The Electromagnetic Radiation Spectrum

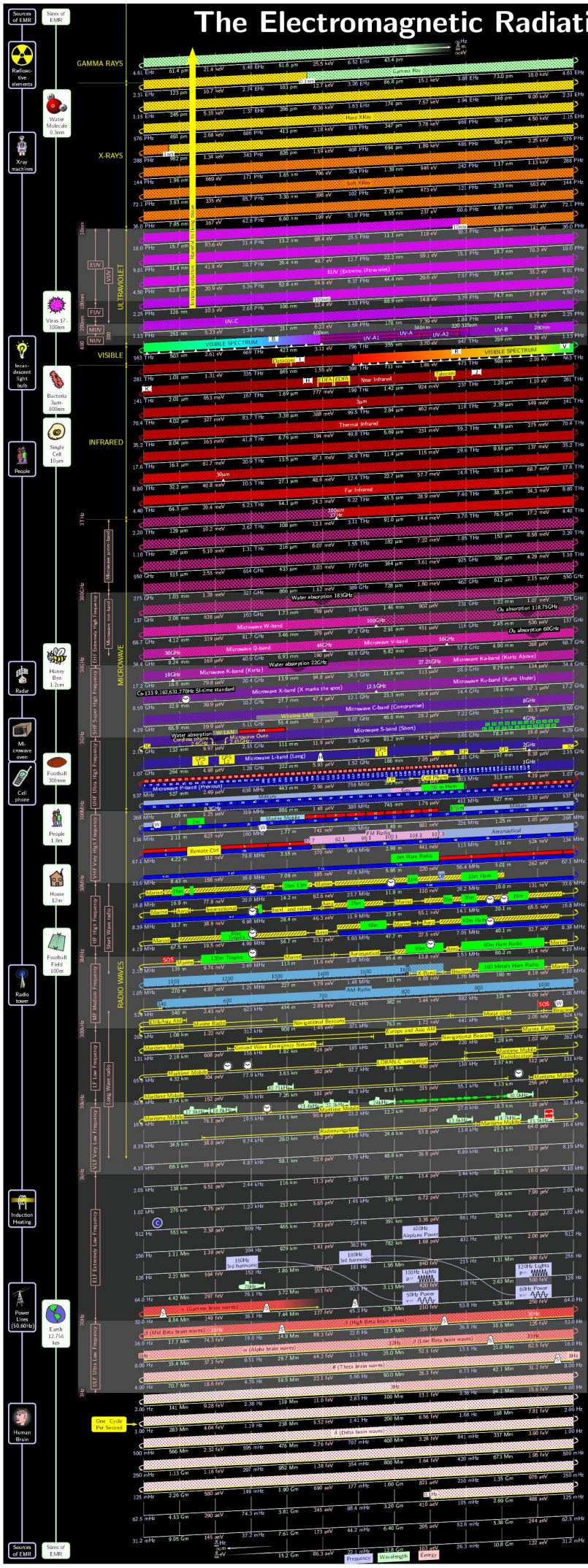

How to read this chart

- This chart is organized in octaves (frequency doubling/halving) starting at 1Hz and going higher (2,4,8, etc) and lower (1/2, 1/4, etc). The octave is a natural way to represent frequency.
- Frequency increases on the vertical scale in the upward direction.
- The horizontal bars wrap around from far right to far left as the frequency increases upwards.
- There is no limit to either end of this chart, however, due to limited space, only the "known" items have been shown here. A frequency of 0Hz is the lowest possible frequency but the method of depicting waves used here does not allow for ever reaching 0Hz, only approaching it. Also, by the definition of frequency (Cycles per second), there is no such thing as negative frequency.
- Values on the chart have been labeled with the following colours: Frequency measured in Hertz, Wavelength measured in meters, Energy measured in electronVolts.

Ultraviolet Light

- Ultraviolet light is beyond the range of human vision.
- Physicists have divided ultraviolet light ranges into Vacuum Ultraviolet (VUV), Extreme Ultraviolet (EUV), Far Ultraviolet (FUV), Medium Ultraviolet (MUV), and Near Ultraviolet (NUV).
- UV-A, UV-B and UV-C were introduced in the 1930's by the Commission Internationale de l'Eclairage (CIE, International Commission on Illumination) for photobiological spectral bands.
- Short-term UV-A exposure causes sun-tanning which helps to protect against sunburn. Exposure to UV-B is beneficial to humans by helping the skin produce vitamin D. Excessive UV exposure causes skin damage. UV-C is harmful to humans but is used as a germicide.
- The CIE originally divided UVA and UVB at 315nm, later some photo-dermatologists divided it at 320nm.
- UVA is subdivided into UVA1 and UVA2 for DNA altering effects at 340nm.
- The sun produces a wide range of frequencies including all the ultraviolet light, however, UVB is partially filtered by the ozone layer and UVC is totally filtered out by the earth's atmosphere.
- A bumblebee can see light in the UVA range which helps them identify certain flowers.

Emission and Absorption

- As EMR passes through elements, certain wavelength bands get absorbed and some new ones get emitted. This absorption and emission produces characteristic spectral lines for each element which are useful in determining the makeup of distant stars. These lines are used to prove the red-shift amount of distant stars.
- When a photon hits an atom it may be absorbed if the energy is just right. The energy level of the electron is raised – essentially holding the radiation. A new photon of specific wavelength is created when the energy is released. The jump in energy is a discrete step and many possible levels of energy exist in an atom.
- Johann Balmer created this formula defining the photon emission wavelength (λ): where m is the initial electron energy level and n is the final electron energy level:

$$\lambda = 364.56\mathrm{nm}\left(\frac{m^2}{m^2-n^2}\right)$$

- Much of the interstellar matter is made of the simplest atom hydrogen. The hydrogen visible-spectrum emission and absorption lines are shown below:

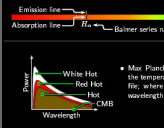

- Max Planck determined the relationship between the temperature of an object and its radiation profile, where B_λ is the radiation power, λ is the wavelength, T is the temperature:

$$B_\lambda = \frac{37418}{\lambda^5\left(e^{\frac{14388}{\lambda T}}-1\right)}$$

Cosmic Microwave Background Radiation

- CMB radiation is the leftover heat from the hot early universe, which last scattered about 400,000 years after the Big Bang.
- CMB permeates the entire universe at a temperature of 2.725 ± 0.001K.
- CMB was predicted in the 1940's by Ralph Alpher, George Gamow and Robert Herman.
- Arno Penzias and Robert Wilson accidentally discovered CMB while working for Bell Telephone Laboratories in 1965.
- The intensity is measured in Mega Jansky (Jy) per steradian. $1Jy = 10^{-26}W/m^2/Hz$

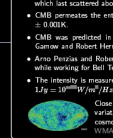

Close examination of slight CMB intensity variations in different parts of the sky help cosmologists study the formation of galaxies. WMAP photo by NASA

Television

- Television is transmitted in the VHF and UHF ranges (30MHz - 3GHz).
- TV channels transmitted over the air are shown as TV.
- TV channels transmitted through cable (CATV) are shown as TV. CATV channels starting with "T-" are channels fed back to the cable TV station (like news feeds).
- Air and cable TV stations are broadcast with the separate video, colour, and audio frequency carriers grouped together in a channel band as follows:

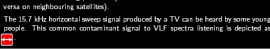

- Satellite channels broadcast in the C-Band are depicted as TV. These stations are broadcast in alternating polarities (Ex. Ch 1 is vertical and 2 is horizontal and vice versa on neighbouring satellites)
- The 15.7 kHz horizontal sweep signal produced by a TV can be heard by some young people. This common contaminant signal to VLF spectra listening is depicted as

Radio Bands

- The radio spectrum (ELF to EHF) is populated by many more items than can be shown on this chart, only a small sampling of bands used around the world have been shown.
- Communication using EMR is done using either:
  - Amplitude Modulation (AM)

    OR
  - Frequency Modulation (FM)

- Each country has its own rules and regulations for allotting bands in this region. For more information, look up the radio communications authority in your area (Ex. FCC in the US, DOC in Canada).
- Not all references agree on the ULF band range, the HAARP range is used here.
- RAdio Detecting And Ranging (RADAR) uses EMR in the microwave range to detect the distance and speed of objects.
- Citizens Band Radio (CB) contains 40 stations between 26.965-27.405MHz.
- Schumann resonance is produced in the cavity between the Earth and the ionosphere. The resonant peaks are depicted as
- Hydrogen gas emits radio band EMR at 21cm
- Some individual frequencies are represented as icons:
  - Submarine communications
  - Time and frequency standards
  - Ham radio and international meteor bands
  - Miscellaneous short wave radio
  - Weather stations
  - Cellular and PCS Phones (including; FDMA, TDMA, CDMA ranges)

Sound

- Although sound, ocean waves, and heartbeats are not electromagnetic, they are included on this chart as a frequency reference. Other properties of electromagnetic waves are different from sound waves.
- Sound waves are caused by an oscillating compression of molecules. Sound cannot travel in a vacuum such as outer space.
- The speed of sound in air is 1240kph (770mph).
- Humans can only hear sound between ≈20Hz to ≈20kHz.
- Infrasound (below 20Hz) can be sensed by internal organs and touch. Frequencies in the 0.2Hz range are often the cause of motion sickness.
- Bats can hear sound up to ≈50kHz.
- The 88 piano keys of the Equal Temperament scale are accurately located on the frequency chart.
- Over the ages people have striven to divide the continuous audio frequency spectrum into individual musical notes that have harmonious relationships. Microtonal musicians study various scales. One recent count lists 4700 different musical scales.
- Middle C is depicted on the chart as C

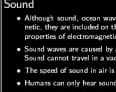

This image depicts air being compressed as sound waves in a tube from a speaker and then travelling through the tube towards the ear.

Gravity Waves

- Gravity is the mysterious force that holds large objects together and binds our planets, stars and galaxies together. Many people have unsuccessfully theorized about the details of gravity and its relationship to other forces. There have been no links between gravity waves and electromagnetic radiation.
- Gravity is theorized to warp space and time. In fact, gravity is responsible for bending light as observed by the gravity-lens example of distant galaxies.
- "Gravity waves" would appear as ripples in space-time formed by large objects moving through space that might possibly be detected in the future by very sensitive instruments.
- The speed that gravity propagates through space has been theorized to be the same as the speed of light.

Brain Waves

- By connecting electrodes from the human head to an electroencephalograph (EEG), it is possible to measure very small cyclic electrical signals.
- There has been much study on this topic, but like all effects on humans, the science is not as exact as the science of materials.
- Generally, lower brain wave frequencies relate to sleep, and the higher frequencies relate to alertness.
- Devices have been made for measuring and stimulating brain waves to achieve a desired state.

Electromagnetic Radiation (EMR)

- EMR is emitted in discrete units called photons but has properties of waves as seen by the images below. EMR can be created by the oscillation or acceleration of electrical charge or magnetic field. EMR travels through space at the speed of light (2.997 924 58 $\times 10^8$ m/s). EMR consists of an oscillating electrical and magnetic field which are at right angles to eachother and spaced at a particular wavelength. There is some controversy about the phase relationship between the electrical and magnetic fields of EMR, one of the theoretical representations is shown here:

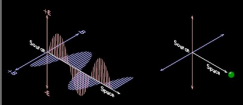

E = Electric Field Strength
B = Magnetic Field Strength
Wave Nature
Particle Nature

- The particle nature of EMR is exhibited when a solar cell emits individual electrons when struck with very dim light.
- The wave nature of EMR is demonstrated by the famous double slit experiment that shows cancelling and addition of waves.
- Much of the EMR properties are based on theories since we can only see the effects of EMR and not the actual photon or wave itself.
- Albert Einstein theorized that the speed of light is the fastest that anything can travel. So far he has not been proven wrong.
- EMR can have its wavelength changed if the source is receding or approaching as in the red-shift example of distant galaxies and stars that are moving away from us at very high speeds. The emitted spectral light from these receding bodies appears more red than it would be if the object was not moving away from us.
- We only have full electronic control over frequencies in the microwave range and lower. Higher frequencies must be created by waiting for the energy to be released from elements as photons. We can either pump energy into the elements (ex. heating a rock with visible EMR and letting it release infrared EMR) or let it naturally escape (ex. uranium decay).
- We can only see the visible spectrum. All other bands of the spectrum are depicted as hatched colours

System International d'unité prefixes (SI unit prefixes)			
Symbol	Name	Exp.	Multiplier
Y	yotta	10^{24}	1,000,000,000,000,000,000,000,000
Z	zetta	10^{21}	1,000,000,000,000,000,000,000
E	exa	10^{18}	1,000,000,000,000,000,000
P	peta	10^{15}	1,000,000,000,000,000
T	tera	10^{12}	1,000,000,000,000
G	giga	10^{9}	1,000,000,000
M	mega	10^{6}	1,000,000
k	kilo	10^{3}	1,000
		10^{0}	1
m	milli	10^{-3}	0.001
μ	micro	10^{-6}	0.000 001
n	nano	10^{-9}	0.000 000 001
p	pico	10^{-12}	0.000 000 000 001
f	femto	10^{-15}	0.000 000 000 000 001
a	atto	10^{-18}	0.000 000 000 000 000 001
z	zepto	10^{-21}	0.000 000 000 000 000 000 001
y	yocto	10^{-24}	0.000 000 000 000 000 000 000 001

Measurements on this chart		
Symbol	Name	Value
c	Speed of Light	$2.997\,924\,58 \times 10^8$ m/s
h	Planck's Constant	$6.626\,1 \times 10^{-34}$ J·s
$\hbar$	Planck's Constant (freq)	$1.054\,592 \times 10^{-34}$ J·s
f	Frequency (cycles / second)	Hz
λ	Wavelength (meters)	m
E	Energy (Joules)	J

Conversions

$E = h \cdot f$

$\lambda = \frac{c}{f}$

$1\mathring{A} = 0.1\mathrm{nm}$

$1\mathrm{nm} = 10\mathring{A}$

$1\mathrm{Joule} = 6.24 \times 10^{18}$ eV

Gamma Rays

- Gamma radiation is the highest energy radiation (up to ≈ 10^{20} eV) that has been measured. At this energy, the radiation could be from gamma-rays, protons, electrons, or something else.
- Alpha, beta, and delta radiation do not electromagnetic but are actually parts of the atom being released from a radioactive atom. In some cases this can cause gamma radiation. These are not to be confused with brain waves of similar names.

Visible Spectrum

- The range of EMR visible to humans is also called "Light". The visible spectrum also closely resembles the range of EMR that filters through our atmosphere from the sun.
- Other creatures see different ranges of visible light, for example bumble-bees can see ultraviolet light and dogs have a different response to colours than do humans.
- The sky is blue because our atmosphere scatters light and the shorter wavelength blue gets scattered the most. It appears that the entire sky is illuminated by a blue light but in fact that light is scattered from the sun. The longer wavelengths like red and orange move straight through the atmosphere which makes the sun look like a bright white ball containing all the colours of the visible spectrum.
- Interestingly, the visible spectrum covers approximately one octave.
- Astronomers use filters to capture specific wavelengths and reject unwanted wavelengths, the major astronomical (visual) filter bands are depicted as

Infrared Radiation

- Infrared radiation (IR) is sensed by humans as heat and is below the range of human vision. Humans (and anything at room temperature) are emitters of IR.
- IR remote control signals are invisible to the human eye but can be detected by most camcorders.
- Night vision scopes/goggles use a special camera that senses IR and converts the image to visible light. Some IR cameras employ an IR lamp to help illuminate the view.
- IR LASERs are used for burning objects.
- A demonstration of IR is to hold a metal bowl in front of your face. The IR emitted by your body will be reflected back using the parabolic shape of the bowl and you will feel the heat.
- Fiber-optic based infrared communication signals are sometimes amplified with Erbium-Doped Fiber Amplifiers

LASER

- LASER is an acronym for Light Amplification by Stimulated Emission of Radiation.
- A LASER is a device that produces monochromatic EMR of high intensity.
- With proper equipment, any EMR can be made to operate like a LASER. For example, microwaves are used to create a MASER.

Polarization

- As a photon (light particle) travels through space, its axis of electrical and magnetic fluctuations does not rotate. Therefore, each photon has a fixed linear polarity of somewhere between 0° to 360°. Light can also be circularly and elliptically polarized.
- Some crystals can cause the photon to rotate its polarization.
- Receivers that expect polarized photons will not accept photons that are in other polarities. (ex. satellite dish receivers have horizontal and vertical polarity positions).
- A polarized filter (like Polaroid™ sunglasses) can be used to demonstrate polarized light. One filter will only let photons that have one polarity through. Two overlapping filters at right angles will almost totally block the light that exits, however, a third filter inserted between the first two at a 45°angle will rotate the polarized light and allow some light to come out the end of all three filters.
- Light that reflects off an electrical insulator becomes polarized. Conductive reflectors do not polarize light.
- Perhaps the most reliably polarized light is a rainbow.
- Moonlight is also slightly polarized. You can test this by viewing the moonlight through a Polaroid™ sunglass lens, then rotate that lens, the moonlight will dim and brighten slightly.

Refraction

- Refraction of EMR is dependent on wavelength as can be seen by the prism example below.

By using a glass prism, white light can be spread by refraction into a spectrum of its composite colours. All wavelengths of EMR can be refracted by using the proper materials.

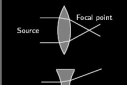

Convex lenses make objects appear closer and are used to correct far-sitedness.

Concave lenses make objects appear farther away and are used to correct near-sitedness.

Photo by STScI

Heavy objects like dense galaxies and large planets cause light to bend due to gravitational lensing.

Reflection

- Reflection of EMR is dependent on wavelength as demonstrated when visible light and radio waves bounce off objects that X-Rays would pass through. Microwaves, which have a large wavelength compared to visible light, will bounce off metal mesh in a microwave oven whereas visible light will pass through.

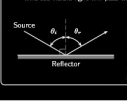

EMR of any wavelength can be reflected, however, the reflectivity of a material depends on many factors including the wavelength of the incident beam.

The angle of incidence (θ_i) and angle of reflection (θ_r) are the same.

© unihedron.com 2004-12.12

electricity from radiowaves 3

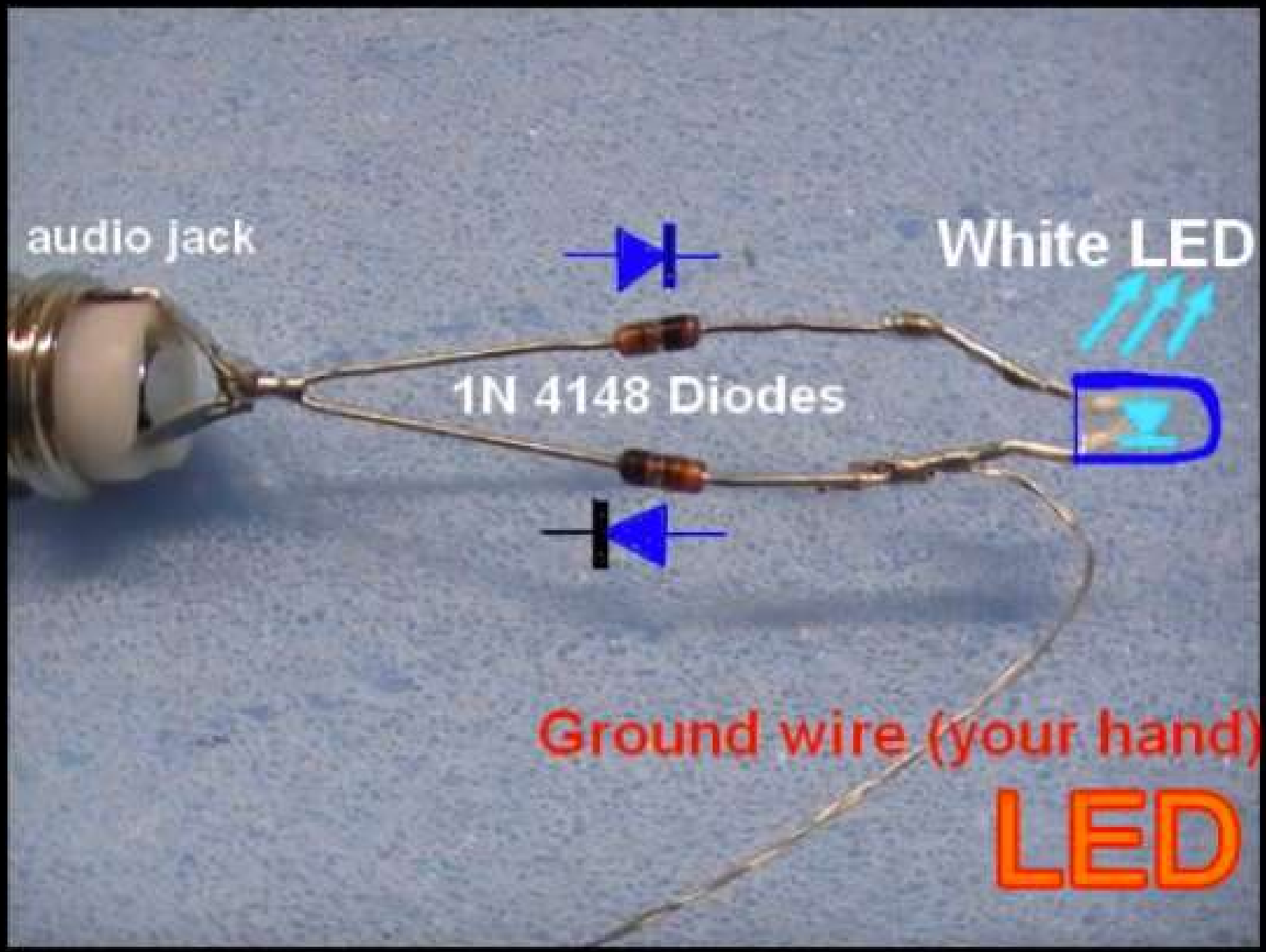

LED HF

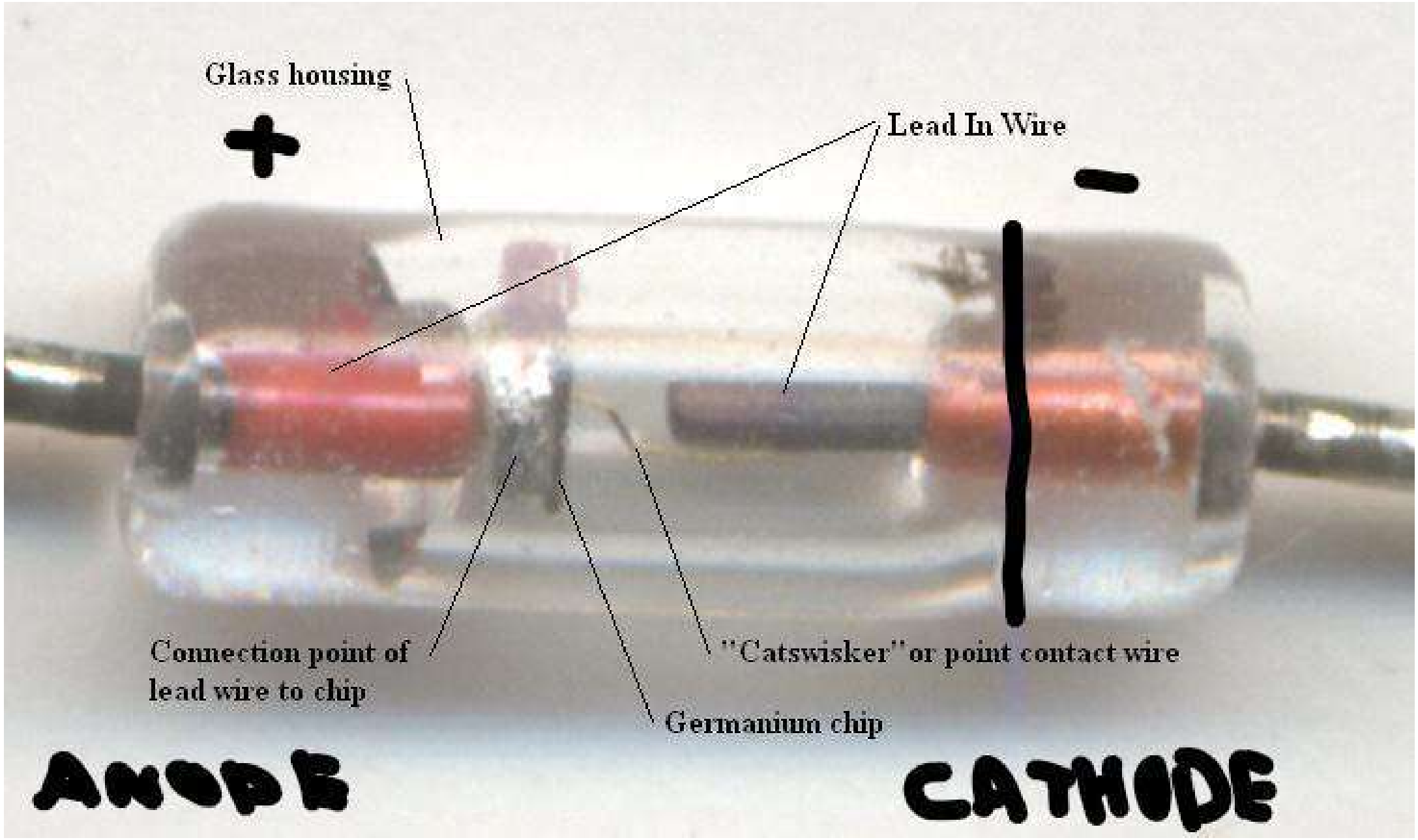
Glass housing
+
Lead In Wire
-
Connection point of
lead wire to chip
"Catswisker" or point contact wire
Germanium chip
ANODE
CATHODE

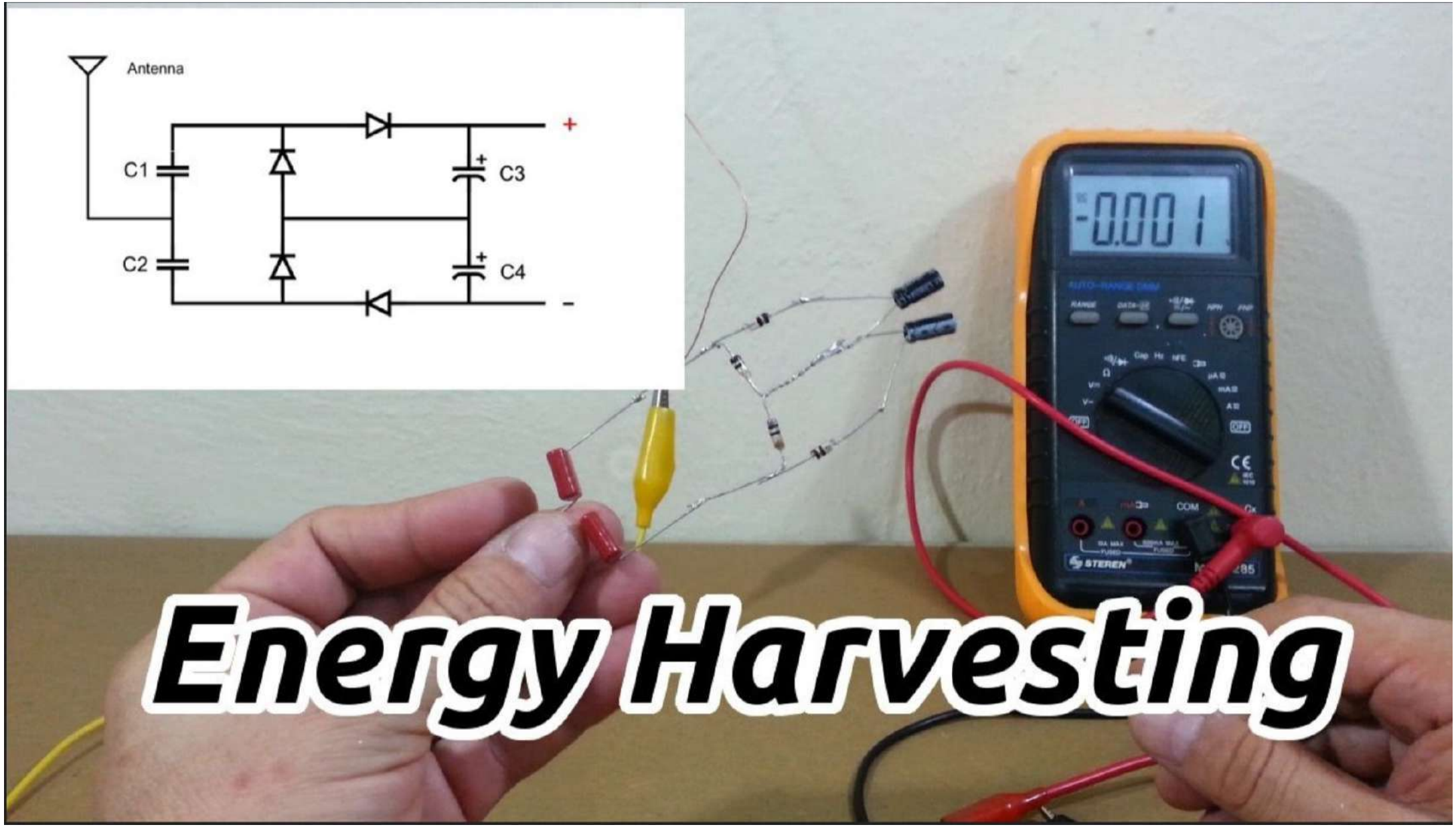
Antenna
C1
C2
C3
C4
+
-
-0.001
Energy Harvesting

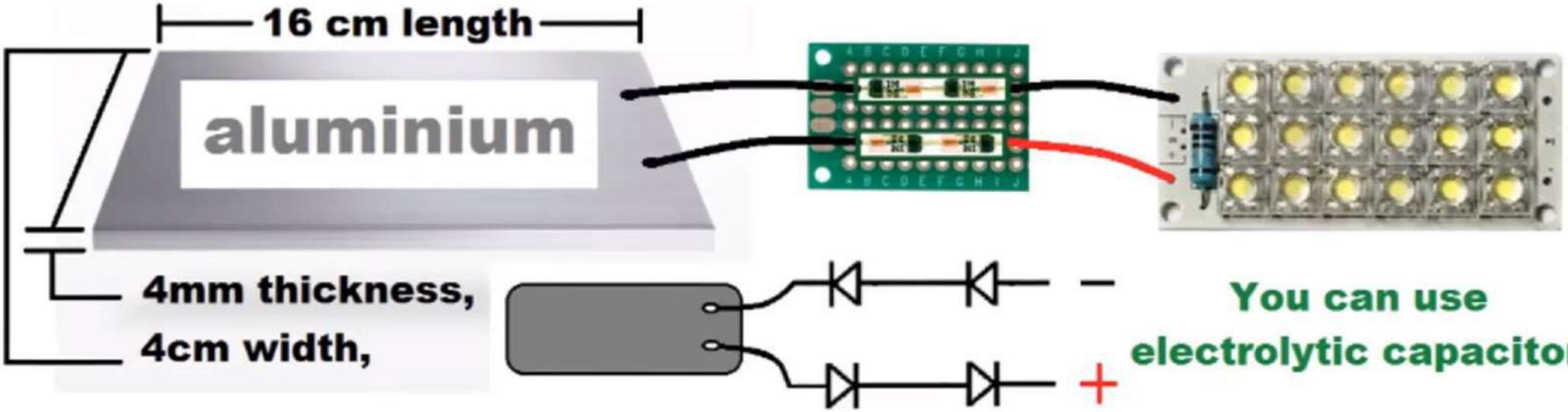

You can use electrolytic capacitor!

Germanium Diode

IN34 or IN34A

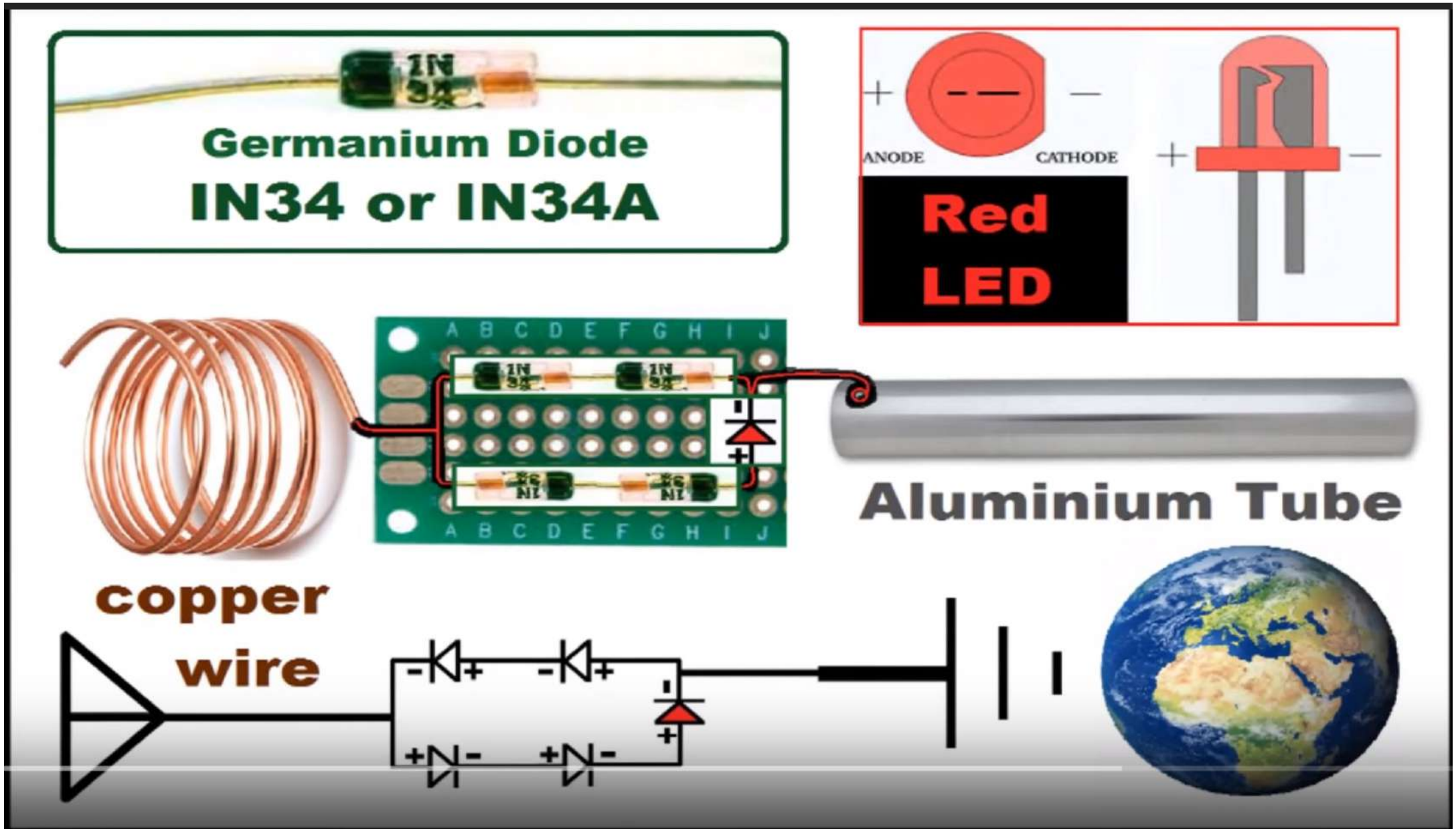
Germanium Diode
IN34 or IN34A
ANODE
CATHODE
Red
LED
Aluminium Tube
copper
wire

.01
10NF
.1
100NF

Ceramic Disc Capacitor

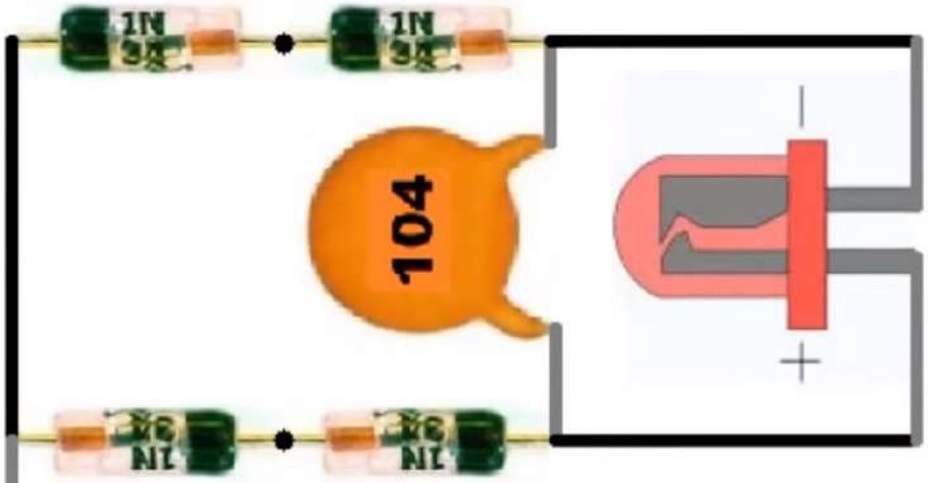

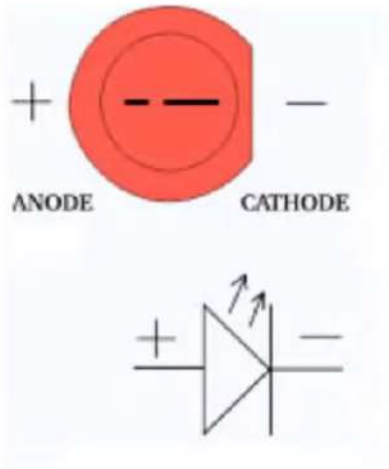

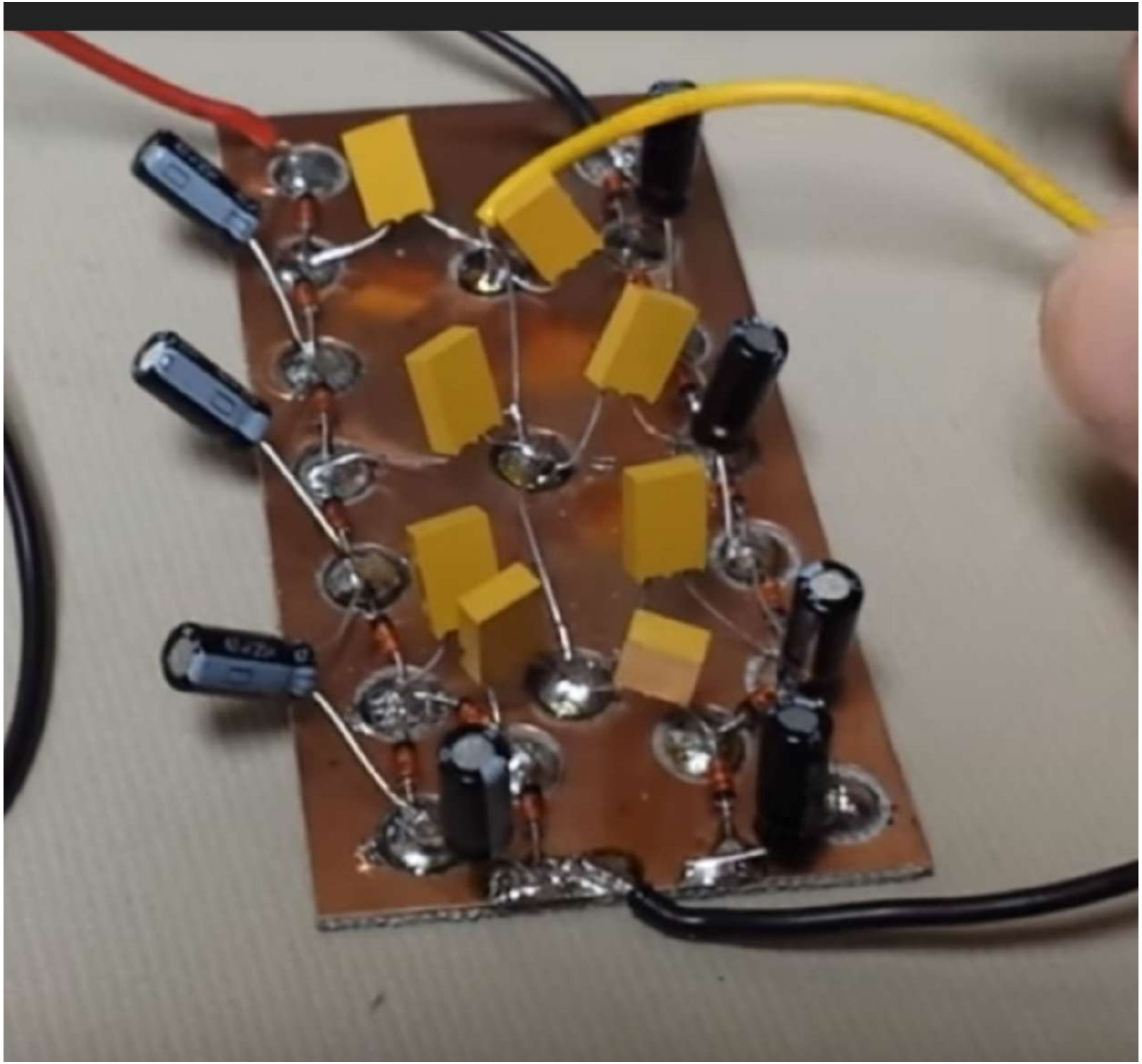

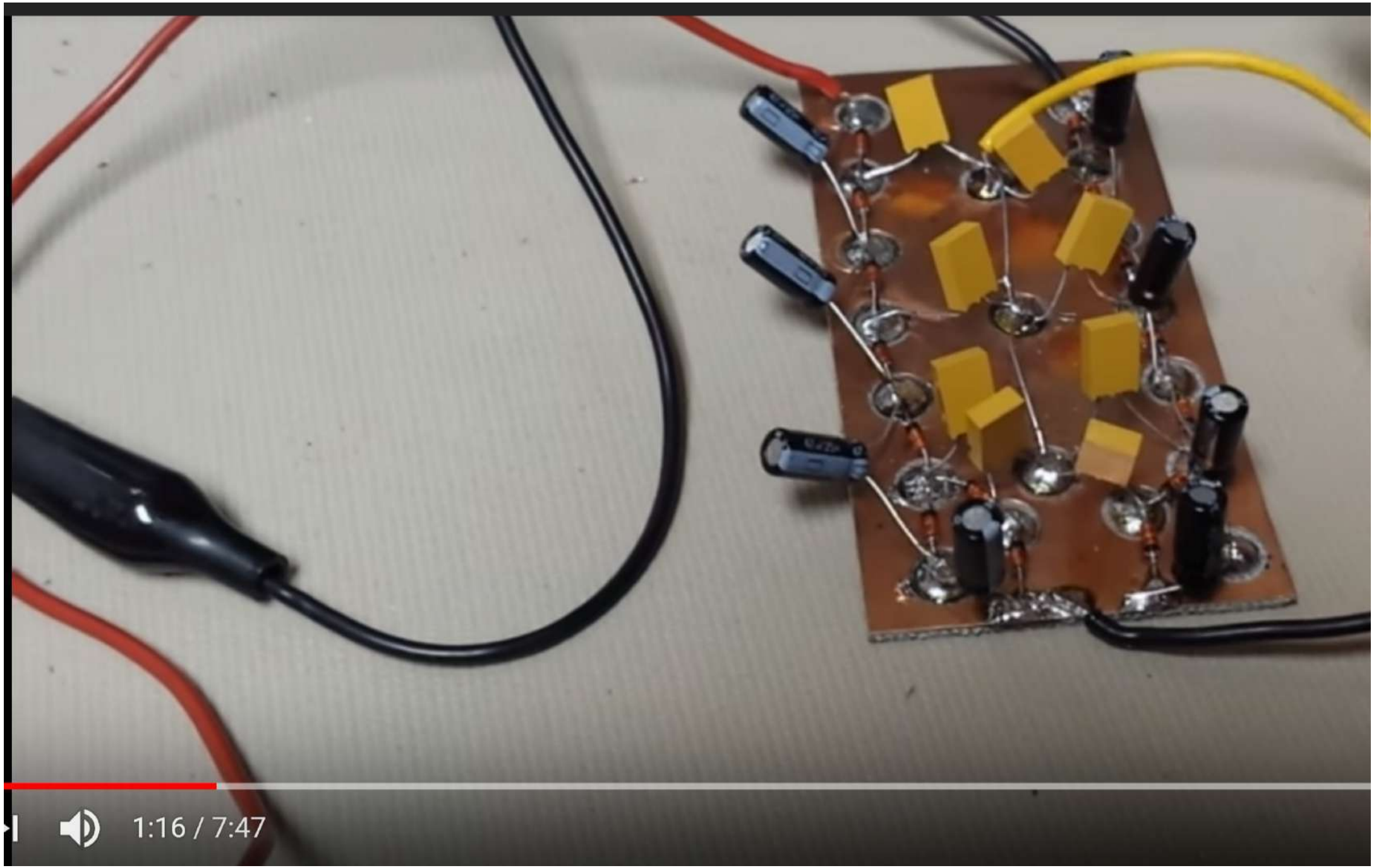
1:16 / 7:47

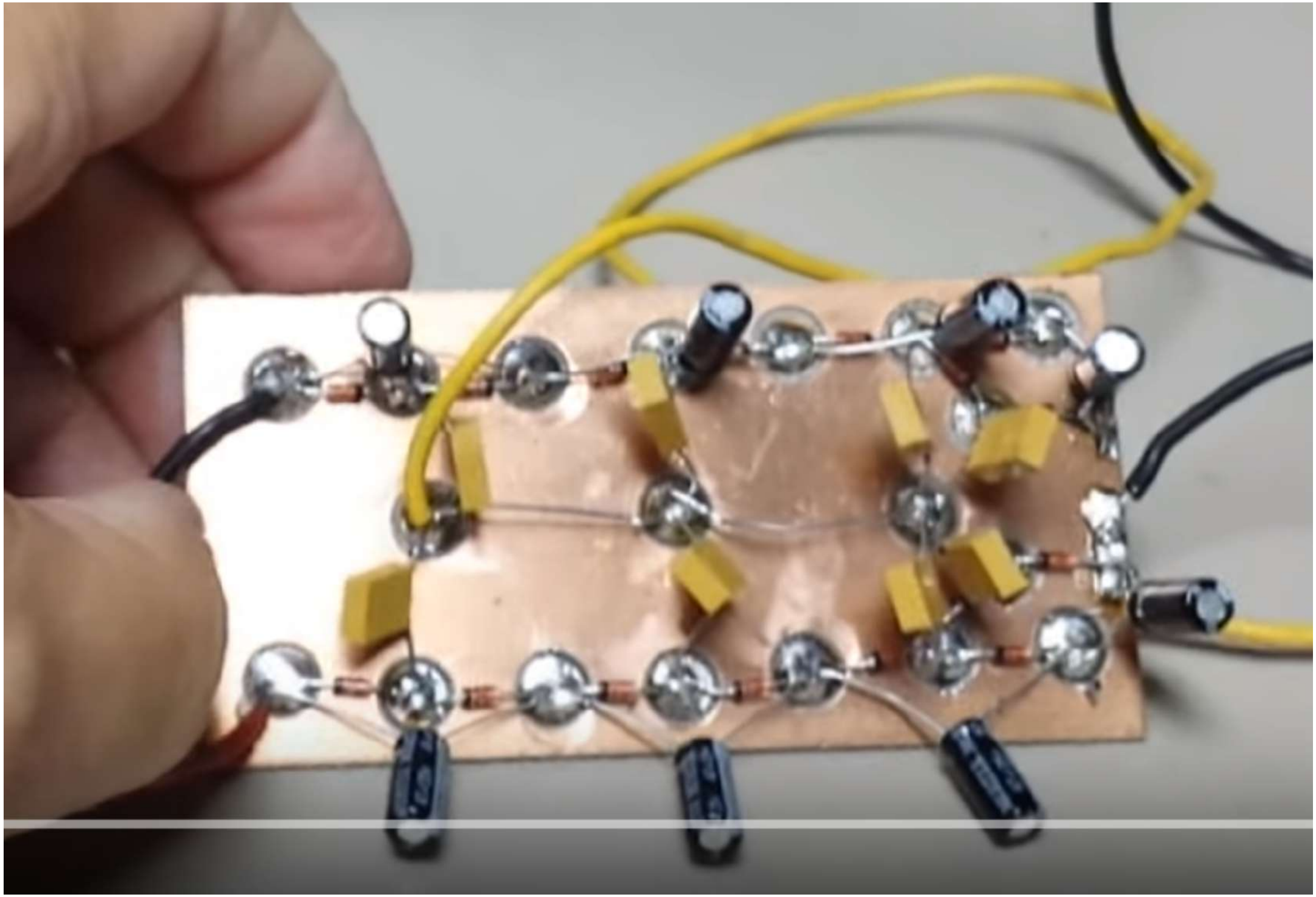

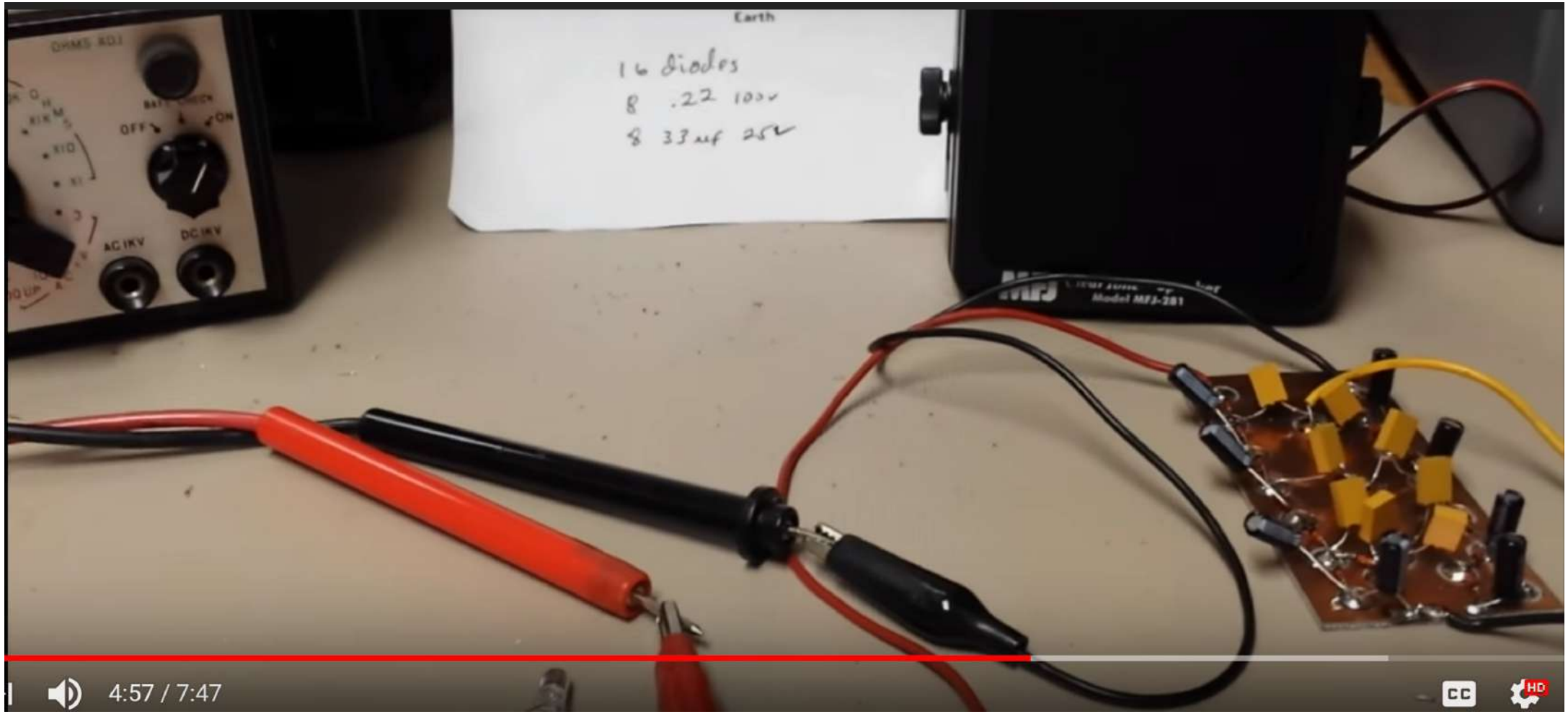
Earth
16 diodes
8 .22 100v
8 33uf 25v
OHMS ADJ
OFF
ON
AC 1KV
DC 1KV
Model MF2-281
4:57 / 7:47

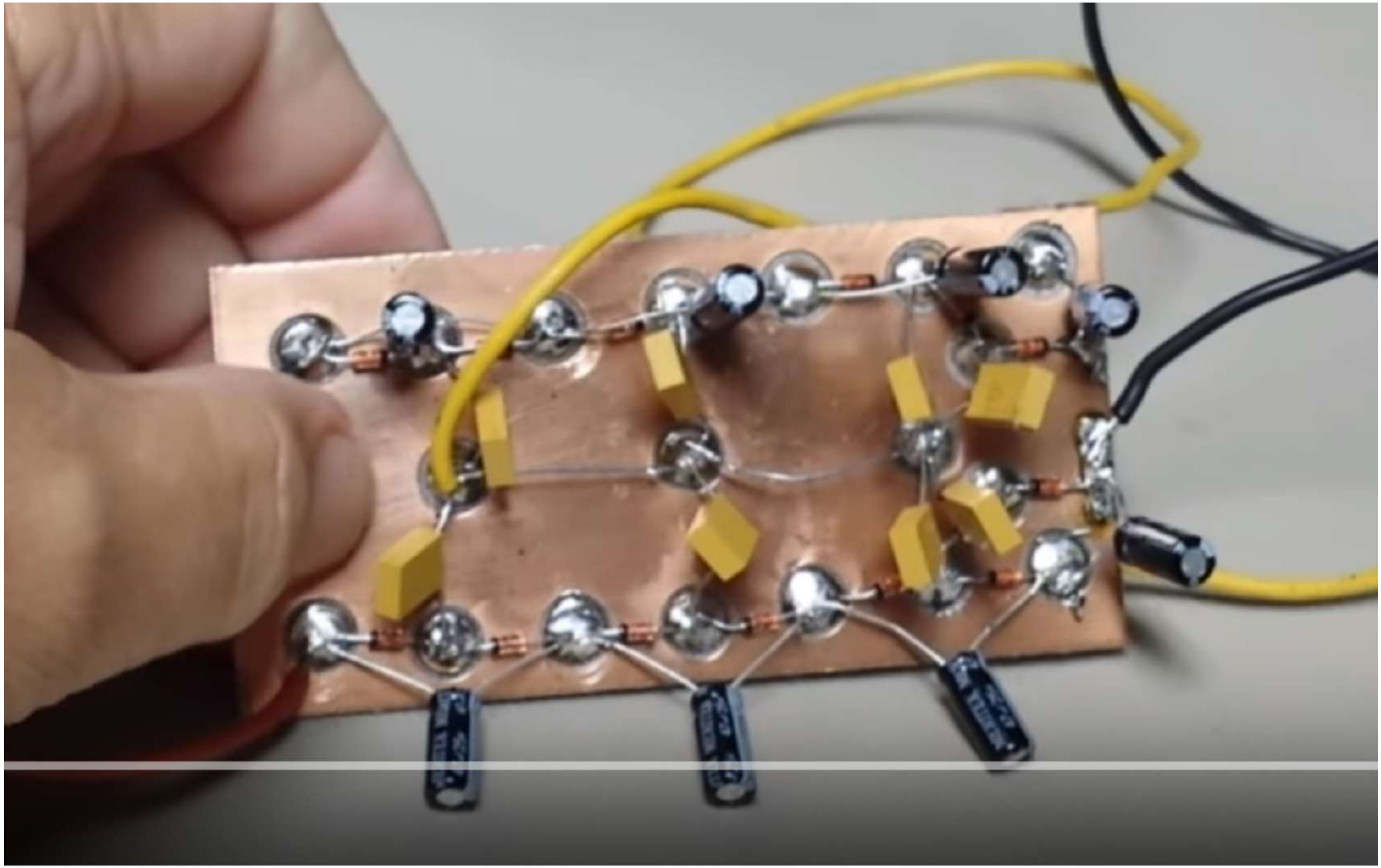

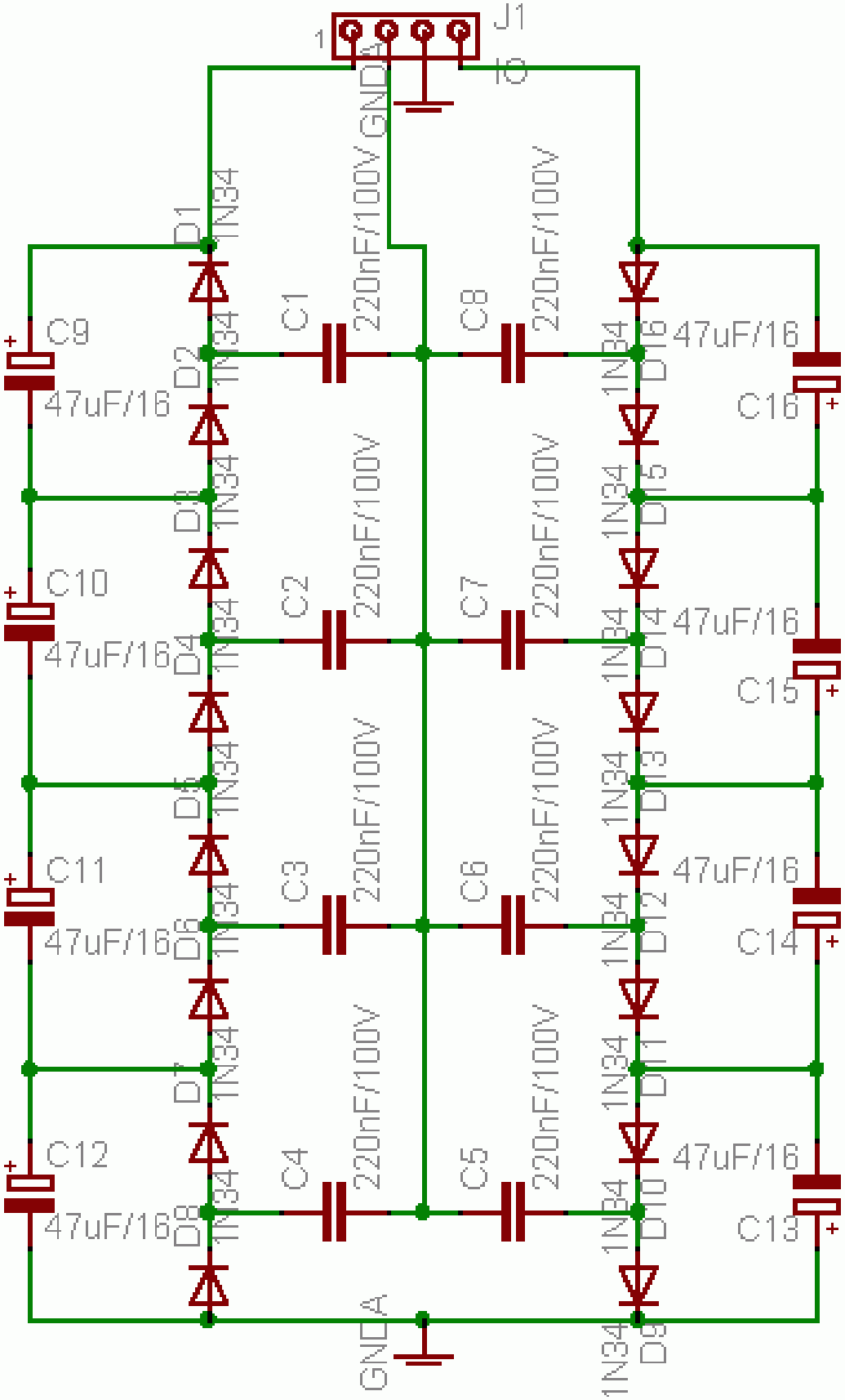

AMBIENT POWER MODULE

(C) - GROUNDLOOP 2012

Circuit Diagram

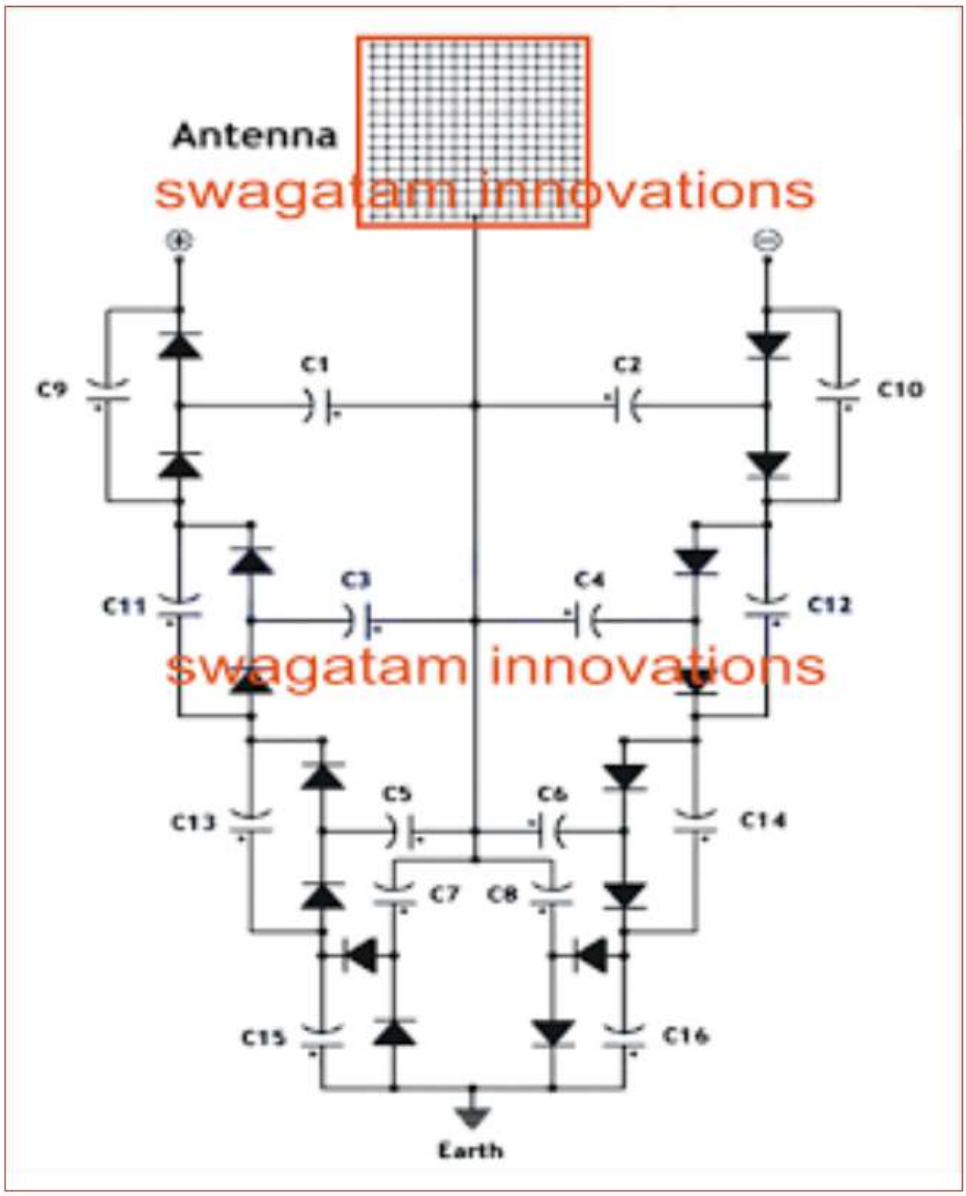

Parts List

All Diodes are 1N4148

C1---C8 = 0.22uF/100V mylar

C9----C16 = 33uF/25V electrolytic

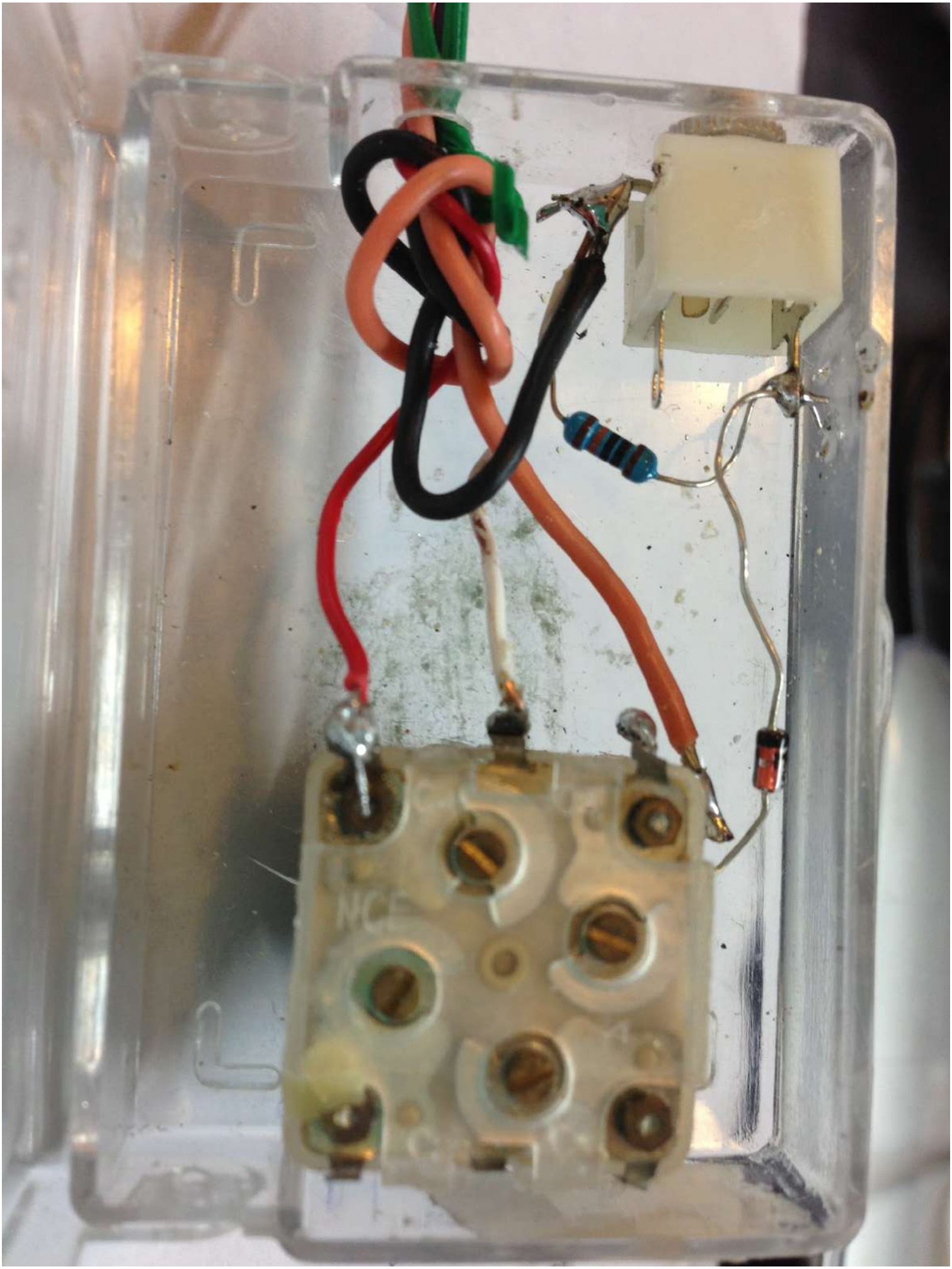

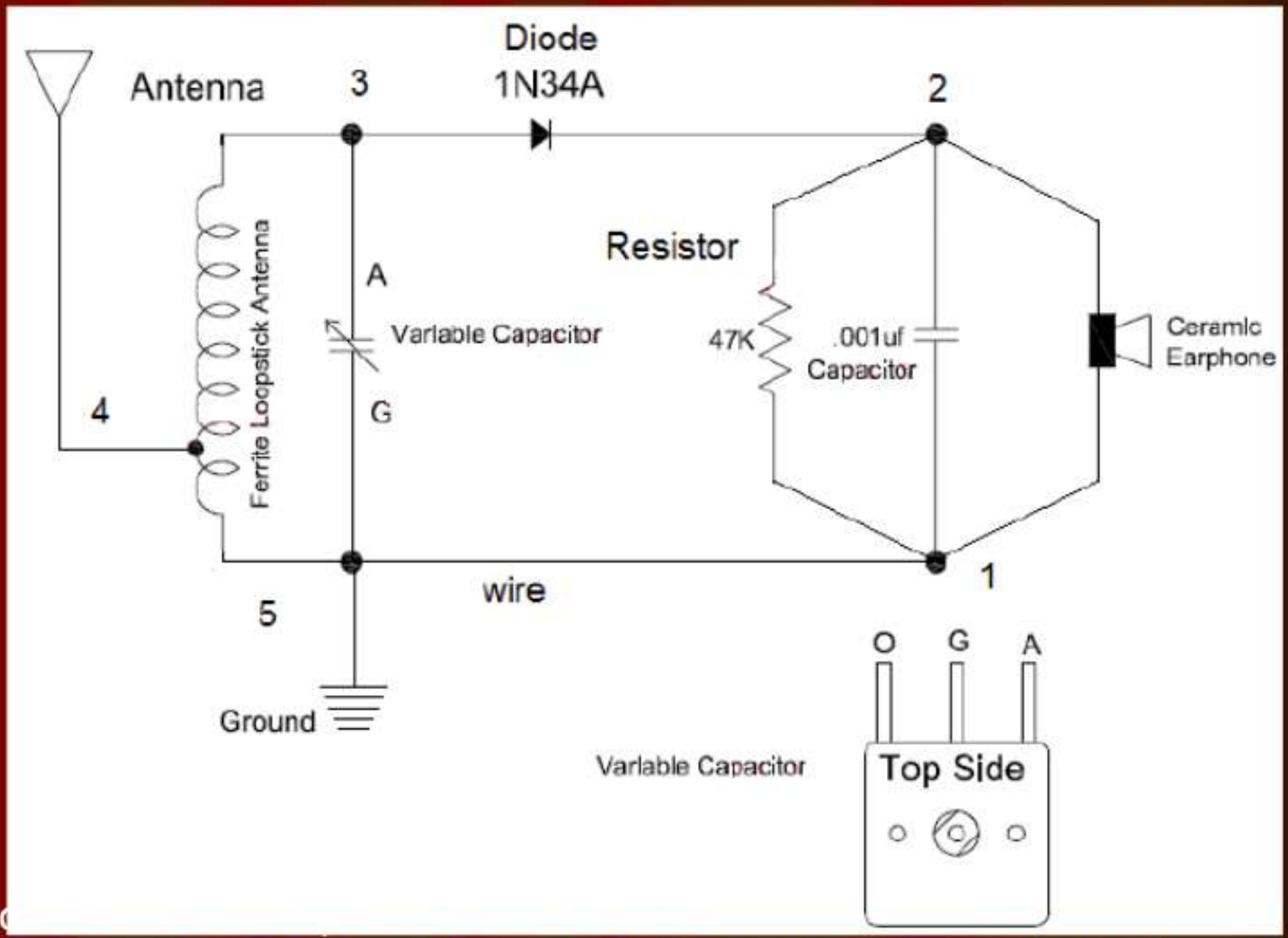

[Sc

http://www.angelfire.com/electronic2/index1/DmCrystalSet.html]

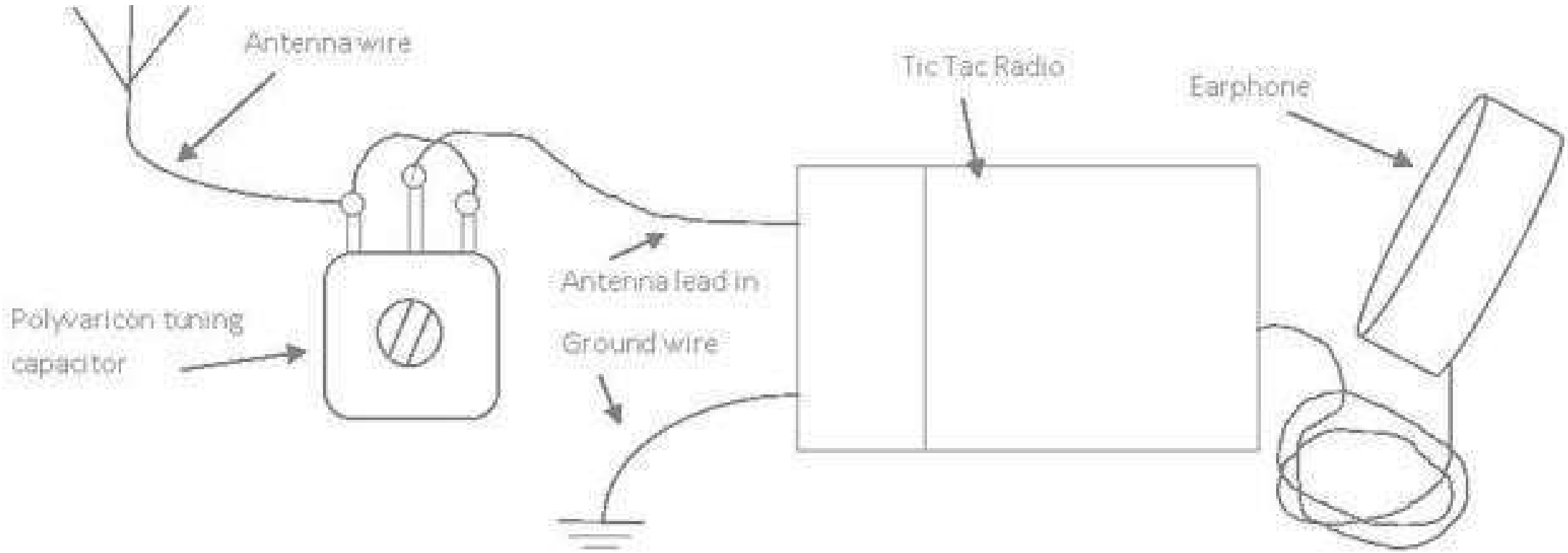
Antenna wire
Tic Tac Radio
Earphone
Antenna lead in
Polyvaricon tuning
capacitor
Ground wire

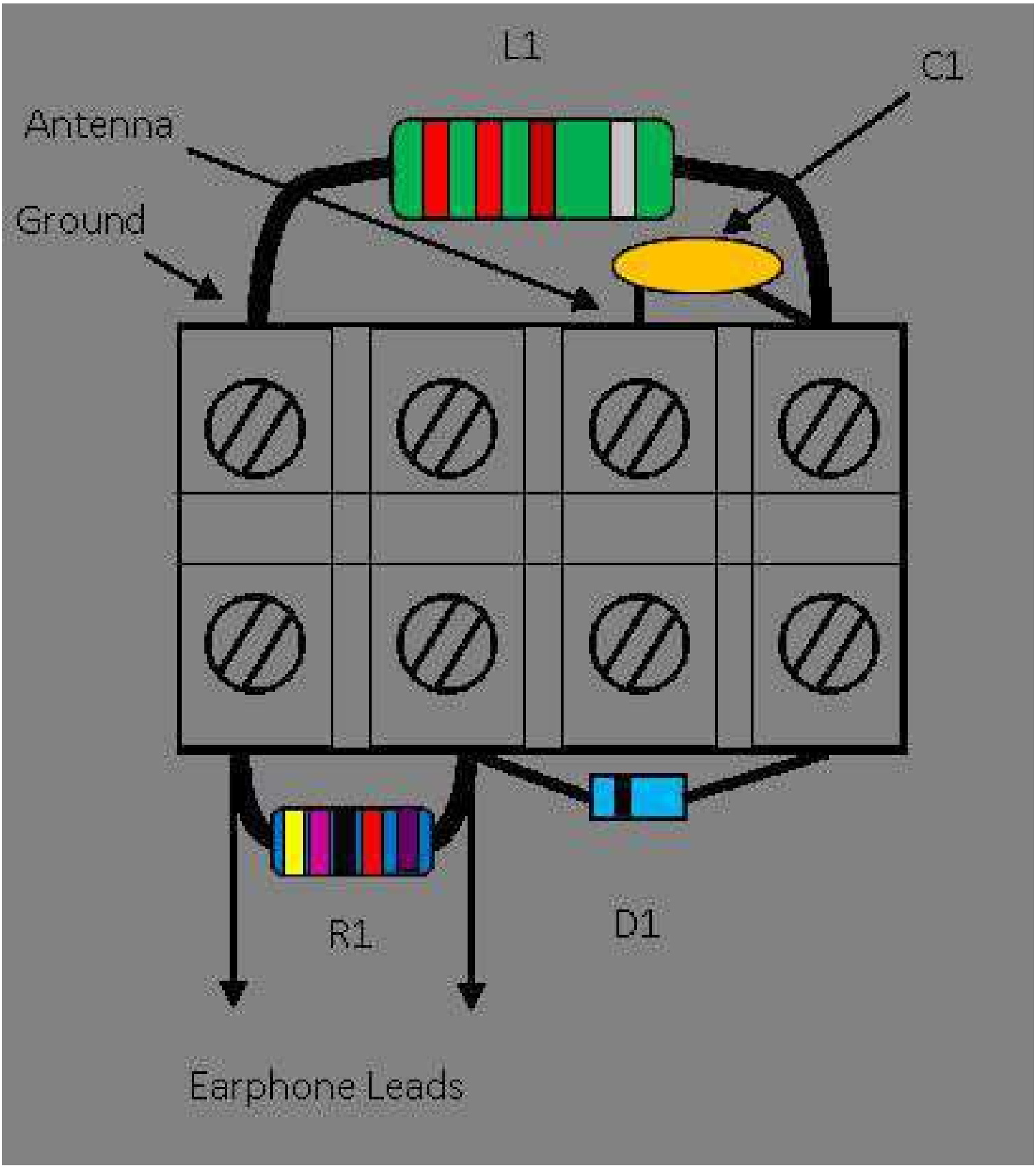
L1
C1
Antenna
Ground
R1
D1
Earphone Leads

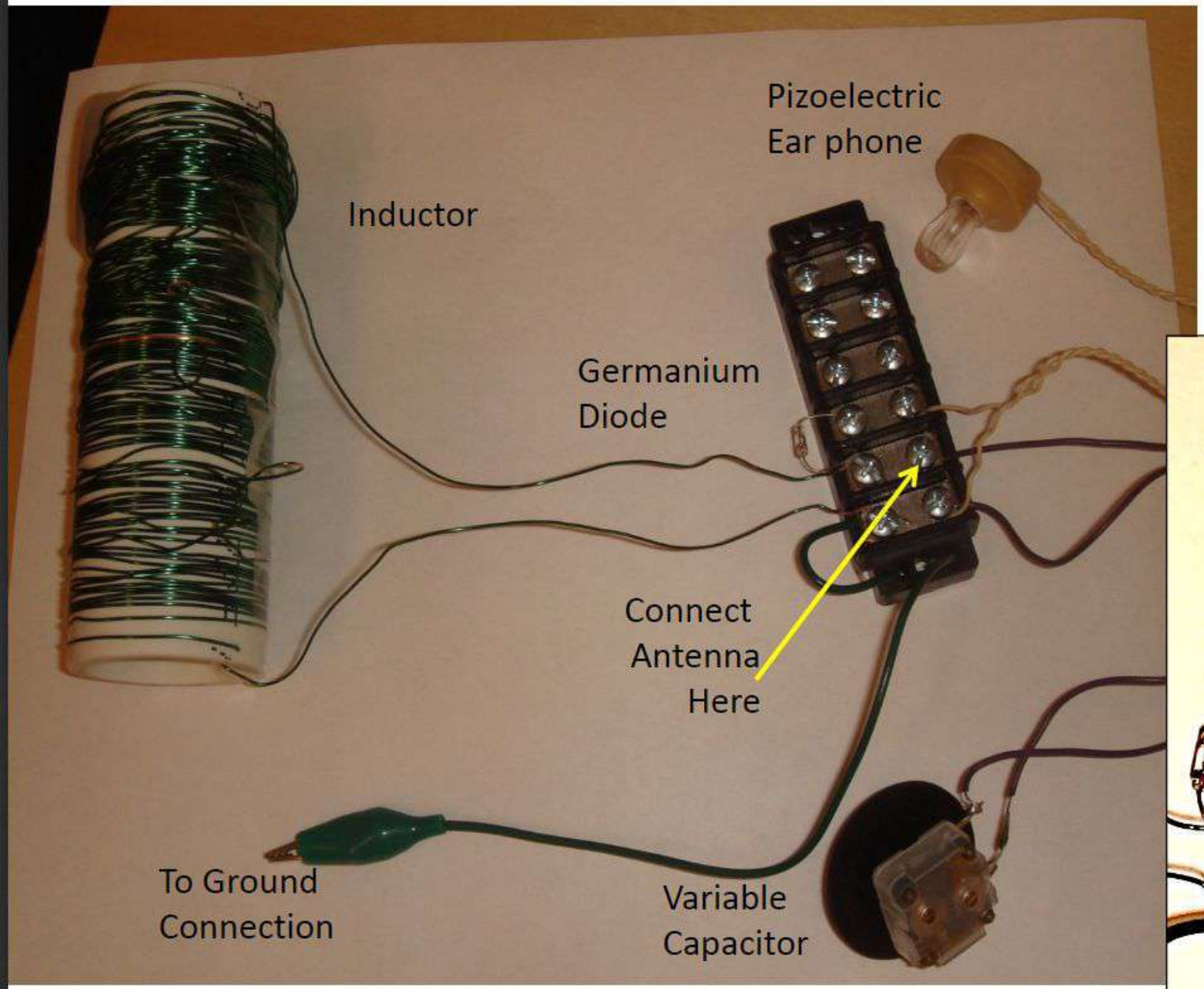
Pizoelectric
Ear phone
Inductor
Germanium
Diode
Connect
Antenna
Here
To Ground
Connection
Variable
Capacitor

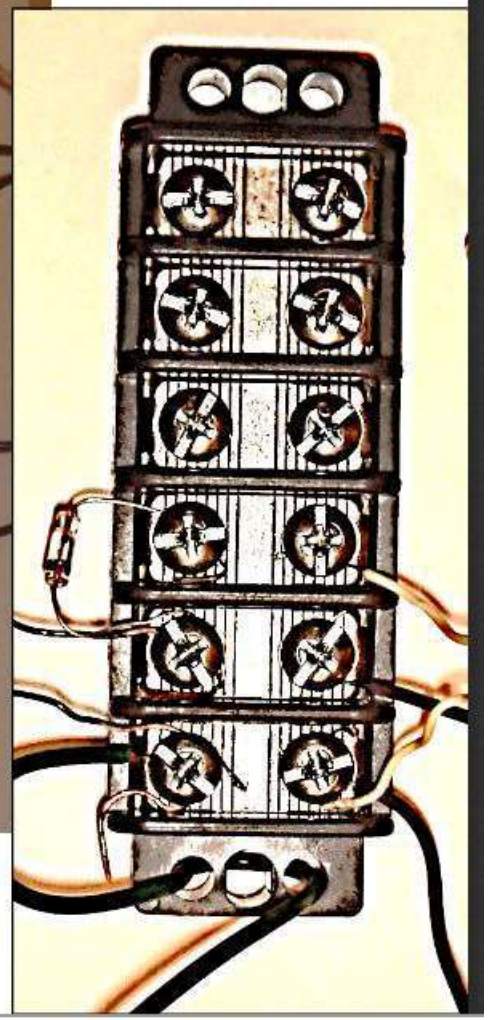

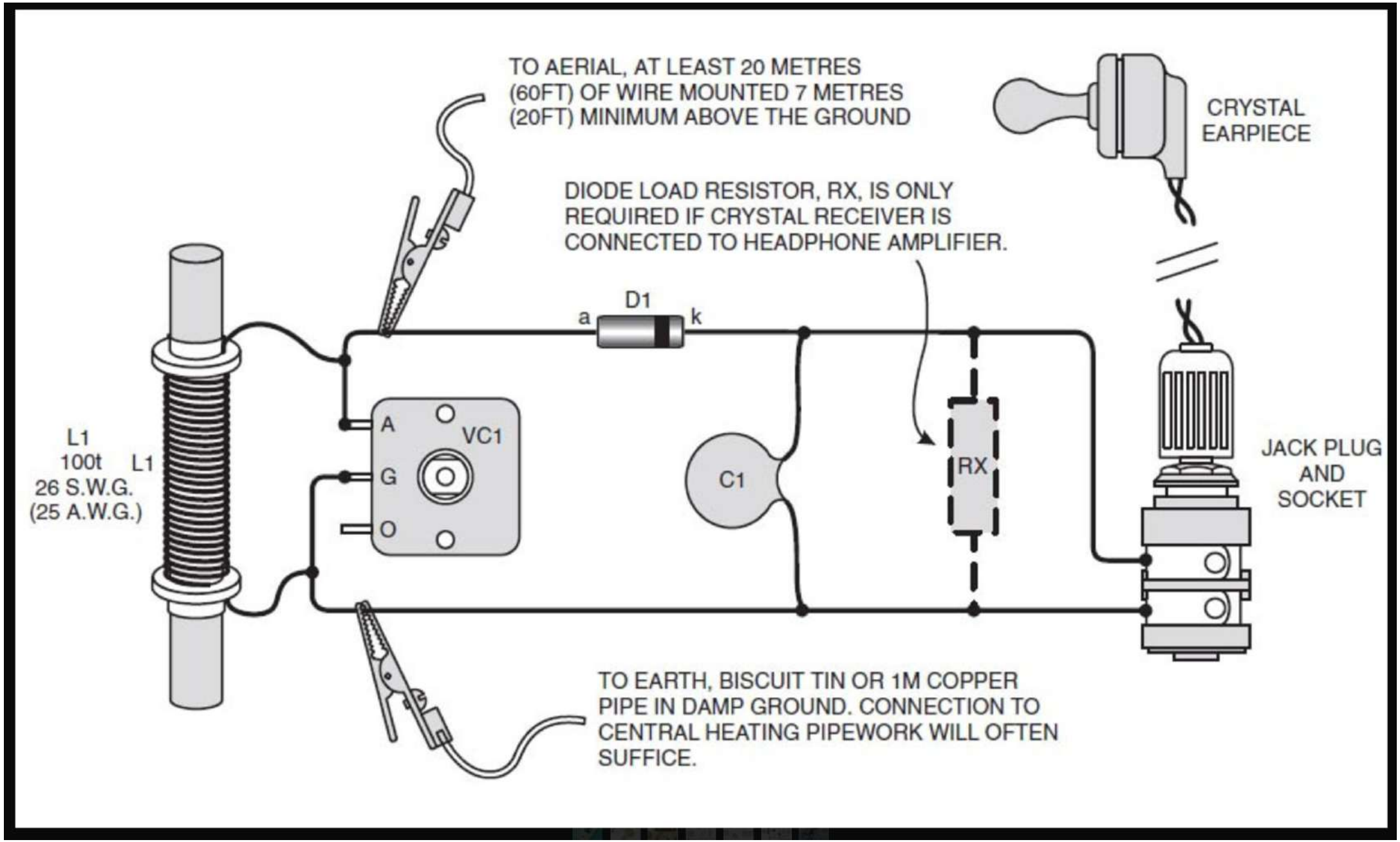
TO AERIAL, AT LEAST 20 METRES
(60FT) OF WIRE MOUNTED 7 METRES
(20FT) MINIMUM ABOVE THE GROUND
CRYSTAL
EARPIECE
DIODE LOAD RESISTOR, RX, IS ONLY
REQUIRED IF CRYSTAL RECEIVER IS
CONNECTED TO HEADPHONE AMPLIFIER.
D1
a
k
L1
100t
26 S.W.G.
(25 A.W.G.)
L1
A
G
O
VC1
C1
RX
JACK PLUG
AND
SOCKET
TO EARTH, BISCUIT TIN OR 1M COPPER
PIPE IN DAMP GROUND. CONNECTION TO
CENTRAL HEATING PIPEWORK WILL OFTEN
SUFFICE.

ANTENNA
-
+
392J
GROUND

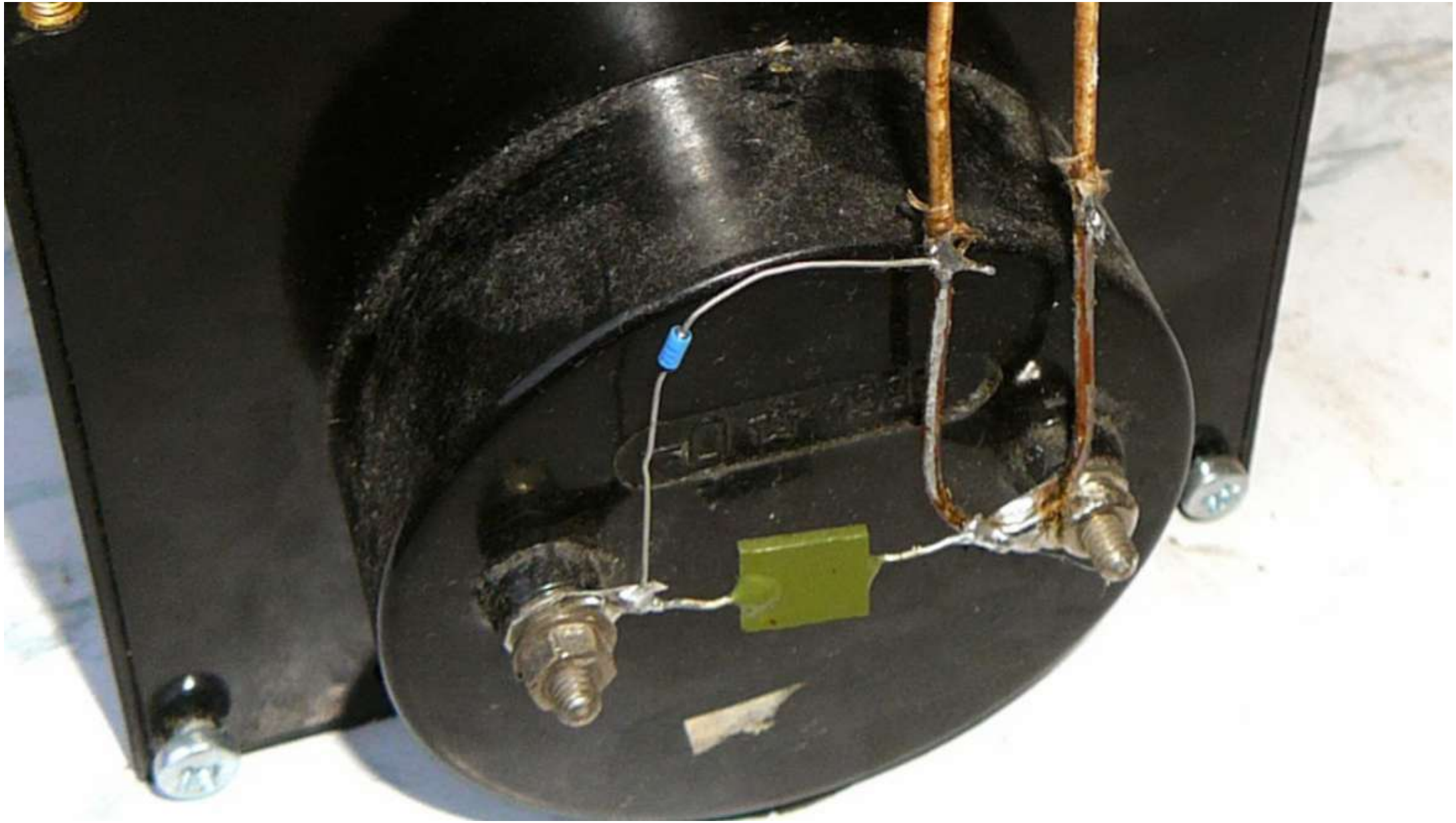

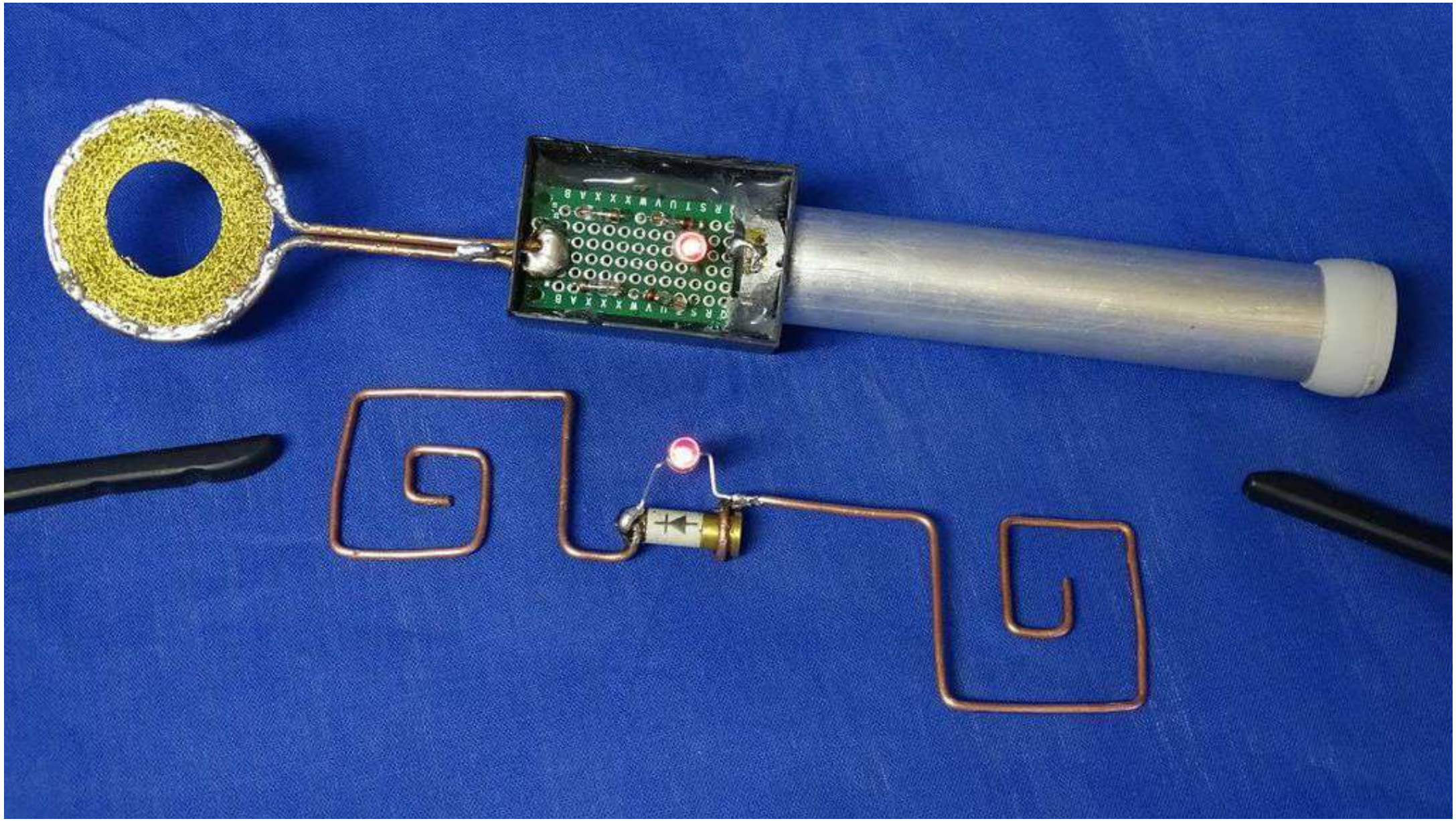

Step 1: LED+RF Diode

First Solder the led parallel to the Rf diode

Add Tip Ask Question Comment Download

Step 2: RF Diode+ LED+ Wires

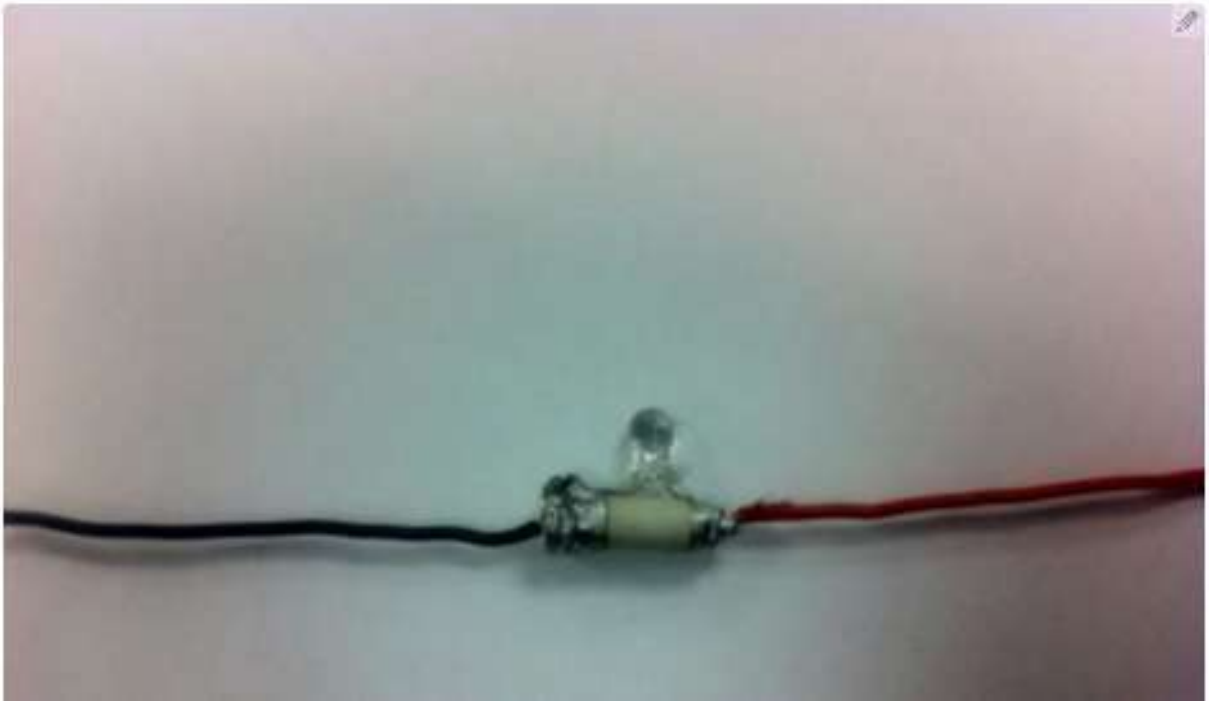

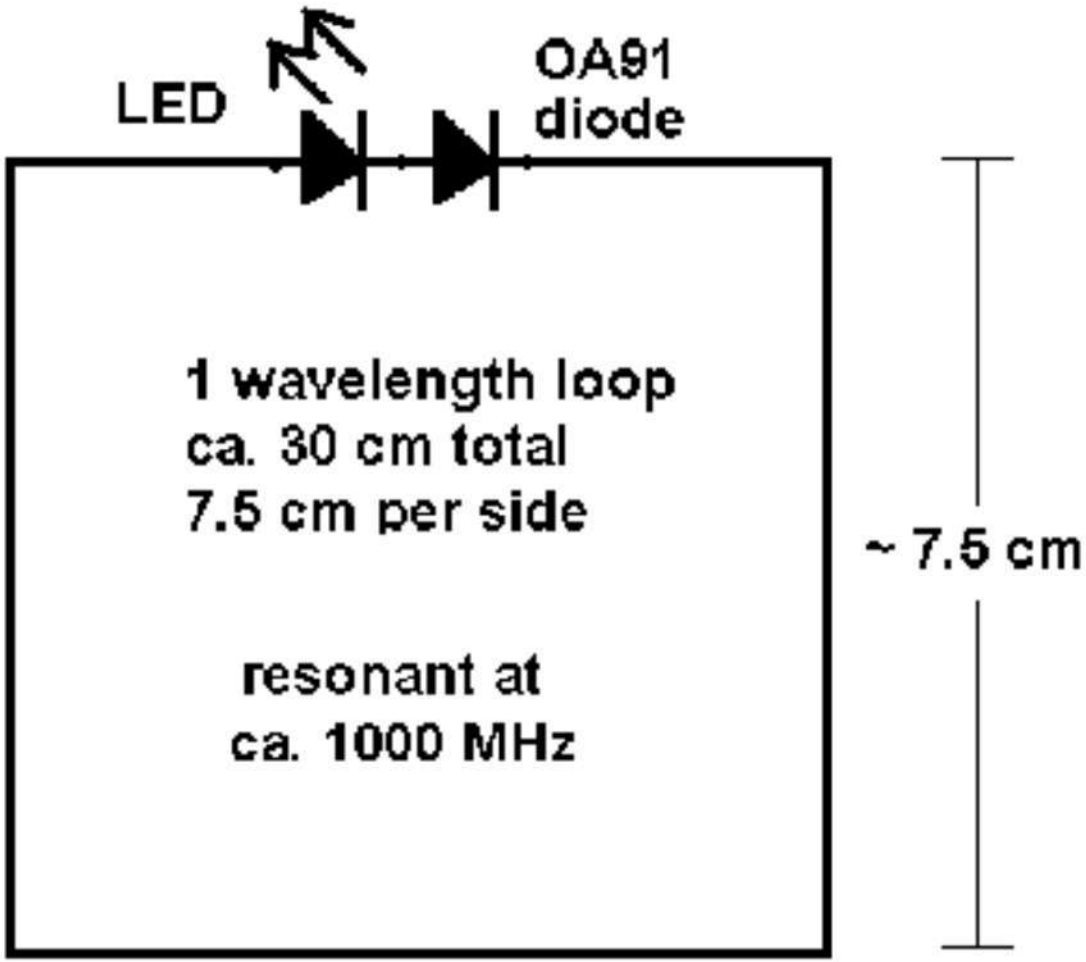
LED
OA91
diode
1 wavelength loop
ca. 30 cm total
7.5 cm per side
resonant at
ca. 1000 MHz
~ 7.5 cm

1N238
0:56 / 1:49

COM
LOGIC

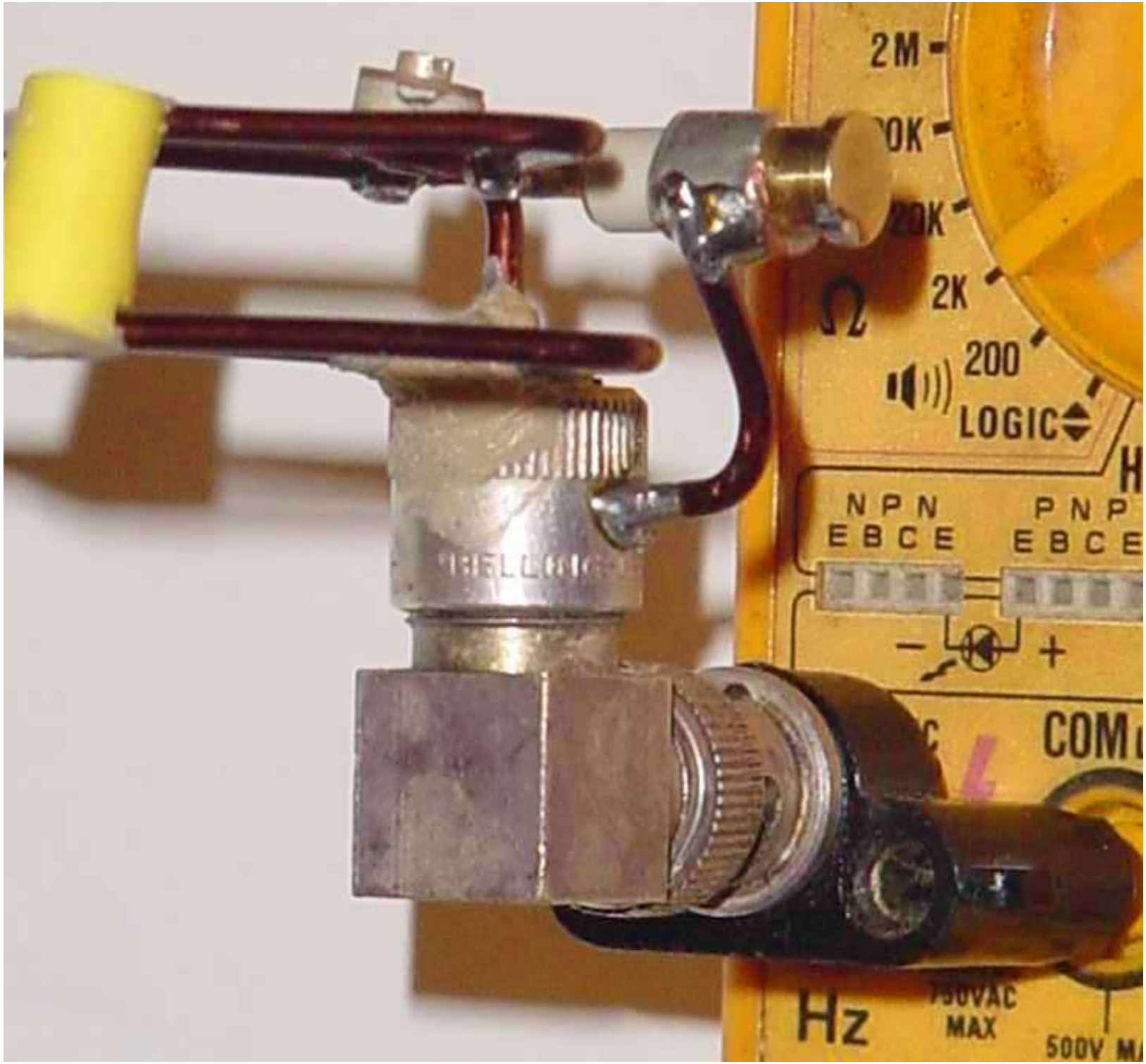
2M
2K
200
LOGIC
NPN
EBCE
PNP
EBCE
COM
Hz
MAX

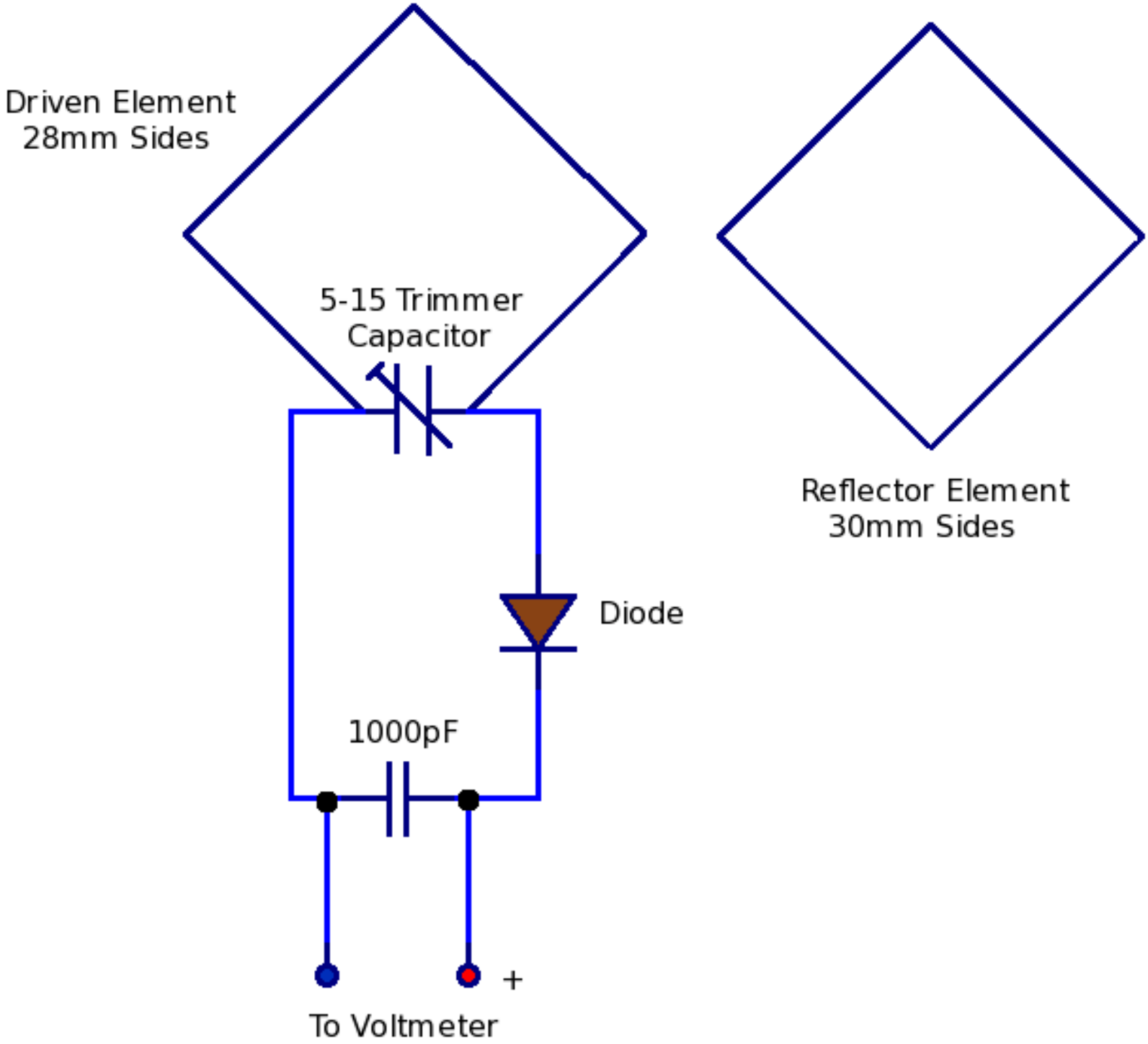
Driven Element
28mm Sides
5-15 Trimmer
Capacitor
Diode
1000pF
+
To Voltmeter
Reflector Element
30mm Sides

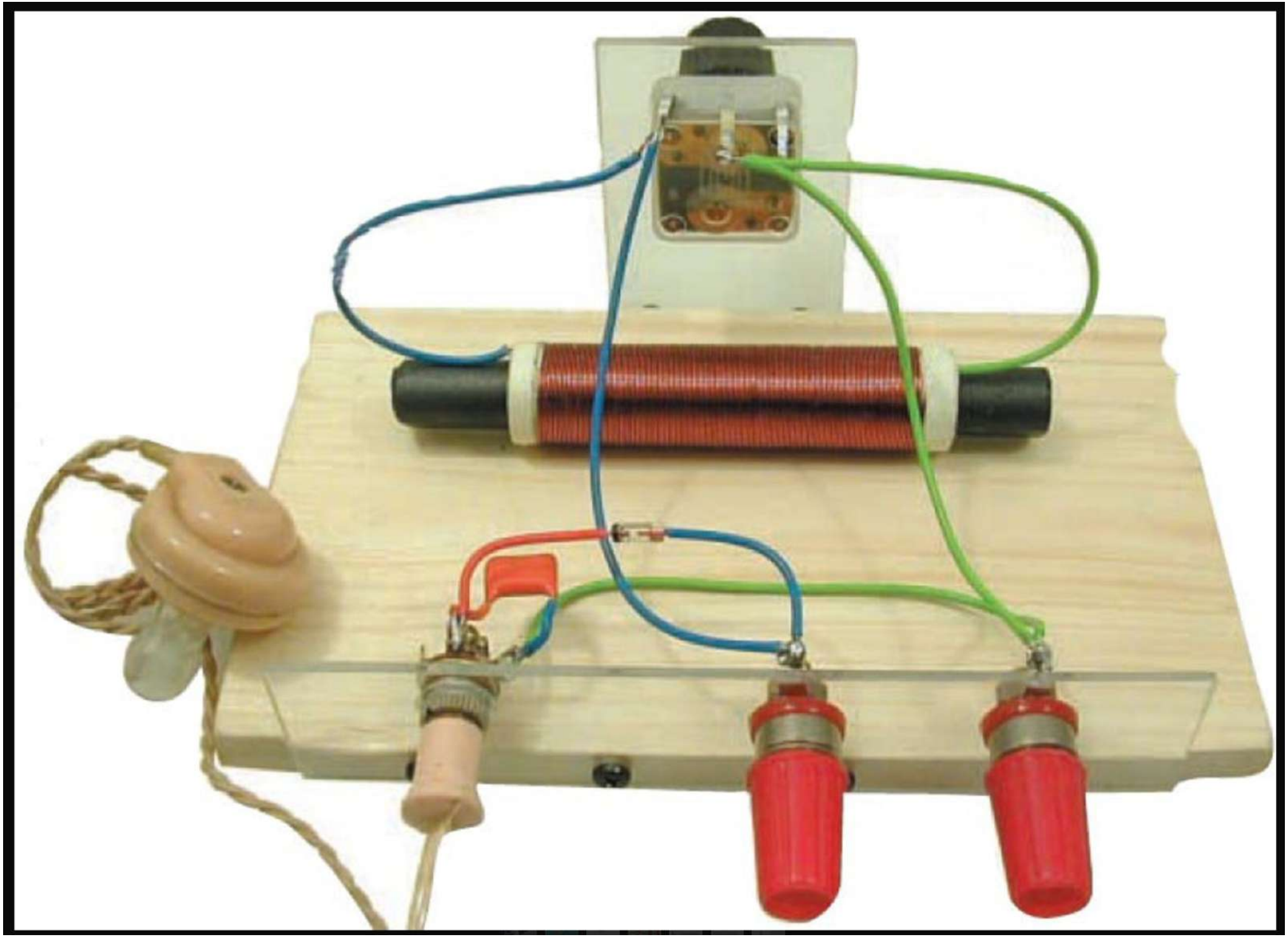

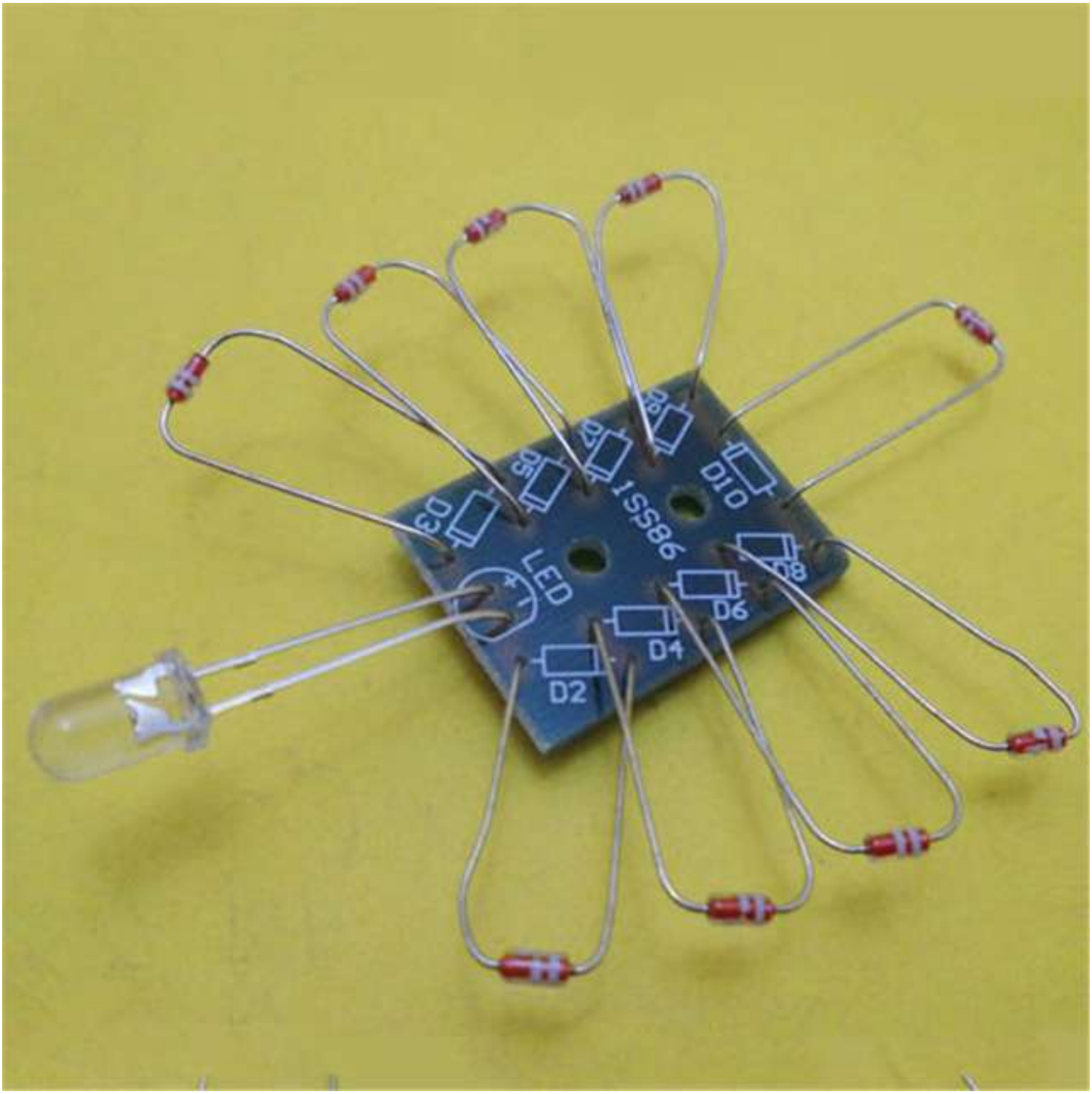
D3
D5
D7
D9
D10
1SS86
LED
D8
D6
D4
D2

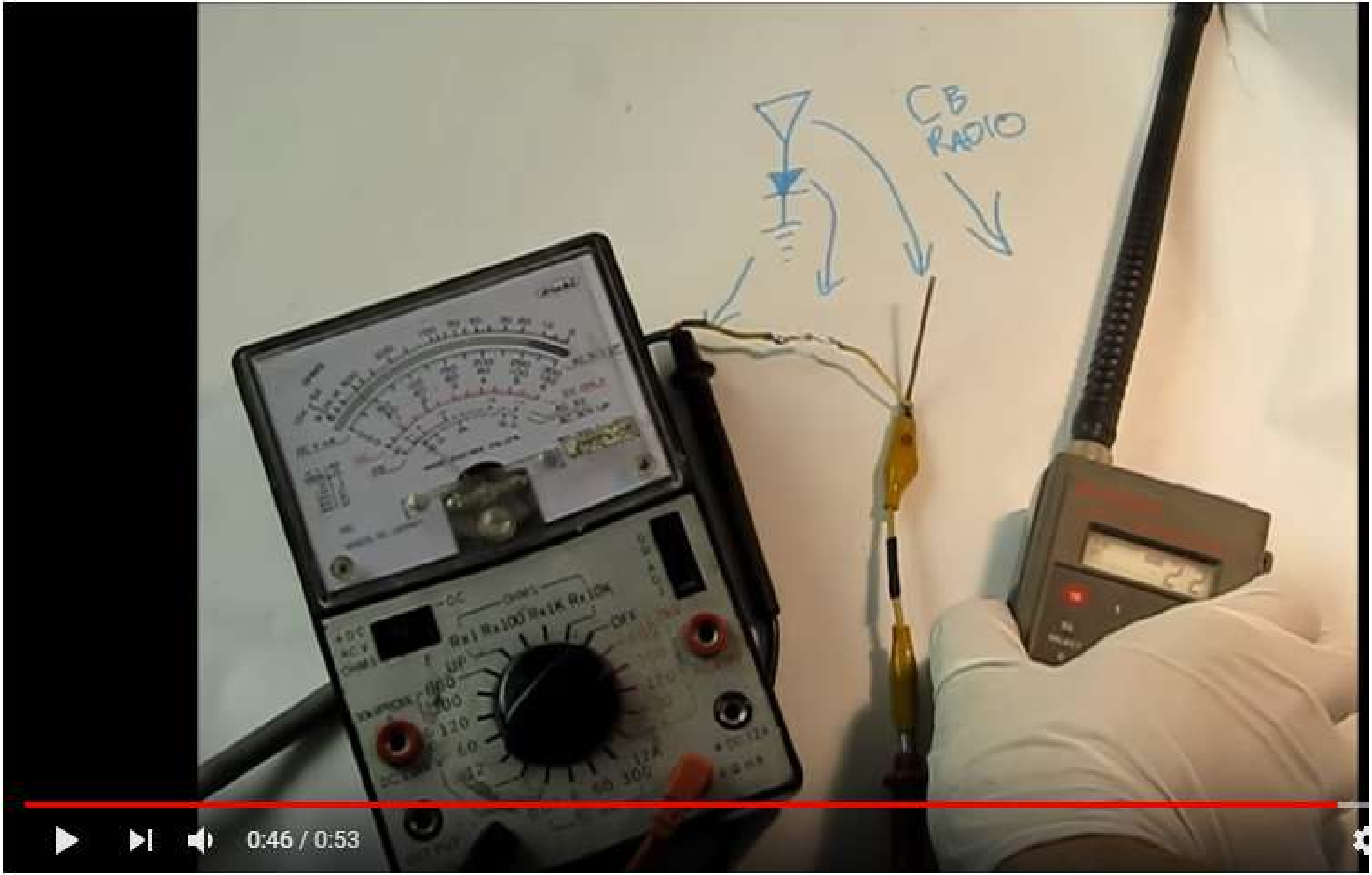

DIY Wireless Power - Part 2: Simple Wireless Power Transmission! (CB)

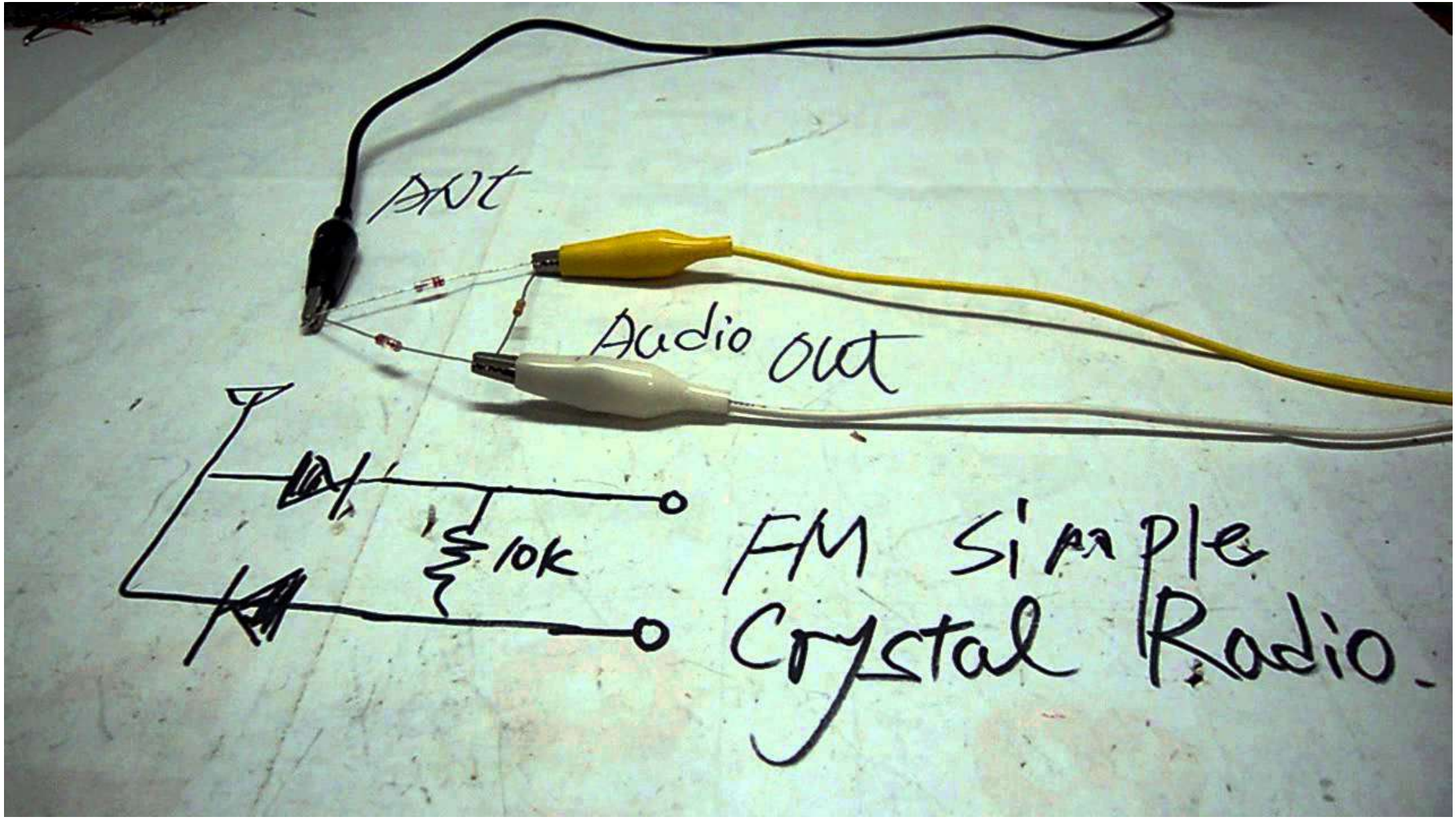
ANT
Audio out
10K
FM Simple
Crystal Radio.

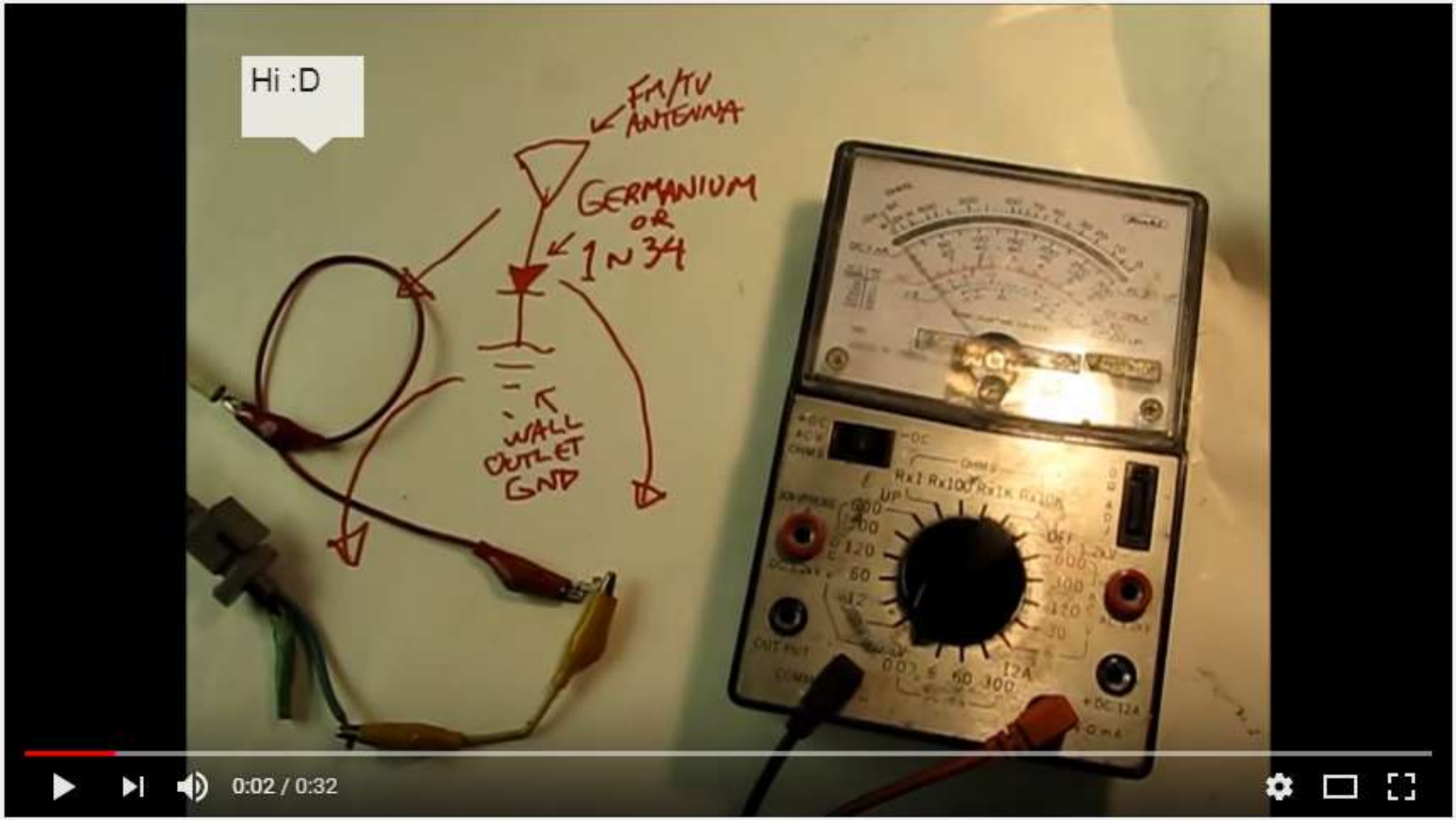

DIY Wireless Power - Part 1: TV/FM Antenna,1N34/Germanium Diode

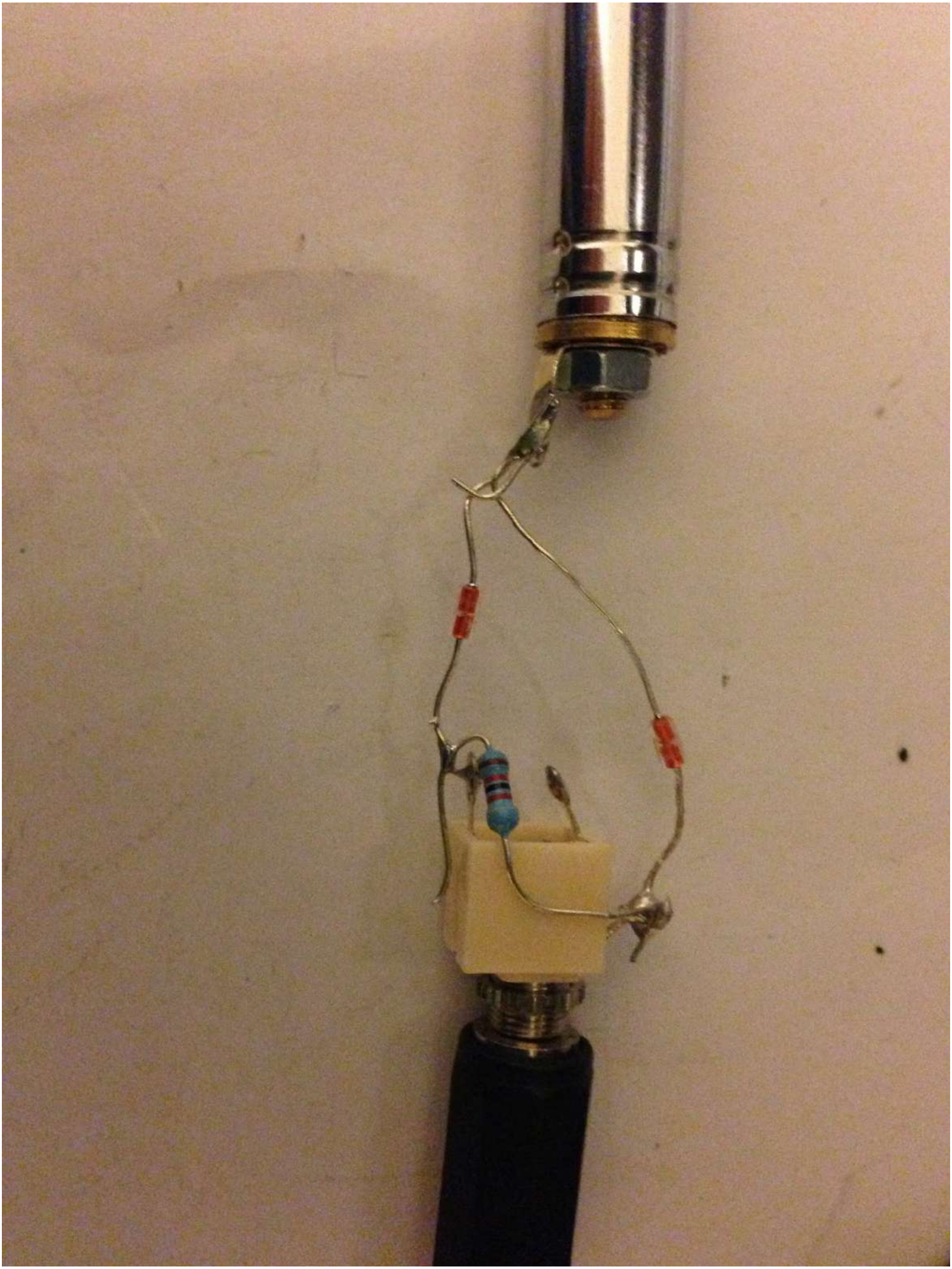

The simplest FM Crystal Radio Circuit - http://billydiy.blogspot.hk

Antenna - Extendable Radio 1.8 meter. That also serves as tuning

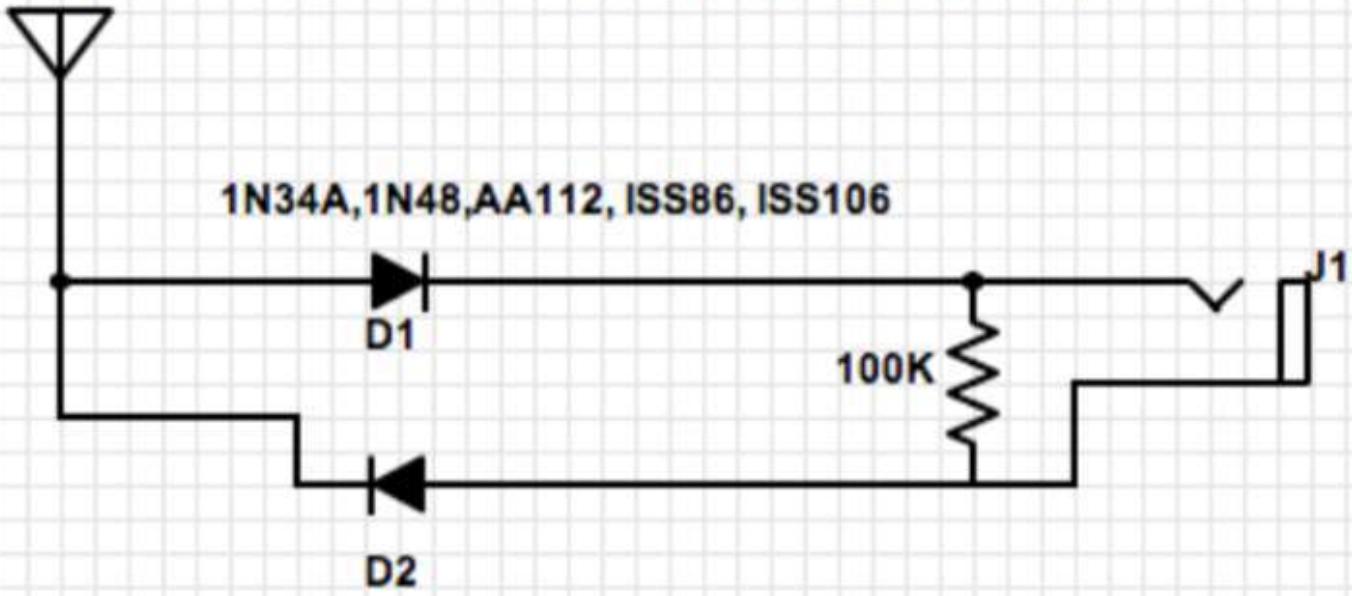

3.5mm Mono earphone Jack for Crystal earphone

Simple crystal receiver for FM

Carlo Bramanti

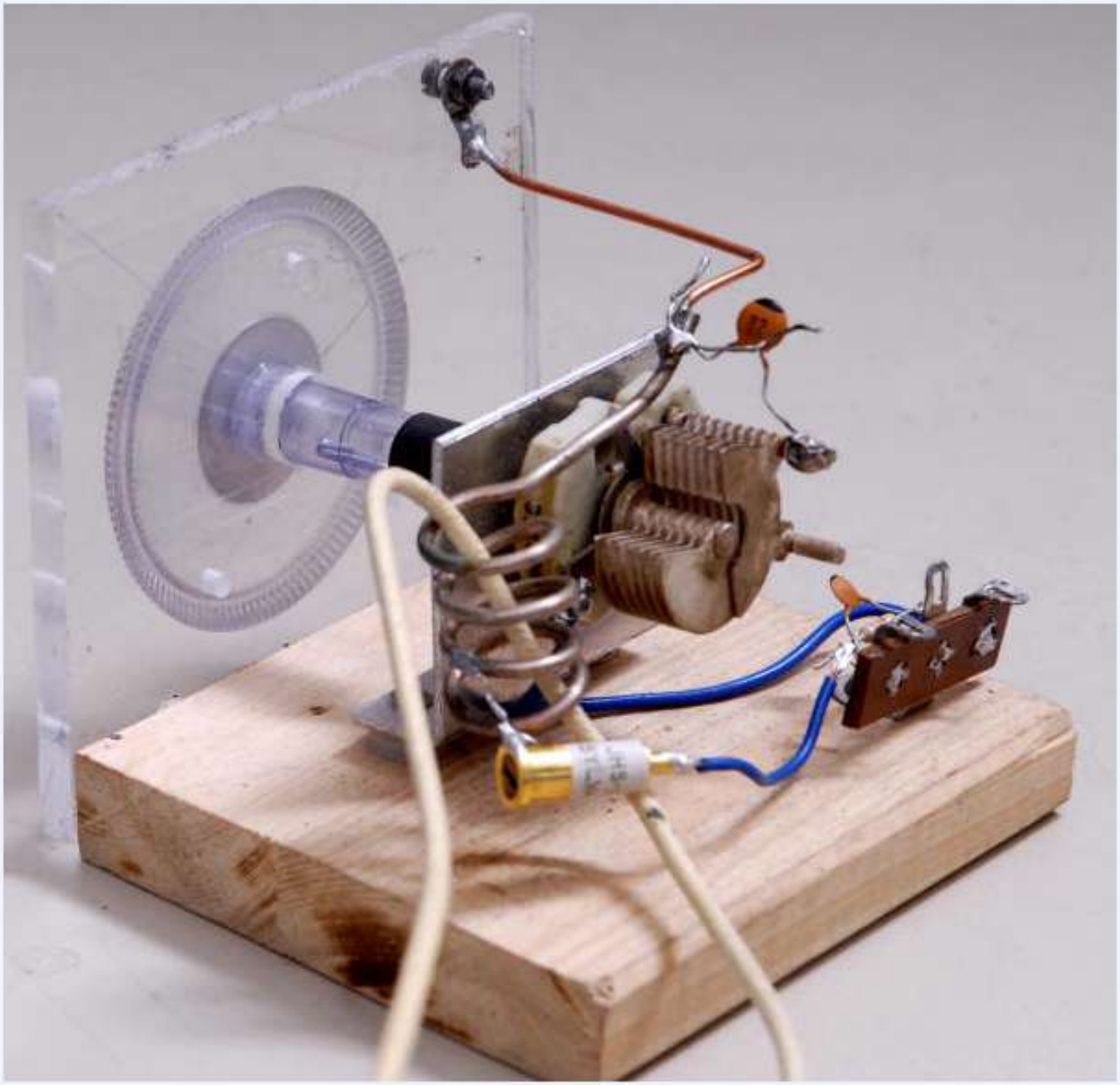

FM Crystal Radio Circuit

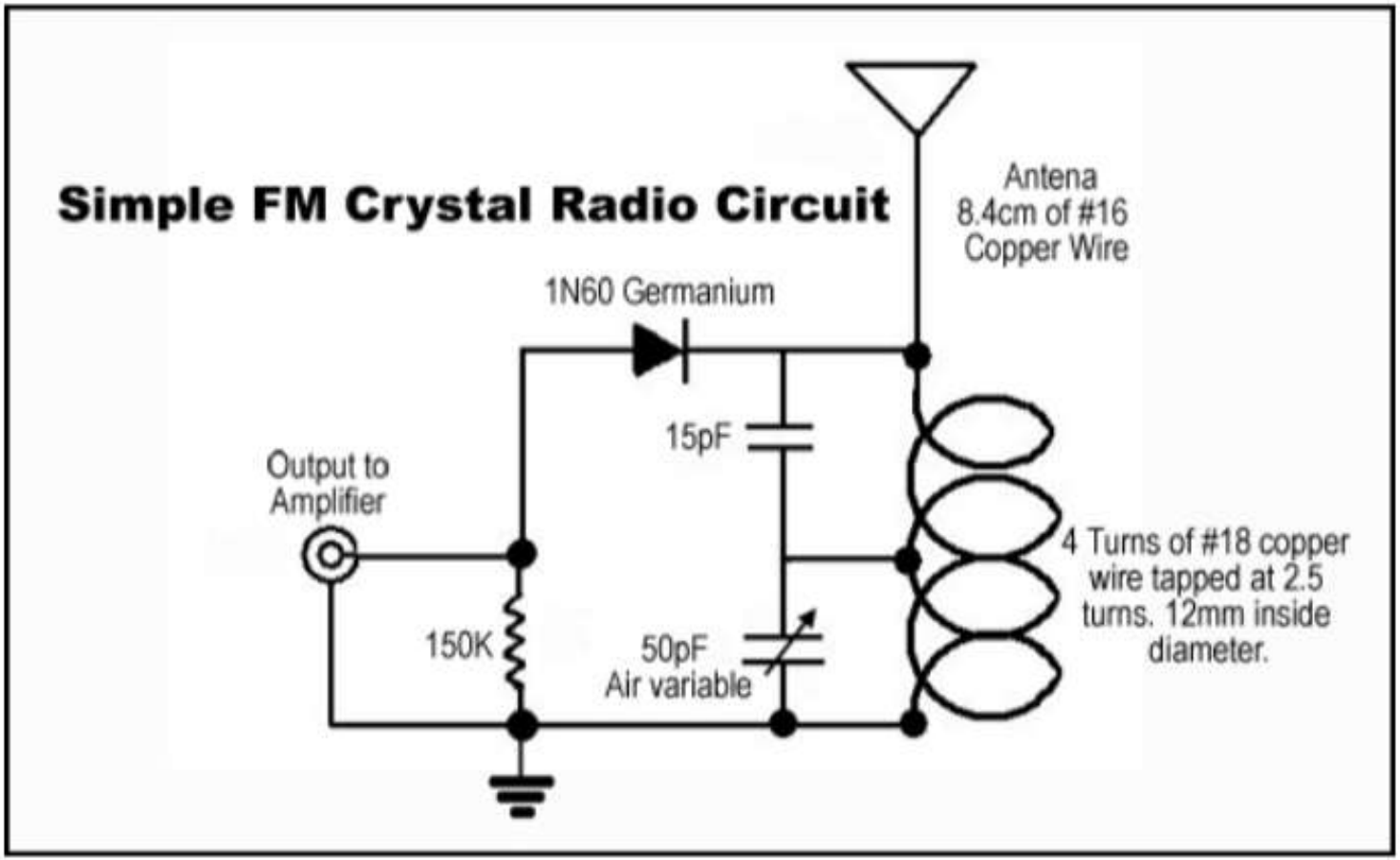

Parts List (some of these parts you can buy from our online store):

- 1N60 Germanium Diode
- 15pF Ceramic Capacitor
- 50pF Variable Capacitor
- 150K Ohm Resistor
- #16 & #18 Copper wires

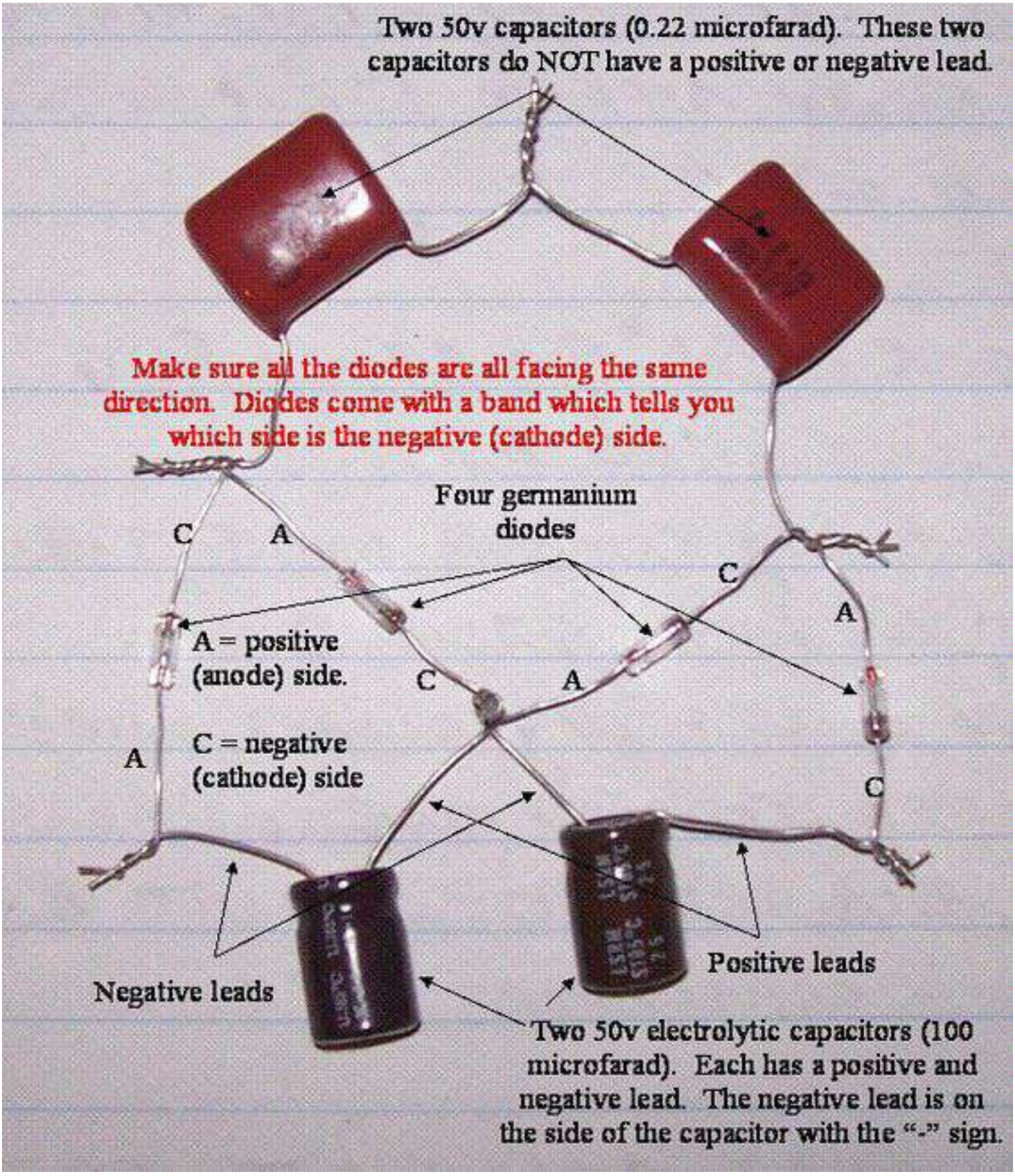
Two 50v capacitors (0.22 microfarad). These two capacitors do NOT have a positive or negative lead.
Make sure all the diodes are all facing the same direction. Diodes come with a band which tells you which side is the negative (cathode) side.
Four germanium diodes
C
A
C
A
A = positive (anode) side.
C
A
C = negative (cathode) side
A
C
Negative leads
Positive leads
Two 50v electrolytic capacitors (100 microfarad). Each has a positive and negative lead. The negative lead is on the side of the capacitor with the "-" sign.

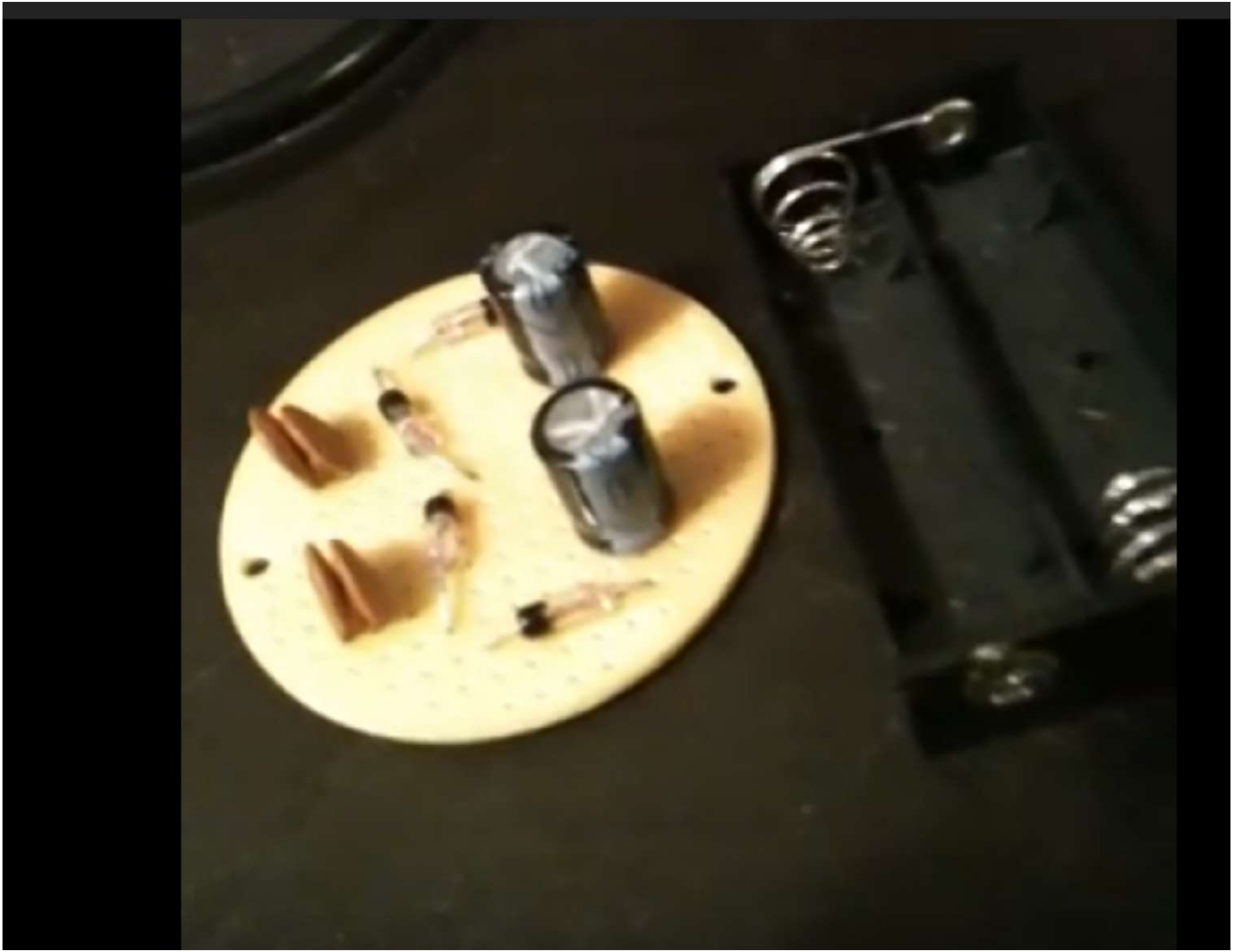

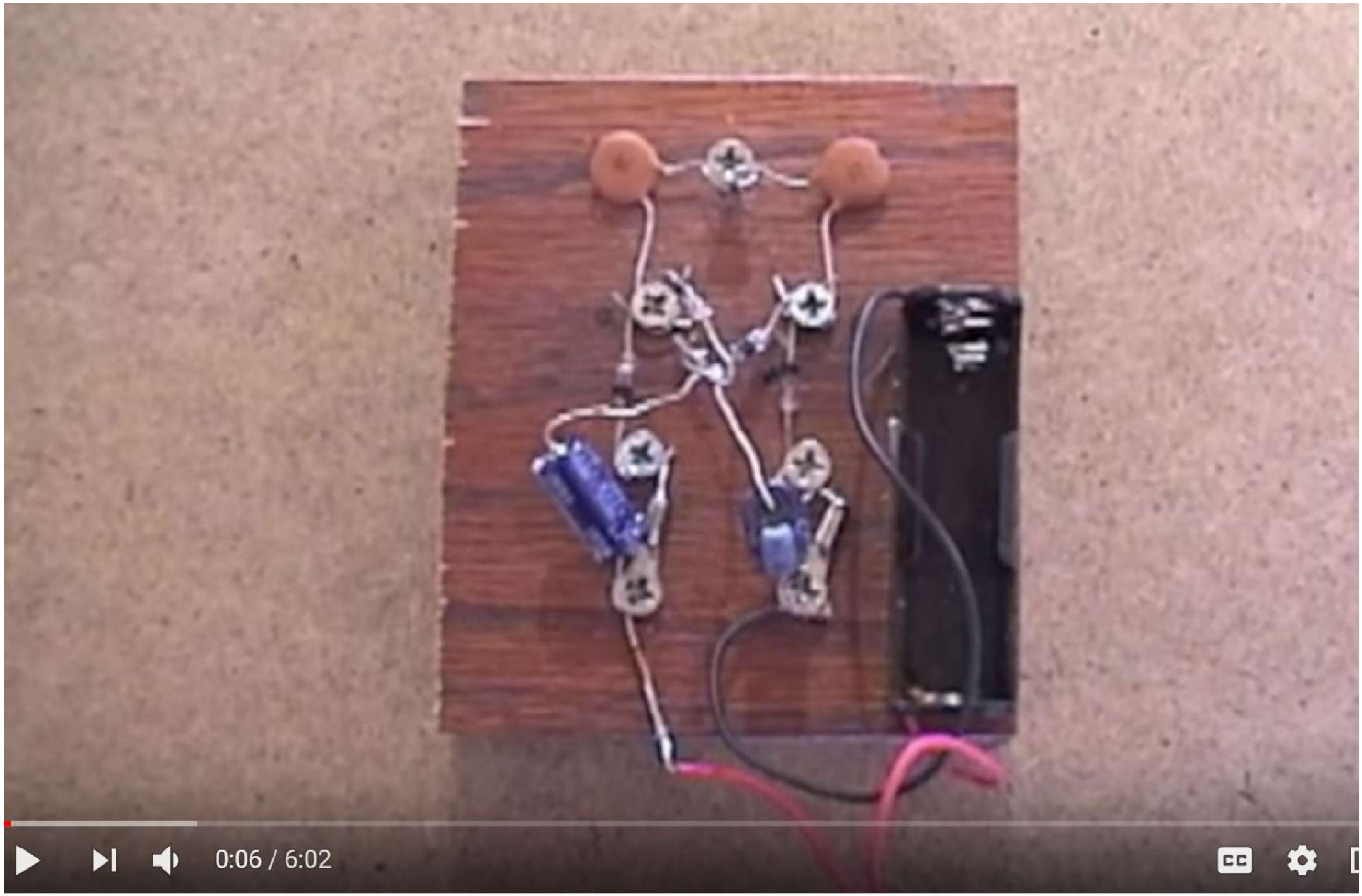
0:06 / 6:02

FIG. 9 TERMINAL STRIP

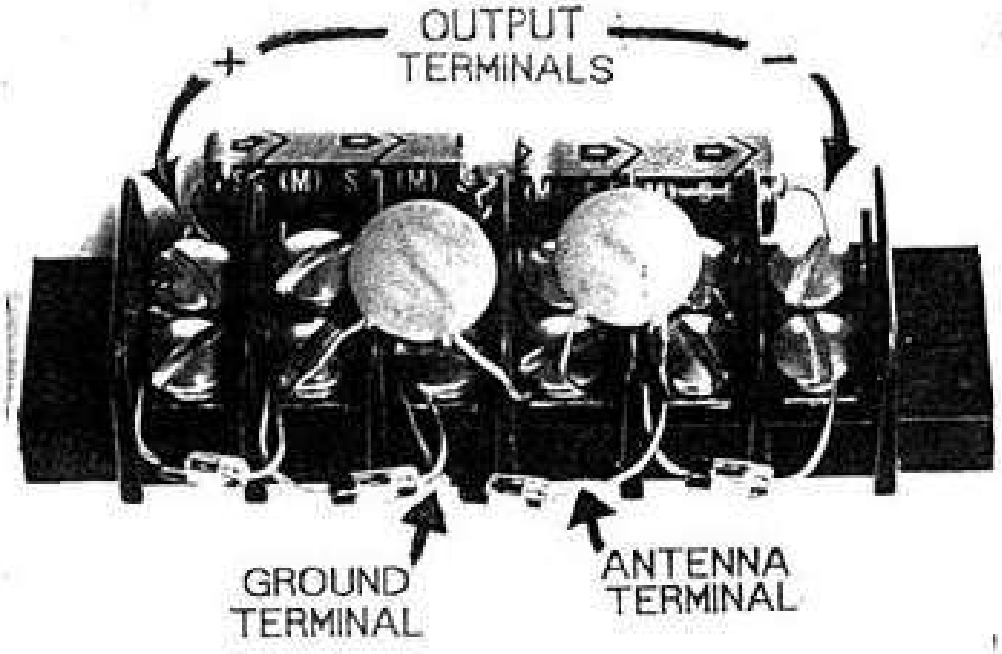

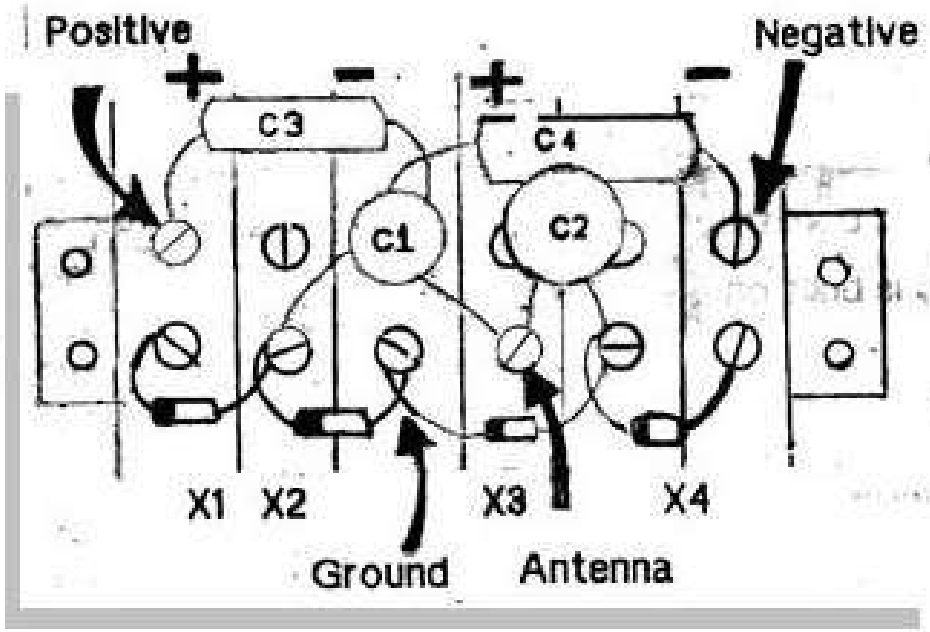

SATURDAY, NOVEMBER 13, 2010

SIMPLE FIELD STRENGTH METER

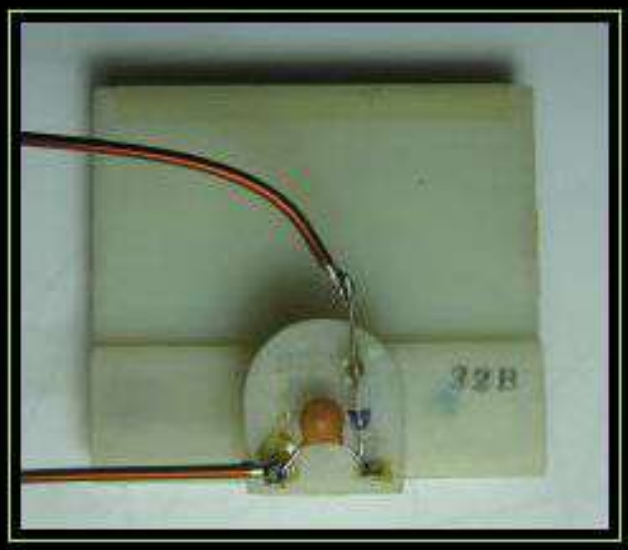

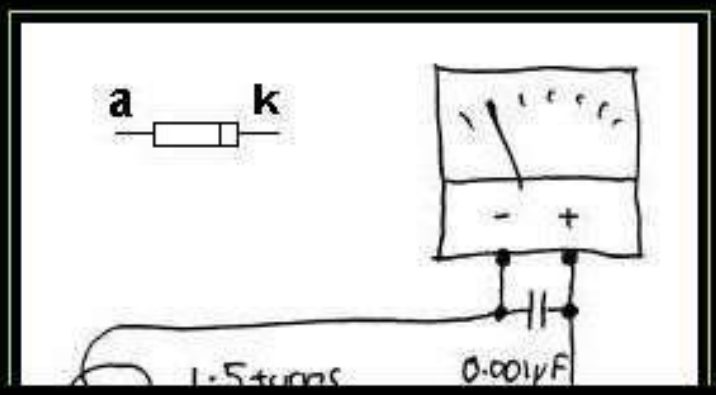

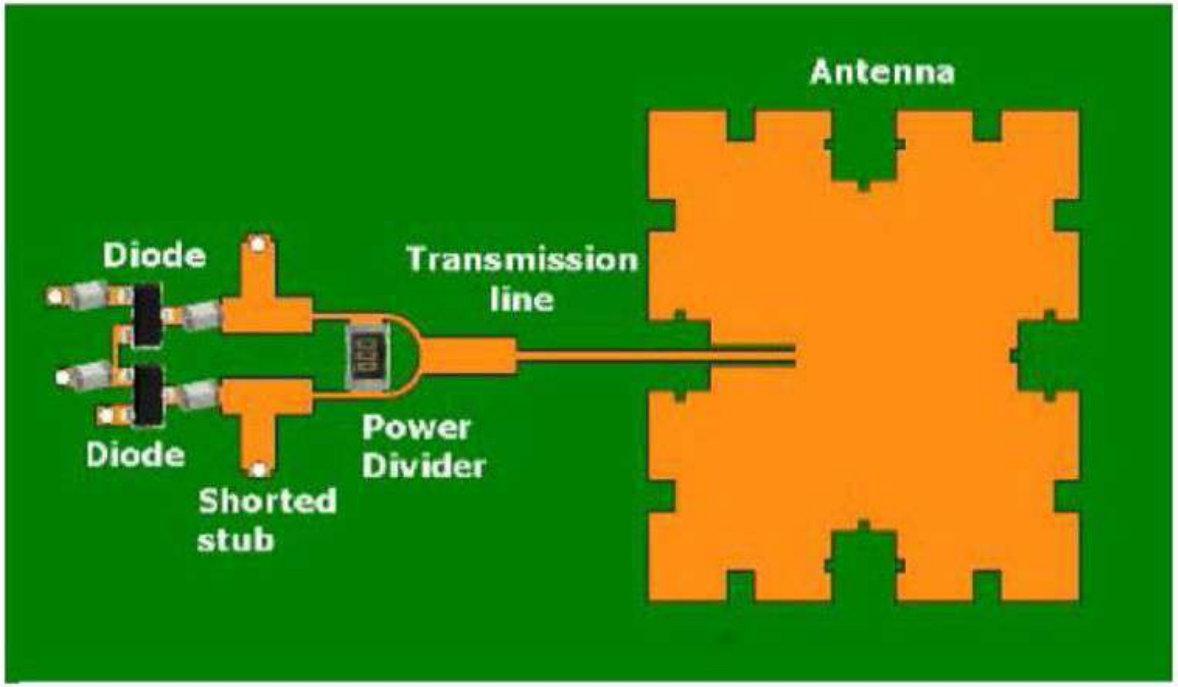
Antenna
Diode
Transmission line
Diode
Power Divider
Shorted stub

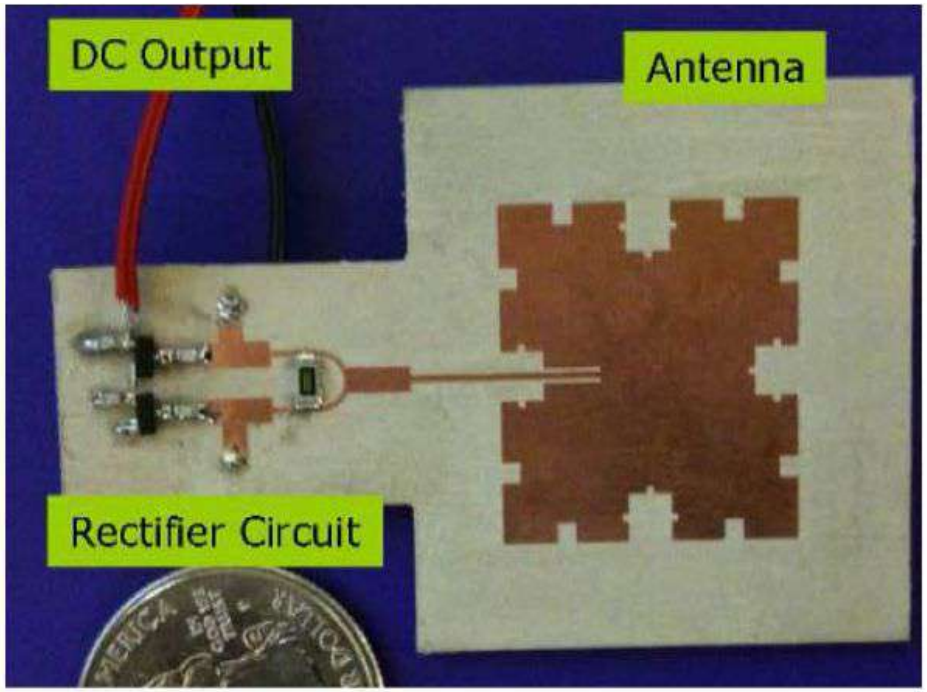
DC Output
Antenna
Rectifier Circuit

4. Results and Analysis

The simulated and measured results at the output voltage of voltage multiplier circuit are shown graphically in **Figure 8**. From the graph analysis, the simulated and the measured results agree considerably with each other. The measured results are shown to be better than the simulation results. The reason behind this may be due to the uncertainty in series resistance value of the diode obtained from SPICE parameters in modeling as explained in Equation (5). This resistance vale of diodes in practical circuit may be lower than in the model, which provides fast discharge path, in turn rise in voltage as passes through the stages and reaches to final output. In this work, the DC output voltages obtained through simulation and measurement at 0 dBm re 2.12 V and 5.0 V respectively. These results are comparatively much better than in ref. [9], where in at 0 dBm, 900 MHz they achieved 0.5 V and 0.8 V through simulation and measurement increasing to 1.4 V, 1.67 V, 1.87 V and 2.12 V for 4, 5, 6 and 7 stages respectively compared to 2 mS as shown in [10]. **Figure 12** shows that the conversion ratio of 22 is achieved at 0 dBm input power and drops to 2.5 at –40 dBm. The highest value at 0 dBm is due to the innate characteristics of the zero bias Schottky diodes which conduct fairly well at higher input voltages.

5. Conclusion

From the experimental results, it is found that the pro-

Table 2. Component used in 7 stage voltage multiplier.

Name of component	Label	Value
Stage capacitors	C_1 - C_{14}	3.3 nF
Stage diodes	D_1 - D_{14}	HSMS 2850
Filter capacitor	C_L	100 nF
Load resister	R_L	100 kΩ

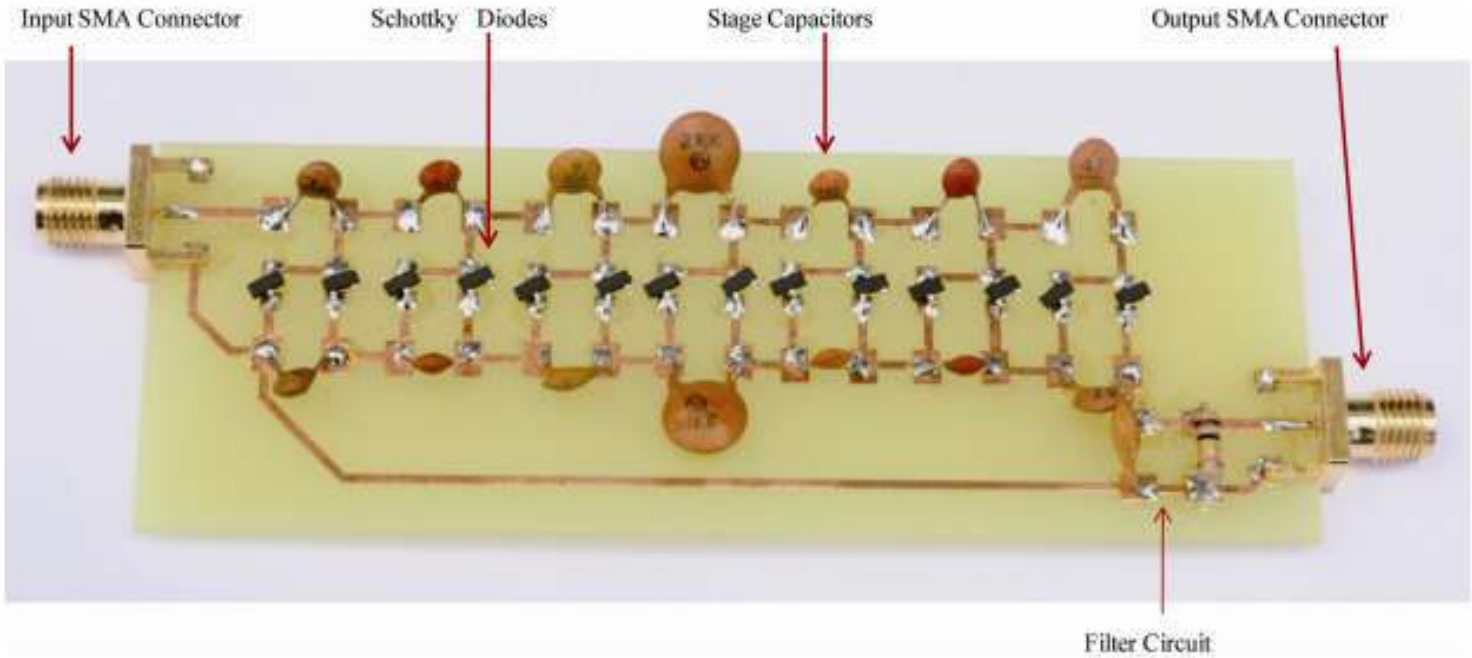

Figure 7. Photograph of assembled circuit board.

sign in this paper uses a capacitor across the load to store and provide DC leveling of the output voltage and its value only affects the speed of the transient response. Without a capacitor across the load, the output is not a good DC signal, but more of an offset AC signal.

In addition to the above, an equivalent load resistor is connected at the final node. The output voltage across the load decreases during the negative half cycle of the AC input signal. The voltage decreases is inversely proportional to the product of resistance and capacitance across the first stage was 3.3 nF, the second stage was 1.65 nF, third stage was 825 pF, fourth stage was 415 pF and so on. But keeping in view of testing, the capacitance values were chosen to have a close match with the standard available values in the market.

Simulation was carried out through 4 to 9 voltage doubler stages. Based on results obtained a 7 stage doubler is best to implemented for this application.

The design of the printed circuit board (PCB) was carried out using DipTrace software. The material used to

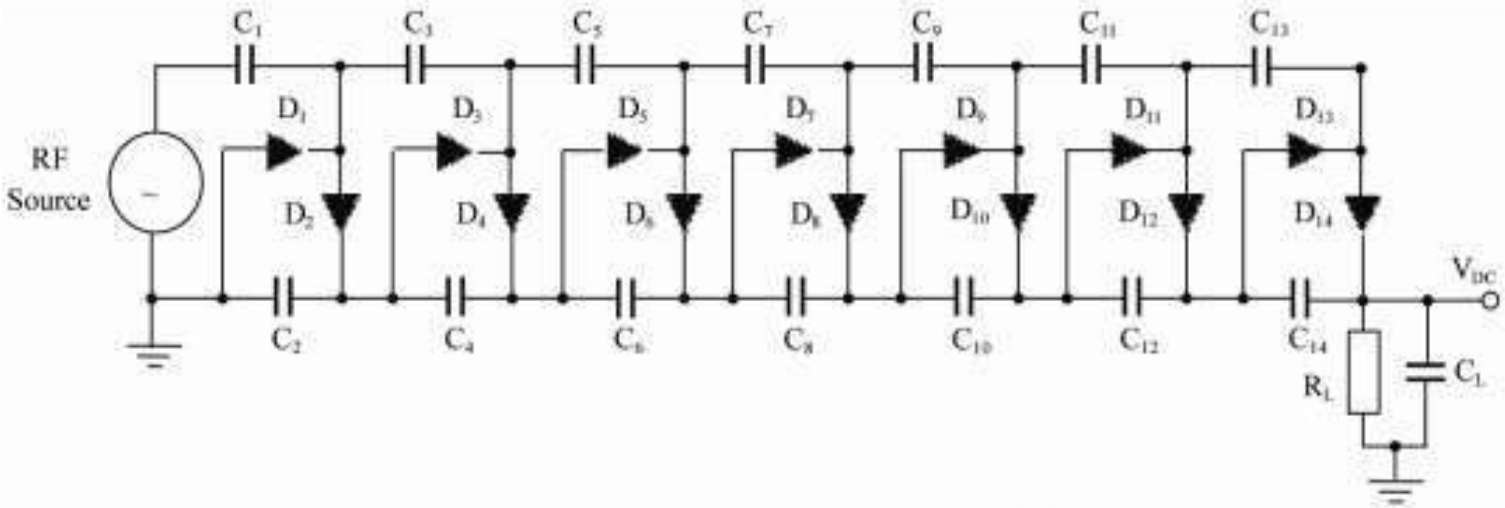

Figure 6. Schematic of 7 stage voltage multiplier.

Copyright © 2012 SciRes.

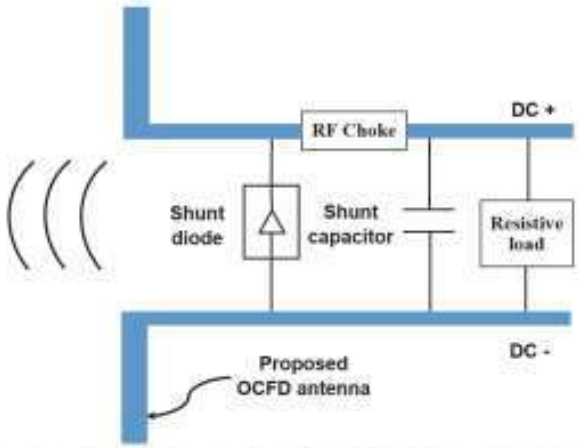

Fig. 9. Configuration of a single shunt diode (Class F) rectifier with a dipole antenna.

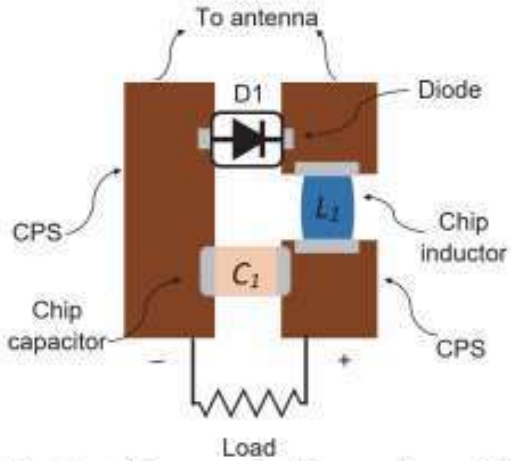

Fig. 10. Configuration of the proposed rectifier on coplanar striplines (CPS).

TABLE III
CIRCUIT COMPONENTS USED IN THE DESIGN

Component name	Nominal Value	Part number and supplier
D1	Schottky diode	SMS7630-079LF, Skyworks
L1	47 nH chip inductor	0603HP47N, Coilcraft
C1	100 nF chip capacitor	GRM188R71H104JA93D, Murata

antenna have a radius of 50 mm and a circumference angle of

respectively. While the imaginary part of the proposed OCFD is around 0 Ω at resonant frequencies 0.6 GHz, 1.2 GHz and 2.4 GHz, which are f_0, $2f_0$, and $4f_0$ respectively. These results have demonstrated that the simulated results agree with the OCFD theory as discussed in Section III–A. Furthermore, the imaginary part of the impedance of the antenna over the resonant frequency band from 1.4 to 2 GHz turns from negative values (for the reference antenna) to positive values (for the proposed antenna). As shown in Fig. 7(b), the value of the imaginary part of the proposed antenna impedance varies between 0 and 300 Ω over the desired frequency band. This feature could help the proposed antenna to produce a better conjugate matching with the rectifier, since the imaginary part of the impedance of the rectifier normally varies between -700 and 0 Ω as we discussed earlier. The simulated 3D radiation patterns of the proposed antenna at the frequencies of interest are depicted in Fig. 8. The 2D polar plots of antenna patterns in *E-plane* and *H-plane* are shown as well. Here we have only showed the directivity (maximum gain) of the antenna (without taking the mismatch loss into account). From Fig. 8, it can be seen that the antenna has symmetrical patterns about YOZ plane with a maximum directivity of 1.8 dBi at 0.9 GHz, 3.5 dBi at 1.8 GHz and 3.3 dBi at 2.4 GHz. The antenna is more directive towards the long arm direction at 1.8 GHz and 2.4 GHz with the half-power beam-widths (HPBW) of around 174° and 185° respectively. The HPBW is about 96° at 0.9 GHz.

Therefore, the proposed broadband OCFD antenna has obtained high impedance over a wide frequency range. The proposed design is just an example to illustrate the proposed new method. The details of the dipole could be modified according to the frequency of interest.

IV. RECTENNA INTEGRATION

A. Rectifier Configuration

The proposed high impedance OCFD antenna may directly conjugate match with the input impedance of a rectifier over a wide frequency band. The rectifier should only consist of few circuit components for rectification, DC storage and output. A single shunt diode rectifier is selected due to its very simple structure and high conversion efficiency [33]. The configuration of the single shunt diode rectifier with a dipole

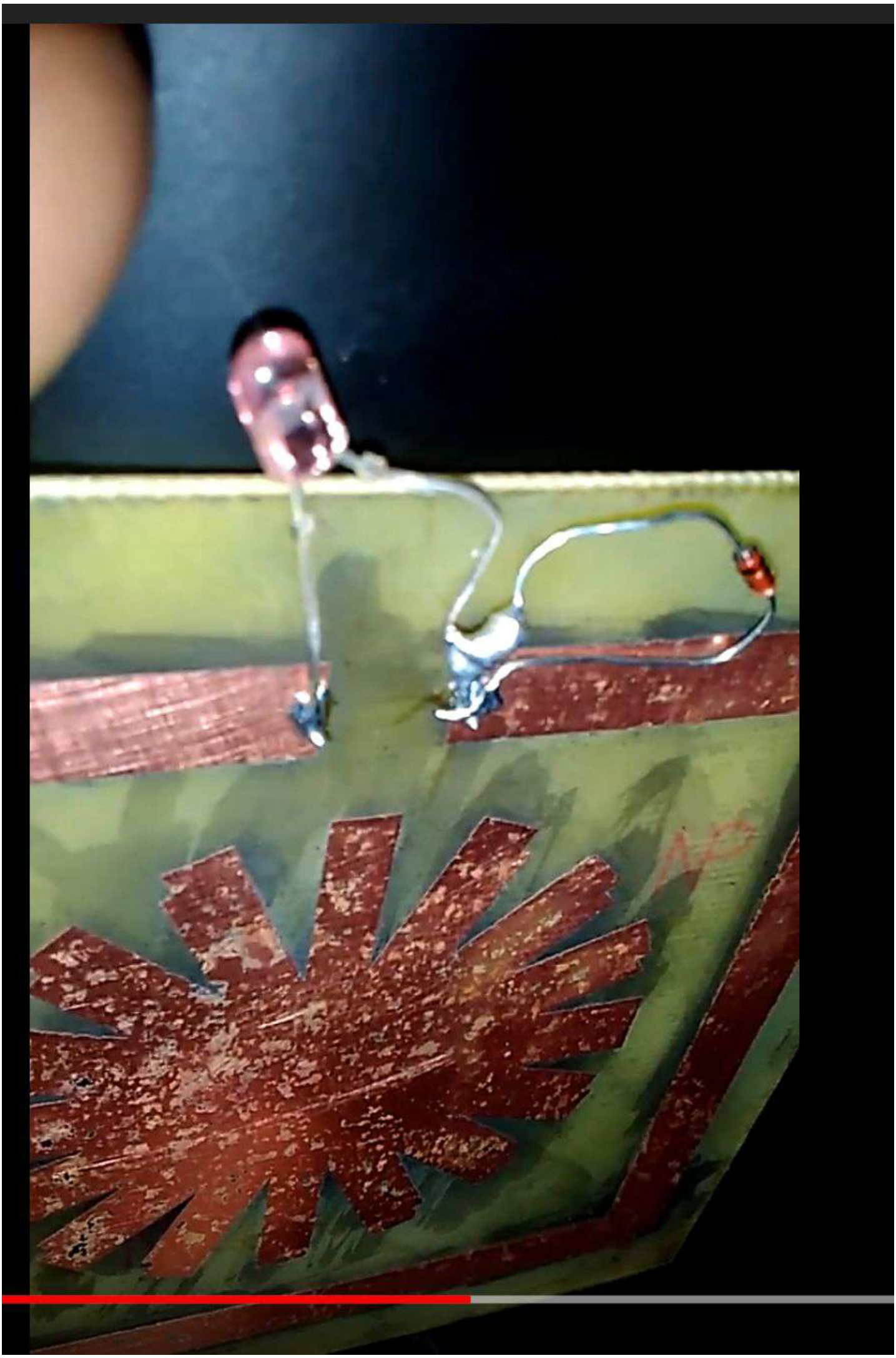

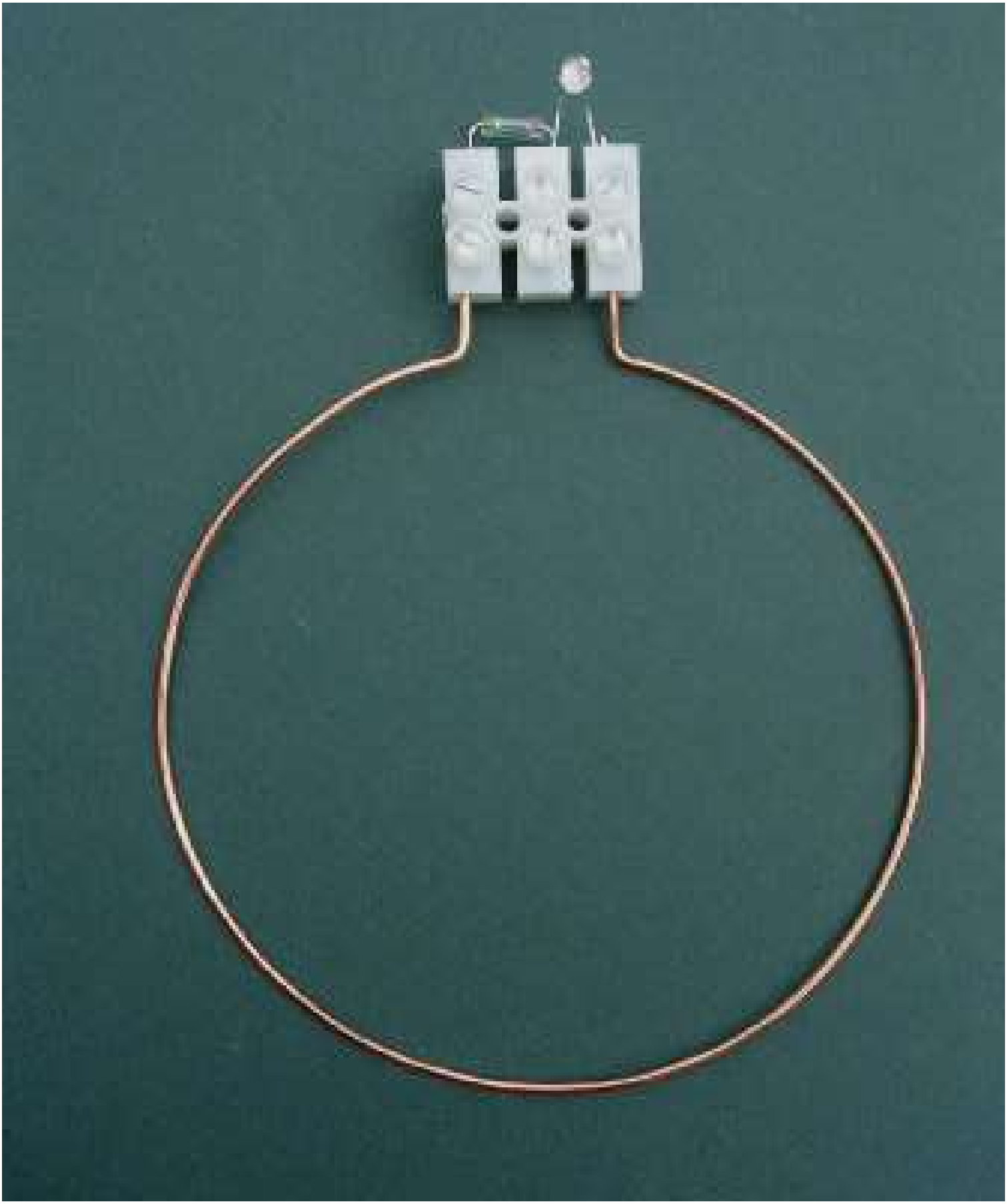

Sony Ericsson

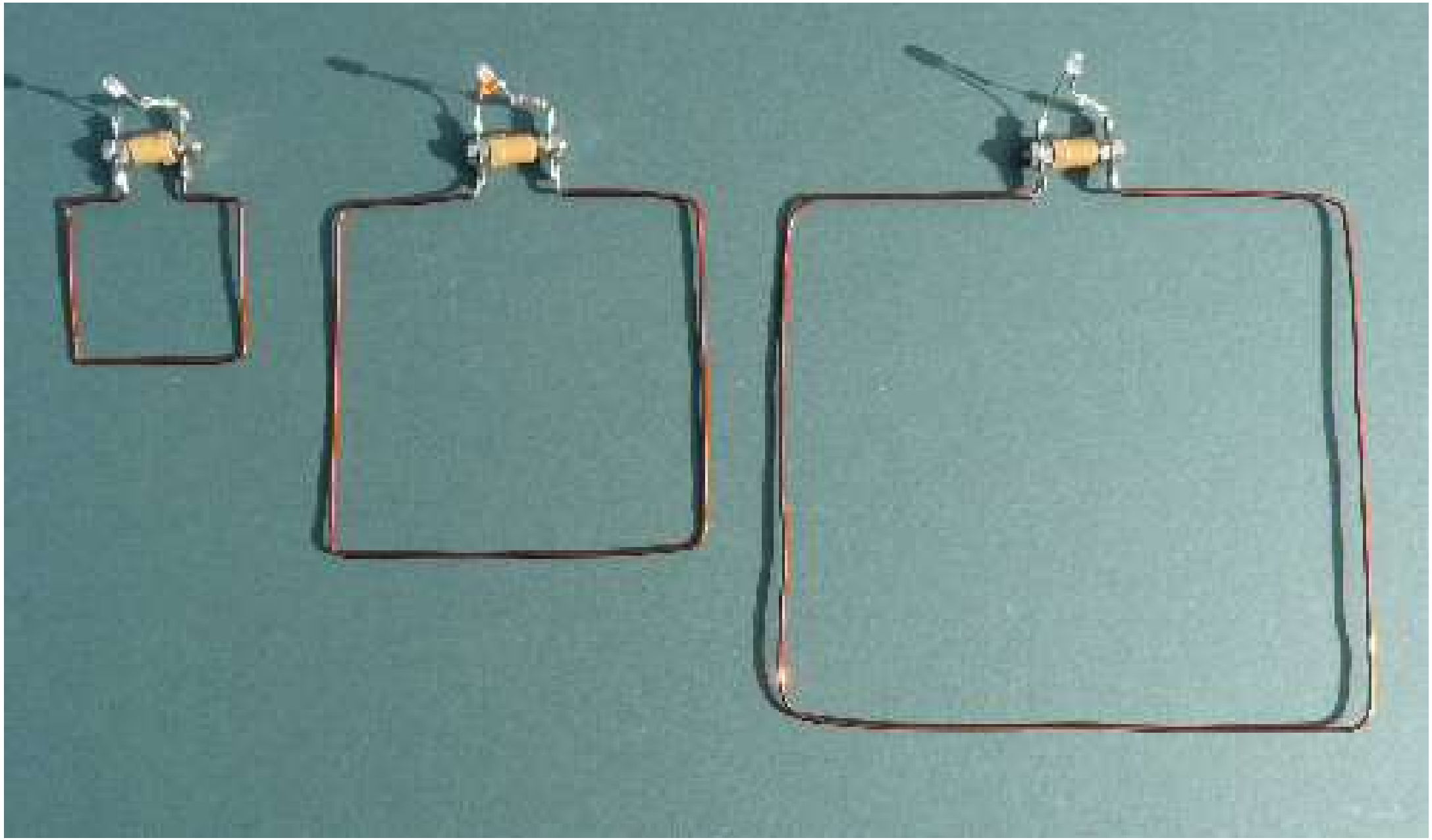

ake and it can be sent in an envelope. I made tens of them and sent them to politicians, newspapers, universities... I gave some to local people, together with a user
later version, that can be rolled up in an envelope that fits the conditions to be sent with only one stamp.

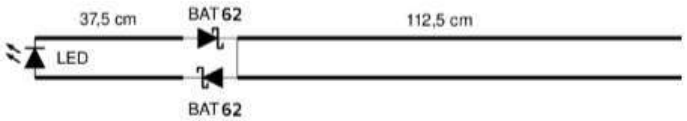

BAT62 detection diodes are no more produced. **BAT15** diodes work fine but they wear out; after a few months they stop functioning. **SMS7630** diodes are great but very little and mechanically fragile. **MMSD701T1G** diodes are sturdy and powerful; an excellent choice for a beginner. Such SMD diodes do also work for cell phone frequencies, which allows to test out a snake with a calling cell phone pushed against it. But any detection diodes that can manage 100 MHz will do.

The LED I'm currently using is the **L-7113SEC-H** . It lights up with a low tension and a very low current (the bluer a LED, the more tension it needs). Its color is red yet close to orange hence it is easily seen by the human eye (the eye is most sensitive to green, yellow and orange). The beam is quite narrow so when the LED is directed towards somebody's eyes it will appear quite bright.

For the lengths of 37.5 and 112.5 centimeters, any electric wire with two copper conductors will do. Audio signal wire is a practical solution. Use the shielding as one of the two conductors. The lengths of the two segments must not be precise. What matters is that the total length of the snake be 1.5 meters. Do not hesitate to try out if a little longer or shorter snake gives better results.

A schematic of my current probes, that I connect to a standard multimeter, measuring Volts DC. The measure displayed by the multimeter must be multiplied by 10. When using a 200.0 mV scale, just read while forgetting the dot:

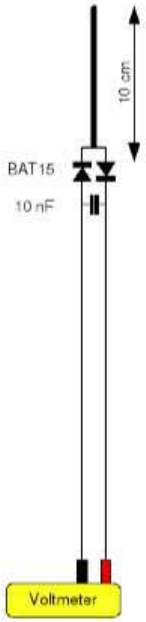

Lead Free Status	Lead Free
RoHS Status	RoHS Compliant

Features, Applications

The MMSD301T1, and MMSD701T1 devices are spin-offs of our popular MMBD301LT1, and MMBD701LT1 SOT-23 devices. They are designed for high-efficiency UHF and VHF detector applications. Readily available to many other fast switching RF and digital applications.

Extremely Low Minority Carrier Lifetime Very Low Capacitance Low Reverse Leakage AEC Qualified and PPAP Capable S Prefix for Automotive and Other Applications Requiring Unique Site and Control Change Requirements These Devices are Pb-Free, Halogen Free/BFR Free and are RoHS Compliant*

XXX G = Specific Device Code SMMSD701T1G = Date Code = Pb-Free Package
Rating Reverse Voltage MMSD701T1G, SMMSD701T1G Forward Current (DC) Continous Forward Power Dissipation = 25C Junction Temperature Storage Temperature Range Symbol VR Value to +150 Unit Vdc M G

152

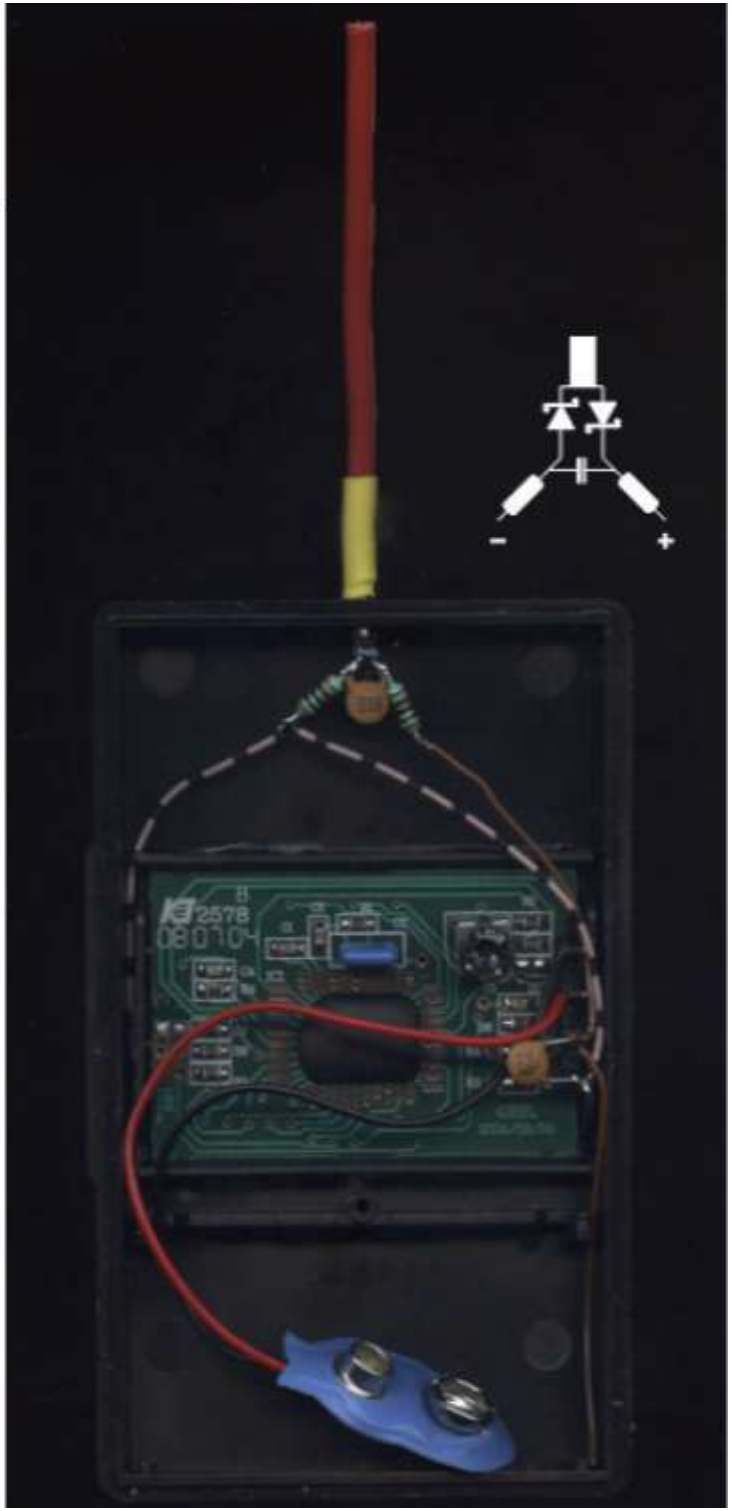
-
+

Parts Required:

1. 100nF & 100pF
2. n4148 Diode x(2)
3. A bright good quality LED

Circuit Diagram:

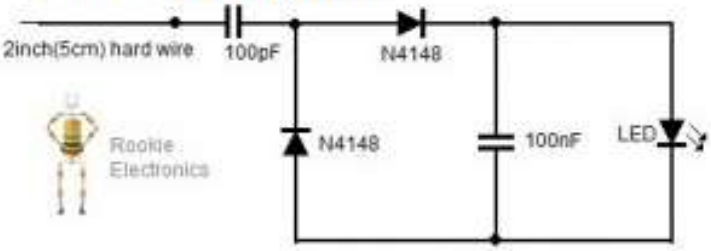

Bread board Arrangement:

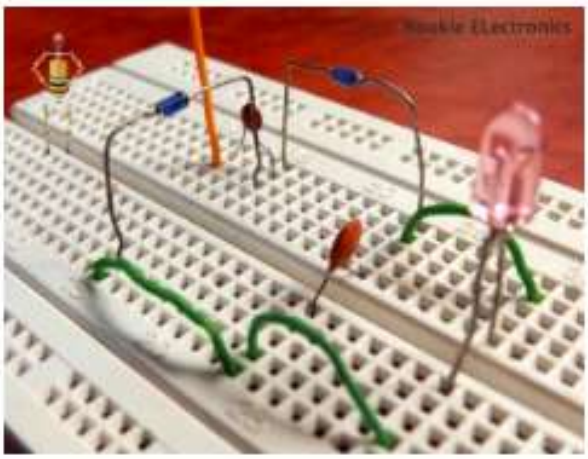

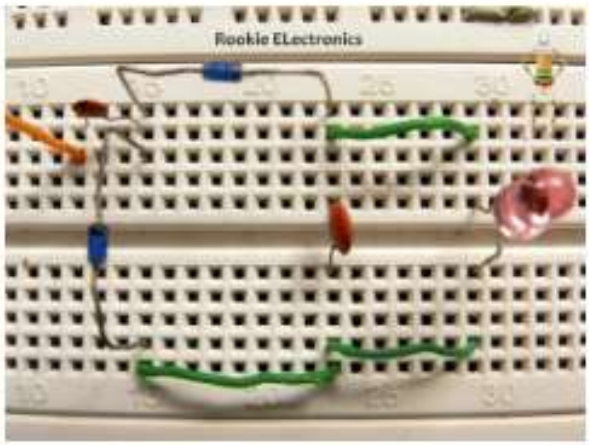

Strip Board:

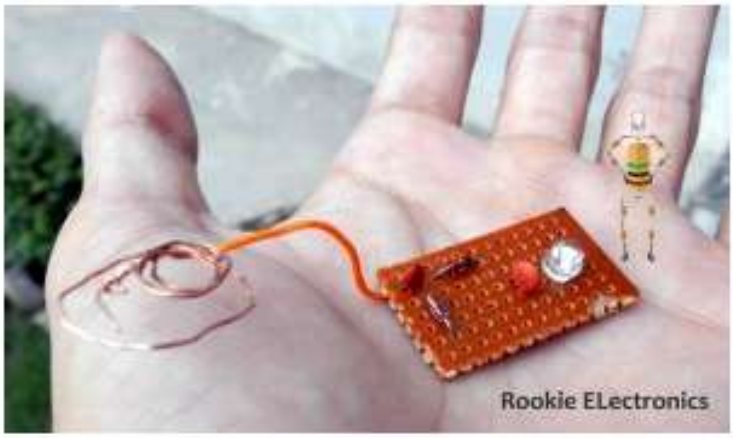

Rookie ELectronics

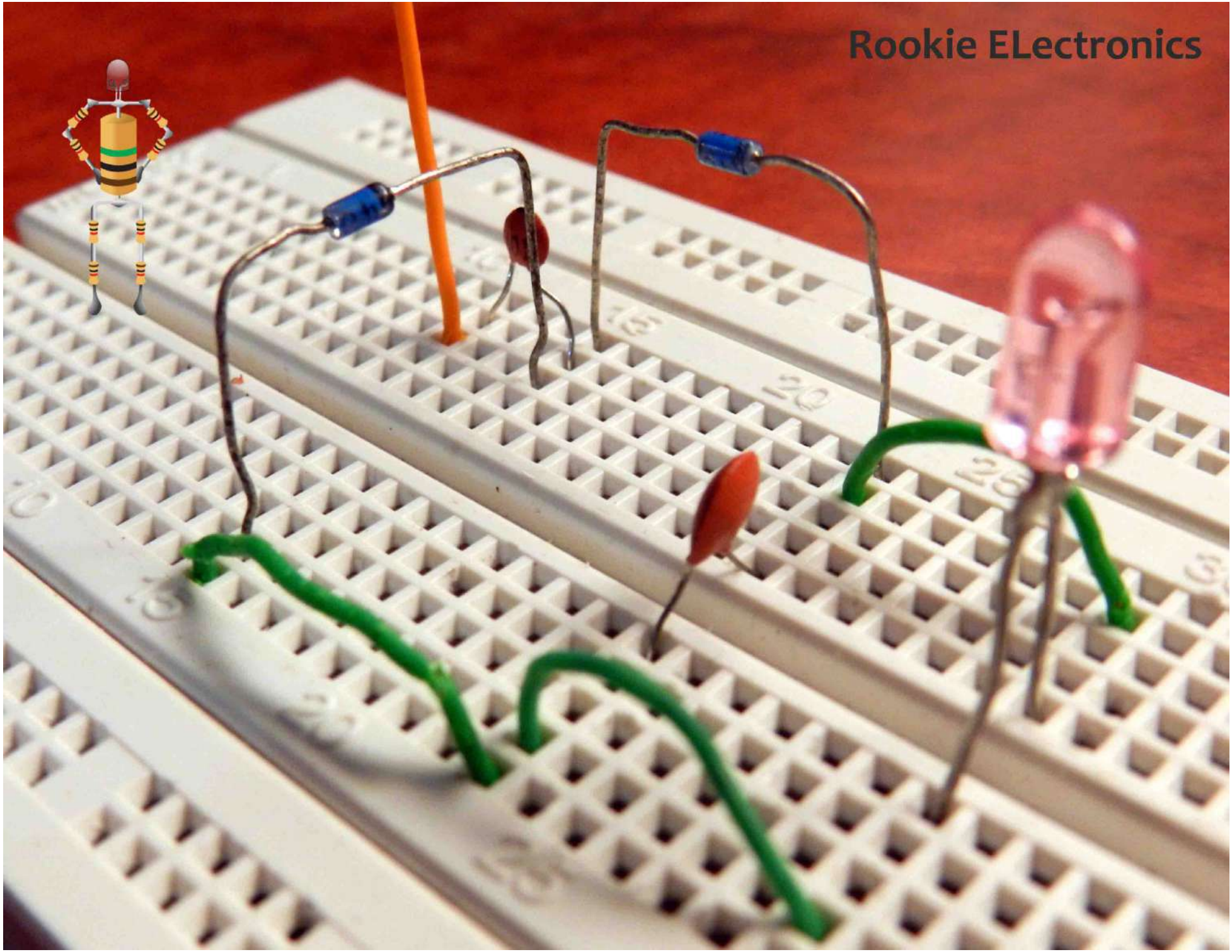

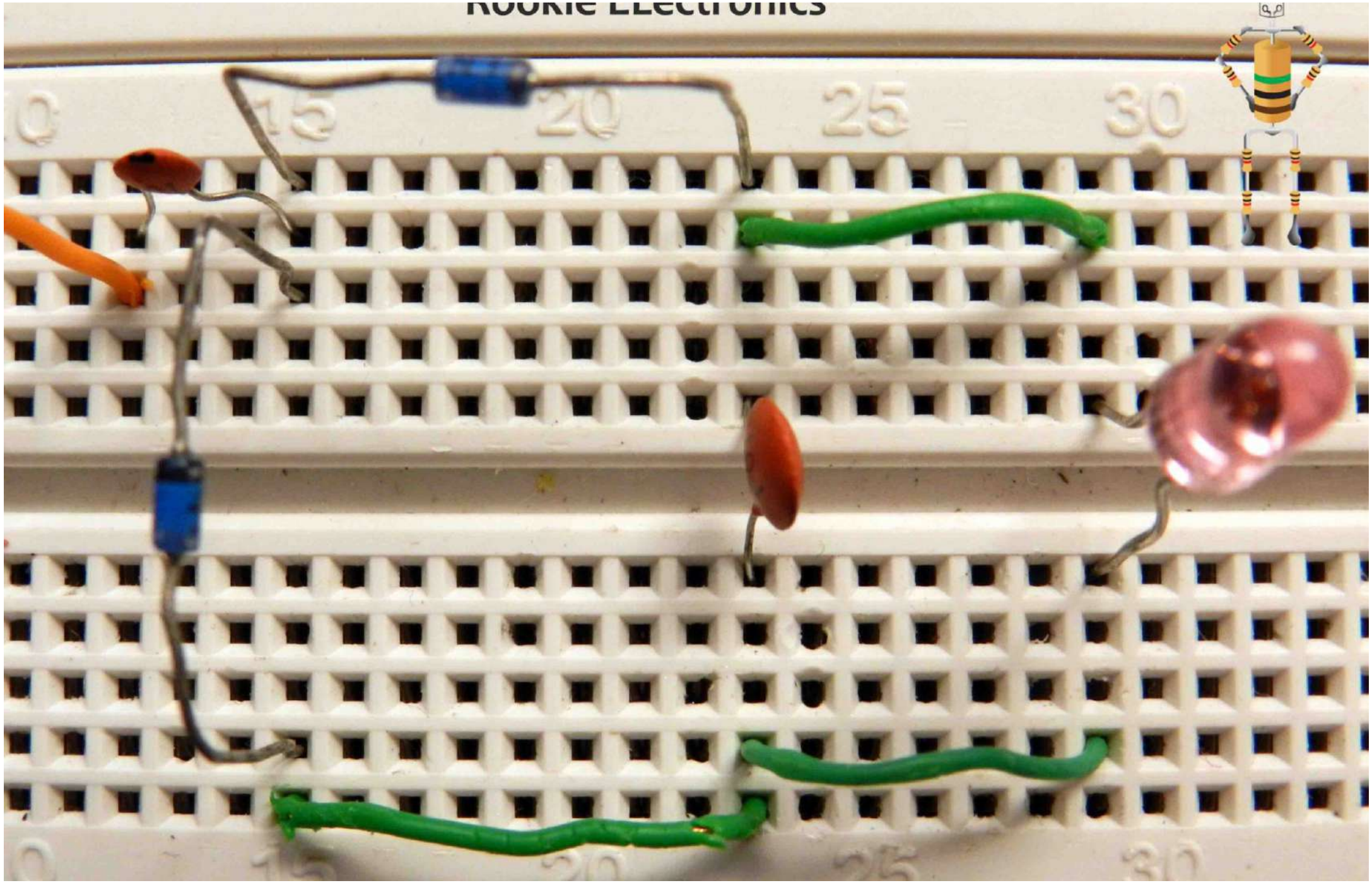
Rookie Electronics
15
20
25
30

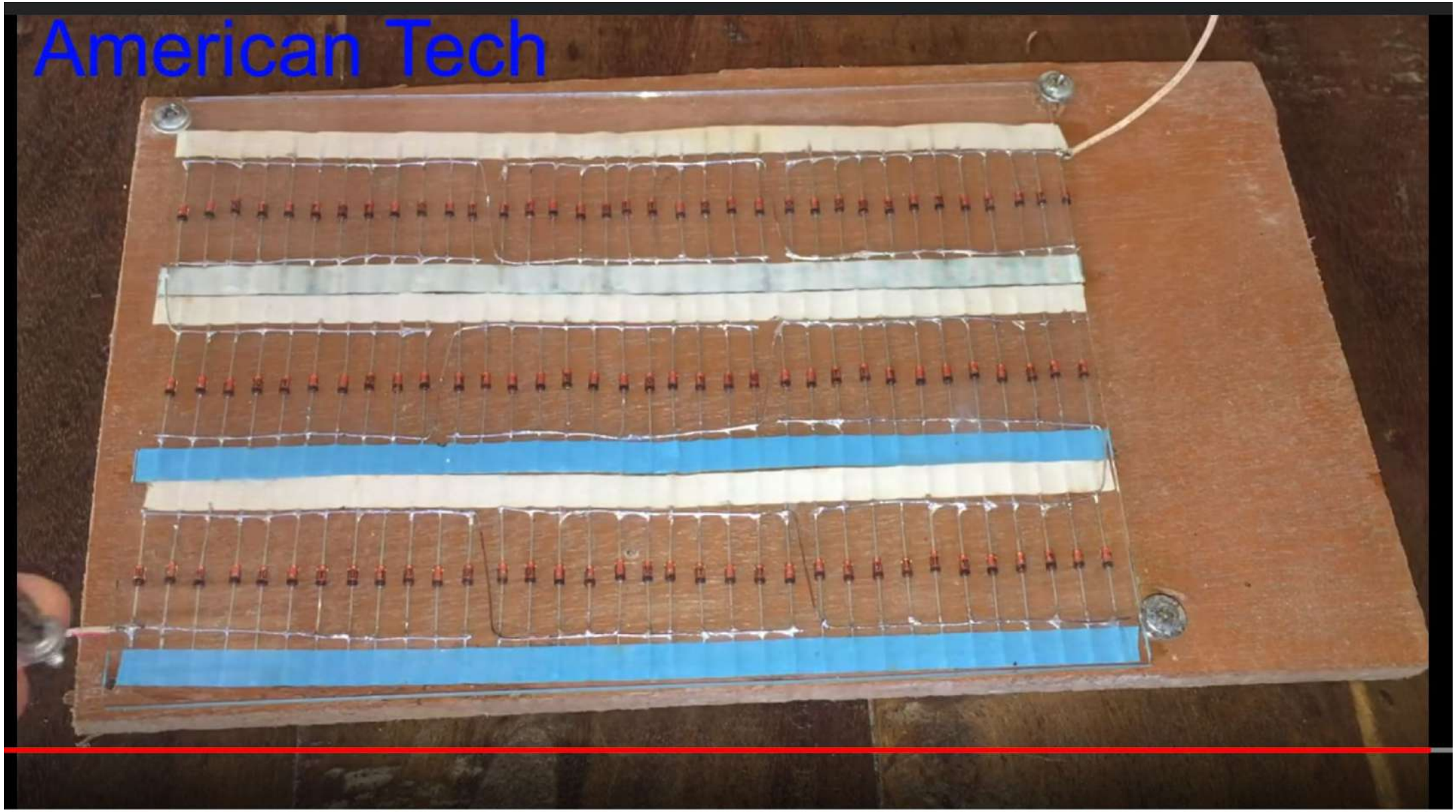
American Tech

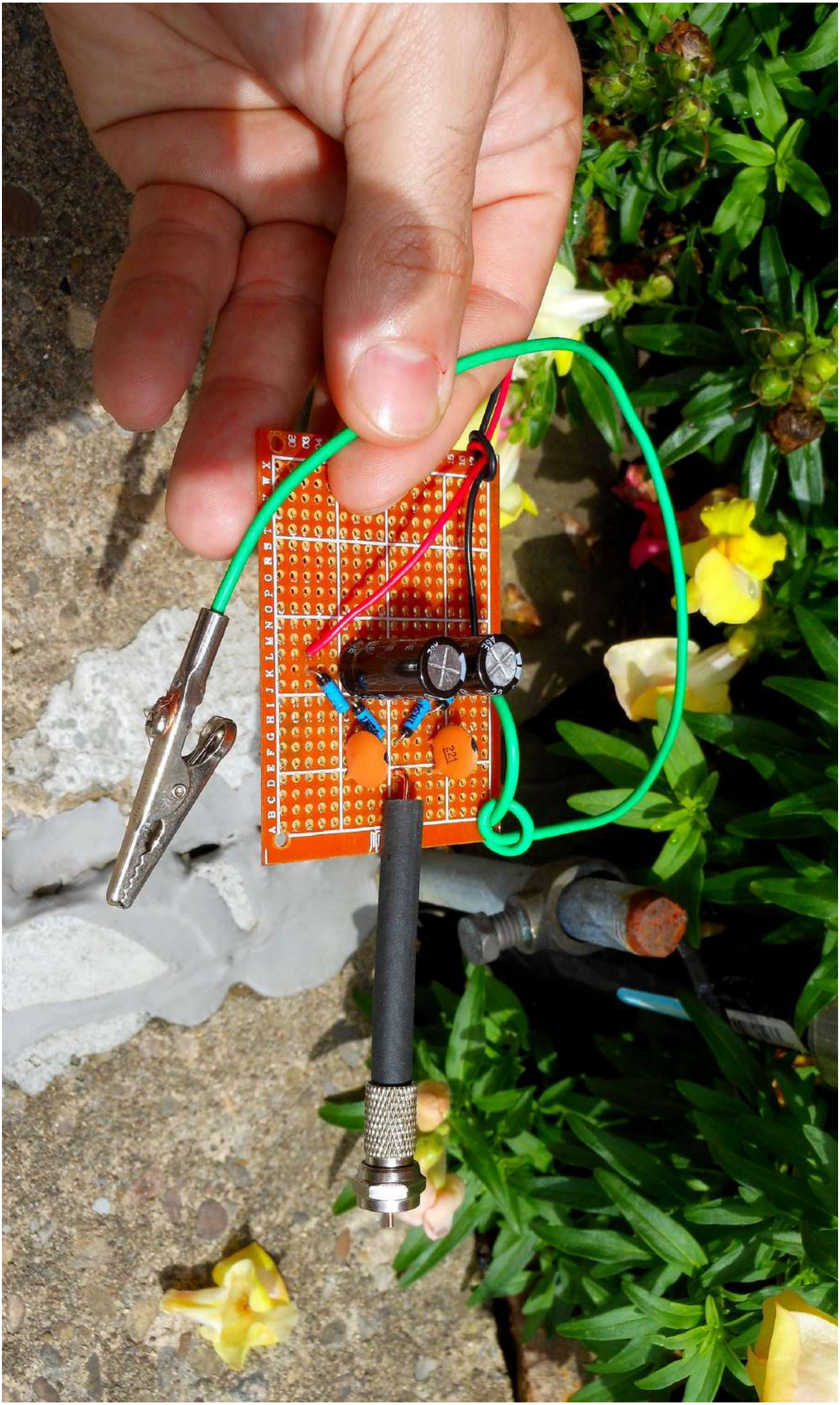
A B C D E F G H I J K L M N O P Q R S T U V W X
221

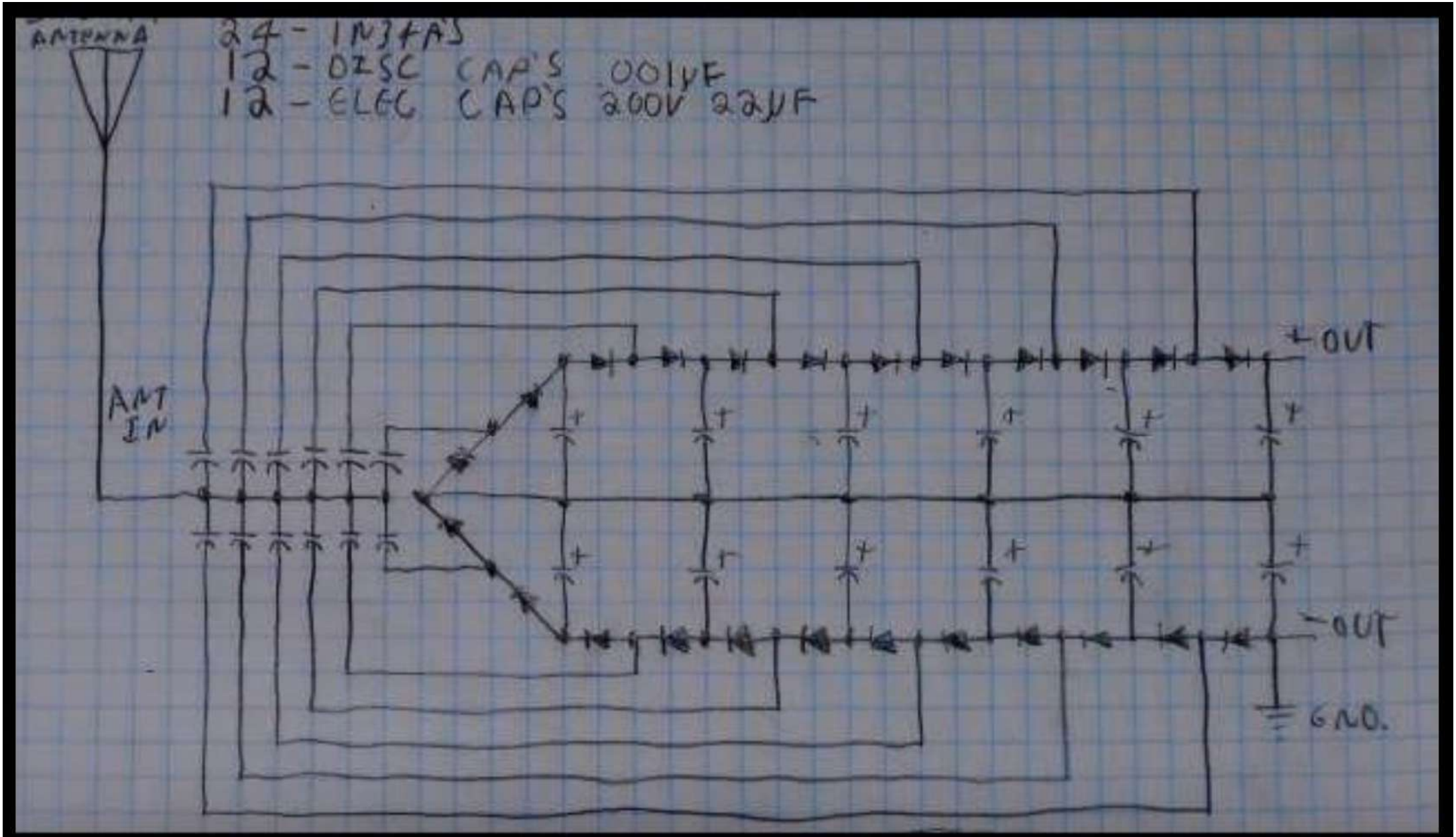
ANTENNA
24 - 1N34A'S
12 - DISC CAP'S .001UF
12 - ELEC CAP'S 200V 22UF
ANT IN
+ OUT
- OUT
GND.

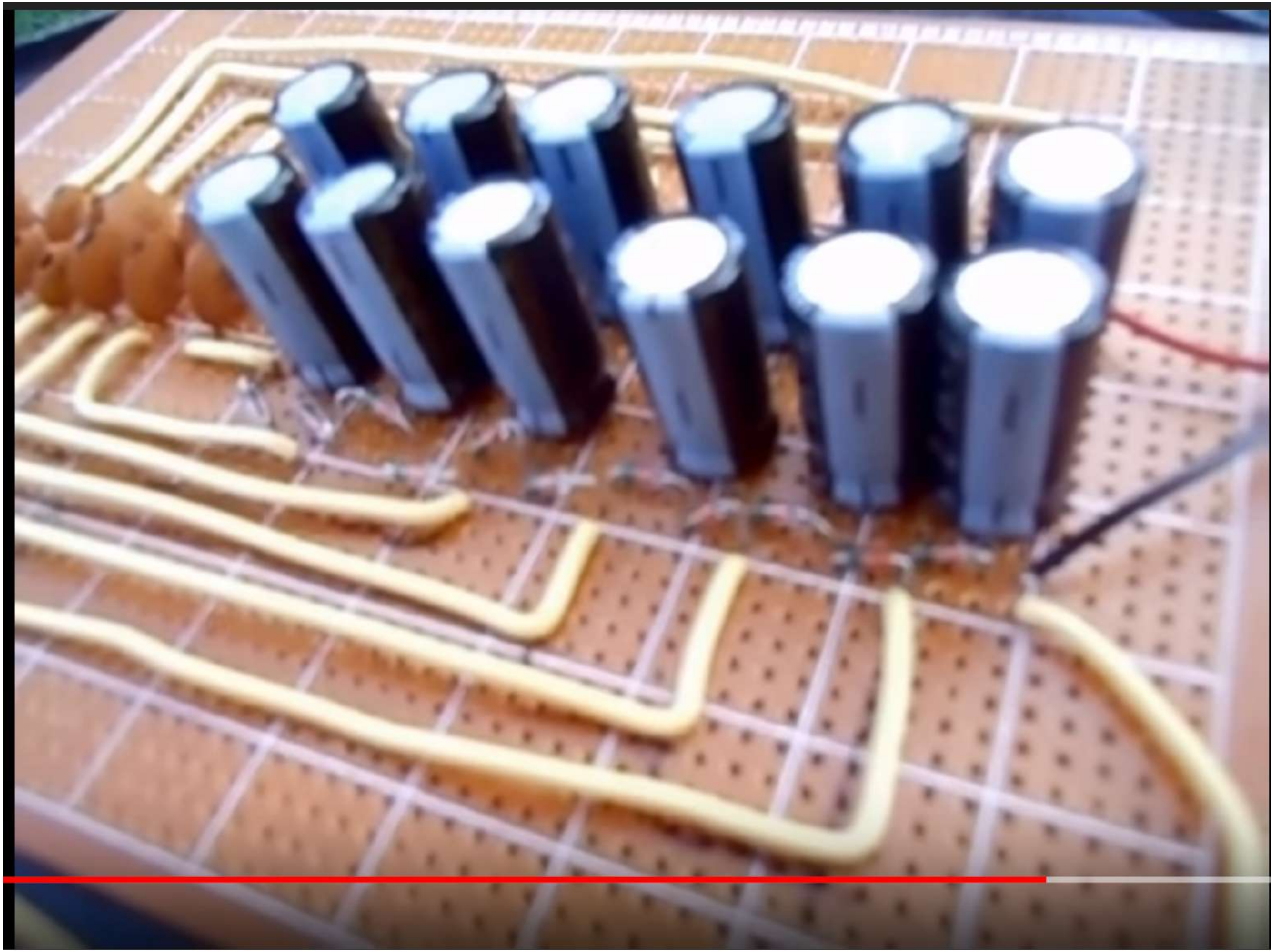

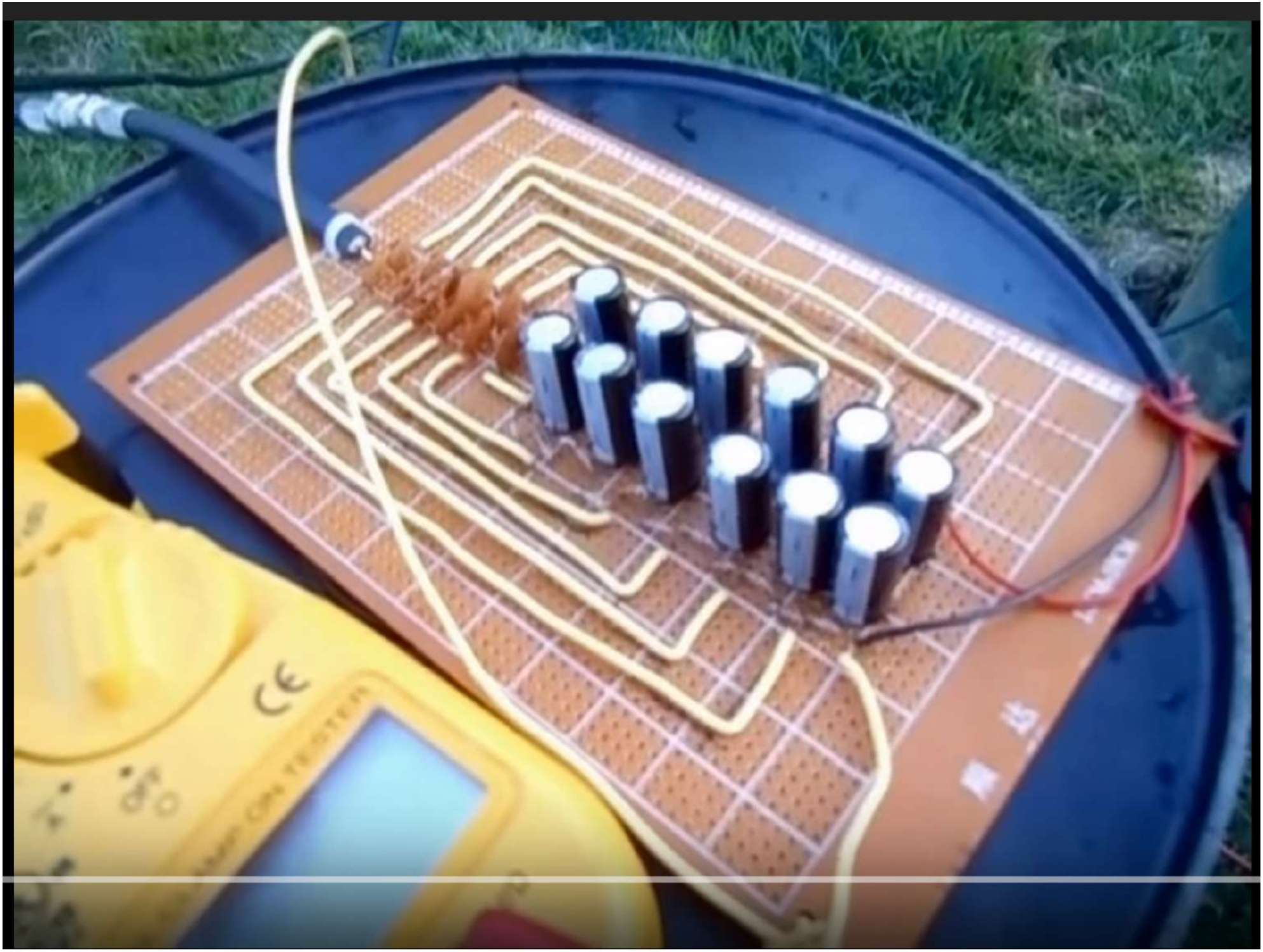

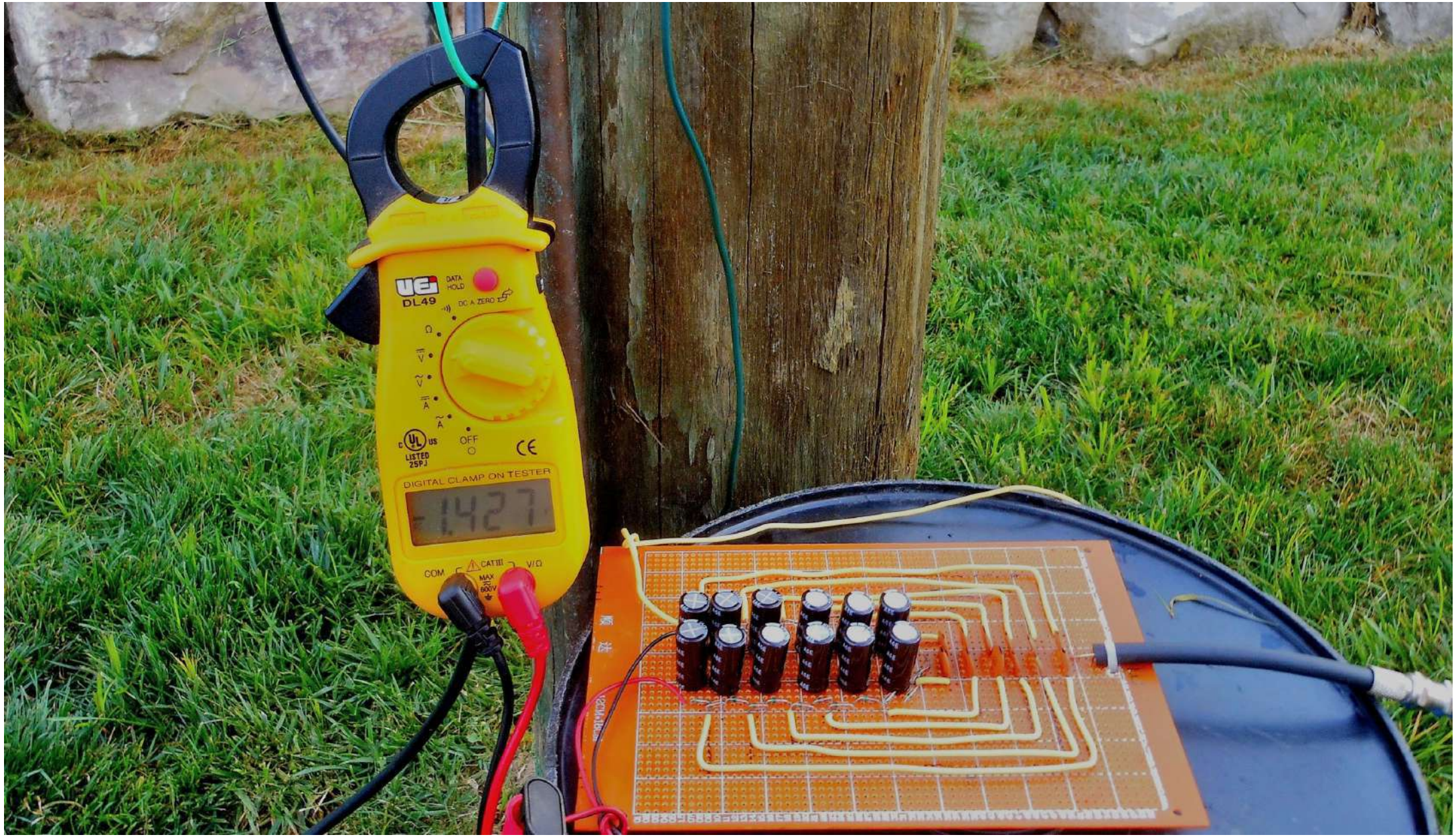
DATA HOLD
DL49
DC A ZERO
OFF
LISTED 25PJ
DIGITAL CLAMP ON TESTER
-1.427
COM
CAT III
MAX 600V
V/Ω

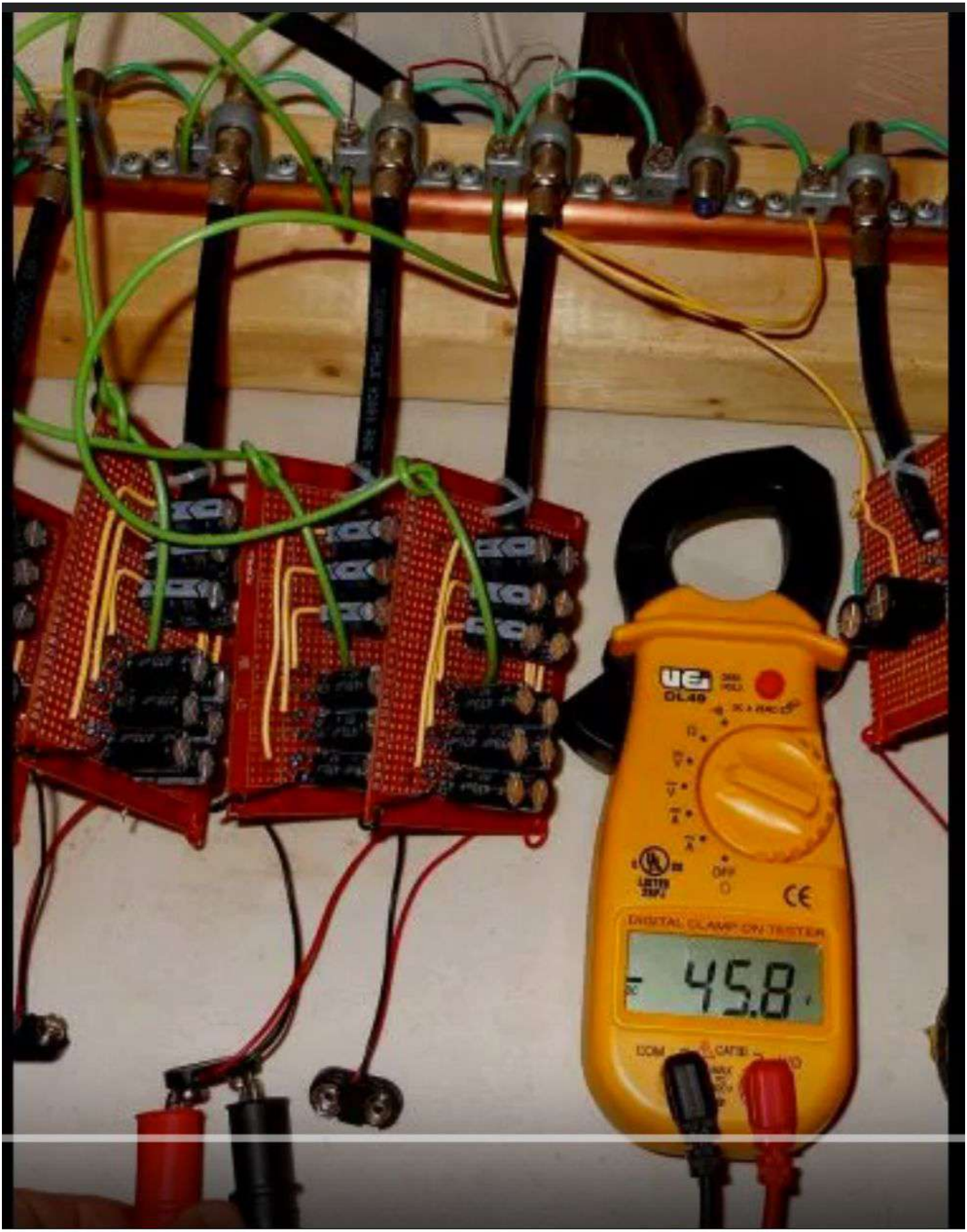
DL40
DIGITAL CLAMP-ON TESTER
45.8
COM

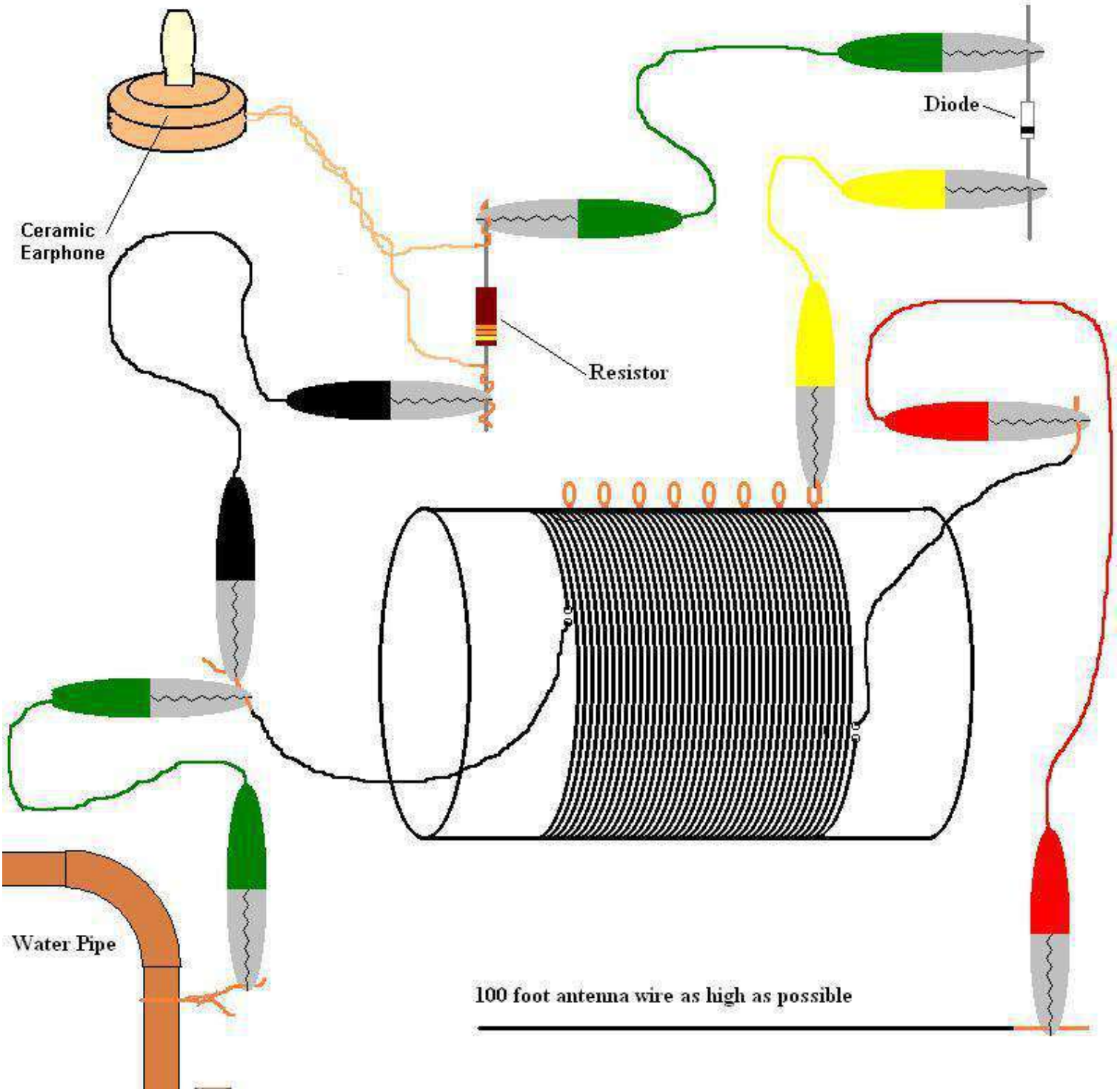
Ceramic
Earphone
Diode
Resistor
Water Pipe
100 foot antenna wire as high as possible

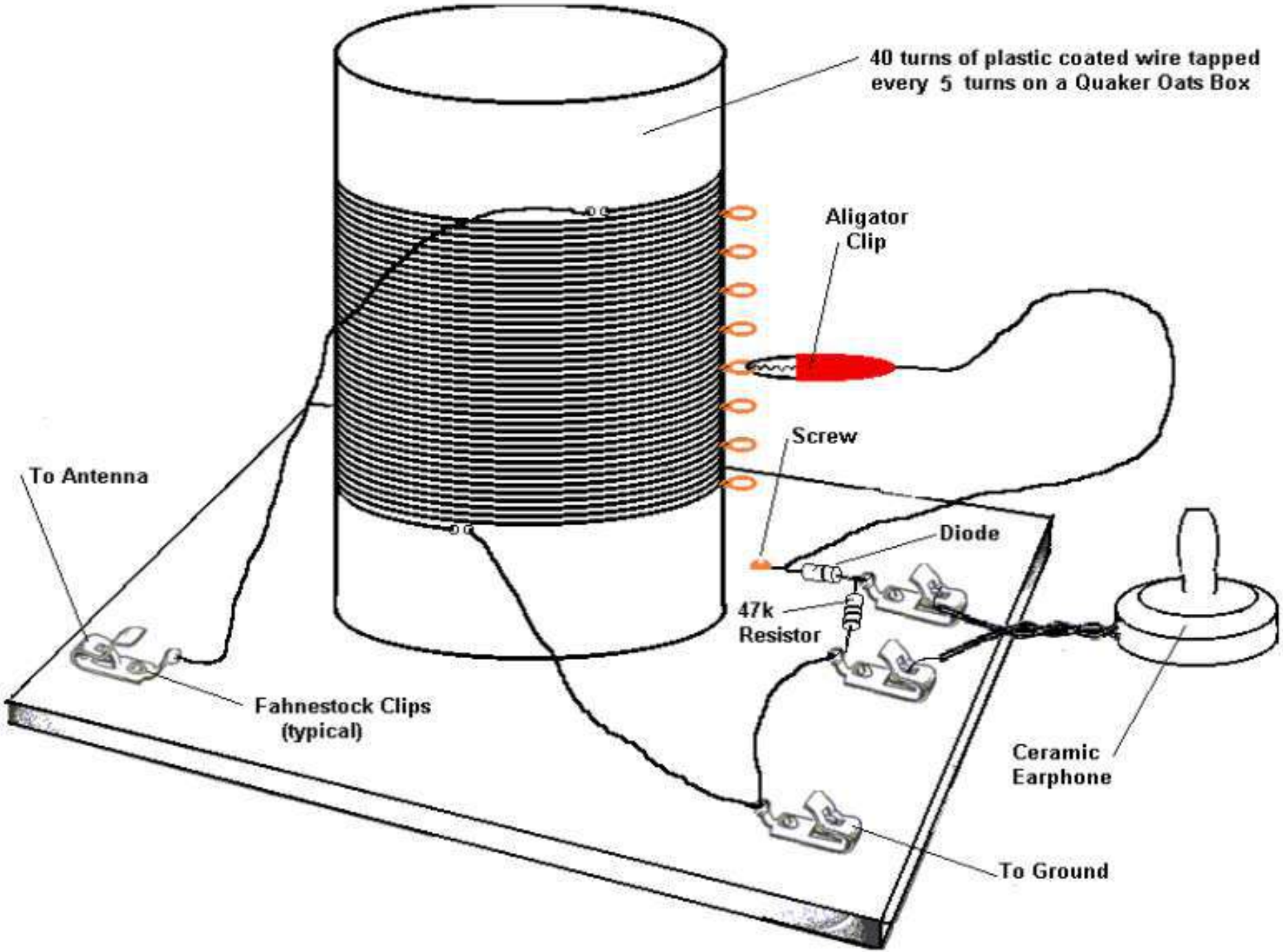
40 turns of plastic coated wire tapped every 5 turns on a Quaker Oats Box
Aligator Clip
Screw
Diode
47k Resistor
To Antenna
Fahnestock Clips (typical)
Ceramic Earphone
To Ground

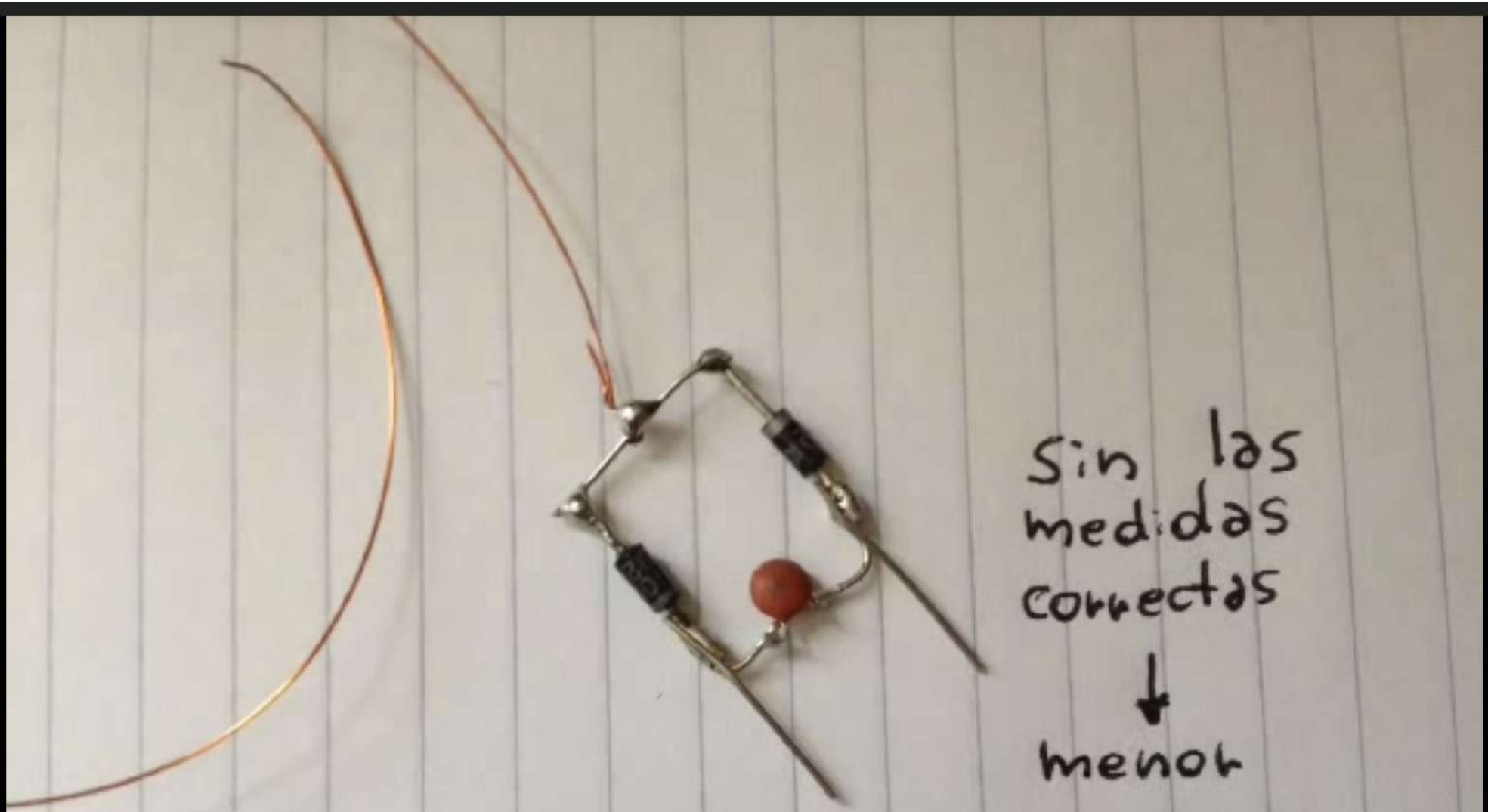

Sin las medidas correctas

↓

menor eficiencia.

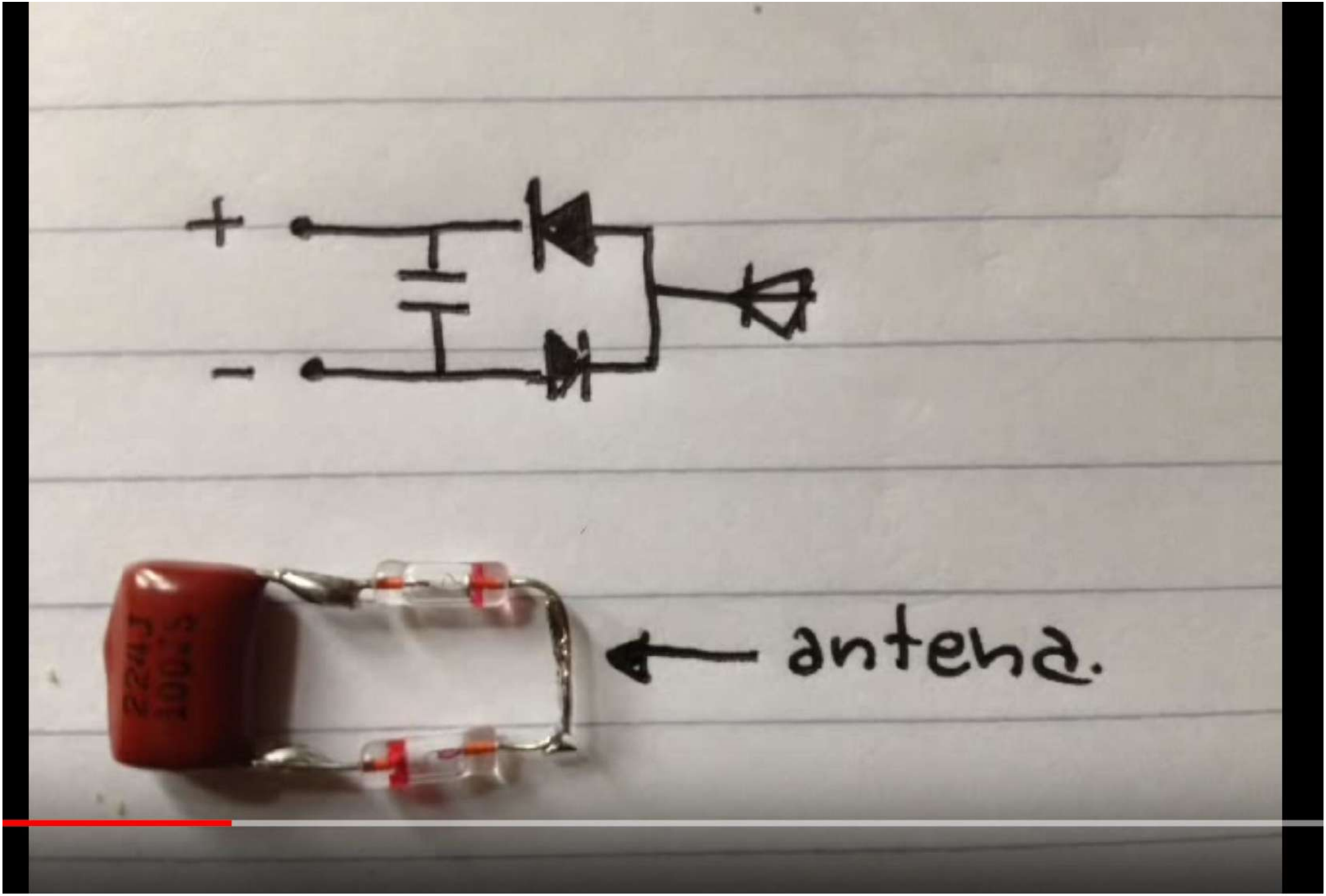
+
-
antena.

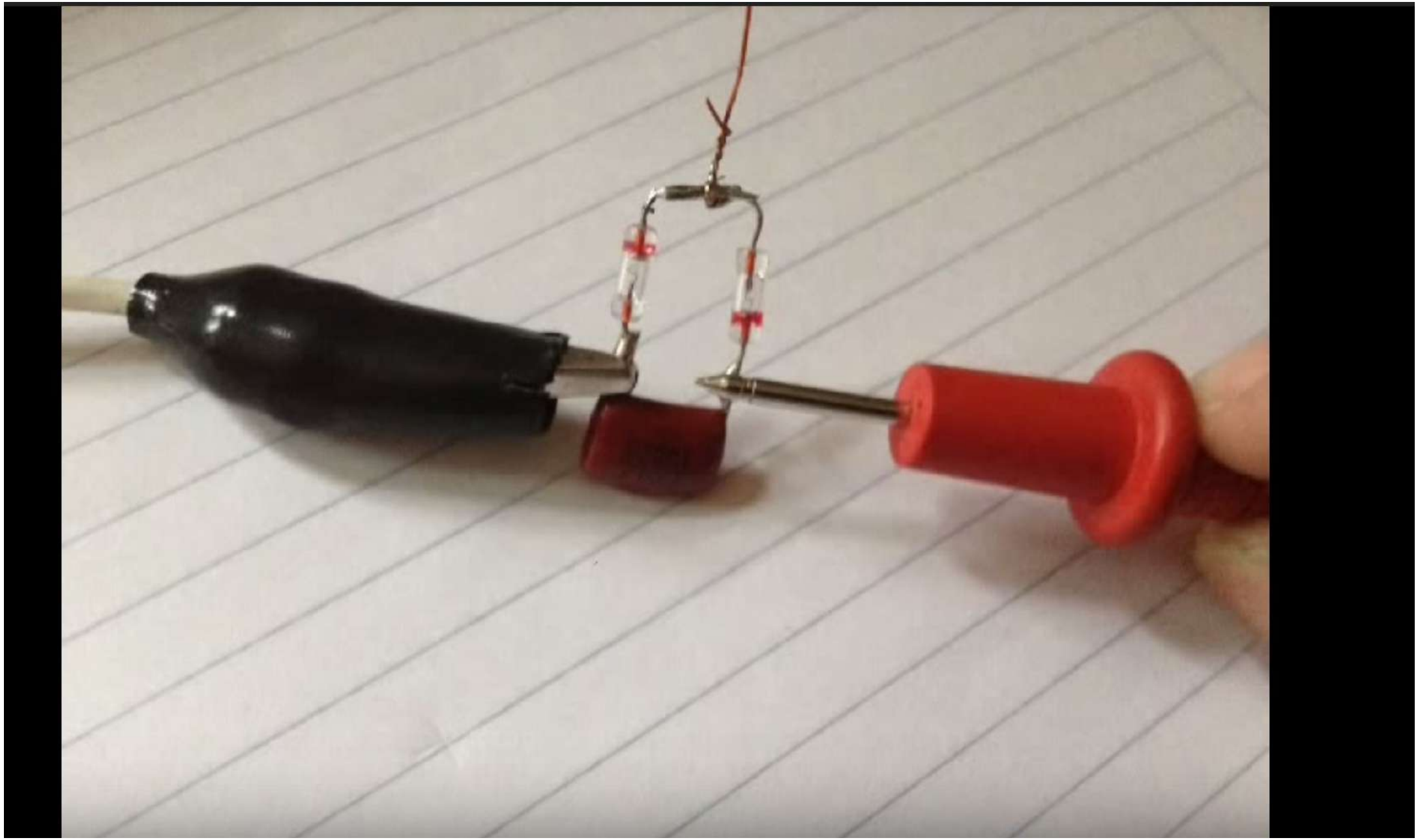

Ricevitore a cristallo per FM

Un progetto di Giacomo Cavuoti

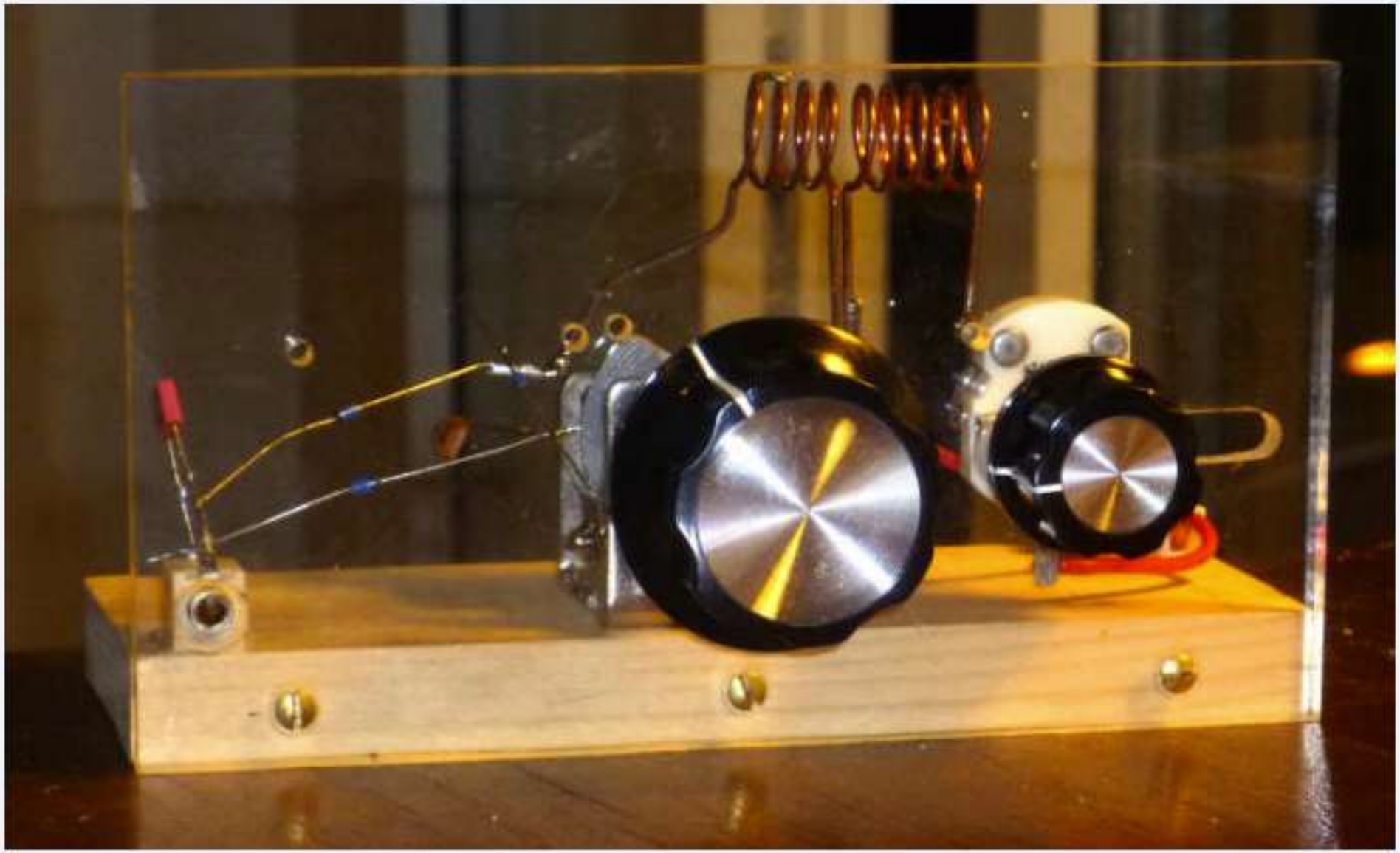

Seguendo l'invito di Leonardo ho realizzato questo semplice ricevitore a cristallo per FM (fare clic sullo schema qua sotto per vederlo ingrandito).

YAESU
HOME
SEL
CLAR
VFOa CW
14.054.00 R
SW
A
B
C
V/M
LOCK
PWR
AF-SQL/RF
C-POISE
1:54 / 2:18

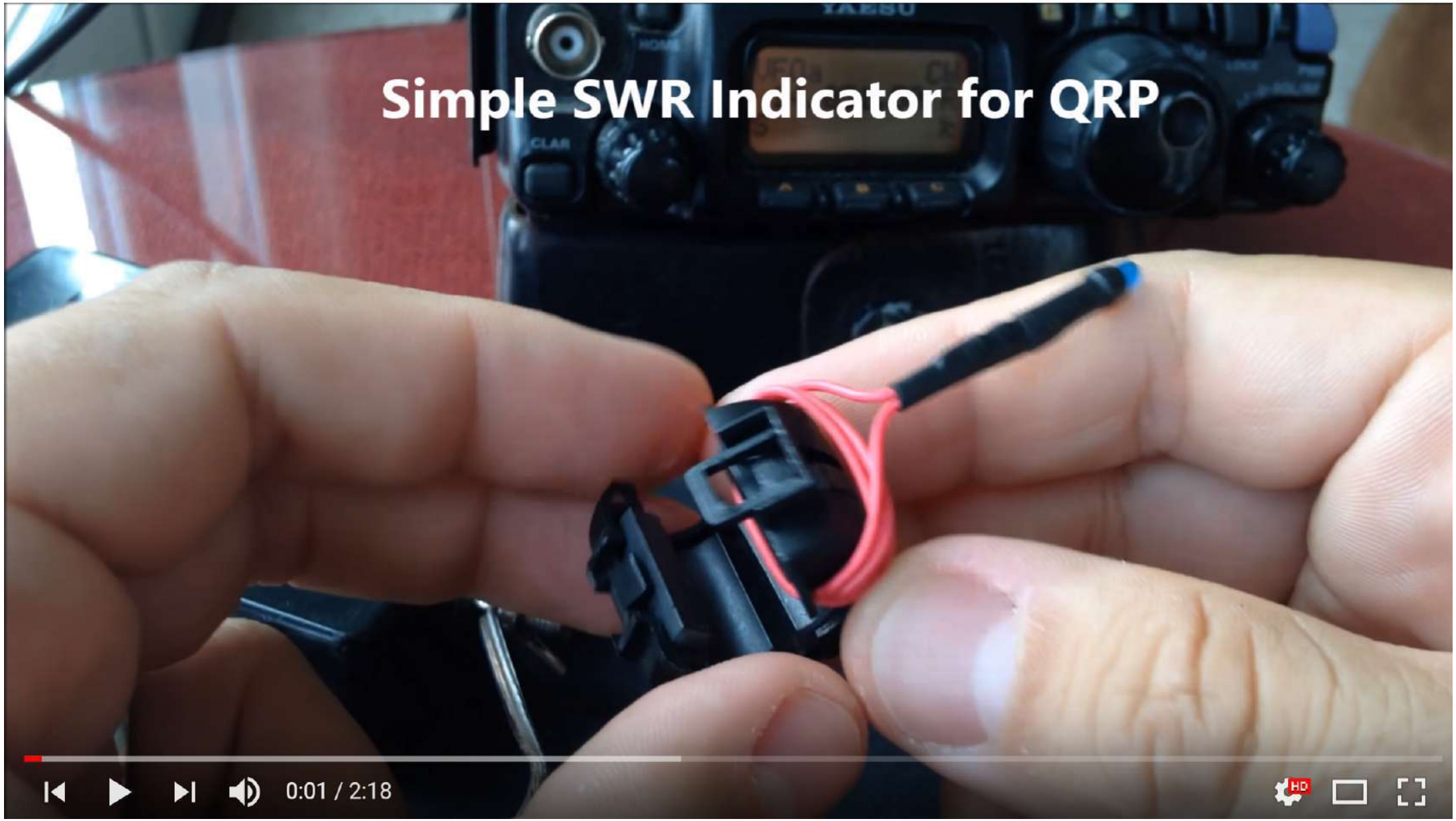
Simple SWR Indicator for QRP
0:01 / 2:18

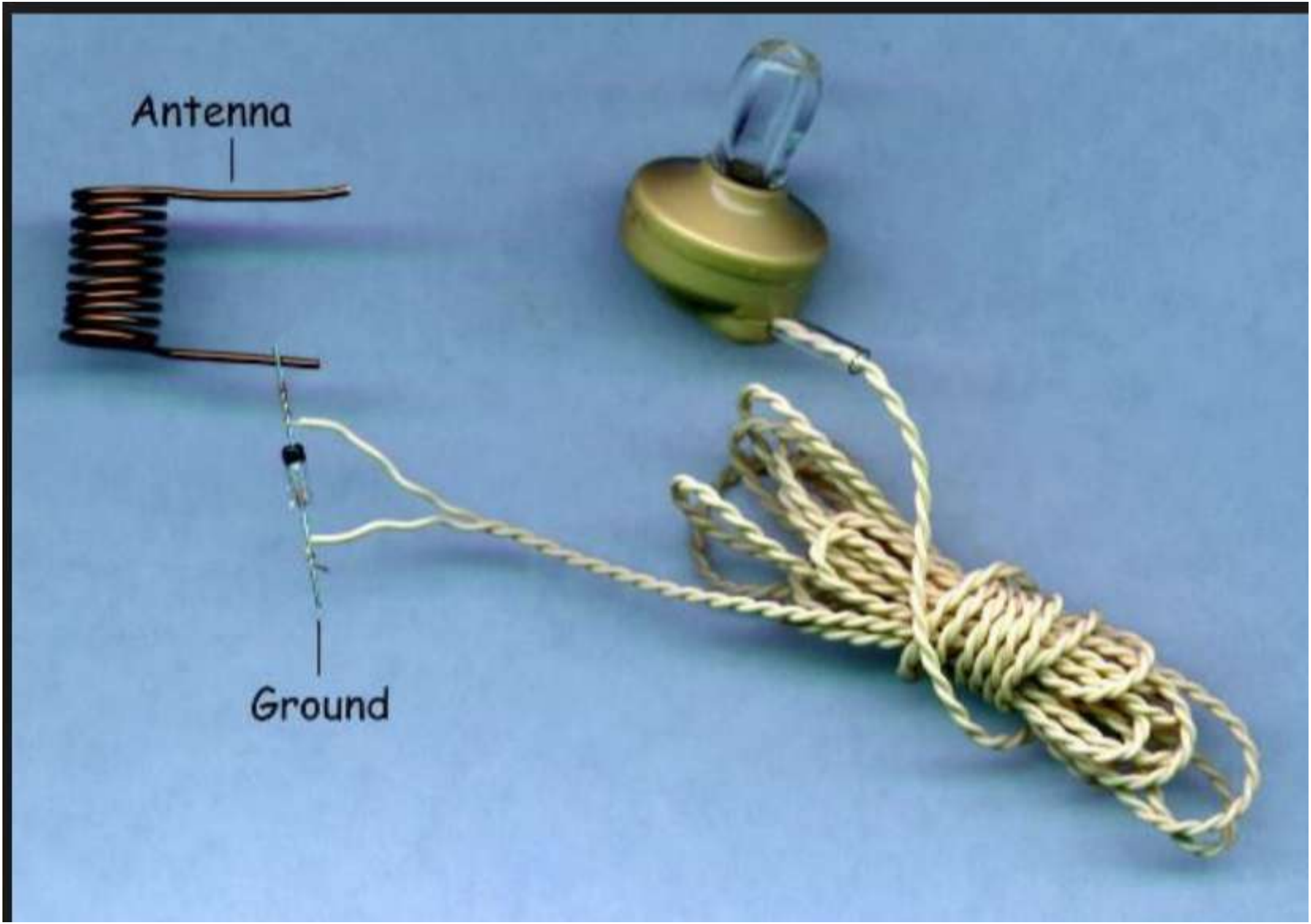
Antenna
Ground

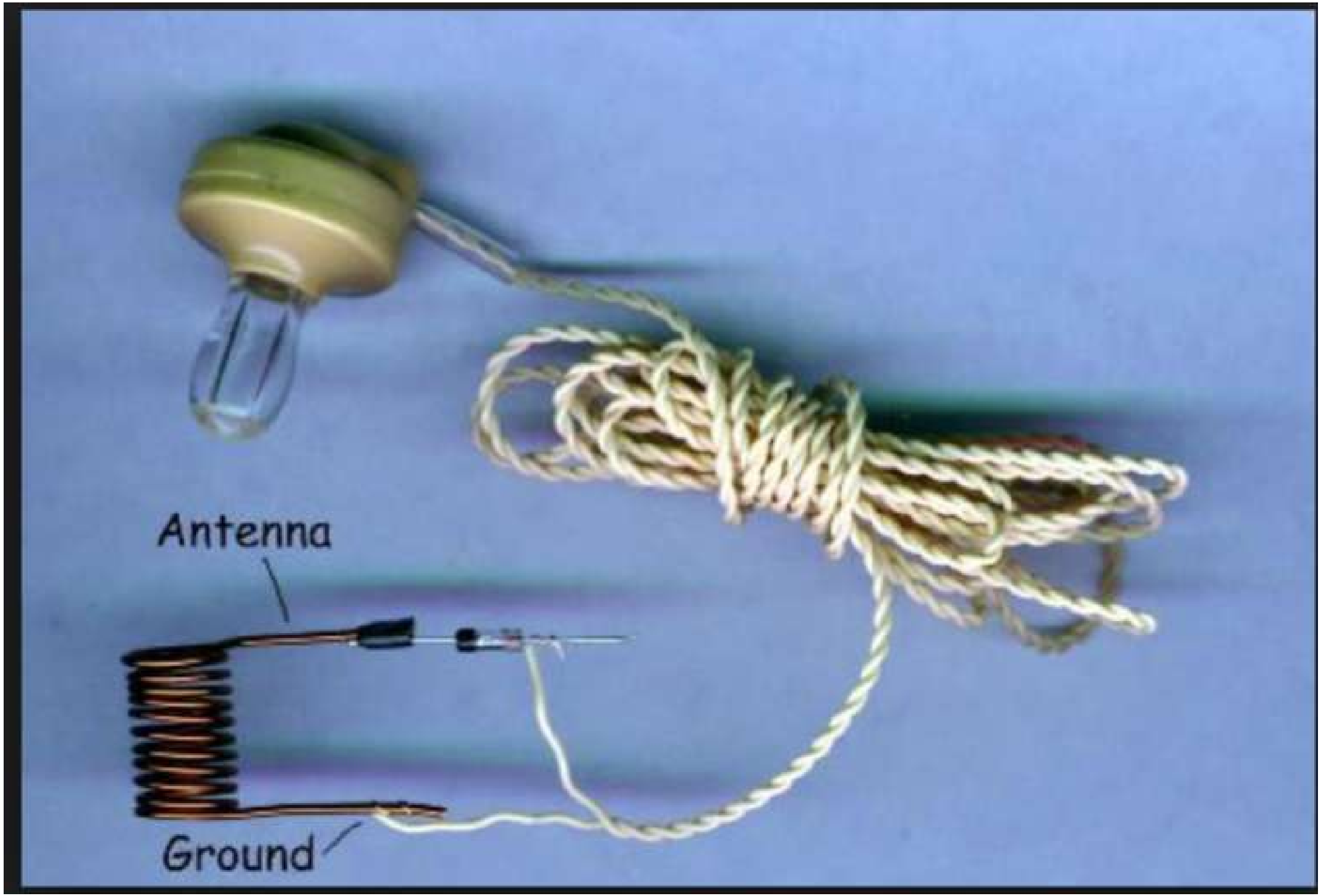
Antenna
Ground

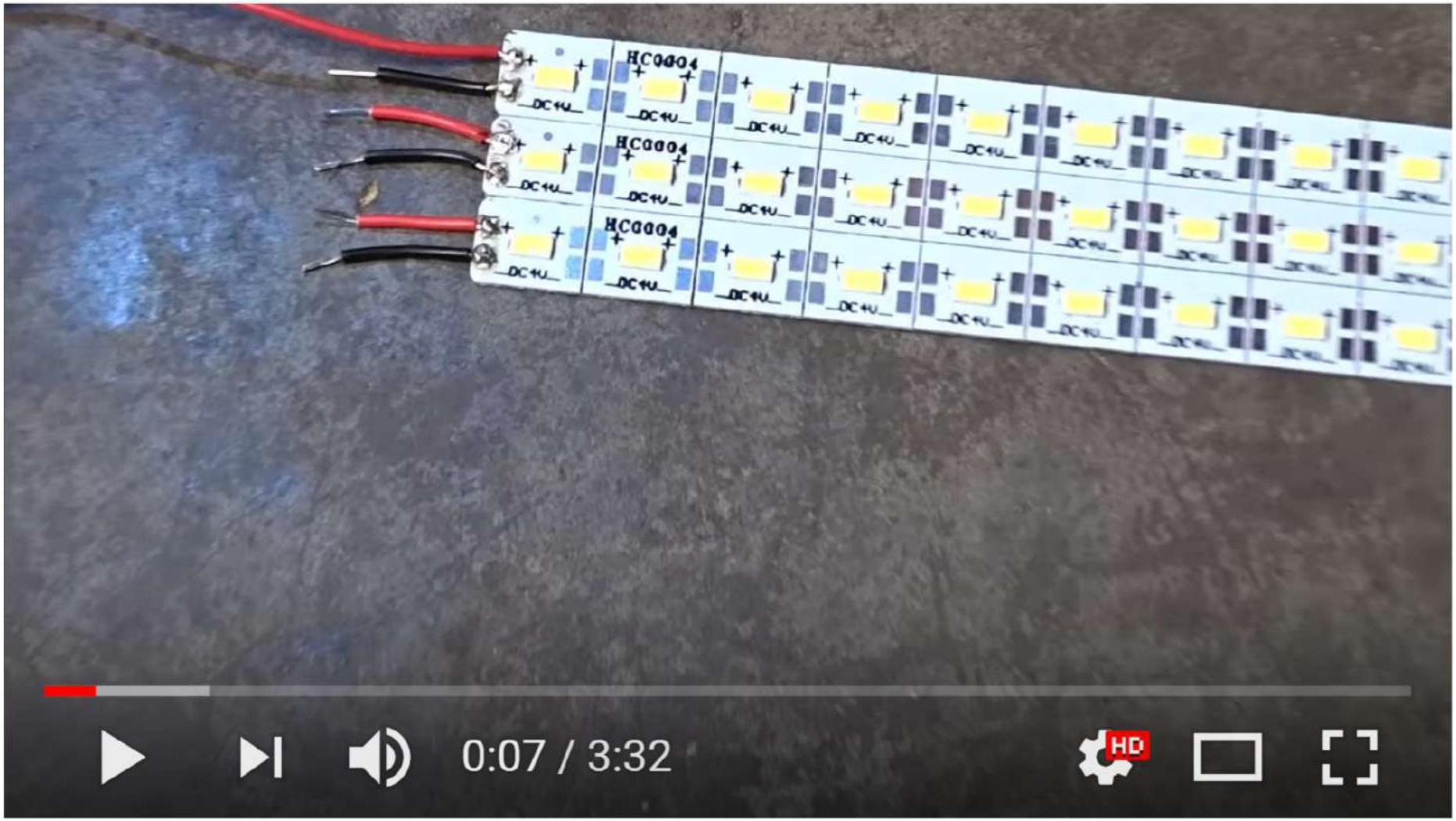

New idea - You can make Solar Cell from LED (Free Energy)

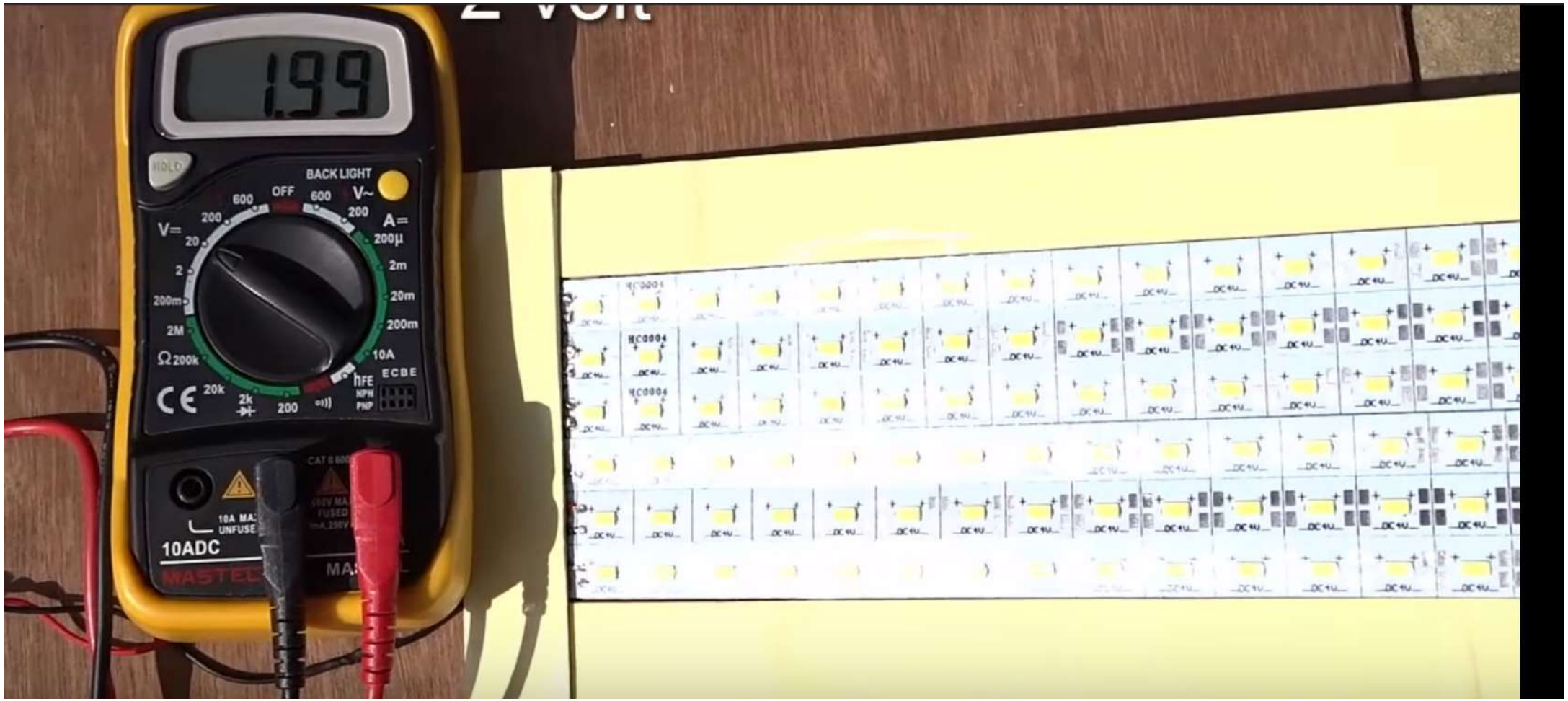
2 volt
1.99
HOLD
BACK LIGHT
OFF
V~
V=
A=
200µ
2m
20m
200m
10A
Ω200k
20k
2k
200
hFE
ECBE
NPN
PNP
10A MAX
UNFUSED
10ADC

Instructions for using
Philmore Crystal Radio Detector

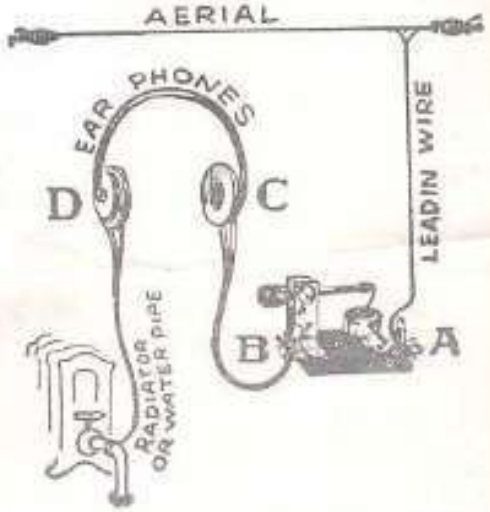

This Detector is a radio in itself, as it is possible to get reception with it alone, provided you are within 25 miles of a broadcasting station. Under very favorable conditions reception is sometimes possible at much greater distances.

In order to get reception, you need an aerial wire and headphones. The AERIAL may consist of 100 to 125 feet of copper wire and two insulators. Attach insulators to each end of the wire. Stretch the wire allowing as little sag as possible. No part of this wire should touch any portion of the building or any other obstruction.

The LEAD-IN may consist of any desired length of covered wire which will reach from the aerial to the set. Scrape each end of the lead-in so that the wire is absolutely clean. Wind one end securely around the aerial wire. Place the other end in the clip marked "A".

There are two cords leading from the headphones. Connect the cord "C" as illustrated, from the earphone to clip "B" or the clip under the detector arm. The other wire from the earphone marked "D" is to be connected to water pipe, radiator or any other suitable connection to be used for the ground.

You are now ready to receive broadcast. Find a sensitive spot on the crystal by means of the cat-whisker. You may find it necessary to "hunt" for live spots on the crystal as only some parts of a crystal are sensitive, and unless you find these sensitive spots you will not hear anything.

If you do not at first get results, do not blame the detector, as every set is tested before being shipped and will positively get results under the proper conditions. Do not write in and ask what the trouble is for a personal examination of your entire hook-up will be necessary. Go over your aerial, ground, various connections, etc., and if necessary get someone who thoroughly understands radios to help you.

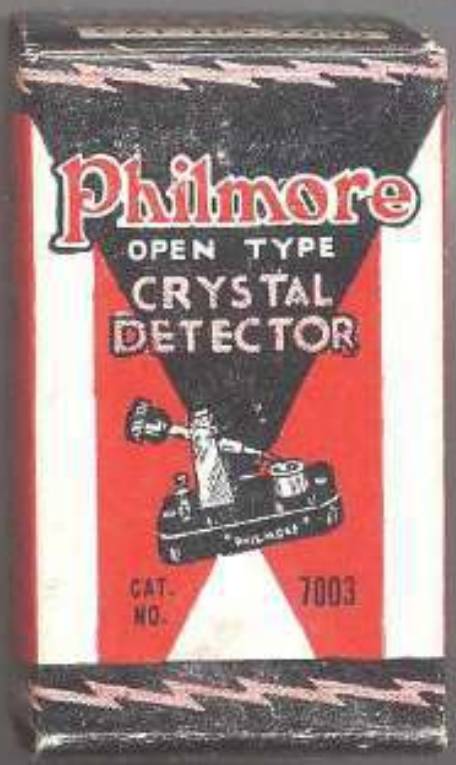

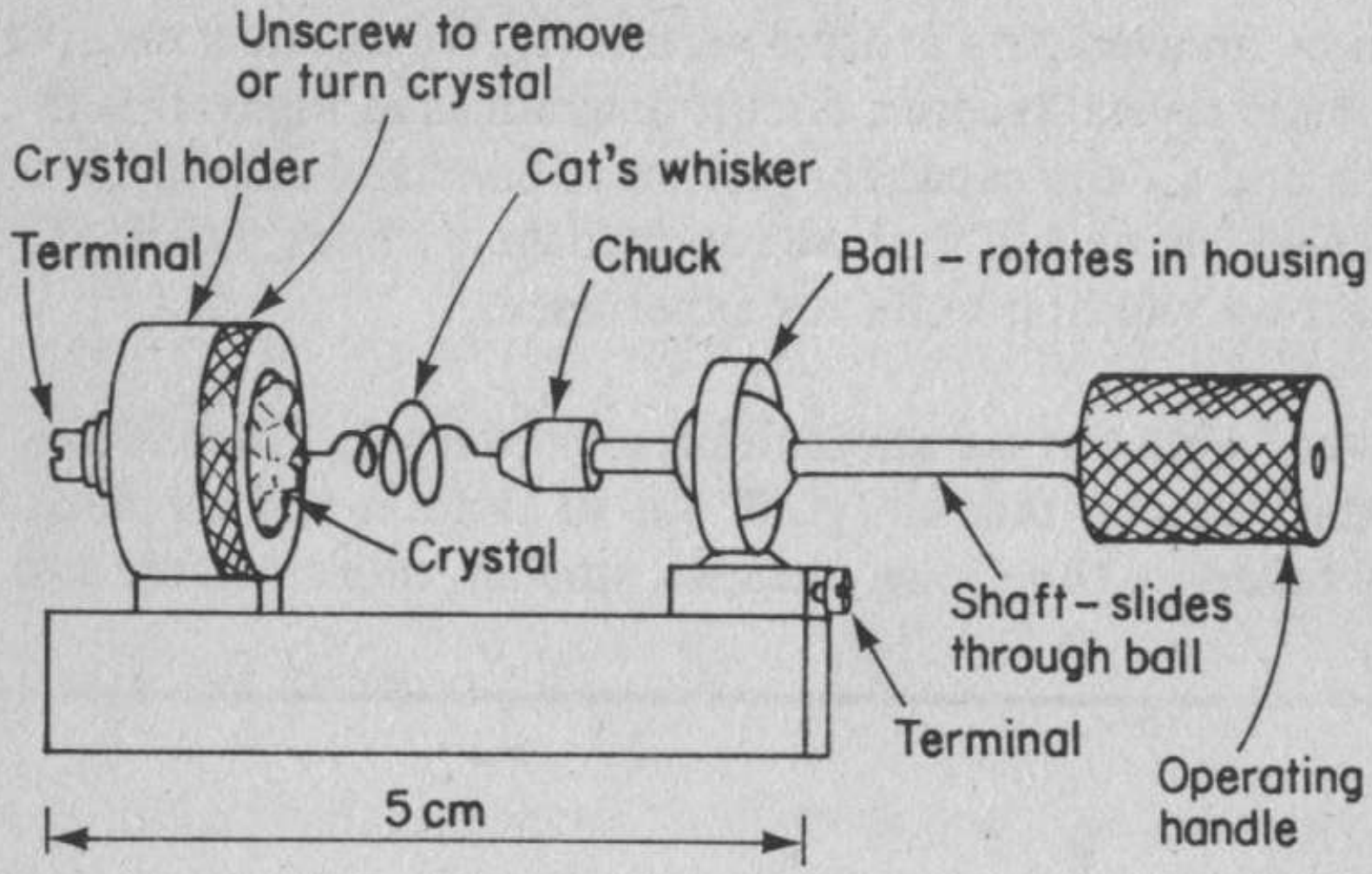

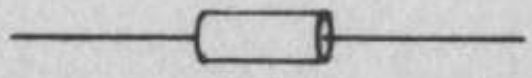

Modern diode (7·5 X 2·5 mm)

Majoritatea componentelor active folosite în circuitele electronice moderne sînt dispozitivele bazate pe semiconductoare.

Cel mai simplu dispozitiv este *dioda* punctiformă cu germaniu. Ea are proprietatea de bază de a se comporta ca şi cum este conectată direct la o sursă electrică de curent continuu (plusul sursei la plusul diodei) şi ca un izolator, cînd este conectată invers la aceeaşi sursă (plusul sursei la minusul diodei), ca în figura 2.9.

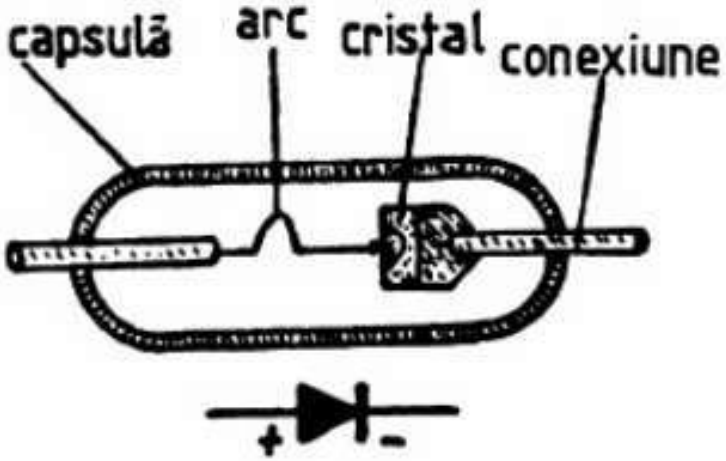

FIG. 2.9.

Dioda punctiformă cu germaniu

FIG. 2.10.

Tipuri de diode semiconductoare

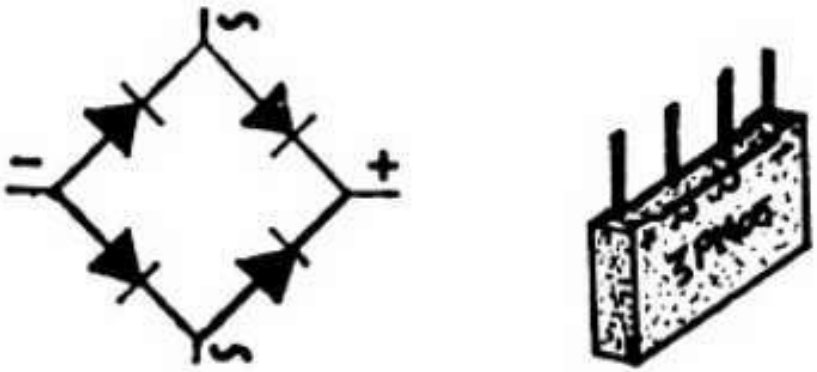

FIG. 2.11.

Puntea redresoare

Fig. 7

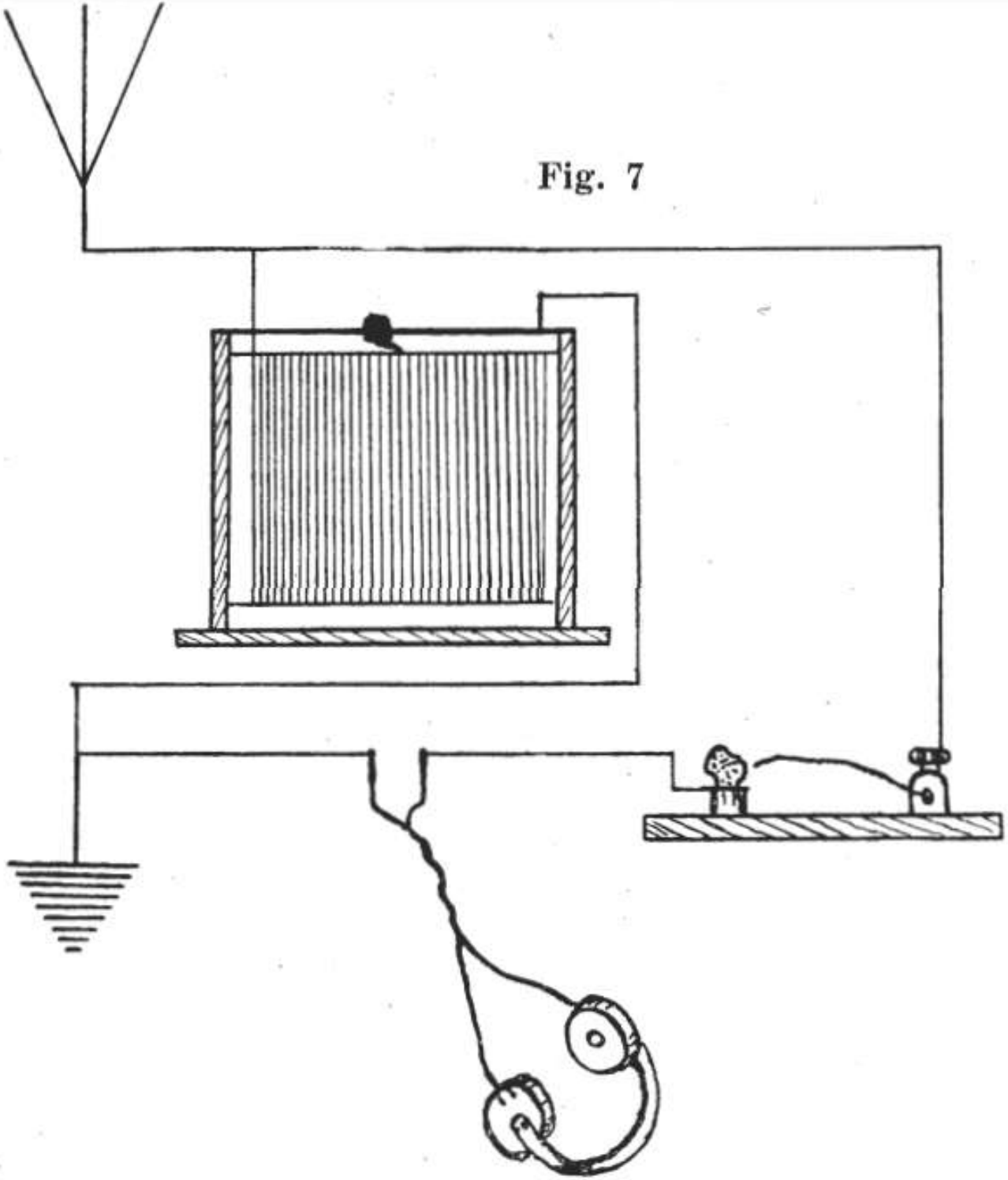

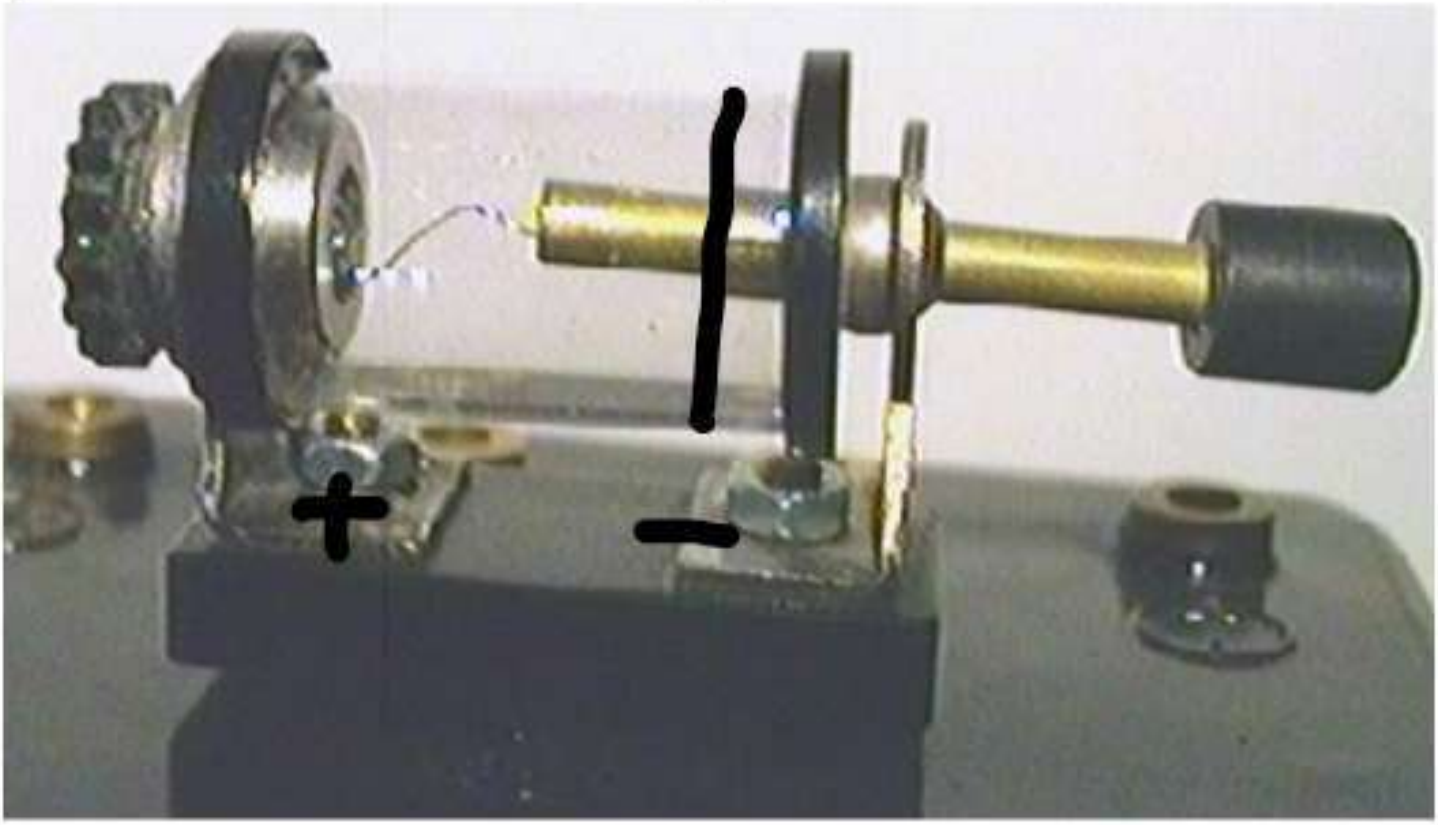
+
−

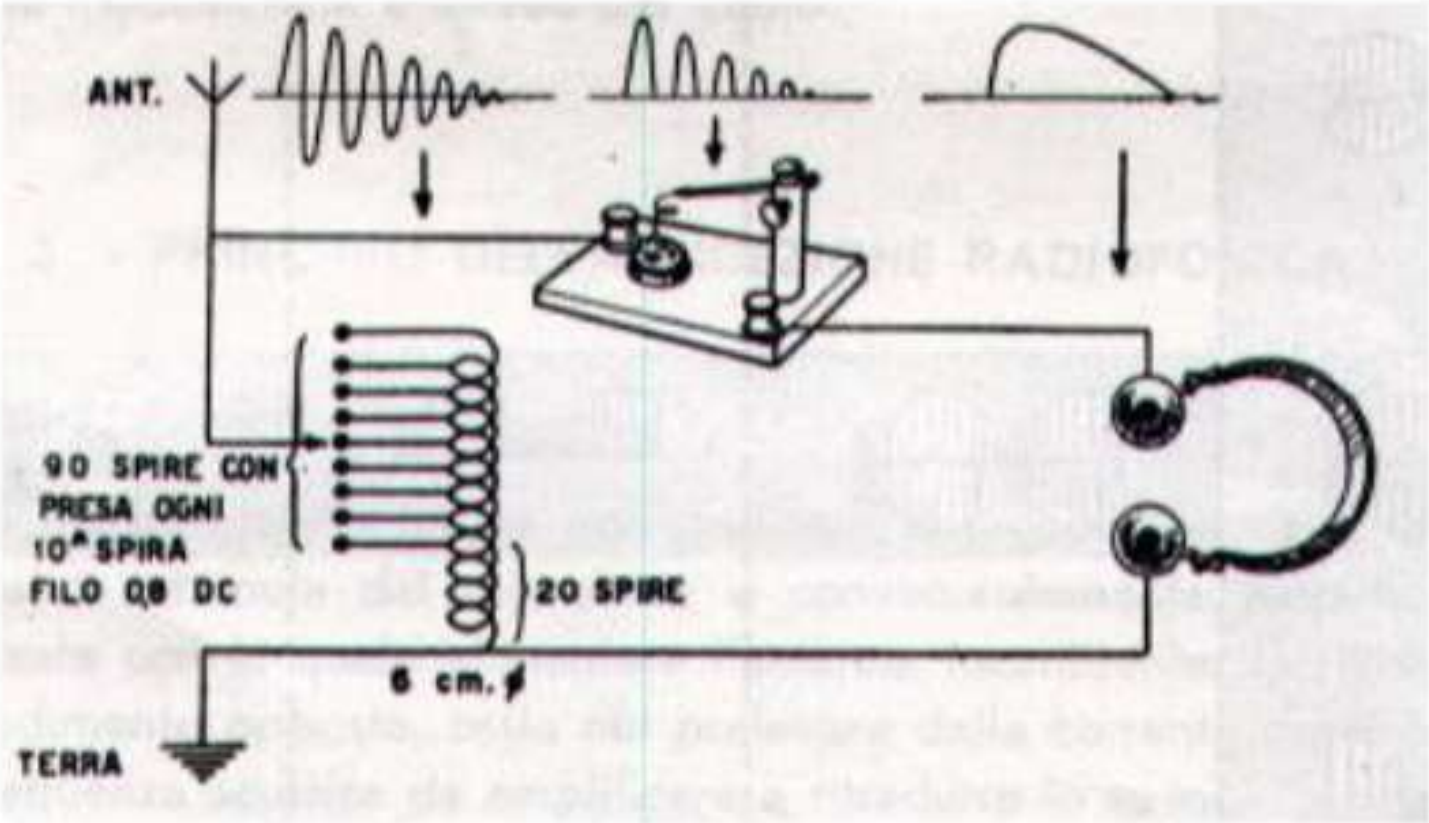
ANT.
90 SPIRE CON
PRESA OGNI
10ª SPIRA
FILO 0,8 DC
20 SPIRE
6 cm. ϕ
TERRA

Lead sulfide crystals, also called "galena"

Crystal detector, the lever was used to position the spring contact on a crystal face capable of performing the radio signal detection.

Yeah , but how does a galena radio work? Here is the constructive scheme of a receiver of this kind, obtained from a book of popular radio commu
to the knowledge of the radio, ed.Hepep 1943):

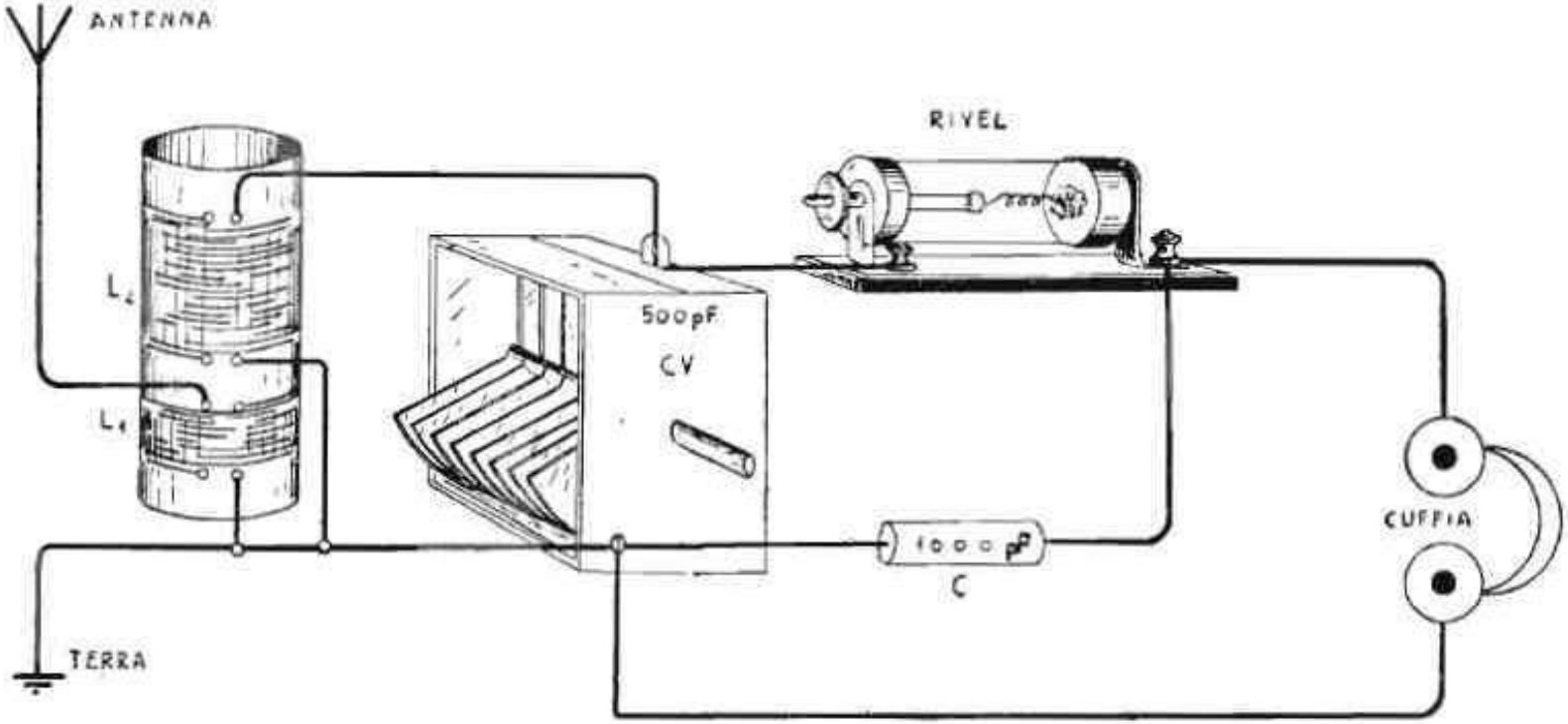

Fig. 13.5. – Realizzazione pratica dello schema di fig. 13.3 con aggiunta della bobina d'antenna.

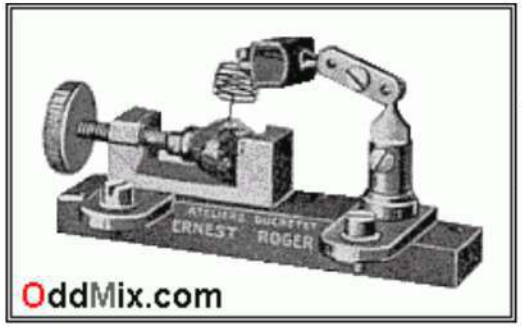

Picture 1. "Ernest Roger" Crystal detector from 1920

Many of the **younger generation** never had the pleasure to have, or to even see a real beautiful crystal detector as shown on **Picture 1**. A detector like that was the product of the early 1920's, and it was an expensive, quality, well made product. They were usually hands assembled with machine made components.

This particular "**Ernest Roger**" detector device is built on an insulated base, either wood or most likely of Bakelite, the most widely used and only available plastic material at the times.

Many of the younger generation never had the pleasure to have, or to even see a real beautiful crystal detector as shown on **Picture 1**. The new generations are much too involved with technology and playing on their computers or going to an **online University**. This excellent detector holder used copper, brass and bronze generously for the crystal holder and for all of the **electrodes**.

The most often used crystal in this and similar detectors - then and now - was **pyrite** or galena as shown in the 1925 listing in a table in the **"American Mineralogist"** publication, that has a listing of thirty three minerals catalogued with rectifying detector properties.

Among the very first commercially produced diodes is the 1N21B shown on **Picture 2**. It is more than curious, that this "diode" is enclosed in a case on which there is a slotted screw-head is just visible on the wide side (lower right). That screw is connected to a fine "cats whisker" steel wire, a few turns of a spring-like device, terminating in a point that is in touch of the germanium semiconductor material connected to the top left diode terminal.

Picture 2. Early point contact diode with adjustable srew

The arrangement is much smaller, and more diode like, then the detector on **Picture 1**., but it made in a very similar arrangement, which has became known as the point contact diode. From these and similar germanium diodes, evolutionary progress leads us to current PN junction Silicon, Gallium Arsenide or other more exotic semiconductor materials which are the achievement of the latest scientific age and many years of steady experimentation, research and development.

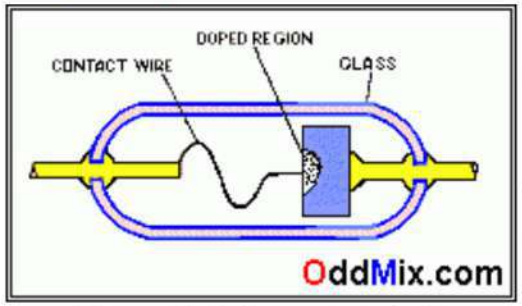

Picture 3. Point contact diode

Picture 3 shows the cross section of a hermetically glass enclosed, point contact diode. If the left side, point contact terminal would be attached to a screw and a short spring, and the glass envelope would have a threaded metal part in it, the **Picture 2** and **Picture 3** devices would be nearly identical.

These point contact "cat's whisker" devices, are still made occasionally because of their very small capacitance. As it was discovered early on, they are highly useful in high frequency electronics. All the way up to microwave frequencies they useable. The simplest radar detectors usually made with a simple horn **antenna**, a diode similar to **Picture 2** and **Picture 3** and a transistor amplifier. If the designer keeps it simple, and don't use a local oscillator, such radar detectors

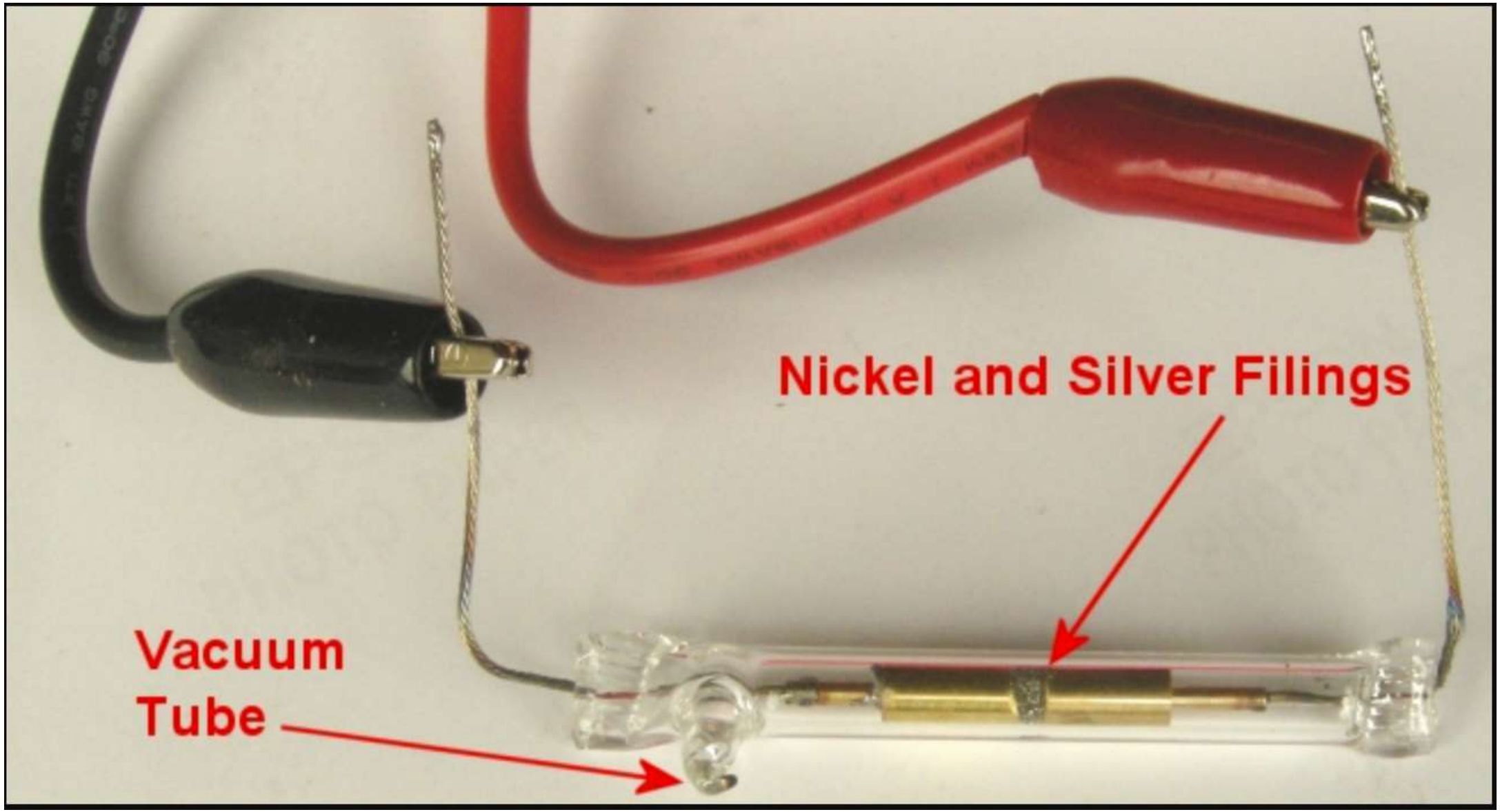
Nickel and Silver Filings
Vacuum
Tube

Meter on 200 Ohm Range
Display Indicates Activation = 11.2 Ohms
Coherer Detector
Press to Spark
Spark Gap
11.2
CEN-TECH
DIGITAL MULTIMETER
OFF
ON
10ADC
COM

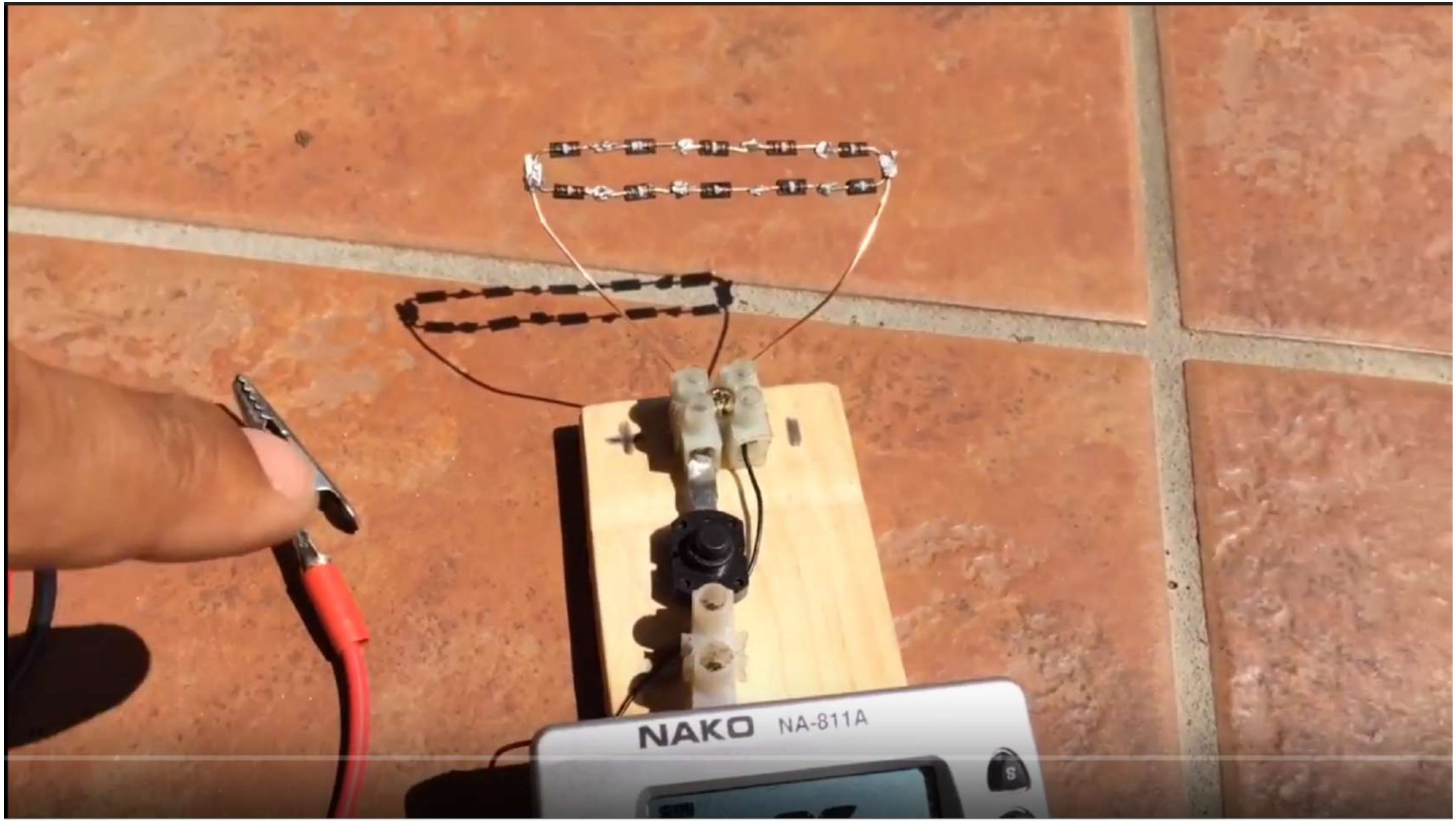
NAKO
NA-811A

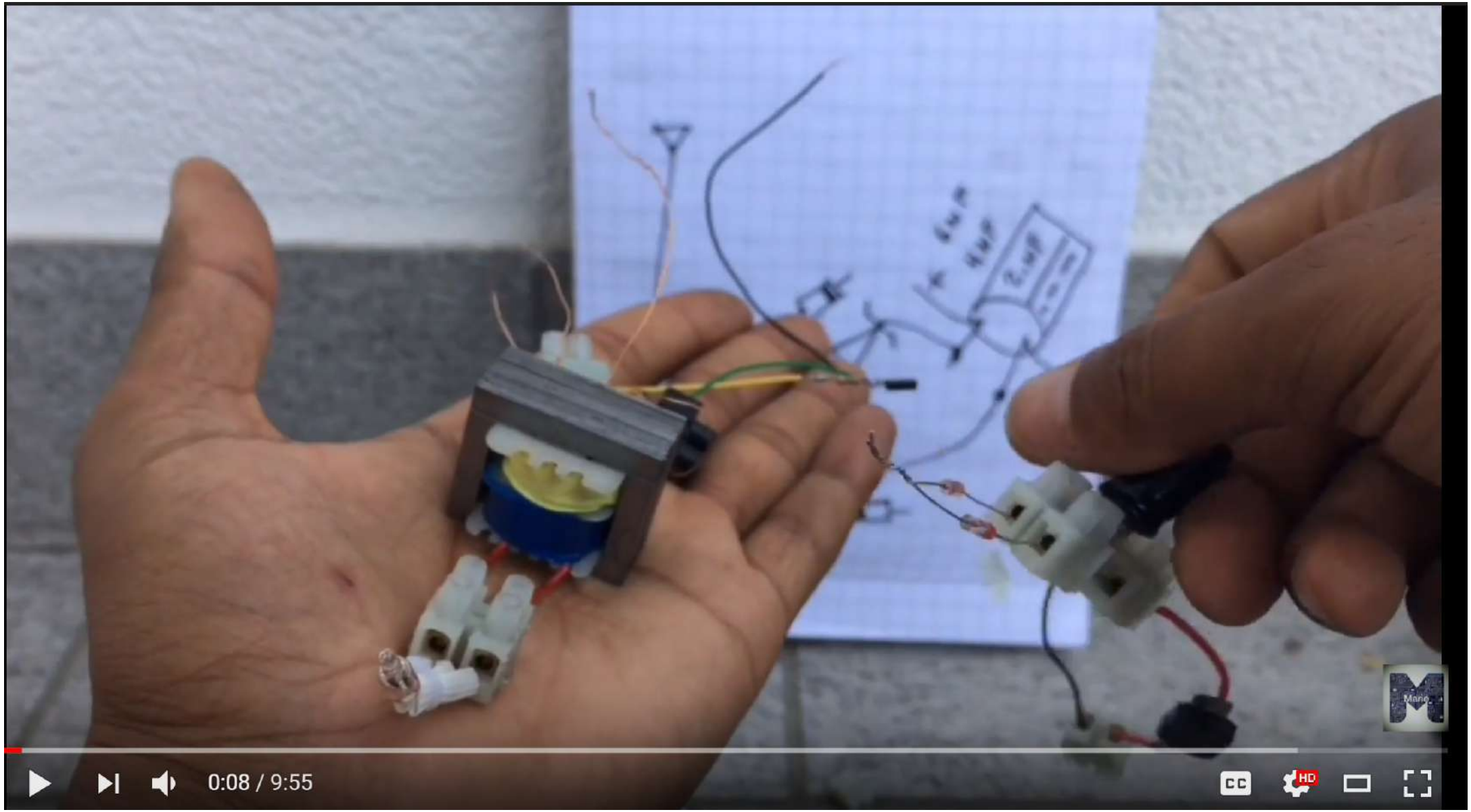
0:08 / 9:55

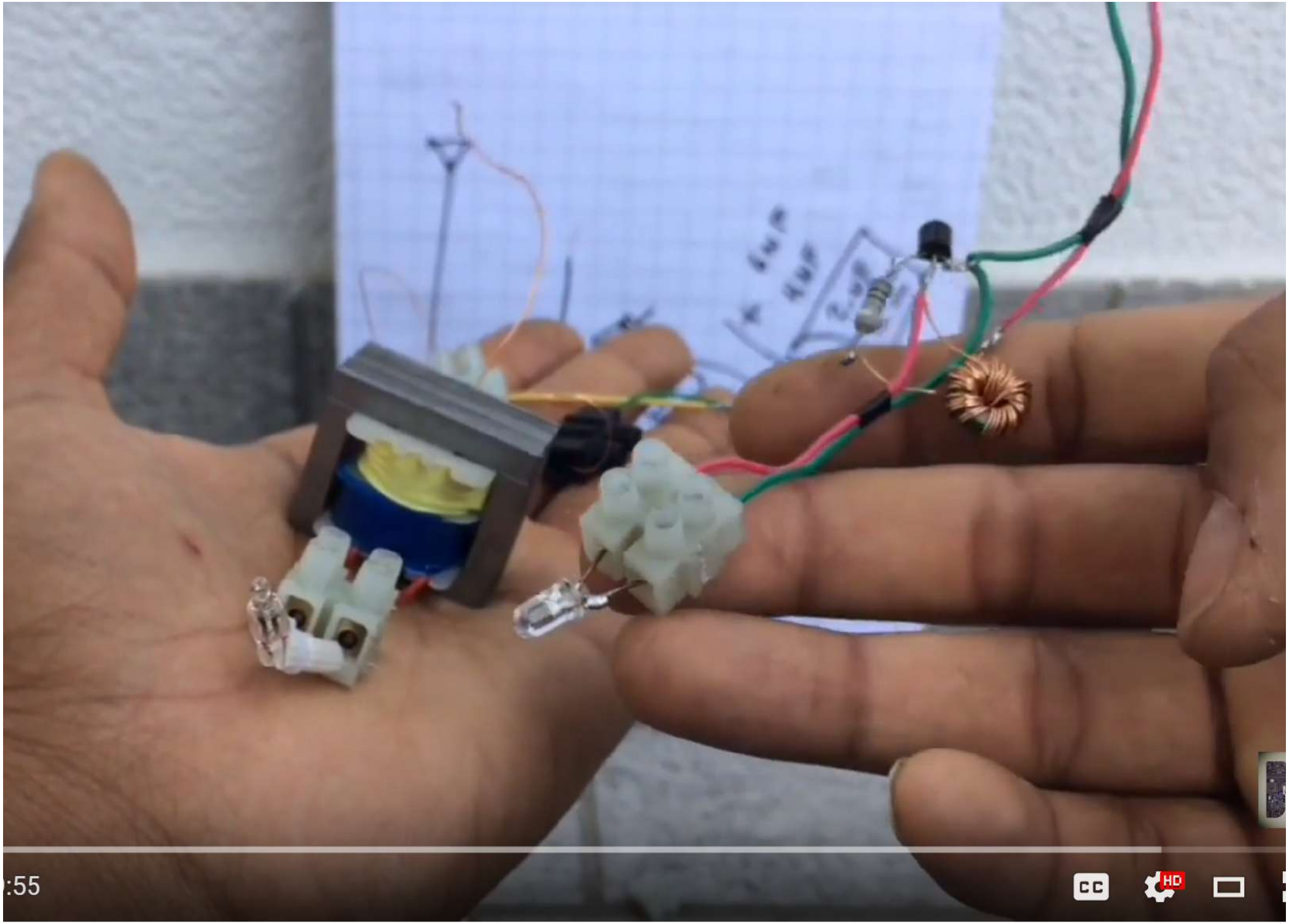
:55
HD

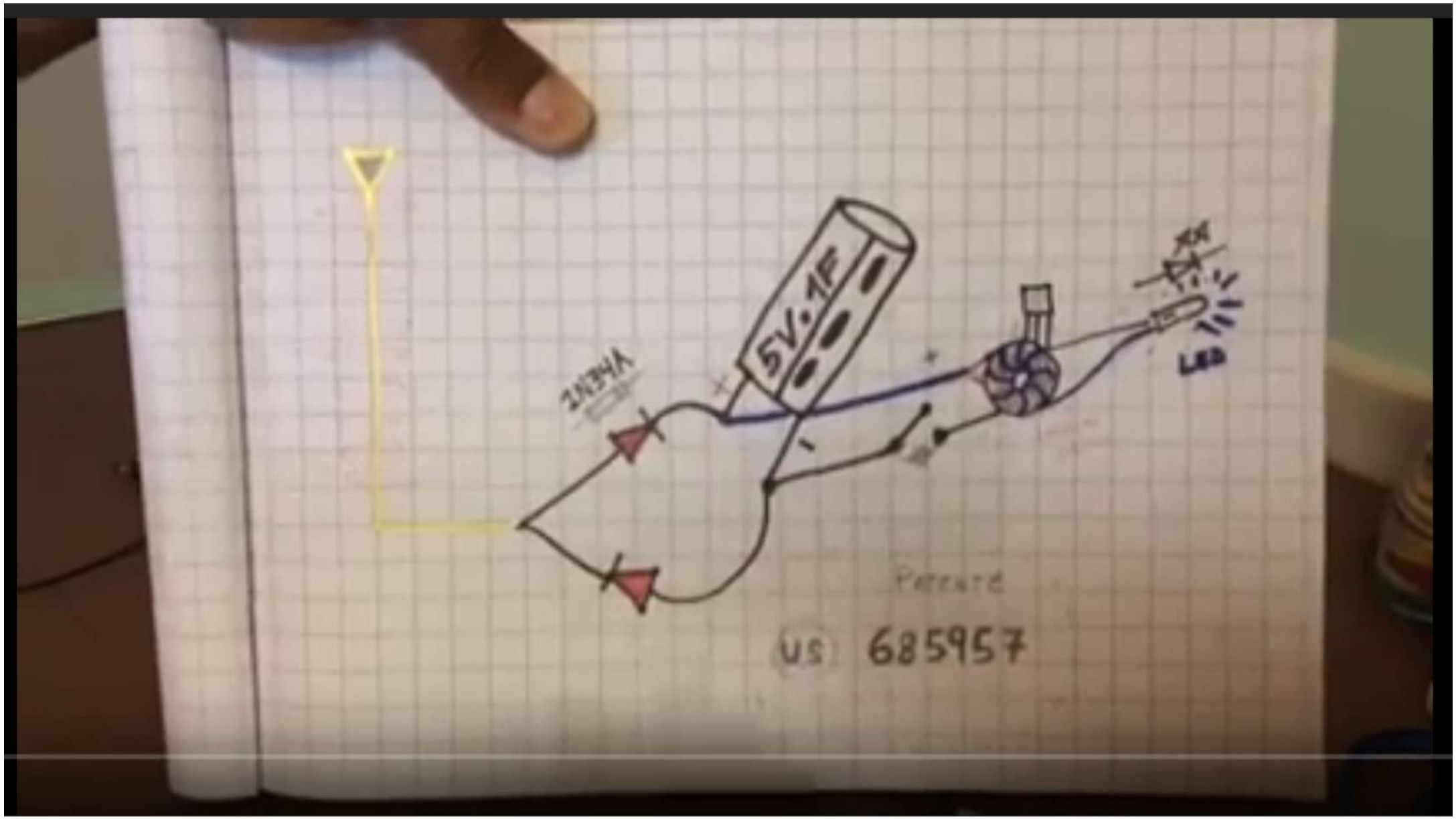
5V.1F
ANTENA
LED
PATENTE
US 685957

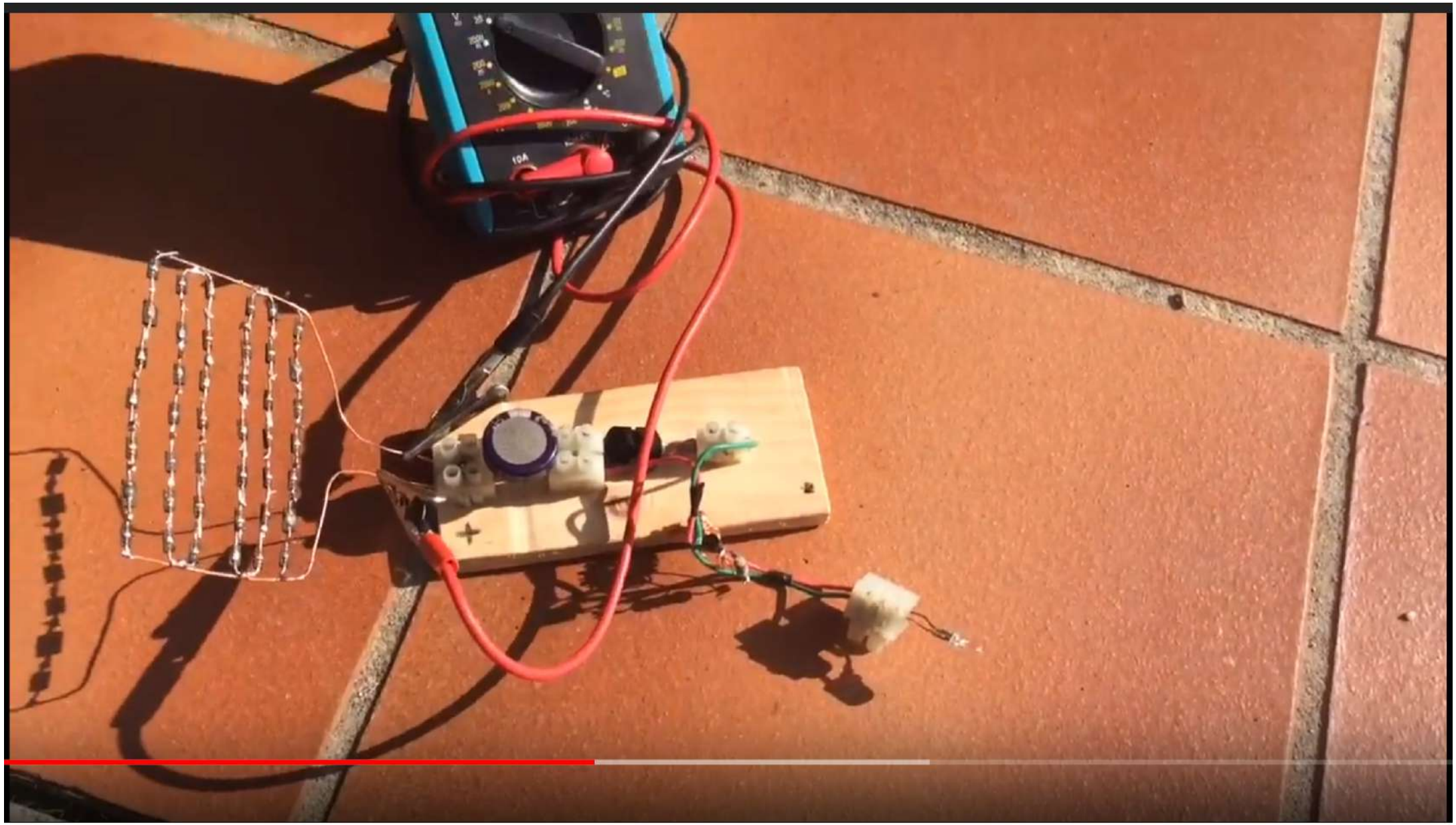
10A

THE
SUPER
CRYSTAL
SET
AERIAL TAP
TUNING
PHONES

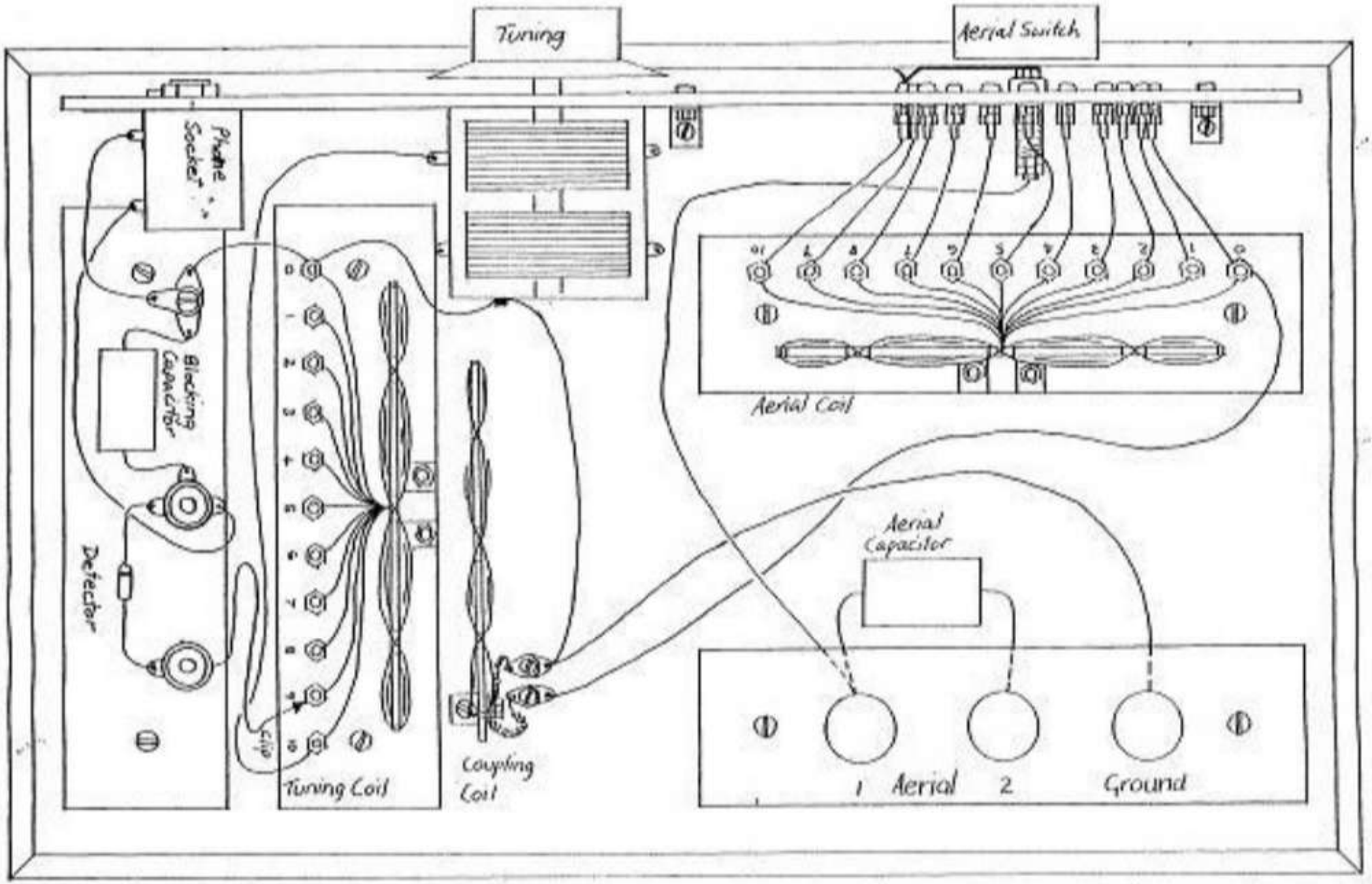
Tuning
Aerial Switch
Phone Socket
Blocking Capacitor
Detector
Clip
Tuning Coil
Coupling Coil
Aerial Coil
Aerial Capacitor
1 Aerial 2
Ground

KB8TAD

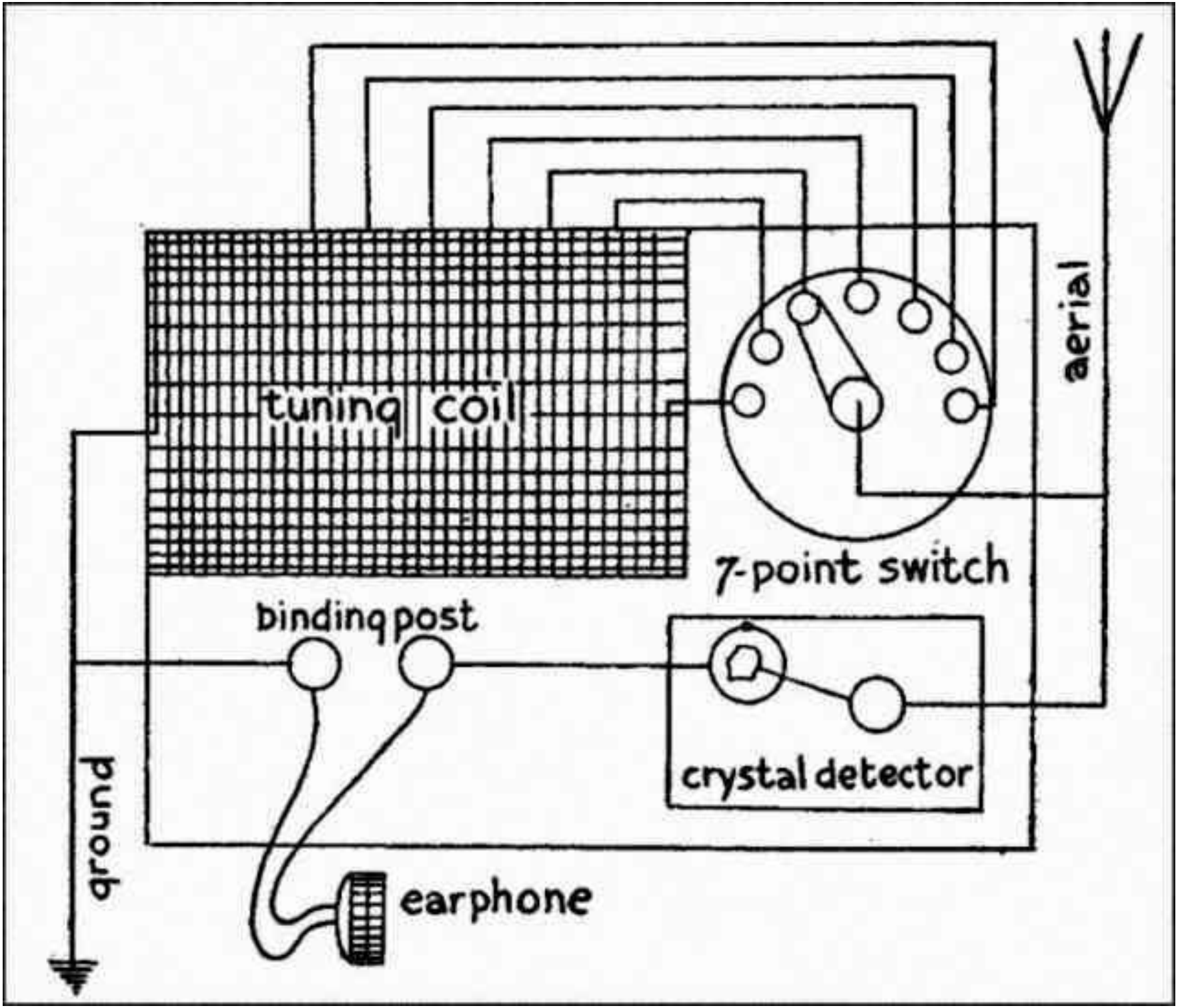
tuning coil
7-point switch
aerial
binding post
crystal detector
ground
earphone

KB8TAD

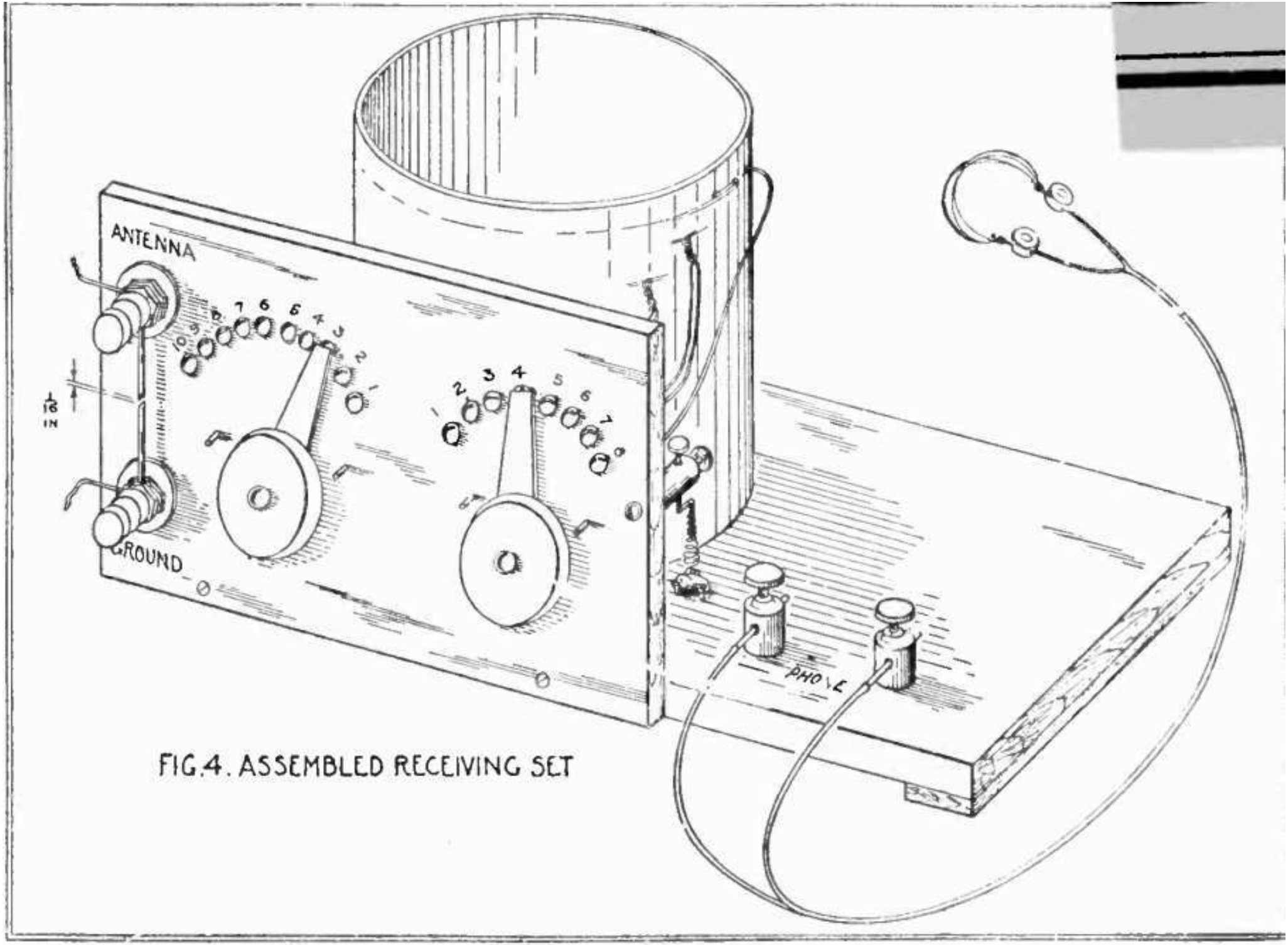

FIG.4. ASSEMBLED RECEIVING SET

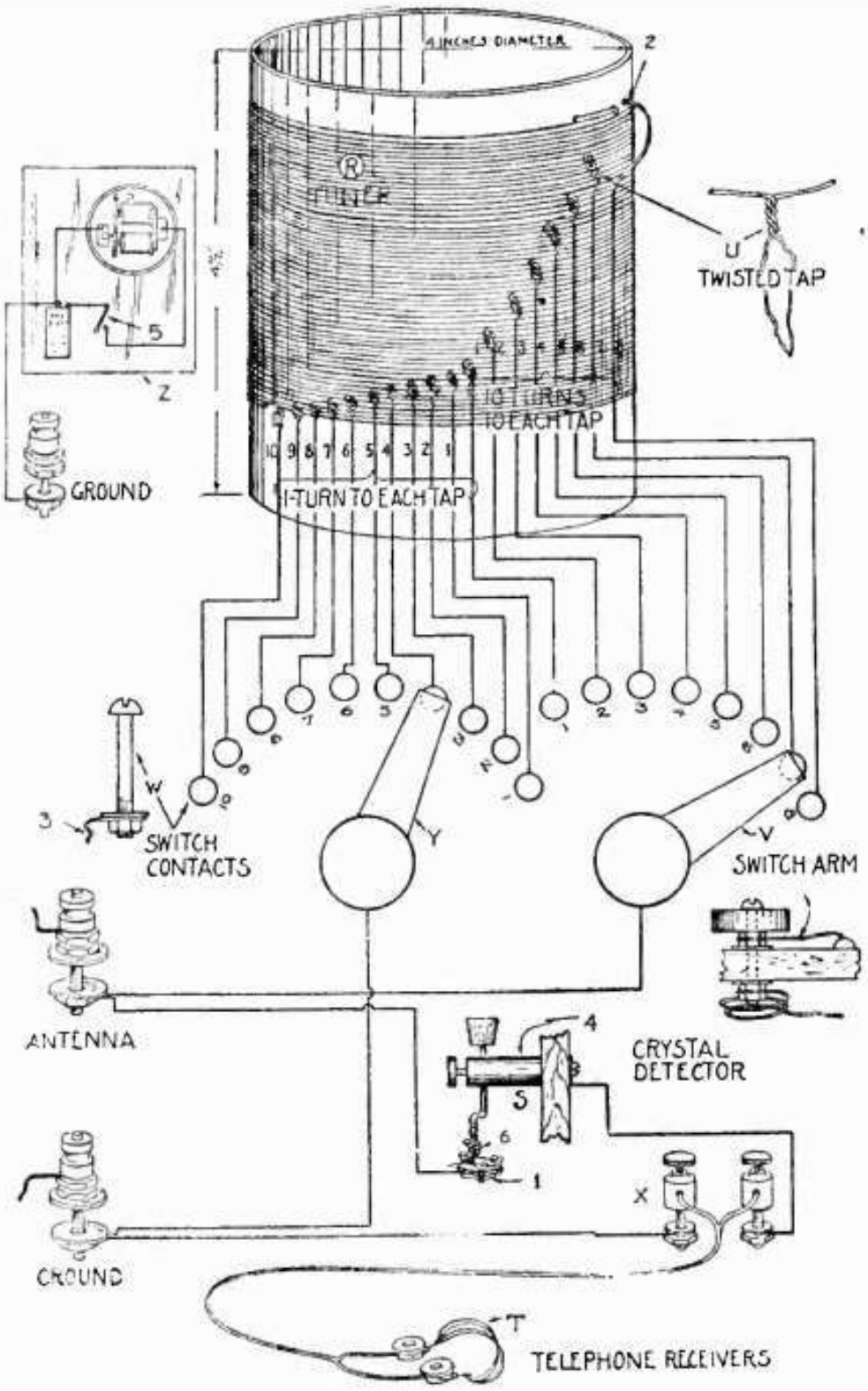

FIG.3 WIRING DIAGRAM AND DETAILS OF RECEIVING SET

FIG 2. RECEIVING SET, WITH ANTENNA AND GROUND CONNECTIONS

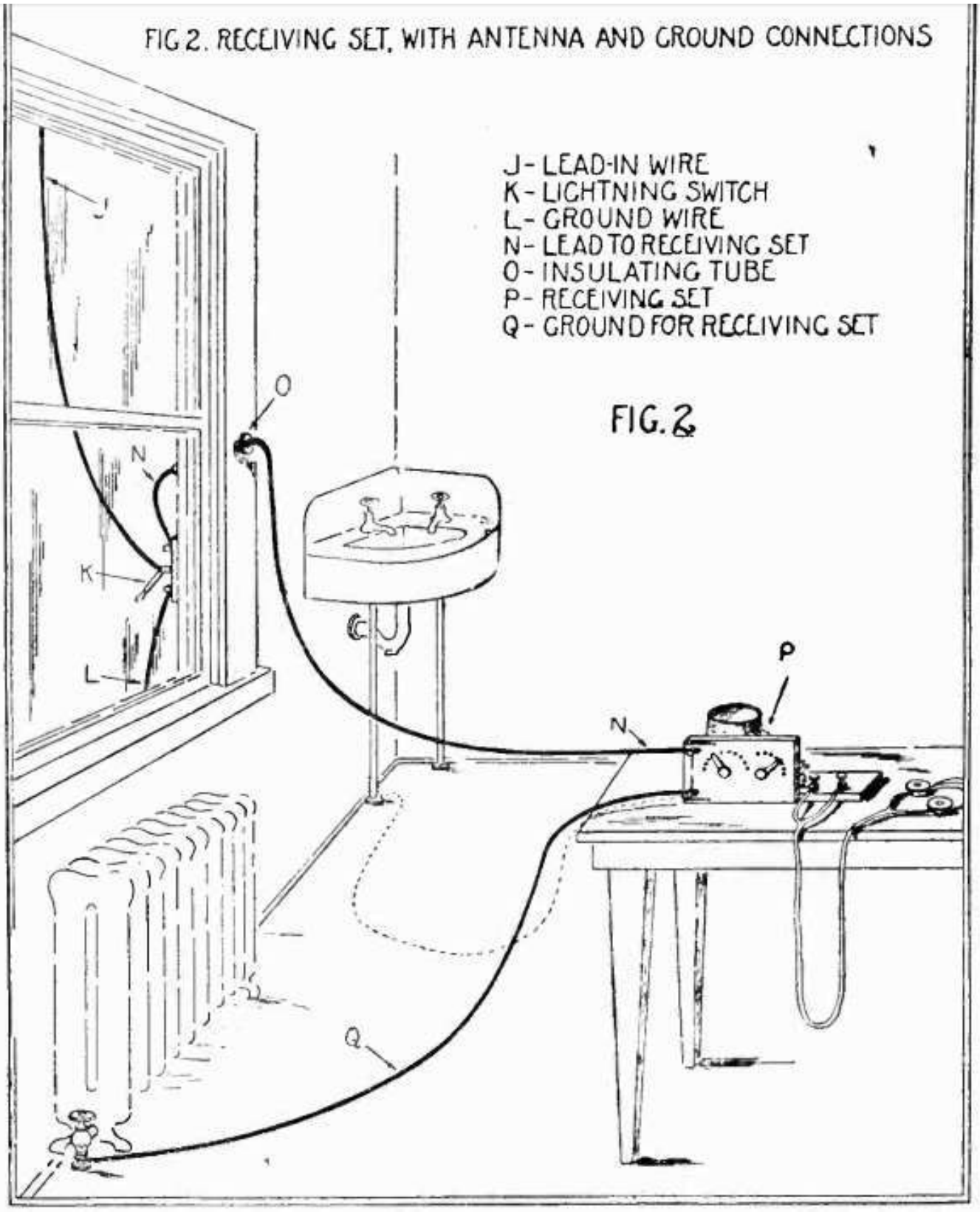

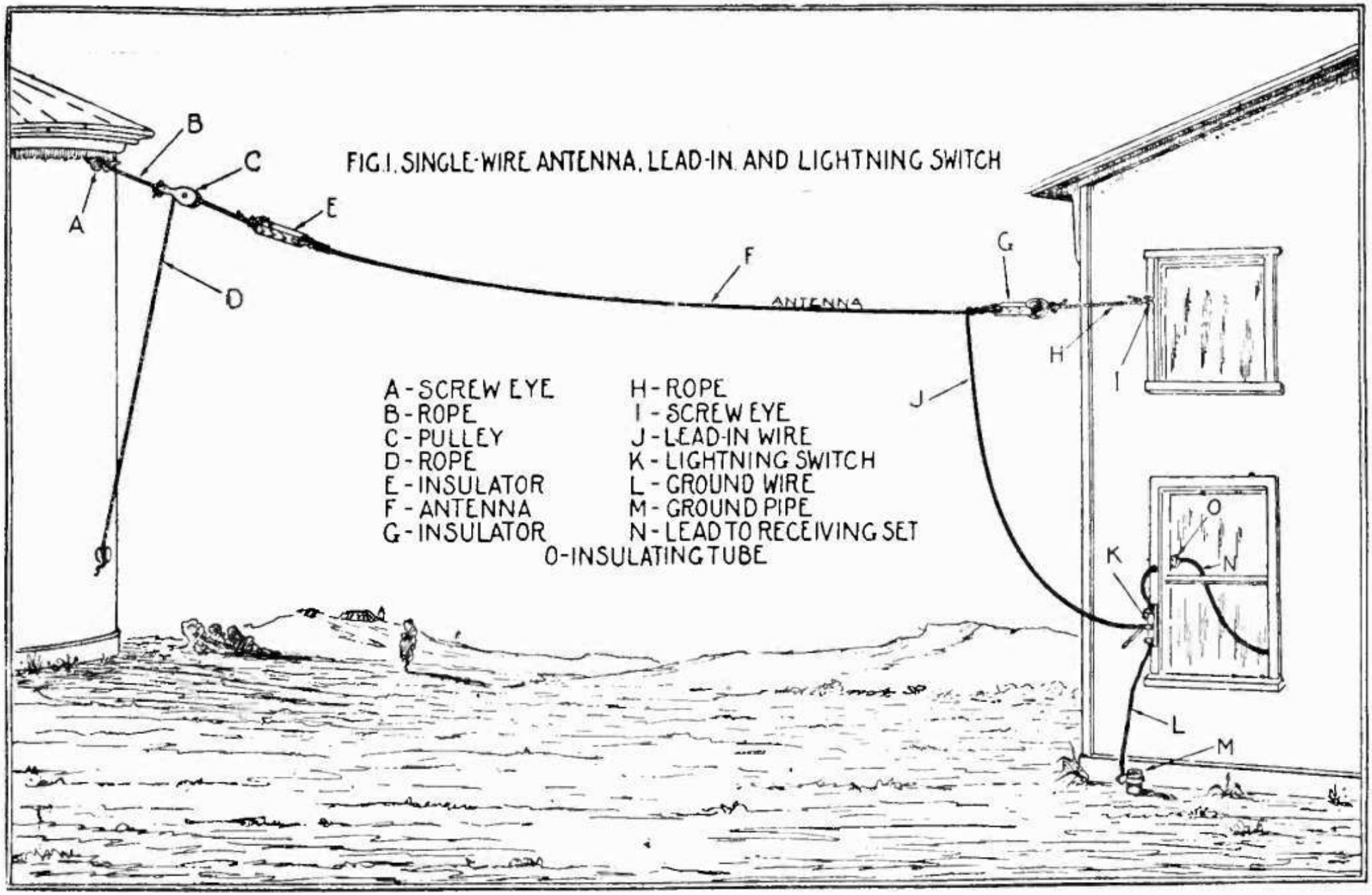
FIG. I. SINGLE-WIRE ANTENNA, LEAD-IN AND LIGHTNING SWITCH
A
B
C
D
E
F
ANTENNA
G
H
I
J
K
L
M
N
O
A - SCREW EYE
B - ROPE
C - PULLEY
D - ROPE
E - INSULATOR
F - ANTENNA
G - INSULATOR
H - ROPE
I - SCREW EYE
J - LEAD-IN WIRE
K - LIGHTNING SWITCH
L - GROUND WIRE
M - GROUND PIPE
N - LEAD TO RECEIVING SET
O - INSULATING TUBE

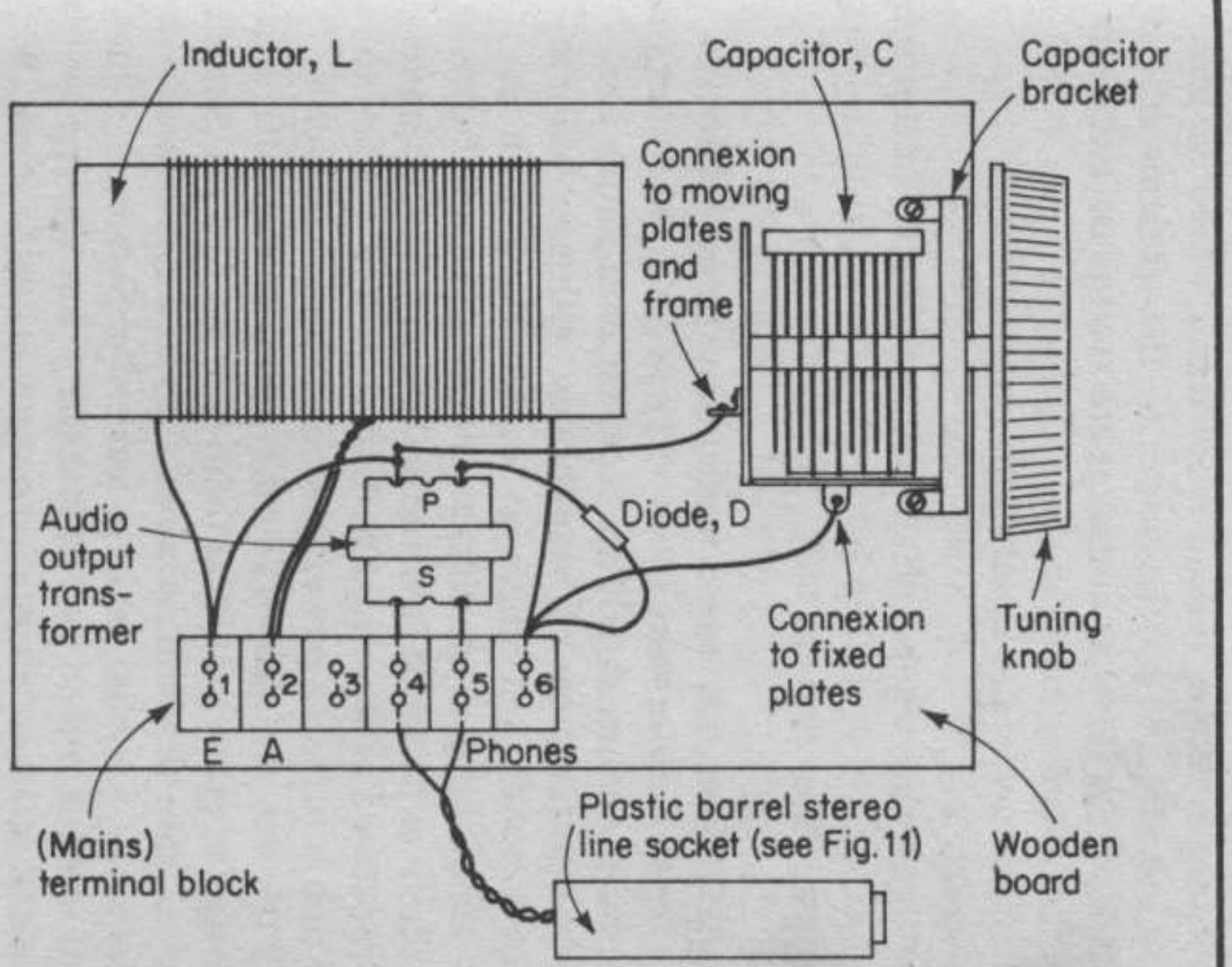

Fig. 14 Suggested component arrangement for elementary crystal set

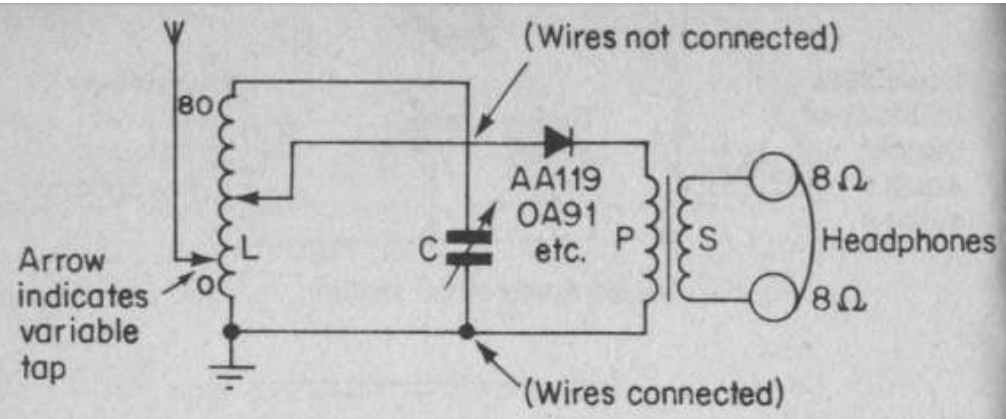

(i) Circuit

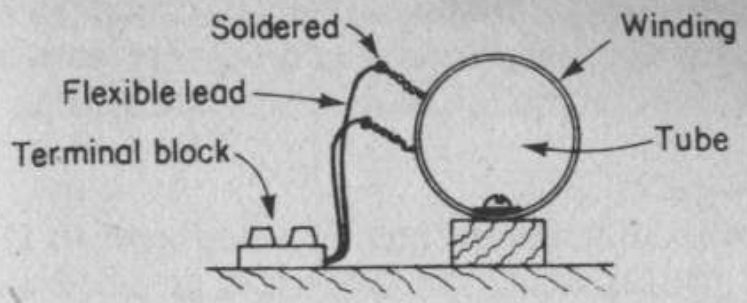

(iii) Alternative mounting

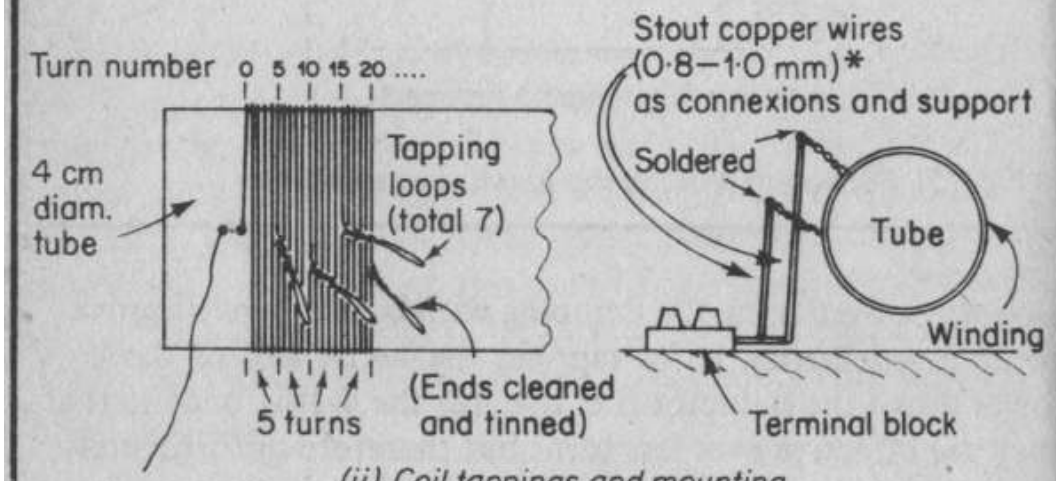

(ii) Coil tappings and mounting

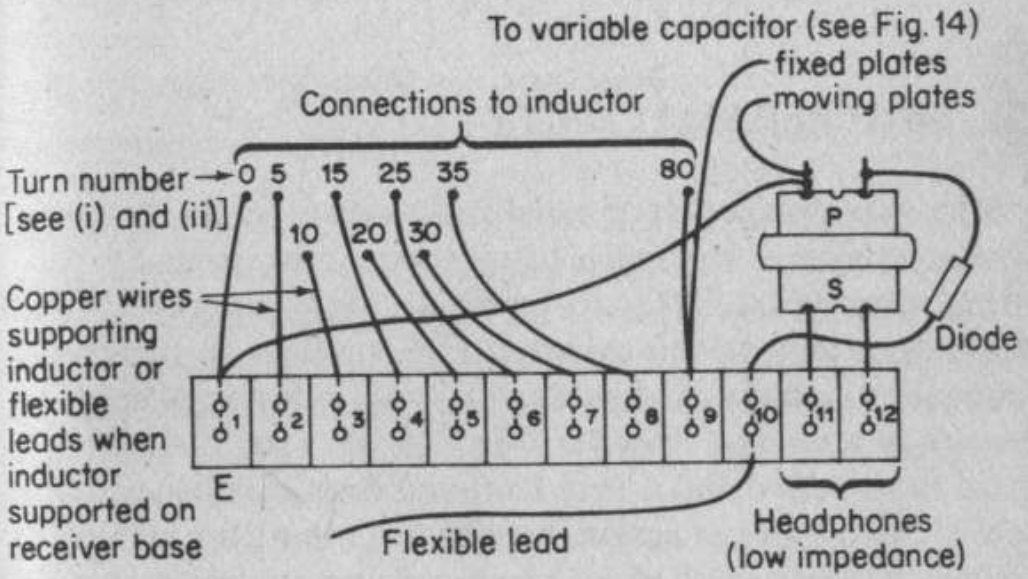

(iv) Suggested component arrangement

Fig. 16 Circuit with tapped inductor

* 21–19 SWG, 20–18 AWG

required) and a *flying lead* for the diode, these components are shown in Fig.16(iv). This is doing the job properly, there is no reason however (except for unreliability of contact) why both aerial and diode flying leads should not terminate on *crocodile clips* and be clipped onto the chosen taps as required.

Earth is connected to terminal 1 and the headphones to 11 and 12. Both the aerial and the diode lead are tried at terminals 2 – 9, a game of "poke and hope" but one which can be rewarding. Remember that generally but not always, the tappings with the lower numbers reduce loudness but increase selectivity. Aerial to terminal 8, diode to 9 brings us back to Fig.13(i) of course.

5.2 SWITCHED SELECTIVITY

A technique of selection of aerial and diode tappings by means of rotary switches has much to recommend it especially if setting changes are likely to be needed for reception of different stations. In this case two single-pole 8-way switches are required, usually obtainable as 12-way so leaving 4 spare. The drawing symbol shown in Fig.17 speaks for itself with regard to its action and it may be found from catalogues that there are two types of *action*, by which is meant the manner in which the switch changes over from one contact to the adjoining one. *Break before make* switches disconnect one circuit before the next is connected and *make before break* have a change-over period during which both circuits are connected at once for a short time. Either type is suitable for us. A knob to rotate each switch is also required, a small one, say 2 cm diameter or less is ample, if with an indicator line or pointer, so much the better. The modifications to Fig.16 for switching are given in Fig.17.

With such rotary switches a search for the optimum arrange-

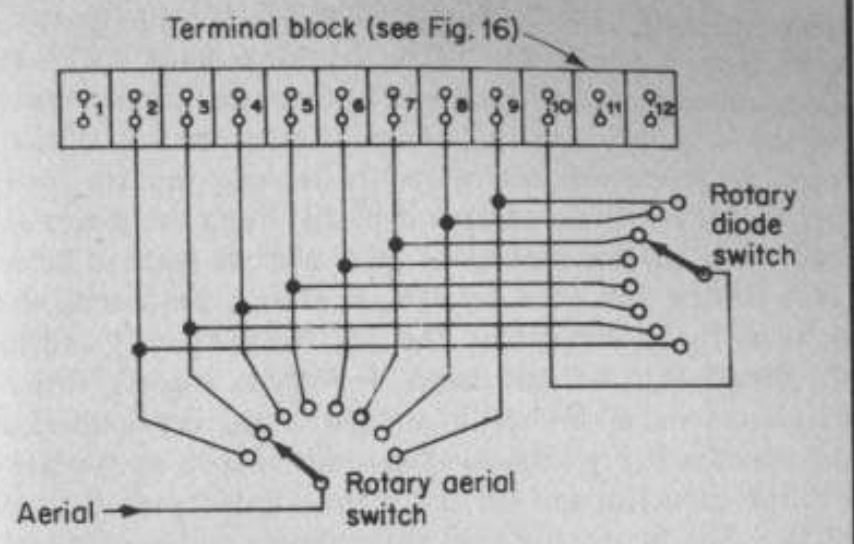

Fig. 17 · Switching aerial and diode leads

variable capacitor, the two switches and the headphone socket, the latter must then be of the chassis type. A pair of terminals for aerial and earth completes the receiver. On the panel the two rotary switches are easily labelled 1 – 8 but we are still uncertain about a tuning dial because we may not have the right variable capacitor for the inductor, this is the subject of the next section.

5.3 GETTING THE RANGE RIGHT

This is where we pause in receiver construction to remove some of the confusion which may still exist with regard to the tuning ingredients, wavelength, frequency, inductance and capacity, each of which has some bearing on the others, to fit together these four pieces of the puzzle, so to speak. For most crystal sets the inductance is fixed according to the variable capacitor available and we tune the receiver over the range by rotating the variable capacitor knob over half a

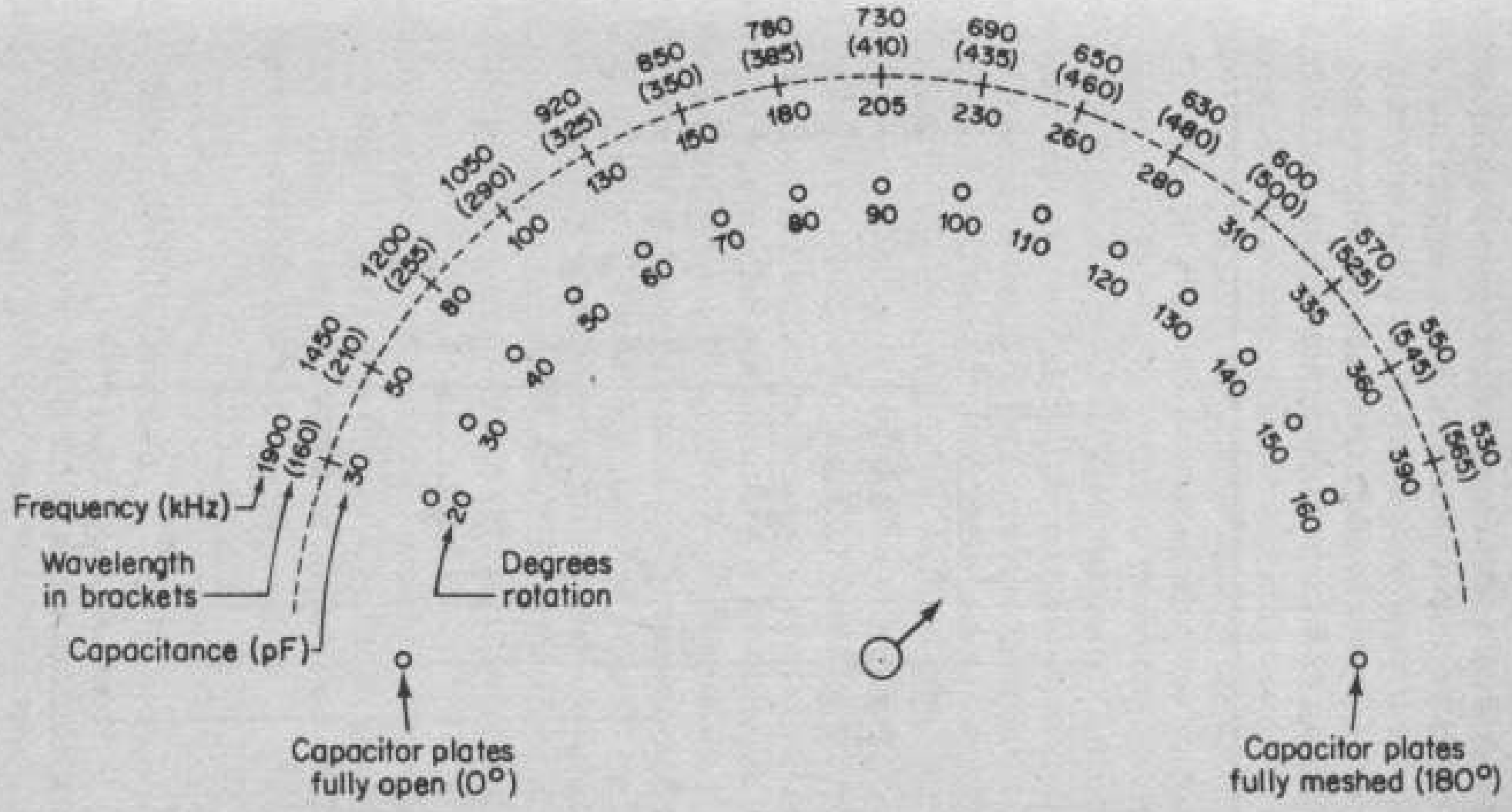

Fig. 18 Approximate capacitance and frequency values for 365 pF variable capacitor and 230 μH coil

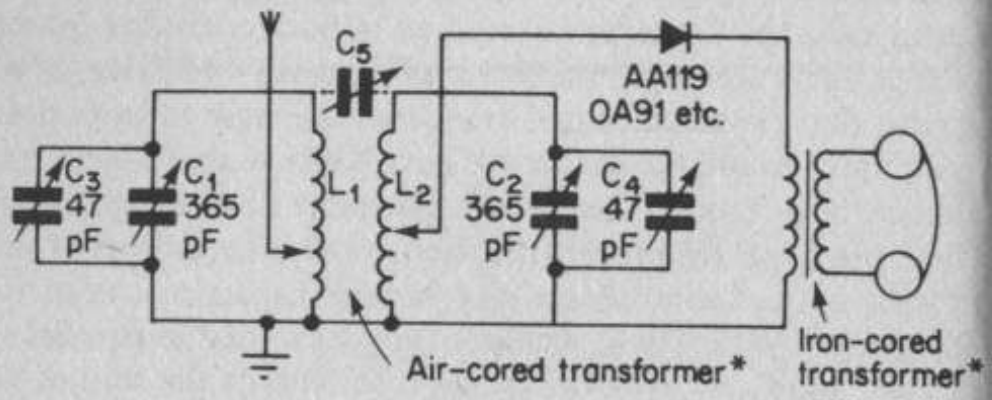

(i) Circuit

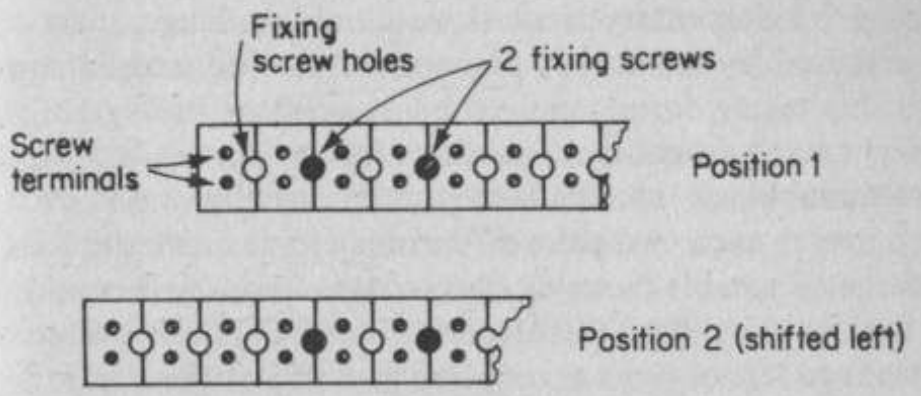

(iii) Moving inductor L_1

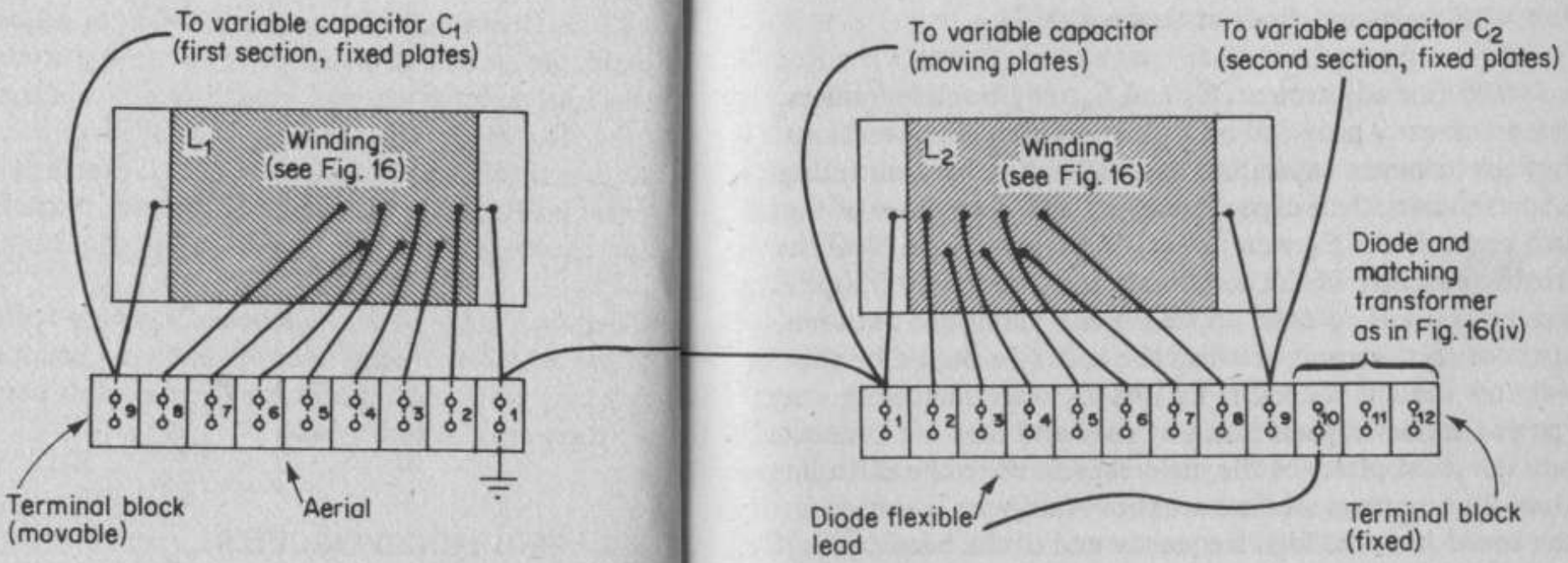

(ii) Arrangement of inductors

Fig. 21 A double-tuned crystal receiver

* See Section 2.4

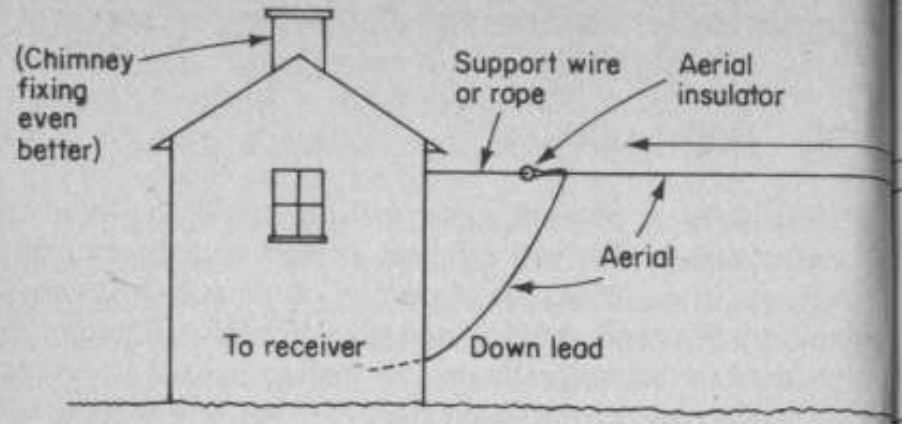

(i) Outdoor Aerial

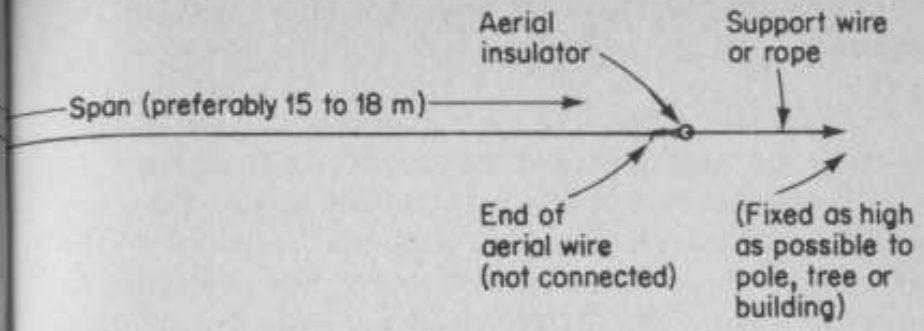

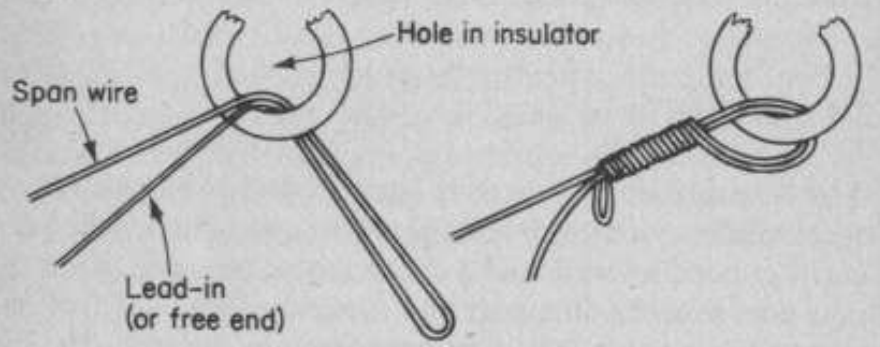

(ii) Attaching aerial to insulator

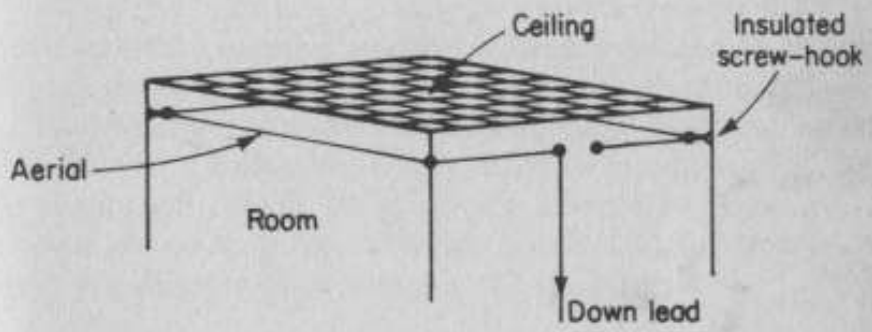

(iii) Room aerial

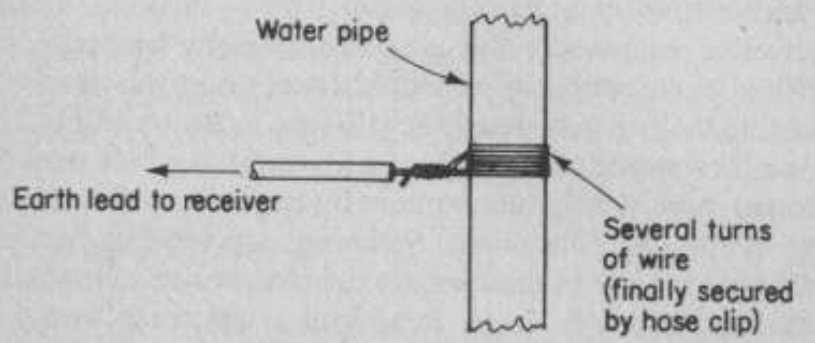

(iv) Earth connection to water pipe

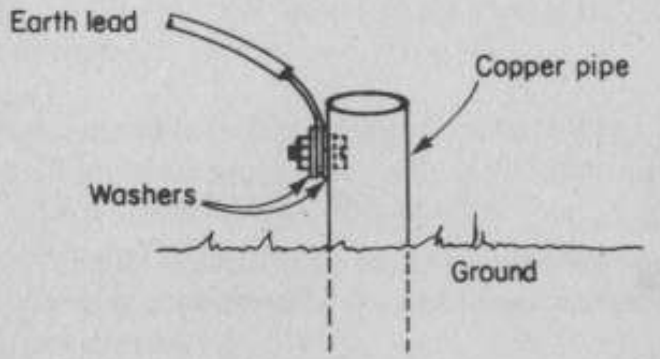

(v) Lead bolted to earth spike

Fig. 12 Aerial/earth systems

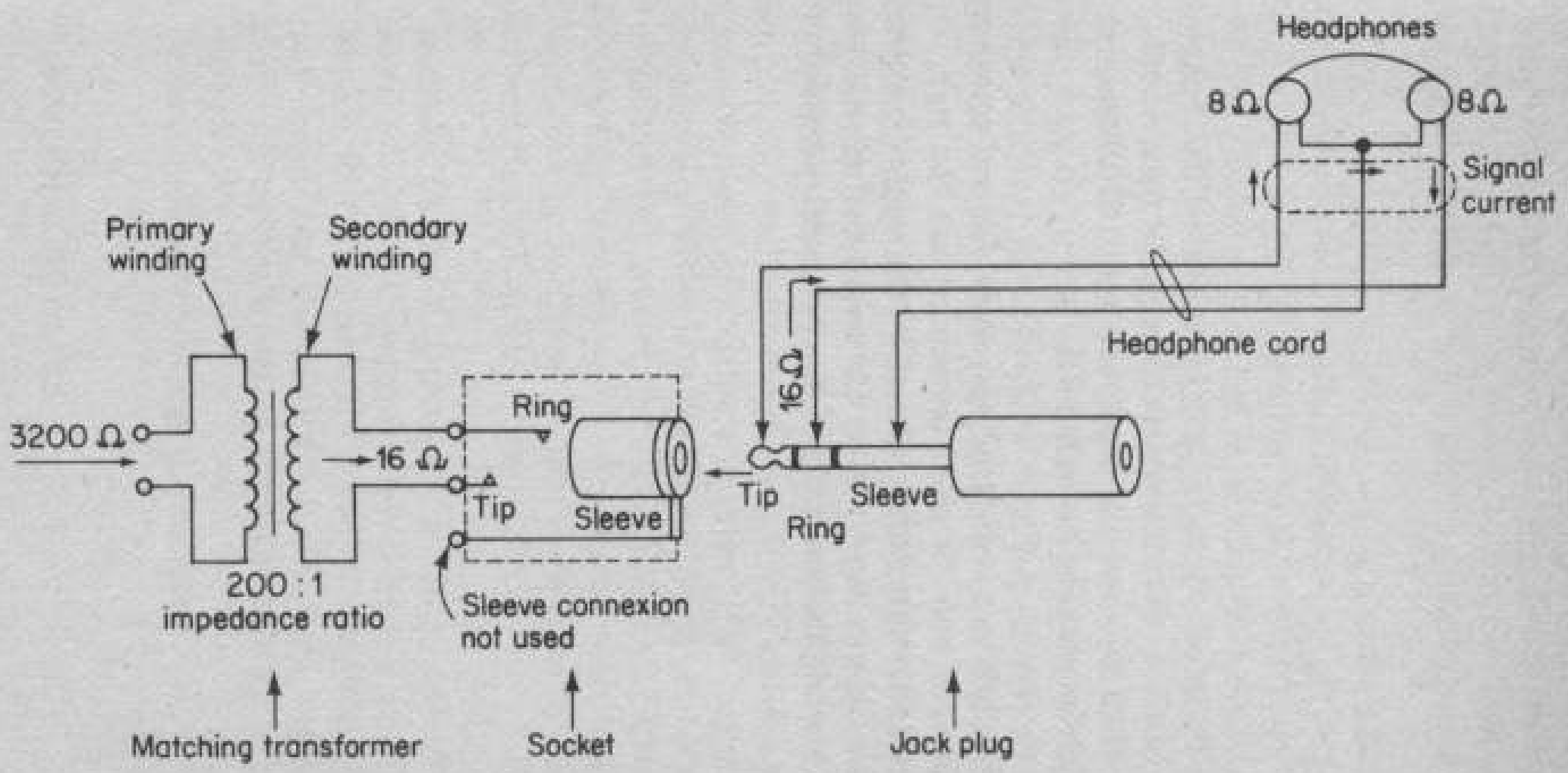

Fig. 11 Matching a high impedance receiver to low impedance headphones

Voltage Balun / "Magnetic Balun"

From GW0VMR's plan

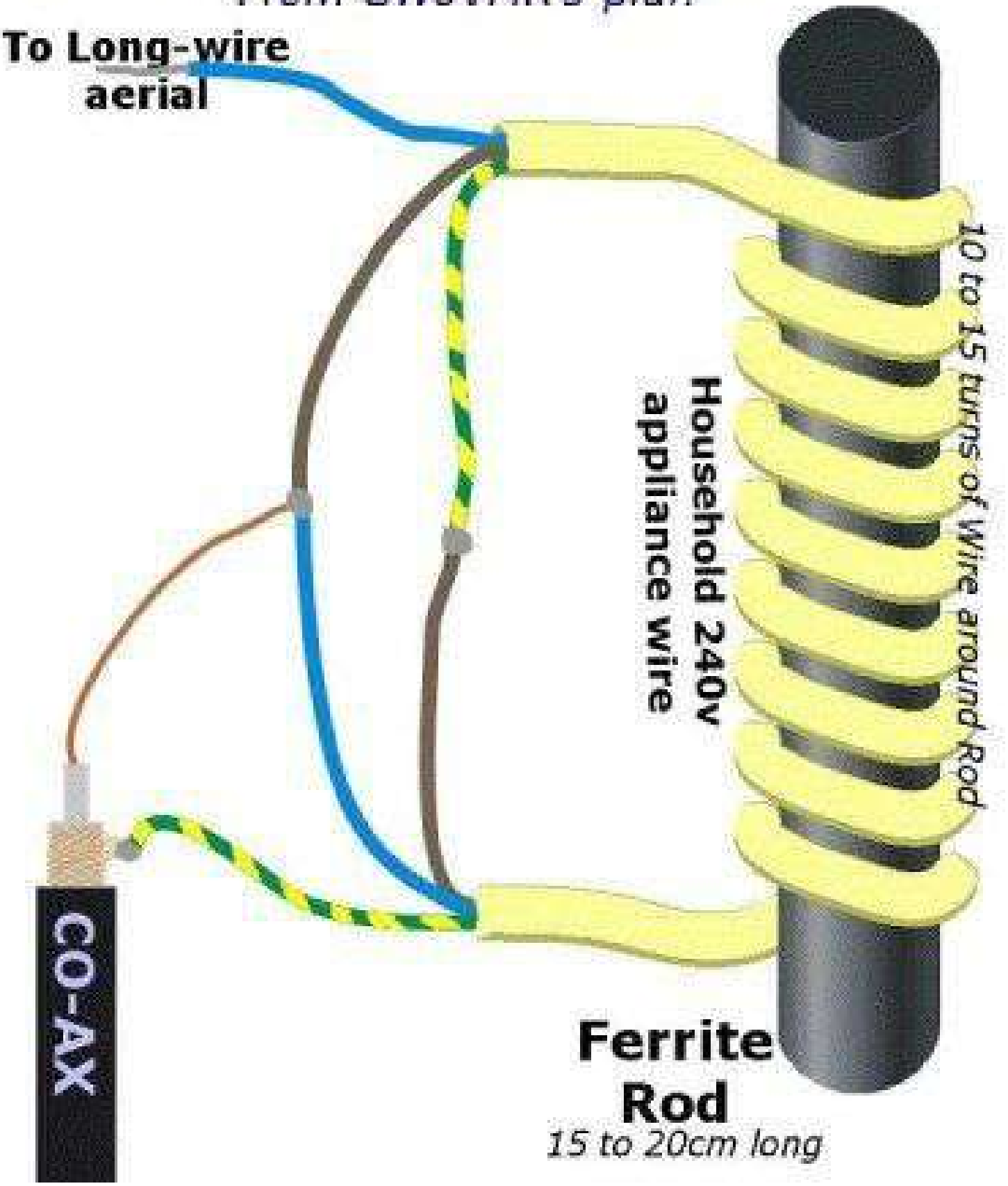

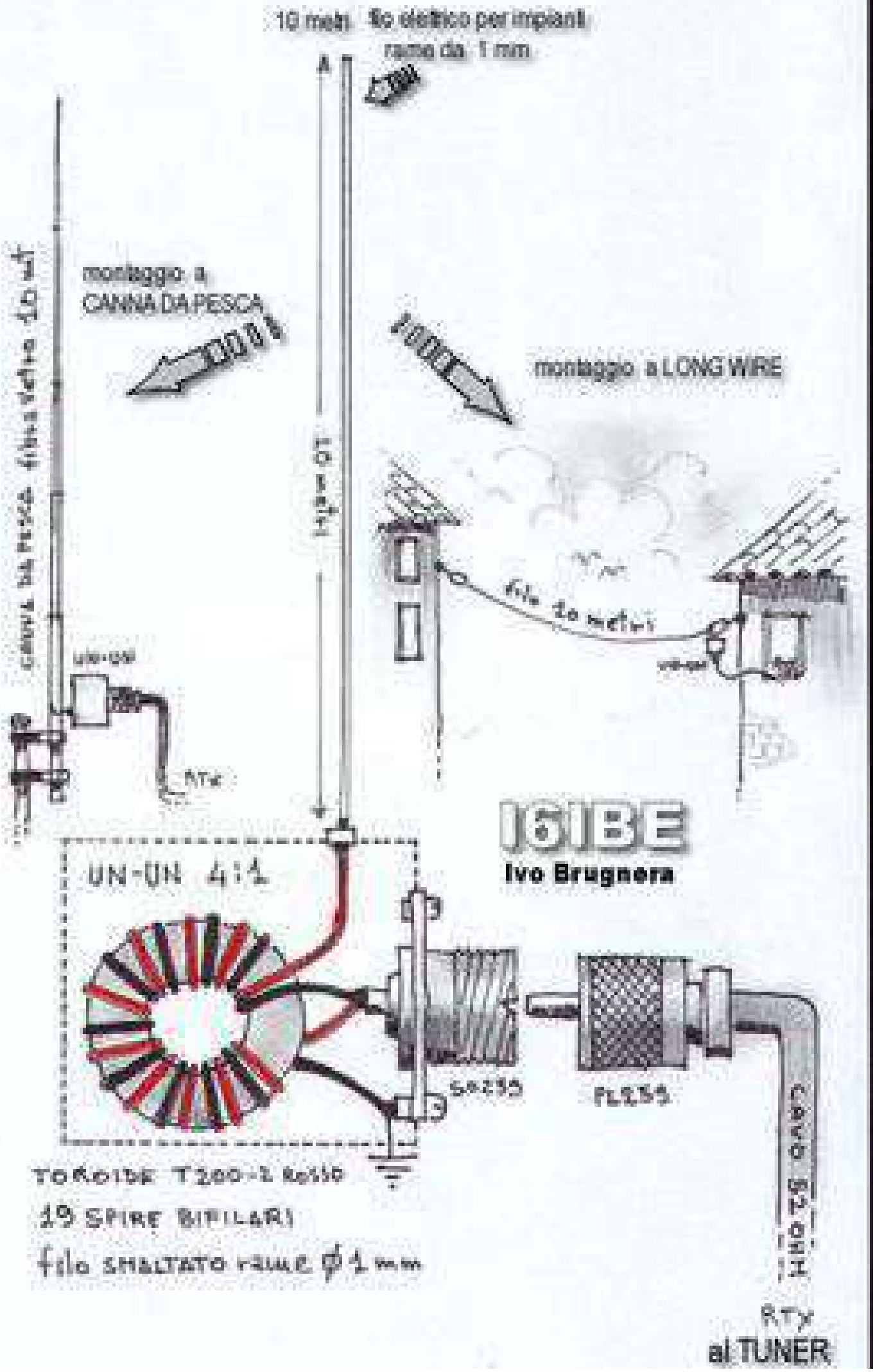
10 metri
filo elettrico per impianti
rame da 1 mm
montaggio a
CANNA DA PESCA
montaggio a LONG WIRE
canna da pesca fibra vetro 10 mt
UN-UN
RTX
filo 10 metri
IGIBE
Ivo Brugnera
UN-UN 4:1
SMA 250
FL 250
TOROIDE T200-2 ROSSO
19 SPIRE BIFILARI
filo SMALTATO RAME Ø 1 mm
CAVO 52 OHM
RTX
al TUNER

BALUN 9:1 Antenna Long Wire

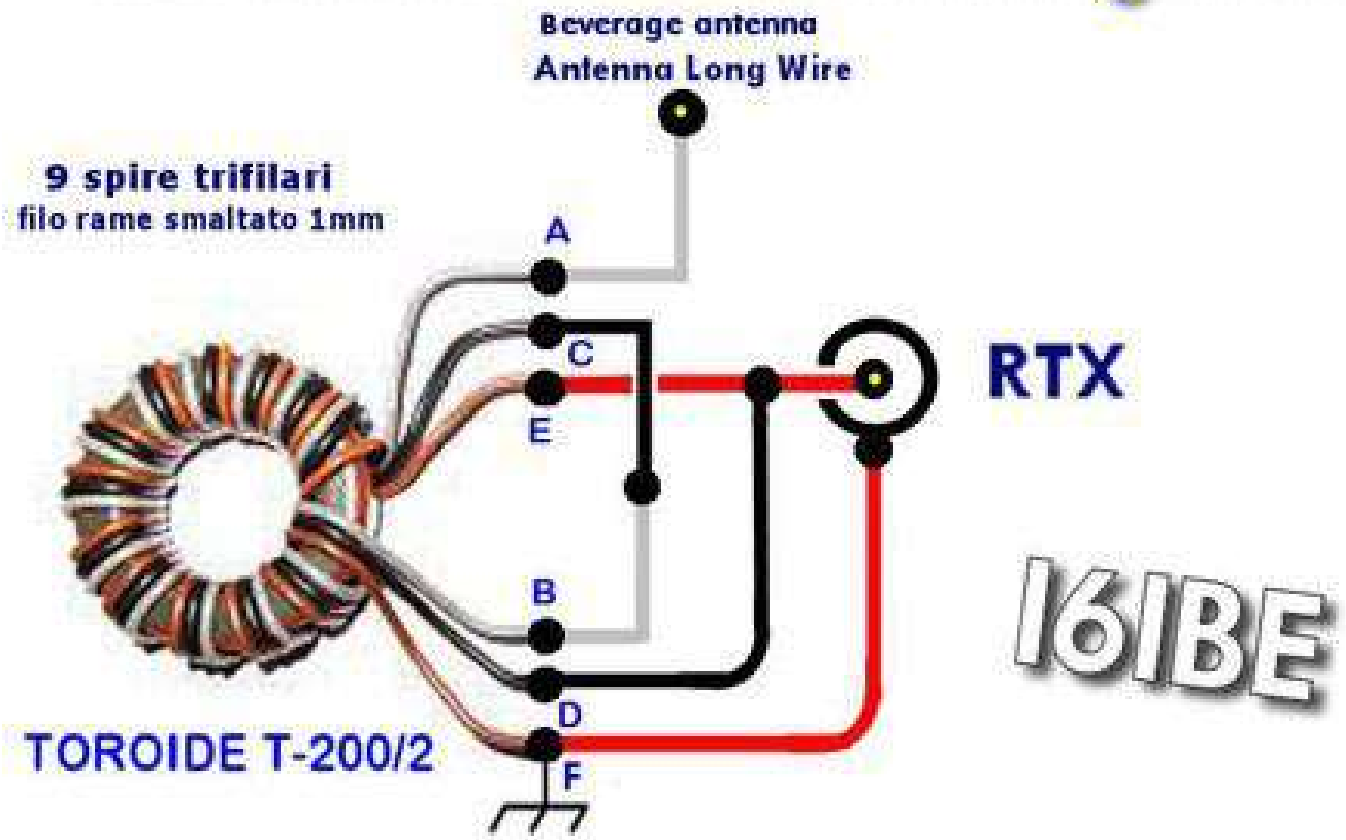

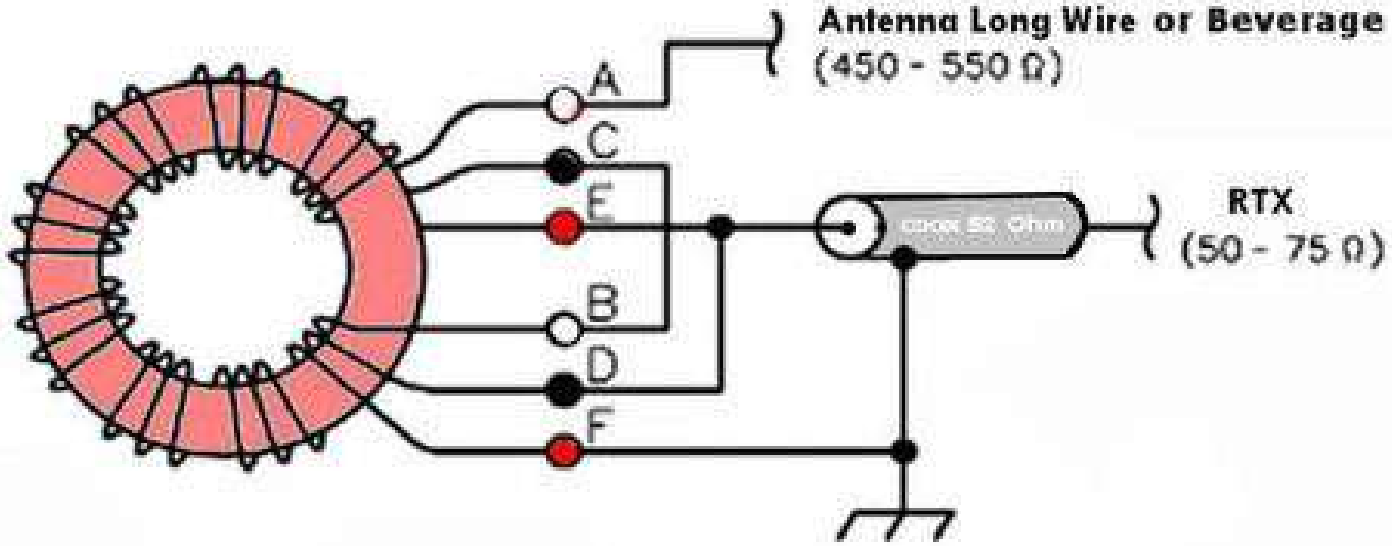

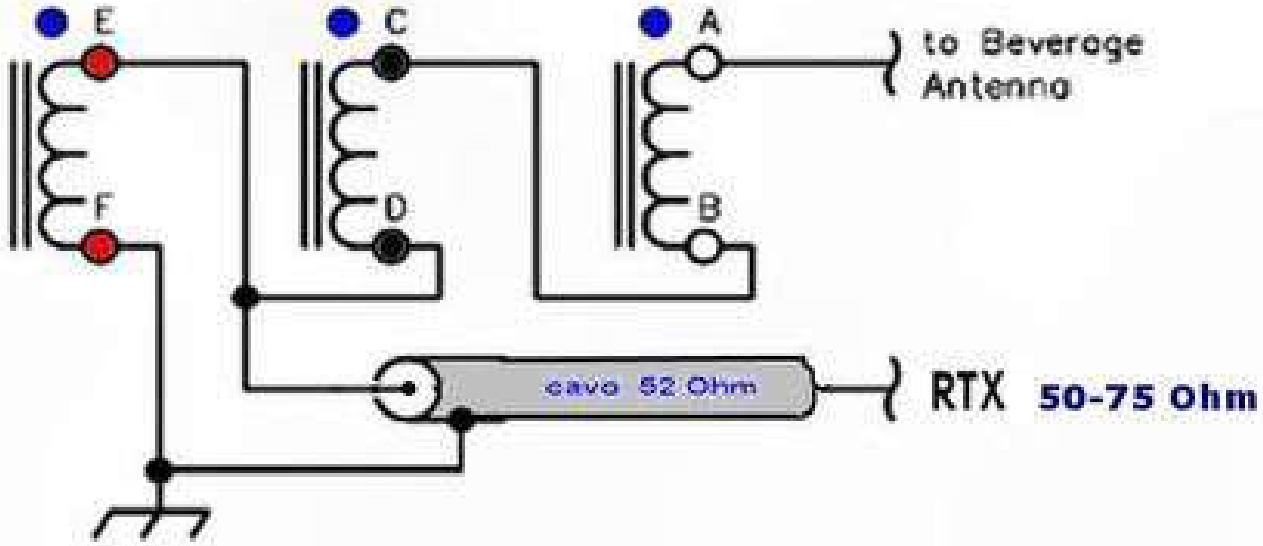

Bal-Un 2:1 per antenna DELTA-LOOP

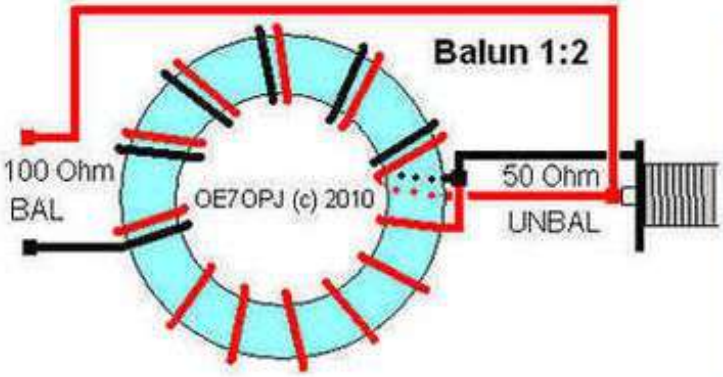

by OE7OPJ

Toroide	Numero di Spire	Potenza Supportata
T80-2	25	60 Watts
T106-2	16	100 Watts
T130-2	18	150 Watts
T157-2	16	250 Watts
T200-2	17	400 Watts
T200A-2	13	400 Watts
T400-2	14	1000 Watts

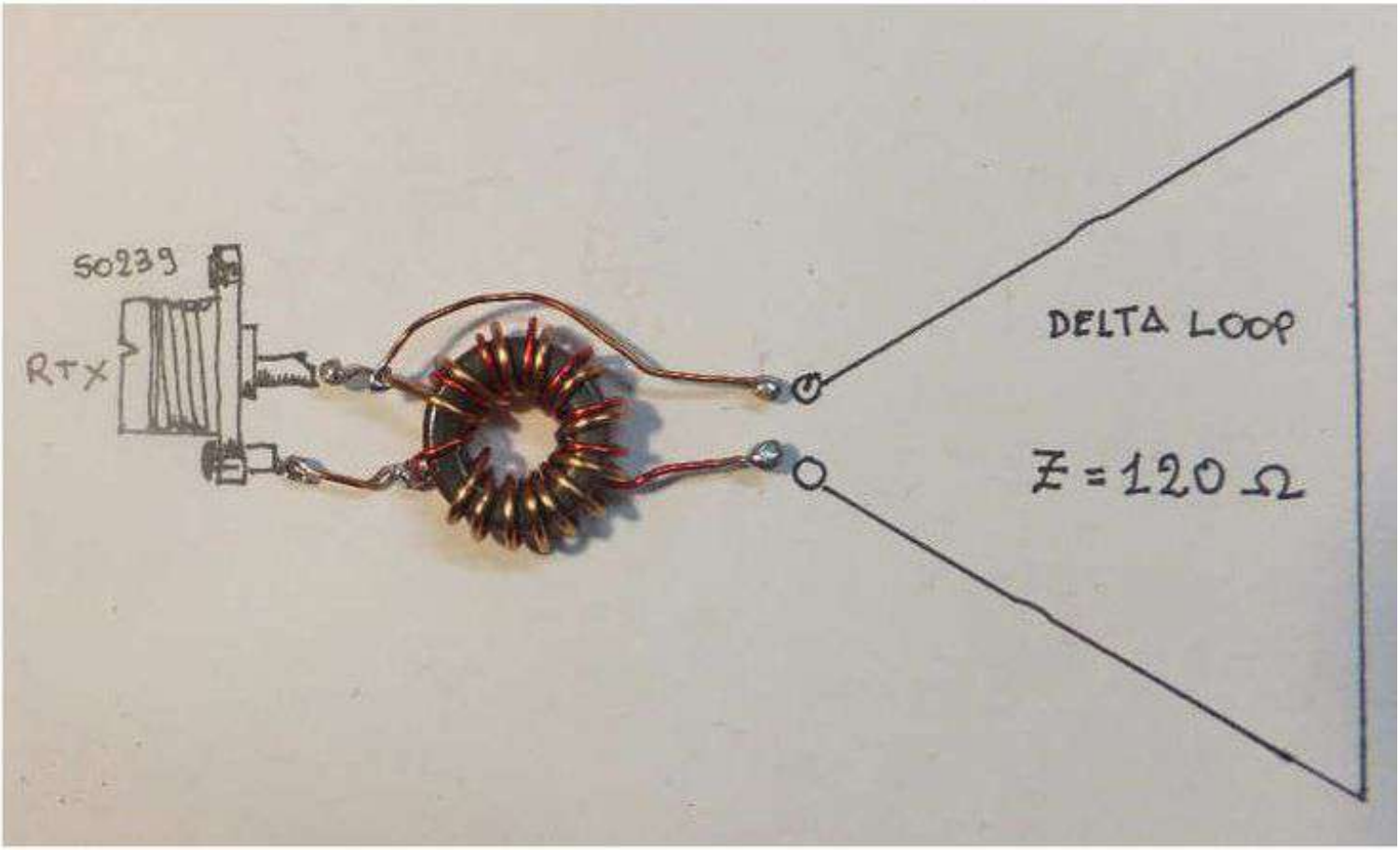

Autoformer, not a parallel transmission line – Ruthroff balun (voltage)

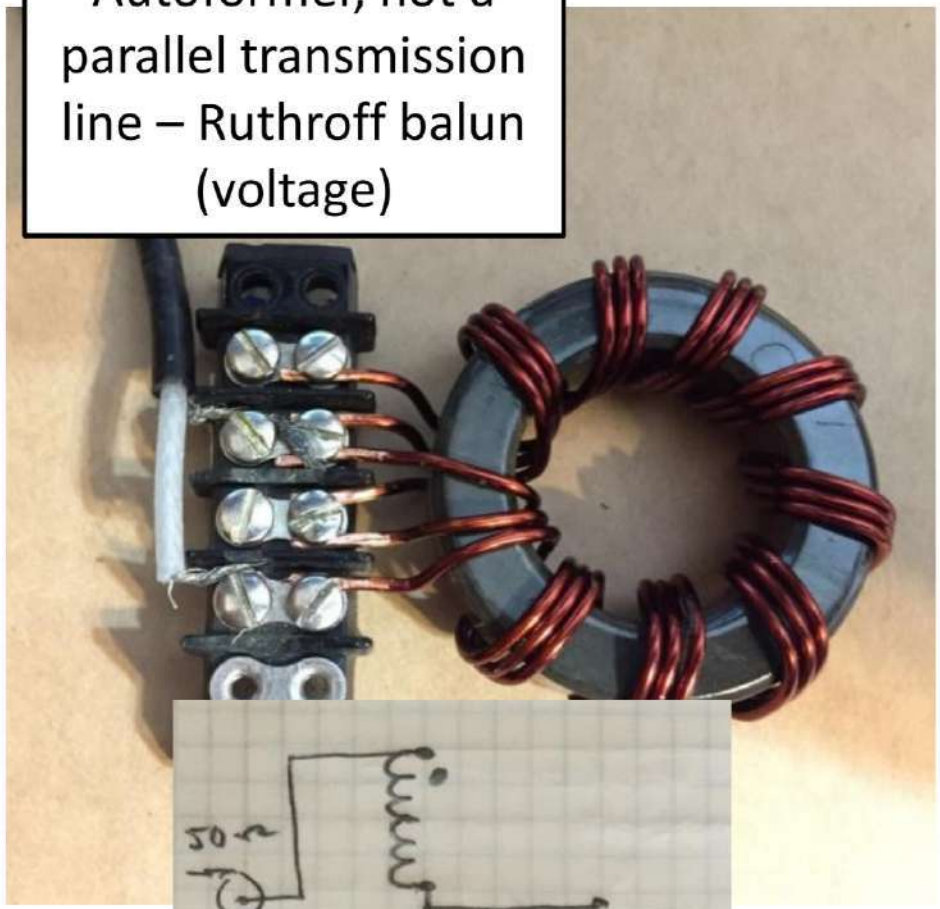

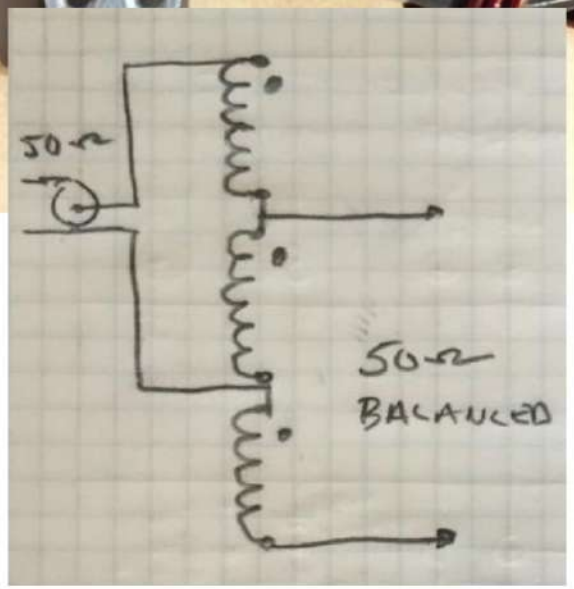

One or more parallel transmission lines, connected various ways – Guanella balun (current) – core is used solely for choking action

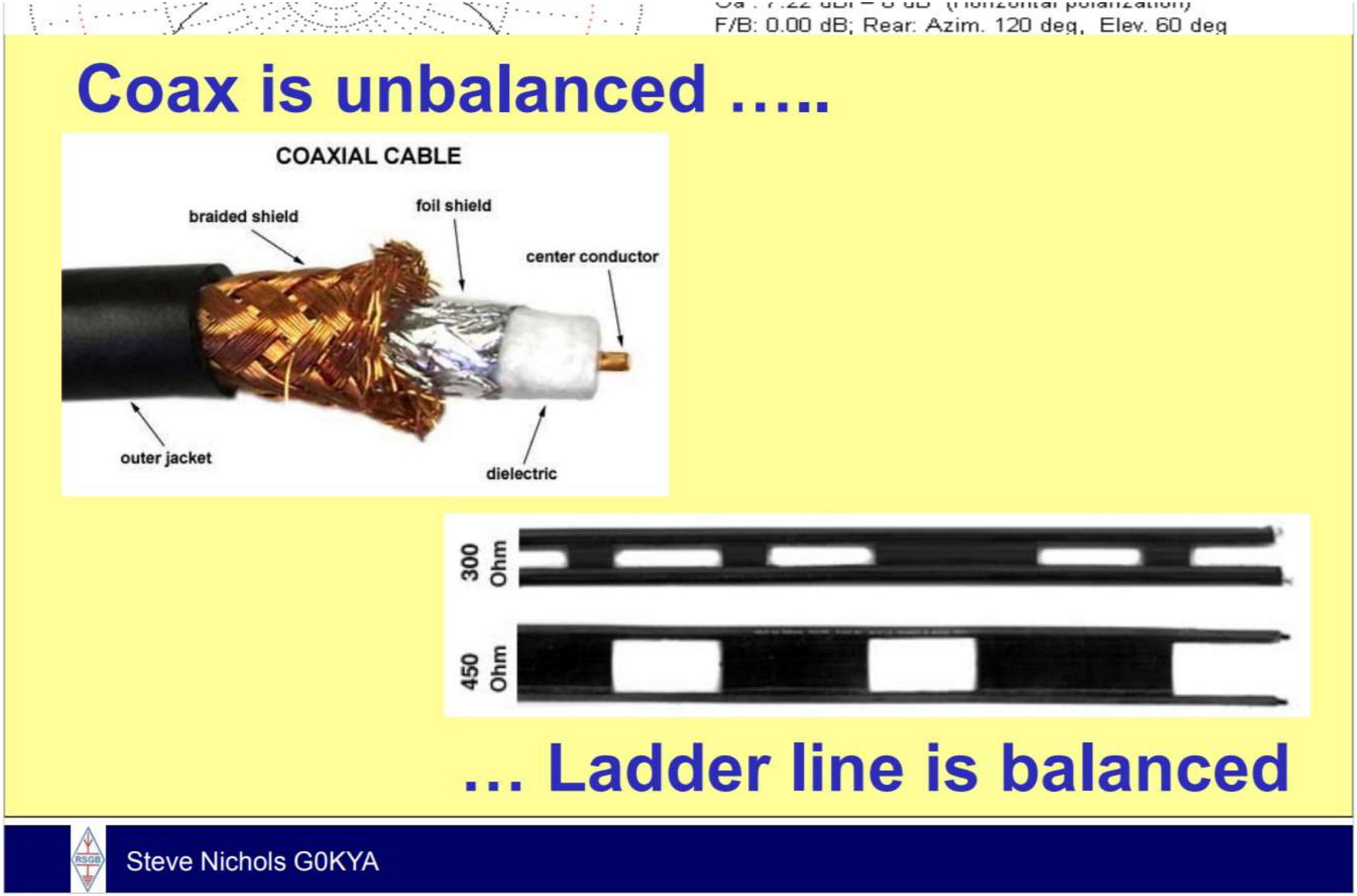

Coax is unbalanced, while ladder line and open wire feeder is balanced, as long as it is used properly and is kept away from metal and "earthy" materials

Convert parallel feedline to coax

Types of Parallel Line

- **Open Feeder** or **Ladder line**
  - Typ 450 and 600 ohm
- **Twin Lead**
  - Common for (old) outdoor TV antennas
- **Window line**
  - Commonly available today

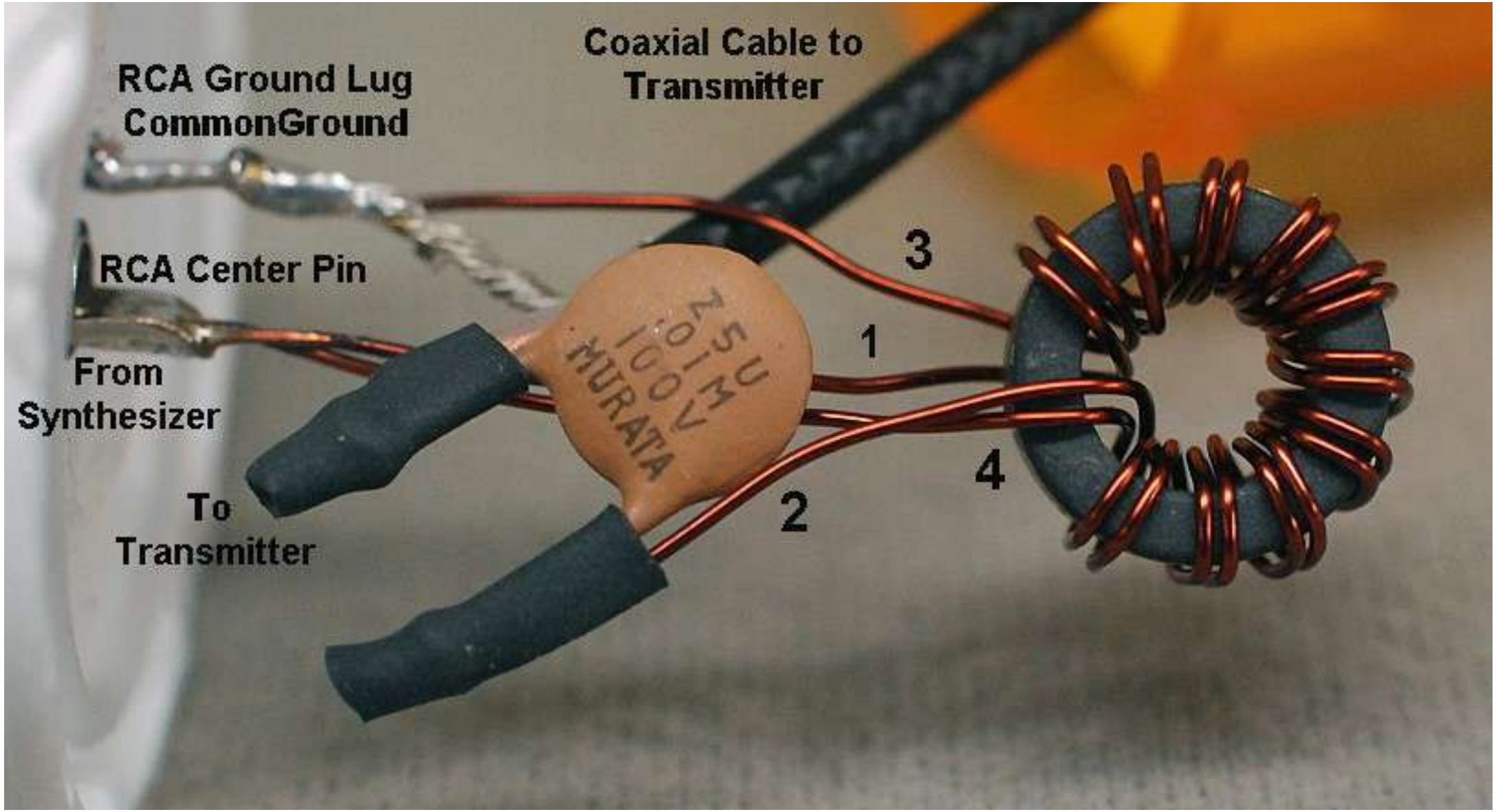
RCA Ground Lug
CommonGround
Coaxial Cable to
Transmitter
RCA Center Pin
From
Synthesizer
To
Transmitter
3
1
4
2
MURATA

I6IBE

Choke RFI

toroide

cavo RG-58

5+5 spire

controfase

BOCCHETTONE
INGRESSO ANTENNA
SO-239

2. Insert metal electrodes and attach multimeter leads [copper (+), aluminum (-)] For measuring direct current voltage: set multimeter function switch to "DCV: 20" take a reading in volts DC. for measuring direct current: set multimeter function switch to "DCA: 20m" take a reading in milliamps (mA) DC.

Lawn battery (summer). INSET: Marsh mud battery. (Circles show position of electrodes.)

Calculating Earth Battery Power (W = I * V)

EXAMPLE: A lawn battery in late summer (little rain) produces a 0.65V, 0.2mA current. A battery power calculation of 0.00013W (0.13mW).

Powered by: PIXEL ink LLC

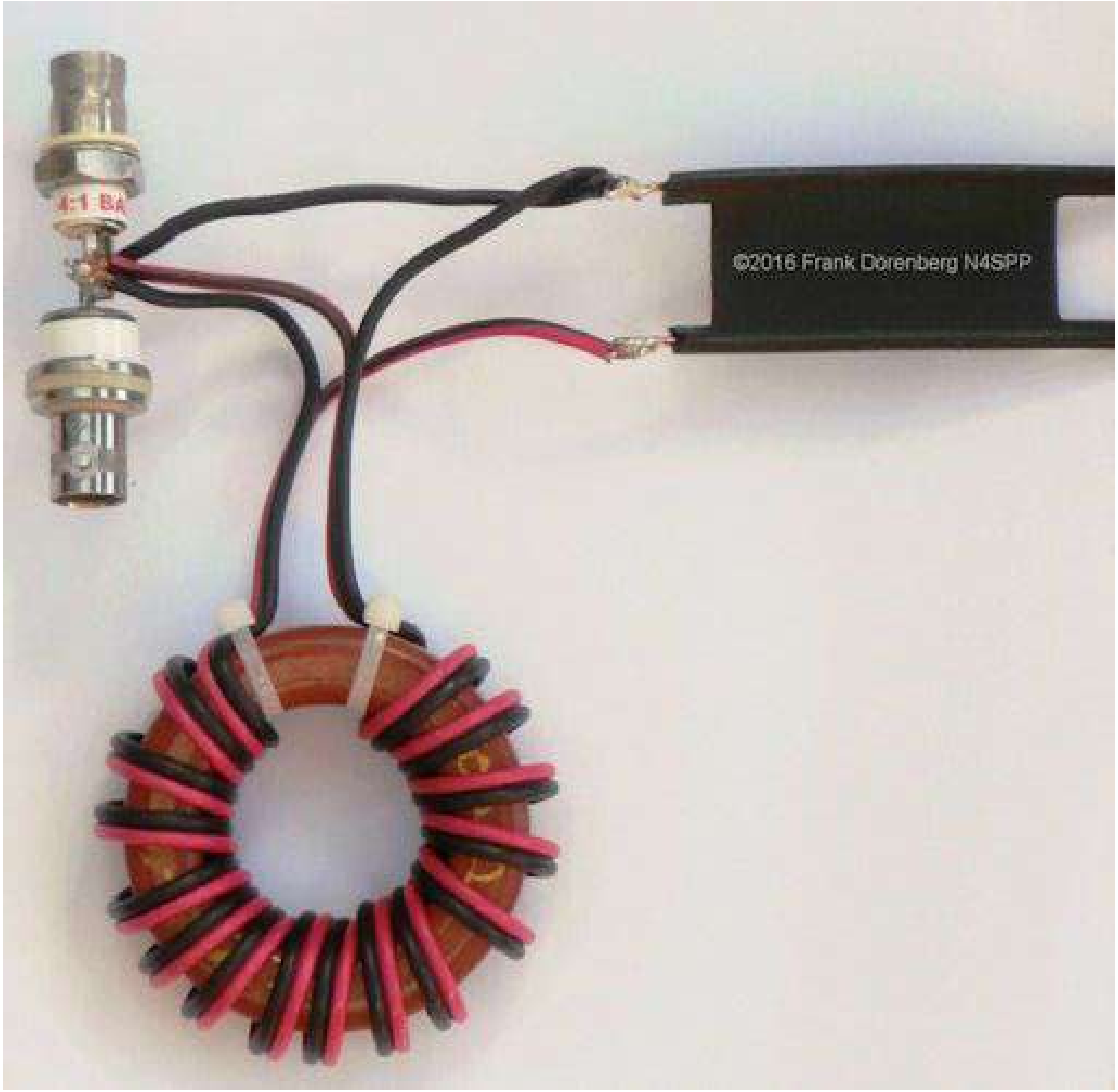
©2016 Frank Dorenberg N4SPP

F/B: 0.00 dB; Rear: Azim. 120 deg, Elev. 60 deg

1:1 Ruthroff Voltage Balun

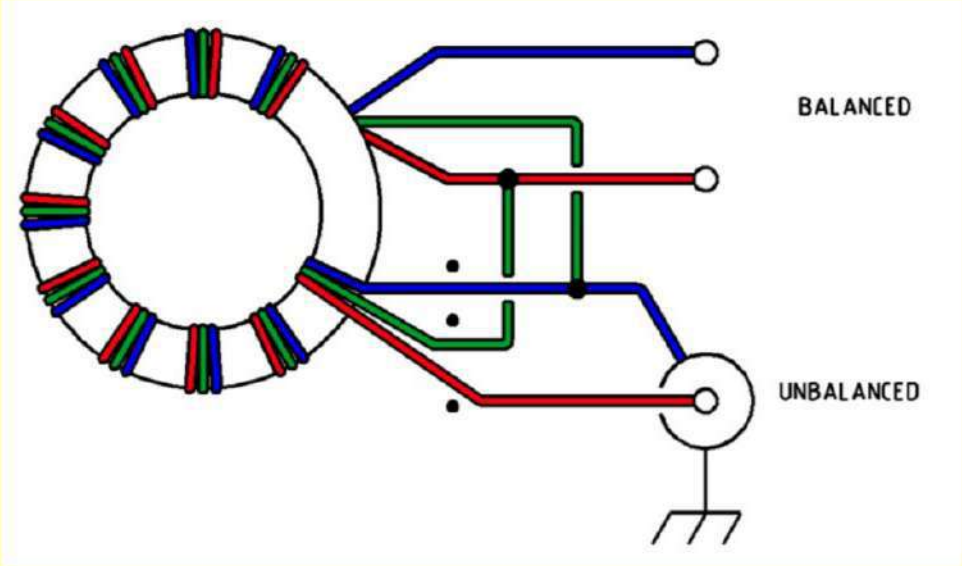

* 450 Ohm ladderline

Steve Nichols G0KYA

The Ruthroff or voltage balun is another type. Voltage baluns balance the voltages. Current balance is considered to be superior to voltage balance. Voltage baluns should not be used in lines with high SWR. They have the narrowest impedance and frequency range of any balun type. Properly designed voltage baluns have low common mode impedance. Properly designed current baluns have high common mode impedance, and provide better balance. If you want to stop common mode currents flowing on your coax a current balun is a better choice. But in the Carolina Windom, which uses the vertical coax as a radiator you WANT common mode currents, so a Ruthroff voltage balun is better.

F/B: 0.00 dB; Rear: Azim. 120 deg, Elev. 60 deg

1:1 Guanella current balun

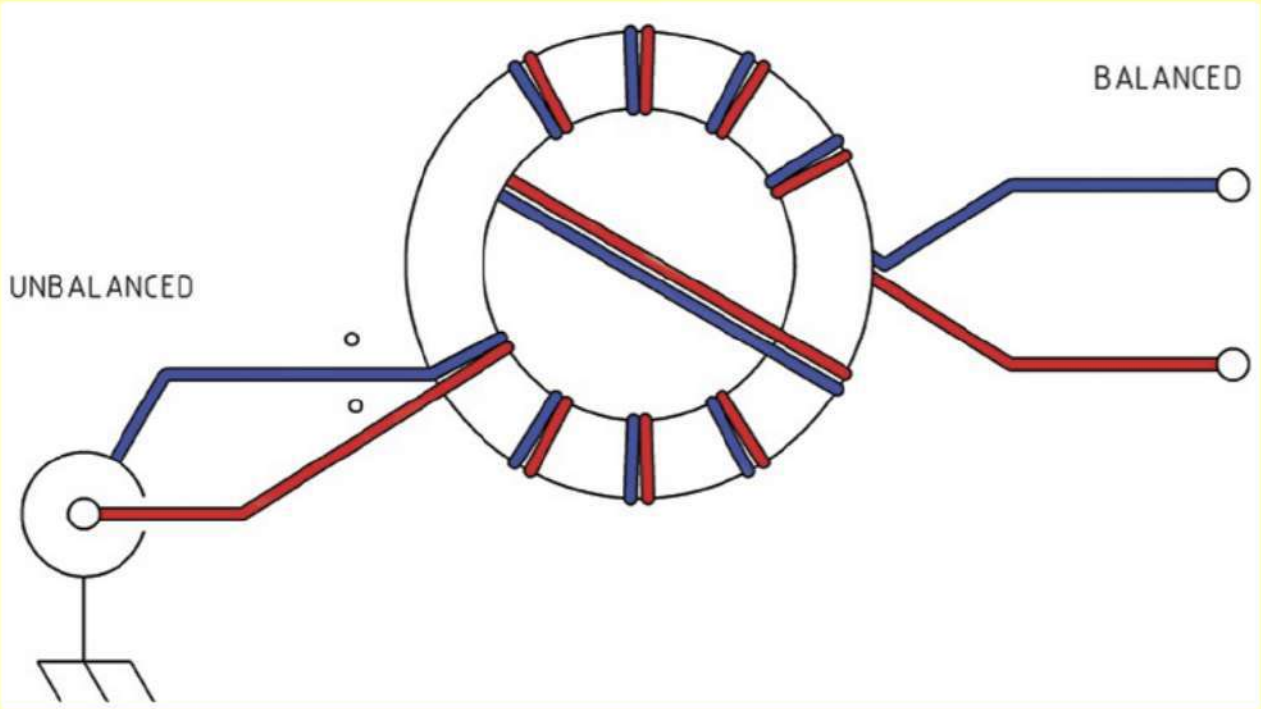

* 450 Ohm ladderline

A Guanella or current balun is very common. Current baluns stop RF from coming back down the outside of the coax shield, and are so called that because they "force equal currents in each side of a dipole"

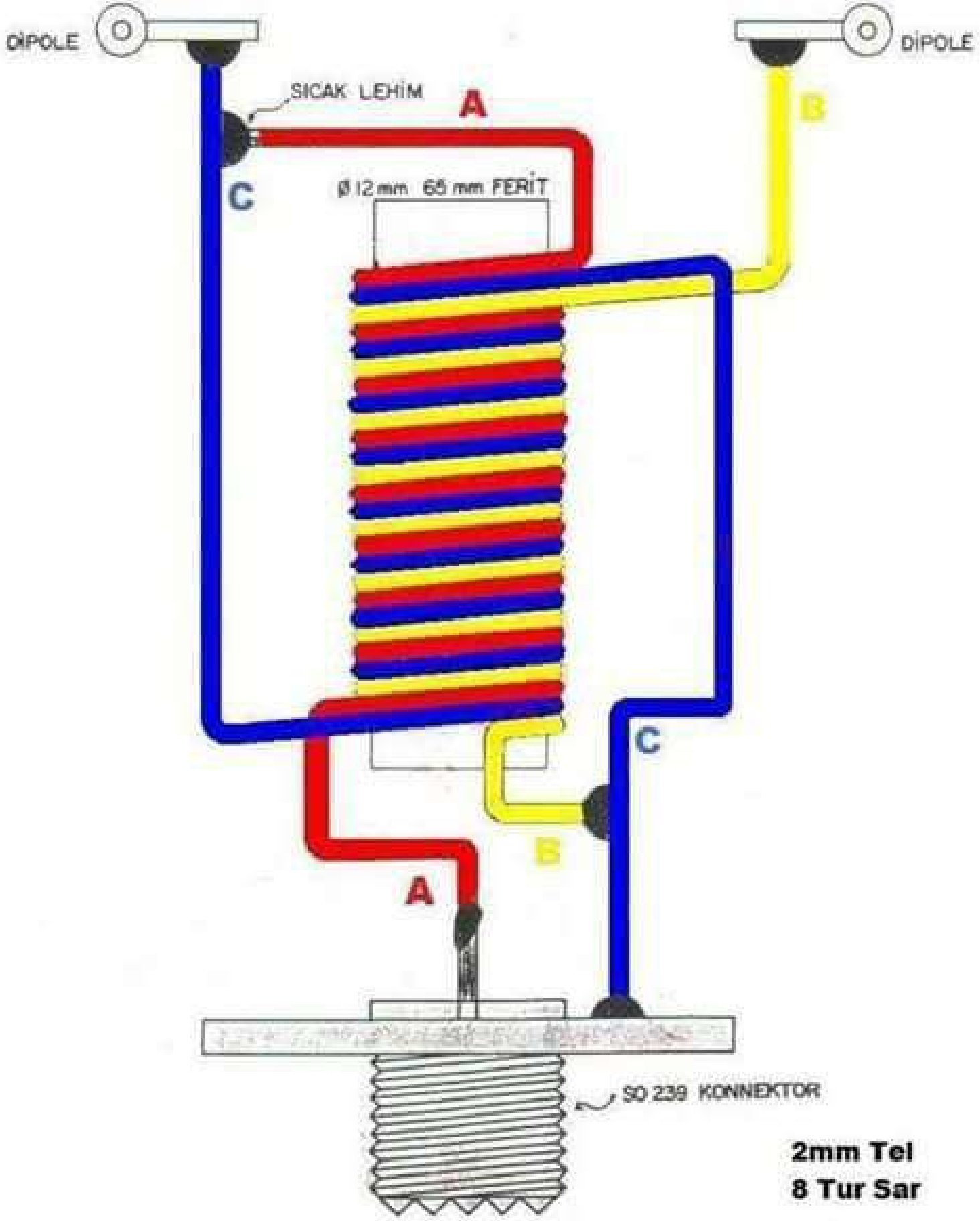

2mm Tel
8 Tur Sar

© Azega.com

I cut a hole in the side of the balun then cut the end off a piece of coax cable I had and soldered it to the contacts of the coax connection.

EXAMPLE: W1JR (Reisert) Cross-Winding Method

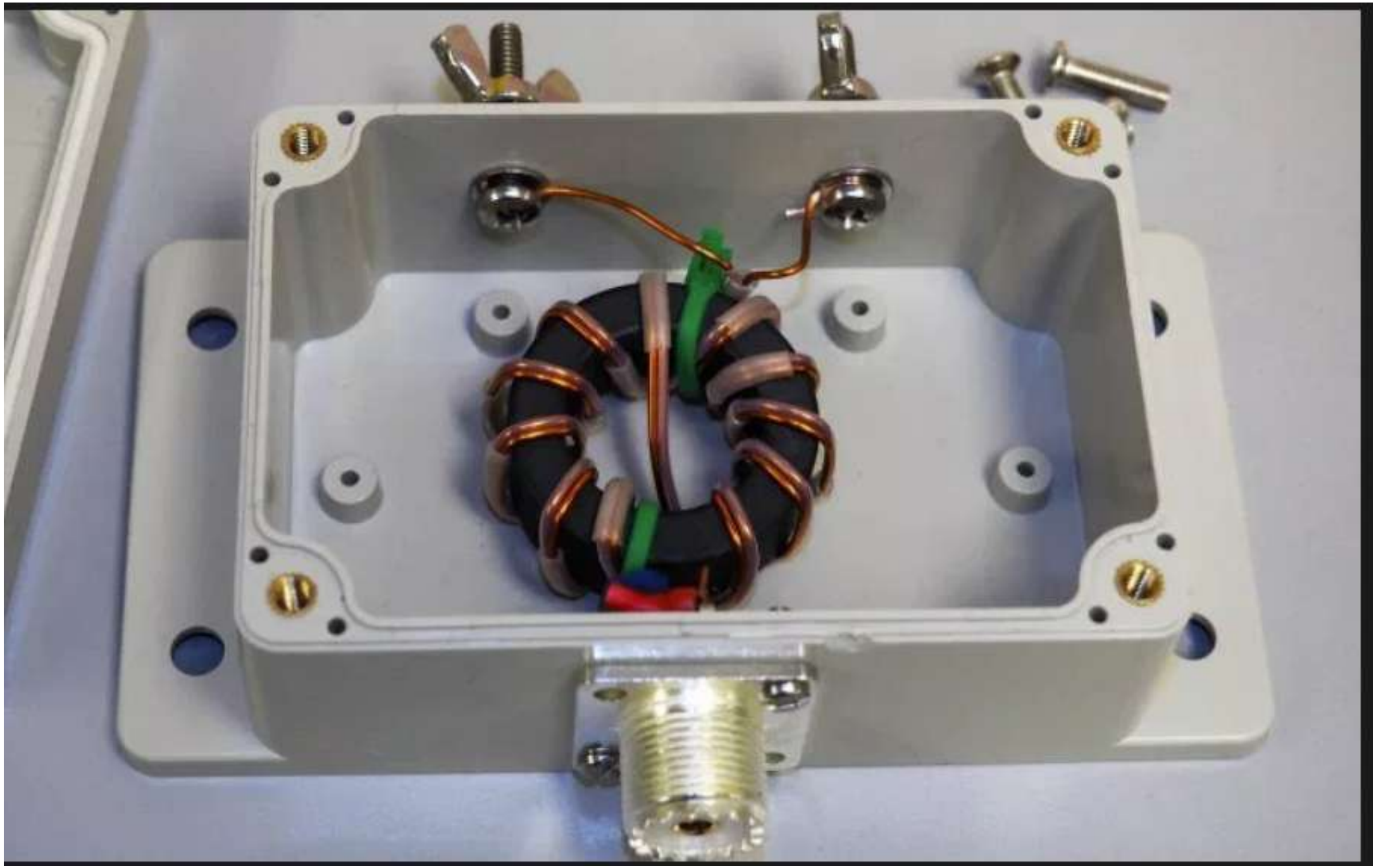

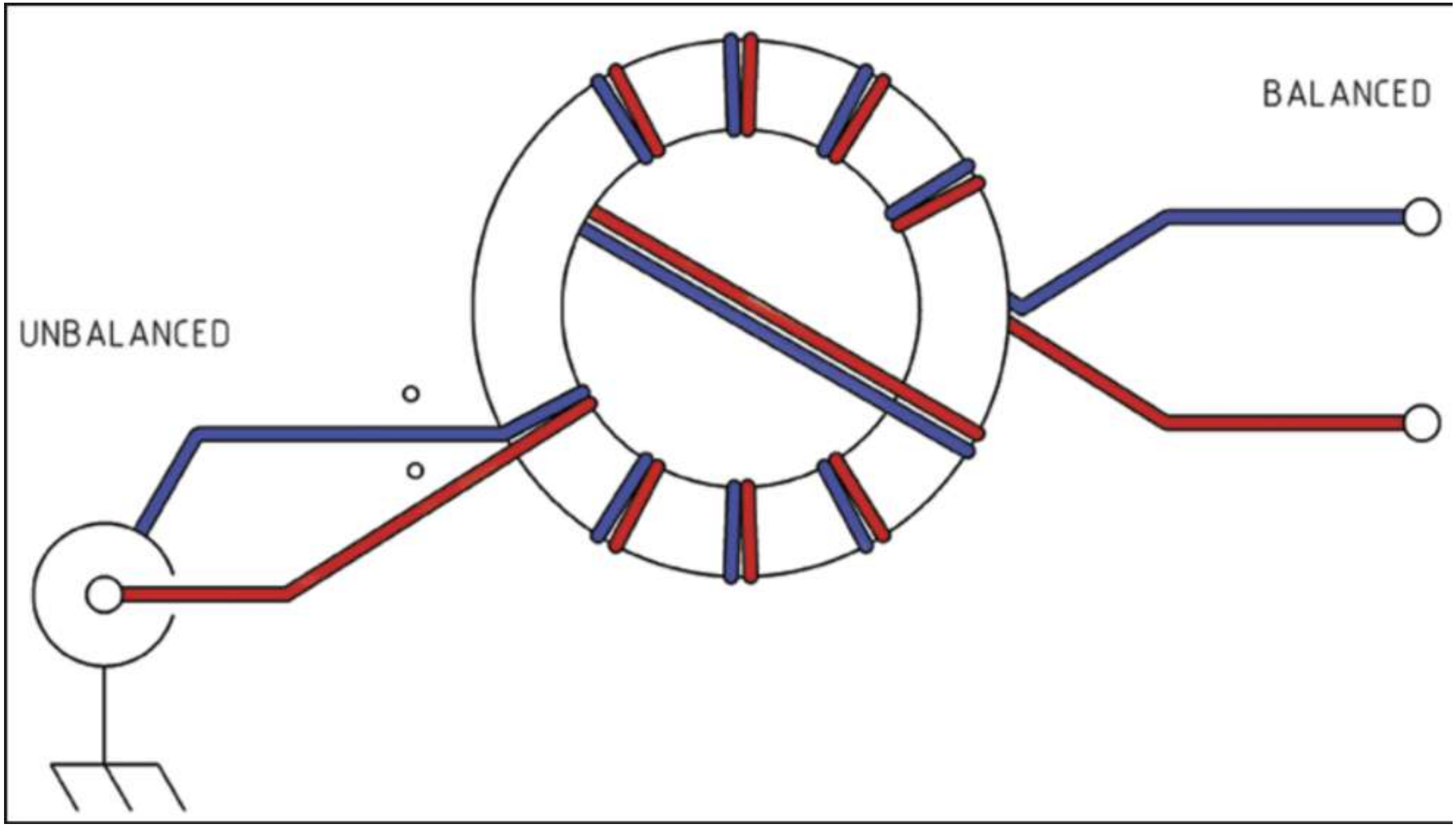
BALANCED
UNBALANCED

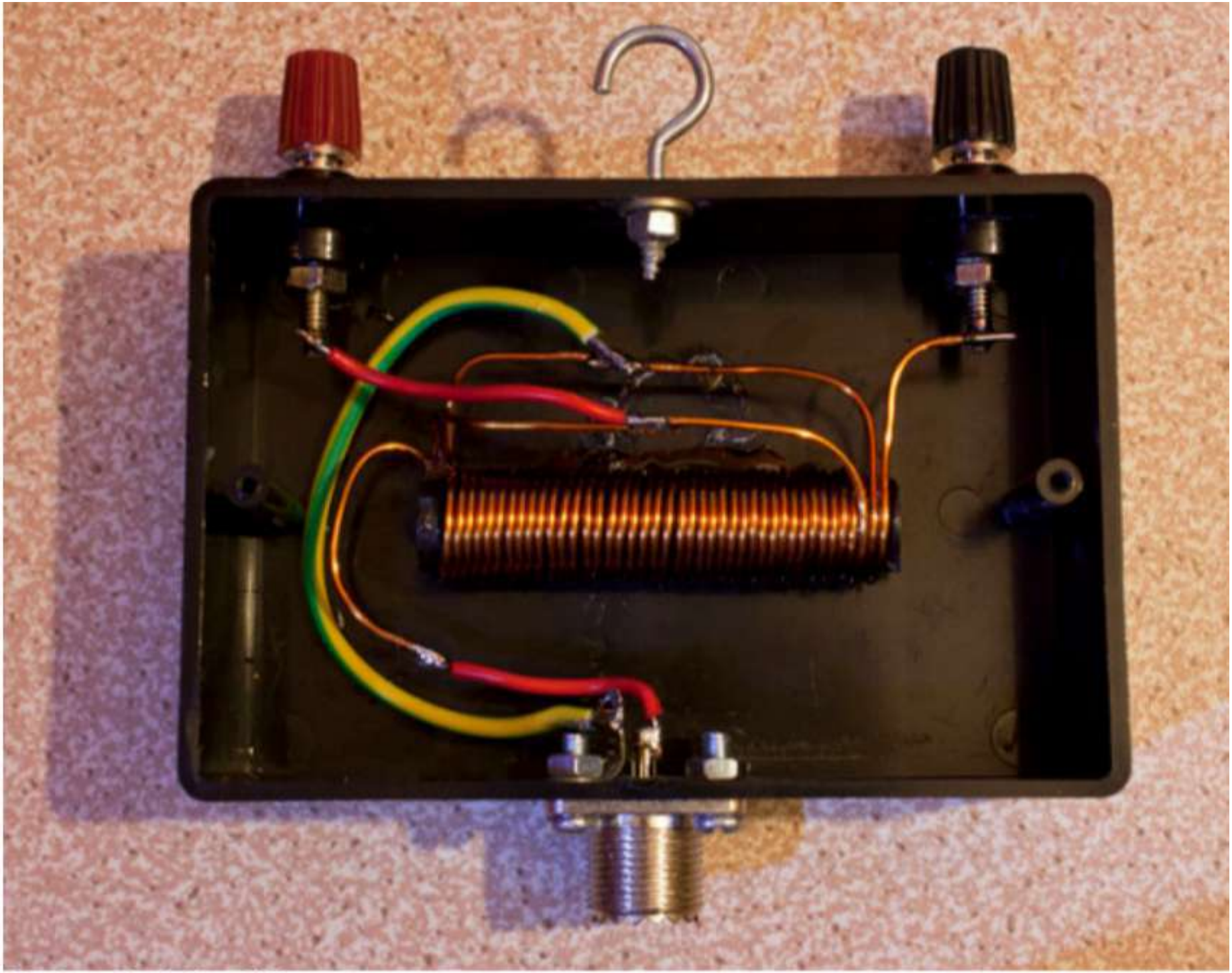

Balun 1: 1 for HF

1:1 Voltage balun ("Ruthroff")

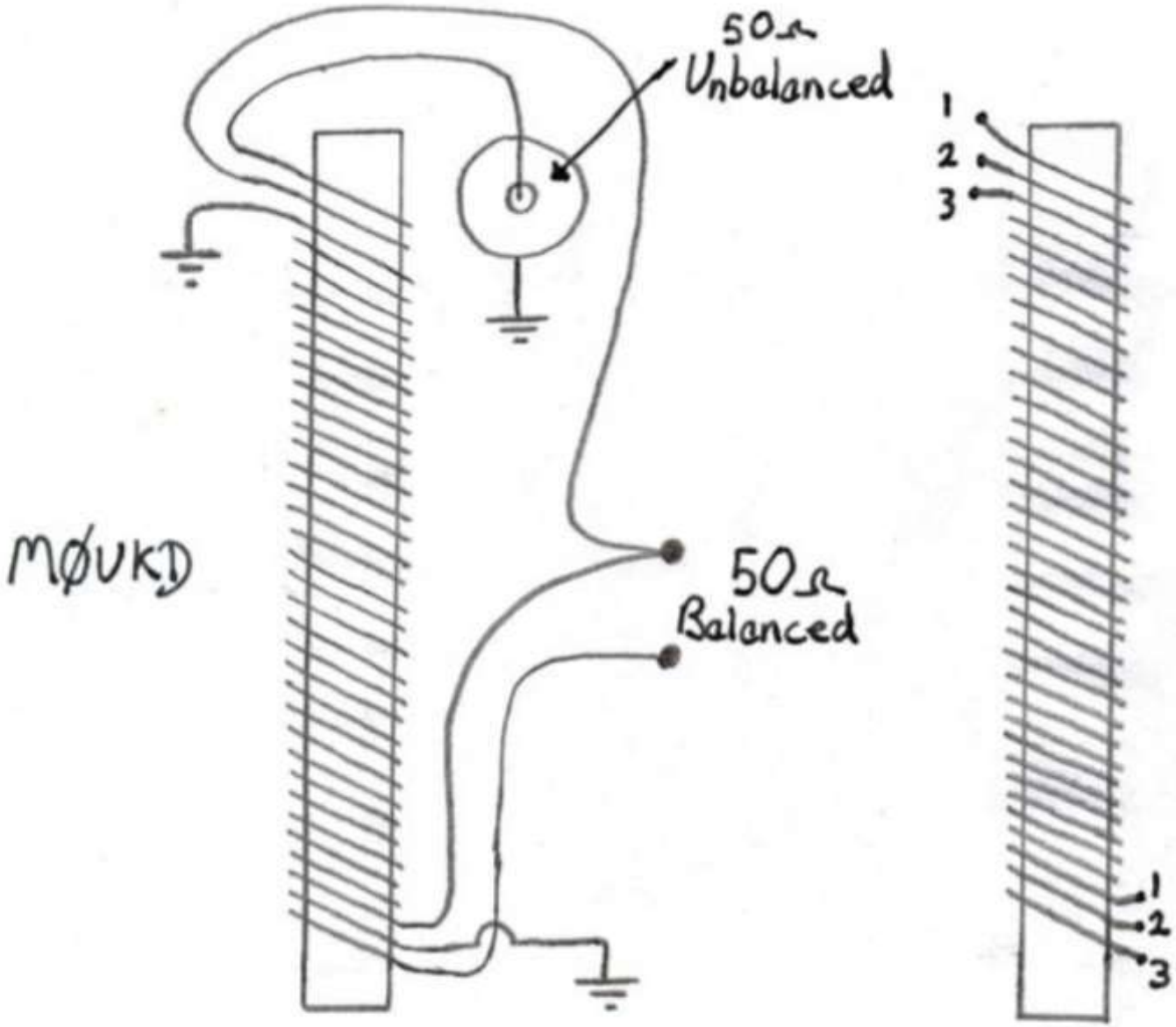

10 - 15 trifilar turns on ferrite rod.

1:1 ferrite rod voltage balun

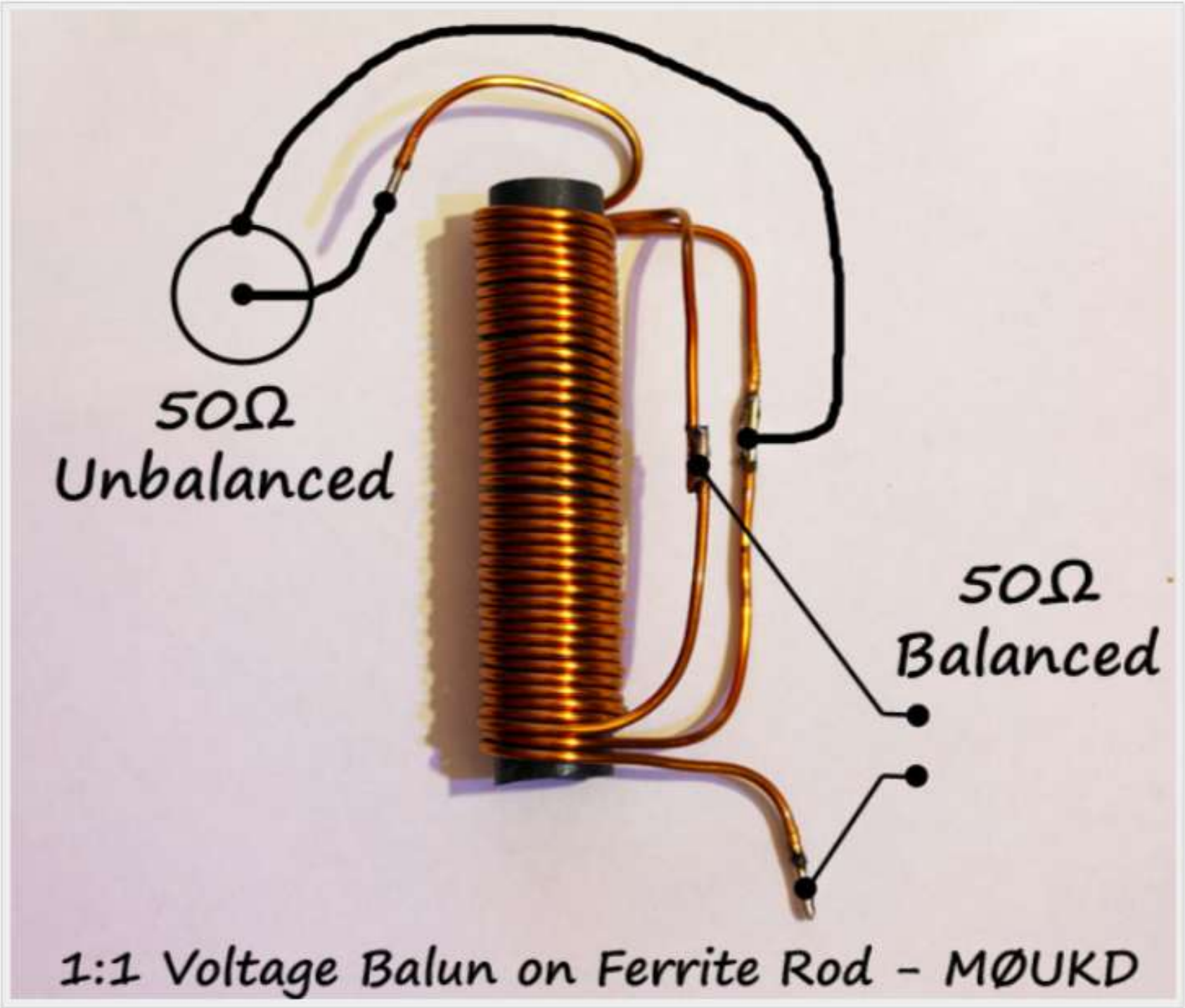

How to convert seawater into drinking water [Class 6, Chapter 14, ...

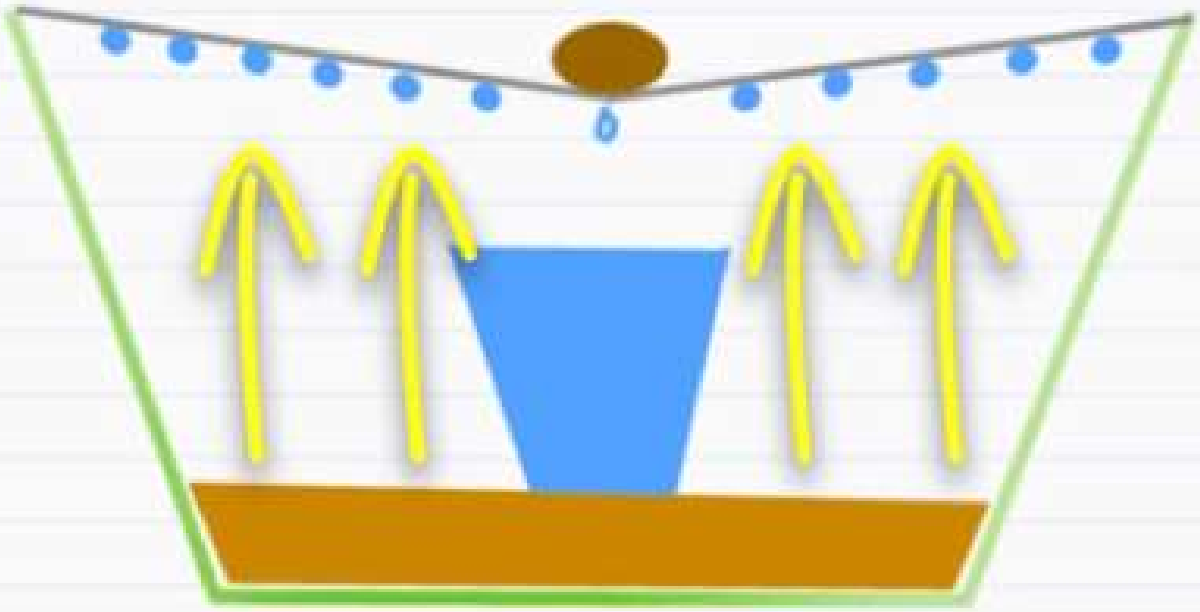

SUBSCRIBE

2:14 / 2:49

YouTube

How to convert seawater into drinking water [Class 6, Chapter 14, ...
SUBSCRIBE
1:09 / 2:49
YouTube

Emergency DIY Water Distillation for Survival Bug-Out Bag
Three 1/2" Cop El 45 Deg
Wet Rag
1/2" x 22" Cop
Stainless
Steel Funnel
Dirty/Salt Water
Clean/Fresh Water
2:59 / 3:27
YouTube

Solar Water Distilling

Simple Survival Water Distilling

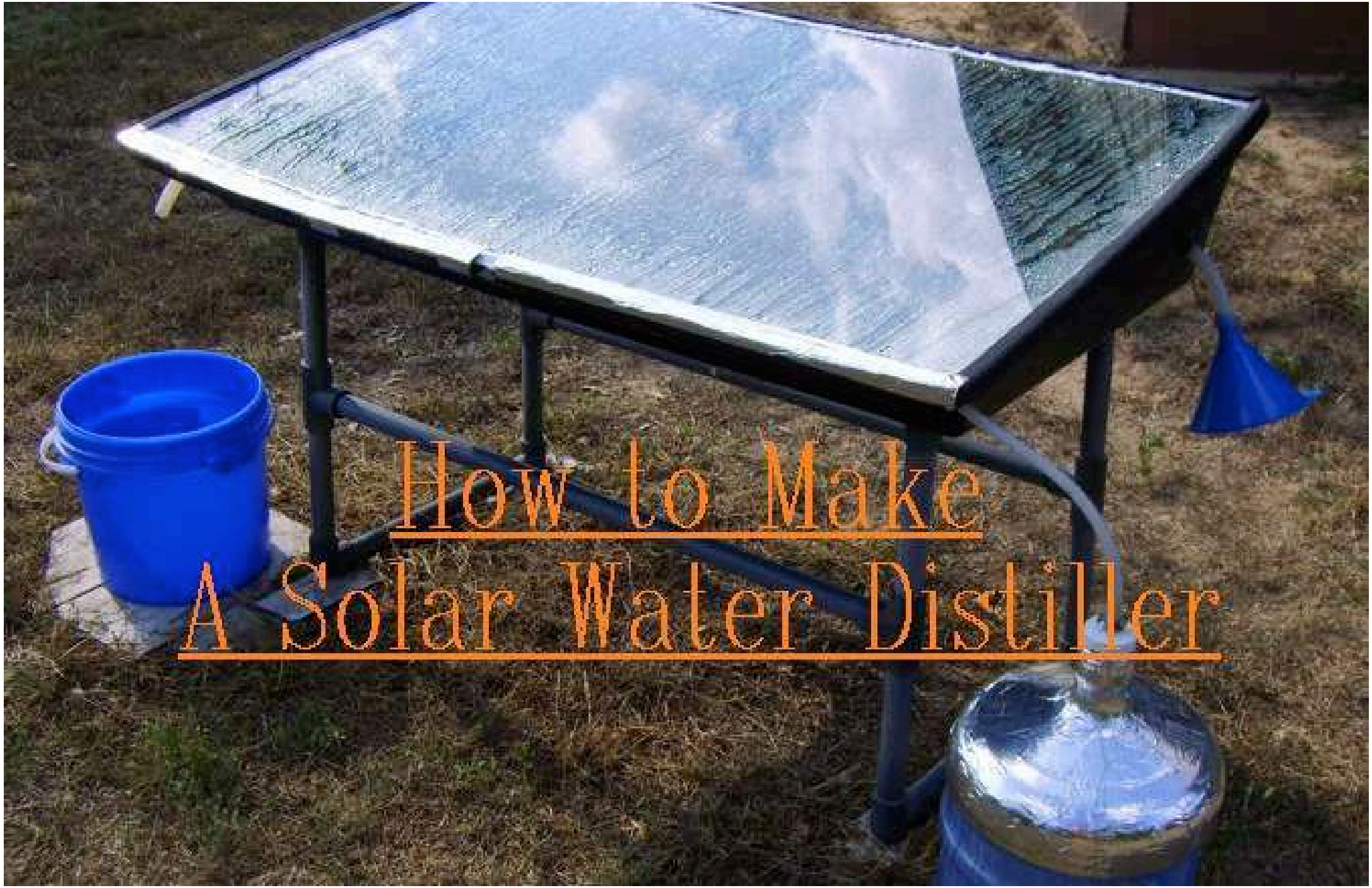
How to Make
A Solar Water Distiller

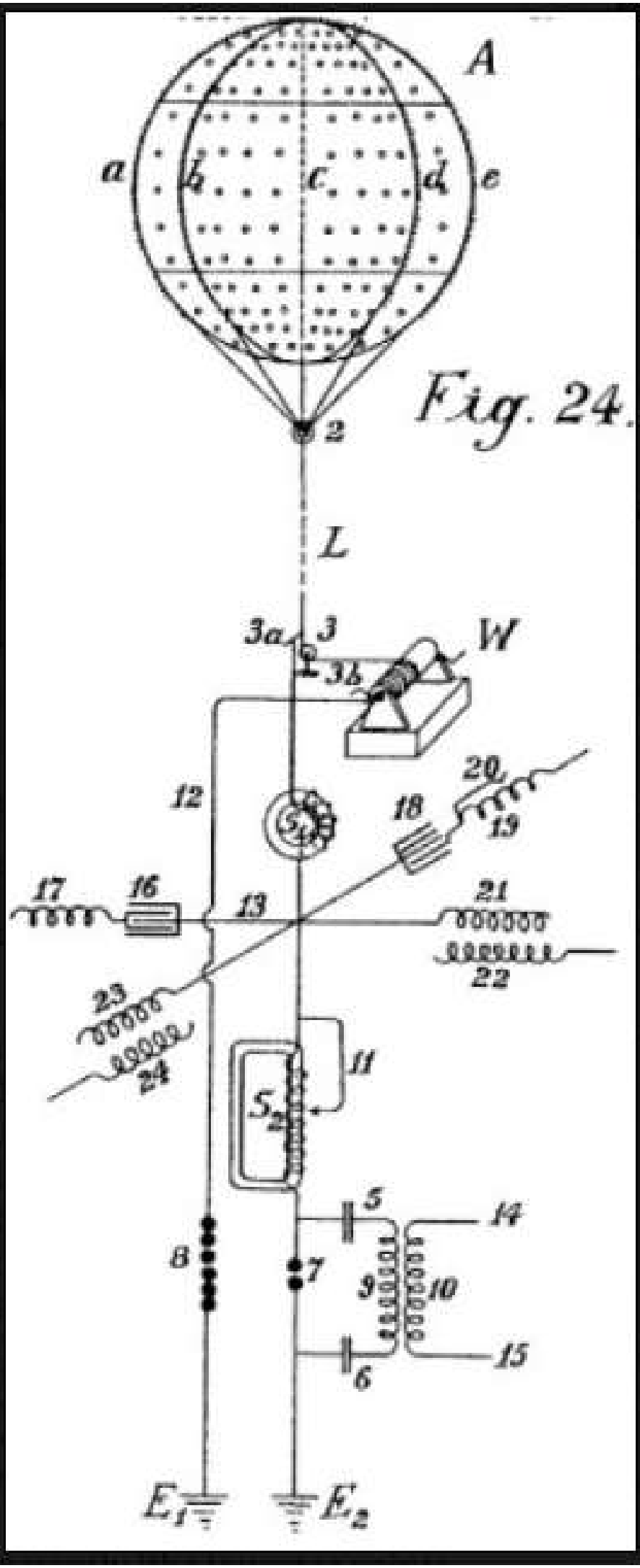
A
a
b
c
d
e
2
L
3a
3
3b
W
12
20
18
19
17
16
13
21
22
23
24
11
5
14
8
7
9
10
15
6
E_1
E_2

Fig. 24.

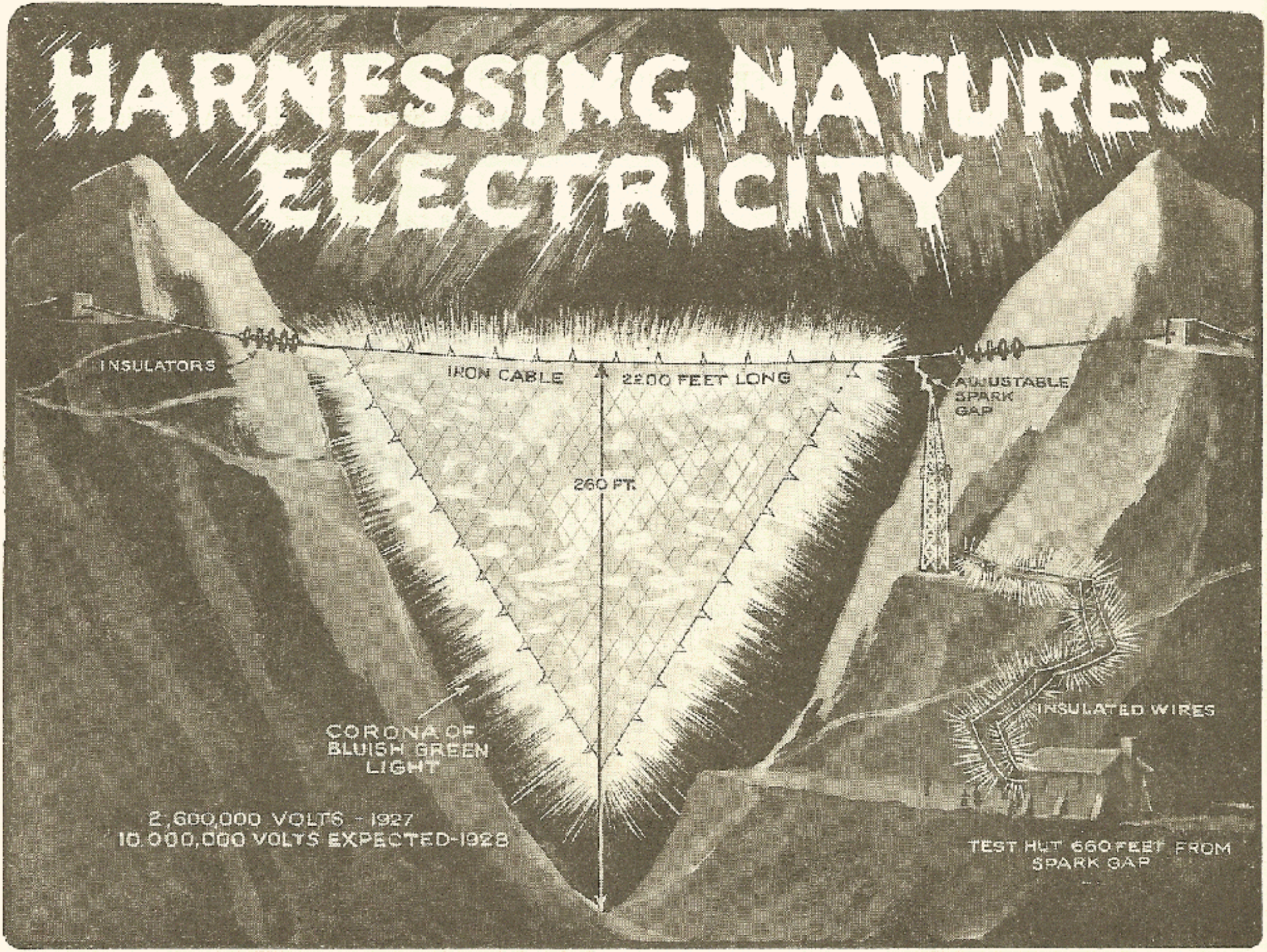
HARNESSING NATURE'S ELECTRICITY
INSULATORS
IRON CABLE
2200 FEET LONG
ADJUSTABLE SPARK GAP
260 FT.
CORONA OF BLUISH GREEN LIGHT
INSULATED WIRES
2,600,000 VOLTS - 1927
10,000,000 VOLTS EXPECTED-1928
TEST HUT 660 FEET FROM SPARK GAP

Remarkable European Experiments with Atmospheric Electrical Discharges with Potentials as High as 3,000,000 Volts

By HENRY TOWNSEND

elevation of 350 ft., and these students of natural electrical phenomena have found a very desirable location in the Alps, where they can suspend between one mountain and an adjacent one, a strong iron cable having a length of about 2,000 ft. This cable is about 250 feet above the intervening valley, and from it these daring engineers have suspended a coarsely woven wire net, which serves as an electrical capacity to gather the electricity from the atmosphere. As shown in the pictures, the wire net is supplied with numerous sharp points to aid in collecting the current from the air.

As the accompanying photographs of the actual apparatus and wire cable used last year clearly show, an adjustable spark gap of considerable length is provided. By adjusting this spark gap to various lengths, it is possible to judge the voltage of the discharge which leaps the gap at any moment. Mr. F. W. Peek, Jr., the well-known American worker in the realm of high voltage measurements, together with other engineers, have provided tabulated data and curves for various lengths of both needle and sphere type spark gaps. As one of the accompanying diagrams shows, it is a simple matter to calculate the voltage when a certain length of gap is used. The engineer first checks the length of the gap on the chart; he then follows a line horizontally from the gap length, to where it intersects with the angular line on the chart; and from the point of intersection he looks in a visual line downward to a place where the voltage is given. For needle spark gap measurements, the characteristic curve on the chart is practically a straight line, while for sphere gaps the characteristic curve on the voltage versus gap length, is a curved line. Those interested in high voltage measurements by means of the spark gap method can find the voltage-gap tables and charts in the *Standardization Rules* of the American Institute of Electrical Engineers. According to Mr. Peek's researches, the voltage per foot of atmospheric electrical discharges is about 100,000, while in laboratory measurements with A.C., transformer high potential discharges, the average voltage per foot of spark was found to be about 150,000 volts. The voltage of a lightning flash may

(*Continued on page* 156)

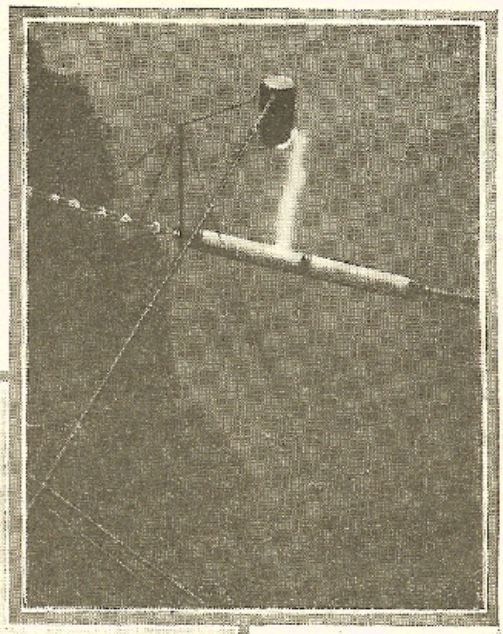

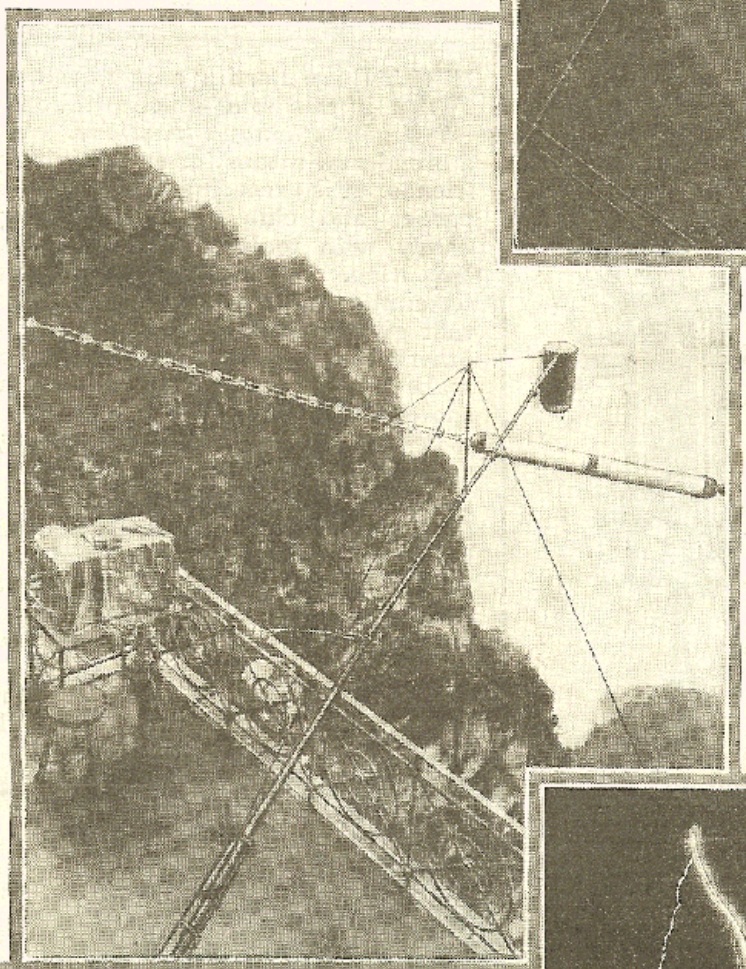

Actual photo above shows 13 ft., heavy spark obtained from the collecting net in the Alps by the German scientists. The voltage is about 2,000,000. The spark occurred once per second for 30 minutes.

Photo, left, shows the adjustable spark gap used in the Alps. Notice the heavy electrode on the end of the adjustable arm to which the spark jumps.

Below we see 3,000,000-volt artificial lightning stroke produced in G. E. Laboratory at Pittsfield, Mass. Note man.

Actual photograph of the experimental "kite" used by the German experimenters in the Alps Mountains, for the purpose of accumulating high potential electrical discharges from the atmosphere. Note the size of the insulators.

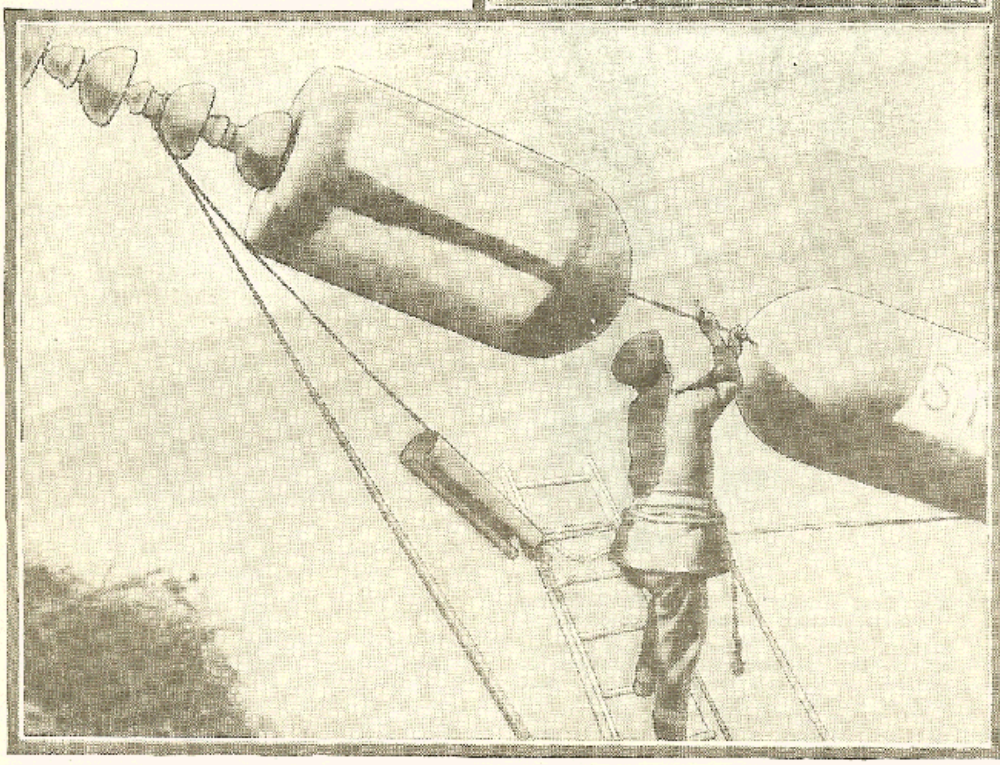

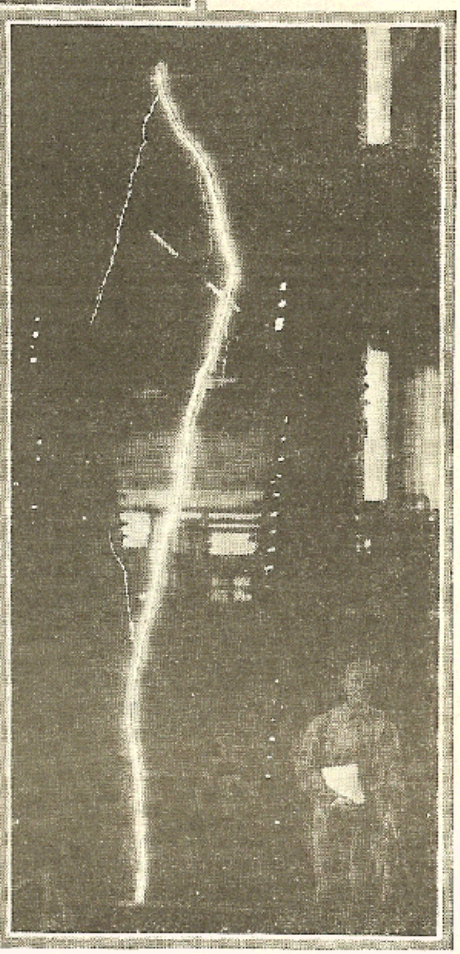

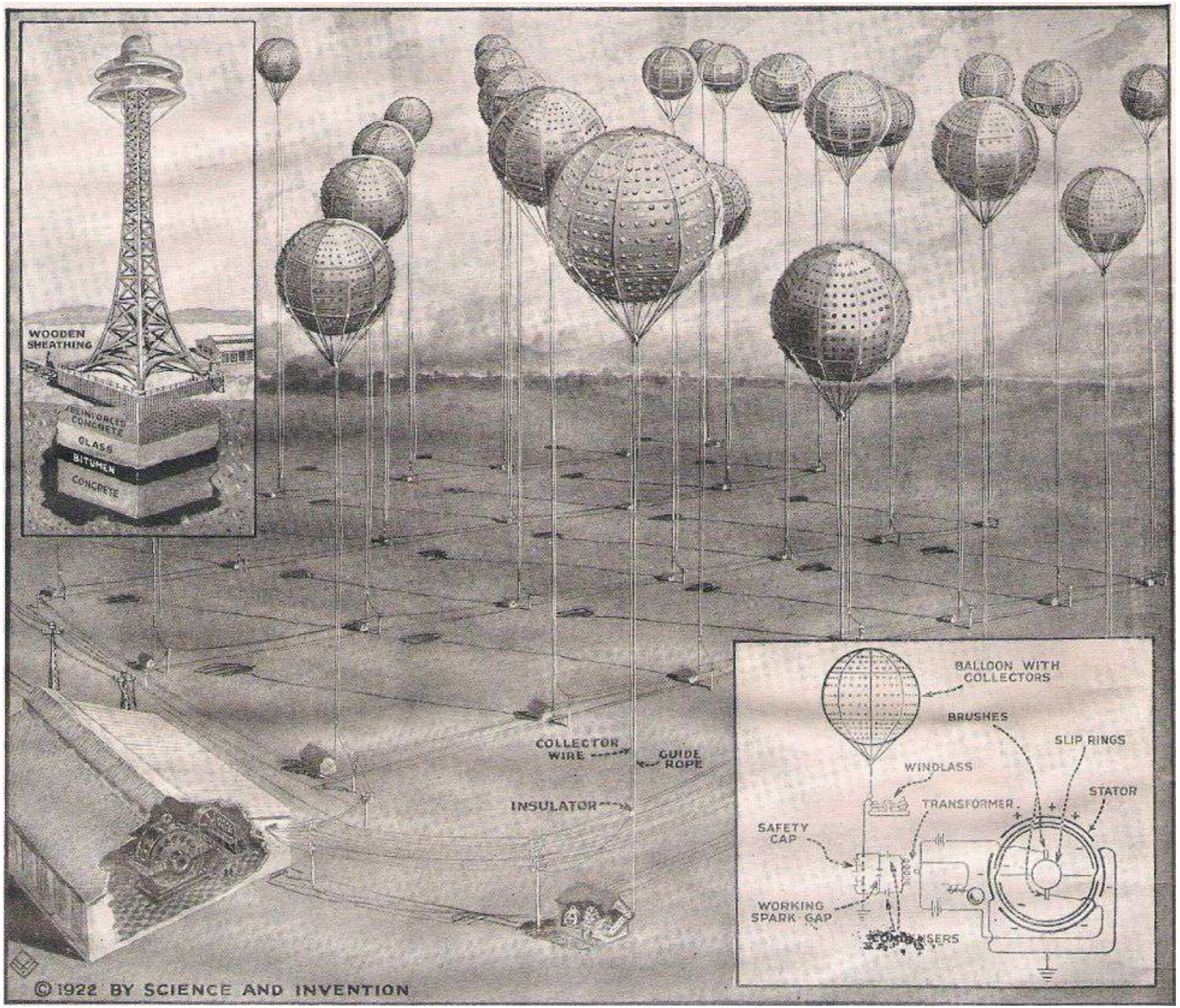
WOODEN SHEATHING
REINFORCED CONCRETE
GLASS
BITUMEN
CONCRETE
COLLECTOR WIRE
GUIDE ROPE
INSULATOR
BALLOON WITH COLLECTORS
BRUSHES
SLIP RINGS
WINDLASS
STATOR
TRANSFORMER
SAFETY CAP
WORKING SPARK GAP
CONDENSERS
© 1922 BY SCIENCE AND INVENTION

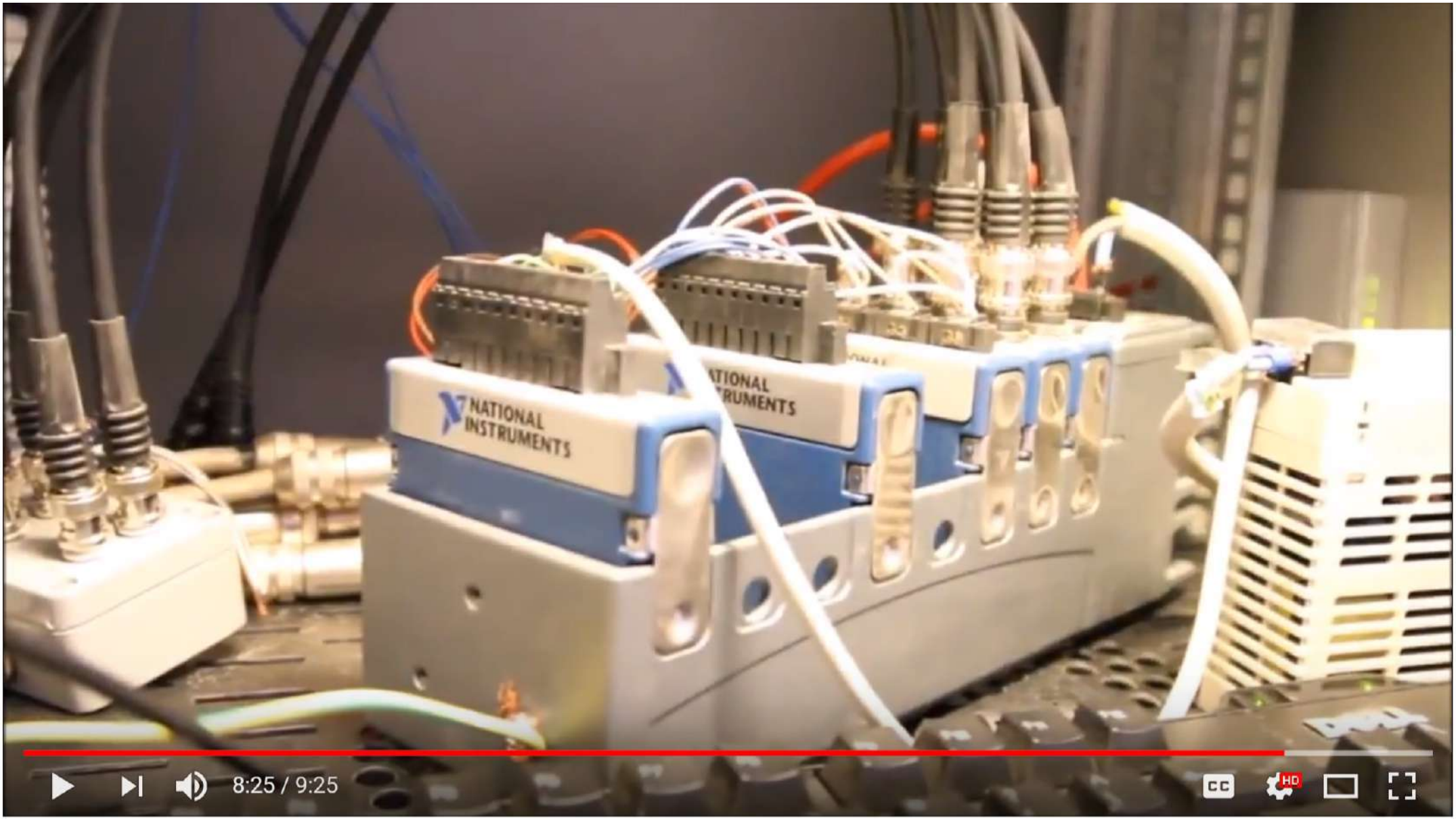

Flat Earth CON SPIRES! Cathedral Spires Are Secretly Atmospheric Electricity Ma

NOT FOR BROADCAST
1:02 / 10:38
STORMHIGHWAY.COM

1:45 / 9:25
CC
HD

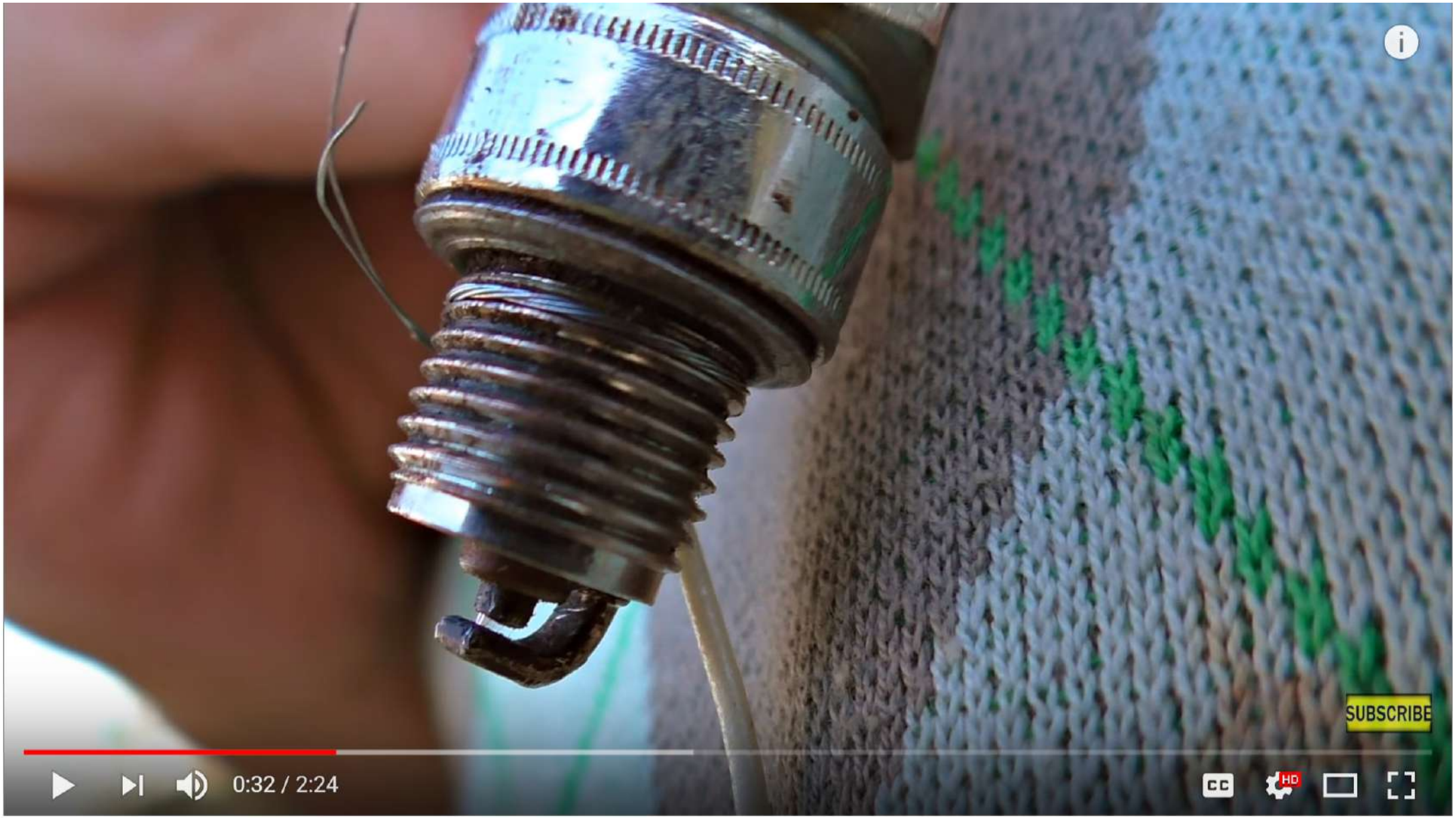

Charging from the power lines.

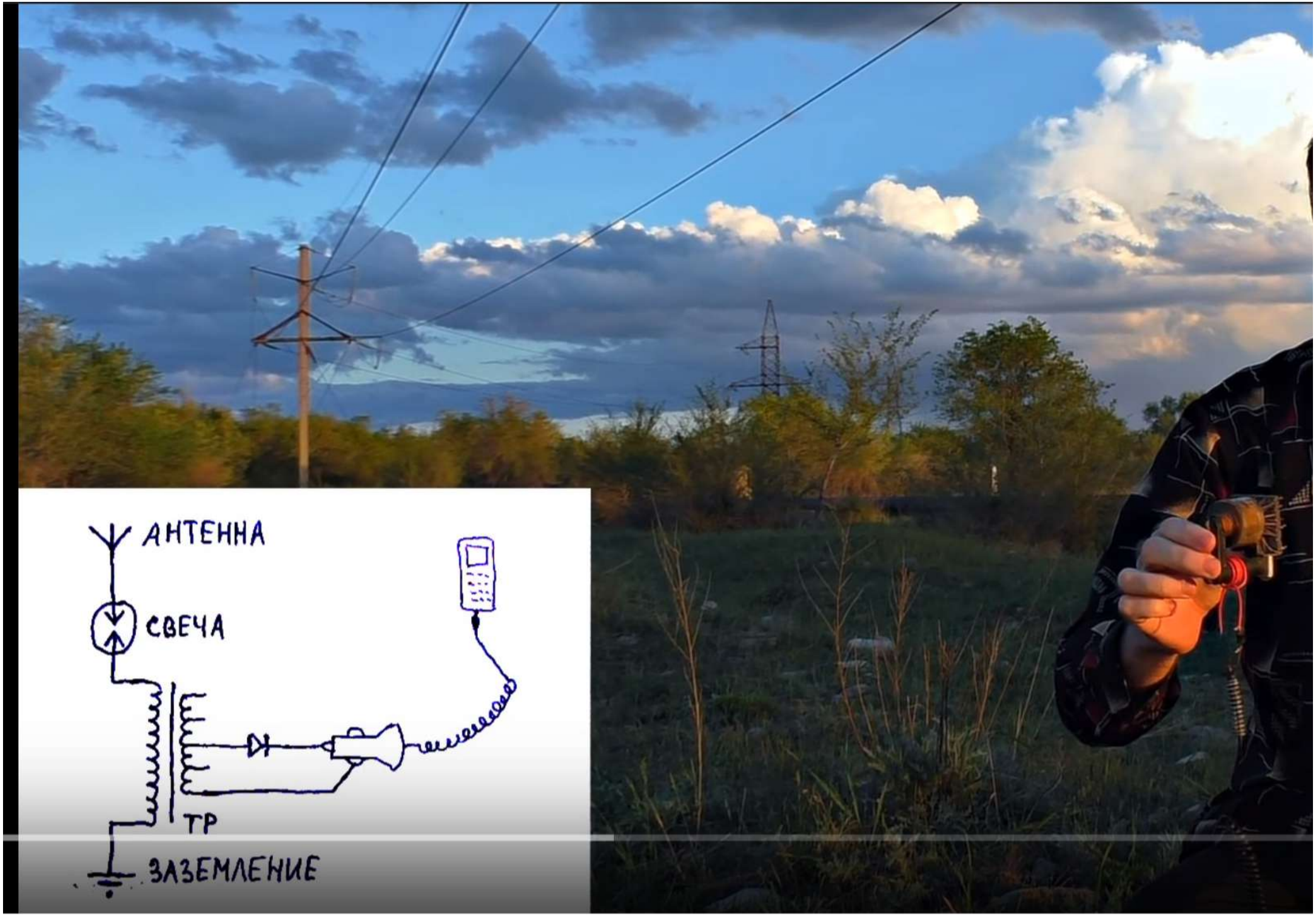
АНТЕННА
СВЕЧА
ТР
ЗАЗЕМЛЕНИЕ

MULTI DISPLAY DMM
10.1
POWER
PNP
NPN
hFE
COM
DT-92

SPARK PLUG DIODE CAR CHARGER FLYBACK TRANSFORMER TV ANTENNA
00.0
POWER
COM
DT-830

must depend on the area occupied by the building; for instance, a church of ordinary design and size would require four "down" rods, that is, one from the spire, one on both sides of the nave, and one at the extreme end. It is advantageous to run two conductors from the top of the spire or tower, one on each side.

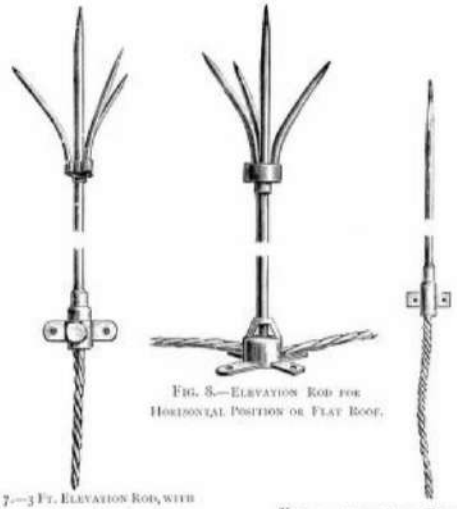

FIG. 7.—3 FT. ELEVATION ROD, WITH POINTS BRAZED TOGETHER, USED WHERE EXPOSED TO MUCH HEAT.

FIG. 8.—ELEVATION ROD FOR HORIZONTAL POSITION OR FLAT ROOF.

FIG. 9.—PLAIN POINT ELEVATION ROD.

Horizontal Conductors (see L.R.C. Suggestion 2, page 15). To complete the system, all the down conductors should be intersected by at least one horizontal rod, with the object of having a path for any side flash or portion of the main stroke which may not be carried away harmlessly by the main rod. Where there is a considerable length of roof, aigrettes (Fig. 11) should be fixed as shown by Fig. 10, which is taken from a model of the roof of Westminster Abbey. The down conductros on their way to earth should be connected to any metal work in the neighbourhood, also to rain-water gutters,

pipes, etc.; the number of these subsidiary down conductors depends on the length of the roof.

At a conference held on behalf of the L.R.C., in April, 1904, Sir Oliver Lodge suggested that these down conductors should, in the case of a church, be run between each of the windows.

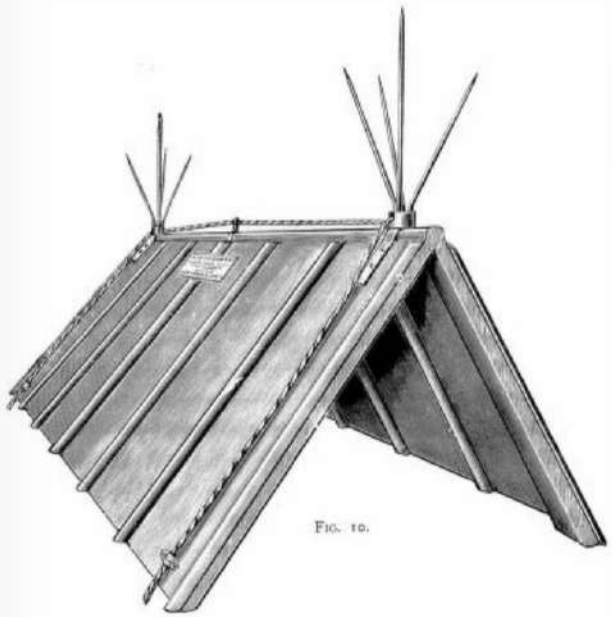

FIG. 10.

Method of running Conductors. These, whether vertical or horizontal, should be kept away from the structure (L.R.C. Rule 10) so as to avoid all sharp bends, and facilitate straining, and secondly, to prevent the corrosion which may take place where the metal is in contact with the brick or stone work. It is found advisable

Modern lightning conductors: an illustrated

surface of the joint need not necessarily exceed that of the cross section of the conductors. The joint should be put together previously by screws or rivets, and the soldered joint, especially if used in underground work, should be carefully protected from local electrical action by tarred rope. Stranded iron conductors can be connected (as previously described) by use of a box joint; the box, Fig. 28, must be of the same metal as the conductors.

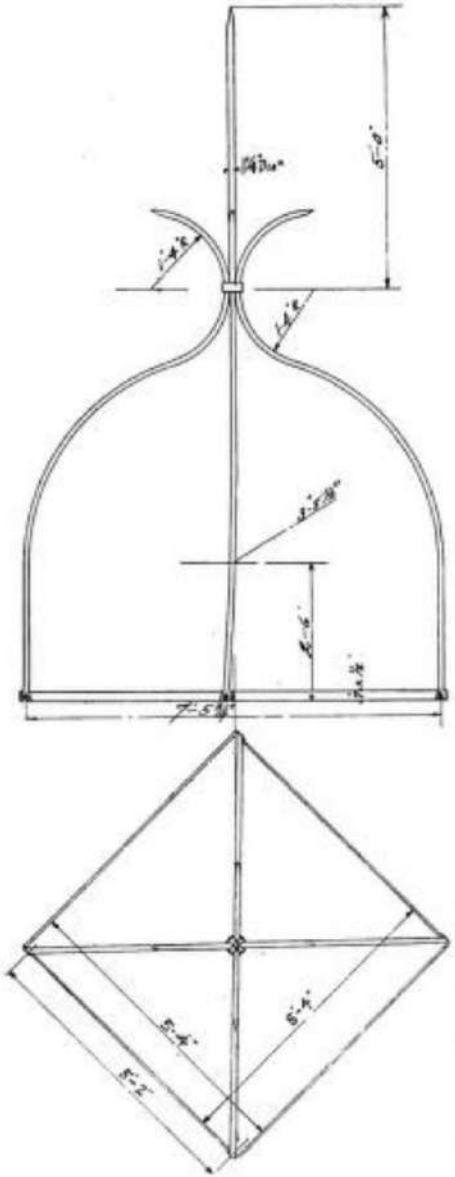

FIG. 27.—TERMINALS IN FORM OF AN ARCH FOR CHIMNEY STACK.

Vanes.—Particular attention must be paid to the necessity of making a permanent joint to the spindle. A clamp is prepared of the same material as the spindle, and is furnished with two bolts to tighten; if iron is used it is well to line the clamp with a piece of sheet lead. The conductor is sweated into a socket which is fitted with an eye, through which one of the tightening bolts passes. In the

FIG. 28.

case of the vanes of churches and those fixed in inaccessible positions, two separate clamps should be used.

Internal Masses of Metal.—Roof trusses fitted with longitudinal iron tie rods will, as a rule, be found to be electrically connected, but should this not be the case each truss must be joined to the conductors. All large and long masses of metal, such as beams, girders, roof trusses, tie rods, hot water systems, traveller ways, hoisting crabs, engines, boilers, large machines, and ventilators fixed in the interiors of buildings, should be connected to all conductors that pass near them, and as far as possible with one another. The discontinuous parts of traveller rails should be connected by straps, or in some cases tramway bonds might be used. If electric light wires are run in tubes, such as the "SIMPLEX," this should be earthed. Metallic contact between lead or zinc sheeting and flashings should be carefully studied, and for special work strips of sufficient size should be either burnt on to lead or soldered in such a way that the joint will stand rough usage, and allow for expansion or contraction.

Earth Connection.—"*It is essential that the lower extremity of the conductor be buried in permanently damp soil; hence proximity to rain-water pipes, and to drains, is desirable. It is a very good plan to make the conductor bifurcate close below the surface of the ground, and adopt two of the following methods for securing the escape of the lightning into the earth. A strip of copper tape may be led from the bottom of the rod to the nearest gas or water* main—*not merely to a lead pipe—and be soldered to it; or a tape may be soldered to a sheet of copper 3 feet by 3 feet and* $\frac{1}{16}$ *inch thick, buried in permanently wet earth, and surrounded by cinders or coke; or many yards of the tape may be laid in a trench filled with coke, taking care that the surfaces of copper are, as in the previous cases, not less than* 18 *square feet. Where iron is used for the rod, a galvanised iron plate of similar dimensions should be employed.*

"The use of cinders or coke appears to be questionable owing to the chemical or electrolytic effect on copper or iron. Charcoal or pulverised carbon (such as ends of arc-light rods) is better. **A tubular earth** consisting of a perforated steel spike driven tightly into moist ground and lengthened up to the surface, the conductor reaching to the bottom and being packed with granulated charcoal, gives as much **effective area** as a plate of larger surface, and can easily be kept moist by connecting it to the nearest rain-water pipe. The resistance of a tubular earth on this plan should be very low and practically constant."—*Lightning Research Committee, 1905.*

:05 / 4:25

Washington Monument is an Atmospheric Electricity Mast

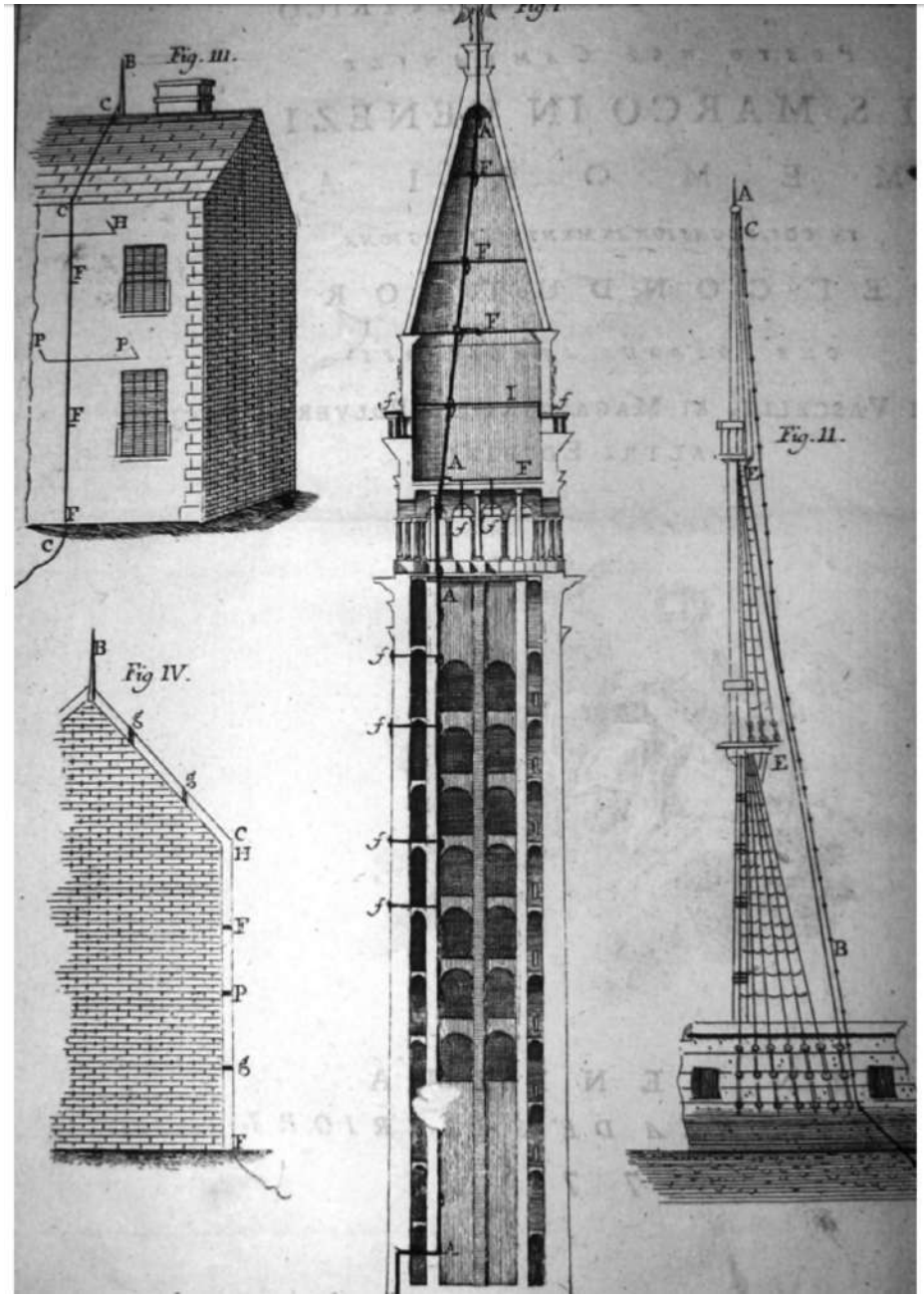

Figure 2.3. The lightning rod that Toaldo designed for the church of San Marco in Venice. GiuseppeToaldo, "Del conduttore elettrico posto nel campanile" (Padua, 1776). Franklin Collec-

Gilded Temples Are Secretly Atmospheric Electricity Masts

How To Find S-W Stations Quickly

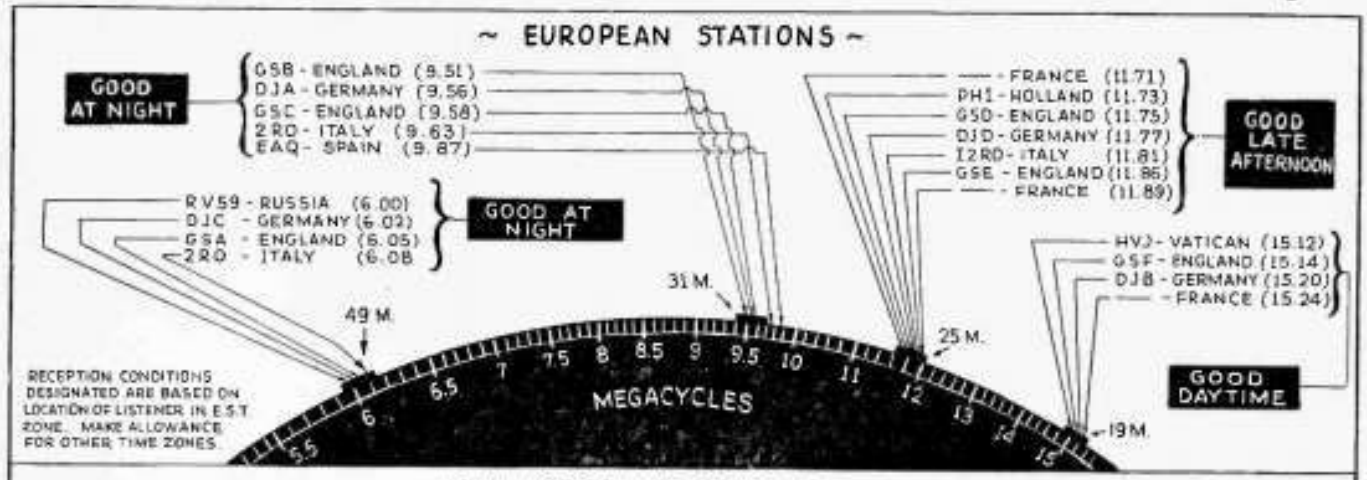

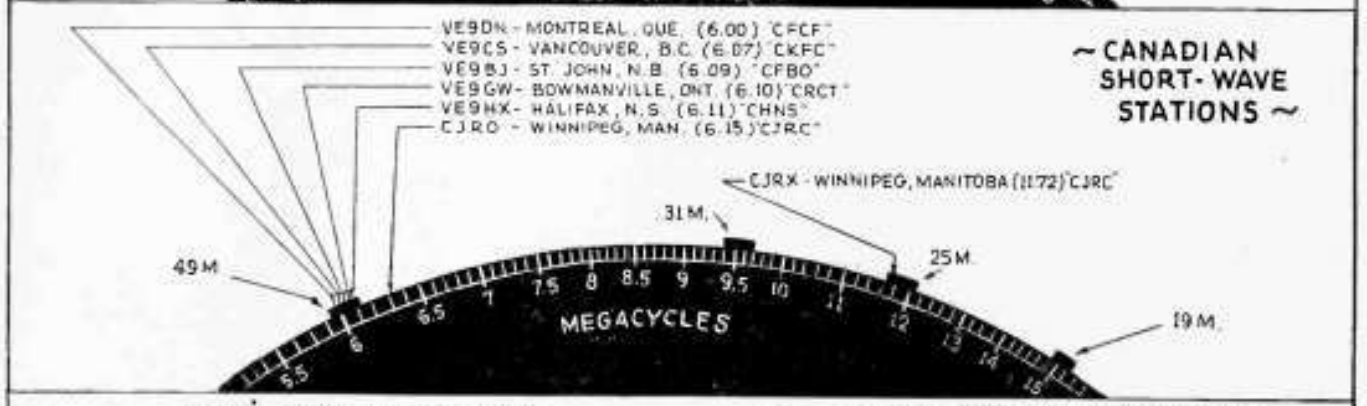

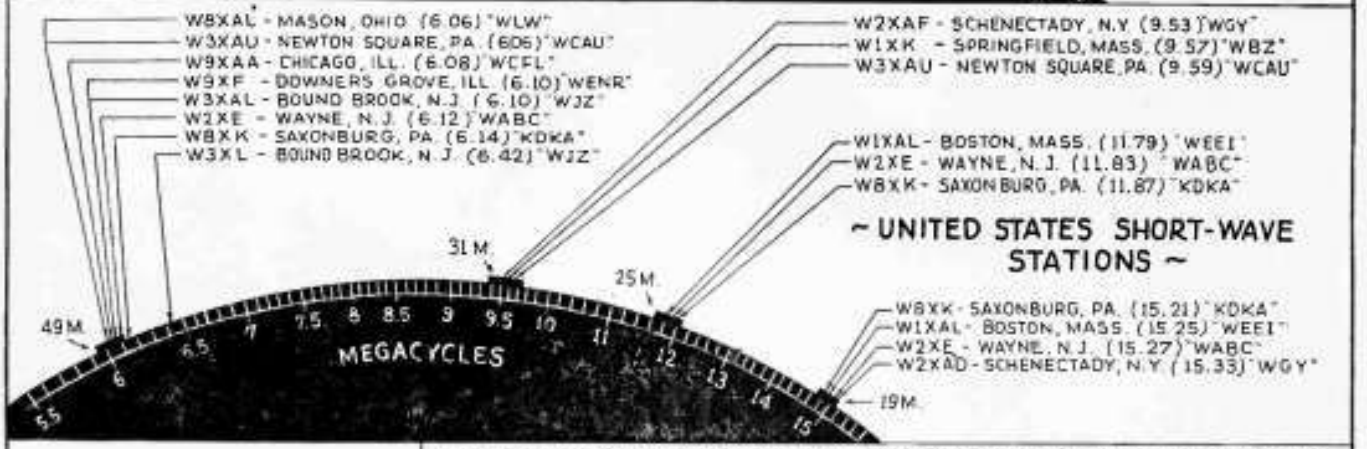

When To Tune and Where

● Until you have had considerable experience in short wave tuning, it is well to confine your efforts to the four bands indicated on the dial. These may look small, compared to the total length of the dial, but they contain the best "plums" among the foreign stations and many faint ones which, at first, you will probably pass unnoticed until you learn to tune slowly and carefully, intent upon identifying each slight "swish", which may be a station.

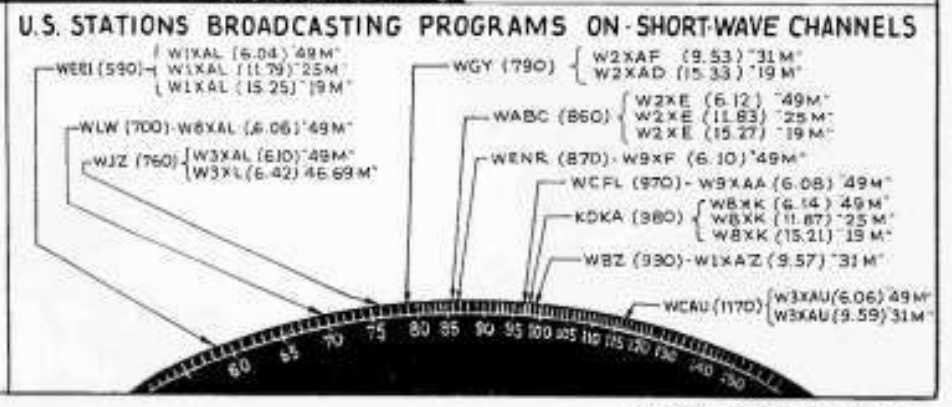

Copyright 1935 by H. Gernsback.

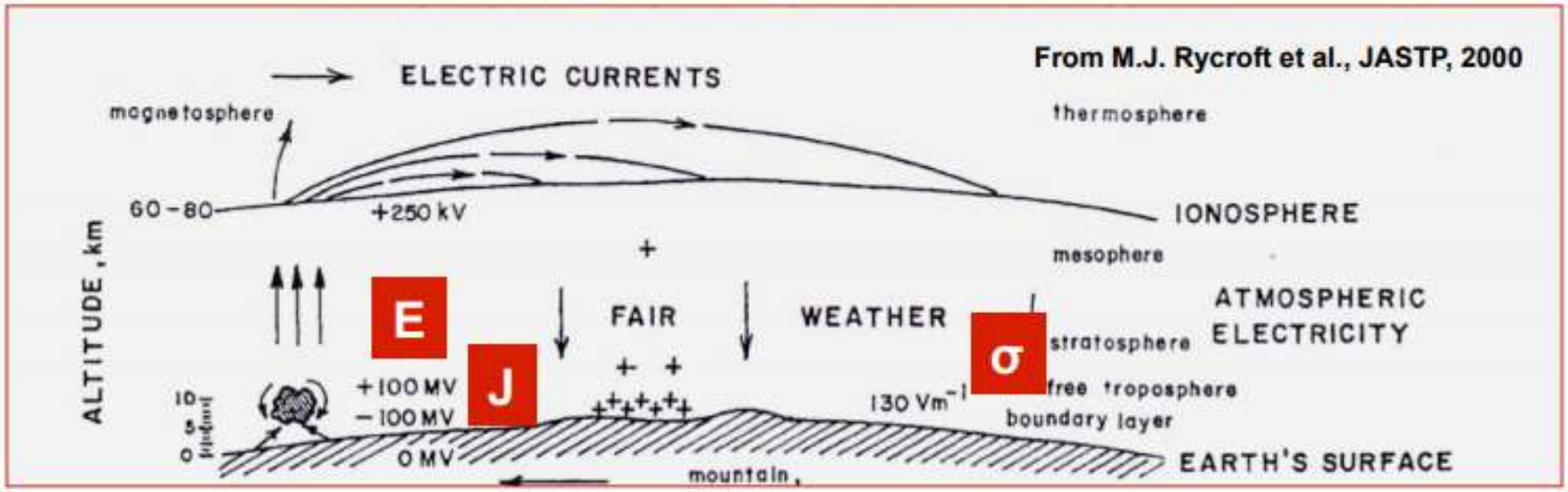
From M.J. Rycroft et al., JASTP, 2000
ELECTRIC CURRENTS
magnetosphere
thermosphere
60 – 80
+250 kV
IONOSPHERE
mesophere
ALTITUDE, km
E
FAIR
WEATHER
ATMOSPHERIC
ELECTRICITY
σ
stratosphere
J
+100 MV
– 100 MV
0 MV
130 Vm⁻¹
free troposphere
boundary layer
EARTH'S SURFACE
mountain

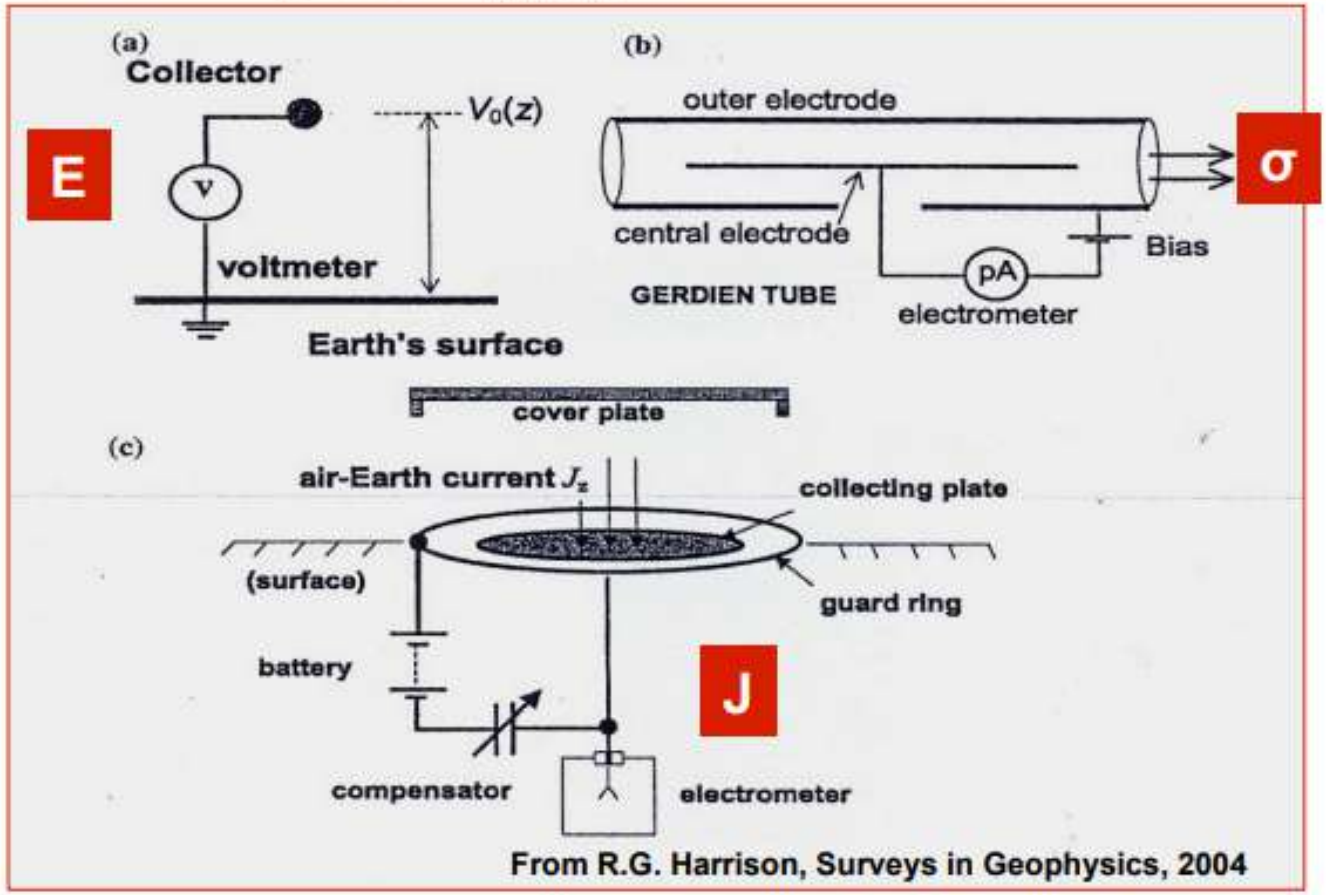
(a)
Collector
E
V
$V_0(z)$
voltmeter
Earth's surface
(b)
outer electrode
σ
central electrode
Bias
pA
GERDIEN TUBE
electrometer
cover plate
(c)
air-Earth current J_z
collecting plate
(surface)
guard ring
battery
J
compensator
electrometer
From R.G. Harrison, Surveys in Geophysics, 2004

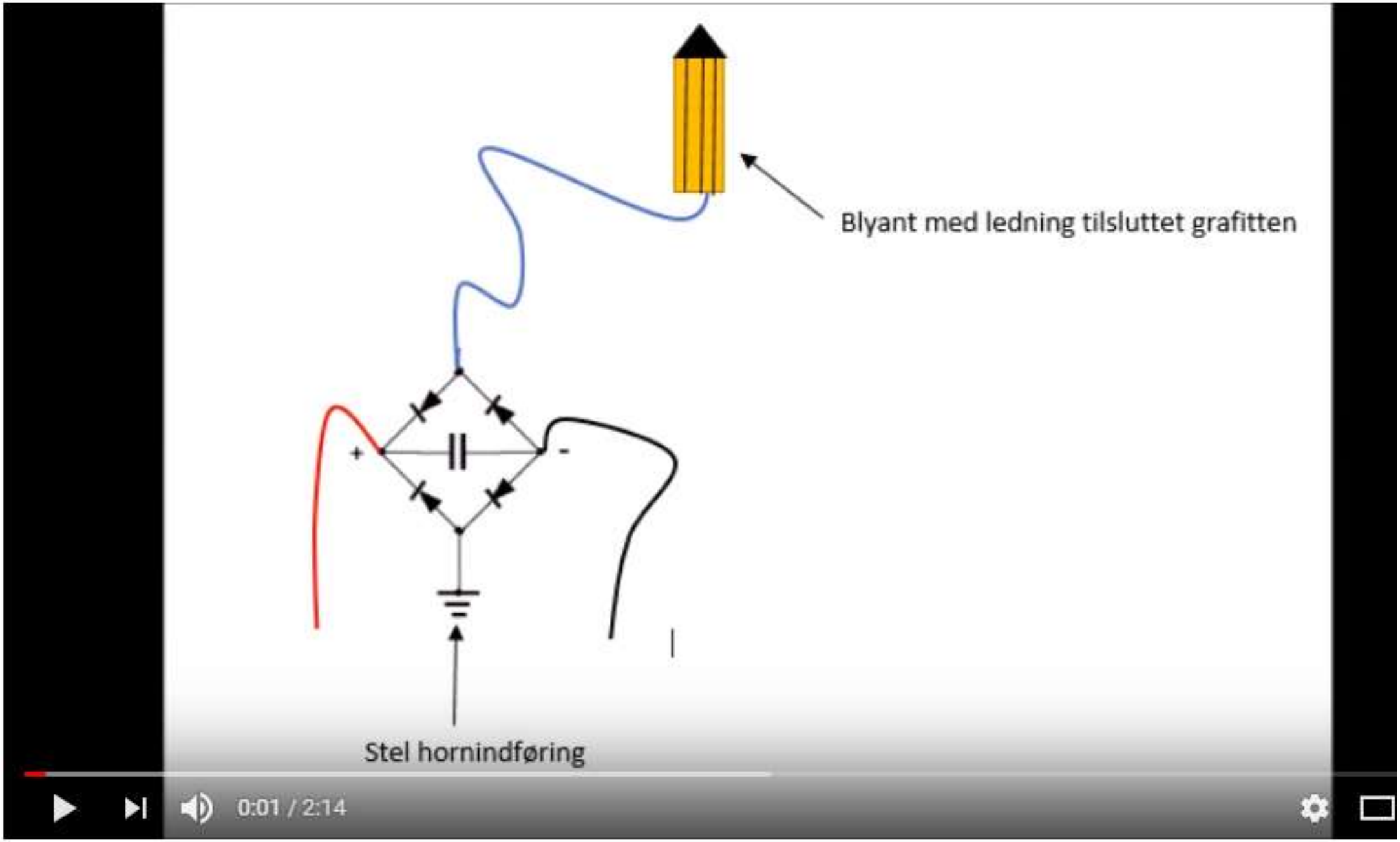

tesla radiant collector/ion collector with pencil

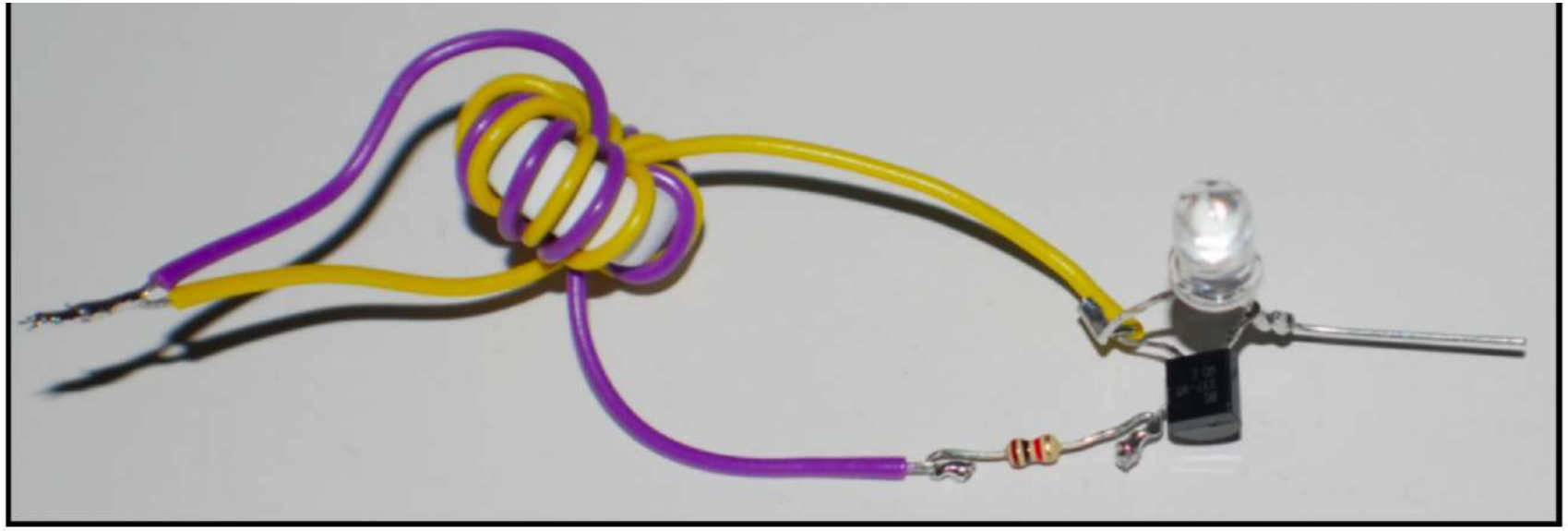

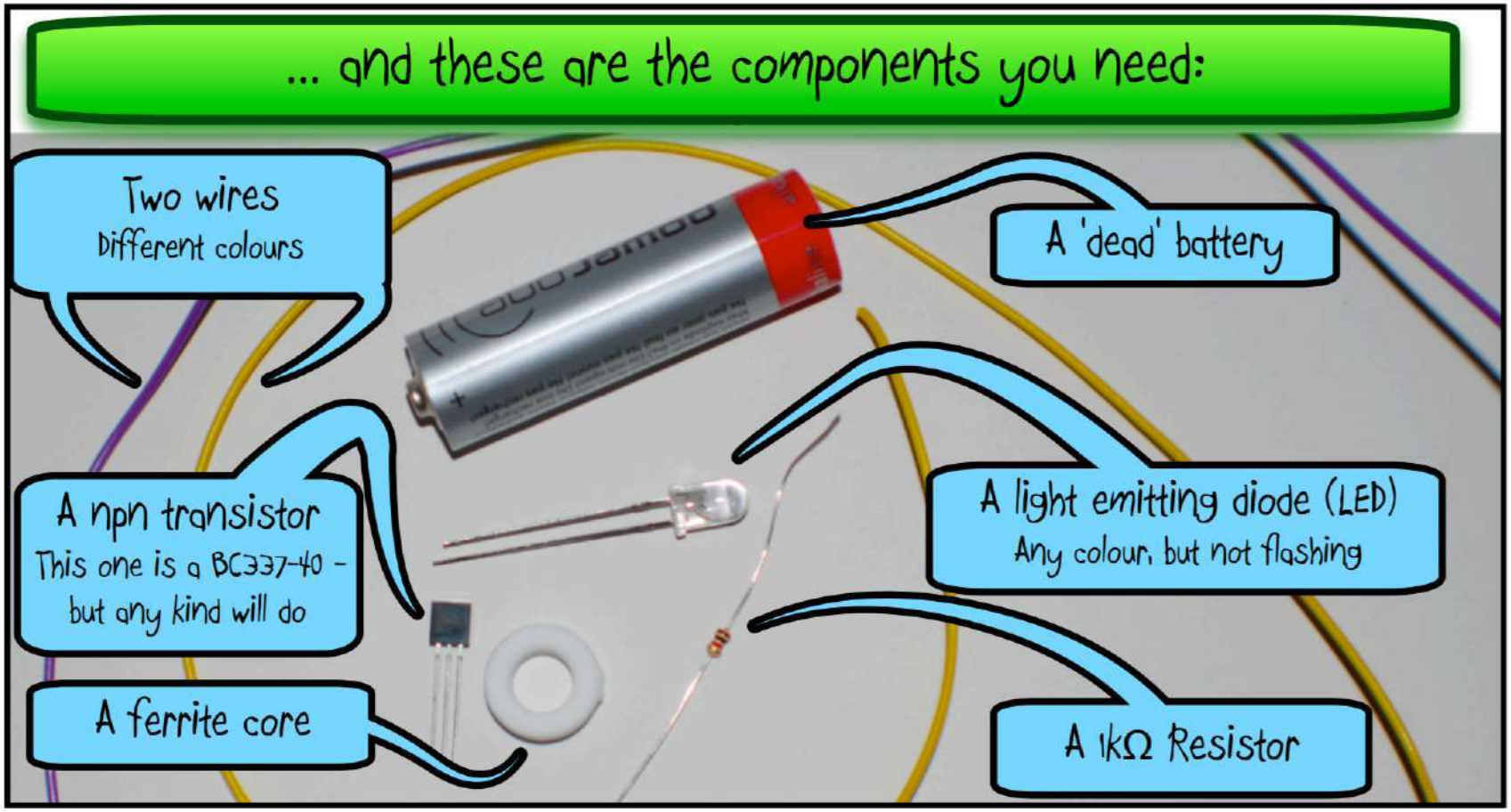
... and these are the components you need:
Two wires
Different colours
A 'dead' battery
A npn transistor
This one is a BC337-40 - but any kind will do
A light emitting diode (LED)
Any colour, but not flashing
A ferrite core
A 1kΩ Resistor

Solder the 1kΩ Resistor to either of the unsoldered wires coming from the inductor.

Solder the other end of the resistor to the base lead of the transistor.
On the transistor used here, that is the middle lead.
Cut off the spare ends of leads.

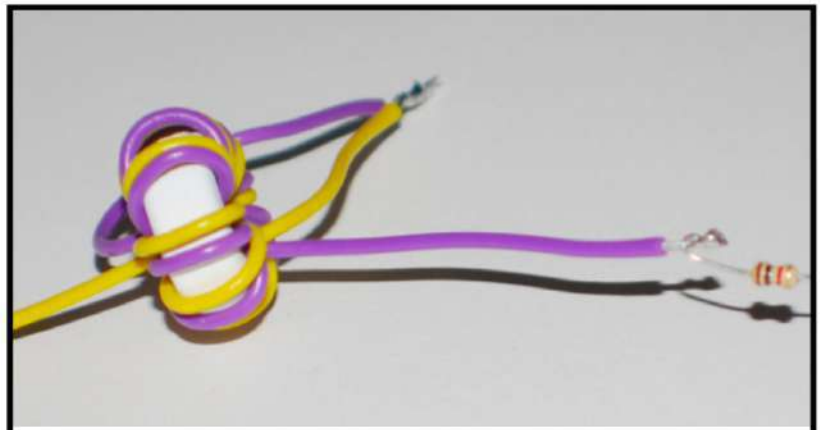

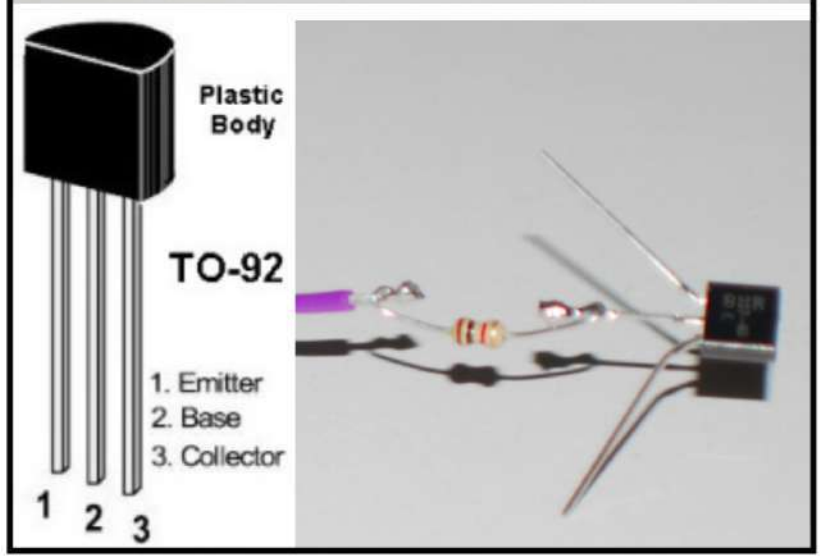

Solder the anode of the LED (the longer leg) to the collector lead of the transistor AND the remaining wire from the inductor.
Cut off the ends of the leads.

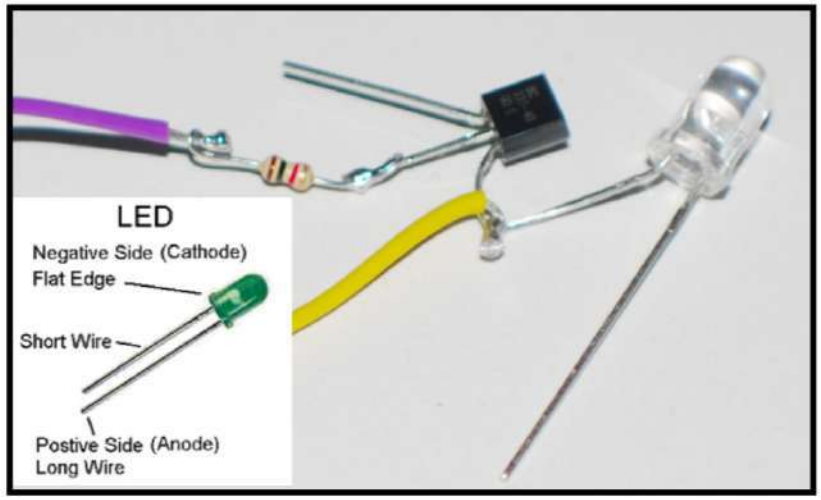

Solder the other leg of the LED (the cathode) to the emitter lead of the transistor.
Do NOT cut off the LED leg.
(Don't wory if you have cut it off - you'll just need to solder another wire to this leg so that you can connect it to the battery.)

That's the circuit finished. Now use it.

First you need a 'dead' battery - that means one where the voltage is less than 1.3V.
You can see that the battery used here has a Voltage of just over 1V.

Connect the two soldered wires coming from the inductor to the positive (+) side of the battery.
Connect the uncut LED leg (the athode) to the negative (-) side of the battery.

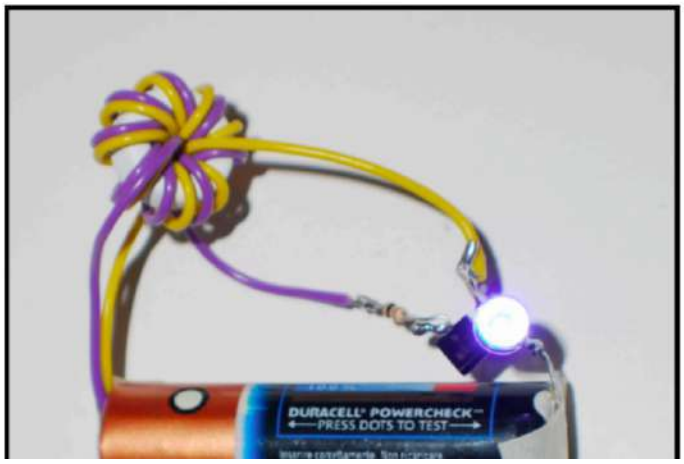

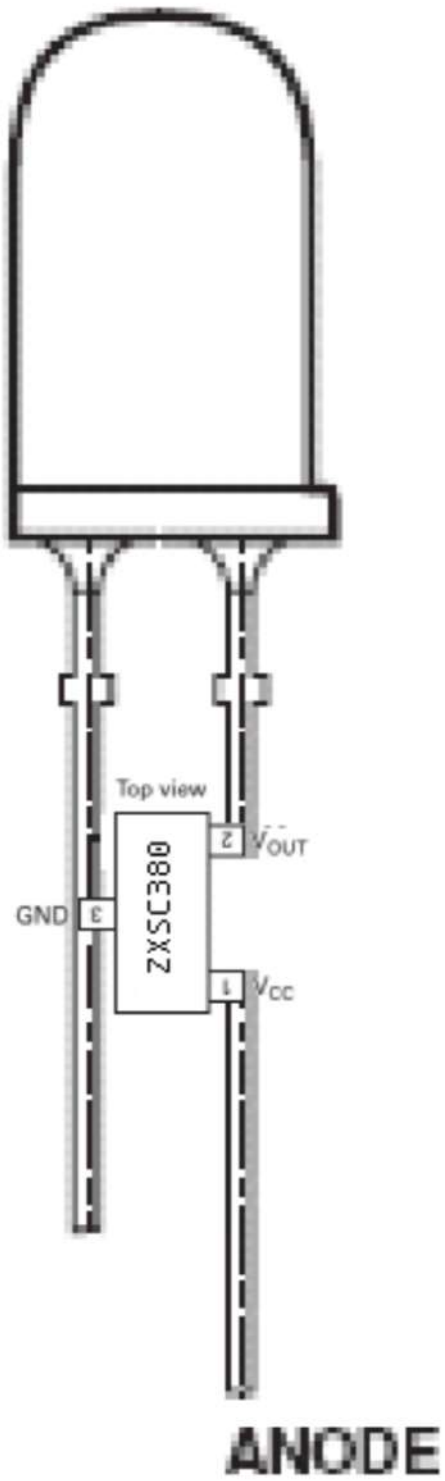

The chip is soldered onto the legs of the LED and then the wire between pins 1 and 2 is cut out so there is no connection. The inductor is then soldered so as to bridge pins 1 and 2. I soldered the inductor on before cutting out the wire but it might be easier to try some other method.

As I said previously, this is a tedious solder job, and the SOT23 IC is easily damaged (ask me how I know!) It takes patience and a steady hand to assemble these few parts.

This circuit would work for the LED indicator in the 1.5v boosters and would most likely be a better choice than the Joule Thief that I posted previously.

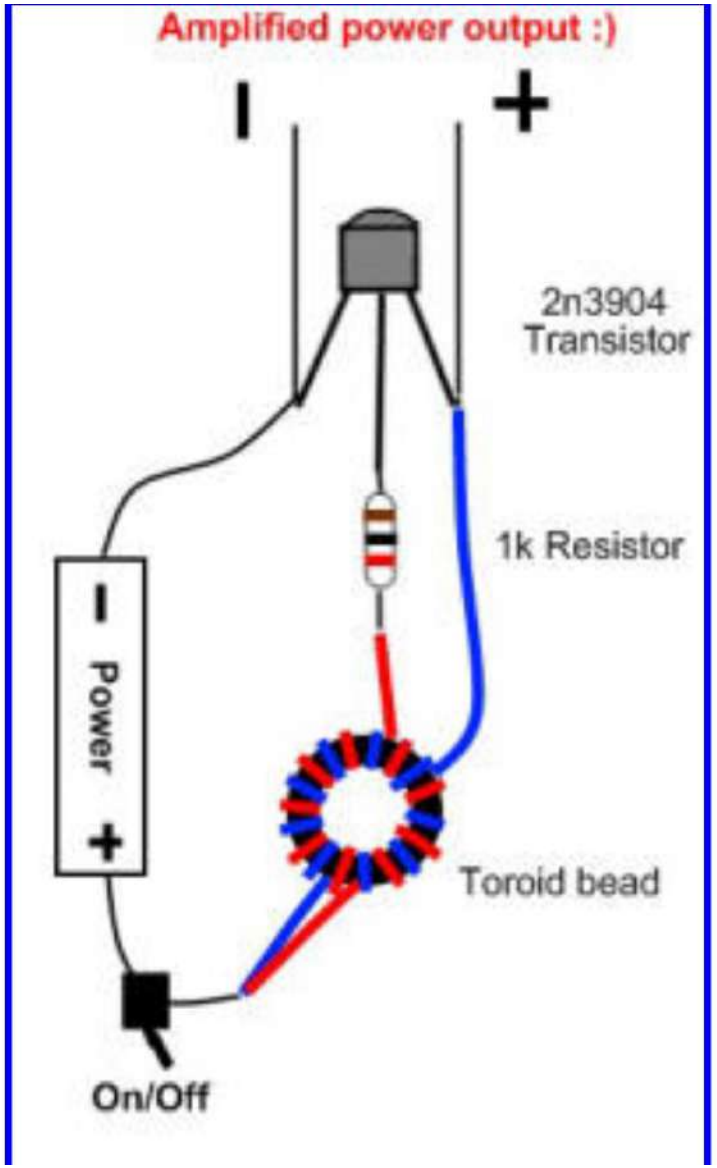
Amplified power output :)
-
+
2n3904
Transistor
1k Resistor
- Power +
Toroid bead
On/Off

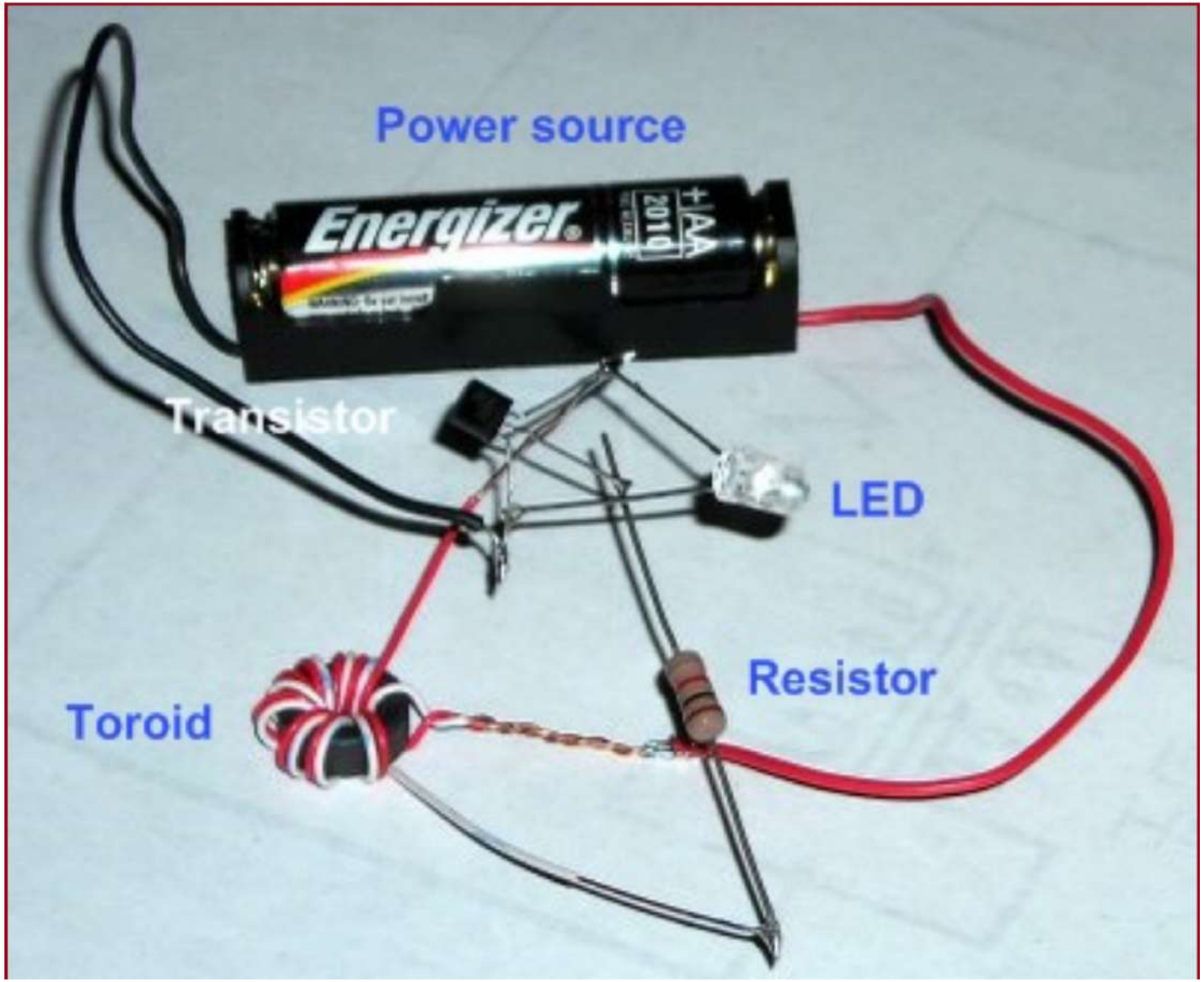
Power source
Energizer
Transistor
LED
Resistor
Toroid

The CIRCUIT

The circuit is very simple. All the work is done by the 5252F chip.
It contains an oscillator, a high speed diode and a power transistor. All these components inside the "IC" that looks like a 4-leaded transistor!
This IC is smaller and cheaper than all the parts individually and is less expensive than the competition (that costs 70 cents).
We can produce a complete project for a few dollars and it has two "test features."
You can place a LED across one of the LEDs on the board and find out the colour as many LEDs come in a "clear-as-glass" package and you cannot tell the colour until they are illuminated.
The other feature is INDUCTOR TESTING.
The current taken by the circuit changes according to the value of the inductor.
You just need a few reference values and you can work out the value of an inductor within the range of the inductors you have used as samples, or slightly higher or lower values.

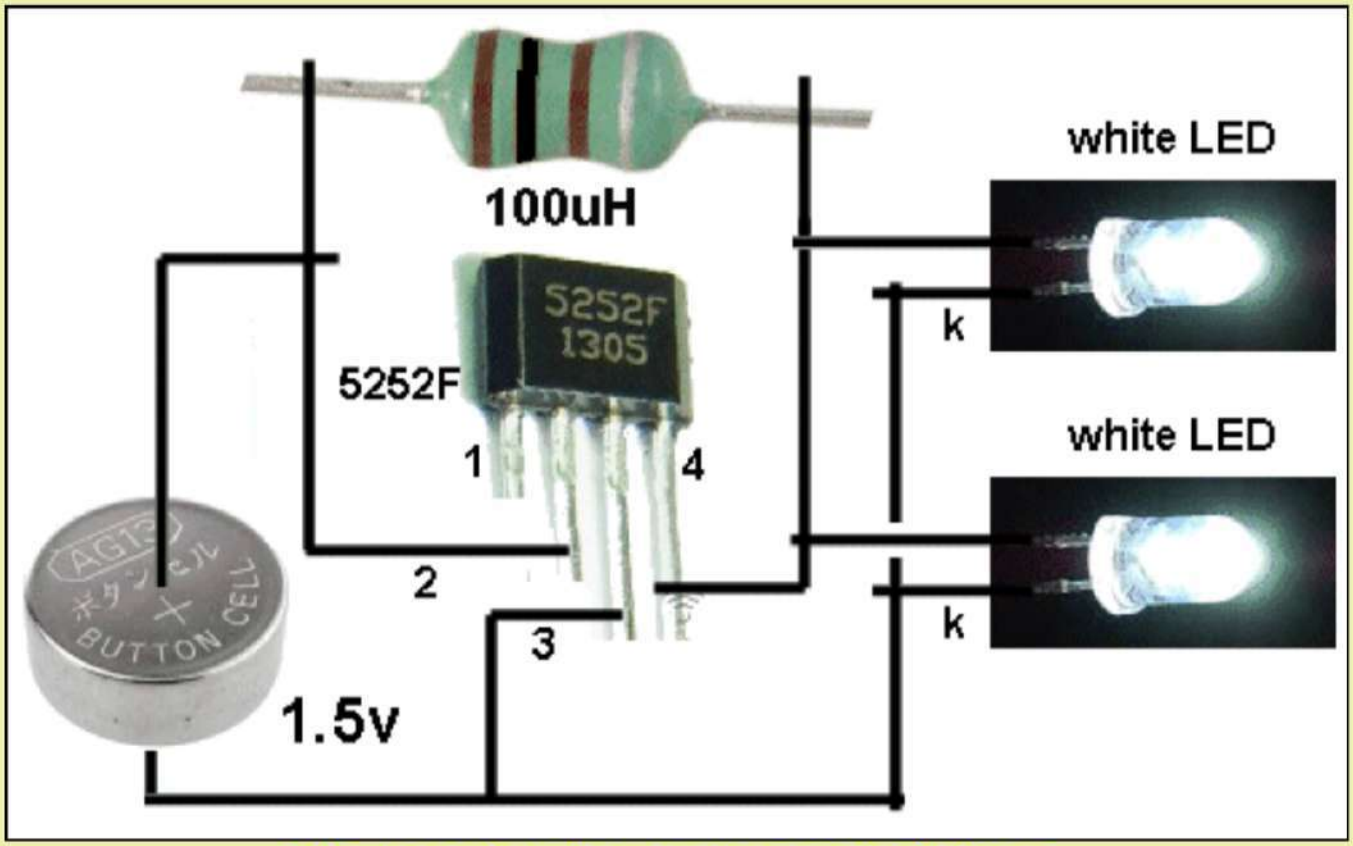

The layout using component pictures.

Using a 220uH, the circuit takes 13mA and illuminates 2 white LEDs very brightly.
Using 100uH the circuit takes 30mA and the LEDs are really the same brightness.
Using 33uH the circuit takes 80mA and the LEDs are just about the same brightness.
Obviously the 220uH creates the most efficient circuit.
The QX5252F is capable of delivering more than 100mA to the LEDs but we only need

Watson's 2 Transistor "Joule Thief" V. Booster

Uses 2N3904 for output. Coil is 180 microhenry, 2.5 ohm RF choke (green blob)

www.rustybolt.info
Jan 29, 2012

Watson's Version of "1.5v Joule Thief -Blinks Led"

Taken from http://www.youtube.com/watch?v=GVP2QGpk5KE Nov 14, 2012

My version does boost the voltage and light the LED, but it doesn't blink.

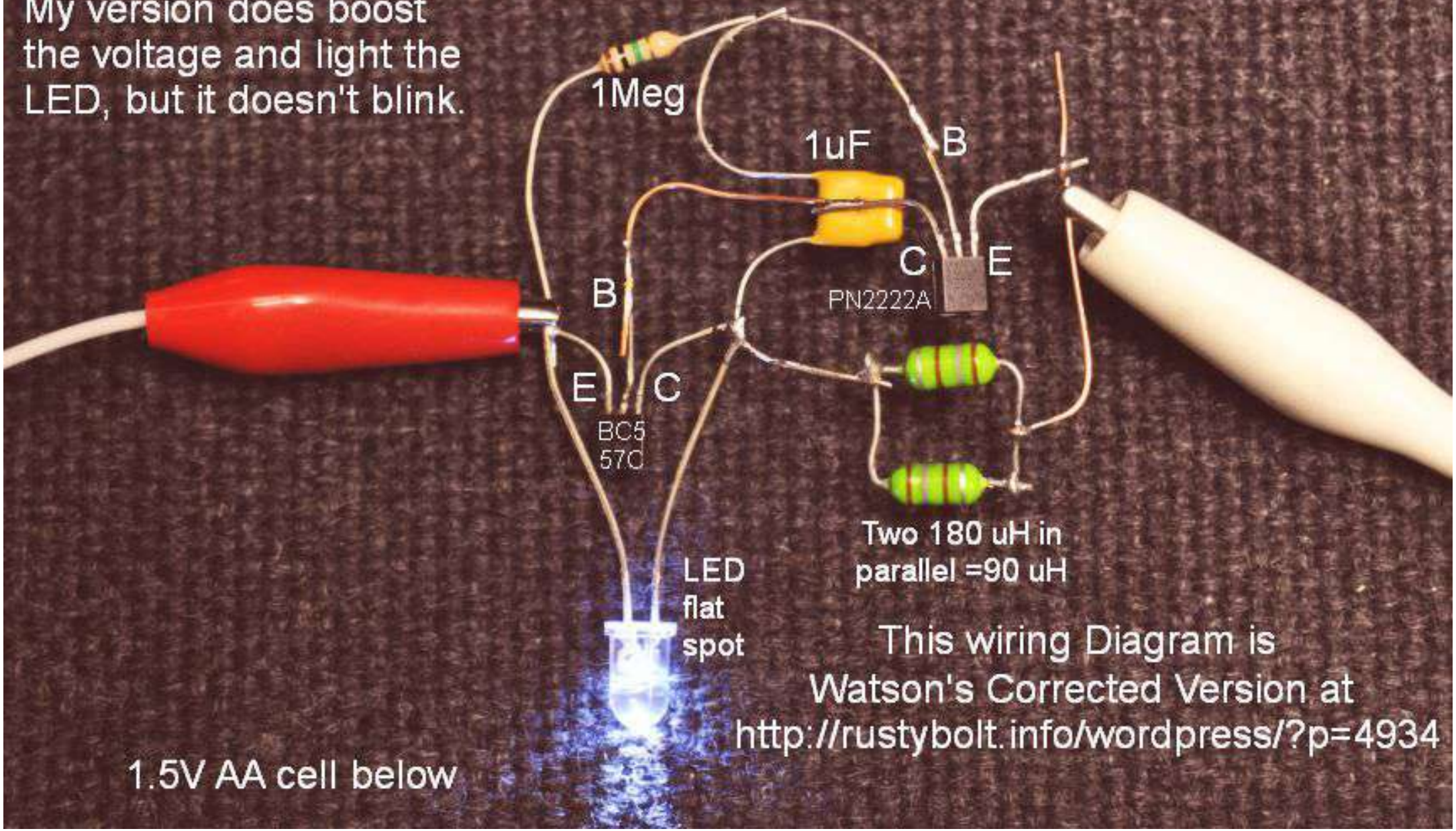

This wiring Diagram is Watson's Corrected Version at http://rustybolt.info/wordpress/?p=4934

1.5V AA cell below

Watson's Joule Thief Pictorial Diagram

http://rustybolt.info/wordpress/?p=128 2011 Dec 07

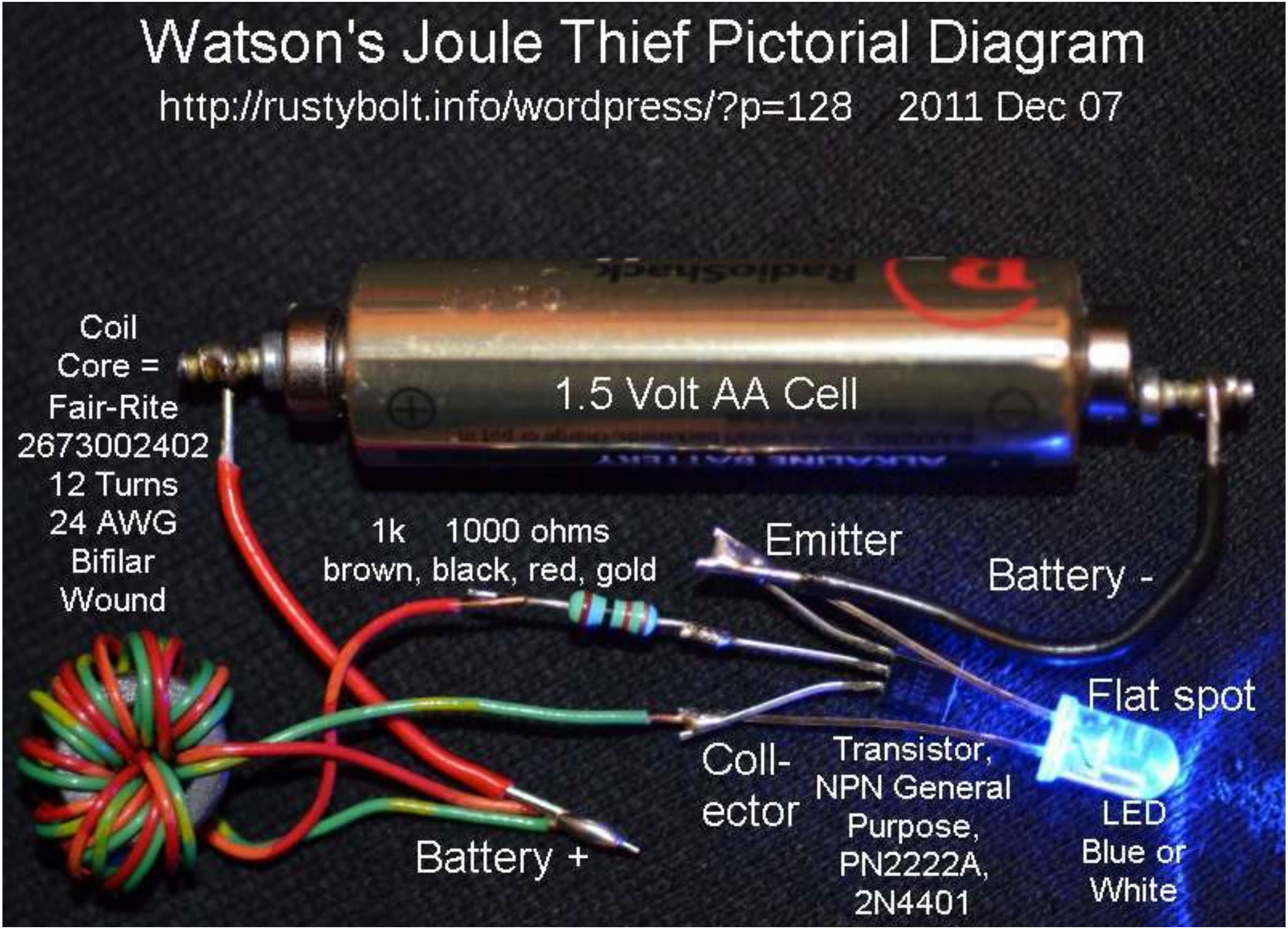

Joule Thief

Pictorial Wiring Diagram Dec 11, 2009

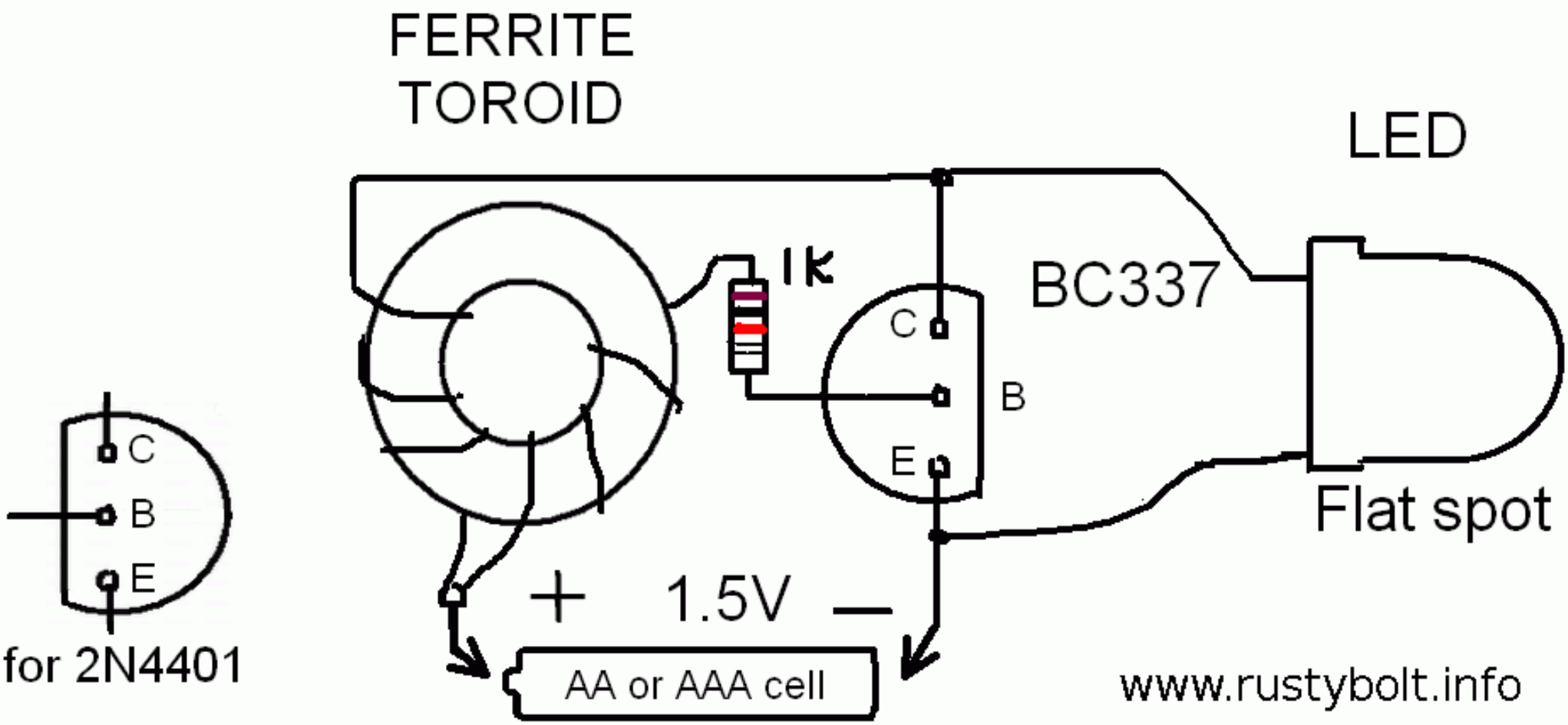

www.rustybolt.info

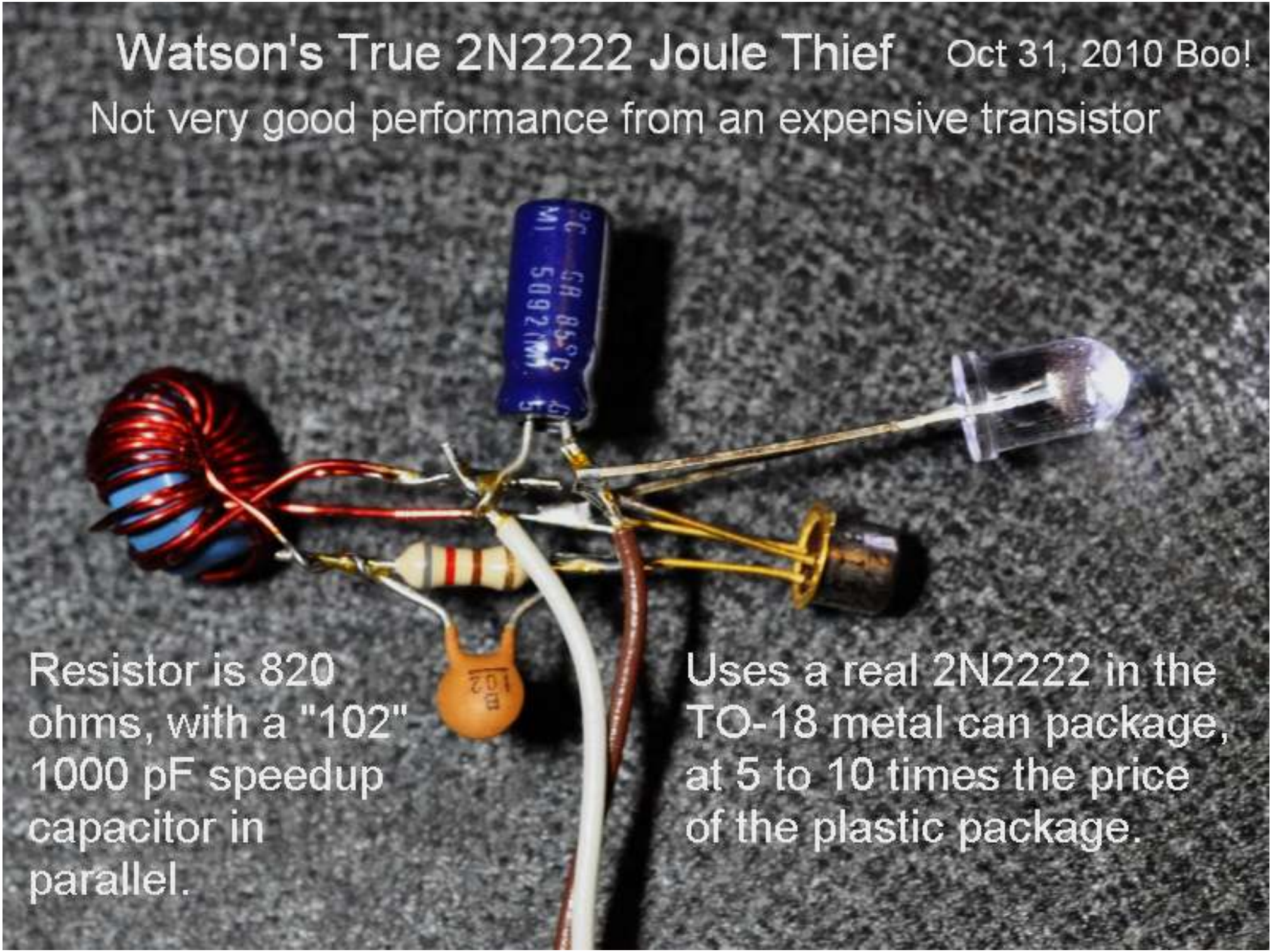
Watson's True 2N2222 Joule Thief
Oct 31, 2010 Boo!
Not very good performance from an expensive transistor
Resistor is 820 ohms, with a "102" 1000 pF speedup capacitor in parallel.
Uses a real 2N2222 in the TO-18 metal can package, at 5 to 10 times the price of the plastic package.

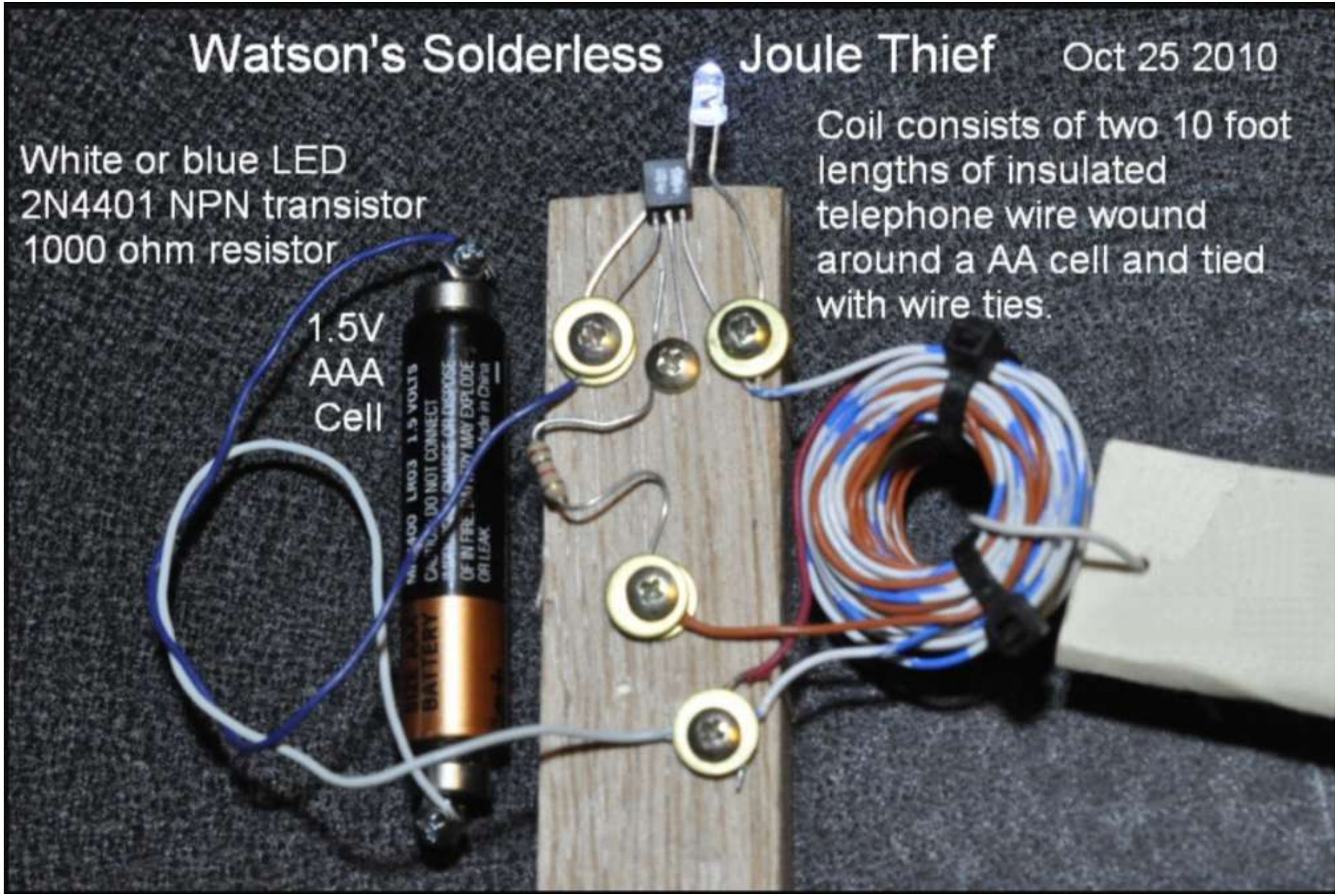
Watson's Solderless Joule Thief
Oct 25 2010
White or blue LED
2N4401 NPN transistor
1000 ohm resistor
1.5V
AAA
Cell
Coil consists of two 10 foot lengths of insulated telephone wire wound around a AA cell and tied with wire ties.

Watson's 'Toroid Free' Air Core Joule Thief
2.2k Red, Red, Red, Gold
rustybolt.info/wordpress/?p=2872 May 21, 2012

AA FORMAT · FSH
LR6 · AM3 · 1.5V

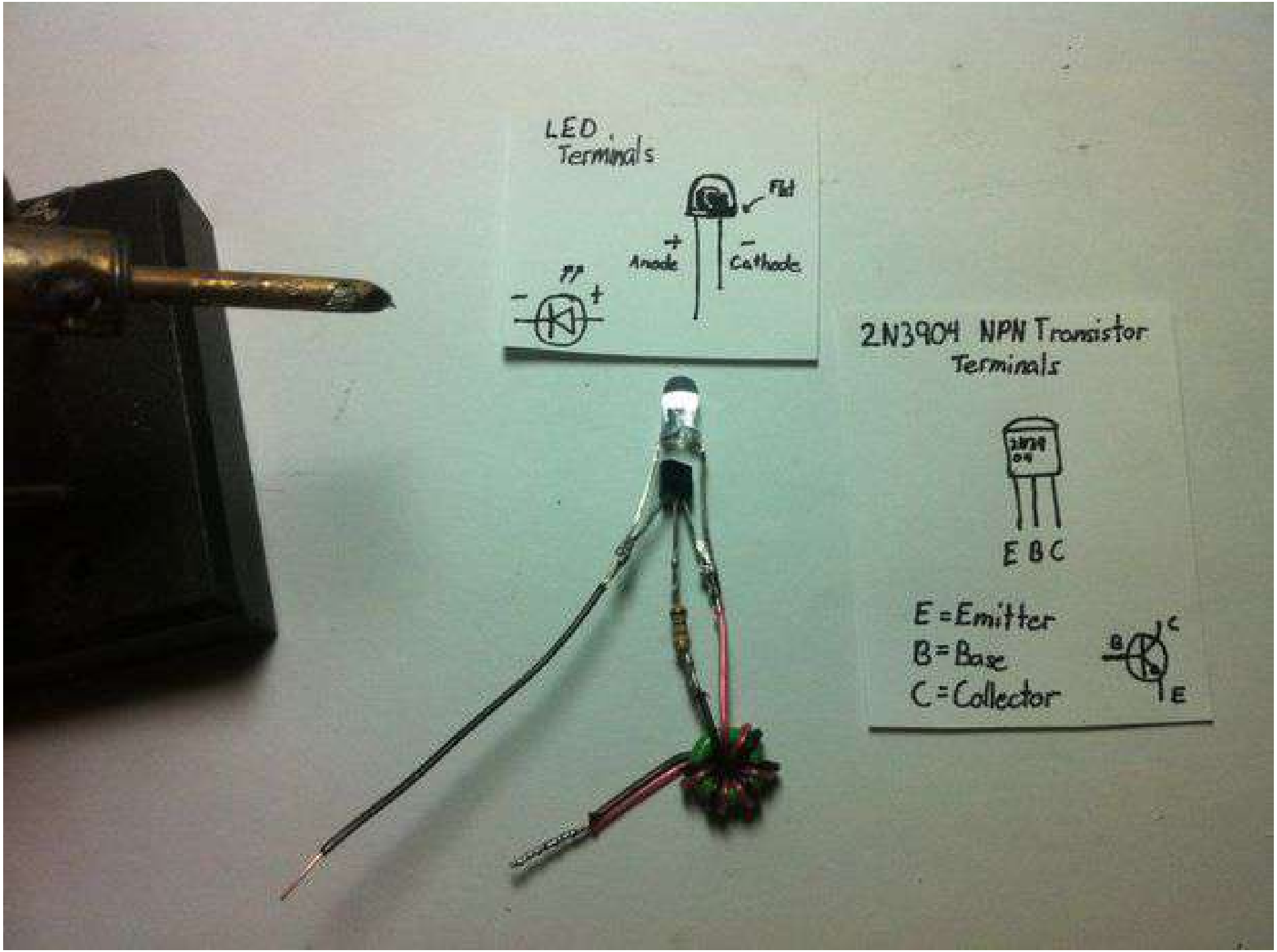
LED
Terminals
Flat
+
Anode
-
Cathode
-
+
2N3904 NPN Transistor
Terminals
E B C
E = Emitter
B = Base
C = Collector
B
C
E

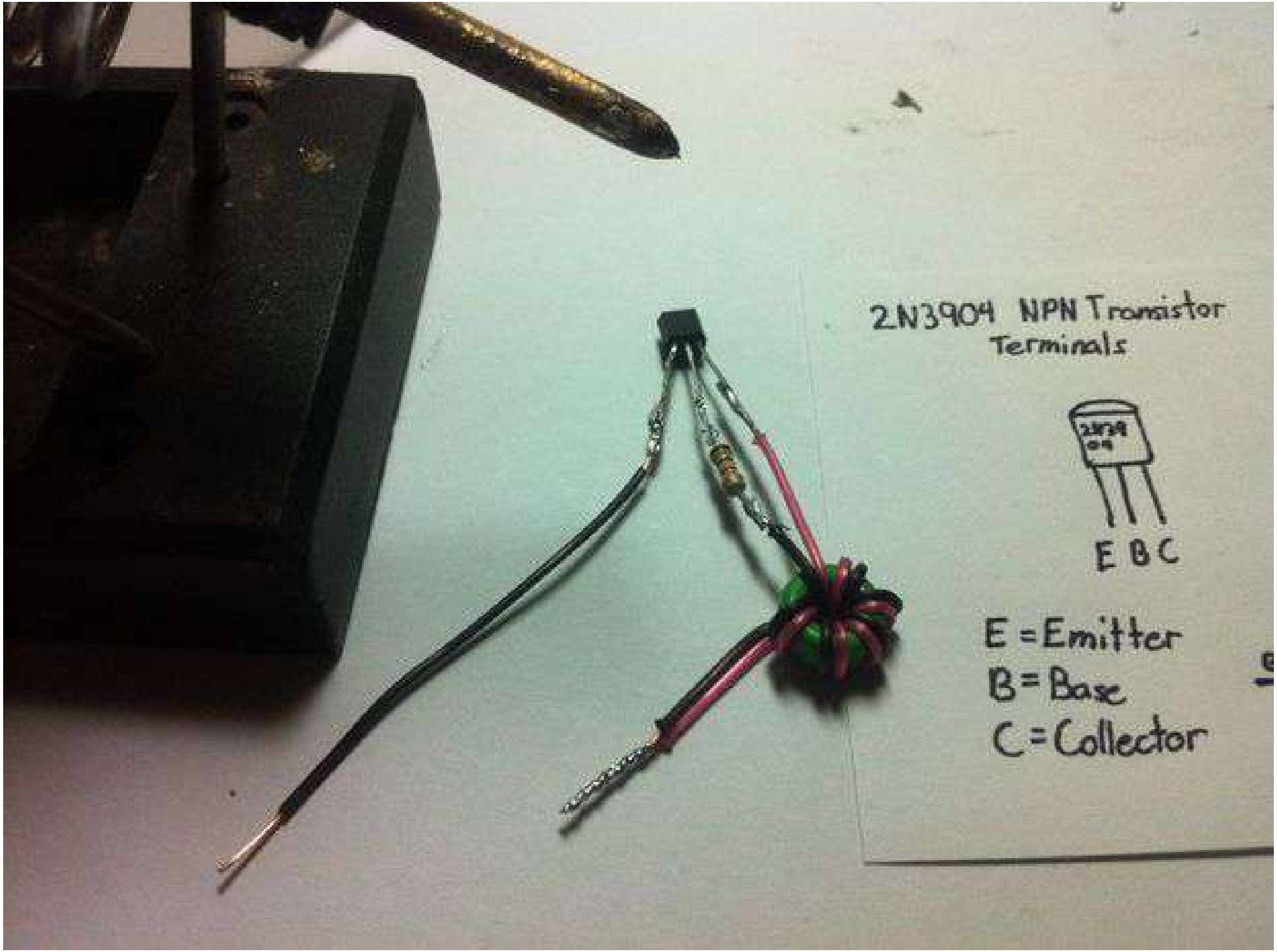
2N3904 NPN Transistor
Terminals
E B C
E = Emitter
B = Base
C = Collector

Transistor Terminals

2N3904
(NPN Transistor)

LED Terminals

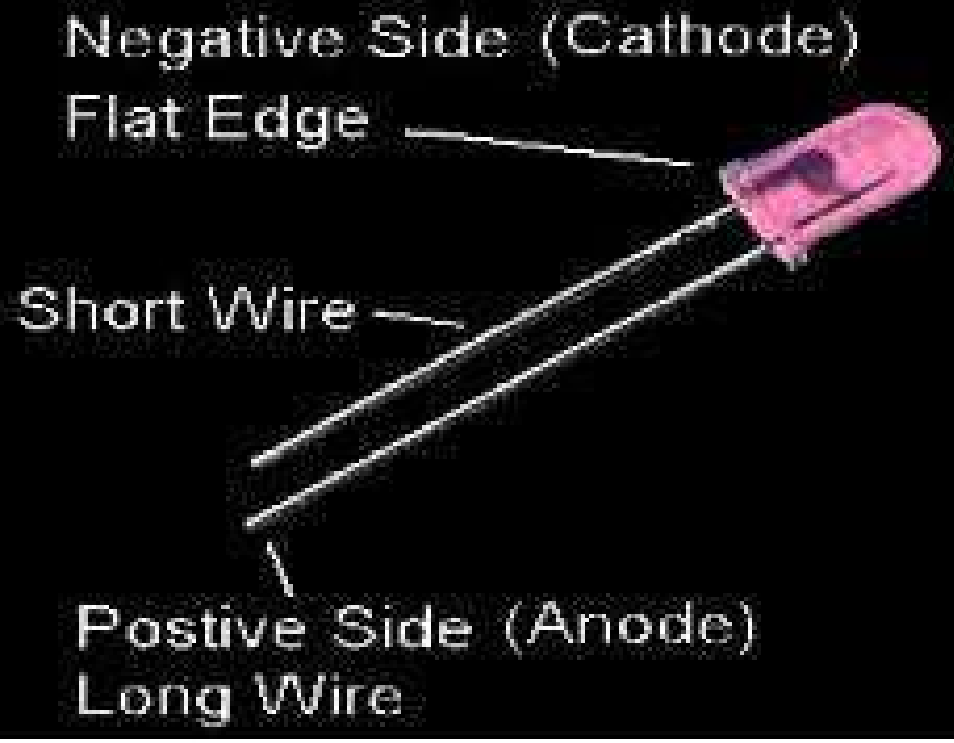

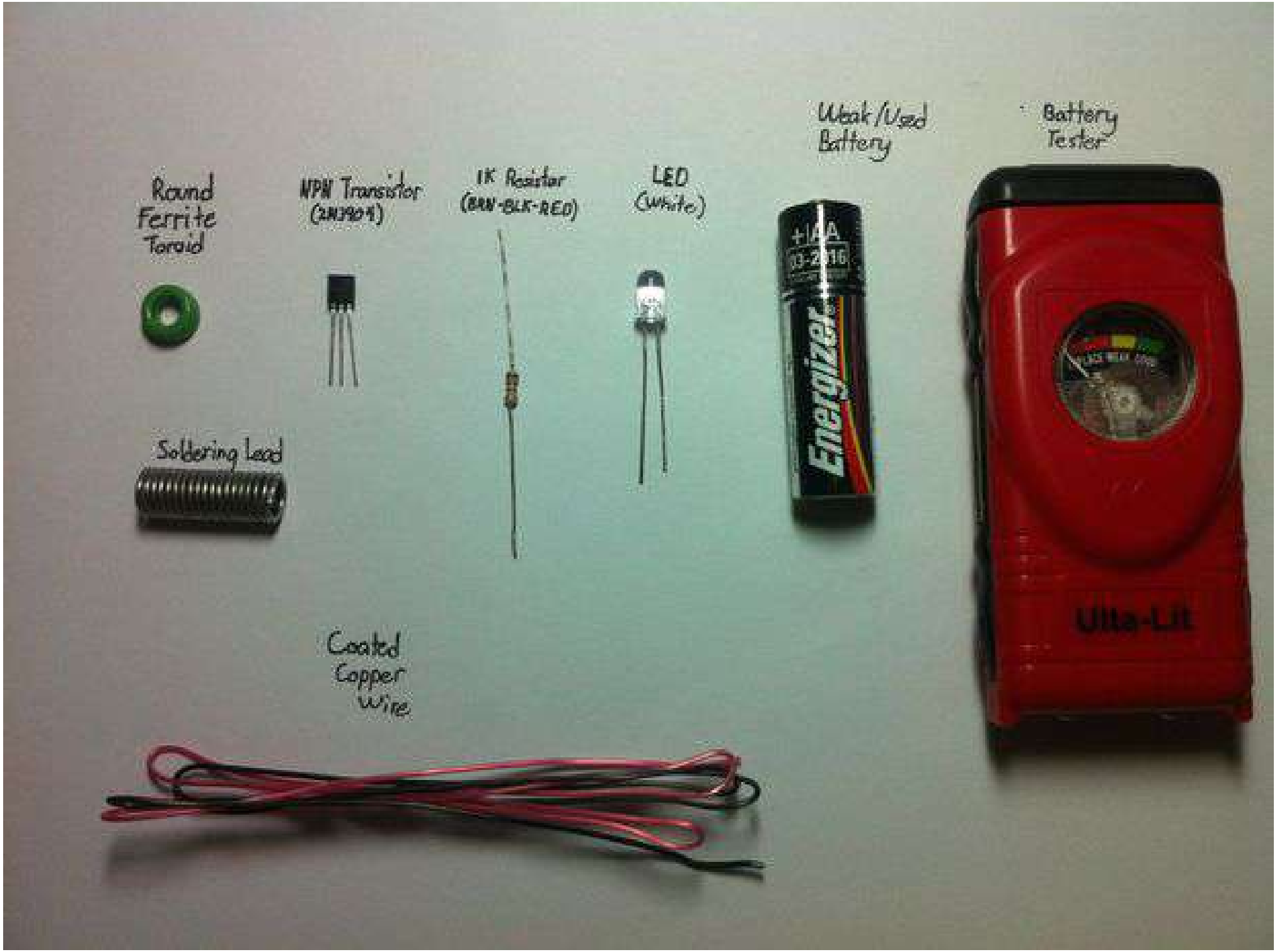
Round Ferrite Toroid
NPN Transistor (2N3904)
1K Resistor (BRN-BLK-RED)
LED (White)
Weak/Used Battery
Battery Tester
Soldering Lead
Coated Copper Wire
Energizer
Ulta-Lit

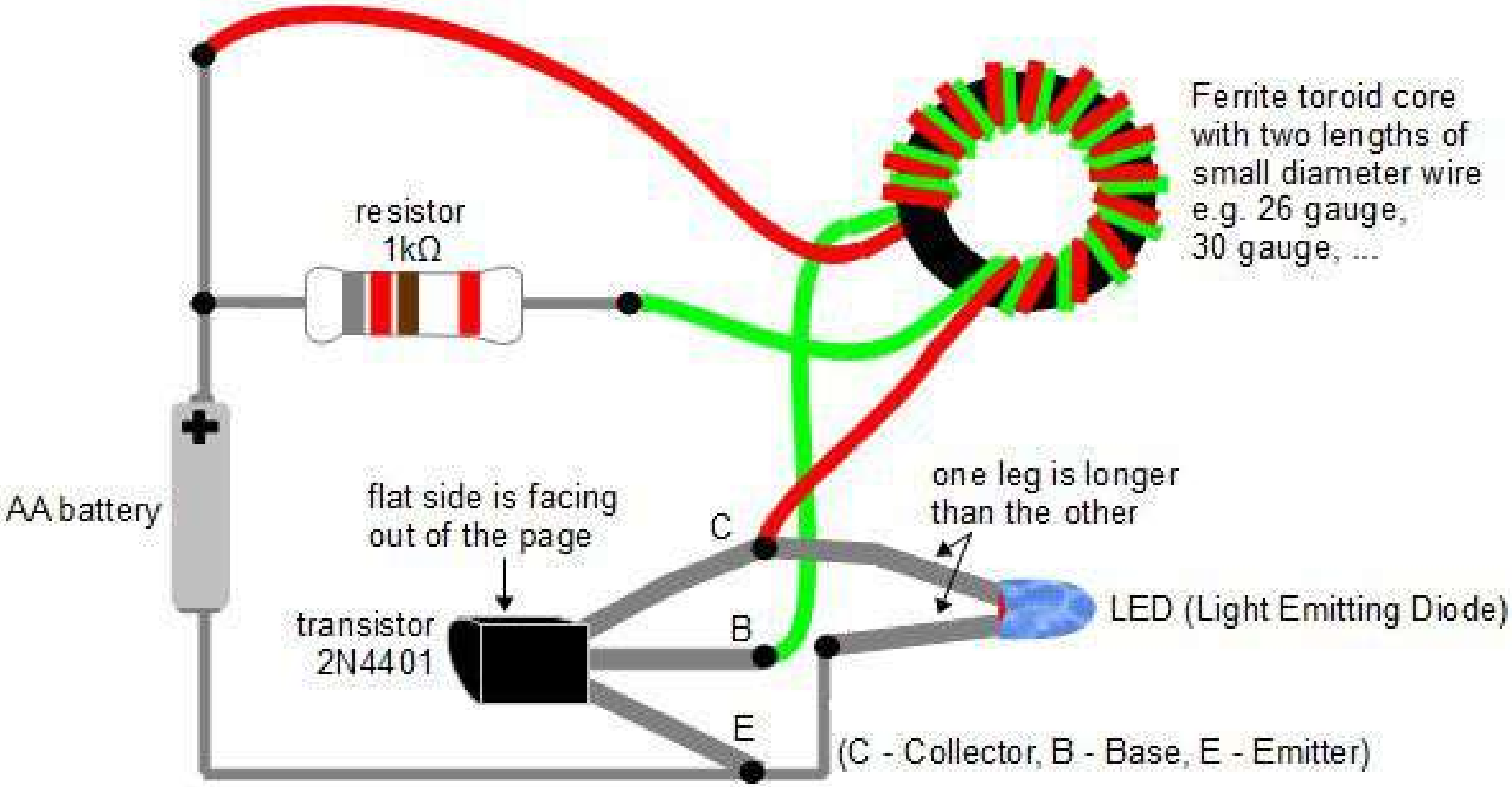
Ferrite toroid core
with two lengths of
small diameter wire
e.g. 26 gauge,
30 gauge, ...
resistor
1kΩ
AA battery
flat side is facing
out of the page
one leg is longer
than the other
C
B
E
transistor
2N4401
LED (Light Emitting Diode)
(C - Collector, B - Base, E - Emitter)

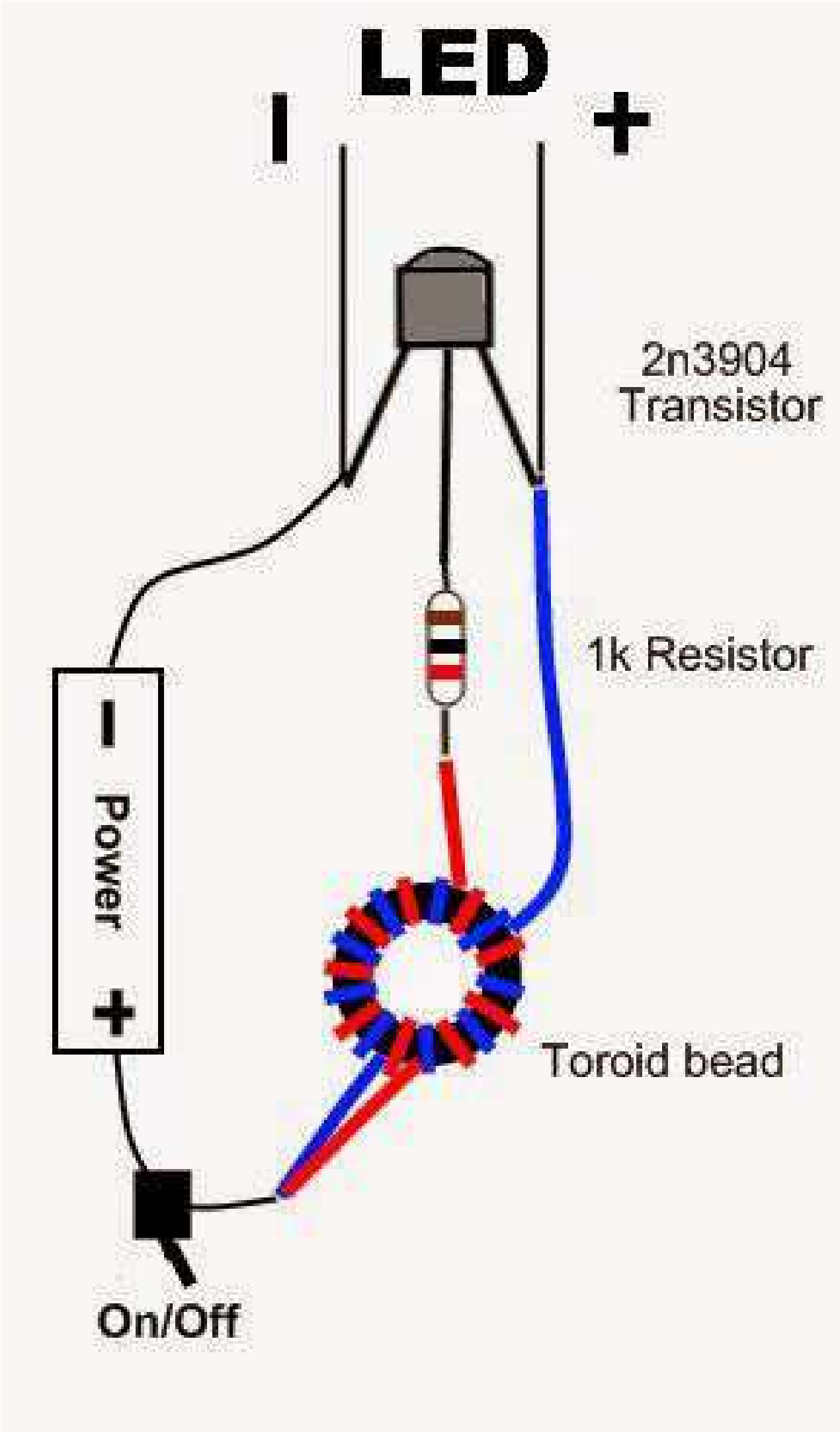
LED
I
+
2n3904
Transistor
1k Resistor
-
Power
+
Toroid bead
On/Off

COSMIC VIBRATIONS

Octave	Manifestation	Vibrations per second	Gaps
1	TOUCH	2	
2		4	
3		8	
4		16	
5	SOUND	32	
6		64	
7		128	
8		256	
9		512	
10		1,024	
11		2,048	
12		4,096	
13		8,192	
14		16,384	
15		32,768	
16	ELECTROMAGNETIC (Lesser Spectrum)	65,536	
17		131,072	
18		262,144	
19		524,288	
20		1,048,576	
21		2,097,152	
22		4,194,304	
23		8,388,608	
24		16,777,216	
25		33,554,432	
26		67,108,864	
27		134,217,728	
28		268,435,456	
29		536,870,912	
30	ELECTROMAGNETIC (Increasing)	1,073,741,824	
31		2,147,483,648	
32		4,294,967,296	
33		8,589,934,592	
34		17,179,869,184	
35		34,359,738,368	
36		68,719,476,736	
37		137,438,953,472	
38		274,877,906,944	
39	HEAT OR INFRARED	549,755,813,888	
40		1,099,511,627,776	
41		2,199,023,255,552	
42		4,398,046,511,104	
43		8,796,093,022,208	
44		17,592,186,044,416	
45		35,184,372,088,832	
46		70,368,744,177,664	
47		140,737,488,355,328	
48	VISIBLE LIGHT	281,474,976,710,656	
49		562,949,953,421,312	
50		1,125,899,906,842,624	
51	ULTRAVIOLET	2,251,799,813,685,248	SPIRIT ELECTRONS
52		4,503,599,627,370,496	
53		9,007,199,254,740,992	
54		18,014,398,509,481,984	
55		36,028,797,018,963,968	
56		72,057,594,037,927,936	
57	X-RAY	144,115,188,075,855,872	
58		288,230,376,151,711,744	
59		576,460,752,303,423,488	
60	GAMMA AND COSMIC RAYS		PSYCHIC PROJECTIONS
61			
62		4,611,686,018,427,387,904	
63			
64		*The Vibrations in these octaves increase to an incomprehensible number per second.*	
65			
66			
67			
68			
69			
70		*The phenomena of psychic projections and soul essence occur in octaves considerably beyond those of any known material manifestations. Consequently, they must not be considered as immediately following any manifestation which we have shown on this chart.*	
71			
72			
73			SOUL ESSENCE
74			
75			
76			
77			
78			
79			
80			

(THESE INTERVALS AND FIGURES ARE APPROXIMATE AND NOT EXACT)

NOTICE

This chart was carefully compiled by the Editorial and Research Departments of AMORC College after consulting the most eminent scientific authorities on the subjects of physics and chemistry and comparing their observations and notations with the reports from the Rosicrucian laboratories in foreign countries.

There is a slight disagreement in regard to the rates of vibrations for the various keys of the musical keyboard, due to different standards of pitch in various countries, and there is some disagreement among scientific authorities in regard to the colors associated with various musical notes. This chart represents not only the consensus of most of these authorities but also adheres strictly to what the Rosicrucians have been able to demonstrate as truth in our own laboratories and in the experiments of thousands of members in various parts of the world. Regardless, therefore, of any disagreement with authorities outside the organization, this chart is the authentic presentation of the Rosicrucian knowledge.

This chart is to be used by the members of the Rosicrucian Order in connection with their studies and experiments and is not to be used for any other purpose or in any other way. Like the lessons themselves, this chart and the facts contained on it are reserved and restricted in use under the rules and regulations of the organization.

INTERNATIONAL SEAL OF THE SUPREME LODGE of the Rosicrucian Order

AD ROSAM PER CRUCEM · AD CRUCEM PER ROSAM

THE SOLAR SPECTRUM

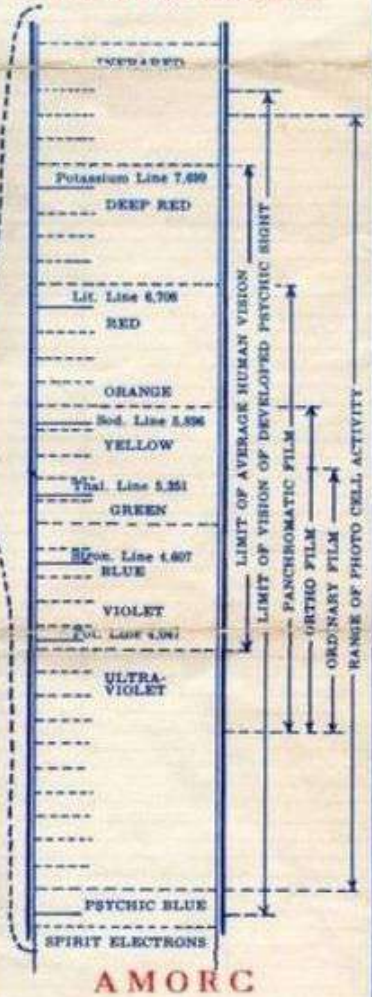

AMORC

THE *Rosicrucian Order*

San Jose, California

Reich's Orgone Accumulator Box

Cutaway View of Box Layers

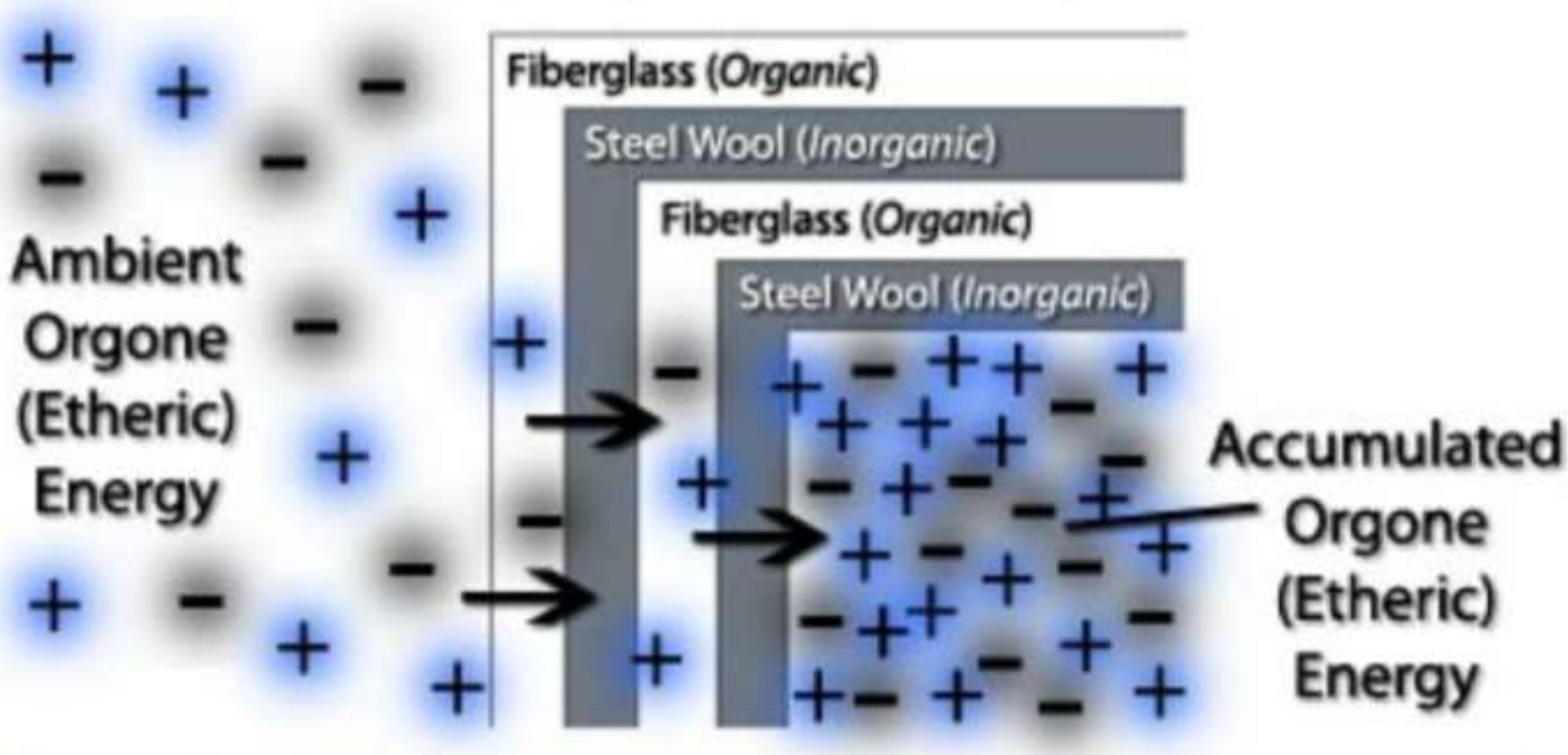

Key:

+ Positive Orgone (Etheric) Energy (a.k.a., "OR" / "POR")

− Deadly Orgone (Negative Etheric) Energy (a.k.a., "DOR")

rgonite.info

How to build a Don Croft ORGONITE CLOUD BUSTER

Materials List:

Wear safety gear as necessary
- respirator, gloves when pouring resin.
- gloves & goggles when cutting wood - with a respirator if cutting MDF etc.

4 x 10' lengths of copper (or other) pipe (cut 3 lengths in half, and one length into six 1' pieces)

6 pipe endcaps and 6 pipe connectors

2 gallon bucket (polypropylene if possible)

10 double terminated quartz (6 of these must fit into garden hose for insertion into base of pipes)

6 pieces of garden hose (3/4" - 1" long)

Resin and metal suitable for orgonite

A roll of tape (duct tape etc)

Glue (silicone glue will work)

Stick for mixing metal into resin when pouring layers

Top, middle (temporary) and bottom spacers cut and drilled out of wood. If not buying readymade, use templates or measure with copmass, ruler, pencil.
Drill the holes with 1 1/8" and 1 1/4" wood drill bits, and cut into shape with a Jigsaw.

Refer to (Part 1 - 2) How to Make an Orgonite CloudBuster:
http://www.youtube.com/watch?v=cCn1DO2Rj6k

Third - The temporary spacer is removed and the pipe-tops are taped up to stop resin or metal getting into them.
Further layers are poured, allowing resin to cure and cool between pouring.
More crystals or other components may be added with the basic orgonite mixture.
When done, the tape is removed from the pipe ends.

Second poured layer (the temporary spacer is fixed in place while this layer is curing, and then removed)

First poured layer (1" - 1 1/2" high) Include four double-terminated crystals at compass points

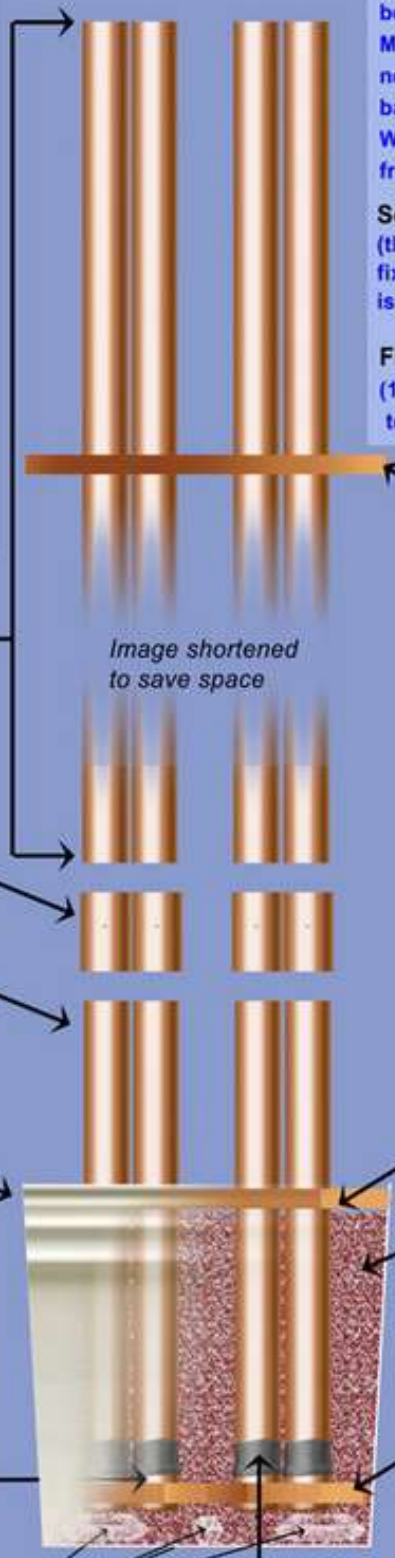

Six 5' lengths of copper pipe
When the orgonite base of the cloud buster is complete, fix the top pipes to the bottom ones using pipe connectors, then fix the top spacer in place to provide stability.

Pipe connectors

Six 1' lengths of copper pipe
(1" diameter pipe)

2 Gallon .....plastic bucket
(8" bottom-interior diameter, 9" top interior diameter)

Double Treminated Crystal
(secured into hose with glue)

Section of garden hose
3/4" - 1" piece
(glued into end cap with silicone glue)

Copper end cap

Four double terminated crystals in the base are aligned with the cardinal directions

Taped joint where each copper pipe fits into its end cap (duct tape or any kind to stop resin seeping into endcap)

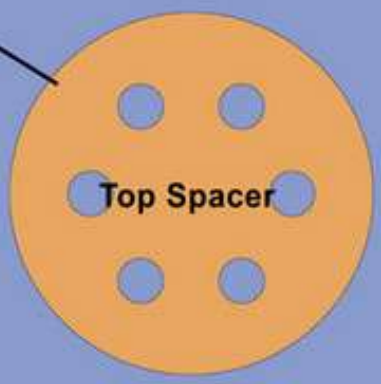

Temporary Spacer
This spacer fits tightly into the top of the bucket. (used to hold the pipes in place while the first layer of resin cures)

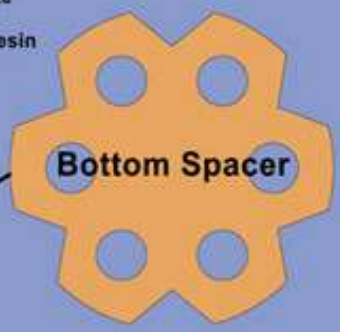

BOAT
BOAT
GOOP

N. TESLA.

APPARATUS FOR TRANSMITTING ELECTRICAL ENERGY.

APPLICATION FILED JAN. 18, 1902. RENEWED MAY 4, 1907.

1,119,732. Patented Dec. 1, 1914.

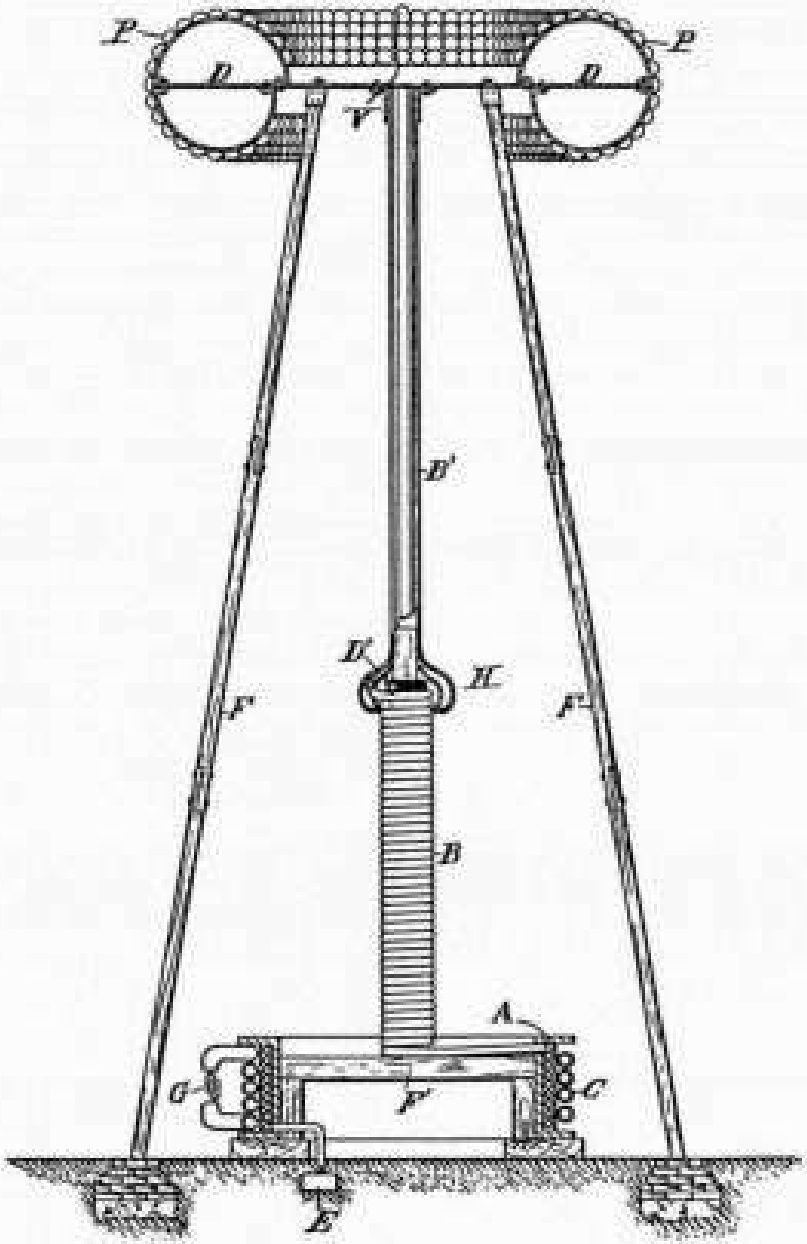

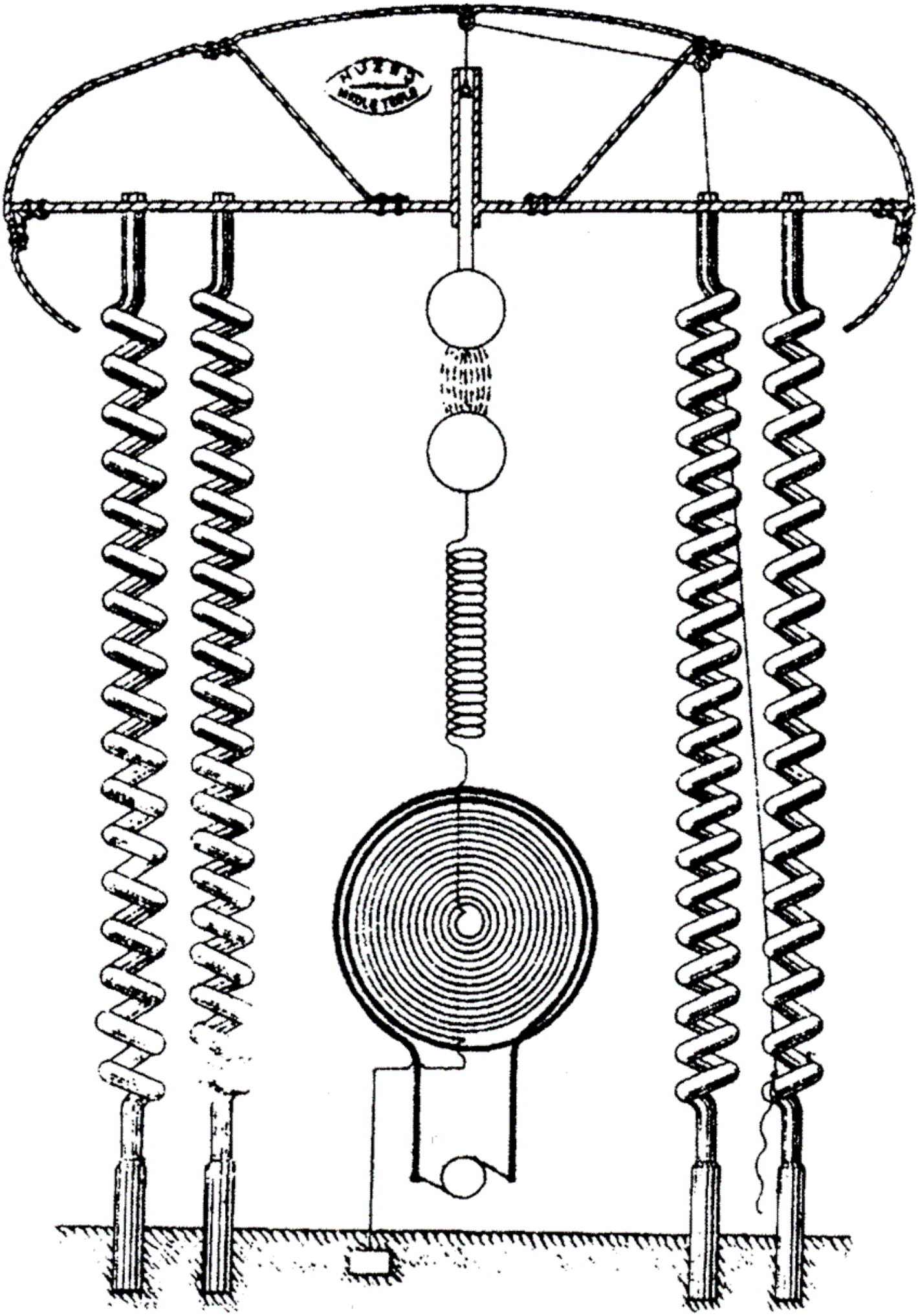

New York, Aug. 30th, 1901
46 & 48 East Houston Str.

Mr. Stanford White
160 Fifth Ave.
New York City

My Dear Stanford:
Many thanks for your suggestions. I am writing to Mr. Powell today. Perhaps he will be able to clear the land altogether.

I want you to understand that I went to the American Bridge Company simply because of my anxiety to have the work pushed through as fast as practicable. I am only too glad to follow your advice and beg you to consider yourself absolutely free in your choice and arrangements regarding this work.

Yours very sincerely,
N. Tesla

New York, Sep. 12th, 1901
46 & 48 East Houston Str.

Babcock & Wilcox Co.
85 Liberty Street
New York City

Gentlemen:
Under enclosure I forward sketch showing your two boilers as they will be placed in my building and their position relative to and exact distance from the chimney. The scale is ½ inch to a foot.

You will greatly oblige me by furnishing the drawings of the flues leading to the chimney and the position of the breech, as the builder cannot proceed without this information.

Yours very truly,
Encl.

Anyone familiar with the Wardenclyffe Tower knows it to have been a colossal structure. Yet, few realize that it was supposed to have been even larger. Although the exact figures are not revealed, Tesla must have drastically underestimated the cost of building his structure as is evidenced by the following response to White.

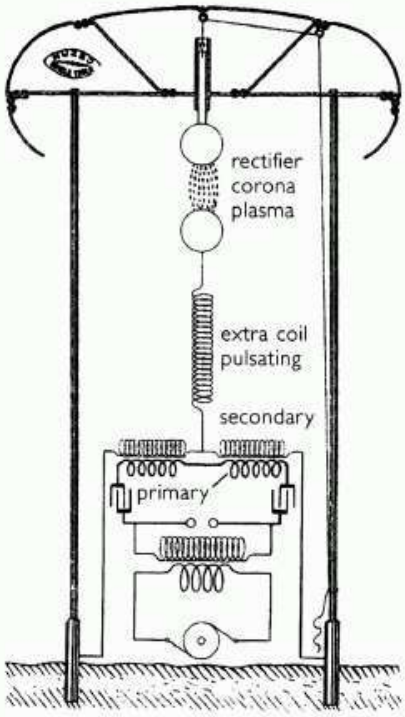

Fig. 5 Oscillating statically charged terminal.

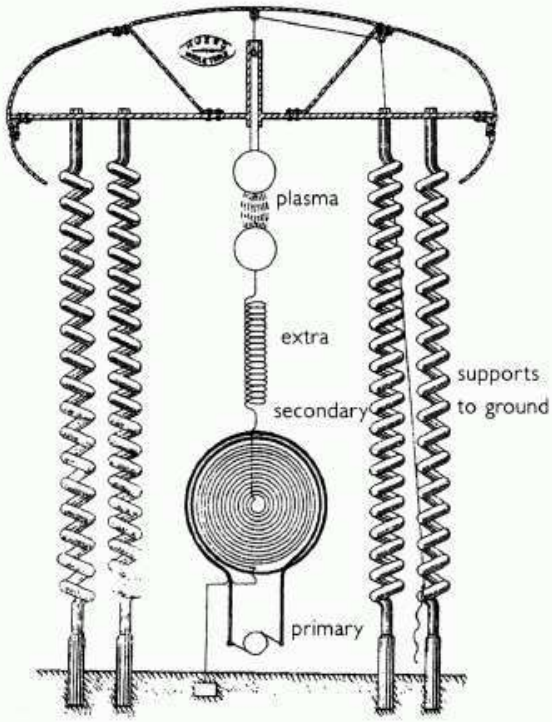

Fig. 6 Oscillating electrostatically charged dome.

N. TESLA

APPARATUS FOR TRANSMITTING ELECTRICAL ENERGY.

APPLICATION FILED JAN. 18, 1902. RENEWED MAY 4, 1907.

1,119,732. Patented Dec. 1, 1914.

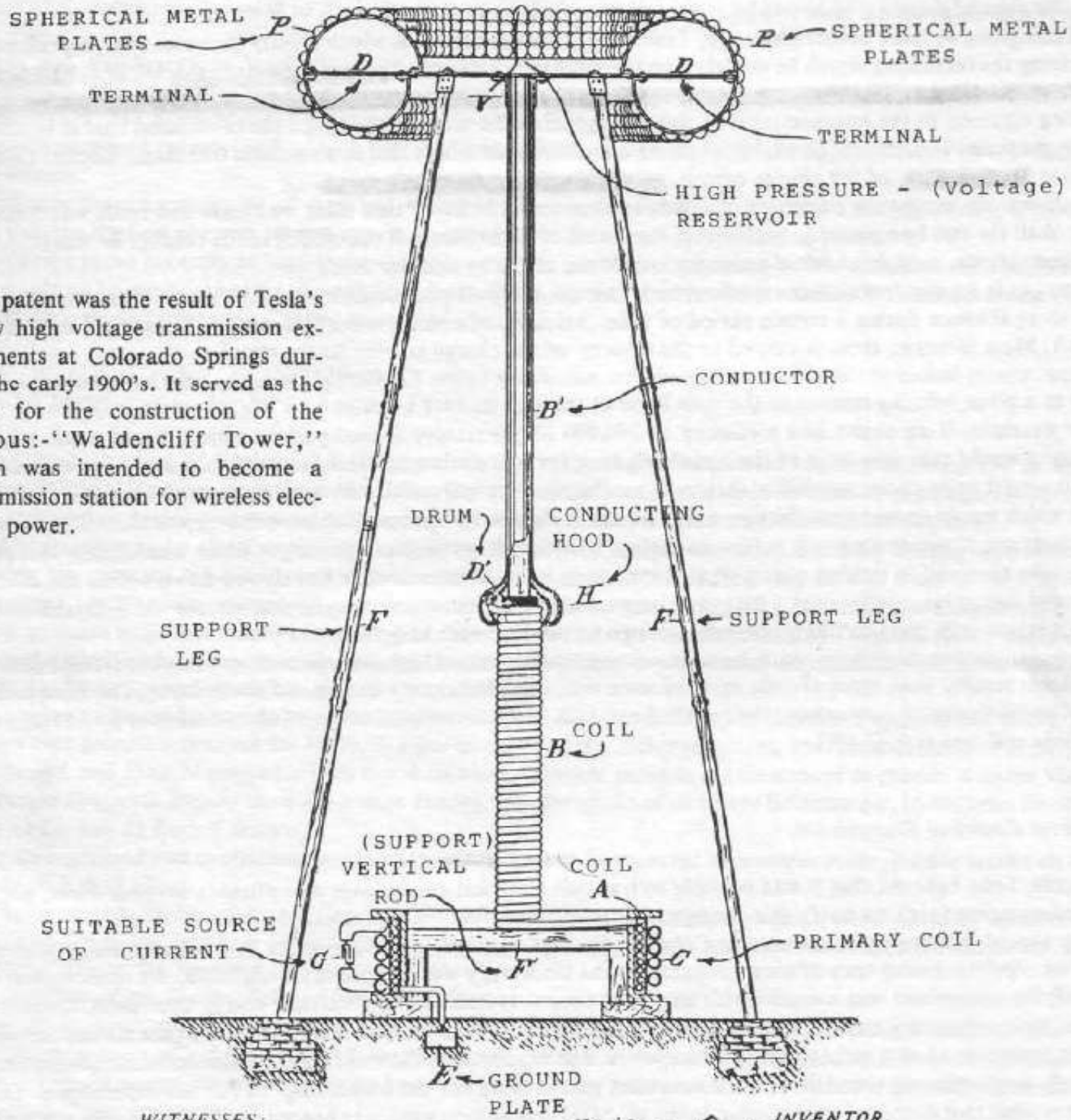

This patent was the result of Tesla's many high voltage transmission experiments at Colorado Springs during the early 1900's. It served as the basis for the construction of the famous:-"Waldencliff Tower," which was intended to become a transmission station for wireless electrical power.

WITNESSES:
H. Lawson Dyer
Benjamin Miller.

Nikola Tesla, INVENTOR,
BY Kerr, Page & Cooper,
his ATTORNEYS.

EXTENDED DAY CREED
WATCH YOUR THOUGHTS THEY BECOME YOUR WORDS,
WATCH YOUR WORDS THEY BECOME YOUR FEELINGS,
WATCH YOUR FEELINGS THEY BECOME YOUR ACTIONS,
WATCH YOUR ACTIONS THEY BECOME YOUR HABITS,
WATCH YOUR HABITS THEY BECOME YOUR LIFESTYLE ,
WATCH YOUR LIFESTYLE IT CONTROLS YOUR DESTINY.
05/07/2013 04:26 PM

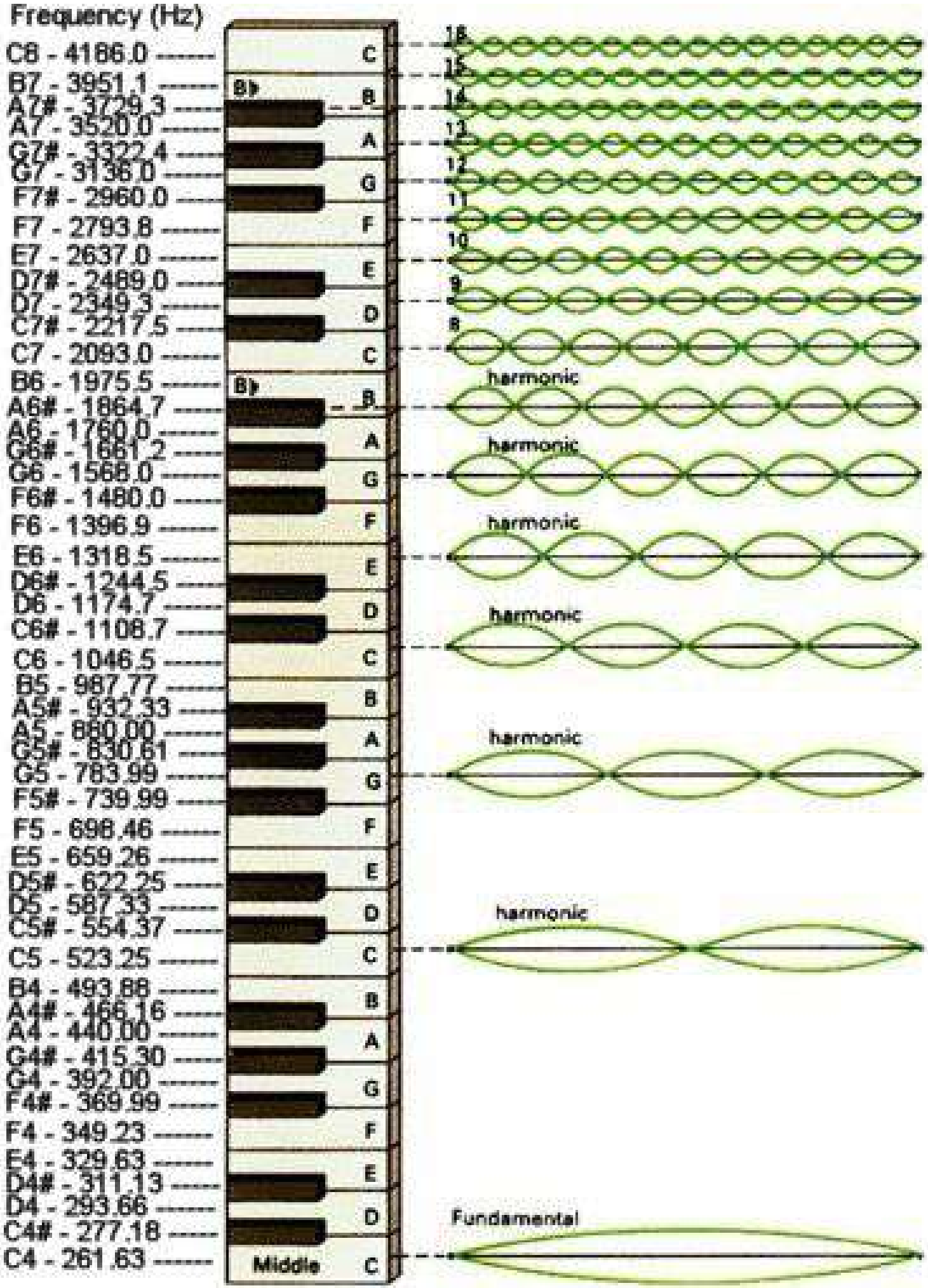
Frequency (Hz)
C8 - 4186.0
B7 - 3951.1
A7# - 3729.3
A7 - 3520.0
G7# - 3322.4
G7 - 3136.0
F7# - 2960.0
F7 - 2793.8
E7 - 2637.0
D7# - 2489.0
D7 - 2349.3
C7# - 2217.5
C7 - 2093.0
B6 - 1975.5
A6# - 1864.7
A6 - 1760.0
G6# - 1661.2
G6 - 1568.0
F6# - 1480.0
F6 - 1396.9
E6 - 1318.5
D6# - 1244.5
D6 - 1174.7
C6# - 1108.7
C6 - 1046.5
B5 - 987.77
A5# - 932.33
A5 - 880.00
G5# - 830.61
G5 - 783.99
F5# - 739.99
F5 - 698.46
E5 - 659.26
D5# - 622.25
D5 - 587.33
C5# - 554.37
C5 - 523.25
B4 - 493.88
A4# - 466.16
A4 - 440.00
G4# - 415.30
G4 - 392.00
F4# - 369.99
F4 - 349.23
E4 - 329.63
D4# - 311.13
D4 - 293.66
C4# - 277.18
C4 - 261.63
B♭
B♭
Middle
C
B
A
G
F
E
D
C
B
A
G
F
E
D
C
B
A
G
F
E
D
C
B
A
G
F
E
D
C
18
15
14
13
12
11
10
9
8
harmonic
harmonic
harmonic
harmonic
harmonic
harmonic
Fundamental

4

The **immortal jellyfish** (***Turritopsis dohrnii***) is capable of biological immortality.

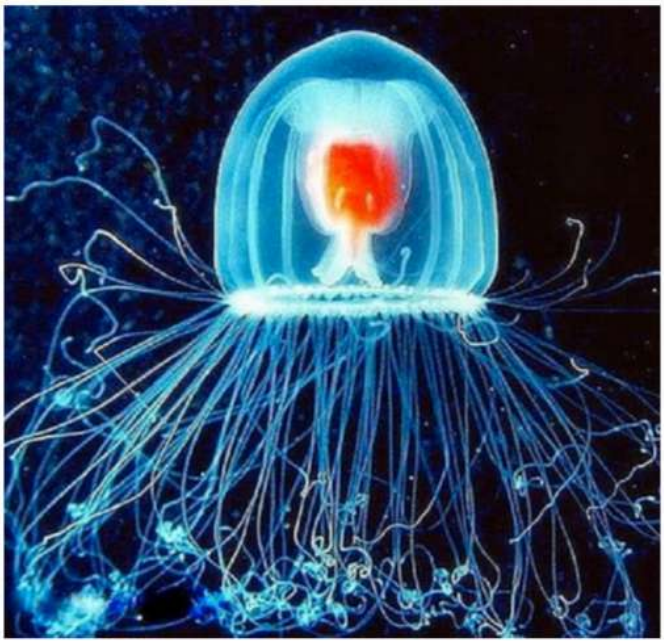

It's one of few known species capable of reverting completely to a sexually immature, colonial polyp stage after having reached sexual maturity as a solitary (free-floating) individual (called a medusa).

> Theoretically, this process can go on indefinitely, effectively rendering the jellyfish biologically immortal

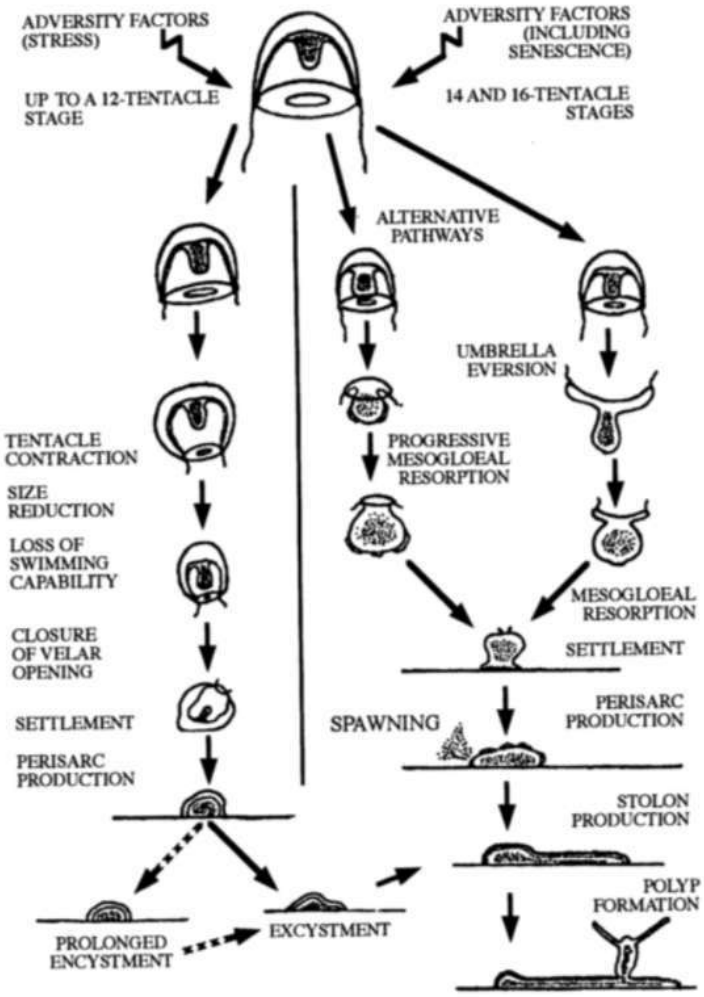

Figure 3. Pathways of transformation from medusa into polyp. Fate of stressed medusae up to 12-tentacle stage (left side), and alternative transformations of stressed or spawning medusae from a 14-tentacle or 16-tentacle stage (right side). The final product is always the polyp colony (bottom), directly or through a resting stage.

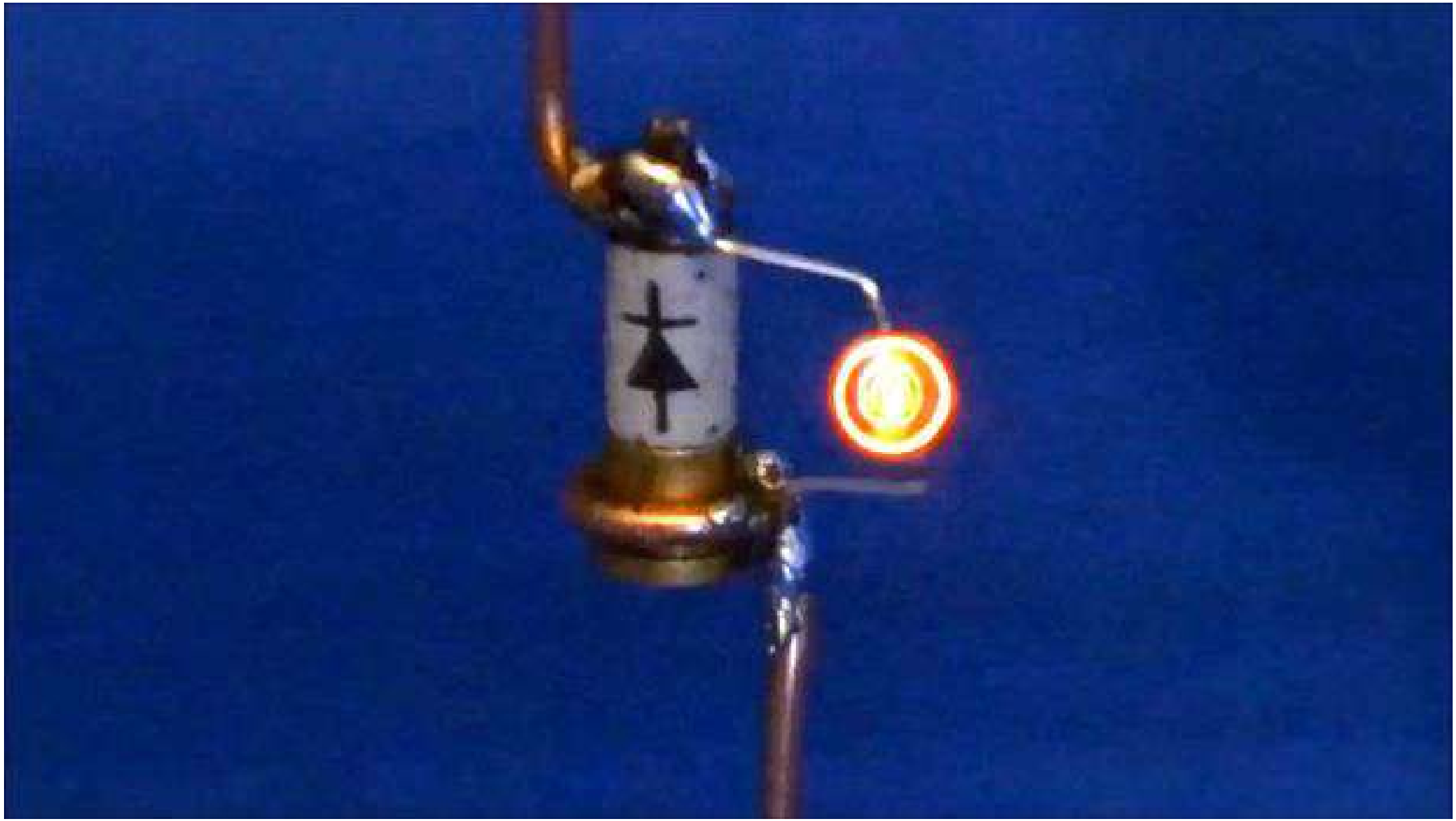

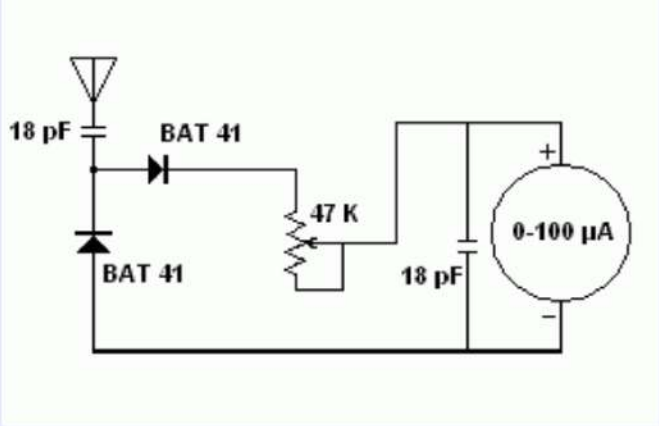
18 pF
BAT 41
47 K
BAT 41
18 pF
0-100 µA
+
−

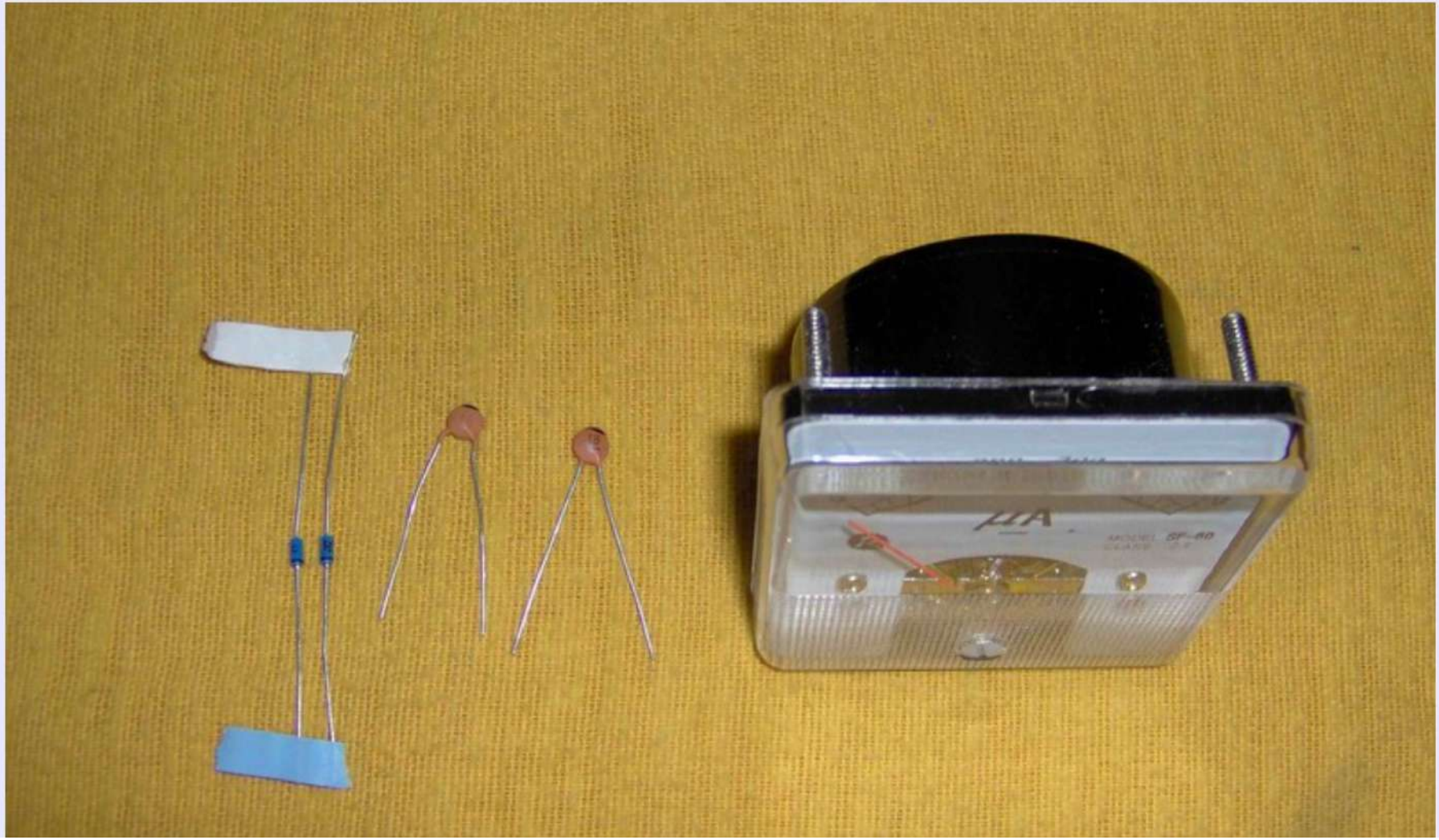
µA

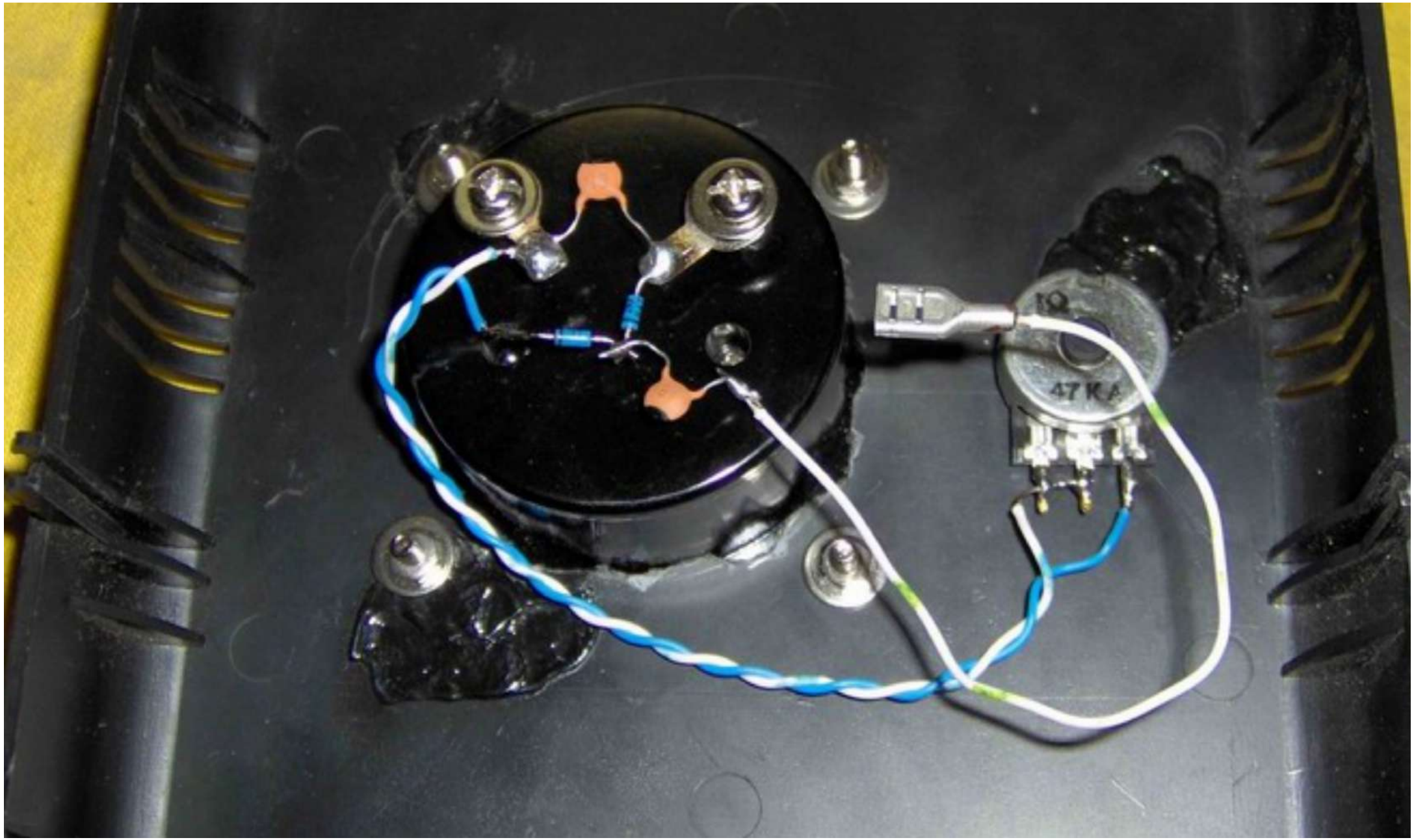
47 K A

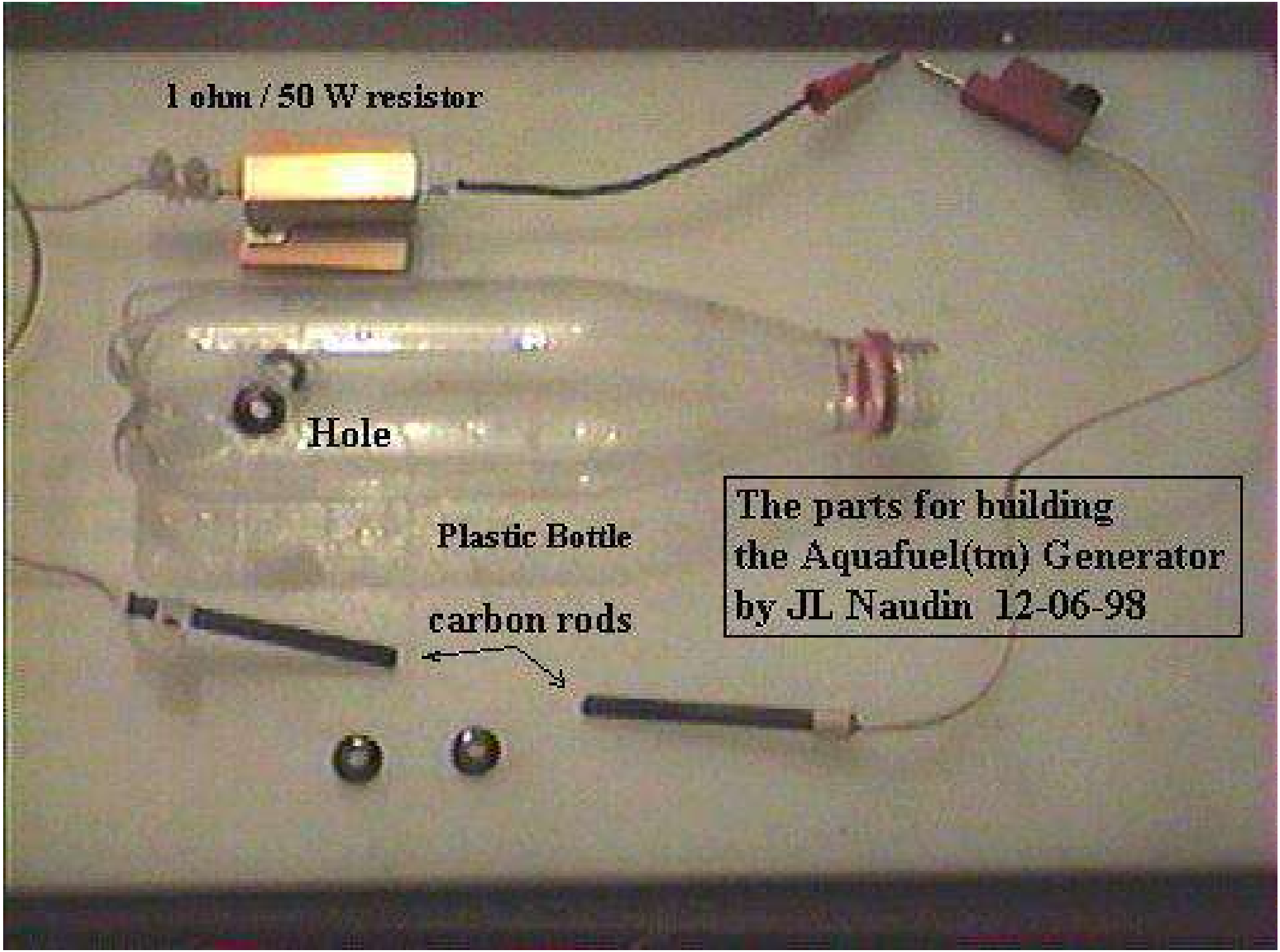
1 ohm / 50 W resistor
Hole
Plastic Bottle
carbon rods
The parts for building
the Aquafuel(tm) Generator
by JL Naudin 12-06-98

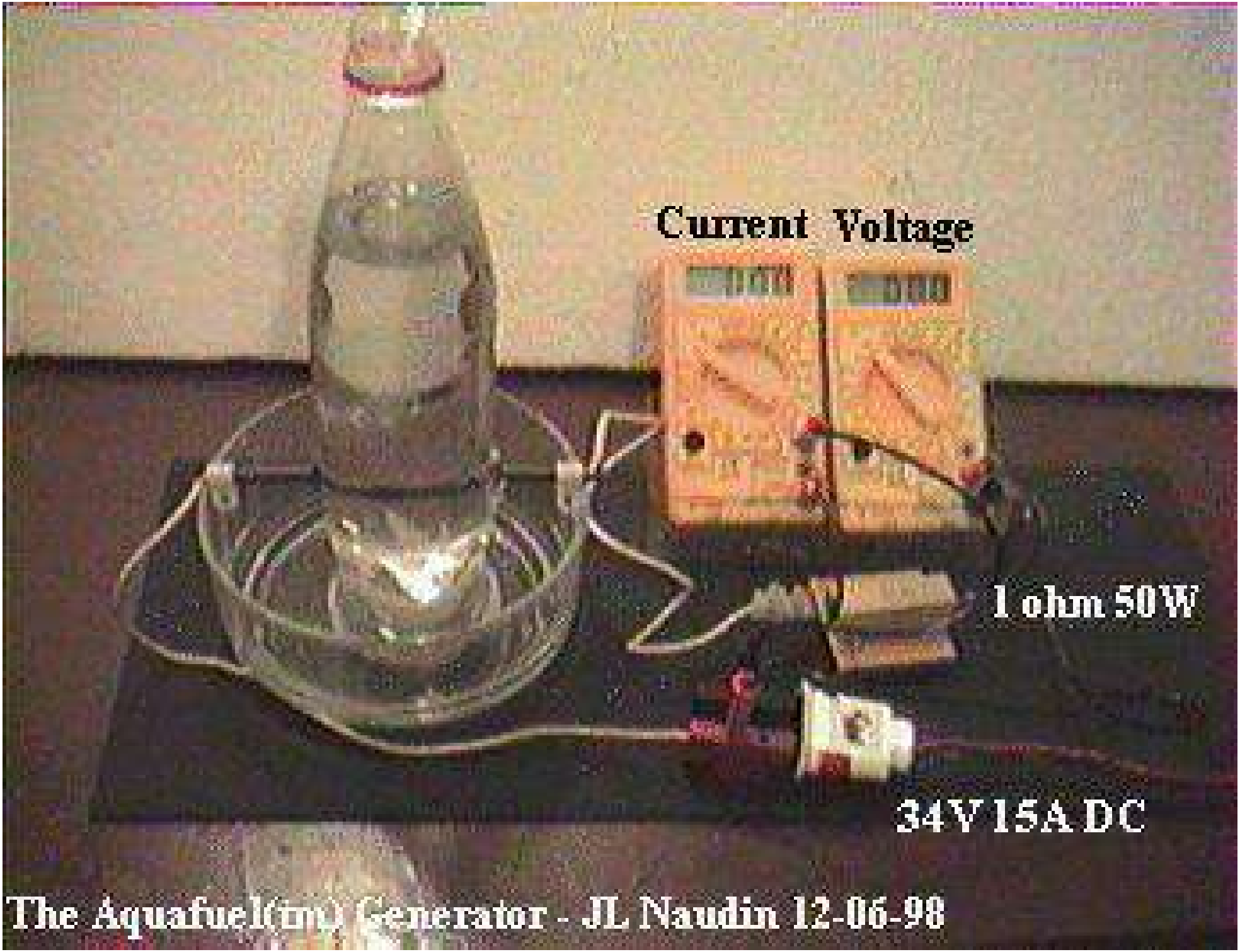

The Aquafuel(tm) Generator - JL Naudin 12-06-98

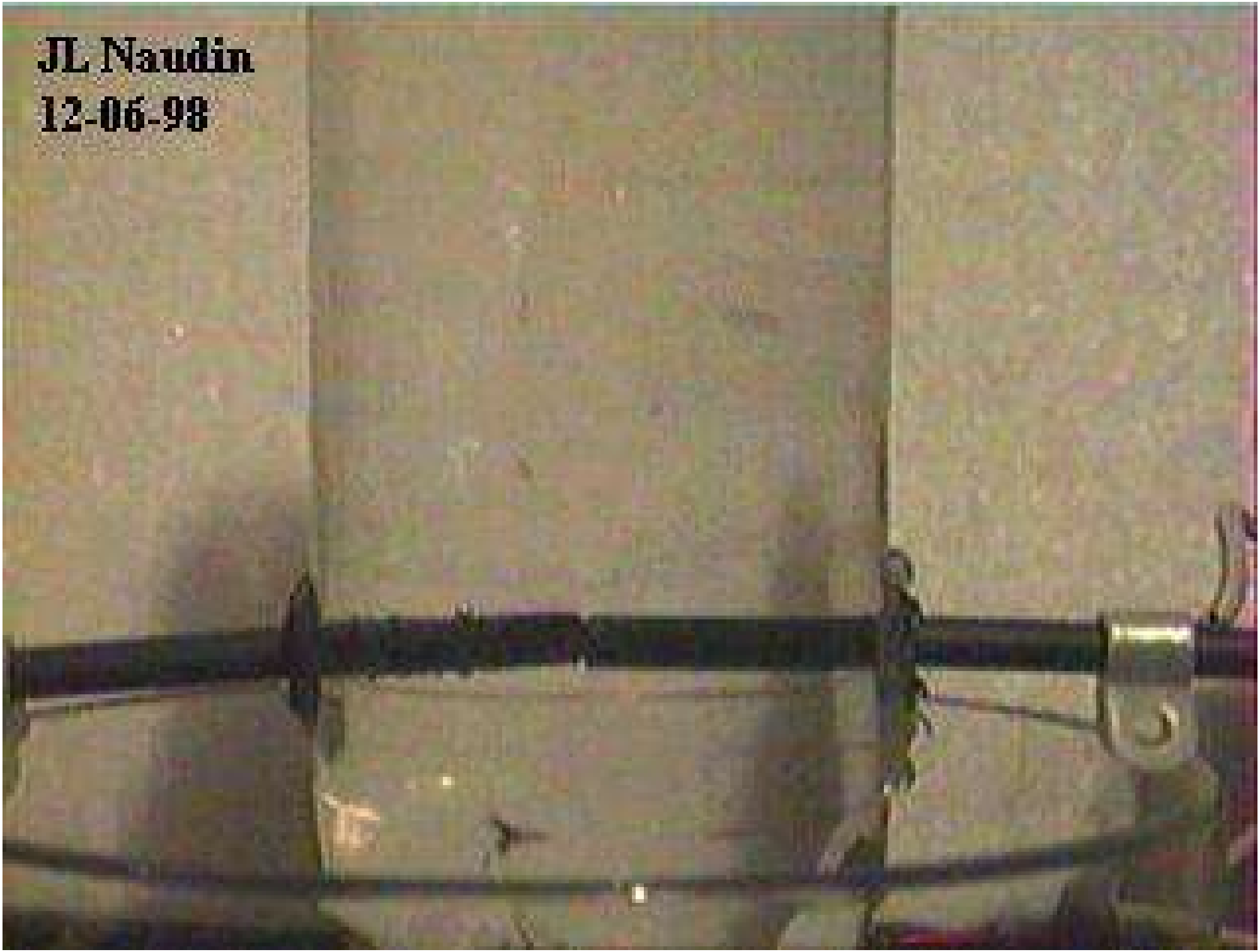
JL Naudin
12-06-98

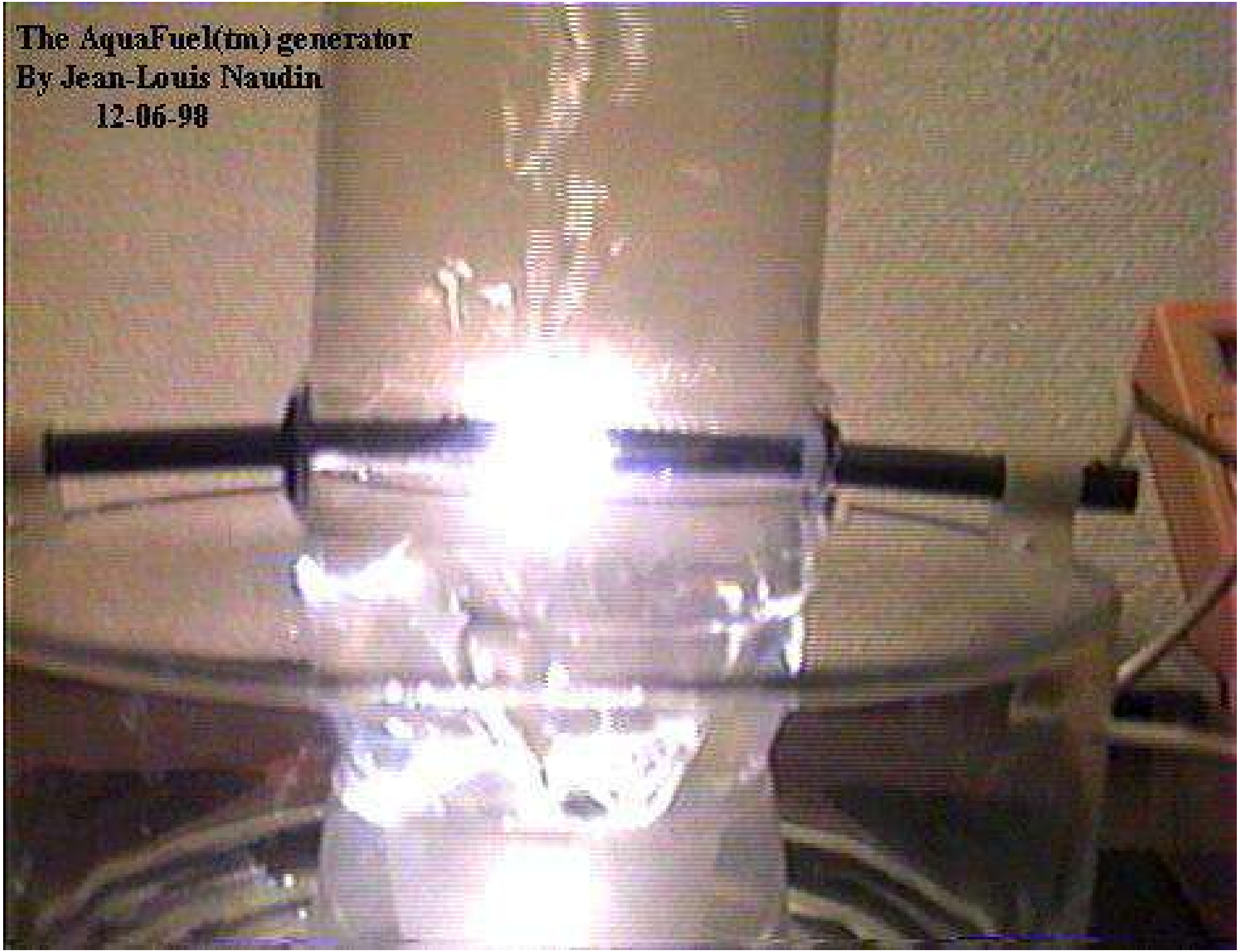
The AquaFuel(tm) generator
By Jean-Louis Naudin
12-06-98

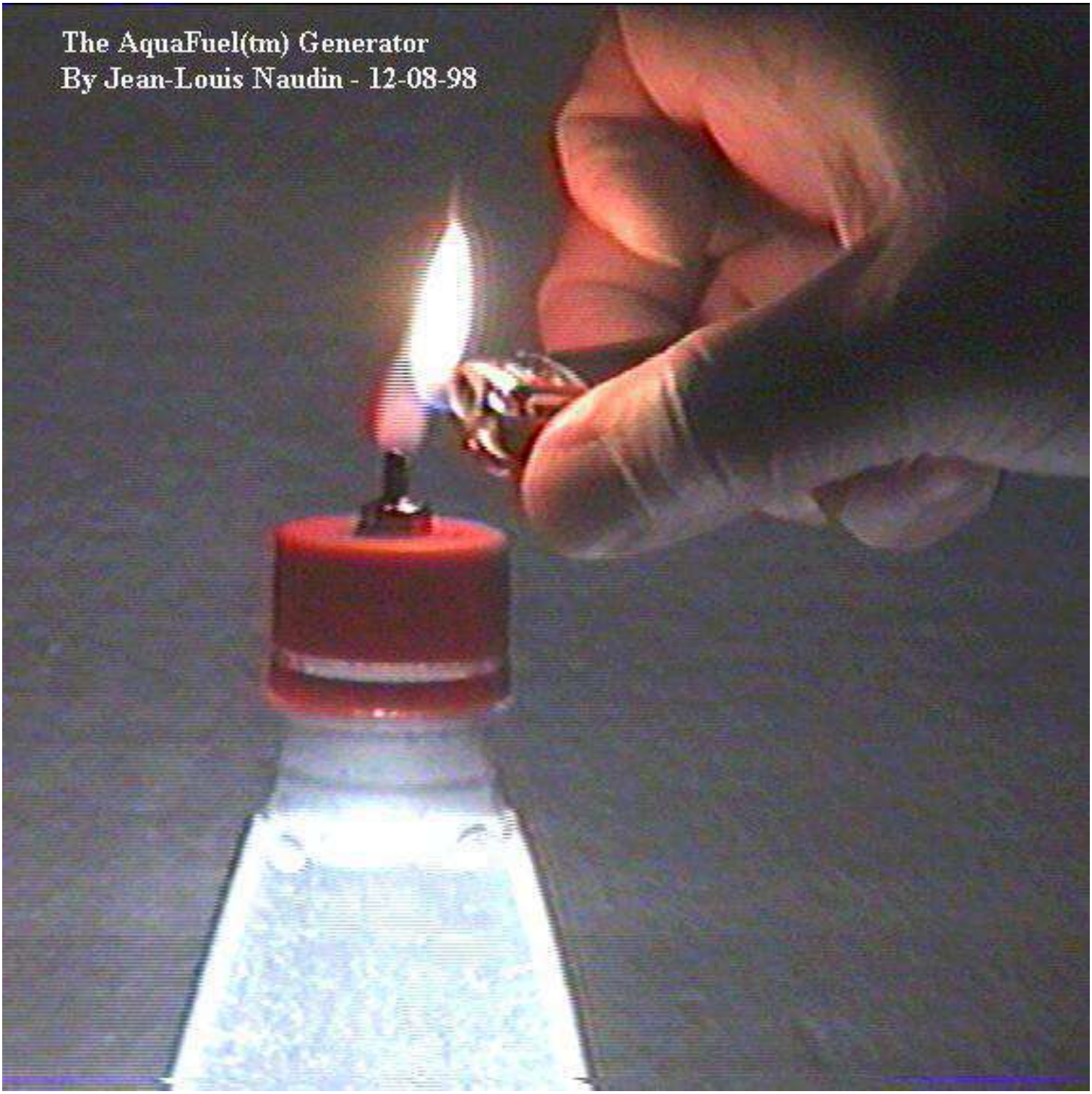
The AquaFuel(tm) Generator
By Jean-Louis Naudin - 12-08-98

BingoFuel Reactor v1.1 - The components for the reactor and and reaction chamber
(c) 2003 by Jean-Louis Naudin - Email: Jnaudin509@aol.com - http://www.jlnlabs.org

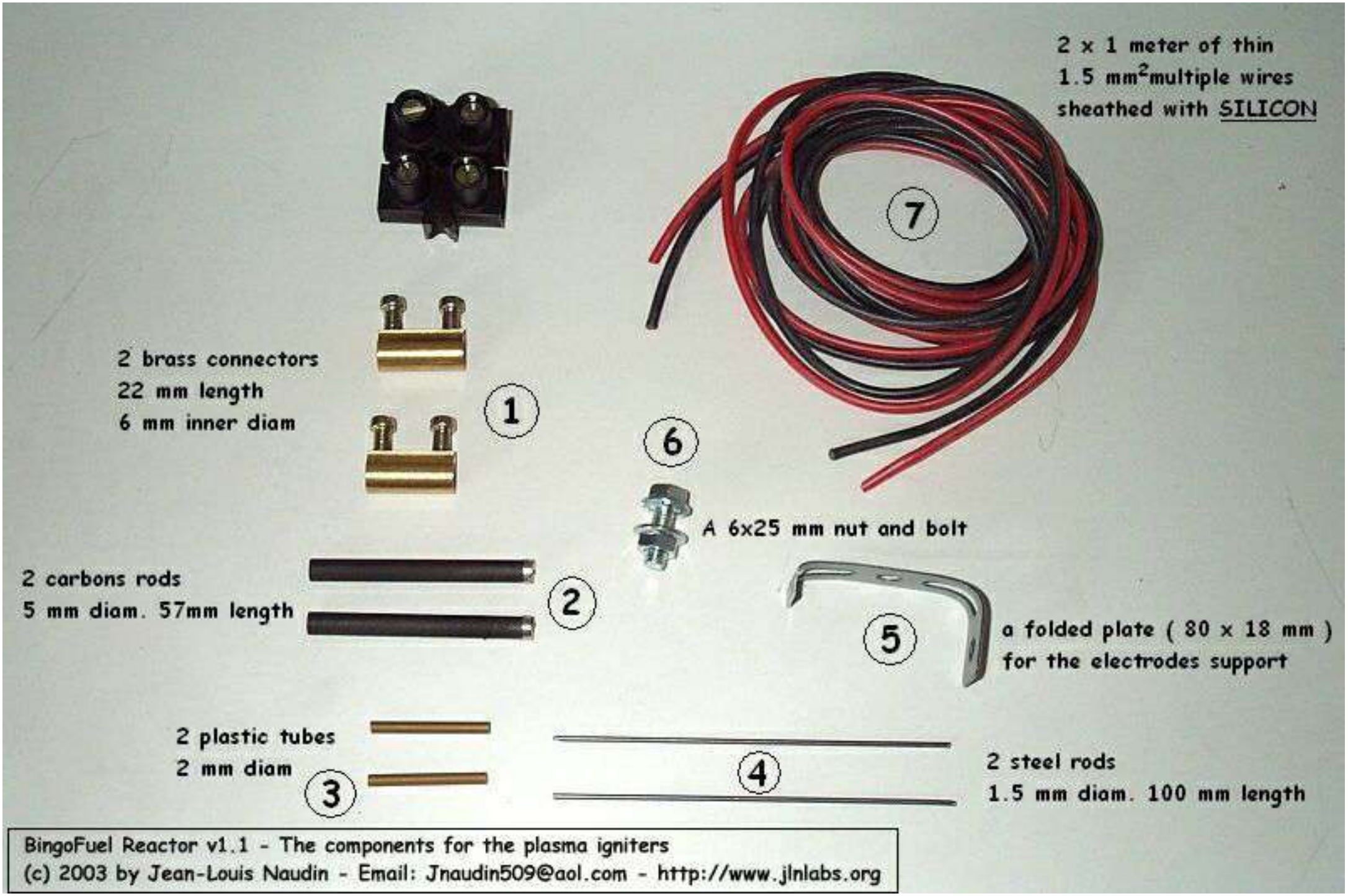

BingoFuel Reactor v1.1 - The components for the plasma igniters
(c) 2003 by Jean-Louis Naudin - Email: Jnaudin509@aol.com - http://www.jlnlabs.org

Carbon rods
ZINC
CARBON
BATTERY
4.5V Zinc Carbon Battery

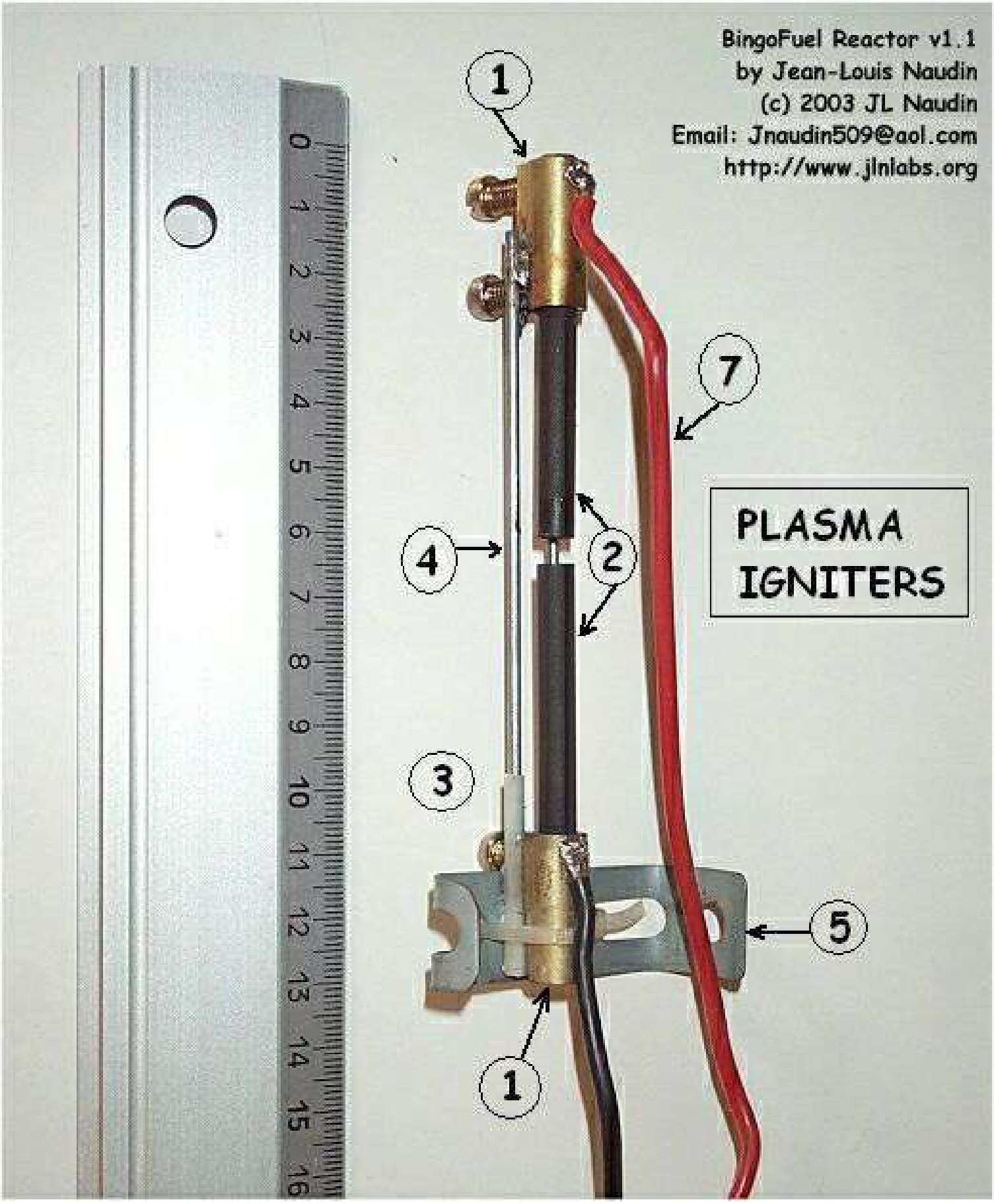
BingoFuel Reactor v1.1
by Jean-Louis Naudin
(c) 2003 JL Naudin
Email: Jnaudin509@aol.com
http://www.jlnlabs.org
PLASMA
IGNITERS
1
2
3
4
5
7

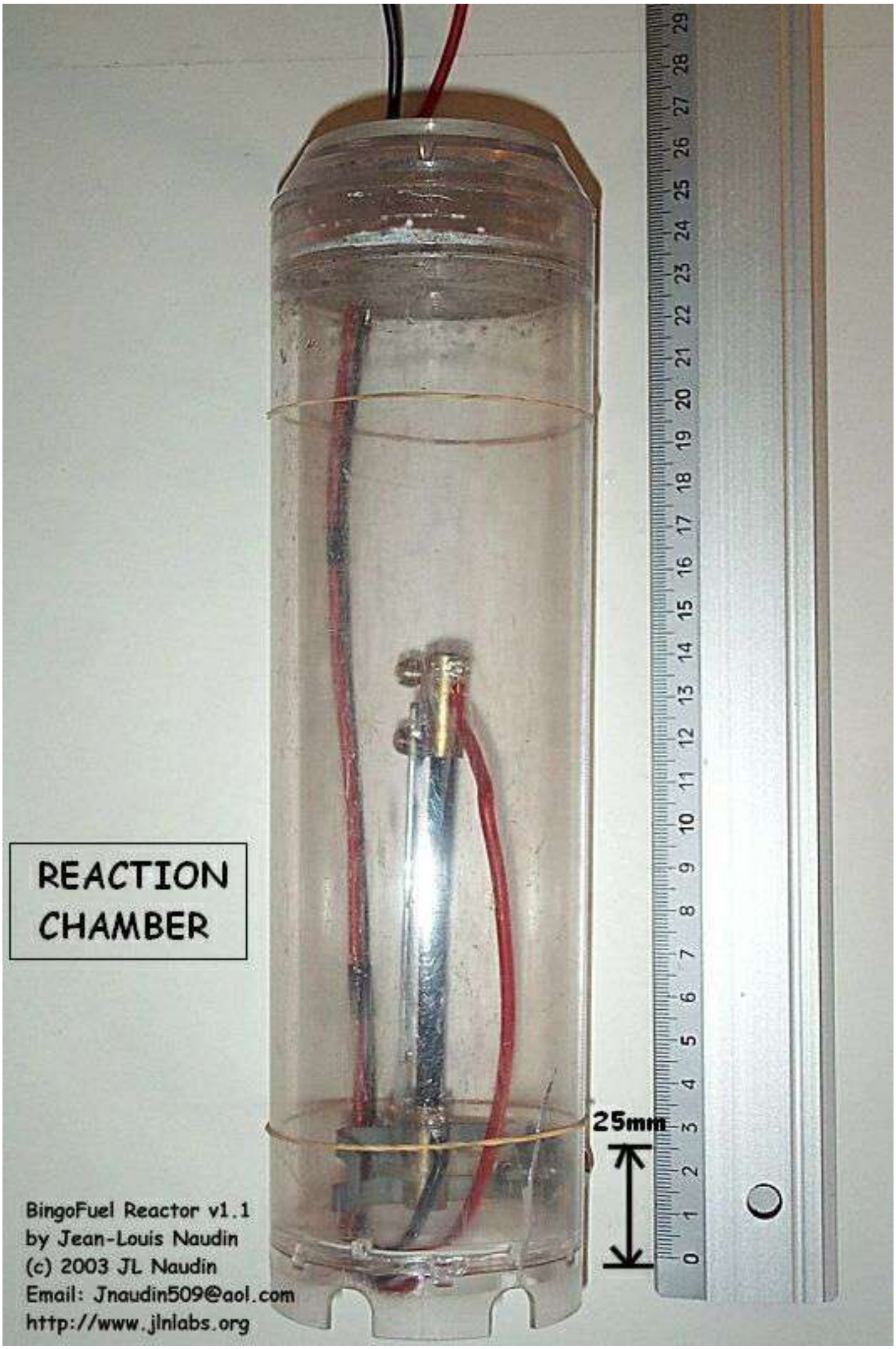
REACTION
CHAMBER
25mm
BingoFuel Reactor v1.1
by Jean-Louis Naudin
(c) 2003 JL Naudin
Email: Jnaudin509@aol.com
http://www.jlnlabs.org

BingoFuel Reactor v1.1 - (c) 2003 by Jean-Louis Naudin
Email: Jnaudin509@aol.com - http://www.jlnlabs.org

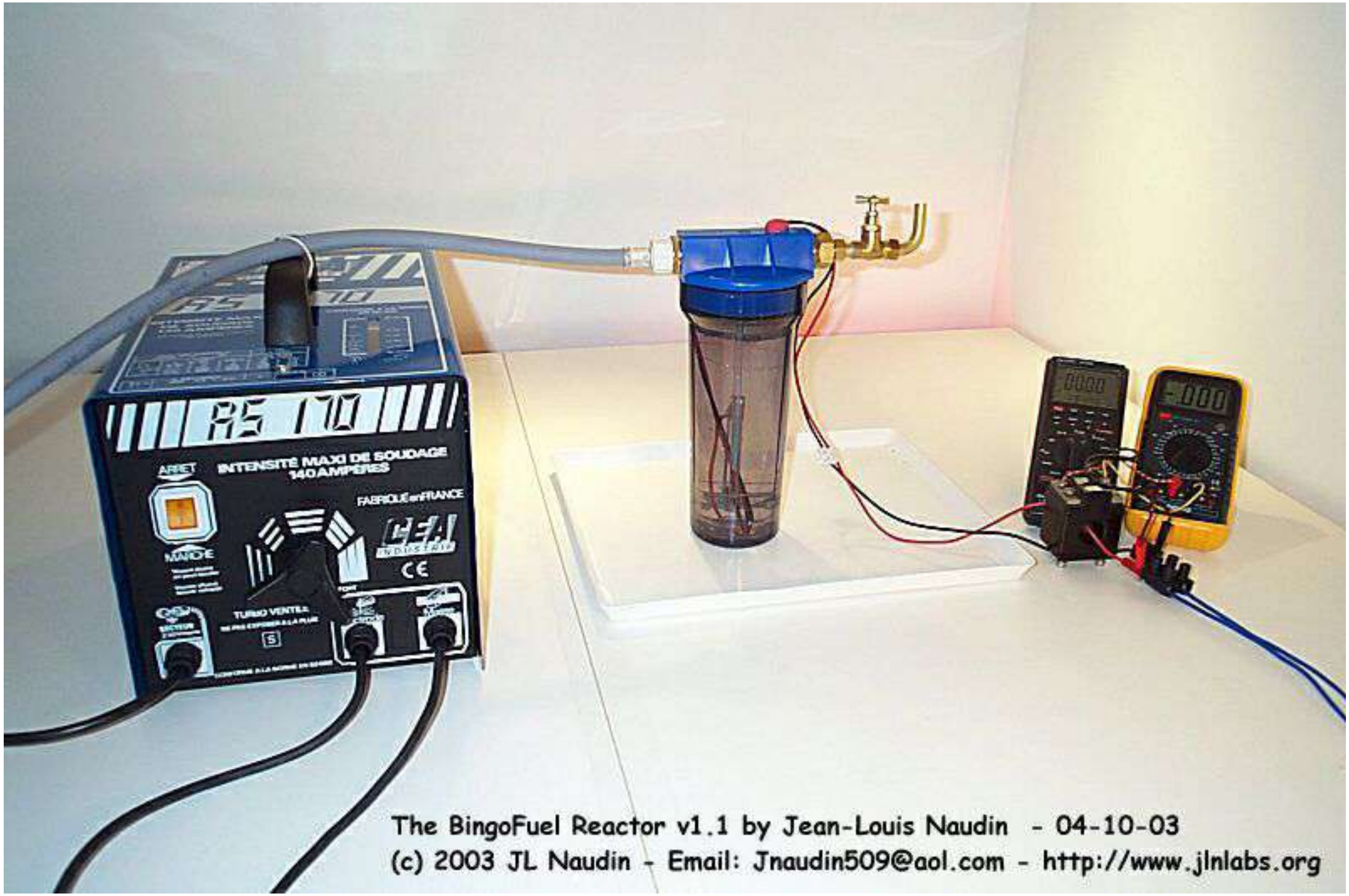

The BingoFuel Reactor v1.1 by Jean-Louis Naudin - 04-10-03

(c) 2003 JL Naudin - Email: Jnaudin509@aol.com - http://www.jlnlabs.org

OUTPUT = 180 L/h
of synthetic gas
OUTPUT = 900 L/h of fuel mixture
V=30.8V AC I = 81.6 A
204
The BingoFuel Reactor v1.1 by Jean-Louis Naudin - 04-10-03
(c) 2003 JL Naudin - Email: Jnaudin509@aol.com - http://www.jlnlabs.org

GROUPES ÉLECTROGÈNES MONOPHASÉS

50 hz			Moteur							Alternateur					Options				
Type	Puissance max 230V		Marque	Type	Sécurité huile	Démarrage électrique	HP 3600 tr/mn	Autonomie	Réservoir L	230V Disjoncteur	Niveau sonore CEE Lwa	dB(A) @ 7 m	Dimensions L x l x h cm	Poids Kg	Kit bouteille	Disjoncteur	Quick lock	Com. à distance	Coffret élec. auto
	kW ISO 8528	kVA(1) Cosφ 0,8																	
RANGER™ 2500	2,1	2,6	Honda OHC	GC 160	•	x	5	2,2	2	•	**98**	75	58x46x44	30	x	x	x	x	x

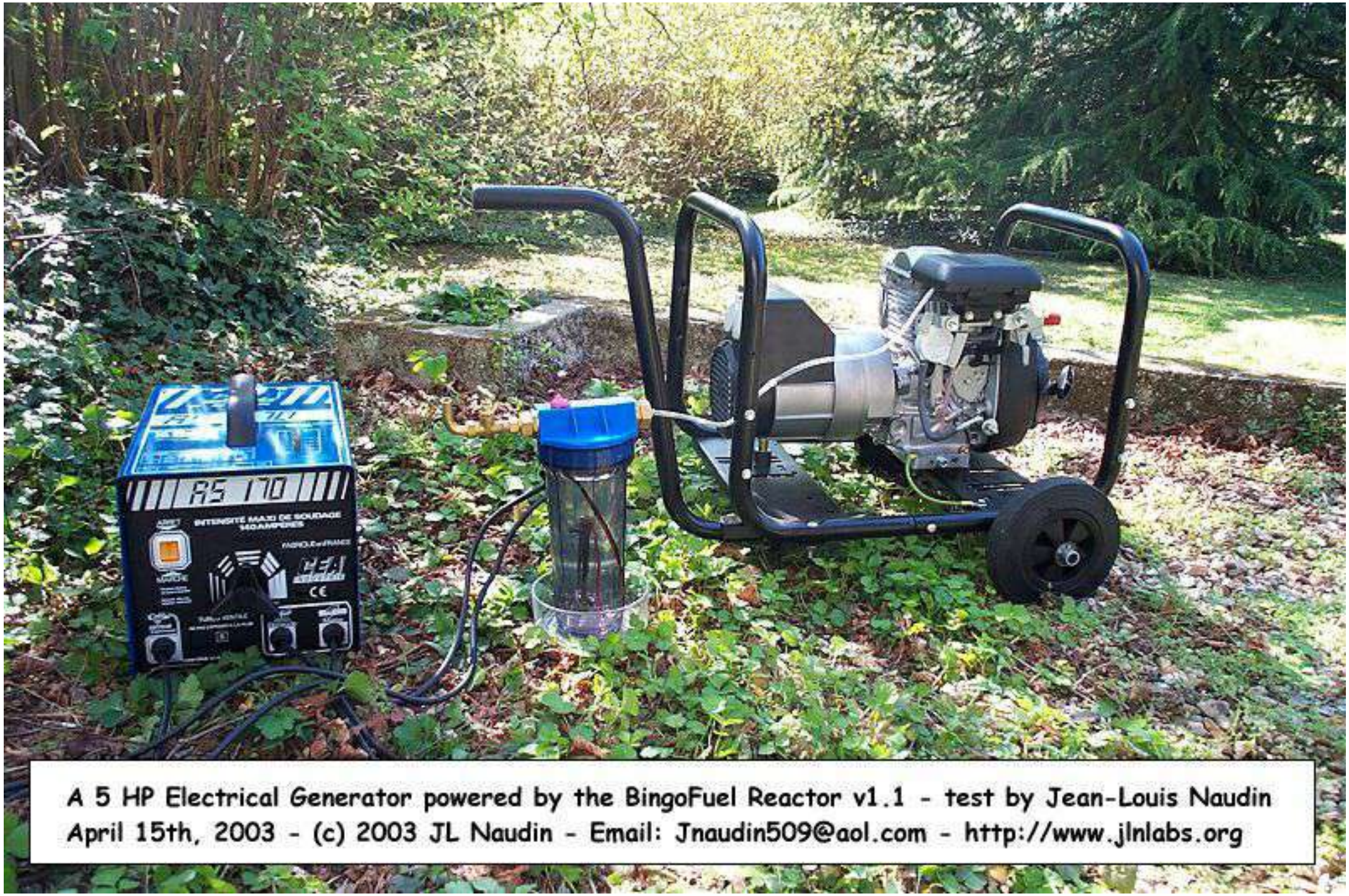

A 5 HP Electrical Generator powered by the BingoFuel Reactor v1.1 - test by Jean-Louis Naudin
April 15th, 2003 - (c) 2003 JL Naudin - Email: Jnaudin509@aol.com - http://www.jlnlabs.org

A 5 HP Electrical Generator powered by the BingoFuel Reactor v1.1 - test by Jean-Louis Naudin
April 15th, 2003 - (c) 2003 JL Naudin - Email: Jnaudin509@aol.com - http://www.jlnlabs.org

A 5 HP Electrical Generator powered by the BingoFuel Reactor v1.1 - test by Jean-Louis Naudin
April 15th, 2003 - (c) 2003 JL Naudin - Email: Jnaudin509@aol.com - http://www.jlnlabs.org

A 5 HP Electrical Generator powered by the BingoFuel Reactor v1.1 - test by Jean-Louis Naudin
April 15th, 2003 - (c) 2003 JL Naudin - Email: Jnaudin509@aol.com - http://www.jlnlabs.org

Materials:

1. Fluorescent Lamp Protector Sleeve – used to make the two Leyden jars.

2. Staircase Balusters – these will be the supports for the rotating disks.

3. 1/8" Bronze Brazing Rod – will be used to fabricate all of the conductors. If you can't find this at your local hardware store look for a welding supply shop, they are sold by the pound and are incredibly useful for many things even if you don't own an oxyacetylene torch.

4. Fiberglass Driveway Marker Rod – Make sure it's round and 5/16" in diameter; these will be the shafts and insulated supports.

5. 3/8" OD Thin Wall Brass Tubing – one 3' section.

6. Knick-Knack Shelf Kit – approximately 24" by 6". You can use any ¾" board you desire, the shelf included has a nice rail that will add to the overall look of the project.

7. Inline Skate Replacement Wheels – Quantity 2.

8. Lamp Parts – You will need a selection of lamp parts which may vary depending on what is available at your particular store. Pictured here are pull chains, finials, and ball nuts used to make parts of the charge collector combs and discharge electrodes. Also pictured are cabinet knobs which were not used in this project but would make good alternatives. See the charge collector construction step for details.

9. 1" Copper Pipe Hangers – These you'll find in the plumbing section, they are copper plated steel.

10. Solder wick (not pictured) – for the neutralizing brushes, you might have to visit Radio Shack for this.

11. Rubber feet – Quantity 6.

12. Clothes Line Pulleys – must be plastic.

13. 3/16" Acrylic Glazing – enough to cut (2) 14" circles from. Polycarbonate will work too and is easier to work with but costs more than twice as much.

14. Aluminum tape (not pictured) – found with the duct tape and HVAC supplies, get the kind with the peel off paper backing.

15. Rubber O-ring belts (not pictured) – available from McMaster-Carr, part number: 94115K259 about $15 for a package of eight.

The total cost of purchasing the materials new is about $100. However, these are all relatively common items

Disks and Drive Components:

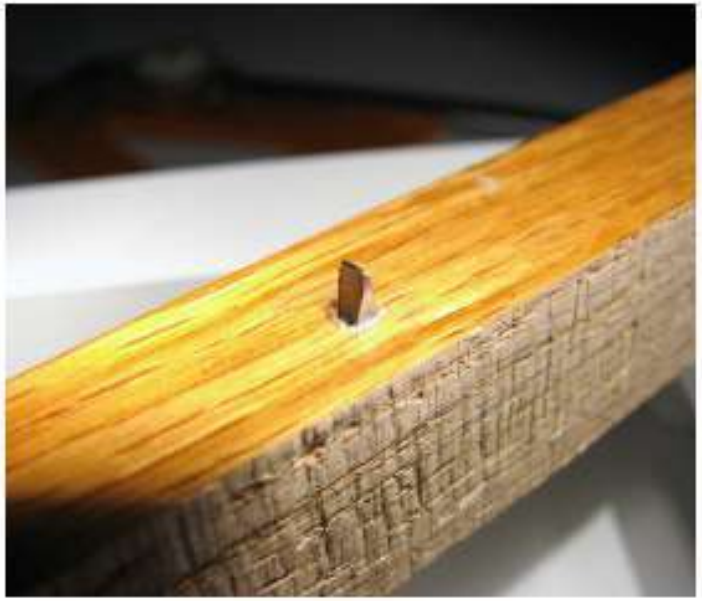

wimshurst-circle-cutter-inset.jpg

Make the cutting tool:

1. To cut the two 14" acrylic circles we will first need to make a tool. Cut a 12" length of wood ¾" square. Pine will work but hardwood is preferable.
2. Drill a pilot hole near one end and press or drive a #6 penny nail through the stick so the point sticks out about ¼".
3. Drill a second hole exactly 7" from the first and insert another #6 penny nail into it.
4. Use a fine metalworking file to shape the point of the second nail as shown. You want to make a chisel point with a slight undercut on the leading face.

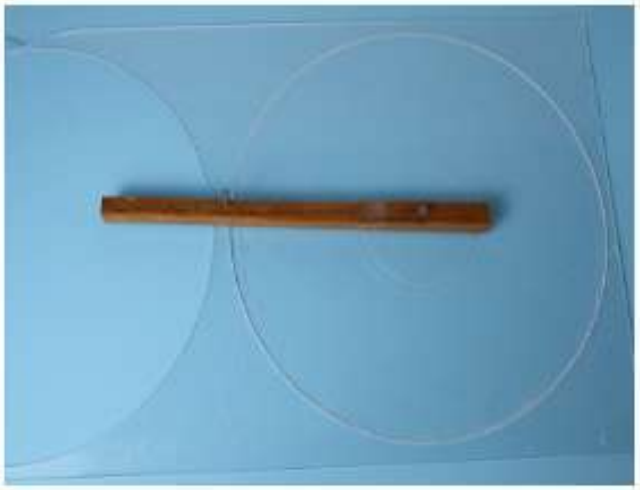

wimshurst-circle-cutter.jpg

Cut the acrylic disks:

1. Lay out your circles with a compass to be sure they will both fit on your sheet of acrylic.
2. Drill a 1/8" hole in the center of your circle. Be gentle when drilling acrylic, it cracks easily. Polycarbonate is quite a bit tougher.
3. Working on a carpeted floor, insert the unmodified nail in the center and begin scoring your circle. Cut about a quarter of the way with each stroke and work your way around the circumference.
4. If the cutter sticks, lift it out and move to a different spot.
5. When you think you've gone about halfway through, flip the acrylic sheet over and cut from the other side. You may end up flipping the sheet several times before the circle pops free.
6. Clean up the edge of the circle with some 400 grit sand paper and set them aside.

wimshurst-skate-wheel-groove.jpg

Cut belt grooves in the skate wheels:

1. Gently clamp or strap your drill to a workbench as pictured.
2. Assemble a mandrel from a 5/16" bolt and some large (fender) washers, when assembled the entire wheel must spin, not just the bearings.
3. Chuck the assembly into the drill. The wheel should turn toward you and the speed should be fairly fast.
4. With a crosscut bastard file make a ¼" wide flat on the wheel and then switch to a rat-tail file to cut the grove. Apply light and even pressure to the file.

wimshurst-skate-wheel-mount.jpg

Attach the skate wheels to the disks:

1. Use a step drill bit like the one pictured to increase the size of the hole in the acrylic disk to 5/16". Remember, be gentle and go slowly because acrylic is easily cracked.
2. Remove the washers from the wheel and use the 5/16" bolt to center the wheel against the disk.
3. Drill (4) 1/8" holes through the disk, don't drill into the wheel.
4. Switch to a 3/32" bit and drill partway into the wheel in 4 places.
5. Finish the holes with a counter sink.
6. Now remove the 5/16" bolt and drill the center hole out to ½" or 5/8" using a step drill, you want the edges of the hole completely clear of the rotating parts of the wheel bearing.
7. Install (4) small counter sunken screws, tighten these so they *just* touch the disk, the disk must remain as flat as possible.

wimshurst-sector-cutting.jpg

Cut the sectors:

1. Decide how many sectors you are willing to cut. I'm rather lazy and opted for fewer sectors, 16 per disk. If you decide to make 24 or even 32 sectors you'll have to make them smaller but you will be rewarded with longer sparks.
2. The sectors are cut from aluminum tape. Make a template from a piece of plastic milk jug and trace each sector. Cut them individually, don't be tempted to stack multiple layers of tape; the cut will end up ragged and will bleed charge away into the air.
3. Tip: I found it easiest to use an X-acto knife and straight edge to cut the long sides and then switch to scissors for the curved ends.

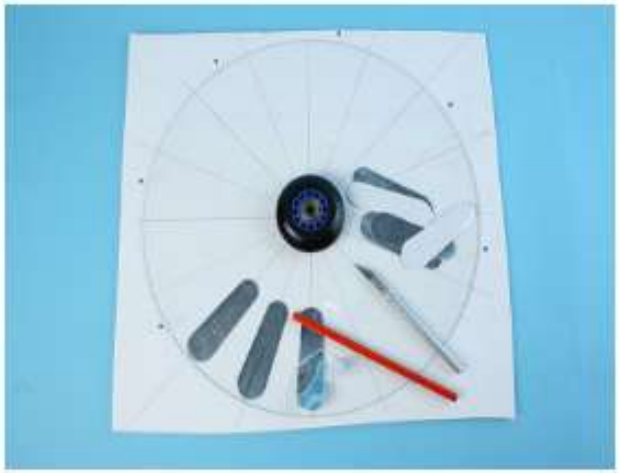

wimshurst-affix-sectors.jpg

Attach the sectors:

1. Lay out a circle on a piece of foam board.
2. Draw radial lines to correspond with the number of sectors you've chosen
3. Place your template centered at 6 o'clock and trace it. The large end should face out and be about ¼" from the edge of the disk.
4. Set the disk on the foam board and insert push pins around the circumference so it turns in place.
5. Carefully peel and stick the sector in place. It's a good idea to make some extra sectors and practice this operation first. A length of fiberglass rod makes an excellent burnishing tool.
6. Turn the disk one line to the left and repeat. Always index the line to the first sector you stuck down, this will help make the spacing as even as possible.

wimshurst-drill-pulley.jpg

Prepare the drive pulleys:

1. Remove the pulleys from their cages by drilling out the rivets.
2. Use the step drill to enlarge the holes to 5/16". Drill from one side, then the other to enlarge the full depth of the hole in the pulley. Note: The use of the step drill is especially important here because of its self-centering characteristics.
3. Cut (2) 7" lengths of fiberglass rod, slightly bevel the ends with a file to prevent chip out. Be careful of the glass fibers, they can be really irritating!
4. Drill the splines out of the window crack bore with a regular 5/16" drill bit. Clamp the crank in a vise and go slowly; making sure the bit is in line with the axis.

wimshurst-drill-upright.jpg

Cut and drill the supports:

1. Cut 12" off of each of the staircase balusters. Choose the end that you think looks best. On my prototype machine I used both ends of the same baluster and thus had two different style supports.

2. Clamp the two supports together as shown and drill 5/16" holes 3 ¼" inches from the bottom (square end) and 11" inches from the bottom.

3. The lower hole will need to be reamed out so that the fiberglass axle turns freely in it. Use a slightly larger drill or rat-tail file for that. You can also drill it larger and insert plastic bushings for smoother operation. Alternatively you can bore it out with a step drill to match the diameter of a pair of skate bearings – this works exceptionally smoothly and is what I ultimately did to my own machine.

wimshurst-screw-uprights.jpg

Attach the supports to the base:

1. Draw a line parallel to the back of the base 2 ½" in, this is not quite to the center. Draw a second line perpendicular to the first on the center of the base.

2. Cut a 1 ¼" gap in the rail on the center line, as pictured.

3. Drill (2) 3/8" inch holes through the base on the center line 5/8" from the front and back edges.

4. Use 2" drywall screws and large washers to attach the supports to the base. The combination of the large washer and 3/8" hole will allow you to adjust and align the position of the rotating disk precisely.

5. Drill (2) 5/16" holes on the line parallel to the long dimension and 7 5/8" from the centerline on each side – these holes need to be straight up and down so drill carefully, use a small carpenter's square to line up the drill.

Charge Combs and Neutralizing Bars:

wimshurst-solder-balls.jpg

Prepare the charge collectors:

1. Use a hacksaw to cut off the nail ends of the pipe hanger. The overall length should be 5".
2. You'll find small brass ball cap nuts in the electrical section at the hardware store; they are most commonly used to secure the top of brass outdoor lighting fixtures.
3. Place the small brass ball nuts on the ends of the hanger, heat them with a small torch and apply just enough solder to fill the joint. Note: Be careful not to overheat the pipe hanger, it is copper plated steel and it you heat it too much the solder may not adhere.

The torch pictured is a Lenk LSP-180 butane torch/soldering iron and it is a marvelous tool.

wimshurst-prongs-progression2.jpg

Attach the collector comb prongs:

1. You need to make 8–12 pointy prongs down each side of the collector comb. I stripped the conductors out of a 3' section of telephone wire to make them.

2. Wrap the copper wire around the pipe hanger as shown in the left-most example. I made 11 turns.

3. Cut away the center portion of the wire on one side only and bend the cut ends around the pipe hangers.

4. Spread the prongs out evenly along the portion of the charge collector that will be opposite the sector.

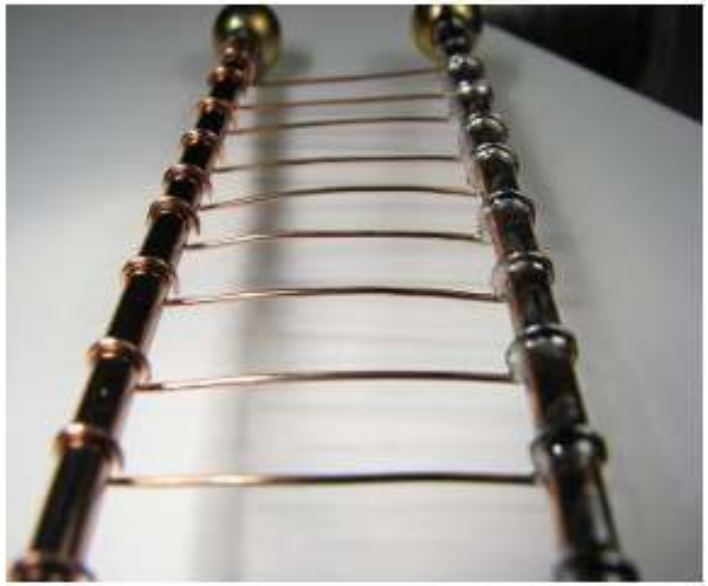

wimshurst-solder-prongs.jpg

Solder the prongs:

1. Crimp the ends tightly around the pipe hanger.

2. Use a large soldering iron to solder each joint. Apply sufficient solder so that when you take the soldering iron away solder flows down to fill the gap at the end of each length of wire. We want to avoid any points other then the prongs themselves.

3. Once you've soldered all of the joints cut down the center of the wires but don't trim them to length until it's time to install the combs.

wimshurst-collector-assembly.jpg

Charge collector mount:

I made a couple of different collector mounts using various lamp parts and cabinet knobs. This was the simplest, but you may have to improvise if you can't find these particular lamp parts at your local hardware store.

Pictured here right to left:

- 3/8" OD thin wall brass tubing 6" long
- 3/8" threaded collar
- 3/8" lamp "nipple" 1" long
- Lamp washer nut (threaded)
- Rubber flat washer
- 3/8" brass washer
- 3/8" threaded lamp finial
- #8-32 screw

Prepare the collector mount:

1. Using the step drill, bore out one half of the threaded collar.
2. Screw the nipple halfway into the collar and insert the brass tubing into the opposite end and solder it in place.
3. Drill one hole straight down into the top of the finial and thread with a #6-32 tap. Use the drill size written on the tap.
4. Drill a 1/8" hole through the body of the finial as pictured, this is for the discharge electrode.
5. Cut a ½" length from the extra you trimmed off of the pipe hanger earlier and solder it to the brass washer, this will allow the assembly to clamp and hold the charge collector perpendicular to the support.
6. Test assemble the mount and then disassemble and set aside.

wimshurst-discharge-assembly.jpg

Prepare the discharge electrodes:

1. Cut two 15" lengths of brazing rod and bend them as shown. I bent mine by hand but you could bend a 30" length around a five gallon pail and then cut it in the center for a neater appearance.

2. The balls for the discharge electrodes come from some more lamp finials, cut them off just below the ball with a hacksaw. These balls are about ½" in diameter.

wimshurst-discharge-ball-cut.jpg

3. Solder the discharge balls to the electrodes; fill the hole with solder so it makes a smooth transition to the rod.

wimshurst-discharge-ball-solder-prep.jpg

Note: do not solder the small ball nuts in place!

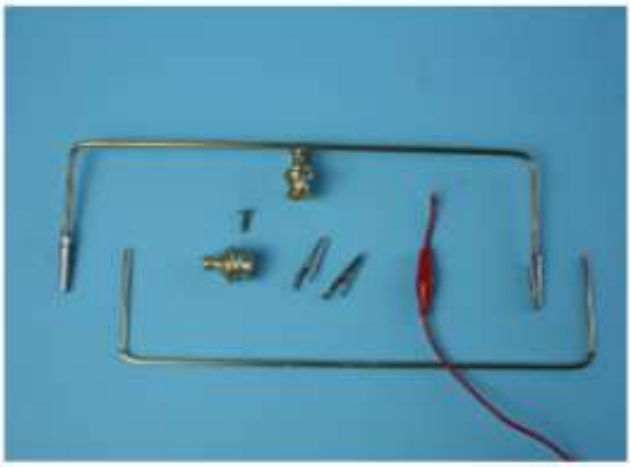

wimshurst-neutralizer-bar-parts.jpg

Fabricate the neutralizing brushes:

The neutralizing brushes are made with more brazing rod, alligator clips salvaged from a pair of clip-leads, and yet another type of lamp finial.

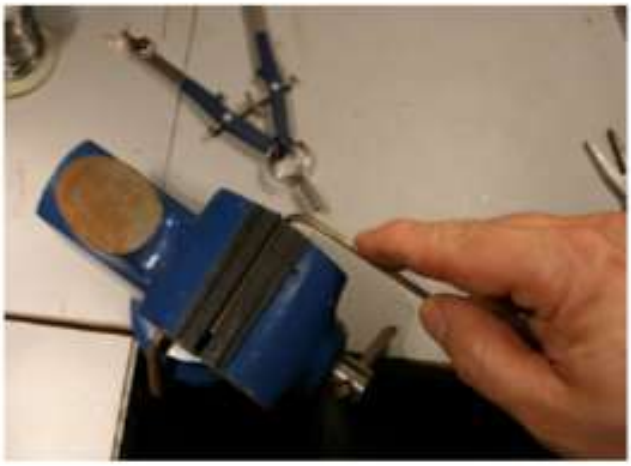

wimshurst-neutralizer-bend.jpg

Bend the brush support:

1. Cut a length of brazing rod 14" long and mark it 2" from either end.
2. Make (2) 90 degree bends in the rod at the 2" marks.

wimshurst-neutralizer-hub.jpg

Solder the brush support to the brush boss:

1. Drill a hole for a set screw in the base of the finial and tap with the #6-32 tap.

2. File a groove in the top of the lamp finials, these particular finals have a 3/8" threaded hole in the bottom and a small hole in the top. I think they are made for ceiling fixtures that have a center pull string.

3. Center the neutralizer bar on the finial and prop it so its parallel to the workbench top and solder it in place.

Attach the brush clips to the support:

wimshurst-neutralizer-clip.jpg

1. Crimp the alligator clips on to the ends of the neutralizer bar and solder.

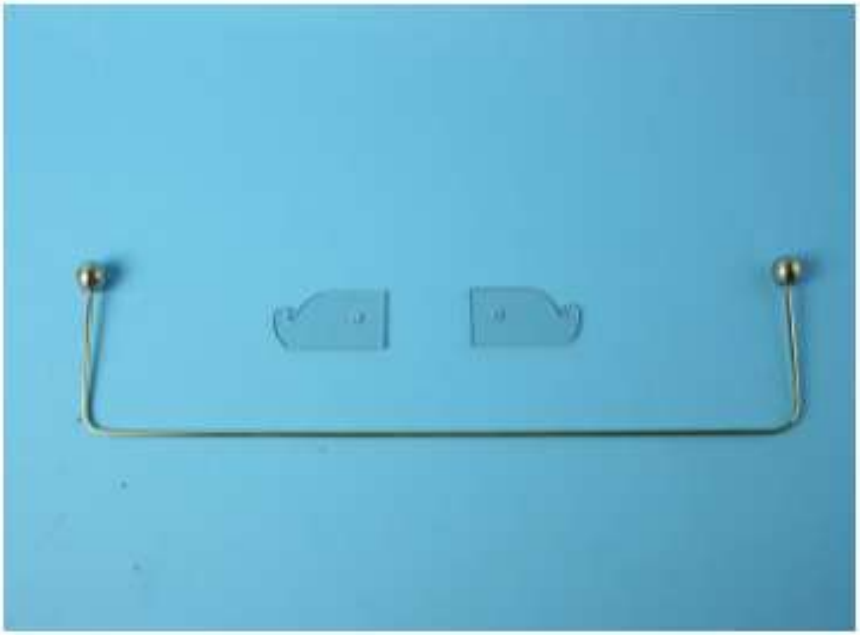

wimshurst-layden-shunt.jpg

Fabricate the Leyden jar shunt:

1. Cut a 22" length of brazing rod.

2. Make 90-degree bends, 3 ½" in from each end.

3. Solder two brass balls to the end. These are the large brass lamp chain pull balls, smaller finial balls or cabinet knobs would work here, too. If you use knobs be sure to remove any lacquer finish.

wimshurst-layden-cut-tube.jpg

Cut the Leyden jar body:

1. Using the miter box and fine tooth hacksaw, cut two 7 1/2" lengths from the fluorescent lamp protector sleeve.

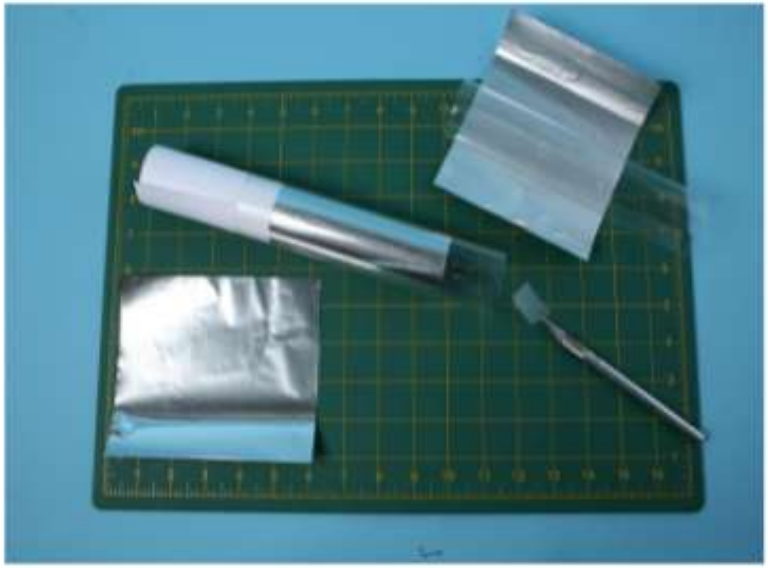

wimshurst-layden-plate-inner.jpg

Cut and affix the inner plate:

1. Cut (4) 5" by 6" sheets of heavy duty aluminum foil.

2. Form one sheet by wrapping it around the tube and then rolling it so it can be inserted. Roll along the 6" axis so the foil cylinder ends up being 5" high.

3. Insert the foil into the tube so that it is 1" from one end. Use a couple of rolled up sheets of paper to hold the foil firmly against the inside of the tube while you tape it in place. The tighter you can make it to the inside of the tube the better.

Affix the outer plate:

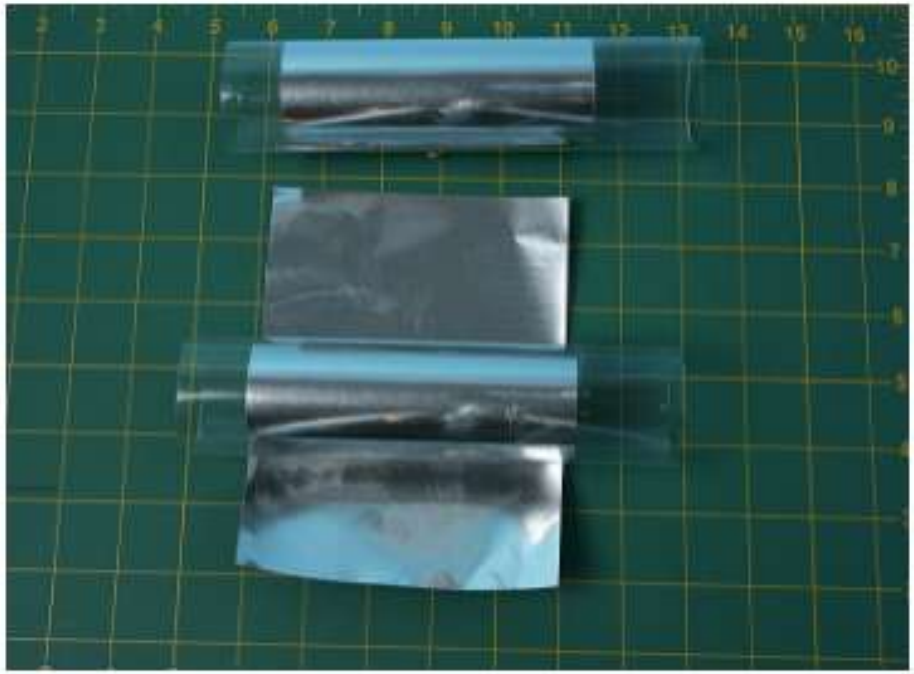

wimshurst-layden-plate-outer.jpg

1. Wrap another piece of aluminum foil around the outside and tape it in place. Again, the tighter the better, but don't wrinkle the foil.

wimshurst-layden-plate-bottom.jpg

Make the bases:

1. Snap the tube ends onto the opening that is 1" from the foil

2. Make the Leyden jar bases from a pair of plastic closet pole mounts. Drill out the center hole to 5/16".

Note: These are Stanley brand and I had to trim some reinforcing ribs off with an X-acto knife to make them slide into the tubes.

wimshurst-axle-collars.jpg

Mount the disks and drive line:

1. Slide the disk axle into a support and put on a 5/16" set screw collar, an O-ring belt, the two disks, the other belt, and another collar.

2. Attach the casement window crank to the drive shaft, insert the bushings in the supports if you are using them and slide the shaft through the pulleys. The pulleys should be a tight fit and you will have to twist the shaft back and forth to get it through. Don't forget about the belts hanging from the top shaft, one will need a twist so that the disks rotate in opposite directions. A collar goes on either end of the drive shaft.

3. Once both shafts are in place, stretch the belt around the pulleys. (In the picture, the belt with the twist is hidden behind the disk. What you are seeing is a reflection of the untwisted belt.)

Note: 5/16" set screw collars can be found at the hardware store but I made my own by drilling out a 5/16" nut and threading a #6-32 screw into the side.

Note: I found that my machine became difficult to turn once it was fully charged due to the electrostatic attraction of the disks. I cut a 2 ½" washer from a plastic milk jug and placed it on the shaft between the disks to remedy this problem.

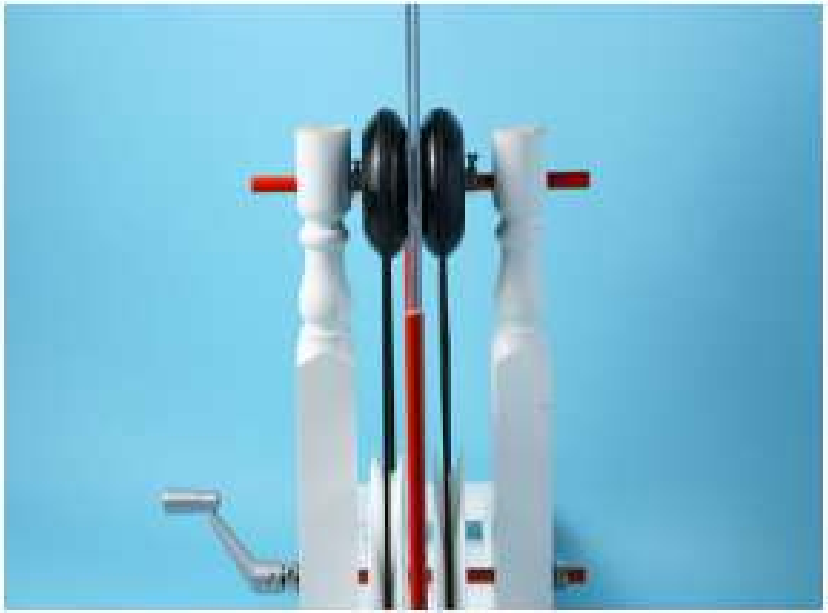

wimshurst-lineup-collectors.jpg

Align the disk and collector supports:

1. Cut two 11" lengths of fiberglass rod and press them into the holes made earlier in the base.

2. Loosen the screws that hold the two supports to the base and slide them around to adjust the disks so they line up with the charge collector supports.

3. Re-tighten the supports.

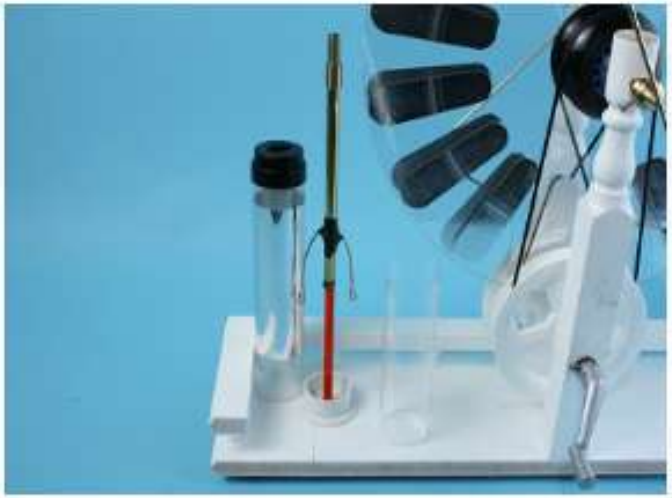

wimshurst-layden-contact-inner.jpg

Install the Leyden jar base and inner plate contact:

1. Slide the Leyden jar bases onto the fiberglass charge collector supports.
2. Slide the charge collector assembly over the fiberglass supports.
3. Using about 6" of 14 AWG solid copper wire, form the inner plate contact. Wrap it once around the brass tube and form two loops in the ends.
4. Using a scrap of the plastic tube as a guide, adjust the inner plate contacts so they apply even and gentle pressure. You want good contact with the foil but you don't want to rip the foil when you install the Leyden jars.

Epoxy the charge collector assembly in place:

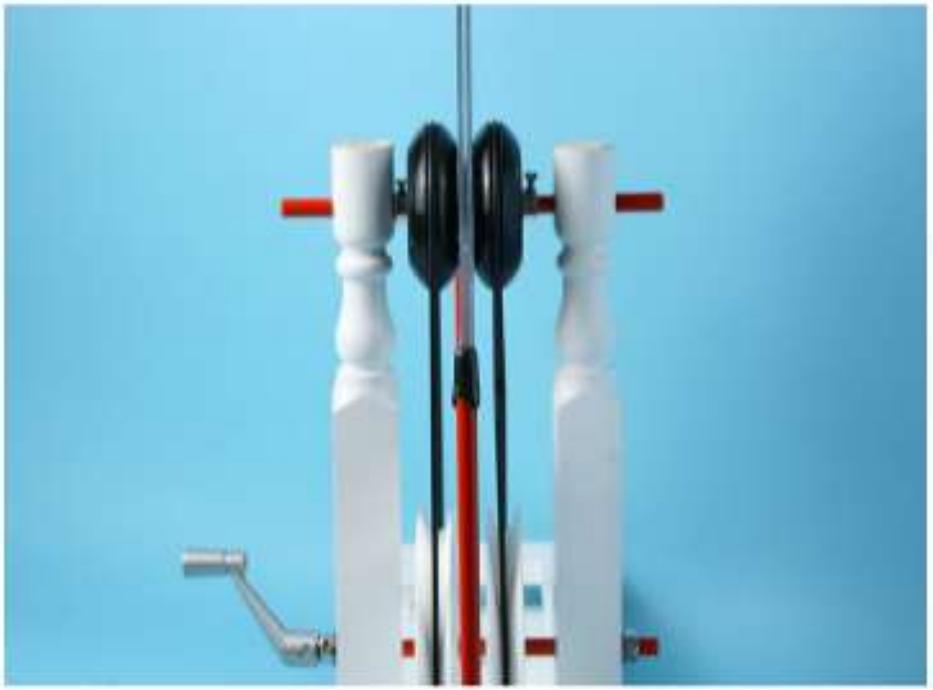

wimshurst-collector-epoxy.jpg

1. Apply epoxy to the end of the rod and slide the brass charge collector assembly down onto the fiber glass support rod.

2. Set aside while the epoxy cures.

wimshurst-layden-complete.jpg

Install Leyden jar and assemble collector:

1. Slide the Leyden jar onto its base, being careful not to tear the foil as makes contact.

2. Line up the charge collector comb and trim the prongs. Test spin the disks to see if there is any wobble and trim the prongs to come as close as possible to the disks without touching.

3. Assemble the charge collectors.

wimshurst-collector-inplace-2.jpg

Install discharge electrode:

1. Insert the discharge electrodes into the lamp finial on the charge collector and tighten the screw to hold it in place.

2. The finial should be tight enough to hold the collector comb but allow the discharge electrode to move back and forth. If it's too tight, or not tight enough, the support rod can be twisted in the base to accommodate.

3. Wrap a small bit of tape around the end of the electrode and screw on one of the small ball nuts; this will prevent charge from bleeding off the sharp end.

wimshurst-neutralizer.jpg

Install neutralizing brushes:

1. Slide the neutralizing bars onto the upper shaft and adjust them to be about 45 degrees from the collector combs.

2. Sectors should pass through a charge collector, encounter a neutralizing bar after about 1/6 of a rotation, and then encounter the other charge collector after a further 1/3 of a rotation.

3. Tighten the set screw to secure.

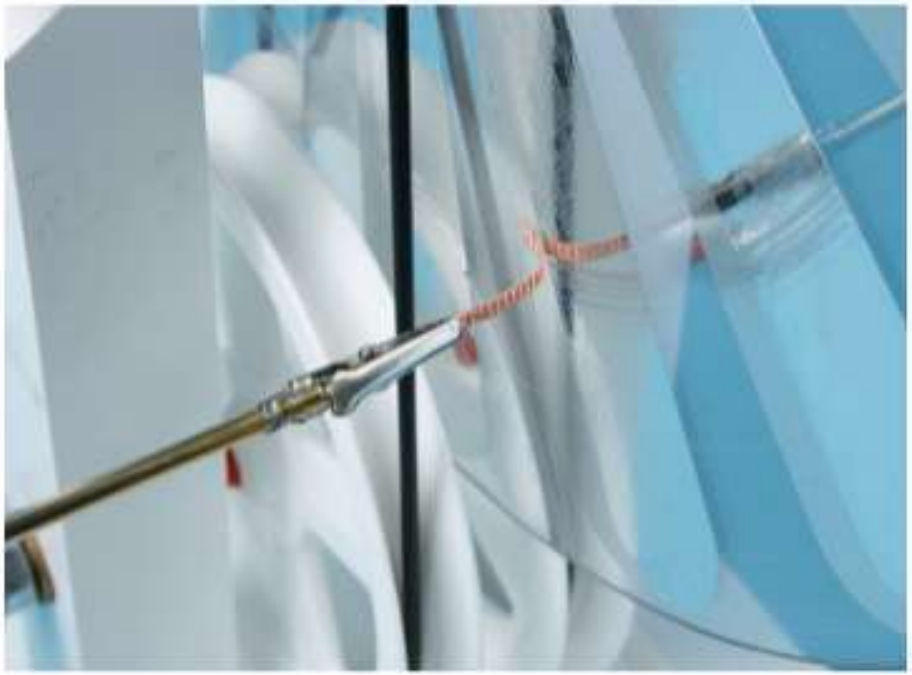

wimshurst-neutralizer-brush.jpg

Position brushes:

1. Clip (2) 1 ½" lengths of Solder Wick™ to the ends of the neutralizing rods so they make good contact with the disk.

wimshurst-complete-front.jpg

Mount the Leyden jar shunt and add optional finials:

1. Use small brass wood screws to attach the (2) acrylic brackets to the front disk support, leave them a little loose at first.

2. Place the Leyden jar shunt in the brackets and line them up so the balls on the shunt lean comfortable against the Leyden jars.

3. Tighten the brackets.

The two tops of the disk supports looked a little bare to me so I raided my junk box for more lamp parts and came up with these decorative finials. The wealth of finial and cabinet knobs at the typical home center means that there are infinite

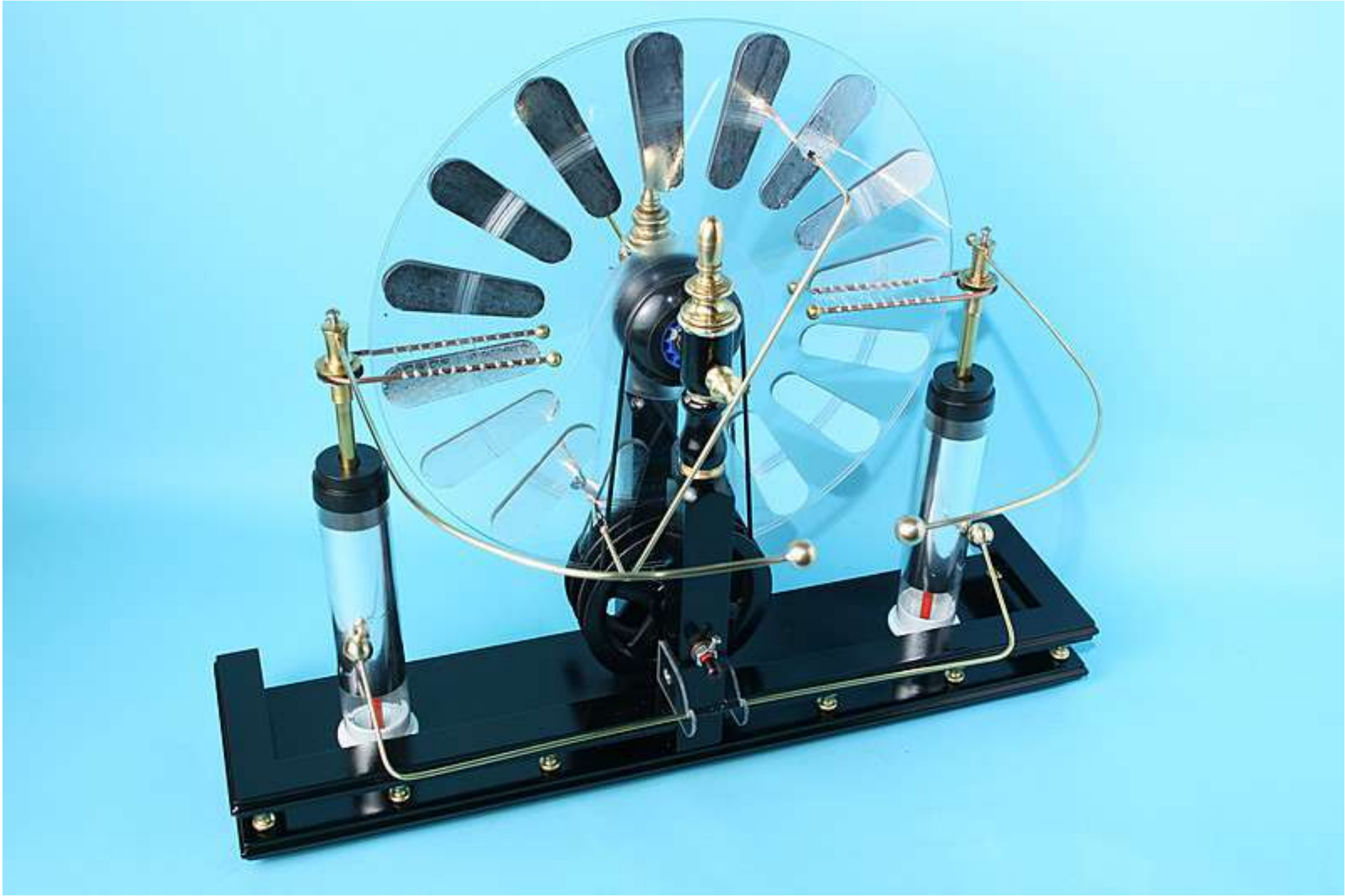

Attaching a small ball to the positive electrode will result in larger and more interesting sparks. The small ball creates a plume of ionized air that helps the spark jump the gap.

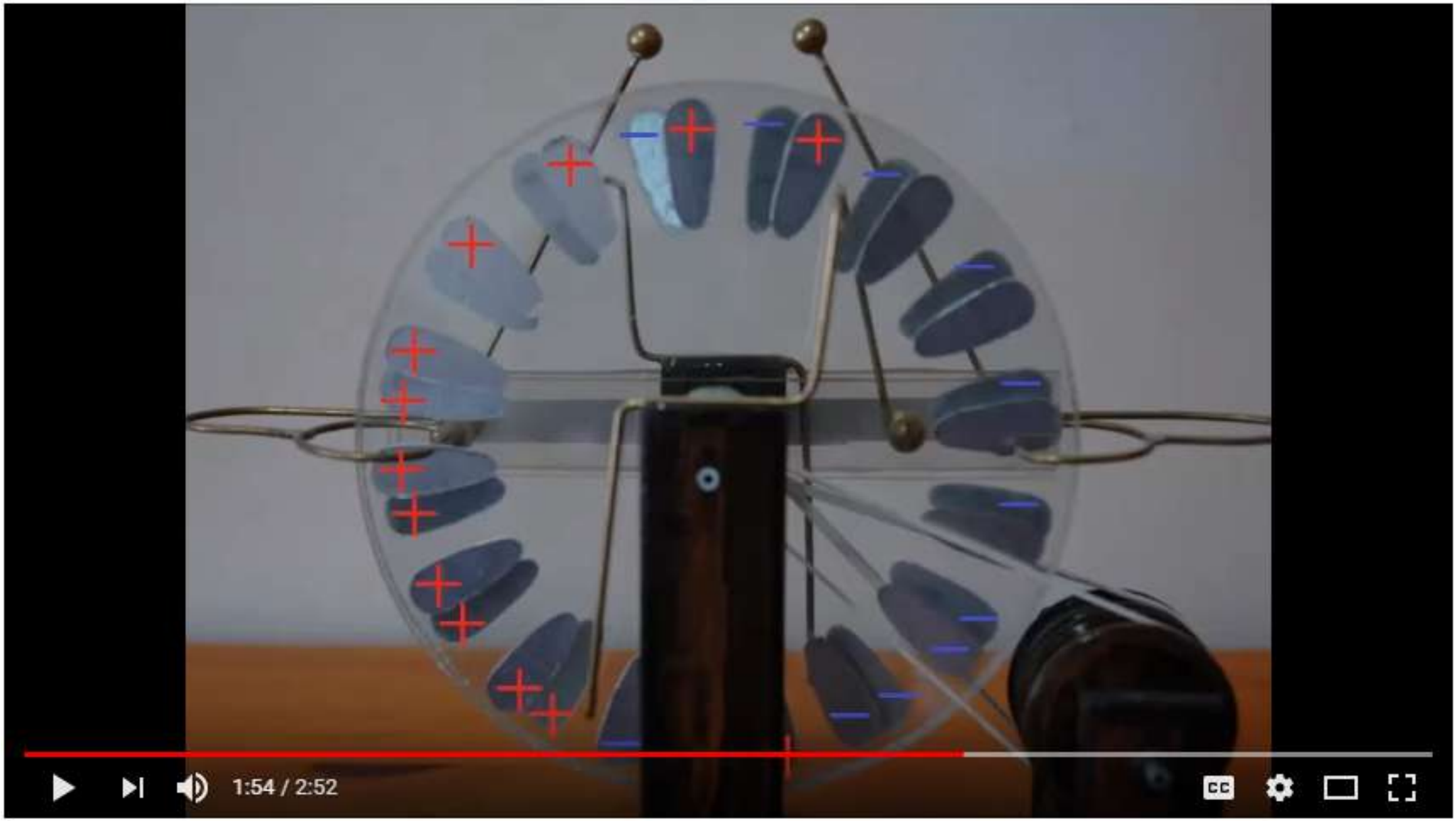

How the Wimshurst Works

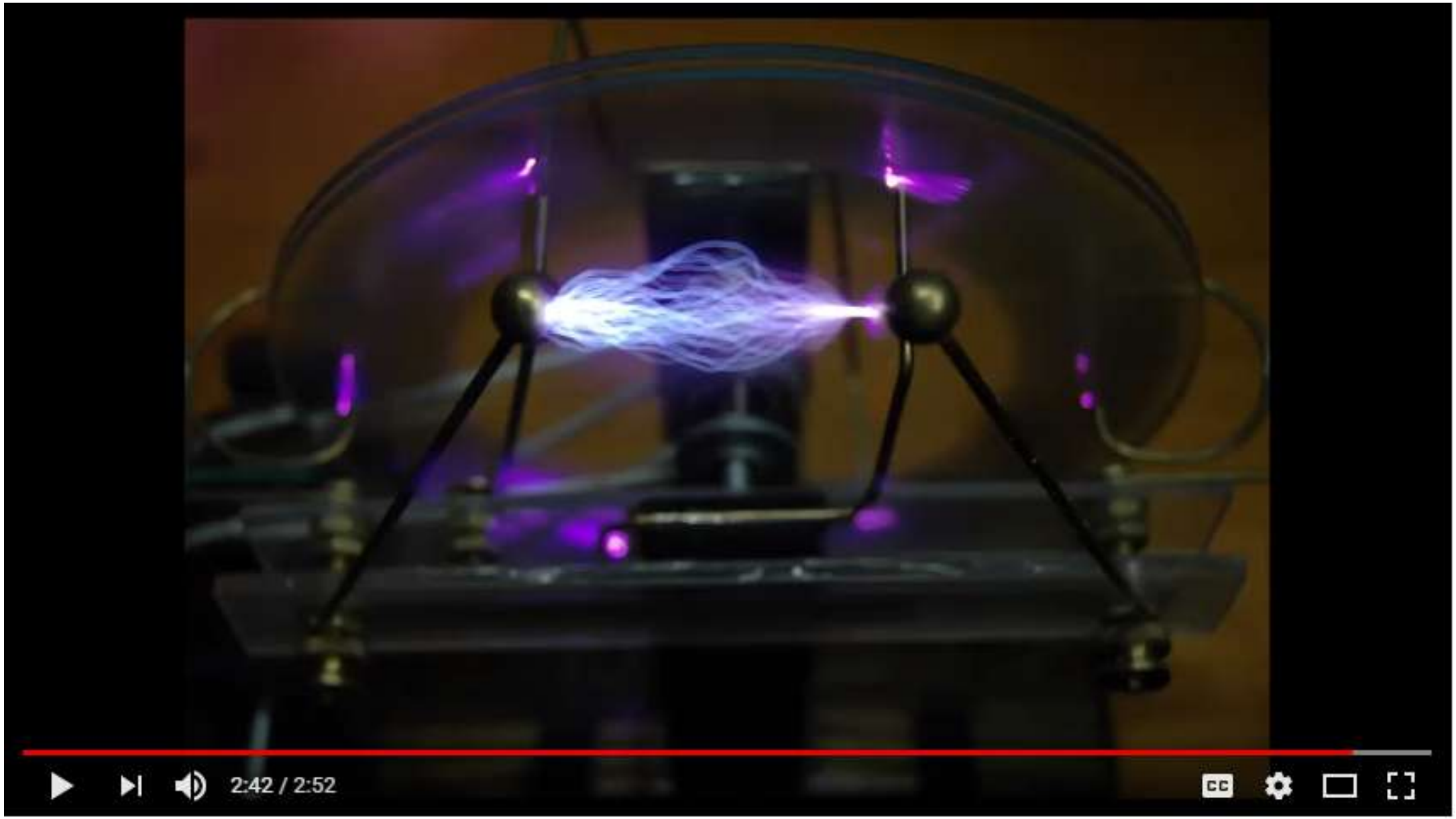

How the Wimshurst Works

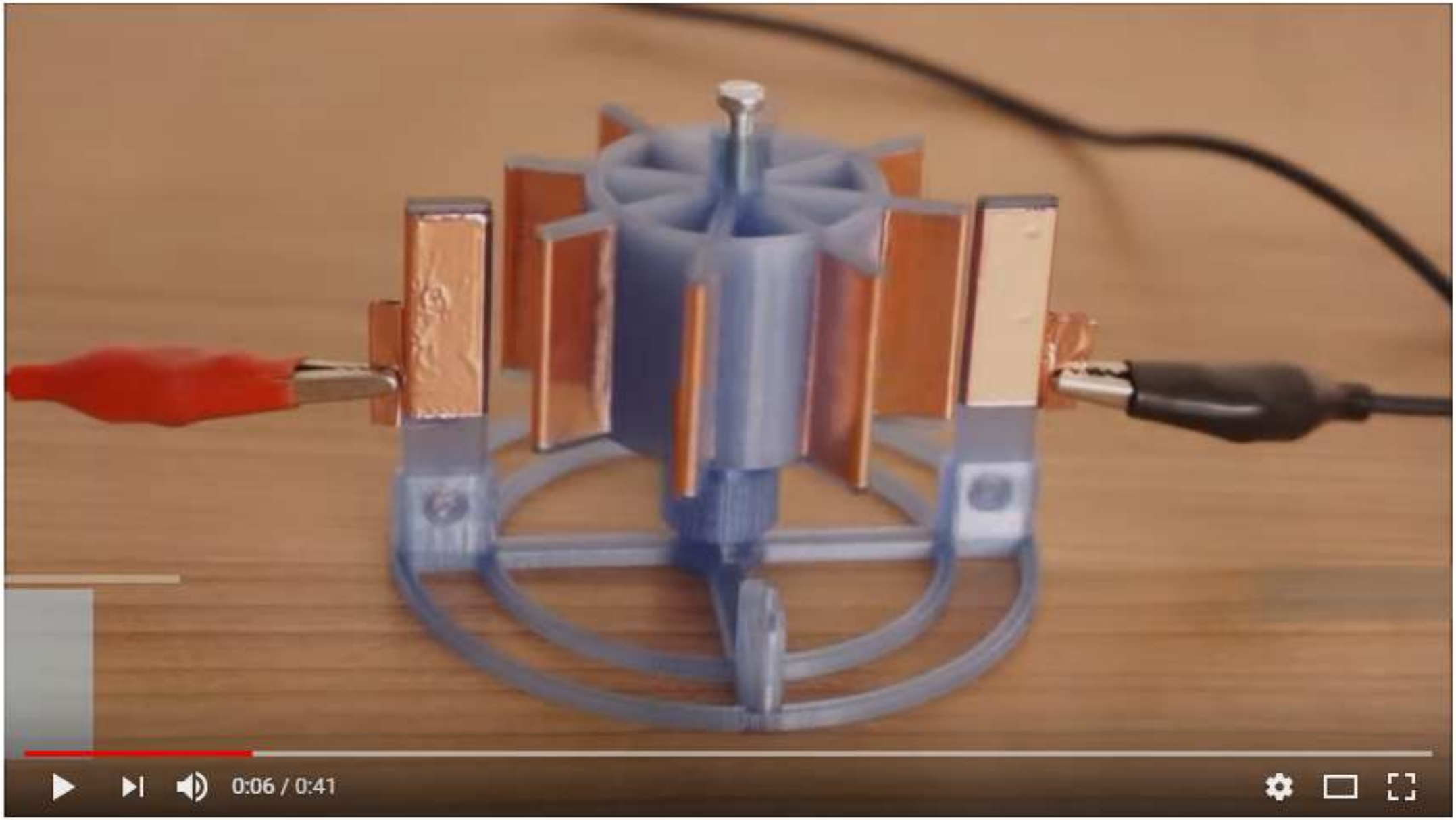

Electrostatic Motor

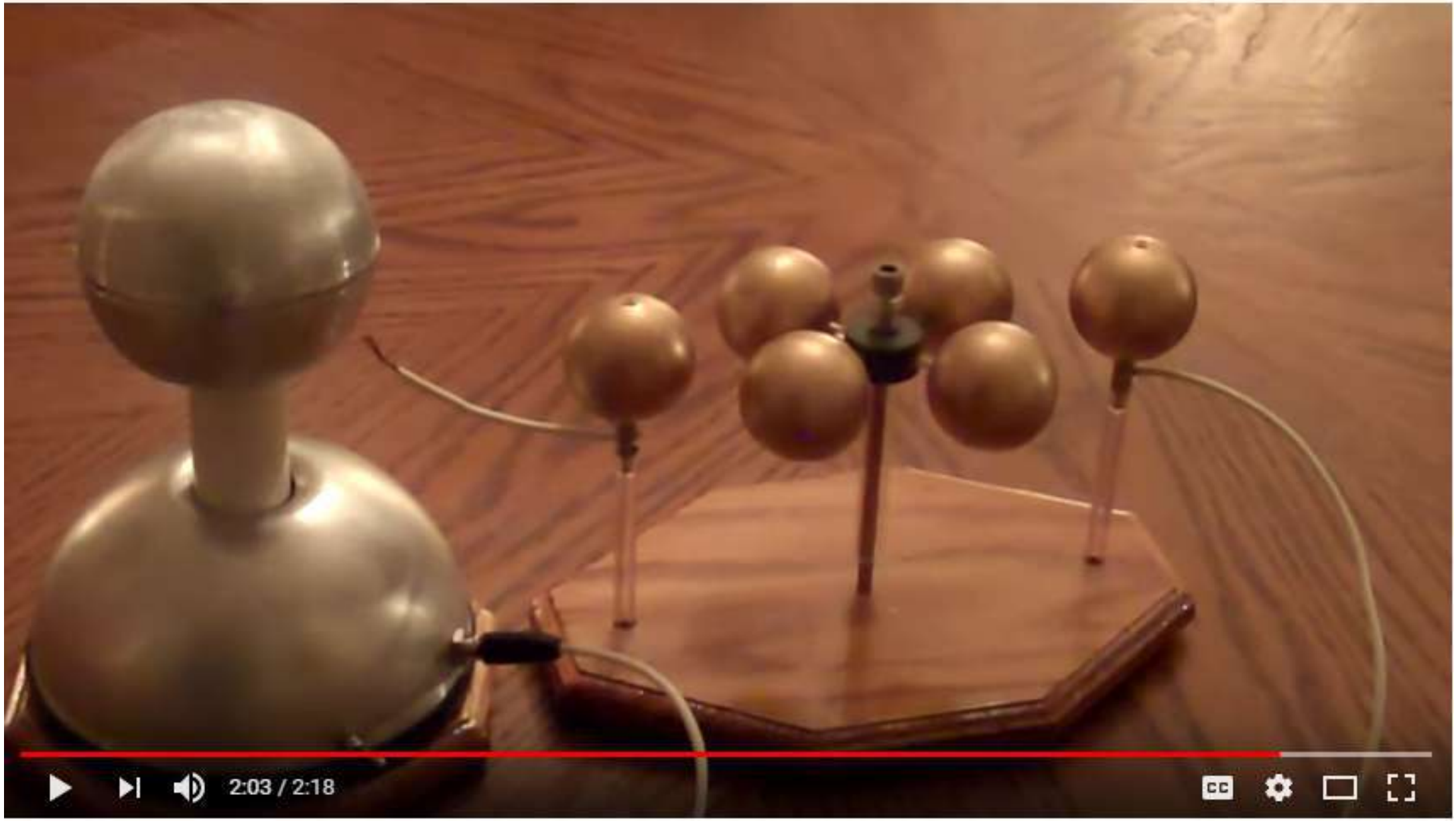

Home Made Electrostatic Motor

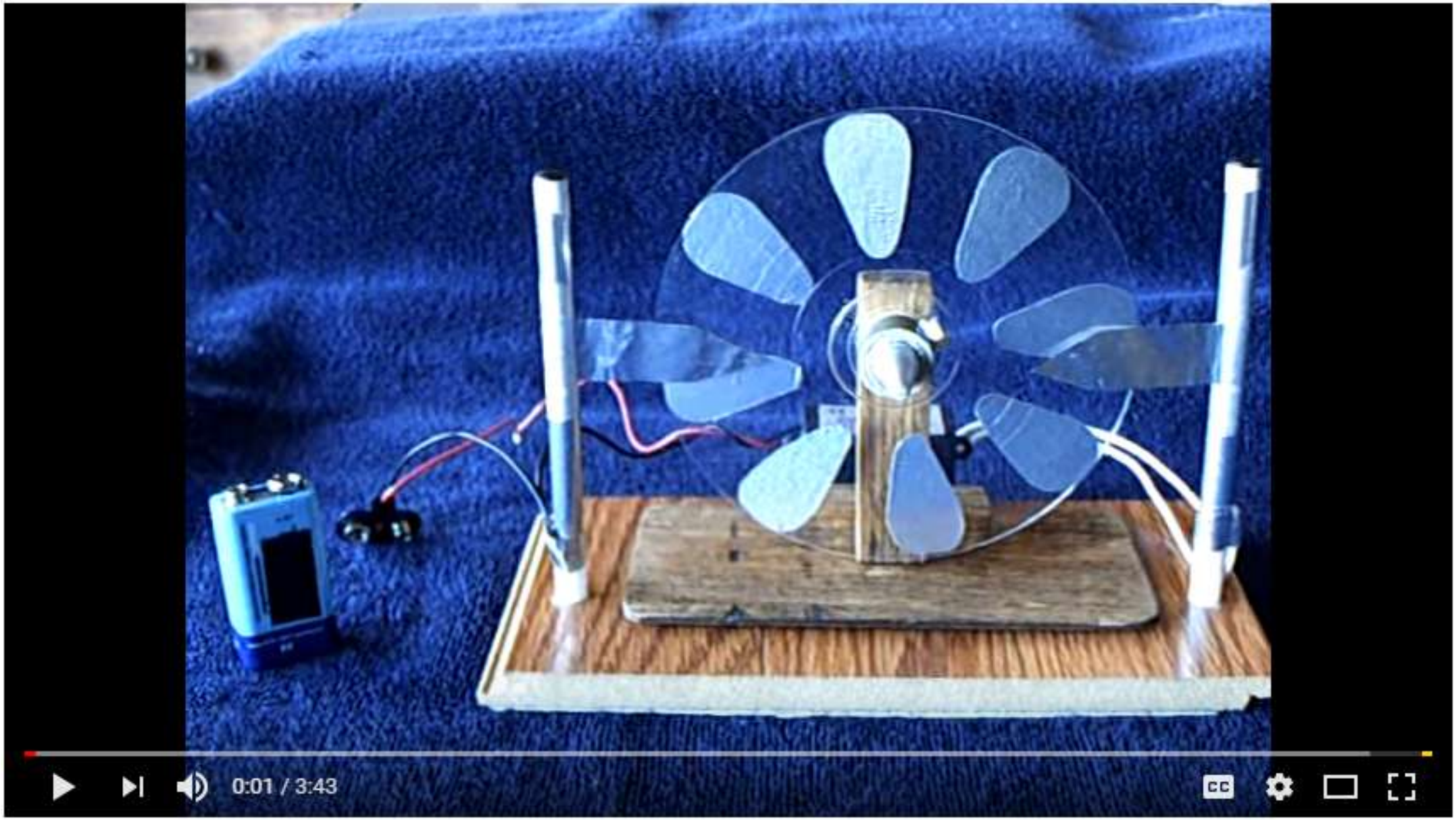

Clear Disk Electrostatic Motor

2:57 / 3:43

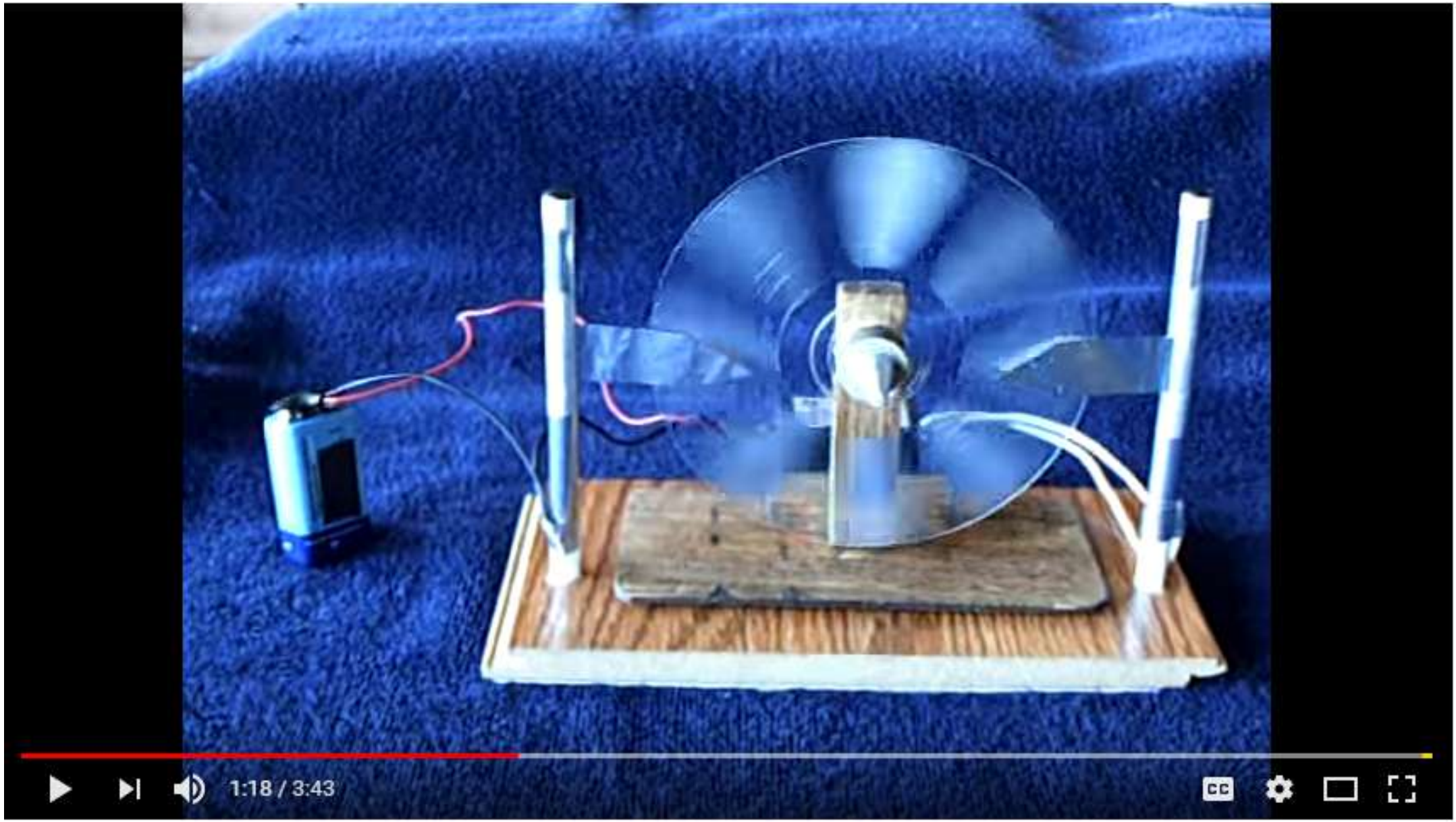
1:18 / 3:43

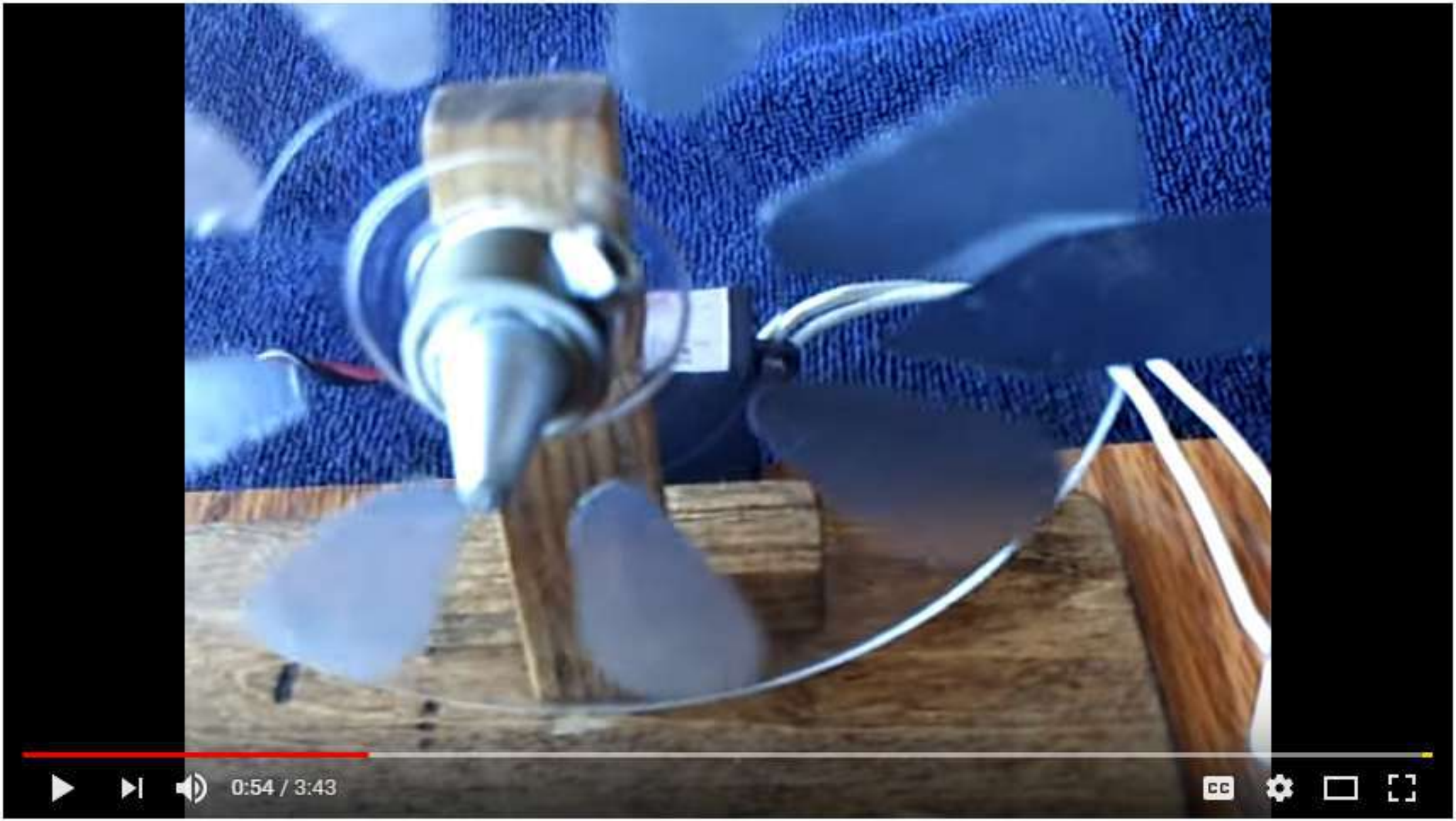
0:54 / 3:43

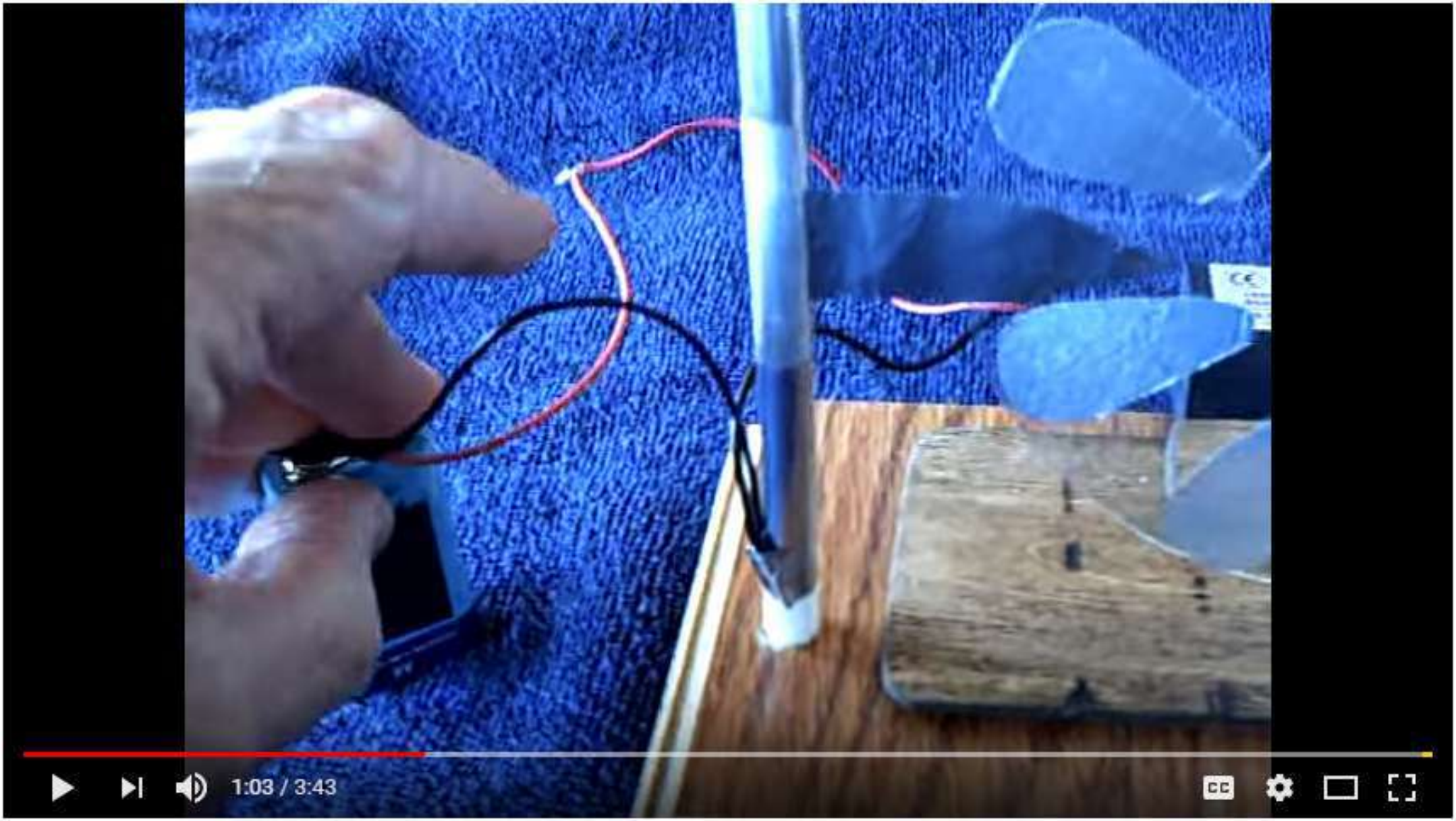
1:03 / 3:43

3:37 / 3:43

Make Water Appear Frozen In Time Using Sound

24 Hz sound
makes water appear "frozen"
2:35 / 7:34

f1=24.0 Hz
f2=23.0 Hz

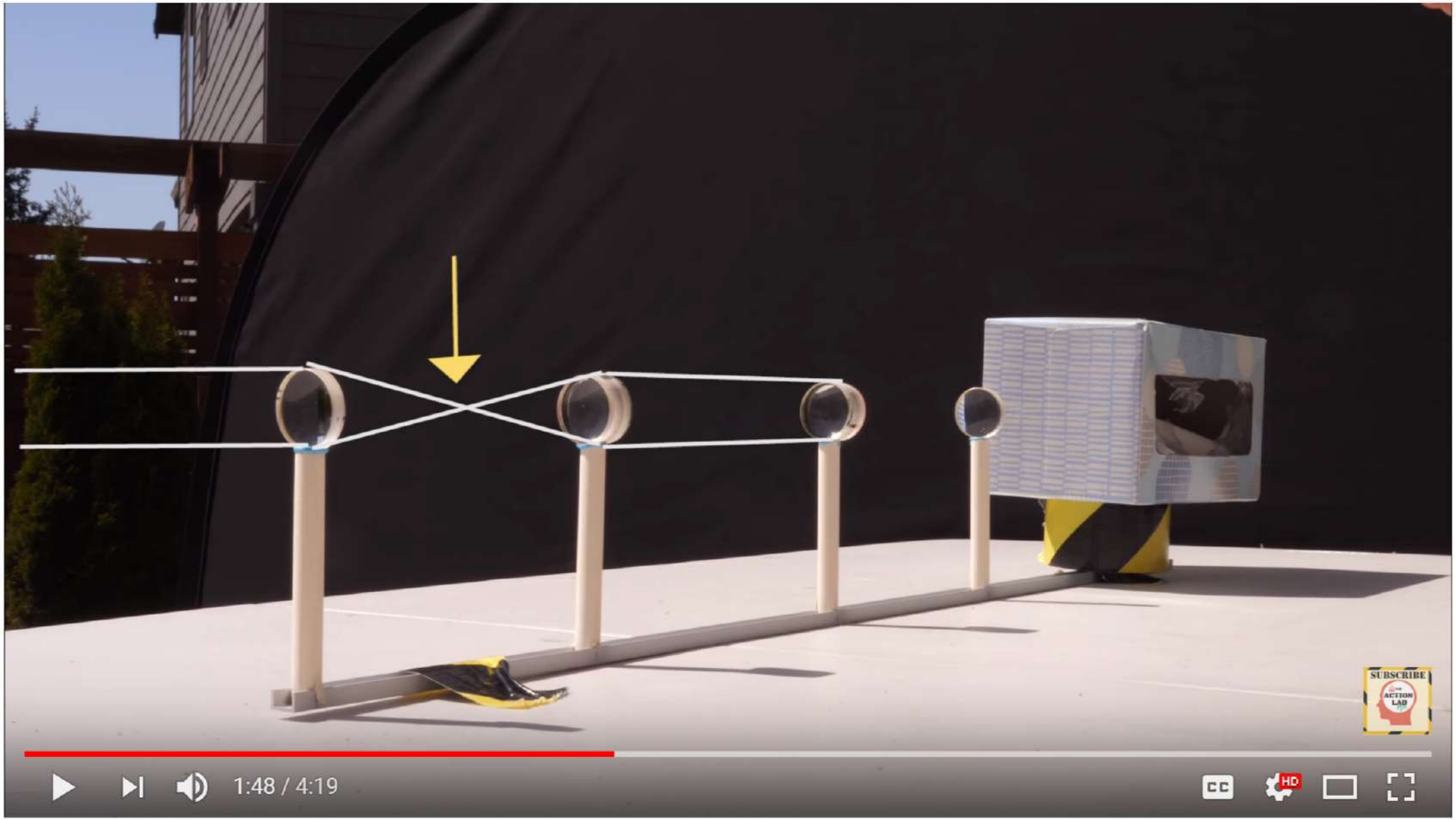
SUBSCRIBE
ACTION LAB
1:48 / 4:19

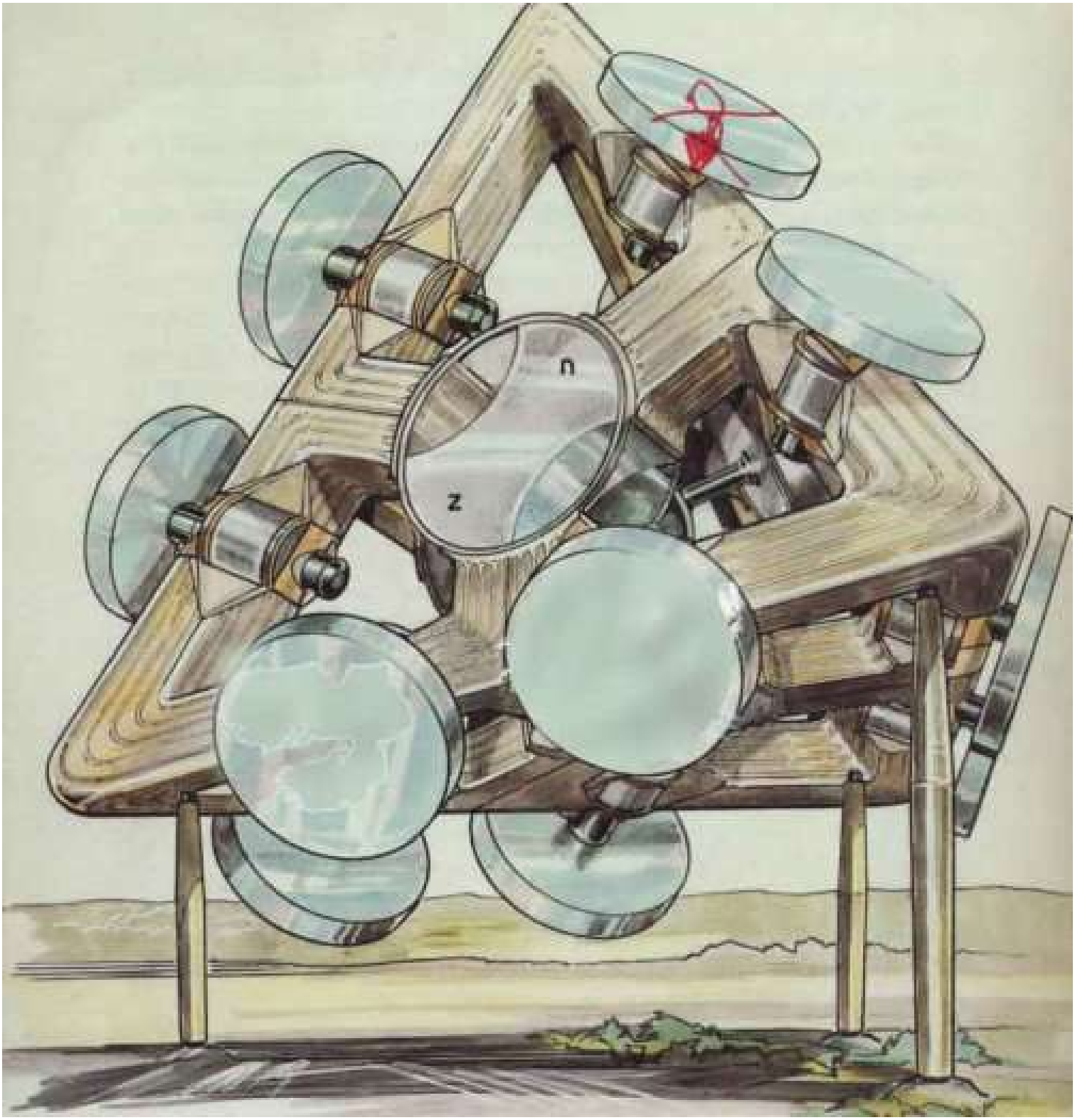
n
z

De universele schepping

Het draagveldparadigma

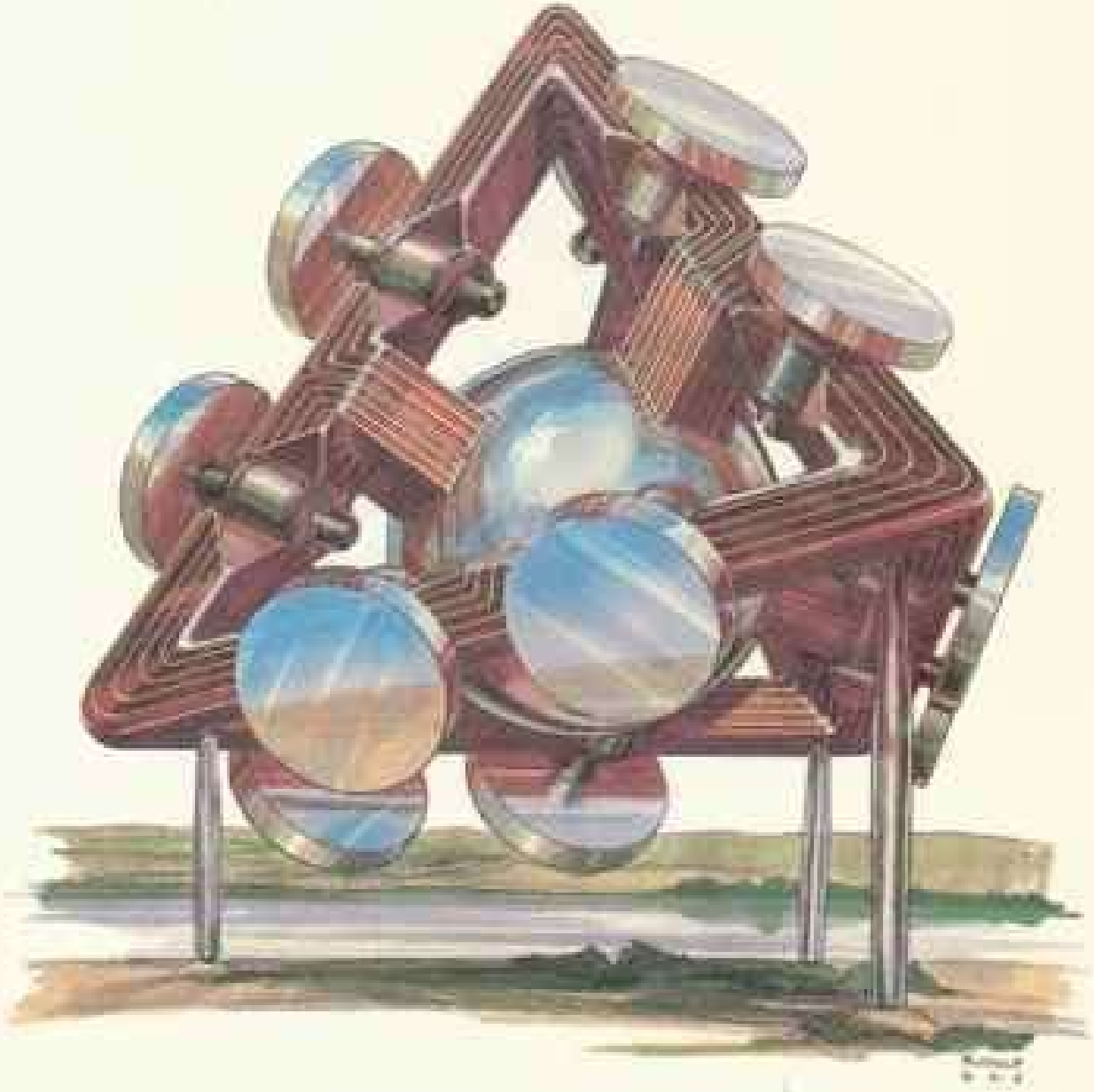

Stefan Denaerde

Meet The largans!

Typical largan

largan gets into photo without being seen at the time photo was taken!

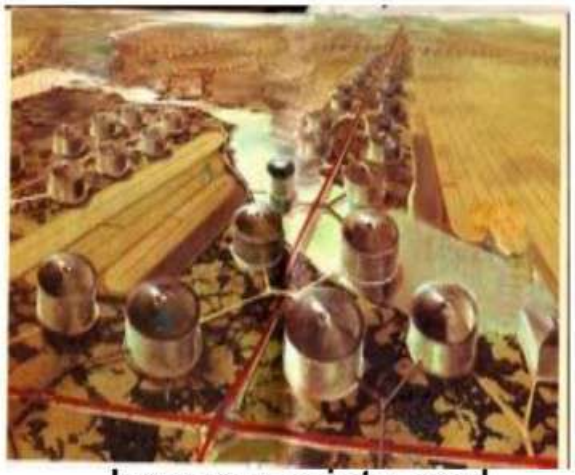

largan society and transportation infrastructure of housing units

Another view and close up of cylinder which houses 10 people each!

From Inside The Control Room

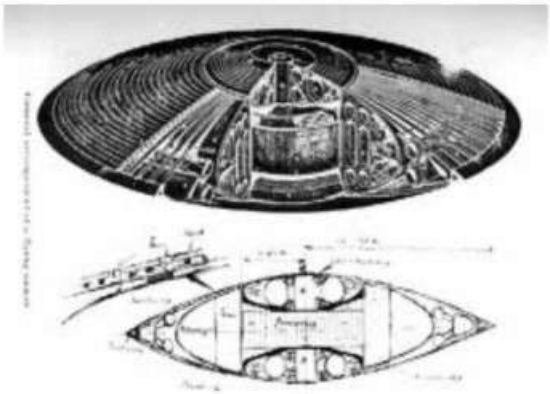

The blue print of a Sun wheel which holds 10,000 people as well

Rune Overby_2001

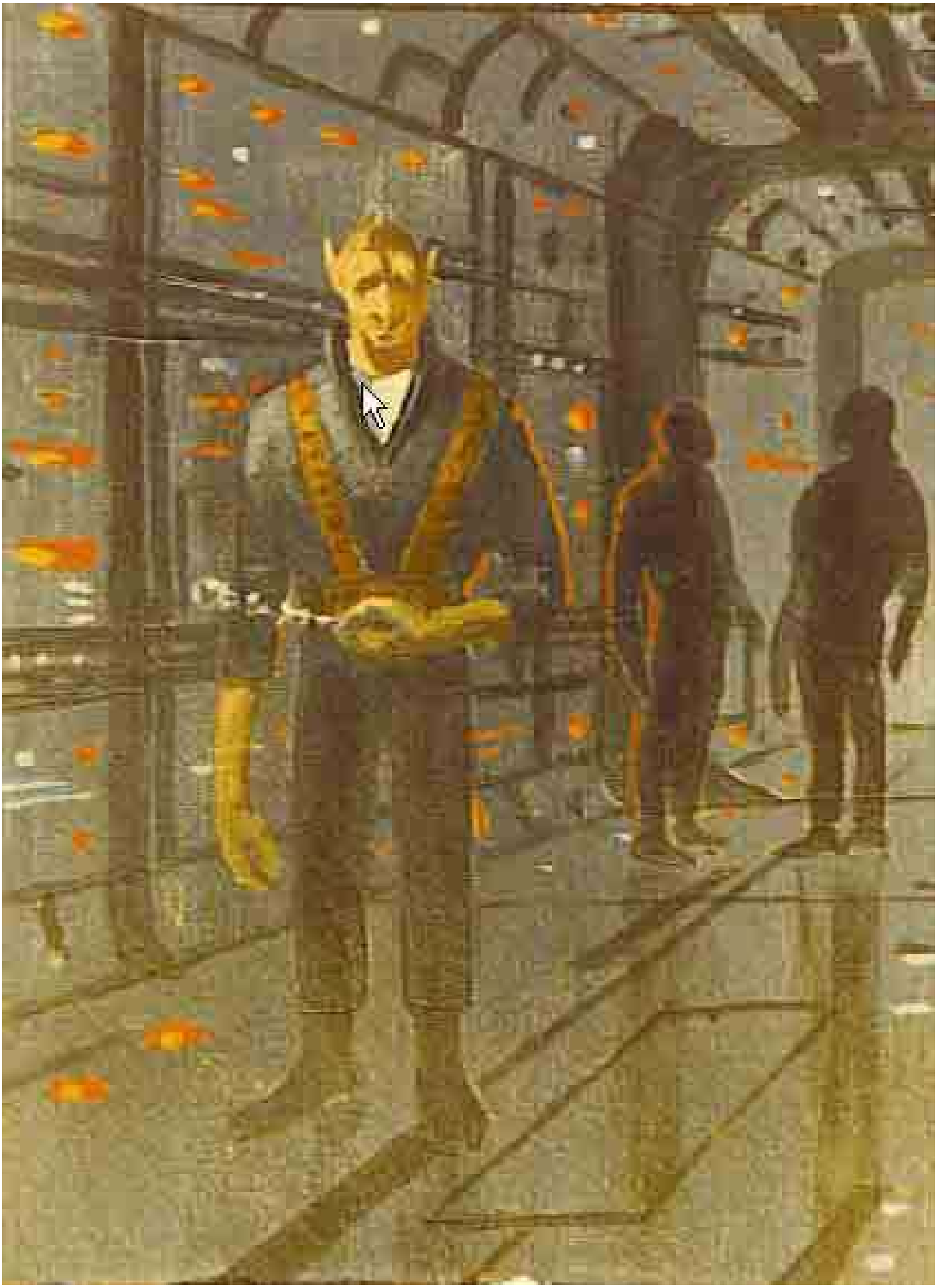

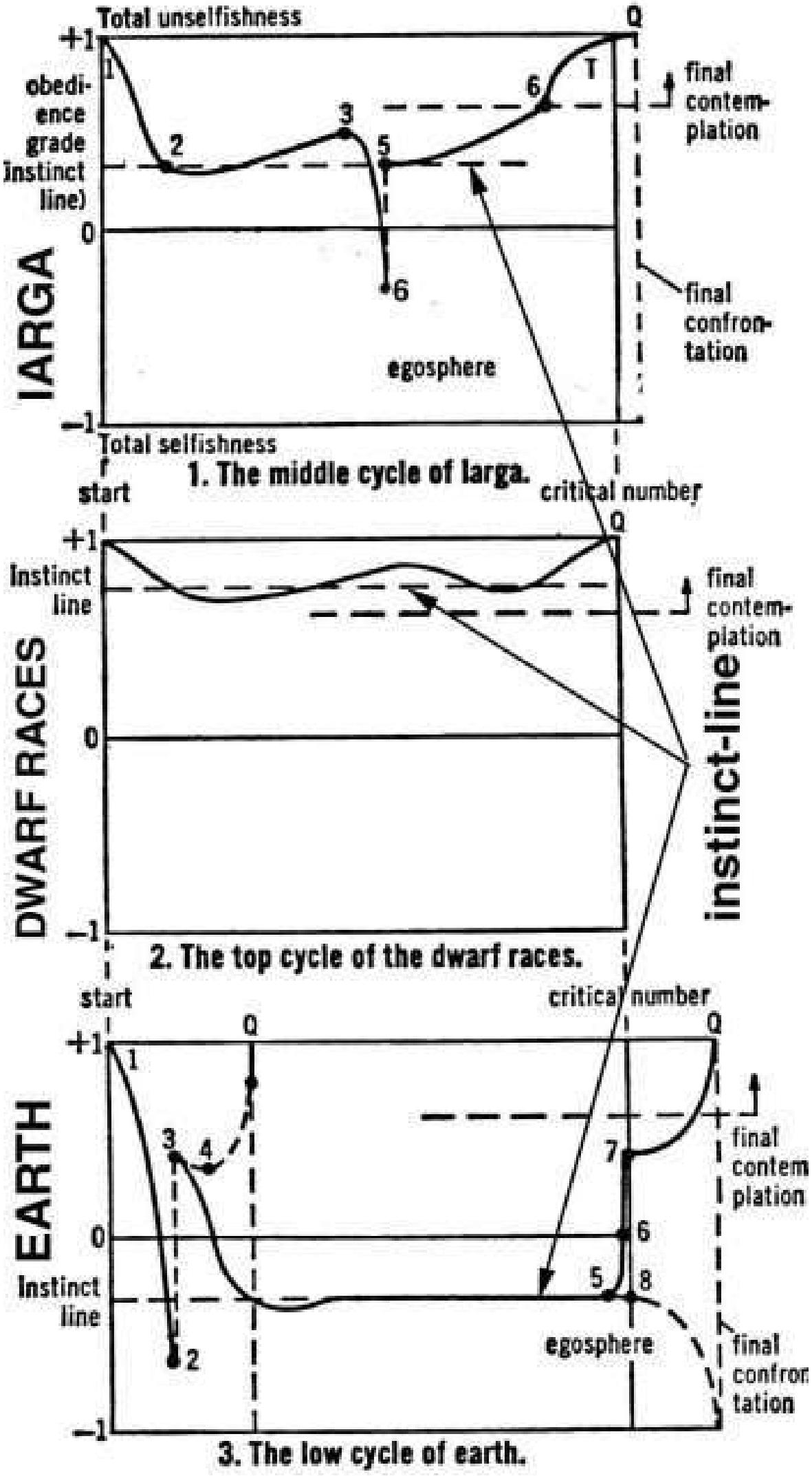
Total unselfishness
+1
obedi-
ence
grade
(instinct
line)
0
IARGA
-1
Total selfishness
Q
T
final
contem-
plation
final
confron-
tation
egosphere
1. The middle cycle of larga.
start
critical number
+1
Instinct
line
0
DWARF RACES
-1
final
contem-
plation
instinct-line
2. The top cycle of the dwarf races.
start
critical number
+1
0
EARTH
-1
Instinct
line
final
contem
plation
egosphere
final
confron
tation
3. The low cycle of earth.

EACH BIOFRAME HIGHER THAN S''' IS CONNECTED, BY ONLY THREE ORTHOROTATIONS, TO LAB FRAME S.

EACH S''' AND HIGHER BIOFRAME IS A MIND.

A PARTICLE IN ONE OF THESE FRAMES IS A "THOUGHT" OR "THOUGHTFORM" IN A MIND.

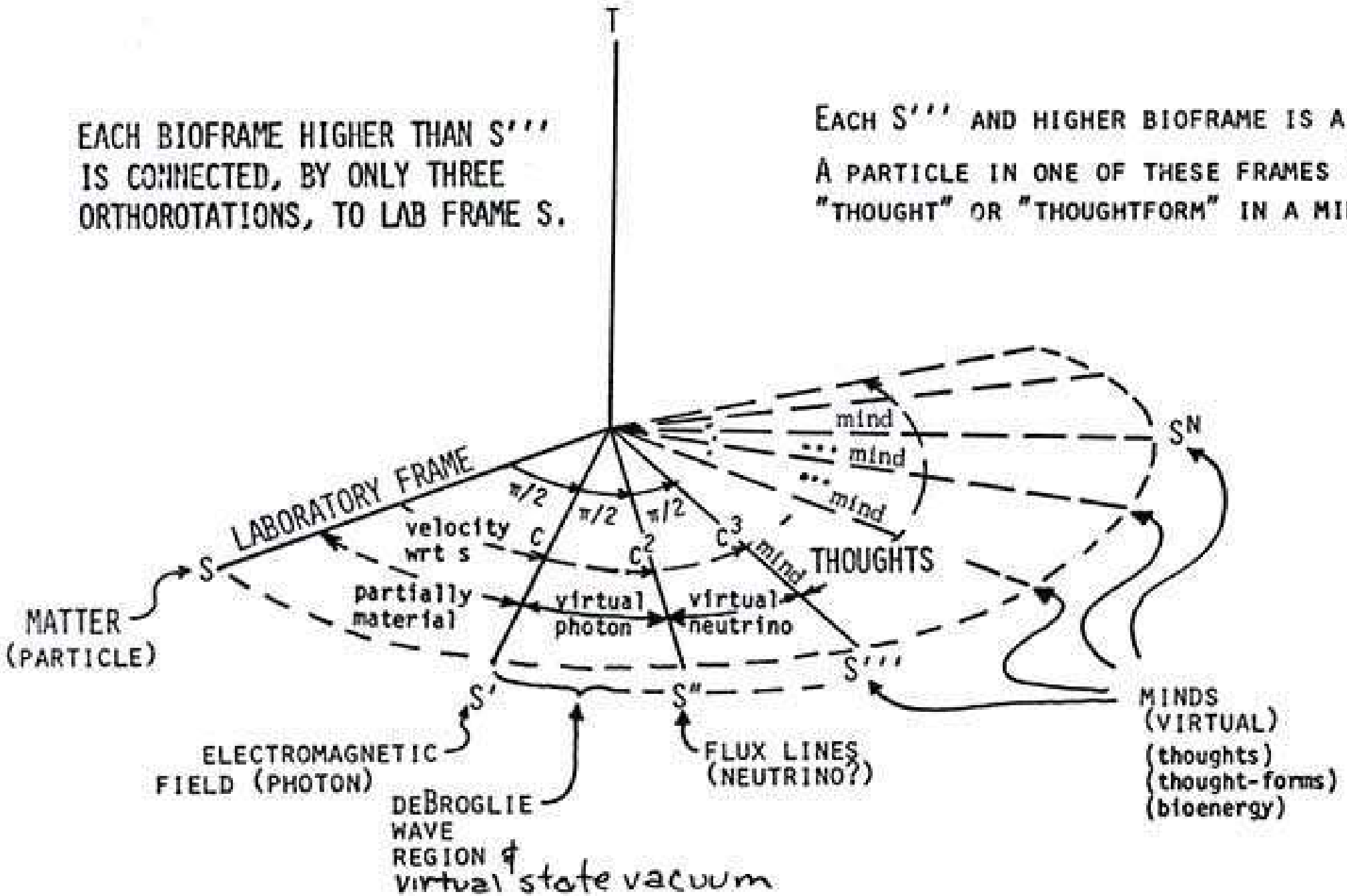

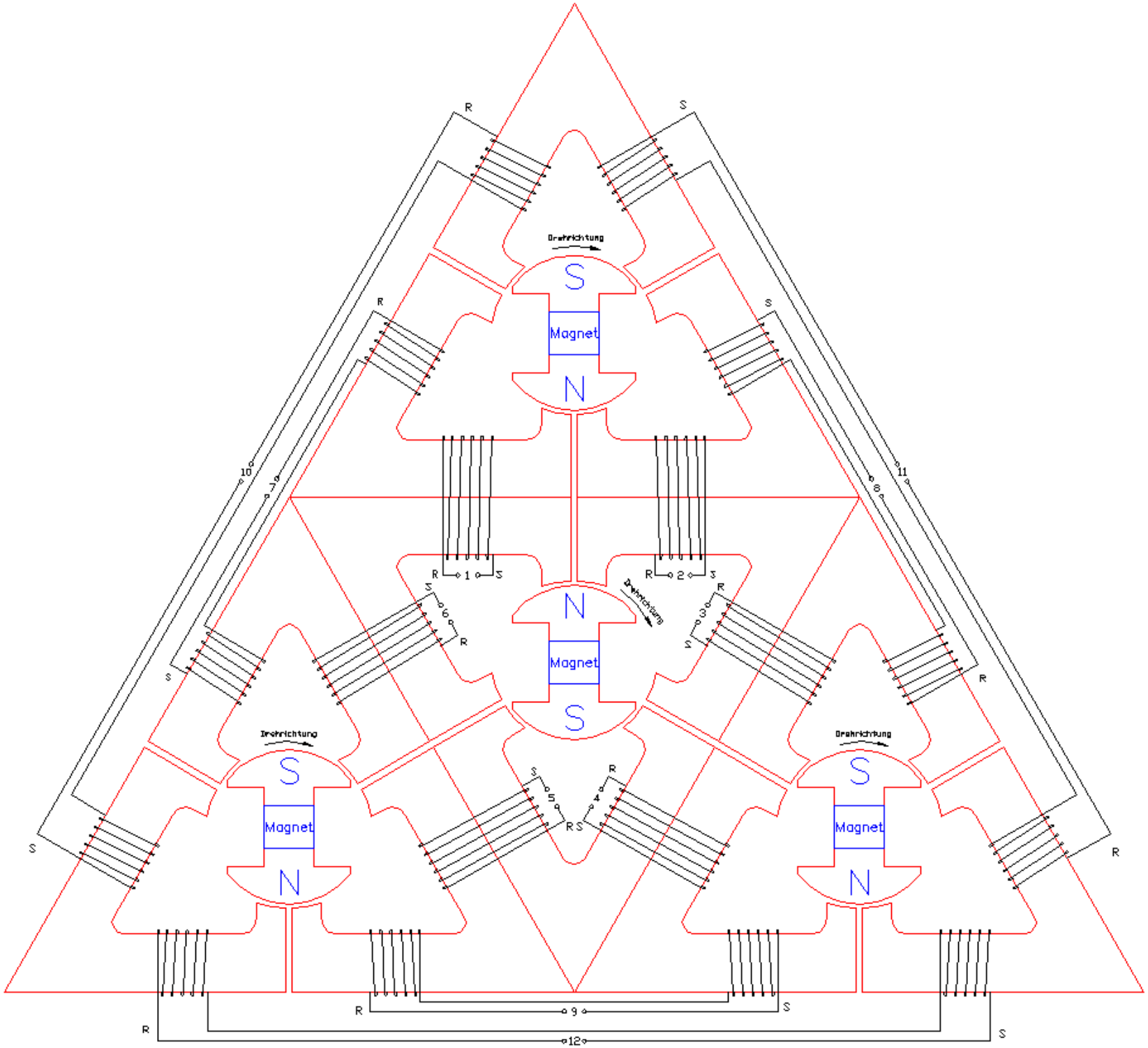
Drehrichtung
S
Magnet
N
R
S
10
11
8
1
2
3
4
5
6
9
12

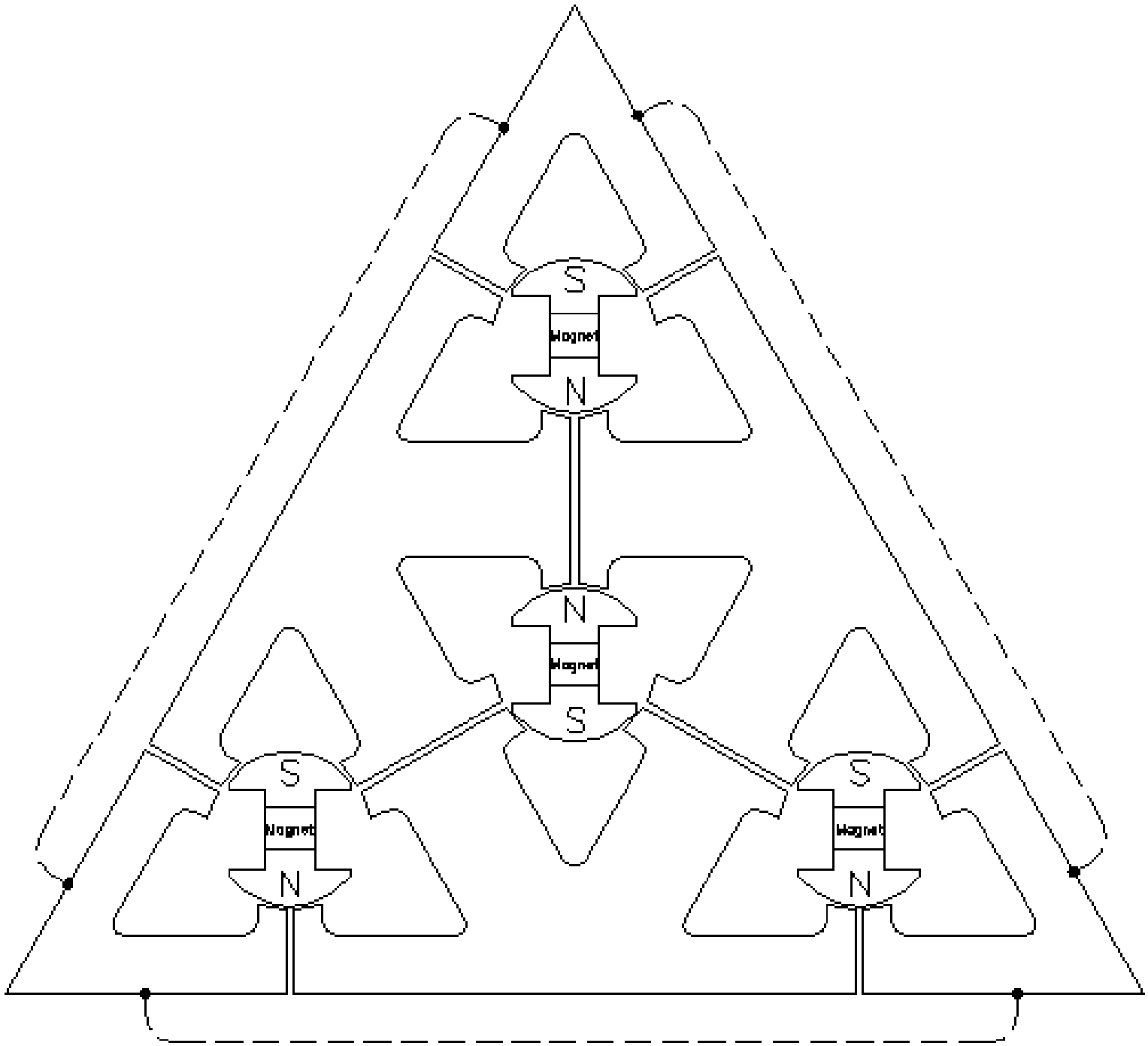
S
Magnet
N
N
Magnet
S
S
Magnet
N
S
Magnet
N

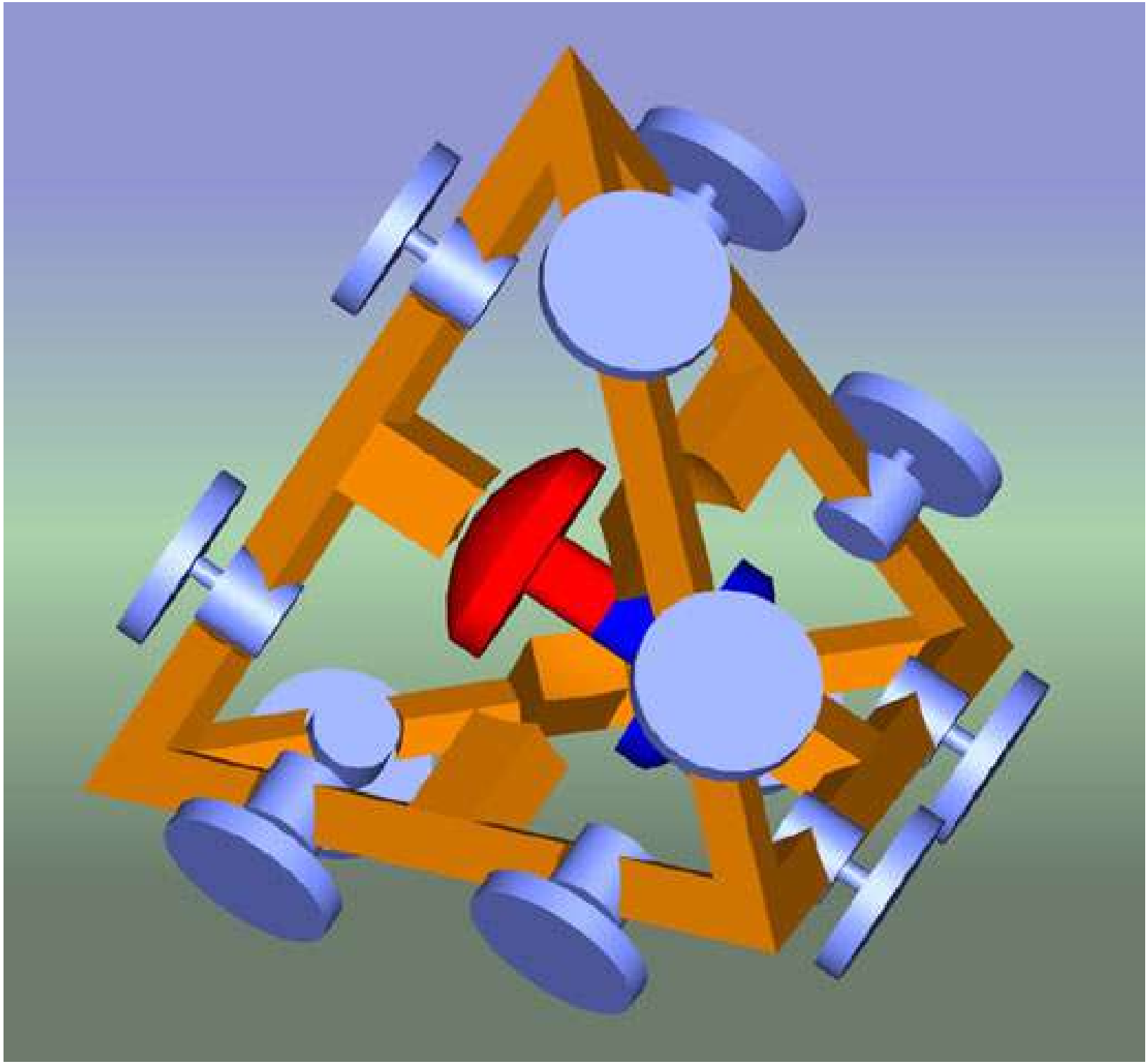

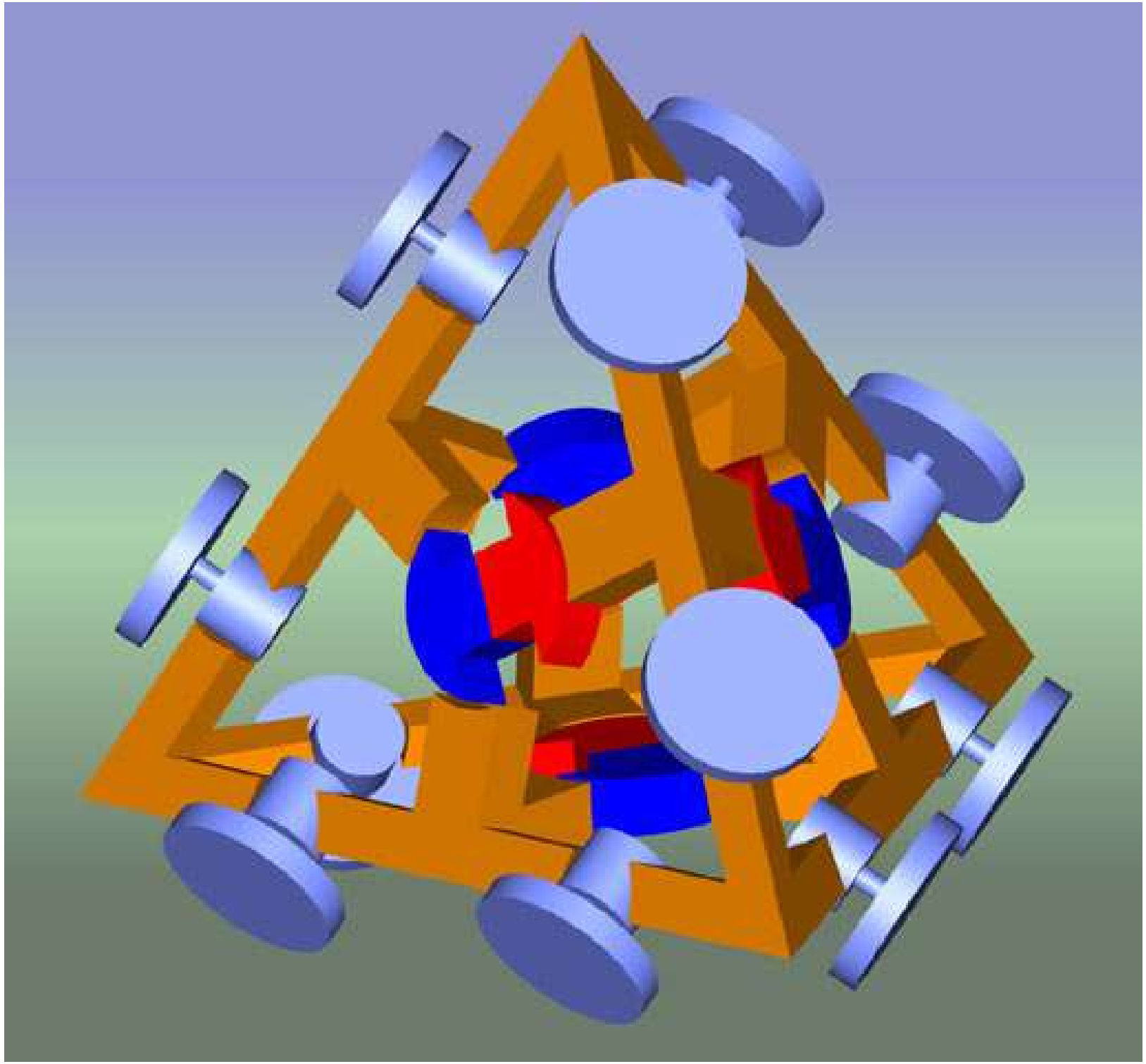

Making the simplest Transmitter

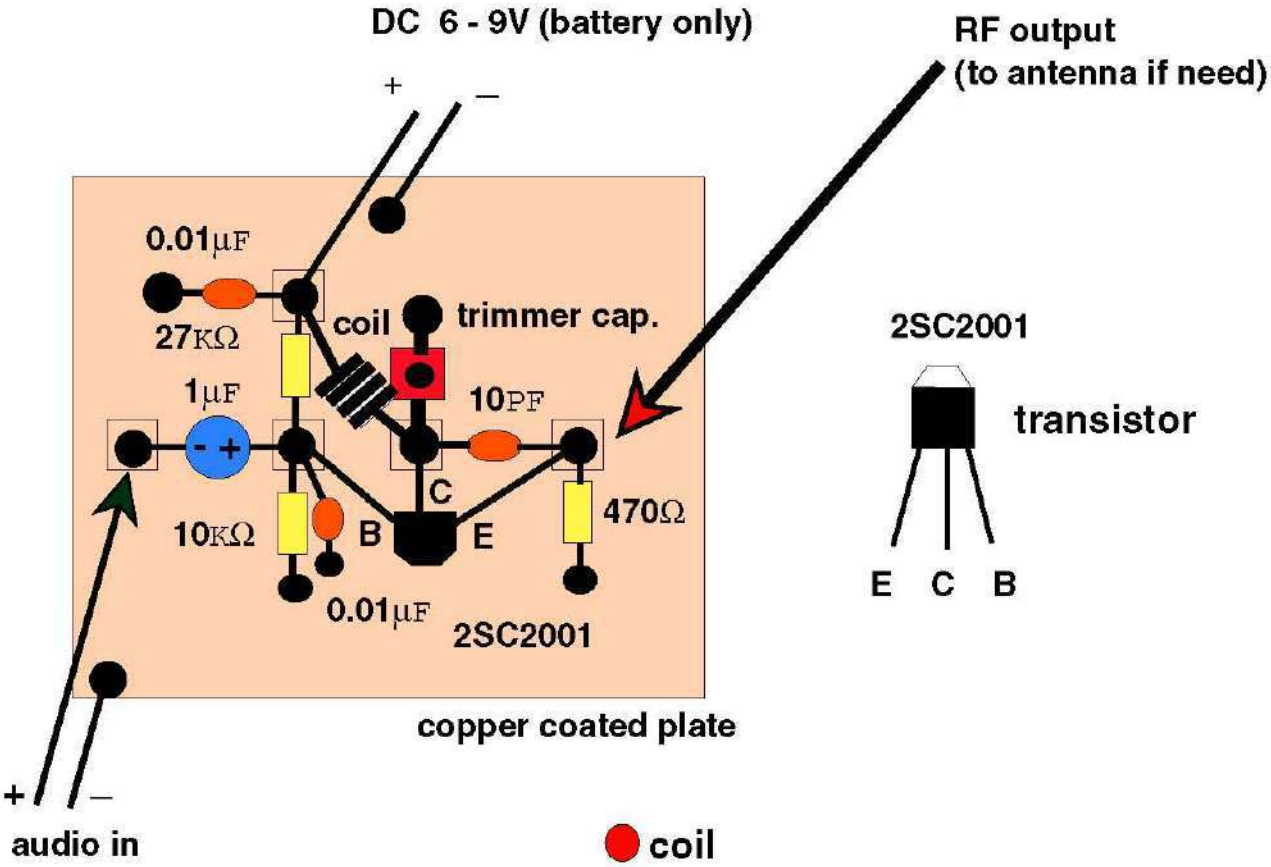

- **soldered point:**
  - ● : direct to the ground
  - ▣ : insulated from the ground

- **coil**
  3 - 4 turns by coated 0.8 mm wire
  ○ 5 - 7mm

- **registers**
  470 Ω *(yellow-violet-brown)*
  10K Ω *(brown-black-orange)*
  27K Ω *(red-violet-orange)*

- **capacitors**
  10 PF
  0.01 μF *(103)*
  1 μF

- **trimmer capasitor 20PF**

2005-03-16 by Tetsuo Kogawa

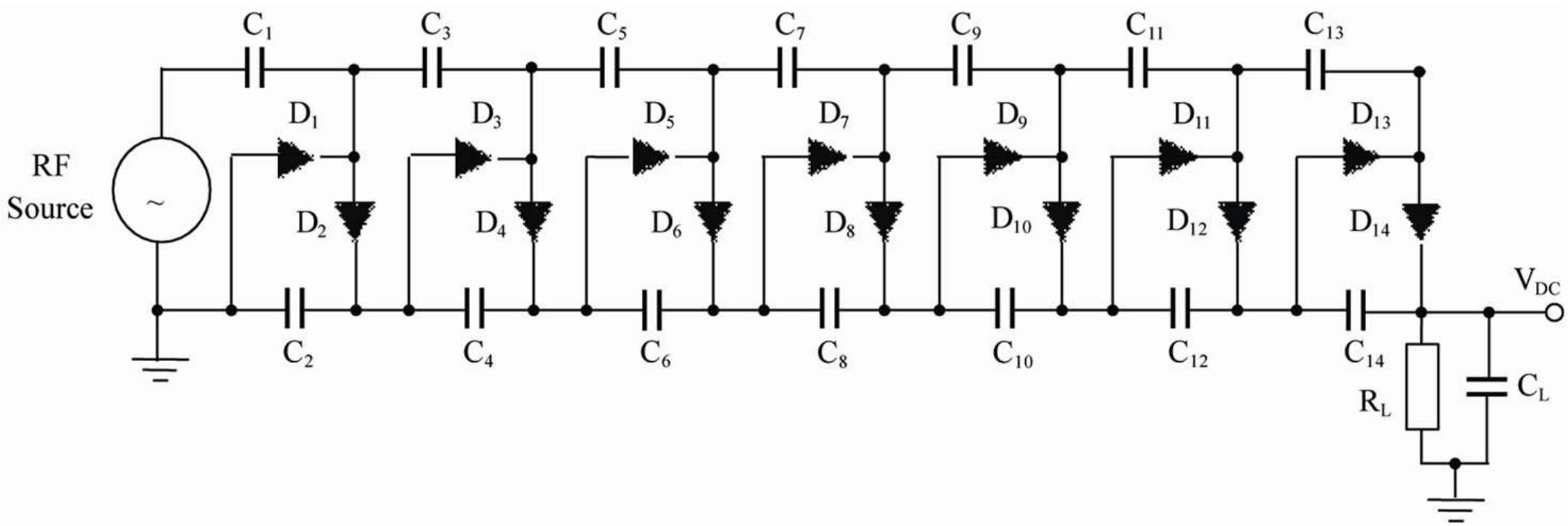
C1
C3
C5
C7
C9
C11
C13
D1
D3
D5
D7
D9
D11
D13
RF
Source
~
D2
D4
D6
D8
D10
D12
D14
VDC
C2
C4
C6
C8
C10
C12
C14
RL
CL

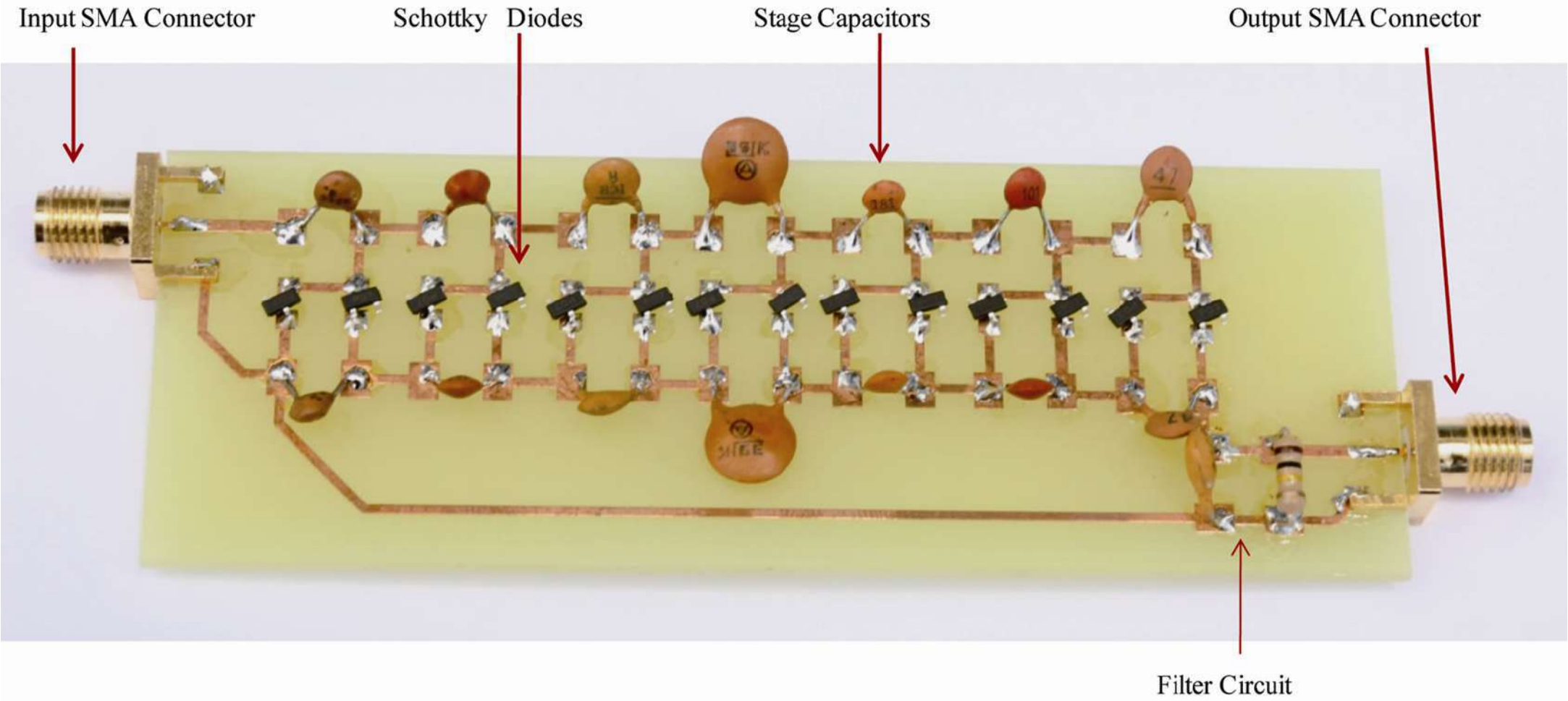
Input SMA Connector
Schottky Diodes
Stage Capacitors
Output SMA Connector
Filter Circuit

Three-dimensional micro-fabricated microwave and millimeter-wave circuits and antennas

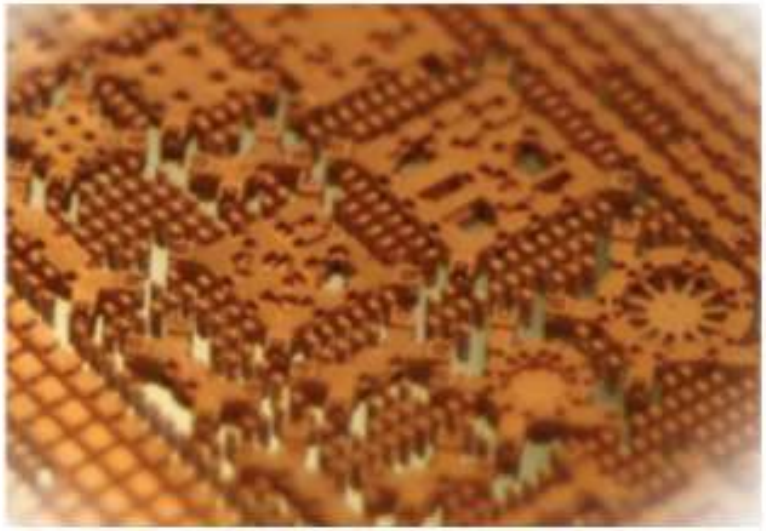

Another active area of research has been in collaboration with Nuvotronics LLC (DAPRA and NASA) in the area of wafer-scale microfabricated coaxial lines and passive and active coaxial-based components. The advantages of these lines, fabricated by Nuvotronics, is extremely low loss into the millimeter-wave range, extremely good isolation of neighboring lines enabling high density circuits, broad bandwidth and low dispersion, and amenability for integration with passive and active surface-mount components. Our research goals are focused on design of completely new components in this technology, in order to push the bandwidth, power handling and flexibility for various communications and sensing applications. Some results include 22:1 bandwidth impedance transformers and 22:1 bandwidth power divider networks which operate up to millimeter-wave frequencies.

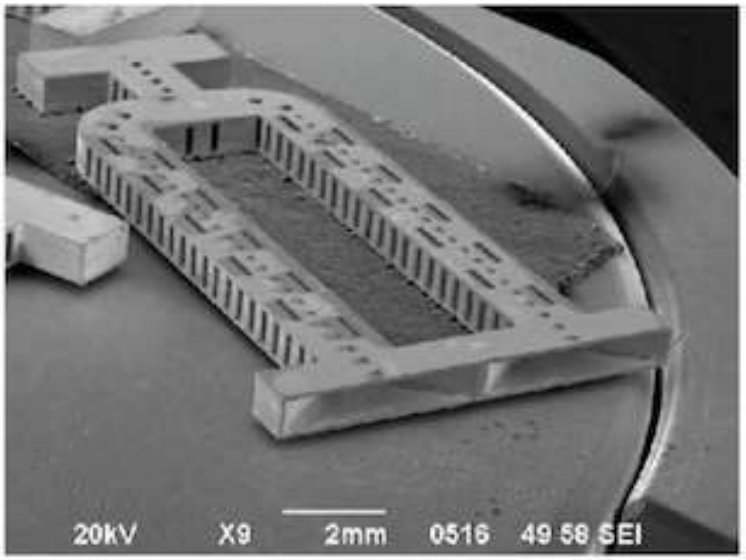

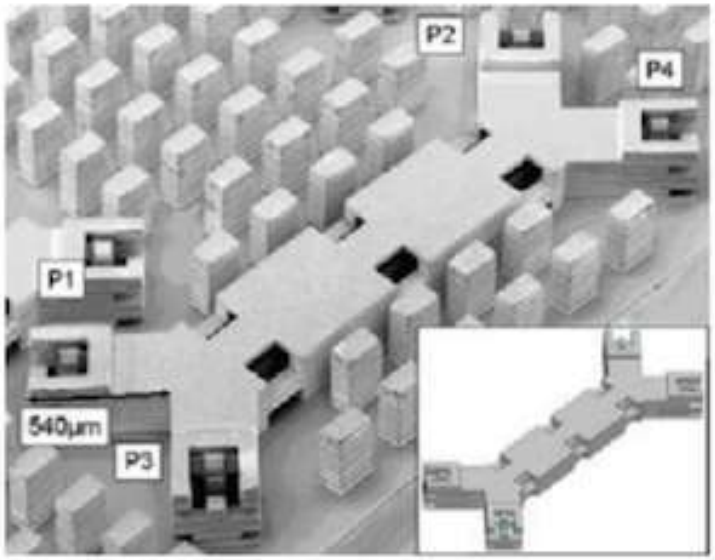

Hz

Hz = oscillation per second

Hz	Brainwave Activity	Frequency Description
1.600		**WLAN//WI-FI/wireless Internet/network and microwave ovens** transmit at the ultra high frequency 2,45 GHz which disturbs the brain's own clock frequency. WLAN pulsation varies. The frequencies of the microwave oven change the molecules and contaminate the inner and outer environment. Increasing infertility and cell mutations are the consequences. Bluetooth technology, e.g. the wireless headset transmits with a pulsation of 1600 Hz in the frequency band 2,45 GHz (= 2450 MHz)
217	"Ultra" Beta	**Mobile phones = 217 electroshocks per second into the nervous system** = the wireless society short-circuits us and we suffer from disconneXion syndrome. 3G mobile phones transmit by significantly more powerful intensity and the pulsation varies. This unnatural intruder causes electrostress which "might" lead to brain stress due to the rapid pulsating electroshocks per second. We become electric and are being disconnected from the Now. The EU REFLEX study from 2003 with 12 research teams from 7 nations proved that our DNA is damaged and cell mutations occur. The results confirm the Freiburg Appeal from 2002 with more than 1.300 worried doctors, the Bamberger Appeal from 2004, and the Bamberger doctor's letter from 2006.
100	"Hyper" Beta	**Cordless DECT phones = 100 electroshocks per second into the nervous system** Cordless DECT technology in private homes or in companies transmit at a frequency pulsating at 100 Hz - non-stop 24/7/365. When connected to the mains and switched on it transmits, also when it is on stand by. The intensity of cordless phones connected to traditional wired phone systems are much higher than the intensity of cell phones. The base unit equals a mobile phone antenna - just this one is often placed on bed tables or close to where people live, eat, and sleep. It disturbs our brain's centre for sleep, life energy, and recovery in the Alpha state - we burn out. **The base of the brain** vibrates at 100 Hz - but not pulsated. That is our centre for creativity adn important for spiritual development - getting to know one self. Disturbances create a chain reaction throughout the entire endocrine system and there- by cause hormonal disturbances - infertility?
50	"High" Beta	**The electric current in the mains oscillate at 50/60 Hz** Even the AC (alternating current) in television sets, computers and the switches in ordinary homes influence our cells in an unnatural way. The term electrostress has been known as a medical disease in several countries since at least 1969. **We are being disconnected from the wisdom of the Now by so-called knowledge** Stress, fear, anxiety, depression, and burn out constantly increase when we are bombarded with knowledge and information through all channels. We are being held in a state of "High" Beta. We become more aggressive, impatient, and short-minded. We become imprisoned in our mind - the MATRIX left brain mentality = limitation and resistance.
33		**At 33 Hz and above nervousness, panic, and anxiety starts**
13	Beta	**Consciousness constantly alert, increase of stress, "fight or flight mechanism"** Thinking and concentration. Alertness, analytical problem solving, tense, stress, agitation, discord, and mental unbalance. As the frequency increases we disconnect more and more from what is in the Now. The joy of Life decreases. Our joy centre in the brain vibrates at 17,5 Hz. TETRA mobile phones transmit with a pulsating frequency of 17,65 Hz which seriously disturbs the Calcium-ion flow in and out of the cells of the brain.Police and rescue services all over Europe are destined to use TETRA systems.
7	Alpha & omega	**Responsibility and action = always in the Now = Flow. Accept is the first step** Living in the Now is the key to understanding and new consciousness. A state of calmness. Light awareness and alertness. Increased learning ability and sensitiveness. A state of Unity between body and Spirit. It is a relaxed, harmonious, energized awaken state like a light meditation. We are aware and present in the Now in Alpha - den real world. The Limbic Centre in the brain vibrates with 12,5 Hz - it is the centre for sleep. Life energy, healing, and recovery. The limbic centre is closely related to our feelings. **The Pineal Gland** is the superior gland in the brain. It vibrates at 10 Hz being the frequency for our nerve and time centre. The Pineal Gland produces the transmitter Melatonin which controls and regulates the other hormone producing glands and the immune system. Melatonin is particularly being produced at night where we are asleep. Darkness and silence are both very important factors. Melatonin has a protecting effect against cancer. The Pineal Gland is very sensitive towards electromagnetic influences. Both light and sounds are electromagnetic signals at different frequencies. Microwaves affect all cells and especially the Pineal Gland. Imbalance in the Pineal Gland causes increased mental activity which "might" lead to burn out syndrome.
3	Theta	**Meditative state. Deep relaxation.** Increased creativity and vivid imagination. Access to what is normally unconscious potential. Connected-ness in general is acknowledged in a wider context. Being able to connect-the-dots of the "big picture".
	Delta	**Regeneration and harmonious balance.** The frequency band 3-12,5 Hz is the vitality "field". We "recharge", recover, and maintain homeostasis - the dynamic balance that keeps us alive. Our immune system strengthen, and our sleep is invigorating. In this field we get energy, Life force, and the power needed for a modern Life style. **Very deep relaxation.** Deep sleep. Trance. Deep hypnosis.

Fig. 4 a Delon voltage doubler rectifier with an L-section matching network. b Fabricated PCB of the L-section matched Delon voltage doubler rectifier

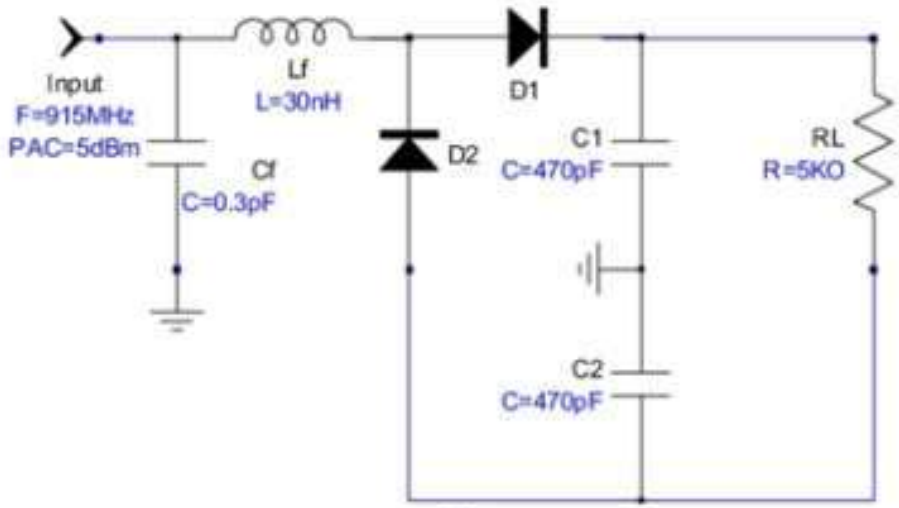

(a)

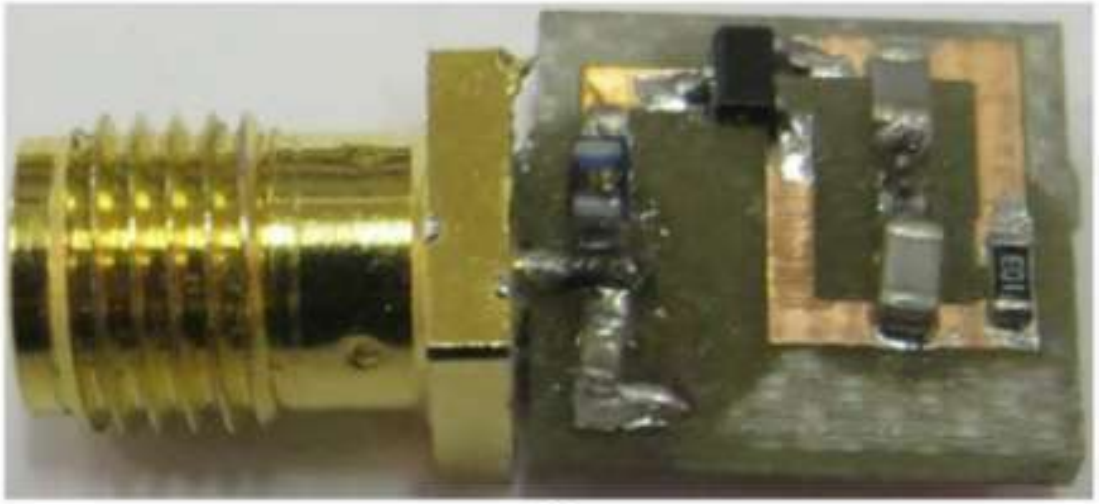

(b)

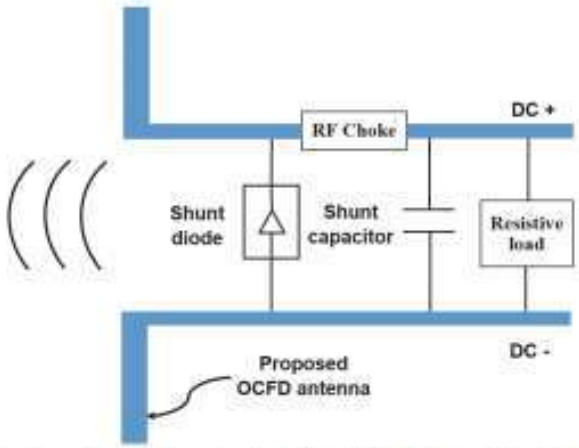

Fig. 9. Configuration of a single shunt diode (Class F) rectifier with a dipole antenna.

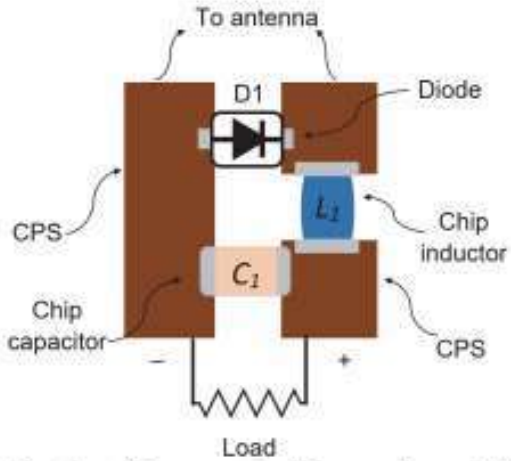

Fig. 10. Configuration of the proposed rectifier on coplanar striplines (CPS).

TABLE III
CIRCUIT COMPONENTS USED IN THE DESIGN

Component name	Nominal Value	Part number and supplier
D1	Schottky diode	SMS7630-079LF, Skyworks
L1	47 nH chip inductor	0603HP47N, Coilcraft
C1	100 nF chip capacitor	GRM188R71H104JA93D, Murata

antenna have a radius of 50 mm and a circumference angle of

respectively. While the imaginary part of the proposed OCFD is around 0 Ω at resonant frequencies 0.6 GHz, 1.2 GHz and 2.4 GHz, which are f_0, $2f_0$, and $4f_0$ respectively. These results have demonstrated that the simulated results agree with the OCFD theory as discussed in Section III–A. Furthermore, the imaginary part of the impedance of the antenna over the resonant frequency band from 1.4 to 2 GHz turns from negative values (for the reference antenna) to positive values (for the proposed antenna). As shown in Fig. 7(b), the value of the imaginary part of the proposed antenna impedance varies between 0 and 300 Ω over the desired frequency band. This feature could help the proposed antenna to produce a better conjugate matching with the rectifier, since the imaginary part of the impedance of the rectifier normally varies between -700 and 0 Ω as we discussed earlier. The simulated 3D radiation patterns of the proposed antenna at the frequencies of interest are depicted in Fig. 8. The 2D polar plots of antenna patterns in *E-plane* and *H-plane* are shown as well. Here we have only showed the directivity (maximum gain) of the antenna (without taking the mismatch loss into account). From Fig. 8, it can be seen that the antenna has symmetrical patterns about YOZ plane with a maximum directivity of 1.8 dBi at 0.9 GHz, 3.5 dBi at 1.8 GHz and 3.3 dBi at 2.4 GHz. The antenna is more directive towards the long arm direction at 1.8 GHz and 2.4 GHz with the half-power beam-widths (HPBW) of around 174° and 185° respectively. The HPBW is about 96° at 0.9 GHz.

Therefore, the proposed broadband OCFD antenna has obtained high impedance over a wide frequency range. The proposed design is just an example to illustrate the proposed new method. The details of the dipole could be modified according to the frequency of interest.

IV. RECTENNA INTEGRATION

A. Rectifier Configuration

The proposed high impedance OCFD antenna may directly conjugate match with the input impedance of a rectifier over a wide frequency band. The rectifier should only consist of few circuit components for rectification, DC storage and output. A single shunt diode rectifier is selected due to its very simple structure and high conversion efficiency [33]. The configuration of the single shunt diode rectifier with a dipole

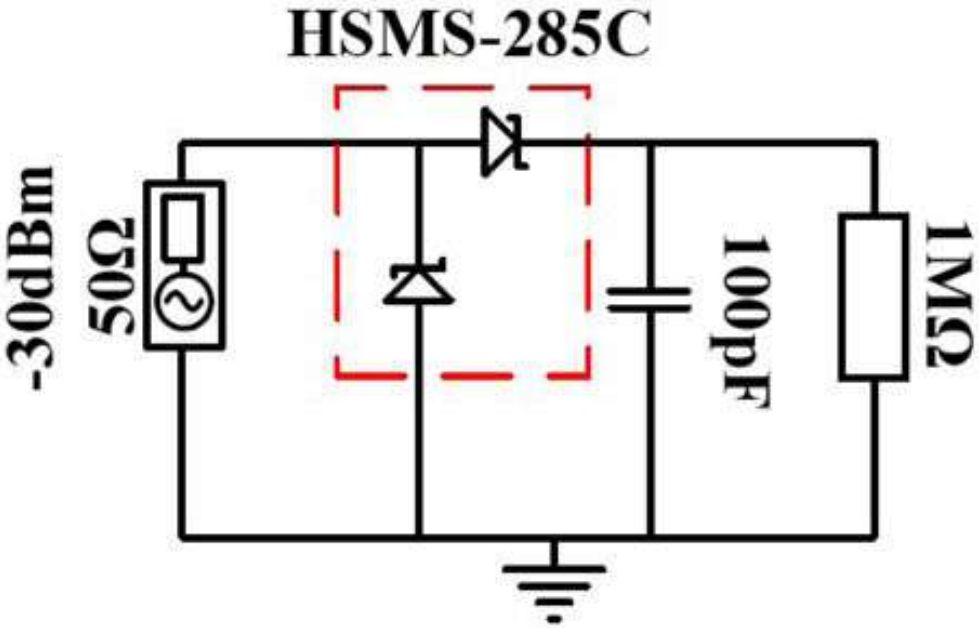
-30dBm
50Ω
HSMS-285C
100pF
1MΩ

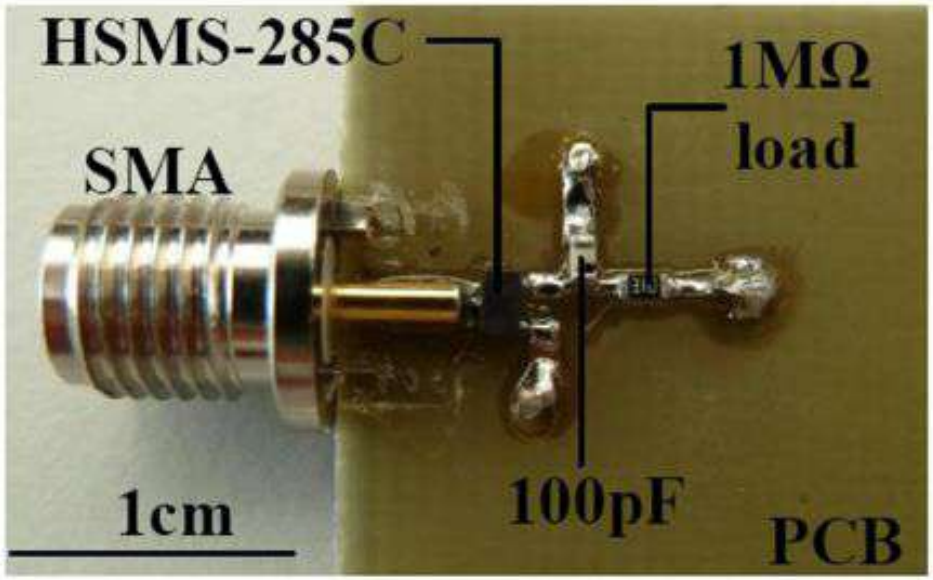
HSMS-285C
1MΩ
load
SMA
1cm
100pF
PCB

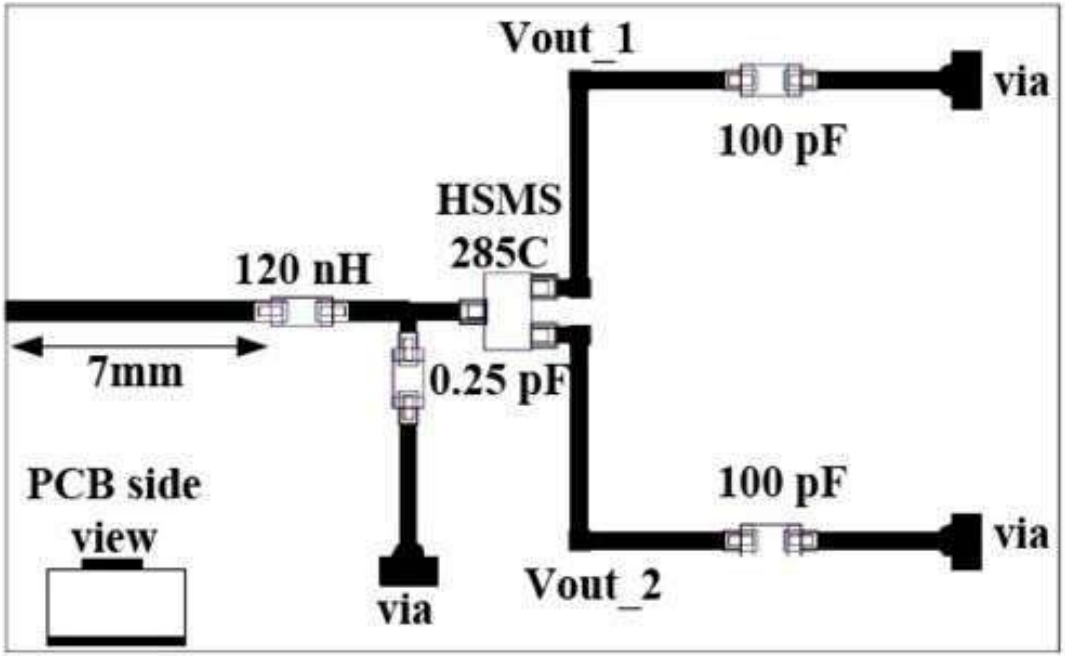
Vout_1
via
100 pF
HSMS
285C
120 nH
7mm
0.25 pF
PCB side
view
100 pF
via
Vout_2
via

(c)

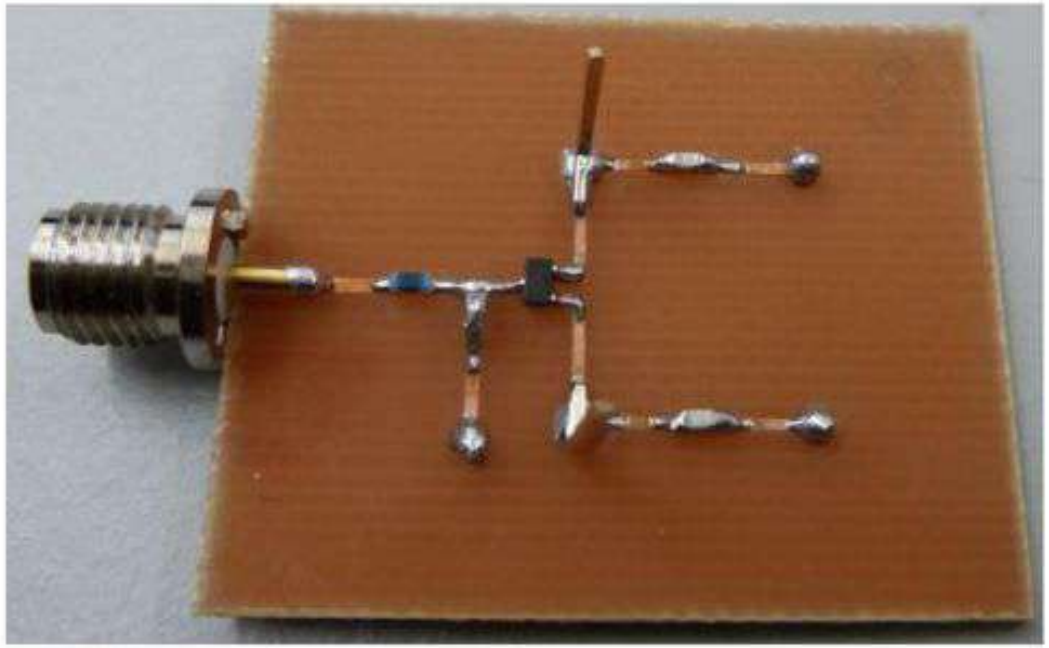

(d)

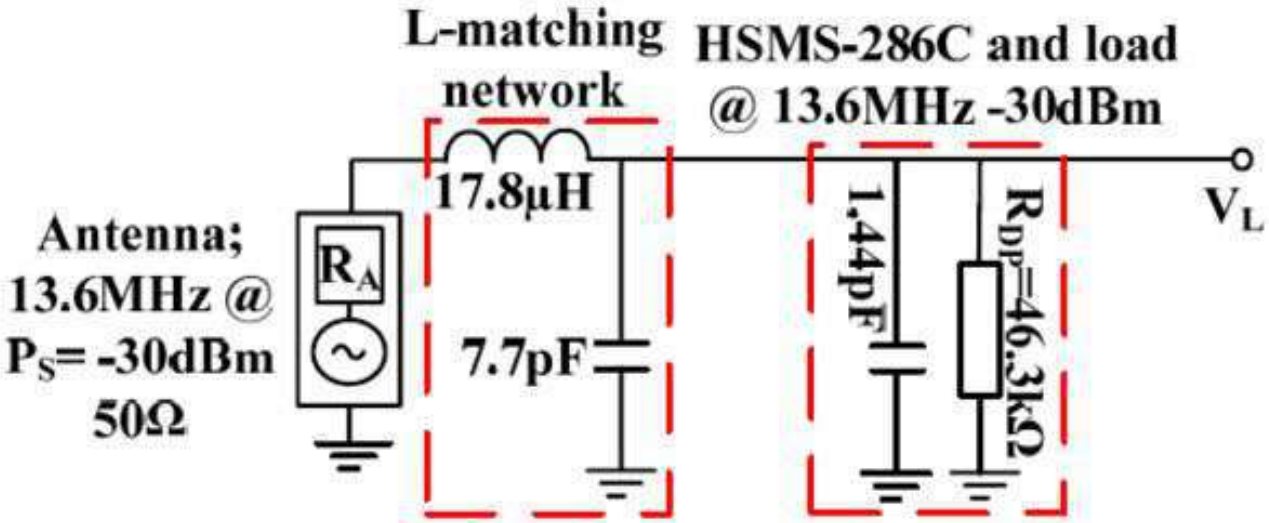
L-matching network
HSMS-286C and load @ 13.6MHz -30dBm
17.8µH
Antenna; 13.6MHz @ P_S= -30dBm 50Ω
R_A
7.7pF
1.44pF
R_{DP}=46.3kΩ
V_L

(a)

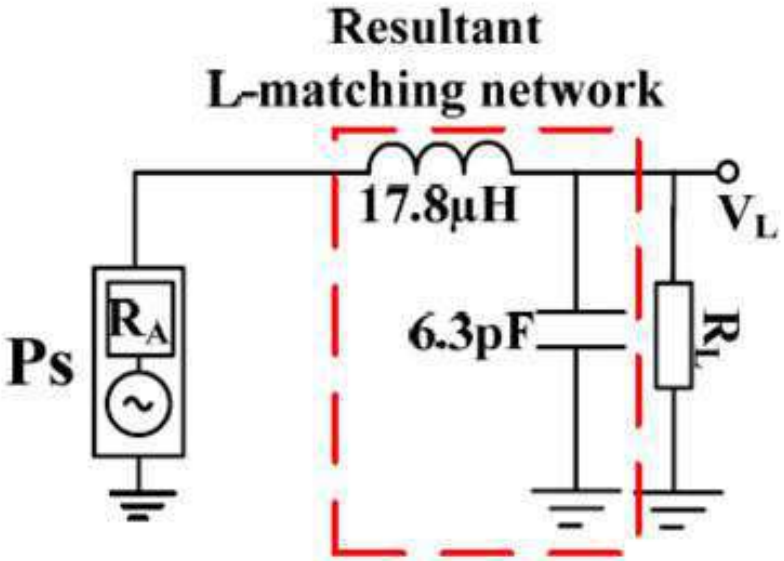
Resultant L-matching network
17.8µH
V_L
Ps
R_A
6.3pF
R_L

(b)

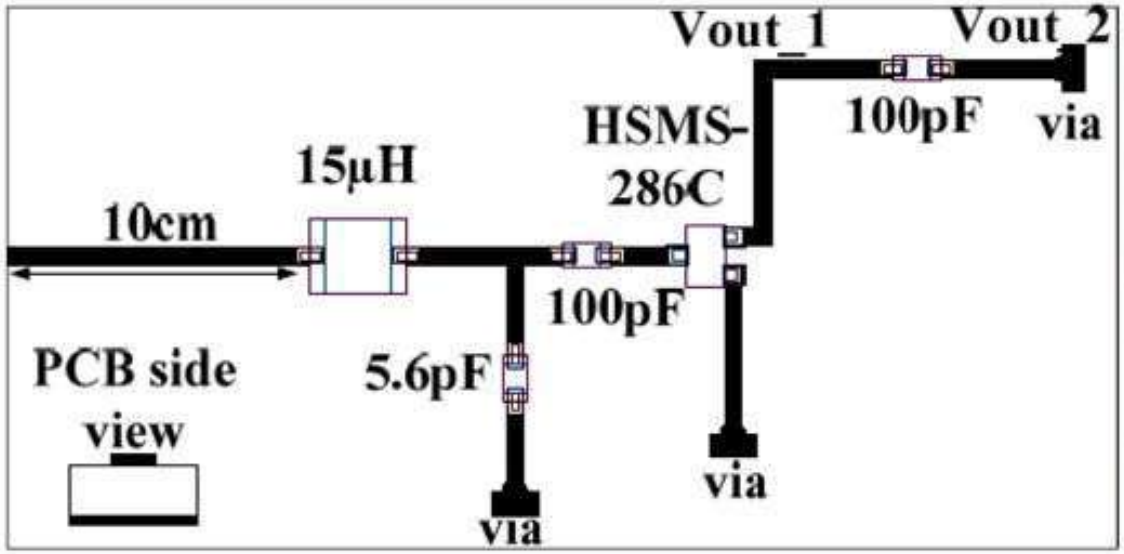
Vout_1
Vout_2
100pF
via
HSMS-286C
15µH
10cm
100pF
PCB side view
5.6pF
via
via

(c)

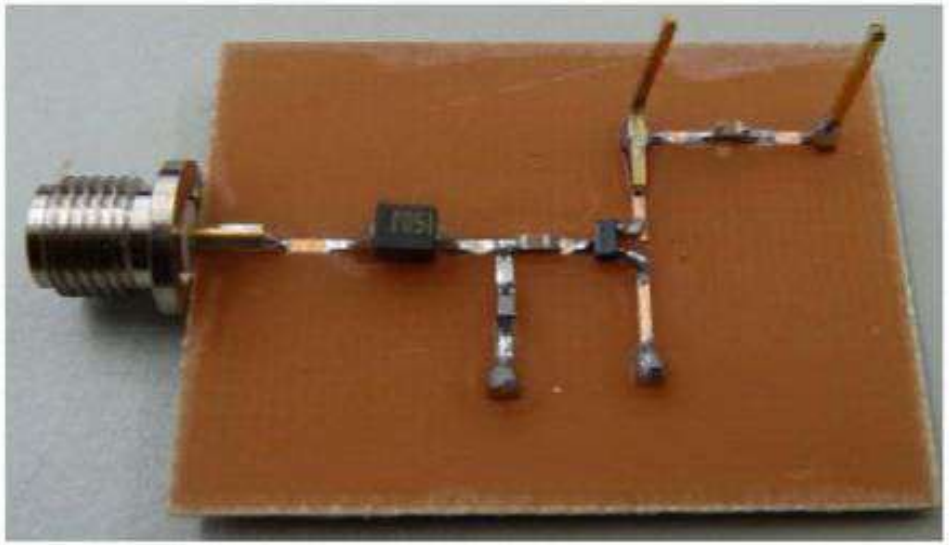

(d)

Survival Camping: #1 Turn Seawater into Fresh Water with Trash
5:30 / 15:40
YouTube

Survival Camping: #1 Turn Seawater into Fresh Water with Trash
5:37 / 15:40
YouTube

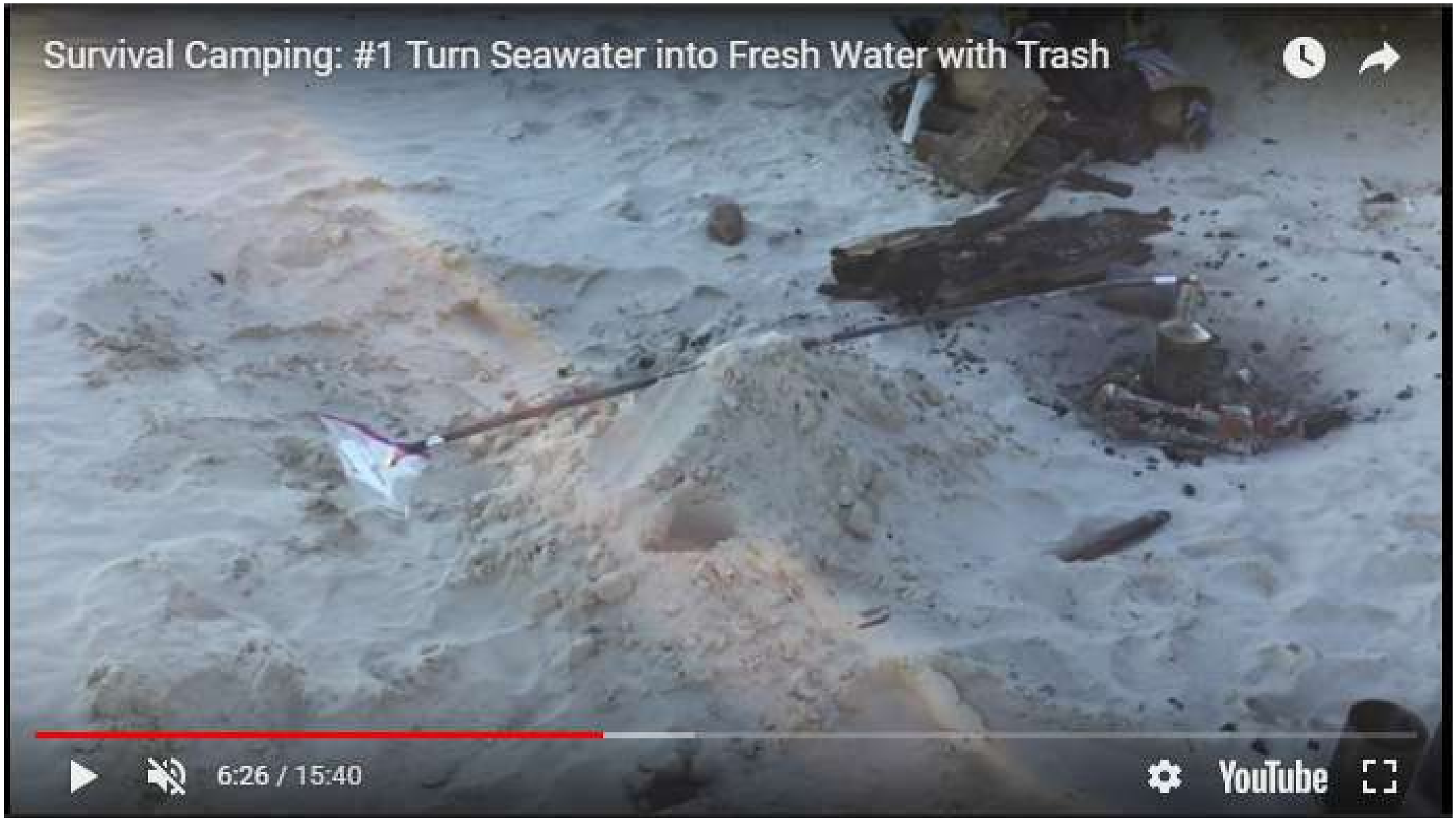
Survival Camping: #1 Turn Seawater into Fresh Water with Trash
6:26 / 15:40
YouTube

Survival Camping: #1 Turn Seawater into Fresh Water with Trash
6:34 / 15:40
YouTube

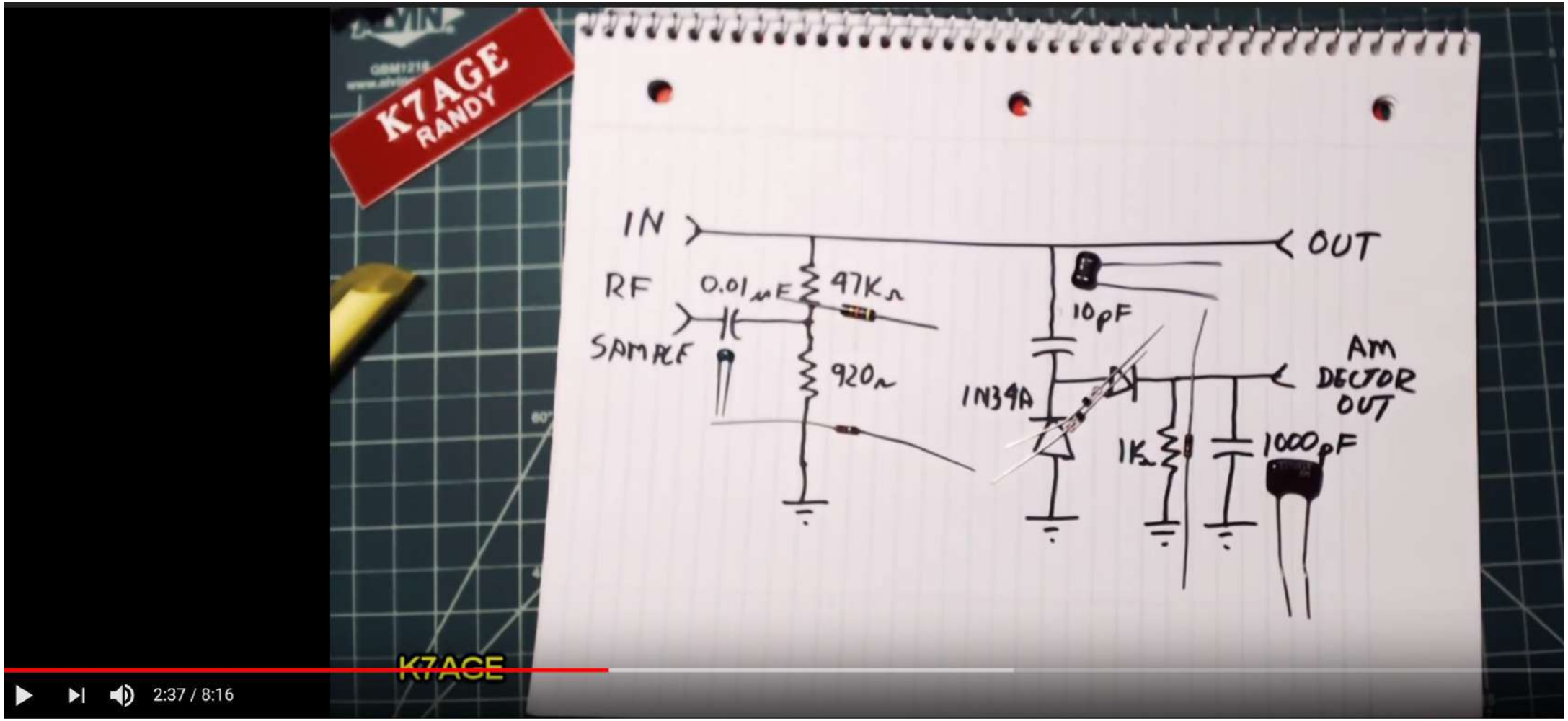

How To Build An RF Sampler Box

K7AGE
RANDY
The Original Celebrated
ALTOIDS
CURIOUSLY STRONG MINTS
PEPPERMINT
60°
45°
K7AGE

ALVIN
K7AGE
RANDY
K7AGE

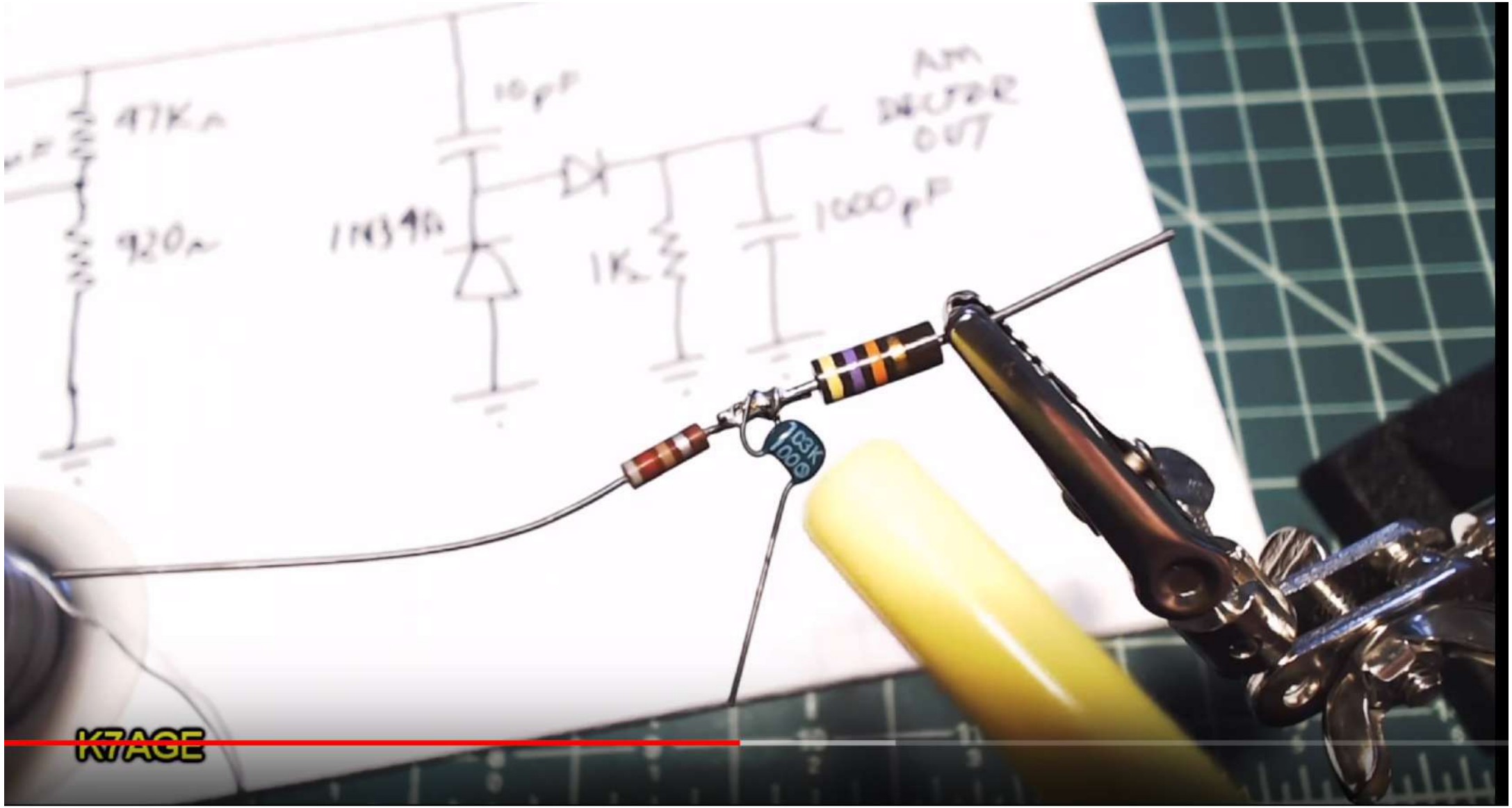
47K Ω
920 Ω
10 pF
1N34A
1K Ω
1000 pF
AM
DETECTOR
OUT
K7AGE

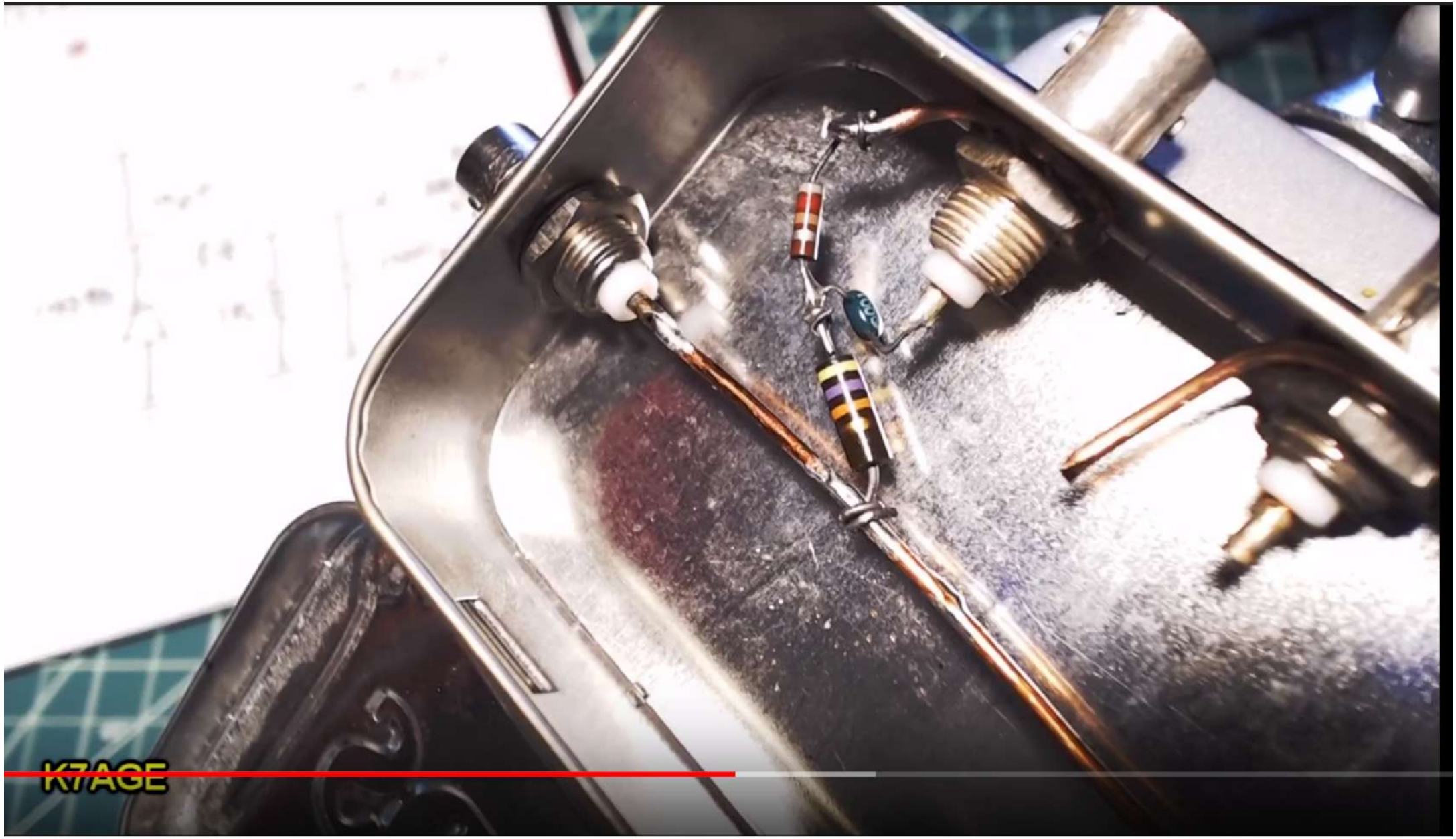
K7AGE

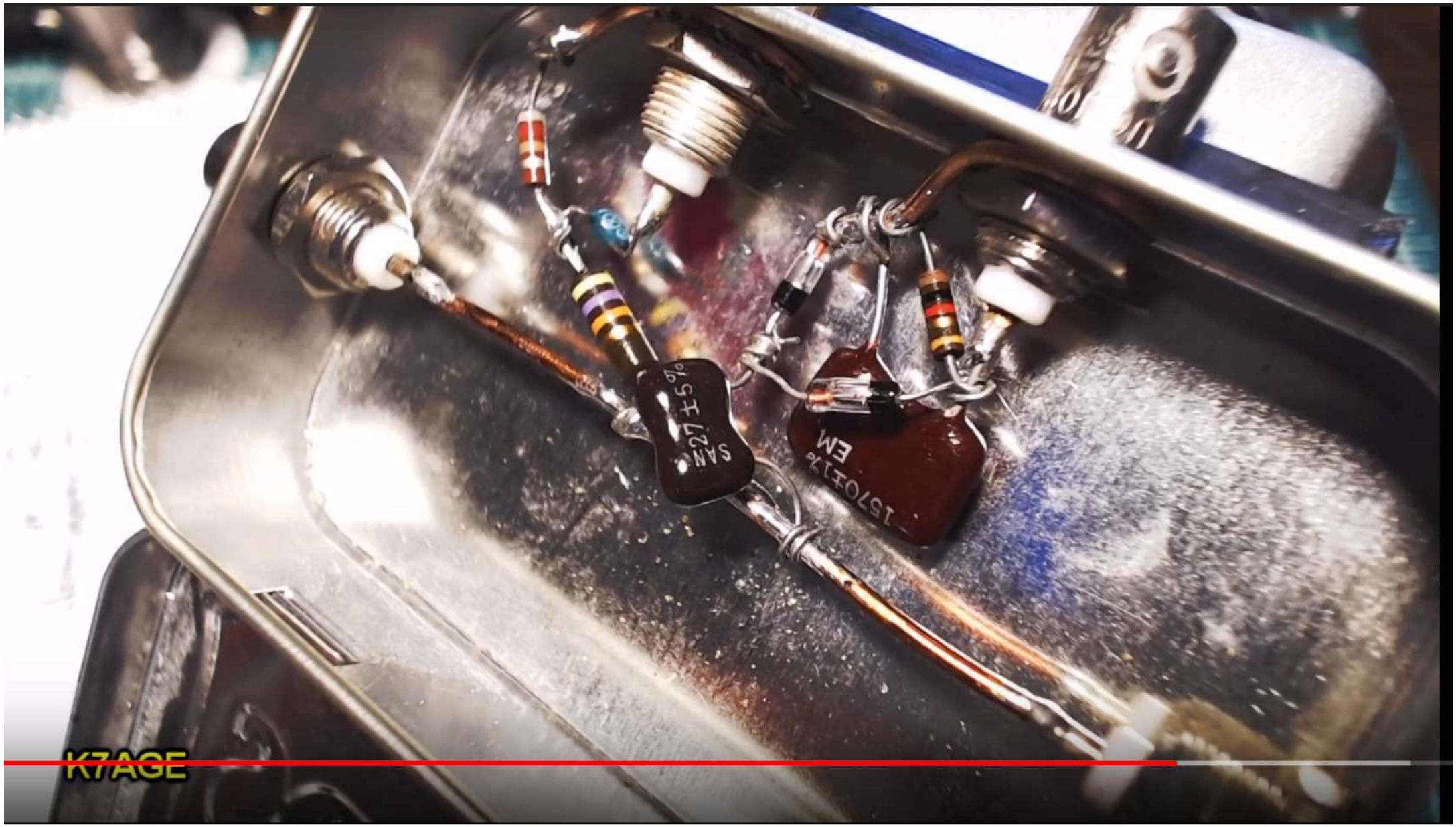
K7AGE

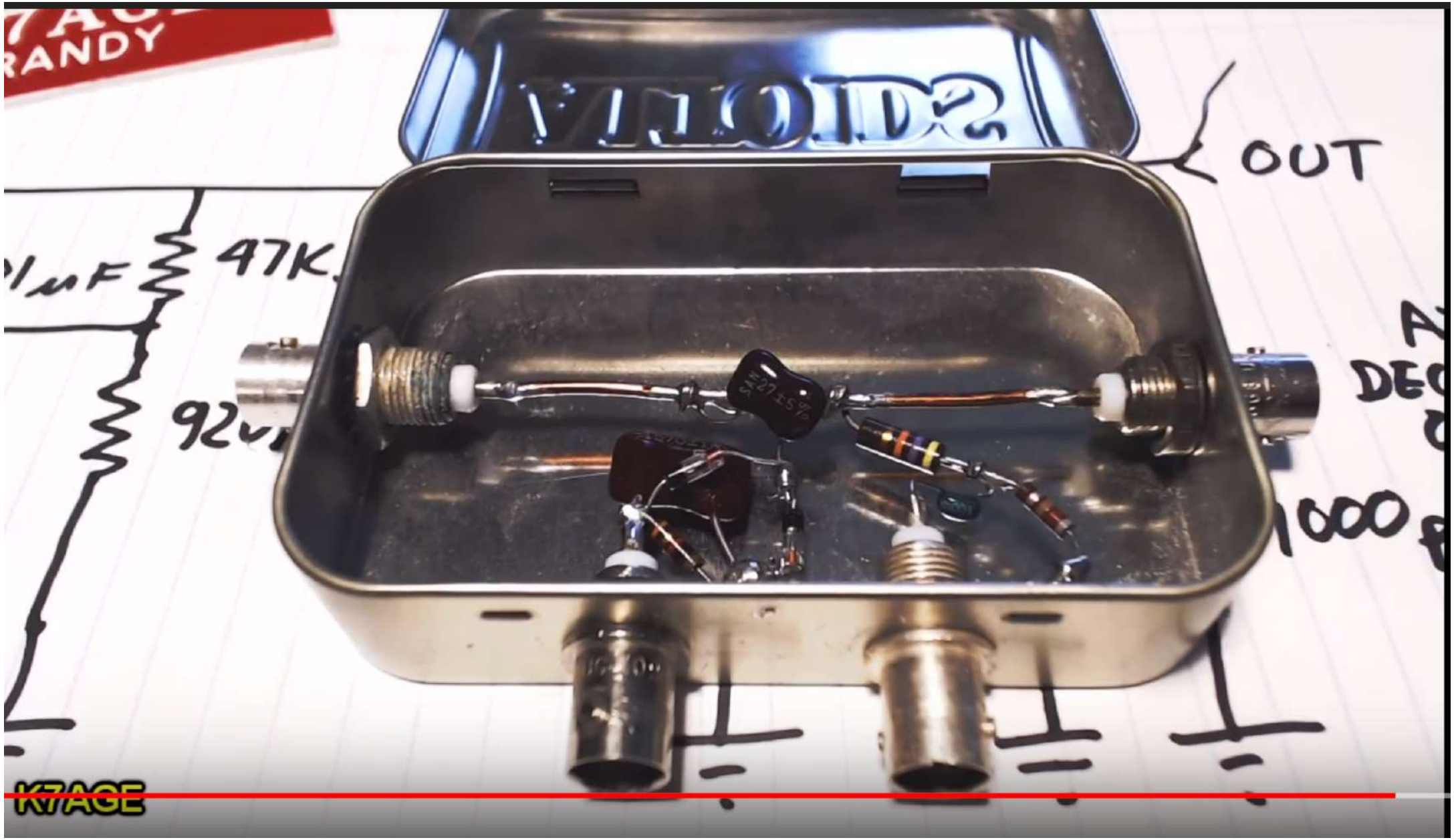
OUT
47K
K7AGE

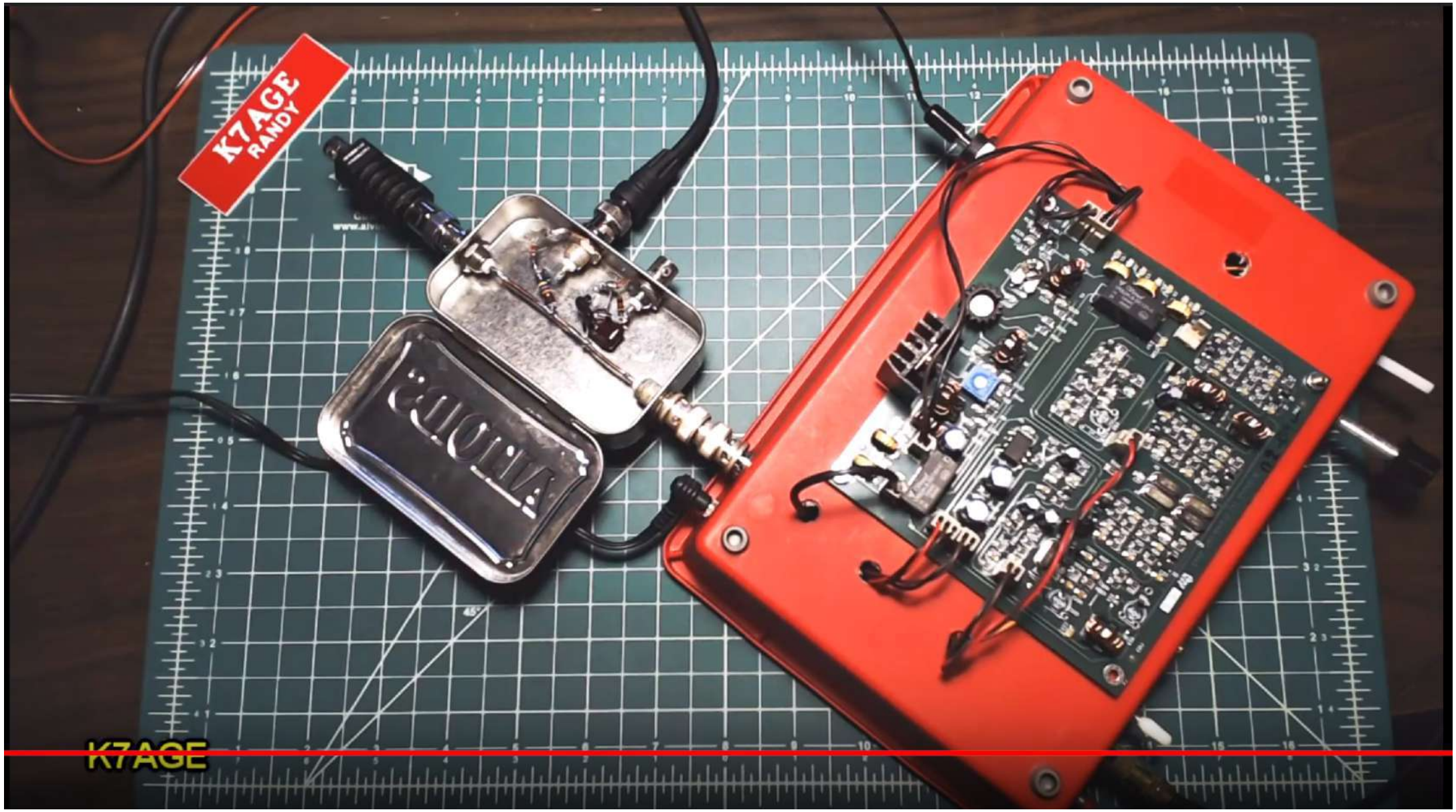
K7AGE
RANDY
K7AGE

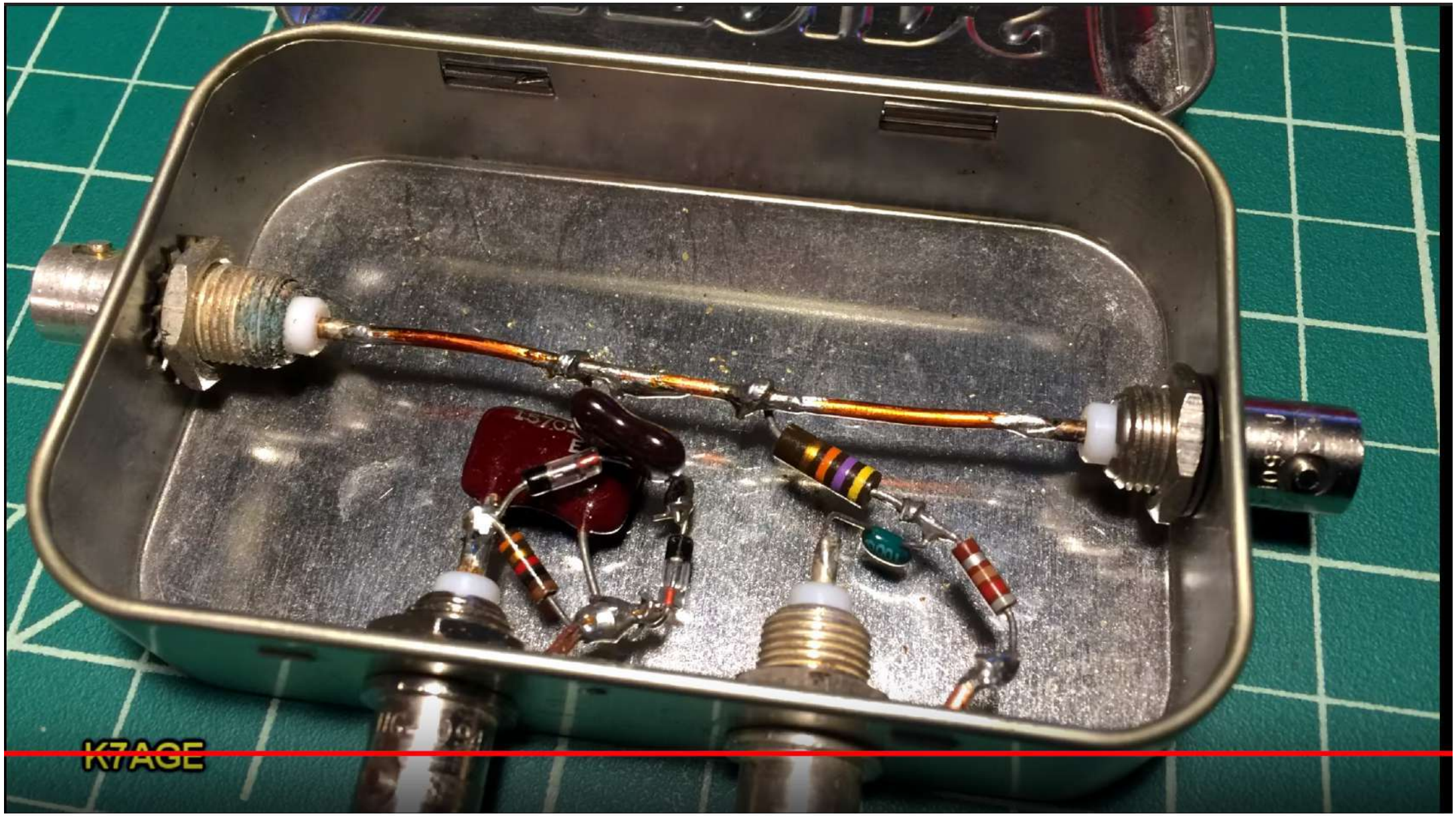
K7AGE

K7AGE

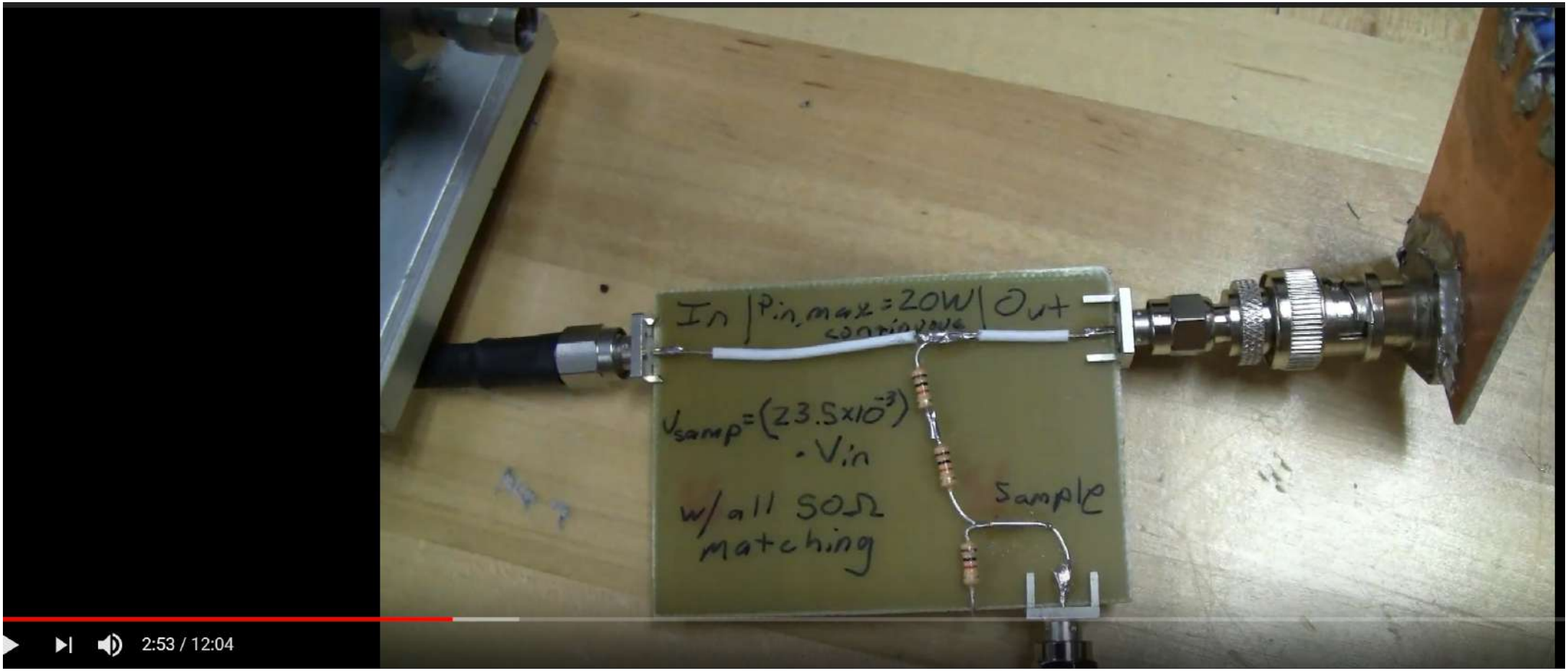

2:53 / 12:04

Building an RF Signal Sampler for Oscilloscope Measurements

Up next

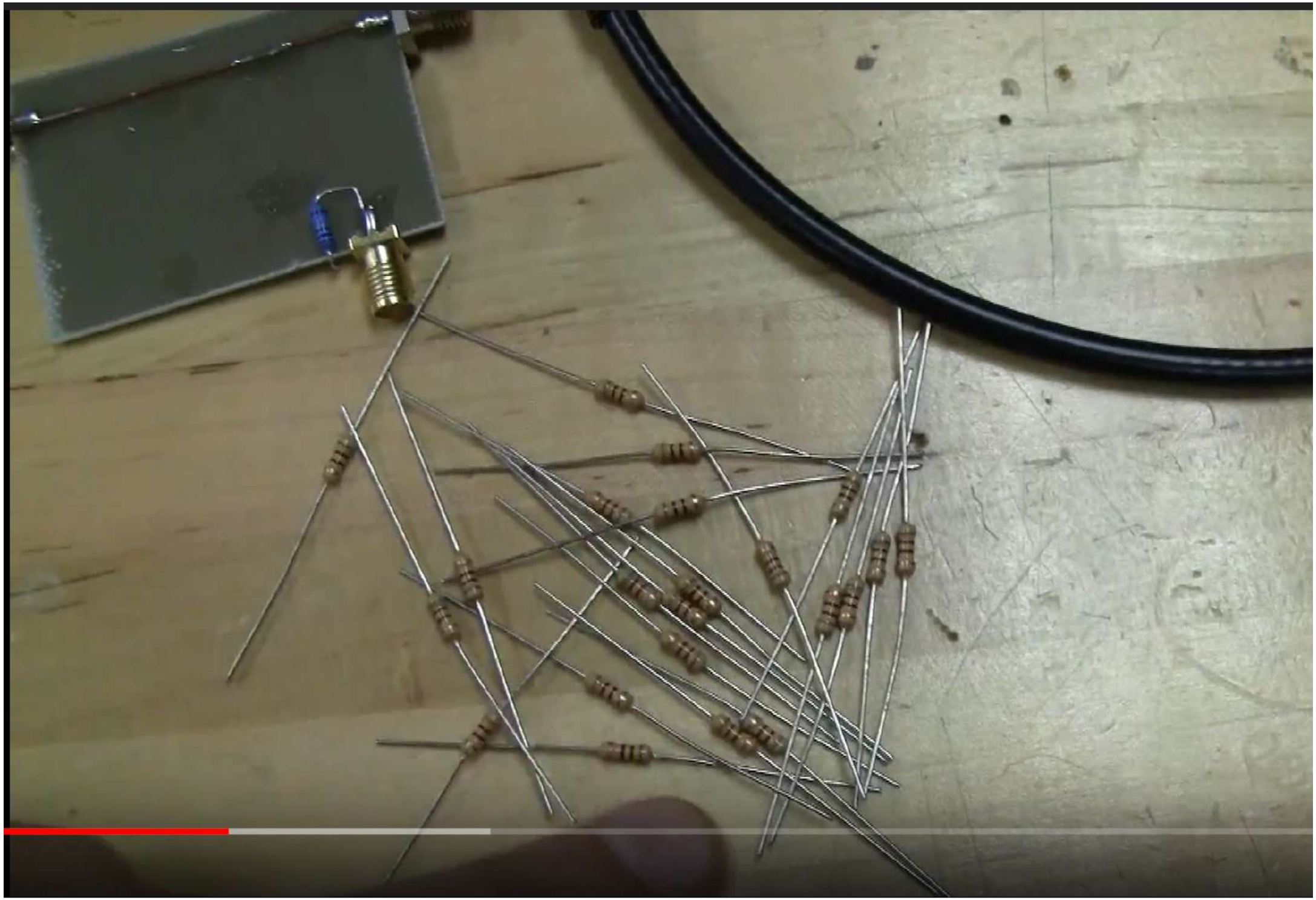

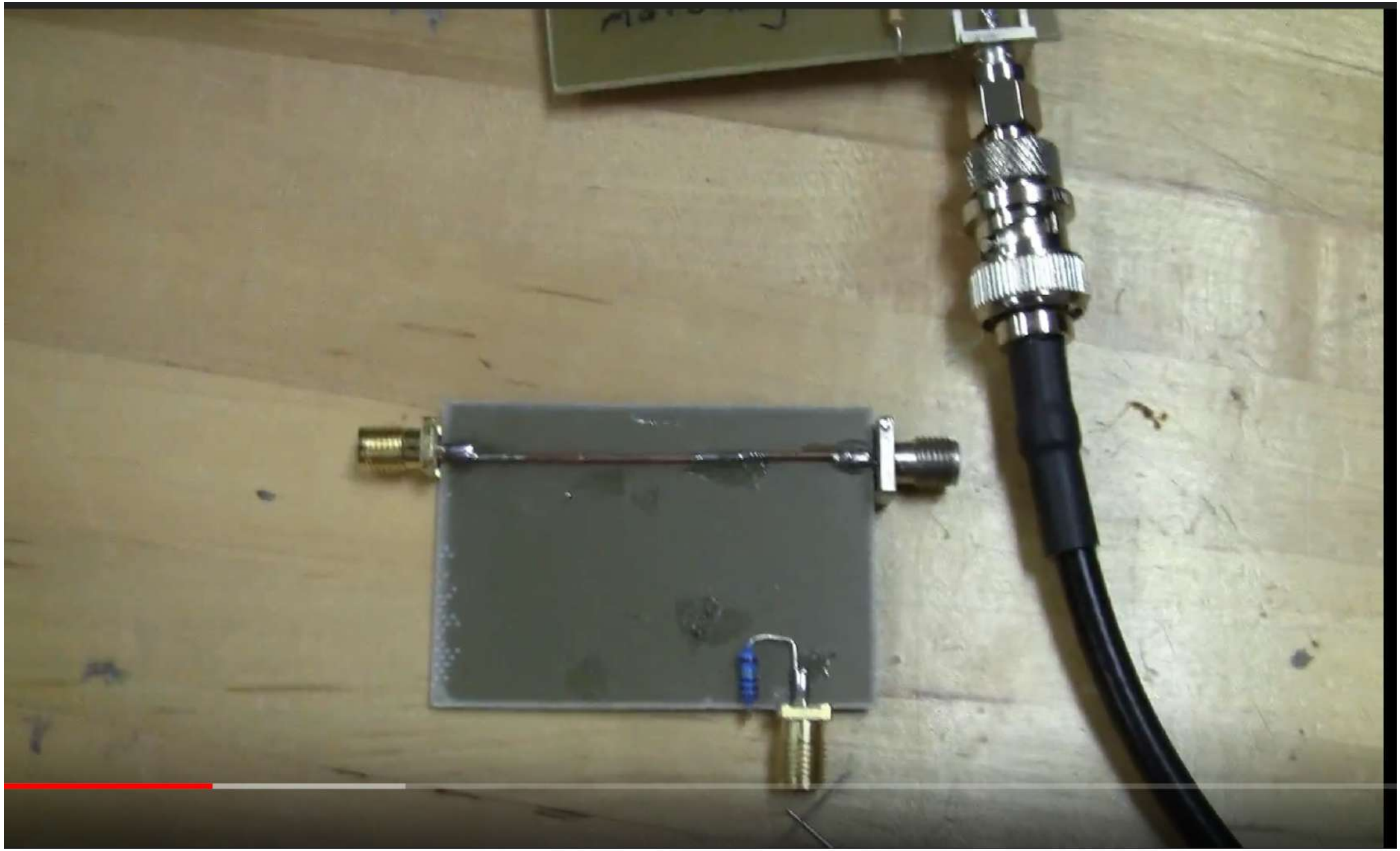

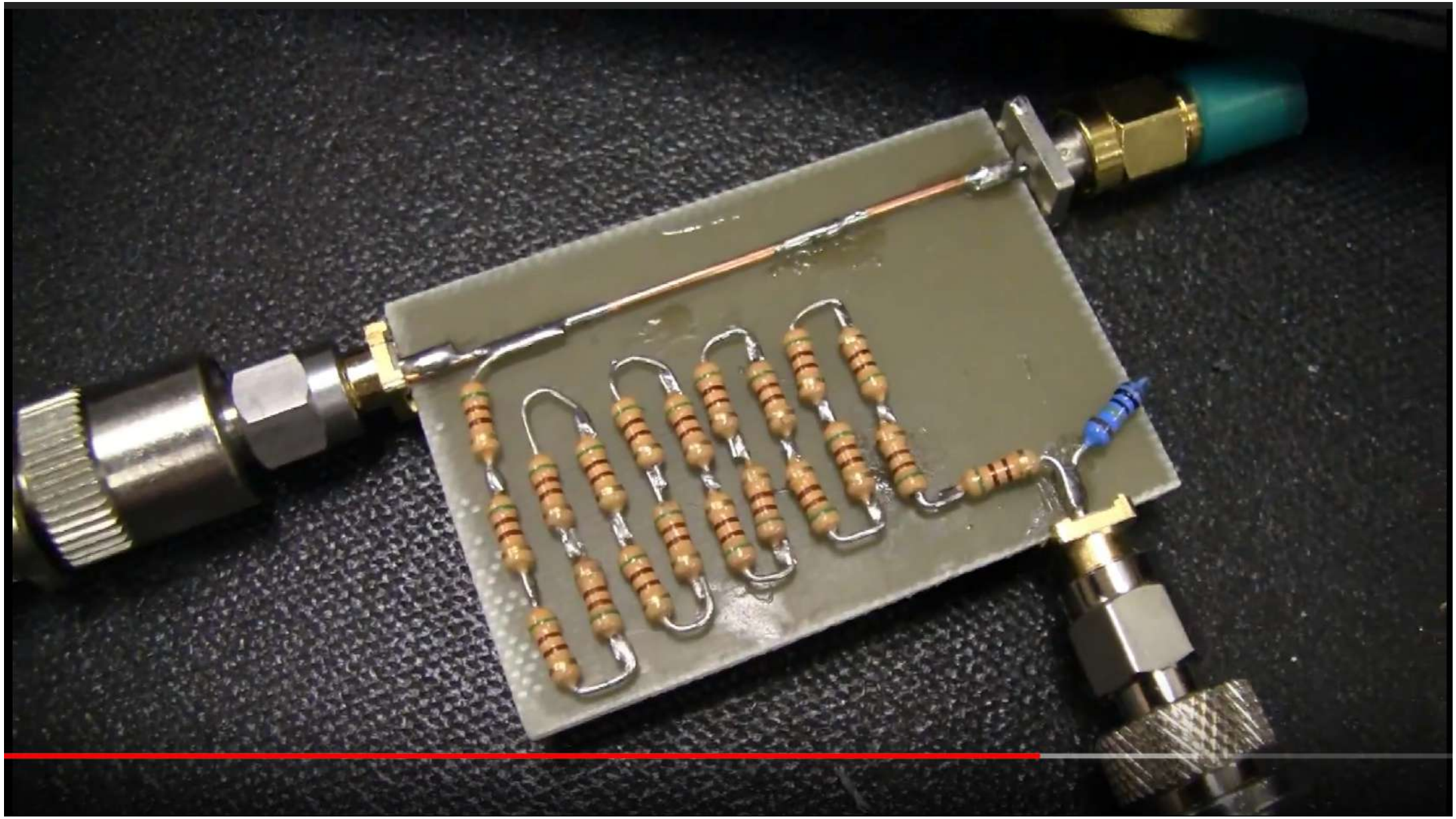

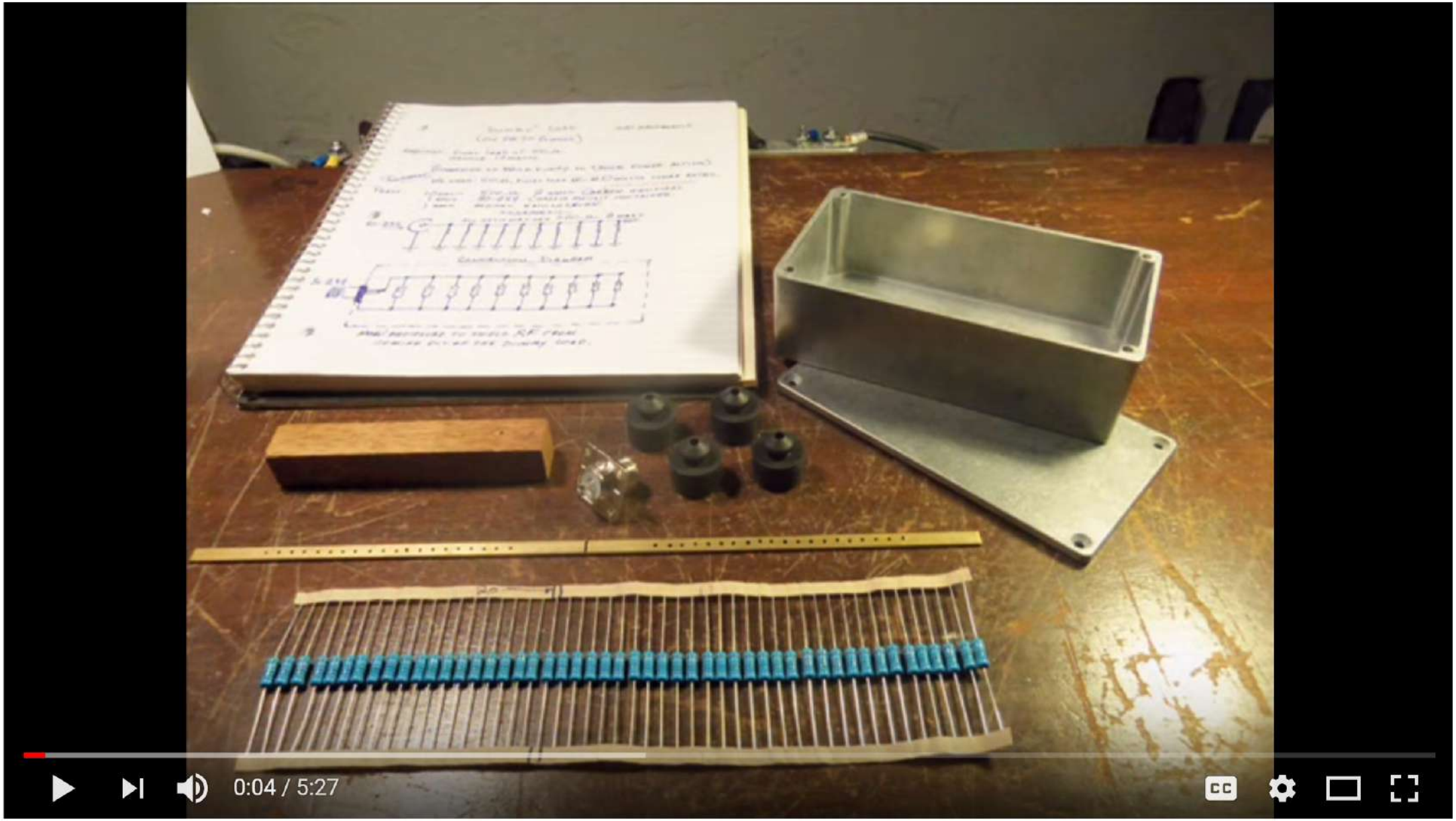

RF Dummy Load

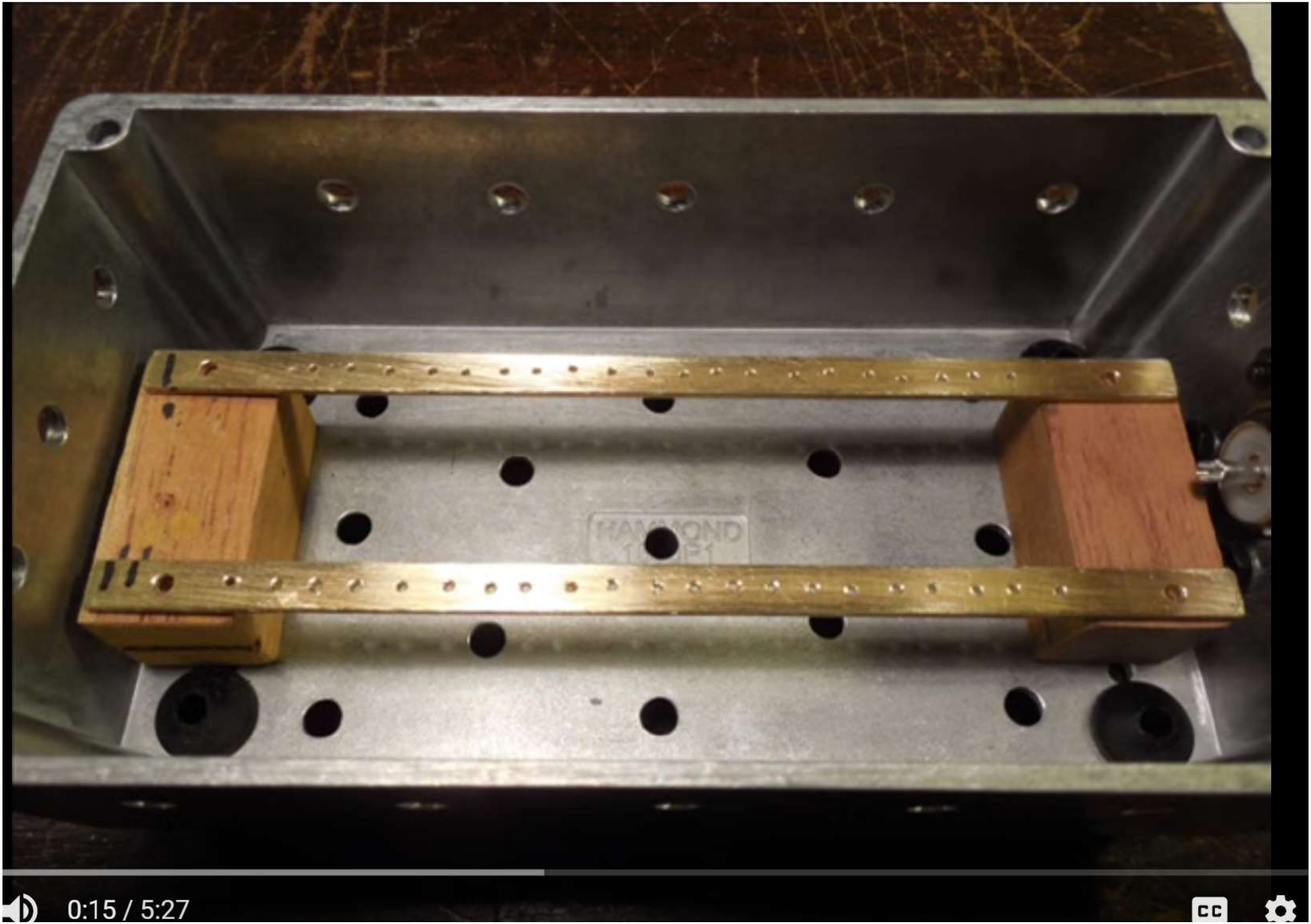
HAMMOND
0:15 / 5:27

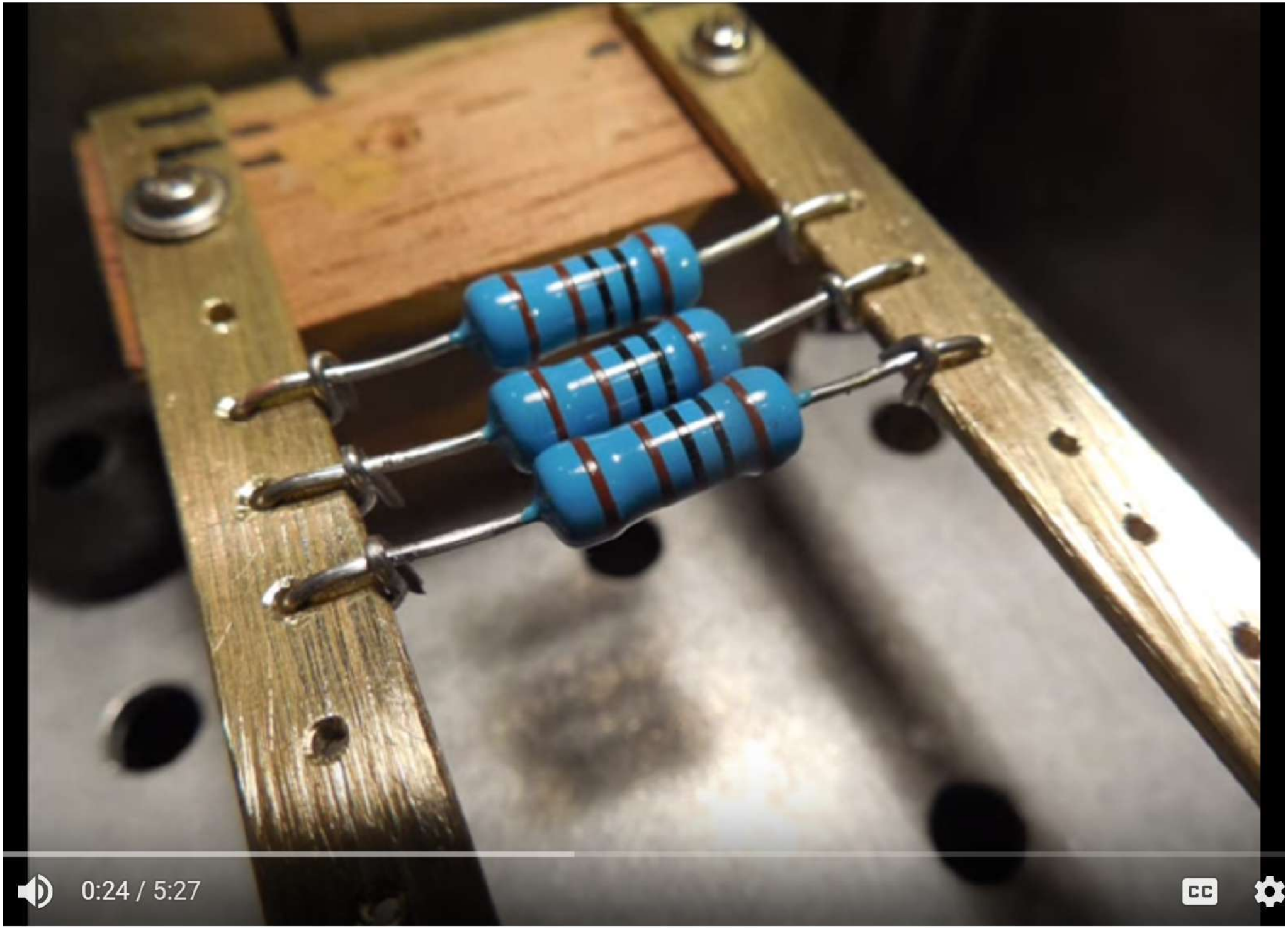
0:24 / 5:27

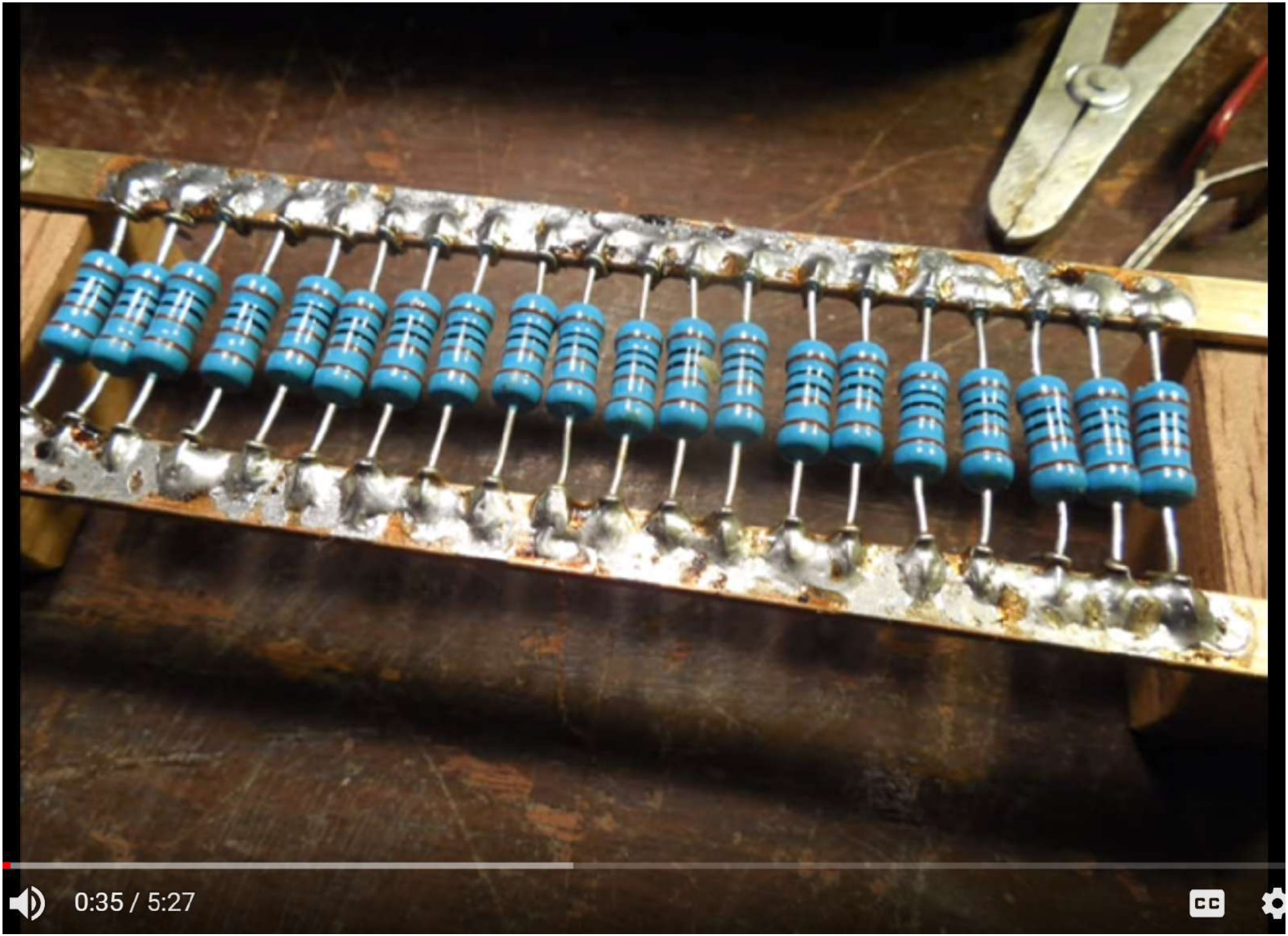
0:35 / 5:27

NEVER USE WIRE

PARTS: 10 EACH 500 Ω 2 WATT CARBON RESISTE
1 EACH SO-239 CHASSIS MOUNT CONTAINE
1 EACH METAL ENCLOSURE

SCHEMATIC

ALL RESISTORS ARE 500 Ω 2 WATT

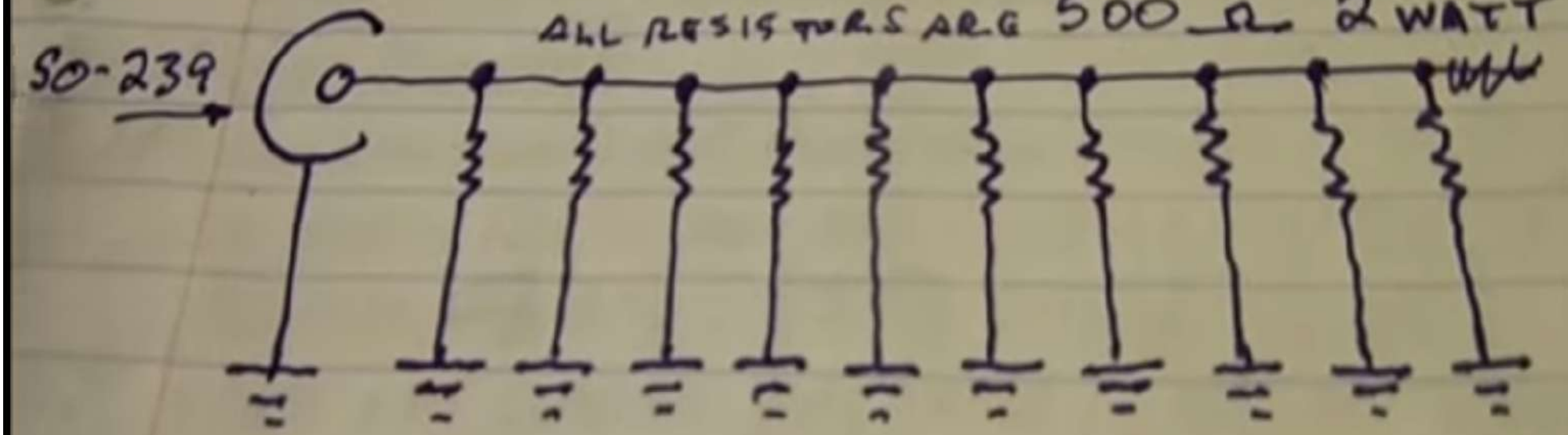

CONNECTION DIAGRAM

2:23 / 5:27

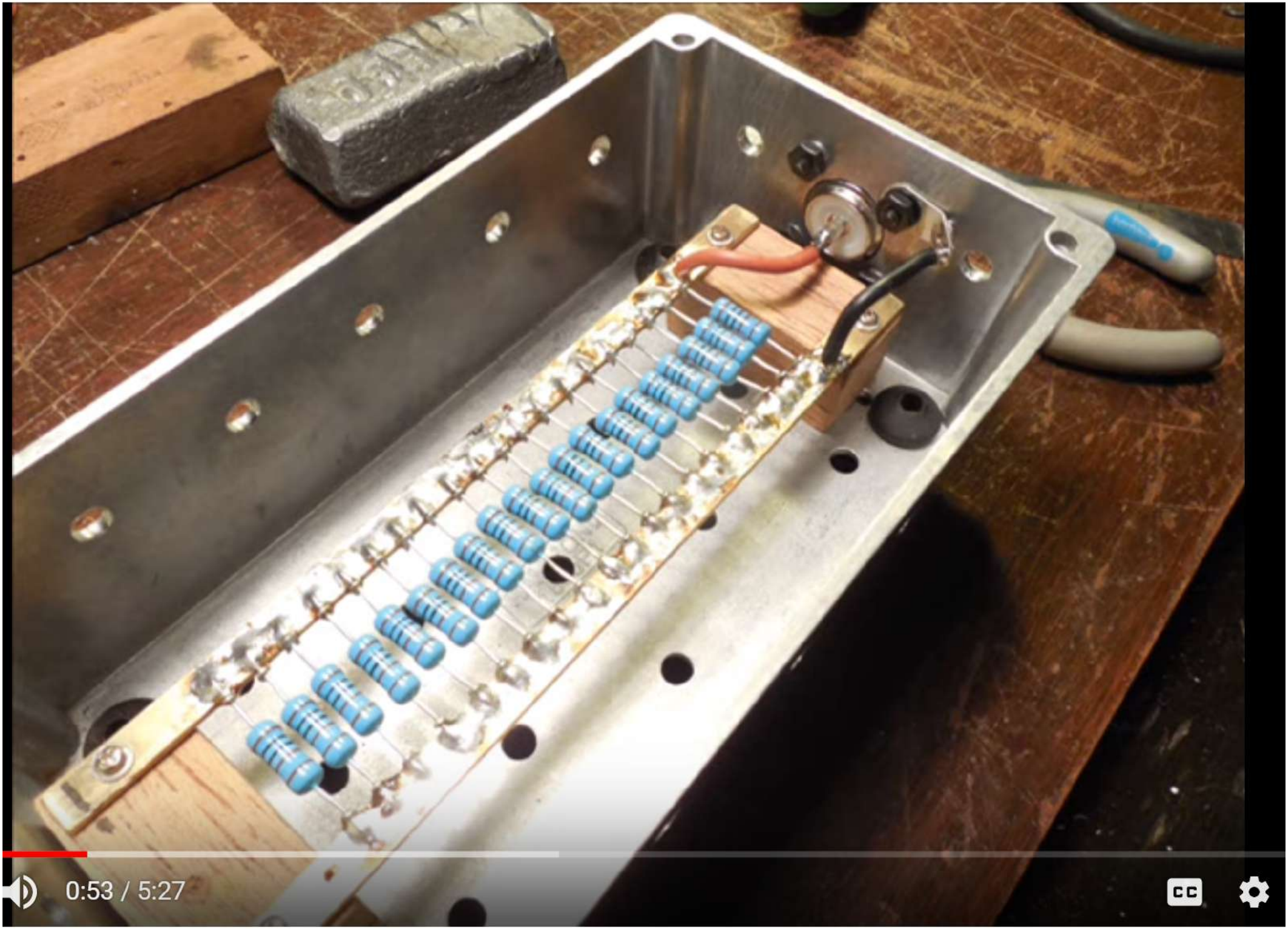
0:53 / 5:27

Dummy" LOAD
(FOR HW-20 PAWNEE)
RESISTANCE
IN
PARALLEL
DUMMY LOAD
50 OHMS
20 WATTS
3:47 / 5:27

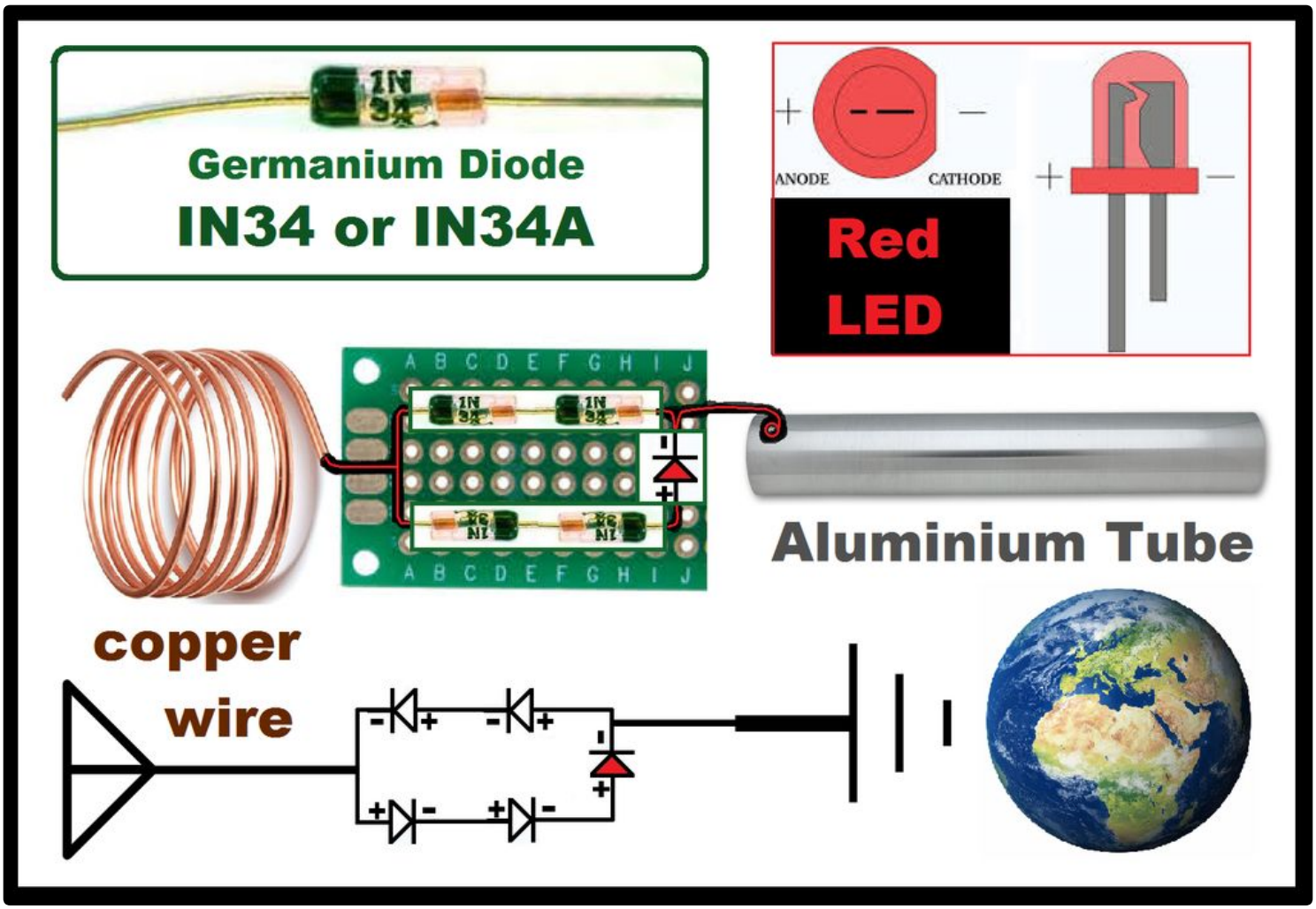
Germanium Diode
IN34 or IN34A
ANODE
CATHODE
Red
LED
Aluminium Tube
copper
wire

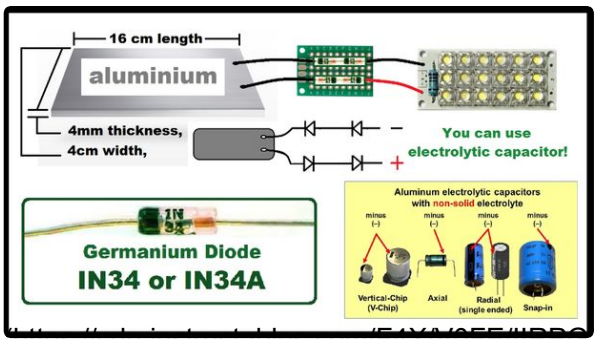
16 cm length
aluminium
4mm thickness,
4cm width,
You can use
electrolytic capacitor!
Germanium Diode
IN34 or IN34A
Aluminum electrolytic capacitors
with non-solid electrolyte
Vertical-Chip
(V-Chip)
Axial
Radial
(single ended)
Snap-in

Germanium Diode
IN34 or IN34A

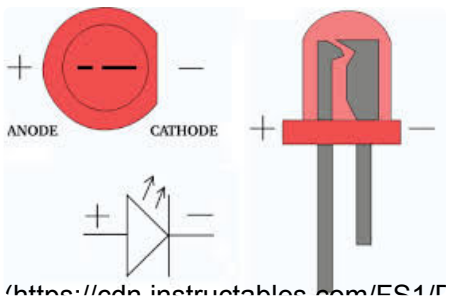
ANODE
CATHODE

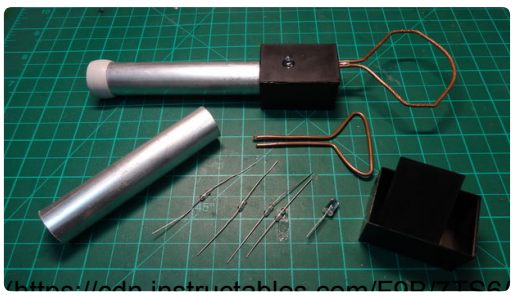

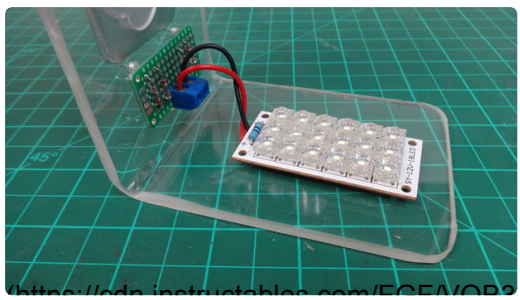

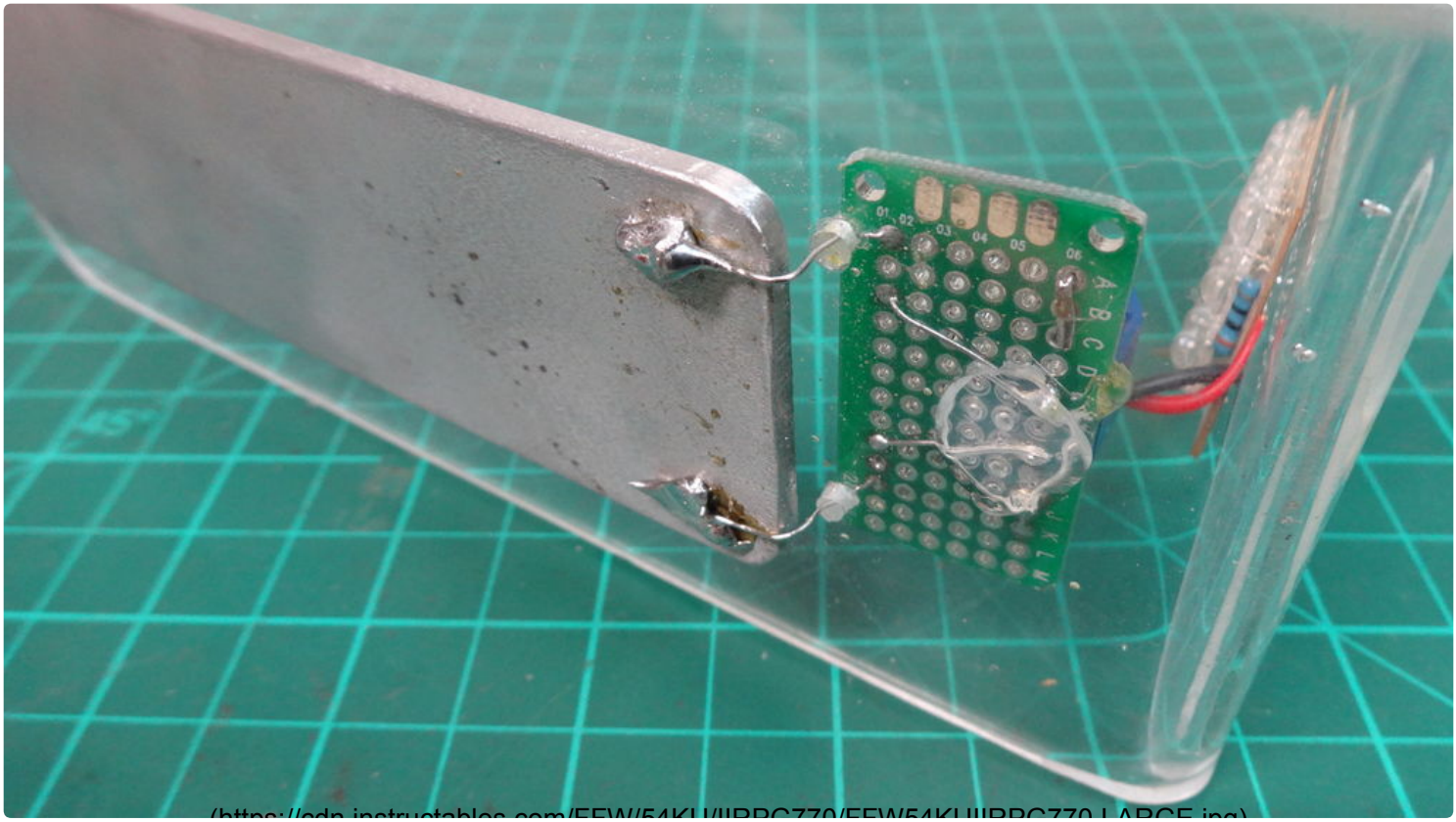

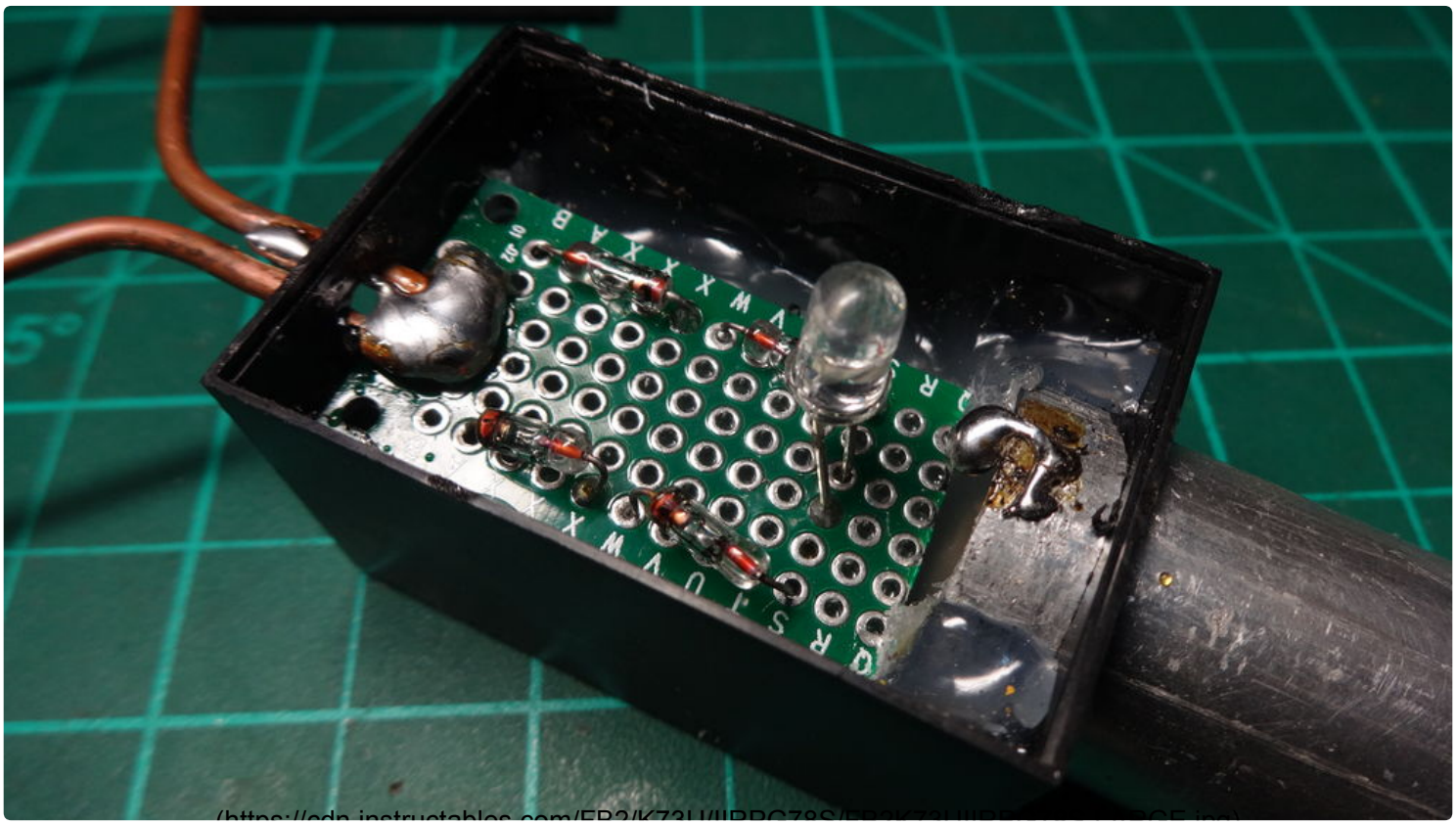

How to Make a Electrostatic RF Detector or Ghost Detector, Hunting Solution. Much cheaper and easier than you may think For Under $5 ! A simple description is that IN34 or IN34A RF Germanium Diodes for Crystal Radio can take "Ambient" or "Radio Waves" to turns them into DC energy. I would like to show the Tesla Coil

K3OPS®

| HOME |

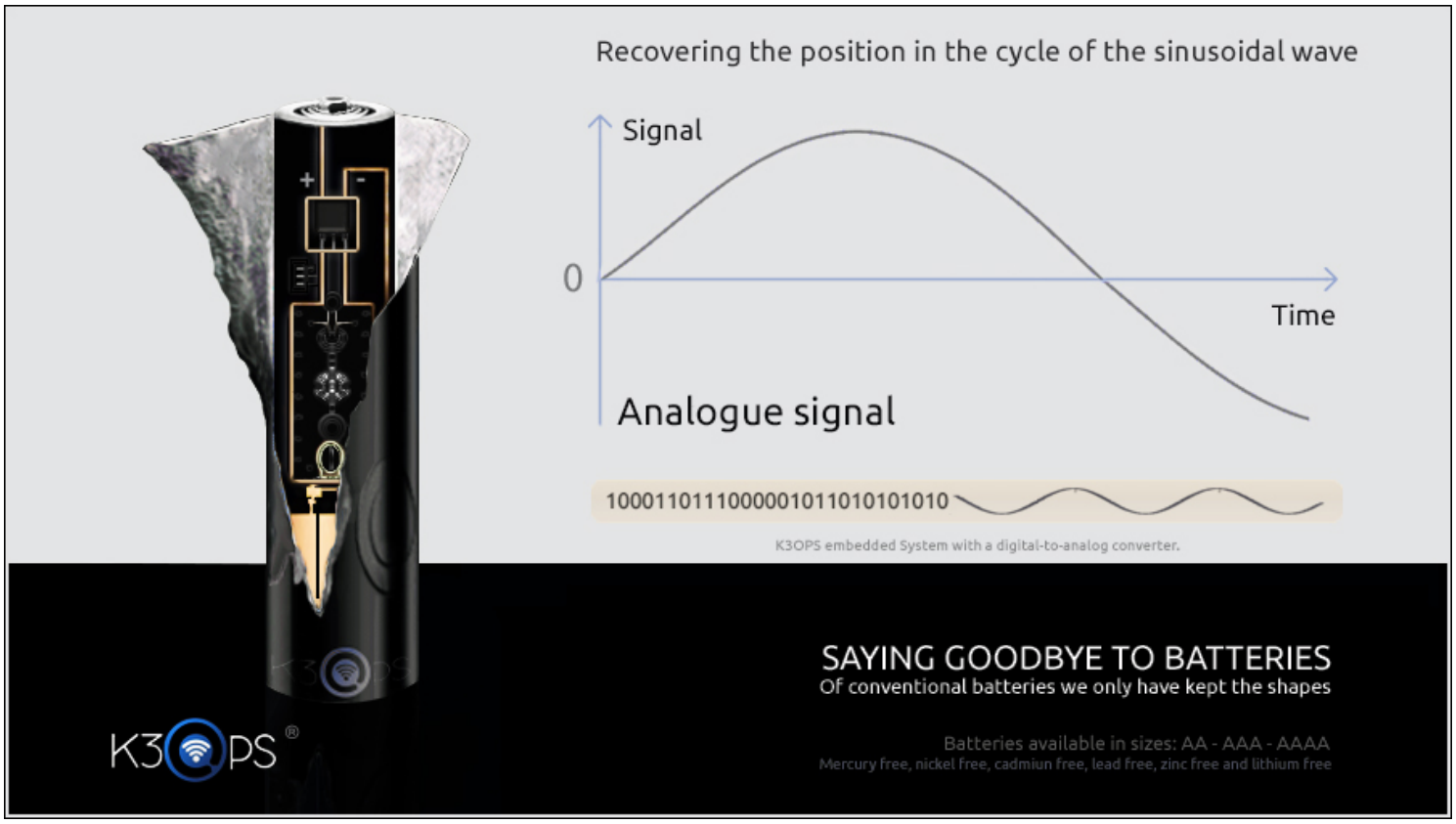

An electromagnetic field uses the photon as an elementary particle to transmit force. It combines:

- **A magnetic field** *force resulting from the movement of loads µT.*
- **An electric field** *force created by the attraction of repulsion loads, measured in volts per meter - V/m.*

With an energy determined according to the speed of light, the RF are by far the best medium to transmit any kind of information.

The multiplication of wireless communications systems in our environment ensures sufficient microwave leakages to harvest from the ambiant and enough energy to convert into DC electricity. Electromagnetic fields are everywhere and since they carry energy, they became the best candidate to deliver an endless source of renewable energy.

$\vec{B}$ is the magnetic induction expressed in T refered to **Nikola Tesla**, "Father of Free Energy", which is at the origin of the electromagnetism.

Using meta-materials combined with nanotechnology has deeply increased the performance and miniaturization of rectennas embedded in K3OPS system. Our products operate autonomously, offering an endless supply of green energy in a respectful and environment-friendly approach.

principles and beautiful sentences. At that point in time I would have simply been Xin, a child like any other...

But one day I dreamed. I woke up far away, somewhere else, in another past. I decided to change my destiny and even if I was supposed to become a mathematician, I eventually decided to create, because already as a child my heart was chasing the stars.

Of the hundreds of directions shown to me after graduating, only one captured my attention: a single goal... Build the impossible for a safer world. So, over the past 3 years, our real challenge to overcome for all RF Energy Harvesting technics was to optimize electricity conversion. The massive proliferation of wireless telecommunication systems since the past two decades brought a saturation of the electromagnetic fields with a constant growth of 15% every year in our environments. As a result, this situation reversed the base problem that makes today Harvesting RF Energy a game changer. The key was the Power Management System.

We are far beyond the conversion constraint and performance by controlling "RF-interferences", by harvesting different frequencies *from near and far*, by using Metamaterials combined with nanotechnologies. We dramatically have improved power conversion efficiency and reduced the size of our Energy Harvesting systems embedded in all K3OPS' products.

Thanks to Nikola Tesla, my inspiring mentor, K3OPS' products have reached by far their objectives in terms of converting and performance, offering an endless efficient source of green energy, reliable in an environmentally friendly approach.

Xin WEI Co-Founder of K3OPS technology with Alexandre Despallieres

K3OPS®

| HOME |

The Rectenna was invented in 1964 by William C. Brown, patented in 1969. It is a rectifying antenna used to convert microwave energy into DC. A simple Rectenna consists of a dipole antenna with an RF diode connected across the dipole elements. The diode rectifies the AC current induced in the antenna to produce DC power.

K3OPS Copyright © 2018 Alexandre Despallieres and Xin Wei - All rights reserved.

Terms of use | Privacy Policy | Press | Login

AUTODESK. Make anything. (http://www.autodesk.com)

[redacted]

advertisement

FREE ENERGY MICROWAVE

Posted Dec. 22, 2015 | (cc) BY-NC-SA

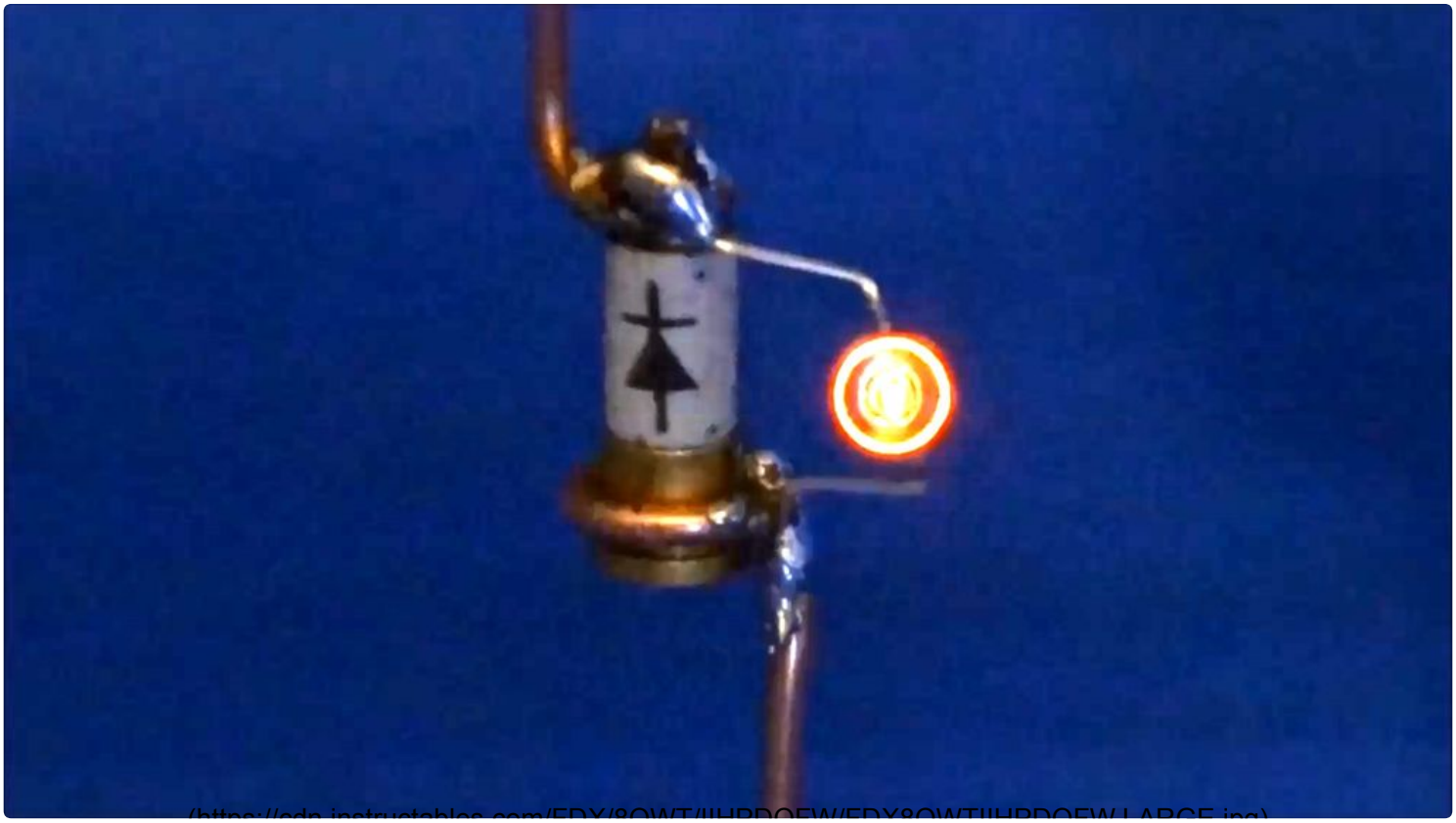

(https://cdn.instructables.com/FDX/8QWT/IIHPDQFW/FDX8QWTIIHPDQFW.LARGE.jpg)

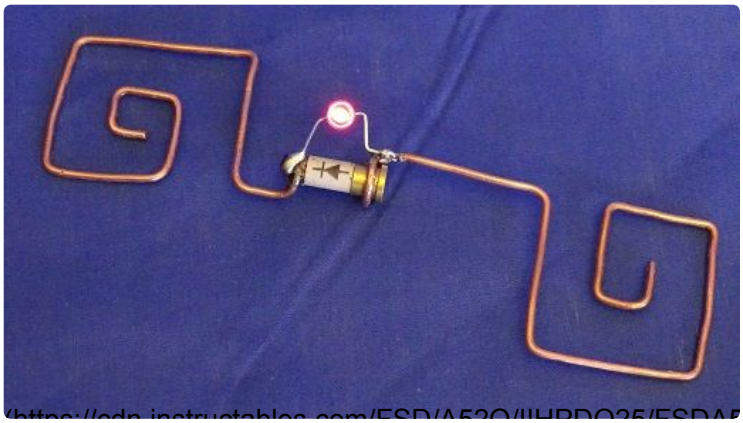

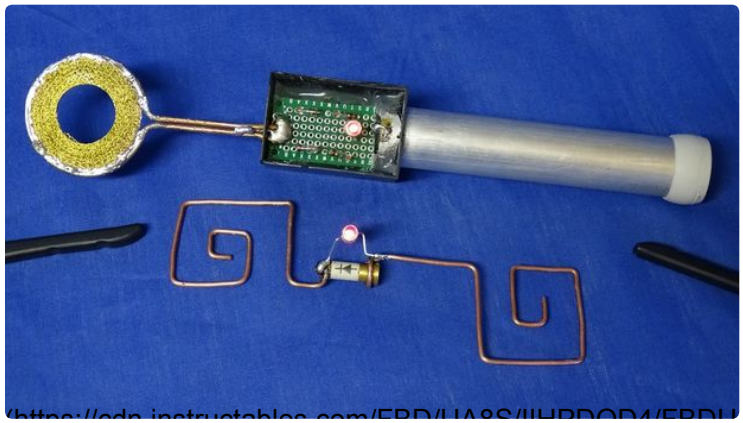

In electronics, a diode is a two-terminal electronic component that conducts primarily in one direction; it has low resistance to the flow of current in one direction, and high resistance in the other. A semiconductor diode, the most common type today, is a crystalline piece of semiconductor material with a p–n junction connected to two electrical terminals. A vacuum tube diode has two electrodes, a plate and a heated cathode. Semiconductor diodes were the first semiconductor electronic devices. The discovery of crystals' rectifying abilities was made by German physicist Ferdinand Braun in 1874. The first semiconductor diodes, called cat's whisker diodes, developed around 1906, were made of mineral crystals such as galena. Today, most diodes are made of silicon, but other semiconductors such as selenium or germanium are sometimes used.

This diode is able to detect RF signals and converts it to DC electricity to power a Led the amazing thing about this is that its completely passive and doesn't require any batteries... Gold Plated Slug 1N23B is Vintage U.S. ARMY Military for General Purpose UHF-MW Silicon Mixer. Primarily used in the Allies’ radar systems during World War II.

Add Tip

Ask Question

Step 1:

[redacted]

Electronics Repair
Make Electronics Repair Great Again

DON'T MISS LED TV T-Con Board Problem

AdChoices RF Strength Fix

Building Your Own RF Field Strength Meter

By Jestine Yong on June 1, 2013

29 SHARES SHARE TWEET SHARE SHARE 34 COMMENTS

A simple and easy project for a rainy Sunday!

Why would you need one? Sometimes we build electronic projects for fun only, or just for satisfying our technical curiosity; this is what I do sometimes. This project, however, started with a need.

The need originated when a friend called for help to solve an intermittent problem with the UHF transceiver on his boat. The receiving ends reported frequent cuts in his transmission.

I quickly improvised a very simple Field Strength Meter composed of a small antenna, a detector diode, a resistor, capacitor and a Micro Ammeter. Assuming that this simple circuit would be sensitive enough to detect the HF field, providing we keep it close enough to the transmitting antenna. This worked quite well, and the intermittent problem was easily diagnosed and fixed; it was caused by a broken antenna cable, making intermittent contacts. With the meter we were able to see a clear drop of the field strength when moving the cable.

From there, the technical curiosity took over; what if we could improve the circuit, making it more sensitive and, how high in frequency it would still work? Would it work for much higher frequencies such as 2.4 GHz, to check RF fields from Wi-Fi routers and mobile phones?

I gave up (at least temporarily!) to the idea of building a wide range RF amplifier to amplify the antenna signal over that wide range of frequencies. This might be another project for another rainy Sunday (or many more rainy Sundays!). Instead, I preferred trying to amplifying the DC signal after the RF detection and see how far we can go.

And here we go; we have a very simple instrument that can detect the activity of your Wi-Fi router, your mobile phone and about any RF transmitter through a wide range of frequencies.

Jestine's Free Report
Enter your name and email below to get Free Instant Access to the Free Report "How To Be A Successful Electronics Repairer".
Over 60,000 people
have enjoyed my Free Report and received exclusive Electronics Repair tips.
Name:
Email:
SUBMIT

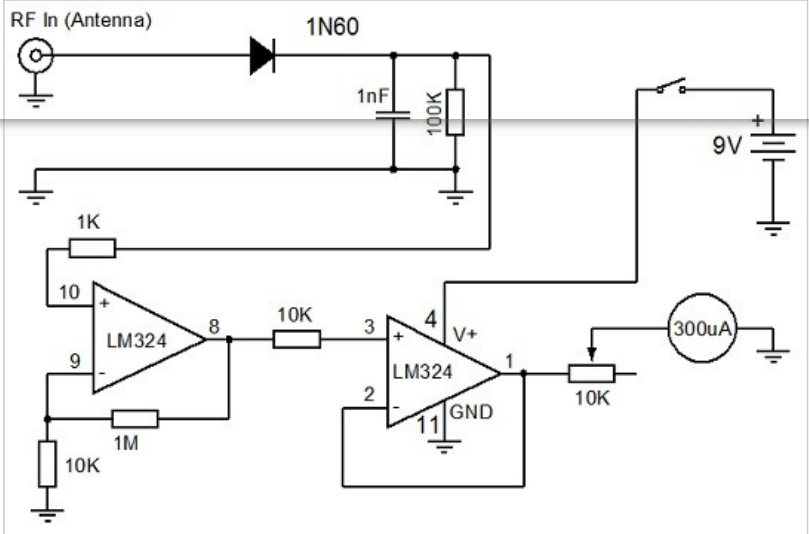

Fig. 1 Schematic diagram

It is powered by a 9 V battery. The diode is a critical component; it should have a low threshold voltage. The diode used in this circuit is a germanium diode 1N60. A ghost from the past, but it is still available on the market (Escol for example).

Fig 2. Inside the box. Plenty of space for further developments!

The diode and the 1 nF capacitor are soldered directly at the base of the antenna connector. In the next version of this circuit I would put the 100 K resistor there as well.

Another critical point is the antenna. It should be cut to ¼ wavelengths for the frequency range you

1 PLC Calibration ISO 17025
Over 60 years combined experience in Electronics and RF
plccalibration.com

2 Radiation Monitors
Measure radiation doserate and environmental contaminants.
tracerco.com

3 #1 VPN Service
Fastest Speeds. 100% Anonymous. No Logs. Money Back Guarantee.
IPVanish VPN

4 PCB Topological Autorouting - with hand routing results.
Finally an autorouter that doesn't require cleanup.
simplifyda.com

5 Better Than Bitcoin
Here are the top 5 cryptocurrencies that will overtake bitcoin. Free report.
Early Investing

ELECTRONICS REPAIR CATEGORIES
Electronics Repair Categories
Select Category

REPAIR TIPS POPULAR COMMENTS

Lada 111 1.6L 16V 2005 Year – Immo Off
...
January 9, 2018 7

Servicing Technics RS-M85-MK2 Tape Deck
...
January 9, 2018 4

21 Inch Hotpoint CRT Television (Model 21JI8US) Wide Horizontal Lines Repaired
...
January 3, 2018 26

HOME ABOUT JESTINE YONG REPAIRING E-STORE FREE SUBSCRIPTION TECHNICAL TRAINING
MUST HAVE-BLUE METERS EXPERTS KENT'S EBOOKS DAMON'S EBOOKS

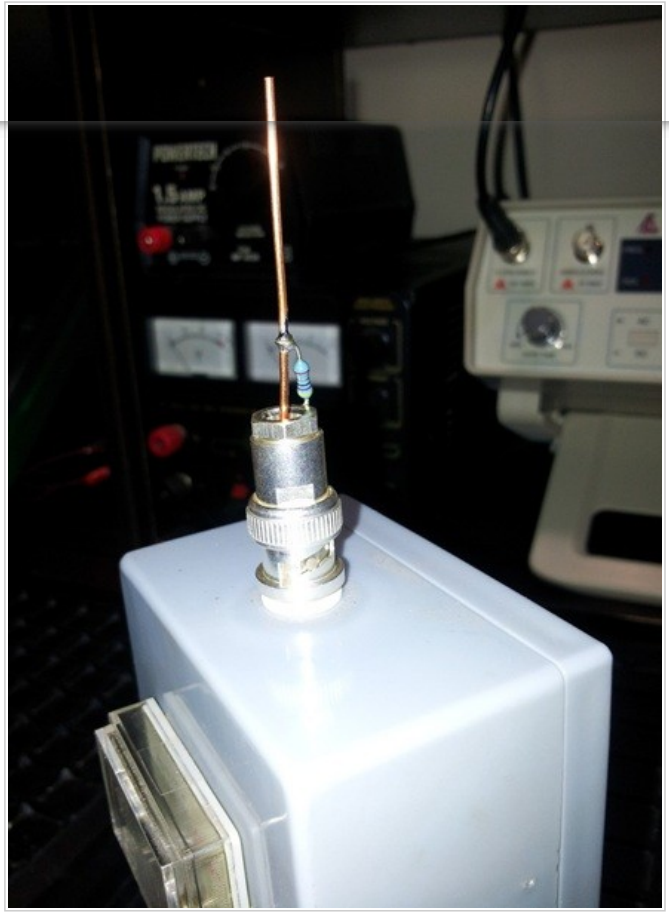

Fig 3. The antenna for 2.4 GHz

This simple RF Field Strength Meter proved to be much more effective than expected. It will react to your Wi-Fi router and mobile phone transmitting activities. You can also check the leaks of your microwave hoven, but be careful, put the sensitivity button to a very low position as the signal proved to be very strong! I guess this is normal…

Desoldering With The Help Of Medical Needles (Hypodermic Needle)

...

December 26, 2017 22

Servicing Coby LCD TV Monitor

...

December 26, 2017 6

LIKE US ON FACEBOOK

Be the first of your friends to like this

Album **Advanced Electronics Repair Course**

Noahtech Electronics Training
about a month ago

Just completed the Advanced Electronics Repair Course for two participants from Malaysia

Fig 4. Reacting to the mobile phone transmission.

Note that the sensitivity button is at a quite low position, showing that the device it quite sensitive at those frequencies.

This project can be built with components we have in our drawers. Who want to go out buying components on a rainy Sunday? I used a Vu-Meter from a scrapped amplifier for the indicator. The scale is not important as the measurements are comparative anyway. Those Vu-Meters are quite sensitive. The OP Amp can be any one of the common type as we amplify DC only. I used one fond in a drawer…

Possible improvements:

– A power jack so we can power the device with an external power supply when it is convenient, saving the precious battery life.

– A better antenna with a better gain. This device can be used to compare the performances of various antennas.

– A wide range RF amplifier… maybe later.

This article was contributed by Gerald Musy from Penang, Malaysia

Note: If you have any interesting repair article that you want to share to others please do email me HERE

Please give a support by clicking on the social buttons below. Your feedback on the post is welcome. Please leave it in the comments-thanks.

Likes (88) Dislikes (0)

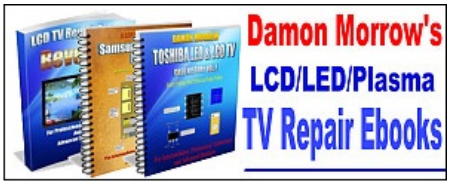

Click Here Now

Click Here Now

Build a Homebrew Radio Telescope

Explore the basics of radio astronomy with this easy to construct telescope.

Mark Spencer, WA8SME

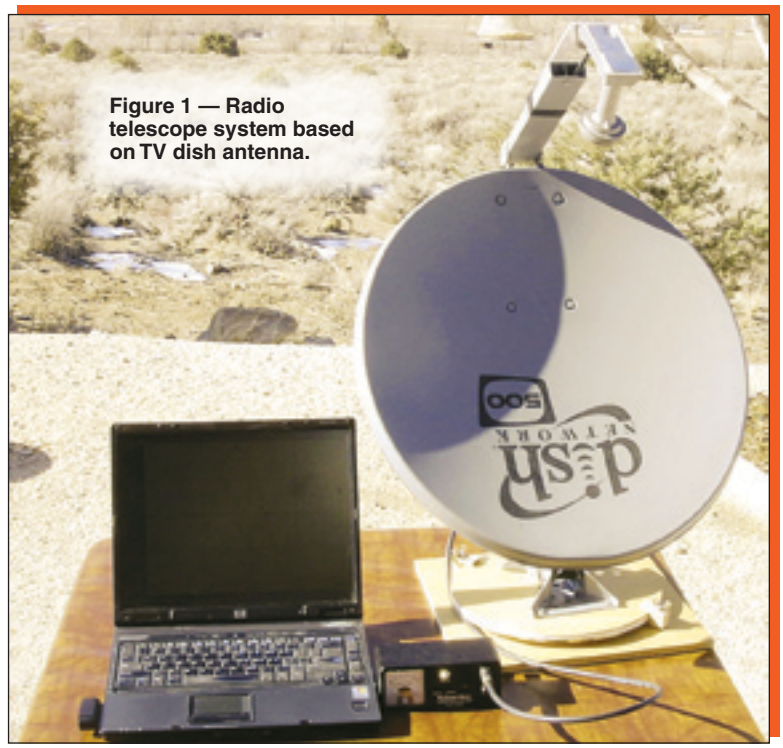

Figure 1 — Radio telescope system based on TV dish antenna.

There are many ham radio related activities that provide a rich opportunity to explore and learn more about the science of radio. One of those opportunities is radio astronomy.

All matter emits radio frequency (RF) energy dependent on the temperature and makeup of the matter, including the matter in space. The foundation of radio astronomy is to study the heavens by collecting and analyzing the RF energy that is emitted by bodies in space, very much as optical astronomers use light energy collected by telescopes. It sounds complicated. While professionals use very sophisticated and expensive equipment, you can, with some simple equipment and a little investment, build a radio telescope that will allow you to learn and explore the fundamentals of radio astronomy.

A Homemade Radio Telescope

In this article, I will build on an existing design of a radio telescope made from one of those ubiquitous TV dish antennas that you see around your neighborhood. The radio telescope (RT) project described here can easily be reproduced. Although this is not a fully capable RT, it can provide a wonderful learning opportunity for you, or perhaps students in your local school.

Figure 1 shows the radio telescope set up. The major components include a modified TV dish antenna mounted on a wooden support structure to allow pointing the antenna, a commercial satellite signal strength detector that displays the signal strength of signals collected by the dish on a meter and an interface that converts the signal strength into a amplitude modulated tone. The tone is fed into a computer sound card and finally a computer and software graphically displays the signal strength as a function of time.

The TV dish modifications are structural, and any available TV dish system can be used. The signal strength detector costs between $40 and $65 and is widely available from Web retailers. The interface circuit, which will be described shortly, is easily duplicated and costs approximately $20. Finally, the display software is free.

Figure 2 — Dual LNB mount. Note two coax connectors.

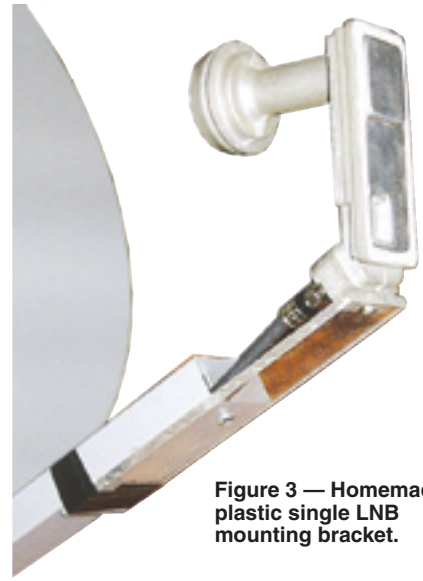

Figure 3 — Homemade plastic single LNB mounting bracket.

What it Can Do

The following is just a sample of what you can do with this simple RT:

- Use the sun to study and determine the beamwidth of the dish and verify the mathematic formula that is used to predict dish antenna performance.
- Measure the radiation intensity of the Sun and perhaps detect changes in solar activity.
- Measure the relative changes in the surface temperature of the moon.
- Learn about and explore a common radio astronomy collection technique called the *drift scan*.

From June 2009 QST © ARRL

Figure 4 — Dual coax connector configured LNB. Terminate one connector with a dummy load.

Figure 5 — CM satellite signal strength meter.

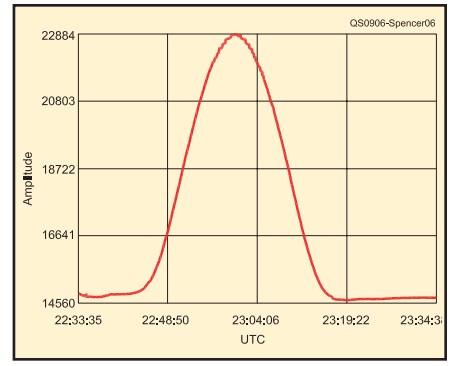

Figure 6 — *SkyPipe* screen showing antenna response.

- Explore the fundamental principle of energy emission as a function of temperature by detecting the relative differences between the temperatures of emitting bodies.
- Detect satellites parked along the Clarke Belt in geosynchronous orbit and illustrate how crowded space has become.
- Detect the Earth's rotation around the Sun and the Earth's spin on its axis by comparing daily drift scans of the horizon.

Antenna Subsystem

The basic RT system is based on the "Itty-Bitty" design that is described in two Web pages.[1,2] The TV dish is an offset 18 inch dish that has down converter(s) mounted at the focal point of the dish. The down converter is called a low noise block (LNB). The LNB is a preamplifier/down converter that converts the satellite signals from around 12 GHz down to around 2.4 GHz. Most modern dishes have two or more LNBs to access more than one TV satellite at a time without changing the pointing of the dish (Figure 2). The LNBs are mounted to share the focal point of the dish. Since only one LNB is required for the RT, I made a minor adjustment to the published Itty-Bitty design to position the single LNB at the dish focal point. Mounting the single LNB at the focal point really helps in pointing the antenna.

I used the existing LNB housing and mounting bracket as a template to determine the distance between the edge of the mounting arm to the mounting hole of the LNB. I then used a piece of plastic to fabricate a new mounting bracket for the LNB as shown

[1]Notes appear on page 45.

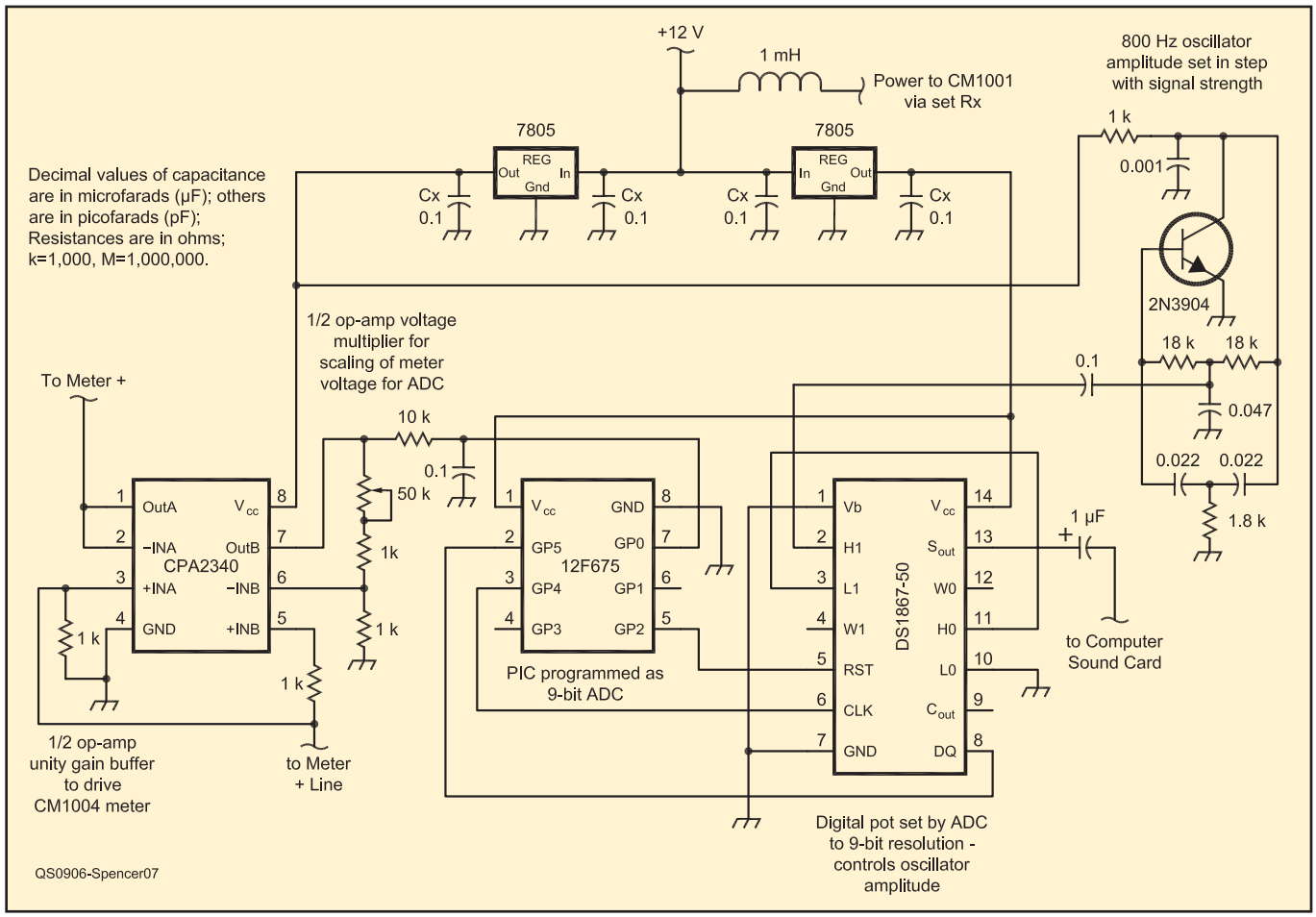

Figure 7 — RT Interface circuit diagram.

From June 2009 QST © ARRL

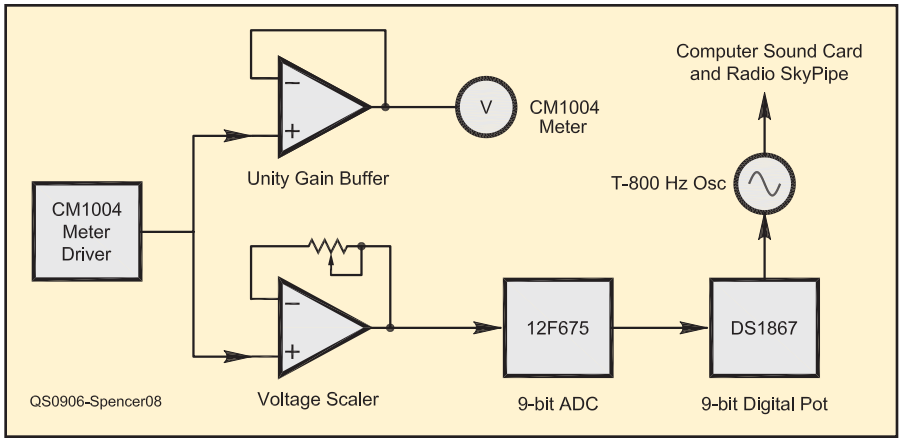

Figure 8 — RT Interface block diagram.

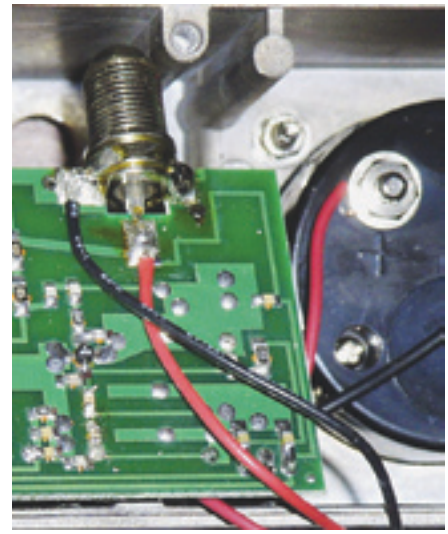

Figure 9 — Power and ground connection to CM board.

in Figure 3. The dimensions are not super critical, but careful placement certainly will improve the RT performance.

Some LNBs have two coax connectors. Only one will be used in the RT (Figure 4). It is a good idea to terminate the extra coax connector with a 75 Ω dummy load plug to balance the load on the LNB. The dummy loads for F type TV coax connectors are readily available from electronic parts retailers.

Note that the dish is mounted upside down. Though this orientation is not ideal for receiving satellite signals, this arrangement helps with pointing the dish in its radio telescope role.

Satellite Detector

The detector used in this project is the Channel Master (CM) satellite signal level meter model 1004IFD (Figure 5).[3] The CM is connected to the LNB. Power is supplied to the LNB through the coax connection from the CM. The CM detects the signal coming from the LNB and gives a meter indication of the signal strength and also varies the frequency of an audio tone to help technicians point the dish at the desired satellite. As you move the dish through the beam coming from the satellite, the meter indication will increase and then decrease coincident with the pitch of the audio tone.

The Itty-Bitty plans detail how to connect power to the CM and in turn connect power to the LNB (this power connection is handled by the interface in this project). Though somewhat effective, the CM meter and variable frequency tone indications provide limited utility in detecting changes in signal strengths required for radio astronomy.

Display

To really study the signals received by the RT, you will need to see them displayed graphically on a strip chart. There is an excellent software package called *Radio-SkyPipe* that is posted on radio astronomy Web sites.[4] The free version of this software is a good place to start. *SkyPipe* uses the computer sound card to measure the incoming signal strength and graphically displays the signal strength as a function of time. Figure 6 is illustrative of a signals detected by the RT. *SkyPipe* is very easy to use but some study of the HELP files will make it easier for you to fully tap into the capabilities of this software.

SkyPipe requires audio signals to be fed into the sound card MICROPHONE jack. The output of the CM detector is either an analog meter reading or a frequency modulated (constant amplitude) tone that is not really compatible with *SkyPipe*. An interface is required.

Interface

What is required to make the CM output work with *SkyPipe* and a sound card is to convert the signal level into an amplitude varying audio tone. The interface designed to do this is shown in Figure 7 and as a block diagram in Figure 8. Refer to the block diagram during the description of the interface function.

The unity-gain op-amp is used as a buffer between the CM meter driver circuit and the analog meter. The other op-amp is used as a voltage multiplier to scale the CM meter driver output voltage to match the 5 V reference voltage of the following analog to digital converter (ADC). The variable resistor in this voltage multiplier circuit is used to calibrate the CM to *SkyPipe*. The voltage from the multiplier is fed to a programmable interface controller (PIC) that is programmed as a 9-bit ADC to covert the analog voltage that is a function of received signal strength to a 9-bit digital word that is used to control a digitally controlled variable resistor. The interface includes a simple Twin-T audio oscillator circuit that provides a tone of approximately 800 Hz that is fed to the computer sound card. The amplitude of this audio oscillator is varied by the digital pot that is being controlled by the PIC. The result is the audio amplitude being varied in step with the signal strength detected by the CM.

The circuit provides power to the CM and the LNB. A 12 V source in the CM is tapped through an RF choke and this is connected to the LNB coax connector inside the CM (Figure 9). The 12 V is also regulated to 5 V to provide power to the interface. Though probably not required, there are two 5 V sources, one for the digital components of the interface, and the other for the analog components with one common ground point. This arrangement is used to isolate potential digital and analog noise sources within the circuit.

The interface is built on a circuit board and mounted right inside the CM box

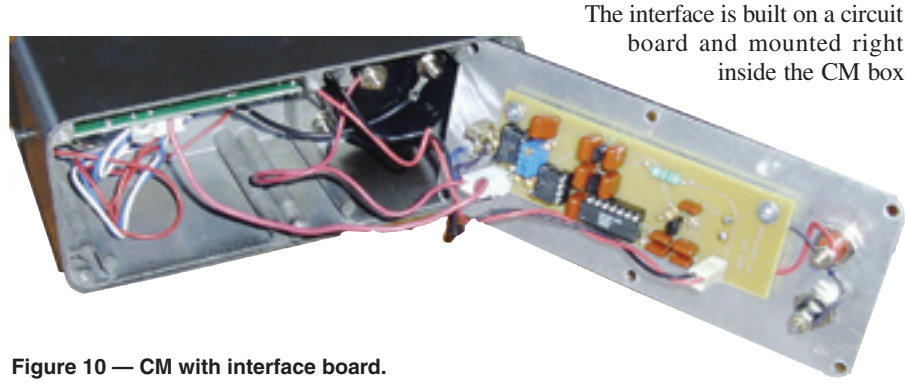

Figure 10 — CM with interface board.

From June 2009 QST © ARRL

Figure 11 — Aiming the RT at the Sun, note LNB shadow location.

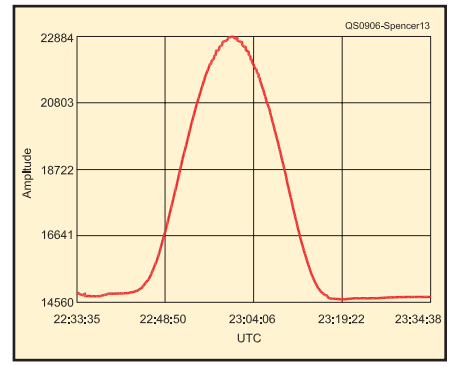

Figure 13 — Drift scan of the Sun indicating antenna's azimuth pattern.

(Figure 10). Though I made an etched circuit board for the circuit, the hand wired prototype worked equally well for those who would rather roll their own. The PIC firmware is available on the *QST* Web site.[6]

RT in Action

The first thing you need to do is learn how to point the RT antenna. The best place to start is to connect the CM to the antenna and point the antenna at the Sun. *Caution*: Do not look into the Sun as you do this, or at any time. Adjust the pointing angle and elevation until you get peak signal strength as indicated on the CM meter or hear the highest pitch audio tone. With the antenna pointed directly at the Sun, take note of the position of the shadow of the LNB on the surface of the dish (left in Figure 11). If you look from behind the dish, along the LNB

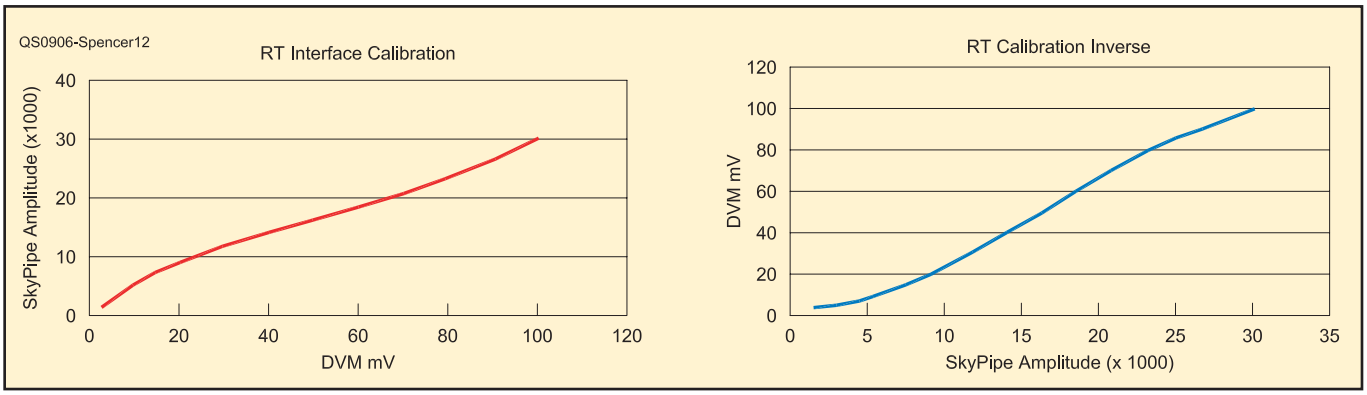

Figure 12 — Example calibration curves.

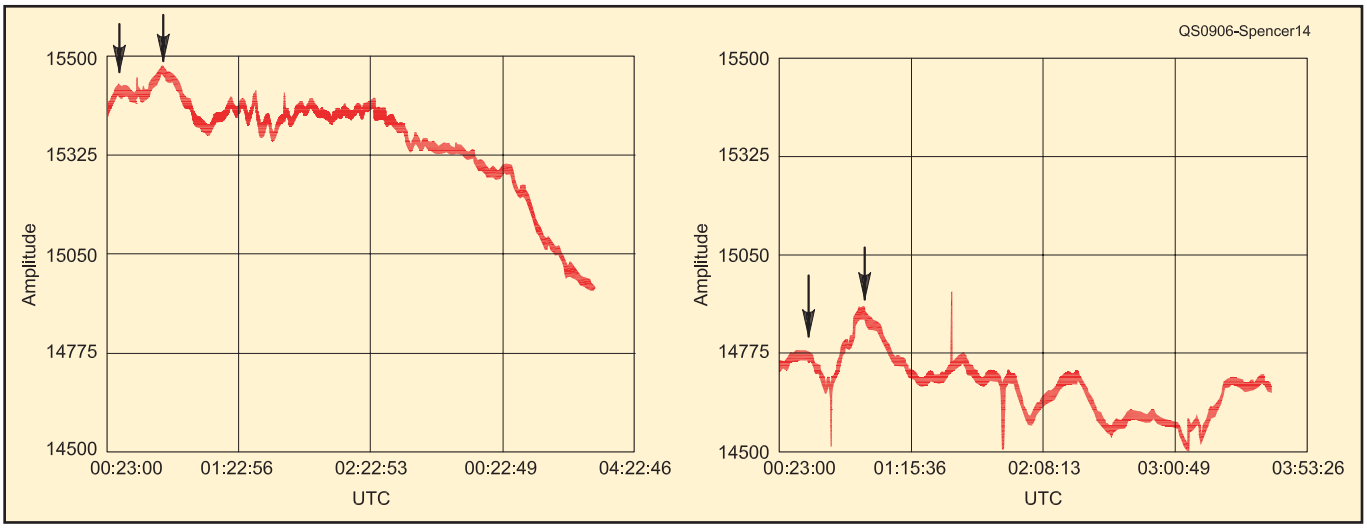

Figure 14 — Sequential drift scans. Note the time offsets between the peaks.

From June 2009 QST © ARRL

supporting arm (between the arm and the rim of the dish), you will see the Sun being blocked by the LNB.

Once you have the RT set up, it needs to be calibrated to match the output of the CM to *SkyPipe*. I have developed an *Excel* spreadsheet template to help with the calibration and a few of the other activities that you can accomplish with the RT (also available from the *QST* Web site). Turn the RT to a signal source, the Sun, or the side of a building would work. Turn the gain control of the CM to set the meter to maximum. Run *SkyPipe* and adjust the variable resistor on the interface board until you get a reading on the *SkyPipe* graph vertical (y) axis of approximately 32,000. With the maximum value set, adjust the CM gain control through the voltage range (0 to 100 mV) in 10 mV steps and record the corresponding y axis value on *SkyPipe*. This data is entered into the *Excel* spreadsheet to compute the calibration curve between voltage and y axis value. Both voltage and y axis values are used in analyzing recorded signal strength data (Figure 12).

A good first activity is to do a drift scan of the Sun. A drift scan means that you set the antenna azimuth (AZ) and elevation (EL) to some fixed pointing angle and allow the Earth to serve as the rotator to drag the antenna across the sky. To do a drift scan of the Sun, first set the elevation and azimuth to point directly at the Sun (maximum signal) and then move the azimuth toward the west (leave the elevation set) until you are off the peak signal. Now start *SkyPipe*. In about 15 minutes, the Sun will pass through the antenna pattern beam width and the result will be as illustrated in Figure 13. You can also use this collection technique to explore the antenna performance parameters.

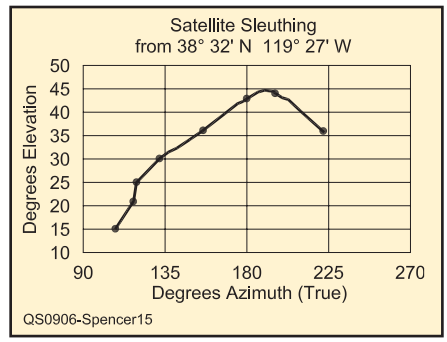

Figure 15 — Clarke Belt plot — tracking down satellites.

A good second activity is to do two drift scans of the night sky on two consecutive nights (beginning the scans at the same time each night) using the same fixed antenna azimuth (AZ) and elevation (EL). Figure 14 shows two such drift scans. Although at first glance they may not seem similar, there are some interesting features that are pointed to by arrows. If you compare the time that these two peaks occurred, the time difference is about 4.5 minutes. This shift is the result of the distance the Earth had traveled during the 24 hours between collections. This illustrates that the Earth's rotation as well as its travel in orbit needs to be considered when comparing drift scans. Enough to make your head spin (pun intended)?

A final good starting activity is to point the antenna toward the Clarke Belt and find all the satellites in geosynchronous orbit transmitting on 12 GHz. If you record signal strength peaks and AZ and EL for each peak, you will develop a graph of the Clarke belt as illustrated in Figure 15.

I have only scratched the surface, and the sky is the limit of this little project. The RT project can certainly broaden your horizons and expand your understanding of our universe. If you would like more detail than can be presented here, please contact the author.

Notes

[1]**www.setileague.org/articles/lbt.pdf**.
[2]**www.aoc.nrao.edu/epo/teachers/ittybitty/procedure.html**.
[3]**www.pctinternational.com/channelmaster/0612/satellite.html**.
[4]**radiosky.com/skypipeishere.html**.
[5]**en.wikipedia.org/wiki/Geostationary**.
[6]**www.arrl.org/files/qst-binaries/**.

Mark Spencer, WA8SME, is ARRL Education and Technology Program Coordinator. He is an ARRL member and holds an Amateur Extra class license. You can reach Mark at 774 Eastside Rd, Coleville, CA 96107 or at **wa8sme@arrl.org**.

Did you enjoy this article?
Cast your vote at:
VOTE www.arrl.org/members-only/qstvote.html

March 25, 1969 W. C. BROWN ET AL 3,434,678

MICROWAVE TO DC CONVERTER

Filed May 5, 1965

Sheet 1 of 3

FIG. 1

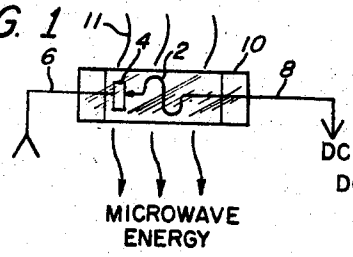

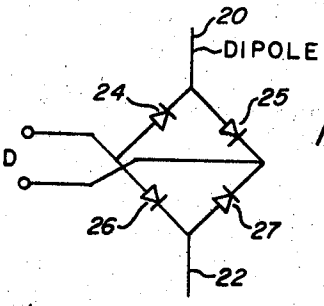

FIG. 2

FIG. 3

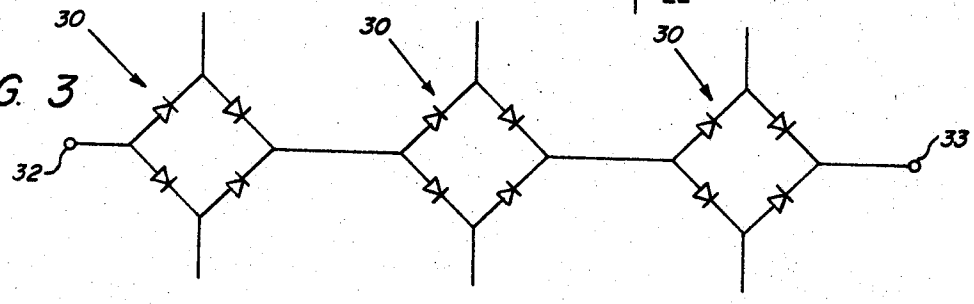

FIG. 4

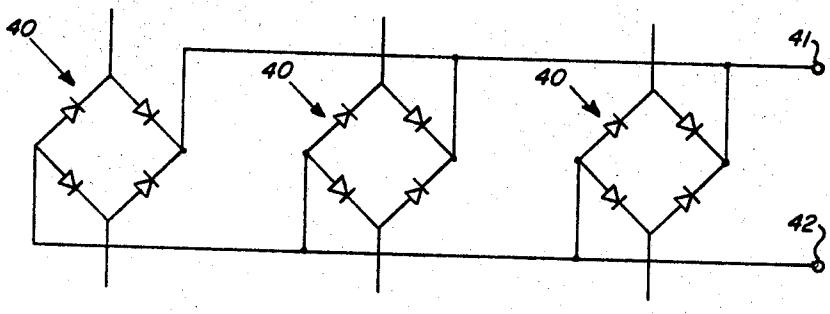

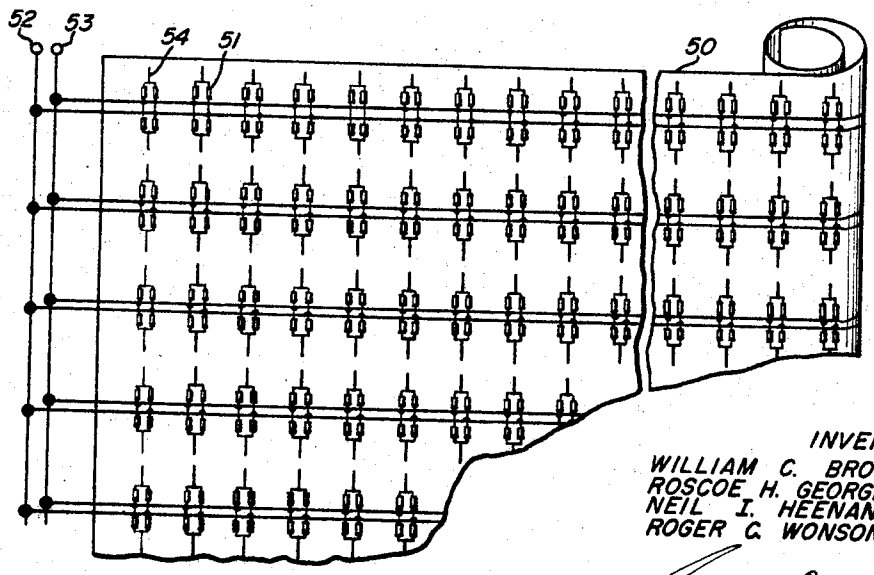

FIG. 5

INVENTORS
WILLIAM C. BROWN
ROSCOE H. GEORGE
NEIL I. HEENAN
ROGER C. WONSON

BY Edgar O. Lost
ATTORNEY

FIG. 7

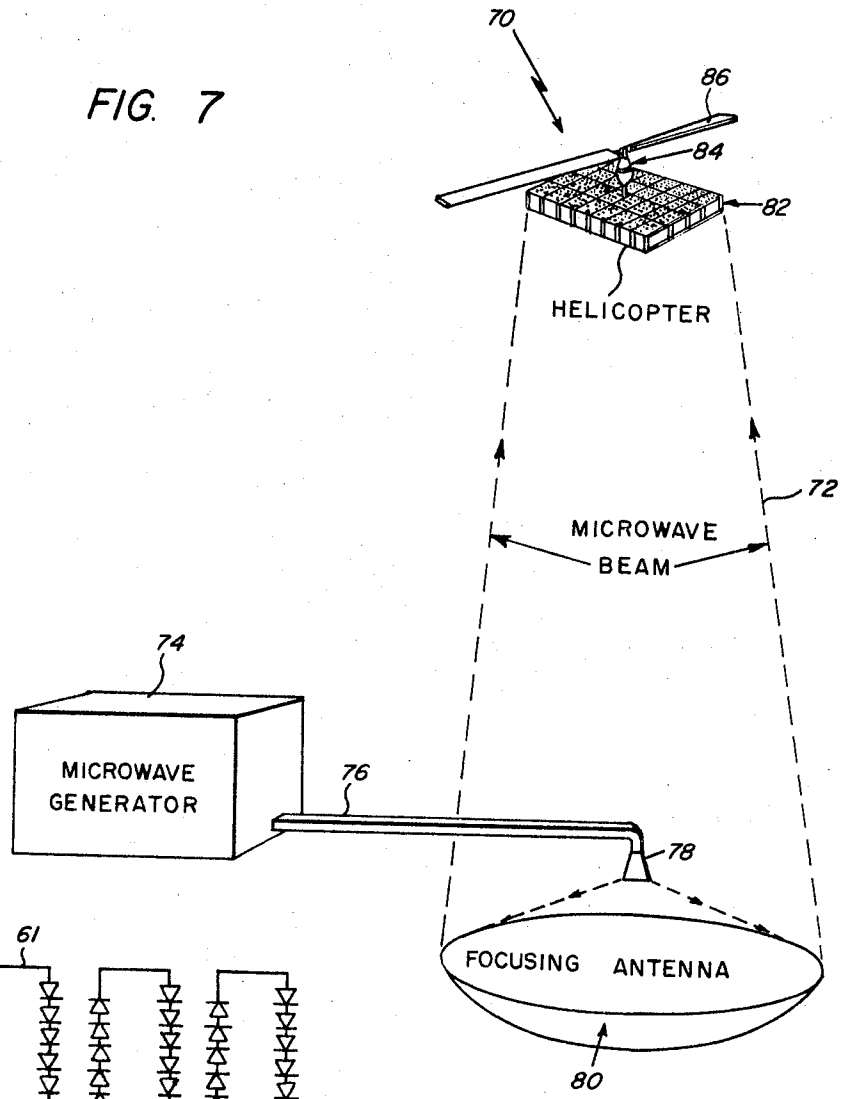

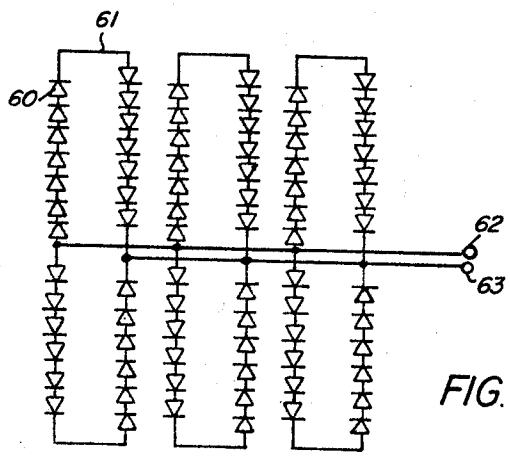

FIG. 6

INVENTORS
WILLIAM C. BROWN
ROSCOE H. GEORGE
NEIL I. HEENAN
ROGER C. WONSON

BY Edgar O. Lost
ATTORNEY

MICROWAVE TO DC CONVERTER

Filed May 5, 1965

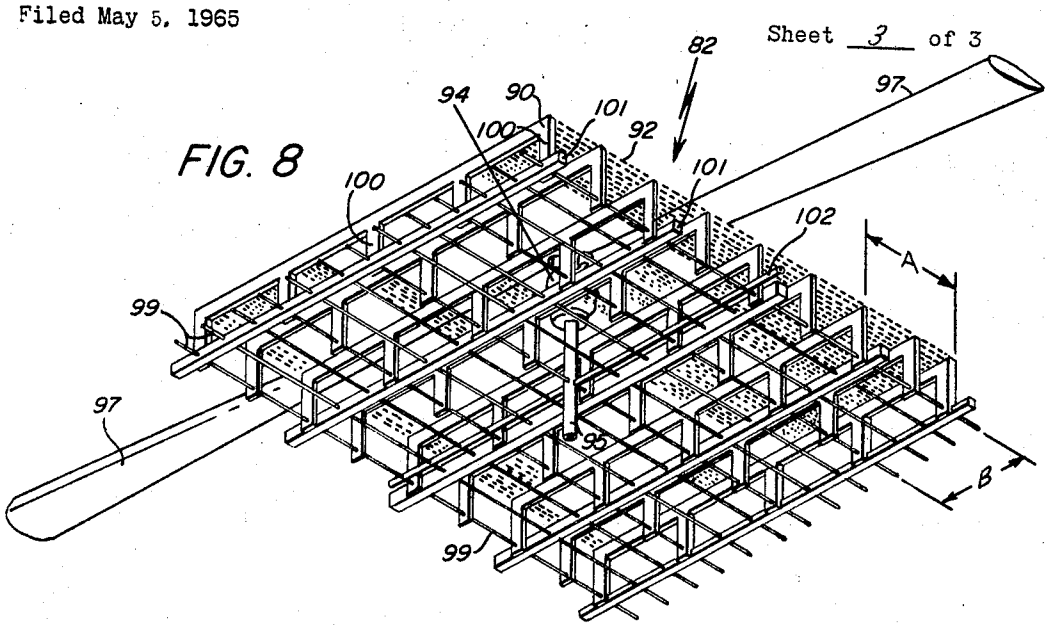

FIG. 8

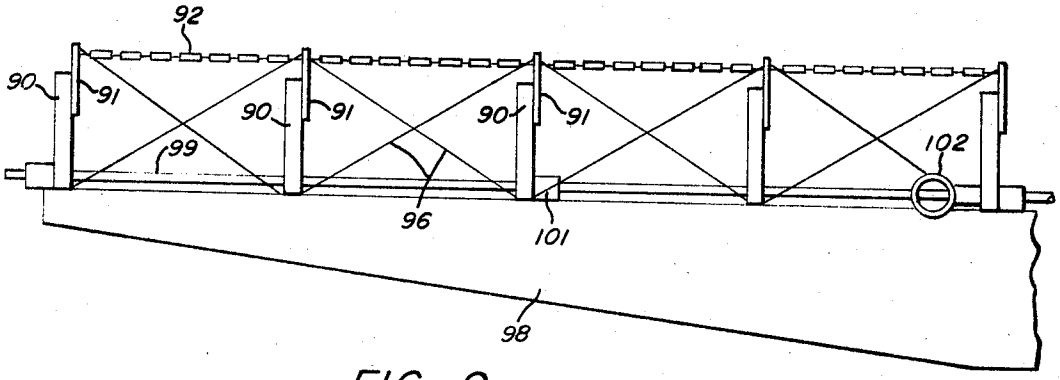

FIG. 9

INVENTORS
WILLIAM C. BROWN
ROSCOE H. GEORGE
NEIL I. HEENAN
ROGER C. WONSON

BY Edgar O. Rost
ATTORNEY

United States Patent Office

3,434,678

Patented Mar. 25, 1969

1

3,434,678

MICROWAVE TO DC CONVERTER

William C. Brown, Weston, Mass., Roscoe H. George, West Lafayette, Ind., and Neil I. Heenan, Needham, and Roger C. Wonson, Beverly, Mass., assignors to Raytheon Company, Lexington, Mass., a corporation of Delaware

Filed May 5, 1965, Ser. No. 453,415
Int. Cl. B64g 1/00
U.S. Cl. 244—1 3 Claims

ABSTRACT OF THE DISCLOSURE

A combined antenna and conversion mechanism for reception of beamed high frequency electromagnetic energy in space including a large array of unidirectional current semiconductor rectifier devices. A self-supporting space vehicle utilizing the rectified DC electrical energy for propulsion is disclosed in an illustrative embodiment.

The present invention relates in general to the transfer of energy by means of an electromagnetic wave beam and more particularly to interception and rectification of such energy into low frequency electrical DC energy with a high degree of efficiency.

Improved technology in the field of microwave energy generation at superpower levels has resulted in the realization of electrical energy transmission over considerable distances for remote energization of devices or vehicles without the aid of wires. The transmission of microwave electromagnetic energy into space has been commonly employed in the radar pulse echo systems for the detection and orientation of desired objects within a predetermined scanning range of a transmitting antenna. Beams of a similar nature may now be employed for other useful purposes and the advantages attendant the utilization of electromagnetic energy in the microwave region in contrast with other wavelengths may now be enumerated.

Microwaves have been generally defined as high frequency radio waves whose wavelength is less than 30 centimeters, with a lower wavelength limit on the order of 1 millimeter sometimes being applied to what is commonly referred to as the "microwave region." The superiority of high frequency microwaves is due in part to the fact that it is generally desirable to focus the transmitted energy so as to achieve a high power density at a remote point or area with respect to a given power source. In accordance with the laws of optics, the sharpness of the microwave beam produced by a transmitting antenna varies as the ratio of antenna dimensions to the wavelength of the transmitted energy. Therefore, for a given or desired power density or beam sharpness, a decrease in the wavelength of the transmitted energy permits a corresponding decrease in the dimensions of the antenna. From the standpoint of mechanical considerations, it is desirable to employ small antennas and other components, and it is therefore advantageous to employ high frequency energy of very short wavelength. In addition, the difficulties encountered in long wave transmission as a result of natural and man-made interference or noise do not occur with any appreciable significance at microwave frequencies. Further, in aerospace applications with considerable distances separating the transmitter at an earth or mother planet location and the employment of shorter wavelength beamed energy is preferred since longer wave signals will generallly be reflected at certain altitudes by reflecting layers in the atmosphere.

In view of certain losses due to absorption which may occur in the atmosphere, microwaves in the region having the approximate bounds of 2 and 30 centimeters are

2

readily adaptable to the convenient radiation of power to remote points without the utilization of wires. The preferred wavelengths are of the order of 5 or 10 centimeters to provide efficient focusing with existing transmitting antenna systems which may be maintained at a reasonable size. An illustrative device of the superpower high frequency microwave generators operative in the desired band is the so-called Amplitron which is an amplifier having a broad bandwidth and excellent performance characteristics for the focusing of the beam. Such devices are capable of producing 15 or 20 kilowatts of average continuous wave power in the neighborhood of 10 centimeters in wavelength with capabilities expected in the region of 500 kilowatts or more average power with 50 megawatts peak power. A complete description of such devices may be had by referring to Patent No. 2,933,723 issued Apr. 19, 1960 to William C. Brown and assigned to the assignee of the present invention.

With microwave energy capable of being generated and directed over longer distances conversion of such high frequency electromagnetic energy is of paramount concern. One conversion mechanism in the prior art involves direct conversion of such energy into heat which may then be utilized directly or indirectly for propulsion or generation of flight-producing forces. Examples of such devices for heat energy exchange as well as space vehicles utilizing such energy may be noted in Patent No. 3,174,-705, issued Mar. 23, 1965, to D. Schiff et al., as well as U.S. Letters Patent No. 3,083,528, issued Apr. 2, 1963 and No. 3,114,517, issued Dec. 17, 1963, to William C. Brown. The heat exchanger method of conversion of electromagnetic energy into useful power is limited by the overall efficiencies of approximately 25 percent in the conversion of heat into mechanical or electrical work. Desirable, therefore, would be the direct rectification of the high frequency electromagnetic energy into low frequency electrical energy for the operation of many useful aerospace devices as well as systems.

The present invention has for its primary object the conversion of high frequency electromagnetic energy in the microwave region directly into low frequency electrical energy.

A further object of the present invention is the provision of a combined nondirectional receiving antenna and microwave electromagnetic energy to low frequency electrical energy conversion means in a unitary structure.

A still further object of the present invention is a provision of a new and novel combined nondirectional receiving antenna and microwave to DC energy converter for aerospace applications.

Another object of the present invention is the provision of a new and novel nondirectional receiving antenna and microwave to DC energy converter having a high degree of efficiency.

Still another object of the present invention is the provision of a new and novel aerospace vehicle with nondirectional receiving antenna and microwave to DC energy converter means with said vehicle being capable of being supported by its own energy generation means at a distance spaced apart from the power generation means.

In accordance with the teachings of the present invention, the above and other objects are achieved by the employment of efficient unidirectional microwave power rectifiers and dipole antenna means. Such rectifying devices, while being individually limited in power-handling capabilities, normally in the order of fractions of watts, have been found to be highly efficient means for the rectification of microwave power when assembled in large numbers in various arrays. It is interesting to note that the observed collective efficiency was on the order of 40 to 70 percent. In an illustrative embodiment, point-

contact semiconductor diodes were arranged in four arm bridge connected networks with the networks interconnected in various configurations such as series, parallel and series-parallel.

In discussing aerospace applications, an additional problem is encountered in the beaming of microwave energy to a remote point and the interception and utilization of such electrical energy. In such applications the advantages of a vehicle which may be maintained in space for indeterminate periods of time without employing a local fuel source are readily apparent. Such devices could readily provide communication networks, surveillance functions using radar techniques along with numerous other functions. The acapture of the beamed high frequency electromagnetic energy raises the need for an efficient antenna means capable of intersecting the beam at high altitudes. Conventional techniques employed in microwave radar usage such as receiving antenna horns are capable of intersecting only a small portion of the beam energy and add considerable weight in applications involving heavier-than-air vehicles. In an exemplary embodiment of the invention a space vehicle, namely a helicopter, is disclosed for either moving flight or a stationary location with self-supporting electrically operative propulsion means. The semi-conductor diode rectifier arrays have been demonstrated to fulfill the receiving antenna functions as well as the electrical energy rectification means in a highly efficient manner. Such combined antenna and rectifier means has also assisted in reduction of the weight problem in airborne devices. Further, it has provided a nondirectional means for the interception of the microwave energy to thereby reduce the problems of focusing inherent in prior art directional horn type receiving antennas.

With the above features, advantages and objects in mind the invention will now be described by reference to the following detailed description together with the accompanying drawings in which:

FIG. 1 is a perspective view of an illustrative diode rectifier;

FIG. 2 is a schematic circuit diagram of a bridge connected diode network with dipole antenna means;

FIG. 3 is a schematic circuit diagram of a plurality of bridge connected networks arranged in series;

FIG. 4 is a schematic circuit diagram of a parallel bridge connected network array;

FIG. 5 is a perspective view of an illustrative embodiment of a combined antenna and rectifier array in a folded or rolled up configuration;

FIG. 6 is a schematic circuit diagram illustrating the bridge connected diode array incorporated in the aerospace vehicle shown in FIG. 7;

FIG. 7 is a schematic representation in elevation illustrative of a heavier-than-air aerospace vehicle incorparating the structure of the present invention;

FIG. 8 is a perspective view of the aerospace vehicle embodiment as viewed from the under portion thereof; and

FIG. 9 is an enlarged partial view in elevation of a portion of the illustrative embodiment shown in FIG. 8.

FIG. 1 illustrates a point-contact semiconductor diode rectifier of the type employed in radar microwave receiver apparatus to rectify returned radar pulses. Any of the high burnout semiconductor diodes having high rectification characteristics are preferred and are commercially available, such as the 1N82 or 1N830. The rectifying junction is formed by whisker element **2** contacting the semiconductor element **4** respectively connected to leads **6** and **8**. Silicon is preferred over germanium for element **4** because of its ability to operate at higher temperatures and thereby handle higher powers. Envelope **10** houses the rectifying elements and may be of a hermetically sealed dielectric material or combination metal and ceramic composition. The inherent characteristic of such diode rectifiers is that the microwave energy is intercepted and rectified in a unidirectional manner and the line **11** indicate pictorially the rays of the beamed electromagnetic microwave energy in a plane normal to the envelope. In FIG. 2 a full-wave bridge connected diode network is illustrated with the forward direction of the rectified DC electric current indicated by the direction of the arrow symbols. The network shown consists of half-wave dipoles **20** and **22** each terminated with a diode rectifier element **24** to **27** in an arm of the bridge connected network. The dipole elements **20** and **22** are of the half-wave configuration and may be spaced apart from each other a one-half wavelength at the frequency of the beamed electromagnetic energy.

Referring now to FIG. 3, an array of bridge connected diode networks each with the half-wave dipoles are shown connected in series. Each network is referred to by the numeral **30** and is similar in the bridge connections to the single element network shown in FIG. 2. The DC output of the collective rectified energy is coupled by means of terminals **32** and **33**. In FIG. 4, a similar number of individual bridge connected diode-dipole networks are shown connected in a parallel array. Each network is indicated by the numeral **40**, and the output terminals are indicated as **41** and **42**.

Any number of diode-dipole networks may be provided and in FIG. 5 such a multi-element array is illustrated by mounting on a flexible material **50** which may be rolled or folded into any desired package or enclosed within a capsule to be launched and released at a predetermined point in space. Any flexible material which is pervious to electromagnetic energy is preferred. The total power desired would be the determining factor in a number of individual diode-dipole elements required. In this embodiment, the bridge connected networks **51** are connected in parallel to the output load indicated by terminals **52** and **53**, and representative measurements of electrical characteristics have shown that approximately five watts of DC electrical energy is realizable for each square foot of area of the combined antenna-rectifier. While the dipole elements **54** have been indicated in a particular array, it is within the scope of the invention to stagger the placement of such dipoles to increase the overall efficiency of the antenna-rectifier.

To further increase the DC powder output, the full-wave bridge connected networks are preferably arranged with a plurality of diodes in series in each arm of the bridge. An illustrative schematic circuit diagram of such a configuration is shown in FIG. 6 wherein seven diodes **60** are shown in each arm of the bridge circuit and are connected in series for a total of twenty-eight diodes in each bridge network. The dipole members will then be the substantially U-shaped end portions **61** at the ends of each brace of seven diodes. In the illustration three such twenty-eight diode bridge networks are shown connected in parallel to terminals **62** and **63**. This closer spacing and compact arrangement has been shown to be a source of improved power output and is capable of a high degree of reliability through the redundant nature of the parallel series connections within each bridge network. If one of the diode rectifiers fails to function the over-all voltage drop across this element would be divided among the six remaining diode rectifiers. If any of the connecting wires between the diode elements should break, the adjacent arms of the other bridge assemblies would take the additional load due to the close proximity of the respective arms to each other. In addition, it is possible to have a number of open connections or inoperative diodes dispersed throughout the array without any serious impairment in performance.

In relation to the array concept to be hereinafter described it may be stated that within a six inch square area ten such individual bridge networks each containing twenty-eight diode rectifiers for a total of 280 diode rectifiers may be deployed in such a manner as to provide

maximum exposed area for each diode as well as the connecting leads. Such an arrangement will be hereinafter referred to as a "module" and a DC output in excess of fourteen watts has been measured for such a module. Any number of such modules could be connected provided for a desired power yield and this module concept readily lends itself to use in certain aerospace applications now to be described.

In FIG. 7 a propelled type of space vehicle **70** is shown wholly supported by means of the transfer and rectification of continuous wave electromagnetic energy via a microwave beam **72**. The source of the microwave energy which may be of the Amplitron type device as described in the aforementioned issued Patent No. 2,933,723 is indicated as **74**. This energy is fed by waveguide means **76** to a transmitting horn **78** to illuminate an ellipsoidal beam forming focusing antenna **80** for the transmission of the microwave beam **72**. It will be appreciated by those skilled in the art that the representations of the microwave generation and transmitting antenna means are pictorial representations to illustrate the usage of the invention in diagrammatic form and the present invention is not limited to any particular source of microwave energy or transmitting antenna assembly. It may be stated the reflector of the antenna assembly is considerably larger than most of the reflectors of the prior art in order to focus a large amount of the microwave power at high altitudes for use in the transfer of energy to space vehicles. Such antenna assemblies may be partially supported in a large hollowed area on the earth's surface or other convenient means of support.

The space vehicle or helicopter **70** can be described as a main body member supporting antenna-rectifier means **82** including a large number of the so-called modules connected together and rigidly supported in a planar parallel array. A motor **84** is supported by the combined body member and the receiving antenna-rectifier means and actuates the rotor **86** of conventional design employed in such self-propelled hovering vehicles. The disclosed vehicle provides for the illumination of the planar array of the semiconductor diode dipole elements by the microwave beam and the direct conversion of the microwave power transmitted by the beam into usable electrical energy for the self-propulsion of the device without any local fuel supply being required.

FIGS. 8 and 9 illustrate a space vehicle **82** comprising a plurality of the combined receiving antenna-rectifier module means for interception and rectification of the electromagnetic microwave energy beam emanating from an earth or mother planet source. A planar array of the antenna-rectifier modules is mechanically supported by means of structural members **90** of any lightweight wood or metal. Insulators **91** positioned coextensive with the members **90** support the diode rectifier array and avoid interference with the receiving and electrical performance characteristics by the structural support members. Carrying forward the module concept of 280 diode rectifiers to provide an approximate power output of 14 watts, it was noted that any number of such modules may be coupled together since the individual module outputs are relatively insensitive to a wide range of load resistances connected to the common output terminals. To achieve the desired electrical output of approximately 120 volts and 250 watts of power, subgroups of four modules each were assembled and parallel connected with an approximate 30 volts available for each subgroup. Four such subgroups were series-connected to result in a total of 4,480 diode rectifiers or 16 modules assembled in a two foot square self-supporting planar parallel array structure. The individual diode rectifiers connected in each arm of the bridge network are indicated by the numeral **92**. An exemplary module configuration would extend within the area delineated by the dotted lines and reference letter A on one side and similar dotted lines and reference letter B on the other side.

A motor **94** is connected to the DC side of the overall array and may be additionally supported by tubular member **95**. A shaft and propulsion means consisting of rotor blades **97** provide for the upward lift of the overall vehicle for the self-supporting of same in space applications. Additional structural support such as interlaced rigging **96** of a high tensile strength material such as nylon or steel wire, as well as bracing member **98**, may be employed for strengthening of the body means to withstand the vibrational forces and downwash from the propulsion means.

In accordance with the well known technology of microwave transmission the combined array of diode rectifiers and propulsion means presents a specific load impedance which must be suitably matched to the transmitted microwave energy beam to result in maximum efficiency. In aerospace applications a mismatch of approximately ten to one may be evident. Matching of the load impedance to a value of approximately 377 ohms as the free space value will be provided by a plurality of coplanar parallel metallic rod members **99** disposed in a grating array in front of the diode rectifiers a predetermined distance. Rod members **99** are linearly disposed and extend in a similar direction as the assembled diode rectifiers. A selected frontal spacing of one-quarter of the wavelength of the microwave frequency being transmitted has been experimentally determined to be suitable for impedance matching purposes. An approximate spacing of two inches between the respective members was preferred for a selected microwave frequency of 2,450 megacycles. Each of the members **90** are provided with lateral sections **100** to support the elongated bar members **101** which in turn maintain the rod members **99** in the desired position. A tubular member **102** of a lightweight metal may also be provided to combine with the motor support member **95** for structural support.

The combined antenna-rectifier array provides a source of electrical energy to render any space vehicle self-supporting. The diode rectifier elements when assembled in the antenna array have been found to be nondirectional with respect to interception of the beamed microwave energy. This represents a large step forward in the utilization of high power microwave energy over the prior art horn-type receiving antennas which must be accurately focused and pointed in a particular direction for the reception of any energy. The connections between the respective members of the diode rectifier array and deployment in the parallel configuration serves to provide maximum exposed area. Such connections and in particular the end loop portions adjacent the terminus of each arm of the bridge networks serves as an efficient dipole for the interception of the microwave energy.

Although it is not intended as a full explanation of the high degree of efficiency attained with the disclosed antenna-rectifier array, it is believed that the whisker elements within the semiconductor diodes themselves are a contributing factor and may function as additional dipole elements. The disclosed embodiment functioned efficiently when illuminated by microwave energy generating a vertically polarized beam. Hence, an efficient and light weight energy conversion apparatus is disclosed which may be self-supporting without the requirement of a large local fuel supply payload.

It may be within the purview of the invention to use the available rectified electrical energy for performing many functions in addition to the actuation of the propulsion means. Hence, communications' payloads may be maintained at predetermined positions in space in a hovering attitude utilizing a portion of the electrical energy available. Relay signals to other such vehicles or return signals to ground stations would then be within the realm of possibility. Such available energy may also be employed for servomechanisms, stabilizing and countertorque systems for the navigation of such vehicles.

The electrical efficiencies realized with the combined

receiving antenna and rectifier means have also provided certain weight advantages over other energy converters in aerospace applications. Examples of such converters would be heat exchangers or solar cells. In comparison to the present invention where five to eight pounds per kilowatt of energy realized is a normal characteristic, other energy conversion means weigh in the vicinity of 150 pounds per kilowatt of realizable energy. The inherent advantages of the present invention are therefore apparent. While the technology in the diode rectifier art is being continually advanced, new diode power rectifiers as well as integrated circuit techniques are readily available to future configurations of the present invention. The so-called Schottky barrier diodes could be employed to produce combined antenna-rectifier means weighing even less than two pounds per kilowatt of available energy.

Although the foregoing detailed description has referred to DC power rectification it will be evident that with suitable circuit components low frequency AC energy may also be made available. In addition, other propulsion means may be readily substituted using electrical energy. The embodiments disclosed herein are illustrative only and other modifications or alterations will be apparent to those skilled in the art which do not depart from the scope of the broadest aspects of the present invention as defined in the appended claims.

What is claimed is:

1. A space vehicle comprising:

body means;

said body means including spaced structural support members;

combined antenna and DC electrical energy rectification means for the interception and rectification of incident high frequency electromagnetic microwave energy carried by said support members in a planar parallel array;

said rectification means comprising a plurality of four arm full-wave bridge connected rectifier circuit networks each having a plurality of unidirectional semiconductors in each arm;

said networks being electrically interconnected to common output terminals;

electrically operable propulsion means comprising a motor and rotor members carried by said body means and connected to said terminals for the utilization of said rectified DC energy; and

means for matching the load impedance of said combined antenna and electrical energy rectification means to the incident microwave energy.

2. A space vehicle according to claim 1 wherein said load impedance matching means are arranged in a coplanar array coextensive with said antenna and energy rectification means array, and spaced therefrom a distance of approximately one-quarter of a wavelength at the frequency of the microwave energy.

3. A space vehicle according to claim 2 wherein said load impedance matching means comprise a plurality of parallel disposed elongated metallic members.

References Cited

UNITED STATES PATENTS

1,217,149	2/1917	Caldwell	321—27 X
2,165,055	7/1939	Kafka	321—27
2,444,458	7/1948	Master	321—8
2,927,321	3/1960	Harris	343—6.8 X
3,098,971	7/1963	Richardson	325—592 X
3,174,705	3/1965	Schiff et al.	244—1

RODNEY D. BENNETT, *Primary Examiner.*

MALCOMB F. HUBLER, *Assistant Examiner.*

U.S. Cl. X.R.

307—151; 318—16; 321—27; 325—494; 343—100

AUTODESK. Make anything. (http://www.autodesk.com)

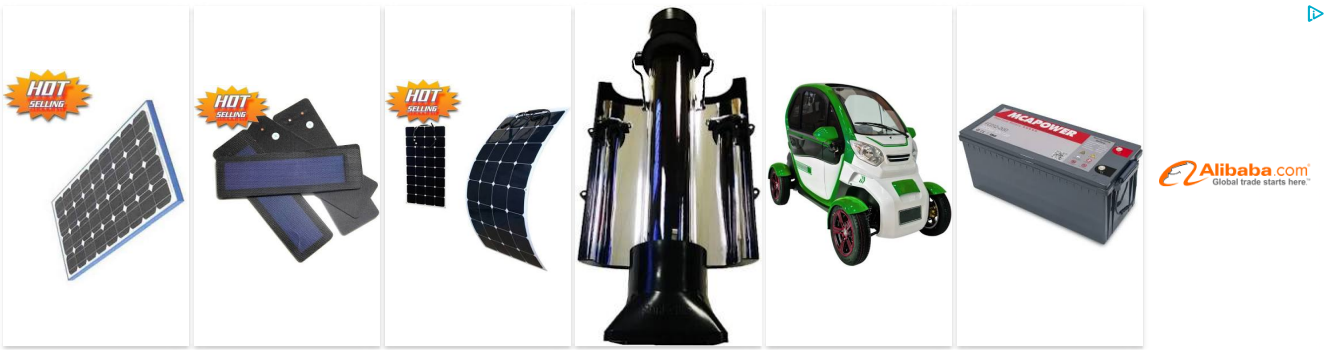

advertisement

Microwave Energy Detector & Wireless Energy Harvesting

By tbudka (/member/tbudka/) in Technology (/technology/) > Electronics (/technology/electronics/) 20,966 282 19 Featured

PUBLICDOMAIN Download Favorite

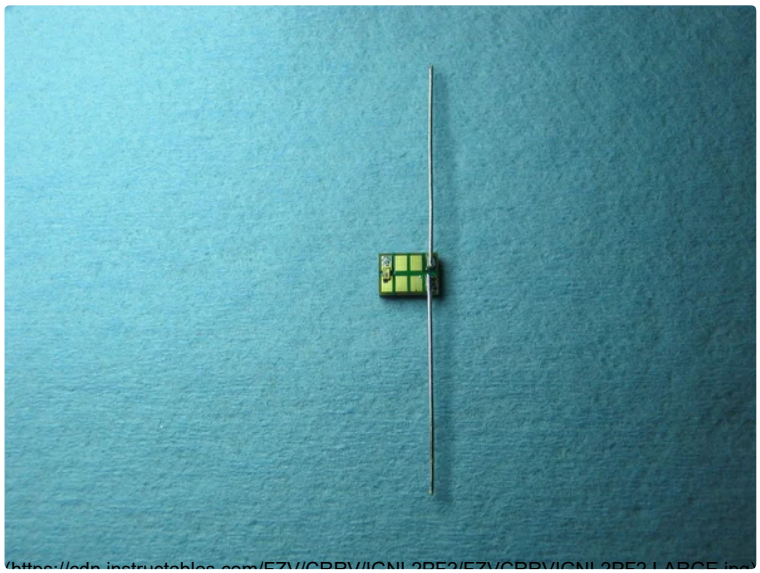

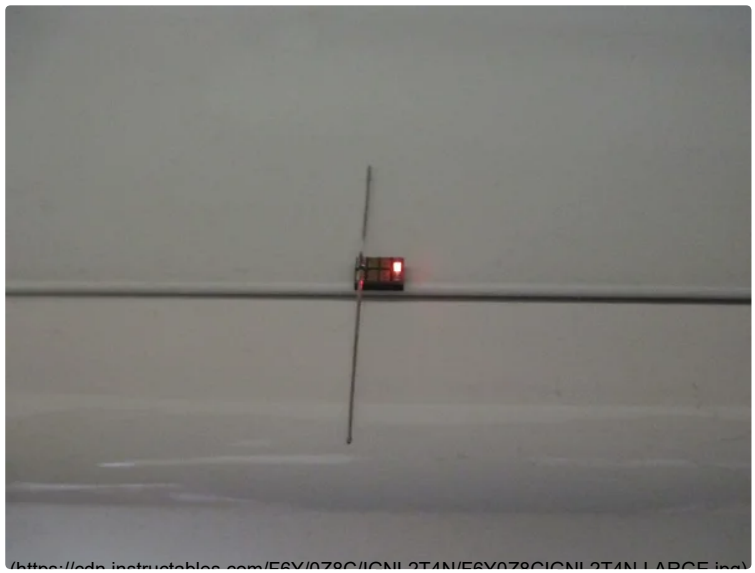

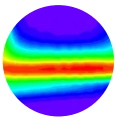

(/member/tbudka/)
By **tbudka (/member/tbudka/)**
RF Diagnostics, LLC
(http://www.rfdiagnostics.com)

Follow

More by the author:

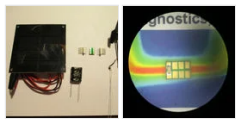

About: Microwave Engineer, Consultant, Design Contractor, Electronics Enthusiast, Power Amplifier Designer, Filter Design, Electromagnetic Simulations, Orcad PCB Editor Design More About tbudka » (/member/tbudka/)

Description

This article describes how to build a wireless harvesting device that will capture stray 2.5GHz energy from a microwave oven and convert it into a useable voltage that will light up a red light emitting diode (LED). Hobbyists can modify the antenna with longer wires and try to pick up other signals such as AM/FM radio, mobile phone signals and other

wireless energy. The LED's light will be visible when the module picks up 1 milliwatt-10 milliwatts of microwave power. Usually the most power leaks out of the door seam of a microwave oven.

What you need:

1 RFD102A (RF-DC Converter) module available at

http://www.rfdiagnostics.com/product/rfd102a/

1 ¼ watt leaded resistor (any value) or two wires that are 1 1/8 inches long (28.6mm)

1 Kingbright Surface mount red LED (part number: APT1608EC) available at Digikey/Mouser/Newark

Fine tipped soldering iron

Solder paste or Fine Solder

Add Tip Ask Question Comment Download

advertisement

Step 1: Assembly Instructions

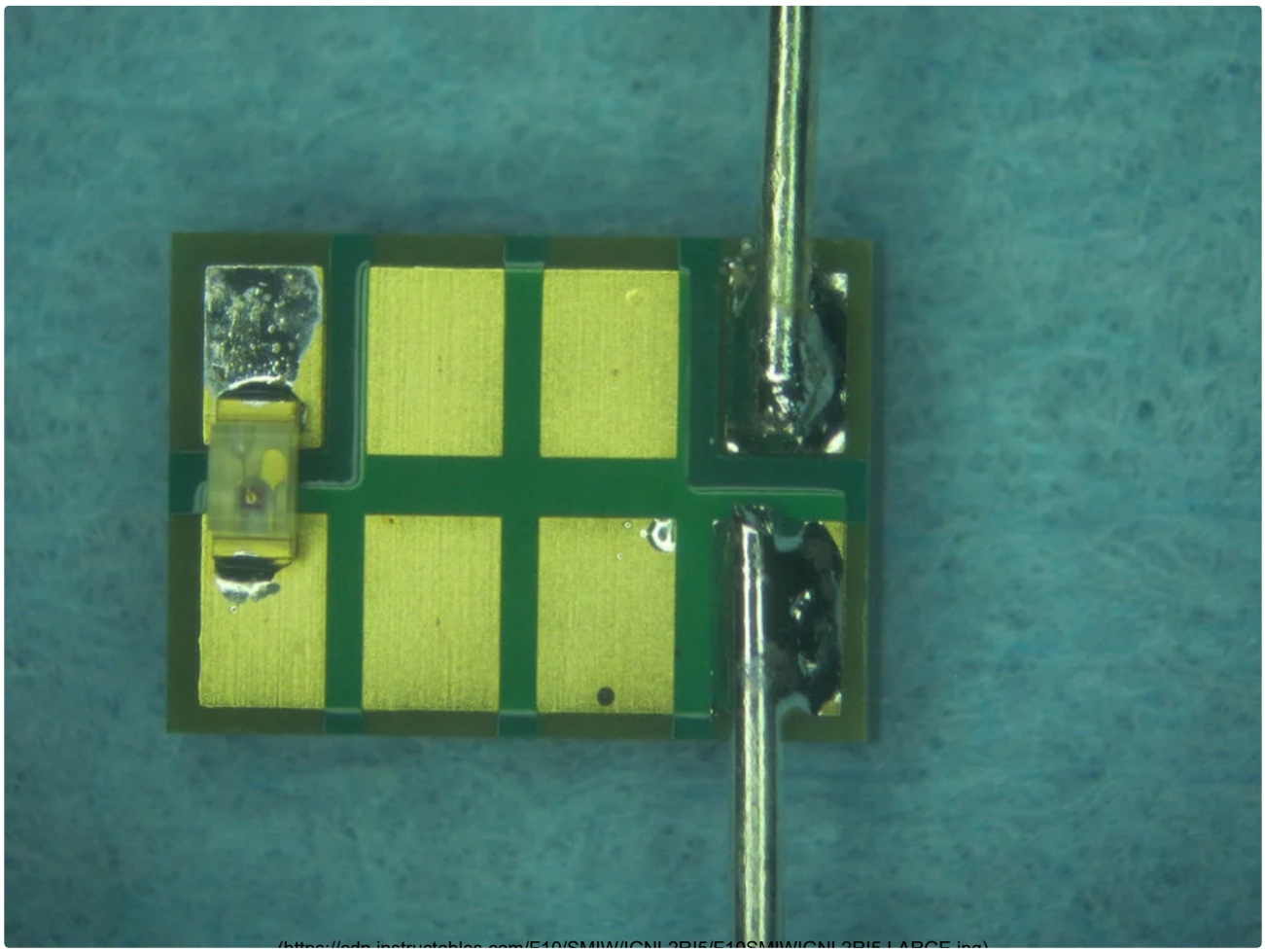

(https://cdn.instructables.com/F10/SMIW/IGNL2RI5/F10SMIWIGNL2RI5.LARGE.jpg)

Cut the resistor wires off next to the resistor. These are just the right size at 1 1/8” long for a 2.5GHz dipole. Throw away the resistor and keep the wires.

Put solder paste on the module at pins 1 & 8 and at pins 4 and 5.Place the wires on pins 4 and 5 and solder carefully using tweezers to hold the wires (it will burn you otherwise). Solder at the lowest soldering temperature possible to avoid damaging the module. If the iron is too hot then you may damage the internal connections inside the module. Use a minimum of time for soldering (<10secs). The wires work as a dipole antenna to collect the 2.5GHz energy into the RF (Radio Frequency) Input of the module.

Place the LED with the anode (positive side) onto pin 1 and the cathode (negative side) on pin 8 and solder carefully. For those not familiar with LEDs, the triangle symbol of the diode should point to the ground pin of the module (pin 8). Your final microwave harvester should look like figure 2

Add Tip Ask Question Comment Download

Step 2: Test on Your Microwave Oven

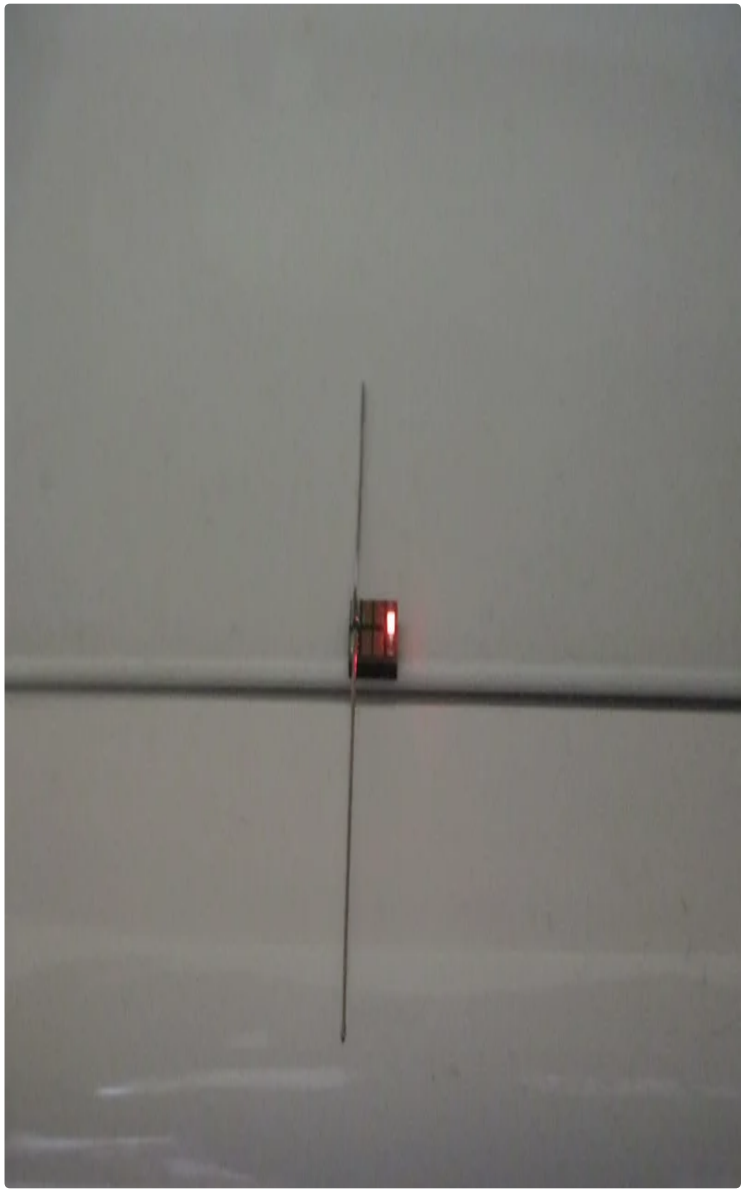

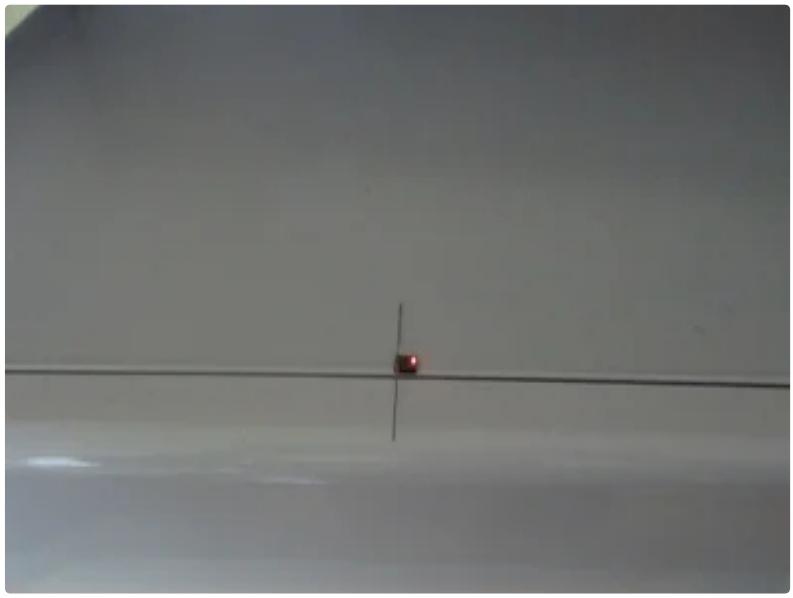

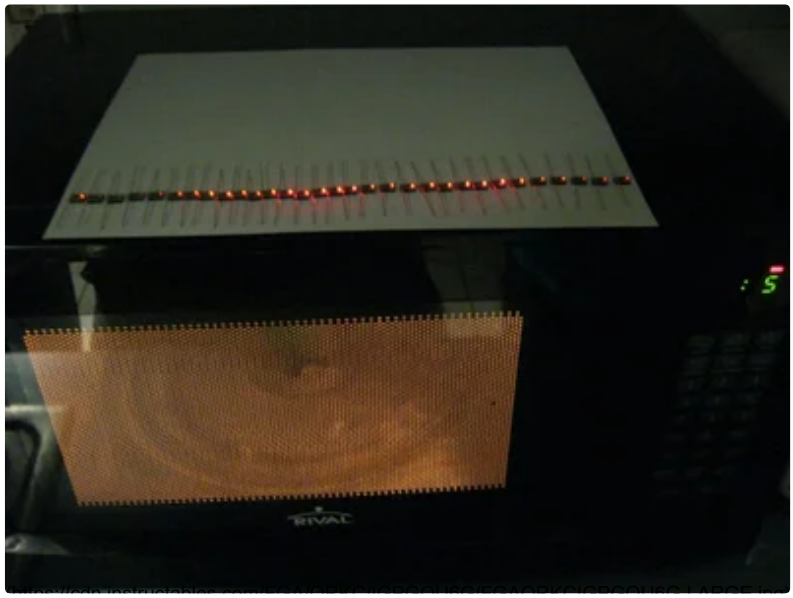

Now put some water in a mug and put it in the microwave oven and cook on high for 2 minutes. While the microwave is running, hold the module and move the module antenna around to find a hot spot on the microwave. Tape the module on the ground wire to the microwave to keep it in place. If all is well then you will see the LED light up and dim as the electric fields change while the mug rotates in the microwave oven. The above figures show the microwave energy harvester in action. Experiment with antenna shapes and sizes. If you go too big or too small with the antenna then less energy will be collected. You can also put the assembled module near an 802.11b/g/n wireless LAN router and watch it flicker as the router transmits and receives 2.4-2.5GHz energy. Enjoy!

Other Project Ideas:

- Harvest AM/FM Radio Signals

FAQ

- What is the maximum current this module can provide? Ans: Typical current is ~0.5-5mA. Max current is 18mA.

- What is the efficiency of converting RF energy to a DC voltage? Ans: If the input power to the module is around 10-50mW then the RFD102A can achieve >50% efficiency if the resistance seen by the DC output is ~10kOhm.

- I don't have a soldering iron and am all thumbs. Where can I get a detector like this already built up? Ans. The RFD102A-DET is available http://www.rfdiagnostics.com/product/microwave-oven-window-energy-harvesting-kit/

- What is the maximum output voltage this module can produce? Ans: With 0.5W input power the module can produce up to 37V at 915MHz.

- Can I charge my mobile phone with this? Ans: It is possible with 4 RFD102A modules and antennas to produce enough current to charge a mobile phone. The hard part is the wireless source would need to be so powerful that you wouldn't want to be in the same room during charging. You may hurt your eyes by cooking them.

Add Tip Ask Question Comment Download

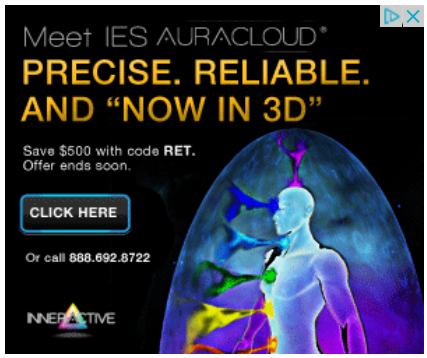

advertisement
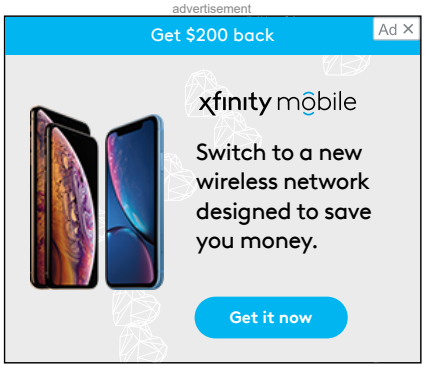

advertisement

Share

Did you make this project? Share it with us!

I Made It!

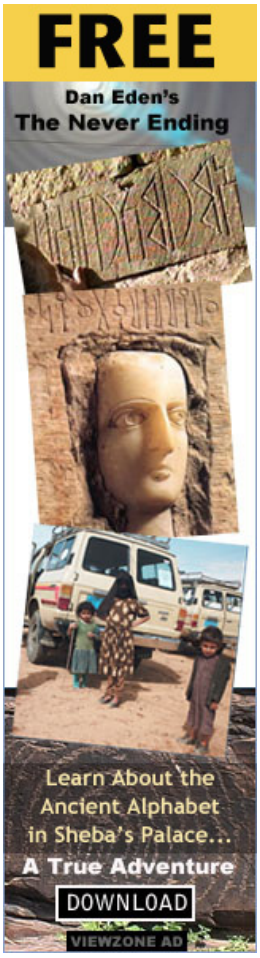

An Invention of Free Energy : 100 Years Ago!

Roy Meyers' Absorber -- "Free Energy"

by Robert A. Nelson

As planet Earth suffers under the relentless onslaught of ever increasing human consumption, we are becoming increasingly desperate for sources of energy with which to power our pretensions of civilization. There is not enough oil or coal available to sustain the present rate of growth, and the apparently inevitable result will be endless wars over dwindling resources. There are, however, numerous marvelous alternative energy technologies that have been suppressed by the powers that be.

We could easily be enjoying the benefits of clean, cheap (and even free) energy in various forms, were it not for the insatiable greed of our corporate masters, who rule the world without regard for humanity or the environment.

There are dozens of stories that can be told of inventors who presented wonderful liberating technologies, only to be ruined for their efforts. Many people have heard of various types of so-called "free energy" or "over-unity" generators that tap what scientists call Zero Point Energy (and other names, such as the aether) without need for fuel and without producing any pollution. Detractors like to label such devices as impossible "perpetual motion machines", even though some of them are solid state electronic systems that have been built and shown to work. Readers who are interested in such possibilities need search no farther than the impeccable history of Thomas Henry Moray, which is widely published on the internet (e.g., http://www.rexresearch.com/moray.moray.htm).

If that is too much bother for you, then just continue reading here. This is the little-known story of **Roy Jerome Meyers**, who invented an "Absorber" that produced limitless electrical power from the terrestrial magnetic field.

Almost 100 years ago, Meyers served a 3-1/2 year sentence in the Arizona state prison at Florence. Before his incarceration, he had already invented an improved trolley wheel head that prevented it from jumping off the wire. While he was imprisoned, he was inspired to invent a device that would draw electricity from the atmosphere. He conferred with Superintendent Sims and Parole Clerk Sanders, and convinced them to give him the opportunity to develop his idea in a wooden shed on the grounds of the penitentiary. Within a few weeks, using easily available materials (chrome steel magnets and iron wire), he constructed the first crude working model, and used it to spark the gas engines of the prison's pump house. His second model developed 8 volts.

Miss Kate Barnard, who was State Commissioner of Charities and Corrections of Oklahoma, was a guest of Superintendent Sims at the time, and she saw the machine in operation. Miss Barnard was so impressed by it and by Meyers' essential integrity (despite the lapse that had gotten him imprisoned) that she told the story of Roy Meyers when later she appeared before the Arizona legislature to address them concerning prison reform. The legislature and Governor Hunt were convinced to grant Meyers an unsupervised leave of absence for 30 days to travel to Washington DC in order to apply for a patent.

Meyers gave this account of his trip:

> **"When I arrived in Washington and laid my plans before the patent office experts, they merely smiled and told me that I would have to build a model and demonstrate my claims --- that it seemed strange that I, unknown as I am in the electrical world, should have**

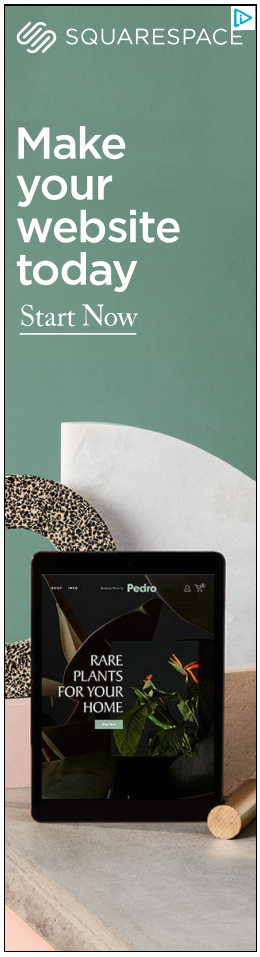

Are you interested in 70-448? Get our self paced MB5-858 and 1Y0-A15 packages to pass your exam 70-667 exam without any difficulty in cisco 642-647 guides.

> **accomplished the things for which Edison, Tesla and other experts have been striving for years.**
>
> **"They could not grasp the meaning of my drawings nor the explanation I tried to make to them. There was little time to spare, as I had only 20 days left of my leave, but I set to work in a few days was able to take a crude model around to the patent office to make a demonstration.**
>
> **"Arriving at the patent office I telephoned to a friend who had been so kind as to introduce me and aid me in reaching the proper officials. The absorber was hoisted on two short poles and made to work. While they were as yet unable to understand the principles involved and hardly willing to believe their eyes, they were forced to admit that I had something new and different, and they told me that there would be no further objection; that I might file my application without further delay.**
>
> **"I hope to construct my first large machine right here in Phoenix. I feel grateful; to Governor Hunt and others for what they have done for me and to the help they have given in securing protection I might not otherwise have had, and I am desirous of demonstrating this gratitude. I am going back to Florence today to resume the serving of my sentence, which will expire in 10 months. Then, here in Phoenix, I will begin the work of making my machines."** (*Technology World Magazine,* 1912)

Meyers planned to build a 200 foot tower upon which to place an "Absorber" (as he called it) with sufficient power to light the city of Phoenix. According to him, it comprised "a series of magnetized steel plates set in a circle and this mechanism attracts the electricity from the atmosphere. This is carried by wires to a transformer in the engine house below and thence is applied to produce either power or light after the usual manner.

> "The flow of electricity is constant. When it emerges into the transformer it is in the form of a direct current. It will absorb the electricity day and night and will work whenever the wireless will work. I can put up a plant to supply such a building as the Adams Hotel for about $1500, and one of the principal items of the expense is the cost of the towers, the wires, the magnetizing of one set of plates, which is part of the secret of the treatment which makes it respond to the accumulations of the atmosphere.
>
> "For use in the case of an electrical storm I have made what I call a modified form of circuit breaker, such as is commonly used as a lightning arrester on telegraph lines. In case of a storm the accumulator would suddenly become overcharged, possibly, and as the electricity would not of itself flow back into the air, the result might be disastrous. So I send it down into the ground, whenever the voltage rises above a certain amount."

And the story ends there. It is not known what became of Roy J. Meyers. No "Absorber" was built to power Phoenix, and it appears that a US Patent was not granted. This writer first learned of Meyers' Absorber in 1986, and repeatedly searched for it in the US Patent Gazette, to no avail. It was not until 2006 that Meyers' British patent for "Improvements in and Relating to Apparatus for Producing Electricity" was located after several periodic advanced searches of the European Patent Office online (http://ep.espacenet.com). The patent has long since expired and entered the public domain. It is reprinted below for your edification.

It should be obvious from this brief but indisputable account, and the description given in the patent, that "free energy" is a reality. Anyone who thinks otherwise is merely ignorant or in denial.

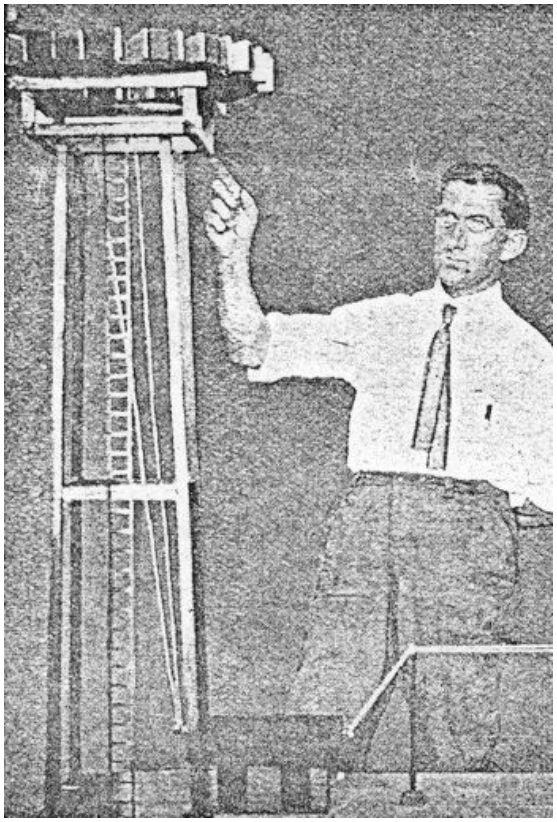

Roy J. Meyers & the "Absorber"

References

(1) Charlton Lawrence Edholm: "Picks Power from the Air"; *Technology World Magazine*, p. 279-281 (1912)*Electronic World* (November 1912)

(2) Roy Jerome Meyers: British Patent # 1098 (January 14, 1913); Improvements in and Relating to Apparatus for Producing Electricity

British Patent # 1098

(January 14, 1913)

Improvements in and Relating to Apparatus for Producing Electricity

Roy Jerome Meyers

This invention relates to improvements in apparatus for the production of electrical currents, and the primary object in view is the production of a commercially serviceable electrical current without the employment of mechanical or chemical action. To this end the invention comprises means for producing what I believe to be dynamic electricity from the earth and its ambient elements.

I am, of course aware that it has been proposed to obtain static charges from upper strata of the atmosphere, but such charges are recognized as of widely variant potential and have thus far proved of no practical commercial value, and the present invention is distinguished from all such apparatus as has heretofore been employed for attracting static charges by the fact that this improved apparatus is not designed or employed to produce or generate irregular, fluctuating or other electrical charges which lack constancy, but on the other hand I have by actual test been able to produce from a very small apparatus at comparatively low elevation, say about 50 or 60 feet above the earth's surface, a substantially constant current at a commercially usable voltage and amperage. This current I ascertained by repeated tests is capable of being readily increased by additions of the unit elements in the apparatus hereinafter set forth, and I am convinced from the constancy of the current obtained and its comparatively low potential that the current is dynamic and not static, although, of course, it is not impossible that certain static discharges occur and, in fact, I have found occasion to provide against the damage which might result from such discharge by the provision of lightning arresters and cut-out apparatus which assist in rendering the obtained current stable by eliminating sudden fluctuations which sometimes occur during conditions of high humidity from what I consider static discharges. The nature of my invention is obviously such that I have been unable to establish authoritatively all of the principles involved, and some of the theories herein expressed may possibly prove erroneous, but I do know and am able to demonstrate that the apparatus which I have discovered does produce, generate, or otherwise acquire a

difference of potential representing a current amperage above stated, or varied therefrom at the will of the operator according to the uses which the current is to be subjected.

The invention comprises generically means for producing electrical currents of serviceable potential substantially without the employment of mechanical or chemical action, and in this connection I have been able to observe no chemical action whatever on the parts utilized although deterioration may possibly occur in some of the parts, but so far as I am able to determine such deterioration does not add to the current supply but is merely incidental to the effect of climatic action.

The invention more specifically comprises the employment of a magnet or magnets and a co-operating element, such as zinc disposed adjacent to the magnet or magnets and connected in such manner and arranged relative to the earth so as to produce current, my observation being that current is produced only when such magnets have their poles facing substantially to the north and south and the zincs are disposed substantially along the magnets.

The invention also comprehends other details of construction, combinations and arrangements of parts as will hereinafter be fully set forth and claimed.

In the accompanying drawings:

Figure 1 is a top plan view of an apparatus embodying the features of the present invention, the arrow accompanying the figure indicating substantially the geographical north, parts of the figure being diagrammatic for condensing the showing.

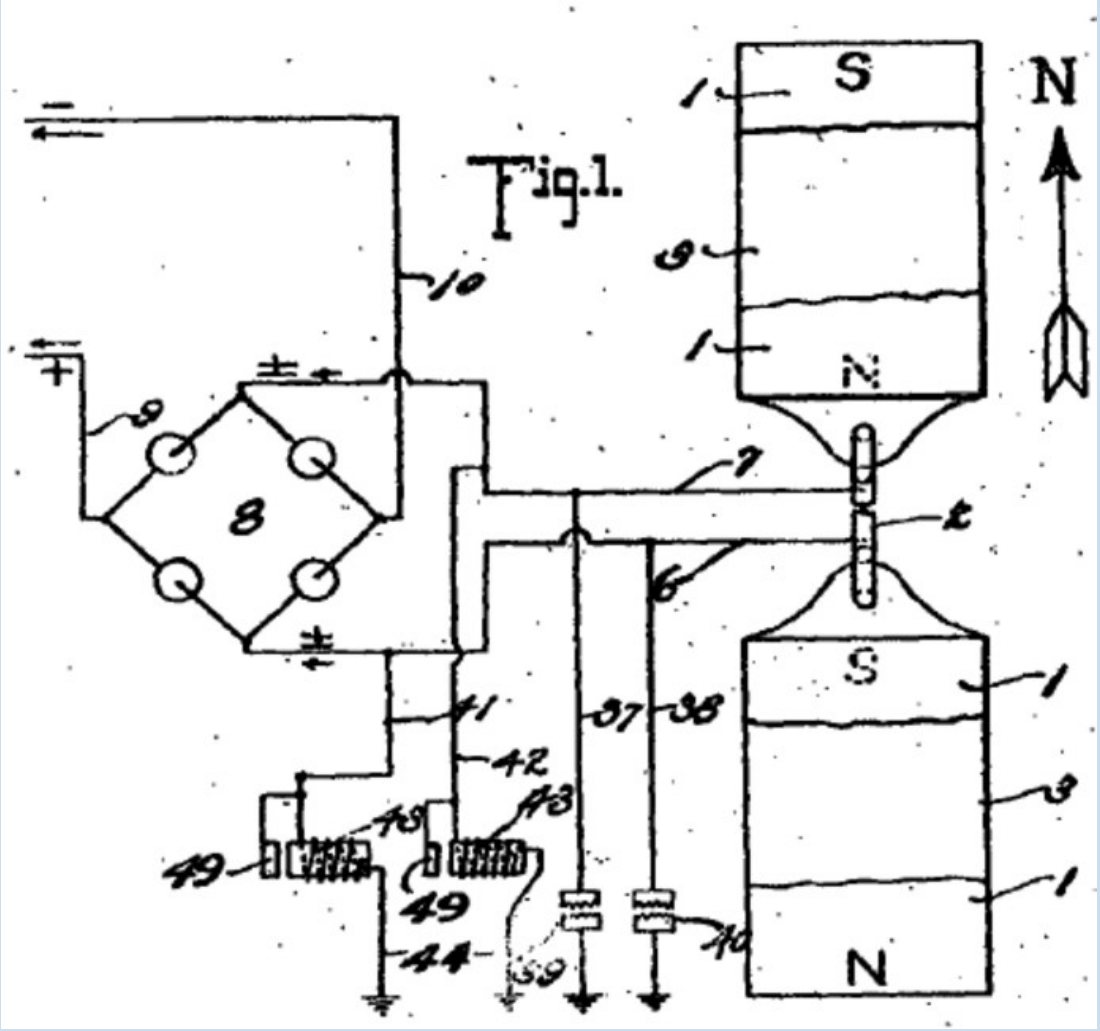

Figure 2 is a view is side elevation of the parts seen in plan in Figure 1.

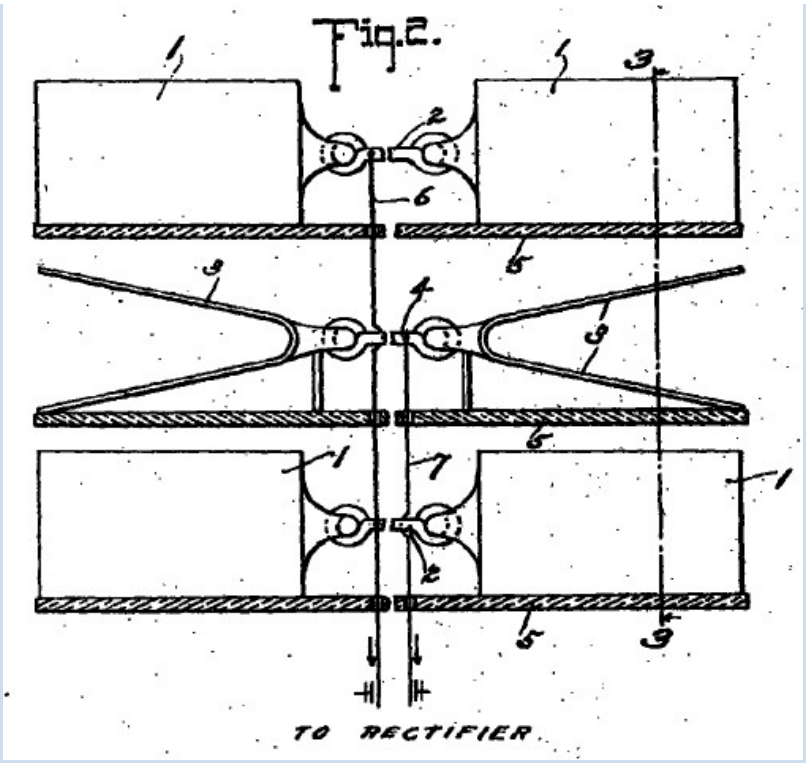

Figure 3 is a vertical section taken on the plane indicated by the line 3-3 of Figure 2 and looking in the direction indicated by the arrow.

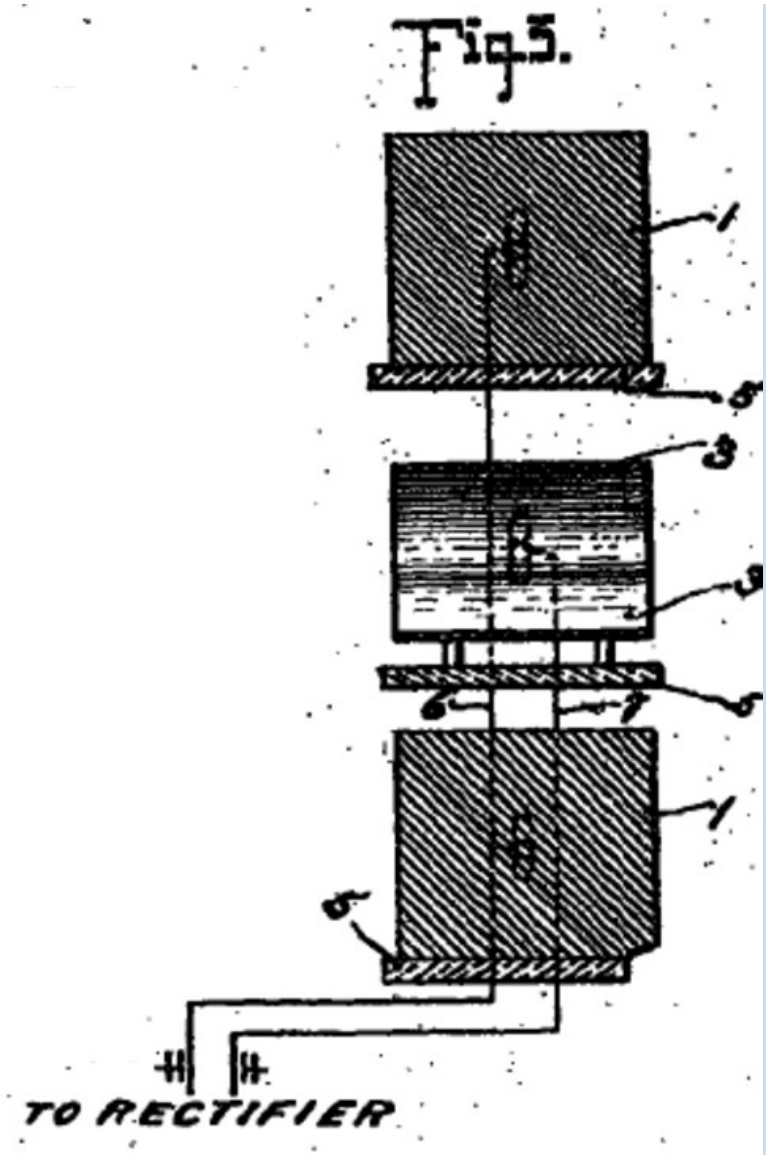

Figure 4 is a detail view partly in elevation and partly in section showing the detail connections of the converter and intensifier.

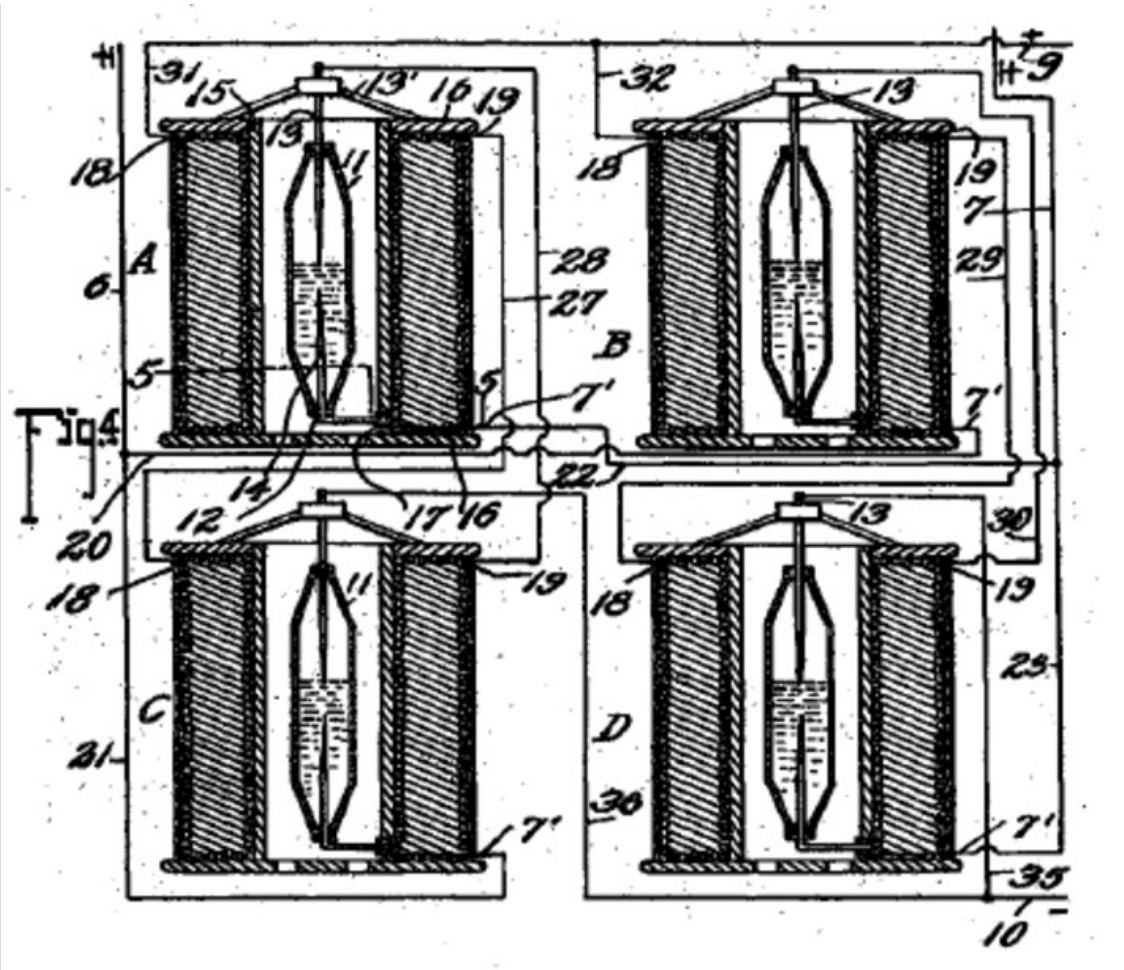

Figure 5 is a transverse section taken on the planes indicated by line 5-5 of Figure 4 and looking downwardly.

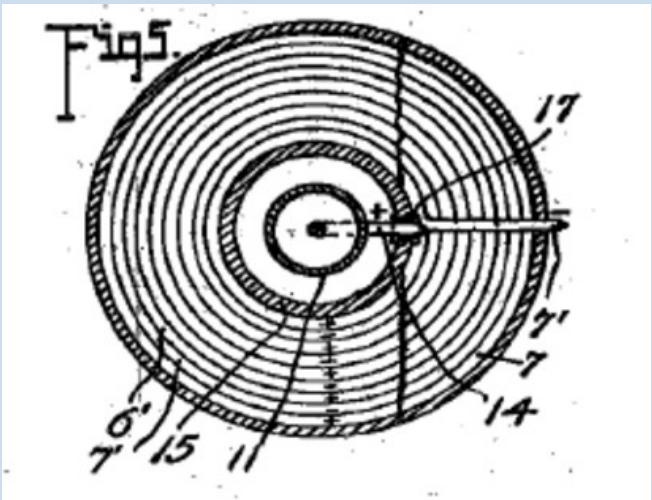

Figure 6 is an enlarged detail fragmentary section illustrating the parts at the juncture of the conductors and one of the intensifiers.

Figure 7 is an enlarged detail view partly in elevation and partly in section of one of the automatic cut-outs and

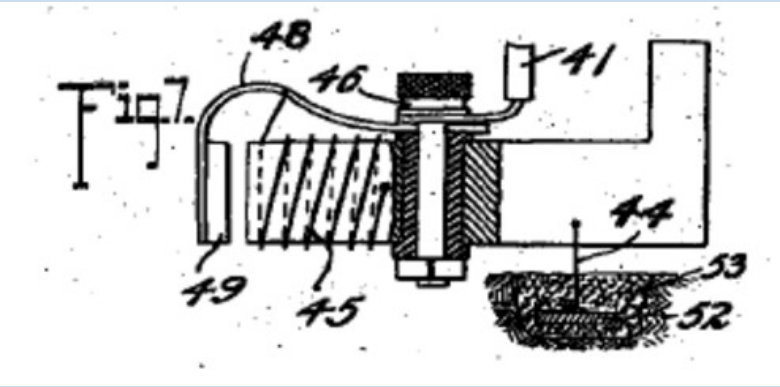

Figure 8 is a diagrammatic view of one of the simplest forms of embodiment of the invention.

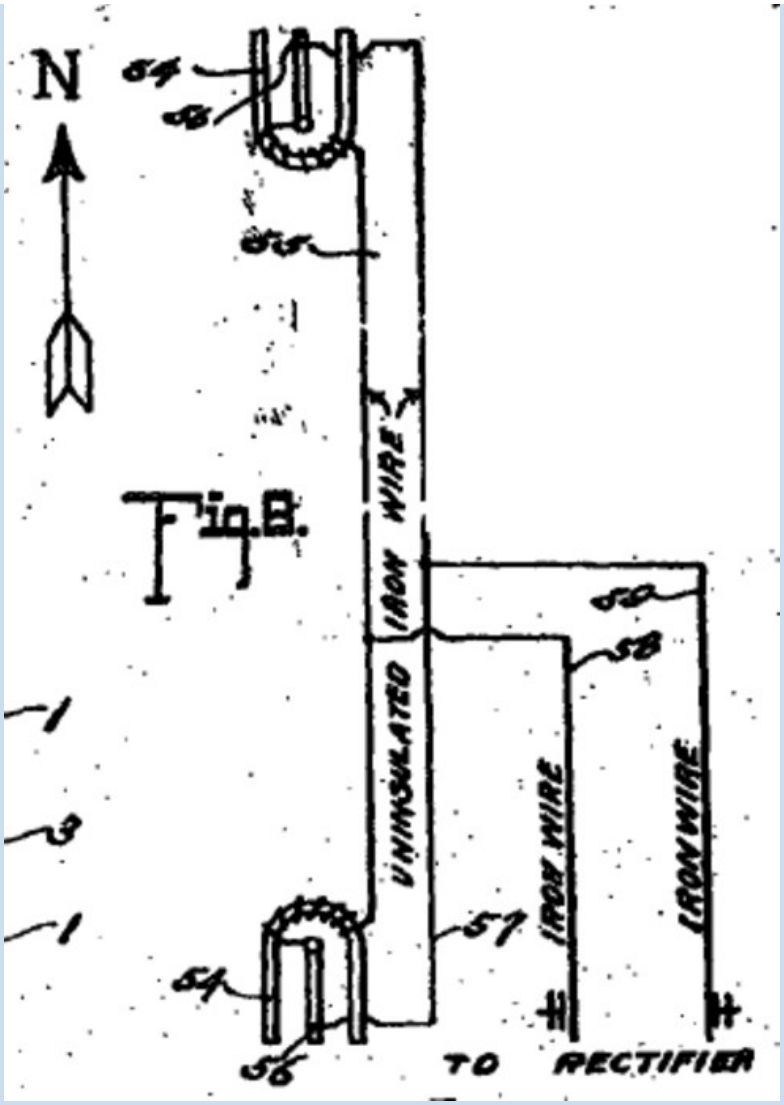

Referring to the drawing by numerals, 1,1 indicates magnets connected by a magnetic substance 2, preferably an iron wire. The magnets 1 are arranged in pairs, one pair being spaced beneath the other, and interposed between the magnets are zinc plates 3,3 connected by an iron wire conductor 4. Suitable insulating supports 5 are arranged for sustaining the respective magnets 1 and plates 3,3. Each plate 3 is preferably bent substantially into V form, as clearly seen in Figure 1, and the V1 of one of the plates opens or faces toward the north and the V of the other plate to the South. I have determined by experimentation that it is essential that the plates 3 be disposed substantially north and south with their flat faces approximately parallel to the adjacent faces of the co-operating magnets, although by experience I have not discovered any material difference in the current obtained when the plates are disposed slightly to one side of north and south, as for instance when the plates are disposed slightly to one side of north and south, as for instance when disposed in the line of the magnetic polarity of the earth. The same is true with respect to the magnets 1, the said magnets being disposed substantially north and south for operative purposes, although I find that it is immaterial whether the north pole of one of the magnets is disposed to the north and the south pole to the south, or vice versa, and it is my conviction from experience that it is essential to have the magnets of each pair connected by magnetic material so that the magnets substantially become one with a pole exposed to the north and a pole exposed to the north. In Figure 1, I have indicated in full lines by the letters 8 and N the respective polarities of the magnets 1, and have indicated in dotted lines the other pole of those magnets when the connection 2 is severed. I have found that the magnets and zinc plates operate to produce, whether by collection or generation I am not certain, electrical currents when disposed substantially north and south, but when disposed substantially east and west no such currents are produced. I also find that the question of elevation is by no means vital, but it is true that more efficient results are obtained by placing the zincs and magnets on elevated supports. I furthermore find from tests that it is possible to obtain currents from the apparatus with the zincs and magnets disposed in a building or otherwise enclosed, although more efficient results are obtained by having the said elements arranged in the open.

While in Figures 1, 2, and 3, I have shown the magnets and the zinc plates as superimposed, it will be apparent, as hereinafter fully set forth, that these elements may be juxtaposed in horizontal planes, and substantially the same results will be secured. Furthermore, the magnets 1 with the interposed zincs 3, as shown in Figures 1, 2 and 3 merely represent a unit which may be repeated either horizontally or vertically for increasing the current supply, and when the unit is repeated the zinc plates are arranged alternating with the magnets throughout the entire series as hereinafter indicated.

A conductor 6 is connected in multiple with the conductors 2 and a conductor 7 is connected with conductor 4, the conductor 6 extending to one terminal of a rectifier which I have indicated by the general reference character 8, and the conductor 7 extending to the other terminal of said rectifier. The rectifier as seen in diagram in Figure 1 may assume any of several well known embodiments of the electrical valve type and may consist of four asymmetric cells or Cooper-Hewitt mercury vapor lamps connected as indicated in Figure 1 for permitting communication of the positive impulses from the conductor 6 only to the line conductor 9 and the negative impulses from conductor 6 on only to the line conductor 10. The current from this rectifier may be delivered through the conductors 9 and 10 to any suitable source for consumption.

While the said rectifier 8 may consist of any of the known types, as above outlined, it preferably consists of a specially constructed rectifier which also has the capacity of intensifying the current and comprises specifically the elements shown in detail in Figures 4, 5, and 6 wherein I have disclosed the detail wiring of the rectifier when composed of four of the rectifying and intensify in elements instead of asymmetric cells or simple mercury vapor valves. As each of these structures is an exact embodiment of all the others, one only will be described, and the description will apply to all. The rectifying element of each construction consists of a mercury tube 11 which is preferably formed of glass or other suitable material, and comprises a cylinder having its end portions tapered and each terminating in an insulating plug or stopper 12. Through the upper stopper 12 is extended the electrode 13 which extends well into the tube and preferably substantially one-half the length thereof to a point adjacent the inner end of an opposing electrode 14 which latter electrode extends thence downwardly through the insulation 12 at the lower end of the tube. The tube 11 is supplied with mercury and is adapted to operate on the principle of the mercury vapor lamp, serving to rectify current by checking back impulses of one sign and permitting passage of impulses of the other. To avoid the necessity for utilizing a starter, as is common with the lamp type of electrical valve, the supply of mercury within the tube may be sufficient to contact with the lower end of the electrode 13 when current is not being supplied, so that as soon as current is passed from one electrode to the other sufficiently for volatilizing that portion of the mercury immediately adjacent the lower end of electrode 13, the structure begins its operation as a rectifier. The tube 11 is surrounded by a tube 15 which is preferably spaced from tube 11 sufficiently for allowing atmospheric or other cooling circulation to pass the tube 11. In some instances, it may be desirable to cool the tube 11 by a surrounding body of liquid, as hereinafter indicated. The tube 15 may be of insulating material but I find efficient results attained by the employment of a steel tube, and fixed to the ends of the of the tube are insulating disks 16, 16 forming a spool on which are wound twin wires 6^1 and 7^1, the wire 6^1 being connected at the inner helix of the coil with the outer end of the electrode 14, the lower portion of said electrode being extended to one side of the tube 11 and passed through an insulating sleeve 17 extending through the tube 15, and at its outer end merging into the adjacent end of the wire 6^1. The wire 7^1 extends directly from the outer portion of the spool through the several helices to a point adjacent the juncture of the electrode 14 with wire 6^1 and thence extends in mechanical parallelism with the wire throughout the coil, the wire 6^1 ending in a terminal 18 and the wire 7^1 ending in a terminal 19. For the sake of convenience of description and of tracing the circuits, each of the apparatus just above described and herein known as an intensifier and rectifier will be mentioned as A, B, C and D, respectively. Conductor 6 is formed with branches 20 and 21 and conductor 7 is formed with similar branches 22 and 23. Branch 20 from conductor 6 connects with conductor 7^1 of intensifier B and branch 21 of conductor 6 connects with the conductor 7^1 of intensifier C, while branch 22 of conductor 7 of intensifier C, while branch 22 of conductor 7 connects with conductor 7^1 of intensifier D. A conductor 27 is connected with terminal 19 of intensifier A and extends to and is connected with the terminal 18 of intensifier C, and a conductor 7 connects with conductor 7^1 of intensifier D. A conductor 27 is connected with terminal 19 of intensifier A. and extends to and is connected with terminal 18 of intensifier C, and a conductor 28 is connected with the terminal 19 of intensifier C and extends from the terminal 19 of intensifier B to the terminal 18 of intensifier D to electrode 13 of intensifier B. Each electrode 13 is supported on a spider 13^1 resting on the upper disk 16 of the respective intensifier. Conductors 31 and 32 are connected with the terminals 18 of intensifiers A and B and are united to form the positive line wire 9 which co-operates with the negative line wire 10 and extends to any suitable point of consumption. The line wire 10 is provided with branches 35 and 36 extending to the electrodes 13 of intensifiers C and D for completing the negative side of the circuit.

Thus it will be seen that alternating currents produced in the wires 6 and 7 will be rectified and delivered in the form of a direct current through the line wires 9 and 10, and I find by experiment that the wires 6 and 7 should be of iron, preferably soft, and may of course be insulated, the other wiring not specified as iron being of copper or other suitable material.

In carrying out the operation as stated, the circuits may be traced as follows: A positive impulse starting at the zincs 3 is directed along conductor 7 to branch 23 to conductor 7^1 and the winding of the rectifier of intensifier B through said rectifier to the conductor 6^1, through the winding thereof to the contact 18, conductor 32 and to the line wire 9. The next or negative impulse directed along conductor 7 cannot find its way along branch 23 and the circuit just above traced because it cannot pass across the rectifier of intensifier B but instead the negative impulse passes along conductor 22 to conductor 7 of intensifier A and the winding thereof to the contact 19 and to conductor 27 to contact 18 of intensifier C, to the winding of the wire 6^1 thereof to the electrode 14 through the rectifier to the of the electrode 13 and conductor of intensifier A, electrode 14 thereof and conductor 6^1 to contact 18 and wire 31 to line wire 9. Obviously the positive impulse cannot pass along the wire 20 because of its inverse approach to the rectifier of intensifier B. The next impulse or negative impulse delivered to conductor 6 cannot pass along conductor 21 because of its connection with electrode 13 of the rectifier of intensifier A, but instead passes along conductor 20 to the wire 7^1 and its winding forming part of intensifier B to the contact 19 and conductor 29 to contact 18 and the winding of wire 6^1 of intensifier D to the electrode 14 and through the rectifier to the electrode 13 and conductor 35 to line wire 10. Thus the current is rectified and all positive impulses directed along one line and all negative impulses along the other lie s that the potential difference between the two lines will be maximum for the given current of the

alternating circuit. It is, of course, apparent that a less number of intensifiers with their accompanying rectifier elements may be employed with a sacrifice of the impulses which are checked back from a lack of ability to pass the respective rectifier elements, and in fact I have secured efficient results by the use of a single intensifier with its rectifier elements, as hereinafter set forth.

Grounding conductors 37 and 38 are connected respectively with the conductors 6 and 7 and are provided with the ordinary lightning arresters 39 and 40 respectively for protecting the circuit against high tension static charges.

Conductors 41 and 42 are connected respectively with the conductors 6 and 7 and each connects with an automatic cutout 43 which is grounded as at 4. Each of said automatic cutouts is exactly like the other and one of the same is shown in detail in Figure 7 and comprises the inductive resistance 45 provided with an insulated binding post 46 wit which the respective conductor 6 or 7 is connected, said post also supporting a spring 48 which sustains an armature 49 adjacent to the core of the resistance 45. The helix of resistance 45 is connected preferably through the spring to the binding post at one end and at the other end is grounded on the core of the resistance, the said core being grounded by ground conductor 44 which extends to the metallic plate 52 embedded in moist carbon or other inductive material buried in the earth. Each of the conductors 41, 42 and 44 is of iron, and in this connection I wish it understood that where I state the specific substance I am able to verify the accuracy of the statement by the results of tests which I have made, but of course I wish to include along with such substances al equivalents, as for instance, where iron is mentioned its byproducts, such as steel, and its equivalents such as nickel and other magnetic substances are intended to be comprehended. The cutout apparatus seen in detail in Figure 7 is employed particularly for insuring against high tension currents, it being obvious from the structure shown that when potential rises beyond the limit established by the tension of the spring sustaining the armature 40, the armature will be moved to a position contacting with the core of the cutout device and thereby directly close the ground connection for line wire 41 with conductor 44, eliminating the resistance of winding 45 and allowing the high tension current to be discharged to the ground. Immediately upon such discharge the winding 45 losing its current will allow the core to become demagnetized and release the armature 49 whereby the ground connection is substantially broken leaving only the connection through the winding 45 the resistance of which is sufficient for insuring against loss of low tension current.

In Figure 8 I have illustrated an apparatus which though apparently primitive in construction and arrangement comprehends the first successful embodiment which I produced in the course of discovery of the present invention, and it will be observed that the essential features of the invention are therein disclosed. The structure delineated in said figure consists of horseshoe magnets 54, 55, one facing north and the other south, that is, each opening in the respective directions indicated and the two being connected by an iron wire 55 which is uninsulated and wrapped about the respective magnets each end portion of the wire 55 being extended from the respective magnets to and connected with, as by being soldered to, a zinc plate 56, there being a plate 56 for each magnet and each plate being arranged longitudinally substantially parallel with the legs of the magnet and with the faces of the plate exposed toward the respective legs of the magnet, the plate being thus arranged endwise toward the north and south. An iron wire 57 connects the plates 56, the ends of the wire being preferably connected adjacent the outer ends of the plates but from experiment I find that the wire may be connected at practically any point to the plate. Lead wires 58 and 59 are connected respectively with the wires 55 and 57 and supply an alternating current at a comparatively low tension, and to control such current the wires 58 and 59 may be extended to a rectifier or combined rectifier and intensifier, as above set forth.

The tests which I have found successful with the apparatus seen in Figure 8 were carried out by the employment first of horseshoe magnets approximately 4 inches in length, the bar comprising the horseshoe being about one inch square, the zincs being dimensioned proportionately and from this apparatus with the employment of a single intensifier and rectifier, as above stated, I was able to obtain a constant current of 8 volts.

It should be obvious that the magnets forming one of the electrodes of this apparatus may be permanent or may be electromagnets, or a combination of the two.

While the magnets mentioned throughout the above may be formed of any magnetic substance, I find the best results obtained by the employment of the nickel chrome steel.

While the successful operation of the various devices which I have constructed embodying the present invention have not enabled me to arrive definitely and positively at fixed conclusion relative to the principles and theories of operation and the source from which current is supplied, I wish it to be understood that I consider myself as the first inventor of the general type hereinbefore described capable of producing commercially serviceable electricity, for which reason my claims hereinafter appended contemplate that I may utilize a wide range of equivalents so far as concerns details of construction suggested as preferably employed.

The current which I am able to obtain is dynamic in the sense that it is not static and its production is accomplished without chemical or mechanical action either incident to the actual chemical or mechanical motion or incident to changing caloric conditions so that the elimination of necessity for the use of chemical or mechanical action is to be considered as including the elimination of the necessity for the use of heat or varying degrees thereof.

Back to Viewzone || Comments?

COMMENTS:

The Meyers invention is a simple antenna. The magnets attract and concentrate the electro-magnetic field and the tin horns collect it.

In Meyers' day he only had the natural magnetic field of the earth to harvest. Today we have filled the E-M spectrum with radio, TV and cell phones. If you were to build this device today it would interfere with all of the above. This would make a lot of people upset with you and probably get you in trouble with the government agencies which regulate these utilities.

If you want to harvest free range electricity, I would recommend using a ground antenna like Nathan Stubblefield or a metallic pyramid like Les Brown.

Robert

This alternate energy source is much like a static energy collector designed and patented by Nikola Tesla in 1901. Patent numbers: 685957 and 685958. However, Tesla didn't find it necessary to use magnets, so there is that difference. There are many inventors on YouTube that mimic his design and show great results. I've seen one with a 40' antennae pole with a wire that generates 135 volts.

I'm currently researching the subject and when I saw your blog concerning Meyers I thought I'd give you the knowledge about Tesla's invention that was years prior to Meyers. Scott

BETA
PLANET INFOWARS
Powered by Infowarriors Worldwide

MEMBERS ACTIVITY | FIND GROUPS | START GROUPS | READ ARTICLES

Read about: Activism | Preparedness | Resistance | Street Art | Outdoors | Guns | Health | Video | Business | Dating | Economics | Entertainment | Offbeat | Politics | Science | Technology | Weird News

Don't Let The Big Energy Corporations Control You – Free Energy Is HERE

(+6 rating, 6 votes, rated)
You need to be a registered member to rate this post.

May 26, 2012 in Activism, Preparedness, Resistance, Science, Technology

by Kellie

The below added text I have been looking into has been an easily made design. Our government goes to no end to stop men and women who help human kind with their awesome God given inventions. I am not afraid to share this as Alex does with his knowledge and research. It is to open the minds of those that are dumbed down by corporate America and the global elite to do as they bid…No…stand up and fight against their system.

Free energy is NOT a hoax as they want you to believe.

If you have any engineer in you or technical expertise – Read…It works !

Jes Ascanius' Version of Nikola Tesla's Aerial System

This sort of information may seem confusing and maybe a little too technical for you, so let me tell you about the practical and useful applications used by Jes Ascanius, a Danish developer, to whom thanks is due for sharing his design. Initially, he set up a system to charge his mobile phone battery overnight from an aerial. Then he went on to produce a full-size Tesla Aerial System as described at the start of this chapter. Let's start with the very simple system and progress from that to the more powerful arrangements.

The initial circuit uses one strand of solid wire which rises vertically to a 700 mm diameter drum where there are some twenty turns. The arrangement is like this:

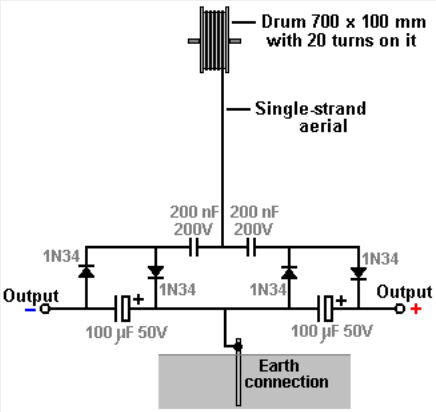

The aerial wire is several metres long, and in the prototype, was supported by (and insulated from) the eaves of a house. The aerial should be vertical or near vertical and a proper earth connection provided by driving a metal rod into the ground or connecting a wire to a metal plate and burying the plate in the ground as a good electrical connection is needed here. The earth connection used here is a 12 mm copper pipe 3 metres long, driven into the ground and the ground around it saturated with water:

The wire used to connect with the earthing rod is very important and should not be less than 8 swg copper wire, that is, 4 mm diameter and 13 sq. mm. cross-sectional area. As with all free-energy devices, the exact constructional details are vital.

The diodes used are germanium 1N34 or 1N34a as germanium diodes drop far less voltage than do silicon diodes and the 1N34 types are low-loss diodes, particularly suited to this application. Ceramic disc types are recommended for the 200 nF capacitors. The prototype build looked like this:

REFEED 24/7
LISTEN NOW

UPCOMING MISSIONS
- Complete Your 'Base, Loc Interests' Sections Of You Complete by:Thursday Dec 31, 2
- Flood Alex With Demands Does And Does So Very T Complete by:Friday Jan 1, 2016 /
- #InfowarsMusic Complete by:Saturday Apr 30, 20
- Prevent Tyranny In All Nat Complete by:Sunday Jan 1, 2017
- Collaborators Remembere Complete by:Sunday Dec 31, 201
- Mission #4: Earth Psychic Complete by:Thursday Dec 31, 2
- N.D.A.A (National Defense Complete by:Sunday Jul 31, 2022
- Be The Best You Can Be Complete by:Wednesday Nov 30,
- Agenda 21 Complete by:Saturday Dec 31, 2
- U.N. Gun Arms Trade Trea Complete by:Saturday Dec 31, 2

INSPIRATION SITES
Infowars.com
PrisonPlanet.tv
Infowars Shop
PrisonPlanet.com

Asked by Infowars
How do you fee players kneelin anthem?
I stand with
I stand with
(https://www.squareoffs

INFOWARS.COM NE

UPCOMING EVENTS
There are no upcoming group e

SEARCH:
Search

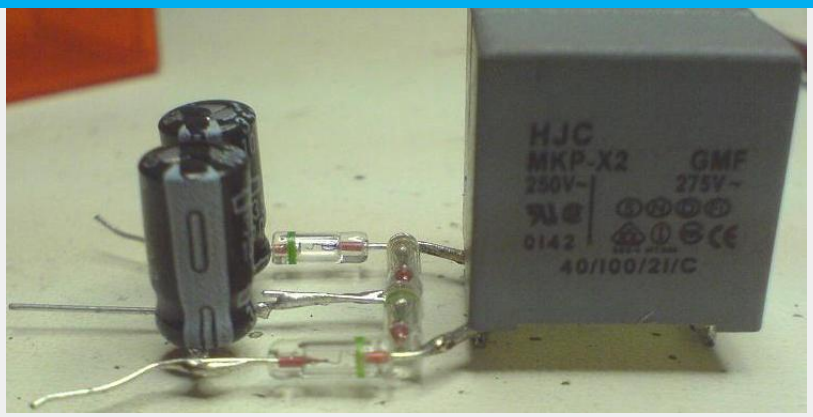

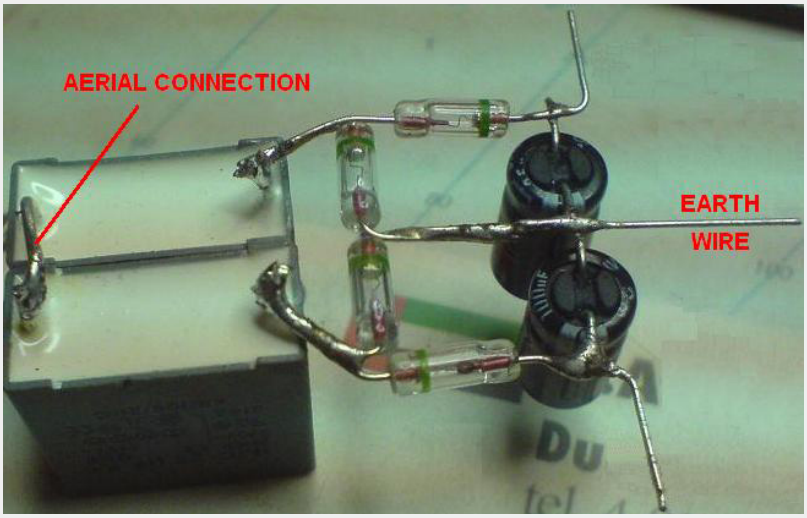

Now, consider this circuit as described, to be one modular building block which can lead to unlimited power from an aerial. I will represent the circuit shown above as a rectangle, showing the above circuit as:

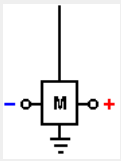

While it is possible to use more than one module with the aerial to get more power, the Danish developer then switched to the full-blown Tesla arrangement by attaching a 800 x 600 x 2 mm aluminium plate inside the sloping roof of his house:

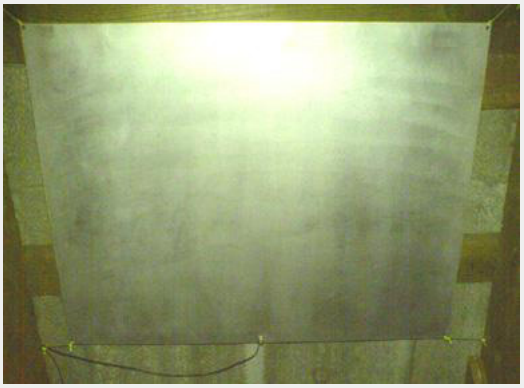

The plate being suspended using nylon cord to prevent it touching the roof or anything else:

The plate is positioned between 3 and 3.5 metres (10 to 12 feet) above the ground and the attachment to the plate is also heavy-duty 8 swg cable:

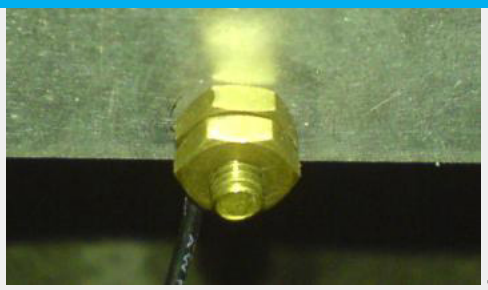

The cable is connected to the aluminium plate using a brass bolt and nuts which the builder thinks may be significant, quite apart from avoiding any galvanitic connection to the circuit. The cable is then run vertically downwards to the circuit. For this arrangement a second earthing point is also used. This is a galvanised iron pipe 3 metres long, driven vertically into the ground which is saturated with water. The second earth is 2 metres away from the first earth.

This arrangement provides serious power, enough to cause injury to, or kill a careless human. With two modules, it will light an LED very brightly, driving it to 2.6 volts. If the LED is removed, then the voltage climbs to about twenty volts and is easily sufficient to charge a 12V battery or battery bank although that takes time. With twenty modules as 12V battery can be charged over night. It is estimated that with two hundred modules, the power would be sufficient to power a household although that has not yet been done. It should be borne in mind that each module is easy and cheap to make, so arranging for a stack of them where additional modules can be added at a later date for more power, is an ideal arrangement. The circuit is like this:

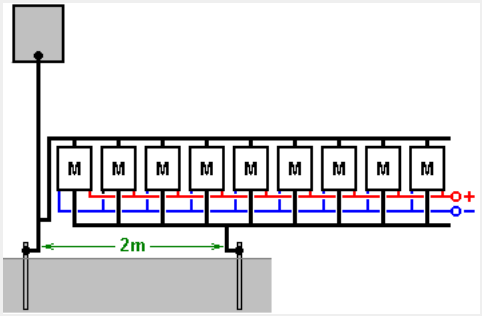

This circuit looks completely mad as the aerial input to the circuit appears to be directly short-circuited by the second earth connection. In spite of this, the circuit works very well when connected this way. Additional modules can be added without any known limit. Increased power can be had by either raising the aluminium plate higher above the ground, to say, 10 metres (33 feet), or by adding one or more additional aerial plates. As you have a good aerial connected through to a very good earth, there has to be the possibility of the equipment being hit by lightning, and so it is suggested that a protective spark-gap is installed between the aerial and the earth, close to the circuit, so that if high-voltage is suddenly applied to the aerial, the spark gap will fire and shunt the excess power through to the earth. Alternatively, possibly a better solution is to install a standard lightning rod system a few metres away from the aerial and a metre or two higher up, so that it forms a more attractive point for a lightning strike.

Further experimentation has shown that altering the connection point for the aerial has a significant effect on the results. If the connection is made at the mid point between the aerial plate and the earth connection, it produces a greater output:

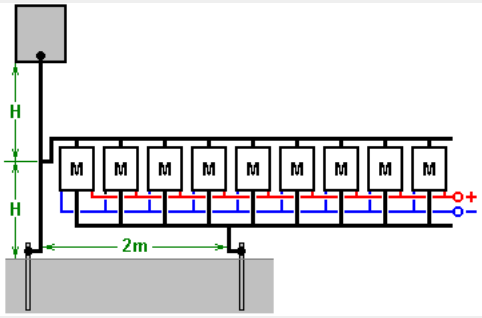

With this arrangement a single module produces around 30 volts while the original method of connecting near the earth was giving about 26 volts with two modules.

Dragan Kljajic has been experimenting with this circuit and has started by building many of these modules on a printed circuit board like this:

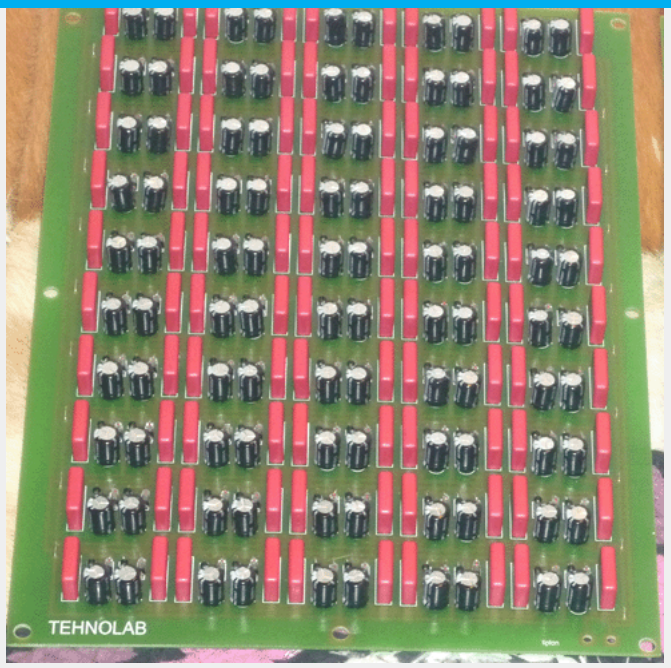

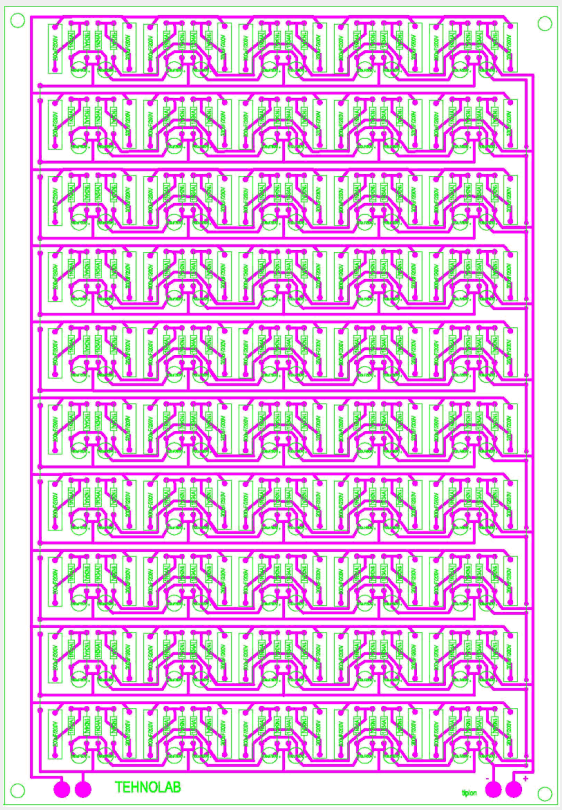

Using two of these boards, Dragan is pulling 96 watts continuously from his aerial plate. He intends to extend this arrangement much further, but is being hindered at present by a local civil war.

There is a forum where some builders of this system share comments. One comment is that there is an increased risk of a lightning strike where you have an earthed aerial, and so it is advisable not to place the aerial plate inside a house, but perhaps suspended between two trees. Also, using a car spark plug connected across the module set can protect against lightning strikes damaging the circuitry.

← Truth is a commodity… Sad →

INFOWARS.COM VIDEOS:

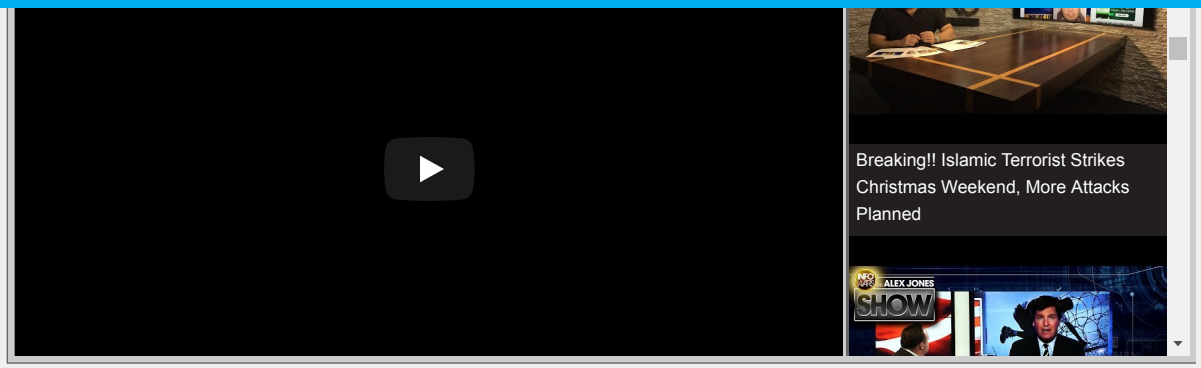

COMMENT ON THIS ARTICLE:

Comment rules

9 responses to *Don’t let the big energy corporations control you – Free energy is HERE*

Hendra said on April 26, 2016

Hello, I am new to this website and I am trying to build this things right now with the pcb. Has anyone successfully built this things with the PCB that Dragan make ?

THank you

Hendra

Log in to Reply

ifree said on June 1, 2012

cool. I remember reading an article about a farmer who was able to light a bunch of bulbs from a really long cable that somehow just inducted energy… this was after that idiotic show “Mythbusters” said it was impossible.. so, yeah. I don’t recommend that show.

Log in to Reply

Shaun said on June 1, 2012

I have made two of these boards but in A4 size with 32 modules on each board im in the process of drilling holes.
The alexkor circuit in Chap 7 is also worth looking at I will let you know when Im done with the Tesla /Jes Ascanius circuit and what results I get I know its important to polish the plate and to have a very good earthing plate.

Log in to Reply

United said on May 28, 2012

Great post! thanks

Planet Infowars Log In Visit

Kakashi said on May 28, 2012

Is this transduction?

Log in to Reply

Kellie said on May 28, 2012

The whole article is here http://www.free-energy-info.com/Chapt7.html

Log in to Reply

WizarDave said on May 26, 2012

Gotta love Tesla!

Kellie said on July 6, 2012

Yes, and look how our great government treated him later in life up unto his death, and still to this day…Corrupticians !

Log in to Reply

ZerMaster said on May 26, 2012

Don’t forget about Tesla’s Turbine at 1PSI Steam hooked up to a generator (1PSI! think about it …) cheap to build and use. http://books.google.ro/books?id=BOMDAAAAMBAJ&pg=PA188&dq=popular+mechanics+Tesla&hl=en&sa=X&ei=BeC_T4G1FdDn-gbS-rCcCg&sqi=2&ved=0CCwQ6AEwAA#v=onepage&q=popular%20mechanics%20Tesla&f=false

http://www.youtube.com/watch?v=Ogyh-JyCmQc

Log in to Reply

Leave a reply

You must be logged in to post a comment.

BE ACTIVE

LOGIN
GROUPS
MEMBERS
F.A.Q.
TUTORIALS

YOUR ACCOUNT

LOGIN

MORE

CONTACT
WRITING TIPS
TERMS OF SERVICE
DIGITAL MILLENNIUM COPYRIGHT ACT

©2012 Planet.Infowars.com is a Planet Infowars, LLC company. All rights reserved - Digital Millennium Copyright Act Notice.

Nov. 12, 1957

L. R. CRUMP

POWERING ELECTRICAL DEVICES WITH ENERGY ABSTRACTED FROM THE ATMOSPHERE

Filed March 12, 1954

2,813,242

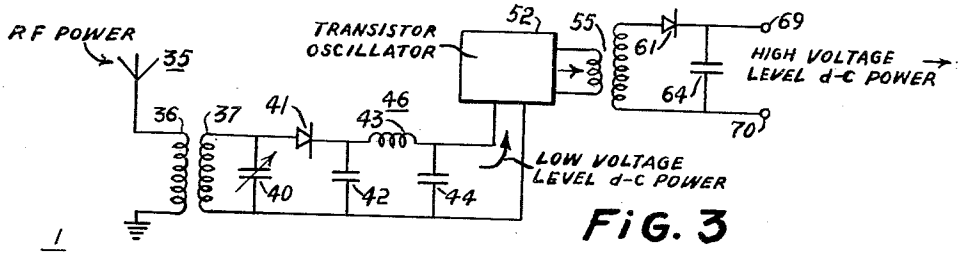

FIG. 3

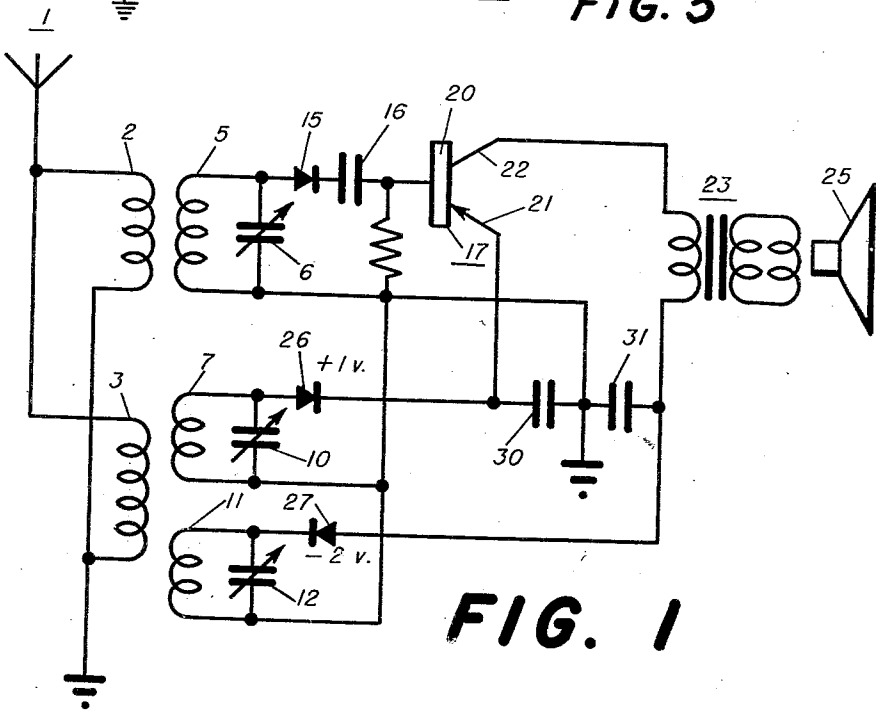

FIG. 1

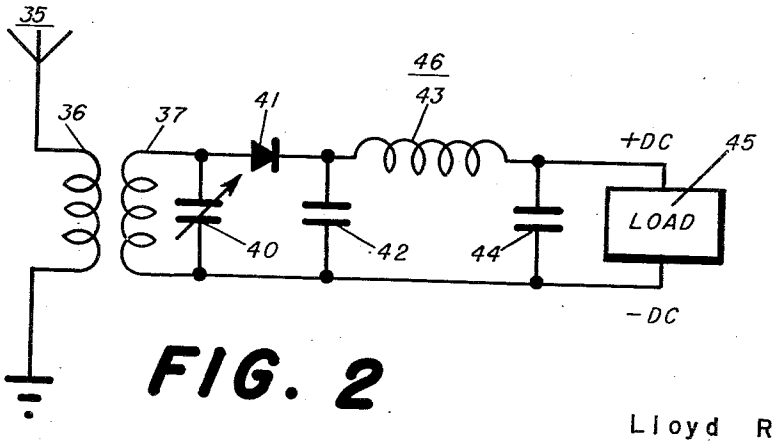

FIG. 2

INVENTOR

Lloyd R. Crump

BY W. E. Thibodeau + A. W. Dew

ATTORNEYS

United States Patent Office

2,813,242

Patented Nov. 12, 1957

1

2,813,242

POWERING ELECTRICAL DEVICES WITH ENERGY ABSTRACTED FROM THE ATMOSPHERE

Lloyd R. Crump, Silver Spring, Md.

Application March 12, 1954, Serial No. 415,986

1 Claim. (Cl. 321—2)

(Granted under Title 35, U. S. Code (1952), sec. 266)

The invention described herein may be manufactured and used by or for the Government for governmental purposes without payment to me of any royalty thereon.

This invention relates to the convenient and economical provision of power for the operation of electronic circuits and devices using transistors, and of other electrical devices having modest power requirements.

A great advantage of transistors, and a major reason for their enthusiastic reception since their introduction a few years ago, is the fact that they will operate satisfactorily with very low supply voltages and currents. One milliwatt or even less is sufficient to power a transistor in many applications. Various batteries have been developed to provide, in a minimum of space, the relatively minute amounts of power needed by transistors.

My invention provides methods and means that permit transistor circuits, and also other low-powered electrical devices, to be economically and conveniently operated without any batteries whatever, and indeed without any power supply whatever as power supplies are ordinarily conceived.

The invention centers around my discovery that it is practicable to construct operative transistor circuits that are able to abstract from the atmosphere sufficient electromagnetic energy to provide all necessary supply voltages and currents for their own operation. Circuits and devices powered according to my invention will operate indefinitely without any local power source whatever.

I have successfully constructed and demonstrated such circuits. For example, I have constructed a batteryless transistor radio receiver on which I have listened to either nearby or distant broadcast stations as desired, using either headphones or a loudspeaker; this receiver has been powered entirely by electromagnetic energy abstracted from the atmosphere.

From the successful operation of this receiver, and from other experimental work, it becomes clear that, by the methods and means of the invention, a great variety of practical and useful transistor circuits can be powered entirely by energy abstracted from the atmosphere.

Furthermore, as will become apparent below, my invention is applicable to the powering of other electrical devices requiring relatively small amounts of power.

An object of the present invention is to provide methods and means for powering transistor circuits entirely from radiofrequency energy abstracted from the atmosphere.

Another object is to provide methods and means for powering remote radio receivers, low-powered radio transmitters, and other low-powered electrical devices, with energy received by radio from a master station, so that no local power supplies are needed by the devices and so that the powering or non-powering of the remote device is under the control of the master station.

A further object is to provide methods and means for powering transistor circuits and other low-powered electrical devices with radiofrequency energy received from one or more remote radio transmitters.

2

Other objects, aspects, uses, and advantages of the invention will become apparent from the following description and from the drawing.

Figure 1 is a schematic diagram of a transistor radio receiver in which all necessary power is supplied by energy abstracted from the atmosphere in accordance with the invention.

Figure 2 is a schematic diagram showing a general application of the invention to provide direct-current power to a load.

Figure 3 is a schematic diagram of a system for obtaining a high energy D.-C. source at a high voltage level using energy abstracted from the atmosphere.

Referring to Figure 1, a receiving antenna **1** is connected to antenna coupling coils **2** and **3**, the other ends of which are connected to ground. A parallel resonant circuit consisting of coil **5** and capacitor **6** is coupled to coil **2**. A second parallel resonant circuit consisting of coil **7** and capacitor **10** is coupled to coil **3**. A third parallel resonant circuit consisting of coil **11** and capacitor **12** is also coupled to coil **3**.

Coil **5** and capacitor **6** are tuned to the frequency of a radio transmitter from which it is desired to receive information—for instance, an amplitude-modulated standard broadcast station. The signal received from this transmitter need not be strong. The signal is detected by diode **15** to obtain an audio-frequency information signal. This audio signal is coupled through a capacitor **16** and is amplified by a circuit that includes a transistor **17** having a base **20**, an emitter **21**, and a collector **22**. The amplified audio output of the transistor is coupled through an audio transformer **23** to an electroacoustical transducer, preferably a permanent-magnet dynamic loudspeaker **25** as shown.

The novelty of the invention lies largely in the method and means by which the necessary direct-current power is supplied to the emitter and collector circuits of transistor **17**. This method and means will now be described.

Coil **7** and capacitor **10**, and also coil **11** and capacitor **12**, are tuned to receive radio signals of relatively high strength. It does not matter whether these signals contain information. These power signals are rectified by diodes **26** and **27** to provide direct-current power that is filtered by capacitors **30** and **31**. The D.-C. power thus obtained is utilized to power the transistor **17**.

In the circuit shown, two tuned circuits (coil **7** and capacitor **10**, and coil **11** and capacitor **12**) are tuned to power signals and the D.-C. voltages obtained from each are connected in series. The tuned power circuits may be tuned to the same or different power signals. Under certain circumstances it may be desirable to use more than two tuned power circuits and to tune them to more than two power signals; in this way power can be obtained from several signals and combined. On the other hand, if a strong power signal is available, a single tuned power circuit may suffice to give the needed D.-C. power.

Even weak information signals can be received successfully. A plurality of transistor amplifier stages can be used if desired, or other circuits such as superheterodyne circuits can be used. It is merely necessary that a sufficiently strong power signal or signals be available to provide the small amount of D.-C. needed to power the transistors.

If the information signal happens to be strong, it can be used as the power signal; all of the tuned circuits (coil **5** and capacitor **6**, coil **7** and capacitor **10**, coil **11** and capacitor **12**) are tuned to the information signal.

Engineers who have observed my invention in operation have been surprised at the unexpectedly good results obtained, even with readily available power signals of quite moderate strength. For instance, sufficient power for satisfactory operation of a loudspeaker at low volumes is

readily obtained from a 5-kilowatt standard broadcast station 5 miles away, using only an indoor antenna to pick up the power signal as well as information signals. In typical operation under these conditions a D.-C. voltage of about 2.5 to 3 volts is obtained between the emitter and the collector, at a current of about 250 microamperes; D.-C. power input to the transistor is thus of the order of 0.5 to 1 milliwatt. So far as I am aware, no one has ever before discovered and demonstrated the practicability of this method of powering a radio receiver.

Because existing broadcast stations within a radius of a number of miles provide adequate power signals, the invention is readily practicable with existing power signals in almost any location in or near any city in the United States.

Although I have described a transistor radio receiver powered by my invention, it will be readily apparent that the invention is applicable to the powering of any transistor circuit using one or a number of transistors, and to the powering of other devices requiring relatively small amounts of power. For instance, sensitive electromechanical, electrochemical, or electrothermal devices can be operated by the method of the invention.

Referring to Figure 2, which shows a more general embodiment of my invention, an antenna 35 picks up radiofrequency energy from the atmosphere. This energy flows through coil 36, which is coupled to a tuned circuit consisting of coil 37 and capacitor 40. The radiofrequency voltage across capacitor 40 is rectified by diode 41 and filtered by a low-pass filter 46 consisting of capacitors 42 and 44 and choke coil 43. The resulting D.-C. voltage is applied to a load 45.

In the practice of my invention, larger amounts of power can be obtained for short periods of time by storing received energy in a suitable energy storage device. Stored energy may then be withdrawn at intervals at a more rapid rate than that at which it was received and put into the storage device. In this way the invention can be used to provide short pulses of relatively very high electrical energy. This result can be readily obtained by charging a relatively large capacitor with direct current and then discharging the capacitor rapidly into a load when desired. This rapid discharge can be initiated automatically when the voltage across the capacitor reaches a certain level, or it can be initiated when a transistor radio receiver receives a certain information signal.

Higher voltages can be obtained with the invention by means of well known devices for raising D.-C. voltages as shown in Figure 3. The D.-C. voltage output from the capacitor 44 can be used to power a low frequency transistor oscillator 52 whose A.-C. output is raised to a higher voltage level by the transformer 55. This relatively high A.-C. voltage can then be rectified by a diode 61 and fed to a capacitor 64 to provide a high energy D.-C. source at a relatively high voltage level at the terminals 69 and 70. If desired, energy can now be withdrawn from the capacitor 64 at intervals in short pulses of high energy at a high voltage level. Pulsed radio transmission is one of the possible uses for this form of the invention. Other uses would be to provide a single relatively powerful pulse needed to actuate an electrothermal or electromechanical device.

As has been indicated above, in many locations and particularly anywhere in or near most American cities, power signals normally present in the atmosphere are readily available for the easy and convenient practice of the invention. However, the invention also has important applications in systems in which the necessary power signal is generated and transmitted specifically for the operation of the particular system. Such systems can, for example, comprise a master station transmitting all the power that is needed for hundreds or thousands of fixed or mobile transistor receivers or other remote devices over

a range of many miles. This eliminates the need for hundreds or thousands, as the case may be, of local power supplies. At the same time, such a system has the advantage that all of the remote devices can be simultaneously activated or deactivated at the will of the master station, simply by starting or stopping the transmission of the power signal. In such systems it will often be advantageous to use power signals of frequencies sufficiently high to permit the use of resonant receiving antennas of small physical dimensions for signal pickup at the remote devices. In addition to the power signal, the master station may transmit an information signal on the same or a different carrier.

Certain types of devices powered entirely by received radio waves are of course well known. The well-known "crystal set" of the early days of radio, which used a diode rectifier to demodulate an amplitude-modulated radiofrequency signal, is an outstanding example of such a device. My invention is readily distinguishable from such prior devices, however. In typical prior devices a modulated radiofrequency signal is applied to a diode to obtain unidirectional half-wave pulses whose amplitudes vary with modulation. These pulses are integrated by means of a capacitor to obtain a unidirectional signal the amplitude of which follows the audiofrequency modulation envelope. If the radiofrequency signal is received with sufficient strength the audio signal may have sufficient power to operate headphones or similar utilization device without power amplification; but the signal is utilized for its information content, rather than to supply non-information-containing power.

My invention, on the other hand, entails the utilization of received radiofrequency energy to supply power to at least one pair of circuit points (across capacitor 31 in Fig. 1, for example), such circuit points requiring power solely for its power content and not for any information or modulation it may contain. In other words, my invention entails the utilization of radiofrequency energy to supply power that would otherwise have to be supplied by batteries, generator, or other local power source.

It will be apparent that the embodiments shown are only exemplary and that various modifications can be made in construction and arrangement within the scope of the invention as defined in the appended claim.

I claim:

An electrical device for obtaining a high energy D.-C. source at a high voltage level using energy abstracted from the atmosphere, said device comprising in combination: resonant means for receiving radio waves, first rectifier means for converting said radio waves into first direct current energy, first capacitor means for storing said first direct current energy, an oscillator powered by said direct current energy, said oscillator producing an A.-C. output, transformer means for raising said A.-C. output to an increased voltage level, second rectifier means for converting the A.-C. output of increased voltage level from said transformer into second direct current energy, and second capacitor means for storing said second direct current energy.

References Cited in the file of this patent

UNITED STATES PATENTS

1,540,998	Plauson	June 9, 1925
2,056,824	Cawley	Oct. 6, 1936
2,553,734	Adler	May 22, 1951
2,569,687	Pan	Oct. 2, 1951
2,647,957	Mallinckrodt	Aug. 4, 1953

OTHER REFERENCES

Turner: "A crystal receiver with transistor amplifier," Radio and Television News, January 1950.

Crystal Detectors to Point Contact and Layered Signal Diodes in Electronics

OddMix.com - Technical Note - Crystal Radio - TN080417 - Karl Nagy

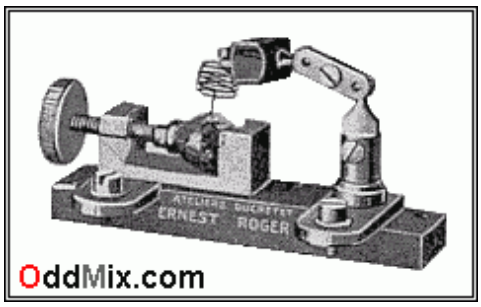

Picture 1. "Ernest Roger" Crystal detector from 1920

Many of the **younger generation** never had the pleasure to have, or to even see a real beautiful crystal detector as shown on **Picture 1**. A detector like that was the product of the early 1920's, and it was an expensive, quality, well made product. They were usually hands assembled with machine made components.

This particular "**Ernest Roger**" detector device is built on an insulated base, either wood or most likely of Bakelite, the most widely used and only available plastic material at the times.

Many of the younger generation never had the pleasure to have, or to even see a real beautiful crystal detector as shown on **Picture 1**. The new generations are much too involved with technology and playing on their computers or going to an **online University**. This excellent detector holder used copper, brass and bronze generously for the crystal holder and for all of the **electrodes**.

The most often used crystal in this and similar detectors - then and now - was **pyrite** or galena as shown in the 1925 listing in a table in the **"American Mineralogist"** publication, that has a listing of thirty three minerals catalogued with rectifying detector properties.

Among the very first commercially produced diodes is the 1N21B shown on **Picture 2**. It is more than curious, that this "diode" is enclosed in a case on which there is a slotted screw-head is just visible on the wide side (lower right). That screw is connected to a fine "cats whisker" steel wire, a few turns of a spring-like device, terminating in a point that is in touch of the germanium semiconductor material connected to the top left diode terminal.

Picture 2. Early point contact diode with adjustable srew

The arrangement is much smaller, and more diode like, then the detector on **Picture 1**., but it made in a very similar arrangement, which has became known as the point contact diode. From these and similar germanium diodes, evolutionary progress leads us to current PN junction Silicon, Gallium Arsenide or other more exotic semiconductor materials which are the achievement of the latest scientific age and many years of steady experimentation, research and development.

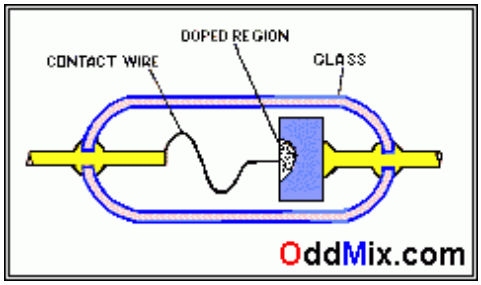

Picture 3. Point contact diode

Picture 3 shows the cross section of a hermetically glass enclosed, point contact diode. If the left side, point contact terminal would be attached to a screw and a short spring, and the glass envelope would have a threaded metal part in it, the **Picture 2** and **Picture 3** devices would be nearly identical.

These point contact "cat's whisker" devices, are still made occasionally because of their very small capacitance. As it was discovered early on, they are highly useful in high frequency electronics. All the way up to microwave frequencies they useable. The simplest radar detectors usually made with a simple horn **antenna**, a diode similar to **Picture 2** and **Picture 3** and a transistor amplifier. If the designer keeps it simple, and don't use a local oscillator, such radar detectors are not even detectable by the police.

Previous Page | **All Circuit List**

Google Search

Web www.oddmix.com

056522

Copyright © 2015 K Nagy - http://www.OddMix.com - All Rights Reserved
Page Revised: 2015-01-01 - - Privacy Policy - Site Map - Support

Hosted by 1&1

FM Crystal Set

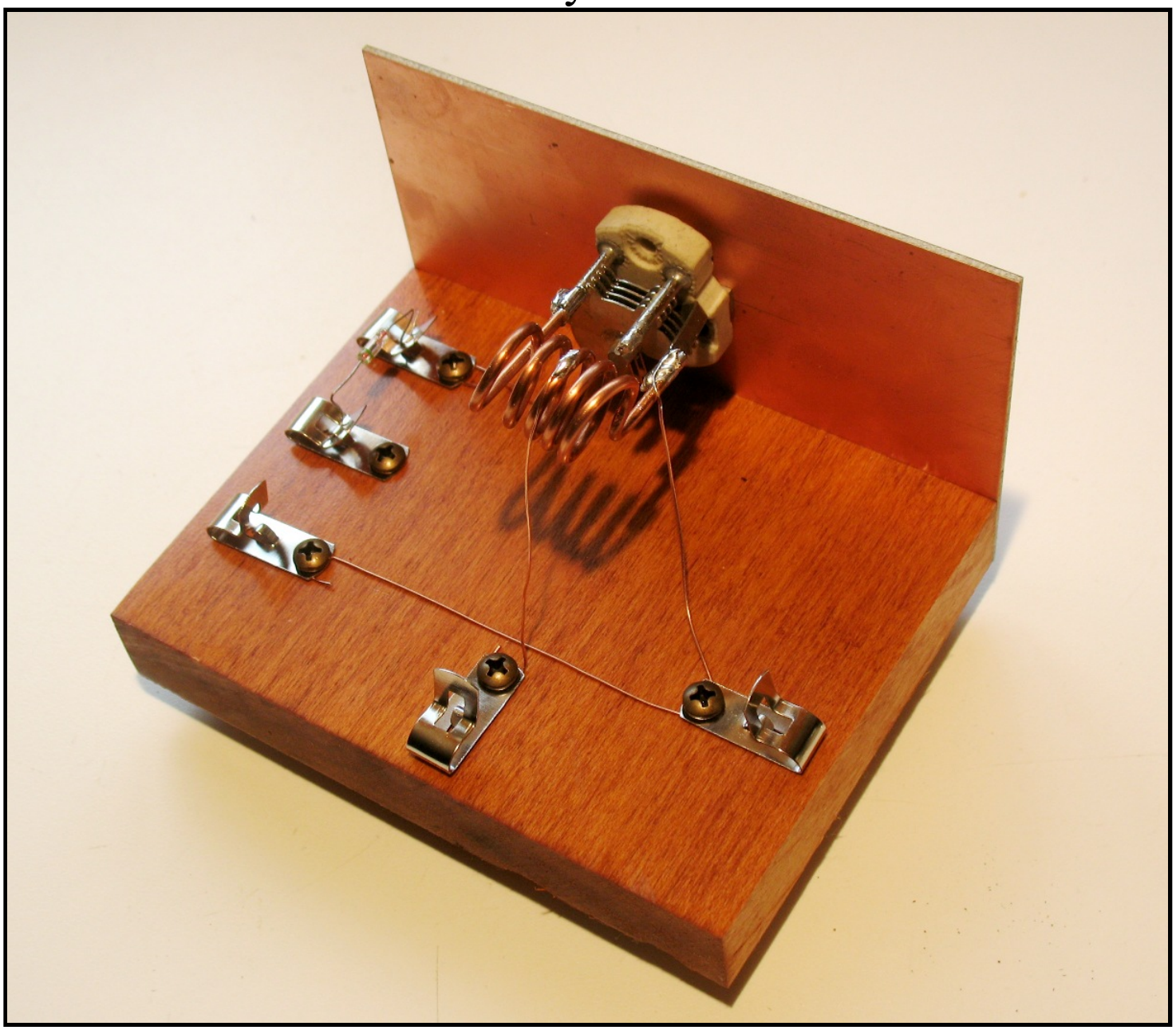

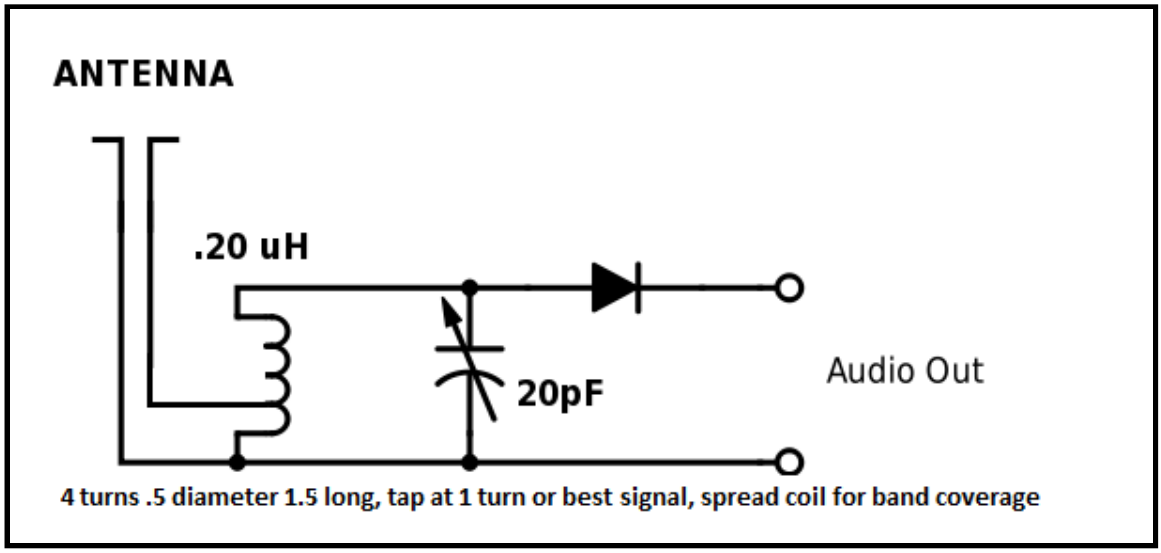

By slope detection you can get FM. If you live close to the stations you should do well with Hi Z phones. I use an audio amp, I am far from the stations. I get three.

Un ottimo ricevitore FM a cristallo

Carlo Bramanti

Vi comunico gli ultimi risultati che ho raggiunto dopo molte intense ricerche per la miglior soluzione per la galena FM. La J antenna andava egregiamente, ma sopportava solo un collegamento brevissimo. Quando mi sono deciso di appendere verticalmente un dipolo di piattina, invece del classico posizionamento di detto, ho scoperto un mondo nuovo. Funziona egregiamente anche con una discesa, in piattina, di 6,5 metri. Solo in quel modo sono riuscito ad ascoltare costantemente e confortevolmente anche senza amplificazione. Ma non mi sono fermato lì: vista la forte corrente che si ricava da un diodo collegato al dipolo (oltre 50 microampere) ne ho usato uno per alimentare un EPAD. Ciò vale per l'FM ed anche per il Kit che ho fatto per la SANDIT.

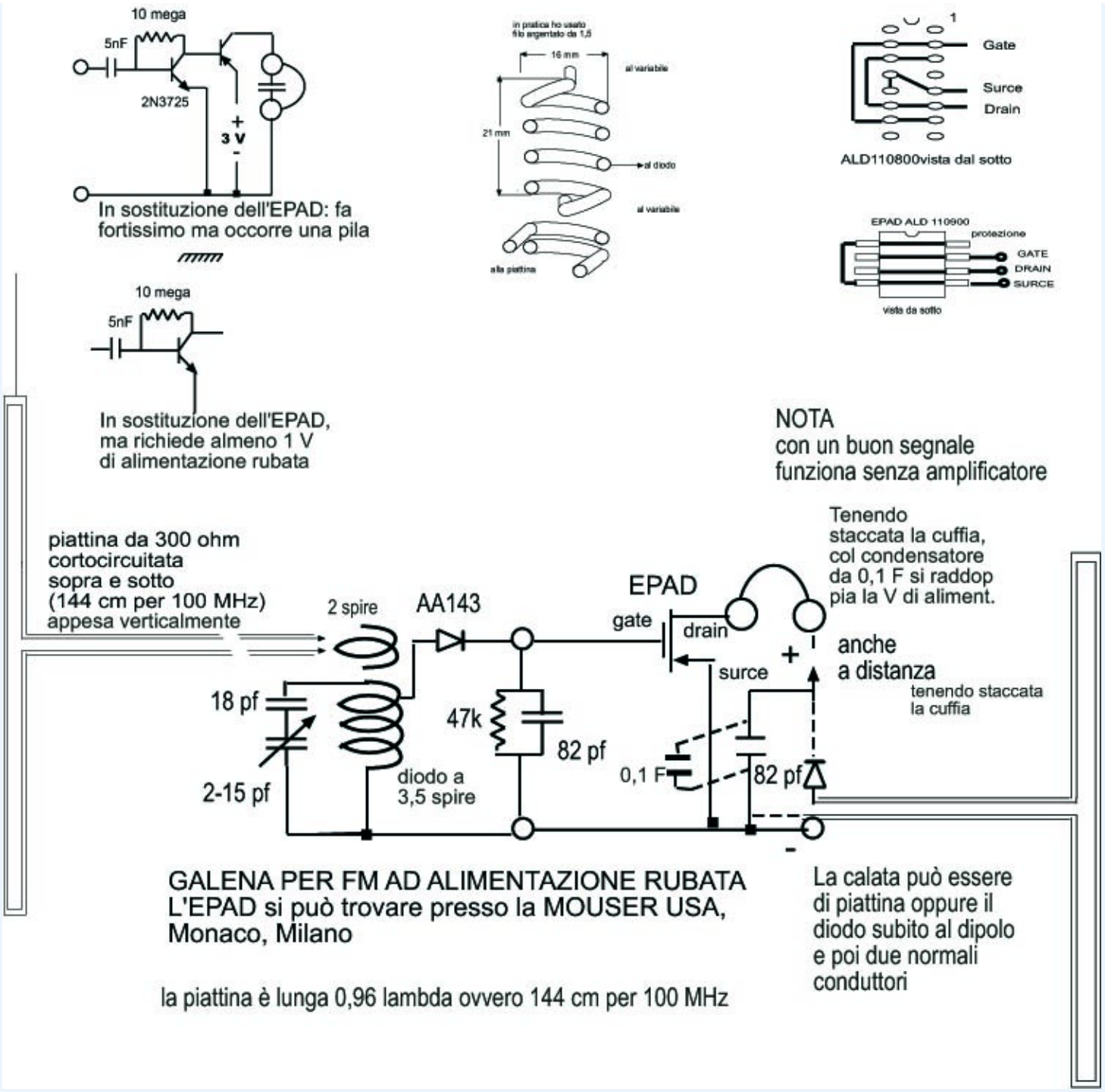
10 mega
5nF
2N3725
+
3 V
-
In sostituzione dell'EPAD: fa fortissimo ma occorre una pila
10 mega
5nF
In sostituzione dell'EPAD, ma richiede almeno 1 V di alimentazione rubata
in pratica ho usato filo argentato da 1,5
16 mm
al variabile
21 mm
al diodo
al variabile
alla piattina
1
Gate
Surce
Drain
ALD110800vista dal sotto
EPAD ALD 110900
protezione
GATE
DRAIN
SURCE
vista da sotto
NOTA
con un buon segnale funziona senza amplificatore
Tenendo staccata la cuffia, col condensatore da 0,1 F si raddop pia la V di aliment.
piattina da 300 ohm cortocircuitata sopra e sotto (144 cm per 100 MHz) appesa verticalmente
2 spire
AA143
EPAD
gate
drain
surce
+
anche a distanza
tenendo staccata la cuffia
18 pf
2-15 pf
diodo a 3,5 spire
47k
82 pf
0,1 F
82 pf
-
GALENA PER FM AD ALIMENTAZIONE RUBATA
L'EPAD si può trovare presso la MOUSER USA, Monaco, Milano
la piattina è lunga 0,96 lambda ovvero 144 cm per 100 MHz
La calata può essere di piattina oppure il diodo subito al dipolo e poi due normali conduttori

La realizzazione con la semplice bobina illustrata mi ha dato intensità maggiore che con la cavità, anche se un poco più di rumore. Una realizzazione fatta usando per bobina un anello di tubo di ottone da 6 mm e 11 cm di diametro, che teoricamente ha un Q 4 volte maggiore di quella classica, mi ha deluso. Dunque avanti con la semplice bobina raccomandandomi di osservare attentamente il disegno allegato, seguirlo a lettera e non arrendersi quando alle prime prove non funziona:capita sempre così.

Progetti dei lettori - Le radio di Sophie

Ricevitore a cristallo per FM

Un progetto di Giacomo Cavuoti

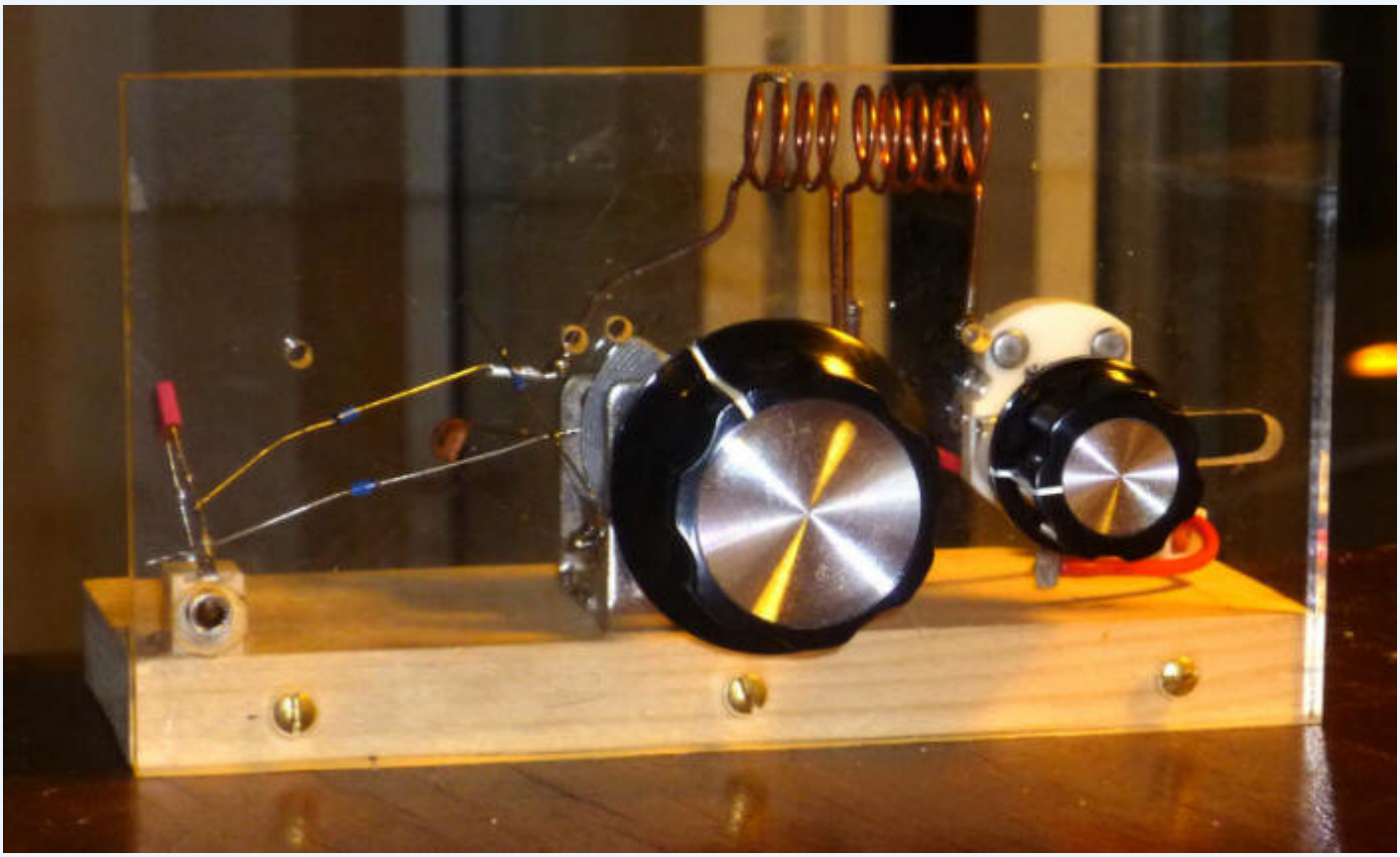

Seguendo l'invito di Leonardo ho realizzato questo semplice ricevitore a cristallo per FM (fare clic sullo schema qua sotto per vederlo ingrandito).

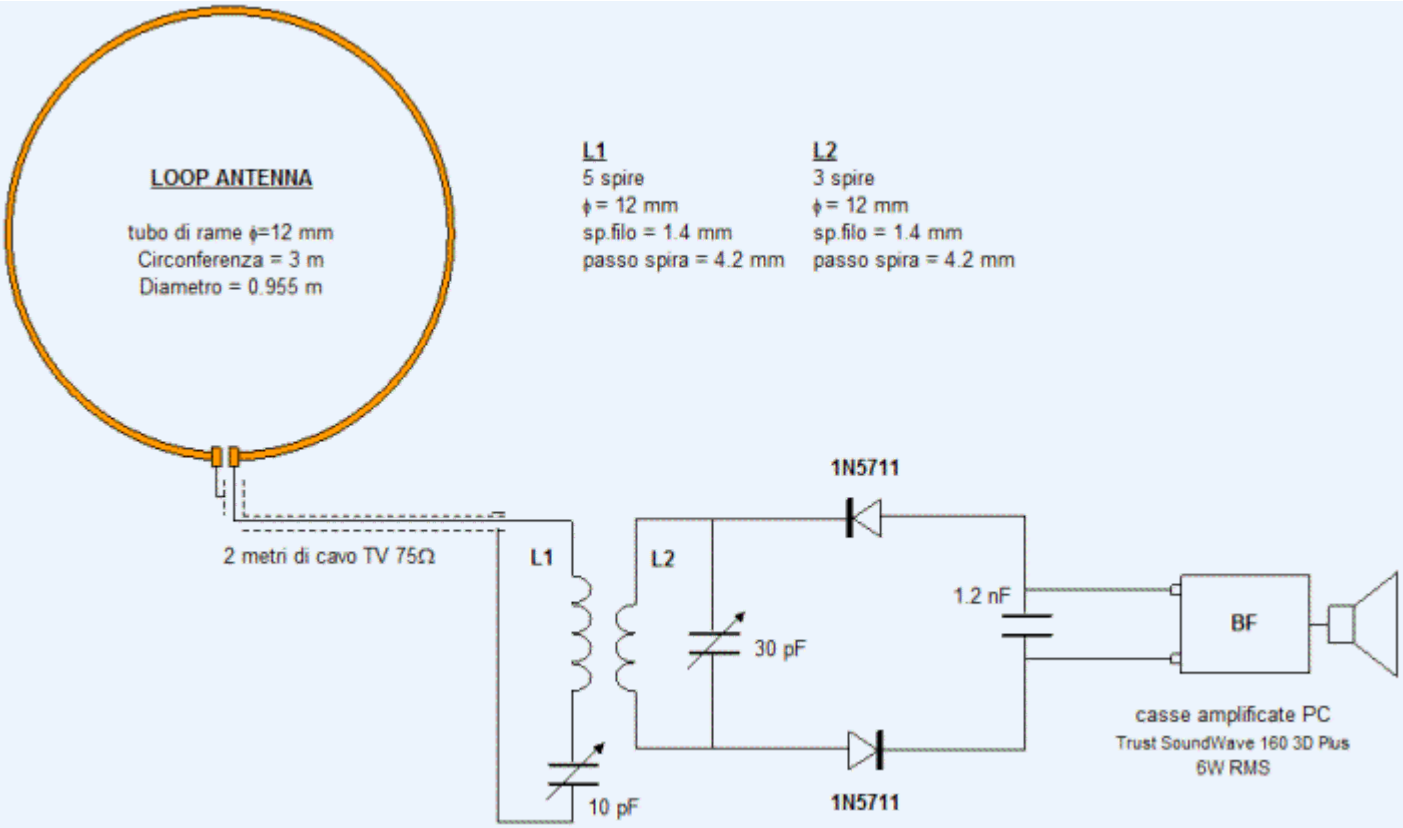

Il ricevitore è “alimentato” da una antenna a loop ad onda intera costituita da una sola spira circolare realizzata con 3 metri di tubo di rame per impianti idraulici (induttanza misurata pari a circa 3 uH). Il supporto è un semplice listello in legno di abete lungo 2 metri, largo 3 cm e spesso 1 cm, a cui il cerchio di rame è stato fissato con nastro isolante. Un’altra soluzione per realizzare l’antenna a loop in modo semplice ed istantaneo è utilizzare una piattina di alluminio di 2 mm di spessore e 2 cm di larghezza. I rivelatori sono due diodi *Schottky* tipo 1N5711, particolarmente adatti per VHF grazie alla bassa capacità (circa 2pF). Sono attualmente in produzione e quindi facili da trovare. Il ricevitore è stato collaudato in una situazione “stiff” con l’antenna esposta in un balcone incassato (3 x 1.6 metri) al quarto piano di un palazzo in cemento armato di 6 piani circondato da altri edifici realizzati con pareti intere in cemento armato. Come si può vedere e sentire dai due filmati che ho caricato su Youtube:

http://www.youtube.com/watch?v=YNiuRoIp36E

http://www.youtube.com/watch?v=SJwx8_3mCfI

la ricezione è buona come anche la selettività, grazie all’accoppiamento appropriato, ma molto facile da trovare, tra la bobina di antenna L1 e quella di sintonia L2. L’amplificazione audio è stata affidata a due piccole casse amplificate da PC. Le foto seguenti mostrano il primo prototipo funzionante montato "in aria" (fare clic sulle immagini per vederle meglio). La foto sotto il titolo mostra invece una realizzazione esteticamente più accurata.

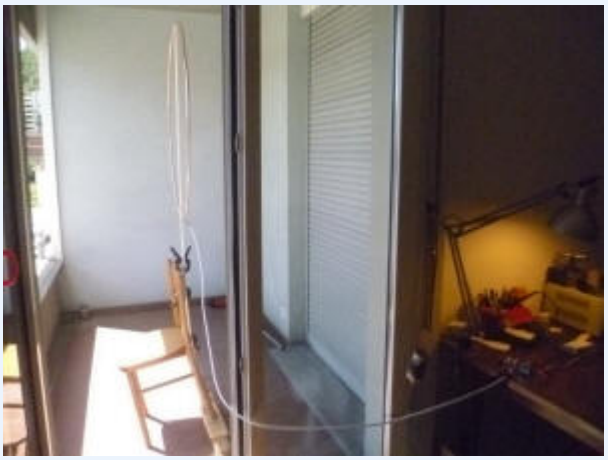

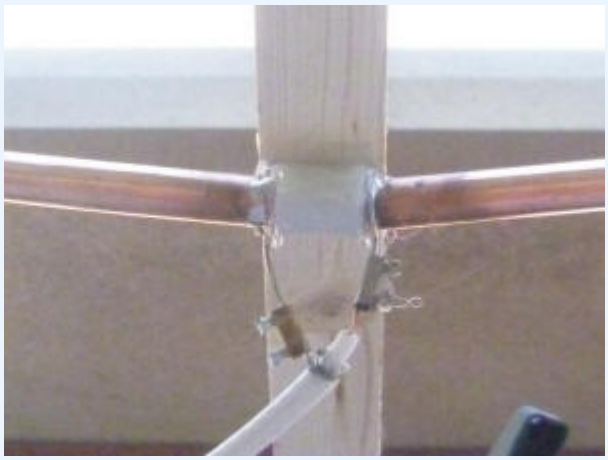

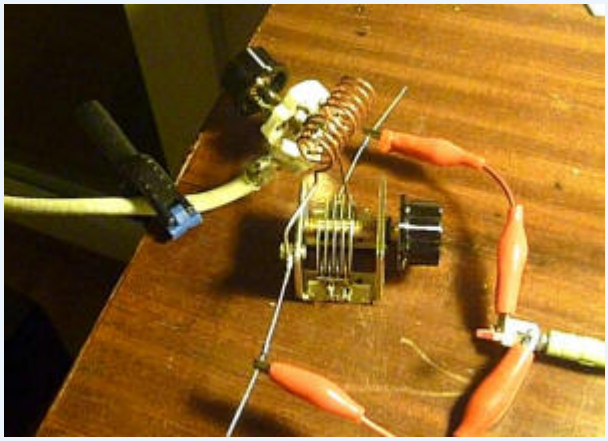

Per ogni chiarimento non esitate a contattarmi. Giacomo Cavuoti

Progetti dei lettori - Radio a cristallo
Torna alla Pagina Principale

Simple crystal receiver for FM

Carlo Bramanti

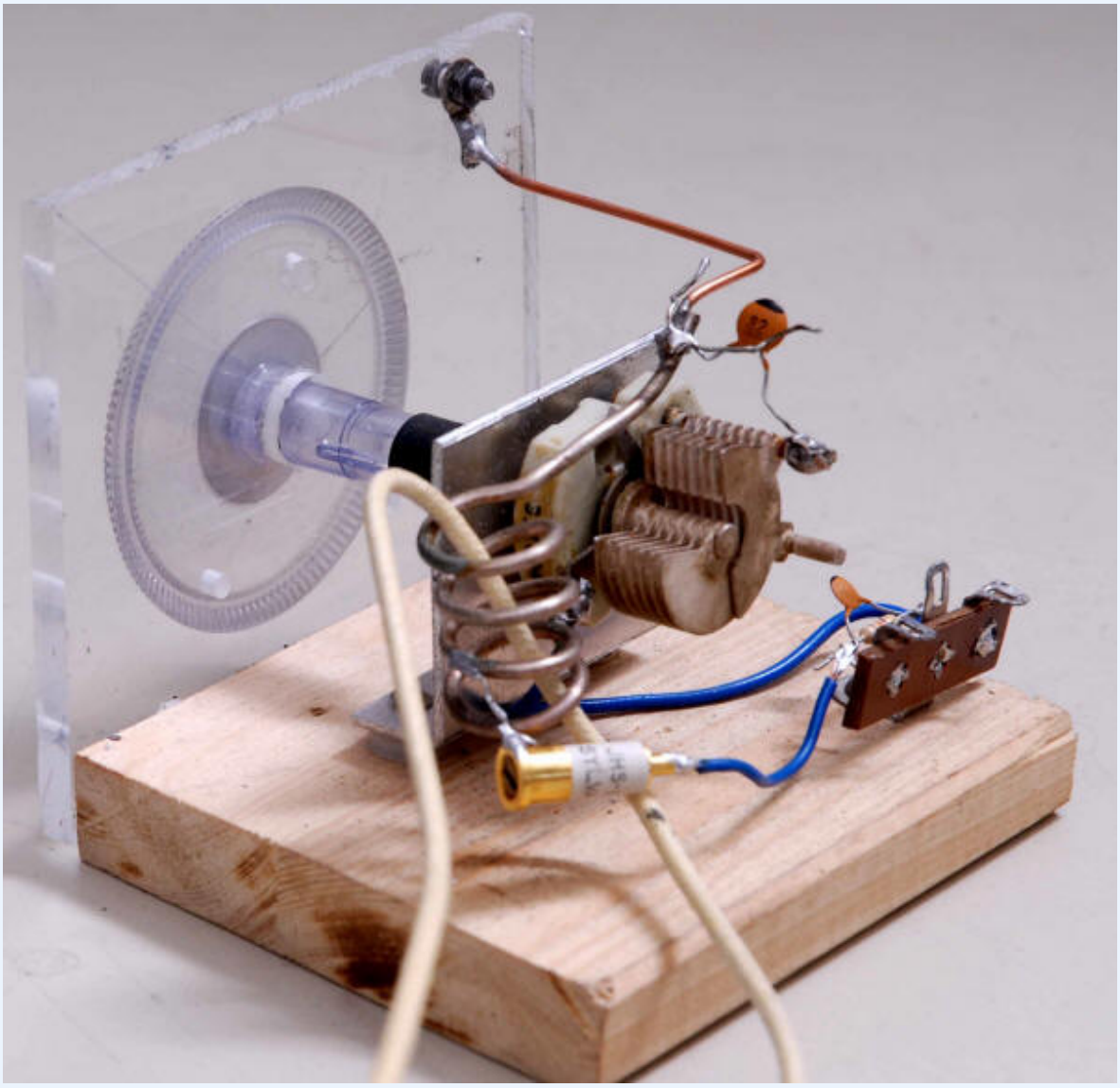

After the success obtained in the realization of the "galena" FM with the resonant cavity, I had promised myself to try also with a simple LC resonant circuit. One of my galena mates favored what he had built without success and I set about making it work.

Operation

With the experience that the audio signal resulting from this detection is very low, I immediately applied the two-transistor amplifier I have already described on these pages. With the fully extended stylus it did not actually work, but by lowering it, you already felt something.

The link

When I connected it to the J antenna it worked fine. The connection that gave me the best results was a simple conductor loop over eighty cm (about ¼ wave), passed through the resonant coil. If we use a cable to move the

antenna away, the loop connects directly to the cable. I have no particular experience on these frequencies and I think that those who have more can still improve performance. In any case they are already adequate, even if slightly inferior to that of the cavity, with the advantage that everything is much more comfortable and pleasant.

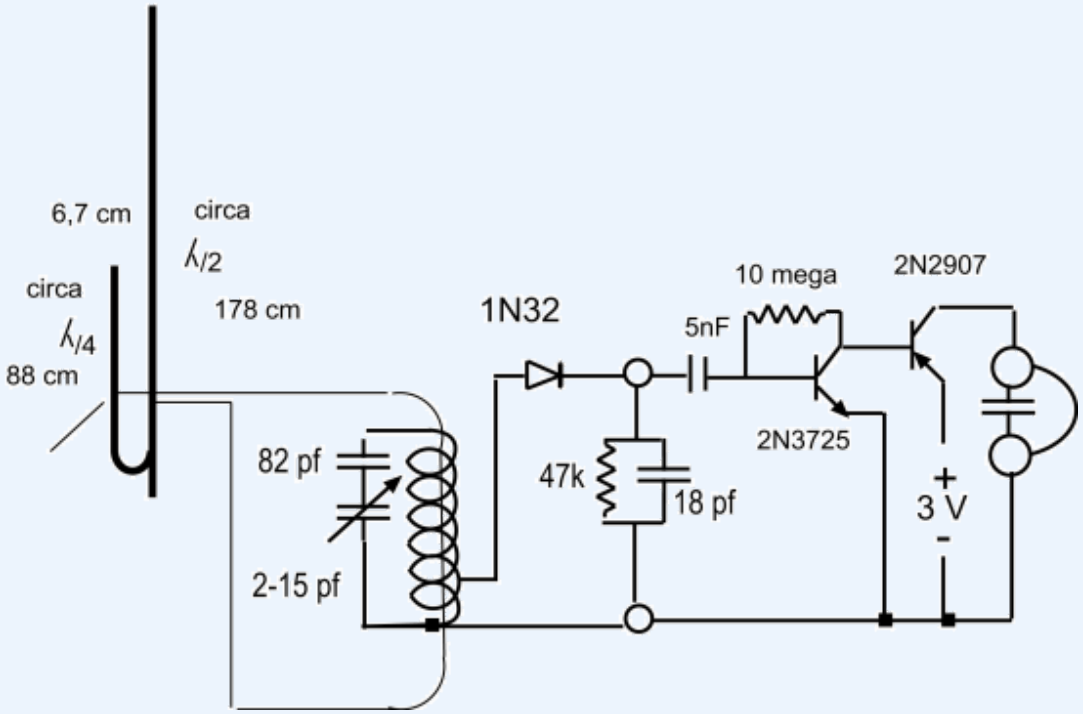

The theory

Normal AM revelation can not reveal weak signals with the consequence that it is useless to amplify after the revelation, since it increases only the volume and not the sensitivity. Instead the detection of the FM also handles very weak signals: therefore, amplifying after the detection, all the weakest stations appear. The amp that I made amplifies a lot (in AM it also acts as a detector, but in FM it must be preceded by a diode); it can be powered by a 3 V lithium drain and it consumes very little: it is even sufficient to disconnect the earphone for almost zero consumption. This makes the use of a switch superfluous.

J antenna

It is an antenna that is easy to realize by bending a copper pipe by fontaniers, with a diameter of 6 o 8 mm. Fixing to a pole or base does not require isolation.

The diode 1N32

I obtained an additional advantage by replacing the germanium diode OA85 with the one with contact tip silicon 1N32, a little old but available and used as a mixer for the K band.

NOTE

In the aforesaid realization the frequencies from 88 to 104 Mc are listened with a rotation of the variable of only 45 degrees, or half of the excursion. Above I hear nothing.

The excursion with trimmers and padders should therefore be extended, while maintaining the optimal L / C ratio.

Realization:

Coil in silver wire from 2 mm.

Average diameter 14 mm

Length 19.5 mm

Number of turns 4

1 ½ coils outlet from the municipality

Ground connection not necessary

Proposal

I would have made the coil with three turns of three millimeters, diameter three cm, length three cm. The Q would be one and a half times higher, which on balance, would improve performance slightly; except try, in this discipline you never know!

See other Bramanti articles on FM Demodulation and Cavity Detector

See also the Bramanti on Galene page

Crystal radio
Return to the Main Page

3rd July 2013

The simplest FM Crystal Radio

The simplest battery-free FM Crystal Radio.

Make the world's simplest battery-free FM crystal radio

Only consists of two high frequency diode: 1N34A or ISS86 or ISS106.
A 100K Resistor.
An 1.8M antenna.
And a crystal or high impedance earphone

[http://1.bp.blogspot.com/-x9lr6oLJ9z8/UdQ_lBNismI/AAAAAAAABQE/pfbpj7x0Azs/s1600/IMG_2607.JPG]

Refer to this circuit diagram

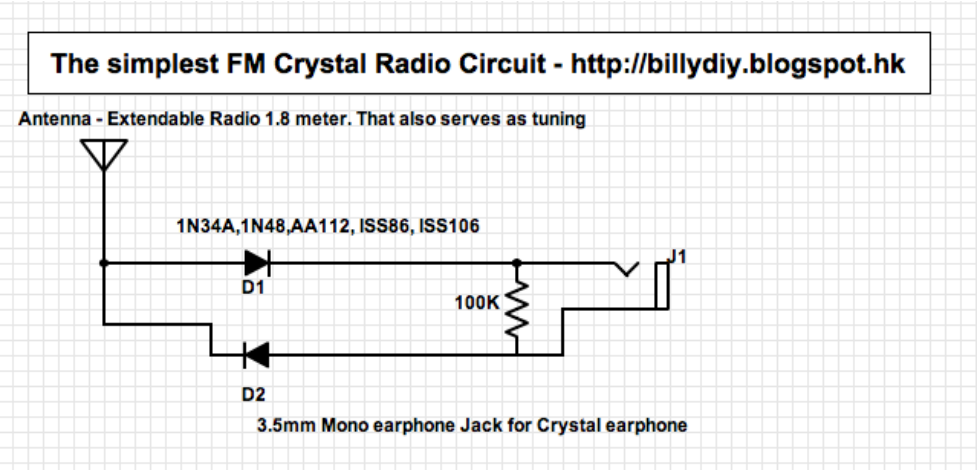

[http://2.bp.blogspot.com/-G9onfk5x8FA/UdRDYhFFyAI/AAAAAAAABRA/mtiP8wFX78E/s639/Screen+Shot+2013-07-03+at+11.28.54+PM.png]

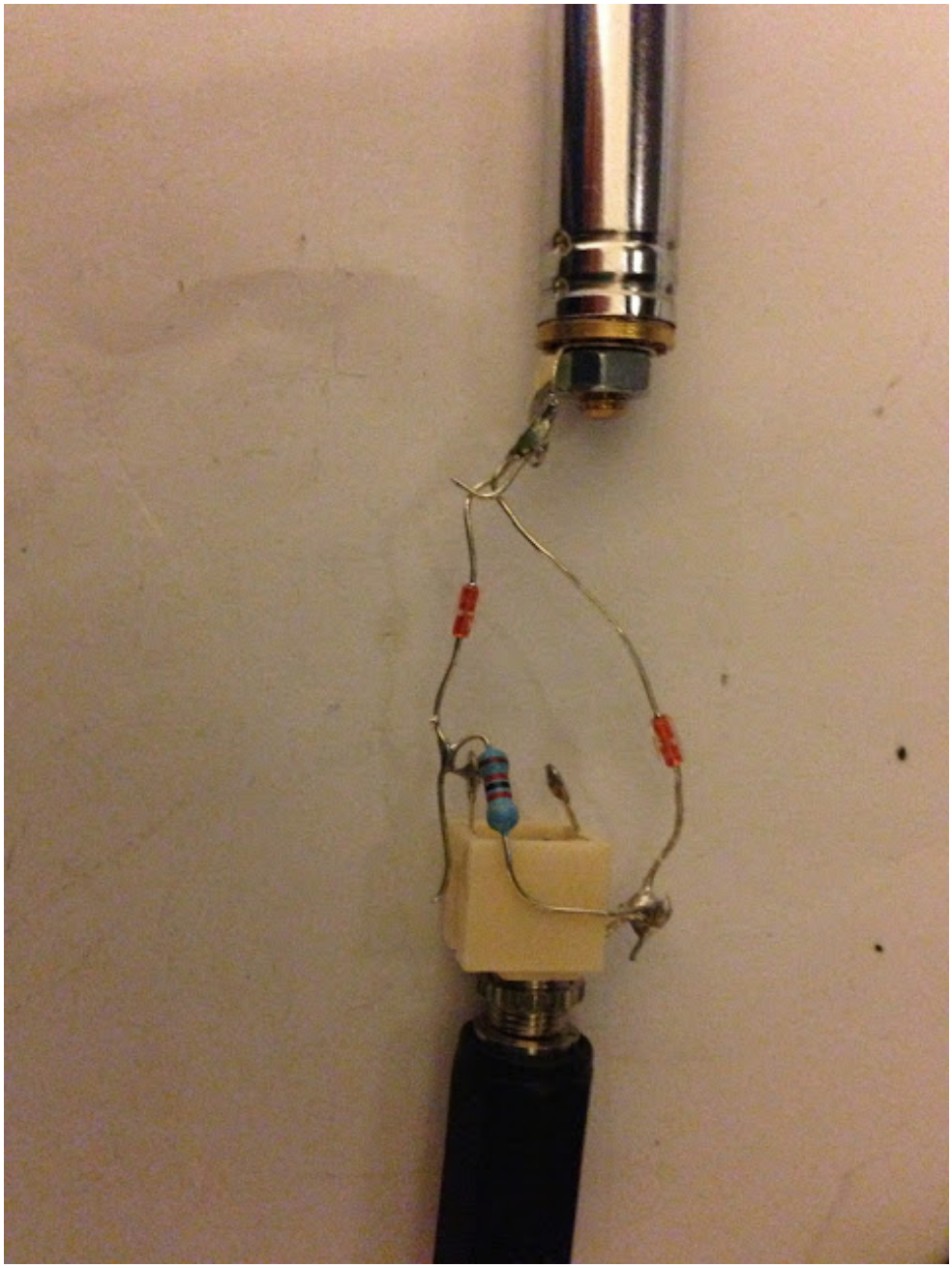

[http://4.bp.blogspot.com/-UVDtJdx6leQ/UdQ_lE_swzI/AAAAAAAABQM/ToNTHsm8pdc/s1600/IMG_2608.JPG]

[http://1.bp.blogspot.com/-jvFTM9CBpKQ/UdQ_kx4Q35I/AAAAAAAABQA/W1wxPV0ezZk/s1600/IMG_2609.JPG]

Posted 3rd July 2013 by Billy

Start Download
Search Videos W/ HowToSimplified On How To Do It Yourself - Free! Go to howtosimplified.com

0 Add a comment

Enter your comment...

Comment as: Unknown (Goo ▼ Sign out

Publish Preview Notify me

FM Crystal Radios?

copyright © 2006 by Larry J Solomon

I have heard, even from a physicist, that it is impossible to build FM crystal radios. On the other hand some experimenters claim that they have built them. This argument intrigued me to try and build an FM crystal radio, which I have done successfully. To my surprise, the result is an astounding performer, pulling in four local stations in Tucson. When connected as a receiver to a good sound system the sound fidelity is as good or better than more expensive AM radios. In fact, it sounds "high-fidelity".

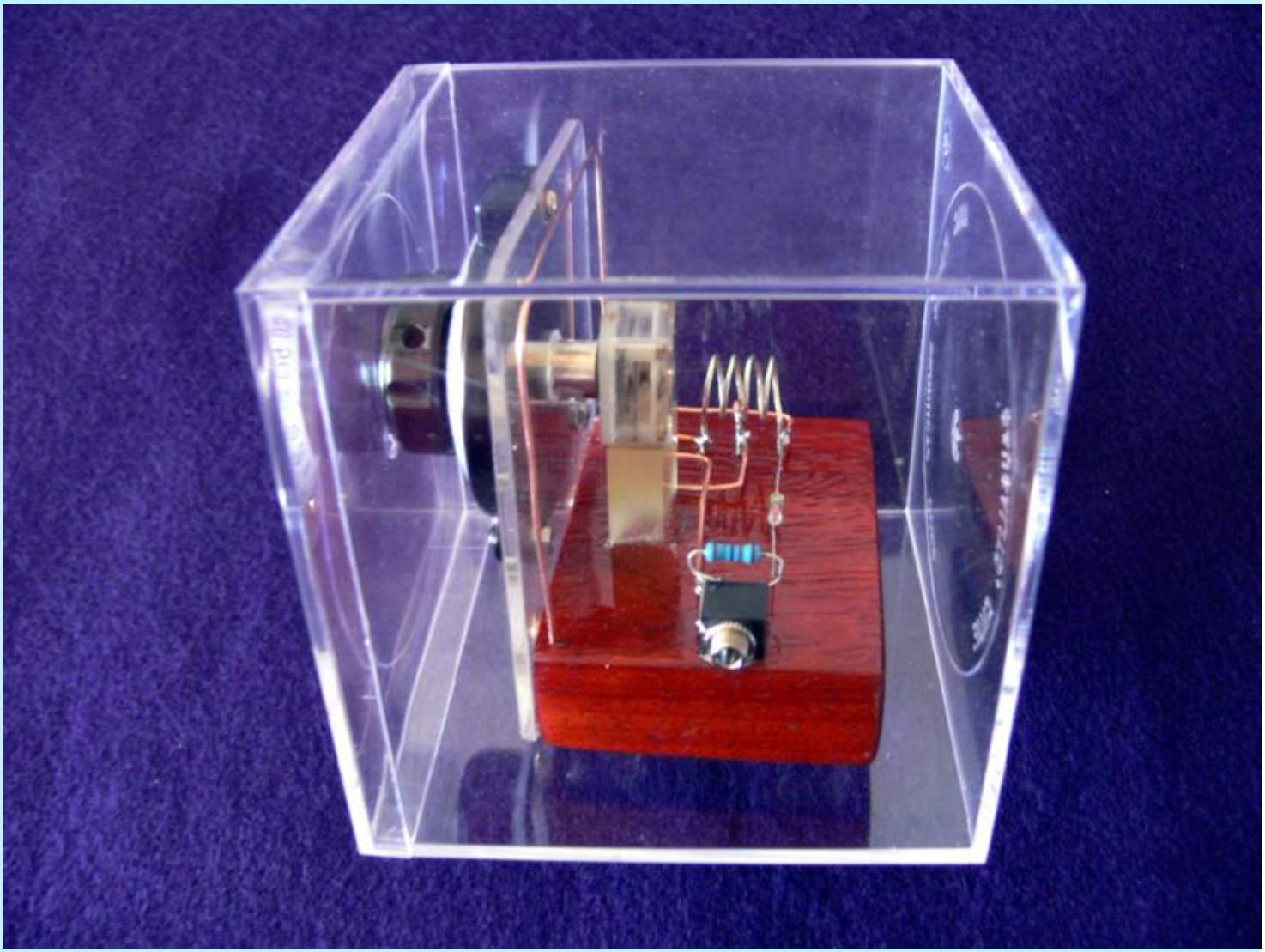

This picture shows the Solomon FM Crystal Set in an acrylic display case. I made the set specifically to fit inside this case (the case came first).

My definition of a crystal radio is one that is not powered, except by the radio transmission itself and employs a crystal detector. So, it should work without any batteries or AC power. An FM crystal receiver must be able to detect and receive FM signals well enough to be heard in earphones without any such extra power.

This FM receiver is an amazing performer. It has crystal clear reception (pun intended), good sensitivity, but only fair selectivity. This set was a discovery for me. I started out by designing and building the normal AM sets. Then one day while testing the "Mystery" set (see my other web links), to my surprise, in addition to the expected panoply of AM stations, I heard a very faint signal that I could not tune out. At first, it seemed too weak to identify. When I tuned out all the AM stations, I was astonished to hear the announcement "KiiM FM, 99.5"! This is a

country music FM station here in Tucson. It was all over the dial, untunable, but the much louder AM signals masked it when they were tuned in.

I set myself the task of trying to improve the FM reception. I tried some simple circuit modifications that did not seem to improve anything. Then I connected a dipole antenna instead of the AM antenna I normally use. Suddenly, the FM signal was much clearer, although still weak. By using the audio output and sound system amplifier, I was even more amazed that four different FM stations came in loud (or rather medium) and clear. I found that changing the telescoping antenna length and position I could tune the stations in and out. They were KRQ, KLPX, KiiM, and KHYT all local FM stations with transmitters nearby. Their reception was also affected by the length and position of the audio output cable.

After doing some research, I discovered that there was a physical theory that claimed that FM reception was possible and even probable using the same circuit as an AM receiver. The theory is called "slope detection". So, I set out to find circuit improvements. A web search yielded little, mostly theory. But there was enough information that I thought I could make some modifications to the AM circuits to make them more tunable to FM signals and less tunable to AM. Since FM operates at higher frequencies, all I had to do, I thought, was make the coil and caps smaller. After much "tinkering" I arrived at the current circuit.

The circuit looks identical to a classic AM crystal circuit but is even simpler to build. The components were reduced in dimension to resonate at higher frequencies. This was done by experimenting with smaller and smaller coils and capacitors. The antenna is also much reduced in size (from that of AM) to resonate at higher frequencies (the antenna is crucial). The air variable capacitor I used has two trimmers in it which should be adjusted for best reception.I have found that a commonly available vernier dial and knob will fit the capacitor nicely. See end of article for a picture of the variable. C3 is a ceramic capacitor of 18 pf, but may be anywhere from 10 to 50pf. A detected FM signal is converted to AM due to an effect called slope detection that modulates amplitude.

This FM Crystal Set works best near the transmitter (I have not tested it beyond about 10 miles). Secondly, the sound level is quiet, especially without an amplifier. A quiet room is needed for listening with earphones. One must be willing to move the set around to find a location for the best reception of signals. However, in addition to listening with high impedance earphones (crystal or otherwise), the set can be connected directly to an audio amplifier's low level magnetic input which can then play amplified through a sound system at any volume -- sounds GREAT. In fact, I recommend starting tests with the FM crystal set by connecting it to the low-level phono inputs of a receiver or preamplifier. (Nowadays, many receivers don't even have a phono input!) That way you can crank up the volume, which makes it more likely to find the FM stations. If no signals are detected, I also recommend connecting an external "rabbit ear" antenna or hanging a short wire (12 inches or so) in various positions next to the internal antenna. The variable length of rabbitt ears can help to tune in stations.

No additional wiring or antenna is necessary (the antenna is optimized in length for FM.)

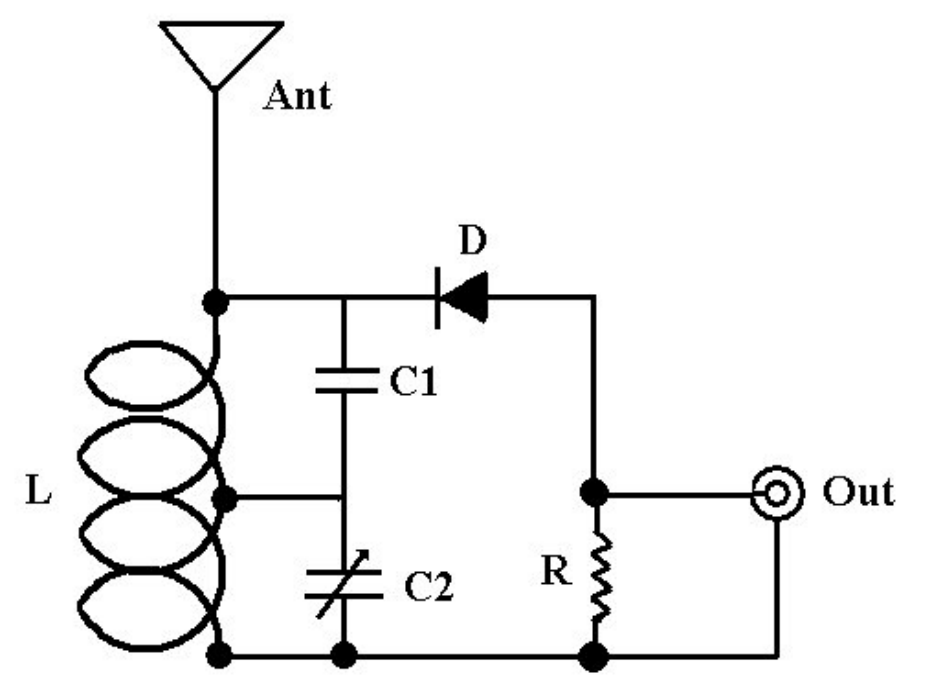

L - 4 turns #18 copper or silver wire, 12mm inside diameter, tapped at 2.5 turns
Ant - 7 inches of #18 bare copper wire
C1 - 18 pf ceramic capacitor
C2 - 50 pf air variable capacitor
D - 1N34 diode or rock crystal
R - 150K resistor

The diode is tapped directly to the antenna. The vernier dial fits directly on the tuning capacitor. The antenna parallels the perimeter of the acrylic face plate. "Military style" #18 AWG wiring is used without any insulation. It is important to keep the components physically close together. The component specifications are the same as in circuit #2. The coil is silver rather than copper, but copper does just as well. I think that the contrast of the silver and copper is beautiful. The coil was wrapped around a Sharpie Permanent Marker, then slipped off and expanded slightly. The wooden base is made from lacquered, polyurethane padouk.

I consider this set a work of art as well as science and think it is the most elegant crystal receiver I have created. I love the contrast of the silver coil, the copper antenna, the clear acrylic faceplate, the black vernier dial, the white and transparent variable capacitor, and the subtle colorings on the resistor, the diode, and the lucite base. Yet the circuit is so ridiculously simple that some will not believe it is possible without building it themselves. No shielding is necessary, and there is no problem with hand capacitance. However, the output cable position may affect reception sensitivity.

Photos of wired circuit

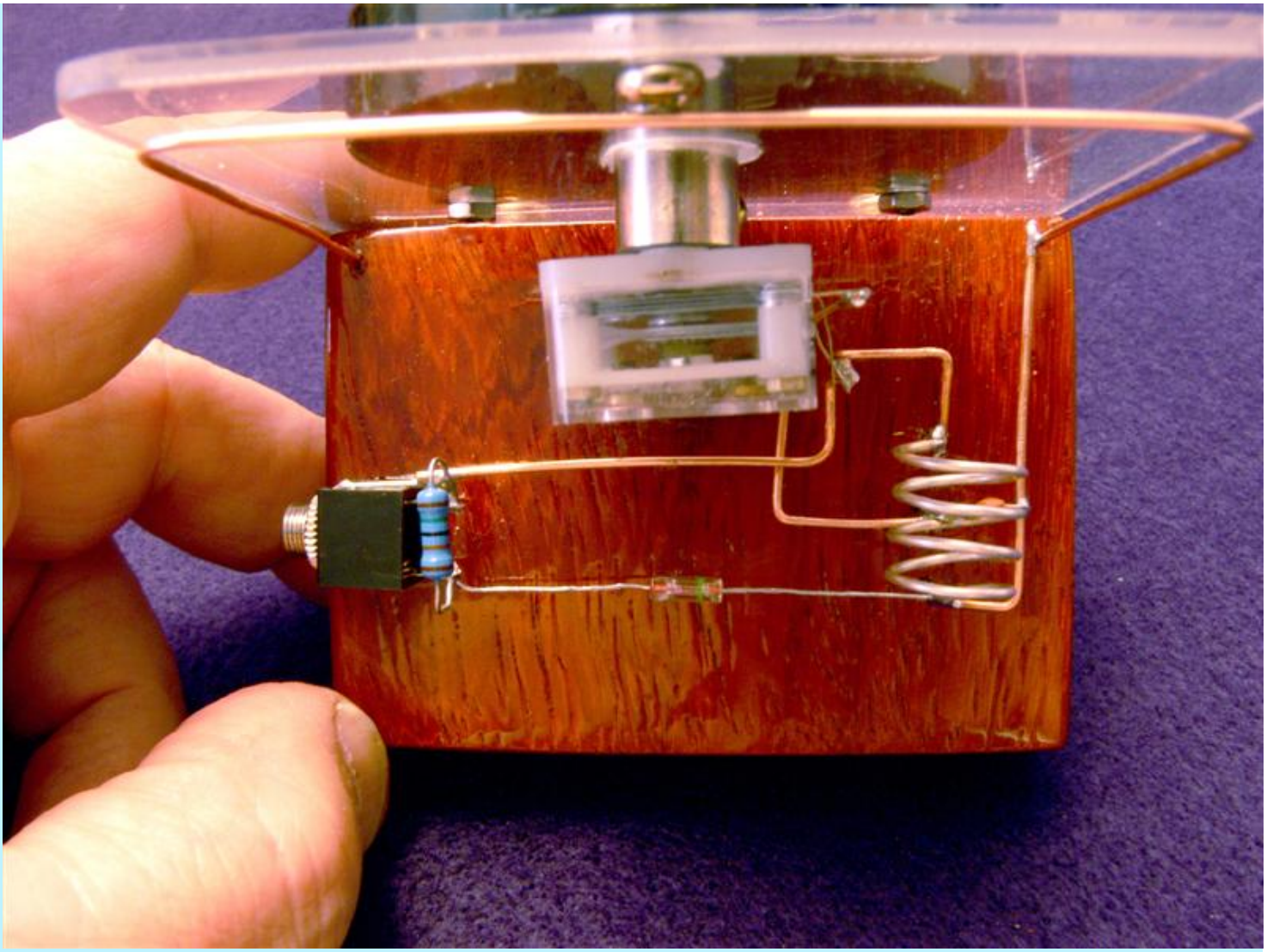

A hand is included in this photograph to show scale. Note the military style wiring, diode, and antenna. I wanted the wiring to create a modern design similar to a Mondrian painting. Not only is this set beautiful, it works! No power and no long antenna! It looks like a work of fiction.

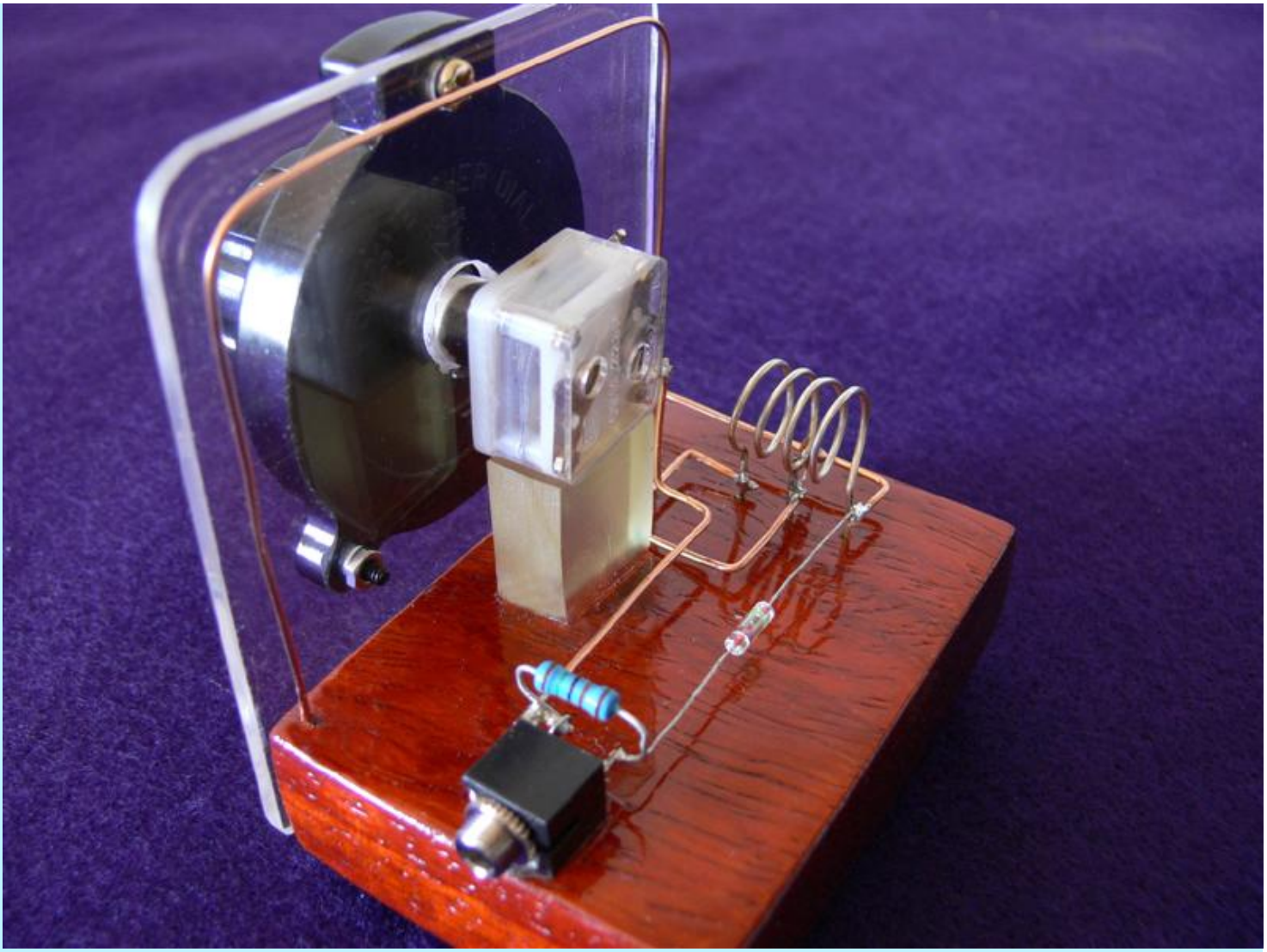

Is this thing imaginary -- science fiction? Well, imagination did play a part, but it is definitely not science fiction. This shot shows the elegance of the FM set best, I think. There is only one resistor and one fixed capacitor.

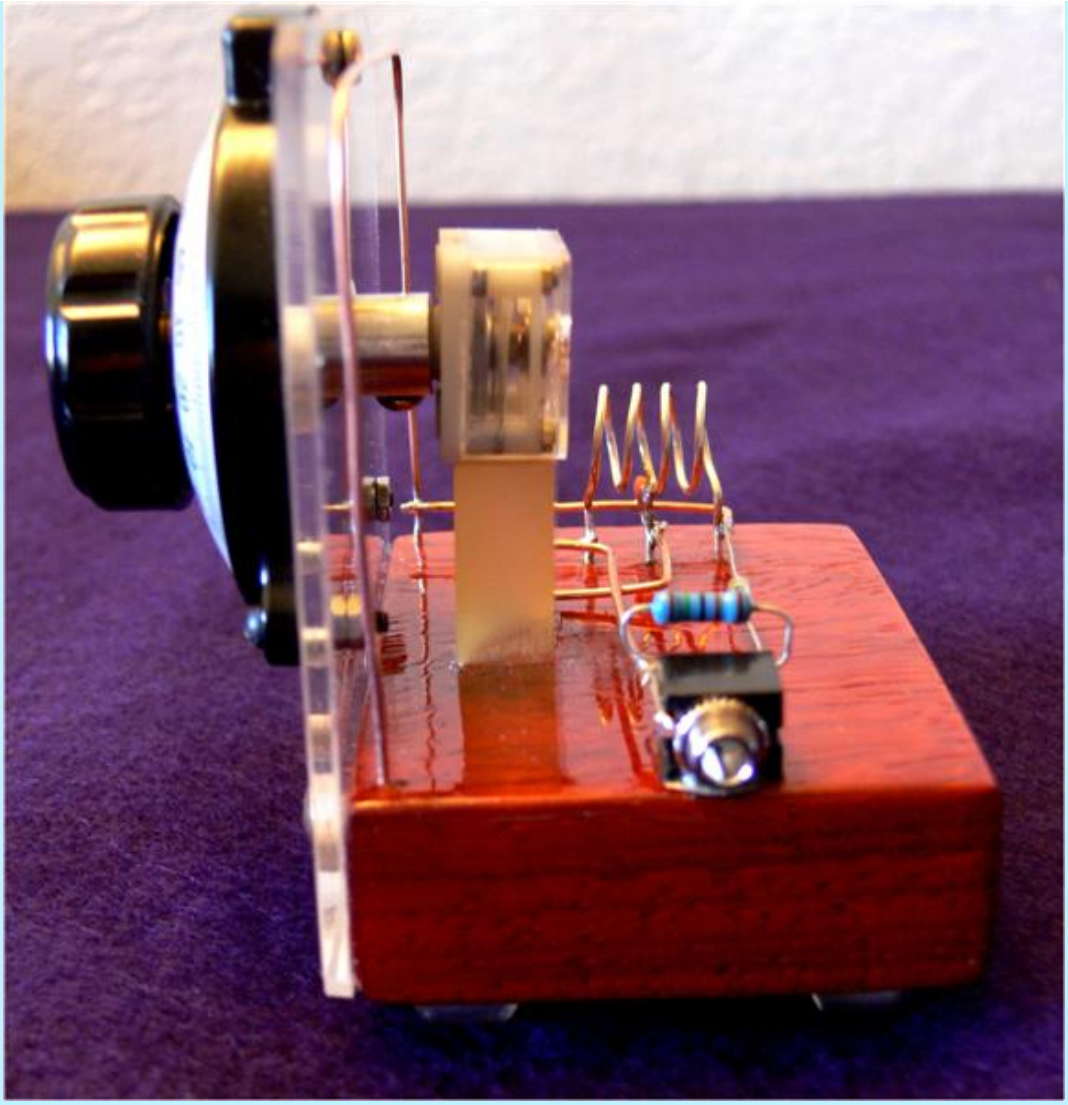

The inside of the tuning capacitor and the phono jack/output can be seen here. Can you spot the fixed ceramic capacitor? Note the polished edge of the face plate and the reflection in the wooden base.

A quarter-inch piece of lucite was fitted under the tuning capacitor to anchor it. Note the two tiny trimmers on the back of the tuning capacitor. Brass screws were used to enhance appearance.

The vernier dial is large to accomodate ease of tuning, and the vernier makes it easy to separate stations. Two golden (brass) wood screws fix the face plate to the base. Holes for the face plate were made with special plastic drills, but ordinary drills may be used if drilled very SLOWLY. The knob is removable.

FM Crystal Circuit #2

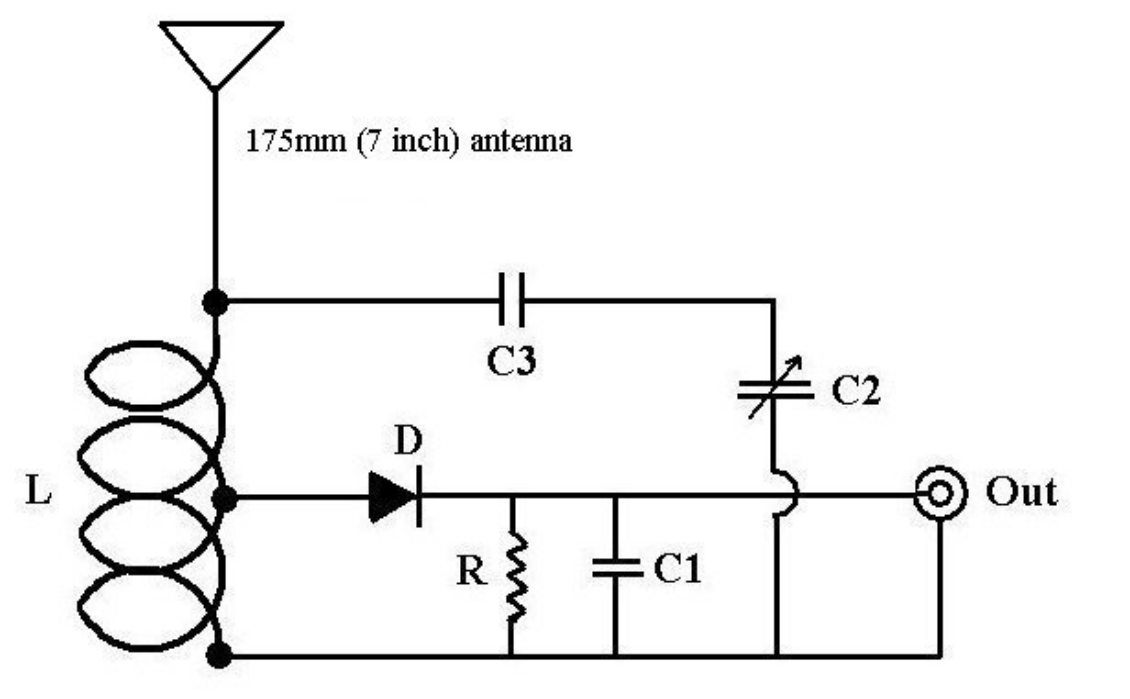

L - 5 turns AWG#18 bare copper or silver wire, 12mm inside diameter, tapped at 2.5 turns
D - 1N34 or rock crystal diode
C1 - 82 pf capacitor
C2 - 80 pf air variable capacitor
C3 - 18 pf capacitor
R - 150K resistor

The following photographs show the circuit wired with the handmade Saturn Dial. and knob. It is perhaps not as visually striking as set No. 1, but it works just as well. In fact, this set was the original version. Notice that all the wiring and coil are copper.

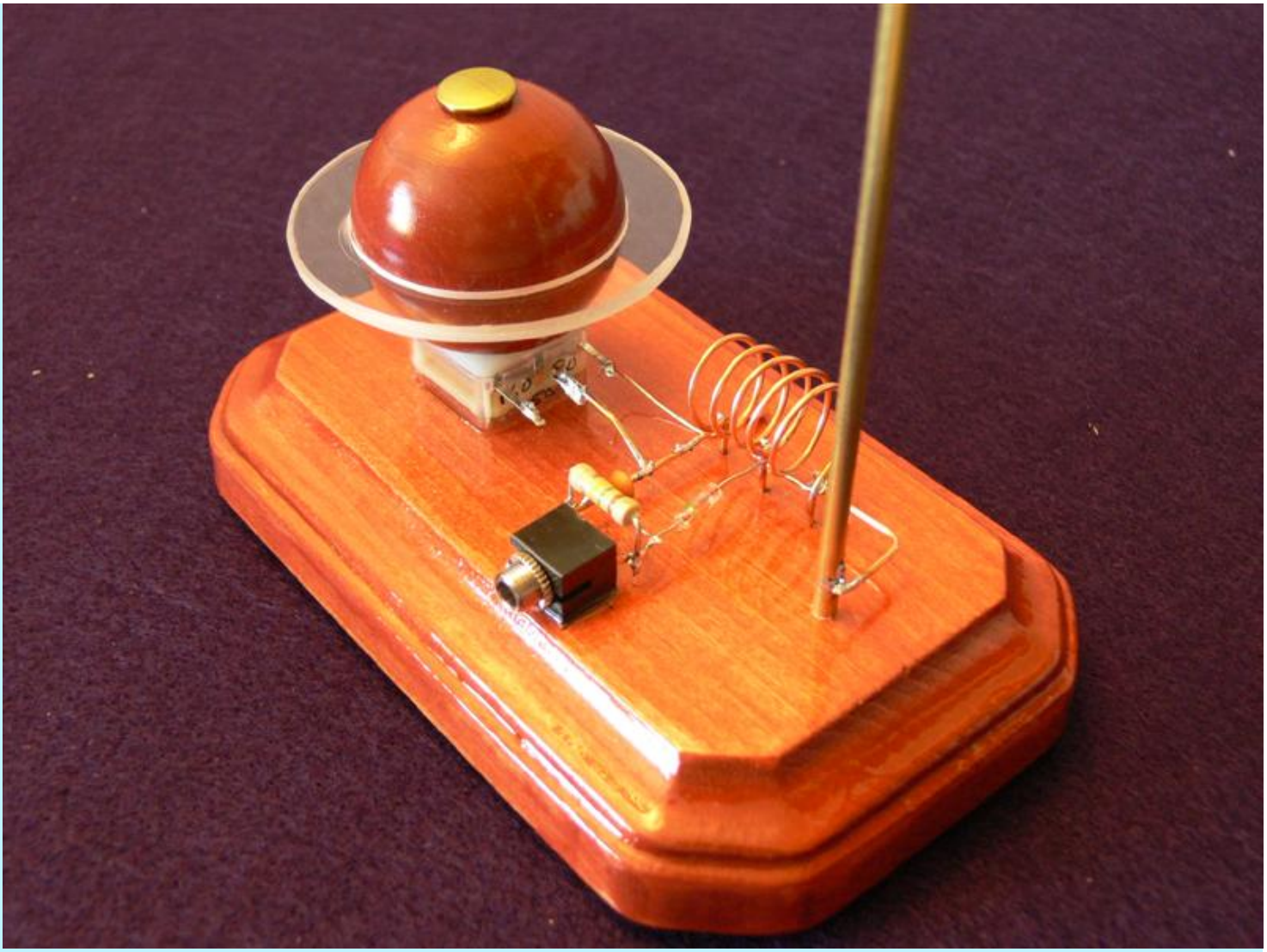

The Saturn dial and knob were fashioned from a "doll's head" from Michael's Arts and Crafts, a piece of lucite cut with two circle cutters, and a brass paper fastener. The knob is fixed to the tuning capacitor with a small machine screw that fits in the hole below the brass fastener. The most difficult part of this was fashioning "Saturn's rings". This must be done very carefully and slowly. The inside edge should be cut slightly undersized and then sanded with a drum sander to fit snugly. The outside edges can be sanded with fine sandpaper and polished with a plastic polisher.

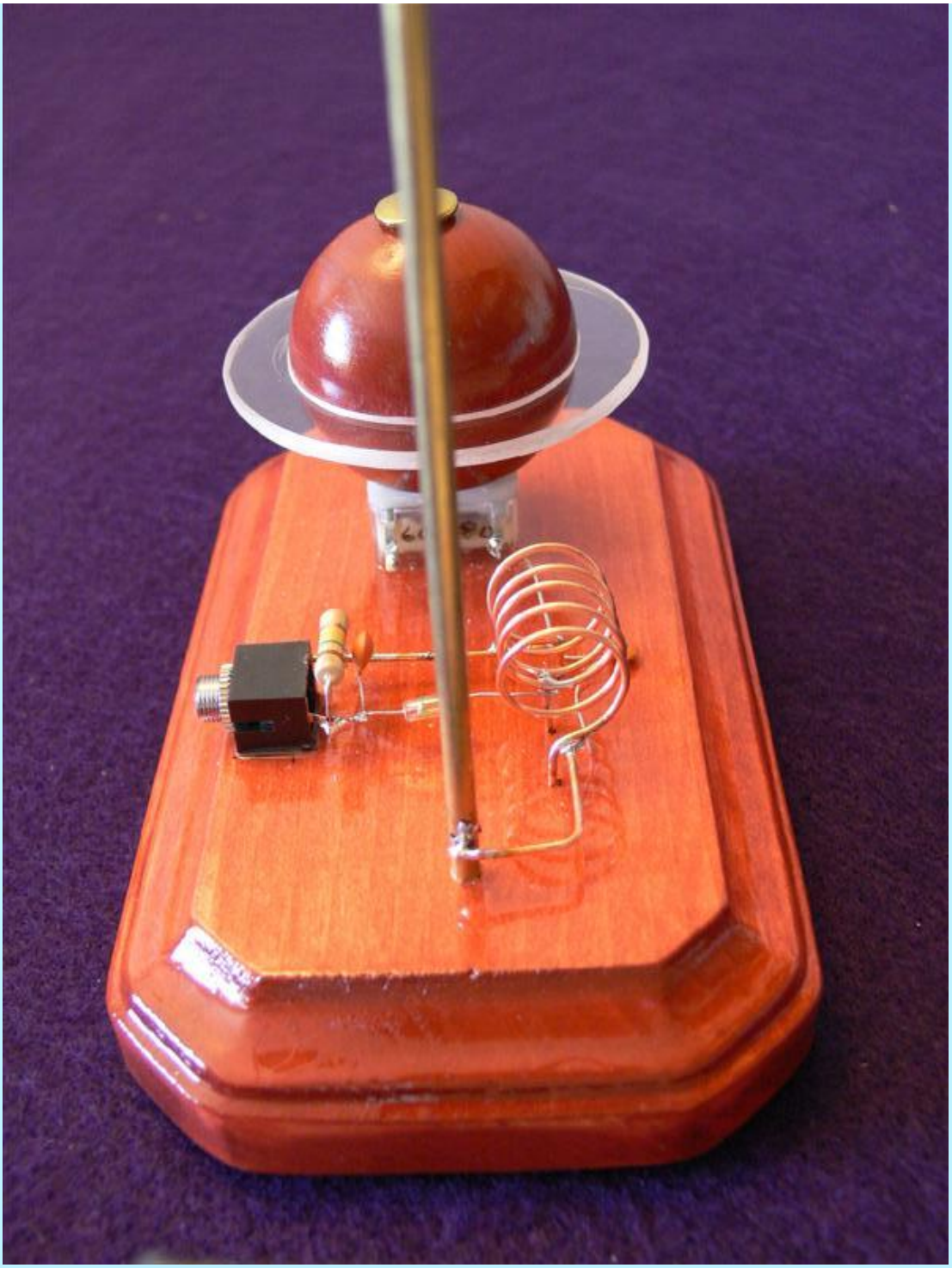

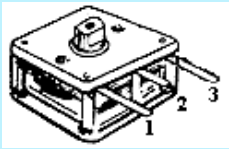

The air variable capacitor may be obtained from Electronix Express at http://www.elexp.com/. Part number 14VCRF10-280P. The 80 pf side is recommended for the second circuit, contacts 2-3. Contacts 1 and 3 were used for the first circuit (50pf).

- OSC: 5-59 pf
- ANT: 5-142 pf
- OSC and ANT Trimmer 10pf range

Home -- If you want to contact me go to the home page and go through the Music Clinic link.

[Return to VK3YE amateur radio projects]

A simple crystal set for free power radio

Of any electronic project, the crystal set would have to rate as one of the most popular. Many amateurs are on the air today because of their early construction of a crystal set. Most practical electronic books for beginners include at least one crystal set project. Unfortunately, some of these circuits take simplicity too far and deliver mediocre performance, often by omitting key components such as the tuning capacitor, or failing to provide coil taps.

This article describes a crystal set of medium complexity. It features coil taps for the antenna and diode to make it useful for both country and metropolitan listeners. The taps allow the set to cover 160 metres if desired. All parts are easily obtainable, making it a good choice for the beginner. The endless possibilities for experimentation also make crystal sets interesting novelty projects for experienced constructors. The schematic is shown here:

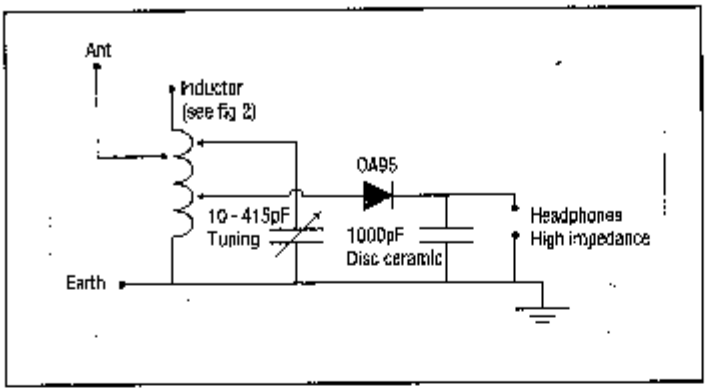

Figure One: Schematic diagram of crystal set

VK3YE Crystal Set

Schematic & Layout diagrams

Press Back button to return to main article

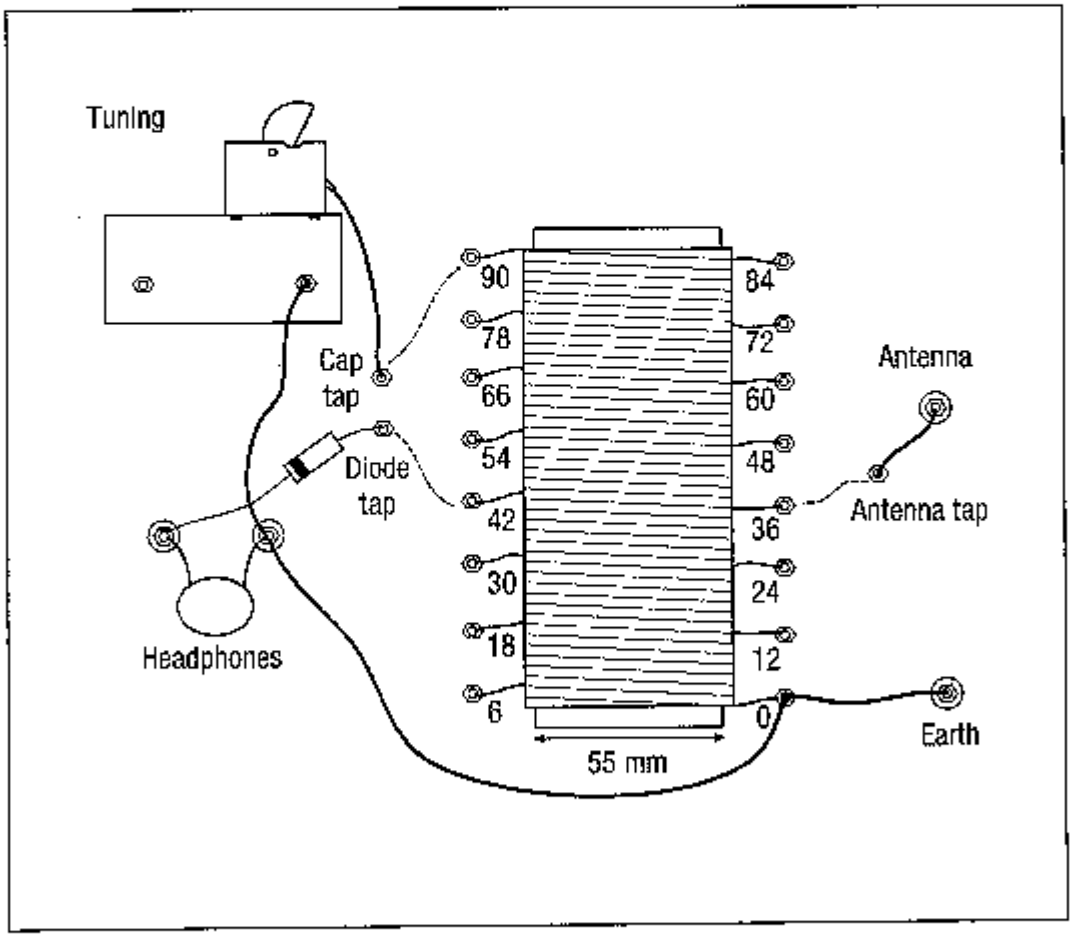

Figure Two: Rear view of front panel, showing coil details

(from Amateur Radio February 2001, page 20)

Obtaining the parts

Tuning capacitor

A large air-spaced type, covering about 10 to 415 picofarads is preferred. These capacitors were common in valve and early transistor radios and often appear at hamfests. Their long shafts make it easy to attach large tuning knobs. When purchasing one see that the shaft turns freely, but is not loose. Ensure that the plates are straight and do not touch when meshed - use a multimeter (preferably with audible continuity function) to test this. Avoid capacitors with 3/8 inch shafts unless nothing else is available â€“ knobs for these are not obtainable, and an old valve radio dial drum will need to be used instead.

If a large capacitor is unavailable, a small plastic dielectric unit is suitable (such as stocked by Jaycar and online). The lower maximum capacitance (160 pF) means that more coil turns are required to provide coverage of the lower end of the broadcast band. This can be partially overcome by connecting the 60 and 160 pF sections in parallel (link the 'A' and 'O' tabs). The main disadvantage of these capacitors is their short shafts, which makes it harder to attach most types of knobs.

Vernier Drive and dial

The use of a vernier reduction drive is not necessary. However, its inclusion makes tuning easier, particularly on the higher frequencies. These are rare new but sometimes come up at hamfests. If your drive lacks a dial, one can be fashioned from a plastic or metal disc, such as a jar lid or salvaged computer hard disc. Glue the dial directly to the skirt of the tuning knob if you lack a vernier drive.

Diode

This is the most easily obtainable and cheapest component in the project. A germanium diode, such as a 1N60, 0A90, 0A91, 0A95 or 1N34A will be suitable. The purists still make their own diode detector with a 'cats whisker' and lump of galena, but modern diodes provide more stable and repeatable performance.

Headphones

The very old high impedance headphones are required for this circuit. A minimum of two kilohms is suggested. Medium impedance headphones (approx 600 ohms) will also work, but are less sensitive.

High impedance headphones have become difficult to obtain. Alternatives include:

1. Old-style telephone earpiece. Quite sensitive. Found in the old Telecom corded phones.

2. Crystal earpiece. These are sensitive, easy to obtain and inexpensive. You may need to connect a 100k - 470k resistor in parallel for it to work properly.

3. Piezo transducer. Believe it or not, these actually will work as an earphone. Some sizes even fit snugly in the outer ear in a similar manner to modern earpieces, such as used with mobile phones. The main drawback with transducers is their peaky audio response. Â In some cases it may be necessary to wire a 100k - 470k ohm resistor across the earphone connections for correct operation.

4. 1k to 8 ohm audio transformer and standard low-impedance headphones. Works well, but not as sensitive as a crystal earpiece.

5. Cheating! Use a transistor or IC amplifier kit to run a speaker. This approach eliminates the 'free radio' advantage of the crystal set, but provides louder reception in weak signal areas and allows speaker listening.

Coil and Coil former

This needs to be a cylinder about 55 millimetres in diameter and 150 mm long. The length needs to be long enough to accommodate all ninety coil turns used, with enough left over for mounting to the front panel. Plastic pipe, shampoo container or similar will suffice. Though enamelled copper wire can be used for the winding, the prototype used thin plastic-covered stranded insulated wire.

Front panel

All parts are mounted on a 6mm-thick polyethylene chopping board, which forms the front panel. A hacksaw was used to cut the panel to fit inside the wooden case. Use the thinnest chopping board available so that the many screw-mounted sockets used can be fastened properly. The front panel pictured was cut to 240 mm square.

Case and handle

Use non-metallic material for the enclosure. The box used in the prototype was originally a speaker bought cheaply at a school fete. The lid (which held the speaker) was removed, and the rest of the box painted. The top carry handle is optional and came from a hardware store.

Construction

Commence construction once all components have been obtained. Plan how the parts will fit behind the front panel. The diagram and pictures above show the arrangement used in the prototype. The coil is fastened with stand-offs and the variable capacitor is screwed to an aluminium L-shaped bracket. 4mm binding posts with banana sockets are used for the antenna and headphone connections, and 2mm micro sockets for the coil tapping points.

Start by winding the coil. This consists of ninety turns of thin stranded insulated wire close wound on a plastic tube approximately 55 millimetres in diameter. A large number of tapping points are provided so that the user can vary the set's frequency coverage, and antenna and diode coupling. This makes it possible to obtain the best compromise between volume and selectivity for a particular station.

Figure Two shows the coil construction. Start from the earth end (identified as '0' in the diagram). Make two holes in the former to anchor the end of the wire. Wind six turns and then an extra half-turn. With a knife remove about 1cm of insulation, taking care not to cut the wire. Form the bare wire into a loop and lightly coat with solder. Do not apply excessive heat - the wire insulation easily melts. Wind another five and a half turns and make another tap. Repeat for the remainder of the coil until approximately ninety turns have been wound. Add more turns and taps if using a smaller variable capacitor than specified. Again make two small holes in the former to anchor the wire.

Place the completed coil aside and start work on the front panel. Mount the 4mm banana binding post terminals for the antenna, earth and headphones, as shown in Figure Two. Drill holes and mount the 2mm terminals for the coil taps and the antenna, diode, variable capacitor taps. The tuning capacitor can also be fastened at this time.

Two sets of screws and spacers can be used to mount the coil to the rear of the front panel. A 10mm separation between the coil and the panel is adequate. Solder in the various components and connecting wires as per Fig 2. Use insulated wire for the connections between the sockets and to the variable capacitor. Tinned copper wire can be used for the short links between the coil taps and the 2mm sockets. Use insulated wire for the three jumper leads. The jumpers should be sufficiently long to be able to make connections with all taps along the coil.

This completes the construction. The panel can now be inserted into the box. In the unit pictured, the front panel is recessed â€“ this protects the banana sockets and dial and makes the set more rugged. It also allows attachment of a hinged lid if required.

Parts List

* 10 â€“ 415 pF variable capacitor x1 (see text)

* 0.001 uF disc ceramic capacitor x1

* 1N60 germanium diode x1

* Vernier dial or drive x1 (optional)

* 2mm micro socket x19

* 2mm micro plug x6

* Banana socket (red) x2

* Banana socket (black) x2

* Insulated wire 20m

* Tinned copper or bell wire 1m

Other items: case and handle; polyethylene chopping board; Coil former â€“ 55mm dia, 150 mm long; screws, nuts, washers and spacers; mounting bracket for variable capacitor.

How it works

To receive signals, a radio circuit must perform three functions: selection, detection and reproduction.

The inductor and variable capacitor form a tuned circuit. The role of the tuned circuit is to select one of the many signals present at the antenna. The size of the inductor and capacitor determines the frequencies that can be tuned. The

capacitor is made variable to allow the full range of AM broadcast band frequencies (531 to 1602 kHz) to be received.

The diode detector converts the selected radio frequency signal to an electrical current varying at audio frequencies.

The headphones convert this audio frequency energy to sound. The principle is similar to a relay â€“ the signal cause current to flow in a winding that forms an electromagnet. The magnetism generated vibrates the metal diaphragm, thus creating sound. Crystal earpieces perform the same function, but rely on the piezo-electric effect.

Unlike in a conventional radio, which uses amplifying devices such as transistors and integrated circuits, crystal sets are powered by the signal from the incoming station, so no batteries is required. If provided with an efficient antenna and earth, crystal sets can receive signals thousands of kilometres away.

Antenna and earth

A crystal set requires a wire antenna to operate properly. The longer and higher it is the better. A length of at least 10 metres in urban areas, and 20 â€“ 30 metres elsewhere should provide reception in most cases. The antenna should always be installed away from power lines for safety reasons and to reduce interference pick-up. An existing amateur or TV antenna can also be effective, especially if the coaxial feedline is used as part of the antenna. This is achieved by connecting both the outside and the inside of the coaxial connector to the receiver's antenna terminal.

An earth provides stronger signals, and is essential in remote areas. In homes with copper water pipes, this can simply be a lead to the nearest cold water tap. In newer homes, where plastic pipes are used, an outside ground stake can be used instead.

For long distance reception (hundreds or thousands of kilometres) more than usual effort needs to be taken when installing the aerial and earth. Reference One suggests a length of about 100 metres and a height of at least 12 metres. A series of buried radials is suggested for the earth, rather than the water pipe suggested above.

Operation

Connect antenna, earth and earphones. Install the three jumper leads. Set the capacitor tap to near the top of the coil (either the 78th or 90th turn) and the diode and antenna taps to approximately midway along the coil.

In a quiet room, adjust the tuning control and listen for a station. If several stations are audible, move the diode or antenna taps nearer the earth end (lower numbered turns) of the coil. This increases the set's selectivity and makes it possible to separate stations. In a capital city it should be possible to separate at least nine or ten stations. Optimum tap settings vary across the broadcast band â€“ lower frequency stations are often best received with higher tap settings. In rural areas volume is normally more important than selectivity, so the taps can be moved near the top of the coil.

Reception of AM operators on the 1.8 MHz (160 metre) amateur band is possible by moving the capacitor tap lower down the coil, to the 54th or 66th turn. Performance will be well down on a superhet or regenerative receiver, and SSB signals cannot be resolved. Whether you hear amateurs or not depends on your antenna system and the extent of activity from nearby operators. Here in Melbourne 160 metre AM activity includes the Monday to Saturday AM morning net starting at 11am.

In many areas there are narrowcast stations between the top of the official AM broadcast band and 160 metres. Because of their low power these stations will be weaker than the mainstream broadcasters. However these stations are excellent tests of your receiver and antenna system.

Video demonstrations of this project

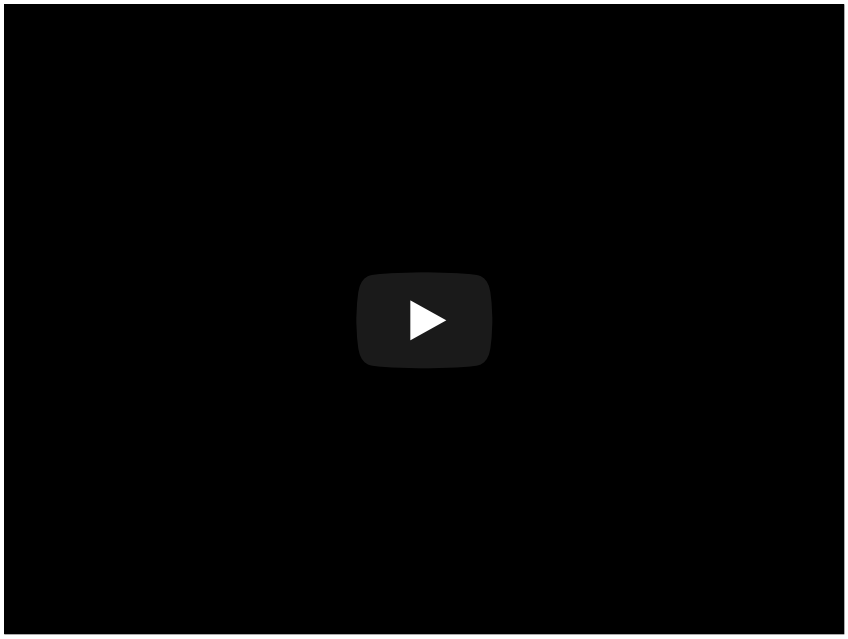

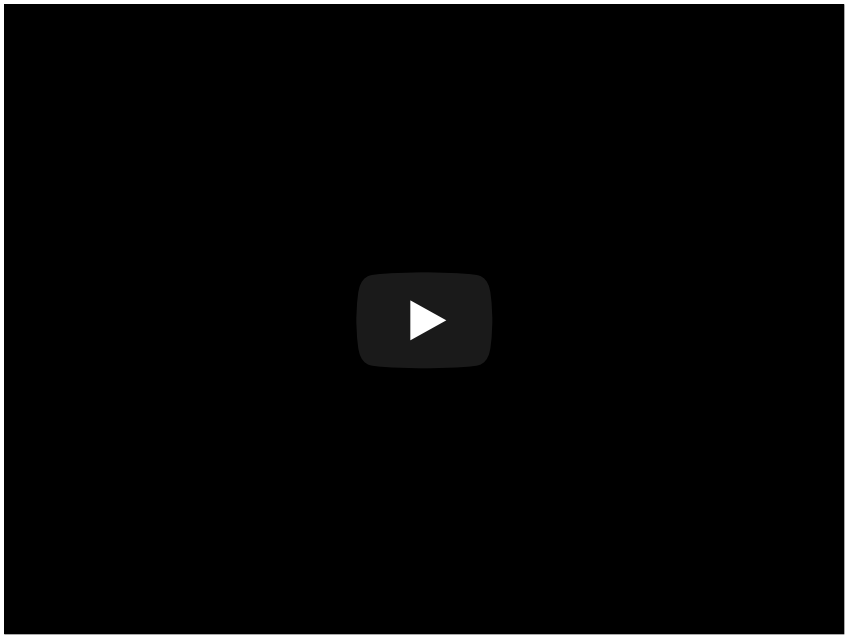

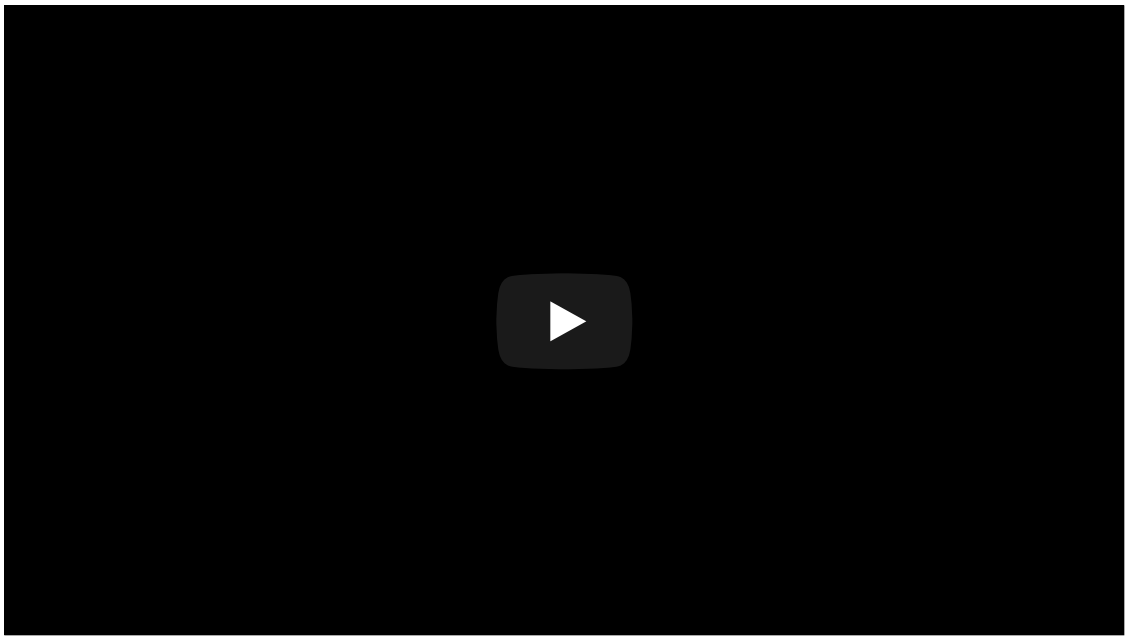

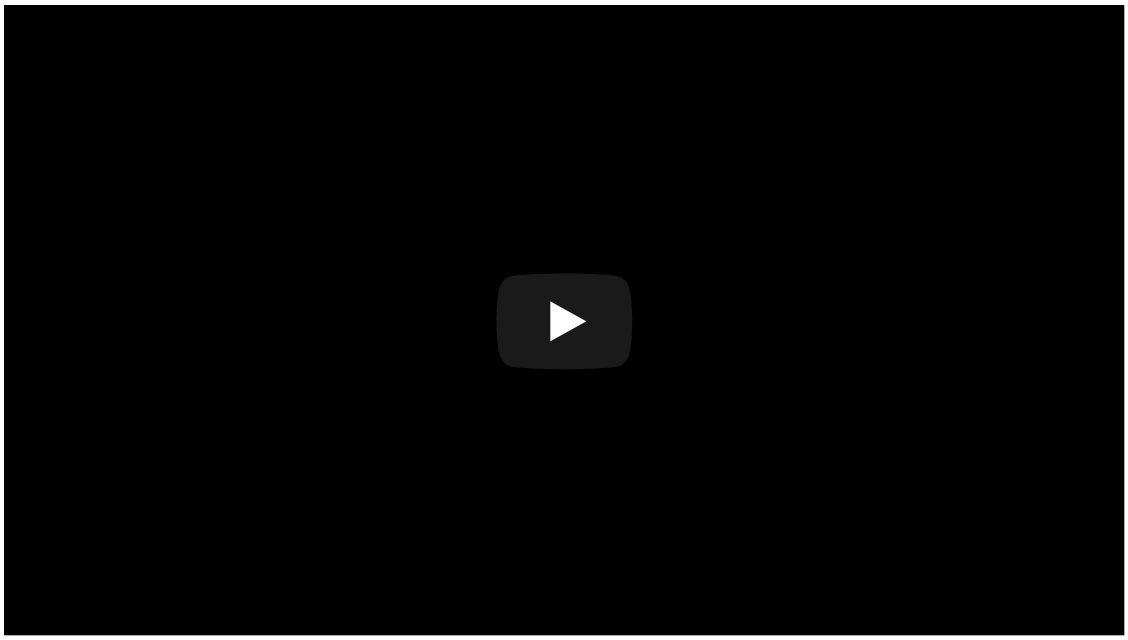

Conclusion

A crystal set of moderate complexity has been described. It is the minimum required to provide good reception of local stations in urban and rural areas. However numerous refinements to increase sensitivity, selectivity or audio output can be made. These include:

1. Double tuned circuits (with variable coupling between them) to improve selectivity

2. Use of a tuned trap to null out interfering signals

3. Attention to the construction of coils to provide the highest possible Q

4. Addition of an impedance matching network to provide efficient power transfer between the antenna and the tuned circuit

5. Use of a large loop antenna for the coil to allow reception of signals without an external antenna and nulling of unwanted signals

6. Voltage doubler diode detector circuit using two diodes to increase volume

7. Use of DC bias (from a DC voltage applied to the diode) or RF bias (from a locally generated RF signal on the receiving frequency) to improve sensitivity, or, in the case of the latter, to provide CW and SSB reception.

8. Use of a Q multiplier to increase sensitivity and allow CW and SSB reception.

Should you decide to experiment with these changes, it would be desirable to keep this set as a reference and build a second receiver as a test bed for the experiments.

Obtaining the parts

Suitable parts were discussed in detail above. Many if not all can be bought online, with examples presented below.

Variable capacitor and knob

amazon

Variable Capacitor -...
$2.26
Shop now

amazon

Capacitor - Variable,...
$13.95
Shop now

amazon

2 Pcs 24mm Top Potentiometer...
$5.24 Prime
Shop now

Inductor (insulated wire and cylinder former only required only for this project - other crystal sets use ferrite rods)

amazon

TEMCo 24 AWG Copper...
$6.09
Shop now

amazon

Remington Industries...
$10.35 Prime
Shop now

amazon

Ferrite Rod, 33 Material,...
$8.95
Shop now

amazon

Creative one 25 Pcs Silver...
$6.99 Prime
Shop now

Other parts and further reading

amazon

Crystal Radio Earphone,...
$8.88 Prime
Shop now

amazon

uxcell 1N60P Germanium...
Shop now

amazon

PIXNOR 1/4W Resistor Kit 56...
$9.99 Prime
Shop now

amazon

SMAKN® LM386 Audio Amplifier...
$6.90 Prime
Shop now

amazon

Radios That Work For Free II
$9.99
Shop now

amazon

Build Your Own Transistor...
$21.19
Shop now

Disclosure: I receive a small commission from items purchased through links on this site.
Items were chosen for likely usefulness and a satisfaction rating of 4/5 or better.

Note: This item is an updated version of an article that first appeared in *Amateur Radio*, December 2000.

Books by VK3YE

amazon

99 things you can do with...

$4.99

Shop now

amazon

Getting back into Amateur...

$4.99

Shop now

amazon

Hand-carried QRP antennas:...

$4.99

Shop now

amazon

Minimum QRP: Doing more...

$4.99

Shop now

All material on this site (c) Peter Parker VK3YE 1997 - 2017.

Material may not be reproduced without permission.

all about CRYSTAL SETS

by
Charles Green

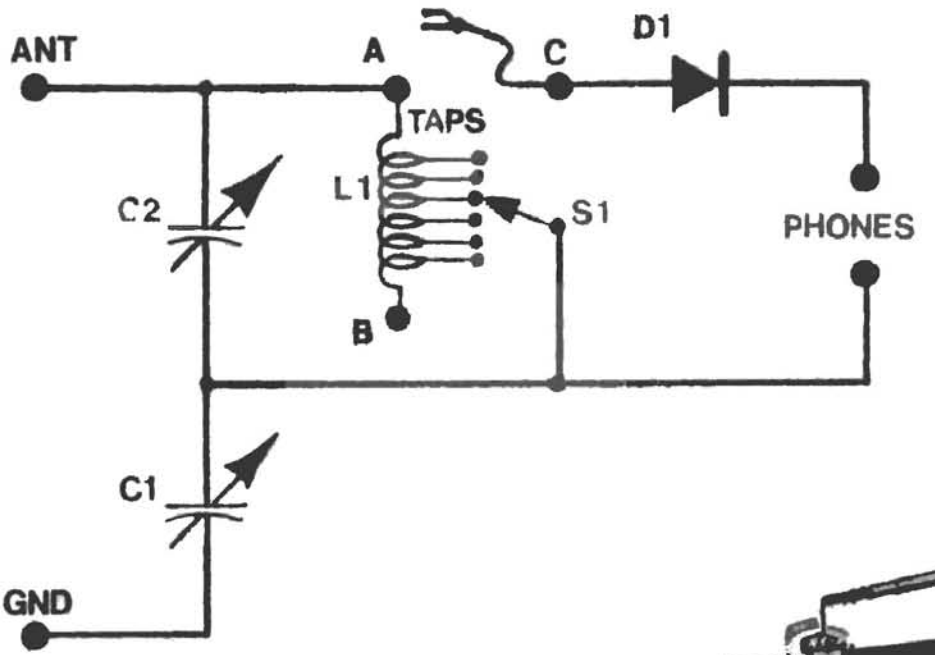

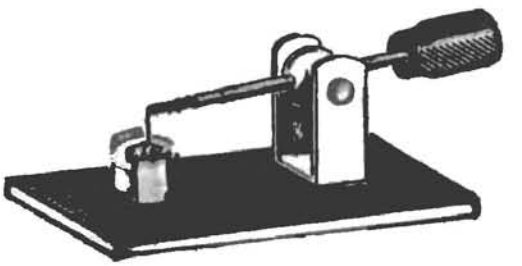

How-To-Build Simple Crystal Set Radios

621.3841
G795A
c.1

allabout books no. 101

all about CRYSTAL SETS

by

Charles Green

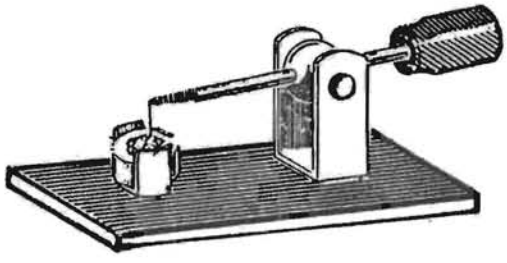

How - To - Build Simple Crystal Set Radios

FIRST EDITION

All rights reserved, including the right of reproduction in whole or in part in any form.

Copyright © 1984 by Charles Green

Published by Allabout Books
P.O. Box 22366
San Diego, CA 92192-2366

ISBN 0-930003-00-4

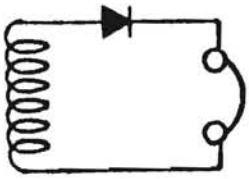

PREFACE

In the beginning of this century, when radio was called "Wireless", most of the early experimenters used a crystal set to receive radio signals.

The crystal set is still the simplest type of radio receiver. A catwhisker (made from a thin wire) touching a sensitive spot on a piece of galena or silicon mineral crystal and a tuning coil, form the basic parts of this radio.

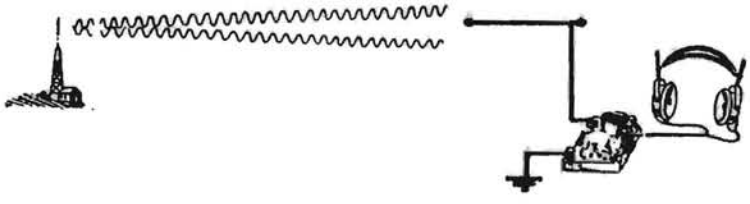

Radio signals from a nearby station are picked up via antenna and ground connections to the crystal set. The galena or silicon crystal detects the signals and the resultant audio is heard with headphones. No battery or electrical power is required.

This book tells you about crystal sets and shows you how to build them.

Charles Green

CONTENTS

1

THE CRYSTAL DETECTOR.....4
- How-it-Works, 4
- Detection of Radio Waves, 6
- Tuning the Crystal Set, 7
- Capacitor, 8
- RF Coil, 8
- Tuned Circuit, 9
- Antenna and Ground, 10
- Headphones, 11

2

SIMPLE RECEIVER PROJECTS.....12
- Simple Crystal Set, 12
- Slider Tuned Crystal Set, 17
- Ferrite Coil Crystal Set, 23
- Spiderweb Coil Crystal Set, 27

3

ADVANCED RECEIVER PROJECTS.....32
- Dual-Tuned Crystal Set, 32
- Selective Crystal Set, 37
- Carborundum Crystal Set, 43

4

COMPONENT PROJECTS.....48
- Book Tuning Capacitor, 48
- Rotary Switch, 53

5

WORKSHOP.....54
- Soldering, 54
- Project Construction Tips, 55
- Mounting Minerals, 56

INDEX.....57

1 THE CRYSTAL DETECTOR

A crystal detector of radio waves can be either a traditional catwhisker and natural mineral crystal, or a modern semiconductor diode.

SEMICONDUCTOR DIODE

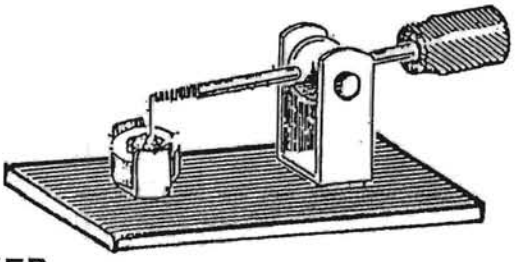

CATWHISKER DETECTOR

Certain natural minerals such as galena (lead sulphide) and silicon have electrically sensitive surface spots. In the beginning of this century, experimenters discovered that electrical current would flow into the sensitive spot on a mineral crystal from a catwhisker, but would not pass readily (high resistance) from the crystal to the catwhisker. This unique feature was used to detect (rectify) radio waves and extract the audio modulation.

HOW-IT-WORKS

There are two general types of crystal detctors;

- Point contact diode
- Junction diode

Both types use semiconductor material such as silicon, germanium, or galena. The basic semiconductor junction diode is made of two portions of the material "doped" in manufacturing by adding controlled amounts of chemicals. The doped portions have opposite electrical properties:

"P" TYPE, with an excess of positive electrical charges (holes).
"N" TYPE, with an excess of negative electrical charges (electrons).

Junction Diode

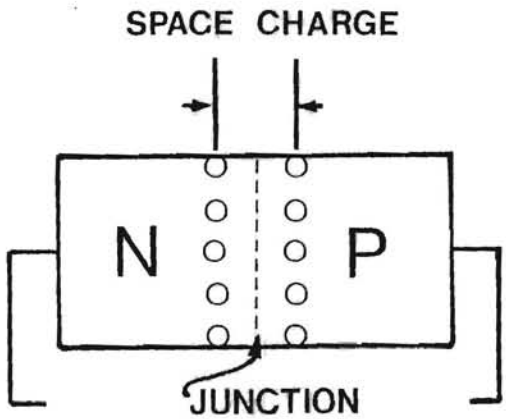

The boundary between the two doped portions is called a PN junction. The area on both sides of the PN junction is called the space charge region. When a positive voltage is applied to the "P" material (and negative voltage to the "N" material), the space charge region becomes narrow and electron current flows through the PN junction.

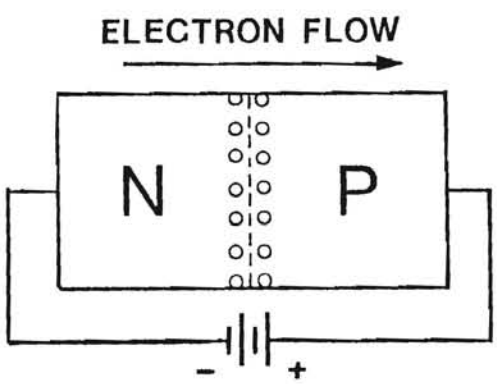

FORWARD BIAS

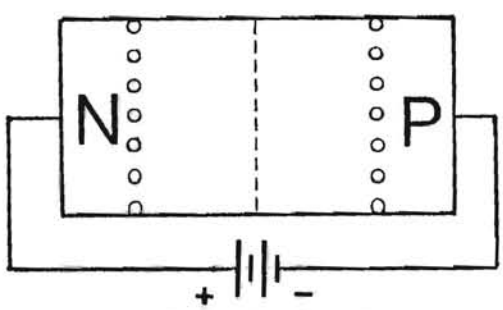

REVERSE BIAS

When the voltage polarities are reversed, negative to "P" and positive to "N", the space charge region widens (increasing the effective resistance of the PN junction) and the electron flow is very small (back current). If an ac voltage is applied to the PN junction, it will act as a rectifier (or radio wave detector).

Point Contact Diode

The point contact diode uses a "catwhisker" of thin wire contacting the surface of doped "N" semiconductor material. The pointed end of the wire produces a high intensity electric field in the area of the semiconductor surrounding the wire. When an electric current flows from the wire to the semiconductor material, a small region of "P" material forms around the area of the point contact. Thus a PN junction is formed which operates in the same way as the junction diode.

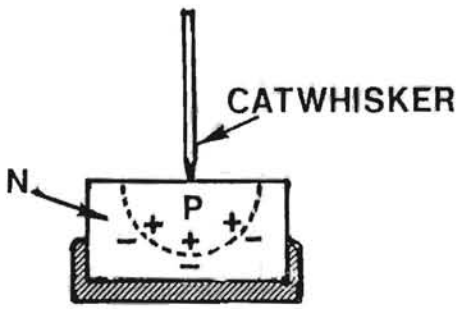

The sensitive spots of galena and silicon crystals used in traditional catwhisker detectors have naturally doped areas of semiconductor material, and operate in the same way as the point contact detector.

DETECTION OF RADIO WAVES

At the transmitting radio station, a microphone converts sound waves into electrical audio signals. The audio signals then modulate the transmitted radio waves.

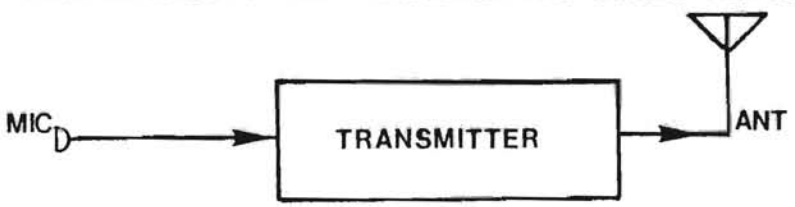

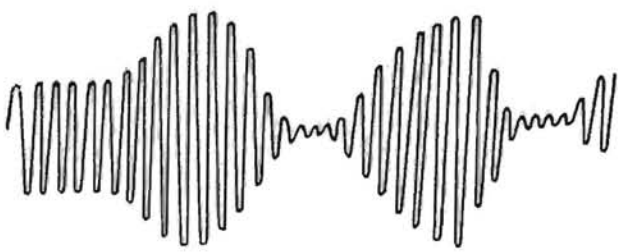

MODULATED RADIO WAVES ⟶

the crystal detector

The transmitted radio waves are intercepted by the receiving antenna and small rf currents are induced in the antenna wire. The rf currents (high frequency ac) flow through the detector to ground. As previously explained, the crystal detector will pass current in only one direction, therefore, pulsating dc voltages (detected audio signals) are developed by the crystal equivalent to the audio modulation of the transmitted radio waves.

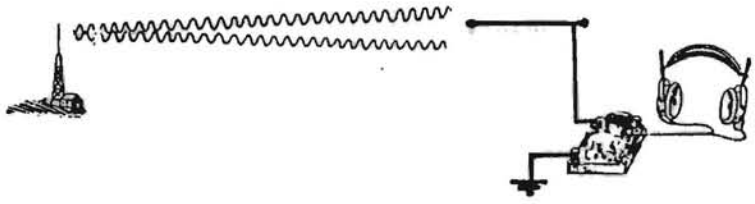

The detected audio signals flow through the headphone coils and affect the intensity of a magnetic field. This causes the steel discs of the headphones to vibrate and produce audible sound waves.

TUNING THE CRYSTAL SET

The antenna intercepts all radio waves in the area, and the signals will be heard jumbled up in the earphones. A nearby radio station may be received with the other stations heard in the background.

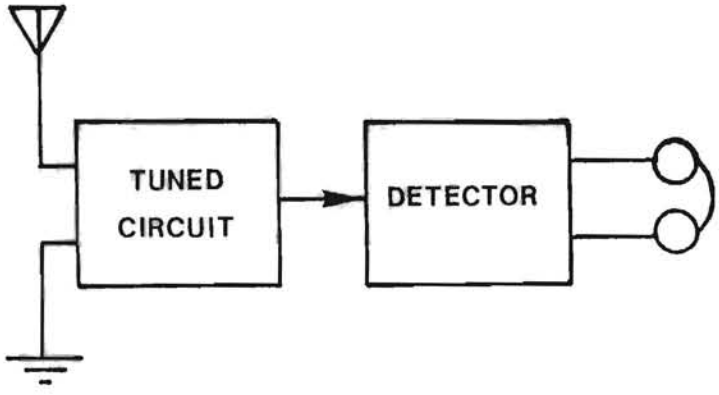

In order to receive a radio station properly, the crystal set must be tuned to the frequency of the transmitter. A tuned circuit composed of an rf coil (inductance) and a capacitor, is connected between the antenna/ground circuit and the detector.

Capacitor

The modern capacitor is evolved from the old Leyden jar. It consists of two or more metal sections separated by a dielectric (air, paper, or plastic). The capacitor stores energy in the form of an electrostatic charge in its dielectric. A variable capacitor (used in a tuned circuit) has movable metal sections that adjust the amount of capacity.

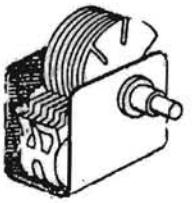

A capacitor will allow pulsating dc current or ac current to flow through it, but will block steady dc current. A capacitor has an oppositon or "reactance" to ac that varies with frequency. The higher the frequency, the lower the reactance of a given value of capacity. Capacity is measured in micro-farads (uF) or micro-micro-farads (picofarads) (uuF or pF).

RF Coil

An rf coil is made of insulated copper wire wound on a plastic or cardboard tube. When electric current flows through the coil, a magnetic field is created. This magnetic field resists any change in electric current flow. This opposition or "reactance" to ac varies with frequency. The higher the frequency, the higher the reactance of a given value of rf coil inductance. Inductance is measured in millihenrys (mH) and microhenrys (uH).

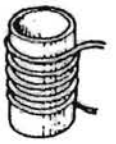

Tuned Circuit

A tuned circuit is composed of a capacitor and an rf coil. As previously described, the reactances of a capacitor and an rf coil change with frequency (but in opposite ways). At a particular frequency, the two reactances will cancel each other out. This condition is called "resonance". The impedance of a parallel tuned circuit is at its highest at resonance. Radio signals at the resonant frequency will be greatly magnified, while signals at other frequencies will be shunted to ground (rejected).

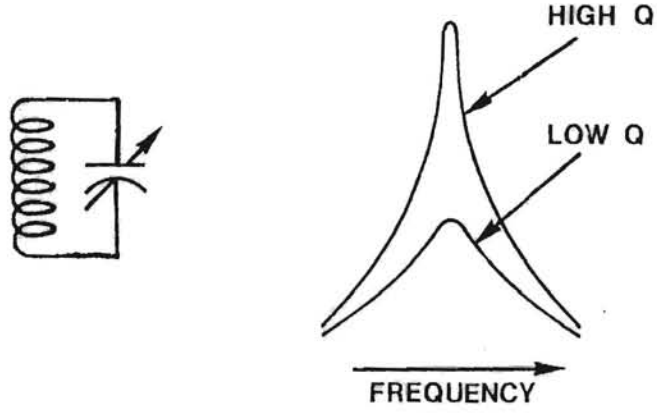

The resonant frequency of a tuned circuit can be changed by adjusting the capacitance (using a variable capacitor),or by varying the inductance (using a slider or taps on the rf coil). A ferrite core can also be used to change the inductance of a coil. The selectivity of a tuned circuit is dependent upon the quality (Q) of the components and the inductance /capacity ratio (L/C ratio). A high-Q tuned circuit is more selective than a low-Q circuit. A tuned circuit with a high L/C ratio (large inductance and small capacity) is more selective than a low L/C ratio circuit.

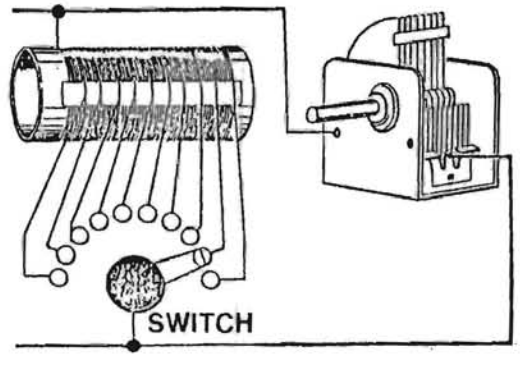

ANTENNA AND GROUND

A simple crystal set depends upon the strength of the radio waves received by the antenna to produce audio in the earphones. If you live in a strong signal area (a nearby radio transmitter), a crystal set can produce loud audio in earphones with only an inside antenna. But in lower signal areas, a good outside antenna with a ground connection is required.

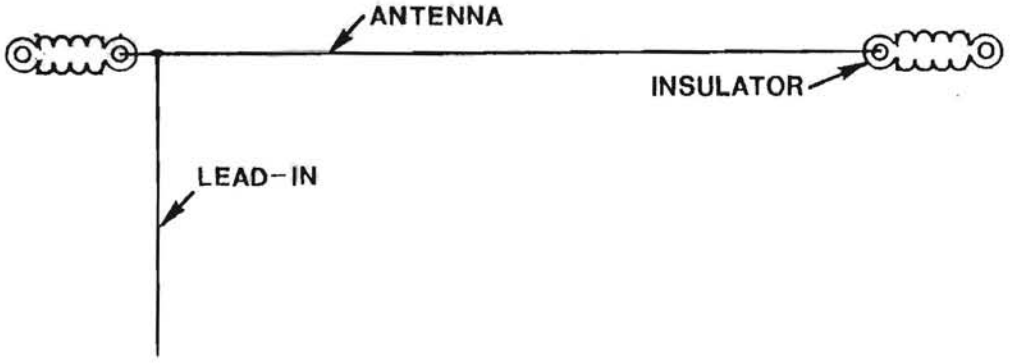

If you are fortunate enough to be able to put up an outside antenna, the basic rule of thumb is the higher, the better reception. Check your local electronics store for an antenna kit. You can construct an antenna using a glass or plastic insulator at each end of a length of copper wire (insulated or bare). Make the antenna as long as possible. It does not have to be in a straight line to work.

CAUTION

ANTENNA INSTALLATION
NEAR ELECTRICAL POWER
LINES IS DANGEROUS.

Make sure that your antenna is far enough away from any power line, so that it will not touch a wire if it falls.

Connect a length of insulated wire between the end of the antenna and your crystal set antenna terminal. This antenna lead-in wire can be fed into your house through a window.

If you can not erect an outside antenna, run a length of insulated wire as long and high as possible through your house or apartment. It will work, but not as well as an outside antenna because of the shielding affect of the house walls.

Connect a ground lead to a cold water pipe. Make sure that it is a metal pipe. Or, you can buy a ground rod from your local electrical supply store and drive it into the ground near your house. Then connect your crystal set ground lead to the rod. For safety install a lightening arrestor between the antenna lead and ground (see the instructions with the device).

HEADPHONES

Headphones (also called earphones, or headset) are required to hear the received audio from a crystal set. The standard headphones are made with dual coils of fine wire connected in series in each phone. Horseshoe magnets are built into each phone case to provide a magnetic field. A disk of thin sheet iron (diaphragm) is mounted near the top of the coils. The phones are connected in series with a set of flexible leads terminated in metal "phone tips".

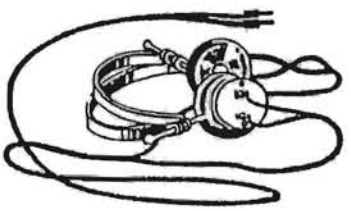

Detected audio signals flow through the coils and affect the intensity of the magnetic field from the horseshoe magnet. This changes the magnetic attraction of the diaphragm, and causes it to vibrate and produce audible sounds.

The total resistance of the series headphone coils is used as a measure of audio sensitivity. A resistance of 2000 ohms is sufficient. More sensitive headphones have a resistance of over 5000 ohms and are used to hear very weak signals.

The 2000 ohm headphones can be obtained at electronic parts mail order houses.

2 SIMPLE RECEIVER PROJECTS

SIMPLE CRYSTAL SET

Look at the schematic diagram. The crystal set uses a tunable ferrite coil L1, and a crystal diode D1. This type of tuning coil is called a "loopstick". The ferrite core is screwed into the coil form and increases the inductance of L1, thus tuning the receiver to a lower frequency.

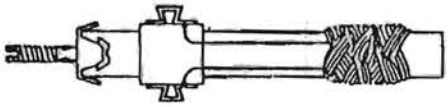

CONSTRUCTION

As shown in the illustration, the crystal set components are mounted on a 5 1/2-inch by 2 1/2-inch by 3/4-inch wood base. Layout and install the crystal set parts in the locations shown. The loopstick L1, is mounted with a metal strip supplied with it. Push the snap-in end of L1 into the large hole of the metal strip. Then bend 1/2-inch of the other end of the strip to form a bracket and mount it on the base with a wood screw. If the metal strip is not available, make one out of sheet metal approximately 2-inches long by 1/2-inch wide. Then drill a hole to fit L1 at one end, and a small hole to fit a wood screw at the other end.

Mount the four fahnestock clips and solder lugs with wood screws in the locations shown in the illustration.

WIRING

Use hookup wire to connect the crystal set components as shown in the schematic and illustration. The loopstick L1 may have three terminals. One of the terminals is a tap, which is not used in this circuit. Make sure that you connect only to the terminals at the start and end of the loopstick coil.

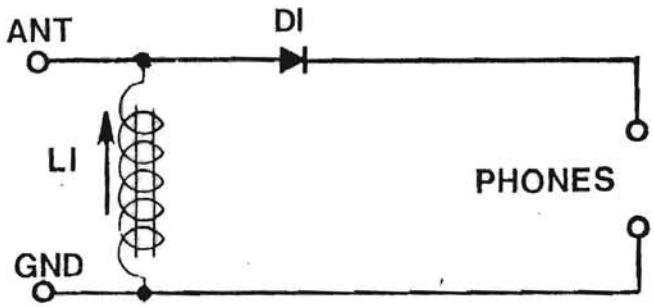

SIMPLE CRYSTAL SET

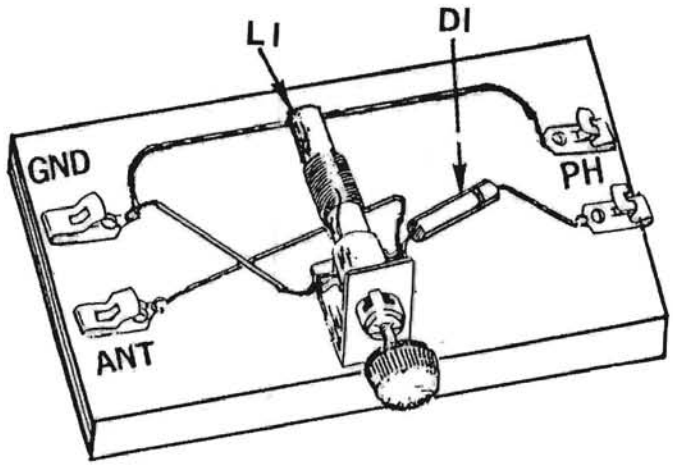

List of Materials

D1 - Germanium diode
(1N34A or equiv.)
L1 - Loopstick
(see text)
4 - Fahnestock clips
BASE - 5 1/2 X 2 1/2 X
3/4-inch wood section
PHONES - 2000-ohm headphones
MISC. - Solder lugs, wood screws,
knob and bracket to fit L1,
hook-up wire.

Install a small knob on the end of the L1 adjustment screw. Make sure that the screw turns freely with the knob. Position the 1N34A diode as shown before soldering the leads.

Experiment 1

Connect the antenna, ground, and 2000-ohm headphones to the crystal set terminals. Rotate the L1 knob counter-clockwise as far as it will go. Do not turn past this point, or you may break the ferrite rod inside the coil form. The ferrite is now outside of the coil winding. This is the highest frequency point of the tuning range of L1.

Slowly turn the L1 knob clockwise and listen for received radio stations. When the L1 knob is turned fully clockwise, the ferrite will be completly inside the coil (increasing the inductance) and it will be at the lowest frequency point of the tuning range.

Experiment 2

Connect capacitors, with values from 50 mmf to 300 mmf, in parallel with L1. Then tune L1 and note how the frequency range has changed.

AMPLIFIER CONNECTION

The simple Crystal Set (and the other receiver projects) can be connected to an amplifier in place of earphones. This amplifier can be a single channel input of your home stereo.

Parts values are not critical; C1 is approximately .005 mfd, and the volume control R1 can be any value from 1000 ohms to 10,000 ohms. Use shielded wire between R1 and the amplifier input jack.

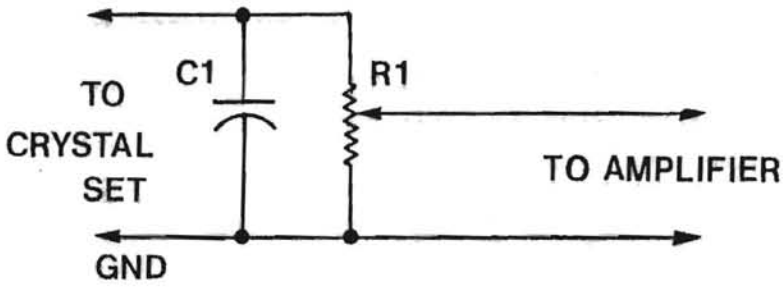

Amplifier Connection

Schematic Symbols

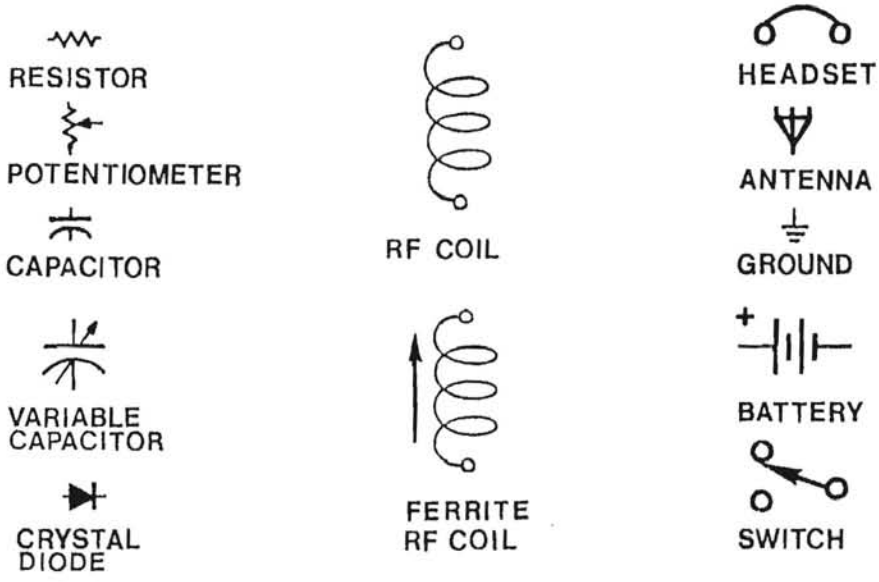

List of Materials

D1 - Germanium diode, type 1N34A, 1N60, 1N82A, or equiv.
L1 - Slider-tuned coil (see text)
4 - Fahnestock clips (terminals)
BASE - 6 x 3 x 1/2-inch section of wood (see text)
PHONES - 2000 ohms headphones
MISC. - Coil form (see text), No. 24 enameled copper wire, 3/32 inch dia. brass rod, brass ball slider (see text), solder lugs, two small brackets, hook-up wire, wood screws, machine screws and nuts.

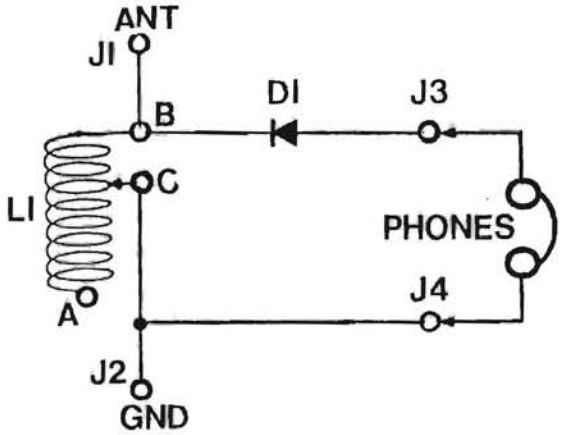

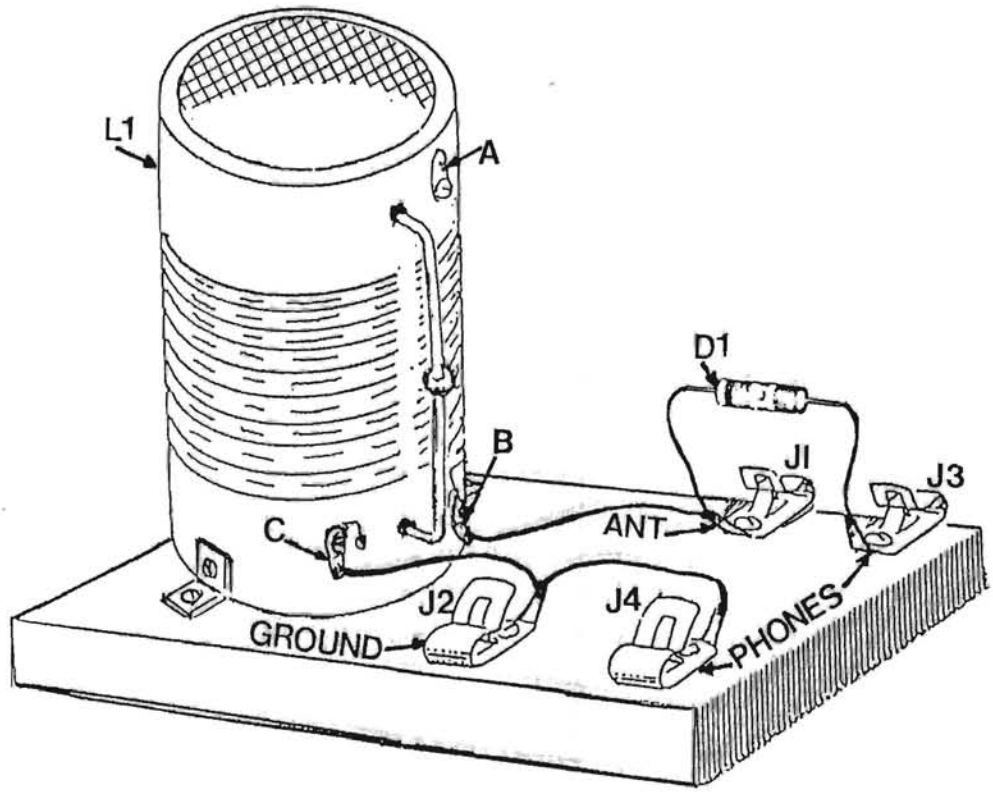

SLIDER TUNED CRYSTAL SET

SLIDER TUNED CRYSTAL SET

In the early days of radio, slider tuned coils were used in crystal sets. This method of tuning the inductance uses an adjustable metal contact (slider) that moves over the coil. The slider makes contact with individual coil wires to tune in the radio stations.

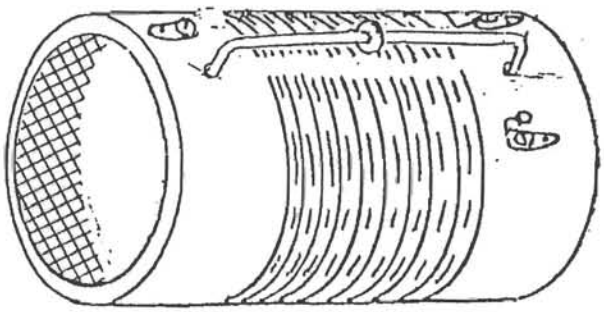

The enamel insulation of the coil wires in the slider path is removed for good electrical contact.

You can experiment with a slider tuned coil by building this crystal set. As shown in the illustration, the coil is mounted upright on a 6-inch by 3 1/2-inch by 1/2-inch wood base. A semiconductor diode is used for a detector.

TUNING COIL CONSTRUCTION

Look at the drawing of the tuning coil L1 construction details on the next page. The tuning coil is wound on a cardboard or plastic mailing tube section, 2 5/8-inches in diameter and 5-inches long. Make sure that you select a rigid, thick-walled tube for a coil form. The tube used in our model has a 3/16-inch wall. The coil form must be rigid to hold the slider ball and rod assembly.

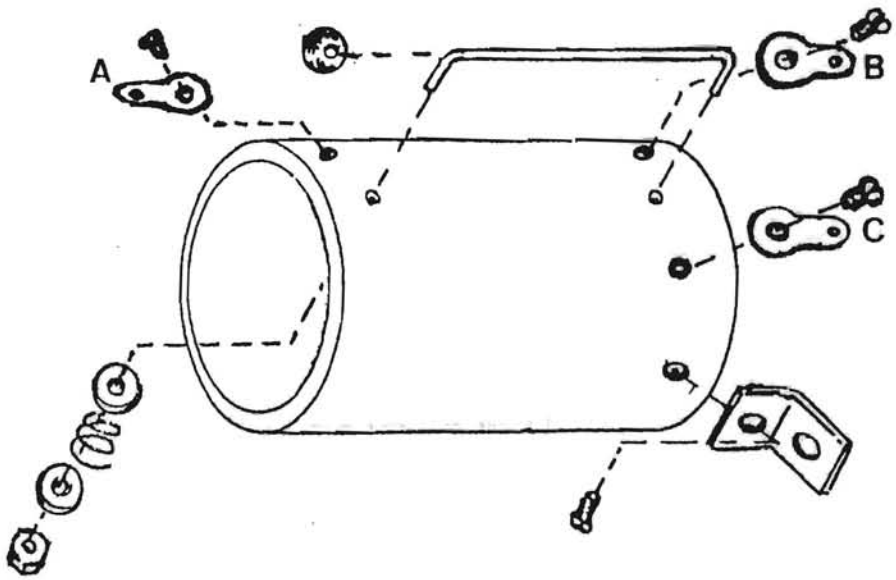

Before winding the coil, drill all the holes in the form as shown in the drawing, and then install the solder lugs. Position the solder lug ends toward the coil form edges.

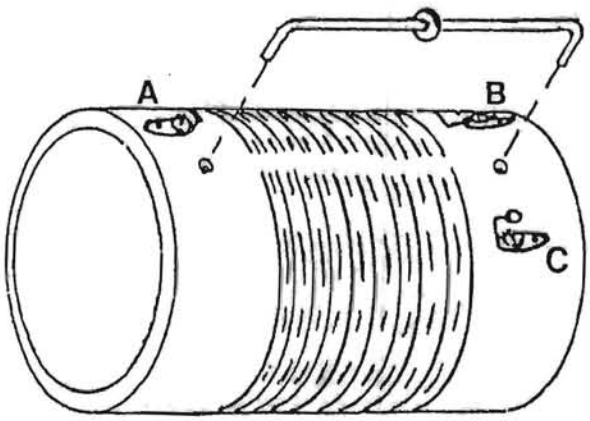

The coil is wound with No. 24 enameled copper wire. Remove the enamel from the wire end with sandpaper and then solder the wire to the lug. Start winding the coil, keeping the turns as tight and close together as possible. Wind the wire to the front of the bottom solder lug B. Remove the enamel and solder the wire end to the lug.

A brass ball approximately 3/8-inches in diameter is used as the moving contact slider. This brass ball can be found at your local electrical supply store. It is a type of ball that is used as a top nut for small table lamps. Drill a hole through the ball so that it will slide over a length of 3/32-inch diameter brass rod. Bend the brass rod at each end (after placing the ball in the center of the rod), to fit through the holes in the coil form as shown in the drawing. Cut the rod 1-inch down from the bend at each end.

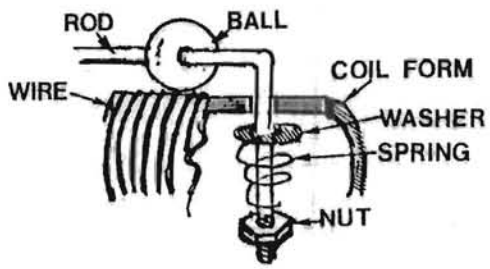

Insert the brass rod with the slider ball into the coil form holes. Then place a small washer and spring on one end of the rod (inside the coil form). Solder a nut on the end of the rod to hold the spring in place. Do the same to the other end of the rod. After soldering, slide the ball over the wires and check that it slides smoothly. Use sandpaper to remove the enamel insulation of the wires in the path of the ball slider. Connect a wire between the soldered nut on the bottom end of the brass rod and the solder lug near the rod.

BASEBOARD

All of the crystal set components are mounted on a wood baseboard as shown in the drawings. Cut the baseboard to size; a 6-inch by 3 1/2-inch section of 1/2-inch thick wood (maple is used in our model). Sand the edges after cutting. It is not necessary to paint or stain the baseboard.

Mount the four terminals and solder lugs as shown in the drawing. Label the four terminals with either rub-on lettering or cemented paper tags. Install two brackets on opposite sides of the bottom of the coil, and mount it on the baseboard with the lugs toward the terminals.

WIRING

Bare No.22 wire was used to wire our model, but any kind of hookup wire can be used. Connect the wires between the solder lugs as shown in the drawing, except do not connect the antenna terminal lug wire to the coil terminal at this time. Connect the crystal diode between the solder lugs as shown.

Experiment 1

This experiment will show how an untuned crystal detector functions.

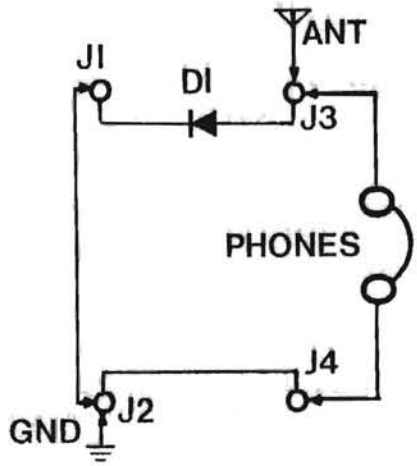

Connect the untuned detector circuit as shown in the drawing, and then hook-up your antenna and ground leads. Connect 2000-ohm headphones to the circuit and listen to the detected radio waves.

You will probably hear a strong local radio station, with other, weaker radio station transmissions all jumbled together.

Experiment 2

Reconnect the baseboard wires to the circuit of the Slider-Tuned Crystal Set as shown in the drawing. Listen to the detected radio waves as you tune the coil by sliding the brass ball over the sanded wire path. You should be able to receive the radio stations much better than the untuned detector circuit of Experiment 1.

LOADING COIL

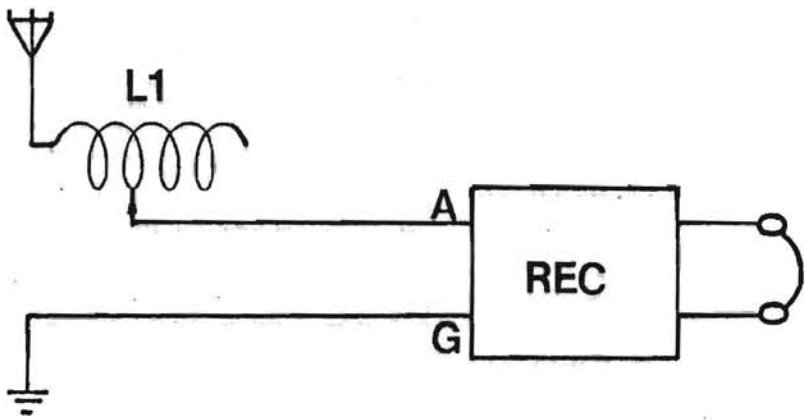

An additional slider tuned coil, L1, can be used as a Loading Coil to increase the electrical length of your antenna. This may allow better reception of the lower broadcast band frequencies. Connect L1 in series with the antenna lead to the receiver, and tune it for best reception.

WAVE TRAP

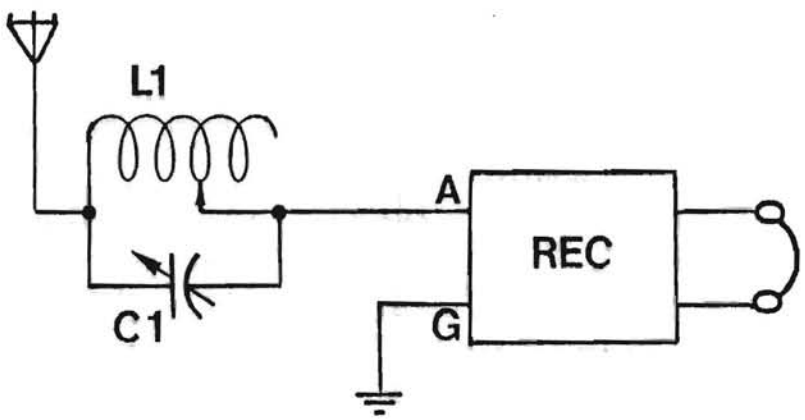

L1 can also be used in a Wave Trap circuit to tune out a strong local signal, and allow easier tuning of weaker stations. C1 is a 365 mmf variable capacitor connected in parallel with L1. Adjust L1 and C1 so that the interfering station is at minimum.

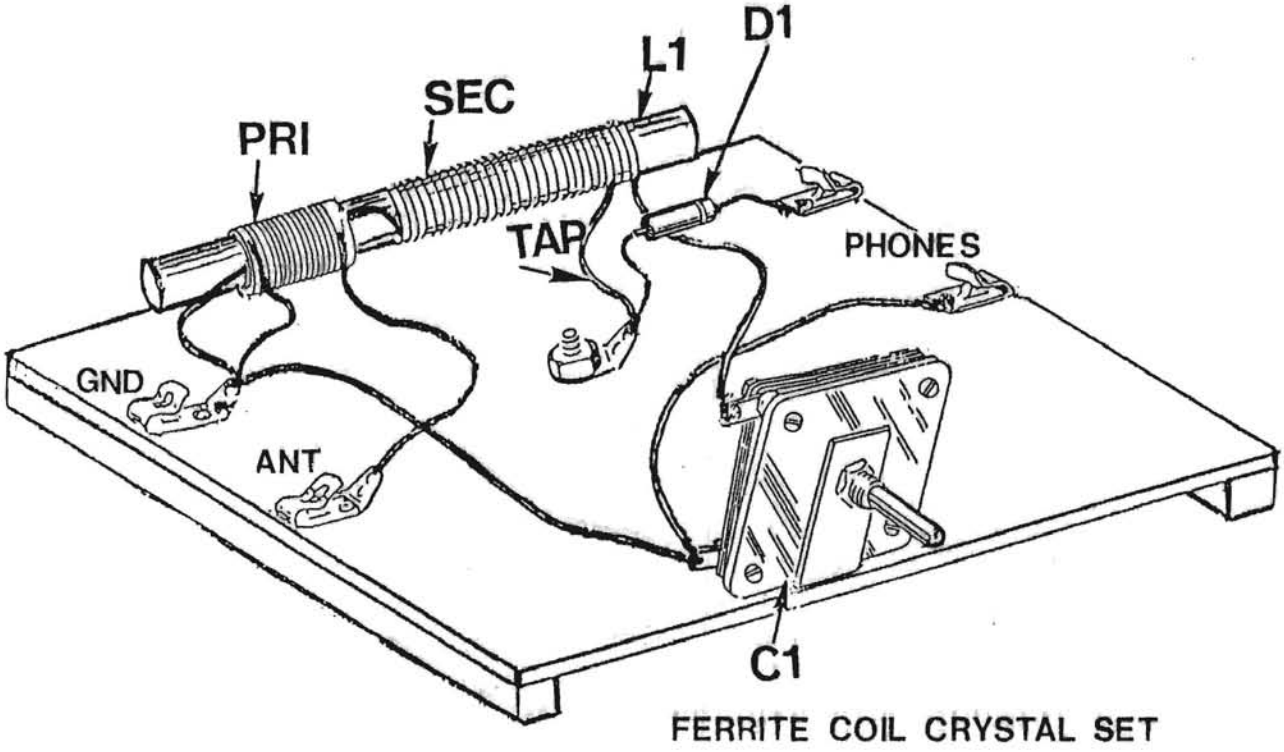

FERRITE COIL CRYSTAL SET

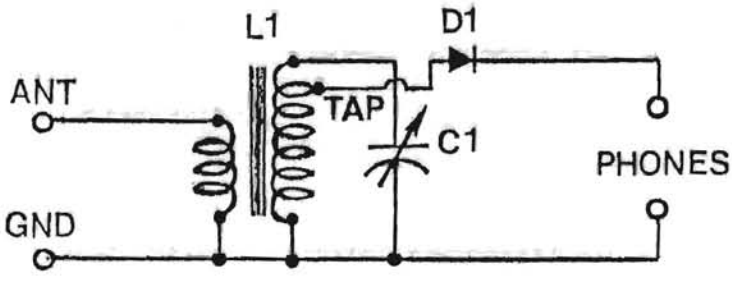

List of Materials

C1 - 365 mmf variable capacitor.
D1 - Germanium diode (1N34A or equiv.).
L1 - Ferrite coil (see text).
4 - Fahnestock clips.
2 - wood sections; 6 X 1/2-inch square (see text).
BASE - 8 1/2 X 6-inch sheet plastic (see text).
PHONES - 2000-ohm headphones
MISC. - plastic tube section for L1 primary winding (see text), solder lugs, machine screws and nuts, wood screws, bracket for C1 (see text), knob for C1, hookup wire.

FERRITE COIL CRYSTAL SET

This crystal set has a large ferrite core coil L1 of a type that is normally used for a built-in antenna in portable radios. This type of coil has a very high "Q" and may be more selective than an air-core coil. As you can see in the schematic, a primary coil is wound around the ferrite coil. The original winding is used as the secondary.

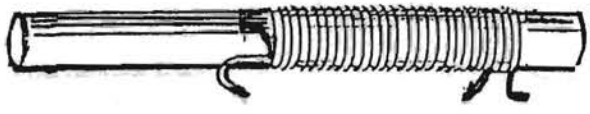

The primary coil (connected to the antenna and ground) can be moved close to, or away from, the secondary (original winding connected to D1). This variable coupling is used to control the selectivity of the crystal set.

PRIMARY COIL

The primary coil is wound on a 1-inch section of plastic tube that can fit loosely over the ferrite rod. A 1/2-inch diameter plastic tube is used on the receiver shown in the illustration. Wind 12-turns of hookup wire evenly over the tube and twist the ends together to prevent movement. Leave 4-inch leads from the primary coil winding. Slide the primary coil over the center of L1.

BASEBOARD

The crystal set components are mounted on a 8 1/2-inch by 6-inch section of sheet plastic. The thickness of the plastic is not critical, but it must be rigid enough to hold the parts without bending. A 6-inch long 1/2-inch square wood section is installed under each end of the baseboard. A section of wood can be used for the baseboard with wood screws to mount the parts, in place of machine screws and nuts.

The model shown uses a plastic variable tuning capacitor, but an air type capacitor can be used for C1 instead. Make a metal bracket approximately 1-inch wide by 1 1/4-inch high and a 1/2-inch right angle mounting foot from sheet aluminum. Drill a hole in the top of the bracket to fit C1 and two holes in the mounting foot to fit small machine screws. Locate the components on the baseboard as shown in the illustration and then drill mounting holes. If you have a cardboard or plastic mounting supplied with ferrite coil L1, you can mount it on the baseboard. If not, L1 can be taped loosely on top of the baseboard. Th ferrite coil L1 in our crystal set was obtained from an old radio. Install the components on the board with solder lugs, machine screws, and nuts.

WIRING

Connect the parts with hookup wire as shown in the illustration. Use the schematic diagram as a guide. Make sure that the ground lead from L1 secondary passes inside the primary coil. Also check that the primary coil slides freely over the L1 winding. Install a knob on the C1 shaft, and mark the terminal designations on the baseboard.

Experiment 1

Hookup the antenna, ground and 2000-ohm headphones to the crystal set terminals. Slide the primary coil over the center of the L1 winding. Tune C1 for radio stations. Then slide the primary coil towards the ground end of L1 while tuning C1. Note the difference in selectivity.

Experiment 2

Change the number of turns of the primary winding and repeat Experiment 1.

Operating Tips

After operating a crystal set for some time, you may notice a difference between day, evening, and night reception of radio stations. This is due to the two ways that radio signals travel between the transmitting antenna and a receiving antenna.

(a) The ground wave; which moves along the surface of the earth.
(b) The sky wave; which travels upward and is reflected by the ionosphere.

The reception of broadcast stations is dependent upon the time of day. During daylight hours, stations are received primarily by ground wave transmission. At night, the broadcast stations will be received via sky wave transmission. Also, some radio stations change to a lower power at night. Reception in the evening may be more difficult as the fading ground wave is interfered with by reflected waves. But later, it may be possible to hear far-away stations transmitted by sky wave.

Your geographical location to radio stations is very important for reception, as a crystal set receiver does not amplifiy signals. It is entirely dependent upon the strength of the radio waves. If you are in a deep valley surrounded by high mountains, reception will be difficult. If you live in a flat plain, with no obstacles to radio transmission, reception may be very good.

An outside antenna is necessary for for best reception. If possible, try erecting an extra antenna at a right angle to the original one, and switch it in to provide a directional effect for increased signal strength. Keeping a log of received stations for a week may be helpful in determining the radio reception conditions in your area.

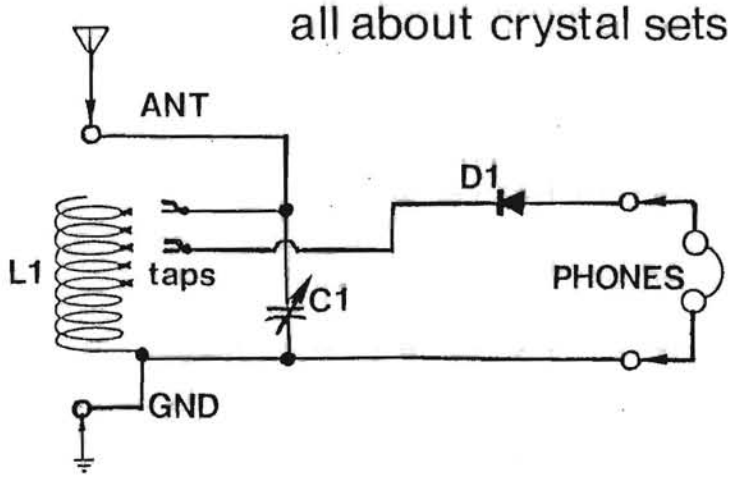

List of Materials

C1 - 365 mmf variable capacitor.
D1 - Catwhisker crystal detector (or 1N34A or equiv. diode).
L1 - Spiderweb coil (see text).
4 - Fahnestock clips.
2 - small alligator clips
BASE - 8 X 6 X 1/2-inch section of wood (see text).
MTG. POST - 5 x 3/4 x 3/8-inch wood section (see text).
PHONES - 2000 ohms headphones.
MISC. - Coil form (see text), No. 22 enameled copper wire, solder lugs, hook-up wire, wood screws, machine screws, and nuts.

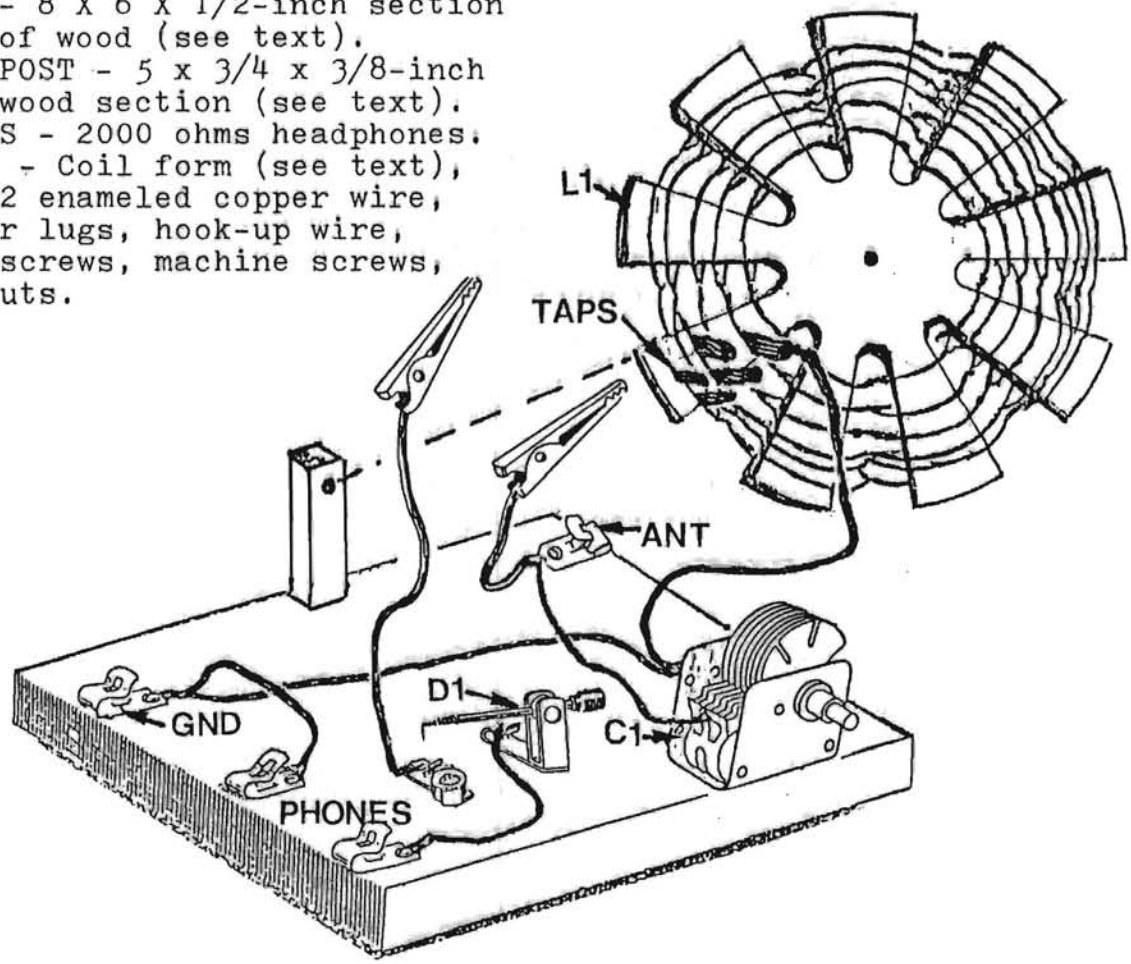

SPIDERWEB COIL CRYSTAL SET

SPIDERWEB COIL CRYSTAL SET

The spiderweb coil is a tuning coil that is wound on a flat wheel form that has an uneven amount of spokes. This type of coil was also used as a loop antenna in early radios.

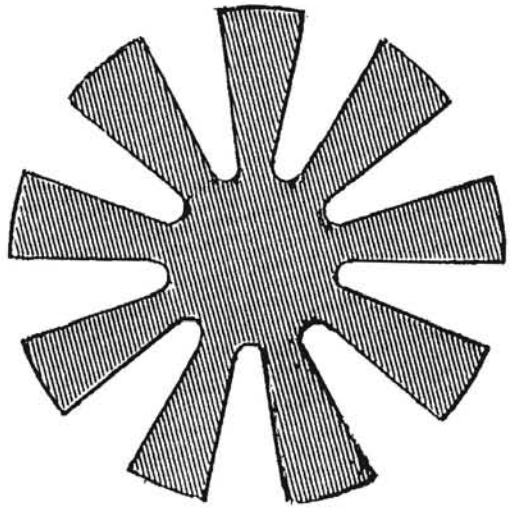

Our receiver uses a tapped spiderweb coil that is tuned by a variable capacitor. As shown in the illustration, the spiderweb coil is mounted at the rear of a 8-inch by 6-inch by 3/4-inch wood base. A catwhisker crystal detector and a variable capacitor are mounted near the front of the wood base.

SPIDERWEB

The spiderweb coil is wound on a 6-inch diameter flat form that has nine vanes. Make a tracing of the spiderweb coil form template on the next page. Then use carbon paper to transfer the tracing to a section of 1/8-inch fibreboard or sheet plastic. Cut the coil form out with a jeweler's saw, and drill a center hole to fit a small wood screw.

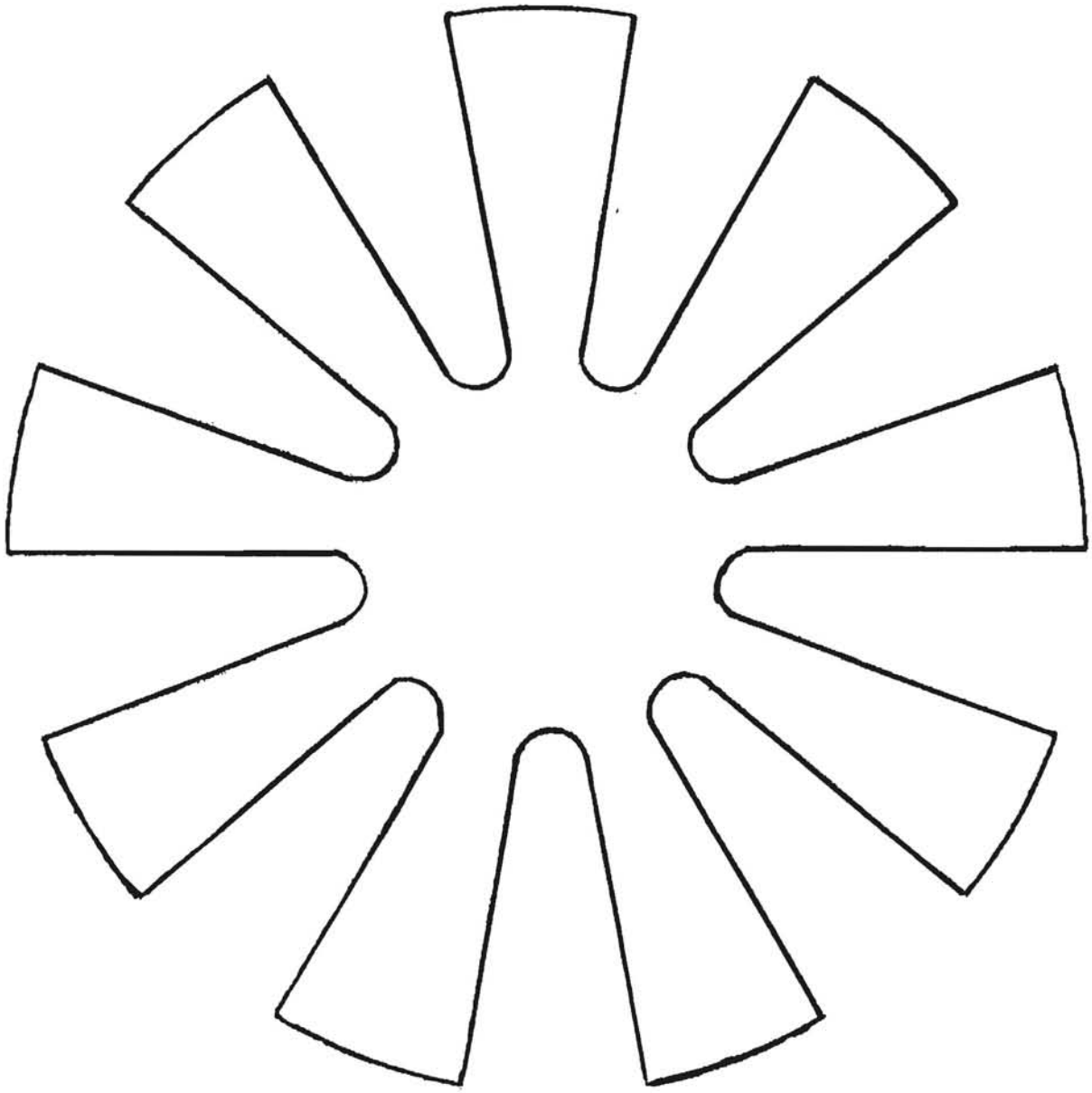

Spiderweb Coil Form Template

Wind the coil with No. 22 enameled copper wire, starting from the center and winding outward. Leave about 5-inches of the starting end of the wire free. It will be used as a connecting lead. Feed the wire behind a vane and over the front of the next vane as you wind. Wind the wire closely and evenly on the form. It is not necessary to count the turns. Wind the wire to about 1/4-inch from the end of a form vane. Then drill a small hole near the vane end, and bend a solder lug through it. Solder the wire end to the lug.

On one of the vanes, count down five wires and then carefully lift it outward. Remove about 1/4-inch of the enamel with a section of sandpaper and then bend the end of a solder lug aound the bared wire. Solder the lug to the wire, then cut off remaining portion of the lug (away from the bentover end). Repeat this every five turns until you have a total of six lug taps on the coil. Stagger the lugs away from each other to keep them from shorting.

BASEBOARD

As shown in the illustration, the Spiderweb Coil Crystal Set parts are mounted on a wood baseboard. Cut the 8-inch by 6-inch baseboard from a section of 1/2-inch thick wood. White pine was used in our model. Sand the surface of the wood after cutting.

Make the spiderweb coil mounting post by cutting out a 5-inch by 3/4-inch by 3/8-inch wood section. Then cut a notch in the center of the rear of the baseboard to fit the wood section. Install the wood section in the notch with small wood screws.

Mount the parts on the baseboard as shown in the illustration with small wood screws. If the mounting holes of the tuning capacitor C1 are on the bottom, drill matching holes in the baseboard and use flathead machine screws to hold the capacitor.

Install solder lugs with the four terminals, and mount the spiderweb coil to the mounting post with a wood screw through a center hole in the coil form. The coil should be positioned with the lugs facing forward (on the left side of the coil form).

WIRING

Connect the crystal set components with hookup wire as shown in the illustration. Use 6-inch lengths of insulated stranded wire to the two small alligator clips.

Experiment 1

Connect antenna, ground, and 2000-ohm headphones to the crystal set. Then connect the D1 alligater clip lead to the antenna terminal. Set the tuning capacitor C1 to minimum capacity (rotor blades all the way out). Connect the antenna clip lead to the tap on L1 near the center of the form.

Adjust the crystal detector D1 catwhisker to a sensitive spot and tune C1 for a radio station. It may be easier to tune for stations if you temporarily connect a crystal diode (1N34A or equiv.) in place of the catwhisker crystal detector.

After a station is heard, you can disconnect the diode and probe for a sensistive spot on the crystal with the catwhisker. Change the antenna clip lead to other L1 taps and continue tuning C1 for radio stations.

Experiment 2

Disconnect the D1 clip lead and reconnect it to a tap on L1 close to the center of the coil. This will load L1 more lightly than if the detector was connected to the top of the coil. Repeat the tuning procedure of Experiment 1 and note the difference in selectivity and volume of the received radio stations. Then tune in a radio station and move the D1 clip lead to other taps on L1. There will be a particular tap point for optimum selectivity and volume for each received station.

STATION LOG

DATE	TIME	DIAL	STATION	NOTES

3 ADVANCED RECEIVER PROJECTS

DUAL TUNED CRYSTAL SET

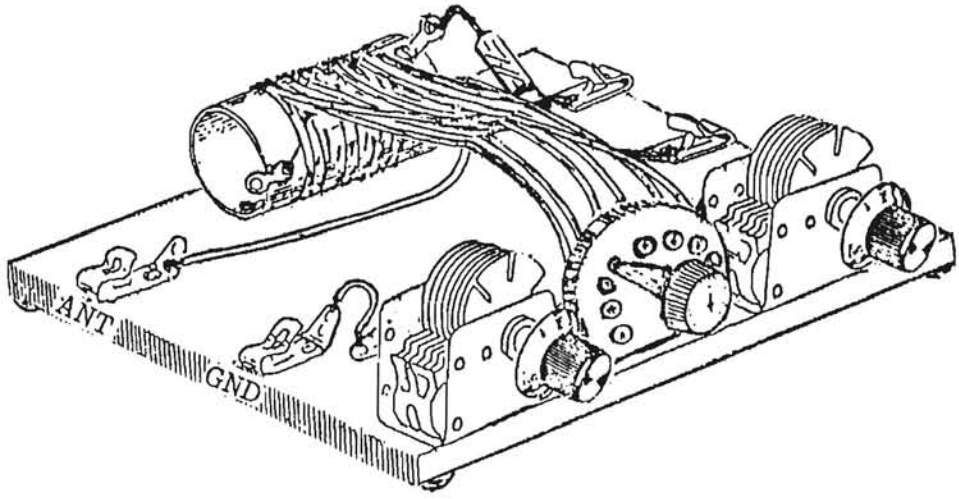

This crystal set circuit uses two variable capacitors C1 and C2. As you can see in the schematic drawing, C1 tunes the ground circuit, and C2 tunes a tapped coil L1. The taps of L1 are connected via the rotary switch S1.

TUNING COIL

Look at the drawing of the coil form construction details on page 34. The tuning coil L1 is wound on a section of 1/8-inch wall plastic tube, 2-inches in diameter, and approximately 4-inches long.

Drill holes in the form and install three solder lugs with machine screws and nuts. Position the solder lug ends towards the coil form ends as shown.

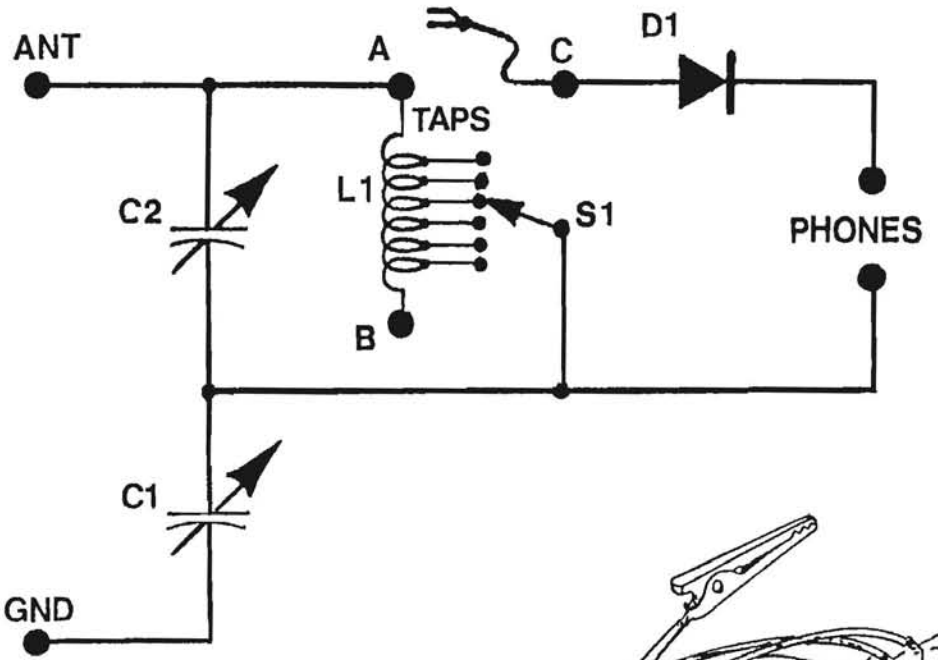

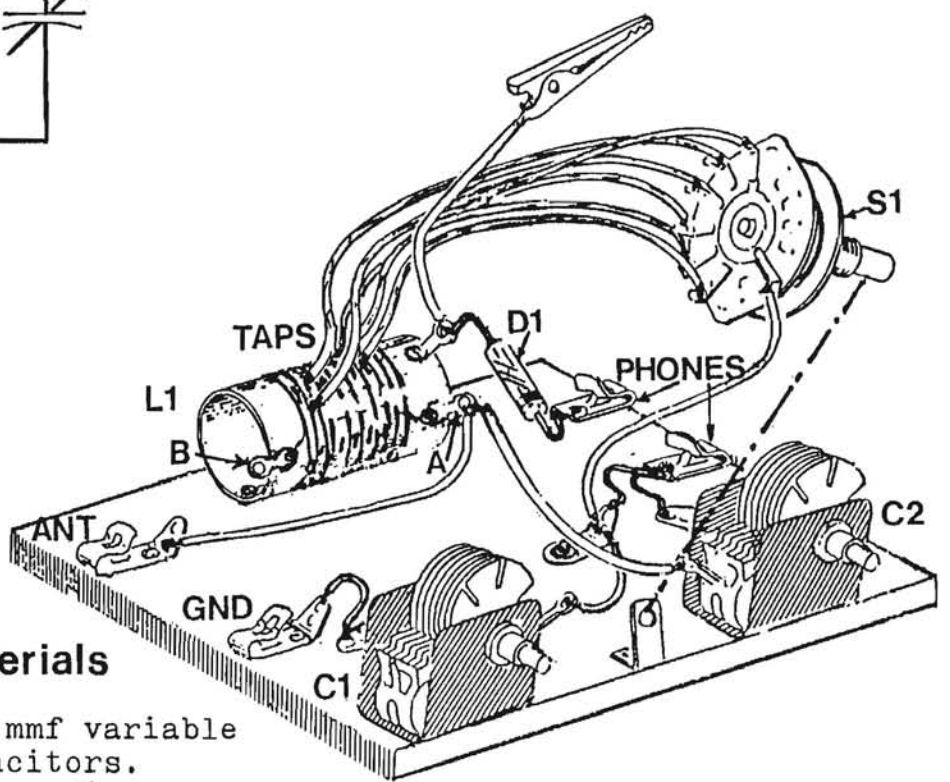

List of Materials

C1,C2 - 365 mmf variable capacitors.
D1 - Germanium diode (1N34A or equiv.).
L1 - Tuning coil (see text).
S1 - 1-pole, 10-position rotary switch (see text).
4 - Fahnestock clips.
1 - Small alligator clip.
BASEBOARD - 5 x 8 x 3/8-inch wood section (see text).
PHONES - 2000-ohm headphones.
MISC. - Coil form (see text), No. 24 enameled copper wire, solder lugs, hook-up wire, wood screws and nuts, knobs, bracket for S1.

DUAL TUNED CRYSTAL SET

The coil L1 is wound with No. 24 enameled copper wire, and is tapped every five turns for a total winding of 75 turns.

Drill a small hole in the coil form approximately 1 1/4-inch from the "A" lug. Remove the enamel from the end of the No. 24 wire and then feed the wire end through the hole. Solder the wire to lug "A".

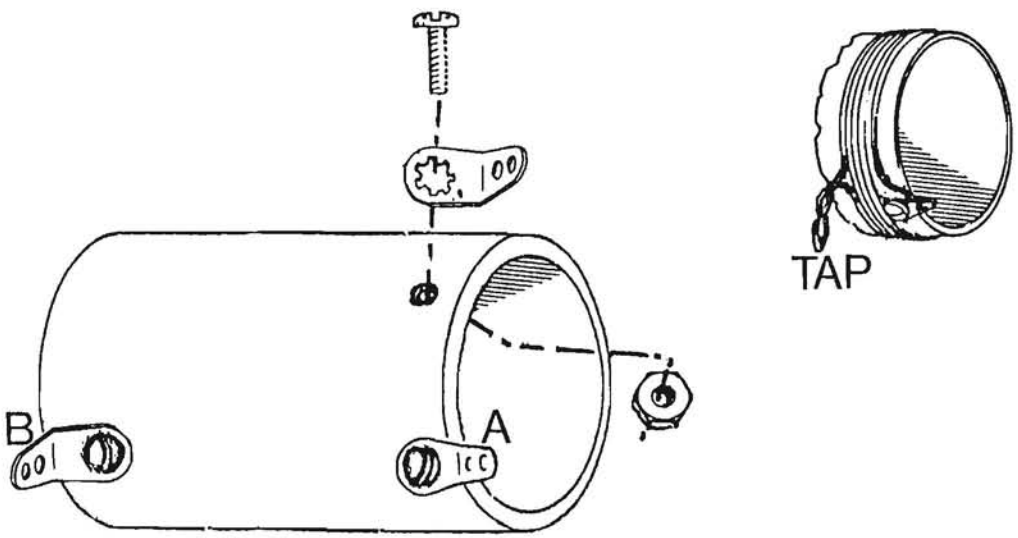

Wind five closely spaced tight turns around the coil form. Then bend back and twist together 1/2-inch of the wire to make a tap. Position the tap outward and then continue winding the coil, keeping the turns as tight and close together as possible. Make a tap every five turns and then drill a small hole in the coil form after the 75th turn. Feed the wire through the hole, remove enamel, and solder the end to lug "B".

BASEBOARD

The Dual-Tuned Crystal Set is built on a wood baseboard as shown in the illustration. Cut the 5-inch by 8-inch baseboard from a section of 1/4-inch thick plywood. Sand the edges and surface of the baseboard to remove any splinters. Drill holes in the baseboard and install the parts with small machine screws and nuts in the locations shown in the illustration. Drill mounting holes at each end of the tuning coil L1 and position it on the rear of the baseboard with the coil taps toward the front. The illustration shows a commercial rotary switch, but a wooden rotary switch can be used for S1 instead. (See page 53 for construction details.)

Install the four fahnestock clips (used as antenna, ground and headphone terminals) with solder lugs. Mount an additional solder lug on the baseboard midway between S1 and L1.

WIRING

Connect the crystal set parts with hookup wire as shown in the pictorial illustration and the schematic diagram. Use the center solder lug as a junction point for leads from C1, C2 and S1 as shown in the illustration. Connect the leads from S1 to the taps on L1 in numerical sequence; every 5 turns for 7 taps. Then connect the last three leads every 10 taps. Insert the lead ends into the taps and hold them with a drop of solder. This will make it easier to move leads to other L1 taps. Use a 5-inch length of stranded hookup wire for the alligator clip lead connected to D1 at solder lug C.

Experiment 1

Connect 2000-ohm headphones, antenna and ground leads, to the crystal set terminals. Then connect the D1 clip lead to the L1 "A" solder lug.

Set S1 to each tap position in turn and tune C1 and C2 for received radio stations. If all of the local stations can not be heard, experiment with different connections to the L1 taps. More turns may have to be added to L1 (with additional five-turn taps) to receive stations at the lower frequency end of the broadcast band.

Experiment 2

Remove the D1 clip lead from "A" and then connect it to the "B" solder lug on L1. Repeat the tuning method of Experiment 1 and note if the crystal set is more selective. This is possible, because L1 is now connected as an rf transformer. You can also connect the D1 clip lead to each of the S1 taps and note if there has been any improvement in reception.

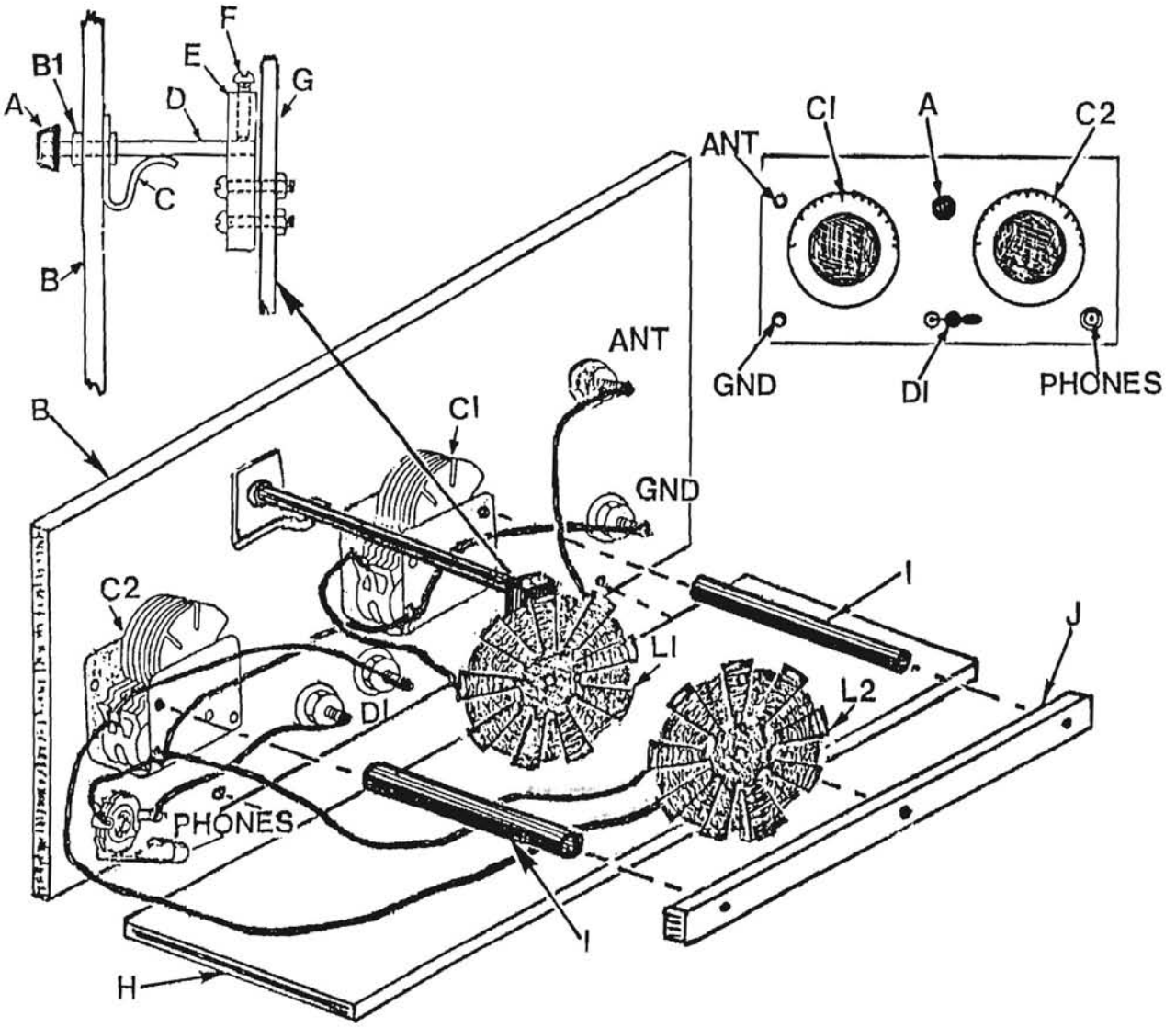

SELECTIVE CRYSTAL SET

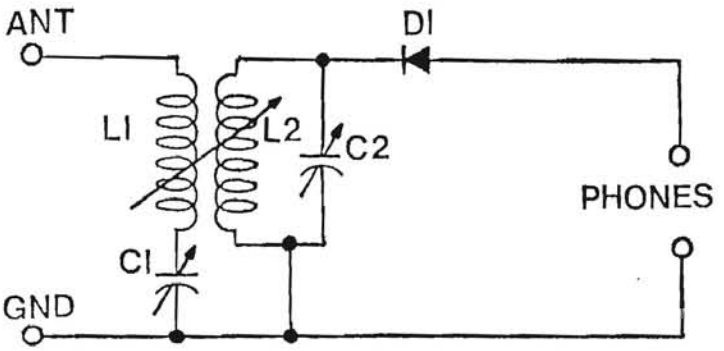

SELECTIVE CRYSTAL SET

This receiver uses two spiderweb coils in a two-circuit tuner for good selectivity and sensitivity. As you can see in the schematic diagram, the antenna-ground rf input circuit is tuned by L1-C1 for maximum signal gain. L1 acts as the primary winding of an rf transformer, with L2-C2 as the tuned secondary. Coupling between L1 and L2 is variable for best selectivity. L2 is connected to a catwhisker crystal detector and the audio signals are fed through the phone jack to 2000-ohm headphones.

As shown in the illustration, the crystal set parts are mounted on the rear of a black plastic panel. This type of layout is similar to the type of construction of the old-time crystal sets.

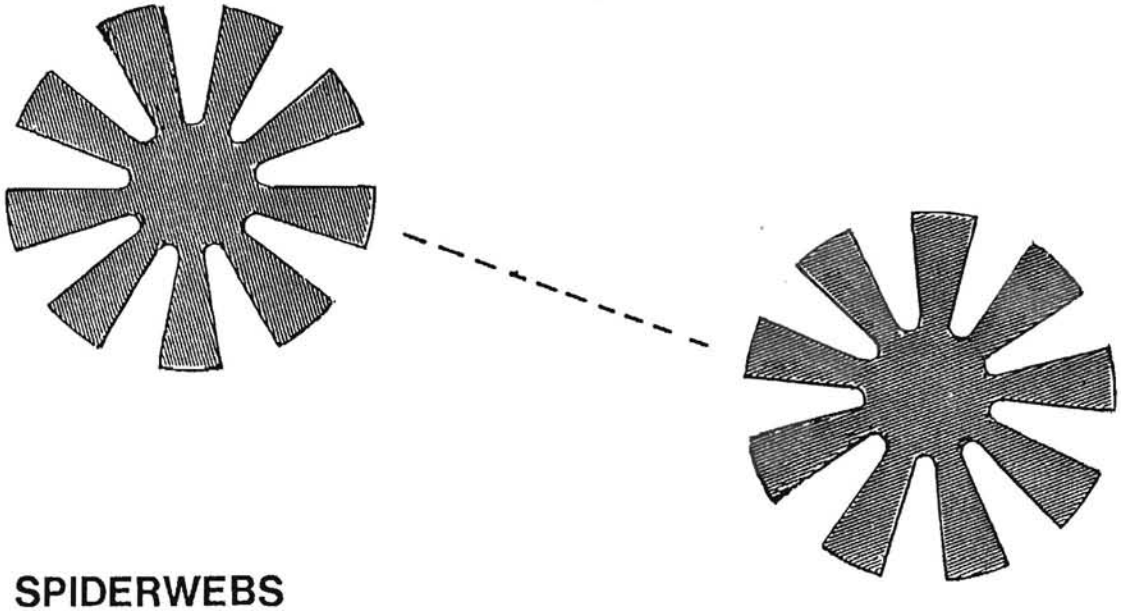

SPIDERWEBS

Both L1 and L2 spiderweb coils are made exactly the same way. L1 and L2 are wound on 17-vane coil forms 3 5/8-inches in diameter. The coil forms in our receiver are made from 1/16-inch sheet plastic of the same type used for printed circuit boards (but without the copper foil). Any kind of rigid sheet plastic should be suitable for the coil forms.

Make a tracing of the spiderweb coil template. Then use carbon paper to transfer the tracing on a section of 1/16-inch thick sheet plastic. Cut out the vanes with a jeweler's saw. Drill two holes as shown, and install the two solder lugs.

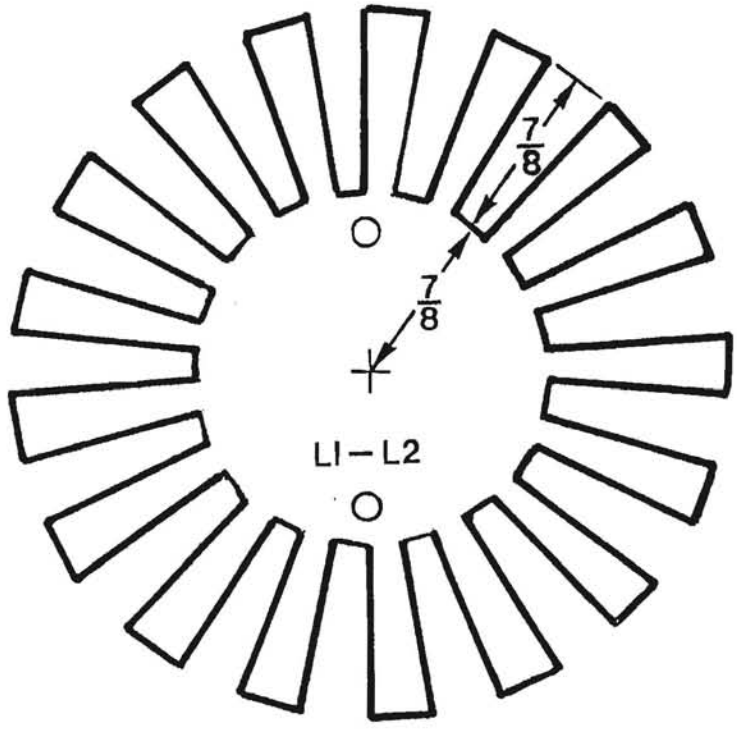

COIL FORM TEMPLATE FOR L1–L2

Wind as much No.22 enameled wire as possible on each coil form. Solder the wire to a solder lug before winding a coil. Then wind the wire over a vane and under the next vane. Wind the wire closely and evenly on the form. It is not necessary to count the turns. Solder the wire end to the remaining solder lug

CONSTRUCTION

The panel used in our receiver is a 7 3/4-inch by 4 1/2-inch section of 1/4-inch thick black acrylic plastic. The size is not critical, but it should be large enough to mount all of the parts as shown in the illustration.

Layout and drill the mounting holes of the components on the panel. Make sure that C1 and C2 are positioned so that the edges of the tuning knob dials are more than 1/2-inch apart. Install the catwhisker crystal detector assembly, antenna and ground terminals, and the phone jack in the locations shown.

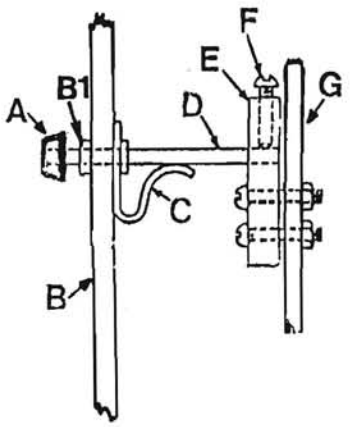

As you can see in the illustration, L1 is installed on the end of a variable coupling metal rod. This 1/4-inch diameter rod is 3-inches long with a flat side. Drill and tap a small hole close to the end of the rod. The rod used in our model came from a discarded volume control. Cut a 2-inch long by 1/2-inch wide by 3/8-inch thick wood section and drill holes to fit the rod, two mounting screws, and a hole for the rod set screw. Locate and mount the wood section in the center of a spiderweb coil L1 so that the rod will be 3/4-inch down from the edge of the top vane.

Hold L1 behind the panel and using the free end of the rod, locate the panel hole. Position L1 midway between C1 and C2, and make sure that the top edge of the coil is below the top of the panel. Drill a hole to fit the rod bushing in the panel hole location. The panel bushing in our model was removed from a discarded volume control.

Drill a hole to fit the bushing in one end of a 2-inch by 1/2-inch section of sheet aluminum. Bend the other end of the section to fit against the flat side of the rod. Install the metal section and the bushing in the panel hole.

Insert the rod into the bushing and make sure that the metal section end fits close to the flat side to prevent rotation of the rod. Install a knob on the rod end and make sure that the rod can be pushed in and out easily. If necessary, put a small amount of grease on the flat side of the rod.

Install the remaining spiderweb coil L2 on a wood section that is mounted on the rear of the panel with two spacers. The spacers should be long enough for L2 to be located 1/4-inch behind L1 with the rod pushed all the way in. The 5 1/2-inch by 1-inch by 1/4-inch wood section in our model is supported with screws installed through 1 1/2-inch metal spacers into tapped holes in the rear of C1 and C2. The screws and bushings can be made longer and mount into panel holes in your receiver.

Install a wood section on the bottom rear of the panel to keep the receiver upright. A 5-inch by 3-inch section of 1/4-inch thick wood is used in our receiver.

SET WIRING

Connect the receiver components with hookup wire as shown in the illustration and schematic diagram. Use flexible stranded wire for connections to L1. Make sure that the L1 leads do not touch any component as the variable coupling rod is moved in and out.

Install knobs on C1, C2, and the variable coupling rod. Then place the crystal in the detector assembly.

OPERATION

Connect antenna and ground leads to the receiver terminals. Plug in a set of 2000-ohm headphones into the panel phone jack. For easier initial operation of the receiver, temporarily connect a germanium diode (1N34A or equivalent) across the D1 connecting lugs. Make sure that the catwhisker is not touching the crystal at this time.

Push the variable coupling rod half way in and tune C1 and C2 for a station. Adjust the variable coupling rod and retune C1-C2 for best reception. Check operation over the entire broadcast band. It may be necessary to add or subtract turns of wire on L1-L2 for complete coverage. After checking operation with the germanium diode, remove it and try using the catwhisker crystal detector.

List of Materials

C1,C2 - 365 mmf variable capacitor.
D1 - Catwhisker crystal detector assembly.
L1,L2 - Spiderweb coils (see text).
2 - Terminals.
1 - Phone jack.
PHONES - 2000-ohm headphones.
MISC.- Plastic sheet for spiderweb coils, solder lugs, machine screws and nuts, wood screws, hookup wire.
CONSTRUCTION MATERIALS (See Text).
A - knob
B - Panel
B1- Bushing
C - Aluminum section
D - Rod
E - Wood section
F - Setscrew
G - L1 coil form
H - Wood section
I - Spacers (2)
J - Wood section

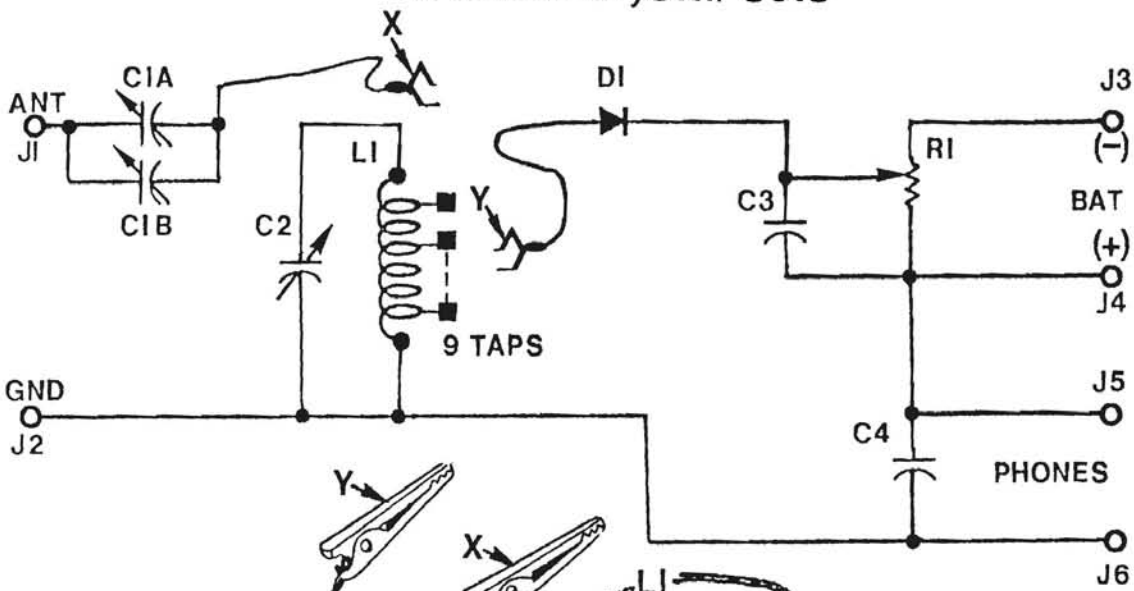

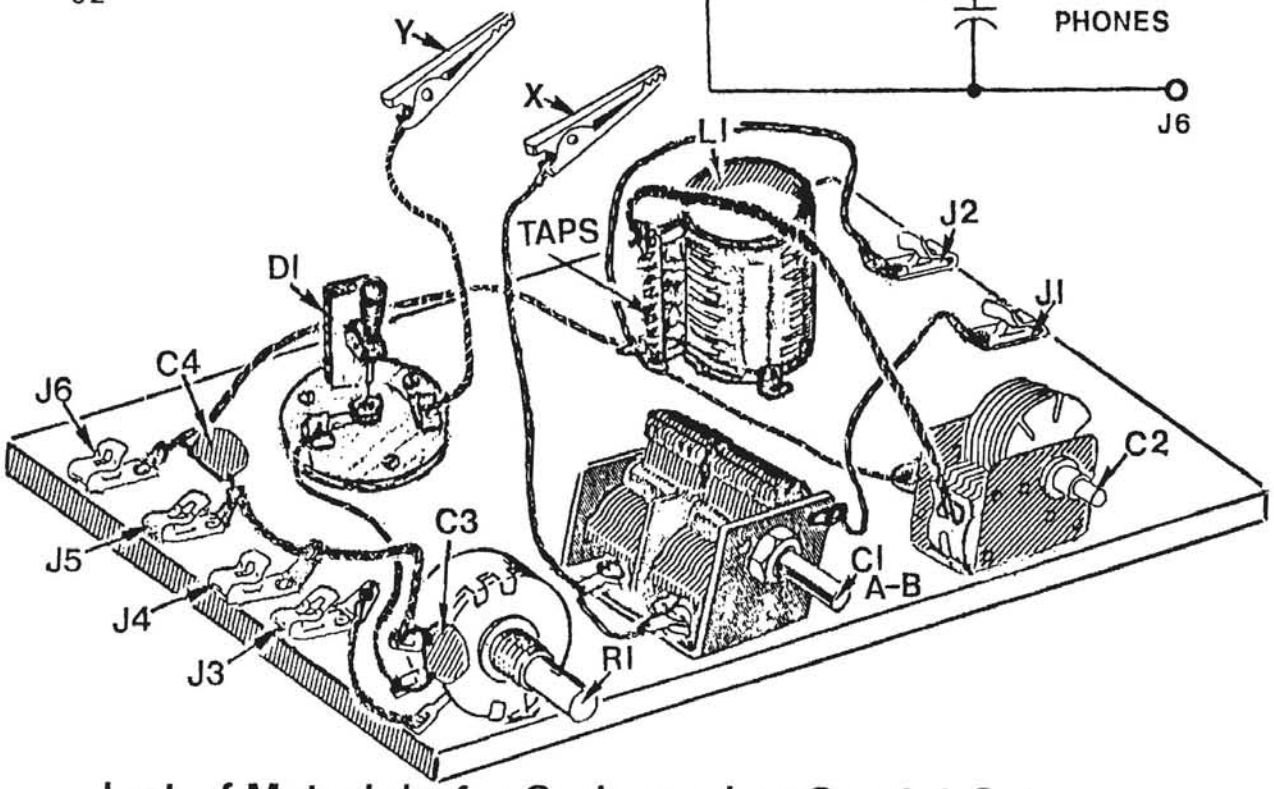

List of Materials for Carborundum Crystal Set

C1A-C1B - Dual 365 mmf variable capacitor.
C2 - 365 mmf variable capacitor.
C3 - 0.1 mf capacitor.
C4 - 1000 mmf capacitor.
D1 - Carborundum crystal and catwhisker detector assembly (see text).
J1 to J6 - Fahnestock clips.
L1 - Tuning coil (see text).
R1 - 5,000-ohm potentiometer (linear taper).
BAT - 6-volt battery
PHONES - 2000-ohm headphones.
MISC. Coil form (see text), No.24 enameled copper wire, 1/2-inch long spacers, perfboard strip (see text), push-in clips, solder lugs, knobs, hook-up wire, 1N34A diode (or equiv.), wood for base and D1 detector assembly (see text), wood screws, machine screws and nuts, alligator clips X-Y, brackets for L1 and R1.

CARBORUNDUM CRYSTAL SET

Materials other than galena, silicon or germanium have the property of detection. In the beginning of radio, carborundum (the name given to a compound of silicon carbide) was also used as a detector. The required heavy catwhisker pressure made it suitable for the early radio stations on ships, as it did not fall out of adjustment. It would also handle the strong signal energy from nearby spark transmitters without burning out. But what makes this type of crystal detector different, is the necessity for a bias battery.

A crystal detector has a high current flow with voltage applied so that it conducts in the forward direction (catwhisker to crystal), and a very low current flow in the reverse direction. The amount of current flow in the forward direction depends upon the characteristics of the crystal material and the applied forward voltage.

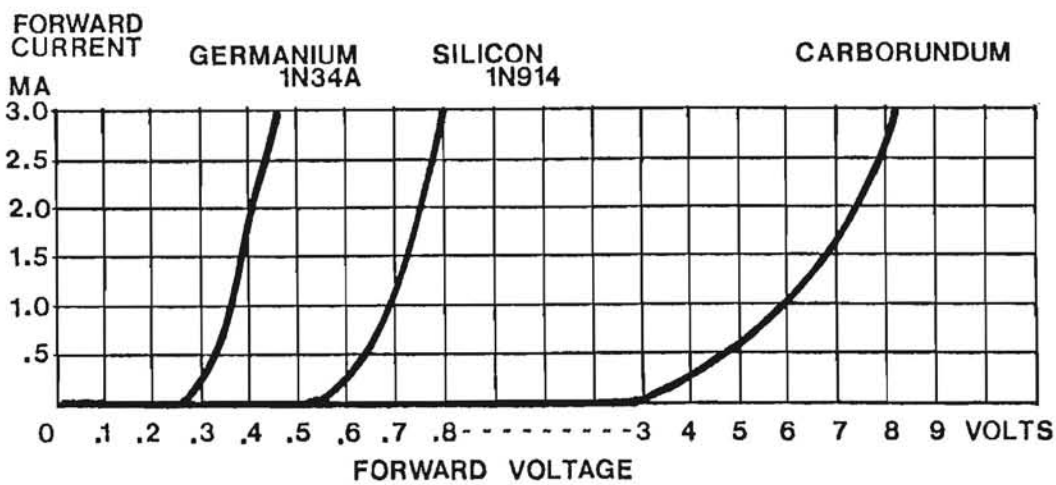

TYPICAL CRYSTAL DIODE CURRENT

The graph compares carborundum with germanium and silicon crystal detectors. Germanium minimum conduction voltage is about 0.3 V. Silicon is 0.6 V, and carborundum is 3 V. The high carborundum minimum conduction voltage is the reason a bias battery is used to move the threshold down so that weak radio signal voltages can be detected.

TUNING COIL

As shown in the illustration, the tuning coil L1 is wound on a cardboard (or plastic) mailing tube section 2-inches in diameter and 2 3/4-inches long.

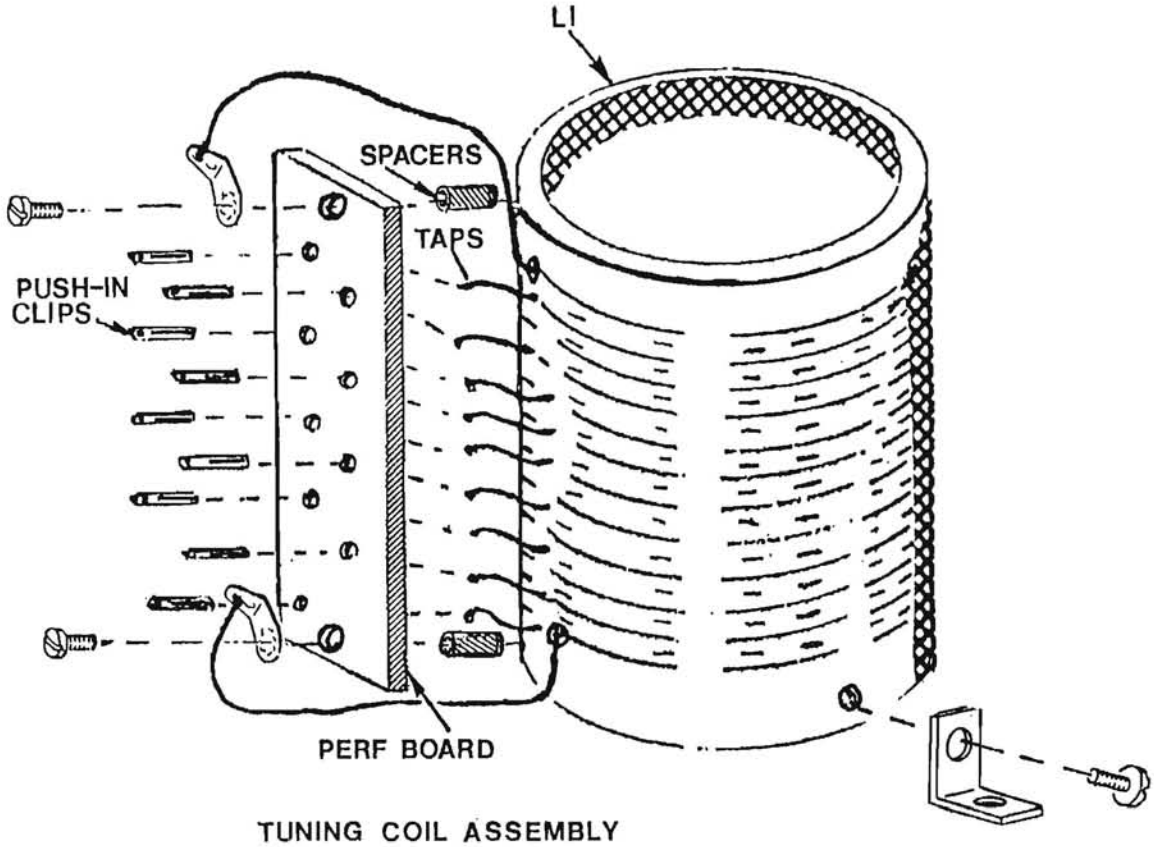

TUNING COIL ASSEMBLY

Locate and drill a hole 1/4-inch from each coil form end for machine screws to fit the two spacers. Also drill holes for two mounting brackets at one end. Then drill a small hole near each spacer hole to feed the wire on the form before you start winding.

Wind the coil with No. 24 enameled copper wire. Tap the coil every 10 turns for a total of 9 taps. An easy way to make the taps is to twist the wire together for a half inch and position the free end out. Make all the coil taps in the area between the two spacer holes. Thread the free end of the wire through the small hole at the end of the form near the spacer hole. Make sure that all of the turns are tightly wound and close together. Use a section of sandpaper to remove the enamel from the tap wire ends. Then tin the ends.

Mount 9 push-in clips in a 1/2-inch by 2 1/4-inch perf board section. Locate and drill holes on the board and install it on the coil form with two solder lugs, 1/2-inch spacers, machine screws, and nuts. Solder the coil taps to the ends of the push-in clips. Connect the coil leads to the solder lugs and mount the two 1/2-inch brackets on the coil form.

DETECTOR

The crystal detector assembly is vertical, (as shown in the illustration) instead of horizontal as in most catwhisker detectors. Begin construction by cutting the 2 1/2-inch diameter base and 2-inch by 4-inch vertical section from 1/4-inch thick wood.

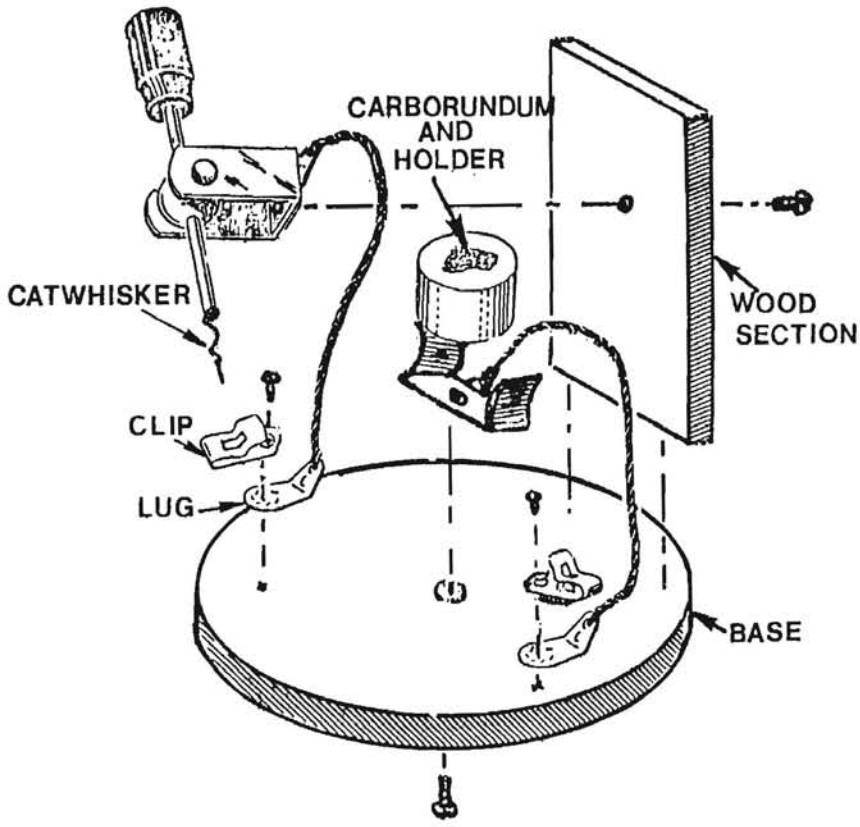

DETECTOR ASSEMBLY

Locate and install the two fahnestock clips on the base with solder lugs and small wood screws. Mount the vertical section on the edge of the base with wood screws (or cement). Locate and install the catwhisker holder with a solder lug, machine screw and nut near the top of the vertical section.

Temporarily position the crystal holder on the base so that the catwhisker will touch the center of the crystal. Locate and mount the crystal holder in this position with a solder lug and machine screw and nut. Connect the detector assembly with hookup wire as shown in the illustration. Solder a short section of coiled steel spring wire to the end of the positioning rod to serve as a catwhisker. Cut the end of the wire diagonally to give it a sharp point.

BASEBOARD

The receiver parts are installed on a 8-inch by 7-inch by 3/4-inch wood base. Wherever poossible, small wood screws are used to hold the components on the base.

Begin construction by laying out and installing the parts in the positions shown in the illustration. It will be necessary to make a metal mounting bracket to fit R1. C1A-B and C2 are mounted with machine screws in the tuning capacitor frames through countersunk holes in the base. Install solder lugs in the rear frame of both tuning capacitors. Also mount solder lugs with all of the terminals. Install knobs on the tuning capacitors and R1.

WIRING

Use hookup wire to connect the crystal set parts as shown in the schematic and illustration. Connect 5-inch leads of flexible stranded insulated wire to each alligator clip. Solder one lead to the stator lugs of C1A-B and connect the other lead to D1. Connect C3 and C4 as shown and keep their leads as short and direct as possible.

Experiment 1

Connect your antenna to J1, ground to J2, and 2000-ohm headphones to J5 and J6. Temporarily connect a germanium diode (1N34A or equiv.) in place of the carborundum crystal detector D1. The diode will make it easier to check out the receiver.

Do not attach the battery to J3-J4 at this time, or the diode may be damaged.

Connect **X** C1A-B clip lead to the top tap of L1, and **Y** D1 clip lead to the second tap from the top. Tune in a radio station with C2 and then adjust C1A-B for best volume. Change the position of the clip leads and retune C1A-B and C2 for best reception. Check operation of the receiver over the entire broadcast band.

Experiment 2

Tune the receiver to a radio station and then disconnect the germanium diode. Do not disturb the receiver tuning. Install a carborundum crystal into the D1 assembly. Set R1 to mid range, and connect a 6-volt battery to the receiver; negative lead to J3, positive lead to J4.

Adjust the D1 catwhisker for a sensitive spot on the carborundum crystal. Then set R1 for best volume of received signal. Retune C1A-B and C2 and change the clip leads on the L1 taps as necessary for reception of radio stations.

Note

Carborundum that will work as a detector may be hard to find. Grinding wheels are not suitable as a source, because the carborundum is usually in fine particles mixed with other material. Best bet is to contact collectors of antique radio parts. But you can use this receiver to experiment with minerals for semiconductor operation. See the Workshop Section for information on mounting mineral sections for detector experiments.

4 COMPONENT PROJECTS

BOOK TUNING CAPACITOR

During the roaring 20's,the Crosly Radio Corporation used a type of tuning capacitor that had two plates hinged together on one edge. The dielectric was a sheet of mica between the two plates. This type of tuning capacitor was called a Book Condenser.

The tuning capacitor shown in the illustration is similar to the Crosly Book Condenser. It uses aluminum foil plates cemented to fixed and movable wood sections, and a plastic sheet dielectric (cut from thin transparent plastic notebook protector material).

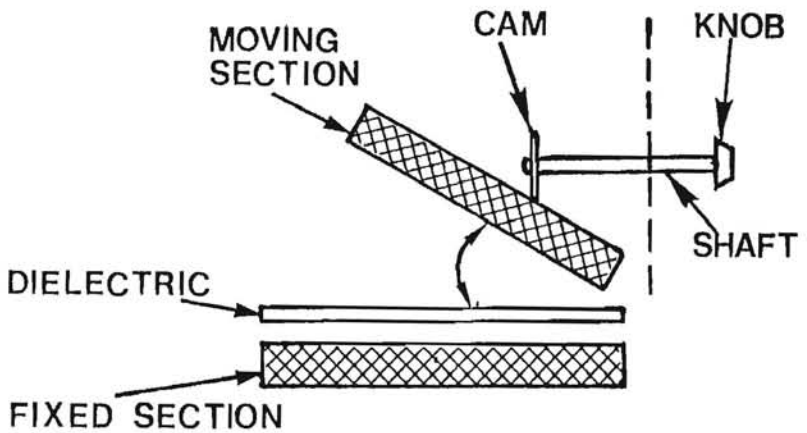

Adjusting the tuning knob causes a metal cam to rotate and control the movement of a spring loaded wood section. This varies the capacity between the two foil plates. As the plates are brought closer together, the capacity increases. As they are separated, the capacity decreases.

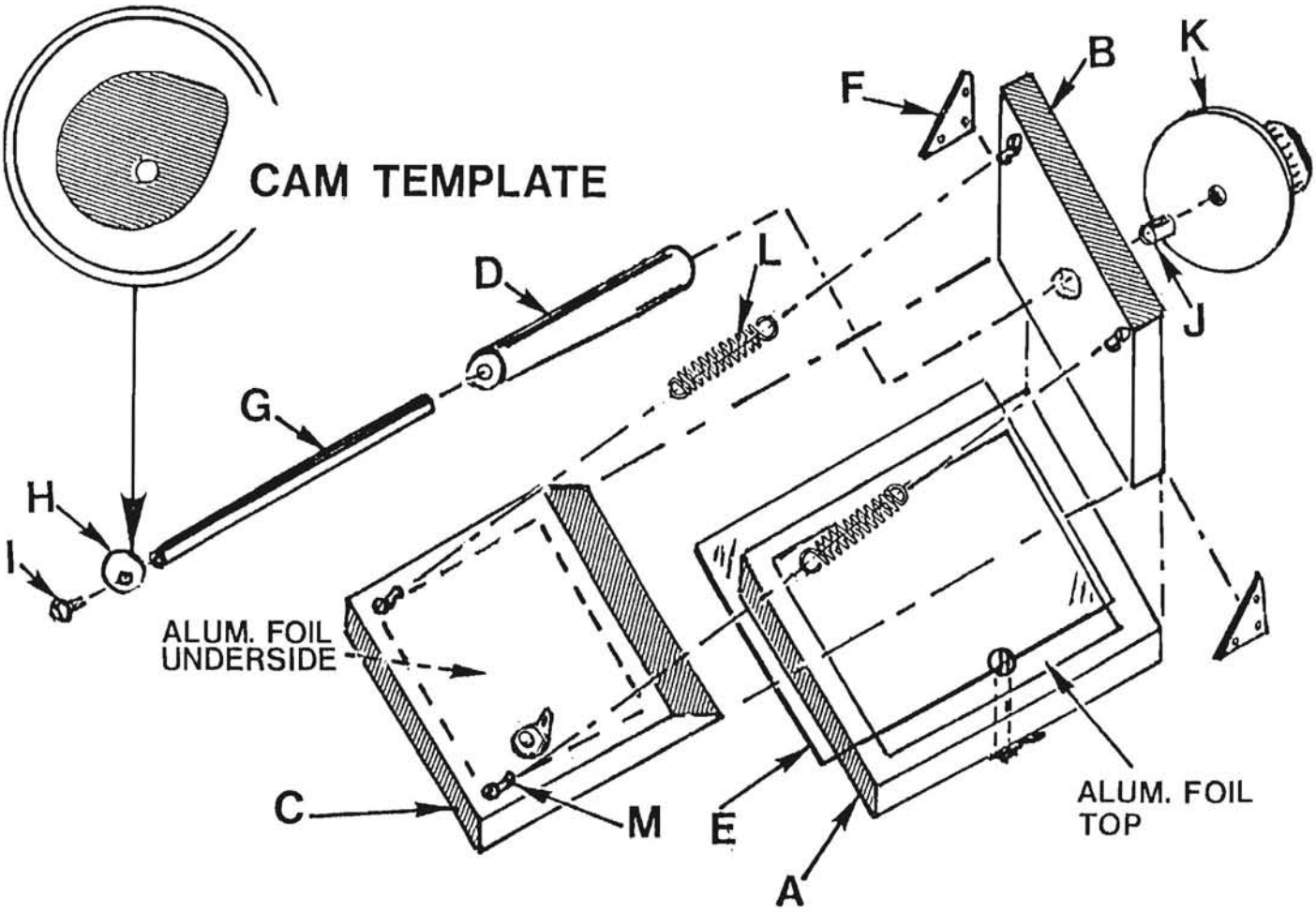

BOOK TUNING CAPACITOR

List of Materials

A - 3 x 3 1/2 X 3/8-inch wood section
B - 3 x 1 3/4 x 3/8-inch wood section
C - 3 x 3 1/8 x 3/8-inch wood section (one end beveled 45 degrees - see text).
D - 3/4 - inch diameter wood dowel, 2 1/4 inches long.
E - 3 1/2 x 3 -inch sheet plastic (See text).
F - 2 triangular 1-inch metal sections
G - 1/4-inch metal rod, 3 -inches long.
H - Metal cam (see text).
I - Machine screw (see text)
J - Bushing 3/8-inch long (to fit rod G).
K - Tuning knob (to fit rod G).
L - 2 springs 1/4-inch diameter by 1 1/4-inch long.
M - 4 solder lugs.
MISC. Small wood screws, nails, aluminum foil, machine screws, nuts, solder lugs and washers.

CONSTRUCTION

Start construction by cutting the wood sections from 3/8-thick wood to the sizes shown in the drawing. Section C has a 45 degree bevel at one end. This acts as a pivot point for the movable section. Drill and countersink a hole to fit a flathead machine screw in the places shown on sections A and C. Do not install the screws at this time.

Cement aluminum foil on the top of section A and on the bottom of section C. Then cut and remove a 1/2-inch strip of foil from the front edge of section A. Cut a 1/8-inch strip from the remaining edges. Also cut away a 1/8-inch strip from all the edges of the foil on section C.

Carefully slit the foil on top of the machine screw hole on section A and press the foil gently inside the hole. Install the flathead machine screw into the hole, making sure that it is in contact with the foil. Fasten the screw with a washer and nut. Make sure that the screw does not turn and rip the foil. Install a solder lug and nut on the free end of the screw. Repeat this operation with section C.

Cut the sheet plastic E to size and place it on top of section A. Then place section B on top of the plastic sheet and install it on the end of section A with wood screws. Install the two metal sections F with small nails.

Saw the metal rod G to size and tap one end to fit a machine screw. Cut the dowel D to size and center drill it to fit the rod G. Cut a flat on one side of the dowel.

Make a tracing of the cam H template and cement it on a section of heavy gauge sheet aluminumm. Cut the cam to size and drill a hole to fit the rod machine screw in the location shown. Install the cam with a lock washer on rod G. Insert the free end of the rod into dowel D. Place section C on top of the plastic sheet E on section A. Then temporarily position dowel D with rod G in the center of section B. Rotate the cam so that its long end touches the top of section C. Mark the placement of the dowel on section B. Drill a hole in section B to fit dowel D. Cement the dowel in place.

Locate and install solder lugs with wood screws on sections A and C as shown in the drawing. Bend over the ends of the solder lugs and install two springs L in the lugs.

Mount tuning knob K and bushing J on the free end of rod G. Adjust the knob and check that section C moves in and out with the cam rotation. changing the capacity between the foil plates.

You may have to experiment with the cam diameter for best operation of section C. File the cam edges in small increments only and recheck the operation often. Use very light springs to keep section C from pressing against the cam and moving it.

Reverse the cam on rod G to alter the direction of capacity (clockwise or counterclockwise). The capacitor can be installed vertically on a receiver project with a small metal bracket mounted on the bottom side of section A.

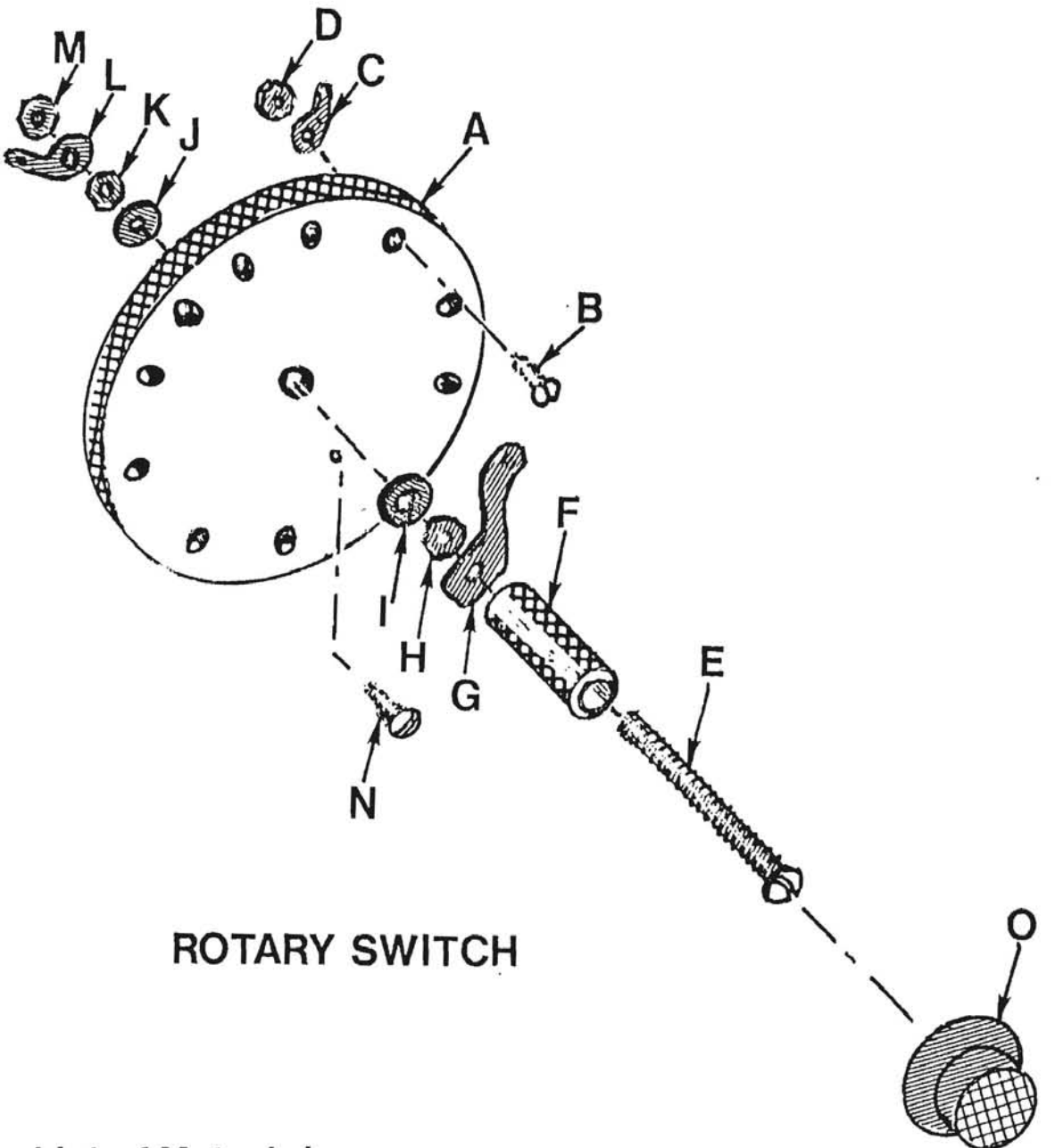

ROTARY SWITCH

List of Materials

A - 2 1/4 diameter x 3/8-inch wood section.
B - Flat head machine screws.
C,L - Solder lugs.
D - Nuts to fit B.
E - Machine screw 1 1/4-inches long.
F - 1/4 diameter x 1/2-inch long bushing (to fit E).
G - Switch arm 1 x 1/4-inch (sheet brass, see text).
H,K,M - Nuts to fit E.
I,J - Washers to fit B.
N - Small woodscrew.

ROTARY SWITCH

In the early days, radio experimenters could not buy parts that are readily available today. They had to build their radio components from wood sections and common hardware.The rotary switch ilustrated is similar to a type constructed for use with tapped coils of crystal sets.

The rotary switch shown uses flat head screws for contact points that are mounted on a wood section. The switch arm is cut from sheet brass and is installed on a machine screw.

CONSTRUCTION

Refer to the drawing of the rotary switch. Begin construction by cutting the 2 1/4-inch diameter section A from 3/8-inch thick wood. Locate, drill,and countersink the holes for the flathead machine screws B. The rotary switch shown has 10 machine screws, but you can space the hole locations for the number of switch contact points desired. Allow a space between the starting and ending contact points for the woodscrew N. This woodscrew is used as a stop for the rotary arm G. Locate and drill a center hole for the machine screw E. Install the screws B in section A with solder lugs C and nuts D. Install the woodscrew N.

Measure and cut the rotary arm G from a section of sheet brass. The arm should be long enough to reach the contacts. Make sure that it is not too wide, or it may short out to a nearby contact. Make a dent or "dimple" on the contact end, and drill a hole for screw E on the other end. Bend the rotary arm as shown in the drawing. Install screw E into bushing F, and arm G, and tighten the assembly with nut H. Place washer I on the screw and install screw E into the center hole of A. loosely fasten the screw with washer J and nut K. Then rotate the bushing F and arm G. Adjust the tightness of nut K as required to allow rotation of G with only a slight "drag". Install solder lug L on screw E with nut M. and bend the lug towards the screw end. Install knob O on bushing F, and recheck operation of the arm G. It should touch all of the contacts B and stop at screw N.

The rotary switch is used as shown in the Dual-Tuned Crystal Set Construction Project. Make sure that extra lead length is allowed for connection to the solder lug L. Bend the lead into a "pig-tail," so that it will not break as the solder lug L is rotated.

5 WORKSHOP

The construction projects in this book can be built with common hand tools found in an average home workshop.

Useful Hand Tools

Safety glasses or face shield
Steel rule
Square
Hack saw
Wood saw
Screwdrivers
Pliers
Wirecutters
Tin snips
Center punch
Files
Hammer
Soldering Iron

Wear safety glasses or face shield while working. Observe common sense safety precautions.

SOLDERING

Make sure that the part to be soldered is clean. Use only rosin core solder. Prepare the soldering iron tip as follows:

File each surface of the tip to remove oxidation. Plug in the iron and let it heat until you can melt solder on the tip (before the copper tip turns blue or bronze color). Melt enough solder until all sides of the tip are coated. Then wipe off excess solder with a damp sponge or cloth.

Make sure that the bare wire lead to be soldered is free of oxide. It is best to tin it first by melting a bit of rosin core solder on the lead end. Crimp the lead in the part hole to keep it from moving during soldering. Hold the iron tip under the part until it is hot enough to melt solder. Apply only enough rosin core solder to cover the surface of the part. Remove the iron. Do not move the part or wire while it is cooling.

PROJECT CONSTRUCTION TIPS

Tape a sheet of graph paper over a project wood section. Mark locations of the parts on the paper. Center punch mounting hole centers through the paper. Use a compass to draw circles the same size as the holes. Then drill holes through the paper.

Lettering on the projects can be done with a labelmaker that prints on strips of adhesive coated plastic. You can also use decals or dry transfer lettering sheets.

Small metal brackets can be made from heavy gauge sheet aluminum. Layout and drill the mounting holes and then cut it to size with a tin snips. Form the bracket by using a heavy mallet and a vise.

Tuning Capacitors, Knobs, and Dials

Old radios are a good source of components. The radios generally use two tuning capacitor sections ganged together. The receivers previously described will operate with one of the capacitor sections (365 mmf). You can cut out cardboard discs and cement them to radio knobs and use them as dials with the tuning capacitors. Mark the dials with dry transfer lettering, or black drawing ink.

Panels and Cabinets

The layout and construction of crystal sets is not critical. They can be fitted into many different types of wood cabinets. You can use almost any type of non-metallic box, but metal boxes are not recommended as sheet metal close to the tuning coil may lower its "Q". Black sheet plastic used for the front panel with white dry transfer lettering will give your receiver project an antique look.

MOUNTING MINERALS FOR CRYSTAL DETECTORS

Minerals (galena, etc) for experimentation as crystal detectors, will work best when mounted in a metallic base. For temporary mounting (while testing), wrap aluminum foil tightly around the sides and bottom of the mineral. Then place it into a sheet metal ring or cup that will fit into the detector assembly.

After testing, the mineral can be permanently mounted in a metal slug. Drill a shallow hole of a diameter equal to the detector assembly crystal in a block of wood. Fill the hole with melted solder. While the solder is still molten, carefully place your mineral section into the center. Hold the mineral in place with tweezers or long nose pliers until the solder cools. Then pry the metal slug out of the wood. Be sure that the top of the mineral section is free of solder.

INDEX

Advanced receiver projects,32
Amplifier connection,14,15
Antenna lead-in,10
Antenna,10

Book tuning capacitor,48
Boundary,5
Bias,5

Capacitor,8
Capacity,8
Carborundum crystal set,43
Carborundum,43
Catwhisker detector,4,6
Catwhisker,6
Component projects,48
Construction tips,55
Crystal detector assembly,45
Crystal detector,4

Detected audio signals,7
Detection,4,6
Diode electron flow,5
Dual spiderweb coils,37
Dual-tuned crystal set,32

Earphones,11
Enamel insulation,17
Electron current flow,5

Ferrite coil crystal set,23
Ferrite coil,12
Ferrite rod,23

Galena,4
Germanium,4
Ground lead,10
Ground wave,25
Ground,10

Hand tools,54
Headphones,7,11
Headset,11

Junction diode,4,5

Knobs and dials,55

Lettering,55
Loading coil,21
Loopstick,12

Modulated radio waves,6
Mounting minerals,56

N type material,4
Natural crystal,4

Operating tips,25

P type material,4
PN junction,5
Panels and cabinets,5
Parallel tuned circuit,9
Point contact diode,4,6
Primary coil,23

Reactance,8
Receiving radio waves,7
Resonant frequency,9
Rf coil,8
Rotary switch project,53

Schematic symbols,15
Secondary coil,23
Selective crystal set,37
Selectivity,9
Semiconductor diode,4
Silicon,4
Simple crystal set,12
Simple receivers,12
Sky wave,25
Slider tuned coil,17
Slider tuned set,17
Soldering,54
Space charge region,5
Spiderweb coil set,27
Station log,31

Tapped coil,32,44
Tapped spiderweb,27
Transmitted waves,6,7
Transmitting station,6
Tuned circuit,7,9
Tuning crystal set,7

Untuned detector,20

Variable capacitor,8
Variable coupling,39

Wave trap,21
Workshop,54

About the Author

Charles Green has been involved in the design and construction of electronic equipment for industry and the U.S. Government for 30 years. Much of his experience has been as a technical writer preparing operation and maintenance manuals. His continuing interest is in constructing radios and he has had over a hundred articles published in hobbyist magazines over the past two decades.

"Amateur Wireless" Handbooks

CRYSTAL RECEIVING SETS

And How to Make Them

Fully Illustrated

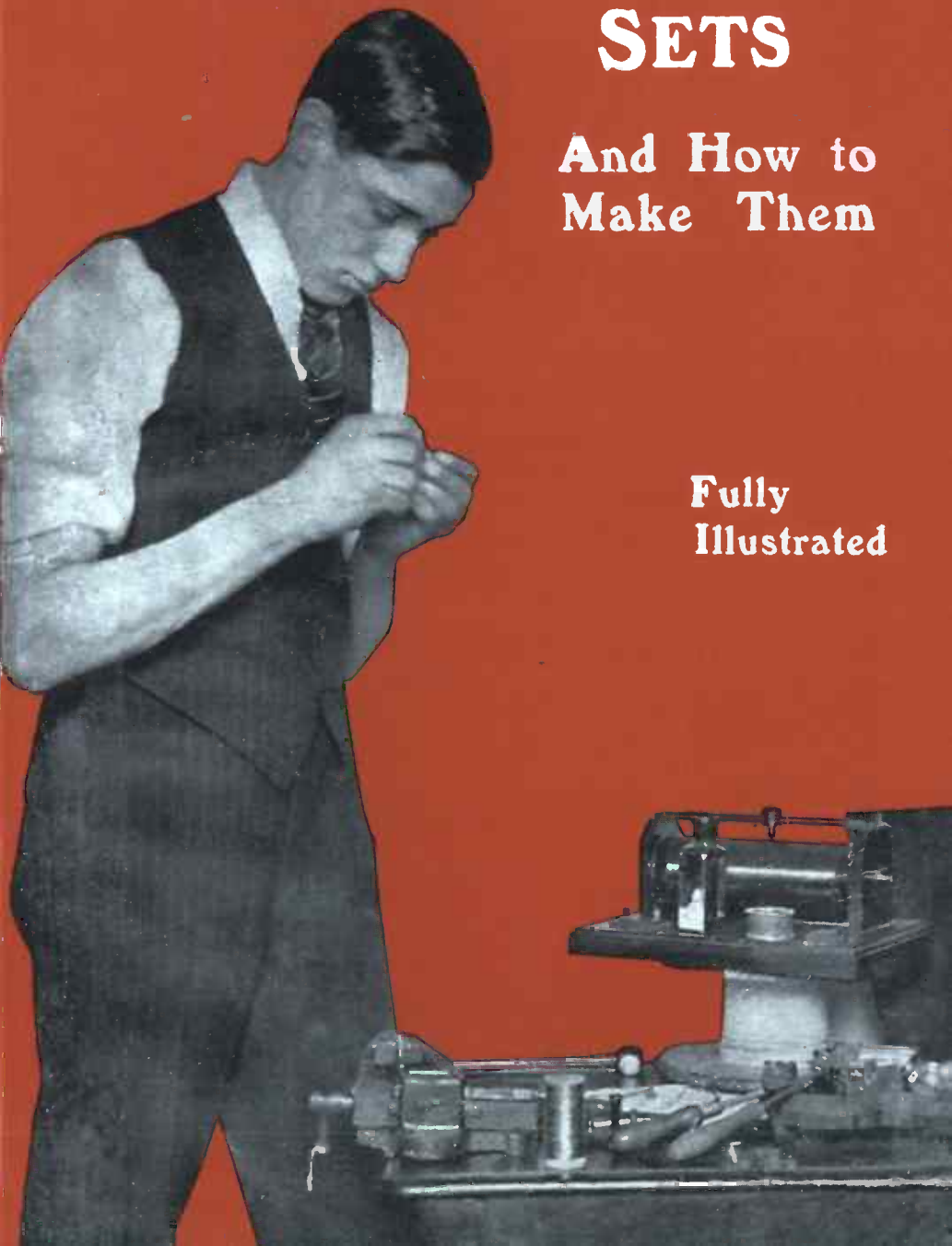

The Best Paper for Wireless Amateurs

Amateur Wireless And Electrics

The Leading Weekly

Devoted exclusively to the interests of Wireless Amateurs; explains the Underlying Principles; Makes the Way Plain to Beginners; Shows them How to Start; What to Do; What to Buy; What to Make, and How to Make It. Gives Expert Replies to Readers' Questions; no matter what the difficulty is, the Reader is helped out of it by Highly Skilled Experts; Wireless Club and Society Fixtures; and the Latest News of Wireless Developments. Fully illustrated by Helpful Diagrams and Photographs.

Every Thursday 3D.

ON SALE EVERYWHERE

Cassells, Publishers, London.

SIMPLE CRYSTAL RECEIVING SETS

AND HOW TO MAKE THEM

EDITED BY

BERNARD E. JONES

Editor of "Amateur Wireless," etc. etc.

WITH 114 ILLUSTRATIONS

CASSELL AND COMPANY, LTD

London, New York, Toronto and Melbourne

PREFACE

THIS Handbook deals, in a simple, straightforward manner, with the making of a number of different kinds of crystal sets representative of those in present-day use. It is uniform in style and price with other members of the "Amateur Wireless" Handbook Series, notably with two of them, namely "Wireless Component Parts and How to Make Them" and "Simple Valve Receiving Sets and How to Make Them," the former containing detailed instructions on the making of the various components forming part of many kinds of wireless receiving apparatus, and the latter treating of valve sets in exactly the same way as crystal sets are dealt with in this present Handbook.

This book has been compiled from the pages of "Amateur Wireless," the well-known weekly journal for wireless amateurs, and the name of the author responsible for each of the various chapters is given in many cases immediately below the chapter heading.

It is believed that the information is presented in such simple fashion as not to cause the reader any trouble when putting it into practice, but should he be in difficulty with regard to any matter dealt with in this book, or to any other subject within the scope of the weekly journal mentioned, he should send a query to "Amateur Wireless," La Belle Sauvage, London, E.C.4, *but should take particular care to accompany his query with a stamped and addressed envelope and a coupon from the current issue of that journal.*

THE EDITOR.

CONTENTS

CHAPTER		PAGE
1.	A Simple and Efficient Receiving Set	1
2.	A Single-slider Set	16
3.	Set with Semicircular Tuner	25
4.	Crystal Set with Tapped Single Coil	33
5.	A Loose-coupled Set	45
6.	Set with Plug-in Basket Coils	58
7.	Combined Crystal and Valve Receiver	68
8.	Some Miniature Receiving Sets	73
9.	Crystal Circuits	85
10.	How Crystals Work	91
11.	Making a Buzzer	99
12.	Receiving C.W. Signals on a Crystal Set	103
13.	Making a Wavemeter from a Crystal Set	108
14.	Converting Low-resistance Phones	111
15.	The Morse Code	121
	Index	124

SIMPLE CRYSTAL RECEIVING SETS AND HOW TO MAKE THEM

CHAPTER I

A Simple and Efficient Receiving Set

As the result of recent experiments conducted in the United States of America to produce an efficient crystal receiving set that at the same time would be reason-

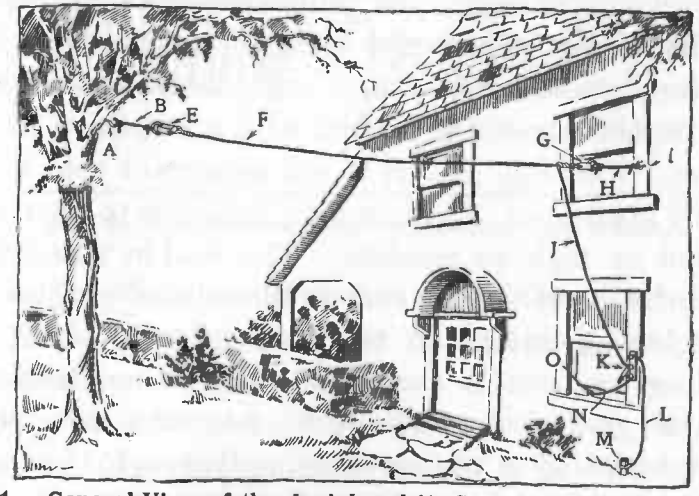

Fig. 1.—General View of the Aerial and its Supports and Connections.

ably simple and inexpensive to make, a circular was issued by the American Bureau of Standards giving constructional details of a set evolved in accordance with the result of those experiments. The set, it is

thought, forms a fitting introduction to this book. It has been made by thousands of people, including hundreds of readers of "AMATEUR WIRELESS," and its efficiency is well proved by ample practical experience.

Elements of the Set.—In this receiving set there are five essential parts: the aerial, lightning switch, ground or earth connection, tuner and detector, and telephone receivers, and the construction of each (excluding the last-named, which, of course, must as a rule be purchased) is described under its proper heading.

The details regarding the aerial and earth hold true for any set, but it must be remembered that the aerial, both as regards type and system of erection, is largely dependent upon individual circumstances.

The Aerial.—The aerial is simply a wire suspended between two elevated points, and should not be less than 30 feet above the ground with a length of about 75 feet. (See Fig. 1.) It is not important that it be strictly horizontal. It is, in fact, desirable to have the far end as high as possible. The lead-in wire from the aerial itself should run as directly as possible to the lightning switch. If the position of the adjoining buildings or trees is such that the distance between them is greater than about 85 feet, the aerial can still be held to a 75-foot distance between the insulators by increasing the length of the piece of rope (B) to which the far end is attached. The rope (H) securing the aerial insulator to the house should not be lengthened to overcome this difficulty, because by so doing the lead-in wire (J) would be lengthened.

The parts will be referred to by reference to the letters appearing in Figs. 1 and 2.

A and I are screw eyes sufficiently strong to anchor the aerial at the ends. B and H are pieces of rope $\frac{3}{8}$ in. or $\frac{1}{2}$ in. in diameter, just long enough to allow the aerial to swing clear of the two supports. B is a piece of $\frac{3}{8}$-in. or $\frac{1}{2}$-in. rope sufficiently long to

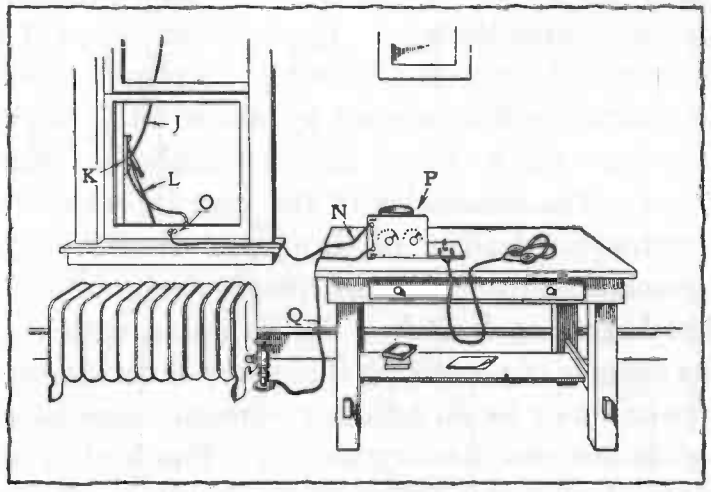

Fig. 2.—The Receiver and its External Connections.

make the distance between E and G about 75 feet. A single-block pulley may be used, but is not really essential.

E and G are two insulators which may be constructed of any dry hardwood of sufficient strength to withstand the strain of the aerial; blocks about $1\frac{1}{2}$ in. × 2 in. × 10 in. will serve. The holes should be drilled, as shown in Fig. 1, sufficiently far from the ends to give proper strength. If wood is used the insulators should be boiled in paraffin wax for about

an hour. If porcelain wiring cleats are available they may be substituted instead of the wood insulators. If any unglazed porcelain is used as insulators, it should be boiled in paraffin wax in the same way as the wood. The wire for the aerial may be No. 14 or 16 copper wire either bare or insulated. The end farthest from the receiving set may be secured to the insulator (E) by any satisfactory method, care being taken not to kink the wire. Draw the other end of the wire through the other insulator (G) to a point where the two insulators are separated by about 75 ft.; twist the *insulator* (G) so as to form an anchor as shown in Fig. 1. The remainder of the wire (J) which now constitutes the lead-in or drop-wire should be just long enough to reach the lightning switch.

The Lightning Switch.—The lightning switch K is for the purpose of protecting the system from lightning. This switch may be an ordinary porcelain-base, single-pole double-throw battery switch. The lead-in wire (J) is attached to this switch at the middle point. The switch blade should always be thrown to the upper clip when the receiving set is not actually being used and to the lower clip when it is desired to receive signals.

The Earth Lead.—L is the earth wire for the lightning switch; it may be a piece of the same wire as used for the aerial, of sufficient length to connect the upper clip of the lightning switch (K) to the clamp on the earth rod (M), which is a piece of iron pipe or rod driven 3 ft. to 6 ft. into the ground, preferably where the ground is moist, and extending a sufficient

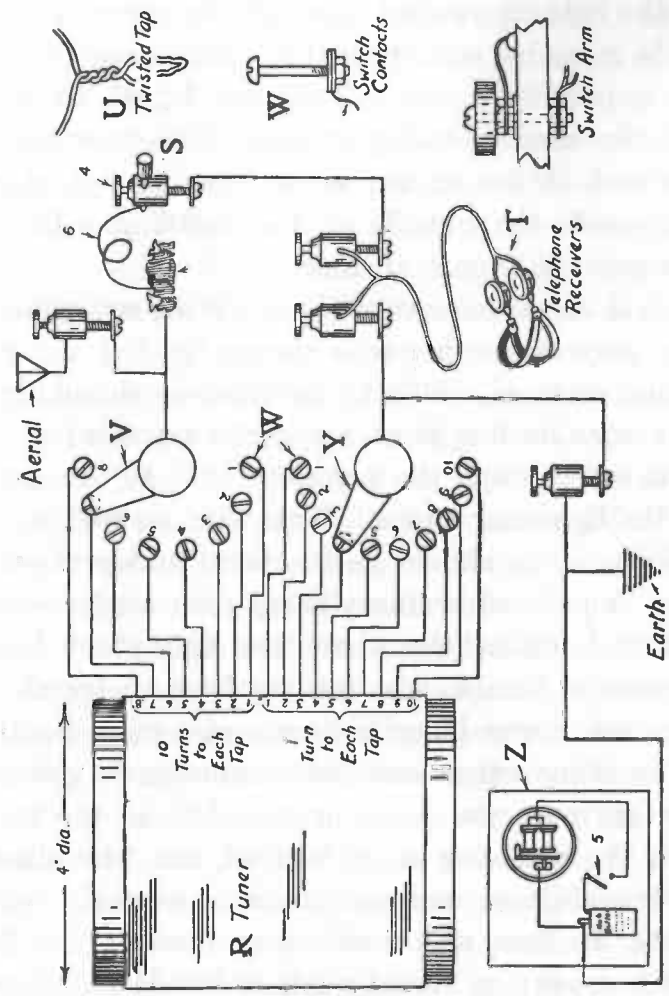

Fig. 3.—The Receiving Set in Complete Detail.

distance above the ground in order that the ground clamp may be fastened to it.

The Lead-in.—N is a wire leading from the lower clip of the lightning switch through the porcelain tube (O) to the receiving set terminal marked aerial (Fig. 3).

O is a porcelain tube of sufficient length to reach through the window casing or wall. This tube should be mounted in the casing or wall so that it slopes down towards the outside of the building. This is done to prevent ingress of rain.

General Arrangement.—The receiving set installed in some part of the house is shown by Fig. 2. P is the actual receiver, which is described in detail later. N is the wire leading from the aerial terminal of the receiving set through the porcelain tube to the lower clip of the lightning switch. This wire, as well as the wire shown by Q, should be insulated and preferably flexible. A piece of ordinary hemp cord might be unbraided and utilised for these two important leads. Q is a piece of flexible wire leading from the receiving set terminal marked earth to a water-pipe, heating system or some other metallic conductor to ground. If there are no water-pipes or radiators in the room in which the receiving set is located, the wire should be run out of doors and connected to a special earth below the window, and which may consist of a few yards of wire netting buried a few inches deep in damp soil, or an iron rod as mentioned.

Crystal Detector.—The construction of a crystal detector (S, Fig. 3) may be very simple although quite satisfactory. The crystal, as it is ordinarily

purchased, may be unmounted or mounted in a little block of metal. For mechanical reasons the mounted type may be more satisfactory, but that is of no great consequence. It is very important, however, that a good crystal be used. It is probable also that a galena crystal will be the most satisfactory.

The crystal detector may be made up of a tested crystal, three wood-screws, a short piece of copper wire, a nail, setscrew type of terminal, and a wooden knob or cork. The crystal is held in position on the wooden base by three brass wood-screws, as shown in Fig. 4. A bare copper wire may be wrapped tightly round the three brass screws for contact. The assembling of the rest of the crystal detector is quite clearly shown in Fig. 4. If, however, the reader wishes to adopt any other type of detector, he will find almost every type illustrated and explained in "Wireless Component Parts, and How to Make Them," uniform in style and price with the present volume.

Telephones.—It is desirable to use a pair of telephone receivers connected by a head band, usually called a double telephone head-set (T, Fig. 3). The telephone receiver may be of any of the standard commercial makes having a resistance of between 2,000 and 3,000 ohms. The double telephone receivers will cost more than all the other parts of the station combined, but it is desirable to get them, especially if one intends to improve the receiving set later. A single telephone receiver with a head band may be used, though it gives results somewhat less satisfactory.

Accessories.—Under the heading of accessory equipment may be listed terminals, switch-arms, switch-contacts, test-buzzer, dry battery, and boards on which to mount the complete apparatus. The terminals, switch-arms and switch-contacts may all be readily purchased. There is nothing peculiar about the pieces of wood on which the equipment is mounted, except that they should be soaked in melted paraffin wax for an hour or two.

Winding the Tuner.—Having obtained a piece of cardboard tubing 4 in. in diameter and about ½ lb. of No. 24 (or No. 26) d.c.c. copper wire, start the winding of the tuner (see R, Fig. 3). Punch two holes in the tube about ½ in. from one end, not shown in the diagram. Weave the wire through these holes in such a way that the end of the wire will be quite firmly anchored, leaving about 12 in. of the wire free for connections. Start with the remainder of the wire to wrap the several turns in a single layer about the tube, tightly and closely together. After ten complete turns have been wound on the tube, hold those turns snugly while a tap is taken off. This tap is made by forming a 6-in. loop of the wire and twisting it together at such a place that it will be slightly staggered from the first tap. This method of taking off taps is shown quite clearly at U (Fig. 3). Proceed in this manner until seven twisted taps have been taken off at every ten turns. After these first seventy turns have been wound on the tube, then take off a 6-in. twisted tap for every succeeding single turn until ten additional turns have been wound on the tube.

After winding the last turn of wire, anchor the end by weaving it through two holes punched in the tube, much as was done at the start, leaving about 12 in. of wire free for connecting. It is to be understood that each of the eighteen taps is slightly staggered from the one just above, so that the several taps will not be bunched along one line on the cardboard tube.

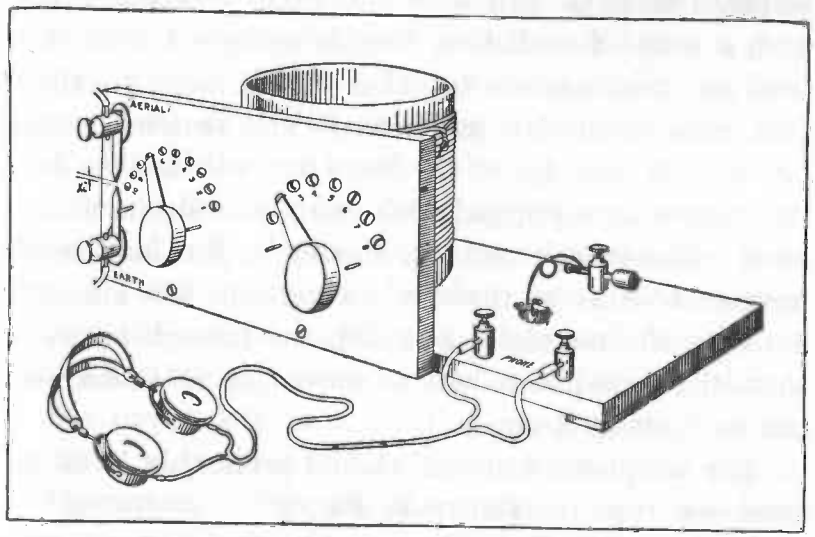

Fig. 4.—View of the Receiver.

It will be advisable, after winding the tuner, to dip it in hot paraffin wax.

Upright Panel and Base.—Having completed the tuner to this point, set it aside and construct the upright panel shown in Fig. 4. This panel may be a piece of wood approximately ½ in. thick. The positions of the several holes for the terminals, switch-arms and switch-contacts may first be laid out and drilled. The aerial and earth terminals may be ordinary ⅛-in.

brass screws of sufficient length and supplied with three nuts and two washers. The first nut binds the bolt to the panel, the second nut holds one of the short pieces of stiff wire, while the third nut holds the aerial or earth wire, as the case may be. The switch-arm with knob (shown in Fig. 3) may be purchased in the assembled form, or it may be constructed from a thin slice cut from a broom-handle and a bolt of sufficient length equipped with four nuts and two washers together with a narrow strip of thin brass somewhat as shown. The switch contacts (W, Fig. 3) may be of the regular type, or they may be brass bolts equipped with one nut and one washer each. The switch-contacts should be just sufficiently near each other so that the switch-arm will not drop between the contacts, but also far enough apart so that the switch-arm can be set so as to touch only one contact at a time.

The telephone terminal should preferably be of the set-screw type, as shown in Fig. 3.

Wiring.—Having constructed the several parts just mentioned and mounted them on the wood base, the next matter is to connect the several taps to the switch-contacts and attach the other necessary wires. Scrape the cotton insulation from the loop ends of the sixteen twisted taps as well as from the ends of the two single-wire taps coming from the first and last turns. Fasten the bare ends of these wires to the proper switch contacts as shown by the corresponding numbers in Fig. 3. Be careful not to cut or break any of the looped taps. It would be prefer-

able to fasten the connecting wires to the switch-contacts by binding them between the washer and the nut, as shown at W (Fig. 3). A wire is run from the back of the terminal marked earth (Fig. 3) to the back of the left-hand switch-arm bolt (Y), thence to underneath the left-hand binding post marked phones in Fig. 4. A wire is then run from underneath the right-hand terminal marked phones to underneath the binding post W (Fig. 3), which forms a part of the crystal detector. Take a piece of No. 24 bare copper wire about $2\frac{1}{2}$ in. long and twist one end tightly round the nail passing through binding post S; its other end will rest gently by its own weight on the crystal. The bare copper wire which has been wrapped tightly round the three brass wood-screws holding the crystal in place is led to and fastened at the rear of the right-hand switch-arm bolt (V), thence to the upper left-hand binding post marked aerial. As much as possible of this wiring is shown in Fig. 3.

Operation.—After all the parts of the set have been constructed and assembled the first essential operation is to adjust the little piece of wire, which rests lightly on the crystal, to a sensitive point. This may be accomplished in several different ways; the use of a miniature buzzer transmitter is very satisfactory. Assuming that the most sensitive point on the crystal has been found by the method described later, the rest of the operation is to get the set in resonance or in tune with the station from which one wishes to hear messages. The tuning is attained by adjusting the inductance of the tuner. That is, one

or both of the switch-arms are rotated until the proper number of turns of wire of the tuner are made a part of the metallic circuit between the aerial and earth, so that, together with the capacity of the aerial, the receiving circuit is in resonance with the particular transmitting station. It will be remembered that there are ten turns of wire between each of the first eight switch contacts and only one turn of wire between each two of the other contacts. The tuning of the receiving set is best accomplished by setting the right-hand arm (v., Fig. 3) on contact (1) and rotating the left-hand switch-arm over all its contacts. If the desired signals are not heard, move the right-hand switch-arm to contact (2) and again rotate the left-hand switch-arm throughout its range. Proceed in this manner until the desired signals are heard.

The Test Buzzer.—As mentioned previously, it is easy to find the most sensitive spot on the crystal by using a test buzzer (z, Fig. 3). The test buzzer is used as a miniature local transmitting set. When connected to the receiving set, as shown at z, Fig. 3, the current produced by the buzzer will be converted into sound by the telephone receivers and the crystal, the loudness of the sound depending on what part of the crystal is in contact with the fine wire.

In order to find the most sensitive spot connect the test buzzer to the receiving set as directed, close the switch 5, Fig. 3, set the right-hand switch-arm on contact point No. 8, fasten the telephone receivers to the binding posts marked phones, loosen the set-screw of the binding post slightly and change the

position of the fine wire (6, Fig. 3) to several positions of contact with the crystal until the loudest sound is heard in the 'phones, then tighten the binding post set-screw (4) slightly.

The illustrations to this chapter were published by " Popular Radio " and prepared by them from the drawings issued by the U.S.A. Government, and the Editor of the present Handbook wishes to express his indebtedness for their use to the American publication named.

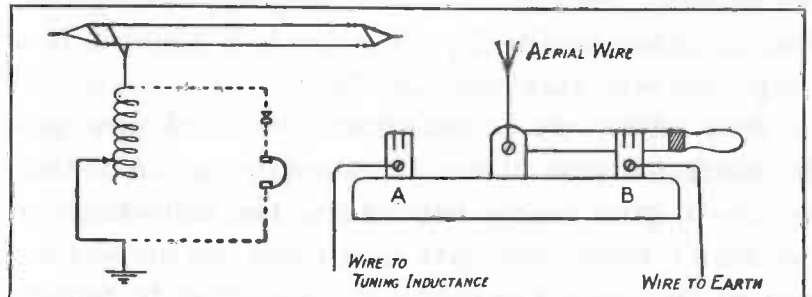

Fig. 5.—Diagram of Oscillatory Circuit. **Fig. 6.—Details of Lightning Switch and Connections.**

The Range of the Set.—It is impossible to state offhand what the range of a set will be, for there are different factors that govern the operation. Briefly these are as stated below :

(1) The distance of the transmitting station and its direction.

(2) The power used by the station ; this, of course, varies enormously.

(3) The height and length of the receiving aerial.

(4) The position of the receiving station. If it is on a hill or a level plain, and is not sheltered by trees

or neighbouring houses, these conditions confer great advantages.

(5) The efficiency of the receiving set. This depends on (*a*) good insulation, (*b*) proper adjustment of detector, and (*c*) good telephones.

Hints on Operation.—In order that signals may be received, it must be remembered that the receiving set must be in " tune " with the vibrations in the ether set up by the transmitting station. To tune-in stations of different wave-lengths either the inductance or capacity, or both, of the oscillatory circuit (see Fig. 5) must be altered. The method adopted in a simple set is to vary the inductance.

Now inductance necessitates a length of wire, preferably in the form of turns ; two turns, provided they are close, give nearly four times the inductance of one turn ; three turns give nine times the inductance, and so on. Also the inductance increases in proportion to the square of the diameter of the turns in the same way. By having, say, 100 turns of wire in a former (each turn being close to its neighbour but well insulated from it), and having a slider, we can vary the inductance over a wide range, increasing by a single turn at a time. The slider has certain disadvantages. It wears the wire by constant rubbing and is liable to short-circuit two or more turns, which will waste some of the energy. In order to overcome these objections, and also to make an inductance suitable for panel mounting, the turns are brought out to two switches, one called the " tens switch " and the other the " units." Each stud on the tens switch

has ten complete turns connected to it, so that by moving the knob of this switch the inductance is varied by comparatively large amounts at a time. To tune more closely the units switch is used, ten studs being connected to the last ten turns on the coil.

By using both switches together it is possible to include any number of turns varying from one to the greatest number on the coil.

The lightning switch is shown enlarged by Fig. 6. A single-pole change-over switch is used. The aerial wire is connected to the arm. The lead to the tuning inductance is connected to A and the earth wire to B. When the set is in use the switch should be over to the left (A), and when out of use it should be over to the right (B), thus earthing the aerial.

CHAPTER II

A Single-slider Set

By PAUL D. TYERS.

REMEMBERING the statement in the previous chapter that the longer the wave-length the greater is the amount of inductance required to tune it in, it will be obvious that it is impossible to wind up one coil to receive all wave-lengths. The range of the set here described is from about 350 metres to 600 metres.

Construction of the Tuner.—The coil will be wound on a cylinder 6 in. long and 3 in. in diameter. Cardboard postage tubes are very suitable for the purpose if they are previously prepared. A 6-in. length is cut off with a saw and the surface and ends are carefully smoothed with very fine glass-paper. Three small holes are drilled in each end of the tube in the position shown in Fig. 7. The tube is then heated in an oven to drive out any absorbed moisture, and while it is still hot it is given a coat of thick shellac varnish. This is prepared by dissolving shellac in methylated spirit. The tube should be heated and varnished at least three times.

Wooden ends are fixed to the cylinder, which serve as a support for the slider, as follows: Two wooden discs about $\frac{3}{8}$ in. thick are cut out with a fretsaw of such size as tightly to fit into the ends of the tube. This will be understood by reference to Fig. 8, and

it will be seen that they are afterwards secured by small brass screws passed through the sides of the tube. The end pieces are made from any hardwood, and should be about $4\frac{1}{2}$ in. square and $\frac{1}{2}$ in. thick. These are fixed to the discs by brass screws after the coil has been wound.

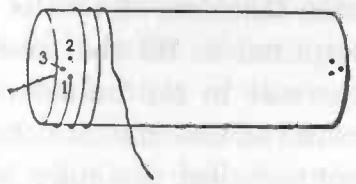

Fig. 7.—Method of Fixing Winding.

Winding the Coil.—When winding a very large coil it is usual to arrange some form of winding apparatus, but it is unnecessary in this case. Referring to Fig. 7, about 6 in. of free end of the wire is passed down hole No. 1, up hole No. 2, and down hole No. 3, the end being put through the loop which has been formed inside the tube between holes No. 1 and No. 2.

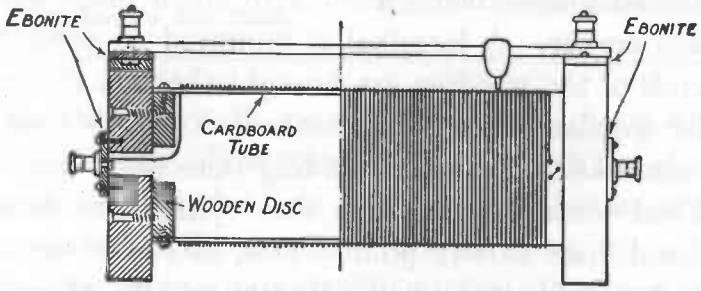

Fig. 8.—Half Section of Tuning Coil.

It will be found that this will fix the end of the wire quite firmly. The winding is then started, making each turn close against the other. It is essential to keep the wire fairly tight, but not so tight as to strain it. When the other end of the coil is reached the wire is fastened off in a similar manner to the first

turn. The best wire is double silk-covered, but this, of course, is rather expensive, and cotton- or enamel-covered may be substituted. It should be remembered that enamelled wire is thinner than silk-covered, and therefore if this is employed more turns will be required to fill the winding space, with a consequent increase in the inductance of the coil. It is not very usual to use silk- or cotton-covered wire with a sliding contact, but this may be done if the winding is given a thin coat of shellac.

Mounting the Coil.—Although a connection is only required to one end of the winding, it is useful to bring both ends to terminals for use in other circuits. A hole about $\frac{3}{4}$ in. in diameter is made in the centre of each wooden disc and end piece. Two squares of ebonite about $1\frac{1}{2}$ in. long are placed over the holes in the end pieces, being fixed with small brass screws at each corner. A terminal is mounted on each, and the ends of the winding are brought through the holes in the wooden disc, being connected to the back of the terminals. Thus the winding does not come into electrical contact with either the cylinder or wooden ends and discs at any point; this, of course, ensures the best possible insulation. Having reached this stage the end pieces can be screwed to the wooden discs, thus firmly fixing the coil.

The Sliding Contact.—The slider may be made if desired, but as it is a standard detail it can be purchased cheaply. It consists of a piece of moulded ebonite containing a spring and brass plunger which makes contact on the winding of the coil. Usually

the slider is made to fit a $\frac{1}{4}$-in.-square brass rod, as shown in the diagram. A piece of square brass rod is cut about 7 in. long (that is, the length of the tube and end pieces), and a hole is drilled in each end to take a small terminal screw. Two pieces of ebonite are next prepared. These should be made about 1 in. long and $\frac{1}{8}$ in. thick. The width is that of the end piece, the ebonite being fixed to this as shown in Fig. 9. It will be noticed that a hole is drilled in the middle of the ebonite, a small part of the end piece

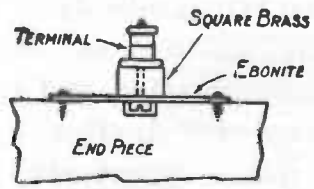

Fig. 9.—Method of Fixing Slider Rod to End Piece.

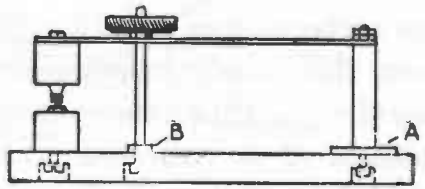

Fig. 10.—Simple Detector.

being cut away to accommodate the head of the terminal screw. The screw is put through the ebonite, passed through the hole in the square brass, and the two parts of the terminal are screwed up tightly. The same process is repeated at the other end of the square brass, and the pieces of ebonite are then screwed to the ends.

Two terminals are connected to the slider rod, whereas only one is needed. This makes the appearance of the coil symmetrical, and the additional terminal may sometimes be of use in different circuits.

The Contact Line.—The coil is now complete with

the exception of the coil contact line; where the slider touches the winding the insulation must be removed. This is best accomplished by rubbing it with a piece of very fine glass-paper, using the edge of a straight piece of wood as a guide, so that a neat line of bare copper wire appears. Only just sufficient insulation should be removed to ensure the slider making an efficient contact.

The Crystal Detector.—There are a number of different forms of detectors (see Chapter II of the "Amateur Wireless" Handbook "Wireless Component Parts"), the most stable type probably being the carborundum and steel-plate combination. However, this usually requires a potentiometer, and it is therefore a little more complicated. Another type consists of a very fine wire (called a cat-whisker) which bears lightly on the surface of the crystal. This combination is perhaps a little more sensitive than others, but at the same time it is rather erratic in behaviour. The set here described has a perikon detector.

The detector will be understood by reference to Fig. 10. The base may be of ebonite, 4 in. by 3 in. and $\frac{1}{2}$ in. thick. The crystal cups may be drilled or turned from brass rod $\frac{1}{2}$ in. in diameter, or they may be bought for a few pence. The success of the detector depends upon its rigidity; a weak or springy detector will never keep sensitive for more than a few minutes, and it will be found a source of everlasting annoyance. One crystal cup is fixed near the end of the base, as shown in Fig. 10, and the other is screwed

to the end of a piece of brass $2\frac{1}{2}$ in. long, $\frac{1}{2}$ in. wide, and a little less than $\frac{1}{16}$ in. thick.

A thick brass screw about 2 in. long is passed through a hole drilled at the other end of the base. A strong washer (A, Fig. 10) is put on the screw, together with a length of stout brass tube about $\frac{3}{8}$ in. external diameter. This is followed by the brass strip, which is finally secured by two nuts. The length of the brass tube will depend, of course, upon the height of the crystal cups. A similar but longer screw is fixed

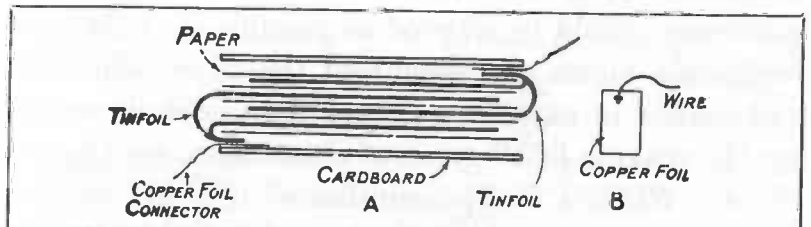

Fig. 11.—Diagram showing Construction of Telephone Condenser.

to the base with a nut B, and the end is allowed to project through a slit in the brass arm. A nut to fit the screw is soldered to a small piece of thin brass, which is then screwed to an ebonite knob. It will be understood that by screwing the knob downwards the two cups will be brought nearer together, thus varying the pressure between the crystals. The crystals are set in the cups with either molten solder or Wood's metal. It is usual to employ a pointed piece of bornite or copper pyrites resting on a flat face of a piece of zincite. Two terminals mounted on the base complete the detector; connection is made, of

course, to the fixed cup and the screw holding the upright.

The Telephone Condenser.—This can be made very simply from tinfoil and paper. The actual value of the condenser is not of very great importance, so that the following details need not be adhered to very strictly. Eight pieces of tinfoil 3 in. by $1\frac{1}{2}$ in. and nine pieces of thick writing paper $2\frac{1}{2}$ in. by $2\frac{1}{2}$ in. will be required. Fig. 11 illustrates the method of assembling the condenser, only four plates being shown for clearness. It is essential that the insulation of the condenser should be as good as possible, and therefore before the plates are assembled the paper should be well soaked in paraffin wax. (For full details regarding the making of all types of condensers, see Chapter IV of "Wireless Component Parts.") When the tinfoil plates are assembled, the four plates which project on one side are bent on to the top piece of paper, and the other four are bent on to the bottom piece of paper. The length of the projecting pieces should be a little over half an inch.

Two pieces of waxed cardboard are cut to the same size as the paper to act as a kind of cover. Connection has yet to be made to the plates, and this is best done as follows: Two short lengths of copper wire are soldered to two small pieces of copper foil. These are placed one against each of the bent pieces of tinfoil, being slipped between the top and bottom pieces of paper and the cardboard. This should be quite clear from the diagram. To ensure an efficient contact the condenser is pressed well together, and it is then firmly

bound round with some tough brown paper which is secured with a little gum. To serve as a protection against damp, the finished condenser is painted with hot wax, great care being taken to cover the parts where the copper foil emerges from the paper. If desired, the condenser may be placed in a box, when the wires would be brought to two terminals mounted on a piece of ebonite on the top.

Connecting the Apparatus.—Fig. 12 is divided into

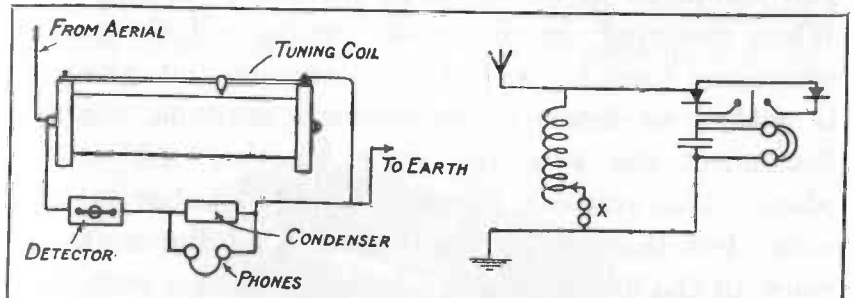

Fig. 12.—Details of Connections showing Arrangement of Apparatus and Wiring Diagram.

two parts. One part shows how the apparatus appears when it is connected up, and the other part shows the standard way of indicating the various components. It will be noticed that a switch has been included between the telephones and the detector. It is so arranged that either of two detectors may be used at will. This is a very convenient method of working, as, should one detector suddenly become insensitive in the middle of an important signal, it is only necessary to put the switch in the other position, thereby connecting up the second detector. As soon as the signal

has finished, it is possible immediately to readjust the faulty detector. The switch is also very useful for comparing two different types of detectors, since it is possible to change from one to the other without disconnecting any of the apparatus.

Using Loading Coils.—The tuning coil, as previously stated, is designed to receive wave-lengths up to about 600 metres. However, if it is desired to receive longer waves, all that is necessary is to insert two terminals in the position marked x in Fig. 12. When receiving on the small tuning coil these are connected together with a piece of wire, but when it is wished to listen to longer-wave stations, simply disconnect the wire and insert another coil in its place. This coil can be made exactly similar to the other, but there is no need to fix a sliding contact, since all the fine tuning can be accomplished with the original coil. It is only necessary to tap the coil at varying intervals, bringing the tappings to a multi-point switch.

A coil of this description is usually called a loading coil, since it loads the aerial to the required wave-length.

CHAPTER III

Set With Semicircular Tuner

By O. J. RANKIN.

THE tuning inductance of the set described in this chapter (see Fig. 13) has been specially designed for the efficient reception of broadcasting, "dead-end" effects being obliterated as far as possible by only

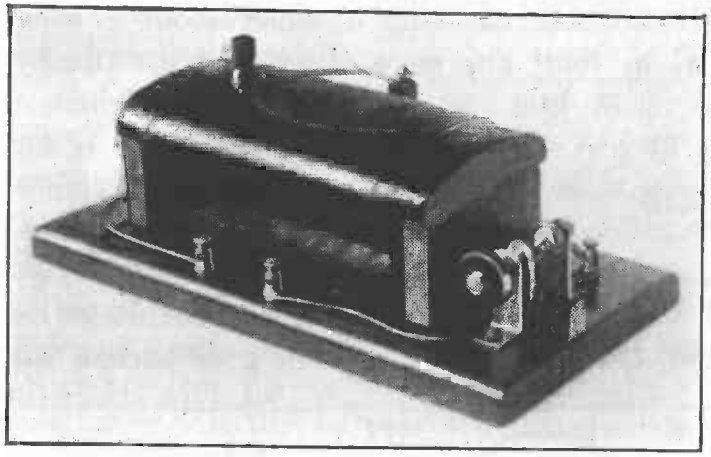

Fig. 13.—Photograph of Set with Semicircular Tuner.

winding on enough wire to just cover the broadcasting wave-lengths.

Materials.—The materials and parts required to build this receiver comprise one cardboard cylinder or "former," 6 in. long by 4 in. diameter, ½ lb. bobbin of No. 24 (or nearest) enamelled copper wire, one

baseboard $\frac{1}{2}$ in. thick, 14 in. long and 8 in. wide, one piece of board $\frac{3}{4}$ in. thick, $3\frac{7}{8}$ in. wide and $7\frac{1}{2}$ in. long, two pieces of board each about $\frac{1}{2}$ in. thick, $3\frac{7}{8}$ in. wide

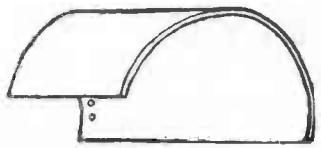

Fig. 14.—Former for Coil.

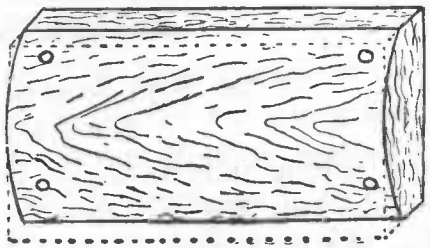

Fig. 15.—Wooden Support for Former.

and 3 in. long, one strip of wood about $\frac{1}{2}$ in. square by $3\frac{1}{2}$ in. long, one piece of spring brass (hard-rolled brass) 4 in. long by $\frac{3}{8}$ in. wide, also one piece $1\frac{1}{2}$ in. long by $\frac{1}{2}$ in. wide, two strips of $\frac{1}{8}$-in. brass $1\frac{3}{4}$ in. long by $\frac{1}{2}$ in. wide, one crystal cup and crystal (preferably hertzite or permanite), one small terminal with nut, four medium-size wood-screw terminals, length of 2 B.A. screwed rod and six nuts, two ebonite or wooden knobs, one spring washer, some good shellac varnish,

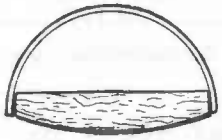

Fig. 16.—End View of Former.

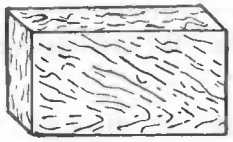

Fig. 17.—End Support.

about one yard of connecting wire and systoflex, and a quantity of small nails, screws, and washers and other sundries.

Inductance Coil.—Cut the cardboard cylinder lengthwise, as shown by Fig. 14, and put aside the other half, as this will not be required. Take the thick piece of board, $3\frac{7}{8}$ in. wide by $7\frac{1}{2}$ in. long, and shape it as shown in Fig. 15. Fit this to the inside of the semi-cylinder, as shown in Fig. 16, and secure it with a few small brass nails driven in so that the heads are flush with the cardboard. See that the straight edges of the cardboard are flush with the curved edge of board, and that an equal portion of board is left projecting at each end. Give this a coat of shellac varnish inside and out, and when perfectly dry apply a second coat. When this is quite dry screw on the two end supports (Fig. 17), which are the two pieces of board $3\frac{7}{8}$ in. wide by 3 in. long, as shown in Figs. 18 and 19. Attach the end of the wire from the bobbin to a small screw T (Fig. 19), apply another coat of shellac, and while this is still "tacky," wind on the wire, taking care that there are no spaces between the layers, particularly where it covers the top curved portion. Having finished it, leave about six or eight inches of wire at the end, and pass it through the holes shown in the cardboard in Fig. 14 to prevent it

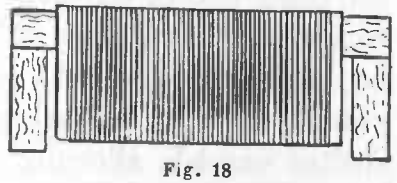

Fig. 18

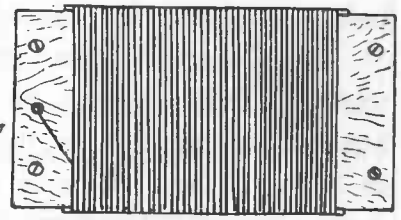

Fig. 19

Figs. 18 and 19.—Elevation and Plan of Coil.

unwinding. Apply shellac freely over the winding and allow the coil to dry.

Next take the piece of spring brass 4 in. long by $\frac{3}{8}$ in. wide, round off the corners with a smooth file, and drill a hole in each end (see Figs. 20 and 21), one of which must take a length of the 2 B.A. rod and the other a round-headed wood-screw. Cut off about 1 in. of the screwed B.A. rod and fit one end into a suitable wood or ebonite knob, as shown in Fig. 22. Bend the other end of the strip slightly, so that it is parallel to the projecting part of the rod. The latter should be made quite smooth and rounded off to a blunt point. Give the baseboard at least three coats of shellac varnish, allowing each coat to dry thoroughly before applying the next.

The Detector.—The construction of the crystal detector should present no difficulties. The two $\frac{1}{8}$-in. brass strips should be cut out and drilled as shown in Figs. 23 and 24, and bent at right angles at the dotted lines. The shank of the terminal fitted to the crystal cup (Fig. 25) should slide freely in the slot (Fig. 24). This small terminal should, of course, be fitted before mounting the crystal.

Take the piece of spring brass $1\frac{1}{2}$ in. long by $\frac{1}{2}$ in. wide as shown by Fig. 26, solder the fine wire feeler or "cat's whisker" U (Fig. 27) to one end and bend to the shape shown. Solder the other end to the base of the piece of brass (Fig. 23). The hole at the top of the pillar should be tapped 2 B.A. An alternative method is to drill the hole slightly larger than the diameter of the detector screw and solder on a nut

previously filled with clay to prevent the solder adhering to the thread. The detector screw (Fig. 28) is self-explanatory. A suitable wood or ebonite knob is clamped tightly to a short length of the 2 B.A. rod with two nuts, as shown, and the end of the rod

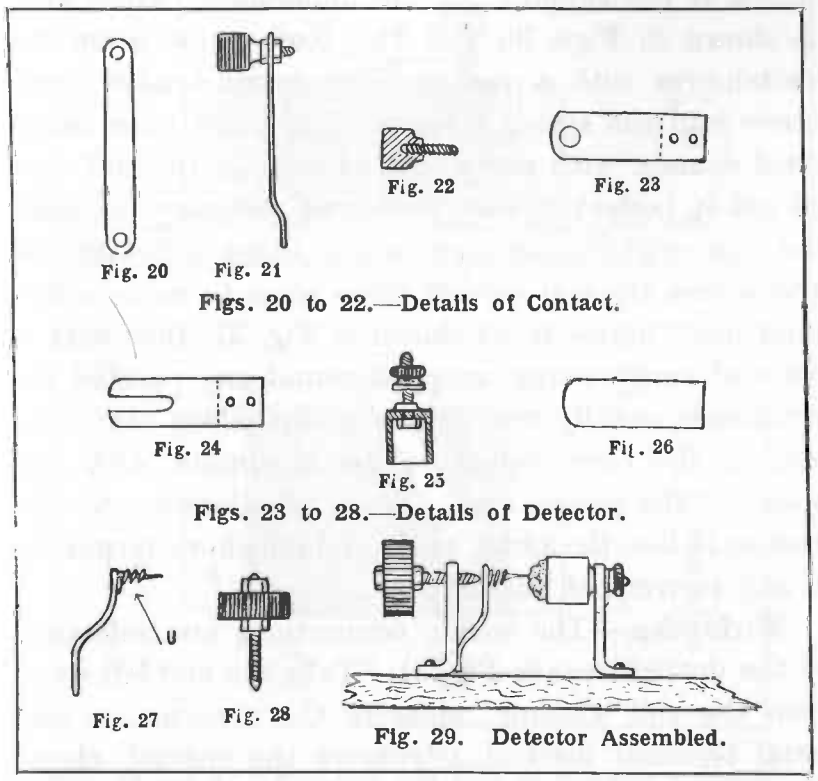

rounded off to a point. The general arrangement of the detector is clearly shown in Fig. 29.

Assembling.—Place the mounted coil on the centre of the baseboard, move it along to the left about $1\frac{1}{2}$ in., see that everything is quite square, and with a pencil mark all round the bases of supports. Drill four holes

large enough to take the screws, and screw the two parts firmly together as shown in Fig. 30. Take the strip of ½-in.-square wood, place it at the back and on a line with the centre of coil, and attach it to the base in a similar way. The correct position of this, which is the support for the inductance switch arm, is shown in Figs. 30 and 31. Now screw down the switch-arm with a medium-size round-headed wood screw and the spring washer. The point must make good contact with every turn of wire on the coil, and to get it perfect it may be found necessary to bend the arm slightly one way or the other. Rotate the arm across the coil several times so as to make a distinct mark across it, as shown in Fig. 31, then with a piece of emery-paper wrapped round any pointed instrument carefully remove the enamel along that line, leaving the bare copper to make contact with the point on the switch arm. Screw the detector to the base and place the aerial, earth and telephone terminals in any convenient position.

Wiring-up.—The wiring connections are indicated by the dotted lines in Fig. 31. Take the end left over from the coil winding, measure the distance to the aerial terminal marked A, remove the enamel, clean thoroughly with emery-paper, and wind it once round the shank of the terminal. Insulating sleeving should be slipped over all connecting wires. Connect another short length of wire from the aerial terminal to the detector pillar which holds the crystal cup, placing the end under one of the screws or soldering it direct to any convenient part of the pillar. This latter

method is always preferable. From the detector pillar carrying the detector screw connect a wire to the nearest phone terminal, from the other phone terminal to the earth terminal marked E, and from E to the

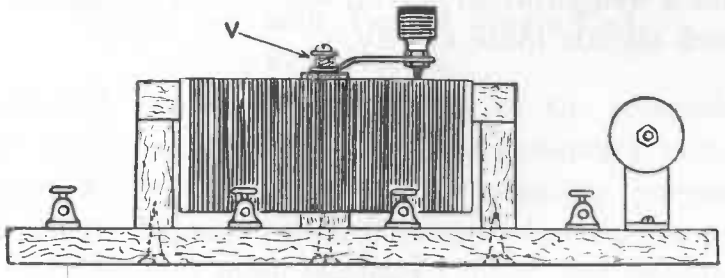

Fig. 30

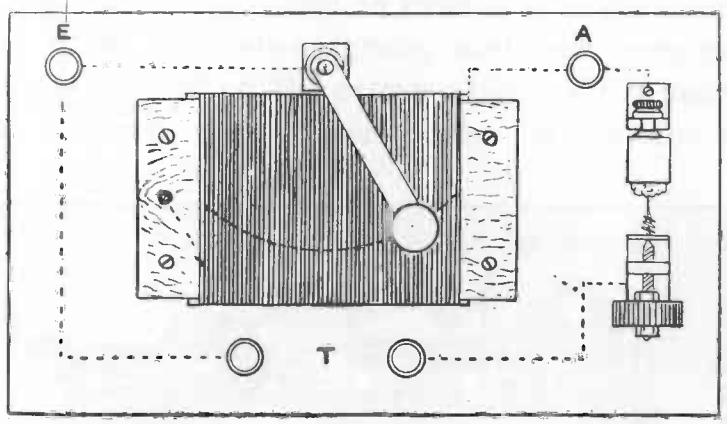

Fig. 31

Figs. 30 and 31.—Elevation and Plan of Complete Receiver.

spring washer V (Fig. 30), which, of course, should be soldered. It may be necessary to add that the other end of the coil winding terminates at E.

It will be easily understood that the point on the switch arm represents the end of the winding in the

sense that only the turns of wire between the connected end of the coil and the switch-arm contact are actually being used. By rotating the switch-arm the inductance is made variable.

This receiver is extremely simple to operate, and with a well-adjusted crystal will receive telephony and spark signals quite clearly.

CHAPTER IV

Crystal Set with Tapped Single Coil

By A. J. COOPER.

Single-coil Tuner.—A photograph of the completed tuner is shown by Fig. 32. The secondary circuit detailed later is not essential for receiving purposes and can be dispensed with if desired, but its use permits of finer and more selective tuning, and therefore the constructor is advised to include it in his instrument. The bar-switch, studs, and two terminals shown in Fig. 32 on the extreme right of the instrument illustrate that portion of the arrangement re-

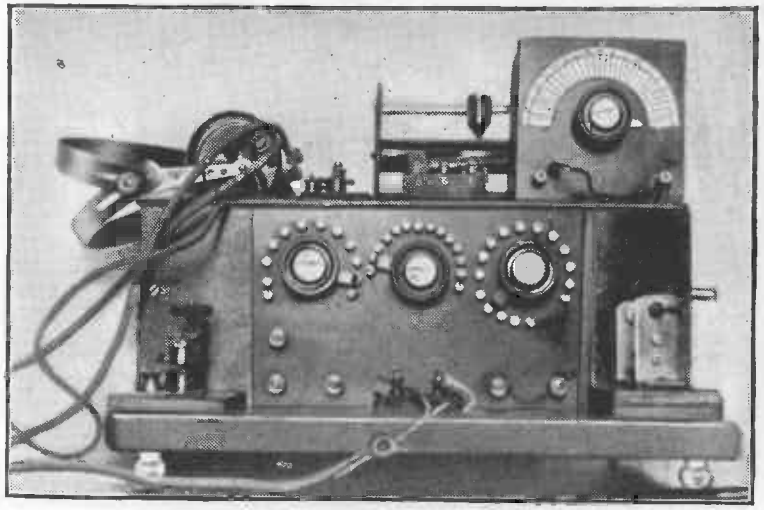

Fig. 32.—Photograph of Complete Tuner.

lating to this secondary circuit, and will be dealt with later on.

Should the constructor decide to embody the secondary circuit in his set he should prepare the panel for its reception according to the sketches, etc., as to do so later will necessitate dismantling the set.

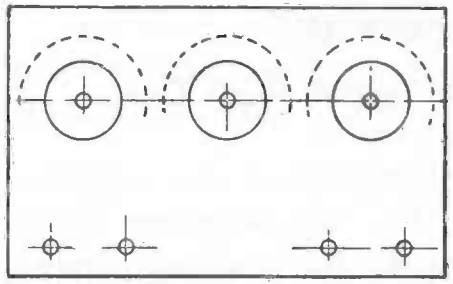

Fig. 33.—Lay-out of Ebonite Panel.

The material detailed does not include the material for the closed circuit, which necessitates an additional 12 studs, 2 terminals and bar-switch.

Panel.—The panel which carries the tuning switches

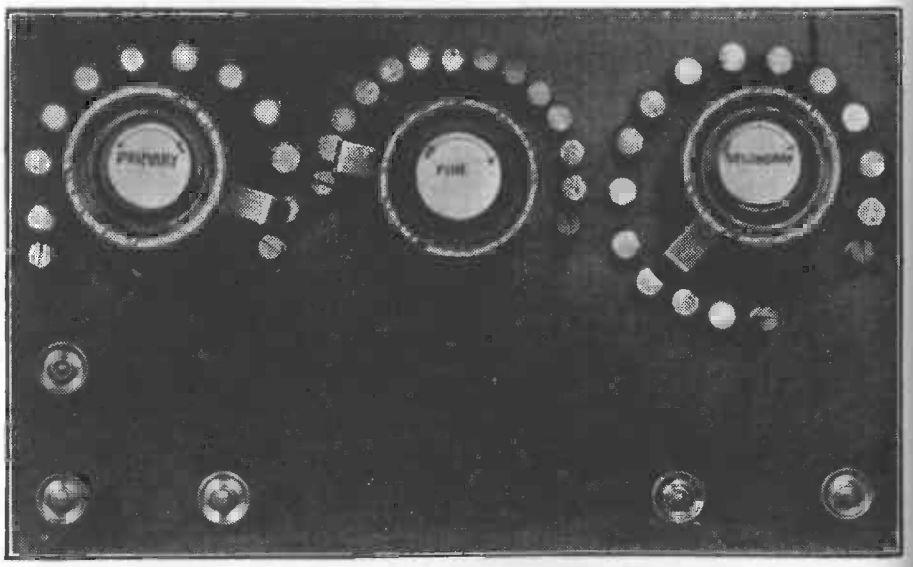

Fig. 34.—Photograph of Panel and Tuning Switches.

will first be dealt with, and a sketch showing the lay-out is given in Fig. 33.

First take the ebonite and smooth off the rough edges to the dimensions specified, that is, $8\frac{3}{4}$ in. by $5\frac{1}{4}$ in. Prepare a sheet of paper marked with the required dimensions and glue it to the ebonite. The holes required for two sets of 10 contact studs, etc., can now be drilled. The sizes of the holes and dis-

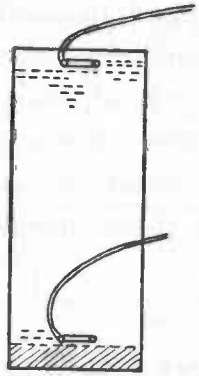

Fig. 35.—Method of Securing Wire.

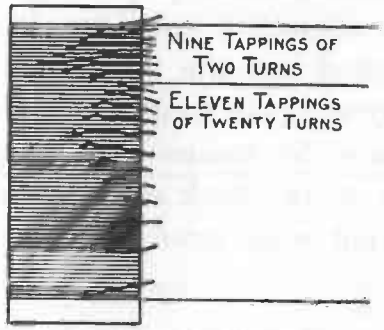

Fig. 36.—Details of Tappings.

tances apart are not given, as these must be bored to the dimensions of the material obtained. The positions of the contact studs will vary according to the area of their bearing surface, but they should be placed so that the bar-switch cannot fall between them. When boring tapping holes for screw-threads a drill must be put through of the dimension of the inside of the thread for which the hole is intended. Care must be taken when working on ebonite not to exert too much pressure, as the material is very easily broken

and also the ebonite might be torn away on the under side, leaving an ugly, uneven edge. When all the holes are drilled, those which are intended for screw-threads should be tapped according to the size for which they are intended.

A photograph of the completed panel is shown in Fig. 34, and this incorporates the bar-switch and studs and terminals for the secondary coil. After the insertion of the contact studs and terminals (the threads of which should previously be dipped in shellac) in their respective positions, the bar-switches should be mounted and the tip of the switches adjusted so as to give equal contact on the centre of each stud. Ensure, by means of pinning or soldering, that the nuts on the back of the panel on these bar-switches will not work loose.

Materials for Instrument and Aerial

$\frac{1}{4}$ lb. No. 28 s.w.g. d.c.c. wire.

A cardboard cylindrical former $3\frac{1}{2}$ in. in diameter and 5 in. long. (Should a former of these dimensions not be procurable a Horlick's Malted Milk dummy will meet requirements.)

2 bar-switches with two nuts and spring washer.

Small quantity of shellac varnish.

Crystal cups, crystals, and sundry brass-strip and screws.

2 terminals with large bearing surfaces between the nuts.

2 binding-post terminals (for telephones).

1 pair of high-resistance phones (total resistance of 4,000 ohms).

1 fixed telephone condenser .003 microfarads.

1 sheet of ebonite $8\frac{3}{4}$ in. by $5\frac{1}{4}$ in.

20 contact studs.

Wood for case, quantity specified in diagram, Fig. 37, $\frac{5}{8}$ in. thick (this wood should be very well seasoned).

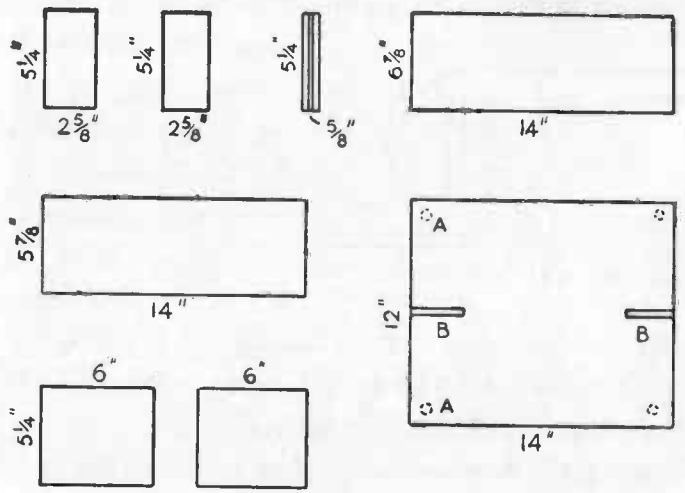

Fig. 37.—Details of Material for Case.

4 small china insulators (feet for instrument).

100 ft. of 7/22 bare or insulated copper wire.

8 2-in. china "reel" insulators with $\frac{1}{2}$-in. diameter hole in centre.

A pole or poles not shorter than 22 ft. if possible.

Tuning Coil.—Should the coil former be of cardboard it should be put into a moderately hot oven for

five minutes and then shellac-varnished. If the former is of ebonite, paxolin or any other specially-prepared material, this process need not be resorted to.

Shellac varnish may be made by dissolving about 4 oz. of shellac in half a pint of methylated spirit.

Now take the former and cut out a disc of wood $\frac{5}{8}$ in. in thickness to fit exactly in one end and glue it in position. Two holes of about $\frac{1}{16}$ in. should be made about $\frac{1}{2}$ in. apart on this end of the former and the end of the No. 28-gauge wire inserted and made fast in these holes, being wrapped round as shown in the sketch Fig. 35, leaving a free end protruding from one hole about 12 in. long. Proceed to wrap the wire round the former, taking off tappings every twenty turns for the first 200 turns, and then every two turns for another 18 turns.

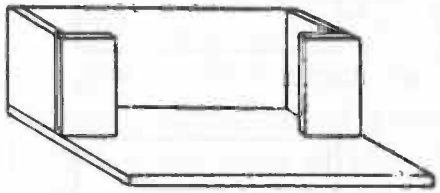

Fig. 38.—Case Assembled.

Tapping the Coil.—The method of making the tapping is to take the wire and turn a length of about 12 in. back on itself, twisting it two or three times between the finger and thumb and leaving a loop of 6 in. When the winding of the coil is completed, thoroughly clean the cotton covering from the wire where it is twisted, apply some powdered resin and solder it. When the soldering is completed, one side of the wire loop can be cut, and this will result in a lead of about 12 in. long being left, which is subsequently soldered to the contact stud.

An alternative method of making the tapping leads is to leave the wire twisted and to bare the end of the loop and solder this to the contact stud, but this method is not so neat or efficient. A loop of 9 in.

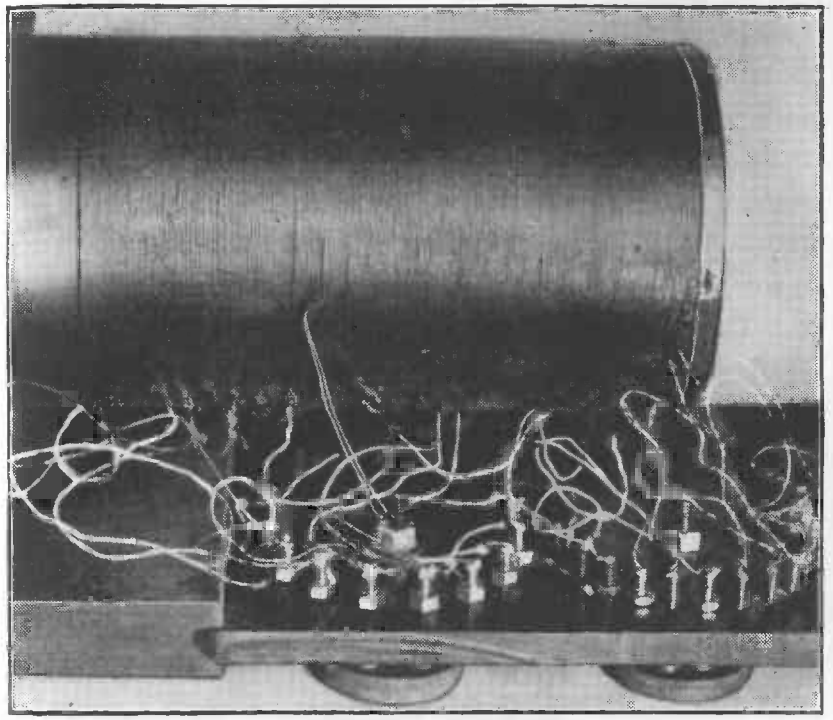

Fig. 39.—Photograph of Coil Connected to Panel.

should be taken if this method is used in order to allow sufficient wire to reach the contact stud.

Finish off the winding in the same manner as it was commenced, leaving a free end of 1 ft. On completion of the winding and the soldering the coil should be given two or three good coats of shellac. The tappings are illustrated in Fig. 36.

Case.—The next operation is to prepare the case for the reception of the coil and the panel. This should be of $\frac{5}{8}$-in. hardwood. Mahogany, teak or oak is to be preferred, but ordinary white wood or pine can be used if it is well seasoned. The case may be french-polished or stained and varnished, according to taste. Prepare the case according to the dimensions and lay-out given in Fig. 37, and use only screws in its construction. The right-hand side and top and bottom should be easily removable, otherwise the constructor can carry out the work according to his skill in joinery, providing the dimensions given are adhered to. The case when finished should appear as in Fig. 38.

A photograph of the coil with wires soldered is given by Fig. 39.

In order to attach the wires of the coil to the panel, as shown in the photograph (Fig. 39), lay the panel on the bench with the bar-switches assembled in position and its top towards the constructor, and place the coil with the end with the wooden end piece to the left and solder the free end to the first contact stud and the loops in rotation to the remaining studs. Keep the leads as short as possible consistent with leaving room to fix the coil and panel in the case and for other wiring. The tappings of twenty turns should now be on the left-hand switch and the two-turn tappings on the right-hand switch, the second free end being soldered to the last right-hand contact stud when completed.

It will now be seen that when the bar-switches are in a position where they point to each other the

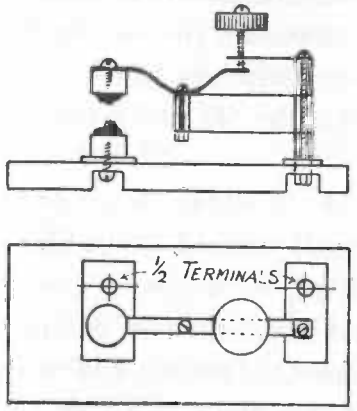

Fig. 40.—Elevation and Plan of Detector.

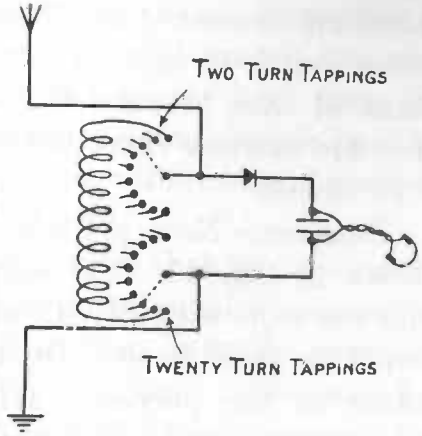

Fig. 42.—Circuit Diagram of Receiver.

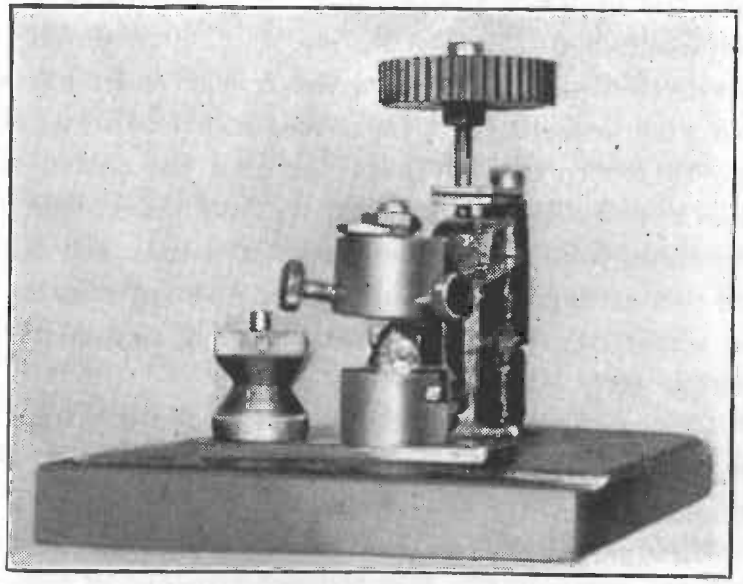

Fig. 41.—Photograph of Detector.

minimum amount of coil is in circuit, and that rotating either switch to right or left increases the number of turns of wire between the bar-switches until, when they are extreme right and left, the whole of the coil is in circuit.

Detector.—Now prepare the crystal detector as shown in Fig. 40. The crystals should be soldered into the cups with Wood's metal, with the screws inserted in their bases. On no account use ordinary solder for this purpose. When the screws are withdrawn they will leave a path for their re-entry into the cups when affixing them in position on the detector. Zincite and copper-pyrites or zincite and bornite are recommended, the zincite in each case being the upper of the crystals. A photograph of the completed detector, which should be mounted on ebonite or dry, well-seasoned wood, is given by Fig. 41. Two such detectors can be made, and it is an advantage to incorporate both of them in the instrument with a suitable two-way switch, as one might be sometimes found to be more sensitive than the other, and this arrangement also facilitates the comparing of the sensitivity of one crystal or set of crystals with another set.

The constructor may now complete the wiring of the panel with 18 S.W.G. tinned copper wire (see Fig. 42).

Wiring.—Particular care should be taken that all connections are made fast either by means of nuts or soldering. When applying the soldering-iron to terminals or studs in the panel do not apply it too hot,

as this is likely to spoil the insulating properties of the panel. A wet rag may be held against the stud being soldered, and this will take the heat from the panel. Ordinary 1/18 rubber-covered electric lighting cable can be used for the wiring with the braid stripped off (not the rubber), or bell wire.

It will be noted by the reader that the number of contact studs on the front of the panel illustrated in the photograph differs from that actually provided for, and also there is an extra terminal. The reason for this is that the writer has used the instrument for certain experimental purposes, such experiments necessitating an additional number of studs, etc., being used, but there is no need for the present construction to embody them.

Assembling.—The crystal detector and phones might be mounted in the position shown in the photograph (Fig. 32), and this has been found to be very convenient, the wiring being under the base and the instrument being kept insulated by the small china insulators. The constructor can, however, use his own discretion as to the position of these accessories. Two detectors are shown in the photograph, one being the perikon and the other a "cat's whisker." A potentiometer, carborundum detector and condenser are also shown on the top of the instrument; these will be described in the next chapter. The wire between the back of the aerial and earth terminals and the bar-switches should be electric-bell flexible wire, as this will allow for rotation of the switch.

Fix the coil by screwing it to the inside of the left-

hand side of the case in a convenient position about midway across the side and about ½ in. from the base of the instrument.

Testing the Set.—To operate the present instrument the crystal detector should be adjusted, and the contact between the two crystals should be light. A buzzer might be sounded near the coil or earth lead, and when the note of this buzzer is heard in the telephones the crystal is in a sensitive condition. Rotate the left-hand switch until signals are heard, and finish by fine tuning on the right-hand switch.

CHAPTER V

A Loose-coupled Set

By A. J. COOPER.

THE apparatus described in this chapter is of a more advanced type than that described in the previous chapter, and includes a tuner with a secondary closed circuit. The general constructional details, however, excluding the loose-coupler, are the same as in the set described in that chapter.

Materials.—The materials required are as follows: A cylindrical former 4½ in. long by 2¾ in. in diameter, 1 oz. 36 d.c.c. wire, a length of ⅜-in. dowelling, 12 contact studs, 1 bar-switch, 2 terminals, 15 ft. of electric-bell flexible wire.

The Former.—First take the former and prepare two wood or ebonite end pieces exactly to fit in the end, with a hole ⅜ in. in diameter bored through the centre of both, as illustrated at A in Fig. 43. If wood is used it should be perfectly dry and of a thickness of about ½ in. Should ebonite be used, it need be only ⅜ in. thick. In one of the end pieces drill ten or twelve small holes, as illustrated at B, Fig. 43.

The former, if of cardboard material, should be prepared with shellac varnish as specified for the primary former. Now draw a straight line down one side, mark off ½ in. from each end, and beginning just inside these marks bore twelve holes right through

the former at equal distances from each other. The positions of these holes should be marked on the former before the commencement of operations. A second hole should now be drilled near the first and last holes for making the end of the wire fast. A diagram of the former prepared to these instructions is given by Fig. 44.

Winding the Former.—Now take the 36-gauge wire and commence winding it on to the former in precisely the same manner as adopted for the primary coil, with the exception that the end of the wire has first of all a length of the flexible electric-bell wire soldered to it and is then pushed through the hole into the former. A slip of paper numbered 1 should now be attached to this flexible lead, which should be about a foot long. Proceed with the winding, and meeting the first hole strip the cotton covering off the twisted wire and solder a flexible lead to this; insert it through the hole and number it 2. Proceed with the winding, and ensure that the next turn of wire bears closely against the one just soldered, and so carry on the soldering and numbering of the leads as the holes are reached until the coil is completed, when twelve flexible leads should be obtained from the end of the former farthest from the starting end. The leads will be numbered 1 to 12. Now insert the end pieces into the former, securing them in position by small brass screws, the one with the small holes being utilised at the end of the coil from which the leads emerge, the leads being passed through the small holes. The numbered tickets should be taken off the leads one at a time whilst they

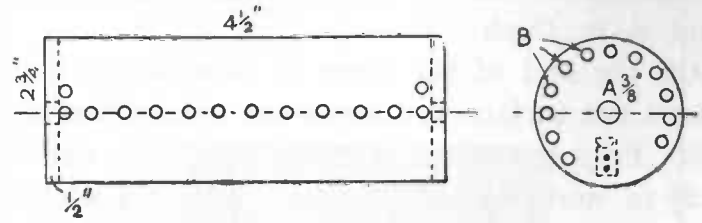

Fig. 44.—Diagram of Former. Fig. 43.—End Piece.

are being pushed through, and then re-attached after the lead is through.

The primary-coil end piece should now have a hole bored through it ⅜ in. in diameter, and it is preferable that this should be done with the end piece detached from the coil.

The Sliding Arrangement.—Next take the dowelling and cut off a length exactly to fit inside and across the length of the case—that is, 12½ in. long if the case has been made to the specification—and prepare another piece 8 in. long.

Prepare a small brass right-angle bracket 1 in. each way from the apex of the angle, and bore two holes

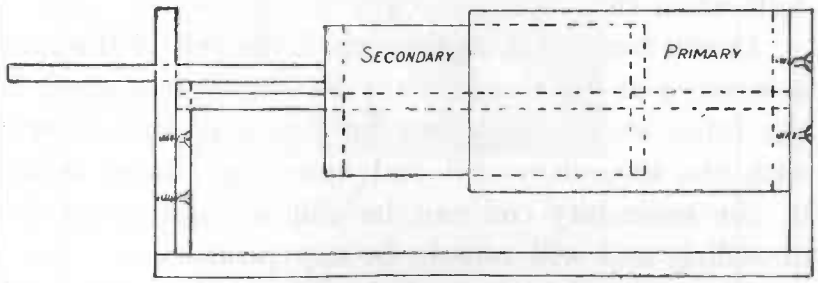

Fig. 45.—Diagram of Loose-coupler.

in each side to take small wood screws $\frac{1}{4}$ in. long and about $\frac{1}{16}$ in. thick.

On the end of the piece of dowelling 8 in. long make a flat surface and screw one side of the bracket to it. Prepare a piece of wood $\frac{1}{2}$ in. thick and $2\frac{3}{4}$ in. by $2\frac{3}{4}$ in. and take off the end of the case which does not hold the primary coil. This side would be the right-hand side when the case is facing the constructor. Now pass the piece of dowelling which is to fit exactly into the case through the secondary coil, and see that it slides easily and freely; then place the end in the hole just made in the end piece of the primary. Position the coils and dowelling in the case against the left-hand side about 1 in. clear of the base, and place the piece of wood $2\frac{3}{4}$ in. by $2\frac{3}{4}$ in. against the other end of the dowelling and resting on the base of the case. Adjust the coils and dowelling to a horizontal position, and mark on the piece of wood the centre position of the dowelling and bore a hole $\frac{3}{8}$ in. in diameter at this position. Now screw the wood to the end piece of the case which has been removed, seeing that it is in a line with the centre line of the coils when they are positioned in the case.

It will now be clear that when the end of the case is screwed in position and the primary coil secured to the other end of the case by means of two screws, with the secondary coil and dowelling placed inside it, the secondary coil can be slid up and down the dowelling and will remain in any position.

Now take the piece of dowelling with the right-angle bracket attached to it and secure the other side

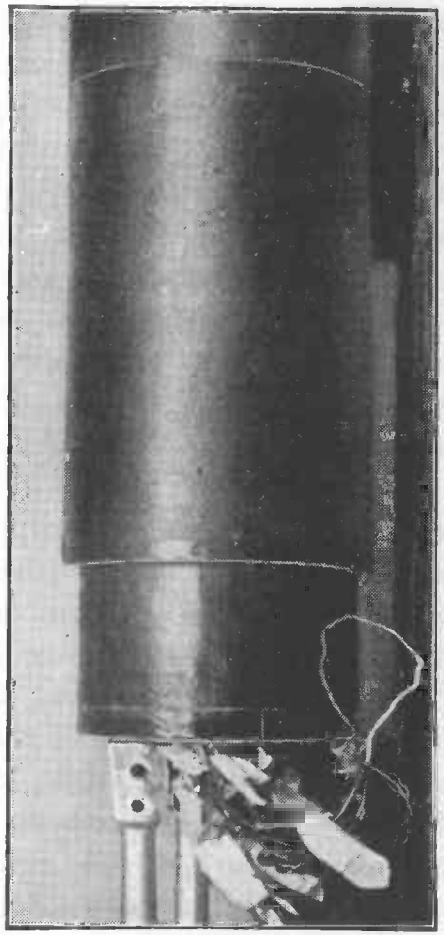

Fig. 46.—Photograph of Loose-coupler.

of the right-angle bracket to the secondary-coil end piece through which the flexible leads emerge. A hole must now be bored through the end of the case which has been removed to allow this piece of dowelling to project, and this forms the rod by which the coupling of the coils is varied. The coil when viewed from the back will now appear as in Figs. 45 and 46.

Solder the ends of the flexible leads and the contact studs of the secondary bar-switch, fix the coils in position in the case, and wire up the remainder of the circuit, as in the diagram (Fig. 47). From this diagram it will be seen that the secondary coil, crystal detector, phones and variable condenser are in an entirely self-contained or closed circuit, and the primary coil is in a separate circuit in a position between aerial, and earth.

The Closed Circuit.—There is no apparent connection between the two circuits, but the connection is made by induction between the two coils. To put it simply, the oscillating current passing through the primary coil on its way to earth sets up magnetic lines of force about the primary, and the secondary coil being close enough to intersect these lines of force, a corresponding current is induced in this closed secondary circuit. These high- or radio-frequency oscillations are rectified or filtered out by the crystal "detector," which allows a high percentage of low-frequency current (sometimes termed audio-frequency) to pass and produce an audible note in the telephones.

The Variable Condenser.—Although not essential, it is customary to employ a variable condenser in

conjunction with the close or secondary circuit, as by its means very fine tuning is possible.

Such a condenser can take several forms for practical work (see the companion handbook "Wireless Component Parts," which also explains capacity calculations), the cheapest and possibly easiest to construct being of the sliding type and made from old

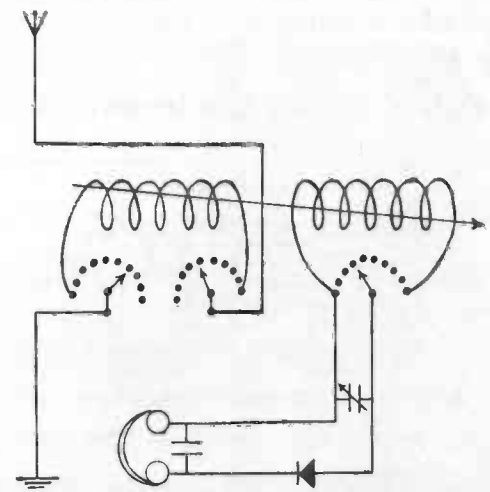

Fig. 47.—Circuit Diagram for Loose-coupled Crystal Set.

photographic negatives and sheet zinc. The glass (with the film cleaned off) is interposed and supported between sheets of zinc of a slightly smaller area, and the movable or sliding sheets of zinc are pushed in between the glass sheets and the fixed zinc plates above and below. In this case the glass is the dielectric.

A diagram showing the construction of a variable condenser of this nature is given in Fig. 48.

The capacity of a condenser is measured in microfarads, and the size of condenser suitable for the present purpose is .0003 microfarads.

Other forms of condenser are in existence, such as the tubular and rotary-vane type. It is this latter type which is considered by the majority of experimenters as being the most suitable for wireless work generally, as it is compact and smooth in operation. A photograph of a condenser of the capacity prescribed is shown by Fig. 49.

Mounting the Variable Condenser.—When assem-

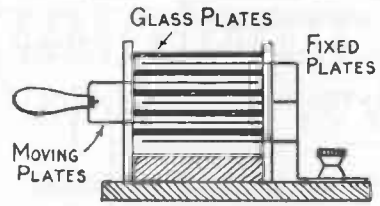

Fig. 48.—Sliding-type Condenser.

bling the variable condenser, which should have an ebonite panel and base, one of the fixed plates should be placed on the ebonite panel and used as a template for marking off the position of the ties which hold these fixed plates in position. A rotary plate should be placed so that its straight edge is square with the straight edge of the fixed plate but not quite touching it, and the small projecting piece should just fit into the recess cut into the fixed plate for its reception. When the centre of the square hole in the rotating plate has been marked on the ebonite all the holes may be bored with drills of an appropriate size. The

fixed-vane tie rods should be screwed into the ebonite, and for this purpose a tap will be required in order to put a thread in the hole in the panel. The rotary-vane spindle must of course be a close fit to the shoulder on the spindle. When the top panel has been prepared it can be used as a template for the base in which corresponding holes will be required.

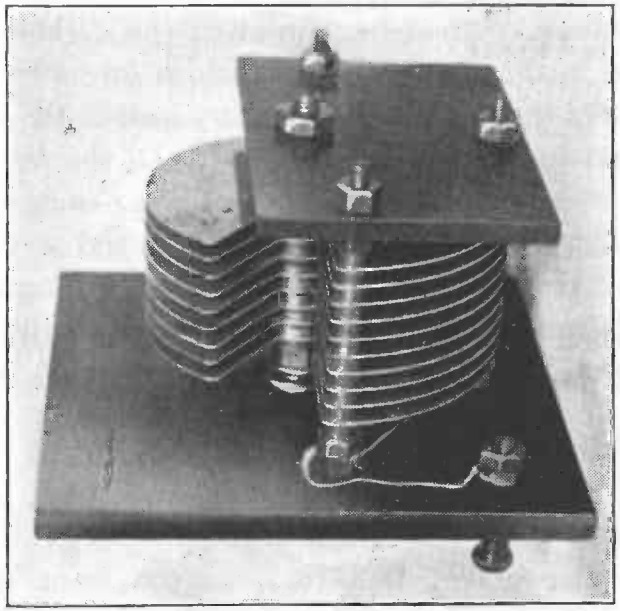

Fig. 49.—Photograph of ·0003 mfd. Variable Condenser.

Additional Experimental Instruments.—It is probably known to many readers that a carborundum detector requires a potentiometer and battery for use in conjunction with it, and that these are required in order to create a difference in potential between the carborundum crystal and steel plate. The reader may like to construct a simple type of carborundum

detector, and for this reason dimensions and details are given in Figs. 50 and 51.

Making the Potentiometer.—The potentiometer consists of a piece of wood (broom handle will do) 1 in. in diameter by 4 in. long, wound for $3\frac{1}{8}$ in. of its length with No. 36 d.s.c. Eureka resistance wire and mounted between suitable supports. A slider makes contact on the top surface and runs on a piece of brass rod $\frac{1}{4}$ in. square. When incorporating the carborundum detector in the circuit the wire which formerly led to one side of the perikon detector is joined to the square brass rod by means of a terminal, and the two ends of the resistance wire are connected to each side of a 4-volt dry battery. There is also looped or twisted with one of these battery wires a wire leading to the steel plate on the crystal detector, and another wire runs from the crystal to the telephones. A switch should be incorporated in the potentiometer to cut off the battery current when not in use. The buzzer is used as explained in the previous chapter, and is obtainable for a very small sum.

The Catwhisker Detector.—In the front of the instrument should be placed a simple catwhisker detector, as used in conjunction with certain crystals —for example, galena, rectarite, hertzite, etc. This is simple to construct, and Fig. 52 shows the general arrangement. A photograph is shown by Fig. 53.

The bracket is a piece of brass 3 in. by $\frac{3}{4}$ in. bent to an angle of 90 degrees. A hole is drilled $\frac{1}{2}$ in. from the top of the long side (2 in. long) to take the screw

which secures the crystal cup. A hole is drilled on the other side (1 in. long) to take a terminal.

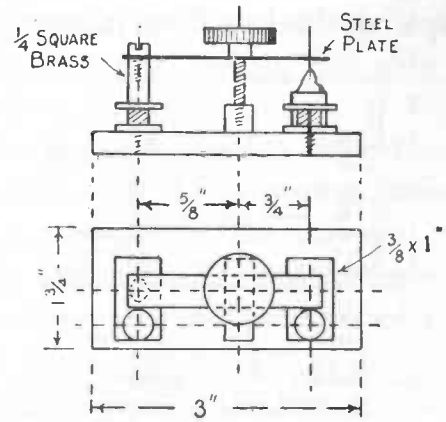

Fig. 50.—Details of Carborundum Detector.

The other bracket is a similar piece of brass bent in the same manner and to exactly the same dimen-

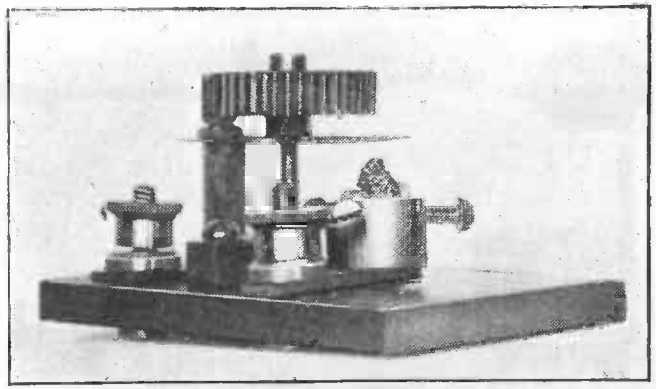

Fig. 51.—Photograph of Carborundum Detector.

sions. A hole is drilled $\frac{1}{2}$ in. from the top of the 2-in. piece, but of a larger diameter—in fact, almost large

enough to allow a brass ball to pass through it, but not quite. This brass ball might be ½ in. in diameter, but not larger; the one used on the instrument in the photograph was taken from the top of an old

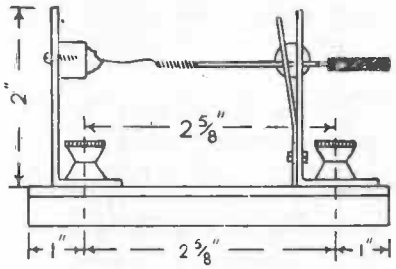

Fig. 52.—Details of Catwhisker Detector

bed rail. A piece of springy brass is prepared 2 in. by ¾ in., and has a similar hole drilled in it. The bracket and the spring are then placed together and a hole drilled through the component parts about ½ in.

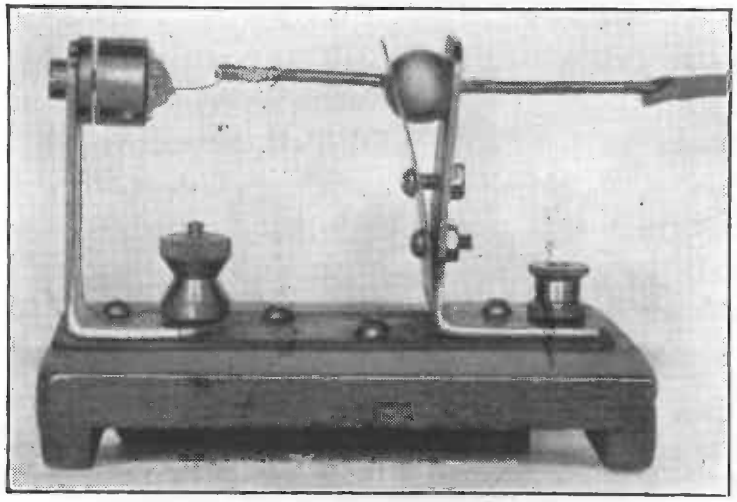

Fig. 53.—Photograph of Catwhisker Detector.

from the foot of the bracket to take a clamping screw, which should be provided with a nut. The brass ball has a hole drilled right through it to take a piece of stout brass wire 3½ in. long, which is then soldered in place, allowing one end on one side of the brass ball to be 1½ in. long.

Place the ball in position over the hole in the bracket and fit over it the spring brass, and clamp in position by means of the nut and screw shown. Solder to the long side of the stout brass wire a spiral of wire 36 S.W.G., and on the other end fit a piece of ebonite rod or rubber to act as an insulator when adjusting the position of the fine wire on the crystal. Fit the crystal cup with a piece of crystal and mount the whole on a suitable base of ebonite or hard. dry wood.

CHAPTER VI

Set with Plug-in Basket Coils

By H. J. TURPIN.

An unusual type of crystal receiver is described in this chapter, one in which is embodied extreme selectivity. Instead of the orthodox slider and cylindrical inductance coil or the variometer methods, the writer has adopted a system of combined adjustment of the aerial and earth connections, each of which can be independently connected to any particular part of an inductance coil of the "basket" type. It is claimed that by this method (which is explained more fully later) an amount of wire equal to $\frac{1}{2}$ in. can be added to or subtracted from the total quantity in the inductance circuit depending upon the relative position of the aerial and earth tuning plugs. The set is shown photographically in Figs. 53A and B.

In order to ensure that the instrument is as compact as possible it is made in a simple box form, one end of the case being used to carry the crystal detector which is entirely covered in by a suitably designed lid, while the main part contains the ebonite panel and the basket inductance coil.

Case.—The complete case is shown pictorially in Fig. 54, and is made throughout of mahogany $\frac{1}{4}$ in. thick, the overall dimensions being $5\frac{5}{8}$ in. by 4 in. by

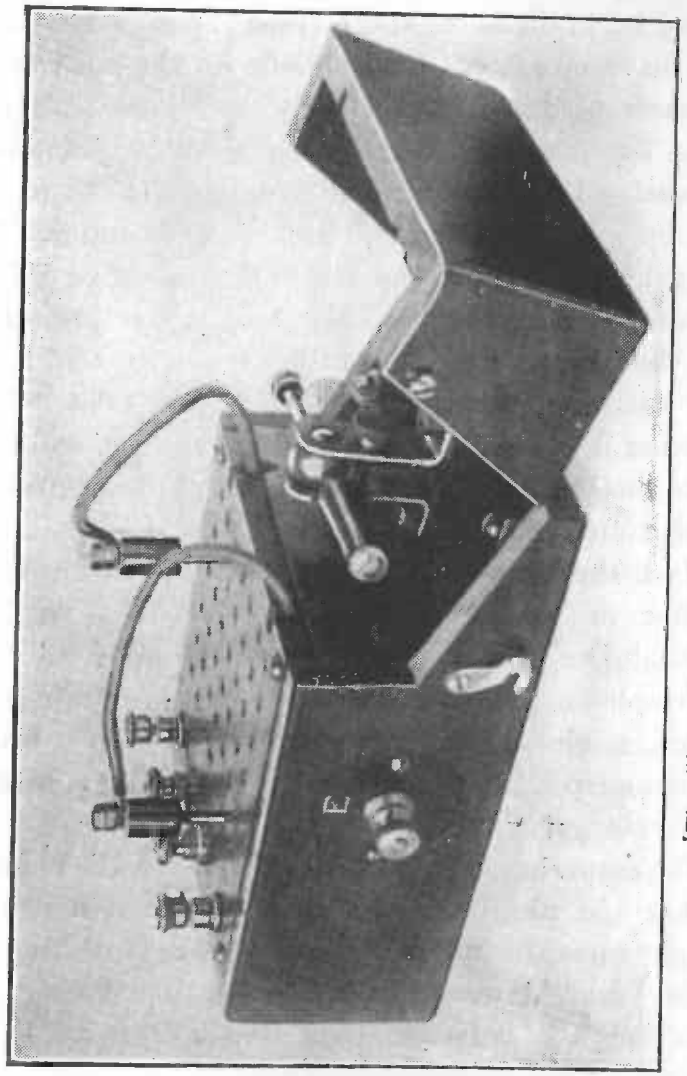

Fig. 53a.—Photograph of Receiver shown Open.

2 in. deep, and the inside dimensions of the chamber containing the "basket" coil are $3\frac{1}{2}$ in. by $3\frac{1}{2}$ in. Holes $\frac{7}{8}$ in. in diameter and recessed $1\frac{1}{4}$ in. in diameter by $\frac{1}{16}$ in. deep are cut on each side for the main aerial and earth terminals respectively, as shown at A and E, Fig. 54. Beyond this the figure is self-explanatory.

Panel.—The panel is made of ebonite $3\frac{3}{4}$ in. by $3\frac{1}{2}$ in. by $\frac{1}{4}$ in. thick arranged as in Figs. 55 and 56. The tuning holes are made by screwing a piece of 2 B.A. rod into the ebonite until the end is just projecting from the other side; the rod is then sawn off almost flush with the panel and roughly filed flat. This operation is repeated for the forty-two plugs and then all are finally filed flush with the panel face, finishing off with medium emery cloth and oil.

Mark the centres of the plugs with a centre punch and then drill each one $\frac{1}{8}$ in. in diameter by $\frac{7}{32}$ in. deep and slightly round off the edges of the holes.

Telephone terminals are fitted in the positions indicated, as also are another pair connected by a bridge of brass strip so that on removing the bridge a loading coil for longer wave-lengths can be fitted.

The slots shown in Fig. 56 are filed in the ebonite, so that the plug leads for aerial and earth can be brought outwards when the instrument is in use, and can be folded downwards and tucked inside the cover containing the detector when the instrument is not required.

Detector.—This is built up entirely of old pieces, the ball being a brass one (from an old bedstead) and plugged and drilled for the wire holder. A simple

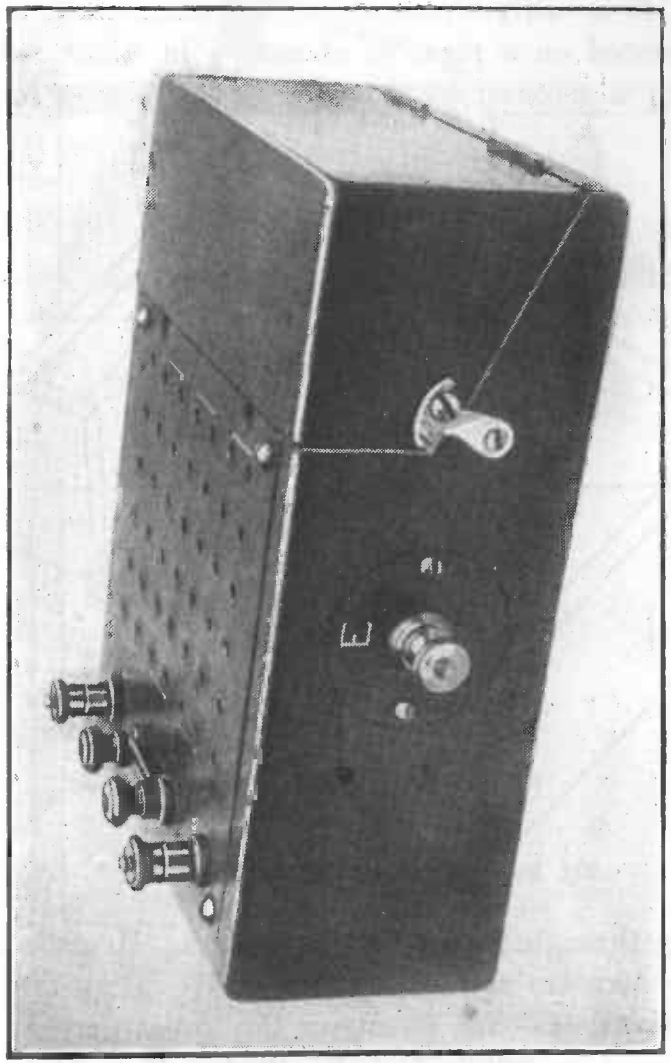

Fig. 53b.—Photograph of Receiver shown Closed.

method of holding the wire is to screw the end of the rod and then clamp the " whisker " between two nuts. It is easily replaceable. The complete detector is mounted on a piece of ebonite $\frac{1}{8}$ in. thick, which in turn is screwed to the base by four brass screws

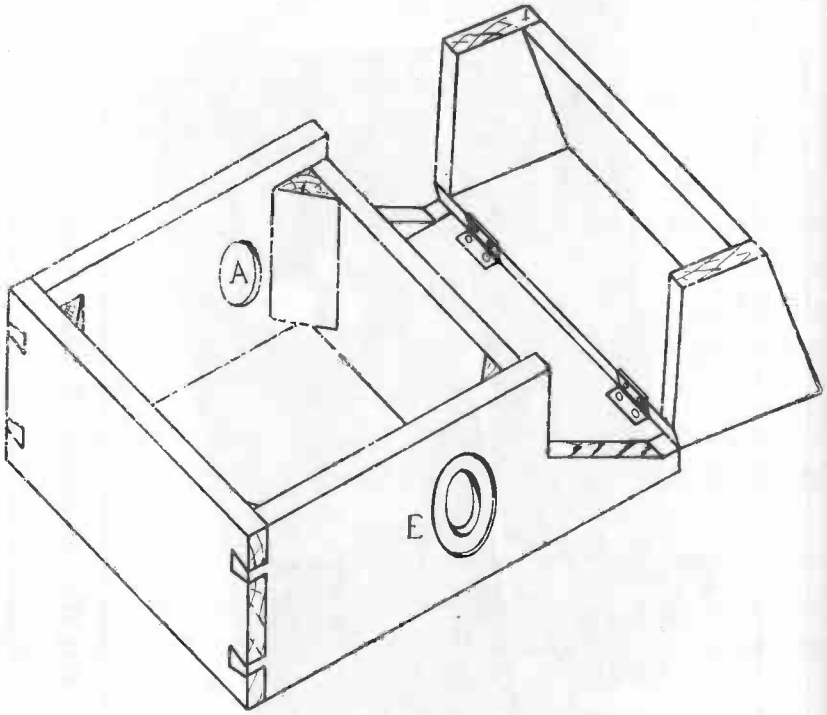

Fig. 54.—Details of Containing Case.

passing through four celluloid washers. Hertzite and copper wire are used as a detector.

Inductance.—Fig. 60 shows the appearance of the former cut in celluloid $\frac{1}{16}$ in. thick. It is $3\frac{1}{2}$ in. in diameter and contains 9 vanes, the bottom of which is on the circumference of a circle $\frac{3}{4}$ in. in diameter. Seventy-two turns of No. 26 d.s.c. wire are wound on

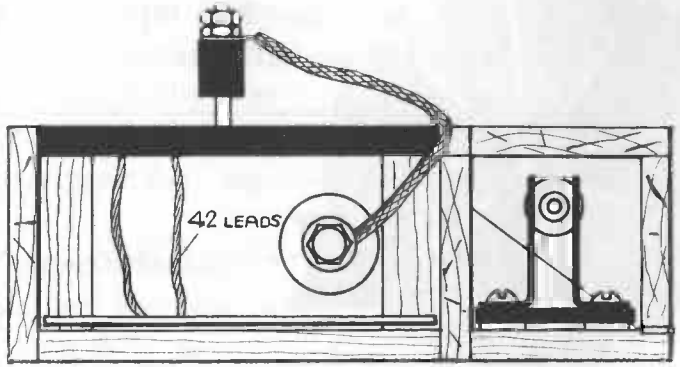

Fig. 55

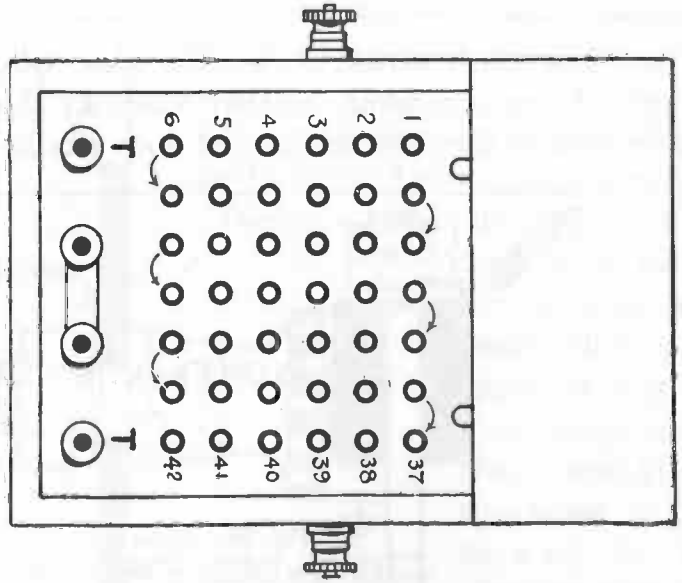

Fig. 56

Figs. 55 and 56.—Section and Plan of Receiver with Plug-in Basket Coils.

and tappings taken off in the following manner :—Starting from the inside, the first tapping is taken after the first turn, the second is taken at the next

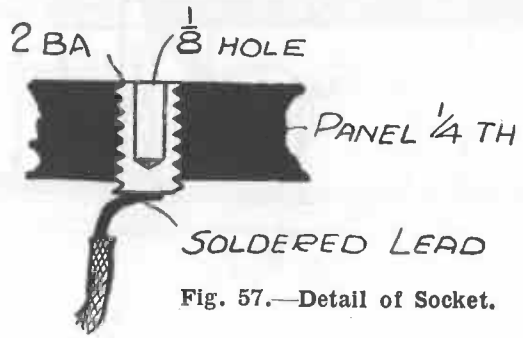

Fig. 57.—Detail of Socket.

one and one-ninth turns, i.e. on the vane following the end of one revolution, so that when all the tappings are made they are not heaped upon one another

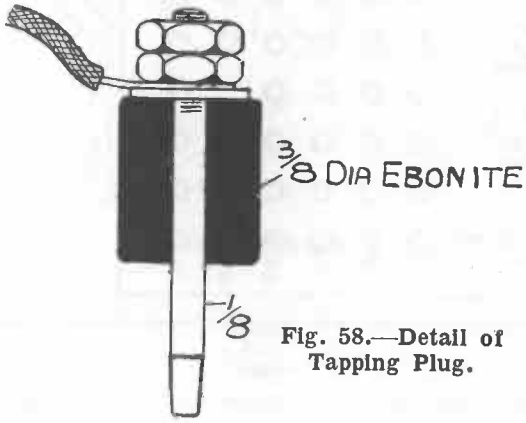

Fig. 58.—Detail of Tapping Plug.

on the same vane. The third tapping is taken after the next one and one-ninth turns, and so on. When completed, 33 tappings should be taken as just

described and 9 tappings taken at every four and one-ninth turns. The latter are for coarse tuning, and the former for fine tuning.

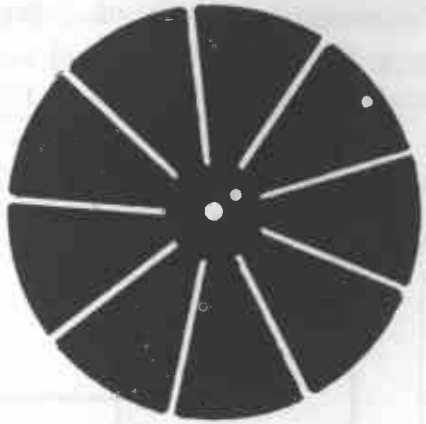

Fig. 60.—Tuning-coil Former.

Connections.—For inductance coil use a five-stranded flexible wire (called "baby" flex) and make each 5 in. long. Solder all connections, and on completion soak the whole in paraffin wax.

The plug numbers in Fig. 56 indicate the order of attaching connections.

Tuning.—As an illustration of the method of tuning, for example, it is found that 2 L O comes in very well when plugs are in Nos. 2 and 41, and also when in Nos. 29 and 42, but there is a very slight difference in the result, as the difference between the length of wire

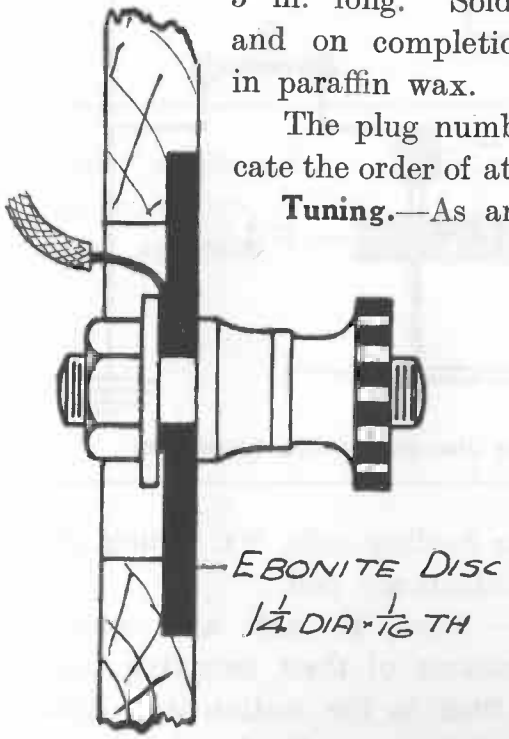

Fig. 59.—Method of Fixing Terminals.

between each pair of holes is very small. In this case the final tuning is obtained by moving the aerial and earth plugs together into either pair of holes.

Explanatory details are shown in Figs. 54 to 60 and a wiring diagram in Fig. 61, in which figure B

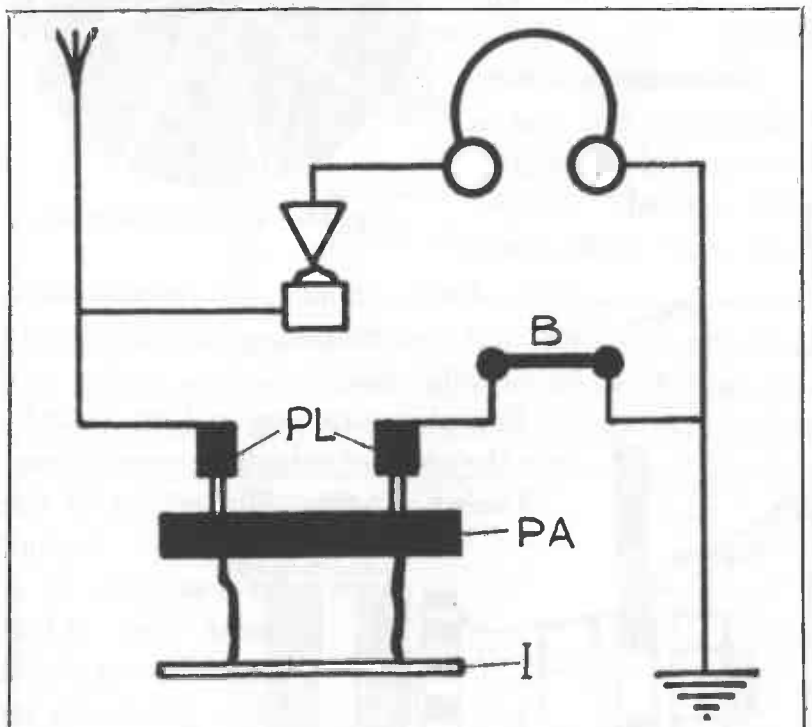

Fig. 61.—Circuit Diagram showing Connections.

represents bridge for loading coils, P L tuning plugs, P A panel, and I inductance coil.

Tuning Cards.—Most, if not all, amateurs memorise the calibrations of their receiving sets or have to tune each time to the station it is desired to hear. It may not be generally known that the

use of a tuning card would be of great assistance. These are used in just the same way as a business

Stn.	γ	A.T.I.	A.T.C.	C.C.C.	Coil Nos.			Coupling	H.T. (volts)	Strength	Remarks
					P	S	R				

man uses a file index. An example of such a card is shown above, though, of course, this may be modified according to individual requirements.

CHAPTER VII

Combined Crystal and Valve Receiver

By P. T. BEARD

THE receiver dealt with in this chapter is not new, but its many advantages are usually unknown to the newcomer in the wireless field. It is as easy to make as a simple one-valve receiver. Briefly the receiver consists of a valve used as an amplifier of radio-frequency oscillations, in conjunction with a crystal used as a detector or rectifier.

The Tuner.—An ebonite or prepared cardboard cylinder 4 in. long by 3 in. in diameter is wound with forty turns of No. 20 d.c.c. copper wire, tapped off to a seven-point switch from the following turns: 6, 12, 18, 24, 30, 36 and 40. Between turns 12 and 13 a space of $\frac{1}{4}$ in. is left as shown in Fig. 62.

Reaction Coil.—This is a basket-wound coil of No. 26 s.c.c. copper wire wound on a cork 1 in. in diameter with thirteen pieces of cycle-wheel spoke or blanket pins spaced equally round its circumference. The wire is simply wound in and out round the spokes (Fig. 63) until the coil is just of sufficient diameter to rotate inside the inductance coil without touching. When the reaction coil is wound, leave about 6 in. of loose wire at each end for connections, and soak the coil in a bath of melted paraffin wax. When the wax is just about to set, remove the coil and allow it to

harden. Afterwards the spokes can be withdrawn and the cork taken away.

A piece of brass rod 5 in. long and $\frac{1}{8}$ in. in diameter

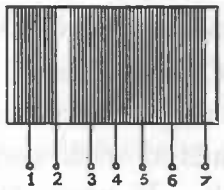

Fig. 62.—Inductance Coil.

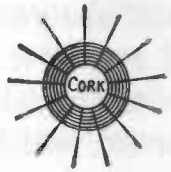

Fig. 63.—Reaction Coil.

is now passed through the inductance coil in the space left between turns 12 and 13, and the coil lashed securely to the brass rod by means of adhesive tape. A hardwood or ebonite knob is fastened to the end of the brass rod so that the reaction coil can be rotated inside the inductance coil (Fig. 64).

A variable condenser of about ·0005 microfarad

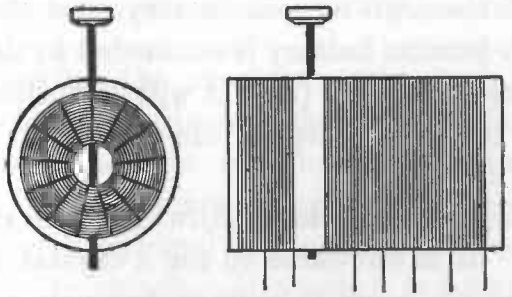

Fig. 64.—End and Side Views of Mounted Reaction Coil Fitted in Inductance Coil.

capacity is connected between the aerial end of the inductance (A) and the handle of the seven-point switch, and the tuner is complete (Fig. 65).

The complete receiver is shown in the diagram (Fig. 65). It will be seen that the aerial is joined to the inductance coil at the end nearest to No. 1 tapping. The earth is connected to the arm of the seven-point switch, and the variable condenser is placed between the aerial and earth. The grid of the valve (G) is connected to the aerial terminal through a grid leak and condenser (C), which may be omitted with very little detriment to the signal strength. If used, the grid leak should be of two megohms resistance and the grid condenser of ·0003 microfarad capacity.

One connection of the reaction coil (which is, of course, inside the inductance coil) is connected to the plate of the valve (P), and the other connection is taken to the telephone terminal which is nearest to the positive terminal of the high-tension battery (M). Take careful note of this part of the circuit. A connection is taken from this telephone terminal to the positive of the high-tension battery, and the negative of the high-tension battery is connected to the negative of the filament battery (H). It will be noticed that the negatives of both batteries are joined to the earth terminal (E).

The Crystal Detector.—Now for the crystal detector (K). It is advisable to use a crystal which does not require an applied voltage through a potentiometer. A connection is taken from the plate of the valve (P) to one terminal of the crystal detector (K). The other terminal of the crystal is joined to the telephone terminal opposite to the one which is connected to the reaction coil. A fixed condenser (N) of

about ·01 microfarad capacity placed across the phones and high-tension battery as shown will improve results. The valve filament is supplied from a 6-volt accumulator through a variable resistance (J) of 5 ohms.

Operating the Set.—Phones of from 4,000 to 8,000 ohms total resistance should be used, or 120-ohm phones will do as well if a telephone transformer is inserted between the phones and phone terminals.

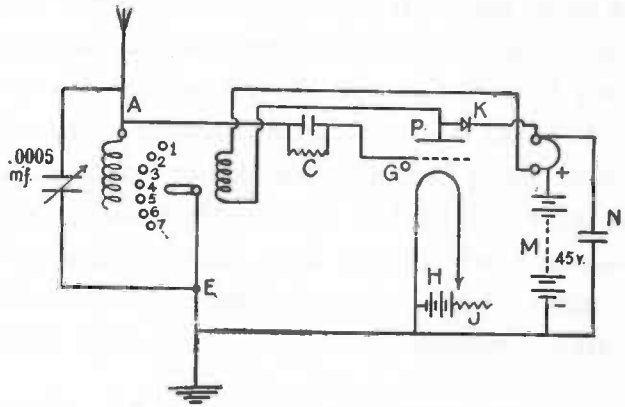

Fig. 65.—Diagram of Connections for Complete Receiver.

When testing the receiver, make sure that the crystal is correctly adjusted, then rotate the reaction coil; at the same time tap the aerial terminal with the finger. If clicks are heard in the phones each time the aerial terminal is touched, the receiver is ready to receive signals. If no click is heard, reverse the connections to the reaction coil; this will give the desired result.

With careful adjustment of the crystal the strength of signals will be from 200 per cent. to 300 per cent. louder than those obtained when using the valve alone.

Another advantage of this circuit is that by simply switching off the filament current signals can still be received on the crystal. This is an asset when the filament battery runs down in the middle of an interesting transmission.

CHAPTER VIII

Some Miniature Receiving Sets

WHILST a set carefully built on orthodox lines is a necessity for those living some distance from a broadcasting station, the simplest of sets, even those which may be classed as freaks, are capable of giving excellent results within a range of a few miles of a broadcasting centre. Some have yielded good results over a range of more than 100 miles, but this must be taken as exceptional, and not to be expected as a general rule. The sets described in this chapter are miniature sets of the simplest possible construction.

A BASKET-COIL RECEIVER

This set, as previously intimated, is limited as regards range ; that is, it can be described as a single-purpose instrument suitable for broadcast reception only.

An elevation and plan of the instrument is shown by Figs. 66 and 67.

The set consists of an ebonite block supported on four legs, between which are situated inductance coils of the " basket " type. On the top of this block is secured the crystal detector and terminals.

Constructing the Coils.—The construction of the coils is the first operation, as really the size of the base

is dependent upon the outside diameter of these, but if the latter are made in accordance with Fig. 68 sufficient wire can be wound on to suit the majority of " broadcast " aerials. Disks $2\frac{3}{4}$ in. in diameter are cut from waxed cardboard, celluloid, or ebonite, and nine slots, each $\frac{3}{32}$ in. wide, cut therein, so that they reach down to the circumference of a circle 1 in. in diameter. A hole $\frac{1}{8}$ in. in diameter is drilled in the centre, and two pairs of holes about $\frac{1}{16}$ in. in diameter are made for the purpose of securing the ends of the wire.

Winding.—The wire is put on as follows: Wind on uniformly 44 turns of No. 26 d.s.c. wire on each disk and secure the ends through the holes just mentioned. It will be necessary to test these coils, the aim being to obtain perfect tuning when they are in the assembled position shown in Fig. 66.

Coupling these coils together and connecting to a crystal detector in the manner shown in the diagram (Fig. 69), it will be possible to determine the best relative position of the coils. (It must be remembered that it is important that the windings should both be in the same direction.) If, for instance, good reception is obtained with the coils 12 in. apart, then some wire must be removed from each coil, taking off one turn at a time, until with the coils about 1 in. apart good results are obtained. In the writer's case the coils each contain 38 turns, in others 36 and 44 turns have been necessary, depending on the natural wave-length of the aerial. This completed, leave 6 in. of wire projecting at each end for connecting purposes, give the

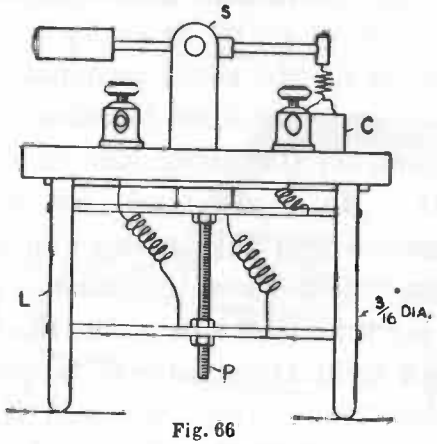

Fig. 66

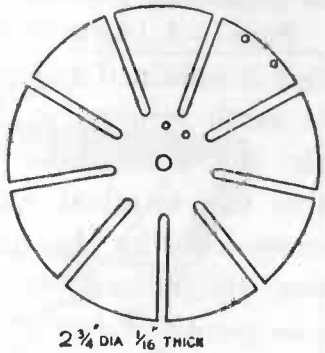

Fig. 68.—Former for Winding Coils.

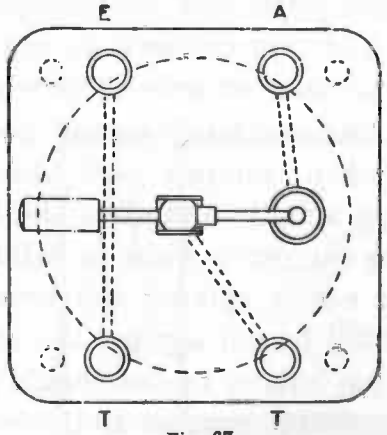

Fig. 67

Figs. 66 and 67.—Elevation and Plan of Miniature Basket-coil Receiver.

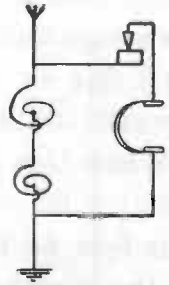

Fig. 69.—Circuit.

whole a coat of shellac varnish, and set aside until the remaining portion of the instrument is completed.

Base.—A block of ebonite $3\frac{1}{4}$ in. by $3\frac{1}{4}$ in. by $\frac{3}{8}$ in. thick is obtained and drilled for the aerial terminal A, the earth terminal E, the two telephone terminals T (Fig. 67), and counterbored on the under side to receive the terminal nuts. Holes are made for the screws securing the stirrup S and the crystal cup C, after which channels are cut underneath connecting these points as shown. On the under side of the block five holes are drilled (not right through) and tapped 4 B.A. to receive the four legs L (Fig. 66), and the centre spindle P, which is a piece of rod 2 in. long screwed 4 B.A.

Assembling.—Assemble the four terminals, crystal cup and stirrup and make permanent connections in the channels provided. The best connections are obtained by taking three or four strands of thin wire and twisting them together, as single-strand coarse wire is liable to break when clamped hard under a nut; screw in the centre spindle and then the four legs. When this is done cut out a piece of celluloid (Fig. 66) to fit over the centre spindle and between the four legs, so that it will lie flat against the under side of the ebonite base (no nuts or screws should project). Before finally assembling, connect up the inductance coils to the respective terminals, replace the celluloid and place on the first coil, taking care to insert a rubber washer $\frac{1}{2}$ in. in diameter by $\frac{3}{16}$ in. thick between. Clamp up by means of a 4 B.A. nut. Solder the wire connection between the two coils, and

twist the intervening length into a neat coil and assemble the second disk at the predetermined distance by

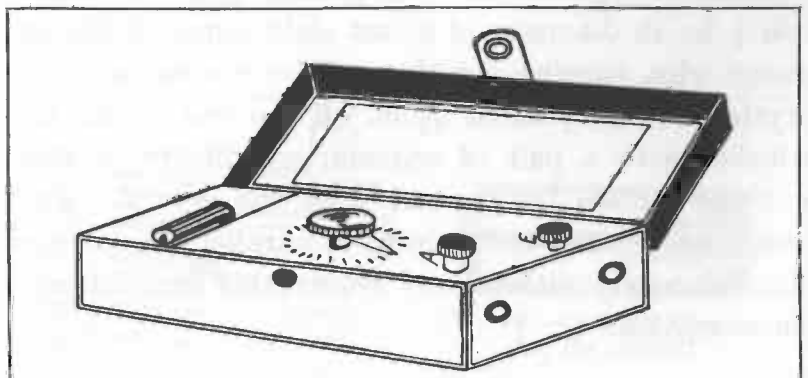

Fig. 70.—General View of Vest-pocket Receiver.

a 4 B.A. nut on each side, at the same time observing the correct direction of the coil winding.

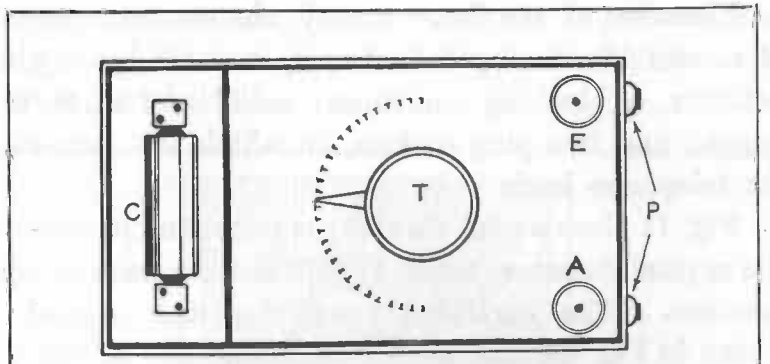

Fig. 71.—Plan of Vest-pocket Receiver.

Check over the connections carefully in accordance with the diagram Fig. 69.

The Detector.—Hertzite crystal and copper wire is probably the most satisfactory combination. The copper wire (catwhisker) is preferably made into a coil $\frac{1}{4}$ in. in diameter of about eight turns of No. 36-gauge wire, turning out the end for contact with the crystal. Cutting about $\frac{1}{32}$ in. off the end of the catwhisker with a pair of scissors periodically provides a clean surface for contact with the crystal. Four headphones (each 4,000 ohms) in parallel can be used simultaneously without any appreciable diminution of the reception.

Building a Vest-pocket Receiver

The sketch (Fig. 70) gives a general idea of the appearance of a vest-pocket receiver contained in a safety-razor case. The instrument has only one adjustment, the small tuning knob in the centre of the panel.

Elements of the Set.—Briefly, the receiver consists of a variable tuning inductance, a cartridge crystal detector, a blocking condenser, aerial and earth terminals, and two plug sockets, to which are connected the telephone leads.

Fig. 71 gives a plan view of the panel and position of the crystal detector, while Fig. 72 is a diagram of connections. The cartridge containing the crystal is shown in Fig. 73, and the tuning inductance in Fig. 74.

The Case and Panel.—The first item requiring consideration is the containing case. The ordinary safety-razor case is ideal for this purpose. An ebonite panel is now cut to fit tightly into the case, leaving a small partition in which the crystal is housed. The ebonite

panel must be securely supported, either by means of a small strip fixed in the inside of the case or by means of small countersunk screws passing through the sides.

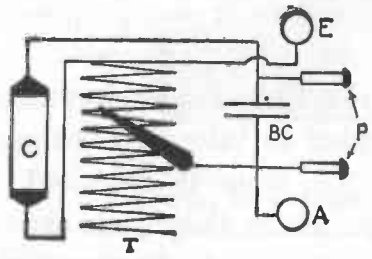

Fig. 72.—Diagram of Connections of Vest-pocket Receiver.

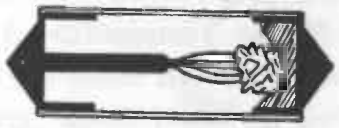

Fig. 73.—Cartridge Containing the Crystal.

The Tuning Coil.—To the under side of the ebonite panel is fitted the tuning inductance, which consists of No. 32 enamelled wire wound on an ebonite former $\frac{3}{16}$ in. thick, 2 in. deep, and as wide as can be got into the case, that is, a shade smaller than the ebonite panel itself.

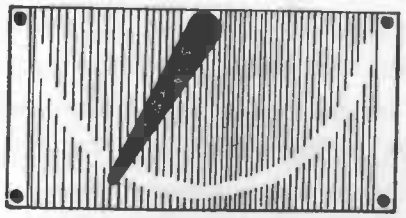

Fig. 74.—Tuning Inductance.

The Contact Finger.—A small contact finger is now made up, soldered to a short spindle, and arranged to make contact on the bared portion of the inductance

winding, as shown in Fig. 74. This contact finger is moved by means of the tuning knob T on the top of the panel. A pointer may be fitted to enable comparative tests to be made, a scale being engraved on the panel, as indicated in Fig. 71. Two small terminals are fitted at one end of the panel for the purpose of connecting the aerial and earth wires to the set.

Phone Terminals.—At the end of the containing case two small holes are drilled to take two ordinary valve sockets; these must be securely mounted in position. The holes through which they pass should preferably be bushed with ebonite to increase the insulation efficiency of the set.

A pair of valve legs, corresponding to the sockets, should be soldered to the phone, which, for compactness' sake, may consist of a single 4,000-ohm receiver without a head-band.

The Detector.—The cartridge crystal detector is very simple in construction: a short length of ebonite or fibre tube is obtained and two small metal caps made to fit tightly into each end. One cap should be filled with Wood's alloy, and a good sample of a galena crystal mounted therein. The other cap is fitted with a metal rod $\frac{1}{8}$ in. in diameter, to the end of which are soldered several wires of about No. 26-gauge copper wire. Hard-drawn wire should be used on account of its springiness.

With regard to the metal end cap, these are best turned out of solid brass rod, the ends being pointed for the spring-clip holder provided. This holder may consist of two right-angled brass strips screwed to the

bottom of the containing case. It is, of course, understood that the cartridge is assembled so that the bunch of copper wires makes contact with the crystal in several different places.

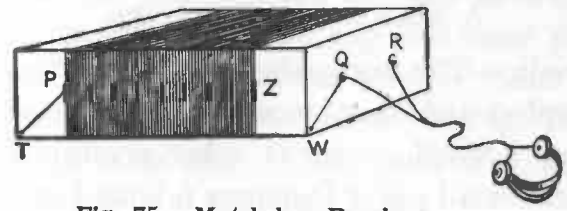

Fig. 75.—Match-box Receiver.

The Condenser.—The blocking condenser consists of eleven sheets of tinfoil, 2 in. by $1\frac{1}{2}$ in., interleaved with wax paper and mounted, underneath the panel on the bottom of the case.

Connections.—The diagram of connections is given in Fig. 72. The telephones are connected to the plug sockets P, the aerial and earth to A and E, B C

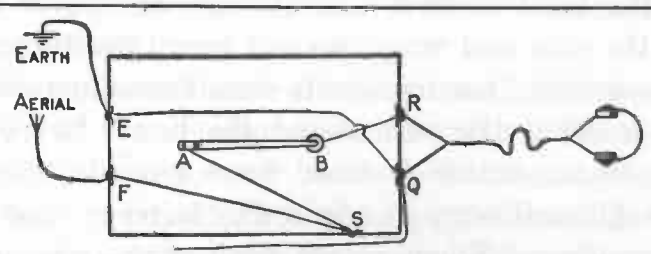

Fig. 76.—Diagram of Connections of Match-box Receiver.

being the blocking condenser, T the tuner, and C the crystal.

Range of Set.—Using an aerial of the regulation length and height the broadcast concerts should come through very clearly, while a certain amount of Morse

and amateurs' transmissions may be picked up under good conditions.

Quite sharp tuning can be obtained with the wiring as given in Fig. 72.

A Match-box Receiver

Materials.—The materials required for this set are of the simplest and merely comprise : 1½ oz. of No. 26 d.c.c. wire, 1 small galena or other crystal, 1 match-box, several small paper fasteners (about ¼ in.), 4 large paper fasteners (about ½ in.), a small strip of thin brass, and the screw cap of a metal-polish tin.

Winding the Tuner.—The amount of wire, etc., depends on the size of the match-box used ; the best is one of the largest. At each end of the box make two holes about 1 in. apart, and through these holes put the large fasteners. About a ¼ in. from the end on one side of the box put a small fastener P (Fig. 75), with the head inwards and through the cover only. Take the wire and wrap the end round the fastener P on the outside, leaving about 6 in. for wiring. Then begin to wind the wire round the box. Every five turns put in another fastener, head inwards, bare the wire a bit and wrap it round the fastener, and continue winding. When within ¼ in. of the end put in another fastener, cut the wire, bare the end and wrap it round the last fastener.

Through the inner box part put a fastener S, as shown in Fig. 76, so that its head will touch the head of the fastener Z when the box is closed.

The Detector.—The detector is easily made with

the piece of galena, the strip of brass, and the screw-cap. Take the screw-cap and cut four slits in the side to about half-way down as in Fig. 77. Bore a hole in the bottom of the cap and fasten it down to the inside part of the box with a small fastener as B (Fig. 76). Then put the crystal in the cap and bend down the edges, thus holding the crystal firmly. Take the strip of brass and cut it into the shape of Fig. 78, boring a hole in the wide end. Then bend it to the shape

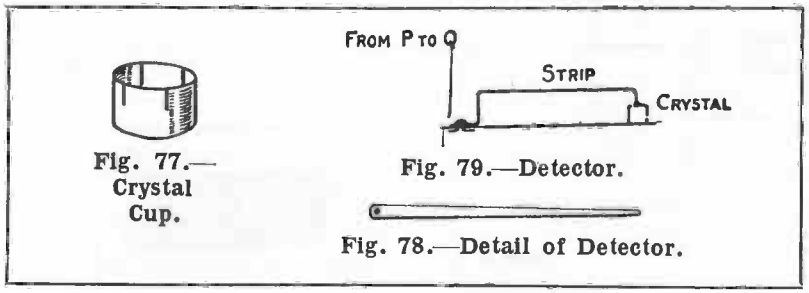

Fig. 77.—Crystal Cup.

Fig. 79.—Detector.

Fig. 78.—Detail of Detector.

shown in Fig. 79, and fasten it with a fastener at the proper distance from the cup.

Wiring Connections.—Having completed the tuning coil and the detector the next thing is the wiring. Through the outer cover in the bottom corner bore a small hole T (Fig. 75), and through it thread the wire from P. Run wire along the inside of the outer cover so that it comes out at W at the other end, then join it to Q. Next attach a wire to the cup B and connect it to R on the inside. Then attach a wire to the strip A and connect that wire to the fastener S ; connect the fastener S to the fastener F, and attach a wire to Q on the inside and join it to E.

If desired, a small knob can be glued on to the box between E and F for the purpose of tuning.

The head-phones are attached to the terminals R and Q, the aerial is attached to F and the earth to E.

Operation.—In use the point of the strip A should be moved about until signals are heard. Tuning is then effected by pulling the inner part of the box out.

CHAPTER IX

Crystal Circuits

THE illustrations (Figs. 80 to 85) in this chapter show diagrammatically (as distinct from conventionally) the common circuits used in crystal sets.

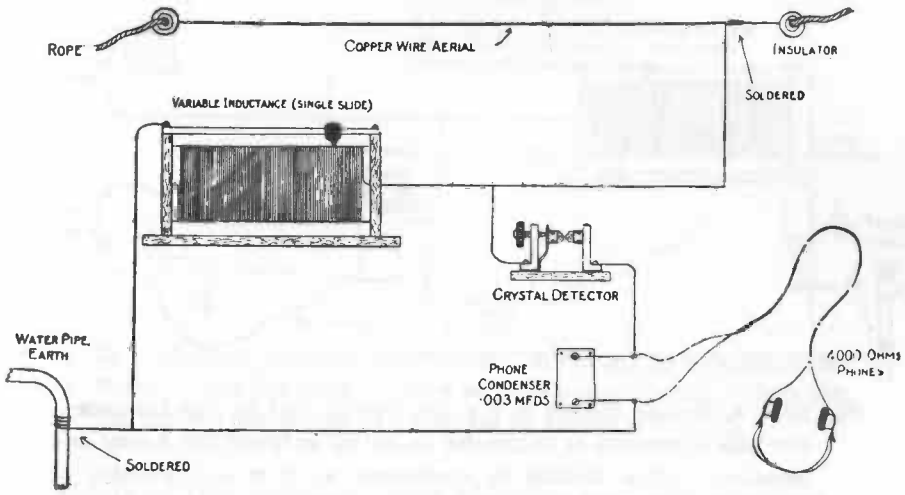

Fig. 80.—Diagram showing the Method of Connecting up a Single-slider Tuning Inductance to a Crystal Detector. This manner of Coupling is termed "Direct-coupling."

There are various types of tuning devices in general use, the more common, perhaps, being the single-layer solenoid type. These may be divided up into two classes—the "tapped" and the sliding contact tuners. Dealing with the single coil direct-coupled

tuners, the most effective as regards fine tuning is doubtless the single slider tuning coil as illustrated in Fig. 80. Here it will be seen that tuning is effected by simply sliding a spring contact along the coil. It is possible to obtain fairly accurate tuning to within one complete turn of wire on the coil. For finer tuning a variable condenser is often inserted in the aerial

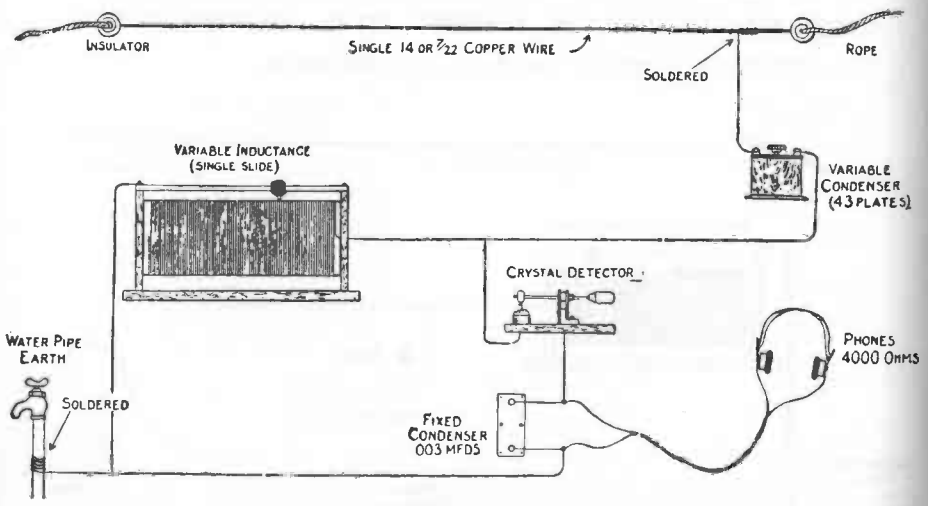

Fig. 81.—A Similar Circuit to Fig. 80, except that in this instance a Variable Condenser is Connected in Series between the Aerial and Receiver. This Method is Inefficient as it is not possible to obtain Correct Tuning.

system, in series with the tuning coil as in Fig. 81. This condenser certainly facilitates short-wave tuning, but is often undesirable owing to its effect in causing unbalanced tuning. Another type of sliding contact tuner is the two-slider. The original object of a two-slider coil was to form an auto-transformer coupling which would give a reasonable transformer step-up in

signal strength without the usual losses attendant to the use of a loose-coupled air-core transformer. The wiring of this two slider is shown by Fig. 82. Here it will be seen that the one coil governs two circuits—the aerial, one portion of the coil and earth being one circuit, and the crystal, phones, one section of the coil and earth, the other circuit. The aerial to earth

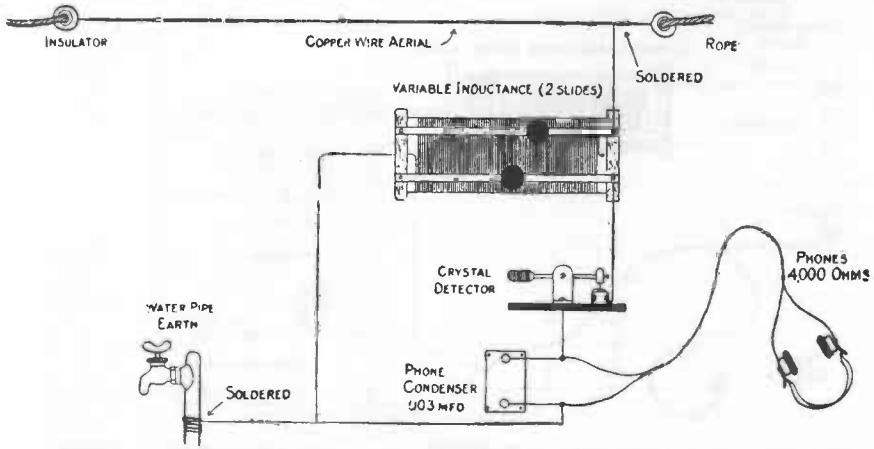

Fig. 82—Diagram showing One Way of Connecting up a Double-slider Tuner. This Coupling is known as "Auto-transformer" Coupling. The Circuit above may be Improved as shown in Fig. 83.

circuit is the primary, and the crystal, coil, and telephone circuit forms the secondary. Fairly correct tuning is obtained from the primary circuit, but when the secondary circuit is adjusted with a greater number of turns of wire to obtain the necessary transformer step-up, the secondary circuit becomes out of "tune." To obviate this, a variable condenser is inserted in parallel across the secondary section of the coil as in Fig. 83. By means of this condenser, accurate

secondary tuning is possible, allowing scope at the same time for any reasonable transformation ratio of turns between the primary and secondary sections of the tuning coil. Provided accurate tuning is employed, this type of tuner is probably the most desirable from the point of view of the crystal user.

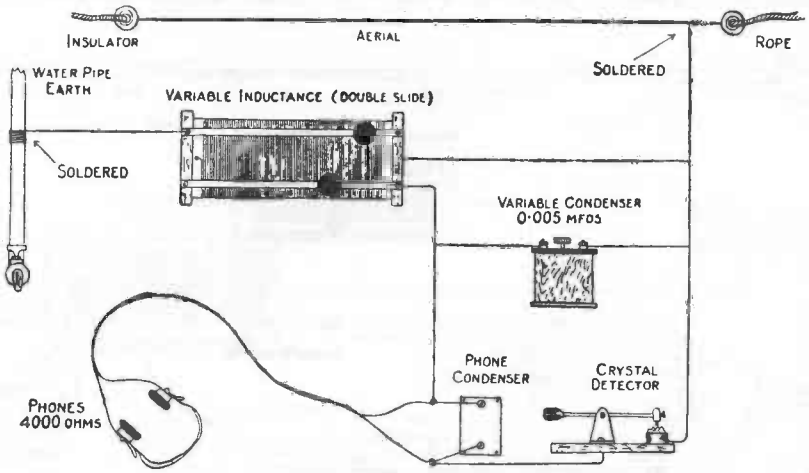

Fig. 83.—A Circuit with a Variable Condenser Connected in Parallel across the "Secondary." A "Transformer Step-up" Effect between Primary and Secondary is Produced which gives Selective Tuning and very Efficient Results.

Another method of tuning is that known as "tapping" the coil. Fig. 84 illustrates the single switch-arm type. Correct tuning, however, is not possible unless the tappings are accurately taken at calibrated points for certain wavelengths. A tuning condenser may, however, be connected between the aerial and earth terminals of the coil to facilitate accurate tuning. A more efficient type of tapped coil is that shown by Fig. 85 where two switch-arms are employed. One

switch-arm is designed to make contact over a portion of the coil which is tapped in units of turns, the other switch-arm making contact over the remainder of the coil which is tapped in sections each equalling the total number of turns covered by the unit switch-arm. Suitably designed, and for short wavelengths, it is possible with this type of tuner to obtain correct

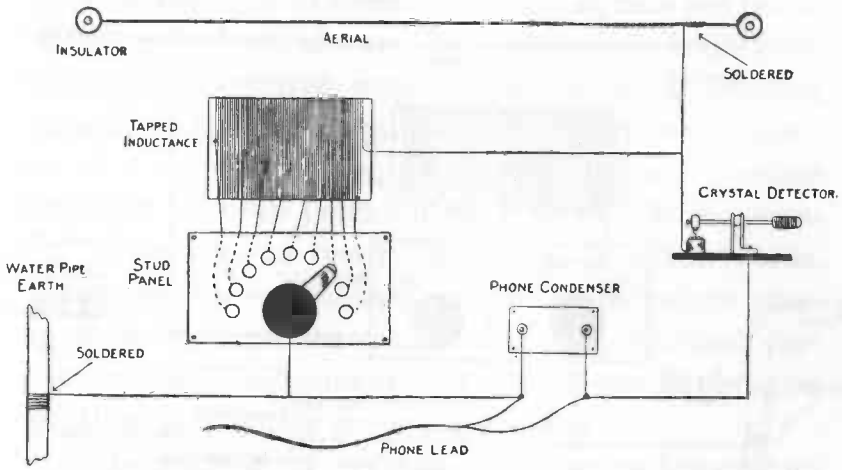

Fig. 84.—Diagram showing the Connections for a Tapped Inductance Employing only One Switch-arm. This Circuit does not allow of very Fine Tuning.

tuning to within one turn of wire on the coil. This type of tuner has one great advantage over the slider method, inasmuch as the wire on the coil is not worn away or cut through by constant use of a slider. These fine particles of copper, worn from the coil by the slider, tend to bridge neighbouring turns of wire on the slider coil. In the tapped coil this trouble is eliminated, but the advantage is lost if the tapping studs are poorly insulated. On each diagram will be

seen the necessary crystal detector for detecting and rectifying the signals, and also the telephone condenser and the telephones. The telephone condenser is not absolutely an essential instrument, as the self-capacity of the telephone windings and the telephone leads is often adequate. However, it will generally be found that a fixed condenser of capacity between

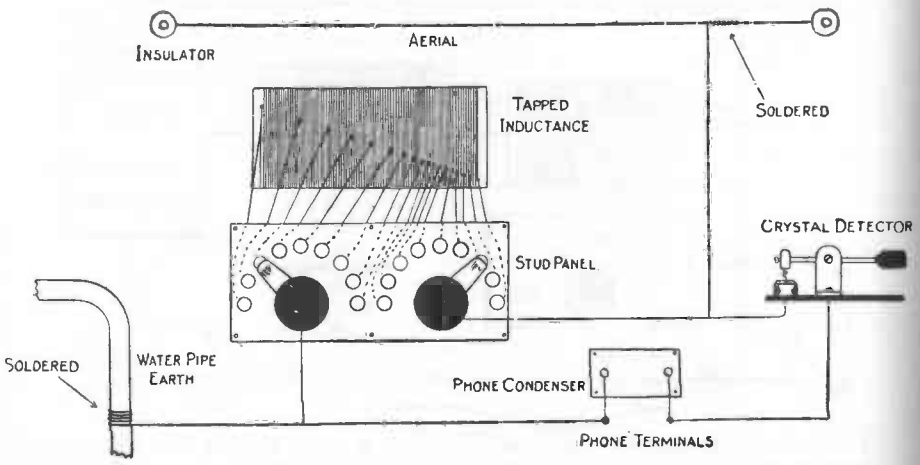

Fig. 85.—An Effective Means of Wiring-up a Tapped Coil to Two Switch-arms which Facilitates Fine Tuning.

·001 and ·005 microfarads will considerably improve the note of the signal heard in the telephones. All bare wire connections should be thoroughly clean and soldered, all terminal connections should be clean and tightly bolted. Do not grind or break crystal surfaces unnecessarily and periodically wash the surface of the crystal with methylated spirits by means of a small brush.

CHAPTER X

How Crystals Work

What the Crystal Does.—Wireless signals are transmitted in the form of waves created in the ether, which, striking the receiver aerial, cause small alternating currents to travel up and down it. As these currents are of a very high frequency, the ordinary wireless telephone receiver cannot detect them. It is necessary, therefore, to rectify them, or, in other words, change them into unidirectional currents, before passing them through the telephones. The rectified currents produce a movement of the telephone diaphragms and thus the signals are made audible.

Certain kinds of crystals, such as carborundum, zincite, bornite, silicon, galena, molybdenite and iron pyrites (see Figs. 86 to 93, which show crystals enlarged to about three times normal size), have the peculiar property of being able to rectify small alternating currents. An explanation is given to show how they do this.

How a Crystal Rectifies.—A crystal rectifies because it allows current to flow through it in one direction and does not, to any appreciable extent, allow current to flow through it in the opposite direction. It is practically a uni-directional conductor. The ratio of currents flowing in opposite directions through

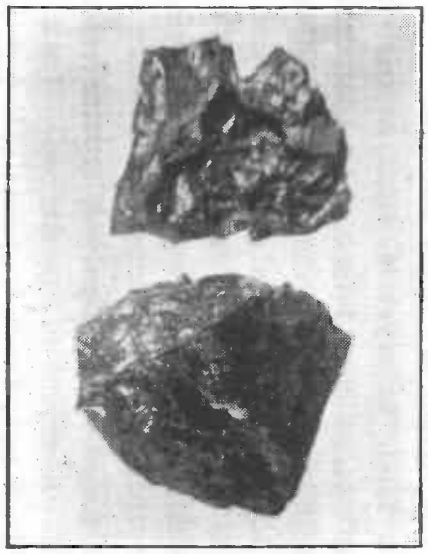

Fig. 86.—Silicon.

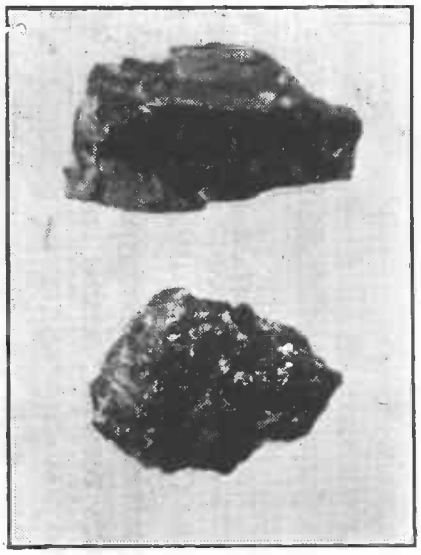

Fig. 87.—Galena and Special Galena.

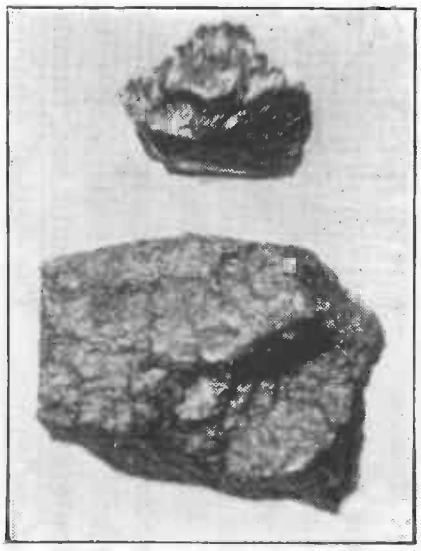

Fig. 88.—Bornite.

Fig. 89.—Radiocite.

a good crystal should be about 40 : 1. It will be understood that the crystal acts electrically, very much in the same manner as a ratchet-wheel acts mechanically.

Carborundum Crystals.—Carborundum is probably the best crystal for all-round use. It is not affected by mechanical vibration nor by fairly heavy electrical discharges across it, and it is very sensitive. This crystal has to be used in conjunction with a 4-volt battery and potentiometer, because it requires a small initial potential or voltage to be applied across it to bring it to its most sensitive point. Carborundum is used with a flat steel surface, the rectification taking place at the point of contact. This crystal is manufactured by fusing carbon and silicon together in an electric furnace. In practice three kinds of carborundum crystal are met with : (*a*) a hard dark variety, having great metallic lustre which has poor rectifying properties ; (*b*) a soft crystal of a pale-green colour, a colour due to the presence of copper and iron salts (this type of crystal is a very poor rectifier) ; (*c*) a dark grey crystal which will be found to give the best results as regards sensitivity and stability of action.

The Perikon Detector.—The most popular crystal detector is without doubt the perikon detector. This is a combination of either zincite and bornite or else zincite and tellurium. The latter combination is usually found to give the better results. Zincite, a zinc-oxide ore, is dark red in colour ; bornite is a compound of copper and iron sulphides, being bluish grey

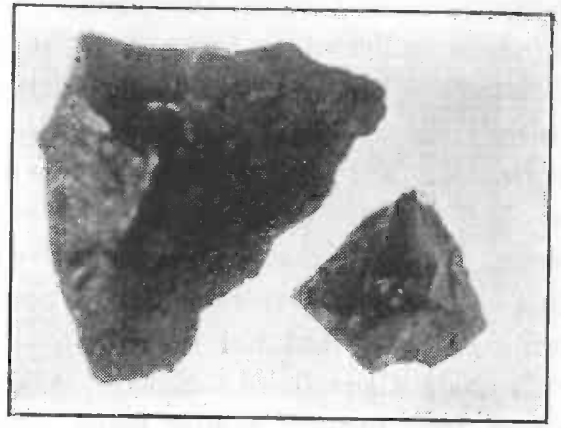

Fig. 91.—Copper Pyrites.

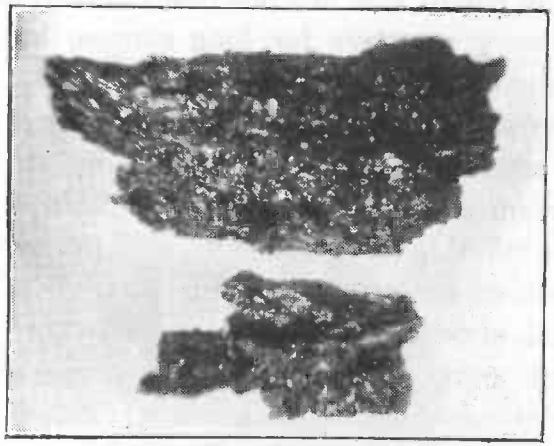

Fig. 90.—Carborundum.

in appearance and fairly heavy. Tellurium is a light-coloured metal. The perikon detector does not require a potentiometer because the voltage of the incoming signal is sufficient to bring it to its sensitive point. It has the advantage of being fairly easy to adjust. Also when a crystal becomes slightly insensitive it can be scratched with a knife and a new surface used. To obtain the best results it is usually found that the crystals must make a light contact with each other. This detector is more sensitive in action than the carborundum type, but not so robust.

Other Crystals Considered.—Silicon, galena, molybdenite and iron pyrites, whilst being serviceable for experimental work, do not give such satisfactory general results as either carborundum or the perikon detector. All these crystals are minerals. Silicon is light grey in colour and has not many sensitive points. Galena is very sensitive for long ranges, but strong signals destroy its sensitivity. It is bluish black in colour, has a metallic lustre, and is heavy. When using this crystal it is usual to have a graphite contact in conjunction with it. Molybdenite is dark in appearance and is suitable for the reception of strong signals; it is convenient for use in portable sets. Iron pyrites is a cubical crystal, being very metallic and heavy. It possesses many of the properties of carborundum but is not so sensitive.

Finding the Best Crystal.—The only sure way to obtain a good crystal is to search for sensitive points amongst several specimens. It is wise to remember that sensitivity is not everything; a good crystal

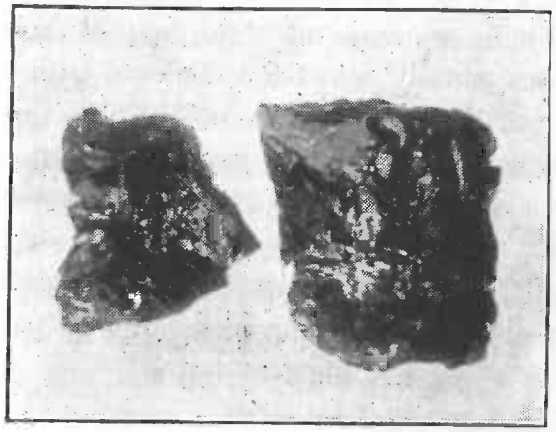

Fig. 93.—Zincite.

Fig. 92.—Permanite.

should have the qualities of being constant in action and of not being affected by atmospheric disturbances. Such crystals as "radiocite" and "permanite" are usually sensitised forms of galena. They are very sensitive but not constant; a fine copper wire contact is used in conjunction with them.

There is plenty of instruction and amusement to be had with a good crystal set. The range of a crystal set is about 300 miles for ordinary ship stations and 20 or 30 miles for high-power telephony.

CHAPTER XI

Making a Buzzer

By A. W. HULBERT

THIS chapter deals with a new type of buzzer, one which utilises a circular armature or diaphragm instead of the usual flat strip of metal. Due to the fact that this diaphragm is supported all round, it is possible to have the magnet almost touching the diaphragm, resulting in a more sensitive instrument and one capable of producing an extremely high-pitched note.

The overall dimensions of the instrument are also considerably less than the standard instrument, and having a minimum of working parts it is very easy to make.

Constructional Details.—Fig. 94 is a section of the instrument. A circular ebonite case B, with a snap-on lid, is fitted with an electro-magnet M, which is wound on a strip of soft iron P which serves the double purpose of a core for the magnet and also a support. The soft iron strip P is bent round and mounted on the bottom of the ebonite case with the aid of two screws, the opposite arm to that carrying the coil M being in contact with the diaphragm D, which rests on a ledge turned in the ebonite case. The distance between the diaphragm and the pole of the magnet M is approximately $\frac{1}{32}$ in.

The lid of the ebonite case B is undercut to enable

the diaphragm to vibrate. Mounted on the top is a contact screw S and a terminal F. The other terminal (not shown in Fig. 94) is connected to one end of the magnet winding, the other end being earthed to the polepiece P. The passage of the current through the instrument is therefore from the battery or accumu-

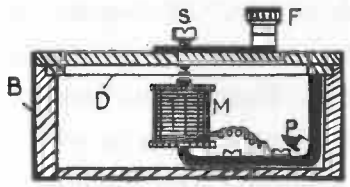

Fig. 94

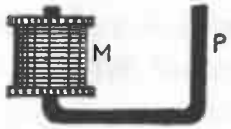

Fig. 96

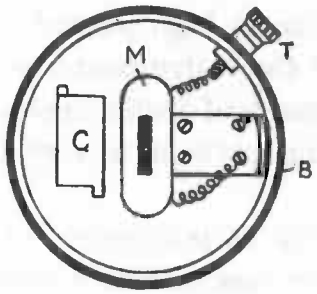

Fig. 95

Fig. 94.—Section of Complete Buzzer.

Fig. 95.—Details of Interior showing Connections.

Fig. 96.—Pole-piece and Coil.

lator to the terminal F, and the metal plate to the contact screw S, across the contacts and the diaphragm D to the pole-piece P, and through the magnet winding to the terminal T (Fig. 95), and thence back to the battery.

Due to the fact that the snap-on lid clamps the diaphragm securely all round, it is possible, as mentioned previously, to have the diaphragm very close to the magnet, thereby producing a high-pitched note.

The Magnet.—With regard to the construction of the magnet M, this is wound on a metal former made up by soldering two metal cheeks to one arm of the metal strip P. This strip should measure $\frac{5}{8}$ in. wide by $1\frac{1}{2}$ in. long, and may be cut from sheet-iron $\frac{1}{2}$ in. thick. This is bent up as shown in Fig. 96; that portion forming the core of the magnet should be insulated by means of waxed silk, which should also be gummed on to the inside of the cheeks. The magnet is wound with No. 36 d.s.c. wire, the last layer but one being covered with a strip of varnished silk. The final layer of wire should be wound on very carefully and secured by looping the last turn under itself, the complete coil then being soaked in melted paraffin wax.

The Pole-pieces.—The complete coil and iron core P should now be placed on a surface plate or other flat base and the heights of the two pole-pieces carefully measured. The arm or pole-piece on which the coil is wound must be $\frac{1}{32}$ in. shorter than the other. The height of the other pole-piece must be such that it just reaches a shade higher than the ledge in the ebonite case B, so that when the metal diaphragm D is in position direct contact is made with the pole-piece P.

The Diaphragm.—The diaphragm D may be one taken from an old telephone receiver, the only addition being a contact stud soldered in the centre. Both this and the contact on the screw S should be of german-silver or other suitable alloy. The actual sparking may be considerably reduced by fitting a

small condenser C (Fig. 95) in the case and connecting this across the contacts.

The Case.—The ebonite case B can easily be turned up by anyone possessing a lathe, or one may be purchased from an electrical dealer. The battery voltage may be anything from 2 to 4 volts, and when the buzzer is used exclusively for testing faults in the circuits the terminals may be dispensed with and a length of twin flexible lead soldered on permanently.

CHAPTER XII

Receiving C.W. Signals on a Crystal Set

By E. H. ROBINSON

It is frequently stated that a simple crystal receiving set will enable the listener only to pick up spark stations and telephony, and that valves will have to be installed before continuous-wave (C.W.) signals can be satisfactorily received. This is true to a certain extent, but this chapter shows how some of the louder C.W. stations can be received by means of a very simple addition.

C.W. Signals.—The reason why C.W. signals cannot be heard on ordinary crystal circuits is that when the key at the transmitting station is pressed down a continuous rectified current passes through the head telephones of the receiver, not an interrupted one as in the case of spark and telephony, with the result that no sound is heard except perhaps a faint click when the key is depressed or raised. If, however, an interrupting device, capable of making and breaking the circuit at a high rate, say 500 times a second, is inserted between the crystal and the phones, then any continuous current in the phones will be broken up into a musical note which is clearly audible.

The "Tikker."—Such an arrangement is shown diagrammatically in Fig. 97. In this figure T is a rapidly rotating cog-wheel against which a small metal

tongue rests lightly. The use of such an interrupter is the invention of the Danish scientist Pedersen, who used it for reception of signals from the famous arc-transmitting system which bears Poulsen's name. Pedersen called the interrupter a "tikker," and this is the name by which the device is still known.

The cog-wheel T may conveniently be the fastest-moving wheel in the mechanism of a clock. It will be necessary to remove the escapement so that the wheels rotate freely. If the spring is now wound up and the mechanism allowed to run it will go at a tremendous speed and be run down in a few seconds; a governing device must, therefore, be added, and this can easily be done by soldering, or otherwise fixing, a small vane cut out of thin sheet brass to the most rapidly revolving spindle as shown in Fig. 98. Owing to the friction of the air with this vane the mechanism will not be able to "race," and will run nicely for a considerable time. The actual size of the vane for best working will depend on the nature of the clockwork and will have to be determined in individual cases by trial; the larger the vane the slower the mechanism will run. In the writer's own tikker the vane is only $\frac{3}{4}$ in. across and $\frac{1}{4}$ in. wide, but it is sufficient to ensure a steady run of about twenty minutes. The only other thing that remains to be done is to fix a light tongue which has to make contact with the cogs of the fastest wheel in the train.

The method of mounting is shown in Fig. 99. A is an ebonite strip, sufficiently thick to be rigid, through which a hole has been made at each end. By means

of a bolt and fly-nut one end of the ebonite strip is fixed to a point C in the frame, and that at the other end will come near the wheel T, a hole being made at

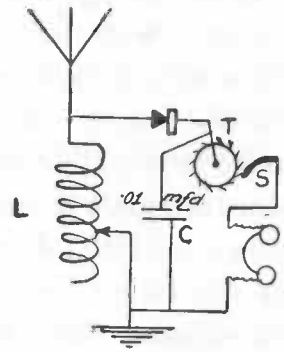

Fig. 97.—Circuit Diagram of Interrupter.

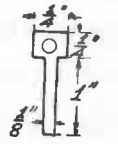

Fig. 100.—Metal Tongue.

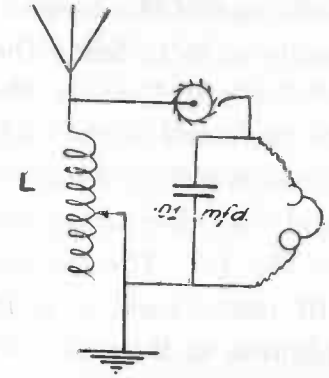

Fig. 101.—Pedersen System of C.W. Reception.

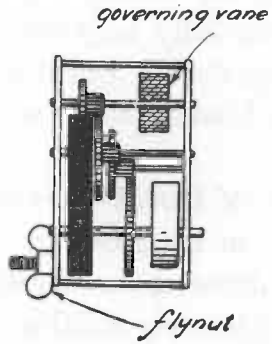

Fig. 98

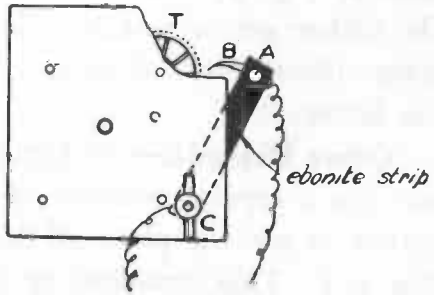

Fig. 99

Figs. 98 and 99.—Front and Side Elevations of Interrupter.

C to accommodate the bolt. The tongue B is cut to the shape shown in Fig. 100 out of springy sheet brass about the thickness of drawing-paper. An ordinary pair of scissors will cut the brass quite easily, and the

hole shown in the wide end may be pushed through by any sharp tool. The tongue is fastened to the upper end of the ebonite strip A by means of a nut and bolt through the hole which has been made there, and the thin part of the tongue is given a twist through a right angle so as to bring the free end square with the teeth of the wheel T. A piece of flexible wire is connected to the clock-frame and another to the tongue; one of these wires is connected to one of the phone leads and the other to one of the detector terminals as shown in Fig. 97. The condenser C, having a capacity of about .01 microfarad, is shunted across the tikker and telephones, as it greatly improves the signals. Some little adjustment of the speed of the tikker may be necessary before good results are obtained. When a C.W. station is tuned in (by means of the variable inductance L, Fig. 97), the detector carefully adjusted and the tikker set in motion, the signals are heard as an intermittent musical note or a hissing note, usually the latter.

Other Methods.—As a matter of fact, Pedersen did not use a crystal detector at all in his receiver. The tikker is put in place of the detector as shown in Fig. 101. This arrangement is extremely reliable, but, in the writer's experience, is not quite so sensitive as when a crystal detector is included. However, as crystal detectors are very liable to go out of adjustment the writer would recommend the method shown by Fig. 101.

Where a crystal detector is to be used, either a good piece of zincite touched by a sharp piece of

bornite or copper pyrites, or a piece of galena touched by a small spiral of 40-gauge copper wire, will be the most suitable. Crystals, like carborundum, which require a battery and potentiometer, cannot be used satisfactorily in conjunction with a tikker. Much depends on getting good specimens of crystal.

A gramophone can be used as a tikker by connecting one wire to the works and allowing the other to rub lightly against the edge of the revolving turntable

CHAPTER XIII

Making a Wavemeter from a Crystal Set

THE components of a crystal set—or some of them—can be assembled to produce a wavemeter that gives approximately truthful results.

With a coil of known inductance, a variable condenser, crystal and phones, a useful wavemeter can be rigged up. The circuit is as shown in Fig. 102.

First calculate from the formula :

$$1{,}885 \sqrt{L \times C}$$

(which simply means 1,885 multiplied by the square root of the product of the inductance and capacity) the wave-length range the coil and condenser will give. For example, condenser ·0001 to ·001, and coil, say, 2,000 mhy. = 850 L C to 2,550 L C approx. Next prepare a chart on squared paper (Fig. 103) as follows : Mark off the condenser degrees equidistant on the vertical edge. Start at, say, 900 metres and square the units as follows : 9^2, 10^2, 11^2, 12^2, etc., = 81, 100, 121, 124. 100 — 81 = 19 ; 121 — 100 = 21. There will be an increase of two in every case after the first number of squares is found ; the others need not be worked out. The wave-length scale starts at 900 metres, therefore count 19 squares and mark 1,000 m. from this mark. If 19 squares is too large and half is taken then the increase will be halved.

Calibrating.—When the scale is prepared start the calibrating as follows : Set the receiver to a known wave-length adjustment within the scale or get a

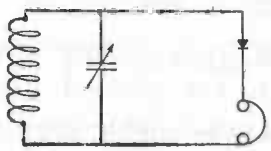

Fig. 102.—Circuit Diagram of Wavemeter.

station on a known wave that can be relied upon, say G.F.A. on calibration waves. Then listen in on the wavemeter circuit, coupling it closely at first to the C.W. receiver and varying the condenser until a rustling noise is heard, which will be very sharp tuning on the shorter waves. This point will be more quickly found

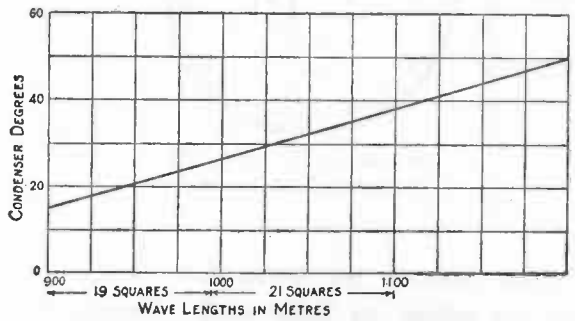

Fig. 103.—Chart for Purpose of Calibration.

if the aerial terminal of the receiver is tapped with a moistened finger. The clicks heard when a set is oscillating will be heard in the wavemeter when it is

in tune and sufficiently coupled. The tuning must be completed without the finger or capacity effect will give a false tune, though the difference is usually small.

The wave-length is marked on the chart at the point corresponding with degrees—wave-length. Two or more such points are plotted and joined and produced, when any wave-length between the limits can be found. To use the wavemeter it is set to the wave-length, and while listening in the receiver is tuned until the hiss is heard; then transfer on to the receiver and listen for signals. Different values of coils may be used and scales plotted.

If a calibrated condenser is available the chart can be plotted without the aid of the receiver. A buzzer can be used, when the crystal and phones will not be necessary.

CHAPTER XIV

Converting Low-resistance Phones

Meaning of Resistance.—With a few exceptions, it is necessary that the telephone headgear for wireless work be wound to a high resistance, anything from 60 to 4,000 ohms per receiver being general. The statement "high resistance" is perhaps apt to mislead the reader; what is actually meant, of course, is

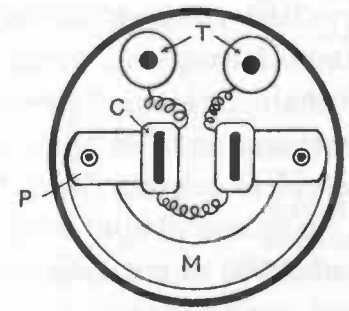

Fig. 104.—Diagram of Interior of Receiver.

that the magnet coils must be wound with a great number of turns of fine wire in order to produce a maximum magnetic effect with very little current. The resultant resistance is, therefore, merely a necessary evil, unavoidable in all magnetic devices which are more or less voltage operated.

Another point about wireless phones is that the

diaphragms are much thinner than those used on ordinary commercial telephones. This makes them more sensitive to small variations in the magnetic force from the coils. At the same time, the diaphragms are more easily damaged, an excessive current causing them to buckle.

Construction of Receivers.—The general arrangement of a receiver of the common watch-pattern type is shown in Fig. 104, the ebonite earpiece and diaphragm having been removed. A permanent magnet M of semicircular shape is screwed to the outer containing case, and mounted on the poles are two pole-pieces P, which are bent at right angles and carry the magnet windings C. The ends of the windings are connected direct to the terminals T, which pass through insulated bushes in the metal case and serve to connect the coils C with the main receiving instruments.

The coils C when removed from the ordinary receiver will be found to contain fairly thick wire. The task is to strip them and rewind with much finer wire to a resistance of 2,000 ohms each receiver. Fig. 105 shows the general appearance of the coil when wound, the figures in the sketch corresponding with the reference letters in Figs. 104 and Figs. 106 to 108.

It will be seen that with such a small coil and with only a bent strip of metal P to hold, winding the empty bobbin by hand would be an extremely awkward job ; in fact, it would be almost an impossibility to wind the wire with sufficient evenness to get anything like the required amount on the coils.

Again, the wire being so fine it is necessary to use

great care to avoid breakage, which would mean starting all over again, and also the coil being so small, it would be almost impossible to hold it long enough to get all the wire on at once without the hand becoming cramped.

There are several ways of getting over this difficulty, such as with a winding machine.

Device for Winding.—Perhaps the best method is

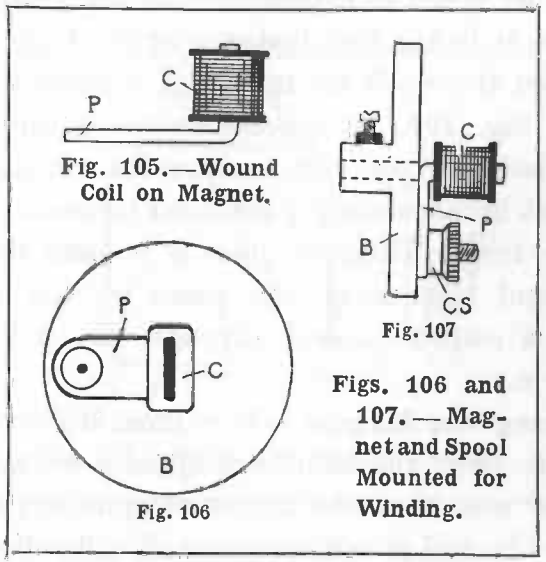

Fig. 105.—Wound Coil on Magnet.

Fig. 107

Fig. 106

Figs. 106 and 107.—Magnet and Spool Mounted for Winding.

to use a small electric motor. The arrangement is clearly shown in Fig. 108, E being a small electric 4- or 6-volt motor, using current from an accumulator and having a variable resistance in the circuit to regulate the speed. Clamped to the end of the armature shaft is a circular block of ebonite or fibre B on which the telephone coil C is mounted, being secured in position by means of the clamping screw C S, which passes through the holes in the pole-piece. It will be

noticed that the coil C is arranged to rotate as near as possible in the line of the armature shaft, so that, in spite of the coil itself being rectangular in shape, it will revolve with as little wobble as possible. This is very necessary, as any tendency of the coil to revolve eccentrically will tend to break the very fine wire. The ebonite block B is turned up in the lathe and a hole bored through whilst still in the chuck to take the armature spindle; this can either be a good tight fit in the first instance or the block may be clamped on the shaft by means of a small set-screw, shown in Fig. 107. A second clamping screw C S is fitted, to hold the coil C in position for winding. This screw must be accurately positioned to ensure the coil C running true. The best plan is to hold the coil in position and then mark the place for the screw by means of a scriber passed through the hole in the pole-piece P.

Revolving the Magnet.—It is most important that the hole to take the armature spindle be accurately bored, and also that the armature spindle runs true, otherwise the coil C will wobble and difficulty will be experienced, not only in the wire continually breaking, but also in getting it to fill in close to the cheeks of the coil. If the motor E is of the type in which the armature shaft extends at both ends, the opposite end to which the block B is mounted may be used to carry a small knurled knob fitted with a short piece of brass wire about $\frac{1}{8}$ in. in diameter to form a handle. This will prove particularly useful for controlling the motor or for winding portions of the coil by hand.

Winding.—The motor should be connected up to the accumulator and regulating-resistance and tested to see that it is in running order. The block B is then permanently fixed to the armature shaft and one of the coils to be wound clamped in position and trued up. Some fairly thin shellac varnish should be near at hand, together with a strip of silk ribbon, this latter cut to the width of the inside of the coil.

A single layer of silk ribbon is stuck on the core

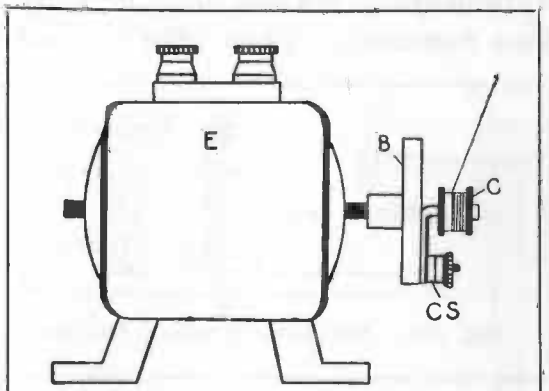

Fig. 108.—Motor with Magnet Mounted.

of the coil with shellac varnish, one layer of wire is then wound on and covered with a second layer of ribbon soaked in shellac. The free end of the wire is then carefully brought outside the coil and secured to the clamping screw C S for the time being. It is taken for granted, of course, that the sides of the coil C are already insulated with varnished ribbon or paper; at the same time it is a good plan to stick a small piece of varnished ribbon over the free end of the wire, to insulate it from the subsequent layers of wire

when these are wound on. The bobbin on which the wire is purchased should be mounted on a small brass rod so that it is free to rotate, and with the wire resting lightly across the second finger of the right hand, the motor should be started on the first speed, gradually increasing the speed of the motor.

If one has access to a gramophone another method of winding is to obtain an empty cotton reel which has a hole through its centre just large enough to fit over the projecting portion of the spindle of the gramophone turntable. Then take the bobbin which

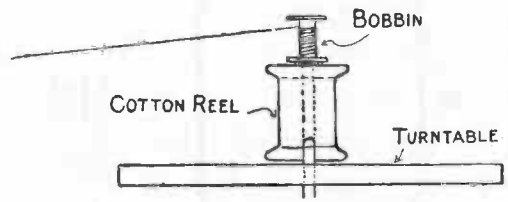

Fig. 109.—Telephone Winding Bobbins.

is to be wound and fix it to the top of the reel by means of a spot of glue or sealing-wax. The wire can then be attached to the bobbin and the turntable allowed to revolve as in Fig. 109. The speed at which it revolves can, of course, be regulated by the controller which is fitted to most gramophones.

When the coil is almost full a single layer of silk ribbon should be put on, the last layer of the wire being wound over this, leaving about six turns from the end empty. The top layer is then held in position with the thumb and finger, while an assistant soft-solders a short length of double silk-covered No. 28

S.W.G. wire to the winding. The last six turns will consist of thick wire, when the coil should be covered with two layers of ribbon and the whole thoroughly

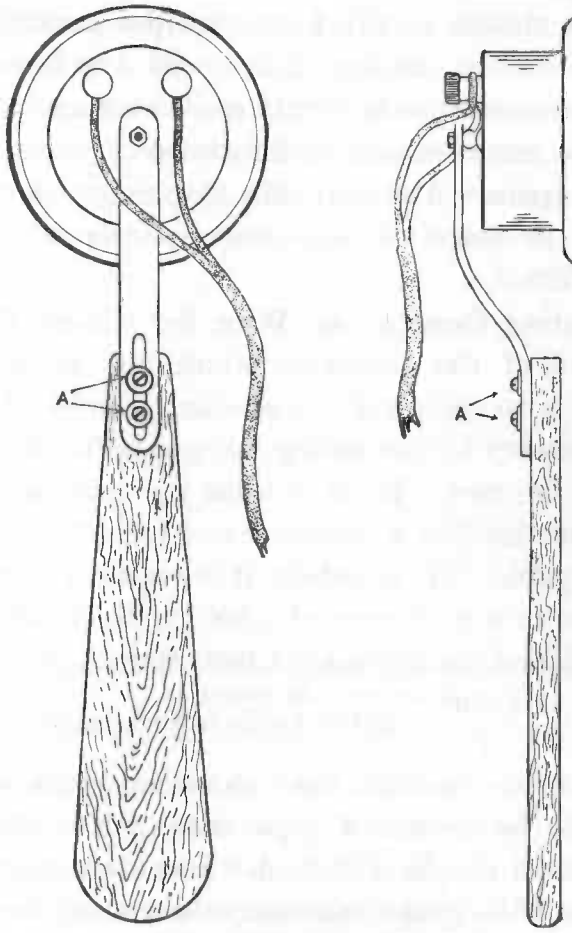

Figs. 110 and 111.—Telephones Fitted with Handles.

soaked in shellac varnish and allowed to dry before touching again. The second coil should be treated in the same way.

Assembling.—When both coils are dry they may be remounted on the magnet poles in the receiver case, and the winding connected to the terminals.

Having connected up to the terminals T the whole of the case should be filled with melted paraffin wax up to the level of the top of the coils, the loose connecting wires will thus be firmly embedded and a break in the wire rendered almost impossible.

Diaphragms.—A special thin diaphragm should be purchased in place of the comparatively thick one originally fitted.

Calculating Quantity of Wire for Given Resistance.—One of the problems which the reader will encounter is to calculate the amount of wire of given gauge necessary for rewinding. Suppose No. 42 gauge wire is to be used. From a table of resistances it is found that this has a resistance of 1,910·5 ohms per thousand yards. If, therefore, it is required to rewind the phones to a resistance of 4,000 ohms, divide 4,000 by 1,910·5 and multiply by 1,000, thus :

$$\frac{4{,}000}{1{,}910{\cdot}5} \times \frac{1{,}000}{1} = 2{,}093 \text{ yards approximately.}$$

This is a better method than calculating the weight, as will now be shown. Copper wire of No. 42 S.W.G. weighs ·14533 lb. per 1,000 yd. To obtain the *weight* of wire of this gauge necessary to rewind to 4,000 ohms the calculation becomes

$$\frac{4{,}000}{1{,}910{\cdot}5} \times \frac{1{,}000}{1} \times \frac{{\cdot}14533}{1{,}000} = {\cdot}304175 \text{ lb.}$$

The difficulty of gauging this amount of wire is at once apparent, apart from the fact that the weight

given does not and cannot take the weight of the covering into consideration.

Testing Phones.—The test commonly used for phones was by means of the handiest and weakest of batteries—a penny and a two-shilling piece, between which a bit of moist paper was placed. The end of one wire from the phones was connected to the " copper," and then the silver coin touched lightly (and repeatedly) with the end of the other wire.

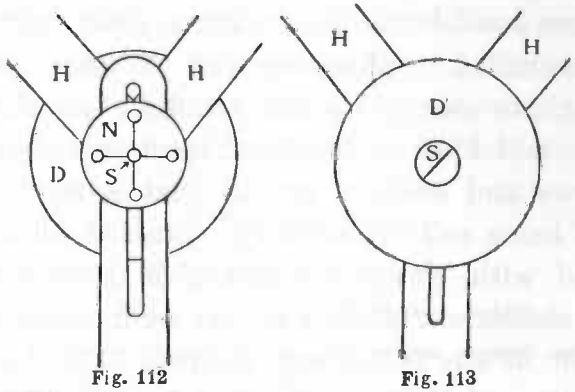

Fig. 112 Fig. 113

Figs. 112 and 113.—Outside and Inside View of Improved Head-band.

Nowadays a similar test is made with a single piece of sheet aluminium, which should be damp. Simply connect one wire of the phone to one end of the aluminium plate, and then touch the plate with the other wire, when, if the phone is properly adjusted each contact will cause a click in the phones.

Another method of testing phones is less difficult and perhaps more efficient than testing by the " weak battery " or sixpence and penny method.

The two leads from the earphones are connected to the two terminals of an ordinary electric bell. No battery whatever is put in circuit. The clapper is pressed forward to the bell and then quickly released. It will vibrate several times before coming to rest. A similar vibration will take place and will be heard plainly in the phones. The explanation of the action is that there is a small amount of magnetism in the magnet of the bell which usually works it.

Handles for Phones.—Ladies often complain of the phone head-band disarranging their hair. This can be remedied by disconnecting the head-band and attaching to short wooden handles, as shown in Figs. 110 and 111. A length of hard dry wood and a few screws and washers are all that is required, the sketches being self-explanatory. Smooth all edges off the wood with glasspaper and give it two or three coats of shellac varnish, or it may be finished in black enamel or in any other way desired. Fig. 110 shows a back view of the phone and link connected to the wooden handle by the screws and washers A, and the side view and general arrangement is clearly shown in Fig. 111. Another method of eliminating the difficulty is to cut out of pasteboard (or other suitable material) two discs 2 in. in diameter. Remove the screws at each side of the head-bands. Pass a screw through the centre of each disc and replace on the head-bands. Fig. 112 shows the outside view, and in this figure D is the disc, H the head-bands, N the nut and S the screw. Fig. 113 (inside view) shows how the attachment shields all moving parts.

CHAPTER XV

The Morse Code

MOST owners of crystal receiving sets will be interested in learning the Morse code, for it is interesting to be able to pick up and translate the messages sent between the various ship and shore stations. One excellent method of memorising it is to learn the code in four different groups, the easiest signs being in the first group, which should be learned thoroughly.

FIRST GROUP.

E ▪	is opposite	T ▬	
I ▪ ▪	,, ,,	M ▬ ▬	
S ▪ ▪ ▪	,, ,,	O ▬ ▬ ▬	
H ▪ ▪ ▪ ▪			

SECOND GROUP.

A ▪ ▬	is opposite	N ▬ ▪	
U ▪ ▪ ▬	,, ,,	D ▬ ▪ ▪	
V ▪ ▪ ▪ ▬	,, ,,	B ▬ ▪ ▪ ▪	

THIRD GROUP.

W ▪ ▬ ▬	is opposite	G ▬ ▬ ▪	
R ▪ ▬ ▪	,, ,,	K ▬ ▪ ▬	
P ▪ ▬ ▬ ▪	,, ,,	X ▬ ▪ ▪ ▬	
L ▪ ▬ ▪ ▪	,, ,,	Y ▬ ▪ ▬ ▬	
F ▪ ▪ ▬ ▪	,, ,,	Q ▬ ▬ ▪ ▬	

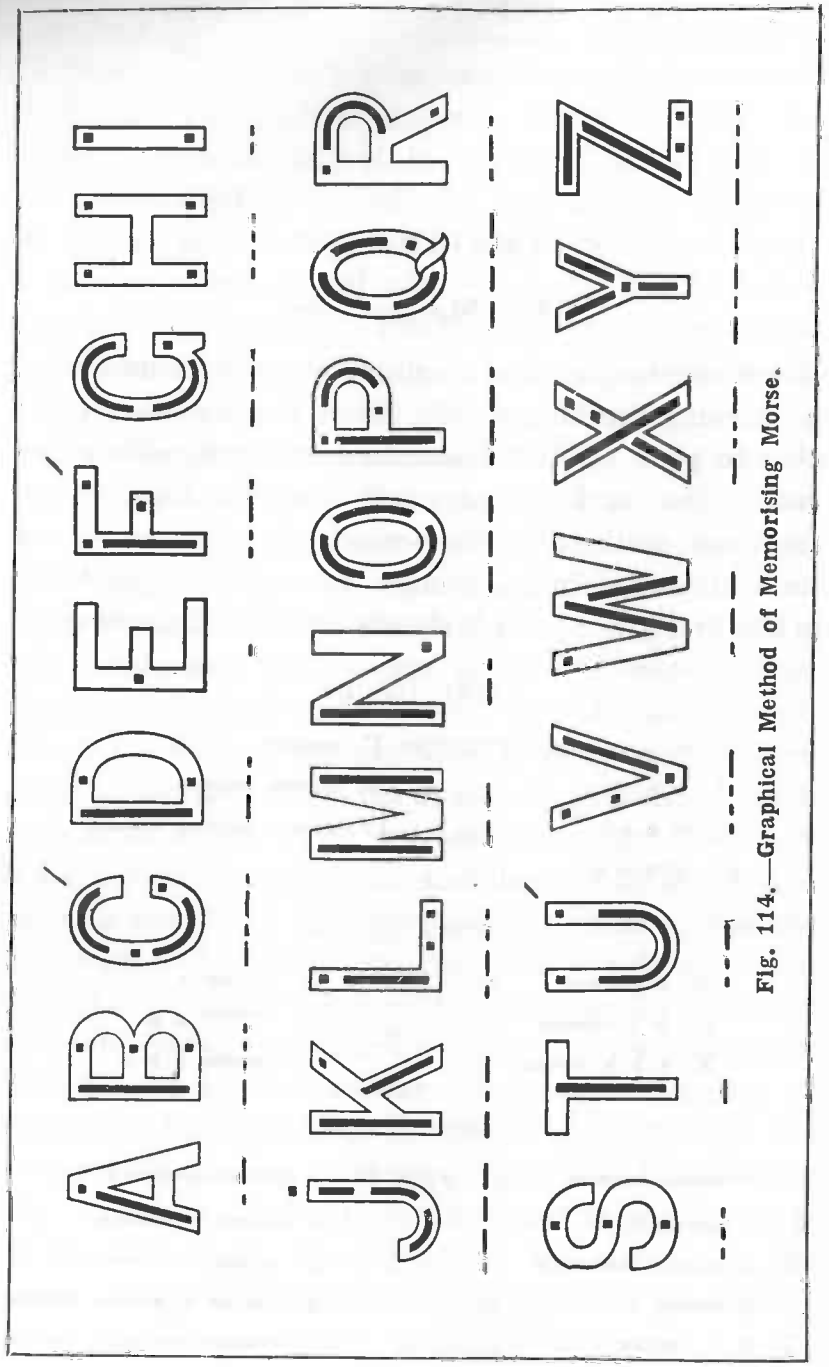

Fig. 114.—Graphical Method of Memorising Morse.

FOURTH GROUP.

C — · — ·
J · — — —
Z — — · ·

} No opposites

Fig. 114 shows another method of memorising the Morse code. The code is learnt rapidly simply by visualising the code letters as superimposed upon the alphabetical letters. On thinking of any letter the mind conjures up a mental picture of it and of the dots and dashes of the Morse code lying on it and actually forming part of its shape. The twenty-six letters can be learnt in as many minutes, but only practice, practice, and yet more practice at sending and receiving can make perfect.

INDEX

AERIAL erection, 2
Auto-transformer coupling, 87

BASKET-COIL receiver, miniature, 73
——, tuner, plug-in, 58
Basket coils, winding, 62, 69, 74
Bornite crystal, 93
Buzzer, making, 99
—— test, applying, 12

CARBORUNDUM crystal, 95
Case for set, making, 40, 58
Circuits for crystal sets, 85
Closed circuit explained, 50
Coil, mounting, 18
——, tapping, 38
Condenser, phone, making, 22, 81
Contact, sliding, making, 18
Continuous-wave signals, receiving, 103
Copper pyrites, 95
Coupling, auto-transformer, 87
Crystal and valve receiver, 68
—— detector, making, 6, 20, 28, 42, 54, 60, 70, 78, 80, 82
——, finding best, 96
Crystals: how they rectify, 91
——, types of, 91

DIRECT-COUPLED circuit, 85

EARTH lead, 4

GALENA crystal, 92

HEAD-BANDS for phones, 119

INDUCTANCE coil (*see* Tuning coil)
Interrupter, 103

LEAD-IN, connecting to set, 6
Lightning switch, purpose of, 4
Loading coils, use of, 24
Loose-coupled set, 45
—— set, sliding arrangement for, 47

MATCH-BOX receiver, 82
Miniature crystal sets, 73
Morse code, memorising, 121

OFFICIAL receiving set, 1
Operation of crystal set, 11, 14, 71, 84

PEDERSEN, 104
Permanite crystal, 97
Phone condenser, making, 22, 81
Phones, calculating quantity of wire for, 118
——, constructional details of, 112
——, converting low-resistance, 111
——, handles for, 120
——, improved head-bands for, 119
——, selecting, 7
——, testing, 119
——, winding device for, 113
Plug-in basket-coil tuner, 58
Pocket receiver, 78
Potentiometer, making, 54
Poulsen, 104

RADIOCITE crystal, 93
Reaction coil, 68
Rectification by crystal explained, 91

SETTING of set, recording, 66
Silicon crystal, 92
Single-coil set, tapped, 33
Single-slider set, 16
—— with semicircular tuner, 25
Sliding arrangement for loose-coupler, 47
—— contact, making, 18

TAPPED single-coil set, 33
Tapping coils, 38
Testing receiving set, 44
"Tikker," making, 103
Transformer step-up effect, 88
Tuning cards, use of, 66
—— coil, basket, winding, 62, 69, 74
—— ——, cylindrical, tapping, 38
—— —— ——, winding, 8, 16, 27, 37, 46, 79, 82

VALVE and crystal receiver, 68
Variable condenser, 50, 52
Vest-pocket receiver, 78

WAVEMETER, calibrating, 109
——, making from crystal set, 108
Winding device for phones, 113

Zincite crystal, 97

PRINTED BY CASSELL & COMPANY, LIMITED, LA BELLE SAUVAGE, LONDON, E.C.4.
F75.623

There's Money in Knowing How!

Knowing how to do "odd jobs" and repairs, and how to make things for the home, means the saving of expense in many directions. Most men could be "handymen" but lack the necessary knowledge.

"WORK" is a long-established weekly which supplies this knowledge in a simple, straightforward manner. Its articles are full of working details and explanatory diagrams, and are written in simple, non-technical language. Every issue contains several pages devoted to solving, in comprehensive answers, the difficulties of readers.

As a practical guide for the amateur it is unrivalled and unique.

As a mine of information it is inexhaustible.

3D Weekly

BUY A COPY TO-DAY

CASSELLS
La Belle Sauvage, E.C.4

ECONOMIC ELECTRIC LTD.

TELEPHONE: MUSEUM 1055.

IT'S A FACT

THAT OUR "MAXSIG"

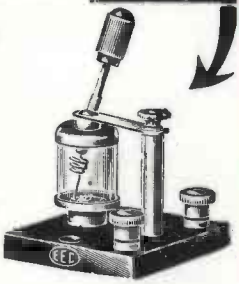

CRYSTAL DETECTOR

WILL OPERATE A LOUD SPEAKER TEN MILES FROM A BROADCASTING STATION !!

APPLY NOW for the

"EEC" RADIO BOOK

which describes this wonderful Detector, and gives the keenest prices for complete CRYSTAL & VALVE SETS, Component Parts, Material, etc. Undoubtedly the Radio Constructors' *VADE MECUM.* Comprises 40 pages, over 250 illustrations and circuit diagrams for Crystal and Valve Receivers. Send us 4d. in stamps and secure this wonderful publication.

Head Office: 10, FITZROY SQUARE, LONDON, W.1.

Showrooms: 303, EUSTON RD., N

THE BOY'S BOOK of CRYSTAL SETS

BY

W. J. MAY

BERNARDS (PUBLISHERS) LTD.
THE GRAMPIANS
WESTERN GATE
LONDON W.6

General Editor

WALTER J. MAY

First Published—March, 1954
Second Impression—June, 1954
Third Impression—April, 1955
Fourth Impression—January, 1956
Fifth Impression—February, 1957
Sixth Impression—August, 1957
Seventh Impression—March, 1958
Eighth Impression—October, 1958
Ninth Impression—April, 1959
Tenth Impression—December, 1959
Eleventh Impression—April, 1960
Twelfth Impression—October,1960

Printed by V. Cooper & Partners, Ltd., Flitcroft St., W.C.2
for Bernards (Publishers) Ltd., The Grampians, Western Gate, London, W.6

PREFACE

The Publishers make no apology for reviving interest in the crystal set. For too long the technical press has immersed itself in an orgy of complex superheterodyne receivers and television equipment, all of which is necessarily expensive. In the 1920's, crystal set construction was a fascinating and inexpensive pastime indulged in by the majority of boys of that day. Today this pleasurable hobby can be even more attractive, the introduction of the germanium crystal diode and high performance coils, has opened up new paths which will capture the interest of boys of all ages. Perhaps most important of all, not only can a receiver capable of impeccable reproduction be produced without any technical knowledge; but the cost is no greater than that of a few visits to the cinema

CONTENTS

	Page
Preface - - - - -	4
Introduction - - - -	5
Receiver No. 1 - - - -	12
Receiver No. 2 - - - -	13
Receiver No. 3 - - - -	14
Receiver No. 4 - - - -	16
Receiver No. 5 - - - -	19
Receiver No. 6 - - - -	20
Receiver No. 7 - - - -	23
Receiver No. 8 - - - -	24
Receiver No. 9 - - - -	26
Receiver No. 10 - - - -	27
Receiver No. 11 - - - -	30
Receiver No. 12 - - - -	31

INTRODUCTION

Before any attempt is made to construct a receiver, it is necessary to examine the problems which surround the crystal set, so that the best can be obtained from any of the designs attempted.

Firstly, it must be understood that the crystal set as it is to-day does **not** provide any amplification. It relies entirely on what is fed into it via the aerial and earth system and gives a very faithful replica of the original transmission.

From this it will be obvious that the aerial and earth system must be as efficient as possible if the final results are to be in any way outstanding. This because these are the only means by which the signals are fed to the receiver.

Secondly it is necessary to understand the nature of the transmitted signal, then it will be easy to understand the working of the set and to appreciate the function of each of the components.

When crystal sets first became popular, very little information was generally available, at least, not in a form that school-boys could understand.

We all built sets of all shapes and sizes, with coil designs that had to be seen to be believed, but very few of us had much idea of how they worked.

I well remember the case of a cousin of mine who, in those days acquired a magnificent variable capacitor or condenser as it was then called, this instrument had a most impressively engraved dial of polished ebonite, brass vanes and nickel plated end plates. Having observed similar dials on several highly priced commercial receivers in the town, he at once ripped out the somewhat tattered coil from the family receiver and replaced it with this device. The profound silence which ensued caused considerable amazement and dismay until a better informed adult explained the mysteries of L and C to him. Readers of this manual, however, will be better informed and there is no risk of failure with any of the designs described provided the instructions are carefully followed.

The Signal

To commence, we will assume that an orchestra is playing in a broadcasting studio. Since the principle of radio transmission is electrical it is necessary to change the sound produced by the orchestra into an electrical equivalent. This is carried out by the microphone, which picks up the sound and changes it into minute electric currents.

As they appear at the output of the microphone they are too small to be of use and accordingly are passed through a high power amplifier. These amplified currents could now be transmitted, but unfortunately, as we shall learn, owing to the inherent nature of the signal in this state, transmission over any useful distance would be impractical.

When the music from the orchestra is transformed into electrical currents they are in the form of alternating currents, usually called A.C., that is they rise to a maximum in one direction, fall to a minimum, rise to a maximum in the opposite direction and then fall to minimum again. This process is repeated over and over again. One complete rise and fall in each direction is called a cycle and is drawn in Fig. 1. Every time a note is struck on a piano, vibrations are sent out which reach the ear enabling you to hear it. These vibrations are also spoken of as cycles, they rise and fall in intensity the same way as an alternating current. The number of cycles radiated by any given note over a period of one second are referred to as its frequency. Middle C on the piano sends out 261 cycles every second and is known as having a frequency of 261. The microphone also "hears" the note and in the case of middle C produces minute A.C. at 261 cycles. This can be drawn as in Fig. 2, the only difference between Fig. 1 and 2 is, that the time factor is given so that the frequency can be identified. The higher the pitch of a note the higher the frequency and the lower the pitch the lower the frequency. On a piano the frequency of the top note is 3515 cycles and that of the lower 27 cycles. Those of you who have listened to an organ in a concert hall will have noticed that when a very deep note was played, it sounded like a growl to the ear, but the vibrating fre-

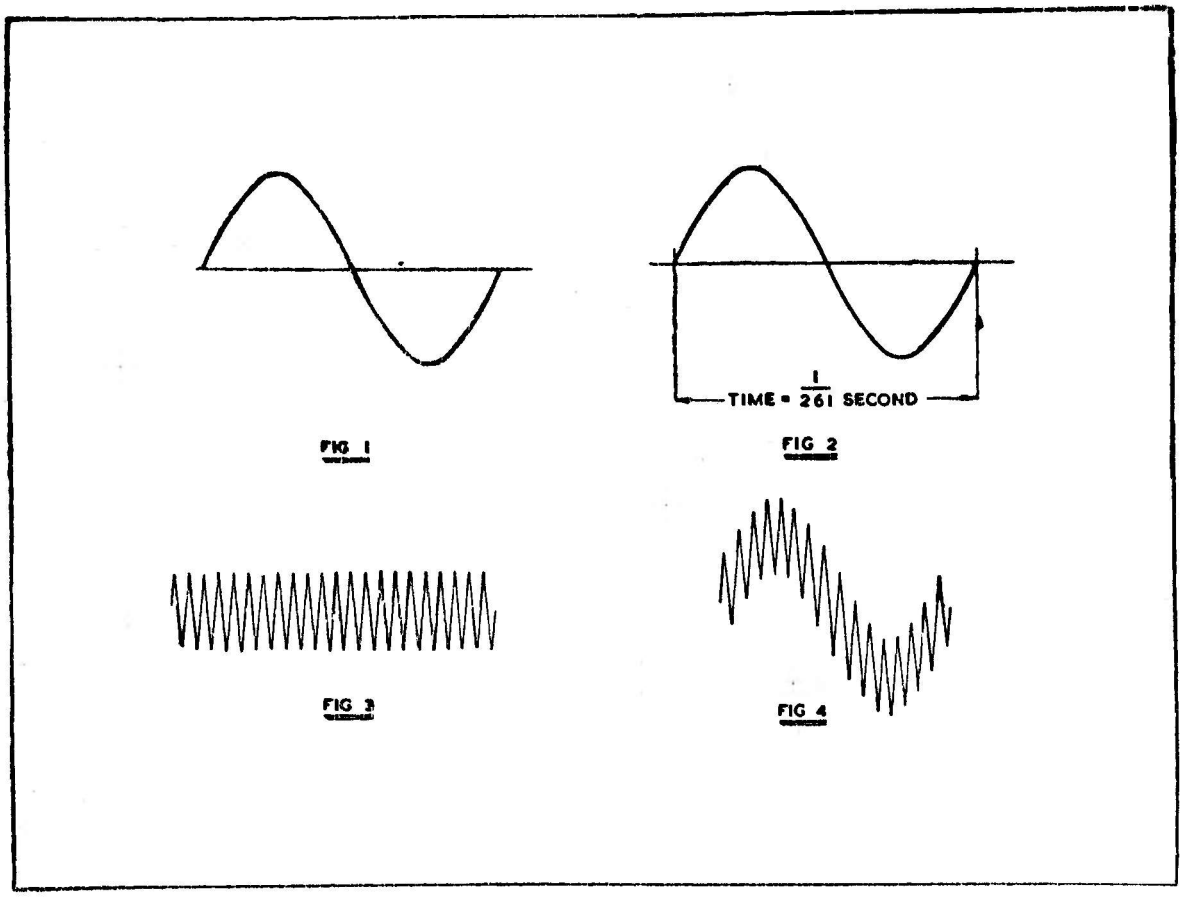

quency could be distinctly felt through the seat. Higher notes have too high a frequency to be observed in this manner.

The range of sounds which can be detected by the human ear are known as audio or low frequencies. From this you will understand that a low frequency amplifier is one which amplifies sound.

So that the transmitter will carry the programme over a useful distance it is necessary to radiate high frequencies. Now, as explained, the programme to be transmitted consists of low frequencies, and to overcome the difficulty, the transmitter generates A.C. of high frequency and combines it with the low frequencies. It will now be understood that the transmitted signal consists essentially of two different parts, a high and a low frequency content.

Fig. 3 gives a representation of the high frequency signal generated by the transmitter. In the case of the London Home Service, the frequency is 908000 cycles.

When referring to a high frequency signal on the medium or long wave-band it is usual to express the frequency in thousands of cycles, thus 908000 cycles becomes 908 kilo-cycles, which in turn may be abbreviated to 908 k/cs. It might at first be thought that by adding the low frequency or L.F. signal to the high frequency or H.F. carrier a form such as in Fig. 4 would result, such a combination is useless, and, so that the original L.F. content can be satisfactorily extracted by the receiver, the L.F. signal must vary the amplitude or output power of the H.F. signal as in Fig. 5.

It is in this form that the signal arrives at the receiving aerial. The aerial in itself is incapable of discriminating between one signal and another, and countless signals will be collected by the aerial at any one time. Many of these are too weak to be of use but the stronger ones must be sorted out since there is no point in receiving several programmes at once.

Fig. 6 shows the basic circuit of the input to a crystal. The coil L possesses a quality known as inductance, and the capacitor C, that of capacitance. If the coil had no capacitance whatever across it, all signals arriving at the aerial would be effectively short circuited to earth. As a matter of interest, it is impossible to obtain this state of affairs since even without any additional capa-

citor any coil **must** contain a certain amount of self capacitance.

By combining a coil and capacitor as in Fig. 6 a peculiar effect is observed, at one particular frequency, the signals are not short circuited to earth, but are developed across the coil. In other words the combined effect of L and C no longer provides a short circuit, **but only at one particular frequency.** If the value of C is altered the effect will be observed at a different frequency; likewise by altering L the frequency at which the effect will take place can be changed. There is a name for this phenomena, the frequency at which it occurs with any given L and C combination is known as the **resonant frequency.**

The values of the coils and capacitors shown in this manual have been carefully chosen so that resonance will be obtained at all frequencies where stations are broadcasting. Broadcasting stations work in bands of frequencies, those of major interest to crystal set constructors are the medium wave-band 1200 k/cs—600 k/cs and the long wave-band 300 kc/s—150 k/cs.

Usually a variable capacitor is used with a fixed inductance to cover one band and an additional coil switched in to increase the inductance to cover the other. In this way the L and C combination can be adjusted to provide resonance at the desired frequency of any given station. In other words you can **select** the station you want by varying C, that is turning the dial of the variable capacitor. This procedure is referred to as tuning. Having selected or tuned the required station it still remains necessary to change the form of the signal back to that of the original transmission. This process is called detection or de-modulation.

Examination of Fig. 5 will show that the signal has been duplicated, in other words, as it rises in one direction it also rises equally in the other. In this form the signal is useless since each half of the signal cancels the other, and if this signal is applied to a pair of headphones silence will result. Obviously some provision must be made to get rid of the unwanted half of the signal, and it is here that the crystal detector must be considered. This device will pass current in one direction only, ignoring any signal in the opposite direction, so that if the signal of Fig. 5 is passed through such a crystal, that of Fig. 7 will result. There is still the H.F. content to be reckoned

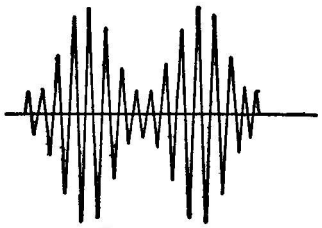

FIG 5

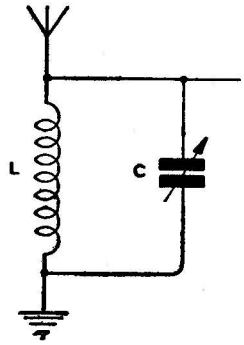

FIG 6

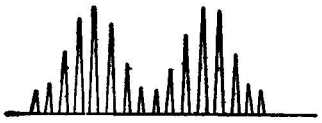

FIG 7

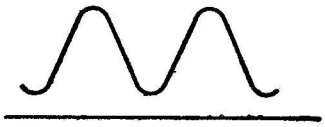

FIG 8

with, fortunately this is easily dealt with, a capacitor connected across the headphone terminals effectively disposes of this, leaving only the audio or L.F. content, as shown in Fig. 8. This audio content, which is a faithful replica of the original transmission is fed to the headphones. These in turn reverse the process of the microphone and transform the electrical currents into sound waves acceptable to the human ear.

Briefly then, your requirements are as follows:—

(1) A good aerial and earth installation, to make the most of the available signals.
(2) A receiver containing:—
  (a) Some form of coil and capacitor (L & C) combination to select or tune in the wanted station.
  (b) A crystal to get rid of the unwanted half of the signal (detection).
  (c) A fixed capacitor across the headphones to get rid of any remaining carrier.
(3) A pair of sensitive high resistance headphones.

Aerials

By this time the intending constructor will be able to appreciate the necessity of a good aerial. It is a point which cannot be over-emphasised. Assuming that you are in the fortunate position of being able to erect an outdoor aerial there are two main considerations, height and length.

One of the best that can be used is the inverted L shown diagramatically in Fig. 9.

It should be erected as high as is practical, every foot counts. The horizontal wire, that is the aerial proper, should have a minimum length of 60′ to which of course the length of the down lead is added. Where it is impossible to erect an aerial with an ideal horizontal length, a compromise must be effected.

Fig. 10 shows a three wire spreader aerial which gives quite a good effective length.

Suitable wire for a receiving aerial will not set any problems, stranded copper about 7/22 gauge is the best. 7/22 means that it consists of 7 strands of 22-gauge wire. This wire may be obtained covered, and for the present purpose is better than the plain or enamelled kind.

Note that insulators are used between the actual aerial wire and its anchoring supports, it is important that these are used, otherwise leakage will occur which will of course spoil its efficiency. Fig. 11 and 12 show how the wire may best be attached to two of the most common types of insulator available. Fig. 11 is of porcelain and is usually referred to as an egg insulator, whereas Fig. 12 shows a more modern (and more expensive) type in glass. If you are using the glass pattern, one is usually sufficient at each end of the aerial, but with the egg type two should be used. No doubt many readers will not be in a position to erect an out-door aerial, and must necessarily be content with an indoor installation.

The next best thing to a good out-door aerial is a replica constructed in a loft. If this form of construction is used, care must be taken when feeding the down lead to avoid close contact with the wall of the house. At the point where the lead feeds under the eaves, a length of rubber tubing can be used to cover the wire. The lead is fed through one of the small spaces left for ventilation purposes. A general idea is given by Fig. 13.

A less elaborate but quite effective aerial can be obtained by using a bed-spring. A length of 7/22 copper insulated wire is connected between the receiver and the spring. The spring should first be cleaned with emery cloth. Remove about 2″ of insulation from the wire and bind it tightly round the prepared spring. The joint may be covered with insulating tape which is obtainable from all electrical stores for a few pence.

Such aerials are quite popular since so many crystal sets are built for bedroom use.

When an aerial is required in the living room, the picture rail can be conveniently used. Insulated screw-eyes are fixed at intervals of about 3 feet along the rail, the wire is firmly anchored to one of them, and stretched right round the room until you arrive back at the starting point. By use of one of the insulated screw-eyes, the wire is secured and the down lead fed to the receiver. The idea is illustrated in Fig. 14.

Soldering

Before leaving the subject of aerials, a few words on soldering will not come amiss. Down leads on outdoor aerials should be soldered, and the same applies to loft types. Apart from aerial leads; earth leads and all the connections in the receiver will require soldering.

For the type of soldering necessary in radio construction an electric iron is the best solution. One of the small types marketed by Adcola or Henleys will be found admirable for the job. These are excellent for actual set construction but are hardly large enough for soldering the down lead to an outdoor type of aerial. Here the heat is dissipated much more quickly and a larger iron is required in order to get the solder to flow.

Ordinary irons which may be heated by a gas flame can be obtained very cheaply from most ironmongers' stores. Assuming the use of such an iron, first heat the iron until the copper bit is giving off a green coloured flame, the iron is now at the correct operating temperature. The bit is now discoloured or oxidised and its tip

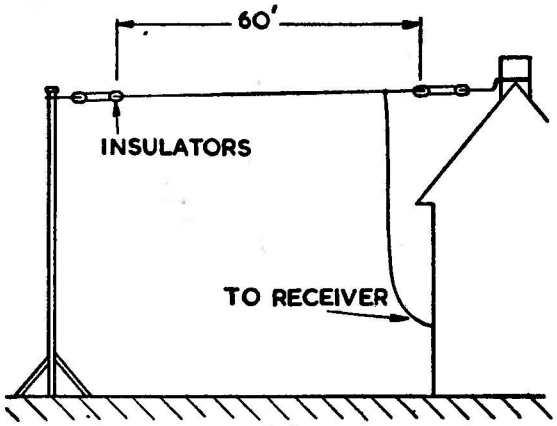

INVERTED 'L' AERIAL

FIG. 9

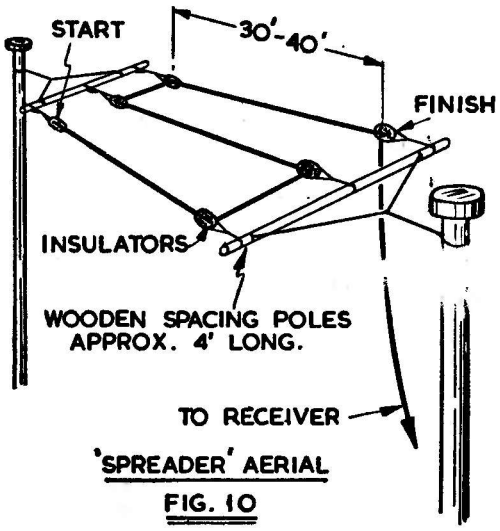

'SPREADER' AERIAL

FIG. 10

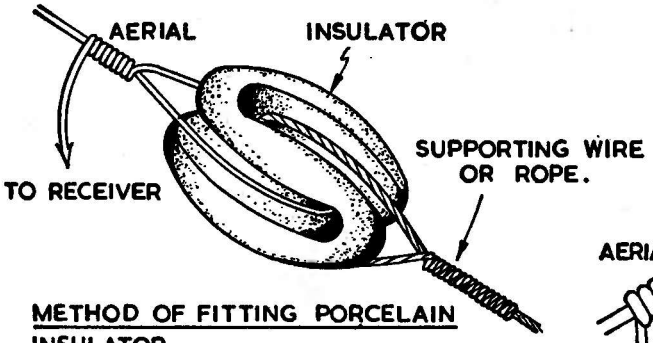

METHOD OF FITTING PORCELAIN INSULATOR

FIG. 11

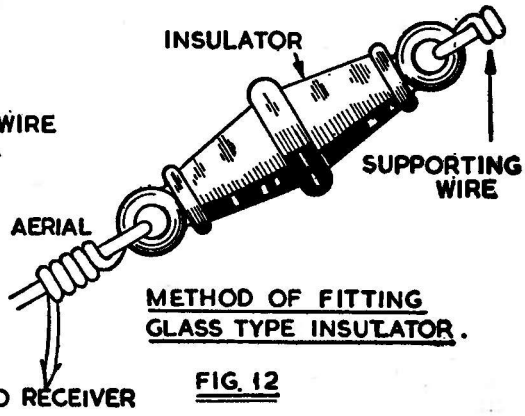

METHOD OF FITTING GLASS TYPE INSULATOR.

FIG. 12

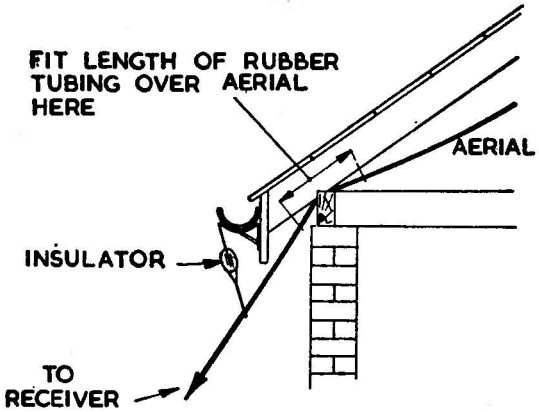

LOFT AERIAL.

FIG. 13

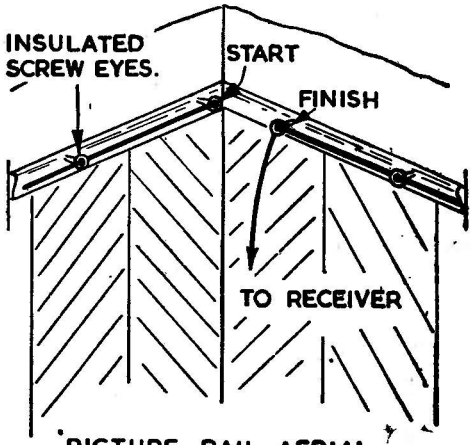

PICTURE RAIL AERIAL.

FIG. 14

should be quickly cleaned with an **old** file which should be kept specially for the purpose. A better idea is to obtain a small block of sal-ammoniac and rub the tip of the hot iron on it. This will clean the tip of the bit perfectly. Next take a length of cored solder such as Ersin Multicore, and melt a little on to the prepared tip faces, now smooth it evenly over the surface with a piece of old rag (be very careful not to burn your fingers) the iron is now "tinned" and ready for use. When heating the iron, be very careful not to let the bit overheat or get red hot, otherwise the tinned surface will be destroyed and the whole process will have to be gone through again.

An electric iron will not overheat, and the tinning will last much longer than with ordinary types, and since the heat does not deteriorate there is less likelihood of making faulty joints.

Having obtained a tinned iron, the process of soldering joints is remarkably simple and anyone with a little patience can acquire the art in a very short time.

To solder two copper wires together: clean the wire with emery cloth, apply a prepared iron and some cored solder to it, the solder will flow evenly over the wire thus tinning it. Repeat the process with the remaining wire and then twist the two together. Now apply the iron to the joint from the underside and the cored solder to the joint on top. Solder will flow evenly over the joint. Remove both iron and solder and allow to set. The solder will harden or set in a few seconds but during this period the joint must not be touched or moved, as otherwise the joint will be "dry" and quite useless mechanically or electrically. On radio components, tags for soldering are already tinned though if they are old, or discoloured it is best to re-tin them. Normally, however, it is only necessary to twist the connecting wire to it and apply the iron and solder as explained.

Remember: **never** apply the solder to the iron and then the iron to the joint, always apply the iron **and** the solder to the joint. It is however a good thing to apply a little solder to the iron tip even when it is perfectly tinned just before making a new joint.

One final "DON'T," you will have noticed that the solder referred to is "cored," that is, it contains resin and other substances through its centre, plain solder as used by electricians and plumbers will not do, as it is the resin or flux

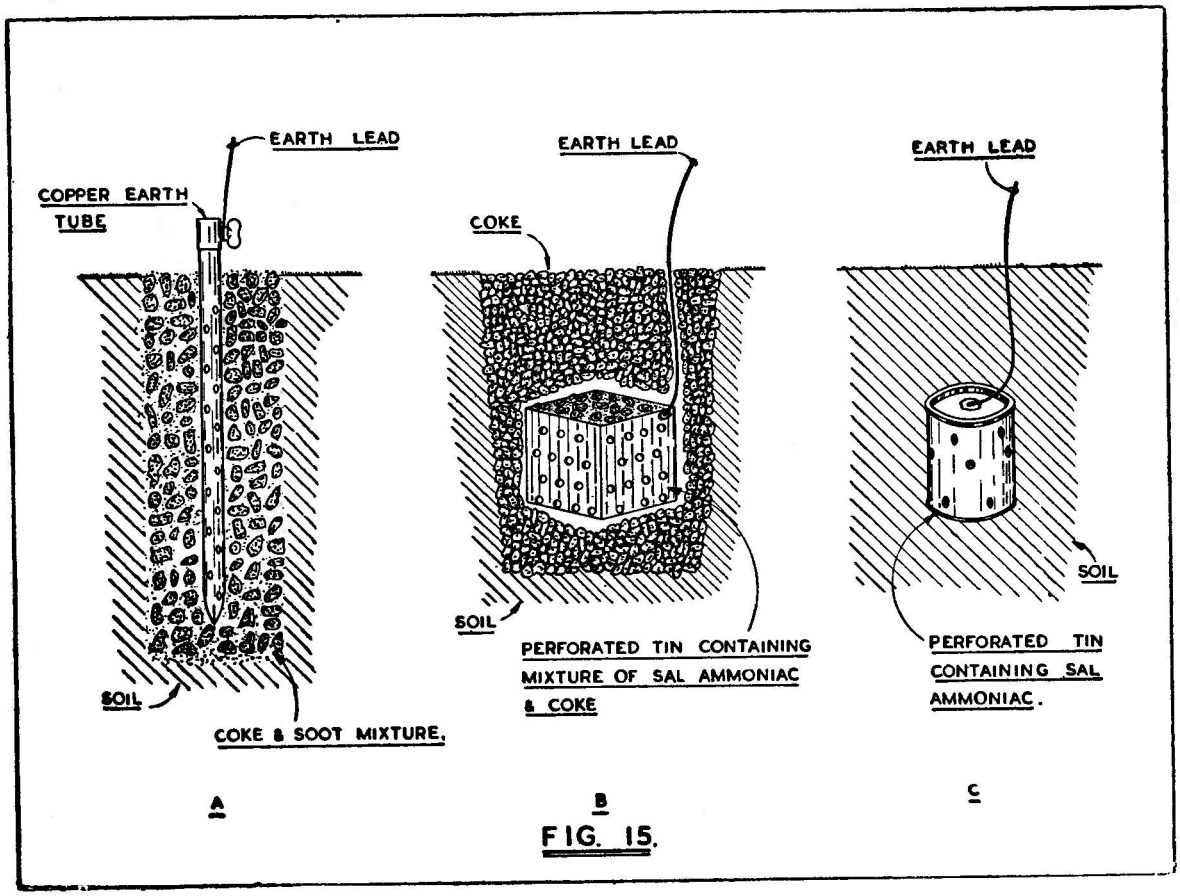

FIG. 15.

as it is called which makes the solder flow evenly and permits a good electrical joint.

Equally important do not attempt to use a separate flux or soldering fluid with plain solder or to "help" the cored solder; since these are almost certain to cause eventual corrosion and will destroy any components that have been contaminated.

Earths

The provision of a good earth is just as important as the rest of the installation.

Much disappointment would be avoided if this fact were not lost sight of, to avoid any slip up in this direction I am proposing to outline several well tried and efficient earth systems.

If it can be obtained, an earth rod, specially designed for the purpose provides the basis of a good earth connection. These were very popular some years ago when the majority of receivers were either crystal or battery operated, but in these days of modern mains driven sets they are not often used and consequently not always readily available.

Fig. 15 shows how it is used. First excavate a hole to a depth of three feet and fill with a mixture of soot and coke. Drive in the earth rod, which is a hollow copper tube, perforated. The lead to the receiver is connected at the top, and should be of covered 7/22 gauge, as used for the aerial system. Though not obvious it is important that this lead-in should be in covered wire, otherwise a number of indifferent earth contacts are likely to be made at various points along its length until it reaches the set. This is very undesirable and will spoil the efficiency of the system. It is essential to keep the soil surrounding the rod moist, which is one reason why the tube is hollow, and care must be taken to pour water into the tube at intervals.

A very efficient earth is the percolative type also popular at one time. Due to the chemicals used, it will extract moisture from its surroundings, thus maintaining a permanently moist earth. It should be installed as in Fig. 15b.

The container is of copper or zinc, anything else will quickly rust away, again a good quantity of coke is used. Fill the container with a mixture of sal-ammoniac and coke, and then bury in coke as illustrated. This earth will not require further attention. It is possible to use powdered calcium chloride instead of sal-ammoniac but unless a chemist can be persuaded to make some up it is better to stick to sal-ammoniac.

If a zinc container is not available and you do not use or cannot easily get coke, Fig. 15c should be used. This makes a better earth than many so-called "earths" that I have come across. Obtain as large a tin as possible, make a number of holes as shown. Solder the lead in the bottom and fill it with sal-ammoniac. Replace the lid and bury in the ground. The tin will eventually rust away, but the replacement cost is negligible.

If it is quite impossible to make direct contact with the ground, a water pipe must be pressed into service. This should be a main pipe feeding straight to ground and not a hot water pipe or one fed from a tank. Scrape the pipe clean and twist the lead in tightly around it, a copper clip is even better. Do not attempt to solder on to the water pipe; since cold water is flowing through the pipe, it is extremely unlikely that your soldering iron will heat up the water supply sufficiently to allow a sound electrical joint, though you may spring a leak.

No attempt should be made to utilise gas pipes; the possibility of causing a fire is certainly very remote but, they make incredibly bad earth connections due to a number of joints made before true ground is reached. These joints are at best only semi-conductors, at least from an electrical standpoint.

Headphones

Since the late war there have been a large number of head-phone sets available on the surplus market. These may be roughly divided into two types, high-impedance and low-impedance. For the crystal sets detailed in this book high-impedance 'phones are required and the low-impedance pattern will not be suitable unless a matching transformer is used. As this is likely to cost more than the rest of the installation including the set, it will be as well to avoid them.

High-impedance types have an impedance of 2000Ω to 4000Ω whereas the low-impedance types are usually 600Ω.

The remaining consideration is weight; often cheap headphones are very heavy and uncomfortable to wear, every endeavour should be made to obtain 'phones as light in weight as possible.

Crystals

All the sets shown in this book have been designed to work with modern germanium crystals rather than the older galena crystal.

These germanium crystals require no adjustment, which, in itself, removes the main objection to this class of receiver. Suitable crystals are available from the following manufacturers and on the surplus market: Mullard, G.E.C., Brimar, Westinghouse and B.T.H. They are of robust construction, some in glass, others in ceramic or plastic, but must not be subjected to heavy knocks, otherwise the contact point may become dislodged.

From the information given, you should now be able to install an excellent aerial and earth system, and have some idea of how the crystal set works, so it is time to pass on to the actual receiver construction.

CONSTRUCTION 1

If you examine the following circuits you will find that each one is different. In most cases the difference lies in the coil design and/or the method by which the crystal and aerial is tapped into it. Each of these circuits has its own particular advantage to suit different conditions and the ideal circuit in some localities is not necessarily the best in others. It is not just a matter of a given circuit giving louder results than another, if it were there would be no point in showing more than one.

The main problem is to obtain adequate selectivity without reducing the volume level.

A receiver is said to be selective when it tunes sharply, a set with poor selectivity allows the stations to spread over the dial and when used near a transmitter will receive the local stations mixed together, which of course is useless.

Consider Fig. 16a, this is a very simple receiver, with no special attempt to provide any great amount of selectivity. In areas where signal

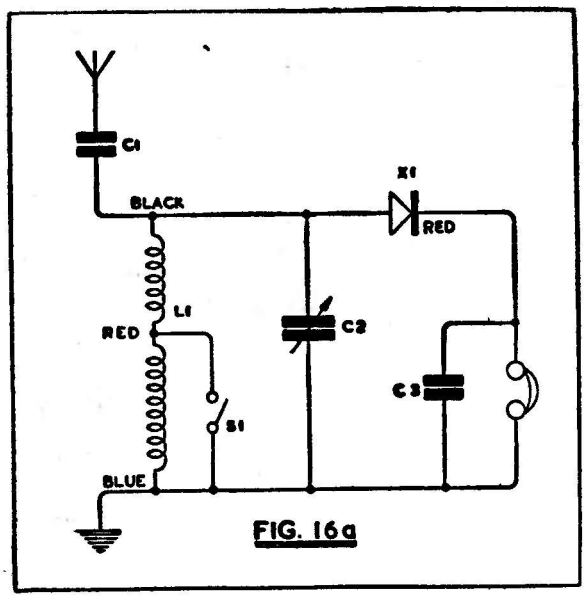

FIG. 16a

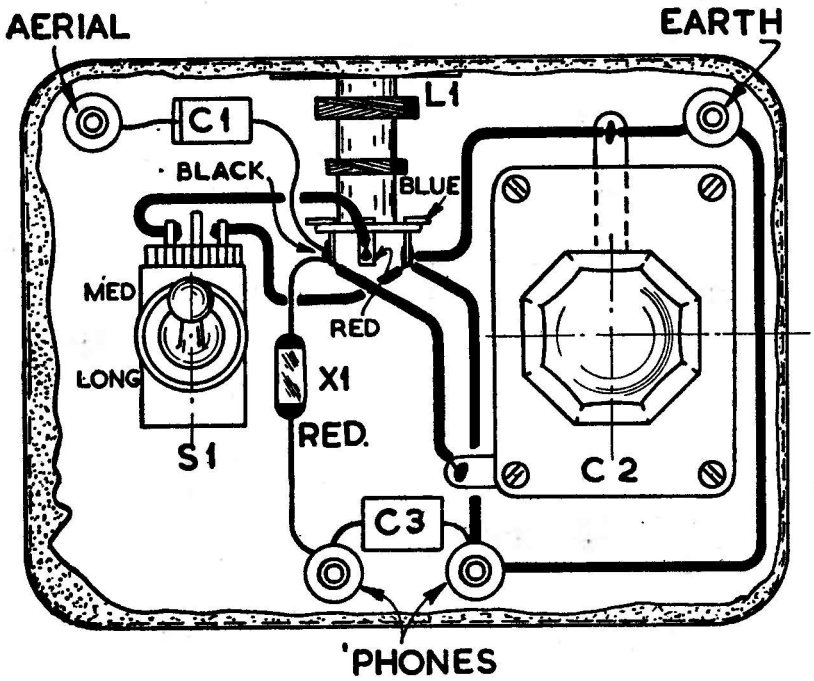

LID SHOWN BROKEN AWAY TO REVEAL POSITION OF COMPONENTS.

FIG 16b

strength is not high, or a short aerial is used, it will probably be ideal.

It would have been quite easy to increase the selectivity by providing a tap on the coil for the aerial as in Fig. 17a, but unfortunately, as the selectivity is increased overall volume is likely to decrease, so that unless you live close enough to the transmitter to have a large signal available and therefore need the selectivity, the circuit of Fig. 16a will be quite satisfactory.

Capacitor C1 is to prevent the aerial damping the circuit too heavily because this would flatten the tuning unnecessarily, however with small aerials it may be better to take the aerial direct to the black tag on L1. The signals are selected or tuned by L1 and C2, X1 is the crystal and C3 the capacitor across the 'phones to prevent unwanted carrier or R.F. reaching the 'phones.

A practical diagram (Fig. 16b) is provided showing the layout and all the wiring. You will require nuts and bolts to fix the coil, about ½", 4BA size will do, the other parts have locking nuts provided. An old 2-oz. tobacco tin makes a very good container and keeps the size down. Note that the metal box is connected to earth. With the exception of AC/DC receivers the metal work on any receiver or amplifier is connected to earth.

When S1 is open as in the diagram, the set will tune in long-wave stations, but when closed the medium wave-band will be received.

Components List, Fig. 16a

C1 100pF mica capacitor.
C2 500pF tuning capacitor, solid dielectric.
C3 1000pF mica capacitor.
X1 Germanium crystal.
L1 Crystal Set Coil. R.E.P.
S1 Single Pole toggle switch.
4 Insulated wander-plug sockets and plugs.
1 2-oz. tobacco tin (or similar container).

Make sure that the wander-plug sockets are of the **insulated** type, otherwise the metal case will join all the sockets together electrically.

Try to follow the theoretical diagram when wiring, a little practice will soon enable you to wire up a set without a practical diagram, which is a great advantage because often only the theoretical diagram is given when circuits are detailed in the technical press.

Fig 28 on page 34 gives a list of symbols used on the theoretical diagrams, so that you can readily identify the components.

2

Fig. 17a circuit is similar in many respects to that of Fig. 16a. The difference is purely one of selectivity, tuning will certainly be sharper, and even with comparatively inefficient aerials the design will put up a very good performance. There is no reason why the construction should not follow the same lines as the previous receiver but, by enlarging the set a little and using an air spaced tuning capacitor, the efficiency is improved. Observe that the colour coding on the coil, an R.E.P. Dual Range (Blue Box) is different from that of the Crystal set coil used on the previous design, and make sure it is correctly wired in.

C1 is a mica compression capacitor, often referred to as a "trimmer" and because it is adjustable, permits the set to be matched to aerials of varying lengths. Construction is carried out on a square panel of bakelite, perspex or wood, as shown in Fig. 17b. Perspex being clear like glass presents a most attractive finish, provided the set is neatly wired. It must be drilled slowly, however, otherwise the generated heat of the drill will make the hole wander, and spoil the panel.

After the set has been wired and tested a small wooden container can be made to house the completed set.

When carrying out reception tests, a little experiment is well worth while, to get the best out of the set. Try removing the germanium crystal

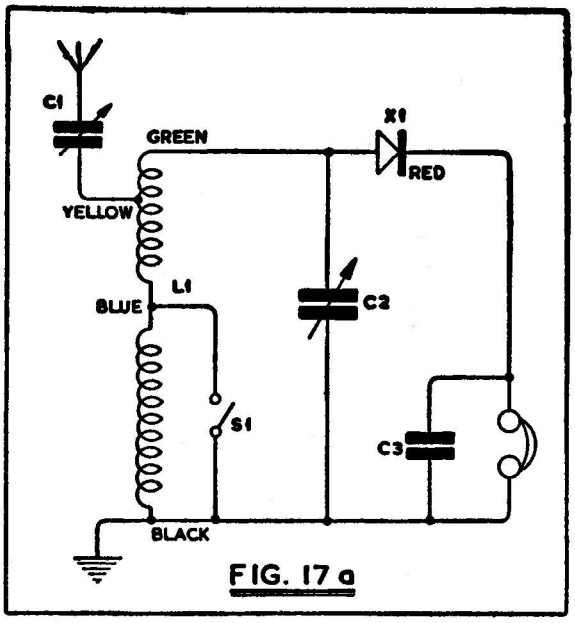

FIG. 17 a

from the green tag on L1 and connecting it to yellow, at the same time removing the lead from C1 to yellow and connecting it to green. Once the best arrangement has been found the wiring

can be left permanently in that position. Note that two tags on the coil are unused, this is intentional because on this circuit the extra winding connected to these tags is not required. With the switch S1 closed, the coil will cover the medium wave-band, and when open, long wave stations can be received. It is customary to abbreviate the expression medium wave-band to M.W. and long wave-band to L.W.

Components List, Fig. 17a

C1	100pF mica trimmer capacitor.
C2	500pF variable capacitor (air spaced).
C3	1000pF mica capacitor.
L1	Dual Range Coil R.E.P. (Blue Box).
S1	Single Pole toggle switch.
X1	Germanium Crystal.
4	Terminals or wander-plugs and sockets. Perspex, bakelite or wood for mounting panel.

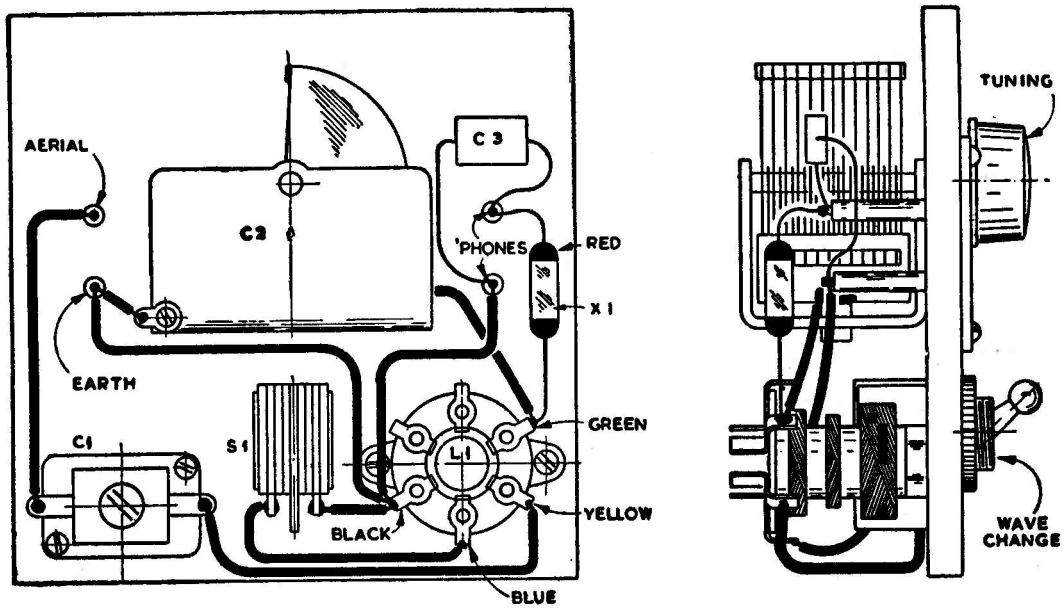

FIG. 17b

3

The design shown in Fig. 18a and 18b is more flexible than either of the preceding sets. That is, it can be varied to suit local conditions to a greater extent than the first two sets. This is made possible by the large number of taps provided on the coil.

You will notice that in this instance the coil is home-constructed on a cardboard former and is much larger than commercially produced coils. Coils wound in this manner are called **solenoids**, the turns are wound on side by side; in this case to a depth of some three inches. The diameter of the coil is made purposely large so as to obtain high efficiency. Modern commercial coils are invariably wave-wound and quite often are litzendraht which is the German for litz wire. This wire is made up of a number of strands of fine copper wire, each strand is enamelled to insulate it from the others, the whole is then silk covered. Litzendraht is more efficient than solid copper wire, and by using this and wave-winding, manufacturers can produce an efficient coil which is also small. Unfortunately wave-wound coils cannot be produced without a complex winding machine and home-constructed coils must take the solenoid form. It would be possible to use litzendraht but it is not easy to obtain by the reel, it is most expensive, and is difficult to handle. This last point is because at termination points, each strand must be cleaned of its enamel before a joint is made, and if one strand is broken, its advantage over plain copper wire is lost. How-

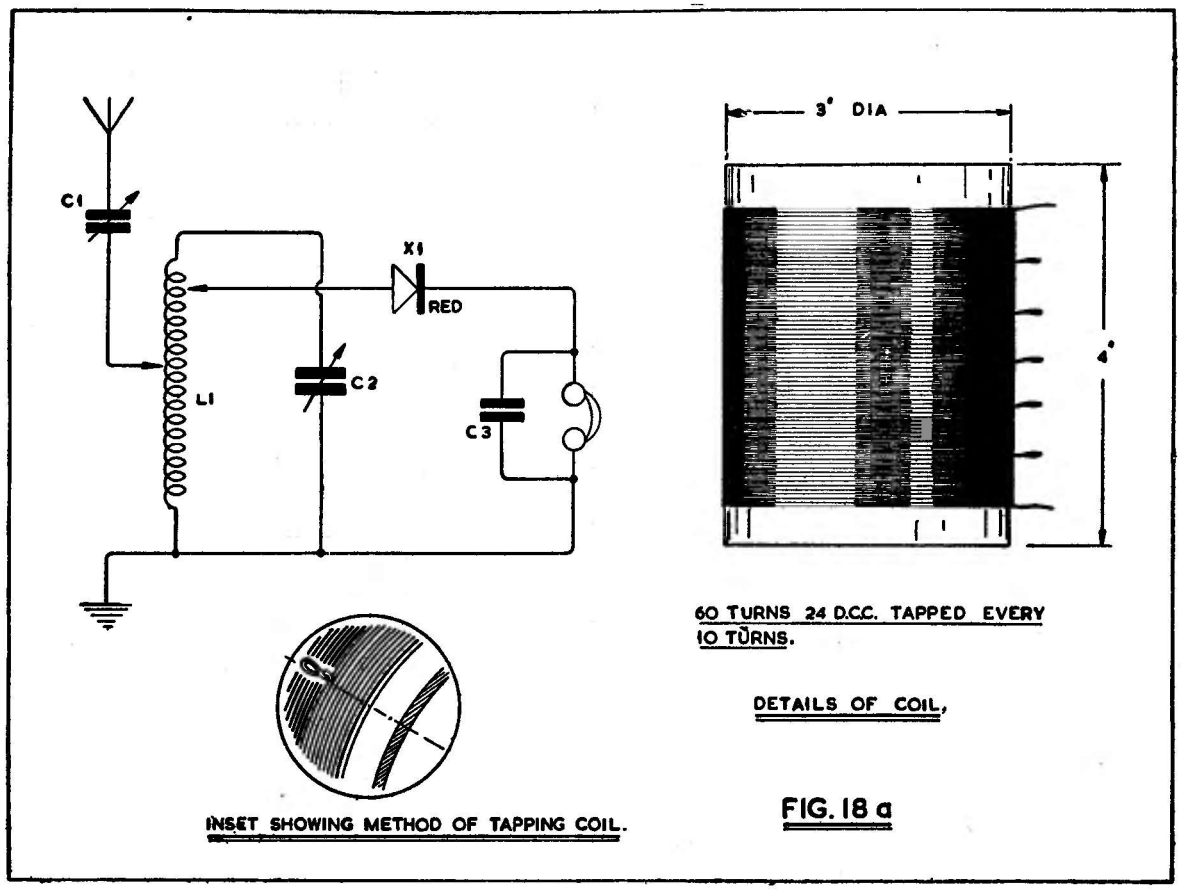

FIG. 18 a

ever, by using a former of reasonably large dimensions an efficient coil can be produced cheaply using ordinary copper wire.

The wire must be firmly secured at the start and finish of the windings. Pierce three small holes about ¼" apart ½" from the end of the former. Pass the wire through the first from the outside, return it through the second and pass it back again through the third. Leave some 6" of wire at the end to make off the connection. It will now be possible to wind the turns on tightly without wire slipping.

Count on ten turns and make a loop 1" long. The method of preparing loops is shown in Fig. 18a, loops or taps should always be made in this manner, never by baring the wire and soldering a further length of wire to it. Carry on with the winding, making off the taps every ten turns as directed until the coil is complete.

Construction is carried out on a wooden base-board and front panel. Secure the coil to the base-board as shown on Fig. 18b, mount the remaining components and proceed with the wiring.

When testing out, it will be found that the further the aerial is tapped down the coil towards the earth end, the greater the selectivity. A position should be found which permits separation of local stations without excessive loss of sensitivity.

The crystal tap is adjusted for best results and different settings of C1 tried out, when choosing the best position for the aerial tap.

Components List, Fig. 18a

C1	450pF padder.
C2	500pF variable capacitor.
C3	1000pF mica capacitor.
L1	See text and Fig. 18a.
X1	Germanium Crystal.
2	Crocodile Clips (to connect leads to coil taps).
4	Wander-plugs and sockets.

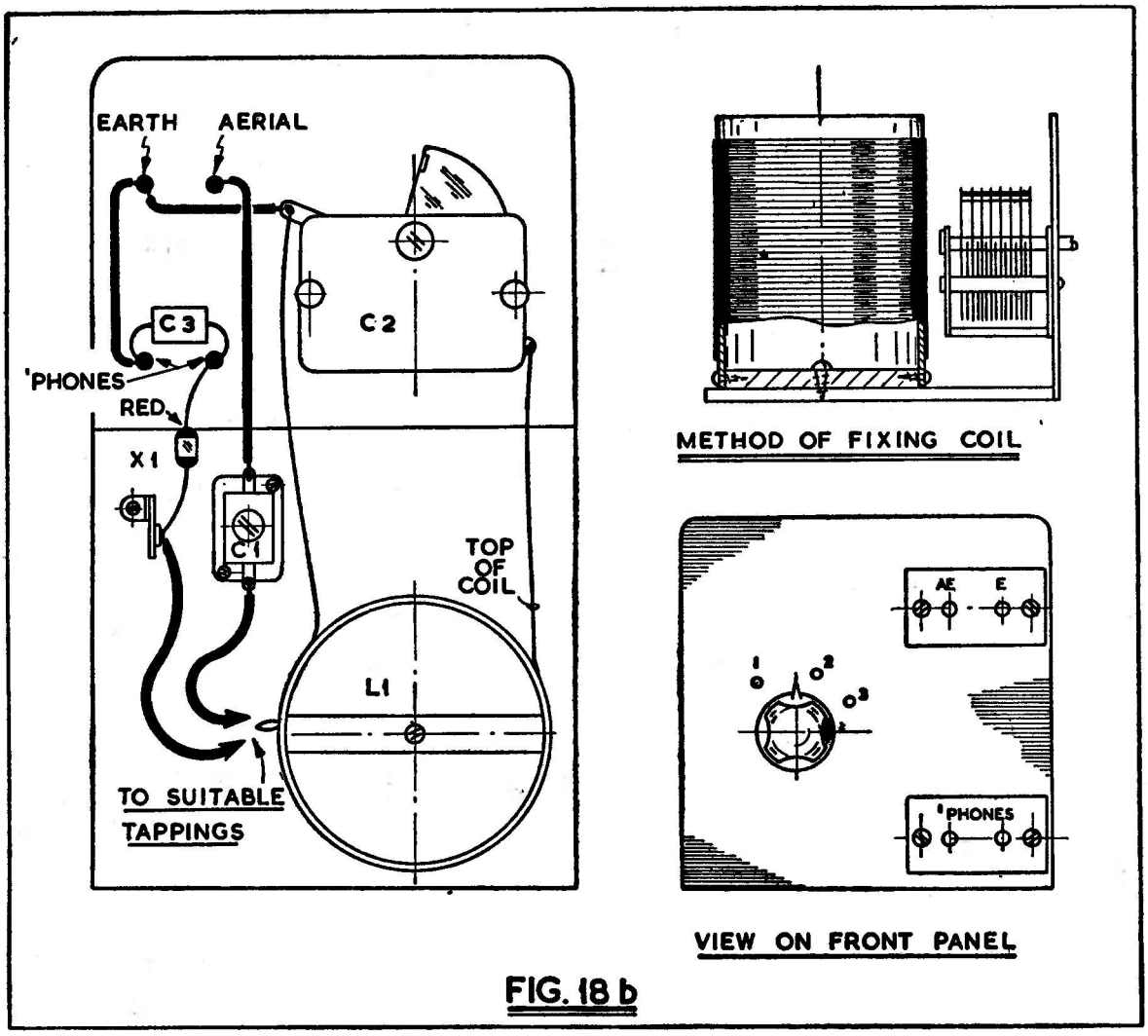

FIG. 18 b

4

A most unusual design is reproduced in Fig. 19a.

It first appeared in America about three years ago, and it certainly does offer some advantage over more conventional sets. The tuning circuits are duplicated and two crystals are used, so the circuit may be described as a full-wave receiver. Signals received will certainly be louder than with simple sets, but care must be taken with the coil winding, as with the other receivers using home-made coils, otherwise results will be disappointing. Be very careful to ensure that all three windings are in the same direction, this is very important.

The distance between each winding should be $\frac{1}{8}$". After the coil has been wound it is a good plan to warm it before a fire and paint the windings with "Durafix." Heating the coils makes the "Durafix" run freely. This substance sets quite hard and there will be no risk of the windings loosening. A small quantity of enamelled wire will cover the requirements of this coil, a 2 oz. reel will provide more than sufficient.

Before wiring in the germanium crystals, examine them carefully, note that one end is coloured red or in some cases marked with a positive sign thus +. You will notice, the sign is the same as the addition symbol used in arithmetic.

It is essential that both the red or positive ends are connected together, note that this is clearly marked on Fig. 19b. The receiver cannot work if

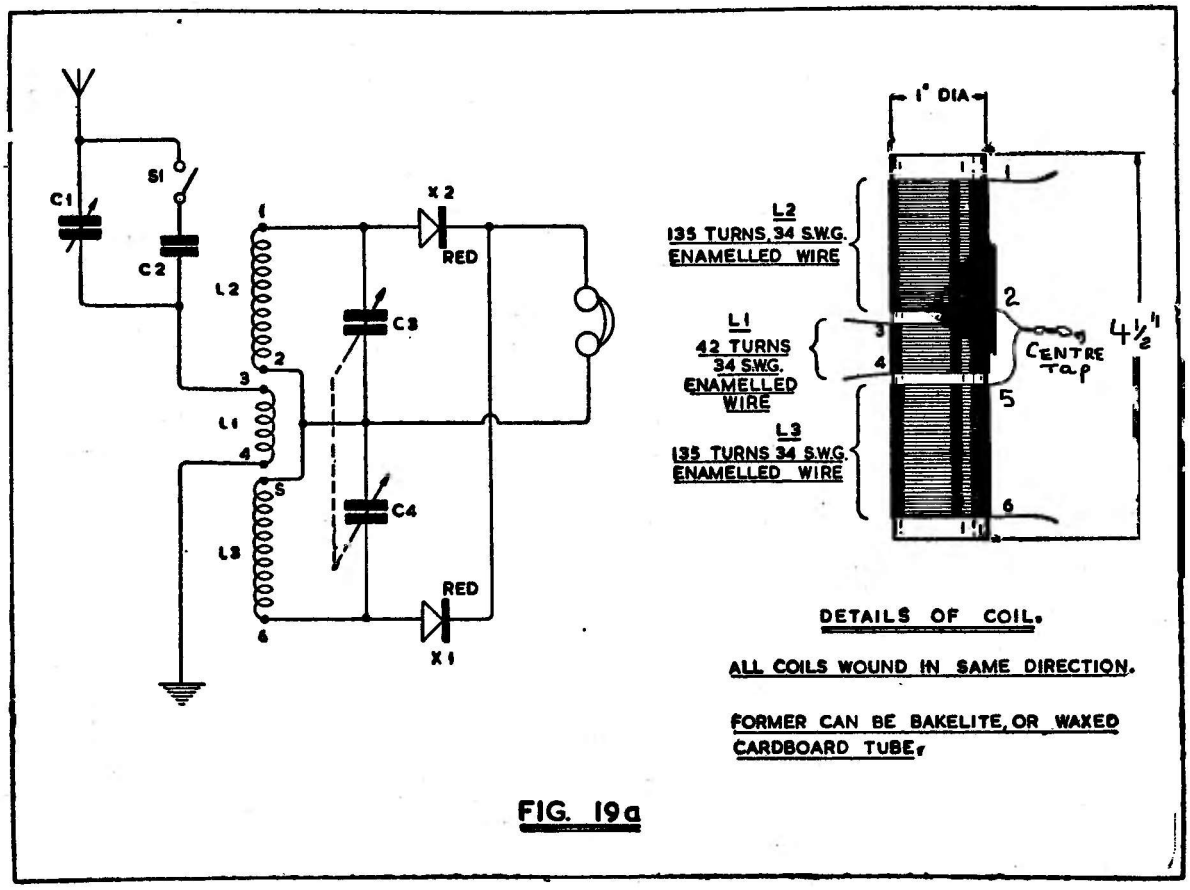

FIG. 19a

one of the crystals is connected the reverse way round.

A baseboard and panel form of assembly is used for this set which looks quite attractive if housed in a small polished cabinet. Dimensions are not at all critical but Fig. 19b gives a general idea of the layout that should be used. To avoid any unnecessary losses the coil should be mounted on perspex.

Obtain two strips of perspex 5½" long by ½" wide, drill fixing holes at both ends of each strip. It is best to clamp the two together when drilling these holes. Place one strip on the board in position, then put the coil and remaining strip over the first one and screw down. The coil will be clamped neatly and rigidly into position.

Twin socket bakelite strips are used to carry the aerial/earth and 'phone connections, if desired terminals mounted on pieces of bakelite could be used. These socket strips can be purchased from most shops selling components. If feet are not provided, drill two holes and screw into the edge of the base-board. Tag-strips are used to anchor some of the wires from the coil, and the germanium crystals. These also can be purchased for a few pence. At least two tags are necessary on one, and three on the other, though if the strips have more tags than required it is of no consequence. C3-C4, the ganged tuning capacitors have trimmers fitted, this should be stipulated when purchasing, and when first operating the set these small trimming capacitances are set about half-way. The idea of these trimmers is, that they compensate for any difference between the self-capacity of the tuning coils. With the switch S.1 open, that is in the OFF position, turn

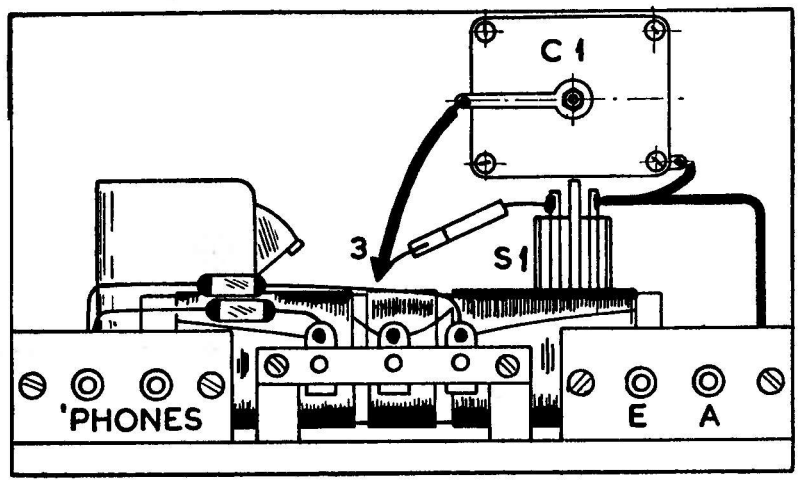
C1
3
S1
'PHONES
E
A

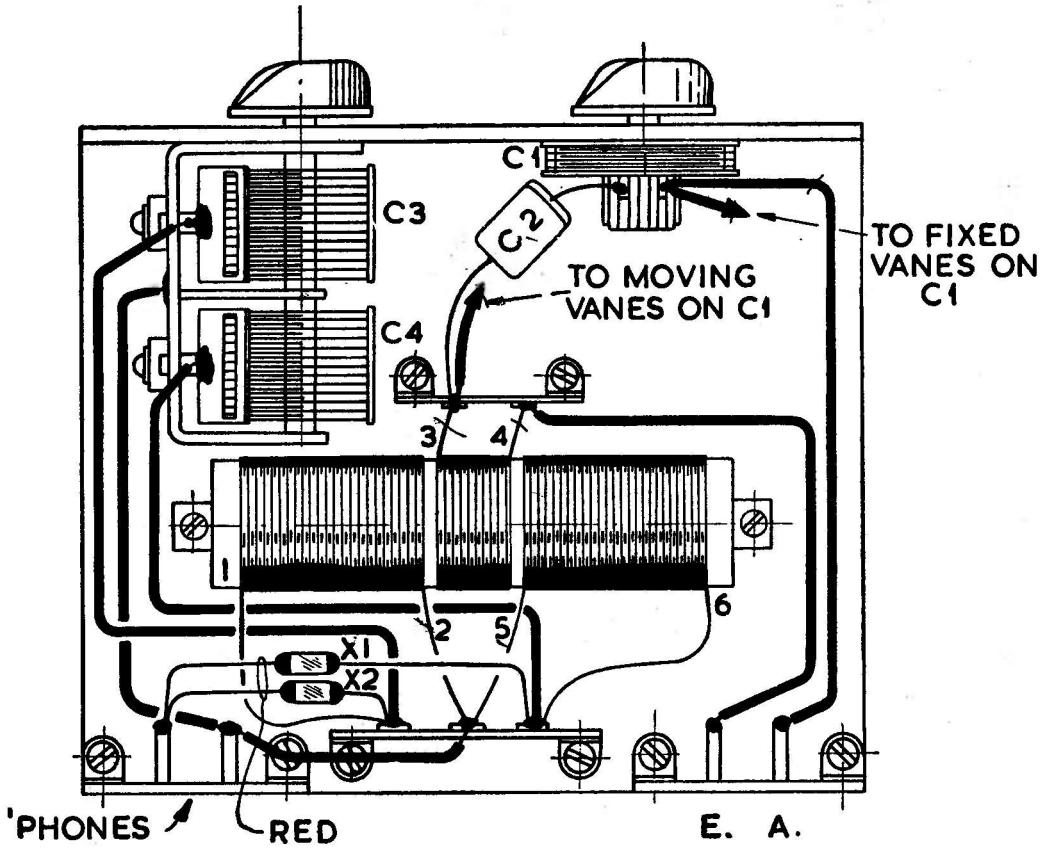
C1
C3
C2
TO FIXED VANES ON C1
TO MOVING VANES ON C1
C4
3
4
1
6
2
5
X1
X2
'PHONES
RED
E. A.

FIG. 19 b

in a station at the high-frequency end of the band, that is with the vanes of C3-C4 towards the disengaged position. Adjust C1 for maximum volume, without interference from other stations. Now adjust the trimmers for loudest headphone strength. It may be necessary to run over the adjustments several times for best results. Once they are correctly set, the trimmers require no further adjustment. The tuning coil covers the M.W. band, 1500 kc/s. to 600 kc/s., as the capacitor C3-C4 is advanced and the vanes start to mesh, the frequency to which the receiver tunes **decreases** so that with the vanes disengaged the set is tuned to 1500 kc/s. approximately and at full mesh, 600 kc/s. Switch S1 is used as follows, for stations **lower** in frequency than 850 kc/s it should be in the ON position with the contact closed, but for stations **higher** in frequency, it is in the OFF position. As an example both the London Home Service and London Light Programme transmitters on the M.W. band operate at a higher frequency than 850 kc/s. If any doubt exists as to the operating frequency of a given station, reference should be made to the Radio Times which quotes both wave-lengths and frequency. If you know the wave-length in metres, it is simple to find the frequency. Divide 300,000 by the wave-length in metres, the dividend equals the frequency in kilocycles, i.e., 300,000 ÷ 300 metres=1,000 kc/s. In the same way, dividing 300,000 by the frequency in kilocycles will produce the wave-length in metres.

To use the receiver, tune in the signal by C3-C4, adjust C1 for maximum volume without allowing stations to overlap.

Components List, Fig. 19a

C1	300pF solid dielectric variable capacitor.
C2	1000pF mica capacitor.
C3-4	500pF twin gang variable capacitor.
L1-2-3	See text and Fig. 19a.
X1-2	Germanium Crystal.
2	Tag-strips.
2	Twin socket strips.
S1	Single Pole toggle switch.

5

Whenever crystal sets are discussed, constructors are apt to think in terms of medium-wave reception. When you consider that at least 98% of published circuits are designed for this band (sometimes with the long-wave band thrown in as an afterthought) it is understandable. However, if you can provide a good outdoor aerial (and an equally good earth) there is a lot of fun to be had listening to the short-wave bands. This receiver is designed specially for short-wave reception.

A metal chassis is used for construction, these can be obtained ready made in aluminium from most good supply houses. It can be quite small and on the original model a 6″ x 4″ was used. Low loss components are used so as to obtain greatest efficiency on the short wave bands. The coil is a commercial product which plugs into a 4-pin base. Best results were obtained on the 3mc/s to 7mc/s band though coils covering other bands are available.

Note that the tuning capacitor C1 is smaller than normally used and has a maximum capacitance of 140pF.

Coil type 706/R covers the 3mc/s to 7mc/s band, but the set is equally satisfactory on the M.W. band, and to cover this coil type 706P should be used. This coil has an iron dustcore which can be adjusted to make the coil cover the required band. The effect of the core is as if turns were being added or removed from an ordinary coil. When dealing with the short waves it is customary to refer to the frequencies in terms of mega-cycles (mc/s) rather than kilo-cycles. One mega-cycle is equivalent to 1000 kilo-cycles, that is 1,000,000 cycles.

Layout and wiring can be clearly followed from Fig. 20b and a theoretical diagram is shown in Fig. 20a. Care should be taken when arranging a mounting for the aerial terminal. The best plan is to cut a 1″ hole in the chassis, mount the aerial terminal on a piece of perspex and screw into the chassis. This avoids any unnecessary losses between aerial and chassis. The earth terminal is screwed directly into the chassis.

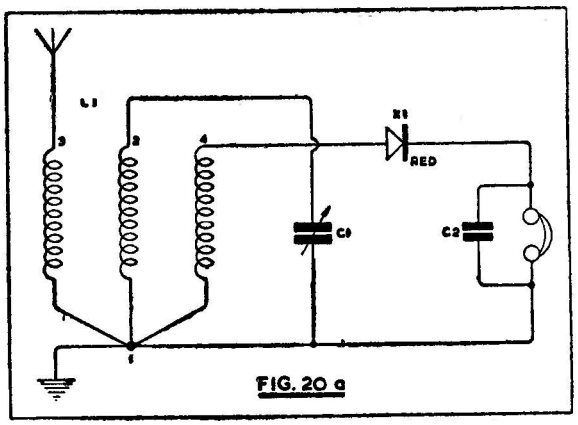

FIG. 20 a

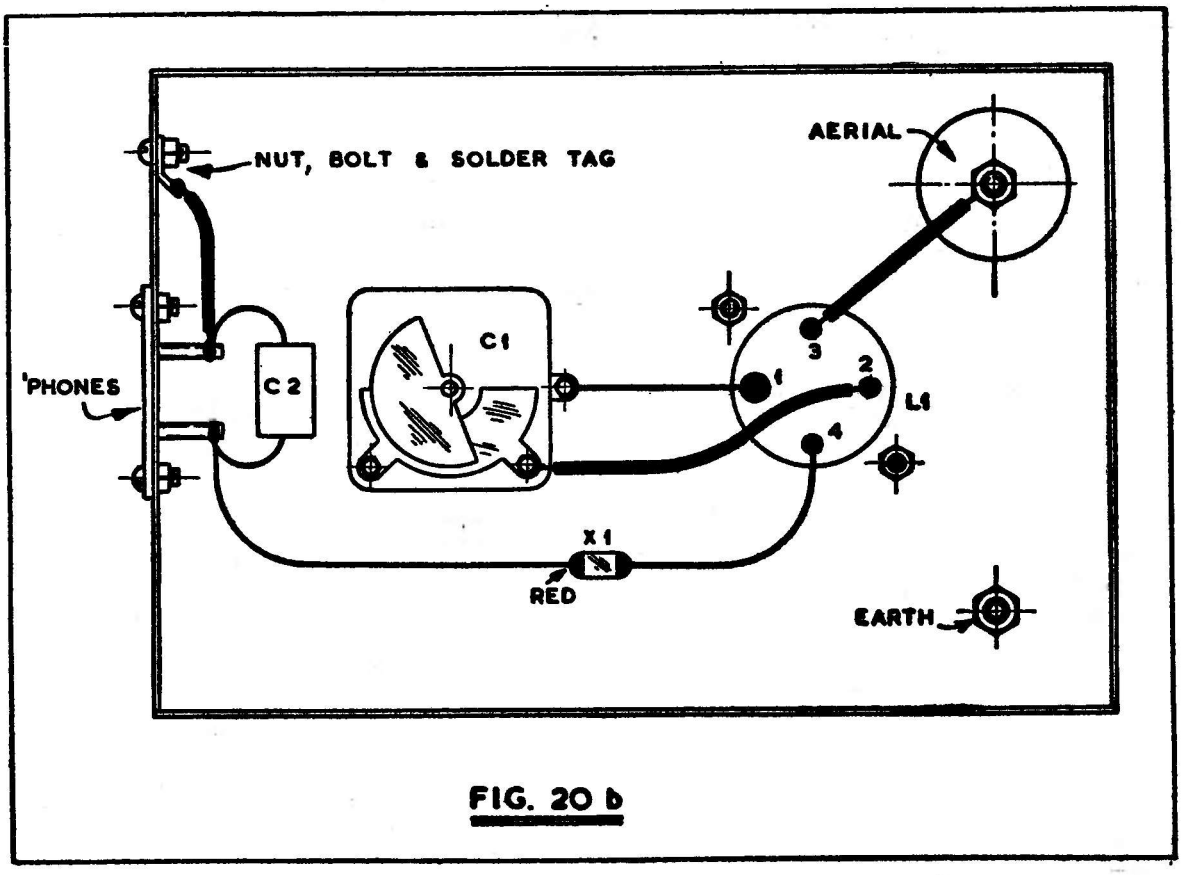

FIG. 20 b

Wiring as shown in Fig. 20a is likely to give the best results, but other arrangements are possible and to get the best out of the set they should be tried.

Refer to Fig. 20a. The aerial is connected to pin 3 on L1, C1 to pin 2 and X1 the crystal to pin 4. If you have a long aerial try this combination—Aerial to pin 4, C1 to pin 2, and the crystal to pin 3. Connections to pin 1 are not altered. In a few cases the following arrangement may prove best. Crystal and C1 to pin 2, aerial to pin 3, pin 4 left free and again pin 1 is unaltered.

Tuning on the short-wave bands is more critical than on the medium waves so tune very slowly over the band and remember signal strength is likely to vary from day to day.

Components List, Fig. 20a

C1	140pF variable capacitor Eddystone 586.
C2	1000pF mica capacitor.
1	Coil holder Eddystone 707.
L1	3m/c—7m/c coil Eddystone 706/R.
1	Engraved tuning dial.
1	6"x4"x2½" chassis.
2	Terminals (Aerial-Earth).
1	Twin socket strip ('phones).
X1	Germanium Crystal.

6

Fig. 21a-b is yet another design from America and appeared in Radio Craft some years ago, designed by Mr. W. J. Spain. The original used a silicon crystal which preceded the development of the germanium. Results are certainly very good though of course on the model built here, a germanium crystal was used. Selectivity can be adjusted to suit all conditions and even at short distances from local stations. Good volume can be obtained without the programmes overlapping. Home made coils are used and for best results a 75′ outdoor aerial is desirable.

Baseboard and panel construction is used, which can conveniently be housed in a small wooden cabinet.

Operation is a little more complicated than some of the other designs, but the results certainly merit the extra trouble taken. As with the other receivers much of the success obtainable is due to the coils and these must be carefully made otherwise results will be disappointing.

Layout and wiring can be followed quite easily from Fig. 21b and requires no special comment.

First make the coils. L1 is a tapped coil, the taps should be made in the same way as shown in Fig. 18b. It consists of 90 turns of 22 D.C.C. (double cotton covered) copper wire tapped at the following number of turns, 5, 10, 15, 25, 30, 40, 50, 60, 70 and 80. The former used has a diameter of 2". L2 is also wound on a 2" diameter former, this coil however is not tapped, it consists of 110 turns of 38 D.C.C. or enamelled copper wire. Great care must be taken when handling this wire, it is quite fine and in the hands of the inexperienced will easily break.

After wiring has been carried out the set can be put into operation.

Selectivity is controlled by S2, in position B tuning is broad but in position A it can be quite sharp.

When searching for a station switch S2 to B. Tune the station and switch S2 to A. The frequency range is controlled by the position of the tap on L1, a good plan is to start with the 5 turn tap on L1.

Components List, Fig. 21a

C1	500pF variable capacitor.
C2	500pF variable capacitor.
C3	1000pF Mica Capacitor.
X1	Germanium Crystal.
L1 & L2	See text.
S1	Single Pole toggle switch.
S2	Single Pole 2-way toggle switch.
2	Twin socket strips (Aerial/Earth and 'Phones).

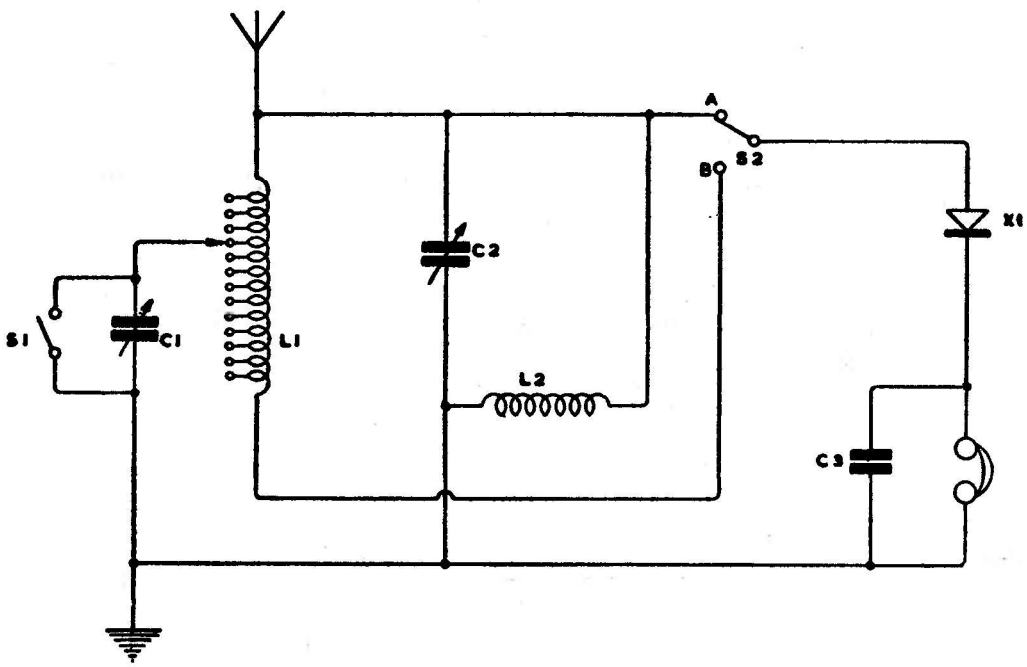

FIG. 21 a

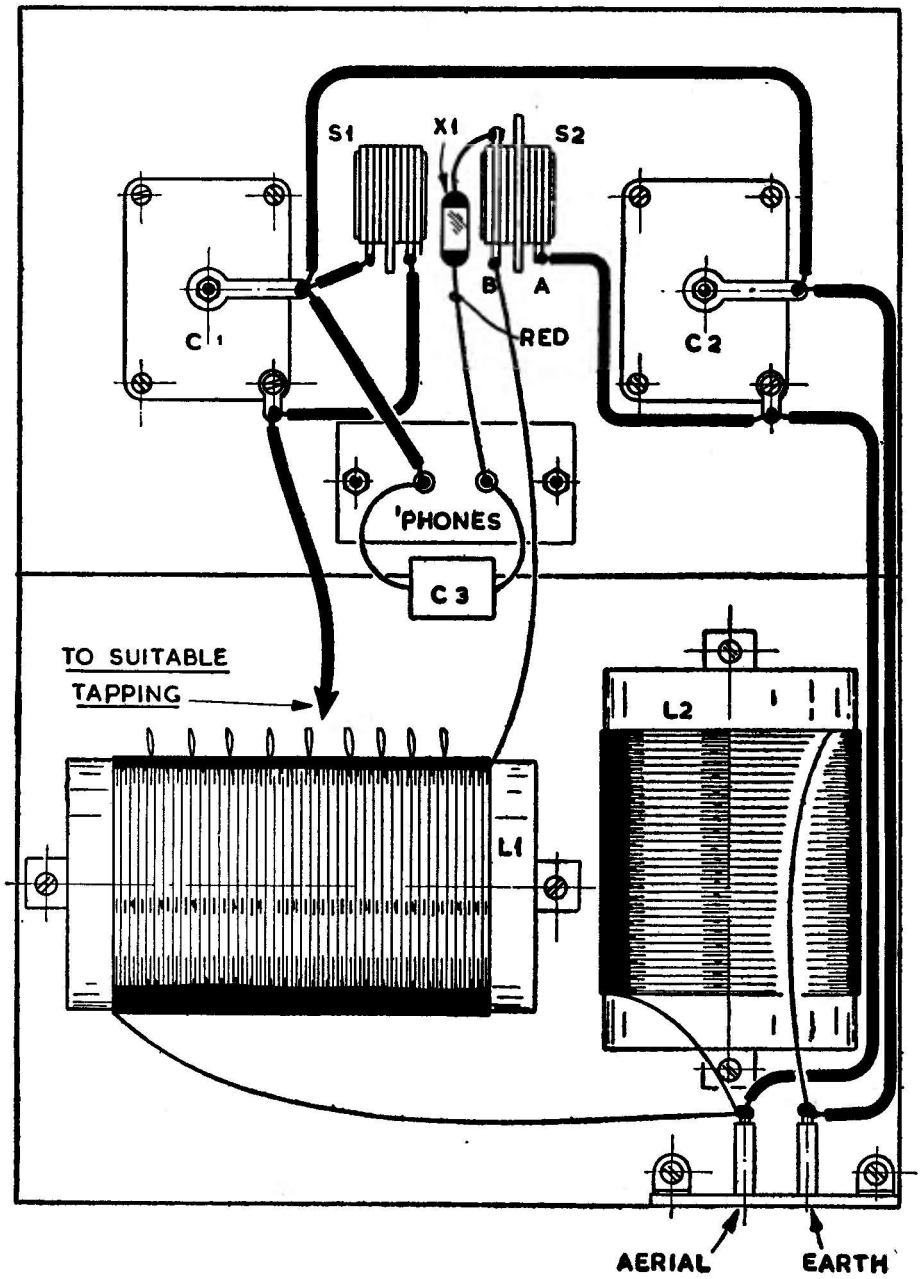
S1
X1
S2
B
A
RED
C1
C2
'PHONES
C3
TO SUITABLE
TAPPING
L2
L1
AERIAL
EARTH

FIG. 21 b

Keep S1 open and C1 for tuning, adjusting the tap on L1 for best results. Very powerful signals are best brought in with S1 closed. When using C1 and adjusting the taps on L1, switch S2 is kept in the A position.

It will be found that C2 acts as a fine control on C1. One division of the tuning dial on C1 is roughly equal to a movement of 20 divisions on C2.

Note that the coils are mounted at right angles to one another and that in this instance wood has been used as far as possible, an aluminium or other metal chassis is not suitable.

7

A very useful receiver for both medium and long-wave reception is possible with the circuit of Fig. 22a-b. A home-made coil is used. On the original a 1¼" diameter former was used but in fact this is not very critical and a 1½" former could be used. An interesting point is the construction of the long-wave coil section. Solenoid coils as used for the medium wave-band are not efficient if the length is too great relative to the diameter. Now as the long-wave section has 300 turns, if wound as a solenoid the winding length would be very great and a lot of efficiency would be lost. To overcome the difficulty the coil is pile wound. If the whole coil were to be wound in one pile it would still be inefficient because of the capacity formed in the winding, but by dividing it into five sections a coil of reasonable efficiency results. The same remarks concerning winding apply to this coil as to all the others in

Components List, Fig. 22a

C1 300pF Mica Capacitor.
C2 500pF Variable Capacitor.
C3 1000 Mica Capacitor.
X1 Germanium Crystal.
L1-2 See Text.
S1 Single Pole Toggle Switch.

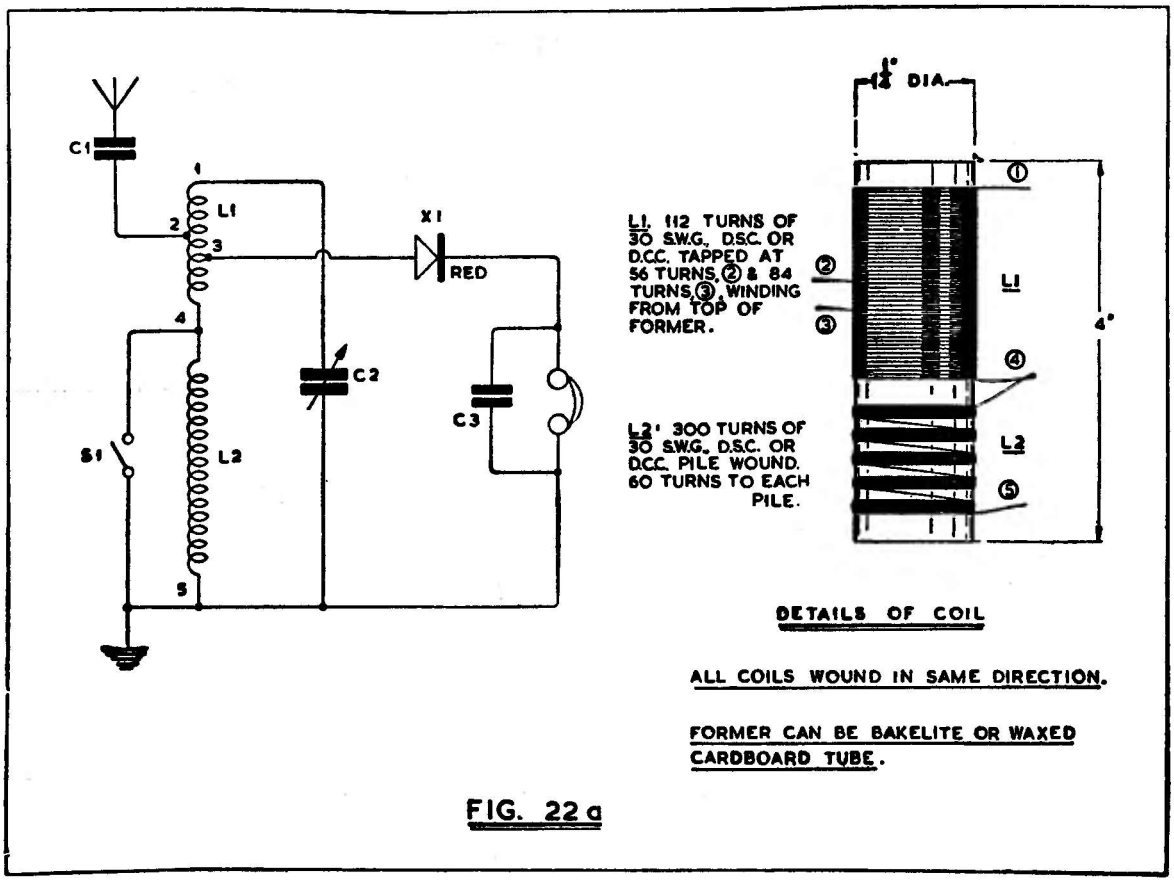

FIG. 22 a

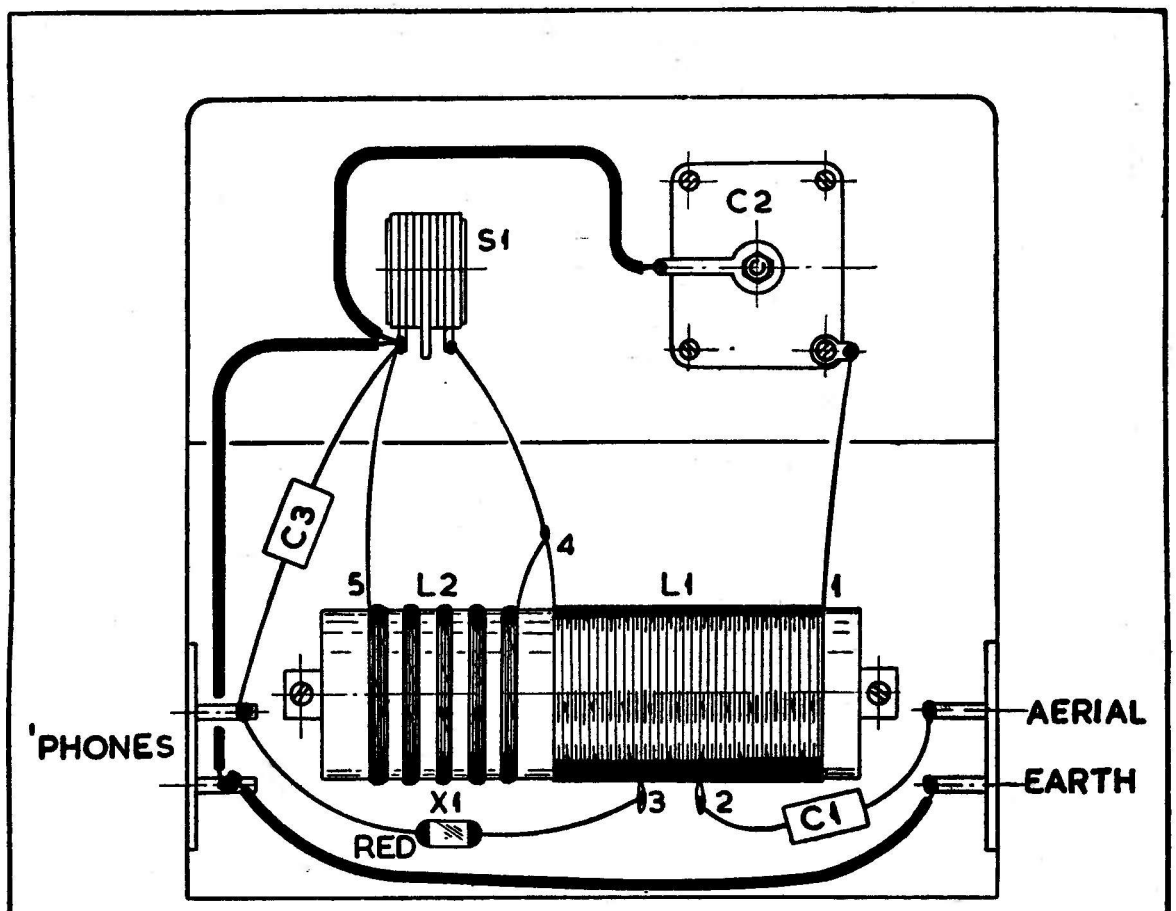

FIG. 22 b

this book, and readers should not, by this time, encounter any difficulties.

The design provides good selectivity with good sensitivity, and provided the set is not required to operate within a few miles of a powerful transmitter, no trouble will be encountered from interference between adjacent stations.

A wooden base-board and front panel is best for this design, and the wiring and layout can be clearly followed from Fig. 22b. Switch S1 is open for long-wave reception and closed for the medium-wave band.

Coil mounting can be on the same principle as for the full-wave design Fig. 19a-b.

8

If you look at all the other circuits shown in this book you will find that in each case the tuning capacitor and tuning coil are in parallel, this is by no means essential and the circuit of Fig. 23a shows a series arrangement that is the tuning capacitor is between the coil and earth instead of being wired up across it. This design also appeared in **Radio Craft** a few years ago.

An interesting point is that the coil is a conversion adapted from another type of component. To make this coil you must obtain an old I.F. transformer as used in superheterodyne receivers.

You will require one designed to work anywhere between 450 and 470 kc/s. Some of the

very early ones worked at 110 kcs/ but these are unsuitable.

The I.F. transformer must also be of the type tuned by an iron dust core at each end.

Dismantle the transformer, remove the parallel capacitors and mounting wires so that you are left with two coil bobbins and their former. Be very careful when un-soldering the wires from the supports because the coils are usually wound in litzendraht and must remain intact. Remove 25% (approximately) of the turns from one coil which we will call the secondary, and completely remove the iron dust slug from this coil, now cut the former in half, and mount as in Fig. 23a. Warm the coils with heat from your soldering iron or from a fire and gently slide the coils into position at the ends of the former as in Fig. 23a. The wax will set again holding the coils in their new position.

Note that the wires from the coils are connected to tags on the mountings. These are pieces of bakelite, and usually the original end pieces used on the I.F. transformer can be used.

A word about soldering litzendraht. Do not attempt to use emery paper. Prepare the end of wire by removing the outer silk covering and dip the end in methylated spirits. Ignite with a match and after about five seconds wipe with a cloth held between finger and thumb. This will quench the flame and will remove all traces of enamel from the wire. It is a good plan to experiment with the odd length of wire removed from the secondary coil. If the coils prove to be constructed of ordinary copper wire, it can of course be prepared with fine emery cloth in the normal manner.

Components List, Fig. 23a

C1 500pF variable capacitor.
X1 Germanium Crystal.
L1 See Text.
4 Plugs and sockets or terminals.

Wiring is straight forward as can be seen from Fig. 23b and requires no explanation.

Operation is as follows, selectivity is controlled by varying the distance between coils with the wing nut, and to an extent by the position of the primary iron dust core. Remember that the aerial and earth installations are as important with this set as with any other crystal receiver. No parallel capacitance appears necessary across the 'phones, the set works quite happily relying on the self-capacitance of the head-phones.

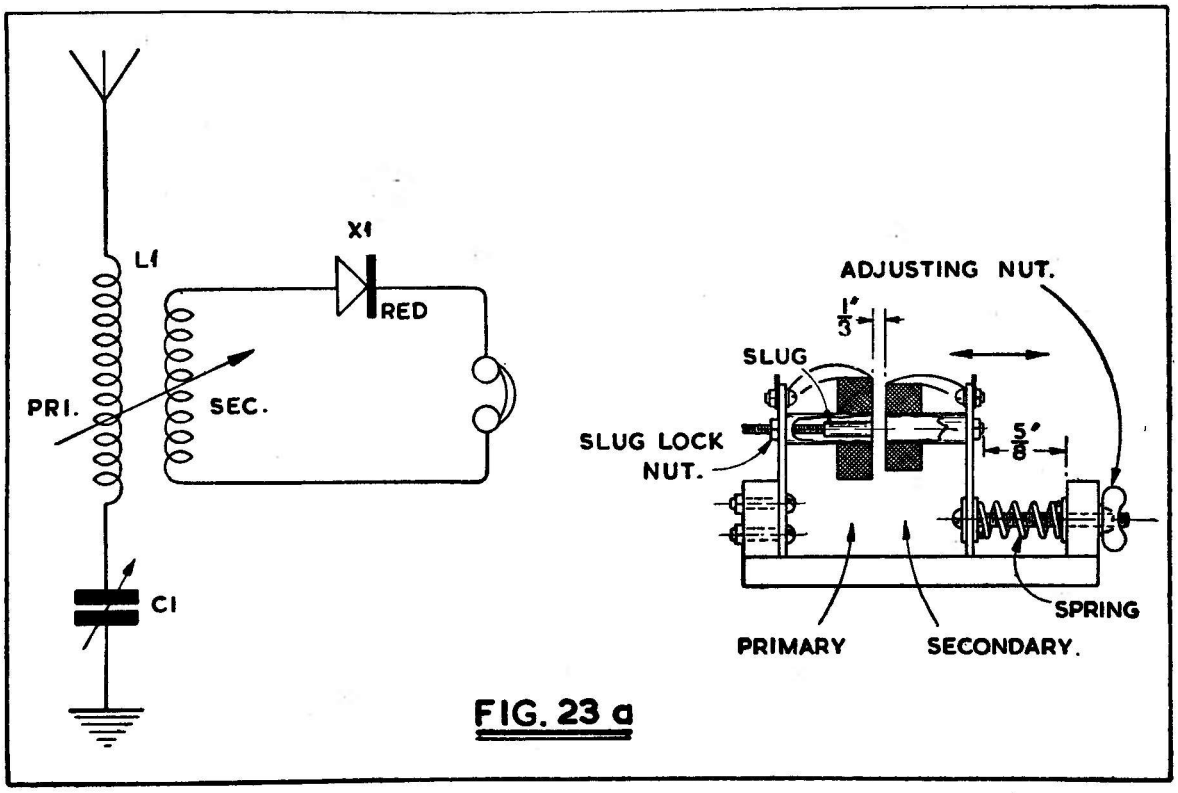

FIG. 23 a

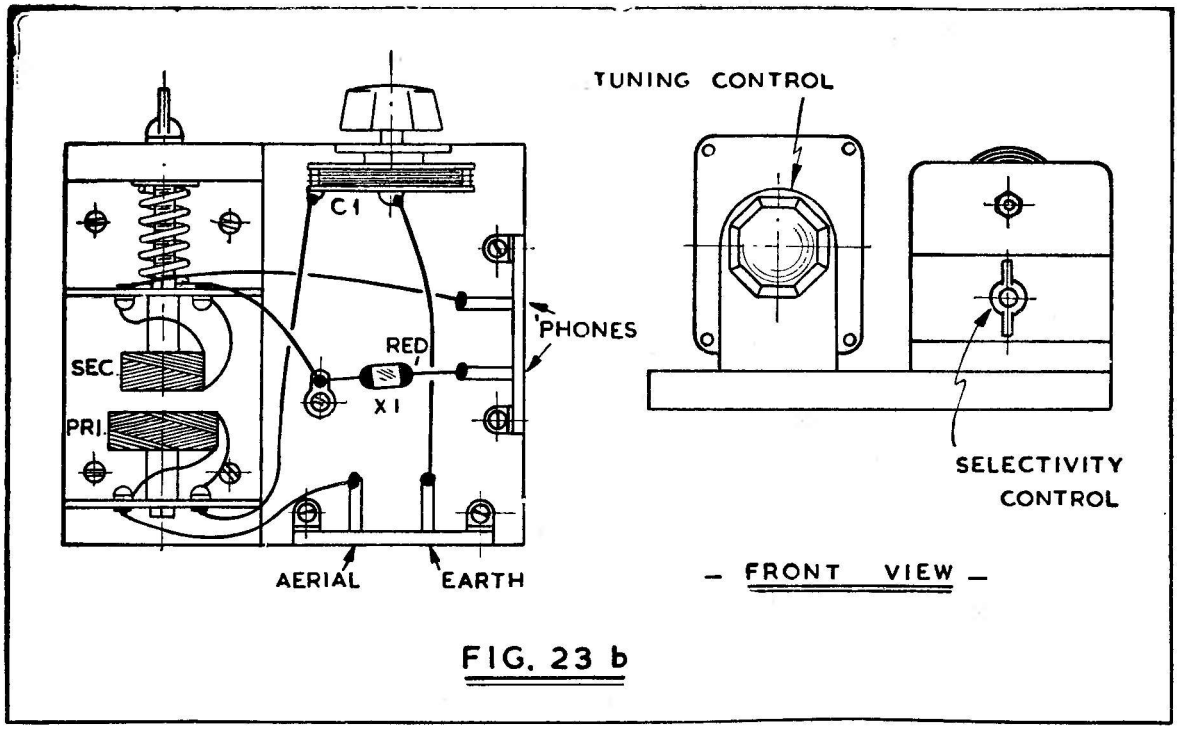

FIG. 23 b

9

So as to give a truly varied selection of circuits, some of the sets have been designed around commercial coils whilst others use coils which must be home-constructed.

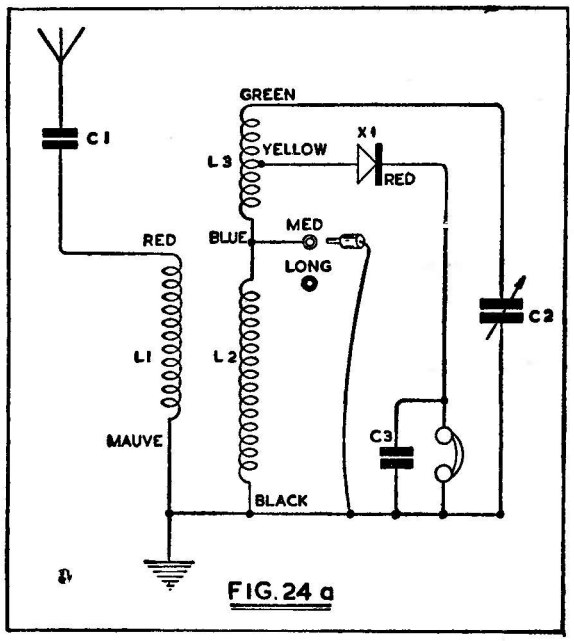

FIG. 24 a

Most enthusiasts like to build their own coils but when it is a question of something really small combined with efficiency a commercial coil is the obvious choice.

Fig. 24a-b uses a tobacco tin or a similar container just as the design shown in Fig. 16a.

This receiver however is a little more selective and is more suitable than the earlier design, if you are near a transmitter or have a very long aerial. Take great care to connect the coil according to the colours shown on the diagrams. Sockets are used for wave-changing, this cheapens the cost a little and they are just as efficient.

Components List, Fig. 24a

C1 100pF Mica capacitor.
C2 500pF variable capacitor solid dielectric.
C3 1000pF Mica capacitor.
X1 Germanium crystal.
L1-2 R.E.P. dual range coil. Blue box.
6 Insulated wander-plug sockets.
5 Wander Plugs.
2oz. Tobacco tin or similar container.

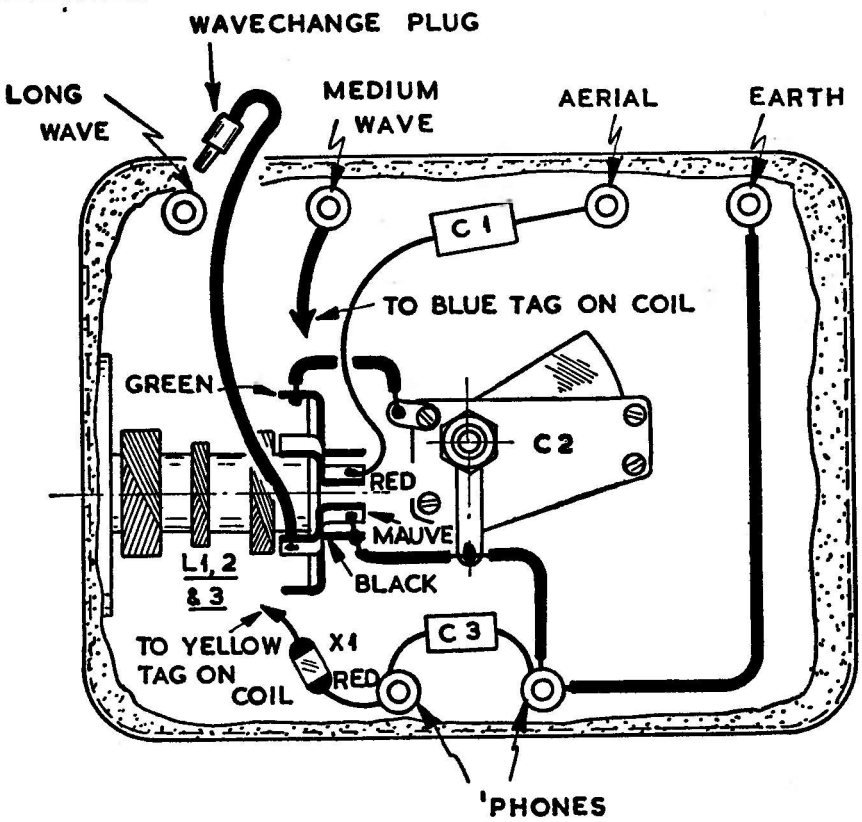

LID SHOWN BROKEN AWAY TO REVEAL POSITION OF COMPONENTS.

FIG. 24 b

10

In certain cases, signals from the local transmitter are too powerful to permit a crystal set with a normal coil to be of much use. I myself live in Hertfordshire a few miles from the London transmitters, and find a more elaborate circuit is necessary. Now in radio circles it is a well-known fact that the greater the number of tuned circuits, the greater the overall selectivity. Look at Fig. 25a, you will see that the usual L and C tuning arrangements have been duplicated. This type of circuit is known as a Band-Pass Filter. There are many kinds of such filters, this particular type is an inductively-coupled filter, note that energy from the first half (L2) is conveyed to L3 by way of two small inductors L1 and L4.

Tuning is quite sharp and the "feel" of the set is quite different from that of single coil designs. A small chassis is ideal for construction.

6"x4"x2½" was used on the original, though it could have been smaller.

Fig. 25b gives the layout and wiring.

Take particular notice that L1-2-3 is mounted horizontally and at right angles to L4-5-6, this is to prevent the coupling from being too "tight" which would ruin the idea of the filter. A good aerial and earth is of course necessary. It may be found on test that the selectivity is too great

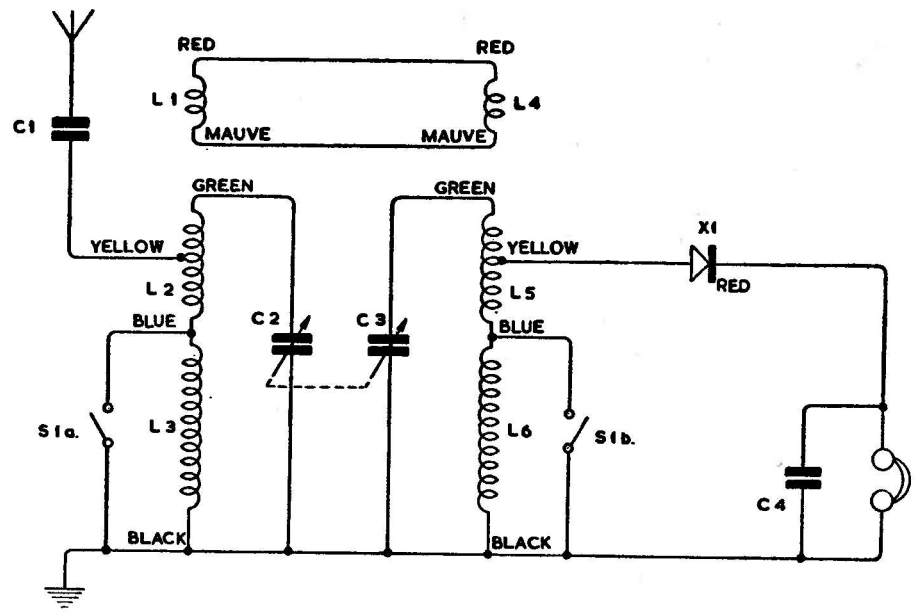

FIG. 25 a.

and that volume has suffered. This can be ingeniously overcome by connecting a very small capacitance between the two Green tags on the coils. The simplest way is to connect it across the fixed vane connections on C2-C3. Values for this extra capacitance are a matter for experiment usually a value between 10pF and 47pF is sufficient. A small 50pF trimmer could be used and adjusted to suit. The ideal setting is to enable powerful adjacent stations to be received just short of overlap so that as much volume as possible is obtained.

There is one point to be observed with the ganged capacitor. It should be of the type fitted with trimmers though of course, there is no reason why you should not fit them yourself. These are to allow for differences between coils to be balanced out, and consist of a small variable capacitance across each main section.

When setting up the receiver, first set each trimmer at half way and tune in a station near the high-frequency end of the band (vanes nearly out) adjust the trimmers for maximum volume. If extra coupling capacity is added as described, try adjusting them further.

Once properly set up, no further adjustment is necessary.

Components List, Fig. 25a

C1 100pF Mica capacitor.
C2-3 2 x 500pF variable capacitor (see text).
C4 1000pF Mica capacitor.
L1-2-3 Dual Range Coil R.E.P. (Blue Box).
L4-5-6 Dual Range Coil R.E.P. (Blue Box).
X1 Germanium Crystal.
S1a-b 2 pole single throw toggle switch.
4 Terminals or plugs and sockets.

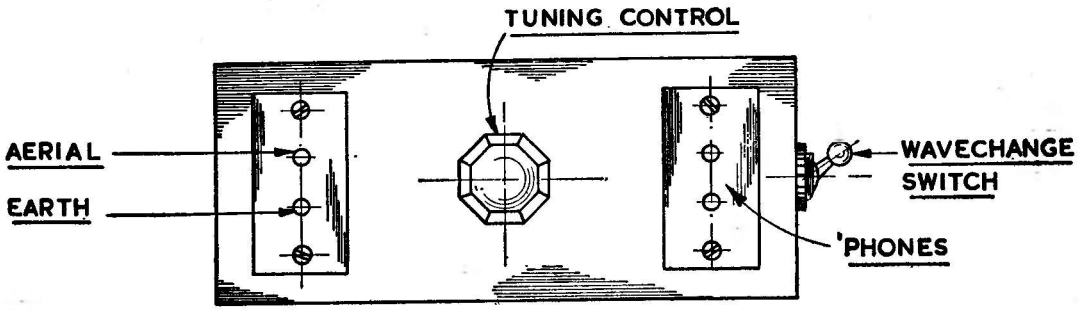

FRONT OF COMPLETED RECEIVER.

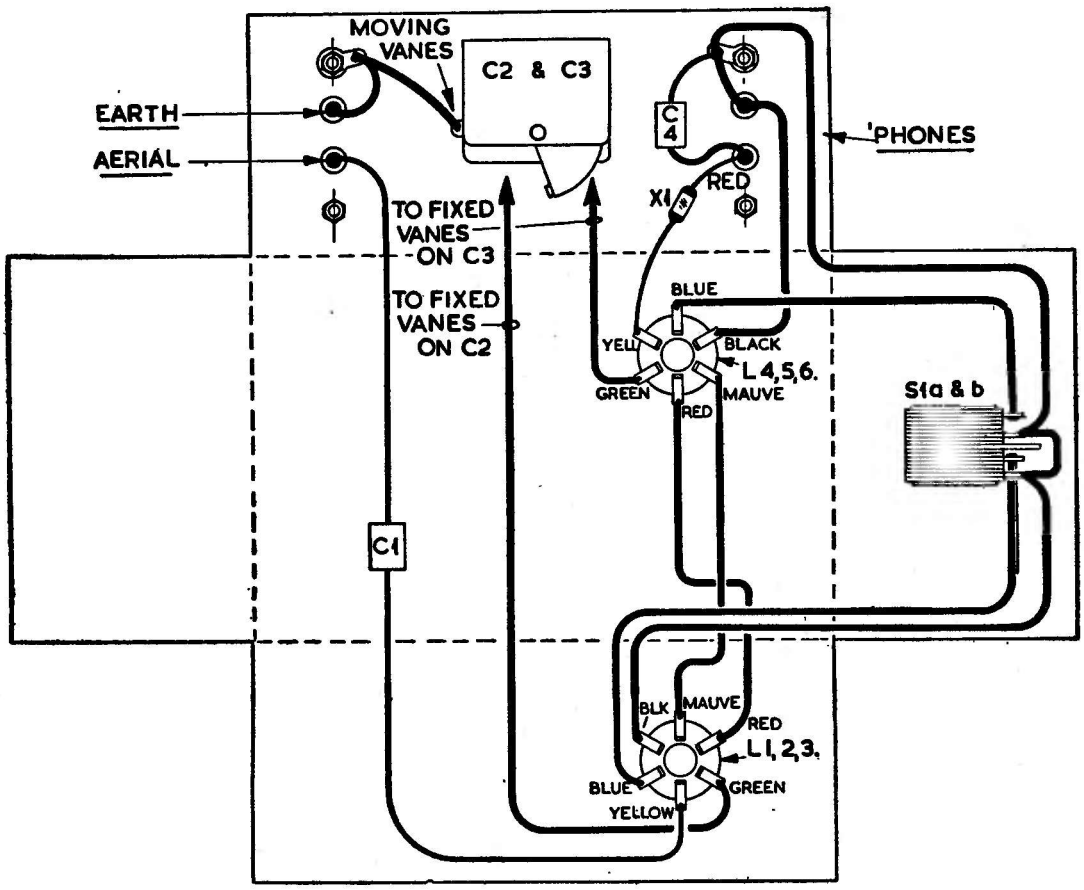

EXPLODED UNDER-CHASSIS VIEW

FIG. 25 b

11

Another band-pass circuit is shown in Fig. 26a. This time home-made coils are used. This filter is not inductively coupled but entirely capacitive, relying on C3. As in the previous circuit it must be adjusted to give just sufficient " broadness " to the tuning to provide adequate volume without station overlap. To avoid unwanted coupling a screen is mounted between the coils, this is necessary because due to the size of the coils they would be bound to couple quite tightly without it. Such precautions were not necessary with the circuit of Fig. 25a, as the commercial coils are much smaller physically and the risk of unwanted coupling reduced.

The coils for this receiver are for medium wave reception only, this keeps the size down. Coil winding procedure has already been fully explained, and covers all the requirements of these coils. Base-board and panel construction is used, and for more accurate tuning since the coils are home-made, separate tuning capacitors are recommended. Fig. 26b gives the layout and practical wiring.

Components List, Fig. 26a

C1 100pF Mica capacitor.
C2 500pF variable capacitor.
C3 50pF Mica trimmer.
C4 500pF variable capacitor.
C5 1000pF mica capacitor.
L1-2 See text.
X1 Germanium Crystal.
4 Terminals or plugs and sockets.

For those who do not wish to bother with these a ganged capacitor can be used, but tuning may not be as good as with separate ones. The screen mounted between the coils is of aluminium or copper and should be about 1″ higher than the coils and the same length as the baseboard depth.

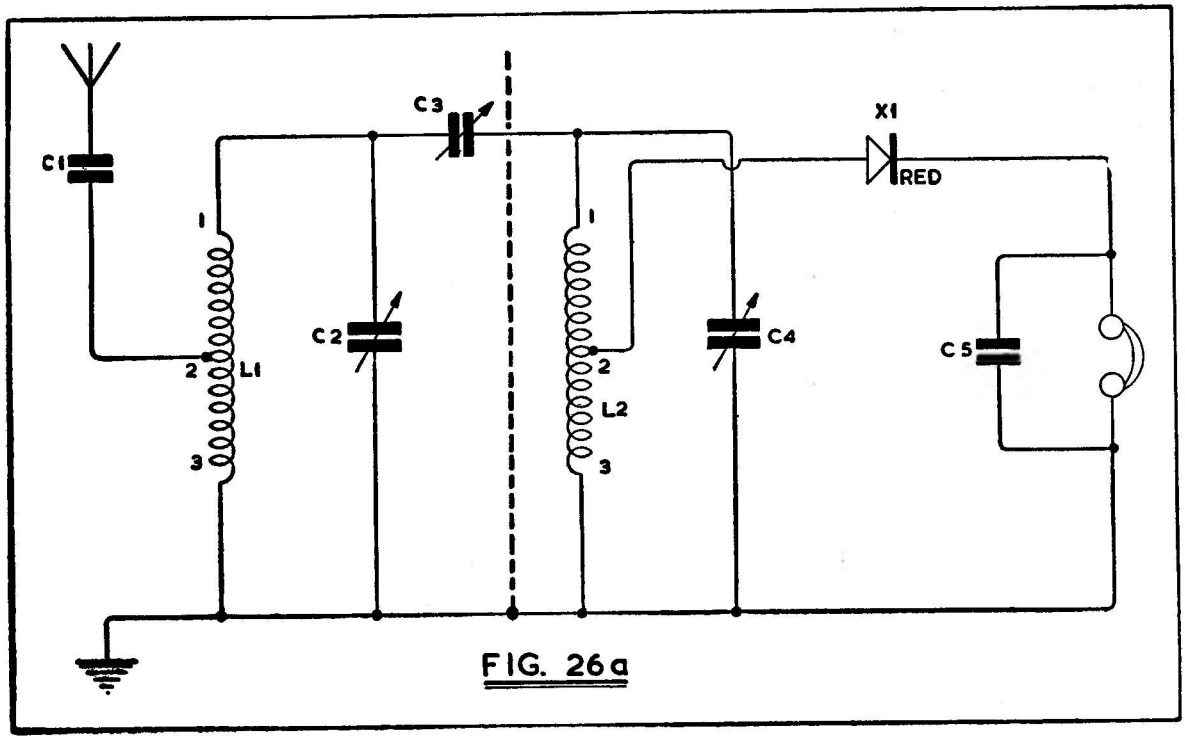

FIG. 26a

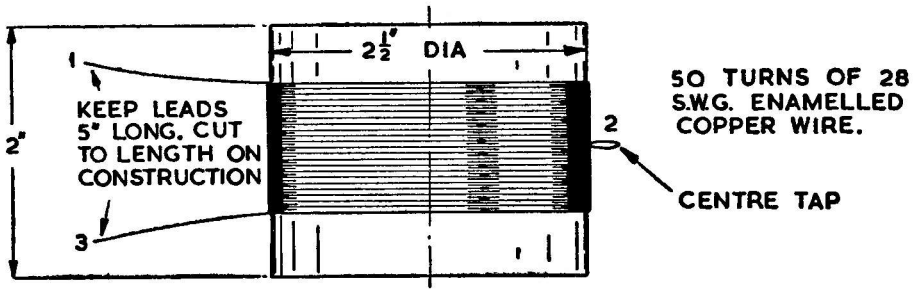

COIL DETAILS.

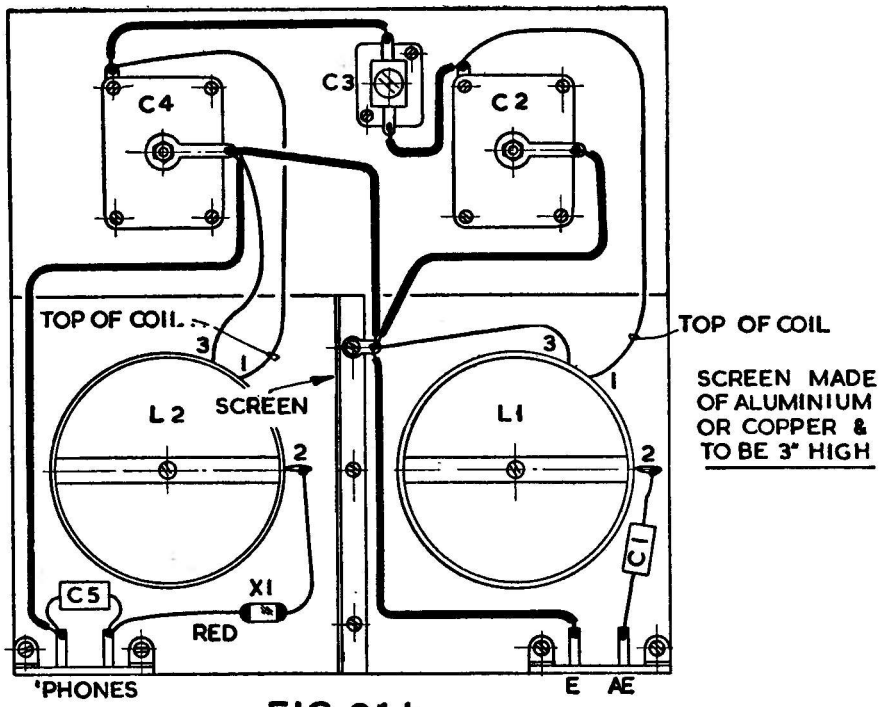

FIG. 26 b

12

Fig. 27a-b uses a band-pass filter for tuning, and the coils are home-constructed.

With this design a ganged capacitor is quite suitable as the coils tune quite accurately. It is essential that the coupling condenser C3 is **non-inductive,** there will be no difficulty in obtaining a new component of this pattern but it is as well to avoid old components which may not employ this form of construction.

Receivers using this type of filter are used to the best advantage when situated a short distance from a powerful transmitter and if selectivity is not important this particular design is not the most suitable.

Both medium-waves and long-waves are catered for: consider L1-2-3, this is the first half of the filter.

L1 is the aerial coupling coil, with S1 closed,

the medium-waves are received. This coil is inductively coupled to L2 and L3. Again with S2 open L2 and L3 combined cover the long-waves and when S2 is closed the medium waves are covered.

Tuning for this half of the filter is by means of the capacitor C1, which is one half of the ganged capacitor. A screen is erected between the two sets of coils comprising the filter, and coupling is effected by C3, an earth return for the coils is provided by R1.

L4 and L5 operated in a similar manner to L2 and L3, tuning is by means of C2, the remaining section of the ganged capacitor. You will realise that the coils must be accurately wound otherwise tuning will not remain constant between the two sections over the band.

The ganged capacitor should be fitted with trimmer capacitors when purchased so that the two circuits can be balanced.

You will have noticed that this circuit uses three sets of switch contacts. A three-pole two-way wafer switch is the best choice otherwise either two or even three separate switches are necessary. All the necessary coil details are given in the diagrams, the tap on L4 is made in the same way as shown for other coils in the manual. One other component used only on this design, is the resistor R1, its size is not important because the current flowing is so small it can be ignored.

A ¼ watt rating is adequate, its precise value is not critical so that a 20% tolerance component is quite suitable.

Resistors are coded by colours and the 1000Ω type you require will bear the following sequence. At one end will be painted three coloured rings.

Components List, Fig. 27a

C1-2 500pF 2 gang, variable capacitor.
C3 0.05mfd. non-inductive paper capacitor.
C4 1000pF mica capacitor.
R1 1000 ohm resistor.
X1 Germanium Crystal.
S1-2-3 3-pole 2-way wafer switch.
L1-2-3 & L4-5 See text.
4 Terminals (Aerial, Earth and 'Phones).
Sheet copper or aluminium for screen.

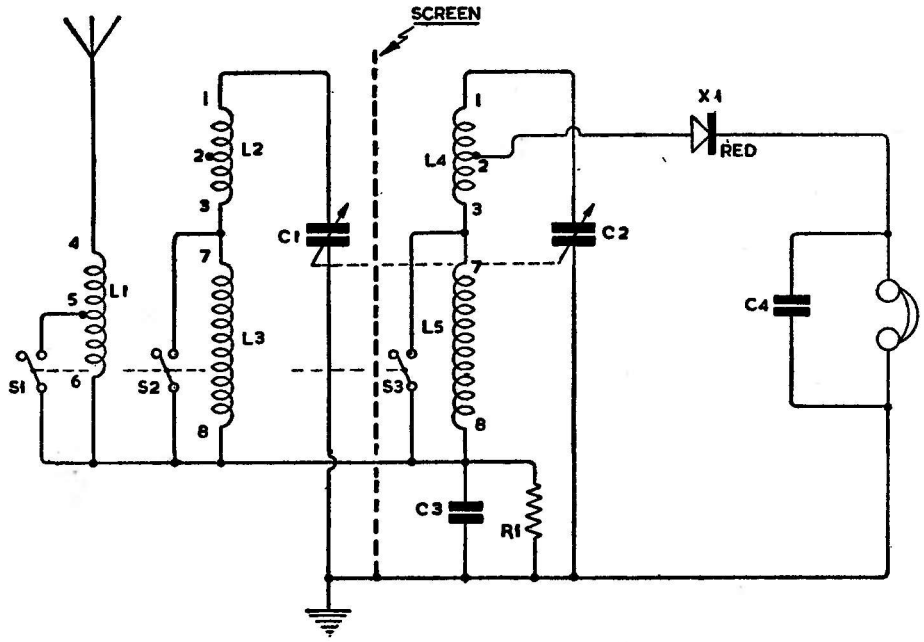

FIG. 27a

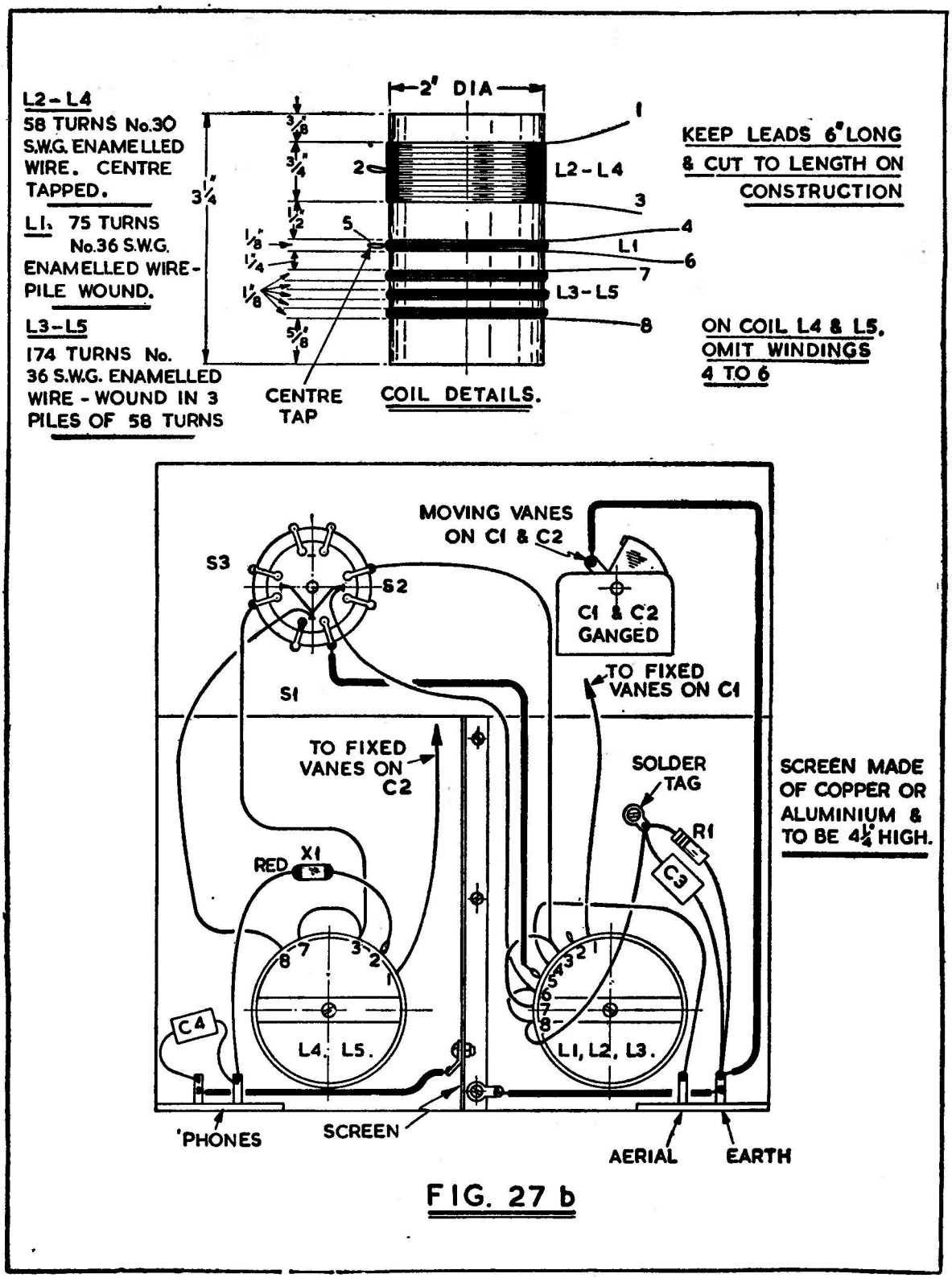
L2 - L4
58 TURNS No.30 S.W.G. ENAMELLED WIRE. CENTRE TAPPED.
L1. 75 TURNS No.36 S.W.G. ENAMELLED WIRE - PILE WOUND.
L3 - L5
174 TURNS No. 36 S.W.G. ENAMELLED WIRE - WOUND IN 3 PILES OF 58 TURNS
2" DIA
3/8"
3/4"
1 1/2"
1/8"
1/4"
1/8"
5/8"
3 1/4"
1
2
3
4
5
6
7
8
L2 - L4
L1
L3 - L5
CENTRE TAP
COIL DETAILS.
KEEP LEADS 6" LONG & CUT TO LENGTH ON CONSTRUCTION
ON COIL L4 & L5, OMIT WINDINGS 4 TO 6
MOVING VANES ON C1 & C2
S3
S2
S1
C1 & C2 GANGED
TO FIXED VANES ON C1
TO FIXED VANES ON C2
SOLDER TAG
R1
C3
X1
RED
C4
L4, L5.
L1, L2, L3.
SCREEN MADE OF COPPER OR ALUMINIUM & TO BE 4 1/4" HIGH.
'PHONES
SCREEN
AERIAL
EARTH

FIG. 27 b

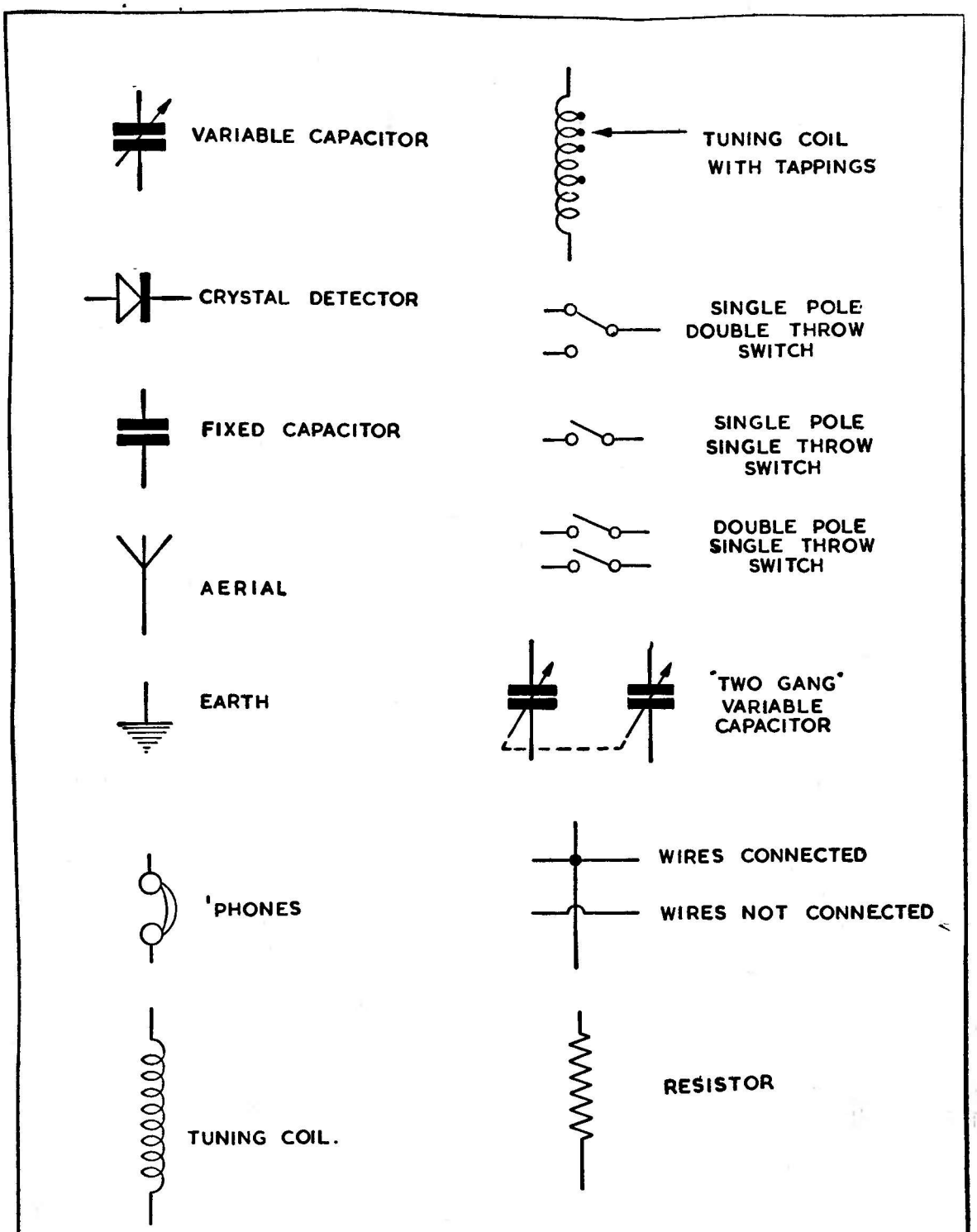

SYMBOLS USED IN THE CIRCUITS DESCRIBED.

FIG. 28

The first one is BROWN which represents 1, the first figure of the value, the second BLACK, this indicates the second numeral is nought, and the third colour is RED which tells us that two further ciphers or noughts are added to give the total value. From this you can see, we have 1 plus a nought equalling 10, plus two further noughts which total 1000. Some earlier types of resistor were painted differently, the whole body colour represented the first figure, one tip was coloured to represent the second figure, and a painted dot in the centre gave the number of ciphers to be added.

There are no other special points regarding construction except perhaps that if a long aerial is used, a small 100pF capacitor might be tried in the aerial lead to prevent damping the first tuned circuit.

When setting up the receiver, tune to a station at the high-frequency end of the M.W. band and set the trimmers for loudest volume, no other adjustments are necessary.

CONCLUSION

The twelve receivers described are representa tive of the best crystal set designs available to-day. Their construction will provide many hours of useful enjoyment, and the results will give lasting pleasure.

A final word about components, if no actual maker is specified, any good class component can be used. Switches, fixed and variable capacitors and crystals, are available from numerous manufacturers all of which are invariably of excellent quality. Where a particular manufacturer's product is called for, the specification should be adhered to. The commercial coils specified are freely available from most supply houses specialising in components for constructors, but in case of difficulty write to Bernards (Publishers) Ltd., The Grampians, Western Gate, London, W.6, who will, on receipt of a S.A.E. be pleased to supply the address of your nearest stockist. Coil formers are not always easy to obtain and in this case advice should be sought from Post Radio Supplies, 395, Queensbridge Road, London, E.8, who will be pleased to help in any way possible.

The Choccy Block Crystal Set Radio Kit

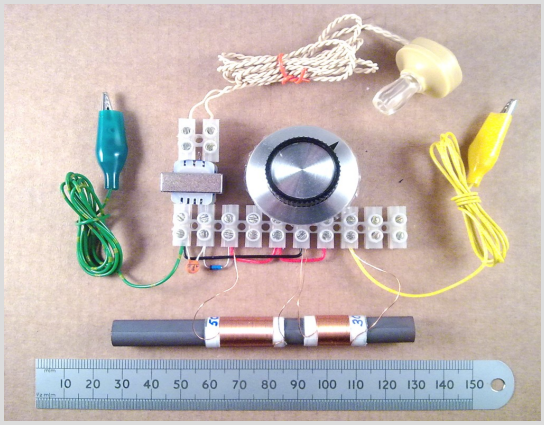

I've sold quite a few of these now and people are having success with them. If you're thinking of buying one of the commercial plastic sets without an aerial coupling coil, output transformer and with an untested earphone, please consider this one instead. I can confirm that it is much better and you won't risk the 40% chance of getting a dud earphone that are the current odds. (See The Problem With Crystal Earphones)

A kit of electronic parts is available on Ebay here: Useful Components Ebay Shop

This is a small crystal radio which can be constructed without soldering using 3A terminal strip or "Choccy Block." It's best to read right through the page first before starting out.

How To Build The Radio

Here is a pdf electronic schematic diagram. If you're familiar with electronics this will be helpful. If not, you can just look at the pictures. In addition to the parts provided in the picture you will need a screwdriver for the terminal block, some pliers, some wire cutters and some form of wire stripper. To make the paper tubes for the coils you will need some paper, glue, scissors and sticky tape.

Schematic Diagram

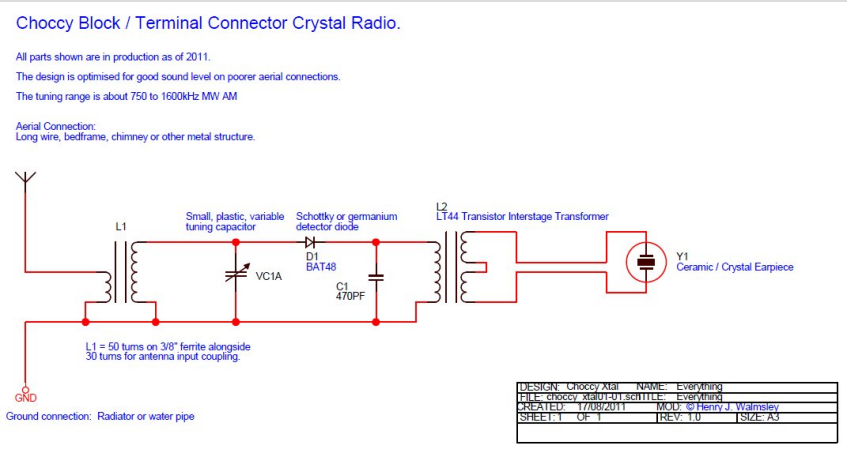

Link to Schematic Diagram of Choccy Block Crystal Set Radio

```
Bill Of Materials:

* 3 Amp terminal strip
```

```
* LT44 transformer L2
* variable capacitor VC1
* 2 M2.5 4mm screws
* 3 M2.5 20mm screws
* 3 M2.5 nuts
* 5 M2.5 washers
* BAT48 schottky diode D1
* 470pF ceramic disc capacitor C1
* ceramic / crystal earpiece Y1
* 30SWG / 0.315mm enameled copper wire 4m
* 1m yellow aerial connection wire
* 1m green earth connection wire
* 1 yellow insulated crocodile clip
* 1 green insulated crocodile clip
* control knob for short shaft
* 100mm long, 9.5mm diameter ferrite rod
* 100mm single core red hookup wire
* 100mm single core black hookup wire
```

General Connections

[Link to Large Photo of Choccy Block Crystal Radio Wiring]

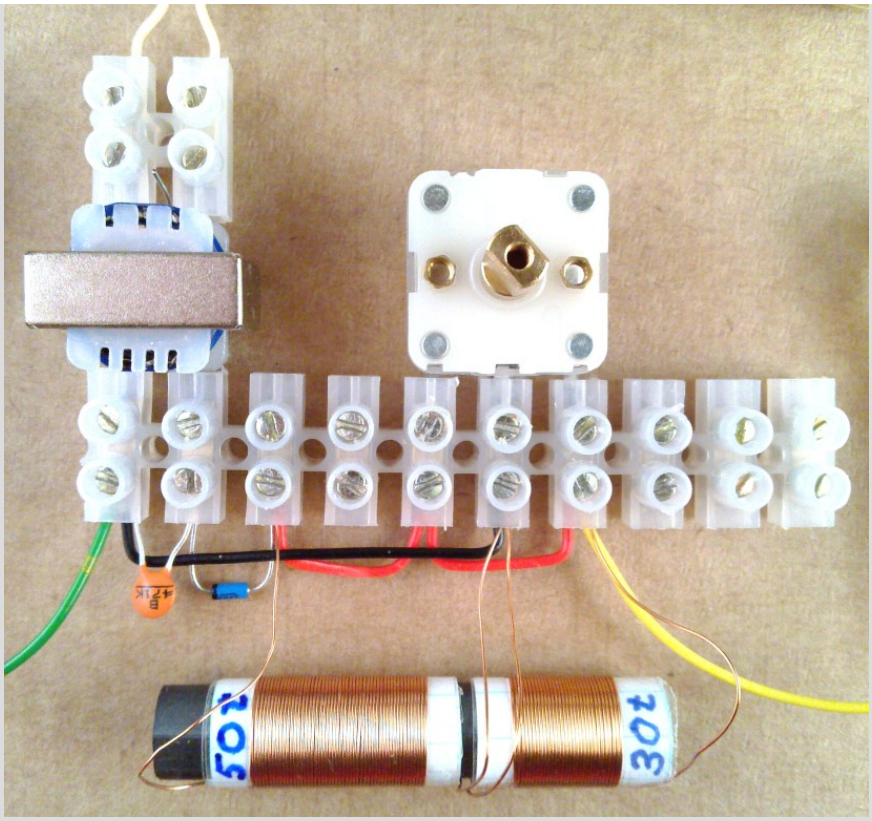

In the photo above you can see each component and where it is connected quite easily, using the large wiring picture if needed. You need to cut a group of two terminals from one end of the block for the connections to the earpiece. The red and black link wires, the aerial and earth wires, and the crystal earpiece wires need to be stripped of plastic insulation where they connect into the terminal block. The coil wire ends need to have the enamel insulation scraped off where they connect in. The LT44 transformer should be connected so that the outer two wires of the end with three wires are connected to the earpiece wires. You can leave the middle wire disconnected. The transformer is best butted right up against the terminal strip which gives it a little bit of support to stop the wires bending. The same applies to the variable capacitor.

The Variable Capacitor Connections

Looking at the variable capacitor from the bottom side, the side without the control shaft, you will see two trimmer screws and the three strip connections. The two trimmer screws add extra fixed capacitance to the variable elements. They should be adjusted as shown in the third photograph for minimum extra capacitance. This is the position where the semi-circular moving plates attached to the screws are clear of the lower metal plates.

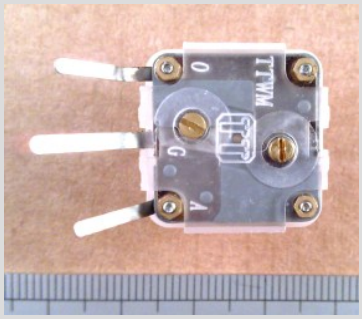

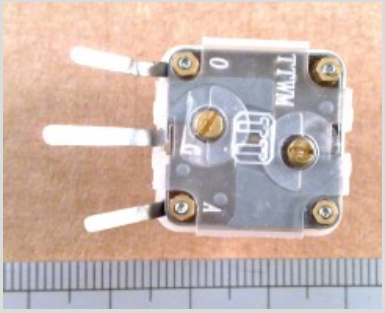

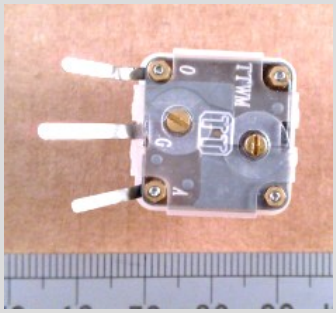

The middle strip is the common ground for the two capacitors and the outer strips are the remaining connections. The variable capacitor is actually two capacitors which are connected together in the

terminal strip circuit. As supplied, the connection strips exit at the side of the top face of the capacitor. To fit it into the terminal strip you need to remove the transparent plastic case of the variable capacitor, and unfold the strips so that they go out of the holes in the bottom face, as shown in the picture sequence.

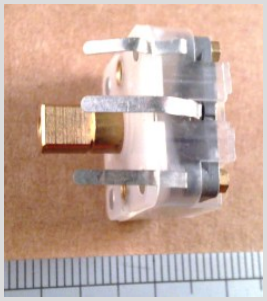
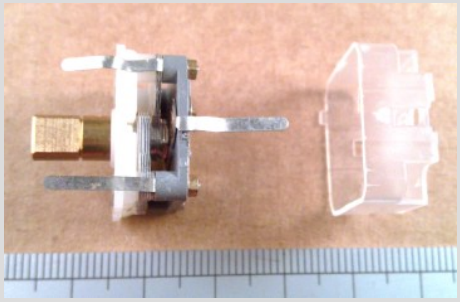
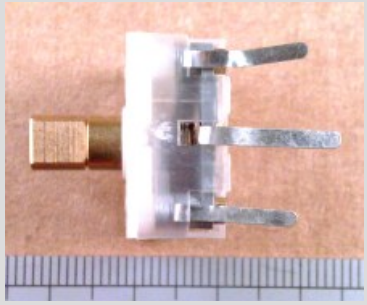

Making the Coils

To wind the coils you need the wire supplied, some sellotape, scissors, ordinary paper and some glue. The process in shown in the pictures. You first need to make two paper tubes by cutting a piece of paper 25mm wide and about 100mm long and another about 20mm wide by 100mm long. The tubes are formed by applying glue to two thirds of the length of the paper and wrapping it loosely around the ferrite rod. The tubes need to be able to slide up and down on the rod, so don't wrap it too tightly. It's best to leave the glue to dry before winding the wire on so that the tube doesn't crush and bind on the rod. The wire is secured at one end of the paper former with a thin strip of tape and then for the larger main coil, wind 50 turns onto the tube. The aerial coupling coil requires just 30 turns. It is better to turn the tube rather than winding the wire around by hand, because winding it around puts a twist in the wire. Again, you need to wind the turns just tightly enough to stay in place so that the coil and tube can still move on the rod afterwards. At the end of each coil, another thin strip of tape holds the far end of the wire in place. If you lose exact count of the number of turns don't worry. It need only be approximate.

Update: The ferrite rod provided is now 100mm long, so it's a bit easier to handle and you can make the paper tubes a bit wider. You still want to be able to slide the antenna coil close up to the tuning coil though.

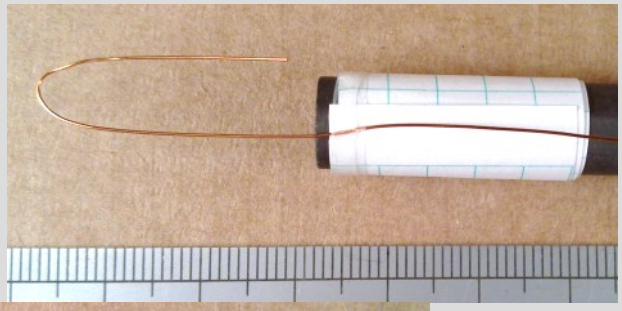
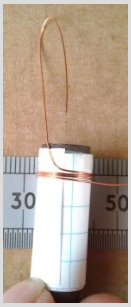
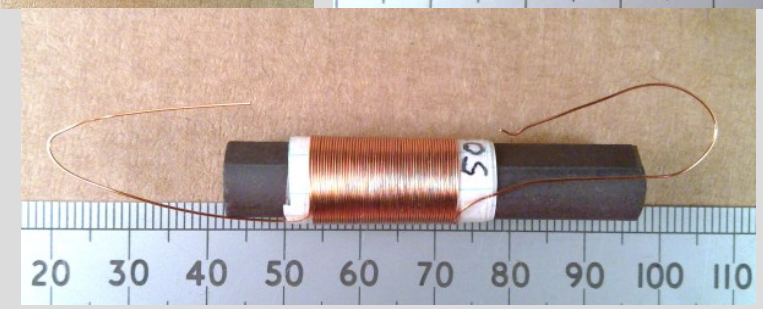

Connecting to the Crocodile Clips

The crocodile clips are much more convenient for connecting to aerials and earth connections than bare wires. You need to strip the ends of the yellow and green wires first, then remove the insulating boot from the clips as shown. The metal flaps on the ends of the clips can then be crushed down on the folded-back stripped wire ends to make a firm connection before putting the boot back on from the other end of the wire. To remove and replace the insulating boot, hold the jaws open by clipping them onto some small object.

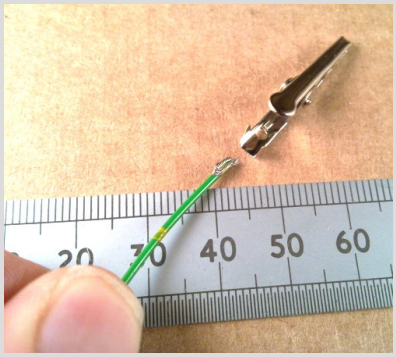

Finishing Off

It is worth checking that all of the wires are trapped under each screw correctly and that none of them will pull out. When everything is wired as in the main picture, the control knob can be fitted to the shaft of the variable capacitor and you are ready to test.

Testing and Operation

Connect the green earth wire to your earth connection and the yellow aerial wire to your aerial. With the coils in about the position shown, turn the tuning knob until a station is heard. You may find that you can increase the loudness of a particular station a bit by moving the coils around on the ferrite rod, but the adjustment is not critical. There's very little to go wrong, so troubleshooting should be confined to checking that the connections are made as shown. That concludes the building instructions and should get you going. Once it's working you can fix the terminal strips down to a wooden board by carefully banging in nails down through the holes or using the M2.5 screws provided. If you decide to fix the variable capacitor to a front panel, only use the very short 4mm screws provided. These are guaranteed short enough not to foul the insides of the capacitor.

If you want to get on and build it, that's all you need to know but there's more information below which might be useful and some technical discussion.

More Information

Aerials and Earths

I have successfully used this to pick up the main MW station in the UK just by connecting to a central heating radiator for the earth and to the outer casing of a television antenna cable, disconnected from the TV, for the aerial. This is not ideal because the TV cable is nailed to the house which both blocks and drains away a lot of the MW radio signal. It is much better if you can erect a long wire high up in a garden and there are many places online which will show you how to do that, taking the usual precautions against lightning strikes and going near to power cables. Not everyone has a garden though, and you don't want the TV aerial being disconnected on a regular basis, so there are other interesting ways to get an aerial and earth.

Farm and Other Fences

While out walking I wondered if there were any useful MW signals being picked up on farm fences. They are not good aerials for a number of reasons, but they can be quite long which can make up for that. You need to connect the earth clip to the lowest wire and the aerial clip to the highest wire. They will always be a bit corroded so you have to wiggle the clips to get a good connection. If you find a fence in good condition, outside of a deep valley which has dry posts and isn't covered in wet bushes, you will almost always get reception of one or more station. Station pickup depends on the direction of the fence as well, so it's worth trying a few if you are out walking.

Some fences are electrified and it will be pretty clear which those are, those being a single wire with insulated posts. Obviously, I have to say it: Don't use those.

Update September 2011: If you get a high-ish spot and a decent dry fence this can work even better than I expected. I walked up Clee Hill in Shropshire recently and attached the set to an ordinary fence with the ground wire clipped to the standard square mesh below and the barbed wire on top. I wasn't expecting much because the mesh and wire sections have little separation, only a few inches. Signals from Absolute radio, Five Live and another station were good and loud. I needed to move the aerial coupling coil away from the main coil on the rod to help separate the stations. The air traffic radar station in the background is coincidental.
Update October 2011: The New Forest campsite at Holmsley is neither particular high, nor is the fence all that uncluttered; Still I picked up three stations from there and found that it was best using either myself holding the green clip for the ground or the very bottom fence wire which was partially buried.

Other Structures

If you see any two metal structures which are not obviously connected together you can see if there is reception available from them. For example at various times in the past, crystal radios have been used in prisons connected to a water pipes for an earth and a bed frame for an aerial. Always stay away from using the electrical mains earth and avoid connecting to household appliances.

Boxing it Up

If you want to carry this around on walks, it's a bit inconvenient in the basic form which was intended to be the easiest way to build it up. If you want to put it in a small box, the first thing to do is to change the variable capacitor connection strips back around so that they once more exit at the same side as the shaft. You can then fit the variable capacitor into the terminal strip upside down so that the shaft faces downwards, or outwards from your box, and the terminal strip and transformer will all be flush with the same surface. I've shown an example below where I have used an old cassette case. This isn't very good because the transformer is too big so you have to cut a hole for it in the back. It doesn't matter which terminal strip connection along the block each circuit node connects into, so you can shuffle the parts along towards the left to save space, and cut off the unused terminals. The tuning knob is specially selected as one which works well with this tuning capacitor: The grub screw is

quite near to the bottom of the knob and it has a recess underneath which clears the mounting screws. This allows it to fit well on the short tuning shaft.

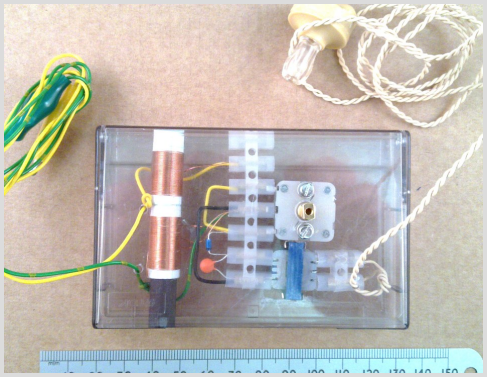

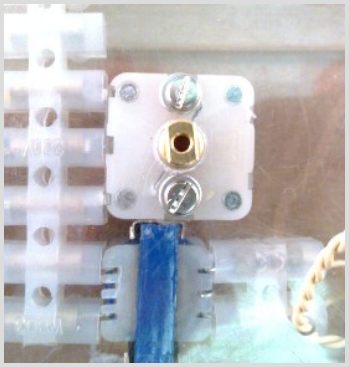

Soldering

If you're happy soldering the wires directly together it is possible to squeeze things up even further. If you shorten the ferrite rod and wind the coils in a small pile you can just about fit the whole thing into an old 35mm film canister. The tuning knob sits neatly at one end. Something a bit like this was used in the Maze prison in the early 1980s. If you want to shorten the ferrite rod to fit it in a box, first use a hacksaw to cut a shallow notch in it. Then wrap the rod in a tea towel and snap it into two pieces at the notch by hand.

Further Technical Discussion

Circuit Operation - Earpieces

Anyone who's played with crystal sets a bit will see that everything in the circuit is pretty standard. There are some small points to note. The beige coloured ceramic / crystal earpieces are quite sensitive and in circuit model terms appear much like a 26nF capacitor in series with some lossy resistance. 26nF is about 6K Ohms impedance at 1kHz. The LT44 is used in reverse to provide a higher impedance audio match to the top of the tuning coil via the diode. Looking into the diode side of the transformer, the impedance actually increases when the the earpiece is connected due to a fortunate broad resonance with the earpiece and transformer leakage inductances. The result is audio which is a bit restricted on bandwidth but which has a fairly good match and efficiency. Some of the ceramic earpieces in the supply chain are very poor at the moment and I recently sent back 67 out of an order of 100 as completely dead on arrival. The ones supplied with the kit are 100% tested.

Diodes

You can use a 1965 Mullard OA81 or OA91 germanium point contact diode if you really want to. In this circuit I've found that the modern low Vf silicon Schottkys work as well as the best germanium diode out of the junk box, and a lot better than a poor one of which there were plenty.

Coils

CRYSTAL SETS 5
Experimental Crystal Sets

CRYSTAL SETS 5: EXPERIMENTAL CRYSTAL SETS

.

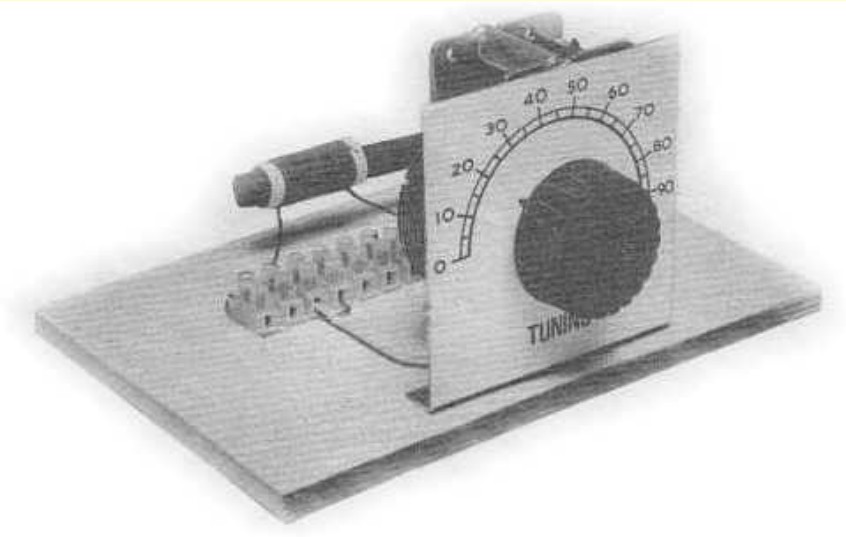

Picture 1 - The Complete Experimental Crystal Set

THE POPULARITY of the crystal radio arises from its simplicity, and the fact that it needs no power supply. The circuit here allows for easy experiments with tuning, aerial and diode coupling, and frequency coverage. Wrong connections can cause no damage to any components.

A Crystal Set is more often than not used for the reception of medium and long wave radio, but short wave reception is also quite feasible. It will normally be possible to receive some of the stronger international radio stations.

This is adapted from an article that appeared in the 1970's in Everyday Electronics, and gave me almost endless hours of fun!

BASIC CIRCUIT

The basic circuit is shown in Picture 2 below. The coil L1 can be air cored, or have a ferrite rod placed in its winding. The variable capacitor C1, in conjunction with aerial-earth capacitance, tunes the circuit to resonate with the wanted radio station frequency. The diode D1 "detects" or demodulates the radio signal so that the programme is heard in the earpiece.

This basic circuit can be modified in various ways to obtain better performance.

EARPHONE

As most constructors will be using a Crystal Earpice to listen to the crystal set it is essential that a 47k Ohm resistor is connected across the earphone terminals (TB1/1 and TB1/2 in the diagram), i.e. in parallel with the earphone, otherwise results will be very quiet.

A High Impedance headset of 20k Ohms (20,000 Ohms) may give even better results, but these are very difficult to obtain , so unless you happen to already own such a headset the Crystal Earphone with 47k resistor will be the only option. An ordinary magnetic earpiece or Walkman headphones will not work with a crystal set.

ASSEMBLY

Construction is of a 'breadboard' type using a wooden board of about 165 x 130 mm. A 12-way block connector, TB1, is used to connected together the components and this is screwed onto the wooden board. The use of a block connector provides an easy method of connecting the components together and then subsequently rearranging them as the experiments progress.

Tuning capacitor C1 is screwed to a bracket made of some scrap metal which is then also screwed firmly down to the baseboard, see Picture 1 above. Thin plywood screwed to the front edge of the baseboard would also provide a suitable method of fixing the tuning capacitor to the base. A knob with pointer is fitted to C1, and a scale is drawn and fitted behind this.

Except for C1, all connections are made by the terminals of the 12-way terminal block as shown in Picture 4. Loosen the screws with a small screwdriver, insert the bared ends of the wires, and tighten the screws. The various locations on the terminal block, TB1, are also shown in the circuit diagram, Picture 2.

AERIAL AND EARTH

Crystal receivers need a long wire aerial preferably strung outside and about 25m long, or as long as is possible to install. If this is outside it should be high and clear of earthed objects as this will improve performance.

An earth is absolutely essential for a crystal set to work properly. The earth lead can be run to an earth rod or spike that is buried to a depth of about 1 meter into damp soil. Or it may be soldered to a bare metal can which is buried in damp soil.

It is feasible, though not recommended, that the earth lead can be connected to the earthing terminal of a hi-fi system or even to the bare metal case of a personal computer that is plugged into an earthed mains outlet, but is switched OFF.

Stranded, insulated wire, or purpose made aerial wire can be used for the aerial and earth leads.

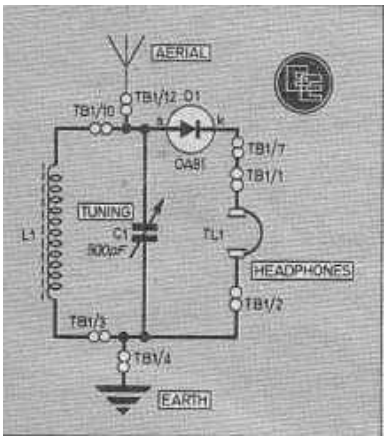

Picture 2 - The Basic Circuit

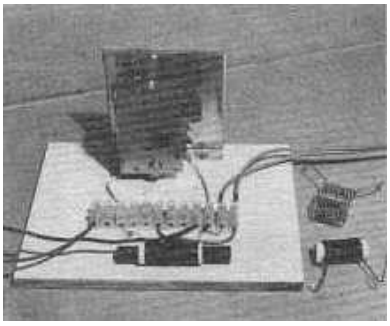

Picture 3 - Photo Of The General Layout

INDUCTORS (The Tuning Coils)

The following four coils are suggested for initial use as L1 :

Coil 1: Make a thin card tube to slide on a 10mm diameter ferrite rod, and on this tube wind about 105 turns of 32 s.w.g. enamelled copper wire, side by side. Secure ends with sticky tape.

Coil 2: Make a similar coil to to coil 1 having about 15 turns of 24 s.w.g. enamelled wire on the card tube. Loops of cotton will help hold the ends in place.

Coil 3: Wind 9 turns of 20 s.w.g. bare tinned copper wire on an object about 20mm in diameter. Remove and stretch to separate the turns, to obtain a coil about 25mm long.

Coil 4: Make a similar coil to coil 3, but with 5 turns.

The Ferrite Rod

It will be necessary to have a ferrite rod of about 60mm to 75mm long available. Coils 1 and 2 will provide reception of medium wave and the longer short wave bands. Coil 3 should cover about 3 - 10MHz shortwave with the ferrite placed in it, or about 6 - 18MHz with the ferrite rod removed. Coil 4 should cover about 6 -13MHz with the rod in, and about 9 - 20MHz without the' rod.

It will be noted that as the ferrite rod is inserted, any particular signal has to be re-tuned by opening Cl. This arises because the ferrite increases the inductance of the winding, so less parallel capacitance is needed for the same resonant frequency.

EFFICIENCY CHECKS

Tune in a m.w. transmission using coil 1 which gives good headphone volume. Place a microammeter or multi-range meter on a sensitive range in series with the headphones. A reading of 50-100uA or more may be obtained, depending on aerial, earth, earphone resistance and resistor value, coil and detector efficiency and strength of signals at your locality.

Placing the ferrite rod in the coil and re-tuning should boost the meter reading to some extent. Surplus or other detector diodes can be tried by substituting them in turn and noting the meter reading. Improvements to the aerial (or earth) will also show up as a rise in meter reading.

If experimenting with a crystal earpiece, which gives no direct current circuit, the meter may be clipped across the phone leads, i.e. D1 cathode to earth.

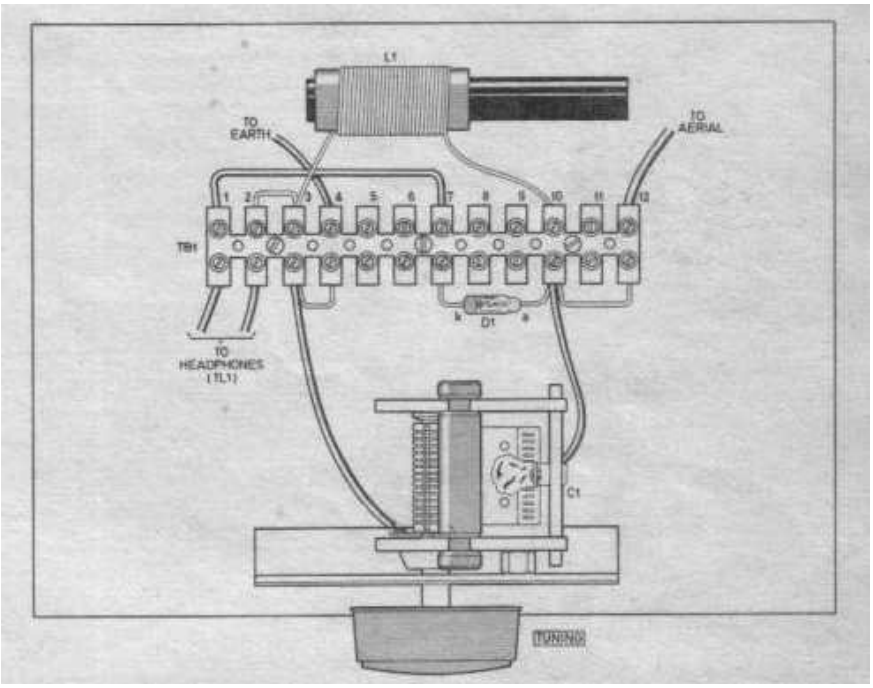

Picture 4 - Baseboard Layout Of The Crystal Set

AERIAL COUPLING

The aerial loads the tuned circuit heavily when connected directly to the top of the tuned circuit, as in Picture 2. This damps the tuning action and it can be found that stations spread out all over the dial, which is unsatisfactory.

The series capacitor, C2 connected in Picture 5(a) reduces the loading and thus improves the sharpness of the tuning. A variable or pre-set capacitor of about 250pF maximum is most suitable. for this role, though it is possible to experiment with a variety of fixed value capacitors in this range also.

Connecting the aerial to a tapping on the coil, as in Picture 5 (b) also sharpens tuning. It may also increase volume. Try about 2 turns from earth for coil 4, or 4 turns from earth for coil 3.

Another method is to have a coupling primary, as in Picture 5 (c). This consists of a second coil, with about one third the turns of the original wound on top of the existing coil.

You can even combine these methods to find what arrangement best suits the aerial in use.

The diode can be disconnected from the end of L1 and taken to a spare position on TB1 for example location TB1/9. You can then run a flying-lead fitted with a crocodile clip from this position, connecting it to various tappings on the coil as required as in Picture 5 (d). This method also reduces loading on the tuned circuit.

Coils with spaced turns of bare wire are readily tapped. For other coils, small loops can be made every ten turns or so, and crocodile clips can be attached to these when selecting tapping points.

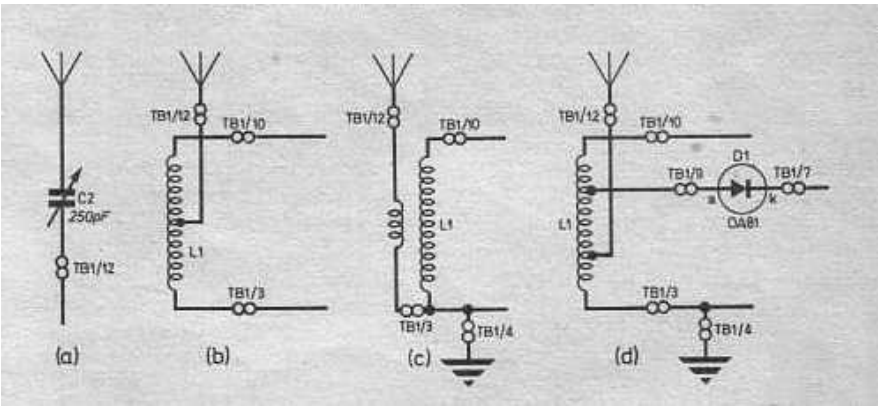

Picture 5 - Alternative Methods Of Aerial Coupling

SHORT WAVES

For shortwave reception, a good efficient outdoor aerial is certainly recommended. Evening listening in the region around 5 - 9MHz in often proves to be the most fruitful.

Since there is no amplification, as with a valve or transistor receiver, certain frequencies will seem to be completely dead at particular times of day. So if the crystal receiver works satisfactorily on medium wave and longwave, but no shortwave signals are heard, check again in the evening, or after dark, when conditions are different.

PARTS REQUIRED

C1	**365pF or 500pF Air Spaced Tuning Capacitor**
D1*	**OA47, IN34, OA81, OA90, OA91, IN94 or similar point contact small signal Germanium Diode** * The OA47 will be of particular interest since it has the lowest forward bias voltage of any of these diodes which will make the crystal set somewhat more sensitive and therefore louder. The US equivalent of the British OA47 is the IN34.
TL1	**High Impedance Headphones (20,000 Ohms) or Crystal Earphone**
TB1	**12-Way Plastic Screw Block Terminal**
Also Required:	**47 k Ohm Resistor for Crystal Earphone: Enamelled Copper Wire: 32 and 24 s.w.g. for L1: 20 s.w.g. tinned wire for L1: Ferrite Rod 10mm diameter x 75 mm long: 25m of wire for aerial: Wire and rod or spike etc for earth: Wood for base e.g. 10mm x165mm x 130mm: Scrap of metal of thin plywood for C1 bracket/front panel: Knob: Crocodile clip(s)**

Adapted from an article in Everyday Electronics magazine, November 1981, By F.G. Rayer.

HERE ARE A COUPLE OF VERY INTERESTING CRYSTAL SET DESIGNS SENT IN BY KRYSATEC - "THE RAT" - FROM THE CZECH REPUBLIC

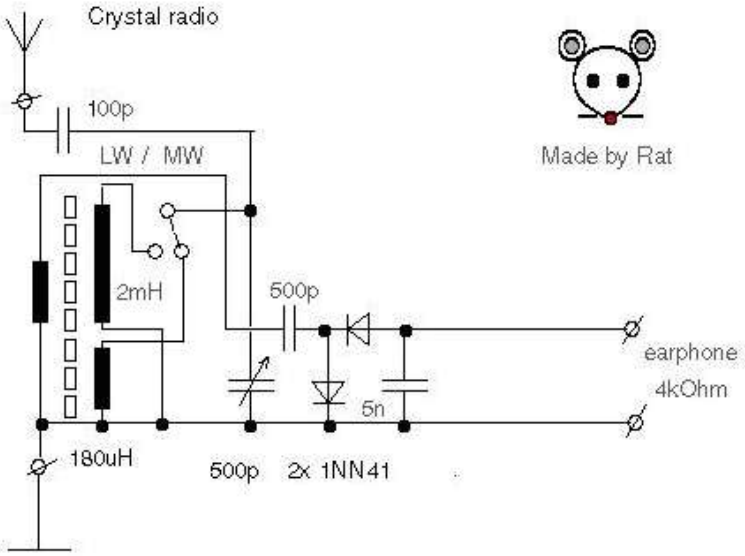

1/ Using old coils from old bulb radio for MW and LW band. Though it would be straightforward to wind the coils - one for Long Wave, one for Medium Wave and a coupling coil. Variable capacitor is 2 x 500pF only one half is used: 500pF. For the crystal earphone a resistor of about 82k ohm in parallel is required. This set also uses two Ge diodes as a multiplier in the quest for for higher audio signal output.

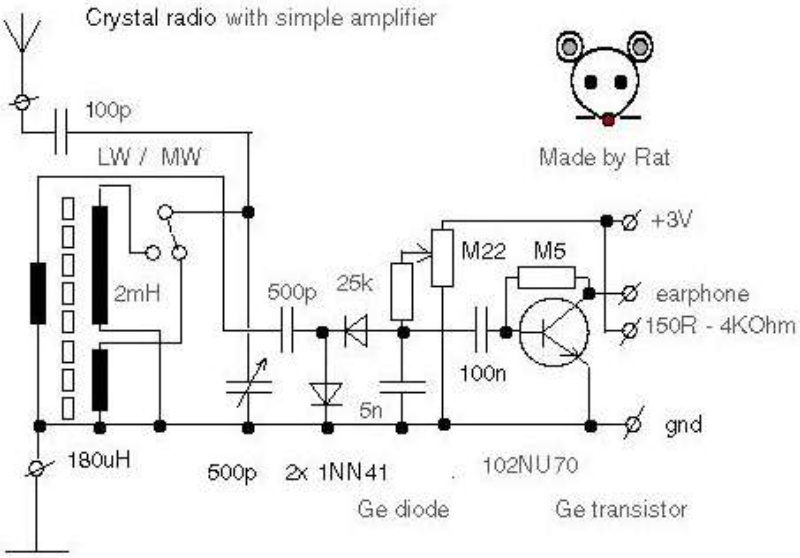

2. If signals are not strong signal in your location, then the above circuit design can be considered. A simple transistor amplifier is used. A variable resistor M22 is used for better sensitivity which can be adjusted for poor signals. This crystal radio is aversion from cca 1960 - 1970 y.

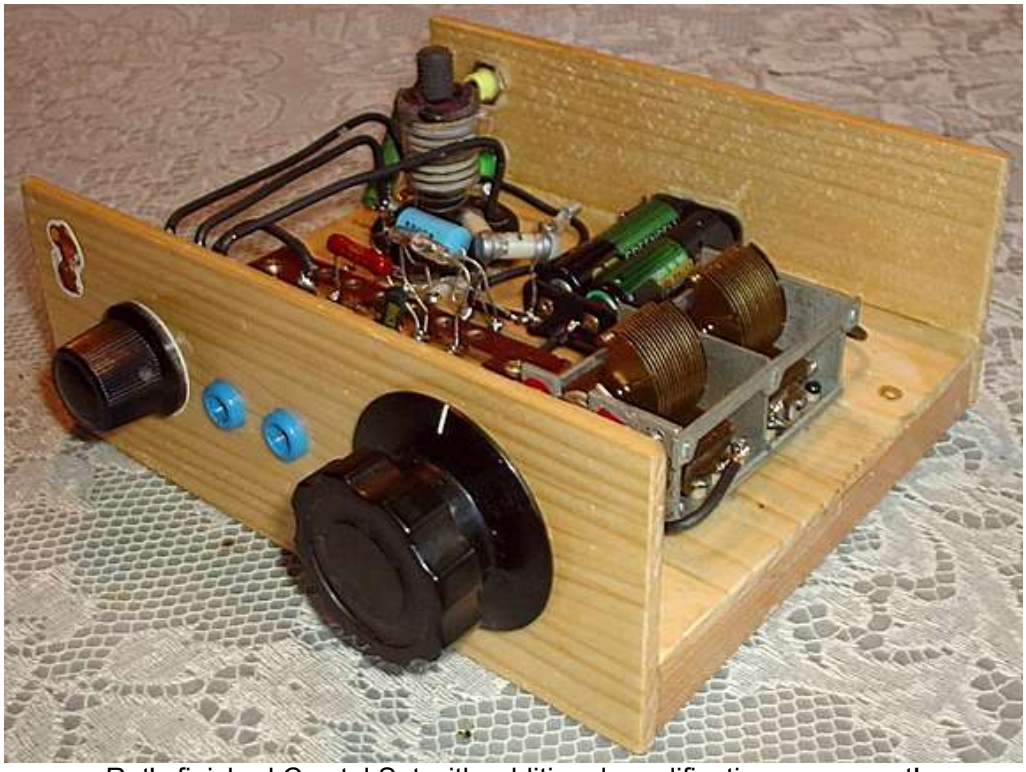

Rat's finished Crystal Set with additional amplification - very neat!

'Minilabs' Crystal Radio

BELOW: Ian Tomlinson kindly sent in a photograph of the box that contained the kit for his John Adams Toys 'Minilabs' Crystal Radio.

It is a very simple circuit consisting of the coil (inductor) with a sliding contact that provides variable tapping points, a diode and crystal earphone. All that is added is the aerial and earth. There is no variable tuning capacitor for simplicity and to keep costs down.

The coil provides the inductance required for tuning into a certain frequency (wavelength). These days a variable "tuning" capacitor is normally wired in parallel across the inductance (coil) in order to vary the resonance of the tuned circuit and therefore enable to easily tune into various transmitters on different frequencies. This crystal is tuned varying the number of turns on the coil (ie varying the inductance) by tapping off at different points using the sliding contact ("ball").

The crystal earpiece, or high Z headphone, is connected between the output of the detector diode (the other end from the coil) and earth. The volume from a crystal earpiece may be considerably improved by connecting a resistor of - somewhere between - 4.7 k and 47k ohms in parallel with the earpiece. A crystal earpiece cannot directly allow current to flow through it and the parallel resistor therefore allows current to better flow through the circuit.

'Minilabs' crystal set by John Adams Toys

A discussion on configurations for Crystal Sets by Felix Scerri VK4FUQ

This discussion, by Felix Scerri VK4FUQ, was posted at this address which no longer appears on the web www.tarc.org.au/techinfo2.htm (error 404) so here it is reproduced:

Crystal Set design is one of my passions closely allied with my obsession for audio and high fidelity.

My main interest in crystal sets, apart from the wonder of a radio receiver that does not require a power source, is the potential excellence of the recovered audio quality from normal AM broadcast stations.

Personally, it is one of my great laments that most people have never heard how good wideband AM can sound. A high performance crystal set or similar TRF approach is, in my opinion,the only way to do it. There are a few people around who have heard the audible results of my efforts,and can only agree.

I have often wondered,given the ultimate simplicity of the crystal set, being essentially a tuned circuit,a diode detector and some form of output device, what it takes to achieve optimum performance. What follows are my thoughts on the matter.

Crystal Set optimisation, is in my opinion, all about reduction of circuit losses. Essentially this means high "Q" tuned circuits and high quality detectors. Efficient output devices also help too. But as we will see, there are some trade-offs required as well. A high "Q" tuned circuit is always benefical, as a high "Q" tuned circuit has lowest RF losses,highest potential selectivity,and highest voltage at resonance, which is very useful for the diode being fed from the tuned circuit. Variable capacitors, even the "modern" miniature variable capacitors (although the older air dielectric units, as used in old valve receivers are more desirable) for various reasons,are generally quite efficient, and a higher "Q" coil will produce the most worthwhile improvements.The best (highest "Q") coils are wound with "Litz" wire, which is a multistranded woven wire with all strands insulated from each other. The performance of Litz wire wound coils is spectacular, unfortunately, although I know Litz wire is still being made, from personal

experience, it is VERY rare in Australia.

Efficient coil design can be quite complex and all my coils are wound on ferrite rods. There seems to be,at least for ordinary single wire windings (close wound), an optimum wire thickness for optimum coil "Q". I have determined .315 mm winding wire to be about optimum for simple (single wire) coils on ferrite rods. Thicker wire is NOT better, believe it or not.

Lacking Litz wire, an interesting winding approach I have developed is to use two slightly thinner wires wound as a bifilar winding connected together at the beginning and end of the coil, yields considerably higher "Q" compared to a simple single wire winding. I have found 0.25 mm winding wire optimum in this application.

Whilst high "Q" coils are beneficial from the RF point of view, there is a possible downside. If one is interested in maximum selectivity and sensitivity, there is no problem, but remember highest "Q" results in a narrowed audio band-width as a simple consequence of band-width. For high fidelity applications this could be a disadvantage under some circumstances, although there are clever ways around this.

Regardless of ultimate coil "Q", selectivity is a major issue with crystal sets generally. Here another trade-off is evident. For the maximum voltage into the diode, connecting the diode to the high impedance end of the coil (i.e. the top) yields the greatest voltage but the selectivity is usually terrible, because of severe "loading" by the diode circuit. For this reason, tapping well own the coil improves selectivity at the expense of signal volume (reduced voltage). Once again there are ways around this. As described in my "Double Tuned Crystal Set Tuner" article in "Amateur Radio" magazine, March 2002, the use of two separately tuned coupled resonant circuits allows top connection into the diode without compromising overall selectivity, thanks to the use of a second tuned circuit which is fed from the external antenna. The whole network forms a double tuned input bandpass filter and in practice this approach works very well. For single coil crystal sets I recommend the use of an un-tuned "antenna" winding adjacent to the "hot" end of the main coil, preferably adjustable (old paper reels from sewing cotton threads are ideal). This allows the degree of coupling to be optimised under actual listening conditions. The double tuned set up is best, yielding superb selectivity, but the un-tuned antenna coil arrangement also works quite well, especially if the diode is tapped well down the main coil.Tapping halfway works well.

The other method of performance improvement involves the use of the most effective detector system possible. Here things get very interesting. In fact the temptation is to use more complex circuitry, but that gets away from the charming simplicity of the crystal set. As an example, my own crystal set tuner has at times mutated into a TRF tuner complete with FET RF preamplifiers, active(powered) detectors and other enhancements. These modifications do work well, but loses the simplicity of a basic crystal set. In actuality, a simple diode detector can work extremely well, subject to some qualification. Diodes like to work with a reasonable level of RF input voltage. Audio distortion can result under conditions of low signal level, due to diode transfer curve non linearity and other factors, such as the widespread use of broadcast station "processing". The actual type of diode makes a difference. The 1N34A germanium diode is very popular for crystal set use, although in my experience just about ANY germanium diode will work, although it is worth trying different specimens. Some are definitely better than others. Even from a pack of twenty 1N34A's from the same source, some were definitely better than others. Measuring the average value of rectified output voltage across the diode load resistor will show which diodes are best. By the way, I regard a diode load resistor as being mandatory. I find a value of about 47K about right, especially if a crystal earpiece is being used or the crystal set is being used as a tuner feeding an audio pre-amplifier and following amplifier. If using high impedance magnetic type headphones, the headphones provide the diode DC load.

Another type of diode that is very interesting, is the hot carrier diode. There seem to be a lot of different hot carrier diodes around these days. There are even hot carrier diodes now being sold as "germanium diode equivalents". I have tried them and they do work acceptably well, but they are not quite as good as genuine germanium diodes such as the 1N34A. Typical UHF mixer hot carrier diodes, such as the 1N5711 will not work well in crystal set service simply because their "turn on voltage"is too high, similar to silicon diodes such as the 1N4148/914 series, which require a lot of RF input to function adequately as RF detectors, however a simple technique can be used to turn hot carrier diodes such as the 1N5711 into superlative detectors.

I guess we are cheating a little, because the technique is to use a little voltage bias supplied via a 1.5v battery, through a simple potentiometer voltage divider arrangement, with capacitor (for DC isolation) fed into the diode from the tuned circuit. With applied adjustable bias, I find the 1N5711 diodes absolutely superlative detectors under ANY signal strength conditions. I find the detection quality also superlative, with a clarity and low noise profile unmatched by any other diode arrangement. In my opinion, hot carrier diodes, running bias,are the best detectors overall.

Regarding other detector arrangements, the diode "voltage doubler" is often recommended, however my own

experiments with the doubler arrangement have been inconclusive and slightly disappointing overall. I have found no real advantage in their use over a simple (one) diode detector, believe it or not.

Yes, they do work, but they're nothing special, at least in my opinion.

Any comments on this general subject of crystal set optimisation would be welcome.

73's Felix Scerri VK4FUQ.
22nd July 2002

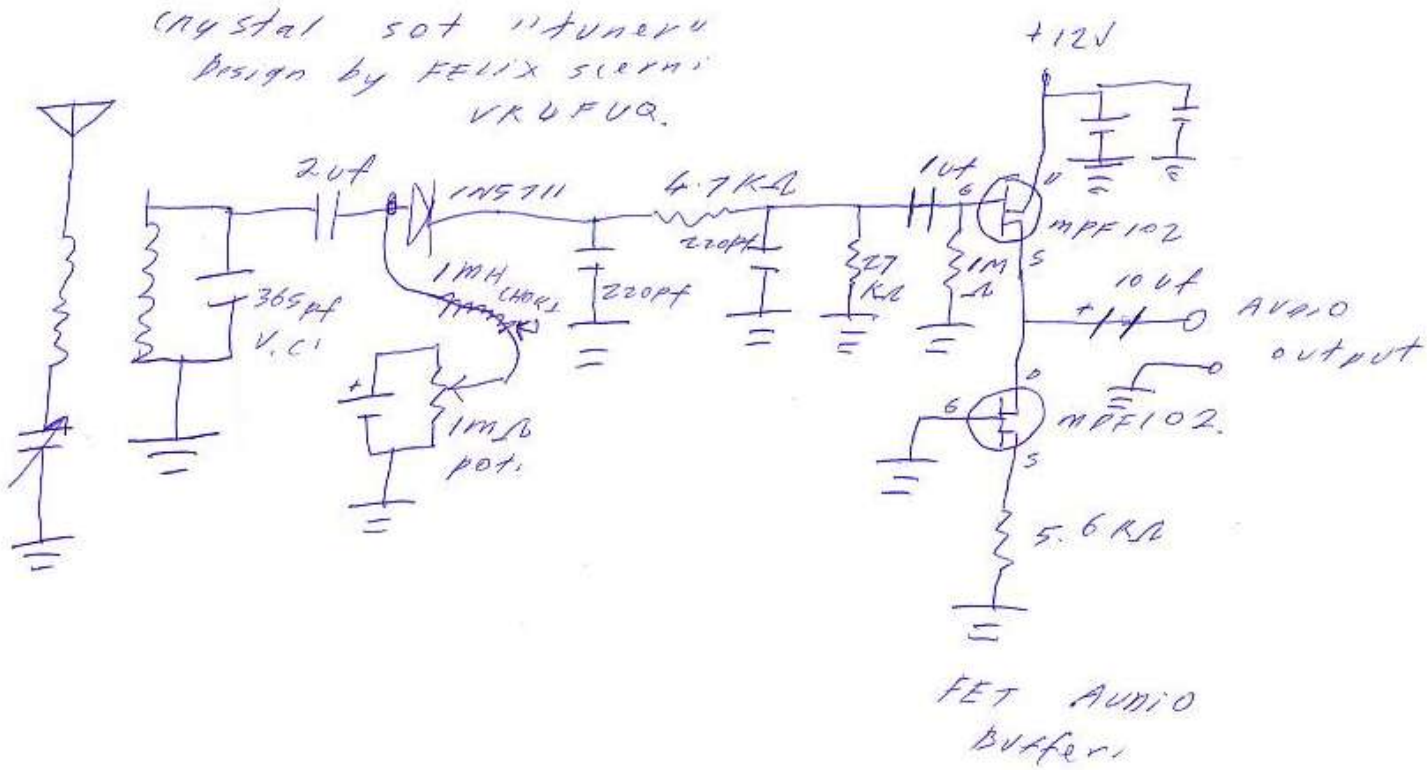

Above: CRYSTAL SET BASED CIRCUIT PROVIDING A HIGH QUALITY PROGRAMME SOURCE

IMPROVED VERSION OF THE ABOVE CONCEPT !! New update from Felix Scerri February 2010:

New 'two FET infinite impedance AM detector'

I've developed a new version of my old favourite FET 'infinite impedance' AM detector that I think sounds very nice. I include a short audio of one of our local AM stations. I picked this station as it is my reference 'torture test AM station' as they run very heavy 'processing' which normally sounds yuck with all my other (diode and non diode) detectors! However it's quite clean with this detector. What do you reckon? I'll do up a circuit if you'd like to feature it in your TRF radio section. A general draft article follows.

'A favourite non diode based AM detector that I've built and used many times over the years is the FET based infinite impedance detector, offering very good general AM detector performance, especially under weak RF signal conditions where diode based detectors do not perform well, especially in terms of audio distortion.

However one of the slightly strange things I've noticed about the simple FET based infinite impedance detector is the variable audio quality noted, even when using the same type of FET. Some I've built have sounded good and others slightly fuzzy when used with an audio preamp and fed into a high quality audio system. I've been giving this a considerable bit of thought of late and I've wondered if the audio distortion might be a result not necessarily of the detection process itself, but the FET stage in its guise as a 'source follower' audio stage which essentially, it is.

I have long been aware that as a simple audio buffer stage, the FET based 'source follower' can exhibit a considerable amount of audio distortion, and a technique I've long used to greatly reduce this audio distortion is to use a second FET in the source lead of the first FET as a 'constant current source' which serves to 'linearise' and

greatly reduce audio distortion in the buffer stage overall. So, to test the theory I built a simple one FET infinite impedance AM detector which worked well, but with just a hint of audio 'fuzziness' on received AM stations. So I added a second FET in the source lead of the first FET wired as a constant current source, taking the output from the source of the first RF detector FET and the source resistor and RF bypass capacitor off the source lead of the second FET 'constant current source'. The result, totally clean audio! The theory seems proved! I call this modified detector the 'Two FET infinite impedance detector'

))) Here's what is sounds like - click to play the audio file (((

Here is the circuit diagram:

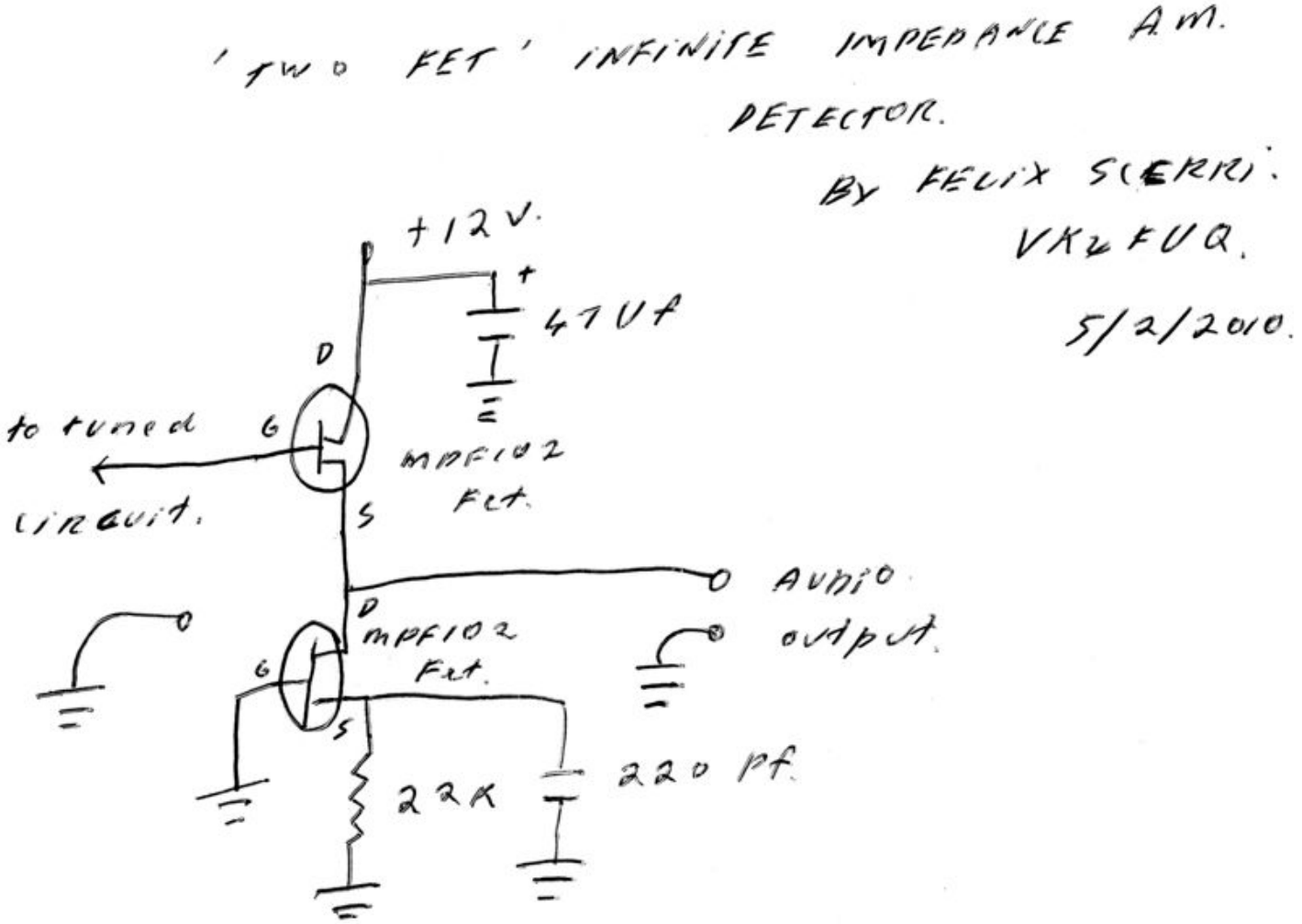

This detector has been a real eye opener for me in terms of its excellent performance, especially considering its circuit simplicity. Indeed in the past I have designed other more complex FET based infinite impedance circuits that do not quite work as well in practical terms as this latest circuit, at least according to my well calibrated ears!

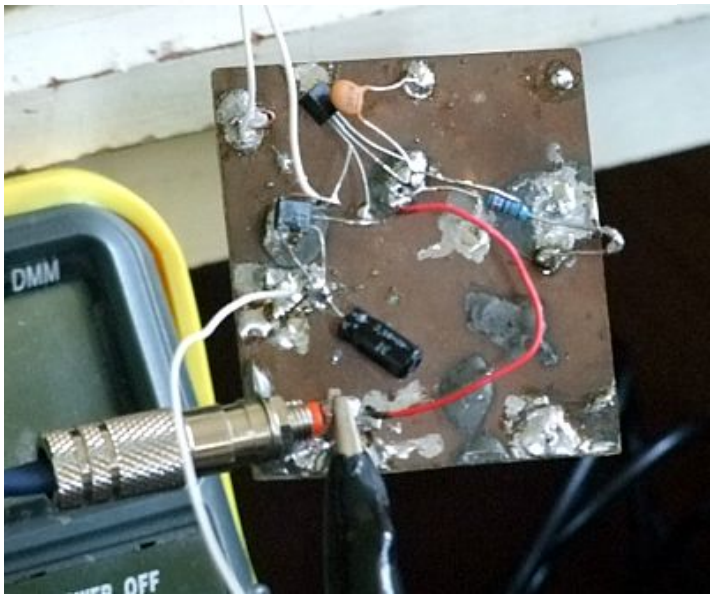

I do not have access to any precise test equipment but my well calibrated ears tell me this 'two FET infinite impedance detector' is a beauty, surpassing practically every other AM detector I've built even at low RF input, and that's rather a impressive claim and the audio quality when used as an AM tuner feeding a high quality audio system is quite remarkable. Possibly the best thing about this detector is its excellent performance under weak signal conditions. Diode based detectors also work beautifully, but the use of an RF stage to ensure detection over a linear portion of the diode's curve is mandatory! This compound infinite impedance detector works

beautifully on the sniff of a useable RF signal.

Just add a high Q tuned circuit and that's it!

Felix Scerri
VK4FUQ

A better FET for the 'basic' Infinite Impedance Detector:

Quite recently by accident, I've realised the MPF102 FET that I've long used in my FET based infinite impedance detectors is possibly not the best FET to use. This was the reason why I developed the 'two FET' infinite impedance detector some time ago which works very well.

However I've found the choice of a more suitable FET works beautifully in the basic FET based infinite impedance detector circuit, which has appeared for many years in many editions of the ARRL Handbook.

I use the 2N5457 and others of the same 'family' may be equally suitable, but I haven't tried them! However with a 2N5457 in place of an MPF102, the basic infinite impedance detector has became my AM detector of choice. It works beautifully even at low signal input with lovely and clean low distortion audio along with a very high input impedance for good tuning selectivity. It's a beauty! The basic generic circuit is attached, courtesy of Rod Elliott's ESP website.

73 Felix VK4FUQ
10 / 02 / 2012.

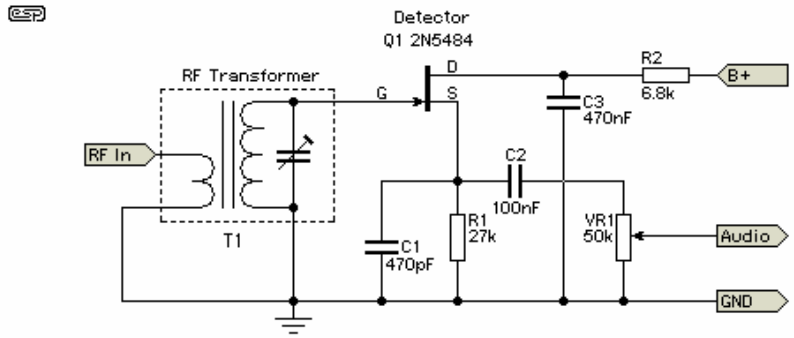

The basic generic circuit is attached, courtesy of Rod Elliott's ESP website
Felix Scerri VK4FUQ

As often happens with me, my renewed interest in FET based 'infinite impedance detectors' of late has led to some interesting new research and I may have considerably improved the 'two FET infinite impedance detector' as a result.

My research suggests that although the use of a CCS (constant current source) reduces audio distortion in an audio stage, the value of the 'source resistor' in the CCS stage is somewhat critical for best results.

By using a potentiometer in lieu of a fixed resistor I have found that a resistance value of around 470 kohms cleaned up all overall audio distortion. I used an MPF102 as the CCS in this circuit. An interesting and worthwhile little circuit refinement.

73 Felix VK4FUQ
21 / 02 / 2012.

A Minimum Component Count High Quality AM Detector

I was generally messing around with various circuit ideas and I came up with this AM detector circuit, a simple diode detector along with a FET stage. It was an attempt to provide good performance along with minimum number of components. Actually I've been pleasantly surprised at the excellent level of general performance and the best of all, it sounds great!

The circuit is quite conventional being a BAT 46 diode detector feeding an MPF102 FET buffer/ common source amplifier stage. I would ordinarily use a FET source buffer stage in this application, but opted to use a simple low gain FET 'common source' amplifier stage instead, with excellent results. I also used a BAT 46 Schottky diode instead of an ordinary germanium signal diode.

This was done for several reasons. Firstly, germanium diodes are now very hard to find but in any case these 'germanium diode equivalent' Schottky diodes are actually a superior diode, having very low noise, almost zero back leakage and an essentially complete absence of carrier storage effects and very good weak signal sensitivity. I call these diodes high fidelity diodes as they sound wonderful as RF detectors.

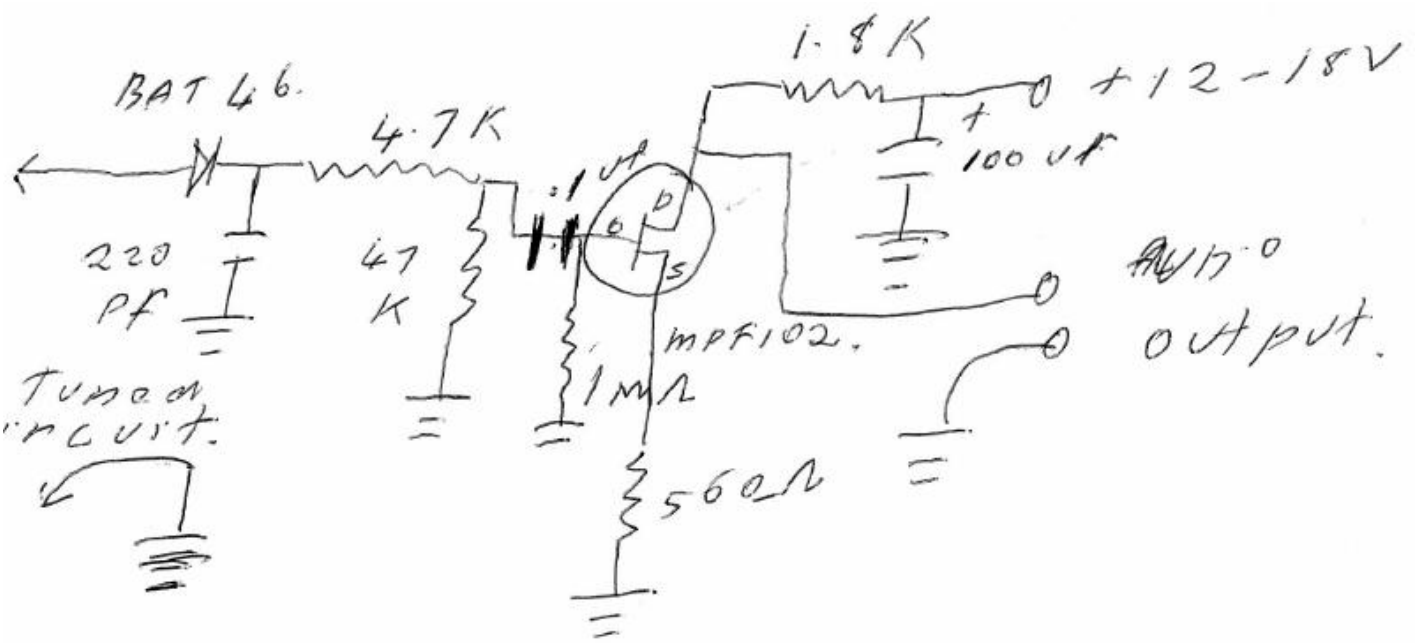

Circuit Diagram of the Minimum Component Count AM Detector by Felix Scerri

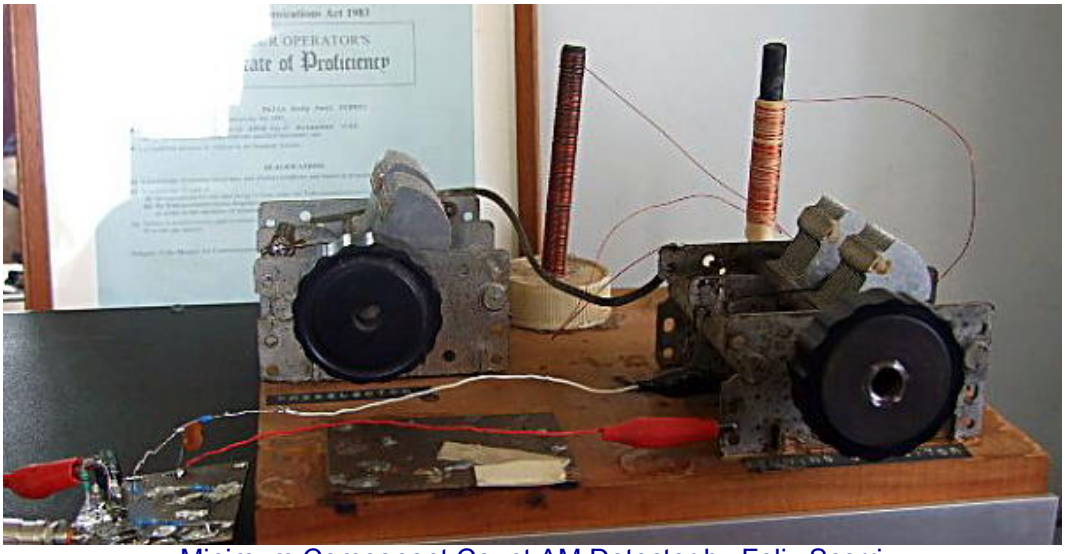

Minimum Component Count AM Detector by Felix Scerri

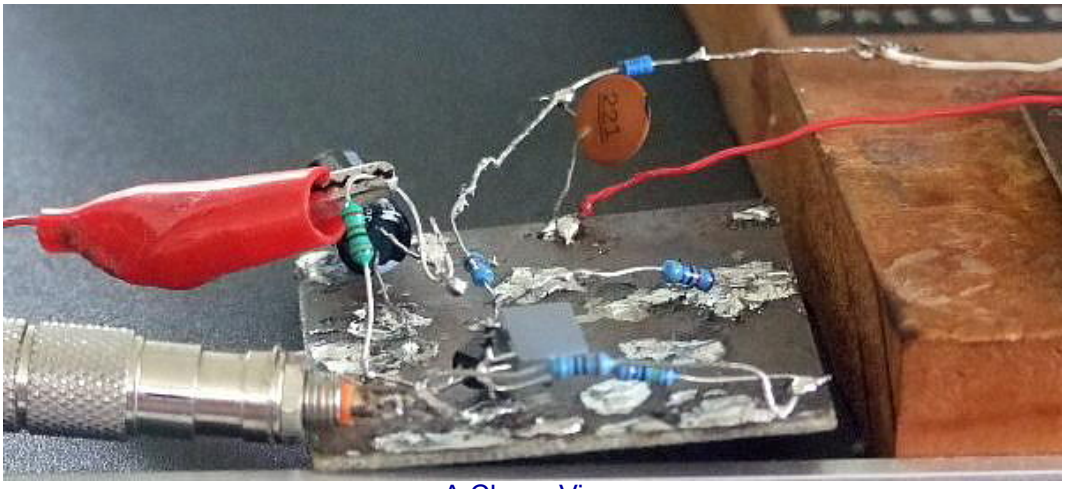

A Closer View

The high impedance of the FET's gate circuit is perfect for optimal buffering of the diode detector, something very important for good low distortion diode detector performance. Apart from providing slight voltage gain, the use of the common source FET amplifier is a new idea, as this prevents the possibility of incidental RF rectification occurring in a FET source follower stage, which can happen. A 1 uf plastic film capacitor may be added in series with the audio 'hot' output lead to block the DC offset out of the FET drain, if required.

Despite no additional RF stage ahead of the diode, audio quality on even relatively weak RF strength stations is actually very good, and of course the audio quality will be even better with increasing RF signal strength, something which will also increase the audio output level. Just on this, for a long time I was somewhat negative regarding diode detectors, as one AM station locally (the strongest one) was always distorted when using a diode detector.

I strongly suspected a transmitter fault, but my complaints were ignored, until one day some time ago when all audio distortion suddenly disappeared! Nothing was ever 'said', but I realised that my suspicions of a long standing transmitter fault were correct, after all!

73 Felix
VK4FUQ
02 March 2012

Voltage Doubler Detector

This is an AM detector circuit that I've long known about and which worked ok, but never seemed to work as well as it should have. However I spent some time late last night trying to optimise the circuit, with some success.

It is a curious circuit being essentially a 'voltage doubler' originally developed for power supply applications, and its use as an AM detector is hard to analyse! It seems that the component values in the circuit are somewhat critical for good performance and if not, the performance is rather 'ordinary'. The circuit that I eventually came up with uses a 150 picofarad 'input capacitor' with a 150 kohm 'load' resistor and loaded into a FET common source voltage amplifier stage (as previously described) through a coupling capacitor with a 1 Mohm input resistance.

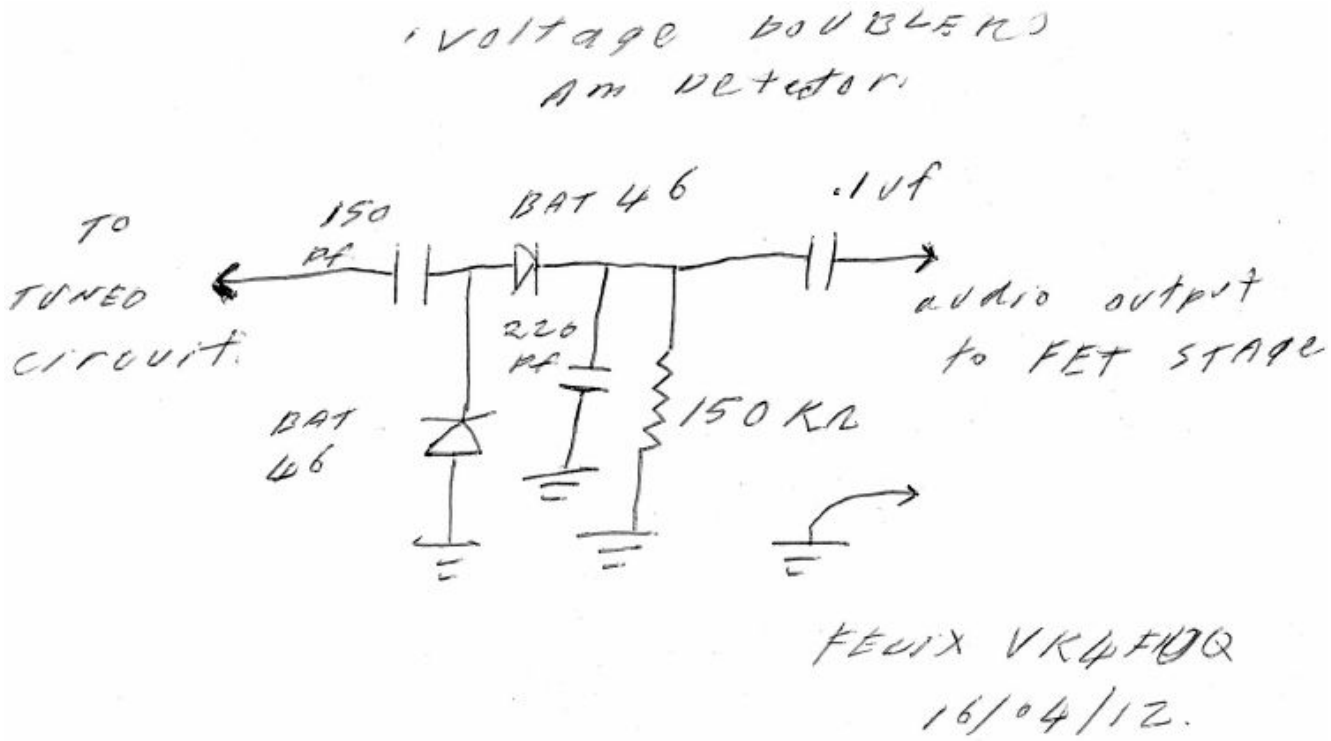

With these circuit values, it all works 'quite well'. Give it a go! It's an interesting AM detector with quite good 'sensitivity' and clean audio quality, and it seems to work well at low signal levels.

73 Felix
vk4fuq.

16th April 2012.

Simple AM detectors: What works best? A practical experimenters viewpoint.

I have written a lot about simple AM detectors for use as tuners for feeding into an audio amplifier, and it has been a long time interest. These days I use either diode based or 'infinite impedance' types of AM detectors. In this location our 'local' AM stations are quite distant and are therefore quite weak in terms of signal strength.

As such I find infinite impedance detectors based on field effect transistors give consistently better results for tuner applications due to their lower apparent overall detector distortion. Diode based detectors are quite 'fussy' as they require both optimal output buffering (AC/DC ratio) and an 'adequate' (beyond the diode knee) level of RF signal injection. http://www.tonnesoftware.com/appnotes/demodulator/diodedemod.html

Diode based detectors will happily 'detect' at very low signal levels, however the (inevitable) audio distortion that results, can be extremely irritating to the ear! Under these conditions I find infinite impedance detectors (even without additional RF preamplification and subject to individual FET characteristics), generally sound 'cleaner' and more pleasant to the ear.

FET's of course require a power source for operation whereas diodes are passive (un-powered) detectors (most of the time), however this is of no real advantage in a tuner application as an 'active' audio amplifier stage will generally be required anyway for audio level boosting, buffering etc.

In the end it will come down to a consideration of prevailing RF signal levels and other related circuit considerations at one's location. If local RF levels are strong, a well designed diode detector will give excellent results. If not, an 'infinite impedance' type of detector is most likely the better option unless one goes towards the option of additional RF preamplification prior to the diode detector.

73 Felix
vk4fuq.

17th April 2012.

ANOTHER DETECTOR by Felix Scerri !

I've tried diode based 'voltage doubler' (or more correctly 'diode integrator') AM detectors before with indifferent results, however the other day, just trying a few ideas I came up with this version that works rather well, with low audio distortion, high audio output and really 'nice' audio quality and the best of all, it seems to work very at very low RF input level.

The two diode 'voltage doubler' detector using two BAT 46 silicon schottky diodes feed directly into a MPF102 source follower stage set at 1 Megohm input resistance. The 'input' capacitor feeding the diodes from a tuned circuit is 68 picofarads.

I have the simple RF filter right on the output of the FET stage. In that respect this circuit is vaguely similar to the old 'Selstead-Smith' valve AM detector of the past. An interesting one! I am very happy with its general performance. Regards, Felix vk4fuq 11/04/2013

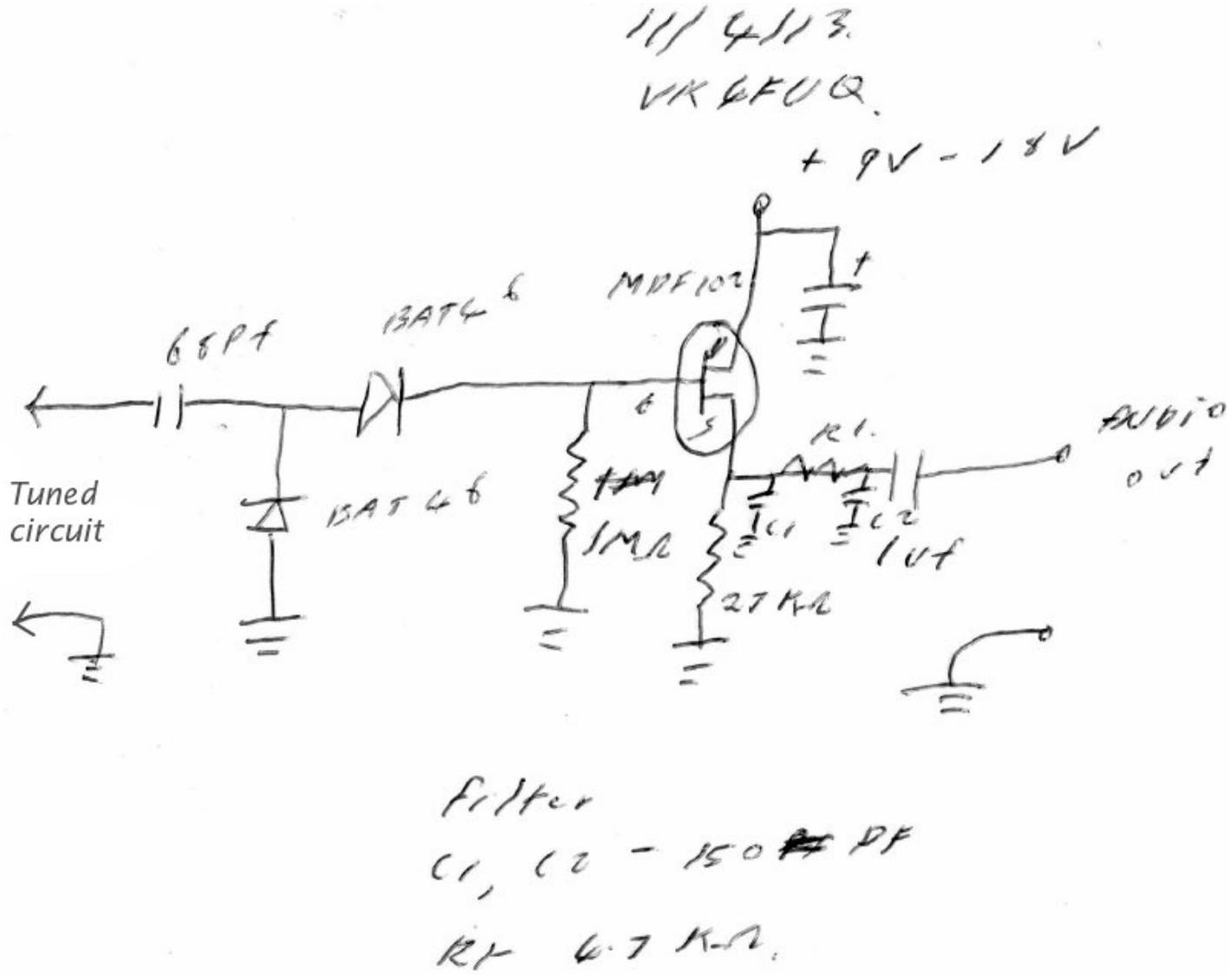

Felix Scerri VK4FUQ

UPDATE - JUNE 2013

G'day all, readers may recall the two FET infinite impedance detector I developed some time ago. That circuit worked well, but some samples of the MPF102 regretfully produced distorted output. However a recent discovery has resulted in an improved version that has truly exemplary performance.

The MPF102 is in all honesty a device essentially designed for VHF applications, but is often used in simple audio applications albeit with occasionally indifferent results, due to general device parameter 'spread'. More or less by empirical trial and error I have found that a simple change in source resistor value to 100 k (from a much lower value), pretty well fixes everything.

In a FET source follower circuit this is interesting as the output impedance is actually a lot lower than 100 k due to the action of the FET's transconductance. It is similar to the action of a bipolar transistor emitter follower circuit. In fact a simple infinite impedance detector with a 100 k source resistor actually works very well and will be good enough for many applications, however the addition of a second FET as a constant current source does markedly reduce overall audio distortion in the stage overall, and produces very clean and low distortion audio quality and also reduces the output impedance considerably (good for tuner applications), so take your pick!

Regards, Felix vk4fuq 02/06/2013.

UPDATE - JANUARY 2014
A simple modification to the basic FET 'infinite impedance' AM detector that dramatically improves performance.

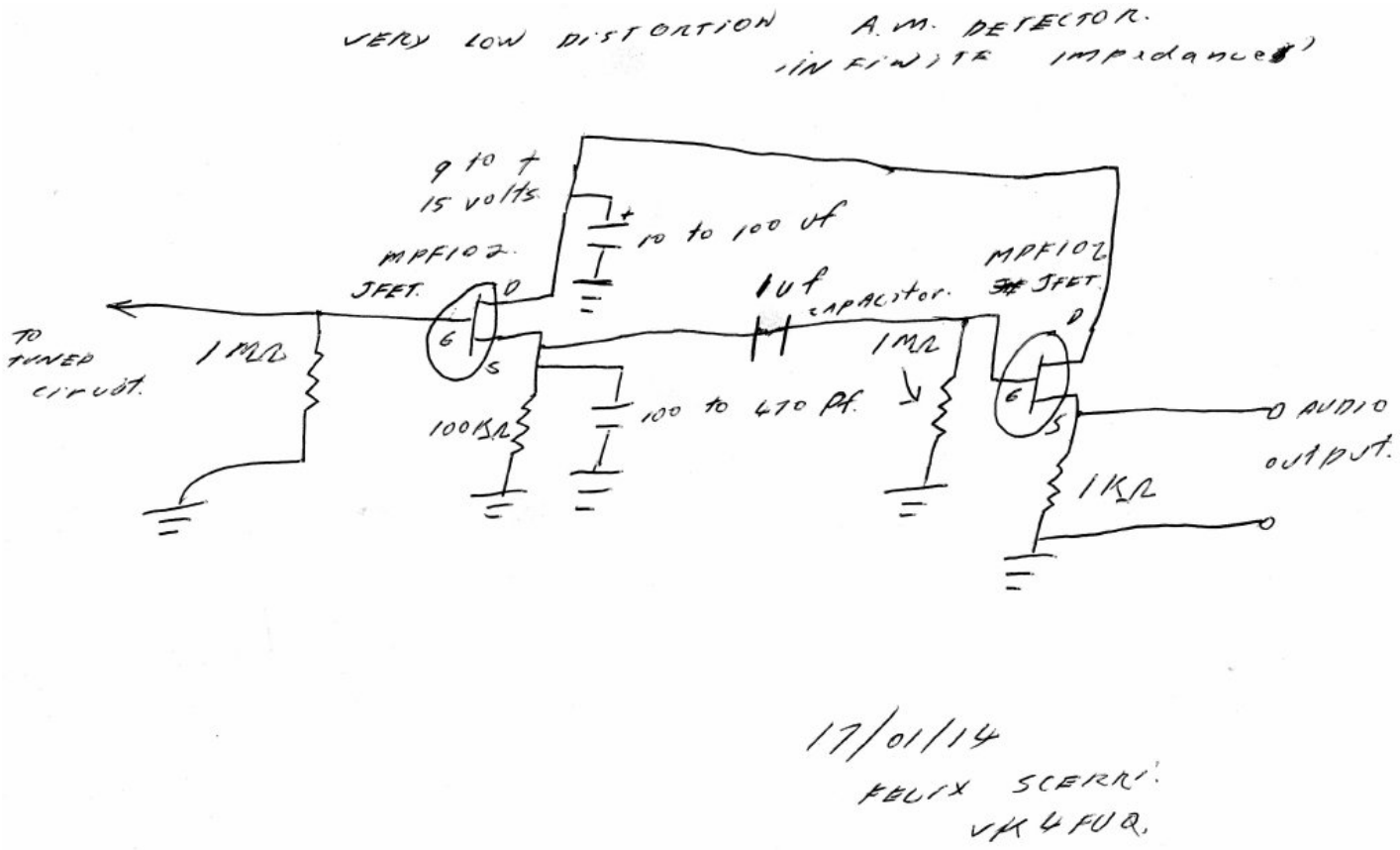

G'day all, over the Christmas break just messing around I worked out (mostly by accident), a simple modification for the simple FET based 'infinite impedance' detector circuit that dramatically improves weak signal performance and also greatly reduces audio distortion.

Essentially by the addition of another FET 'buffer' stage, another source follower, capacitively coupled from the first detector stage. The circuit is actually a simplified version of the circuit that I described in this link, http://sound.westhost.com/articles/am-radio.htm (figure 6) and testing the two head to head, they both sound superb and the simpler version is actually somewhat easier to build. I cannot get over how low distortion and 'nice' the recovered audio sounds. It is a joy to listen to!

Regards, Felix vk4fuq 12/01/2014.

Diodes for ‘weak signal’ crystal set applications.

As I am primarily interested in using crystal sets as AM tuners for feeding into a preamplifier/amplifier and loudspeakers, the actual type of diode can be relatively critical. In a strong signal area, not so much, but in a weak signal area such as where I reside, definitely. A diode with a good ‘square law’ performance (the area below the ‘knee’ in the diode curve), generally results in much cleaner and lower distortion than other good performing diodes, and believe me diode distortion under weak conditions, even with optimised diode ‘buffering’ used is very nasty sounding to the ear!

Testing many, many diodes in actual working crystal sets and listening critically to the audio output, it seems to me that the best diodes to use under weak signal conditions are the so called ‘gold bonded’ germanium diodes. I have sampled many different gold bonded germanium diodes and they all work well in this specific application, although sometimes the rectified output voltage may not be as high as other germanium or silicon schottky diodes, however the audio quality is much cleaner and shows much less apparent distortion!

I have tried OA5, OA47, IN141 and several ‘CG’ gold bonded germanium diodes with consistently excellent results. Other ‘ordinary’ germanium diodes may also work well under weak signal conditions, but they will need to be tested individually to check actual performance in a working circuit. One thing that I have noticed about germanium diodes is that due the ‘point contact’ nature of their construction, even diodes of the same specific type can exhibit rather different levels of performance!

The otherwise very good BAT46 silicon schottky diode works extremely well at good RF input level but not so well at weak RF input, especially when heavy broadcast ‘processing’ (commonplace these days), is used. New ‘gold bonded’ germanium diodes are probably no longer made although I am aware that they can be purchased through vendors over the internet. Apart from that, they may be found in old gear. As stated earlier, ordinary germanium diodes may be quite good but will need to be checked individually. Diodes are complex things!

Felix (vk4fuq). 29/01/2014.

* * * * * * * * * * * * * *

Just when I thought that I’ve tried everything I realised that I’ve not tried a voltage doubler (diode integrator) detector with an RF stage in front. It is an unfortunate fact that all diode detectors ‘need’ a good RF injection level (and buffering) or audio distortion becomes ‘bad’ (an understatement!)

Consider yourself very lucky if you live in a strong signal area! (unfortunately I don’t). Anyway I quickly built a couple of prototypes which worked ok but not as well as hoped. Initially I tried using a source follower buffer (no voltage gain), but converting it to a common source amplifier (with appreciable voltage gain), seemed no better, which was strange.

After staring at my prototype for what seemed like forever with my magnifiers on, I (finally) realised my mistake. A common source stage takes its output off the ‘drain’ terminal of the FET, not the ‘source’ terminal as it does with the FET source follower buffer stage. I shifted one wire, and all worked as expected and it sounds fantastic! All diode detectors (one diode envelope detectors, doubler detectors etc), need good RF input and a simple untuned FET RF gain stage works very well. As to the sound, it sounds great.

73 vk4fuq 10/03/2014.

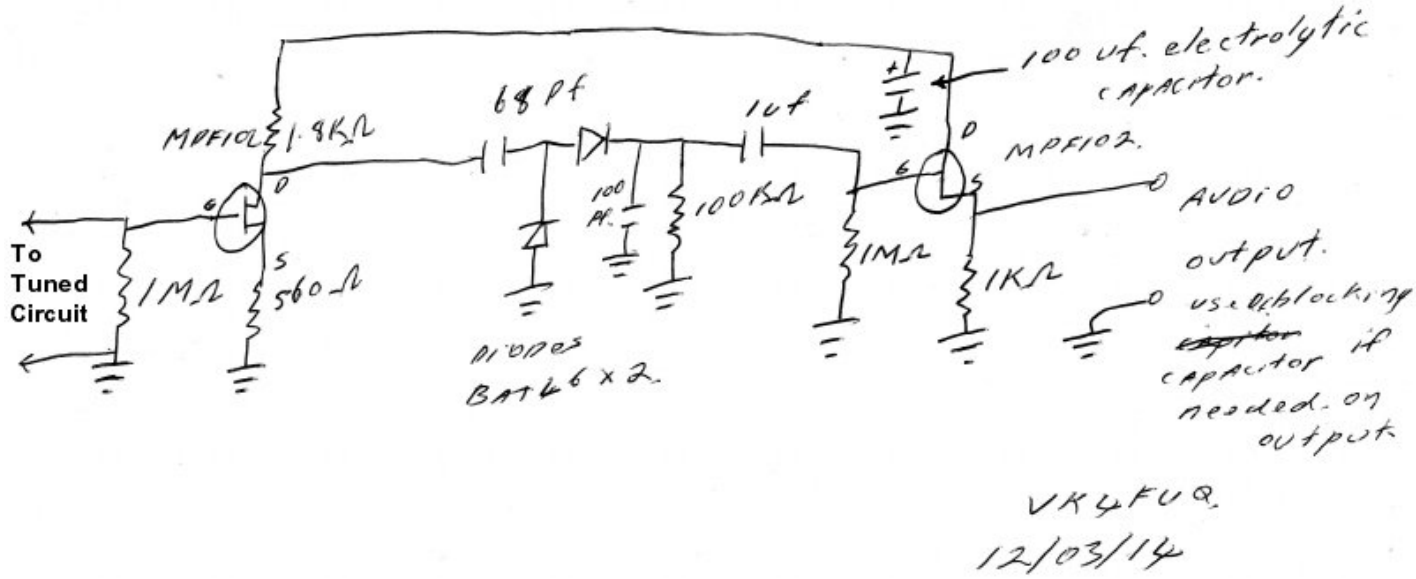

Felix Scerri's FET Crystal Set with Voltage Doubler

A 'nice sounding' AM detector - update October 2015

Looking through these pages the other day I was slightly shocked to realize that I've completely forgotten about some of the circuits that I've contributed in earlier days! They all work pretty well, however in my advancing older age and a little like my tastes in high fidelity generally, I'm starting to show a particular preference for 'nice sounding' bits of audio gear.

I guess that this also means low noise/low distortion too, although with AM broadcasting, at least in this country and probably elsewhere in the world too, the very common use of broadcasting 'processing' tends to make it hard for AM detectors generally, often resulting in a 'hard/compressed' sort of sound although still low in distortion, is not 'nice sounding', if that makes any sense!

Well of all the AM detectors that I've tried and/or developed, only one sounds 'nice' when confronted by heavy broadcast processing and that is an AM detector 'based' on a voltage doubler/diode integrator circuit (similar to the above circuit, actually the 68 pf capacitor should be changed to .1 uf, for slightly greater output).

It has taken me a very long time (years) to 'optimise' this circuit, but as it presently stands this is my favourite 'nice sounding' AM detector, and gets most use for general high quality listening on the AM broadcast band. It sounds really good! It somewhat reminds me of an old OA47 gold bonded diode detector from years ago before such abhorrent 'processing' became commonplace!

Ah yes the OA47….now that is a lovely sounding detector diode!

Regards, Felix vk4fuq. 17 / 10 / 2015.

* * * * * * * * * * * * * *

That's it for crystal sets. I hope you try building one, it's easy and great fun!

See some useful links below....

73's
Mike

Crystal Sets (Part1) | Build Your Own Crystal Set (Part 2)

Spider's Web Crystal Set (Part 3) | Crystal Set By Kenneth Rankin (Part 4) | Crystal Radio Links

Amateur Radio
MØMTJ Visit my amateur radio pages MØMTJ
Visit my Amateur Radio Pages >

No AM radio stations or transmitters in your locality or country?

Has your local medium wave broadcast station closed or been moved to VHF/FM or Digital? Don't worry. You can still build and experiment with crystal sets and TRF radios by also buying or even building a simple low power AM transmitter. So, not only can you use your crystal sets but you can also run your own radio station that can be heard in and around your home - playing the music or programmes that you want to hear!

SSTRAN AMT3000 Superb high fidelity medium wave AM transmitter kits from SSTRAN. Versions available for 10kHz spacing in the Americas (AMT3000 or AMT3000-SM) and 9kHz spacing in Europe and other areas (AMT3000-9 and AMT3000-9SM). Superb audio quality and a great and well designed little kit to build: http://www.sstran.com/pages/products.html

http://www.sstran.com/

Other AM transmitters available:

Spitfire & Metzo Complete, high quality ready built medium wave AM Transmitters from Vintage Components: http://www.vcomp.co.uk/index.htm Vintage Components offer a choice of the high quality Spitfire and Metzo transmitters:

SPITFIRE AM Medium Wave Transmitter with 100 milliwatt RF output power:

http://www.vcomp.co.uk/spitfire/spitfire.htm

METZO AM Medium Wave Transmitter with built in compressor:

http://www.vcomp.co.uk/metzo/metzo.htm

AM88 LP A basic AM transmitter kit from North County Radio.
http://www.northcountryradio.com/Kitpages/am88.htm

LINKS: Fine links to more Crystal Radio websites here

Component Suppliers: Links to electronic component suppliers here

Visit my Amateur Radio Pages >

Crystal Sets (Part1) | Build Your Own Crystal Set (Part 2)

Spider's Web Crystal Set (Part 3) | Crystal Set By Kenneth Rankin (Part 4) | Crystal Radio Links

^Top Of Page

Home | Contact | Site Map | Radio Stations & Memorabilia | Amateur Radio

Crystal Sets Introduction | Resistor & Capacitor Conversion Tables

www.mds975.co.uk © 2004 - 2015

Radio a galena FM

per la “banda commerciale” 88 – 108 MHz

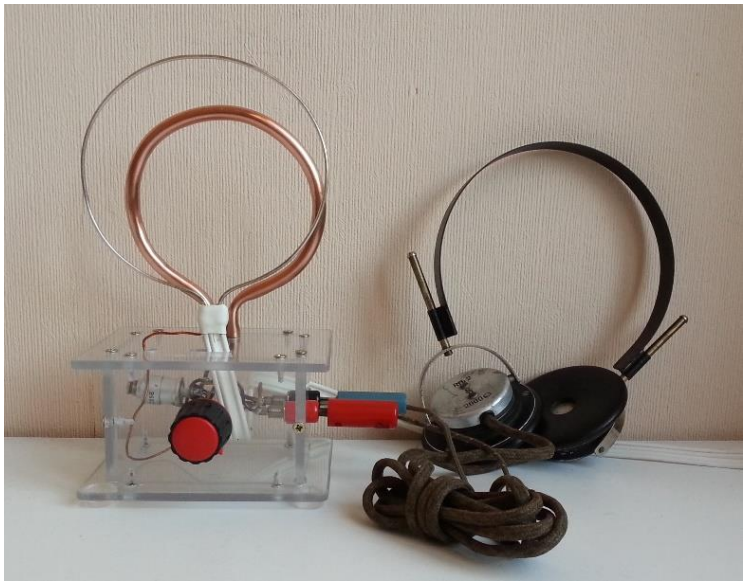

Figura 1: Radio a galena a montaggio ultimato.

Sono passati già otto anni da quando decisi di sperimentare con il primo ricevitore a galena. Lessi come costruirne uno proprio da questo sito (Realizza il tuo Primo Ricevitore a cristallo) e decisi di montarlo pensando di continuo che non avrebbe mai potuto funzionare veramente. La sorpresa nel “sentire qualcosa” da un vecchio auricolare telefonico è stata grande, e da allora la Vecchia Signora ha rapito la mia passione per l’elettronica, dirottandola verso la radiotecnica. Nonostante questa galena fosse pensata per ricevere segnali ad onde medie (come tutte le prime galene che si rispettino) è interessante notare che, già allora, quell’unica stazione che riuscivo a ricevere ho scoperto poi appartenere alla gamma delle onde corte… perché non è da pochi anni che le onde medie sono in crisi!
Stazioni abbastanza potenti per permettere un ascolto soddisfacente in cuffia da qualsiasi punto del Pese sono ormai quasi esclusivamente disponibili in onde corte, gamma che di sera offre segnali fortissimi provenienti da posti anche al di là del globo. Ma la radio a cristallo era pensata per permettere l’ascolto “dell’emittente locale”, e non di segnali provenienti da chissà dove, ed in chissà quale lingua! Sono cambiati i tempi, dunque… cambiamo anche la radio a glena, no? Eppure oggi le moderne tecnologie ed il più basso costo dei materiali permettono di realizzare ricevitori a cristallo di grandi prestazioni, proprio quando, paradosso, il tempo della radio a galena è da considerarsi ormai concluso.
L’unico territorio abbastanza inesplorato è quello della gamma broadcasting F.M., e ciò ha spinto gli appassionati amministratori e lettori di questo sito a sperimentare con le VHF, come è stato possibile notare dai progetti di radio a cristallo per FM che hanno fatto capolino da qualche anno ad oggi. Se si vuole sperimentare, d’altro canto, bisogna farlo subito giacché si sente parlare sempre di più di D.A.B. e di digitalizzazione…
È possibile ascoltare una radio a galena in FM solo se si abita nelle immediate vicinanze di un ripetitore; circa 10km di aperta campagna e di costa marina (ho provato) sono troppi per un ricevitore a cristallo.

Il caso ha voluto che andassi ad abitare in una città dove ci sono dei ripetitori, e questo mi è bastato per decidermi a sperimentare, rispondendo all'appello lanciato su questo sito qualche anno fa.
Questo articolo, già comparso nei numeri di giugno e di luglio-agosto della rivista Radiokit Elettronica, nasce come proposta di realizzazione del circuito presentato dal lettore Carlo Bramanti su questo sito (Galena per FM). Ad ogni modo il progetto da me proposto differisce alquanto dall'originale per la cruciale scelta del diodo rivelatore, del quale presento un piccolo "lavoro di ricerca", e per la presenza di un nuovo componente.

1. Schema elettrico

Il circuito elettrico della galena FM, riportato in Figura 2, risponde all'esigenza di essenzialità tipica di ogni ricevitore a cristallo. Lo schema elettrico deve essere semplice, soprattutto se si vogliono ricevere deboli segnali, per di più nella banda delle onde ultracorte.

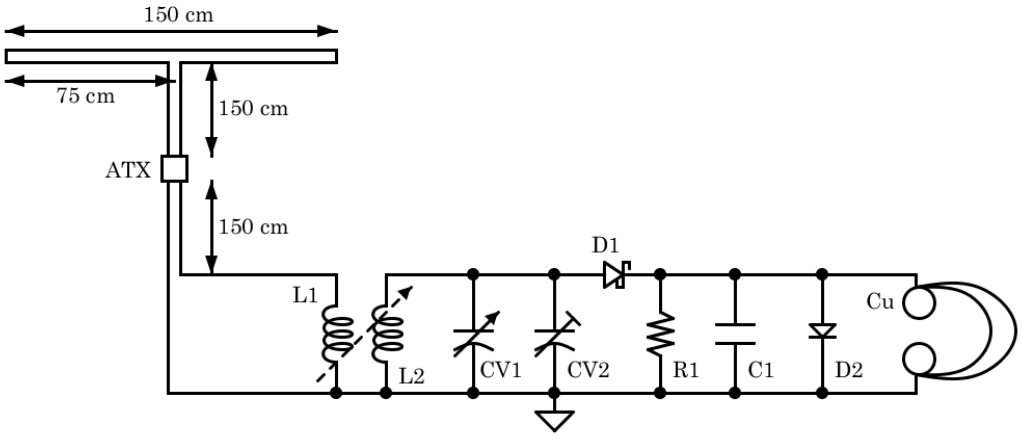

Figura 2: Schema elettrico della radio a galena FM.

I componenti adoperati sono:

- L1 = vedi testo (sezione Bobine L1 e L2);
- L2 = $0.137\mu H$, vedi Figura 7;
- CV1 = Johnson 160-211-1 $(2.7 - 10.8)pF$ per sezione;
- CV2 = trimmer tubolare da $(5 \div 15)pF$;
- D1 = diodo Schottky Skyworks modello SMS7630-001;
- D2 = diodo di segnale 1N4148;
- R1 = $47k\Omega$, $1/4$W;
- C1 = $100pF$ ceramico a disco;
- Cu = cuffie ad alta impedenza ($2k\Omega$ o superiore);
- ATX = connettore ATX femmina e header pin;
- Due connettori banana femmina.

Il segnale ricevuto dall'antenna è inviato alla bobina L1 che, insieme all'induttanza L2, forma un trasformatore RF in aria. L'induttore L1 è quindi il classico "primario aperiodico" il cui accoppiamento alla bobina di sintonia L2 è variabile a piacere. Il circuito accordato per la sintonizzazione delle stazioni è completato dall'ancor più classico condensatore variabile CV1 e dal correttore CV2, indispensabile

per la taratura del ricevitore. Seguono poi il diodo rivelatore D1 ed il filtro di deenfasi, costituito dal resistore R1 e dal condensatore C1.
Un componente piuttosto insolito, presente nella mia radio, è il diodo D2, in parallelo all'uscita; del tutto assente nelle classiche galene, questo diodo serve per proteggere il rivelatore, ed il motivo della sua presenza verrà spiegato più avanti.
Un paio di cuffie ad alta impedenza Cu completano il tutto, e possono essere sostituite da un qualsiasi amplificatore (va bene anche l'ingresso del microfono di un PC).

2. Realizzazione

Come in tutti i ricevitori a cristallo la realizzazione è sempre un passo importante; ottime saldature e collegamenti cortissimi sono la chiave per ottenere una radio a galena funzionante. Di seguito vi riporto nel dettaglio le varie fasi del montaggio arricchite di consigli empirici e note pratiche in parte sperimentate per la prima volta con questo ricevitore.

2.1. Antenna

Per questa radio le antenne possibili sono tante, ma ho condiviso la scelta del dipolo ripiegato già proposta da Carlo Bramanti per diversi motivi: Perché ha una resistenza di irradiazione di circa 300Ω, maggiore rispetto a quella del classico dipolo (75Ω), quindi tensioni di segnale più alte ai capi dell'antenna; perché è piuttosto compatta (basta con le antenne chilometriche ed ingombranti!) ma, soprattutto, perché ho trovato un modo facile e veloce per realizzarla. Sono riuscito a reperire una piattina per i vecchi impianti elettrici (una rimanenza di una ferramenta) che comprendeva pure il conduttore di messa a terra. Dopo averlo eliminato ho ritagliato la piattina in tre parti, di lunghezza indicata in Figura 2, per realizzare così un dipolo ripiegato ed un cavo di discesa. L'antenna a montaggio ultimato si presenta come in Figura 3. In pratica ho spelato i due conduttori alle estremità di uno dei pezzi da $150cm$ per poi saldarli tra loro.

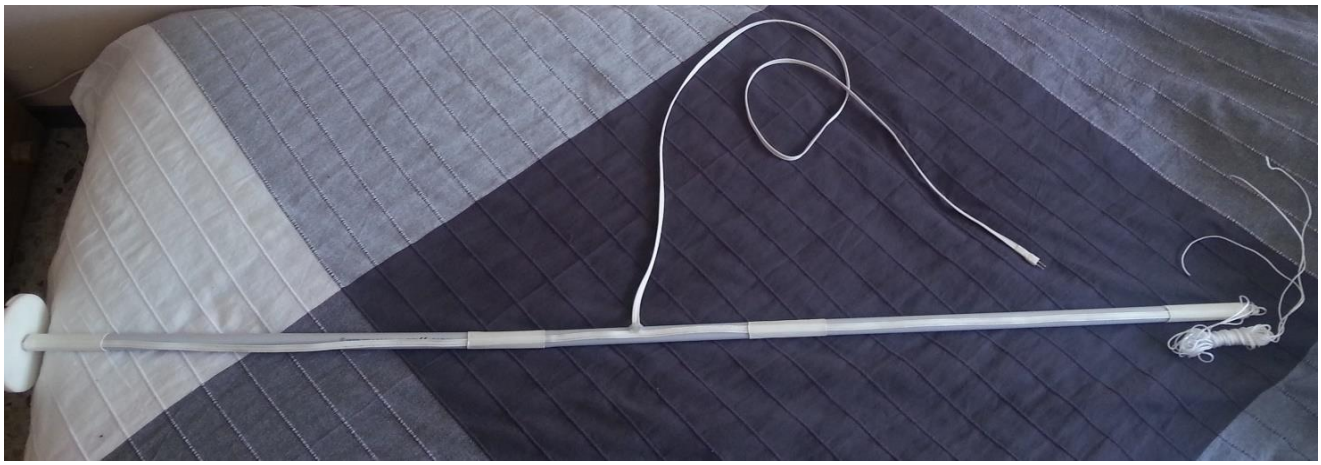

Figura 3: Dipolo ripiegato a montaggio ultimato.

Ho poi tagliato al centro uno dei due fili per realizzare la presa centrale per "il cavo di discesa", quello che termina con il connettore header pin (Figura 3). Il particolare della presa è visibile in Figura 4.
Chi non riuscisse a reperire una piattina (ormai non più in commercio) può sempre acquistare un dipolo

Figura 6: Esempio di impiego del dipolo ripiegato.

Figura 4: Particolare della presa per il cavo di discesa.

Figura 5: Particolare dei cordini fissati alla canalina.

ripiegato già pronto all'uso, di quelli venduti per i sintonizzatori degli impianti stereo domestici. Di solito anche queste antenne sono realizzate con una piattina di colore rossiccio/rosa trasparente.

Per poter mantenere l'antenna sempre "in piedi" ho pensato di fissarla su una canalina da $2cm$ di diametro, e lunga $152cm$ (poco più del dipolo, insomma). Per il fissaggio (peccato che non si possano usare viti metalliche…) ho adoperato degli spezzoni di tubo di gomma termorestringibile bianchi, lunghi circa $10cm$, e disposti a distanza quasi regolare, come visibile in Figura 3.

La presa centrale (Figura 4) è stata invece fissata con della colla termica trasparente. Sempre dalla Figura 3 si può notare anche una matassina di cordino bianco; è una corda da $1.5mm$ di diametro, di polipropilene (abbastanza anti ingarbugliamento) ritagliata in tre pezzi lunghi ciascuno due volte la lunghezza del dipolo. Economica, questa corda mi ha permesso di fissare l'antenna in qualsiasi punto di una stanza, realizzando dei rapidissimi tiranti. Basta fare un paio di nodi ed il dipolo ripiegato si mantiene in piedi, come si può vedere dalla foto di Figura 6. Questa soluzione, tanto semplice quanto funzionale, permette anche di appendere l'antenna, per fissarla in punti più in alto, lontani dalle pareti e dal pavimento. Ai non addetti

ai lavori preciso che è indispensabile che l'antenna sia posizionata verticalmente, come di Figura 6, perché verticale è la polarizzazione dei segnali irradiati dai ripetitori FM che si vogliono ricevere; posizionando l'antenna orizzontalmente (ho anche provato!) non si riceve nessuna stazione. Per assicurare i cordini alla canalina ho praticato tre fori, come in Figura 5, ed ho unito le tre corde in un unico grosso nodo, riscaldato poi alla fiamma. Ho stampato in 3D anche una piccola base (il disco bianco di Figura 6), che contribuisce alla stabilità del dipolo, anche se non è strettamente necessaria. Chi non ha una stampante 3D può sostituire la base magari con un piatto di plastica (di quelli rigidi) ed un tappo di sughero…
Il dipolo così realizzato è accordato circa al "centro banda". Ricordando infatti che in un dipolo ripiegato i nostri $150cm$ rappresentano metà della lunghezza d'onda del segnale che si vuole sintonizzare, la frequenza corrispondente è data dalla relazione:

$$f = \frac{c}{\lambda} = \frac{3 \cdot 10^8 m/s}{2 \cdot 1.5m} = \ 100MHz$$

$75cm$ rappresentano quindi un quarto della lunghezza d'onda relativa al segnale a $100MHz$.
Per trasportare facilmente l'antenna e la radiolina ho pensato di interrompere il cavo di discesa con un connettore header pin maschio, che andrà poi innestato ad un connettore ATX, di quelli usati negli alimentatori dei PC per portare i $12V$ alla scheda madre. Ho adoperato questo tipo di connettore perché, oltre che essere robusto, presenta una distanza tra i due conduttori che è simile a quella della piattina, e magari il disadattamento introdotto lungo la linea del cavo di discesa è ridotto al minimo (trascurando la discontinuità dell'isolante).

2.2. Bobine L1 e L2

La piattina del cavo di discesa termina direttamente con la bobina L1. Questa è stata realizzata con un filo di rame argentato da $1.6mm$, avvolta a formare una sola spira circolare di circa $9.5cm$ di diametro. A fine realizzazione la ho subito protetta con dello spray di vernice trasparente, che ha la funzione di preservare il prezioso metallo dall'ossidazione pur non coprendone il colore originale.
Questa bobina così fatta è molto bella a vedersi; l'attenzione per l'estetica è una delle linee guida che ho cercato di seguire per realizzare questa radio, ed è una diretta conseguenza del tipo di montaggio scelto: scatola in plexiglass per avere tutto il circuito in vista. In ogni caso la sua induttanza non è molto importante; le prove che ho fatto hanno confermato che l'importante è che il diametro della spira sia pari o superiore al diametro medio della bobina L2. Non è neanche necessario che la bobina L1 sia accordata con un condensatore in serie, perché ci ho provato e non ho ottenuto migliorie.
Ho realizzato poi la bobina L2 piegando in una sola spira circolare un tubo di rame da $7mm$ di diametro; tutte le sue dimensioni sono indicate nell'immagine di Figura 7.
Questa è una delle soluzioni possibili per avere un'induttanza con un alto fattore di merito (purtroppo ad oggi non ho un Qmetro funzionante, e quindi non ho potuto misurarlo). L'induttore ottenuto ha quindi delle ridotte capacità parassite (una sola spira) ed un ridotto effetto pelle, avendo a disposizione un'ampia superficie di conduttore. Il tubo che ho adoperato infatti è cavo, di quelli impiegati per gli impianti dei climatizzatori, e reperito ad un brico. Vi auguro di trovarne uno con un diametro inferiore al mio, perché già $7mm$ è il massimo possibile per realizzare un'induttanza da $0.137\mu H$.
Per diametri maggiori, infatti, il tubo diventa veramente difficile da lavorare. Lo è stato già il mio, che sono riuscito a sagomare aiutandomi con una piccola morsa, dopo averlo piegato gradualmente su supporti di diametro decrescente. Al fine di ridurre l'effetto pelle è indispensabile che il rame non sia minimamente ossidato. Teoricamente, se non si tocca il tubo con le mani (il sebo della nostra pelle poi a

contatto con l'ossigeno ossida il metallo) quindi adoperando i guanti, e se si riesce a lavorarlo in poco tempo, per poi subito proteggerlo con della vernice, sarebbe possibile evitare che si ossidi. In realtà ciò è difficile a farsi; il tubo è già molto difficile da piegare afferrandolo con le mani nude, figuriamoci con i guanti! … ma con un po' di pasta abrasiva si può eliminare tutto l'ossido ripristinando la lucentezza tipica del rame. Ed è questa la soluzione che ho usato per rendere bella la mia realizzazione, spruzzando quattro mani di vernice trasparente acrilica sulla bobina, dopo averla lucidata.

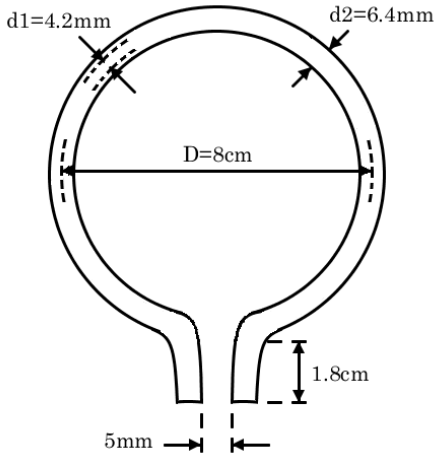

Figura 7: Dimensioni della bobina realizzata.

Per calcolare il valore dell'induttanza L2 ho faticato davvero tanto (con mia grande sorpresa!) a trovare la formula. Sono riuscito a trovarne una approssimata sul Radio Engineering Handbook (F. E. Terman) e, anche se non è di facile impiego, ve la riporto qualora doveste ottenere un'induttanza da $0.137\mu H$ con un tubo di diametro minore del mio (cosa che continuo ad augurarvi). Con riferimento alla Figura 7, l'induttanza di un tubo ripiegato a forma di Ω è:

$$L = 0.01595 \cdot D \cdot \left[2.303 \cdot \log_{10}\left(\frac{8 \cdot D}{d_2}\right) - 1.75 - \frac{d_1^2}{2 \cdot (d_2^2 - d_1^2)} + 2.303 \cdot \frac{d_1^4}{(d_2^2 - d_1^2)^2} \cdot \log_{10}\left(\frac{d_2}{d_1}\right)\right]$$

dove:

- L = induttanza in micro Henry;
- D = diametro medio della spira in pollici (come al solito!);
- d_1 = diametro interno in pollici;
- d_2 = diametro esterno, sempre in pollici.

Scusate per i pollici, ma se avessi incluso anche il fattore di conversione, la formula sarebbe diventata illeggibile. In ogni caso vi ricordo che, per passare dai pollici ai centimetri, basta dividere i centimetri per 2,54. Con un foglio Excel od una calcolatrice scientifica si può provare a variare il diametro D, fino ad ottenere il valore di induttanza voluto; il Terman consiglia comunque la possibilità di semplificare la formula per frequenze molto alte, come segue:

$$L = 0.01595 \cdot D \cdot \left[2.303 \cdot \log_{10}\left(\frac{8 \cdot D}{d_2}\right) - 2\right]$$

2.3. Condensatore variabile, rivelatore e filtro di deenfasi

Il condensatore variabile CV1 collegato in parallelo alla bobina L2 è del tipo ad aria con rotore a farfalla, ad alto fattore di merito, pensato per alte frequenze. È composto da due sezioni identiche, ma io ne ho usata una soltanto (avevo solo questo nel cassetto!). Considerando che il montaggio introduce una capacità parassita di almeno $10pF$ (è un valore molto ottimistico, lo so, ma con collegamenti cortissimi ci si può riuscire), e che il trimmer CV2 ha una capacità minima di $5pF$, è possibile sintonizzarsi sull'intera gamma FM con il variabile scelto. Il segnale radio così sintonizzato viene poi demodulato dal diodo D1 con la tecnica del classico "rivelatore a pendenza".
Il circuito RC-parallelo formato da C1 e R1 costituiscono, come già accennato, il filtro di deenfasi. Tale filtro deve essere del primo ordine, e con frequenza di taglio di $3.2kHz$ circa. Ho calcolato quindi i valori di R1 e C1 ipotizzando di collegare all'uscita del circuito un amplificatore ad alta impedenza (maggiore di $47k\Omega$, nel mio caso). A rigore avrei dovuto calcolare il condensatore C1 sulla base dell'impedenza di $4k\Omega$ offerta dalle mie cuffie, ma la qualità del segnale ascoltato non permette di apprezzare queste differenze. Ho provato infatti a collegare in parallelo alle cuffie un condensatore di valore idoneo, più alto, ma sono rimasto deluso nel non sentire alcuna differenza! Ho preferito allora lasciare valori bassi di C1, anche perché questo shunta a massa il segnale RF residuo, quindi è bene che sia ceramico, di piccola capacità. Il resistore R1, d'altronde, essendo collegato in parallelo all'uscita, tenderebbe a cortocircuitare il già debole segnale che si vuole ascoltare, quindi è bene che il suo valore sia più alto possibile.

2.4. Diodo di protezione

I'1N4148 serve da protezione per il delicato diodo rivelatore. Data la bassa tensione di soglia dell SMS 7630 – 001, dal datasheet si legge che la massima tensione inversa applicabile Vr è di circa $1V$. Peccato che le tensioni a vuoto indotte dalle cuffie, quando le si urtano un po' tra loro (o semplicemente le si appoggiano sul tavolo) sono di circa $6V_{pp}$, durata $1ms$ circa, e possono arrivare anche a $20V_{pp}$! Le cuffie infatti, come ogni trasduttore, possono funzionare "al contrario", fungendo da microfono, e generando segnali di valore elevato, data la loro alta impedenza. Per questo motivo, in parallelo all'uscita (quindi alle cuffie) ho inserito un "veloce" 1N4148, che tosa tutti i picchi maggiori di circa $0.6V$, impedendo quindi la rottura del rivelatore. Il lettore attento avrà certamente notato che il diodo "di protezione" potrebbe tosare anche il segnale radio che si vuole ascoltare; in realtà ciò non può mai accadere poiché, con le cuffie inserite, il segnale di uscita ha un valore massimo di picco di circa $250mV_{pk}$. Questa condizione sarebbe comunque da verificare, giacché la tensione del segnale di uscita dipende molto dalle cuffie adoperate. Il massimo valore di $250mV_{pk}$ è assicurato dato che, per ottenere questa misura, ho collegato alla radio direttamente l'uscita dell'oscillatore modulato, che quindi mi ha fornito i segnali più ampi possibili sintonizzabili con la galena. La presenza del diodo D2, in ogni caso, introduce una capacità trascurabile in parallelo al filtro (circa $5\ pF$), dunque la sua frequenza di taglio non viene alterata.
Un paio di connettori a banana completano il tutto, permettendomi di calzare le mie Siemens da $4k\Omega$ e godermi l'ascolto di qualche stazione (cuffie ad alta impedenza sono strettamente necessarie dati i debolissimi segnali in gioco). Ai meno esperti raccomando di collegare in parallelo all'uscita un'induttanza da $100mH$ o superiore, qualora decideste di optare per un paio di auricolari piezoelettrici (es. buzzer) al posto delle classiche cuffie ad alta impedenza, che magari non avete a disposizione. Tale induttanza servirebbe per cortocircuitare la tensione continua che altrimenti si accumulerebbe ai capi del condensatore C1, polarizzando il diodo e bloccandone l'azione rivelatrice, impedendovi quindi di sentire alcunché. Il resistore R1, comunque, dovrebbe già assolvere a questo compito, ma, a mio avviso, sarebbe opportuno verificare caso per caso.

2.5. Cablaggio

Per il cablaggio del circuito ho usato del filo di rame smaltato da $2mm$ di diametro per collegare la bobina L2 e lo statore del CV1, mentre per il diodo rivelatore è bastato un filo da $1{,}8mm$. Come è possibile notare dalla foto del montaggio (Figura 8) i collegamenti sono ordinati e corti, con fili che non sono mai piegati ad angolo retto, cosa da evitare assolutamente in alta frequenza.

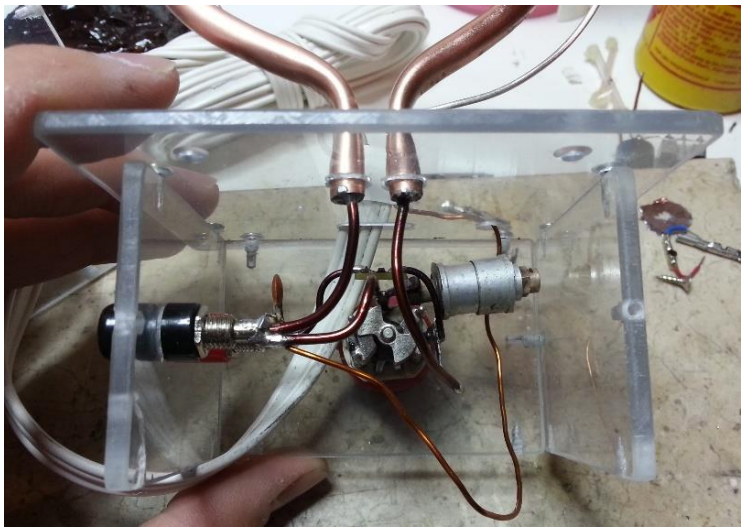

Figura 8: Vista posteriore del cablaggio

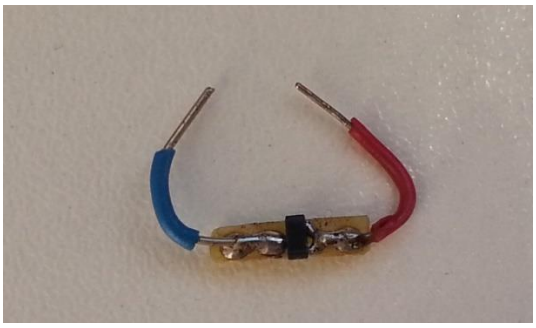

Figura 9: Particolare del diodo sulla basetta millefori.

Il filo di rame smaltato più chiaro e più sottile che si allunga verso il basso, visibile in Figura 8, serve per collegare un capo della bobina d'antenna con quello che è stato scelto come il riferimento del circuito. In questa maniera si può fare a meno della presa di terra per assicurare un percorso di ritorno per il segnale, ottenendo gli stessi risultati. Questo filo serve anche per mantenere la bobina d'antenna nella posizione scelta per realizzare l'accoppiamento voluto con la bobina di sintonia.
Il diodo rivelatore che ho impiegato nel mio circuito ha un contenitore tipo SOT-23, quindi pensato per il montaggio in SMD. In realtà il diodo non è troppo piccolo per essere saldato con una punta standard di un saldatore qualsiasi, quindi mi è bastato ritagliare una striscetta di una fila di basetta millefori, con quattro piazzole. Dalla Figura 9 si può vedere che il diodo occupa lo spazio tra una piazzola e la successiva; gli altri due reofori esterni sono stati usati per saldare i due fili che mi sono serviti per provarlo. I collegamenti del diodo al resto del circuito sono visibili in Figura 10.

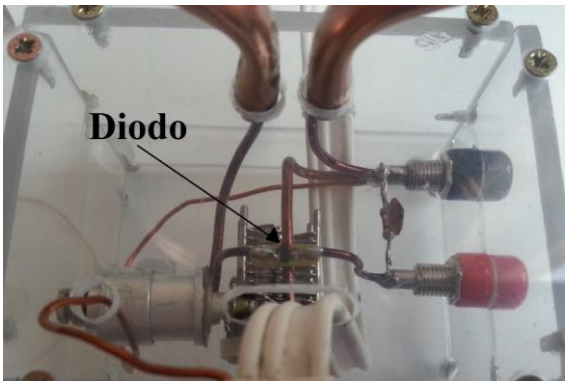

Figura 10: Cablaggio del diodo rivelatore.

A montaggio ultimato, nella sua scatola di plexiglass da $3.5mm$ di spessore, la radiolina appare come nelle immagini di Figura 11, Figura 12, Figura 13 e Figura 14.

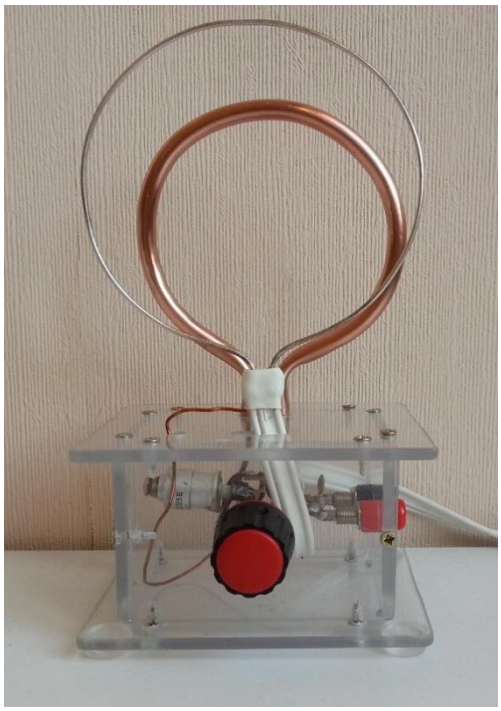

Figura 11: Vista frontale.

Figura 12: Vista laterale sinistra.

Figura 13: Vista posteriore.

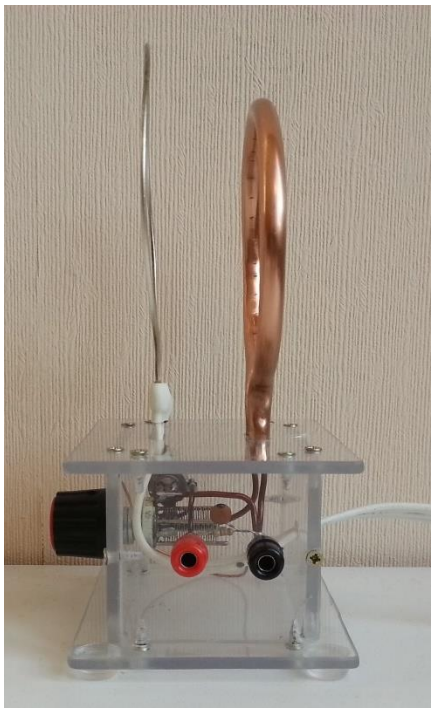

Figura 14: Vista laterale destra.

La realizzazione di un mobile con questo materiale è da sconsigliare per chi, come me, non ha un laboratorio attrezzato con apparecchi di precisione per il taglio e la foratura. Il plexiglass mette molto in risalto i minimi graffi, ed è piuttosto difficile da lavorare e "tagliare dritto". Tuttavia non ho rifatto la scatola avendo impiegato molto tempo per realizzarla. Per fissare i vari pannelli tra loro ho adoperato un metodo che mi ha permesso di ottenere un montaggio solido: ho forato il plexiglass con una punta da $2mm$, per poi inserirvi delle viti autofilettanti dal diametro poco superiore. Il risultato estetico ottenuto non è un granché (a parer mio), perché nei pannelli si vedono delle protuberanze biancastre al posto delle "viti affogare nel vetro", effetto che speravo di ottenere. In ogni caso il contenitore completamente trasparente ha il suo fascino, anche se costringe a posizionare i vari fili di collegamento in un certo modo, che possa essere insieme bello da vedere e fatto per ridurre al minimo le capacità parassite e la lunghezza dei collegamenti.
Con questo credo di avervi raccontato tutto… della complicata teoria dice che i segnali FM ricevuti sono molto deboli quindi, per realizzare una soddisfacente radio a galena su questa gamma bisogna avere l'antenna migliore (spero di averla!) le bobine con il più alto fattore di merito (le abbiamo) un buon condensatore variabile e delle cuffie ad alta impedenza (non credo ce ne siano da più di $4k\Omega$). Ma se il segnale è debole, ci vuole un ottimo diodo rivelatore, con bassissima tensione di soglia, e magari a basso rumore (e piccole capacità parassite). Ad una fiera dell'elettronica trovai degli strani diodi, venduti come "diodi tunnel". Avevano i terminali cortissimi, per essere innestati in degli appositi connettori, con un contenitore cilindrico plastico, marrone. Erano gli 1N82A; ne presi un po', convinto che un giorno li avrei usati per chissà quale strana applicazione. Dopo aver visionato il datasheet scoprii che erano in realtà dei diodi mixer adatti per le bande VHF/UHF. Avevo a disposizione anche i classici OA90, OA95, AA117, e 1N542. Dopo aver montato un primo prototipo di galena ho provato tutti questi diodi, scoprendo che la situazione era talmente tanto critica che solamente due degli esemplari di 1N82A permettevano un ascolto soddisfacente in cuffia. Nel tentativo di fare tutte le prove possibili per migliorare al massimo la mia radio, ho deciso di acquistare un po' di diodi RF, del tipo "mixer" o "zero-bias", a bassa tensione di soglia, e di cercare il migliore tra questi.

3. Alla ricerca del "diodo migliore"

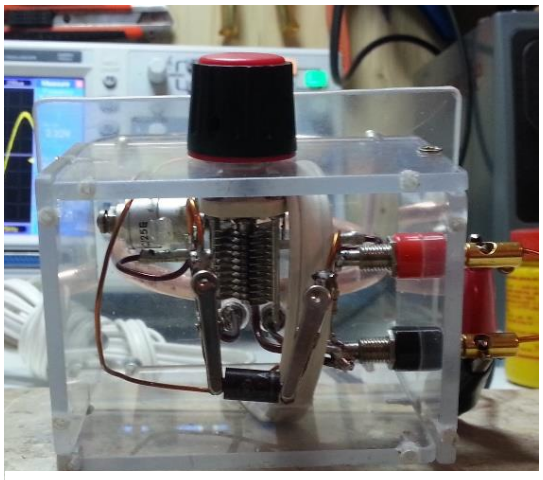

Figura 15:Particolare dei coccodrilli montati per provare i candidati diodi

Per riuscire in questa impresa ho pensato di non fare troppe cerimonie, testando magari il diodo in "circuiti equivalenti" a quelli della mia radio, ma di fare alcune misure collegando il diodo nello stesso circuito nel quale poi l'avrei usato: la mia radio, appunto. Per provare agevolmente tutti i rivelatori candidati ho saldato dei coccodrilli come in Figura 15. Dopo qualche prova preliminare con l'oscillatore modulato mi sono subito reso conto che la misura del segnale rivelato dopo il filtro di deenfasi era tutt'altro che banale, perché il segnale BF ai capi delle cuffie era molto distorto e rumoroso, oltre che "piccolo".
Dopo tante prove sono pervenuto all'allestimento del banco di misura illustrato in Figura 16 e Figura 17, e schematicamente rappresentato in Figura 18.

Figura 16: Banco di misura.

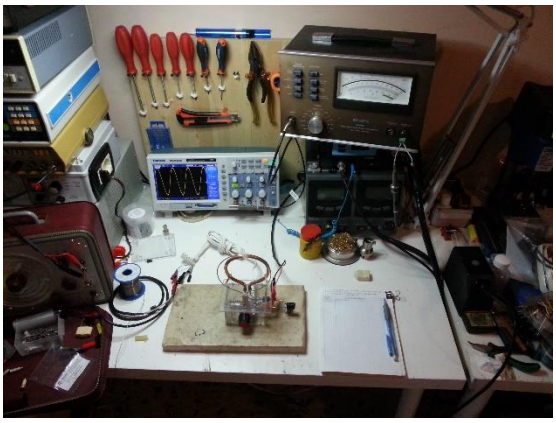

Figura 17: Vista superiore del banco di misura.

Le impostazioni degli strumenti, in parte già presenti in Figura 18, sono:

- **Generatore di funzioni**: segnale di uscita sinusoidale, ampiezza $400mVpp$ (con uso dell'attenuatore di 30 dB), frequenza $1kHz$, senza offset;
- **Oscillatore modulato**: ingresso per modulazione esterna selezionato, frequenza (misurata con l'oscilloscopio) di $88MHz$, attenuatore regolato per la massima ampiezza del segnale d'uscita;
- **Noisemeter**: amplificazione $1mV$ fondo scala, filtro CCIR inserito.

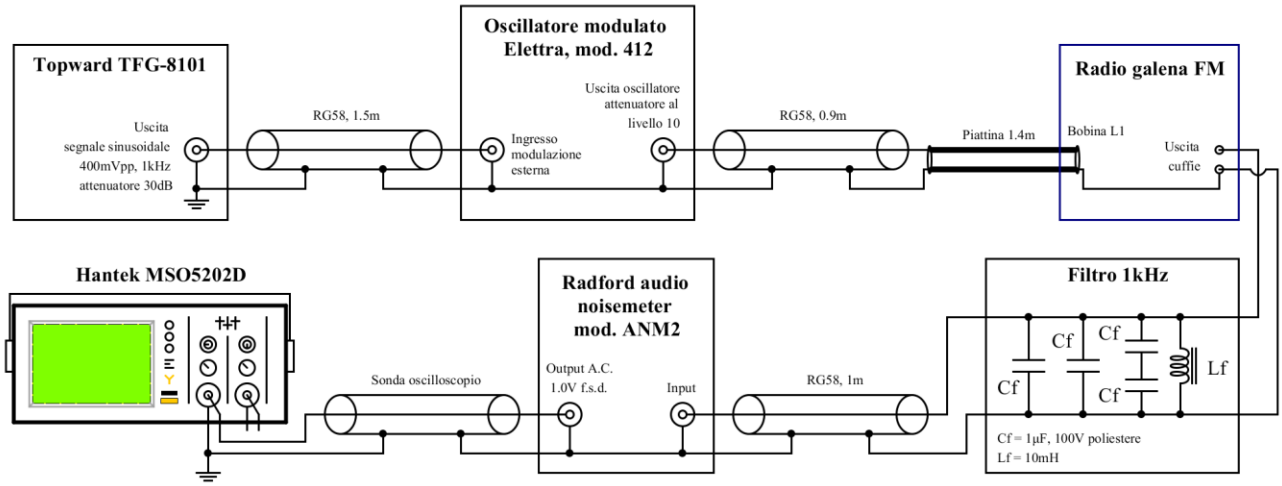

Figura 18: Schema del banco di misura messo a punto.

Gli accorgimenti che mi hanno permesso di ottenere un segnale rivelato pulito sullo schermo dell'oscilloscopio sono stati:

- La sistemazione dei cavi di collegamento lontano dalla galena.
- La scelta di un segnale di modulazione esterno perché quello generato internamente è distorto. L'ampiezza del segnale modulante è stata scelta la massima possibile per non avere sovramodulazione;

- La scelta di un segnale di $88MHz$ per l'oscillatore modulato perché il segnale dello strumento a quella frequenza è più ampio. In ogni caso non sarei mai riuscito a sintonizzarmi sull'estremo alto della gamma con le capacità parassite aggiunte dai coccodrilli di Figura 15;
- Il doppio filtraggio del segnale audio ottenuto sia con un circuito accordato alla frequenza di $1kHz$, collegato all'uscita della radio, sia con il filtro CCIR del noisemeter. La frequenza di $1kHz$ è stata scelta perché la curva CCIR non amplifica né attenua a questa frequenza. Ho prediletto poi questo filtro del noisemeter perché è quello che presenta il maggior filtraggio della banda audio.

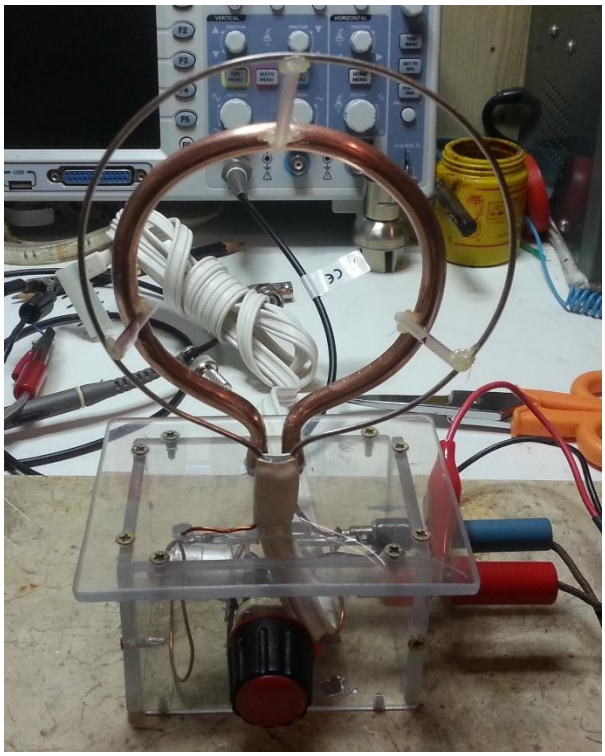

Figura 19: Vista frontale dell'accoppiamento fisso delle bobine.

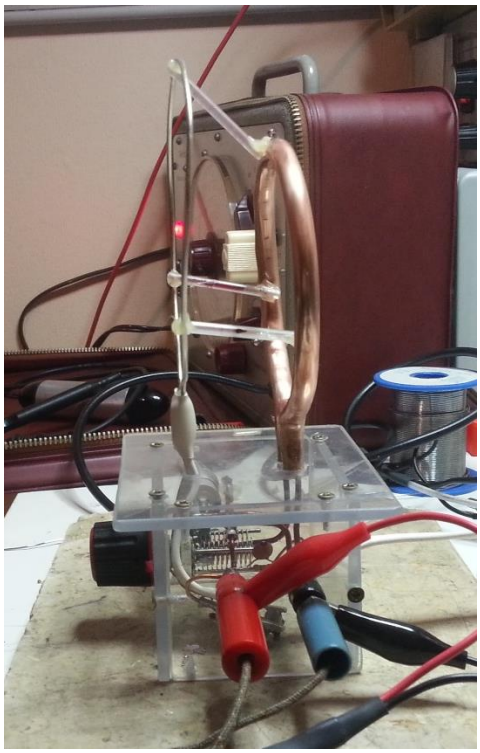

Figura 20: Vista laterale dell'accoppiamento fisso delle bobine.

Prima di eseguire le misurazioni ho atteso più di 20 minuti per permettere a tutti gli strumenti di "riscaldarsi".
Per ottenere delle misure coerenti tra un diodo e l'altro ho agito in questo modo:

- Per prima cosa ho fissato la bobina d'antenna alla bobina di sintonia per mezzo di tre spezzoni di tubetto di plastica (ex contenitore di inchiostro di penna Biro) incollati con colla termica, come indicato nelle foto di Figura 19 e Figura 20. In questa maniera l'accoppiamento tra L1 e L2 è stato sempre lo stesso per tutti i diodi;
- Ho inserito nel circuito dapprima il diodo 1N82A, che ho scelto come riferimento; mi sono accertato che il massimo segnale udito in cuffia durante l'operazione di sintonizzazione corrispondesse alla massima ampiezza del segnale sinusoidale misurato con l'oscilloscopio e con il noisemeter;
- Ho eliminato le cuffie perché tendevano a sporcare il segnale; dopo di che ho misurato tutti gli altri diodi;

- Ogni volta dopo aver inserito un nuovo diodo ho risintonizzato il ricevitore fino ad ottenere la massima deviazione dell'indice del noisemeter;
- Prima di misurare un nuovo diodo ho rimisurato l'1N82A per accertarmi di riottenere lo stesso valore letto dopo la prima misurazione;
- Ho eseguito le misure una di seguito all'altra, senza toccare i cavi di collegamento e restando seduto sempre nello stesso punto, onde evitare di variare gli accoppiamenti capacitivi tra il mio corpo e la radio ed i cavi;

Vi faccio presente che l'ingresso del noisemeter è ad alta impedenza ($1M\Omega$), quindi tutte le misure della Tabella 1 rappresentano i valori del segnale ad $1kHz$ misurato all'uscita della radio come se fosse "a vuoto". L'inserzione di un resistore da $4.7k\Omega$ per simulare il carico introdotto dalle cuffie ha avuto come effetto quello di ridurre troppo l'ampiezza del segnale in uscita, rendendolo ancora più rumoroso; quindi non l'ho usato. In ogni caso il filtro passivo ad $1kHz$, che idealmente non avrebbe dovuto "caricare" il circuito, ha ridotto di molto l'ampiezza del segnale rivelato, segno che, in realtà, un piccolo carico era comunque introdotto. Per questa ragione, onde visualizzare un bel segnale sullo schermo dell'oscilloscopio, ho adoperato l'uscita del noisemeter, che può essere usato come amplificatore calibrato. Un esempio del segnale demodulato si può intravedere sullo schermo dell'oscilloscopio nelle foto di Figura 16 e Figura 17. Ho adoperato anche l'oscilloscopio perché il Radford è un voltmetro a vero valore efficace, e avrebbe potuto fornirmi un massimo di tensione laddove in realtà l'ampiezza picco-picco del segnale rivelato non era massima. Con l'uso del noisemeter e dell'oscilloscopio ho potuto controllare volta per volta che il massimo segnale rivelato (Vpp) coincidesse con la massima deviazione dell'indice dello strumento.
Ad essere rigoroso avrei dovuto adattare l'impedenza di uscita dell'oscillatore modulato (50Ω) all'impedenza della piattina, che si aggira intorno a 300Ω. Ho deciso di non farlo perché l'adattatore d'impedenza fornito insieme all'oscillatore modulato, essendo passivo, riduceva di molto l'ampiezza del segnale generato. Il ricevitore ha comunque funzionato bene anche senza adattatori, segno che il disadattamento del circuito era trascurabile.
Nella Tabella 1 ci sono tre colonne, ed ogni colonna si riferisce alla misura di un esemplare del diodo indicato nella corrispondente riga. Questo perché, laddove il portafogli me lo ha consentito (alcuni di questi diodi sono piuttosto costosi) ho acquistato tre esemplari dello stesso diodo, sulla scorta del fatto che dei sei diodi 1N82A che avevo, soltanto tre hanno funzionato a dovere, mentre soltanto due erano utilizzabili come rivelatori. Ho rieseguito le misure per più di una volta, ed i valori riportati sono da intendersi con una "precisione" (accuratezza) di $0.05mV_{eff}$ in più o in meno.
Le misure riportate mi sono servite quindi per vedere quali tra i diodi provati mi fornisse, nelle stesse condizioni degli altri, un segnale rivelato più ampio; non si deve quindi andare a guardare il decimo di milliVolt in più o in meno. Inoltre può essere accaduto che, per i diodi dei quali ne ho acquistato un solo esemplare, me ne sia capitato uno un po' sordo, ma non è detto che questa sia una prerogativa di quel particolare modello di diodo.
Dopo aver eseguito le misure ho guardato la tabella, ed il vincitore come miglior diodo rivelatore si è *rivelato* essere il... SMS7630-001! Meno male, dovrei dire, perché l'1N23A, l'MA423A e l'1N405A costano 15 euro l'uno! L' SMS7630-001 invece mi è costato solo 1 euro. In realtà questo era il risultato che speravo di ottenere, perché dimostra che, per realizzare un'ottima galena, possono andare bene dei diodi di moderna concezione, e che quindi non si deve andare alla ricerca di chissà quale esoterico surplus da chissà quale negozio e/o fiera.

Diodo	Segnale rivelato $[mV_{eff}]$		
	primo	secondo	terzo
1N82A	0.80	0.85	-
AA137	0.35	0.35	0.30
DDC2353	1.00	0.97	-
ND4991	1.00	0.97	-
SMS7630-001	1.50	1.50	-
AAY30	0.28	0.30	0.32
BAT17-04	0	0	0
AA114	0.10	0.15	0.10
OA95	0.10	0.10	-
1N914	0	0	-
1N618	0.15	-	-
1N76A	0.80	-	-
1N23A	0.80	-	-
MA423A	0.70	-	-
1N405A	0.87	-	-

Tabella 1: Misure del segnale rivelato con i diodi.

Guardando poi i datasheet dei diodi della Tabella 1 risulta chiaro perché l'SMS7630-001 sia il migliore: è quello che presenta la più bassa tensione di soglia, ma anche la più bassa tensione inversa! Cosa che mi ha costretto ad aggiungere un 1N4148 in parallelo all'uscita. Ho aggiunto questo diodo dopo aver fatto "il servizio fotografico" alla radio, ed è per questo motivo che non è presente nelle foto.

4. Taratura e messa a punto

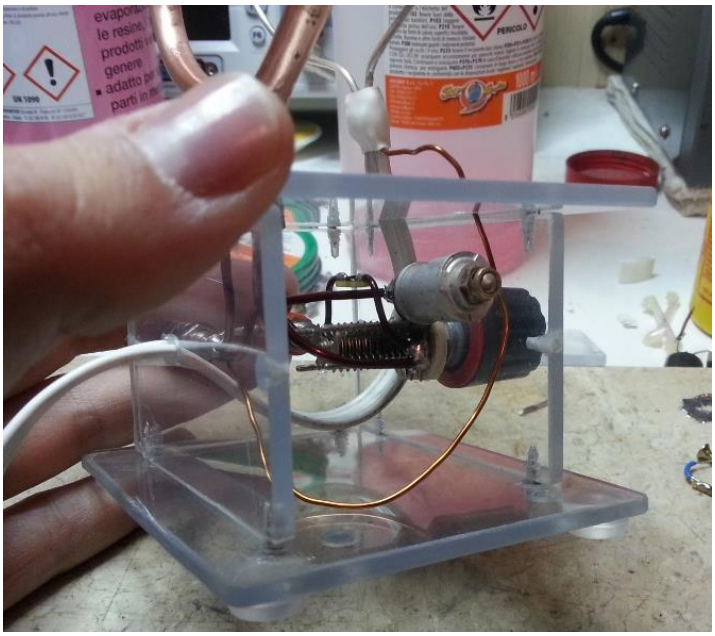

Figura 21: Taratura del ricevitore.

Per poter sintonizzare tutta la gamma FM bisogna eseguire una piccola taratura agendo sul trimmer tubolare. Per fare ciò ho aperto la scatola da uno dei lati, come in Figura 21, ho collegato l'uscita dell'oscillatore modulato ad un filo di un metro circa, che poi ho avvicinato all'antenna. Dopo aver impostato lo strumento per generare un segnale modulato di $87MHz$, con il condensatore variabile tutto chiuso, ho avvitato il trimmer con un tubetto di colla termica, per non toccarlo con le mani, fino ad ottenere il massimo segnale in cuffia. Il ricevitore è così tarato e "pronto all'uso".

5. Prova d'ascolto

Usare la radio è molto semplice; basta montare l'antenna come per esempio in Figura 6, collegarla alla radio avendo cura di posizionare in orizzontale il cavo di discesa, cosicché non possa fungere da seconda antenna, calzare le cuffie e ruotare il condensatore variabile. Separare le stazioni interferenti è sempre possibile grazie al sistema di accoppiamento tra la bobina d'antenna e quella di sintonia, che permette di posizionarle anche ad angolo retto e ad una distanza di ben $5cm$, come è possibile notare nelle foto di Figura 22 e Figura 23.

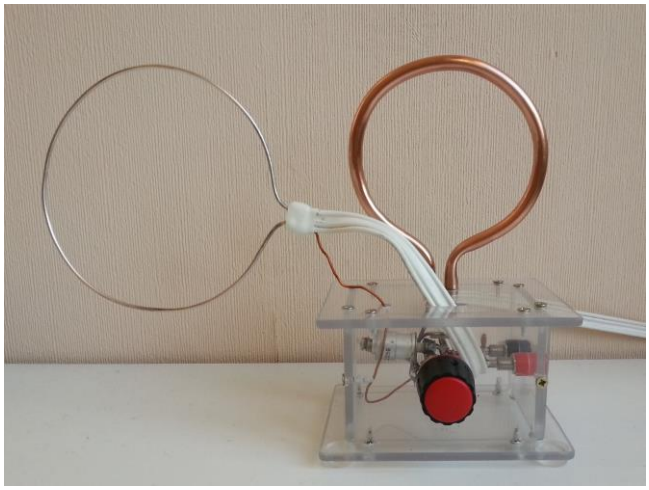

Figura 22: Esempio di accoppiamento lasco ottenibile tra le bobine L1 e L2.

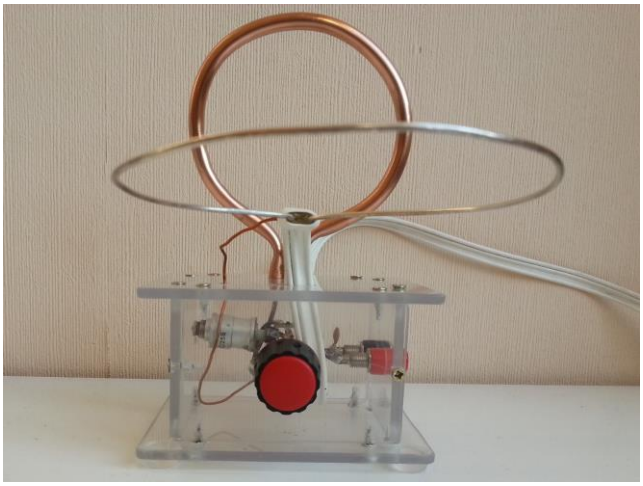

Figura 23: Esempio di accoppiamento minimo ottenibile tra le bobine L1 e L2.

I risultati ottenuti variano molto in base alla posizione del radiotecnico rispetto all'antenna ed all'installazione del dipolo ripiegato. In ogni caso con l'antenna montata nella mia stanza sono riuscito a ricevere un paio di stazioni, la più forte delle quali aveva un'ampiezza di circa $60mV_{pp}$. Con la stessa antenna sono riuscito a ricevere quattro stazioni collegando al posto delle cuffie un amplificatore. Con un'installazione migliore, sul balcone, sono riuscito a ricevere cinque stazioni, tre delle quali ben udibili.
Chi non ha già sperimentato con una radio a galena non può immaginare la gioia di poter ascoltare delle stazioni in lingua italiana, a qualsiasi ora del giorno e senza il bisogno del classico impianto antenna-terra. Un'antenna lunga almeno 10 metri è spesso difficile da installare, mentre una buona presa di terra è spesso impossibile da trovare, e puntualmente costringe il radiotecnico a posizionarsi in un punto scomodo della propria abitazione sia durante le sperimentazioni che durante le sessioni d'ascolto. Con un'antenna compatta come il dipolo ripiegato, che include anche la presa di terra, la radio a galena diventa un'oggetto portatile, come in effetti lo è sempre stato il circuito del ricevitore in sé. Sperimentare con le VHF può essere sicuramente difficile ma, a conti fatti, credo proprio che i vantaggi ottenuti compensino ampiamente le avversità con le quali ogni sperimentatore è chiamato a scontrarsi.
Con questo non mi resta che augurarvi un buon ascolto con tante sperimentazioni attorno ad una galena simile alla mia e alle altre già presentate su questo sito, sperando di esservi stato d'aiuto nel darvi molte idee per la realizzazione, e che la mia galena, insieme alle altre, vi abbia convinto ad avventurarvi in questa difficoltosa quanto gratificante impresa.
Per eventuali ulteriori chiarimenti resto sempre a disposizione; potete contattarmi all'indirizzo email damiano.cirielli@gmail.com.

Damiano Cirielli, 4/09/2017

A note before getting into the crystal radio story.

After I experimented with the Heathkit CR1 crystal radio and built the radio described below, I got out my old regenerative radio I made in 1958 and was once again astounded by how much better it performed than even the CR1. I have now come to the conclusion that anybody who wants to build an ultra-simple radio really should consider my Armstrong "Crystal" Radio first.

Recently added to my website

If you are looking to build a little radio that is as simple and as easy to build as a basic crystal radio, but performs many, many times better than even the best and most complex crystal radio, I highly recommend building my Armstrong "Crystal" Radio . There is a link to the Armstrong Radio project at the very bottom of the following crystal radio story. Please scroll down for the link, but I invite you to look over the pictures and headings to see if there isn't something that might interest you.

If you are determined to build a tiny crystal radio with no amplification or are just interested in reading about my crystal radio and how I built it for its entertainment and especially for its educational value, please read on.

A miniature, but selective and high performance CRYSTAL RADIO KIT

The description of a project intended for advanced science students and hobbyists and containing personal and controversial opinions and thoughts that you can skip

by John Fuhring

My tiny, but selective and sensitive crystal radio.

Introduction

Not long ago I rebuilt and put into operation a Heathkit CR1 crystal radio. I hadn't built a crystal radio since I put together my first radio when I was 10 years old, nor had I used a crystal set since I was 13. During the period of the mid to late 1950s, I owned at least three crystal radios of varying performance. With the Heathkit, I now had a crystal radio that performed far better than any of the radios that I remember using as a kid and once again I was struck by the magic of building and operating such an utterly simple and basic radio receiver. Suddenly it occurred to me that it might be fun to try my hand at designing and building my own crystal set from scratch. Besides that, a former grammar school teacher I'm friends with suggested to me that school aged kids would have a lot of fun learning about radio theory if they could build a working crystal radio and he asked me to come up with such a radio.. Of course, this strongly reminded me of how, in 1955, my aunt gave me crystal radio kit to build and how that experience lead to my lifelong interest in radio and my career in electronics. The memories flooded back and awoke in me that desire I think we all have and that is to pass along to others those things that have helped us.

Well, I have given a lot of thought to crystal radios lately and I have concluded that the ultra-simple, very poorly performing crystal radios that most teachers have their classes construct are just not worth building. Rather than try to force kids who are just not interested in how their technological world actually works -- and after all, most of us only want to use technology, not design or even understand it -- I think that building a crystal

set should be limited to only those students who show a genuine interest in this sort of thing. In my opinion, the only students who should build something like this are the kids I call a school's "the scientific elite" (but who others would call "the nerds"). I think that building a crystal radio should be done as an individual science project, but not as a class project. However, and this is most important, any radio anybody builds should be worth building and should at least approach the performance of the Heathkit CR1.

It soon became my goal to design a low cost, but good performing little radio that would not only be easy and practical to build, but would be something a young person would be proud of and want to keep and use. Of course, this applies to adults too, even old geezers like me. So, the following paragraphs will describe the little radio I have come up with. Please be aware that because the little radio is very compact, it requires some very careful, precision soldering using a dangerously hot soldering iron. Additionally, winding 7 feet of wire on each of two toroid forms is tedious and requires manual dexterity and skill. Because of these difficulties, I am very much of the opinion that this little radio is not a project for very young (under 12) kids. You must use your own judgment regarding whether or not this project is practical for you or your student(s) to build.

Design considerations for a simple but good performing crystal radio

Before I begin the technical phase of this article, please note that I performed several experiments with different kinds of wire and different detectors before I finalized the design that I will be presenting. What I'm presenting here is how and with what materials and components I think a builder should use for optimum performance.

Here then are my design criteria:

Any crystal radio worth building should have good selectivity. That means that you should be able to hear a station without the audio of an adjacent station in there too. Of course, the selectivity of any crystal radio is such that, if you listen closely, you will always hear a powerful nearby station in with your station, but that unwanted signal should be very faint.

Any crystal radio worth building should have good sensitivity. That means that you should be able to hear even relatively distant and weak stations. Of course, crystal radios have no amplification and depend entirely on capturing enough radio energy to operate the earphone to produce sound waves. The radio must have efficient tuning coils, tuning condensers and a efficient detector so that the tiny amounts of energy that is picked up by the antenna is not wasted or lost in the radio any more than absolutely necessary. If the radio is designed properly with low-loss components, the human ear, with its amazing ability to hear even very low energy sound waves, will do the rest.

Any crystal radio worth building should be in a pleasing enclosure or chassis that makes mounting the components easy, makes connecting to the antenna and ground easy, makes it easy to plug in the earphones and makes operating the tuning controls convenient. When the project is complete, the builder should have a radio that looks like a radio and something (s)he is proud of and proud to show to others.

Certainly, the Heathkit CR1 fits these criteria extremely well and I think that the little radio I will present on this page fits the criteria well too. In some respects, if I may say so myself, my radio fits some of them even better than the CR1.

An update as of June 21, 2017

After exchanging some email with a reader, I have revisited my little project and have rethought some things. I then went in and made some simple modifications and I am extremely pleased with the results. The modifications work so well, I am redrawing the schematics and the improved version of this radio is what I will present.

Building the radio

List of parts:

1) Two each, T80-15 toroid cores. **
2) Two each, dual section 335 X 335 PF variable tuning capacitors (670 PF total each). ***

3) Two each, knob and shaft extension for the above tuning capacitors.
4) Four each, 2.5 X 5 MM countersink screws to mount the tuning capacitors.
5) One 1N34A diode.
6) One piezoelectric earphone (or high Z magnetic earphones) with a miniature phone plug.
7) One panel mount miniature phone jack (to match item 6 above).
8) One, panel mount RCA type jack.
9) One RCA type plug with item 10 wire leads soldered to it to match item 8 above.
10) Two each, 6" 20 Ga. colored (red & black) insulated wire leads for the antenna and ground. (Use black for ground)
11) Two each, small alligator clips. Solder to the end of the above insulated wires for antenna and ground connections.
12) Two pieces of 40/46 litz wire each 7 feet long. No. 30 (or larger) magnet wire can be used but not recommended.
13) One 6" section No. 24 ga magnet wire for the interconnecting link. Litz wire can be used, but stiffer wire may be preferred.
14) One 24,000 ohm (24K) resistor. A 1/4 or 1/8 watt resistor is recommended to more easily fit in the limited space.
15) One L1 coil made of 6 turns of litz wire wrapped around a wooden match stick. Cut off unused wood.
16) One 12 coil made of 12 turns of litz wire wrapped around a wooden match stick. Cut off unused wood.
17) A single pole double pole miniature switch.
18) A small tube of RTV type adhesive. Do not use an adhesive that becomes hard because you may want to change coils.
19) Metal or plastic box to mount the components.
20) Antenna 60 + feet or as long as practical and mounted as high up as practical.

** Use only toroids made with the -15 material. Other cores will greatly complicate winding and/or degrade performance. Smaller cores may be used, but the number of turns will have to be adjusted.
*** You can use smaller values for finer tuning. For large chassis projects, conventional 360 PF air variable condensers are excellent and will probably give you higher 'Q' and lower signal losses. Ganging the two sections of the miniature condensers as I have done gives a greater tuning and antenna trim range. Since the tuning of a crystal radio is so broad, condensers ganged this way are still easy to adjust for maximum signal and minimum interference from stations off to the side.

Total cost of parts will be about $25 -$30.

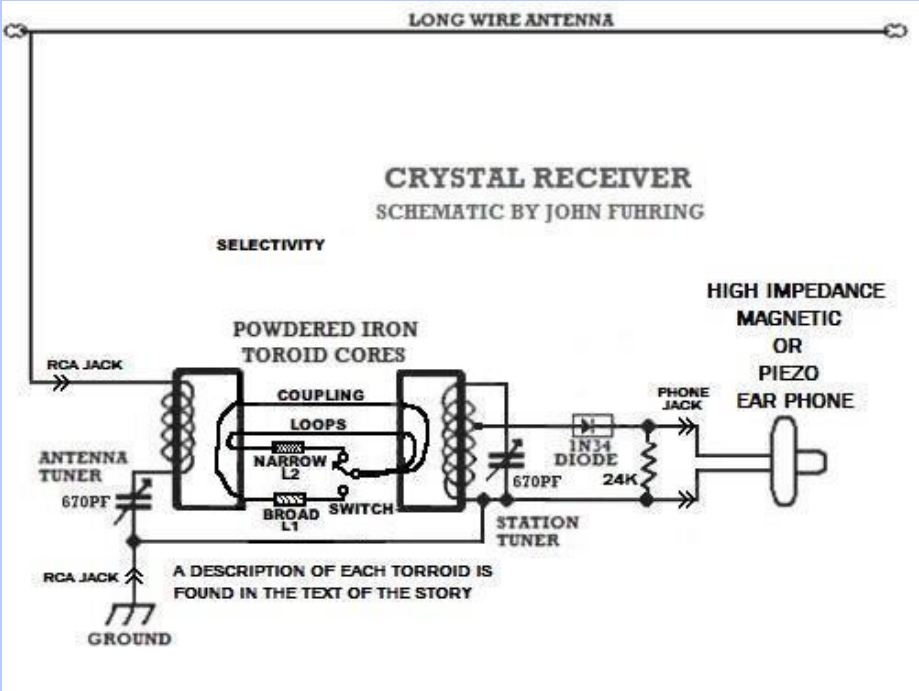

Crystal radio schematic diagram.

Notes

I originally wound the coils with No. 30 magnet wire, but was dissatisfied with the selectivity and sensitivity. I had never used the stuff before, but I knew that a special kind of "woven" multi-strand wire worked best for radio coils operating at broadcast frequencies. Of course, I'm talking about litz (German for woven) wire that reduces something called the "skin effect." Because of the magnetic field that is generated by AC flowing in a conductor, electron flow is forced out to the "skin" or outermost part of the conductor. This is an undesirable feature of conductors carrying AC current but at 60 Hz it is hardly noticeable. The skin effect gets worse the higher in frequency you go and at radio frequencies, it is really bad causing high resistance in coils and ruining their 'Q' or "quality factor." Litz wire, because it is made of several wires woven together, noticeably increases a coil's 'Q' and allows it to tune much sharper. Litz wire also reduces a coil's resistive losses, thereby allowing the radio to pick up faint signals. I rewound both coils with litz wire and as expected, noticed a big improvement in both selectivity and sensitivity.

Next I experimented with detector diodes to see which kind gave the better sensitivity. Originally the radio used a BAT-46 Schottky diode for its detector. I even experimented with biasing the Schottky for additional sensitivity, but in the end, I replaced the Schottky detector with an ordinary 1N34A point contact diode. In my radio with its particular configuration, the old technology 1N34A diode gives superior performance.

I further experimented with with the the radio's selectivity by varying the coupling between the two toroid coils. With toroids, it is impossible to get a coupling lighter than a single turn unless you put a coil, a capacitor or a resistor in series with the coupling loop. To get the maximum selectivity out of one of these radios, it is necessary to have fairly light coupling between the antenna and the tuning toroid coils so at first I tried a resistor and it worked - sort of. When I put a little coil of Litz wire (wrapped around a bit of wooden match stick) in series with a single linking coil, I noticed a profound improvement to the overall selectivity of the set, but not much loss of sensitivity. A second coil was put in with twice as many turns on its matchstick and one or the other is selected by a little toggle switch. When this "larger" coil is selected, it very noticeably improves selectivity over the smaller coil, but it does cut down a little on the radio's sensitivity.

The station (detector) tuning coil is tapped 30 turns from the top so that 2,000 ohm magnetic headphones can be used without loss of selectivity.

In my radio's present configuration, its selectivity now matches the Heathkit CR1, but although very good, it isn't quite as sensitive.

Suggest layout and building instructions.

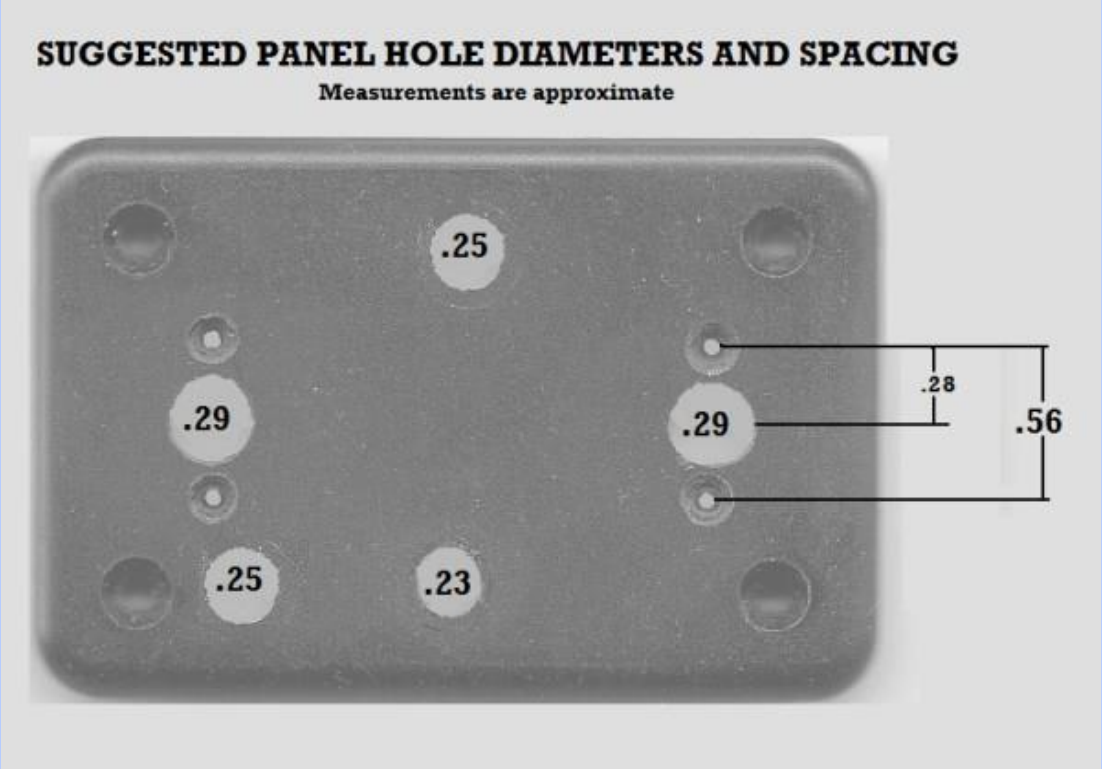

All measurements are in inches.

Steps in building the radio

First, shop around and pick out a suitable chassis box to put the radio in. A small box such as shown above will accommodate the miniature tuning condensers and the jacks for the earphone and antenna/ground RCA jack, however the parts will be crowded as shown in the pictures. A larger box will make assembly and soldering somewhat easier. A plastic box will make drilling and mounting the components extremely easy. A small wooden box that could be lacquered and polished might be very handsome.

The two capacitor extension shafts should be filed down for an overall length of 0.4 inches with the mounting screw cut to 0.48 inches. You can leave them their original length, but the knobs won't be flush with the panel.

This radio uses two T80-15 toroid cores that are each wound with 7 feet of 40/46 litz wire. Three turns on each side form a coupling link between the toroids. The station tuner coil is tapped 30 turns from the top. At what will be the top of this coil and with an inch of wire sticking out, square knot tie the wire to the toroid (to hold it in place) and then begin winding the coil while counting each turn. At 30 turns, stop winding and create a tap. Tapping is accomplished by simply twisting the wire for about a half inch. Carefully start winding again and continue to wind until all the wire is used up (about 70 more turns). When finished winding, the twisted wire at the tap and the wires at the ends of the coils are heated with a soldering iron until the insulation melts and then "tin" the wires with hot solder.

Note that the diagram that accompanies the tuning condensers shows which of the long metal tabs are connected to the stator (ground) and the rotor sides of the units. These condensers have 4 trimmers built into them, but we will not use any trimmers so ignore (or cut off) their tabs.

With the photos and schematic as a guide, perform the following:

1) For the antenna tuning condenser, bend the rotor tabs over at a 90 degree angle and solder them together.
2) For the station tuning condenser, bend the rotor tabs over at a 90 degree angle and solder them together.
3) Extend the ground tabs (stators) of the two condensers until they touch and then solder them together. This is the ground bus.
4) Solder short pieces of bare wire from the outer shells of the RCA and phono jacks to this bus.
5) Trim the leads to fit and solder one side of the 24K resistor to this bus.
6) Place the other lead of the 24K resistor into the mounting hole of the ungrounded side of the phone jack.
7) Trim the leads of the detector diode to fit and place one lead in the same hole of the phone jack with the 24K resistor.

8) Solder the detector diode and 24K resistor leads from steps 6&7 to the phone jack.
9) Place the station tuning coil on top of the station tuning condenser and perform the following:
10) Solder the top of the station tuning coil to the station tuning condenser's rotor tabs.
11) Solder the bottom of the station tuning coil to the ground bus.
12) Place the antenna tuning coin on top of the antenna tuning condenser and perform the following:
13) Solder the top of the antenna coil to the ungrounded lug of the RCA jack.
14) Solder the bottom of the antenna coil to the rotors of the antenna tuning condenser.
15) Glue the two toroids to the tops of their tuning condensers as shown. Use a silicone rubber adhesive and allow it to set.
16) L1 With a 4 inch section of litz. wire, wind 6 turns on a wooden match stick and glue them down. Leave one end with a long pig-tail and the other end a little shorter. Trim off the excess wood.
17) L2 With a 4 inch section of litz. wire, wind 12 turns on a wooden match stick and glue them down. Leave one end with a long pig-tail and the other end a little shorter. Trim off the excess wood.
18) Solder the short end of L1 to the "wide" terminal of the switch. No stripping is necessary with litz wire.
19) Solder the short end of L2 to the "wide" terminal of the switch. No stripping is necessary with litz wire.
20) Thread the two L1 and L2 long wires through both toroids as shown and bring them out together to the center terminal of the switch. Twist them together and solder them on. Remove excess wire.
18) Solder the other side of the detector diode to the tap of the station tuning coil as shown.
19) Solder two 3-6 inch pigtail leads on to the RCA plug for the antenna (red) and ground (black) and solder alligator clips to their ends.
20) Connect the alligator clips to a long wire antenna and suitable ground, plug in the earphone and tune to a local station. Recheck wiring if you fail to detect a station.

Refer to the schematic diagram and the photos below to make sure you have wired everything correctly. Remember that a schematic diagram is not exactly as a radio is wired, but is electrically correct and actual wiring must make all the connections (and no others) as shown. As long as the leads are kept short and if all the connections are made properly and there are no shorts to other parts of the circuit, the radio will work It is up to you to figure out the best routing and lead lengths for all the connections shown in the schematic. Keep in mind that external connections such as to the earphone, the antenna and the ground go to the earphone jack and the antenna jack respectively. If you are not familiar with schematic diagrams and how to wire something up using such a diagram, this is an excellent project for you to start learning how this is done.

Finally, the RCA jack and the phono jack normally uses the outside shell connected to ground so that when they are bolted to a metal panel, they are at the right potential. If you are using an insulated panel to mount these jacks, it doesn't matter if the outside shell is grounded, but I recommended that you connect it this way. You may notice that the detector diode is shown in the schematic as "forward biased," however, it makes no difference (in this case only) which way you connect the diode.

Tools you will need

1) A low wattage soldering iron. A temperature controlled soldering station is ideal, but an ordinary iron will work fine.
2) A very fine needle nose plier or (better yet) a fine hemostat.
3) A small wire cutter.
4) Drill, bits and countersinking tool for cutting holes in the panel.
5) Screwdrivers to fit the various screws.
6) Pliers or wrenches for tightening the jack's mounting nuts.

Do not over-tighten screws or nuts.

Photos of the completed project in its tiny box

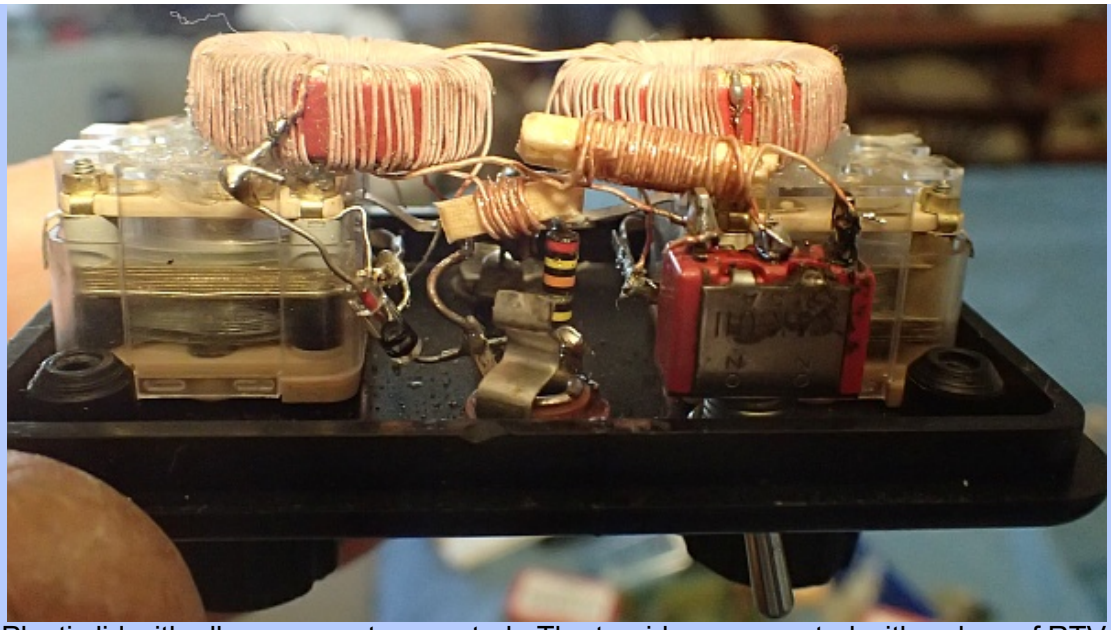

Plastic lid with all components mounted. The toroids are mounted with a drop of RTV.
Silicone rubber mounts the toroids quite securely, but allows for future changes.
Miniature tuning condensers have dual sections, each 335 PF and are ganged for 670 PF.
The long ground tabs of the two condensers are soldered together and make a very convenient ground bus that the other components can attach to.
Also shown here are L1 and L2 which are turns of litz wire wrapped on match sticks.
This little radio will tune to the LF band below the broadcast band, but I doubt you will find anything down there to listen to.

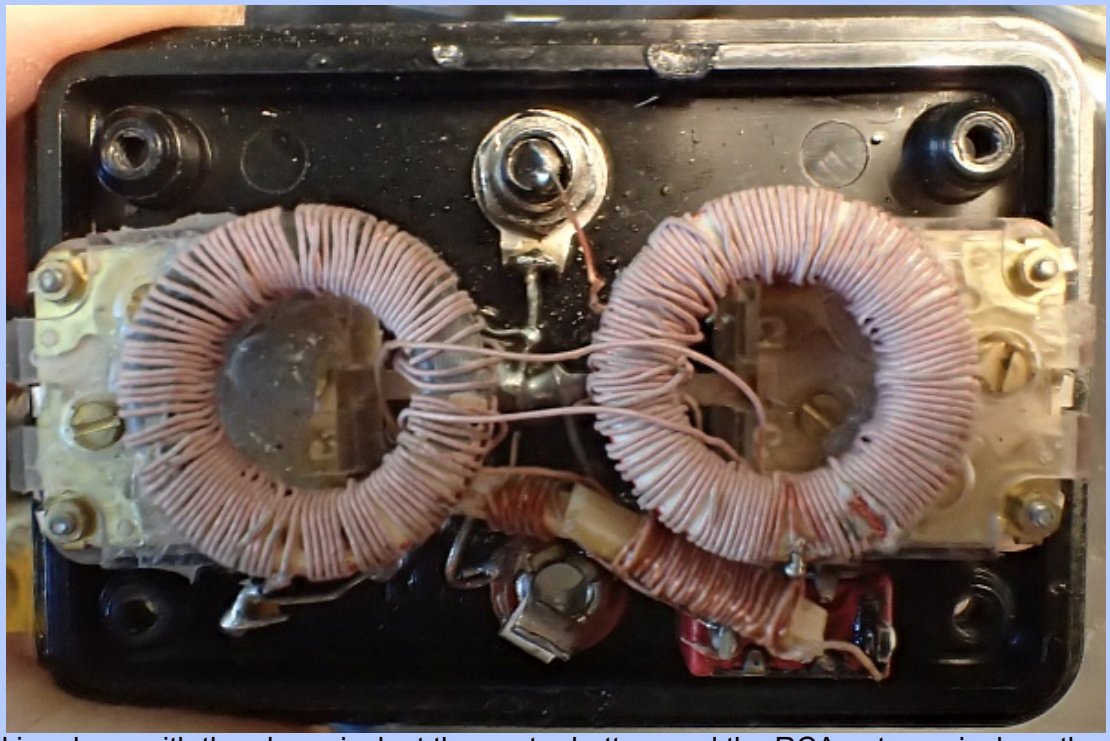

Looking down with the phone jack at the center bottom and the RCA antenna jack on the top.
Notice a ground bus runs in the center connecting the two condensers and that the other components are soldered to it.

The front panel. Antenna tuning on the left, station tuning on the right.
The toggle switch controls wide or narrow selectivity tuning.

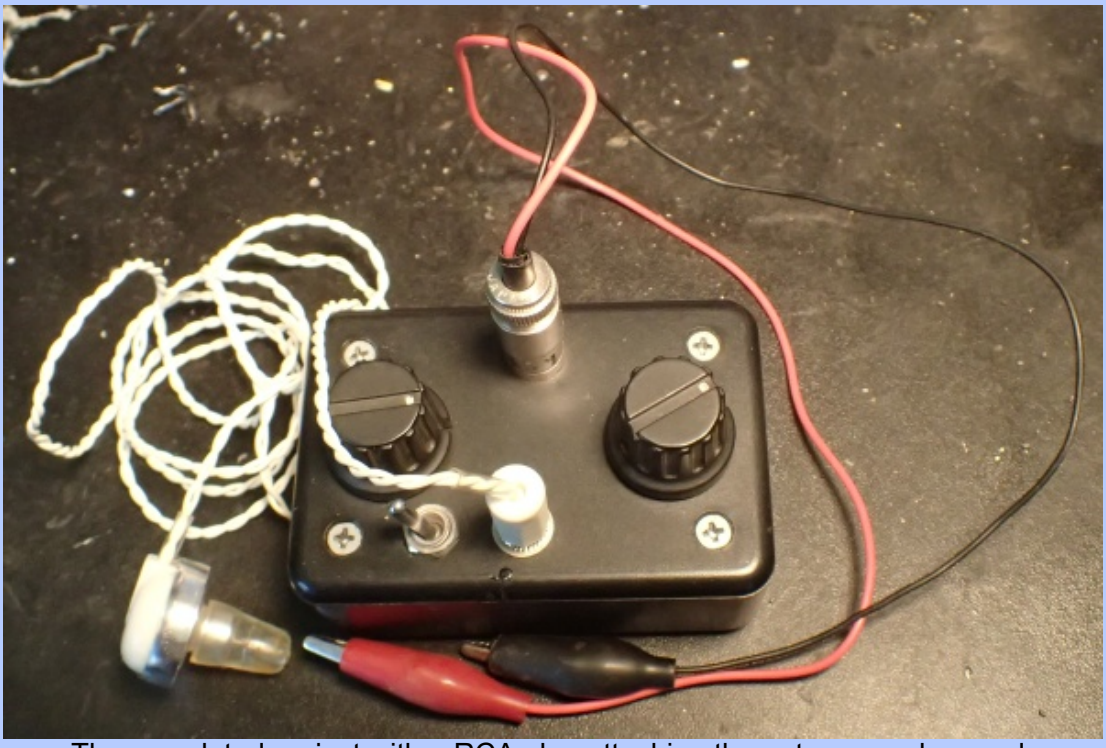

The completed project with a RCA plug attaching the antenna and ground.
I think you will agree that this is a very neat little package.
The tiny size belies its rather excellent performance.

Here's a picture of both my radio and the Heathkit CR1 showing their relative sizes
This is an old photo before the wide/narrow selectivity switch was installed.

The way this radio works is as basic as it is possible to get
and here's how it all works:

The setting:
Imagine that there is a radio station 10 miles away and that it that is broadcasting radio waves at 1,400 KHz. Imagine that our radio station is broadcasting hundreds of watts of energy into space and that if we could capture just a tiny amount of this energy, it would be possible to hear what was being broadcasted. Imagine that we have a crystal radio like the one above connected to a long wire antenna.

(1) The passing radio wave from our station induces a tiny high frequency voltage on our antenna wire. The antenna is connected to the antenna coil (coil on the left of the diagram) with its antenna tuning capacitor to the left and below it.
.

(2) When the antenna capacitor is tuned just right so that the inductance of the coil is matched by the capacitance of the tuning capacitor, a tiny current from the antenna flows in the antenna coil to produce an oscillating (or varying) magnetic field inside the toroid core on the left. By carefully adjusting the antenna tuning capacitor, this oscillating magnetic field will be right in tune with 1,400 KHz and 1,400 KHz only. This is important because it helps separate our 1,400 KHz signal from all the others on the AM band.
.

(3) The oscillating magnetic field created by currents in the antenna coil causes a voltage to be developed in the turns of the link coil through the principle of mutual inductance. The oscillating voltage in the link creates a oscillating magnetic field in the right side core the core that has the station tuning coil wound on it. The link isolates the two circuits so that unwanted signals are not coupled between them.
.

(4) The 1,400 KHz signal that has been coupled to the station tuning coil is contained in a "tank circuit" that is made up of the station tuning coil and the station tuning capacitor (shown to the coil's right).
.

(5) By carefully adjusting the station tuning capacitor so that its capacitance exactly matches the coil's inductance, a so-called tank circuit is formed. This tank circuit "resonates" or "tunes in" the 1,400 KHz signal and that means that it further separates our 1,400 KHz signal from all the other nearby signals. We now have just the radio signal we want, but we need to do more because it is impossible for our ears to hear radio frequency signals.
.

(6) To "detect" the presence of the radio frequency signal that is resonating in the tank circuit, the station tuning coil is wired to one side of the 1N34 detector diode.

.

(7) The 1N34 diode chops off the negative part of the radio frequency wave. The detector needs to do that or the negative part of the wave would cancel out the positive part of the wave and nothing would be heard.

.

(8) When the diode detector chops off part of the radio frequency signal, direct current audio frequency undulations are all that are left over from the original radio wave. These direct current audio frequency undulations correspond to the sound being transmitted by the station and when the wires of a very sensitive earphone are connected to the detector, these undulations of direct current cause the mechanism inside the earphone to vibrate in step with the undulations and it is those vibrations that we hear as sound.

Here is a graphical representation of what's going on when a radio frequency signal is detected (turned into sound):

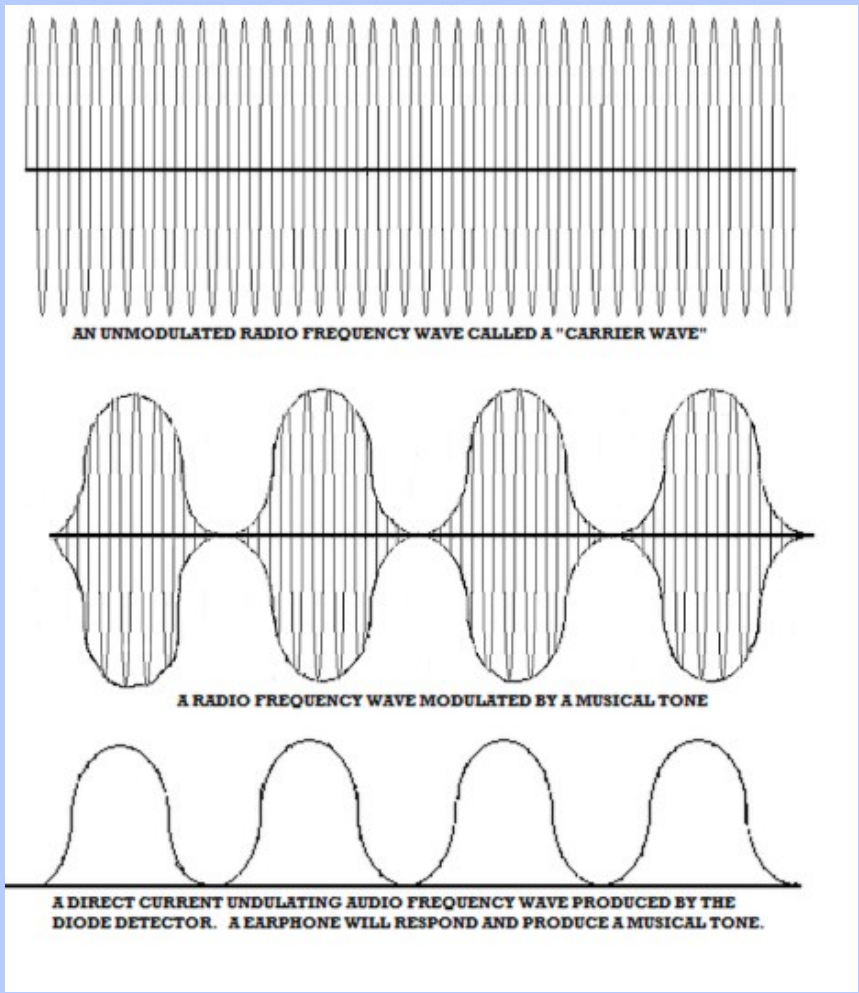

Graphs of the various waveforms seen at the tuner stage (top two) and at the detector stage. Unmodulated carrier waves are also called "continuous waves" and can't be heard by a crystal detector except as a kind of a very faint humming noise and a quiet spot on the tuning dial. AM radio stations try to avoid sending out unmodulated carrier waves (called "dead air") and so this waveform is rarely seen. More common is the waveform showing lower frequency sound waves superimposed on the carrier wave.

The thick black line is where the voltage is zero as a carrier wave crosses from positive to negative. As shown here, the negative going parts of the wave are stopped by the detector diode so that positive to zero to positive undulations remain. If

you reverse the diode, the direct current undulations will be negative to zero to negative, but the same musical tone will be heard in the earphone.

Crystal radios use only one half of a radio frequency's wave because full wave rectification is unnecessarily complicated and results in reducing the selectivity with little or no increase in sensitivity.

The importance of a good antenna and ground system

These radios are not connected to your house's AC power and they use no batteries. A crystal radio has no amplifying circuits and yet they output sound and sound is energy. Where do they get the energy to make sound? Do they somehow use mysterious and occult "free energy from space" or something goofy like that? The energy needed to run these radios doesn't cost you anything directly, but it isn't free or mysterious. The energy is from a tiny fraction left over from the hundreds of watts of radio frequency energy a station broadcasts out to space. The vast, vast majority of the energy a broadcast station radiates out of its antenna system is lost, but a tiny fraction of it may be picked up by an antenna at somebody's house.

Antennas for listening to AM stations can range from tiny "loop" antennas that are extremely inefficient, but good enough for amplified radios, all the way to elaborate "long wire" systems dozens and dozens of feet long and high up in the air. The general rule was discovered by Marconi over a hundred years ago that the longer and higher the antenna, the better it is at capturing some of that energy that is passing by. To capture enough passing energy so that it can be processed by the crystal radio's components and then come out as sound energy strong enough to vibrate the mechanism inside the earphone, the antenna needs to be as long and as high as is practical. Practical is what you have room for and how high you can safely go. Practical antennas can be strung between poles located at the ends of a roof or from the house out to a distant tree or pole. It is true that antennas longer than 60-100 feet and higher than 25 feet do capture more energy, but things soon get very difficult and for very little extra gain at distances and heights beyond what is practical.

In addition to a really good long wire antenna (as long as is practical as mentioned), this radio must have a good ground. Right now, I am using my house's wiring as a ground and it seems to work well. Water pipes, when available to connect to, are supposed to work even better. When using house wiring, it would be a deadly mistake to connect to anything but the AC ground, so be careful.

Tuning this radio for maximum sensitivity and selectivity

The trick to tuning this radio is to first locate a strong local station of known frequency and tune it in with both the antenna tuner and the station tuning controls. Both controls should be used to peak the signal for maximum loudness. Once you have an idea where on the dial your station is located, move both controls to about where you guess the weaker station you want to listen to might be. Once there, slowly and carefully adjust the station tuning until you hear something and then peak it up with the antenna tuning control. You may have to go back and forth a few times to get maximum volume with minimum interference from nearby and stronger stations.

The best time of the day to have fun with these kinds of radios

During the daytime and during the summer months, about all that can be received with a little set like this, at least around here, is the trash in English that the local broadcasters pander to and a couple of Mexican language and music stations, but in the evening, electrified layers way up high in the outer fringes of the atmosphere allow radio waves to be bent back down to earth so that interesting stations worth listening to, but which are 200 to 300 (sometimes even more) miles away may be heard loudly and clearly. This long distance "refraction" or bending of the radio waves back to earth (a process called "skip") makes it possible to hear these distant stations, but it isn't like listening to the station next door. This "skipping" of radio waves off electrically charged layers in the upper atmosphere makes these signals subject to all kinds of things including interference from even more distant stations, fading in and out, some strange sounding distortions and sometimes there is even an echo effect. These so-called "propagation effects" can be annoying, but if you just wait a few seconds or minute or so, the signal generally returns.

I think that listening for yourself, to hear what Nature is doing to these signals way up in the sky, is part of what makes listening to the Broadcast Band at night so interesting. There is a certain randomness to this skip that is explained to some degree by solar astronomy and physics. Scientists and engineers all over the world

closely monitor our local star and measure it for electrical and magnetic activity. Reports and prediction tables are compiled by various scientific agencies and all this stuff is available on the Internet. When you can test these predictions for yourself by listening for "skip," you are participating in a scientific observation in your own little way.

Building and operating a crystal radio gives insights into science and technology

Listening to far distant stations with a crystal radio like this one shows you how ships like the Titanic could communicate with other ships and to shore stations hundreds of miles away with nothing more than crystal radio receivers. Speaking of the Titanic, two thirds of all the people on her died and only about 700 were rescued, but without early radios, very much like this crystal set, everybody would have died. In the 100 years since the Titanic disaster, just imagine how radio has connected ships, airplanes, space missions and your cellphone with the rest of the world.

If you make one of these radios and actually put it to use, you will see how, with a good antenna and good sharp tuning circuits, individual radio signals can be picked out from the mass of signals out there and a station you might want to listen to can be heard from a long way off under the right conditions. For me, this is a very wonderful thing, especially when I consider that these radios do not amplify their signals, but use the tiny amounts of electrical energy that is picked up by the antenna to make sound. Such is the extreme sensitivity of human hearing and the amazing efficiency of the circuits, the detector crystal and the earphone, that microwatts of power, originally coming from a station hundreds of miles away and landing on my antenna wire, can be heard clearly.

How far we have come

When you think about it, it seems that such basic radio technology represented by this little crystal radio is quite old, but in fact, the first Fleming Valve and crystal radios were invented just a little over 100 years ago. When my mother was a girl, people were building crystal sets so that they could listen to the wonderful new radio broadcasts from the big cities. In a relatively short span of time, the time since my grand parents were young in the 1890s to my parent's time, to this very moment, consider just how far we have come with radio, television, GPS, cell phones, satellite broadcasting, wireless Internet, interplanetary missions to space and so much other allied radio technology.

A totally irrelevant comment

I know that the following is irrelevant to this article, but I'd just like to say that compared to the one tube (valve) Armstrong regenerative radio I built in 1958 while in the 8th grade (and without any adult help or supervision and the story of which is found elsewhere on my website), both the Heathkit and this little crystal radio really suck. It is no wonder that the crystal radio was quickly superseded by valve radios (starting about 1919 and using Armstrong's designs) even though the early vacuum tubes (valves) were extremely expensive, ate up expensive batteries and quickly burned out. Yes, even by 1920 the crystal radio was technically obsolete and their owners started to become just a tiny fraction of the listening public that they are today. Nevertheless, crystal radios did not completely disappear. They have remained popular all these years and years and years because these little radios are easy and cheap to build and they have provided endless hours of fun and precious education to uncounted numbers of people over the decades.

Why you might want to have second thoughts about building this radio

(These are my personal opinions that you are not obliged to agree with and you may skip down if you wish)

There is something that should be considered when thinking about having your young people build any kind of AM radio and what I'm referring to is the unpleasant realization that, in many places in the U.S., there is absolutely nothing on AM radio that is (in my opinion) good for young, developing minds to listen to. Many local broadcasters pander to the most disgusting right-wing propaganda and Fundamentalist religious crap. Anyway, it is my opinion that persons wishing to direct young people into building a simple AM radio should carefully monitor their local AM broadcasting for the kind of trash I'm taking about. If the local airwaves are full of this trash, they must ask themselves: would building this kind of a project likely help or harm their young people? I think building an AM radio can have the potential to do more harm than good if your area is dominated (as mine is) with this sort of trash broadcasting. Now, on the other hand, if you actually WANT your kids to be exposed to religious or political propaganda before before their minds are sufficiently developed to resist brainwashing, then ignore this warning.

Of course, this applies to adults wishing to build one of these radios too. Is it really worth the expense and especially the effort to build a crystal radio when there is nothing to listen to? I did it strictly for the technical

challenge, but certainly not to listen to local entertainment.

All this aside, if you decide build this radio or (better yet) my Armstrong "crystal" radio, I think you will have a lot of fun and will learn a lot. Just remember that for about the same money you can get a MP3 player with an FM radio and 8 gigs of memory. While the MP3 player is a better deal, listening to it won't teach you anything about electronics. However, the horrible trash that's on AM radio has a well deserved reputation for making its listeners stupid and crass while listening to classical music through your MP3 player just might make you smarter and highly cultured, but it's your choice.

Other considerations

Finally, there are some serious downsides to building this radio you should be aware of. One downside is the extreme tediousness of winding the toroid coils. Let's face it, few of us have toroid winding machines and putting 100 turns (about 7 feet of wire) on one of these cores is time consuming and boring with many a tangled wire. Mounting the tiny components wasn't all that difficult because the plastic box lid was very easy to drill, but it was fine work and time consuming. The most serious downside is the very fine and very careful soldering that must be done to connect up all the very tiny parts. If I would have chosen a larger box to put everything in, the soldering wouldn't have have required so much patience and expertise, but it would still be, in my opinion, beyond the skill of most middle school (and younger) kids to do except under the most close and individual supervision especially when you consider that the young person would be handling a hot soldering iron that could burn him/her badly if mishandled.

A final word

I have to admit that with the exception of the Heathkit CR1 radio, this is the best crystal radio I have ever made or used and I'd say the project was a success. I'm sure that people will tell me that there are some ultra high performance crystal radios out there that have very sophisticated low loss coils, high quality tuning capacitors and superior detectors with that could outperform this and the CR1, but I have no desire to go to the trouble to try to build them.

By the way, if you build a crystal radio based on what has been presented here, please drop me a line and describe it to me and, if you can, attach some pictures. I'd sure appreciate it if you would tell me how much you like the radio and how it performs for you. You can write me directly at my geojohn.org mail address. Be sure to look over my story of the Armstrong "Crystal" Radio before you decide to build this or any crystal radio.
Good luck.

The End

Having arrived this far, obviously you have a superior attention span and reading ability that far exceeds that of the
majority of web users. I highly value the opinion of people such as yourself, so I ask you to briefly tell me:

Did you enjoy this article or were you disappointed?

Please visit my guest book and tell me before you leave my website.

Or you can **contact me by E-mail** directly if you have any questions or comments.

If you liked this article, perhaps you would like to read about the radio my radio is based on.

The high performance Heathkit CR1 crystal radio

Homebrew Galena Crystal Set

Enjoying a 1920's radio experience

Ever since my youth, I have been attracted to crystal radios I had seen pictured in old books. There is a special appeal about a device, however primitive, that can pull in radio voices and music through the air from many miles away without batteries or electrical power of any kind, just an antenna and a ground.

That explains my immediate attraction to this little homebrew crystal radio with galena detector found at a swap meet. It was built into a deep cigar box using a heavy paper roll as a coil form. The coil form measures 4 1/4 inches long with 3 3/4 inches outside diameter. The coil itself consists of 99 turns of solid double-cotton covered wire tapped every 9 turns. Those taps are fed to ten smooth-head screws that make up the tap selector switch contacts.

Repairs
As with all older electronics, the first repair is a good cleaning, making sure the solder joints are in good shape, and applying a bit of deoxit to all moving electrical contacts, in this case the ten-position tap switch and the crystal holder.
The top of the cigar box had been removed and apparently lost over the years. The cover had been fastened with a small nail which was still on the box. I made a top cover from another old cigar box lid.
The galena crystal was potted in Wood's metal that had separated into two pieces. Quick work with a soldering iron solved that problem. I cleaned the galena surface with rubbing alcohol as recommended in older articles. I then measured forward and back resistance ratios of the galena-and-cats-whisker diode. While there is a signifcant difference between forward and back resistance readings on an ohmmeter, the ratio was nowhere close to that of a modern germanium diode, thus limiting the efficiency of the crystal.

A 1920s experience
I hooked up the set to my 80 meter dipole antenna and listened to the two local AM stations with adequate volume using my equally old but very efficient Baldwin headphones. I could find sweet spots with the "cat's whisker" on the galena crystal that worked reasonably well. However, connecting a 1N34A germanium diode in series with the headphone lead to the galena crystal made a major difference. I could see why the introduction of fixed germanium diodes quickly ended the era of the galena and cat's whisker detector.

Crystal set schematic showing similar set with 7 position switch and coil taps
(Source: The Radio Amateur's Hand Book by A. Frederick Collins, 1923)

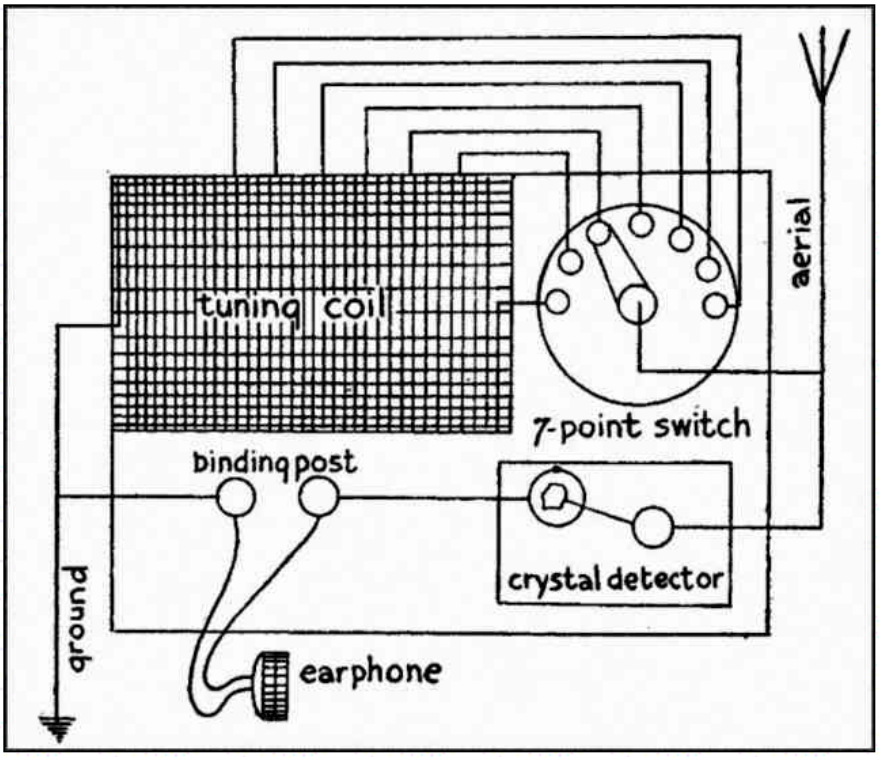

The ten-position tap switch enabled good separation in tuning of the two local stations which are 370 KHz apart. At night I was able to also comfortably listen to a some distant stations with strong signals.
I also tried a very long wire antenna but found the volume to be about the same as with the 80 meter dipole. Living the experience of a 1920s listener was the fun part. My hat is off in tribute to the quality work of the unknown builder of this very nice little set.

Information sources
The internet has lots of good sources on building crystal radios with modern parts. Here are a few:
"Build A Crystal Radio" from **The Stay Tuned Website**
"Simple Crystal Radio" from **techlib.com**
"Building a crystal radio out of household items" from **scitoys**
"Quaker Oat Box Radio Project" from **The Xtal Set Society**

8-24-10;

An Altec Lansing A-324A Amplifier was the previous item on the bench.

Go back to the BA Pix Homepage.

No. 96

CRYSTAL SET CONSTRUCTION

SIMPLE INSTRUCTIONS FOR MAKING NINE CRYSTAL SETS

by B. B. BABANI

There is to-day a marked revival of interest in crystal receivers, and this book has been specially prepared to introduce the home constructor to the design and building of the various types. The text is simple and free from technicalities, so that even the young reader may confidently embark on the construction of any of the receivers shown.

CONTENTS

1. AERIALS.
2. EARTHS.
3. CRYSTAL DETECTORS.
4. COILS.
5. THE BEGINNERS' CRYSTAL RECEIVER.
6. FRAME AERIAL RECEIVER.
7. LONG DISTANCE RECEIVER.
8. HIGH GAIN RECEIVER.
9. HIGH SELECTIVITY RECEIVER.
10. BATTERY AIDED CRYSTAL RECEIVER.
11. MEDIUM AND LONG BAND RECEIVER.
12. ULTRA SENSITIVE ALL WAVE RECEIVER.
13. AN ADVANCED CRYSTAL DIODE RECEIVER.

THERE ARE 12 DIAGRAMS

LONDON: BERNARDS (PUBLISHERS) LIMITED

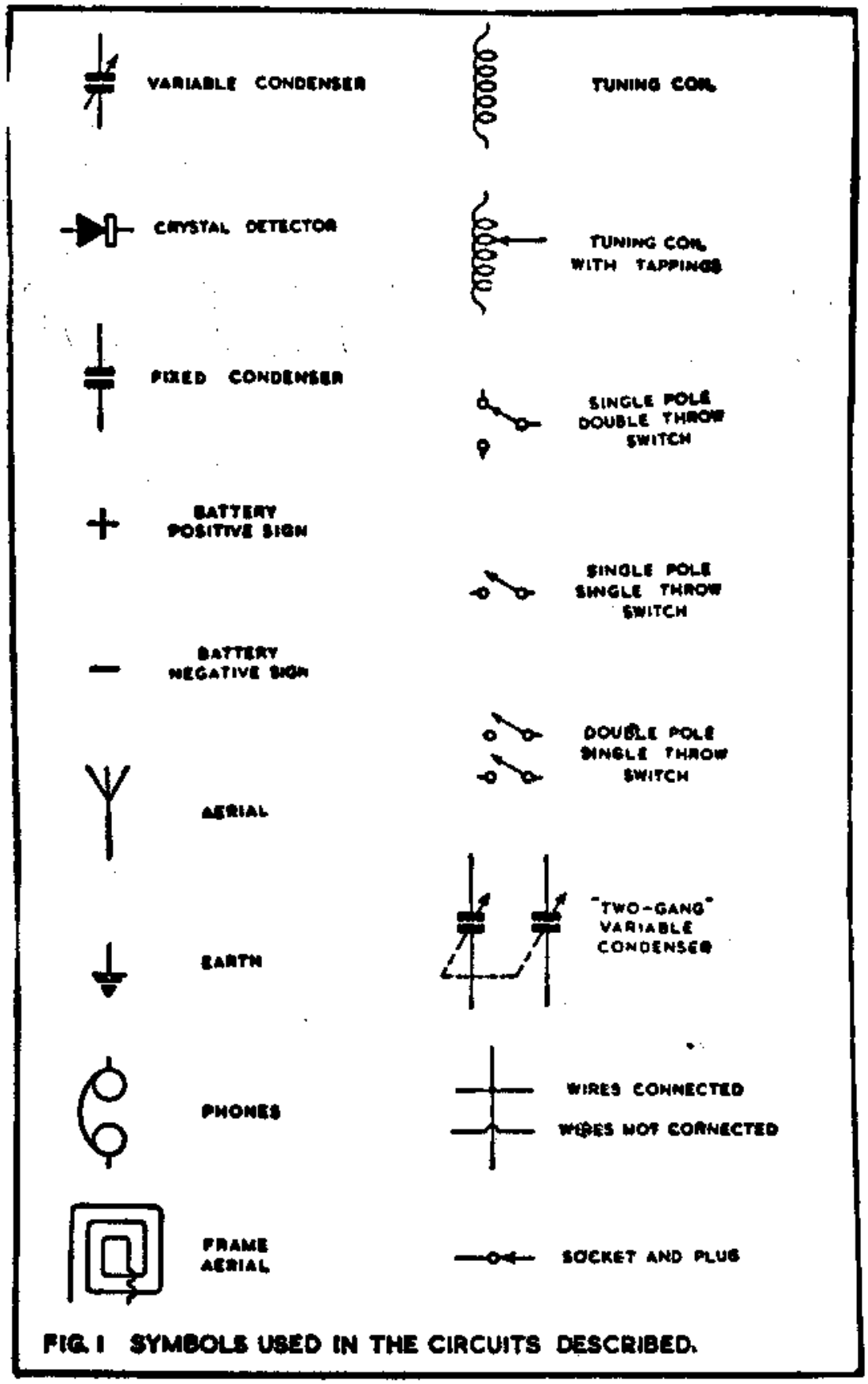

FIG. 1 SYMBOLS USED IN THE CIRCUITS DESCRIBED.

1. Aerials.

One of the essentials for satisfactory reception with crystal sets is an efficient aerial. Four different types are suggested and are shown in Fig. 2.

There are several important points to be noted when erecting an aerial for a crystal set.

(1) See that it is suspended as high as possible and is not screened by tall buildings, obstructions, etc.

(2) The aerial itself and the lead-in from the aerial must be adequately insulated. Be sure that the porcelain or plastic insulators do not permit the aerial or lead-in to touch the building, tree, or post from which they are suspended. The lead-in should be brought into the house through an insulated rod.

(3) It is exceedingly important to use insulated copper wire, either single or multi-stranded, for both the aerial and the lead-in.

2. Earths.

An adequate and efficient earth contributes to the good performance of any well-designed crystal set and Fig. 3 shows the best method of obtaining an efficient earth where there is a garden or patch of ground available at a short distance from the receiver.

Obtain a 3-ft. length of ½-in. galvanised iron pipe and at one end drill a hole right through. Insert a bolt with spring washer and locking nut in the hole. Connect the earth lead-in wire to the bolt; the other end of the lead-in to the earth connection on the receiver. Leave both ends of the pipe open. Insert the end opposite the bolt into the ground vertically until only 3-in. are showing above the surface of the surrounding earth.

It is important to see that the surrounding ground is kept damp, if necessary by occasionally pouring a pint or two of water down the open projecting end of the pipe.

Ready-made copper earthing rods with a pointed end for easy hammering into the earth are sometimes obtainable from radio dealers.

Should a garden not be available, an alternative earth is a cold water pipe coming from a rising main. Simply file very lightly the pipe at the back of the tap and wind the copper wire earth lead-in round the filed part and cover the joint with insulating tape.

In no circumstances should a gas pipe be used for an earth.

3. Crystal Detectors.

Most radio dealers can supply very efficient permanent or semi-permanent crystal detectors of proprietary makes. However, there are always available quite a number of ex-Government surplus units which are called crystal valves and, though these were originally designed for a very different use in service equipment, they are easily adaptable and will give extremely efficient results when used in circuits designed for them. To enable the constructor to purchase suitable types for this purpose—and they cost very little—the following list gives the Government reference numbers.

CV 101, CV 102, CV 103, CV 111, CV 112, CV 113, CV 226, CV 241, CV 246, CV 247, CV 253, CV 291, CV 351, CV 361, CV 364, CV 367, CV 727, CV 749, and CV 1785.

One of the satisfactory proprietary makes of this class of crystal detector is the BTH CS7A, which, incidentally, is the commercial equivalent of the CV 253.

For all these Government types, one connection should be made to each end by arranging a holder to fix them into or by carefully soldering the appropriate connecting wires to each end.

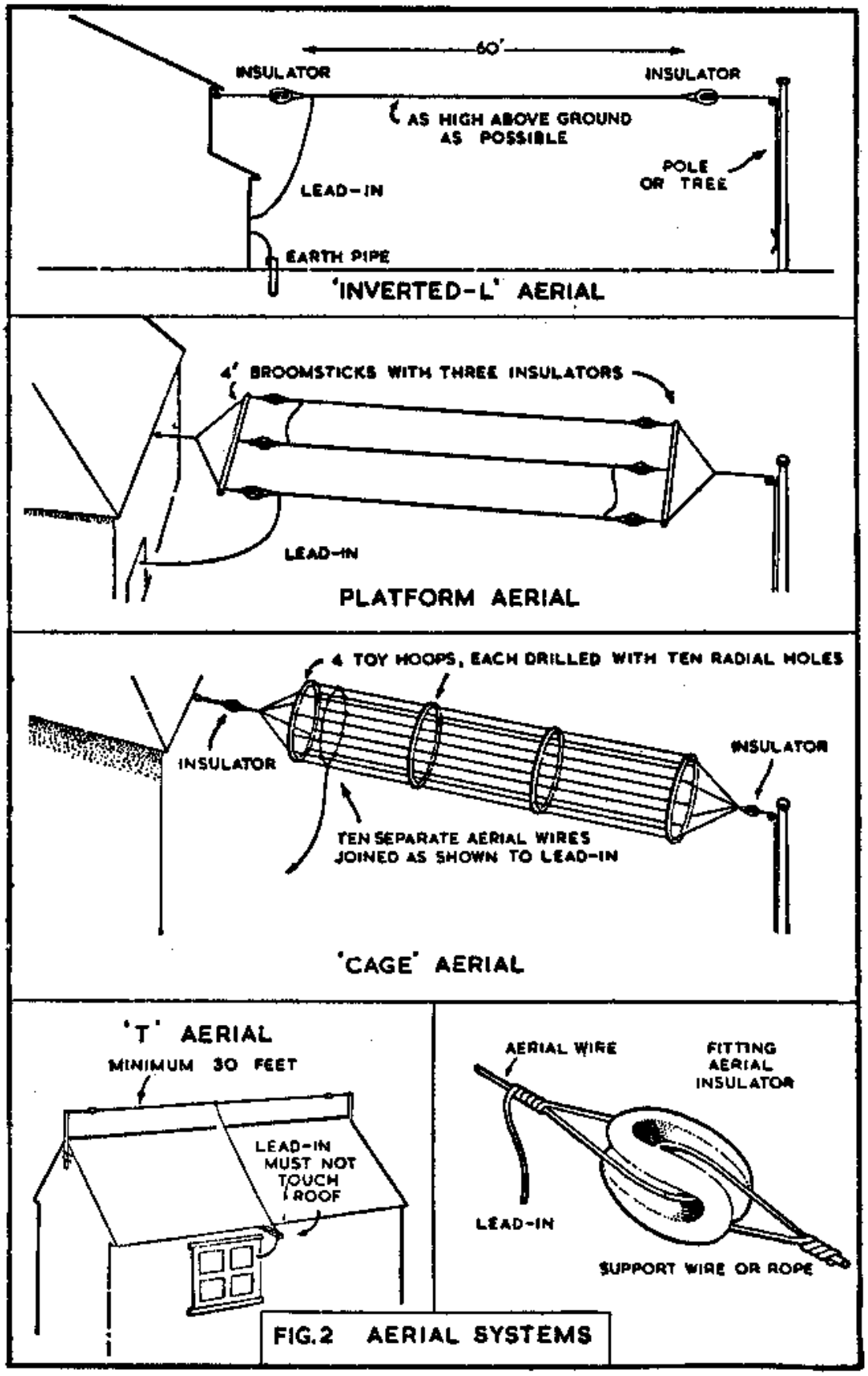

FIG. 2 AERIAL SYSTEMS

4. Coils.

In Fig. 3 two methods are shown of fixing the coil to the chassis. However, the ingenious constructor may evolve another arrangement.

The important thing to remember is that the coil should be fixed so that it is completely insulated from the metal chassis that may be used.

It is also important to remember that if a metal chassis is used, one must see that all components and wiring, with the exception of earth connections, are adequately insulated from this chassis so as to make sure that no short circuits take place. It is recommended that all crystal sets should be built on a panel, and that both panel and chassis should be of bakelite, paxolin or perspex, as these three materials are efficient insulators in themselves.

5. The Beginners' Crystal Receiver.

The popularity of the crystal receiver among beginners is undoubtedly due to the very modest outlay necessary, and the ease with which such receivers may be built. It is not always appreciated that, to obtain worth while results,

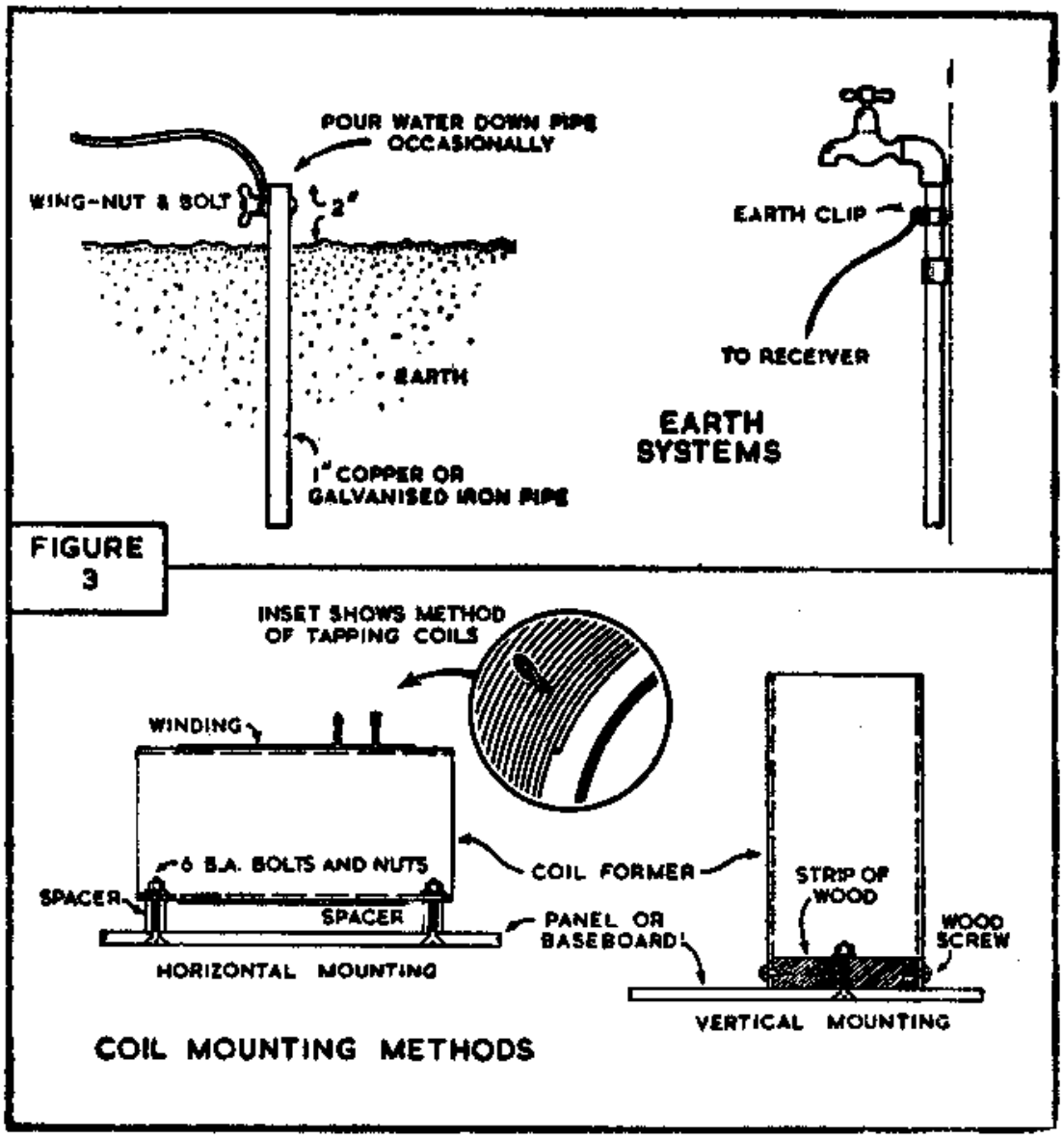

far more care in avoiding losses is necessary than with a three or four valve receiver. One reason for this is the fact that the crystal receiver can offer no help by way of amplification and it is therefore dependent on an efficient aerial/earth system, low loss design within the receiver itself, and the use of sensitive headphones. The experience gained is well worth the time expended since, when more ambitious receivers are attempted, the constructor will remember the benefits gained by efficient construction and installation with the result that each receiver attempted will be an instrument capable of giving a first class performance.

Losses within the receiver itself may be considerably reduced by efficient coil design. Unfortunately, selectivity is a factor which must not be overlooked; it is this factor which governs the sharpness of the tuning and permits the separation of adjacent powerful stations. The greater the selectivity, the greater the ease with which signals may be separated; but at maximum selectivity the received signals are at minimum strength. In Fig. 4, the coil is tapped at four points, which enables the best point between selectivity and sensitivity to be chosen. The nearer the aerial tap to the earth end of the coil, the greater the selectivity. The pre-set condenser C1 also aids selectivity; at minimum capacity the selectivity is high, and *vice versa*.

Used in conjunction with the coil taps, the constructor should have no difficulty in selecting a condenser setting and tapping point which permit the reception of strong signals and at the same time effect the required separation of powerful stations.

The coil is constructed on a former 3-in. diameter × 2-in., and consists of 50 turns 36 S.W.G. enamelled wire close wound and tapped at every tenth turn. These taps are brought out in the form of loops twisted firmly so that there is no actual break in the winding continuity. After completion the winding may be painted with Durafix to prevent any movement, and the taps and two free ends cleaned with emery cloth to remove the enamel. The layout and wiring is shown in Fig. 4. The headphones should have a resistance of some 4,000 ohms or more and should be of reputable manufacture. Any of the aerials previously described are suitable for use with this receiver.

C2 .0005 variable condenser.
C1 .0002 pre-set condenser.
C3 .001 mica condenser.
1 Crystal detector, semi-permanent pattern.
2 oz. 30 S.W.G. enamelled copper wire.
1 Coil former 3-in. dia. × 2-in.
1 Ebonite or Bakelite panel 6-in. × 5-in. × ⅛-in.
4 terminals, connecting wire, etc.

6. Frame Aerial Receiver for Local Station use on Medium wave bands.

This receiver was specially designed for constructors who are within 5 to 10 miles of a powerful station and who have no facilities for constructing a good outdoor aerial.

The frame itself consists of two ¾-in. × ¾-in. square section wooden rods each 36-in. in length. These are placed together at their centre line to form a cross; they are fastened by a nut and bolt and these in turn pass through an upright piece of wood ½-in. × 1-in. section 2-ft. in length. This upright support is then screwed into a baseboard 8-in. × 8-in. × 1-in. thick. At each of the arms of the 36-in. cross a 4-in. strip of ½-in. square section wood is placed. Reference to Fig. 5B will give the details of the construction of this aerial quite clearly.

It will be noted that approximately 85-ft. of 20 S.W.G. double cotton-covered wire are required for the inductance to cover the medium wave broadcast band. The wire should be wound around the four crossbars, thereby creating

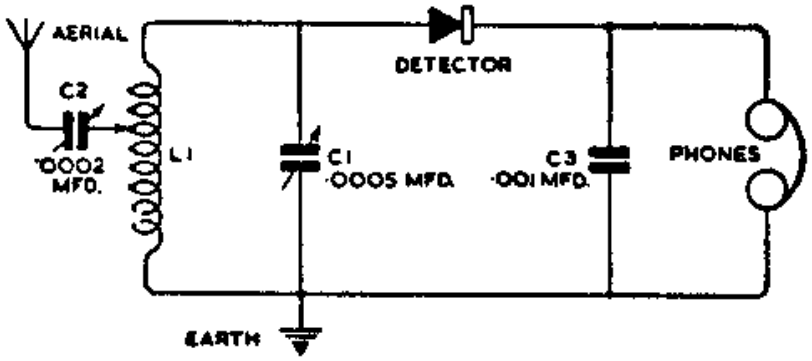

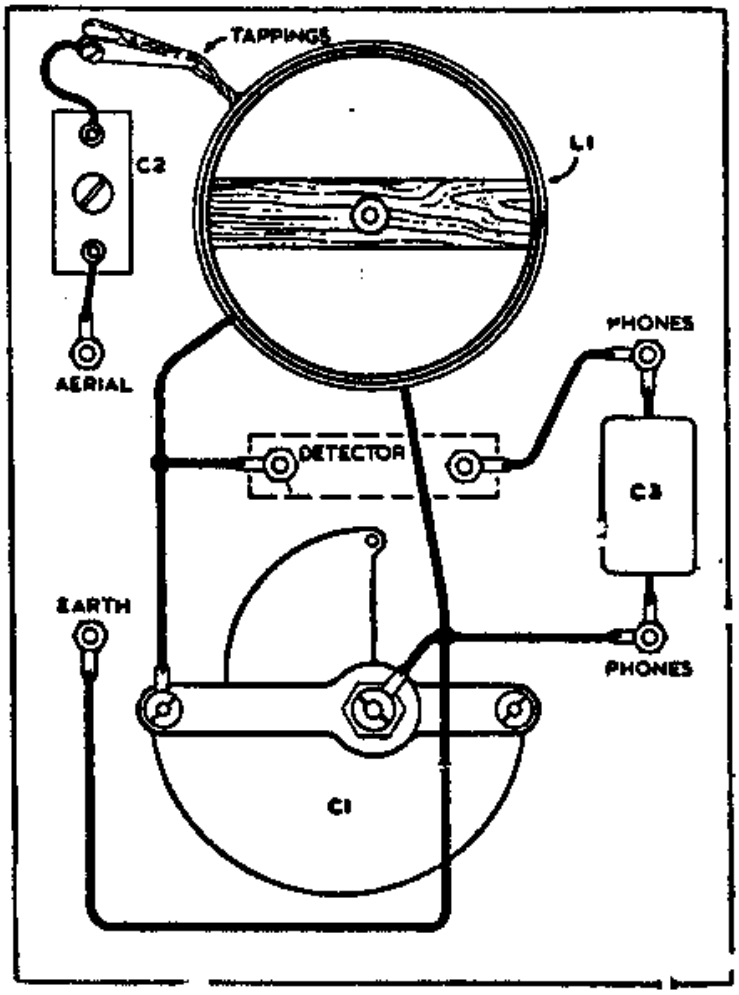

FIG. 4 THE BEGINNER'S CRYSTAL RECEIVER.

a square wire frame, and each turn of the wire should be spaced approximately ⅛-in. The best way to effect this spacing accurately is to file on the 4-in. crossbars a number of small nicks at ⅛-in. intervals. The two ends of the wire should then be brought down on the two terminals which may be screwed into the square baseboard and two leads taken from there to the crystal set itself.

The actual set may be constructed on a small ebonite, paxolin or perspex panel 8-in. × 5-in. which may be screwed to one side of this base supporting piece of wood, thereby making the set virtually self-contained except for the earphones. Fig. 5A shows the circuit of the receiver.

To obtain the best results with this receiver, the aerial should be rotated by hand until the signals become loudest.

1 Semi-permanent crystal detector.
C1 1 .0005 mfd. variable condenser.
C2 1 .0005 mfd. fixed condenser.
1 condenser dial marked 0 to 100 or 0 to 180.
1 pair of high sensitivity earphones.
85-ft. to 90-ft. of 20 S.W.G. double cotton covered wire. (8oz.)
Sufficient connecting wire for wiring purposes.

7. Long Distance Receiver.

This receiver has been specially designed to achieve high sensitivity. With a sufficiently good outdoor aerial effective reception has been obtained up to 150 miles.

The circuit is quite straightforward, as can be seen from Fig. 6 and the only special point is in winding the coil L1.

This coil consists of a 2½-in. diameter former on which are wound a total of 51 turns using 24 S.W.G. double cotton wire. Starting at one end, tap every two turns until there are eight taps; wind a further 15 turns and tap; then a further 10 turns and tap; finally, add 10 turns to end the winding. The wire should be close wound, *i.e.*, with turns touching.

To obtain the best results, the two crocodile clips A and B should be tried on the various coil taps until the loudest reception is obtained. It may be found in use that the loudest reception of any particular station causes another station to be heard at the same time; care should, therefore, be taken to select the appropriate tapping point to separate any two powerful stations that may interfere with one another.

4 oz. 24 S.W.G. DCC copper wire.
Coil former 2½-in. dia. × 3-in.
C1-2 single variable condensers .00035 mfd.
2 Condenser dials marked from 0 to 100 or 0 to 180.
1 Permanent crystal detector.
C3 .001 fixed condenser.
1 pair of high sensitivity earphones (preferably between 4,000 ohms and 8,000 ohms impedance).
2 Crocodile clips.

8. High Gain Receiver.

This receiver has been designed to give good reception up to 50 miles distance from any normal power broadcasting station in the medium band. It is a very selective circuit and will therefore enable the user to separate closely situated stations.

It will be noticed in the circuit (Fig. 7) that the variable condenser C1, has an on/off switch S1 to throw it out of circuit if necessary. It is used to increase the selectivity of the receiver and, in operating, it should be tried with this condenser either in or out of circuit on the various tappings on the coil L1.

L1 consists of 90 turns of 22 S.W.G. double cotton covered wire wound on a 2-in. diameter former and tapped every ten turns. L2 separately wound on a 2-in. former, consists of 90 turns of 22 S.W.G. double cotton covered wire, also tapped as L1. The components required are given on page 3

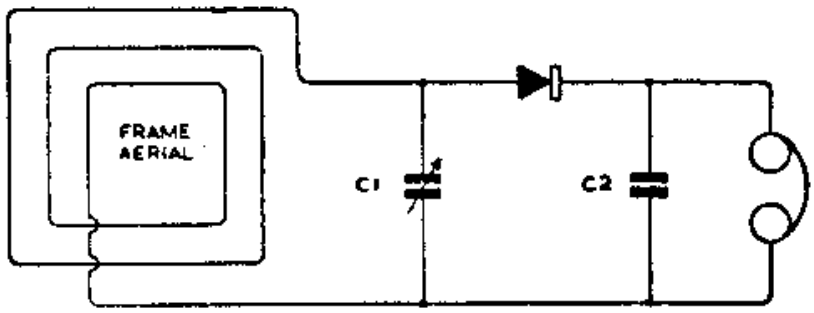

FIG. 5A FRAME AERIAL CRYSTAL RECEIVER

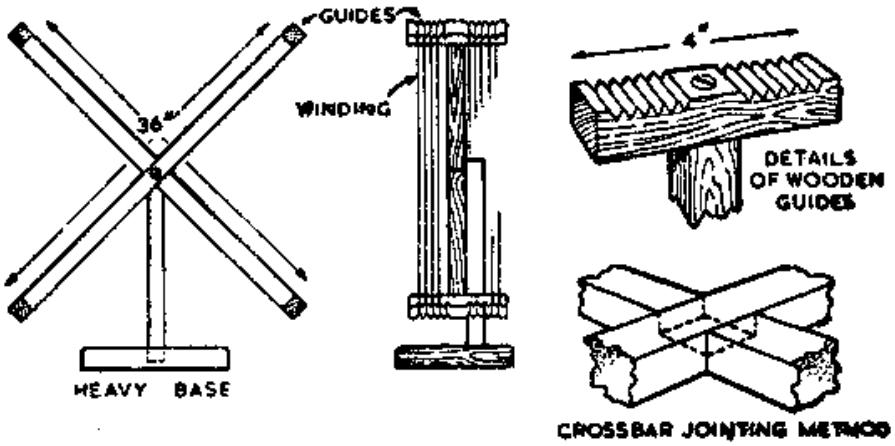

FIG. 5B. DETAILS OF FRAME AERIAL

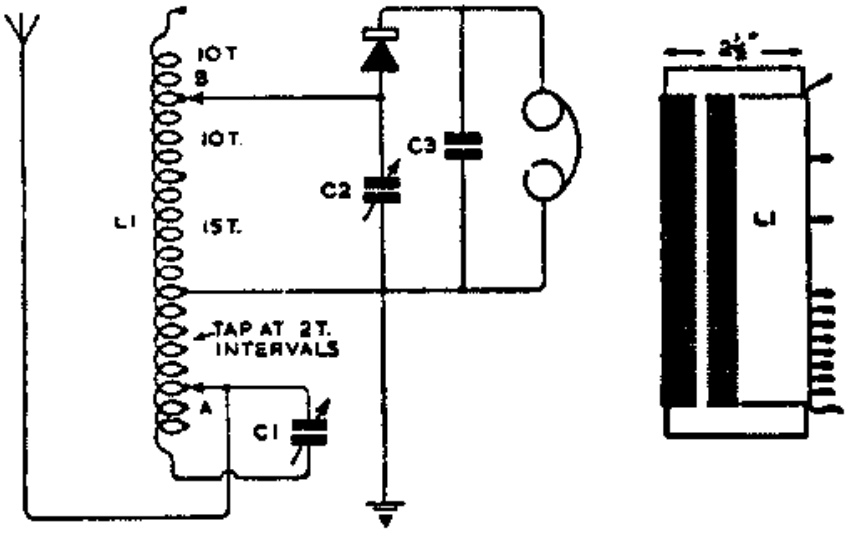

FIG. 6 LONG-DISTANCE CRYSTAL RECEIVER

C1-2 Single variable condensers .00035 mfd.
S1 Single pole single throw switch.
C5 .0001 preset condenser.
1 Permanent crystal detector.
C3-4 .001 mfd. fixed condenser.
1 Pair of high sensitivity earphones.
8 oz. 22 S.W.G. DCC.
2 Dials for variable condenser marked 0 to 100 or 0 to 180.

9. High Selectivity Receiver.

This circuit (see Fig. 8) is for use in high saturation strength areas where it is desired to separate powerful stations. The circuit is not complicated and is extremely effective.

It will be noted that C1 and C2, each .00035 mfd. capacity, are 2 gang unit.

The only special point in this set is the design of coils L1, 2 and 3, which are constructed as follows: L1, 60 turns of 22 S.W.G. double cotton covered wire on a 3 × 4 inches former tapped every five turns; L2, 15 turns of 22 S.W.G. double cotton covered wire on a 3 × 6 former; and L3, 85 turns of 22 S.W.G. double cotton covered wire wound on the same former as L2, the two windings being separated by approximately ¼-in. (see Fig. 8).

Note that the aerial lead is brought down to one of the tappings on wire L1. This should be tried on each of the tappings and the one giving the required selectivity should be used.

C1-2 2-gang variable condenser .00035 mfd.
2 3-in. formers for coils L1-2-3.
8 oz. 22 S.W.G. DCC.
C3 .0005 fixed condenser.
1 Semi-permanent crystal detector.

10. Battery-aided Crystal Receiver.

Fig. 9 shows a design which utilises a 9-volt grid bias battery to improve performance.

The charge built up in the .02 mfd. fixed condenser is changed to a positive current when it passes through the coil L1. This, in turn, is superimposed on the positive charge that is commencing to be rectified by the crystal detector and thereby increases the signal strength.

Coil L1 consists of a 4-in. diameter former wound with 85 turns of 24 S.W.G. double cotton covered wire tapped at 5, 25, 45 and 65 turns from the earth end. The earth end and these four taps are brought out to five small sockets and the connection from the earth is taken to a small socket. The plug should be tried in each of the five positions to find which one gives the greatest signal strength.

The 9-volt battery is connected across the .02 mfd. condenser and special care should be taken to see that the battery is connected correctly, *i.e.*, negative pole to earth.

1 Permanent crystal detector.
1 4-in. dia. × 3-in. former.
8 oz. 20 S.W.G. DCC copper wire.
C1 Variable condenser .0005 mfd.
C2 Fixed condenser .005 mfd.
C3 Fixed condenser .02 mfd.
1 pair of high sensitivity headphones.
1 Clix plug.
5 Clix sockets.
1 9-volt grid bias battery.

11. Medium and Long wave band Receiver.

This set has been designed for reception on two wave bands.

Care must be taken in winding the coils L1, 2, 3 and 4. These are wound on a single 3-in. diameter former. L1 consists of 30 turns of 28 S.W.G. DCC tapped at 8, 16 and 24 turns. L2, 60 turns of 32 S.W.G. DCC. L3, 40 turns of 28 S.W.G. DCC, and L4, 80 turns of 32 S.W.G. DCC. All are close wound and are separated from each other as follows: between L1 and L2, 3/16-in.;

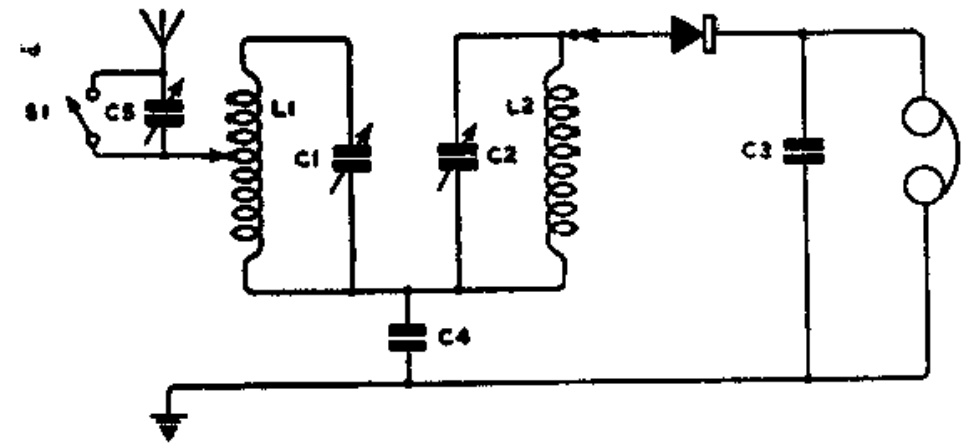

FIG. 7 HIGH-GAIN CRYSTAL RECEIVER

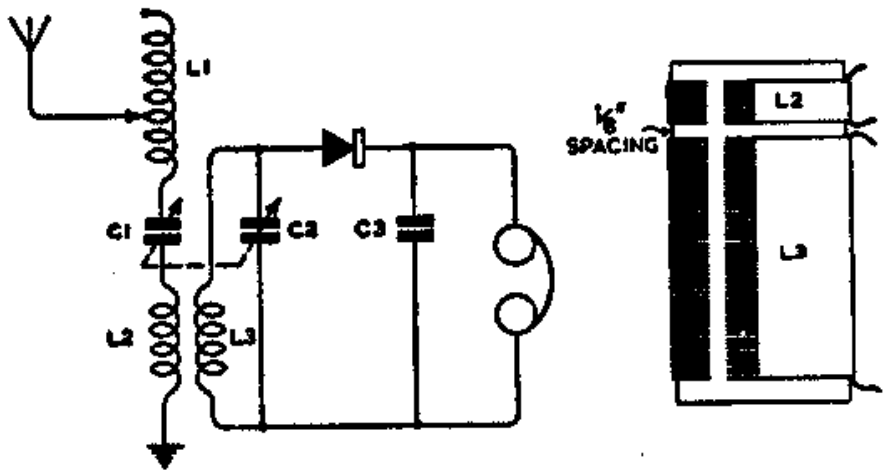

FIG. 8 HIGH SELECTIVITY CRYSTAL RECEIVER

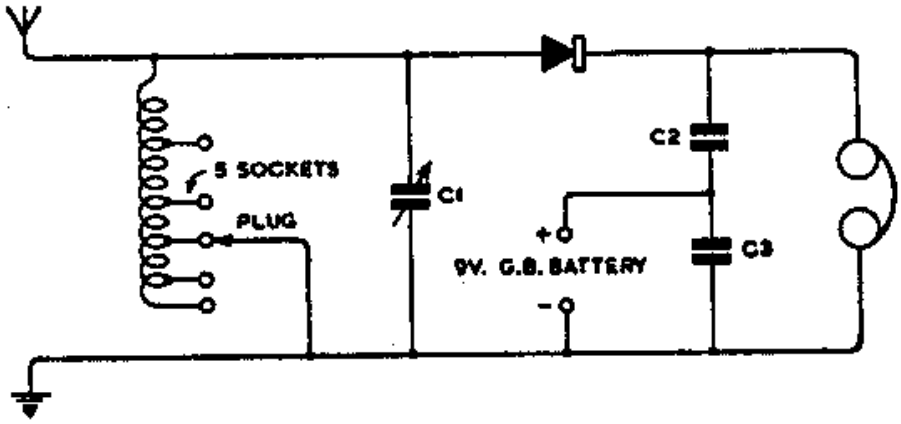

FIG. 9 BATTERY-AIDED CRYSTAL RECEIVER

between L2 and L3, 1-in.; and between L3 and L4, 3/16-in. See Fig. 10.

C1-2 single variable condensers .0005 mfd.
2 Variable condenser dials marked 0 to 100 or 0 to 180.
1 Clix plug.
3 Clix sockets.
S1 Single pole double throw switch.
C3 .001 mfd. fixed condenser.
1 Pair of high sensitivity earphones.
1 3-in. dia. × 8-in. former.
2oz of both 28 and 32 S.W.G. double cotton covered wire to make these 4 coils.
1 Permanent crystal detector.

In use, the plug should be tried in each of the three sockets to find the point which gives the best results. The switch is used as a wave band change switch.

12. Ultra Sensitive All Wave Receiver.

The receiver shown in Fig. 11 is for long distance reception. It is a novel circuit and, though apparently complicated in construction, it is really very simple to assemble with the minimum of tools and labour.

It will be seen from the circuit diagram that there are two banks of sockets, five black and six red. When using this set the appropriate black and red plugs should be inserted in whichever of the similar coloured sockets give the best results. The coil is quite easy to construct and consists of a primary winding which is inserted at the earth end of the secondary winding. For the medium wave band, the secondary winding L2 consists of 54 turns of 20 S.W.G. enamelled or cotton covered wire. This coil has four taps in addition to the starting point and the end connection, and these taps are taken at six turns, 14 turns, 27 turns and 40 turns from the earth end. The taps are taken out and a connection is made to an appropriate socket, as shown in the diagram.

The coil is wound on a 3-in. diameter former which may be a paper tube, bakelite, paxolin or perspex, and spacing is approximately 17 turns to the inch.

For short wave work down to about 30 metres, L2, the secondary coil, will consist of the same diameter former wound with 15 turns of the same gauge wire, the four taps being taken at 3, 6, 9 and 12 turns from the earth end.

L1, the primary coil, is used for both wave bands and consists of 11 turns of similar gauge wire to that used for L2, wound on a 2-in. × 1-in. former, the winding to be spaced the same as L2. The coil is then inserted at the earth end of whichever secondary coil L2 is being used.

The crystal detector may be one of the semi-permanent types freely available to-day; the old-fashioned cat's whisker pattern; or one of the silicon permanent detectors which are sold by many surplus dealers.

The 'phones should be of a standard type 4,000 ohms impedance although 'phones of other values will probably operate quite satisfactorily with this powerful receiver. It should, however, be stressed that the better the headhones used, the more satisfactory the reception.

Coils for other wave bands may be experimentally designed by the constructor, remembering that four tappings are advisable for the secondary coil L2.

A long aerial is very desirable with this receiver, placed as high as possible. It is recommended that a minimum length of 70-ft. be allowed, to include the aerial and lead-in.

The values of the components are shown in the following components list. The constructor should experience no difficulty in obtaining excellent results from this cleverly designed receiver.

C1 .0005 variable condenser.
C2 .002 fixed condenser.
1 semi-permanent crystal detector.
1 coil former 3-in. dia. × 4½-in.
1 coil former 2-in. dia. × 1-in.
½ lb. 20 S.W.G. enamelled or DCC copper wire.
6 red wander plug sockets.
6 black wander plug sockets.
1 red and 1 black wander plug.
Headphones, terminals, connecting wire

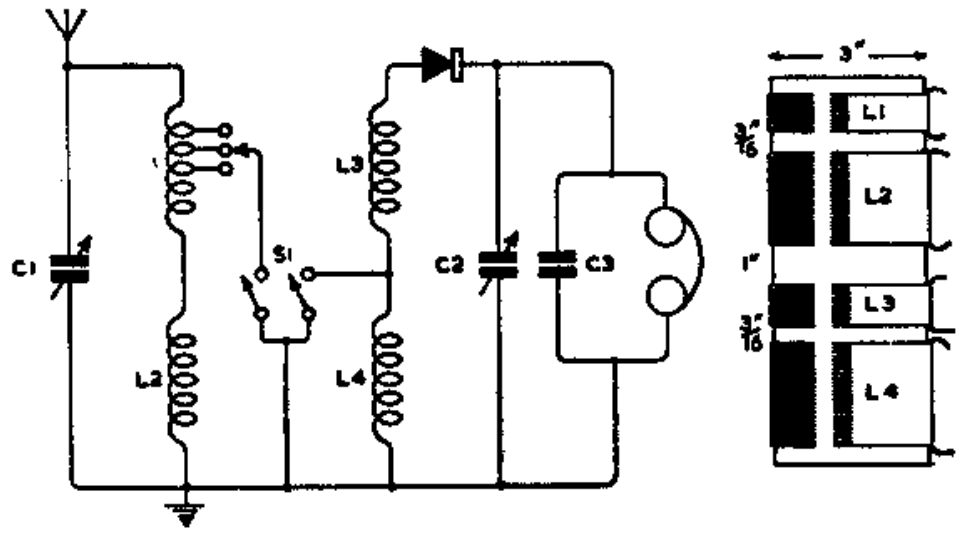

FIG. 10 MEDIUM AND LONG-WAVE CRYSTAL RECEIVER

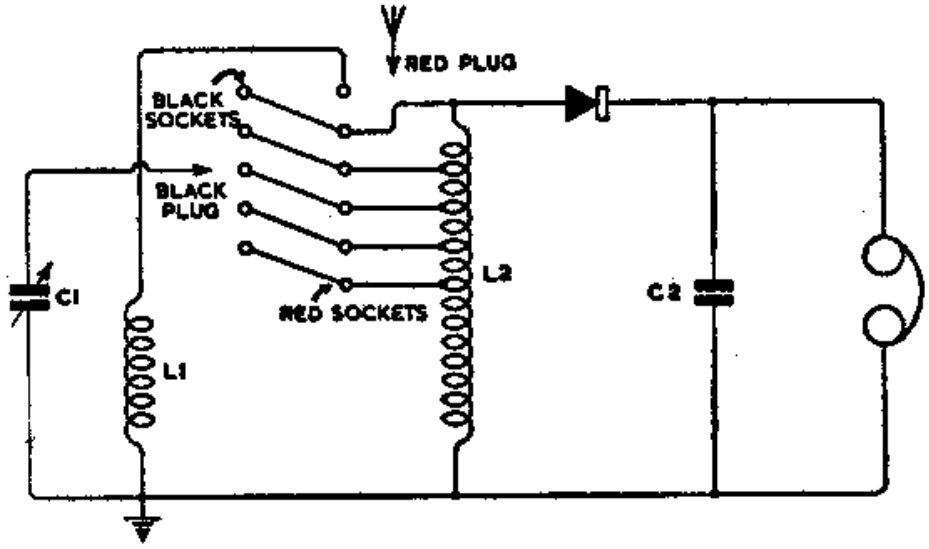

FIG. 11 ULTRA-SENSITIVE ALL-WAVE CRYSTAL RECEIVER

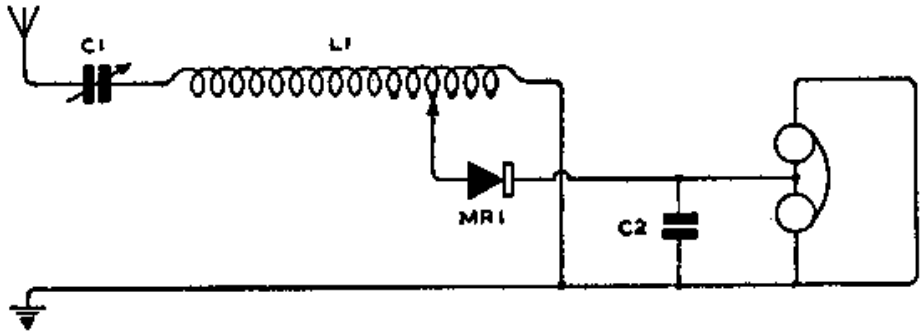

FIG. 12 ADVANCED CRYSTAL DIODE RECEIVER

13. An Advanced Crystal Diode Receiver.

The modern crystal diode of the radar type does not require any adjustment and thus has a distinct advantage over the ordinary crystal detector which needs delicate adjustment—even the semi-permanent type.

Such crystals are now obtainable on both the regular and the surplus markets, and a popular type is the B.T.H. CS7A silicon crystal (also coded as CV 253).

A rather different circuit from the usual crystal set arrangement is needed to suit the characteristics of a crystal diode. The diode must be tapped on to the tuning coil, and it is found that the tuning circuit itself gives best results if a series-tuned acceptor circuit is used. The circuit of a radar crystal receiver is shown in Fig. 12. The type of aerial used with this circuit has a very great bearing on the behaviour of the receiver for, in effect, the tuned circuit, with a series resistance equivalent to the reflected crystal load resistance, is in series with the capacitance of the aerial to earth and the aerial's effective series resistance.

At resonance—when the combination is tuned to any particular signal—the inductance resonates with the capacitances of the tuning condenser and the aerial in series, and the final effect is that the reflected load of the crystal, in series with the coil's R.F. resistance, is paralleled across the aerial's series resistance.

For maximum power transfer, the crystal load resistance must be made equal to the sum of the aerial series resistance and the coil R.F. resistance, and so the method in which the crystal is tapped into the tuning coil, and the exact capacitance required to tune the receiver to any required signal, must depend to a very great extent on the aerial itself.

At the same time the crystal resistance varies with the signal strength, the resistance being high for weak signals and dropping by as much as 50 per cent. and more for strong signals, so that this effect also has a bearing on the correct coil tap. The output impedance of the crystal also varies similarly, affecting the matching of the headphones into the crystal diode, and so for any set of conditions, the receiver requires to be matched up to both the aerial and the signal being received for best results. This would mean a series of coil taps and (theoretically, not practically) a matching transformer between the diode and the headphones; but in practice it will be found that a receiver using standard parts can be built up to give very good results under various conditions.

It has been shown already that the tuning of the receiver depends to a great extent on the characteristics of the aerial, and while a .0005 mfd. variable capacitor is shown in Fig. 12 as the tuner, the constructor must be prepared to experiment with different capacitance values until the required station is tuned in. The range of reception given by the receiver is quite good, if a really long and high aerial, and a good earth connection, are used; but no more than the local station signal can be expected, and the tuning therefore must be adjusted to suit the station frequency.

It must be mentioned that the headphones are shown parallel connected. High resistance headphones of the 4,000 ohm type must be used, and if two of these are connected in parallel rather than in the more usual series method, they will provide a roughly accurate match to the crystal. If more than one pair of headphones are to be connected in, then the pairs of headphones may be left series connected in the usual manner, the sets of headphones being connected in parallel.

The capacitor across the headphone terminals completes the crystal R.F. circuit, and any value between about 0.001 and 0.005 mfd. will serve. The higher capacitance will, of course, by-pass some of the higher audio frequencies, so

that if good steady reception is obtained some experiment with this condenser is also worth while.

C1, .0005 mfd. variable condenser.
C2, .005 mfd. fixed condenser.
M.R.1 CV 253 Crystal diode.
Coil former 1½-in. dia. × 4½-in.
4oz. 26 S.W.G. enamelled copper wire.

Coil details are as follows: 150 turns of 26 S.W.G. tapped at 20, 25, 30, 35, 40 and 45 turns from the earth end. At each tapping-point the wire should be twisted up into a loop and the winding then continued without breaking the wire; when the coil is completed and the ends anchored the tapping loops can be bared.

BERNARDS RADIO BOOKS

No.		Price
56.	Radio Aerial Handbook	2/6
57.	Ultra-Shortwave Handbook	2/6
58.	Radio Hints Manual	2/6
64.	Sound Equipment Manual	2/6
68.	Frequency Modulation Receivers' Manual	2/6
73.	Radio Test Equipment Manual	2/6
83.	Radio Instruments and their Construction	2/6
96.	Crystal Set Construction	1/-
99.	One Valve Receivers	1/6
100.	A Comprehensive Radio Valve Guide, Book 1	5/-
103.	"Radiofolder" A. The Master Colour Code Index for Radio and T.V.	1/6
104.	Three Valve Receivers	1/6
107.	Four Valve Circuits	1/6
108.	Five Valve Circuits	2/6
121.	A Comprehensive Radio Valve Guide, Book 2	5/-
123.	"Radiofolder" F. The Beginners' Push-Pull Amplifier	1/6
126.	Boys' Book of Crystal Sets and Simple Circuits	2/6
129.	Universal Gram Motor Speed Indicator	1/-
134.	F.M. Tuner Construction	2/6
135.	All Dry Battery Portable Construction	2/6
138.	How to Make F.M. and T.V. Aerials, Bands 1, 2 and 3	2/6
141.	Radio Servicing for Amateurs	3/6
143.	A Comprehensive Radio Valve Guide, Book 3	5/-
145.	Handbook of AM/FM Circuits and Components	2/-
146.	High Fidelity Loudspeaker Enclosures	5/-
147.	Practical Tape Recording Handbook	5/-
148.	Practical Transistor Receivers, Book 1	5/-
149.	Practical Stereo Handbook	3/6
150.	Practical Radio Inside Out	3/6
151.	Transistor Superhet Receivers	7/6
155.	Portable Transistor Radio and Radiogram	2/6
156.	Transistor Circuits Manual, No. 1	2/6
157.	A Comprehensive Radio Valve Guide, Book 4	5/-
158.	Radio, Television, Industrial Tubes, Semiconductor and Diodes Equivalents Handbook (206 pages)	9/6
159.	Realistic High Fidelity	5/-
160.	Coil Design and Construction Manual	5/-
161.	Radio, Television and Electronics Data Manual	3/6
162.	High Fidelity Stereo Gramophone	5/-
163.	Transistor Circuits Manual, No. 2	2/6
164.	High Fidelity Tape Recorder for the Home Constructor	2/6
165.	Hartley on Hi-Fi, Book 1, Radio Tuners	5/-
166.	Public Address Systems	2/6
167.	Transistor Circuits Manual, No. 3	2/6
168.	Transistor Circuits Manual, No. 4	2/6
169.	Hi-Fi Transistor F.M. Tuner for the Home Constructor	3/6
170.	Transistor Circuits for Radio Controlled Models	7/6
171.	Super Sensitive Transistorised Pocket Set Construction	3/6
172.	International Radio Stations List	2/6
173.	Practical Transistor Audio Amplifiers	3/6
174.	Transistor Subminiature Receivers Handbook	5/-
175.	Transistorised Test Equipment and Servicing Manual	3/6
176.	Transistor Audio Amplifiers Manual	6/-
177.	Modern Transistor Circuits for Beginners	7/6
178.	Comprehensive Radio Valve Guide, Book 5	6/-
179.	Transistor Circuits Manual No. 5	5/-
180.	British Semiconductor Survey	15/-
181.	22 Tested Circuits Using Micro Alloy Transistors	5/-
182.	"At A Glance" Radio Valve & T.V. Tube Equivalents	3/6
183.	How to Receive Foreign T.V. Programmes on your Television Set by simple Modifications	5/-
	Resistor Colour Code Disc Calculator	1/6
	Engineers' Reference Tables	1/6
	International Radio Tube Encyclopaedia—3rd Edition	63/-

FREE-POWER AM RECEIVER (P,E)

This project uses a strange way to get its power. It uses power "extracted" from the tuned station to give to the amplifier transistor. With a reasonably strong applied modulation envelope, this type of detector produces a strong demodulated output.

Naturally, the closer you are to a strong station, the more current your radio will be able to supply.

For best results, you must do everything possible to deliver a strong signal to the transistor detector. We recommend a good antenna and ground, the latter preferably being made to a water pipe or solid external ground composed of a pipe driven at least 5 feet into moist earth. This is important for ensuring maximum signal pickup.

If you have plenty of space available, the longer the antenna (up to about 100 feet), the better the results.

Figure 1 shows the schematic diagram of the Free-Power AM receiver. Observe that the heart of the circuit is a germanium transistor that works as a detector and audio amplifier.

Components placement on a terminal strip used as a chassis is shown in ***Figure 2.*** The terminal strip can be fixed on an experiment board that can be constructed using some common tools and materials.

Q1 is any germanium transistor, such as GE-2 or 2N107. You can find germanium transistors in old nonworking AM transistor radio receivers. Nonworking AM radios can also supply the variable capacitor and the loopstick (ferrite rod).

Earphone must be a high-impedance crystal type. Low-impedance earphones don't function in this circuit.

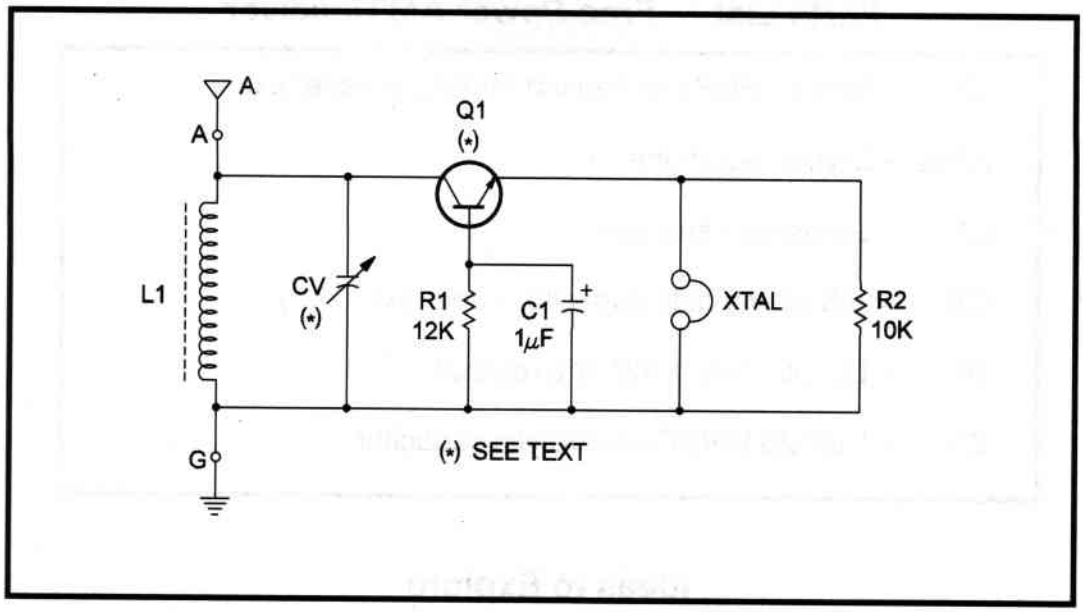

Figure 1

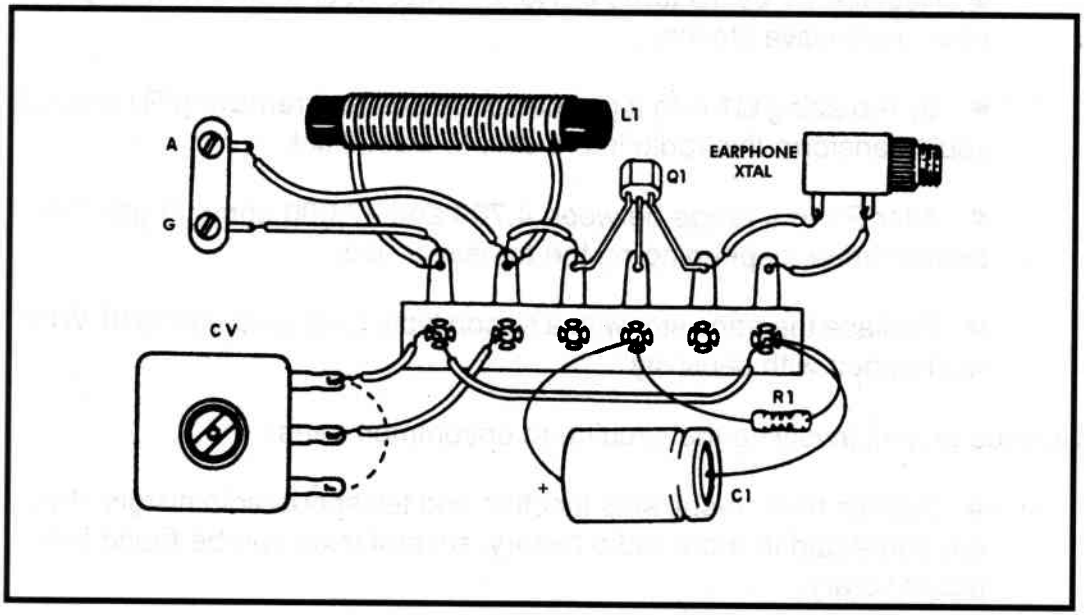

Figure 2

Parts List — Free-Power AM Receiver

Q1	- NPN or PNP germanium transistor - see text
XTAL	- Crystal earphone
L1	- Loopstick - see text
CV	- 365 pF variable capacitor - see text
R1	- 12,000 ohm, 1/4W, 5% resistor
C1	- 1 uF, 25 WVDC electrolytic capacitor

Ideas to Explore

To learn more about the circuit:

- Replace L1 by 15 turns of No. 28 wire, wound on a ferrite rod, to tune short-wave stations.
- By replacing Q1 with a germanium diode and removing R1 and C1 you'll transform this radio into a simple crystal set.
- Alter R1 in a range between 4,700 and 47,000 ohms to get better performance, depending on the transistor used.
- Replace the transistor with a silicon type, such as the BC548. What will happen with sensivity?

Science project involving the circuit and uncommon uses:

- Explain how crystal sets function and tell about radio history. If you are interested in more radio history, several texts can be found in the public library.
- If you want to learn more about radio receivers, try to find information about heterodyne and super-hereterodyne types.

Crystal Set

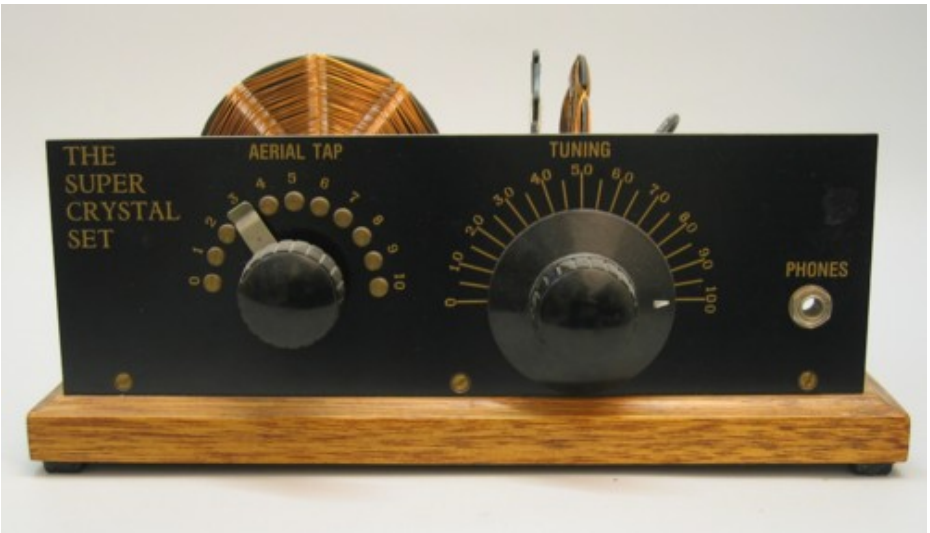

Many years ago I purchased a crystal set kit from Orpheus Radio in Ballarat. The design of the set was based on a 1920's naval radio and featured high-Q spider-web inductors, a variometer, mica capacitors and a rotary inductance selector switch. It is one of the best DX crystal sets I have ever owned. The selectivity and sensitivity are excellent and with this set I have been able to receive many stations from around Australia and south-east Asia. Unfortunately, Orpheus Radio doesn't seem to exist any more so for the crystal set enthusiast wanting to build this excellent radio apparatus, here is a description of that set. For the purist, the germanium diode can be replaced with a cat's whisker detector to produce a totally authentic piece.

Headphones

Before the construction of a crystal set is contemplated, a pair of high quality high-impedance headphones should be obtained. The performance of the crystal set is highly dependant upon the quality of the phones. It is possible (and I have done so) to modify a set of standard 600 ohm headphones to produce an excellent pair of high-impedance phones. The modifications include complete disassembly of the phones and tediously re-winding the coils. This is not a job for the feint-hearted but if your sense of adventure extends this far then the results can be very satisfying.

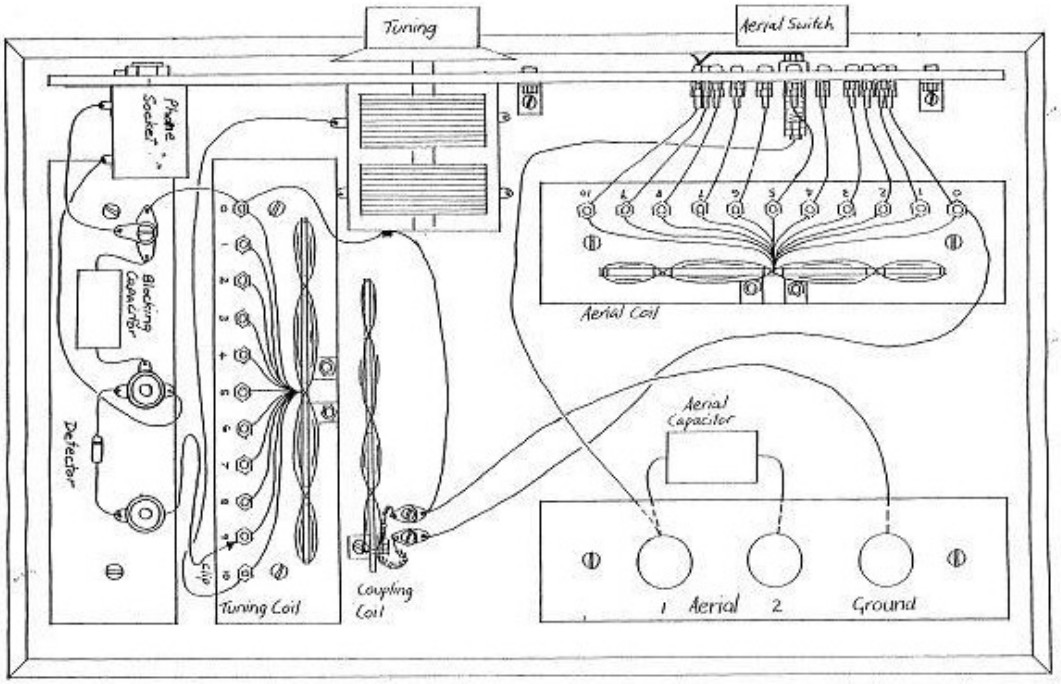

A sketch showing the layout of the crystal set

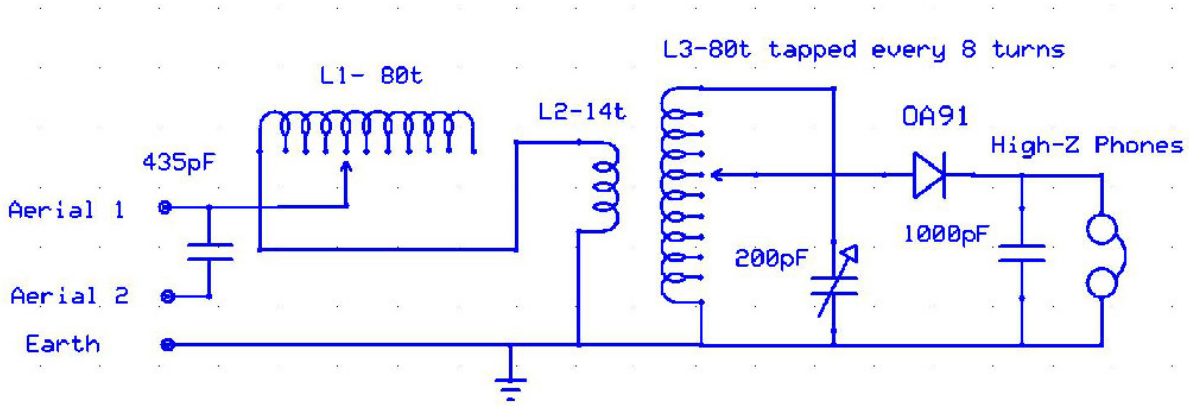

Schematic of the crystal set

Circuit Description

The crystal set incorporates an aerial tuning circuit that is quite separate from the main tuning. Altering the aerial switch selects an appropriate tap on L1 to bring the aerial circuit in to tune. The 435pF aerial capacitor C1 will enable the circuit to tune a long aerial. In some cases, it may necessary to reduce the value of this capacitor to enable a very long aerial to be brought into tune.

Following the aerial circuit is the variometer coil L2, used to control the amount of RF coupling to the main tuned circuit. As L2 is pivoted away from the tuning coil L3, the amount of interaction (or mutual inductance) between these coils is reduced. In this way the amount of energy drawn from the aerial circuit is minimized, maintaining sharp tuning of the set.

The main tuning circuit consists of L3 and the tuning capacitor C2. This circuit is energised via the

aforementioned variometer and some of its energy is drawn off to feed the detector circuit consisting of D1 and C3. As with the aerial circuit, it is important that the energy drawn from the tuned circuit is minimised. This is achieved by the tap selection on L3. For a given detector arrangement, an optimum tap is selected using the flying lead and alligator clip.

Construction

The coils are wound in the spider-web style and due to the low inter-winding capacitance of this winding arrangement, a coil of very high Q results. The details of the former and winding format are illustrated in the following sketches.

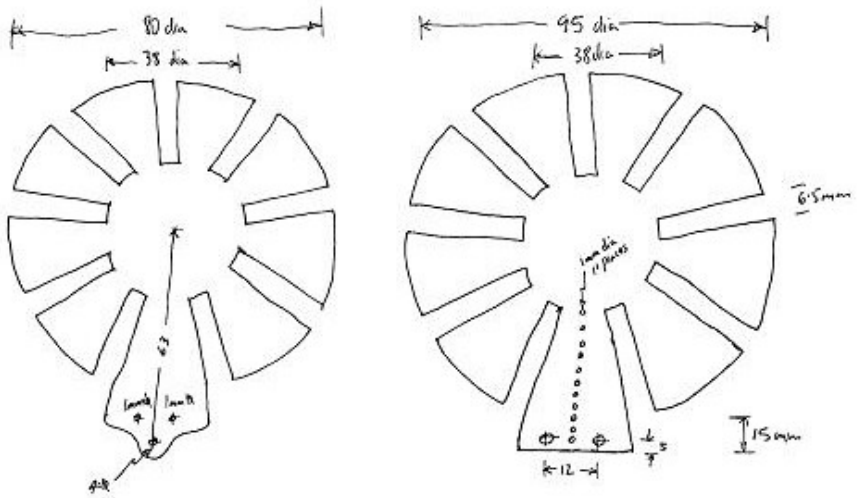

Spider-web coil formers, variometer on the left and aerial and tuning coils on the right

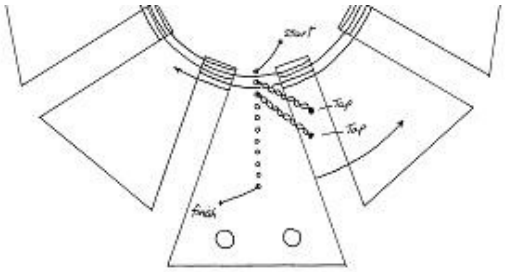

Coil winding details - aerial loading coil (L1) and tuning coil (L3) - 80 turns of 26g B&S enamelled wire with a tap every 8 turns. variometer coil (L2) - 14 turns

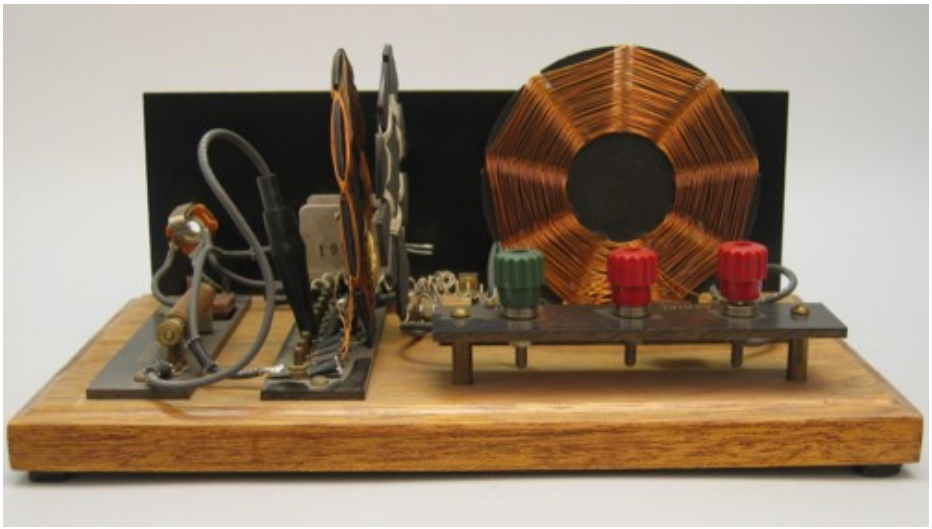

Rear view of the crystal set

Aerial coil taps

The coupling coil (variometer) is pivoted at its mounting bracket to allow the amount of RF coupling to be adjusted by the operator. For best selectivity, it should be adjusted for the least amount of coupling possible. Increased coupling will provide increased volume but the selectivity of the set will deteriorate markedly.

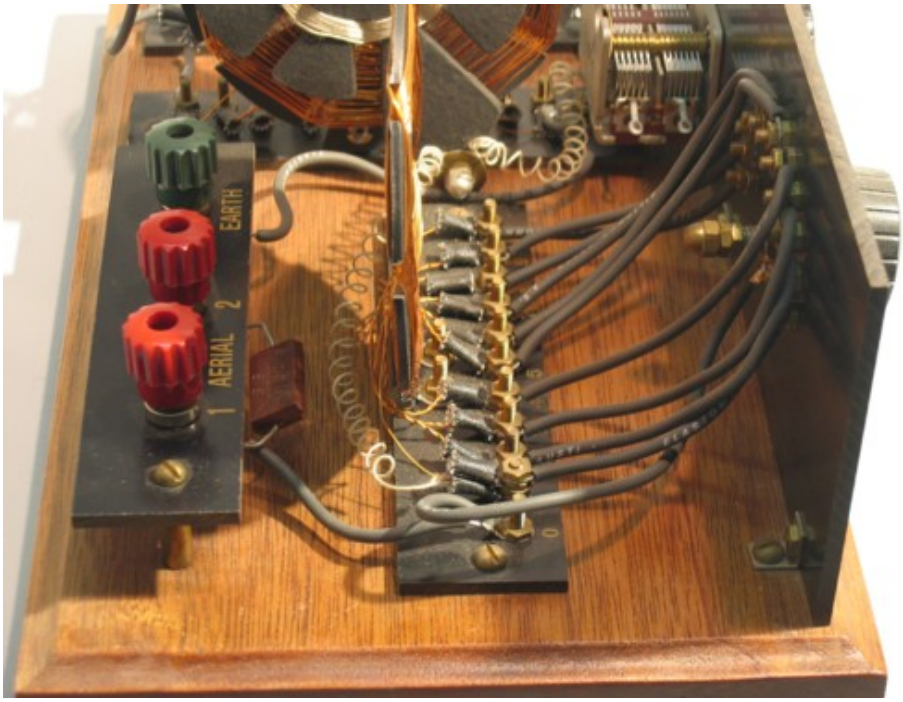

Aerial coil taps

Operation

The set requires a substantial aerial and earth system for best performance. It can be a little tricky to operate as several separate tuning operations are required. One operation selects the appropriate station by turning the tuning knob and the other tunes the aerial circuit by adjusting the aerial taps. Additionally, the variometer and detector tap will need to be adjusted and the correct aerial terminal selected (terminal 1 for short aerials and 2 for long ones). All of this makes for an interesting and challenging pastime. A log book is useful for recording the various adjustments so that an interesting station can be revisited at a later date.

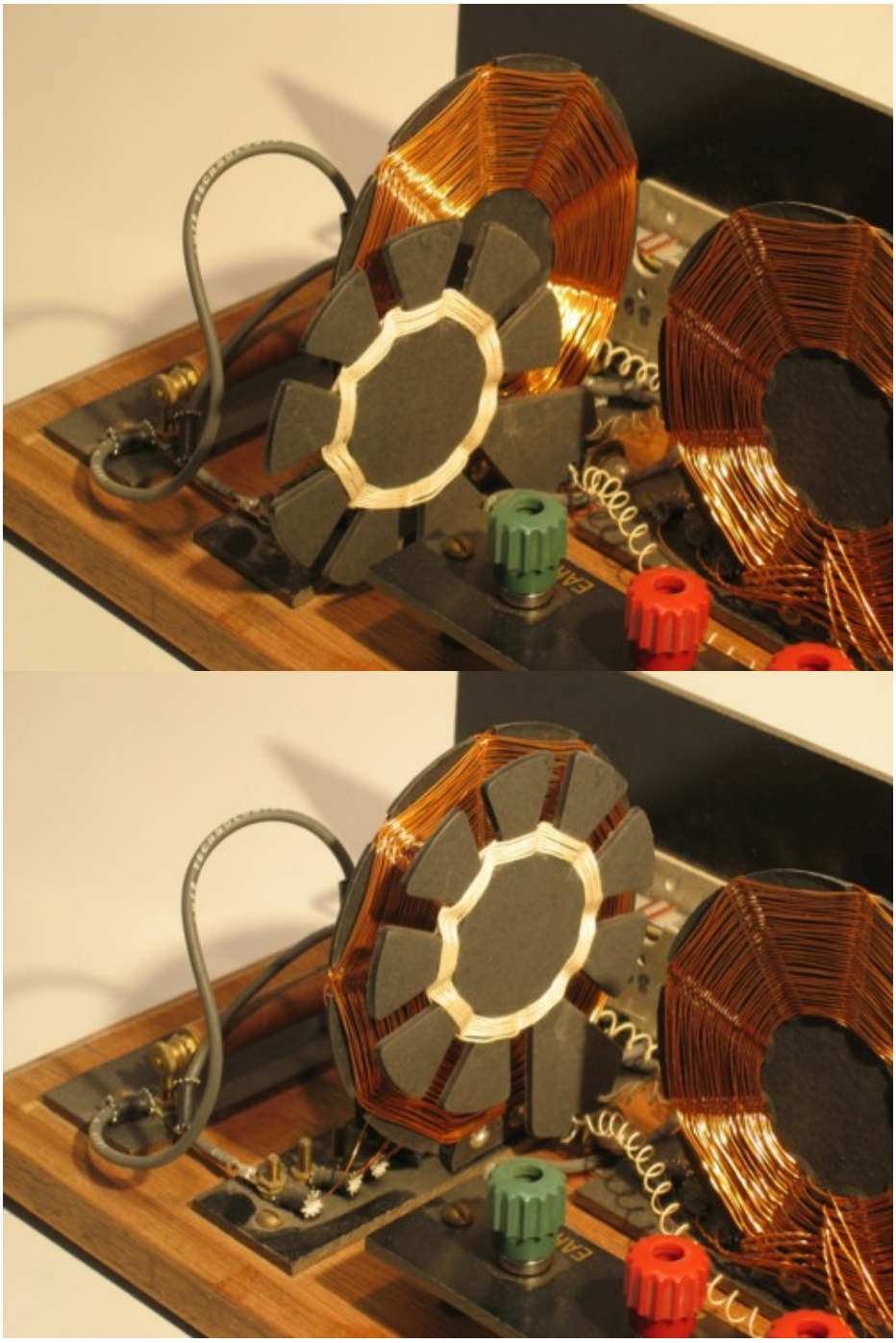

The variometer set for minimum and maximum coupling

To operate the set, connect the aerial and earth, plug in the high-impedance headphones, set the aerial tap to 0 and set the variometer for maximum coupling. It should now be possible to find a station using the tuning control (C2). Once a station is found, reduce the variometer coupling as much as possible while still hearing the station. Now adjust the aerial tap to find a peak. When this is found it should be possible to further reduce the variometer coupling and re-tune for best signal. The detector circuit tap should be set as low as possible to provide the best selectivity of the set.

Detector set to tap no. 7

With careful operation of the controls it should be possible to select even quite weak stations from amongst the stronger signals. With a skilled operator, the performance of this crystal radio is quite remarkable.

A Variation on the Design

When cleaning out my shed the other day I came across a set that I had constructed many years ago. It is a variation on the Orpheus design with a small beehive trimmer capacitor used to control the coupling between the tuned circuits in place of the variometer. Also, a different approach to the coil winding design is used.

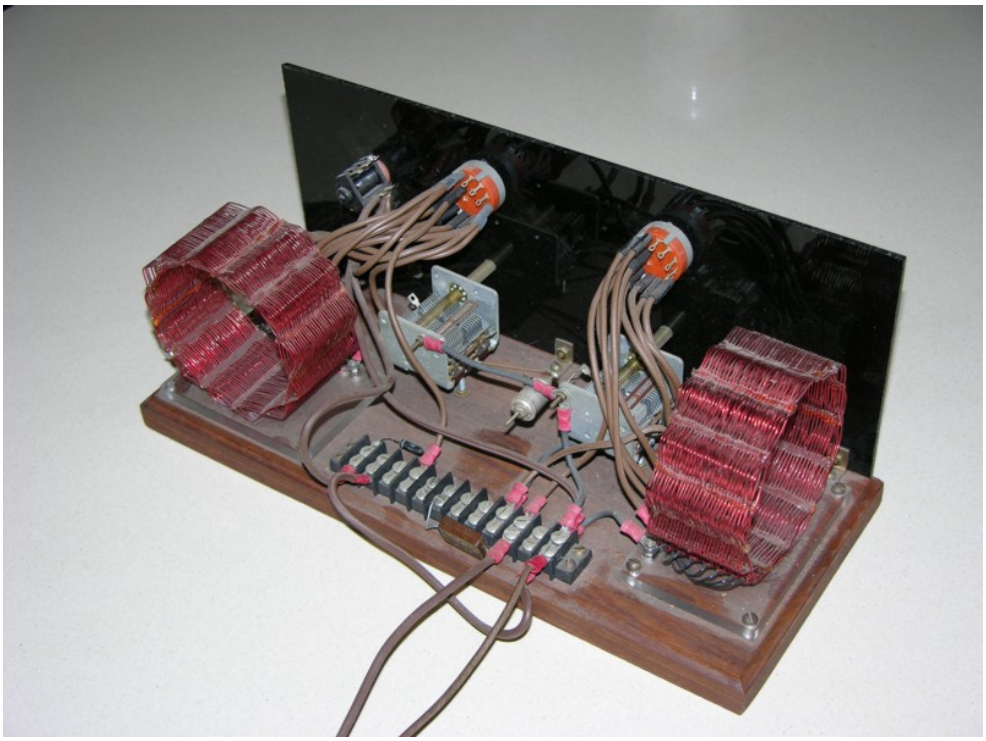

Rear View

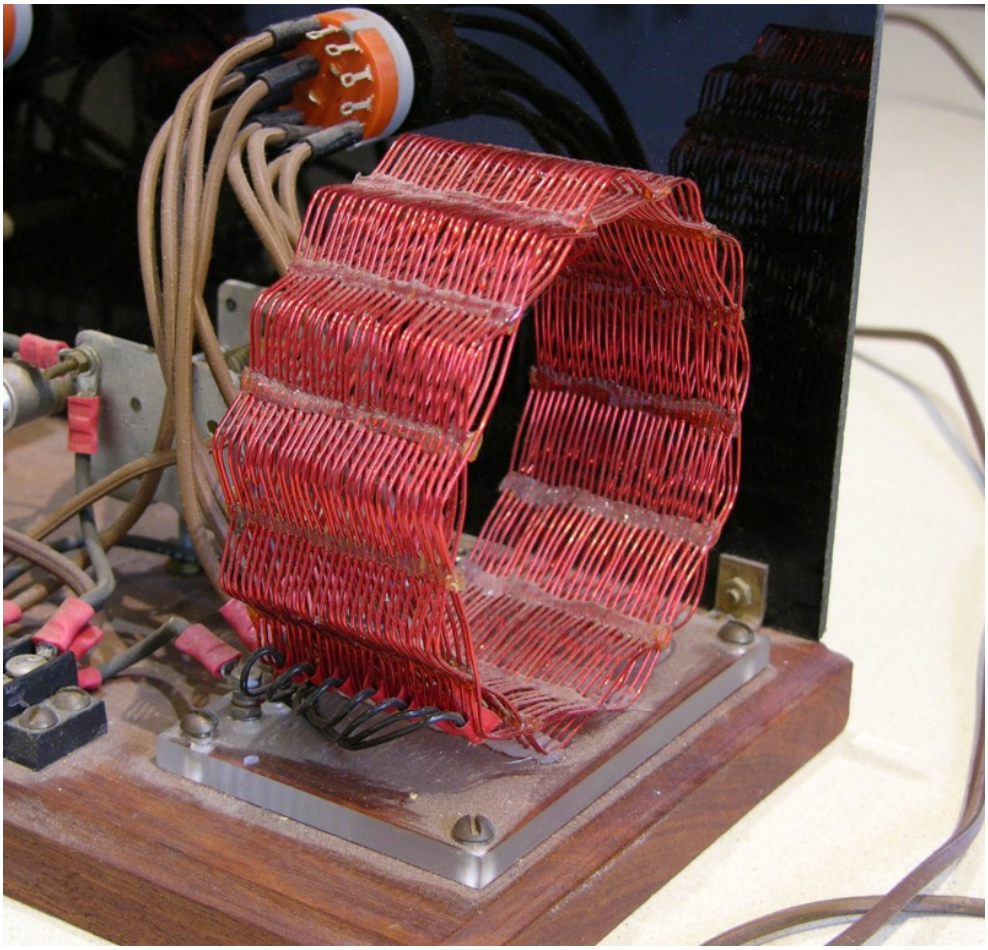

Aerial Coil - Note the alternative method used to reduce inter-winding capacitance.

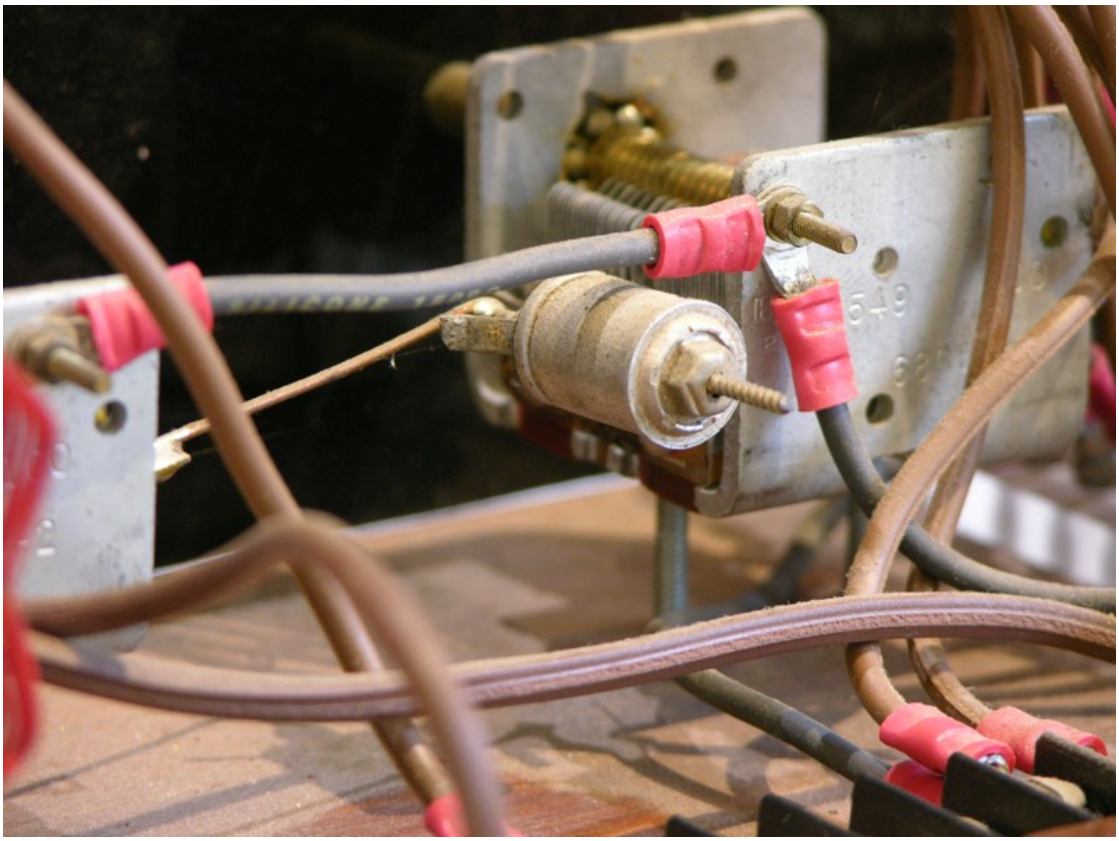

The small trimmer capacitor is used to couple the tuned circuits. Like the design using a variometer, it is adjusted to optimise the trade-off between sensitivity and selectivity.

Ricevitore a cristallo con amplificatore

Un progetto di Luciano Loria

Si tratta di una classica radio a cristallo per O.M. con sintonia a variazione d'induttanza, (tramite il nucleo in ferrite che può scorrere all'interno della bobina di sintonia) con amplificazione del segnale audio rivelato.

Lo schema elettrico è suddiviso, idealmente, in due parti: la prima, sulla sinistra, comprende il circuito di sintonia e di rivelazione; la seconda, a destra, è un tipico amplificatore Darlington (Tr1 e Tr2 collegati a cascata).

L'amplificazione permette l'ascolto della stazione locale, in auricolare o in cuffia, anche se non si dispone di una lunga antenna filare, inoltre, nelle ore serali e con bel tempo, è possibile la ricezione d'altre stazioni radio, nazionali ed estere; il collegamento di terra, in presenza di segnali forti, potrebbe causare del ronzio; se ciò accadesse si può omettere.

Schema elettrico

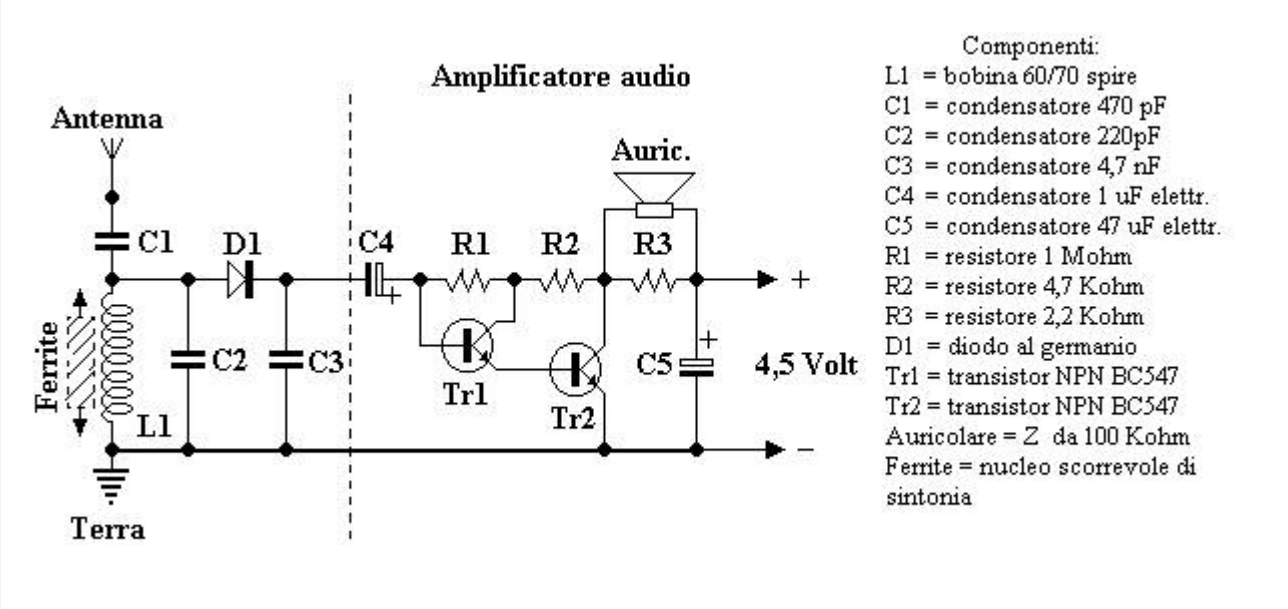

Sullo schema elettrico c'è ben poco da aggiungere, si noti la linea tratteggiata che separa l'amplificatore audio dal rivelatore (diodo al germanio), il condensatore C4, oltre che da accoppiatore tra i due circuiti, funziona da filtro passa-basso, non permette, cioè, il passaggio di eventuali frequenze di A.F., presenti ancora dopo la rivelazione.

Il condensatore C1, posto tra l'antenna ed il circuito accordato di sintonia, funziona, invece, da filtro passa-alto, quindi, lascia passare l'alta frequenza e si oppone al passaggio della bassa frequenza, come quella di rete, che può disturbare la ricezione.

La sintonizzazione della stazione radio si ottiene facendo scorrere un pezzetto di ferrite all'interno della bobina di sintonia, l'induttanza della bobina è minima con il nucleo completamente all'esterno, è massima quando il nucleo è completamente all'interno.

Per ottenere risultati soddisfacenti è necessario provvedersi d'adeguata antenna filare, dai 10 ai 30 metri, stesa all'aperto ad almeno tre/quattro metri dal suolo e ben isolata dai supporti, in un punto qualsiasi collegare il filo di discesa all'apparecchio radio.

All'alimentazione provvede una comune pila piatta da 4,5 Volt che durerà tantissimo, l'assorbimento in corrente si aggira intorno ai 3-4 milliampere.

La costruzione dell'apparecchio non è assolutamente impegnativa ed è alla portata di chiunque abbia pazienza, un minimo d'abilità manuale e qualche arnese d'uso comune, presente, ormai, in ogni casa.

E' indispensabile, comunque, per il montaggio, usare un saldatore elettrico da circa 30 W max. di potenza ed un rotolino di stagno per elettronica (lega Sn/60 Pb/40), occorrono anche un martellino ed un paio di forbici, molto utile può rivelarsi una pinza a becchi lunghi o, in alternativa, una pinzetta da manicure.

Tutti gli elementi della radio trovano posto su una tavoletta di legno di minime dimensioni e sono collegati, fra di loro, mediante saldatura ai punti d'ancoraggio che si predispongono piantando, in posizione opportuna sulla tavoletta, dei chiodini di ferro ottonato.

Montaggio

Per la buona riuscita della costruzione, seguendo i disegni e le foto, e per ottenere un effetto estetico discreto, date le dimensioni dei chiodini, occorre aiutarsi con delle pinzette per sostenere, perfettamente verticale, il chiodo mentre si va a battere col martello; lasciare la testa del chiodo fuori del piano per circa 3 o 4 mm.

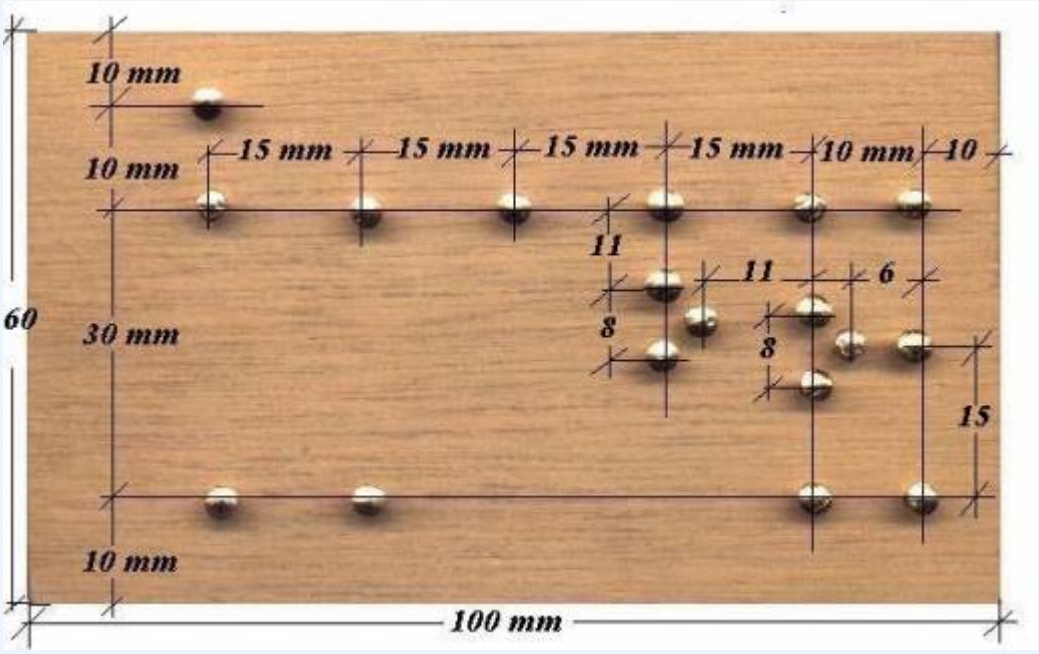

Si comincia proprio con chiodi e martello, le operazioni da specialisti le lasciamo ad un secondo tempo!

Nella foto sopra ecco come vanno disposti i chiodini che serviranno come punti di collegamento per i vari elementi; le dimensioni indicate non sono tassative, dato che resistenze e condensatori hanno i terminali lunghi, si potrebbero aumentare di un buon 50%, l'importante è rispettare la disposizione indicata, anche la tavoletta della foto può essere sostituita da altra più grande e costituita, per chi lo desidera, da legno pregiato.

L'operazione successiva consiste nella filatura: termine oramai desueto che prevede la disposizione dei fili di collegamento occorrenti da un ancoraggio all'altro; la filatura, nei moderni apparati elettronici è scomparsa quasi del tutto con l'uso dei circuiti stampati, dove le varie piste ramate, realizzate con un processo d'incisione, provvedono al collegamento elettrico dei vari elementi.

La fotografia successiva mostra la disposizione del filo di rame rigido così come occorre per il nostro montaggio, si può utilizzare anche un filo rigido isolato in plastica, volta per volta occorrerà spellare lo spezzone occorrente e provvedere alla saldatura, questa andrà eseguita, su ogni chiodino interessato, appena sotto la testa.

Sarà utile sagomare a forma d'anello aperto il terminale iniziale e quello finale del collegamento affinché, restando il filo in posizione, sia più agevole saldarlo al chiodino.

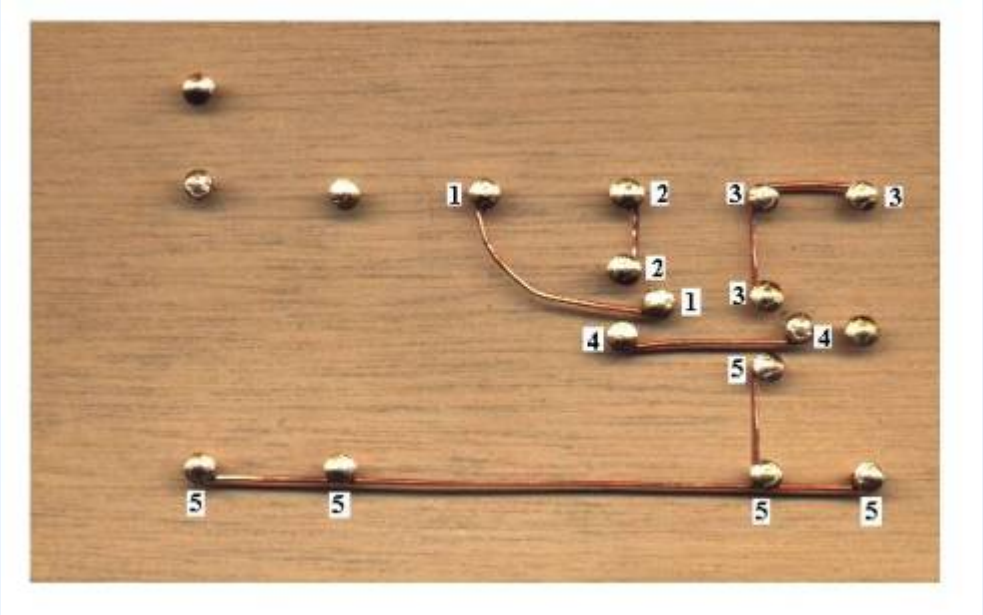

I collegamenti sono stati numerati, sistemare lo spezzone di filo e saldarlo in corrispondenza d'ogni numero.

A questo punto è possibile proseguire inserendo, al loro posto nell'ordine: resistenze, condensatori, bobina, diodo e transistor; naturalmente occorre identificare con assoluta certezza ogni valore per evitare errori che faranno perdere tempo o determinare un insuccesso.

Le spiegazioni successive che a molti parranno superflue sono destinate ai neofiti!

Le resistenze sono cilindriche con i terminali assiali e sono identificate da strisce colorate:

1 Megaohm = marrone-nero-verde-oro (il colore oro determina la tolleranza =5%)

4,7 Kiloohm = giallo-viola-rosso-oro;

2,2 Kiloohm = rosso-rosso-rosso-oro.

I condensatori ceramici hanno forma di pastiglia e riportano scritto sul corpo il loro valore:

470 picoFarad = 471 (le prime due cifre indicano il valore, la terza indica il numero di zeri da aggiungere: 47 + 0 = 470)

220 picoFarad = 221 (22 + 0 = 220)

4,7 nanoFarad = 4700 picoFarad= 472 (per cui: 47 + 2 zeri = 4700 pF).

I condensatori elettrolitici sono cilindretti d'alluminio ricoperti da una guaina plastica con sopra riportato il valore in microFarad e la tensione di lavoro, per il loro montaggio occorre rispettare la polarità indicata sullo schema, generalmente, sul corpo è segnato il terminale negativo:

1 microFarad = 1uF/25V (la tensione indicata può essere anche più elevata: 63 o 100 V);

47 microFarad = 47uF/25V (può essere anche da 100uF, il valore non ha influenza sul risultato).

Il diodo è costituito da un cilindretto in vetro con terminali assiali ed il catodo (o terminale positivo) è contraddistinto mediante striscia colorata, generalmente nera; anche se nello schema elettrico, e sulle fotografie è riportato un preciso senso d'inserzione, per il funzionamento della radio non è necessario rispettare tale senso, vorrà dire che anziché rivelare la semi-onda positiva del segnale di BF, sarà rivelata quella negativa.

I transistor sono gli unici ad avere tre terminali, quello centrale è la base, gli altri due ai lati sono il collettore e l'emettitore, per il loro montaggio (da eseguire come ultima operazione) sarà bene osservare attentamente figure e fotografie, infatti, un errore, in questo caso, comporta l'immediata distruzione del semiconduttore.

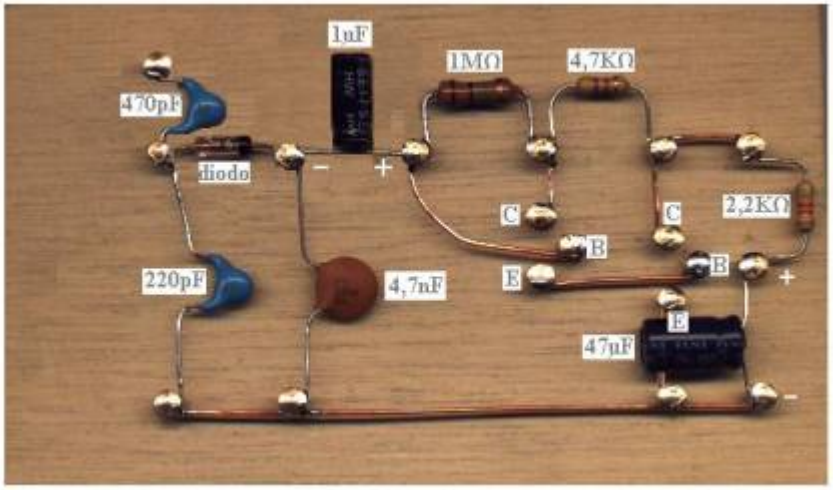

La fotografia qui sopra mostra come deve essere eseguito il montaggio, ci sono ancora da inserire: la bobina, i transistor ed i fili di collegamento alla pila ed all'auricolare; per proseguire è necessario costruire la bobina, questa sarà avvolta, usando del filo smaltato da 0,3 mm di diametro, su di un tubetto di PVC lungo 6 cm e di 16mm di diametro.

Iniziare ad avvolgere, a circa 1,5 cm dal bordo, fermando il capo iniziale con un pezzetto di nastro adesivo, non è necessario contare le spire, basta avvolgere il filo in modo da ottenere circa 3 cm di avvolgimento, il numero di spire sarà, all'incirca, di 60/70. Le spire devono essere affiancate molto bene senza lasciare alcuno spazio fra l'una e l'altra.

Terminato l'avvolgimento, perché questo non si svolga, sarà bene rivestirlo con un giro di nastro adesivo trasparente, i terminali vanno raschiati dallo smalto e stagnati, la bobina trova spazio sul lato sinistro della basetta e va collegata ai capi del condensatore da 220 pF, due gocce di colla saranno sufficienti a tenerla in posizione, anche la colla a caldo o il silicone sono una buona soluzione.

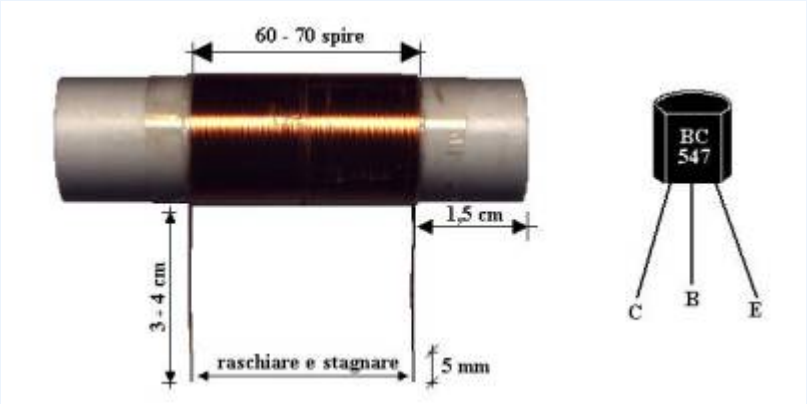

A questo punto si salderanno, al loro posto direttamente sulla testa dei chiodini, i due transistor (occorre fare attenzione per non sbagliare nell'identificare i terminali), i fili rosso-nero provvisti delle pinzette a coccodrillo per il collegamento alla pila, l'auricolare o la cuffia ai capi della resistenza da 2,2 Kohm, il filo d'antenna al terminale del condensatore da 470 pF, il filo per il collegamento di terra al negativo.

Il pezzetto di ferrite va infilato su un'estremità di un tubetto di PVC (lungo 10 cm circa e di diametro leggermente inferiore al diametro interno del tubetto della bobina) e fermato in posizione con colla, ovatta, nastro adesivo, elastici, collante a caldo, resina epossida, silicone,stecchini o quanto altro la fantasia può suggerire.

La radio è ora pronta, se non sono stati commessi errori clamorosi funzionerà certamente, collegare il filo rosso al positivo della pila ed il filo nero al negativo, infilare il tubetto col nucleo di ferrite all'interno della bobina e muoverlo lentamente avanti ed indietro, si troverà la posizione in cui la ricezione della stazione locale avrà un suo massimo; facilmente, a causa della scarsa selettività che contraddistingue le radio a cristallo, si

udranno anche altre emittenti sovrapposte, soprattutto se le stazioni hanno frequenze di trasmissione vicine o multiple.

Certamente, nelle ore notturne, si riscontrerà un maggior affollamento di stazioni, sarà necessario muovere il tubetto, in maniera micrometrica, per l'esatta sintonizzazione.

In alcuni momenti, specialmente se ci si trova nelle vicinanze del ripetitore radio, si potrebbe udire un ronzio molto fastidioso, in tal caso provare a scollegare il filo di terra, il fenomeno dovrebbe scomparire o attenuarsi.

Chi vuole, può scollegare l'auricolare e collegare, sempre ai capi della resistenza da 2,2 Kohm, l'ingresso di un amplificatore per l'ascolto in altoparlante, ancora, sul sito è spiegato come utilizzare una normale cuffia stereo, più confortevole ad usarsi, dove occorre utilizzare, come in questo caso, un trasduttore ad alta impedenza.

Nell'ultima immagine qui sotto ecco come appare la radio terminata e funzionante, naturalmente, se s'incontrassero dei problemi, relativi al montaggio ed all'uso, inviare un e-mail al seguente indirizzo:

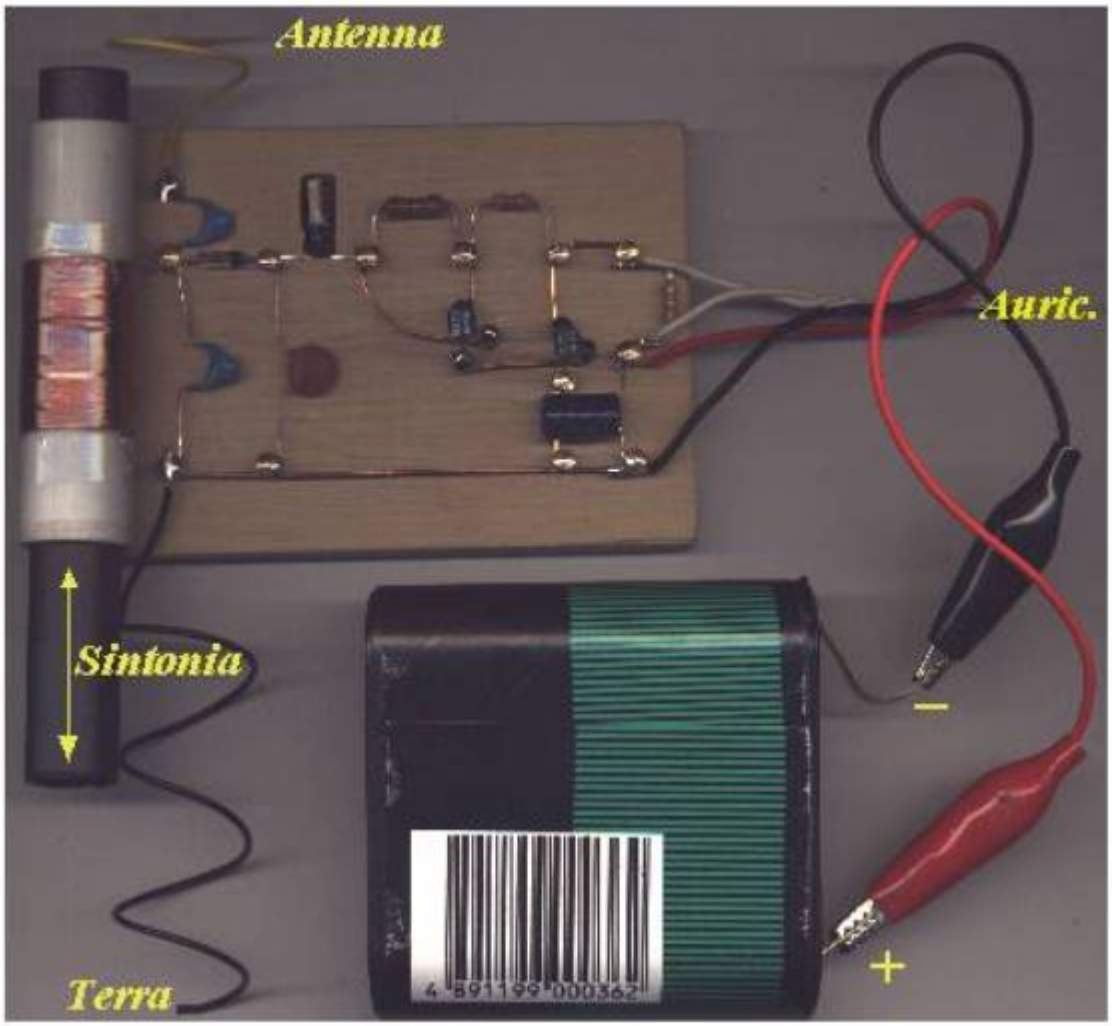

THE CRYSTAL-SET RADIO

100 more Crystal Set plans

Everyone wants to make a RADIO.

The simplest radio is a **CRYSTAL SET**. (Sometimes called a **Crystal-Set Radio** or **Xtal Radio Set** or **Crystal Diode Radio**.)

However a **Crystal Set** needs a number of components that are very hard to get: (tuning capacitor with knob) and (crystal earpiece for $1.25).
The "air" TUNING CAPACITOR (20p to 415p) is not easily available and the postage is expensive. The germanium diode is a special component and the aerial coil wound on a ferrite slab is difficult to obtain.

But you don't need these components. They can be substituted.

There are hundreds of websites on the internet describing the **CRYSTAL SET** and if you want to build a "normal" set, you can Google these sites or **100 more Crystal Set plans**. Many of them sell kits too.

But this article is different.

We are going to have all the fun of making a **CRYSTAL SET** but with modern components and easy-to-make components and with an amplifier stage. The output is loud so you don't need a long antenna. And we are going to make our own TUNING CAPACITOR and a very simple aerial coil (called a FRAME AERIAL) as well as replacements for the germanium diode (use a TRF radio IC or a transistor) and in place of hi-impedance headphones (use a piezo diaphragm) and a crystal earpiece equivalent (a piezo diaphragm).
It's even better to have one of each type of component so you can compare the performance, so no matter how many parts your get, nothing will be wasted.

We are also going to explain the fundaments of how the circuit works as even the simplest circuit has a number of very important features that are used in many other circuits.

But first we are going to learn about the components and how they combine to make the circuit work.
When two or more components are connected together they sometimes produce a completely different result to the capabilities of either item.
This is the case with a capacitor and inductor in parallel. An inductor is simply a coil - turns of wire on a cardboard tube - called a former and the centre of the coil is AIR. It is called an air-cored coil or air-cored inductor.
Each component (the coil and capacitor) is called a PASSIVE DEVICE - in other words it does not amplify, but when the are connected together they create a result very near to amplification. And they also produce a result of picking up a huge number of signals and only allowing one signal to appear across the pair. A truly amazing result.

We start by placing a capacitor across the coil.
There is so much activity in the air, from radio, TV, taxi and mobile phone usage that the air is filled with electromagnetic radiation.
This radiation will cut the turns of the inductor (the coil) and produce a microscopic voltage in the turns. This is enough to start the two components passing energy back and forth at a rate

determined by their values. This is the basis of our first discussion.
These two components are called a TUNED CIRCUIT and make up our first building block called THE FRONT END.
.

THE FRONT END

This consists of a coil and capacitor. These two components are in PARALLEL and the signal (called the RADIO SIGNAL or RADIO WAVE) passes through the centre of the coil and produces a voltage in the turns of the coil. The electromagnetic wave has to pass through the centre of the coil.
This voltage is the result of a mass of signals that are interfering with each other and producing a signal called BACKGROUND NOISE.
The voltage can be increased by an external aerial (called an ANTENNA) and it consists of ALL THE LOCAL radio stations (and everything else).
The voltage is a mass of signals and is absolutely useless as it represents all the stations AT THE SAME TIME.
However, across the coil is a capacitor and these signals charge the capacitor with the very small voltage produced by the energy of the signals. When the capacitor is charged, it delivers its voltage to the coil. The coil accepts the energy and converts it to magnetic flux.
After a very short period of time the capacitor becomes discharged and the magnetic flux collapses and produces a voltage in the coil of the opposite polarity to charge the capacitor again in the opposite direction.
These two components keep oscillating back and forth, using the tiny amount of energy from the stations.
There is a natural frequency for the capacitor and coil to pass energy back and forth and one of the stations will provide energy to assist this natural frequency.
When this happens, the amplitude of the signal increases and the signals from all the other stations cancel themselves out and only one signal (waveform) remains.
This signal is called the NATURAL FREQUENCY OF RESONANCE and it corresponds exactly to one of the radio stations.

The end result is a waveform that is the exact same frequency as one of the radio stations and when voice or music is played, the amplitude of the waveform increases and decreases. This will be the signal you hear in the earpiece or speaker.
It is called an AMPLITUDE MODULATED signal and that is where we get **AM RADIO** from.

Understanding the concept of a CAPACITOR and INDUCTOR in parallel is very important. They form a TUNED CIRCUIT that has a natural RESONANT FREQUENCY.
Here is a very similar analogy. You have a heavy metal ball on a long string attached to the gutter on your house - just like a pendulum. You can push the ball very lightly with a finger and after a number of pushes you will be able to get the heavy ball swinging in a very large arc.
The only way to keep it swinging is to push it very lightly at exactly the right time. If you push it at the wrong time it will eventually stop swinging.
The parallel tuned circuit is exactly like the ball. It wants to oscillate at a particular frequency.
All the radio stations are pushing and pulling the circuit at the wrong times and nothing is happening. But one radio station pushes at exactly the right time and the circuit starts to oscillate.
All the other stations are fighting each other just like one person pushing the ball sideways and another pushing the ball from the opposite side. The results cancel each other and you are the only one assisting the swing.
The TUNED CIRCUIT can also be called a FILTER with a very narrow BAND-PASS frequency but our simple explanation describes the operation much more clearly.

There are a few other terms used to describe the components in the font end:

LOOP STICK ANTENNA -This is an alternate name given to the coil of wire wound on a ferrite rod or slab. It also has the name ROD ANTENNA or FERRITE ROD ANTENNA.
The winding can be enamelled wire or flexible wire called LITZ WIRE. This is very fine strands of enamelled wire twisted together and covered in cotton. The purpose of changing a thick wire to lots of very thin wires is to prevent the radio signals creating loops of signals within the wire and these signals will cancel each other and not produce a signal out the end of the wire.
In our experiments, we have not noticed any difference in a coil made with ordinary enamelled wire and Litz wire.

Here is a set of components to make your own Crystal set from **Scott's Electronic Parts**:
You can see the rod antenna, germanium diode, crystal earpiece, capacitor and resistor. The kit costs about $9.00 plus postage and includes knob, clips and screws but no board to mount the parts.

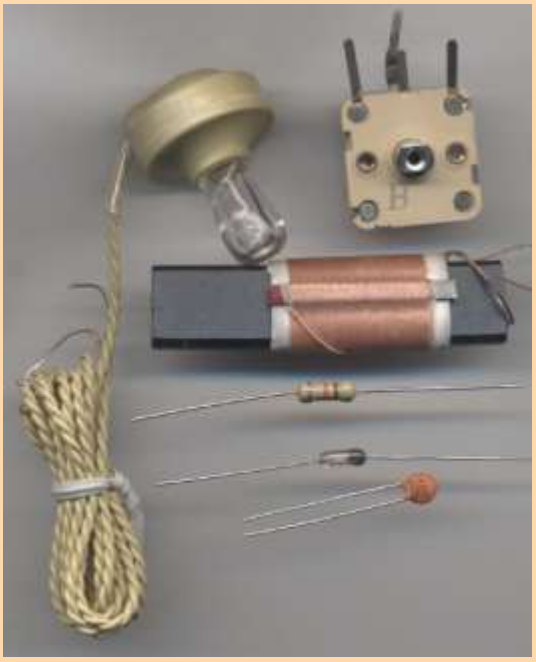

Here is the circuit for a Crystal Set:

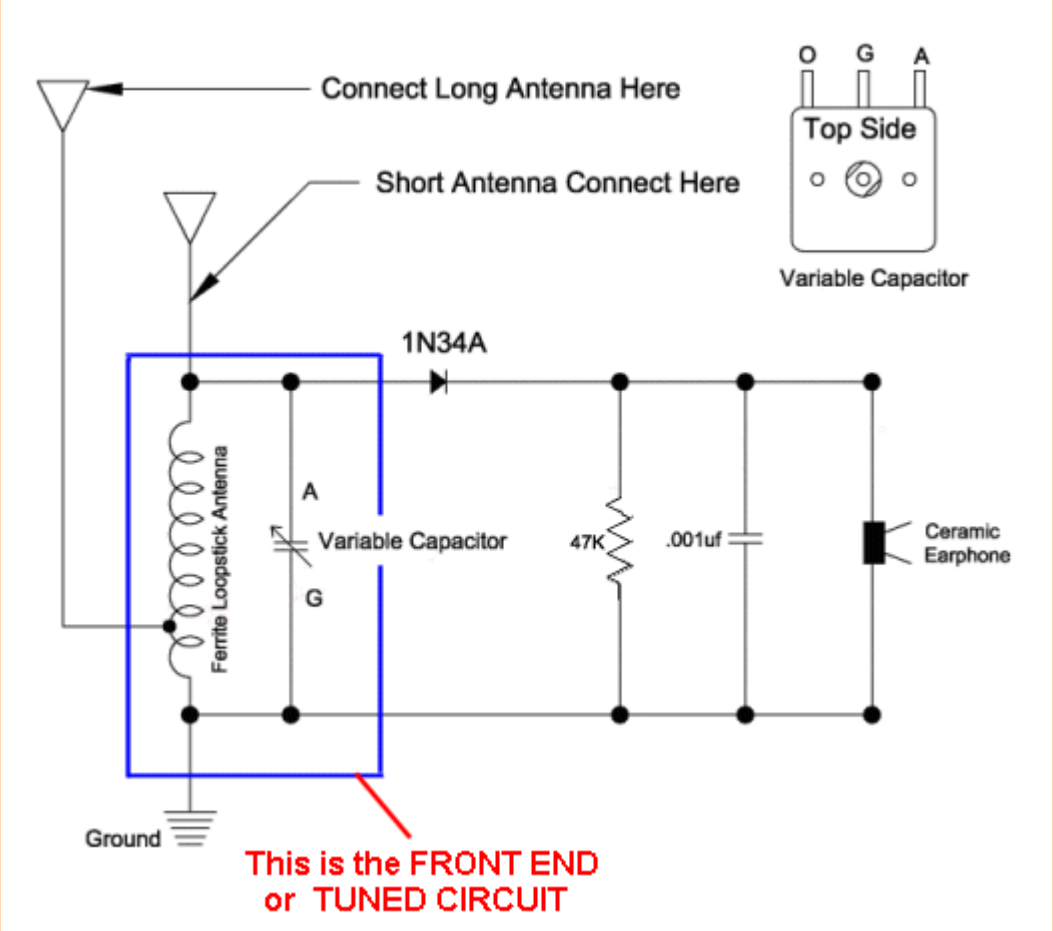

Here are the components mounted on a board called BREADBOARD:

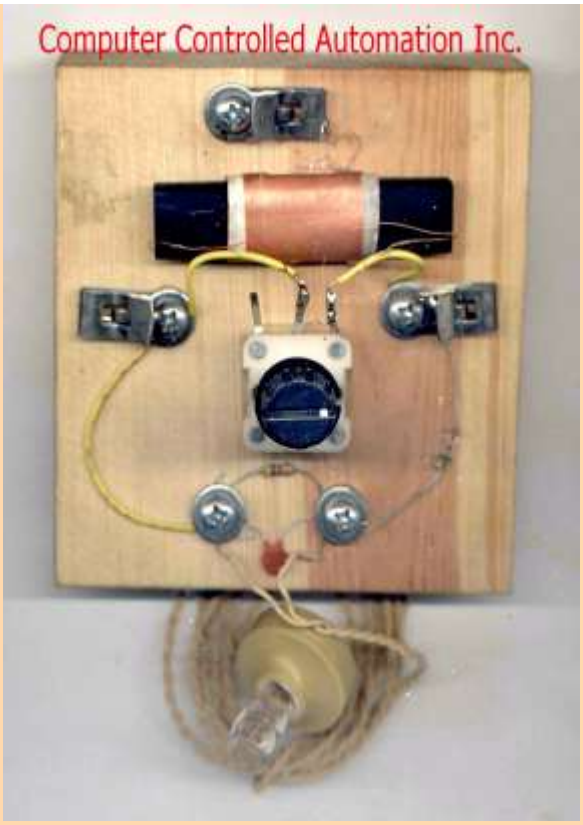

The top clip connects to a long antenna. The left clip connects to ground and the right clip connects to a short antenna.

Let me clear up a point. You do not need a ferrite rod antenna for the coil. You can use an ordinary coil wound on a cardboard tube and it will work just as well if you are using an outside antenna.
Here is the circuit using a home-made coil.

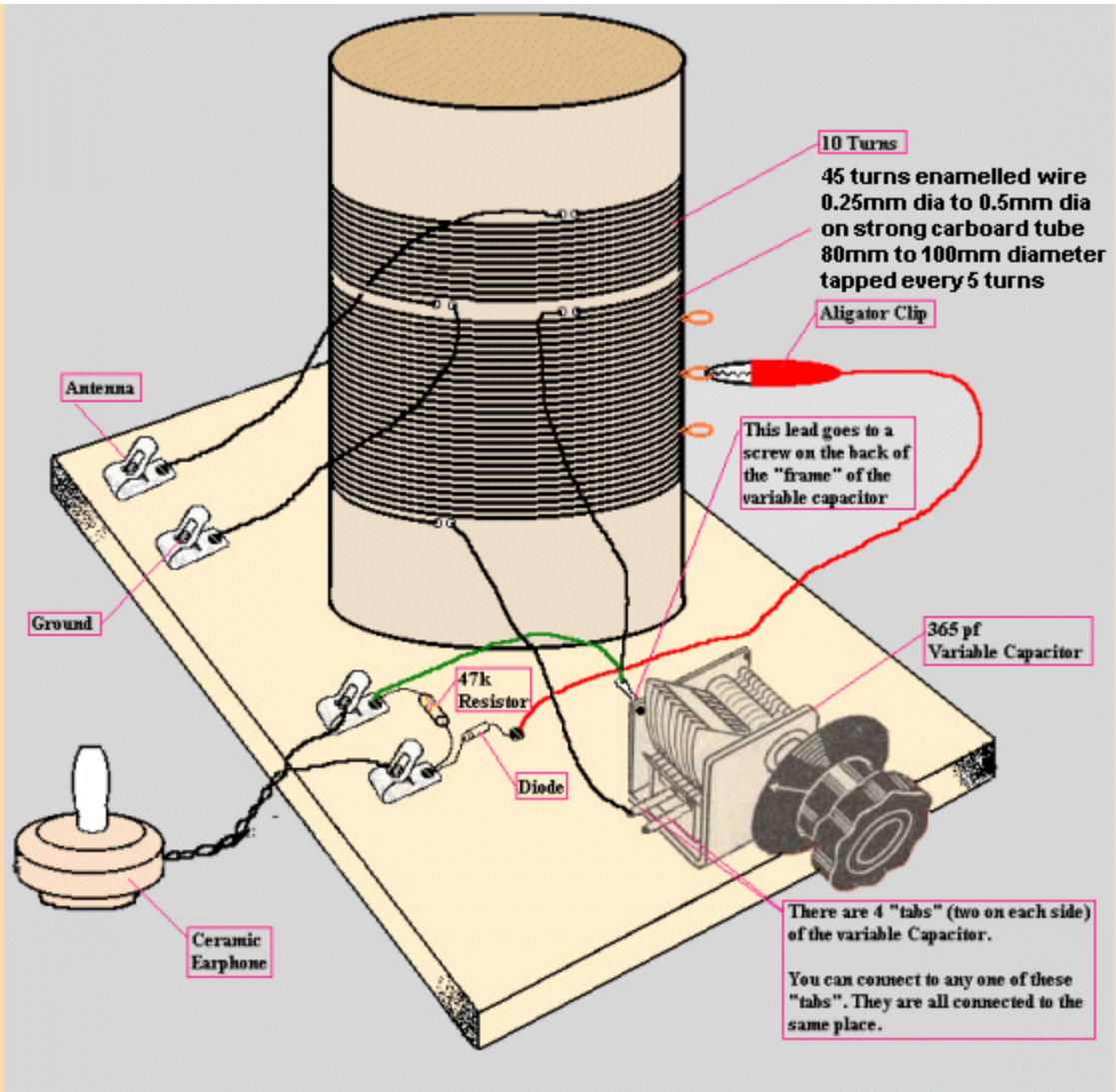

The tappings on the coil allow a wide band of radio stations to be tuned.
Each tapping allows a different portion of the band to be covered.

The next part to understand is this:
The coil and capacitor must not be LOADED. In other words, you cannot connect anything to this combination because the signal it is producing will be "taken away" or "removed" or "considerably reduced" by the item you are connecting to the circuit.
These two components are called a TUNED CIRCUIT and when they are not loaded they pick up all the radio stations, one station at a time, when the natural resonant frequency of the coil and capacitor exactly match the frequency of the radio station. The circuit actually "rejects" all the radio stations except one. Because all the other stations are trying to make the Tuned Circuit oscillate at a different frequency and it does not do this.
The result of the TUNED CIRCUIT oscillating under NO LOAD conditions produces a waveform that is very high and this gives the circuit GOOD SELECTIVITY. The circuit can select one station and reject nearby stations.
It also has good SENSITIVITY as it can pick up weak stations.
If you load the circuit, only the strongest signal will be detected and it will be spread across the full range of the tuning capacitor.
Obviously the theory is more-complex but we are explaining the end-result.
Theory talks about the "Q" value of the coil and this is its ability to produce a very good output when the magnetic flux collapses and the "Q" value increases when the circuit is not loaded. .
Although these voltages are very small (in the order of microvolts or millivolts) the result is very important as the rest of the circuit will be amplifying this waveform a few thousand times.
As we explained above, pushing the weight on a string only needs a push of 1 cm and eventually the weight will swing 1 metre. This is a gain of 100:1 The same thing happens with the tuned circuit. The incoming radio signal is in the order of microvolts, but the coil and capacitor will produce a signal as high as 500 millivolts. This is an improvement or "gain" of more than 1,000 and is referred to as the "Q" of the circuit.
You will also notice the TUNED CIRCUIT is not connected to any supply voltage. It does not have

be connected. It generates its own waveform from the signals in the air.
It should not have any DC current flowing through it via the supply as this would put a load on the circuit and reduce its operation.

However we must "pick-off" the signal so it can be amplified.
This must be done with a very high impedance circuit.

THE CONVERTER (detector) - THE DIODE

The next part of the circuit is the CONVERTER. Commonly called the DETECTOR.
It converts the RADIO FREQUENCY signal to an AUDIO FREQUENCY signal.
This is the job of the DIODE.
The radio frequency signal is a very high frequency signal (say one million cycles per second) and it is sending a tone of one thousand cycles per second through the air-waves.
What is happening is this: The one megahertz signal has a certain amplitude and over a range of the first one-thousand cycles, the amplitude gradually decreases and then increases again. If you look at the tops of this 1,000 cycles you will see a waveform that corresponds to the one kilo-Hertz signal.
The 1MHz signal is picked up by the coil and capacitor in the front end and makes it oscillate.
The radio frequency signal is gradually getting larger over 500 cycles then smaller over the next 500 cycles and this increase and decrease represents the 1,000 cycles per second tone.
This is the waveform (the signal) that passes through the diode. This will be explained further in a moment.
The diode does not pass any signals less than 200mV as the first 200mV is lost in the junction of the diode. This means the signals start to appear on the other end of the diode when they are above 200mV.

This is how the diode works:
Across the crystal earpiece is a capacitor. The capacitor gets charged via the diode.
The diode is present to stop the capacitor getting discharged when the waveform is in the wrong direction. (by this we mean - when the waveform is lower or smaller in amplitude than the voltage on the capacitor).
And the waveform is in the wrong direction about 50% of the time. To charge the capacitor for one-half-cycle requires 500 "little increments" in voltage with each increment adding a microscopic increase in voltage. We don't want this voltage to reduce when the waveform is reversing direction and the diode stops the voltage flowing back to the Tuned Circuit.
During the next half of the cycle when the pulses are getting smaller and smaller, the voltage on the capacitor is "bled off" by the load resistor.
The crystal earpiece detects this voltage. What we mean, is the diode allows the voltage to rise (increase) on the capacitor via lots of little "pulses" and the voltage increases in the form of a sinewave to a maximum amount. This voltage is passed to the crystal earpiece.
Once the voltage rises to a maximum, the little pulses of energy are not quite as strong, and the voltage on the capacitor reduces to form the second portion of the sinewave. This voltage is always being passed to the crystal earpiece and you can hear it as an audio signal.

GERMANIUM OR SILICON DIODE

The preferred type of diode for a Crystal Set is germanium. This is because it drops only about 0.3v.
But a silicon diode can be used, even though it drops about 0.7v, if the radio stations are very loud (close by).
You have to remember, you need a very good aerial (and a water-pipe earth) to get any results with a Crystal Set because you are asking the signal to provide the energy to drive the earpiece.
By simply adding a transistor, you are improving the performance 100 times and the long antenna can be reduced to a FRAME ANTENNA and the earth can be the metal frame of your soldering iron.

THE EARPIECE or EARPHONE
also The Magnetic Earpiece or CRYSTAL EARPIECE

The earphone or earpiece used in a Crystal Set must be a high impedance device because the crystal set does not produce a high current and cannot drive a low-impedance earpiece. That's why a CRYSTAL EARPIECE is ideal.
It has a crystal glued to the back of the earpiece and connected to its top surface is an aluminium diaphragm. When the crystal expands and contracts as a result of a voltage applied via two electrodes, the diaphragm moves and you can hear the signal. It exhibits a very high impedance

because it consists of a crystal and no coil of wire is contained inside the case.
If you do not have a Crystal Earpiece, you can make your own from the shell of an 8 ohm earpiece and a piezo diaphragm. Only the front part of the earpiece is used.

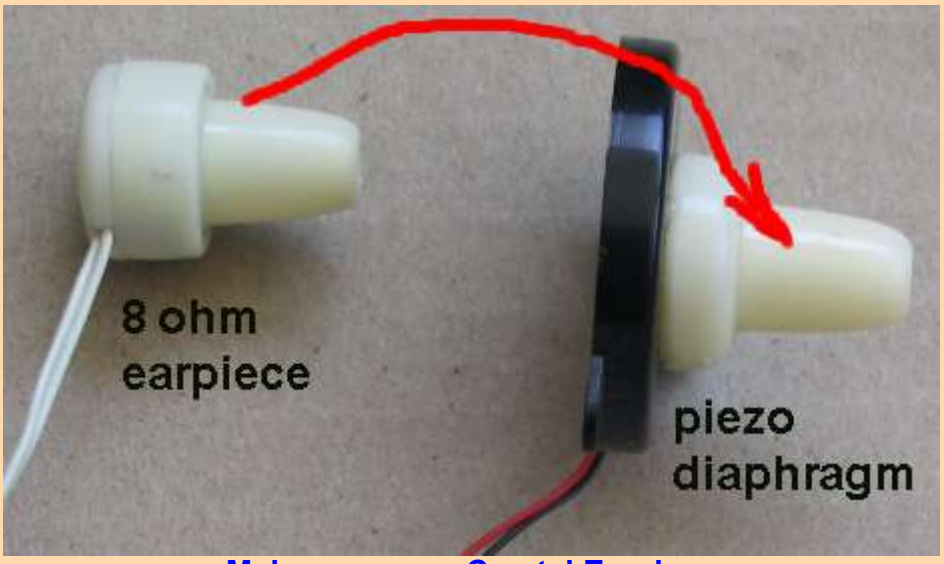

Make your own Crystal Earpiece

Hit the 8 ohm earpiece on the side and the front comes off. Glue the front onto a piezo diaphragm with hot-melt glue. See photo above.
The piezo diaphragm is a ceramic substrate that deflects in the presence of a voltage. It is quite sensitive and you can hear the audio quite clearly.
The waveform emerging from the diode in a Crystal Set is called AUDIO and although it has an amplitude of a few hundred millivolts, it does not have any current associated with it. The crystal earpiece and the piezo diaphragm react to this voltage.

THE 8ohm EARPIECE

The 8 ohm earpiece can be used with our 8ohm Buffer stage shown below.

16ohm 32 ohm and 64 ohm EARPIECE(s)

Earpieces and headsets from mobile phones are 16 ohm or 32 ohm per earpiece and are terminated via a stereo 2.5mm or 3.5mm plug. The earpieces are connected in SERIES to get the best coupling to our radio circuits and you need to find the two pins on a stereo socket to produce series connection. Get a multimeter and switch to "ohms." Try all the pins and you will get a click in the left ear then the right ear. Keep searching until you get a click in both earpieces at the same time. Use these two pins.

Stereo mobile phone headset - unusually 32R or 64R

PROBLEMS

The biggest problem with a Crystal Set is the need for a long antenna.
The first 200mV to 300mV of a signal is lost in the diode and you need a long antenna to pick up a signal so the output of the TUNED CIRCUIT has enough voltage to drive the high-impedance earpiece.
This requires an outside aerial 5 metres long and 3 metres high.
This is not practical for most hobbyists so we will be adding an amplifying stage to the crystal set so a shorter (smaller) aerial can be used.

THE FRAME AERIAL or FRAME ANTENNA or FRAME COIL

The aerial coil shown in the photo above is a ferrite slab with about 80 turns of Litz wire. You can find one of these in an old broken AM radio or from a parts-shop. In the instructions below we show how to make your own Ferrite Rod Antenna
An equally-good substitute is a frame antenna made by winding insulated wire in a rectangle around wooden sticks.

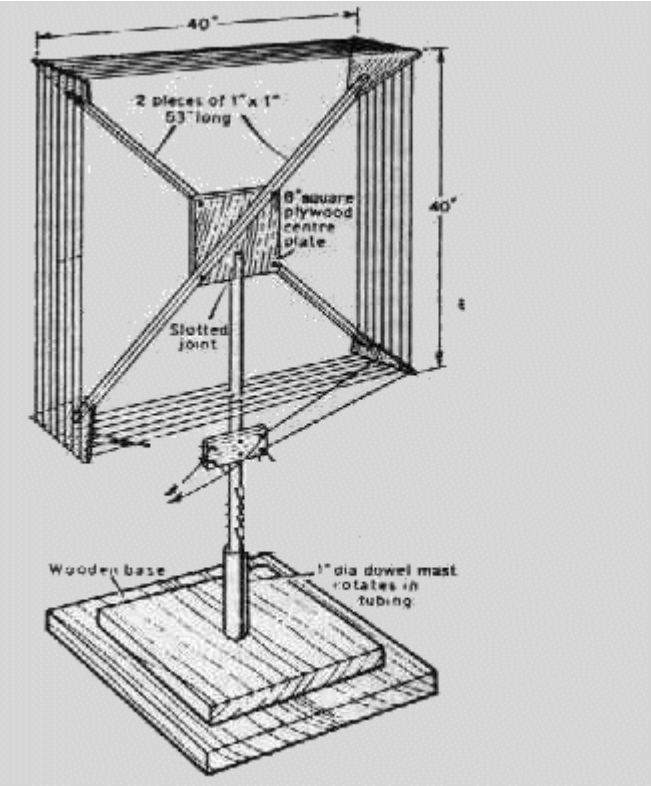

FRAME ANTENNA

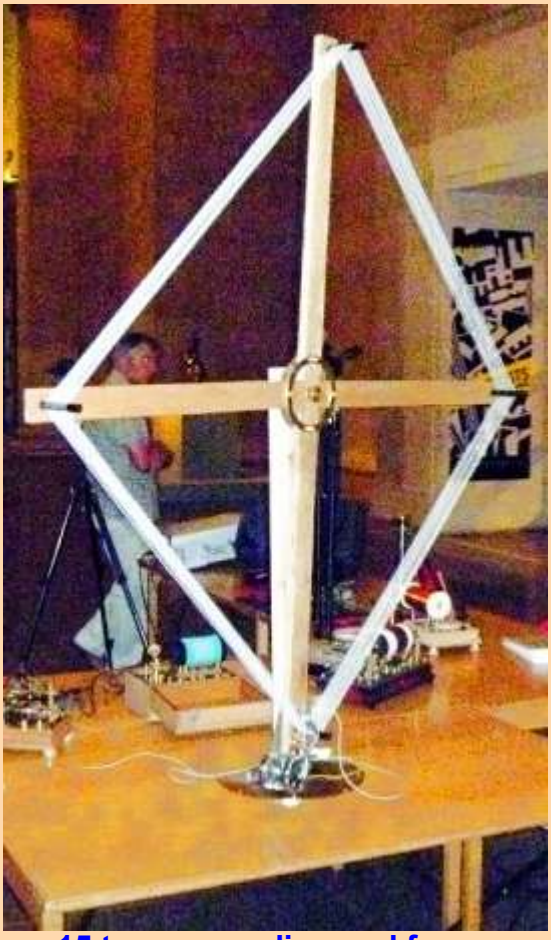

15 turns on a diamond frame

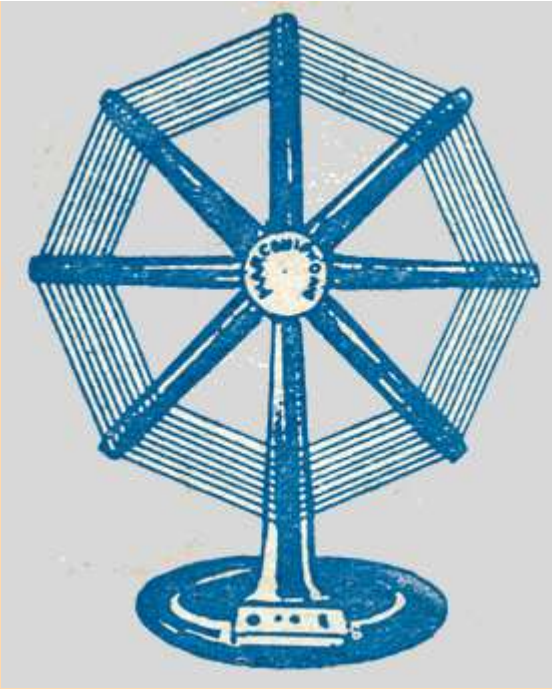

One of the earliest Frame Antennas

The Frame Aerial can be as large as 100cm x 100cm or as small as 10cm x 10cm around a plastic chocolate box.

Here are two FRAME ANTENNAS:

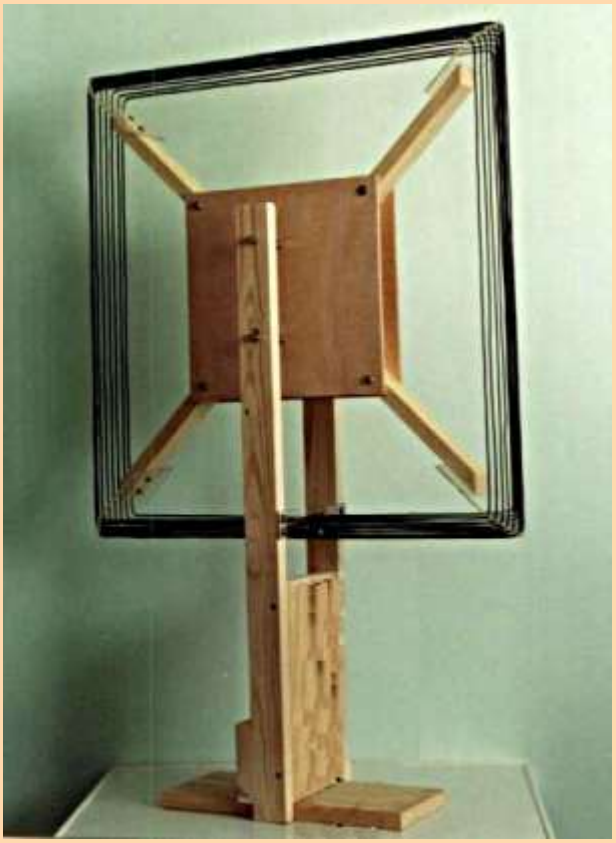

This will work just as good as a ferrite slab antenna. The slab antenna is just 100 times smaller. The slab antenna was invented so a transistor radio could be built in a small case. But if it is not available, you can wind 20 turns around a plastic chocolate box and it will work just as good.

Alternately you can wind 20 turns around a biscuit tin. Put a pencil on the tin and wind the turns over the pencil too. Remove the pencil and it will be easy to remove the turns. Use tape to keep

the turns together.

The FRAME AERIAL does two things. It picks up the radio waves and it becomes the coil (called the INDUCTOR) in the TUNED CIRCUIT. It must be placed away from metal objects, such as a refrigerator.

BASKET WEAVE COIL

There is no point making a complex BASKET WEAVE COIL as it will not work any better than simply jumble winding all the turns at the maximum circumference of the coil, because the energy capturing capability of the coil relies entirely on the amount of flux lines passing through the centre of the coil.
By increasing the centre of the coil, the amount of flux is increased for the same coil size.
In fact, the simplest and cheapest is to wind turns around a box, as explained later in this article, or make a frame antenna as shown above. Technically speaking, a round coil has the best performance but only by a few percent.

A BASKET WEAVE COIL

THE VARIABLE INDUCTANCE TUNING COIL

Whenever the size or shape of the coil is changed, (or the number of turns), the natural frequency of the Tuned Circuit will change and a different radio station will be picked up.
This means tuning across the band can be done by altering the characteristics of the coil while keeping the value of the capacitor fixed.
Changing the inductance can be done in many different ways.
The coil can have taps every 5 turns and an alligator clips selects the correct tap. But very few radio stations will correspond exactly to each tap.
Another way is to have a slider move up and down the turns as shown in the following image:

The slider makes contact where the insulation has been removed. But it may touch two turns at the same time and create a "shorted turn" and reduce the "Q" of the coil.

Another way is to move a ferrite bar (rod) in and out of the coil:

THE SLUG TUNED COIL

To tune across the radio band, the natural frequency of oscillation of the TUNED CIRCUIT must be adjusted (changed). This can be done by changing the value of the capacitor or the value of the inductor.

The value of the inductor can be changed by adding or removing turns or changing the amount of magnetic material in the centre of the coil.
A ferrite bar can be screwed in and out of the coil or slid in and out and this component is called a **SLUG TUNED COIL**.
The following diagram shows a **SLUG TUNED CRYSTAL SET**:

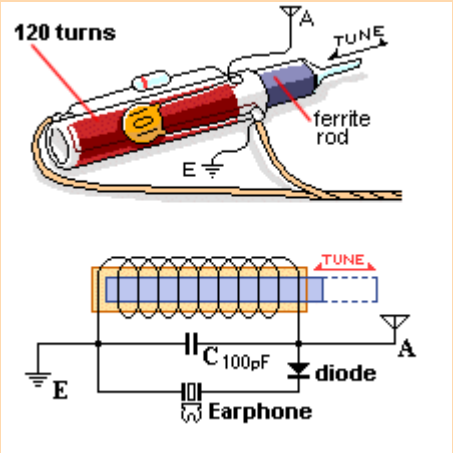

By changing the value of the 100p capacitor, different parts of the band can be picked up.

The photo shows a slug tuned coil using 60 turns of insulated wire on a 10mm tube (or any tube that will fit over a 8-10mm ferrite rod) and a circuit containing an AM radio chip plus a buffer driver transistor:

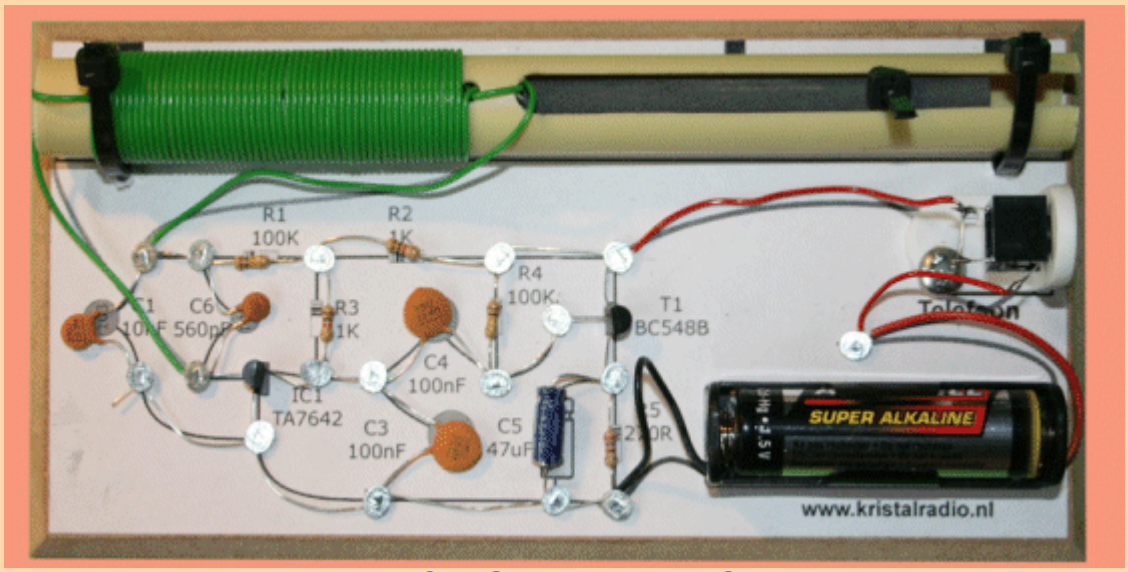

A SLUG-TUNED RADIO

The circuit above is has a broad-band amplifier consisting of 10 transistors (IC1) and they are directly coupled (connected) to each other because it is not possible to "manufacture" a capacitor inside the IC. The IC has 3 terminals (pins, legs) and it looks like an ordinary transistor. Experimenting with this type of IC has shown that it is no better than 2 ordinary transistors connected in a direct-coupling arrangement.

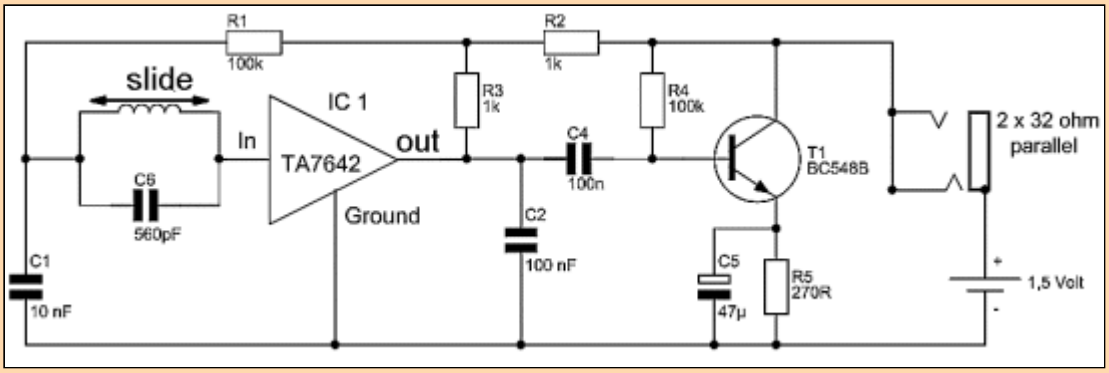

Here is the address of the site for the slug-tuned radio.
http://www.kristalradio.nl/
Unfortunately the site is in Dutch and the kit is not available. However the photos give a clear picture of the how the parts are connected.

The inductance of the coil can also be altered by winding another coil and placing it near the first coil so that the magnetic field interacts with each other and changes the inductance of the circuit. This is called a VARIABLE INDUCTANCE TUNING COIL.
You can have one coil inside the other, two coils near each other or two flat coils side-by-side. Any two coils will interact with each other.

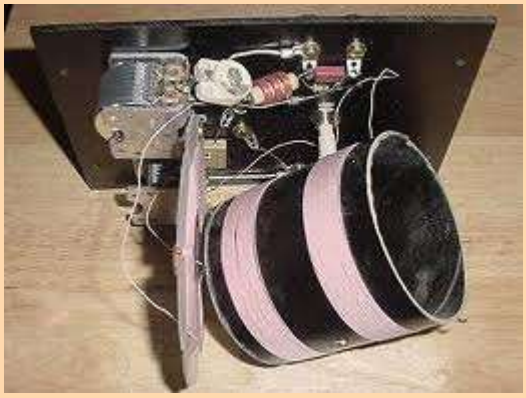

An Inductive TUNING COIL called a VARIOMETER

MAKING YOUR OWN FERRITE ROD ANTENNA

You can make your own FERRITE ROD ANTENNA by winding 60 to 80 turns of 0.25mm enamelled wire onto a 9mm ferrite rod or slab. If you wind it on a paper sleeve, you can move the coil along the rod to get the best performance. When the rod is slid out of the coil, the inductance changes considerably. However the inductance does change very slightly when the coil is moved along the rod.

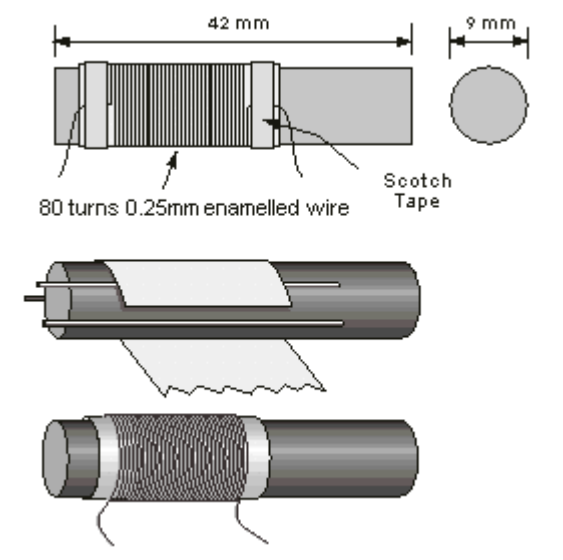

Make your own ferrite antenna

Now we come to the tuning capacitor::

THE TUNING CAPACITOR

The "C" in the "LC" TUNED CIRCUIT can be fixed or variable. When it is variable, it is called a TUNING CAPACITOR. The sheets of aluminium in the air tuning capacitor below are called PLATES and the moving plates are called VANES. The fixed plates make up the STATOR.
The space between the plates is AIR. The photo shows a single capacitor. If two capacitors are connected to the same shaft it is called a GANGED CAPACITOR.
The plates do not come fully out of mesh and that's why the capacitor has a minimum value. The maximum capacitance is when the plates are fully meshed. The odd shape of the plates is designed to produce a fairly constant increase in capacitance as the plates are engaged.

An air tuning capacitor:

Air Tuning Capacitor
(Variable Capacitor)

The capacitor can be made much smaller by using thinner vanes and placing plastic between the vanes. Plastic increases the capacitance about 3 times to 10 times.

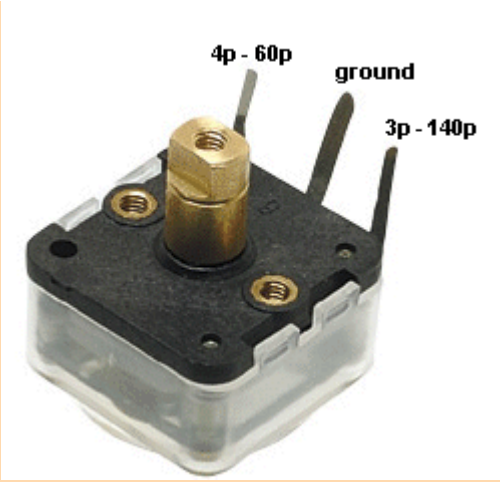

Tuning Capacitor as found in a pocket radio

The tuning capacitor can be replaced with a home-made equivalent that will work just the same.
You need:
4 sheets of aluminium foil (cooking foil) 10cm x 10cm.
4 sheets of thin cardboard 15cm x 20cm (cut A4 sheets in half).

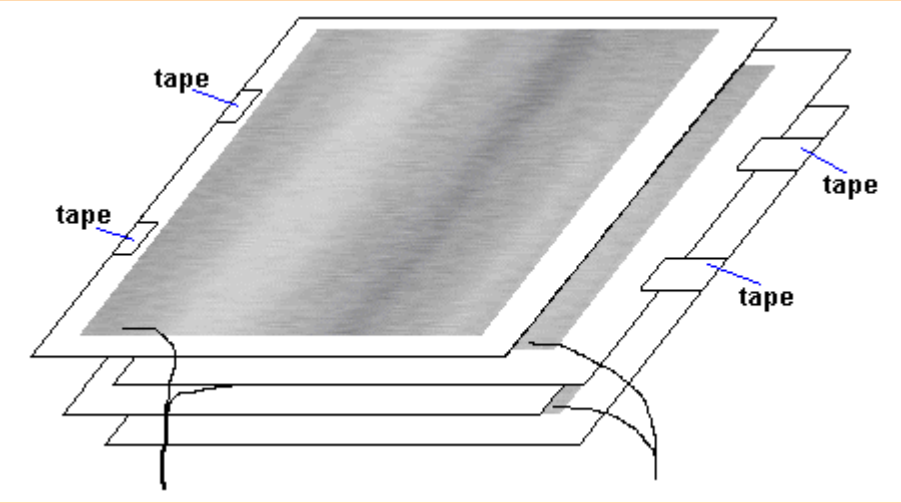

HOME-MADE CAPACITOR

Tape a sheet of aluminium foil to each sheet of cardboard with sticky-tape around all 4 sides. Take one strand of wire from a length of hook-up flex and sticky-tape the end to each sheet of aluminium to make good contact. Place 2 sheets on top of each other and move the top sheet slightly to the left and sticky-tape the edge so they don't move. Do this with the other two sheets but move the top sheet to the right. Now interleave the sets. Connect the wire from the first sheet to the third sheet. Connect the wire from the second sheet to the fourth sheet.
The cardboard (or paper) between the aluminium sheets increases the capacitance three times. The capacitance decreases when the sheets are moved apart and the capacitance increases when the sheets are moved in. The capacitance also INCREASES when the sheets are squashed together such as when a book is placed on them.
You can also make a smaller capacitor by making each sheet smaller and using 6 sheets. You can then add a 100p or 220p in parallel with the home-made capacitor, to select the lower part of the band.

EACH CIRCUIT

Each circuit we describe in the following set of circuits is an improvement or advancement on the previous. We also offer a number of different types of aerial coils, amplifying stages and earphones. Some of the circuits use easy-to-obtain components and home-made equivalents for hard-to-get items. There will be something in this section for everyone to build.

In all radio circuits you will encounter **TWO MAIN PROBLEMS**:

If the FRONT END (the Coil and Capacitor) is loaded too much by the "pick-off" of the amplifying stages, you will only get one station.
If you get squealing or "motor-boating," try a different circuit and layout as the components you are using, plus the voltage of the battery, will need changing.
You cannot always increase the voltage of the supply and get a louder output. Sometimes the increased voltage will stop the circuit working or it may introduce too much gain that the circuit starts to squeal.
The Radio IC (ZN414) DOES NOT WORK on a voltage above 1.5v and some of the transistor circuits completely stop working with a higher voltage. This has to do with the biasing arrangements and if the circuit is designed for a low voltage, you need to keep to the suggested voltage and experiment with a slight increase in voltage and see what happens.
Building a radio is not easy as the enormous amount of amplification of the combined stages creates a feedback loop via the power rail that sets the circuit into oscillation. This effect gets worse with a higher supply voltage and we will explain this further with each of the circuits.

MAKING A CRYSTAL SET

You can buy a **CRYSTAL SET** kit (see the photo of the kit, above) or the individual components (a kit is the cheapest) or use the replacement for the **FERRITE ANTENNA COIL** (16 turns to 20 turns on a 150mm biscuit tin) and/or the **TUNING CAPACITOR** made from aluminium foil and cardboard sheets.
You will need an outside antenna and an earth (such as a water tap or the frame of your soldering iron) to pick up the radio stations.
If you cannot put up an outside antenna, you will need to add one or more amplifying stages and this will allow you to reduce the length of the antenna and increase the volume of the audio.

ADDING AMPLIFYING STAGES TO A CRYSTAL SET

You can add two different types of amplifying stages to a crystal set.
You can connect amplifying stage(s) to the FRONT END and these will be designed to put less load on the front end so the sensitivity and selectivity increases. These stages work at the frequency of the radio signal and they are called RF STAGES (Radio Frequency Stages).
You can build these stages out of individual components or use a chip called a RADIO CHIP or RADIO IC (integrated circuit) for less than $2.00.
The chip contains 5 stages of amplification and these are RF stages (or RF AMPLIFYING STAGES) and the concept is called TRF. (Tuned Radio Frequency).
It is not easy to get this type of amplifier working because the stages produce a very high overall gain and you get a lot of "motor-boating" and squealing if the gain is not controlled. The gain must be reduced when a strong signal is being passed through the circuit because a strong signal will produce a large output and this will be so large that some of the waveform will find its way to the front of the amplifier via the power rail and start to be amplified again. To prevent the output getting too large, the circuit has a negative feedback line - called the AGC line - Automatic Gain Control.
It would be very difficult to reproduce these 5 stages of amplification with discreet components and that's why it is best to use an IC.

The next stage is a DIODE to convert the RF (Radio Frequency) to AF (Audio Frequency). This can be done with the diode-characteristics of a base-emitter junction in a transistor and we will show the alternatives.

Any stages after the diode are AUDIO STAGES or AUDIO AMPLIFIER STAGES.
The main job of the AUDIO AMPLIFIER is to increase the DRIVE CAPABILITY.
In other words, increase the current capability of the circuit for an 8 ohm speaker or 8ohm earpiece (or 16 or 32 ohm).
This is a very difficult thing to do and requires at least 2 stages.
The LOAD you can put on a Crystal Set must be 10,000 ohms or higher. (if you put a lower resistance (impedance) on the output, you will load the FRONT END and reduce its ability to separate the stations.
That's why a crystal earpiece is normally used with a crystal set. It puts almost NO LOAD on the circuit.
If you put a load on the circuit the result will be only one or two stations across the whole dial and only the most powerful station will be received.

If you don't have a crystal earpiece, you will have to use an 8 ohm earpiece. This will require an IMPEDANCE CONVERTING CIRCUIT of 1,250:1
This is a simple way of saying we want the 8 ohm earpiece to appear as 10,000 ohms to the

crystal set.
To produce an overall gain of 1250, we need two stages of amplification.
If a transistor has a gain of 70, it will it will produce an impedance conversion of 70 times. This is a realistic value. Transistors with a gain of 200 will have a gain of about 70 when fitted to a circuit. This means the other transistor needs to have a gain of about 20 and that is easy to achieve.

ADDING AMPLIFYING STAGES TO THE FRONT OF A CRYSTAL SET

Adding stages to the front of a crystal set are called RF STAGES (Radio Frequency Stages) because they amplify the RADIO STATION SIGNAL.
It does not matter if you amplify RF signals or AF signals. The result is the same.
The only difference is this: The frequency of RF signals is much higher (1,000 times higher) and the coupling capacitors can be much smaller.
This allows an RF amplifier to be built into an IC - called a Radio Chip.
One of the most popular Radio IC's is ZN414 or YS414. This chip has been copied by other manufacturers as: MK484, TA7642 and LMF501T.
All the chips are the same but the pinout is different.
These chips work on a 1.5v supply and if the voltage is increased above 1.5v, the gain of the stages increases to a point of total distortion.
To prevent strong signals producing distortion on 1.5v supply, the output is passed back to the input via a 150k resistor. This feedback line is called the AGC (Automatic Gain Control).
The chip contains 5 stages of amplification plus a stage that converts the RF signal to AF (Detector Stage). This means the signal diode in a Crystal Set is not needed.

Here is the circuit of the TA7642 Radio Chip. It performs the same as the ZN414 Radio Chip.

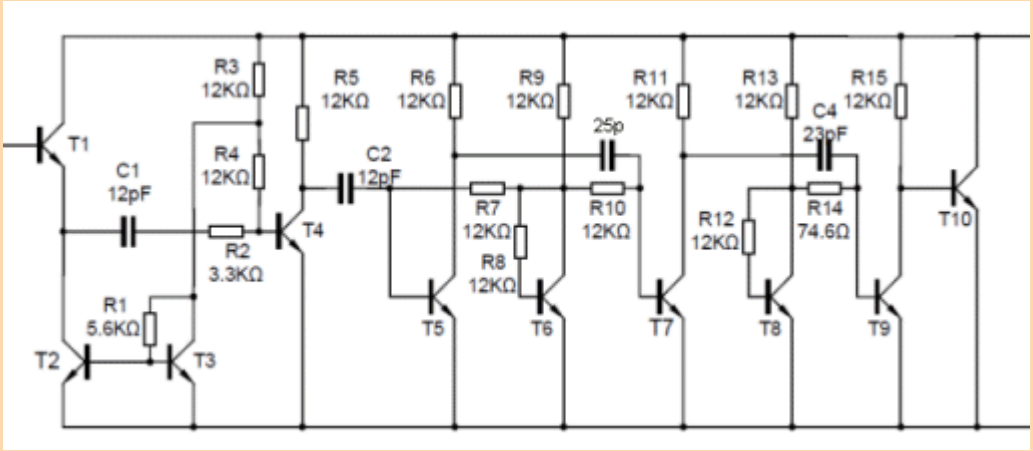

Here is the BLOCK DIAGRAM of the ZN414 Radio Chip:

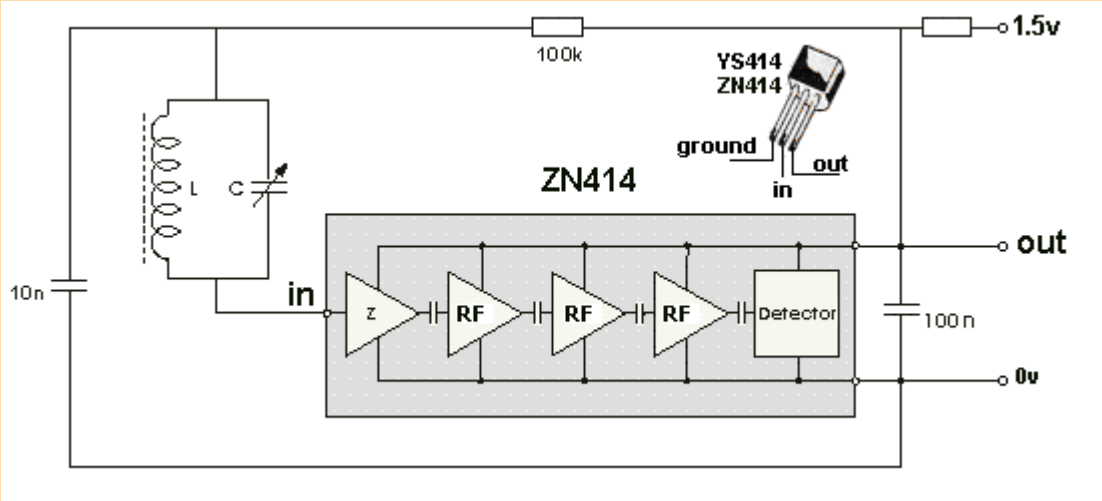

The ZN414 chip can be purchased from Talking Electronics for $1.00 plus postage

USING THE ZN414 RADIO IC

By using the ZN414 radio IC (or any if the equivalents) you can create a POCKET RADIO to drive a headphone or speaker.
But it is not easy to use the chip. The main problem is receiving the strong signals without producing distortion and then being able to pick up the weak stations.
A fixed 100k feedback resistor does not provide adequate control and a TRF radio has limited capabilities.
That's why radio manufacturers make SUPERHETRODYNE receivers. Even though they are more complex, the result is far superior.
However a simple TRF set can be made with the Radio IC and a few stages of audio amplification.

The following circuit uses just the Radio IC and a crystal earpiece or the home-made earpiece described above:
You can use a home-made FRAME ANTENNA or a home-made FERRITE ROD ANTENNA and a home-made VARIABLE CAPACITOR.

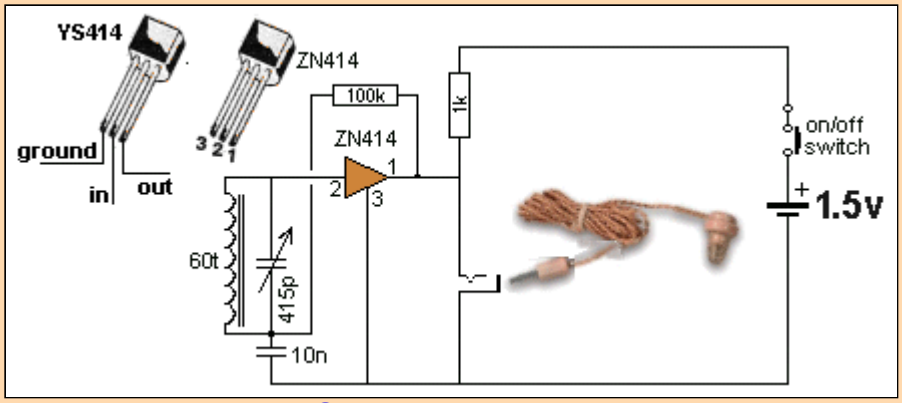

The Simplest ZN414 Radio

Connecting the ground (0v rail) to the frame of your soldering iron or a water tap will increase the output volume. The circuit above shows a Crystal Earpiece. Using a Crystal Earpiece may require adding a 10n across the earpiece to improve the output volume. The substitute Piezo Earpiece is effectively a 20n capacitor and an additional capacitor is not needed.

2 TRANSISTOR RADIO

Here is a simple 2-Transistor radio.
The secret to its performance is the 7 turn "pick-off" from the FRONT END (the TUNED CIRCUIT).
The ratio of 7 turns to 60 turns means a small percentage of the voltage generated in the tuned circuit is passed to the transistor. Thus it puts a small load on the TUNED CIRCUIT.
I don't want to go into any mathematics. The turns ratio is 60:7 = 8 but the effect of the 7 turns "pick-off" has an effect called the IMPEDANCE EFFECT and this is the SQUARE OF THE TURNS RATIO. Thus the IMPEDANCE EFFECT is 8 x 8 = 64. This means the "pick-off" (the LOADING EFFECT) is just a few percent. The front end can produce voltages as high as 500mV because a crystal set can produce a voltage high enough to pass through a diode (350mV) and have sufficient to drive a crystal earpiece.
Even though the front end has a "step-down" ratio, the voltage out the 7 turns will be sufficient to drive the first transistor.
The "transformer" does 2 things: It reduces the loading on the tuned circuit ENORMOUSLY and it produces an output with a higher current than is circuiting in the front end. Even though the transistor is turned ON and biased by the 33k, it is classified as a low-impedance load as far as the front end is concerned and the input signal has to be accompanied by a certain amount of current, otherwise the transistor will not respond to the voltage. The 7-turn "pick-off" is able to provide this current.
Both transistors are biased ON via the 33k base-bias resistors and thus the first transistor responds to the slightest millivolt signal.
This circuit was tested and had the same performance as the **Simplest ZN414 Radio Circuit** above. It can be operated on 1.5v to 6v and the strongest stations tend to overload on 6v. A short antenna is needed.

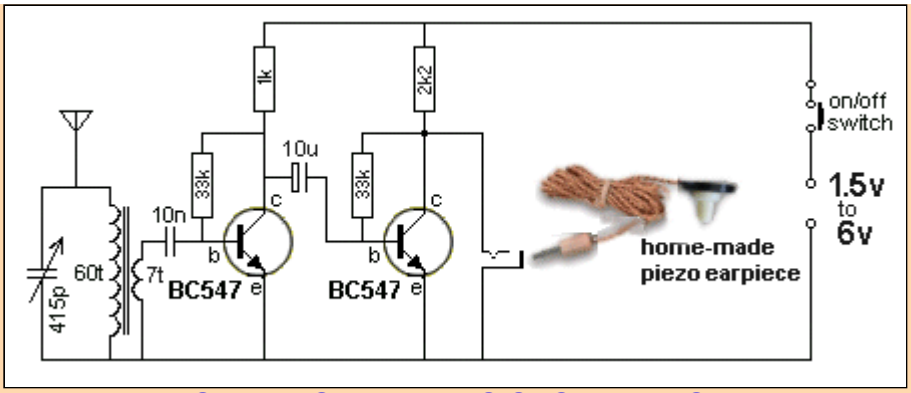

SIMPLEST 2-TRANSISTOR RADIO
using a very-high-impedance earpiece

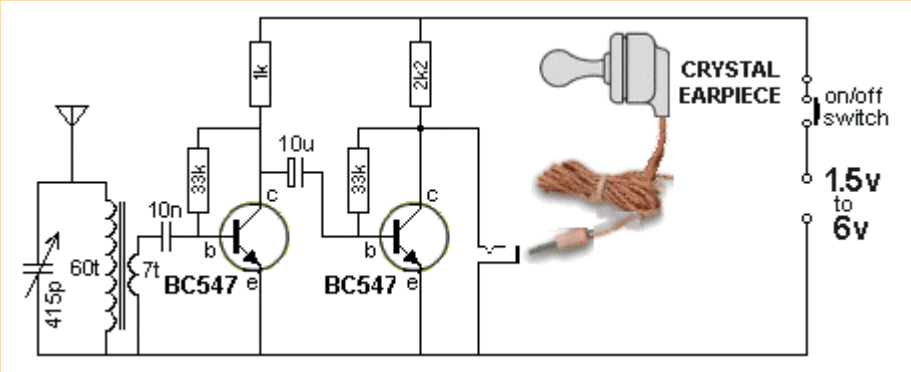

SIMPLEST 2-TRANSISTOR RADIO
using a crystal earpiece

ADDING AN IMPEDANCE MATCHING STAGE

You can add an IMPEDANCE MATCHING STAGE to the output of the circuit above so a low-impedance earpiece can be used.
We call it an IMPEDANCE MATCHING STAGE because this is the correct technical term. It is an AMPLIFYING stage but it amplifies the CURRENT because the second transistor cannot drive an 8 ohm LOAD. 8 ohms is a very low resistance and if it is connected directly to the second transistor, the output will be almost zero.
The reason for this is covered in our discussion: The Transistor Amplifier.
This stage will not increase the volume but simply match the 8 ohm load to the circuit above.
It is very difficult to connect a LOAD to this type of circuit because it will take more current from the battery and cause the supply voltage to fluctuate. These fluctuations will be passed to the first stage and cause variations in the signal. This will be amplified by the first and second transistors in the form of a low-frequency buzzing called **MOTOR-BOATING**.
The only way to reduce or remove this noise is to add an electrolytic across the power rails and reduce the supply voltage. The third transistor simply takes the waveform on the output of the second transistor and delivers it to the earphone with a higher current. It is called an IMPEDANCE MATCHING STAGE as it effectively increases the 8 ohm load by a factor of about 100.

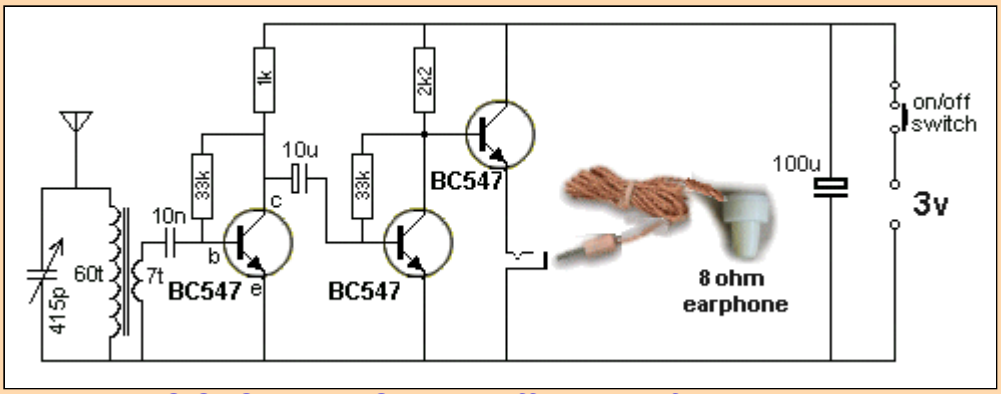

3-TRANSISTOR RADIO with buffer stage for 8 ohm earpiece

The 3rd transistor converts the 8R to about 800R

You can use 16 ohm, 32 ohm or 64 ohm in place of the 8R earpiece and these will give better performance as they will take less current and improve the stability of the circuit.
Low-impedance earphones create "motor-boating" due to the peaks of current and this can be very hard to fix.

A 2-TRANSISTOR RADIO with REGENERATION

The next stage in our discussion to get better performance is a feature called **REGENERATION**. Regeneration sends a small output signal back to a previous stage in the form of POSITIVE FEEDBACK to INCREASE the original signal. The signal on the emitter of the first transistor is the same amplitude as the signal entering the base but the FRAME ANTENNA has a turns ratio of 5:15 and this increases the signal on the receiving section of the antenna by up to 3 times. But we want the returning signal to be just above the amplitude of the receiving signal and so a resistive adjustment (attenuator) is provided on the emitter to deliver just the right amplitude.
This has the effect of increasing the amplitude on the TUNED CIRCUIT and is just like reducing the load on the circuit.
As we have mentioned above, when the tuned circuit is lightly loaded, it will pick up a station at the exact frequency of transmission and if the dial is changed slightly, the station will disappear. This quality is called SELECTIVITY.
At the same time, the Tuned Circuit will pick up weak stations and this is called SENSITIVITY.
The quality of a receiver depends on the loading of the TUNED CIRCUIT.

Here is the original circuit from Elektor Magazine with the prototype made on matrix board and fixed to a base-board with a frame antenna made from two sticks of wood. The photo shows a speaker but the output is so low that you really need headphones.

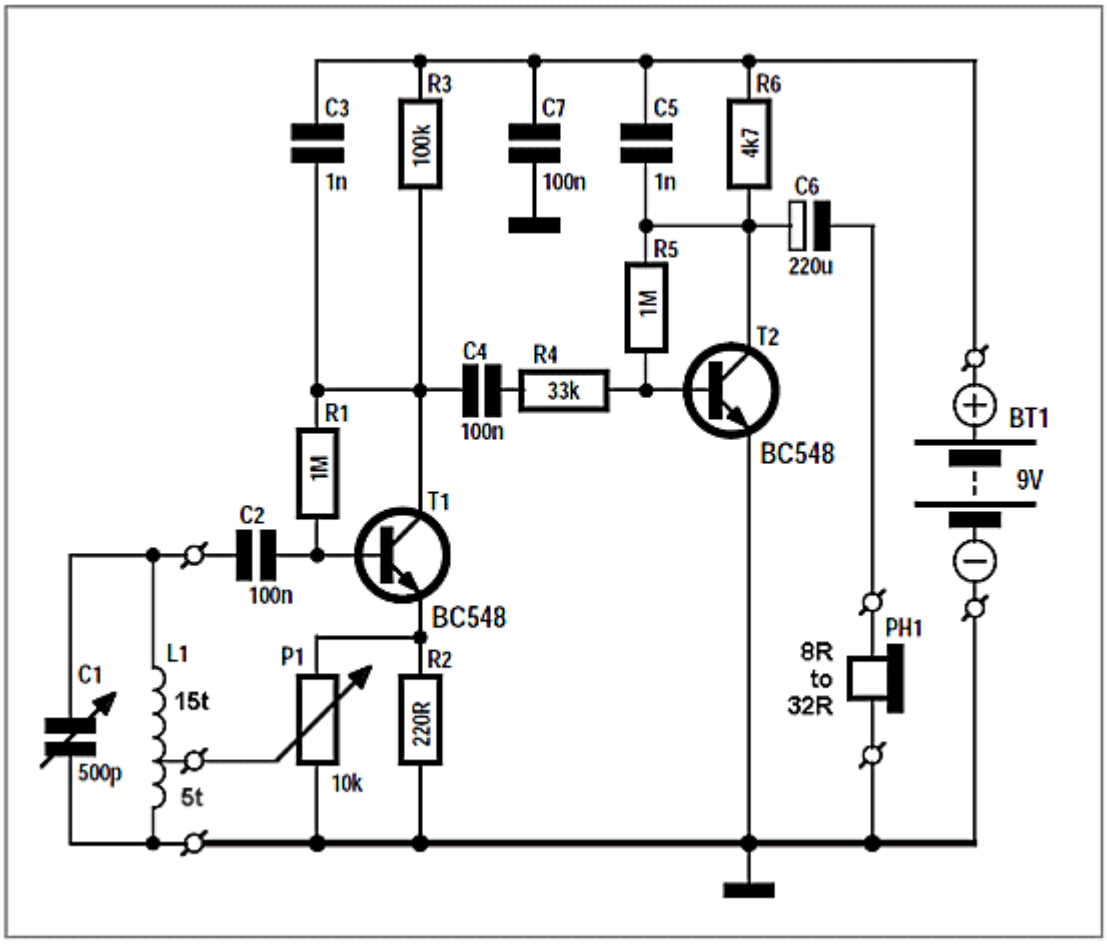

2 TRANSISTOR REGENERATIVE RADIO from Elektor Magazine

The circuit is very complex and the output will be very low as the circuit cannot drive a low-impedance earphone via a 4k7 load resistor. The 4k7 resistor is actually driving the speaker (the transistor is simply discharging the 220u). The 4k7 only allows 32/4700 x 9 = 61mV to appear across the earphone - a very poor result.
The skill of designing a transistor stage is covered in our comprehensive eBook: The Transistor Amplifier and you wont make a mistake like this !!!
The circuit above can be simplified and we can add the REGENERATIVE feature to our **Simplest 2-Transistor Radio** circuit:

Our circuit uses a 15 turn circular FRAME ANTENNA 15cm diameter and a 5 turn REGENERATION coil.

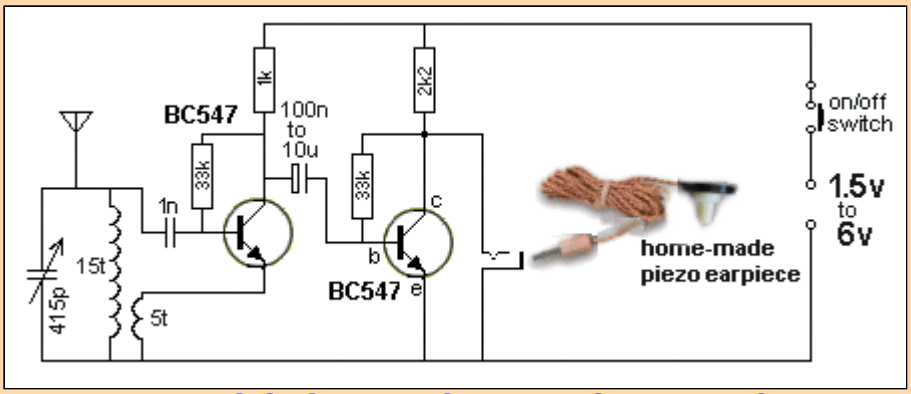

2 TRANSISTOR RADIO with REGENERATION

The regeneration coil is brought near the main coil and as it gets closer you can hear the audio get louder. If this does not happen, turn the coil around.
Early radios used this technique and the operator had to adjust the coil by hand. No-one minded because radio was a fascination and the simplest radio cost more than a weeks wages. To listen

to a broadcast through headphones was an amazement and listeners would sit all night with headphones listening to music.
This is very fiddly and by adding an extra buffer stage, we can use a Frame Antenna with a very clever "pick-off" that does not load the front end. This gives the circuit very good sensitivity and selectivity without regeneration.

3 TRANSISTOR RADIO

Here is our final design for the simplest self-contained 3-Transistor Radio using our home-made Tuning Capacitor and 250mm x 350mm Frame Antenna. It picks up the local stations and drives a low-impedance earphone or set of earphones (from a mobile phone).

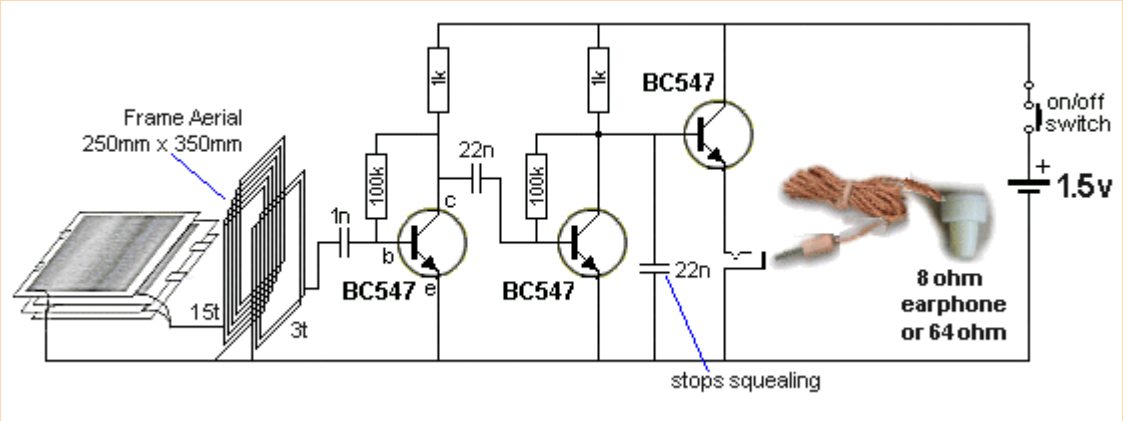

3-TRANSISTOR RADIO

The circuit performs very well and uses readily-available components. The 22n across the output is essential to stop squealing.
The secret to sensitivity and selectivity is the turns-ratio on the Frame Antenna. The 3-turn "pick-off" puts very little load on the front end and this allows the stations to be tuned with our home-made Tuning Capacitor.
The circuit contains all the features we have discussed above and only needs a 1.5v supply.
Build this circuit before you buy any expensive tuning capacitors, IC's or ferrite slab antennas as you will not get any better results.
This is called a TRF circuit and because the stages operate at Radio Frequency or Audio Frequency. Due to the high amount of amplification, the circuit can start to squeal (feedback, motorboat) due to the layout.
You may need to shorten or lengthen the leads or move the parts slightly - it's that critical.
However the result is a portable radio that needs no earth and will pick up the strong stations.
You can try connecting the 0v rail to the metal part of a soldering iron to increase the number of stations.

LOADING

The whole success of picking up a radio station is the RECEIVING CIRCUIT. The receiving circuit is the coil and the signal in the air (from the radio station) must go down the centre of the coil.
It cannot pass over the top or the bottom of the coil. Only the signal that goes down the centre of the coil is received.
As you can see, the centre of the coil is not very big and it is amazing that the signal can pass down the centre. But it does, and that is the only signal that will be amplified.
This signal is passed to the capacitor and we have explained how the signal is gradually increased and increased in amplitude until it is as large as 500mV. The signal from the radio station may be as small as a few millivolts, but as it keeps pushing the "swing" back and forth, the amplitude get larger and larger.
If you put your finger on the "swing" you will prevent it get larger and larger and it only requires the slightest touch of your finger to prevent the swing gaining full amplitude.
In electronic terms, your finger is called LOADING THE CIRCUIT and since we have to pass the signal to further stages of amplification, we need to "tap" or "load" or "pick-off" a signal.
The aim is to load the circuit as least as possible because the actual energy entering the circuit is very small.
In fact, this is all the energy we can remove as that is all the energy entering it.
Because a very small amount of energy is entering the "front-end" we classify it having a very

high impedance. It is very difficult to provide a value of impedance for this circuit because impedance has the term "Z" and the circuit is operating a very high frequency so resistance values are not the same as impedance values.
The actual resistance of the circuit is ONE OHM but the impedance is more like 10,000 ohms to 100,000 ohms.
We can explain its high impedance if we put a 100,000 ohm resistor across the circuit. The waveform will be reduced very slightly. If we put a 10,000 ohm resistor across the circuit, the signal will be reduced a reasonably large amount. If we put 1,000 ohms across the circuit it will stop working.
This means a load of 100,000 ohms will have the least effect.
In a crystal set, the diode creates NO LOAD until a voltage of 350mV is reached. It then passes excess voltage to a crystal earpiece that has a very high impedance. That's why a crystal set will produce a good output. The LOADING is very small.
When a transistor is connected to the TUNED CIRCUIT, it starts to put a load on the circuit after 600mV and this load is VERY HIGH. The "resistance" of the base-emitter junction is about 1k and the signal will find it very difficult to rise above 600mV because the incoming energy is not sufficient to increase the voltage.
Adding a capacitor between the base and the front end allows the transistor to be self-biased and get a turn-on voltage of about 600mV from a base-bias resistor.
The FRONT END is now separated from the transistor and ANY voltage it is producing will be passed to the transistor via the capacitor.
Whereas, with the crystal set, the first 350mV could be produced without any loading, the circuit is now loaded AT ALL TIMES.
This means we have to load the circuit as lightly as possible to be able to pick up individual stations.
The only way we can do this is to use a capacitor of the smallest practical value and this has to be worked out by trying different values. If the value is too small, the transistor will not detect a small signal. If the value is too large, the circuit will stop working.
Values such as 1n, 10n and 100n are suitable.
Values such as 1u, or 10u will be too large.
The CRYSTAL SET loading and a transistor load are completely different.
The transistor loads the front end ALL THE TIME and that's why you need to use a transformer or other ways to reduce the loading. Sometimes a Field Effect Transistor is used as it puts almost no load on the front end.

2-4-2016

Histats.com
Vis. today
10

Easy To Use, All in One, CRM.
1.5 Million Insightly CRM users worldwide.
insightly TRY FOR FREE

Easy To Use, All in One, CRM.
1.5 Million Insightly CRM users worldwide.
insightly TRY FOR FREE

Capacitor Kit
The World's Only Professional Kits Low Price! Fast Shipping; In Stock.
analogtechnologies.com

Capacitor Kit
The World's Only Professional Kits Low Price! Fast Shipping; In Stock.
analogtechnologies.com

United States Patent [19]

Minovitch

[11] **Patent Number: 5,052,638**

[45] **Date of Patent: Oct. 1, 1991**

[54] **ELECTROMAGNETIC RAMJET**

[76] Inventor: **Michael A. Minovitch,** 2832 St. George St. #6, Los Angeles, Calif. 90027

[21] Appl. No.: **330,632**

[22] Filed: **Mar. 30, 1989**

[51] **Int. Cl.**[5] **B64C 39/00;** B64D 27/02

[52] **U.S. Cl.** ..... **244/53 R;** 60/202; 244/62; 244/172

[58] **Field of Search** ..... 60/202; 244/53 R, 62, 244/166, 172

[56] **References Cited**

U.S. PATENT DOCUMENTS

3,114,517	12/1963	Brown	244/62
3,174,705	3/1965	Schiff et al.	244/62
3,322,374	5/1967	King, Jr.	244/62
3,436,918	4/1969	Brogan et al.	60/202
3,542,316	11/1970	Hart	244/53 R
3,818,700	6/1974	Kantrowitz et al.	244/53 R
3,825,211	7/1974	Minovitch	244/62
3,891,160	6/1975	Minovitch	244/62
4,006,597	2/1977	Dick	60/721

FOREIGN PATENT DOCUMENTS

2212773	8/1989	United Kingdom	244/53 R

OTHER PUBLICATIONS

Astronautics & Aeronautics, Kantrowitz, Propulsion to Orbit by Ground-Based Lasers, May 1972, pp. 74–76.

Primary Examiner—Charles T. Jordan
Assistant Examiner—Richard W. Wendtland
Attorney, Agent, or Firm—Christie, Parker & Hale

[57] **ABSTRACT**

An electromagnetic ramjet propulsion system is provided for accelerating high mass payloads through the upper atomsphere at orbital velocities. The propulsion system comprises a plurality of coplaner self-supporting superconducting dipole coils several hundred meters in diameter that is initially accelerated to high altitude and supersonic speed by magnetic repulsive forces generated by a plurality of superconducting field coils several kilometers in diameter embeded beneath the earth's surface. The ramjet is accelerated to orbital velocities by a multigigawatt microwave beam that is transmitted from the earth's surface. A reflecting grid of conducting wires is mounted inside the inner dipole which shock ionizes the low dentisy atmospheric gas passing through it. The frequency of the microwave beam is adjusted to produce electron cyclotron resonance with the free electrons passing through the magnetic field of the dipoles thereby accelerating them away from the dipoles by magnetic repulsive forces, taking the positively charged ions with them. The system becomes a giant hypervelocity ionospheric ramjet propelled by magnetic repulsive forces without any velocity limitations. By utilizing a plurality of microwave transmitters located along the ground track of the ramjet, it is possible to accelerate payloads of several thousand tons to orbit.

133 Claims, 14 Drawing Sheets

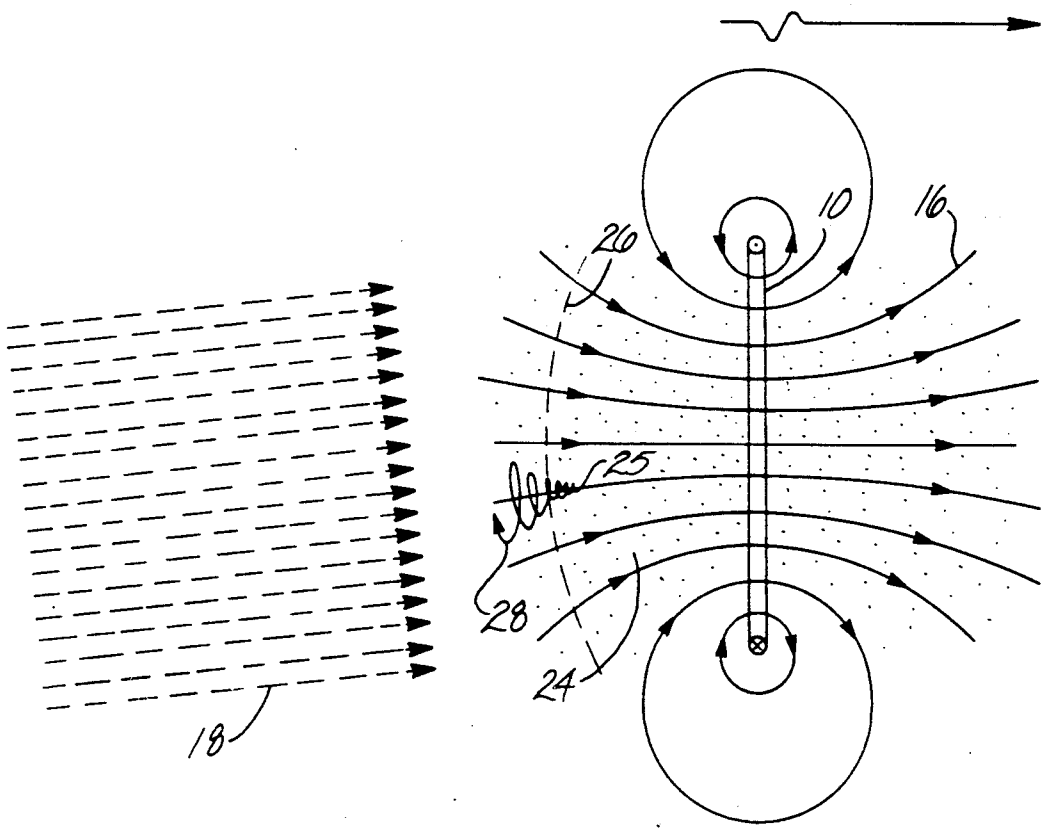

Fig. 1

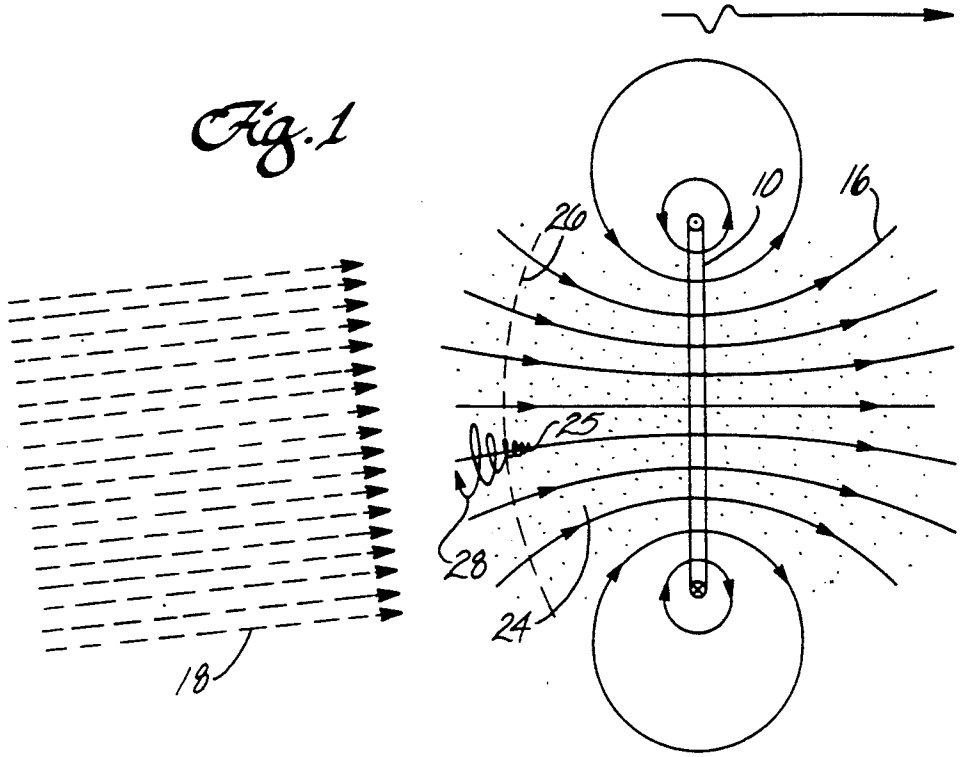

Fig. 2

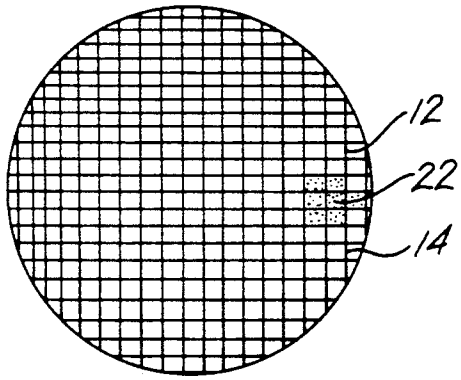

Fig. 3

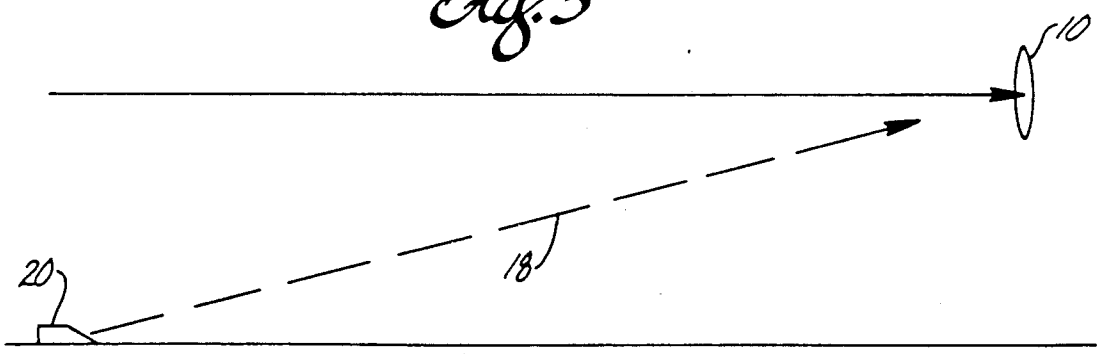

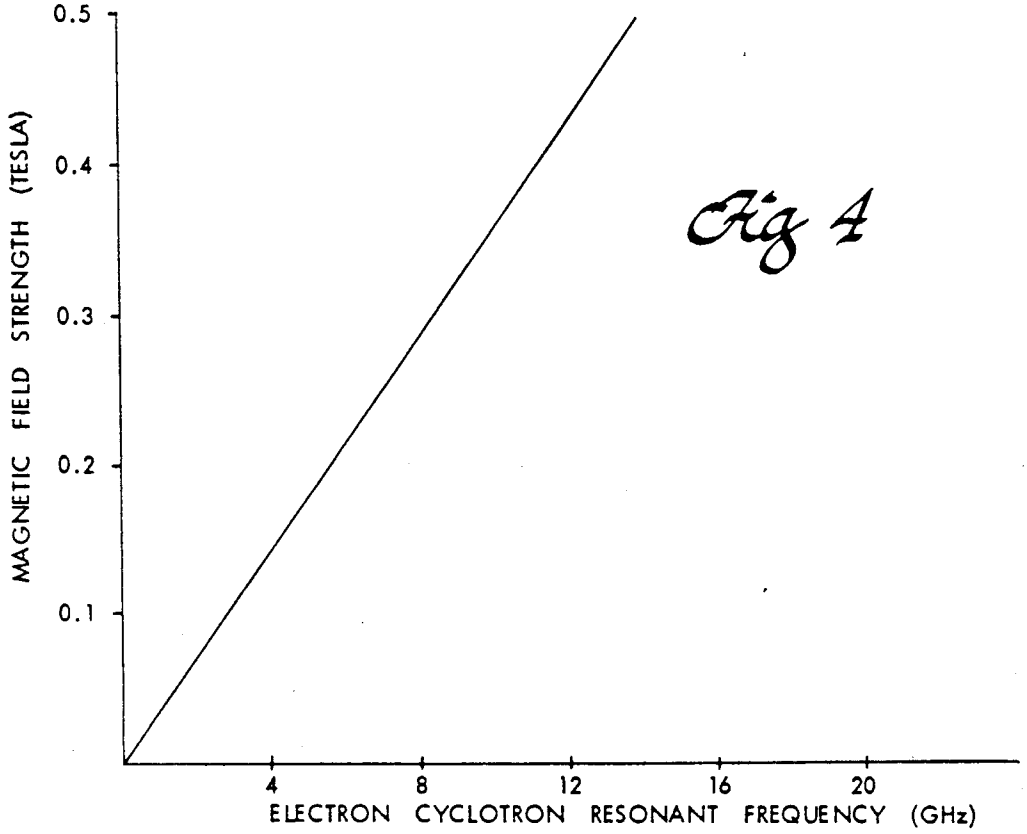
0.5
0.4
0.3
0.2
0.1
MAGNETIC FIELD STRENGTH (TESLA)
4
8
12
16
20
ELECTRON CYCLOTRON RESONANT FREQUENCY (GHz)

Fig 4

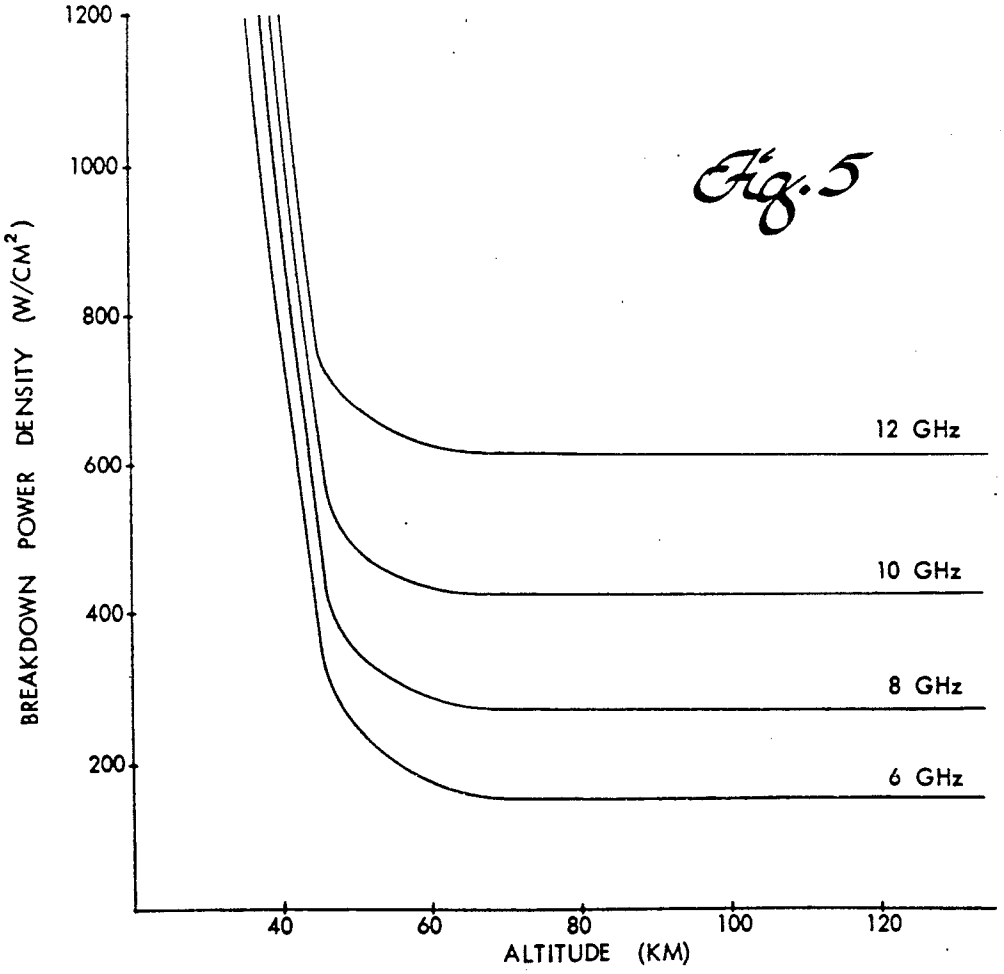
1200
1000
800
600
400
200
BREAKDOWN POWER DENSITY (W/CM²)
12 GHz
10 GHz
8 GHz
6 GHz
40
60
80
100
120
ALTITUDE (KM)

Fig. 5

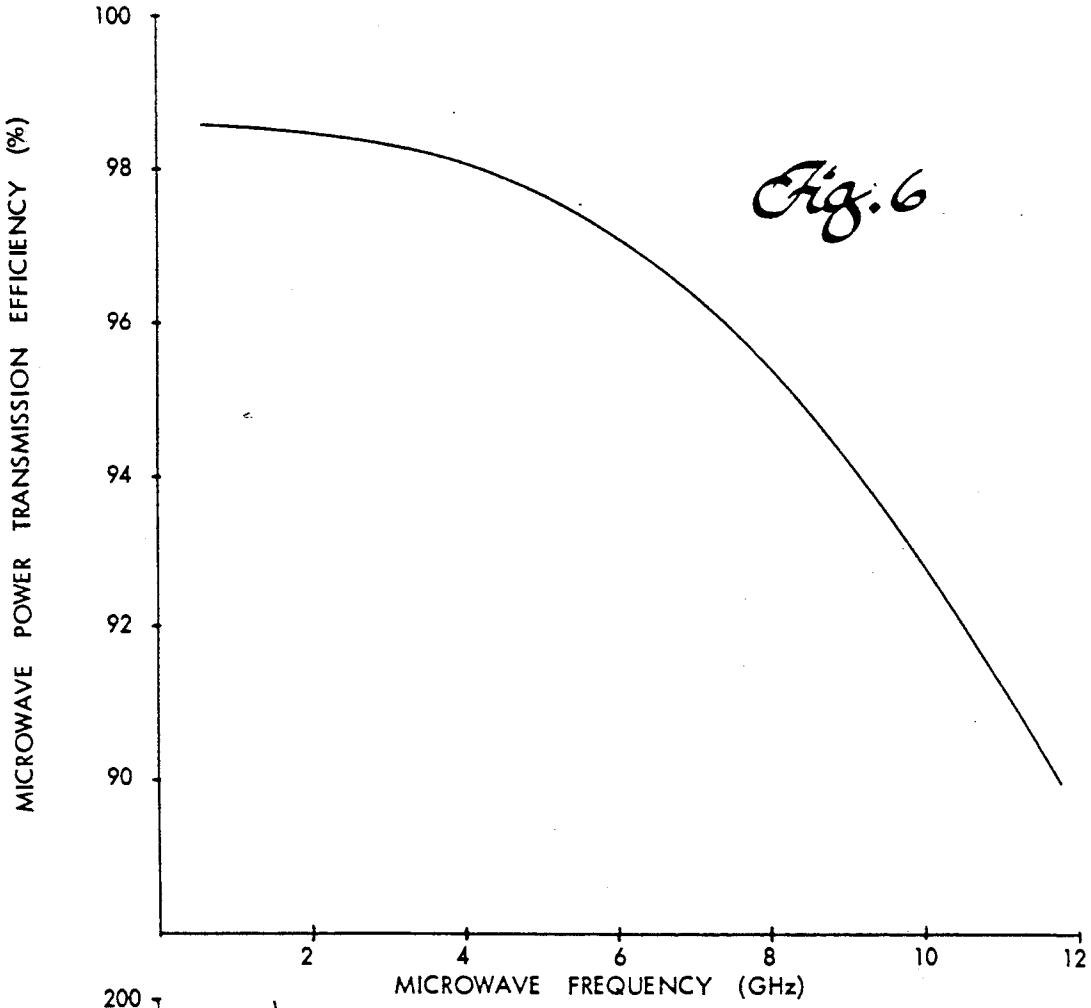
100
98
96
94
92
90
MICROWAVE POWER TRANSMISSION EFFICIENCY (%)
2
4
6
8
10
12
MICROWAVE FREQUENCY (GHz)

Fig. 6

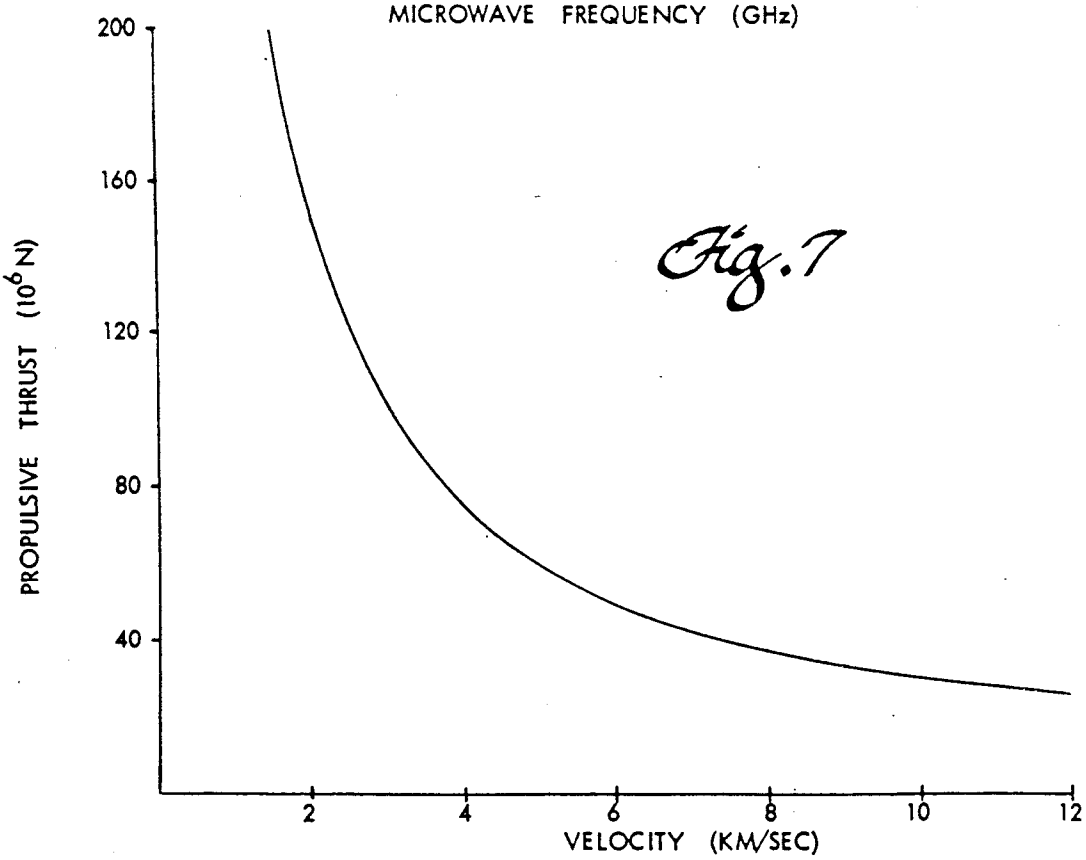
200
160
120
80
40
PROPULSIVE THRUST (10^6 N)
2
4
6
8
10
12
VELOCITY (KM/SEC)

Fig. 7

Fig. 8

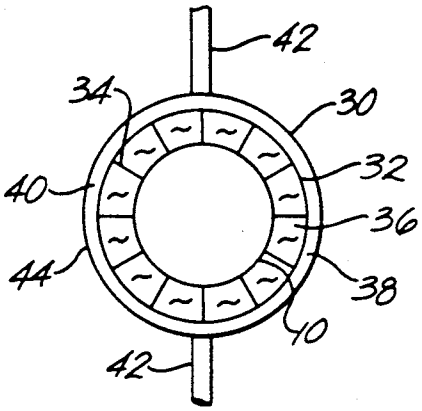

Fig. 9

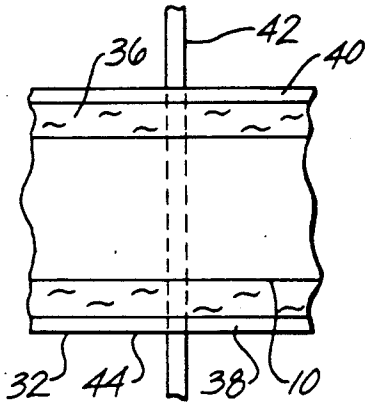

Fig. 10

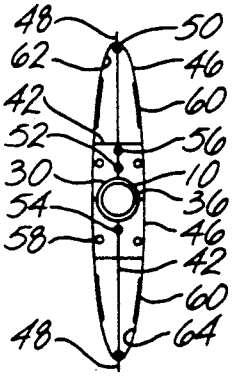

Fig. 11

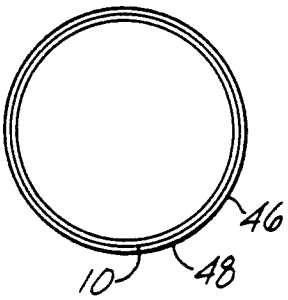

Fig. 12

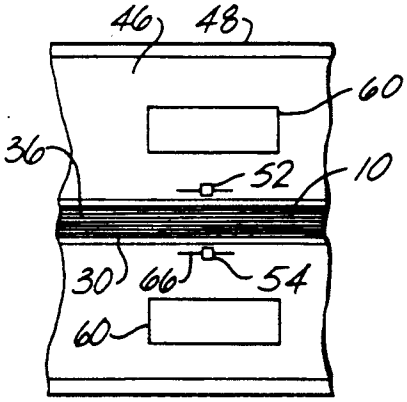

Fig. 16

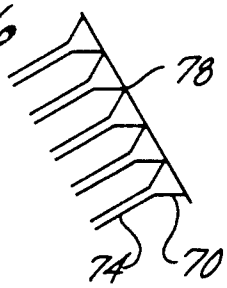

Fig. 15

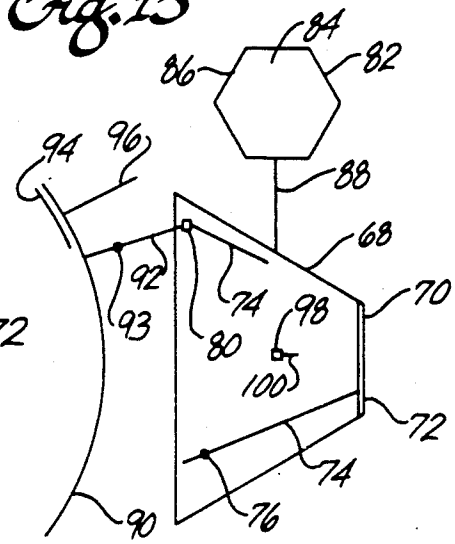

Fig. 13

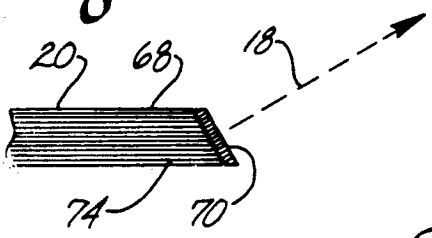

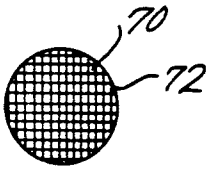

Fig. 14

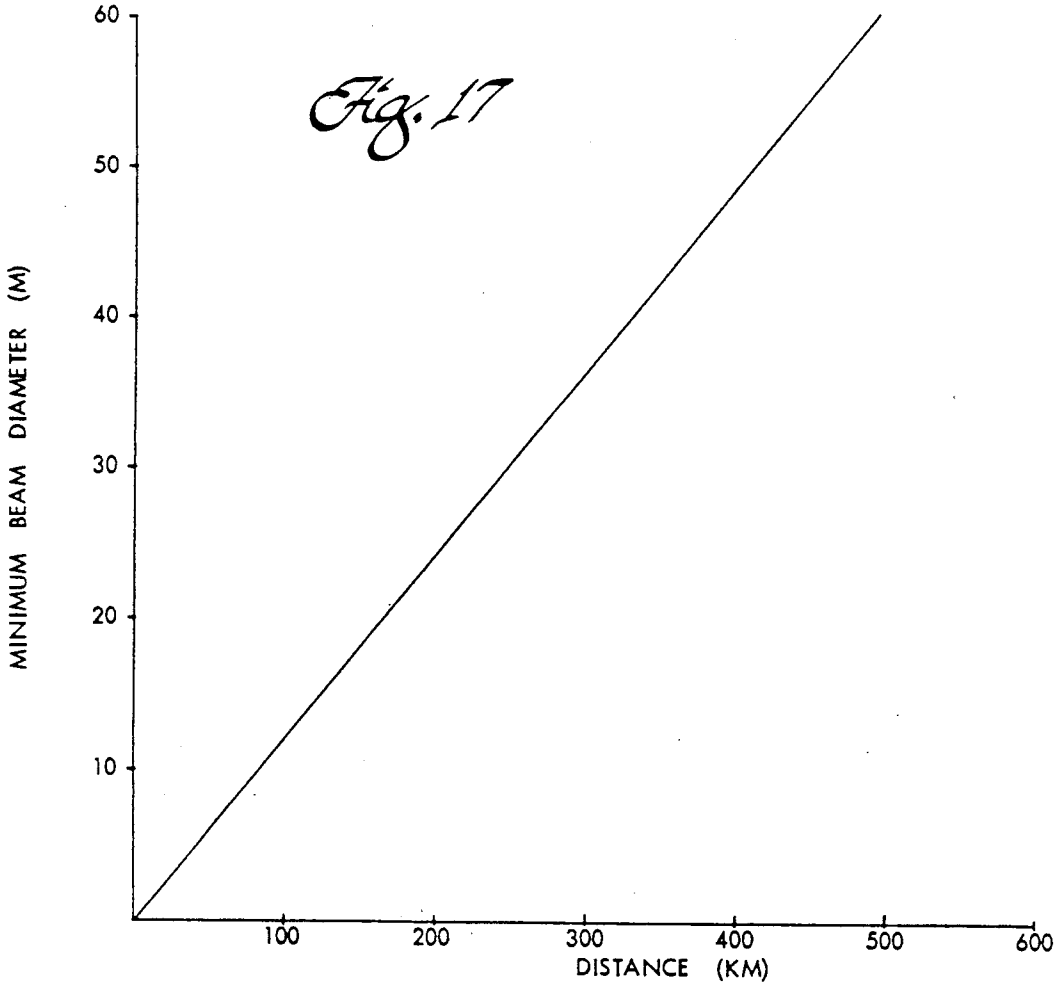
Fig. 17
MINIMUM BEAM DIAMETER (M)
60
50
40
30
20
10
100
200
300
400
500
600
DISTANCE (KM)

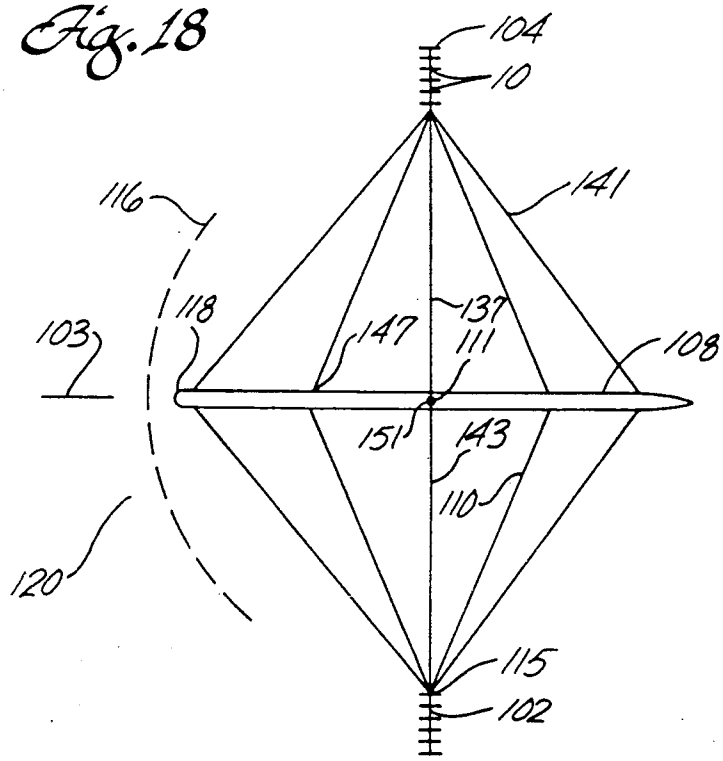
Fig. 18
104
10
141
116
118
103
147
137
111
108
151
143
110
120
115
102

Fig. 19

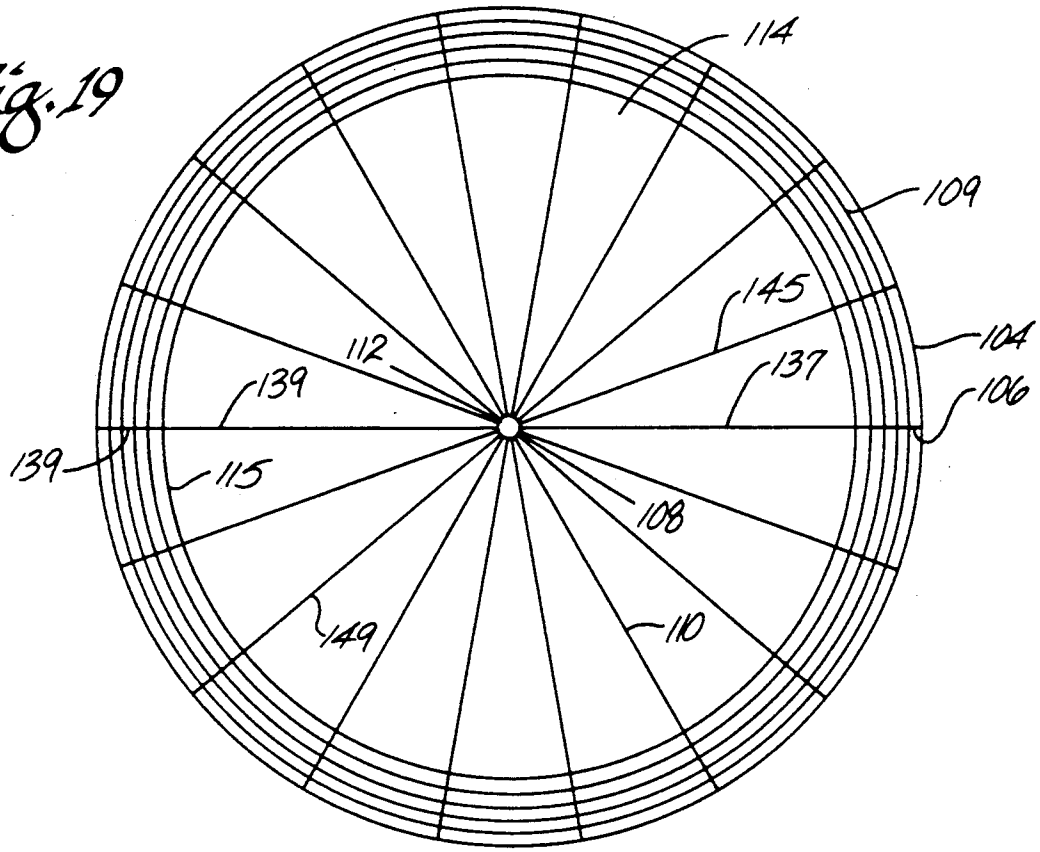

Fig. 20

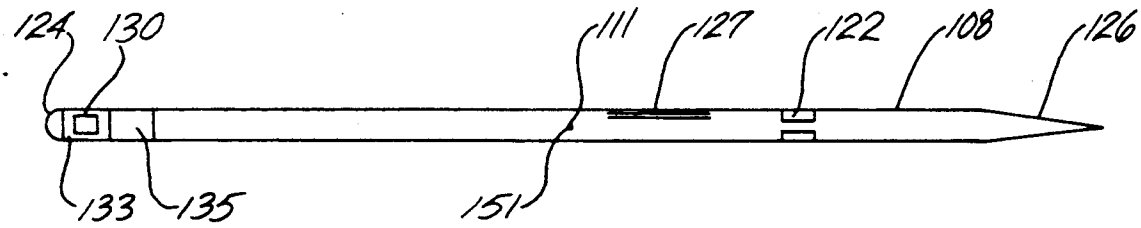

Fig. 21

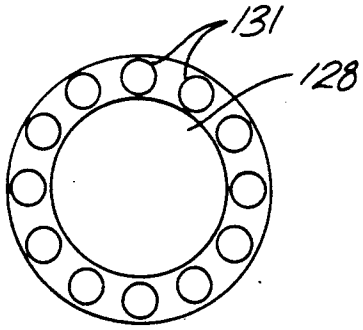

Fig. 22

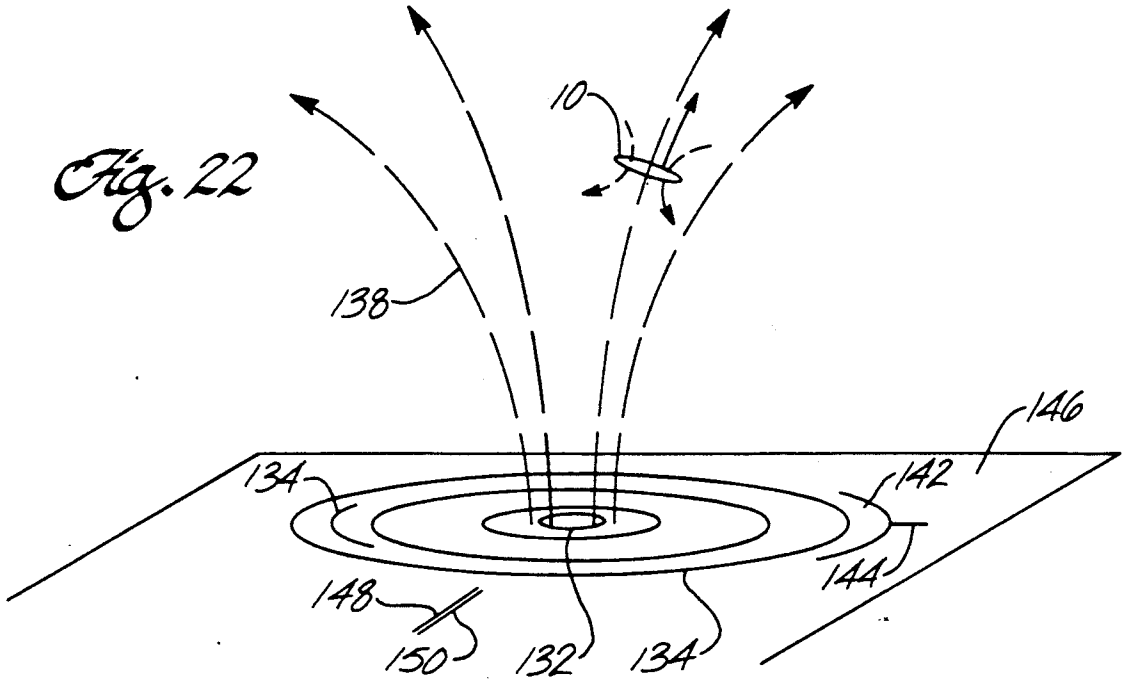

Fig. 23

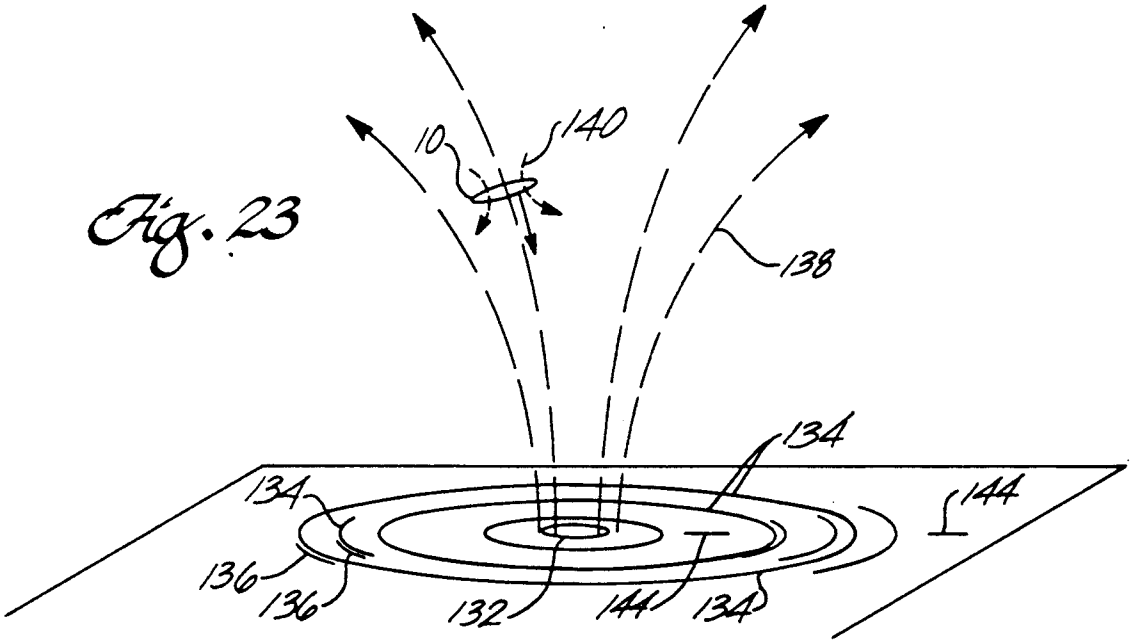

Fig. 24

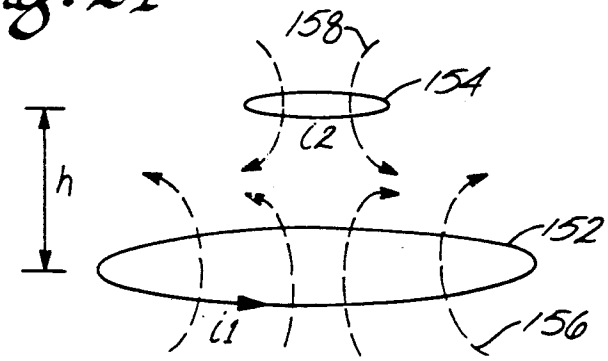

Fig. 25

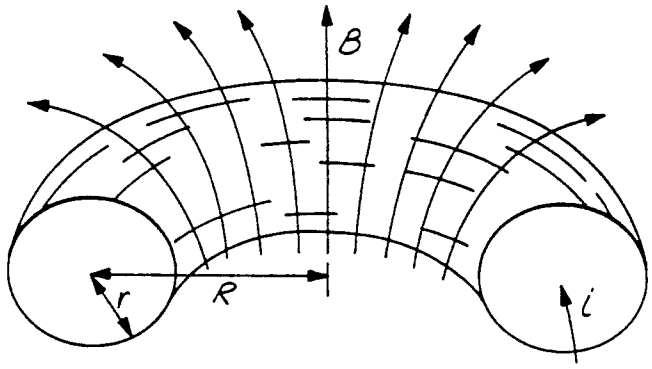

Fig. 26

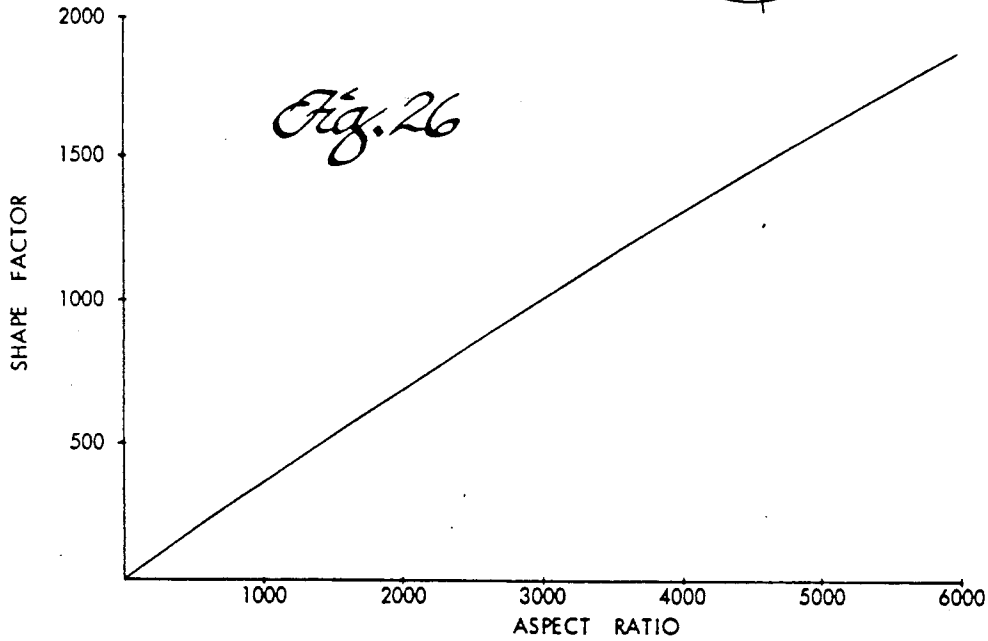

Fig. 27

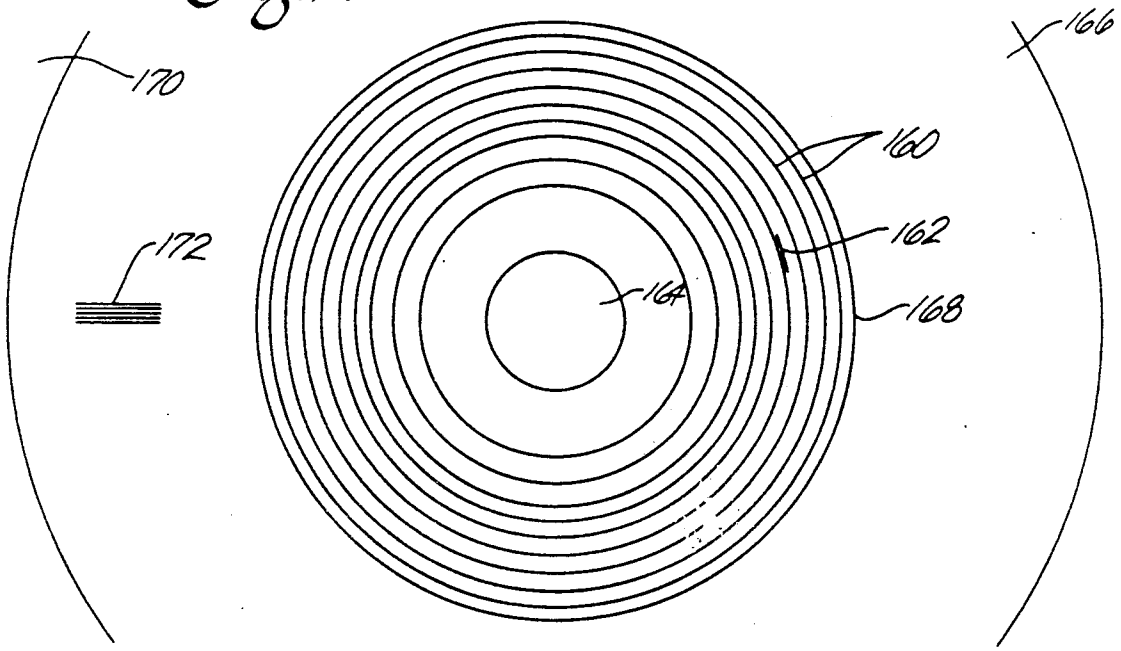

Fig. 28

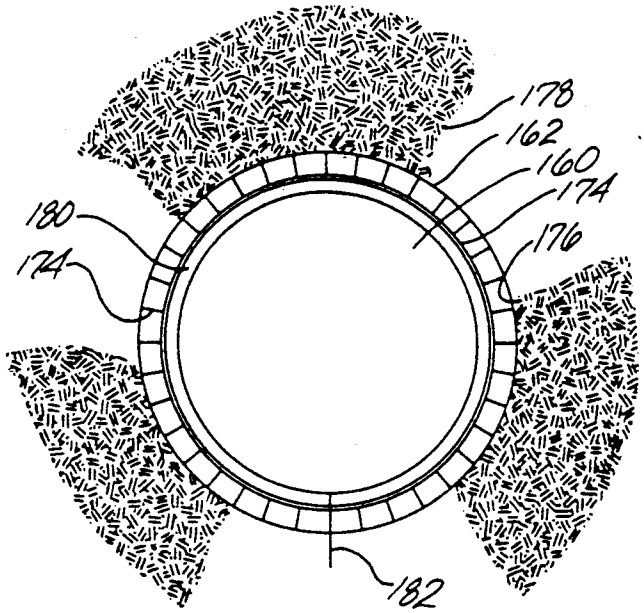

Fig. 29

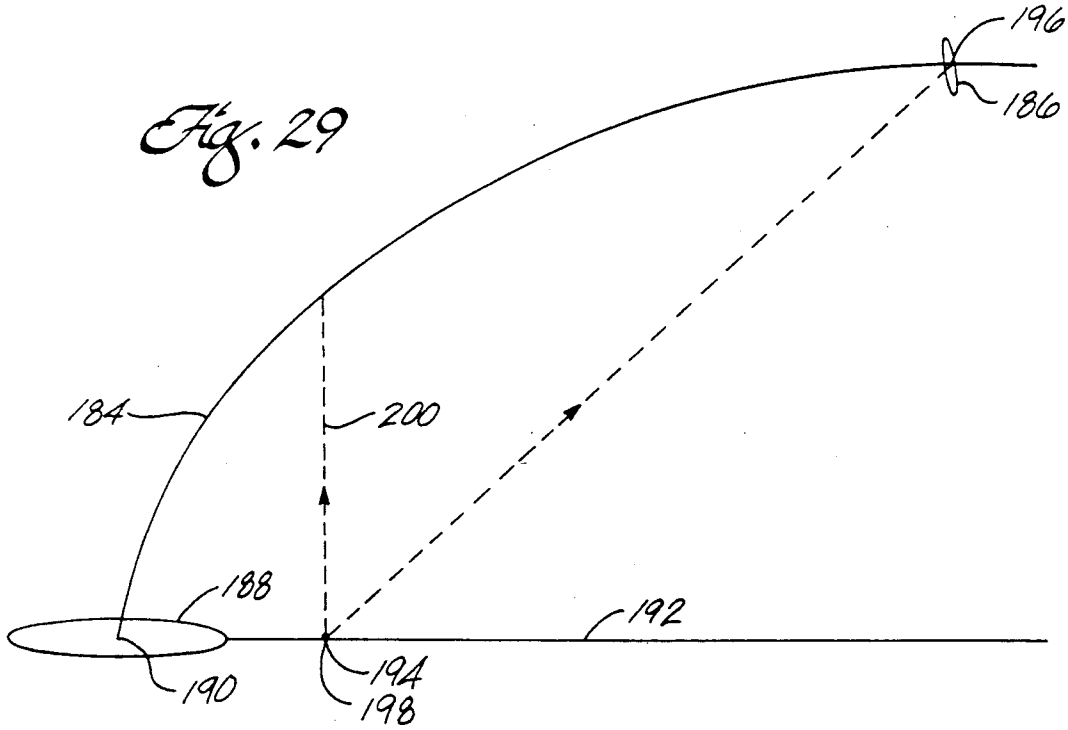

Fig. 30

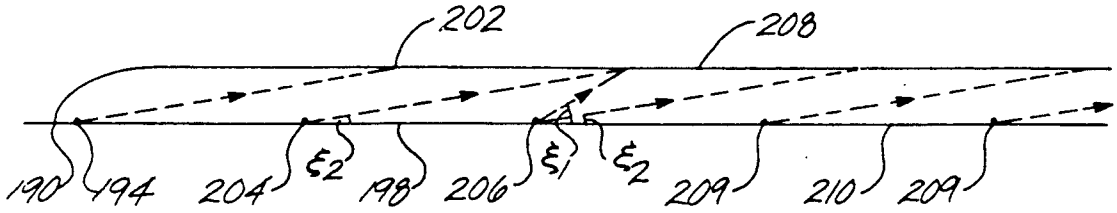

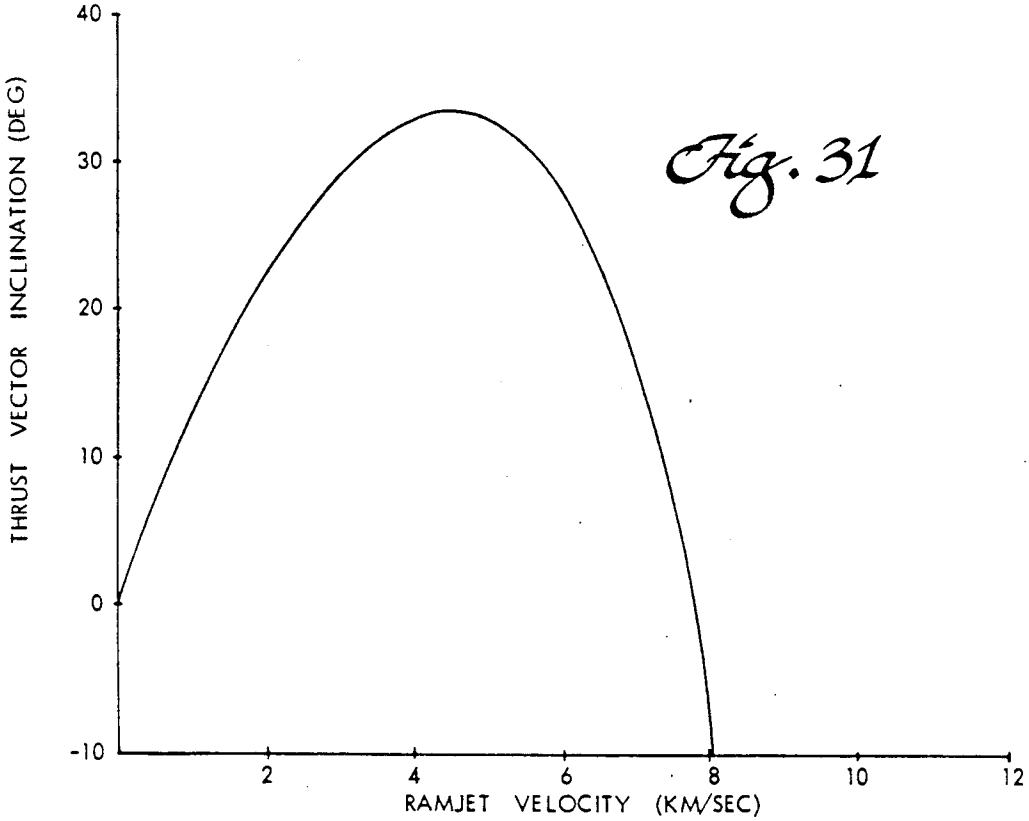
THRUST VECTOR INCLINATION (DEG)
40
30
20
10
0
-10
2
4
6
8
10
12
RAMJET VELOCITY (KM/SEC)

Fig. 31

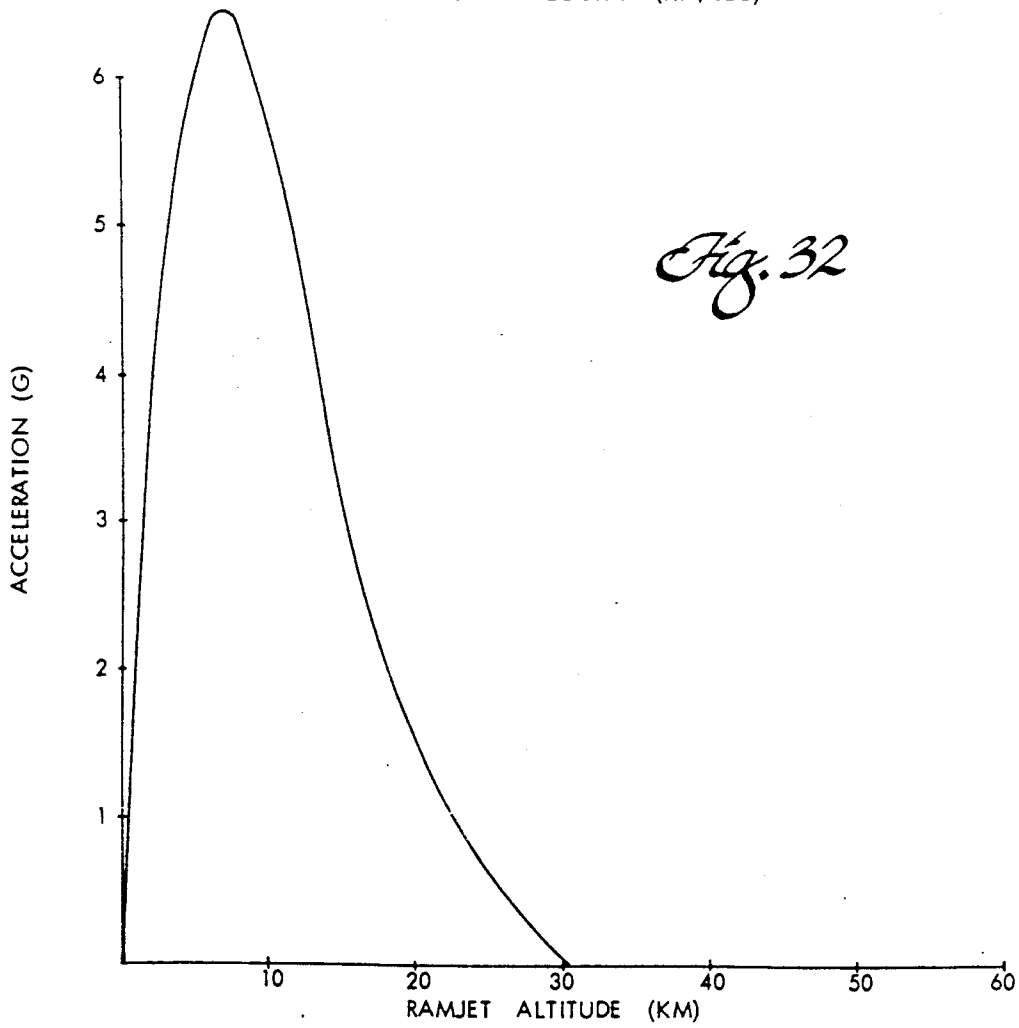
ACCELERATION (G)
6
5
4
3
2
1
10
20
30
40
50
60
RAMJET ALTITUDE (KM)

Fig. 32

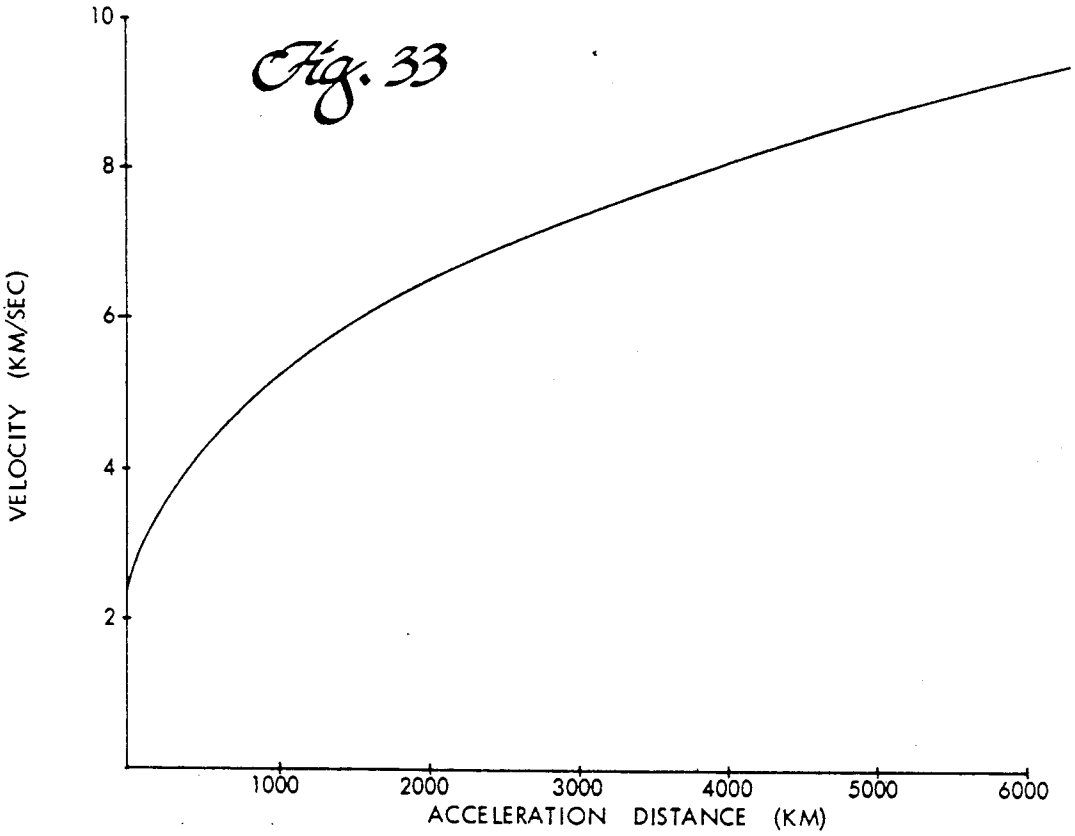
Fig. 33
VELOCITY (KM/SEC)
10
8
6
4
2
1000
2000
3000
4000
5000
6000
ACCELERATION DISTANCE (KM)

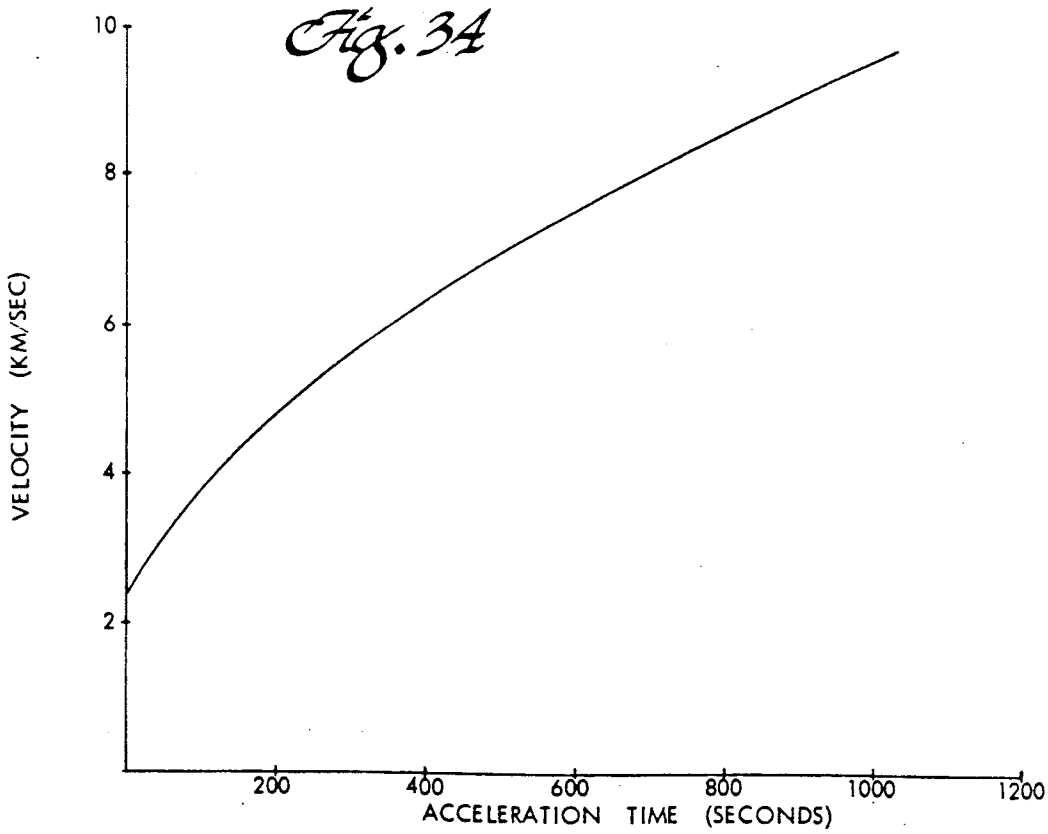
Fig. 34
VELOCITY (KM/SEC)
10
8
6
4
2
200
400
600
800
1000
1200
ACCELERATION TIME (SECONDS)

Fig. 35

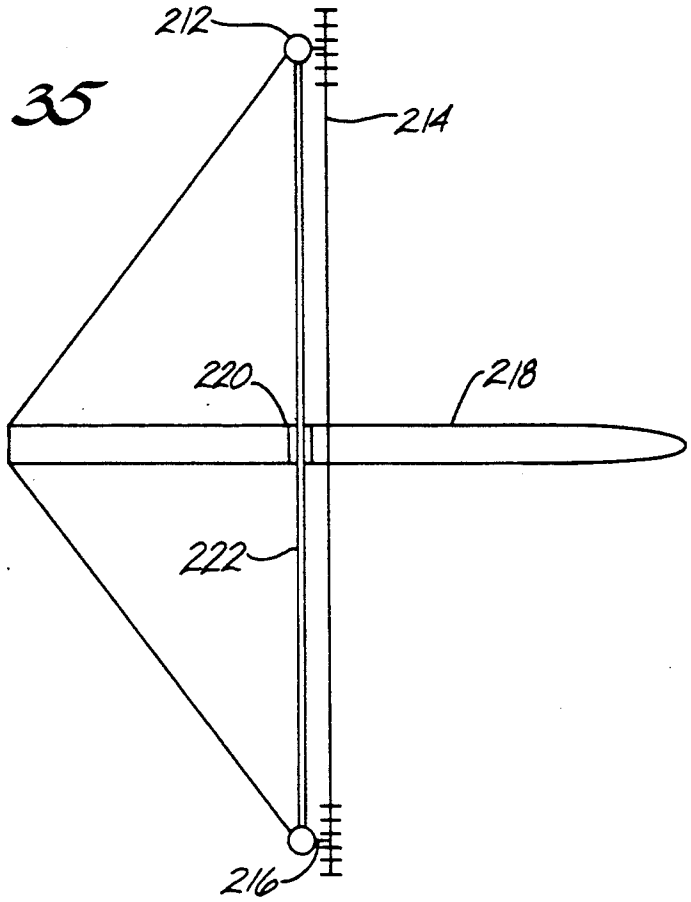

Fig. 36

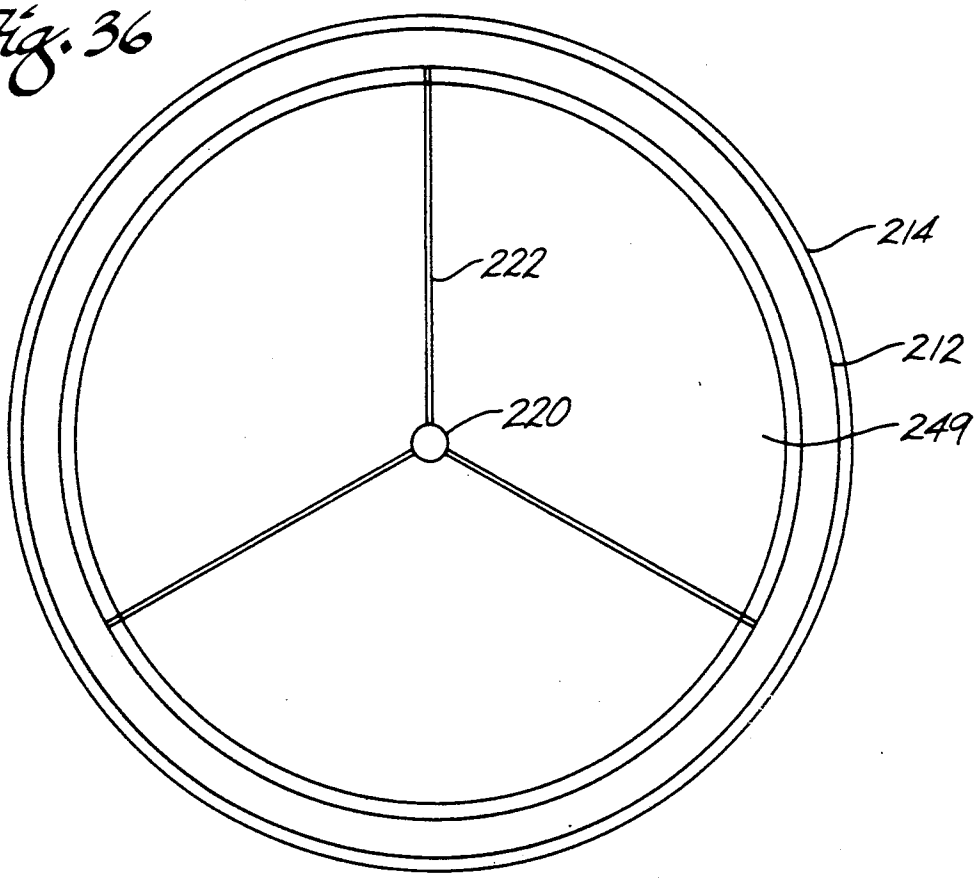

Fig. 37

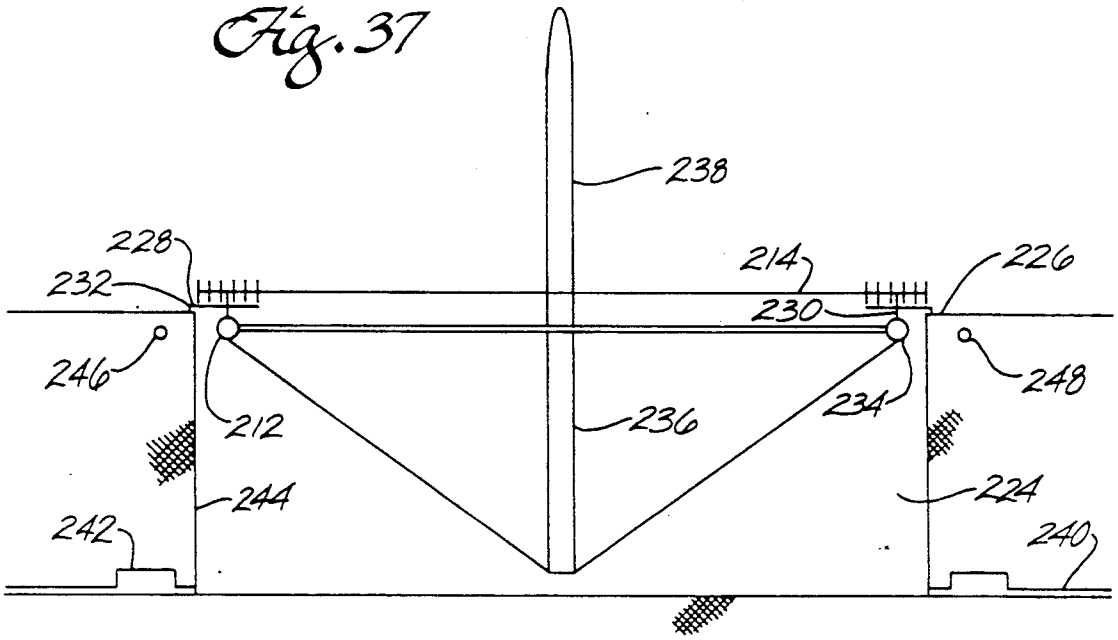
238
228
232
214
226
230
246
248
212
236
234
244
224
242
240

Fig. 38

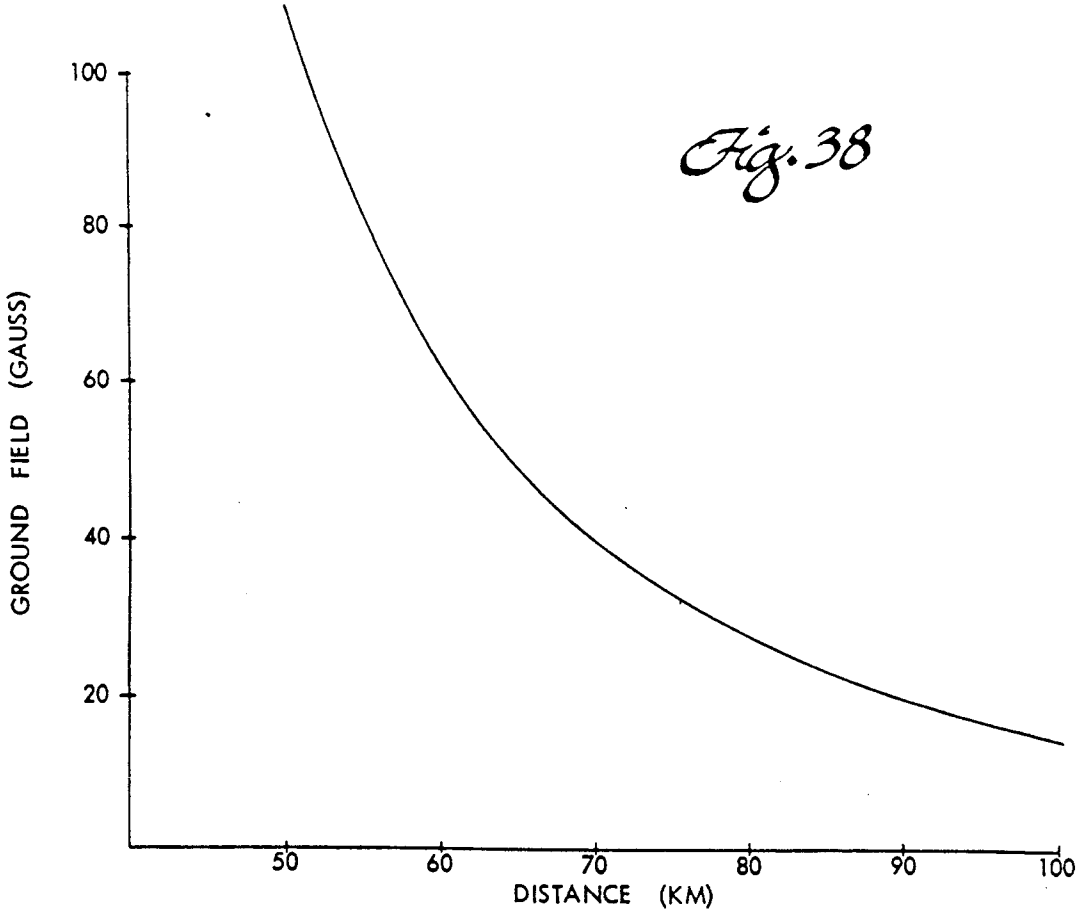
100
80
60
40
20
GROUND FIELD (GAUSS)
50
60
70
80
90
100
DISTANCE (KM)

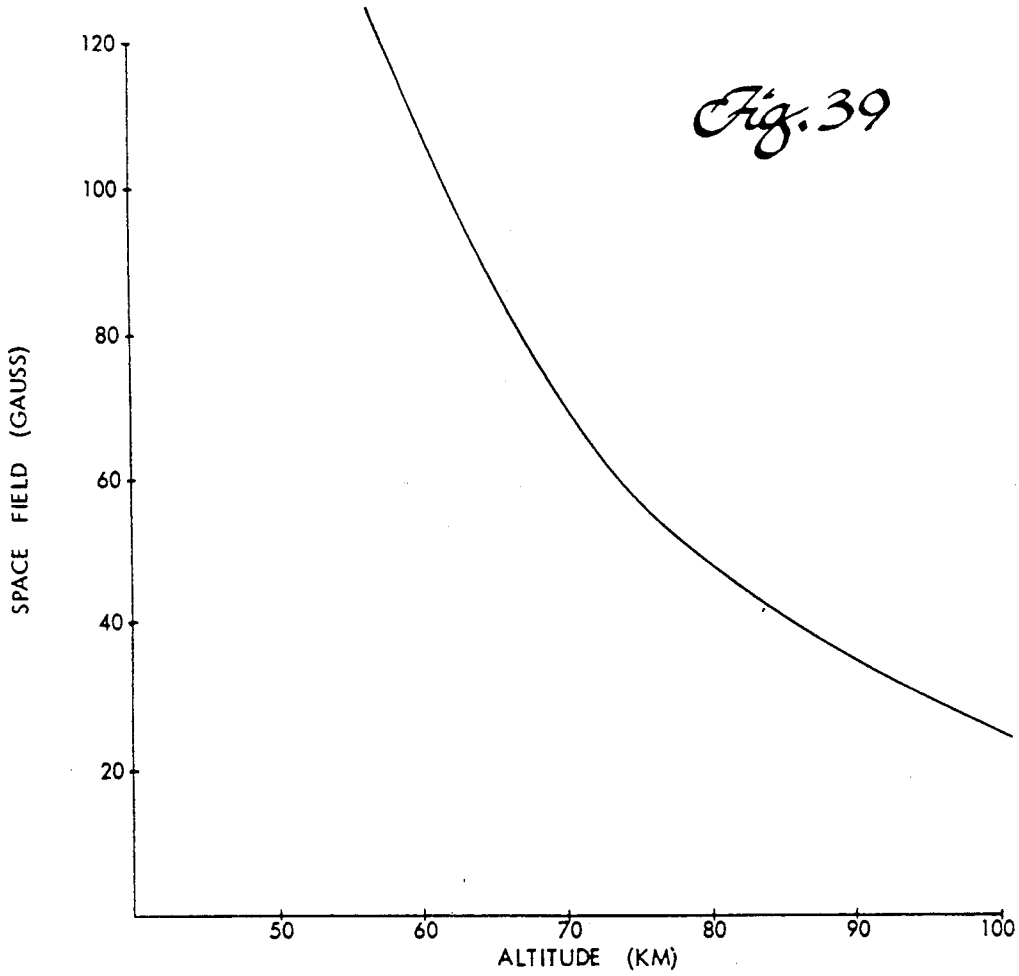
Fig. 39
SPACE FIELD (GAUSS)
120
100
80
60
40
20
50
60
70
80
90
100
ALTITUDE (KM)

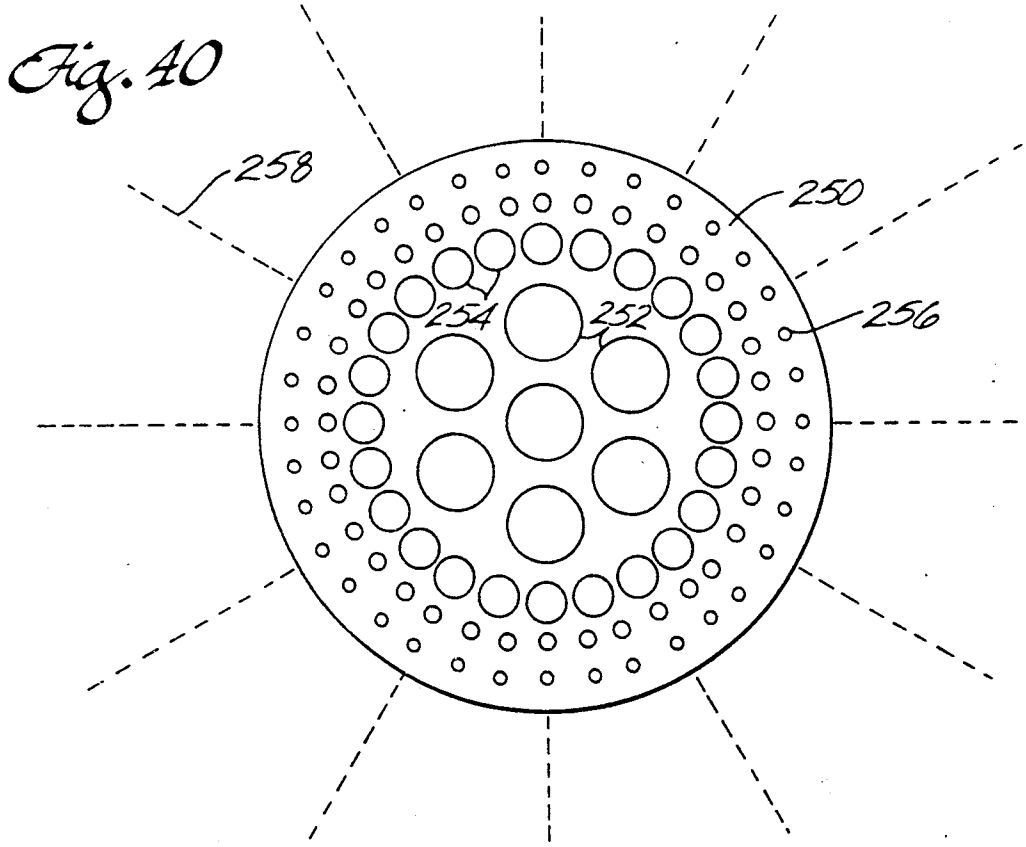
Fig. 40
258
250
254
252
256

ELECTROMAGNETIC RAMJET

BACKGROUND

The problem of launching payloads into orbit from the earth's surface involves the development of a thrust generating mechanism powerful enough to lift a payload off the earth's surface and accelerate it to orbital velocities. In the prior art, this has been achieved with the development of high thrust rocket engines using the reaction principle. Unfortunately, rocket engines consume huge quantities of propellant that must be stored onboard the vehicle. Hence, in order to launch even relatively small payloads into orbit, the size of a rocket propelled launch vehicle must be enormous in order to contain all of the propellant. (The required propellant mass is over 100 times greater than the payload mass.)

The "scramjet" designed for the proposed ground-to-orbit aerospace plane, represents another type of propulsion system for accelerating payloads to high velocities. Basically, this engine is a ramjet in that it ingests air at some ingestion velocity (which is essentially equal to the engine's forward velocity through the atmosphere), sprays it with fuel which ignites forcing the expanding combustion gases to leave the engine with a velocity greater than the ingestion velocity. Since the ingestion velocity is very high, the ignition time must be very short. Only hydrogen fuel can be used in these scramjet engines because of the very short ignition time. Unfortunately, liquefied hydrogen has a very low density which requires fuel tanks five times larger than conventional fuel tanks (which must be thermally insulated since liquefied hydrogen is a very low temperature cryogenic fluid). This results in a high inert structural mass with a corresponding decrease in payload mass. See "Will the Aerospace Plane Work," *Technology Review,* January 1987, pp. 42–51 by S. W. Korthals-Altres. This problem is compounded by the fact that since the kinetic energy which the vehicle must develop in order to reach orbital velocity is so high (4×10^9 Joules/kg) the amount of hydrogen fuel that must be carried by the vehicle to achieve orbital velocity is about 56% of the total initial vehicle mass, even assuming optimal combustion efficiency. See "From Earth To Orbit In A Single Stage," *Aerospace America,* August 1987, pp. 32–34, by R. A. Jones and C. D. Donaldson. Thus, there are inherent fundamental engineering problems with this propulsion concept that cannot be circumvented even if the scramjet propulsion system can be made to operate as envisioned at orbital velocity (which may be a physical impossibility). Moreover, another problem will be introduced involving a severe limitation on payload size because nearly all of the interior volume of the vehicle will have to be filled with liquefied hydrogen.

Since the scramjet propelled reusable aerospace plane is currently believed to represent the cheapest method for achieving orbit (with an estimated cost of $200/lb compared to $2,000/lb for the Space Shuttle) the prospects for commercial space travel by private individuals in the 21st century appear to be very remote. (For example, it would cost a 200 lb passenger without luggage $40,000 to be transported to orbit on a one-way flight with the scramjet propelled vehicle.)

By utilizing the concept of beamed energy transmission where a vehicle's propulsive energy is generated off the vehicle at some remote power generating plant and transmitted to it via microwave or laser beams, it is possible to construct a ramjet which does not require

the vehicle to carry any fuel. A microwave propelled ramjet was proposed as early as 1959 by William Brown. (See his U.S. Pat. No. 3,083,528 entitled "Microwave Engines" filed May 12, 1959.) This microwave propelled ramjet concept was later developed by Schad and Moriarty to propel payloads from the earth's surface directly into orbit. (See "Microwave Rocket Concept," *International Astronautical Congress,* Vol. 16, Athens, 1965, pp. 175–199.) Unfortunately, the problem of designing a sufficiently large receiving antenna for capturing the beamed microwave power and focusing it into the ramjet engine required for long range power transmission rendered the concept impractical. Since the wavelength of optical radiation is much smaller than micro wave radiation, it is possible to achieve significantly greater power transmission distances using a laser beam as the energy transmitting medium. A laser propelled ramjet was invented in 1972 by Kantrowitz and Rose. (See U.S. Pat. No. 3,818,700 entitled "Ram Jet Powered By A Laser Beam".) However, all of these prior art beamed energy ramjet propulsion concepts generate propulsive thrust by using the incoming beam energy to heat the ingested air to high temperatures so that it can be expelled through a conventional exhaust system with a velocity greater than the ingestion velocity. Thus, the incoming beam energy is not converted directly into propulsive thrust. These systems require the intermediate step of heating. Since all thermal rocket engines require a relatively small heating region, there is a practical upper limit on the amount of beam power that can be converted into propulsive thrust in thermal rocket engines that is set by power density limitations and by the thermal limitations of the surrounding structure. This intermediate heating step also results in a considerable reduction of efficiency. (More than 50% of the beam energy is wasted by radiative heat losses.) Since laser generators are not very efficient to begin with, prior art beamed power propulsion systems using laser beams will consume large amounts of input energy in the conversion to vehicle kinetic energy.

In theory, the most efficient method for propelling payloads into orbit is by means of an electromagnetic accelerator because the cost essentially reduces to the cost of generating an amount of electrical energy equal to the kinetic and potential energy of the total mass that is accelerated to orbit. For example, if the cost of generating electrical energy is 10¢/KW-hr, this cost is 90¢/kg or 41¢/lb for a 200 km high circular orbit. This is 5,000 times cheaper than the U.S. Space Shuttle and about 500 times cheaper than the proposed aerospace plane. Although there are several different types of prior art electromagnetic accelerators (which are also called mass drivers) that have been designed to accelerate bodies to high velocities (i.e., orbital velocities) from the earth's surface, they all have one common and very undesirable characteristic: they all require an evacuated launch tube through which the payload is accelerated. Therefore, unless an evacuated tube of several hundred kilometers is provided, the acceleration of prior art electromagnetic ground to orbit launchers are inherently high, and the mass and physical dimensions of the payload are too small to be of any significant practical value. See "Electromagnetic Launchers," *IEEE Transactions On Magnetics,* Vol. MAG-16, No. 5, Sept. 1980, pp. 719–721 by H. Kolm et al.

Large objects, such as completely assembled space based interplanetary transfer vehicles (ITVs) with diameters exceeding 25 m and lengths exceeding 100 m would be completely impossible to accelerate to orbit from the earth's surface by any prior art electromagnetic accelerator. In fact, completely assembled payloads with these dimensions could not be accelerated into orbit by any prior art ground to orbit transportation system (or any such system proposed for the future) because they would simply be too large to fit inside any launch vehicle. It is assumed without question and taken for granted that large objects designed for operating in earth orbit will have to be transported there piece by piece, in relatively small sections, and assembled in orbit.

The high cost and payload limitations of prior art launch vehicles is a result of the basic thrust generating principles used for their propulsion. For all practical purposes, these prior art propulsion principles are believed to be essentially unchangeable because they involve basic laws of physics. However, the discovery of a fundamentally new physical phenomenon or principle be applied to develop a completely new thrust generating propulsion concept. The electromagnetic ramjet propulsion concept disclosed herein is based upon one such discovery—superconducting materials with high critical temperatures. It will be shown that this propulsion concept will enable payloads to be orbited with mass and physical dimensions far beyond that which were previously believed to be possible. Moreover, since this propulsion concept is basically electromagnetic, it also enables payloads to be transported to orbit with minimum cost. The vacuum environment usually required for electromagnetic accelerators is provided by operating the ramjet in the ionosphere at very high altitude—instead of on the earth's surface inside a vacuum tube.

BRIEF SUMMARY OF THE INVENTION

With the foregoing in mind, the present invention provides an ultra high thrust electromagnetic ramjet propulsion system for accelerating high mass payloads with very large dimensions from the earth's surface directly into orbit. The propulsion system comprises a plurality of coplanar self-supporting superconducting dipole coils several hundred meters in diameter with very high aspect ratios that is initially accelerated to supersonic speed by magnetic repulsive forces generated by a plurality of giant superconducting field coils several kilometers in diameter mounted coaxially in circular underground tunnels located in a remote region. All of the superconducting coils are constructed with superconducting material having a critical temperature above liquid nitrogen thereby eliminating the need for expensive liquefied helium cryogenic refrigeration systems. The electromagnetic ramjet, along with the attached payload, is launched vertically and initially accelerated along a line of magnetic induction generated by the field coils.

The propulsion coils of the ramjet are mounted inside circular hypersonic wing-like airfoils equipped with movable aerodynamic control surfaces for guidance. The surfaces are moved by a plurality of electric servo motors controlled by a high accuracy inertial guidance system. The propulsion system can also be controlled from the ground, or from an orbiting satellite via radio signals. The individual superconducting dipole coils and their surrounding circular airfoils are maintained in a rigid concentric spaced-apart relationship by a plurality of radial airfoils that are mounted between adjacent circular airfoils. This system of circular airfoils containing the superconducting dipole propulsion coils and the radial airfoils mounted between them comprise the electromagnetic ramjet propulsion system. It is a self-contained automated reusable launch vehicle which is able to traverse through the atmosphere in controlled flight and land back at the launch site.

The payload is mounted inside a long cylindrical central body (fuselage) extending along the perpendicular longitudinal axis of the dipoles that is connected to the ramjet by a plurality of detachable cables. A reflecting grid of conducting wires is mounted across the inner dipole such that after the system is initially accelerated to supersonic speed at high altitude by the field coils, the low density atmospheric gas passing through the inner dipole is shock ionized via collision processes.

After the electromagnetic ramjet is launched from the earth's surface and accelerated to a relatively high initial altitude by the field coils, it is accelerated to orbital velocity by means of an ultra high power microwave beam. The frequency of the microwave beam is adjusted to produce electron cyclotron resonance with free electrons of the shock ionized gas moving away from the magnetic field of the dipoles. When the free electrons move into this resonance region they are rapidly accelerated in circular transverse paths that are perpendicular to the lines of magnetic induction of the dipoles. The electrons are thus pumped into very high energy cyclotron orbits by the microwave beam. A strong coupling between the electrons and the microwave beam is created resulting in the absorption of essentially all of the beam energy by the electrons. But this absorption is not thermalization. Almost all of this energy is pumped into extremely high energy electron cyclotron orbits. The high energy orbiting electrons become strong magnetic dipoles by virtue of their circular motion. Their magnetic moments are essentially aligned antiparallel to the coil's magnetic field. The magnetic field of the dipole coils decreases with increasing distance from its center giving rise to a magnetic gradient. This gradient is felt by the electron dipoles as a strong magnetic repulsive force which rapidly accelerates them away from the dipole coils. Although the remaining positively charged ions are not affected by the microwave beam, or by the magnetic field, the resulting charge separation accelerates them after the receding electrons. This generates a retarding force on the electrons. However, the electrons keep accelerating ahead of the ions propelled by magnetic repulsive forces. A strong magnetic repulsive recoil force is then exerted on the dipole coils propelling them forward. Basically, the orbiting electrons, in their aggregate, create a huge magnetic field behind the ramjet propelling it forward by magnetic repulsive forces. The process is purely electromagnetic so that in principal, the microwave beam can be converted into propulsive thrust with an efficiency approaching 100%. The dipole coils become a giant electromagnetic ionospheric ramjet several hundred meters in diameter that is propelled by enormous magnetic repulsive forces.

By constructing the microwave transmitter on the earth's surface as a close-packed, electronically steered, phased array with several million active elements each radiating microwave power on the order of one megawatt, it is possible to obtain CW beam powers of thousands of gigawatts for accelerating extremely large

payloads of several thousand tons. The DC electric current used to operate the microwave transmitter can be obtained from the field coils which are utilized as a giant inductive superconducting energy storage system. By employing several microwave transmitters located along a prescribed ground track, the acceleration process can be extended over distances of several thousand kilometers thereby reducing the peak acceleration loads to relatively low levels that can be easily tolerated by human passengers. The propulsion system is so powerful that it will be possible to transfer huge payloads of thousands of tons directly from the earth's surface to lunar orbit.

Since the magnetic field strength directly over the field coils at orbital altitudes is inversely proportional to the cube of the altitude, the field at orbital altitudes directly over the coils is negligibly small (smaller than the earth's natural magnetic field) and decreases very rapidly with increasing altitude. Likewise, the magnetic field generated by the coils on the earth's surface in a region surrounding the outer perimeter of the coils (in the plane of the coils) also decreases very rapidly with distance. Thus, the magnetic fields generated by the field coils resulting from fundamental principles of electromagnetism are ideally suited for the propulsion concept proposed herein because these fields are sufficiently strong locally to generate enormous propulsive thrust, but decrease very rapidly with increasing distance so as to not affect the surrounding region at any significant distance.

A system of annular arrays of photovoltaic solar cells are mounted around the outer periphery of the field coils for generating electrical energy. This electrical energy is used for initially charging up the superconducting field coils and maintaining them with a desired inductive energy. The amount of inductive energy in the fully charged field coils is several orders of magnitude greater than the amount of energy used to launch a payload. Thus, the system will enable multiple launches to take place nearly simultaneously with massive payloads without any significant decrease in the magnetic field. By constructing large solar arrays with diameters of many kilometers, the system will generate significantly more electrical energy than is used for launching payloads. Thus, the cost of the electrical energy used in launching payloads is zero and the excess electrical energy generated by the arrays can be sold to utility companies for generating income revenue that is significantly greater than the total cost of operating the system.

Since the solar arrays can only generate electric power during daylight hours, the field coils are also utilized for accumulating a portion of the electrical energy generated during daylight hours so that it can be released into a power distribution system to various utility companies during the non-daylight hours. Thus, the field coils also serve as a giant load-leveling system that allows electric power to be fed info the distribution system at a nearly uniform rate 24 hours per day.

A large fleet of automated electromagnetic ramjet accelerators are provided operating from a large central launching/landing region using the same field coils and microwave transmitters ranging in size from a few dozen meters in diameter for accelerating small payloads of a few thousand kilograms to a diameter exceeding one kilometer for launching payloads exceeding 5×10^8 kg. The ground-to-orbit transportation system is envisioned as a vast circular complex with an outer diameter exceeding 80 km and an inner launching/landing region 10 km in diameter for providing very low cost transportation to orbit. It is also envisioned as a giant electric power generating plant.

DRAWINGS

These and other advantages and features of the invention will be apparent from the disclosure, which includes the specification with the foregoing and ongoing description, the claims, and the accompanying drawings wherein:

FIG. **1** is a schematic longitudinal cross section of an electromagnetic ramjet having a single superconducting dipole propulsion coil illustrating its basic operating principles;

FIG. **2** is a schematic transverse cross section of a single coil electromagnetic ramjet illustrating its basic design features;

FIG. **3** is a schematic longitudinal perspective view illustrating a microwave transmitter on the earth's surface accelerating an electromagnetic ramjet by a high power microwave beam;

FIG. **4** is a graph of magnetic field strength B versus the electron cyclotron resonant frequency of a microwave beam propelling an electromagnetic ramjet;

FIG. **5** is a parametric system of graphs illustrating the atmospheric breakdown power density for a microwave beam versus ambient atmospheric pressure and corresponding altitude for various frequencies;

FIG. **6** is a graph illustrating the percentage of microwave power that is transmitted through the atmosphere corresponding to a beam elevation angle of 30° as a function of frequency on a rainy day with a precipitation rate of 2 mm/hr.

FIG. **7** is a graph of propulsive thrust F versus velocity V generated by an electromagnetic ramjet powered by a 300 GW microwave beam and operating with an efficiency of 100%;

FIG. **8** is a schematic transverse cross section of a superconducting propulsion dipole mounted inside a tubular cryogenic Dewar system that is mounted inside a ramjet's circular airfoil illustrating the design and construction;

FIG. **9** is a schematic longitudinal cross section further illustrating the design and construction of a cryogenic Dewar system for a superconducting dipole coil that is mounted inside a circular airfoil of an electromagnetic ramjet;

FIG. **10** is an enlarged transverse cross section through the minor axis a propulsion coil illustrating the design and construction of a circular hypersonic winglike airfoil mounted around the propulsion coil with movable aerodynamic control surfaces;

FIG. **11** is a perpendicular cross section of FIG. **10**;

FIG. **12** is a longitudinal cross section of a portion of the airfoil shown in FIG. **10** further illustrating its design and construction;

FIG. **13** is a schematic longitudinal cross section of a giant multigigawatt phased array microwave transmitter;

FIG. **14** is a schematic transverse cross section of FIG. **13** further illustrating the design and construction of a phased array microwave transmitter

FIG. **15** is a schematic plan view of a giant multigigawatt phased array microwave transmitter further illustrating its design and construction;

FIG. **16** is an enlarged longitudinal cross section of a portion of the phased array microwave transmitter illus-

trating the design and construction of the individual beam launching horns and the connecting waveguides;

FIG. **17** is a graph of the minimum beam diameter d_s versus transmission distance D corresponding to a phased array microwave transmitter with an effective transmitting aperture diameter of 600 m operating at a frequency of 10 GHz;

FIG. **18** is a schematic longitudinal cross section illustrating the design and construction of a multiple-coil electromagnetic ramjet with a cylindrical central body containing the payload;

FIG. **19** is a transverse view of the multiple-coil electromagnetic ramjet shown in FIG. **18**;

FIG. **20** is an enlarged schematic longitudinal cross section of the electromagnetic ramjet's rotatable central body which contains the payload and which is accelerated to orbital velocity by the ramjet;

FIG. **21** is an enlarged schematic transverse cross section through the rear of a central body illustrating its high thrust propulsion system;

FIG. **22** is a schematic perspective view showing a superconducting dipole coil of an electromagnetic ramjet accelerating away from a plurality of coaxial field coils buried beneath the earth's surface by magnetic repulsive forces;

FIG. **23** is a schematic perspective view showing a superconducting dipole coil of an electromagnetic ramjet being decelerated during its return to the launching site via magnetic repulsive forces generated by the field coils;

FIG. **24** is a schematic perspective view illustrating the magnetic repulsive force between two parallel coaxial current carrying coils;

FIG. **25** is a perspective view of half of a dipole coil showing its relative geometrical relationships;

FIG. **26** is a graph of a propulsion coil's shape factor versus its aspect ratio;

FIG. **27** is a schematic plan view illustrating the field coils in the preferred embodiment and a plurality of annular arrays of photovoltaic solar cells for generating electrical energy;

FIG. **28** is a schematic transverse cross section illustrating a superconducting field coil mounted inside an underground tunnel;

FIG. **29** describes the initial ascent trajectory of an electromagnetic ramjet after a vertical launch from the center of the field coils;

FIG. **30** shows the electromagnetic ramjet being sequentially accelerated along a 100 km high circular trajectory by a series of microwave transmitters positioned at 400 km intervals along the trajectory's ground track;

FIG. **31** is a graph of an electromagnetic ramjet's angle of inclination relative to its flight path versus velocity while accelerating a mass of 28,000,000 kg with a 1,200 GW microwave beam;

FIG. **32** is a graph of acceleration versus altitude of an electromagnetic ramjet's initial ascent trajectory to an altitude of 60 km propelled by magnetic repulsive forces generated by the field coils;

FIG. **33** is a graph of velocity versus acceleration distance for an electromagnetic ramjet accelerating a mass of 28,000,000 kg with a 1,200 GW microwave beam;

FIG. **34** is a graph of velocity versus time for an electromagnetic ramjet accelerating a mass of 28,000,000 kg with a 1,200 GW microwave beam;

FIG. **35** is a schematic longitudinal cross section of a fully assembled and manned 660 m diameter 25,000 ton toroidal space station attached to a 700 diameter electromagnetic ramjet that lifts the space station off the earth's surface and accelerates it to orbital velocity;

FIG. **36** is a transverse cross section of FIG. **35**;

FIG. **37** is a schematic longitudinal cross section illustrating how the space station shown in FIG. **35** is launched from the earth's surface by the electromagnetic ramjet and initially accelerated to an altitude of 60 km by magnetic repulsive forces generated by the surrounding field coils;

FIG. **38** is a graph showing the magnetic field strength on the earth's surface generated by the field coils at various distances from the center;

FIG. **39** is a graph showing the magnetic field strength in space directly above the center of the field coils at various altitudes; and

FIG. **40** is a schematic plan view of the central launching/landing complex inside the inner field coil with a plurality of individual circular launching/landing terminals for accommodating various electromagnetic ramjets with different diameters.

DESCRIPTION OF THE PREFERRED EMBODIMENT

The ramjet propulsion system disclosed herein is radically different from prior art ramjet propulsion systems in that it does not involve any thermodynamic processes and operates at very high altitudes. It uses electromagnetic energy to generate propulsive thrust instead of chemical energy obtained by burning fuel. Moreover, since this electromagnetic energy is converted directly into propulsive thrust without any intermediate thermalization stage, the input electromagnetic energy is converted into kinetic energy with nearly 100% efficiency. Since the ramjet operates in the ionosphere, aerodynamic drag is essentially zero. The electromagnetic energy is generated at a remote power generating plant and transmitted to the vehicle by a microwave beam. Consequently, it does not have any energy limitations. Since it does not have to accelerate any dead inertial mass such as an energy generating source or fuel load, it is capable of very high performance. The thrust generating mechanism involves converting the microwave power directly into magnetic repulsive forces generated by very low density atmospheric gas passing through the ramjet at high velocity. Consequently, unlike all prior art ramjet propulsion systems designed for operation within the earth's atmosphere, this electromagnetic ramjet propulsion system has no inherent velocity limitations. It is basically a giant electromagnetic accelerator that does not require a vacuum tube. Although it does require a partial vacuum environment, this environment is not provided artificially within a tube. Rather, it is obtained by operating the system at very high altitudes. Therefore, this accelerator has no size or payload mass limitations.

The underlying propulsion principles upon which the invention is based are made possible by the recent discoveries of superconducting material with critical temperatures, critical fields, and current densities significantly greater than previously believed possible. This fundamentally important technological breakthrough enables current carrying superconductors to be operated at liquid nitrogen temperature instead of much colder liquid helium temperature. Since liquid hydrogen is colder than liquid nitrogen and can be easily

stored and maintained aboard space vehicles, it is possible to maintain extremely large superconducting coils in orbit that are capable of generating very large and intense magnetic fields indefinitely.

FIGS. **1** and **2** are schematic longitudinal and transverse cross sections of an electromagnetic ramjet with a single dipole coil illustrating its basic design and operating principles. As is illustrated in these figures, the ramjet is extremely simple and comprises a superconducting self-supporting dipole coil 10 several hundred meters in diameter. The dipole **10** moves through the rarified upper atmosphere at supersonic speed such that the plane of the dipole is nearly perpendicular to its velocity vector. A grid **12** of conducting wires **14** is mounted as a screen across the inside periphery of the dipole. This screen has two functions. It provides a means for ionizing the low density atmospheric gas passing through it at supersonic speed by generating small shock waves via collision processes; and it also serves as a microwave reflector which prevents the microwave beam from passing through the dipole. The wires **14** are mounted inside small stress bearing tubular filaments of fused silica glass (or some other suitable high temperature material) as thermal protection for the wire screen.

As is shown in FIG. **1**, the superconducting dipole coil **10** is charged with electric current which generates a very large magnetic field **16**. An ultra high power microwave beam **18**, is transmitted to the dipole **10** into the magnetic field **16** from a ground based transmitter **20** located several hundred kilometers directly behind the dipole and on its ground track, FIG. **3**. (In some embodiments, the microwave transmitter may be located in orbit.) The microwave beam **18** is plane polarized such that its electric field vector is perpendicular to the dipole's central magnetic field. When the low density atmospheric gas **22** passes through the screen **12** inside the dipole coil **10**, a plurality of small shock waves are generated behind the screen **12**. This system of multiple shock waves intersect a short distance behind the screen **12** and forms a low density cloud of ionized gas **24** moving away from the dipole **10** with a velocity approximately equal to the dipole's forward velocity through the atmosphere

(i.e., the ramjet's intake velocity) In order for the ramjet to generate forward propulsive thrust, the ionized gas cloud **24** must be accelerated away from the dipole with a relative velocity significantly greater than the intake velocity. This acceleration will be accomplished by the principle of electron cyclotron resonance. The electromagnetic acceleration mechanics of this principle can be understood by referring to FIG. **1**.

The frequency of the microwave beam **18** is adjusted to produce electron cyclotron resonance with the free electrons **25** passing into a region **26** of the magnetic field of the dipole **10** located several meters behind the shock screen **12**. This resonance frequence is given by the equation

$$f=(B/2\pi)(e/m) \quad (1)$$

where the term e/m denotes the charge to mass ratio of the electron which is 1.7592×10^{11} coloumb per kg and where B denotes the field strength. When the free electrons **25** of the ionized gas **24** move into this region **26** they are rapidly accelerated in circular transverse paths **28** that are perpendicular to the magnetic field lines of induction **16**. The free electrons are thus pumped into very high energy cyclotron orbits by the transverse electric field vector of the microwave beam that is oscillating at a frequency f. A strong coupling between the low density plasma cloud and the microwave beam is created resulting in the absorption of essentially all of the beam energy by the plasma cloud **24**. But this absorption is not thermalization. Most of the energy is pumped into extremely high energy electron cyclotron orbits. Any gas passing through the dipole screen **12** that remains unionized, is ionized when it enters the resonance region **26**.

The high energy orbiting electrons become strong magnetic dipoles by virtue of their circular motion. However, because of "Lenz's Law", their magnetic moments are aligned anti-parallel with the magnetic field. The magnetic field strength decreases with increasing distance from the dipole **10** giving rise to a strong magnetic gradient ∇B. This gradient is felt by the electron dipoles j as a magnetic repulsive force which rapidly accelerates them away from the dipole **10**. Although the remaining positively charged ions are not affected by the magnetic gradient ∇B, the resulting charge separation accelerates them after the accelerating electrons. A magnetic repulsive recoil effect is then exerted on the dipole coil **10** thereby creating a propulsive reaction force. Eventually, the orbital energies of the electrons decay to relatively low levels thus converting their kinetic energy from transverse circular motion to directed linear motion. Basically, the orbiting electrons, in their aggregate, create a huge magnetic field behind the dipole coil **10** propelling the coil forward by magnetic repulsive forces. The inertia of the positively charged ions enables the repulsive forces generated on the dipole coil **10** to be very strong. With this underlying accelerating principle, it is possible to convert essentially 100% of the microwave beam power directly into magnetic propulsive thrust that is exerted on the superconducting dipole coil **10** by the accelerating gas cloud **24**.

FIG. **4** is a graph of magnetic field strength B versus the electron cyclotron resonant frequency f of a microwave beam propelling an electromagnetic ramjet given by equation (1).

Since the superconducting dipole coil which represents the ramjet is several hundred meters in diameter, the total mass flow rate of low density atmospheric gas passing through the coil is fairly high. Since the diameter of the microwave beam is equal to the diameter of the dipole coil, the beam power can reach levels of thousands of gigawatts. Consequently, this high altitude electromagnetic ramjet concept can generate propulsive thrust far beyond any prior art ramjet, rocket engine or any other propulsion system.

The technique of accelerating a low density plasma to high velocities by the principle of electron cyclotron resonance using microwave power as the energy source is usually applied in high energy physics laboratories concerned with the investigation of nuclear processes. The principle has also been studied as a means for accelerating and expelling propellant stored onboard a space vehicle for generating small amounts of propulsive thrust the microwave power is only on the order of a few kilowatts and generated onboard the vehicle. (See the article "Cyclotron Resonance Thruster Design Techniques," *AIAA Journal*, Vol. 4, No. 5, May 1966, pp. 835–840.) However, the principle of electron cyclotron resonance has never been considered as a means for accelerating atmospheric gas passing outside a vehicle in the form of a ramjet using microwave power trans-

mitted to the vehicle from a remote power generating station.

The propulsive thrust F generated by the electromagnetic ramjet can be expressed as

$$F = \frac{P}{V} \quad (2)$$

where P is equal to the beam power and V is equal to the dipole velocity. Assuming that the diameter of the microwave beam is equal to the diameter of the propulsion dipole **10**, the beam power P can be expressed as

$$P = \pi R^2 \rho \quad (3)$$

where R is equal to the dipole radius and ρ is equal to the power density. The maximum power density ρ_{max} of the microwave beam that can be transmitted to the dipole is limited by the breakdown limitations of the atmosphere. This maximum power density can be expressed as

$$\rho_{max} = Cp^2[1 + (f/5.3 \times 10^9 p)^2 \quad (4)$$

where p is equal to the ambient atmospheric pressure in Torr, and C is a constant equal to 119.38 W/(cm^{2}Torr^2). FIG. **5** is a parametric system of graphs of ρ_{max} versus atmospheric pressure p corresponding to several microwave frequencies f. (The altitude corresponding to various values of atmospheric pressure is also shown in FIG. **5**.) For a more detailed technical description of microwave breakdown in air at various pressures see "Breakdown Limitations on the Transmission of Microwave Power Through the Atmosphere," *IEEE Transactions On Antennas And Propagation,* Vol. 12, Nov. 1964, pp. 709–717, by W. E. Scharfman et al. FIG. **5** indicates that in order to obtain high power densities, the frequency f of the microwave beam should be as high as possible.

If the frequency of the microwave beam is too high, atmospheric attenuation begins to reduce the transmission efficiency of microwave power through the atmosphere. This is due to the absorption of microwave power by water vapor, oxygen, and various scattering processes. FIG. **6** is a graph showing the percentage of microwave power that is transmitted through the atmosphere with a beam elevation angle of 30° as a function of frequency during a cloud covered rainy day with a precipitation rate of 2 mm/hr. Thus, for example, at a frequency of 10 GHz, the microwave power transmission through the atmosphere with a beam elevation angle of 30° exceeds 95% even when it is raining with a precipitation rate of 2 mm/hr and total cloud cover. A laser beam operating at optical frequencies would be completely absorbed by the atmosphere under these conditions. A detailed technical description of atmospheric attenuation of microwave power can be found in the article, Atmospheric Attenuation of Microwave Power," *The Journal of Microwave Power,* Vol. 5, No. 4, Dec. 1970, pp. 269–278 by V. Falcone.

FIGS. **5** and **6** are important for determining the optimum operating frequency for the microwave beam. In order to be able to obtain a high power density ρ, the frequency should be as high as possible. However, if the frequency is too high, atmospheric attenuation will reduce the power transmission efficiency. Since it will be shown herein that the transmitter will be able to provide almost unlimited beam power, power losses due to atmospheric attenuation will be of secondary importance. Thus, the frequency selected for the preferred embodiment will be relatively high in order to obtain a high power density. A frequency f=10 GHz will provide a power density of 425 W/cm^2 and is selected for the preferred embodiment. It should be noted however, that this frequency will still provide very high transmission efficiencies which, on a clear day, will approach 98% for beam elevation angles on the order of 30°.

In order to comprehend the very high performance capabilities of the electromagnetic ramjet suppose R=150 m and f=10 GHz (f=10^{10}). The maximum power density ρ_{max} of the microwave beam operating at this frequency is 425 watts/cm^2. Hence, the maximum effective beam power that can be used to propel the ramjet will be 300 GW. This power is many orders of magnitude greater than any prior art beamed power propulsion concept—and this power is converted directly into propulsive thrust by electromagnetic processes with an efficiency of nearly 100%. FIG. **7** is a graph of propulsive thrust F versus velocity V that could be generated by the ramjet using 300 GW of propulsive power.

The reason why it is possible to operate the ramjet at these very high power levels is because of its huge dimensions—and these dimensions are possible because the superconducting propulsion coil can create and sustain enormous magnetic fields with a relatively small amount of material.

The most efficient operating altitudes of the electromagnetic ramjet (where the beam power to propulsive thrust conversion efficiency approaches 100%) is between 100 km and 120 km. At an altitude of 100 km the particle density of the atmosphere is about 10^{13} molecules/cm^3 and the ramjet operation will be very nearly collisionless. Thus, there will be essentially zero thermalization and the ramjet operation will involve purely electromagnetic processes. Since altitudes on the order of 100 km are well within the ionosphere the ramjet can be viewed as "ionospheric ramjet."

It should be pointed out that the shock screen **12** used to ionize the molecules passing through the dipole coil **10** is not necessary at 100 km altitudes. The ionosphere at 100 km altitudes contains some fraction of the molecules that are already ionized by natural solar radiation. When the superconducting dipole coil **10** sweeps through this region with its large magnetic field, it acts as a giant ion scoop several kilometers in diameter which collects the ionized molecules and free electrons from all directions. Thus, the fraction of ionized molecules passing through the dipole is several orders of magnitude greater than the natural fraction at this altitude. When the free electrons pass into the electron cyclotron resonance region **26** (FIG. **1**) behind the moving dipole coil and rapidly accelerated into expanding circular cyclotron orbits they will, in themselves, form an ionizing region, which will ionize most of the remaining unionized gas molecules passing through it in an avalanche effect. Although this process will reduce the overall beam power to propulsive thrust conversion efficiency of the ramjet, this reduction will only on the order of 2 or 3%.

At low altitudes below the ionosphere the fraction of ionized gas molecules is not large enough to start an ionizing process. The shock screen **12** therefore provides a means for generating a plasma source when the ramjet is moving at relatively low altitudes.

It should also be pointed out that the microwave generators could easily be designed to change frequency. This capability would allow the electromagnetic ramjet to be "fine tuned" from the ground while it is accelerating a payload to optimize its propulsive efficiency. It follows from equation (1) that by varying the frequency f of the microwave beam, it will be possible to move the resonance region of the orbiting electrons to give optimum performance. Consequently, in view of the large dimensions of the resonance region and the nearly perfect beam quality, it will be possible to operate the electromagnetic ramjet close to its theoretical performance limits.

One of the most important technical aspects of the invention is the fact that the superconducting dipole coil **10** is constructed with superconducting material having a relatively high critical temperature such that it can be maintained at liquid hydrogen temperature (18° K) instead of very low liquid helium temperature (4° K). FIGS. **8** and **9** illustrate the design and construction of a cryogenic Dewar system **30** that is designed to maintain the coil **10** at liquid hydrogen temperature. The system **30** comprises a double walled tube **32** that completely encloses the coil **10**. A plurality of stand-off mounting struts **34** keep coil centered inside the tube **32**. The tube **32** is filled with liquid hydrogen **36** such that the coil **10** is completely immersed in this cryogenic fluid at 18° K. The tube **32** and mounting struts **34** are constructed with material having very low thermal conductivity. The space **38** between the double walls of the tube **32** is filled with multiple layers of cryogenic thermal insulation **40**. A plurality of larger mounting struts **42** are attached to the outer tube wall **44** and used for supporting an outer circular wing-like, high-speed airfoil **46** that completely encloses the Dewar **30**.

FIGS. **10**, **11**, and **12** describe the detail design and construction of a high-speed airfoil **46** that is mounted around the coil **10** and its Dewar **30**. As described above, the airfoil **46** is attached to the Dewar **30** by a plurality of supporting struts **42**. Some portions of the airfoil **46** are equipped with movable aerodymamic control surfaces **48** that enable the ramjet propulsion system to be steered while traversing through the lower atmosphere at high velocity. The control surfaces **48** are moved by electrically driven servo motors **50** that are controlled by a guidance computer **52** and an inertial guidance system **54**. A back-up radio control system **56** is provided to enable the control surfaces **48** to be controlled via radio signals transmitted from the launch site or from an orbiting satellite. A plurality of small orbiting maneuvering thrusters **58** (which could be high pressure vessels of compressed gas) are also provided for generating small amounts of propulsive thrust while traversing through the ionosphere (or while in orbit above the atmosphere). These thrusters **58** are controlled by the guidance system **54** and can also be used for providing lateral guidance when the propulsion system is moving at low velocities near the earth's surface. The airfoil **46** is also equipped with a plurality of high speed dive brakes **60** for providing additional decelerating propulsive thrust while traversing through the lower portions of the atmosphere. The dive brakes **60** are also controlled by the guidance system **54**.

The airfoil **46** and the movable control surfaces **48** are constructed with high strength, high temperature composite material such as graphite fiber with negligible magnetic susceptibility. (See, "New World for Aerospace Composites," *Aerospace America*, Oct. 1985, pp. 36–42, by W. F. De Mario.) This protective high-speed airfoil **46** gives the ramjet propulsion system a fairly high lift to drag ratio which enables it to glide and maneuver a considerable distance through the lower atmosphere without any propulsive forces.

As is shown in FIGS. **10**, **11**, and **12**, the airfoil **46** is designed with a small transverse cross section with a chord to thickness ratio of about 8 to 1. This design enables the total structural mass of the airfoil **46**, including all of its internal components except the dipole coil **10**, to have a total mass approximately equal to 25% of the coil mass. Thick blankets of evacuated multilayer cryogenic thermal insulation **62** are mounted along the inside walls **64** of the airfoil **46**. Essentially all of the structure surrounding the coil **10** is constructed with material having very low magnetic susceptibility. Small superconducting magnetic shielding coils **66** are provided to shield various electron command and control systems from the magnetic field of the dipole **10**.

The circular airfoil **46**, all of its internal structure and operating systems, and the superconducting propulsion dipole **10** (along with its cryogenic Dewar system) comprise a single-coil electromagnetic ramjet. It is a self-contained, automated reusable launch vehicle (i.e., accelerator) which is able to maneuver in space and traverse through the atmosphere in controlled flight and land vertically back at the launch site. For simplicity, FIGS. **1**, **2**, **3**, **10**, **11**, and **12** illustrating the design and construction of the electromagnetic ramjet do not show the payload in order to keep the discussion focused on its operating principles.

Although the construction of a CW beamed power transmitter capable of generating a 300 GW laser beam at optical frequencies is well beyond the state of the art, it can be easily achieved at microwave frequencies. FIGS. **13** and **14** illustrate the design and construction of a giant phased array microwave transmitter **20**. As is shown in FIG. **13**, the transmitter **20** is rigidly mounted in a housing **68** with multiple radiating elements **70** having a broadside beam elevation angle of 30°. The beamed power electromagnetic ramjet propulsion system envisioned herein will require a plurality of microwave power transmitters. The first transmitter, located closest to the launch point, will have a broadside beam elevation angle of 45° . All other transmitters will be designed with a broadside beam elevation angle of 30°. In the preferred embodiment, the array **72** is circular (FIG. **14**) with a diameter of 600 m. Each radiating element **70** (which comprises a beam launching horn) is fed CW microwave power via a waveguide **74**. As is shown in FIG. **13** and in FIG. **15** (which is a plan vie of the transmitter) the waveguides **74** extend outward from the back of the array **72** in diverging directions for several hundred meters so as to provide some space between adjacent waveguide **74** that is large enough for access by technicians. These are where the phase shifters **76** are mounted. The microwave beam **18** is steered electronically by these phase shifters **76** which control the phase of the microwave power that is fed to the beam launching horns **70**. FIG. **16** shows an enlarged longitudinal cross section of some of the beam launching horns **70** and the waveguides **74** that are connected to them. It is possible to design this microwave feed system with low loss waveguides such that over 99.9% of the microwave power fed into the system is transmitted.

In the preferred embodiment, the transmitting horns **70** and waveguides **74** have square transverse cross

sections. The transmitting end of the horns **70** have aperture dimensions 4λ by 4λ where λ denotes the wavelength of the microwave beam. For the preferred frequency of 10 GHz, λ=3 cm. Hence, the end of each transmitting horn **70** has inside dimensions of 12 cm by 12 cm. The mounting of the array **72** is such that the spacing **78** between the inner walls of adjacent horns **70** is λ/2=1.5 cm so as to form a close-packed array with negligible sidelobes. This close-packing design of the array will enable essentially 100% of the radiated power to be contained in the main lobe which forms the microwave beam. With these dimensions, the array **72** will be composed of 15,514,038 separate beam launching horns **70** and a like number of waveguides **74** and phase shifters **76**. Since the technology of microwave power transmission enables relatively small waveguides to convey very high levels of microwave power (because the power density can be as high as 1.2 MW/cm^2) over long distances with virtually zero loss, it is possible to achieve a total beam power of essentially any desired value by simply feeding a sufficient amount of microwave power into each individual waveguide. This is an important operating feature of the invention as it enables the electromagnetic ramjet to be designed to operate with essentially any desired level of microwave power. In the preferred embodiment of the invention, the microwave transmitters will be designed to transmit a maximum beam power of 10,000 ^{GW} (10^{13} watts). In order to obtain a maximum beam power of 10,000 GW, it is only necessary to feed 645 KW of microwave power into each individual waveguide **74**. Since 645 KW microwave generators operating at 10 GHz are readily available as commercial "off the shelf items", the possibility of achieving a beam power of 10,000 GW (and much greater power) is very easy. It is just a matter of numbers. For example, since 1 MW amplitron microwave generators operating at 10 GHz (with an overall electric-to-microwave efficiency of 95%) are readily available and could be used to feed each waveguide **74**, a beam power of over 15,500 GW could be achieved. (See, "High Power Microwave Generators of the Crossed-Field Type," *Journal of Microwave Power*, Vol. 5, No. 4, December 1970, pp. 245–259, by William Brown.) The reason why the waveguides **74** diverge and extend in back of the array for several hundred meters is to separate them to allow individual access and to enable the heat that is generated by the very small inefficiency losses to be carried off by various cooling systems.

The particular method adopted for generating the microwave power and feeding it into each waveguide will depend upon economics which is beyond the intended scope of this disclosure. However, it is instructive to identify a few of the possibilities. The first method involves connecting each waveguide **74** to its own separate microwave generator as described above. However, since the number of waveguides is so enormous, this method may be too expensive. Another method would be to generate several gigawatts of microwave power in single unit microwave generators and use the output to feed several thousand waveguides. In particular, a single microwave generator operating with an efficiency of 90% in the form of a 1.22 m long, 2.75 m diameter cylinder with a mass of only 5,400 kg would be capable of generating 10 GW of microwave power at 10 GHz. (See pages 176–180 of the paper, "Microwave Rocket Concept," *International Astronautical Congress* Vol. 16, Athens, 1965 by J. Schad and J. Moriarity.) It would only require 1,000 of these units (each of which feeding 15,504 waveguides) to obtain the desired maximum 10,000 GW beam power. For definiteness, this is the method adopted herein. Thus, as shown in FIGS. **13** and **15**, the 10 GW microwave generating units **80** are positioned at various locations, each of which are connected to 15,504 waveguides **74**.

In order to dissipate the waste heat, a large cooling system **82** is provided. This cooling system **82** takes large quantities of water **84** from a nearby reservoir **86** and circulates it via conduits **88** around the microwave generators **80**, phase shifters **76**, and large portions of the waveguides **74** and beam launching horns **70**. Since the transmitter will have to operate for only few minutes, the heat build up will not overwhelm the cooling system.

The electrical energy used to power the 1,000 microwave generators **80** is obtained from a large underground superconducting energy storage system **90**. Such energy storage systems will be easily capable of supplying over 10,000 GW of DC electric current for the microwave generators **80** since superconducting inductor coils can be discharged at very high power levels. The electric current is fed to the generators **80** via superconducting power transmission lines **92** that are connected to the inductor **90** via superconducting on/off control switches **93**. A large cryogenic cooling system **94** is provided for the inductor **90** and for the various superconducting transmission lines **92** and switches **93**. Since an electromagnetic ramjet receiving propulsive power from a particular transmitter will usually be within range of the transmitter for less than 2 minutes, the total amount of inductive energy stored in the superconducting energy storage system could be easily achieved. It would require a storage capacity of about 350 GW-hr to provide 10,000 GW for 2 minutes. Such systems are well within engineering feasibility. (See for example, "Superconductive Energy Storage For Diurnal Use By Electric Utilities," *IEEE Transactions On Magnetics*, Vol. MAG-17, No. 1, January 1981, pp. 340–343 by R. Boom.) After the superconducting energy storage system is discharged by feeding current to the microwave generators **80** at very high power levels, it is recharged with current via other superconducting power transmission lines **96** at a much lower power level, but over a much longer time period. These recharging transmission lines could be connected to the field coils that are used to launch the ramjet vertically off the earth's surface. However, since some of the transmitters will be located several thousand kilometers from the launch point, it may be more practical to recharge the superconducting energy storage systems **90** by specially designed "stand-alone" power plants. A large superconducting MHD power plant would be ideal for this purpose because this type of power plant is very efficient and could be easily designed to operate on an intermittent basis with the capability of generating very large amounts of power. (See *Investigation of MHD Power Generation, Vol. II Integration With Cross-Field Microwave Devices*, RADC-TDR-62-464, Contract AF 30 (602)-2487, by W. C. Brown.) For example, such a power plant could be designed to generate 100 GW of power for 3½ hours which would be sufficient to recharge a completely discharged superconducting energy storage system **90**. However, since the first transmitter will be located near the field coils, the electric current it uses to power its microwave generators will be taken directly from the superconducting field coils.

In this case, the inductive energy storage system for the transmitter would be the field coils themselves and thus there would be no need for a separate system **90**.

There is another method for operating the microwave power generation and transmission system that may be the most economical. This method is based upon taking maximum advantage of the enormous microwave power that can be efficiently transmitted through circular large-diameter pressurized gas high frequency waveguides. For example, if d (meters) denotes the diameter of such a waveguide, the microwave power P (gigawatts) that could be transmitted through it is given approximately by

$$P=(5d)^2\ GW$$

(See, "Economic Feasibility of Microwave Power Transmission in Circular Waveguide," Ch. 3.6, pp. 256–269, D. Dunn and W. Loewenstern, Jr., *Microwave Power Engineering*, Vol. 1, Academic Press, 1968, E. Okress, ed.) Consequently, a waveguide of this type having a diameter of only 14.14 m (46.39 ft) would be capable of transmitting 5,000 GW. Two such waveguides would be capable of transmitting the maximum desired microwave power. Thus, instead of having to generate 10,000 GW of microwave power at each transmitter, it could be generated at the first transmitter (via the generators **80**) and fed to the other transmitters sequentially by a pair of these giant waveguides mounted in underground tunnels that are connected to all of the transmitters located within the continental United States. The process of turning off the microwave power at one transmitter and turning it on at the next transmitter would simply involve switching the power flowing through the waveguides from one transmitter to the next transmitter. Consequently, with this method, there would be no need for any microwave generators **80** or superconducting energy storage systems **90** at these transmitters. The microwave power would be fed directly into the small waveguides **74** that feed it past the phase shifters **76** to the beam launching horns **70** at each phased array transmitter.

Although the phased array microwave transmitter may appear to be a very complex structure and operating system, it is, in reality, a simple bee-hive type housing with millions of waveguides. Since there are no moving parts, there is nothing to ware out. It would not require very much maintenance and it would be essentially 100% reliable. The economics of automated mass production techniques could be employed to reduce the total cost of the array.

As pointed out above, the microwave beam **18** is steered electronically by controlling the phase of each radiating element **70** in the array by the phase shifters **76**. Each of these phase shifters **76** are controlled by a beam steering computer **98** via electric conduits **100**. This computer **98** generates the steering commands such that the beam is automatically pointed at the electromagnetic ramjet as it traverses through the ionosphere several hundred kilometers away. The phase shifters **76** also enable the beam to be focused on the dipole such that the beam diameter is always maintained exactly equal to the dipole diameter as it moves away from the transmitter. An excellent technical exposition on the design and operating principals of electronically steered phased array microwave transmitters is given in the book: *Theory And Analysis Of Phased Array Antennas*, John Wiley & Sons, Inc., 1972 by N. Amitay et al.

The focused minimum possible diameter d_s of the microwave beam at a distance D is given by the formula

$$d_s=2.44\ D\ (\lambda/d_t) \qquad (5)$$

where d_t is equal to the diameter of the transmitting antenna, which is, in the preferred embodiment, equal to 600 m. Since $\lambda=0.03$ m, the minimum possible beam diameter d_s at a distance $D=2{,}459$ km (2.5×10^6 m) is 300 m. Consequently, the effective operational range of this transmitter when beaming propulsive power to an electromagnetic ramjet with a diameter of 300 m is 2,459 km. FIG. is a graph of d_s versus D corresponding to this transmitter where $\lambda=0.03$ m, an $dt=600$ m. Since the maximum required distance will only be about 500 km (which corresponds to a ramjet altitude of 100 km, and a beam elevation angle of 10°) this 2,459 km range is much more than is actually required. The minimum beam diameter d_s for this transmitter at the maximum 500 km range is 61 m. Consequently, in order to operate this transmitter at maximum power transmission efficiency (where the beam diameter is always equal to the smallest dipole diameter) the dipole diameter must be equal to or greater than 61 m. In order not to exceed the maximum power density of 425 W/cm^2 (so as to avoid atmospheric breakdown) the maximum beam power that could be transmitted to an electromagnetic ramjet with this diameter is 12.42 GW (which is only 0.12% of the transmitter's maximum power generating capability of 10,000 GW).

As pointed above, the actual design of the electromagnetic ramjet will comprise not one but several superconducting dipole coils. This enables the effective magnetic field of the central region (i.e., the electron cyclotron resonance region) to be increased by the superposition of the magnetic fields generated by all the dipoles, thereby significantly increasing the propulsive thrust. The diameter of the microwave beam is continuously focused so as to be equal to that of the inner most dipole coil. FIGS. **18** and **19** are schematic longitudinal and transverse cross sections of a typical electromagnetic ramjet **102** with six concentric coplanar superconducting dipole coils **10** mounted inside circular concentric airfoils **104**. (These airfoils **104** are essentially identical to the airfoil **46** described in FIGS. **10**, **11** and **12**.) The concentric circular dipole airfoils **104** are maintained in rigid, spaced apart positions relative to each other by a secondary system of straight radial airfoils **106** that are mounted between adjacent dipole airfoils **104**.

A cylindrical central body **108**, (i.e., fuselage), which represents the ramjet's payload, is mounted along the central longitudinal axis of the dipole via a plurality of cables **110** made of very high strength, high temperature material (such as fused silica glass fibers). The central body **108** has a length less than the diameter of the inner airfoil **115** and contains several large in dependent cargo bays for the payload. It is mounted such that its center of mass **111** coincides with the center of mass of the ramjet **102** (which is at the geometrical center of the dipole coils). As is shown in FIG. **19**, the transverse cross sectional area **112** of the central body **108** is a small fraction of the area **114** of the inner airfoil **115**. Therefore, its presence inside the center of the electromagnetic ramjet does not restrict the air flowing through it and does not reduce its thrust generating capabilities. The electron cyclotron resonance region **116** of the ramjet is designed to be behind the end **118** of the central body **108** such that the central body **108** is

outside the accelerating region **120** of the ionized atmospheric gas passing through the ramjet and does not interfere with it. Unlike prior art ramjet propulsion systems that are mounted inside a fuselage or attached to wings (such as the "scramjets" proposed for the ground-to-orbit aerospace plane), the electromagnetic ramjet proposed herein is so huge that the entire fuselage of the vehicle is mounted inside the ramjet and the "wings" become the external structure of the ramjet itself.

FIG. **20** is an enlarged schematic longitudinal view of the central body **108** illustrating a plurality of large aerodynamic dive brakes **122** that are used to assist in decelerating the ramjet as it traverses back through the atmosphere while returning to the launch site on the earth's surface. The rear of the central body **108** is fitted with large hemispherical doors **124** made of high temperature material that provides thermal protection during the high-speed descent through the atmosphere back to the launch site. The front **126** of the central body **108** has a streamlined shape to reduce aerodynamic drag while accelerating to orbit through the atmosphere. Large portions of the inside walls of the central body **108** are fitted with superconducting shielding coils **127** to prevent the magnetic field generated by the ramjet's dipole coils from entering the central body.

FIG. **21** is a schematic transverse cross section of the rear of the central body directly behind the hemispherical thermal doors **124** illustrating the exhaust duct **128** of a very large multigigawatt electron cyclotron resonance (ECR) accelerator **130**, surrounded by the exhaust nozzles **131** of twelve high thrust chemical rocket engines **133** using propellant **135** stored inside the central body **108**. These engines **130, 133** provide the vehicle with a considerable amount of orbiting maneuvering propulsion that is used after the primary ramjet propulsion system accelerates the vehicle to a desired launch velocity. For example, this auxiliary propulsion system can be used for plane changing maneuvers and for circularizing the vehicle in a desired circular orbit. Since the electromagnetic ramjet propulsion system is capable of accelerating the vehicle through the ionosphere to lunar transfer velocities, this self-contained propulsion system enables the vehicle to decelerate into lunar orbit, unload cargo, and accelerate back to earth. By constructing a plurality of superconducting field coils on the moon's surface, the ramjet (and its payload) will be able to land on its surface and be catapulted back to earth via magnetic repulsive forces, thereby providing direct surface-to-surface transportation between the earth and the moon for passengers and/or cargo. But before this magnetic propulsion system could be constructed on the moon, it will be necessary to perform lunar propulsive maneuvers using the conventional reaction principle of rocket propulsion.

The electrical energy used to operate the ECR engine will be obtained from the ramjet's superconducting dipole coils **109** which are utilized as a large inductive energy storage system. Since these dipole coils **109** will have to be nearly completely discharged before the ramjet can be returned back to the launch site in order to be properly decelerated by the magnetic repulsive forces of the field coils, the utilization of this stored inductive energy for maneuvering propulsion is very convenient. (Since the total mass of the returning vehicle will be significantly lower than the launch mass, it is necessary to reduce the magnetic field of the returning ramjet so as to reduce the magnetic repulsive forces generated by the field coils and allow the ramjet to land.) For a detailed technical description of the ECR engine see my paper "Generalized Theory of Rocket Propulsion for Future Space Travel," AIAA *Journal of Propulsion and Power*, Vol. 3, No. 4, July-August 1987, pp. 320–328.

When the electromagnetic ramjet is being accelerated by the microwave beam, the intensity of the repulsive magnetic field generated by the free electrons moving in their resonant cyclotron orbits behind the ramjet will be several orders of magnitude greater than the intensity of the earth's natural magnetic field. Consequently, during this time, the earth's natural magnetic field will have no effect on the ramjet. However, when the microwave propulsion is terminated, the earth's natural magnetic field will exert a magnetic torque on the dipole coils that will force the dipole plane of the ramjet to remain oriented perpendicular to the earth's magnetic field. Therefore, the central body **108** is mounted on the ramjet **102** such that after the microwave propulsion is terminated and the vehicle is in orbit, the central body **108** will be free to rotate 360° around a rotation axis **137** that passes through its center, perpendicular to its longitudinal axis **103** which extends along the diameter of the circular airfoils **104**. This central rotation axis **137** is a tubular beam **137** mounted inside co-linear radial airfoils **139** that are attached to the circular airfoils **104**. A plurality of co-planer supporting cables **141** (FIG. **18**) extending from the central body **108** are attached to the rotation axis **137** thereby providing additional support for the central body **108** while the central body **108** rotates around the rotation axis **137**. A plurality of superconducting cables **143** are mounted inside the central beam **137** and enable electric current taken from the dipole coils **109** to pass into the central body **108** and fed into the ECR engine **130**.

When the ramjet is being accelerated by the field coils, and then by the microwave beams, the thrust forces generated by the dipole coils **109** will be very great. In order to transmit these thrust forces to the central body **10** without causing any significant coil deformations, a large number of supporting cables **145** are mounted at close intervals around each circular airfoil **104** (FIG. **19**) that are attached to various bulkheads **147** (FIG. **18**) on the central body **108**. After the microwave propulsion is terminated, those supporting cables **149** that are not attached to the rotation axis **137** are detached from the airfoils **104** and withdrawn into the central body **108** thereby allowing the central body to rotate freely around the rotation axis **137**. The reflector grid **12** is also disconnected from the inner airfoil **115** and withdrawn into the central body **108**. Although the dipole plane must always remain perpendicular to the earth's magnetic field, the longitudinal axis **103** of the central body **108** can be pointed in any direction by rolling the vehicle around the longitudinal axis **103** and by rotating the central body **108** around the rotation axis **137**. Consequently, the propulsion system of the central body **108** can generate propulsive thrust in any desired direction while the coil plane remains perpendicular to the earth's magnetic field and such that the thrust vector always passes through the vehicle's center of mass. A large attitude control moment gyro system **151** is mounted at the center of mass **111** inside the central body **108** (FIG. **20**) in order to carry out these rolling and rotating movements.

When the vehicle is preparing to return to the earth's surface prior to reentering the atmosphere, the central

body **108** is rotated around the rotation axis **137** such that the longitudinal central axis **103** of the central body **108** is aligned with the longitudinal central axis of the ramjet **102**. The alignment is such that the hemispherical doors **124** on the rear of the central body **108** are heading into the direction of motion. Since the dipole coils **109** are nearly discharged (which will be required when returning to earth) the magnetic torque exerted by the earth's natural magnetic field will be relatively weak and could be cancelled by the attitude control system. However, when the ramjet approaches to within a few hundred kilometers of the launch site, the magnetic field generated by the field coils will become stronger than the earth's natural magnetic field. This will create a new and stronger magnetic torque that will keep the dipole plane perpendicular to the magnet field of the field coils and this is precisely what is required during the final descent to the landing area.

As described above, the electromagnetic ramjet, along with its payload, is launched vertically from the earth's surface and accelerated to supersonic speed at high altitude by magnetic repulsive forces generated by a plurality of coaxial superconducting field coils several kilometers in diameter embedded beneath the earth's surface. Since the superconducting dipole coils of the electromagnetic ramjet generate such a huge magnetic field (when fully charged), this field is utilized to initially lift the vehicle off the earth's surface and to accelerate it to an altitude where the ramjet can begin operating by the microwave beam. Thus, after the vehicle reaches a sufficiently high altitude, the electromagnetic ramjet propulsion system is started using microwave power transmitted from the earth's surface which accelerates the vehicle to orbital velocity. After the payload is removed from the central body, the vehicle is decelerated back to the launch site by continuous aerodynamic braking while gliding through the upper atmosphere at high altitudes over extended distances gradually descending to lower altitudes and landing vertically at the launch site with final decelerating thrust provided by magnetic repulsive forces generated by the same field coils used to launch the vehicle. These launching and landing methods are illustrated in FIGS. **22** and **23** respectively. For simplicity, the ramjet appears as one dipole propulsion coil in these figures and the central body is omitted.

As is illustrated in FIG. **22**, the dipole coil **10** of an electromagnetic ramjet accelerated vertically from an annular launching platform **132** by magnetic repulsive forces generated by a plurality of superconducting field coils **134** (which are also dipoles) mounted inside circular coaxial underground tunnels **136** in a remote region. These field coils **134** generate a resultant magnetic field **138** (represented by the vector summation or "superposition" of the individual magnetic fields) which opposes the magnetic field **140** generated by the propulsion dipole **10** which has opposite polarity. This results in a magnetic repulsive force exerted on the propulsion coil **10**, and magnetic repulsive forces exerted on the field coils **134**. Multiple arrays **142** of photovoltaic solar cells are mounted around the outer perimeter of the field coils for generating electrical energy. This electrical energy is used to charge up the superconducting field coils. As described above, the field coils are also utilized as a giant superconducting inductive energy storage system for supplying current to the microwave generators at the first transmitter. A plurality of underground superconducting power transmission lines **144** are provided for transferring excess electrical energy not needed to operate the propulsion system to the national intertie power grid for distribution across the United States.

FIG. **23** is a schematic perspective view showing how a superconducting propulsion coil **10** is decelerated back to the launch site by the stationary field coils **134** embedded beneath the earth's surface **146**. The inductive coupling between the field coils **134** and the magnetically decelerated propulsion coil **10** enable a portion of the potential and kinetic energy of the coil **10** to be reconverted into electrical energy when the coil **10** is brought to rest back on the launching platform **132**. This inductive coupling appears as an increasing repulsive magnetic field generated by the dipole coil **10** when approaching the field coils that generate strong magnetic repulsive forces decelerating the coil and enabling it to lose all of its velocity at the moment of contact with the earth's surface in the center of the field coils. This is a beautiful situation as it allows the propulsion dipole **10** to be automatically partially recharged with current that is used to launch the next payload. However, a great deal of additional current must be fed into the dipole coil because the launch mass will be many times greater than the return mass. But the cost of this additional inductive energy that must be added to the propulsion coil will be zero since the solar arrays are conducted to be an integral part of the entire system.

Payloads are brought to the launch site via an underground access tunnel **148**. The surrounding walls of this tunnel **148** are fitted with superconducting shielding coils **150** to prevent the magnetic field **138** generated by the field coils **134** from entering the access tunnel **148**.

In order to demonstrate the basic engineering feasibility of lifting the electromagnetic ramjet off the earth's surface (along with its payload) and accelerating it to very high altitude via magnetic repulsive forces generated by a plurality of superconducting field coils embedded beneath the earth's surface, it is necessary to conduct a mathematical investigation. FIG. **24** illustrates two parallel coaxial circular coils **152**, **154** with radii R_1 and R_2 separated by a distance h and carrying currents i_1 and i_2 in opposite directions respectively. Hence, the corresponding magnetic fields **156**, **158** generated by the currents i_1 and i_2 have opposite directions, and the coils are therefore repelled by a magnetic repulsive force F. The exact mathematical expression for this repulsive force is given by

$$F = \frac{\mu_o i_1 i_2 h}{\sqrt{h^2 + (R_1 + R_2)^2}} \left[\left(\frac{R_1^2 + R_2^2 + h^2}{(R_1 - R_2)^2 + h^2} \right) E_2 - E_1 \right] \quad (6)$$

where E_1 and E_2 and the complete elliptic integrals of the first and second kinds, respectively given by

$$E_1 = \int_o^{\pi/2} \frac{dx}{\sqrt{1 - k^2 \sin^2 x}}$$

and

$$E_2 = \int_o^{\pi/2} \sqrt{1 - k^2 \sin^2 x} \; dx$$

where

-continued

$$k^2 = \frac{4R_1R_2}{h^2 + (R_1 + R_2)^2}$$

If $R_1 >> R_2$, equation (6) can be expressed to a good approximation by the equation

$$F = \frac{3\pi\mu_o R_1^2 R_2^2 i_1 i_2 h}{2(R_1^2 + h^2)^{2.5}} \quad (7)$$

where $\mu_o = 4\pi \times 10^{-7}$ henry/m (MKS units are used). See, *Introduction to Electromagnetic Fields And Waves*, Addison-Wesley Publishing Company, 1968, pp. 219-220, by E. V. Bohn. It is important to point out the fact that equation (7) demonstrates that the propulsive force F acting on the second coil **154** increases with the square of its radius R_2.

Suppose that the first coil **152** (field coil) is at rest on the earth's surface and the second coil **154** (propulsion coil) is being repelled above it by the magnetic repulsive force F. The downward force of gravity W acting on the second coil **154** is equal to m_2g where m_2 is equal to its mass and $g = 9.81$ m/sec^2 is equal to the average gravitational acceleration at the earth's surface. If the second coil **154** has a mass density ρ and a current density J, the thrust to weight ratio F/W for the magnetically repelled coil **154** can be expressed as

$$\frac{F}{W} = \frac{3\mu_o R_1^2 i_1 R_2 J h}{4g\rho(R_1^2 + h^2)^{2.5}} \quad (8)$$

It is apparent from this equation that the thrust to weight ratio of the magnetically repelled coil **154** can be increased by increasing its radius R_2 and its current density J. If the coils **152**, **154** are superconducting, the values of i_1 and J can be made very large. Moreover, by utilizing superconducting coils, all internal electrical resistance vanishes, and the currents i_1 and i_2 do not have to be sustained by any external power source to make up for resistive losses.

There exists the practical problem of charging the second coil **154** with current i_2 without it being catapulted away from the first coil **152** (which is assumed to be fully charged with current i_1) before the second coil **154** can be fully charged. However, in view of equation (8), there is no upward thrust exerted on the second coil when $h=0$. In order for the coil **154** to be magnetically repelled away from the field coil **152**, it must have some relatively small initial altitude h_o where $F/W = 1$. Thus, the second coil **154** can be charged with its current i_2 while resting on the earth's surface (at $h=0$) in the center of the larger field coil **152**.

Let B_1 denote the magnetic field strength generated by the first coil **152** at its center. Hence

$$B_1 = \frac{\mu_o i_1}{2R_1} \quad (9)$$

If A_2 denotes the area of the second coil **154**, its magnetic dipole moment $M_2 = i_2A_2$. Therefore, since $A_2 = \pi R_2^2$, the magnetic dipole moment M_2 of the second coil **154** can be expressed as

$$M_2 = i_2\pi R_2^2 \quad (10)$$

If the second coil **154** is charged with current i_2 when it is on the earth's surface in the center of the field coil **152**, its magnetic potential energy E_m, which is equal to B_1M_2, can be expressed as

$$E_m = \frac{\mu_o \pi i_1 i_2 R_2^2}{2R_1} \quad (11)$$

This magnetic potential energy E_m is converted into kinetic and potential energy by the second coil when it accelerates away from the first coil (which remains stationary). The mathematical expression of this energy represented by equation (11) clearly demonstrates that an enormous amount of magnetic potential energy E_m can be fed into the second coil (by charging it with current i_2) if the coil is constructed with a very large radius R_2. This method of launching the ramjet by magnetic repulsive forces involves the recognition (through equations 7, 8 and 11) that enormous amounts to stored propulsive energy E_m and propulsive thrust F can be achieved with the principle of magnetic repulsion by utilizing superconducting coils and scaling up their physical dimensions many orders of magnitude—far beyond anything previously contemplated. By constructing a superconducting field coil **152** with a radius of several kilometers and charging it with an enormous current i_1, it is possible to construct the superconducting propulsion coil **154** with a radius of hundreds of meters and charge it with current i_2 to obtain an initial magnetic launch energy E_m far greater than the initial chemical launch energy contained in the propellant of any prior art chemically propelled launch vehicle. In fact, equation (11) shows that, for all practical purposes, there is virtually no limit on the amount of launch energy E_m than can be obtained for the magnetically propelled coil—and this launch energy E_m will be converted into kinetic and potential energy with an efficiency of nearly 100% compared to only about 2% for chemically propelled launch vehicles. (Almost all of the initial chemical launch energy of conventional rocket propelled launch vehicles is wasted by having to lift and accelerate the enormous propelled load.)

In order to better understand this magnetic propulsion concept, it may be helpful to consider a simple numerical example. Suppose the field coil **152** has a current $i_1 = 1.5 \times 10^9$ amp and a radius $R_1 = 10{,}000$ m. Suppose the current density of the second coil **154** is $J = 5 \times 10^8$ amp/m^2 and has a radius $R_2 = 1{,}000$ m with a mass density $\rho = 3{,}000$ kg/m^3. At an altitude $h = 10{,}000$ m (32,800 ft) the thrust to weight ratio for the magnetically repelled coil **154** would be equal to 42.46. Thus, at this altitude, the coil **154** would be accelerating upward by the magnetic repulsive force with an acceleration of 41.46 g and would be moving with a velocity of 3.156 km/sec (7,059 MPH or Mach 10,2).

The corresponding velocity V at any altitude h can be calculated from the equation

$$V = \{C[(R_1^2 + h_o^2)^{-1.5} - (R_1^2 + h^2)^{-1.5}] - 2G[(r_e + h_o)^{-1} - (R_e + h)^{-1}]\}^{\frac{1}{2}} \quad (12)$$

where

$$C = \frac{\mu_o R_1^2 i_1 R_2 J}{2\rho}$$

and $G=3.981\times10^{14}$ m^3/sec^2 (earth's gravitational constant) $R_e=6{,}371{,}315$ m (earth's mean radius) and h_o is equal to the launch altitude (which is equal to the initial height where $F/W=1$). For the above example $h_o=41.16$ m and $C=1.571\times10^{19}$ m^5/sec^2. The coil would be accelerated to a maximum altitude of 916 km. The altitude where the magnetic repulsive force is equal to the gravitational force ($F/W=1$) is 37.73 km (123,800 ft). This altitude could be sustained indefinitely by the propulsion coil without expending any energy.

This simple example demonstrates the very powerful propulsive forces than can be generated by magnetic repulsion when large superconducting coils are used. These propulsive forces are significantly greater than that which can be generated by conventional rocket engines. The most important fact however, that has profound importance in the field of space travel, is that these powerful propulsive forces are generated without using any propellant or any power generating system on the propulsion coil.

Before proceeding, it should be pointed out that although the construction of a 20 km diameter superconducting field coil would be expensive, it would cost significantly less than the $3 billion cost of the Superconducting Super Collider underground particle accelerator, with a diameter of 60 km that is being designed and constructed for high energy physics research. (See "The SSC: A Machine For The Nineties," *Physics Today,* March 1985, pp. 28–37, by S. Gladshow and L. M. Lederman). Using mass production techniques for manufacturing the superconducter, the cost of installing a 20 km diameter field coil could probably be kept to about $10 million per kilometer or $625 million. Thus, the concept of magnetic propulsion introduced herein is well within economic feasibility.

It follows from equation (8) that the thrust to weight ratio F/W of the propulsion dipole **154** can be increased by maximizing the product R_2J. But the radius R_2 and current density J are not independent variables. They are related by the mechanical stress limitations generated by magnetic forces. Any current carrying conductor generates a magnetic field. This magnetic field generates $\vec{J}\times\vec{B}$ Lorentz forces on the conductor which, in turn, generates various mechanical stresses that must be contained by some supporting mass. In the case of superconducting propulsion coils described herein, the conductor itself is designed to contain these forces. Thus, in order to minimize the mass of a propulsion coil it will be designed to be a self supporting superconducting dipole. The stresses are contained by the superconducting cable used to construct the dipole.

The inductive energy E of a superconducting coil carrying a current i with self inductance L is given by the equation

$$E=\tfrac{1}{2}Li^2 \tag{13}$$

The self inductance of a dipole coil with major radiums R and minor radius r (FIG. **25**) is given by

$$L=\mu_o R[\log(8R/r)-1.75] \tag{14}$$

Consequently, the total radial outward force F acting on the dipole is

$$F=\frac{\partial E}{\partial R}=\frac{1}{2}i^2\frac{\partial L}{\partial R}=\frac{1}{2}i^2\mu_o[\log(8R/r)-.75]$$

where i denotes the total current flowing through the coil's total cross sectional area A_t. If F_t denotes the total tension in the coil, its stress $\sigma=F_t/A_t=F_t/\pi r^2$. Consequently, since $F_t=F/2\pi$, it follows that

$$F_t=\frac{F}{2\pi}=\frac{i^2}{4\pi}\mu_o[\log(8R/r)-.75]=\pi r^2\sigma \tag{15}$$

The magnetic filed B_o at the center of the dipole is given by

$$B_o=\frac{\mu_o i}{2R} \tag{16}$$

and the maximum magnetic filed B_m which occurs on the surface of the dipole closest to the center, is given by

$$B_m=\frac{\mu_o i}{2\pi r} \tag{17}$$

Consequently, since the aspect ratio $\gamma=R/r$, equation (15) can be expressed as

$$B_o^2\gamma^2[\log(8\gamma)-0.75]=\sigma\pi^2\mu_2 \tag{18}$$

Since the current i is related to the current density J by $i=JA_t=J\pi r^2$, it follows from equation (16) that

$$JR=\frac{2B_o\gamma^2}{\pi\mu_o} \tag{19}$$

Hence, in view of equation (18) it follows that

$$JR=2(\sigma/\mu_o)^{\frac{1}{2}}[\gamma/(\log(8\gamma)-0.75)^{\frac{1}{2}}] \tag{20}$$

This equation is of fundamental importance because it relates the product JR to the tensile strength σ of the superconducting cable and the aspect ratio γ of the propulsion dipole.

The function $F(\gamma)$ in the brackets of equation (20) defined by

$$F(\gamma)=\gamma/[\log(8\gamma)-0.75]^{\frac{1}{2}} \tag{21}$$

is dependent only on γ and hence the shape of the dipole (i.e., only on the relative thickness of its cross section). It will therefore be called the "shape factor". A graph of this function is shown in FIG. **26**. It is very nearly equal to a straight line with a slope of 0.3. Hence, the product JR can be expressed to a good approximation by the equation

$$JR=.600\,\gamma\sqrt{\sigma/\mu_o} \tag{22}$$

This equation clearly demonstrates that the value of JR can be increased to large values by increasing the aspect ratio γ of the dipole and by constructing the superconducting cable of the dipole with a very high tensile strength σ.

The aspect ratio γ of a dipole coil can also be determined to a good approximation by the equation

$$\gamma = \frac{.3\pi\sqrt{\sigma\mu_o}}{B_o} \tag{23}$$

which follows from equation (18) using the approximately $F(\gamma)=0.3\gamma$. However, it should be emphasized that the exact value of γ corresponding to a central field B_o is obtained by solving equation (18).

In view of equations (8) and (22) the thrust to weight ratio F/W of the dipole can be maximized by constructing the superconducting cable with a high strength to density ratio σ/ρ. The fabrication of such a cable is disclosed in my U.S. Pat. No. 4,078,747 filed June 2, 1975 entitled "Orbiting Solar Power Station." Basically this fabrication method involves reinforcing high strength, low density, superconducting cable previously fabricated by vapor depositing a thin layer of superconducting material onto high strength carbon fibers, with a tensile strength of 0.28×10^{10} N/m^2, with super high strength fused silica glass fibers, with a tensil strength of 1.4×10^{10} N/m^2. However, by using new high temperature ceramic superconducting material, the superconducting layer can be vapor deposited directly onto the fused silica glass fibers thereby eliminating the need for any carbon fibers. The technique of vapor depositing superconducting material onto high strength fibers is discussion in the article "Superconducting Properties of Thin Film Niobium Carbonitrides on Carbon Fibers," *IEEE Transactions on Magnetics,* Vol. Mag-11, No. 2, March 1975, pp. 185–188 by G. E. Pilce et al. Since experiments involving high temperature ceramic superconducting material indicate that such material is intrinsically stable, there is no need for any stabilizer material such as copper or aluminum. The resulting tension bearing superconducting cable fabricated by this technique will have a tensil strength $\sigma=1.4\times10^{10}$ N/m^2, and a mass density $\rho=2{,}160$ kg/m^3. This is the cable that will be used to construct the superconducting propulsion dipole.

In view of equation (1), the magnetic field B_o at the center of the dipole coil **10** is determined by the electron cyclotron resonance frequency f of the microwave beam. Hence

$$B_o=2\pi f(m/e) \tag{24}$$

Therefore, since $f=10^{10}$ (10 GHz) it follows this equation that $B_o=0.3572$ T. Consequently, when this value is substituted into equation (18), with $\sigma=1.4\times10^{10}$ N/m^2, the resulting aspect ratio $\gamma=429{,}094$.

If the major radius R_2 of the propulsion dipole were 300 m, the minor radius r_2(see FIG. **25**) would be $R_2/\gamma=0.6991$ m. Since the density ρ of the coil is 2,160 kg/m^3, the total coil mass would be equal to 6,252,000 kg. This can be significantly reduced by employing multiple dipole coils. Thus, in the preferred embodiment of the electromagnetic ramjet, the magnetic field is generated by six dipole coils instead of one, and each coil generates an equal field strength at the center. Therefore, the magnetic field generated at the center of each coil will be equal to $B_o/6=0.0595$ T. When this value is substituted into equation (18) the resulting aspect ratio γ is 2,324.1, which is a factor of 5.416 times greater than that of a single coil. Therefore, in view of equations (8) and (22) the thrust to weight ratio F/W of each of the six dipole coils will be increased by a factor of 5.416 over that of the single dipole. If the radii of these six dipole coils were 300 m, 310 m, 320 m, 330 m, 340 m and 350 m, the total mass would be 1,629,300 kg which represents a reduction by a factor of 3.8 over the single dipole design. The minor radius r_2 of the inner dipole would be 300 m/2,324.1=0.129 m (12.9 cm or 5.1 in) and the minor radius of the outer coil would be 350 m/2,324.1=0.151 m.

The general formula for calculating the total coil mass m_c of an electromagnetic ramjet with n dipole coils with equal aspect ratio is

$$m_c = \frac{2\pi^2\rho}{\gamma^2}\sum_{j=1}^{n} R_2{}^3{}_j \tag{25}$$

The magnetic launch energy E_m of the dipoles of an electromagnetic ramjet can be arbitrarily increased to any desired value without increasing its size or current by simply increasing the current i_1 in the field coils and/or by simply increasing the number of field coils. Since the field coils remain stationary on earth, their mass is of no consequence. Moreover, they do not have to be self-supporting as in the case of the propulsion dipoles. Since they will be embedded in underground tunnels the stresses could be supported by the surrounding earth itself.

In the preferred embodiment of the invention, there will be many (coaxial) field coils instead of only one. In view of the principle of field superposition where the effective propulsive field is equal to the vector sum of the individual fields, the propulsive thrust and energy can be increased to achieve unlimited values by simply increasing the number of field coils—which can be easily accomplished since the field coils remain fixed in underground tunnels. In this case, the thrust to weight ratio given by equation (8) becomes

$$\frac{F}{W} = \left(\frac{3\mu_o R_2 Jh}{4g\rho}\right)\sum_{j=1}^{n}\frac{i_{1j}R_{1j}^2}{(R_{1j}^2+h^2)^{2.5}} \tag{26}$$

where R_{1j} is equal to the radius of the j'th field coil and there are n field coils altogether. The current in each field coil is equal to i_{ij}. In view of equation (20) the product R_2J will be equal for each individual dipole coil of a ramjet since the aspect ratio γ is constant. Therefore, the thrust to weight ratio for each dipole will be equal regardless of their radii.

The thrust to weight ratio of a multiple coil electromagnetic ramjet with coil mass m_c propelled by multiple field coils is given by

$$\frac{F}{W} = \left(\frac{3\mu_o hM^2}{2gm_c}\right)\sum_{j=1}^{n}\frac{i_{1j}R_{1j}^2}{(R_{1j}^2+h^2)^{2.5}} \tag{27}$$

where M_2 is equal to the total magnetic dipole moment of the ramjet.

The total magnetic dipole moment M_2 of a multiple coil electromagnetic ramjet is equal to the summation of the individual dipole moments M_{2j} of each coil. Hence

$$M_2 = \sum_{j=1}^{n} M_{2j} = \sum_{j=1}^{n} i_{2j}\pi R_{2j}^2$$

The current i_{2j} flowing through the j'th coil is equal to its density J_j multiplied by its transverse cross sectional area A_{ij} which is equal to πr_{2j}^2 where r_{2j} is equal to the coil's minor radius. Since $r_{2j}=R_{2j}/\gamma$, the current i_j can be expressed as

$$i_j = \frac{\pi(j_j R_{2j})R_{2j}}{\gamma^2}$$

However, in view of equation (20), the value of $J_j R_{2j}$ is the same for each coil. Consequently, the total magnetic dipole moment of the ramjet can be expressed as

$$M_2 = \frac{2\pi^2}{\gamma}\left[\frac{\sigma}{\mu_o[\log(8\gamma) - .75]}\right]^{\frac{1}{2}} \sum_{j=1}^{n} R_{2j}^3 \tag{28}$$

The magnetic dipole moment M_2 of the ramjet with six propulsion coils given in the example above with radii R_{2j} equal to 300 m, 310 m, 320 m, 340 m, 350 m will be equal to 6.18179×10^{13} amp m^2. The magnetic dipole moment corresponding to the ramjet with a single coil with radius 300 m would be 4.82220×10^{13} amp m^2.

The velocity V of the ramjet at any altitude h can be calculated by

$$V = \left\{ C_o \sum_{j=1}^{n} i_{1j}R_{1j}^2 [(R_{1j}^2 + h_o^2)^{-1.5} - (R_{1j}^2 + h^2)^{-1.5}] - 2G[(R_e - h_o)^{-1} - (R_e + h)^{-1}] \right\}^{\frac{1}{2}}$$

where

$$C_o = \frac{\gamma}{\rho}\left[\frac{\sigma\mu_o}{\log(8\gamma) - .75}\right]^{\frac{1}{2}} \approx \frac{.3\gamma\,(\mu_o\sigma)^{\frac{1}{2}}}{\rho}$$

When using the formula for determining the ascent velocity of an electromagnetic ramjet carrying a payload, the density ρ has to be multiplied by the mass ratio $m_t m_c$ where m_t the total vehicle mass and m_c is the total coil mass.

The total magnetic potential energy E_m of the propulsion dipole is equal to

$$M_2 \sum_{j=1}^{n} B_{1j}$$

where B_{1j} is equal to the magnetic field strength at the center of the j'th coil generated by the j'th coil, and where M_2 is equal to the total magnetic dipole moment of the ramjet.

Let B_1 denote the central magnetic field strength generated by the field coils at the launch altitude h_o where the thrust to weight ratio F/w=1. This altitude h_o represents the initial height above the plane of the field coils. Since the launch altitude above the earth's surface is assumed to be o, the field coils are installed in underground tunnels at a depth equal to h_o. Therefore, the strength of the magnetic field due to the field coils at the earth's surface is given by

$$B_1 = \tfrac{1}{2}\mu_o \sum_{j=1}^{n} \frac{i_{1j}R_{1j}^2}{(R_{1j}^2 + h_o^2)^{1.5}} \tag{29}$$

Consequently, the initial magnetic launch energy E_m of the electromagnetic ramjet (which is equal to M_2B_1) can be expressed as

$$E_m = \tfrac{1}{2}\mu_o M_2 S_1 \tag{30}$$

where

$$S_1 = \sum_{j=1}^{n} \frac{i_{1j}R_{1j}^2}{(R_{1j}^2 + h_o^2)^{1.5}} \tag{31}$$

The magnetic inductive energy E_c stored in a multiple coil electromagnetic ramjet is given by

$$E_c = \tfrac{1}{2} \sum_{j=1}^{n} L_j i_{2j}^2$$

where L_j denotes the self-inductance of the j'th dipole coil given by equation (14). Since $i_{2j}=\pi R_{2j}(JR_{2j})/\gamma^2$, it follows from equations (14) and (18) that the ramjet's inductive energy E_c can be expressed by

$$E_c = \frac{2\pi^2\sigma}{\gamma^2}\left[\frac{\log(8\gamma) - 1.75}{\log(8\gamma) - 0.75}\right] \sum_{j=1}^{n} R_{2j}^3 \tag{32}$$

As described above, this stored inductive energy will be used for maneuvering the vehicle outside the earth's atmosphere by the onboard ECR engine after the ramjet propulsion system accelerates the vehicle to the required launch velocity.

Since the superconducting field coils are stationary and embedded in underground tunnels, the mechanical stress generated by their magnetic fields can be contained by the surrounding structure and supported by the earth itself. Thus, by eliminating the stress limitations on the field coils, the field coils can be designed to carry significantly more current than the propulsion coils (i.e., the current density J of the field coils can be designed to be much greater than that of the propulsion coils). Although the actual current densities J_o of the current carrying superconductor will be about the same for propulsion coils and field coils, the conductor to non-conductor cross sectional area ratio of the field coils will be much greater than that of the propulsion coils.

In order to take advantage of the very favorable scaling laws that are inherent in the magnetic launching system disclosed herein, the preferred embodiment will be very large. In the preferred embodiment there will be ten superconducting field coils **160** (FIG. **27**) mounted coaxially in underground tunnels **162** with increasing radii R_{ij} (j=1,2, . . . , 10).

In order to obtain a more uniform acceleration for the initial ascent trajectory, these field coils **160** will be concentrated toward the outer coil with a gradually decreasing spacing between adjacent coils determined by the function $2\times10^7/R$. Consequently, the radii R_{ij} of the ten field coils will be equal to 10,000 m, 12,000 m, 13,667 m, 15,130 m, 16,452 m, 17,668 m, 18,800 m, 19,864 m, 20,871 m, and 21,829 m. These field coils will all be designed to carry a current i_{ij} equal to 1.5×10^9 amp. Since the field coils will cover a circular region 44 km (27 miles) in diameter, it will be constructed in some remote, and relatively flat area within the western part of continental United States. (One remote desert region

in the north west corner of the state of Nevada would be ideal.) A relatively flat circular central region **164** is provided with a diameter of 10 km, that serves as the launching and landing region The strength of the magnetic field in this region will be 0.6 T (6,000 Gauss).

By employing large scale production facilities, the cost of manufacturing the field coils will be relatively low. For example, studies by John Gilman, at the Lawrence Berkeley Laboratory in Berkeley, Calif. have shown that new ceramic oxide high temperature superconducting material could be mass produced at a cost of only $20/ton if the rate of production were 500,000 ton per year. This cost could be reduced to $2/ton by producing 50,000,000 tons/year. See the article, "The Commercial Potential Of High-T_c Superconductors," *Physics Today,* March 1988, by J. J. Gilman. The cost of producing fused silica glass (which would represent most of the mass of the propulsion coils) could be manufactured at a much lower cost. The underground tunnels would have a maximum depth of about 500 m and could be rapidly excavated by employing ten high speed tunnel boring machines operating simultaneously. The required tunnel diameter would be about **12** or **13** m. The construction of the coils could proceed by automated winding machines that continuously travel around each tunnel with spools of superconducting cable that build up each coil to the required thickness.

Since the local magnetic field on the earth's surface in an annual region **166** surrounding the outer field coil **168** will be many times greater than the earth's natural magnetic field, it will be kept isolated from the more distant surrounding region **170** where the field is not as great. In order to make good use of this isolated region **166**, it will be used for generating electric energy via photovoltaic solar arrays. The presence of a magnetic field does not affect the operation of photovoltaic solar cells. Thus, in the preferred embodiment of the invention, a huge annular array **172** of solar cells, 18 km wide with an inner radius of 22 km, and an outer radius of 40 km, is constructed around the outer field coil **168** for generating bulk electric power. This array **172** will cover a total land area of about 3,500 km^2.

The solar array **172** can be constructed from long continuous sheets of thin film amorphous silicon cells and mounted in rigid, 10 m long by 3 m wide modules produced in huge automated factories to reduce unit cost. The raw materials needed for the production, namely silicon, is the second-most abundant element on earth. Hence, by increasing the scale of the production facilities, it should be possible to construct the array with a unit cost of about $30/$m^2$. (See "Photovoltaic Power," *Scientific American* April 1987, pp. 87–92, by Y. Hamakawa.) Thus, the total cost of the array will be about $100 billion with an average operating efficiency of 15% the total amount of electric power that could be generated by the system is 526 GW. Since the solar array can only generate electric power during the daylight hours, the average daily power output of the system will be about 100 GW. This represents about 30% of the entire electric generating capacity of the United States and is much more than required to operate the transportation system. Thus, the complete ground to orbit transportation system envisioned herein also represents a giant solar-electric power generating plant. Since this electric generating system does not burn any combustible or nuclear fuel, and has no moving parts, it would require very little maintenance and it could remain operating indefinitely. The operating cost would be nearly zero. A large portion of the excess power could be fed into the existing U.S. electric power intertie grid for distribution throughout the United States and Canada. Large portions could also be fed into Mexico and other countries via superconducting power transmission lines. This electric power generating capability of the system would therefore enable many thermal electric power plants to be dismantled thereby eliminating atmospheric and thermal pollution caused by these plants. It would also have a substantial beneficial effect on the total U.S, economy since it would not only reduce the national balance of payments, but reverse it on a colossal scale.

The initial construction cost of $100 billion for the array could be recovered by the commercial sale of the electric power generated therefrom. For example, if the average output of the array is 50 GW per year, and if the average commercial sale of the electrical energy is 10¢/KW-hr, the amount of income revenue that could be generated by the array over a one year time period would $44 billion. At this rate the entire cost of the array could be paid in less than 3 years time.

Since the solar array **172** can only generate electric power during the daylight hours, the field coils **160** will be utilized as a giant underground superconducting inductive energy storage system for accumulating part of the electrical energy generated during the daylight hours so that it can be released into the power distribution system during the non-daylight hours. Thus, the field coils serves as a giant inductive energy storage system and load leveling system that allows electric power to be fed into the distribution system at any desired rate, 24 hours per day. Since the total amount of inductive energy stored in the field coils is so great, the amount of additional energy put into the system (or withdrawn from the system) represented by the output of the array over five or six days operation is relatively small and will not cause any significant change in the magnetic field. A portion of the inductive energy of the field coils could also be used in national defense. In particular, it could be used for instantly energizing various directed energy weapon systems in a national emergency. This capability would be extremely valuable to our country's critically important SDI program since the engineering feasibility of such beam weapon systems depends largely upon the availability of a sufficiently large power source

FIG. **28** is a schematic transverse cross section of a superconducting field coil **160** mounted inside an underground tunnel **162** and supported by a surrounding structure **174**. This structure **174** is itself supported by the tunnel walls **176** and the surrounding earth **178**. A liquefied nitrogen cryogenic Dewar system **180** is provided for maintaining the coil **160** at liquefied nitrogen temperatures. The coil's minor radius r is designed to be 5.0 m. Hence, it follows from equation (17) that the maximum magnetic field B_m on the surface of the coil will be 60 T. The coil's current density $J=i_1/(\pi r^2)=1.9099\times10^7$ amp/m^2. (Since the actual current carrying superconducting material will represent about 25% of the superconductor will be about 7.6×10^7 amp/m^2). Current is fed into and withdrawn drawn from the field coils **160** by a plurality of superconducting power transmission mission lines **182** that are connected to the solar array **172**; to the microwave power generators of the first transmitter; and to the national intertie power grid.

After the solar array is constructed, the electrical energy generated therefrom would first be used to charge up the ten field coils. If L_j denotes the inductance of the j'th field coil which carries a current $i_1=1.5\times10^9$ amp, the total electrical energy E_c that would have to be fed into the field coils to charge up the system is given by

$$E_c = \tfrac{1}{2} i_1^2 \sum_{j=1}^{n} L_j$$

where

$$L_j = \mu_o R_j [\log(8R_j/r) - 1.75]$$

The radius r of each coil is equal to 5 m. Consequently, $E_c=1.98982\times10^{18}$ Joules. Assuming that the solar array generates an average output of 50 GW per day, it would require a total of 460.61 days (1.26 years) to charge up the field coils. Although this charging time is fairly long, it is reasonable. It would represent an enormous energy reservoir. After the charging up process is completed, almost all of the power generated by the array could be sold to commercial utility companies to generate vast amounts of revenue that could continue indefinitely with very little operating expense.

The total specific energy $\hat{E}_o$ of the electromagnetic ramjet at any velocity V and altitude h above the plane of the field coils is equal to the sum of its kinetic and gravitational potential energy which is given by

$$\hat{E}_o = \tfrac{1}{2} V^2 + G\left[\frac{1}{R_e} - \frac{1}{R_e + (h - h_o)}\right] \tag{33}$$

The field coils **160** are designed to lift and magnetically accelerate the ramjet to high altitude at supersonic speed where the atmospheric pressure is sufficiently low to allow the electromagnetic ramjet propulsion system to begin operating with the microwave beam. This altitude will be about 60 km (200,000 ft) where the pressure is 0.2 Torr. Since sonic velocity (Mach 1.0) is about 320 m/sec at this altitude, a velocity of 1,200 m/sec (Mach 3.75) will be sufficient to start the ramjet. Consequently, the specific energy $\hat{E}_o$ corresponding to this end point of the boost phase of the launch trajectory is 1.302928×10^6 Joules/kg (which is obtained from equation (33) with h=60,500 m and h_o=500 m.) The altitude above the earth's surface is equal to $h=h_o$=60,000 m.

The total initial specific magnetic launch energy E_m that the ramjet must have in order to lift the vehicle from the earth's surface and accelerate it to the initial point for microwave propulsion is

$$\hat{E}_m=\hat{E}_o+\hat{\Delta}_m \tag{34}$$

where $\hat{\Delta}_m$ is equal to the specific magnetic potential energy at an altitude of 60 km. If this altitude is significantly greater than the diameter of the outer field coil, then $\hat{\Delta}_m\approx0$. However, since this is not the case for the preferred embodiment, $\hat{\Delta}_m$ cannot be ignored. If the total launch mass is m_t, then $\hat{\Delta}_m$ can be expressed as

$$\Delta_m = \frac{\mu_o M_2 S_2}{2m_t} \tag{35}$$

-continued

where

$$S_2 = \sum_{j=1}^{n} \frac{i_{1j} R_{1j}^2}{(R_{1j}^2 + h^2)^{1.5}} \tag{36}$$

The required magnetic launch energy $E_m=m_t\hat{E}_m$. Consequently, in view of equation (30), the total launch mass mt can be expressed as

$$m_t = \frac{\mu_o M_2 (S_1 - S_2)}{2E_o} \tag{37}$$

For the field coils described in the preferred embodiment h_o=500 m and $S_1=9.54098\times10^5$ amp/m and $S_2=1.41324\times10^4$ amp/m. The magnetic dipole moment M_2 corresponding to the six coil electromagnetic ramjet described above is 6.18179×10^{13} amp m^2. When these values are substituted into equation (37) the total launch mass m_t is equal to 27,928,651 kg (61,582,675 lbs or 30,791 tons).

Since the total mass of the six dipole coils comprising the electromagnetic ramjet is only 1,639,300 kg, this total launch mass is 17.036 times greater than the total coil mass. Thus, the weight lifting capability of the ramjet's superconducting dipole coils is truly enormous. This launch mass is many times greater than the largest mass ever launched from the earth's surface.

In order to understand how great this launch mass really is, it is helpful to make a comparison—it is actually greater than an average World War II Battleship or an Essex class aircraft carrier. Moreover, all of this launch mass will be accelerated into orbit (or to the moon) by the electromagnetic processes system. Since this will be accomplished by electromagnetic processes by converting electric power into propulsive thrust (with an efficiency approaching 100%) using electrical energy generated by the solar array, the cost will be zero. (Since the electromagnetic ramjet operates in the ionosphere at very high altitudes, the drag forces are essentially zero.)

The total amount of inductive energy that is taken out of the field coils to launch the vehicle will be equal to $m_t\hat{E}_o=3.6389\times10^{13}$ Joules. Since this amount of inductive energy represents less than 0.002% of the total inductive energy stored in the field coils, the launch will have virtually no effect on its magnetic field. Moreover, if the solar array is used to replace this energy with a power of 100 GW, it would only require 364 seconds (6.06 minutes).

By combining equations (25), (28), and (37), the "mass ratio" m_t/m_c of the electromagnetic ramjet that is launched by the field coils can be expressed as

$$\frac{m_t}{m_c} = \frac{\gamma(S_1 - S_2)}{2\hat{E}_o\rho}\left[\frac{\mu_o\sigma}{\log(8\gamma) - .75}\right]^{\int 8} \tag{38}$$

which, in view of equation (21) can be expressed to a good approximation by

$$\frac{m_t}{m_c} = \frac{.15\gamma(S_1 - S_2)(\mu_o\sigma)^{\frac{1}{2}}}{\rho\hat{E}_o} \tag{39}$$

Since the parameters σ, ρ, and E_o are fixed constants, the mass ratio of the ramjet depends only upon the aspect ratio γ of its dipole coils. Thus, the mass ratio (weight lifting capability of the ramjet) can be arbitrarily increased to any desired value by increasing the aspect ratio. (For the magnetic propulsion concept introduced herein, the efficiency of the propulsion system increases with increasing mass ratio instead of decreasing with mass ratio as in prior art rocket propulsion systems.)

The velocity V along the initial ascent trajectory at any altitude high above the plane of the field coils can be expressed by the equation

$$V = \left\{ \frac{\mu_o M_2 (S_1 - S_2)}{m_t} - 2G\left[\frac{1}{R_e} - \frac{1}{R_e + (h - h_o)}\right]\right\}^{\frac{1}{2}} \quad (40)$$

The initial ascent trajectory **184** (FIG. **29**) of the ramjet **186** into the ionosphere will be along a curve of magnetic induction generated by the field coils **188**. This trajectory **184** is vertical at the launch point **190** and becomes parallel to the earth's surface **192** at an altitude of 100 km. However, when the ramjet **186** reaches an altitude of 60 km, the microwave beam from the first transmitter **194** is turned on and the vehicle is propelled by the combined thrust of the field coils **188** and the microwave beam. As the vehicle is accelerated further away from the field coils **188**, their propulsive effect gradually decreases. When the vehicle is ascending from the launch point **190** along the ascent trajectory **184** propelled by the magnetic repulsive force of the field coils **188**, the longitudinal central axis of the ramjet is maintained tangent to the ascent trajectory (i.e., tangent to the line of magnetic induction) so as to generate maximum repulsive thrust from the field coils.

Omitting the mathematical details it can be shown that a line of magnetic induction generated by the field coils passing through its center will follow a curve that can be represented in polar coordinates by the equation $r = C \sin^2\theta$ **8** where C is a constant. The vertical line passing through the center **190** of the field coils **188** represents the polar axis where $\theta = 0$. The condition that this curve be horizontal to the earth's surface **192** at an altitude of 100 km determines the value of C to be equal to 259.808 km. At this point $\theta = 54.736°$ and $r = 173.207$ km. The curve defined by the equation $r = 259.808 \sin^2\theta$ therefore defines the ascent trajectory from the launch point **190** to the point **196** where it reaches an altitude of 100 km. After the vehicle reaches 100 km, its trajectory remains circular at this altitude until the microwave propulsion is terminated.

When the altitude of the vehicle reaches 60 km, $\theta = 31.330°$, $r = 70.242$ km and the ground track **198** is 36.352 km east of the launch point **190**. This is the location of the first microwave transmitter **194**. Thus, as is shown in FIG. **29**, initially the microwave beam **200** will be pointing vertically upward into the inner dipole coil. The tangent line to the ascent trajectory **184** when the vehicle is directly over the first transmitter makes an angle $\phi = 48.258°$ with the verticle. In order to cancel out the gravitational force acting on the vehicle, the ramjet's thrust vector will have to be inclined upward at an angle $\alpha = 14.968°$ to this tangent line. Hence, the angle between the dipole axis and the incident microwave beam will be $\phi - \alpha = 33.290°$. If the radius of the ramjet's inner dipole coil is R_{21}, the initial beam diameter d_s will be equal to $2R_{21} \cos(\phi - \alpha) = 2R_{21} \times 0.8359$ which is nearly equal to the dipole's diameter $2R_{21}$. However, it should be noted that since the electric field vector of the microwave beam **200** is polarized to oscillate in a plane perpendicular to the central magnetic field lines of the ramjet, a strong coupling will result between the microwave beam and the free electrons passing through the resonance region which will pump them into very high energy electron cyclotron resonance orbits without requiring the beam to have a zero angle of incidence. Since the vehicle will be moving at a relatively slow initial velocity (1,200 m/sec) when the microwave propulsion begins, equation (2) shows that the initial beam power P does not have to be very high in order to achieve high propulsive thrust F.

As the vehicle passes over and begins to recede from the first transmitter **194**, (FIG. **29**) the angle of incidence between the microwave beam and dipole axis begins to decrease thereby enabling the beam diameter to be larger for greater propulsive power. When the vehicle reaches an altitude of 100 km, the vehicle will be 144.845 km from the first transmitter **194**, and the beam elevation angle relative to the local horizon will be 43.192°. At this point **196**, the dipole axis is inclined to its circular flight path by an angle $\alpha \approx 25°$ so as to provide an upward component for the thrust vector. Thus, the beam diameter d_s at this point **196** will be equal to $2R_{21} \cos(43{,}192 - \alpha) = 2R_{21} \times 0.95$ which is essentially equal to the inner dipole diameter. Since the vehicle will be moving at suborbital velocities, this upward thrust component will be necessary to maintain the vehicle's altitude. This vehicle flight attitude will also enable the microwave beam to have a nearly zero angle of incidence with the dipole axis thereby allowing a maximum beam diameter and hence maximum power transmission.

The first transmitter **194** continues to transmit prepulsive power until the elevation angle ϵ of the microwave beam **200** decreases to 10° relative to the local horizon. At this time, the first transmitter **194** is 477.398 km from the vehicle **202** (FIG. **30**) and 463.288 km from its ground track **198**. At this instant, the first transmitter **194** is turned off and the second transmitter **204** is turned on such that there is no interruption of propulsive power transmitted to the ramjet. In the preferred embodiment, the second transmitter **204** is located 400 km from the first transmitter **194** such that the initial beam elevation angle ϵ_1 of the second transmitter is 57.184° and the range is 118.609 km. As in the case of the first transmitter **194**, the second transmitter **204** continues to transmit microwave power until its beam elevation angle ϵ_2 decreases to 10° and the range is 477.398 km. At this instant, the second transmitter **204** is turned off and the third transmitter **206**, located 400 km further along the vehicle's ground track, is turned on. The vehicle is accelerated a distance of 406.278 km along its circular flight path **208** while being accelerated by the second microwave transmitter **204**. All succeeding transmitters operate with these same characteristics (i.e., maximum power transmission, and initial and terminal beam elevation angles ϵ_1, ϵ_2 of 57.184° and 10° respectively; beginning and ending beam transmission distances D_1, D_2 of 118.609 km and 477.398 km respectively; and a vehicle acceleration distance s_{12} of 406.278 km).

When the second transmitter **204** stops transmitting its propulsive power, the third transmitter **206** takes over in a precisely synchronized power relay operation

such that the propulsive thrust generated by the electromagnetic jet is a smooth and continuous process that may involve many transmitters over a very long acceleration flight path **208**, This process of transmitting the microwave power by utilizing a series of transmitters **209** positioned at 400 km intervals along the vehicle's ground track **210** continues until the vehicle reaches the required orbital velocity. The ascent, magnetically propelled trajectory, and the microwave propelled trajectory are always assumed to have the same azimuth so that the ground track **210** for each launch remains unchanged. (However, the altitudes may vary to obtain optimal propulsion efficiency.)

In the case of very massive payloads as in the above numerical example, the electromagnet ramjet will require a long acceleration time that extends over several thousand kilometers in order to reach orbital velocities. The flight path **208** (FIG. **30**) will take it directly over a large number of microwave power transmitters that are located at 400 km intervals along the ground track. Assuming that the launch point is located in the north east corner of Nevada, the ground track will follow a southeasterly great circle arc across the United States and across the state of Florida. Since the system will be capable of generating extremely high launch velocities if the acceleration path is extended over long distances, the preferred embodiment will be designed to take maximum advantage of this operating feature. Consequently, in the preferred embodiment there will be 17 microwave transmitters constructed along a 6,800 km long ground track that begins in the north east corner of Nevada and extends southeasterly across the United States and West Indies, with the last transmitter located on Barbados Island. Six of the transmitters will be located on a chain of small islands in the West Indies. Since the unit cost of each transmitter system will decrease because of the economics of mass construction, the total cost of these transmitters should not exceed $30 billion.

At this point it is necessary to digress a moment to demonstrate some important operating characteristics of the electromagnetic ramjet. As pointed out above, in order for the vehicle to maintain an altitude of 100 km while it being accelerated by the microwave beam, the thrust vector $\vec{F}_p$ generated by the ramjet must be inclined at some angle α relative to the vehicle's circular flight path in order to cancel out the downward force of gravity. In particular, the vertical upward component F_{up} of the vehicle's thrust vector $\vec{F}_p$ together with the upward centrifugal force F_c must be equal to the downward force of gravity F_g. These forces can be expressed as

$$F_{up} = F_p \sin \alpha$$

$$F_c = \frac{m_t V^2}{R}$$

$$F_g = m_t g$$

where V is equal to the vehicle's velocity along the circular flight path of radius $R = R_e + 100{,}000\ m = 6{,}471{,}315\ m$ and where the gravitational constant at 100 km altitude is equal to 9.5062 m/sec^2.

When the vehicle is moving along the 100 km high circular trajectory **208** propelled by the microwave beam **200**, the propulsive power P will always be assumed to be maximum P_{max}. As described above $P_{max} = \pi R_{21}^2 P_{max}$ where P_{max} is equal to the maximum power density limit (425 watts/cm^2) of the microwave beam set by atmospheric breakdown and where R_{21} is equal to the radius of the ramjet's inner dipole coil. In view of equation (2) the ramjet's propulsive force F_p along the thrust vector can be expressed as

$$F_p = \frac{P_{max}}{V_p}$$

where V_p is equal to the vehicle's velocity component along the thrust vector given by

$$V_p = V \cos \alpha$$

Therefore, the condition $F_{up} + F_c = F_g$ results in the equation

$$\tan \alpha = \frac{m_t}{P_{max}} \left(g - \frac{V^2}{R} \right) V \tag{41}$$

which can be used to determine the angle of inclination α. FIG. **31** is a graph of α versus vehicle velocity V corresponding to the above numerical example where $m_t/P_{max} = 2.32417 \times 10^{-5}$ *kg/watt*. This inclination is important because it enables the microwave beam that is transmitted from the ground to intercept the coil plane of the ramjet at a nearly perpendicular angle (i.e., nearly broadside) for maximum power reception. Since circular orbital velocity at an altitude of 100 km is 7,843.32 m/sec, α becomes zero when V is equal to this value.

Although the ramjet's propulsive thrust vector $\vec{F}_p$ is inclined to the vehicle's circular trajectory in order to cancel out the downward force of gravity so that it can maintain its altitude, the tangental component F_t of the thrust vector along the trajectory which accelerates the vehicle along the trajectory is not diminished by this fact and is independent of α. This can be demonstrated as follows:

The component F_t of the ramjet's thrust vector along the flight path is equal to $F_p \cos \alpha$. However, $F_p = P_{max}/V_p$ where $V_p = V \cos \alpha$. Consequently, $F_t = [P_{max}/(V \cos \alpha)] \cos \alpha = P_{max}/V$. Therefore, the propulsive force generated by the ramjet along the trajectory is independent of α and is equal to that generated when there is no gravitational force and the thrust vector can be directed along the flight path with magnitude given by equation (2).

If a_c denotes the vehicle's acceleration along the circular trajectory, the tangental propulsive force $F_t = m_t a_c = P_{max}/V$. Since $a_c = dv/dt$, this equation gives rise to a simple differential equation which can be solved to determine the time interval T required to achieve a velocity V while accelerating along the circular trajectory under maximum propulsive power. This time is given by the equation

$$T = \frac{3(V^2 - V_o^2)}{2K} \tag{42}$$

where V_o is equal to the initial vehicle velocity when it begins moving along 100 km high circular trajectory at point **196** (when T=0) and where K is a constant given by

$$K = \frac{3\,P_{max}}{m_t} \tag{43}$$

The distance s_c traversed by the vehicle accelerating along the circular trajectory can be expressed as

$$s_c = \frac{V^3 - V_o^3}{K} \tag{44}$$

Consequently, the vehicle velocity can be expressed as a function of s_c by the expression

$$V = [Ks_c + V_o^3]^{\frac{1}{3}} \tag{45}$$

The values of V_o and K will depend upon the particular situation. This will be illustrated by continuing the numerical example given above.

Table 1 is a detailed computer simulation of the magnetically propelled ascent trajectory from launch to an altitude of 60 km corresponding to the above example where the total launch mass m_t=27,928,651 kg. The various flight paramaters described in the table are:

H=altitude above earth's surface (km)
T=elapsed time from lift off (sec)
ϕ=flight path angle (from vertical, deg)
s=distance traveled along ascent trajectory (km)
F=propulsive thrust (10^6 N)
P=propulsive power (GW)
a=acceleration (g)
V=velocity (m/sec)
M=Mach number

TABLE 1

Flight Parameters of A 700 m Diameter Electromagnetic Ramjet Accelerating a Launch Mass of 27,928,651 kg To An Altitude of 60 km at Mach 3.75 By Magnetic Repulsive Forces Generated By 10 Underground Coaxial Superconducting Field Coils

h	T	ϕ	s	F	P	a	V	M
0	0	0	0	0	0	0	0	0
2	14.84	7.570	2.009	1,248	338	3.563	270.67	0.794
4	20.02	10.748	4.035	1,812	926	5.631	511.23	1.530
6	23.37	13.216	6.080	1,994	1,419	6.305	711.39	2.174
8	25.98	15.322	8.144	1,906	1,661	5.994	871.04	2.735
10	28.21	17.202	10.228	1,695	1,688	5.233	995.31	3.216
12	30.28	18.923	12.332	1,448	1,579	4.338	1090.67	3.632
14	32.17	20.526	14.457	1,206	1,402	3.464	1163.12	3.998
16	33.97	22.039	16.603	989	1,204	2.683	1217.68	4.262
18	35.72	23.479	18.772	805	1,013	2.020	1258.30	4.359
20	37.44	24.861	20.965	656	845	1.488	1288.06	4.416
22	39.15	26.194	23.181	534	700	1.053	1309.35	4.445
24	40.85	27.486	25.423	433	574	0.694	1323.98	4.453
26	42.55	28.745	27.690	354	473	0.417	1333.35	4.446
28	44.27	29.975	29.985	292	391	0.201	1338.54	4.423
30	46.00	31.181	32.309	241	323	0.023	1340.38	4.392
32	47.76	32.366	34.661	197	263	−0.127	1339.52	4.352
34	49.54	33.535	37.045	163	218	−0.239	1336.45	4.300
36	51.35	34.689	39.460	140	186	−0.312	1331.56	4.242
38	53.19	35.832	41.910	117	155	−0.383	1325.17	4.182
40	55.07	36.966	44.395	95	126	−0.451	1317.53	4.119
42	56.99	38.093	46.917	83	109	−0.483	1308.81	4.055
44	58.95	39.215	49.478	72	94	−0.511	1299.18	3.988
46	60.96	40.335	52.080	60	78	−0.542	1288.76	3.921
48	63.02	41.454	54.726	52	67	−0.558	1277.65	3.863
50	65.14	42.574	57.418	46	58	−0.570	1265.93	3.828
52	67.32	43.697	60.159	39	48	−0.582	1253.66	3.798
54	69.56	44.825	62.952	34	42	−0.585	1240.89	3.787
56	71.87	45.960	65.800	29	35	−0.591	1227.68	3.774
58	74.25	47.103	68.707	25	30	−0.590	1214.04	3.761
60	76.71	48.258	71.678	24	29	−0.578	1200.00	3.750

This table clearly demonstrates that the magnetic field generated by the field coils will exert a tremendous magnetic repulsive force on the electromagnetic ramjet such that it will lift the ramjet (along with the enormous payload mass) off the earth's surface and accelerate it to supersonic speed at a high altitude very rapidly. For example, 28.21 seconds after launch, the vehicle will be at an altitude of 10 km (32,808 ft) and moving nearly vertically upward with a velocity of 995 m/sec (Mach 3.22). At 37.44 seconds after launch, the vehicle will be at 20 km (65,618 ft) and moving at 1,288 m/sec (Mach 4.42). The vehicle essentially leaves the sensible atmosphere 46.00 seconds after launch with a velocity of 1,340 m/sec (Mach 4.39) at an altitude of 30 km (98,425 ft). Relatively little initial magnetic launch energy is lost by aerodynamic drag while traversing through the atmosphere. The system is therefore able to convert initial electrical energy into kinetic and potential energy with an efficieny of nearly 100%. FIG. **32** is a graph of acceleration (g versus altitude H (km) corresponding to this example.

Perhaps the most spectacular parameters in the table are propulsive thru F and propulsive power P. At any altitude of 6 km, the propulsive force is 1,994,000,000^N which is more than 60 times greater than the maximum lift off thrust generated by the giant Saturn V Apollo launch vehicle. The corresponding propulsive power is 1,419 GW. This enormous propulsive power is being generated by magnetic repulsive forces acting on the ramjet's superconducting dipole coil by the field coils.

It is important to point out and emphasize that the initial launch trajectory from the earth's surface to an altitude of 60 km described in Table 1, where the ramjet is propelled by the magnetic repulsive forces generated by the field coils, will be the same for each vehicle regardless of the ramjet's size or total launch mass. This is because the velocity of a vehicle along this initial portion of the trajectory which is given by equation (40)

is determined only by the ratio of the ramjet's magnetic dipole moment divided by the total launch mass M_2/m_t. But in view of equation (37) this ratio is always the same and given by

$$\frac{M_2}{m_t} = \frac{2\hat{E}_o}{\mu_o(S_1 - S_2)} \tag{46}$$

Consequently, the acceleration along the initial launch trajectory is always the same regardless of launch mass and is given by Table 1 and described graphically in FIG. **32**.

When the vehicle reaches an altitude of 60 km and is moving at 1,200 m/s (Mach 3.75) the electromagnetic ramjet is started by transmitting microwave power from the first transmitter **194** (FIG. **29**). The amount of gravitational potential energy represented by the vehicle climbing from 60 km to 100 km (which is equal to 40,000 g) while being propelled by the ramjet will appear as a velocity loss. A small fraction of this loss will be canceled by the remaining magnetic potential energy $\hat{\Delta}_m$ generated by the field coils given by equation (35) which is equal to 19,654.41 m^2/sec^2. This residual magnetic potential energy is equivalent to a gravitational potential energy difference of 2,003.51 m (assuming $g=9.81/m/sec^2$). Consequently, the gravity losses will be equal to that resulting from a climb of 37,996.40 m, which will be equal to a velocity loss of 863.42 m/sec. Therefore, by assuming that the vehicle's initial velocity at the altitude of 60 km is (1,200.00−863.42) m/sec=336.58 m/sec instead of 1,200 m/sec, the combined effects of gravity and the residual magnetic field along the remaining portion of the trajectory can be ignored.

For simplicity, the microwave power will begin at a relatively low level and is gradually increased to give the vehicle a constant acceleration a_o along the remaining portion of the ascent trajectory (from 60 km to 100 km altitude) such that when the vehicle reaches an altitude of 100 km, the microwave power is at its maximum possible level $P_{max}=1.20166\times10^{12}$ watts. Consequently, if Δs is equal to the distance the vehicle travels along the remaining portion of its ascent trajectory (from 60 km altitude to 100 km altitude) which is equal to 114,732.50 m, the vehicle's velocity V_o after reaching 100 km altitude will be given by the equation

$$V_o = 336.58 \text{ m/sec} + \sqrt{2a_o\,\Delta s}$$

The vehicle's propulsive force F_o at the beginning of the circular 100 km high trajectory is given by

$$F_o = \frac{P_{max}}{V_o}$$

However, at this point the vehicle's acceleration is equal to a_o. Consequently since $F_o=m_t a_o$ it follows that

$$V_o = \frac{P_{max}}{m_t a_o} \tag{47}$$

By combining these two equations for V_o, the required acceleration a_o can be determined by solving the equation

$$\frac{P_{max}}{m_t a_o} = 336.58 \text{ m/sec} + 2a_o\Delta s \tag{48}$$

The result is $a_o=18.114$ m/sec^2. Consequently, $V_o=2{,}375.32$ m/sec.

With the value V_o determined, it is now possible (via equation **44**) to determine the required accelerating distance s_c the vehicle must travel along the circular trajectory **208** in order to reach a desired launch velocity V. For example, if the required launch velocity is 8,000 m/sec, the required distance $s_c=3{,}862.76$ km. In this case, the vehicle would be accelerated by only 11 of the 17 transmitters. As soon as the required launch velocity is reached, the microwave power transmission is terminated. The time T required to carry out this acceleration process can be determined by equation (42). This time is 678.17 sec (11.303 minutes). The peak acceleration is equal to a_o (which is 1.85 g). After reaching the required launch velocity, the vehicle moves out of the atmosphere along a free-fall trajectory. In order to remain out of the atmosphere during the next orbit revolution, the vehicle has to execute a small propulsive maneuver using onboard propulsion of a few meters per second when passing through its apogee.

FIG. **33** is a graph of velocity V versus acceleration distance s_c given by equation (45) corresponding to this numerical example where $V_o=2{,}375.32$ m/sec. FIG. **34** is a graph of V versus time T given by equation (42) corresponding to this numerical example.

In view of Table 1, the maximum overall acceleration will occur during the initial portion of the ascent trajectory when the vehicle is propelled by the repulsive magnetic field generated by the field coils. This maximum will be about 6.5 g and will occur when the vehicle is at an altitude of about 6,300 m (20,670 ft) and moving at Mach 2.3. Since this acceleration decreases very rapidly, it could be easily tolerated by human passengers. (The passengers would be lying in a prone position on special acceleration couches designed to enable them to withstand very high acceleration.)

In some situations it may not be possible to propel the vehicle to the required launch velocity during one pass over the transmitters. For example, suppose that the required launch velocity is not 8,000 m/sec, but 11,035.72 m/sec which would be required for a direct flight to the moon. In order to achieve this launch velocity, an acceleration distance $s_c=10{,}309$ km would be required. However, the system would still be able to give the vehicle the required launch velocity by carrying out two propulsive passes over the microwave power transmitters instead of only one pass.

In order to enable the vehicle to make another propulsive pass over the transmitters, the initial orbit must be such that it will take the vehicle back over the initial ground track over the transmitters at some future time. However, since the earth's surface is moving relative to an earth centered inertial frame by virtue of its rotation, the initial ground track will not be under the vehicle after the vehicle makes one complete revolution in its orbit. The orbital mechanics of the situation are such that in order for the vehicle to pass over the initial ground track at some future time, it must have an orbital period that is a rational fraction of one sidereal day (i.e., its orbital period P_v must be expressible as $(n_1/n_2)P_s$ where P_s is one sidereal day and n_1 and n_2 are integers). These orbits are called "synchronous orbits". If $n_1=1$,

the vehicle will pass over the launch site exactly one sidereal day after it is launched after making n_2 complete orbit revolutions. This is the shortest possible time interval between successive pass overs. Thus, the initial orbit of the vehicle will be designed such that its orbital period $P_v = P_s/n_2$ where $p_s = 86{,}164.099$ seconds and n_2 will be some integer $\leqq 16$. Since the period P_v of an orbit is related to its semi-major axis a by the equation

$$P_v = 2\pi\sqrt{\frac{a^3}{G}}$$

each integer n_2 corresponds to a unique value of a synchronous orbit's semi-major axis a_n that is determined by the equation

$$P_v = 2\pi n_2\sqrt{\frac{a_n^3}{G}}$$

Each of these values corresponds to a unique launch velocity V_n given by

$$V_n = \sqrt{G\left(\frac{2}{R_o} - \frac{1}{a_n}\right)}$$

where $R_o = 6{,}471{,}315$ m, and each of these launch velocities corresponds to a required acceleration distance s given by equation (44).

For example, if $n_2 = 16$, then $a_n = 6{,}637{,}660.85$ m, $V_n = 7{,}940.990$ **m/sec and** $s_c = 3{,}775.63$ km. If $n_2 = 15$, then $a_n = 6{,}929{,}483.65$ m, $V_n = 8{,}098.463$ m/s and $s_c = 4{,}011.03$ km. If $n_2 = 2$, then $a_n = 26{,}550{,}643.40$ m, $V_n = 10{,}394.29$ m/sec and $s_c = 8{,}596.42$ km. Since this distance exceeds the maximum acceleration distance of the electromagnetic ramjet, $n_2 = 2$ is too small. If $n_2 = 3$, then $a_n = 20{,}261{,}933.10$ m, $V_n = 10{,}167.97$ m/sec and $s_c = 8{,}040.40$ km. Hence this value of n_2 is also too small. Values of 4 and 5 are also too small for n_2. However, if $n_2 = 6$, then $a_n = 12{,}764{,}218.01$ m, $V_n = 9{,}583.66$ m/sec and $s_c = 6{,}715{,}49$ km which is within the maximum 7,000 km long acceleration distance. The best design strategy is to choose the initial synchronous orbit having the smallest eccentricity so that the ramjet will stay within the atmosphere over a long distance during its second pass over the transmitters. Therefore, the integer $n_2 = 16$ is selected. Since the earth's rotation will given the vehicle an additional 368.76 m/sec relative to an earth centered inertial frame, the actual launch velocity needed to achieve this synchronous orbit will be (7,940.99 − 368.76) m/sec = 7,572.23 m/sec. The required acceleration distance $s_c = 3{,}259.88$ km.

After the vehicle is launched onto this $n_2 = 16$ synchronous orbit (with an eccentricity e = 0.02506) it will reach an apogee altitude (one-half revolution later) of 432.69 km. It will then make another half revolution and pass through its perigee point at an altitude of 100 km. Atmospheric drag will be very small and probably could be disregarded. However, if experience shows that this drag cannot be neglected, its effect can be canceled by increasing the initial launch velocity a small amount such that after 16 complete revolutions, the vehicle passes directly over the initial ground track and over the microwave power transmitters.

The initial velocity V_o corresponding to the second ramjet propulsive maneuver will be equal to the initial launch velocity, which is 7,572.33 m/sec. Taking into consideration the effect of the earth's rotation, the required launch velocity for a direct trajectory to the moon is equal to (11,035.72 − 368.76) m/sec = 10,666.96 m/sec. Consequently, the required acceleration distance needed to reach this velocity corresponding to the second pass over the microwave power transmitters is 6,039.35 km. It will be completed in 655.94 seconds (10.93 minutes). The vehicle acceleration at the beginning and end of this second propulsive maneuver is 5.682 m/sec^2 (0.579 g) and 4.045 m/sec^2 (0.412 g) respectively. The trip to the moon would take 2.1 days.

It is important to point out the fact that since the acceleration path over the microwave transmitters takes place in a fixed plane relative to the earth's surface, the launch trajectory to a particular target and intercept point will have to satisfy this condition. In particular, the latitude ϕ_o and azimuth angle β_o of the launch point will depend upon the launch velocity. For example, low launch velocities will probably have a launch point over the United States, while high launch velocities may require a long accelerating distance that ends near Barbados Island with a latitude of only 11°.

If γ_{01} represents the free-fall transfer trajectory's sweep angle between the launch point and the target intercept point relative to an earth centered inertial frame, the declination angle δ_1 at the intercept point is determined by the equation

$$\sin\delta_1 = \sin\phi_o\cos\gamma_{01} + \cos\phi_o\sin\gamma_{01}\cos\beta_o \quad (49)$$

In the case of the lunar transfer trajectory given in the above example, $\phi_o = 12°$ $\beta_o = 124°$ and $\gamma_{01} = 169.2°$. Consequently, the declination angle of the intercept point will be equal to **−17.862°**. Since the moon's declination angle is constrained by its orbital motion to lie within the range **±28.5°**, the above described transfer trajectory could be easily accomplished with the electromagnetic ramjet accelerating system. (A detailed mathematical discussion of earth to moon free fall trajectories can be found in the book *Fundamentals of Astrodynamics,* Dover Publications, Inc. **1971**, by Roger Bate.)

The vehicle would approach the moon with an asymptotic approach velocity of 1,198 m/sec. It could go into orbit around the moon by executing a retro propulsive maneuver using its onboard chemical rocket engines. For example, if the desired orbital altitude is 100 km, the vehicle would approach the moon along a hyperbolic trajectory to within 100 km and execute a ΔV retro maneuver of 968.39 m/sec. Assuming that the onboard chemical rocket propulsion system has a specific impulse of 490 sec (with an exhaust velocity of 4,806.9 m/sec) the amount of rocket propellant consumed during this retro propulsive maneuver would be 5,095,914 kg. Although this represents a very large amount of propellant, it is a relatively small fraction of the vehicle's actual payload. This payload (which would be about 20,000 tons) could be transferred down to the moon's surface by a fleet of relatively small lunar excursion molecules. (The propellant used to operate these vehicles could be manufactured from lunar material.)

After the payload is removed from the vehicle, the vehicle could accelerate out of lunar orbit and return to earth by means of its ECR propulsion system using the

inductive energy stored in the ramjet's superconducting dipole coils. Since the ECR propulsion system will be capable of generating a much higher specific impulse than the chemical propulsion system, a significant saving in propellant mass can be achieved by using the ECR engine. Moreover, since it will be desirable to discharge the ramjet's dipole coils before reentering the earth's atmosphere in order to eliminate magnetic torque generated by the earth's magnetic field, it is very convenient to discharge the dipole coils by using the inductive energy to power the ECR engine.

Let P_e denote the propulsive power generated by the ECR system. If u_e denotes the exhaust velocity, the rate of propellant mass flow $\dot{m}_e$ is given b

$$m_e = \frac{2P_e}{u_e^2} \tag{50}$$

For any given propulsive power P_e, the rate of propellant mass flow m_e can be increased or decreased by decreasing or increasing the exhaust velocity u_e respectively. The amount of propellant m_p used to carry out the propulsive maneuver is given by

$$m_p = \dot{m}_e T_e \tag{51}$$

where T_e is equal to the time interval required to carry out the propulsive maneuver. Consequently, the required velocity increase ΔV can be expressed as

$$\Delta V = u_e \log\left(\frac{M_1}{M_1 - m_e T_e}\right) \tag{52}$$

where M_1 is equal to the total vehicle mass before the propulsive maneuver. In view of equation (50) this equation can be expressed as

$$\Delta V = u_e \log\left(\frac{M_1}{M_1 - (2P_e T_e/u_e^2)}\right) \tag{53}$$

The product $P_e T_e$ in equation (53) is equal to the amount of propulsive energy used to carry out the maneuver. The exhaust velocity u_e of the ECR propulsion system will be designed such that the ramjet's dipole coils are completely discharged when the required $\Delta V = \Delta V_r$ is achieved. (For the lunar mission $\Delta V_r = 968.39$ m/sec.) Consequently, if η_e denotes the overall efficiency of the ECR engine, the required exhaust velocity u_e can be determined by solving the equation

$$\Delta V_r = u_e \log\left(\frac{M_1}{M_1 - (2\eta_e E_c/u_e^2)}\right) \tag{54}$$

where E_c is equal to the total inductive energy of the dipole coils given by equation (32). Suppose $M_1 = 3{,}000{,}000$ kg and $\eta_e = 0.90$. Therefore, since $E_c = 9.455 \times 10^{12}$ Joules, the exhaust velocity u_e required to return the vehicle back to earth with $\Delta V_r = 968.39$ m/sec using all of the inductive energy stored in the dipole coils would be equal to 6,318.57 m/sec. (This corresponds to a specific impulse of 644 sec.) The expelled propellant mass $m_p = 426{,}281$ kg. If the propulsive power of the ECR engine were 3 GW, the corresponding rate of propellant mass flow $\dot{m}_e = 150.28$ kg/sec, and the time T_e required to carry out the maneuver would be equal to 2,836.50 sec (47.28 minutes). If chemical rocket propulsion were used to carry out the ΔV_r maneuver, the required propellant mass would be 547,387 kg. Consequently, by using the ECR propulsion system instead of the chemical propulsion system, a propellant mass saving of 121,106 kg will achieved.

The vehicle returns to earth along an eccentric trajectory having a perigee altitude that dips into the earth's upper atmosphere. This altitude is designed to be sufficiently low to enable the vehicle to be decelerated to suborbital velocity by atmospheric breaking. Since the vehicle's mass will be relatively low, this initial deceleration will be relatively easy. After the vehicle is decelerated to suborbital velocity, the deceleration process can be very gradual, extending over several thousand kilometers so as to avoid excessive aerodynamic heating. Guidance and control of the vehicle are accomplished automatically via computerized navigation and flight control systems. After the vehicle is decelerated via aerodynamic breaking to a relatively low velocity, it executes a controlled glide to the landing area (i.e., launch site) and makes a final descent along a line of magnetic induction generated by the field coils. The resulting magnetic repulsive forces allow the vehicle to be decelerated such that its vertical velocity is exactly zero at the instant it makes contact with the landing/launching platform. The vehicle's aerodynamic control surfaces, dive brakes, attitude control gyros and reaction thrusters provide a high level of vehicle control to enable it to land automatically with very high precision.

Although the dipole coils of the electromagnetic ramjet are discharged when it reenters the atmosphere, they are partially recharged by the inductive coupling with the field coils. This creates magnetic repulsive forces between the ramjet and the field coils that allows the vehicle to be magnetically decelerated as it approaches the launch site, and descends for a vertical landing.

Since the space transportation system made possible by the electromagnet ramjet propulsion concept disclosed herein allows vast quantities of payload to be transported from the earth's surface directly to the moon, it will be possible to construct a system of superconducting field coils, similar to that described for the earth, on the moon so that vehicles could be decelerated by magnetic repulsive forces and land directly on the moon's surface. It is instructive to describe the required magnetic field that would have to be generated by the superconducting coils.

If the vehicle on the above described lunar transfer trajectory were allowed to free-fall onto the moon's surface without any retro propulsion, the impact velocity $V_m = 2{,}658.63$ m/sec. Consequently, if lunar field coils are used to decelerate the vehicle by magnetic repulsive forces such that its velocity is zero immediately prior to making contact, the total amount of specific kinetic and potential energy E_o that must be converted into specific magnetic potential energy is given by

$$\hat{E}_m = \hat{E}_o = \tfrac{1}{2} V_m^2 = 3.5341469 \times 10^6 \; Joules/kg$$

The total magnetic potential energy $E_m = m_l \hat{E}_m$. If B_m represents the magnetic field strength at the center of the field coils, the magnetic potential energy

$E_m = M_2 B_m$ where M_2 represents the magnetic dipole moment of the electromagnetic ramjet. Consequently, the central magnetic field strength of the field coils can be determined by

$$B_m = \frac{m_t E_o}{M_2}$$

Assuming that the magnetic dipole moment of the electromagnetic ramjet remains unchanged with a value of 6.18179×10^{13} amp m^2, the required magnetic field strength of the lunar field coils will be 1.59669 T (15,966.9 Gauss). Thus, the superconducting coil system would have to be larger than the one described for the earth. However, if such a system were constructed and put into operation it would represent the ultimate in transportation efficiency. Since there is no atmosphere on the moon, nearly 100% of the total kinetic energy of a vehicle being decelerated to a gentle landing on moon's surface will be converted into electrical energy and stored inductively in the coils by the inductive coupling between the magnetically decelerated dipole coils of the ramjet and the field coils. This energy can therefore be used to launch the vehicle back to earth. However, since the mass of the vehicle returning to earth will be significantly lower than its arrival mass, the system will generate vast amounts of electrical energy that could be used to launch many magnetically propelled vehicles with payloads taken from the moon for other destinations. Such a system would be very versatile because unlike prior art electromagnetic accelerators designed for the moon's surface that require a long accelerating track with a fixed launch azimuth, this electromagnetic accelerating system does not require any accelerating track and will provide any launch azimuth desired. It will also be much safer since the vehicle being accelerated does not have to move near any stationary body (such as a guide rail or drive coils) where any accidental contact could result in a catastrophic disintegration of the entire system.

In order to determine the actual payload mass m_{pay} that could be delivered to the moon in the above example, the total mass of the ramjet propulsion system and connecting cables must be determined. Since the structural mass of the airfoil surround the propulsion coils, including all internal components except the coils themselves, will have a mass equal to about 25% of the total coil mass, this mass will be about 410,000 kg. The airfoils will have a chord of about 4.3 m and a thickness of about 60 cm (20 in). The total mass of the radial airfoils (FIG. **18**) will be approximately 25,000 kg. Thus, the total mass of the electromagnetic ramjet m_r will be equal to about 2,074,300 kg. Therefore, the total mass m_o that will be accelerated by the ramjet will be about 25,854,400 kg. Since the maximum acceleration a_m (including 1.0 g from gravity) will be 7.6 g, the corresponding maximum accelerating force $F_m = m_o a_m = 1.902 \times 10^9$ N. Assuming that the total length of the central fuselage **108** is 400 m (1,312 ft) and is attached to the ramjet in a central position such that the fuselage extends 200 m on each side of the ramjet's coil plane, the supporting cables **110** attached to the inner airfoil and the rear of the fuselage **108** will make an angle of 56.3° with the central longitudinal axis of the ramjet. Consequently, the total tension F_t acting on these cables **110** when the vehicle is under maximum acceleration a_m will be equal to $F_m/\cos 56.3° = 3.429 \times 10^9$ N. If A_t denotes the total cross sectional area of these cables and σ denotes the tensil strength, then $\sigma A_t = F_t$. Assuming that the supporting cables are constructed with high strength fused glass fibers where $\sigma = 1.4 \times 10^{10}$ N/m^2, the required cross-sectional area $A_t = 3.429 \times 10^9$ $N/1.4 \times 10^{10}$ $N/m^2 = 0.2449$ m^2. The length of the cables will be $[300^2 + 200^2]^{\frac{1}{2}} = 500$ m. Therefore, the density $\rho = 2{,}160$ kg/m^3, the total mass of these cables will be $500\ A_t \rho = 264{,}514$ kg. Thus, the total mass m_{cab} of all the supporting cables attached to the fuselage will be about 300,000 kg.

If the fuselage **108** is cylindrical with a maximum diameter of 30 m (98 ft) and is constructed with high strength composite material with a mass density of 3,000 kg/ms, the total empty mass m_f of the fuselage **108** will be about 700,000 kg. Consequently, if the total propellant mass $m_p = 5{,}600{,}000$ kg, the total payload mass m_{pay} that could be delivered to the moon in the above numerical example would be $m_{pay} = m_t - m_r - m_{cab} - m_f - m_p = 19{,}254{,}400$ kg (42,456,000 lbs or 21,300 tons).

It is estimated that in the future, the lowest cost of transporting payloads to the moon from the earth's surface will be about $25,000/lb using the most efficient prior art propulsion systems. Hence, it would cost over one trillion dollars ($10^{12}) to deliver the same amount of payload mass m_p as described in the example. Using the electromagnetic ramjet propulsion system disclosed herein, this cost would be essentially zero. The electromagnetic ramjet propulsion system would also be much more reliable than any prior art propulsion system because the engine has no moving parts and burns no combustible fuel.

There is another economic aspect which will have a profound impact on the SDI Program. The current planning for SDI payloads calls for 50 million pounds to be orbited at a total launch cost of $130 billion. The electromagnetic propulsion system envisioned herein will be easily capable of delivering all of this payload in a single launch at zero cost. Moreover, the propulsion system will also be capable of transporting extremely large and bulky SDI payloads that could be completely assembled and tested on the ground before being transported to orbit as a single unit. This would eliminate the very tedious, costly, and time consuming process of having to assemble large SDI systems in orbit by transporting small components piece by piece.

The electromagnetic ramjet propulsion system could easily launch a huge fully assembled space station that is even larger and more elaborate than the giant toroidal design illustrated in Arthur C. Clarke's famous science fiction novel "2001 Space Odyssey"—fully manned with a crew of several hundred. In these ultra large payloads, an outer ablative protective jacket could be mounted around the hull that is designed to protect it while traversing through the atmosphere at high speed. (It could be enclosed in a detachable structure while being transported to orbit.) FIGS. **35** and **36** are schematic longitudinal and transverse verse cross sections illustrating how a fully assembled 25,000 ton toroidal space station **212** with a major and minor radius of 325 m and 20 m respectively, is attached to an electromagnetic ramjet **214** via detachable cables **216**. This toroidal space station **212** is equipped with two, 250 m long, 30 m diameter, central column cylinders **218** that are connected to the central hub **220** of the space station via swivel joints so as to remain stationary while the toroi-

dal hull is rotating to provide an artificial earth-like gravitational field for the inhabitants by centrifugal force. Three relatively small 4 m diameter spoke cylinders **222** connect the hub **220** with the toroidal hull. When the ramjet transports the space station to a certain altitude, the calbes **216** are detached from the ramjet, and the ramjet returns to the launch site without any central structure. The space station is equipped with a plurality of ECR propulsion systems that maneuver the station to a desired final orbit. The design of the space station could be similar to the one disclosed in my U.S. Pat. No. 4,730,797, entitled "Inflatable Core Orbital Construction Method and Space station," filed Aug. 12, 1985.

FIG. **37** is a schematic longitudinal cross section of the electromagnetic ramjet **214** attached to a fully assembled toroidal space station **212** prior to launch. The space station **212** is assembled inside a large subsurface cylindric cavity **224** that is 220 m deep with a diameter of 700 m. The electromagnetic ramjet **214** is positioned around the rim **226** of the cavity **224** on a plurality of movable launching/landing platforms **228**. The main connecting cables **230** are positioned between the platforms **228**. When the space station is launched vertically upward, the platforms **228** simultaneously swing away from the rim **226** of the cavity **224** so that the ramjet can lift the space station upward by magnetic repulsive forces acting between its superconducting dipole coils and the surrounding superconducting field coils. The platforms **228** are fitted with superconducting current carrying cables **232** that charge up the ramjet coils prior to launch and discharge the coils after a landing. The toroidal hull **234** of the space station **212** can be constructed inside the cavity **224** using the method described in my U.S. Pat. No. 4,730,797. The two column cylinders **236,238** and all of their internal structures and systems can be constructed outside the cavity **224** and transported into it via large diameter underground access tunnels **240**. A plurality of large underground subassembly workrooms **242** are provided around the cavity **224**. All of the walls of the tunnels, workrooms, and cavity are fitted with superconducting shielding coils **244** which prevent the magnetic field of the surrounding field coils from entering the work areas.

It should be noted that although magnetic shielding is provided to prevent the surrounding magnetic field generated by the field coils from entering the underground facilities of the launch complex, there is no medical evidence indicating that exposure to 6,000 Gauss magnetic fields is biologically harmful. See "Human Tolerance to Magnetic Fields," *Astronautics*, March 1962 by D. E. Beischer. However, in order to minimize the risk of such exposure, some personnel working inside the underground launch complex can be provided with flexible suits that are designed to keep out a magnetic field.

A superconducting dipole coil **246** is mounted inside a tunnel **248** near the rim **226** of the cavity. This coil **246** is designed to generate a relatively weak local magnetic field with variable strength so as to assist in guiding the ramjet **214** to a precise landing on the landing/launching platforms **228**.

Large toroidal space stations represent ideal payloads for the electromagnetic ramjet because the area inside the circular periphery of a toroidal space station provides a large, relatively unobstructed central region **249** (FIG. **36**) for low density atmospheric gas to pass through the ramjet. Other payloads such as the 400 m long cylindrical central body **108** (FIGS. **18,19,20**) can also be introduced into the cavity **224** and attached to the electromagnetic ramjet **214** via detachable connecting cables. In this case, the central body would be brought into the cavity in two completely assembled sections, (loaded with payloads) and joined together inside the cavity **224** in a vertical position. This central body may contain two completely assembled self-refueling interplanetary transfer vehicles for carrying out ultra high speed interplanetary voyages around the entire solar system. Since these vehicles generate their own propellant while undergoing decelerating propulsive maneuvers, they never have to be refueled with propellant from external sources. The ability to launch fully assembled self-refueling interplanetary transfer vehicles would open up the entire solar system for manned exploration and eventual colonization. (See "A Generalized Theory of Classical Rocket Propulsion For Future Space Travel," *Journal of the British Interplanetary Society*, Vol. 40, No. 8, August 1987, pp. 341-352.)

In the practical application of the proposed ground to orbit space transportation system using the electromagnetic ramjet, it is important to consider the strength of the magnetic field generated by the field coils at various distances on the earth's surface. The field strength inside the central region **164** (FIG. **27**) will be nearly constant and (for the preferred embodiment) equal to 0.6 T (6,000 Gauss). For distances D from the center that are outside the outer field coil **168**, the magnetic field strength is given by

$$B = \frac{\mu_o}{4D^3} \sum_{j=1}^{n} i_{1j} R_{1j}^2$$

For the particular field coils in the preferred embodiment

$$B = \frac{1367.8\ (T\ \mathrm{km}^3)}{D^3}$$

where D is the distance in kilometers. Thus, the field strength in the region surrounding the field coils decreases very rapidly, inversely with the cube of the distance from the center. For example, at a distance D=30 km (8.17 km from the outer field coil **168**) the ground field is 0.0507 T (507 Gauss). At a distance D=50 km (28.17 km from the outer field coil) the ground field 0.0103 T (103 Gauss). At a distance of 100 km from the outer field coil, the ground field would only be 8 Gauss. These correspond to very weak magnetic fields and would be essentially imperceptible. At distances greater than about 400 km, the ground field would be less than the earth's natural magnetic field. The annular region close to the outer field coil where the magnetic field strength is high is occupied by the solar array **172** which is unaffected by the field. FIG. **38** is a graph of the magnetic field strength (Gauss) generated by the field coils on the earth's surface versus distance from the center D (km) for the preferred embodiment.

The strength of the magnetic field at various altitudes h above the center of the field coils is given by

$$B = \frac{\mu_o}{2} \sum_{j=1}^{n} \frac{i_{1j} R_{1j}^2}{[R_{1j}^2 + h^2]^{1.5}}$$

In the preferred embodiment of the field coils, the magnetic field strength at an altitude of 100 km directly over the center of the field coils would be 26 Gauss. At an altitude of 200 km, the field would only be 3 Gauss, and at an altitude of 500 km, it would only be 0.2 Gauss (which is approximately equal to the earth's natural magnetic field at this altitude). Thus, the region in space directly above the field coils **134** would be very weak at orbital altitudes. Consequently the field coils will not affect any artificial satellites moving in orbit above them. This is a beautiful situation as it allows the field to be relatively strong in a region where it is needed to lift the electromagnetic ramjet off the earth's surface and accelerate it to supersonic speed at a sufficiently high altitude to enable it to be accelerated by the microwave beam, but it decreases very rapidly beyond this region where it is no longer needed. FIG. **39** is a graph of the magnetic field strength in space directly above the field coils versus altitude.

Since the microwave power generating and transmitting stations are designed to transmit a maximum beam power of 10,000 GW (10^{13} watts), it is possible to construct a much larger electromagnetic ramjet to take full advantage of this enormous power capability. It will be instructive to carry out this calculation as it will provide additional teaching as to how the various equations developed herein are applied in the actual design of an electromagnetic ramjet. The radius R_{21} of the inner dipole coil of a multicoil electromagnetic ramjet designed to operate with the maximum 10^{13} watt microwave beam is determined by the equation

$$\pi R^2_{21}\,\rho_{max}=10^{13}\ W$$

where ρ_{max} is equal to the beam's power density at the onset of atmospheric max breakdown, which is 425 w/cm^2. Hence, $R_{21}=865.4$ m. Suppose that the ramjet has ten coaxial superconducting dipole coils with **10** m spacing between adjacent dipoles and that the magnetic field strength at the center generated by each coil is equal. Consequently, since the total strength of the magnetic field inside the inner dipole coil must be equal to 0.3572 T in order to generate electron cyclotron resonance with the 10 GHz microwave beam (as determined by equation 1) the central field of each dipole coil is equal to 0.03572 T. Upon substituting this value for B_o into equation (18), the aspect ratio γ of each coil in the ramjet will be equal to 3,772.0. The total magnetic dipole moment M_2 of the electromagnetic ramjet can now be calculated by equation (28). The result is $M_2=1.35167\times10^{15}$. The total launch mass m_t can now be calculated from equation (37). The result is $m_t=611{,}023{,}607$ kg. Since the total mass m_c of the dipole coils is 22,679,413 kg, this launch mass is a factor of 26.9 times greater than the coil mass. In the previous example, this "mass ratio" was 17.0. It is greater in this example because the aspect ratio γ of the dipole coils is greater than in the previous example (3,772.0 instead of 2,324.1). As is demonstrated by equation (38), the greater the aspect ratio, the greater the mass ratio (i.e., weight lifting efficiency).

Assuming that this mass is boosted to the 100 km high circular accelerating orbit along the same ascent trajectory as in the previous example, the initial velocity V_o, determined from equation (47) and (48) will be 1,786.46 m/sec The initial acceleration a_o along the circular accelerating orbit will be equal to 9.1611 m/sec^2(0.934 g). In order to reach orbital velocity (7,843 m/sec), the ramjet would have to accelerate the vehicle a distance of 8,419 km, which is obtained from equation (44). Since the maximum acceleration distance in the preferred embodiment is 7,000 km, it will not be possible to accelerate the launch mass to orbital velocity. The maximum mass that could be accelerated to orbit velocity with the preferred embodiment can be calculated by determining the value of K in equation (44) where $s_c=7\times10^6$ m, $V=(7{,}843-370)$ m/sec$=7{,}473$ m/sec and $V_o=1{,}786$ m/sec. The result is $K=58.805$ w/kg. Consequently, it follows from equation (43) that the maximum possible vehicle mass $\overline{m}_t=3\ P_{max}/K=510{,}156{,}788$ kg. Since the total mass of the ramjet's 10 dipole coils is 22,679,413 kg, and since the total mass of the ramjet's airfoils and all internal systems is assumed to be equal to 25% of the total coil mass, the total mass of the ramjet would be 28,349,266 kg. Hence, the total mass that could be transported to low earth orbit with this system would be equal to 481,807,522 kg (1,062,385,586 lbs or 531,193 tons). Since the ground to orbit transportation cost for the Space Shuttle is $2,000/lb, it would cost $2.125 trillion to orbit this amount of payload in that prior art system—and it would be in the form of 16,000 small pieces! Moreover, at a rate of one Shuttle launch every week, it would require over 300 years to deliver it. (By using the proposed scramjet propelled aerospace plane the cost could be reduced by one order of magnitude, but it would still require over a hundred years to deliver it—piece by piece.)

Although the capability of orbiting huge payloads with a mass of this magnitude may appear to be beyond any conceivable practical application, I do not believe this is the case. A ground-to-orbit transportation system with this capability would enable giant sized, completely assembled, toroidal habitats to be transported into orbit along with all of its inhabitants that may number in the tens of thousands.

The possibility of developing a ground-to-orbit transportation system having this capability is so remote in the prior art of astronautics that it is not even discussed in science fiction novels. However, the present disclosure introduces such a system that is well within present engineering feasibility. It is made possible by the electromagnetic ramjet propulsion concept and the recent developments in high temperature superconducting material which makes it possible. (Superconducting cable constructed with new ceramic high temperature superconducting material with critical temperature above liquid nitrogen is already being manufactured on a commercial basis. See "Superconducting Wire," *Popular Science,* March 1989, p. 17.)

The above example describes the performance capabilities of the most powerful electromagnetic ramjet that could be used in the preferred embodiment of the invention. It is therefore instructive to consider the performance capability of a ramjet having the smallest inner dipole diameter. This diameter is 61 m and is set by the minimum beam diameter at an assumed maximum range of 500 km. In this case $R_{21}=30.5$ m. Consequently, the ramjet's maximum propulsive power $P_{max}=\pi R_{21}^2\rho_{max}=1.242\times10^{10}$ w (12.42 GW). It will be assumed that this ramjet has 3 dipole coils separated by 2 m intervals with equal aspect ratio γ. Hence, $R_{22}=32.5$ m and $R_{23}=34.5$ m. In order to generate the 0.3572 T central magnetic field that is required for electron cyclotron resonance with 10 GHz microwave beam, each of the three coils must generate a central magnetic field $B_o=0.11907$ T. Hence, the aspect ratio of

each coil will be 1,205.7 which is obtained by equation (18). The ramjet's total magnetic dipole moment $M_2=6.17777\times10^{10}$ amp m^2 (which is obtained by equation 28). The total launch mass $m_t=28{,}003$ kg (which is obtained from equation 37). Since the total coil mass $m_c=3{,}043$ kg, the mass ratio $m_t/m_c=9.20$. This mass ratio can also be obtained directly from equation (38). The total ramjet mass will be about $m_c+0.25\ m_c=3{,}804$ kg. Hence, the non-ramjet payload mass will be 24,199 kg.

Assuming, as in the previous examples, that the vehicle is accelerated to the 100 km high circular accelerating trajectory along the same ascent trajectory, the initial velocity $V_o=4{,}895.90$ m/sec and the initial acceleration $a_o=90.59$ m/sec^2 (9.23 g) which is obtained from equations (47) and (48). In order to reach an orbital velocity of 7,843 m/sec (which would require a launch velocity of 7,493 m/sec because of the earth's rotation) the ramjet would only have to accelerate the vehicle a distance of 228 km along the circular flight path, which is obtained from equation (44). Hence, only the first microwave transmitter would be used in this case. (More than half of the required orbital velocity would be obtained while climbing along the initial ascent trajectory). Since the initial launch trajectory between lift-off and 60 km altitude is the same for every vehicle regardless of its mass (because the ratio M_2/m_t which determines the launch trajectory given by equation (46) is unchanged) the vehicle's maximum acceleration will be 9.23 g. Although this acceleration is rather high, it is still within the limits of human toleration. (It could be easily lowered by reducing the propulsive power.) Consequently, since this smallest ramjet propelled vehicle would have the highest acceleration, every ramjet propelled vehicle in the preferred embodiment of the invention would be capable of transporting human passengers. However, these very small ramjet propelled vehicles would be ideal as automated unmanned ground to orbit supply vehicles.

Since any number of electromagnetic ramjets could be used to accelerate payloads into orbit (one at a time) by the same field coils and microwave transmitters, the ground-to-orbit transportation system envisioned herein is very large and includes many individual ramjets of various sizes. FIG. **40** is an enlarged schematic plan view of the central 10 km diameter launching/landing region **250**. The center of this region contains 7 launching/landing terminals **252** designed for the largest ramjets with inner and outer dipole diameters of 1,731 m and 1,911 m respectively. These terminals are surrounded with other launching/landing terminals **254** using smaller ramjets. The smallest ramjets have an inner dipole diameter of **61** m and use the smallest outer launching/land terminals **256**. A network of underground access tunnels **258** connect the various terminals. Passengers could be transported to and from various launching/landing terminals via high speed trains operating in some of the underground tunnels **258**.

The field coils **160** (FIG. **27**) may also have many other embodiments. For example, if it is possible to initiate the microwave propelled ramjet propulsion system at relatively low altitudes instead of at an altitude of 60 km, only one field coil would have to be constructed. In fact, in some embodiments of the invention, a vehicle propelled by an electromagnetic ramjet propulsion system could be boosted to some initial altitude and speed by a conventional chemical rocket system without requiring any field coils. After reaching this initial altitude, the rocket booster could be separated from the vehicle and the vehicle could be propelled by the electromagnetic ramjet receiving propulsive power from a microwave beam. However, as described herein, the preferred embodiment of the invention uses a plurality of large superconducting field coils to initially lift the vehicle off the earth's surface and to propel it to some initial altitude because this will enable the system to launch much greater payloads into orbit.

It should also be pointed out that the magnetic field generated by the field coils used in the preferred embodiment of the invention, may be increased by the presence of underground deposits of iron ore or other natural ferromagnetic substances in the earth near the field coils. This would be very desirable as it would reduce the number of field coils required to establish a desired magnetic field in the vicinity of the launch site.

In another embodiment of the invention, an orbiting microwave transmitter could be used to power the electromagnetic ramjet instead of a plurality of ground based transmitters. This would enable the accelerating distance s_c of the ramjet to be essentially unlimited. It would also enable the maximum power density ρ_{max} of the microwave beam to be increased because atmospheric breakdown at very high altitudes requires much higher power densities.

In still other embodiments, the frequency of the microwave beam may be other than 10 GHz. This is a design detail that would be determined after a more detailed study of the invention involving optimization analysis.

It should also be pointed out and emphasized that the construction of the self-supporting dipole propulsion coils described above, where thin layers of ceramic superconducting material is vapor deposited directly onto fused silica glass fibers, is not a necessary construction feature in the practice of this invention. The superconducting material can be deposited on some intermediate fiber substrate having high tensil strength σ and low density ρ such as carbon fibers. The superconducting tension bearing cable could then be fabricated by embedding the carbon filaments in a matrix of fused silica glass fibers as described in my previously mentioned U.S. Pat. No. 4,078,747.

Although constructing the ramjet's superconducting dipole coils with new high temperature superconducting material is an important construction feature of the invention, this feature is not a necessary construction feature in the practice of this invention. The dipole coils could be constructed with ordinary superconducting material that is vapor deposited onto the stress bearing fibers as disclosed in my U.S. Pat. No. 4,078,747. However, in this case the liquid hydrogen cryogenic refrigerant **36** (FIGS. **8**,**9**) used for maintaining the ramjet's superconducting dipole coils **10** at cryogenic temperature would have to be replaced with liquid helium.

It should be emphasized that the ground to orbit electromagnetic propulsion concept and operating system disclosed herein is radically different from prior art electromagnetic propulsion concepts that also use magnetic forces generated by current carrying coils to generate propulsive thrust. In prior art electromagnetic propulsion systems, (which are called "Mass drivers" or "coaxial electromagnetic accelerators") the moving propulsion coil (which is mounted around the payload) is very small, usually only a few centimeters in diameter, and moves through an evacuated tube surrounded by a plurality of identical coaxial drive coils mounted at

various intervals along the tube. The drive coils are exited (i.e., pulsed with a current surge) in a sequence timed with the moving coil to generate a travelling magnetic field. Thus, the moving coil is accelerated by series of relatively small incremental steps as it passes through each drive coil. These prior art systems are very complicated electronically (because of the required timing circuits) and can only accelerate very small payloads that are restricted in size by the diameter of the evacuated accelerating tube. Moreover, if the moving coil makes accidental contact with the inside walls of the tube, it could cause the system to disintegrate because of the very high speeds involved Since the tube must be several kilometers long in order to reduce acceleration loads, its construction will be very expensive and prone to catastrophic failure. These are fundamental problems inherent in prior art electromagnetic propulsion systems that cannot be circumvented. Thus, the practical utility of prior art ground-to-orbit launch systems using electromagnetic forces is severely limited. A good technical description of this prior art can be found in the following papers: "Basic Principles Of Coaxial Launch Technology," *IEEE Transactions On Magnetics,* Vol. MAG-20, No. 2, March 1984, pp. 227-230, by H. Kolm and P. Mongeau; and "An Alternative Launching Medium," IEEE Spectrum, April 1982, pp. 30-36, by H. Kolm and P. Mongeau.

The electromagnetic propulsion concept disclosed herein generates its magnetic propulsive force by creating a moving repulsive magnetic field behind superconducting dipole propulsion coils by utilizing low density ionized gas in the earth's upper atmosphere. This is achieved by directing a microwave beam at the propulsion dipoles having a frequency designed to produce electron cyclotron resonance with free electrons moving through the coils. When free electrons move into this resonance region they are rapidly accelerated into circular cyclotron orbits perpendicular to the lines of magnetic induction of the coils. The electrons are thus pumped into very high energy cyclotron orbits by the microwave beam. A strong coupling between the electrons and the microwave wave beam is created resulting in the absorption of essentially all of the beam energy by the electrons. The electrons become strong magnetic dipoles which, in their aggregate, generate a strong repulsive magnetic field behind the propulsion coils that accelerates the coils forward by magnetic repulsive forces. The unique relationship between the magnetic field of the propulsion coils and the frequency of the microwave beam required to produce electron cyclotron resonance is such that very large coil diameters are possible so that thousands of gigawatts of beam power could be used for accelerating giant size payloads with dimensions and mass many orders of magnitude greater than could be accelerated by any prior art propulsion concept. This is at the heart of the invention.

Unlike prior art beamed power propulsion concepts, where a beam is used to heat a working fluid in a relatively small heating region, so that it can be expelled at high velocity to generate propulsive thrust, the beam in the present invention is not absorbed by thermalization processes. Almost all of the beam energy is used to pump free electrons into high energy cyclotron orbits in a very large region. Thus, the microwave beam is converted directly into propulsive thrust with an efficiency that could, in principle, approach 100%. Consequently, the cost of transporting payloads into orbit with this system is essentially equal to the cost of generating an amount of electrical energy equal to the orbital energy. Since the system generates its own electrical energy, this cost is essentially zero.

Although the propulsion system is basically a high altitude ramjet, it is fundamentally different from all prior art ramjets in that it does not require any fuel, and does not involve any heating or combustion processes. Consequently, it has no inherent velocity limitations and, since it generates its propulsive power from a microwave beam, it has no energy limitations. Since the electromagnetic ramjet propulsion system does not have any moving parts and operates by electrical processes, it would be extremely reliable.

Perhaps the most striking operating feature of the electromagnetic ramjet propulsion system disclosed herein is the fact that it can be operated as a reusable self-contained payload acceleration system whereby pre-assembled payloads with very large dimensions and virtually unlimited mass can be lifted off the earth's surface and accelerated into orbit at essentially zero cost. This is a fundamental physical impossibility within the prior art of space travel and will have truly revolutionary implications. For example, it will enable huge completely assembled and fully equipped space stations, manned with hundreds (or thousands) of occupants with a mass of tens of thousands of tons to be transported into essentially any orbit around the earth or the moon at zero cost. Hundreds (of even thousands) of such stations, in the form of orbiting self-contained cities, could be transported into space on such a vast scale that a significant fraction of the total world population could be living in them before the end of the next century. It could also be used to transport huge, completely assembled self-refueling space based interorbital/interplanetary vehicles operating under the generalized theory of rocket propulsion to transport hundreds of passengers at very low cost on high speed interplanetary trajectories throughout the entire solar system. This could lead to the colonization of the solar system.

From the foregoing description, it will thus be evident that the present invention provides a vastly improved method for propelling payloads from the earth's surface into orbit for achieving economical space transportation. As various changes and modifications can be made in the above system and operating method without departing from the spirit or scope of the invention, it is intended that all matter contained in the above description or shown in the accompanying drawings, should be interpreted as illustrative and not in a limiting sense.

What is claimed is:

1. A method for generating propulsive thrust comprising the steps of:

charging a superconducting coil with electric current to generate a magnetic field;

providing a source of ionized gas moving through a portion of said magnetic field; and

directing a beam of electromagnetic radiation into said magnetic field with a frequency designed to produce electron cyclotron resonance with free electrons of said ionized gas moving through said magnetic field thereby accelerating said ionized gas away from said coil and generating propulsive thrust.

2. A method as set forth in claim **1** wherein said gas is atmospheric air that is moving through said coil.

3. A method as set forth in claim 1 further comprising the step of mounting said superconducting coil inside a circular wing-like airfoil having an open duct-like central region.

4. A method as set forth in claim 3 further comprising the step of maintaining said coil at cryogenic temperature by cryogenic cooling means mounted inside said airfoil.

5. A method as set forth in claim 3 wherein said ionized gas is atmospheric air and further comprising the step of moving said airfoil through the atmosphere so as to provide a continuous source of gas moving through said coil

6. A method as set forth in claim 5 wherein said beam of electromagnetic radiation is transmitted from a transmitter located on the earth's surface.

7. A method as set forth in claim 5 further comprising the step of mounting movable aerodynamic control surfaces on said airfoil adapted for guiding said airfoil through the atmosphere.

8. A method as set forth in claim 5 wherein a portion of said ionized air is generated by the step of moving said airfoil at supersonic speed thereby generating supersonic shock waves and creating ionized gas.

9. A method as set forth in claim 5 wherein said airfoil establishes a central longitudinal axis passing through the center of said coil and perpendicular to the plane of said coil and furhter comprising the step of mounting a payload carrying central body in the center of said airfoil extending along said longitudinal axis.

10. A method as set forth in claim 9 further comprising the step of rotating said central body about an axis perpendicular to said longitudinal axis when said airfoil is moving outside the earth's atmosphere.

11. A method as set forth in claim 10 further comprising the step of mounting secondary thrust generating means inside said airfoil and inside said central body for controlling the attitude of said airfoil and for providing maneuvering thrust when said airfoil is moving outside said atmosphere.

12. A method as set forth in claim 5 further comprising the steps of:

creating a static magnetic field on the earth's surface that extends upward into the atmosphere;

launching said airfoil from the earth's surface to some initial altitude at some initial velocity by magnetic repulsive forces exerted on said coil by said static magnetic field; and

accelerating said airfoil to higher velocity by directing said beam or electromagnetic radiation into said magnetic field generated by said superconducting coil when said airfoil reaches said initial altitude,

13. A method as set forth in claim 5 further comprising the steps of:

mounting aerodynamic breaking means on said airfoil; and

decelerating said airfoil by said aerodynamic breaking means so that said airfoil means can be returned to the earth's surface.

14. A method as set forth in claim 3 wherein said step of providing a source of ionized gas comprises the step of moving said airfoil through the earth's ionosphere and utilizing said ionosphere as a source for said ionized gas.

15. A method as set forth in claim 1 wherein said superconducting coil is self-supporting dipole with an aspect ratio exceeding 100.

16. A method for generating propulsive thrust comprising the steps of:

moving a current carrying superconducting coil means generating a magnetic field through the atmosphere such that atmospheric air flows through said coil means; and

creating a secondary repulsive magnetic field behind said coil means by free electrons in said atmospheric air moving in circular electron cyclotron orbits in the magnetic field of said coil means energized by a microwave beam tuned to the electron cyclotron resonant frequency of said orbiting electrons.

17. A method as set forth in claim 16 wherein said microwave beam is transmitted from a transmitter located on the earth's surface.

18. A method as set forth in claim 16 furhter comprising the step of mounting said superconducting coil means inside circular wing-like airfoil means having an open duct-like central region.

19. A method as set forth in claim 16 wherein said superconducting coil means comprises a plurality of superconducting coils further comprising the steps of

mounting said coils inside a like plurality of circular wing-like airfoils having an open duct-like central region; and

maintaining said airfoils in a co-axial spaced-apart relationship with a plurality of radial supporting airfoils mounted between adjacent circular airfoils.

20. A method as set forth in claim 18 further comprising the step of maintaining said coil means at cryogenic temperature by cryogenic cooling means mounted inside said airfoil means.

21. A method as set forth in claim 18 further comprising the step of mounting movable aerodynamic control surfaces on said airfoil means adapted for guiding said airfoil means through the atmosphere.

22. A method as set forth in claim 18 further comprising the step of generating free electrons in the atmosphere by moving said airfoil means at supersonic speed thereby shock ionizing a portion of said air flowing through said airfoil means.

23. A method as set forth in claim 18 further comprising the step of moving said airfoil means through the earth's ionosphere thereby utilizing natural ionized gas present in the ionosphere as a source for free electrons.

24. A method as set forth in claim 18 wherein said airfoil means establishes a longitudinal central axis passing through the center of said airfoil means and further comprising the step of mounting a payload carrying central body in the center of said airfoil means extending along said longitudinal axis.

25. A method as set forth in claim 24 further comprising the step of rotating said central body about an axis perpendicular to said longitudinal axis when said airfoil is moving outside the earth's atmosphere thereby allowing said central body to be aligned along any desired direction while said coil means is constrained by magnetic torque exerted by the earth's natural magnetic field.

26. A method as set forth in claim 25 further comprising the step of mounting secondary thrust generating means inside said airfoil means and inside said central body adapted for controlling the attitude of said airfoil means and for providing maneuvering thrust when said airfoil means is moving outside said atmosphere.

27. A method as set forth in claim 18 further comprising the steps of:

creating a static magnetic field on the earth's surface that extends upward into the atmosphere;

launching said airfoil means from the earth's surface to some initial altitude at some initial velocity by magnetic repulsive forces exerted on said coil means by said static magnetic field; and

accelerating said airfoil means to higher velocity when said airfoil mean reaches said initial altitude by directing said microwave beam into said magnetic field generated by said coil means thereby creating said secondary repulsive magnetic field behind said coil means.

28. A method as set forth in claim **18** further comprising the steps of:

mounting aerodynamic breaking means on said airfoil means; and

decelerating said airfoil means by said aerodynamic breaking so that airfoil means can be returned to the earth's surface.

29. A method as set forth in claim **16** wherein said superconducting coil means comprises a plurality of self-supporting dipoles having aspect ratios exceeding 100.

30. A method for generating propulsive thrust comprising the steps of:

charging a superconducting coil means with electric current thereby generating a magnetic field; and

accelerating ionized gas away from said coil means by a microwave beam having a frequency tuned to produce electron cyclotron resonance with free electrons of said ionized gas moving in said magnetic field.

31. A method as set forth in claim **30** wherein said ionized gas is atmospheric air moving through said coil means.

32. A method as set forth in claim **30** further comprising the steps of:

mounting said superconducting coil means inside circular wing-like air-foil means having an open duct-like central region; and

moving said airfoil means through the atmosphere such that said gas is atmospheric air moving through said duct-like central region.

33. A method as set forth in claim **32** further comprising the step of ionizing a portion of said atmospheric air moving through said airfoil means.

34. A method as set forth in claim **32** further comprising the step of maintaining said coil means at cryogenic temperature by cryogenic cooling means mounted inside said airfoil means.

35. A method as set forth in claim **32** wherein said microwave beam is transmitted from a transmitter located on the earth's surface.

36. A method as set forth in claim **32** further comprising the step of mounting movable aerodynamic control surfaces on said airfoil means for guiding said airfoil means through the atmosphere in controlled flight.

37. A method as set forth in claim **32** wherein said circular airfoil means establishes a central longitudinal axis passing through the center of said airfoil means further comprising the step of mounting a payload carrying central body in the center of said airfoil means extending along said longitudinal axis.

38. A method as set forth in claim **37** further comprising the step of rotating said central body about an axis perpendicular to said longitudinal axis when said airfoil means is moving outside the earth's atmosphere thereby allowing said central body to be aligned along any desired direction while said coil means is constrained by magnetic torque exerted by the earth's natural magnetic field.

39. A method as set forth in claim **38** further comprising the step of mounting secondary thrust generating means inside said airfoil means and inside said central body for controlling the attitude of said airfoil means and for providing maneuvering thrust when said airfoil means is moving outside said atmosphere.

40. A method as set forth in claim **32** further comprising the step of moving said airfoil means through the atmosphere at supersonic speed thereby generating shock waves and ionizing a portion of said atmospheric air moving through said airfoil means.

41. A method as set forth in claim **32** further comprising the steps of:

creating a static magnetic field on the earth's surface that extends upward into the atmosphere;

launching said airfoil means from the earth's surface to some initial altitude at some initial velocity by magnetic repulsive forces exerted on said coil means by said static magnetic field; and

propelling said airfoil means to higher velocity when said airfoil means reaches said initial altitude by accelerating ionized gas away from said airfoil means by transmitting said microwave beam tuned to said electron cyclotron resonant frequency.

42. A method as set forth in claim **32** further comprising the steps of:

mounting aerodynamic breaking means on said airfoil means; and

decelerating said airfoil means by said aerodynamic breaking means so that said airfoil means can be returned to the earth's surface.

43. A method as set forth in claim **32** further comprising the steps of:

moving said airfoil means through the earth's ionosphere while generating said propulsive thrust; and

utilizing said ionosphere as a source for ionized gas.

44. A method as set forth in claim **30** wherein said superconducting coil means comprises a plurality of circular superconducting coils further comprising the steps of:

mounting said coils inside a like plurality of circular wing-like airfoils with an open duct-like central region; and

maintaining said airfoils in a co-axial, spaced-apart relationship with a plurality of radial supporting airfoils mounted between adjacent circular airfoils.

45. A method as set forth in claim **30** wherein said superconducting coil means comprises a plurality of self-supporting dipoles having aspect ratios exceeding 100.

46. A method for accelerating a body to high velocity comprising the steps of

charging a superconducting coil means with electric current so as to create a magnetic field;

mounting said superconducting coil means inside an airfoil means adapted for flight through the atmosphere;

attaching said body to said airfoil means; and

creating a travelling repulsive magnetic field behind said airfoil means by inducing free electrons in the atmosphere to move in circular electron cyclotron resonance orbits by a microwave beam thereby accelerating said airfoil means by magnetic repulsive forces.

47. A method as set forth in claim 46 wherein said microwave beam is transmitted from a transmitter means located on the earth's surface.

48. A method as set forth in claim 46 further comprising the step of maintaining said superconducting coil means at cryogenic temperature by cryogenic cooling means mounted inside said airfoil means.

49. A method as set forth in claim 46 further comprising the step of ionizing a portion of atmospheric air for generating free electrons.

50. A method as set forth in claim 46 wherein said airfoil means has a circular wing-like shape with an open circular duct-like central region that is surrounded by said coil means and further comprising the step of moving said airfoil means so that atmospheric air passes through said open duct-like region.

51. A method as set forth in claim 50 further comprising the step of mounting movable aerodynamic control surfaces on said airfoil means for guiding said airfoil means through the atmosphere in controlled flight.

52. A method as set forth in claim 50 further comprising the step of mounting secondary thrust generating means inside said airfoil means for controlling the attitude of said airfoil means and for providing maneuvering thrust when said airfoil means is moving outside the earth's atmosphere.

53. A method as set forth in claim 50 further comprising the step of moving said airfoil means through the atmosphere at supersonic speed thereby generating shock waves and ionizing a portion of said atmospheric air moving through said open duck-like airfoil means.

54. A method as set forth in claim 50 wherein said body has a length less than the diameter of said open duct-like region further comprising the step of mounting said body inside said duct-like region on a beam extending along a diameter of said duct-like region and such that said body can be rotated around said beam.

55. A method as set forth in claim 54 wherein said body defines a longitudinal central axis that is perpendicular to said beam further comprising the steps of:

rolling said body about said longitudinal axis; and

rotating said body around said beam so that said longitudinal axis can be pointed in any direction independent of the orientation of said airfoil means.

56. A method as set forth in claim 47 further comprising the steps of:

creating a static magnetic field on the earth's surface that extends upward into the atmosphere;

launching said airfoil means from the earth's surface to some initial altitude at some initial speed by magnetic repulsive forces exerted on said coil means by said static magnetic field; and

accelerating said airfoil means to higher velocity when said airfoil means reaches said initial altitude by creating said travelling repulsive magnetic field by said microwave beam transmitted from said transmitter means.

57. A method as set forth in claim 50 further comprising the steps of:

mounting aerodynamic breaking means on said airfoil means; and

decelerating said airfoil means by said aerodynamic breaking means so that said airfoil means can be returned to the earth's surface.

58. A method as set forth in claim 46 further comprising the steps of:

moving said airfoil means through the earth's ionosphere; and

utilizing the ionosphere as a source for ionized gas for creating said travelling repulsive magnetic field.

59. A method as set forth in claim 46 wherein said superconducting coil means comprises a plurality of circular superconducting coils and further comprising the steps of:

mounting said coils inside a like plurality of circular wing-like airfoils with an open duct-like central region; and

maintaining said airfoils in a co-axial, spaced-apart relationship with a plurality of radial supporting airfoils mounted between adjacent circular airfoils.

60. A method as set forth in claim 46 wherein said superconducting coil means comprises a plurality of self-supporting dipoles having aspect ratios exceeding 100.

61. An apparatus for generating propulsive thrust comprising:

superconducting coil means for generating a magnetic field;

means for passing ionized gas through a portion of said magnetic field; and

means for transmitting a microwave beam into said magnetic field with a frequency designed to produce electron cyclotron resonance with free electrons of said ionized gas moving through said magnetic field thereby accelerating said ionized gas away from said coil means and generating propulsive thrust.

62. An apparatus as set forth in claim 61 wherein said ionized gas is atmospheric air.

63. An apparatus as set forth in claim 61 further comprising:

circular wing-like airfoil means having a duct-like central region; and

means for mounting said superconducting coil means inside said airfoil means.

64. An apparatus as set forth in claim 63 further comprising cryogenic cooling means mounted inside said airfoil means for maintaining said superconducting coil means at cryogenic temperature.

65. An apparatus as set forth in claim 63 wherein said circular airfoil means is moved through the atmosphere such that atmospheric air flows through said duct-like central region and through said magnetic field.

66. An apparatus as set forth in claim 65 wherein said means for transmitting said microwave beam comprises a phased array microwave transmitter located on the earth's surface.

67. An apparatus as set forth in claim 65 further comprising:

movable aerodynamic control surfaces mounted on said wing-like airfoil means;

actuator means for moving said movable control surfaces mounted inside said airfoil means;

guidance and navigation computer means mounted inside said airfoil means; and

electrical conduit means connecting said computer means with said actuator means enabling said airfoil means to be guided automatically through the atmosphere along a pre-calculated flight path.

68. An apparatus as set forth in claim 65 further comprising means for generating supersonic shock waves mounted inside said duct-like central region of said airfoil means such that when said airfoil means is moving at supersonic speed, a portion of said atmospheric air flowing through said duct-like central region is ionized by said shock waves.

69. An apparatus as set forth in claim 65 wherein said duct-like region establishes a longitudinal central axis further comprising means for mounting a payload carrying central body in the center of said airfoil means extending along said longitudinal axis wherein the transverse cross sectional area of said central body is significantly less than the transverse cross sectional area of said open duct-like central region so as to not restrict the atmospheric air flowing through said central region.

70. An apparatus as set forth in claim 69 wherein said central body has a length less than the diameter of said airfoil means and further comprising means for rotating said central body about an axis perpendicular to said longitudinal axis when said airfoil means is moving outside the earth's atmosphere thereby allowing said central body to be aligned along any desired direction while said coil means is constrained by magnetic torque exerted by the earth's natural magnetic field.

71. An apparatus as set forth in claim 70 further comprising attitude control and maneuvering propulsion means mounted inside said airfoil means and inside said central body for providing attitude control and maneuvering propulsion when said airfoil means is moving outside the earth's atmosphere.

72. An apparatus as set forth in claim 65 further comprising:

means for creating a static magnetic field on the earth's surface that extends upward into the atmosphere; and

means for launching said airfoil means from the earth's surface to some initial altitude at some initial velocity by magnetic repulsive forces exerted on said coil means by said static magnetic field such that when said airfoil means reaches said initial altitude, said microwave beam is turned on from a microwave transmitter located on the earth's surface thereby accelerating said airfoil means to higher velocity.

73. An apparatus as set forth in claim 72 further comprising a plurality of spaced-apart microwave transmitters located on the earth's surface such that when said airfoil means moves out of range of one transmitter, the next transmitter is turned on in a precisely synthronized manner so as to enable said airfoil means to be continuously accelerated sequentially through the atmosphere by a series of transmitters until said airfoil means reaches a desired terminal velocity.

74. An apparatus as set forth in claim 65 further comprising aerodynamic breaking means mounted on said airfoil means for decelerating said airfoil means when said airfoil means is traversing through the atmosphere so that said airfoil means can be returned to the earth's surface.

75. An apparatus as set forth in claim 61 wherein said superconducting coil means is a self-supporting dipole with an aspect ratio exceeding 100.

76. An apparatus for generating propulsive thrust comprising:

superconducting current carrying coil means generating a magnetic field;

means for moving said coil means through the atmosphere such that atmospheric air flows through said coil means; and

means for creating a secondary repulsive magnetic field behind said moving coil means by free electrons in said atmospheric air moving in circular electron cyclotron orbits in the magnetic field of said coil means energized by a microwave beam tuned to the electron cyclotron resonant frequency of said orbiting electrons.

77. An apparatus as set forth in claim 76 wherein said microwave beam is transmitted from a phased array transmitter located on the earth's surface.

78. An apparatus as set forth in claim 76 further comprising:

circular wing-like airfoil means having a duct-like central region; and

means for mounting said superconducting coil means inside said airfoil means.

79. An apparatus as set forth in claim 78 wherein said circular airfoil means is moved through the atmosphere such that atmospheric air flows through said duct-like central region and through said magnetic field generated by said coil means.

80. An apparatus as set forth in claim 76 wherein said superconducting coil means comprises a plurality of superconducting coils further comprising:

a like plurality of circular wing-like airfoils having a duct-like central region;

means for mounting said coils inside said airfoils; and

means for maintaining said circular airfoils in a coaxial, spaced-apart relationship by a plurality of radial supporting airfoils mounted between adjacent circular airfoils.

81. An apparatus as set forth in claim 79 further comprising:

cryogenic cooling means; and

means for mounting said cryogenic cooling means inside said airfoil means for maintaining said superconducting coil means at cryogenic temperature.

82. An apparatus as set forth in claim 79 further comprising:

movable aerodynamic control surfaces mounted on said circular airfoil means;

actuator means for moving said movable control surfaces mounted inside said airfoil means;

guidance and navigation computer means mounted inside said airfoil means; and

electrical conduit means connecting said computer means and said actuator means enabling said airfoil means to be guided automatically through the atmosphere along a pre-calculated flight path.

83. An apparatus as set forth in claim 79 further comprising means for generating supersonic shock waves mounted inside said duct-like central region of said airfoil means such that when said airfoil means is moving at supersonic speed, a portion of said atmospheric air flowing through said duct-like central region is ionized by said shock waves.

84. An apparatus as set forth in claim 79 wherein said duct-like central region establishes a longitudinal central axis further comprising means for mounting a payload carrying central body in the center of said airfoil means extending along said longitudinal axis wherein the transverse cross sectional area of said central body is significantly less than the transverse cross sectional area of said airfoil duct so as to not restrict the atmospheric air flowing through said duct.

85. An apparatus as set forth in claim 84 wherein said central body has a length less than the diameter of said airfoil means and further comprising means for rotating said central body about an axis perpendicular to said longitudinal axis when said airfoil means is moving outside the earth's atmosphere thereby allowing said central body to be aligned along any desired direction

while said coil means is constrained by magnetic torque exerted by the earth's natural magnetic field.

86. An apparatus as set forth in claim **85** further comprising attitude control and maneuvering propulsion means mounted inside said airfoil means and said central body for providing attitude control and maneuvering propulsion when said airfoil means is moving outside the earth's atmosphere.

87. An apparatus as set forth in claim **79** further comprising:

means for creating a static magnetic field on the earth's surface that extends upward into the atmosphere; and

means for launching said airfoil means from the earth's surface to some initial altitude at some initial velocity by magnetic repulsive forces exerted on said coil means mounted inside said airfoil means by said static magnetic field such that when said airfoil means reaches said initial altitude, said microwave beam is turned on from a microwave transmitter located on the earth's surface thereby accelerating said airfoil means to higher velocity.

88. An apparatus as set forth in claim **87** furhter comprising a plurality of spaced-apart microwave transmitters located on the earth's surface such that when said airfoil means moves out of range of one transmitter, the next transmitter is turned on in a precisely synchronized manner so as to enable said airfoil means to be continuously accelerated sequentially through the upper atmosphere by a series of transmitters until said airfoil means reaches a desired terminal velocity.

89. An apparatus as set forth in claim **84** further comprising aerodynamic breaking means mounted on said airfoil means and on said central body for decelerating said airfoil means when said airfoil means is traversing through the atmosphere so that said airfoil means can be returned to the earth's surface.

90. An apparatus as set forth in claim **76** wherein said superconducting coil means comprises a plurality of self-supporting dipoles having aspect ratios exceeding 100.

91. An apparatus for generating propulsive thrust comprising:

superconducting coil means for generating a magnetic field;

means for passing ionized gas through said magnetic field;

a microwave transmitter located on the earth's surface;

means for transmitting a microwave beam from said microwave transmitter into said magnetic field with a frequency tuned to produce electron cyclotron resonance with free electrons of said ionized gas moving in said magnetic field thereby accelerating said ionized gas away from said coil means and generating propulsive thrust.

92. An apparatus as set forth in claim **91** wherein said ionized gas is atmospheric air.

93. An apparatus as set forth in claim **91** further comprising:

circular wing-like airfoil means having a duct-like central region; and

means for mounting said superconducting coil means inside said airfoil means.

94. An apparatus as set forth in claim **93** further comprising:

cryogenic cooling means; and

means for mounting said cryogenic cooling means inside said airfoil means for maintaining said superconducting coil means at cryogenic temperature.

95. An apparatus as set forth in claim **93** wherein said circular airfoil means is moved through the atmosphere such that atmospheric air flows through said duct-like central region and through said magnetic field.

96. An apparatus as set forth in claim **95** wherein said superconducting coil means comprises a plurality of superconducting coils further comprising:

A like plurality of circular wing-like airfoils having a duct-like central region;

means for mounting said coils inside said airfoils; and

means for maintaining said circular airfoils in a coaxial spaced-apart relationship by a plurality of radial airfoils mounted between adjacent circular airfoils.

97. An apparatus as set forth in claim **95** further comprising means for ionizing a portion of said atmospheric air flowing through said duct-like central region.

98. An apparatus as set forth in claim **95** wherein said microwave transmitter is an electrically steered phased array.

99. An apparatus as set forth in claim **95** further comprising:

movable aerodynamic control surfaces mounted on said wing-like airfoil means;

actuator means for moving said movable control surfaces mounted inside said airfoil means;

guidance and navigation computer means mounted inside said airfoil means; and

electrical conduit means connecting said computer means with said actuator means enabling said airfoil means to be guided automatically through the atmosphere along a pre-calculated flight path.

100. An apparatus as set forth in claim **95** wherein said duct-like region establishes a longitudinal central axis further comprising means for mounting a payload carrying central body in the center of said airfoil means extending along said longitudinal axis wherein the transverse cross sectional area of said central body is signficantly less than the transverse cross sectional area of said airfoil duct so as to not restrict the atmospheric air flowing through said duct.

101. An apparatus as set forth in claim **100** wherein said central body has a length less than the diameter of said airfoil means and further comprises means for rotating said central body about an axis perpendicular to said longitudinal axis when said airfoil means is moving outside the earth's atmosphere thereby allowing said central body to be aligned along any desired direction while said coil means is constrained by magnetic torque exerted by the earth's natural magnetic field.

102. An apparatus as set forth in claim **101** further comprising attitude control and maneuvering propulsion means mounted inside said airfoil means and inside said central body for providing attitude control and maneuvering propulsion when said airfoil means is moving outside the earth's atmosphere.

103. An apparatus as set forth in claim **95** further comprising means for generating supersonic shock waves mounted inside said duct-like central region of said airfoil means such that when said airfoil means is moving at supersonic speed, a portion of said atmospheric air flowing through said duct-like central region is ionized by said shock waves.

104. An apparatus as set forth in claim **95** further comprising:

means for creating a static magnetic field on the earth's surface that extends upward into the atmosphere; and

means for launching said airfoil means from the earth's surface to some initial altitude at some initial velocity by magnetic repulsive forces exerted on said coil means mounted inside said airfoil means by said static magnetic field such that when said airfoil means reaches said initial altitude said microwave beam is turned on from a microwave transmitter located on the earth's surface thereby accelerating said airfoil means to higher velocity.

105. An apparatus as set forth in claim **104** further comprising a plurality of spaced-apart microwave transmitters located on the earth's surface such that when said airfoil means moves out of range of one transmitter, the next transmitter is turned on in a precisely synchronized manner so as to enable said airfoil means to be continuously accelerated sequentially through the upper atmosphere by a series of microwave transmitters until said airfoil means reaches a desired terminal velocity.

106. An apparatus as set forth in claim **105** wherein said central duct-like region of said airfoil means has a radius exceeding 100 m and wherein said microwave beams transmitted by said transmitters have beam powers exceeding 100 GW and further comprising cable means attached to said airfoil means adapted for accelerating a toroidal space station having a maor radius greater than said duct radius, from the earth's surface into orbit.

107. An apparatus as set forth in claim **95** further comprising aerodynamic breaking means mounted on said airfoil means for decelerating said airfoil means when said airfoil means is traversing through the atmosphere.

108. An apparatus as set forth in claim **91** wherein said superconducting coil means comprises a plurality of self-supporting dipoles having aspect ratios exceeding 100.

109. A high altitude ramjet propulsion system comprising:

superconducting coil means for generating a primary magnetic field;

circular duct-like airfoil means;

means for mounting said superconducting coil means inside said duct-like airfoil means;

a microwave transmitter located on the earth's surface; and

means for transmitting a microwave beam from said transmitter into said primary magnetic field with a frequency designed to produce electron cyclotron resonance with free electrons moving in said primary magnetic field thereby creating a secondary repulsive magnetic field behind said primary magnetic field and generating propulsive thrust.

110. An electromagnetic accelerator for accelerating a body to high velocity comprising:

movable superconducting coil means for generating a primary magnetic field;

means for attaching said body to said movable superconducting coil means;

microwave transmitter means mounted on the earth's surface; and

means for creating a travelling repulsive magnetic field behind said superconducting coil means within the earth's atmosphere by a microwave beam transmitted from said transmitter means thereby accelerating said coil means by magnetic repulsive forces.

111. An electromagnetic accelerator as set forth in claim **110** wherein said means for creating said travelling repulsive magnetic field behind said movable superconducting coil means comprises transmitting said microwave beam into said primary magnetic field with an electron cyclotron resonant frequency, such that free electrons from the atmosphere moving through said primary magnetic field are pumped into high energy electron cyclotron resonant orbits which, by virtue of their circular paths, become magnetic dipoles creating said travelling repulsive magnetic field.

112. An electromagnetic accelerator set forth in claim **111** further comprising:

circular wing-like airfoil means having an open circular central duct-like region; and

means for mounting said movable superconducting coil means inside said airfoil means such that said coil means surrounds said open central duct-like region and such that said primary magnetic field passes through said duct-like region.

113. An electromagnetic accelerator as set forth in claim **112** wherein said circular airfoil means is moved through the atmosphere such that atmospheric air flows through said central duct-like region and through said primary magnetic field.

114. An electromagnetic accelerator as set forth in claim **113** further comprising cryogenic cooling means mounted inside said airfoil means for maintaining said superconducting coil means at cryogenic temperature.

115. An electromagnetic accelerator as set forth in claim **113** further comprising:

movable aerodynamic control surfaces mounted on said airfoil means;

actuator means for moving said movable control surfaces mounted inside said airfoil means;

guidance and navigation computer means mounted inside said airfoil means; and

electrical conduit means connecting said computer means with said actuator means enabling said airfoil means to be guided automatically through the atmosphere along a pre-calculated flight path.

116. An electromagnetic accelerator as set forth in claim **113** wherein said open circular central duct-like region defines a central longitudinal axis and wherein said body has a length less than the diameter of said duct-like central region and a transverse cross sectional area less than 10% of the transverse cross sectional area of said duct-like region and wherein said mounting means comprises:

a beam extending along a diameter of said open central duct-like region perpendicular to said longitudinal axis connected to said airfoil means; and

means for mounting said body on said beam such that the center of mass of said body passes through said beam.

117. An electromagnetic accelerator as set forth in claim **116** wherein said body defines a longitudinal central axis that is perpendicular to said beam further comprising:

means for rolling said body around its longitudinal central axis; and

means for rotating said body around said beam such that said longitudinal axis of said body can be pointed in any direction independent of the orientation of said airfoil means.

118. An electromagnetic accelerator as set forth in claim 117 further comprising attitude control and maneuvering propulsion means mounted inside said airfoil means and inside said central body for providing attitude control and maneuvering propulsion when said airfoil means is moving outside the earth's atmosphere.

119. An electromagnetic accelerator as set forth in claim 113 further comprising means for generating supersonic shock waves mounted inside said duct-like central region of said airfoil means such that when said airfoil means is moving at supersonic speed, a portion of said atmospheric air flowing through said duct-like region is ionized by said shock waves.

120. An electromagnetic accelerator as set forth in claim 113 further comprising:

means for creating a static magnetic field on the earth's surface that extends upward into the atmosphere; and

means for launching said airfoil means from the earth's surface to some initial altitude at some initial velocity by magnetic repulsive forces exerted on said coil means mounted inside said airfoil means by said static magnetic field such that when said airfoil means reaches said initial altitude, said microwave beam is turned on thereby creating said travelling repulsive magnetic field behind said airfoil means accelerating said airfoil means to higher velocity.

121. An electromagnetic accelerator as set forth in claim 120 further comprising a plurality of spaced-apart microwave transmitters mounted on the earth surface such that when said airfoil means moves out of range of one transmitter, the next transmitter is turned on in a precisely synchronized manner so as to enable said airfoil means to be accelerated sequentially through the upper atmosphere by a series of microwave transmitters until said airfoil means reaches a desired terminal velocity.

122. An electromagnetic accelerator as set forth in claim 113 further comprising aerodynamic breaking means mounted on said airfoil means for decelerating said airfoil means when said airfoil means is traversing through the atmosphere.

123. An electromagnetic accelerator as set forth in claim 113 wherein said superconducting coil means comprises a plurality of superconducting coils further comprising:

a like plurality of circular wing-like airfoils having a circular duct-like central region;

means for mounting said coils inside said circular airfoils such that said coils surround said open central duct-like region; and

means for maintaining said circular airfoils in a coaxial spaced-apart relationship by a plurality of radial airfoils mounted between adjacent circular airfoils.

124. An electromagnetic accelerator as set forth in claim 110 wherein said superconducting coil means comprises a plurality of self-supporting dipoles having aspect ratios exceeding 100.

125. An electromagnetic accelerator as set forth in claim 118 further comprising:

secondary electromagnetic propulsion means mounted inside said body energized by electric current; and

means for utilizing electric current stored inside said superconducting coil means as an energy source to power said secondary propulsion means.

126. An electromagnetic accelerator as set forth in claim 120 further comprising control and guidance means for landing said airfoil means back on the earth's surface while decelerating said airfoil means by magnetic repulsive forces generated by said static magnetic field.

127. An electromagnetic accelerator for accelerating a body to high velocity above the earth's surface comprising:

movable superconducting coil means for generating a primary magnetic field;

means for attaching said body to said movable superconducting coil means;

microwave transmitter means mounted on the earth's surface; and

means for generatig a travelling secondary repulsive magnetic field behind said superconducting coil means by a microwave beam transmitted from said transmitter means.

128. An electromatnetic accelerator as set forth in claim 127 wherein said means for generating said travelling repulsive magnetic field comprises accelerating free electrons from ionized gas moving in said primary magnetic field into circular cyclotron orbits by said microwave beam operating with an electron cyclotron resonant frequency.

129. An electromagnetic accelerator as set forth in claim 128 wherein said ionized gas is ionized atmospheric air.

130. An electromagnetic accelerator as set forth in claim 129 wherein said microwave transmitter means comprises a series of spaced-apart microwave transmitters mounted on the earth's surface further comprising switching means such that when said coil means moves out of range of one transmitter, said energizing microwave beam is transmitted from the next transmitter in the series so that said coil means can be accelerated over a long accelerating distance.

131. An apparatus for generating propulsive thrust comprising:

superconducting coil means for generating a primary magnetic field; and

means for generating a secondary repulsive magnetic field behind said superconducting coil means by a microwave beam.

132. An apparatus as set forth in claim 131 wherein said means for generating said secondary repulsive magnetic field comprises accelerating free electrons from ionized gas moving in said primary magnetic field into circular cyclotron orbits by said microwave beam operating with an electron cyclotron resonant frequency.

133. An apparatus as set forth in claim 132 wherein said ionized gas is ionized atmospheric air.

* * * * *

United States Patent [19]

Phillips, Sr.

[11] **Patent Number: 4,685,047**

[45] **Date of Patent: Aug. 4, 1987**

[54] **APPARATUS FOR CONVERTING RADIO FREQUENCY ENERGY TO DIRECT CURRENT**

[76] Inventor: **Raymond P. Phillips, Sr.,** 1200 S. Frances, Terrell, Tex. 75160

[21] Appl. No.: **886,138**

[22] Filed: **Jul. 16, 1986**

[51] **Int. Cl.**[4] **H02M 7/06**

[52] **U.S. Cl.** **363/126;** 307/151

[58] **Field of Search** 363/125, 126; 307/151

[56] **References Cited**

U.S. PATENT DOCUMENTS

649,621	11/1901	Tesla	455/39
685,957	5/1902	Tesla	455/619
3,434,678	3/1969	Brown et al.	307/151
3,445,767	5/1969	Beard	324/78
3,678,365	8/1972	Fremiot	307/151
3,723,891	3/1973	Whitely	307/246
3,760,257	9/1973	Fletcher et al.	307/151
3,784,845	1/1974	Haas	307/519
3,792,290	2/1974	Brocker	307/522
3,944,935	3/1976	Plant	307/519
4,079,268	3/1978	Fletcher et al.	307/151
4,079,325	3/1978	Mawhinney et al.	307/261
4,085,377	4/1978	Turski et al.	307/519
4,195,237	3/1980	Meslener	307/261
4,297,557	10/1981	Tyler et al.	219/10.55 B
4,360,741	11/1982	Fitzsimmons et al.	307/151
4,360,865	11/1982	Yasumura et al.	363/126
4,393,441	8/1983	Enge	363/126

Primary Examiner—Patrick R. Salce
Assistant Examiner—Jeffrey Sterrett
Attorney, Agent, or Firm—Millen & White

[57] **ABSTRACT**

Apparatus for and methods of converting radio frequency energy into direct current for generating electric power includes a dipolar antenna for receiving radio frequency energy and a circuit connected thereto for converting the radio frequency energy to direct current. The circuit has a positive output line connected to one pole of the antenna and a negative output line connected to the other pole of the antenna. A positive transmitting diode is in the positive output line and a negative transmitting diode is in the negative output line. First and second bus lines and a pair of tuned circuits of opposite polarity couple the positive output line and negative line to the bus line with one of the bus lines being connected to ground. Each tuned circuit includes a first bridging line connecting the positive output line to the first and second ground lines and a second bridging line connecting the negative output line to the first and second ground lines. Each bridging line has a diode therein oriented at a polarity which is reverse with respect to the input diode. The bridging lines of each tuned circuit are connected to one another by an inductance and have capacitors disposed between the diode and the bus lines. A direct current device is connected to the positive line of the circuit.

11 Claims, 1 Drawing Figure

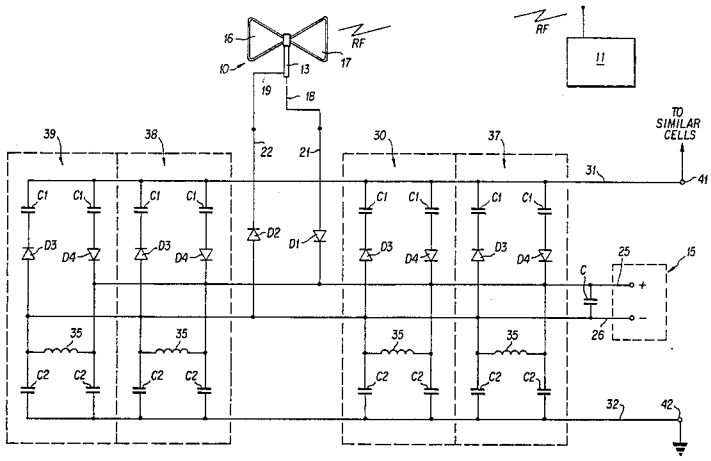

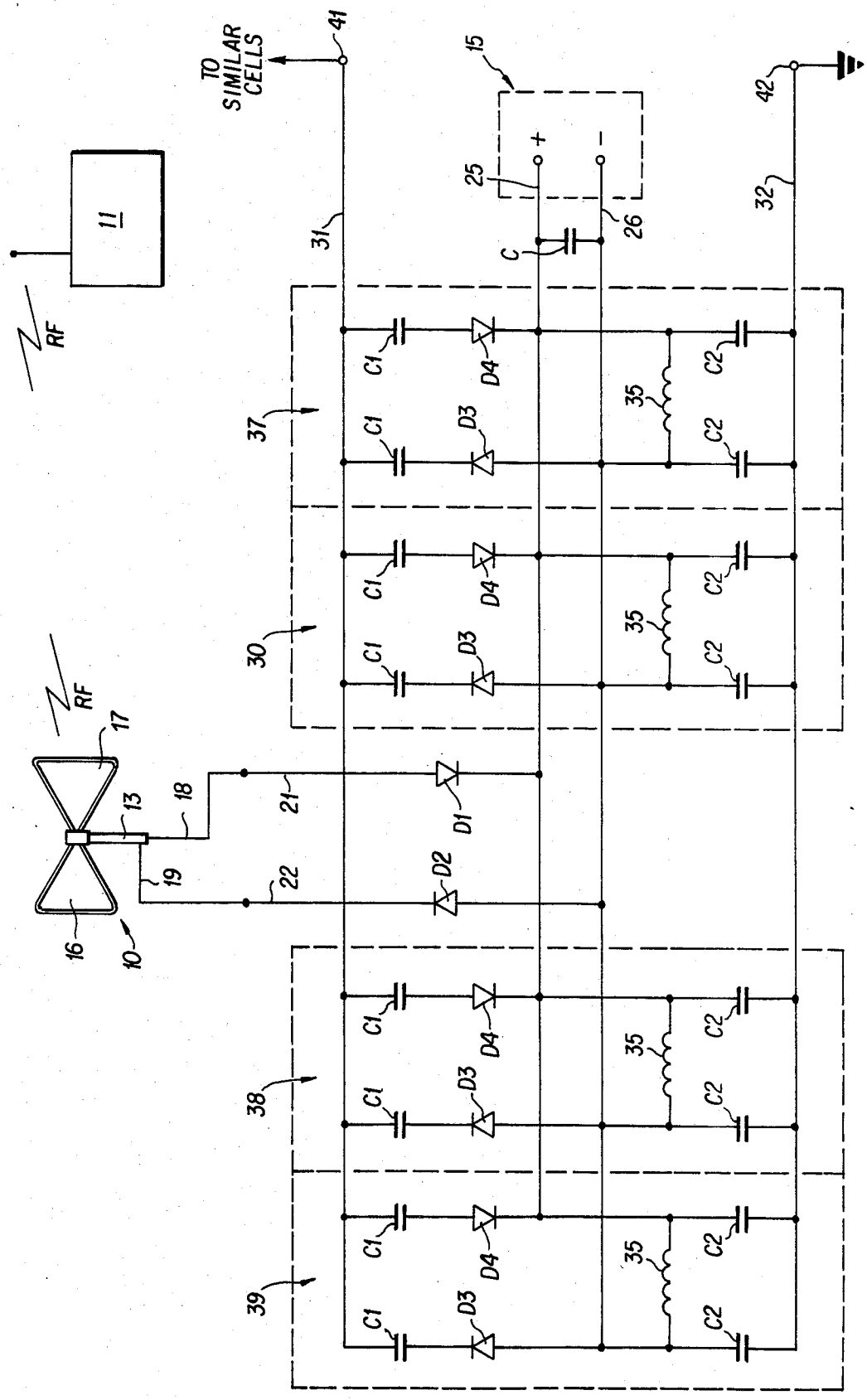
TO SIMILAR CELLS
41
15
42
11
RF
25
+
-
26
32
31
C
37
C1
D4
D3
35
C2
30
RF
17
13
18
21
D1
19
22
D2
16
10
38
39

APPARATUS FOR CONVERTING RADIO FREQUENCY ENERGY TO DIRECT CURRENT

BACKGROUND OF THE INVENTION

1. Field of the Invention

The instant invention relates to methods of an apparatus for converting radio frequency energy to direct current; more particularly, the instant invention relates to methods and apparatus for converting radio frequency energy to direct current wherein the direct current is of sufficient magnitude to power devices such as battery charges and electric motors without the use of amplification.

2. Technical Considerations in Prior Art

There has long been interest in technology directed to transmitting electrical energy over a distance without utilizing conductors, such as wire conductors. Development of such a technology has enormous potential. This was first recognized by Nikola Tesla who in 1899 constructed a 200 foot Tesla coil rated at 300 kilowatts and 150 kilocycles. Tesla hoped to set up standing waves of electrical energy around the whole surface of the earth, so that receiving antennas set at optimum points could tap the power when needed. Tesla was able to light hundreds of lamps at a distance of about 40 kilometers with his device without utilizing electrical conductors. The scheme has generally remained a scientific curiosity but has provided the initial groundwork for current developments wherein attempts are being made to transmit power by microwaves. However, power transmitted by microwaves is envisioned in the form of a beam of very high intensity which is focused from a microwave generator to a receiving antenna. This technology is envisioned as being used for many types of purposes such as transmitting microwave energy collected from gigantic solar power satellites and "star wars"-type weapons systems. However, the focused microwave beam is not suitable for many applications in that the beam must be directed toward a receiving antenna and cannot be transmitted through most objects, including living objects, without destroying the objects.

The instant invention relies on converting energy from standing waves which are emitted from radio frequency antennas in the RF range rather than the microwave range. Of particular interest are very low frequencies which are not used in communications and are available for transmitting power. Also of interest with respect to the instant invention are the low frequency waves emitted by the earth due to pulsation thereof caused by its magnetic field. These low frequency standing "earth" waves can be picked up by receivers tuned thereto.

SUMMARY OF THE INVENTION

It is an object of the invention to provide new and improved methods of an apparatus for converting radio frequency currents to direct current for practical uses other than communications, wherein the direct current energy converted from the radio frequency input energy does not require amplification.

Upon further study of the specification and appended claims, further objects and advantages of this invention will become apparent to those skilled in the art.

The instant invention contemplates an RF antenna for receiving radio waves. The RF antenna connected to a circuit configured in accordance with the principles

of the instant invention to convert the RF signals to direct current. The radio frequency signals received by the antenna are transmitted to first and second leads, with one lead being rectified to transmit positive voltage and the other lead being rectified to transmit negative voltage. The positive voltage lead being connected directly to a positive output line and the negative voltage lead being connected directly to a negative output line. The positive output line is connected to a pair of bus lines through a first pair of capacitors, while the negative output line is connected to the pair of bus lines by a second pair of capacitors. Disposed between the first bus line and the positive output line is a reverse diode of negative polarity, while disposed between the negative output line and first bus line is a reverse diode of positive polarity. The positive and negative output lines are connected to one another through an inductance which is in parallel with the capacitors of the first and second pair connected between the second bus line and the positive and negative output lines.

In accordance with one embodiment of the invention the afore-described circuit is duplicated for each positive and negative output line. In accordance with another embodiment of the invention, the afore-described circuitry is coupled to additional circuits identically configured in order to increase the direct current output of the arrangement.

In accordance with a further configuration of the invention, the antenna utilized is a dipolar antenna of aluminum wire arranged in a "butterfly" configuration.

The instant invention further contemplates the method of utilizing the afore-described elements so as to generate direct current having sufficient power to perform tasks such as charging batteries, lighting lamps and powering direct current electric motors without the use of amplifiers.

BRIEF DESCRIPTION OF THE DRAWING

Various other objects, features and attendant advantages of the present invention will be more fully appreciated as the same becomes better understood when considered in connection with the accompanying drawing, in which like reference characters designate the same or similar parts throughout the several views, and wherein:

There is shown a diagram of a circuit in accordance with the instant invention in combination with a driven device and a dipolar antenna which receives radio frequency waves which are converted to DC current for powering the driven device.

DESCRIPTION OF THE PREFERRED EMBODIMENT

Referring now to the drawing, there is shown a dipolar antenna, designated generally by the numeral **10**, which receives radio frequency waves from an RF transmitter **11**. The radio frequency waves are transmitted to a radio frequency to direct current converting circuit, designated generally by the numeral **12**, through a coaxial cable **13** and DC current from the circuit **12** is used to power an output device, designated generally by the numeral **15**, which may for example by a battery charger DC motor or lighting device. The circuit **12** has no other power inputs other than the radio frequency energy transmitted thereto by the antenna **10** and therefore includes no amplifiers for amplifying the RF energy.

The source of radio frequencies convertible to direct current by the circuit shown may include sources of high frequency, low frequency (LF), very low frequency (VLF) and extremely low frequency (ELF) radio waves as well as seismic vibration of the earth's magnetic fields.

Preferably, the dipolar antenna **10** is formed of two triangular loops of aluminum wire **16** and **17**, one of which is connected to the annular conductor **18** of the coaxial cable **13** and the other of which is connected to the center conductor **19** of the coaxial cable. The size of the bipolar antenna **10** is dependent on the particular application to which it is put. In accordance with one embodiment of the invention, the antenna **10** is approximately 12 inches in width and 18 inches in length. Such an antenna is used to receive five watt energy, such as that generated by a walkie-talkie or citizen-band radio.

The annular conductor **18** of the coaxial cable **13** is connected to a positive lead **21** of the circuit **12**, while the center conductor **19** of the coaxial cable is connected to a negative lead **22** of the circuit. A positive transmitting diode D1 is disposed between the lead **21** and the remainder of the circuit **12** while a negative transmitting diode D2 is disposed between the lead **21** to a positive output line **25** while the negative diode D2 is connected to a negative output line **26**. Accordingly, the positive voltages with respect to ground are produced on output line **25** and negative voltages with respect to ground are produced on output line **26**.

In order to provide a DC output of sufficient power, a plurality of inductance-capacitance, RF, tuned circuits **30**, each forming a positive cell, or a negative cell, are utilized for connecting the positive output line **25** and negative output line **26** to first and second bus lines **31** and **32**, respectively. Bus line **32** is connected to ground while bus line **32** can be connected to circuits similar to circuit **12**. The positive output line **25** is connected by a first bridging line **33** to the first and second bus lines **31** and **32** while the negative output line **26** is connected by a second bridging line **34** to the first and second bus lines. The bridging line **33** has capacitors C1 and C2 disposed between the positive output line **25** and the first and second bus lines **31** and **32**, while the bridging line **34** also has capacitors C1 and C2 dispensed between the negative output line **26** and the first and second bus lines **31** and **32**. Connected between the bridging lines **33** and **34**, is an inductor **35** which serves as an RF choke, while disposed between the positive output line **25** and the capacitor C1 there is a negative polarity diode D4 referred to herein as a bridging diode and disposed between the negative output line **26** and capacitor C1 in line **34** there is a positive polarity diode D3 referred to herein as a bringing diode. As is seen of the drawing, the RF tuned circuit cell **30** is repeated a plurality of times. In the specific example shown, the circuit **12** has separate cells **30**, **37**, **38** and **39**. The cells **30** and **38** are of opposite polarity and balance one another while the cells **37** and **39** of opposite polarity and also balance one another. In order for the system to function, a pair of opposite polarized cells must be utilized. The particular number of cells **30** and the value of the components thereof are determined by the configuration of the dipolar antenna **10** and the power and frequency of the RF transmitter **11**.

The radio frequency to direct current conversion circuit **12** may itself be connected to a duplicate circuit via pins **41** so as to provide additional direct current output on lines similar to positive output line **25** and negative output line **26** the output lines may be connected together in order to boost the total output of the system.

An operative embodiment of the invention utilizes the following elements:

Diodes D1, D2, D3 and D4—Germanium Diodes, Archer 1 N34A,Catalog #1123.

Inductor 35–47 Milli henry R. F. Choke

Capacitors C1 and C2–0.47 Pico Farads at 200 volts

Coaxial Cable **13**—50 ohms

Dipolar Antenna **10**—aluminum wire triangular loops approximately 12 inches by 18 inches.

From the foregoing description, one skilled in the art can easily ascertain the essential characteristics of this invention, and without departing from the spirit and scope thereof, can make various changes and modifications of the invention to adapt it to various usages and conditions.

What is claimed is:

1. Apparatus for converting radio frequency energy into direct current for generating electric power, the apparatus comprising:

a dipolar input for receiving radio frequency energy;

a positive output line connected to one pole of the dipolar input and a negative output line connected to the other pole of the dipolar input;

a positive transmitting input diode means in the positive output line and a negative transmitting input diode means in the negative output line;

first and second bus lines and a pair of tuned circuits of opposite polarity coupling the positive output line and negative output line to the bus lines, one of the bus lines being connected to ground;

each tuned circuit including a first bridging line connecting the positive output line to the first and second bus lines and a second bridging line connecting the negative output line to the first and second bus lines, each bridging line having a bridging diode means therein oriented at a polarity which is reverse with respect to the transmitting input diode means of the respective output line; the bridging lines of each tuned circuit being connected to one another by an inductance and having capacitors disposed between the bridging diode means thereon and the bus lines, and

a direct current device connected to the bridging lines of the tuned circuit.

2. The apparatus of claim **1**, wherein there are a plurality of similarly configured tuned circuits connected between the output lines and the bus lines.

3. The apparatus of claim **2**, wherein there are a plurality of radio frequency-to-direct current conversion circuits connected to one another to provide a direct current power array tuned to a specific radio frequency such as a high frequency source, low frequency source, very low frequency source, extremely low frequency source, or source created by seismic vibrations of the earth's magnetic field.

4. The apparatus of claim **3** wherein the dipolar input is a dipolar antenna.

5. The apparatus of claim **1**, wherein the device connected to the output lines is a direct current motor.

6. The apparatus of claim **1**, wherein the device connected to the output line is an illuminating device.

7. The apparatus of claim **1**, wherein the device connected to the output lines is a battery charger.

8. The apparatus of claim **1**, wherein the device connected to the output lines is a DC-to-AC inverter.

9. The apparatus of claim 1, wherein there are a plurality of radio frequency to direct current converter circuits connected to one another to form an array of circuits tuned to a particular radio frequency.

10. The apparatus of claim 1 wherein the dipolar input is a dipolar antenna.

11. The apparatus of claim 10, wherein the dipolar antenna utilizes aluminum wire arranged in pair of triangular loops.

* * * * *

Low Profile Design for Intrepid to Assess, Measure and Harvest RF Energy

Manish Upadhyay*

Electronics and Communication Engineering Department
Bharati Vidyapeeth's College of Engineering
New Delhi, India
**Corresponding author E-mail:polarizadmax@gmail.com*

Abstract

A low profile design which could be used in order to analyze RF energy in near home premises is presented in this paper. The system design is intended to practice in the real world in an easy, economical and DIY way. The idea was to detect the possible source of RF energy that could be harvested even for a short span. A monitoring unit which is microcontroller with two patch antennas, each with a two stage schottky diode voltage multiplier acting as its sensors look for a potential RF energy (Bi-directional only) as soon unit powered up, then unit compare and record the strength of nearby RF energy which is provided as feedback to a servo motor. A rectenna, which is mounted on the top of the servo motor, is made responsible to measure and harvest RF energy. The DC power from the harvesting rectenna is used to power digital thermometer with an LCD module. A low profile prototype is implemented, tested locally and found with acceptable performance.

Keywords: *Energy harvesting, Measurement, Rectennas, Schottky diode, Sensor System.*

1. Introduction

Emerging self powered systems challenge and dictate the direction of research in energy harvesting (EH). State of the art in energy harvesting is being applied in various fields using different single energy sources or a combination of two or more sources. This kind of environmental friendly energy sources include energy harvesting from rectennas, passive human power, wind energy and solar power. Power we can extract from those techniques is limited by regulations and free-space path loss. As a general idea, small dimensions are a basic feature of portable devices, so the rectenna should be the same way. [17] Smaller the size results in the received power to be lower. This made wireless power transfer suitable for the low-power applications, e.g., a low-power wireless sensor.

The way technology advance every year allow the decrease of certain characteristics in digital systems, like size and power consumption, that will lead to the gain of new ways of computing and use of electronics, as an example we have wearable devices and wireless sensor networks. Currently, these devices are more powered by batteries, however, they present many disadvantages such as: the need to either replace them or recharge them periodically and their big size and weight compared to high technology electronics. A solution proposed to this problem was stated before: to extract (harvest) energy from the environment to either recharge a battery, or even to directly power the electronic device. [3][20]

Targeted RF energy is in the ambient or areas close to transmission towers provides an opportunity to harvest that energy. Some of the most prominent sources are FM radio systems ((88-108 MHz, transmitted power few tens of KW), TV Transmission (180-220 MHz, transmitted power few tens of KW), Cell Tower Transmission (10 to 20 W per carrier), Wi-Fi (2.45GHz, 5.8GHz), AM Transmission (540-1600 KHz, transmitted power few hundred KW) and mobile phones (transmitted power 1W to 2W), etc. [15] Cell towers can be used as a continuous source of renewable energy as they transmit 24 hours.

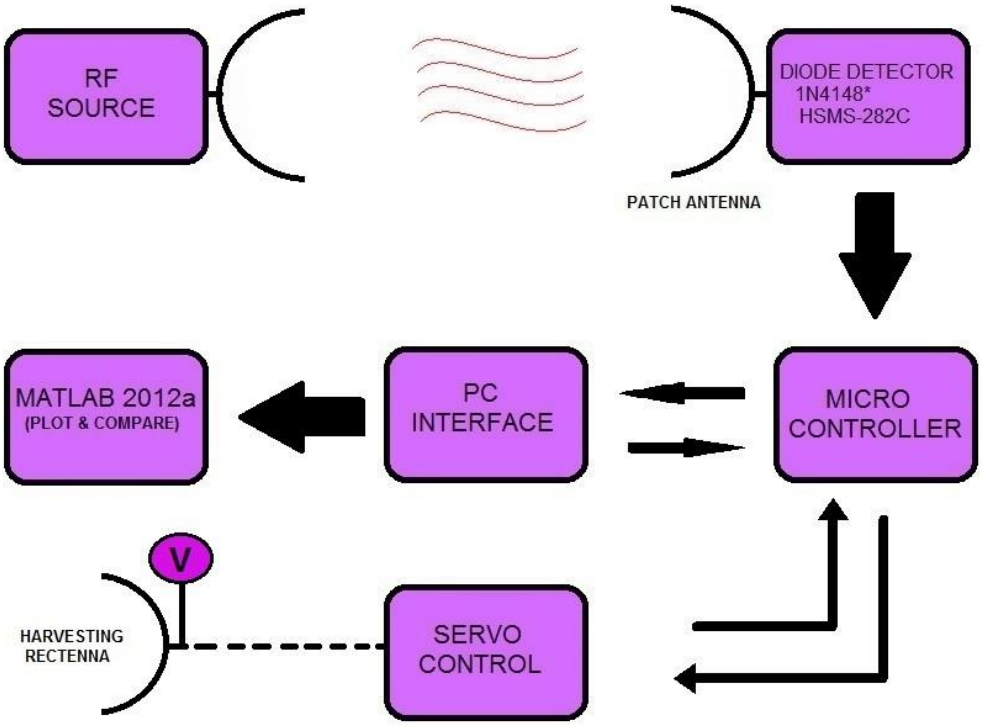

Fig. 1: a) Detailed Block Diagram for proposed system. (V-voltmeter)

Fig 1 presents the basic functionality of the system:

1. First, an antenna is in charge to capture the RF signals from the possible source of interest (CDMA-GSM Band).
2. Then a zero bias diode detector circuit (voltage multiplier) will convert RF-DC (carrier power) which will be input to the monitoring unit.
3. The Arduino Uno (open source hardware as monitoring unit) is used to read real time analog data from the voltage multiplier and will send it to PC via an interface.
4. Matlab R2012a software is used to read digital data values available at pc port and to plot it in terms of voltage, compare the signal and put command to control servo motor of the measuring Rectenna.
5. Servo motor will get a command from Matlab R2012a via microcontroller unit and also sent back feedback voltage for current position.
6. Finally the measuring rectenna will be on target RF source to measure electric field strength and display it in terms of voltage on the voltmeter.

Several operating frequencies for the rectenna have been investigated in the literature. Traditionally the GSM900 band has been utilized due to the presence of 2G networks; additionally the 1800 MHz band has also been considered which implies a smaller antenna aperture area than that of 900MHz. Both frequency bands present similar advantages because they have comparably low atmospheric loss, cheap components availability, and high conversion efficiency.[4][8] Hence the frequency bands corresponding to mobile telephone systems such as 800 MHz, 900 MHz and 1800MHz present good alternatives for electromagnetic energy harvesting systems, although they require a larger antenna size.

2. Design

In order to be able to utilize wireless power efficiently rectenna is needed. This paper presents a rectenna system with numerical and test observations. This provides a good insight of low profile system for the wireless power assessment and utilization. The incident RF power is converted into dc power by the voltage multiplier. The matching network, composed of inductive and capacitive elements, ensures the maximum power delivery from antenna to voltage multiplier. The energy storage (output capacitor) ensures smooth power delivery to the load and as a reserve for durations when external energy is unavailable. Such a design needs to be carefully crafted: increasing the number of multiplier stages gives higher voltage at the load, and yet reduces the current through the final load branch. [17]

This work has three major goals:

1. Measurement of stray radiation in term of Electric field intensity (V/ m).
2. RF energy harvesting/recycling.
3. Powering of low-power applications.

2.1. Voltage multiplier and diode selection

The forward voltage drop (V_f), reverse-recovery time (T_{rr}), and junction capacitance (C_j) of Schottky diodes are closer to ideal than the average "rectifying" diode. This makes them well suited for high-frequency applications. Unfortunately, though, Schottky diodes typically have lower forward current (If) and reverse voltage (V_{rrm} and V_{dc}) ratings than rectifying diodes and are thus unsuitable for applications involving substantial amounts of power, Though they are used in low voltage switching regulator power supplies. [23]

The Schottky diodes used are characterized by a low parasitic capacitance C_{jo} (0.14 pF) and a low serial resistor R_s (20 Ω). At microwave frequencies, rectifiers are highly nonlinear and difficult to design based upon purely analytic equations. Commercially available harmonic-balance simulators are useful at low power levels.

When looking for a rectifying diode in the context of RF recycling, a diode with high conversion efficiency, even for very small incident power levels is required. One of the crucial requirements for the energy harvesting circuit is to be able to operate with weak input RF power. For a typical 50-ohm antenna, the -20 dBm received RF signal power means amplitude of 32 mW. As the peak voltage of the ac signal obtained at the antenna is generally much smaller than the diode threshold [12], diodes with lowest possible turn on voltage are preferable. Moreover, since the energy harvesting circuit is operating in high frequencies, diodes with a very fast switching time need to be used. [17] Schottky diodes use a metal–semiconductor junction instead of a semiconductor–semiconductor junction. This allows the junction to operate much faster, and gives a forward voltage drop of as low as 0.15 V.

Earlier the choice was using Fairchild's 1N4148 small signal diodes and 1N5819 Schottky rectifiers. But the study presented in [22] gave a broad view of there operation under various condition determine that the previous diodes having higher forward voltage requirement as compared to Hsms 282c and the capacitance of the diode's is higher as well .The final rectifier circuit is designed using Hsms 282c Schottky Diode. Avago's Hsms-282x family of zero bias Schottky detector diodes are already designed and optimized by manufacturer for use in small signal (Pin >-20 dBm). They are ideal for RFID and RF Tag applications where primary (DC bias) power is not available. [13][14]

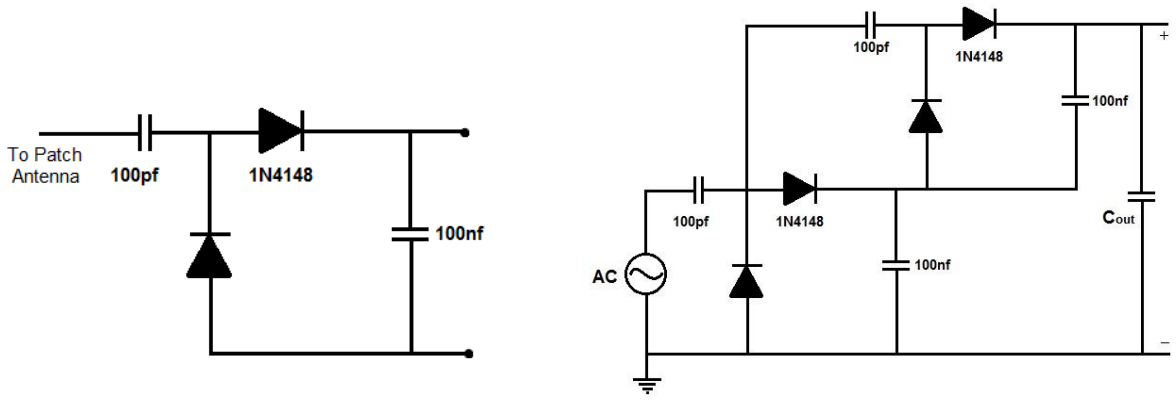

a) **b)**

Fig. 2: a) Single stage diode detector. b) Two stage diode detector with output capacitor.

The fig. 2 above presents the two types of diode detectors on of which (b) is full wave rectifier (known also as a two stage diode voltage doubler). Such a circuit offers several advantages. First the voltage outputs of two diodes are added in series, increasing the overall value of voltage sensitivity for the network (compared to a single diode detector). Second, the RF impedances of the two diodes are added in parallel, making the job of reactive matching a bit easier. [14]

The number of rectifier stages has a major influence on the output voltage of the energy harvesting circuit. [17] Each stage here is a modified voltage multiplier, arranged in series. The output voltage is directly proportional to the number of stages used in the energy harvesting circuit. However, practical constraints force a limit on the number of permissible stages, and in turn, the output voltage. Here, the voltage gain decreases as number of stages increases due to parasitic effect of the constituent capacitors of each stage, and finally it becomes negligible.[13]

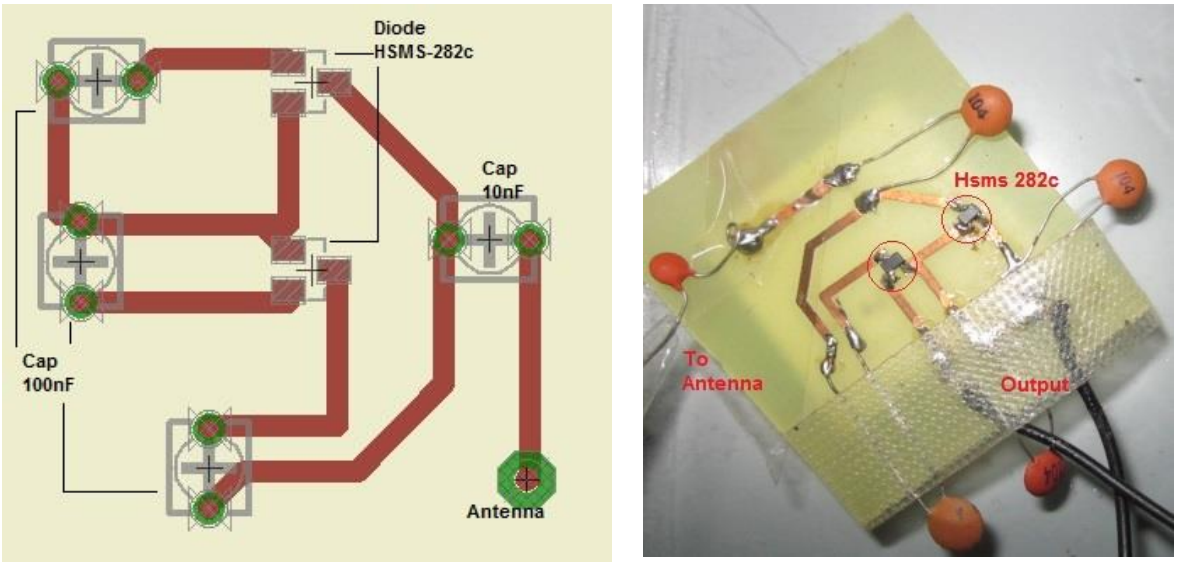

a) b)

Fig. 3: a) PCB layout for voltage multiplier b) Fabricated two stage voltage multiplier with HSMS-282c.

2.2. Rectenna

The word rectenna is composed of rectifying circuit and antenna. The rectenna and its word were invented by W. C. Brown in 1960's. [2] The rectenna can receive and rectify a microwave power to DC, is passive element with a rectifying diode, operated without any power source. The antenna of rectenna can be any type such as dipole, Yagi-Uda antenna, microstrip antenna, monopole, coplanar patch, spiral antenna, or even parabolic antenna. The rectenna can also take any type of rectifying circuit such as single shunt full-wave rectifier, full-wave bridge rectifier, or other hybrid rectifiers. The circuit, especially diode, mainly determines the RF-DC conversion efficiency; rectennas with FET or HEMT appear in recent years. (The rectenna using the active devices is not passive element). [2]

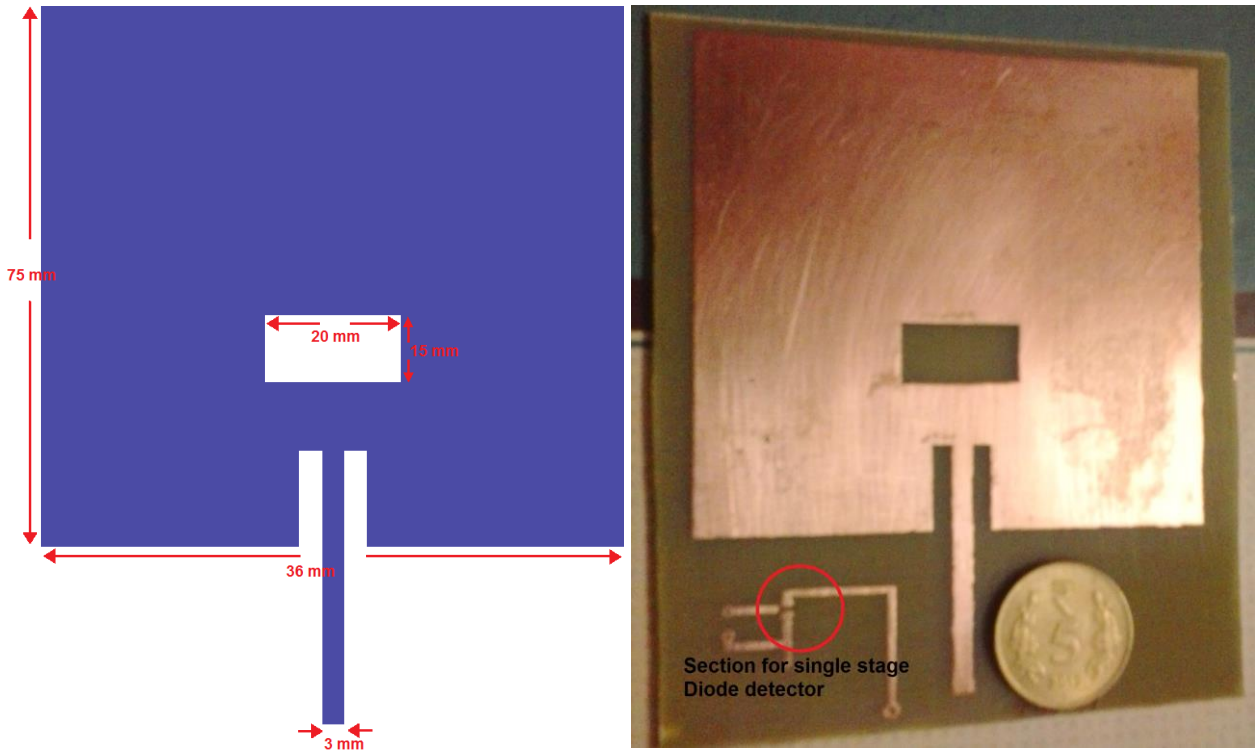

a) b)

Fig. 4: Modified Inset-feed Patch Antenna with Dimensions a) CAD design with dimension b) Fabricated patch on FR4

A circular polarized microstrip patch antenna in fig 4 a) and b) above (86 mm x 75 mm) has been associated with the rectifier to obtain the complete rectenna design. The antenna simulation was carried out using the electromagnetic simulator Ansoft HFSS v.11 [9]. The closest to desired resonant frequency has been achieved and matched in a single simulation. It showed a good input matching level at 886 MHz.

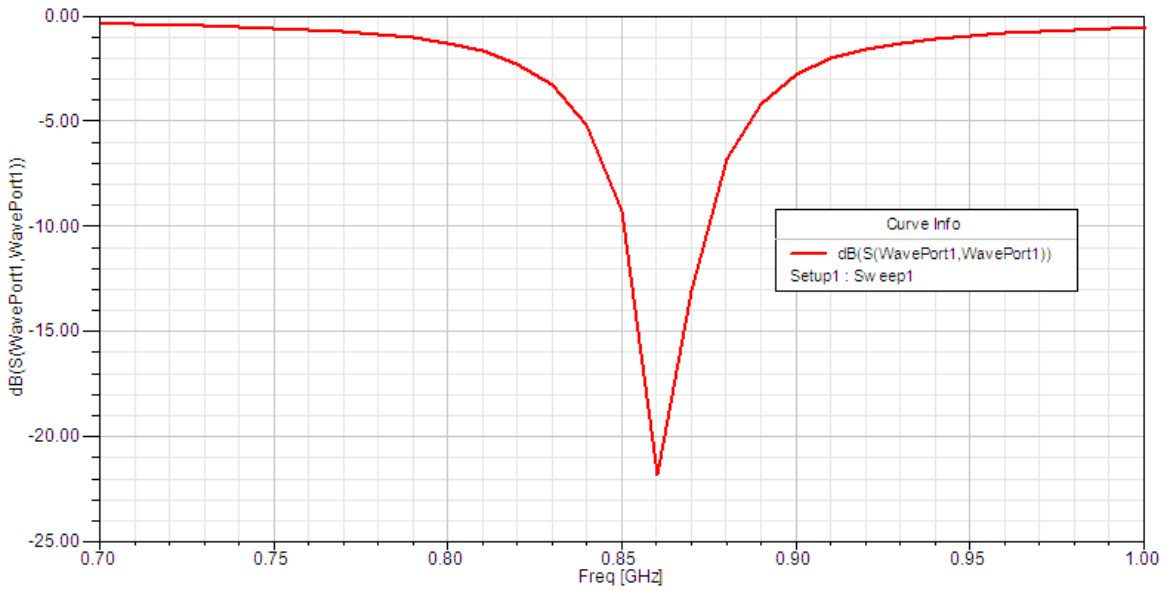

Figure 5: Return Loss (S_{11}) of Microstrip antenna.

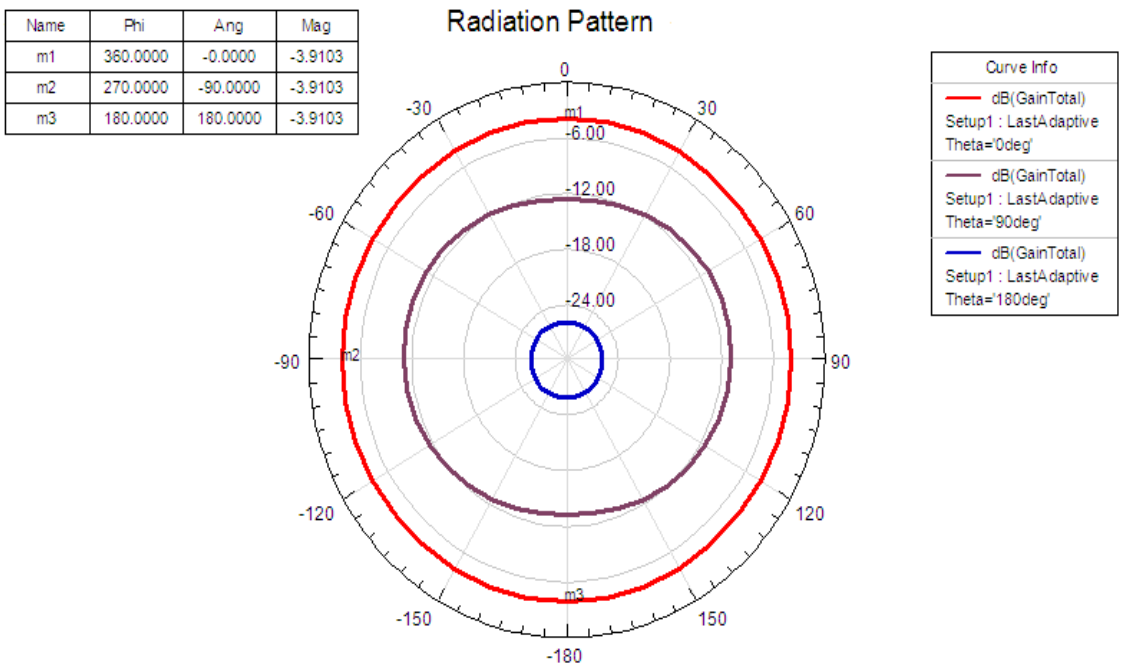

Figure 6: Radiation Gain plot of Microstrip antenna.

After simulating the structure figure 5 above showing return loss (S_{11}) of the patch antenna structure .The plot gives return loss of ~21.9 dB at 886 MHz. Figure 6 is the radiation gain plot of the microstrip antenna at 886 MHz from three major angles of 0, 90 and 180 degree which is showing the maximum gain as -3.91dB.Here point t ponder is although the bandwidth of antenna is ~25 MHz still it could be used to beyond that band. The problem that will occur using this antenna beyond its resonant band is mismatched impedance and it will not produce maximum/efficient output.

The purpose of the inset cut in the patch is to match the impedance of the feed line to the patch without the need for any additional matching element. This is achieved by properly controlling the inset position. Hence this is an easy feeding scheme, since it provides ease of fabrication and simplicity in modeling as well as impedance matching. However as the thickness of the dielectric substrate being used, increases, surface waves and spurious feed radiation also increases. The feed radiation also leads to undesired cross polarized radiation. [17][11]

The three essential parameters for the design of a rectangular Microstrip Patch Antenna are:

- Frequency of operation (fo) : 886 MHz
- Dielectric constant of the substrate (εr) : 4.4
- Height of dielectric substrate (h) : 1.6 mm.

The parameters obtained using the formulas for inset feed [11] are:

- Total width of the antenna (W) : 86 mm
- Total length of the antenna (L) : 75 mm
- Effective Dielectric Constant (εreff) : 3.9262

At higher frequencies such as 800 or 1900MHz the low values of inductors are difficult to construct especially at board level circuit design. But using the inductor along with capacitor at integrated circuit level design greatly improves the performance. Resonant frequency is also influenced by diode capacitance as it is related with reverse diode voltage and input voltage. [6][23]

In order to test single and double stage voltage multiplier output both are fabricated on a Copper clad sheet (FR4).the single stage detector is embedded with the patch antenna as in fig.7 a) while the two stage diode detector is attached with patch antenna on it back side can be seen in inset of fig.7 b).

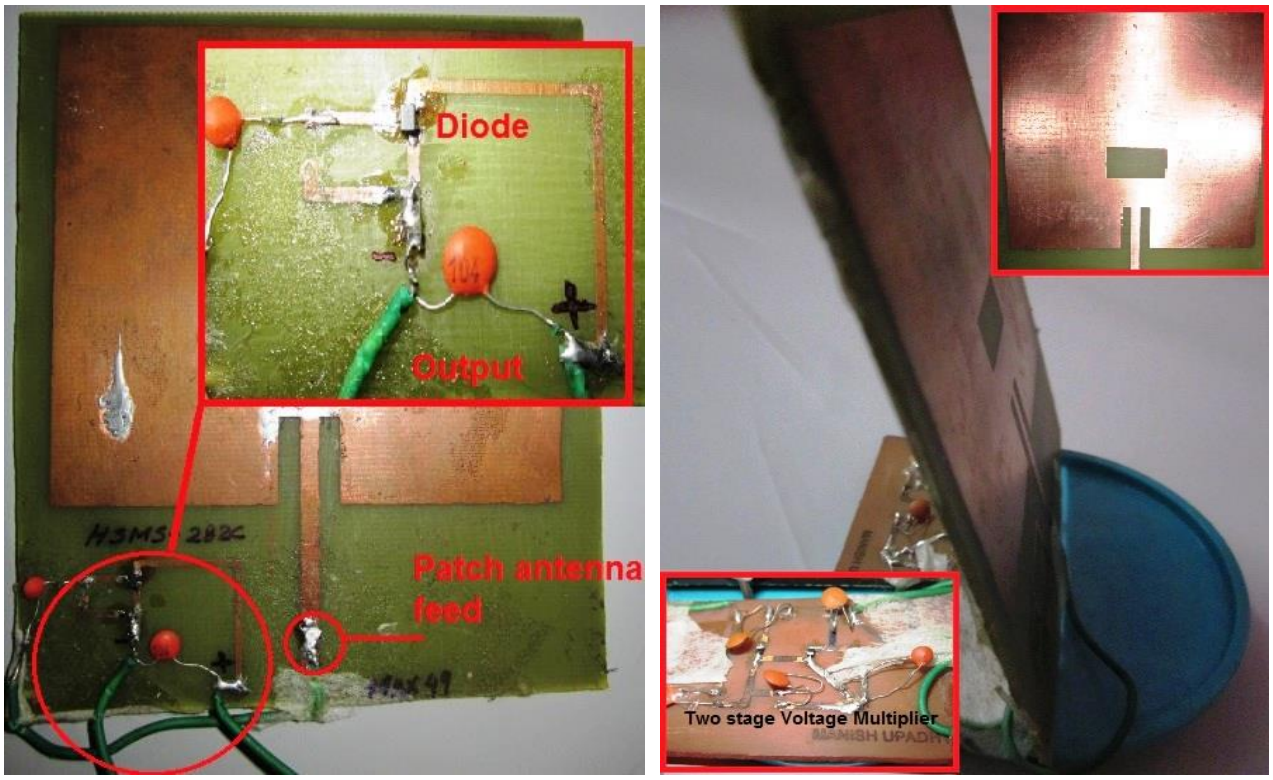

a) b)

Figure 7: Fabricated patch antenna with a) single stage diode (HSMS-282c) detector b) two stage diode (BAT-16) detector (voltage multiplier).

Some effects were previously observed by many researchers is that the circuit yields the optimal efficiency at a particular load value, that is, the circuit's efficiency decreases dramatically if the load value is too low or too high. Since the energy harvesting circuit consists of diodes, which are nonlinear devices, the circuit itself exhibits nonlinearity. This implies that the impedance of the energy harvesting circuit varies with the amount of power received from the antenna. Since the maximum power transfer occurs when the circuit is matched with the antenna, the impedance matching is usually performed at the particular input power. [17]

The RF signals can be captured using Multiband antenna such as quad band are easily available in market and usually work at 900MHz/1800MHz/1900MHz/2.4GHz. These are of usually whip type, but small size such as printed, patch, spiral antennas are also testable. A tuning capacitor (C_{tune}) is used to capture the maximum power at required frequency range. Using only Clamp capacitor in antenna matching circuit we can tune the antenna at its resonant frequency. The tuning Capacitor (C_{tune}) can be verified by using the following formula to resonate with antenna inductance ($L_{antenna}$), where f is the frequency of operation.

$$2\pi f = \frac{1}{\sqrt{L_{antenna} \times C_{tune}}} \qquad 1.$$

f = Reasonant Frequency
C_{tune} = Tuning Capacitor
$L_{antenna}$ = Antenna Inductance

3. Test and Observation discussion

As per the block diagram representation the system required a (CDMA-GSM) RF source with known power level that is served by BTS tower near the lab. It is well known that in India the mobile tower have major band of operation in 877MHz-915MHz. For measurement it needs to determine the power at specified distance that is measured by Spectrum Analyzer and my four stages diode detector using 1N4148 is used earlier. Antenna for transmitting is assumed omni-directional whip antenna. While the antenna used in case of measurement of standard emission by RF source is measured using helical wire (unmatched) antenna on spectrum analyzer port and a copper patch for IN4148 diode detector.

Since the test receiver/detector used was a very low profile diode detector using 1N4148 (Semiconductor-semiconductor junction) which is having forward voltage drop ~620mV at 1mA and 1V at 15mA which is not an efficient value for the required application. For the final tests 1N4148 design is neglected and Schottkey Diodes (zero bias) like HSMS-282C AND BAT-16 that is designed for having very low forward voltage drop (approx. 340mV & 580mV respectively) and high switching speed is used.

3.1. Testing at external site

Setup shown in fig. 8 is a copper patch attached with two stage diode voltage multiplier to test electric field strength in vicinity of mobile phone tower. In order to make comparison of the electric field strength (V/m) near mobile phone tower antenna one needed to calculate ideal value of power that should be received and then the practical value measurement.

a) **b)**

Fig 8: Rectenna
a) using two stage schottkey diode detector b) Testing at external site (cell tower)

For calculation of ideal radiation figures/component certain parameters are assumed (on the basis of previous presented reports and data from Indian ministry of telecommunication site). These considerations could have deviation from standard one which may be the possible cause of difference reflected in practical measurement. Below present equation 2 to 7 are standard equations that are used with FRISS Model to calculate ideal values and to convert measured value. [17]

Parameters:

Frequency of interest (f) = 900 MHz (Between CDMA and GSM band)

Largest radiator dimension (D) = approx. 1 meter

Wavelength in meters (λ) = 0.33 meters

Typical Base station power (single carrier per operator) (Pt) = 10 watts/2 watt (amended Indian limit for radiation).

Typical Transmitter Antenna gain (Gt) = 17 dB

Receiver Antenna gain assumed to be (Gr) = -3.9 dB = -1.75 dBi (calculated with simulation model)

$$\mathrm{P_r} = Ae.\mathrm{E}.\mathrm{H} \qquad 2.$$

$$Ae = g\frac{\lambda^2}{4\pi} \qquad 3.$$

$$E = Z_o.\mathrm{H} \qquad 4.$$

$$Z_o = 120\pi = 377\Omega \qquad 5.$$

$$S = \frac{E^2}{Z_o} \qquad 6.$$

$\mathrm{P_r}$ = Power received (W)
Ae = Antenna aperture (m)
E = Electric field strength (V/m)
H = Magnetic field strength (A/m)
λ = Wavelength (m)
g = Antenna gain
Z_O = Impedance (Ohm)
S = Power density (W/m2)

The **Fraunhofer** distance (d):

$$d = \frac{2.\mathrm{D}^2}{\lambda} = 6m \qquad 7.$$

During measurement practice its is to be ensure that measurement is taken by maintaining minimum distance from cell tower because the Friss model of calculation that is to be used to estimate power received valid over far field only. The observations are presented in the table 1.Some quick conclusion that could be made is the test site reading are closer to ideal value one with the 2W/carrier standard.

Distance from Source	Power & Electric Field density (Ideal)			Power & Electric Field density strength Received (Test site)		
15 meter	177.3 mW/m^2	8.16 V/m	18.94 dBm	15 mW/m^2	2.44 V/m	-10.31 dBm
	35 mW/m^2	3.63 V/m	11.90 dBm			
30 meter	44 mW/m^2	4.07 V/m	12.89 dBm	6.7 mW/m^2	1.62 V/m	-13.97 dBm
	8.8 mW/m^2	1.82 V/m	5.90 dBm			
50 meter	15.9 mW/m^2	2.35 V/m	8.22 dBm	3.2 mW/m^2	1.1 V/m	-17.23 dBm
	3.1 mW/m^2	1.08 V/m	1.37 dBm			

Table 1: Test results comparison with ideal calculated values while mobile tower as RF source and two stage diode detector as receiver. Ideal transmitted power values correspond to RED = 10W/carrier & BLUE = 2W/carrier

3.2. Testing with the combined system

The combined system is presented in fig 9 a) which includes a glass container used to house two patch antennas connected with separate voltage multiplier which can be seen in fig 9 b) are connected to arduino uno (open source hardware platform with atmega-328) to its analog input pins. The measuring rectenna is mounted over a servo motor, which is controlled by the monitoring unit (microcontroller atmega-328).The voltmeter which is designed to measure electric field strength (V/m) is connected to the output of measuring antenna. The data to the analog pin of arduino uno is converted to equivalent digital bits and fed to laptop. The Matlab 2012a program on the laptop will collect data from arduino uno.

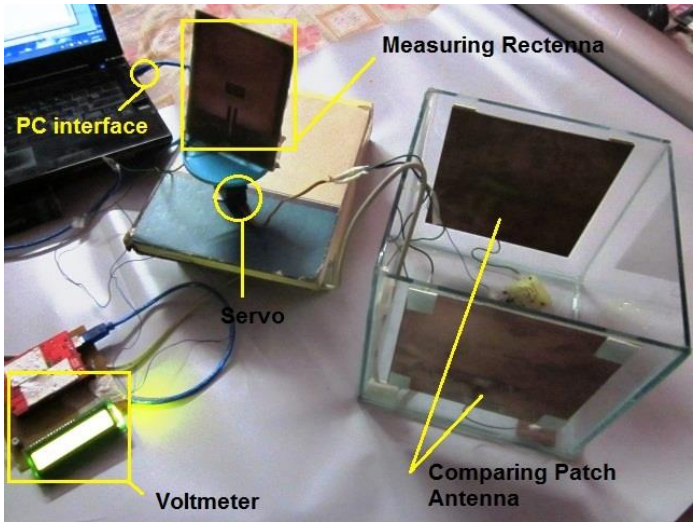

a)

When an RF source (CDMA-GSM band) like an operating cell phone with call initiated is brought near the measuring rectenna will result into an output voltage on voltmeter (field strength) as shown in fig 9. A program file written in the Matlab 2012a software which is for comparing output from the monitoring unit if executed, will start the arduino uno (monitoring unit); patch antenna on both the side of glass structure will start working to provide the strength of nearby field which will be input to the analog pins of arduino uno. Further the monitoring data will be fed to Matlab 2012a program executing on its way. The program will start plotting a real time graph of two voltages (for both the side of glass structure); on the basis of the relative strength of both antennas the program will command servo via arduino uno to move/target measuring rectenna toward the major RF source. In Fig. 9 c) the cell phone with a call initiated brought near the measuring rectenna, which result into an output of ~4.9V as pulsating DC is displayed on voltmeter LCD. Once the program is manually started in Matlab 2012a its activate both the patch antenna attached with monitoring unit as a result we can see the fig. 10 .The patch antennas are marked as right and left are assigned with color marker in Matlab 2012a graph plot. In Fig. 10 we can see that initially voltage plot is high due to the cell phone setting up communication with nearest tower. Another point we can notice is that the cell phone and the rectenna facing to the left side of the glass structure result into the left patch receiving most of the RF radiation.

Once we move RF source (cell phone) away from left side result into decreasing strength of RF radiation recorded by the blue line (left patch antenna) on the plot Eventually moving toward the right of the glass structure rise the RF strength recorded by right Patch antenna which will result into high red line strength on the plot. When the red line (right patch) record higher strength than a blue line (left patch),

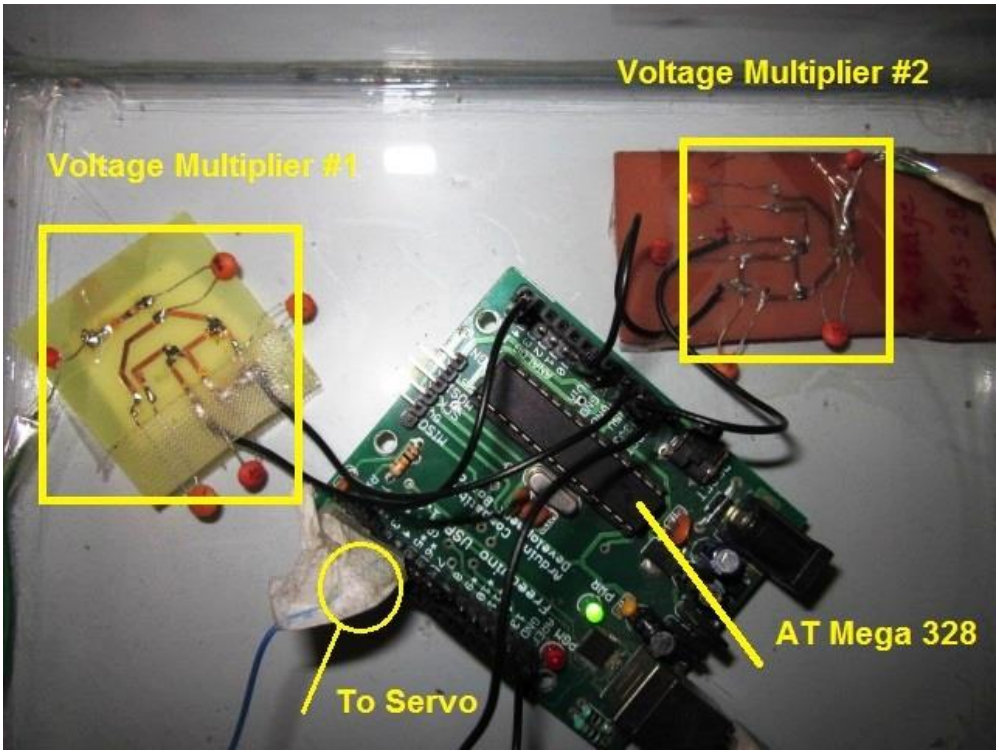

b)

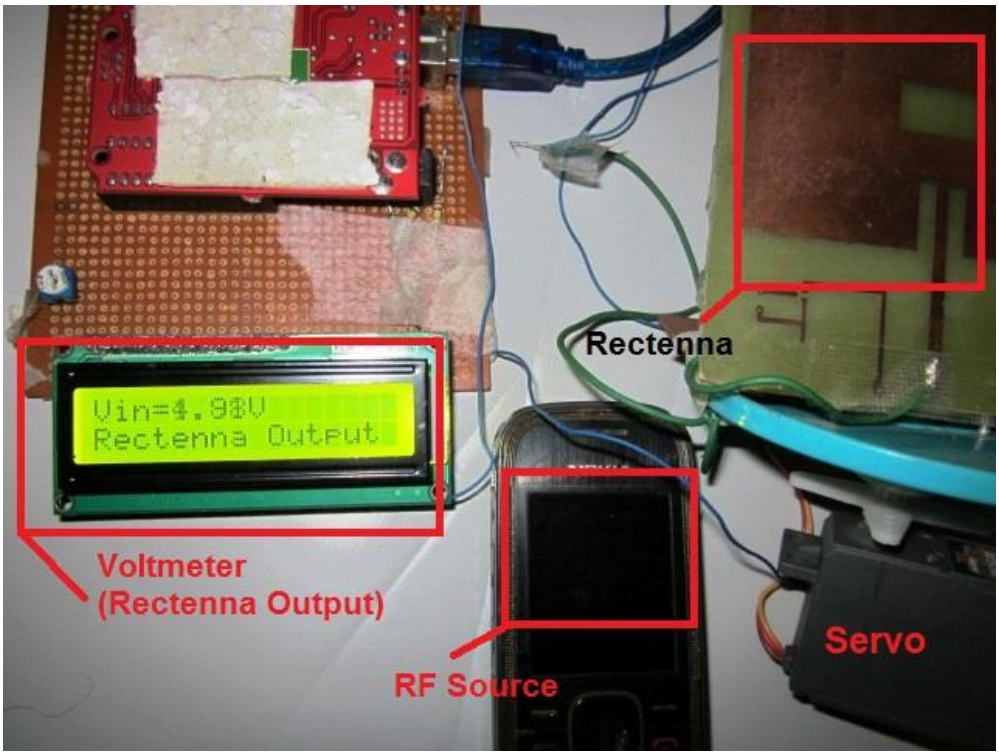

c)

Figure 9: Combined system testing a) complete prototype operation, b) circuit inside glass structure, c) measuring rectenna output on voltmeter.

The program will command servo to move measuring rectenna position (facing) from left to Right side .In this way, system will keep on comparing the strength and will automatically move measuring antenna toward more RF strength.

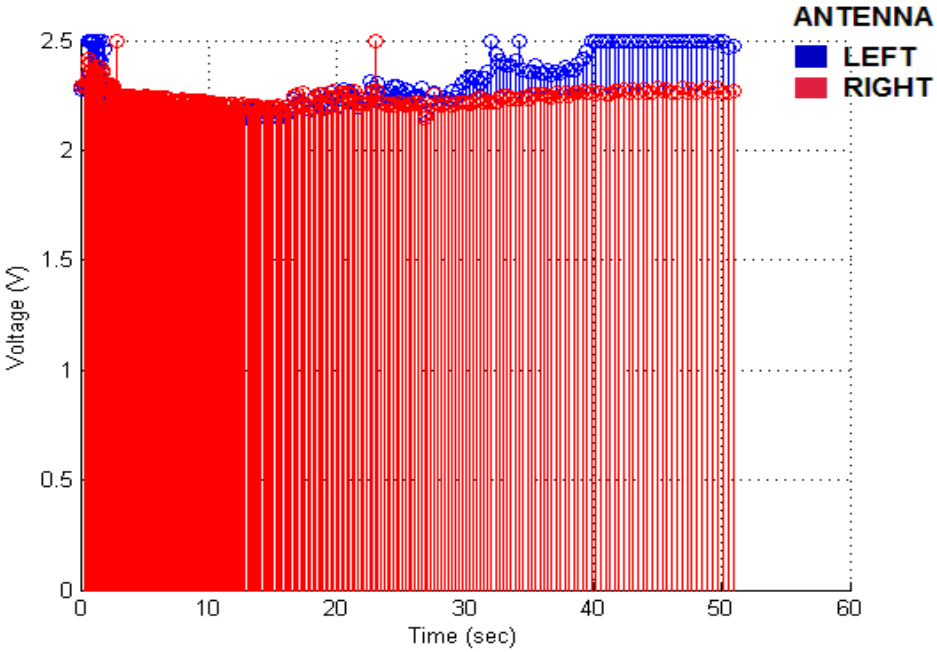

Figure 10: Plot for patch antenna on left (blue) and right (red) side of monitoring unit.

3.3. Powering LCD thermometer module

In fig 11 above presented a practice to power up an LCD thermometer module using the rectenna and a cell phone. As in fig 11 b) we can see that the battery from the thermometer module is replaced by rectenna output. Here in this case the wire connected to the battery section of the thermometer module is nothing but the output of single stage zero biased diode detector using (HSMS-282c), which will convert RF current to DC. When we brought a cell phone with an initiated call result in rectenna to provide dc voltage to the thermometer module as could be seen in fig. 11 a) the LCD on thermometer module start operating. Once the call terminated the rectenna stopped providing dc output result in the power to Thermometer module get down in very short span. Although the thermometer is able to operate for the very short span during an operating cell phone call still it is verified that power is enough to operate module but a consistent source of RF energy or a capacitor with low leakage and possibly with high discharge time.

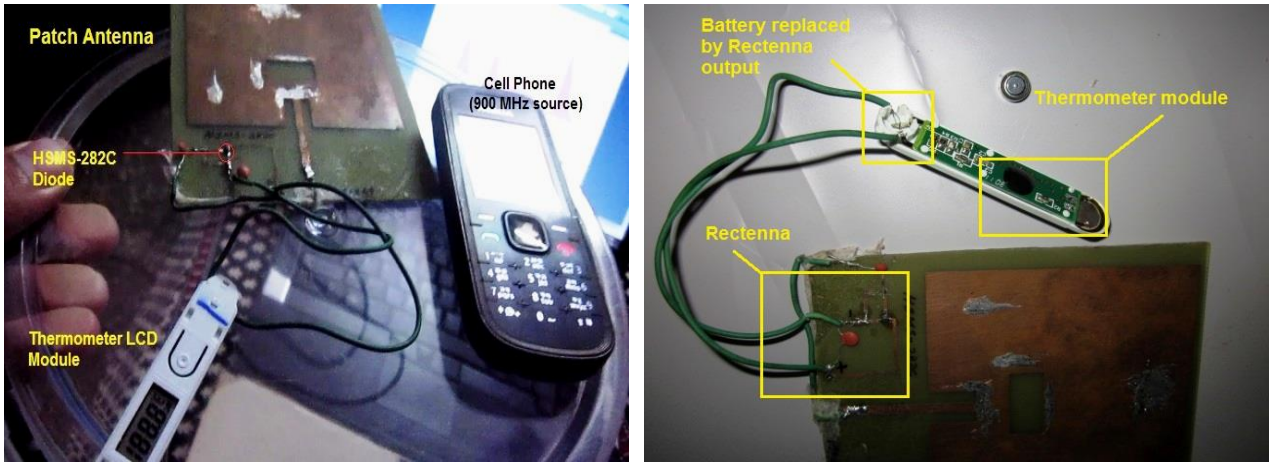

a) **b)**

Figure 11: LCD thermometer module a) powered by rectenna using cell phone as RF source, b) Battery is replaced by rectenna output.

4. Conclusion

A low profile RF (CDMA-GSM) energy measuring and harvesting system has been analyzed, designed and tested. The novel idea is to track/target the RF energy in real time to measure and harvest it. Voltage multiplier configurations, has been verified and optimized by means of test series conducted in lab and external site. Although no input low pass filter is used for rejection of harmonics at the input power of the rectifier still results gives good agreement to theoretical calculations.

A low profile inset-feed modified patch antenna is developed and used. A silicon based schottky diode single stage and 2 stage rectifiers are designed and fabricated on copper clad sheet (FR4). Comparison of ideal and RF energy measured with rectenna at test site with cell towers is presented.

Low series resistance Schottky diode in single stage detector is used to implement rectenna which could successfully power up the LCD thermometer. Although the power is not consistent for long use but system could be improved using super capacitor as output load of rectenna to operate low power devices.

Finally such system could be developed to be prove effective in charging of mobile handset (primary device) by placing to be charged mobile handset (secondary device) very close to fully charged mobile handset and draining primary device energy for charging the secondary device. Higher performance can be achieved by implemented the circuit in low sub micron manufacturing processes. Output voltage level can be increased using multiple stages of the multiplier circuit.

Acknowledgements

This project is using the part of the study carried out by me for the thesis submitted to GGSIPU, Delhi. I would like to express my thanks to the Asst. Professor Mr. S.B. Kumar and Ms. Jolly Parikh of Dept. of Electronics and Communication Engineering, BVCOE, New Delhi, for their guidance and support throughout this study.

References

[1] Nicolas Tesla. Experiments with Alternate Current of High Potential and High Frequency, McGraw, 1904.
[2] William C. Brown. “The history of power transmission by radio waves”, IEEE Trans.MTT, 32(9):1230-1242, 1984.
[3] N. Shinohara.”Wireless power transmission for solar power satellite” (sps second draft). 2006. http://www.sspi.gatech.edu/wptshinohara.pdf.
[4] W. C. Brown. “An experimental low power density rectenna”. IEEE MIT-S Int. Microwave Symp, 1991.
[5] David M. Pozar. “Microwave Engineering”, John Wiley &Sons, Inc. 1998
[6] J. A. G. Akkermans, M. C. van Beurden, G. J. N. Doodeman, and H. J. Visser, “Analytical models for low-power rectenna design,” IEEE Antennas Wireless Propag. Lett., vol. 4, pp. 187–190, 2005.
[7] J. Zbitou, M. Latrach and S. Toutain, “Hybrid Rectenna and Monolithic Integrated Zero-Bias Microwave Rectifier”, IEEE Trans. on Microw. Theory and Tech., vol. 54, no.1, pp 147-152, Jan. 2006.
[8] A. Douyere, J.D. Lan Sun Luk and F. Alicalapa, “High efficiency microwave rectenna circuit: modeling and design,” Electronics Letters, vol. 44, no. 24, Nov. 2008.
[9] Ansys HFSS Software Version 10, Ansys Corporation.
[10] Hewlett Packard, Technical Data “Surface Mount Microwave Schottky Detector Diodes”.
[11] JAMES J.R., and HALL P.S., Handbook of Microstrip Antennas, Peter Peregrinus Ltd., London, UK, 1989.
[12] Balanis, C.A., ‘Antenna Theory: Analysis and Design’, Third Edition, John Wiley & Sons, Inc, 2005.
[13] Qijuan He and Changjun Liu. “An Enhanced Microwave Rectifying Circuit Using HSMS-282x”, School of Electronics and Information Engineering, Sichuan University, Chengdu 610064, China.
[14] Stewart Jenvey, Jonas Gustafsson and Fredrik Henriksson “A Portable Monopulse Tracking Antenna for UAV Communication”, in 22nd International Unmanned Air Vehicle Systems Conference, April 2007.
[15] Avago Technologies. “Surface Mount Zero Bias Schottky Detector diode” Technical Data Sheet.
[16] Prof. Girish Kumar (IIT-B) “Report on cell tower radiation”, to Dept. of Telecomm. Delhi, Dec 2010.
[17] M. Guardiola, B. Monsalve, I. Calafell and G. Roqueta “Eco-Friendly Approach for Young Intrepid Students on the Fabrication and Measurement of Home-Made Standard Antennas”, IEEE Antennas and Propagation Society, DIY team ,May 2010.
[18] P. Nintanavongsa, U. Muncuk, D.R. Lewis and K.R. Chowdhury “Design Optimization and Implementation for RF Energy Harvesting Circuits, Vol. 2, March 2012.
[19] Fairchild Semiconductor Corporation, “1N4148 Small Signal Diode - Rev. B.
[20] Source for number of BTS: http://telecomtalk.info.
[21] Omar André Campana Escala, “Study of the efficiency of rectifying antenna systems for electromagnetic energy harvesting”, Pontificia Universidad Católica del Perú, Oct 2010.
[22] Richard Patterson, Ahmad Hammoud, Malik Elbuluk, Scott Gerber, “Performance of Various Types of Diodes at Cryogenic Temperatures”, NASA Electronic Parts and Packaging Program.
[23] M.Arrawatia, M.S.Baghini, Girish Kumar, “RF Energy Harvesting System from Cell Tower in 900MHz Band”, Indian Institute of Technology Bombay, India.
[24] Special-purpose diode, Volume-III semiconductors: www.allaboutcircuits.com/vol_3/chpt_3/12.html

US005590031A

United States Patent [19]

Mead, Jr. et al.

[11] Patent Number: 5,590,031

[45] Date of Patent: Dec. 31, 1996

[54] **SYSTEM FOR CONVERTING ELECTROMAGNETIC RADIATION ENERGY TO ELECTRICAL ENERGY**

[76] Inventors: **Franklin B. Mead, Jr.**, 44536 Avenida Del Sol, Lancaster, Calif. 93535; **Jack Nachamkin**, 12314 Teri Dr., Poway, Calif. 92064

[21] Appl. No.: **281,271**

[22] Filed: **Jul. 27, 1994**

[51] **Int. Cl.**[6] **H02M 1/00**

[52] **U.S. Cl.** **363/8**; 363/178; 342/6

[58] **Field of Search** 363/8, 13, 178; 342/6, 61, 73, 173, 175

[56] **References Cited**

U.S. PATENT DOCUMENTS

3,882,503	5/1975	Gamara	343/100 R
4,725,847	2/1988	Poirier	343/840
5,008,677	4/1991	Trigon et al.	342/17

Primary Examiner—Peter S. Wong
Assistant Examiner—Adolf Berhane
Attorney, Agent, or Firm—Chris Papageorge

[57] **ABSTRACT**

A system is disclosed for converting high frequency zero point electromagnetic radiation energy to electrical energy. The system includes a pair of dielectric structures which are positioned proximal to each other and which receive incident zero point electromagnetic radiation. The volumetric sizes of the structures are selected so that they resonate at a frequency of the incident radiation. The volumetric sizes of the structures are also slightly different so that the secondary radiation emitted therefrom at resonance interfere with each other producing a beat frequency radiation which is at a much lower frequency than that of the incident radiation and which is amenable to conversion to electrical energy. An antenna receives the beat frequency radiation. The beat frequency radiation from the antenna is transmitted to a converter via a conductor or waveguide and converted to electrical energy having a desired voltage and waveform.

14 Claims, 8 Drawing Sheets

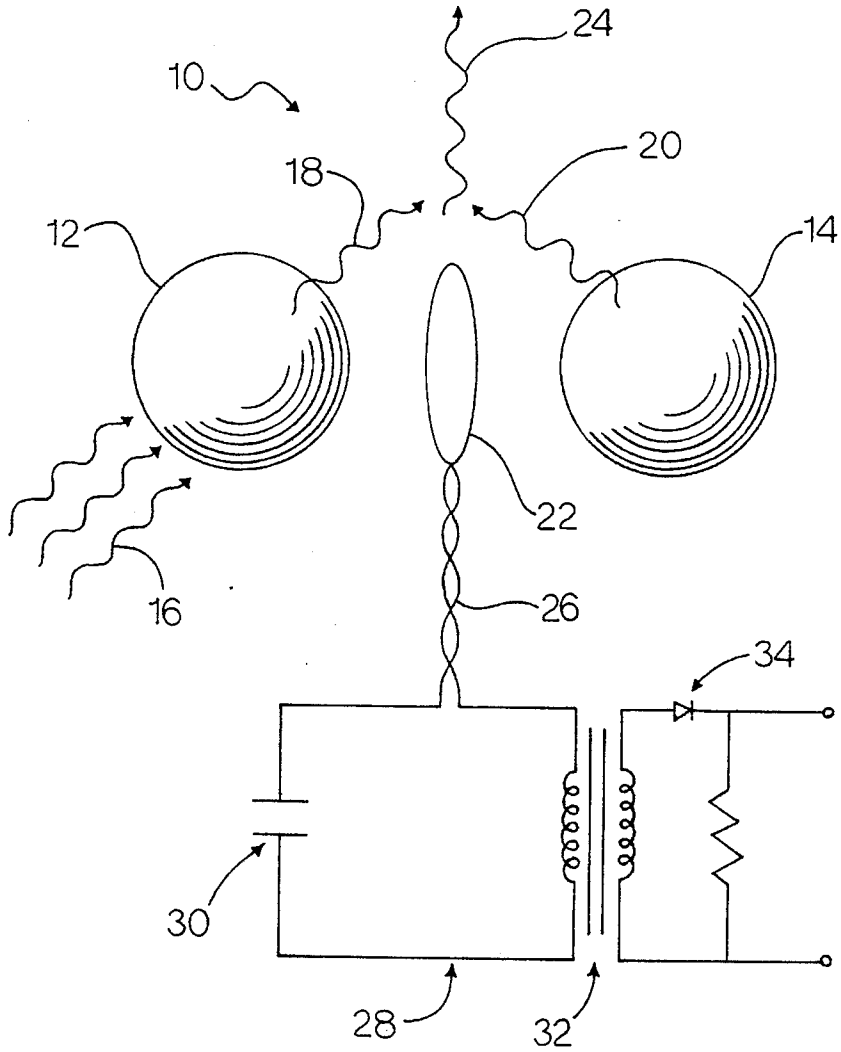

FIG. 1

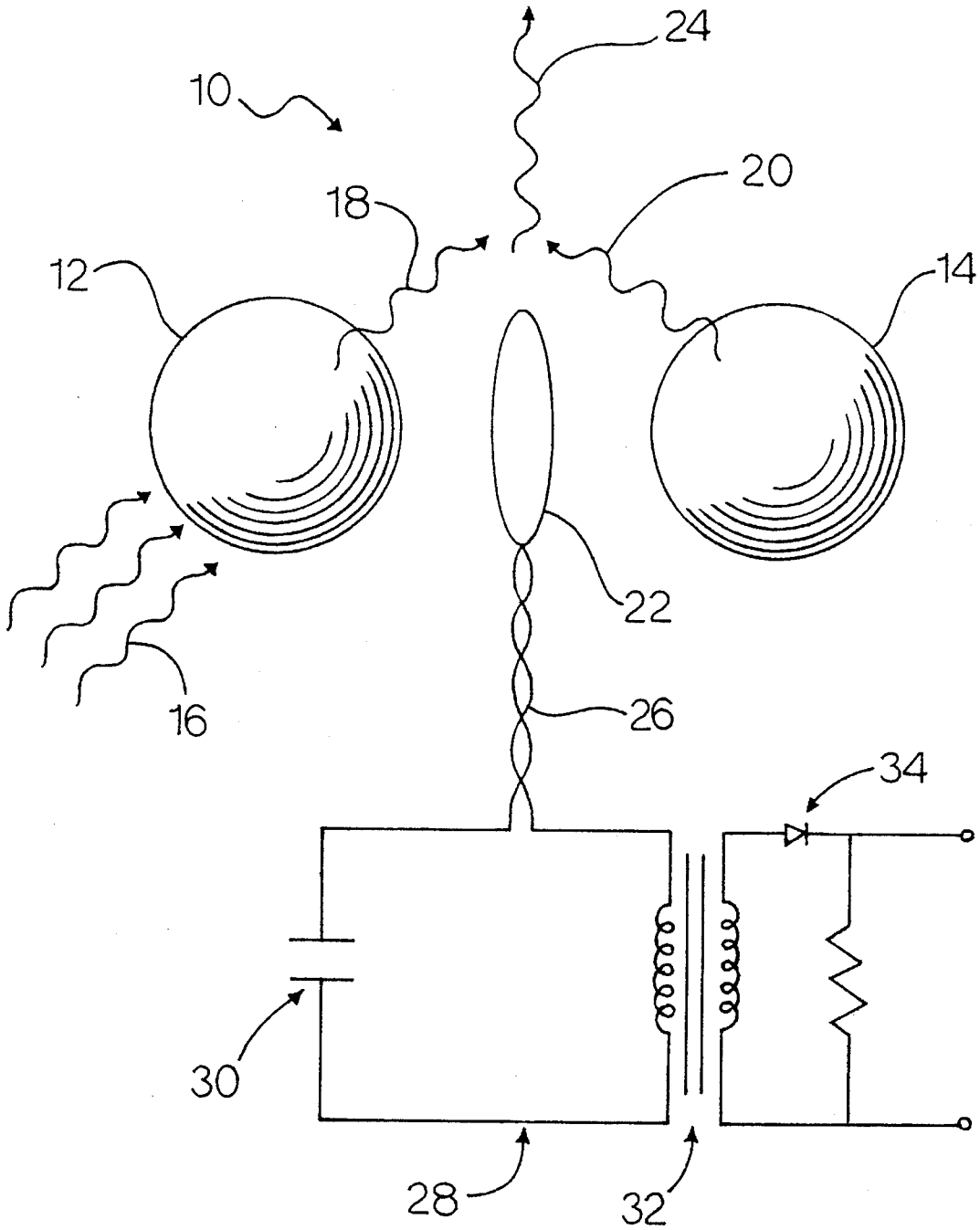

FIG. 2

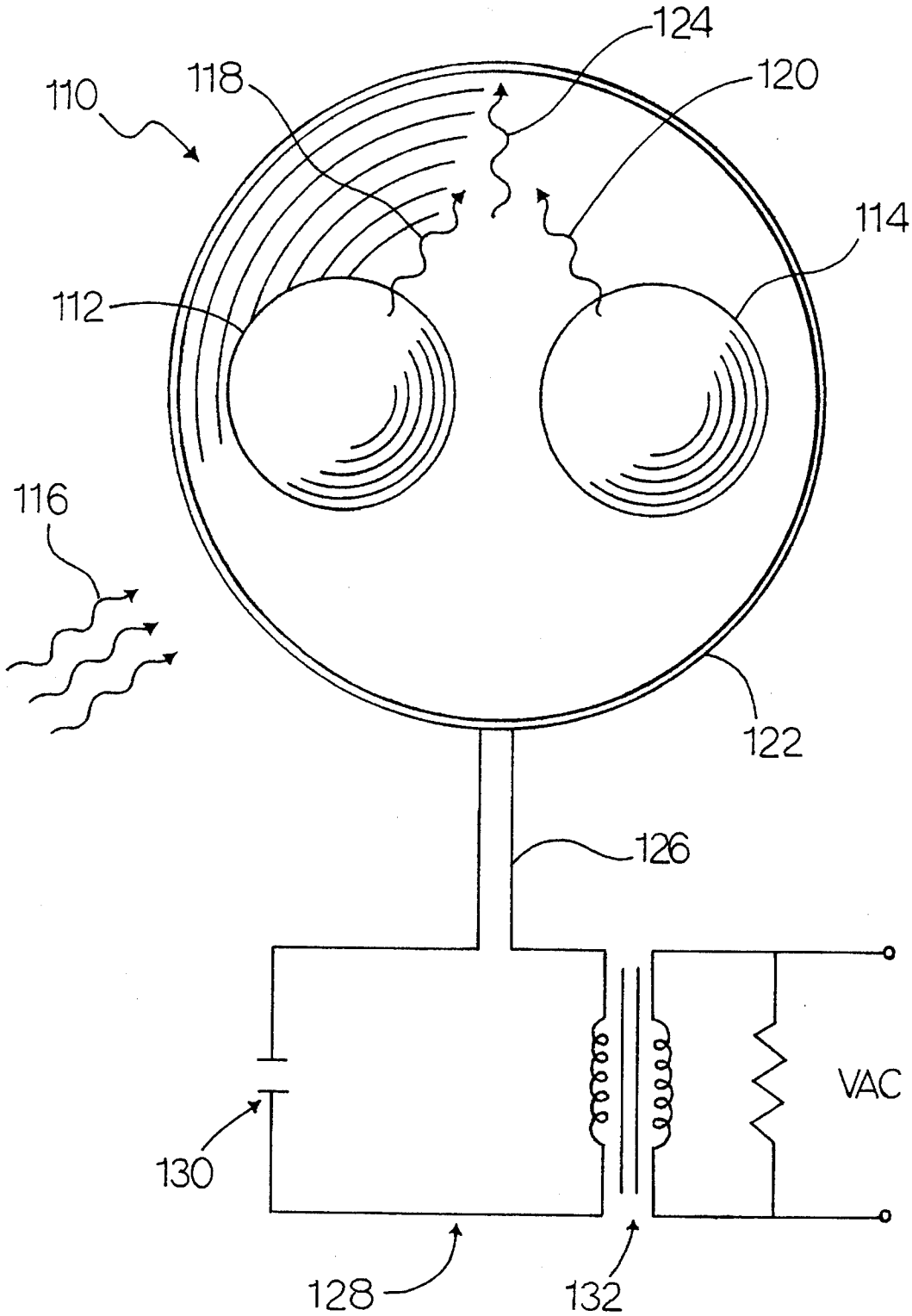

FIG. 3

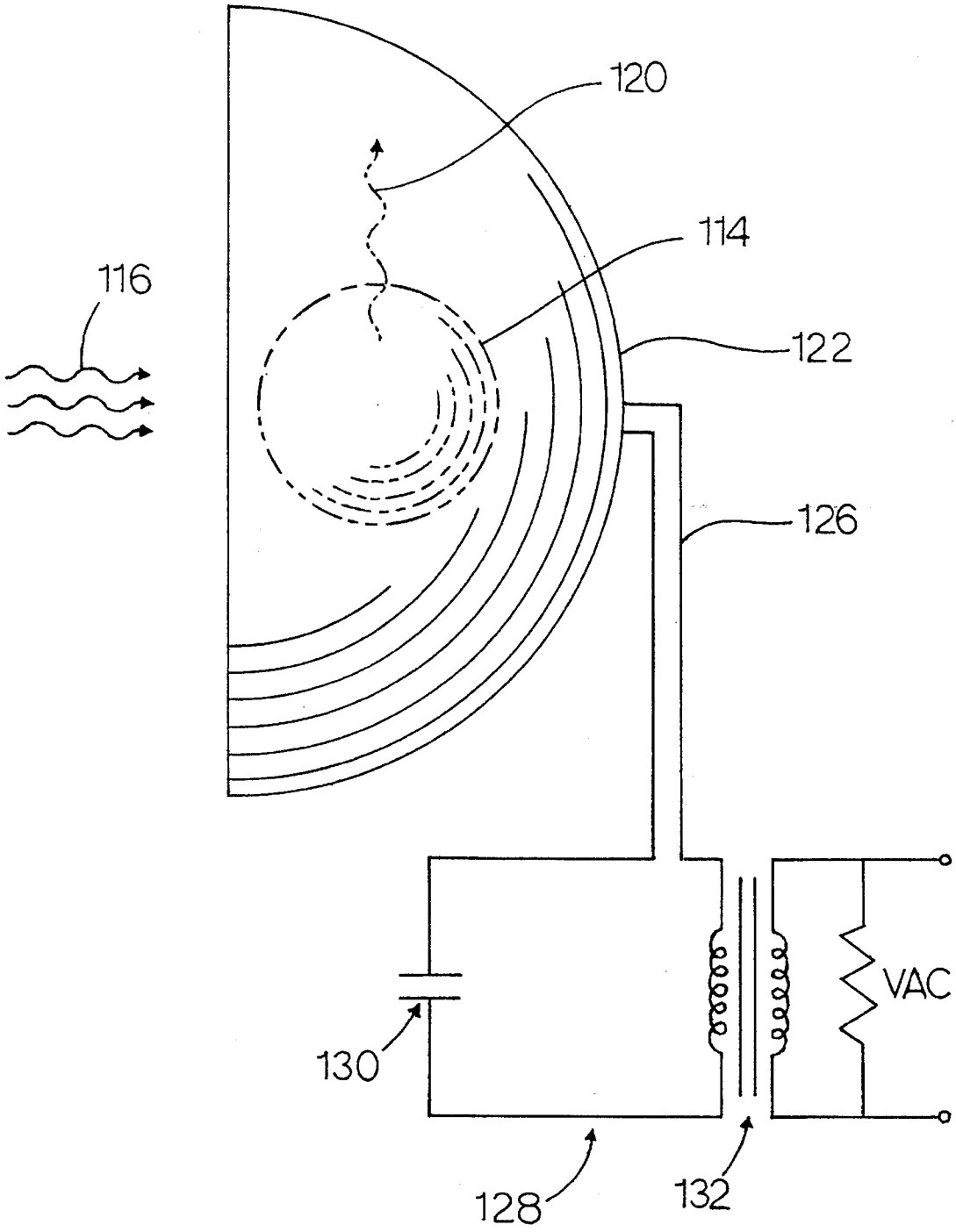

FIG. 4

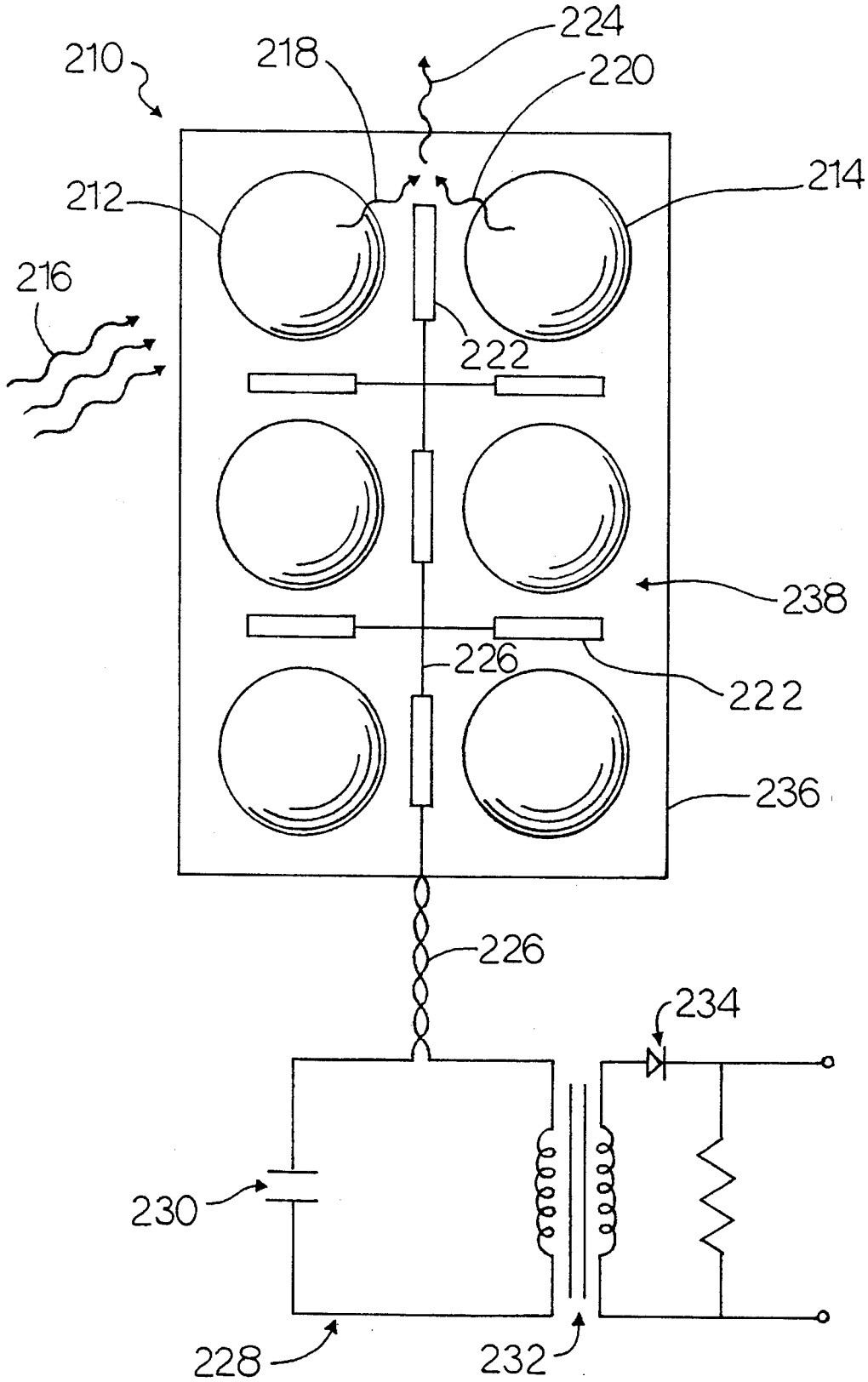
210
218
224
220
212
214
216
222
238
226
222
236
226
234
230
228
232

FIG. 5

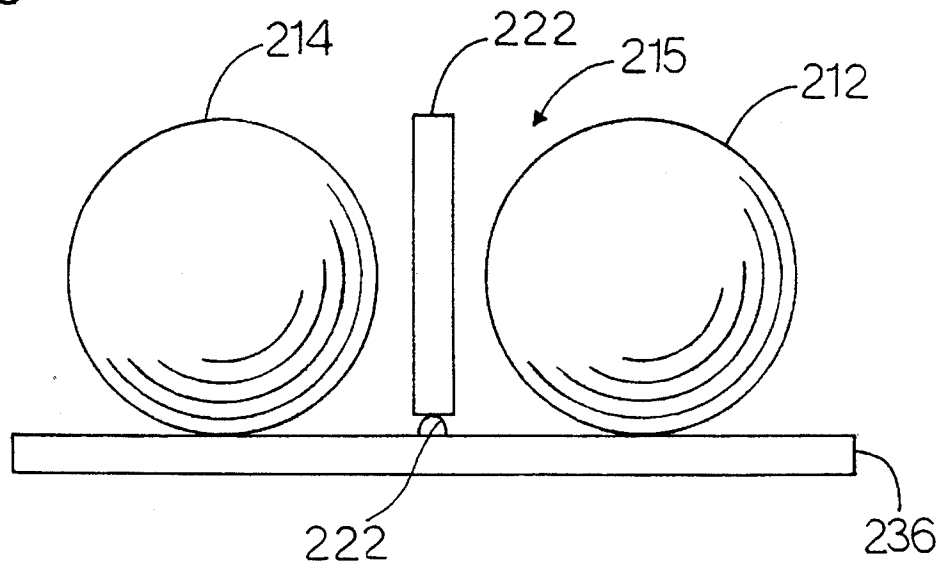

FIG. 6

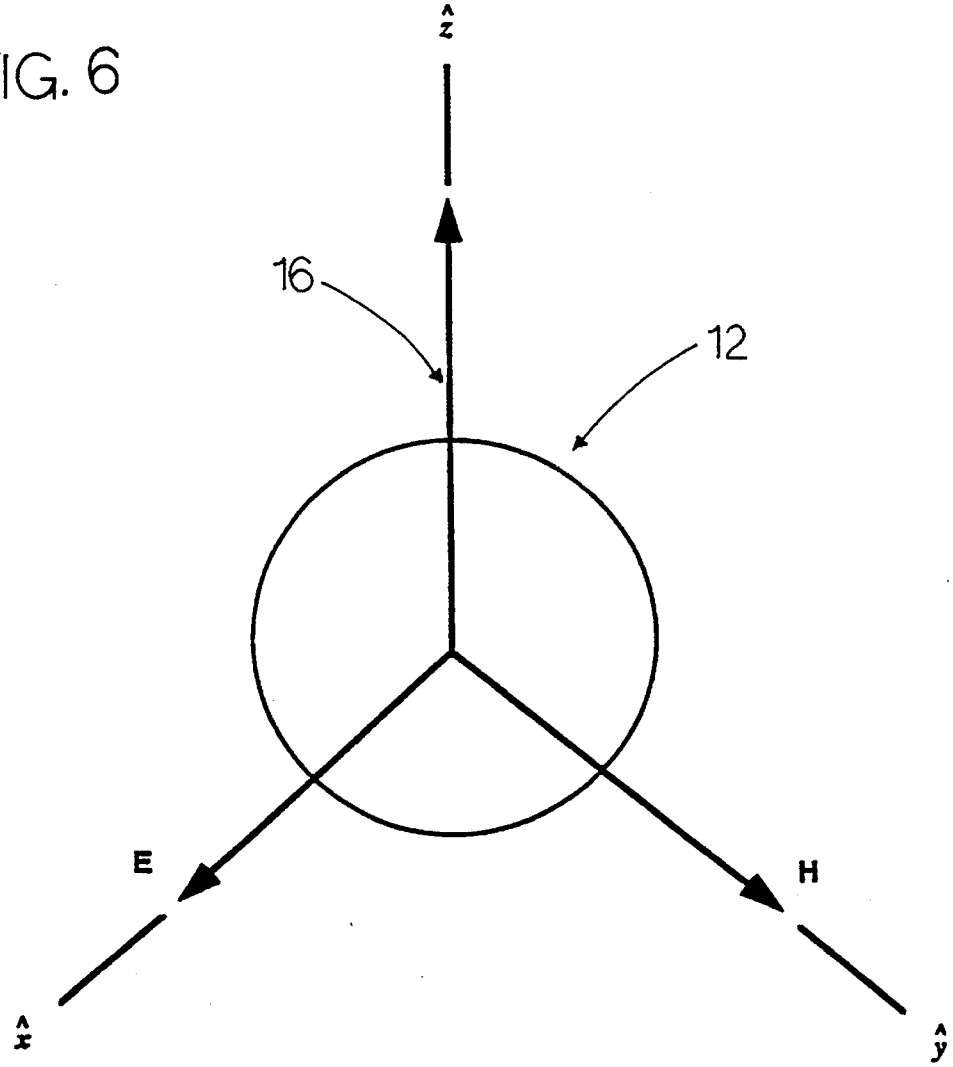

FIG. 7

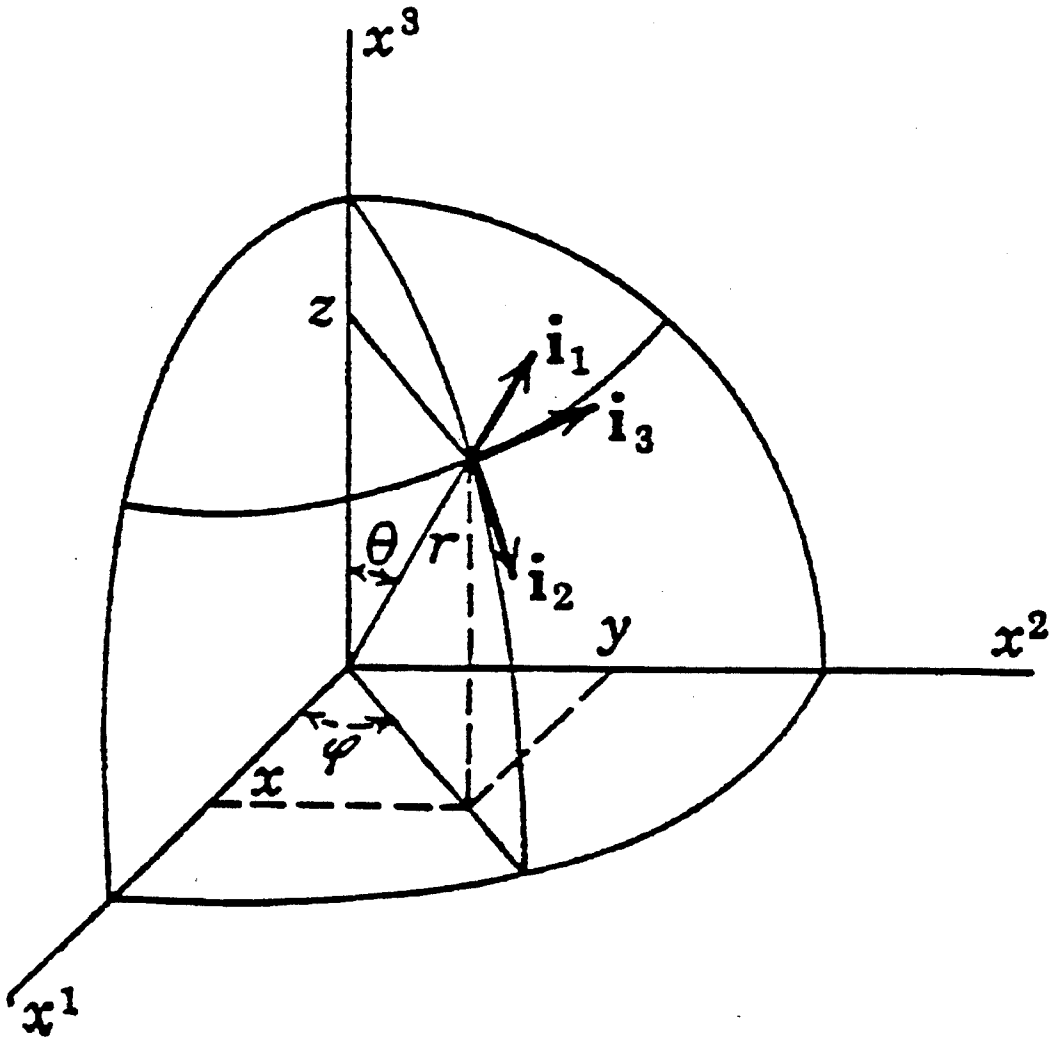

FIG. 8

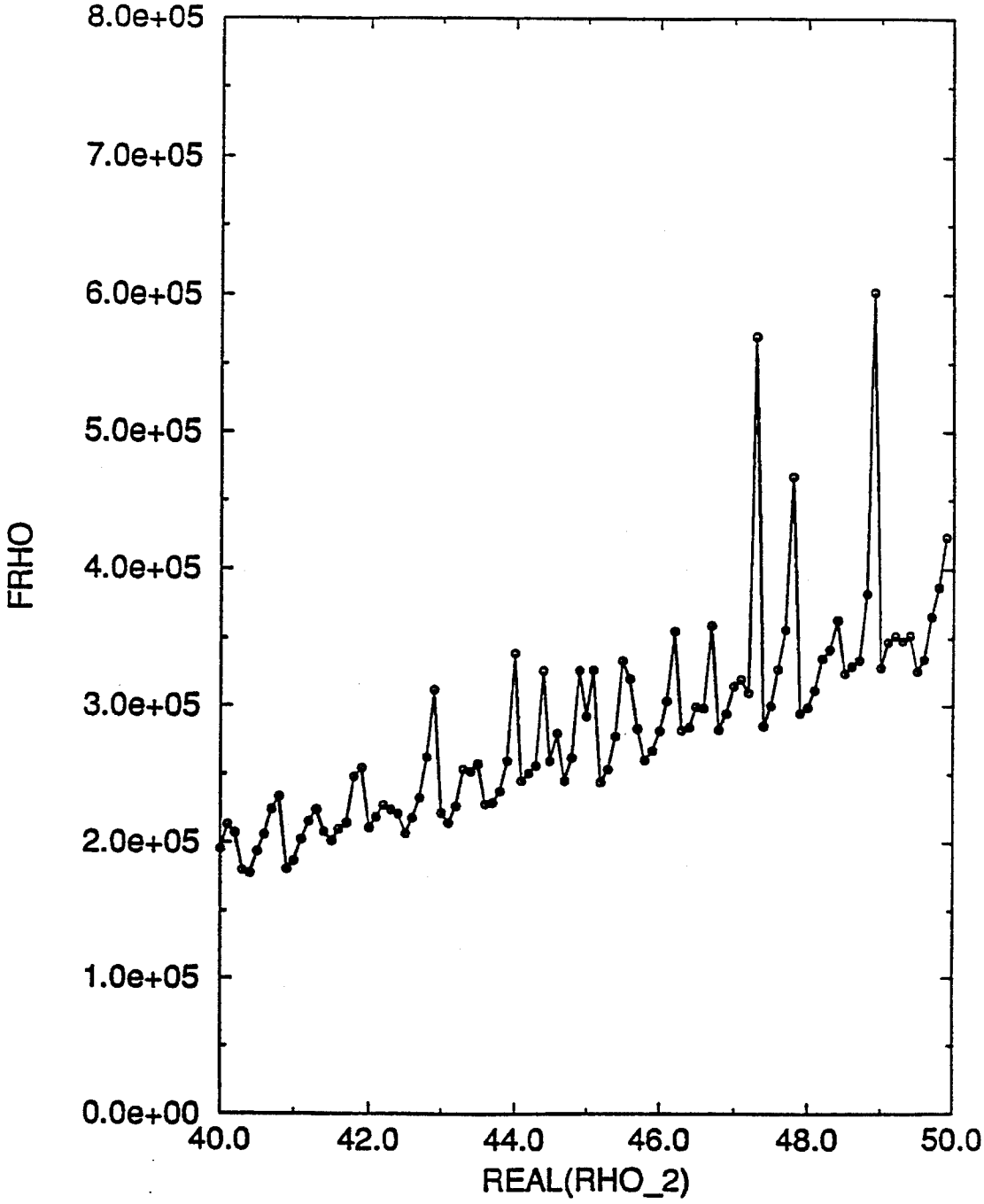
8.0e+05
7.0e+05
6.0e+05
5.0e+05
4.0e+05
3.0e+05
2.0e+05
1.0e+05
0.0e+00
FRHO
40.0
42.0
44.0
46.0
48.0
50.0
REAL(RHO_2)

FIG. 9

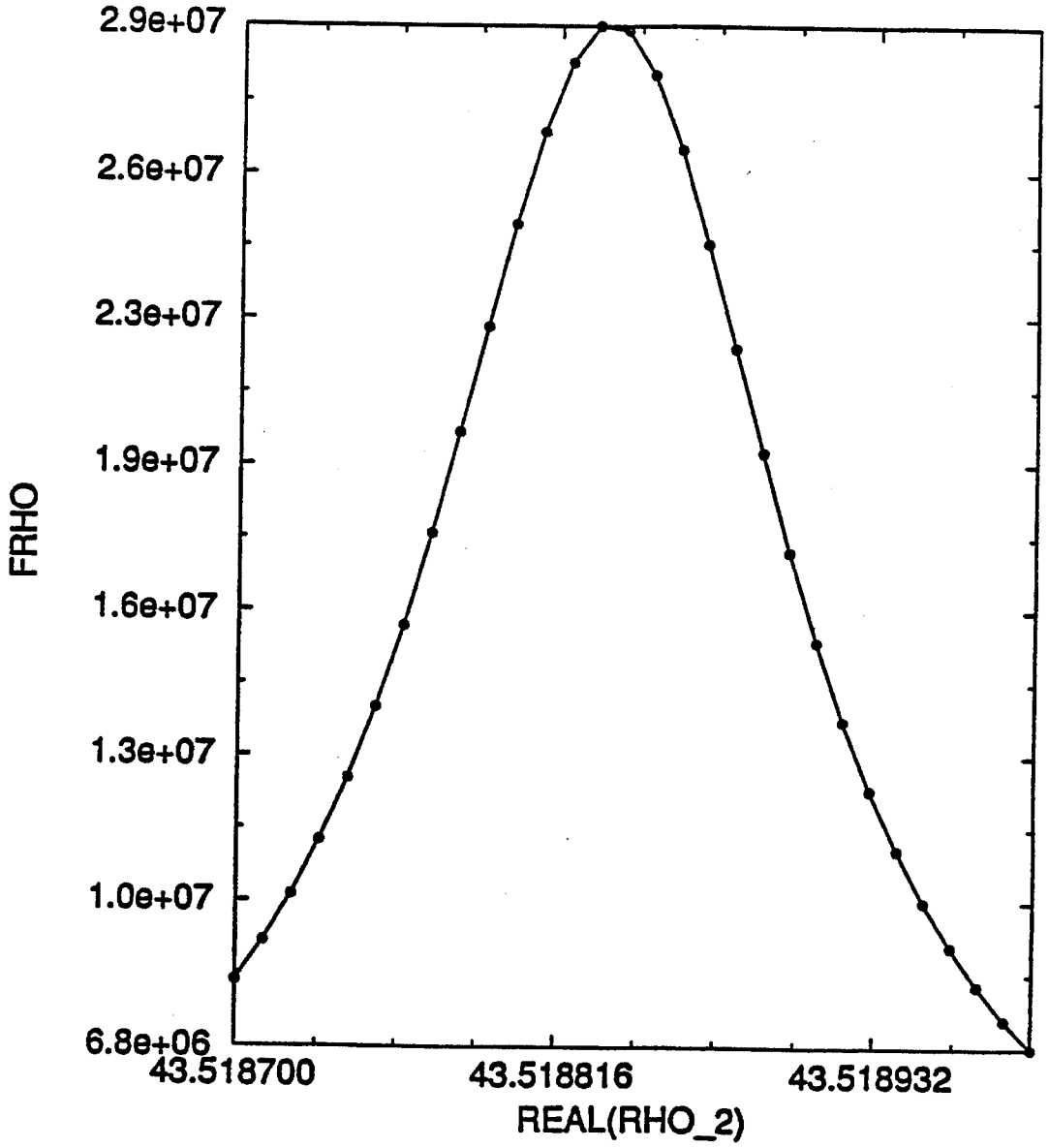
2.9e+07
2.6e+07
2.3e+07
1.9e+07
1.6e+07
1.3e+07
1.0e+07
6.8e+06
FRHO
43.518700
43.518816
43.518932
REAL(RHO_2)

SYSTEM FOR CONVERTING ELECTROMAGNETIC RADIATION ENERGY TO ELECTRICAL ENERGY

BACKGROUND OF THE INVENTION

The invention relates generally to conversion of electromagnetic radiation energy to electrical energy, and, more particularly, to conversion of high frequency bandwidths of the spectrum of a type of radiation known as zero point electromagnetic radiation to electrical energy.

The existence of zero point electromagnetic radiation was discovered in 1958 by the Dutch physicist M. J. Sparnaay. Mr. Sparnaay continued the experiments carried out by Hendrik B. G. Casimir in 1948 which showed the existence of a force between two uncharged parallel plates which arose from electromagnetic radiation surrounding the plates in a vacuum. Mr. Sparnaay discovered that the forces acting on the plates arose from not only thermal radiation but also from another type of radiation now known as classical electromagnetic zero point radiation. Mr. Sparnaay determined that not only did the zero point electromagnetic radiation exist in a vacuum but also that it persisted even at a temperature of absolute zero. Because it exists in a vacuum, zero point radiation is homogeneous and isotropic as well as ubiquitous. In addition, since zero point radiation is also invariant with respect to Lorentz transformation, the zero point radiation spectrum has the characteristic that the intensity of the radiation at any frequency is proportional to the cube of that frequency. Consequently, the intensity of the radiation increases without limit as the frequency increases resulting in an infinite energy density for the radiation spectrum. With the introduction of the zero point radiation into the classical electron theory, a vacuum at a temperature of absolute zero is no longer considered empty of all electromagnetic fields. Instead, the vacuum is now considered as filled with randomly fluctuating fields having the zero point radiation spectrum. The special characteristics of the zero point radiation which are that it has a virtually infinite energy density and that it is ubiquitous (even present in outer space) make it very desirable as an energy source. However, because high energy densities exist at very high radiation frequencies and because conventional methods are only able to convert or extract energy effectively or efficiently only at lower frequencies at which zero point radiation has relatively low energy densities, effectively tapping this energy source has been believed to be unavailable using conventional techniques for converting electromagnetic energy to electrical or other forms of easily useable energy. Consequently, zero point electromagnetic radiation energy which may potentially be used to power interplanetary craft as well as provide for society's other needs has remained unharnessed.

There are many types of prior art systems which use a plurality of antennas to receive electromagnetic radiation and provide an electrical output therefrom. An example of such a prior art system is disclosed in U.S. Pat. No. 3,882,503 to Gamara. The Gamara system has two antenna structures which work in tandem and which oscillate by means of a motor operatively attached thereto in order to modulate the radiation reflected from the antenna surfaces. The reflecting surfaces of the antennas are also separated by a distance equal to a quarter wavelength of the incident radiation. However, the Gamara system does not convert the incident radiation to electrical current for the purpose of converting the incident electromagnetic radiation to another form of readily useable energy. In addition, the relatively large size of the Gamara system components make it unable to resonate at and modulate very high frequency radiation.

What is therefore needed is a system which is capable of converting high frequency electromagnetic radiation energy into another form of energy which can be more readily used to provide power for transportation, heating, cooling as well as various other needs of society. What is also needed is such a system which may be used to provide energy from any location on earth or in space.

SUMMARY OF THE INVENTION

It is a principle object of the present invention to provide a system for converting electromagnetic radiation energy to electrical energy.

It is another object of the present invention to provide a system for converting electromagnetic radiation energy having a high frequency to electrical energy.

It is another object of the present invention to provide a system for converting zero point electromagnetic radiation energy to electrical energy.

It is another object of the present invention to provide a system for converting electromagnetic radiation energy to electrical energy which may used to provide such energy from any desired location on earth or in space.

It is another object of the present invention to provide a system for converting electromagnetic radiation energy to electrical energy having a desired waveform and voltage.

It is an object of the present invention to provide a miniaturized system for converting electromagnetic radiation energy to electrical energy in order to enhance effective utilization of high energy densities of the electromagnetic radiation.

It is an object of the present invention to provide a system for converting electromagnetic radiation energy to electrical energy which is simple in construction for cost effectiveness and reliability of operation.

Essentially, the system of the present invention utilizes a pair of structures for receiving incident electromagnetic radiation which may be propagating through a vacuum or any other medium in which the receiving structures may be suitably located. The system of the present invention is specifically designed to convert the energy of zero point electromagnetic radiation; however, it may also be used to convert the energy of other types of electromagnetic radiation. The receiving structures are preferably composed of dielectric material in order to diffract and scatter the incident electromagnetic radiation. In addition, the receiving structures are of a volumetric size selected to enable the structures to resonate at a high frequency of the incident electromagnetic radiation based on the parameters of frequency of the incident radiation and propagation characteristics of the medium and of the receiving structures. Since zero point radiation has the characteristic that its energy density increases as its frequency increases, greater amounts of electromagnetic energy are available at higher frequencies. Consequently, the size of the structures are preferably miniaturized in order to produce greater amounts of energy from a system located within a space or area of a given size. In this regard, the smaller the size of the receiving structures, the greater the amount of energy that can be produced by the system of the present invention.

At resonance, electromagnetically induced material deformations of the receiving structures produce secondary fields of electromagnetic energy therefrom which may have eva-

nescent energy densities several times that of the incident radiation. The structures are of different sizes so that the secondary fields arising therefrom are of different frequencies. The difference in volumetric size is very small so that interference between the two emitted radiation fields, and the receiving structures at the two different frequencies produces a beat frequency radiation which has a much lower frequency than the incident radiation. The beat frequency radiation preferably is at a frequency which is sufficiently low that it may be relatively easily converted to useable electrical energy. In contrast, the incident zero point radiation has its desirable high energy densities at frequencies which are so high that conventional systems for converting the radiation to electrical energy either cannot effectively or efficiently so convert the radiation energy or simply cannot be used to convert the radiation energy for other reasons.

The system of the present invention also includes an antenna which receives the beat frequency radiation. The antenna may be a conventional metallic antenna such as a loop or dipole type of antenna or a rf cavity structure which partially encloses the receiving structures. The antenna feeds the radiation energy to an electrical conductor (in the case of a conventional dipole or comparable type of antenna) or to a waveguide (in the case of a rf cavity structure). The conductor or waveguide feeds the electrical current (in the case of the electrical conductor) or the electromagnetic radiation (in the case of the waveguide) to a converter which converts the received energy to useful electrical energy. The converter preferably includes a tuning circuit or comparable device so that it can effectively receive the beat frequency radiation. The converter may include a transformer to convert the energy to electrical current having a desired voltage. In addition, the converter may also include a rectifier to convert the energy to electrical current having a desired waveform.

BRIEF DESCRIPTION OF THE DRAWINGS

FIG. **1** is a plan view of the receiving structures and antenna of a first embodiment of the system of the present invention with a schematic view of the conductor and converter thereof and also showing the incident primary and emitted secondary electromagnetic radiation.

FIG. **2** is a front view of the receiving structures, antenna and waveguide of a second embodiment of the system of the present invention with a schematic view of the converter thereof and also showing the incident primary and emitted secondary electromagnetic radiation.

FIG. **3** is a perspective view of the receiving structures, antenna and waveguide of the second embodiment shown in FIG. **2** with a schematic view of the converter thereof and also showing the incident primary and emitted secondary electromagnetic radiation.

FIG. **4** is a front view of the substrate and a plurality of pairs of the receiving structures and a plurality of antennas of a third embodiment of the system of the present invention with a schematic view of the conductor and converter thereof and also showing the incident primary and emitted secondary electromagnetic radiation.

FIG. **5** is a top view of some of the components of the third embodiment of the system of the present invention showing two of the plurality of pairs of receiving structures and two of the plurality of antennas mounted on the substrate.

FIG. **6** is a diagram of a receiving structure of the system of the present invention showing an incident electromagnetic plane wave impinging on the receiving structure and illustrating the directions of the electric and magnetic field vectors thereof.

FIG. **7** is a diagram of a spherical coordinate system as used in the formulas utilized in the system of the present invention.

FIG. **8** is a graph showing an imaginary ρ parameter plotted against a real ρ parameter illustrating the values thereof at resonance as well as values thereof at other than resonance.

FIG. **9** is a graph showing a portion of the graphical representation shown in FIG. **8** illustrating the real and imaginary ρ values at or near a single resonance.

DETAILED DESCRIPTION OF THE PREFERRED EMBODIMENT

Referring to the drawings, a first embodiment of the present invention is generally designated by the numeral **10**. The system **10** includes a first and second means for receiving **12** and **14** incident electromagnetic radiation **16**. The means for receiving **12** and **14** are preferably a pair of spherical structures **12** and **14** which are preferably composed of a dielectric material. Alternatively, the spheres **12** and **14** may be cubical structures or any other suitable shape. The spheres **12** and **14** may be mounted on a suitable foundation by any suitable mounting means (not shown), or spheres **12** and **14** may be suspended from a suitable foundation by any suitable suspension means (not shown). The spheres **12** and **14** are preferably composed of a dielectric material. The dielectric spheres **12** and **14** scatter and concentrate electromagnetic waves. At very sharpely defined frequencies, the spheres **12** and **14** will have resonances wherein the internal energy densities can be five orders of mangitude larger than the energy density of the incident electromagnetic field driving the spheres **12** and **14**. At resonance, the electromagnetic stresses, equivalent to pressures proportional to the energy density, can cause material deformation of the spheres **12** and **14** which produce a secondary electromagnetic field. The spheres **12** and **14** are preferably positioned proximal to each other, as shown in FIG. **1**. Although the proximity of the spheres to each other will adversely affect the resonances, the very high "Q"s of the isolated-sphere resonances results in such adverse affect being relatively small. However, the proximity of the spheres **12** and **14** allows the spheres to interact electromechanically which increases the magnitude of the secondary radiation emitted therefrom.

The electromagnetic radiation incident upon the spheres **12** and **14** which drives the spheres to resonance is preferably zero point radiation **16**. However, other types of electromagnetic radiation may also be used to drive the spheres **12** and **14**, if desired.

The effect of a dielectric sphere such as **12** or **14** on an incident electromagnetic radiation such as a plane wave thereof is shown in FIG. **6**. The plane wave propagates in the z axis direction and is diffracted by the sphere **12** resulting in scattering thereof. This scattering is commonly known as Mie scattering. The incident radiation wave has an electric vector component which is linearly polarized in the x axis direction and a magnetic vector component which is linearly polarized in the y axis direction.

An electromagnetic wave incident upon a structure produces a forced oscillation of free and bound charges in synch with the primary electromagnetic field of the incident electromagnetic wave. The movements of the charges produce a

secondary electromagnetic field both inside and outside the structure. The secondary electromagnetic radiation comprising this secondary electromagnetic field is shown in FIG. **1** and designated by the numerals **18** and **20**. An antenna which is shown simply as a loop antenna but may also be a dipole or any other suitable type of antenna is also shown in FIG. **1** and designated by the numeral **22**. The nonlinear mutual interactions of the spheres produces interference between the secondary electromagnetic radiation **18** and **20** produces a beat frequency radiation **24** which is preferably at a much lower frequency than the primary radiation **16**. It is this beat frequency radiation **24** which is desired for conversion into electrical energy because it preferably is within the frequency range of rf radiation which may be converted into electrical energy by generally conventional systems. Thus, the radiation **24** received by the antenna **22** is fed via an electrical conductor **26** to a means for converting the beat frequency radiation **24** to electrical energy. This means for converting is designated by the numeral **28** and preferably includes a tuning capacitor **30** and a transformer **32** and a rectifier (preferably a diode) **34**. Instead of including the capacitor **30**, transformer **32** and rectifier **34**, the converter **28** may alternatively include an rf receiver of any suitable type.

The resultant field at any point is the vector sum of the primary and secondary fields. For the equations that follow, the structure receiving the incident plane wave is a sphere of radius a having a propagation constant k_1 positioned in an infinite, homogeneous medium having a propagation constant k_2. The incident plane wave propagates in the z axis direction and is as shown in FIG. **6**. The spherical coordinate system used for the vector spherical wave functions is shown in FIG. **7**. Expansion of the incident field provides:

$$E_i = E_o e^{-i\omega t} \sum_{n=1}^{\infty} i^n \frac{2n+1}{n(n+1)} \left(m_{01n}^{(1)} - i n_{e1n}^{(1)}\right)$$

$$H_i = -\frac{k_2}{\omega\mu_2} E_o e^{-i\omega t} \sum_{n=1}^{\infty} i^n \frac{2n+1}{n(n+1)} \left(m_{e1n}^{(1)} + i n_{01n}^{(1)}\right)$$

where E is the electric field and H is the magnetic field; and

$$m_{\substack{01n\\e1n}}^{(1)} = \pm \frac{1}{\sin\theta} j_n(k_2R) P_n^1(\cos\theta) \begin{matrix}\cos\\ \sin\end{matrix} \phi i_2 - j_n(k_2R) \frac{\partial p_n^1}{\partial\theta} \begin{matrix}\sin\\ \cos\end{matrix} \phi i_3$$

$$n_{\substack{0ln\\e1n}}^{(1)} = \frac{n(n+1)}{k_2R} j_n(k_2R) P_n^1(\cos\theta) \begin{matrix}\sin\\ \cos\end{matrix} \phi i_1 + \frac{1}{k_2R} [k_2Rj_n(k_2R)]' \times$$

$$\frac{\partial P_n^1}{\partial\theta} \begin{matrix}\sin\\ \cos\end{matrix} \phi i_2 \pm \frac{1}{k_2R\sin\theta} [k_2Rj_n(k_2R)]' P_n^1(\cos\theta) \begin{matrix}\cos\\ \sin\end{matrix} \phi i_3.$$

The electric and magnetic fields of the incident wave transmitted into the sphere i.e., R<a, can be similarly expanded:

$$E_t = E_0 e^{-i\omega t} \sum_{n=1}^{\infty} i^n \frac{2n+1}{n(n+1)} \left(a_n^{tm} {}_{01n}^{(1)} - i b_n^{tn} {}_{e1n}^{(1)}\right)$$

$$H_t = \frac{k_2}{\phi\mu_1} E_0 e^{-i\omega t} \sum_{n=1}^{\infty} i^m \frac{2n+1}{n(n+1)} \left(b_n^{tm} {}_{e1n}^{(1)} - i a_n^{tn} {}_{01n}^{(1)}\right)$$

If $j_n(k_2R)$ is replaced by $h_n^{(1)}(k_2R)$ in the previous equations, the functions $m^{(1)}$ and $n^{(1)}$ become $m^{(3)}$ and $n^{(3)}$. The outgoing fields i.e., R>a, are represented by:

$$E_R = E_0 e^{-i\omega t} \sum_{n=1}^{\infty} i^n \frac{2n+1}{n(n+1)} \left(a_n^{rm} {}_{01n}^{(3)} - i b_n^{tn} {}_{e1n}^{(3)}\right)$$

$$H_r = \frac{k_2}{\phi\mu_1} E_0 e^{-i\omega t} \sum_{n=1}^{\infty} i^m \frac{2n+1}{n(n+1)} \left(b_n^{rm} {}_{e1n}^{(3)} - i a_n^{tn} {}_{01n}^{(3)}\right)$$

where H_r represents the resultant wave in the medium surrounding the sphere. At resonance, the values of ρ at resonance require that the a_n^t and b_n^t coefficients be infinite. In order to determine these values of a_n^t and b_n^t, the boundary conditions at the sphere radius are needed. Since there must be continuity of the E and H values at the surface, the following equations are used:

$$i_1 \times (E_i + E_r) = i_1 \times E_t \text{ and}$$

$$i_1 \times (H_i + H_r) = i_1 \times H_t$$

which lead to two pairs of inhomogeneous equations:

$$a_n^t j_n(N\rho) - a_n^r h_n^{(1)}(\rho) = j_n(\rho)$$

$$\mu_2 a_n^t [N\rho j_n(N\rho)]' - \mu_1 a_n^r [\rho h_n^{(1)}(\rho)]' = \mu_1 [\rho j_n(\rho)]' \text{ and}$$

$$\mu_2 N b_n^t j_n(N\rho) - \mu_1 b_n^r h_n^{(1)}(\rho) = \mu_1 j_n(\rho)$$

$$b_n^t [N\rho j_n(N\rho)]' - N b_n^r [\rho h_n^{(1)}(\rho)]' = N[\rho j_n(\rho)]'$$

where $k_1 = Nk_2$, $\rho = k_2 a$, $k_1 a = N\rho$. Spherical Bessel functions of the first kind are denoted by j_n, while those of the third kind are denoted by $h_n^{(1)}$. The resulting equations are:

$$a_n^t = \frac{\mu_1 j_n(\rho)[\rho h_n^{(1)}(\rho)]' - \mu_1 h_n^{(1)}\rho)[\rho j_n(\rho)]'}{\mu_1 j_n(N\rho)[\rho h_n^{(1)}(\rho)]' - \mu_2 h_n^{(1)}(\rho)[N\rho j_n(N\rho)]'}$$

and

$$b_n^t = \frac{\mu_1 N j_n(\rho)[\rho h_n^{(1)}(\rho)]' - \mu_1 N h_n^{(1)}\rho)[\rho j_n(\rho)]'}{\mu_2 N^2 j_n(N\rho)[\rho h_n^{(1)}(\rho)]' - \mu_1 h_n^{(1)}(\rho)[N\rho j_n(N\rho)]'}$$

At a resonance, the denominator of either a_n^t or b_n^t will be zero. Thus, ρ values are found using the above equations that correspond to a resonant combination of angular frequency (ω) and radius (a) for a given sphere material and given surrounding medium. In determining such values of ρ, the following equations are also specifically used:

$$\rho = ak_2 = a\omega\sqrt{\epsilon_2\mu_2} \text{ and}$$

$$\rho_1 = (k_1/k_2)\rho$$

where ρ_1 corresponds to the sphere material. An iterative method is preferably used to find the desired values of ρ at resonance. In calculating ρ utilizing the above equations for purposes of example, it was assumed that $\mu_1 = \mu_2 = \mu_0 = 4\pi \times 10^{-7}$ and $\epsilon_2 = \epsilon_0 = 8.85419 \times 10^{-12}$.

One major root of ρ which was found has a value of:

Real (ρ)=+66.39752607619131

Imaginary (ρ)=−0.6347867071968998.

These particular values are not shown in FIG. **8**. However, other values of ρ found using the equations set forth herein are shown in FIG. **8**. The peaks in FIG. **8** are the resonances. One of these resonances shown in FIG. **8** is shown in detail in FIG. **9**. These resonance values are shown for purposes of example. Other resonances also exist which have not been determined; thus, not all possible resonance values are shown in FIGS. **8** and **9**.

Calculation of these values also allows the determination of a possible am combination which would have these root values. For ρ, ϵ (epsilon)=ϵ_0 and $\mu=\mu_0$, and

$$\rho = a\omega\sqrt{\epsilon_0\mu_0} = a\omega/c.$$

Expressed in SI units, the speed of light $c=2.99792458\times10^{14}$ m/s. If an a value of 10^{-6} m is assumed for the examples shown herein, then:

$$\omega=\rho c/a\approx1.9919\times10^{16}-i1.9044\times10^{14} \text{ radians/s.}$$

This is an example of the angular frequency required within the impingent EM radiation in order to create a resonant situation. Examples of other resonances were indicated, and these are shown in FIG. **8**. No complex-frequency plane waves exist. Therefore, the calculations were made by considering only the real portion of the above root and setting the imaginary portion equal to zero. However, upon doing this, the iterative calculation procedure becomes insensitive to any root in the vicinity of the root's real portion. In the iterative calculation procedure, initially a range of ρ values is input into the equations. These ρ values are in the neighborhood of the prospective root. A range of ρ values is subsequently studied to find any imaginary ρ i.e., fρ (a function of ρ), peaks in that range. Next, once a peak has been chosen, the function order n giving the dominant fρ is determined. This also gives a clue as to whether the peak is due to a magnetic resonance (a_n approaches infinity) or an electrical resonance (b_n approaches infinity). A large number of Newton-Raphson iterations is preferably performed in order to converge upon a root ρ value.

FIGS. **2** and **3** show a second embodiment of the present invention generally designated by the numeral **110**. Embodiment **110** is essentially the same as embodiment **10** except that the antenna is a rf cavity structure **122** which feeds the received beat frequency radiation **124** to a waveguide **126**. Embodiment **110** also preferably includes two spheres **112** and **114** which receive the primary incident electromagnetic radiation **116** and emit the secondary electromagnetic radiation **118** and **120**. As with the spheres **18** and **20** of embodiment **10**, spheres **118** and **120** are preferably composed of a dielectric material. Embodiment **110** also includes converter **128**, capacitor **130**, transformer **132** and rectifier **134** which are essentially identical to the correspondingly numbered elements of embodiment **10**. Therefore, a description of these components of embodiment **110** will not be repeated in order to promote brevity. In addition, the same equations and method of calculation set forth above with regard to embodiment **10** also apply to embodiment. Therefore, their description will not be repeated in order to promote brevity.

FIGS. **4** and **5** show a third embodiment of the present invention generally designated by numeral **210**. Embodiment **210** is essentially identical to the first embodiment **10** except that the embodiment **210** includes a plurality of pairs **215** of receiving means (spheres) **212** and **214** mounted on a substrate **236**. The spheres **212** and **214** are thus in the form of an array **238**. The pairs **215** of the array **238** are preferably positioned proximal to each other in order to maximize the amount of energy extracted from a particular area or space of a given size. Since, as set forth hereinabove, the energy density of the zero point radiation increases as the frequency of the radiation increases, it is desirable that the spheres resonate at as high a bandwidth of frequencies as possible. Because the spheres **212** and **214** must be small in direct proportion to the wavelength of the high frequencies of the incident electromagnetic radiation **216** at which resonance is desirably obtained, the spheres **212** and **214** are preferably microscopic in size. Current lithographic techniques are capable of manufacturing such microscopically small spheres mounted on a suitable substrate thereby providing a suitably miniaturized system **210**. A miniaturized system enhances the energy output capability of the system by enabling it to resonate at higher frequencies at which there are correspondingly higher energy densities. Consequently, utilization of array **238** in the system **210** enhances the maximum amount of electrical energy provided by the system **210**.

Lithographic techniques may be more amenable to manufacturing microscopically small receiving structures **212** and **214** which may be disc shaped, semispherical or have another shape other than as shown in FIGS. **4** and **5**. Consequently, the receiving means **212** and **214** may accordingly have such alternative shapes rather than the spherical shape shown in FIGS. **4** and **5**. In addition, a large number of small spheres may be manufactured by bulk chemical reactions. Packing a volume with such spheres in close proximity could enhance the output of energy.

Embodiment **210** also includes a plurality of antennas **222** positioned preferably between the spheres **212** and **214** which receive the beat frequency radiation **224** produced by the interference between the secondary radiation **218** and **220**. The antennas **222** are shown as loop antennas **222** but may be any other suitable type of antennas as well.

Embodiment **210** has a plurality of electrical conductors **226** which preferably include traces mounted on the substrate **236** which occupies a finite volume. The electrical conductors **226** feed the electrical output from the antennas **222** to a suitable converter **228** which preferably includes tuning capacitor **230**, transformer **232** and rectifier **234**, as with embodiments **10** and **110**. Except as set forth above, the components of embodiment **210** are identical to embodiment **10** so the detailed description of these components will not be repeated in order to promote brevity. In addition, the same equations and method of calculation set forth above for embodiment **10** also apply to embodiment **210**. Therefore, the description of these equations and method of calculation will not be repeated in order to promote brevity.

Accordingly, there has been provided, in accordance with the invention, a system which converts high frequency zero point electromagnetic radiation into electrical energy effectively and efficiently and thus fully satisfies the objectives set forth above. It is to be understood that all terms used herein are descriptive rather than limiting. Although the invention has been specifically described with regard to the specific embodiments set forth herein, many alternative embodiments, modifications and variations will be apparent to those skilled in the art in light of the disclosure set forth herein. Accordingly, it is intended to include all such alternatives, embodiments, modifications and variations that fall within the spirit and scope of the invention as set forth in the claims hereinbelow.

What is claimed is:

1. A system for converting incident electromagnetic radiation energy to electrical energy, comprising:

a first means for receiving incident primary electromagnetic radiation, said means for receiving producing emitted secondary electromagnetic radiation at a first frequency, said first means for receiving having a first volumetric size selected to resonate at a frequency within the frequency spectrum of the incident primary electromagnetic radiation in order to produce the secondary electromagnetic radiation at the first frequency at an enhanced energy density;

a second means for receiving the incident primary electromagnetic radiation, said means for receiving producing emitted secondary electromagnetic radiation at a second frequency, the secondary radiation at the first frequency and the secondary radiation at the second frequency interfering to produce secondary radiation at a lower frequency than that of the incident primary radiation, said second means for receiving having a second volumetric size selected to resonate at a frequency within the frequency spectrum of the incident primary electromagnetic radiation in order to produce the emitted secondary electromagnetic radiation at the second frequency at an enhanced energy density;

an antenna for receiving the emitted secondary electromagnetic radiation at the lower frequency, said antenna providing an electrical output responsive to the secondary electromagnetic radiation received;

a converter electrically connected to said antenna for receiving electrical current output from said antenna and converting the electrical current output to electrical current having a desired voltage and waveform.

2. The system of claim **1** wherein:

said first means for receiving is composed of a dielectric material; and

said second means for receiving is composed of a dielectric material.

3. The system of claim **1** wherein:

said first means for receiving is spherical; and

said second means for receiving is spherical.

4. A system for for converting incident zero point electromagnetic radiation energy to electrical energy, comprising:

a first means for receiving incident primary zero point electromagnetic radiation, said means for receiving producing emitted secondary electromagnetic radiation at a first frequency;

a second means for receiving the incident primary zero point electromagnetic radiation, said means for receiving producing emitted secondary electromagnetic radiation at a second frequency, the secondary radiation at the first frequency and the secondary radiation at the second frequency interfering to produce secondary radiation at a beat frequency which is lower than that of the incident primary radiation;

an antenna for receiving the emitted secondary electromagnetic radiation at the lower frequency, said antenna providing an electrical output responsive to the secondary electromagnetic radiation received;

means for transmitting the emitted secondary electromagnetic radiation at the beat frequency from said antenna, said means for transmitting connected to said antenna;

a converter connected to said means for transmitting for receiving the emitted secondary electromagnetic radiation at the beat frequency from said antenna and converting the same to electrical current having a desired voltage and waveform.

5. The system of claim **4** wherein:

said first means for receiving has a first volumetric spherical size selected to resonate in response to the incident primary electromagnetic radiation in order to produce the secondary electromagnetic radiation at the first frequency at an enhanced energy density; and

said second means for receiving has a second volumetric spherical size selected to resonate in response to the incident primary electromagnetic radiation in order to produce the emitted secondary electromagnetic radiation at the second frequency at an enhanced energy density, said first and second volumetric sizes selected based on parameters of propagation constant of said first and second means for receiving, propagation constant of medium in which said first and second means for receiving are located and frequency of the incident primary electromagnetic radiation.

6. The system of claim **5** wherein the first and second volumetric sizes are selected by utilizing the formulas:

$$a_n^t = \frac{\mu_1 j_n(\rho)[\rho h_n^{(1)}(\rho)]' - \mu_1 h_n^{(1)}\rho)[\rho j_n(\rho)]'}{\mu_1 j_n(N\rho)[\rho h_n^{(1)}(\rho)]' - \mu_2 h_n^{(1)}(\rho)[N\rho j_n(N\rho)]'}$$

$$b_n^t = \frac{\mu_1 N j_n(\rho)[\rho h_n^{(1)}(\rho)]' - \mu_1 N h_n^{(1)}\rho)[\rho j_n(\rho)]'}{\mu_2 N^2 j_n(N\rho)[\rho h_n^{(1)}(\rho)]' - \mu_1 h_n^{(1)}(\rho)[N\rho j_n(N\rho)]'}$$

$$\rho = a\omega\sqrt{\epsilon_2\mu_2}$$

wherein at a resonance, the denominator of either equation for a_n^t or b_n^t will be approximately zero and wherein k_1=propagation constant of the means for receiving, k_2=propagation constant of medium through which the incident electromagnetic radiation propagates, a is the radius of either means for receiving, $N=k_1/k_2$, $\rho=k_2a$, $k_1a=N\rho$, a_n^t=magnitude of oscillations of the electric field of the nth order, b_n^t=magnitude of oscillations of the magnetic field of the nth order, ω=angular frequency of the incident electromagnetic radiation, ϵ is the permittivity of the material or medium and μ is the permeability of the material or medium.

7. The system of claim **6** wherein the radius of the first means for receiving is different from the radius of the second means for receiving, difference between the radius of said first means for receiving and the radius of said second means for receiving selected so that the beat frequency resulting from the difference is a frequency which facilitates conversion of the beat frequency electromagnetic radiation to electrical energy.

8. The system of claim **4** wherein:

said first means for receiving is composed of a dielectric material; and

said second means for receiving is composed of a dielectric material.

9. The system of claim **4** wherein:

said first means for receiving is spherical; and

said second means for receiving is spherical.

10. The system of claim **4** wherein said antenna is positioned generally between said first and second means for receiving.

11. The system of claim **4** wherein said antenna is a loop antenna.

12. The system of claim **4** wherein said antenna is a generally concave shell partially enclosing said first and second means for receiving.

13. The system of claim **4** wherein said means for transmitting is a waveguide.

14. A system for for converting incident zero point electromagnetic radiation energy to electrical energy, comprising:

a substrate;

a plurality of pairs of first means for receiving incident primary zero point electromagnetic radiation and second means for receiving incident primary zero point electromagnetic radiation, said plurality of pairs of means for receiving mounted on said substrate, said first means for receiving producing emitted secondary

electromagnetic radiation at a first frequency, said second means for receiving the incident primary zero point electromagnetic radiation producing emitted secondary electromagnetic radiation at a second frequency, the secondary radiation at the first frequency and the secondary radiation at the second frequency interfering to produce secondary radiation at a beat frequency which is lower than that of the incident primary radiation, said first means for receiving having a first volumetric size selected to resonate in response to the incident primary electromagnetic radiation in order to produce the secondary electromagnetic radiation at the first frequency at an enhanced energy density, and said second means for receiving having a second volumetric size selected to resonate in response to the incident primary electromagnetic radiation in order to produce the emitted secondary electromagnetic radiation at the second frequency at an enhanced energy density, said first and second volumetric sizes selected based on parameters of propagation constant of said first and second means for receiving, propagation constant of medium in which said first and second means for receiving are located and frequency of the incident primary electromagnetic radiation, said first and second volumetric sizes being different from each other;

a plurality of antennas for receiving the emitted secondary electromagnetic radiation at the lower frequency, said antenna providing an output responsive to the secondary electromagnetic radiation received, said plurality of antennas mounted on said substrate, each of said plurality of antennas receiving the emitted secondary electromagnetic radiation of one of said pairs of first and second means for receiving;

means for transmitting the emitted secondary electromagnetic radiation at the beat frequency from said antenna, said means for transmitting connected to said plurality of antennas;

a converter connected to said means for transmitting for receiving the emitted secondary electromagnetic radiation at the beat frequency from said antenna and converting the same to electrical current having a desired voltage and waveform.

* * * * *

rexresearch.com

Radiesthesia Patents

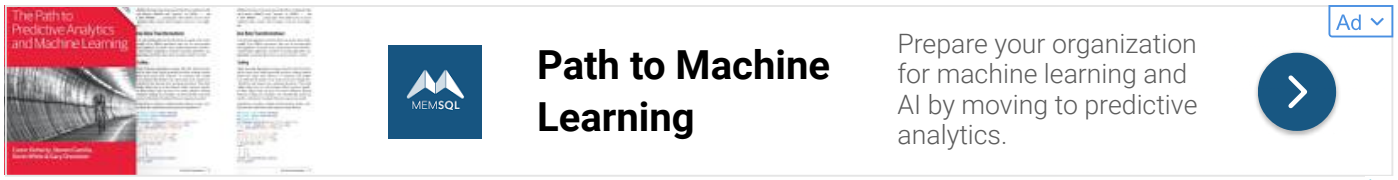

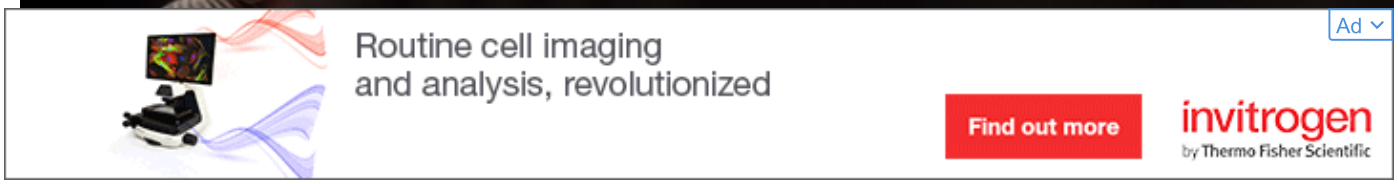

European Patent Office Advanced Search :
http://ep.espacenet.com/advancedSearch?locale=en_EP

Classification : EC: A61N1/16

WO 9523628
DEVICE FOR FORMING AN ENERGY FIELD

Inventor: TOLSTOI VLADIMIR STEPANOVICH
Also published as: AU7865694

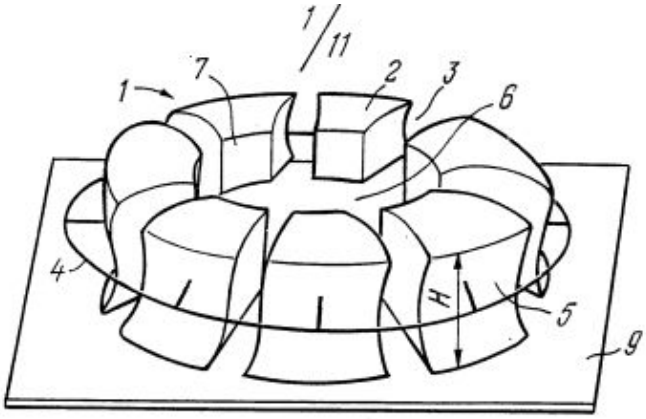

FIG.1

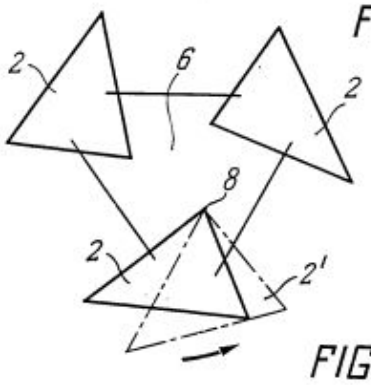

FIG.2

Abstract -- The proposed device for forming an energy field comprises at least one collector (1) made up of a plurality of energy sources (2) arranged along a closed line and separated by gaps, with a central open area (6). The energy sources (2) are interconnected and can move in relation to each other.

DE 3433292
Apparatus for the directed deflection or screening of so-called earth radiation - geopathogenic zones

Inventor: VERZICHT DES ERFINDERS AUF NENNUNG

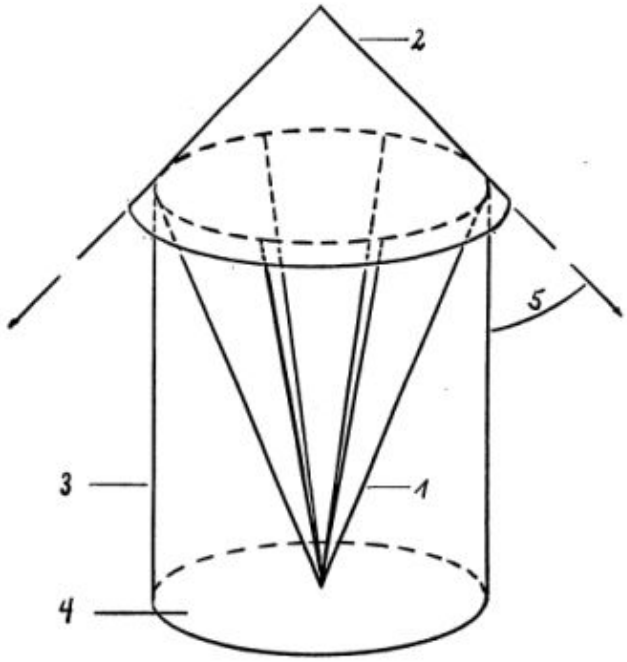

Abstract -- Antennas - bar antennas, V-shaped multiple-bar antennas, spirals, in connection with tubular sleeves which serve as wave guides and are or may be equipped with a ground reflector to increase their effect, emit all around a deflecting radiation or an interference radiation in the upright position in conjunction with a directional reflector mounted at the top, charged by a geopathic wave field. This radiation is capable in its effective range of drifting or neutralising other interfering stimuli/radiation caused by further interference zones (water veins, etc.). In the case of interference radiation/deflection radiation directed downwards due to a corresponding reflector shape there is no rod deflection above the erection site. In the case of interference radiation/deflection radiation directed upwards due to a corresponding reflector shape there is no rod deflection below the erection site. The effective range is influenced by the size of the antenna, the charge thereof (interference zone crossing) and by the shape of the reflector screen.

DE 3525521
Pyramidal magnetic field device for the regulation of energy disturbances in the human body or for the continuous material recovery

Inventor: KAUSCH OTTO

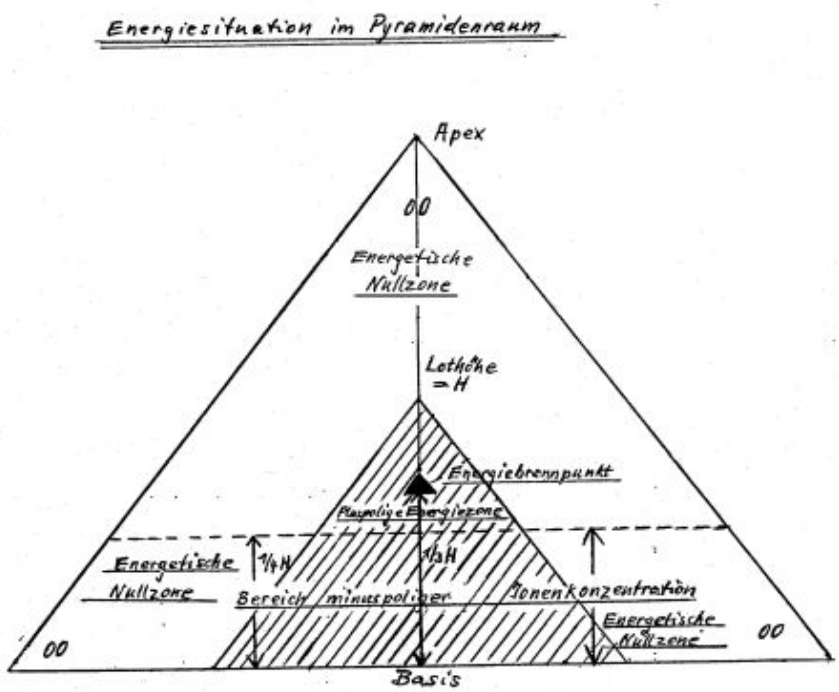

Abstract -- The device comprises, for example, a pyramid of dielectric material having the dimensions, as true to scale as possible, of the Cheops pyramid and in a size corresponding to the use to which it is put. The collector effect of the pyramid, one edge of which is to be aligned to magnetic north, bundles the positive pole energy of the magnetic earth field in the energy core of the device. As in a mirror image, "reflected" force fields with negative energy result above and below the pyramid. a) By appropriately positioning a person in, above or underneath the pyramid it is possible to supply the bundled energy resulting from the collector effect of the pyramid to the person in order to balance out energy disturbances of the body. b) If the subject-matter of the application is used for the continuous automatic material recovery a pyramid of appropriate size is to be fitted over the metal part (e.g. bearing) in such a way that the part is located within the energy core of the pyramid and the pyramid is aligned to the direction of magnetic north/south.

DE 3823178

Device for collecting and selectively transmitting programmed radiesthetically measurable radiation, in particular, to the human body

Inventor: NEMITZ MANFRIED

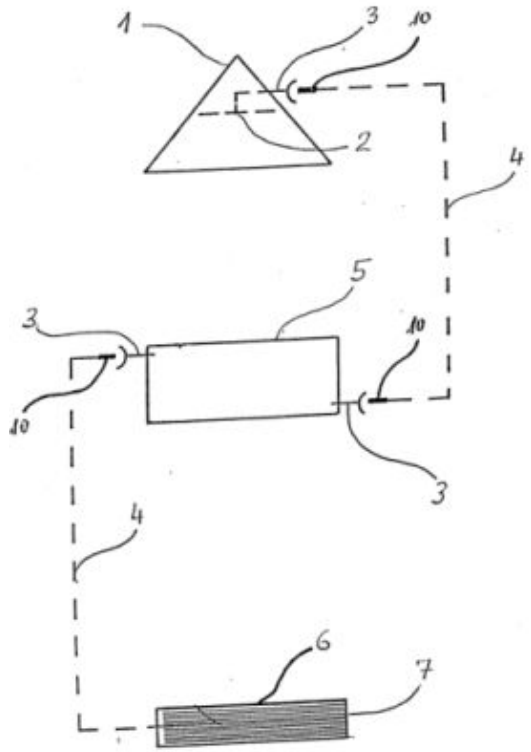

Abstract -- The invention relates to a device for collecting and selectively transmitting programmed radiesthetically measurable radiation, in particular, to the human body. The device comprises three or four functional elements which are connected to one another, namely a pyramid-shaped body as a radiation collector, a vessel serving as radiation transmitter and a tubular radiation injector and, if appropriate, a radiation adapter.

DE 8460071
Device for accruing cosmobiological energy

Inventor: RUDHARDT, ELFRIEDE, 8960 KEMPTEN, DE

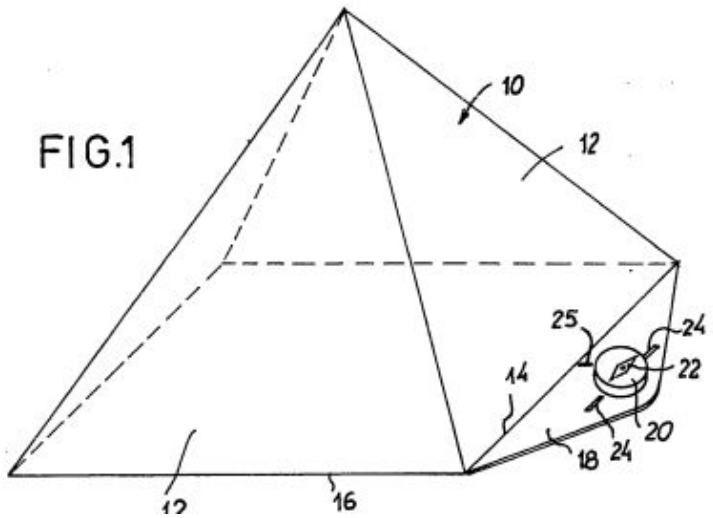

Abstract -- A hollow body (10) in the form of a regular pyramid with a square base has an outer attachment (18) along its one bottom edge (14), on which attachment a magnetic compass (20) is secured, a marking (24; 25), provided on the attachment (18), lying with the compass axis in a plane which is parallel to one pair of bottom edges (14) and at right angles to the other pair of bottom edges. The hollow body (10) can be moved quickly and accurately into a position in which two parallel bottom edges (14; 16) are aligned in the earth's

North-South direction. In this position, the hollow pyramid is able to accrue cosmobiological energy and to supply it to objects situated therein.

EP 0838208
DEVICE FOR TREATING AN ORGANISM WITH ENERGY

Inventor: DENISOV STANISLAV GEORGIEVICH [RU] ; ATAEV DZHAVANSHIR ISMAIL OGLY

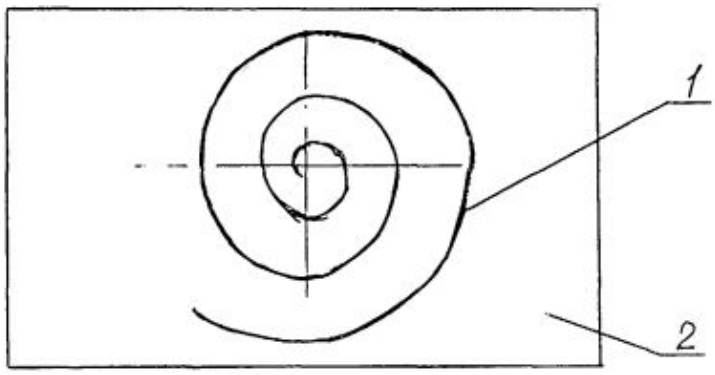

Fig .I

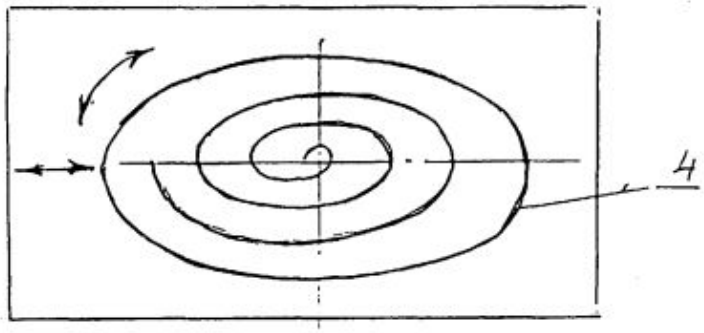

Fig .2

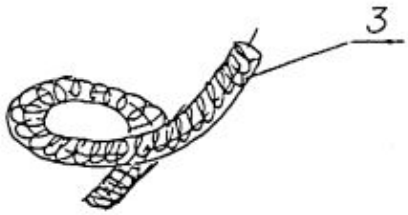

Fig.3

Abstract -- Device by energetics affect to bio-object contains wire which is fixed on a substrate as open-ended space spiraling curve, and wire, is representing by not crossing coils, is located in spiral form, and the device is supplied by the element for regulation of intensity by affect, this element executed as closed electro-conductivity contour, which is located with possibility to change its position concerning space spiral-graphic curve. Space spiral-graphic curve can be ellepes -graphic form, and closed contour - form curve, located with a

opportunity of turn and linear moving concerning space spiral-graphic curve. The wire can be executed as electro-conductiving cover, which is make up dielectric material. The device can be supplied having by bio-energetics activity chemical elements such as tellurium, lanthanum, gadolinium, bismuth and etc., which are located in a zone of wire arrangement.; The way of valuation at efficiency device's work by energetic affect to bio-object is concluded to measure conductivity of biologic active points by Foll's method at ten main points on each foot and brush before and after affect, to determine for each points its deviation from given significance, which is accepted 50+2 scale points of the device, thus repeated measurements conductivity make after period of time, equal 1, 24 or 48 hours, and the efficiency by affect is evaluate at size of deviations conductivity is received by results its measurement after effect, do not exceeding 40% from size of deviations conductivity, received by results of its measurement before the affect.

EP 0673185
Device for improving the efficiency of engines

Inventor: BERGMANN HERMANN
EC: H05F7/00

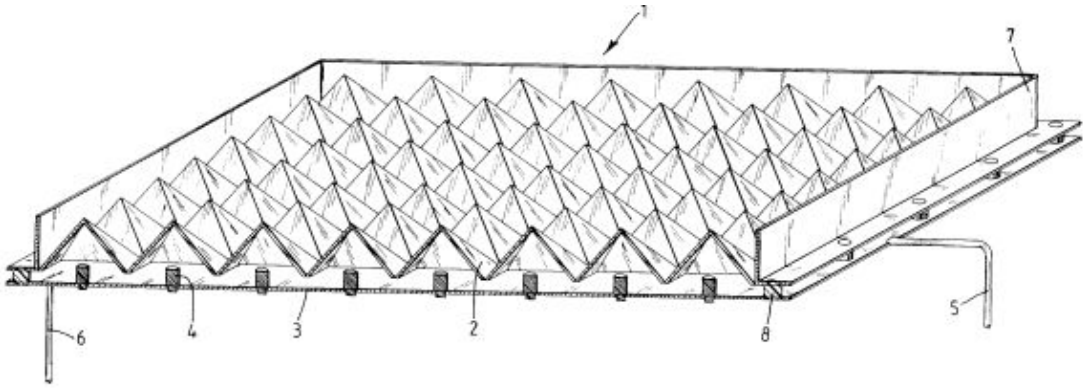

The device has a plate (1) provided with a number of pyramids (2), with a pin (4) positioned centrally under the peak of each pyramid, supported by an electrically-conductive collector plate (3). A pair of electrical leads (5,6) extend between the collector plate and the fuel feed for the i.c. engine, or the engine block, or between the collector plate and the electric motor leads, or the electric motor housing. Pref. the individual pyramids are made of Cu sheet and arranged in a matrix with eight pyramids in each direction. Magnets may be inserted in the leads between the collector plate and the i.c. engine or electric motor.

WO 9420702
DEVICE FOR CONVEYING DAMP OR SALTS

Inventor: MOHORN WILHELM

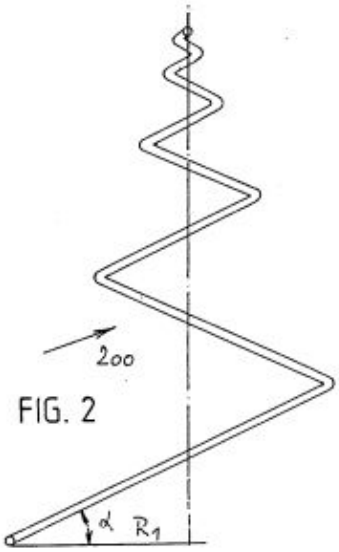

FIG. 2

Abstract -- In a device for conveying damp or salts, e.g., to dry masonry, with at least one electrical conductor wound into a coil (100) and fitted in a housing, the winding diameter of the coil (100) diminishes spirally from one end to the other. Here the distance between the windings of a spiral or wedge-spiral coil (100) and the coil axis in the inward direction is 40 to 60 % smaller on each full revolution than the previous distance. On average, therefore, this gives: for the spiral radius measured at 90 DEG : R'1 = R1-R2/4; at 180 DEG : R"1 = R1-R2/2; at 270 DEG : R'"1 = R1-R2x3/4; at 360 DEG : R2 = R1/2.

FR 2554354
Device sensing telluric and cosmic waves and inhibiting their effects

Inventor: DUPIN JACQUES

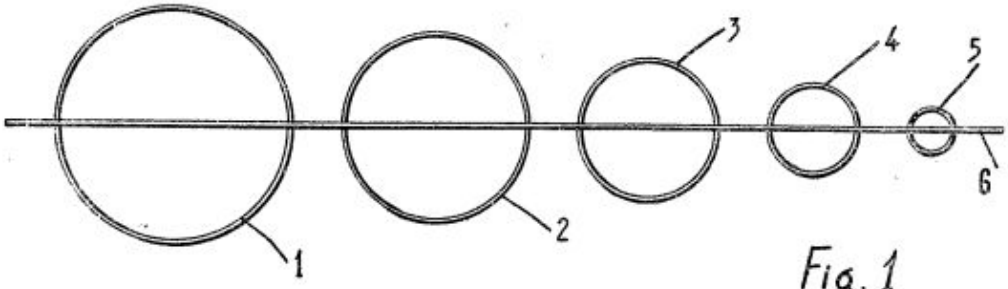

Fig. 1

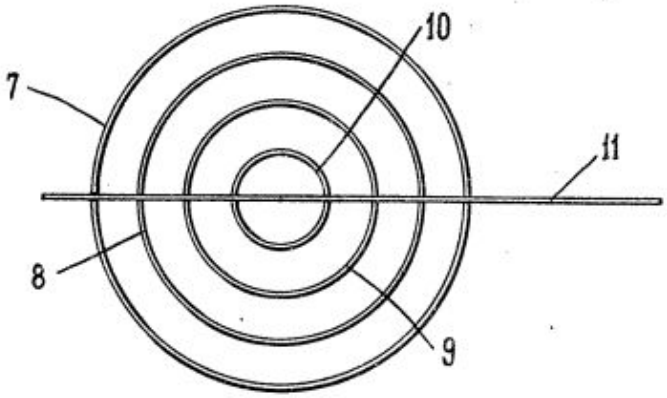

Fig. 2

Abstract -- Device ensuring physiological protection against the harmful effects of telluric and cosmic waves.

The invention is constituted by one or several oscillating circuits formed of rings associated with a bar parallel to their plane and extending on either side, the said device being placed horizontally oriented northwards. It is in this way that the device can comprise the rings 1 to 5 centred, side by side, on a single bar 6 or concentric according to 7 to 10 associated with the bar 11, their effect differing in power according to the disposition adopted. The invention can be used to increase physiological comfort and to improve health.

GB 1077765
Device for affecting the growth or properties of organic or mineral bodies

Inventor: ROBERT ANFOSSO

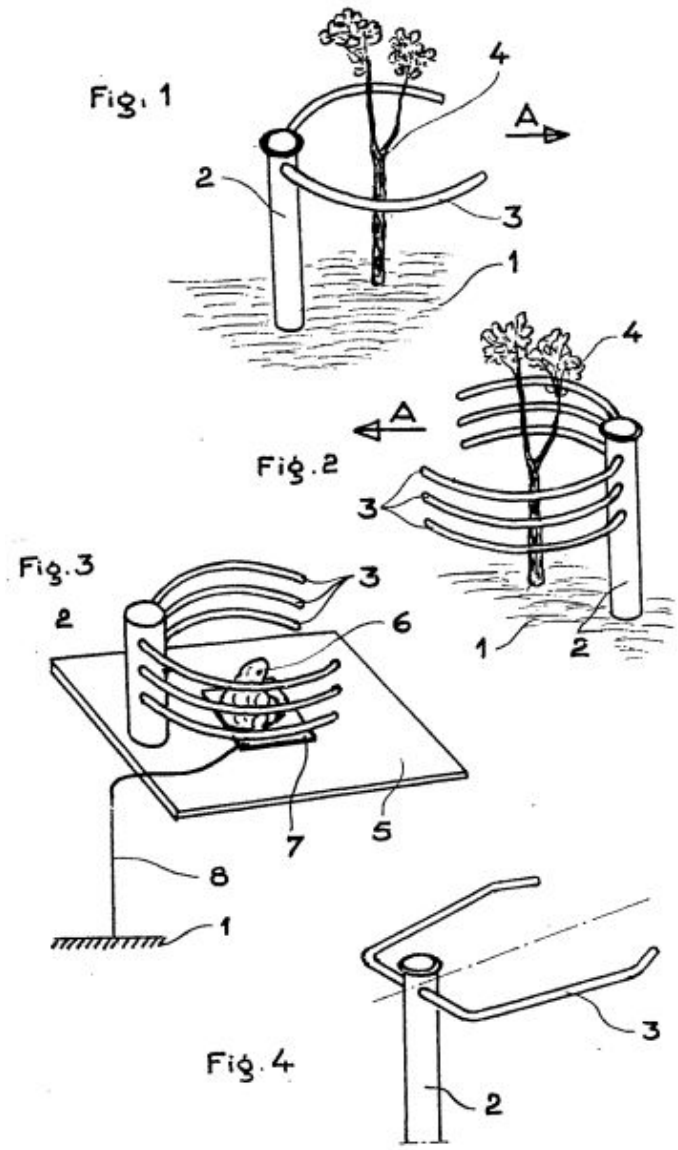

Abstract -- A device said to stimulate plants, or animal or mineral bodies, comprises one or more arcuate or bent member 3 of an electrically conductive material supported on an electrically insulating member 2 of ebonite or a synthetic plastics material. An animal or mineral body being treated may be positioned on an earthed plate. The effect is said to be improved if the member 3 is directed to the East.

GB 766886
A device for screening or neutralising dowsing rays or fields

Inventor: WALTER GISHFORD EDWARDS

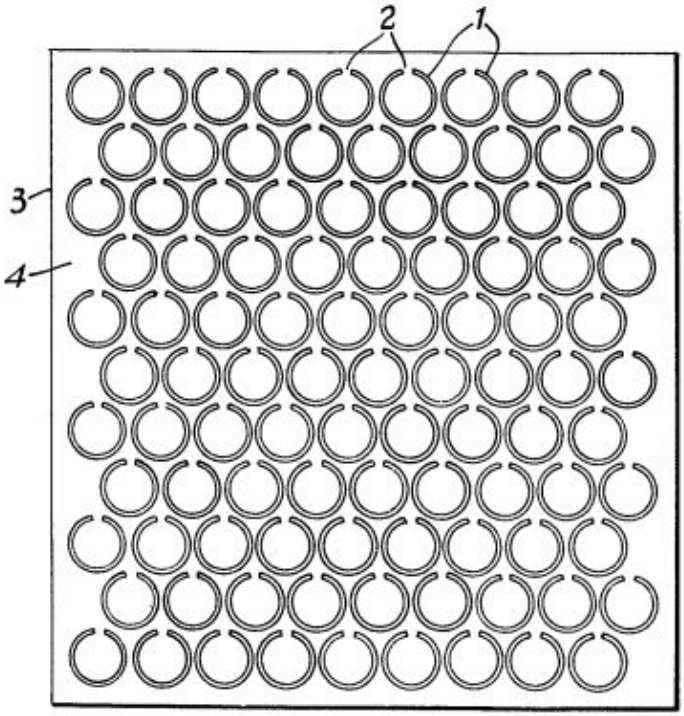

Abstract -- A device for screening the body from dowsing rays or fields comprises a foundation 4 of paper or other suitable material to which is secured rings 1 or loops of metal wire or foil arranged in a comtiion plane so that they do not touch one another. The rings 1 or loops may be made of copper wire or foil and each ring may be broken to form a gap 2.

EP 0098656
Earthing device

Inventor: GIERKINK ALPHONS JOHANNES

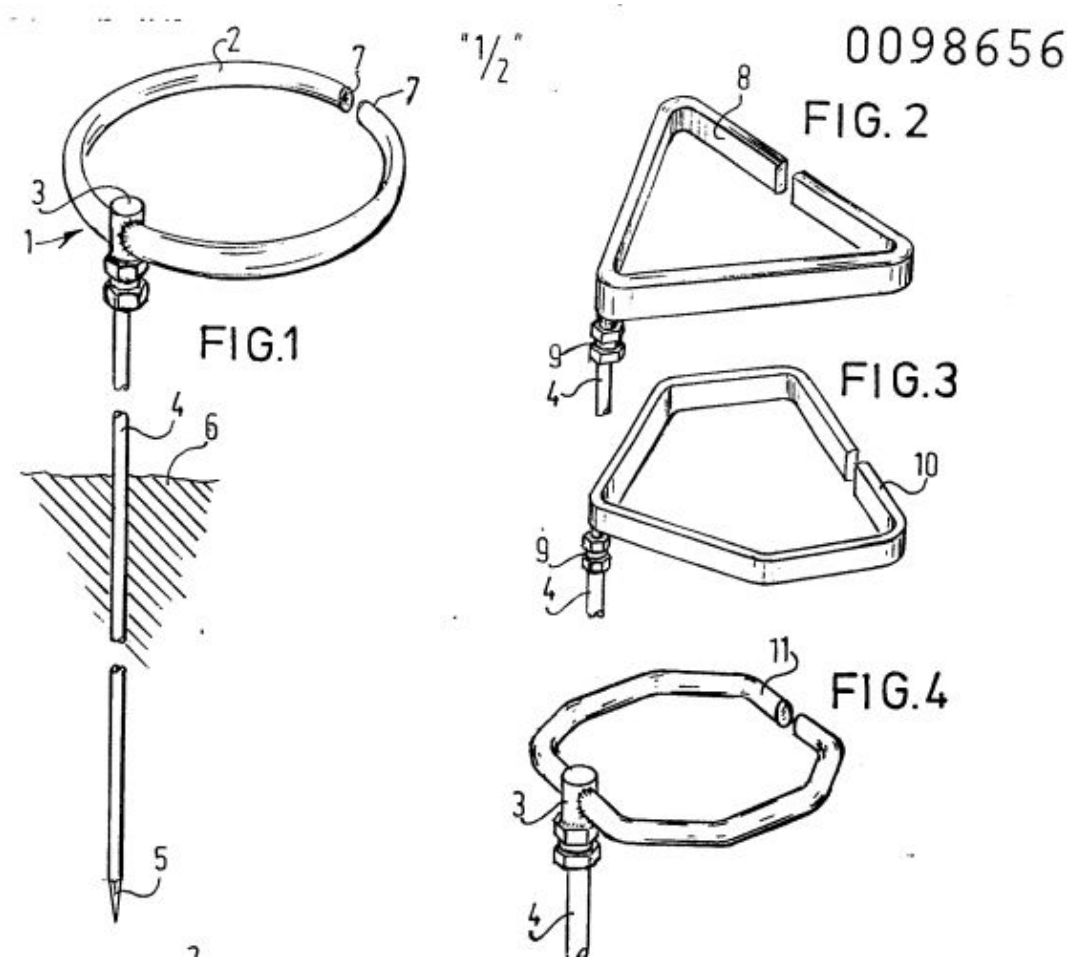

Abstract -- The invention has for its object to counteract the negative influence of biologically active fields on living organisms and provides for this purpose a device for neutralizing such fields, said device comprising an electrically conductive strip or wire having an earth connection at the middle, said strip or wire being located substantially in one plane and being constructed in the form of a ring symmetrical to the middle, whilst the ends of the strip or wire are spaced by a small distance.

WO 0240859
SYSTEM AND METHOD FOR GENERATING A RIGHT TORSION FIELD

Inventor: PAVLENKO ANATOLIY R [UA] ; PAVLENKO OLEXANDER

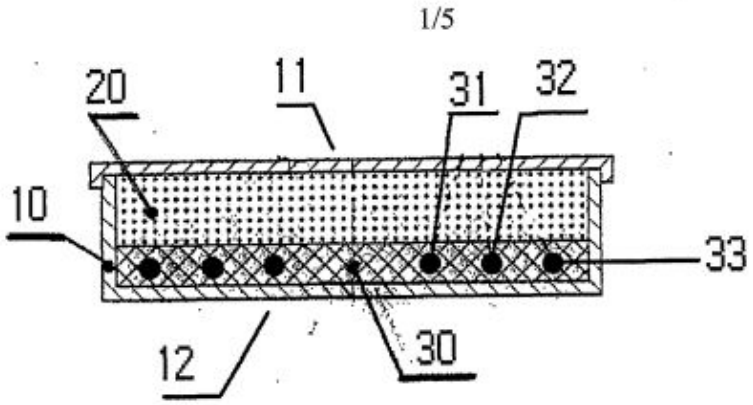

Abstract -- A device for generating a right torsion field having an outer body, a salt solution, and ring. The ring generates a first right torsion field. The ring and the salt solution are disposed within the outer such that a portion of the first right torsion field propagates through the salt solution.; A device for generating a right torsion field (43) having an outer body (10), a salt solution, and a ring (31, 32, 33). The ring (31, 32, 33) generates a first right torsion field (41). The ring (31, 32, 33) and the salt solution are disposed within the outer body (10) such that a portion of the first right torsion field (41) propagates through the salt solution.

FR 1260006
Emetteur de radiations calculées

Inventor: BIENBOIRE GUY-EDOUARD-GABRIEL

US 5449376
System and method for producing highly amplified radio signals for feedback into the human body

Inventor: CALLAHAN PHILIP

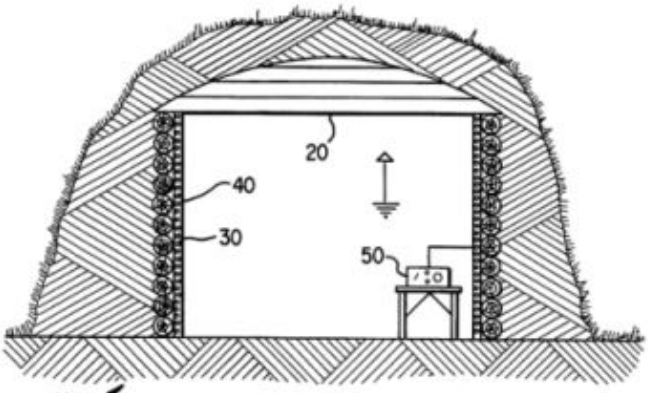

FIG. 1A

Abstract -- The present invention includes an apparatus and method for generating, duplicating, and transmitting biophotonic radio frequencies that propagate along the atmospheric boundary layer of the human skin and the earth's atmosphere. These biophotonic radio frequencies are applied to a human patient for therapeutic purposes. This function is realized with the use of a series of oscillators (i.e., electronic function generators) designed to produce modulated or unmodulated sine and square wave photons. The oscillators are further adapted to emit the modulated or unmodulated sine and square wave photons from a dielectric or metal antenna built as loops into the walls of a diamagnetic-paramagnetic chamber. When a person is seated in the chamber, the photons of energy from the waves generated along the loop antenna penetrate the human body and provide a variety of therapeutic benefits. Among these therapeutic benefits are relief of rheumatic muscular pain, slowing the metabolism, increasing the efficiency of the immune system, eliminating certain psychosomatic ailments, and suppressing cancer.

WO 9325270
DEVICE FOR PROTECTION AGAINST THE BIOLOGICAL EFFECTS OF ELECTROMAGNETIC NON-IONISING RADIATIONS, PARTICULARLY THOSE EMITTED BY VDU EQUIPMENT

Inventor: FILLION-ROBIN MAURICE SERGE

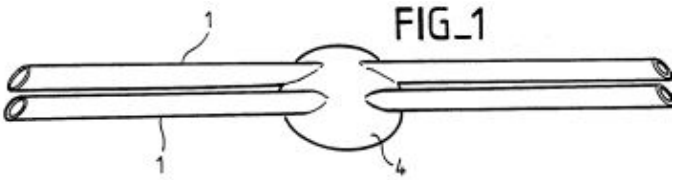

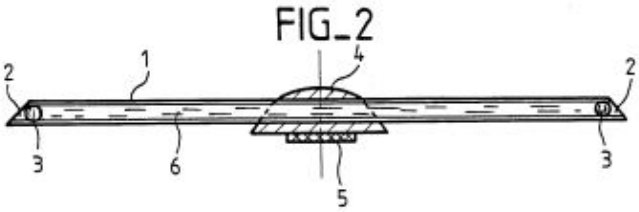

EP 0551668
Resonators eliminating the harmful effects on living beings from electromagnetic radiation

Inventor: SURBECK JACQUES
EC: H05F7/00

ES 2040624
Electromotive power generator for therapeutic uses

Inventor: RAMOS FERNANDEZ FELICISIMO

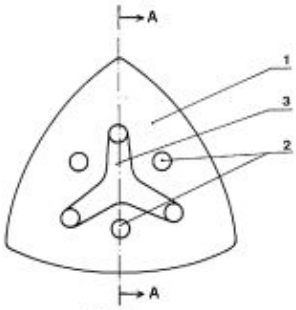

Fig. 1

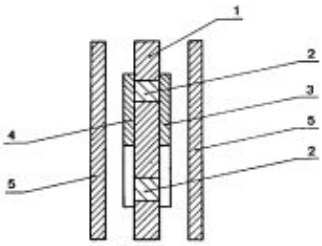

Fig. 2

EP 0302192
Device for the treatment of living beings and plants with pyramid energy

Inventor: OEHME RAINER

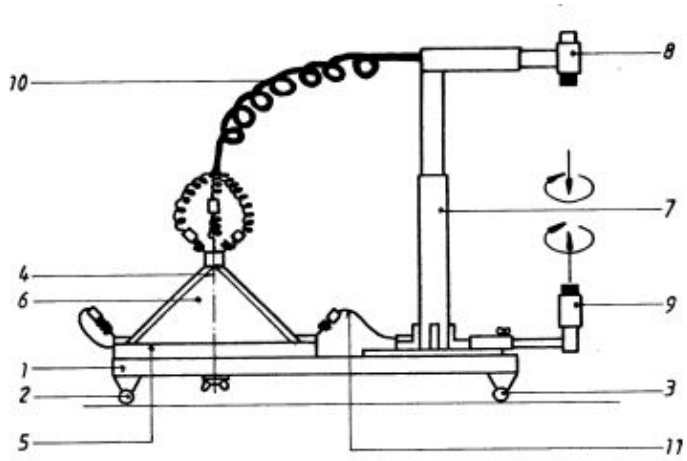

Fig. 1

Abstract -- In a device for the treatment of living beings and plants with pyramidal energy, the energy is picked up on energy pick-up lines (12, 13), which are arranged electrically separate along the four edges of the pyramid (6). Since the emission of energy is particularly strong along the pyramid edges, a particularly large amount of energy can be picked up by energy pick-up lines (12, 13) of this type. Such energy pick-up lines (12, 13) are considerably cheaper to produce.

FR 2618076
Device for emitting beneficial wave forms

Inventor: BOURGOUIN DOMINIQUE [FR] ; DACIER CHRISTOPHE

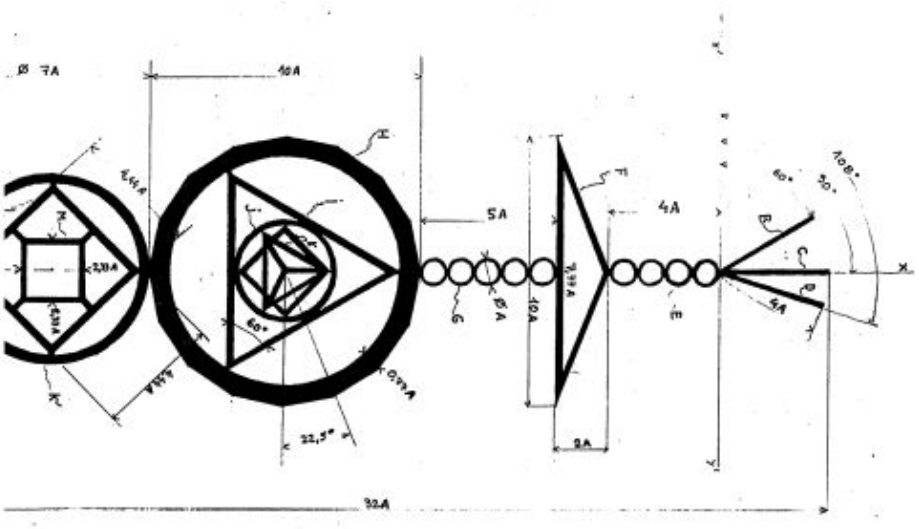

Abstract -- The invention relates to a device allowing the emission of wave forms which are beneficial for all living things. It consists of a set of geometrical shapes whose arrangement generates a symbolic application and gives rise to the appearance of powerful emissions which are beneficial for all living beings. The device according to the invention is in particular intended for creating a beneficial vibrational field.

Cited documents: FR2329089 // FR2554354 // FR1584210 // FR2421531

FR 2591494
Ambience harmoniser consisting of a cube surmounted by three hemispheres which can move around a vertical axis

Inventor: BABONNEAU BERNARD

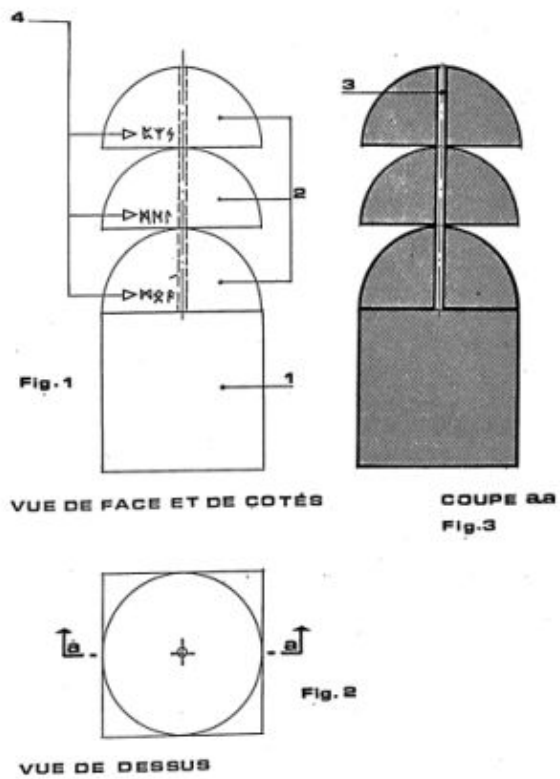

Abstract -- Device for harmonising a location. The invention relates to a device for obtaining or re-establishing maximum vibrational harmony of a location. It consists of a cube 1 surmounted by three hemispheres 2 which can move around a vertical axis 3. Twenty-four "runes" 4 are pyrographed on each hemisphere. The device according to the invention is intended in particular for general harmonisation working towards maintaining plants, animals and human beings in "good health" in the place in which they live.

FR 930466
Method and apparatus for the processing of fluid by radiation

Inventor: PEQUIGNOT MICHEL

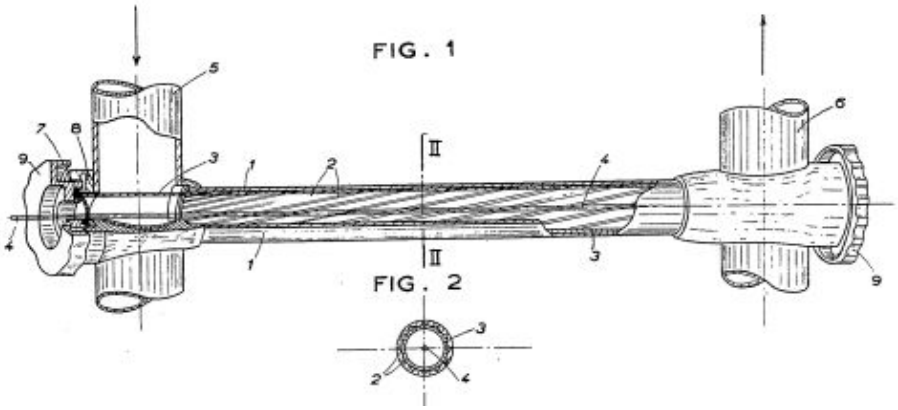

FR 1153623
Collecting and use of the cosmic rays

Inventor: LARONZE JEAN-ANDRE

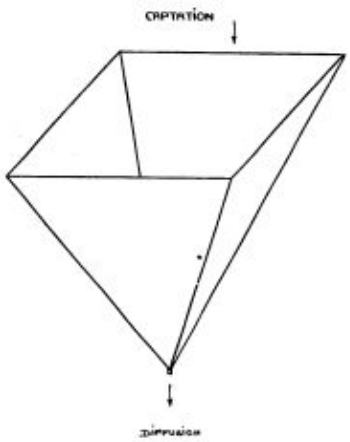

DE 2457792
TECHNISCHE ANORDNUNGEN

Inventor: HANSCHMANN HORST

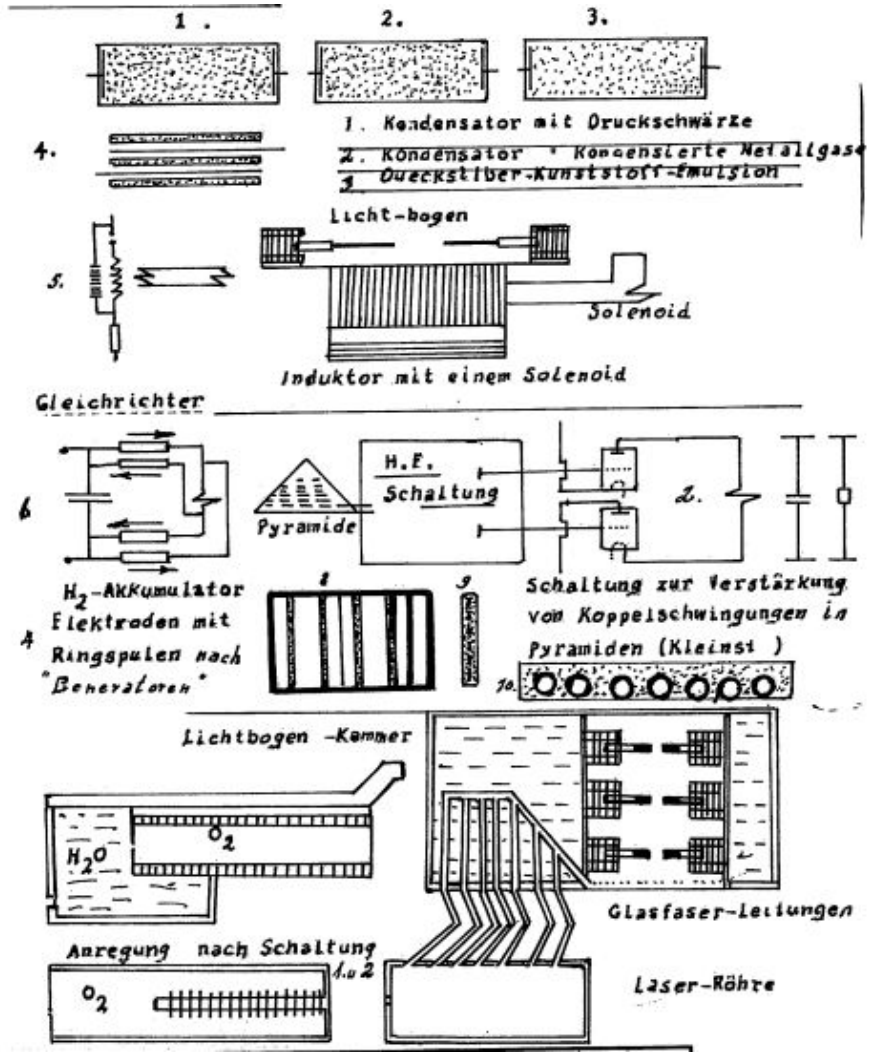

Construction of arrangements and technical apparatus among other things for the degradation of cancer cells.

DE 8535780
Probe

Inventor: HANS BRUEGEMANN GMBH

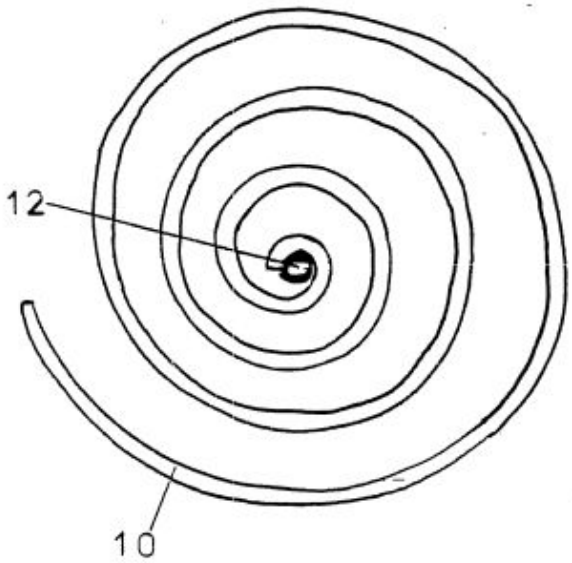

FIG.1

Such probes with body electrode are known and come before all things for therapeutic purposes to the use. A known therapy procedure plans it to strengthen the bio alternating field in one, detected of the body of an patient with an acceptance probe, the probe downstream metre to diagnose and provide feeding back with the calculated complement either over the same acceptance probe or over an other particular

---

DE 2559383
Method & Apparatus for Programming of Cells

Inventor: HANSCHMANN HORST

GB 2117183
Protective apparatus

Inventor: ARENS CARL [DE] ; SCHMIDT PAUL

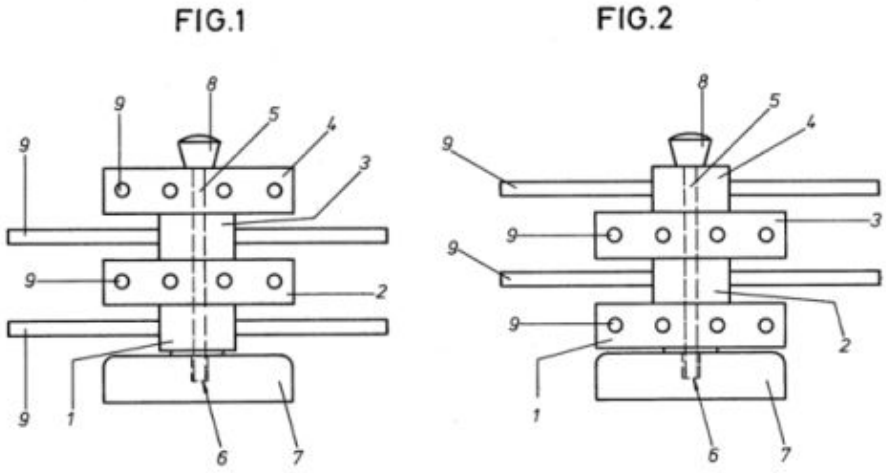

Abstract -- Apparatus for protecting living organisms against geo-biological radiation comprises a series of

layers of spaced apart electrically conducting metal rods 9. The rods in each layer are parallel to each other and are held in an electrically insulating holder member 1-4 of plastics material. The members 1 to 4 are clamped together by a knob 8 on a rod 5 which is screwed into a pedestal 7. The rods in adjacent layers are shown at 90 degrees to each other, but this angle can be adjusted by loosening the rod 5, turning the holder members and then tightening the rod again.

Also published as: FR2523850 // DE8208300 // CH658790
Cited documents: DE3036085 // GB1077765

DE 7143603
Shielding Equipment

Inventor: ANGELE J

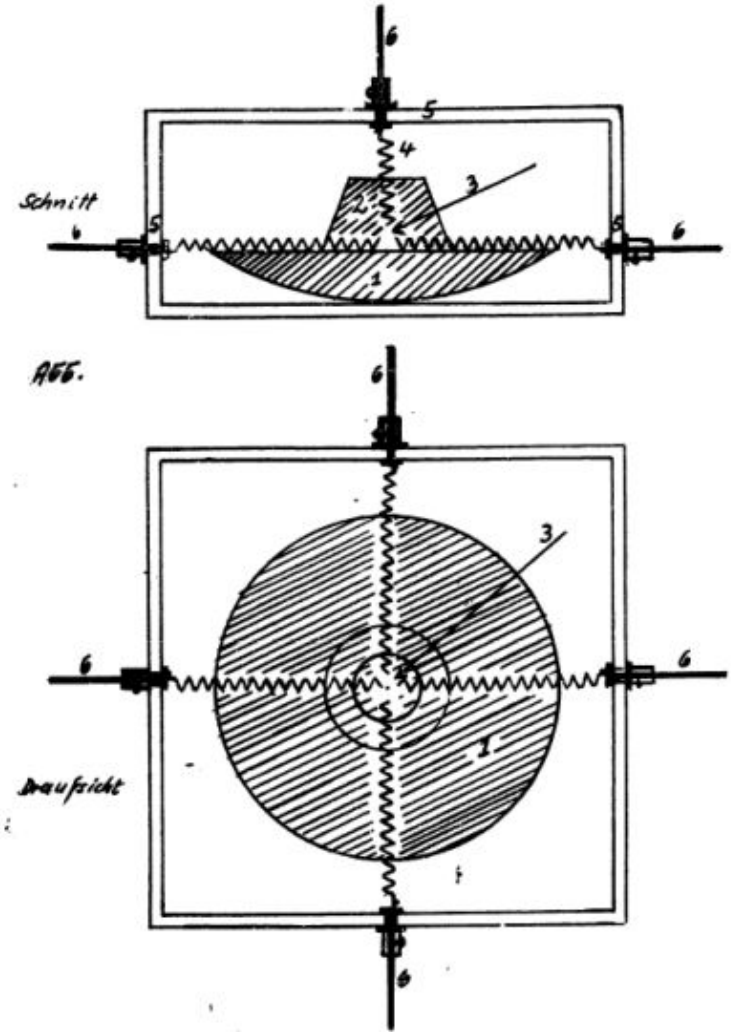

The invention relates to shielding equipment to weaken electrical radiation, caused from shafts by running water in the earth and variations of the earth's magnetic field, furthermore wave gate zones and other effects of other origins.

CH 145271
Mechanism to Collect Telluric Energy

Inventor: EDUARD HART

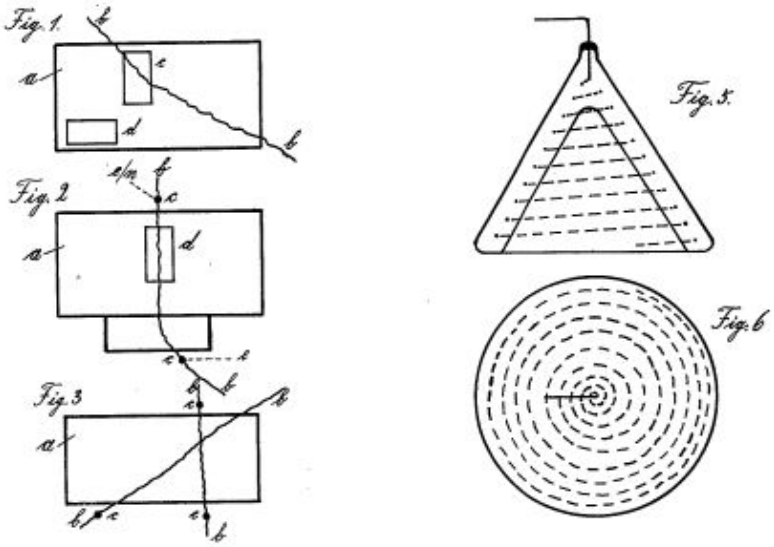

EP0651595
Process and associated device for the neutralisation of the effects of electromagnetic fields within open areas and/or volumes

Inventor: CICCOLO ENZA
Cited documents: GB385987 // DE3543765 // DE3433292 //DE4009003

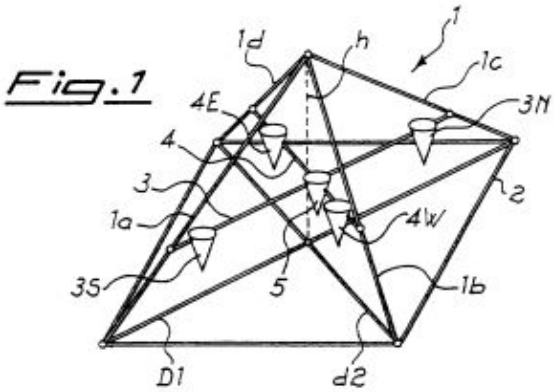

Abstract -- Device for neutralizing the effects of electromagnetic fields inside areas and/volumes in which said fields occur, consisting of a pyramid (1) having as its base a rhombus (2), the greater diagonal (D1) and smaller diagonal (d2) of which are respectively of a length such as to give rise to a so-called golden ratio D1/d2, and also of a height (h) such as to give rise to a ratio h/D1 also of the golden type, there also being provided at least one pair of arms (3) and (4) respectively parallel to the greater diagonal (D1) and to the smaller diagonal (d2) and respectively joining pairs of opposite edges (1a,1c,1b,1d) of the pyramid (1), said arms (3,4) supporting in the region of said edges respective containers (3N,3S,4E,4W) designed to contain a predetermined quantity of a liquid and intersecting in the region of a further, central, container (5) arranged along the height of the pyramid.

WO 9212761
DEVICE FOR ACCELERATING GROWTH

Inventor: KOLAR GABOR

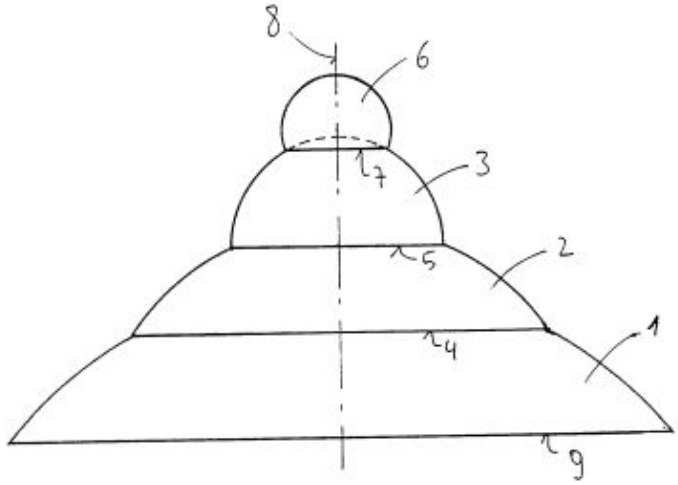

Fig. 1

Abstract -- The invention relates to a device for promoting and accelerating growth in human beings and animals and for accelerating the recovery of human beings and animals following illness and injury and to support healing processes. It consists of a combination of at least two of the items below, possibly with suitably selected intermediate components: a) pyramids with at least hexagonal bases; b) truncated pyramid with at least hexagonal base and summit surface; c) cylinders; d) tapered domes; e) truncated tapered domes; f) toroidal section; g) paraboloid region or cap; h) ellipsoid region or cap (9, 10); i) ridged band (11) on the surface of one of items a) to h), which may be of various shapes. Two items of the same group with differing dimensions may also be combined, with the proviso that, if only one of items a) to h) is combined with item i), there are at least six items i).

Also published as: JP5505332 // HU66203 // EP0522117 //AU1176492 // AT397618
Cited documents: EP0302192 // EP0229874 // FR2329089 // FR2572289 // FR2591494

WO 2006070213
DEVICE TO TRANSFER BIOLOGICAL ENERGY INTO BIOMECHANICAL ENERGY

Inventor: AKSZJONOVICS IGOR VASZILJEVICS
Also published as: RU2007129006 // HU0402686 // EP1861163

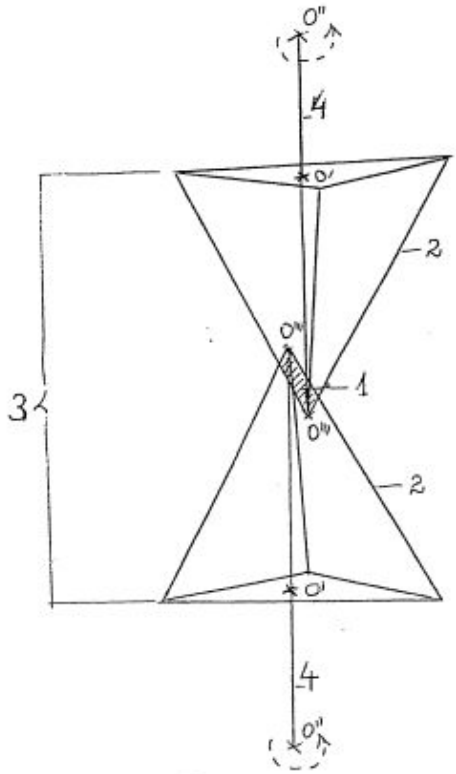

Fig. 1

Abstract -- The invention relates to a device realises the transformation of biological energy into biomechanical energy in the form of a geometric body. The characteristic feature of the invention is that it contains a number of pyramids or cones inserted into one another at their points or bases which form a unified geometric form, with a common space inside them, which may stand empty or be filled with organic or inorganic material, which may have any form, colour or extent, what is more the extent and form of the internal volume may be changed and regulated, the structure itself may be made of organic or inorganic material.

WO 9404221
DEVICE FOR ACCUMULATION OF BIOLOGICO-COSMIC ENERGY

Inventor: DODONOV BORIS PETROVICH [RU] ; DODONOV ROMAN BORISOVICH
AKTSIONERNOE OBSCHESTVO ZAKRYT [RU] ; DODONOV BORIS PETROVICH [RU] (+1)
Also published as: AU2517692

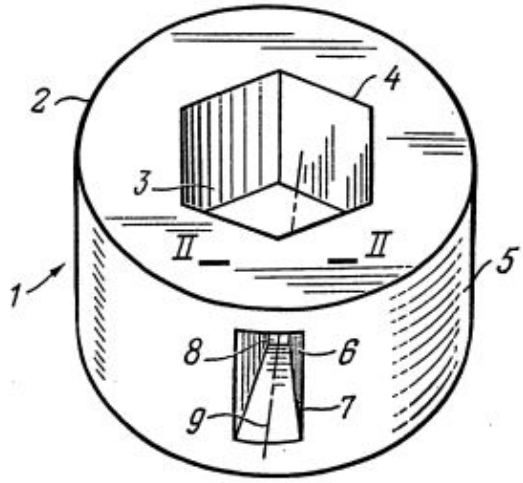

FIG. 1

Abstract -- The device (1) comprises a body (2) with a cavity in its central area having the form of a linear channel (3) and connecting with the surrounding space by an inlet opening (4). The lateral wall (5) of the body (2) is provided with at least one linear tangential channel (6) connecting by an outlet opening (8) with the linear channel (3) and by an inlet opening (7) with the surrounding space. The longitudinal axis of the tangential channel (6) is situated in a cross-sectional plane of the channel (3).

DE 3826890
Method for influencing the degree of order of an inorganic or organic system by using the change, occurring in the area of action of a hollow pyramid

Inventor: KEPPELER MANFRED
EC: B01D9/00

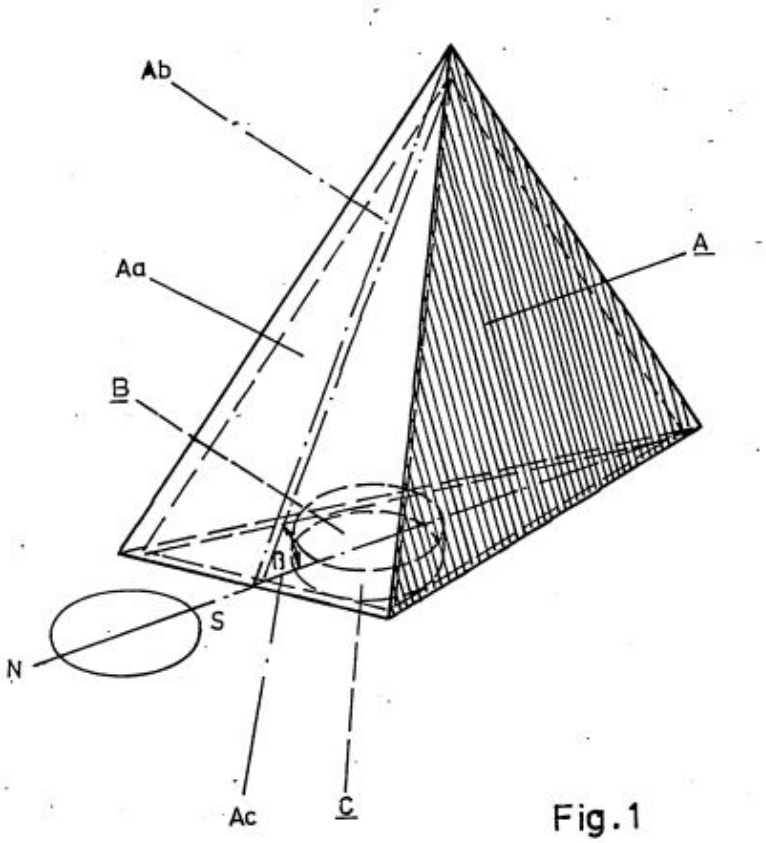

Fig.1

Abstract -- The invention includes a method for influencing the degree of order of an inorganic or organic system by using the change, occurring in the active region of a hollow pyramid, in the sub-region of the terrestial magnetic field otherwise prevailing there, by directing the terrestial magnetic subfield to at least one hollow pyramid face, which is inclined essentially at the local inclination angle, is aligned together with the inclination plane with the magnetic north-south direction and is formed from diamagnetic material, on to the system, which is preferably brought into the interior, below or in the immediate vicinity of the pyramid, and exposing the system to the influence of the pyramid in essence over the duration of its natural development time. In addition, the invention includes a hollow pyramid for carrying out this method, in which at least one pyramid face is inclined at the inclination angle which is decisive for the application site, and at least this pyramid face consists of diamagnetic material having a volumetric susceptibility below -15. The hollow pyramid preferably consists of brass, zinc, silver, bismuth, graphite or ytterbium with in each case a volumetric susceptibility of below -15, or else of an alloy or composition of these materials. The method according to the invention is suitable for improving the formation of crystals in solutions, cultivating microorganisms (microbes), improving the germination of seeds...

EP 0259769
Installation for pyramidal energy

Inventor: OEHME RAINER
Also published as: DE3630523

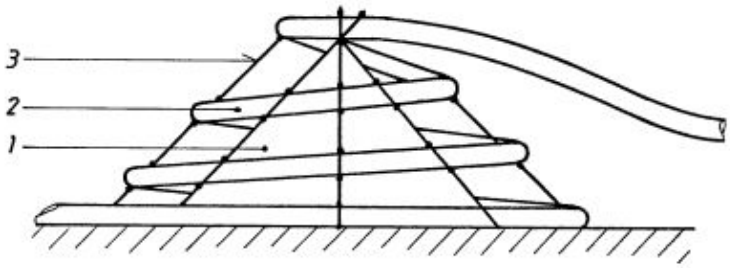

Fig.1

Abstract -- A conductor (2) runs externally over a pyramid (1) in the form of a conical spiral. Its outgoing conductor part (4) is passed over the apex of the pyramid (1). The conductor (2) consists either of an electrical conductor or alternatively of a tubular body through which a medium to be treated can be passed. Using such a conductor (2) as an energy absorbing device, the complete vibration spectrum of the pyramid (1) can be detected.

EP 0287687
Device for the treatment of living beings and plants by pyramidal energy

Inventor: OEHME RAINER
EC: A23L3/26; A61N1/04

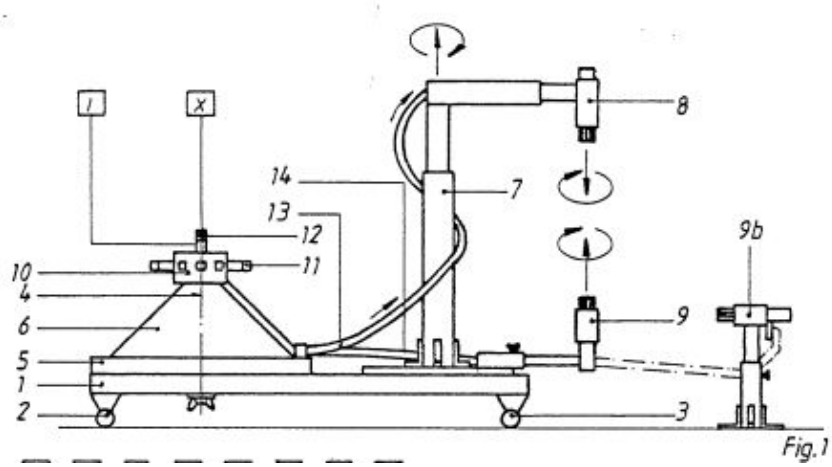

Fig.1

Abstract -- Pyramidal energy is taken from a pyramid (6) by means of a vibration pick-up applied to it from above. Lines (13, 14) are guided down from this vibration pick-up (10) along an edge of the pyramid (6) and convey the picked-up energy to an upper and lower chakra electrode (8, 9), which are arranged on a support (7).

EP 0229874
Protection device

Inventor: PALM HUBERT DR MED

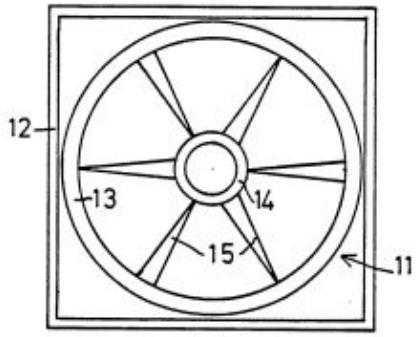

FIG. 1

Abstract -- The protective effect and healing action of the device for all life is based on its qualitative biological and structural equivalence to the harmonical system of the cosmos and especially, according to Kepler, of the solar system. Its construction starts from the assumption of all high religions and high cultures that the good part of the cosmos as a whole - as creation of God - and therefore with all its parts is an integral unit of life. Harmonic equipment that bears a qualitative structural resemblence to life and, in particular, is capable of electromagnetic vibrations, must therefore process biologically the same cosmic life forces as it has to transmit inductively, which experience shows occur everywhere in the cosmos, especially in the form of vibrations.

DE 3530841
Chakra electrode

Inventor: OEHME RAINER

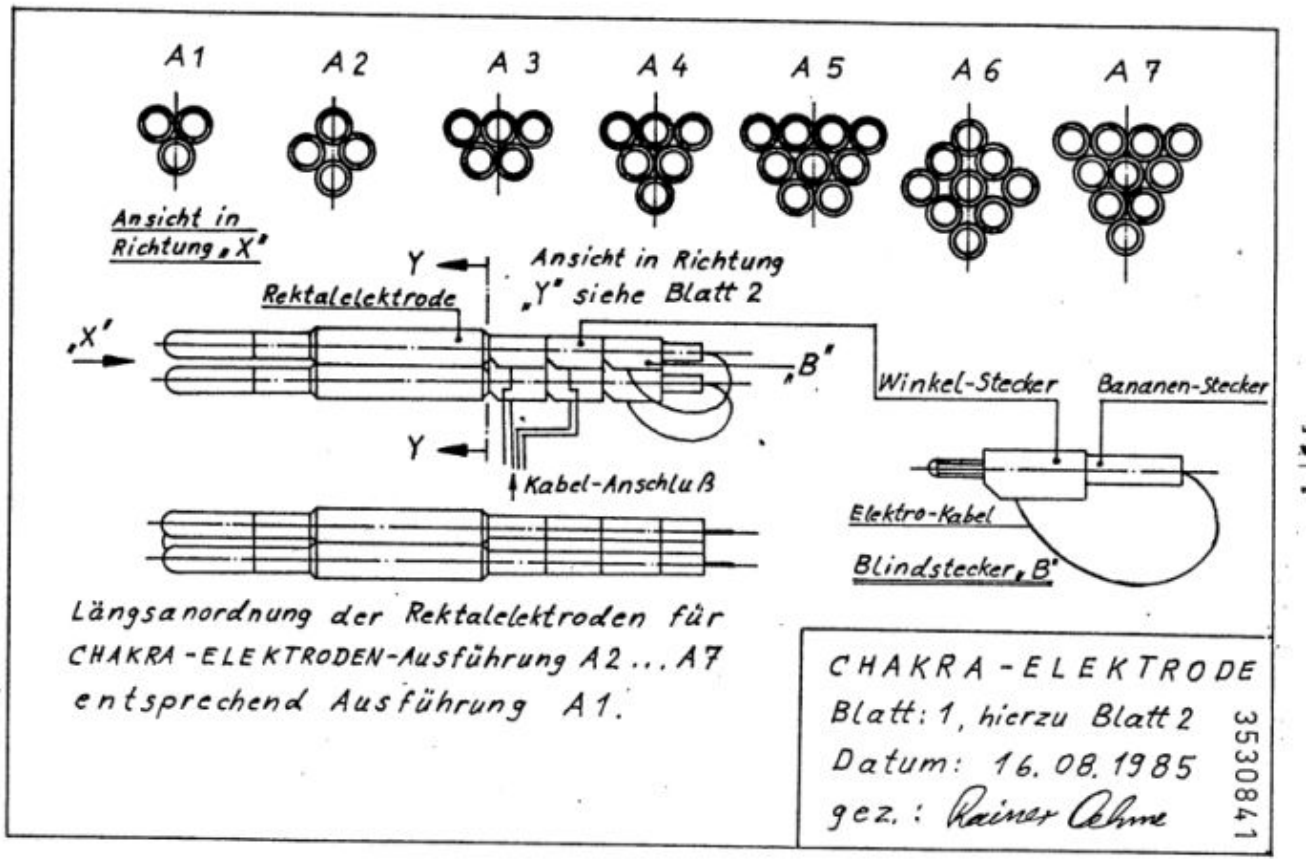

FR 2580180
System for protection against the physiological effects of electromagnetic fields

RAZE ETIENNE [FR]

Abstract -- System intended for protecting living beings against the physiological effects of electromagnetic fields, characterised in that it is composed of at least two devices each consisting of a casing, on the bottom of which there are disposed at least a first bar made of a magnetisable material and at least one second bar made of a material which is non-magnetisable but which has a high coefficient of conductivity, these bars being disposed without touching each other in an open angular pattern, the remaining volume of the casing being filled with ferrite particles dispersed within a dry, inert microionised powder, and agglomerated using an inert binder, these devices being subjected before use to an activation treatment consisting in passing them through at least one pair of electromagnetic fields with inverted orientations,; the said devices together defining a protective screen situated in the space which separates them.

FR 2572289
Device having the ability to cure certain cancers

LEMBEYE CHARLES [FR]

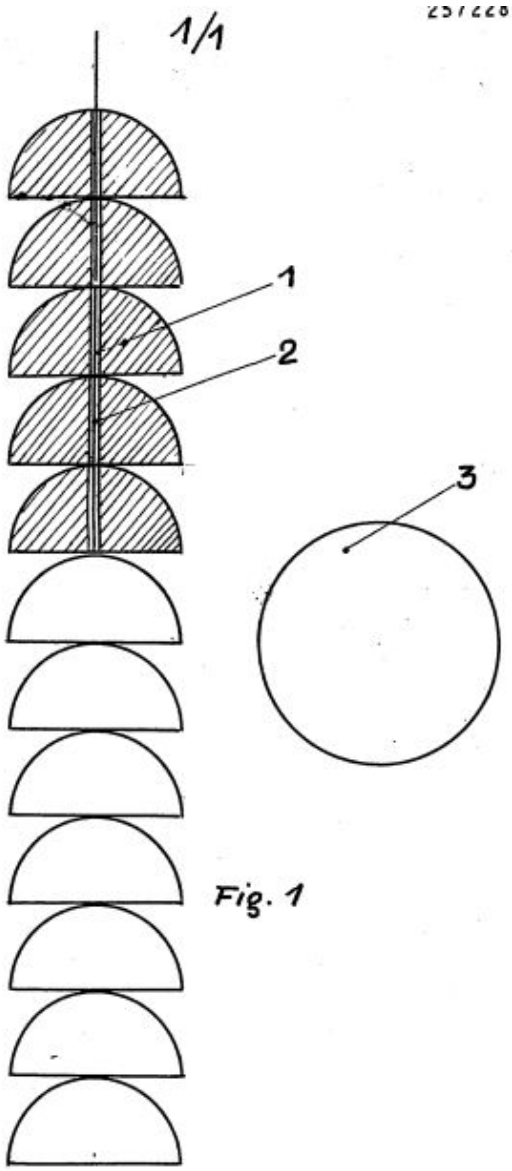

Fig. 1

Abstract -- The invention relates to a device which has the ability to transmit an energy flux which cures certain cancers. This device consists of twelve hemispheres made of hard wood pierced with a hole 1 and threaded on a leather thong 2. A leather washer 3 is placed under the stack thus constituted.

CA 2043936
Device for accumulation, amplification and local direction of the positive cosmic energy

Inventor: STOJANOVIC BRANISLAV
Also published as:
EP0460670 // AU7819491

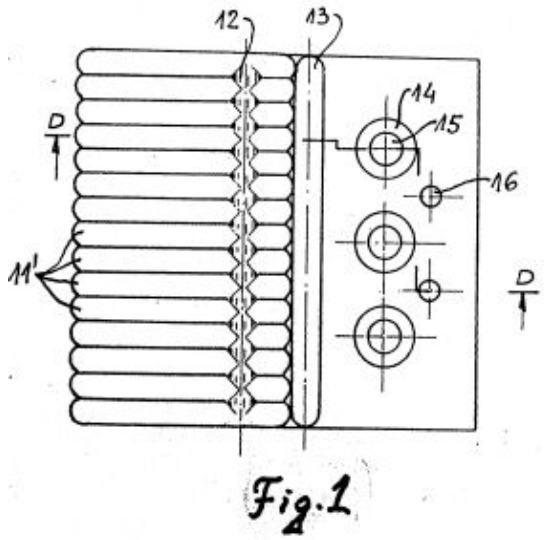

Abstract -- The novelty about the device for accumulation, amplification and local direction of the positive cosmic energy is that between the V-shaped arms (11) of the support (1) there is anothed V-shaped piece (2) which is fixed tightly by its arms (21) between the convexity (16) and a semi-cylindrical convexity (13) on the arms (11). At the end of the arms (11) there are cylindrical convexities (11') over which there is a convexity (12) at the angle of 90 degrees in relation to the longitudinal axis of the cylindrical convexities (11'). At the end of convexities (11') there is a cylindrical convexity (13).; On the outer surface of arms (11) there are three holes (15) on each side, respectively, and spherical convexities (14) around them, and two hemispherical convexities (16) on each side, respectively, next to them, whereas on arms (21) of the piece (2) there are three holes (24) on each side, lined with convexities (23) and there are two hemispherical convexities (22) on the outer surface of each side, as well as two hemispherical convexities (25) on the inner surface of the arms (21).

EP 0296142
Device to counterbalance the surrounding electromagnetic radiation

Inventor: DECKERS FRANCOIS

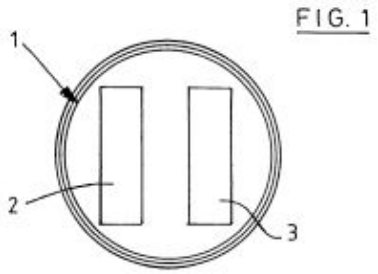

WO 9526215
Method of Immunomodulation of the non-specific reactivity of an animal organism

---

GB 1496582
An Energy Reabsorption Enhancement Chamber

Inventor(s): SACHER FRANCES VON

Also published as: NL7501808 // SE7412497 //JP50114888 // BR7500933 // DE2503622

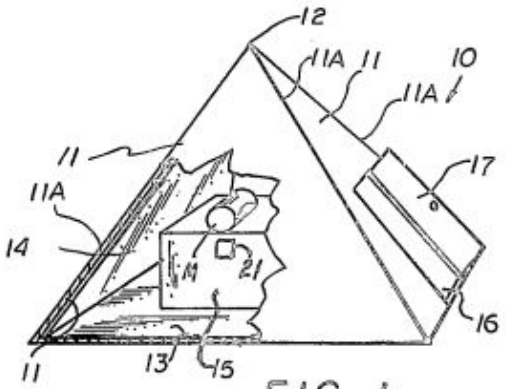

FIG. 1

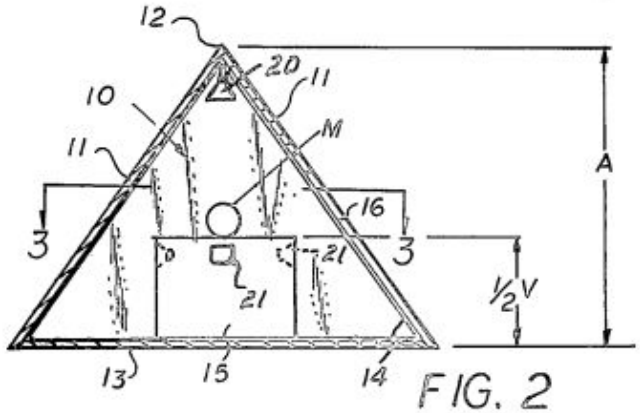

FIG. 2

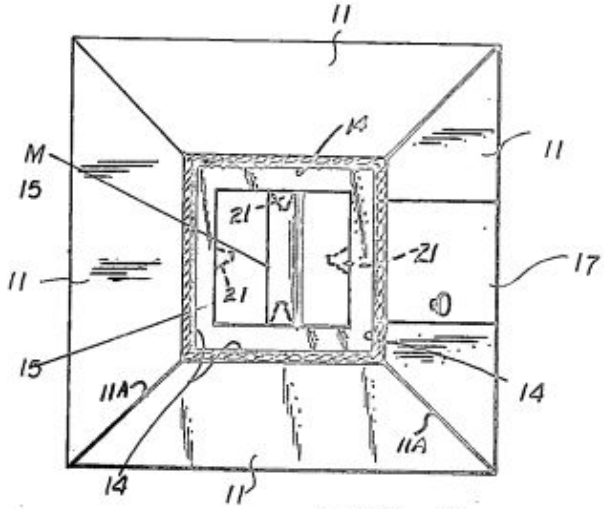

FIG. 3

FR 48135

Emetteurs d'ondes permettant de ranimer ou de transporter les ondes émises par les corps de la nature

Inventor: TURENNE LOUIS

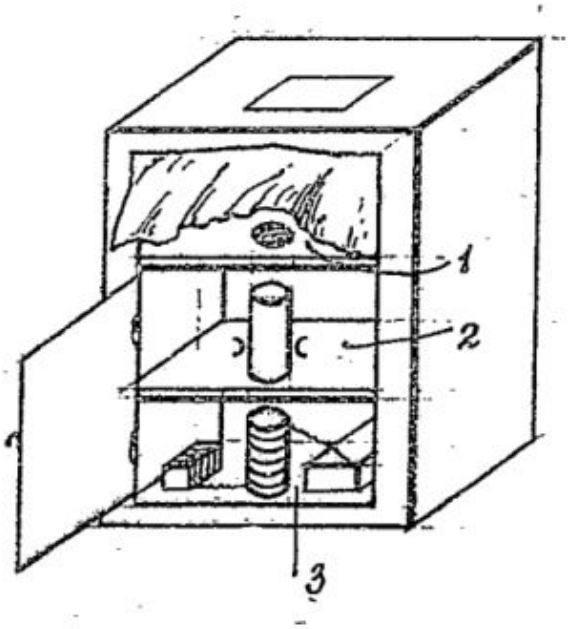

DE 1719878

ANORDNUNG ZUR ABSCHIRMUNG ODER ZUR NEUTRALISIERUNG VON FELDSTOERUNGEN

Inventor: JAKOB W F STAENGLE [DE]

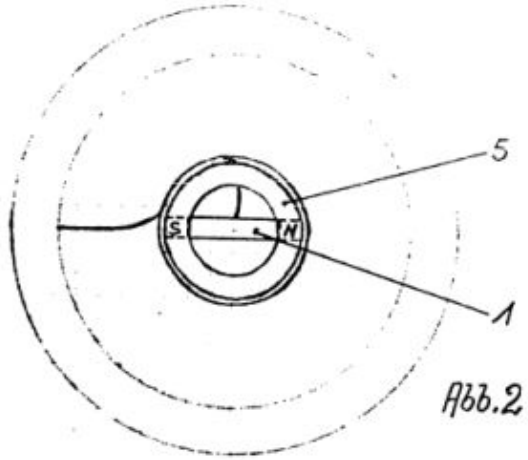

Abb.2

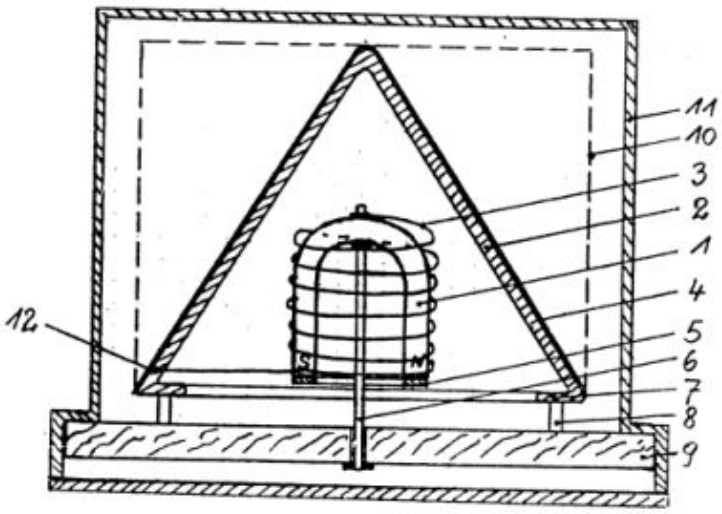

Abb.1

FR 485945
No title available

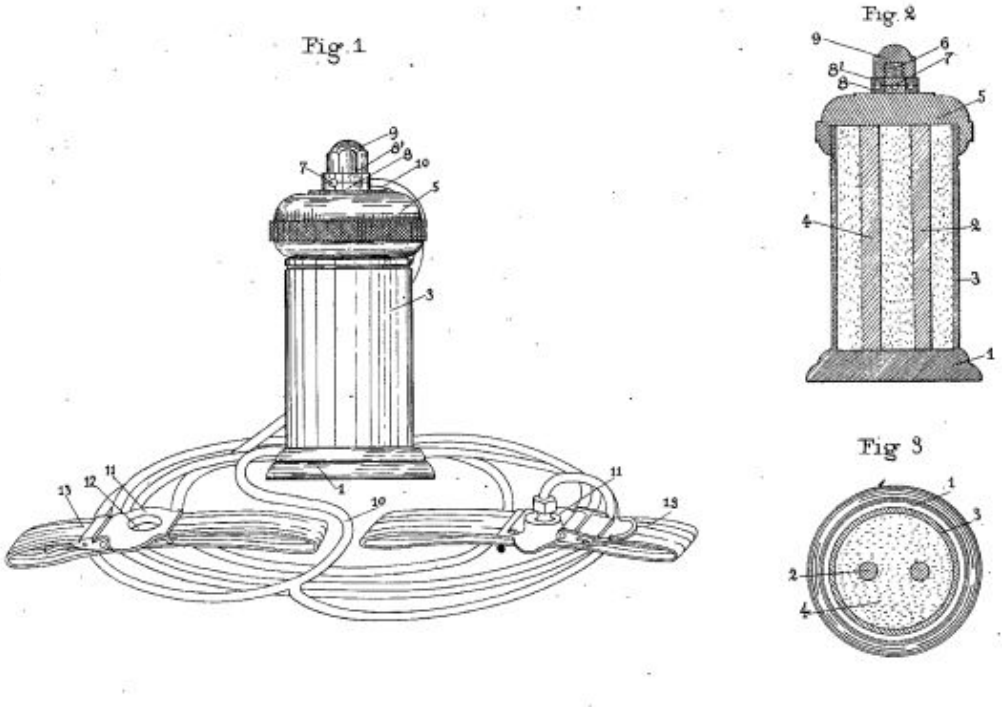

DE 3320510
Radiation switch for radiation deflection and irradiation

Inventor: VOELKNER KARL HEINZ [DE] Applicant: VOELKNER KARL HEINZ

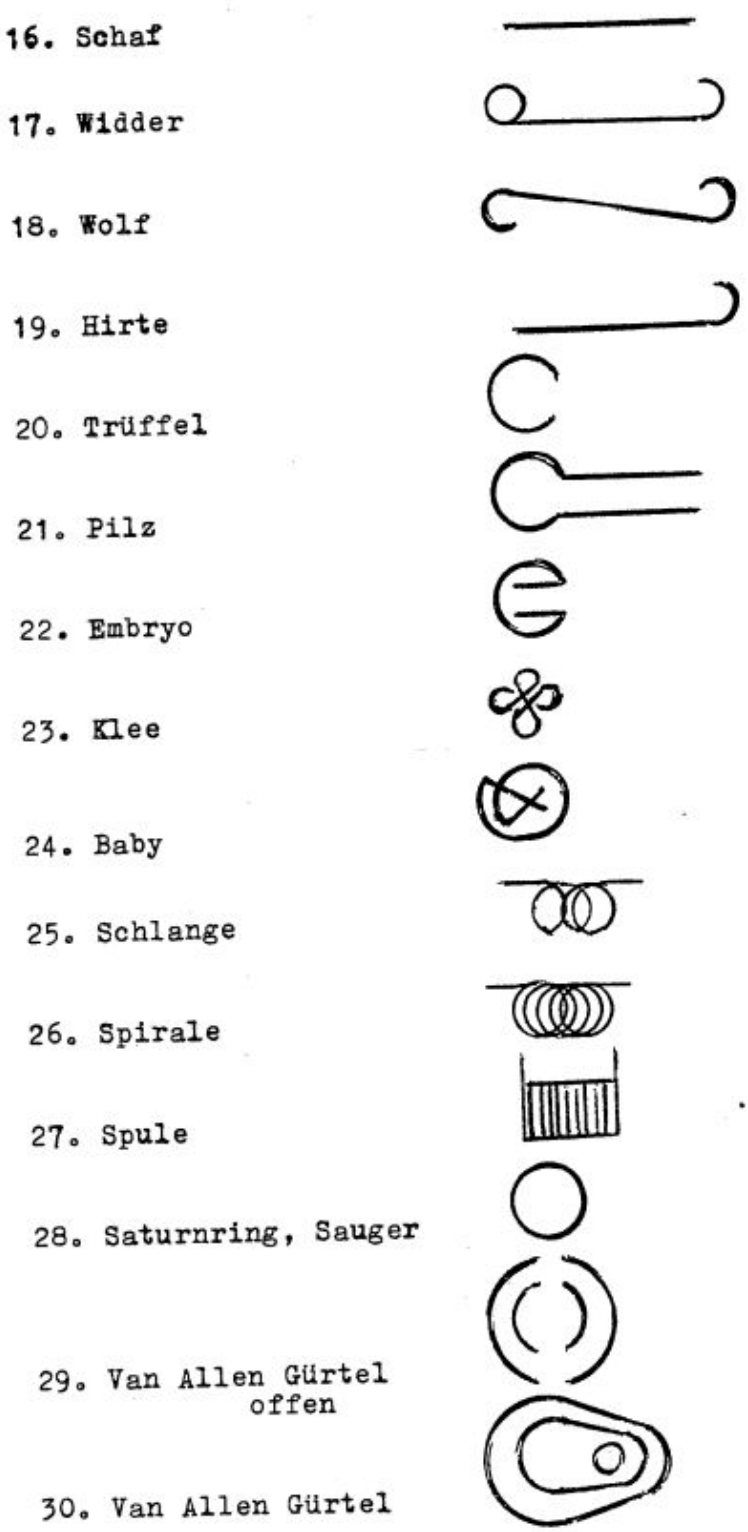

Abstract -- Radiation switch for radiation deflection and irradiation. b) Radiation surface suction probe for radiation deflection and irradiation. The patent specification for which a patent is applied is the combined result of my many years of research into environmentally harmful radiation returning to the sun. In fairly high concentration it is visible as livid-coloured light having a frequency of 40,000 mm. Livid radiation reflectors are produced and assembled by the industry over an uncontrolled, immense area. When used conscientiously and in a controlled manner, the switches and probes listed in the patent specification are suitable for preventing vegetation damage to man, animals, trees and plants. Measurable: with a 50 cm long golden chain on which a golden ring is threaded, shortened to 25 cm. The harmful radiation intensity starts at a pendulum deflection of 1 cm which leads absolutely to death of the

vegetation. Optically: photo/video: falsification of the spectral colours by superposition of the livid light. This livid radiation knows no obstacles. It can only be prevented by application and extension by experts of the law governing radiation protection.

WO 0218007
METHOD FOR PROTECTING A HUMAN BEING FROM THE ACTION OF A SPIN FIELD (RADIATION) HAVING LEFT POLARISATION OF SPACE

Inventor: ORLOV IGOR IVANOVICH [UA] ; BACHISHEV GORCHMA NURY-OGLY

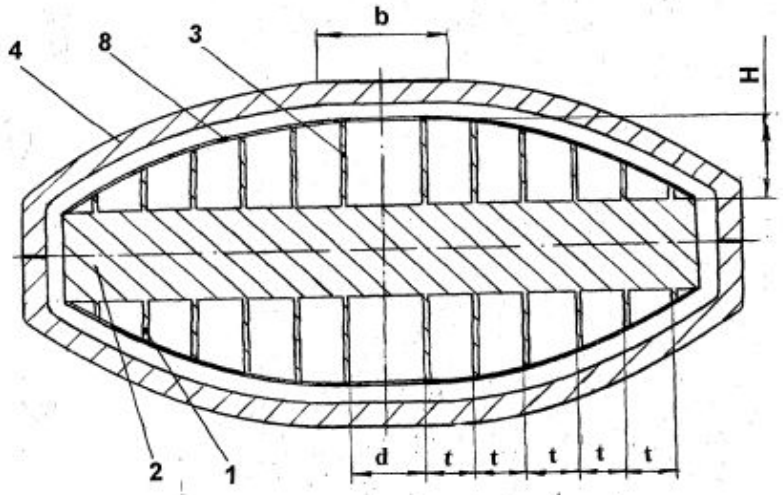

Abstract -- The invention relates to medical equipment which is directed at neutralising damaging effects produced by data display devices, more specifically terminal display devices, TV sets etc, and can be used for video devices, computers and power devices. Said invention can be also used for protecting against the negative effects of geopathogenic zones and geobiological systems. The inventive method is based on an additional field (radiation) having the opposite direction of a spin polarisation within the volume of the field. Said field is produced by the data display device. In addition, a supplementary compensating spin field having a right polarisation of environmental space is created with the aid of a physical vacuum polariser having a right polarisation which is based on the effect of prepolarisation of the polariser's substance. The inventive device comprises a compensating element embodied in the form of at least two coaxial sockets which are arranged on a common base. The internal socket has the lower of the dimensions d of the cross section thereof, which is equal to d> 0,5 H, where H represents the height of the socket. Said coaxial sockets have the cross section chosen from a range consisting of a polygon with the side number thereof m >= 3, a circle, a rotary body having an arbitrary shape and the combination of said figures. The walls of the sockets are embodied in such a way that they are sharp-edged on the side of the free ends thereof.

WO 9632192
DEVICE FOR INFLUENCING THE STRUCTURE OF MATERIAL OBJECTS

Inventor: UVAROV VLADIMIR VASILIEVICH
UVAROV VLADIMIR VASILIEVICH [RU]

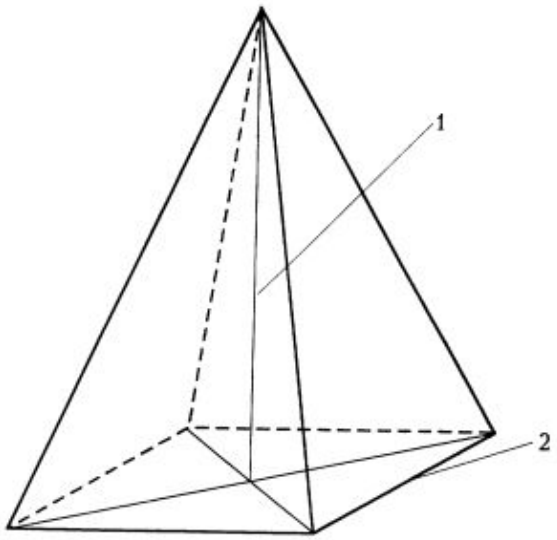

Fig. 1

Abstract --The technical problem addressed by the invention is that of enhancing an influence on material objects. To enhance a positive influence on material objects, regular rectangular pyramids are proposed, made from a dielectric material and set up in such a way that each of the side facets is aligned with the directions of the horizon, while the geometrical shape of the pyramid is determined by a ratio of the base sides to the pyramid height expressed as follows: A = 1.572302...H or A = 0.485868...H, wherein A is the base side of the regular rectangular pyramid and H is the height of the regular rectangular pyramid.

WO 9319579
METHOD AND DEVICE FOR INFLUENCING AN OBJECT AND APPARATUS USING SAID DEVICE

Inventor: KARP YULY SEMENOVICH
Also published as: WO9319579 // EP0646392 // EP0646392 // AU3098692

Abstract -- A method for influencing an object participating in a technological process consists in directing an external energy on an intermediate element which changes its functional state and influences the object participating in the technological process, and the influence is formed as a secondary radiation which is interconnected with the external energy and which is generated from the substance contained in the material of the intermediate element. The formation of the secondary radiation flow with desired parameters is effected by periodical variation of the vector of anisotropy of the substance of the intermediate element and the thus formed flow of the secondary radiation is directed on the object.; The device comprises an external energy source (2) and an intermediate element (3) capable of generating an influence in the form of secondary radiation matching with the external energy from the source (2) and resulting from the periodical change of the vector of anisotropy of the substance contained in the material of the intermediate element (3). The device is used as apparatus for programmed stimulation of self-regulation of biological objects for correction of their functional state.

DE 3320518
Device for changing radiesthetically measurable fields

Inventor: SCHWEITZER PAUL DR

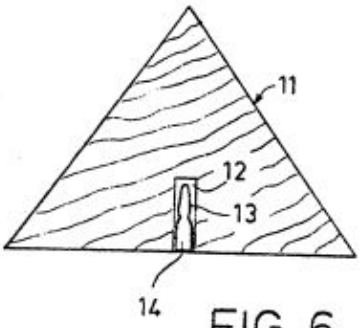

FIG. 6

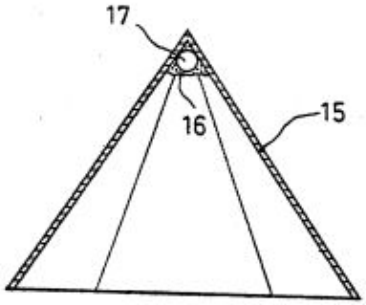

FIG. 7

Abstract -- The invention relates to a device for changing radiesthetically measurable fields with the object of avoiding the pathogenic effects of their biologically active regions, the so-called irritant zones. These fields are mainly caused by underground water veins. However, they are also found in space lattice-like structures, the so-called lattice systems incident from the atmosphere. All the measures and devices known to date for attenuating or eliminating the effect of the irritant zones have shortcomings or disadvantages. As a rule, they are ineffective with regard to the particularly dangerous crossing region of the irritant zones, or they detect only individual frequencies and must be adjusted with the risk of inefficacy due to maladjustment. The invention is based on the object of creating a device for changing radiesthetically measurable fields which avoids the aforesaid disadvantages. This object is achieved using a pyramidal body in that one or more elements, e.g. another pyramidal body, or an element which is resonant in the microwave range, e.g. a spiral, or a homeopathic preparation, is arranged within or directly underneath this body.

Your Support Maintains this Service

Buy

The ***Civilization Kit***

... It's Your Best Bet & Investment in Sustainable Humanity on Earth ...
Everything @ rexresearch.com on a Data DVD !

ORDER PAGE

An FM Crystal Set

Updated 2010-11-28:

Since this page was first posted in June 2010, I have made a number of improvements to the receiver described below. I've also received a few requests for additional information. In reviewing this page, I realized that it was long overdue for an update. The original information is unchanged. The updated information appears at the bottom of the page.

Introduction

Crystal sets–totally passive receivers without any amplification–have been popular for many years. The vast majority of them are designed and built for the Medium Wave band, 530 to 1700 kHz. However, there have also been some built for the shortwave bands, and occasionally some for the FM band (88 to 108 MHz).

Having several local powerful FM stations, I'd occasionally noticed that I was picking up FM on a medium wave crystal set. Considering that there was a strong enough signal to receive FM when it wasn't wanted, it should be possible to build a receiver to pick up the signal intentionally.

Most FM crystal sets use slope detection. That is, they are tuned slightly off the centre frequency of the station, and as the frequency modulated carrier moves in and out of the receiver's resonant frequency, an audio signal approximating the original modulation is produced. True FM detection requires a frequency discriminator circuit, and the complexity generally makes it unsuitable for a passive receiver. I'm only aware of one such project. It was designed and built by Edward Richley, and was written up in the Xtal Set Society Newsletter, January and March 1996. In order to achieve the high Q required, the circuit used a coaxial resonator constructed from 2 inch copper pipe. It was ingenious in that, while most FM discriminators have two tuned circuits, this one only required a single tuned

circuit. This was an important feature, because trying to adjust two tuned circuits when tuning to different stations, would be extremely difficult, if not impossible.

I've redrawn the Richley circuit here:

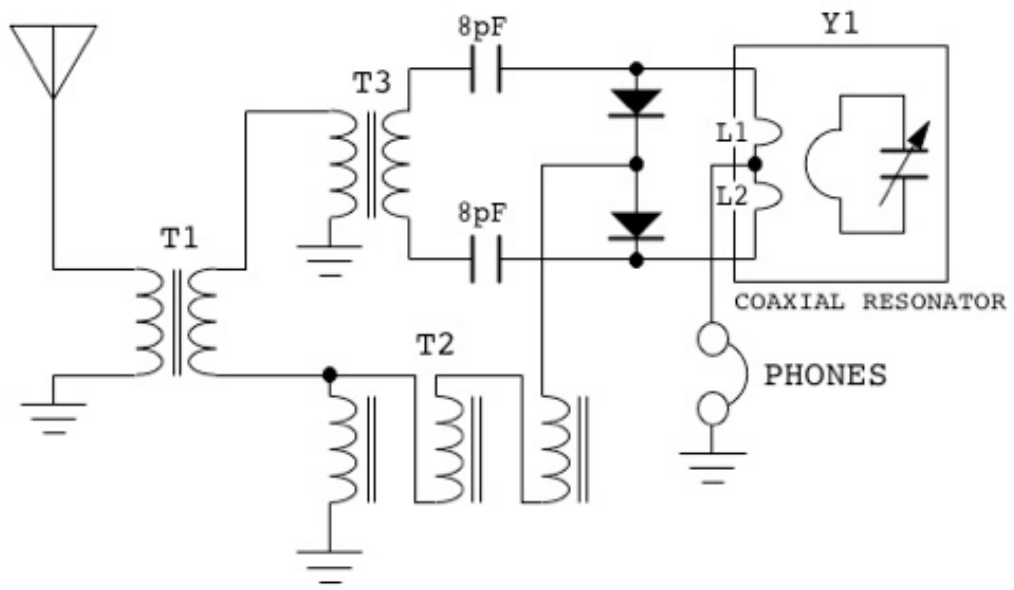

COAXIAL RESONATOR Y1:
CENTRE CONDUCTOR: COPPER TUBING 0.5" DIAMETER, 25.5" LONG;
SHIELD: COPPER PIPE 2" DIAMETER, 29.5" LONG;
TUNING BY MEANS OF MOVABLE SLUG IN TOP OF RESONATOR;
L1 & L2: SINGLE TURN WIRE LOOPS 2.75" LONG X 0.5" WIDE MOUNTED AT BASE END OF RESONATOR ON OPPOSITE SIDES OF CENTRE CONDUCTOR.

A very brief description of the circuit follows. For a more thorough discussion, please refer to the original newsletter articles.

As described in the diagram notes, the resonator is constructed from a two foot piece of 2 inch diameter copper pipe, with a centre conductor of 1/2 inch copper pipe. The resonator is designed for an unloaded Q of 2000, and a loaded Q of about 500, which is required for acceptable selectivity. FM channel bandwidth is 200 kHz, or 0.2 MHz. Therefore, at a frequency of 100 MHz, required Q will be 100/0.2=500.

Transformers T1, T2, and T3 are made from standard 300:75 ohm baluns which are included in the kit of parts that come with virtually every new

television or radio. T1 is used unmodified. T2 is rewound as 1:3 autotransformer. T3 has a two turn primary and a two turn secondary. Transformer T1 converts the incoming unbalanced signal to a balanced signal which then feeds T2 and T3. The secondary of T3 is loosely coupled via the 8 pF capacitors to the resonator coupling loops, which develop a 90° phase shifted signal due to the normal behaviour of a coupled circuit at resonance. The secondary of T2 is connected to the common point between the diodes. This signal is 180° out of phase with the incoming RF. Hence, there are quadrature signals applied across the diodes which act as a synchronous detector. As the frequency modulated radio carrier moves above and below the resonant frequency, the phase shift varies above and below 90°. The detector converts this phase shift into an audio frequency signal which matches the original audio source.

Initially, I planned to build a copy of this receiver, but after doing a bit of research, I concluded that a helical resonator would be more practical at these frequencies. My new plan was to duplicate this circuit, except that I would substitute a helical resonator for the coaxial resonator.

The first step then was to design a helical resonator with an unloaded Q of 2000 at a resonant frequency of 110 MHz, the top of the FM band. Using standard helical resonator design formula, the resulting resonator has an inner coil constructed from 4.3 turns of 9.5mm (3/8") copper tubing. Coil outside diameter is 65mm (2.6"), and coil length is 84mm (3.3").

The shield is constructed from copper sheet, and is 84mm (3.3") square by 200mm (8") long. It is housed inside a wood enclosure for rigidity. The shield is about 2" longer than required to allow room for coupling loops at the bottom, and for a tuning assembly at the top. The photo to the right shows the shield parts prior to assembly. The tuning mechanism is a small plate attached to a length of brass tubing which runs through the end cap. The rod is moved in and out by means of a screw. This changes the fringing capacitance at the open end of the coil. The closer the plate is to the coil, the lower the resonant frequency. The next photo shows

the top cap with tuning mechanism assembled. The tubing has a square cross section to prevent the assembly from turning. It slides inside a slightly larger piece of square tubing. This type of tubing is available at hobby shops and comes in a range of sizes suitable for close sliding fits. The coil and the inside of the shield were polished to remove

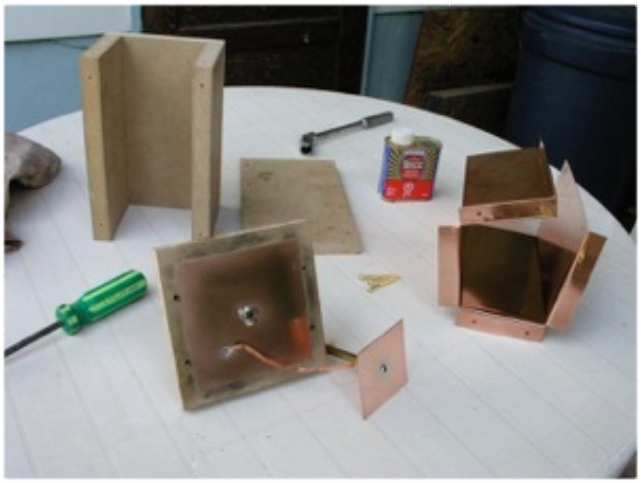

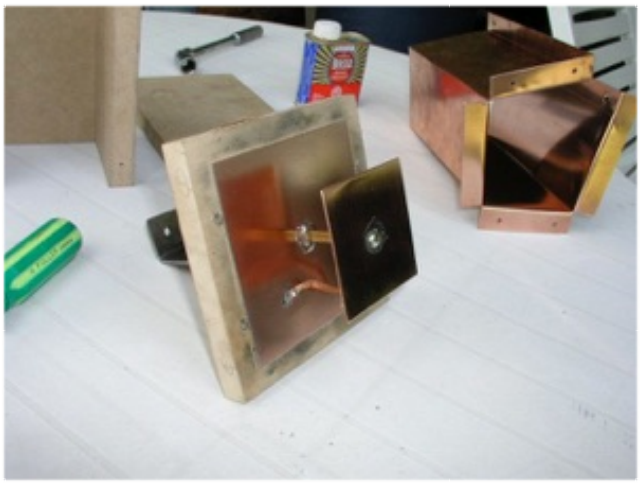

oxidization, and hence maximize Q. The partially assembled resonator is shown in the next two photos. The photo on the left is of the top end, and the photo on the right is of the bottom end.

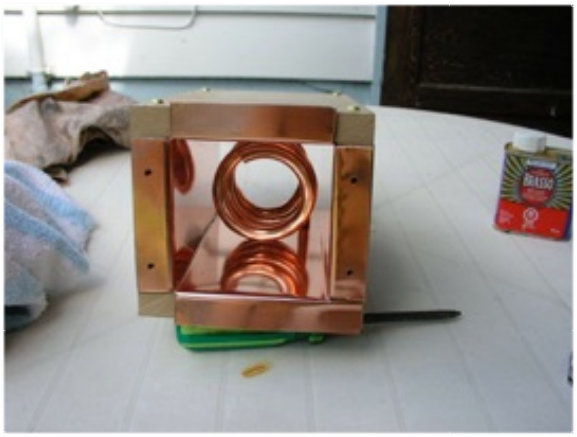

The next photo shows the top cap installed and the exterior part of the tuning mechanism:

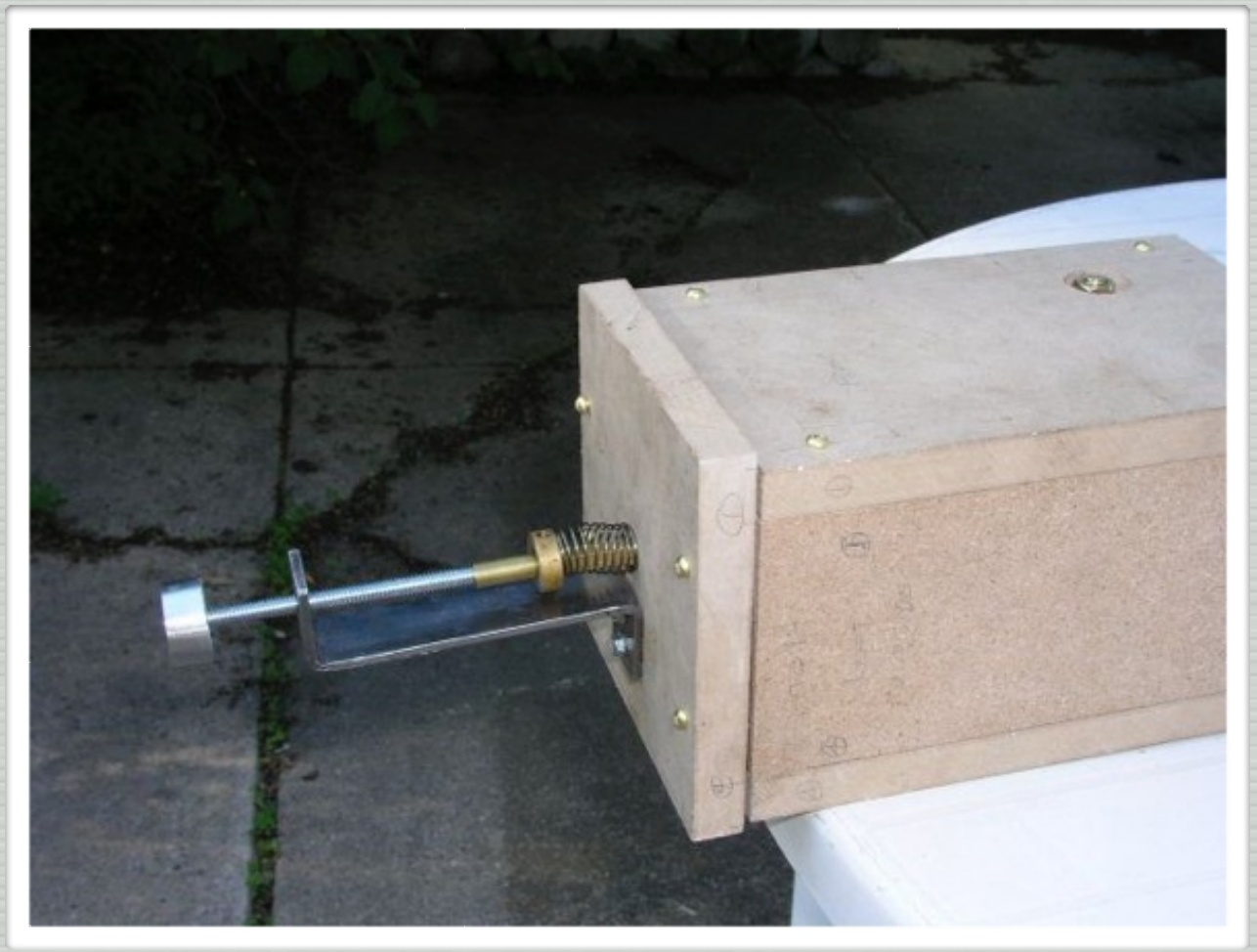

I decided that for initial testing, it would be best to keep things simple and use a slope detector circuit. This is shown in the following schematic:

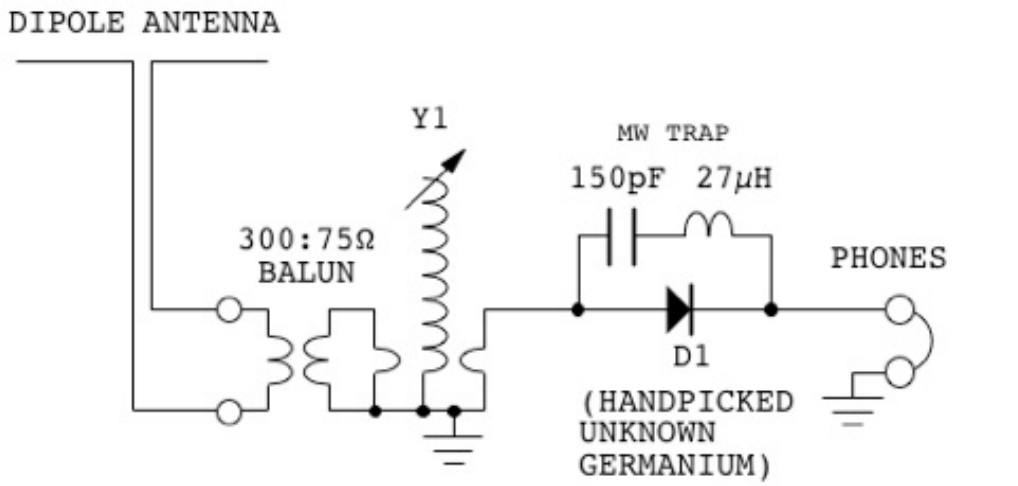

HELICAL RESONATOR Y1:
COPPER TUBING 9.5mm (3/8")
4.3 TURNS
OUTSIDE DIAMETER 65mm
COIL LENGTH 84mm
SHIELD SIZE 85mm SQUARE X 198mm HIGH
TUNING BY MEANS OF MOVABLE END PLATE IN TOP OF RESONATOR

The 27uH choke and 150pF cap are a low pass filter to trap out a local high powered AM station that was causing some interference problems. For a diode, I used a 1N34A initially, but found another unknown type in my parts box which worked slightly better. It may in fact also be a 1N34A from a different manufacturer. The detector and coupling loops were built on a small circuit board and mounted on a block of wood so that the assembly could be repositioned easily to obtain the best performance. The assembly is shown below.

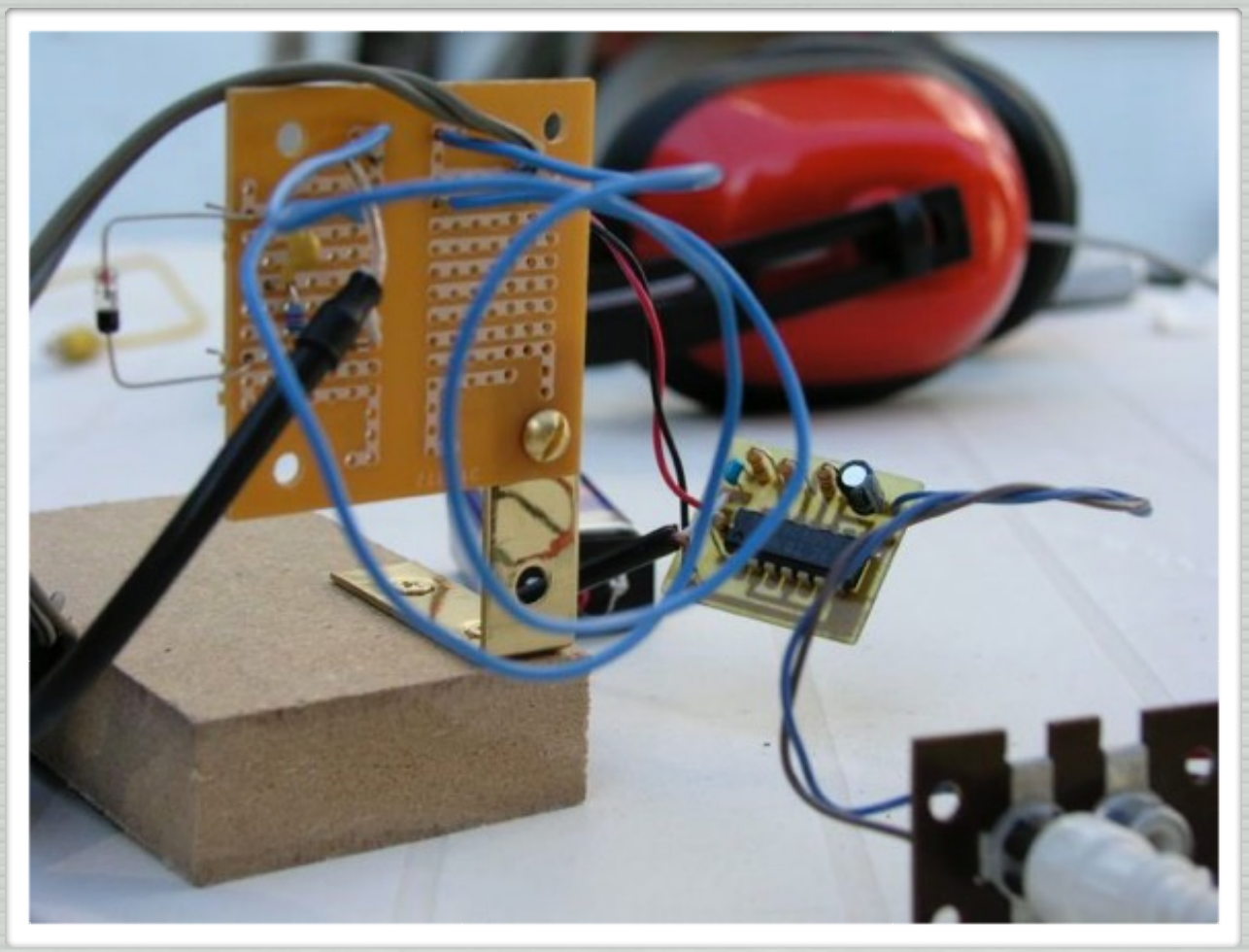

The RF and detector coupling loops are blue hook-up wire. The little postage stamp sized circuit board is a low power headphone amplifier which was used in conjunction with my relatively insensitive headphones to make testing a bit more painless. The initial working set-up is shown below:

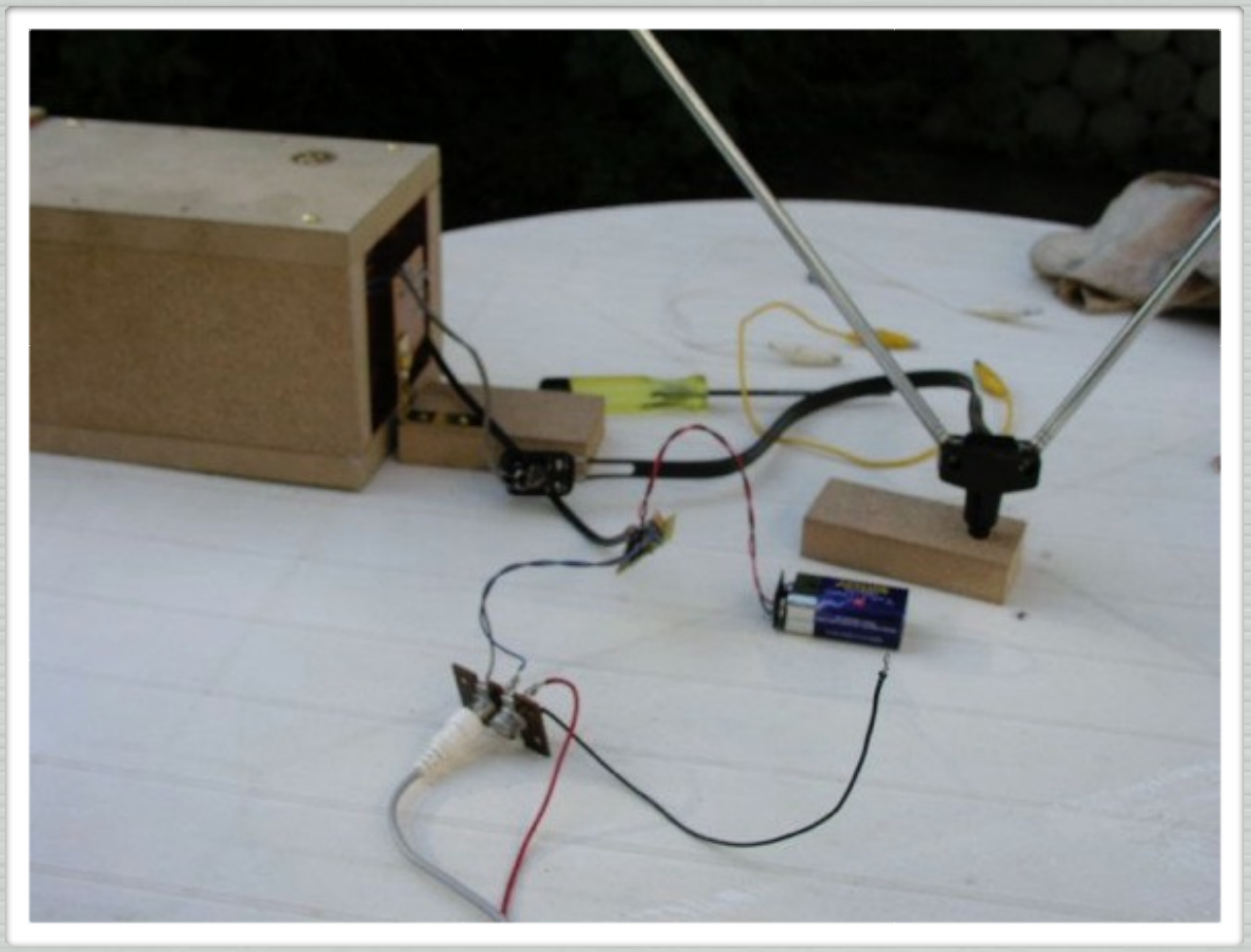

Reception was fairly good. The signal was weak using my piezo phones without any amplification. So, I connected in the headphone amplifier, and did all the remaining testing with it. Selectivity was very good. However, I don't have any easy means to measure the Q. I found that I could easily pick either side of a station's centre frequency for detection, and if I tuned dead centre, the signal became very distorted. That leads me to believe that the Q is very high. I couldn't get that kind of precision with earlier experimental sets which used a coil/capacitor tuned circuit.

So with that bit of success, I started thinking about making a true discriminator. As mentioned above, I had intended to duplicate Ed Richley's circuit except that the coaxial resonator would be replaced with the helical one. However, after reviewing the original circuit, I concluded that two of the transformers could be eliminated. The first transformer is a balun to convert from an unbalanced RF signal from the antenna to a balanced one. Since I intended to use a dipole antenna, this was unnecessary.

Rather than excite the resonator via coupling loops through the small capacitors, I decided to drive the resonator directly at a tap near the ground

end of the resonator coil. This eliminated the need for the balanced secondary winding on T3.

I decided that I could combine T2 and T3 into a single transformer. I had disassembled several baluns and found some to have two-hole cores and some were simple toroids. I used the toroid from one of these and wound a 4-turn primary, and 4-turn secondary. The secondary has a tap after the first turn which is grounded. The schematic follows:

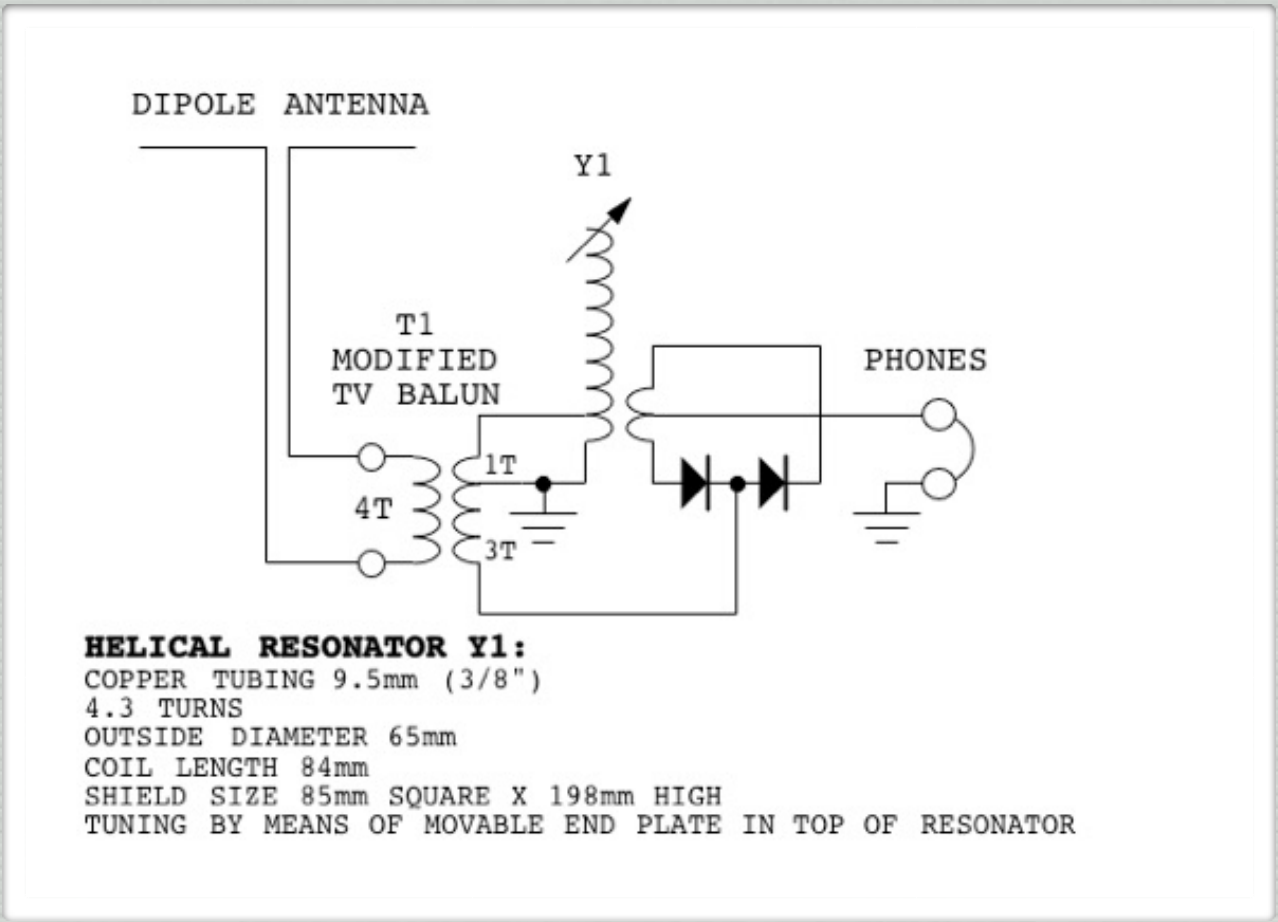

The secondary arrangement still gives the same 3:1 power ratio between the diodes and the resonator excitation, but the circuit is much simpler. The revised coupler/detector board is shown below:

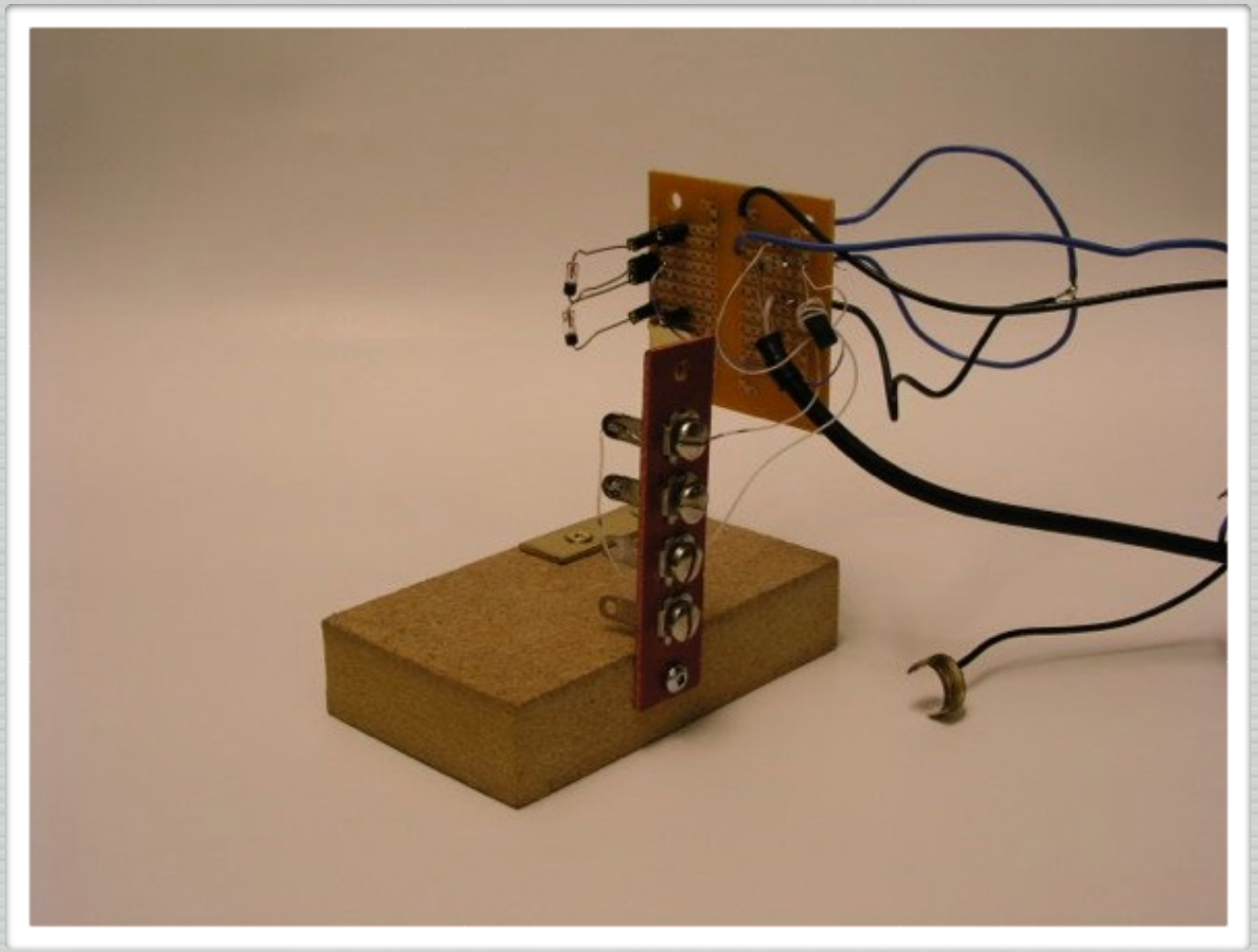

The black wire with the brass clip is for connecting to a tap on the resonator coil. I made it this way so that I could quickly try different positions. Optimum turns out to be about 40mm (1.5") from ground.

The pickup loop is the single loop of blue wire with the audio output tap at the halfway position (black wire).

Diodes are socket mounted so that different ones may be tried without fuss. I didn't put in an AM trap this time, because the circuit arrangement is not conducive to AM pickup, since the diodes are essentially shorted at MW frequencies by the pickup loop.

Here's a brief description of how the circuit works:

Input transformer T1 splits the incoming RF (untuned) into two signals 180 degrees out of phase with reference to ground. The low level side goes to the resonator and the high level side goes to the common point of the diodes. The voltage induced by the resonator into the pickup loop will be 90 degrees out of phase with the the input signal. This is the nature of a loosely

coupled tuned circuit at resonance. The phase of the signal on the pickup coil will vary on either side of 90 degrees as the carrier is frequency modulated. The "90 degree" signal is applied to the outside ends of the diodes while the 180 degree signal is applied to the diode common point which then act as a quadrature detector. Hence it is essentially the same mode of operation as Richley's original circuit.

The following photo shows the discriminator assembly in position:

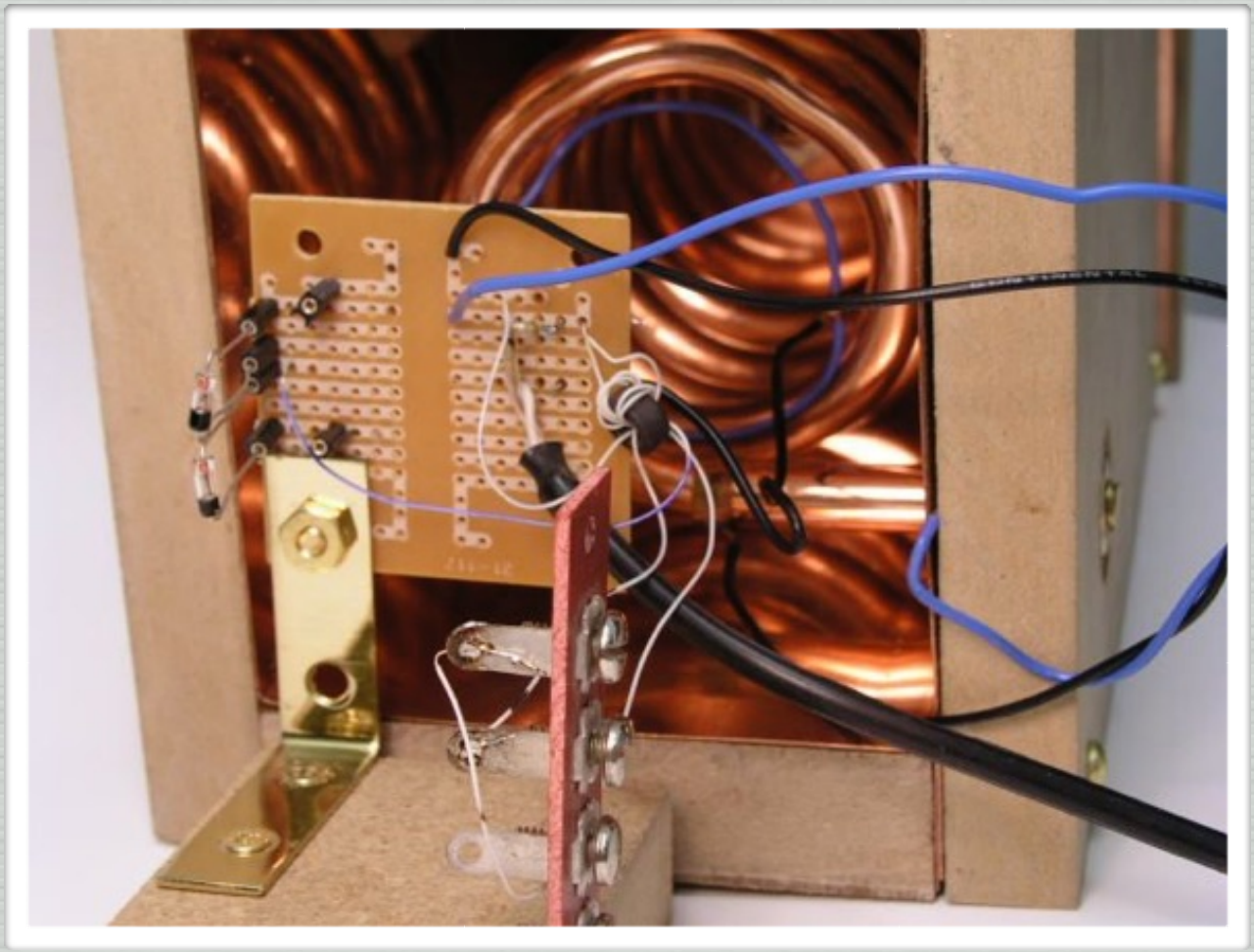

Now, with everything connected up, and after finding the best position for the pickup coil I found that the discriminator appears to be working correctly. Tuning is sharper, and there are no double slopes to select as I could previously. In fact tuning this receiver has very much the same feel as tuning a commercially made FM receiver. Audio level has increased significantly too. This is something I had been wondering about. I was concerned that a true discriminator might be less sensitive than a slope detector, but it appears not to be the case.

2010-11-28 Update:

Since the original material first appeared on this page, I've continued to tinker with this circuit, resulting in several incremental improvements. Although the improvements came in many small increments, the cumulative result is that this is now a very good performing receiver. Improvements listed in order of importance (most important first) are:

- Changing the detector diodes to Avago HSMS-2850;
- Changing the turns ratio on the RF input transformer;
- Getting a good set of sound powered headphones;
- Permanently mounting the detector loop;
- Finding a good antenna location;
- Shortening the resonator helix.

Diodes

The Avago (formerly Agilent) HSMS-2850 diodes are rather odd ones. I had purchased these along with a number of other different types of detector diodes, more or less at random, to test their effectiveness. These particular diodes were described as "**zero bias**" which made them too intriguing to pass up. When they arrived, I set them aside and didn't think about them again until I ran across this page on Dick Kleijer's site. He had also built an FM crystal set and had tested a number of different diodes. Among them were the HSMS-2850's which turned out to be his best performers. I dug through my diode assortment and confirmed that they were the same ones I had. These are surface mount, and so I had to construct a small printed circuit adapter board. Otherwise, I would have tried them much sooner. When I tried them, there was a considerable improvement in performance. I mentioned that these diodes are odd ones. They have a very low R_0 (zero crossing resistance) of about 5000 ohms (many thanks to Mike Tuggle who measured them for me). Coincidentally, this is about the same R_0 as a galena detector. The low R_0 would normally make them a bad choice as a crystal set detector (galena aficionados notwithstanding). However, it appears that this particular resonator circuit has a very low resonant RF output resistance, which turns out to be a good match to the diodes. For more info on this, see Article #4 on Ben Tongue's site. This low RF resistance has another

consequence which is discussed below.

In addition to the above mentioned diodes, I also recently tested Sanyo 1SS351 diodes. These are a surface mount type, with two diodes in a single package, and while not quite as sensitive as the HSMS-2850's they are significantly better than any of the germaniums or other Schottkys that I've tested. I also tried paralleling two of these, and got a further improvement in performance. In a listening test (which was completely subjective) I found it difficult to tell much difference between the parallel 1SS351's and the singleHSMS-2850's.

RF Input Transformer

Getting the best turns ratio for the RF input transformer was an iterative procedure which also affected the optimum input tap position on the resonator. The schematic appearing earlier on this page shows a primary with 4 turns, and a secondary with 4 turns, with a grounded tap at 1 turn. After much experimentation (and wire breakage), I currently have a primary with 6 turns, and a secondary with 8 turns, with the grounded tap again at 1 turn. This is the current schematic:

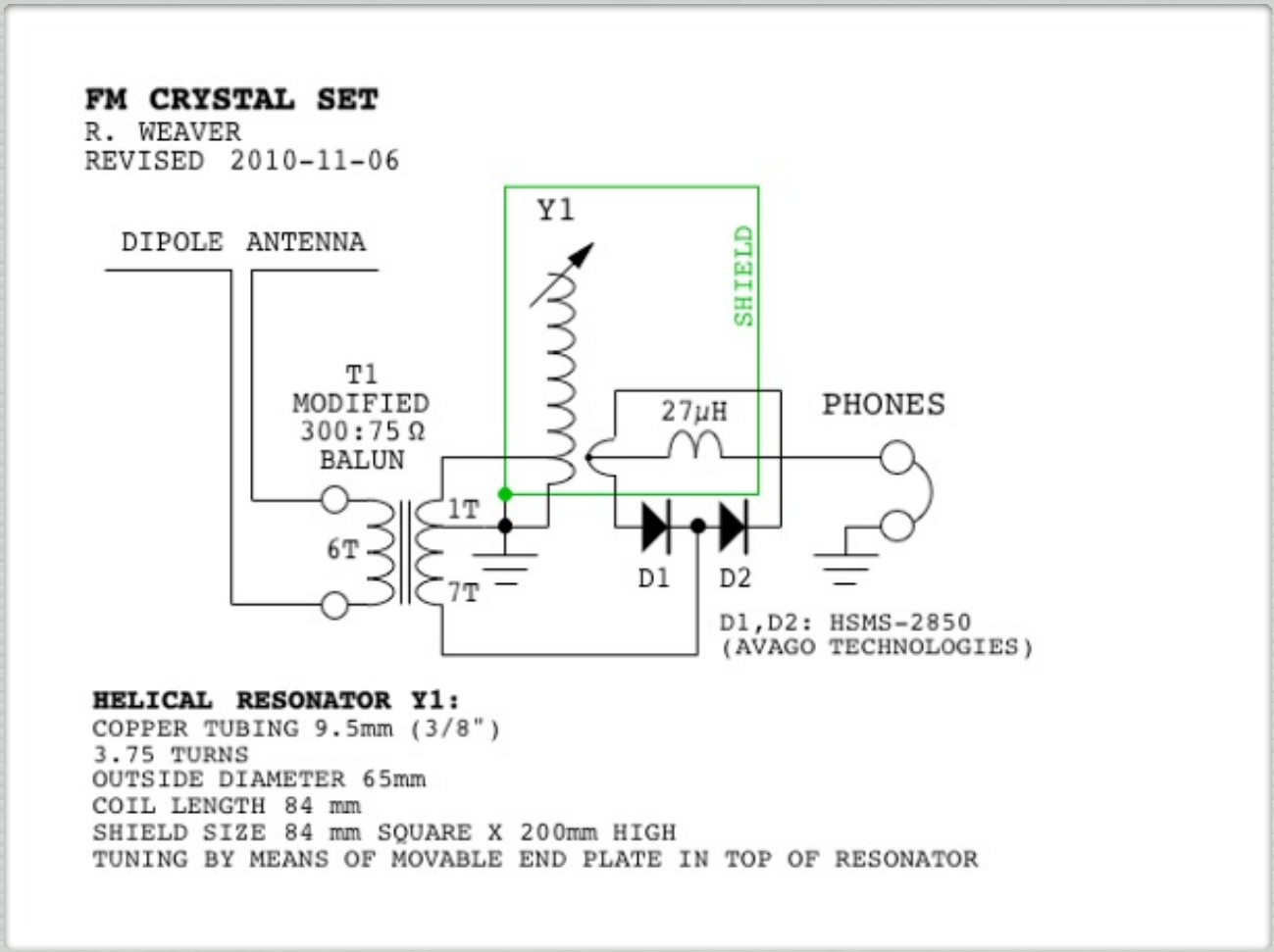

I might have arrived at this turns ratio a bit sooner if I hadn't made a bit of a blunder, confusing a dipole antenna with a folded dipole antenna, and thinking my antenna impedance was 300 ohms when in fact it is 75 ohms. (You may pick up on this goof in the earlier text of this page, which I haven't corrected yet.) I'm not yet at the point where I will claim this transformer configuration to be optimum, but it is much improved over what I had before.

Another addition is the 27µH choke connected between the centre tap on the detector loop and the phones. This seems to help isolate the audio wiring from the RF part the circuit, and vice versa. This improvement is subjective at this point (it seems to increase volume), but regardless, it doesn't appear to be a bad idea.

There were a few other changes made to the circuit as well, but in the end, except for the diodes, the revised RF transformer windings, and the addition of the 27µH choke, the other changes resulted in negligible improvements. Hence, they were dropped.

While on the subject of the schematic diagram, alert readers will note the apparent short circuit at audio frequencies if the diodes happen to be conducting. The consequence of this is that when receiving a very strong signal, there is an upper limit to how much audio the detector will produce. My earlier circuit simulation verified this, but I haven't yet encountered a real life signal strong enough to hit this limit. However, I have allowed for circuit modifications should this ever become a problem. It would involve the addition of a resistive or reactive component (Z1) between the diodes as shown in the diagram here. The circuit model used in the simulation does not yet have sufficiently accurate parameters for the diodes or other components, to give a good idea what values to use for Z1 or the coupling capacitors. My circuit board has several strategically located

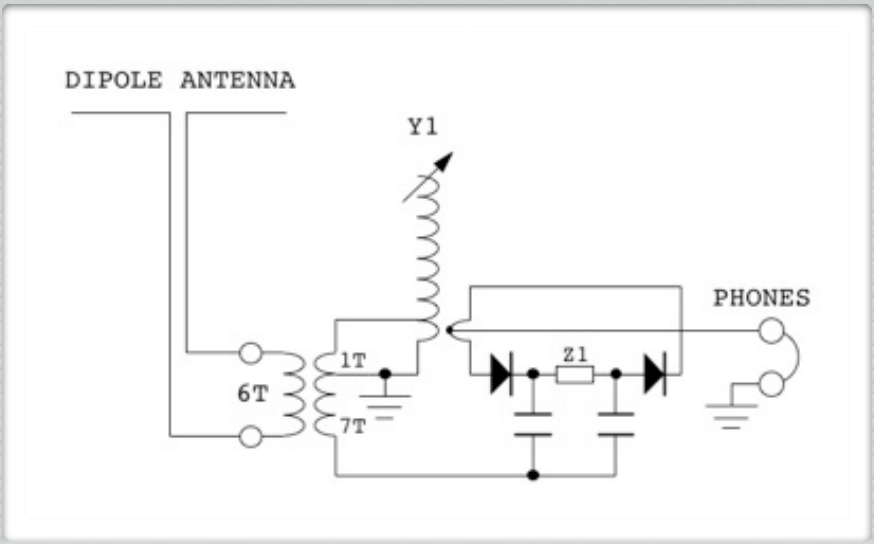

jumper plugs to allow for this future addition without the need for any soldering or de-soldering.

Sound Powered Phones

There's not much I can say about sound powered phones other than: If you're serious about crystal radios, eventually you'll have to get a pair. There is nothing else that compares in sensitivity. Piezo phones are not bad if you have nothing else available, but simply don't compare to sound powered phones . I was lucky enough to get a pair of Western Electric SP phones (thanks to Darryl Boyd), and with the other improvements that were made in the receiver, there is no longer any need for an amplifier, not even for testing purposes.

The Western Electric phones (model D173014) have an impedance of about 600 ohms per element, and I have them wired in series for a total impedance of 1200 ohms. This turns out to be such a good match for the low impedance detector, that I have not found any advantage to using an audio matching transformer. Originally, I tested these with a Bogen T725 transformer wired as an autotransformer. The best transformer configurations were the 2:1 and 4:1 ratios. However, I couldn't honestly detect any improvement over the direct connection using no transformer at all. I did notice a slight difference in frequency response (better bass with the transformer), but no net improvement in volume using the transformer. I'm guessing that the optimum impedance would be somewhere around 2400 to 3000 ohms, but the transformer's insertion loss probably negated any benefits from the better impedance match.

Detector Loop Mounting

Originally, as shown in the early photos above, I mounted the diodes and detector loop on a separate moveable base. Once I'd determined the optimum position for the loop, I mounted it permanently through the side of the enclosure. This eliminated quite a bit of excess wire which is never good to have when dealing with VHF. The RF transformer and diodes are now mounted on the side of the enclosure where the leads come through. Here is a detail of how the detector mounts:

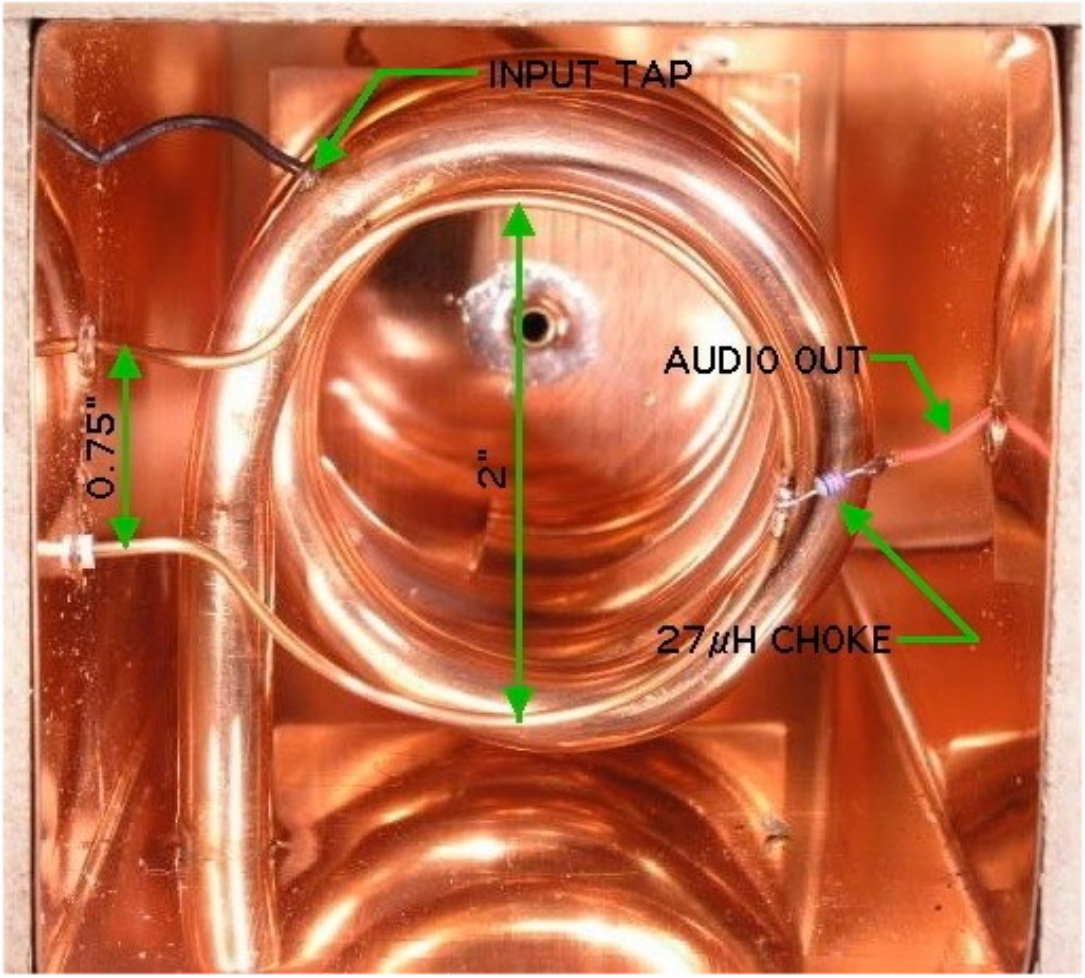

The detector loop is 50 mm (2") diameter #14 AWG (1.6 mm) copper wire, which is stiff enough to maintain optimum shape and position, once those have been determined. It is a friction fit through the side of the enclosure. Both leads are insulated where they pass through the shield.

The detector loop could mount through any of the four sides of the shield. However I chose the arrangement shown here, where both ends of the loop cross the ground end of the helix at 90°. It's my belief that this would minimize any possible unbalance in the loop due to ground capacitance effects.

What isn't shown in the photo, is the separation between the detector loop and the bottom of resonator helix. The distance is approximately 16 mm (5/8"). The loop has a bit of a twist in it, to follow the pitch of the helix, so that separation is a fairly constant 16 mm at all points, except where it bends around the ground end of the helix. Audio is taken off at the middle of the loop through the 27µH choke. The input tap (black wire) is connected to the resonator helix about 75 mm (3")

from the grounded end.

Antenna Location

Unfortunately, antenna location is much more critical when dealing with VHF than when dealing with medium wave. A change in position of less than a metre can drastically affect reception. Initially, I found that to receive some stations, the antenna would have to be in one position, and to receive other stations, the antenna would have to be moved somewhere else. In all cases the antenna would have to be rotated to get the strongest signal.

My antenna is a simple set of rabbit ears (dipole) that was supplied with some long forgotten television receiver. I have it mounted on a camera tripod with a pan head, making it easy to rotate.

Currently, it sits in one corner of my house where I find that it gives good reception for all of my local FM stations (except one; more on that below). I have no explanation for why this particular location is best. No doubt, there are many complicated factors. However, I do note that this is in a far corner of my house which likely has the least amount of electrical wiring in the walls and ceiling.

Resonator Helix Length

Originally the helix was 4.3 turns of tubing. According to my design calculations this should have given a resonant frequency of about 110 MHz, just above the top of the FM band. In practice, it gave a resonant frequency of just a bit over 103 MHz. I expect this is mainly because I wasn't able to make the helix diameter exactly as designed.

The resonant frequency is also affected by fringing capacitance between the ungrounded end of the helix and the outer shield. If the helix is not perfectly centred in the shield (particularly the ungrounded end) the fringing capacitance will be higher and the resonant frequency will be lower. The resonant frequency can often be increased slightly by adjusting the position of the helix (ie., making sure it's exactly centred). However I wasn't able to increase the resonance enough, using this method. So, I trimmed pieces off the end of the helix until the resonance increased to an acceptable value.

After trimming, the helix was stretched out lengthwise to return the

overall length to the design value of 84mm (3.3").

Currently, the the helix is 3.75 turns, and it tunes up to 106.3 MHz which covers all of the FM stations in my area, but not quite the whole FM band.

Performance

Shortly after building the phase discriminator version of the detector circuit, I was asked–quite legitimately–whether I was certain that the circuit was behaving as a proper phase detector, and not just an oddly configured slope detector. So, it was quite important that I verify its operation. Previously, I'd run a circuit simulation which indicated it would work. Then subsequently, I put a digital voltmeter on the audio output and verified that as an unmodulated carrier was slowly and manually swept across the resonant frequency of the receiver, the output went negative, crossed through zero, became positive and then dropped to zero again. But that's a far cry from actually seeing a decent response curve on a scope.

Unfortunately, I don't have a VHF signal generator which can be suitably frequency modulated. However, I do have a cheap FM modulator (intended for playing portable music players through a car's FM radio). It uses a Rohm BA1404 FM modulator IC. The RF output is tied back into the 12V power cable which plugs into the car's cigar lighter. This was not suitable for providing a reliable and consistent signal to the receiver. So, I had to perform some surgery. Thanks to an online data sheet for the BA1404, I was able to locate the RF output (pin 7, for anyone interested), and connect a separate RF output lead.

Once I managed to separate the RF output, I got a nice clean signal. My audio sweep source is a sine wave from an audio generator. The only remaining complication was that the FM modulation was slightly out of phase relative to the input audio signal. So, I had to build an adjustable phase shift circuit to go between the audio generator and the scope X-input. Once it was adjusted properly, the waveform cleaned up very nicely, and I was quite thrilled to see a fairly good S-shaped discriminator response curve which is shown here:

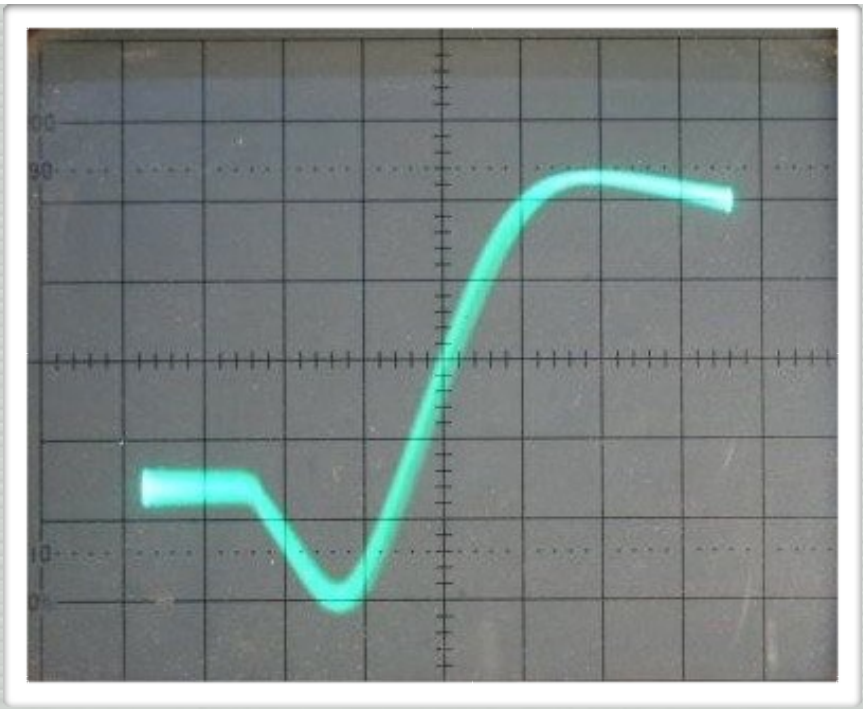

This is the actual DC response of the detector with an input FM signal of about 100 MHz. Mid position on the graticule is 0 Volts DC. Some asymmetry can be seen in the response curve; the skirt on the right tapers off much more gradually than that on the left. At some point I will probably investigate why this is happening, though I'm not too concerned about it. The flat section on the left is an artifact of the FM modulator. All things considered, I'm quite happy with the results.

Unfortunately, because the modulator is uncalibrated, I'm unable to say just what the actual bandwidth is. I hope to address this in the future.

As a side note, it can be seen that the trace is somewhat fuzzy. This is because there is a superimposed 19 kHz stereo pilot tone which is produced by the FM modulator. This had me baffled for a while until it dawned on me what it was. By adjusting the audio generator frequency, the 19 kHz signal can be made almost stationary, but still moves too fast for the camera to catch it.

The test set-up, used to generate the above response curve, is shown here:

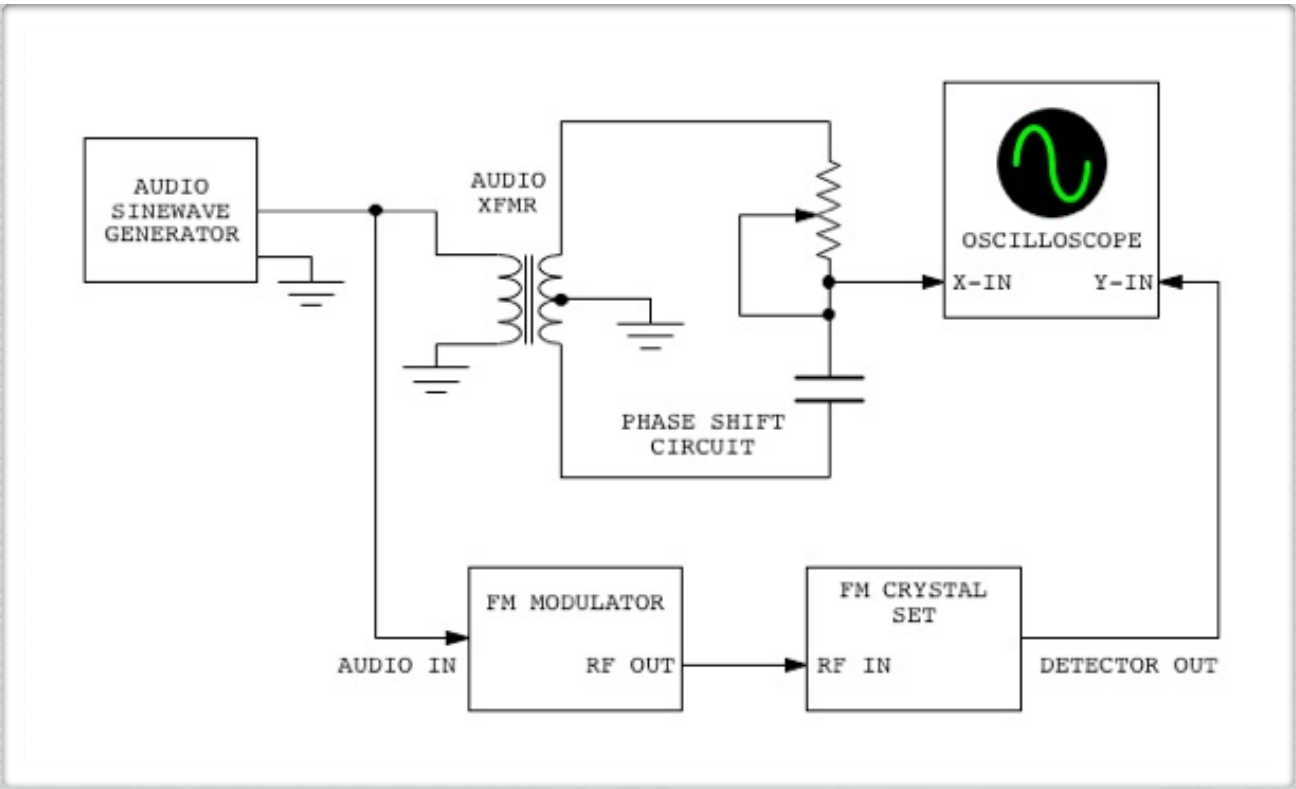

Listening Test

I have twelve local FM stations (within approx. 30 km). With this receiver I can clearly hear all except for two of them. Of those two, the first (91.7 MHz) seems to be temporarily off the air (although I can pick up its unmodulated carrier on other receivers). The second (100.3 MHz) is so weak that I can barely pick it up on a regular FM receiver, and even then, it is buried in noise and is barely intelligible.
So, I wasn't too upset about not picking it up on the crystal set.

The ten local FM stations, which I can hear clearly, range in power from 1300 Watts to 100,000 Watts. All of them can be heard at pleasant volume in a reasonably quiet room. The 1300 Watt station is one of the loudest. However, its transmitter is probably closer to my listening location than the others. The receiver is selective enough that there is absolutely no overlap in stations. Audio quality is very good with the sound powered phones.

Four of the stations are strong enough that they can be heard fairly well with Sony MDR-W08 Sport Walkman phones when properly matched with a Bogen T725 transformer. Although the volume was considerably lower than with the sound powered phones, it was still quite intelligible.

Here is an audio clip tuning through the ten local stations starting at

88.7 MHz and ending at 105.5 MHz, which gives a general idea of the audio quality. File size is 1.6 MB. It was created by connecting the crystal set audio output through a simple RC de-emphasis filter, into a microphone preamp and then into the audio input of my computer running Audacity 1.25 software. The audio is exactly as recorded with no editing or other processing. You will notice that the sound quality changes rather erratically during tuning. This is due to backlash in the tuning mechanism (particularly troublesome at the bottom of the band), and simultaneous adjustment of antenna direction.

More to Come

While this project is close to being complete, a few things remain to be done.

Firstly, the tuning mechanism is very non linear. Tuning at the low end of the band is very touchy, and backlash in the adjusting screw makes tuning these stations a bit frustrating. I'm currently looking at an alternative tuning method which should result in more linear tuning.

Secondly, I would like to test the receiver with a good quality outdoor FM antenna.

Finally, I need to do some final clean-up of the construction, and make

$4.95

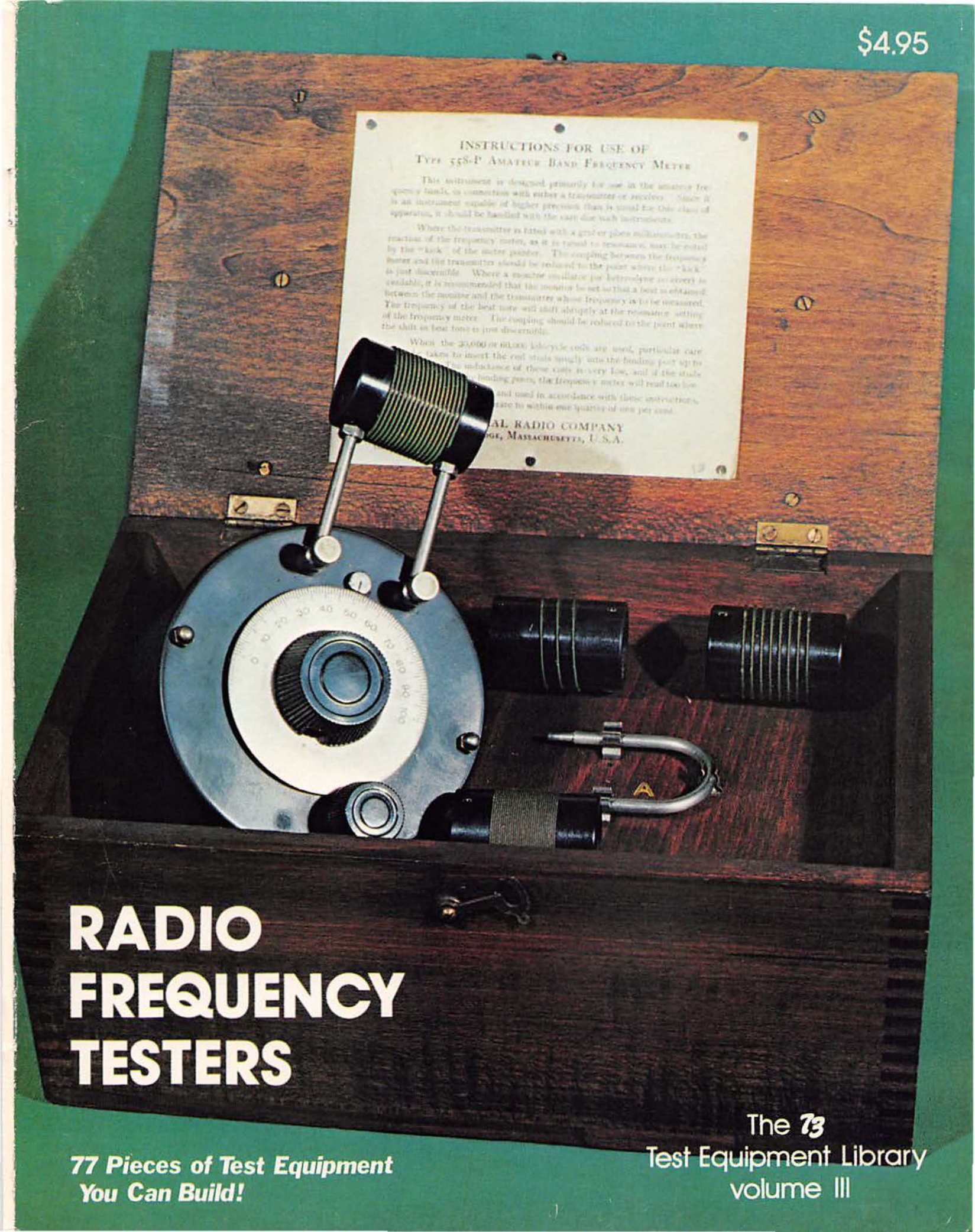

RADIO FREQUENCY TESTERS

77 Pieces of Test Equipment You Can Build!

The 73 Test Equipment Library volume III

Table of Contents

The 73 Test Equipment Library

Volume III: Radio Frequency Testers

Chapter I: What is Your SWR, OM?		
SWR Power Meter for 80 Thru 10m Bands	W6VAT	5
An Etched Circuit SWR Bridge	WA5SWD	6
Checking Your SWR Indicator	W5EHC	8
Home Brew Bridge Calibration	W4OAB	8
Mini SWR Bridge	W2EEY	8
VSWR Supreme	W4BRS	9
A Simple VHF SWR Meter	W2EEY/K3EZ	10
Directional Coupler and VSWR Bridge for VHF and UHF	WA6SXC	13
A Slotted Line for 1250 MHz	WA8CHD	14
Some Directional Wattmeters and a Novel VSWR Meter	G3PDM	16
SWR Bridges Using Zero-Center Meters	W2EEY/K3EZ	18
Chapter II: How to Measure RF Impedance		
The Antennascope – An Effective Tool	VE3CEA	21
How to Build an Antennascope	WA1CCH	22
The Mark III RF Impedance Bridge	W6CRT	22
Measure RF Impedance with Your SWR Bridge	W2AOO	26
Use Your GDO and Z Meter	WØBMW	27
Chapter III: Measuring RF Power Output		
Measuring RF Output	WA6CPP	30
Light Bulbs as RF Indicators	WB2GQY	30
Build Yourself a Light Wattmeter	Henry	32
Low Power Light Wattmeter	K1CLL	33
Yet Another Light Wattmeter	K5CXN	34
A Low Cost RF Wattmeter	WA3AJR	35
RF Power Measurement Using Hot Carrier Diodes	W6AJF	36
VHF Dummy Load Wattmeter	K9STH	38
Chapter IV: Measure Your Field Strength and Frequency		
The RF Sniffer	K5JKX	39
A Useful Accessory for the Ham Shack	W2WHX	40
Two Thru Twenty FSM	W7OE	40
An Amplified, Calibrated Signal Strength Meter	VE3CES	41
Frequency Measuring Equipment at Microwave Frequencies	WA9VFG	42
Frequency Meter-1 to 10 GHz Amateur Microwave	K1CLL	43
Lambda Lines	W2DXH	46
Chapter V: RF Signal Generators		
Zero-Beating with a Frequency Meter	WB4TBX	48
Hand Calibrate the BC-221 Frequency Meter	Henry	48
High Accuracy VHF Frequency Measurements	W5WGF	49
Transistorized LM Meter	W5SOT	50
An I-F Spotter	W5WGF	52
430-470 kHz Sweep Frequency Generator	WA5SWD	53

An Armstrong Sweeper	W2EMF	54
A New Broom	K6JHJ	54
Low Cost Signal Source	VE3GFW	55
Receiver Tweaker	K6UAW	56
Citizen Band Alignment Aid	WA5SWD	56
FET Chirper	K6QKL	57
UHF Signal Source	K1CLL	58
Crystal Controlled Signal Source with Infinite Attenuator for 144, 432 and 1296 MHz	K1CLL	59
Low Cost 220 MHz Signal Generator	K1CLL	60
UHF Signal Generator	K6MIO	62
Lab Type IF/RF Sweep Generator Using ICs	K4DHC	63
100 kHz Thin-Line Pulse Generator	W2DXH	70
Chapter VI: Crystal Calibrators		
All Band Band-Edge Marker	WA2HRZ	74
The Multical	K9VXL	74
100 kHz Marker Generator	W7CJB	75
All Band Frequency Marker	W1KNI	75
Poor Man's Universal Frequency Generator	W2EEY	76
Calibrate that Calibrator	W2KPE	78
A Simple Frequency Deviation Meter	K6BJ	78
Chapter VII: GDOs		
The Indicating Oscillator	KH6AF	80
The Little Gate Dipper	W5ETT	81
The Great Dipper	WAØAYP	83
The Great Dipper-Modification	WAØAYP	85
Etched Circuit UHF Dipmeter	W1JJL	86
UHF Grid Dipper	WA6BSO	87
Wide Range VHF-UHF Dipper	K1CLL	91
Extra Services from Your Grid Dip Oscillator	WA4UZM	94
GDO to Find C	G3OGR	94
GDO Coil Extension	WAØABI	94
Chapter VIII: Noise Generators		
Simple Noise Generator	K9ONT	96
A Crystal Diode Noise Generator	W5TEV	96
Temperature Limited Diode Noise Generator	Thomas	97
Calibrated Noise Generator for 432	W6GXN	98
Another Way to Measure Noise Figure	K5JKX	99
Chapter IX: Attenuators and Dummy Loads		
Low Power Attenuators for the Amateur Bands	WB6AIG/WA6RDZ	102
S-Unit Attenuator	WA5SWD	103
The Ever-Useful T-Pad	K5JKX	103
Combination Dummy Load/Attenuator Network	W2EEY	104
The Minican	W6JTT	106
The Tiny Terminator	K5JKX	106

Chapter I

What is Your SWR, OM?

SWR POWER METER FOR 80 THRU 10m BANDS

James Lee W6VAT

WITH the declining sunspots, usage of the lower frequency bands is definitely increasing. The resulting increased QRM is helpful to no one and only efficient equipment and operating procedures will result in a maximum number of QSO's. The SWR/PWR meter described here won't make you a better operator, but it can help you be sure that you are delivering the most rf to your antenna from your rig. Fig. 1 shows a front view of the meter.

The basic circuit is a directional coupler switched to sample either forward or reverse voltage and a voltmeter to read this voltage.

This type of coupler has an output proportional to length, power, and frequency. The longer it is, the more output it gives. Since it puts a small impedance "bump" in the line, the length of the coupler should be limited to not over 1/20 wavelength at the highest frequency, or it may begin to contribute noticeably to the SWR itself. For a given power, if the frequency of the rf flowing through the coupler is reduced, the maximum coupler output is reduced. This means that you can get full scale readings on 10 M with a lot less power than on 80 M. The meter described here gives half scale deflection on 40 M, at maximum sensitivity, with about 350 watts of forward power. If your rig is a KW this meter will fill the requirements for SWR/PWR measurements nicely. It can be left in the line at all times to monitor SWR or Power delivered to the antenna or other load. If desired, a Barker and Williamson type 551A coaxial switch can be used to insert the meter in the line for test purposes and then switch it out during operating periods.

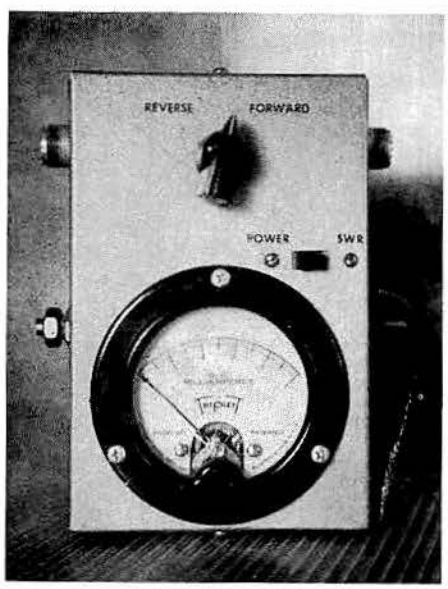

Construction

The unit is built in a gray hammertone LMB type 141 box. The dimensions of this box are 3" x 4" x 6". Fig. 2 shows the parts placement and should answer any questions concerning layout.

The coax directional coupler is made from a 14" length of RG-8/U. The outer covering is slit lengthwise with a knife and peeled off. Take care here not to cut into the woven braid. The woven braid is then bunched toward the center to loosen it. Next, a length of #22 enameled wire is passed through the braid at about 2¼" from one end and run under the braid next to the inner insulation. It is brought out at the other end, again 2¼" from the end of the shield braid. When this is done, smooth the braid back to its original position carefully to avoid scratching the enamel on the #22 wire. The #22 enameled wire should lay as straight as possible under the braid. It should have no slack nor should it twist around the inner insulation to any great degree. The ends of the shield braid are trimmed back far enough to be soldered to Amphenol 83-1H hoods. The inner insulation is trimmed off so as to expose about 3/16" of the inner conductor. The inner conductors are then soldered to Amphenol 83-1R female type chassis mount coax connectors. The coupler may now be set aside and the rest of the meter constructed.

Potentiometer R_1 is mounted on 1/16" x 1" x 4" piece of bakelite and positioned approximately in the center of the box to minimize capacity to ground. The metal rear cover is removed from the pot for the same reason. The pot ground lead is to the center of the coax and is wire in last. The diode D_1 should be protected from damage by heat when soldering it in the circuit. Long nose pliers gripping the leads near the body of the diode are satisfactory. The directional coupler is the last item soldered in place. As can be seen in the photos—the coax connectors are mounted from the inside of the box. When the #22 enameled leads are soldered to S_1 they should be the same length, and again, take care not to scratch the enamel or a short circuit may occur and you'll have to do it all over again.

Calibration

There are any number of ways to calibrate the SWR/PWR meter, but the way most hams will use is their own rig and a suitable dummy load. Though very limited in power, a 2 watt 50 ohm resistor such as made by Ohmite, IRC and others, mounted inside an Amphenol 83-1SP male coax plug makes a very good dummy load. Although not completely non-inductive, this dummy load is far superior to such real unknowns as light bulbs, electric iron heating elements, etc. This particular load is 50 ohms shunted by 6 mmfd over the range of 3-30 mc. It is a good dummy load—though a low power one.

With the back cover off, attach the dummy load to J_2, the load jack. Set R_1, the Sensitivity Control, to maximum and S_1 to FORWARD. Next apply power by hooking your rig (or

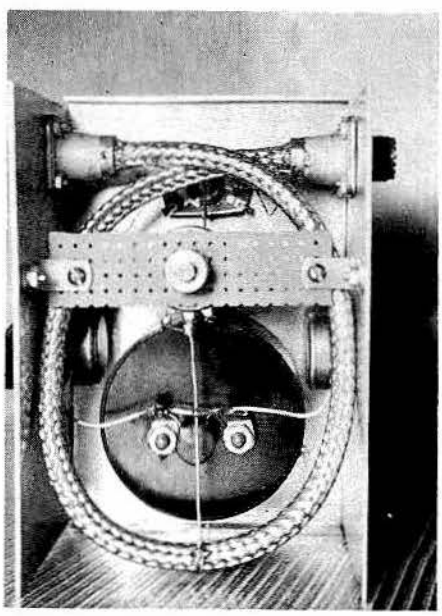

other rf source) to J_1, the transmitter jack. Make sure that the rf applied is 28-30 mc, or, the highest frequency you operate in the 3-30 mc region. This meter is sensitive to frequency. Stray capacities and other unbalances will have their greatest effect at the highest frequencies. In any event, calibrate the unit on the highest frequency your rig will tune in the 3-30 mc region. With power applied, set R_2 so the meter reading is at least half scale and switch S_1 to REVERSE. This will result in a lower meter reading. R_1 should then be adjusted for a minimum reading on the meter. Using the suggested load, you will not get a complete null, but the null should not be much more than 50 ua for half scale deflection in the FORWARD position on S_1. Don't put too much power into the dummy load since excessive dissipation can ruin it and change its characteristics greatly. If you have a higher power dummy load whose characteristics you know accurately, by all means use it, but remember a light bulb is not a good load. Once nulled, lock the nut on R_1 taking care not to disturb the setting. Replace the back cover and using the dummy load, recheck the null to make certain that it has not shifted.

Using The Meter

To make SWR measurements you need only insert it in the line and set S_1 to FORWARD and S_2 to SWR. Adjust the sensitivity control for at least a half scale reading. Then switch S_1 to REVERSE and read the value. SWR is then calculated by the following:

$$\text{SWR} = \frac{I_{fwd} + I_{rev}}{I_{fwd} - I_{rev}}$$

For example:

let $I_{fwd} = 500$ ua and $I_{rev} = 50$ ua, then

$$\text{SWR} = \frac{500 + 50}{500 - 50} = \frac{550}{450} = 1.22:1$$

The meter is useful for tune-up purposes where exact SWR is not needed. Just keep the FORWARD reading at a constant value and tune for minimum REVERSE readings. The exact SWR can be calculated when you have found the lowest REVERSE position.

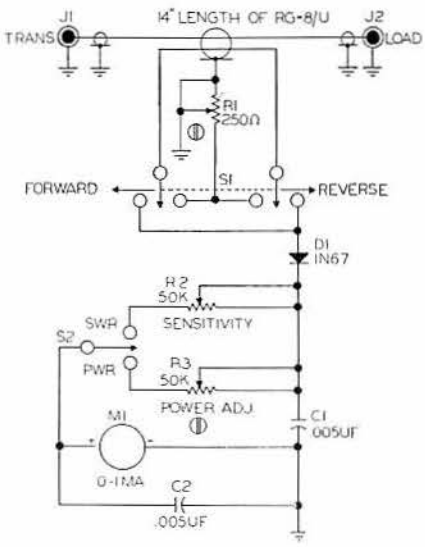

The POWER position may appear to be essentially the same as the SWR position and it is. When measuring power into a load of known fixed value you only need to know the voltage across (or the current through) the load. The POWER position on S_2 is used with S_1 set to FORWARD. R_3 is merely set to a scale reading that is convenient for all bands if only a relative reading is used. If a good 50 ohm high power dummy load is available, you may make accurate calibrations by using a VTVM plus high frequency detector probe and measuring the actual voltage across the load. Just put a T-connector on the load jack J_1. Put the dummy load on one arm of the "T" and read the voltage at the other arm. 200 volts across a pure resistive load of 50 ohms is equal to 800 watts of power. If your rig delivers a key down 800 watts to a load then you could set R_3 at 0.8 ma on the scale, etc. The scale will not be precisely linear, particularly at low powers, but if enough resistance is used at R_3 the effects should be minimum. Since the coupler voltage is frequency sensitive one setting of R_3 will not hold for all bands. If desired, R_3 could be replaced with a switch and a number of selected resistors (one for each band). This would keep the scale factor constant between bands. This could be done for R_2 as well, but complicates an otherwise simple device

Operation

Once calibrated, the meter is very simple to use. Just hook it in the line at some convenient point and apply power. With S_1 set to FORWARD and S_2 set to SWR, adjust R_2 for at least a half scale reading. Switch S_1 to REVERSE and you will then be able to continuously monitor your reverse power. For power measurements, set S_1 to FORWARD and S_2 to PWR. Apply power and the meter will be monitoring your forward power continuously. R_3 is a screw driver adjusted pot. It can be set, and locked at a point which allows operation on all the bands you operate. The scale reading on each band will be different, but once set, these readings can be jotted down in your log book and any change quickly noted. This meter is also an excellent device for the antenna "tinkerer," or if you have coax coupling between stages in your rig it can be used to provide proper power transfer. Best of all, it is not expensive nor difficult to construct. Try one and you won't be without one again.

AN ETCHED CIRCUIT SWR BRIDGE

Ed Lawrence WA5SWD

Several of these boards have been etched and units assembled, and all have been satis-

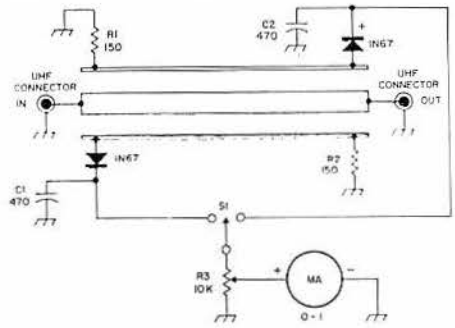

Schematic diagram of SWR bridge.

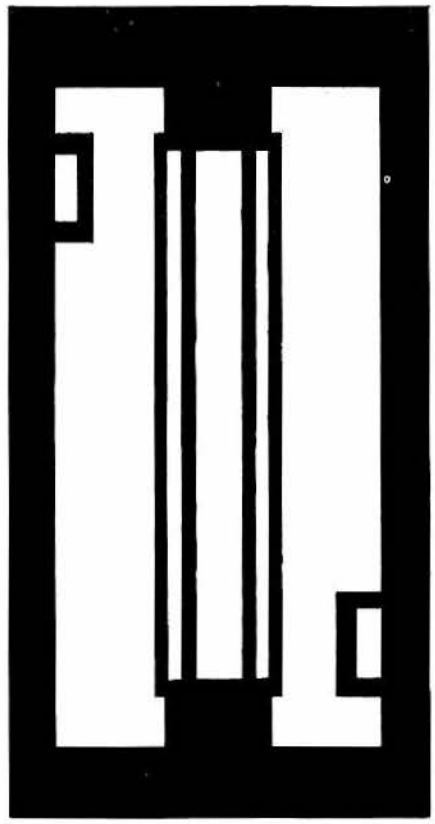

factory. I have used mine, with a 200 microamp meter, from a kw on the low bands up to a "Twoer," with no problems with sensitivity.

Since Bud Miniboxes are commonly available, I scaled this board to fit into the Bud

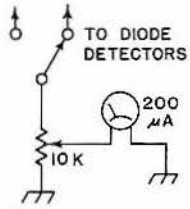

Fig. 1. Metering circuit for the etched circuit SWR bridge.

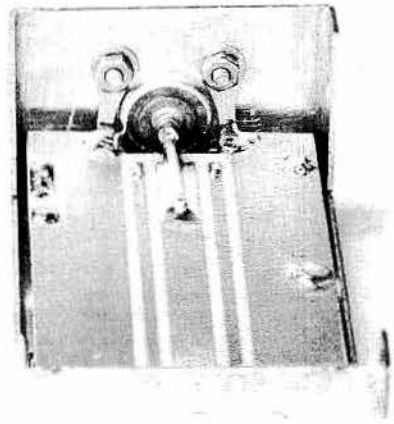

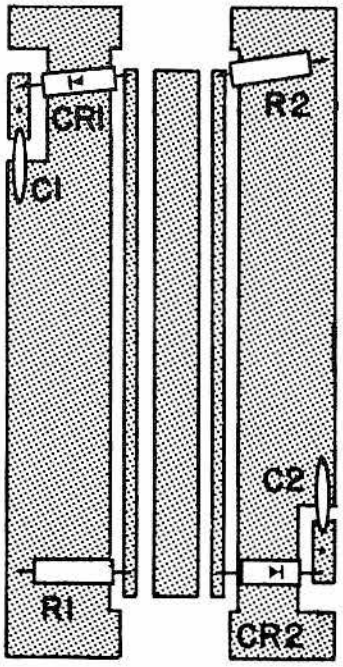

Fig. 2. Layout for the printed circuit board.

Minibox CU 2102A or CU 3002A. If you want to include the metering in the same package, the CU 2103A or CU 3003A should be used to give more room.

If you use the CU 2102A, center the coax connectors on the ends. If the CU 2103A, mount the connectors 8 inches from the open end. I used solder lugs bent at right angles to mount the P. C. Board to the chassis. The photograph shows the mounting much better than 10,000 words.

The meter sensitivity control circuit shown has a wider control range than the one shown in the *ARRL Handbook*, since the pot shunts the meter at low settings. This action could be accentuated by putting a fixed resistance in series with the meter movement, at the expense of sensitivity.

Although the virtues of operating transmission lines with low standing wave ratios (SWR) have been discussed many times in the past, evidently the economics of maintaining low SWR's are not readily apparent, particularly if the frequency of operation is low and the transmission line short. This has been reflected in various pseudo-technical QSO's where many have been led to the utter disregard for standing wave ratios. Most members of the amateur fraternity exist on limited budgets at best and when a significant portion of that precious transmitted power is eaten up by transmission line losses and misinterpreted standing wave ratios for naught, something should be done.

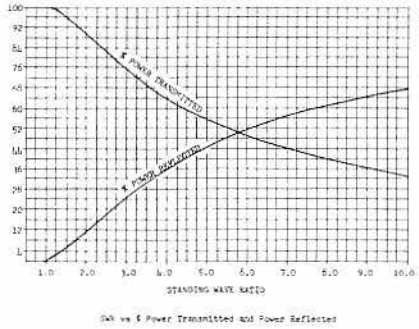

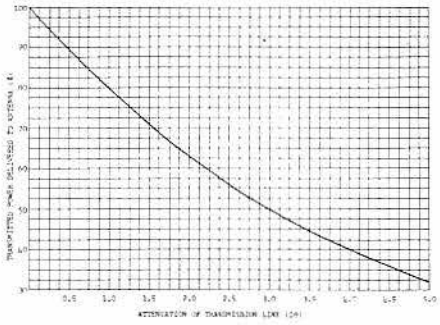

Attenuation vs Power transmitted.

A look at the graph in Fig. 1 will show you the percentage of power reflected for various standing wave ratios. For instance, if you are presently tolerating an SWR of about 5.8:1 (not uncommon in many ham shacks), 50% of the power which reaches the antenna is actually reflected back down the transmission line, heating up the final tank and causing TVI. Nor is only the transmitted signal effected, a high SWR will similarly degrade the received signal. This is particularly important in the reception of the extremely low level signals often encountered in DX and VHF operating. Stereophonic buffs should take heed too. A recent report by the IEEE (Institute of Electronic and Electrical Engineers) Professional Group on Broadcasting noted that a high SWR on receiver antenna inputs causes a reduction of stereo quality.

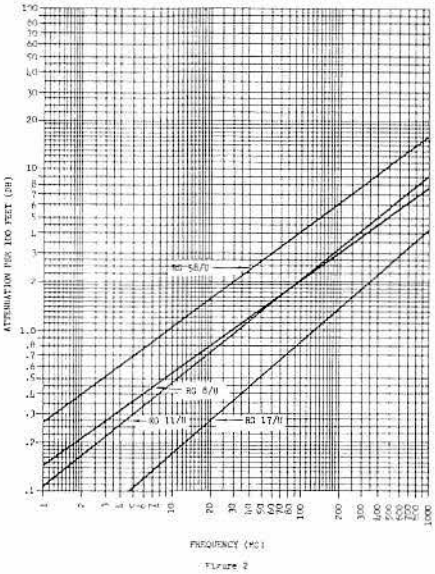

Attenuation vs frequency.

Many of the amateur stations on the air today make use of RG8A/U coaxial cable. Its excellence is proven out by its extensive use by the military, but a look at the loss graph (Fig. 2) for this cable indicates that it is not completely lossless! Even at 4 mc it has approximately 0.3 db loss per 100 feet, and on six meters there is a loss of 1.4 db for the same length. A look at Fig. 3 indicates that on 75 meters only 94% of the transmitted power is delivered to the antenna if 100 feet of RG8A/U is in use. At 50 mc the loss has sky rocketed to 26% for the same length of line. However, there is one big hooker for these conditions to exist: the SWR must be 1:1. For any other value of SWR there will be further line losses as shown in Fig. 4 because standing waves have the property of multiplying attenuation. This graph indicates that if a transmission line is operating at an SWR of 3.7:1, the line loss will be multiplied by a factor of two. For the previously mentioned situation on 50 mc, an additional 24% loss could be expected with an RG8A/U line operating at an SWR of 3.7:1.

It should be obvious by now that the use of an SWR bridge in the line at all times is very advantageous in the maintenance of a low SWR at the operating frequency. However, contrary to popular belief, the SWR bridge does not tell all. Since there is loss or attenuation in any length of transmission

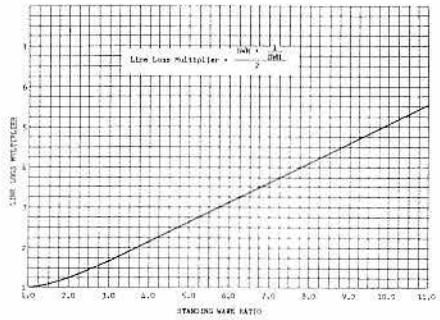

Line loss multiplier vs SWR.

line, the reflected wave will be attenuated in the same matter as the transmitted or incident signal. Because the standing wave ratio is the ratio of the incident wave to the reflected wave, attenuation of the reflected wave will give erroneous SWR measurements when the SWR bridge is conveniently located at the transmitter. In this location the bridge will see the full power of the transmitter, but only a portion of the reflected signal. In some cases where the length of the transmission line is excessively long, the reflected wave will be attenuated to such a degree that the SWR will appear to be very close to 1:1, while in reality it will be a good deal higher. This fact is graphically represented in Fig. 5.

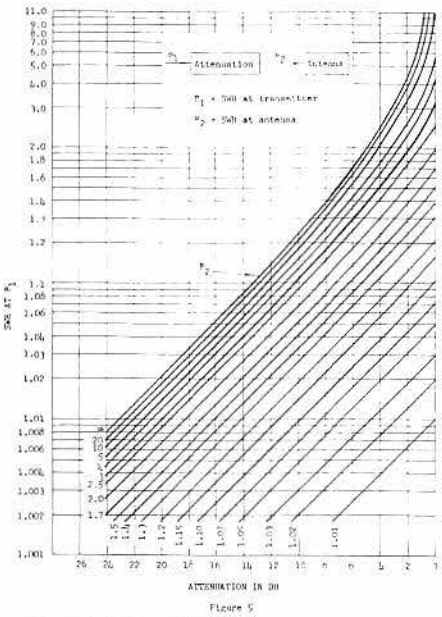

SWR vs attenuation.

For example, 143 feet of RG8A/U at 50 mc would result in approximately 2 db attenuation. If an SWR bridge inserted in the line at the transmitter indicated an SWR of 2:1, this graph shows that an SWR of 3:1 exists at the antenna. A look at Figs. 3 and 4 will indicate that a 3.3 db loss (2 db times 1.65 multiplier) occurs, amounting to 47% loss of transmitted power in transmission line losses. Of the remaining 53% power arriving at the antenna, 24% will be reflected back down the line. A little simple arithmetic will show that of the total power transmitted, only 30% will be radiated! This simple mathematical fact should make the merits of low standing wave ratios immediately obvious if we wish to get the most out of our equipment. By keeping transmission lines short and by insuring that the SWR is as close to 1:1 as practicable, line losses will be minimized, maximum power will be delivered to the antenna and more successful and reliable radio communications will result.

CHECKING YOUR SWR INDICATOR

Carl Drumeller W5EHC

Many articles have been published on how to build and even some on how to calibrate a VSWR indicator. The calibration instructions usually tell you to terminate the indicator's output with a purely-resistive 52-ohm load and then to adjust the device so that a maximum forward and minimum reflected meter deflections are obtained. Sometimes they'll go further and tell you to reverse the device and recheck for opposite indications.

This is all very well. It assures you that the VSWR indicator will be telling you the truth when it says "All's well!" while looking into an utterly-flat transmission line. It doesn't tell you a thing about what the indicator will have to say when it gets tangled up with a line that has a wildly-mismatched termination.

As most transmission lines, in actual practice, are terminated in loads which are not only mismatched in the matter of resistance but also in the inclusion of a considerable magnitude of reactance, it would be well to explore the indications you'll get under realistic circumstances. After all, these are the situations under which you'd want to take corrective steps. Accurate indications of undesired conditions, therefore, are imperative if intelligent remedial actions are to be taken.

Fortunately, some quite enlightening tests are made easily. All you'll need are some lengths of coax transmission line (the same as you're using in your antenna feedline) equipped with male fittings at each end and a few female-to-female junctions. Select the frequency at which you want to make the test. Usually it's wise to make the test on the highest frequency band you plan to use. With this in mind, make up three one-eighth wavelength sections of transmission line and mount the male fittings on the ends of each section.

If your antenna presents an unmatched load to your transmission line, you may elect to skip over this paragraph and go directly to the next one. If it does not (Ah, you dreamer!), you'll need another piece of transmission line. It should be fairly long, perhaps a half wavelength. Put a male fitting at one end and attach a termination, which is deliberately made to be a sad mismatch, at the other end. Don't just mismatch it by using too high or too low a value of resistance. Throw in some reactance, too! You might use a resistor with an inductor in series. Or, you might try a capacitor in series with the resistor. Or, you could use either an inductor or a capacitor in parallel with a resistor. In fact, it would be best to experiment with all four!

Now that you have a transmission line available that you know is mismatched, you're ready to start the test. The first check (the "control", you might call it) is made with everything normal. That is, you'll have the transmitter feeding directly into the VSWR indicator's transfer box and the transmission line (either the one to your antenna or the substitute line to the mismatched load) attached to the output of the transfer box. Note the VSWR indicated. Also note your transmitter; insure that it's tuned to resonance and is adjusted to a power you can maintain throughout the first portion of the tests. Jot down these indications. Now, insert an eighth-wave section between the transfer box and the transmission line and without making *any* other changes or adjustments, note the VSWR. Repeat these steps, adding an additional eighth-wave section each time until you've used all three. Did you detect any change in VSWR? If there was even the slightest change, your VSWR indicator is not trustworthy!

Now for two more checks. Try varying the transmitter power output. Does this have any effect upon the indicated VSWR? If it does, your VSWR indicator is not trustworthy! Then try varying the transmitter output tuning, deliberately throwing the stage out of resonance. Does this have any effect upon the indicated VSWR? If it does, your VSWR indicator is not trustworthy!

Few VSWR indicators under the $150 class will pass these basic tests. If yours doesn't, don't be perturbed. You have an instrument that still has a useful field of application. You can use it as a comparative indicator. For instance, if you're adjusting the gamma match at an antenna, it'll serve quite well; in this application, you're holding all of the significant variables constant, with the exception of one (the gamma match), the effect of which you want to observe. Your tests will have shown you the parameters you'll have to hold constant for any other than simple comparisons. In all probability, you will have found that measurements taken with different (electrical) lengths of transmission line are invalid. Also, it's probable that, owing to the non-congruity of diode curves, measurements will have to be taken at precisely the same level of rf power if accurate comparisons are to be made.

If you'll keep its very real limitations in mind, you'll find that even an inexpensive VSWR indicator has excellent potentials for useful measurements. But don't ask it to perform at levels that even its expensive siblings can't attain!

HOME BREW BRIDGE CALIBRATION

Clifford Honess W4OAB

This table is useful for all homebrew SWR bridges and gives the % reflected power and the % full scale reading in the reflected mode, when the meter is set at full scale in the forward mode.

SWR	% Pwr. Refl.	Refl. Rdg. in % of Full Scale
1.1	.2%	4.8%
1.2	.8	9.1
1.3	1.7	13.1
1.4	2.8	16.7
1.5	4.0	20.0
1.6	5.3	23.1
1.7	6.7	25.9
1.8	8.2	28.6
1.9	9.7	31.1
2.0	11.0	33.3
2.1	12.6	35.5
2.2	14.0	37.5
2.3	15.5	39.4
2.4	17.0	41.2
2.5	18.4	42.9
2.6	19.7	44.4
2.7	21.1	45.9
2.8	22.5	47.4
2.9	23.8	48.7
3.0	25.0	50.0
4.0	36.0	60.0
5.7	49.0	70.0
9.0	64.0	80.0
19.0	81.0	90.0

MINI SWR BRIDGE

John Schultz W2EEY

Most SWR meters today are of the coupled variety which can be left in a transmission line while a transmitter is operated at full power. However, for a number of prolonged

tune-up operations, involving antenna matching systems, for instance, such couplers have several disadvantages.

On 160 and 80 meters, especially, a reasonable amount of power is necessary to produce full deflection—up to 100 watts with some configurations. With a very low-powered transmitter, making adjustments at this power level certainly may damage the output tube or tank-circuit components with a high SWR. This will not be the case with higher-powered circuits but, in any case, a signal strong enough to cause needless QRM will be radiated.

Another disadvantage of the coupled SWR meter, if it is home constructed, is that it must be carefully calibrated since its response is very dependent upon the mechanical configuration of the coupling circuit. This is unlike the bridge-type SWR meter (described in this article) where a standard SWR curve may be used with a good degree of accuracy.

The above factors, plus the fact that I didn't need an SWR meter continuously in the transmission line, led me to construct the little resistance type SWR bridge shown in the photograph. It is just about as simple and inexpensive a unit as can possible be built.

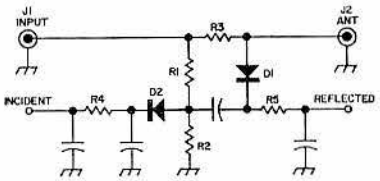

Fig. 1. SWR Bridge Circuit. See text for values of R_1, R_2 and R_3. R_4 and R_5 may be any matched value from 10 k to 47 k. D_1 and D_2 are IN34, IN54, or similar types. All capacitors are disc ceramic, .005 MF, 100V.

Construction

Two SO-239 coax chassis connectors are joined back to back by two 1¼ inch threaded hex spacers. The two four-lug terminal strips are mounted at the ends of one of the spacers. The wiring of diodes D_1 and D_2 as shown in **Fig. 1**, should be such that the incidental voltage-measuring point appears on the terminal strip mounted on the "input" SO-239 connector, in order to avoid confusion in measurement. Short leads, of course, should be used but hardly anything else is possible with only 1¼ inches between connectors.

Some attention must be paid to the components used if accurate readings are to be obtained. Resistor R_3 must closely match the impedance of the coaxial line used (52 or 75 ohms). For 52-ohm lines, a suitable resistor (within ½ to 1 ohm) can usually be found from a group of standard 10% tolerance, 47-ohm resistors; and for 75-ohm lines, from a group of 68-ohm resistors. Resistors R_1 and R_2 can have any value from about 30 to 100 ohms, but it is important that they are as closely matched as possible. One trick which may be used to affect very small resistance changes is to file "V" notches in

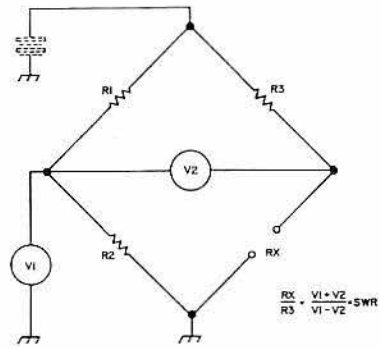

Fig. 2. Simplified diagram of SWR Bridge. V_1 represents incident voltage and V_2 the reflected voltage.

a composition resistor to raise its resistance. Two-watt units are suggested for these resistors because of their longer-term stability and endurance in case too much input power is applied.

Resistors R_4 and R_5 serve as linearizing resistors so that almost any meter with a basic movement of 1 mA or less can be used as an indicator. The lower dc voltage ranges on almost any VOM will work fine. These resistors as well as diodes D_1 and D_2 should be checked to see that they match reasonably well (the resistors within a few precent and the diodes within a few percent for their forward and reverse resistance readings).

Calibration

There are really no adjustments that can be made to the bridge, and calibration really consists of checking the balance. **Fig. 2** is the dc circuit of the bridge (a simple Wheatstone bridge with resistance arms). If the balance of the bridge is good, V_2 should be the same when points R_X are opened or shorted so long as V_1 is held constant. This can be checked on the actual bridge by applying an input at the highest frequency of interest (6 or 10 meters), shorting J_2, and checking that incident and reflecting voltages are the same. The same is done with J_2 open. If the voltages are not equal, the difference can be taken as an indication of how accurate the SWR readings will be. If the difference is too great, R_1 or R_2 will have to be changed for a better match or the mounting of the components changed to reduce stray couplings.

A further check is to connect a known 52 or 75 ohm resistor across J_2. The reflected voltage should, of course, read zero.

Operation

As noted in **Fig. 2** the actual SWR is a simple function of the incident and reflected voltage readings. **Fig. 3** presents this function in graphical form. The incident voltage is simply adjusted for some convenient value,

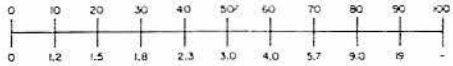

Fig. 3. SWR values for selected reflected voltage readings taken as % of incident voltage reading.

say 10 volts reading on the dc scale of a VOM (possible with most SSB transmitters by adjusting the carrier balance control with no audio input). The reflected voltage is then read as a percentage of the incident voltage and the SWR found from **Fig. 3**. The input power required to operate the bridge is essentially independent of frequency, being about 1-2 watts maximum.

It should be remembered that such a bridge can measure only the resistive portion of an impedance. When using it to adjust a circuit, if a SWR minimum null but not a zero reading for reflected voltage can be obtained, it indicates some reactive component must still be present.

VSWR SUPREME

E. L. Klein W4BRS

One of the most valuable tools used by the amateur is the Voltage Standing Wave Ratio Meter. It ranks with the grid-dipper and the plate current meter as an indispensable instrument around the ham shack. We know that the VSWR meter is very handy in indicating relative power output when tuning a transmitter, particularly when the plate dip is not too discernable. It is most useful, however, in proving that the last available watt has reached the antenna where it can do some good.

Why a good match?

Although a good copper connection is made all the way to the antenna, an efficient transfer of power may not be achieved because of a mismatch between the characteristic impedances of the various portions of the transmission system. The interesting thing is that the "match" is different for each frequency because the antenna is essentially a single frequency device.

We can appreciate the importance of a proper match between the transmitter and the antenna when we are told, for example, that a VSWR of 3 to 1 causes a power loss of nearly 3 dB for 200 feet of RG-8/U coaxial line at 30 MHz. The table below provides

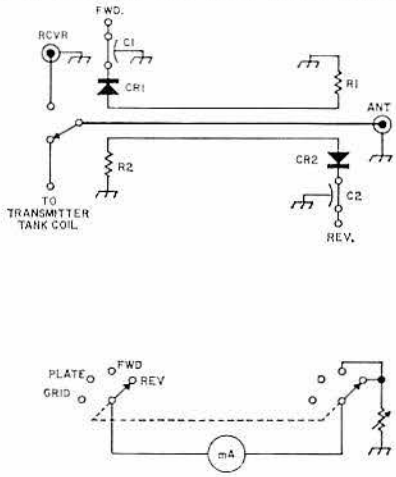

Fig. 1 Schematic of basic VSWR Meter and associated switching circuits.

Table I

VSWR	Power Loss (dB)	Transmitter Power Needed to Provide 1 kW at the Antenna
1.5:1	2.1	1600 watts
2:1	2.3	1700
3:1	2.8	1900
4:1	3.3	2000
5:1	3.7	2300
7:1	4.5	2800
10:1	5.3	3400

Additional power needed to compensate for a poor impedance match between transmitter and antenna. Figures are based upon 200 feet of RG-8/U cable at 30 MHz.

the real reason why we should be concerned with the impedance match. Notice how much the transmitter power would have to be increased to make up for a poor match between the transmitter and the antenna. Incidently, this match involves each and every part of the total transmission system including connectors, antenna relay, low-pass filter, balun, etc., as well as the transmission line itself and that particularly critical point at which it is connected to the antenna.

A new approach

Most VSWR meters today are an external accessory to the transmitter. But this practice is not good. Coaxial connectors are expensive and cause unwarranted mismatch and power loss. Meter faces usually end up behind the transmitter or in some other inaccessible location. When switching from forward to reverse, the little accessory box scoots across the table leaving scratches and a distraught operator.

The transmitter plate current meter is no longer a plug-in accessory. Why should the VSWR meter be? (Believe it or not, plate meters used to be plugged in with phone jacks.) Using the simple design described here, the home constructor as well as the commercial manufacturer can now build the VSWR meter into the transmitter in the smallest possible space and at only pennies of cost.

The circuit

Nothing is new about the circuit. It has been adequately described in the past in magazine articles and handbooks. However, for the convenience of the reader, the VSWR meter circuit is reproduced in **Fig. 1** for handy reference. Terminating resistors R1 and R2 should be 33 ohms for a 50-ohm transmission line when the physical configuration, as shown here, is used. One-half watt or smaller size resistors may be used. Diodes CR1 and CR2 are any matched pair of silicon diodes or germanium. The types which are enclosed in glass cases are the easiest to use because of their small size. The ohmmeter can be used to select and match the diodes of the ten-cent surplus variety found in advertisements in ham magazines such as *73*. Bypass capacitors C1 and C2 are 1500 pF Centralab type FT-1500.

Physical components

Parts used in this VSWR meter are illustrated in **Fig. 2**. The brass tubing is about 5 to 7 inches long and of 5/16 inch outside diameter. This size tubing fits snugly around the inner polyethelyne insulation from RG-8/U coaxial cable. About 10 inches of coax is stripped of its outer jacket and braid. The inner insulation is trimmed to extend 1/8 inch past each end of the brass tubing. Two large solder lugs are selected to fit over the 1/4 inch threaded shank of the bypass capacitors. These lugs should be of the long variety so they may be shaped and soldered to the brass tubing as shown in **Fig. 3**. Two 8-inch pieces of #22 enameled copper wire are also required.

Assembly

After soldering the lugs to the brass tubing about 5/8 inch in from each end, the bypass capacitors are assembled to the lugs. Place several fiber washers under the ring nuts prior to tightening them down on the threaded shank of the capacitors. This permits careful soldering of the capacitors to the lugs without danger of also soldering the nuts in place.

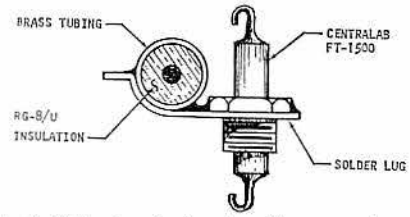

Fig. 3 Solder lug is shaped to fit one-quarter way around the brass tubing.

Two small grooves are now cut 180 degrees apart for the total length of the polyethelyne insulation. A small wood carving gouge or carefully manipulated razor blade can be used for this purpose. These grooves provide a space for the enameled copper wire which is held in place when assembling as shown in **Fig. 4**. Prior to this operation, the wire should be stretched and work-hardened by jerking it between two pairs of pliers. Be sure that the plane described by the two wires lies at right angles to the chassis on which the unit is mounted. This permits all resistors and diodes to have equal lead lengths.

When the inner assembly has been tugged and shoved into place within the brass tubing, the #22 wire ends are trimmed, stripped and soldered to their respective resistors and diodes. Much care should be exercised at this point to prevent melting the insulation or damaging the near zero-length component leads.

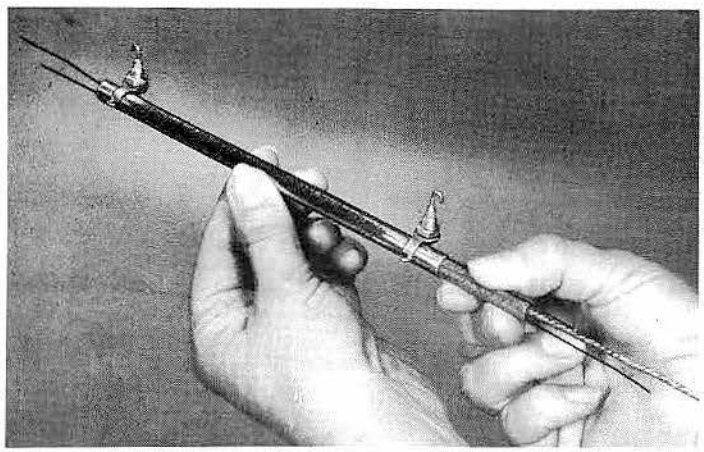

Fig. 4 Assembling the inner components into the brass tubing.

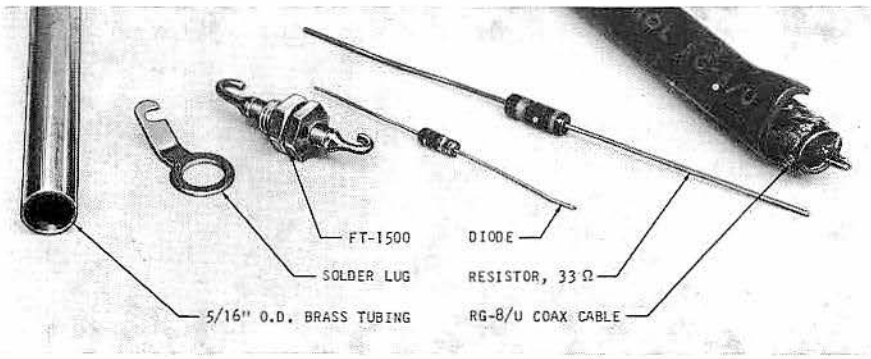

Fig. 2 Component parts used in making the VSWR sensing unit.

Application

A completed sensing unit for the VSWR meter is shown mounted on a typical chassis in **Fig. 5**. It will be noted that no conventional box or housing is used because the total outside of the unit is at ground rf and dc potential, save for the component connections at each end. By mounting the bypass capacitor in the chassis, the low-voltage rectified current fed to the meter switch is

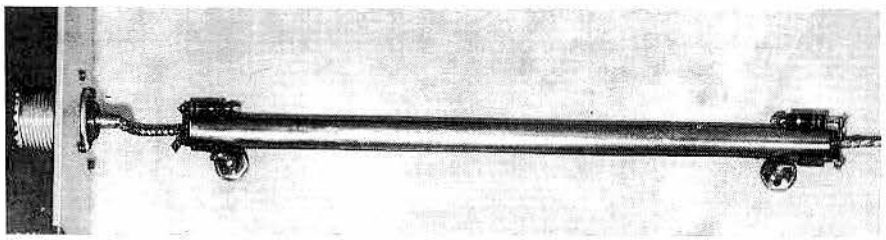

Fig. 5 Finished VSWR sensing unit mounted on a typical chassis.

isolated from high-power rf on the other side of the chassis. It can readily be seen that the finished sensing unit occupies no more space than would be used by a coaxial lead running from an antenna relay to the antenna connector on the chassis.

A further refinement is shown in **Fig. 6.** Complete isolation of the high-power rf is provided by the coaxial hood. Impedance discontinuity is also minimized by use of the hood, which was designed for this purpose and is readily available.

Length of sensor

The dimensions given for the length of the sensor element, including its outer tubing and inner conductor, are not critical. They are, however, directly related to the power of the transmitter with which the VSWR meter is used. For example, with a one kilowatt high-frequency CW transmitter and a 0-1 milliammeter as the indicating meter, the length of the sensor can be as short as 2-3 inches. A sensor which is constructed approximately 7 inches long, as illustrated in this article, will work fine with the same meter on a 25-200 watt high frequency transmitter. If meters with higher current ratings are used, a longer sensor is required, and, conversely, a more sensitive meter would provide adequate full-scale deflection with a shorter sensor element. Obviously, it is impracticable to vary the length of the sensor element in order to vary the sensitivity of the VSWR meter as a whole. It is for this reason that the adjusting resistor is provided in series with the meter. For VHF use, the sensor can be shorter.

All that has been said above can be depicted graphically. **Fig. 7** shows the generalized relationship between the sensor length and transmitter power with which it is used. The two curves represent different meter sensitivities. A 0-1 milliammeter offers a good compromise. With a 5-7 inch long sensor and the proper series resistor, all powers normally encountered in amateur work can be handled. However, if space requirements so dictate, a shorter sensor unit can be employed with some small sacrifice in accuracy.

Terminating resistor

Small variations in mechanical construction and lead dress will have an effect on the value of the terminating resistors, R_1 and R_2. Also, a carbon resistor does not display the same reactance at high frequencies as its measured resistance at dc. The value of the 33-ohm resistor was therefore determined empirically.

To verify the proper value of the terminating resistors, the test set-up shown in **Fig. 8** is used. A radio-frequency source of approximately 10 to 20 watts is required. A transmitter exciter stage operating on the 10-meter band is preferred for this purpose. Ten meters, or even fifteen meters, will provide better accuracy than one of the lower frequency bands. A dummy load is also required. This load must be capable of dissipating the power of the radio-frequency source used in making the test. Three or four 2-watt carbon resistors of the proper value in parallel to provide 52 ohms will suffice if the power is not left on continuously.

In making the test, the selector switch is first placed in the "forward" position. With power applied, immediately adjust the sensitivity control so that the meter reads full scale. Upon switching to the "reverse" position, the meter should read near zero and be at or below the 1:1 calibration point on the meter scale. Several resistors may be substituted until the proper value is found. The important thing to remember is that both of the resistors should be simultaneously substituted and that they must be as near identical as possible as measured on a reasonably good ohmeter. Lead lengths should also be as short as possible and of identical length.

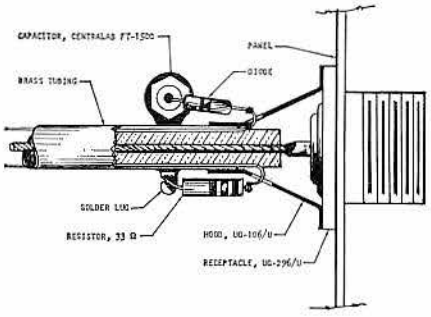

Fig. 6 Recommended chassis connection for output of VSWR meter sensing unit.

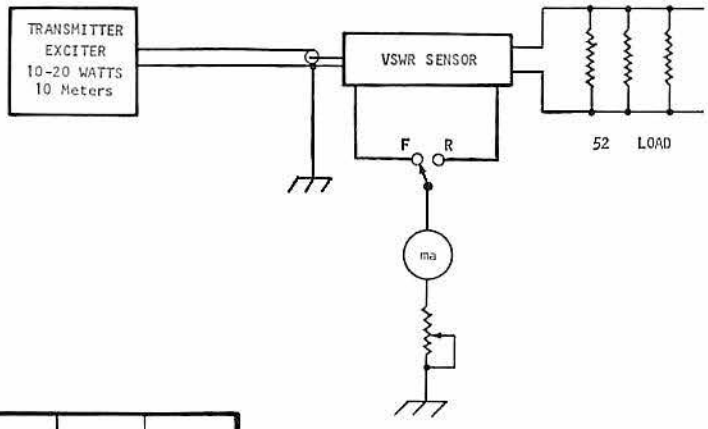

Fig. 8 Test set-up for verifying the proper value of the terminating resistors which are a part of the sensor unit. The value of the dummy load should match the characteristic impedance of the sensor unit and have a total wattage rating nearly equal to the source power.

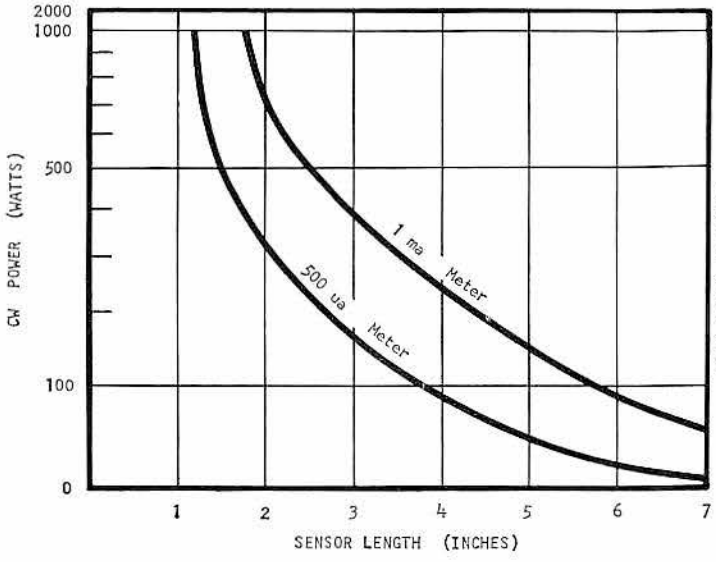

Fig. 7 The approximate relationship between sensor length and transmitter power is shown for two commonly used meter movements. Other meter values may be used as discussed in the text.

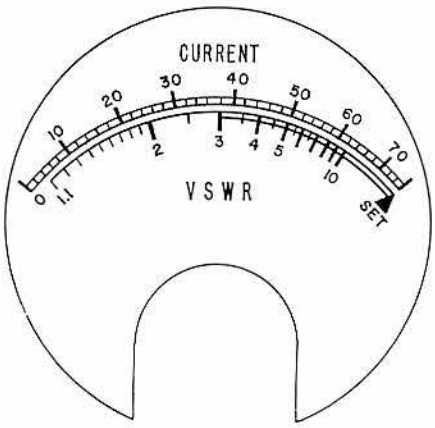

Fig. 9 Full-size photomaster of the VSWR meter dial. A multi-purpose meter was used in the author's transmitter so that the grid and plate currents could also be read on the upper scale.

The dial scale

Using the standard formula for calculating VSWR, it is possible to calibrate the meter face as follows:

$$\text{VSWR} = \frac{\text{forward} + \text{reverse}}{\text{forward} - \text{reverse}}$$

Fig. 9 is a full-scale illustration of a meter face used with the *VSWR Supreme*. This scale fits the Triplett Model 327, as well as a number of other meters of the same size category. A word of caution—don't assume that the scale calibration, or linearity will be the same for all makes of meters. The individual meter movement selected should be checked by using the above formula and marking off radials representing 4-5 different VSWR values. With the scale from your meter at the center of an oversized radial(s) drawing, it is possible to verify the angular placement of each VSWR calibration point.

The *VSWR Supreme* is truly a novel approach to an old standby. Using the construction methods outlined in this article, it is possible to fabricate the sensor unit so that it occupies the smallest possible space. This sensor can now be built into a transmitter and take up no more room than the coaxial lead which it replaces.

A SIMPLE VHF SWR METER

John Schultz W2EEY/K3EZ

I recently wanted to do some work on a 2 meter antenna and since no other instrument was handy, started to use an SWR meter manufactured for use on the high frequency bands. After some erratic results, it was decided to check the SWR meter accuracy on 2 meters with some carbon resistors to simulate different SWR's. The results readily confirmed that the SWR meter was useless at VHF unless one didn't care whether a SWR was really 1:2 or 1:5. Rather than purchase another SWR meter, it was decided to construct one that would render reasonable results, within 10% accuracy or so, on the VHF bands, particularly 144 and 220 MHz.

There is nothing basically new in the circuitry of the SWR meter to be described. What is different about it is that it utilizes a particularly simple and inexpensive method of construction that yields reasonable results. It can be constructed as a completely self-contained SWR meter or only the pickup element can be constructed and used with an external meter. The circuitry as shown here for the meter utilizes two meter movements so one can read forward and reflected power simultaneously and avoid the annoyance of having a forward-reflected switch arrangement for a single meter.

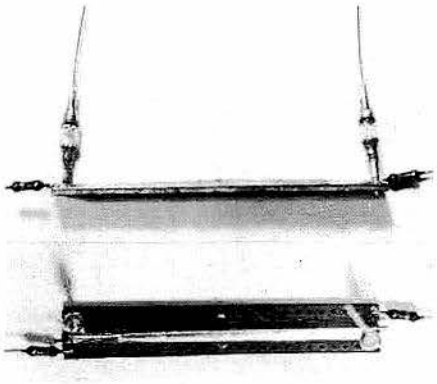

The heart of the SWR meter is a carefully constructed pickup element. Details of construction are discussed in the text but the photo shows how closely the diodes and terminating resistors must be soldered to the pickup element.

Pickup Element

The "heart" of any SWR meter of the reflectometer type is the pickup element. Many elaborate forms for such elements have been devised which involve complicated mechanical construction. Such complicated construction does become necessary if very accurate results are desired and if the meter is to maintain linearity over a very wide frequency range. However, over a smaller frequency range and with some minor sacrifice in accuracy, the construction of a pickup element can be greatly simplified. Basically, the pickup element should not cause any discontinuity in the transmission line section in which it is inserted but yet be long enough so enough voltage can be picked up in both the forward and reflected directions to make the meter usable with even low power transmitters.

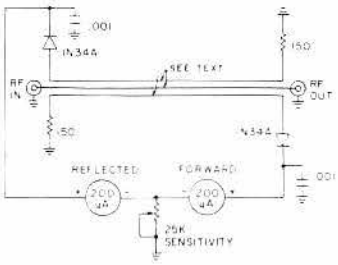

Fig. 1. SWR meter circuit. Two identical meters should be used (current range and internal resistance).

The pickup element I devised is shown in the photo. It is a 2-7/8" long piece of alternate grid pre-punched perf-board stock. The board is about 7/16" wide and within this width contained 4 separate copper strips spaced about 1/16" or less apart. The center two strips are soldered together to act as the inner conductor continuation of a coaxial line section. To solder the two inner strips together tack solder a bare piece of hookup wire between the two strips and then cover the entire two strips with solder.

Without the use of pickup wire, it will be nearly impossible to develop a smooth solder flow between the strip. Each outer strip acts as a pickup element for the SWR meter circuit shown in Fig. 1. The terminating resistor and diode are soldered to each end of the outer strip as shown in the photo and with minimum excess lead length to the strip. The use of a heat sink on the diode is necessary to prevent damage during soldering.

Mounting The Pickup Element

The pickup element made from the board stock is mounted between two approximately spaced SO-239 chassis connectors. The center strip of the board is soldered at each end to the center post of the SO-239 connector. The terminating resistor at each end is grounded as directly as possible to a ground lug held in place by one screw of the SO-239 mounting hardware. These details are shown in Fig. 2. It is important that the terminating resistor be grounded in this manner with minimum lead length. The enclosure in which the pickup element is contained should just be wide enough to accommodate the SO 239 connectors so that when the enclosure is secured together, the pickup element is boxed in by a metal surface on each side except directly above it. Many chassis or enclosure types are suitable for this purpose and the overall size of the enclosure will depend, of course, on the meter used and sensitivity control placement. These details are not covered here because they can be made as desired. They will not affect the basic accuracy of the meter as long as the pickup element is properly mounted and enclosed. The bypassing of the pickup rectifier diodes must also be done with as short leads as possible on the bypass capacitor. As shown in Fig. 2, a two lug terminal strip (one lug grounded)

mounted on the side wall of the enclosure immediately at the cathode end of the diode will perform this task very well. The length of the IN34A diodes is such that the bypass capacitor cannot be connected to the same ground lug used for the terminating resistor. The leads on the capacitor would be too long and it will be ineffective.

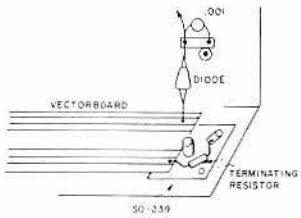

Fig. 2. Center strip of vector board is soldered to center post of SO-239. Other components are mounted at each end of board as shown (only one end shown here).

Operation and Results

The dual meter circuit of Fig. 1 reads forward and reflected power simultaneously. The sensitivity potentiometer is set to read full scale on the forward meter and the SWR read directly from the reflected meter. The latter meter can be calibrated for various SWR's by the use of small carbon resistors (100Ω to simulate a 1:2 SWR in a 50Ω line, etc.). Usually, it is only necessary to calibrate the reflected meter for SWR's of 1.5, 2 and 3 at the frequency of interest. Calibrated in this manner, the accuracy of measurement will be roughly 10% and is certainly good enough for most general antenna work. A particularly nice meter display can be made if one can find a two meter movement in one enclosure. I purchased a surplus stereo VU meter which had dual 200 μA movements and used it in the SWR meter.

The sensitivity of the SWR meter is such that transceivers of the 1-2 watt output class can easily be used with it on the VHF bands. The basic meter, of course, can also be used on the lower frequency bands as well and it will retain good accuracy. The only problem on the lower frequency bands is that the pickup strips are so short that more transmitter power has to be used to activate the meter than is usually convenient to use during antenna experiments. No exact tests were made but probably 70–100 watts would be needed to use the meter on as low a band as 80 meters. The meter was used and checked, however, on 40 meters. The accuracy of the meter remained very good and full scale deflection of the forward level meter required a power level of 60 watts. Being an in-line type meter, it can be left permanently in line when used on any band with a minimum of loss.

DIRECTIONAL COUPLER AND VSWR BRIDGE FOR VHF AND UHF

Bob Kolb WA6SXC

The aerospace industry has fostered the development of many new components and materials. Hams, being the kind of people they are, are quick to see practical applications for these materials that never occur to design engineers. I have often heard the criticism that it is impractical to publish articles or design ham gear with these new or expensive materials, because most OM's don't have access to them. Yet I've often been dismayed when I learn of an application for a piece of surplus equipment after it is no longer available. For this reason I feel that we should publish any application that is practical regardless of how immediately it can be used. Sooner or later, the material will show up on the surplus market and then we'll know what use can be made of it.

Reliable test equipment for the VHF-UHF bands is difficult to come by on a low budget. The literature is full of "relative" measuring devices but few pieces of homebrew gear are engineered for repeatable performance. Several directional couplers have been built according to the description in this article and each has measured to within ±.5 dB of the designed value. This is due in part to the mechanical rigidity and close tolerance of RG-141 "coaxitube." No special tools are required outside of a cheap pair of vernier calipers. The tools used to make the original coupler were an Xacto knife, file, soldering gun, vernier calipers and a vise. Don't let the calipers scare you. If you're not after a closely calibrated device they may be omitted.

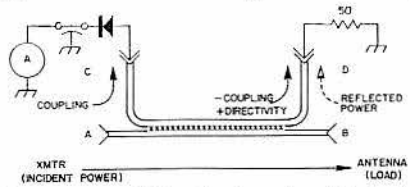

Fig. 1. A typical directional coupler. This device is the heart of a VSWR bridge, and can also be used for many other applications.

The design goal was a directional coupler with about 30 dB directivity in the passband with a low insertion loss. Each milliwatt measured at the coupling arm equals one watt through the main line. Such a device is the heart of a good quality VSWR Bridge. The measured values were 30.3 dB coupling and 38 dB directivity at 432 MHz. Data presented in the graph was taken using HP608C and 614A signal generators and a General Microwave R. F. Power Meter. The measured insertion loss was 0.2 dB.

Resolution of the smallest possible VSWR is limited by directivity. Few of the handbook VSWR bridges or the low cost type attractive to the CB trade achieve as much as 20 dB directivity. Thus the minimum discernable VSWR is approximately 1.7:1. With 38 dB directivity, 1.02:1 VSWR's can be accurately measured.

Directivity may be defined as the isolation of arm D from arm A, over and above the coupling as shown in the **Fig. 1.** Coupling is achieved by removing part of the jacket between adjacent coax conductors. If the input is at arm A, incident power can be sampled 30 dB down at arm C but appears −68 dB at arm D. Reflected power entering arm B is sampled −30 dB at arm D while at arm C it is −68 dB. It stands to reason if the directivity is low, one cannot tell with certainty if he is measuring incident or reflected power. Port D may be used as the dc return for a detector at port C and vice versa.

This device will have its fundamental passband where the length exposed between the two lines is $\lambda/4\sqrt{\epsilon_r}$. It will also have a passboard at $(2n - 1)\ \lambda/4\sqrt{\epsilon_r}$ or at three, five, seven, etc., times the frequency for which it is a quarter wave. Hence a coupler designed at 432 MHz is usable at 1296 MHz.

This coupler has also been used to measure relative power and modulation at 2 meters where its coupling factor for incident power is approximately −40 dB but the directivity is poor, hence arm D must be terminated in 50 ohms. It's a real aid for tune up and will give a good indication of increased power with AM modulation right in the r.f. line. RG141 will handle 500 watts of rf up to 2000 MHz.

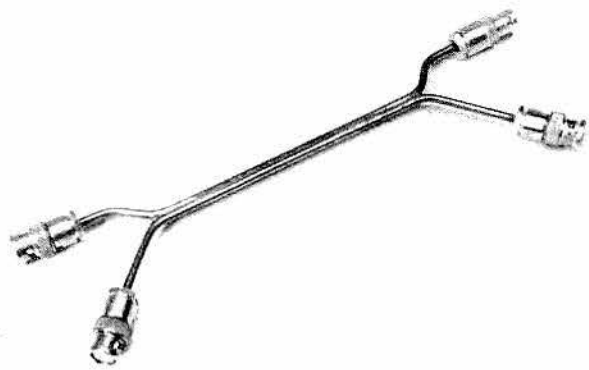

This UHF directional coupler is very simple to make, yet offers excellent performance on the 70 and 23 cm bands.

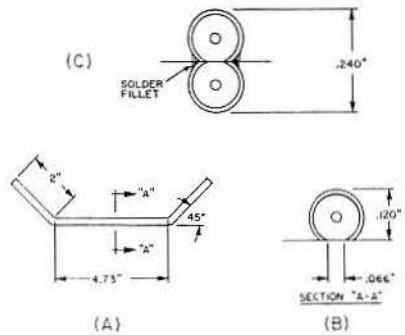

Fig. 2. Details of the construction of the UHF directional coupler.

The formula for determining coupling length is

$$\frac{c}{4fo\sqrt{\epsilon_r}} = \frac{\lambda c}{4\sqrt{\epsilon_r}} \text{ or } \frac{300 \times 10^8 \text{ cm}}{4 \times fo \times \sqrt{2.1} \times 2.54 \ \text{cm}/\text{in}}$$

$$= \frac{\lambda c \text{ inches}}{4\sqrt{\epsilon_r}}$$

$\sqrt{\epsilon_r}$ for Teflon $= \sqrt{2.1} = 1.449$

From these calculations $\frac{\lambda \text{coupling}}{4}$ at 432 MHz is 4.73 inches. With an Xacto knife cut two pieces of line 8.73 inches long and carefully bend them so that they form the shape shown in **Fig. 2A.**

Clamp the bent coax into the vise and file away the copper jacket taking care that the filed surface is smooth and flat. A belt or stationery disc sander works well too. A cross section of the filed piece should look like **Fig. 2B.** Next fit the two pieces together so that a cross section would look like a figure 8 and secure in a vise. Heat with a soldering gun only. Do not use a torch. Avoid excessive heating. Flow solder between the two lines as shown in **Fig. 2C.** The "arms" can now be bent into any convenient configuration provided enough allowance is made at the ends for connector assembly. A good rule to follow is a minimum bend radius of half an inch although a quarter inch radius is permissible. The arms should be approximately two inches long.

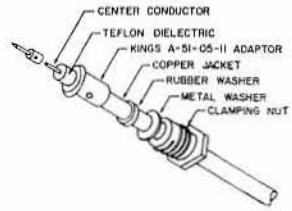

Fig. 3. Use of Kings A-51-05-11 adapter for using GR-141 with standard BNC connectors.

RG 141 has the same cross section as RG 58/U *without* the vinyl jacket therefore any connector that will accept RG 58/U can be used on RG 141 provided a sleeve is made up to make a snug fit in the clamping nut. A special adaptor is made by Kings for this purpose and sells for 45 cents. The connector assembly is shown in **Fig. 3.** Three RG 88E/U and one RG 89C/U connectors were used on the coupler shown in the photo.

Fig. 4 gives the measured directivity and coupling for this type of directional coupler at both 70 and 23 cm. You can see that performance is quite satisfactory.

Fig. 5 lists a number of applications for a directional coupler. The detectors in the measuring instruments should be suitable for use at 500 or 1300 MHz.

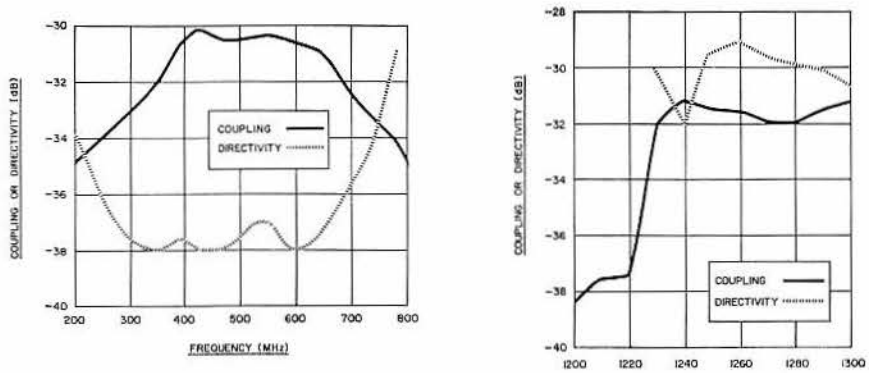

Fig. 4. Coupling and directivity for a directional coupler similar to the one discussed in the text. This device used a coupling wavelength of 4.635 inches rather than the 4.73 inches specified in the text. The only effect of the longer wavelength is to center the curves on 432MHz instead of about 500 MHz.

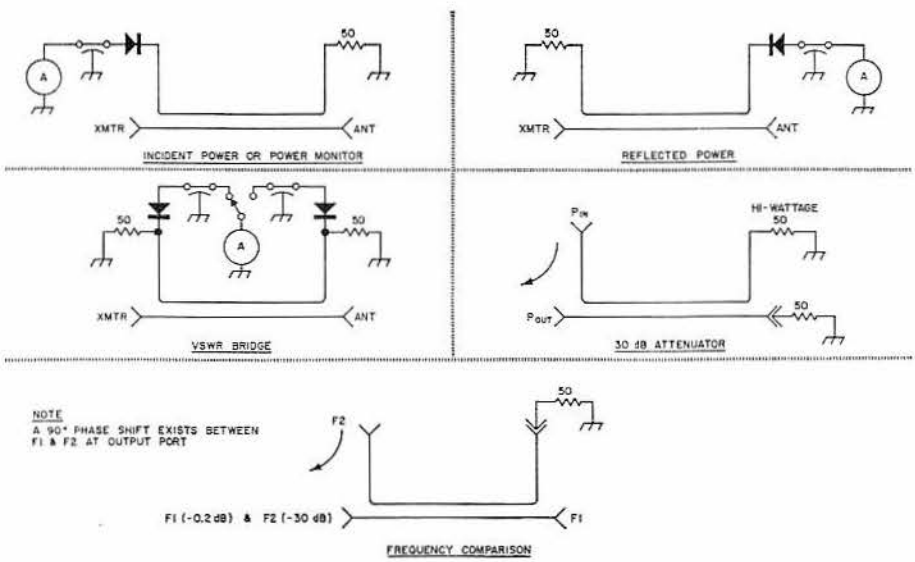

Fig. 5. Applications of the directional coupler described in the text. Unlike most pieces of ham-made test equipment, this one is good at 450 and even 1300 MHz.

A SLOTTED LINE FOR 1250 MHz

Silas Smith WA8CHD

The SWR bridge is a very useful—and sometimes badly neglected—tool. Especially on 1250 mc with only two or three watts of power, you should measure your SWR and do something about it if necessary. I recently joined the 23 cm boys, though I have only worked 1234 mc so far. My first attempt to communicate with W8VKQ on the other end failed but after two evenings of diligent work with a meagre amount of test equipment we made contact. It would have been a lot easier with test equipment good in the 1250 mc range since most hams are not equipped to measure frequency and adjust their rigs at these frequencies.

After that experience, I made the slotted line indicator described in this article. The cost is next to nothing and it's easy to build, but it does a good job. The unit is built around a one inch thin wall copper tube 10¼" long (Fig. 1). This tube has a ⅛" slot cut lengthwise for 7½", about ¾ wavelength at 1250 mc. This is long enough to get a fair sampling of the standing wave or null points.

Three other pieces of 1" copper pipe are needed. Two are 5/16" long and one is 1⅜" long. The two 5/16" pieces each have ¼" cut out and are reshaped to fit inside the 1" tube. These two pieces were each soldered to 1/16" plates as in the detail in **Fig. 1.** This process makes two cup-like structures which should

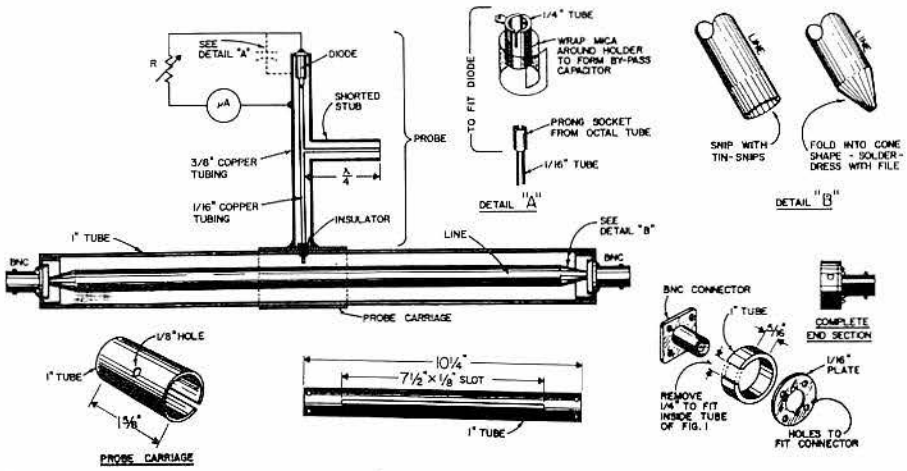

Fig. 1. The slotted coaxial line and probe for 1215 to 1300 mc described in this article.

fit within the end of the 1" pipe. Drill nine holes in each cup: four holes for attaching the cup to the slotted line, four to fit the BNC connector mounting plate and one ⅜" hole to pass the main body of the connector. File two notches for the connector ears. You can fasten the cups to the slotted tube with small sheet metal screws, threaded holes or nuts soldered to the back of the holes.

The 1" x 1⅝" piece of pipe is for the probe carriage. It is cut lengthwise on one side, slipped over the 1" tube, centered, and a ⅛" hole drilled through it over the slot in the 1" tube.

The probe is built from ⅜" and ⅛" brass tubing from your hobby shop. At the probe end is an insulator from a coax fitting and on the other end is a jack made from an octal tube socket. A small piece of ¼" brass tubing is used to make the diode socket (see detail A). A piece of 22 gauge wire is inserted in the probe end of the 1/16" tubing and soldered. A 1N21 diode works very well.

Use **Fig. 2** to choose the proper size for the line in the center. Each end of this line should be tapered and soldered to the coax fitting as in detail B. The center conductor should be 7/16" for 50 ohms or 5/16" for 73 ohms.

The meter used should have a range that permits a full scale reading and should be calibrated with some scale.

Uses: Measuring frequency

Frequency can be measured with the slotted line in two ways: the distance between null points at one half wavelength ($\lambda/2$) or the distance between peaks. See **Fig. 3.** Measuring between the nulls is preferable since the peaks are very broad. If your line is flat, the peaks and nulls may be very small, so you may have to induce a mismatch in the line. Likewise, you may have to induce a mismatch to get the two nulls to fall within the 7½" of the line. The easiest way to induce a mismatch is a short in the line.

Measure the distance between the nulls carefully with a centimeter rule. Twice this distance divided into 30,000 will give you your frequency in megacycles. It would be a good idea to check this against a standard or at least avoid operating too close to the edge of the band.

Measuring VSWR

Measuring voltage standing wave ratio (VSWR) with the slotted line is easy, too. We are looking for a ratio of E_{min}, the minimum voltage on the line, and E_{max}. The ratio:

$$\frac{E_{max}}{E_{min}} = \text{VSWR}$$

However, there is a slight complication of vectors in E_{max} and E_{min}, so that to find them, you must first determine the highest voltage read on the meter, E_1 and the lowest voltage read on the meter, E_2 with the same setting of the shunt resistor, as the probe carriage is slid along the line. Now, $E_{max} = E_1 + E_2$ and $E_{min} = E_1 - E_2$ so that

$$\text{VSWR} = \frac{E_1 + E_2}{E_1 - E_2}$$

An even simpler method is to set the meter to full scale (100) at the highest reading, and reading the VSWR directly from **Fig. 5.**

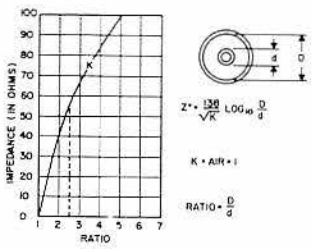

Fig. 2. Ratio of outer tube to inner line for various impedances.

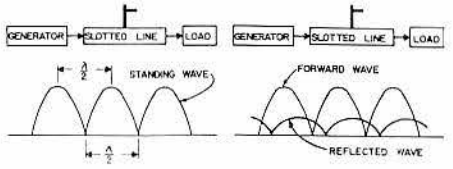

Fig. 3, Left. Measuring frequency. Fig. 4, Right. Measuring VSWR.

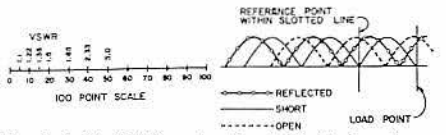

Fig. 5, Left. VSWR scale. Fig. 6, Right. Impedance measurements.

Impedance measurements

It's a little harder to measure impedance, but even it's not bad if you do it step by step. First, consider the high impedance on your line when your antenna is open or shorted. Perhaps you don't think of it as a change in impedance. This is what we are looking for. Remember that there is a definite relationship between impedance and frequency. **Fig. 6** shows the voltage relationship between a short and open. On a short set the probe for a null point, usually the first null from load end of the slotted line. This will be our reference point. You will note that when the load point is open there is a shift of 90° or a quarter wavelength either side of the reference point. This adds up to one half wavelength. Any impedance between infinity and zero ohms will lie somewhere along the half wavelength of the line. It will be noted that an open is equidistant from the reference point toward the generator and toward the load, however the line has moved toward the load (capacitive reactance). To measure this reactance, we replace the load that we measure with a short. We set our probe to the first minimum reading from the load end of the slotted line. Mark this spot with a scribe. This is our reference point. Now we remove the short and add our load under measurement. It will be noted that the voltage has moved upward. Move the probe toward the load. If the voltage goes down, you are heading in the right direction. If the voltage starts to go up change direction toward the generator. Move the probe as above to the new null point and note the direction that the probe has been moved.

Here's a step-by-step example. First, you'll need the frequency and wavelength, VSWR, direction of probe, distance between reference point and new null, and impedance of the slotted line.

Let's say as we measured the frequency, the distance between the null points was 12 cm. This is half the wavelength, so the wavelength is 24 cm. The frequency is 30000/24 or 1250 mc.

Let's say we read 80 as a maximum and 20 as a minimum on a point scale in measuring the VSWR:

$E_{max} = E_1 + E_2 = 80 + 20 = 100$
$E_{min} = E_1 - E_2 = 60$

$$\text{VSWR} = \frac{100}{60} = 1.66$$

Or set E_1 to 100 by adjustment of R, then E_2 would read 25 on the meter, a VSWR of 1.66 by **Fig. 5.**

As in **Fig. 6,** the probe was moved toward the load.

Let's assume the distance from the reference point to the new null was 2 cm. What part of a wavelength is 2 cm? Wavelength is 24 cm, so 2/24 = .083 wavelengths.

This is a movement of .083 wavelengths toward the load.

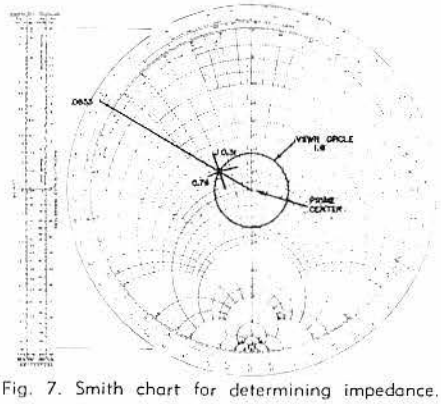

Fig. 7. Smith chart for determining impedance.

The slotted line used has an impedance of 50 ohms.

We are now ready to plot this information on the Smith chart (**Fig. 7**, better get out your magnifying glass).

Draw the VSWR circle at the prime center with a radius of 1.6.

Draw a line from .083 wavelength toward the load from the prime center.

At the intersection of the circle and line, follow the constant resistance circle to .74 and the capacitive reactance circle to .31. Our load impedance is then:

$Z_L = Z_0\ (.74 - .31j)$

$Z_L = 50\ (.74 - .31j)$

$Z_L = 37 - 15.5j$

Well, there are some of the things your slotted coax line can do besides telling you that you're on the air. A commercial version would cost $750. I guarantee that you'll get your dollar's worth out of this one as it costs less than $1 to build. I hope that it helps you get on 1250 mc.

SOME DIRECTIONAL WATTMETERS AND A NOVEL VSWR METER

P. G. Martin G3PDM

Most conventional reflectometers cannot be used for accurate power measurement because their sensitivities are frequency dependent. This is due to the use of combinations of reactance and resistance in the sampling circuits which detect the transmission line current and voltage.

This basic problem can be solved by the use of conventional lumped components instead of the distributed parameters of a transmission line. The line voltage can be sampled by two resistors or two capacitors used as a voltage divider, rather than one resistor and some distributed capacitance. The line current can be monitored by a properly designed current transformer instead of an inductance and resistance. High frequency current transformers consist of primary and secondary windings on a ferrite or iron dust toroidal core, with a low value of load resistance across the secondary winding.

All SWR bridges and directional wattmeters need to generate two dc voltages proportional to the forward and reflected voltages or currents of the transmission line. To achieve this one has either the current detector or the voltage detector providing two antiphase signals so that addition and subtraction can be performed.

A Frequency-Independent Directional Wattmeter

M. B. Allenson G3TGD, has designed a wattmeter using the above principles, where the low resistance in the current transformer secondary circuit is split into two equal parts. The center connection is taken to the voltage sampling point so that sum and difference voltages are available at the ends of the transformer secondary winding, see Fig. 1.

With two meters, this circuit can be used as a versatile calibrated directional wattmeter over the freqnecy range 100 kHz to 70 MHz, with an accuracy of about 10 per cent. Precise calculations of SWR and transmitter efficiency can be made.

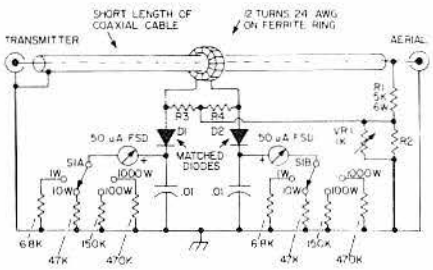

Fig. 1. Circuit of the basic frequency-dependent directional wattmeter due to G3TGD. The two meters indicate forward and reflected powers.

Maximum sensitivity with a 50 μA meter is less than five milliwatts, but with the multiplier resistors specified in Fig. 1, full scale deflection corresponds to power of 1, 10, 100 and 1000 watts. Calibration is non-linear, because the instrument samples voltage, and power is proportional to voltage squared.

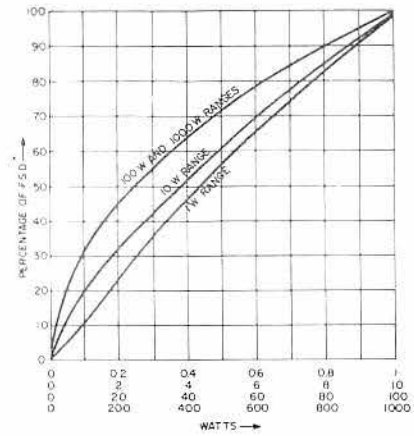

Fig. 2. Calibration curves for the instrument described in Fig. 1.

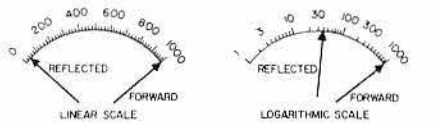

Fig. 3. Linear and logarithmic scales. The inherent advantages of the logarithmic form are immediately obvious.

Unfortunately, two transmission line impedances are in common use in coaxial systems: 50Ω and 75Ω. As it is not possible to design instruments whose sensitivities are independent of line impedance, some component values must depend on the impedance in use. For simplicity, only one of the voltage driver resistors need be changed, but instrument calibration will be different. By changing the current transformer resistors as well as one of the voltage divider resistors, the calibration is the same for both line impedances. This technique has been adopted here, and the calibration curves in Fig. 2, are correct for 50 or 75Ω lines provided the resistor values in Table I are used.

The Logarithmic Wattmeter

The basic instrument can be simplified by including a logarithmic network so that the power range switch is redundant and a single meter scale can be used for powers from, say, one watt to 1000 watts. A logarithmic scale has the 1, 10, 100 and 1000 watt points equally spaced (see Fig. 3).

The advantage of a logarithmic instrument is that one can measure very low reflected powers and very high forward powers simultaneously with the same percentage accuracy, without having to switch meter ranges.

It is simple to add a reasonably accurate *wide-range* logarithmic network to the meter in Fig. 1 (see Fig. 5). The basis of its

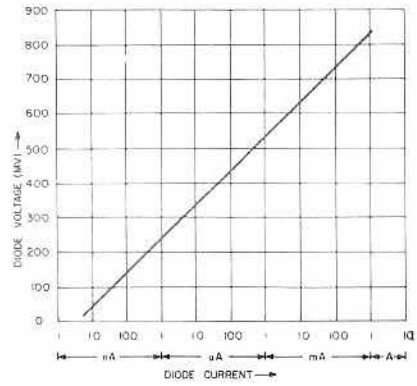

Fig. 4. Smoothed experimental plot of the current /voltage characteristic of a 1N4002 silicon junction diode, showing its logarithmic properties.

operation is that the voltage dropped across a forward-biased p-n junction diode is proportional to the logarithm of the current passing through it (see Fig. 4). To reduce the potential dynamic range of the circuit, a relatively insensitive meter is used, and a small resistance is added in series with the logarithmic diode to restore a logarithmic form to the scale (see Fig. 6).

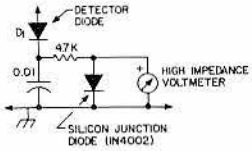

Fig. 5. Basic wide-range logarithmic converter.

An experimental logarithmic wattmeter is shown in Fig. 7. Figure 8 gives the calibration scale for 50 or 75Ω lines, provided the correct resistors are used (Table I).

A Direct-Reading SWR Meter

A particularly useful device would be an instrument giving a direct measurement of the standing wave ratio on a transmission line, independent of the absolute power levels or the frequency in use. Such an instrument, with its single meter, would be ideal for incorporation into transmitters and transceivers (especially with the physically small sampling circuits associated with it).

The swr can be expressed in terms of the forward and reflected voltages according to:

$$\text{swr} = \frac{E_f + E_r}{E_f - E_r} \qquad (1)$$

We wish to generate this function electronically, so that outputs of the two detectors can be used to generate a meter current proportional to SWR. This would be rather tedious, though not impossible.

Conveniently, manipulation of equation (1) shows that:

$$\frac{E_f}{E_r} = \frac{\text{SWR} + 1}{\text{SWR} - 1} \qquad (2)$$

which although not proportional to SWR, is a mathematical function of it only. Electronic division of E_f by E_r is easily done by taking logarithms and subtracting. That is:

$$\log \frac{E_f}{E_r} = \log E_f - \log E_r$$

Table I

	Ω	Ω
Line impedance	50	75
R3 and R4	27	33
R2	220	180

Values for R2, R3 and R4 to be used in 50 and 75Ω transmission lines.

In Fig. 9, the two silicon diode voltages are proportional to the logarithms of their currents, which in turn are proportional to the forward and reflected voltages. The two diode voltages can be subtracted directly by connecting a meter between them, rather than from each one to chassis.

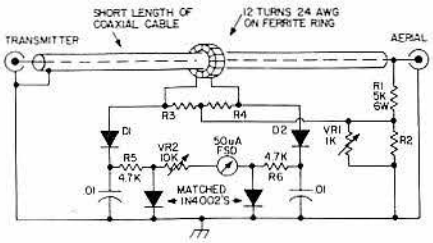

Fig. 6. Circuit of the logarithmic directional wattmeter. D3 and D4 are matched (see text).

The meter cannot be calibrated linearly in SWR, because of equation (2), and because the circuit does not take anti-logarithms after subtracting the logarithms. The outcome of this is beneficial: the SWR meter is increasingly sensitive as the standing wave ratio approaches 1:1. This is where one wants most sensitivity: to make the final

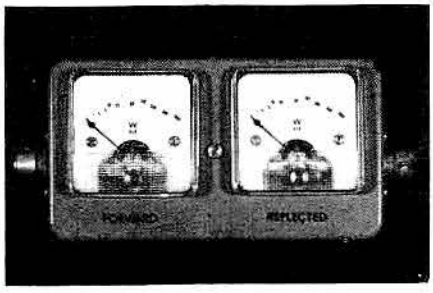

Fig. 7. An experimental logarithmic wattmeter.

adjustments to aerial arrays, to measure the variations in SWR over a band, and so on. Fig. 10, shows a calibration curve for SWR meters. Naturally the meter sensitivity cannot be completely independent of the power level in use. Accuracy falls when the reflected power is less than about half a watt (this corresponds to an SWR of 1.05:1 when the forward power is 1 kW).

A differential amplifier could be added to the circuit of Fig. 9, to enable a less sensitive meter to be used.

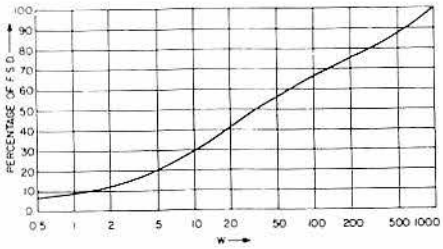

Fig. 8. Calibration curve for logarithmic wattmeters.

Construction of the Instruments

Layout of the sampling circuits is fairly critical, see Fig. 11. The input and output sockets should be set a few inches apart, and connected together with a short length of coaxial cable. The coax braid must be grounded at one end only, so that it acts as an electrostatic screen between the primary and secondary windings of the toroidal transformer. Twelve turns of 24 AWG enamelled wire, equally spaced around the circumference of the ring, form the secondary winding. The primary is formed by simply threading the ring onto the coax.

A suitable ferrite ring is the Mullard FX1596, made in England, although other types are suitable. The FX1596 has an outside diameter of half an inch, and is designed for wideband rf applications between 5 and 20 MHz. The main requirement is that the ferrite material should maintain a high permeability over the frequency range in use.

Other components in the sampling circuits should have the shortest possible leads. R1, R2 and R must be non-inductive solid carbon types: for high power levels (about 100 watts) R1 should consist of two or three 2 watt carbon resistors in parallel. VR1 should be a miniature skeleton potentiometer to keep stray reactance to a minimum, although it may be dispensed with by trying various fixed resistors for R2 until the reflected indication under matched conditions is zero.

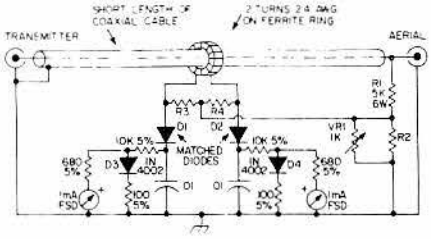

Fig. 9. Complete circuit for a power-independent, frequency-independent direct-reading SWR meter.

The detector diodes need to be matched for similar voltage drop, using the circuit in Fig. 12. Point contact germanium types with a PIV rating of 80 volts or so are recommended.

Logarithmic diodes should be modern medium-current silicon junction types, such as conventional rectifier diodes. The 1N4002 is specially recommended for its good logarithmic properties. Log diodes should also be matched with the circuit in Fig. 12.

The 0.01 μF decoupling capacitors should be a disc ceramic type.

In designing a toroidal transformer different to that specified, several factors should be borne in mind. As the number of secondary turns increases, the self-capacitance rises and causes the response to fall at high

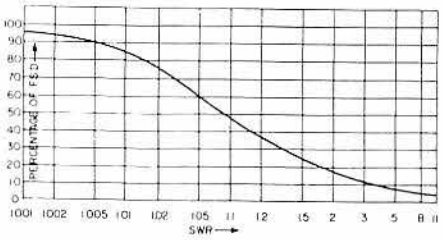

Fig. 10. Calibration curve for SWR meters of the type described in Fig. 9.

frequencies. Failure of this nature causes the reflected power indication to rise; in other words the directivity of the instrument falls. If the 27Ω resistors are raised appreciably in value, the instruments will eventually become frequency sensitive.

The ratio of the voltage sampling resistors (R1 and R2) in the HF designs is determined by the sensitivity of the current sensing circuit, and the two sampling voltages must be equal in magnitude under matched conditions. VR1 provides fine adjustment of the ratio. Absolute values of the resistors can be varied considerably, bearing in mind that as their values increase the stray capacitance across them may need to be compensated for.

Useful Equations

Let the line current be I amps, the line voltage be V volts, and the characteristic impedance of the transmission line be Z_O. Then $V = IZ_O$.

If the current transformer has a ratio of 1:n, and each of the resistors in its secondary circuit has a value of RΩ, then the rf voltage across each of them is given by:

$$V_{(i)} = \frac{IR}{n} \qquad (3)$$

The voltage detector output is obviously

$$V_{(v)} = \frac{VR_2}{R_1 + R_2} = \frac{R_2}{R_1 + R_2} IZ_O$$

Which is, to a good approximation,

$$V_{(v)} = \frac{R_2}{R_1} IZ_O \qquad (4)$$

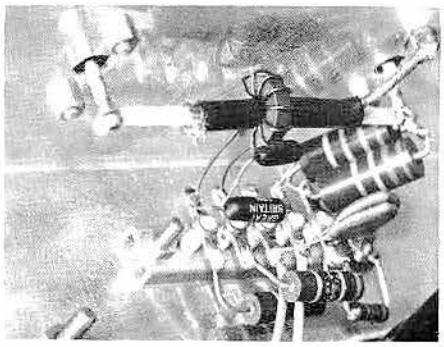

Fig. 11. Photograph showing layout of sampling circuits used in an experimental swr meter.

The main design equation for all the HF instruments is therefore:

$$R_2 = \frac{R.R_1}{n.Z_O}$$

where the value for R2 includes the effect of VR1, if fitted.

The dissipation of some of the components specified is quite high. For those planning different circuits, the following equations express the dissipation of R1 and the current transformer resistors R:

$$W_{(R1)} = \frac{Z_O.W}{R_1} \text{ watts,}$$

where W is the transmitter output power.

$$W_{(R)} = \frac{W.r}{n2.Z_O} \text{ watts.}$$

In the instruments described, $W_{(R1)}$ is about 5 watts, and $W_{(R)}$ 2 watts for a transmitter power of 500 watts.

Calibration

If any of the instruments are built exactly as described, and used in systems of the correct impedance, the calibration given in Figs. 2, 8 and 10 will be sufficiently accurate for most purposes. For those designing their own circuits, the following procedure is recommended.

Test equipment needed includes a high power rf source (a transmitter) and an rf voltmeter. The instruments can be calibrated with less accuracy without the rf voltmeter. The wattmeters are calibrated by feeding power through the meter into an appropriate dummy load (50 or 75Ω). VR1 is set for minimum reflected power indication, and the power scale is marked according to the rf voltage appearing across the load. If an rf voltmeter is not available, a peak-reading type can be made with a diode, capacitor and dc voltmeter. As the detector output is equal to the peak rf voltage applied to it, equation (4) leads to:

$$V_{(det)} = 2.8\ V\ \frac{R_2}{R_1} = 2.8\sqrt{WZ_O\frac{R_2}{R_1}}$$

It would be difficult for most amateurs to obtain sufficient high power carbon resistors to calibrate an SWR meter by means of deliberate mismatching. An indirect method is therefore recommended.

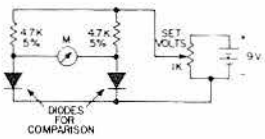

Fig. 12. Hookup circuit for matching detector diodes for equal forward voltage drop, and silicon junction diodes for similar logarithmic properties. The meter should be as sensitive as possible (say 50 μA fsd), and should not deflect appreciably as the voltage is varied between zero and nine volts.

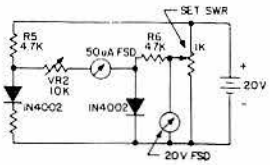

Fig. 13. Circuit used to calibrate SWR meters(see text).

Disconnect R5 and R6, Fig. 9, from the detectors, and connect them instead as shown in Fig. 13. One voltage is fixed at about 20 volts, and the other is varied between zero and 20 volts. The ratio of these voltages corresponds to a definite SWR which can be determined from equation (1). Before carrying out this procedure, however, VR2 should be set for full scale deflection of the meter under matched conditions at the highest power level to be used.

Conclusions

All of the instruments described in this article have been tested under actual operating conditions, on all amateur bands between 1.8 MHz and 30 MHz. Power levels used varied from 100 to 1200 watts. With the components specified, the instruments will sustain power levels well above the kilowatt level for periods of tens of seconds.

It is hoped that by introducing frequency independent directional wattmeters, one will be able to make useful comparisons of absolute power levels and accurate assessments of standing wave situations. The logarithmic scales are an added convenience, and the direct-reading SWR meter offers a saving in meters.

SWR BRIDGES USING ZERO-CENTER METERS

John Schultz W2EEY/K3EZ

The basic coaxial cable swr meter, which samples both the forward and reflected voltages on a transmission line, is an essential instrument in setting up an amateur station. Although a low transmission line swr in itself doesn't guarantee that an antenna system will work, knowing what the swr is remains an essential bit of information in evaluating the status of the transmitter/antenna interface.

The virtues of the usual coaxial line swr meter – economy and simple circuitry – are offset by the awkwardness involved in using the instrument: that is, switching back and forth between "forward" and "reflected" switch positions and adjusting a sensitivity control for sull-scale deflection in the forward position. This awkwardness of operation is partly relieved by dual-instrument swr meters so the forward/reflected switch is no longer necessary – but the cost of the instrument increases. The awkwardness of

operation can be completely relieved by special dual movement meters with crossing pointers and/or special circuitry, but then the cost really soars.

Another approach is the usage of some different circuitry to detect the swr which can then activate a zero-center meter so one can peak up the antenna coupler, etc., for minimum swr on a transmission line with the same ease as one tunes an FM entertainment receiver for a zero-center reading on the discriminator meter. In the end analysis, practically no line is set up for any specific swr, but simply for the lowest swr that can be achieved. So, why not make the process as simple as possible? Circuitry to do this has actually been available for many years and was especially developed for use with the automatic servo-tuning of military transmitters. The zero output when tuning conditions were correct, and the plus or minus output when they were not, allowed, after sufficient power amplification, the activation of motors to tune transmitter PA task circuits, coupling circuits, etc. Now, with the economical availability of toroids and imported zero-center meters, zero-center swr type circuits can be applied to amateur usage and meet the criteria of being easy to construct and economical. They offer a real challenge to the conventional type of swr meter, especially when one is using a multiband antenna and tuner arrangement, or just leaves an swr meter in a transmission line to verify that the line swr is holding constant. In the former case, one usually knows the approximate transmitter/tuner settings on each band, and the swr meter is used to peak up the adjustments. Such peaking-up, as mentioned before in the case of an FM receiver, is certainly facilitated by just having to look at a zero-center meter. In the latter case, a zero-center meter will more readily reveal slight changes in transmission line swr from an established norm. Perhaps the only place where a conventional swr meter is still to be preferred is when one is

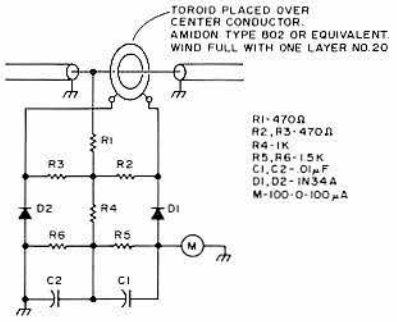

Figure 1.

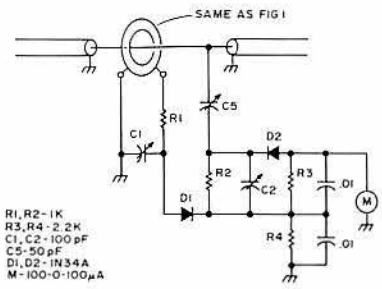

Figure 2.

dealing with experimental antennas where extreme swrs exist and a conventional swr meter can help to more quickly obtain "ballpark" antenna coupler or loading coil settings. The zero-center type circuits operate on a slightly different basis than the conventional swr meter circuits, and just a brief review of transmission line operation will be helpful to understand the different basis for the functioning of the two types.

If a transmission line is attempting to deliver power to a load, both voltage and current values exist along the line. If the antenna load impedance is resistive and equals that of the line impedance, all the power feed into the line reaches the antenna less any power loss in the line itself because of the line's inherent loss. If the load is not equal to the line impedance or reactive, part of the power the line tries to deliver is rejected by the load and reflected back along the line. This sets up standing waves of voltage and current which are not in phase with the original voltage and current waves the transmitter is trying to "pump" into the line.

Conventional swr meters sample a portion of the voltage or current wave traveling towards the load and a sample of that traveling back from the load. The relative amplitude of the two samples is the swr and, of course, the desired condition is that there be no reflected wave from the load. If there is no reflected power from the load, the line is often referred to as being "flat." This term is a bit misleading. Although the reflected power may be zero under matched conditions, the power flowing to the load via the line will still set up normal sine wave distributions of voltage and current along the line.

Another way to sense that the load is matched to the line is to determine first of all that the phase difference between the voltage and current on the line is zero and that the ratio of the in-phase voltage and current is correct for the impedance of the line being used. If there is no reactance present in the load, there will be no phase difference between voltage and current, as in any ac circuit feeding a resistive load. If the load is not only non-reactive but also of the correct resistance, the ratio of voltage and current on the line will have a definite relationship correct for a given line impedance. The zero-center meter circuits are designed to monitor both of these line conditions.

Practical Circuits

Two separate circuits are used to monitor the line conditions just described. One could switch a separate zero-center meter between the two line monitor circuits but with imported zero-center meters available for as low as $1.50, it is hardly worthwhile to do so. (A good source of the 100-0-100uA meters needed is Edlie Electronics, 2700 Hempstead Turnpike, Levittown NY 11756. Their meters with order number DA798 or DA792 cost only $1.50 but they have a $7.50 mail order minimum.) Also, for many installations, it is not necessary to use both circuits. For instance, in a home installation feeding a set of various fixed antennas, it would probably be of primary interest to have the impedance monitor circuit (voltage/current ratio). Once the antennas have been set up and operate satisfactorily, one would primarily just be interested to know that some impedance condition on the line has not changed. In a mobile installation, where some reactance cancelling L or C needs to be adjusted with frequency changes, it would be of prime interest to have the phase monitor circuit once the installation has been initially set up for a correct impedance match, and the reactance cancelling component only needs adjustment during actual operation.

Phase Monitor

Fig. 1 shows the circuit of the phase monitor. It is a basic discriminator circuit. The voltage on the transmission line to ground is sampled via R1. The current on the line induces a voltage in the windings on the toroid placed in the line which, of course, is 90° out of phase with the voltage sample. The voltage proportional to the line voltage is divided across R1 and R4 (C1 and C2 are rf bypass capacitors). The voltage proportional to line current (across the toroid winding) is divided between R2 and R3. Referenced to the center point of R2 and R3, these voltages are 180° out of phase with respect to each other and either one is 90° out of phase with respect to the voltage across R4. The voltages across R2 and R4 are rectified by D1 and, because of the diode

polarity, produce a voltage with the polarity indicated across R5. Similarly, R3 and R4 and D2 produce a voltage of opposite polarity across R6. When the transmission line current and voltage are in phase, the voltages across R5 and R6 are equal and opposite, and the resultant voltage output which drives the meter is zero. For an out-of-phase condition, some output voltage exists whose magnitude indicates the amount of the phase difference and whose polarity would indicate whether the line voltage leads or lags the line current.

One could actually calibrate the output meter for different magnitudes and directions of phase difference, but this would be very tedious and not of real use for just checking the adjustment of a line for reactance cancellation. The only calibration that has to be checked is to excite the circuit into a resistive dummy load and to be sure that the zero-center feature works. If it does not, it indicates that some unbalance has been introduced during construction or some of the components (R2/R3 and R4/R5) are not closely enough matched. If the meter excursions off zero center become too violent with a high power transmitter, some additional resistance can be introduced in series with the meter to limit the maximum current flow.

Impedance Monitor

Fig. 2 shows the circuit of the impedance monitor, which is also a form of discriminator circuit. Samples of the transmission line voltage and current when they achieve the desired ratio produce an output voltage from the circuit which is zero. As in the previous circuit, a toroid placed around the center conductor of the transmission line develops by transformer action a voltage proportional to the line current. A sample of the line voltage to ground is taken via the variable capacitor C5. Unlike the previous circuit, both the sampled voltages are rectified, producing voltages across load resistors R3 and R4, without paying any attention to the phase differences between the sample voltages. It is only the amplitude of the sample voltages which determines the amplitude of the voltage across R4 (for the line voltage) or across R3 (for the line current). Because of the diode polarities, the voltages across R3 and R4 are of opposite polarity. They will cancel when equal, producing zero output voltage, and since C5 is variable, this condition can be set to occur at any desired line voltage to current ratio.

The difficulty with this circuit is that the sample voltages generated by the toroid transformers and the C5 coupling are frequency dependent. The rest of the components in the circuit (R1/C1 and R2/C2) are there to help eliminate the frequency sensitive output of the coupling elements over a reasonable range.

C5 is set with C1 and C2 at mid-range to provide a zero voltage output from the circuit on 20m when the line is terminated in a resistive load equal to the line impedance. Going to 10m, C2 is adjusted to restore balance and on 80m, C1 is used to restore balance. The adjustment has to be gone through several times before a good balance is achieved over the entire HF range. It would be possible to calibrate the meter with different value load resistors for different swrs. For high value loads, the meter would move off center in the opposite direction for low value loads. But, such calibration would only hold true for non-reactive loads.

Construction

Many conventional swr bridge circuits have been described over the last year or two in amateur literature where a toroid transformer, rather than a parallel wire to the center conductor of a coaxial line, has been used as a pickup element. The construction of such units applies equally well to the circuits shown here. It is only the circuitry following the pickup element that is really different, plus the added R1 pickup in Fig. 1, or the C5 pickup in Fig. 2. Note that it doesn't matter on which side of the toroid these pickups are placed. However, as in any rf circuit, all leads must be kept as direct and as short as possible. The circuits shown are for the HF range, but by changing the toroid and values of the bypass capacitors, they can be extended, by experienced experimenters, into the VHF range.

Chapter II

How to Measure RF Impedance

THE ANTENNASCOPE – AN EFFECTIVE TOOL

W. R. Carruthers VE3CEA

There are two types of antennas, commercial and amateur. A commercial antenna is generally designed for one frequency, has many acres of ground around it, no obstructions and miles of heavy copper cable buried underground to provide an "effective" ground. These antennas work as designed – very well. The amateur antenna, on the other hand, is just that – an amateur design and construction.

This antenna is subject to all ills, roof tops, buildings, trees, TV masts, house electric wiring, telephone wires and what not. It's a wonder they work at all! But they can be made to work and thousands of amateurs make them work. They make them work by pruning or lengthening the feeder cable and by using an antenna coupler. These are always empirical steps, the "let's cut and try and see what happens" method. How much better it would be, and a time saver too, if we tested our antenna systems electrically and *knew* what was happening and then could take intelligent action to put the whole antenna system into resonance.

This fact is well known – an antenna can only accept power and radiate properly when it is operating at its resonant frequency. This is no problem for the commercial people who operate at one frequency. The amateur, however, wants to "roam the band" and may wish to operate over frequencies hundreds of thousands of cycles wide, even megacycles wide. How can he do this with a fixed antenna system? The answer is, he can't! But he can construct an antenna system for a certain frequency and take the penalty of reduced radiation when he moves far away from it. However this actually works very well, because each amateur has his own particular part of a band in which he likes to operate – and his friends tend to stay there too. On this particular spot, the amateur works diligently to "put out a good signal."

The question arises – how can we make sure our antenna system is radiating well at the particulaf frequency we wish to use? One answer is to use electrical test equipment to show us what is happening on the whole antenna system, which includes the antenna and the feed line.

One of the most useful devices for this purpose is the rf bridge, generally called the Antennascope. It is a simple device, inexpensive to construct and very effective in results. It is usually powered by a grid dip oscillator. Such bridges should be used at the junction of the feed line and the antenna and will show the resonant frequency of the antenna itself and the radiation resistance at the feed point.

Making such measurement up in the air is a difficult thing for the average amateur and impossible for those whose antennas are supported at the ends. If we are willing, however, to accept a small degradation in results, we can use the *rf* bridge at the station end if we have a half wave, or multiple of a half wave, feed cable. At every half wave point on a feeder cable the voltage and current vectors are in phase, which simply means that the electrical condition seen at the end of the cable is repeated every half wavelength in the cable. We can use the *rf* bridge then, at the station end of the feed line, if we are willing to agree that the results will not be 100% but reasonably close to it. The results will be affected by all the various factors that affect amateur antenna resonance and these effects may give us some peculiar results, but they can be overcome and the final results may be quite valuable to us.

Let me give you an example to illustrate what I'm talking about and to show you how effective the use of the *rf* bridge can be: –

A friend of mine constructed a 40 meter inverted V antenna, held at the feed point 40' up on his beam tower, 66' legs down to supports which held the ends about 8' off the ground. Feed line was 100' of Twin Amphenol cable, velocity factor .68. The antenna was difficult to feed, swr was high, radiation was poor. He asked me to have a look (electrical) at it. I took my grid dip meter, *rf* bridge and vtvm.

The first thing done was to check the feed line length. 1/2 wave length at 7.1 MHz was 492 x .68/7.1 or 47.1 feet. Two 1/2 wave lengths (to get into the station) would be 94.2 feet.

The first conclusion was that the feed line was 5.8 feet too long.

Next Test No. 1 was made using the *rf* bridge with results as shown in **Fig. 1**, the results being shown in table form and also plotted in graphical form.

It was obvious from this graph that the antenna system was resonating outside the

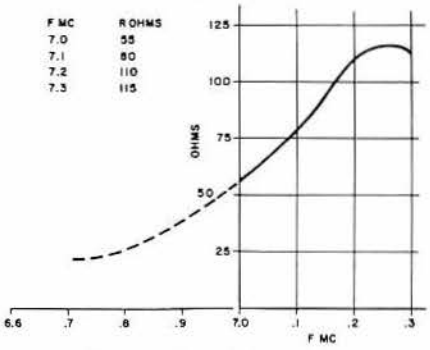

Fig. 1. 100' Feedline Test No. 1.

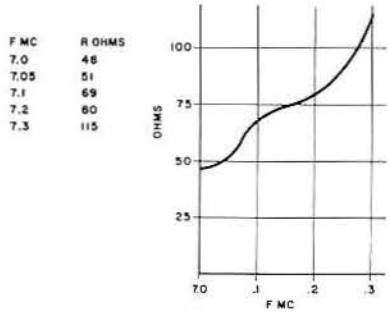

Fig. 2. 94.2' Feedline Test No. 2.

band as shown by the dotted lines. This test was repeated and the results were taken down to 6.4 MHz. They showed the system to be resonant at 6.6 MHz.

Test No. 2 was made next using the feed line cut to 94.2 feet. **Fig. 2** shows the results.

It was obvious the resonant point of the system was rising.

Test No. 3 was made next, cutting the feed line to 91.2 feet long. **Fig. 3** shows the results.

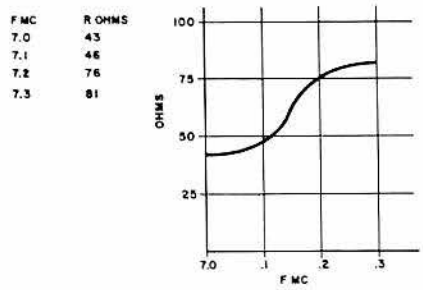

Fig. 3. 91.2' Feedline Test No. 3.

The resonant point was rising, but not far enough yet.

Test No. 4 was made using the feed line cut to 88.2 feet long. **Fig. 4** shows the results. It was obvious that we were very

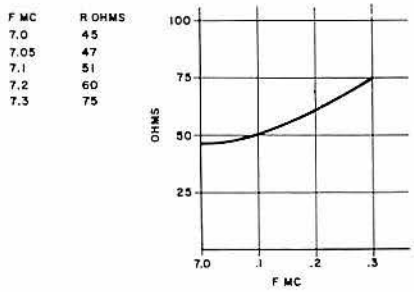

Fig. 4. 88.2' Feedline Test No. 4.

close to the resonant frequency of 7.1 MHz which my friend wished to use.

Test No. 5 was with 85.2 feet in the feed line. **Fig. 5** shows the results.

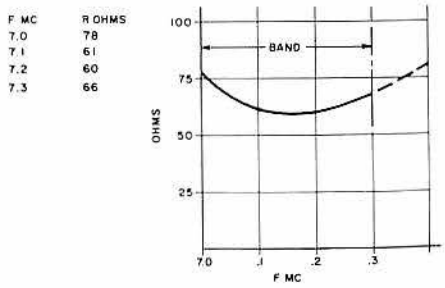

Fig. 5. 85.2' Feedline Test No. 5.

Test No. 6 was with the transmitter (300 watts CW) and antenna coupler connected. There was no trouble in loading and no trouble in balancing the coupler to obtain an swr of 1 to 1 ratio.

The results on the air were interesting, 5/9+ reports to the Eastern half of the U. S. A., 5/8 reports to Germany etc. *Conclusion:* The results shown above are not precise, nor can they be expected to be precise. There are too many unknown factors entering the electrical picture, such as those which required a shortening of the feed line, in this example, to somewhat less than a half wave length. But the bridge showed us the overall picture and suggested what was required to be done. The on-the-air results show that it was giving us a good picture and a result that was very satisfactory for my friend's needs.

Why not construct an *rf* bridge and check you own antenna system? I suggest it will pay off and be very informative to you, showing you what your antenna system looks like electrically and what to do to bring your whole system to the resonant frequency you wish to obtain. . . . VE3CEA

HOW TO BUILD AN ANTENNASCOPE

Paul Franson WA1CCH

A type of simple bridge used for measuring antenna impedance is called the Antennascope, shown in Fig. 1. This bridge is designed for low power operation – a grid dip meter usually gives plenty of power. It should be built very compactly with short leads. The potentiometer should be of high quality; an Allen-Bradley Type J is fine. The bridge can be calibrated with regular composition resistors. Simply connect the resistors in turn to the antenna terminal and adjust the pot until the meter reading dips to zero. Then mark the value of the resistor by the pot pointer. In use, the meter reading will not null completely except for resistive loads, so it will not read zero for reactive antennas. Nevertheless, the minimum reading will occur at the approximate impedance reading. Remember that all antenna bridges should be used between the antenna and the transmission line.

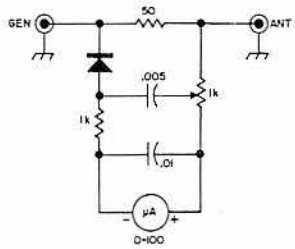

Fig. 1. The Antennascope is a simple antenna impedance bridge. It should be constructed compactly for best high frequency use.

THE MARK III RF IMPEDANCE BRIDGE

Mark Cholewski W6CRT

NEED to measure the input impedance of that new beam? Or maybe to find out just what is the Q of the coils in your final? Or even to determine how much signal is being soaked up by your coax? If you ever want to do these, or any similar jobs, then the Mark III RF Impedance Bridge is the thing for you.

You can build it for a total cost of about $30 (exclusive of sheet metal) and, if you follow instructions closely, it will be accurate to closer than 10 percent throughout its operating range. Unlike the more common resistive-bridge and reflectometer methods of measuring impedance, the Mark III operates equally well at resonance or far away. It will measure both resistance and reactance present in resistors, capacitors, inductors, antennas, and transmission lines at any frequency between 2 and 30 mc.

Before we start into the actual construction of the Mark III, one thing must be emphasized. Accuracy can be assured only if the components, circuit, and parts layout are absolutely duplicated. The original instrument's calibration was obtained through tedious laboratory techniques. If you make any changes, the calibration curves will no longer apply. However, if instructions are followed to the letter you need have no worries about accuracy. A test model, built by W6BJU following these instructions, checked out to 2 percent accuracy at 2 mc and 10 percent at 30 mc.

Construction of the Mark III divides into three major sections: Preliminary metalwork, actual wiring, and calibration. Each will be described separately. Ready? Let's go!

Preliminary Metalwork

1. Cut, drill, and bend to shape from soft aluminum shields S1, S2, and S3 as shown in Figs. C1, C2, and C3.
2. Cut, drill, and tap plexiglas insulators I1, I2, and I3 from bulk rod stock as shown in Figs. C4 and C5. When tapping plexiglas, use water as lubricant.
3. Cut, drill, bend, and solder tubular shields S1A, S2A, and S3A as shown in Fig. C6. Copper or brass may be used; aluminum should be avoided because of solding difficulties.
4. Assemble shielded resistor assembly R2/S4 as shown in Fig. C7. The copper tubing must be drilled out to clear the body of R2. When soldering, hold the assembly in a vise to protect R2 from excessive heat.
5. Cut, drill, bend to shape, and solder box shields S1B, S2B, and S3B as shown in Fig. C8.
6. Drill S5 (a 3x4x6 LMB unpainted chassis box) as shown in Fig. C9.
7. Cut, drill, and bend to shape shield partition S5A as shown in Fig. C10.

Shielded Transformer

While classified under the "preliminary metalwork" section for reasons which will become obvious, construction of the shielded transformer is the most critical part of the entire project. Before proceeding, read and re-read steps 8 through 24 and be sure that you understand them fully. Take special care when soldering—three transformers were built for the original instrument before a non-shorted one was achieved.

8. Cut to length, drill, and tap transformer mounting insulator 14 from 5/16-inch plexiglas rod.

9. Cut and drill two bobbin-end washers as shown in Fig. C12 and solder them to a length of copper tube as also shown. Then cut halfway through the bobbin with a hacksaw.
10. Pull the shielding from an 18-inch length of RG58/U. Save 8 inches for step 19 and use the rest in step 11.

11. Solder one end of the 10-inch shielding into the U-shaped slot on the bobbin end, using an aluminum rod or small drill to keep the inside of the shielding open. It must pass

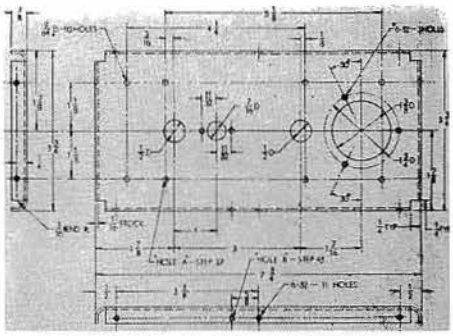

C1—Shield S1 (1 REQ), Mat'l Aluminum

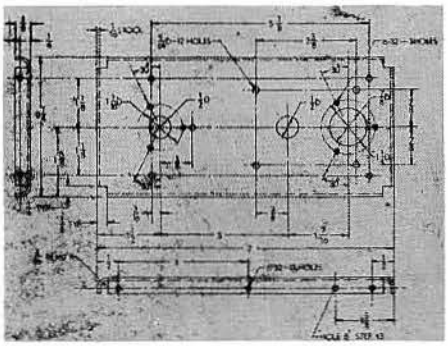

C2—Shield S2 (1 REQ), Mat'l Aluminum

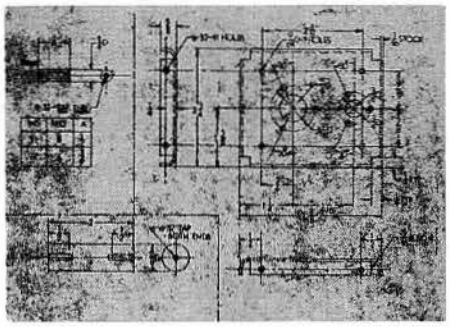

C4 — Insulators, Mat'l Plexglas rod
C5 — Insulator 13 (8 REQ), Mat'l Plexiglas rod

C3—Shield S3 (1 REQ), Mat'l Aluminum

No. 26 plastic-covered wire. Clean off all metal burrs and solder splatters.

12. Wind 48 turns of No. 26 plastic-covered hookup wire on the bobbin in three lays of 16 turns each. Solder the start of the winding at point A (see Fig. C12) and wind in the direction shown by the arrow.

13. The last turn will end at the shielding attached in step 11. Feed the free end of the wire into the shielding, draw the turns tight, and secure the winding with plastic tape.

14. Cut a piece of brass or copper shim stock as shown in Fig. C13 to a length which will wrap around the bobbin but will not allow the ends of the shim stock to touch each other.

15. Tin the shim stock along the edges.

16. Place the wound bobbin in a vise, wrap the shim stock around it, lining up the free ends of the shim with the slot cut in step 9, and solder the shim to the bobbin ends. Caution. *Do not overheat the winding; the plastic covering melts easily and a short is almost impossible to detect.*

17. Connect an SO-239 coax connector and UG-177/U hood to the shielded primary lead as shown in Fig. C15.

18. Wind one turn of ¼-inch diameter half-hard copper tubing around a 1-inch diameter form. Saw the tubing as shown by "phantom lines" in Fig. C14. Drill as shown in Fig. C14 and clean off all burrs.

19. Locate the 8-inch piece of shielding left over from step 10.

20. Using same technique as in step 11, solder one end of the shielding into the ⅛-inch hole. Clean off all solder splatter and burrs.

21. Solder one end of another length of No. 26 plastic-covered hookup wire to point A (see Fig. C14) and wind three turns inside the tubing in the direction shown.

22. Feed the free end of the hookup wire through the shielding. Bend the tubing into final shape as shown in Fig. C14. Pull up the three turns snugly, making sure that the plastic coating is undamaged.

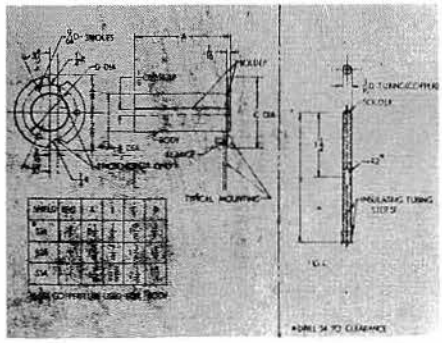

C6—Tube shield, Mat'l .010 Brass

C7 — Shield Assembly S4

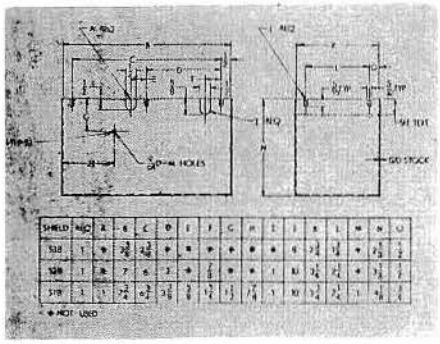

C8—Shield can, Mat'l Aluminum

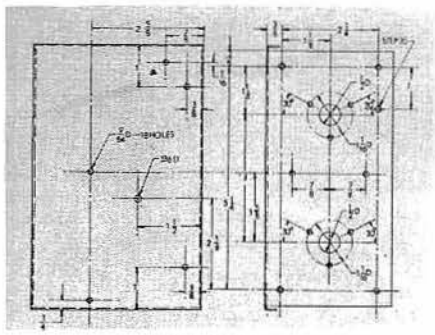

C9—3X4X6 LMB Shield can S5

23. Connect a male phono plug to the free end of the shielded wire as shown in Fig. C15. Length of the wire is critical.

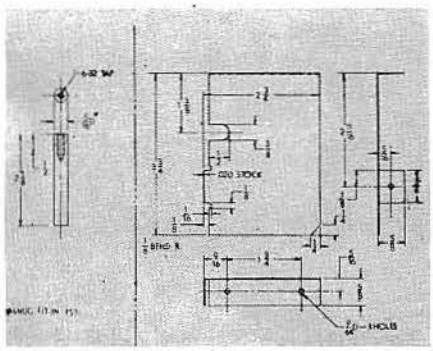

C11 — Insulator 14, Mat'l Plexglas

C10—Shield Partition S5A, Mat'l Aluminum

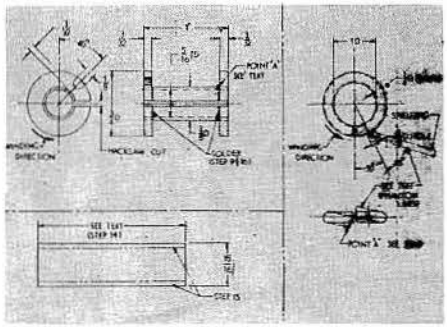

C13—Shield PS1A, Mat'l .005 Brass or Copper
C12 — Primary bobbin PS1, Mat'l Brass or Copper

C14—Shield PS2, Mat'l copper

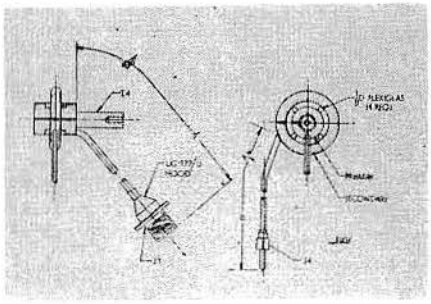

C15—Transformer assembly

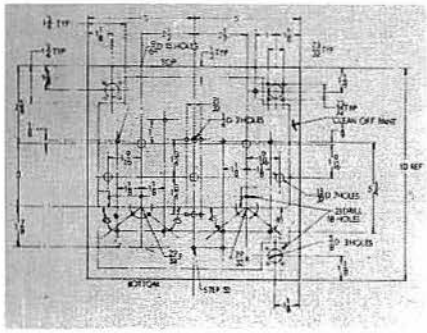

C16—Inside view of panel

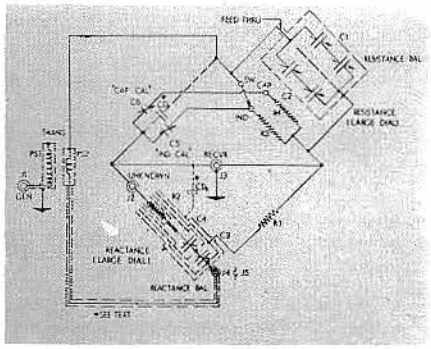

Fig. 1—HF. RF. Bridge Mark III Schematic

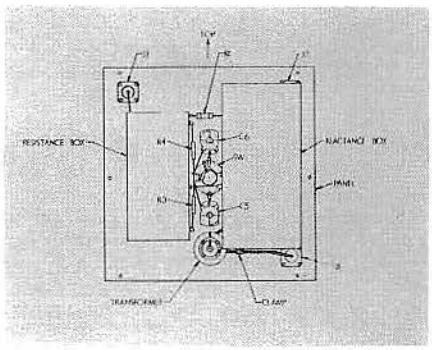

Fig. 2—Inside view

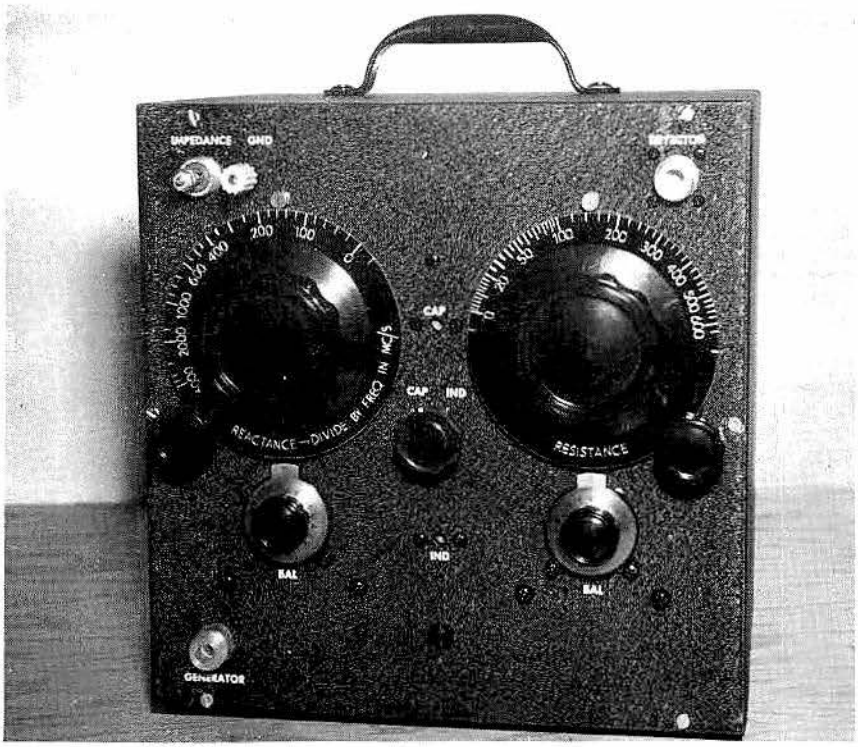

24. Using four pieces of ⅛-inch diameter plexiglas rod as spacers, assemble the primary and secondary shielded windings as shown in Fig. C15. Attach insulator I4 to the transformer by cementing it into the bobbin hole with Duco. Cement both windings to spacers with Duco and allow to dry overnight. This completes the transformer.

25. Remove top and bottom from the 8x10x10 utility box. Remove all paint from flanges; clean to bare metal to provide adequate rf shielding on reassembly.

26. Remove paint from inside of bottom plate for ½ inch in from each edge.

27. Remove paint from inside of top plate as shown in Fig. C16 by "phantom lines."

28. Drill the top plate as shown in Fig. C16.

Note that drawing shows INSIDE surface of plate.

29. Cut shafts of all four variable capacitors to ⅜-inch length. Remove all trimmer capacitors.

30. Tap the threeholes on the face of each capacitor, using a 6-32 tap. Take care not to damage the first stator plate; a bottom tap may be necessary. Attach three type I2 insulators to C1 and C2, using ¼-inch-long 6-32 set screws as shown in Fig. 3. This completes preliminary metalwork.

Actual Wiring

31. Attach C1 and C2 to shield box S5 using six ¼-inch-long 6-32 machine screws. Connect stator lugs of C1 to those of C2 with No. 18 tinned wire, as shown in Fig. 3.

32. Mount two soldering lugs as shown in Fig. 3 and connect remaining stator lugs to them, using No. 18 tinned wire.

33. Press the Erie CF-408 feed-thru into the 0.136-inch diameter hole in S5. Solder a short No. 18 tinned lead from the inside terminal of this insulator to the wire installed in step 31, as shown in Fig. 3.

34. Attach shield partition S5A, using three ¼-inch-long 6-32 machine screws. One of the screws installed in step 32 must be temporarily loosened and removed.

35. Attach four type I3 insulators to shield box S5 as shown in Figs. 3 and C9.

36. Attach three more soldering lugs to S5 as shown in Fig. 3, using ¼-inch-long 6-32 machine screws.

37. Attach four type I3 insulators to shield platform S1, using the 4¼-inch-spaced holes in S1 and 6-32 screws. Attach S1A to S1, using 6-32 screws from the inside of S1. Attach the female phono socket to S1 in the 7/16-inch diameter hole. Attach four type I1 insulators, using ¼-inch-long 6-32 screws. Do not tighten the screw in the hole marked "Hole A" in Fig. C1; this screw will hold a cable clamp later. See Fig. 4 for details of insulator placement.

38. Attach four type I1 insulators to shield platform S2, using the 2⅜-inch-spaced holes in S2 and ¼-inch-long 6-32 screws. Attach S2A to S2. Attach capacitor C3 with 1-¼-inch-long 6-32 screws, using two nuts on each screw as shown in Fig. 4. Mount a soldering lug under one nut as shown. Align the capacitor by adjustment of the mounting screws and nuts.

39. Solder a No. 18 tinned wire to the female phono socket and pass the wire through the corresponding hole in S2. Attach S2 to S1 with ¼-inch-long 6-32 screws going into the type I1 insulators attached to S1 in step 37.

40. Attach C4 to shield platform S3 using ⅝-inch-long 6-32 screws with dual nuts (same as in step 38). Attach S3A to S3.

41. Connect two of the stator lugs of C4 with No. 18 tinned wire as shown in Fig. 4. Slide shield assembly S4 into S3A. Center assembly S4 in S3A, using a piece of ¼-inch-long insulating tubing. Make certain that opposite ends of S4 and S3A are even as shown in Fig. 4, and cement tubing in place with Duco. Solder the shorted end of resistor R2 (which is in S4) to the wire connecting stator lugs of C4.

42. Attach shield platform S3 to S2, using ¼-inch-long 6-32 screws going into the type I1 insulators installed on S2 in step 38.

43. Place a ¼-inch-long 6-32 screw in the flange of S3 as shown in Fig. 4, with a soldering lug. Connect this lug to the stator lug of C3 with No. 18 tinned wire. Using ¼-inch-long 6-32 screws, mount a soldering lug in Hole B (see Fig. C1) of S1 and another in S2 as shown in Fig. C2. These lugs are mounted in a direction opposite to that of the platform flanges.

44. Attach the "unknown" ground lug to the panel next to the "unknown" coax connector hole, as shown in Fig. C16. Attach the "receiver" coax connector to the panel, from the inside. Attach the "IND-CAP" switch to the center of the panel, using an extra nut to position the switch as far as possible from the panel. Orient the switch as shown in Fig. 5. Place a soldering lug under each nut. Mount C5 and C6, using ⅜-inch spacers between the capacitor frames and the panel. Connect the

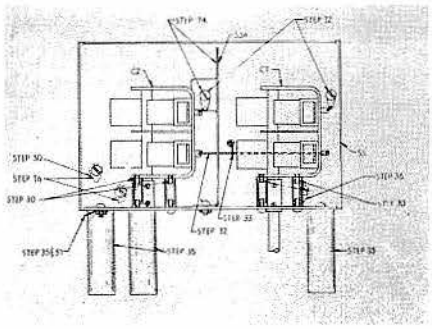

Fig. 3—Resistance box—Inboard view

rotors of C5 and C6 to the lugs of the switch with No. 18 tinned wire as shown in Fig. 5.

45. Solder a 2½-inch length of No. 18 tinned wire to the "COMMON" terminal of the switch. Connect the stators of C5 and C6 to the remaining switch terminals, as well as resistors R3 and R4. Complete connections are shown in Fig. 5.

46. Attach the "unknown" coax connector to

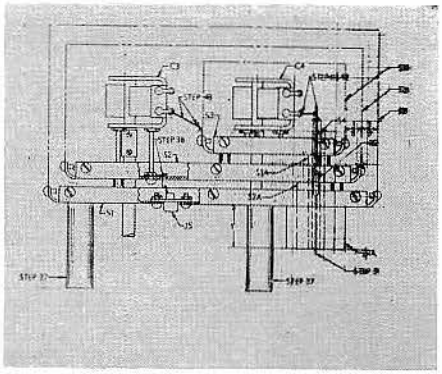

Fig. 4—Reactance Assembly—Inboard view

the panel, placing a soldering lug under one mounting screw. Connect the "unknown" ground lug to this soldering lug to provide a good bond.

47. Mount panel bearings for capacitors C2 and C4. Mount the special panel bearings furnished with the Johnson Vernier Dial assemblies in place. Attach the two large dials to dummy shafts and mount the dial indicator in the position you prefer. Remove the large dials and dummy shafts after placing the dial indicators.

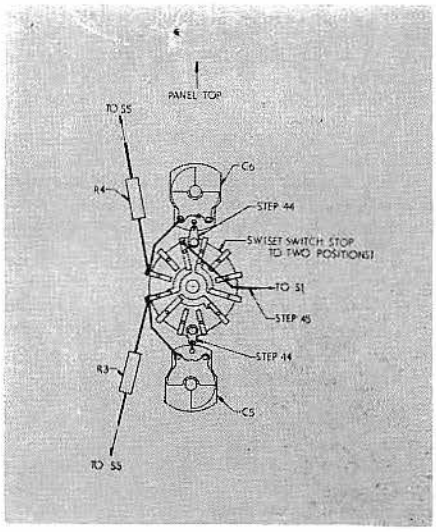

Fig. 5—Switch Assembly

48. Mount S5 at the left side of the panel (as shown in Fig. C16) and mount the assembly of S1, S2, and S3 at the right side. See Fig. 2.

49. Attach shaft couplers to the four capacitors. Cut the plexiglas shafts to length and mount them in place. Attach the large vernier dials. Set the dial of C2 so that it reads "0" at minimum capacity. Set the dial at C4 so that it reads "100" at maximum capacity. Mount the two Calrad dials on the panel, setting them so that they both read "0" at maximum capacity. Attach the knob to the "IND-CAP" switch.

50. Connect resistor R1 (270-ohm deposited-carbon) from the soldering lug on S2 to the lug in line on S5. Connect R3 (220 ohms) and R4 (100 ohms) to the soldering lugs on S5 which were installed in step 36. R3 will be the resistor nearest the bottom of the panel.

51. Connect a No. 18 tinned-wire lead from the "detector" coax connector to the lug on S5. Connect a No. 12 (note different wire size) lead from the "unknown" connector to the free end of R2. *Make sure that* R2 *is not shorted to any shield.*

52. Attach the transformer, completed in step 24, to the bottom of the panel as shown in Fig. 2. Attach the coax connector connected to the transformer to the panel in the "signal generator" hole. In the hole between the transformer and the connector, mount a cable clamp to hold the shielded primary lead. Secure the

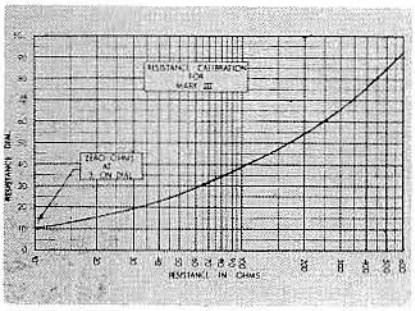

Fig. 6

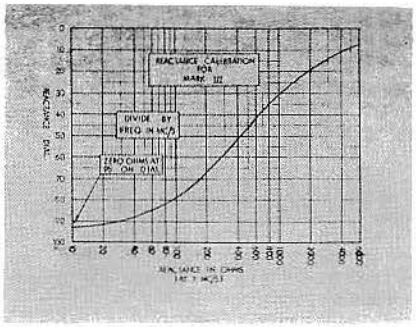

Fig. 7

shielded secondary lead with another clamp held by the loose screw installed in step 37.

53. Mount a soldering lug to S1B with a ¼-inch-long 6-32 screw, placing the lug in the direction of the box opening.

54. Place ¼-inch-long 6-32 screws in all remaining tapped holes in S1, S2, and S3. Starting with S3, place all shield boxes in place and secure screws. Connect a No. 18 tinned lead from the soldering lug installed in step 53 to the Erie feed-thru on S5. Set C5 and C6 to mid-capacity.

55. Attach four rubber feet to the bottom plate of the case and four more to the bottom side of the utility cabinet. Restore the front plate in place and secure with the sheet-metal screws provided. This completes construction of the bridge. After calibration, it will be ready for use.

Calibration and Use

Since the Mark III is a null-type instrument (adapted from the Schering bridge circuit) it can only be used with a signal generator and a detector. Both must be shielded; however, a Heath SG-8 will do nicely as the signal generator and any decent communications receiver will serve as the detector. For best results, it

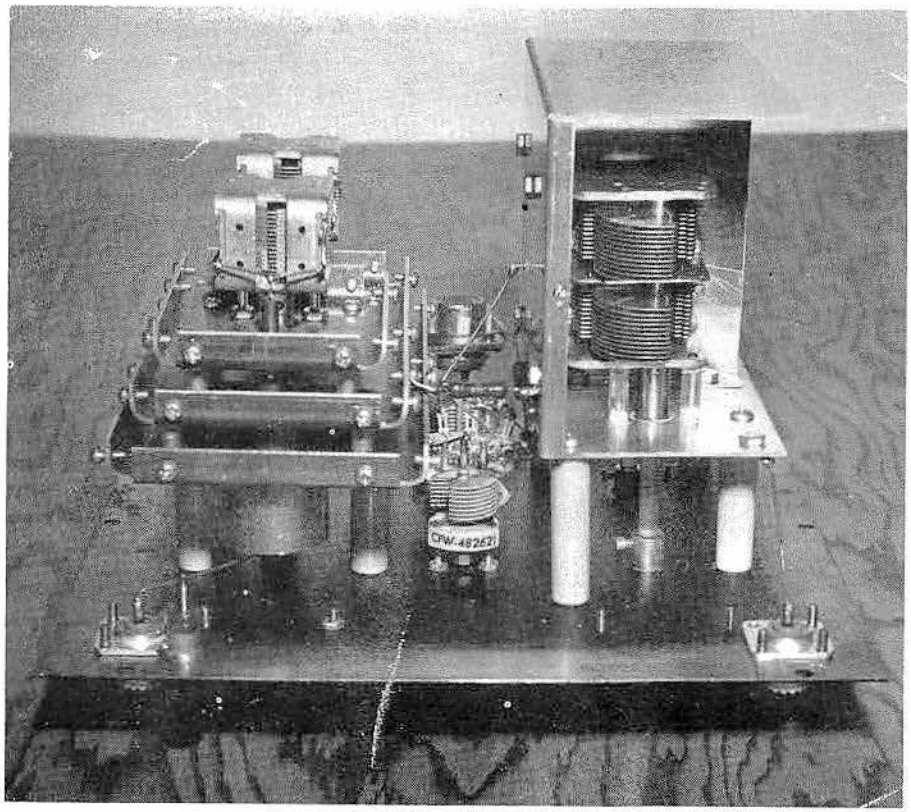

should be calibrated with the signal generator and receiver with which it will be used.

56. Connect the bridge to the signal generator and the receiver, using coax cable from the panel connectors to each.

57. Set both the signal generator and the receiver to 2 mc.

58. Short the "unknown" terminal and ground terminal using a banana plug in the connector or a coaxial short made by soldering the pin of a PL-259 connector to the shell through a copper disc.

59. Set the "IND-CAP" switch to "CAP."

60. Set the "Reactance" dial to 15.

61. Set the "Resistance" dial to 5.

62. Tune the signal generator, only, for maximum signal in the receiver.

63. Using the two small "balance" dials, reduce the signal in the receiver to the lowest level possible. This is the "null" or "balance" condition. The dials will interact, and multiple adjustment will be necessary. However, all receiver and signal generator adjustments must be left alone during this step.

64. Replace the short across the "unknown" connector with the 620-ohm deposited-carbon "test" resistor.

65. Using only the large "resistance" and "reactance" dials, null out the signal once more. Record the final reading of the "resistance" dial. If this reading is 95, you are extremely lucky and the first half of the calibration is complete. If not, proceed with step 66.

66. If the "resistance" dial reading is less than 95, increase the capacity of C6 slightly and repeat steps 60 through 65. If the reading is larger than 95, decrease the setting of C6 and repeat steps 60 through 65. Continue this process until the reading comes out at 95.

67. When capacitive calibration is complete, set the "IND-CAP" switch to "IND," and the "reactance" dial to 30.

68. Repeat steps 60 through 65; if the final reading of the "resistance" dial is other than 95, proceed with step 69.

69. If the reading is less than 95, increase the capacity of C5 slightly and repeat steps 60 through 65. If the reading is larger than 95, decrease the setting of C5 and repeat. Continue until the reading is 95. This completes calibration, and the curves shown here can be used for readings.

Using the Mark III

To use the Mark III, set the instrument up as described in step 56 of the calibration procedure. Set the signal generator to the desired frequency and short out the "unknown" terminal of the bridge as described in step 58.

If you're measuring an inductive impedance, set the "IND-CAP" switch to "IND," the reactance dial to 95, and the resistance dial to 5. Null the signal with the small balance dials.

Now remove the short and connect the unknown. Rebalance the bridge using the large dials, note the readings, and convert the readings to ohms by use of the calibration curves.

These initial values must be corrected. The reactance value is corrected by dividing the value read from the curve by the frequency (in mc) at which the reading was taken. The resistance value is corrected by obtaining the correction factor due to frequency from Fig. 8 and multiplying the reading by this factor.

If you're measuring a capacitive impedance, set the switch to "CAP." Then estimate the reactance of the unknown and set the large reactance dial to a value just larger. Set the resistance dial to 5 and short out the "unknown" connector. Null the signal with the short and again with the unknown, the same as for an inductive impedance.

Correct the resistance reading in the same manner as for an inductive impedance. However, the reactance reading is corrected differently: Subtract the value taken from the calibration curve from the value originally set on the reactance dial. Now divide this remainder by the frequency (in mc) at which the reading was taken. The result is the true value of capacitive reactance.

A few minutes' practice will make operation of the Mark III far more simple than the detailed directions would indicate; in practice, you can make a reading in less time than it takes to read these paragraphs.

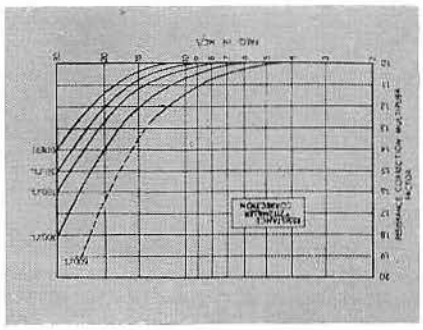

Fig. 8

Parts Substitutions and Design Changes

Since few hams are content to build a "Chinese copy" of someone else's design, a few words on the effect of changes are necessary.

Naturally, the Mark III doesn't represent the only possible—or even necessarily the best—way in which such a bridge can be built. Any part, or all, may be changed. However, any such change will invalidate the calibration curves, and is not recommended unless the builder has access to laboratory equipment.

Even then, before making any substitutions, these three design articles should be read and fully understood:

"A Radio-Frequency Bridge for Impedance Measurements From 4000 KC/S to 60 MC/S," D. B. Sinclair, Proceedings of the I.R.E., November, 1940, pages 497-502.

"A High Frequency Model of The Precision Condenser," D. B. Sinclair, General Radio Experimenter, October-November, 1938, pages 1-7.

"The Effect of Stray Capacitances to Ground in Substitution Measurements," M. Reed, Wireless Engineering, May, 1936, page 284 ff.

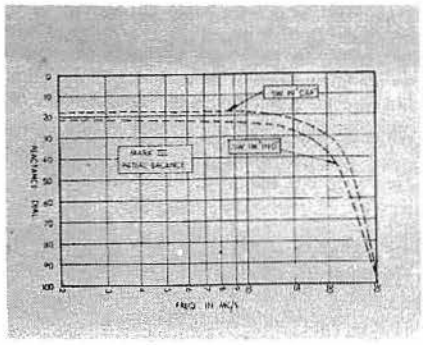

Fig. 9

Parts List

Quan.	Item	Description	Cat. No.
1 ea.	C1, C2	Miller, 10-365 mmf/sect.	2112
1 ea.	C3, C4	Miller, 10-365 mmf	2111
1 ea.	C5, C6	50 mmf air padder (good quality)	APC-50
1 ea.	J1, J2, J3	SO-239 Panel coax connector	
1	J4	Phono plug	
1	J5	Phono socket	
1	R1	Aerovox 1% 1/2W 270 ohm "Carbofilm"	Type-CP
1	R2	330 ohm 5% 1/2W Carbon Resistor	
1	R3	220 ohm 5% 1W Carbon Resistor	
1	R4	100 ohm 5% 1W Carbon Resistor	
1	Test	Aerovox 1% 1/2W 620 ohm "Carbofilm"	Type-CP
1	SW	Centralab 3p; 1 Sect; 2-3 Position (reset stop to two positions only)	2506
*2	Dials	E. F. Johnson Vernier (0-100 CW)	116-285-1
2	Brgs	E. F. Johnson Panel Bearings	115-255
4	Cplrs	Metal ¼ shaft couplers	
3	Rod	¼ inch diameter plastic rod x 12"	
1	Rod	⅛ inch diameter plastic rod x 6"	
2	Rod	⅝ inch diameter plastic rod x 12"	
2	Dials	"Calrad" 1-13/32 inch Vernier Dial	VD-36
1	BP	Binding Post (ground lug)	
1	Case	Bud carrying case 10"x10"x8"	CC-1100
1	Box	LMB box (plain) 3" x 4" x 6"	
1	Hood	UG 177/U coaxial cable hood	
1	Insul.	Erie feed-thru insulator	CF-408
1	Short	PL-259 coaxial male connector	
2	Clamps	Walsco clamp for ⅛ to 3/16 cable	7502-N

Of the above list the critical parts are:
C1, C2, C3, C4, J2, R1, Test resistor, Case, LMB box, UG 177/U, Erie feed-thru.

* This author hand engraved these dials per Figs. 6 and 7.

MEASURE RF IMPEDANCE WITH YOUR SWR BRIDGE

Warren McDowell W2AOO

So far, the great majority of antenna impedance bridges that we have found in construction articles are devices that function only with a low power rf source. The run-of-the-mill impedance bridge is designed to operate with a grid dipper as the source of rf excitation. Operation with tube type dippers is generally intended as the transistor dippers produce an rf level that is too low for excitation of this bridge type.

The conventional antenna bridge cannot be left in the transmission line continually as excessive rf energy would soon destroy the device. This means that each time measurement of antenna impedance is desired, the transmission line must be opened and the bridge inserted and grid dip excitation applied. Grid dippers are not necessarily the most accurate rf source for a specific frequency in an amateur band . . . therefore the station receiver must monitor the dipper output for any bridge accuracy. A low power bridge will not often present the true operating impedance of the antenna . . . especially antennas with parasitic elements. A bridge that operates under full transmitter power will present a much more accurate picture of your antenna system at a specific frequency.

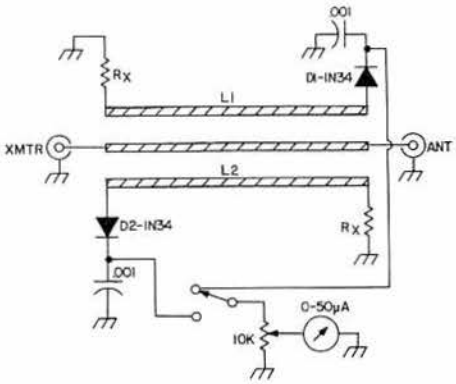

Fig. 1. Conventional swr bridge.

Inspiration for the "In Line" full power bridge came from information concerning the standard swr bridge. Just about every amateur has in his possession some sort of swr bridge and the great majority are of the type illustrated in Fig. 1. This bridge consists of a section of transmission line near which are placed two inductors. These inductors are actually two bridges along with their associated diodes and resistors. One of the bridges reads forward power and the other reflected power. The resistors (Rx) at the end of the inductors L1 and L2 are critical for accurate bridge null (balance) and therefore must be the proper value for the specific transmission line used. For the average swr bridge the value for Rx is 100Ω for 75Ω line and 150Ω for 50Ω transmission line. Considering that resistor Rx is critical for the impedance of the line in use, varying the value of Rx and devising a system of calibration for Rx would enable us to determine the impedance of a line when a null is achieved on the bridge meter.

The "reflected" inductor which is L1 in Fig. 1 is the portion of the bridge circuit we are interested in for impedance measurements. The value of Rx and the transmission line must balance the bridge for a null to be realized. Any variation from the above parameters will mean changing the value of Rx so that the bridge again balances at a new impedance value.

By experimenting with various values of resistance at Rx, it was determined that a 1000Ω potentiometer represents a fair value. The 1000Ω potentiometer is inserted in place of Rx on inductor L1 (see Fig. 2). This is the inductor with the diode pickup located toward the load or antenna end of the swr bridge.

Make sure that all leads to the 1000Ω potentiometer are short and that the metal case (shell) of the potentiometer is well grounded. Excessive lead length or inductance will create inaccuracy of the device. The position of the potentiometer will be determined by the physical layout of your particular swr bridge. It must be set at a point where the shaft can be extended through the front panel of your swr bridge. Allowance must also be made for a dial or other indicating device which can be calibrated in ohms (impedance) on the front panel. It might even be desirable to mount your entire present bridge in another larger case so that all functions can be accommodated.

Calibration of this in-line bridge was the major problem. An ordinary grid dip meter will not provide sufficient excitation for readings. With full power applied, especially a kilowatt, it becomes difficult to find resistive dummy loads of various values to calibrate the bridge. Even with 100W of rf, proper resistive load values are not common.

The solution to the calibration problem came to us in the form of an (ouch!) CB transmitter. A CB transmitter is fortunate if it is able to put out 3W of rf and at the same time is well within the frequency range of an swr bridge. The most important fact is that a CB transmitter will provide adequate excitation for calibration of the bridge with ordinary 5W 5% carbon (garden variety) resistors. For calibration, a good assortment of these resistors is necessary. Use values such as 5, 27, 47, 75, 100, 150, 220 and 470Ω. Intermediate values can be then interpolated on your scale. The calibration procedure is simple . . . first borrow your neighbor's CB, then attach the 5W resistors across the antenna coax connector of the bridge and excitation of the CB transmitter is applied to the remaining connector on the bridge. The bridge sensitivity should be set for a middle scale reading of the meter and the 1000Ω potentiometer is varied until you reach a null on the meter. Mark the value of the calibration resistors on the potentiometer scale (dial). Do this for all of the available resistors and your bridge will be in fair calibration.

At this point we should mention that this system does not measure reactive components in the antenna system. If your antenna is reactive, either inductive or capacitive, the meter will present a shallow, poorly defined null at the operating frequency. A sharp, well defined null will indicate a purely resistive impedance.

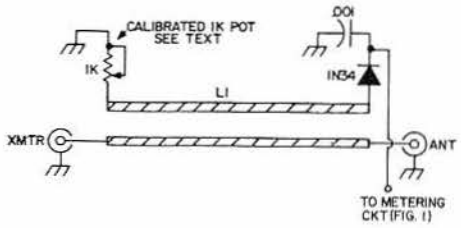

Fig. 2. The modified bridge leads to 1K pot should be as short as possible and shell (case) of pot grounded.

When using the bridge in its former function as an swr bridge, set the resistance dial to the value of your transmission line. When measuring impedance, vary the dial for maximum dip on the meter and read the resistance (impedance) directly.

As a final point, it is wise to insert the swr/impedance bridge at a half-wave or an even multiple of a half-wavelength from your antenna. At half-wave points from the antenna, the antenna impedance is repeated. This will enable your measurements to be much more accurate. When determing half-wavelength points, take into consideration the velocity factor of your particular coax.

USE YOUR GDO AND Z METER

Denys Fredrickson WØBMW

The GDO is one of the most versatile pieces of test equipment available. Yet there are many hams who don't know how or when to use one. The writer will try to describe and explain some of its various functions.

The GDO is basically a variable high frequency oscillator with a frequency range of approximately 550 kc to 250 Mc. It may also be used as a diode detector or wave meter. The GDO gets its name from the fact that a meter measures the grid current and when the oscillator circuit is coupled to a resonant circuit a reduction in grid current is obtained. This is called the grid dip. However, when it is used as a wavemeter and coupled to an rf source, an increase in current is obtained at resonance.

The GDO and impedance meter can be used to accomplish the following:

1. Determine the resonant frequency of tuned circuits, including antennas.
2. Determine the impedance of circuits, receiver inputs and antennas.
3. Determine the length of half-wavelength or quarter-wavelength transmission or tuning stub lines.
4. Determine the "Q" of a circuit or component with the aid of a VTVM.
5. Determine the resonant frequency of individual coils, capacitors or crystals that are within the range of the GDO.
6. Determine the rf frequency of energized circuits.
7. Monitor a radiated rf signal with the aid of headphones.
8. Neutralize rf stages.
9. Locate parasitic oscillations.
10. To align receivers and television sets.
11. Determine where BCI and TVI is entering the radio or television receivers.
12. Determine unknown inductance.
13. Determine unknown capacitance.

Now if you will step into the lab we will try to demonstrate how these instruments can be put through their paces. Let's begin with

the simple functions and then gradually creep up to those which are more complex so they don't scare us before we get started.

An oscillator-detector

Simply plug in a pair of headphones (if GDO has facilities for them) and "zero-beat" with the radiating signal. This then will be the frequency of the radiating signal.

Crystal frequencies

Connect a one turn loop of wire across the crystal and couple the GDO close enough to get a dip of the meter when resonance is obtained. It is always wise to check lower frequencies to be sure it is the fundamental frequency that is being indicated.

Frequency determination

Generally the GDO has a switch which is used to remove the plate voltage from the tube. The tube will then serve the function of a diode and the meter as a diode load. When a peak deflection of the meter is obtained this will indicate the frequency of the radiating signal.

Resonance of an RF choke

When an rf choke is used as a parallel or shunt fed circuit, it must be free of self resonance over the operating frequency range of that circuit or it may burn up. The popular pi tank circuit is an example. Place a short circuit across the choke and then determine its self resonant frequency by coupling the GDO close enough to indicate a dip on the meter when the resonant frequency is obtained.

Neutralization

Apply plate power to the exciter stages and filament power only to the stage being neutralized. Use GDO as a wavemeter and couple close to the tank coil in the stage being neutralized. Vary the frequency of the GDO until maximum reading is obtained and then adjust the neutralization for minimum GDO meter reading. The circuit being neutralized may have to be retuned and the above procedure repeated with a closer coupling of the GDO to the Tank coil.

IF alignment

Tune the GDO to the desired frequency and couple it close to the if coil to be aligned. Adjust the if coil until a dip is observed on the meter. The if coil will then be tuned to the desired frequency.

Inductance and capacitance checking

To determine the value of an unknown capacitor, connect it across a known inductance and use the GDO to find the resonant frequency of the circuit. With these known values a reactance chart will give the value of the capacitor. Some GDO's supply a chart which corresponds to the coils supplied with the GDO as the known inductances. To determine the value of an unknown inductance, connect a known capacitance across the coil and use the GDO to find the resonant frequency. Again, the reactance chart may be used or the following formula (which may be used for either inductance or capacitance) for resonant circuits:

$$L = \frac{1}{39.48\ (f^2)\ C} \quad \text{or} \quad C = \frac{1}{39.48\ (f^2)\ L}$$

Where f = cycles per second
L = inductance in henries
C = capacitance in farads

The inductance of an air core coil can be estimated by the following formula:

$$L = \frac{(rN)^2}{9r + 10w}$$

Where L = inductance in microhenries
N = number of turns
r = radius of coil in inches
w = length of coil in inches

Q measurements

Connect a condenser across the coil so the tank circuit resonates at the desired frequency. Connect a VTVM across the tuned circuit and tune the GDO until maximum reading is obtained on the VTVM. The GDO coupling may be changed until a convenient value is obtained on the VTVM and then it must not be moved during the remainder of the test. Note the resonant frequency f_c then detune the GDO to a lower frequency until the VTVM reads 70.7 percent of its original or peak value and call this frequency f_1. Now detune the GDO to a higher frequency until the VTVM again reads 70.7 percent of its original or peak value and call this frequency f_2. The Q is then calculated by using the following formula:

$$Q = \frac{f_c}{f_3}$$

Where f_c = is the center of resonant frequency
f_3 = the difference between f_1 and f_2

Parasitic oscillations

By using a pair of headphones with the GDO, the parasitic oscillation frequency may be determined. Turn the power off of the stage being checked and then use GDO to find the circuit which resonates at the parasitic frequency by moving the GDO slowly around the wiring. When a "dip" is observed, moisten the finger and touch an ungrounded point of the circuit. If a change in the dip is observed, it indicates that it is the portion of the circuit that would be a likely suspect.

BCI and TVI locator

Most of the BCI and TVI problems can only be resolved at the receiver, either by installation of filters, resistors or condensers or a combination of all three. The problem is—where is the rf entering the receiver? Use the GDO tuned to the frequency which produces the greatest amount of interference. Probe around with the GDO until the most sensitive spot is located, which is indicated by watching or listening to the receiver interference. After the point of entry is determined then the appropriate corrective action can be accomplished.

Antenna measurements

Space does not permit to discuss all types of antennas and adjustments so only a few will be mentioned to give some idea on the use of the instruments. At this point it should be mentioned that inductive type coupling should be used between the GDO and antenna when checking near the current maximum point and capacitive coupling when checking near the voltage-maximum point.

The beam antenna has gained tremendous popularity in recent years plus many headaches for those striving to obtain the maximum effectiveness. Most of the headaches can virtually be eliminated by using the GDO and Impedance meter (Z-meter). Let's take a look at a 3 element yagi and see what has to be done to obtain a good adjustment. The element lengths must be physically adjusted or electrically loaded to obtain resonance at the desired frequencies and the feed point impedance must match the impedance of the transmission line. These two points are not the only considerations for beam adjustment but they are the most important factors. The GDO can be inductively coupled to each element and the elements adjusted until each one is resonant at the desired frequencies. It is best to make the measurements while the antenna is in operating position. This is very difficult to do in many cases but let's assume you can. After the elements have been adjusted, the feed point must be adjusted to match the line. The Z-meter and GDO will be used to accomplish this adjustment. The Z-meter is basically a resistance type bridge with a calibrated potentiometer as one of the bridge arms. Connect the Z-meter directly to the antenna feed point. Couple the GDO to the Z-meter inductively thru a couple loops of wire connected to the other terminals of the Z-meter. Tune the GDO to the resonant frequency of the beam and adjust the Z-meter to the dip or null. If the impedance indicated by the Z-meter is not the same as the transmission line then readjust the matching network and redip the Z-meter until the impedances are equal.

Now—if you can't adjust the antenna in the operational position you still can determine the resonant frequency and the impedance by standing on the good old Terra-Firma. The procedure is a little more involved but effective. First—we must have a means of electrically connecting the instruments to the antenna. This is best accomplished by a transmission line a half-wave or a multiple of a half-wave in length. Determine the height of the antenna above ground and calculate how many half-wave lengths of line will be required by using the following formula for a half-wave length of line:

$$L = \frac{(492)\ (K)}{f}$$

Where L = feet
f = megacycles
K = propagation constant
(RG/8 is .66)

This is an approximate length so be sure and cut it extra long because now we will find the exact physical length. Why an exact physical length? A halfwave length of transmission line will reflect the resistance placed across the output at the input end of the line, i.e. if a 50 ohm non-reactive resistor is placed across one end of a half wave or multiple length thereof, the GDO and Z-meter will indicate 50 ohms at the other end of the line. Cut the line somewhat longer than calculated above, short one end and connect the Z-meter to the other end of the line. NOTE: Keep twin lead off the ground and away from metal objects. Set the Z-meter to zero impedance and couple the GDO inductively to the Z-meter. Adjust GDO frequency until the fundamental frequency causes the Z-meter to dip or indicate a null. The frequency indicated should be lower than the desired frequency. Simply cut a few inches of cable off, short the end again and readjust the GDO. Repeat this procedure until the desired frequency (which should be the same as the resonant frequency of the antenna) is obtained. You will then have an electrically halfwave length of line or a multiple thereof.

Coax or twin-lead may be used for the halfwave length line when checking the impedance of the antenna. Connect the line to the antenna, hoist the antenna up to its operating position and adjust both the Z-meter and GDO for the null indication. If the antenna is not resonant at the desired frequency, the driven element should be readjusted a measured amount and then note the frequency change. This will give you an idea how much the resonant frequency changes with a corresponding element change. Now adjust the matching network to the desired impedance. This will be accomplished when the Z-meter dips at the desired impedance with the GDO set at the resonant frequency of the Antenna.

What would you do if your 100 foot coax cable developed a short someplace along the line? Replacing the whole line would be too expensive. Simply connect the Z-meter to one end of the line, adjust the Z-meter for zero impedance and then adjust the GDO for lowest frequency which will produce a null on the Z-meter. Use this frequency in the formula given for a halfwave length line and carefully calculate the length which will be the distance from the input end to the short.

A quarter wave length tuning stub can also be determined by using the procedures just outlined for the halfwave length line except a quarter wave line reflects a short at the input when the output end is electrically open. Now that we have mentioned the quarter wave length line, some may be wondering just what useful purpose does it serve. The quarter wave tuning stub (as it is sometimes called) may be used for antenna matching, TVI elimination or matching two units which have different impedances. The quarter wave matching stub can be used as a matching device on antennas which is explained in most antenna handbooks. It may also be used to eliminate an interfering frequency from entering the TV. This is accomplished by connecting a quarter wave stub to the TV antenna terminals which is a quarter wave in length at the interfering frequency.

Another use for the quarter wavelength matching stub is to permit maximum signal transfer between the source and a load which have different impedances. If the signal source impedance was 100 ohms and the load impedance was 52 ohms, a 72 ohm quarter wavelength of line would give a good impedance match. Hold it just a minute, how in the world did we come up with that 72 ohm business? Simple—another formula will give us this information.

$$Z_o = \sqrt{Z_s Z_a}$$

where Z_o = Impedance of quarterwave matching stub
Z_s = Impedance of the source
Z_a = Impedance of the load

Very little has been said concerning the various methods of GDO coupling. Actually—only two types of coupling are used; inductive and capacitive. Capacitive type coupling may be used on shielded coax cable, the ends of antenna elements and generally where the voltage maximum exists. To obtain the greatest accuracy, the GDO should be loosely coupled. Parallel coupling to inductors can be used to obtain maximum coupling.

Chapter III

Measuring RF Power Output

MEASURING RF OUTPUT

Paul Schuett WA6CPP

So your new Bandjammer 5000-Q is rated at 752W peak power. Big deal. How much of this is getting out where it counts?

It's easy to find out by inserting an rf ammeter in series with the line. A more exact reading would be to have the rf ammeter at the antenna input terminals, but that might be impractical when it comes to reading the meter (although you could put a diode there and a remote-reading meter in the shack).

Recently I found an rf ammeter at one of the mail-order surplus houses for $2.95. I installed this in a little cabinet, put two coax connectors on the back (in and out) and now can read rf current in the line, into the dummy antenna, or wherever it is going.

Remember the formula $P=I^2R$? Square the reading on the meter, multiply by the impedance of the line you're using, and you have the power past that point. At the antenna, you could determine the antenna resistance and take the current reading at that point.

For those who have difficulty with mental computations and can't find a pencil, the following chart fives the computed power levels present in matched 50 and 70 Ohm coaxial lines for various levels of rf current:

RF Current Amperes	Power Output in Watts 50 Ohm Line	70 Ohm Line
0.5	12.5	17.5
1.0	50	70
2.0	200	280
3.0	450	630
4.0	800	1120
5.0	1250	1750

When tuning up the rig, place the ammeter on the antenna side of any tuning or matching devices and tune for maximum current.

Inside wiring is extremely simple. Note ground wire installed to insure continuity of the shield circuit.

The completed instrument showing the coax connectors on the rear.

It's amazing to learn how much (or how little) current these rigs produce. For instance, my Swan 250-C puts 1.35A into a 50Ω line. My friend's SB101 from Heathkit put out 0.7A until we worked on the antenna – then it put out about 1.25A. My Heathkit SB401 puts anywhere from 2 to 0.6A into a 50Ω Cantenna, depending on what band it's on.

Commercial stations determine their power by the antenna current. Knowing the antenna resistance at the operating frequency, they multiply that by the current squared. If the antenna resistance is 62½Ω, 4A rf would be 1 kW into the antenna. 126.48A would be 1 MW.

Remember the ammeter does insert a little reactance in the line (I never leave it in all the time), and the calibration changes with frequency, although you can tell what side of the ballpark you are on. An rf ammeter in the shack makes a nice piece of test equipment.

LIGHT BULBS AS RF INDICATORS

John Houser WB2GQY

The major appeal to the amateur – as well as some commercial applications – of light bulbs as rf power indicators is low cost. To this must be added the universal availability of bulbs and screwbase sockets for pennies.

As low cost is of primary interest to well over 50% of those interested in any project, and as I have always had an insatiable desire to find out the why's and wherefore's of standard light bulbs as rf power indicators, I decided it might be the opportune time to do a resarch project and determine once and for all just which bulbs might be suitable and which might not be, and also to determine whether light bulbs would make *good* rf power indicators, or poor, and to find out what precautions might have to be taken if one decided he was going to take this low-cost path of determining his transmitter output power rather than go for a more expensive power output meter.

Also, power output meters in the higher wattage ranges become quite expensive compared to the $2 to $5 which might be expended in a light bulb indicator. In general, porcelain screw bases are available for from 12¢ to 25¢ each, and bulbs from 15¢ to 65¢ each, and not more than four of each are necessary for up to 3 KW power indication.

Table 1 lists most of the common types of electric light bulbs readily available. One look at this table immediately reveals why such light bulbs might not be such good rf power indicators as some folks may have thought they were in the past. It also reveals that some very special precautions have to be taken in using them, or the user may find he has overloaded his transmitter and burned up a few components which might be expensive to replace.

Table 1

Variation in Resistance, Cold to Hot State, Common Variety of Electric Light Bulbs.

Bulb Rating Watts At 115V	Cold Filament Resistance	Hot Filament Resistance	Ratio Cold to Hot Filament Res. (Approx.)
7.5	166	1750	1 to 10
25	40	529	1 to 13
40	27	331	1 to 12
60	20	219	1 to 11
100	9	132	1 to 15
150	6	83	1 to 14
200	4.5	65	1 to 14
250	3.5	53	1 to 15
500	2	26	1 to 13
750	1+	17.7	1 to 15

Table 2

Possible Configurations for Various Power Outputs at Various Impedance Terminations

A. – Nominal 70 to 73Ω Impedance Loads:		
175W Load:	3–60W bulbs in parallel	(73Ω)
	OR	
	7–25W bulbs in parallel	(70Ω)
3,000W Load:		
	4–750W bulbs in series	(71Ω)
B.) Nominal 50 to 55Ω Impedance Loads:		
250W Load:	4–60W bulbs in parallel	(54.9Ω)
500W Load:	2–150W bulbs in series, both paralleled by	
	1–150W bulb	(55Ω)
1,000W Load:	2–500W bulbs in series	(53.6Ω)
2,250W load:	3–750W bulbs in series	(53.1Ω)

The extremely high ratio of cold to hot filament resistance in all types of these bulbs immediately struck me as being the most undesirable factor in using them.

It is very easy to see, for instance, that if one wished to use a 250W bulb for indication on a 250W transmitter, and he computed the resistance at 250W to be 53Ω, (which it is, but only when *hot*), he would assume he had just about a perfectly matched indicator to plug in in place of his 52.5Ω feed line.

However, from this table, it is apparent that this 53Ω resistance is attained *only* at full brilliance and wattage, and the actual cold resistance is only 3.5Ω. In other words, if the bulb were connected to the antenna terminals of the transmitter, and the transmitter keyed full power, the transmitter would be looking into *not* 53Ω, but 3.5Ω, which is a lot of difference, and an extremely low value for any pi network to match.

For a few seconds, until the filament attained full brilliance, the transmitter would be subjected to a terrific overload, due to this impedance mismatch.

Therefore the first precaution which might be emphasized in using light bulbs would be *not* to key the transmitter at full power with a cold bulb, but to gradually bring the power from some lower value to full power as the bulb attains full brightness (and hot, matching resistance).

Not until I got into this project did I realize the very high ratio of resistance of these filaments from the cold to hot state; I don't suppose very many people do. It also brings to mind how the house electric meter must jump every time a bulb is snapped on in the house. This is not an ad for those light dimmers being sold at all the electrical stores, but it sure brings to mind that power bills could be cut appreciably through their use, i.e., bringing the bulb gradually to full brilliance instead of just snapping on a switch.

Getting back to the bulbs, Table 2 gives in various configurations series, and/or parallel combinations which would be most likely to give the amateur a load for a particular transmitter power output, in nominal impedances near 52 and 72Ω. If the configuration mentions 200W, this does not mean that it would be suitable for indicating the output of a 100W output transmitter, because at half brightness, the resistance offered by the bulb is not identical to that at full brightness.

While a differance of an ohm or two would not be serious, nor would a difference of as much as five, or even ten watts, at high power levels, at low power levels less than 100W, for instance, such differences would be seen to become increasingly serious from the matched impedance standpoint. The configurations given match quite a variety of standard line impedances and a wide range of power outputs. Matches can be obtained for RG-8, 11, 17, 13, 58 and 59 type cable.[1]

One may not realize without measurement that the lead length of the filament support wires alone inside the 25–150W bulbs is very close to 18 cm. Even though they are coiled on a 2 to 1 ratio, the filament is inductive in every sense of the word. At higher frequencies, the filament support wires would appear inductive, and to these factors must be added the parallel capacity of the screwbase shell and the central base contact wafer. Even though such capacity is small, it would become significant at most amateur frequencies above the 30 MHz range. Though the 22 cm total wire path would perhaps indicate a bulb could be used up to 300 MHz, such is not at all the case.

It is easy to see that the sometimes suggested trick of using a capacitor in series with a light bulb as a load should be approached with caution, for it would be very easy indeed to run into a series resonant circuit which might result in damage to the transmitter to which such circuit were connected.

In the course of my preparation of this article, I discussed the ramifications with a number of interested hams. Some of them suggested I extend the research to include the use of the smaller types of indicator (pilot) bulbs as loads for testing out transmitters with power outputs in the 1W to 20W range, not only just for amateur applications, but also with a view to using them as loads in testing FM transmitters.

When one considers that there are well over 100 types of these small bulbs, rated from .001W to 2W, and if all of these were to be considered individually, it could take a vast amount of time – and eventually one would end up with perhaps only five or so of these bulbs that would be at all suitable, so such research was not included in this article. However it did open up a field in which there may be a demand for information and may be the subject of a subsequent article.

Frequency Ranges

The use of standard screw-base ceramic or steatite porcelain light bulb sockets is entirely feasible for all of the configurations shown and will handle all amateur bands, 160 through 10. Naturally the leads from socket to socket should be as short as possible in either the series and/or parallel configurations. I found these leads can be kept to approximately 2 cm for such interconnections. Likewise, the coax termination lead should be kept to 2 cm or less.

If extra precautions as to lead lengths are observed, and the bases of the bulbs removed to enable connections directly to the stem wires, it would appear reasonable to suspect that these bulbs might be used for 6, 5, and perhaps 2 meter bands, but it is also quite evident the 2 meter band would be the practical limit.

One should be able to conjecture that light bulbs as power rf indicators are not quite the equal of well-designed power output meters which maintain their rated impedances over a very wide power output range – bulbs do not – but then, they *are* cheap in comparison.

Visual comparison of brightness is completely satisfactory for comparison purposes.

For instance, a 500W bulb connected to the 115V mains should show the same brilliance as one of the 500W bulbs as used in the 1 KW load.

Actually a transmitter supposedly putting out 2,000W PEP is putting out something less than 1,000W with average voice modulation; it would be more of the order of 500–750W average power. Remember that the light bulb is only going to show average power output, not peak, and as ham transmitters are limited to 1,000W dc input to the final amplifier, one cannot expect much more than 500–750W output (average) unless the efficiency of the final amplifier stage approaches 85% which is very unusual, although I am hearing lately that certain high-power transistors are in development which will deliver such high efficiency figures; a bit above that which heretofore has been obtainable with tubes. You should be hearing a lot more about these super-efficiency transistors in the near future; and I expect them to be appearing in certain ham transmitters within a year or so.

Naturally a CW transmitter with the final operated Class C may deliver as much as 850W with 1,000W dc input, while a DSB transmitter on phone could not be expected to deliver more than 650W with Class A or B modulation.

The research and conclusions I reached on this project brought to mind the old subject of using light bulbs in series with primaries of transformers to reduce the secondary output voltages, which is a trick which has been used for years by hams and others. The information contained herein indicates they are not only quite suitable for such usage, but in fact make quite ideal voltage regulators of a sort.

In fact, the question immediately arises as to why bulbs would not make rather ideal voltage regulators for high voltage supplies if used as a variable-resistance dc regulator in the dc leg. This again opens up a field which might bear intense investigation.

[1] Solid Dielectric RF Transmission Lines, W8LUQ, *Radio News* Oct. 1946.
Line Matching: Table of Power and Voltage Loss in DB, *Radio News* Feb. 1947.

BUILD YOURSELF A LIGHT WATTMETER

Carl Henry

Every week brings something new in the hectic field (or pasture) of electronics. Attempting to solve old problems with new components is an interesting pastime for electronics enthusiasts, but they must be careful not to put their foot in the wrong thing. One of the new components is the cadmium sulphide/selenide photocell. A semiconductor sensitive to light is not an entirely new concept, since selenium cells have been around for some time, but the degree of sensitivity makes the cadmium cell stand out.

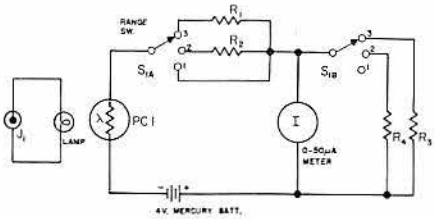

Fig. 1. Circuit of Light Wattmeter.

In measurements especially, there are many possible applications for cadmium photocells. One measurement in particular is usually difficult for the amateur, and this is power measurement. There is a way of using cadmium photocells to measure power, and I call this circuit a "light wattmeter". Operation is just as the name implies, that is, the power is used to generate light which is measured by the photocell.

You have probably realized by now that we are going to use a light bulb as a load. Now this is frequently done in amateur circles, but no one will go out on a limb as to its accuracy. Except me. We know that the ordinary lamp filament has a positive temperature coefficient. Fig. 5 illustrates the variation of a typical lamp filament resistance with input power. By keeping this in mind, fairly good accuracy can be had. Of course, if you use a different lamp, the curve will still apply, but the resistance will be different.

You can run your own graph, however, by using the setup shown in Fig. 2. Either dc or ac can be used, and since the lamp has little inductive or capacitive effect, the readings taken will be good to better than 100 mc. After you have a graph on the lamp you are using, you can effect any kind of impedance match you wish.

Using a lamp as a load simplifies the problem of power measurements because loads for this service are hard to come by. Power resistors are too inductive, and when they approach 1000 watts, they become downright expensive. However, even a 1000 watt lamp is not too expensive.

Fig. 1 shows the circuit that I used as the basis of this article. A standard 150 watt lamp was used here as a load. The photocell is mounted about five inches from the bulb. A wooden box houses the wattmeter, completely sealed internally against extraneous light. Figs. 3 and 4 illustrate the variation of resistance of the photocell with variation of power applied to the lamp. Even very small amounts of power are measureable, if the cell

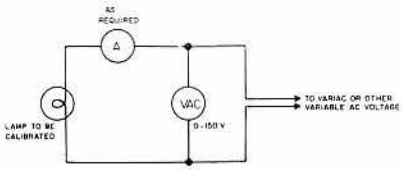

Fig. 2. Method of calibrating lamp and determining resistance.

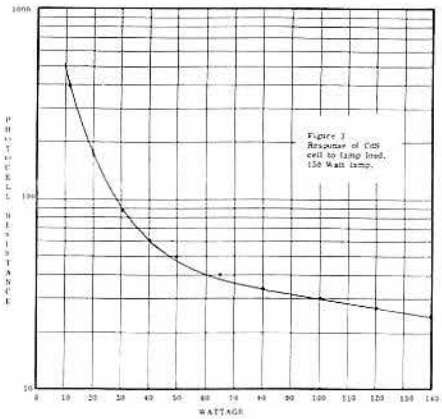

Fig. 3. Response of CdS cell to 150 watt lamp.

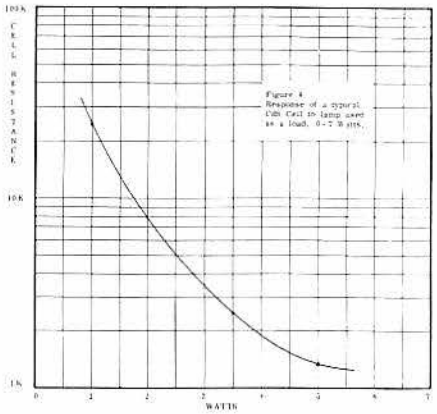

Fig. 4. Response of cell to 7 watt lamp.

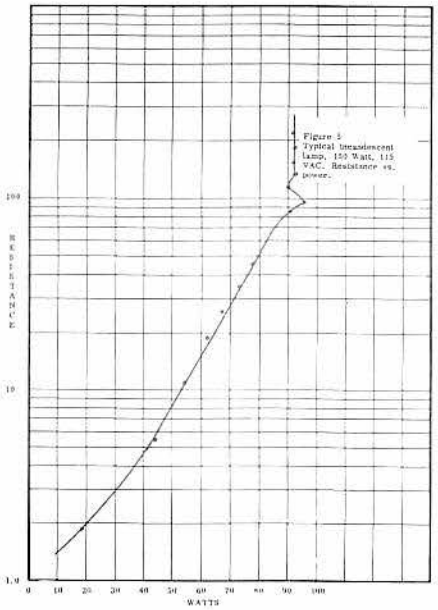

Fig. 5. Resistance versus power input, 150 watt lamp.

is shielded from external light.

The wires from the input connector to the lamp are kept as short as possible by removing the lamp base and soldering the lamp wires directly to the coaxial connector. Switch S1 selects three ranges, which can be set by the builder to anything he desires. In my case I used three ranges which cover from 0.5 watt full scale to 250 watts full scale. With some photocells a 1.35 volt mercury battery can be used instead of the 4 volt battery shown. Also, I used a 50 microamp meter, because of convenience (mine), but even a 10 ma meter will work. Don't exceed the rated power dissipation of the photocell, and remember this may derate with increasing ambient temperature. One thousand watts in a box can be a lot of ambient temperature.

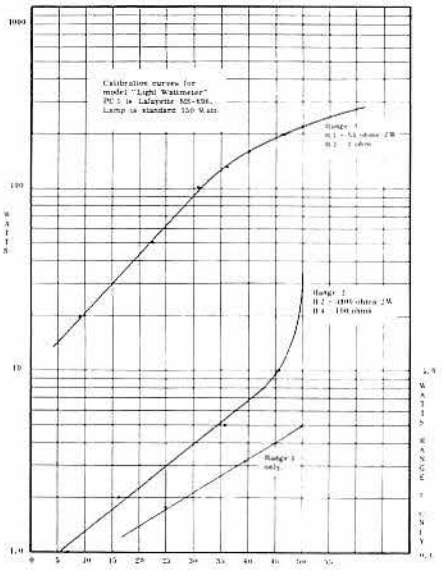

Fig. 6. Calibration curve for Light Wattmeter.

Getting back to the accuracy, if I were to tell you what the meter would read with such and such a lamp, and a given power input, your calibration would be off ten to twenty per cent when the construction was finished. The best way of getting a good calibration is something you've heard before; "if you want a job done right around here you've got to do it yourself".

Now obviously you can't calibrate the wattmeter at 14 mc, because this is what you are trying to measure to start with. Luckily the light from the lamp filament is primarily a power function, and it doesn't matter whether this is dc power, or 100 mc power.

So, to calibrate the wattmeter, apply ac or dc as you wish. Measure the input voltage and current, and read the meter. Make a graph of input power vs. meter reading, and there you have it. Fig. 6 is the graph that I use with the circuit in Fig. 1. Keep the impedance variation in mind, and select a lamp with the power impedance so that standing waves won't eat up lots of your power. As a dummy load and approximate power indictor this is not too critical, of course. But if you wish accurate power measurements, your impedance should be approximately matched.

LOW POWER LIGHT WATTMETER

Bill Hoisington K1CLL

This article describes a very useful gadget for determining the rf power output of solid-state VHF–UHF transmitters in the difficult range to measure, from about 10 mW up to 5 watts. It does not read watts directly; but by a simple comparison of calibrated pilot light brilliance, it will tell you how many watts you are putting out, to within less than 5%. It allows you to check power increases and estimate your efficiency quite close.

Principle Involved

We'll start right in with this part because, while this unit is not by any means a "trick," it does not read rf directly. You first light a pilot light as a good dummy load, matching it into the rf tank circuit of your transmitter by the normal means, also noted here.

You then switch on a second bulb of the same type by means of a battery, controlling the light output with a $1.30 wirewound potentiometer in series, as shown in Fig. 1. This pot must be previously calibrated in milliwatts, as by the method of "volts times milliamperes equals milliwatts." You then match the brilliance of the bulb lit up with rf or its dull glow at some 18 to 25 milliwatts if you're just getting your transmitter going, and read the watts on the wattmeter dial. It's astonishing how well it works, how repeatable it is, and how you wouldn't be without it once you build and calibrate it.

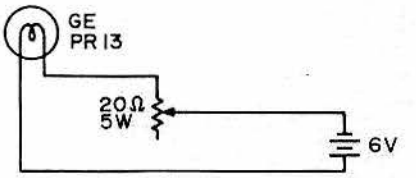

Fig. 1. The circuit supplies the brilliance "standard" for comparison. When the "standard" lamp is mounted adjacent to the dummy load, the pot permits variation of the standard to match the load. If the resistance is panel-marked in watts, a good power indication is achieved.

Brilliance Standard

Figure 2 tells almost the whole story at a glance. You can, of course, put as much calibration on the dial as you have time for. It is quite important to orient the bulb filaments in the same relation to your eyes for best matching. There isn't much in back of the panel except one 6V battery which can be obtained in any hardware store.

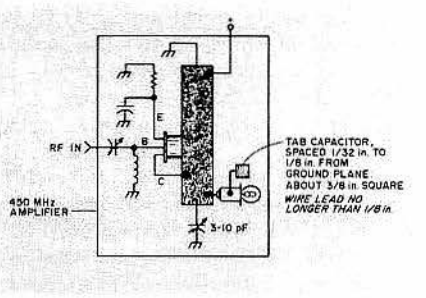

Fig. 3. Matched pilot light load for the UHF version.

RF Matching

Not that it is particularly critical, but be sure and note the need for a large range of series capacitors for the rf pilot lights as you go up in frequency. This can be seen clearly in Figs. 2 and 3. The block diagram, Fig. 2, shows a 6 meter setup. As you go up in frequency the series capacitance drops. A good matched load on 432 MHz can be obtained as shown in Fig. 3. I sometimes remove the tin base from the bulbs, but this is not an absolute neces-

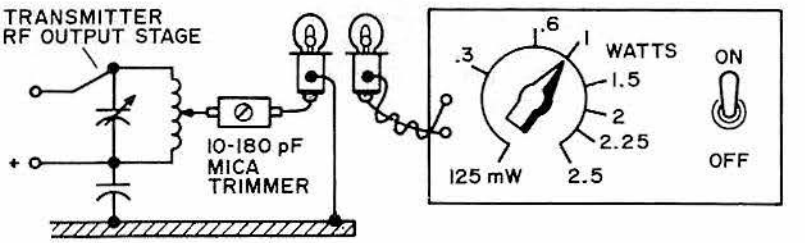

Fig. 2. A series capacitance loads the rf indicator for comparison. The capacitance value will decrease inversely with frequency increases.

sity. It is important to vary the amount of coupling, and thus the series capacity, by spacing the tab capacitor closer or further away from the ground plane, as detailed in Fig. 3. You also can use as many bulbs as you can solder onto a tuned rf inductor, even though they don't all light up with the same brilliance. You can match them all up, but you don't have to. Just check the wattage, or milliwattage, of each one and add them up for the total.

The number 48 or 49 bulb, listed at 2V and 60 mA, is rated at 120 mW, and glows dim at about 12 to 15 mW; so it can be used for low-power receiver oscillators, etc. With two other bulbs found in hardware stores, connected and matched to the rf inductor, such as the PR13 (5V at 500 mA), you can read correctly up to 5W. From there on up you're on your own, although a good variable 115V dc supply can be made up to work around 50 to 100W. I generally use a variety of 115V bulbs of different wattage, light them up with rf, and use their rated wattage.

YET ANOTHER LIGHT WATTMETER

John Meisner K5CXN

Many VHF operators would like a cheap, accurate instrument to measure rf power. The same desire is frequently expressed by operators of the HF bands. Here is a very simple wattmeter which when used with a 50Ω transmission line or load has all of the following desirable characteristics:

1. Easily calibrated to good accuracy (±5%) with your multimeter and a variable dc source;
2. Perfectly flat from dc to 450 MHz;
3. Insertion VSWR less than 1.05
4. Power readings in the 2 to 50 watt range (higher power can be measured with slight design changes);

The operating principle of this wattmeter is stark simplicity. A pilot lamp across the rf line senses a small portion of power in the line and glows brighter with increasing power. An appropriately located photovoltaic cell connected to a microammeter measures the light output which is proportional to the power flowing in the line. Of course a good deal of nonlinearity is involved in the various elements – both the lamp's resistance and its spectrum output change with heating; output of the photovoltaic cell varies considerably with both the amount and frequency of the light shining upon it. Some of these factors tend to cancel out however, because the photovoltaic cell produces some current with only infra-red lamp output at low power levels before the lamp even produces a visible glow, and the cell tends to saturate, increasing its output quite slowly at more intense illumination levels.

Probably the biggest single requirement of any wattmeter is that it must be capable of being inserted into a transmission line without disturbing the operating conditions in the line (low insertion VSWR). It might be argued that hanging a lightbulb across a transmission line will seriously affect the line impedance. Ordinarily, this is true, but the undesirable changes can be minimized and indeed approach an insignificant level if the resistance of the lamp filament is very large when compared to the line impedance. In general, a factor of 15 or more times the line impedance is sufficiently large to produce negligible effects. In the case of the suggested 10V, .014 Ampere pilot lamp, the mismatch produced in the line gives a VSWR of 1.05:1 at the power level of 1 watt. This mismatch decreases rapidly with increasing power. It falls to well below 1.01:1 at 50 watts. Another point of interest with regard to this particular choice of lamp is that it is a long-life type with a life expectancy of 10,000 hours. This implies two advantages: (a) The lamp will operate at well over its rated voltage without burnout (50.0V at 50 watts), and (b) the interior of the lamp envelope will resist darkening which would negate the wattmeter calibration. In addition, the filament structure of this type of lamp is a single-strand straight tungsten wire. The coiled type of filament structure introduces undesirable inductance into the circuit which can distort wattmeter readings in the UHF range.

The wattmeter shown is constructed in two boxes for the sake of convenience. The sensor can be located in the transmission line at any point and the meter can be placed beside the transmitter. For test work, the whole unit could easily be put into a single box. Coaxial fittings and cable were used for interconnection, but since dc only flows in this circuit, any type of wiring would be satisfactory.

The photovoltaic cell used in this wattmeter is a unit obtained from the local Allied/Radio Shack store. (Catalog No. 276-115.) Output of the cell is rated .5V at .6 mA in sunlight.

Since the cell generates considerably more than 20 mA under moderate illumination, a switching arrangement is incorporated into the wattmeter to shunt it into progressively higher current ranges with increasing power. Alternatively, a 50 or 100 milliammeter could be used with less switching at a sacrifice of sensitivity in the 1–3 watt range.

Calibration of the wattmeter is a simple process. By solution of the formula $P = V^2/R$ for voltage, the following tabulation is made for a 50Ω line impedance:

VOLTAGE (rms or dc)	POWER (Watts into 50Ω)
7.07	1
10.00	2
12.24	3
14.14	4
15.71	5
17.32	6
18.71	7
20.00	8
21.21	9
22.36	10
31.62	20
38.71	30
44.71	40
50.00	50

Using the tabulation, fasten a metered variable dc supply into the wattmeter according to the following diagram. Now simply note the reading on your wattmeter for each of the selected voltages in the table and tabulate this reading with the corresponding power in watts in a table of your own. It may even be possible to remove the front of the meter case and mark new calibrations directly on the dial. This was not possible with some hermetically sealed meters. It is best to disconnect the wattmeter from the antenna feedline for this calibration. If the meter is left with a transmission line attached and the antenna happens to be fed through a balun device with near zero resistance, the power supply, and perhaps the balun, will suffer.

It must be pointed out again that this power meter is intended for use either with 50Ω coaxial line systems with low VSWR or with 50Ω dummy loads. A coaxial line that is not "flat" (unity VSWR) or a dummy antenna that does not look like" 50Ω, which is the case with

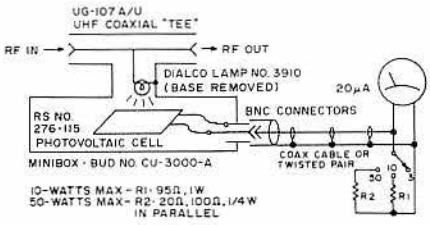

Fig. 1. Schematic diagram.

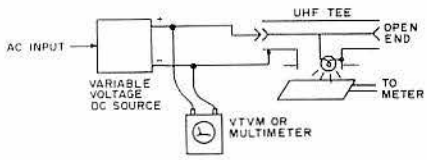

Fig. 2. Calibration diagram.

most HF loads used at VHF or UHF, may cause distorted power readings. If you have doubt about your transmitter's power output when using this meter, you should check it while using a known 50Ω load rated at the transmitter's output frequency.

I mentioned before that this power meter was easily adaptable to higher power readings. To upgrade the meter, the only change required is to insert the correct higher voltage pilot lamp having low current, long-life specifications. Suggestions for some of these are the following Dialco Lamps:

Part No.	Max Power Level (Watts)
24CS	100
48CS	200
60PSB	340
120PSB	800

A LOW COST RF WATTMETER

Mark Leavey WA3AJR

You say you just finished building that 2 meter rig and want to find out how much power you're running but can't afford to buy a wattmeter? You've been calling "CQ 80 QRP" all day with your quarter-watt wonder and nobody is answering? Then get yourself up, go down into the workshop, and build yourself a neato-keeno handy-dandy wattmeter.

If we are going to build a wattmeter, let's consider what we want. Accuracy and ease of calibration, as well as simplicity in construction are prime requisites. The meter described here is as accurate as components allow, and it's easy to build. The calibration is logarithmic, which means that a simple graph is possible, and easier than changing the meter scale.

For the mathematicians, I will present the formulas upon which this device is based, and ways of modifying it; for those of you who avoid math whenever you can, look at the graphs and skip these few paragraphs.

To spare undue complexity, assume 51Ω line – other values can be dealt with later. Perhaps the easiest parameter to measure, and one that is proportional to power, is rf voltage. A voltmeter can be made most easily with a series resistor and a 0–1 mA meter. Now let's plunge into the actual calculations.

Assume W is the full-scale meter reading in watts, Z is the line impedance, E is the voltage measured, I is the full-scale meter reading in amps of the basic meter, and R is the value of the series resistor in ohms. We know that the voltage (IR) is equal to the square root of "impedance times power," or 14.270V. Now, since the voltage and the current (.001A because the full-scale movement is 1 mA) are known, simple division yields 14,270. The resistor value, then, is 14.270 kΩ. The upper portion of Fig. 1 is a graph that will enable the nonmathematician to choose the value of the resistor for full-scale readings up to 4 kW, with 51Ω line and a 0–1 mA meter.

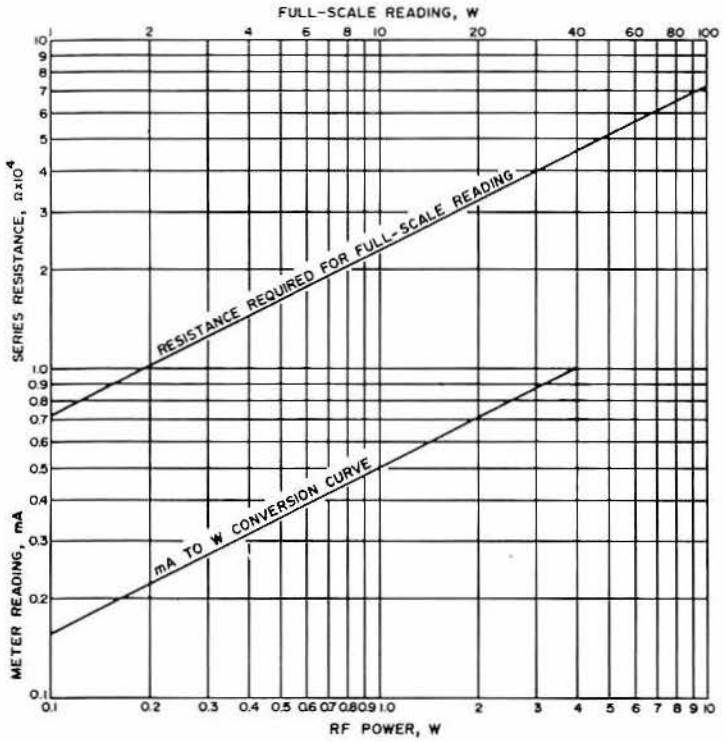

Fig. 1. Logarithmic plots for determining power. The upper curve gives resistance values for determining what the full-scale meter deflection will be (remember to multiply the series resistance value shown on the chart by 12 kΩ). The lower curve will allow you to determine your precise power out if you use a 0–1 mA meter.

Why 4 kW with an amateur power limit of 1 kW? A look at the bottom half of Fig. 1 will explain. Although this is the calibration of the prototype, for 4W full scale, it will double for 40, 400, or 4000W. A half-scale reading, 0.5 mA, corresponds to 1W (1 kW, etc.). This spreads out the range below 1 kW for ease of reading and measuring.

Now get out that soldering copper and gas pliers, and build it. As the schematic (Fig. 2) shows, the circuit is a basic rectifying type rf voltmeter. The prototype was built in a small can of the plug-in-module variety that was scrounged from the junkbox. About the only critical part is the series resistor. The capacitors in the prototype were mica, but ceramic disks would work as well. The diode can be a 1N34A, 1N270, 1N52, 1N38A, or just about anything else. Use the old ham's rule of thumb: "When in doubt, try it out!"

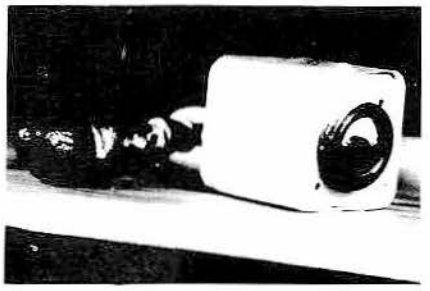

Front view of unit.

Two sockets might prove more convenient rather than one with a coaxial tee as shown. Conventional minibox construction or building into a new or existing rig will be more than adequate. Point-to-point wiring is used to permit compactness and reduce lead length.

"Fine," you say, "but I don't have a huge mound of test equipment. How do I calibrate it?" That is the beauty of it – you don't! If the series resistor is accurate, the meter will be self-calibrating to a log scale. Remember, you know R and Z, and the full-scale W. Now assume a half-scale

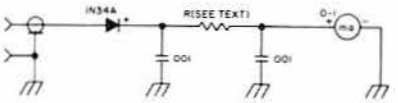

Fig. 2. Schematic diagram of the simple, accurate, and easy-to-build rf wattmeter.

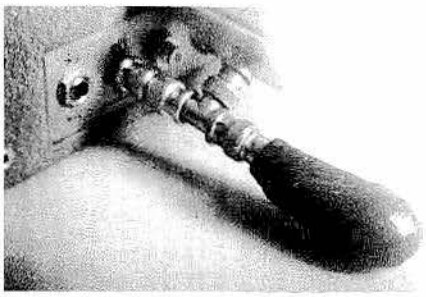

Connection to transmitter with dummy load (see text).

reading, I = 0.0005, and calculate W for half-scale. Plot these two points at 1.0 and 0.5 mA on Fig. 1, and connect by a straight line, which you may extend the length of the graph.

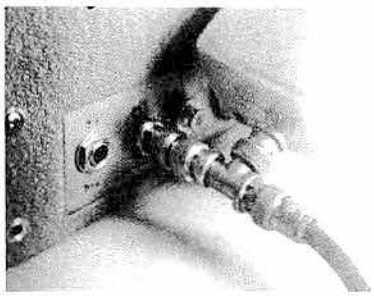

Connection to transmitter with antenna connected.

Install the meter through a coaxial tee at your antenna connector, or through some other predetermined means, and terminate with a dummy load. The one seen in the picture is three 150Ω resistors in parallel, dipped in epoxy, shielded with a copper braid, and installed on a BNC plug. Apply power and read the meter. That's it! The meter can be used with an antenna if your swr is below about 1.2:1.

So what did I promise? A low-cost, rf wattmeter that is inexpensive enough for the Novice, practical and useful enough for the General, and "Extra" accurate. Go raid the junkbox, and add a worthwhile piece of gear to your shack.

RF POWER MEASUREMENT USING HOT CARRIER DIODES

Frank Jones W6AJF

Two rf wattmeters are shown here, one with a range of 25 mW to 10W and the other covering the range of 5 to 300W. Both are useful from low radio frequencies on up through 450 MHz.

The low-power version (Fig. 1) makes use of a 20W Sierra dummy antenna built into the meter case, though the metering circuit only goes up to 10W. If the maximum is to be 20W, the reference meter reading could be about 45 μA instead of 30. The minimum power reading would be doubled. In this wattmeter, the power range potentiometer is calibrated and only a reference line on the meter is used when making rf measurements. The dummy 50Ω antenna resistor is rated up to 1000 MHz so is excellent from 450 MHz down.

The range potentiometer had an audio (nonlinear) taper. By connecting the "high" resistance end to the diode, the watt range scale is spread out quite well in the 0.1 – 10W range. The hot carrier diode, an HP 2900, has a 10 PIV rating, which means that the rms rf voltage across it should be less than 3V for safe operation. At 10W of rf power, the rms voltage would be a little over 22V, which means a voltage divider is needed to keep the applied diode voltage down to about 2V. An HP 2800 diode with a 75 PIV rating would be more desirable, especially if the meter was to be calibrated for 20W maximum. This diode is about $1 and has a little higher capacitance, which would require a different shunt capacitance across parts of the resistor divider to make the device work with the same power range calibration.

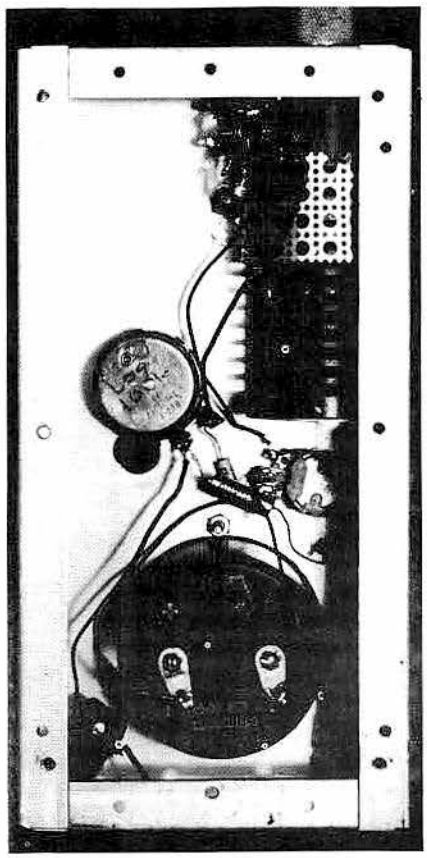

Bottom view of 10W unit with the rf dummy antenna clamped in one corner.

Top view of low powered rf wattmeter covering .025 to 10W. Built into a 8x4x2 chassis with wire screen bottom plate for ventilation.

The divider should use ½W resistors of the carbon or metal film type, since these units are part of the rf circuit. It is better to use three ½W 300Ω resistors in the string rather than a single 900Ω 2W resistor: this is because the rf resistance characteristic is usually better in ¼ or ½W types in certain ranges of resistance. Every resis-

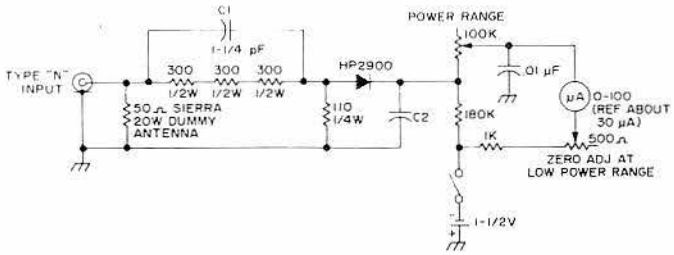

Fig. 1. .025 to 10W RF wattmeter.

tor has some inductance and shunt capacitance which becomes part of the voltage divider. The diode shunt capacitance is in parallel with that of the 110Ω ¼W resistor in Fig. 1. However, nearly any combination of resistor sizes can be equalized within 10 to 20% over the desired frequency range. This divider is across the 50Ω dummy antenna, so should not shunt the value down to less than 49 or 48Ω. This divider has to dissipate a little rf power also. Its total resistance should be at least 20 times as high as the dummy antenna load resistor.

The values shown in Fig. 1 are just about the minimum that should be used. Too high values makes it more difficult to extend the frequency range to the upper end, though it can be done, as was discovered in the higher-powered wattmeter of Fig. 2.

All diodes are poor rectifiers at applied rf voltages below their forward bias values of 300–700 mV (peak). By using a forward dc bias voltage to make the diode conduct at least 5 or 10 mA, the detection sensitivity is increased as much as 5 or 10 times. This requires a small battery, a couple of fixed-value resistors, and an adjustable pot to balance this current out of the meter when measuring rf powers below 100 mV. If the power range is limited to a minimum of ¼ or ½W, no bias circuit is needed in this 10W instrument. The range scale in either case has to be hand calibrated.

A low-powered radio transmitter or exciter can be used as a 10W power source when calibrating the power range pot scale. The transmitter can use stage detuning to reduce power outputs down to the lower values needed. Many swr meters have watts of power calibration and one of these can be put in the coax line to the rf wattmeter for calibration service. A more accurate calibration can be made by comparing the power readings against some reliable commercial rf wattmeter within its frequency range and calibration charts. This scheme is usually necessary for checking the calibration at VHF or UHF. Another method is to use an accurate rf voltmeter across the dummy antenna connection to ground and read the power values in watts = E^2/R. For example, 5V (rms) squared is 25; and divided by 50Ω is equal to 500 mW.

The Sierra 50Ω dummy antenna has no connection available at the high end of the resistor, which terminates in a type N fitting. The metering circuit has to connect to this point as close as possible by getting into the inner conductor of a coax fitting, or by drilling a 3/8 or ½ in. hole through the shell of the dummy antenna close to the rf fitting end. This can be done and the first 300Ω resistor in the voltage divider soldered to the inner connection to the large 50Ω resistor. A long 1/8 in. diameter soldering iron tip is needed. The divider resistors, diode, and four .001 μF stud-mounted bypass capacitors were all mounted around this large hole in tapped 6-32 holes for the four capacitors. Larger values of bypass capacitors can be shunted across these 0.001 μF values to ground to extend the frequency range down to low rf or even af values. For example, a .02 μF capacitor shunt would allow operation to 2 MHz. A miniature 50 or 100 μF electrolytic shunt would function at audio frequencies down to 300 Hz. The diode must have a low-impedance path to ground over the desired frequency range to function as a peak rectifier and get as much dc output voltage as possible for the meter circuit. The microammeter in series with a variable range resistor is simply a dc voltmeter. The diode rectifier converts rf voltage to dc, so the diode should be equally efficient over the whole rf range.

The 5–300W unit was built to use with a large dummy antenna rated up to 500 MHz, which is a massive unit external to the box shown in the photographs. Quite a bit of rebuilding went into this device to make one calibration of the range potentiometer fit all frequencies from 450 to 2 MHz. The input and output coax fittings had to be finally mounted so the inner conductor tips could be soldered together and the resistor divider connected to this point. The latter consisted of two 4300Ω 2W carbon resistors and a 68Ω 1W resistor in series to a copper sheet inside of the aluminum box.

The watt range variable resistor was a 500 kΩ linear potentiometer which was limited to a lower value by shunting it from the moving arm to the diode connection end with a 220 kΩ resistor. This gave a maximum power reading of 300W when

Top view of 5 to 300W metering circuit for use with external high powered dummy antenna.

the reference line was drawn on the meter face at 12 μA. The import, low priced, 0–30 μA meter had a large meter scale. A smaller 0–50 μA meter would have been usable, since the meter is used only as a reference. The range pot knob is adjusted when rf power is applied to run the meter reading up to the line drawn on the meter scale face.

The circuit shown in Fig. 2 was equalized to within about 15% error over the range of 2 to 450 MHz by shunting a 5 pF capacitor across the 68Ω resistor in the rf divider.

Calibration of this device was made at 144 MHz using a transmitter having up to 400W available carrier output. The meterizing unit was connected to a large Bird rf wattmeter at the external fittings of the latter. Several thermocouples had to be used to cover the wide range of power for the calibration. This required reading a chart curve for each Bird wattmeter reading and using correction factors for frequency in order to obtain the actual watts of rf power. Now, the large unit is used without the thermocouples, charts, rf choke, etc. simply as a dummy antenna. The new metering circuit connects directly into the antenna fitting, with a few feet of 50Ω coax over to the transmitters being tested.

This power measuring device can be used in any 50Ω coaxial line to monitor the actual power going toward the antenna. The swr in the line should be low, or near unity, in order for the calibration to be reasonably accurate.

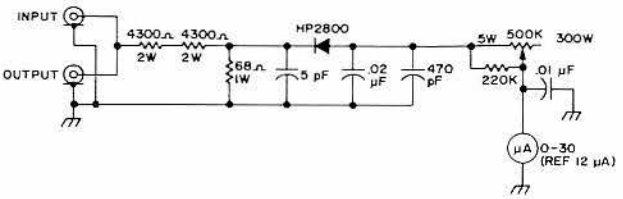

Fig. 2. 5 to 300W RF wattmeter metering circuit. External 300 or 400W during antenna load.

VHF DUMMY LOAD WATTMETER

Glen Zook K9STH

The unit

The unit described herein is similar to some 60 watt units which may be found around many commercial two-way radio shops. This dummy load has provision for connection to an external relative output meter. This external output meter may become an accurate wattmeter if the following criteria are met:

1. Frequency bandwidth of ±10% of calibration frequency.
2. RF output kept within power dissipation of dummy load.
3. Accurate initial calibration.

These criteria may be easily met in amateur vhf operation if only one band is considered for each set of calibration data. Since most vhf amateurs operate on 50 mhz, 144 mhz or 432 mhz, the ± 10% frequency limitations may be easily met. This limitation gives a 10 mhz bandwidth at 50 mhz, 29 mhz bandwidth at 144 mhz, and 86 mhz at 432 mhz. The limitation to the power ratings of the dummy load is only common sense, for if a resistive network is overloaded, the impedance may be drastically increased, caused by damage to the load resistors. The calibration limitation may be overcome if a standard, previously calibrated unit, or commercial unit is used.

The unit consists basically of 16 220 Ohm resistors in a series parallel arrangement. The metering circuit consists of a germanium diode pickup with necessary rf filtering. The meter movement is generally a vom, but any 50 ua meter movement should suffice. Exact physical layout is not extremely critical, but it is suggested that the layout be made similar to the unit shown in the accompanying photographs. This unit is acceptable for 60 Watt output transmitters without modification. The power capability may be increased to about 200 Watts if the resistive network is suspended in 1 quart of oil. If this is done, care must be taken to keep the metering circuit out of the oil. The lead from the diode to the resistive network must, of course, be partly submerged, but keep the diode itself out of the oil. I do not personally use this arrangement, but I know of two units which have been in use at a large Southeastern two-way radio shop for several years. The same shop has incorporated a range switch with several meter shunts for various maximum scale power readings. This feature is especially useful to the amateur vhf FM operator who may be working with equipment of from ½ to 250 Watt outputs. The schematic appears as Fig. 1, and the basic circuit for various meter shunts as Fig. 2.

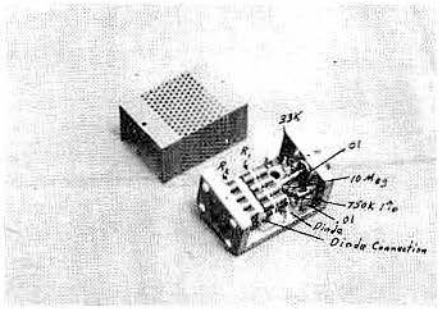

Parts layout and interior view of Dummy Load – Wattmeter

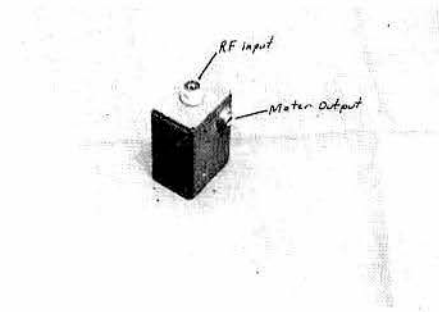

External view.

Calibration

Calibration is best accomplished by using a Bird "Thruline" or similar commercial vhf inline wattmeter. Second choice is a Bird "Termaline" or similar dummy load-wattmeter. In both cases, a graph should be created by plotting meter divisions on the horizontal axis, and power on the vertical axis. The meter shunt should be placed at minimum resistance and increased to give maximum reading at the desired power level (this holds primarily true for units using the metering circuit of Fig. 2) or, if a vom or vtvm is being used the range switch should be placed on a high voltage setting and reduced a setting at a time until the desired reading is obtained. The transmitter should be adjusted for various power levels on the standard wattmeter and the voltage or current reading on the new meter recorded on the graph. In the case where the standard meter is of the dummy load-wattmeter type, it will be necessary to switch the coax from one unit to the other. Do not retune the transmitter, for each unit will present almost the same load to the transmitter (50 ohms). Take the reading and record as with an inline type of meter. The points on the graph should now be connected with a smooth curve (use of a draftsman's range switch is used, it will be necessary to calibrate for each switch position. Also, if multi-band use is expected, the graphs must be made for each band. Use of the wattmeter now requires only the connection to the transmitter, setting of range switch to the proper level, and reading the graph.

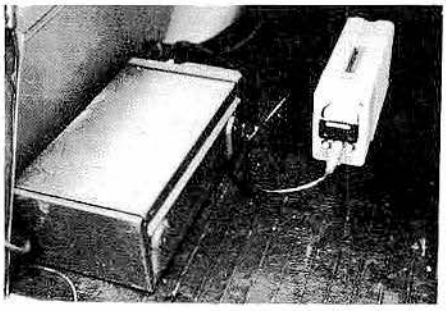

Using the Dummy Load – Wattmeter to check output of FM unit.

Uses

The uses of this dummy load-wattmeter are as varied as the amateur mind can devise. One very important use is determining the losses of 50 ohm coax. Measure the output of the transmitter at the transmitter. Then measure the output at the end of the length of coax. The losses in the line become apparent. The loss in db may be calculated by the standard power ratio formula, 10 $\log_{10}$ Power out of coax/Power into coax.

Another use is the determination of efficiency of final amplifier stages. This efficiency may be calculated by Power out (measured by dummy load-wattmeter)/Power in (measured by plate current/plate voltage meter) x 100%. A third use is determining once and for all which amateur really has the most output. This list may be expanded by the builder to suit his own tastes.

Conclusion

This dummy load-wattmeter is not a Bird "Termaline" nor should it be regarded as a substitute for any other laboratory equipment. However, with a little care in calibration, (assuming a 5% accuracy standard is used for initial calibration) the accuracy should be within 10%, and this, my friend, is not bad for a wattmeter costing less than $10.

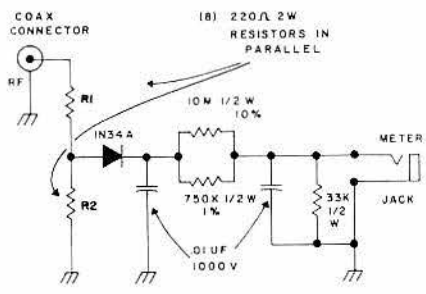

Fig. 1. Schematic. R1 and R2 consist of eight resistors each, in parallel.

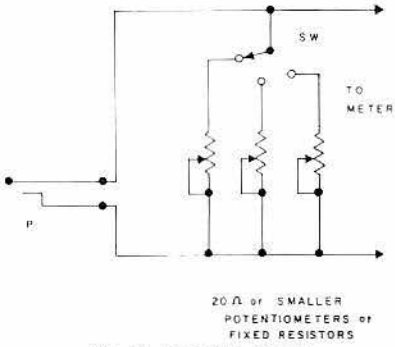

Fig. 2. Metering shunts.

Chapter IV

Measure Your Field Strength and Frequency

THE RF SNIFFER

Jim Kyle K5JKX

Every now and then there's a need to know if any rf is present in a circuit. Frequency isn't so important—the question is simply. "Is there rf here?"

Your grid-dipper can frequently answer this, if used in the wavemeter mode, but occasionally it's not sensitive enough—particularly if you're working with a receiver oscillator where power is measured in microwatts.

Here's an rf Sniffer which will indicate the slightest trace of rf in a circuit. In addition to checking receiver oscillators, it's a perfect gadget to ensure perfect neutralization of a transmitter final.

Connect the components as shown in the schematic. Use long-nosed pliers as a heat sink between the diode and the solder joint when wiring, to prevent diode damage. Note that the pickup loop of 14 gauge wire is insulated with a strip of spaghetti.

Mount capacitor and diode on back of meter with shortest possible leads. Attach pickup loop directly to negative meter terminal; it's stiff enough to do without other mechanical support.

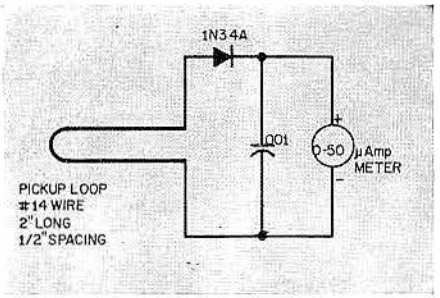

Amplifier Neutralization—Couple the Sniffer to the antenna terminal with a temporary two-turn link around the pickup loop. Remove plate and screen voltage from the final amplifier. Apply drive. Adjust neutralization for minimum indication on the Sniffer—but don't expect to be able to get it down to zero.

Oscillator Checking—Place the pickup loop near the oscillator coil. If the oscillator's working, the Sniffer will indicate rf. Touching either the grid or plate lead (use an *insulated* tool for this test, not your fingers) should reduce the Sniffer's indication.

Receiver Troubleshooting—Check the oscillator as described above. If it's okay, next check the mixer plate coil by placing the Sniffer pickup loop near it. If you get an indication here, move to the first if stage and place the pickup loop near the plate pin of the tube socket. Proceed through the receiver until you lose the indication. The trouble is somewhere between the last indication and the point at which it disappeared.

Field Strength Meter—Couple a short antenna to the pickup loop by two turns of wire around the loop. Field strength will be indicated in a comparative manner by the meter. It cannot be calibrated, but proves useful in tuning mobile or beam antennas, etc.

SWR Measurement—(Parallel lines only). Move the Sniffer long the line. Mark maximum reading and minimum reading over a half-wavelength. Divide minimum into maximum. The quotient is, roughly, your VSWR. This method is by no means exact, but will indicate whether the line is under or over a 2:1 SWR.

UHF Frequency Measurement—Set up Lecher wires. Couple the rf Sniffer lightly to the tank circuit instead of using a flashlight bulb. Use Lecher wires in normal fashion, reading Sniffer indications for maximum and minimum. This is much more exact than the normal methods.

Improvised Grid-Dipper—If you have a signal generator available, it can be used with the rf Sniffer to serve as a "grid-dip" meter to locate resonance for any tank circuit. Couple both the generator and the Sniffer lightly to the unknown tank. Vary generator frequency. A sharp rise in Sniffer indication indicates the resonance point.

THE PINK TICKET REJECTOR

A. D. Taylor GW8PG

Hams sometimes get into trouble with the FCC because they have made a mistake in tuning a frequency multiplier or PA stage. For example, if the multiplier stage following a 3.5 MHz oscillator is accidentally tuned to 10.5 MHz instead of 7 MHz, the PA can be loaded on 10.5 MHz; and if this is done even a short transmission is likely to produce an unwanted "QSL" from the FCC! Mistakes like this can be prevented by using the simple, easily built absorption wavemeter shown in Fig. 1. Only one coil is required in this meter, the low frequency range being obtained by switching a padding capacitor in parallel with the variable tuning capacitor. With switch S1 open the tuning range is approximately 6.8 to 30 MHz, and with S1 closed it is approximately 3.5 to 6.8 MHz.

Construction of the wavemeter is simple. It can be put together in a metal utility box, on a wooden panel and baseboard, or even in a cracker can of the right size. The coil can be wound on any type of ¾ in. diameter form. If nothing else is handy, a short length of dowel could be used. The coil winding consists of 7 turns of 20-gage wire, close wound. Both the tuning capacitor (C1) and the padding capacitor (C2) should be 500 pF components, but the values of the other components are not critical.

Any meter having a full-scale deflection between 100 μA and 1 mA can be used. If the wavemeter is built in a metal box, L1 must be mounted outside the box. A slow-motion drive is not needed. If C1 is fitted with a pointer type knob and a cardboard scale is cemented onto the front panel, the calibration points can be written on the scale in ink.

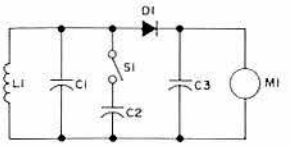

Fig. 1. L1 – 7 turns 20 gage enameled copper wire, close-wound on a ¾ in. form; C1 – 500 pF variable capacitor; C2 – 500 pF fixed capacitor; C3 – Fixed capacitor, any value between 1000 pF and 0.01 μF; D1 – Silicon or germanium; M1 – Moving coil-meter (100 mA–1 mA).

When it came to calibrating the wavemeter I thought of a simple method that I have not seen described before. I soldered about 2 in. of wire onto one end of L1, and about 10 ft of wire onto the other end. I then connected the short lead to the antenna terminal of my receiver and strung the 10 ft of wire up as a temporary antenna. I then tuned the receiver to a steady signal at each frequency at which I wanted a calibration point, and adjusted C1 until the strength of the received signal suddenly dropped sharply, indicating that the wavemeter was tuned to the frequency of the signal. I was then able to mark this frequency on the cardboard tuning scale. The drop in signal strengh was very sharp so calibration was easy. Once enough calibration points had been obtained the temporary wires were unsoldered and the wavemeter was ready for use.

The only frequency which may require a little adjustment is 30 MHz. If the wavemeter will not tune as high as this, push the top turn of coil L1 about 1/8 in. away from the other turns. This should reduce the inductance sufficiently; a spot of cement will hold the turn in its new position.

To use the wavemeter for checking a transmitter, bring coil L1 close to the tank coil of the stage being checked, apply power to the stage and rotate C1 until a maximum reading is obtained on the meter. The output frequency of the stage can then be read off from the wavemeter tuning scale.

The wavemeter can also be used as a radiation meter for tuning up single-wire antennas. If it is tuned to the transmitter output frequency and placed near to the antenna wire, maximum reading on meter M1 will indicate maximum output power from the transmitter.

Many readers will have realized that the calibration method I suggest uses the principle of the rejector circuit. That is why I have called the little gadget "the pink ticket rejector"!

A USEFUL ACCESSORY FOR THE HAM SHACK

Rex Morris W2WHX

BECAUSE we are dealing with something we cannot see, namely electrons and electromagnetic radiation (we only see their effects), we must acquire the ability to use test equipment, in order to understand and find our way in this invisible realm.

The piece of test equipment about to be described is one of the more useful instruments that the amateur should have in the shack. While this instrument serves primarily as a field strength meter, it will also serve as a phone monitor, neutralization indicator and a sensitive wavemeter.

Referring to the circuit diagram, meter M1 is a sensitive instrument which indicates the pressure of rf when the device is used as a

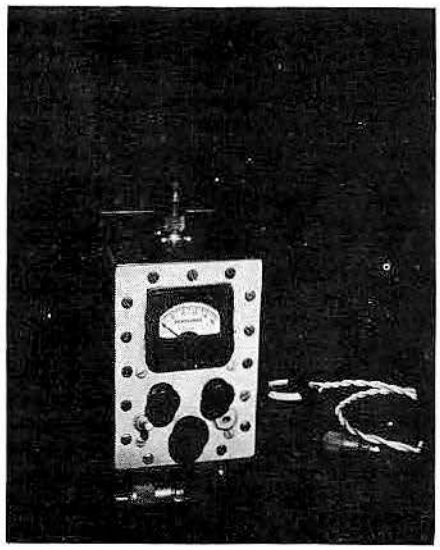

field strength meter, wavemeter or neutralization indicator.

To use this instrument as a wavemeter, a pickup loop is substituted for the short whip antenna at the top. Switch S1, the band switch on the right of the panel, is placed on the proper position. Coil L1 tunes the vhf range of approximately 90 mc to 170 mc (2 meters). L2 tunes 28 mc to 100 mc (10 meter and six meter bands). L3 tunes to 7 mc to 30 mc (40, 20, 15 and 10 meter bands). L4 tunes from 2 mc to 7 mc (80 and 40 meter bands). With switch S1 on the proper tap, condenser C2, on left of panel, is used to peak the reading on meter M1. Using a calibrated dial, frequency may be read directly. Toggle switch S2 is a high-low range switch for meter M1, providing a means of keeping the meter on scale and protecting it against burn-out. Potentiometer R1 (center of panel) is a vernier shunt control, also for keeping the meter on scale.

For use as a phone monitor, rf should be fed into the input jack with a link or pick-up wire. Once again the LC circuit is resonated to the frequency we desire. Earphones inserted in jack J2 will open the meter circuit and allow you to monitor the signal. Switch S2 is placed in the Hi position.

Field strength readings can be taken by using a short pickup antenna. Again the LC circuit should be tuned to resonance. Meter M1 will give an indication of field strength.

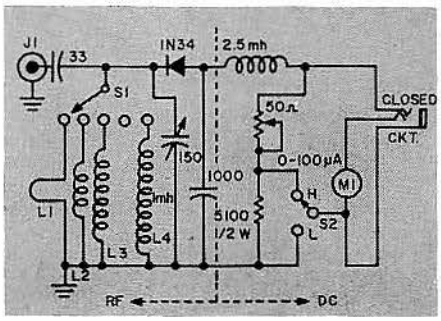

With switch S2 in the Hi position the meter is very sensitive and potentiometer R1 is a variable shunt providing much range of scale adjustment. For use as a remote reading field strength meter an external microammeter (with up to 200 feet of wire) may be plugged into J2. For making transmitter adjustments this is a very desirable feature.

Now notice that one position on the bandswitch S1 is vacant, this vacant position provides a very broad band—low sensitivity position for those extremely high rf fields where even R1 and S2 cannot provide enough attenuation.

Neutralization measurements are made by coupling the instrument through a pick-up link to the tank coil involved, with S2 in the Lo position. When the instrument is tuned to resonance it becomes a very sensitive rf indicator. It is so sensitive that it will readily be seen that complete neutralization exists in theory only.

As in all simple gadgets there are a few simple construction techniques which make the difference between gadget and instrument. In this case the important thing to keep in mind is that from the antenna to the crystal is the rf portion, and from the crystal to the jack J2 is the dc portion (with audio superimposed). With this in mind, construction is such that the two parts are separated, thereby giving some measure of protection from rf energy to the very sensitive microammeter M1. Also note the extensive use of sheet metal screws on the aluminum case. The only rf we want to enter the case is the rf we are attempting to measure via the antenna jack. Note again, we have here an instrument for detecting electromagnetic radiation, from approximately 170 mc to 2 mc. We now have an instrument for visualizing what cannot be seen.

The usefulness of this instrument is limited only to one's ability to apply it and interpret the results it gives. These only come with experience, trial and error and determined application.

Coil Data

L1—One turn hairpin loop.
L2—5 turns of #18 enamel wire space wound 1" dia.
L3—24 turns #22 cloth covered wire, close wound, ⅝" dia.

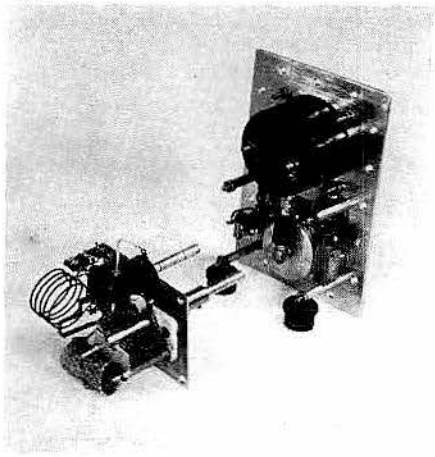

TWO THRU TWENTY FSM

Howard Pyle W7OE

I used a small LMB aluminum meter cabinet with a hole for a 2" meter; any equivalent cabinet can of course be used. With a small enclosure such as this (4"x4") the meter occupies the face of the cabinet and all controls are on the rear. Using a somewhat larger housing both the meter and the control knobs can be placed on a front panel if you prefer.

Rather than wind up the three coils I found that the J. W. Miller Company RF chokes with minor modifications were admirably suited for a compact job. One each of their catalog numbers 4606, 4588 and 4580 were required to cover the three frequency spreads from 2 through 20 meters. The #4606 coil should have five turns carefully removed, to cover the 10-20 meter bands; remove three turns from #4588 for six meters and two turns

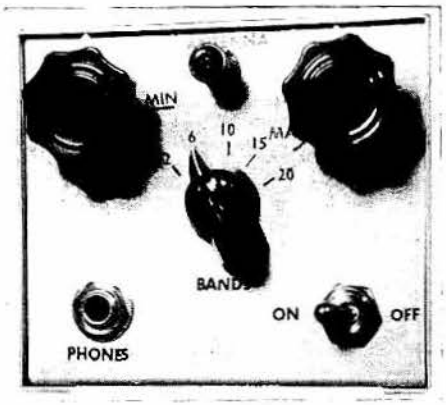

from the #4580 coil to handle 2 meters. These can all be resonated with a 50 pf midget variable tuning capacitor; a Hammarlund HF-50 or the equivalent is excellent. Any of the small multi-point selector switches can be used for band switching. A JBT lever switch type SS-14-ILS will handle the job or, if you prefer a rotary switch you can use a Mallory type 3215J as I did, leaving two positions unused. (I might want to add a couple of coils and try 40 and 80 later!).

Resistors R-1 and R-2 shown in the schematic, need be only ½ watt. A single flashlight cell will serve for the battery although I chose a 1.4 volt mercury transistor battery to conserve space. Other items shown on the schematic are obvious and all parts are readily available from most electronic parts distributors as well as from the electronic mail order houses.

Build this little F/S meter and know what your VHF outputs are doing. If you want to check your modulation quality, a phone jack may be added as shown, making this little gadget really versatile.

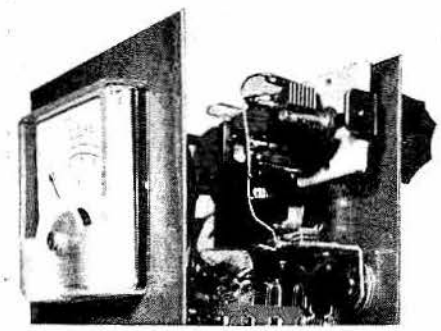

Side view of the FSM.

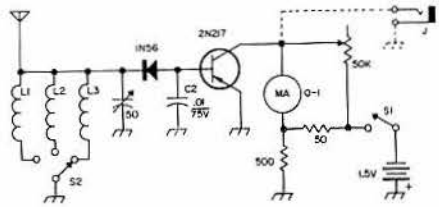

Fig. 1. The bandswitching, transistorized field strength meter for two through twenty meters.

AN AMPLIFIED, CALIBRATED SIGNAL STRENGTH METER

J. L. Iliffe VE3CES

Recently, I had the problem of tuning a four element quad. As you may or may not be aware, these beasties are supposed to be tuned from the rear for minimum signal. A quick check showed none of my friends had a signal strength meter, so I prepared to degrade myself and buy one. A look at a few prices convinced me to build.

Since I wanted some other information on the quad, like front to back ratio and the effect of more or fewer elements, I decided to add a calibrated attenuator and enough gain to make a fairly wide input range. It also had to be cheap!

The result is shown in Fig. 1.

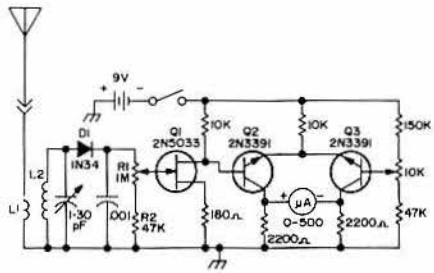

Fig. 1. Diagram of the field strength meter.

To use the normal rf attenuator method of switched T-pads requires complicated shields and quite a few resistors. Also the attenuator has to be terminated in its characteristic impedance to read correctly. To bypass this problem I first detect the rf, then attenuate the dc. This has the added advantage that the circuit is no longer frequency sensitive.

The incoming rf is tuned by C1-L2. C1 can be any small variable. I used both sections of a dual 15 pF because my local surplus store has them for 60¢. For VHF use only 1 section.

L2 is wound on a plastic pill bottle about 1" in diameter and tapering to 7/8". To cover 13–24 MHz, I used 11 turns spaced over about an inch. L1 is 2 turns over top of L2. I tried bandswitching with another pill bottle fastened on the other side of the shield from L2. The idea was to bandswitch another frequency range but I find it more convenient to wind on coils as needed. Use the grid dipper to get you in the ballpark. I have used this meter as high as 72 MHz without trouble. D1 can be any diode. I used a 1N34 because I could then specify it and know it would work, but I tried a computer type which also worked. If you prefer the meter to peak rather than dip, reverse D1.

Rectified rf from D1 is put on the top of R1, the calibrated attenuator. R2 in series with R1 gives the 0 dB point at its junction. For a 30 dB range, R2 is 47K if R1 is 1 MΩ This doesn't quite fill the range but is close. Changing the value of R2 will change the range but 30 dB is considerably more than the F/B ratio of most beams.

Q1 is a 2N5033 FET. The high input impedance of Q1 allows us to set the calibration of R1 directly by dc voltage measurements on the VTVM since it does not draw any base (gate) current. It is a p-channel device. If you use an n-channel type you will have to change the entire biasing of the circuit and also reverse D1.

Q2 and Q3 form a differential amplifier to drive the meter. Q2 is necessary to avoid loading Q1 and I had quite a bit of trouble balancing the meter against battery voltage changes until I added Q3. It will now operate from 8.5–9.2 volts with no trouble. The 10K pot in Q3's base centers the meter. The meter I used is a 250 μA tuning meter with no markings on it except a red/white/blue bar. This is all you need since we calibrate on R1, not the meter.

Operation

The meter is quite sensitive and with a two foot antenna I could get a reading several hundred feet behind my quad at 60 watts input. First tune the input (which is quite sharp) with the attenuator set at zero. This is the least sensitive position. Now set the meter for a convenient reading near the center scale with the incoming signal still on using R3. Adjust your antenna. When you feed it power again the reading will not be quite on scale on the meter but turning up R1 will allow you to put the meter back to the original position. Do not touch R3. The reading on R1 is now the increased gain in dB needed to bring the signal back to its original strength. In other words, the decrease in signal strength.

Note that during measurements you need a received signal to use R1. With no signal the meter will be off scale.

I have also used the meter to align oscillators and doublers in my two meter receiver. A probe can be made for this from two turns of wire on the end of a piece of coax. The high gain available allows the pickup loop to be quite far away which reduces detuning. Adjustments show up well on the meter.

FREQUENCY MEASURING EQUIPMENT AT MICROWAVE FREQUENCIES

Silas Smith WA9VFG

This article is not intended to give the theory, but rather a practical solution to the building and use of wavemeters at micro-vave frequencies.

In microwave work, frequency is one of the most important measurements. It must be understood the wave length in the devices described here is not the exact frequency wave length. A well-constructed wavemeter that has been calibrated can be very precise. They can be within 1.5 MHz at 10 GHz or less than half of a MHz at 1250 MHz. Temperature has some effect on the frequency. Most commercial wavemeters are constructed of Invar, a metal that changes very little with temperature. Some parts are of bi-metal construction to compensate for temperature. For the average experimenter, brass and copper will have to suffice. Although silver plating is desirable, it isn't an absolute necessity. Frequency at microwave frequencies can be measured by three methods: wavemeters, slotted lines, and frequency comparisons. All of these methods are used commercially. The frequency comparison is usually used in the laboratory to calibrate the wavemeter and the slotted line. As a general rule, any method of frequency measurement used at lower frequencies can also be used at the microwave frequencies, but are not always practical. The resonate cavity as a wavemeter is used in microwave measurements.

There are three types of cavity wavemeters: the transmission type, Fig. 1A and 1B, the reaction type, Fig. 1C, and the assorption or absorption type, Fig. 1D. All are resonate cavities. The way in which the wavemeter is used determines the type.

All wavemeters are adjusted for maximum readings except the assorption type. The assorption is adjusted for a dip in power output. The most popular wavemeter used by the beginner is the open circuited transmission line type, Fig. 2. This type of wavemeter is the equivalent of lecher wires. (Open circuit refers to the standing wave within the cavity, not the physical construction except as it pertains to the frequency wave length.) The practical physical dimensions are not many. The inner circumference of the main tube should be less than one wave length at the highest frequency to be measured. The rod should be small compared to the tube. If inductive coupling is used, the inductive coupling should be close to the shorted end. For probe coupling, the probe should be close to the middle. The open circuited transmission line is generally used in two ways. This type can be used "in line' (Fig. 1B) as it has very little loss when it is resonated. However, it should be removed from the line before transmitting, as it will act as a narrow band filter. The half wave length is the measurement between the two successive points at which the generator will load to maximum, as the rod is inserted or withdrawn.

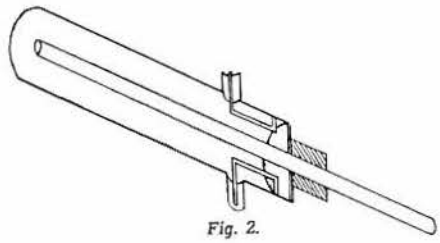

Fig. 2.

Another method in the use of the open circuited transmission line calls for the use of an additional circuit, as in Fig. 3. The circuit is a simple crystal diode detector connected to a microampmeter. The diode and condenser are usually built into the connector, as the leads should be kept as short as possible. The half wave length measurement is made on the rod between two successive maximum readings on the meter, as the rod is inserted or withdrawn. See Fig. 1A and 1B for the setup.

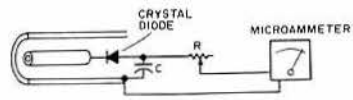

Fig. 3.

The quarter wave coaxial cavity is actually a shorted coaxial line one quarter wave length long (Fig. 4, 5, 6). As illustrated in these figures this type makes a very good cavity to use as a standard. To calibrate, a chart is made of the micrometer settings at different frequency wave lengths from a calibrated source generator. Don't tell them so, but the Public Relations Department of the Telephone Company may help you here, if they have any microwave technicians close by. The quarter wave coaxial cavity can be either physically open or closed. If closed, the closed end should extend at least a quarter of an inch beyond the center conductor at its lowest frequency. The closing of the end will lower the resonate frequency. Probe (capacitance) coupling as used for coupling in Fig. 5 will shorten the center conductor, and loop (inductive) as used in Fig. 4 will lengthen the conductor. In Fig. 4 we change the length of the center conductor to change its one quarter wave length. In Figs. 5 and 6 the center conductor remains the same, and we change the resonate frequency by capacitance. This method makes it necessary to construct the center conductor very short as compared to the full quarter wave length as in Fig. 4. These devices are not longer, so caution must be used when calibrating. The closed wavemeter as indicated in Fig. 7 is a shorted coax line at each end. The wavemeter uses a shorting plunger which is movable along part of its length. If used as the quarter wave coaxial cavity, the center conductor must be longer than a quarter wave length.

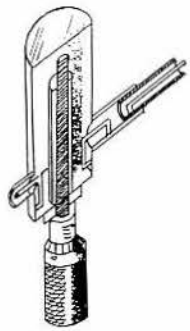

Fig. 4.

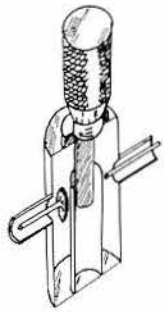

Fig. 5.

Up to this point we have covered most of the wavemeters that could be used from around 144 MHz up to approximately 3000 MHz. 1000 MHz to 3000 MHz are usually called the lower microwave frequencies. If the inner circumference of the outer tube is kept less than one wavelength, these wavemeters will operate in the desired TM mode.

There are four ways to couple energy into a wavemeter, loop (Fig. 4), probe (Fig. 5), direct (Fig. 6) and slit (Fig. 8). The most commonly used is the loop, as it has very little effect upon the electric field. The usual methods for changing loop coupling is to change the size and orientation of the loop. Loop coupling is usually placed in the high current area of the wavemeter. Capacitative coupling is changed by the size of probe and the distance from the center conductor. Capacitative coupling is usually placed at the high voltage portion of the wavemeter. As in Fig. 5, a small probe – say ½ in. piece of No. 22 wire, for example – may require an external voltage amplifier. The smaller the probe, the less effect on the resonate fre-

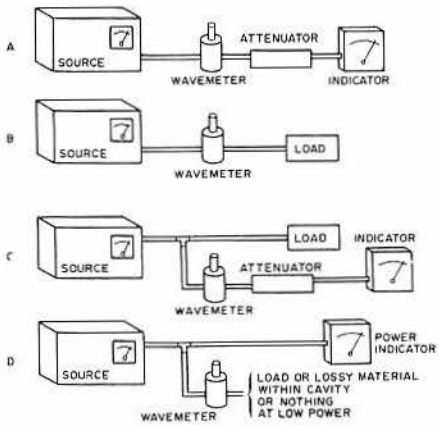

Fig. 1.

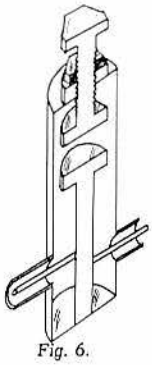

Fig. 6.

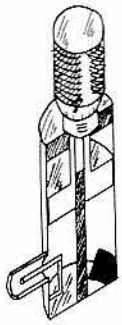

Fig. 7.

quency of the wavemeter. In direct coupling as in Fig. 6 the primary concern is impedance. To increase the impedance, move the coupling up the line away from the shorted end. To decrease the impedance, move the coupling down the line toward the shorted end. Slit coupling (Fig. 8) can be a small hole or a series of small holes or a slit. Its purpose is to allow a certain amount of leakage. In all forms of coupling, it is desirable to use loose coupling, as the wavemeter will have less effect on the system, and the Q of the circuit will be higher.

Above 3000 MHz, usually only the tunable wavemeter is used. The cavity is one quarter wave length long. The cavity can be coupled in three ways: loop, probe and slit. Because of the high frequencies, the slit is usually used, and the meter is most often

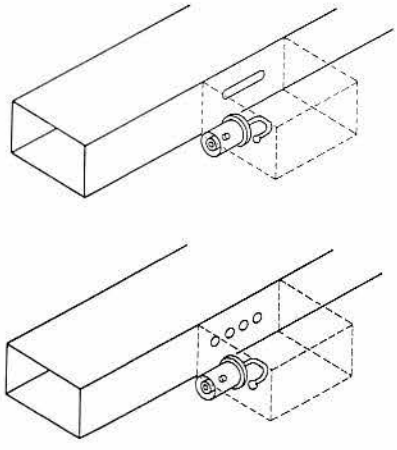

Fig. 8.

kept as an assorption meter. In the assorption method, the wavemeter should be detuned when not in use. Some of the cavity wavemeters have a little lossy material added to absorb some of the energy, as in Fig. 7. Lossy material can be made from graphite impregnated cloth in epoxy.

There is one other type of wavemeter that can be briefly mentioned; it is the reference wavemeter. The reference wavemeter is of any design as described, but would be constructed more like Fig. 6. It can be locked when adjusted to a selected frequency and used as a reference standard. The micrometer assemblies can be made from any micrometer with additional parts welded on. I constructed one using an oversized tube over the main cavity, and dimpled it at various places around its circumference until it fit smoothly over the cavity, and I used a piece of 3/8 threaded brass pipe as the main adjusting screw. I am sure you can come up with a good one without any backlash. This wavemeter spread the 1250 MHz band out to over 100 inches by rough measurements. I haven't calibrated it, so I can't say for sure just how far. There are three nice veeder root counters in the APX 6 which would make excellent wavemeters plus sliding contact material. One could even use the entire cavity.

The last method of microwave measurement that we will look at is the slotted line

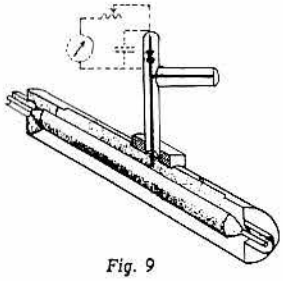

Fig. 9

(Fig. 9). The slotted line is a section of coax line along which is cut a slot. A probe, which is a simple crystal detector with a one quarter wave length shorted stub for a dc return path, is moved along near the center conductor of the slotted section. In this case we are looking for two successive minimum readings along the line. The distance between these readings is one half wave length. A slotted line should also be calibrated. If calibrated at one spot near the intended frequency to be measured, a chart will not have to be made – just a K factor obtained. The distance between two successive readings times the K factor should equal the frequency half wave length. There are a few accessories that can be either built in or used

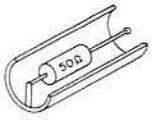

Fig. 10

externally. One is a coax attenuator shown in Fig. 4. It will slide in and out of the other half. It too can be calibrated if one wishes. A 50Ω resistor can be used for an impedance match for 50Ω lines if inductive coupling is used such as in Fig. 10 and when the loop is small. The line stretcher (Fig. 11) is useful with the slotted line. It merely consists of two coax sections, one sliding into the other.

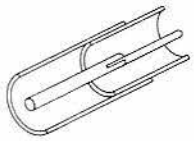

Fig. 11.

FREQUENCY METER – 1 to 10 GHz AMATEUR MICROWAVE

Bill Hoisington K1CLL

A quarter wave coaxial cavity is used up to about 5 ghz, and from there to over 10 ghz the three quarter mode is used. A complete explanation of these types of operation is given.

The same type of unit can be used as a very good tuned mixer from 1 to 10 ghz.

The Coaxial Cavity

The basic circuit of the coaxial cavity is shown in **Fig. 1**. A cylindrical outer cavity wall encloses a round rod some 4 inches long which is the center conductor–this center conductor is grounded at one end.

The Shape of the Cavity

The exterior shape of the cavity is shown in Fig.2. and is seen to be rectangular in cross section, with two thin walls and two thick side walls. Believe me, this configuration was not arrived at in one day! De-

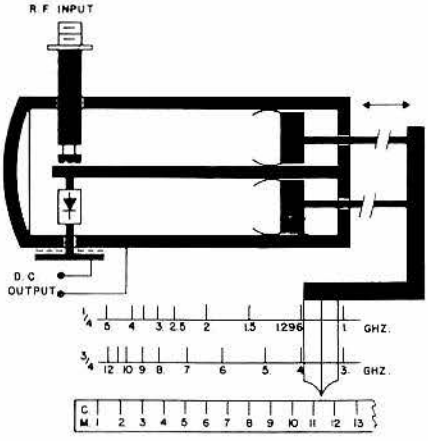

Fig. 1. Basic coaxial cavity.

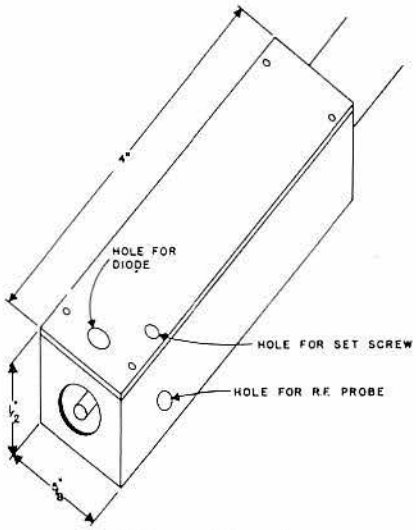

Fig. 2. Shape of the cavity.

signing tuners for X Band, I gaily started in with sections of thin-wall round pipe, the way I'd always done on uhf. The first thing you run up against is, how do you make the diode bypass capacitor? Machine out a curved saddle piece to fit exactly over the outer wall? Possible, but too expensive. And then how do you introduce the rf probe coupling into the cavity? Add on a "saddle" with a hole in it? These considerations and others, such as mounting (more saddles?) led to the abandonment of the pipe as a shape for microwave cavities; but not until a lot of time had been spent on the above mentioned items.

Diode holder and capacity

Looking at **Fig. 3.** you will see the first answer arrived at; but only after weeks and weeks of making different types and shapes. The center conductor is slightly flattened and drilled out to fit the diode prong. An 8/32 copper machine screw is drilled out to fit the other prong, then slotted with a fine

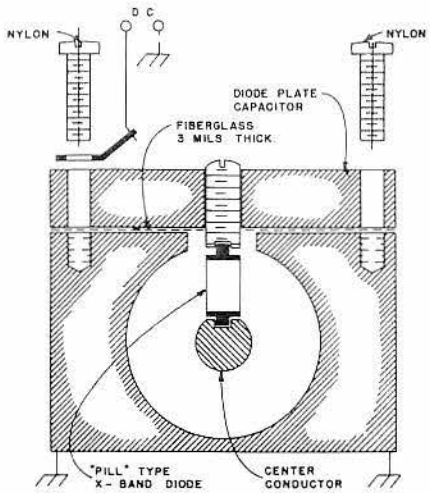

Fig. 3. Diode holder and capacitor.

jeweller's saw, and then compressed slightly to an inside diameter a shade less than the OD of the diode prong. In this way the copper screw will hold the diode as you insert it into the cavity. Believe me, that helps!

The second answer is also evident from **Fig. 3.** as the diode bypass capacity can now be made efficient at X-Band. As mentioned before, you cannot "buy" a capacitor "good for X-Band. You can make it though, as shown in **Fig. 3.**, if the cavity body has been designed correctly for it. One of the thin wall sides of the cavity is drilled out (or machined out) just wide enough to clear the diode and it's holder, which is the 8/32 copper screw. The copper capacitor plate, which is thick enough to take at least a half dozen 2/56 threads, is drilled and tapped for the 8/32 screw, and clearance drilled in the corners for the 2/56 mounting screws. A soldering lug for the dc connection is used under one of these, and a three mil (three thousandth of an inch) thick sheet of fiberglass cut out to fit, larger than the plate. This helps to keep metal particles from lodging inside the tiny crack that might be there if the fiberglass sheet did not extend out beyond the plate all the way around. You can begin to see some of the detail needed at X-Band.

Further reasons for the rectangular cross-section now show up in **Fig. 4.**, which details the rf probe connections. This item was also very troublesome in first models using pipe

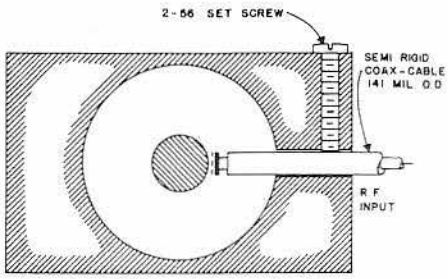

Fig. 4. RF probe connector detail.

walls, where "more saddles" was the only solution. All "saddles" are eliminated by the rectangular shape. Small semi-rigid cable is used for the connector. I have some short lengths with X-Band antennas connected to them for use as "In-Space" pick-ups, feeding directly into the wavemeter cavity. There is at times an advantage in this type of "energy collection" (antennas) which will be taken up later.

Fig. 5. shows detail of the treatment of the cavity end of the rf cable, or probe. The outer conductor is cut away for about one quarter inch in length and removed. About a sixteenth or so of the Teflon is left, which is then removed from the center conductor. A

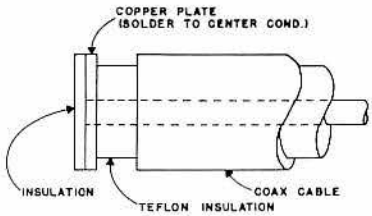

Fig. 5. RF probe detail.

thin copper washer (which I generally cut out of sheet copper since the hole to solder the center conductor is quite small) is then soldered to the center conductor, making the "capacity probe", as shown in **Fig. 5.**

Mylar tape or other good insulation is fastened to the side of this washer facing the center conductor. With this insulation in place you can push the probe all the way in, while testing, and still not have a dead short. Different thicknesses of fiberglass sheet can also be cemented on, to make up more permanent types of fixed capacitors, of different values.

For some uses, particularly in this one as a wavemeter, loose coupling is desired, but it must be securely locked with the set screw, otherwise your dial calibration and frequency reading will suffer.

Plunger fingers

Here is the most difficult item. It is hoped to have stock pieces made up for this work that you can purchase at reasonable cost. The fingers should be made of tempered beryllium-copper, which is not easy to work with.

Fig. 6. shows some details of the plunger and fingers. I assume, having been told so by "well-informed sources" (mechanical engineers) that these units should be made in a machine shop by competent machinists. Maybe so, as the ones I have made here in the shack by hand tend to lose their tension if not handled carefully.

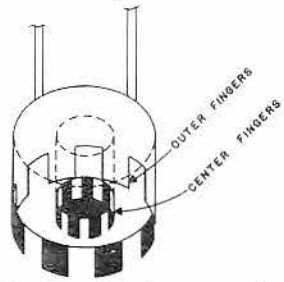

Fig. 6. Plunger details: A)End view, B)Outer fingers, C)Center fingers.

Fig. 7. shows the desired fit for these fingers. The plunger body should be an easily slide-fit *inside* the ¼ inch cavity, and the center hole in the plunger after the fingers should also be an easy fit *over* the center conductor.

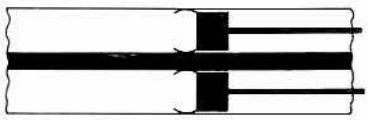

Fig. 7. Desired shape and curvature of the plunger fingers.

Two steel push rods lead back from the plunger through small holes in the back end of the cavity (see **Fig. 1.**); these terminate in the brass block which is furnished with a pointer for the frequency scale. Maximum extension of the plunger should be up against the end piece, as a positive reference point for the dial, in case of trouble after calibration. This point should be indicated on the scale as "minimum frequency" in order to reset the pointer if it should ever become displaced after calibration.

The diode

At present, the diode used is an X-Band "pill package," with a prong at each end as shown in **Fig. 3.** These are point-contact diodes, like the famous 1N23 ceramic cartridge types of World War II fame, only a lot smaller. Referring again to **Fig. 3.** always make sure that the ceramic part of the diode is, as nearly as possible, in the open space between the inner and outer conductors. This space is where the rf is! It is also important to make sure that there is as much metal surface continuity as possible along the cavity wall, across the fiberglass sheet X-Band capacitor insulation onto the diode capacitor plate, and from there over to the diode holder and onto the metal end of the diode.

The rf is at a maximum between the inner and outer conductors, which is an air space of a sixteenth of an inch. and that is where the diode should be.

The diode rf bypass capacitor, formed by the diode plate and the flat top of the cavity body, need only have a capacity which is relatively small; anything over about 20 pF is sufficient. What it *must* have is the proper *lack* of inductance! The details of how this act has been covered in previous paragraphs, and if you follow those details you will find little or no rf on the *outside* of the diode capacity plate or the dc lead from it.

X-Band is not just short waves. It is really short; like a quarter wave at X-Band equals 9/32 of an inch as you can plainly see, if you get one (or more) of those little plastic millimeter rulers in a stationery store for 5 or 10¢. Be sure and get some, by the way, if you're going to do anything above two meters.

Fig. 8. shows the millimeter scale, with s, C, and X-Band plainly showing.

A handy wavelength-frequency chart is included here for your convenience, which is useful from the khz range way up *above* X-Band. See **Fig. 9.** Get to know the easy reciprocals, like 1 centimeter equals 30,000 mhz, 3 centimeters equals X-Band, 10 centimeters equals S-Band (3,000 mhz), 1,000 mhz equals 30 centimeters, etc. Very useful!

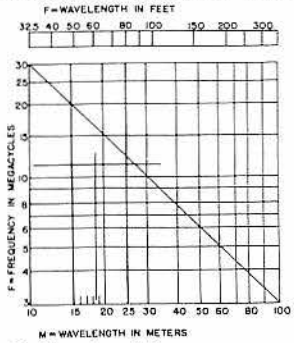

Fig. 9. Wave-length/frequency converter. Use of multiplying factors such as those at the bottom of the graph will cover any portion of the electromagnetic-wave spectrum.

The 3/4 mode and harmonics

Don't worry about that word "mode." Generally when something odd takes place in a cavity or waveguide, certain types of engineers tend to fall back on obscurantism (I seem to have fallen for that S64 word. It just means covering up). They say, "It jumped mode", or, "Spurious showed up."

Here's the straight dope. **Fig. 10** shows the quarter wave "mode" of operation. Starting at 1 ghz you will find *one* point of maximum dc output. If the oscillator under measurement is "running hard" with lots of 2nd and 3rd harmonic energy content, these will be found at 2 and 3 thousand megahertz, and possibly higher ones, which should drop steadily in power as you go up. The diode itself may cause some of these if hit too hard with the rf input.

Fig.11. shows the 3/4 wave mode, which is a very "natural" type of operation. Don't forget that in an instrument of this kind you are looking for standing waves and you want them to be of the greatest amplitude possible (within reason). So, if you tune the cavity by the plunger so that it measures

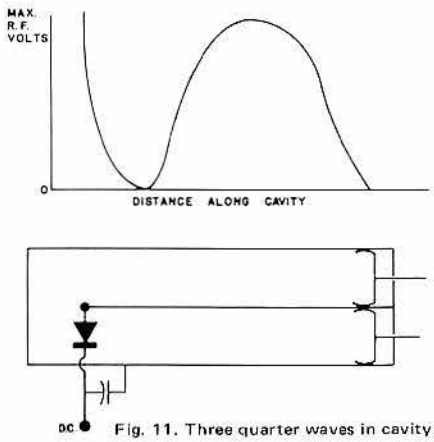

Fig. 11. Three quarter waves in cavity.

some three quarter waves on it (allowing for length-loading of the diode on the first quarter), you will find two peaks on the meter due to the situation shown in **Fig.11.** The higher the Q, and the lower the losses along the line, the more quarter waves can be found. For the 4 inch cavity shown, three quarter waves at S-Band are the longest that will fit.

A check on this operation is easy. Using the millimeter scale on the "dial', take several readings between maximums, for example, 22, 37, 51, and 67, add the spacings together, which comes to 45 millimeters, divide by three (the number of samples), and you will find an average of 15 millimeters for the waves which are standing on the center conductor (or "along the cavity", if you prefer) and there you are, 15 millimeters for the half wave, 3 centimeters for the full wave. Which is X-Band at 10,000 mhz or 10 ghz.

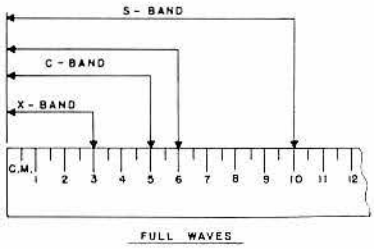

Fig. 8. Full waves for S, C and X-Bands on millimeter scale.

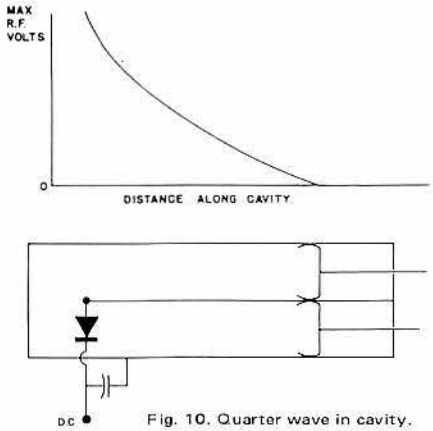

Fig. 10. Quarter wave in cavity.

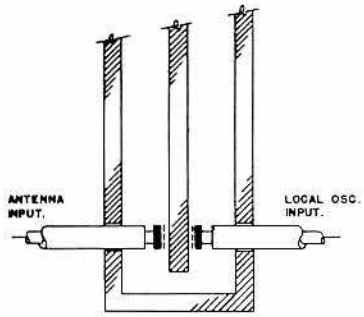

Fig. 12. Double input detail.

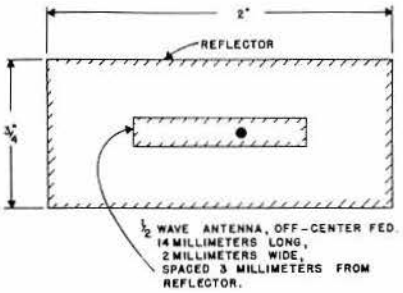

Fig. 13. Test antenna—X-Band "two-element".

If you find numbers which are not well known, you can find the frequency on the chart, at least close enough to put you in one of the microwave amateur bands, such as 5,650 or 10,500 mhz.

Use as a Microwave Mixer

This same type of cavity can be used from 1 to 10 ghz as a mixer for the front end of a superhet receiver covering those frequencies.

This application will only be touched on briefly here as the whole receiver is detailed in another article in *73 Magazine*.

Fig. 12. shows how to do it, so you can plan on this use, and make more than one, if you wish to.

Looking at Fig. 12., you can see how useful it is to have *two* thick sides on the cavity, one for rf input and one for the local oscillator input.

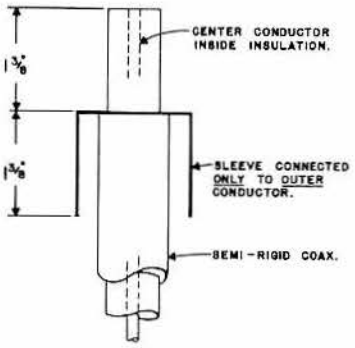

Fig. 14. Test antenna—S-Band. Dimensions suitable for amateur S-Band 2,400 mhz (omni-directional).

Conclusion

That about covers the details and some uses. The whole unit can be mounted on a piece of copper-clad, along with a 50 ma meter, the dial scale, and the centimeter-frequency chart. I broke down on this one and used a "regular" small microwave input connector for the rf. (Instead of an "RCA Phono Jack".) For connections to other units, such as oscillators and multipliers, small flexible cable may be used.

Fig. 13 shows a test antenna for X band, not the best in the world but good enough for a starter. With a lens in front it really picks up signals. Fig. 14 shows an S band antenna for the 2,400 MHz amateur frequencies.

LAMBDA LINES

James Ashe W2DXH

Over the past few years, new kinds of commercial gear and military surplus have made it quite easy to generate VHF frequencies. But the problem of measuring the frequencies has not become any easier for amateurs short on calibrated instruments. Of course this means the newcomer to VHF! What can he do to find what ballpark a circuit is radiating in, if there are no accurate devices available? When this problem came up recently, a simple solution appeared quite by accident. It was so simple, in fact, that its simplicity must be the feature that has kept it out of the ham publications. Another first for 73!

The traditional solution to the rough frequency measurement problem is to make up a Lecher Wire system. There is some question about the value of one of these in the modern ham shack. Narrow-band crystal-controlled techniques guarantee frequency and stability once the multipliers are tuned properly. In the old modulated oscillator days things were not that stable . . . so why go to all that carpentry and construction work for what fairly well promises to be a use-it-once gadget? Particularly when a little reflection (pun intended!) may bring out a cheaper, faster and better arrangement?

Ham and commercial builders of VHF gear have been using tuned stubs for years to match impedances, tune out frequencies, tune in others, etc. Yet it seems to have occurred to very few workers indeed that it might be possible to cut stubs to length accurately enough to serve as frequency standards. Apparently this can be done, with an accuracy of about 5%! This compares very favorably indeed with the performance of lower-frequency grid dip meters and some signal generators. It's pretty good for a pencil and yardstick operation: the only other items required are some understanding of how it works and a piece of 300 ohm twin lead. Belden #8235 recommended. You can calibrate that new GDO for 432 at a cost of just a few cents!

Theory

Many kinds of things show a property of tuning sharply to a certain frequency. This property is called resonance. We hear it when a struck piece of metal rings, and see it in the pendulum of an old grandfather clock. The grid dip meter shows a drop in grid current of an oscillator when a nearby resonant circuit steals energy from the oscillator. And it is the nearby resonant circuit that is the subject of this article.

The basic circuit is the quarter-wave stub. A little browsing around in the handbooks and earlier issues of 73 and other ham magazines will tell you lots about quarter wave stubs. The important practical points are that the stub resonates at certain frequencies, and that at these frequencies it can be dipped at its shorted end in the same way as any other resonant circuit.

But the term 'quarter-wave' has to be taken with a grain of salt. The tuned stub will be shorter than a free-space quarter wave, because the dielectric has a slowing-down effect on the rate at which the RF bounces end-to-end along it. Suppose you laid out a mile or so of twin-lead and transmitted a signal, at the same time sending off a reference signal by space wave. The reference signal would arrive at the other end first, in about 5.35 microseconds. The twin-lead signal would arrive a full microsecond later, about a 20% delay. Since this applies even to short lengths of twin-lead, the delay must be taken into account for accurate measurements. Also, there is a considerable difference in velocity factors between different brands and qualities of twin-lead.

Crystals are often used in overtone oscillators for generating stable VHF frequencies. The various modes of oscillation are pictured in the handbooks. Tuned lines will also show overtone resonances, and in the case of large uncertainty, it might just happen that reasonable errors could lead to a consistent but very wrong result. A halfwave line will resonate at a frequency f, and also at 2f, 3f, and so on. Note both odd and even multiples! All other resonant lines have a similar overtone resonance property. The problem is slightly aggravated by the convenience of using relatively long lines at the higher frequencies because they are easier to handle. The solution is to cut a pair of lines whose collections of resonant frequencies have only one resonance in common. The recommended lengths are a half-wave and a three-quarter wave line.

Fig. 1 shows four basic tuned lines. Just which resonance is an overtone and which is not depends somewhat on the application. The simplest way out of this problem in semantics is to say that the three-quarter wave line really doesn't have that resonance at f/3, ignore the quarter and fullwave lines, and stick to the remaining two for test work.

At 432 MHz a wave in free space is about 27.3 inches long. Suppose we are using Belden #8235 twin lead, which Belden says has a velocity factor or propagation constant of 0.77. The twinlead wavelength than is 27.3 times 0.77 or 21 inches. The halfwave stub must be 10.5 inches long, shorted on both ends; and the three-quarter wave stub 15.75 inches long, shorted at one end. These are convenient lengths, not too long to use on the workbench, nor so short that percentage accuracy in cutting becomes a big question.

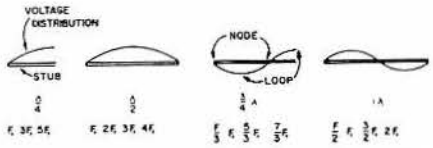

Fig. 1. Four kinds of tuned stubs, taking their fundamental resonances as the frequency producing the illustrated voltage distribution. This shows that none of them has a unique resonant frequency.

Using the stubs

The commercially available grid dip meters are not noted for accuracy. It's commonly estimated that the scale calibration can be

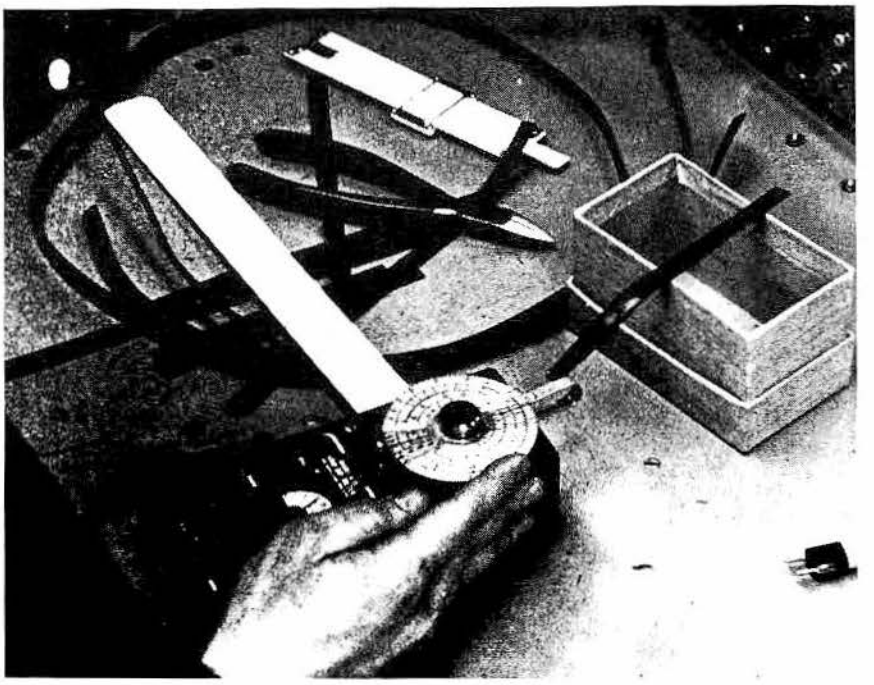

Fig. 2. Some overtone resonances of a halfwave stub (shorted at both ends). F1, F2, F3 and F4 should be 1F, 2F, 3F, 4F.

trusted to within about 20%. With some care, calibration points taken from twin-lead resonators appear to be good to about 5%. The first precaution is accurate construction. Cut the strips slightly long, short one end of each, and cut the three-quarter wave line to length. Then go more carefully at the other end of the halfwave line, which must be shorted at both ends. It should not be too hard to get the correct lengths within one sixteenth inch.

When making frequency checks, the lines must be held off the workbench an inch or two. Use small boxes or pieces of cardboard. Probably the better part of a foot distance is in order if the workbench is of metal or has a copper surface. At two meters, a perceptible change in calibration can be detected if the line is laid out on a wood surface! It's very good practice to make up lines for two meters or lower, and practice dipping them. Some refinement of technique will certainly be required before a halfwave and a three-quarter wave line can be made to dip at the same point on a standard dip meter. Once the trick is mastered, it can be carried up to the higher frequencies.

The lines are dipped in the same way as any coil. Because they have a very high Q, there will be a tendency for the dip oscillator to pull, or to seem to give different readings when tuning down to frequency and tuning up to frequency. The remedy is less coupling: move the dip meter a little further away from the line and try again. Dip the stub at its shorted end!

But what was that trick for calibrating a dip oscillator, mentioned earlier? Can't make up a pair of lines for each frequency. No need to! That's simply the reliable way for finding the right ballpark. When you're there, you can set the lines aside, make up another three-quarter wave resonator cut for the lowest frequency, and after marking that point on the scale, trim the stub up to the next calibration frequency. Throw the remainder away when done calibrating.

The half-wave stub is also useful as a tuned coupler. Suppose you want to tune an oscillator to a particular frequency but have nothing to indicate at that frequency. Loosely couple the RF into one end of the half-wave stub, and take it out the other end with a hairpin loop, through a diode to a 50 μA meter. You will only get a reading at the resonant frequency of the half-wave stub. Simple!

Chapter V

RF Signal Generators

ZERO-BEATING WITH A FREQUENCY METER

Jim Harrison WB4TBX

After putting an LM-18 in service, I found it a nuisance to plug in headphones every time it was necessary to adjust the corrector control to produce Zero Beat at one of the crystal check points. I hooked up a phone plug to the plate winding of an audio output transformer, and then connected a small loudspeaker to the secondary winding. I leave the phone plug inserted in the LM phone jack at all times. After using this setup for a while, it occurred to me that the last few cycles either side of zero beat might not be audible, so I tried a parallel hook-up off the primary side of the transformer. The other end of the cable was connected to the Vertical input of an oscilloscope. Now, when adjusting the corrector control for zero beat, you will see low amplitude sine waves even after you can no longer hear the beat note. You tune out the sine waves until you have a perfectly straight reference line on the scope. The Heterodyne oscillator is then corrected to calibration much more accurately than trusting to the ear alone. The principle is not new, yet the idea may not have occurred to some people. Any old scope will do, as the frequencies are in the audio range.

Another bit of frustration occurred when trying to adjust the corrector knob. I would pass the zero beat point time and time again, due to the stiffness of the control. Remember, these units are built for ship-board use, and loose controls cannot be tolerated. I dug up a small vernier tuning drive, similar to the Jackson Planetary-Vernier drive, (about 5 to 1 ratio). I mounted this drive on a right-angle aluminum bracket and attached it to the LM using the two screws on the upper right side of the unit. Bore holes slightly oversize to allow for accurate alignment of the control shaft so that it will not bind. Cut out a portion of the bracket so the "High-Low" knob can be moved. The precise Zero beat adjustment can now be made very easily with the reduction drive.

HAND CALIBRATE THE BC-221 FREQUENCY METER

Carl Henry

At present many amateurs have an opportunity that may not repeat itself. I refer to the many army and navy surplus frequency meters now available, through MARS and surplus sales. Many of these meters have the original calibration chart missing, and are considered virtually useless. This is demonstrated graphically by prices, the frequency meters with charts costing $100, the meters without charts selling for one-third this amount. Meters without charts are worth more than this would seem to indicate. It is no great job to calibrate one of these meters, but it is time consuming. A little care is required, but you do not need to be a super technician or electronic engineer to do the job. Neither is elaborate equipment required.

Essential to the calibration are several items not commonly available around the shack, but easy to build. Figure 1 illustrates the first requirement. This is a 10 kc multivibrator, which will operate from a 100 kc xtal calibrator, and give 10 kc markers up to 20 mc. I am assuming here that you have or can beg, borrow, or steal a 100 kc calibrator, this being a common item. In fact, some receivers have them built in. Using this 10 kc marker source, the high band of the frequency meter can be calibrated. Interpolation to 1 kc points is then possible, and if care is used an accuracy of better than 0.005% will result.

Fig. 2 shows a simple beat detector that can be used with earphones to get an exact zero beat. It took about ten minutes to wire up a 1629 (army surplus magic eye tube) temporarily for this purpose, and it is certainly worth while in the interest of increased accuracy.

With your equipment assembled, connect the frequency meter to its power supply. Allow at least one hour for proper warm-up so that all equipment will stabilize, including the 100 kc calibrator and 10 kc multivibrator. Set the CALIBRATE control on the frequency meter to center, and be especially careful not to move it until the calibration is complete. After the warm-up period the 100 kc calibrator should be zeroed against WWV, at as high a frequency as possible. The 10 kc multivibrator must be checked to see that it gives nine beats between each 100 kc beat. This can be done with your communications receiver, and it will be easiest to do it on as low a frequency as possible, say 600 to 700 kc. Now type several sheets of paper, listing the high range of your frequency meter by 10 kc points. If you are in doubt as to the range, check it with your receiver. To do this set the dial to the low end of its range, turn on the internal xtal, and zero in on the strongest beat at or near the low end. Turn off the internal xtal oscillator and find the signal from the frequency meter with your receiver. Note the frequency. Tune your receiver until you reach another harmonic from the frequency meter. The difference between the first and second readings is the frequency of the meter at the low end

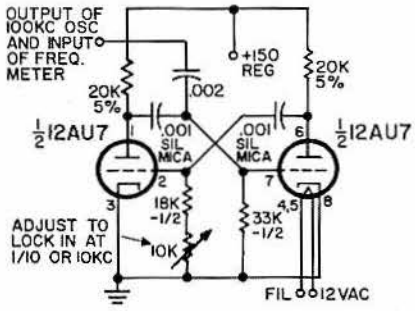

Figure 1. 10 kc multivibrator for use with 100 kc crystal oscillator, providing 10 kc beats with frequency meter.

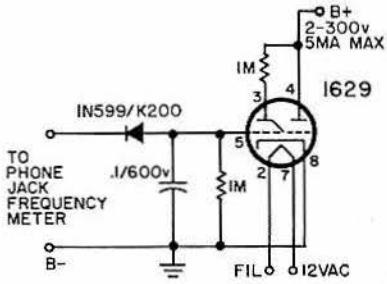

Figure 2. A simple zero-beat indicator for use in conjunction with headphones.

of its dial. Now do the same thing at the high end, and you have the primary coverage of your frequency meter. Most have a range of 125 to 250 kc on the low band and 2 to 4 mc on the high band.

When you write up the frequency range by 10 kc points, leave a space between notations, since you will be adding information here later. Now, using the 100 kc xtal, check the high band of the frequency meter at 100 kc points, listing the dial readings. Now go back and check the dial at 10 kc points, listing all the dial readings. The checks should agree with the 100 kc checks at every tenth point. This is a handy method of cross checking yourself. You might note that on equipment of this type, always approach the final reading from below. If you pass the zero beat point, don't jockey the dial back and forth for zero beat. Go back below the beat by 5 kc or so and approach again from below. This procedure will help to eliminate error from dial backlash.

After your 10 kc points are all listed, interpolate to 1 kc points. This is the hardest part of the job, and is very time consuming. A big pot of coffee and a patient and loving XYL will be a big help here. The patient XYL can be replaced with an adding machine if you have one available, but you'll still need the coffee.

The difference between each 10 kc point must be listed. Note this in the space you left on your sheets. Each 1 kc will be 10% of this, so add 10% to the 10 kc listing for 11 kc, 10% more for 12 kc, 10% more for 13 kc, and so on. When you reach the next listed 10 kc point, the calculated listing and the measured listing must agree, another cross-check. This will take 2000 individual additions.

After the high band is finished, you may wish to calibrate the low band in the same fashion. Referring to Figure 1, change the grid-plate capacitors to 0.01 mfd. This will put the multivibrator at approximately 1 kc intervals. If you have trouble syncing the multivibrator, you may have to build another to operate at 10 kc, and sync the 1 kc from this. No trouble should be had with a strong output xtal calibrator, however. Calibrate the multivibrator as before, except with 1 kc intervals instead of 10 kc.

A calibration book can be prepared when you finish. It is a good idea to file all your original calculations and papers, should the book ever be destroyed. The frequency meter is now as good as any with original calibration book, at a good saving of money.

HIGH ACCURACY VHF FREQUENCY MEASUREMENTS

Howard Burgess W5WGF

Accurate frequency measurements can be a problem for the amateur with a limited budget. However with some home construction and careful operation the average ham can make VHF frequency measurements to an accuracy better than .00015% at two meters. This is the equivalent of measuring the distance from New York to Los Angeles with an error of only 25 feet. Many commercial units cannot equal this figure. The same method can also be used for HF and UHF measurements.

There are many ways to measure frequency but few of them are satisfactory for use at the very high frequencies. The well known hetrodyne frequency meter becomes unstable when its oscillator is operated at VHF. It can no longer be held or read to any degree of accuracy. The oscillator can be operated at a low frequency and one of the harmonics used at VHF, but any error in the oscillator will be multiplied by the number of the harmonic used. A frequency meter that can be held to within 200 hertz at 4 MHz will be off by 7.4 kHz at the 148 MHz harmonic.

A second method of much greater accuracy uses low frequency crystals which are referenced to a known standard such as WWV. The harmonics of these oscillators will be quite accurate and useful far into the UHF region. However this system has its limitations. Even when used with multivibrators and harmonic amplifiers it produces only spot frequencies.

Although neither of these two methods is satisfactory when used alone, they can be combined to make an accurate and versatile system. If you haven't guessed it by now, the system works like this. A crystal oscillator operates on 5 MHz. This oscillator can be kept to zero beat with WWV with very little effort. With a simple harmonic amplifier following it, strong markers are available every 5 MHz far into the UHF region. To fill in between the 5 MHz points, and get full tuneable coverage, all that is required is to add the output of a stable low frequency VFO to the proper marker. Example: To measure 146.25 MHz just add 1.25 MHz from a calibrated tuneable oscillator to the 145 MHz harmonic of the crystal. The same results can be had by using the 150 MHz marker and substracting 3.75 MHz.

The tuneable low frequency oscillator of this hetrodyne system can be any stable, calibrated, oscillator that will give the desired frequencies. A good signal generator can be used but better yet is the old faithful BC-221 frequency meter. The crystal oscillator that supplies the 5 MHz markers should be designed for high stability. However, even simple crystal-controlled units can be kept zero beat with WWV for periods long enough to make most measurements.

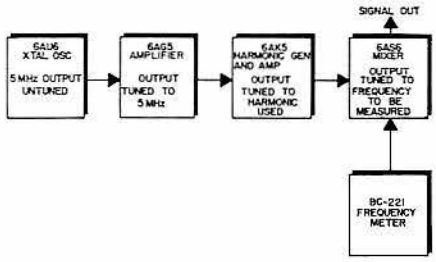

Fig. 1. Block diagram of the VHF frequency meter.

Earlier we quoted a figure of .00015% or better for the accuracy of this system. Perhaps we should show how this is possible. The crystal oscillator can be held to near zero beat with WWV but due to propagation errors in the signal of WWV, we can never be sure that our crystal is closer than 2 parts in 10 million. This would be 2 hertz of error at 10 MHz or an uncertainty of 29 Hz in the 145 MHz marker. The BC-221 is normally considered to be a .05% instrument. This would be an error of about 1.75 kHz at 3.5 MHz. However with care in calibration, and reading it is not difficult to reduce this value to 200 hertz or less. In a hetrodyne system the error of the VFO is not multiplied at VHF but is just added to the error of the crystal marker used.

The total error at 2 meters is 29 Hz contributed by the crystal and 200 Hz by the VFO for a total of 229 Hz. This is a little more than 1.5 hertz per million hertz for a tuneable system. Of course these values are approximate and with careful operation they can be reduced by 50% or more.

In the 146.25 MHz example used earlier, the VFO was required to furnish less than 1% of the total output. To put it another way, the only wobble is in the smallest cog and its contribution is so small it can't shake up the machinery too much.

The circuit shown in Figs. 1 and 2 has been used for monitoring MARS, CAP, and several other services. The crystal oscillator is quite stable but can be tuned enough to zero with WWV. Tuning is done with C1. One stage of harmonic amplification is sufficient to give strong signals well above 150 MHz. The plate circuit of this amplifier stage is tuned to the harmonic to be used. This feeds one input

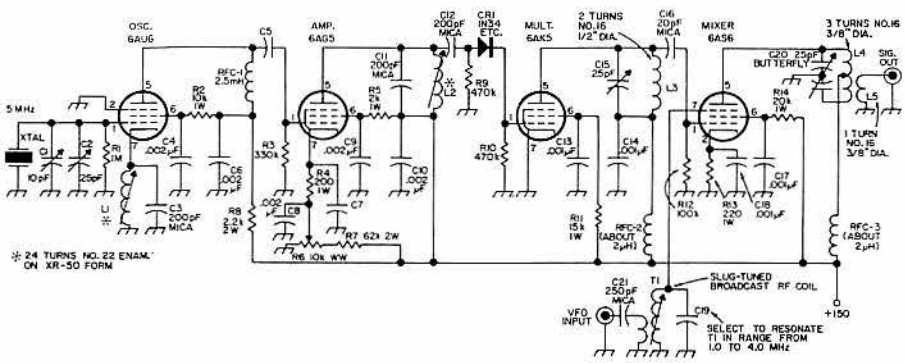

Fig. 2. Schematic of the oscillator, multipliers and mixer for using a BC-221 on the VHF ham bands.

grid of the mixer. The other grid of the mixer is driven by the output of the BC-221 frequency meter. The tuned circuit shown in this grid resonates broadly in the 2-4 MHz range of the BC-221. This helps to keep the higher harmonics of the BC-221 out of the mixer.

The output of the mixer is resonated to the desired operating frequency. This will be either the sum or difference of the two input signals. The level of the output signal can be controlled by R6.

Operation of this system is simple. The "cook book" would read as follows:

1. Couple the output to the antenna of the VHF receiver.
2. Determine the crystal harmonic and VFO frequency that will give the frequency of the signal to be checked.
3. Tune the VHF receiver to the signal to be checked.
4. Tune the BC-221 until the output of the frequency monitor zero beats the received signal.
5. If required, peak the tuned circuits in the monitor for maximum output and adjust R6 as needed.
6. The frequency of the received signal will be the crystal harmonic plus (or minus) the reading of the BC-221.

Many details cannot be covered in one story due to lack of space. The operator will have to determine the most effeceive method of coupling to this particular receiver. He will also have to explore the many combinations of frequencies which can be used. These and many other questions cannot be included at this time. However those who require such a system as this will probably be capable of filling these details.

One word of caution is in order. With two oscillators that are rich in harmonics, there can be many unwanted "birdies." These present no problem after the operator has gained experience but the new user should be very cautious. Many times an unwanted beat can be eliminated at a critical spot by changing the two frequencies that are being mixed (shift from sum to difference).

Perhaps we should emphasize that this system is a "trade off" where the amateur can trade his skill and patience for highly accurate measurements with simple equipment.

A TRANSISTORIZED LM METER

Charles Landahl W5SOT

The last word may never be written about the BC-221 and LM frequency meters. The LM is particularly attractive because it is in the smaller package. With transistors replacing tubes, it has features most everyone wants – it is rugged, portable, and accurate, to name a few. I will describe a conversion of an LM-15 frequency meter in which field-effect transistors replace tubes; the power supply becomes a standard 9V transistor radio battery and the current drain is less than 3 mA when all functions are energized. In addition, I offer calibration information which will be of interest to anyone having a BC-221 or LM without the official calibration book. I bought an LM-15 for a temptingly low price (Fair Radio Sales Co., Lima, Ohio, $14.95). The set is sold in the "as is" condition with tubes and crystal but without calibration book. It is a good idea, but not necessary, to start with a set which is working before making the change to FETs. Resistance measurements will show if the circuits are complete. Important values are marked on the schematic of Fig. 1.

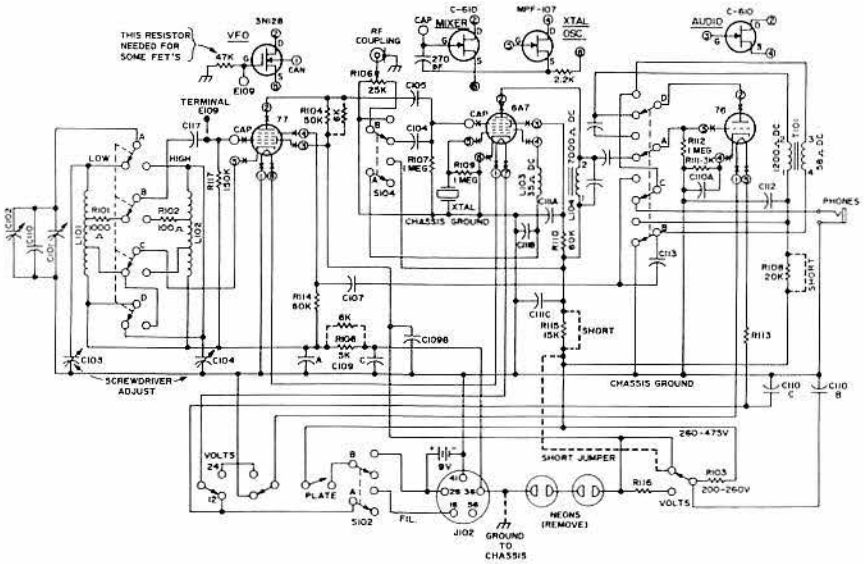

Fig. 1. Modified schematic of frequency meter.

Smash Tubes

The most difficult part of my conversion was getting up the courage to smash the tubes! I wanted the bases for mounting transistors. Place the tubes one at a time in a paper sack, hold the top closed and with a metal object, strike the glass through the paper. The flying glass is caught and collected for disposal. Scrape and clean the mastic from the inside of the tube bases. Should you choose to mount a transistor socket in the wall of each tube socket, you can use the original wires; otherwise, unsolder the old wires and replace the needed ones with about 2 in. of sturdy new tinned wires. The appropriate tube base pin connections are shown in Fig. 2. Actually there is no preferred mounting scheme. Use whatever appeals to you.

Check for clearance between socket and walls. My conversion used transistor sockets mounted on metal plates which were bolted to the wall of the salvaged tube bases. This allowed FET substitution to determine which ones would work best in the several circuits of the LM. All FETs used are N-channel.

Modification

With cover removed and the LM in the upright position, front panel toward you, on the left side wall, look through two oblong machined slots and see mounted on a phenolic board a 50 kΩ plate resistor. Parallel it with about 6 kΩ. Turn the LM upside down, panel toward you. On the underside, two resistors must be shorted and a jumper wire made up and connected. Short R115, which is a 15 kΩ wirewound resistor, quite visible on a phenolic board at the left of the 1000 kHz crystal can. Run an insulated wire from a terminal of this shorted resistor to the 260–470V tap contact of the link switch. This wire can be about 6 in. long and conveniently passes through a wall slot behind the crystal socket. The link switch and its terminals are on a phenolic board in the compartment aft of the crystal socket. The jumper wire will cross near the grid resistor, R109, of the crystal oscillator. While there, change the 100 kΩ (R109) to 1 MΩ. Next, unfasten the screws holding the phenolic board located to the left of the power plug. Tip up the board and short across R108. This is a 20 kΩ composition resistor which is in the plate voltage line to the audio amplifier. Also, at the power plug, locate pin 36. Short it to chassis ground. On most sets pin 36 is the ground return for the vfo cathode. The circuit was closed through external connections in a power supply. You have completed the surprisingly few changes needed to make the LM work on FETs and a 9V battery.

The VFO

With FET source connected to pin 5, drain to pin 2, can to pin 1 (if needed), plug the FET into the vfo socket. Connect

a solid wire between terminal E109 and the gate of the FET. (Terminal E109 held the grid cap wire for the vfo tube.) Connect a 9V battery to the power plug pins. PLUS to 26 and MINUS to terminal 41. If you have a milliammeter in the battery lead, it should read about 1.5 mA when you turn on the FIL and PLATE switches. Provided you were fortunate in the choice of FET, you should hear a clear CW signal in your receiver. Set your receiver to 2 MHz or 4 MHz. You may need to connect a wire from the rf coupling post on the front of the LM to your receiver antenna. Rotate the LM dial between 0300 and 0600 on the readout. Your vfo will be on the low end of 125–250 kHz or 2–4 MHz depending on the position of the low or high band switch. The XTAL and MOD switches should be off. The FET selected for the vfo may require a 47 kΩ resistor between gate and chassis ground. I found this to be true for the RCA 3N128, 3N142,and *one* of the two 40559A FETs. On the other hand, one RCA 40559A and one of several 2N3085 silicon N-channel FET from Poly-Paks worked beautifully without adding 47 kΩ to the gate.

Apparently junction and insulated-gate field-effect transistors have slightly different characteristics which show up in this peculiar vfo circuit. My own choice is the 3N128 with the additional resistor on the gate. You may find it necessary to "tune" the source, drain, and gate resistances in order to have your vfo working well with a particular FET. I used potentiometers across the various elements to arrive at the recommended values. My vfo works reliably from 10V down to 6V and the maximum drain current is 1.5 mA.

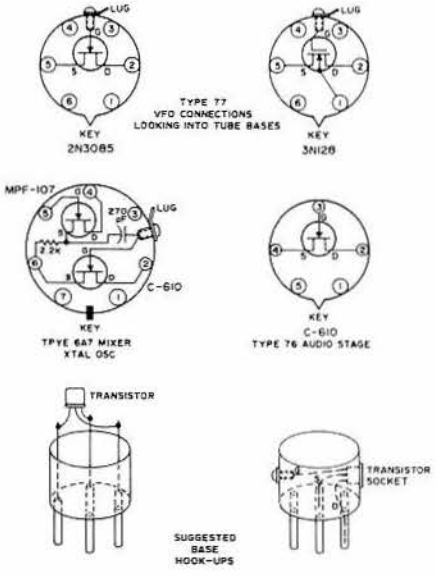

Fig. 2. Suggested semiconductor hookups for tube sockets.

Caution

Other oscillator hook-ups may occur to you, and they will work – but the tuning range and linearity of the vfo will suffer! Linear tuning is most important, so stick with that shown.

The AFO and AF Amplifier

The audio oscillator and amplifier wasn't as fussy as the vfo. I used a Radio Shack 276-664 FET – it is said to replace a C-610 or 2N3088. I found that the Poly-Paks "hobby" FET 92CU588 will work equally well. In making up the socket, gate goes to tube pin 3, source to cathode pin 4, and drain to plate pin 2. That is all there is to this one. Plug in the FET. When you next turn on the 9V power, the milliammeter will barely increase a few hundred microamps as you switch on the modulation control. At this moment a rather pleasant 500 Hz tone will appear on the vfo frequency no matter which harmonic you have tuned in on receiver. Your modulator is finished. The audio amplifier is too, for that matter. You just won't hear anything in the headphones until you complete the crystal oscillator and the mixer circuits.

Crystal Oscillator

The reference oscillator is not much trouble. You have already changed the gate resistor from 100 kΩ to 1 MΩ. Actually this change may not be necessary because some crystals are more active and will oscillate well with the original resistor. Mine went into oscillation better with the higher value. The FET you select for this circuit can be one of several. Mine is a Motorola MPF-107. I found the Radio Shack 276-112 and the Poly-Paks 2N3085 also work, but draw more current. Whichever you choose, the gate connects to base grid pin 5, source to cathode pin 6 *through* a 2.2 kΩ resistor. Drain hooks to plate pin 4.

Now, when 9V is turned on, MOD off, XTAL on, you should hear the crystal oscillator signal every 1000 kHz on your receiver. The milliammeter should increase about 1.5 mA or less when XTAL is turned on. If you don't hear the crystal frequency, bring the receiver antenna wire close to the crystal FET. We still haven't made the connection which adds the crystal-oscillator signal to the rf coupling post on the front of the LM. Assuming you have all circuits in working order up to this point, we move to the mixer.

Mixer

There is no single FET substitute for a pentagrid converter tube. The dual-gate MOSFET comes closest; however, use of one would have defeated my goal of simplest conversion. Therefore, four N-channel FETs are needed to do the work of three tubes, but what a saving in power supply! The mixer concerns itself only with beat frequencies occurring between the reference oscillator, vfo, or an external signal – all audio work. Thus, a hobby FET was selected. I used the Poly-Paks N-channel FET. A Radio Shack C-610 replacement will also work. Connect source to chassis ground through pin 6 of the tube socket; the drain connects to plate pin 2, gate to mixer grid cap wire through the lug in tube socket wall.

Finally, connect a capacitor (200–300 pF) from the top of the 2.2 kΩ crystal oscillator source resistor to the gate of the mixer FET (grid cap wire). You are in business.

With 600Ω phones plugged into the LM, you should hear all the necessary beat frequencies occurring between the vfo and the crystal oscillator as you tune the vfo through its range. XTAL must be on and the MOD switch off. Otherwise, the audio amplifier becomes the modulator and you hear nothing in the LM phones.

What Next?

With the beat notes loud and clear you are ready to calibrate. This is quite the most fun part of the work because the linear tuning rate of the LM is almost unbelievable. The slow rate is due to the series combination of the A section of C109, C101, tuning L101 or L102. The amount of the matter is that one revolution of the 100-division circular dial produces about 3 kHz change on 125–250 kHz range, and about 50 kHz per revolution on the 2–4 MHz range. The actual calibration of my unit was 2.89 kHz and 45.17 kHz per revolution.

The linearity can be checked by how little you need to vary the "corrector" for each zero-beat checkpoint. Each LM or BC-221 will be slightly different. Now, when you consider that the vernier allows you to split one division into tenths, then it is clear that you can set a frequency to better than 0.5 kHz over the range of the frequency meter. May I repeat:

1 dial revolution of
100 div = 45.17 kHz
1 division = 0.4517 kHz
1/10 div = 45 Hz

Therefore, all you need is a checkpoint at which to zero the vfo and start counting revolutions, divisions and tenths of divisions to accurately set any frequency within the two ranges of the vfo. I found it useful to construct graphs on K&E 358 11L graph paper. The grid is 10 X 10 (per 0.5 in.). The paper has 20 units vertical and 30 horizontal. This allows graphing 100 division and leaves room for 10 vernier

divisions on the right hand end of the paper. Use the crystal checkpoints listed in Table I to locate *your* dial settings. Once graphed, a frequency can be selected directly from the chart, or, depending on the accuracy desired, interpolated between checkpoints.

Table I. Crystal Checkpoints

KHz	VFO	XTAL	Approximate Dial Settings
Low Band			
125	8	1	0320
150	20	3	1192
166.667	6	1	1750
200	5	1	2935
222.222	9	2	3700
250	4	1	4647
High Band			
2000	1	2	0396
2250	4	9	0945
2500	2	5	1493
2750	4	11	1050
3000	1	3	2606
3250	4	13	3150
3500	2	7	3711
3750	4	15	4262
4000	1	4	4812

It is obvious from this discussion that the low band of the LM is fabulous. You can squeeze down to about 3 Hz by use of the vernier scale. By the way, hidden behind two cover plates just beneath the corrector knob, are "high" and "low" padder capacitors. These were used when vfo tubes were replaced to bring calibration book values into usefulness. The padders should be set near the middle of their range.

Make it Handy!

Fasten a handle to the case, strap on a 9V battery, go forth and have fun with your rejuvenated frequency meter. I use mine for its intended purposes as well as a band-edge marker and keying monitor.

AN I-F SPOTTER

Howard Burgess W5WGF

If you have ever tried to find the *if* frequencies of unfamiliar and inoperative pieces of surplus gear with no schematic, it is a waste of time to tell you how rough it can be. Even a single *if* transformer from the junk box can be a problem if it has no part number or identification.

Of course in some cases a grid dip meter can be used to find the operating frequency. However, few grid dippers cover the important *if* frequencies below 2 mc. To complicate things, if a dipper is used on a shielded transformer above 2 mc, the resonant frequency of the transformer may be shifted if the shield is removed.

If these problems sound familiar to you, we would like to suggest a little gadget that can help solve them. With just two resistors, two

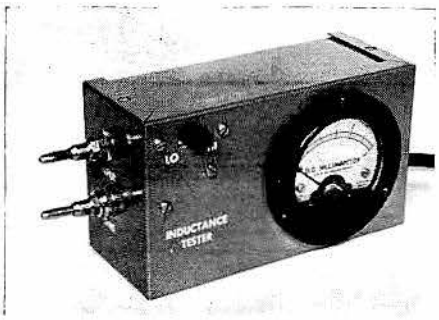

The if spotter. The switch for changing the coupling capacitor is at the upper left marked "HI" and "LO." The posts on the end are X1 and X2.

capacitors, and a tube, don't expect it to give a digital read-out to all your questions, but it can put you in the ball park.

The principle of operation is as simple as the construction. The tuned circuit in question is merely made to oscillate at its resonate frequency. The frequency can then be determined by tuning in its radiated signal on the ham receiver. To set the unknown coil into oscillation requires the use of a simple "two terminal" oscillator. Such an oscillator is shown in the schematic of Fig. 1. When any tuned circuit is connected to the two points marked X, the circuit will oscillate at its resonant frequency.

In this oscillator the twin triode is a tube such as the 12AT7. The section V2 furnishes the necessary feedback and eliminates the need for extra coils or feedback connections.

The construction is simple. The unit could have been built in a larger case with its own power supply and would have become a nice piece of bench equipment. However, due to the few parts required and the small amount of plate power used (3 mils at 90 volts) it was built as an overgrown probe. The power is robbed from another piece of test equipment or the receiver.

As a probe it can be used on the work bench to test individual coils and transformers or it can be held in contact with the various transformers in a receiver.

There is only one point of caution that should be observed in construction. The lead from the grid contact of VI to the XI post should be kept as short and direct as possible with the least capacity to ground. This lead becames part of the oscillating tuned circuit and limits the upper frequency to which the unit will operate.

The coupling capacitor from the grid of V1 to the plate of V2 furnishes the feedback required to maintain oscillation. To reduce the loading on the tuned circuit, this capacitor should be held to the smallest value that will sustain oscillation. Because of the wide range over which this instrument operates, a switch is provided to change values. With the capacitors shown, operation is possible from about 60 mc down to well below 50 kc. The larger value is used at the lower frequencies and is switched in only when required. With coils of medium Q the switching point is around 3 to 5 mc.

The connectors X1 and X2 can be almost any kind of posts. The ones shown on the unit here are banana plugs. These can be used as test points, or alligator clips can be slid over them for use in clipping to coil leads.

The meter shown is a three mil meter and is used to read the total plate current of both halves of the tube. This will indicate when the circuit is oscillating. When the tester is not oscillating the meter will indicate a current of about 1 mil (with 90 plate volts). Under oscillating conditions the meter will rise to as much as 3 mils with a high Q coil. The actual amount of current is not so important as the fact that the upward shift indicates that the coil is not open and is oscillating. A 5 or 10 mil meter will serve the purpose just as well.

As the pictures show, this unit was built in

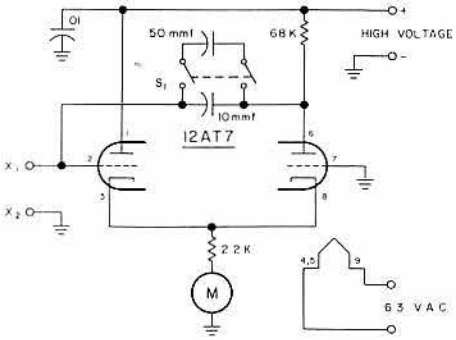

FIGURE 1

Circuit diagram of the if spotter

.01 Ceramic capacitor
50 pf Mica capacitor
10 pf Ceramic
68 K ½ watt carbon resistor
22 K ½ watt carbon resistor
Milliammeter in range of 3 to 10 ma
Slide action Double Pole-Single Throw switch (S1)
2 Banana plugs (x1 and x2)
12AT7 tube
Minibox (size depends on type of meter used)
9 pin miniature tube socket

a small 5" x 3" x 2" box. The unit will work just as well if it is built on a small piece of peg board with a couple of leads run out to the multimeter. This is for the man in a hurry.

When the unit is finished, apply power with the "X" points open (no coil across them). Because of the open grid of V1, the meter will drift about. After the tube has had time to warm up, short the X posts with a heavy piece of bus or copper. The meter will now come to rest somewhere around 1 mil. This is the "no oscillation" current and should be kept in mind as a reference point for future use. Now remove the short and connect almost any kind of an LC circuit across the posts. The meter reading will now rise from the "no oscillation" value indicating that the coil is oscillating. Do not use the large coupling capacitor unless the circuit refuses to oscillate with the smaller value.

To check a single *if* transformer, all that is necessary is to hook one of the *tuned* coils

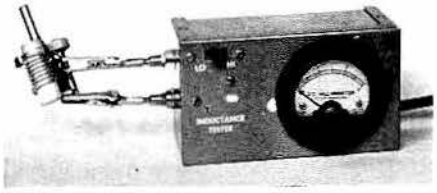

Checking a ten meter tank circuit

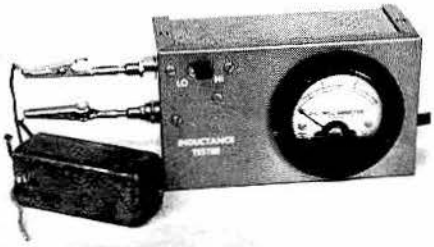

Checking an if transformer

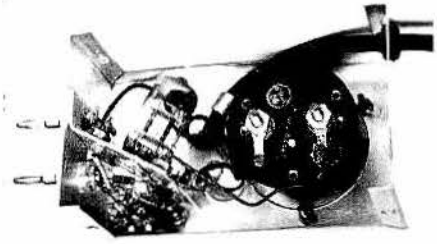

Inside view showing extreme simplicity of the "Spotter." The tube is mounted at an angle to keep the grid lead to the "unknown" as short as possible.

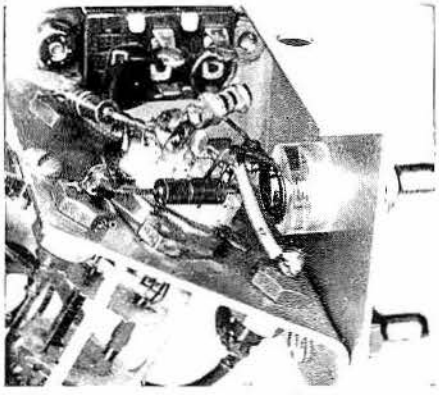

Close up of tube socket showing parts placement.

to the input terminals of the tester. Some transformers have a number of terminals which may not go directly to the tuned circuit inside. To obtain oscillation there must be both a dc and an rf path between the two pots.

If the transformer is one whose frequency falls in the range below the broadcast band it is quite convenient to have one of the surplus receivers that covers the range down to 200 kc. However the check can still be made with a regular broadcast receiver. All that is necessary is to find the harmonics of the tester as they fall in the broadcast band. They will be separated by a value equal to the frequency of the coil being tested. As an example, if a signal is spotted at 900 kc and the next one higher is found at 135 kc, it is a pretty good bet that the transformer is operating on 450 kc $(1350 - 900 = 450)$.

To find the operating frequency of an *if* stage it is not necessary to have the amplifier in operating condition or the tubes hot. Just connect the two contacts across the primary or secondary of the transformer in question and watch for signs of oscillation on the meter. Some transformers have a portion of the bias system inside of the can. This can usually be overcome by connecting the tester from grid to ground of the tube in the stage being tested.

In addition to checking transformers it can also be useful in testing the range over which a transmitter tank will tune. Just make sure that the high voltage is turned off and connect the probe across the tank to be tested. Now you can tune the tank and follow its entire usable range with the receiver. If the tank being checked happens to be the final, the meter on the probe will indicate when the antenna is brought into resonance.

This little tester was built to do just one thing—sort out some old *ifs* in the junk box. After we tried it we found that it would do a lot of useful chores around the ham shack. With proper care and feeding, it can probably learn to do tricks that we haven't even thought of.

430-470 kHz SWEEP FREQUENCY GENERATOR

Edward Lawrence WA5SWD

Here is a simple sweep frequency generator for aligning the most common *if* strips. The unit has only one transistor because the sweep voltage is taken from the oscilloscope it is used with. Most general purpose oscilloscopes have a sawtooth output jack. By using this sawtooth, the frequency is locked to the position of the trace.

The oscillator is made to deviate in frequency in step with the voltage applied to the base bias circuit, either the sweep voltage or the dc voltage applied at the control point. If no sweep or control voltage is applied, the oscillator runs at the center frequency, and may be used as a conventional signal generator.

The 2.5 mh choke and the two 150 pf capacitors form a very broad tank circuit, so it is easy to FM the oscillator without a great change in amplitude. As to how the change in base voltage causes the frequency shift, I am not quite sure. All I know is that it is quite linear and is a positive shift (**Fig. 3**). That is, an increase in base voltage causes an increase in frequency. Also, a change in collector supply voltage will shift the frequency, so be sure to use a stable supply.

Since an rfc is used as part of the tank, you may have to compensate for a variation in center frequency by changing the 150 pf capacitors to some other value to get 455 khz as your center value.

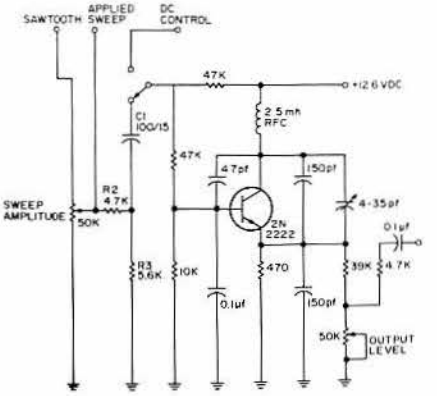

Fig. 1. Sweep generator circuit diagram.

If you do, then run a plot of dc control voltage vs frequency and adjust the voltage divider R2 and R3 so that 1 volt P-P at the sweep pot wiper gives plus and minus 5 khz (10 khz total). This is not as hard as it sounds. Just listen for the harmonics on a broadcast band radio. For instance, the second harmonic of 430 khz is 860 khz, and the second harmonic of 470 khz is 940 khz, both handy on the BC radio. Note the dc voltages at the control point required to obtain these frequencies. Take the difference and divide by four. The answer is the P-P voltage required to shift the oscillator plus and minus 5 khz. Then apply a low, known ac voltage to the wiper of the sweep pot with the switch in the *sweep applied* position. Adjust the value of the divider resistors to get the proper fraction. In my case it was 0.43.

It is advisable to run the sweep rate as slowly as possible, in order to display the response curve as accurately as possible. The sharper the skirts, the more slowly the generator must pass through the bandpass. With this generator, the amount of frequency deviation is controlled by the P-P amplitude at the sweep pot arm. If you are looking at the response of a regular *if*, you would set the sweep amplitude high to see the entire response curve. As far as an accurate display is concerned, this is fine, since the slope of the skirts is shallow. But if you were looking at the response of a sharp filter, you could not tolerate such a wide sweep, because the fast rate-of-change would tend to skew the display. To correct this, reduce the sweep amplitude to reduce the frequency deviation down to the edges of the skirts of the response curve. This reduces the rate of change and minimizes the skewing of the display. Also, it is better to display the *if* before detection, if possible, to prevent the detector time constant from possibly distorting the display.

If you have the sweep generator set up as described, then it is easy to set the sweep for a known deviation, and then procede to read the 3 or 6 db points from the face of the scope. Be sure to disable the AGC for this test.

For those who aren't familiar with the setup for obtaining the response curve display, refer to **Fig. 2.** and the following outline.

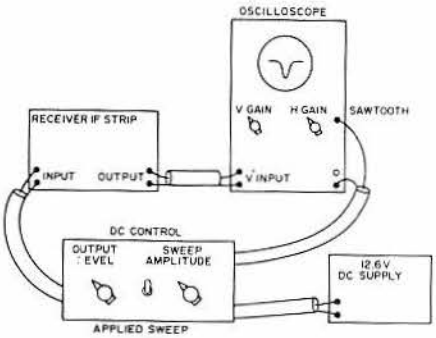

Fig.2. Interconnections of sweep generator.

First, hook up the equipment as in Fig. 1 Set *horz gain* for desired sweep width. Adjust *sweep amplitude* pot on generator for desired frequency range. Set *output level* to mid-range. Adjust the *vert gain* for the desired pattern height.

If we wish to change the total frequency deviation and the horizontal display width at the same time, use the scope's *horz gain* control. This presumes that the amplitude of the sawtooth output is also varied by the *horz gain* control.

If we wish to change the frequency spread and not change the width of the scope display, adjust the *sweep amplitude* control. This allows you to take a better look at the sidelobes or any ripples in the passband, depending on how the controls are adjusted.

You don't have to use a sawtooth to sweep with if it isn't handy.

Sixty hz can also be used, but it will probably skew the passband you are trying to display, so I don't recommend it. One note here: when the sweep generator is first turned on, or the setting of the sweep amplitude is changed, the frequency will drift for a few seconds. This is due to the charge on C1 changing to a new level. C1 is large to couple the low frequency sweep with as little distortion as possible.

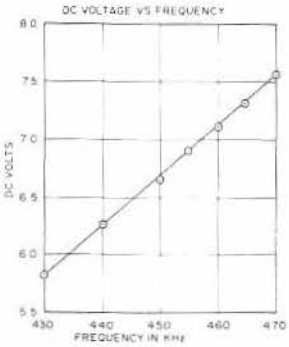

Fig.3. Sweep frequency vs dc voltage.

DC CONTROL VOLTS	FREQUENCY
5.86	430
6.27	440
6.69	450
6.90	455
7.12	460
7.33	465
7.55	470

AN ARMSTRONG SWEEPER

Al Donkin W2EMF

Sometime ago while experimenting with SSB crystal filters at 480 kc, it occurred to me that a manually swept Armstrong oscillator with a pot coupled to the tuning capacitor for 'scope sweep voltage would save point by point frequency measurements with a BC221 while adjusting the filter for minimum in-band ripple. A circuit was hurriedly developed, and the results were even better than expected. Simple though it may be, I'm sure anyone who is working with crystal filters will appreciate its usefulness. The effects of tuning and "diddling" were immediately visible in the in-band ripple and the skirts down to about 20 db could be observed with a few twists of the knob.

With this encouraging experience, a sturdier

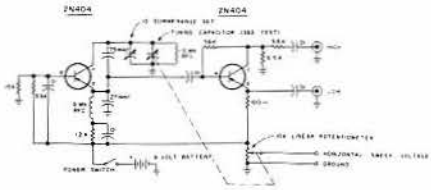

model was constructed. The circuit was assembled on a small piece of Vector-board, with the tuning capacitor and batteries mounted in a 5 × 7 × 3" aluminum chassis. An aluminum bracket was bent to hold the "sweep" pot and mounted behind the tuning capacitor, spaced to accomodate the mechanical shaft coupling. The Vectorboard was also mounted on the bracket.

The oscillator circuit is simple, using a 1 mh rfc for the tank inductor. The range of the circuit as shown is about 400 kc to 500 kc, at center frequency. The tuning capacitor is a Hammerlund MC-50-M with two of the rotor plates removed, resulting in a range of approximately 7-25 mmfd. An untuned amplifier provides isolation of the oscillator from the reactance of the load. I used 2N404 transistors but most PNP *if* transistors will work.

In addition to sweeping crystal filters, I have found this little box handy as a general purpose low frequency oscillator and sweeper for receiver *if's*. The persistency of most oscilloscopes produces a much better display than might be expected, and it certainly beats the point by point method of plotting filter responses.

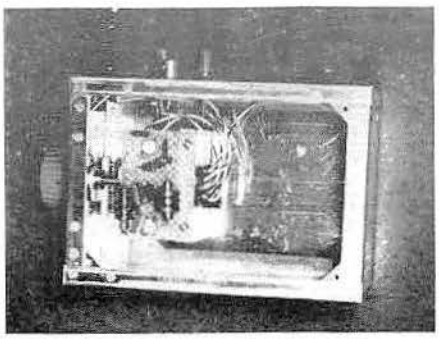

A NEW BROOM

Dick Gridley K6JHJ

This unit is a sweep generator of simple design, with many uses. Besides being useful for filter alignment, as shown in the diagram, it is useful for optimizing receiver and transmitter performance.

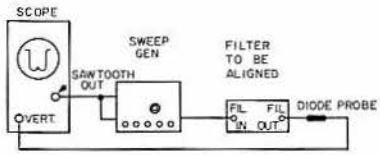

The heart of the rig is an inexpensive item called the Vari-Cap by International Rectifier Corp. Two are discussed here, the 6.8SC20 and the 100SC2. The 6.8SC20, according to the manufacturer, will vary its capacitance from 50 mmfd at .lv to 2.5 mmfd at -200v. The 100SC2 will vary from 600 mmfd at .lv to 100 mmfd at -10v. These units each cost less than $3.00. The construction is not critical in any way, nor is layout a problem—just use good ham practices. Any power supply delivering 150 v dc at 60 ma regulated will do. The oscillator tank must be grounded and I did have some trouble until I removed the unused winding from the 455 *if* transformer used for the oscillator tank.

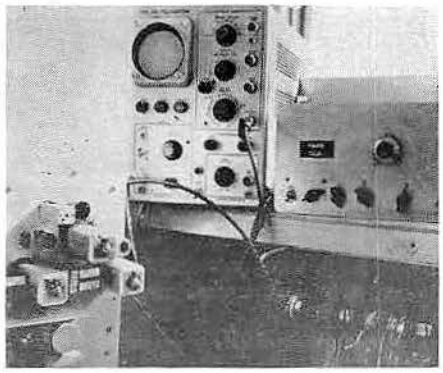

Sawtooth energy is applied to R1 which regulates the amount to be amplified by V1. R2 linear control merely puts a portion of regulated voltage on the Vari-Cap and thus sets the capacity of Vari-Cap close to its center, so the sawtooth pulse creates a linear frequency swing. This circuit gives about 6 kc sweep. I have used TV horizontal coils for L1 and increased C1 and C2 to .003 for 85 kc and 50 kc operation. However, to get enough swing at low frequency, the Vari-Cap was changed to a 100 SC2. For 200 kc to 10 mc the 6.8SC20 gives plenty of sweep.

A note here about scopes. Most of the average do not go below 15 cycles and the sweep rate should be about 10 cycles. Some do not have a sawtooth output jack. The sawtooth output can be picked off the sync circuit. I found the best point is on the feed side of the sync pot through a .25 mfd capacitor. Some scopes have a couple of jack pins to add capacity externally, some don't. You will find little trouble adding about .25 mfd across the slowest speed.

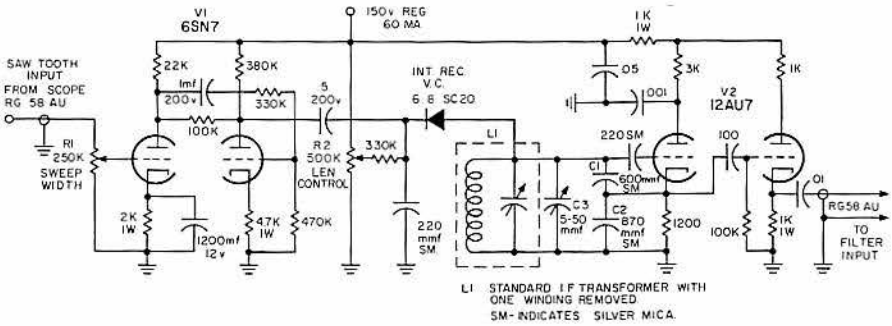

The use of the rig is simple. Plug the lead from R1 into the scope's sawtooth output. Couple the output from the cathode follower section of V2 to the filter input through a .001 mfd capacitor. The vertical input of the scope is connected to the filter output through an rf probe. Adjust R1 and R2 about ½ open. With C3 about ½ meshed, adjust the trimmer in the *if* can to put you in the ball park, and then use C3 for fine adjustments of frequency. Additional minor adjustments of R1 and R2 may be necessary. Of course, when used to align a receiver, the diode probe is unnecessary if the input to the scope is picked off of the diode detector. It goes without saying that it is necessary to plot an index for the scope bezel so that a ready reference is available for band pass width and depth of skirt.

Some one now says "This is just like setting ye old TV—*if* band pass." That it is. The only difference here is the frequency and the sweep generator cost was junk and $5.00.

The unused switch, shown in the photo, was installed to select one of three frequencies. However, this rig has been used on about six. I don't think I ever will decide which three to use. The unidentified tube is a 6U8 used as a 1 kc audio oscillator with cathode follower output.

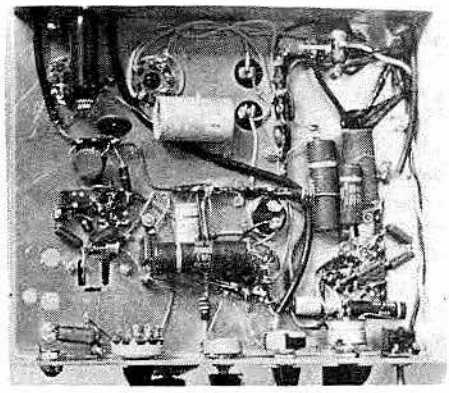

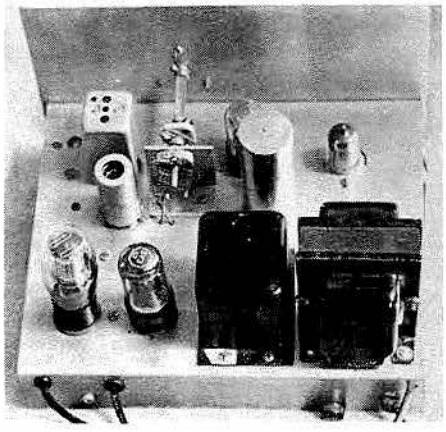

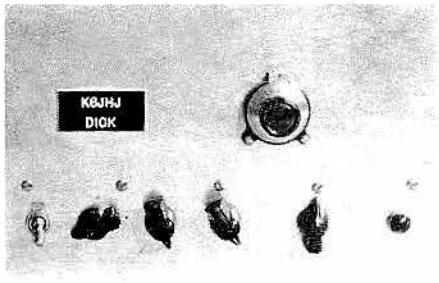

LOW COST SIGNAL SOURCE

Howard White VE3GFW

For many years the Measurements Corporation Model 80 signalgenerator has been the industry standard for tuning rigs. Many hams have wanted to have a laboratory-grade signal source of this type but the $800 price tag is prohibitive. This article describes a signal source that has many of the same features as the 80 except that it only costs 1% as much. That's why I call this the Model 0.8.

You wonder at some of the features of the marvelous little device? To briefly list them, it has:

- Variable output from about 80 nV to 50 mV of rf power.
- Frequency range from 1.8 to 450 MHz so you can cover 160 through ¾ meters.
- Crystal-control frequency stability.
- Fairly clean output signal.
- A 51Ω antenna load.
- Safety feature to prevent the destruction of the device in case a transmitter is accidentally loaded into it.

The Circuit

The circuit is the combined brainchild of many ham engineers and technicians in our local 2m FM club – the Toronto FM Communications Association. More than 300 of these units have been built in the past two years, so the circuit has been exceptionally well tested in the field.

The unit consists of a single 2N5130 NPN transistor oscillator configuration. Other transistors, such as the 2N706, can be used in this circuit with slightly different biasing arrangements; however, the 2N5130 appeared to give the cleanest output signal.

Output level can be varied from less than 80 nV (the best we could measure) to 50 mV. It is controlled by a 1 kΩ pot in the transistor collector circuit. Power is obtained from a 1.5V penlight cell bypassed for rf by a 0.1 μF capacitor.

My present "0.8" signal source has been used intermittently for more than a year without any degradation of output. However, remember to shut the unit off when you're finished with it; the battery doesn't last forever.

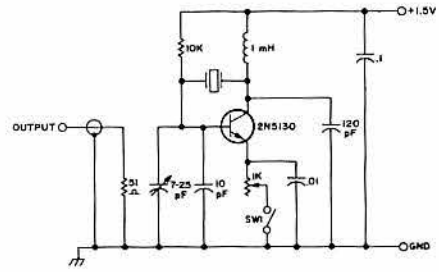

Fig. 1. Schematic diagram of the "Point Eight" Signal Source, the "poor man's Model 80."

The unit is built on a PC board. The parts layout is almost exactly the same as that of the schematic shown in Fig. 1. The electronic components are placed on the copper side of the board. The on-off switch-level control, frequency adjustment, output jack, and crystal socket are on the other side (Fig. 2). The unit can be packaged in a minibox.

Almost any crystal in the 1.8–12 MHz will oscillate in this unit. The output is rich in harmonics to 450 MHz, so you can tune up any receiver from 160 to ¾ meters.

The output impedance of the signal source is 51Ω, a value which simulates a perfect antenna load to the receiver. This is the manner in which this is accomplished: A 51Ω, ½W resistor is connected across the terminals of an RCA phono jack. No physical connection is made to the circuit except through the common

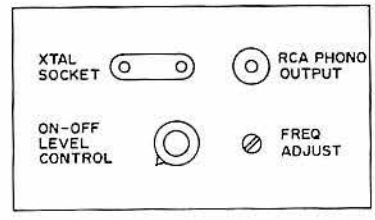

Fig. 2. Minibox layout of the signal source panel.

ground of the PC board. The maximum output level depends on the lead lengths of the resistor. (The unit has plenty of output when the lengths are about ½ in. long.) This design has an added safety feature, too; if by accident you load a transmitter into the unit, all that is destroyed is the ½W resistor.

Operation and Uses

These units were originally designed to tune up 2m FM receivers. The procedure is quite simple. You connect the signal source to the antenna input on your receiver. Plug in a transmit crystal, and adjust the frequency control for a zero reading on the discriminator. Adjust the output level to the desired signal strength (below first limiter saturation) and tune up the receiver.

There are a myriad of other uses for the signal source. Using a 3.5 MHz crystal, you have a band edge marker. With the transmit crystals on a Twoer or any other transmitter you have instant frequency spotting without modifying the circuit of the transmitter. Of course, the signal source can be used to tune up any receiver, peak tuned circuits, be an rf source for an antenna noise bridge, and so on.

RECEIVER TWEAKER

Malcolm Oakes K6UAW

I've found that the singlemost piece of needed test equipment by the amateur on FM is a receiver alignment generator. Most of us, however, do not have access to a signal generator. (Come on now, you wouldn't really call that *TV thing* a signal generator would you?)

The unit to be described is a very functional device that will allow you to scrape every ounce of sensitivity from your receiver. The generator can be built so small you can carry it around in your shirt pocket. Compactness, combined with its battery-powered portability make it ideal for servicing mobile receivers. Stability? It's crystal controlled and is as good as the rock you plug in (you obtain the rock from your transmitter). Output reactance? Nearly zero degrees, allows proper tuning of rf stage. The attenuator shown does not have a great deal of dynamic range due to distributed capacity of the potentiometer. However, I said before, the unit was "functional" and it is just that. The signal can be attenuated into the noise and brought up to approximately a 30 uv level; overly sufficient for a normal alignment.

Construction

The circuit layout is not particularly critical, and if laid out in a manner similar to the schematic, no problems should be encountered. The attenuator section should be completely shielded away from the oscillator and multiplier stages, so rf leakage will not be a problem. A crystal socket should be provided so the unit is versatile for any frequency. However, if you plan on using it on only one channel and can spare a crystal, build it with the crystal inside. Two glass piston screwdriver adjusted trimmers must be provided (to "rubber the crystal" and tune the output to resonance) as front panel controls.

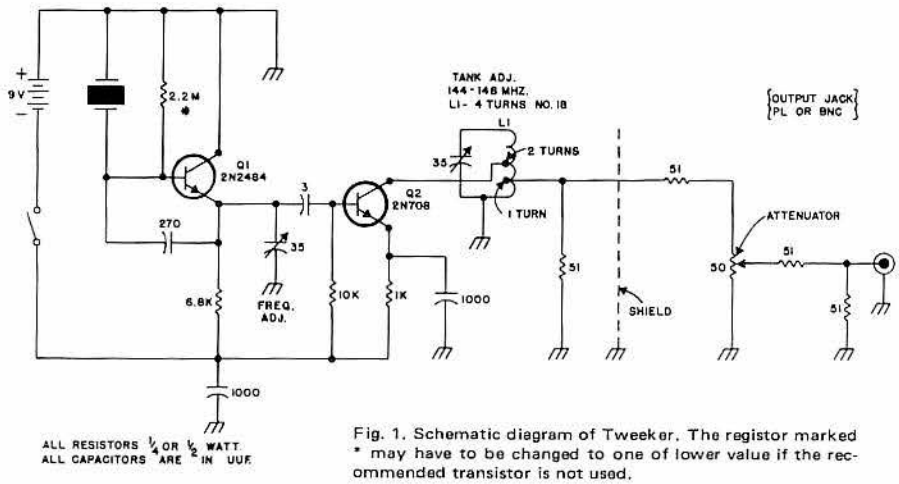

Fig. 1. Schematic diagram of Tweeker. The registor marked * may have to be changed to one of lower value if the recommended transistor is not used.

Circuit

Transistor Q1 in the first stage is a crystal oscillator which is very loosely coupled to Q2 the multiplier. This stage is biased into "class C" so as to multiply the 6 mhz crystal 24 times, up to the two-meter band. (3 mhz crystals will also work at a multiplication of 48.) Another important function of this stage is to attenuate the oscillator output (about 6-7 volts peak-to-peak) to a level usable at the two-meter frequency for alignment – 30 to 40 uv. The potentiometer adjusted attenuator takes the signal down to a level as desired by the operator.

I developed this unit for use on two meters. Several have been built and all work fine. But, for those of you who need a six-meter generator, this same circuit should work fine with the only modification needed being the final tank frequency. (A few more turns on the coil and a slightly larger trimmer capacitor.)

Adjustment and operation

Connect the output of the generator to your rig. Plug in a crystal and tune for zero (with frequency adjustment) on the discriminator (center frequency). Now, looking at the first limiter voltage, peak the final tank. Attenuate the generator as necessary to avoid saturation of the limiter. Repeat as necessary until a definite peak is reached.

If the generator will not go down into the noise with the attenuator control, the final tank may be detuned as necessary to provide the desired range on the attenuator.

CITIZENS BAND ALIGNMENT AID

Edward Lawrence WA5SWD

It is obvious that the front end of a receiver should be tuned to respond equally well across the band, and thus have consistent sensitivity at any frequency in the band, if maximum usefulness is to be obtained. The usual method of insuring reasonable results is to tune at the middle, and check the ends. This is rather spotty, at best, as it would be better to check all channels. This is involved since you must set both frequency and amplitude 23 times in a single pass.

Naturally, a good sweep generator could be used, and the rf-mixer tracking set with it instead, but this was not available to me at the time. The circuit in Fig. 1 was originally a super-regenerative receiver taken from the GE Transistor Manual. These, as is well known, tend to spray a lot of rf back out the antenna. With this in mind, I listened with a communications receiver and noted strong modulation products about 100 kHz above and below the "carrier." Deducing this to be caused by the quench frequency, I brilliantly decided to drop the quench frequency into the audio range, by increasing the capacitance across the base bias resistor. Lo and behold! Suddenly the entire Citizens Band was alive and jumping with a mass of "line noise," which at first appeared to be like

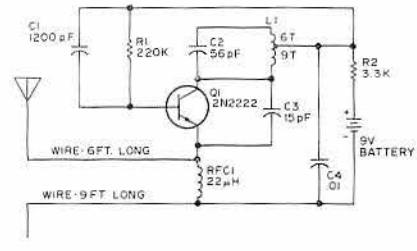

Fig. 1. Schematic of the alignment aid. L1 is 15 turns No. 22 tapped at 9 turns from the collector end. No switch is shown, so remove battery when not in use.

73 LIBRARY

NEW REPEATER ATLAS

Hundreds of new listings . . . listed by both location and frequency . . . dual listing, invaluable for your car . . . find those repeaters as you travel. This is the ONLY complete list of repeaters being published. Almost 3000 repeaters listed in this issue . . . repeaters from all over the entire world. only $1.95

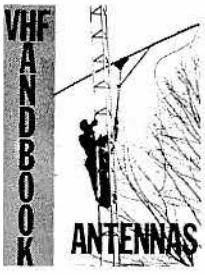

VHF ANTENNA HANDBOOK

The NEW VHF Antenna Handbook details the theory, design and construction of hundreds of different VHF and UHF antennas . . .

A practical book written for the average amateur who takes joy in building, not full of complex formulas for the design engineer. Packed with fabulous antenna projects you can build. $4.95

73 VERTICAL, BEAM AND TRIANGLE ANTENNAS by Edward M. Noll W3FQJ

Describes 73 different antennas for amateurs. Each design is the result of the author's own experiments: each has actually been built and air-tested. Includes appendices covering the construction of noise bridges and antenna line tuners, as well as methods for measuring resonant frequency, velocity factor, and standing-wave ratios. 160 pages. $5.50

73 DIPOLE AND LONG-WIRE ANTENNAS by Edward M. Noll W3FQJ

This is the first collection of virtually every type of wire antenna used by amateurs. Includes dimensions, configurations, and detailed construction data for 73 different antenna types. Appendices describe the construction of noise bridges, line tuners, and data on measuring resonant frequency, velocity factor, and swr. 160 pages. $5.50

2M FM HANDBOOK

Contains almost every conceivable circuit that might be needed for use with a repeater. All circuits explained in detail. All aspects covered, from the operator to the antenna. $5.95

Practical Test Instruments You Can Build

37 simple test instruments you can make — covers VOMs, VTVMs, semiconductor testing units, dip meters, wattmeters, and just about anything else you might need around the test lab and ham shack. $4.95

IC OP-AMP COOKBOOK

by Walter G. Jung. Covers not only the basic theory of the IC op amp is great detail, but also includes over 250 practical circuit applications, liberally illustrated. 592 pages, 5½ x 8½, soft bound. $12.95

RF AND DIGITAL TEST EQUIPMENT YOU CAN BUILD

RF burst, function, square wave generators, variable length pulse generators — 100 kHz marker, i-f and rf sweep generators, audio osc, af/rf signal injector, 146 MHz synthesizer, digital readouts for counters, several counters, prescaler, microwavemeter, etc. 252 pages. $5.95.

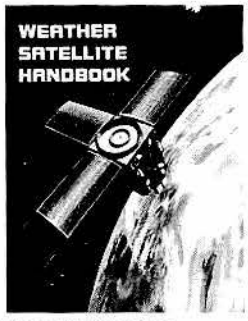

WEATHER SATELLITE HANDBOOK

Simple equipment and methods for getting good pictures from the weather satellite. Antennas, receivers, monitors, facsimile you can build, tracking, automatic control (you don't even have to be home). Dr. Taggart WB8DQT $4.95.

SSTV HANDBOOK

This excellent book tells all about it, from its history and basics to the present state of the art techniques. Contains chapters on circuits, monitors, cameras, color SSTV, test equipment and much more.
Hardbound $7 Softbound $5

FASCINATING WORLD OF RADIO COMMUNICATION

Interesting stories of the history of radio pioneering and discovery. Also includes the fundamentals of broadcast band DXing. A must for every radio amateur. $3.95.

TEST EQUIPMENT LIBRARY

A multi-volume anthology that you won't find anywhere for three times the price! The editors of *73* present a complete guide to testing that is both basic and complete and aimed at everyone from beginners to amateur Extras. Everything from how to test diodes to frequency counters. Plus a cumulative index . . . all in *73*'s all new TEST EQUIPMENT LIBRARY Vol. I – Vol. III.

Vol. I – Component Testers – $4.95
Vol. II – Audio Frequency Testers – $4.95
Vol. III – Radio Frequency Testers – $4.95

1001 PRACTICAL ELECTRONIC CIRCUITS

Tab's new 1001 circuits is available for only $9.95 ppd. The next time you want a circuit for just about anything, eat your heart out that you didn't send for this book the first time you read about it. You'd better order the book right away, before they run out. $9.95

VHF PROJECTS FOR AMATEUR AND EXPERIMENTER

A must for the VHF op. Opening chapters on operating practices and getting started in VHF, both AM and FM, followed by 58 chapters on building useful test equipment, modifying existing and surplus gear. $4.95

Hewlett Packard 6384 A power supply

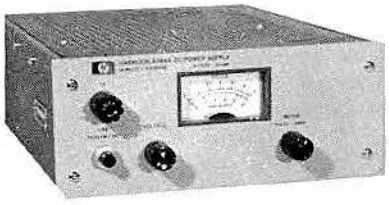

SPECIFICATIONS:

DC Output: 4 to 5.5 Vdc @ 8 Amps
Load Regulation: 2 mV no load to full load
Line Regulation: 2 mV for line changes between 104 and 127 Vac at any output voltage and current within specifications
Ripple & Noise: Less than 5 mV peak to peak
Crowbar, Factory Set at 6.25 V, Automatic cutback limit circuit and overvoltage crowbar protection.

HEWLETT PACKARD 6384A Power Supply $99.95

Power design 1210 regulated power supply

Output: 0 to 12 V @ 0 to 10 Amps
Regulation: 0.01% or better.
Ripple and Noise: Less than 500 uV rms. Voltage Controlled, Metered.

POWER SUPPLY 1210 - Regulated Power Supply - $149.00

a full range, 5-function 3½ digit multimeter

RANGES
DC VOLTS: 0 to ±1.999/19.99/199.9/1500 Volts
AC VOLTS: 0 to 1.999/19.99/199.9/1000 Volts

DC CURRENT: 0 to ±1.999/19.99/199.9/1999 mA
AC CURRENT: 0 to 1.999/19.99/199.9/1999 mA
RESISTANCE: 0 to 199.9 Ω through 19.99 Megohms (6 ranges!)

ACCURACIES

DC VOLTS: ±0.2% F.S. ±0.2% of reading
(1000V range: ±0.5% F.S. ±0.5% of reading).
AC VOLTS: ±0.7% F.S. ±1% of reading
(1000V range: ±0.7% F.S. ±2% of reading).
DC CURRENT: ±0.5% F.S. ±0.8% of reading
(1000 mA range: ±0.5% F.S. ±1.8% of reading).
AC CURRENT: ±0.5% F.S. ±1.3% of reading
(1000 mA range: ±0.5% F.S. ±2.3% of reading).
RESISTANCE: ±0.5% F.S. ±0.8% of reading
(10 megohm range: ±0.5% F.S. ±1.8% of reading).

DATA PRECISION MODEL 134 – $169.00

AST/SERVO SYSTEMS, INC.
20 Republic Road, North Billerica MA 01862
(617) 667-8541

NEW 73 BOOKS

TEST EQUIPMENT LIBRARY
Vol. III, Radio Frequency Testers

Radio frequency waves are the common denominator of Amateur Radio so here is a book for all hams. No matter what your specific interest, such items as SWR, antenna impedance, line impedance, RF output and field strength should interest you. This book not only gives detailed instructions on testing these items but includes sections on signal generators, crystal calibrators, grid dip oscillators, noise generators, dummy loads and much more. It's a must for all up-to-date shacks.

Test Equipment Library
Vol. III, Radio Frequency Testers *$4.95*

TEST EQUIPMENT LIBRARY
VOL. II, Audio Frequency Testers

HOW'S YOUR SPEECH POWER? YOUR SHIFT? YOUR SYNC?

You can find out easily with a little time and a junk box full of parts. It's all right there in the new Volume II of the 73 Test Equipment Library . . . Audio Frequency Testers . . . jam packed full of all kinds of audio frequency test equipment. So if you're into SSB, RTTY, SSTV, etc., this book is a must for you . . . good book for hi-fi addicts and experimenters too!

Test Equipment Library
Vol. II, Audio Frequency Testers *$4.95*

BUILD YOUR OWN TEST EQUIPMENT!

SAVE A BUNDLE!

TEST EQUIPMENT LIBRARY
VOL. I, Component Testers

Just out is Volume I of the 73 Test Equipment Library . . . how to build transistor testers (eight of 'em), diode testers (3), IC testers (3), voltmeters and VTVMs (9), ohmmeters (8 different kinds), inductance (3), capacity (9), Q measurement, crystal checking (6), temperature (2), aural meters for the blind (3) and all sorts of miscellaneous data on meters . . . using them, making them more versatile, making standards, things like that. Invaluable book, ridiculously low priced.

Test Equipment Library, Vol. I, Component Testers *$4.95*

Send me:
☐ Vol. I ..... Component Testers @ $4.95
☐ Vol. II ..... Audio Frequency Testers @ $4.95
☐ Vol. III ..... Radio Frequency Testers @ $4.95

☐ Cash enclosed ☐ Check enclosed

☐ BankAmericard ☐ Master Charge ☐ American Express

Card # _____ Interbank # _____ Expiration date _____

Name _____ Signature _____

Address _____

City _____ State _____ Zip _____

73 magazine • Peterborough NH 03458

Meshna

New England's #1
Surplus Dealer For Over 20 Years.

Send for our latest catalog.

Meshna PO Box 62 E. Lynn, Mass. 01904

Fig. 2. Full size PC board layout (foil side).

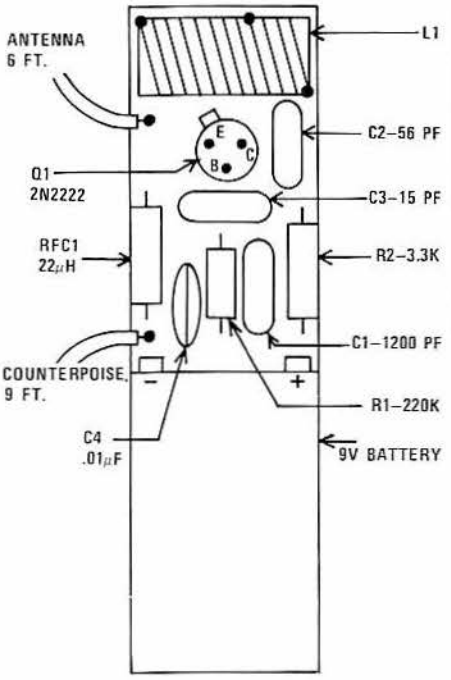

Fig. 3. Component side parts placement.

natural noise. Then I turned on the BFO, which showed it to be many, many, many closely spaced "carriers." I presume the lower quench frequency develops a much larger bias swing on the base of the transistor, FM'ing it across the entire band. This stuff is concentrated in the region of 27 MHz, with very little spill-over into 10 or 15 meters, although the level across the design range is rather constant. The nearly constant rf level is what I needed to simplify tuneup of the front ends of the units I was working on.

Figure 2 is the layout of the P.C. board I made to facilitate reproduction of this useful circuit for a few interested friends and Fig. 3 is the component layout.

I used 6 ft of wire as an antenna connected to the emitter side of the rfc, with 9 ft of wire on the battery side of the rfc as a counterpoise. Since this made it a bit large, I carefully hung it vertically in a handy tree nearby. Of course, since this put a strong signal on every channel into every CB receiver within 300 yards, I limited the use of this device to avoid unnecessary interference to the deserving users of the band. However, one fellow accidentally launched his into a tree too high to recover with an over-ambitious heave, and it ran for about a month in the dead of winter in a nameless northern city, helping every CBer for miles around align their sets! It only draws about half a milliamp from a 9 volt battery.

Since I am sure many others would like to align their 11 meter receivers for optimum results, I am presenting this circuit as a very low cost and worthwhile aid.

FET CHIRPER

Chuck Hines K6QKL

The Chirper is an automatically keyed, crystal controlled, signal source which may be used to optimize the signal-to-noise ratio of a receiving converter. Homebrew or commercial, converters are a common thing around an amateur station. And, most of the VHF Tribe have read thru a jungle of esoterica dealing with low noise front ends, the velvet beauty of FET's on Two, noise generators and eternal truth, and how to copy 20 db below the noise by the selective use of liquid helium. With a kind of relentless evolution converters have been getting better and better, noise figures become lower, and the prices of suitable front end devices are dropping by the hour. But when it comes to aligning these converters the scene is one of wretchedness. A black art at best, the job is taken up with an enduring combination of blunt instrument and myth. The latter have a certain charm. Are you convinced your converter is in top notch condition because you can "hear noise" when you attach the antenna – or better yet, when you place a 50 ohm resistor across the input? Try putting a complete short across that same input. Shorts aren't much good as noise sources. You'll find the short gives about the same change in noise level as the 50 ohm termination. What has changed is the impedance the front end "sees". The same is partially true of the noise from the antenna. Neither is indicative of the performance of the converter. Peaking the system up for maximum on either a weak signal or on noise gets you nowhere. The diode noise generator which every VHF book of substance describes is a good and useful tool when used properly. The assumption is that everyone already knows full well how to use it and does so. Few in fact do.

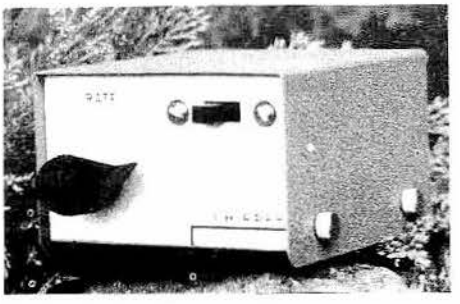

I'm sure you've read of it before in many places, but a little redundancy is in order. The noise with which you are concerned is the noise generated *internally* by the first tube, transistor, or other active device the signal encounters upon its arrival at your converter. By fiddling with the external reactances, adjusting the voltage and current and otherwise manipulating the things soldered to the device, one may minimize the internally generated noise. At the same time the reason the front end exists is to amplify the signal. One usually desires as much amplification possible, short of smoke and oscillation. Minimum noise and maximum amplification is the game. Though the two are not quite mutually exclusive a certain amount of compromise takes place. Thus, the signal to noise ratio. When aligning a converter's first stage every adjustment effects *both* signal and noise. Given a constant signal source coupled into the converter thru an appropriate impedance, the job is finished when the front end has been adjusted for the greatest *difference* between signal and noise of which it is capable.

The Chirper is designed to help you do all this by letting you see what effect each adjustment has on both signal and noise. The TIS34 oscillates at a frequency controlled by the crystal. With the constants shown, that can be anywhere between 8.2 and 36 MHz. The variable capacitor must be adjusted for resonance. It isn't particularily critical but its setting peaks the *rf* output at either the fundamental or some harmonic. For 6 meters an 8.35 MHz crystal is used. A 9.0 MHz rock will pin the meter when the

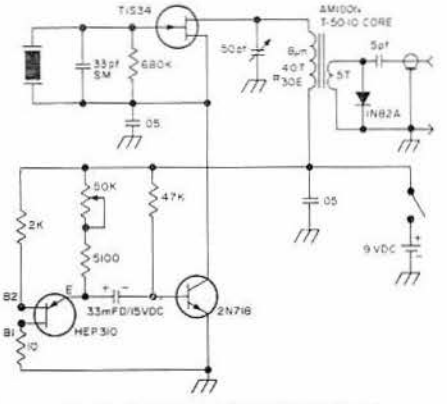

Fig. 1. Schematic of the FET chirper.

Chirper is connected into a 2 meter converter. The Amidon toroid is wound with No. 30 enameled, 40 turns for the primary and 5 turns for the secondary. After it is wound, spread the turns to fill the toroid and paint it with Q dope. The diode and 5 pF coupling capacitor are connected with the shortest possible leads, the diode being grounded at the *rf* connector. The harmonic output is excellent and quite useable at 1200 Mhz.

The oscillator is turned on and off by a multivibrator combination of unijunction and NPN transistor adapted from the *G. E. Transistor Manual.* The rate at which the multivibrator cycles is determined by the large value capacitor, in this case 33 mF. The polarity of the capacitor is critical. Observe it. To increase the cycling rate, decrease the capacitance; and, to decrease the rate, put in a larger value. Mine cycles a little under once per second. A value somewhere between 30 and 40 mF should suit your needs. You are better off scrounging some odd value from a defunct computer board because of the tolerance problem. If it says 33.2 mF, its probably pretty close to that value. Otherwise you're dealing with tolerances of plus 100% and minus 50% or something equally grotesque. The 50K pot determines the portion of the cycle during which the oscillator is On and is mislabeled rate on the Chirper shown. The HEP-310 is generally available and inexpensive. Other unijunctions were not tried. On the other hand almost any NPN of reasonable quality will work in place of the 2N718. A number of 2N388 and 2N3478's were tried and behaved well. It's a good place to use those transistors you've replaced with FET's. Use something with a Beta of 50 or better for best results. The 5100 ohm resistor in series with the pot is for current limiting. It's deletion will increase battery drain with no increase in Chirper performance. Normal current from the 9 volt battery is around 5 mA.

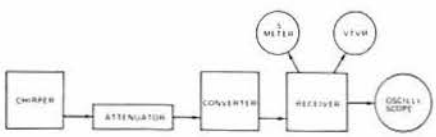

Fig. 2. Test set-up for converter alignment.

Construction is non-critical and pretty much a matter of taste. Mine is built on a piece of vector-board and mounted in a Suzurando box, model M-1N. It measures 3¼ X 2 X 4" and there is still room inside for additions. It sells for 330 yen, about 92c. A slide switch is used to turn the power on and off. Paint one well of the slide switch with red paint – Testor's Pla, a model plastic paint, is good – and the switch will indicate its position. Red for On and black for Off. It saves batteries. Check your work and the polarity of the large capacitor. Re-check the connections to all the semi-conductors. With four different kinds of devices things can become confused. Set the pot to the middle

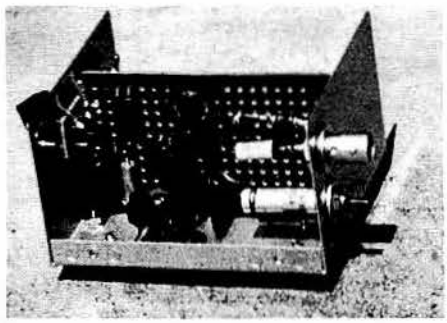

of its range. Insert a crystal in the socket. Connect the Chirper to your converter, turn the switch on and adjust the variable capacitor for the highest reading on your S-meter. The oscillator will turn on and off. Varying the pot will extend or diminish the amount of time the oscillator is on. Whatever you do, *don't connect the chirper to an external antenna.* The harmonic content is high and even at this power level is sufficient to cause severe interference to television receivers within a two block radius.

For converter alignment, the test set-up is illustrated in Fig. 2. The Chirper is fed to the converter thru an attenuator for two reasons. First, the power output of the Chirper is too high on six and two. You don't want to align with a forty over nine signal. Something around S-5 to S-7 is desired. Second, the attenuator maintains a 50 ohm termination for the converter. A converter cannot be aligned with a floating input impedance. Fixed and variable attenuators of excellent quality are available thru surplus and homebrew data is available. See *73,* January 67, p. 40 for one that will do the job. Turn the receiver avc off. The read-out options are diverse. The best is probably a scope connected to the *if.* A vtvm can be used, connected to the audio output. And, the S-meter can be used with the avc on *fast.* This will vary with the receiver and it's particular time constants. What needs to be avoided is avc pumping that interferes with your readings.

Turn the Chirper on, adjust the attenuator for a convenient signal level. When the oscillator is on, you're reading signal. When the oscillator is off, you're reading noise (on the scope, vtvm, S-meter, etc.). As you make adjustments on your converter, observe the effect on both signal and noise. Adjust for the greatest difference between the two. Turn the Chirper off and re-check the converter neutralization. If necessary, re-neutralize the converter and go thru the whole thing again. Talking about it makes it seem somewhat complex. It really isn't and the whole business won't take long once you've done it. It will become quickly apparent that highest signal level and lowest noise level do not coincide. You can vary the bias, voltage, etc., and observe the effects of each on the signal-to-noise relationship. You can, in short, optimize your converter's performance.

A number of things can be done with the Chirper. There is room in the box to build another oscillator section connected to the transistor collector, operating in parallel and simultaneous with the first oscillator. By appropriate choice of crystal and attenuation, both signals can be introduced into the converter in order to adjust the mixer for minimum cross modulation.

Or, instead of using an oscillator at all, you can use the switching section of the Chirper to key a noise generator on and off. This has a certain attraction where an integrating network is used prior to a vtvm. In this case noise is used as a signal.

In spite of it's name, the Chirper is remarkably stable. Chirp becomes apparent from two meters or so, but is no problem. Build one and take the myths out of your converter.

UHF SIGNAL SOURCE

Bill Hoisington K1CLL

The UHF experimenter learns early that the UHF ham bands don't always furnish a signal when you need them. When I build receivers and converters for 432 and 1296, I find that I need a small signal generator for alignment and band spotting. Not much power is needed for this work, so transistors are the ideal choice for generating the signal. This signal source is in three parts, a 432 source, a tripler to 1296 and a modulator.

The 432 Driver

I started with a low-cost 27 mc crystal that I found in my junk box. (Never mind how it got there!) I used my usual phase-reversing crystal circuit followed by a bunch of doublers. Lower-priced transistors were used in the early stages and the UHF ones saved for later. You really need good ones on 1296! Each doubler is biased from rectification of rf from

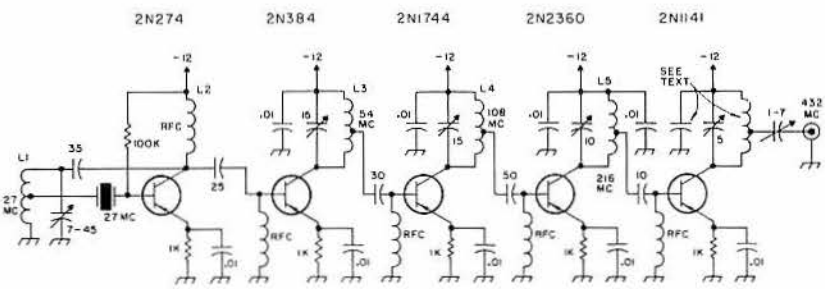

Fig. 1. Schematic diagram of the 432 mc signal source. The transistors aren't critical in most cases and other UHF and VHF ones will work fine.

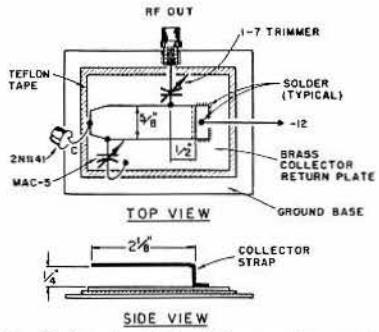

Fig. 2. Details of the 432 mc collector circuit.

the previous stage. If you need more output than this circuit gives you, use less than a 1 k resistor in the emitter, but watch out for high collector current. **Fig. 1** shows the schematic of the 432 mc generator and **Fig. 2** gives details of the 432 mc collector circuit.

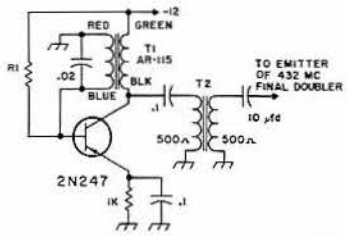

Fig. 3. The tone oscillator for the 432 mc signal source.

The tone modulator

This is a crude modulator (**Fig. 3**), but it works. The modulation transformer is not absolutely necessary, but seems to improve results. You can apply the modulation almost anywhere for this application, but modulating across the 1 k emitter resistor gave the cleanest sound with the doubler used.

Now to 1296

I built this tripler to 1296 just for the fun of it. But it worked quite well. I normally don't hold with triplers at this frequency, but it's an easy way to get 1296 mc energy from the 432 mc driver. The transistor I used was a Motorola 2N1141. It's several years old and there are better ones that are far cheaper now. But it does work on 1296. I couldn't get it to work with grounded emitter, but grounded base is fine. **Fig. 4** gives the schematic but **Fig. 5** gives the details, which are vital. The

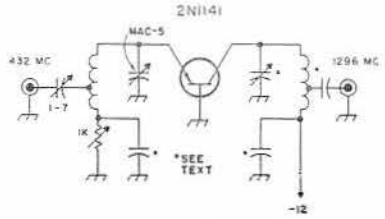

Fig. 4. Schematic of the 1296 mc tripler.

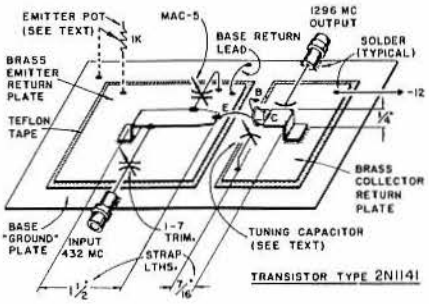

Fig. 5. Pictorial layout of the 1296 mc tripler.

input on 432 tunes very nicely. But I had to reduce the emitter resistor in the doubler to 432 to get enough drive. It ended up at 200 ohms. The collector circuit is short, but tunes smoothly. The 1296 mc output registers 100 a in the 1296 cavity in the May 73.

You might try a small amount of modulation on the 1296 mc tripler. Also a waveguide attenuator. Be seeing you on 23 cm.

CRYSTAL CONTROLLED SIGNAL SOURCE WITH INFINITE ATTENUATOR FOR 144, 432 AND 1296 MHz

Bill Hoisington K1CLL

One of the most useful test-equipment gadgets the homebrewer can build is a signal generator. The one described here is of commercial quality and it can be completely contained inside a waveguide. Positioning, by sliding along the waveguide, provides a variable-strength stable signal of one millivolt, one microvolt, one nanovolt, or less, dropping down gradually to a true zero. It does this in a perfectly smooth fashion without steps or jumps so that every fraction of a decibel in lower noise figure shows immediately on the slide dial. What's more, the slide can be calibrated so that FM'ers can use the device for directly measuring receiver sensitivity in tenths of a microvolt.

In building a 6 meter receiver recently for maximum absolute sensitivity I naturally had to check especially on the first-stage rf transistor and circuit for minimum noise figure. (For this type of work you *must* have a signal generator capable of being attenuated out of sight with any receiver you can buy for any money.) The usual generators on the market under $100 do not do this. And many of the very expensive generators get so leaky that they have to be used 200 ft from the receiver. At any rate, the generator described here can be made up quickly and at low cost, and it *is* stable, reliable, and infinitely variable.

Waveguide

The only possible difficulty might be in obtaining the piece of waveguide needed. The piece I used is 4¼ in. wide by 2 1/8 in. high, and is 24 in. long. If you have a choice, get a piece a little longer. You could make up this item out of brass or copper if you had to, because in this case it is not used to *carry* energy but to *attenuate* it, so the worse you make it the better!

The waveguide *must not* have any holes in it and should be reasonably smooth inside; otherwise your dial would not read smoothly in attenuation. You *could* use copper or aluminum drain pipe, although I have not tried them yet. Working directly on the rf, this attenuator is good for any kind of modulation, including SSB, FM, pulse, or what have you.

Construction

Figure 1 shows the basic idea. When the signal generator plate is close to the

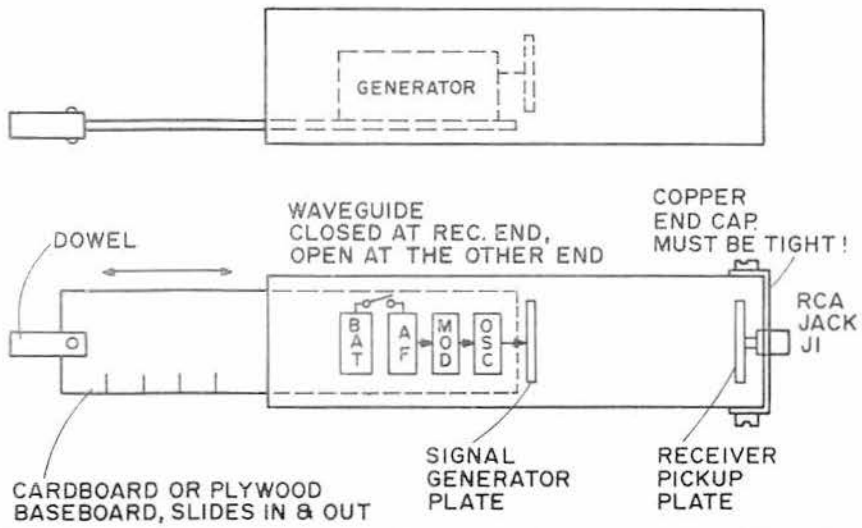

Fig. 1. Sketch shows plan-view layout of unit inside waveguide attenuator. The oscillator unit is mounted on a flat wood or cardboard strip that can be calibrated to give accurate indications of output signal.

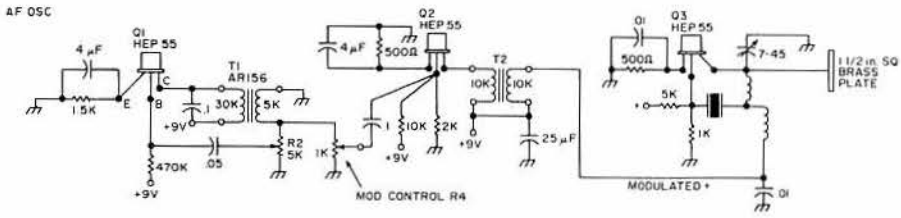

Fig. 2. Schematic of generator. This entire assembly about 3 x 4 in. including small 9V battery and switch must be entirely inside the waveguide. No wire or metal of any kind can be brought outside.

receiver pickup plate, you can get about 100 mV of signal into the receiver, and it is handy for checking diode receivers. When the two plates are about 8 in. apart, the signal is just detectable on a good receiver. Additional spacing between plates amounts to "waveguide beyond cutoff." I do not believe that there is any receiver in the world that can pick up the signal much beyond the 8¾ in. point.

Pretty soon in your receiver "peaking" work you get to that signal that may be but a tenth of a microvolt or so, and you begin dreaming about cryogenic front ends, masers, and such. As mentioned, every fraction of a decibel lower in noise figure, every improvement in sensitivity comes out rigorously and relentlessly on that slide dial. You can easily check which of your low-noise transistors is really low, whether that MOSFET will do a better or worse job for you, and in which circuit.

As you go up in frequency you may have to make smaller and smaller oscillators in order to fit in smaller waveguides to get the cutoff effect. (That will not be a problem if you read 73; the May issue described a "postage-stamp-sized" rf generator that is an ideal candidate for the signal source.)

Circuit

A crystal oscillator, an af oscillator, and a simple class A modulator do an excellent job to start with. Figure 2 shows the present unit as used on 6 meters. It must be stressed again that no wire or other piece of metal may be allowed to reach the outside from this assembly. I'm making up another for 2 meters soon (still my favorite band) and will try one on 450 a little later.

Audio

A controlled-feedback transformer-coupled af oscillator does a good job in furnishing a sine wave. A Motorola HEP55 is used for the oscillator, with feedback to the base from the collector through transformer T1, controlled by resistor R2. Audio output is taken off the 5 kΩ winding of T1, is fed through R4 the modulation control, and then to the base of af modulator Q2. Transistor Q2 is set up for low-power class A operation because not much modulation is needed for the signal generator. Transformer T2 is an old 5W unit from "tube-type portable" days. The secondary of T2 feeds a modulated +9V signal to Q3, the crystal-controlled 50 MHz oscillator.

This rf oscillator is one of my negative-feedback jobs with phase reversal in the crystal. A 1½ in. square plate is tied onto the collector, radiating energy to the receiver pickup plate facing it inside the waveguide. This energy is rapidly attenuated as you move the plates apart, and should be impossible to detect after some 9 or 10 in. of separation.

Once again, do *not* bring any wires or any other metal or conductor out from the oscillator assembly. If you want an outside controlled switch or other control, bring it out as a wooden dowel handle.

That's about it. Tune everything up outside the waveguide on the bench; when you're satisfied, plug your best 6 meter receiver into J1, push the oscillator plank along the waveguide (or rather I should say pull it along) away from J1. You'll get a surprise! Hope this helps you with your low-noise receiver work. It did a lot for me.

LOW COST 220 MHz SIGNAL GENERATOR

Bill Hoisington K1CLL

This article describes the design and construction of an easy to build, inexpensive, crystal controlled signal generator for the 220 MHz band, including a very low cost attenuator that goes from a quarter volt down through 1/20th of a microvolt and on to a real zero (of rf power). It is very useful for receiver front-end tuneup, low noise tests, and as a portable field generator for overall antenna tests through the receiver. For signal identification purposes, af and FM modulation are included.

If you really want to fight for a low-noise front end, this piece of equipment will be of great assistance to you, because the attenuation really is infinite and without any difficult bypassing or shielding.

Design of the attenuator.

Infinite attenuation is achieved here by the use of a 50¢ piece of aluminum tubing, as shown in Fig. 1. You cannot drive 220 MHz signals more than a few inches down inside of a piece of aluminum tubing. By putting *everything* – battery, on-off switch, circuit and all – on the movable generator strip and sliding it in and out of the tubing, you avoid all touchy, difficult and expensive bypassing, costly attentuator pots, shielding, etc., and provide a simplified means of varying the attenuation with stable, smooth, easy repeatability. Calibration is of the slide rule variety and also simple as far as writing down the microvolts on the scale is concerned.

This principle is older than radio tubes; in fact Sir Oliver Lodge used it in his 1890 microwave work.

Attenuator Construction Details

Figure 1 tells most of the story, with details in Figs. 2 through 9. An adequate rf seal can be made at the pickup end of the aluminum tubing, standard TV masting, 1¼ O.D., by 2 or 4 tabs in one end as in Fig. 3 and bending them back as shown, then cutting off the excess tubing. Install the pickup, plate, output jack, and end plate as shown in Fig. 1. I used time-saving external mounts for fastening it down to the wood baseboard as shown in Figs. 2 through 5. Drill a ¼ in. hole for a screwdriver as in Fig. 2, and use angles for the pickup end. Figure 2 also shows the scale in use for attenuation settings, and Fig. 3 shows pointer details.

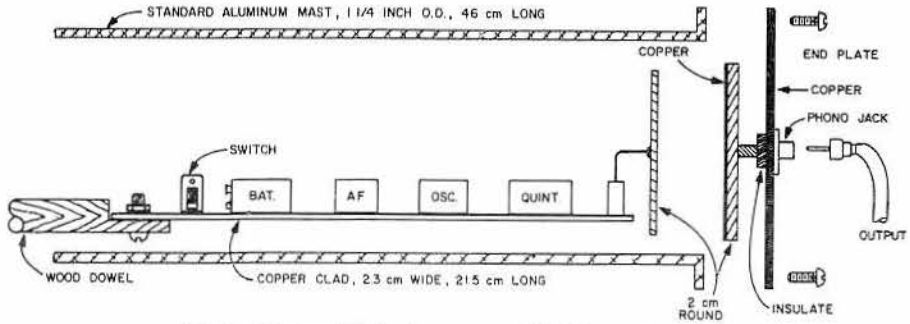

Fig. 1. Sideview, 220 signal generator and infinite attentuator.

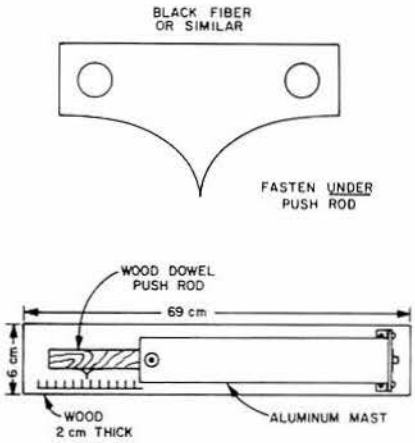

Fig. 2. Top view of the 220 signal generator and details of the calibration pointer.

Figures 6 and 7 show pictorials of the layout, top view and side view.

The Generator

Nothing too fussy here, but attention to details will assure reliable af and rf oscillation at low power and low battery drain and good frequency multiplication. Figure 8 shows the schematic with the details of the two oscillators, the crystal in the 44 MHz range, and the quintupler. The af uses a standard circuit which, however, has one item to watch. Contrary to a transformer coupled circuit, which is seldom mentioned, this twin-T job has a nasty trick of not starting every time. However a small cap from collector to ground cures this and makes it 100% reliable in that respect. The emitter being grounded, I suppose this establishes the correct in-phase relation with the collector, in which both of these elements should be in phase. You can put a small trim pot af gain control between the modulator and the oscillator if you wish, watching out for dc voltages of course. As shown here, there is plenty of modulation for signal identification, both AM and FM.

Referring to Fig. 8, at the left is the af oscillator. It is not down symmetrically, but you can note the two 22K resistors and the two .02 frequency settling caps, along with the .05 and the 2.2K terminating the lines. All of these set the frequency, and to change the frequency you should vary all of them in at least their approximate present ratios. It is around 500 cycles as shown. Do not forget the "starting cap" from collector to ground.

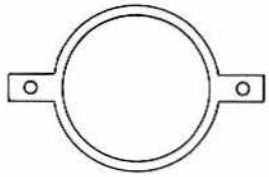

Fig. 3. Cable end view tubing.

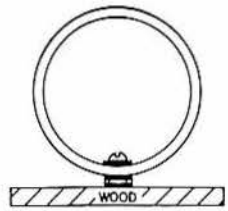

Fig. 4. Open end view.

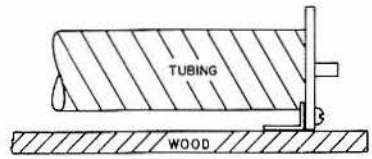

Fig. 5. Side view.

The output goes to the antenna plate on the forward end of the baseboard plank. When this plate is moved all the way in so that it is only ¼ in. from the cable pickup plate in the end of the aluminum tube, a full scale reading may be obtained on a 50 microamp meter on the output of a tuned diode detector (see Fig. 9). My first model here has marks on the scale (see Fig. 2) for 1 rf stage; 2 rf stages; mixer (feeding into a good i-f strip); mixer plus 1 rf, etc. At the 1 rf plus mixer, you begin to hear all the repeaters within 100 miles or so. With 2 rf plus mixer (followed by a sensitive i-f of course) you are really getting sensitivity. This is where you put a scope in line in order to have an electronic comparison point for signal coming out of the noise purposes, and then can really get into the low-noise bit, if you have a hermit location. Just happens I have one here. When I hear the noise of a car, it's a visitor!

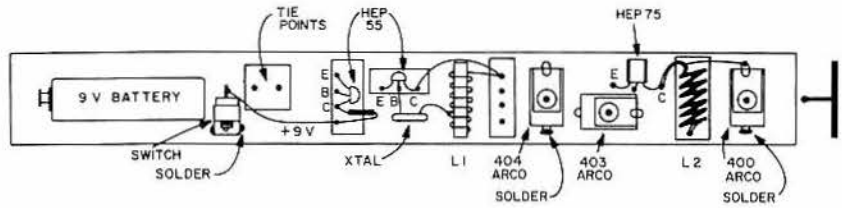

Fig. 6A. Layout, top view.

This audio is fed to the base of the multiplier where it provides some AM and some FM modulation for signal identification purposes. When working with receiver oscillators, and in particular with high-ratio multipliers, this is very important. It may also be locked into any old scope sync for noise figure and sensitivity comparisons. The scope sync gives a reference point where the signal to noise ratio will always be the same, without resorting to guess work. The crystal oscillator is my old tried and true crystal phase-reversing job, which uses negative feedback from the collector coil, which, after going through the crystal, reverses phase and becomes positive, thus assuring oscillation but *only* on the crystal frequency. A HEP 75 (similar to the famous 3866) is used for the quintupler. A lot more output is noted with this powerful but smooth operating old faithful, still good to 450 MHz.

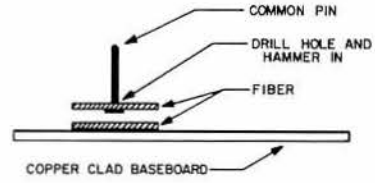

Fig. 6B. Tie-point construction.

Output

You will see for yourself as soon as you start testing that the attenuator is smooth-working and stepless, and that true infinite attenuation is at hand. An rf input state (pre-amp) with a noise figure a fraction better than another shows right away on the scale. For example, adjustment of the fixed bias voltages on the two gates of a 3N200 or 3N201 shows right away on the scale as the

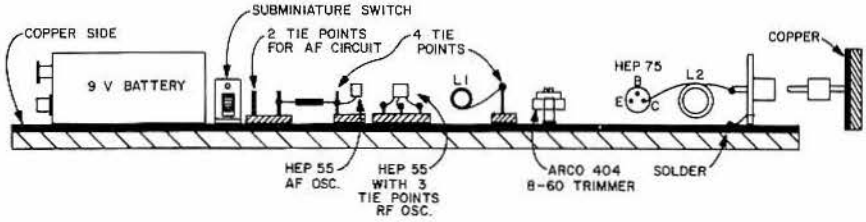

Fig. 7. Side view of the signal generator, 220 MHz.

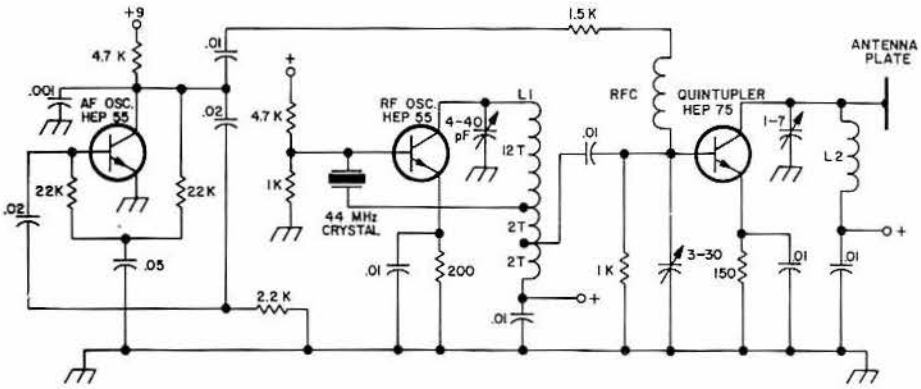

Fig. 8. Schematic. L1 = 16 turns No. 26 output tap at 2 turns, crystal feedback tap at 4 turns, from cold end. Wound on phenloic form .6 cm O.D. L2 = 6 turns No. 18 bare, air wound, .6 cm O.D., 2.5 cm long between tie points. RFC = about 40 turns No. 40, on phenolic form .3 cm O.D., 1 cm long (not critical).

push-rod is moved in and out and the signal is locked onto the scope. This work you can do right on the bench and at low cost.

There is quite a bit of mechanical work in the unit, depending on just how much "finish" you want it to have. You can also bring a dowel rod for "on and off" use. Do not, under any circumstances, bring out a *conductor*. You *can* do this, but only with an extreme amount of filtering, which is not part of this article. Be sure to set up the baseboard, antenna plate and battery first, and get them working mechanically. With a drawn-out shape like this I generally start with a longer piece of copper-clad than needed, build from one end, and then cut off what is left over. Understandably, once you have made the first one you can always see, after it is done, many ways of improving it. However, someone has to make the first one, and that's generally my job.

Antenna and Field Tests

Out of the tubing, and with a small antenna connected via a one turn link around the quadrupler coil and then to ground, returning L2 for maximum output, this little rig puts out a lot of signal on 220. Especially if you reduce the oscillator emitter resistor! Up to several volts of rf can be obtained in a tuned diode receiver if you push things along, which is around 5 to 10 mW. If you place this generator out in a field several hundred yards or more away, you can then line up your antenna on the car or house, check antenna cables, antenna input alignment, and match or mismatch for lowest noise figure, etc.

Front end alignment should first be done with a relatively broadband i-f strip on 10.7 MHz. Be sure nothing metallic on the generator strip protrudes enough to touch the inner wall of the tubing, or "scratch" will occur in the high gain receiver. A piece of thin fiberglass or other insulating sheet wrapped around the whole generator movable plank is a good precaution.

Once again I include a 220 MHz tuned diode detector, which is an absolute must for frequency multiplication, especially quintupling and such, where the other unwanted harmonics are as little as 20% away from the desired frequency. Figure 9 shows this piece of test equipment in pictorial schematic form. Remember, shape is of considerable importance as you go from VHF into UHF. It is quite easy to make the square trough line out of an old piece of copper clad. Or even a new piece! And this particular one described and shown in Fig. 9 goes very well to over 450 MHz and thus is very nice for the next band also. If you make it just as I've shown it, it will do a good job for you.

Calibration will present some difficulties, so line up some other lads around who are already on these bands and get your calibration that way.

So good luck, friends, more coming – lot's more! Keep reading.

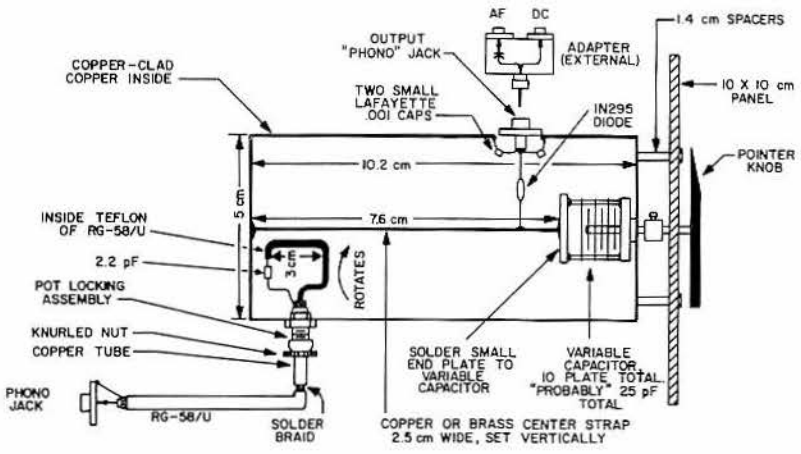

Fig. 9. Tuned diode detector, 160–460 MHz.

UHF SIGNAL GENERATOR

Jim Kennedy K6MIO

Several requirements were the basis for the design of this signal generator: operation on both 432 mc and 1296 mc, high stability e.g., crystal control, variable rf amplitude, provision for insertion of various types of modulation, and lowest possible cost consistent with satisfactory operation.

I had a 27.005 mc overtone crystal left over from a brief period of disillusionment about CB and, since 27 times 6 is 432 which times 3 is 1296, this seemed a likely place to start.

Fig. 1 shows the final result. The overtone oscillator is voltage regulated and is left operating at all times when the generator is on. The crystal is mounted underneath the chassis to protect it from rapid temperature changes from drafts, etc., further enhancing the stability.

The use of diode multipliers at 432 mc and 1296 mc greatly simplifies developing UHF rf.

Direct coupling the modulation into the cathode of the last vacuum tube multiplier provides a modulation input that will accomodate almost any signal from audio to video, or even pulse.

A four position mode switch on the front panel allows the choice of carrier, no carrier, carrier with 60 cycle modulation and finally carrier with external modulation.

Construction

Building the unit presents no special problems except getting it all under the chassis. The 5 x 9½ x 2½ chassis doesn't leave much useful

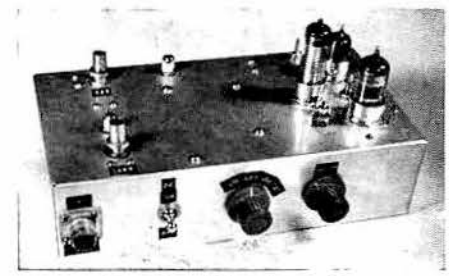

Front view of signal generator.

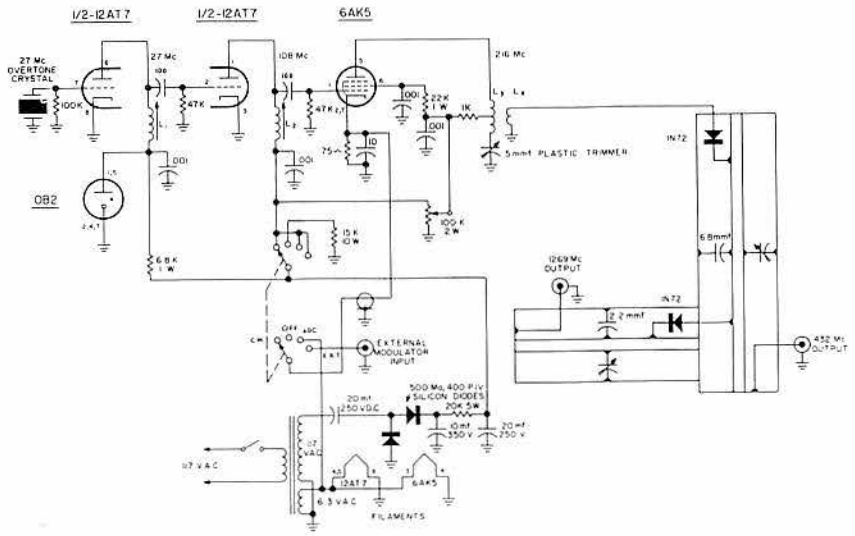

FIGURE 1

L1—10 turns # 28, 3/8" slug form.
L2—3 turns #28, 3/8" slug form.
L3—10 turns #18, 1/2" dia.
L4—3 turns #18, 1/4" dia.

room to spare, but it does make for a very compact device.

The lengths of the diode multiplier tuned lines were determined primarily by the space available and bear only the slightest relation to the wave lengths involved; hence, it was necessary to pad both lines with additional capacitances in order to resonate them properly.

Both lines were folded from 1/32 inch brass sheet stock. The inner conductors are made from ¼ inch brass tubing. The 432 line is 1" x 1" x 7". The input diode is tapped onto the inner conductor 1¼ inches from the other end. The signal output loop is about 1¼ inches long. The output diode is tapped 2 inches from the loop end of the line.

The tuning capacitor is made by soldering a 10-32 nut over a hole in the middle of the line shell. This provides the threads for the 10-32 screw which actually serves as the capacitor.

Round ½ inch disks are soldered to the bottom of the center of the inner conductor and to the end of the turning screw to provide additional range.

The 1296 line is similar except it is only 3⅝ inches long. The multiplier diode is tapped on the inner conductor ⅝ inches from one end. The signal output loop is about ¾ inches long and is located at the other end of the line. The tuning capacitor is identical to the one used in the 432 line.

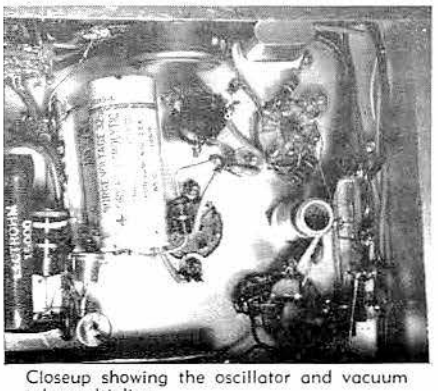

Closeup showing the oscillator and vacuum tube multipliers.

The 15K 10 watt resistor in the carrier OFF position limits the no load voltage from exceeding the ratings on the filter capacitors.

Operation

The tune up of the tube stages can be easily accomplished with a grid dipper. The UHF stages should only need to be peaked with a converter and receiver.

Shields on all tubes and a bottom cover on the chassis are important requirements if stray leakage at the signal frequency or lower harmonics is to be eliminated as a possible source of measurement error. These were removed for the photographs but are always used in practice.

For best results it is a good idea to employ a 50 ohm (or 75 ohm as the case may be) pad between the signal generator and the equipment under test. This will insure that the generator will appear as a resistive load as much as possible. This is necessary if the generator is to duplicate the conditions presented to the receiver by a good antenna.

This pad can take many forms. The two easiest ways to make one would be to use sufficient lengths of some lossy coax. At 432 mc higher, 20 or 30 feet of RG-58 (or RG-59) seems to be quite adequate for most applications. The other approach would involve building a conventional resistor pad into a male and female BNC connector soldered back to back. Fig. 2 shows such a pad.

Aside from receiver testing, this device has several other uses to which it can be put. It is also useful as a signal source for antenna tests and it may be used as frequency standard.

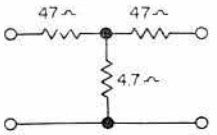

FIGURE 2

Fig. 2. 20 db 52 ohm pad. Resistors mounted in BNC connector.

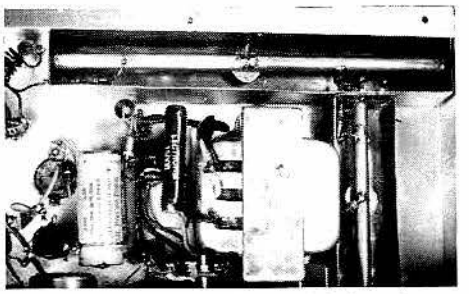

Closeup view showing details of diode multipliers lines.

This last use can be of great value at UHF because of the persistent problem of crystal tolerance versus frequency multiplication. A converter can easily be 40 or 50 kc or more off of the indicated frequency at 1296 mc. This can be quite a problem if you are hunting for a moonbounce signal through a 5 cps filter.

Though not shown on the diagram or in the pictures, it was found that a 50 mmfd variable capacitor connected across the crystal was sufficient to reduce 27.005 mc to the 27.000 . . . mc required to put the generator on 432.00 . . . and 1296.00 . . . mc. It will probably be necessary to retune the oscillator plate circuit for best operation; some loss in output will be encountered but this should not be a serious problem. However, if such operation is contemplated, it might be of some advantage to obtain a 27.002 mc crystal and employ a smaller variable capacitor.

In order to make the frequency standard really something of a standard, a 1 mc calibration oscillator should be employed. Some harmonic of the oscillator (5 mc, 10 mc, etc.) should be zero beated against WWV. The signal generator should then be zero beated against the 27 mc harmonic of the 1 mc calibrator—presto!—a 432-1296 mc frequency standard.

Though there are many refinements which can be made, the unit described has done a yeoman service in all the varied tasks asked of it.

LAB TYPE IF/RF SWEEP GENERATOR USING ICS

Ray Megirian K4DIIC

Just about every kit-type sweep generator on the market starts life out at around 3 or 4 MHz and ends up at 200 MHz or so. This always made analysis or display of 456 kHz i-f amplifier response characteristics a tedious step-by-step plotting procedure or required time out to rig up a temporary gimmick to do the job. No more. The sweep generator to be described here will do the job with ease and precision. Even if you do not intend to duplicate the instrument, you may find parts of it useful for other applications.

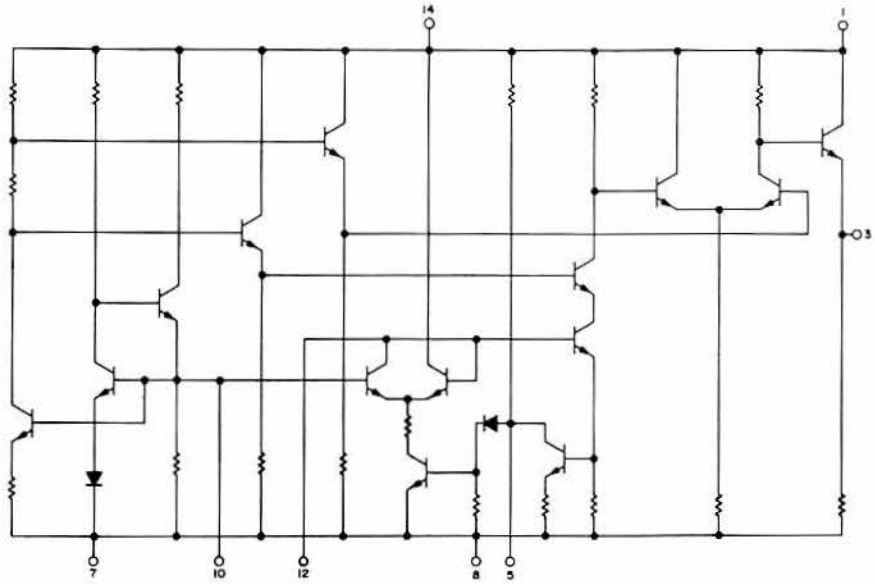

Fig. 1. Schematic of the MC1648 IC.

The generator covers a frequency range of from 400 kHz to 30 MHz in five bands. It can be operated in the CW mode as well as swept, thus allowing it to be used as an ordinary signal generator. Maximum output is 350 mV p-p across 50Ω. When sweeping, the return trace may be blanked or not, as desired. Two calibrated dials are provided for setting the start and stop frequencies and the maximum sweep width would be the entire band in use. The frequencies covered by the five bands are: 400 to 900 kHz, 850 kHz to 2.3 MHz, 2 to 6 MHz, 5 to 15 MHz and 10 to 30 MHz. Sweep time is variable between 20 ms and 6 seconds per sweep. A step attenuator in conjection with a vernier control provide a maximum attenuation of the output of 120 dB. An input is provided for a post-injection marker system built into the unit. A synchronous ramp with gain control is provided for driving the oscilloscope horizontal sweep. Blanking pulses are also brought out to a connector in case they are needed for synchronizing external equipment.

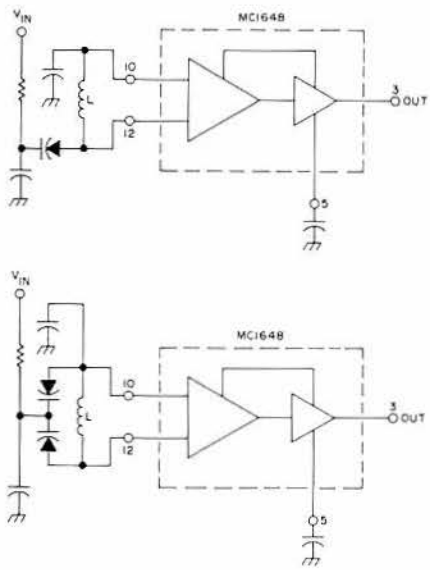

Fig. 2. Tuning the MC1648 with a single diode (A) and using back-to-back diodes (B).

A New IC

The heart of the generator is a new Motorola IC, the MC1648 emitter-coupled oscillator. It was intended for use in phase-locked loop systems operating in excess of 150 MHz, but may be used in many other applications such as this one. The device provides output of high spectral purity and incorporates an internal agc system which simplifies design of the sweep generator by eliminating the need for external leveling. A buffer amplifier and emitter-follower output are also incorporated on the chip, eliminating the need for external amplifiers. Figure 1 is a schematic of the MC1648 IC. Figure 2 illustrates two methods for tuning the oscillator. The device is packaged in a 14-pin DIP and requires a 5V dc supply. Since it was intended to be used with Motorola MECL III logic, either polarity is permissible. A positive supply is used here, connected to pins 1 and 14 with 7 and 8 grounded.

All the information covered by the data sheet for the MC1648 dealt with operation from 10 MHz up to about 180 MHz. Since I was interested in going as low as 400 kHz, I had to do some experimenting with tank circuits. My best results were obtained with the use of cup cores for the two lowest bands. I also found that ordinary molded iron core rf chokes of the miniature variety did an excellent job the rest of the way. Use of these tiny components made possible a very compact 5-band assembly.

The VCO

In order to facilitate shielding and simplify construction, electronic band switching is employed. Figure 3 is the schematic for the rf portion of the generator. The 2N4391 J-FET has a low 'on' resistance and works very well as a switch. One of these transistors is placed in series with each tank circuit

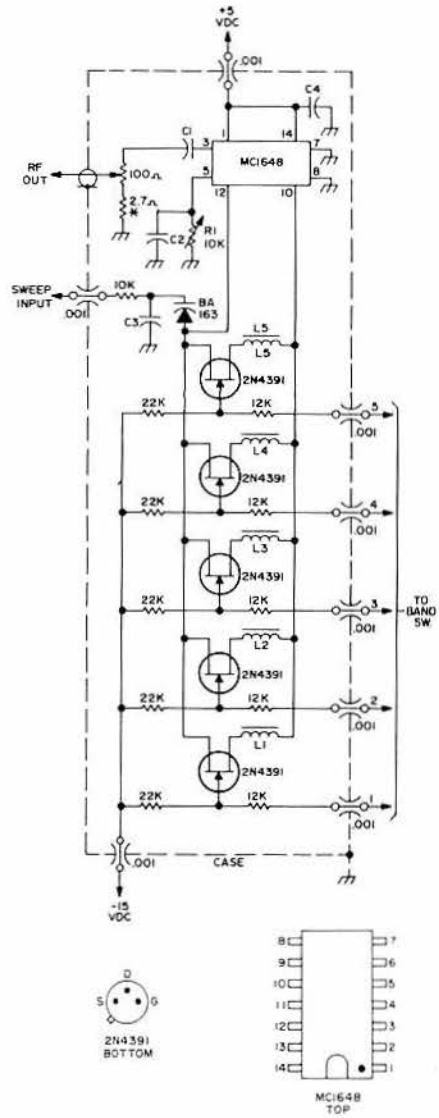

ALL RESISTORS - 1/4W, 5%
L1 - 28 TURNS NO. 30 AWG ENAMEL.
L2 - 12 TURNS NO. 28 AWG ENAMEL
(L1 & L2 MOUNTED IN CUP CORE - See Text)
L3 - 18 μH MINIATURE MOLDED RFC.
L4 - 4.7 μH MINIATURE MOLDED RFC.
L5 - 1.1 μH MINIATURE MOLDED RFC
C1, C2 - TYPE 150D TANTALUM - 2.2 μF/20V.
R1 - BECKMAN 89PR10K 15-T TRIMMER.

* - SELECTED PART - See Text.

Fig. 3. Schematic of the rf assembly using dc band switching.

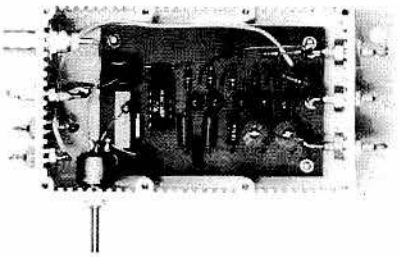

Completed rf assembly ready for mounting in the cabinet. A plastic version of the 2N4391 was used with a considerable savings in parts cost.

and can be turned on by application of a positive voltage at the gate. This allows the use of a strictly dc-operated remote switching arrangement. The entire assembly is built on a 2 x 3 in. pc board and mounted in a Pomona Model 3306 enclosure with a Model 3328 bottom mounting plate.

A BA163 tuning diode by ITT is used to sweep the oscillator. Although it is intended for bc band use, it performs admirably at these higher frequencies and its high capacitance ratio allows wide sweep excursions. If you are planning to use this oscillator for VHF applications, a more suitable diode would be in order. According to the data sheet on the MC1648, typical maximum output frequency is 225 MHz.

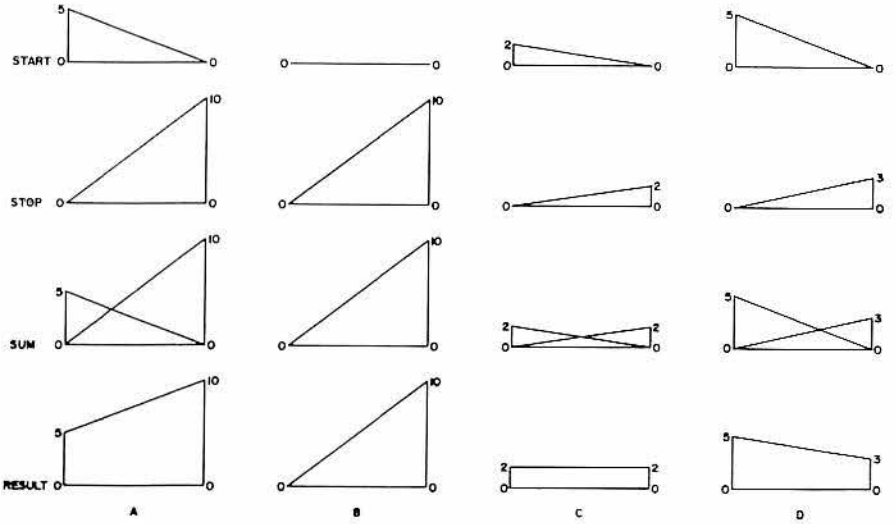

Fig. 5. Pictorial demonstration of ramp generation.

The vernier attenautor is a 100Ω RV6 style potentiometer mounted inside the enclosure. A coupling and extension shaft are used to bring the control out to the front panel. The value of the resistor at the bottom end of the pot will have to be selected so that a range of 20 dB is provided with full swing of the control. Since end resistance varies from one control to another, an exact value will have to be arrived at experimentally.

The output from the VCO is a square wave. If sine wave output is desired, the agc characteristic may be modified by introducing resistance between pin 5 and ground. The small trimmer incorporated on the board is used for this purpose. It was my experience, however, that this may introduce instability with some MC1648s. Although the trimmer was left in, the one in my unit is turned to maximum resistance where it has no effect and left there. It would do no harm to leave it out altogether since no other changes would be needed.

If any readers are contemplating exact duplication of this generator, you will find the cup cores I used are no longer available. These were Ferrox-cube part number 332P133B4-3C and are obsolete. I had a large number of these on hand left over from another project and saw no sense in buying more. I am sure some of the presently available cup cores will make excellent substitutes. Those used here are about 3/8 in. in diameter and are ungapped. You may have to experiment with the number of turns in the coil to obtain the coverage you require. One handy trick you can pull with a cup core is to rotate the slots in each half so that fractional turns are produced when the coil wires are brought out separately through the

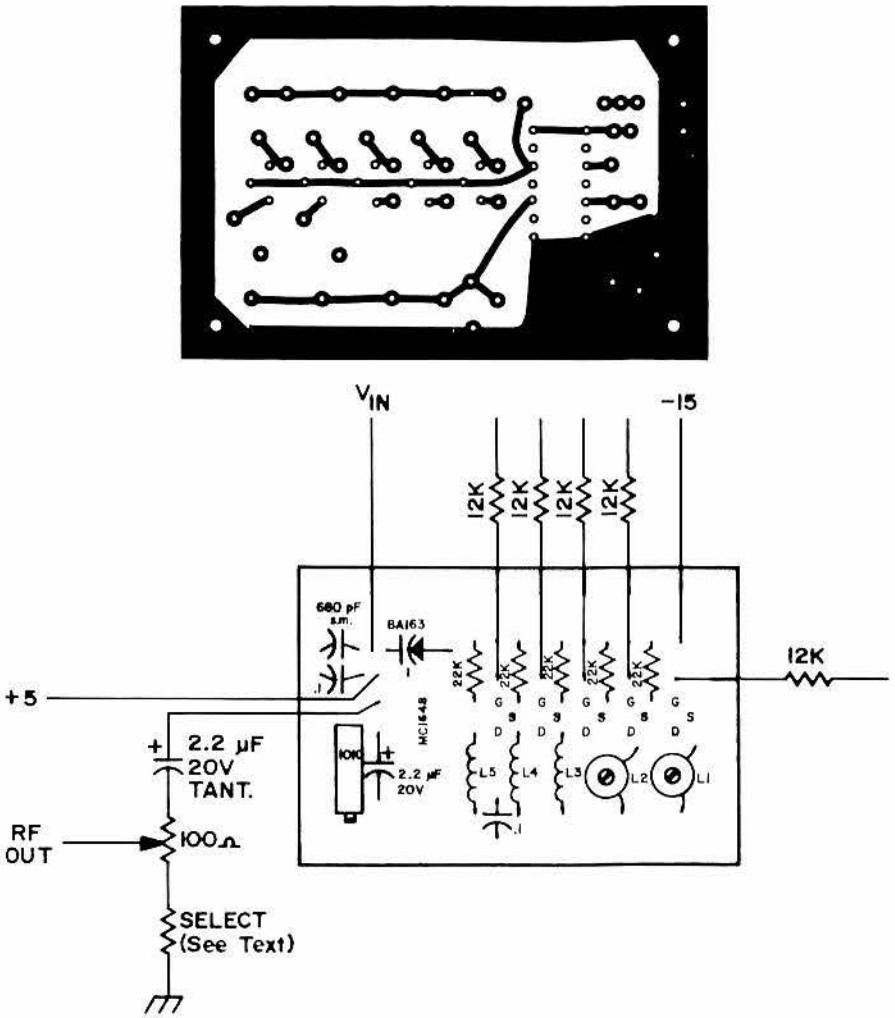

Fig. 4. (A) Foil side of rf pc board. (B) Location of parts on component side.

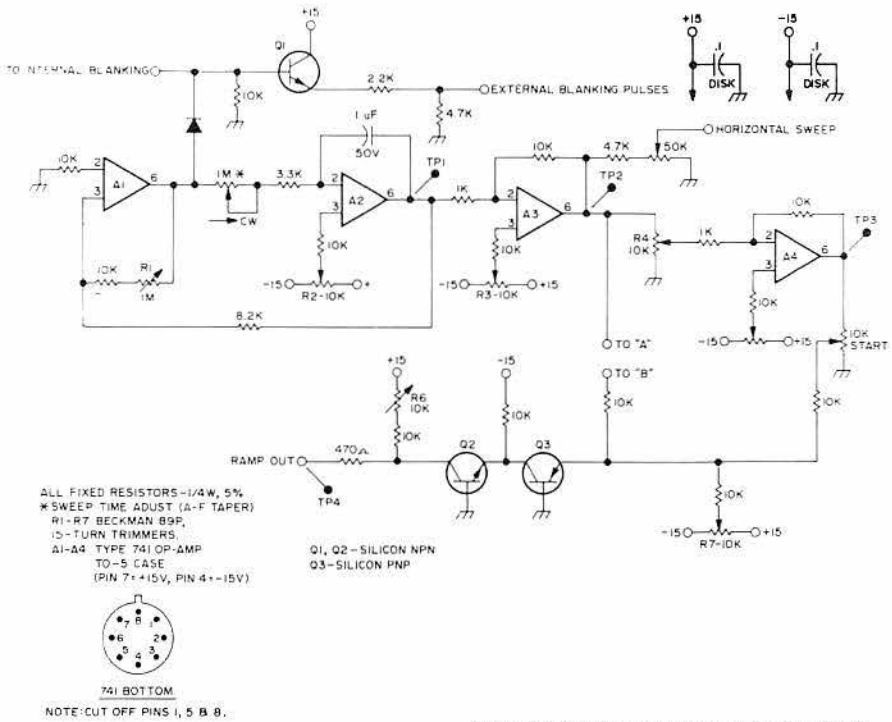

Fig. 6. Schematic of the ramp generator circuit.

two spaced holes. Exerting pressure on the core by means of the mounting screw will also shift the frequency and is almost like having a slug to tune. Increasing pressure seems to raise the frequency. The rf chokes used for the higher bands may also vary slightly from piece to piece and several may have to be tried to get the desired coverage. There isn't much we can do to alter the frequency where the chokes are used. Of course, slug-tuned coils may be used if the pc layout is modified. I do not recommend their use on the two lowest bands, however, since my results were rather unsatisfactory with this sort of tank circuit.

One final point would be in order before leaving the VCO. Note that the 10 KΩ resistor going to the tuning diode, the 2.2 μF rf output capacitor and each of the 12 KΩ resistors going to the transistor gates are not mounted on the board. One end of each has a hole provided on the board and then the component itself is used to make the connection to its final destination. This saves board space and eliminates separate wires. The small resistor at the bottom of the vernier attenuator is similarly mounted between the board and the bottom lug on the control. These points are more clearly seen in the photo. Also note that the cup cores are fastened directly to the board by means of 1-72 screws into threaded holes.

The Ramp Generator

In contrast with kit-type sweep generators that use the 60 Hz line for sweeping the oscillator, laboratory instruments have internal circuitry designed for this purpose. In our case, as with most sweep generators, a voltage ramp is used to control the oscillator during the sweep period. The circuitry has been arranged so that we can adjust the starting point (dc level) of the ramp independently of the stopping point. This simply means that we can set the frequency at which the sweep starts as well as the frequency at which it stops. We can also control, over a fairly wide range, the time it takes for a complete sweep. In this case, the sweep time is continuously adjustable between 20 ms and 6 seconds per sweep.

To get a better idea of how the ramp generator produces the results we've described above, let's look at Fig. 4. Note that a negative-going linear ramp (start) is combined with a positive-going linear ramp (stop) to produce the resultant ramp being applied to the varactor diode. If either input ramp is zero, the resultant will be the same as the single ramp since adding zero to anything will not change its value. Naturally, if both are zero, the output will be zero and the oscillator output frequency will be constant during the sweep period. The same is true whenever both ramps are of equal amplitude, except that the output will be a steady voltage other than zero. Also note that the resultant ramp could have a negative slope if the 'stop' input is lower than the 'start' input, and the oscillator would obviously sweep down in frequency rather than up.

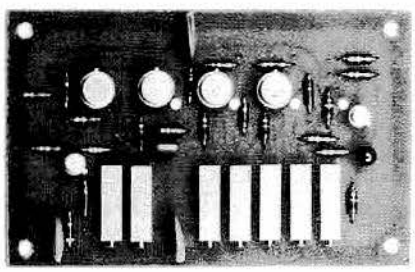

The ramp and blanking generator pc assembly. The leads going to external points will go in the holes visible on the board.

The schematic for the ramp generator is shown in Fig. 6. Operational amplifiers A1 and A2 form a triangle wave generator with A1 acting as a threshold detector and A2 as an integrator. One half of the triangle (negative-going) represents the sweep period while the other half represents the retrace time. Since a square wave is generated at the output of A1, we have a convenient source of blanking voltage built right in. This signal is positive during the sweep period and is connected to the band switch when Swept 1 (blanked retrace) operation is selected. During retrace the square wave drops to zero and actually disconnects the tank circuit until the next sweep starts. An emitter-follower, Q3, buffers the square wave output for external use.

The output of inverting amplifier A3 is a positive-going ramp during the sweep period and is used for both the 'stop' signal and horizontal sweep for the oscilloscope. Since an additional inversion takes place in the output of A4, the negative-going ramp at this point is used as the 'start' signal. These two ramps are applied across front panel controls which have 6:1 reduction drives and are fitted with dials calibrated in frequency for the five operating bands. The outputs from these two pots are fed to summing amplifier Q1, where the output will be the resultant ramp we discussed above. Because the output Q1 is in the negative region (PNP transistor), a second common-base (NPN) amplifier is used to shift the output back to where it will always be positive.

The ramp and blanking generator is constructed on a pc board 2.6 x 4.1 in. in size. For convenience, all the trimmer resistors were mounted along one edge. As seen in the photo, this board was mounted by means of two small brackets in a vertical position with the trimmers facing up. To simplify pattern layout, unused pins 1, 5 and 8 on each of the four 741 opamps were clipped off right at the case. Color-coded wires were connected to all necessary points on the board before it was mounted, with the leads made long enough to reach their destinations. For those interested in building this unit, a detailed procedure for setting up the ramp generator will be given later.

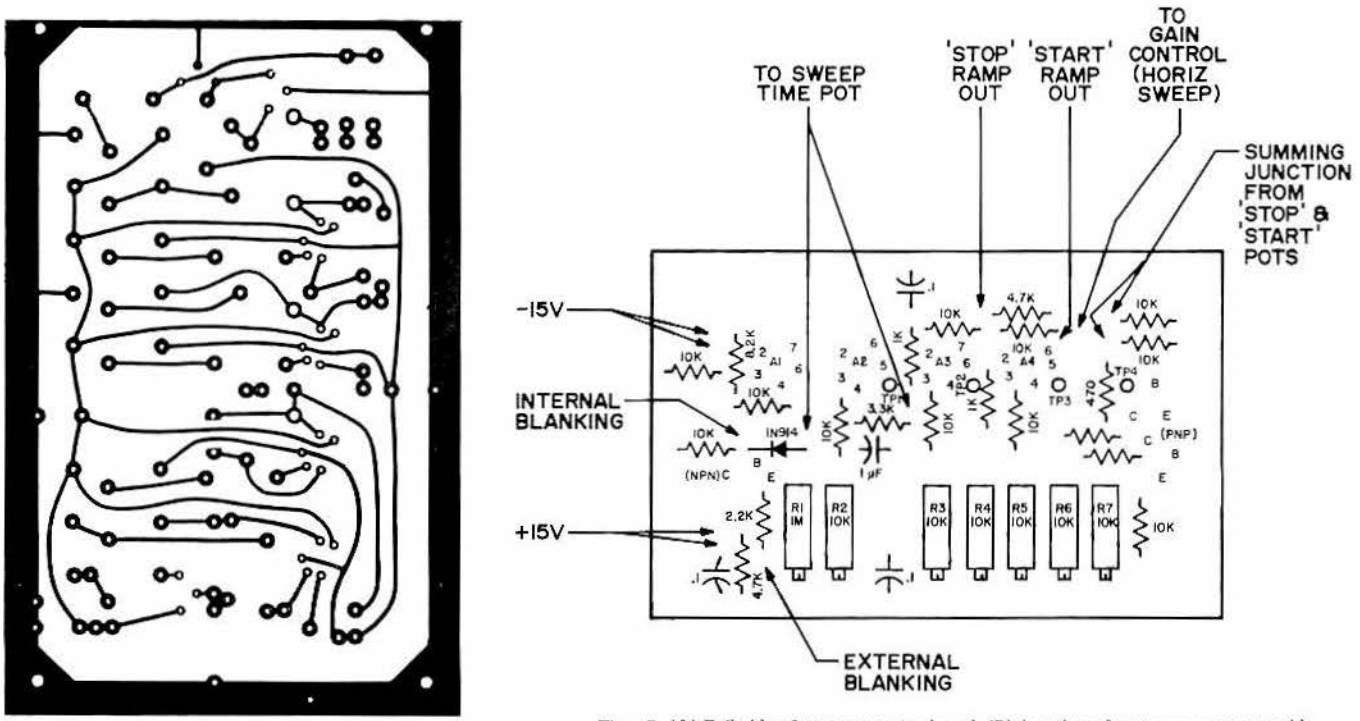

Fig. 7 (A) Foil side of ramp generator board. (B) location of parts on component side.

The Mixer/Amplifier

In order to provide a means for displaying frequency markers, a mixer and amplifier circuit was built into the sweep generator. The schematic for this circuit is shown in Fig. 6. A marker generator was not included inside the sweeper because other rf generators were available for use as markers and the added expense seemed unnecessary. Because the mixer board was to be installed inside a shielded box, dc gain control was resorted to as with the band switching discussed earlier. A 2N4391 is used as a variable resistor to control the signal input to the amplifier stage. This in turn controls the size of the marker being displayed on the curve. A 2N3819 FET is used in a simple mixer circuit which worked the best of several tried. Incidentally, the PNP and NPN transistors used here and on the ramp generator board are unknown surplus silicon units.

The pc board for the mixer is 1.5 x 2.9 in. and is mounted in a Bud CU-124 die-cast aluminum box. Note that here again some of the components are mounted between the board and their external connectors. These include both the 10 pF and 100 pF input capacitors to the 2N3819 and the 10 KΩ resistor going to the gate of the 2N4391.

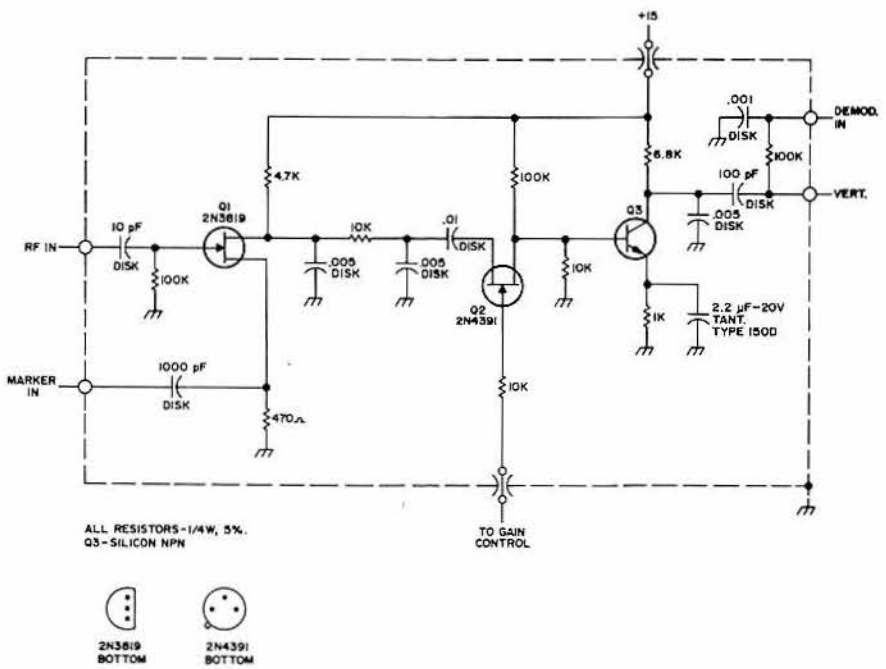

Fig. 8. Post-injection marker circuit with dc gain control of marker size.

The Power Supply

Figure 7 is a schematic for the power supply. Voltage requirements for the sweep generator are +15V, −15V and +5V dc. The current drawn by any of the above circuits runs no more than 30 or 40 mA maximum,

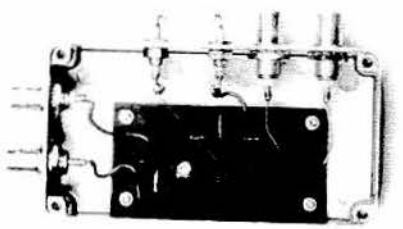

Completed mixer/amplifier board mounted in the die-cast housing.

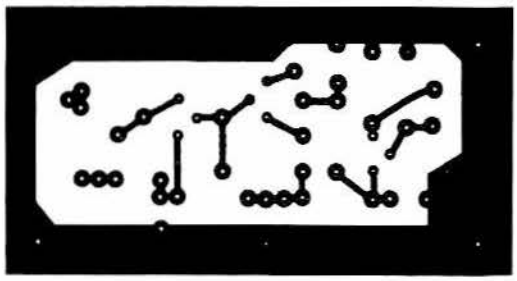

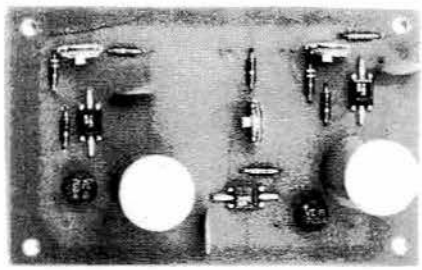

The power supply pc assembly.

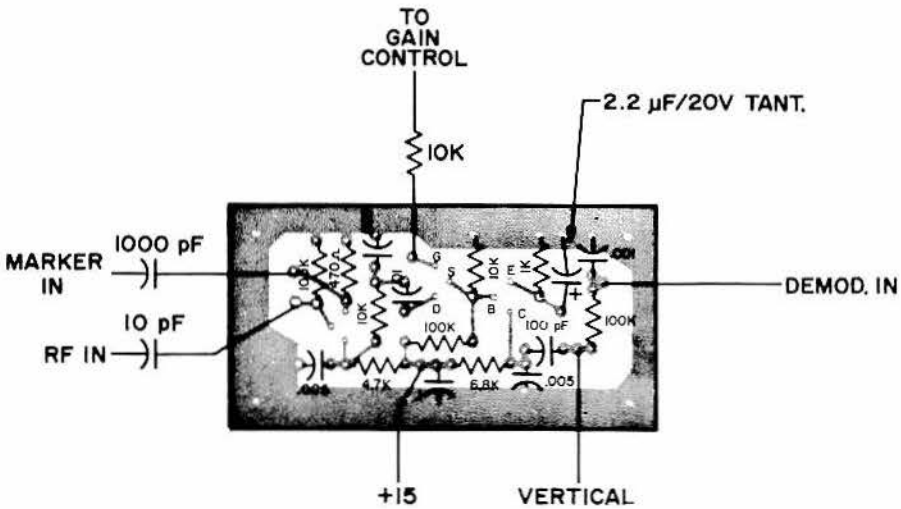

Fig. 9. (A) Foil side of mixer/amplifier pc board. (B) Location of parts on component side.

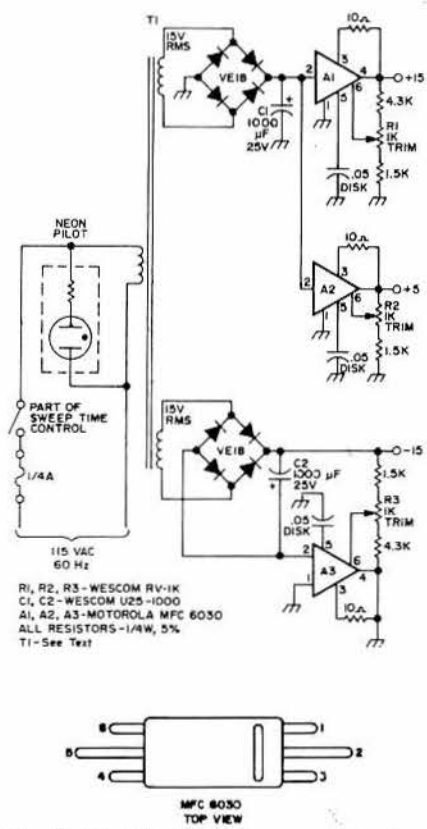

Fig. 10. (A) Foil side of power supply pc board. (B) location of parts on component side.

making the use of small IC voltage regulators ideal. Motorola MFC6030 (plastic) regulators are used in each supply and are overload protected against accidental short circuit. Varo type VE18 molded bridge rectifiers, together with 1000 µF filter capacitors, supply the dc input to the regulators. The +15V and +5V regulators are both fed from the same source. The power transformer was a surplus unit with a 30V CT secondary. The center tap was uncovered and the two leads separated so as to provide two independent 15V windings. A small trimmer is provided in each supply for voltage adjustment.

The pc board for the power supply is 2.6 x 4.1 in. All components but the transformer are mounted on the board. The transformer is mounted directly on the chassis. Relative placement of the various components making up the complete generator can be seen quite clearly in the photo.

Control Circuits

Figure 8 is the wiring diagram for the control circuitry. Note that for CW operation of the generator, a dc voltage is applied to the varactor by way of the Start pot. In order for the dial calibration to be valid in either mode, the dc level applied to the control must be exactly the same as the peak amplitude of the ramp during swept operation. As will be explained in the set-up procedure, the ramp will vary from a starting point of approximately +1.4V and peak at +12V. Resistor R1 in series with the +15V line is selected for a +12V level at the high end of the pot. R2 is selected for a level of +1.4V at the low end. The reason for the offset of 1.4V at the low end is because the pin to which the tuning diode is connected at the MC1648, sits at this level. The source of this bias is the drop developed across two forward-biased junctions within the IC and not from any external source. Once these dc levels have been set for CW with the fixed resistors, the ramp can be made to match by means of the trimmers in the ramp generator circuit.

The rest of the control circuitry is quite straightforward. In position 2 (Swept 1) of the mode switch, positive pulses from the ramp generator are fed to the band switch during the sweep period. When retrace occurs, the pulse drops to zero and the oscillator shuts off until the next sweep starts. In the CW and Swept 2 positions of the mode switch, a steady +15V is applied to the band switch and the oscillator runs continuously.

The final function performed by the mode switch is to route the dc for CW or the ramp for swept operation to the tuning diode. The two fixed resistors are mounted point-to-point behind the panel since all points are readily accessible within every short distances. The fixed resistors associated with the marker gain control are also mounted the same way behind the panel. The switches are ordinary rotary types and the potentiometers are all ordinary carbon controls. The Start and Stop controls as well as all gain controls have linear tapers. The Sweep Time pot is an audio taper type with built-in switch for ac power.

Setting Up the Ramp Generator

For best results, a calibrated dc scope is required to properly adjust the ramp generator. Test points have been provided on the pc board and short pieces of bare wire connected to each of these points make excellent tie points for the scope probe. The

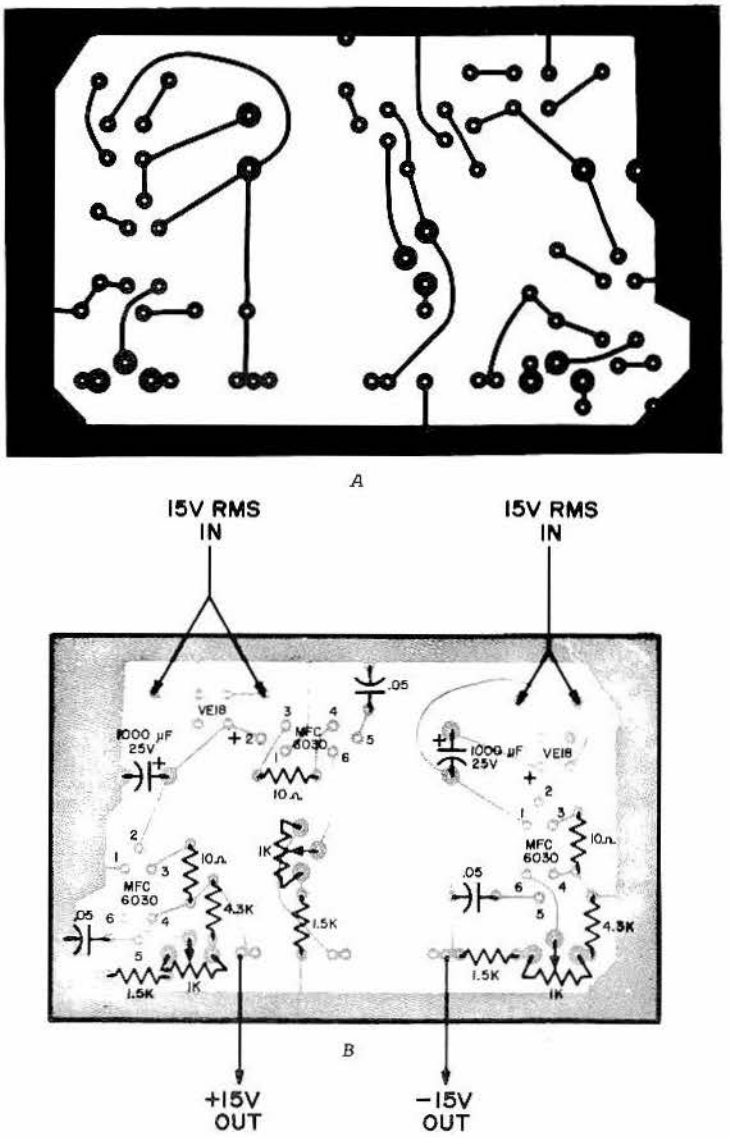

Fig. 11. (A) Foil side of power supply PC board. (B) Location of parts on component side.

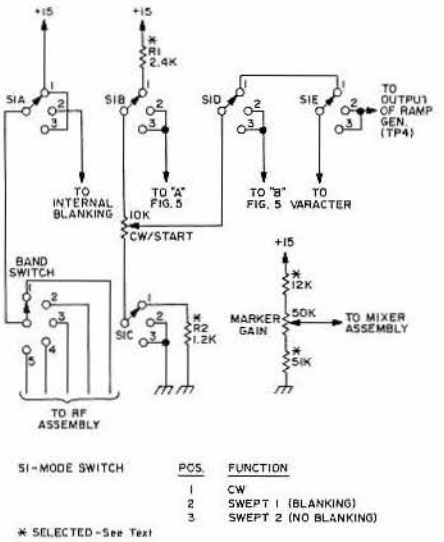

Fig.12 Control circuit wiring schematic.

circuit may be aligned either before or after installation. The Start, Stop and Sweep Time pots can be connected at the ends of their respective leads if the unit is checked outside the cabinet.

Set all seven trimmers to mid-range. Connect the scope to TP1 and adjust the horizontal for a full sweep of 20 ms. Set the Sweep Time control to minimum resistance and apply power. Some sort of triangular wave should be displayed. Adjust R1 for a 3V p-p amplitude of the waveform. Turn R2 cw until the negative-going portion of the triangle is 20 ms long. Since R1 and R2 interact, you will have to stop occasionally and reset R1 for proper amplitude. Once the ramp is set at 20 ms with the Sweep Time pot at minimum, the slow speed end will automatically be about 5 or 6 seconds with a 1 MΩ pot.

Transfer the scope probe to TP2 where a positive-going ramp should be seen. Set the starting point of the ramp to zero volts by means of R3. Amplitude of this ramp must be 10V. If it is not, go back and adjust R1 slightly until it is. If necessary, reset R2 for 20 ms trace length. As soon as a 10V, 20 ms, zero-based, positive-going ramp has been achieved at TP2, go on to TP3.

At TP3 there should be a negative-going ramp. Once again we require a zero base line or starting point. Adjust R5 to accomplish this. Amplitude should once again be 10V and is controlled by R4. Once you have a 10V, zero-based, negative-going ramp, move on to TP4.

Connect the probe to TP4 and set the Stop control to full cw. The Start pot should be at minimum setting. A positive-going ramp should be present at TP4. By means of trimmer R7, move the ramp up or down until the starting point is approximately +1.4V. Ordinarily the ramp will not go below zero but will flatten out as the positioning control is adjusted. This is due to clipping in the output amplifier. If the ramp generator is going to be used with another type of VCO, the ramp can be set to exactly zero if desired. In our case we can't as explained previously.

Because a substantial amount of capacitance change occurs in the tuning diode up to 12V, the final ramp amplitude is set to 12V by means of R6. Because R6 stretches the signal in a negative direction, R7 will have to be used to reset the base line at 1.4V. Other than for checking tracking between the CW and swept modes, this completes the alignment procedure for the ramp generator.

When the generator is finished, you can check the tracking by observing actual signals at the input to the VCO. Connect the scope probe to the feedthrough capacitor on the VCO assembly that goes to the tuning diode and set the Start control to maximum. Switch rapidly between the CW and Swept 1 positions of the mode switch. The CW input will be a straight line sitting at +12V while the swept input will be a ramp peaking at +12V. Next, turn the Start control to minimum and again compare levels. If the Stop control is also at minimum, both signals will be straight lines at +1.4V. If there is any substantial difference between the two modes, use R6 and R7 on the generator board to make the ramp agree with the dc levels. That completes all phases of the ramp set-up procedure.

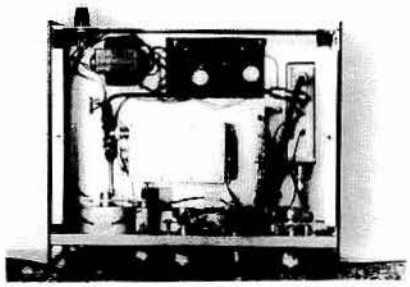

This bird's eye view of the interior shows the location of all major assemblies.

Construction

The cabinet used here is one manufactured by Sorensen Electronics in their Mod-U-Line series. These are the most reasonably priced instrument enclosures I've come across so far and I've used them for several projects. This one is a Model MCH-5129 with a CP-129 chassis plate. Dimensions are: 5¼ in. high by 12 in. wide by 9 in. deep.

The 5-step attenuator was picked up surplus from Fertik's Electronics for about $10. It is well made and designed for 50Ω systems operating up to 1 GHz. It has an integral female BNC output connector on the front face along with four threaded mounting holes for ease of installation. The input connector is a BNC male at the end of a short piece of coax.

All rf assemblies are interconnected inside the cabinet by means of coax cables. This is clearly evident in the photo.

The Start and Stop pots were mounted on brackets behind the front panel so that Jackson Brothers type 4511/DAF reduction drives could be installed for easier tuning. The two circular dials are slightly under 2 in. in diameter and were cut from sheet plastic. While operating in the CW mode, one of these was calibrated in pencil to provide a pattern for the finished product. A master was laid out using Rubylith® film and rub-on numbers. A negative of this was then made using 3M reversing film. From the negative a finished set of dials was printed on aluminum material of the presensitized variety. These were cut out and stuck to the plastic by means of their own pressure-sensitive adhesive backing. The nameplate was made from the same material. The two index pointers are clear plastic with hairlines scored on the inside surface. They are mounted on spacers directly over each dial. All remaining labeling was done with tub-on lettering.

Vendor Addresses:

Fertik's Electronics, 9th & Tioga Sts., Philadelphia PA 19140.

Sorensen Electronics Co., Inc., 418 Queens Lane, San Jose CA 95112.

Wescom, P.O. Box 2436, El Cajon CA 92021.

100 KHZ THIN-LINE PULSE GENERATOR

James Ashe W2DXH

Ordinary 100-kHz frequency standards are usually audible up to a few tens of megahertz. A good one might be usable at 50 MHz. The circuit described here uses a dual NAND gate to generate a 100 kHz signal whose harmonics are usable to 432 MHz or higher. And it can be built without benefit of special instruments and knowledge.

The thin line pulse

One rather surprising result of higher mathematics is that all repetitive signals are composed of harmonically related sine and cosine waves. For example, the familiar square wave is composed of a fundamental frequency, which sets its basic repetition rate, and of odd harmonics only of its fundamental, which contribute to its square corners. If the harmonics' amplitude or phase relationship is upset, the square wave is distorted. This feature makes the square wave very useful for amplifier testing, but its harmonic content is not very good for frequency standard applications.

Now suppose that we start adding up signals of F, 2F, 3F, and so on, phased in so that they all reinforce each other once per cycle. Let's say thay are all the same amplitude. What would we get? See **Fig. 1A.**

The five equal amplitude sine waves peak simultaneously at the beginning of the fundamental's cycle. Everywhere else, until near the end of the cycle, they are more or less out of phase. Trying to see what will happen, we try adding the first two frequencies. **Fig. 1B**, the result, might suggest something to a mathematician.

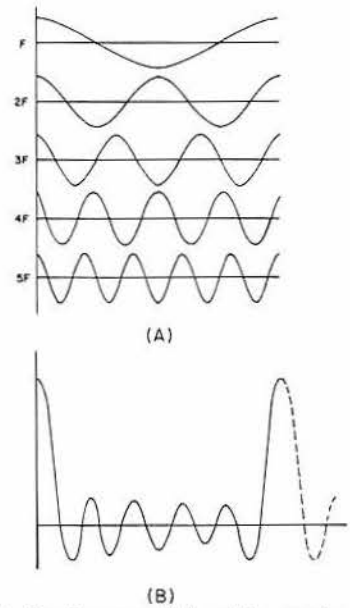

Fig. 1. Five sine waves (A) and the waveform as a result of point-by-point addition (B).

As the number of frequencies is increased, their amplitudes tend to average to zero everywhere except at the beginning of the cycle. Here, they all add up to a short, sharp pulse. It follows that a short, repetitive, one-sided pulse should contain odd and even multiples of the fundamental frequency.

An ideal thin line pulse has infinite frequency content.* No real signal could meet

External view of the 100 Hz thin-line generator.

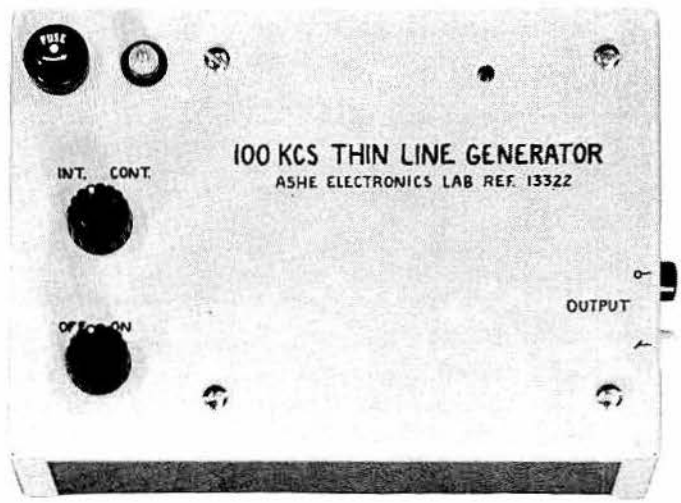

The finished sweep generator makes a professional appearance.

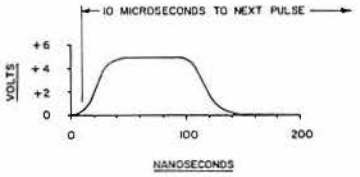

Fig. 2. Real circuit output as seen by a Tektronix 545A oscilloscope. A faster scope shows shorter rise-time and sharper corners.

this spec, but a fast digital IC can produce a very workable approximation. Fig. 2 shows a Tektronix 545A view of the generator output and tests with other scopes indicate the real pulse has better rise time and sharper corners than shown here.

If this pulse is viewed on a low-performance service variety scope, its appearance will be greatly changed. There will be an apparent loss in amplitude, since the pulse occurs and terminates before the slow circuitry can properly respond. The apparent duration is increased, also because of the slower viewing circuitry. And the fast pulse may excite circuit resonances, so that the thin line pulse appears as a damped oscillation. But these problems do not interfere with constructing the generator, because the very simple NAND gate circuitry contains no critical elements or adjustments.

How it works

There are four circuit sections, shown in Fig. 3. A 100-kHz crystal-stabilized oscillator sets the basic frequency, and a dual NAND gate circuit converts the oscillator output to a thin line pulse. A 1-Hz astable generates the output marking signal. A 6 volt dc power source is provided by a voltage doubler zener-regulated supply.

Multivibrator oscillators are not ordinarily very stable frequency sources. But if the oscillator is designed to run slightly below required frequency, and an appropriate crystal is connected between transistor base terminals, oscillations are stabilized at the crystal frequency.

The crystal does not change the multivibrator's style of operation. It synchronizes the astable to its own frequency, by triggering the OFF transistor into conduction shortly before normal RC turn-on. The output is a squarish wave with good fall time, but a long rise time as shown in **Fig. 4A.**

In passing through the first NAND gate the pulse is squared up and becomes slightly unsymmetrical. See **Fig. 4B.** A differentiating network, C7 and R11, converts the square wave into the pulses shown in **Fig. 4C.** These pulses, applied to the second NAND gate, reappear as the thin line pulses shown in **Fig. 4D.**

Since one CW signal sounds just like another and there may be several in the vicinity of a check point, a marker feature is required. This is provided by the 1-Hz astable, which paralyzes the second NAND gate part of the time. Its base bias resistors are unequal, giving a distinctive duty cycle to the output signal. A switch disables the astable if a continuous signal is required. **Fig. 5** shows the output when the second astable is operating: the output is locked in the up condition during half of each 1-Hz astable cycle.

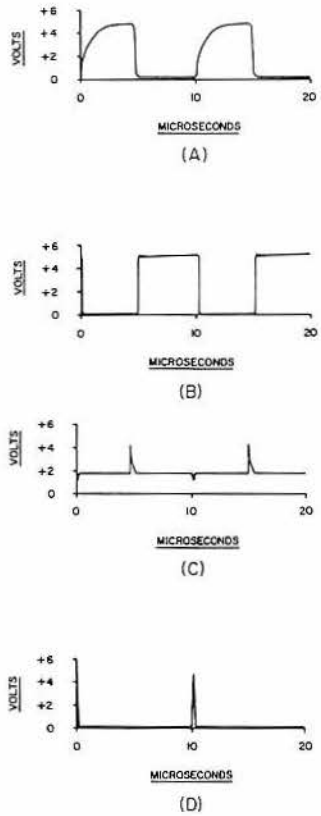

Fig. 4. Signals at four critical points in the generator, as displayed on a Tektronix 545A oscilloscope. They are shown in time coincidence.

Sometimes an astable oscillator will refuse to start oscillating when it is turned on. It does not start because both transistors are in saturation. This reduces loop gain so that available noise cannot be amplified around the loop. It would never start without some strong, outside interference.

A pair of diodes, D1 and D2, provide a reliable remedy. The diodes are arranged so that base bias must come from whichever collector is at the higher voltage. If both transistors are in saturation, their collectors are at perhaps 1 volt, which cannot provide enough base current to keep the transistors in saturation. This contradictory situation does not arise in the real circuit, which starts reliably.

Additional diodes, D5 through D8, appear in the base circuit of the 1-Hz astable. These are protective diodes. The collector swing at turnoff of about 5 volts is conveyed powerfully to the opposite base through the large coupling capacitors C5 and C6. The reverse B-E breakdown voltage of these transistors is not known, so the diodes are provided to prevent the turnoff voltage exceeding 2 volts or so.

DC power for the Generator circuitry comes from a voltage doubler supply based on a low-current filament transformer. Its design is conventional, but a large capacitor, C12, is provided across its output to mini-

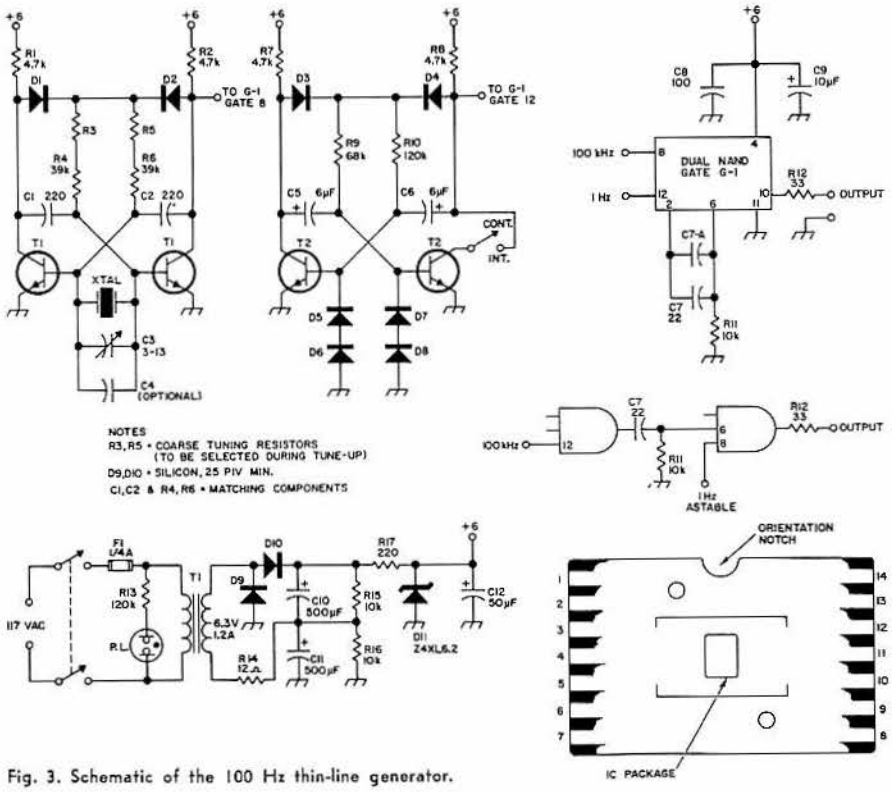

Fig. 3. Schematic of the 100 Hz thin-line generator.

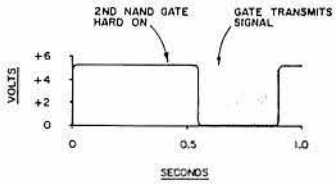

Fig. 5. The second NAND gate locks in its up position part of the time to produce an intermittent output.

mize noise on the supply line. The supply could be replaced with some batteries, shunted by a 50 μF or larger capacitor to absorb transients. The original breadboard ran very well, powered by four flashlight batteries.

Construction

The generator is built in a Premier #PMC 1008 3x5x7 inch heavy aluminum box. Its top cover was refinished in light green enamel, and four ⅜ inch grommets in the bottom piece serve as protective feet.

Inside the box, the 6.3-volt transformer and cheater cord connector are mounted on the left-hand wall. A pilot lamp, fuse, and two switches are mounted on the horizontal panel, at the extreme left. This leaves just enough open space for the two circuit boards which occupy most of the box. Two banana jack output connectors are placed on the right-hand side, just below the panel.

The circuit boards are cut to 4½ x 5 inches, from Vector 3/32 inch pattern A stock and mounted parallel to the panel. The upper board is spaced an inch from the panel, and carries both astable oscillator circuits. The other board is mounted one half inch below, and carries the digital IC and the power supply circuitry. Assembled, the two boards make a sandwich with wiring sides together.

Both boards are mounted on the same four centers. These are through the second hole diagonally inward from each corner. The 1 inch 6-32 internally threaded spacers are modified by adding a short length of 6-32 threaded shaft to one end of each, simplifying assembly.

Component assembly on the boards is largely a matter of plugging in Vector T9.4 lugs. The finished product looks much better if some thought is given to facing the lugs in one of two directions. Mounting and transistor holes should be drilled and reamed to size before installing lugs.

The general arrangement puts all wiring on one side of the board and practically all components on the other side. This approach seems a little inflexible but is straightforward and looks good.

Possible board orientation problems may be overcome by working out a handling and wiring procedure that doesn't require constant reference to actual components. A good approach assumes that the board is only turned over an imaginary hinge at its bottom edge, so that top down when one side is up becomes bottom up when the other side is down. This preserves left-right relationships. Another useful convention is that all supply wiring goes to left-hand end of components.

Wiring is carried out one network (plus supply lines; ground lines; interstage lines, etc.) at a time, with prearranged color coding. Bare wire goes for short runs and where there is no chance of a short. Solder each lug when convenient. #22 solid wire fits the T9.4 lugs well, but flexible stranded wire is used for the four lines from one board to the other.

Transistors precede other components into the board, because they are convenient position markers. They are placed in their mounting holes in the board from the component side, and their leads brought to the T9.4 lugs. Then the other components are mounted on the boards. Diode and electrolytic capacitor mounting polarity should be double checked. The T9.4 lugs may need a little bending before they will take a good grip on the components, but no component soldering is done until everything is installed.

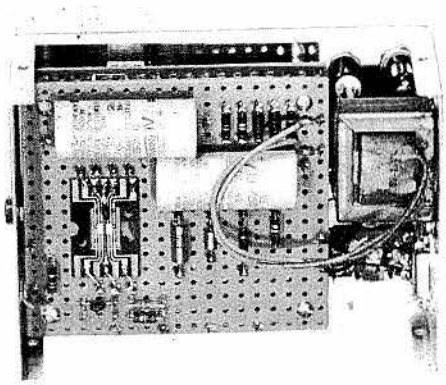

Inside the assembled thin-line generator showing the component side of the power supply and IC board.

Trimmer capacitor C3 is mounted on its tabs just under the top panel. Then a small screwdriver access hole is drilled over it in the panel, before painting, for vernier frequency adjustment after final assembly.

Certain components are matched before installation. An ohmmeter and a capacitor checker will do a satisfactory job of selecting C1 and C2, and R4 and R6, for equal values. These components are chosen alike for best symmetry of the 100-kHz oscillator operation. It might be good planning to leave these components unsoldered until tuning is completed, but everything else can be soldered to the board at this point. Note that the R3 and R5 sites do not get resistors until later.

Two optional capacitor sites are included. These are for C4, an additional and probably unnecessary padder across the crystal; and C7A, which can be added to increase the width of the thin line pulse.

Apparently, the digital IC comes in a specially designed package for testing before use. To mount the IC, solder a ⅜ inch piece of #22 wire in each of the T9.4 lugs carrying supply and signal voltages to the IC. Place the IC between the two rows of lugs, bend the wires against the proper terminals, and solder. No other mounting is required.

The original breadboard showed a lot of transient noise in its supply circuit. This originated from the IC, which was trying to get big chunks of current to manufacture pulses. Since the IC cannot deliver frequencies not available from the supply lines, very careful bypassing is indicated.

High-frequency bypassing consists of C9, a .01μF disc ceramic capacitor across the IC supply terminals on the wiring side of the board, and C10, a 100 picofarad capacitor soldered directly between supply terminals on the IC. The capacitor leads are provided with spaghetti insulation and placed for minimum open space between the capacitor leads and the IC's supply leads.

Testing before final assembly is very easy, because the odd appearing board layouts go together giving a structure that opens out like a book. The hinge is the four leads between boards. Leave transformer leads long, so that the circuit may be tested well free of its cabinet.

The upper half of the Premier box is prepared by a powerful cleaner which removes its original paint. After thorough removal of the cleaner, the metal is roughened with wet sandpaper, rinsed in vinegar solution and then clear water, leaving a very good surface that does not require priming for excellent paint adhesion. Watch out for greasy fingerprints.

Rustoleum #868 Green applied from a convenient spray can gives a fine finish. Follow instructions on the can. After drying, the fresh, clean enamel will take waterproof India ink, applied with a Leroy drafting pen. When the ink is thoroughly dry, a final coat of Rustoleum #717 Clear finishes the job. The enamel is soft at first, but hardens into a coat durable in normal lab use.

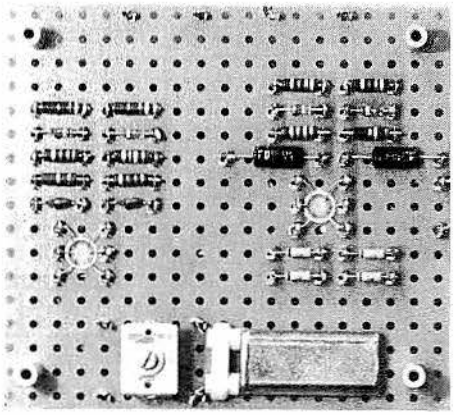

View of the component side of the astable oscillators board.

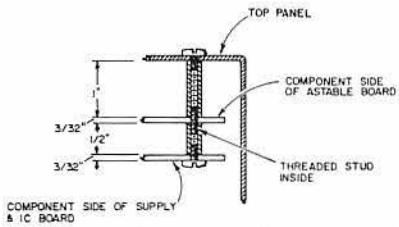

Fig. 6. Mounting dimensions and spacer assembly diagram.

Table of special parts

Crystal: 100 kHz parallel resonant 32 pF. shunt capacitance normally designed quartz crystal.

The following parts were obtained from Solid State Sales, P. O. Box 74, Somerville, Mass. 02143.

- T1 & T2: 2N2060 type dual NPN transistor
- D1, D2, D3, D4: fast point-contact Germanium diodes coded 1N59
- D5, D6, D7, D8: fast point-contact Silicon diodes marked S284GM
- G1: surplus digital integrated circuit Solid State Sales type G1. (comes with data sheet)

Tuning up

The generator should be zeroed to frequency before installation in its case. This is a two-step process. First, the 100-kHz astable base resistances are adjusted by choosing resistors for R3 and R5 to bring the oscillator frequency within trimmer range of 100 kHz, perhaps a few hundred cycles high at 15 MHz. Then the trimming capacitor brings the frequency to accurate coincidence with WWV.

To roughly zero the generator, set the trimmer capacitor, C3, at minimum capacitance. Identify WWV on a short-wave receiver, and tune around a bit to familiarize yourself with what's happening in the vicinity. It would be nice if things are fairly quiet.

Then put 4.7k resistors into the astable board at the R3 and R5 sites, turn on the generator, and look around for the signal. Depending upon actual values of C1 and C2, the signal may be on either side of WWV but is likely to be on the high side. If so, try again with resistors one size larger, which will lower the frequency. You should shortly find resistors that bring the frequency near enough to WWV for final zeroing with the capacitor. Verify tuning range on both sides of WWV.

Correct values for R3 and R5 may be approximated very quickly if a good triggered scope is available. Try selecting resistors for a period of 11.4 microseconds with the crystal removed.

Using the thin line generator

A breadboard test showed that (as might have been expected) there should be some way to distinguish generator signals from other CW signals. The continuous/intermittent feature provides the marking, and once the correct signal is located the generator can be switched to "continuous" for accurate work.

At low frequencies, the generator output and behavior resembles a conventional 100-kHz standard. The signal simply is not as strong. A greater difference appears at higher frequencies: the original model yields an audible beat note at 80-MHz from a diode mixer through an inexpensive audio amplifier. And another test shows a usable signal at 432 MHz: the 4,320th harmonic.

Some connection to the receiver or other detector is required. This is a natural consequence of a circuit design that puts the signal where it belongs, rather than spraying it all over the lab. A few picofarads coupling capacitance is sufficient at all frequencies.

Perhaps this circuit can be used for purposes other than a frequency standard. Its moderate amplitude but wideband output should be ideal for detecting changes in receiver sensitivity over a broad tuning range. In fact, with a little decoupling of the input leads and provision of a coax output connector the generator should do well as a stable, reliable small-signal source. A piece of adjustable waveguide-below-cutoff would make an excellent attenuator for work not requiring exact measurements. Another thought that occurs is possible further development by provision of some arrangement for detecting which harmonic is actually being heard.

Chapter VI

Crystal Calibrators

ALL BAND BAND-EDGE MARKER

Charles Berner WA2HRZ

This calibrator is complete with its own ac supply, eliminating the need for taking power from the receiver. If ac outlets are at a premium at your shack, the on-off switch and the line plug can be eliminated and the ac line connected across the receivers ac input so that the calibrator comes on whenever the receiver is turned on. A high density selenium rectifier was used and this contributes greatly to the compactness of the unit. The whole thing runs very cool and even after 24 hours operation, still isn't hot.

Wiring isn't too critical, but keep all leads short and direct. Using an octal socket for a xtal holder lets you use the unused pins as tiepoints and is recommended.

A Petersen type Z-2 xtal was used because it has a tolerance of .002%. This is one reason why no provision is made for "zeroing" the calibrator against a standard. The other is that there isn't any such standard as WWV for use. However, if this provision is desired, C1, the 56 mmfd capacitor, connected to pin 1 of the 6BH6 thru the 18K resistor, can be

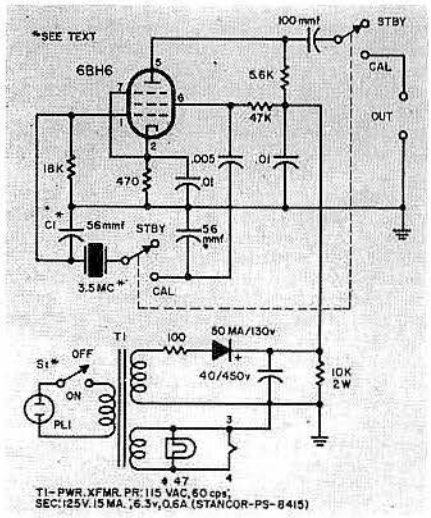

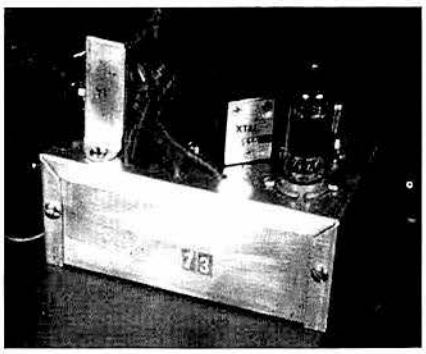

made variable. Also, if band edge markers are wanted for 50 mc and up, a 5 mc xtal may be substituted when this function is wanted and C1 made variable for "zeroing" against WWV.

This gadget can also be used as a xtal activity checker by simply replacing the marker xtal with the xtal to be tested. Tuning your receiver should get you a strong signal at the xtal's fundamental if it is OK.

Table 1:

Band	Harmonic 3.5 mc	100 kc	Marker Frequency
80 meters	1	35	3.5 mc
40 "	2	70	7.0 mc
20 "	4	140	14.0 mc
15 "	6	210	21.0 mc
10 "	8	280	28.0 mc
6 "	15	525	52.5 mc
2 "	42	1470	147.0 mc
1¼ "	63	2205	220.5 mc
1¼ "	64	2240	224.0 mc

THE MULTICAL

E. R. Davisson K9VXL

What is the "Multical"? As the name implies, "multi" would suggest several uses, and "cal" might infer a calibrator of some sort.

Well, that's right, but there is slightly more significance to the name. "Multi" is also a short form term used to describe flip-flop circuits known as multivibrators.

By combining the basic characteristics of a free-running multivibrator (astable) with crystal control, you have a simple, stable, virtually-insensitive-to-temperature-changes, crystal calibrator for that receiver you have been wondering about.

The circuit uses no inductors and depends upon the crystal for the proper feedback for oscillations. Temperature stability is partially due to the absence of capacitors.

Transistor stage Q_2 operates with unity gain, whereas transistor Q_1 operates at considerably more gain. Both stages are operating as feedback amplifiers. The harmonic generator diode D_1 is a 1N128. Any general purpose diode may be used.

By using the multivibrator circuit, the waveform obtained is comparatively rich in harmonics and could be used without any further refinements. However, to insure useful harmonics through 30 MHz starting from a 100 kHz crystal, a harmonic generator consisting of R_6 and D_1 shown in **Fig. 1** was added. The capacitors C_1 and C_2 are used strictly for coupling and have no effect on frequency stability.

Crystals from 100 kHz up to 1 MHz may be used in the Multical with no changes. The circuit will oscillate from voltages as low as 2 volts and can be operated safely from voltages as high as 20 volts. This wide range of voltage operation allows the source to be obtained from virtually any place.

Output from the calibrator may be fed directly into the receiver's input, or may be coupled to a short whip antenna. With a whip antenna, close coupling to the receiver's input

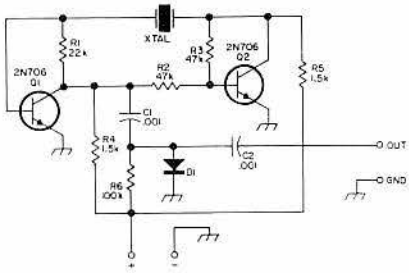

Fig. 1. Schematic of the Multical.

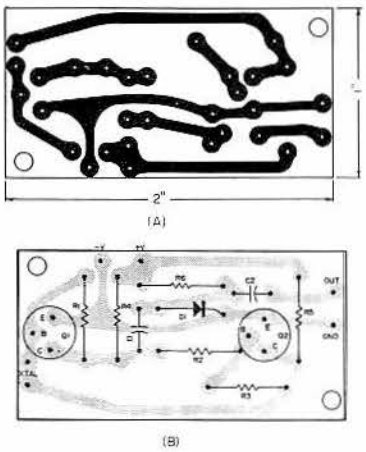

Fig. 2. Suggested printed circuit board layout for the Multical. A gives the copper side, B the component side. A board for the Multical is available for $1 from the Harris Company, 56 E. Main Street, Torrington, Conn.

may be required at higher frequencies. (Especially at the lower voltage levels.)

For the more ambitious builders, **Fig. 2** shows the printed circuit board layout for the Multical. Due to its small physical size (1" x 2"), room can probably be found even in the most compact of receivers. **Fig. 2A** shows the foil side, and **2B** shows the parts placement.

So the next time you wonder about the accuracy of your receiver calibration, give this simple circuit a try and you'll know for sure.

100 KHZ MARKER GENERATOR

W. W. Davey W7CJB

This useful piece of equipment generates usable harmonics from 100 kHz to 225 MHz. It is completely self contained and portable which makes it convenient not only to use in the ham shack, but also in the mobile unit or at a field day location. Its use lies mainly in accurately spotting band edges and 100 kHz calibration points throughout the ham bands.

Most modern day home receivers are equipped with calibrators, but these calibrators are of little use when needed to spot frequencies on VHF and UHF converters or portable equipment.

The generator is constructed in a 2¼ x 4¼ x 1½ inch handi-box. The parts are mounted on a vector board, and the entire unit is powered by one #216 nine volt battery or its equivalent.

Hints on construction First obtain some vector board. The piece I used was cut from the board supplied in a "GE experimenters aid hobbyist kit." The board must be cut to size before construction and will measure 3½ x 2 inches. This will allow room for the 9 volt battery in the end of the handi-box. Make sure the newly cut vector board will fit inside the handi-box before you start mounting parts. It might save a lot of trimming at a later date.

The parts layout is not critical. Components may be arranged as shown in the

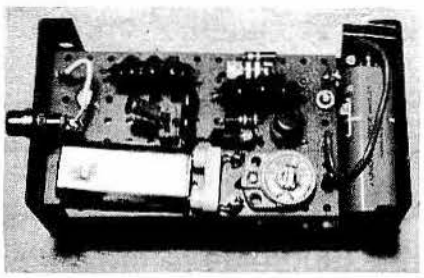

photo or in any other arrangement suitable to the components you may be using. I used sockets for the transistors, as I wanted to be able to experiment to see which transistors from my junk box would give the most output in the VHF and UHF bands. I ended up using the 2N404 for the oscillator and a 2N384 in the multiplier stage. I also found that Japanese 2SA83 transistors which had been removed from the *if* stages of a junked transistor radio, would work equally well in both sockets.

All components are mounted on the top of the Vector board with the exception of C4 and C5. For the most part, wiring can be completed with existing leads on components. The push-in terminals furnished with the GE experimenters kit were used for the battery connections, antenna connection and for mounting the crystal socket. The circuit board can be mounted to the handi-box with three 11/16 inch bushings. This leaves room for a slide switch to be mounted on the cover of the handi-box. Two of these bushings were purposely placed at the end of the board to form a sort of socket to hold the 9 Volt battery. The antenna output connector which is mounted on the handi-box is a switchcraft #3501FP phono jack. A small hole may be drilled in

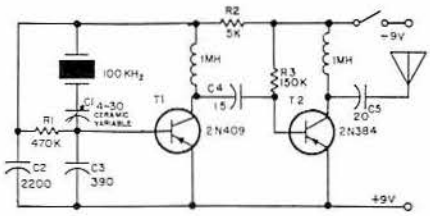

the bottom of the handi-box through which a screwdriver may be inserted for adjusting C1. For extreme accuracy C1 is adjusted to zero beat with WWV.

A 36 inch piece of insulated wire soldered into a phono plug may be inserted into the phono jack and used as a test antenna. The intensity of the markers may be varied by

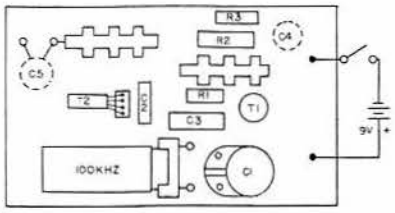

moving this test antenna near your receiver antenna lead-in. If you are using a coax lead-in you can couple by drilling a small hole in your coax relay so that the test antenna can be inserted near the relay armature. You will find that most SWR meters provide an easy method of coupling to the center conductor of the coax. As a last resort you can always couple to the receiver or converter antenna coil.

I have made very good use of this gadget to spot frequencies in the 144 and 220 MHz bands. It was well worth the time and effort it took to build it.

ALL BAND FREQUENCY MARKER

Kenneth W. Robbins W1KNI

Crystal controlled marker generators are useful adjuncts in any frequency determining situation requiring high accuracy, such as locating band edges, sub-bands and calibrating receivers. If you've been entertaining thoughts about construction of one, a version is described here which uses the new C/MOS integrated circuits powered by a 9 volt transistor radio battery. And instead of the usual rotary harmonic selector switch, a multi-pin IC connector strip and three test plugs serve as a miniature patch panel to enable various divisions of the reference crystal, with a maximum countdown of 256. "Rocks" from 100 kHz to 4 MHz oscillate readily in this circuit. In this model an FT241 xtal set to 400,000 Hz has been chosen for control and has usable receiver calibration divisions down to 2.5 kHz. The harmonic spectrum extends to at least 160 MHz, the tuning limit of a transistor superregen used in testing. When used in densely

Divide by	Output, kHz
1	400
2	200
4	100
8	50
10	40
16	25
20	20
40	10
80	5
100	4
160	2.5

Table 1.

occupied HF bands, an AM beeper can be switched on as an identification aid.

Referring to Fig. 1, one third of a hex inverter makes up a crystal controlled oscillator and buffer, another third is a slow rate pulser and the two remaining units function in the dividing section. These are all standard circuits described in RCA's COS/MOS Data Book #SSD-203. An emitter follower minimizes loading on the IC outputs, speeds up rise time to increase harmonic content, and provides a low impedance output. The AM

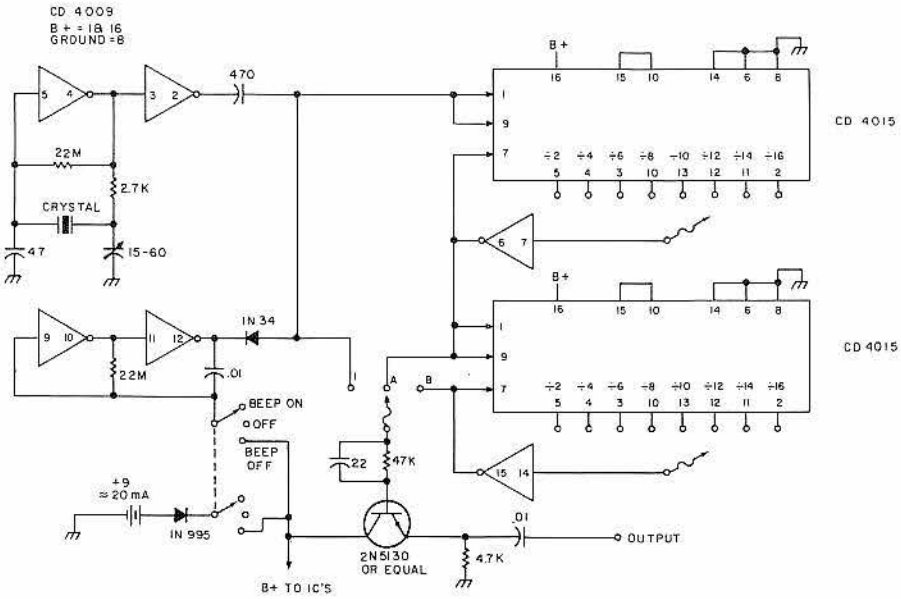

Fig. 1. Schematic.

beeper is a simple clamp that gates rf on or off to following stages.

Photo 1 shows all components mounted on Vector P pattern perf-board that fits inside a Bud minibox. Sleeving 3/8" (10mm) long is slipped over the wire trap terminals of the contact strip to space it up from the board. A DPDT center-off miniature toggle switch acts as one board to panel spacer. Diagonally across from it, a 4-40 threaded rod conducts emitter follower output up through the front panel via a 1/2" (13mm) insulating spacer and plastic shoulder washers. Two regular 4-40 screws and spacers complete the four corner mounting. This spacing allows the contact strip to project partly through a panel cutout so that it is mechanically secure without fastening.

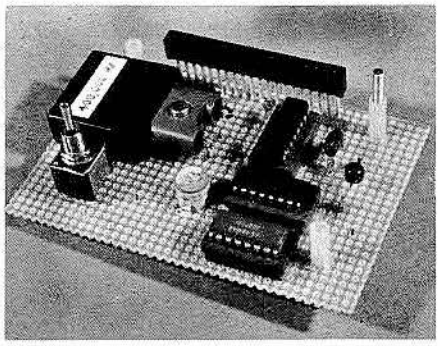

Photo 1.

Photo 2 (completed assembly) shows a stick-on label with patching connection call-outs for various division ratios. If only one crystal is employed, labeling could indicate most used frequencies instead. A typical frequency vs division listing for this model is shown in Table 1. You can easily make up a complete table of all possible ratios, remembering that each CD4015 shift register divides by even numbers ONLY, starting at 2 and ending at 16.

Uses to which a marker generator may be put have been described before: i-f alignment, BFO, scope linearity, etc. A type that divides down to the audio range like this one is especially useful in checking superhets. A very broad and flat spectrum of overlapping signals is generated and an audio tone will be heard no matter where the set is tuned. If its tracking and sensitivity are top-notch, the S meter will hold steady over the tuning range. Tracking adjustment amounts to tweaking for maximum meter reading or loudest audio tone. Then patch for 100 KHz markers and check calibration. It's a lot faster and easier than using a conventional signal generator.

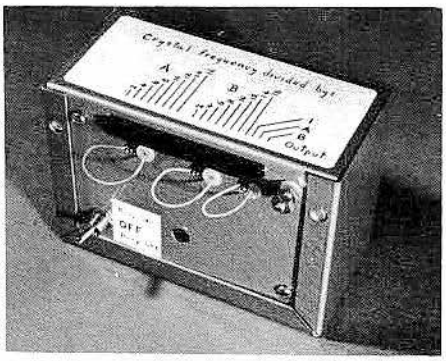

Photo 2.

1	CD4009	1	15/60pF trimmer
2	CD4015	1	.01 uF
1	1N34	1	xtal; see text
1	1N995	1	xtal socket
1	2N5130 or equiv.	1	Alco #MST205P switch
1	2.7k	1	Bud #CU-2115HG minibox
1	4.7k	1	Vector #44P29-062 perfboard
1	47k	1	#216 battery
2	22M	1	Battery connector
1	22pF	3	16 pin IC sockets
1	47pF	3	Augat patch pins or equiv.
1	100pF	1	20 pin contact strip SAE #Series 7000
1	470pF		

Table 2. Parts List.

POOR MAN'S UNIVERSAL FREQUENCY GENERATOR

John Schultz W2EEY

As precise frequency control and measurement becomes more and more a part of the amateur radio game, the need develops for test instruments that deliver a wide range of both rf and af signals of high accuracy. It would be ideal if everyone could have a frequency counter and a synthesizer type rf and af generator but that is hardly the case. Most amateurs must utilize their basic station gear along with selected accessory items to test out and adjust equipment. This article describes a very useful accessory item that for a modest cost goes a long way toward having some of the expensive test equipment just mentioned. The item to be described is somewhat like a grid-dip meter in that it is basically a simple type of oscillator but as one gets to know and use it, new uses for it are found and its versatility constantly expands.

Circuit Description

Figure 1 shows the circuit diagram of the test generator. Basically, it consists of a string of SN7490 decade counters which are used to divide down a selected input signal by a factor of 10 or 2. The input signal can come from a 1 MHz master oscillator, a special crystal oscillator for externally used crystals or from any external sine-wave source. The special crystal oscillator which uses a SN7400 will operate with almost any basic or overtone crystal in the hf range. It can be used for crystals in the low frequency and lower VHF range also by a simple

modification. One gate of the SN7400 crystal oscillator is used to drive a LED which will indicate that the crystal is oscillating so it serves as a crystal activity indicator as well. When an external sine-wave source is used, it is first coupled through a SN74121 multivibrator. This stage squares off the sine wave so it can better drive the subsequent frequency divider chain.

The frequency divider chain is fixed, although one could easily switch the individual SN7490 units to divide by different ratios when desired. This should be obvious by noting the wiring of the divide by 2 SN7490 with that of the divide by 10 units. However, the variety of frequencies which can be generated then with different input sources becomes confusing and more than would normally be needed.

The fixed divider chain follows the sequence: divide by 10, divide by 2, divide by 10, divide by 10. A separate branch after the first divide by 10 unit goes through two other divide by 10 stages. In the case of the divider chain being driven by the 1 MHz master oscillator, this results in the following output frequencies being simultaneously present: 1 MHz (basic oscillator output), 100 kHz, 50 kHz, 10 kHz, 5000 Hz, 1000 Hz and 500 Hz. With any other frequency input source you can easily calculate what frequency outputs the divider chain will bring in both the rf and af regions. Many surplus crystals will produce interesting frequencies of high stability in the af region that can be used for test purposes.

When using the special crystal oscillator, the LED will glow to indicate that oscillation is taking place. As shown with a 150 pF capacitor from one side of the crystal oscillator circuit to ground, the oscillator will work satisfactorily with hf crystals. Its range of oscillation can be extended to lf as well as high frequency overtone crystals by changing this capacitor. The value of capacitor required in picofarads is 500 divided by the frequency of the crystal in MHz. This value need, however, to be only approximate unless you require an absolutely square wave output from the unit.

When using the multivibrator input about a 1½ to 2V peak input, either sine-wave or approximate square wave is required.

Construction

The whole unit can be constructed on a piece of perforated board about 3 x 2 in. and made completely portable if powered by a 4½V battery (Burgess No.532) or just three D cells in series. This arrangement does not provide the absolutely best stability for the 1 MHz master oscillator but unless you intend to use the unit for marker frequency generation in the VHF range, it is a perfectly satisfactory arrangement. Alternatively, one could power the ICs from any standard 5.5V regulated supply used for IC digital circuitry.

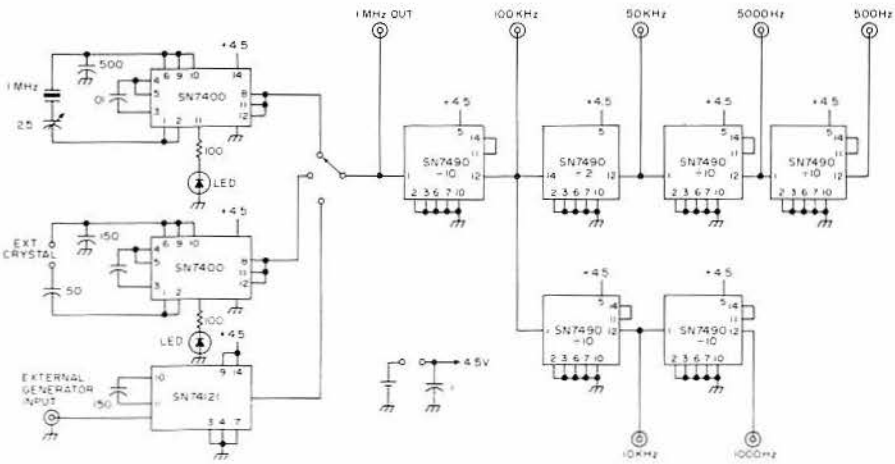

Fig. 1. Diagram of universal frequency generator. Output frequencies shown are for using 1 MHz oscillator.

I constructed my unit for battery powered operation and enclosed the unit in a small aluminum mini-box. The output of each divider was brought to a pin jack on the front panel of the unit.

One simple way to wire the relatively small number of ICs involved is to purchase perforated board which has hole spacing to fit standard DIP and preferably with a copper pad still left around each hole. The ICs are then placed on the board and the appropriate pins which either go to ground or to the 4.5V line bent in different directions. The ground line is run along one side of the IC and the 4.5V line along the other side and bare wire used to connect the appropriate pins to either line. Figure 2, illustrates the wiring for one of the divide by 10 ICs. When one starts this process on the board, it will be surprising how fast the wiring is completed. Individual insulated wire jumpers are used to make the input/output connections between ICs. The wiring is not critical and using a receiver to hear the markers, or an audio amplifier for the lower frequency outputs, one should be able to determine quickly if the circuit is working. The frequency of the 1 MHz master oscillator may be brought exactly on frequency using the 25 pF trimmer in the circuit and checking against WWV with a harmonic of the oscillator or by using a counter.

Applications

As I mentioned before, the applications that you can find for the generator really begin to unfold only after you have had it around the shack for awhile. Some of the applications would be:

1. A frequency marker generator for receiver calibration. The markers are usable up into the VHF range.

2. To extend the range of present rf or af signal generators into lower frequency ranges than they presently cover.

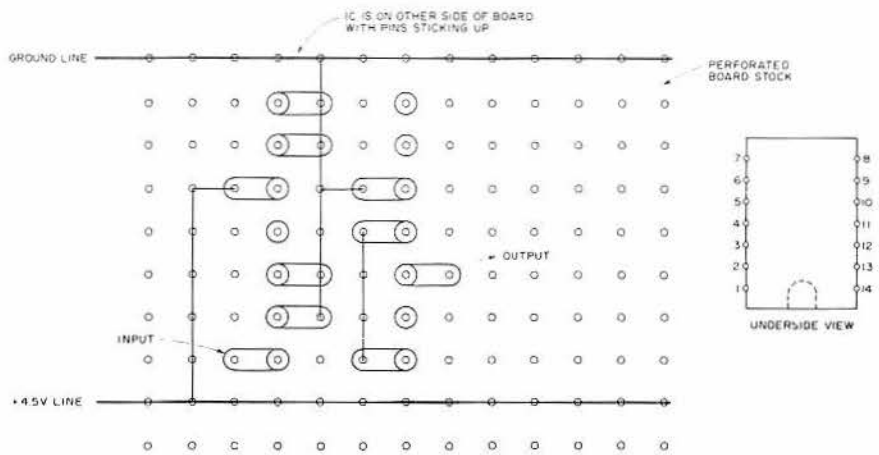

Fig. 2. Perforated board wiring of ICs. One SN 7490 divide by 10 unit is shown wired.

3. To perform stability checks on high frequency variable oscillators. The divider chain will always perform precisely and you can monitor the change in frequency of a higher frequency oscillator with a stable low frequency receiver.

4. A frequency generator to generate precise rf or af square wave signals at any frequency desired by choosing the proper crystal.

5. A crystal activity checker.

6. By taking two or more of the simultaneous outputs together via mixing diodes and a series tuned circuit resonant at the desired frequency, you can also mix the divider outputs to generate a variety of intermediate frequency outputs.

CALIBRATE THAT CALIBRATOR

Mitchel Katz W2KPE

Most modern receivers and transceivers in use today rely upon a 100 kHz crystal oscillator to calibrate the tuning dial. While some of the calibrators are built in, others come as outboard accessories. In any event the operation of each is the same.

By this time we all probably know what "zero beating" is. The 100 kHz oscillator in order to serve as a calibrator must be "zeroed" to some standard frequency such as the WWV carrier frequency on 5, 10, 15, 20, etc. MHz. With a CW or AM receiver, we can very easily tune through the zero beat point. On SSB receivers because one of the sidebands is missing we can only hear the one side as we approach zero. The other side of zero is greatly attenuated and may possibly not be heard at all. To further complicate matters for us in trying to calibrate the 100 kHz oscillator, as we can only hear down to about 20 Hz, we can't zero in any closer than this. Leaving the receiver at this point, we next turn on the 100 kHz calibrate oscillator. After a suitable warm up period, we turn the tune control of the oscillator and again adjust for a zero beat condition against the WWV frequency. With this method of calibration we have several possible sources of error. First in zeroing WWV with the receiver beat frequency oscillator and then zero beating the 100 kHz calibrator against the bfo. Each of these adjustments is limited to the lower limit of our hearing range, as well as the fact that we are obtaining the zero beat at a relatively low i-f frequency.

A more accurate method of calibrating the 100 kHz oscillator will now be discussed. After the receiver and calibrator oscillator have been warmed up for about 30 minutes, tune in WWV on a frequency that produces a fairly good, steady signal. Adjust the tuning for maximum reading on the S-meter. Having tuned in WWV, turn *off* the beat frequency oscillator. Now turn on the 100 kHz oscillator that is to be calibrated. If a harmonic of this oscillator is fairly close to the WWV frequency, a beat note will be heard. At this time adjust the calibrator "crystal tune" control and the S-meter will start pulsing from a maximum to a minimum value. The closer you get to dead center the slower the pulsing action will become. It is fairly easy to come down to 1 pulse per second with this method. If your receiver doesn't have a meter, you can also hear this pulsation very clearly. In any event you would always tune for the slowest pulse rate.

Note that with this method we have adjusted the calibrator frequency harmonic directly to the WWV carrier rather than to a low i-f. We have eliminated one zero beating step, and this, together with the fact that we are obtaining the zero beat at a much higher frequency, will provide greater accuracy.

Having described the method, here are a few points of general interest:

1. Before attempting any calibration let the equipment heat up for at least a half hour to stabilize.

2. After tuning in WWV, wait until the 400 Hz modulating tone goes off before adjusting the calibrator. If not, you may find later that you zero beat the 400 Hz instead of the carrier frequency!

3. The levels produced in the receiver by WWV and the calibrator oscillator should be about equal to produce a good beat between the two frequencies.

4. Use the highest WWV frequency that will produce a good, stable signal in the receiver. Certainly a 1 pulse per second beat at 20 MHz will provide greater calibration accuracy than 1 pps beat at 5 MHz or better yet than 455 kHz! The accuracy will be considerably greater and it is no more difficult to come by.

A SIMPLE FREQUENCY DEVIATION METER

John Reinartz K6BJ

A frequency-deviation meter allows one to read the deviation plus or minus that a received signal is off frequency. Depending on the meter range desired and used, a deviation of ten or less cycles can be read either high or low. Such a device is especially useful when used on MARS nets or when frequency checks are desired of any incoming signal and the answer must be in cycles low or high of a desired frequency. Those grinding their own crystals or desiring to compare crystals will find this device especially useful.

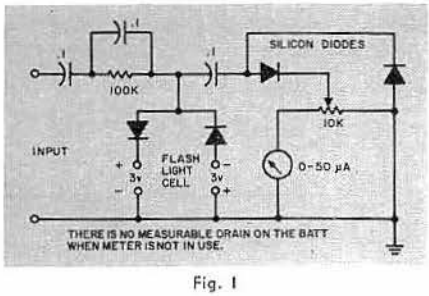

Fig. 1

Two fundamental circuits were investigated, one using diodes only and the other using transistors only. These are shown in Fig. 1 and 2 respectively. A 0-50 microampere meter should be used for the diode type and a 0-1 milliampere meter will serve nicely for the transistor type, although a 0-50 or 0-100 microampere meter will also serve nicely in the transistor type frequency-deviation meter system. Silicon diodes were used for the diode type and 2N123 for the transistor type. An input voltage of 25 is needed for the diode type and 7 volts or less for the transistor type depending on the meter sensitivity, being 2 volts when a 50 microampere meter is used.

Whatever scale reading is desired, be it 250 cycles low or high or 500 cycles low or high, the meter cover is removed and new figures are added below the meter scale with a zero in the center of the scale and maximum readings at each end of the scale as appropriate. Pencil markings will do. The 250 cycle can be read to 10 cycles per division and the 500 cycle scale can be read to 20 cycles per scale division. Each can be read to half these values or 5 and 10 cycles respectively.

In use, you set your frequency meter, LM or 221 either 250 cycles or 500 cycles lower than the frequency to be checked. If the frequency to be checked is right on, the frequency-deviation meter will read zero at the center of the scale on the meter; if the frequency is low, the meter will read low and if higher, the meter will read higher. The answer in cycles will be the value indicated by your new markings. In use the frequency-deviation meter is connected across the high impedance output of your receiver in the case of the diode type and across the low impedance output in the case of the transistor type.

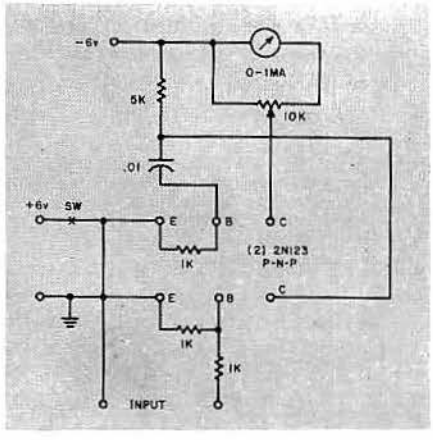

Fig. 2

In those cases where a definite frequency will be under observation, it will be found advantageous to grind or obtain a crystal that is adjustable to 250 cycles low or 500 cycles low, as appropriate, and to use it in the transistorized oscillator shown in Fig. 3. Any crystal holder that has an adjustable air gap will do. Some of the TCS surplus crystal holders have a three point adjustable top plate and are about the best obtainable. Since your

best and probably only method of adjusting the crystal is by the use of your LM or BC221, be sure that your frequency standard is accurate. It is best to use the low frequency position and with the 1 mc crystal switch on, tune the meter to that portion of the desired frequency less the mc part. For instance, to set the LM for a reading of 2,732,000 cycles, set the LM on the low frequency for 732,000 cycles or 732 kc. The 1 mc crystal will furnish the mc part of the reading. In my case I set the LM to 731.5 kc and adjust the crystal to that

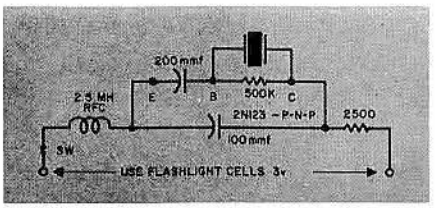

Fig. 3

frequency in the adjustable TCS holder. The transistorized oscillator holds the frequency to such a close tolerance it has not been necessary to make adjustments in weeks. A hand held push switch connected into the positive battery lead allows the oscillator to be turned on as needed to check the frequency of a MARS station on 2732 kc to an accuracy of plus or minus 10 cycles of that frequency. The frequency-deviation meter is of course checked against the 440 or 600 cycle tone of WWV, no other check is necessary since the scale is linear.

Chapter VII

GDOs

THE INDICATING OSCILLATOR

Ken Brown KH6AF

Relatives of this little gadget have been around a long time! Even the transistorized versions, which usually leave something to be desired. With an FET, however, we are back in business as with tubes, but with many advantages.

The range of this oscillator is fantastic. That is, without any circuit tricks or special handling. The low frequency end was carried down to the 1 MHz in order to cover the lowest ham band. The high end takes care of 250 MHz easily. This can be extended with a little more effort.

Use of a field-effect transistor (FET) allows operation more nearly like the tubes with which we are, perhaps, more familiar. However, we are not tied to the power lines, which alone makes it worthwhile.

A 2N4221 FET was used in this indicating oscillator. Very likely other FETs will work also. The MOSFETs also should be as good, if not better. The new ones with built-in diode protection would be much easier to handle.

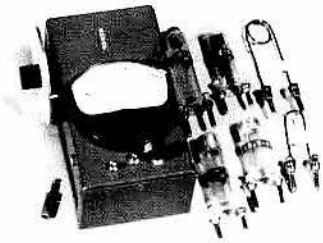

Standard banana plugs spaced ¾ in. make ideal bases for the coils. The lower frequency coils are wound on polystyrene forms.

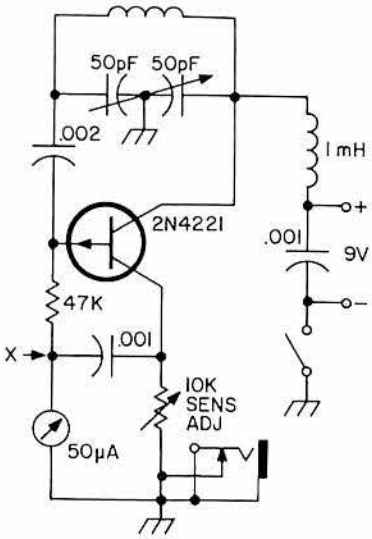

Fig. 1. Indicating oscillator circuit diagram.

The circuit (Fig.1) is not critical. However, the sensitivity control should not be bypassed. Layout could possibly be improved with a slightly larger box, allowing the dial to be placed on the face with the meter. It is a good idea to keep the layout symmetrical as far as possible, particularly the tuned circuit. This can be seen in the photo of the inside view. The box used was an LMB 532 EL with the cover reversed to allow for coil mounting insulator (polystryrene or other good rf insulating material). The meter should be a 50 μA movement; otherwise, a meter amplifier such as the one shown schematically in Fig. 2 will be necessary. This is no problem, as there is room for this amplifier on the circuit board.

A thumbwheel from a BC-375 tuning unit could be used very nicely as a dial. Three sides have been left clear for ease in placement of unit when in use. Plug-in coils makes for easy bank change and application to the job at hand. Standard-spaced banana pins allow for use with other accessories. Use 5/8 in. polystryrene tubing and stud-type banana pins.

A dual banana plug can be used during construction for setting the spacing accurately. The coils shown have the pins wired in place for stronger mechanical assembly. Drill a hole for about 24 AWG copper wire on each side of the pin studs which will lie along each side of the poly tubing. Use a number 59 or 60 drill. One wire is enough on each pin. Form a hairpin with about an inch of wire, push it through the drilled holes from the outside. Now twist tightly with longnose pliers, cut it off short, but not so short as to allow the wire to untwist! Then apply several coats of liquid "poly" cement. Be sure to move the coils frequently during the hardening period to make sure the liquid "poly" flows evenly over the stud and forms a slight fillet with the tube. Epoxy doesn't seem to work well with polystyrene. Neither Allied nor Newark list liquid polystyrene any longer, but your neighborhood hobby shop should be well stocked.

The lowest frequency coil (number 1, 0.95–2.2 MHz) was made from a Miller

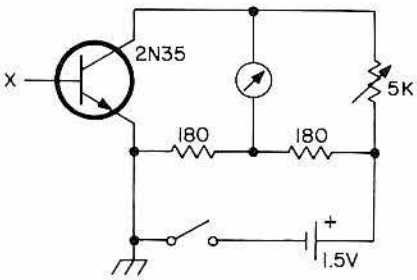

Fig. 2. This meter amplifier will increase the level of the signal so that a less-sensitive meter than 50 μA may be used.

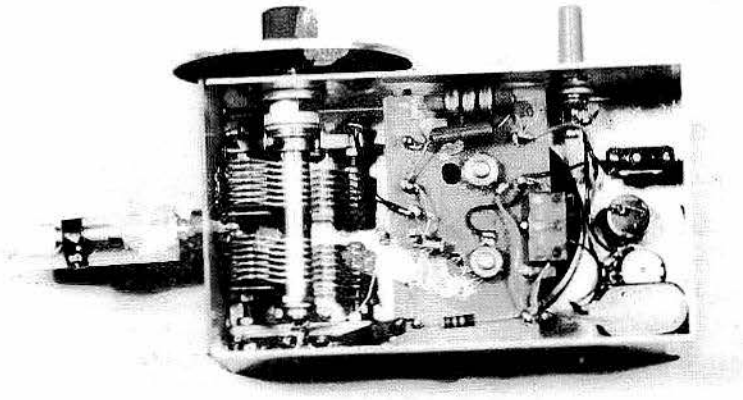

Interior view of oscillator with coil attached shows construction of the author's version.

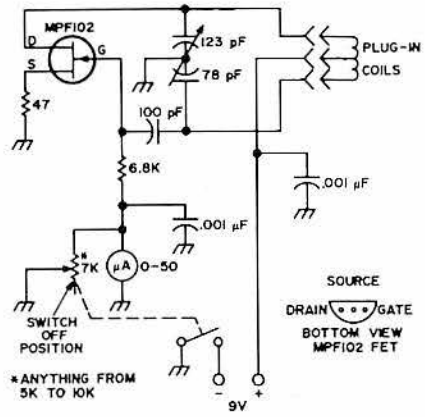

Fig. 1. Schematic diagram of the little gate dipper.

951 ferrite 0.5 mH choke with 6 or 8 turns removed – just enough to slip inside the poly tubing. Some reaming may be necessary. The number 2 coil (2.2–5.4 MHz) was made from a Miller ferrite antenna unit with the slug permanently installed in the top end and all lugs and mounting hardware removed. This coil was also mounted inside the poly tubing. The number 3 coil (5.4–13.5 MHz) consists of 32 turns of 28 AWG enameled wire, close-wound on the outside of the poly tubing. All coils are 2½ in. long with windings as near the end as practical. The number 4 coil (27–50 MHz) consists of 10 turns of 24 AWG enameled wire, close-wound. The number 5 coil (45–100 MHz) consists of 2 turns of 14 AWG enameled wire, self-supporting. The number 6 coil (60–270 MHz) is one hairpin loop 3/8 x 1 in.

A jack is provided for headphone use. The screwdriver-adjusted miniature pot is for zero adjustment of the meter amplifier. It can be seen in the photograph.

THE LITTLE GATE DIPPER

John Aggers W5ETT

Possibly you now own a grid dipper, but is it small, easy to handle, and cordless, making it completely portable? If not, you will want to build this gate dip meter. The cost is extremely low – only about $7. All parts are readily obtainable and construction is simple. The plug-in coil forms, using battery plugs and polystyrene tubing, are easy to make.

The Circuit

An MPF 102 FET is used in a modified Colpitts circuit. Except for the #1 coil, where a choke is used, the B+ is fed to the centertap of the coil. This is necessary to obtain a fairly constant gate current as the oscillator is tuned to its end frequencies. Drain current varies from 4 to 1 mA proceeding from 225 to 1.7 MHz. At the same time the gate current varies from 20 to well over 50 µA.

From this, it is apparent that the stronger the oscillations the smaller the drain current and the larger the gate current. In gate dip operation, as power is drawn from the oscillator the drain current will increase and the gate current will decrease or dip.

Limited wavemeter operation, obtained by switching off the B+, is accompanied by a slight shift in calibration. When the circuit picks up rf, the FET suddenly goes into oscillation using the rf as its battery. Thus, the amount of rf picked up must be large enough or there will be no oscillation and no meter indication. However, despite these deficiencies, it is still considered a useful mode of operation and for that reason has been included. It is only necessary to wire the sensitivity control so that the resistance is maximum when the switch is in the off position.

Construction

A natural finish aluminum minibox (4 x 2-1/8 x 1-5/8 in.) is used for the meter case. The variable capacitor came from an old transistor radio and measured 1 3/8 x 1/2 x 1 in. The shaft was already squared and tapped for a small screw. Since those listed in the catalogs have a plain or flat shaft, you will have to use a collar with setscrew, or drill and tap the shaft. The trimmer capacitors are not used and should be removed.

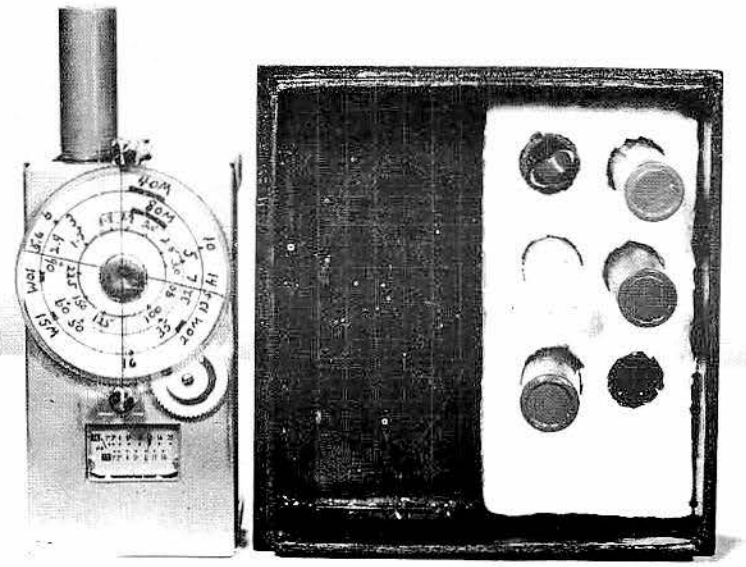

The little gate dipper with spare coils.

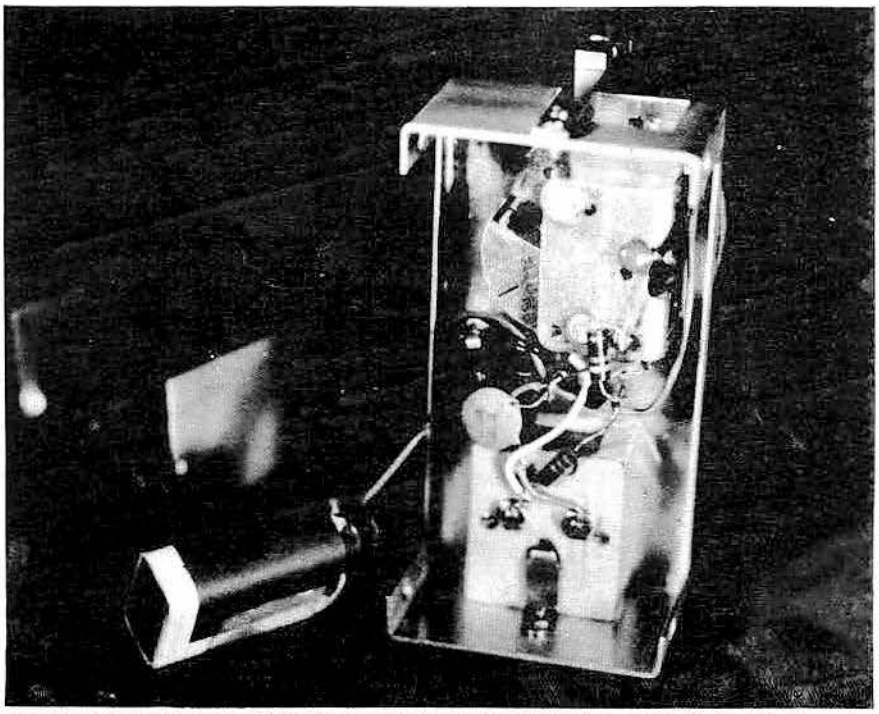

Meter is held against the front panel by a small bracket. The FET is the small black object in the center.

To make the coil socket you will need three pin receptacles from an octal socket, two pieces of 1/8 in. Plexiglas approximately 7/8 x 3/4 in., and one battery plug for a pattern. The pins of the battery plug form a triangle. I shall refer to the holes at the base as the outside holes. Drill holes in one piece of plastic to match the pins of the battery plug. Match the two pieces of plastic, clamp in a vise, and drill the two outside holes in the second piece. Bend the lug part of each socket pin to a right angle. Slip one over each outside pin of the battery plug. Using this as a jig, solder the lug portions to the stators of the variable capacitor. Remove the plug, and the pieces of plastic should fit down over the variable capacitor. The lug part of the center socket pin is brought out between the two layers of plastic.

File a small notch in the bottom piece to accommodate the lug. Before cementing the two pieces together and to the frame, make each hole slightly larger than the diameter of the socket pins. This will allow for expansion when the plug is inserted.

The dial is made of 2-1/4 in. diameter 1/8 in. Plexiglas. To give the dial a rough edge, for good thumb traction, I heated an old gear wheel and rigged up an arrangement to rotate the dial against it. The gear should have rather coarse teeth and rotate with the dial, or you will create flat spots.

The variable capacitor can now be mounted in the case. Position it so that the top and sides of the dial will be just about even with the edges of the case.

The dial marker is mounted on square aluminum posts. The top post (2 in. long) has 1½ in. of its length filed down to a 1/8 in. thickness to reduce its bulky appearance. To make the hairline, scribe a line in a ½ in. wide piece of plastic and fill in with a ballpoint pen.

The sensitivity control I used was already prepared for the knob shown. If you don't have one like it, use a dime-size pot and a setscrew knob. Any resistance from 5 to 10 kΩ will be fine.

Keystone light meters are available from Olson Electronics in a package of five ($3.99) or Transistors Unlimited Co. (75¢ each). Some modification of the meter is necessary. Remove the light cell and series resistor. Drill two holes, spaced ½ in. apart in the back of the case to pass 4–40 machine screws for easy soldering, make sure the heads and nuts are clean and free of any nickel plating. The screws should be filed even with nuts in order to make room for the battery. Solder the leads from the meter movement to the terminals, but be quick because the plastic case tends to melt in a hurry.

Wiring is just a here-to-there proposition, requiring no terminal boards or terminal lugs. The FET is soldered in place supported by its own leads. With reasonable care you should not damage it. A battery holder was found unnecessary; however, it is a good idea to wrap a layer of tape or stiff fiber paper around the battery to prevent the metal case from shorting out the meter terminals.

Coil Construction

Figure 2 and the photo give the necessary dimensions and show the parts needed to make the coil forms. The battery plugs are listed in the catalogs to fit #482 and

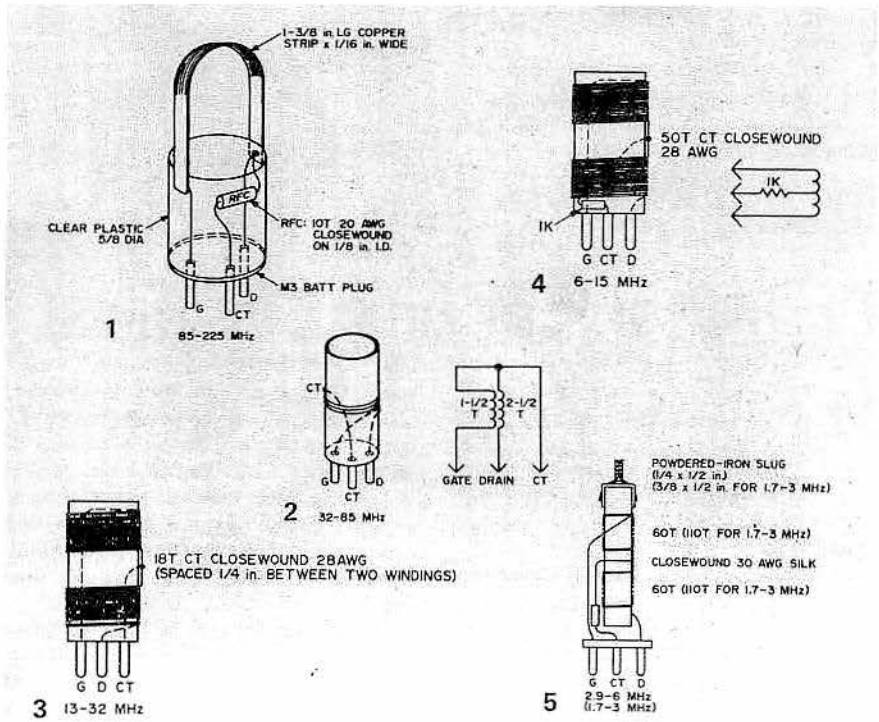

Fig. 2. Coil configurations for various frequencies of resonance.

M3 batteries. The center pin should be filed slightly shorter to make the plug seat evenly in the socket. While you are at it, file the nickel plating from the ends of all plug prongs. This will make for easier soldering.

Complete coil information is given in Fig. 2. However a little explanation may be in order. The irregular method of winding the #2 coil is necessary to reach 85 MHz and still maintain oscillation. With 4 turns close-wound the highest was too low. With the 4 turns spaced, oscillation ceased at the highest frequency. The 30 AWG silk wire was taken from a TV flyback transformer. The resistors in the centertap of the last three coils improve the meter's sensitivity slightly. They are mounted right next to the coil winding. With a slight groove filed inside the insulating sleeve, it should slip over the resistor.

The #6 coil is layer-wound as space permits and scrambled wound the rest of the necessary turns. The top winding of all coils should end near the very edge of the coil form. This will make for easier coupling to a tuned circuit. After the coils are checked out the insulating sleeves may be glued to the plug base.

Allow the glue to dry for several days before plugging the open ends of each coil with a small cardboard disk. The coils are painted with colored lacquers. Colored paper between the coil and the insulating sleeve will probably work just as well.

Calibration

For calibration purposes, you will need another indicating oscillator or dip meter. Operate it in the diode or wavemeter mode and loosely coupled to the gate dipper. I calibrated only 5 points on each scale plus any ham bands which appeared. Remember the dipper is not a frequency meter but something to get you in the ballpark.

Conclusion

The little gate dipper was checked against a well known commercial tube equivalent and, as near as I could tell, they were just about even. The battery should last for a long time because the current drain is extremely low.

THE GREAT DIPPER

John E. Boyd WAØAYP

Test equipment is essential in the hamshack, as those of us have found when we attempted to get that new piece of homebrew perking for the first time. One of the most useful pieces of test equipment is the grid dip oscillator or simply, the GDO; besides being relatively inexpensive, it is particularly versatile. Need an indicating absorption wave meter? The GDO will do that. How about a modulated signal source? It handles that too. If you are interested in discovering its whole variety of uses, why not purchase one of several books on the subject.

Every item used in this GDO was selected with an eye toward the average home builder. There are no parts which must be specially purchased from the West Indies Export Company or similar outfit. Nearly all the parts, except for the meter, miniature pot, and mode switch, were obtained from the junkbox, or rather, from several junkboxes. If you insist on buying all new parts, total cost of the project will be about $20.

Circuit description

The grid-dip oscillator, in this case more properly termed an emitter-dip oscillator, gets its name from the fact that emitter current in transistor Q_1 decreases when the tuned circuit C_1-L_1 is in resonance with a nearby circuit. This decrease is easily seen by the dip of the meter indicating pointer.

When switched to the diode position, B+ is removed from the oscillator and the incoming rf is rectified by diode D_x; the voltage developed across the 2k resistor is amplified by the meter amplifier and monitored by the 0-1 mA meter. In switching to the signal position, B+ is removed from the meter amplifier but applied to the modulator, and a 1 kHz tone is available from one of the output jacks. In the modulated oscillator position, B+ is reapplied to the oscillator, and the oscillator is modulated by the 1 kHz tone.

Like a patch-work quilt, this GDO was built using circuits from already published articles or books and modified where necessary. The whole circuit is composed of three separate entities—oscillator, meter amplifier, and audio tone generator. The circuit is not particularly critical, but lead lengths and dress in the oscillator must follow good VHF practice, if stable VHF oscillation is to be maintained.

My operating time is spent on the various bands from 28 mHz to 432 mHz. Quite naturally, when I discovered that the GDO would not oscillate satisfactorily over the entire range from 2 mHz to 200 mHz, I juggled values so that it would oscillate well at 216 mHz (for tuning frequency doublers to 432 mHz); then I tried to get as low in frequency as possible. Oscillation was vigorous to about 20 mHz. Coils and scales were then made to cover the respective ranges. It you don't do any homebrewing on the VHF bands perhaps you will find it necessary to

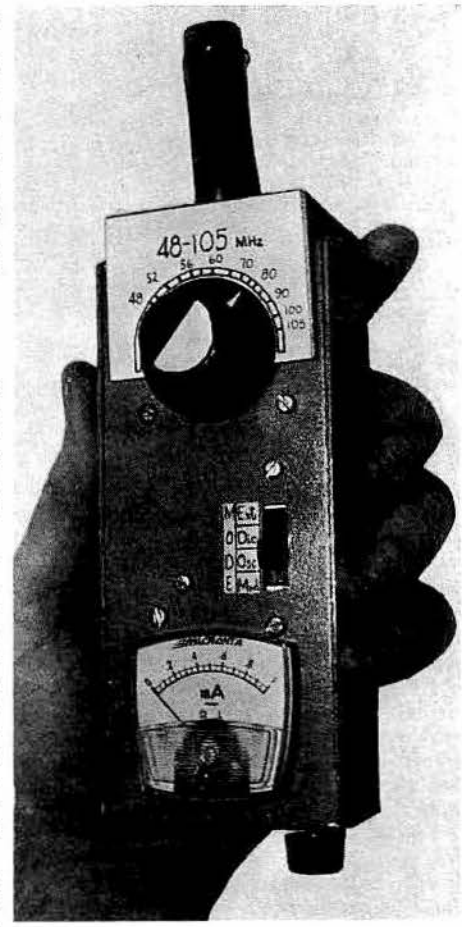

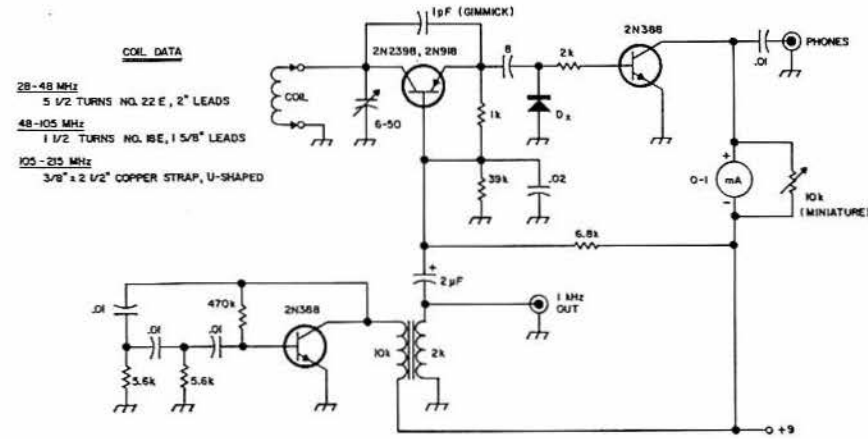

Fig. 1. Circuit diagram of the great dipper. Note that although the 2N2398 is a PNP transistor, the 2N918 is NPN, and if used as the oscillator transistor, problems would arise with voltage polarity. The diode D_x may be almost anything that you have available. The 1 pF gimmick capacitor consists of 1½" of twisted wire.

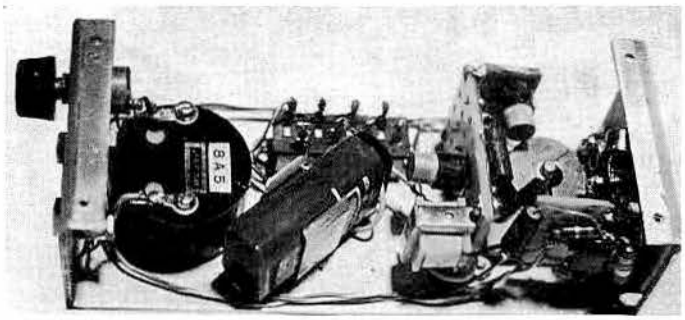

Internal construction of the great dipper. The modulator and oscillator boards are to the right—the oscillator transistor is mounted right next to the coil jacks.

change the value of the emitter-collector feedback capacitor, and to juggle the emitter and base resistor values in order to sustain oscillation at your desired frequencies.

Construction

Vector board was used, mainly because I wanted to experiment with component values; however, a printed circuit would be just as good, especially for something such as a club project. It can be seen from the photograph that the meter amplifier and audio oscillator are built on separate boards. This is due to the fact that I built several different amplifiers; the layout would look neater if they were on the same board. Positioning of the rf oscillator and capacitor C_1 as shown in the photograph is recommended, but the placement of other parts is not critical.

Fiberglass board is used as an insulator for mounting the banana jacks and plugs. It cuts and drills easily and appears to work fine. Three banana jacks were used, the third jack being used merely to provide mechanical rigidity. It could also be used, if necessary, to shunt additional capacitance across the emitter and collector on the lower frequencies.

Because a shear and a brake were available, I constructed my own chassis, consisting of two U-shaped pieces of 1/16" aluminum. Using the GDO is a breeze, for it fits the hand very comfortably; if placed on the workbench, it doesn't roll off each time it is bumped. The completed case (1¾" H x 2½" W x 6¼" L) is exceptionally rigid and imparts a reassuringly solid feel when handled. Commercially available miniboxes could be used if you don't have facilities available for rolling your own.

In building the rf oscillator, keep all the rf leads as short as possible; especially the short lead from C_1 to Q_1 and from circuit ground to chassis ground. It was found that false dips could be completely eliminated if a copper strap ¼" wide was added from the capacitor ground lug directly to chassis ground. Apparently the ground on the variable capacitor C_1 is not quite good enough at frequencies above 100 mHz. Various transistors were tried in the oscillator; the PNP type 2N2398 was found to be a good performer, as was the NPN type 2N918.

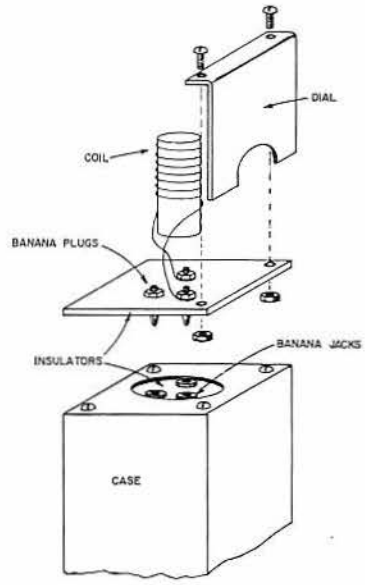

Fig. 3. Construction of the plug-in coil assemblies. The coil forms were made from the plastic containers which hold Polaroid print coater.

However, the use of the NPN type could lead to problems with battery polarity. Capacitor C_2 is a 1½" length of twisted wire positioned near the collector lead of Q_1. This slightly modified oscillator circuit is from a book describing, among other things, a transistorized GDO which you may wish to use as a reference.

To keep cost low, a 0-1 mA meter was used in conjunction with a simple meter amplifier. If you happen to have a 0-50 μA meter lying in the junkbox, that would work equally well, and the circuit could be simplified accordingly. Several circuits were built for the meter amplifier; the one chosen was a compromise between cost and performance. A germanium transistor was used because it requires less voltage to turn it on. Leakage is low, the pointer of the meter resting just off zero when no coil is in place. Further information can be obtained from January 1966 *73 Magazine*, which was the source for this circuit.

A transistorized audio tone generator is coupled by a 2 μF capacitor to the base of the oscillator transistor for modulation. This modulated oscillator allows the GDO to be used as a versatile signal source. An output jack is included on the panel to allow the 1 kHz tone to be used without turning on the oscillator.

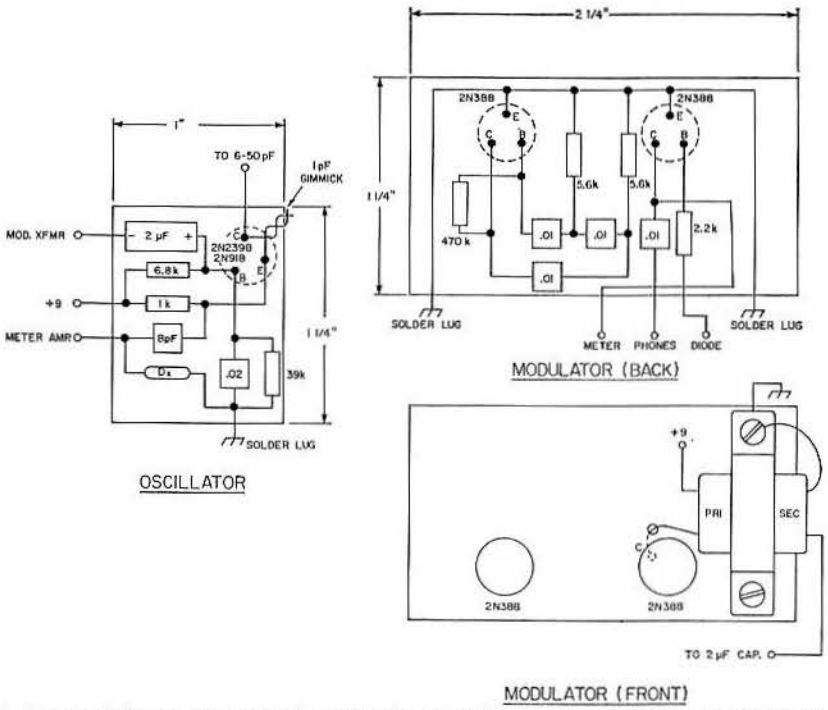

Fig. 2. Layout of the two circuit boards used in the great dipper. Although two boards were used in this case, the circuit could be easily adapted to one board, and even to printed circuitry.

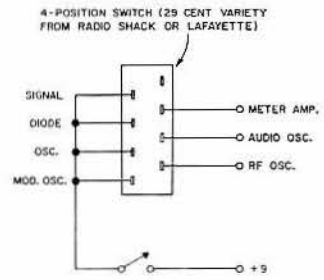

Fig. 4. Wiring the four-position slide switch for the great dipper.

The three plug-in coils for the Great Dipper. Three ranges cover from 28 to 216 MHz. The second harmonic of 216 MHz may be used for tuning up 432 MHz converters and such.

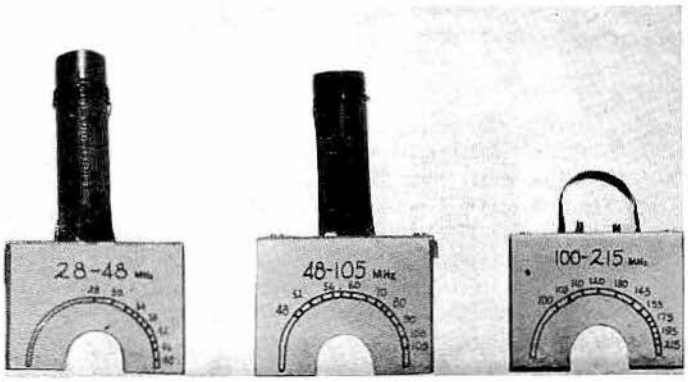

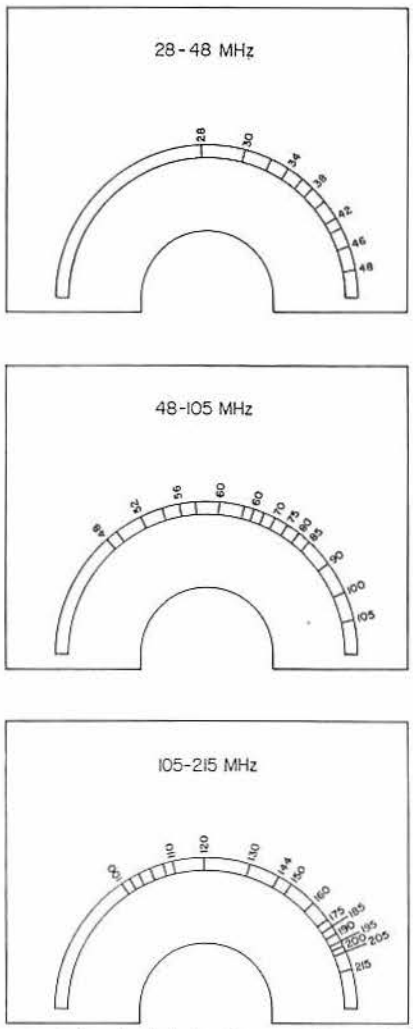

Fig. 5. Full-scale dials for the great dipper. If the construction shown in the photographs is followed closely, the calibration of these dials should be within several percent.

There are a couple of components which not everyone will want to duplicate. One, the sub-miniature 10k pot with SPST switch, was chosen because a very limited amount of space was available; if the unit is built on a larger chassis, the more commonly available *Midgetrol* could be used. The other, a four position switch used to select the desired mode, is a 29c variety available from Lafayette or Radio Shack. It has a peculiar switching arrangement and if you duplicate this project, several hours of experimenting could be eliminated by following the pictorial diagram included in this article. A disadvantage of this particular switch is that the meter does not indicate in the modulated oscillator position.

Using individual scales on each plug-in coil assembly greatly enhances scale legibility, reducing the chance of reading error and speeding frequency identification. This scheme; however, is not original. It was described in a 1957 issue of *Short-wave Magazine*, and is currently being used on a commercial GDO. It requires little additional effort to build the coil assembly in this manner and is, to me, well worth that extra effort. For want of anything else, the coil forms were made from the plastic tubes which contain the film coater supplied with each roll of Polaroid film.

Lastly, ease of tuning is accomplished largely through the use of a 1" skirted knob. Small knobs are simply too difficult to use comfortably.

Calibration and operation

It is best to calibrate this GDO by listening for the oscillator, modulated by the 1 kHz tone, on a general coverage receiver. An alternate method is to use another GDO, placing one in oscillate and the other in diode, tuning for either peak or dip. The scales which were used on this GDO will serve if parts and layout are followed closely.

To use this unit as a dipper, place the mode switch in oscillate, and place the dipper coil next to the coil under test. The turns of both coils should be parallel, and not at right angles to each other. To keep from pulling the oscillator frequency, keep the two coils separated as much as possible, while still maintaining a meter dip. This assures that dial accuracy will be kept high. If a coil is inaccessable, twist a pair of wires together, forming a two turn coil on each end; slip this coupling link over the two coils. Keep in mind that a coil, when it is in a circuit, may not dip at the same frequency as when it is out of this same circuit.

GREATER DIPPER – MODIFICATION

John E. Boyd WAØAYP

Introduction

To the uninitiated, a grid dip oscillator is neither glamorous nor exotic, even if it does happen to be transistorized. But to those who have ever tried to put a coil on frequency, one is worth its weight in microcircuits.

The original model of the *Great Dipper* proved to be a versatile, if unexciting, grid dip oscillator. Intended to be used mostly at VHF, the dipper was limited to frequencies above 28 MHz. To those who seldom operate above 10 meters, the lack of frequency coverage below 28 MHz was a definite handicap. Expanding the frequency coverage downward extends the dipper's usefulness considerably.

Component changes made were not extensive, nor were the physical dimensions of the unit changed. The schematic diagram of the modified circuit is shown in **Fig. 1**, and the pictorial diagram of **Fig. 2** is included to supplement the photographs printed in the original article.

Modification

First, the oscillator circuit board should be rotated 90 degrees from its original position so that transistor substitution or replacement can be made easily. A microwave diode might be substituted for the original glass computer-type diode; this results in better performance at VHF, but its effect cannot be accurately predicted. A 1N21 or 1N23 diode could be used in place of the D4900 called for in the schematic. Best oscillator performance over a wide frequency range results from using a 5 pF capacitor as the collector feedback coupler, but this was a compromise value. If operation is likely to be confined to either the HF or VHF segments of the radio spectrum, some experimentation with this capacitor should result in improved performance over that particular range. For experimentation, use a 3-12 pF or 4-30 pF trimmer.

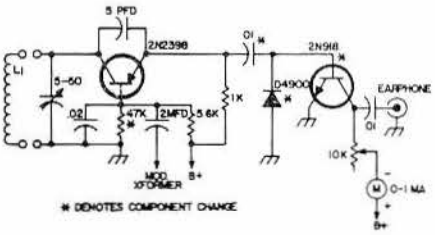

*Fig. 1. Schematic of modified circuit, with component changes indicated by *. L1: 13-23 MHz, 14½ turns No. 20; 22-44 MHz, 5¼ turns No. 24, 45-90 MHz, 1½ turns No. 24; 90-195 MHz, 2½ x 3/8 in.*

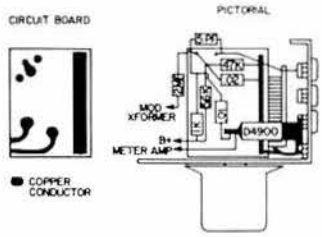

Fig. 2. Pictorial view of the dipper and its circuit board.

To perk up meter amplifier performance, the 2N388 meter amplifier is replaced by a 2N918, a relatively high gain, low leakage transistor.

Although the change was not made in this unit, a 6-100 pF (MAPC-100) variable capacitor could be substituted for the existing 5-50 pF unit. As can be seen from the full-size scales, frequency coverage is narrow on the 13-23 MHz plug-in coil. Those who frequently construct HF gear might benefit from the substitution.

Operation

Operation of the dipper is the same as before, except the frequency range is greater. Another coil must be wound for the 10-25 MHz range, but existing coils were not modified. Calibration is now different from before; full-size scales are included with this article for those who do not have a general-coverage receiver or another grid dip oscillator on hand for calibration.

Oscillation is still vigorous at 13 MHz, which indicates lower frequencies may be reached with a suitable coil plugged in. Similarly, oscillation is still noticeable at 195 MHz, so operation at higher frequencies may be possible.

Finishing Touches

Appearance of the dipper was improved after enlisting the help of a draftsman. The dial and meter scales were professionally inked. Figure 3 provides full-size copies of these scales.

To improve the legibility of the labels and scales, they were inked on yellow cards rather than on conventional white paper. It's a small point, but for those who use test equipment frequently, the black-on-yellow technique results in less eye strain.

ETCHED CIRCUIT UHF DIPMETER

Bob Corbett W1JJL

I made three models of the dipper. They cover 130-175 MHz, 175-250 MHz, and 250-480 MHz. The first two models use the same size inductor, with the 130-175 MHz model using a larger capacitor for tuning with a ceramic trimmer across it. This trimmer is not shown in the schematic; its value is 7-45 pF and it should be adjusted to cover the proper range.

The 250-480 MHz dipper uses a smaller inductor than the others. It also has a copper jumper (shown in the layout) that the lower frequency dippers don't have.

Each dipper is complete (including the battery) except for the meter. The meters were omitted to save space and money, but can be included if you wish to use a slightly larger case.

Each dipper uses one RCA 2N3478 NPN silicon transistor. These transistors cost only $1.90 apiece, but it's likely that other transistors that are even cheaper could be used. The 2N3478 has odd basing—the only reference is the short case-shield lead—so don't shorten any leads until you're sure that you can keep track of the connections.

The copper side of the board for the dipper is shown in Fig. 2 with the component side in Fig. 3. Use glass or Teflon based board. Paper or bakelite board probably wouldn't be satisfactory. Trim the board to the proper shape with a nibbler. The inductor should be coated with coil dope to keep from shorting it when you use it.

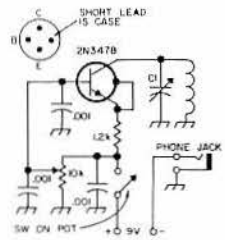

Fig. 1. The etched circuit dipper is very simple. The circuit is almost identical to the one described by WA1CCH in the December 1965 73, but the construction is quite different. C1 is Johnson 160-104 (9 pF) for the two higher frequency dippers, and 160-107 (14 pF) for the 130-180 MHz model. There is a trimmer across C1 in the 130-180 MHz model; see text.

To mount the boards, you'll have to cut a thin slot near the edge of the Minibox used as a case. One way to do it is to drill a number of holes of the proper size in a row, then use a file to finish the slot. You'll have to bend that side of the Minibox out to get the board in. It's held in place by an extra set of nuts on the shafts of the potentiometer and the tuning capacitor. Be sure to trim the leads projecting from the copper side of the board so that they won't touch the metal of the case. The battery is held in place with a simple clip made from scrap metal.

The dipper is very easy to use. But before we get to that, let's check it out and calibrate it.

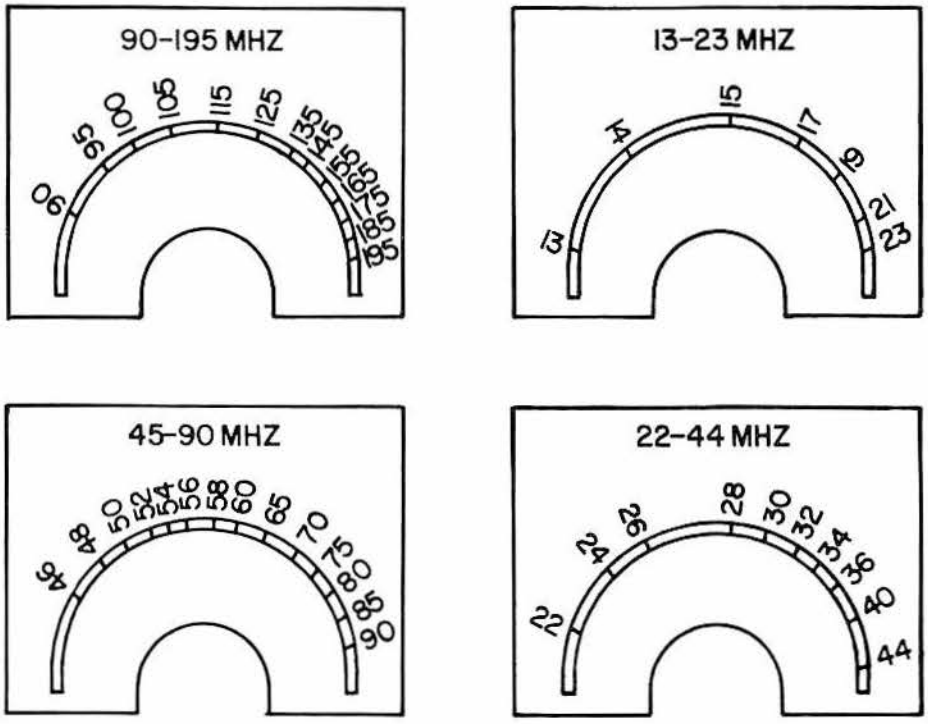

Fig. 3. Dial designs for the various MHz ranges, full size.

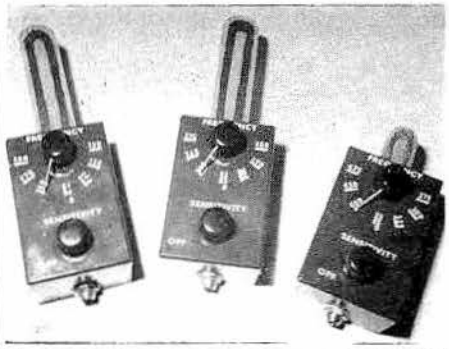

The three dippers shown here cover 130-480 MHz.

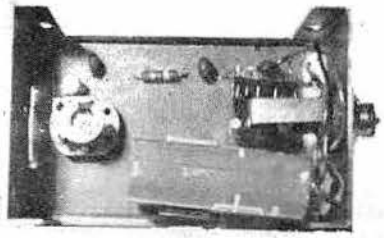

Here's the inside of one of the dippers.

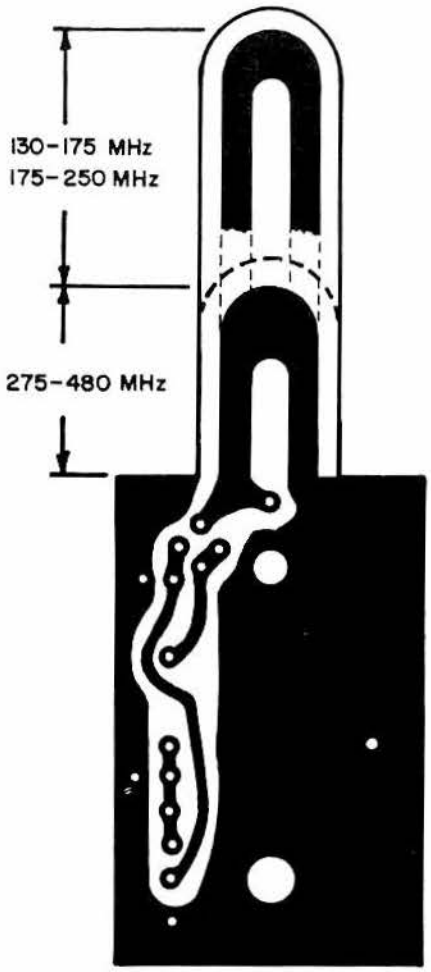

Fig. 2. The copper side of the etched circuit board used in the dipper. This layout is full size. Use board suitable for these frequencies: fiber glass or Teflon.

Plug a 2 to 5 mA meter into the meter jack. You can use a more sensitive meter if you shunt it with a resistor that gives the proper scale. Put the resistor across the meter jack terminals in the dipper if you use the meter for other things.

Turn on the dipper by twisting the potentiometer knob clockwise until it clicks. The meter should show very low current. As you turn the pot, the current should suddenly jump to about 1 mA. That means that the transistor is oscillating. If you touch the coil, the meter reading should drop and the dipper may stop oscillating completely. Now tune the capacitor through its range. There should be a little variation in current, but not too much.

Now you're ready to calibrate the dipper. The easiest method is a sensitive wave meter that covers the range, but it's quite easy to do the job with a TV set. A TV set covers 176 to 216 MHz (channels 7-13) for the low calibration. Then the second harmonics of the dipper tuning 235 to 445 MHz can be received on a UHF TV set (470-890 MHz). If you have a two meter receiver, that gives you another maker at 146 MHz. You can put on the panel markings with Ami-Tron or Datak rub-on lettering.

The dipper should be complete now, and ready for use. Bring the dipper near a resonant circuit in the dipper's range and tune the frequency control. You should get a prominent dip in current when both circuits are tuned to the same frequency. The amount of dip depends on the setting of the pot in the dipper, the distance from the tuned circuit, the Q of the circuit, and the type of coupling.

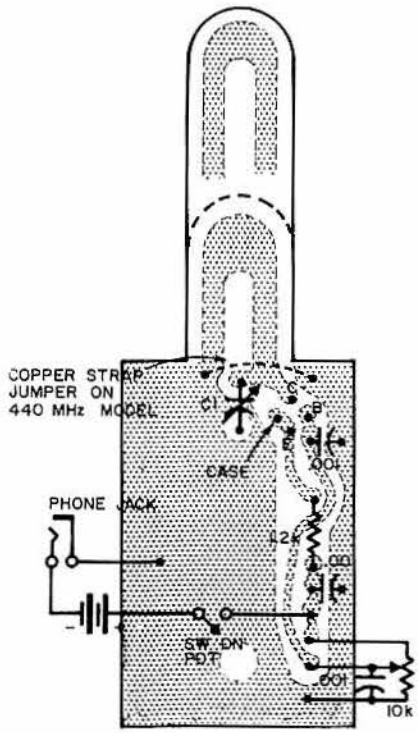

Fig. 3. Component side of the dippers. There is a 7-45 pF ceramic trimmer across C1 in the lowest frequency model. See the text.

In many cases it's easiest to leave the dipper stationary and tune the other circuit.

The dipper can also be used for monitoring AM transmitters by plugging a set of headphones in the meter jack and adjusting the tuning and pot. You can also use the dipper for determining the frequency of another oscillator. Simply tune the oscillating dipper with headphones plugged in until you hear a slight click. You probably won't be able to get a zero beat at these frequencies.

Be careful that you don't use the dipper around an energized transmitter of more than a few watts output or the dipper may be damaged.

These dippers are simple, inexpensive and non-critical to build. After you've build them, you'll wonder how you ever tried to build UHF equipment without a good dipper.

UHF GRID DIPPER

J. Fisk WA6BSO

When building or testing equipment for the 420 mc band, amateurs invariably run into the problem of, "Where am I?". It becomes a little difficult to tell whether you are actually in the band or somewhere nearby. The uninitiated will counter that you should be able to figure close enough, after all the band is 30 mc wide; but even the experienced old timer will confirm that this just isn't so.

The 420-450 mc amateur band falls between the VHF and UHF television assignments and there is very little to use for a frequency reference point. It is nearly impossible to tell exactly where you are without resorting to expensive commercial gear or lecher wires. Nor is the problem confined to the ¾ meter band; when building crystal controlled converters for 432 or 1296, it's nice to know that the last tripler is really tripling and not doubling or quadrupling. Even with a 45 or 50 mc crystal, it's quite easy to tune up on the wrong harmonic. Remember that a 40 mc change at 400 mc is analogous to a 400 kc change on 75 meters.

There are several commercial instruments that fill this requirement nicely, but the cost of the least expensive of these would buy a pretty respectable all band receiver. Occasionally suitable test equipment appears on the surplus market, but again, the price is prohibitive. The simple UHF grid-dipper described in this article was designed specifically to economically fill this need. It covers the frequencies

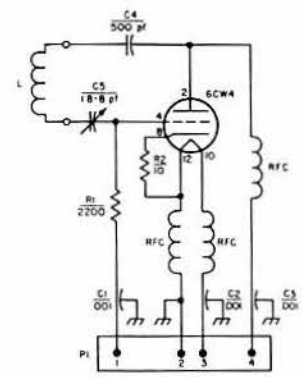

Fig. 1. Schematic of the rf head of the UHF grid dipper.

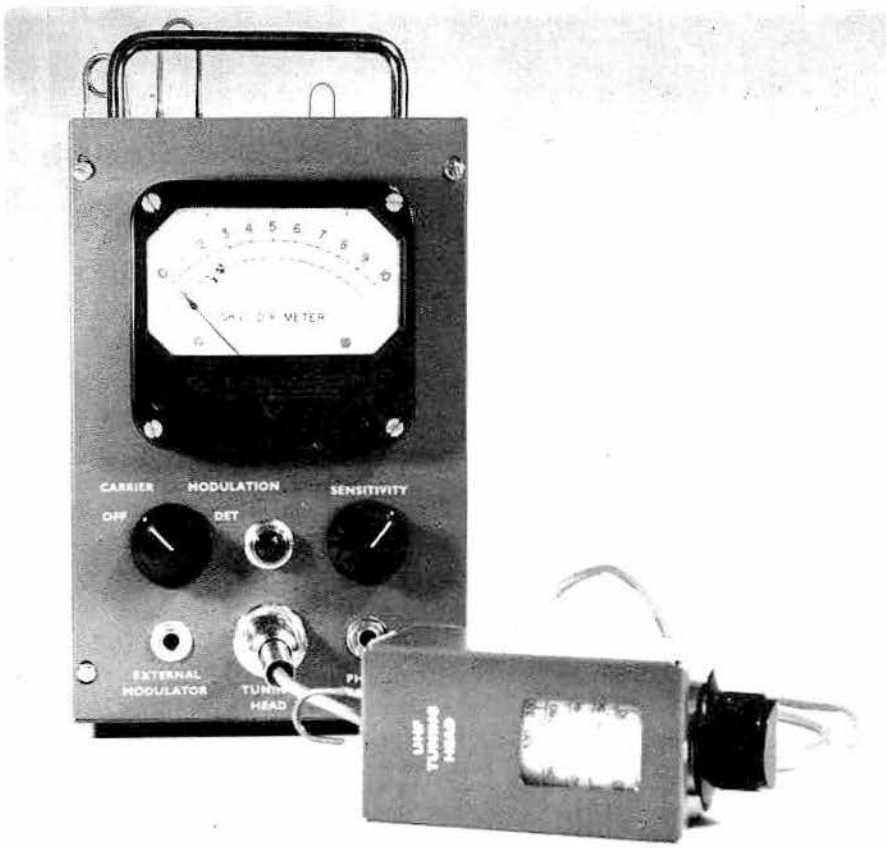

from 300 to 680 mc at a total cost that is comparable to a low-frequency kit-type grid-dipper. By using junk-box parts and smart horsetradesmanship this cost may be substantially reduced. I should hasten to point out that substitution of parts in the tuning head should be avoided if accurate dial calibration is desired.

This particular grid-dipper has been duplicated several times and in each case calibration has been within several percent of the original unit; at least as accurate as the familiar kit-type grid-dipper. This is helpful to the ham who does not have access to commercial equipment for calibration purposes. By using the layout and parts described in this article, the precalibrated dial illustrated in **Fig. 8** may be used with a minimum of error.

Although an accessory power supply, modulator and indicator are included in this design, an enterprising ham could use the power supply and meter presently available in any lower frequency tube type grid-dipper. Although using a modified low-frequency dipper is simple and inexpensive, the power/indicator box specifically designed for the UHF tuning head has several features that are not available in inexpensive kit-type units. These include internal 1,000 cycle modulation, provision for external modulation, and voltage regulation which provides the necessary stability at the ultra high frequencies.

The rf tuning head

The heart of this instrument lies in the tuning head itself. There is nothing particularly new or different about the circuit, but at these frequencies stray inductance and capacitance in circuit layout and construction will seriously affect the end result. All the lead lengths must be as short as humanly possible and physical circuit layout must follow standard UHF practice. One of the big problems in building tunable oscillators at UHF is to obtain an oscillator that will tune from one end of the range to the other with no "holes," frequency jumping or instability. The series tuned 6CW4 nuvistor oscillator shown in **Fig. 1** fills these requirements.

Insofar as possible, all the tuning head wiring is done on a point-to-point basis with the components mounted directly to the 6CW4 tube socket or button capacitor lugs as illustrated in **Fig. 3.** To obtain the desired accuracy with the precalibrated dial, this diagram should be followed as closely as possible.

To keep stray circuit inductance to a minimum, all wiring between the coil and tube socket is done with one-quarter inch wide strips of thin copper sheet. In addition, the rotor of the variable capacitor is connected to the 6CW4 grid (pin 4) with a short strip of the same material. The only tricky part of this wiring is the installation of the series capacitor C4. This capacitor is a 500 picofarad button type mounted as shown in **Fig. 5.** The "S" shaped bracket ("A") is made from a one-quarter inch wide copper strip, one and one half inches long and soldered to the mounting stud of the capacitor. Connection to the 6CW4 plate (pin 2) is made with the soldering lug on top of the button.

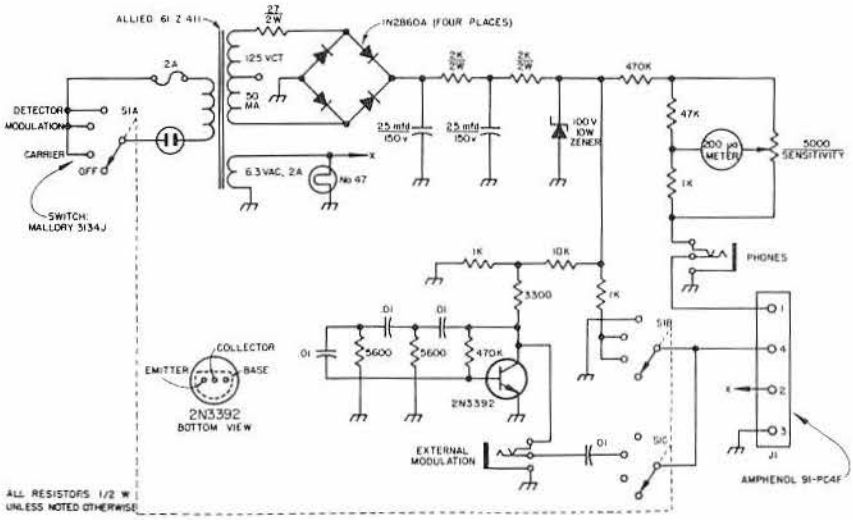

Fig. 2. Power supply and modulator for the UHF grid dipper.

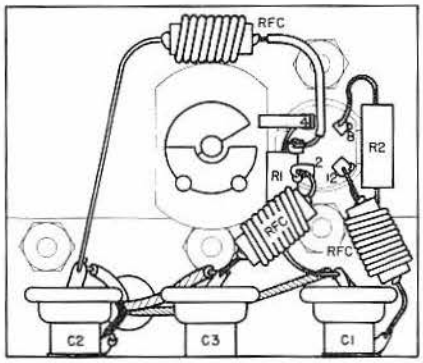

Fig. 3. Critical wiring around the 6CW4 socket.

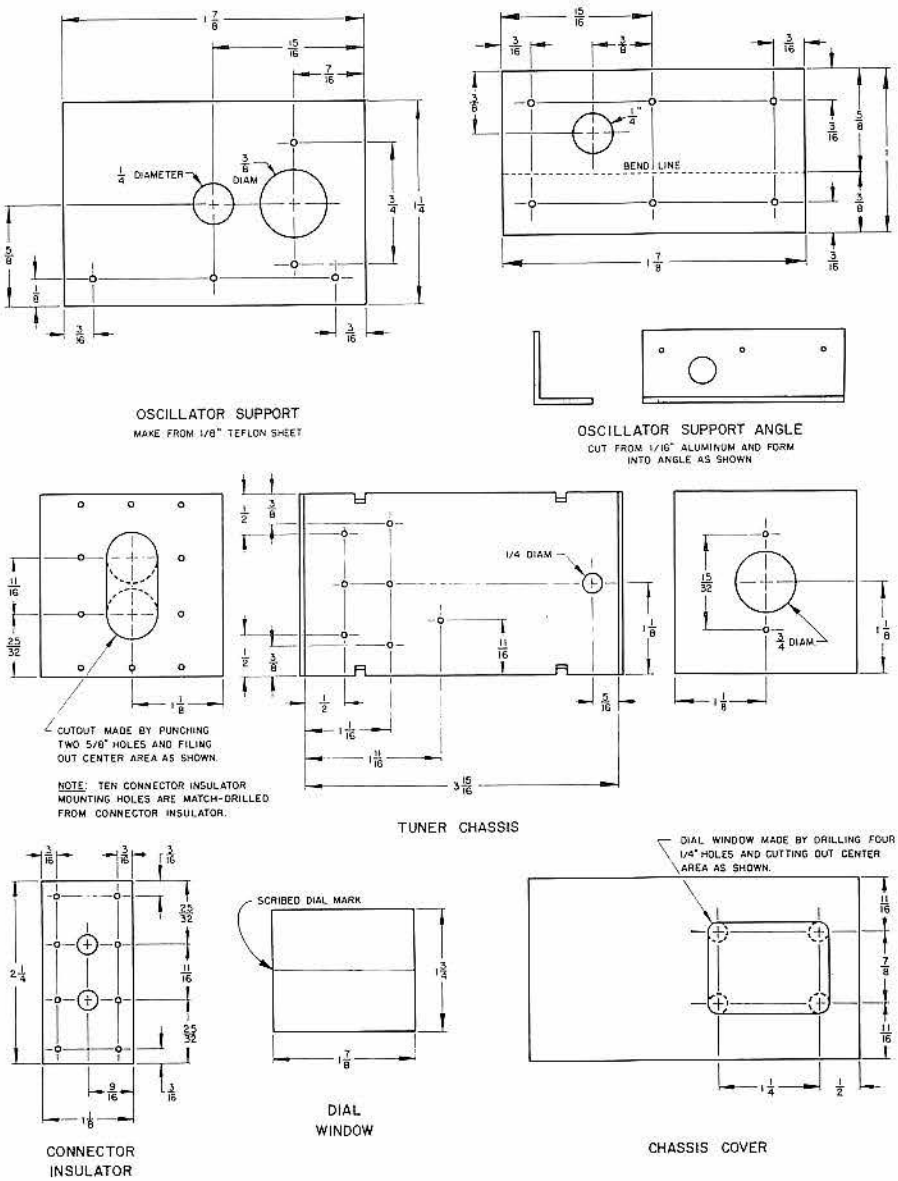

Fig. 4. Layout of the tuner chassis, chassis cover, dial, connector insulator, oscillator support and oscillator support angle.

screw holes are drilled with a standard ⅛ inch drill to pass 4-40 screws; 5/32 inch holes will be required if 6-32 screws are used.

The dial window is cut from a sheet of 1/16 inch clear plastic to the dimensions shown in **Fig. 4**. A hairline is scribed in the center of this window; if a more distinct line is desired, this scribe mark may be filled in with black india ink. After the tuner enclosure is completed, this dial window is epoxied in place over the dial cutout.

The coil socket is made by installing two banana jacks (E. F. Johnson type 108-740) on 11/16 inch centers in the Teflon connector insulator illustrated in **Fig. 4** (if Teflon is not available, Polystyrene may be used). This "socket" is installed over the large oblong hole cut in the end of the chassis. The screw holes used for mounting the connector insulator are match-drilled to the holes in the insulator itself. In this way it is properly mated to the enclosure. Although nylon attaching screws were used in the original model, they are not necessary and regular metallic screws will not alter any of the oscillator's characteristics.

To reduce stray capacity to a minimum, the oscillator circuitry is mounted on an insulating sheet. Teflon was used for this purpose in the original unit, but epoxy board with the copper peeled off would be perfectly suitable. Sheet polystyrene is not too desirable in this location because of its susceptibility to heat. The envelope of the 6CW4 gets very hot and the ambient temperature within the confines of the small chassis is quite high.

The general layout of the Teflon oscillator support and associated support angle are also shown in **Fig. 4**. The angle is cut out from a piece of 1/16 inch aluminum sheet and bent in a vise to form the angle. When these two pieces are mated together, the metal angle will probably interfere with the lower nuvistor socket mounting screw. It must be drilled out using the hole in the oscillator support as a guide. This additional hole is not shown because its exact location will vary from unit to unit and depends upon the accuracy with which the parts are laid out.

The dial mechanism is not complicated, but it is hard to ascertain from the photographs exactly how it is put together. The exploded drawing of **Fig. 6** should help in this respect. The vernier mechanism is an Eddystone 10:1 planetary drive that provides both smooth

Connection to the stator of the variable capacitor is accomplished with another short strip of thin copper as shown in **Fig. 5** ("B"). This piece of copper is bent so it touches both stator mounting pins when the unit is assembled; then it is soldered in place.

The oscillator and tuning mechanism are housed in a standard 2¼ × 2¼ × 4 inch chassis box laid out as shown in **Fig. 4**. Although the author's unit is based on an LMB type 107 chassis box, other manufacturers have similarly sized boxes which are equally suitable. The layout of the enclosure is straight-forward and no difficulty should be found in duplicating it. The dial and coil socket cutouts are made by drilling or punching round holes and then cutting out the area between them as shown in the drawing. This is easily done with an Adel "nibbling" tool. All of the small

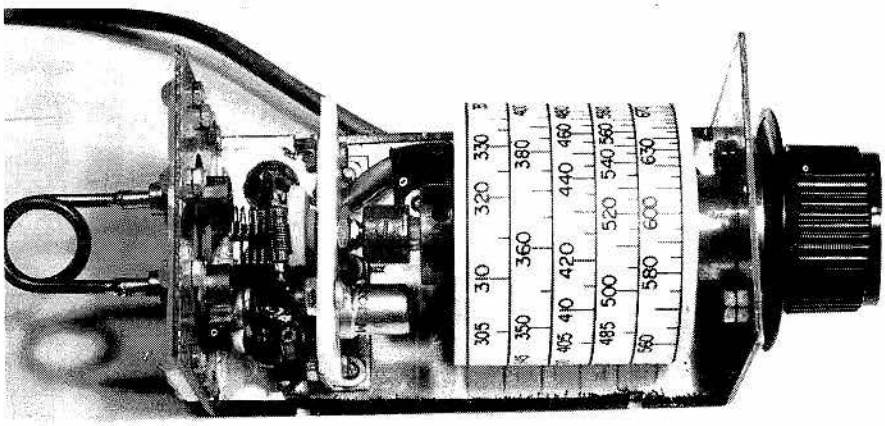

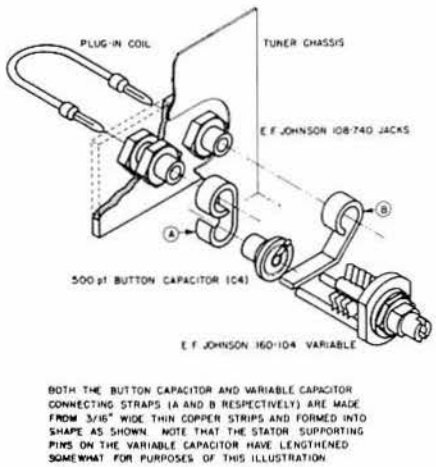

Fig. 5. Exploded view of the connections between the 6CW4 and the coil socket.

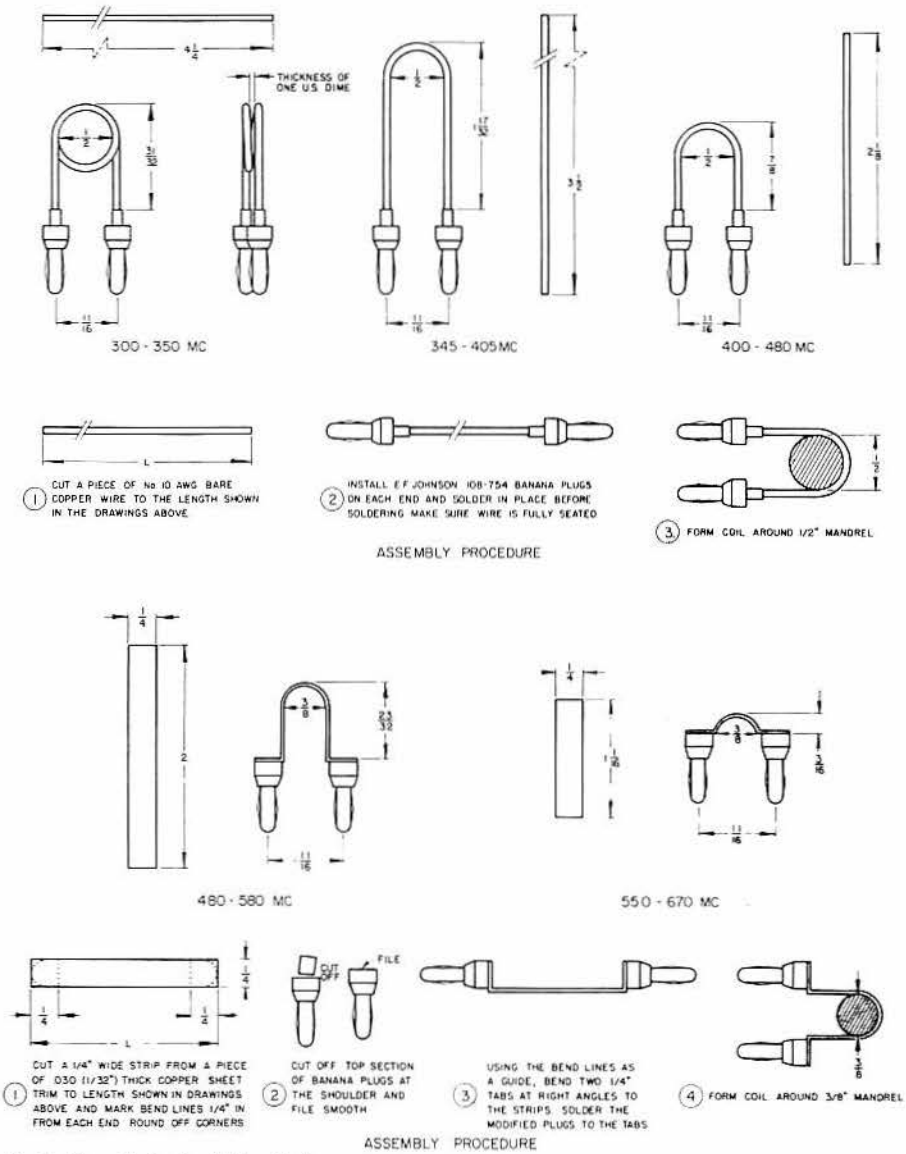

Fig. 7. The coils for the UHF grid dipper.

action and repeatability in a small package. Although this unit is manufactured in England, it is available from many of the larger electronics parts houses in this country.

Substitution of similar drives should be perfectly satisfactory as long as they don't extend more than one inch beyond the front panel of the tuner chasssis.

The vernier drive is connected to the variable capacitor through a ¼ inch polystyrene shaft 1-¼ inches long and the usual "¼ to ¼" shaft couplers. Polystyrene or some other insulator must be used here because the rotor of the capacitor must be isolated from ground. Because of the space limitations inside the enclosure, the coupler at the variable capacitor end of this shaft is only one-half of a standard coupler. A standard "¼ to ¼" coupler is sawed in two and one-half is epoxied to the end of the polystyrene shaft. Save the other half; it will be used for the dial drum hub.

The 8 pf variable capacitor was designed for screwdriver adjustment and its 3/16 inch shaft must be made compatible with the standard coupler. This is accomplished with a bushing made from sheet copper. A short piece of ¼ inch wide, 1/32 inch thick copper strap is formed around the capacitor shaft and takes up the slack between the shaft and the coupler.

The drum dial in the original unit was made from the metal top of a Johnson's Shoe Shine Kit (49¢ at the local grocer's), but any similar closed cylinder 1-15/16 inches in diameter and about 1-11/16 inches long should be suitable; other diameters will void the accuracy of the precalibrated dial. The "skirt" or bottom rim is cut off the metal can at the circumferential notch and a ¼ inch hole is drilled in the center of the top. The remaining half of the ¼ inch shaft coupler that was left over from the polystyrene shaft is then epoxied in place over the hole to provide a dial drum hub. Another hole is drilled in the side of the can 11/16 inches from the top; this provides access to the shaft coupler on the rear end of the vernier drive.

The precalibrated paper dial may now be cemented in place. It's a good idea to cement a piece of white paper the same size as the dial between the dial and the drum, otherwise the label on the can will show through the paper dial. Rubber cement is recommended at this point to prevent excessive wrinkling and distortion of the dial.

When all of the dial parts are completed, they are put together as shown in **Fig. 6**. It's a little crowded in the small box, but all of the parts *will* fit. However, in order to get all of the dial machinery into the box in the right order, a correct assembly sequence must be followed. First the polystyrene shaft and coupler are inserted into the dial drum from the rear. Next insert the Eddystone drive assembly through the hole in the front panel and mate it with the end of the polystyrene shaft. Place the bushing over the capacitor shaft, attach the polystyrene shaft and tighten the coupler; also tighten the coupler at the back end of the Eddystone drive thru the access hole provided in the dial drum. Install the vernier drive mounting screws. Now completely mesh the capacitor plates, center the low edge of the dial in the window and tighten up the dial drum hub. Disassembly must be accomplished in reverse order.

The tuning head is attached to the indicator/power unit through a four-conductor cable three feet long. This cable is attached to the box with a plastic cable clamp mounted in a hole provided immediately adjacent to the oscillator support angle and exits through a rubber grommeted hole at the front end of the enclosure. There is not enough room at the rubber grommet to use a cable clamp, so the cable is epoxied to the box at this point. Before installing the cable, however, check for sufficient clearance between it and the dial drum. It will probably be necessary to route the cable along the corner of the chassis to gain enough clearance.

Power indicator modulator

The power/indicator unit is housed in a standard 9 x 6 x 5 inch utility box (Bud type AU-1040 or equivalent). The layout of this

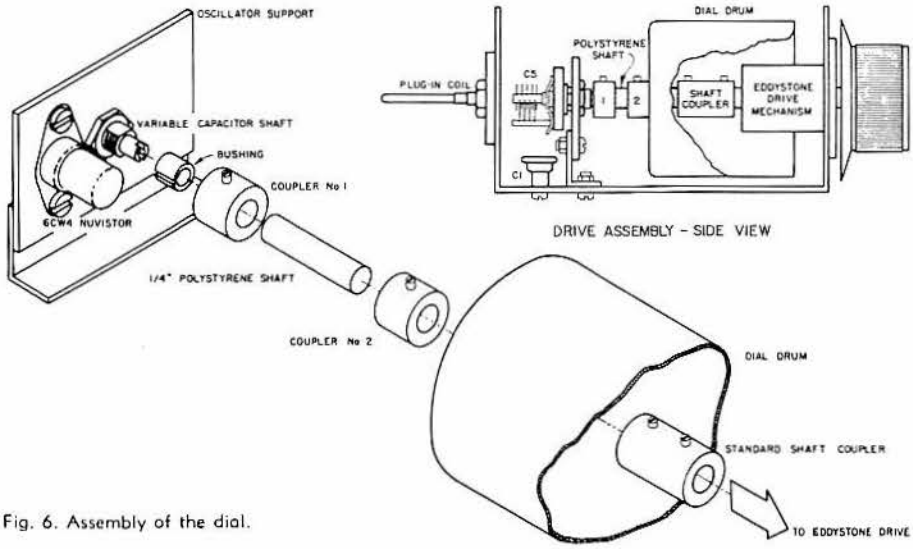

Fig. 6. Assembly of the dial.

circuitry is not at all critical, and just about anything that suits the builder may be used. The only particular caution that must be observed is with the transistorized 1 kc phase shift oscillator. This unit is built on a piece of perforated epoxy board (Vector 32AA18) 1-3/16 inches wide and 1-11/16 inches long. To preclude any 60 cycle pickup, this board is situated on the opposite side of the chassis from the power transformer.

In the author's case all the power/indicator components were mounted on a 4 x 5 x 1 inch aluminum chassis. This chassis was then mounted to the front panel of the utility box with the phone jack and power plug mounting nuts. Two large diameter holes (1-1/8 inch) are punched in the rear panel to provide access to the fuse holder and to pass the AC power plug. A chassis handle (Bud H-9168) on the top and rubber feet on the bottom just about complete the unit. There is one other addition however; five pairs of 5/32 inch holes, drilled on 11/16 inch centers along the rear edge of the top of the box provide convenient storage for the five frequency determining coils. A coat of spray paint and some Datak "Letraset" dry transfer labels are the finishing touches.

Calibration and operation

Without access to existing 420 mc equipment with known frequency characteristics, exact calibration in this band is impossible. However, this grid-dipper may be checked on the other ranges with the aid of an all-band television receiver. If the circuit layout and construction techniques described are closely followed, good correlation can be obtained and reasonable accuracy insured. The bands that are likely to be the furthest off are the lowest and the highest. In the lowest the coil spacing is quite critical and in the highest a slight change in length will move the frequency several megacycles. An accuracy of 2% at 600 mc is plus or minus 12 mc; close attention to the specified dimensions should provide accuracy better than this.

Operation of this grid-dipper is exactly the same as any lower frequency unit. It may be used in determining circuit resonance, detecting parasitic oscillations or as a signal generator. Because of its extended range, it has been found to be very useful in determining the series resonance point of rf chokes and ceramic bypass capacitors.

In the detect mode, this unit will indicate rf voltages as low as 50,000 microvolts. More sensitive operation may be obtained if it is used as an oscillating detector. In this case headphones are used and an audio beat note will be heard when the grid-dipper is tuned to the oscillator being checked. In the upper frequency ranges, it is usually difficult to obtain an actual beat note, and only a "tick" will be discernible when you tune by the frequency of the unknown energy.

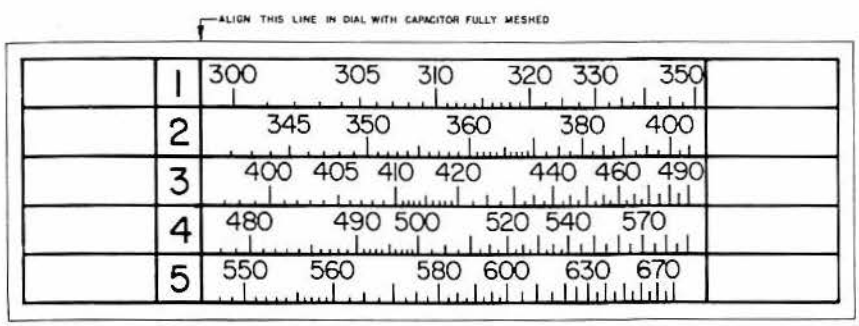

Fig. 8. Full size dial scale.

When the oscillator is tuned between 605 and 650 mc, there is sufficient second harmonic energy to provide a strong reference signal in the 1215 mc amateur band. This is particularly useful in the initial tune-up of converters for this band. Use of the internal 1000 cycle modulation aids in distinguishing the grid-dipper signal from other rf sources that are present throughout the spectrum.

WIDE RANGE VHF-UHF DIPPER

Bill Hoisington K1CLL

Most dippers for amateurs that I have seen so far, not counting the $400 ones, stop around 200 MHz just as you are about to enter the fascinating UHF region. We do have the 432 and 1296 bands, so let's become more familiar with them.

After all these years of "grid-dipping" we find ourselves without a grid; so it just becomes a "dipper". To retain the prestige of a hyphenated name we can call it a "dipper-generator". Most grid-dippers have been used as generators, but this one has built-in modulation, variable input-output coupling, controlled Q, and several other interesting features. Best of all, it goes all the way up to 1296 MHz.

When this little unit is completed it may be used as a dipper for determining the resonant frequency of VHF and UHF circuits, as an indicating frequency meter with an adjustable Q-multiplier, a field strength meter and modulation monitor, a sensitive regenerative receiver, or a CW and MCW signal generator. You can also use it as a harmonic monitor or as a frequency transfer unit from one transmitter to another.

Several circuits must be considered when building a wide band instrument such as this. For example, you should change circuits around 100 MHz and again at 600 MHz, give or take a few hundred. Below 100 MHz coils are good; from there to 600 MHz you can use ¼ wave resonators, and after that the ½ wave job becomes rapidly the best method, up to 1300 MHz.

Plug-in rf heads

I have made no attempt to cover the complete range from 130 to 1300 MHz with one oscillator. By using plug-in tuners you may vary the components to suit the frequency. On 50 MHz for example, you may use a low cost transistor, a coil, and a 25 or 50 pF capacitor. From 100 to 600 MHz you use a better transistor, a ¼ wave strap, and a 10 or 15 pF capacitor. In the microwave region up to 1296 MHz you use the best transistor you've got, ½ wave lines,

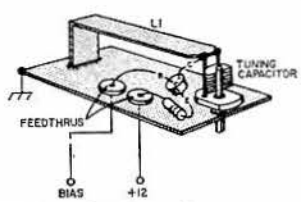

Fig. 1. Basic VHF/UHF oscillator circuit.

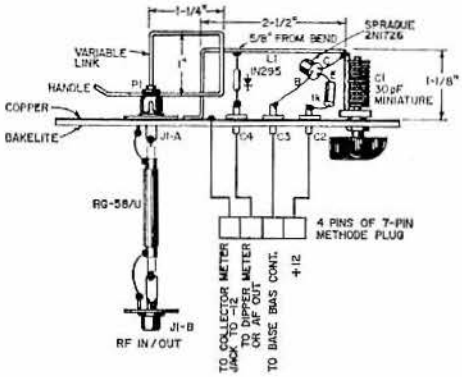

Fig. 2. 130 to 300 MHz tuning head.

and a small butterfly capacitor of 3 to 5 pF.

If you break the circuit at the right point, it simplifies things—then the two halves may be connected through a miniature 7-pin socket and plug as shown in Fig. 2. All four leads are reasonably dead to rf. You can leave out some of the audio if you like, but it's very handy to have a modulated signal. If you're running triple or quadruple conversion, it's nice to know by it's modulation which is the signal and which might be a *birdie*. As far as dials are concerned—it makes calibration and reading a lot easier to have only one band or range per dial.

130 to 300 MHz oscillator

Fig. 1 shows the basic ¼ wave circuit; Fig. 2 the complete rf unit with control, af output and modulation.

The circuit itself is very simplified, as seen in Fig. 1; there being only one inductance, L1, and no choke coils. This should make for a flat tuning oscillator without power dips as it is tuned over a 2 to 1 range in frequency, and it does just that. With a 2N1726 in the circuit there is a smooth power output curve from about one volt rf at 130 MHz down to ½ volt at 300 MHz.

The rf coupling jack J1 couples the rf energy both in and out. This is because L1 acts as either a detector resonator or an oscillator resonator, as required. Actually this rf jack can be used as shown in Fig. 2. P1 is a variable link to L1 and is plugged into J1; J1A has a few inches of cable between the white ABS plastic front panel and the copper clad bakelite sub-panel. Because the phono plug is rotatable, a nice variation in rf coupling can be obtained. The coax cable and J1B get the rf out to the front panel for easy use with antennas, probes, cables, etc.

The emitter goes to a 1K resistor then through a coaxial bypass capacitor which gets the dc in and out and leaves the rf behind. These feed-through type bypasses are very necessary—do *not* skimp on this item.

300 to 600 MHz unit

Fig. 3 shows that this unit is essentially the same as the last, except for dimensions. I used a 2N1141 here although many others will work too. It tunes smoothly from 300 to 600 MHz; use the variable link feature as in Fig. 2.

900 to 1100 MHz

For this frequency range we need a little different approach. From Fig. 4 we can see that we now have two ½ wave lines on which low-voltage points can be found to attach the base and collector resistors. Most of the ¼ wave portion of the lines on the transistor end are actually inside the case. The places where the base resistor and the 500 ohm collector resistor are attached to the ½ wave lines can be found, or checked, by watching the rf meter and touching the lines with a pencil. At the proper point no change occurs in the rf output; sometimes it even increases.

The diode circuit of Fig. 6 is not ideal but it works. I have several of these around the shack and they work very well for detecting 1296 Mhz energy. Even ordinary hook-up wire will support the assembly of Fig. 6 about ¼ inch below the rf lines; you will soon find the best spot with the unit oscillating. The rf input jack and associated loop L3 are fastened so that L3 is in place over L1 and L2, and it's coupling can be varied in a semi-fixed fashion.

At this point we should mention that as a "dipper" the circuit is still working fine; also as a signal generator. It also serves as an rf detector but as the frequency gets up into the microwave ranges it is not quite as good as the tuned rf detectors featured in another article in 73 Magazine. Ideally, you should use the dipper on microwaves as a modulated generator and couple it into the unknown circuit; then a probe attached to *another* tuned detector should be coupled into the unknown circuit. There are quite a few variations using the dipper as an oscillator that you will find useful if you use a little ingenuity.

In the microwave detector line, my experience indicates that the plunger tuned coax cavity line is the best, the tuned trough line next, and the circuit of Fig. 5 next best. As a dipper, generator and regenerative receiver it is still good at 1296 MHz. Just to check, I plugged an antenna into J1, put an audio amplifier across the diode and copied a small transistor oscillator across the room. The base bias control works as a very smooth regeneration control. Smooth regeneration, as we will see later, is very important for maximum sensitivity when looking for harmonics and weak signals.

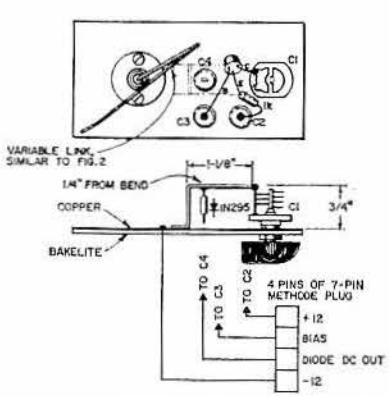

Fig. 3. 300 to 600 MHz oscillator with variable link.

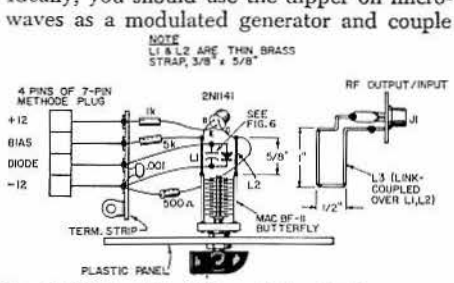

Fig. 4. 900 to 1120 MHz oscillator circuit.

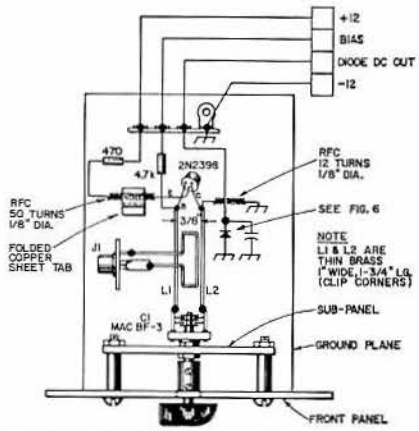

Fig. 5. 1200 to 1300 MHz oscillator and layout.

1200 to 1300 MHz unit

Fig. 5 shows the 1296 unit; I have used this circuit for many months as a dipper, variable-frequency generator, modulated-oscillator source, and as a regenerative receiver for 1296. In this circuit I used a negative dc grounded collector return. Don't short the base plate to the modulator base. Note that one end of the diode is tied to the base plate; this lead is brought out as the minus 12 volt lead. You can also use it ungrounded as in Fig. 4—you can use a 5th lead in the 7-pin plug and keep the diode isolated from the minus 12 volts. Suit yourself, just remember that *all* units have to use the same leads, as they all plug into the single modulator rf unit.

I just plugged a little 12 element Yagi antenna into this dipper and it works nice and smooth as a regenerative receiver. Please note, this is only for test purposes around the shack. You can hear with it, but not *that* good!

I had to put a choke in the cathode lead on this one, and tune it (the choke) with a piece of copper foil. A choke was needed in the collector lead too; after all this is the L-band microwave region.

The rf input jack J1 is mounted on a bakelite upright. Be careful of vertical metal

pieces attached to the base plate; they only need to be two inches long or so to become Marconi antennas on 1296! Bring the base resistor and the collector choke away from the lines in a perpendicular fashion—it helps.

The total length of the diode and it's two leads, from ground to the tiny .001 capacitor C2 is about 1½ inches; it is spaced about 3/16 from the ground plane. The bottom edges of the lines are about ½ inch from the ground plane.

The transistor presently in the unit is a selected 2N2398; about half of the dozen or so I have here go to 1300 MHz, a couple go to 1400, and the rest to 1100 or 1200.

Don't be alarmed that L1 and L2 are longer than those of Fig. 5, the smaller butterfly capacitor does that. You can make a choice as to capacity, length of brass, and desired rf range. You can use a 5 or 10 pF capacitor for C1, shorter lines, and tune over 1300 MHz. In fact, I have reached 1600 MHz with this circuit!

Modulation and control

Fig. 7 shows the circuitry for bias control, modulation and audio. Don't let it scare you. It's just the same old deal of doing what has to be done for control purposes, and from then on just turning the knobs to get what you want.

I have found that a very good plug and jack can be made by using an ordinary 7 pin socket and a Methode 7 pin bakelite plug. Unfortunately, I have never found a miniature tube with a bakelite base; they are always made of glass, so you will probably have to buy the 7 pin plug.

The minus 12 volt lead goes to the collector meter jack and then to the minus 12 volt of the power supply. This puts the rf panel ground at minus 12 volts and the audio af panel at plus 12. Of course, you don't have to ground the plus 12 on the audio panel, I just have that habit.

The base return goes through a 5K resistor and then to the bias control potentiometer. The diode dc/af output goes to af jack J2 and the meter M1 through the meter sensitivity control. This potentiometer is selected to suit the meter; I have used a 10 K unit with a 500 microampere meter. Note that part of this resistor should be used when af output is desired, otherwise the meter shorts out the af.

Audio modulation

You might think that just about everyone knows how to build an audio oscillator. Mine did oscillate, but the tone! And the wave-shapes, hoo-boy! I used an af transformer with the collector on one side and

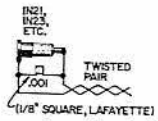

Fig. 6. RF detection loop for half-wave oscillators.

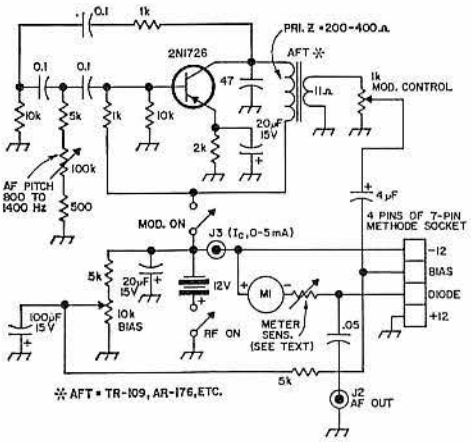

Fig. 7. Power control, modulation and audio circuitry. This circuit is used with all the rf heads.

the base on the other. So, once again to the handbooks and once again practically zilch. I did get the idea for a phase shift oscillator out of one of them, even if the circuit didn't work at first. After considerable experimentation I can recommend the circuit shown in Fig. 7. It works! In addition, the modulation may be adjusted to exactly 1000 MHz. This is very useful as many microwave test amplifiers have built-in narrow band af audio filters centered on 1 KHz. There is also a modulation gain control. This helps if a nice tone is desired.

Almost any small transistor output transformer will do the job for the af transformer, but don't go over 400 ohms impedance in the collector winding. Note the 1K resistor between the collector and the phase shift network; this reduces feedback to the base and may have to be increased or decreased depending on the gain of your transistor at 1000 Hertz.

I usually run the rf current (collector dc) between one and two mils with the 2N1726 transistors; other transistors may take more. A number 48 bulb in the collector lead may save you a $3 transistor. With the 2N1141 the rf output keeps climbing up to 4 or 5 mA collector current. You will readily find the best place to operate. When the collector mils keep climbing and the rf output starts to drop off, back off!

Operation

Dipper

As a general rule "dipping" is easier in the VHF region and gets more difficult as you go into the microwave region. On HF you couple one coil end on to the other; on VHF you bring it near, and on UHF you have to work to get the necessary coupling or use a probe.

With nothing near the dipper, swing the dial through the range to make sure it has no dips of it's own. The VHF/UHF units without chokes described here do not generally have such dips. Unwanted dips can be caused by chokes, resonant feed wire lengths, metal supports, and rf links and cables among other things.

When you do get a dip after coupling to the unknown circuit be sure and change the resonance of that circuit for a final check while watching the dipper meter. If the test circuit is a tuned circuit vary the tuning and see if the dipper will follow it—it *should*. If all else fails, use the dipper as a generator. Since it is very difficult to get the far end of a cable matched exactly over much of a frequency range, *expect* to find external dips in the dipper when using a cable.

Indicating frequency meter

Always keep the transistor plugged in and the base bias at zero so the diode is doing the work. When you advance the bias, collector capacity will cause the dipper frequency to change a little—more with some transistors than others.

For finding a weak signal you can use regeneration by turning up the base bias, but watch out for slight frequency changes. This regeneration can be very handy for finding weak oscillators or hard-to-find rf energy. Use the rf input loop with care; the least coupling is the best. Remember that some cables and terminations will detune L1.

Field strength meter and modulation monitor

The first part is obvious; use a small antenna or probe, get some signal in, and go ahead. Do not use any base bias to start with. If you are working with a very weak signal you might have to push the bias up for regeneration.

The modulation monitor is simply our often-described system of diode detector, transistor amplifier, and padded ear-phones. You can actually hear what your own transmitter sounds like to others. I use it on every new rig and after every circuit change. You don't need much of an antenna or probe when listening to your own rig; don't overload the diode when checking modulation. In fact, use light rf coupling and plenty of audio gain to hear yourself as others hear you.

Regenerative Receiver

Plug an audio amplifier into J2, Fig. 7, advance the bias control, and tune. I have heard several UHF TV stations from Massachusetts up here in Peterborough, so it is really sensitive. One nice feature of this circuit is that the regeneration turns into oscillation very smoothly. Stability is good too. You can heterodyne a crystal controlled two meter signal and copy CW with it. Not bad for a 144 MHz blooper!

To transfer signals from one transmitter (A) to another (B), just tune in A, then shut it off; listen for B and tune it in. That's all. Harmonic monitoring is easy: just tune over the suspected range in the regenerative condition. It is particularly good because only *one* frequency is present in the receiver. This is *not* the case when using a super-het receiver for monitoring harmonics.

Signal generator

One of the big features of this circuit is the presence of an rf meter right in the proper place circuit-wise. The modulation also helps, especially when running triple or quadruple conversion in a receiver. The modulation control is very convenient, at full on its spreads the signal across 20 or 30 kHz on a selective receiver. For checking a difficult to get at circuit, use a cable and probe, either capacitive or inductive, to get the signal into the unknown circuit.

I often use one of these units for antenna and receiver tests. I just plug a little two element beam into the rf jack and set it out away from the shack; often one or two hundred yards away. There is nothing like tuning up pre-amps with your antenna system connected. For antenna tests it is used in reverse.

EXTRA SERVICES FROM YOUR GRID-DIP OSCILLATOR

W. B. Cameron WA4UZM

One of the handiest instruments around the average ham shack is the grid dip oscillator, but many hams do not get all of the advantages this little instrument can offer. Most people know that it is useful for finding the resonant frequency of an LC circuit, or for generating a signal someplace in the range, although it is not quite a substitute for a well calibrated signal generator in this respect.

Many people do not realize that the grid dip oscillator makes an excellent crystal calibrator as well. The typical grid dip oscillator uses a two-terminal coil and a two-section variable capacitor, connected in the form of a Colpitts oscillator circuit, with the variable capacitor providing the voltage division for proper feedback. This same circuit, with a quartz crystal replacing the coil, becomes a very satisfactory crystal oscillator. In this case, the variable capacitor becomes a trimming capacitor capable of putting the crystal on the proper frequency with considerable accuracy and also allowing a fairly wide latitude higher or lower for checking bandpass.

The meter reading gives an index of crystal activity. What is required is an adapter to match the pins of the crystal holders to the coil socket of the grid dip oscillator. I have made up such an adapter for my particular unit which consists of a 1½ inch by 4½ inch piece of masonite which carries two banana plugs to insert into the oscillator socket, and several different sizes of crystal holders, all connected in parallel, to accommodate any crystals I happen to have around the shack. I carry in my tool kit various assorted crystals. These give me spot frequencies for band edges and other reference points on all of the amateur bands.

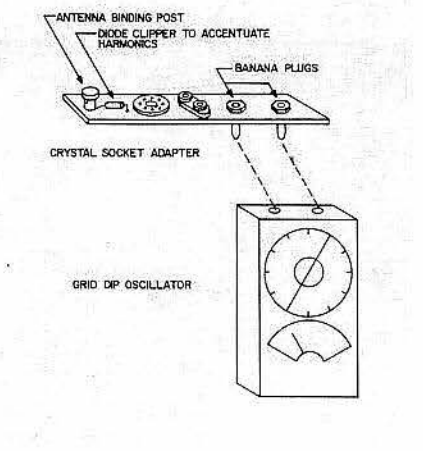

Crystal socket adapter for grid dip oscillator extends the unit's capability by enabling it to read crystal activity.

In checking the higher frequency bands, I find it useful to add a diode clipper and have one permanently wired on the same adapter board. This is a 1N69 which simply goes from one side of the crystal to a terminal point at which I can attach an antenna or a lead to the input jack of the receiver. By simply attaching a short length of wire approximating a quarter wavelength at this frequency, I can provide a strong enough signal from the shack to enable me to check out my direction finding loop in the automobile fifty feet away.

In tuning up my 2 meter FM gear, I plug in a 3061.25 crystal (which is the transmitter oscillator crystal for my Link 2m FM unit) and then couple from the 1N69 to the input of the receiver. This provides a signal stronger than most of the local signals on the band, and adequate for initial tune-up. For finer adjustment of the i-f strip, I clip the lead from the 1N69 to the chassis close to the antenna input jack and the leakage provides a signal of the order of .2 μV, which is useful for final adjustment of the critical tuned circuits, the squelch control, and others. For best results, I leave the oscillator and the receiver on for a half hour or so to warm up, and then with the variable capacitor in the grid dip oscillator, I zero-beat the incoming signal of a station generally considered to be on frequency. Once this is done, I have a signal source on the bench with which to check the receiver for passband balance as indicated on the microammeter connected to the discriminator output.

GDO TO FIND C

F. C. Rayer G3OGR

Most amateurs have a grid dip oscillator lying around, and an easy accessory can allow it to be used to read the values of unknown capacitances up to about 1000 pF. This is useful for unmarked surplus, those with obliterated markings, or to find the swing of small variables. Or we may check the best value found in some circuit position with a preset or variable, then measure this and substitute a near value fixed capacitor.

Figure 1 is the circuit. C1 and C2 are on the lid of an insulated box, carrying also spring terminals for CX. The capacitors have good knobs with pointers. Coil L can be half a dozen turns of stout wire, self-supporting, or anything which comes within a convenient range of the GDO (say 2.5–10 MHz) with both variables fully closed.

To calibrate, close C1 and C2 fully. Tune the GDO for the usual dip. Note the frequency on the box for future use. Take a few 1% capacitors, such as 100 pF, 200 pF, and so on, up to a total of about 1000 pF. Clip one to CX. Open C2 to restore the dip on the GDO. Mark the capacitor value on C2 dial. Series and parallel capacitors give more values. For example, 100 pF plus 200 pF in parallel gives 300 pF, while 500 plus 200 gives 700 pF, and so on.

Restore C2 to its fully closed mark. Repeat to calibrate C1, this time using

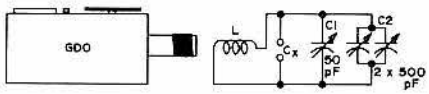

Fig. 1. GDO to find C.

capacitors such as 5 pF, etc., up to about 50 pF. When you see how the scales mark, estimate intermediate markings, to fill in.

Once calibration is finished, it is easy to find a capacitance value from about 2.5 to 1000 pF. Close C1 and C2. Put the GDO near L and tune the GDO for dip. Clip the unknown capacitor across CX. Open C1 or C2, as appropriate, to restore the dip. Read off the value from the scale. That's all there is to it!

GDO COIL EXTENSION

Bill Turner WAØABI

A grid dipper is a great piece of test equipment and belongs wherever rf equipment is to be designed, constructed, or serviced. All writings on the subject seem to be prefaced with this comment, and I hesitate to break tradition. Now that the formalities are over, we will proceed with the subject matter.

Probably the one most inconvenient feature of all grid dip meters is the physical size of the instrument. This holds true for the two unit commercial models as well as the more common self-contained types. It is not

so much that they are large but rather that the head will not always fit into the nooks and crannies which seem to be designed into most equipment. This situation will more than likely become more severe as integrated circuits come into more general use. At lower frequencies the coil assembly is usually long enough to reach to within shouting distance of the desired circuit, but as the frequency is increased the dipper coil shrinks to perhaps an inch protruding from the case. Try getting this even near a circuit buried 2 or 3 in. deep in a chassis and you will fully appreciate the magnitude of the problem.

There is a way of relieving the difficulty which requires neither a great deal of time nor expense. It is only necessary to put to use some basic theory which each of us was required to know in order to get a ham license. Required are perhaps a 3 ft length of small coax (RG 174/U), 6 in. of hookup wire and a ballpoint pen casing. The innards of the pen are removed, and the business end reamed slightly to accept the ends of a ½ in. diameter one turn link formed of hookup wire. Inside the barrel of the pen the ends are soldered to the coax, insulated, and cemented in place. The remaining wire is formed into a 2 turn link which fits snugly on the coil form of your grid dipper. This link is soldered to the opposite end of the coax and secured. Shrinkable tubing is perfect to cover the joint.

The next time you face this perplexing problem hold your head high and fear not. Merely slip the link over the coil form, place your probe so as to allow coupling into the desired circuit and proceed as usual. The only difference will be a more or less fixed load on the oscillator which doesn't affect its ability to indicate resonance. As always, best results are obtained with minimum coupling.

Chapter VIII

Noise Generators

SIMPLE NOISE GENERATOR

George Rubis K9ONT

As anyone knows that has done any work at all on receivers, whether it is a conversion or simply substituting a "hotter" tube in the front end, we get to the point where we begin to wonder if the adaptation was worth while or have we been fooling ourselves.

A noise generator using one of the noise diodes (IN21 or IN23) can give an indication if any improvement has been made.

The circuit is straight forward, but with one addition that others that I have seen do not have. The voltage is regulated by a Zener diode.

The reason is obvious to anyone who has worked with the simpler type of noise generator. The results are not always consistent from measurement to measurement and from day to day. The voltage and current vary with the setting of the variable resistance and due to the normal aging of the battery.

The Zener Diode eliminates this by maintaining a constant line voltage. In our particular instrument it is six volts. Of course we must use a battery in excess of six volts. Nine volts is a good value. I have found that used transistor radio batteries still have enough life in most instances to last for many tests.

One of the main requisites of a noise generator is that it must be shielded throughout. Therefore we must give some thought as to the placement of the various components.

A Mini-box 2¼ x 2¼ x 4 is an ideal size. As for a connector I used the SO-239 coaxial. I find that this connector allows more flexibility

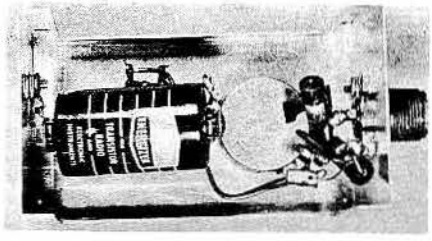

than any other. If a direct connection to the receiver is desired merely attach it through the double connector type DKF-2 made by Dow Key. On the other hand if it is desired to have the controls of the noise generator close at hand merely connect a length of Coax of eighteen inches or so. I haven't been able to discover that it has affected any measurements to any degree.

In the construction of this noise generator just remember a few basic rules. Keep all connections as short as possible. The noise diode and bypass condenser and resistor (50 or 75 ohms as the case may be) as close as possible to the output plug. Remember to use pliers to absorb the heat when soldering the leads of the diodes.

To mount the silicon diode, which has one large end and one small, we must improvise to a certain extent. For the small end a lug from one of the old tube sockets will do. For the large end use a small fuse clip.

Don't be too fussy about the variable resistor. For most purposes any value from 10M up to 50M can be used.

The battery you choose will determine the manner of mounting.

No need to give detailed instructions as to the use of this noise generator. There are ample instructions to be found in various magazines as well as handbooks.

. . . K9ONT

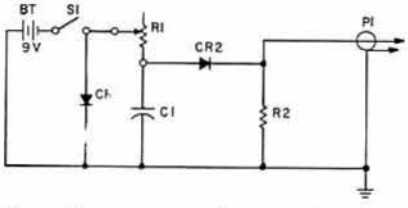

To avoid excess wear and tear on the zener diode and the battery a 200 ohm resistor should be inserted between the 9 v battery and S1.

Parts List

2—¼ x 2¼ x 4 Minibox
Bt—9 volt battery
Cr1—6 Volt Zener Diode
Cr2—IN 21 or IN 23 Silicon Diode
R1—10M-50M Variable
R2—51 ohm or 75 ohm (according to your line)
C1—.001 to .005 disk ceramic
S1—S.P.ST. this may be on your variable resistance
P1—So-239

A CRYSTAL DIODE NOISE GENERATOR

Karl Tipple W5TEV

Most amateurs who do very much operating at the higher frequencies where receiver sensitivity rather than QRM often determines success eventually come to the conclusion that their present receiving equipment is not as sensitive as would be desirable and that a change is in order. And once that change has been made, whether it takes the form of a new converter or modification of existing rf stages, one nearly always wonders whether the new really *is* better than the old. Comparisons of signal strength with new and old equipment are erratic and unreliable at best and do not necessarily give the desired information since the absolute output level or "S" meter reading is not the problem. What is actually of concern is whether the signal to noise ratio of the receiving system has been improved. Or in other words, does a given rf signal produce an audio output signal from the new receiving equipment that is louder in comparison to the background noise than did the same input signal with the original receiving equipment. If it does, the noise figure of the new receiving equipment is smaller (better) and it should be possible to copy a weaker signal than before.

Unfortunately few of us own or have access to a signal generator of the proper frequency range, with an accurately calibrated attenuator and shielded output, for making the type of measurements mentioned above. For the majority of amateurs something less expensive and more readily available is needed. A crystal noise generator, which can be constructed for a few dollars and which will enable anyone to make before and after comparisons of noise figure, is such a device.

Briefly, the theory behind the use of the noise generator follows. The sensitivity of a receiver is highly dependent on the ability of the rf stages to amplify a weak signal as much as possible while adding a minimum amount of noise to the signal. Noise of this type will

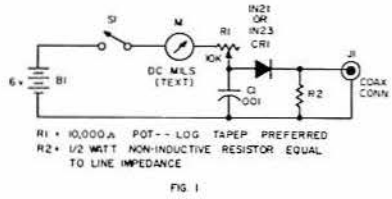

FIG. 1

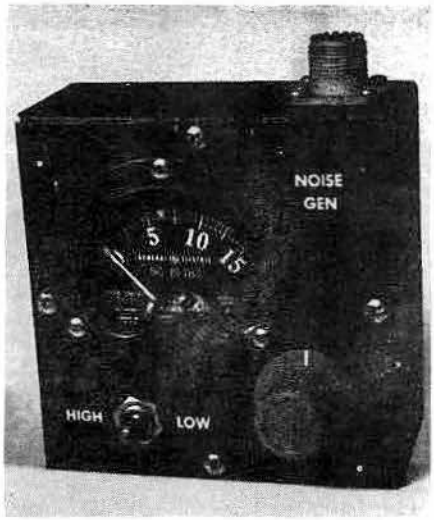

be heard at the receiver output as a familiar hiss or "rushing" sound. Now, if an external source of broadband or white noise (random noise independent of frequency) is connected to the receiver antenna terminals, an increase in noise or hiss will be noted at the receiver output. And if the noise generator output is adjusted to provide exactly twice as much receiver output noise as existed before the application of the noise generator, then the generator must be providing a noise signal equal to that generated in the receiver. Thus, if the receiver can be modified so as to reduce the noise generator signal required to double the receiver noise output, the noise figure of the receiver will have been improved.

A noise generator of the type described in this article can not be used for measurement of absolute noise figure without additional calibrating equipment. It can, however, be used for *comparison* of noise figures. It enables one to determine whether a receiver really has been improved and it can be used to determine which of a number of possible modifications will yield the best results in terms of minimum noise figure (maximum sensitivity). Use of the device will be discussed in more detail later.

A basic noise generator circuit is shown in Fig. 1. The noise is produced by CR1, a silicon diode of the 1N21 or 1N23 variety. These diodes have been widely available on the surplus market for several years. They are also readily available new at small cost; however as will be explained later, it may be desirable to use a surplus diode rather than a new one.

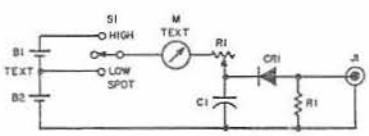

FIG. 2

R1 = 10,000 ohm pot—log taper preferred
R2 = ½ watt non inductive resistor equal to line impedance
Other parts same as Fig. 1

The current supplied to the diode from the battery and therefore the noise generated by the diode is determined by the setting of R1. The best value for R1 is necessarily a compromise since in its maximum resistance position it must limit the current to a low value but it must also not change resistance too rapidly at the low resistance end of the range or the normal operating range of the instrument will be limited to only a few degrees rotation of the R1 shaft. A 10,000 ohm log taper pot should prove satisfactory.

The value of R2 should be about the same as the transmission line impedance. A good value might be 56 or 68 ohms, although if it is desired to use the noise generator with equipment which normally operates from higher impedance lines, a larger value should be selected for R2. In this case one might compromise with a value of 100 ohms. C1 serves as bypass capacitor and may be either mica or disc ceramic.

A more elaborate arrangement was used in the construction of the unit shown in Photo. 3. A schematic of this generator appears in Fig. 2. Here a tapped battery (2 pencells) was used to minimize the range to be covered by R1. It should also be noted that the diode is shown reverse biased in Fig. 2. Many of the surplus diodes available have very poor reverse resistances, which will allow reverse bias operation, and when operated under these conditions will generate considerably more noise for the same bias current than when operated in the more conventional configuration shown in Fig. 1. The diode must have a reverse resistance of only a few thousand ohms or less if it is to work successfully in the reverse bias connection. Therefore unless the reader can obtain some surplus diodes and select one with a low reverse resistance, it will probably be necessary to operate the diode forward biased and to use the higher battery voltage of Fig. 1.

The meter range depends upon the battery voltage and the resistance of the diode in whichever connection it is used. The meter used in Fig. 2 was a 0-4 ma surplus meter. However, if the diode is operated in the forward biased connection a meter of somewhat higher current rating will probably be needed. Therefore, it is suggested that a low range meter be obtained and if more than full scale current is required for the diode to develop sufficient noise, a shunt resistance can be placed across the meter terminals to extend the meter range. An inexpensive meter can be used since all that is needed is a relative indication of current.

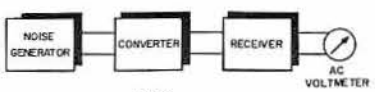

FIG. 3

For those not familiar with the IN21-1N23 type diodes it might be mentioned that they have no wire leads. The anode connection is a brass shell on one end of the unit and the cathode connection is a brass pin at the other end. Although external connecting wires might be soldered to the brass ends, there is danger that the diode will be over heated and destroyed by such techniques. It is safer to make connections by clamps made from small plate or grid caps or fahnstock clips.

It should be evident from the above discussion that there is nothing critical about the construction of a noise generator of this kind and that a number of different circuit variations are possible. Even if the device were constructed entirely of new components the cost should be less than $8 and with a little ingenuity the cost can be reduced substantially through the use of surplus parts.

Perhaps use of the noise generator can best be illustrated by considering an example of noise generator application. Suppose that you want to use either one of two available 6 meter converters with your low band receiver and that you wish to determine which converter will provide the best weak signal reception. A test set-up is shown in Fig. 3.

The ac voltmeter is used to measure the audio output of the receiver and may be either a multimeter or a VTVM. It can be connected across the speaker terminals or across the headphone line. Higher voltages can generally be obtained from the headphone output and this connection will probably have to be used if a multimeter without a very low ac range is used.

The measurements can be started by measuring the ac noise output voltage from the receiver with the noise generator turned "off". Then the noise generator should be turned "on" and the generator level adjusted until the output meter reading has doubled. At this point a note should be made of the noise generator setting. The above procedure can now be repeated with the second converter connected to the receiver. Whichever receiver-converter combination requires the smaller noise generator current setting to double the noise output is the combination that will provide the best weak signal reception.

The noise passed by the receiver is a function of the bandwidth of the receiver. Also the reading given by a particular output meter is dependent on its bandwidth. Therefore the bandwidth of the receiver should not be changed during measurements and the same output meter should be used thoughout a set of measurements.

The technique described above can also be used to determine which of a number of rf amplifier tubes will give the best performance. The noise generator can be used for alignment of rf stages.

For the man who constructs his own converters or receivers the device is a tremendous boon since such adjustments as determining the optimum antenna to grid coil coupling can be made simply by adjusting for maximum increase in noise when the generator is switched "on". (This technique gives the same results as adjusting for minimum noise generator setting to double noise output and it is a bit easier to use when adjustments must be made.) If the input circuit uses a single tapped coil instead of two coils, the best tap position can be determined.

The uses mentioned above are only a few of the possible applications of this noise generator, and for the amateur who constructs his own receiving equipment the device is indispensable.

TEMPERATURE LIMITED DIODE NOISE GENERATOR

F. L. Thomas

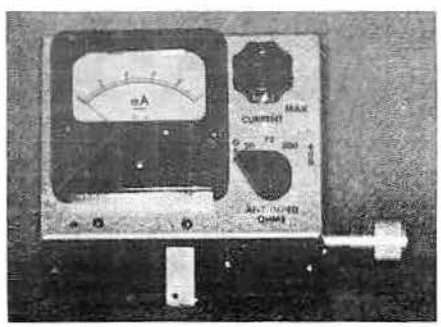

Recently I was confronted with the necessity for a good noise generator. All of the noise generator designs available in any of the

amateur publications at hand were of the crystal diode type. The disadvantage of this type of instrument lies in the fact that the current through the diode has no simple relation to the noise output. Unless expensive calibration equipment is on hand this type of generator is useful only on a comparative basis. Consequently it was decided that a temperature limited diode noise generator would be built.

The noise output of a temperature limited diode noise generator is simply related to the current flowing through the diode.[1] The noise figure of a receiver may be calculated directly from the magnitude of the current by the following equation:[2]

Noise figure in db.=10 log (20 I R)−(1)

Where I=current through temperature limited diode required to make the noise output power of the receiver double the value it was with no current through the diode.

R=antenna impedance

The actual noise generator is quite simple, consisting of half a 6AL5 with a milliammeter in the cathode leg and the appropriate resistance for the antenna circuit connected to the plate by means of a selector switch. The heater current is controlled by a 20 ohm potentiometer in series with the heater. The unit is battery operated for convenience. High current capacity, small sized mercury cells are used throughout. The whole unit is contained in a 3" x 4" x 5" Minibox.

Construction

The resistors are mounted on the switch, making the leads as short as possible. The tube socket is mounted on a small bracket screwed onto the side of the chassis, placed so that the distance from the switch is a minimum. The meter calibration potentiometer and the heater supply battery holders are mounted on another bracket placed over the meter as shown in the photograph.

Operation

To use the generator it is connected to the receiver antenna terminals, the AVC is turned off, and the audio output is measured with the generator off. The generator is then turned on and the current through the diode is increased until the power output is double what it was before. At this point the voltage output will only be 1.41 times the original. The current necessary to give this noise increase is noted and the noise figure calculated according to equation (1), or estimated from the figures given in Table I.

Noise Figure in db.	Current, ma., for antenna impedance of:			
	50Ω	72Ω	300Ω	600Ω
2	1.40	1.15	-	-
4	2.25	1.80	0.42	-
6	3.55	2.85	-	-
8	5.65	4.50	1.05	0.53
10	8.85	7.15	-	-
12	14.2	11.3	2.65	1.32
16	-	-	6.65	3.30
20	-	-	16.6	8.42

The unit described is useful for noise figures up to 13 db at 72 ohms. For higher noise figures a higher current capacity diode and a higher heater voltage and current supply is required, necessitating an ac operated power supply. With a suitable power supply a 6X4 may be satisfactorily operated up to a noise figure of about 22 db. In both cases the maximum noise is obtained by passing more than the allowable average current through the diode. Consequently readings at these extremes should be made and the current lowered again in only a few seconds, or damage to the diode will result.

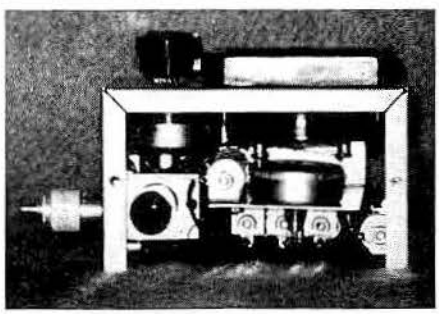

Table I shows the current readings for various noise figures with different antenna impedances.

The generator will operate satisfactorily up to at least 50 mc, and probably considerably higher.

Editor's Note: By substituting flashlight batteries for the mercury cells and a 20 mA meter instead of the 1 mA meter with a shunt across it, the cost of construction can be greatly reduced.

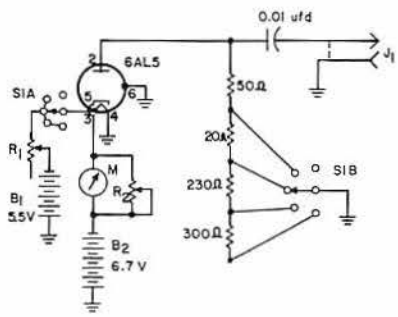

B1—four Mallory RM12 or RM12R in series (lifetime of this circuit should be greater than 10 operating hours)
B2—Mallory TR-135R
M—0-1 ma (Lafayette TM-60 or equivalent)
R1—20 ohm potentiometer
R2—20 ohm Potentiometer
J1—coax connector
S1—DP 5 pos miniature rotary switch

REFERENCES

1. Radiotron Designers Handbook, fourth edition, page 1307, reproduced and distributed by RCA Victor Division, Radio Corporation of America, Harrison, N. J., 1953.
2. Radio Engineering Handbook, fifth edition, page 19-10, Edited by Keith Henney, Published by McGraw-Hill Book Company, 1959.
3. Terman, F. E., Electronic and Radio Engineering, fourth edition, Published by McGraw-Hill Book Company, 1955.

CALIBRATED NOISE GENERATOR FOR 432

Hank Olson W6GXN

As pointed out in previous articles—the temperature-limited noise diode is the best tool for measuring the sensitivity of one's receiver. The measurement made with this device is "noise-figure" or "noise-factor" and this is the magic number by which you can compare your VHF or UHF receiver with Joe's down the street, or Sam's in Massachusetts. These measurements will be comparable between any two receivers because bandwidth, type of detector, and other miscellaneous features (different for each receiver) do not affect the measurement, if it's carefully made (that is, if one's measurement of 3 db power increase, when the diode is turned on, is true).

Past amateur articles on noise-diodes and their use in noise-factor measurement have only shown how to construct units for up to about 200 mc. The noise generators described previously, for amateur use, have used the 5722, the diode wired 24G (3C24), or the diode wired 801A, as their tungsten-filament diodes. The 15E and 01A have also been used occasionally as diode-wired triodes, too. Commercial UHF noise generators use a variety of tungsten-filament tubes, all of which are a bit expensive for most hams. If you can lay your hands on one of these tubes, used or otherwise surplus, by all means employ it in your noise generator. Table I is a list of such gems.

Philco:	L1262A
RCA:	R6212
Bendix:	6144
Marconi:	CV2171

Table I

The tube I used is a triode, a Western Electric 708A, originally designed for grounded-grid UHF amplifier service. The grid and filament are used as the diode elements, ignoring the plate altogether; the plate, if used, could only increase transit time and shunt capacity. The tube is used, as it was intended to be used, with the metal shell (grid) grounded. The 50 Ω load is connected in the filament cricuit; the filament power is fed in by means of a concentric inductor, which also tunes out the stray capacity of the tube.

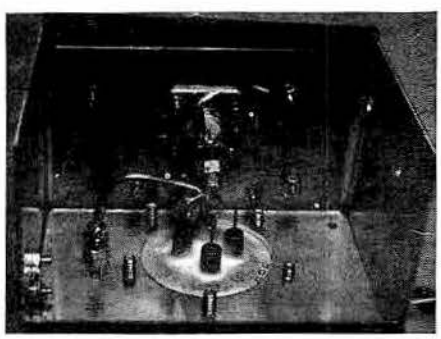

RF Circuitry.

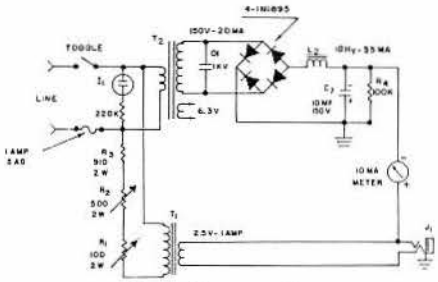

Fig. 1. Power supply.

C_1, a small "tweaker," adds in a tiny additional capacity to make adjustment to 432 mc easier; it makes tuning to anywhere in the 420 to 450 mc band possible. L_1 is constructed of a 1¾" length of ⅛" copper tubing and has a piece of No. 20 teflon insulated wire inside it. The use of teflon insulated wire is only necessary because teflon will withstand the heat of soldering.

The effective circuit, then, is as in Figure 2.

At 432 mc, if $Cgk + C_1 = 3$ mmfd, then L must be 0.04 μh to be parallel resonant. The reactance of either $Cgk + C_1$ or L_1 is about 100 Ω, so the system has a Q of ½, and hence will be rather broad in its noise output spectrum—just as we want it to be.

The WE 708A tube was recently available from a Los Angeles surplus emporium at the price of 39 cents each or ten for a dollar. We bought a buck's worth, figuring some would be NG, but all were perfect and saturated well. One was lost in initial test, when we applied too much filament voltage; it was subsequently hack-sawed open to find out the details of its construction and to confirm connections. The details learned are presented in Figure 3 along with its saturation curve.

The filament is a single, fine, straight, tungsten wire through the grid helix. The grid helix is perhaps 1/16" diameter and is welded every turn to the shell. All this adds up to: good cylindrical diode configuration, close cathode-grid spacing to cut down transit time, and low grid to case inductance. In short, we have a nearly ideal noise diode for a dime a piece.

Construction details: The rf section of the generator is constructed on an aluminum plate bent into an L, the WE 708A protrudes through a 1⅝" round hole to expose its filament pins next to where the UG58A/U connector is mounted on the other side of the L. The WE 708A is held in place by five 8-32 binding-head screws that are tapped into the plate. The UG58A/U has four 200Ω, ½ w resistors soldered to it each at 90° to its neighbors to form a less inductive load, approximating a resistive sheet. These resistors are soldered to the UG58/U before it is mounted to the aluminum sheet to make soldering easier (less heat required). Then L_1 is formed and soldered from the WE 708A filament pin to C_3. The center filament lead of L_1 is fed through and soldered to the other filament pin and to C_4. C_2 is then soldered in; be sure this is the type called for or a similar low inductance stand-off ceramic. The rest is straight forward. Diode and power supply were each built in an LMB 141 box chassis. The details of wiring the diode circuitry are shown in Fig. 4.

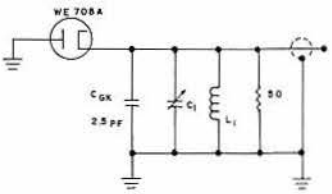

Fig. 2. Basic noise generator circuit.

A word about R_1 (the "fine" adjust) is worthwhile. Make *sure* this one is a 2w type A.B. (ohmite) molded carbon pot, if not both R_1 and R_2. This will make smooth diode-plate current adjustment easy; a wire wound pot will cause the plate current to vary in steps because of the effect of the pot's sliding contact sequencially contacting each wire (the same applies if you use a Variac).

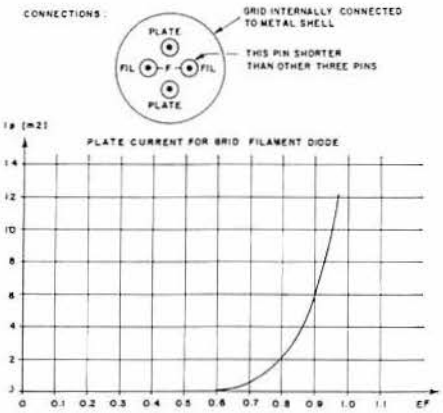

FIG. 3

Fig. 3. Connections of 708A and graph of relationship between "plate" current and filament voltage.

To align on 432 mc, C_2 is temporarily removed and a UHF grid dip meter coupled to L_1, loosely. C_1 is adjusted for a dip at 432 mc. Then C_2 is reinstalled, and we should be ready for receiver checks.

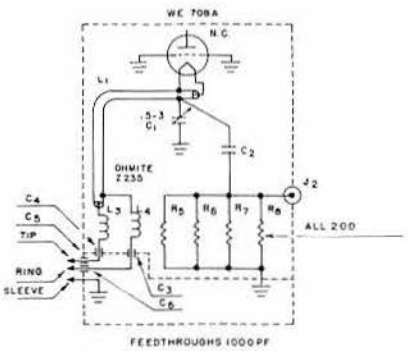

Fig. 4. Circuit of diode noise generator.

The above noise generator was compared with a Hewlett Packard 343A noise diode using my own 432 mc converter as the "to be measured" device. The results showed less than 0.5 db difference.

The author wishes to thank Gene Howell, W4RLU, for his photography of the unit.

ANOTHER WAY TO MEASURE NOISE FIGURE

Jim Kyle K5JKX

Many times it's been said, but it can always bear repeating. Noise figure is probably the least-well-known measurement in any amateur station.

At least a part of the difficulty with noise figure lies in the means usually employed to measure it. While it's not too difficult to figure out the power input to your final, or even the power *output* (often a surprisingly different figure), measurement of receiver noise figure tends to be a complicated and somewhat inaccurate process at best. It requires special equipment, and even then may be no more accurate than plus-or-minus 100 percent.

The classic means of measuring noise figure is to use a noise generator and crank in additional noise until receiver output is doubled. This means, of course, that the noise generator output is then exactly equal to the original noise, and if the noise-generator output is accurately known then the original noise is also known. All this has been gone into in detail in another article.

However, a noise generator with accurate calibration isn't so easy to come by, and an inaccurate noise generator doesn't do much good for measurement purposes (although it's fine for tune-up).

There *is* another way to do it, which is actually much more in line with amateur practice. This other way also requires some test equipment, but it might be more easy to come by.

Before we get into the details of the "other way" to measure noise figure, let's take another look at the reason for using noise-figure measurement as a yardstick for receiver sensitivity in the first place.

To start, we're really interested in the answer to the question "How weak a signal can I hear?" In the 3-30 mc range, the question can be answered directly—how many microvolts must the receiver have to give readable output?

As the vhf region is entered, though, the fractional microvolts become alarmingly small.

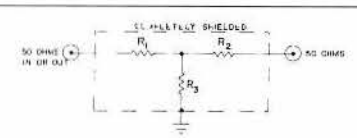

DB Loss	R1, R2	R3
3	8.2	150
6	16	68
9	24	39
20	39	10

All resistors composition, ½ watt, 5%

Fig. 1. Construction of T-pads

Somebody figured out that most of the problem lay in the receiver's own internal noise, and came up with the idea of a "perfect" receiver which would have no noise at all. This is a noise figure of 0 db. Now by comparing existing receivers to this perfect ideal, and comparing the internal noise in db, we had a way of discussing receiver sensitivity.

Since we're now talking about noise, which is equally present at all frequencies throughout the spectrum, we can see that the amount of noise present in a receiver's output is at least partially determined by how much of the spectrum we are looking at. A broad receiver has more noise output than a narrow one, all other things being equal. If you don't believe it, fiddle with the selectivity switch on your own rig and listen to the change of noise output.

This dependence of noise on bandwidth is another reason for using noise figure as a comparison. The *actual* amount of noise is cancelled out in the comparison, leaving only the relative amounts of noise in the "perfect" receiver and the receiver under test to be measured.

When all this became established, nobody

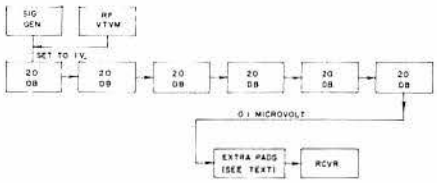

Fig. 2. Test set up.

was paying much attention to receiver bandwidth and it was felt that a true determination of the effective noise bandwidth of a receiver was much more complicated than the comparison measurement. However, in these days of SSB and special filters, that's not so true any more.

As you may have guessed by now, the "other method" of determining noise figure depends on a microvolt measurement and knowledge of the receiver's effective noise bandwidth. The only reason for converting the results back to noise figure is to allow comparison with measurements made in the more conventional manner.

With typical ham measurement techniques, the results won't be of National-Bureau-of-Standards accuracy. However, if you're reasonably careful, results using this method will be at least comparable in accuracy to those made with a homebrew noise generator. Ready? Let's go:

You'll need two items of test equipment (only one if you're really lucky). These are an rf signal generator covering the desired frequency range on fundamental output, and an rf VTVM reasonably accurate at the desired frequency. If you have access to a "microvolter" or similar laboratory signal generator, you won't need the VTVM.

In addition, you'll need a whole handful of 50 ohm T-pads; these can easily be put together in a hurry by following the schematic in Fig. 1. You'll probably need about 8 20-db pads, as well as one each in 3-db, 6-db, and 12-db values.

Turn on both the receiver and the signal generator and let them warm up. For protection against any leakage from signal-generator to receiver through the power lines, it's best to supply them from separate circuits and to use a power-line filter such as that used to eliminate rf interference between the power line and the unit.

Connect a string of six 20-db pads to the signal-generator output as shown in Fig. 2, and adjust output of the signal generator to 0.1 volt. If you have a microvolter or equiv-

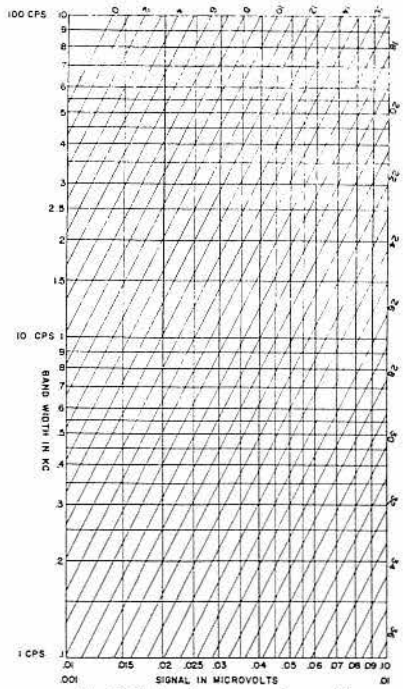

Fig. 3. Noise figure vs. microvolts.

alent, use only one 20-db pad and set generator output to 1 microvolt.

In either event, the output of the final T-pad will be a 0.1 microvolt CW signal. This should be more than adequate for any reasonably-sensitive receiver to allow spotting of the signal.

Switch the receiver's avc off and the bfo on, and place the selectivity switch in any position for which the selectivity is accurately known. The selectivity marked on the front panel will not be the effective noise bandwidth, but you can use it as a starting point to guesstimate the noise bandwidth. If your receiver uses a mechanical filter or other device with approximately the same skirt selectivity, effective noise bandwidth will be about 1½ times the bandwidth marked on the front panel. If it is one of the older types with reasonably broad skirts, noise bandwidth will be about 3 times the marked value. Both these correction factors are approximate, of course; if you have any means of measuring effective noise bandwidth, use it instead.

For a start, use a fairly broad selectivity position; this requires more signal and makes things a bit easier.

Now tune in the signal from the generator, leaving gain controls at maximum but tuning for maximum signal strength just as if it were the new state you need. The 0.1-microvolt signal should be easy to find.

Next step is to reduce the generator output by hooking in additional T-pads until you locate the point of "minimum discernible signal." The 3, 6, and 12 db pads may be hooked up in series in any combination to give you from 3 to 24 db additional attenuation in 3-db steps. Using another 20-db pad will give you from 20 to 44 db more attenuation, and the signal is sure to become too weak to copy before you reach 44 db below one-tenth of a microvolt!

The point of MDS is approximately equal to a 0-db signal-to-noise ratio for most of us, and is considerably easier to determine than would be a true output S/N ratio. When you find this point, record the db below 0.1 microvolt and the selectivity (in kilocycles) used.

Now switch to a different bandwidth on the receiver and repeat the test. Record its results also. For maximum accuracy, repeat each of the tests 10 to 12 times and average the result.

The signal level in microvolts corresponding to db below 0.1 microvolt is given in Table I. Locate it there and move to Fig. 3, the graph of signal versus bandwidth by noise figure.

Enter the graph from the side with effective noise bandwidth, and move across until you intersect the line corresponding to signal level in microvolts. The diagonal lines are noise figure; if one passes through the intersection point, read noise figure in db from it. If not, interpolate between the lines.

In reading Fig. 3, use the 10 kc-100 cps scale with the .01-.1 microvolt scale, and the 100 cps-1 cps scale with the .001-.01 microvolt scale. If your bandwidth-signal level combination falls off the graph to the left, use the

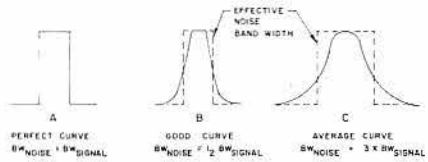

Fig. 4. Relation of noise and signal bandwidths.

lower signal-level scale with the *higher* bandwidth scale and subtract 20 db from the resulting noise figure.

In the happy event that all your errors (and our approximations) cancel out, you'll find the noise figure to be the same at both the narrow and the broad bandwidth positions. However, it's more likely that you'll measure different noise figures at different positions of the selectivity control. It's safest to take the highest noise figure measured as being closest to correct, but you can average them if you prefer. Either way, you will probably be within 1 db of the real figure—and this is as accurate as most noise-generator techniques can be, also.

That completes the measurement, but before we wind this up let's take a more detailed look at the idea of "effective noise bandwidth" which is such a key part of this measurement technique.

Most of us are familiar with the idea of a "perfect" curve for receiver selectivity such

as that shown at A in Fig. 4. Here the receiver has equal response over the desired band, and response drops to zero at the band edge. Such a curve is said to have a shape factor of 1, and is of course impossible to achieve in practice.

Now back to noise; it's spread out equally over the spectrum. A noise bandwidth of 1000 cycles per second contains 10 times as much noise as one of 100 cps. Thus "noise bandwidth" inherently has a shape factor of 1.

Since such a shape factor is impossible to achieve, it follows that "noise bandwidth" and actual receiver bandwidth must differ. If receiver bandwidth is measured at the —60 db points, the noise bandwidth will always be smaller than this receiver bandwidth. If receiver bandwidth is measured at the points where response drops 1 db below peak, the noise bandwidth will always be greater.

The mathematical expression for noise bandwidth is an integral equation involving differential gain, which is a cumbersome thing to solve. In general, the noise bandwidth of a receiver is said to be approximately equal to the bandwidth between points which are 3 db down from peak response.

In practice, if the shape factor (6 to 60 db) of the receiver is 2, the effective noise bandwidth will be approximately 1.3 times the 6-db bandwidth. If shape factor is between 2 and 10, noise bandwidth will be approximately equal to the square root of the shape factor (6 to 60 db) times the 6-db bandwidth. Few receivers have shape factors greater than 10.

The approximations quoted earlier (1.5 times marked bandwidth for SSB-selectivity receivers, 3 times marked bandwidth for others) are based on these relations. If you're really interested in calibrating your receiver's noise bandwidth for using this measurement technique, however, you might take a converter and have it measured for noise figure by the generator technique, then run this technique backwards to determine the effective noise bandwidth of your receiver in each position of the selectivity control.

db BELOW 0.1 MICROVOLT	MICROVOLTS
3	.07
6	.05
9	.035
12	.025
15	.018
18	.013
20	.01
21	.009
23	.007
24	.0063
26	.005
29	.0035
32	.0025
35	.0018
38	.0013
41	.0009

Table I.

The technique described here, incidentally, assumes that no audio filters are used following the detector. If they are, all results are off, since the effective noise bandwidth will have been changed in an unpredictable manner by the audio filters.

However, you can remove the audio filters from the hookup for measurement purposes, determine noise figure, then return the audio filters to the circuit and run the measurement backward to find out your effective noise bandwidth with filters present. Don't be surprised if it comes out in the region from 1 to 10 cycles per second; a good audio filter can work wonders with weak-signal reception.

For additional details on this technique of measuring noise figure, you can consult Reference Data for Radio Engineers, 4th edition, published by IT&T and available from Radio Bookshop, or any good radar text.

Chapter IX

Attenuators and Dummy Loads

LOW POWER ATTENUATORS FOR THE AMATEUR BANDS

George Daughters WB6AIG
Will Alexander WA6RDZ

In the evaluation of rf amplifiers, filters and many other devices, a variable attenuator is indispensable. This article describes attenuators built and tested by the authors. These attenuators are flat from dc to over 50 MHz and usable to over 450 MHz. They use low cost parts, are very simple to build, and are more accurate than ordinarily required in amateur applications.

The basic attenuator section is the symmetrical pi shown in Fig. 1. Resistance values are given by the relations:

$$R_1 = R_s\,(\sqrt{K} + 1)/(\sqrt{K} - 1)$$
$$R_2 = R_s\,(K - 1)/(2\sqrt{K})$$

where R_s is the characteristic impedance of the pad (equal to the source and load impedance) and K is the attenuation factor, P_{in}/P_{out}.

Resistor values for the most commonly used impedance (50 ohms) are shown in **Table 1.**

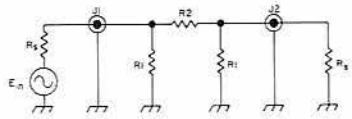

Fig. 1. Basic pi-network attenuator section.

Nominal attenuation in dB	R_1 in ohms	R_2 in ohms	Calculated attenuation in dB	Measured attenuation in dB
1	910	6.2	1.1	1.1- 1.2
2	430	12	2.1	2.1- 2.3
3	300	18	3.0	3.2
6	150	39	6.2	6.3- 6.6
10	91	68	10.2	9.6-10.1
20	62	240	19.6	19.5-19.7

Annenuation measured at 50 MHz and lower.

Table I. Resistor values for 50-Ω attenuators.

Notice that the use of standard value 5% half watt composition resistors allows accuracy within 1 dB of the calculated value of attenuation and within 1 dB of the desired nominal value.

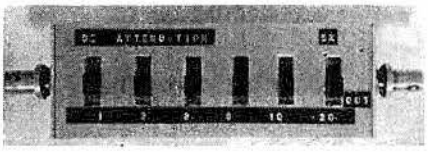

Amateur low-power attenuator made from inexpensive slide switches, 5% resistors and fiber glass, copper-clad board.

The attenuators are built in small channel boxes made of copper-clad etched circuit board material. Aluminum channel boxes commercially available would probably work equally well. Small, inexpensive DPDT slide switches (H. H. Smith No. 518 or equivalent) are soldered directly to the copper board and the resistors are soldered to the switch terminals (which have been cut short) with the shortest leads possible.

Two wiring variations have been tried, one with the series resistors (R_2) mounted between the switch wiper contacts (type B), and one with all resistors connected to the attenuator in terminals (type A). See **Fig. 2** and the photo of the interior of the attenuator. It was found that the latter arrangement, type A,

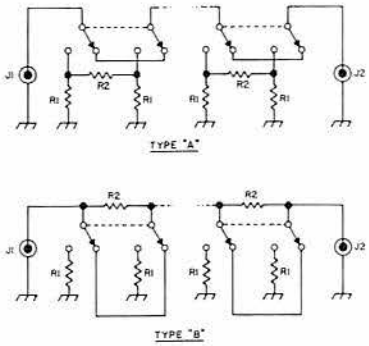

Fig. 2. Two types of attenuator construction. Type A has lower insertion loss than type B at high frequencies, so A is recommended. Resistors R1 and R2 are 5% composition, ½ watt. The switches are H. H. Smith 518 or equivalent. The connectors can be of any type to suit.

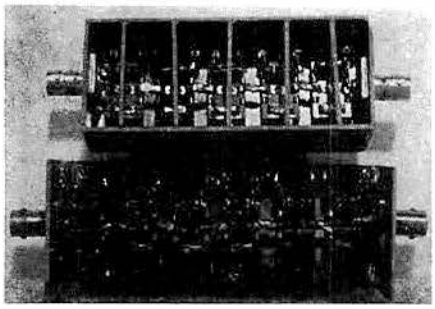

Details of attenuator construction. The top style, with complete shielding, is recommended.

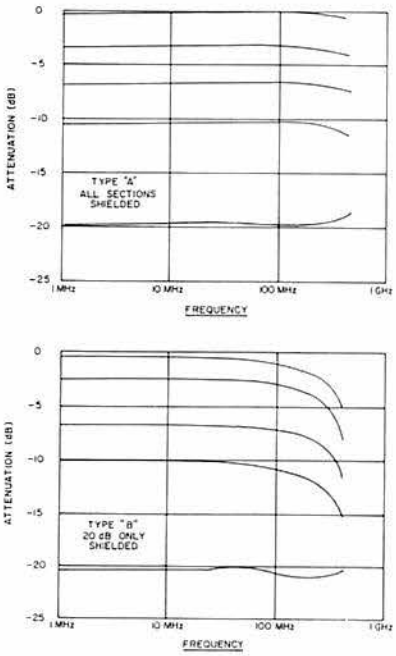

Fig. 3. Insertion loss versus frequency for the two types of attenuator construction: all sections shielded (A) and only the 20 db section shielded (B).

provided less insertion loss than the former at high frequencies, so this type of construction is recommended. Also note that dividing shields are desirable between input and output elements of a single section. These shields prevent capacitive feedthrough at the high frequencies, and are desirable on the high attenuation sections (anything over 10 dB) even at low frequencies. On the low attenuation sections, very little difference is evident below VHF. See **Fig. 3** for the attenuation of the attenuators up to over 450 MHz. Building attenuators with greater than 20 dB attenuation per section by this method is not recommended for high frequency use.

S-UNIT ATTENUATOR

Ed Lawrence WA5SWD

Since the topic of "S meters" is a popular one among radio amateurs, a lot of time is spent describing these devices, usually along the lines of how generous or "Scotch" the meters are at the QTH of the parties in the QSO. After a few such QSO's, I decided to build an attenuator, calibrated in "S" units. My aim was to attain an accuracy of 1 db or better, using 5% ½w resistors and simple construction so it would be easy to duplicate.

As a sidelight, I started out by calculating both "tee" and "pi" pads, and used "pi" because all values of resistance are close to standard values, but (especially for high attenuation pads) the values for "tee" pads can get quite small; and expensive.

I figured the values required from the tables in the Allied's "Electronics Data Handbook", page 8, 5th edition. (Allied Radio, 75c, full of good info.)

Since "S" units are supposed to be 6 db, I figured data for steps of 1,2,4 and 8 times that amount, or 6,12,24 and 48 db. With these steps, any number from 0 to 15 "S" units of attenuation could be selected. However, 8 "S" units proved to be too much for one step, as shown by the lowered attenuation at 30 MHz, due to the inherent shunt capacitance of the resistor used in the series leg, plus the stray capacitance of the switch. So I removed the 8 "S" unit step and installed another 4 "S" unit step. This allows selected steps of attentuation from 0 to 11 "S" units.

Here are the values I calculated, and the actual values used, based on 51 ohms. The steps are switched in series, as required for the desired attenuation.

Resistance Values for 51 Ohm Attenuator:

"S" units	DB	R1 ideal	R1 actual	R2 ideal	R2 actual
1	6	154	150	38	39
2	12	85	82	96	100
4	24	58	56	405	390
8	48	51.5	51	6400	6800

After the attenuator was completed, the attenuation was measured at 3 kHz and at 30 MHz. With the test equipment available it was possible to measure more accurately at 30 MHz than at 3 kHz. Below is the data from the tests.

Atten Step "S" units	DB	Predicted atten DB	Measured at 3 kHz	Measured at 30 MHz
1	6	6.2	6.0	6.02
2	12	12.3	12.2	12.16
4	24	23.3	24.2	24.05
8	48	48.5	47.5	39.11

Now if we want to make an educated guess as to how far up we can expect good results, say 1 db error out of 24 db, then we can use the measured error in the 48 db step to calculate the capacitance across the series leg, and from that calculate the frequency where the 1 db error will occur. Go through the math if that is how you get your kicks, or take my word for it. It comes out to about 2 pF. And this will cause a reduction of 1 db at about 220 MHz. And since the resistor is

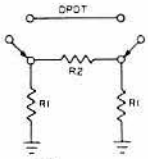

Fig. 1. Diagram for one step in the attenuator.

of a lower value for the smaller steps, they should hold their values to even higher frequencies, but I expect other factors would get into the act along the line somewhere. I will state that still works well at 2 meters.

If you want to get fancy, you can always figure the values for 1, 2 and 3 db steps and have from 0 to 72 db attenuation in 1 db steps.

Referring to the photos; you can see I built my attenuator in a Bud Minibox CU-2102-A, 4" X 2-1/8" X 1-5/8". Four steps is the maximum in this size box, unless different switches are used. Mine are Cutler-Hammer 7592K6. The shielding was made from transformer strap, but could be any soft copper available. Try a Hobby Shop and get the thin sheet that is used for embossing if all else fails.

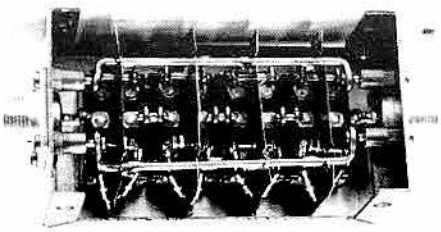

Looking inside the attenuator.

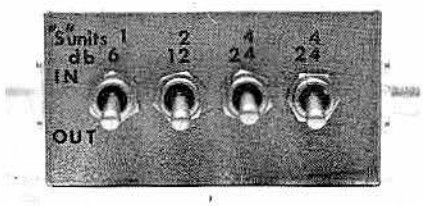

Front panel showing the switches for the various steps of attenuation.

Here are some of the uses an attenuator of this type is suited for:

Checking receiver "S" meter calibration.

Attenuating signals to aid in peaking receivers and converters.

Calibrating diode voltmeters for *rf* measurements.

Checking antenna gain. Or gain of that outboard *rf* stage.

P. S. My "S" meter lies, just as I thought!

THE EVER-USEFUL T-PAD

Jim Kyle K5JKX

Most of us have transmitters; let's hope that an equal number of us have receivers also. Antennas and microphones are usual station accessories, with a few determined diehards here and there clinging to the trusty old key. But how many of us have much in the way of test equipment?

Now and then somebody pops up with a VOM, and occasionally you can even find an operator who uses a scope. But the kind of special-purpose test gear you find in a well-equipped laboratory is almost always absent in the ham shack.

Which is more or less as it should be, since we're hams, not laboratory technicians. But with the present trends toward VHF, at least some specialized test gear is necessary. Otherwise, the regular station equipment can't be tuned for maximum performance.

One of the simplest such items is a noise generator, for getting the VHF receiver in perfect tune. This gadget has been described many times before, so we won't repeat it again —but we do have something which transforms the usual noise-generator lashup from a so-so item to an instrument capable of laboratory accuracy.

Before going into detail, let's look at the normal method of using a noise generator: you connect the generator to the antenna input, tie the converter to the receiver, turn the avc off, connect a voltmeter to the detector load resistor in the receiver (or put an ac voltmeter across the speaker leads), and measure the voltage produced by just noise. Then you turn on the generator and adjust it for a 3 db (1.4 times the voltage) increase in output; the object is to achieve the 3 db increase with the minimum amount of current flowing in the noise generator.

However, this technique of using the noise generator is pretty sloppy, since it assumes that the receiver's detector is absolutely linear for small signals—and this assumption is almost always incorrect.

A far better technique is to hook things up just as before, except now you place three T-pads in the line between converter and receiver. The T-pads on each end of the string serve merely to clamp the line impedance at 50 ohms, but the one in the center is built for precisely 3 db loss.

Now take the 3 db pad out and take your reading as before with the noise generator off; you don't have to turn off avc or hook up a voltmeter. The receiver's S-meter can be

used instead, since we're not measuring anything with the meter itself. It merely serves as an indicator so we can come back to the same point.

Then replace the 3 db pad in the line, turn on the generator, and crank it up until you get the same meter reading as before. Since you now have 3 db of added loss between converter and receiver you must have increased the noise power output of the converter by that same 3 db, and you could care less about the linearity of the detector!

This whole method is far from new, but previous descriptions of it have left something to be desired in the way of telling how to build the T-pad. The gadget is so simple that it must have seemed obvious to previous writers—but it does have its tricky points too.

For instance, since a T-pad consists merely of 3 resistors, it is pretty easy to just wire them up by their leads. But they are hanging in the receiver antenna lead, and present-day receivers are rather sensitive. If you happen to find a 20-meter signal, it's going to foul up your measurements!

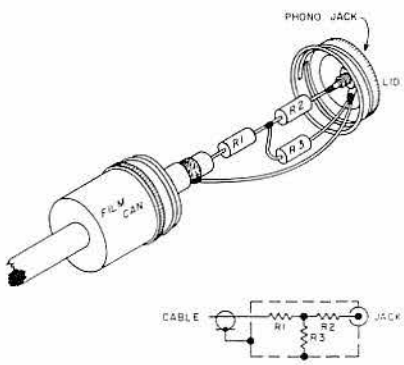

T-Pad construction details

One of the quickest ways to sidestep this problem is to shield the pad against all outside influences—but how do you shield anything so tiny?

The answer here is to use discarded 35-mm film cans, which all photographers who shoot 35-mm cameras have in abundance. The Kodak kind seem to work best. This type has a threaded cap, with a flat spot in its center just right for drilling a ¼ inch hole to take a single-hole-mounting phono jack. At the other end, a ⅜ inch hole can be punched and lined with a rubber grommet for coax cable to enter.

Next step is to place the jack in the hole in the lid, with its solder lug on the inside (be sure to clean the paint so that a good electrical contact will result). The T-pad can be assembled as shown in the drawing with shortest possible leads, and supported by its lead connecting to the jack. Thread a short length of RG-58 through the grommetted hole, and connect its center conductor to the other lead of the pad; the shield and shunt lead of the pad connect to the solder lug of the jack.

All that's left is to wire-brush the threads on the film can for good contact, and screw the lid down tight. Presto, a shielded T-pad. A phono connector should be put on the free end of the cable.

You can make up a whole bunch of these in various loss values, and get virtually any amount of loss you want by stringing them together. And this has a whole lot more use than just using with a noise generator . . .

For instance, when you want to test an antenna, arrange for a steady signal, strong enough to register on your S-meter with the back of the antenna pointed at it. Then swing the antenna in small steps, and bring the S-meter back to the same reading by inserting additional loss between converter and receiver with the T-pads. The difference between this and S-meter indications may amaze you.

Or if you are called upon to measure the difference in signal strength between two stations, the same approach can be used. Note the S-meter reading of the weaker, then knock the stronger one back to the same reading by putting T-pads in the converter-to-receiver line. Read the db off the pads and add them up.

You can even use this in place of an S-meter if you really want to know the signal-to-noise ratio of an incoming signal with accuracy; take a reading on noise, then knock the signal back to the same point. Total up the db, and there's your answer.

Though resistance values in the pad must be precise for absolute accuracy, the pad has an inherent tolerance of small errors and you should have better than 2 percent accuracy if you use 5-percent resistors. Specifically, a 10-percent error in the resistance value of any one arm produces less than ¾ db error in the pad loss, and less than 4 percent error in impedance. Using 5-percent resistors would, of course, cut these error limits in half.

If you want to follow the approach of using a string of these pads for all purposes in the shack, it's best to make them up on a "binary" approach since this gives you the maximum number of db values with the minimum number of parts. A basic assortment might be two 1 db pads, and one each of 2 db, 4 db, 8 db, 16 db, and 32 db. Using them in series in various combinations, you can get any whole number of db from 0 to 64, which pretty well covers the range of values you may ever need. For an example, to get 50 db you would use the 32 db pad, the 16, and the 2. For 60 db, you would use the 32, the 16, the 8, and the 4.

If the ability to increase loss in 1 db steps seems a bit exotic to you in view of the fact that 3 db is only half an S-unit, then you can use a binary progression in 3 db steps; this takes one 3 db pad, one 6 db, one 12 db, and one 24 db. The range is from 0 to 45 db, 3 db at a time.

For clamping a line's impedance, it's a good idea to use at least a 3 db pad and a 6 db unit might be even better. The lower-loss pads pads may not have the ability to swamp out impedance variations on their other sides.

About all that's left to make this complete is a chart of resistance values for various loss figures. Here it is; all are for use with a 50 ohm line; to use at any other impedance, multiply these values by the ratio of the new impedance to 50 ohms:

LOSS AMOUNT	R1, R2	R3
1 db	2.7	430
2 db	5.6	220
3 db	8.2	150
4 db	11	100
6 db	16	68
8 db	22	47
12 db	30	27
16 db	36	16
24 db	43	6.2
32 db	47	2.2

COMBINATION DUMMY LOAD/ ATTENUATOR NETWORK

John Schultz W2EEY

There are many instances when it is desired to use an existing transmitter as an exciter unit for a high-power linear amplifier. Many such linear amplifiers require a drive level that is only a fraction of the transmitter's output. To some degree, the transmitter can be detuned in order to reduce its output level, but this procedure is rarely possible when several orders of magnitude reduction in the power level are necessary. In such a case one can either internally modify the transmitter for a lower output level or use an alternator network between the transmitter and linear amplifier. In the latter case, the transmitter can be operated at its normal power input level and with its tuning controls at their normal settings.

The unit described in this article functions as both an *rf* attenuator and as a

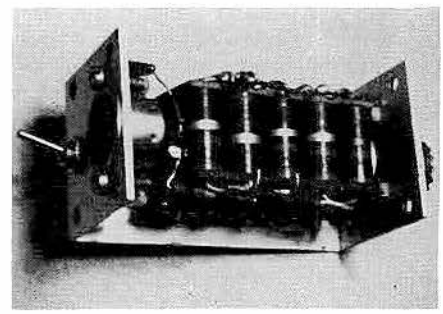
A simple method of construction is employed. Based mainly on "sandwiching" the resistors used between two pieces of vector-board. Details are given in the text. SO-239 is used as coax input connector. The circuit function switch is located below the output connector.

dummy load. The latter capability allows a transmitter to be properly tuned alone for correct operation before it is used to drive a linear amplifier. An optional wattmeter circuit is included which when calibrated allows direct reading, in watts, of the full transmitter output or of the drive level supplied to the linear amplifier.

The unit described was built for use with a nominal 100 output transmitter used primarily for SSB service. The construction used, however, can be extended to other power levels for transmitters operating on 80-10 meters. Also, using the information

Power Reduction	Resistor Factors a	b
1/4 (6db)	.3	1.3
1/5 (7db)	.4	1.1
1/10 (10db)	.5	.7
1/20 (13db)	.6	.5

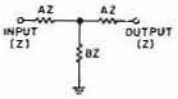

Fig. 1. Approximate resistor factors for "T" network attenuators over the ranges normally desired for exciter power output reduction.

supplied, the same type of attenuator/dummy load can be designed for other than 50 ohm transmission line systems. The attenuator was not designed as a precision network in order to allow the use of inexpensive resistors. However, the attenuation characteristics are quite satisfactory for the intended usage.

Besides its application as a power reducer when driving a linear amplifier, the unit can be used with a transmitter whenever a quick, known level of power output reduction is needed for operating purposes, approximate gain measurements, etc.

Circuit

Fig. 1 shows the circuit values for a generalized T network attenuator that can be used in any impedance unbalanced transmission line. The scaling factors are only shown for those power reduction levels most likely to be needed when driving a linear amplifier with a 75-200 watt transmitter, in order to avoid unnecessary detail. Factors for intermediate power reduction values can be found by interpolation to a satisfactory degree or one can consult an electronics handbook. The basis of the attenuator/dummy load network is to find the combination of resistor arms that will provide the desired attenuation and still be able to be connected together to form a dummy load of the correct value. Fig. 2 shows one possible combination. Each resistor bank has a value of about 20 ohms (5 resistors of 100 ohms each in parallel). In one position of the DPDT switch, the resistor banks are formed into a "T" network attenuator. In the other switch position, all three banks are placed in series as a dummy load connected across the input only. The resistance values which result are not exactly those shown in **Fig. 1** for a 10db alternator. However, they are close enough to be effective and some tailoring of the individual legs is possible since each of the resistor bank values vary by a few ohms due to the tolerance of the resistors used. An optional voltmeter circuit is also shown in **Fig. 2** connected to one pole of the DPDT switch. It can be used as a relative power output indicator or if calibrated, as described later, actually measure the power output of the transmitter and of the attenuator.

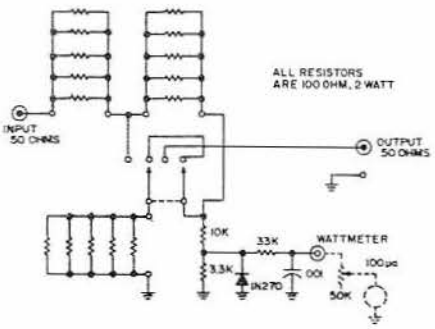

Fig. 2. Circuit of one possible dummy load/attenuator network providing about 10 db power reduction. Optional wattmeter circuit is also included.

Many variations of the basic idea are possible. **Fig. 3** shows the use of four banks of 100 ohm resistors. All four are used to form an attenuator that comes reasonably close to the values required for 7db attenuation in a 50 ohm system. Only three are used in series for the dummy load function. In this case only a simple SPST switch is necessary to disconnect the output. The same *rf* voltmeter circuit as used in **Fig. 2** may be added if desired. The switch, in fact, could be eliminated entirely if one were willing to disconnect the output termination in order to use the dummy load feature.

Whatever combination of resistance banks are used in order to achieve a desired attenuation value and the correct dummy load resistance, care must be taken that each resistance bank has sufficient power dissipation capability. The dissipation in each leg of the "T" network varies according to the attenuation level and can be calculated by Ohms Law. In general, a continuous power rating for a resistor bank equal to about one-third of the SSB peak power rating seems to suffice, including for quick tune-up on CW. For keyed CW service, the power rating should be increased to at least one-half the key-down power level.

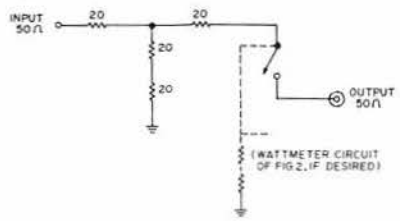

Fig. 3. Another dummy load/attenuator configuration possible with the 100 ohm resistor banks. It provides about a 1/5 power reduction (7db) when used as an attenuator.

Construction

The approach of using a relatively large number of 2 watt composition resistors is far less expensive than using specific value *rf* non-inductive resistors of 10-30 watts power rating. In quantities of more than 10, IRC type RC-2, 2 watt, 10% tolerance resistors cost about 9 cents each. So, one can achieve a 40 watt unit for less than $2 resistor cost. Banks composed of these resistors work well up to 30 mc as long as the interconnecting leads are kept short.

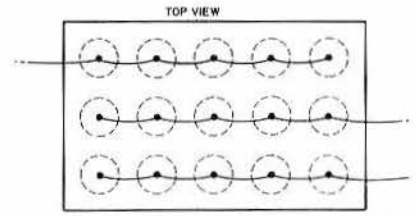

Fig. 4. Similar resistor banks are connected together on the underside of the assembly.

The photograph shows the construction used by the author for the circuit of **Fig. 2**. Similar construction can be used for larger size units as well. As shown in the photograph, the 15 resistors in rows of 5 each are sandwiched between two 1-1/8" x 1-7/8" pieces of vectorboard. None of the resistors physically touches. The wiring is done using the resistor leads. This construction is somewhat compact to expect full, continuous power dissipation from the unit but suffices for intermittent use. The frame measures 2¾" x 1½" x 1½". A cover is not absolutely necessary since the minor radiation that takes place is not important in this application. If a cover is used, it certainly should be of a perforated type to allow maximum air flow. A SD-239 connector is used at one end of the frame for the input. A dual connector is used at the other end, but normally one would use two RCA type phono jacks—one for the output and one for a meter circuit. The switch is located immediately below the output connector—a miniature Alco MST type.

Calibration

If it is desired to calibrate the voltmeter circuit as a wattmeter, it is necessary to use a probe and VTVM. Using the unit as a dummy load, the *rf* voltage is measured at the input and the power calculated. The 50K ohm potentiometer is used to set the meter at full scale for the highest power level used. The *rf* voltage is measured and the power level calculated in order to calibrate the meter for lesser power levels leaving the potentiometer at its "set" value. The same procedure is followed to calibrate the meter for the output power level by measuring the output *rf* voltage when the unit is used as a "T" attenuator and connected to a regular dummy load. The calibration should be made on the lowest frequency band used and rechecked on the highest frequency band used. If the readings differ significantly on the highest frequency band from those established, it may be necessary to add a few mmf capacitance across the diode in the voltmeter circuit in order to compensate for the slightest reactance present in the circuit.

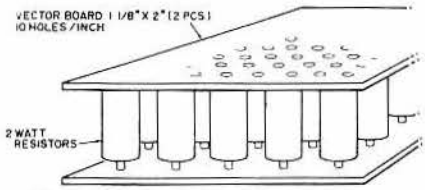

Fig. 5. Sketch showing details of resistor "sandwich" assembly.

Operation

When used between a transmitter and the 50 ohm input of a linear amplifier, the unit is first used as a dummy load for tune-up of the transmitter. The unit is then switched (with the transmitter unkeyed) to its attenuator position. In most cases, no returning of the transmitter should be necessary unless the input of the linear amplifier is particularly reactive.

Summary

The unit described is not intended as a precision attenuator or power measuring device. However, it will perform very well for its intended applications and costs far less than more sophisticated units performing the same functions.

THE MINICAN

Sam Kelly W6JTT

The Heathkit "Cantenna" has proven to be a major breakthrough in the field of dummy loads for ham use. Unfortunately, it isn't the most convenient thing to use on a small work bench with low power rigs! Borrowing their idea, I built this load for use with transmitters in the 5 to 15 watt range. The parts are few: a Campbell soup tin can, four one watt resistors, a UG-254-A connector, a short piece of 5/16 inch brass tubing and transformer oil.

Fig. 1 is a sketch of the assembled unit. The 50 ohm resistance was made up of three 15 ohm and one 5 ohm one watt carbon resistors.

First sand a can lid from a larger size can until it is free of paint. Drill a ½ inch hole through the center of the lid, and a ¼ inch hole on the perimiter. Mount the coaxial connector through the center hole. Solder a 1 inch length of 5/16 in. brass tubing over the ¼ inch hole. Solder the resistors as shown. Center the lid on the can and solder the lid to the can. Use a file to remove all rough edges. Mask the connector with masking tape and paint the can to prevent rusting.

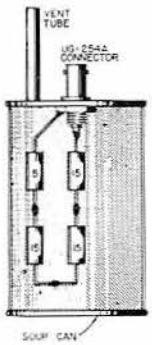

Fig. 1. Construction of the Minican. Main parts are a soup can, coax connector and resistors.

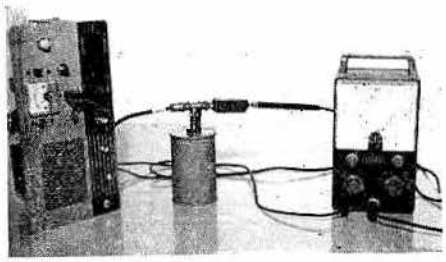

The Minican in use with the companion detector.

Fill the can with transformer oil. A good grade of automatic transmission fluid was used in one load with no degredation in performance. However, it probably is not advisable as the fluid has a relatively low ignition temperature and might create a fire hazard.

The load was tested by running it for five hours with an input of 15 watts of 50 MHz rf. The can became warm, but the resistors showed no signs of overheating.

A maximum VSWR of 1.5:1 was obtained at 234 MHz. The measurement was made at this frequency because an automatic test set was available.

A companion rf detector unit shown in Fig. 2 was built in a two inch section of ¾ inch square extruded brass stock. A Dage 394-1 BNC connector is mounted on one end for connecting to the RF circuit, while the DC output to the VTVM is a tip jack.

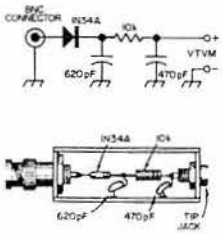

Fig. 2. Rf detector for use with the Minican.

THE TINY TERMINATOR

Jim Kyle K5JKX

HAVE you ever felt the need for a dummy load which would also indicate accurately the actual rf output power of a transmitter?

You can buy such a beastie, you know. The Bird *Termaline*, standard of the two-way communication industry, shouldn't set you back much more than a C-note . . .

But you can also build one at considerable less outlay, and that's what this article is all about.

As the photographs show, there's almost nothing to the "Tiny Terminator"—nothing, that is, but a 50-ohm load for any transmitter, which will absorb 20 watts for days on end and will handle 40 watts for brief periods (a minor modification can double these ratings), will *not* radiate rf into the ether after the fashion of the "standard" light bulb load, will allow accurate measurement of output power up past 225 mc, and can be built in less than two hours for less than $5.

You can see by the schematic that there's nothing to the device electrically; the tricks are all mechanical. Electrically, the Tiny Terminator consists of 20 (that's what we said)

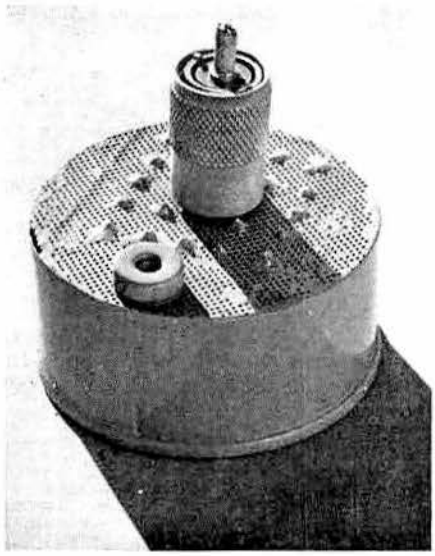

1000-ohm 1-watt resistors connected in parallel, with a crystal diode running from the hot end of the composite resistor to the meter jack and a 27 mmfd capacitor bypassing the meter.

Mechanically, the big problem with a unit such as this is the problem of keeping the load resistive regardless of frequency. Resistor leads have inductance (about 25 millimicrohenries per inch) so we get rid of the leads as completely as possible. This is done by punching holes in a flat plate, passing the lead through the hole until the resistor is flush with the plate, and soldering rapidly with a hot iron (an Ungar 47-watt 1100-degree tip was used in building the model shown) so that the resistor body won't cook before the leads and plate are joined.

The flat plate has capacitance. This is avoided by keeping the plate shielded from outside influences, and separated as far as possible from its shield.

The shield, incidentally, is the bottom of 1½ inches of a Canada Dry cola, soldered all around the edge to the front resistor plate. This confines all rf inside the terminator.

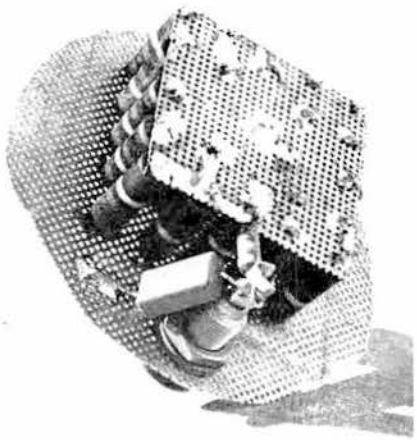

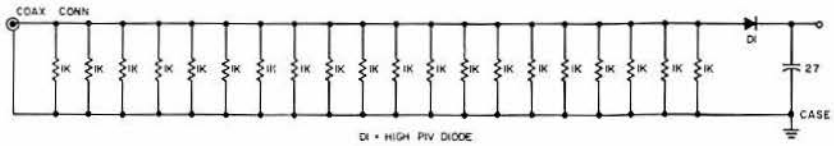

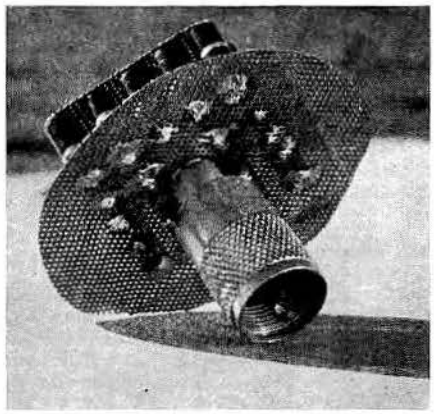

Addition of the crystal diode (a 1N34 was used, but a higher-voltage unit is recommended if you ever expect to measure power higher than 8 watts) and the bypass capacitor provide the power-measuring feature. These two components, in conjunction with an external voltmeter of at least 1000 ohms per volt sensitivity, provide you a peak-reading ac voltmeter. The voltage indicated on the meter will be equal to the peak value of rf voltage present across the load. Squaring the voltage and dividing by 50 (the resistance) will give you the *peak* power. Most power ratings are in rms values rather than peak; multiplying the indicated voltage by 0.707 before squaring will give you the rms power output.

The unit shown in the photos used perforated brass stock for the resistor plates; this happened only because a length of the brass was on hand in the junkbox at the time. A cut-out tin can lid will work equally well and will be much less expensive.

Not visible in the photos is the means of connecting the hot end of the resistor plate. A hole was punched in the middle of the hot plate and a length of No. 14 bare wire was soldered in, then filed off flush on the rear side. The bare wire was threaded through the coax connector and soldered to the center contact after checking for possible shorts.

The coax connector itself is held in place by a solder joint all around the rim of the cable-end aperture (see photo). This joint, if well made, provides plenty of strength.

Earlier, we mentioned that a minor modification would double the power rating. That modification is this: instead of 1-watt resistors, use the 2-watt variety. If you really want to go high-power, use 50 2700-ohm 2-watt resistors and have a terminator which will absorb 100 watts continuously and 200 watts ICAS. However, one that big will cost more—and you'll probably have to use a coffee can for the shield instead of the cola can used here.

United States Patent [19]

Berley

[11] **4,410,805**

[45] **Oct. 18, 1983**

[54] **RADIOMETER GENERATOR**

[76] Inventor: **Lawrence F. Berley,** 19 Chipmunk La., Media, Pa. 19063

[21] Appl. No.: **918,772**

[22] Filed: **Jun. 26, 1978**

[51] **Int. Cl.**[3] **F03G 7/00**

[52] **U.S. Cl.** ..... **290/1 R;** 356/216

[58] **Field of Search** ..... 356/213, 216; 290/1 R; 60/641; 310/306; 73/355 R; 350/1.1; 250/215

[56] **References Cited**

U.S. PATENT DOCUMENTS

1,000,831	8/1911	Martin	356/216
2,004,392	6/1935	Rah	356/216 X
3,348,374	10/1967	Schalkowsky	310/306
4,146,407	3/1979	Litsenko et al.	136/89 PC

FOREIGN PATENT DOCUMENTS

Ad.10769	of 1890	United Kingdom	356/216
1395137	5/1975	United Kingdom	250/215

OTHER PUBLICATIONS

Series of papers published in the Philosophical Transactions of the Royal Society of London (1873–1881), par. 452.

"Radiant Matter", A Resume of the Principal Lectures and Papers by Prof. William Crookes on the Fourth State of Matter, published by James W. Queen & Co., No. 924, Chestnut Street, Philadelphia, Pa., pp. 6–9.

Primary Examiner—J. V. Truhe

Assistant Examiner—W. E. Duncanson, Jr.

Attorney, Agent, or Firm—John F. A. Earley

[57] **ABSTRACT**

A self-contained system embodying the principles of the radiometer, the otheoscope, and the dynamoelectric machine is provided to derive an output of electrical energy from an input of radiant energy, and in particular infra-red energy, from the surrounding environment, and for amplifying that output. The system is suitable for airborne and space as well as terrestrial applications.

27 Claims, 34 Drawing Figures

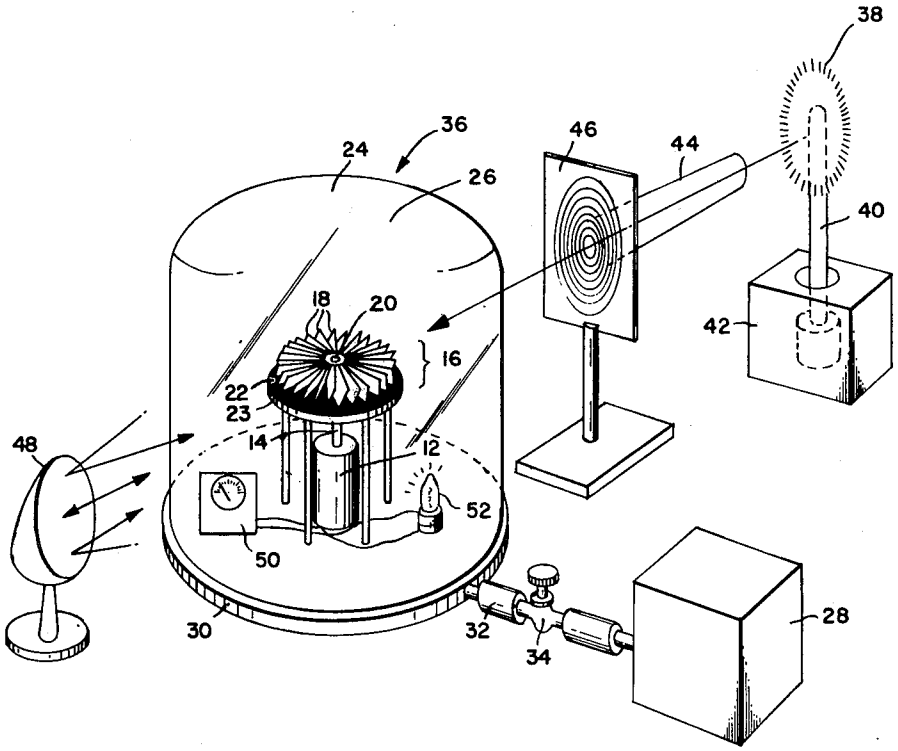

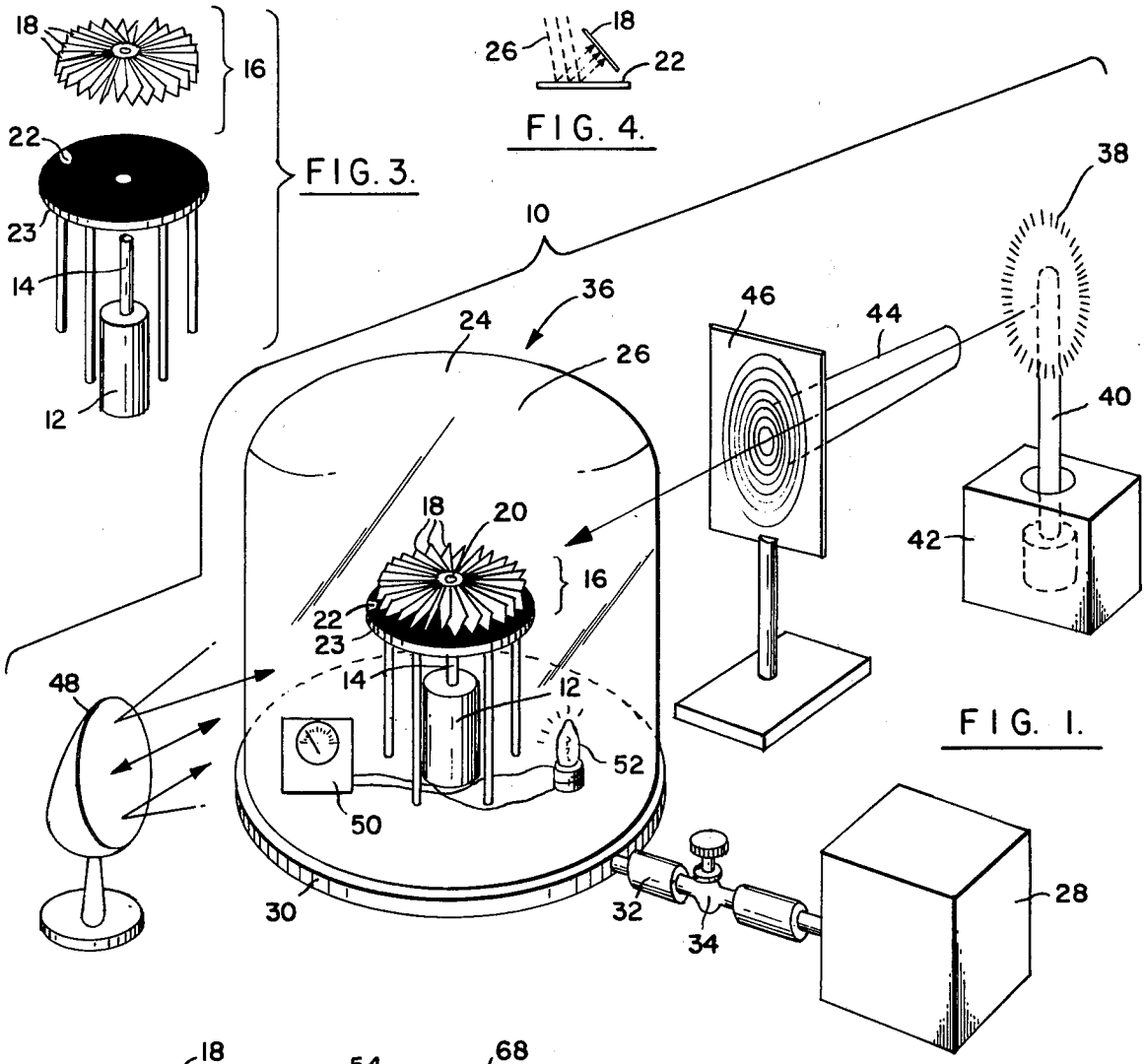

FIG. 3.

FIG. 4.

FIG. 1.

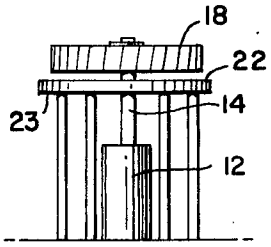

FIG. 2.

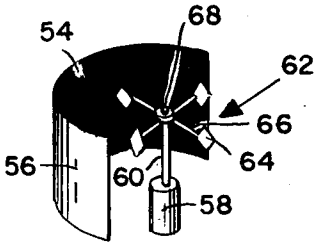

FIG. 5.

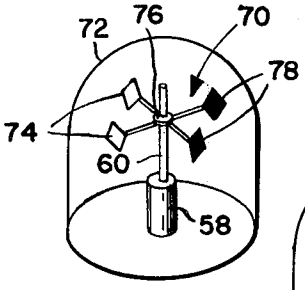

FIG. 6.

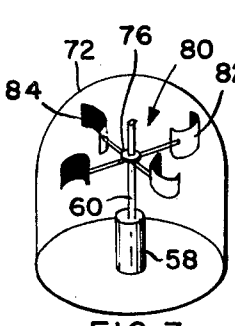

FIG. 7.

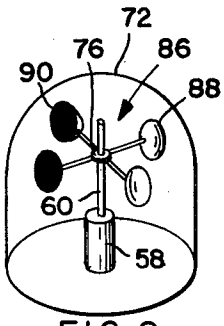

FIG. 8.

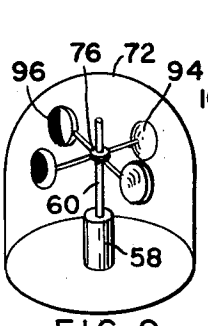

FIG. 9.

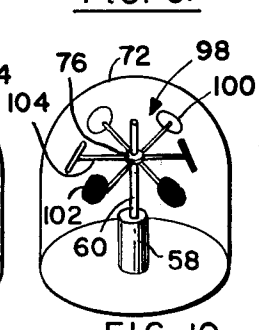

FIG. 10.

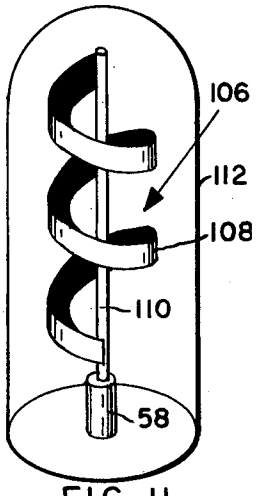

FIG. 11.

FIG. 12.

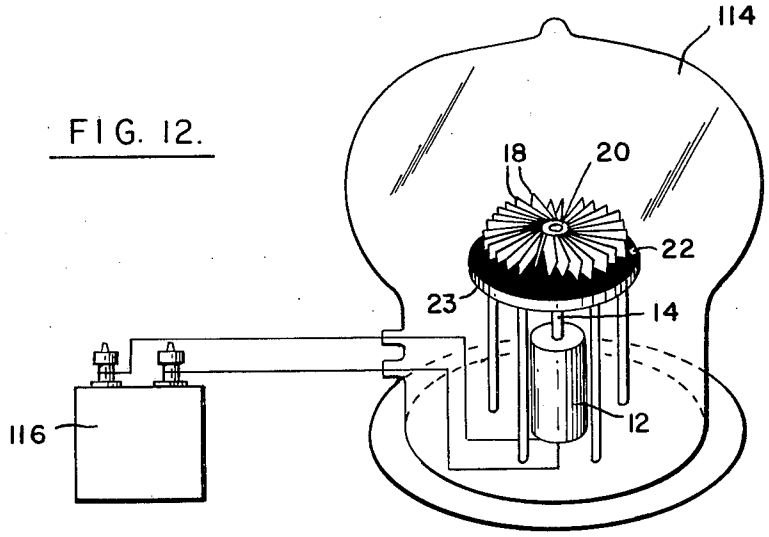

FIG. 13.

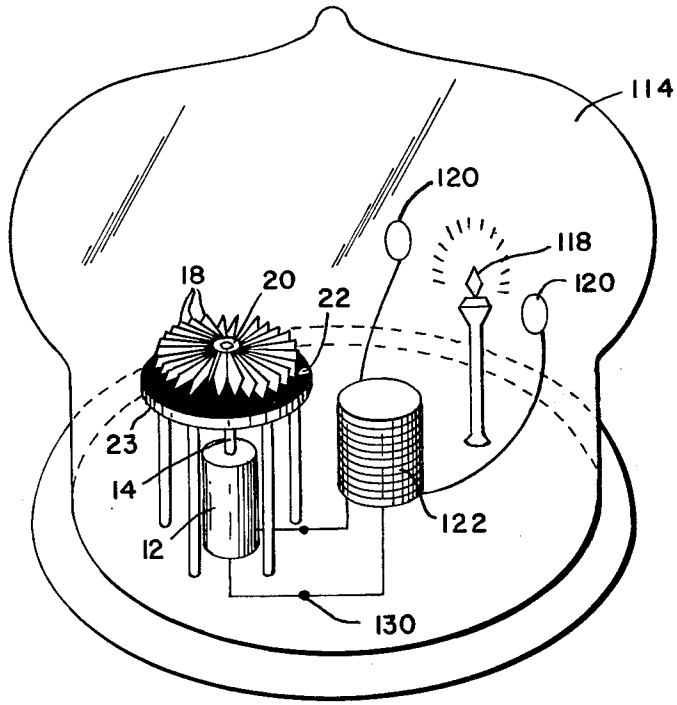

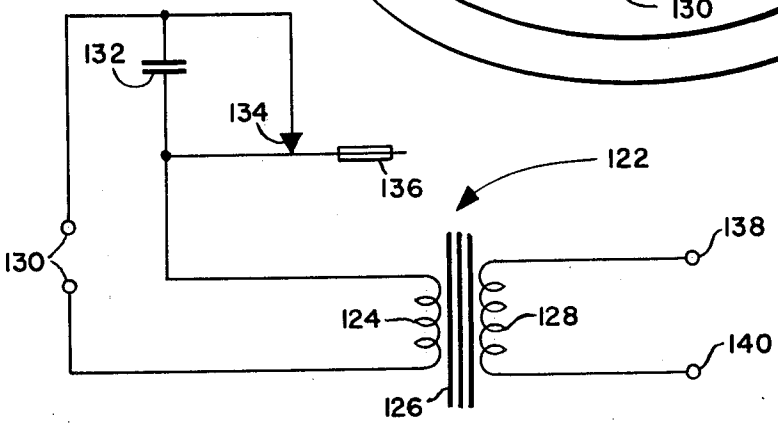

FIG. 14.

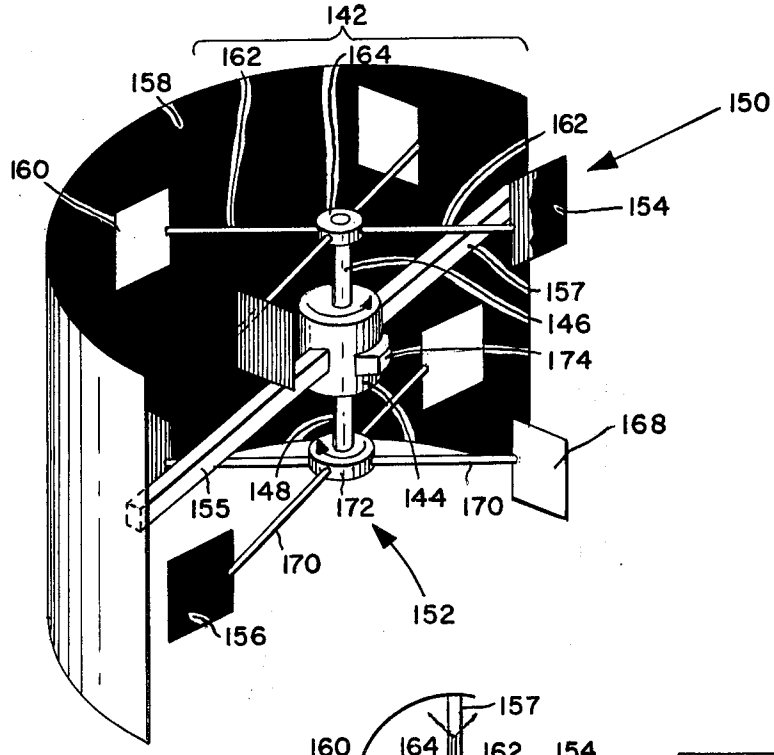

FIG. 15.

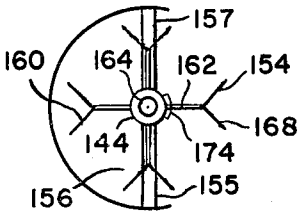

FIG. 16.

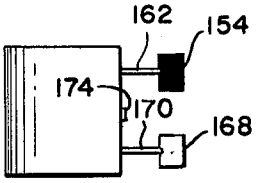

FIG. 17.

FIG. 18

FIG. 19.

FIG. 20.

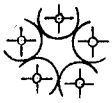

FIG. 21.

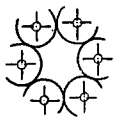

FIG. 22.

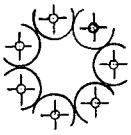

FIG. 23.

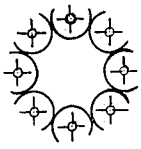

FIG. 24.

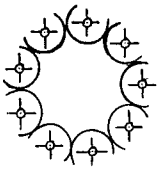

FIG. 25.

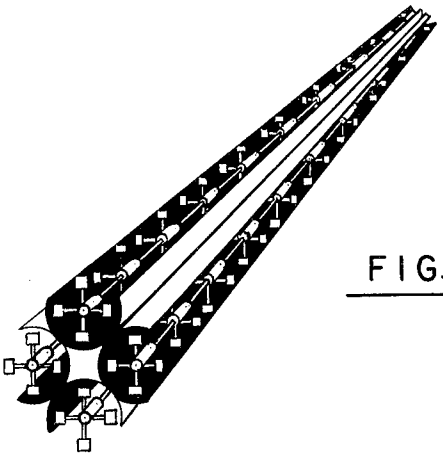

FIG. 26.

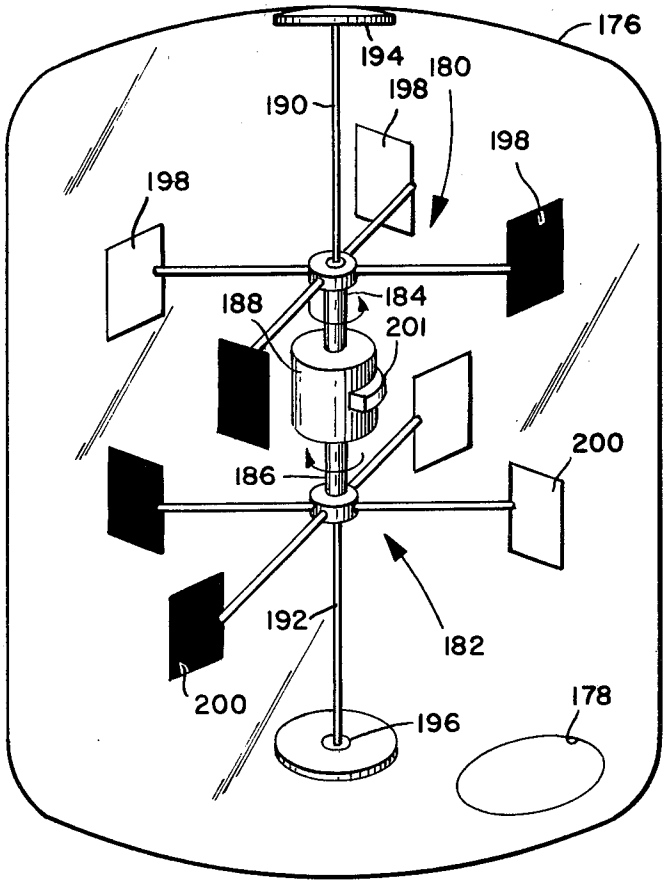

FIG. 27.

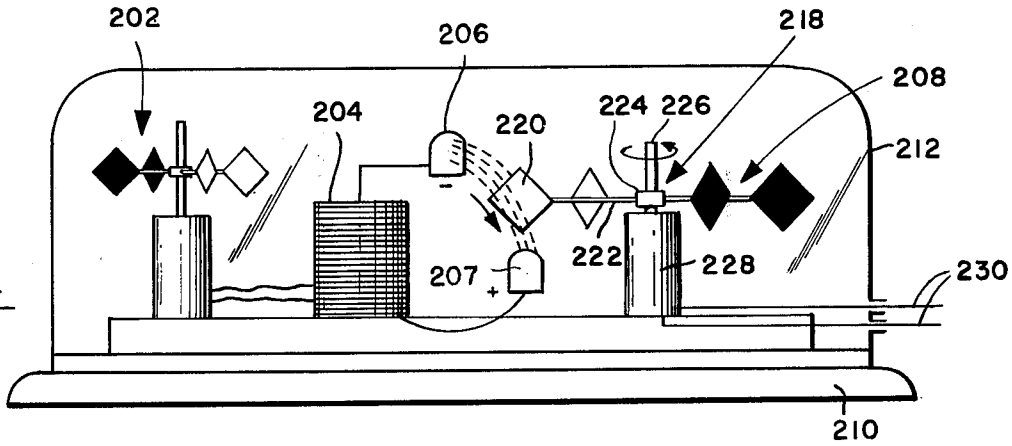

FIG. 28.

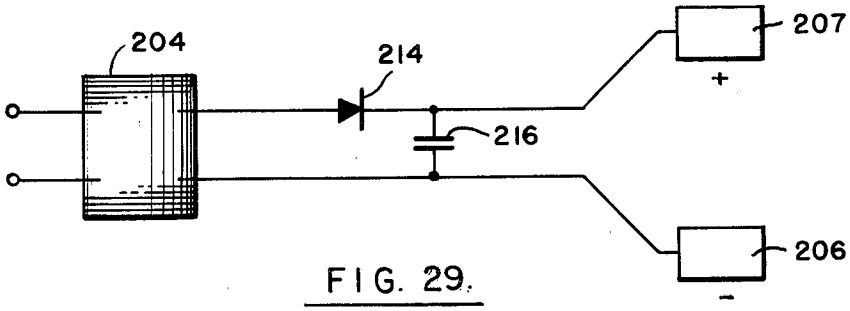

FIG. 29.

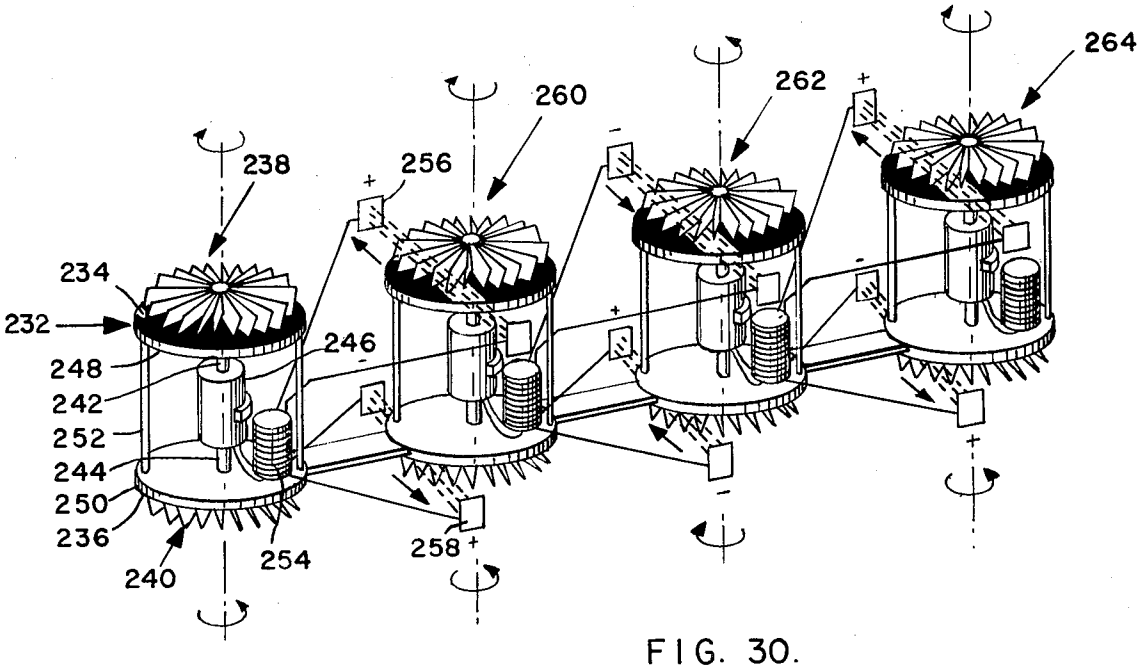
264
262
260
238
256
234
232
246
248
242
252
244
250
236
240
254
258

FIG. 30.

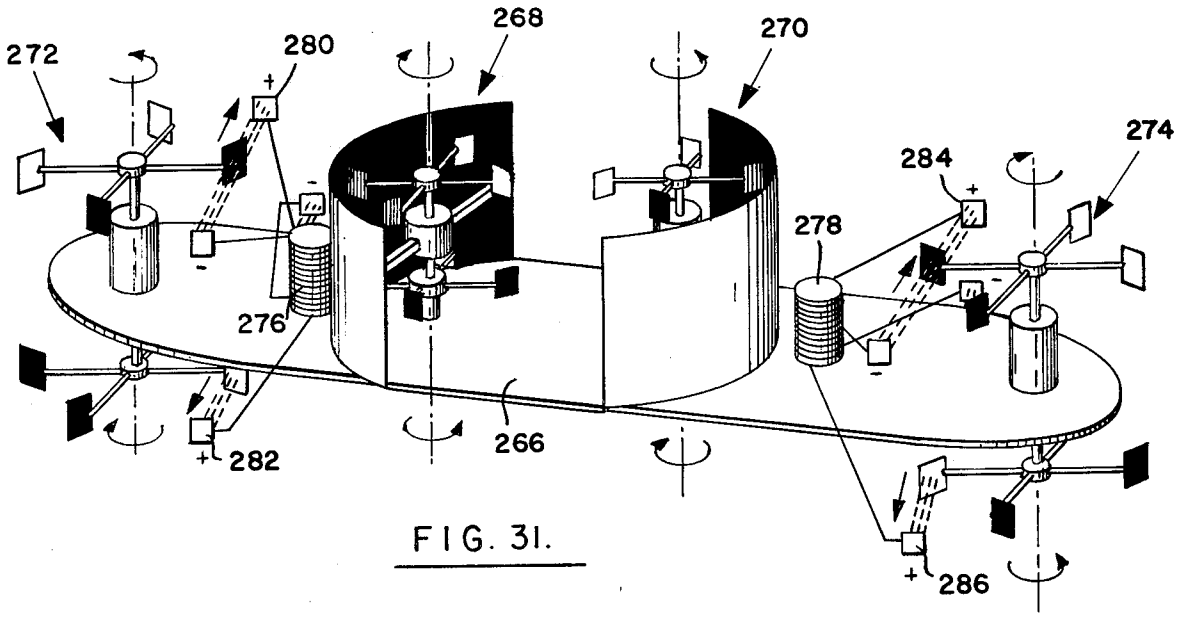
272
280
268
270
274
284
278
276
266
282
286

FIG. 31.

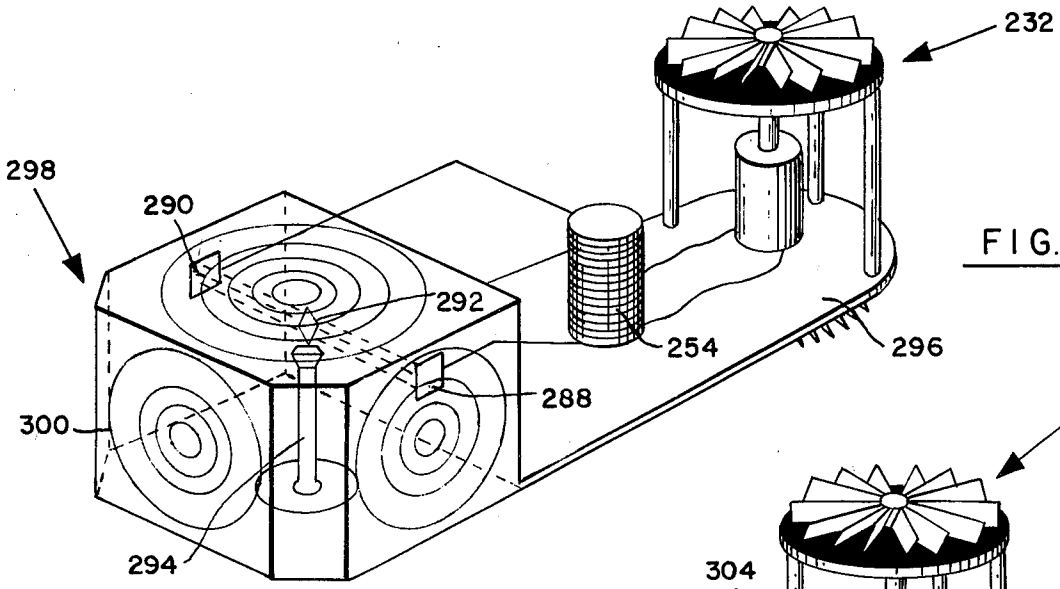

FIG. 32.

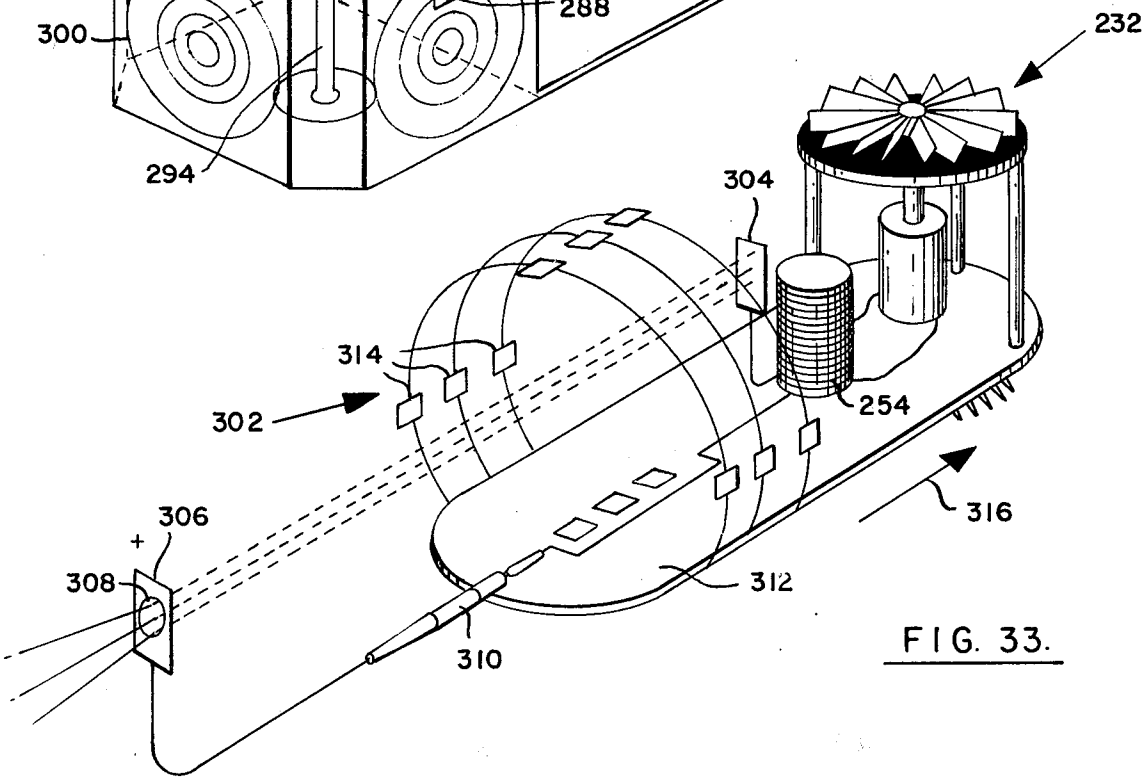

FIG. 33.

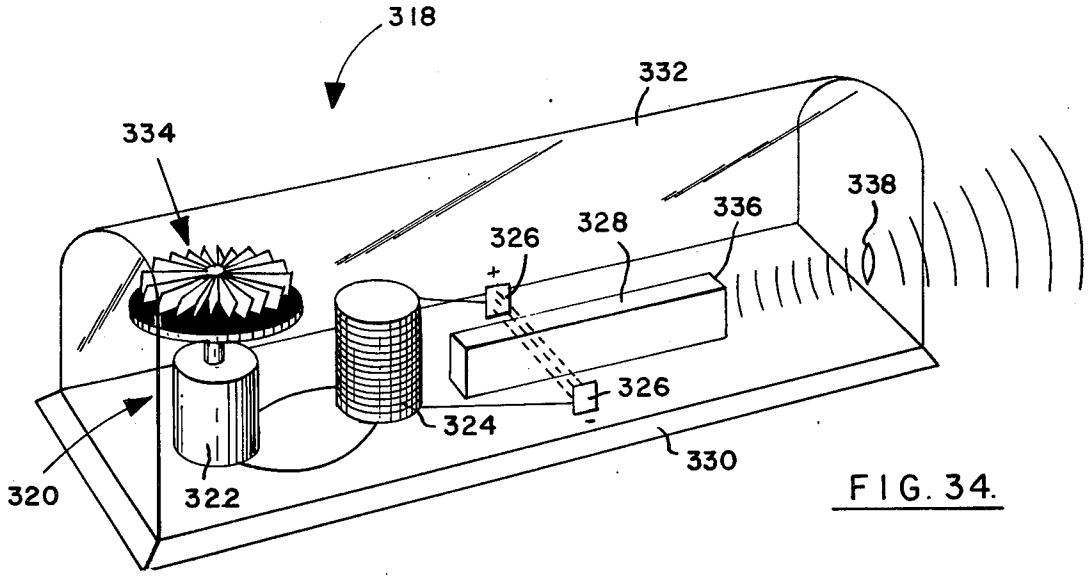

FIG. 34.

RADIOMETER GENERATOR

BACKGROUND OF THE INVENTION

1. Field of the Invention

The invention relates to a self-contained system for utilizing environmentally available radiant energy, specifically infra-red energy, to provide a new source of electrical energy.

2. Description of the Prior Art

Many proposals have been made in the prior art for the conversion of environmentally available radiant energy directly into electrical energy. Specifically, it has been proposed to use the thermoelectric, piezoelectric, and photovoltaic effects for this purpose. Typical U.S. patents showing such generators are U.S. Pat. Nos. 3,757,146 granted Sept. 4, 1973, 3,198,969 granted Aug. 3, 1965, and 3,296,469 granted Jan. 3, 1967. While the underlying principles of such generators have been known for many years, attempts at the utilization of these principles have been beset with problems that have impeded the development of such generators as practical sources of electrical power.

Other proposals for the conversion of infra-red energy into electrical energy have utilized the principle of the decrease in magnetism of bodies, particularly iron and certain other metals, alloys and their compositions as their temperature is increased. Generators embodying this principle are disclosed in U.S. Pat. Nos. 476,093, granted June 14, 1892 and 2,016,100 granted Oct. 1, 1935. Here, again, notwithstanding the apparent potential of such generators, the art has been unable to develop the technology as a practical electrical energy source. Among the problems involved with such generators is the complex and consequently expensive magnetic field structure that is required.

a phenomenon that has long been known as providing an output of kinetic energy from an input of radiant energy is the radiometer. The radiometer is an instrument that was devised by Sir William Crookes to measure the intensity of incident radiation. It operates on the principle that a body delicately suspended in a vacuum is apparently repelled by radiation. The instrument, in a commonly known form, includes a system of four spaced light-weight vanes of poor heat conductivity which are blackened on one side, the other side being bright, and so suspended in a highly exhausted bulb that they are free to rotate about a common vertical axis with the black surfaces all facing in the same direction. Incident radiation from the sun or an adjacent warm body is absorbed and emitted by the black surfaces of the vanes more than the bright surfaces, and as a result, gas molecules near the black surfaces are energized and press more on the black than the bright surfaces causing the vanes to rotate about their axis. The more intense the incident radiation, the more rapid is the rate of rotation. Actually, an outside source of lower temperature such as ice, dry ice, evaporating ether, or other cold material will draw radiant energy from the molecules causing them to move in the direction of the cold material, also driving the vanes. The container enclosing the vanes is necessary to maintain the high vacuum and to provide a barrier to rebound activated molecules back to the vanes, driving them further.

The radiometer is described in a series of papers that were published in the Philosophical Transactions of the Royal Society of London (1873–1881). Reference is

made particularly to Paragraphs 145–148. The publication entitled "'RADIANT MATTER', A Resume of the Principal Lectures and Papers by Prof. William Crookes on the Fourth State of Matter", published by James W. Queen & Co., No. 924 Chestnut Street, Philadelphia Pennsylvania also is concerned with the phenomenon.

In another form of radiation responsive instrument which he called the otheoscope and that is described also in the aforementioned Philosophical Transactions, particularly in Paragraphs 450–454, Crookes provided a larger radiant energy absorbing and emitting surface consisting of a large stationary plate of good heat conductivity having a blackened surface. Thus, in the otheoscope the surface that generates the molecular disturbance is not the one that rotates. The blackened surface of the plate, however, is placed close to the movable vanes. Because of the larger surface area and closer proximity, the blackened stationary plate activates a greater number of molecules and directs them more accurately to the movable vanes resulting in a greater speed or rotation than is achievable by the radiometer with the same intensity of incident radiation. Another advantage of the otheoscope is that an enclosure is not necessary when a vacuum such as outer space is already present. The small space between the stationary blackened surface and movable vanes provide a rebounding space within which molecular rebound can occur and rebound off a container wall is not necessary to provide the moving force of the vanes. Another form of the otheoscope involved a stationary blackened disc above which light-weight blades radiating from a common center were positioned giving the appearance of a turbine.

Although the inventions of the radiometer and the otheoscope were made more than a hundred years ago, the only use proposed heretofore for the instruments and their inherent property of converting radiant energy into kinetic energy has been the measurement of the intensity of radiation falling upon them. That this available kinetic energy might be utilized to provide a useful electrical energy source has gone unnoticed. This notwithstanding the need for new energy sources and the intensive search for such new energy sources that has long been underway. Significant in this connection is the highly developed technology that has been available for the effective utilization of such kinetic energy, specifically the production of an output of electrical energy by the mechanical relative rotative motion of the magnetic field and the electrical conductors of the dynamoelectric machine.

SUMMARY OF THE INVENTION

An object of the invention is to bring together in a self-contained system apparatus embodying the principles of the radiometer, the otheoscope, and the dynamoelectric machine thereby to derive, as a new source of energy, an output of electrical energy from the dynamoelectric machine directly from an input of radiant energy to the system from the surrounding environment.

Another object of the invention is to provide such a self-contained system that is characterized by light-weight, thereby rendering it suitable for airborne and space as well as terrestrial applications.

A further object of the invention is to include in combination with such an electrical generating system a voltage amplifying device such as an induction coil.

A further object of the invention is to provide a series of such electrical generating systems each including a voltage amplifying device the output of which is utilized to provide a driving force for the succeeding stage.

Another object of the invention is to include in combination with such an electrical generating system and amplifying device self-contained photon-emitting devices, for example, solid materials such as gemstones and specially enclosed liquids and gases thereby to provide a self-contained photon-emitting device.

Still another object of the invention is to provide in a self-contained system, combination and cluster arrangements of such electrical generating systems and amplifying devices thereby to increase the electrical power output.

In accomplishing the foregoing objects and other objectives of the present invention, there are provided selfcontained radiometer and otheoscope generating systems for generating electrical energy from impinging or incident external environmental sources of radiant energy such as heat from the sun or any source of infrared radiant energy such as a heat pipe attached to a solar energy heat collector, an atomic pile, an airplane engine, or in general from heat derived in way from space, the air, land or water. The system will function as well if it is giving up radiant energy to a source much colder than it such as ice, dry ice, liquid nitrogen or evaporating fluids.

The system, in its specific aspects, includes an energy source such as a heat pipe, means for concentrating and directing the energy from the heat pipe including a collimator for directing and making parallel the rays of radiant energy to a fresnel lens and thereby to a radiant energy absorbing/emitting surface. There is also provided a parabolic, hyperbolic, or elliptical mirror for the further reflection of rays of radiant energy and then focusing them on the absorbing/emitting surface. The system further includes a dynamoelectric machine and torque converter which cooperates with the absorbing/emitting surface and nearby molecules to drive the dynamoelectric machine. Thus the incident radiant energy on the absorbing/emitting surface is converted to kinetic molecular energy and then to kinetic mechanical energy, specifically a moment to produce the relative rotative motion of the magnetic field and electrical conductors of the dynamoelectric machine. The dynamoelectric machine may comprise a machine of either the direct or alternating current generating type. The rotative moment at the output of the torque converter provides in cooperation with the dynamoelectric machine a capability for high electrical energy output in the form of high voltage or high electrical current. The system of the present invention is distinguished in this important respect from the prior art.

In accordance with one form of the invention, the radiant energy absorbing/emitting surface, torque converter and dynamoelectric machine are suitably mounted in a highly evacuated container. The collimator, fresnel lens and mirror may be located external of the container. The electrical output produced by the system may be employed to energize electrical components that may be located internally or externally of the container, as desired, or if desired, stored in batteries for future use. When utilized in outer space, the container may be omitted since no special provision is then required to provide the evacuated internal environment of the system. In this latter use, structures employing the principles of the otheoscope would be most effective, the close disposition of the stationary blackened surface and movable vanes providing the necessary space within which molecular rebound can occur. That is to say, a container wall is not necessary to provide the moving force of the vanes, as in the radiometer.

In another aspect of the invention advantage is taken of a special property of the highly evacuated internal environment of the system that solid materials such as gemstones, and specially enclosed liquids and gases, in such an environment may be caused to emit photons by virtue of the interaction of high-energy molecules and a spanning high voltage electrical field, thus providing a self-contained photon-emitting device. Such a device emits light rays useful as a beacon or for lighting living areas as a long term lamp that need not be turned off.

BRIEF DESCRIPTION OF THE DRAWINGS

FIG. **1** is a perspective view of an embodiment of the system of the present invention utilizing an otheoscopic generator;

FIG. **2** is a side elevation illustrating the radiation absorber/emitter, the torque converter, and dynamoelectric machine of FIG. **1**;

FIG. **3** is an exploded perspective view of the apparatus of FIG. **2**;

FIG. **4** is a side elevation illustrating the action of heated molecules emitted from the radiation absorber/emitter on a vane of the torque converter after absorption of radiant energy by the absorber/emitter;

FIG. **5** is a perspective view illustrating another form of otheoscopic generator that may be employed in the system of FIG. **1**;

FIGS. **6** through **11** are perspective views illustrating different forms of radiometer generators that may be employed in the system of FIG. **1**;

FIG. **12** is a perspective view illustrating a battery charging system according to the present invention;

FIG. **13** is a perspective view of a self-contained photon-emitting system according to the present invention;

FIG. **14** is a wiring diagram illustrating a typical form of induction coil that may be used in the system of FIG. **13**;

FIG. **15** is a perspective view illustrating another embodiment of the system of the present invention utilizing a dual otheoscopic generator and having particular application in outer space.

FIGS. **16** and **17** show top plan and side elevational views, respectively, of the system of FIG. **15**;

FIGS. **18** through **25** illustrate top plan views of combination and cluster arrangements of the system of FIG. **15**;

FIG. **26** illustrates a perspective view of a cluster arrangement of the basic FIG. **15** system;

FIG. **27** illustrates an embodiment of a dual radiometer generator for outerspace use that is enclosed in a glass or other heat conducting container;

FIG. **28** illustrates an embodiment of the radiometer generator and induction coil as a power amplifier;

FIG. **29** shows a diode rectifier circuit for use with the apparatus embodiment of FIG. **28**;

FIG. **30** illustrates an embodiment linking dual otheoscopic generator power amplifiers into a chain thereby providing increasingly more powerful generators;

FIG. **31** illustrates another embodiment of a power amplification system using dual otheoscopic and also radiometric forms of generators in outer space;

FIG. 32 illustrates an embodiment of the invention employed as a lighthouse in outer space;

FIG. 33 illustrates an embodiment of the invention employed as a propulsive mechanism in outer space; and

FIG. 34 illustrates an embodiment of the invention for providing a source of coherent light.

DESCRIPTION OF THE PREFERRED EMBODIMENT

THE EMBODIMENTS OF FIGS. 1-11

Referring now to the drawings, and in particular to FIG. **1**, there is shown an otheoscopic generator comprising a self-contained system indicated at **10**. This system requires no external power for its operation, other than environmental incident radiation, for converting such incident radiation into useful electrical energy and other desired forms of radiant energy. The system includes a dynamoelectric machine or generator **12** having a drive shaft **14**. The output electrical current from the generator **12** can be alternating or direct, as desired. In FIG. **1**, the generator **12** is shown as a miniature direct current generator having minimal inertial turning resistance of the shaft, minimum armature resistance, and an output voltage of 1.8 volts per 1000 RPM. A permanent magnet not shown provides an internal magnetic field. Where subsidiary current to maintain an internal magnetic field is required, a suitable additional otheoscopic generator of the type herein illustrated in FIG. **1** would be added to provide such current.

The system of FIG. **1** further includes a torque converter indicated at **16** comprising a light-weight circular aluminum fan having a bank or plurality of light-weight vanes **18** each approximately 1/32" thick radiating from a center disc **20** attached perpendicularly to the vertically positioned drive shaft **14** of generator **12**, as for example, with epoxy glue.

A radiant energy absorber/emitter surface indicated generally by the reference numeral **22** may consist of lampblack painted on the upper side or surface of a plate **23** facing the torque converter **16**. The plate **23** preferably is made of a good heat conductor such as silver, gold, copper or aluminum. A desired property of the blackened surface is high absorbancy and emission of infra-red radiant energy. Material other than lampblack may be employed to provide the desired high absorbant black surface **22** for the plate **23**, as is known in the art.

The generator **12**, torque converter **16** and plate **23** with its absorber/emitter surface **22** are positioned within a Bell jar **24**, being suitably mounted therein. The internal environment **26** of the Bell jar **24** consists of molecules representative, for example, of normal sea level air or other gas mixtures by design evacuated to a high vacuum of 15 to 100 microns of mercury pressure. (Note that at 1 micron of mercury pressure there are still 400 billion molecules per cubic centimeter of vacuum space.) To this end, in FIG. **1**, there is provided a vacuum pump **28** that is attached to the Bell jar **24** by way of a suitable platform or base plate **30** on which the Bell jar **24** is mounted, and also by way of a vacuum hose **32** and high vacuum stop cock **34**.

The environment external of the Bell jar **24** is the normal sea level air for the region in which the Bell jar **24** is located under the influence of various climatological and geophysical factors such as temperature, humidity, pressure, gravitational, electrical, and magnetic field gradients. This environment contains many natural sources of radiant energy indicated generally at **38**, including the sun. The energy source **38** chosen for purposes of illustration in FIG. **1** is a 12" heat pipe **40** that is arranged to transfer heat energy from heated water stored in an insulated container indicated at **42**. The environment shown also includes a short collimator **44** that is provided to direct and make parallel the rays of radiant energy from the close source of radiant energy, the heat pipe **40**. The collimator **44** directs the radiant energy to a fresnel lens **46** having plane dimensions of approximately 12" on a side and $\frac{1}{8}$" thick. The fresnel lens **46** concentrates the radiant energy as it is directed toward the absorber/emitter surface **22** and focuses the energy thereon. A parabolic mirror **48** provided on the other side of the Bell jar **24** also reflects radiant energy impinging upon it from the source **40** and focuses it directly on the absorber/emitter surface **22**. Hyperbolic or elliptical mirrors may also be employed.

In FIG. **1** a suitable electrical meter **50** connected to the output of the generator **12** provides a measure of the output of the generator **12**. This output is in the form of a voltage or amperage, as desired. Additionally, a penlight lamp **52**, rated at 5 volts and 60 microamperes, is shown as being energized by the output from the generator **12**.

As those skilled in the art will understand, the absorber/emitter surface **22** and torque converter **16** provide in combination with the generator **12** a capability, in an installation in outer space, for substantial electrical energy output in the form of voltage or electrical current depending upon the electrical design parameters of the generator **12**. Thus, while in FIGS. **1-3** the generator **12** is described as a miniature direct current generator, this is because of physical limitations imposed by housing the structure of the absorber/emitter surface **22** and torque converter **16** within the Bell jar **24**. If housed in a larger container and thus freed of its physical constraints, or located in outer space wherein no housing or container would be required to provide the evacuated space, the torque converter **16**, vanes **18** and absorber/emitter surface **22** may be made of such size as to provide a substantially larger turning moment on the center disc **20**. In this case the absorber/emitter surface **22** would be separate but close to vanes **18** and center disc **20**. Accordingly, the drive shaft **14** and generator **12** may then be increased proportionately in size to provide a correspondingly enhanced output of electrical energy.

The otheoscopic torque converter of FIGS. **1** through **4** is characterized in that the vanes **18** may be transparent so as to allow a substantially unimpeded impingement of radiation on the surface **22** of plate **23** and is further characterized in that the surface **22** that generates the molecular activity in response to incident radiation is stationary, and therefore, is not restricted as to material, weight, shape, size and area of surface. Accordingly, the most suitable heat conducting material and the most efficient size, shape, weight and means of support for the plate **23** can be employed to the end of utilizing the incident radiation to best advantage. The vanes **18** of the torque converter **16**, moreover, can be located very close to the surface **22**, preferably within a millimeter or two, and the angular position of the vanes **18** with respect to the surface so chosen as to take the most efficient mechanical advantage of the radiation produced "molecular wind", as it was termed by Crookes, and as illustrated by way of example in FIG. **4**.

In FIGS. **1** through **3** the stationary plate **23** on which surface **22** is provided is shown as supported on vertical ports that rest on the base plate **30**, and the vanes **18** of the torque converter **16** are disposed in a fan shaped configuration close to the surface **22**, each vane presenting itself to that surface as illustrated in FIG. **4**.

Another form of otheoscopic torque converter that may be employed in the system of FIG. **1** is illustrated in FIG. **5** wherein the surface that generates the molecular activity in response to incident radiation, indicated at **54**, is provided on a metal sheet or plate **56** that is curved to provide a semi-circular cylindrical portion having as its axis the shaft of a dynamoelectric machine or generator **58** having a vertically positioned drive shaft **60**. Generator **58** and shaft **60** may be identical to the generator **12** and shaft **14**, respectively, of FIGS. **1** through **3**.

The arrangement of FIG. **5** further includes a torque converter indicated at **62** comprising four light-weight, transparent diamond-shaped vanes **64** each approximately 1/32" thick, that are attached to the end of a respectively associated rod **66**. The rods **66** radiate from a center disc **68** that is attached perpendicularly to the end of drive shaft **60** in any suitable manner. Each vane **64**, as shown, is vertically positioned on the end of its associated rod **66**, being disposed at an angle displaced from normal with respect thereto, and in each revolution about the axis of shaft **60**, passes close, within a millimeter or two, to the molecular generating surface **54**. The angle of each vane **64** with respect to surface **54** is similar to that between vane **18** and surface **22**, as illustrated in FIG. **4**, and thus molecular activity at the surface **54** produces a moment that causes the vane **64** to move with respect to the surface **54**, thus producing rotation of shaft **60**. The direction of rotation of the shaft **60** depends upon the direction from normal of the angle of the vane **64** with respect to its supporting radial rod **66**, the angle preferably being the same for each of the vanes **64**.

If employed in an environment such as outer space where vacuum conditions exist naturally, it is not necessary to enclose the otheoscopic torque converter **62** within an evacuated container such as Bell jar **24** of FIG. **1**. When not so employed, the converter **62** would be positioned in an environment such as that provided by Bell jar **24** with the generator **58** and the curved plate **56** suitably supported on the base plate **30**.

FIGS. **6** through **11** illustrate alternative radiometric forms of torque converters that may be employed in place of the otheoscopic torque converter in the system of FIG. **1**. The radiometer generators of FIGS. **6** through **11** differ significantly from the otheoscopic torque converter in that the absorber/emitter surface is embodied on the moving members or vanes of the generator instead of on the stationary member, and differs further, as will become apparent, in the requirement for an enclosing wall of the evacuated space to be close to the path of the moving vanes. That is to say, where the absorber/emitter surface is on the moving vanes of the torque converter, an enclosure or wall of the evacuated space must be placed close to the vanes for the latter to be driven when exposed to radiant energy. As noted in connection with the otheoscopic torque converter of FIG. **1**, when the absorber/emitter is provided on a surface separate from the movable vanes, the vanes need not have any lampblack coating.

Each of the apparatus embodiments of FIGS. **6** through **11** includes a glass container within which the moving vane system and dynamoelectric machine are placed, which container, in turn, would be placed inside a Bell jar such as the Bell jar **24** of FIG. **1** and evacuated, also, together with the bell jar.

As illustrated, the torque converter **70** of FIG. **6** is enclosed in a glass container **72** and includes four light-weight vanes **74** each approximately 1/32" thick radiating from a center disc **76** attached perpendicularly to a vertically positioned drive shaft **60** of a generator **58** that may be identical to the correspondingly numbered components of FIG. **5**. One side **78** of each of the vanes **74** is blackened, as with lampblack, the black surfaces all facing in the same direction around the torque converter. The other sides of the vanes are bright. Preferably the material of which the vanes **74** of FIG. **6** are made, and the vanes of the torque converters described in connection with FIGS. **7** through **11** are made, is a poor heat conductor to the end that the high absorbance of infra-red radiant energy on the black side has little or no effect on the temperature of the bright side.

Radiant energy, and in particular, infra-red energy is differentially absorbed and emitted by the blackened surfaces of the torque converter vanes imparting kinetic energy to adjacent gas molecules. The lack of a similar energy exchange between the obverse bright surface and its adjacent gas molecules results in a pressure differential whereby the more energetic gas molecules close to the blackened surface of the vanes give rise to a resultant driving force turning or rotating the center disc **76**.

FIG. **7** illustrates a torque converter **80** that is similar to that of FIG. **6**, but includes vanes that consist of semicircular metal foils, as indicated at **82**. The foils **82** are each blackened on one side indicated at **84**, the blackened sides all facing the same direction as in torque converter **70** of FIG. **6** and also in the torque converters illustrated in FIGS. **8** through **10**.

The vanes of the torque converter **86** of FIG. **8** consists of hemispheric cups **88** each of which is blackened on the inside indicated at **90**, all facing the same direction.

The vanes of the torque converter **92** of FIG. **9** comprise hemispheric cups indicated at **94**. Each cup **94** is provided with a blackened screen **96** that covers the outer half of each cup **94**.

The FIG. **10** form of torque converter **98** is a "turbine" form and includes elliptically shaped vanes or plates **100** that present a substantially circular outline in the primary direction of the radiation source. The plates **100** are blackened on the outer faces indicated at **102**, and are oriented at 45° from the vertical, and also from the rods **104** on the ends of which plates **100** are mounted. The apparatus embodiment of FIG. **10** allows for continuous exposure of the absorber/emitter surfaces **102** of the vanes **100** to incident light and does not require the spacing of the vanes illustrated in connection with the apparatus embodiments of FIGS. **6** through **9**.

The torque converter **106** of FIG. **11** includes a single elongated vane **108** of spiral form that is exposed to incident radiant energy emanating from almost any direction. In FIG. **11**, generator **58** is provided with an elongated shaft **110** to the remote end of which one end of of vane **108** is attached, the other end of the spiral of vane **108** being connected to the shaft **110** adjacent the generator **58**. As illustrated, the glass container, indicated at **112**, for torque converter **106**, is elongated and

shaped to conform to the general outline of the spiral vane **108**.

THE EMBODIMENTS OF FIGS. 12 THROUGH 14

In FIG. **12** there is illustrated another embodiment of the invention in which a glass container **114** that may be similar in size to an ordinary household light bulb is employed, and which embodies the otheoscopic form of torque converter illustrated in FIG. **1**. The glass container **114** is hermetically sealed after placement of the generator system therein and evacuation of the internal environment to 1 to 100 microns of mercury pressure (preferably one micron). The output terminals of generator **12**, in FIG. **12**, are shown connected to an electrical storage device or battery **116** for charging the latter, the electrical charge stored in battery **116** being available for later use.

FIG. **13** illustrates a further embodiment of the invention employing a container **114** of FIG. **12** and the otheoscopic form of torque converter of FIG. **1** wherein a gemstone **118** is positioned between two spaced plate electrodes **120**. The electrodes **120** are connected to the high voltage output of an induction coil indicated at **122** and actuated by the output of the generator **12**.

A typical electrical circuit for the induction coil **122** of FIG. **13** is illustrated in FIG. **14**. As shown, the induction coil **122** includes a primary winding **124**, consisting of only a few turns, wound on an iron core **126**. A secondary winding **128**, wound over the primary winding, consists of a large number of turns. The primary winding **124** is connected to the output terminals **130** of the generator **12** in series with an electrical capacitor **132**. An electrical switch **134** actuated by an armature **136** is connected across the capacitor **132**. The armature **136** is positioned in cooperative relation with the iron core **126**, being normally biased in upward direction to close the switch but is attracted by the iron core **126**, upon magnetization of the latter, to open the switch **134** and thereby break the circuit to primary coil **124**. As a result the armature **136** is returned to its initial position by a spring, not shown, and closes switch **134**, again restoring the circuit to the primary coil. The cycle is rapidly repeated.

In the operation of the induction coil, the flow of electrical current in the primary winding **124** produces a magnetic field in the iron core **126**. Opening of switch **134** results in a collapse of the magnetic field that induces a high voltage in the secondary winding **128**. The capacitor **132** is placed across the switch **134** to reduce the voltage across the switch as it is opened to minimize sparking.

The output terminals **138** and **140** of the secondary winding are each connected electrically to one of the electrodes **120**. Hence, there is established between the electrodes **120** an electrical field in accordance with the A.C. high voltage output of the induction coil **122**. The gemstone **118**, although a solid material, has the property of emitting photons in the environment described and thus provides a self-contained photon-emitting device.

THE EMBODIMENT OF FIGS. 15 THROUGH 26

When positioned in outer space, it is noted that unless the generator **12** is mounted on a stable platform **30** that is able to resist the turning or rotative moment resulting from radiation impinging on the absorber/emitter surface **22**, there is a tendency for the rotative moment to be applied to the generator **12** itself as well as to the drive shaft **14** thereof. Consequently, after a time the absorber/emitter surface **22**, torque converter **16**, drive shaft **14** and generator **12** will all effectively be rotating as a unit. As a result, there will first be a depletion and then, after a time, no generation at all of electrical power. This undesirable situation may be corrected, as indicated, by mounting the generator **12** on a stable platform that effectively resists such turning or rotative moments, and hence, holds the body of generator **12** stationary with respect to the relatively rotating shaft **14**, torque converter **16** and absorber/emitter surface **22**. In outer space, when the blackened absorber/emitter surface remains part of the system of movable vanes **18**, an enclosure or shroud must be provided to return high energy molecules to further drive the vanes **18** in a rotary motion. Such an enclosure is not required with the otheoscopic form of generator in which the absorber/emitter surface is part of the stationary system.

The embodiment of the invention illustrated in the perspective view of FIG. **15** and in top and side views, respectively, of FIGS. **16** and **17**, shows another way in which to arrange a radiation generator system so as to avoid the need for a platform to hold the body of the generator stable with respect to the associated drive shaft torque converter and absorber/emitter. The radiation generator system **142** of FIG. **15** includes a dynamoelectric machine or generator **144** having a pair of drive shafts **146** and **148**, a pair of torque converters **150** and **152**, and a pair of absorber/emitter surfaces **154** and **156**.

The generator **144** can provide an output of alternating or direct current as desired. Desirably, in the apparatus embodiment of FIG. **15**, the generator **144** comprises two separate generators, each having its own rotatable armature, the magnetic field sections thereof being fastened together and arranged within and fastened to the same external, common casing. The drive shaft **146** is attached to the rotatable armature of one generator. The drive shaft **148** is attached to the rotatable armature of the other generator, being axially in alighnment with the drive shaft **146**. The common casing of the generators is supported by brace members indicated at **155** and **157**, between the ends of a curved absorber/emitter surface **158**, at the center of curvature thereof.

The torque converter, indicated at **150**, comprises a plurality of vanes **160** extending from the ends of rods **162** radiating from a center disc **164** that is attached perpendicularly to the end of drive shaft **146** in any suitable manner. The vanes **160**, as shown, are positioned parallel to the shaft **146** and are so arranged as to have an edge pass close, within a millimeter or two, in each revolution about shaft **146**, to the curved absorber/emitter surface **158** that may be similar to the surface **54** of FIG. **5**. The angle of each vane **160** with surface **158** in such that molecular disturbance at the surface **158** produces a turning on the drive shaft **146**, in the counter-clockwise direction, for example. Additionally, one side of each vane **160** is blacked to provide absorber/emitter surface **154**. This provides a supplemental turning movement in the counterclockwise direction on the drive shaft **146**.

Similarly, the torque converter, indicated at **152**, comprises a plurality of vanes **168** extending parallel to drive shaft **148** from the ends of rods **170**. The rods **170** radiate from a center disc **172** that is attached, in any suitable manner, perpendicularly to the end of drive

shaft **148**. The vanes **168** are positioned parallel to drive shaft **148** and arranged to have an edge pass close, within a millimeter or two, to the curved absorber/emitter surface **158**. The angle presented by each of the vanes **168** to the surface **158**, however, is opposite to that of the vanes **160** of the upper torque converter **150**, whereby incident radiation tends to produce clockwise rotation of drive shaft **148**. Additionally, if desired, one side of each of the vanes **168** is blackened to supplement the turning moment of drive shaft **146**, the blackened sides being oppositely disposed with respect to blackened sides of vanes **160** of torque converter **150**.

With this construction, it is evident that any tendency of the rotative moment introduced by one of the torque converters **150** and **152** to rotate the common casing of dual generator **144** is offset or counterbalanced by the rotative moment on the generator casing by the other torque converter thereby providing a substantially balanced system.

The arrangement of FIG. **15** is further advantageous in that the generator **144** effectively comprises two separate generators the outputs of which may be combined whereby a correspondingly larger electrical output is obtained. The output of the generator **144** may be utilized, for example, to energize a device **174** suitably mounted on the body of the generator **144**, externally thereof, as indicated. The device **174** may comprise a lamp providing a beacon, for example, a microwave generator transmitting generated power to receiving antenna or earth, or a radio transmitter transmitting intelligence concerning space environmental factors sensed by detecting devices not shown but supported and electrically powered by the otheoscopic generator **142**. Alternatively, or in addition thereto, the electrical output of the generator **144** may be taken via suitable slip rings provided on the appropriate shaft **146** or **148**.

Another way in which the radiation generating system of FIG. **15** may be arranged so as to be balanced, thereby avoiding the depletion, after a time, of generation of electrical power is to employ but a single generator **144** having two drive shafts **146** and **148** that are axially aligned but extend in opposite directions. With this structure the brace members **155** and **157** for supporting the generator **144** would be carried by a band (not shown) encircling the casing of the generator and disposed, for example, in a groove to preclude vertical displacement but to allow rotation of the casing of the generator relatively to the band and the brace members. One drive shaft **146** of the generator **144** would serve, for example, as the drive shaft **146** of upper torque converter **150** and would be attached to the rotatable armature of the generator. The other drive shaft **148** would be attached to the lower torque converter **152** and also to the body or casing of the generator **144**. It is evident that since the turning moments on the two shafts would be in opposite directions that the system would be balanced and would continue to provide an electrical output irrespective of whether one turning moment were greater than the other. The electrical outputs of the two generators could be connected in parallel or series, as desired.

In accordance with the invention, it is contemplated that otheoscopic generating systems of the kind illustrated in FIGS. **15** through **17** may be arranged in groups or clusters to increase the electrical power output. Thus, FIGS. **18** through **25** illustrate top plan views of combinations of whole system units, from two to nine, each of which may be identical to the structure of FIG. **15**, except for the inclusion on each system unit of a device **174**. FIG. **26** shows a perspective view of constructions linking four whole system units into chains. Other numbers of whole system units may be provided, the chains may be of any length for outer space use. If desired, such chains may be deployed in a star configuration thereby providing desired structural strength as well as contributing to a further increase in electrical power output.

As illustrated in FIG. **26**, it is contemplated that the curved absorber/emitter surfaces would extend, suitably supported, the entire length of each chain. Additionally, more than one set of vanes **160** may be associated with each drive shaft **146** and more than one set of vanes **168** may be associated with the drive shaft **148**. With this arrangement, there is made available a significant increase in the energy for driving each of the generators making up the dual generator **144**. It will further be understood that the kinetic energy outputs of the entire four and if desired, five or more whole system chains that could be provided, may be utilized in parallel, by the provision of suitable gearing, to provide an even more powerful total output.

FIG. **27** illustrates an embodiment of the radiometer generator system of the present invention for outer space use. This system is enclosed in a container **176** that is transparent to infra-red radiation, which container may be glass and may be provided with an opening **178** in the wall to facilitate evacuation to the level of outer space. The system includes two torque converters **180** and **182** that are arranged to rotate oppositely disposed drive shafts **184** and **186** of a generator **188**. The body of generator **188** is directly connected to drive shaft **184**, while the armature of the generator is connected to the drive shaft **186**.

The radiometer generator system of FIG. **27** is rotatively suspended in the container **176** by upper and lower suspension members **190** and **192**, respectively. Thus, as shown, upper suspension member **190** extends between the upper end of drive shaft **184** and a disc **194** that is attached to the wall of container **176**. Lower suspension member **192** extends between the lower end of drive shaft **186** and a disc **196** that is attached to the opposite wall of container **176**.

The torque converters **180** and **182** are shown as of the type illustrated in FIG. **6**, and include four lightweight vanes indicated at **198** and **200**, respectively. One side of each of the vanes is blackened and the other is bright, the black sides of vanes **198** all facing in the same direction, the clockwise direction, as shown, and the bright sides of vanes **200** all facing in the counterclockwise direction. As a result, radiant energy differentially absorbed and emitted by the blackened surfaces of the vanes **198** and **200** impart kinetic energy to adjacent molecules to provide a turning moment on the drive shafts **184** and **186** of generator **188** in the counterclockwise and clockwise directions, respectively. A device **201** that may be similar to the device **174** of FIG. **15** may be provided for utilizing the electrical output of generator **188**.

It will be understood that combinations of whole systems units, each identical to the structure of FIG. **27**, may be provided. Such combinations may be similar to those illustrated in FIGS. **18** through **25**. Additionally, similarly to the constructions of FIG. **26**, the structure of FIG. **27** may be embodied in constructions linking two and more whole system units into elongated chains.

FIG. **28** illustrates a power amplifier embodiment of the present invention in which the output voltage of a radiometer generator system **202**, which may be similar to that illustrated in FIG. **6** is amplified by an arrangement consisting of an induction coil **204**, a pair of spaced electrodes **206** and **207**, and a second radiometer generator system **208**, the entire system being mounted on a base plate **210** and enclosed in a glass container **212** that has been appropriately evacuated, as previously described.

The output terminals of radiometer generator system **202** are connected to the input terminals of the induction coil **204** and the high voltage output terminals of the latter are connected through a suitable diode rectifier **214** to the terminals of a high voltage capacitor **216** as shown in FIG. **29**, the terminals of capacitor **216** being connected to the electrodes **206** and **207**. While shown as of the solid state variety, the rectifier **214** may be of the vacuum type. The induction coil **204** may be similar in construction to the induction coil **122** that has been described by reference to FIGS. **13** and **14**. The high voltage alternating current output of induction coil **204**, however, is converted to direct voltage by rectifier **214** and capacitor **216**.

The radiometer generator system **208** may be similar in construction to the generator system of FIG. **6**, but preferably includes a torque converter **218** in which vanes **220** are somewhat larger, and moreover, are supported on the ends of rods **222** at a greater radial distance from a center plate **224** that is attached perpendicularly to the end of a drive shaft **226** of a dynamoelectric machine **228** having a greater output than generator of system **202**.

As illustrated the electrodes **206** and **207** are so spaced and so positioned with respect to the circular path transversed by the vanes **220** as to intercept a substantial portion of that path without, however, providing any physical obstruction to the movement of the vanes **220**. The polarity of the high voltage applied to electrodes **206** and **207** is such as to make electrode **207** positive with respect to electrode **206** whereby a high voltage molecular stream is established in the direction indicated by the arrow in FIG. **28**. This molecular stream or flow of electrons between the electrodes impinges upon each of the vanes **220** as they successively traverse an arcuate path between the electrodes, thereby to produce a turning moment on the drive shaft **226** in the counterclockwise direction, as illustrated. This turning moment supplements the turning moment produced on the drive shaft **226** by the effect of radiation impingement upon the blackened surfaces of the vanes **220**, one side of each vane **220** being blackened and the other being bright and with the blackened surfaces all facing in the same direction, that required to produce a counterclockwise turning moment. Hence, the high voltage molecular stream enables the turning of the generator **228** to provide an electrical output greater than that obtainable from the generator of radiometer generator system **202**. The amplified power output from generator **228** is available from terminals **230** thereof.

FIG. **30** illustrates an embodiment of the otheoscopic form of radiation generator for use in outer space wherein dual othescopic generators are utilized with associated induction coils to provide power amplifiers, and wherein the power amplifiers are linked into a chain or brigade to produce increasingly higher electrical fields to drive increasingly more powerful generators. Specifically, there is provided in FIG. **30** a first dual otheoscopic generator indicated at **232** consisting of respective upper and lower radiant energy absorber/emitter surfaces **234** and **236**, respective upper and lower torque converters **238** and **240**, respective upper and lower drive shafts **242** and **244**, and a common dynamoelectric machine **246**. Each of the otheoscopic generators may be similar to that illustrated and described by reference to FIG. **1**. Thus, the absorber/emitter surfaces **234** and **236** may each consist of a blackened surface provided on a respectively associated plate **248** and **250** which are disposed in parallel relation to each other, rigidly supported by suitable rods **252**. The surfaces **234** and **236** are respectively associated with torque converters **238** and **240**, each of the latter comprising a fan shaped bank or plurality of light weight vanes radiating from a center disc which, in turn, is attached perpendicularly to a respectively associated drive shaft **242** and **244**. The upper drive shaft **242**, similarly to the arrangement of FIG. **15**, is attached to the armature of a first generator, while the lower drive shaft is attached to the armature of a second generator, the magnetic field sections of the generators being connected together and attached to the outer case. As described in connection with FIG. **15**, the torque converters **238** and **240** are so arranged with respect to their associated absorber/emitter surfaces as to drive their associated shafts **242** and **244** in opposite directions. As a result, the otheoscopic generator **232** is dynamically balanced.

The output terminals of generator **246** are connected to the input terminals of an induction coil **254** that may be similar to that illustrated in FIG. **14**. Additionally, as in the apparatus embodiment of FIG. **28**, a diode rectifier-capacitor circuit desirably is provided to convert the high voltage alternating current output of the induction coil to a high voltage direct current potential. A circuit similar to that shown in FIG. **29** is suitable for this purpose.

The high voltage direct current potential so obtained from the dual otheoscopic generator is applied, in parallel, to a first or upper air of spaced electrodes **256** and to a second or lower pair of spaced electrodes **258**, as seen in FIG. **30**. The spaced electrodes **256** are associated with a fan shaped bank of vanes of an upper torque converter of a second dual otheoscopic generator **260**, being so polarized as to supplement the turning moment on the drive shaft connected to the torque converter that is provided by the associated absorber/emitter surface. The spaced electrodes **258** are similarly associated with the vanes of the lower torque converter of the otheoscopic generator **260**, the electrodes **258** being polarized oppositely to that of the electrodes **256** since the turning moment produced by lower torque converter is opposite to that of the upper torque converter. The otheoscopic generator **260** may be similar to the otheoscopic generator **232**, the output thereof being applied to an induction coil similar to the induction coil **254** and similarly rectified to provide a high voltage unidirectional potential output. Each successive otheoscopic generator may be somewhat larger than the preceding one, four such generators being shown in FIG. **30**, thereby to provide a brigade creating increasingly higher voltage fields to drive increasingly more powerful dual otheoscopic generators, as indicated at **262** and **264**.

FIG. **31** illustrates another embodiment of a power amplification system, according to the invention, that

utilizes a combination of a plurality of otheoscopic generators and a plurality of radiometric generators. Thus, there is provided a platform **266** on which are mounted two otheoscopic generators **268** and **270**, each of which may be similar to the otheoscopic generator illustrated in FIG. **15**, and two radiometric generators **272** and **274**, each of which may be similar to the generator illustrated in FIG. **27**. Desirably, each of the radiometric generators **272** and **274** is enclosed in a glass or heat conducting container that is not shown to avoid undue complication of the drawing.

As illustrated, induction coils **276** and **278** are provided, being respectively associated with the otheoscopic generators and each including a suitable rectifier and capacitor as described in connection with FIGS. **28** and **29**. As in the arrangement of FIG. **30**, two pairs of electrodes **280** and **282**, and **284**,**286** are provided in respective association with the outputs of each of the induction coils **276** and **278**, and the circular path of the vanes of the radiometric generators **272** and **274**. The polarities of the electrodes are so arranged that the molecular streams between electrodes supplements the turning moments provided by the absorber/emitter surfaces of the vanes of the respective radiometric generators, thereby providing increased power output therefrom.

FIG. **12** illustrates another modification of the invention comprisiing an otheoscopic form of radiation generator for use in outer space linked to an induction coil and spaced electrodes to produce photon emission from a gem stone. The light from the gem stone may be transmitted in substantially all coordinate directions through fresnel lenses. Thus, there is provided a self-contained arrangement that aptly may be termed a lighthouse in outer space.

The otheoscopic generator and induction coil of FIG. **12** may be similar to the dual otheoscopic generator **232** and the induction coil **254** of FIG. **30**, and accordingly, have been designated by the same reference numbers. The output terminals of the induction coil **254** are connected through a diode rectifier and capacitor (not shown) to a pair of spaced electrodes **288** and **290**, the latter having a positive potential. A gem stone **292** is positioned between the electrodes **288** and **290**, being mounted on a pedestal **294**. The pedestal **294**, induction coil **254** and generator **232** are all supported on a base plate **296**. The gem stone **292** is positioned centrally of a box-like container **298** that is also supported on the base plate **296**. Each wall of container **298** includes a fresnel lens **300** in that side of container **298**.

FIG. **33** illustrates an otheoscopic form of radiation generator linked to an induction coil for producing a molecular stream of high velocity in a given direction thereby to provide means of propulsion in outer space, specifically a form of rocket engine, for a space craft indicated by the reference numeral **302**. Since it is known that the shape and direction of a high-voltage, high velocity stream can be influenced by a magnetic field, advantage is taken of this in the arrangement of FIG. **33** to direct the electrical field by changing the magnetic field strength.

The otheoscopic radiation generator and induction coil of FIG. **33** may be similar to the dual otheoscopic generator **232** and induction coil **254** of FIG. **30**, and in FIG. **33**, have been designated by those numerals. In practice, it is contemplated that several such otheoscopic generator and induction coil arrangements as illustrated in FIG. **30**, would be utilized. The output terminals of induction coil **254** are connected through a suitable diode rectifier and capacitor, not shown, to a pair of spaced electrodes, indicated at **304** and **306**, the latter being the positive electrode. Electrode **306** has the form of a plate with a centrally located opening indicated at **308** and is positioned on the end of a rudder **310**. Rudder **310** is carried at the rear of a platform **312**, being mounted on a suitable universal joint. Otheoscopic generator **232** and induction coil **254** are shown mounted on the platform **312**, forwardly thereof. Also mounted on platform **312**, by means not shown, are a plurality of spaced magnetic coils, indicated at **314**, that are positioned about and along a portion of the length of the path of the high velocity electrical stream between the negative electrode and **304** and the positive electrode **306**. As those skilled in the art understand, reaction between the magnetic fields established by the magnetic coils **314** and the magnetic field established by the high velocity electrical stream about itself is effective to deflect the stream laterally and vertically in accordance with the relative directions and intensities of the magnetic fields produced by the spaced coils **314**. It will be understood that electrical current for energizing the coils **314** may be obtained from another or even several otheoscopic generators of a type similar to the generator **232**.

In FIG. **33** it is contemplated that a portion of the high velocity molecular stream directed toward the positive electrode or plte **306** escapes through the opening **308** providing a force on the negative electrode **304** that is unopposed, and accordingly, that is useful to propel the space craft **302** in the opposite direction, that indicated by the arrow designated by the numeral **316**. Since the shape and direction of the high-voltage, high velocity stream can be influenced by a magnetic field, advantage is taken of this to direct the stream by changing the relative magnetic field strengths, longitudinally of the stream, in each of the four quadrants about the stream. Thus, for example, deflection of the stream effected to the left rear or port side, as seen in FIG. **33**, will result in the craft turning its bow to starboard. It is contemplated that the strength and spatial intensity of the magnetic fields established by coils **314** would be activated by navigational and computer equipment of conventional or known type, not shown.

Without a magnetic field as produced by magnetic coils **314** present, it will be understood that control of the direction of the craft could be obtained by mechanical movement of the position of the positive electrode or plate **306**, as by mechanical deflection of the rudder **310** about its universal mounting, thereby enabling manual adjustment of the direction in which space craft **302** is propelled.

FIG. **34** illustrates an embodiment of the invention that provides a self contained source of coherent light. Thus, there is provided in FIG. **34** a self-contained laser system indicated at **318** comprising an otheoscopic generator **320**, a dynamoelectric machine or electric generator **322**, an induction coil **324**, spaced electrodes **326**, a gem stone **328**, a base **330** and a glass enclosure **332**.

The otheoscopic generator **320** may be of the type illustrated in FIG. **1** and includes a fan shaped torque converter **334** that is connected to the drive shaft of generator **322**. The induction coil **324**, which may be of the type illustrated in FIG. **14**, has its input connected to the output terminals of generator **322**. The output terminals of induction coil **324** has its output terminals connected through a suitable rectifier and capacitor, not

shown, for converting the high-voltage alternating current output to a high voltage unidirectional voltage output, as described in connection with FIG. **29**. The negative output terminal of induction coil **324** is applied to one of the spaced electrodes **326**, and the positive terminal is applied to the other one of the electrodes **326**. Gem stone **328**, desirably a ruby rod, having a half silvered mirrored surface at one end, is placed between the spaced electrodes **326** for bombardment by the electrical field established by the electrodes in a direction perpendicular to the long axis of the ruby rod. The various otheoscopic generator laser components are suitably mounted on the base **330** and located within glass container **332** which is suitably evacuated.

In the operation of the laser system, the high-voltage electrical field established between the electrodes **326** stimulates the ruby rod **328** to the emission of light. Stimulated emission of light occurs, as is known in the art, as radiant energy travelling back and forth between the mirrored surfaces at the ends of the long axis of the ruby rod **328** builds up to a level of magnitude enabling it to escape through the escape half-silvered morror surface indicated at **336** as a spaced frequency distribution of coherent light. In FIG. **34** a lens **338** is provided in the wall of container **332** for diverging or converging the radiation emitted by the ruby rod **328**, as needs vary. Other kinds of lenses may be employed, if desired.

There has thus been provided, according to the present invention self-contained radiometric and otheoscopic generator system and several variations, combinations and cluster arrangements thereof for generating electrical energy from incident radiation emanating from external environmental sources including the sun or any source of infra-red energy whether derived from space, the air, land or water.

Where the development of an increased electrical output, voltage or current, from the available environmental radiation is desired or required, it has been shown that the electrical outputs of a plurality of otheoscopic and/or radiometric generators may be connected in series or parallel, the series connection providing an increased voltage output and the parallel connection an increased current output.

Additionally, for the development of increased kinetic energy from the incident radiation and correspondingly increased electrical energy from each otheoscopic or radiometric generator, it has been shown that several torque converters each having its own bank or plurality of vanes may be associated with the drive shaft of the generator, arranged either in tandem or in parallel, appropriate gearing being provided for the parallel arrangement, and that further increase in the electrical energy output may be provided by arranging the generator combinations in clusters, particularly, for use in outer space.

Embodiments of the invention involving dual otheoscopic generators linking power amplifiers in a chain or brigade thereby to provide more powerful generators have also been provided. The use of the invention for space ship propulsion also is illustrated.

Embodiments of the invention have also been provided for self-contained photon-emitting devices, providing for example, beacons or lighthouses in space and for providing coherent source of light.

I claim:

1. An electric generator comprising a dynamoelectric machine having an input drive shaft and output electrical terminals, a torque converter having an output member connected to rotate said drive shaft and energy receiving means for driving said drive shaft, and means including a radiation absorber/emitter surface operatively associated with said torque converter for absorbing radiation and transmitting it to nearby gas molecules and imparting energy to them to cause them to travel and impart energy to said energy receiving means, said absorber/emitter surface and nearby gas molecules imparting kinetic energy to said torque converter responsively to incident radiation.

2. A generator as specified in claim **1** wherein said torque converter energy receiving means includes a plurality of movable vanes that radiate from said output member about an axis coincident with said drive shaft.

3. A generator as specified in claim **2** wherein said absorber/emitter surface means includes a black surface formed on a plate that has good heat conductivity and is positioned adjacent the path of movement of said movable vanes.

4. A generator as specified in claim **3** wherein said plate is flat and said movable vanes comprise the vanes of a circular fan.

5. A generator as specified in claim **3** wherein said output member includes a center disc that is attached to the end of said drive shaft, and wherein said plate is curved to provide a semicircular cylindrical portion, and wherein each of said movable vanes is attached to the end of an associated rod that is attached to and radiates from said center disc, the angle subtended by each vane with respect to said curved plate being such that molecular disturbance emanating from the absorber/emitter surface of said curved plate produces a turning moment on said vane.

6. A generator as specified in claim **2** including an evacuated container, said torque converter and said absorber/emitter surface being positioned within said container, and wherein said absorber/emitter surface comprises a blackened radiant energy absorbant surface that is provided on one face of each of said vanes, the other face being bright, with the blackened surfaces all facing in the same direction around said output member, and with each of said vanes so positioned as to have at least a component of the blackened surface thereof parallel to the shaft of said dynamoelectric machine.

7. A generator as specified in claim **2** wherein a surface of each said vanes is so positioned as to be substantially parallel to the drive shaft of said dynamoelectric machine.

8. A generator as specified in claim **2** including an evacuated container and a base plate for said container, and wherein said dynamoelectric machine, torque converter and absorber/emitter surface are supported on said base plate within said container.

9. A generator as specified in claim **8** including a fresnel lens and a parabolic lens, said lenses being positioned externally of said container, one on one side thereof and one on the other, and each directing environmental radiation toward said absorber/emitter surface.

10. A generator as specified in claim **9** including a heat pipe comprising a radiant energy source and a collimator positioned between said heat pipe and said fresnel lens for directing rays of radiant energy to said fresnel lens and for making them parallel whereby said rays of radiant energy are concentrated by said fresnel lens on said absorber/emitter surface.

11. A generator as specified in claim **10** including at least one actuatable electrical device supported on said

base plate within said container, said electrical device being connected to the output electrical terminals of said dynamoelectric machine.

12. A generator as specified in claim **11** wherein said actuatable electrical device comprises an electric lamp, and further including a meter within said container connected to the output electrical terminals of said dynamoelectric machine.

13. A generator as specified in claim **8** wherein said dynamoelectric machine produces direct electrical current and wherein said evacuated container includes a pair of terminals positioned in a wall thereof, said pair of terminals being connected to the output terminals of said dynamoelectric machine.

14. A generator as specified in claim **8** including an induction coil having a pair of input terminals and a pair of output terminals, a pair of electrodes, and a gem stone positioned within said container between said electrodes, the input terminals of said induction coil being connected to the output terminals of said dynamoelectric machine, the output terminals of said induction coil being connected to said electrodes, and said gem stone being positioned between said electrodes so that it is activated by the emissions from the electrodes.

15. A generator as specified in claim **1** wherein said dynamoelectric machine includes a second input drive shaft disposed in axial alignment with said first mentioned input drive shaft, and further including a second torque converter having an output member connected to rotate said second drive shaft, said second torque converter being so arranged with respect to said radiation absorber/emitter surface that the latter and nearby gas molecules impart kinetic energy to said second torque converter, responsively to incident radiation, in a sense opposite to the kinetic energy imparted to said first mentioned torque converter.

16. A generator as specified in claim **15** wherein said first and second input drive shafts are positioned at the opposite ends of said dynamoelectric machine, and said absorber/emitter surface is provided on a plate that is curved to provide a semi-circular cylindrical portion, and wherein each of said torque converters includes a center disc attached to the end of each of said input drive shafts, a plurality of rods radiating from each of said centers discs, and a vane carried on the end of each of said rods for movement in a path closely adjacent said semi-circular cylindrical portion of said plate.

17. A generator as specified in claim **15** wherein each of said torque converters includes a plurality of movable vanes, wherein the vanes associated with each of said torque converters comprise the vanes of an individual circular fan, and wherein said radiation/emitter surface is formed on one surface of each of a pair of oppositely disposed parallel plates, said one surface of each of said plates being positioned adjacent the path of movement of the vanes of an associated one of said circular fans.

18. A generator as specified in claim **15** wherein a second radiation absorber/emitter surface is associated with said second torque converter, said second absorber/emitter surface and nearby gas molecules imparting kinetic energy to said second torque converter responsively to incident radiation, said first and second torque converters each including a plurality of movable vanes that radiate respectively from the associated output member of said first and second torque converters about an axis coincident with said aligned first and second input drive shafts of said dynamoelectric machine, all of said vanes being so positioned as to be substantially parallel to said aligned drive shafts, and wherein said first and second radiation absorber/emitter surfaces respectively associated with said first and second torque converters each comprise a blackened radiant energy absorbant and emitting surface provided on one face of each the vanes of the associated torque converter, the other face being bright, with the blackened surfaces of the vanes of said first torque converter all facing in one direction around the shaft of said dynamoelectric machine and the blackened surfaces of the vanes of said second torque converter facing in the opposite direction.

19. A generator as specified in claim **1** including at least one additional torque converter having an output member connected to said drive shaft of said dynamoelectric machine, and a radiation absorber/emitter surface associated with each such additional torque converter, each such additional radiation absorber/emitter surface and nearby gas molecules imparting kinetic energy to the associated additional torque converter in the same sense as the kinetic energy imparted to said first mentioned torque converter by said first mentioned absorber/emitter surface and nearby gas molecules responsively to incident radiant energy.

20. A generator as specified in claim **19** wherein said torque converters are connected in tandem to said drive shaft of said dynamoelectric machine.

21. A generator as specified in claim **19** wherein said torque converters are connected in parallel to said drive shaft of said dynamoelectric machine.

22. A generator as specified in claim **2** wherein said dynamoelectric machine provides direct electrical current at its output electric terminals and including at least another torque converter having movable vanes and associated absorber/emitter surface that are similar to the first mentioned torque converter and absorber/emitter surface, an induction coil having a pair of input electrical terminals and a pair of output electrical terminals, electrical rectifying means, and a pair of spaced electrodes, said input terminals of said induction coil being connected to said output electrical terminals of said dynamoelectric machine, said output terminals of said induction coil being connected through said rectifying means to said spaced electrodes whereby an alternating electrical current output of said induction coil is converted to a direct current potential output that is applied to said spaced electrodes, said spaced electrodes being positioned to intercept a portion of the path of the movable vanes of said another torque converter whereby a molecular stream established between said electrodes by said direct current potential output impinge upon said last mentioned movable vanes to supplement the kinetic energy output of said second torque converter.

23. An electric generator comprising

a dynamoelectric machine having an input drive shaft and output electrical terminals,

a torque converter connected to said shaft,

said torque converter including a plurality of lightweight vanes radially connected to said shaft,

radiation absorber/emitter means for driving said vanes and rotating said shaft,

said absorber/emitter means including surface means for absorbing radiant energy and heating up and emitting heat to agitate nearby gas molecules and thereby create a molecular wind that rotates said

vanes to rotate said input drive shaft of said dynamoelectric machine and generate electricity.

24. A power amplifier comprising a plurality of dual otheoscopic generators and individually associated dynamoelectric machines linked into a chain to produce increasingly more powerful generators, said otheoscopic generators each including a plurality of movable vanes, said amplifier further including a plurality of pairs of spaced electrodes, a plurality of rectifying means, and a plurality of induction coils each having an input associated with the output and an individual one of said dynamoelectric machines and an output associated with one of said rectifying means, the output of each of said rectifying means being applied between the spaced electrodes of an associated one of said pairs of spaced electrodes, successive ones of said pairs of spaced electrodes being positioned to intercept a portion of the path of the movable vanes of the successive otheoscopic generator in the chain whereby a molecular stream established between pairs of said electrodes impinge upon said movable vanes to supplement the kinetic energy output of said successive generator.

25. A power amplifier as specified in claim **24** wherein each of said dynamoelectric machines includes a pair of oppositely disposed rotary drive shafts, and an otheoscopic generator of each of said dual otheoscopic generators being associated with an individual one of each of said shafts, the direction of rotation of each of said shafts being in opposite directions whereby each of said dynamoelectric machines are dynamically balanced.

26. A power amplifier as specified in claim **25** wherein the electrodes of each of the pairs of spaced electrodes associated with the otheoscopic generators of each dual otheoscopic generator are oppositely polarized whereby the individual molecular streams established between the pairs of electrodes and impinging upon the movable vanes of the associated otheoscopic generator of each dual otheoscopic generator are oppositely directed and have a minimal effect on the dynamic balance of the associated dynamoelectric machine.

27. An electric generator as specified in claim **1** further including means providing an evacuated space, said dynamoelectric machine, torque converter and absorber/emitter surface being wholly contained within said evacuated space.

* * * * *

QUANTUM TELEPORTATION

The science-fiction dream of "beaming" objects from place to place is now a reality—at least for particles of light

By Anton Zeilinger

The scene is a familiar one from science fiction and TV: an intrepid band of explorers enters a special chamber; lights pulse, sound effects warble, and our heroes shimmer out of existence to reappear on the surface of a faraway planet. This is the dream of teleportation—the ability to travel from place to place without having to pass through the tedious intervening miles accompanied by a physical vehicle and airline-food rations. Although the teleportation of large objects or humans still remains a fantasy, quantum teleportation has become a laboratory reality for photons, the individual particles of light.

Quantum teleportation exploits some of the most basic (and peculiar) features of quantum mechanics, a branch of physics invented in the first quarter of the 20th century to explain processes that occur at the level of individual atoms. From the beginning, theorists realized that quantum physics led to a plethora of new phenomena, some of which defy common sense. Technological progress in the final quarter of the 20th century enabled researchers to conduct many experiments that not only have demonstrated fundamental, sometimes bizarre aspects of quantum mechanics but, as in the case of quantum teleportation, have applied them to achieve previously inconceivable feats.

In science-fiction stories, teleportation often permits travel that is instantaneous, violating the speed limit set down by Albert Einstein, who concluded from his theory of relativity that nothing can travel faster than light. Teleportation is also less cumbersome than the more ordinary means of space travel. It is said that Gene Roddenberry, the creator of *Star Trek*, conceived of the "transporter beam" as a way to save the expense of simulating landings and takeoffs on strange planets.

The procedure for teleportation in science fiction varies from story to story but generally goes as follows: A device scans the original object to extract all the information needed to describe it. A transmitter sends the information to a receiving station, where it is used to obtain an exact replica of the original. In some cases, the material that made up the original is also transported to the receiving station, perhaps as energy of some kind; in other cases, the replica is made of atoms and molecules that were already present at the receiving station.

Quantum mechanics seems to make such a teleportation scheme impossible in principle. Heisenberg's uncertainty principle rules that one cannot know both the precise position of an object and its momentum at the same time. Thus, one cannot perform a perfect scan of the object to be teleported; the location or velocity of every atom and electron would be subject to errors. Heisenberg's uncertainty principle also applies to other pairs of quantities, making it impossible to measure the exact, total quantum state of any object with certainty. Yet such measurements would be necessary to obtain all the information needed to describe the original exactly. (In *Star Trek* the "Heisenberg Compensator" somehow miraculously overcomes that difficulty.)

A team of physicists overturned this conventional wisdom in 1993, when they discovered a theoretical way to use quantum mechanics itself for teleportation. The team—Charles H. Bennett of IBM; Gilles Brassard, Claude Crépeau and Richard Josza of the University of Montreal; Asher Peres of Technion–Israel Institute of Technology; and William K. Wootters of Williams College—found that a peculiar but fundamental feature of quantum mechanics, entanglement, can be used to circumvent the limitations imposed by Heisenberg's uncertainty principle without violating it.

Entanglement

IT IS THE YEAR 2100. A friend who likes to dabble in physics and party tricks has brought you a collection of pairs of dice. He lets you roll them once, one pair at a time. You handle the first pair gingerly, remembering the fiasco with the micro black hole

TRAVELERS ARRIVE at Grand Central Station's teleport terminal. Although teleporting large objects, let alone living beings, will never be practical, teleportation of elementary quantum states has been demonstrated.

Updated from the April 2000 issue

SPACE CHANNEL/PHILIP SAUNDERS

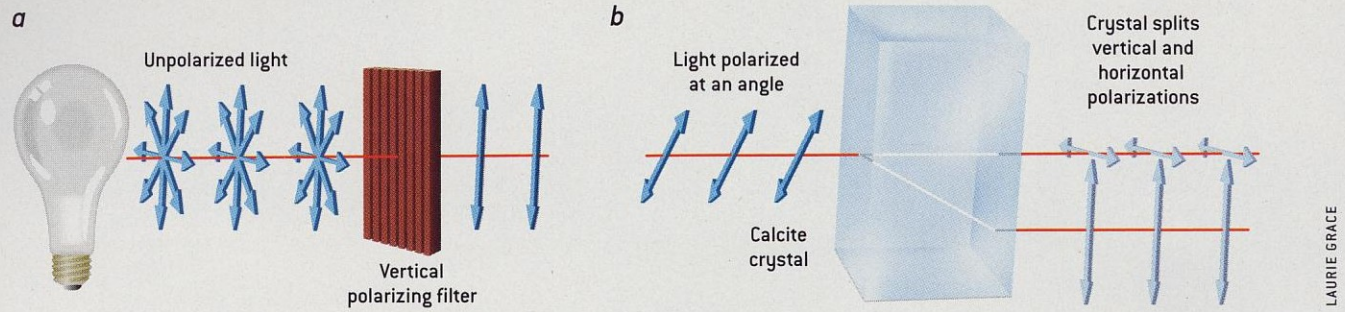

UNPOLARIZED LIGHT consists of photons polarized in all directions (*a*). In polarized light the photons' electric-field oscillations (*arrows*) are all aligned. A calcite crystal (*b*) splits a light beam, sending photons that are polarized parallel with its axis into one beam and those that are perpendicular into the other. Intermediate angles go into a quantum superposition of both beams. Each such photon can be detected in one beam or the other, with probability depending on the angle. Because probabilities are involved, we cannot measure the polarization of a single photon with certainty.

last Christmas. Finally, you roll the two dice and get double 3. You roll the next pair. Double 6. The next: double 1. They always match.

The dice in this fable are behaving as if they were quantum-entangled particles. Each die on its own is random and fair, but its entangled partner somehow always gives the correct matching outcome. Such behavior has been demonstrated and intensively studied with real entangled particles. In typical experiments, pairs of atoms, ions or photons stand in for the dice, and properties such as polarization stand in for their different faces.

Consider the case of two photons whose polarizations are entangled to be random but identical. Beams of light and even individual photons consist of oscillations of electromagnetic fields, and polarization refers to the alignment of the electric field oscillations [*see illustration above*]. Suppose that Alice has one of the entangled photons and Bob has its partner. When Alice measures her photon to see if it is horizontally or vertically polarized, each outcome has a 50 percent chance. Bob's photon has the same probabilities, but the entanglement ensures that he will get exactly the same result as Alice. As soon as Alice gets the result "horizontal," say, she knows that Bob's photon will also be horizontally polarized. Before Alice's measurement the two photons do not have individual polarizations; the entangled state specifies only that a measurement will find that the two polarizations are equal.

An amazing aspect of this process is that it doesn't matter if Alice and Bob are far away from each other; the process works so long as their photons' entanglement has been preserved. Even if Alice is on Alpha Centauri and Bob on Earth, their results will agree when they compare them. In every case, it is as if Bob's photon is magically influenced by Alice's distant measurement, and vice versa.

You might wonder if we can explain the entanglement by imagining that each particle carries within it some recorded instructions. Perhaps when we entangle the two particles, we synchronize some hidden mechanism within them that determines what results they will give when they are measured. This would explain away the mysterious effect of Alice's measurement on Bob's particle. In the 1960s, however, Irish physicist John Bell proved a theorem that in certain situations any such "hidden variables" explanation of quantum entanglement would have to produce results different from those predicted by standard quantum mechanics. Experiments have confirmed the predictions of quantum mechanics to a very high accuracy.

Austrian physicist Erwin Schrödinger, one of the co-inventors of quantum mechanics, called entanglement "the essen-

PREPARING FOR QUANTUM TELEPORTATION ...

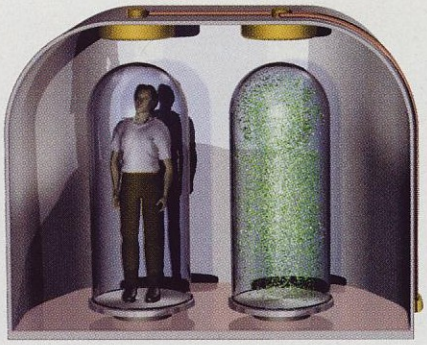

QUANTUM TELEPORTATION OF A PERSON (impossible in practice but a good example to aid the imagination) would begin with the person inside a measurement chamber (*left*) alongside an equal mass of auxiliary material (*green*). The auxiliary matter has previously been quantum-entangled with its counterpart, which is at the faraway receiving station (*right*).

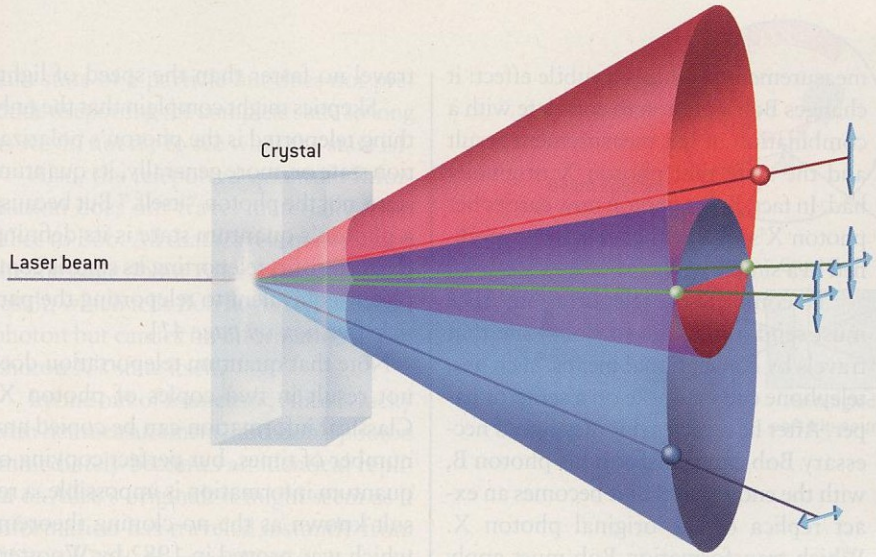

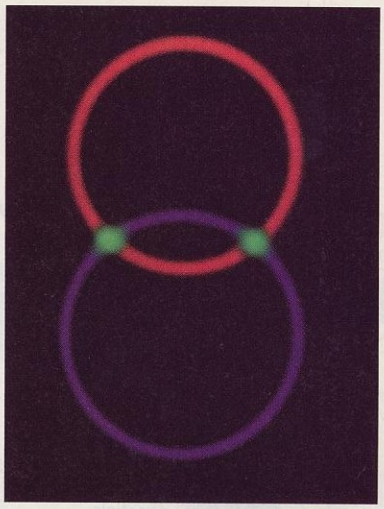

LAURIE GRACE (*left*); P. G. KWIAT AND M. RECK *Institute for Experimental Physics, University of Vienna* (*right*)

ENTANGLED PHOTON PAIRS are created when a laser beam passes through a crystal such as beta barium borate. The crystal occasionally converts a single ultraviolet photon into two photons of lower energy, one polarized vertically (*on red cone*), one polarized horizontally (*on blue cone*). If the photons happen to travel along the cone intersections (*green*), neither photon has a definite polarization, but their relative polarizations are complementary; they are then entangled. Colorized image (*at right*) is a photograph of down-converted light. Colors do not represent the color of the light.

tial feature" of quantum physics. Entanglement is often called the EPR effect and the particles EPR pairs, after Einstein, Boris Podolsky and Nathan Rosen, who in 1935 analyzed the effects of entanglement acting across large distances. Einstein talked of it as "spooky action at a distance." If one tried to explain the results in terms of signals traveling between the photons, the signals would have to travel faster than the speed of light. Naturally, many people have wondered if this effect could be used to transmit information faster than the speed of light.

Unfortunately, the quantum rules make that impossible. Each local measurement on a photon, considered in isolation, produces a completely random result and so can carry no information from the distant location. It tells you nothing more than what the distant measurement result probabilities would be, depending on what was measured there. Nevertheless, we can put entanglement to work in an ingenious way to achieve quantum teleportation.

Teleporting Photons

ALICE AND BOB anticipate that they will want to teleport a photon in the future. In preparation, they share an entangled auxiliary pair of photons, Alice taking photon A and Bob photon B. Instead of measuring them, they each store their photon without disturbing the delicate entangled state [*see top illustration on next page*].

In due course, Alice has a third photon—call it photon X—that she wants to teleport to Bob. She does not know what photon X's state is, but she wants Bob to have a photon with that same polarization state. She cannot simply measure the photon's polarization and send Bob the result. In general, her measurement result would not be identical to the photon's original state. This is Heisenberg's uncertainty principle at work.

... A QUANTUM MEASUREMENT ...

JOINT MEASUREMENT carried out on the auxiliary matter and the person (*left*) changes them to a random quantum state and produces a vast amount of random (but significant) data—two bits per elementary state. By "spooky action at a distance," the measurement also instantly alters the quantum state of the faraway counterpart matter (*right*).

MORE >>>

DAVID FIERSTEIN

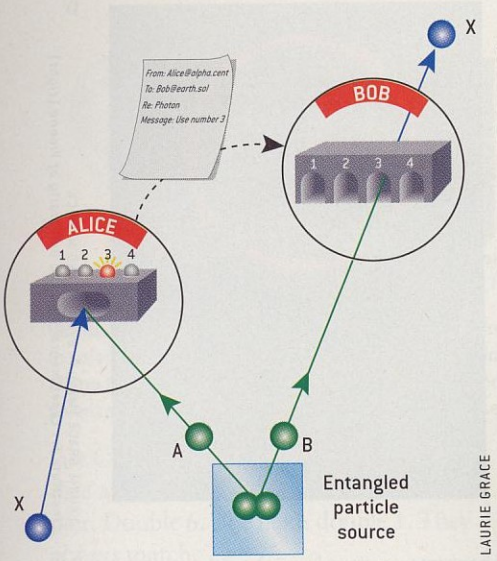

IDEAL QUANTUM TELEPORTATION relies on Alice, the sender, and Bob, the receiver, sharing a pair of entangled particles A and B. Alice has a particle that is in an unknown quantum state X. Alice performs a Bell-state measurement on particles A and X, producing one of four possible outcomes. She tells Bob about the result by ordinary means. Depending on Alice's result, Bob leaves his particle unaltered (1) or rotates it (2, 3, 4). Either way it ends up a replica of particle X.

Instead, to teleport photon X, Alice measures it jointly with photon A, without determining their individual polarizations. She might find, for instance, that their polarizations are "perpendicular" to each other (she still does not know the absolute polarization of either one, however). Technically, the joint measurement entangles photon A and photon X and is called a Bell-state measurement. Alice's measurement produces a subtle effect: it changes Bob's photon to correlate with a combination of her measurement result and the state that photon X originally had. In fact, Bob's photon now carries her photon X's state, either exactly or modified in a simple way.

To complete the teleportation, Alice must send a message to Bob—one that travels by conventional means, such as a telephone call or a note on a scrap of paper. After he receives this message, if necessary Bob can transform his photon B, with the end result that it becomes an exact replica of the original photon X. Which transformation Bob must apply depends on the outcome of Alice's measurement. There are four possibilities, corresponding to four quantum relations between her photons A and X. A typical transformation that Bob must apply to his photon is to alter its polarization by 90 degrees, which he can do by sending it through a crystal with the appropriate optical properties.

Which of the four possible results Alice obtains is completely random and independent of photon X's original state. Bob therefore does not know how to process his photon until he learns the result of Alice's measurement. One can say that Bob's photon instantaneously contains all the information from Alice's original, transported there by quantum mechanics. Yet to know how to read that information, Bob must wait for the classical information, consisting of two bits that can travel no faster than the speed of light.

Skeptics might complain that the only thing teleported is the photon's polarization state or, more generally, its quantum state, not the photon "itself." But because a photon's quantum state is its defining characteristic, teleporting its state is completely equivalent to teleporting the particle [*see box on page 41*].

Note that quantum teleportation does not result in two copies of photon X. Classical information can be copied any number of times, but perfect copying of quantum information is impossible, a result known as the no-cloning theorem, which was proved in 1982 by Wootters and Wojciech H. Zurek of Los Alamos National Laboratory. (If we could clone a quantum state, we could use the clones to violate Heisenberg's principle.) Alice's measurement actually entangles her photon A with photon X, and photon X loses all memory, one might say, of its original state. As a member of an entangled pair, it has no individual polarization state. Thus, the original state of photon X disappears from Alice's domain.

Circumventing Heisenberg

FURTHERMORE, photon X's state has been transferred to Bob with neither Alice nor Bob learning anything about what the state is. Alice's measurement result, being random, tells them nothing about the state. This is how the process circumvents Heisenberg's principle, which stops us from determining the complete quan-

... TRANSMISSION OF RANDOM DATA ...

MEASUREMENT DATA must be sent to the distant receiving station by conventional means. This process is limited by the speed of light, making it impossible to teleport the person faster than the speed of light.

tum state of a particle but does not preclude teleporting the complete state so long as we do not try to see what the state is!

Also, the teleported quantum information does not travel materially from Alice to Bob. All that travels materially is the message about Alice's measurement result, which tells Bob how to process his photon but carries no information about photon X's state itself.

In one out of four cases, Alice is lucky with her measurement, and Bob's photon immediately becomes an identical replica of Alice's original. It might seem as if information has traveled instantly from Alice to Bob, beating Einstein's speed limit. Yet this strange feature cannot be used to send information, because Bob has no way of knowing that his photon is already an identical replica. Only when he learns the result of Alice's Bell-state measurement, transmitted to him via classical means, can he exploit the information in the teleported quantum state. If he tries to guess in which cases teleportation was instantly successful, he will be wrong 75 percent of the time, and he will not know which guesses are correct. If he uses the photons based on such guesses, the results will be the same as they would had he taken a beam of photons with random polarizations. Thus, Einstein's relativity prevails; even the spooky instantaneous action at a distance of quantum mechanics fails to send usable information faster than the speed of light.

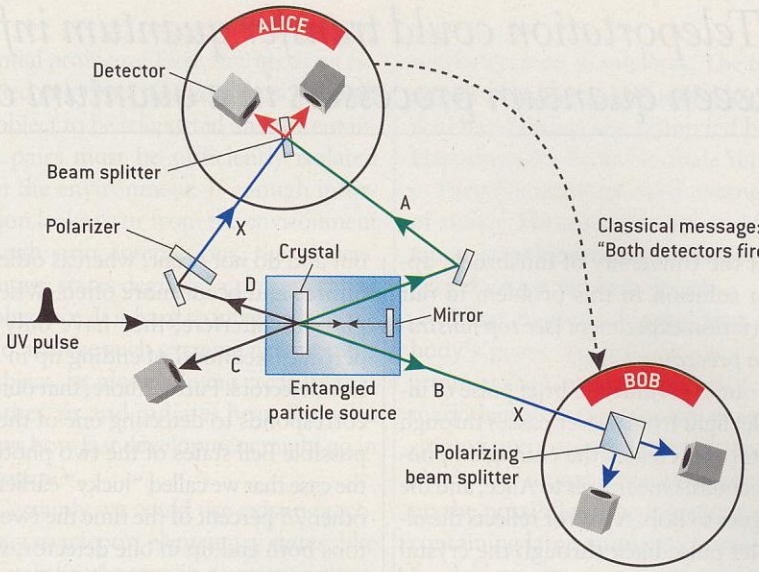

LAURIE GRACE

INNSBRUCK EXPERIMENT begins with a short pulse of ultraviolet laser light. Traveling left to right through a crystal, this pulse produces the entangled pair of photons A and B, which travel to Alice and Bob. Reflected back through the crystal, the pulse creates two more photons, C and D. A polarizer prepares photon D in a specific state, X. Photon C is detected, confirming that photon X has been sent to Alice. Alice combines photons A and X with a beam splitter. If she detects one photon in each detector (as occurs at most 25 percent of the time), she notifies Bob, who uses a polarizing beam splitter to verify that his photon has acquired X's polarization, thus demonstrating teleportation.

It would seem that the theoretical proposal described above laid out a clear blueprint for building a teleporter; on the contrary, it presented a great experimental challenge. Producing entangled pairs of photons has become routine in physics experiments in the past decade, but carrying out a Bell-state measurement on two independent photons had never been done before.

Building a Teleporter

A POWERFUL WAY to produce entangled pairs of photons is spontaneous parametric down-conversion: a single photon passing through a special crystal sometimes generates two new photons that are entangled so that they will show opposite polarization when measured.

A much more difficult problem is to entangle two independent photons that already exist, as must occur during the operation of a Bell-state analyzer. This means that the two photons (A and X) somehow have to lose their private features. In 1997 my group (Dik Bouwmeester, Jian-Wei Pan, Klaus Mattle, Manfred Eibl and Harald Weinfurter),

... RECONSTRUCTION OF THE TRAVELER

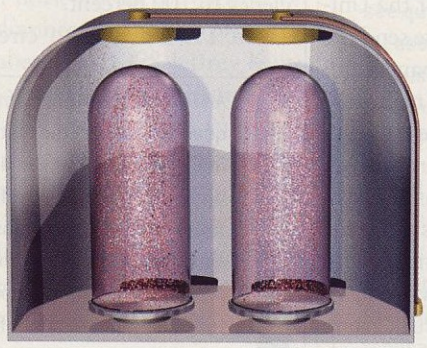

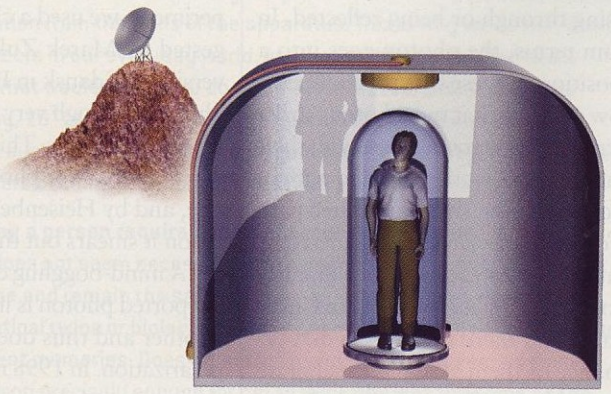

RECEIVER RE-CREATES THE TRAVELER, exact down to the quantum state of every atom and molecule, by adjusting the counterpart matter's state according to the random measurement data sent from the scanning station.

DAVID FIERSTEIN

Teleportation could transfer quantum information between quantum processors in a quantum computer.

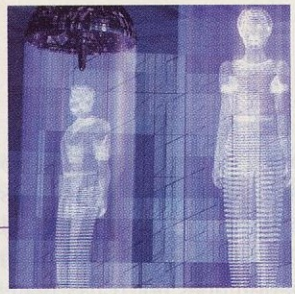

then at the University of Innsbruck, applied a solution to this problem in our teleportation experiment [*see top illustration on preceding page*].

In our experiment, a brief pulse of ultraviolet light from a laser passes through a crystal and creates the entangled photons A and B. One travels to Alice, and the other goes to Bob. A mirror reflects the ultraviolet pulse back through the crystal again, where it may create another pair of photons, C and D. (These will also be entangled, but we don't use their entanglement.) Photon C goes to a detector, which alerts us that its partner, D, is available to be teleported. Photon D passes through a polarizer, which we can orient in any conceivable way. The resulting polarized photon is our photon X, the one to be teleported, which travels on to Alice. Once it passes through the polarizer, X is an independent photon, no longer entangled. And although *we* know its polarization because of how we set the polarizer, Alice does not. We reuse the same ultraviolet pulse in this way to ensure that Alice has photons A and X at the same time.

Now we arrive at the problem of performing the Bell-state measurement. To do this, Alice combines her two photons (A and X) using a semireflecting mirror, a device that reflects half the incident light. An individual photon has a 50–50 chance of passing through or being reflected. In quantum terms, the photon goes into a superposition of these two possibilities.

Now suppose that two photons strike the mirror from opposite sides, with their paths aligned so that the reflected path of one photon lies along the transmitted path of the other, and vice versa. A detector waits at the end of each path. Ordinarily the two photons would be reflected independently, and there would be a 50 percent chance of them arriving in separate detectors. If the photons are indistinguishable and arrive at the mirror at the same instant, however, quantum interference takes place: some possibilities cancel out and do not occur, whereas others reinforce and occur more often. When the photons interfere, they have only a 25 percent likelihood of ending up in separate detectors. Furthermore, that outcome corresponds to detecting one of the four possible Bell states of the two photons—the case that we called "lucky" earlier. The other 75 percent of the time the two photons both end up in one detector, which corresponds to the other three Bell states but does not discriminate among them.

When Alice simultaneously detects one photon in each detector, Bob's photon instantly becomes a replica of Alice's original photon X. We verified that this teleportation occurred by showing that Bob's photon had the polarization that we imposed on photon X. Our experiment was not perfect, but the correct polarization was detected 80 percent of the time (random photons would achieve 50 percent). We demonstrated the procedure with a variety of polarizations: vertical, horizontal, linear at 45 degrees and even a nonlinear, circular polarization.

The most difficult aspect of our Bell-state analyzer is making photons A and X indistinguishable. Even the timing of when the photons arrive could be used to identify which photon is which, so it is important to "erase" the time information carried by the particles. In our experiment, we used a clever trick first suggested by Marek Zukowski of the University of Gdansk in Poland: we send the photons through very narrow bandwidth wavelength filters. This process makes the wavelength of the photons extremely precise, and by Heisenberg's uncertainty relation it smears out the photons in time.

A mind-boggling case arises when the teleported photon is itself entangled with another and thus does not have its own polarization. In 1998 my Innsbruck group demonstrated this scenario by giving Alice photon D without polarizing it, so that it was still entangled with photon C. We showed that when the teleportation succeeded, Bob's photon B ended up entangled with C. The *entanglement* with C had been transmitted from D to B.

My current group at the University of Vienna was able to perform teleportation of entanglement in such high fidelity that the nonlocal correlation between photons B and C violated a Bell inequality. The quality was high enough to make quantum repeaters possible, necessary to connect quantum computers over large distances. Shortly thereafter we overcame a limitation of our initial experiment. Earlier Bob had to actually detect and so destroy his photon X to make sure that teleportation succeeded. Our experiment provided a freely propagating beam of teleported qubits emerging from Bob's side, thus showing that this step is not essential. This is important in a case where the qubits will be used again in some way.

Piggyback States

OUR EXPERIMENT clearly demonstrated teleportation, but it had a low rate of success. Because we could identify just one Bell state, we could teleport Alice's photon only 25 percent of the time—the occasions when that state occurred. No complete Bell-state analyzer exists for independent photons or for any two independently created quantum particles, so at present there is no experimentally proven way to improve our scheme's efficiency to 100 percent.

In 1994 a way to circumvent this

THE AUTHOR

ANTON ZEILINGER (anton.zeilinger@quantum.at) is at the Institute for Experimental Physics at the University of Vienna, having teleported there in 1999 from the University of Innsbruck. He considers himself very fortunate to have the privilege of working on exactly the mysteries and paradoxes of quantum mechanics that drew him into physics nearly 40 years ago. In his little free time, Zeilinger interacts with classical music and with jazz and loves to ski.

problem was proposed by Sandu Popescu, then at the University of Cambridge. He suggested that the state to be teleported could be a quantum state riding piggyback on Alice's auxiliary photon A. Francesco De Martini's group at the University of Rome I "La Sapienza" successfully demonstrated this scheme in 1997. The auxiliary pair of photons was entangled according to the photons' locations: photon A was split, as by a beam splitter, and sent to two different parts of Alice's apparatus, with the two alternatives linked by entanglement to a similar splitting of Bob's photon B. The state to be teleported was also carried by Alice's photon A—its polarization state. With both roles played by one photon, detecting all four possible Bell states becomes a standard single-particle measurement: detect Alice's photon in one of two possible locations with one of two possible polarizations. The drawback of the scheme is that Alice cannot teleport a separate unknown photon X. Doing that would require her to somehow transfer its state onto her photon A, which is essentially a teleportation procedure by itself.

Polarization of a photon, the feature employed by the Innsbruck and Rome experiments, is a discrete quantity, in that any polarization state can be expressed as a superposition of just two discrete states, such as vertical and horizontal polarization. The electromagnetic field associated with light also has continuous features that amount to superpositions of an infinite number of basic states. For example, a light beam can be "squeezed," meaning that one of its properties is made extremely precise, or noise-free, at the expense of greater randomness in another property (à la Heisenberg). In 1998 Jeffrey Kimble's group at the California Institute of Technology teleported such a squeezed state from one beam of light to another, thus demonstrating teleportation of a continuous feature. In 2002 a group at the Australian National University in Canberra led by Ping Koy Lam realized such a teleportation with unprecedented high fidelity.

Remarkable as all these experiments are, they are a far cry from quantum teleportation of large objects. There are two essential problems: First, one needs an entangled pair of such large objects. Second, the object to be teleported and the entangled pairs must be sufficiently isolated from the environment. If enough information leaks to or from the environment through stray interactions, the objects' quantum states degrade, a process called decoherence. It is hard to imagine how we could achieve such extreme isolation for an object, let alone a living creature that breathes air and radiates heat. But who knows how fast development might go in the future?

Certainly we could use existing technology to teleport elementary states, like those of the photons in our experiment, across distances of a few kilometers and maybe even up to satellites. The technology to teleport states of individual atoms is at hand today: the group led by Serge Haroche at the École Normale Supérieure in Paris has demonstrated entanglement of atoms. The entanglement and teleportation of molecules may reasonably be expected within the next decade.

What happens beyond that is anybody's guess. In 2002 Eugene Polzik's group at the University of Århus in Denmark demonstrated entanglement of the spin of two ensembles, each containing about 10^{12} atoms. This experiment opens up the possibility of teleporting systems containing large numbers of atoms.

An important application of teleportation might be in quantum computation,

SKEPTICS CORNER

ANSWERS TO COMMON TELEPORTATION QUESTIONS

Isn't it an exaggeration to call this teleportation? After all, it is only a quantum state that is teleported, not an actual object. What do we mean by identity? How do we know that an object—say, the car we find in our garage in the morning—is the same one we saw a while ago? When it has all the right features and properties. Quantum physics reinforces this point: particles of the same type in the same quantum state are indistinguishable even in principle. If one could carefully swap all the iron atoms in the car with those from a lump of ore and reproduce the atoms' states exactly, the end result would be identical, at the deepest level, to the original car. Identity cannot mean more than this: being the same in all properties.

Isn't it more like "quantum faxing"? Faxing produces a copy that is easy to distinguish from the original. Moreover, because of the quantum no-cloning theorem, in quantum teleportation the original must be destroyed.

Can we hope to teleport a complicated object? There are severe obstacles. First, the object has to be in a pure quantum state, and such states are very fragile. Experiments with atoms and larger objects must be done in a vacuum to avoid collisions with gas molecules. Even a tiny lump of matter would be disturbed merely by thermal radiation from the walls of the apparatus. This is why we do not routinely see quantum effects in our everyday world. Another problem is the Bell-state measurement. What would it mean to do a Bell-state measurement of a virus consisting of, say, 10^7 atoms? How would we extract the 10^8 or more bits of information that such a measurement would generate? For an object of just a few grams the numbers become impossible: more than 10^{24} bits of data.

Would teleporting a person require quantum accuracy? Being in the same quantum state does not seem necessary for being the same person. We change our states all the time and remain the same people—at least as far as we can tell! Conversely, identical twins or biological clones are not "the same people," because they have different memories. Does Heisenberg uncertainty prevent us from replicating a person precisely enough for her to think she was the same as the original? Who knows. It is intriguing, however, that the quantum no-cloning theorem prohibits us from making a perfect replica of a person. —*A.Z.*

THE QUANTUM ADVENTURES OF ALICE & BOB

Intrepid explorer Alice discovers stable einsteinium crystals. Her competitor, the evil Zelda, also "discovers" the crystals. But Alice and her partner Bob (on Earth) have one advantage: QUANTUM COMPUTERS AND TELEPORTERS. Alice does some quantum data processing ...

... and teleports the output —"qubits" of data—to Bob. They are very lucky: the teleportation succeeds cleanly!

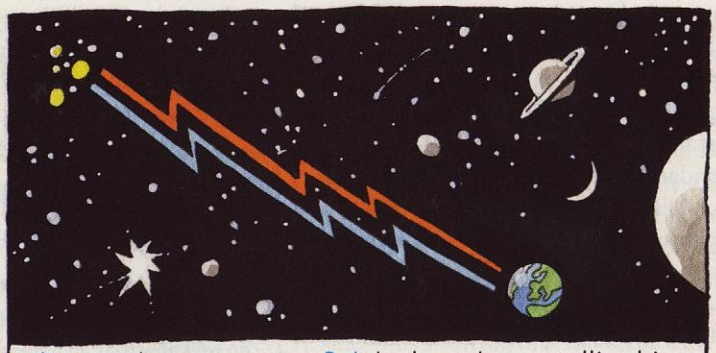

Alice sends a message to Bob by laser beam, telling him his qubits have accurate data. Zelda laser beams her partner, Yuri, about the crystals.

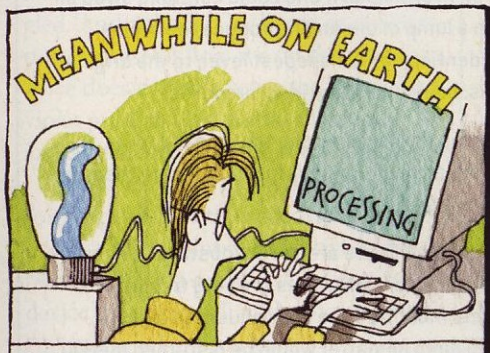

Before the laser beam arrives on Earth, Bob feeds his qubits into a quantum simulation of the economy.

4 YEARS LATER

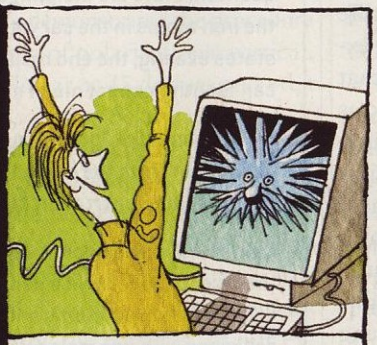

Bob gets Alice's message that his qubits were accurate replicas of hers!

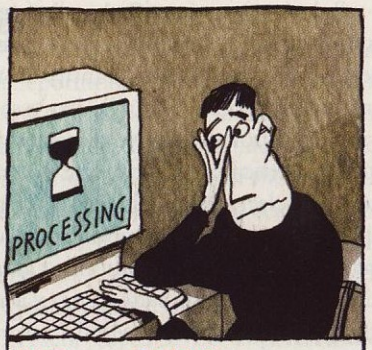

Yuri gets Zelda's message but can only now start his computer simulation.

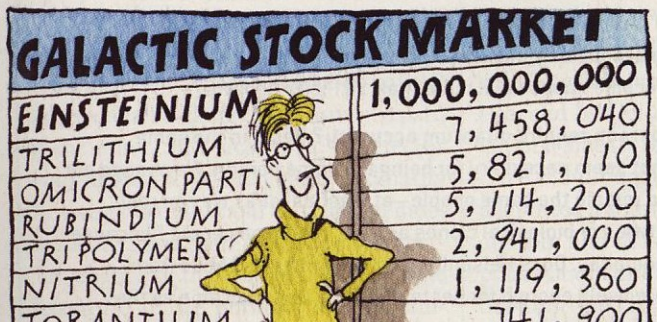

Bob invests his and Alice's nest egg in einsteinium futures ahead of the crowd. Their success depended on luck, one chance in four per qubit ...

... but they only had to get lucky once to strike it rich. Yuri and Zelda change to careers in the non-quantum service industry. THE END

where the ordinary notion of bits (0's and 1's) is generalized to quantum bits, or qubits, which can exist as superpositions and entanglements of 0's and 1's. Teleportation could be used to transfer quantum information between quantum processors. Quantum teleporters can also be used to build a quantum computer [*see box at right*]. The cartoon on the opposite page illustrates an intriguing situation in which a combination of teleportation and quantum computation could occasionally yield an advantage, as if one had received the teleported information instantly instead of having to wait for it to arrive by normal means.

Quantum mechanics is probably one of the most profound theories ever discovered. The problems that it poses for our everyday intuition about the world led Einstein to criticize it very strongly. He insisted that physics should be an attempt to grasp a reality that exists independently of its observation. Yet he realized that we run into deep problems when we try to assign such an independent physical reality to the individual members of an entangled pair. His great counterpart, Danish physicist Niels Bohr, insisted that one has to take into account the whole system—in the case of an entangled pair, the arrangement of both particles together, no matter how far they may be separated from each other. Einstein's desideratum, the independent real state of each particle, has no meaning for an entangled quantum system.

Quantum teleportation is a direct descendant of the scenarios debated by Einstein and Bohr. We run into all kinds of problems if we ask ourselves what the properties of the individual particles *really* are when they are entangled. We have to analyze carefully what it means to "have" a polarization. We cannot escape the conclusion that all we can talk about are certain experimental results obtained by measurements. In our polarization measurement, a click of the detector lets us construct a picture in our mind in which the photon actually "had" a certain polarization. Yet we must always remember that this is just a made-up story. It is valid only if we talk about that specific experiment, and we should be cautious when using it in other situations.

QUANTUM COMPUTERS

PERHAPS THE MOST IMPORTANT, yet still hypothetical, application of quantum teleportation outside of physics research is in quantum computation. A conventional digital computer works with bits, which take definite values of 0 or 1, but a quantum computer uses quantum bits, or qubits. Qubits can be in quantum superpositions of 0 and 1 just as a photon can be in a superposition of horizontal and vertical polarization. Indeed, in sending a single photon, the basic quantum teleporter transmits a single qubit of quantum information.

Superpositions of numbers may seem strange, but as the late Rolf Landauer of IBM put it, "When we were little kids learning to count on our very sticky classical fingers, we gained the wrong intuition. We thought that information was classical. We thought that we could hold up three fingers, then four. We didn't realize that there could be a superposition of both."

A quantum computer can work on a superposition of many different inputs at once. It could run an algorithm simultaneously on one million inputs, using only as many qubits as a conventional computer would need bits to run the algorithm once on a single input. Theorists have proved that the algorithms running on quantum computers can solve certain problems faster (in fewer computational steps) than any known algorithm running on a classical computer. The problems include finding items in a database and factoring large numbers, which is of great interest for breaking secret codes.

So far only the most rudimentary elements of quantum computers have been built: logic gates that can process one or two qubits. The realization of even a small-scale quantum computer is still far away. A key problem is transferring quantum data reliably between different logic gates or processors, whether within a single quantum computer or across quantum networks. Quantum teleportation is one solution.

Daniel Gottesman of Microsoft and Isaac L. Chuang of IBM proved that a general-purpose quantum computer can be built out of three basic components: entangled particles, quantum teleporters and gates that operate on a single qubit at a time. This result provides a systematic way to construct two-qubit gates. In general, building a two-qubit gate for independent qubits provides the same experimental challenge as realizing a Bell-state analyzer for independent systems, and either one, once realized, can be used to build the other one. —*A.Z.*

Indeed, following Bohr, I would argue that we can understand quantum mechanics if we realize that science does not describe how nature *is* but rather articulates what we can *say* about nature. Expressed in modern language, this means that quantum mechanics is a science of knowledge, of information. This is where the current value of fundamental experiments such as teleportation lies: in helping us to reach a deeper understanding of our mysterious quantum world. SA

MORE TO EXPLORE

Experimental Quantum Teleportation. D. Bouwmeester, J. W. Pan, K. Mattle, M. Eibl, H. Weinfurter and A. Zeilinger in *Nature,* Vol. 390, pages 575–579; December 11, 1997.

Quantum Information. Special issue of *Physics World,* Vol. 11, No. 3; March 1998.

Quantum Theory: Weird and Wonderful. A. J. Leggett in *Physics World,* Vol. 12, No. 12, pages 73–77; December 1999.

Entanglement: The Greatest Mystery in Physics. Amir D. Aczel. Four Walls Eight Windows, New York, 2002.

More about quantum teleportation is available at **www.quantum.at**

Picturing Quantum Processes

Aleks Kissinger and Bob Coecke

Radboud University and Oxford University

ESSLLI Toulouse 2017

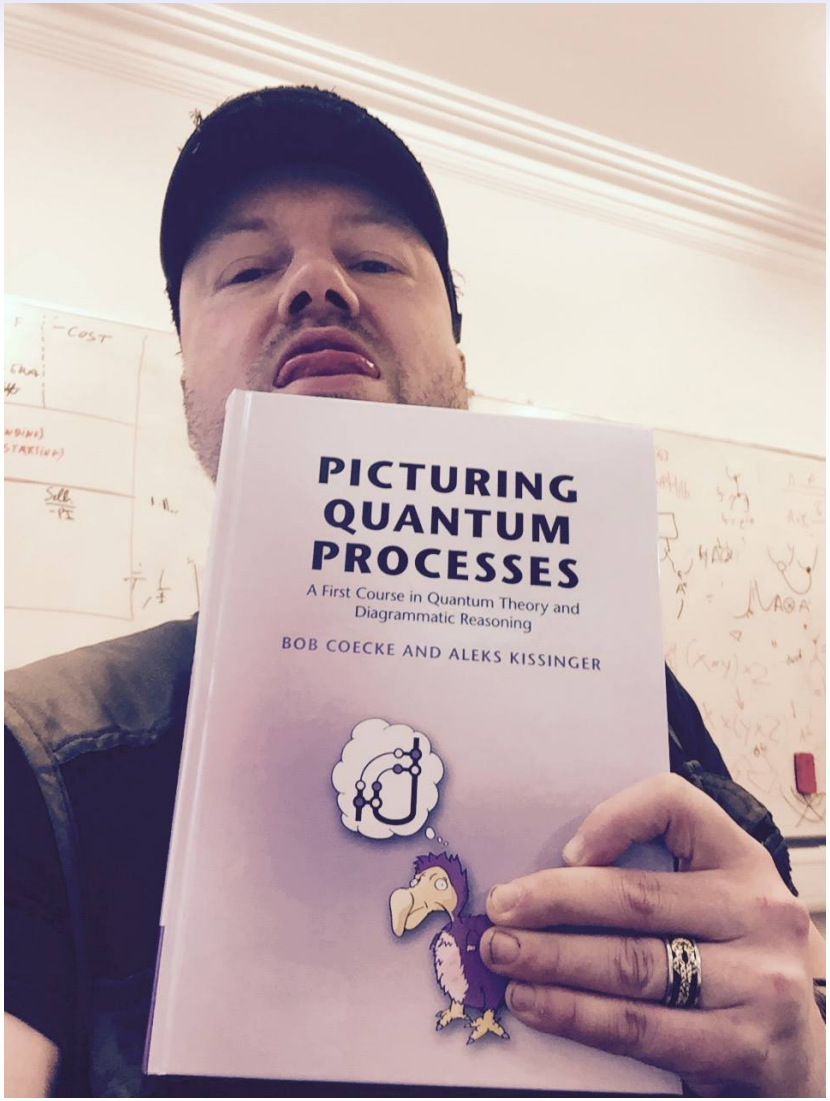

www.cambridge.org/pqp

20% discount @ CUP with code: COECKE2017

Chapters 11-13:

Quantum Foundations, Computation, and Resources

Mermin once summarized a popular attitude towards quantum theory as "Shut up and calculate". We suggest a different slogan: "Shut up and contemplate"!

— Lucien Hardy and Rob Spekkens, 2010.

Spiders

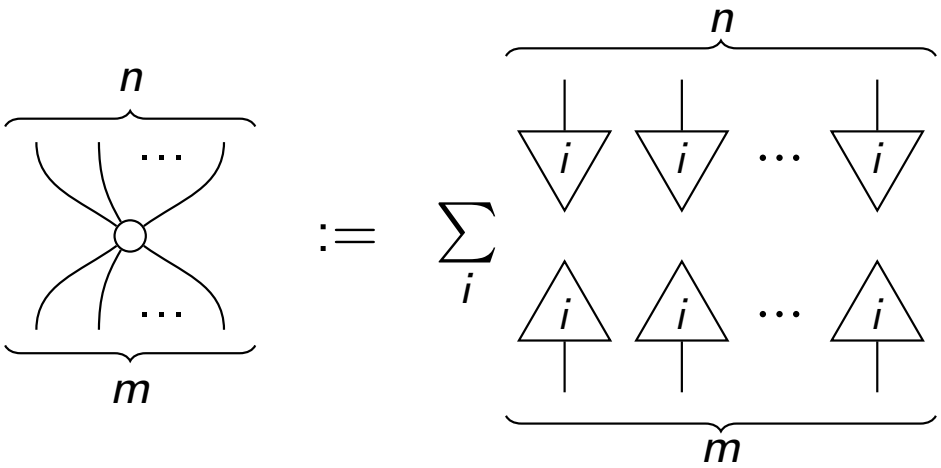

Spiders

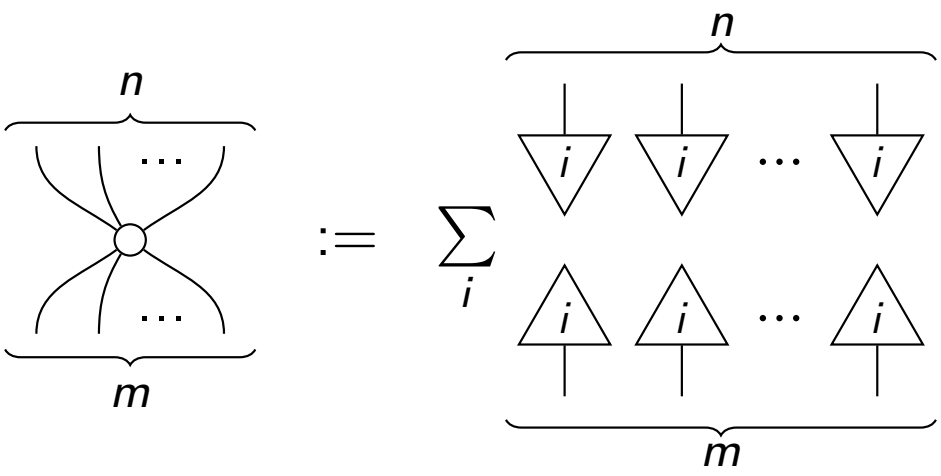

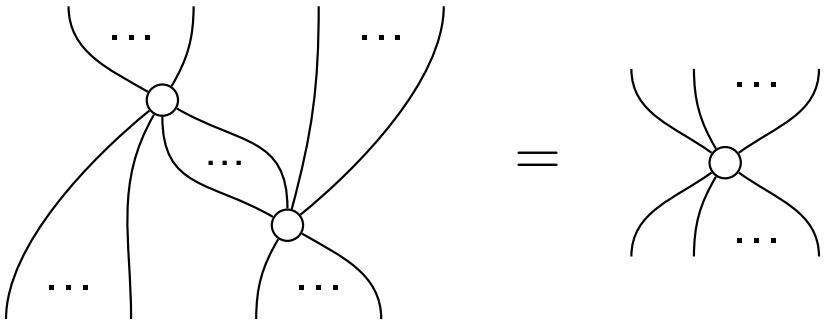

(Classical) spiders are linear maps:

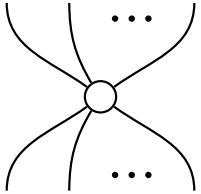

...so we can double them to get *quantum spiders*:

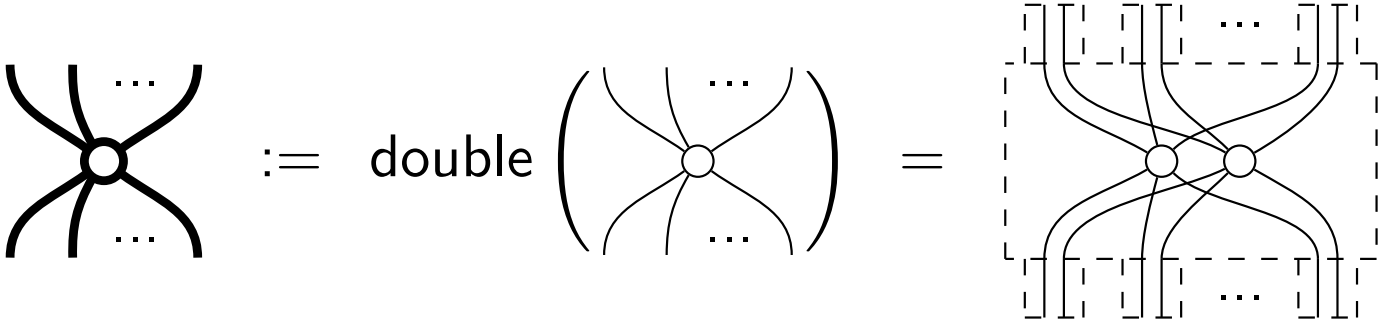

...which also fuse together:

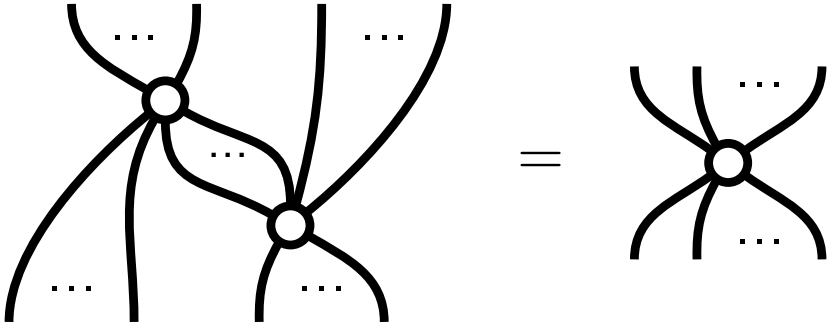

Measuring is a spider:

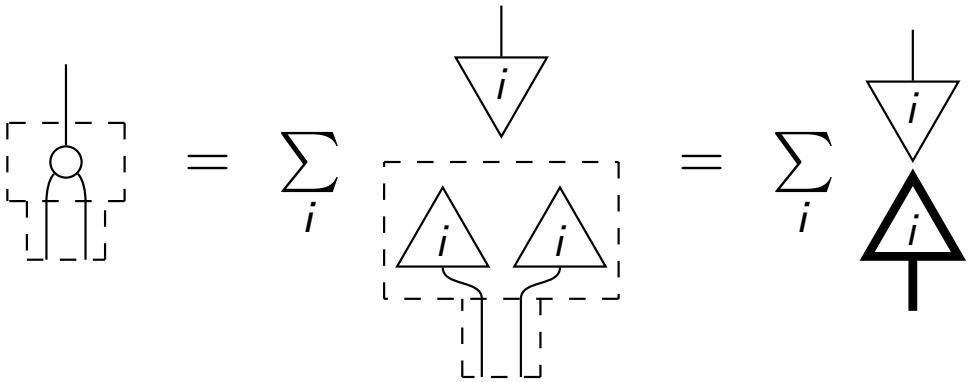

...and so is encoding:

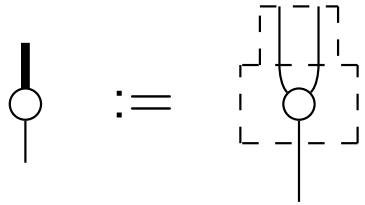

They connect classical to quantum:

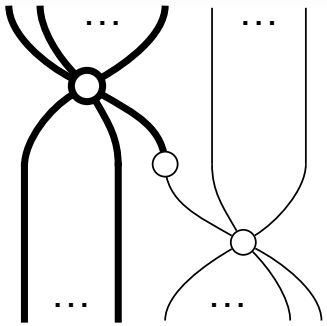

...giving something new:

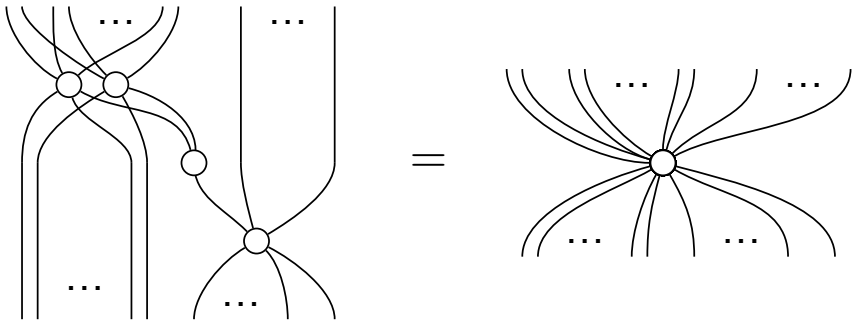

Bastard spiders!

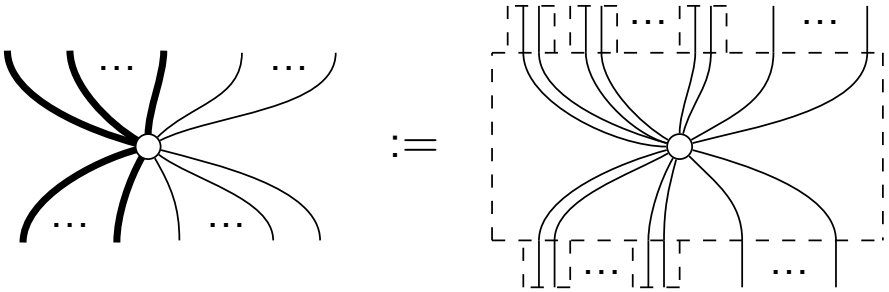

Bastard spiders fuse together:

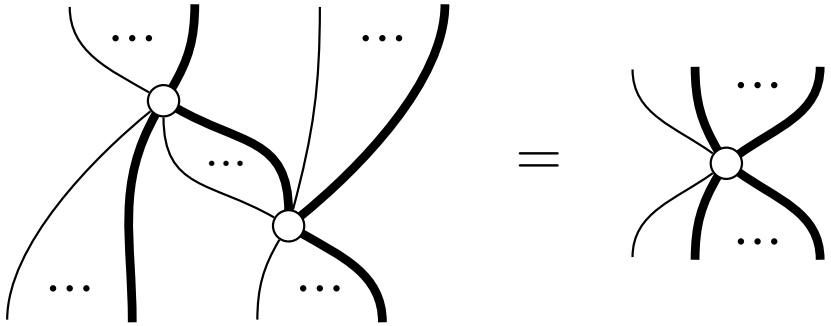

They also absorb other kinds of spider:

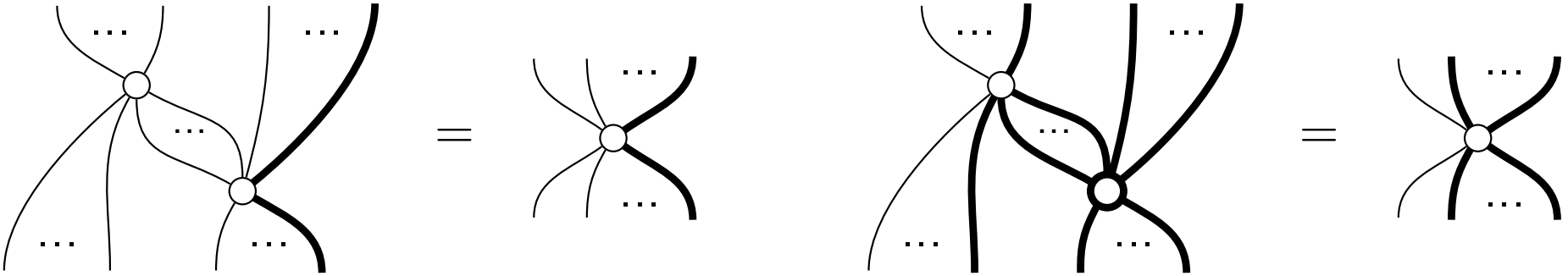

Useful bastards

Bastard spiders arise naturally in the interaction between classical and quantum data, e.g.

- Discarding:

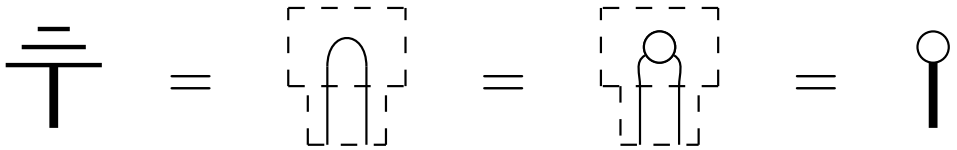

- Decoherence:

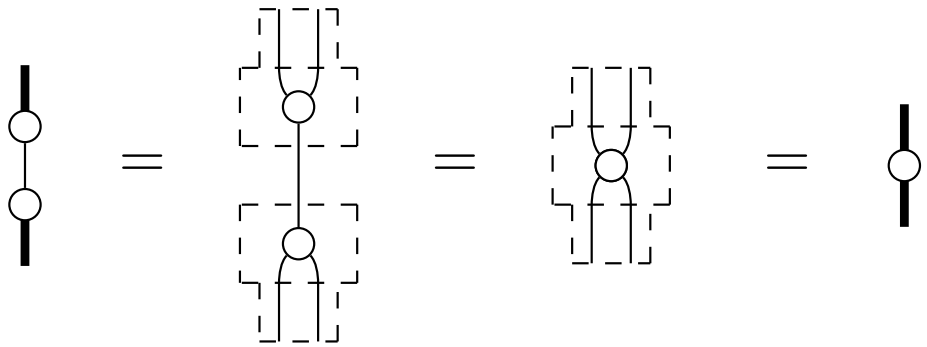

Useful bastards (cont'd)

- Non-demolition measurement:

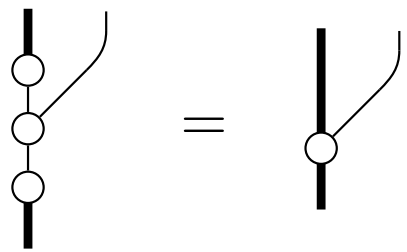

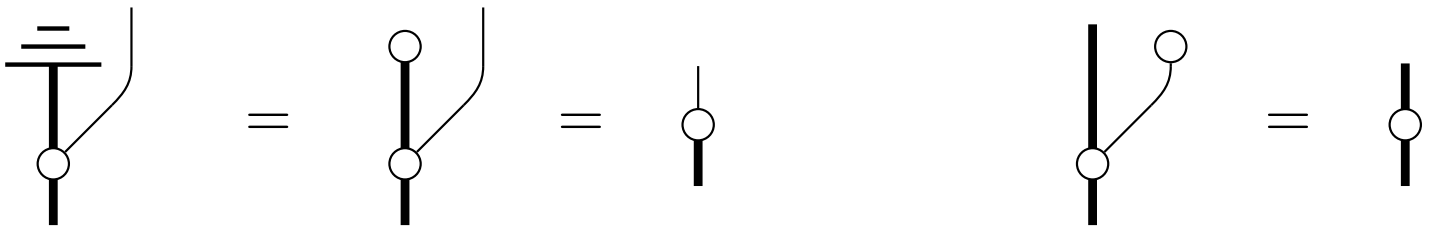

Multicoloured spiders

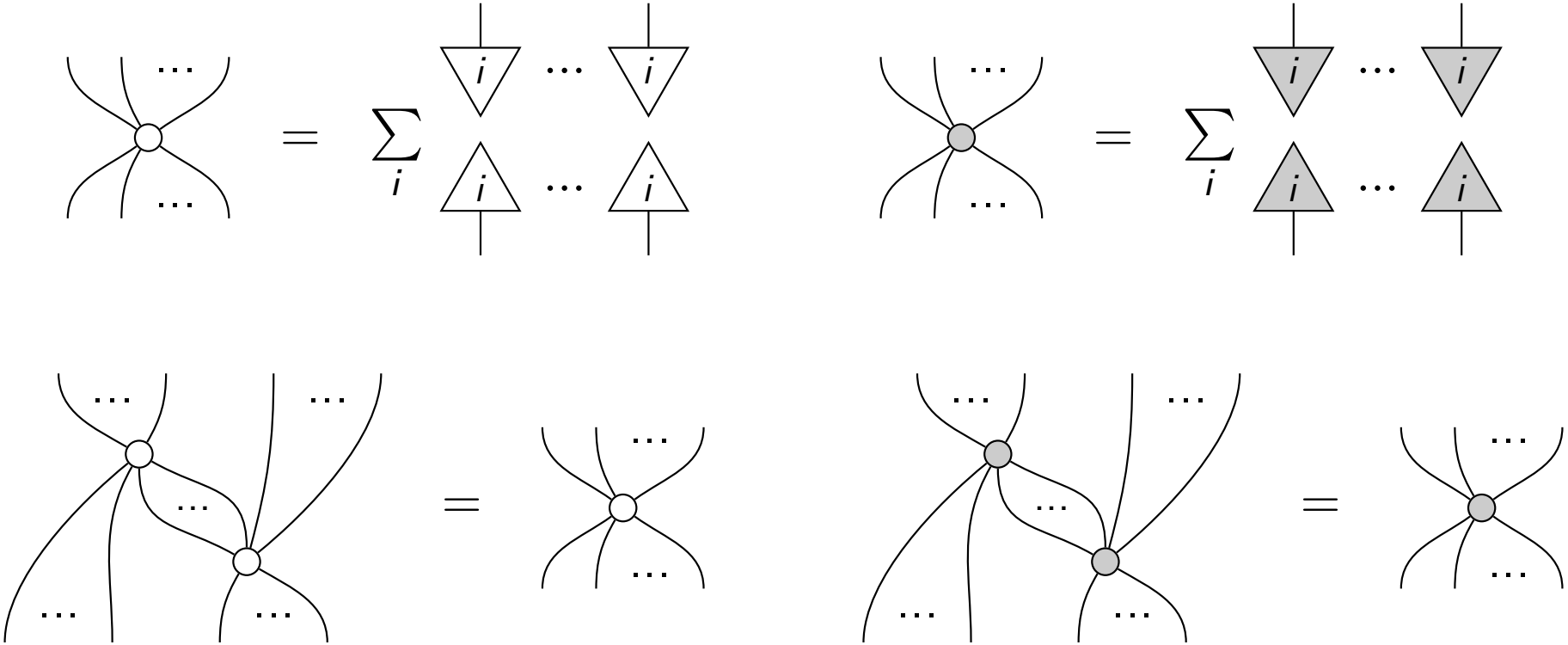

Complementary bases

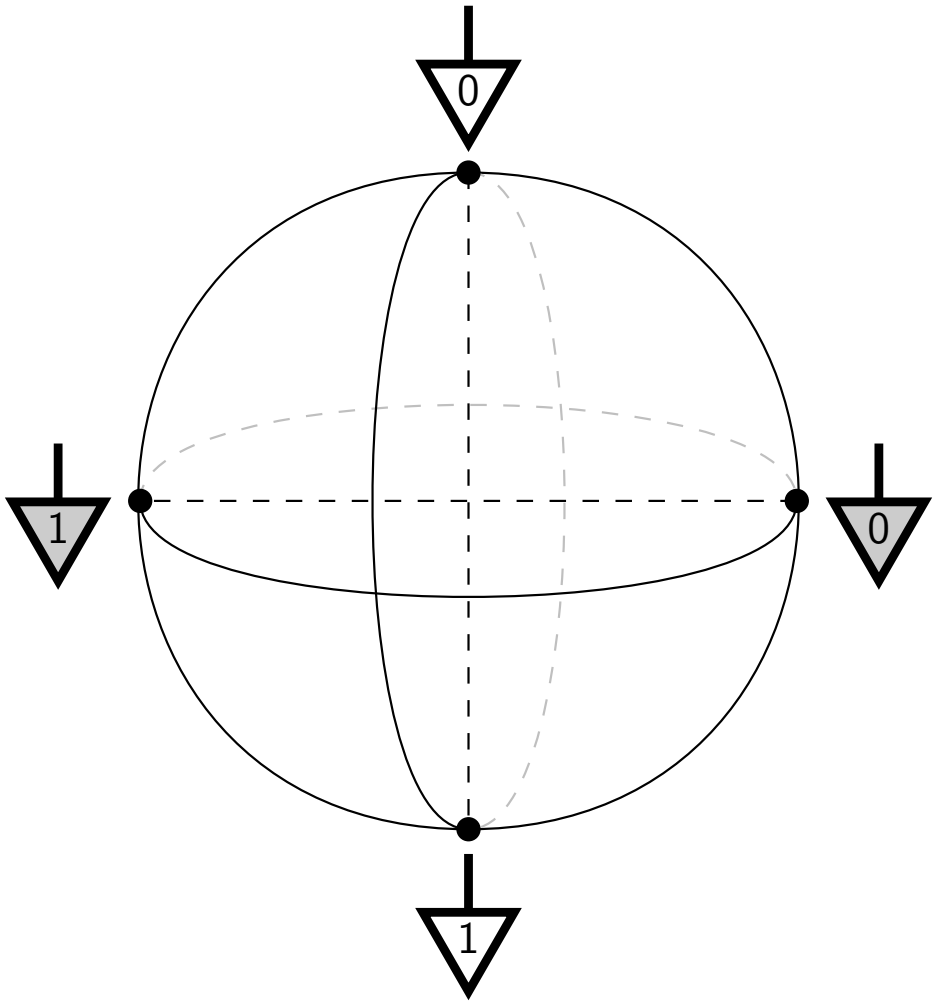

Complementarity

Theorem. Two bases are complementary (a.k.a. mutually unbiased):

$\forall i, j \quad :$

$= \frac{1}{D}$

if and only if:

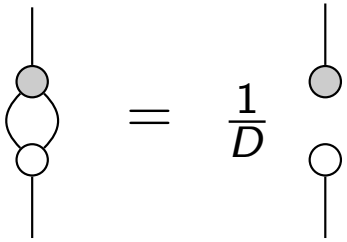

Complementarity

Theorem. Two bases are complementary (a.k.a. mutually unbiased):

$\forall i, j \quad :$

$= \frac{1}{D}$

if and only if:

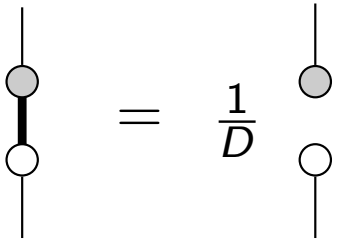

Complementarity

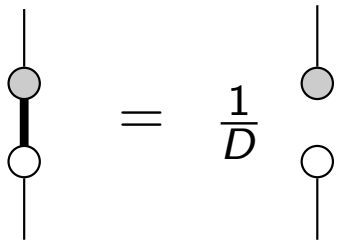

(encode in ○) THEN (measure in ●) = (no data flow)

Stern-Gerlach

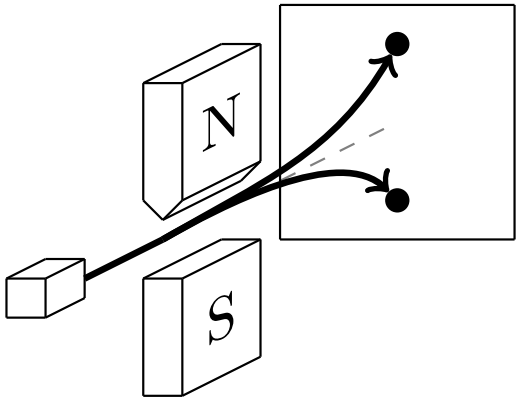

Stern-Gerlach

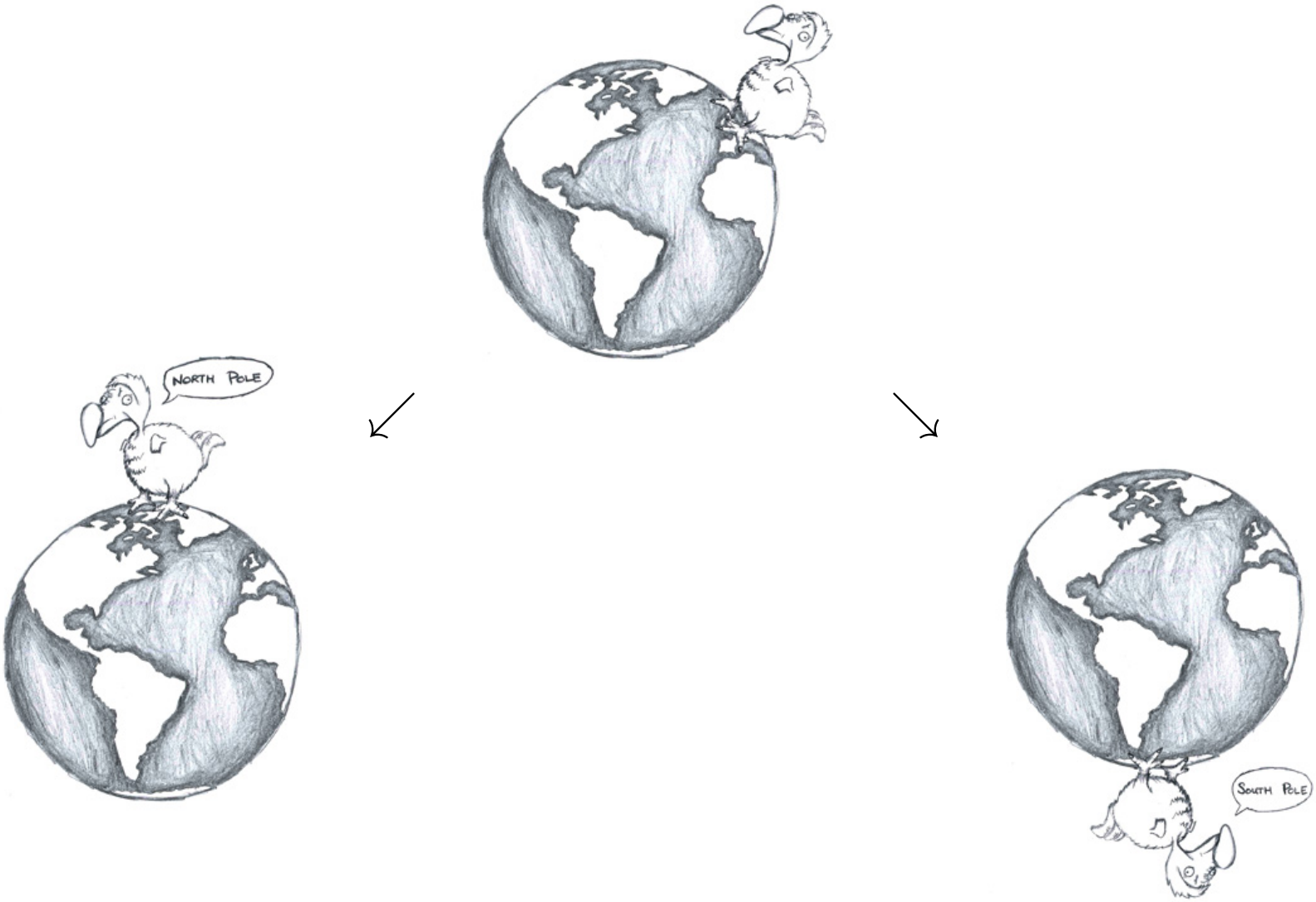

Stern-Gerlach

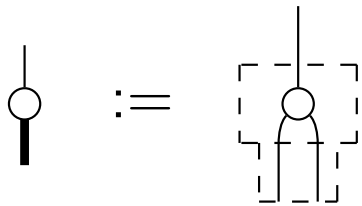

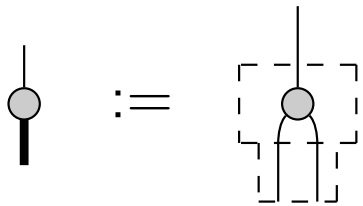

Stern-Gerlach

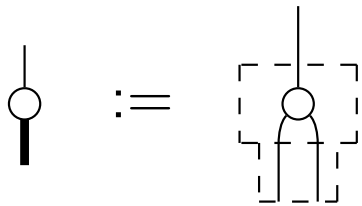

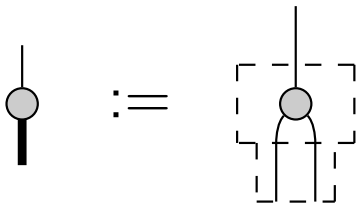

Z-measurement

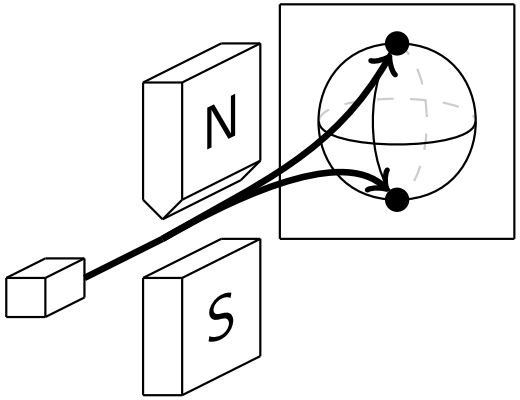

Stern-Gerlach

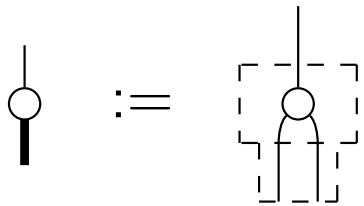

Z-measurement

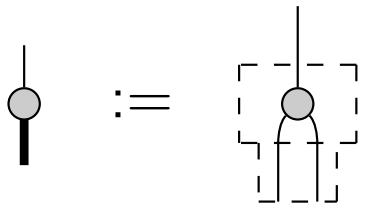

X-measurement

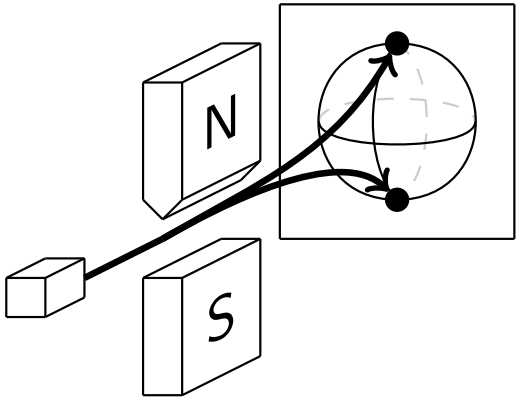

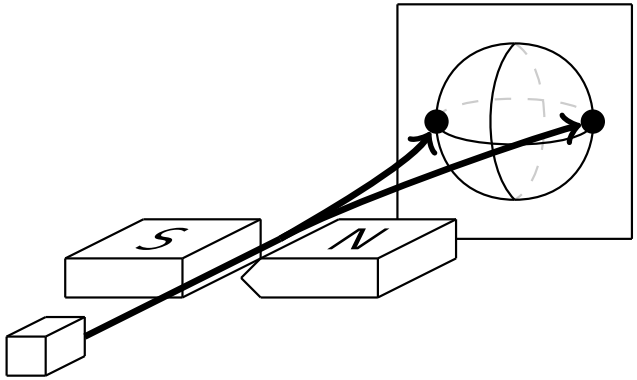

Stern-Gerlach

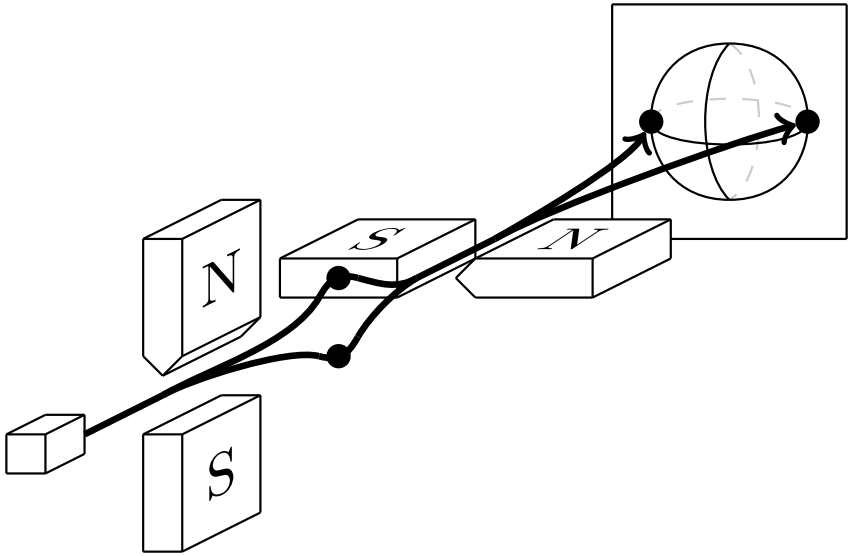

Stern-Gerlach

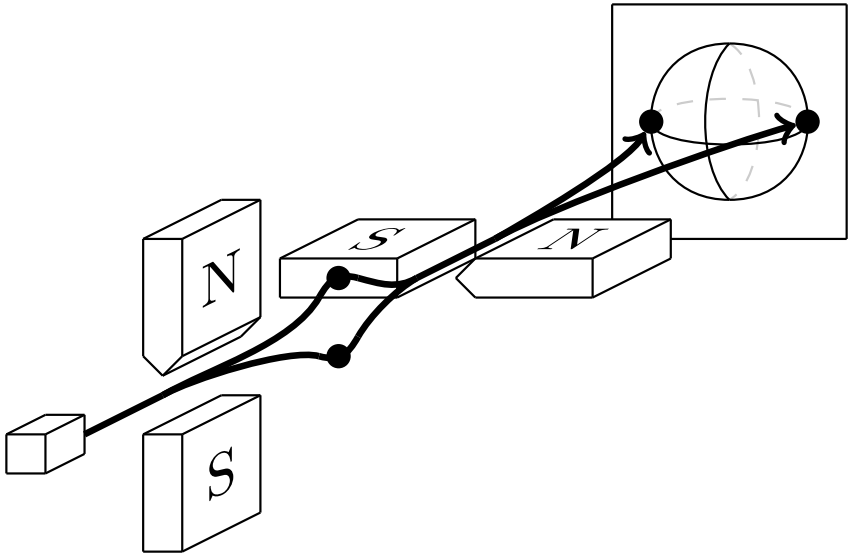

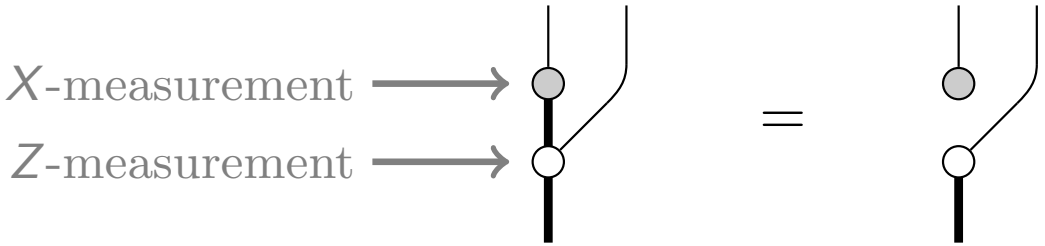

Stern-Gerlach

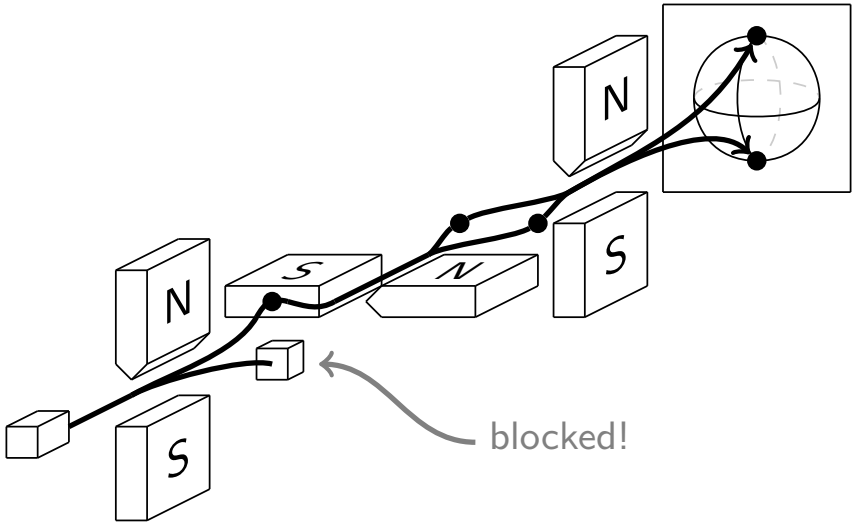

Stern-Gerlach

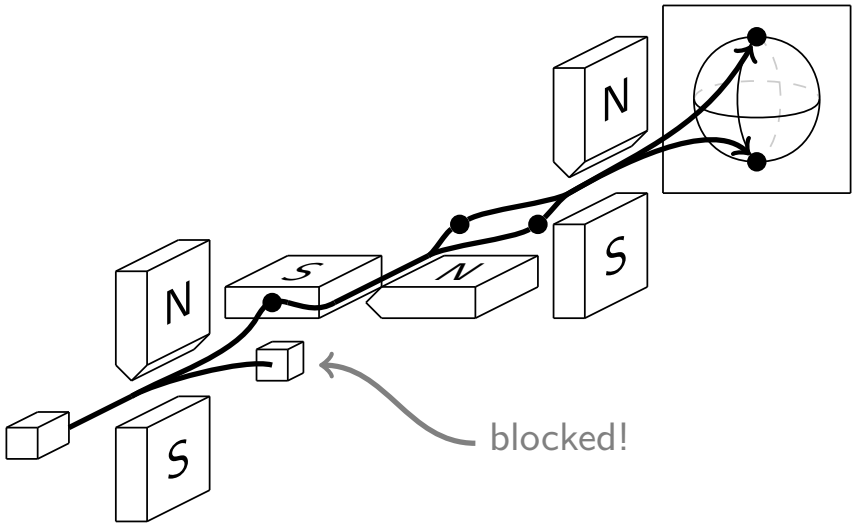

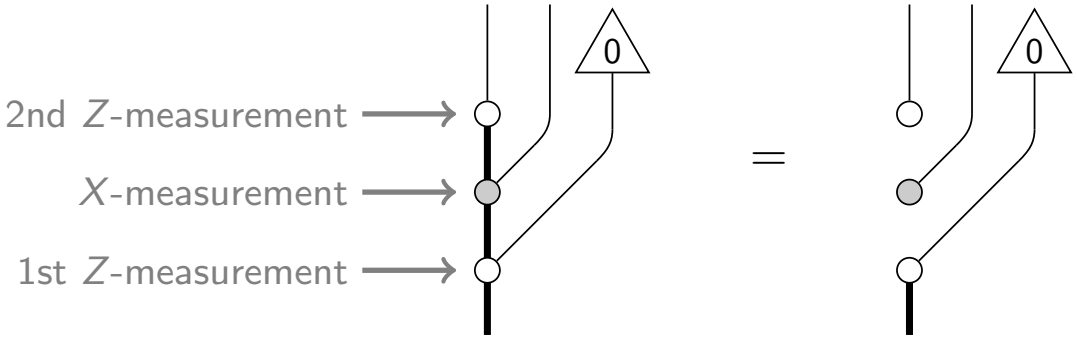

Teleportation with spiders

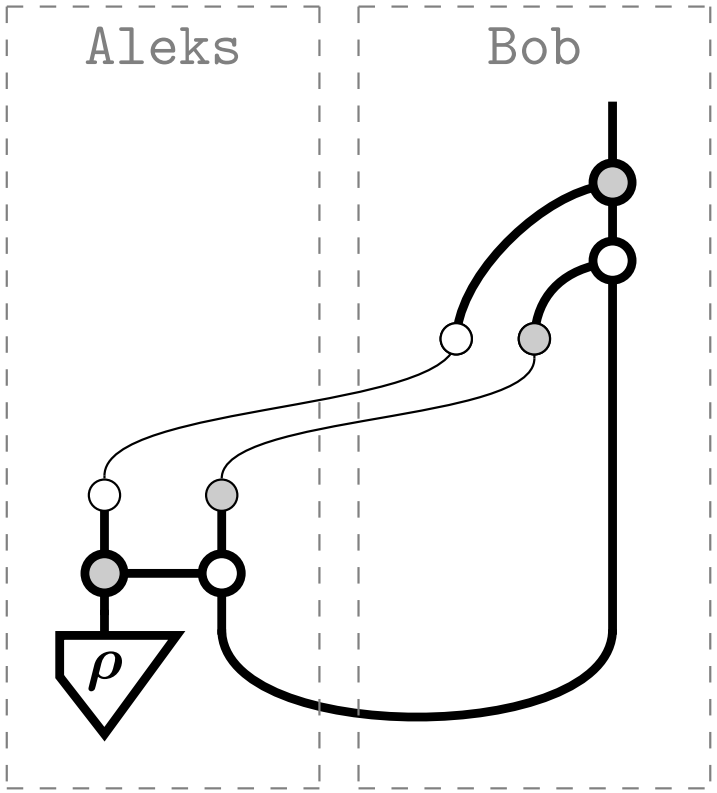

Teleportation with spiders

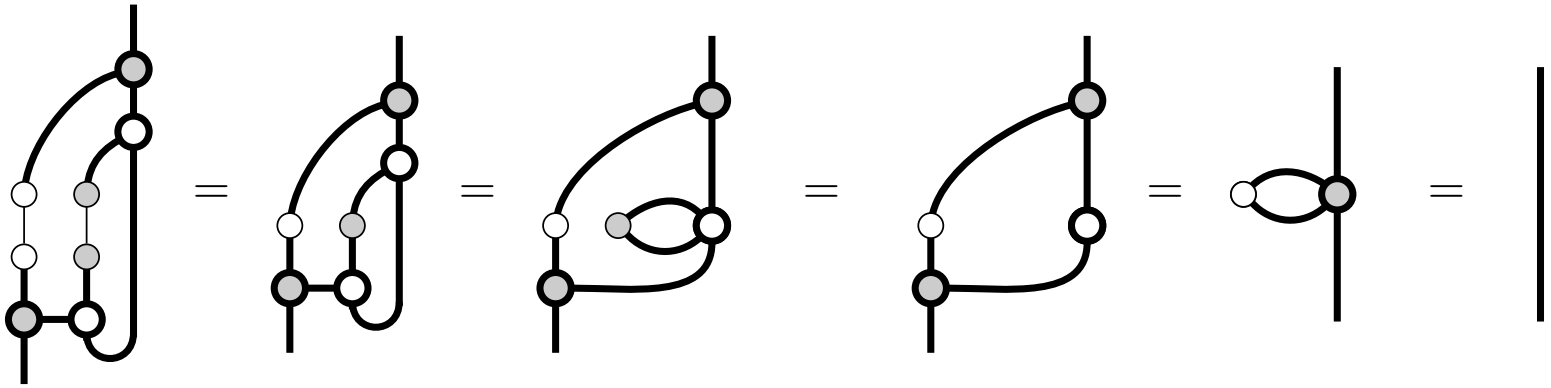

Power of the Graphical Language

We now have a fairly powerful language, it is natural to ask:

Power of the Graphical Language

We now have a fairly powerful language, it is natural to ask:

Q: Is it *universal*?

Can we express any map in terms of spiders?

Power of the Graphical Language

We now have a fairly powerful language, it is natural to ask:

Q: Is it *universal*?

Can we express any map in terms of spiders?

Q: Is it *complete*?

Can we prove every equation between maps using some set of spider-equations?

Universality

Q: Can we write any linear map as a diagram of:

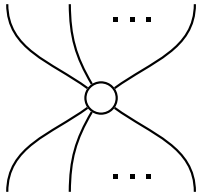

and

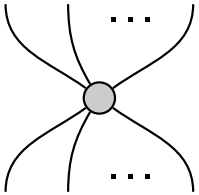

?

Universality

Q: Can we write any linear map as a diagram of:

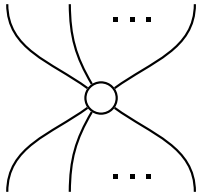

and

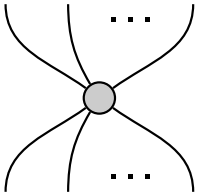

?

A: Clearly not! e.g. $\begin{pmatrix} 1 & 0 \\ 0 & i \end{pmatrix}$

Universality

Q: Can we write any linear map as a diagram of:

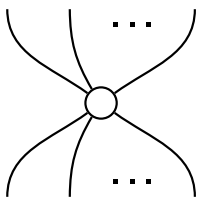

and

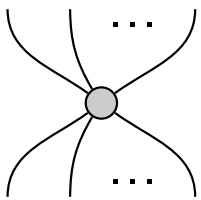

?

A: Clearly not! e.g. $\begin{pmatrix} 1 & 0 \\ 0 & i \end{pmatrix}$

Q2: How much more do we need?

Phases

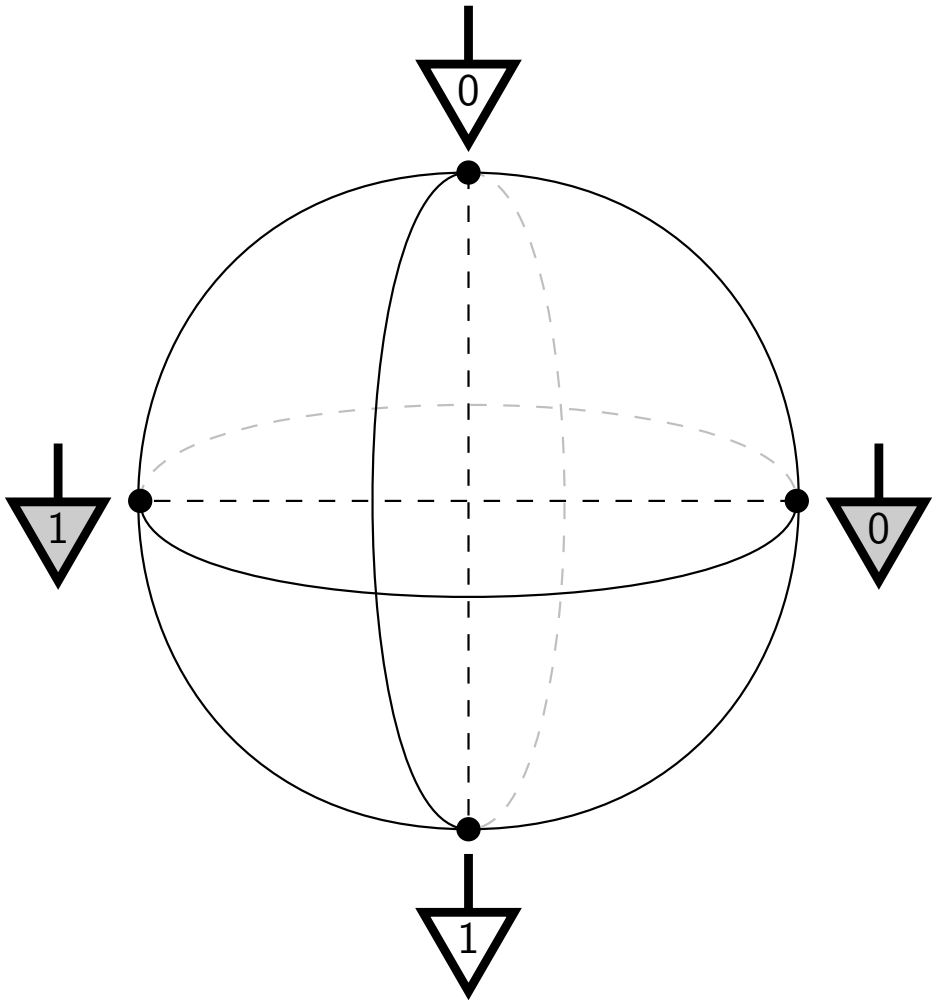

Phases

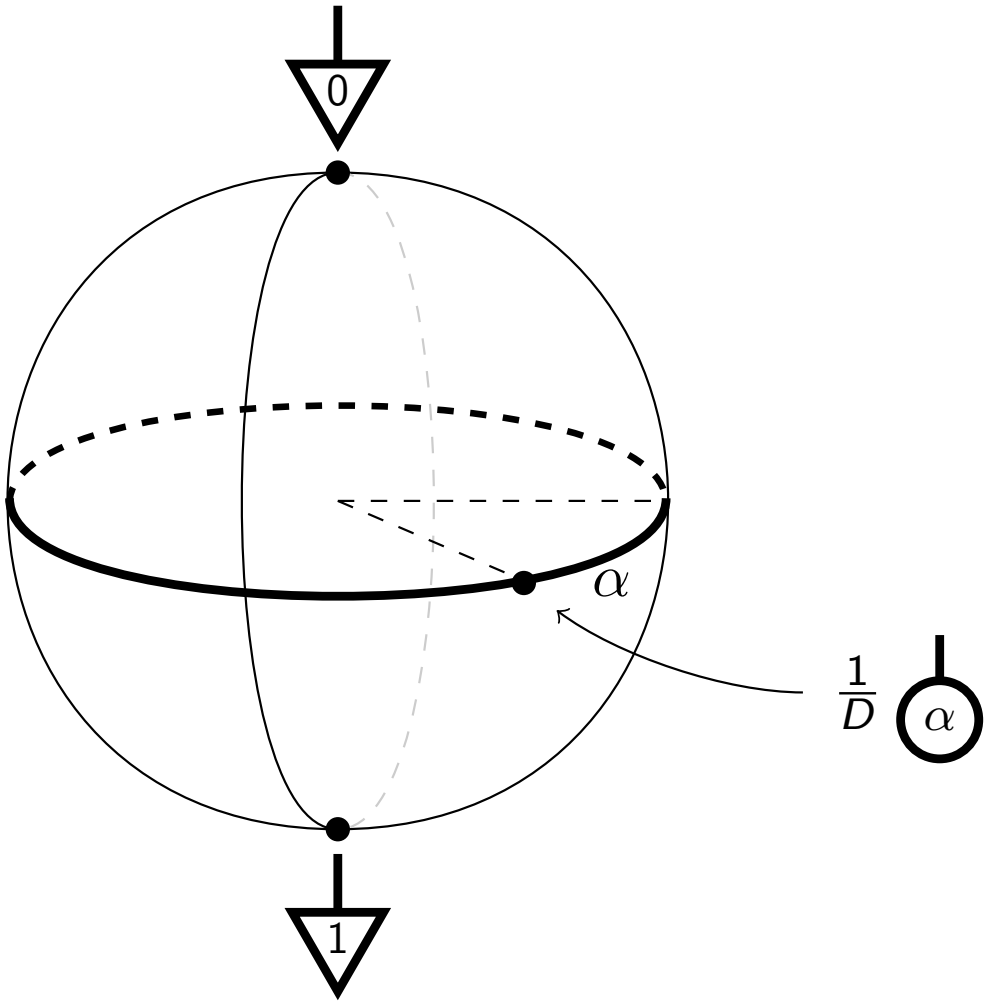

Phase spiders

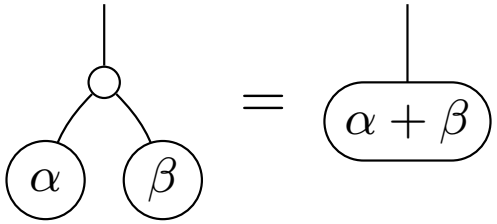

Phase spiders

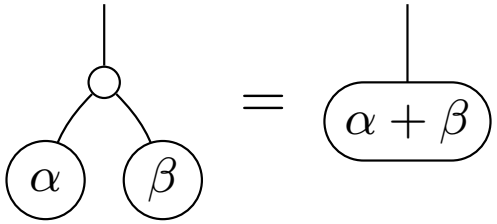

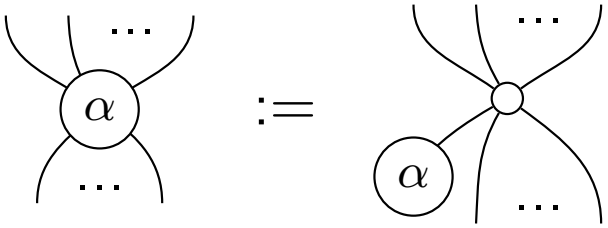

Phase spiders

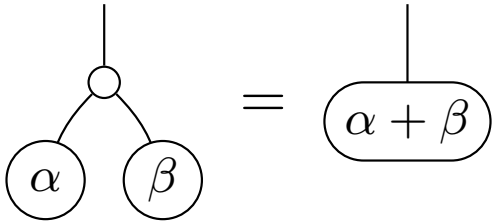

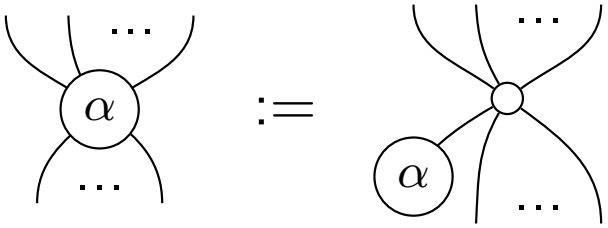

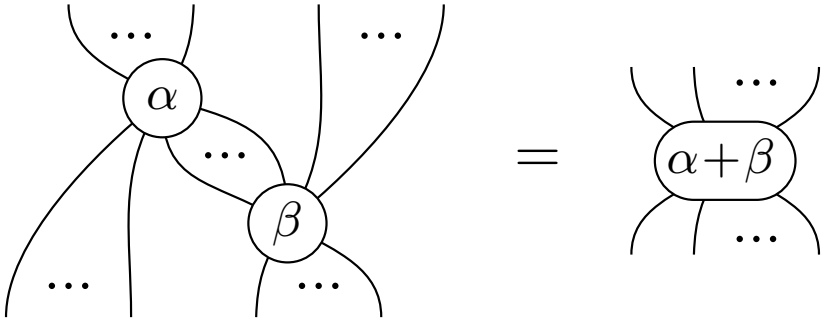

Universality

Universality

Theorem. Any linear map with 2D inputs and outputs can be expressed as a diagram of:

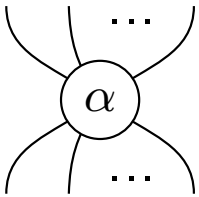

and

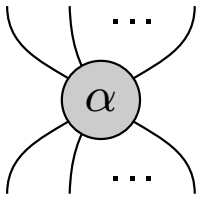

Universality

Theorem. Any linear map with 2D inputs and outputs can be expressed as a diagram of:

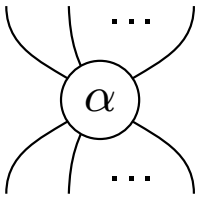

and

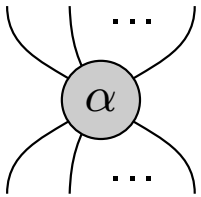

Corollary. Any **quantum map** from qubits to qubits can be expressed as a diagram of:

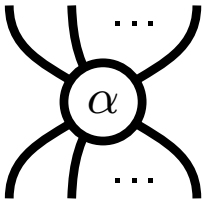

,

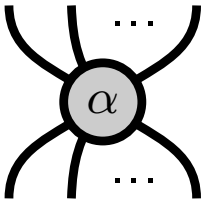

,

and

Universality

Proof. (idea)

Any single-qubit unitary: 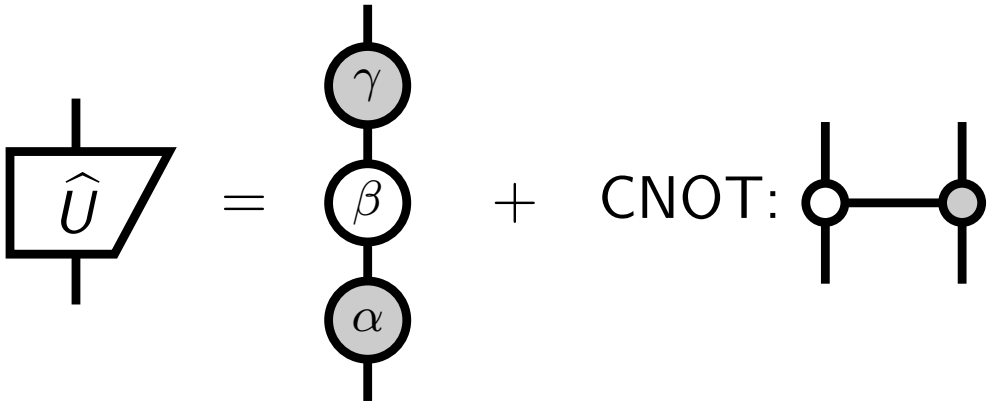

...gives any unitary, which gives any state:

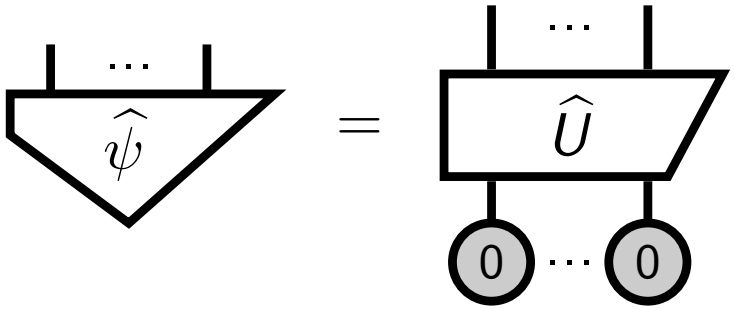

...which gives any map by process-state duality.

Completeness

Completeness

Q. Can we find a *complete* set of equations to describe the behaviour of:

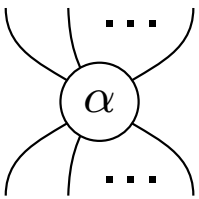

and

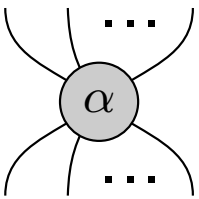

?

Completeness

Q. Can we find a *complete* set of equations to describe the behaviour of:

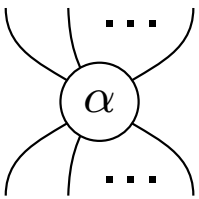

and

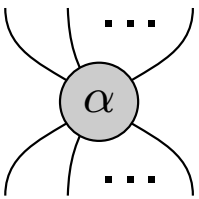

?

A. Yes! The *ZX-calculus*.

ZX-calculus

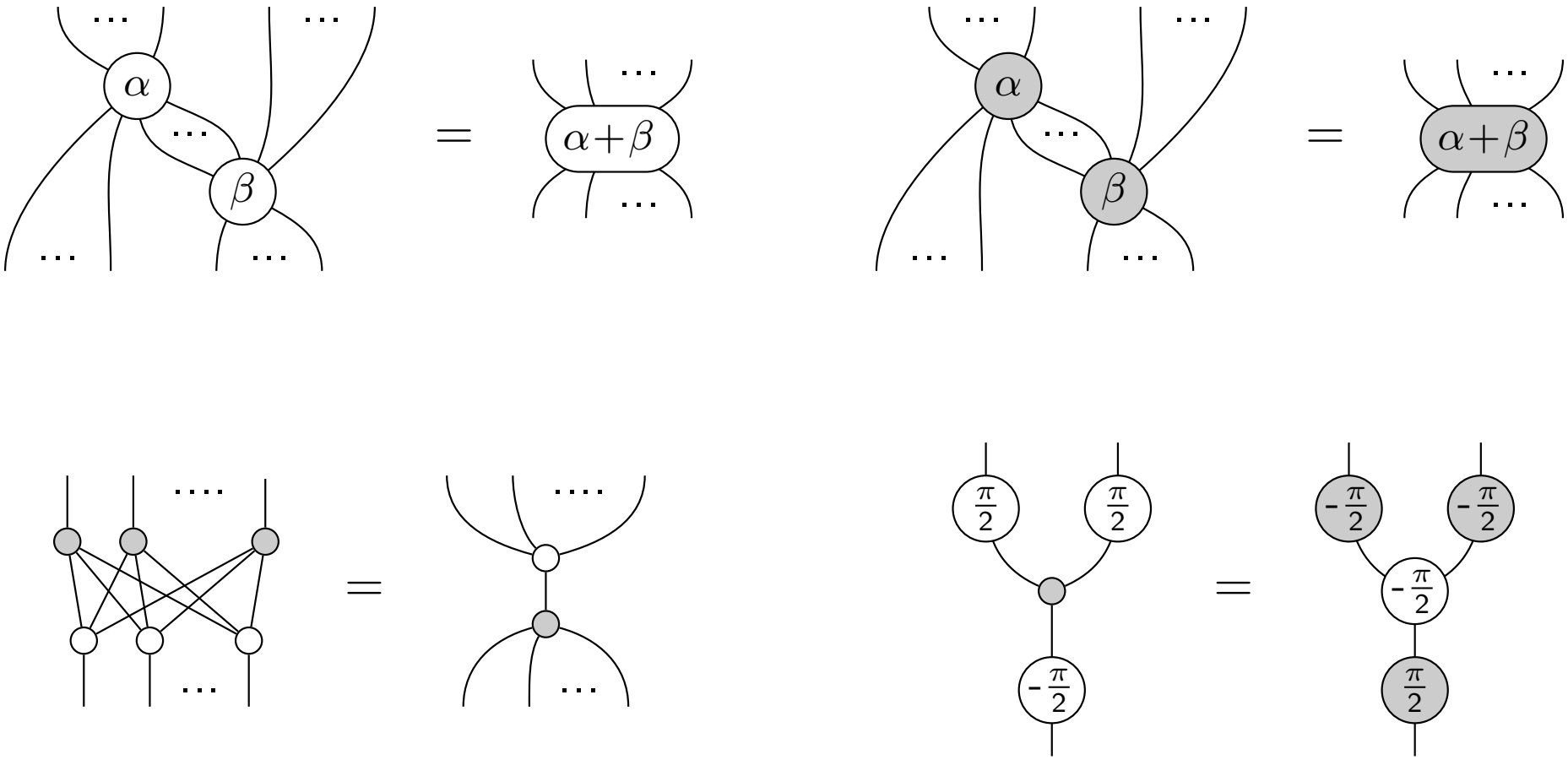

ZX-calculus

Theorem. The ZX-calculus is complete for *Clifford diagrams*, i.e. diagrams where $\alpha \in \{0, \pi, \pm\frac{\pi}{2}\}$.

ZX-calculus

Theorem. The ZX-calculus is complete for *Clifford diagrams*, i.e. diagrams where $\alpha \in \{0, \pi, \pm\frac{\pi}{2}\}$.

Theorem. (Hot off the press! [1,2]) A bigger version of the ZX-calculus is complete for *all diagrams*.

[1] Jeandel, Perdrix, Vilmart. 31 May, 2017. arXiv:1705.11151
[2] Wang & Ng. 29 June, 2017. arXiv:1706.09877

Application: Quantum Computing

The quantum *circuit model*:

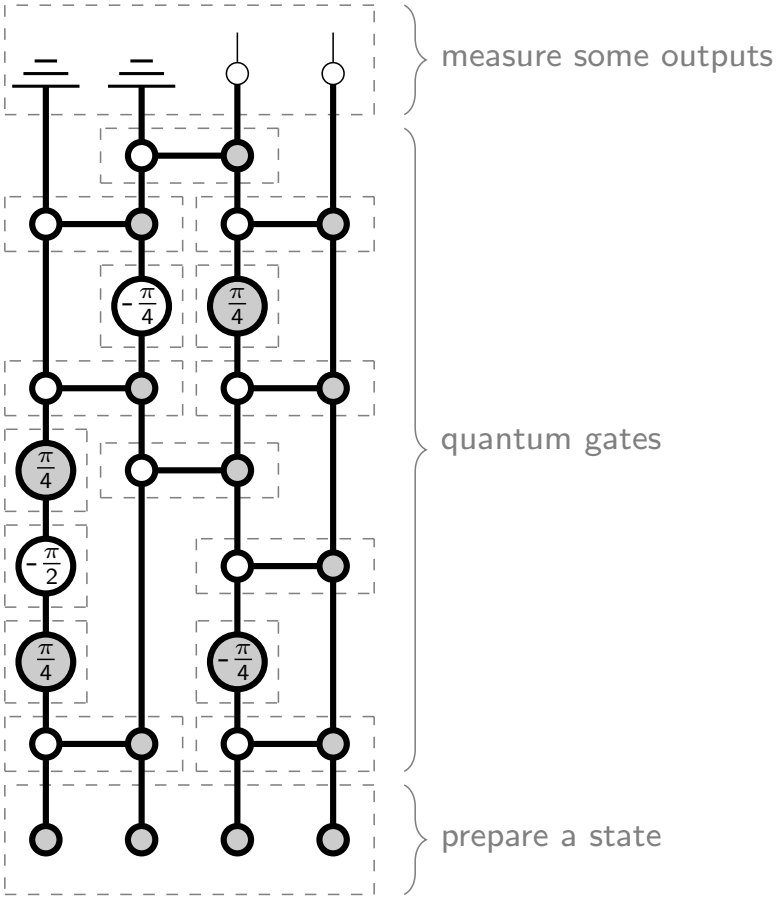

Quantum algorithms

Classical computation

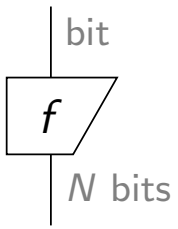

$\Rightarrow$

Quantum process

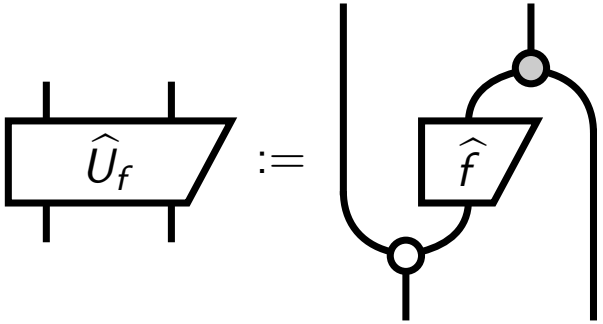

Quantum algorithms

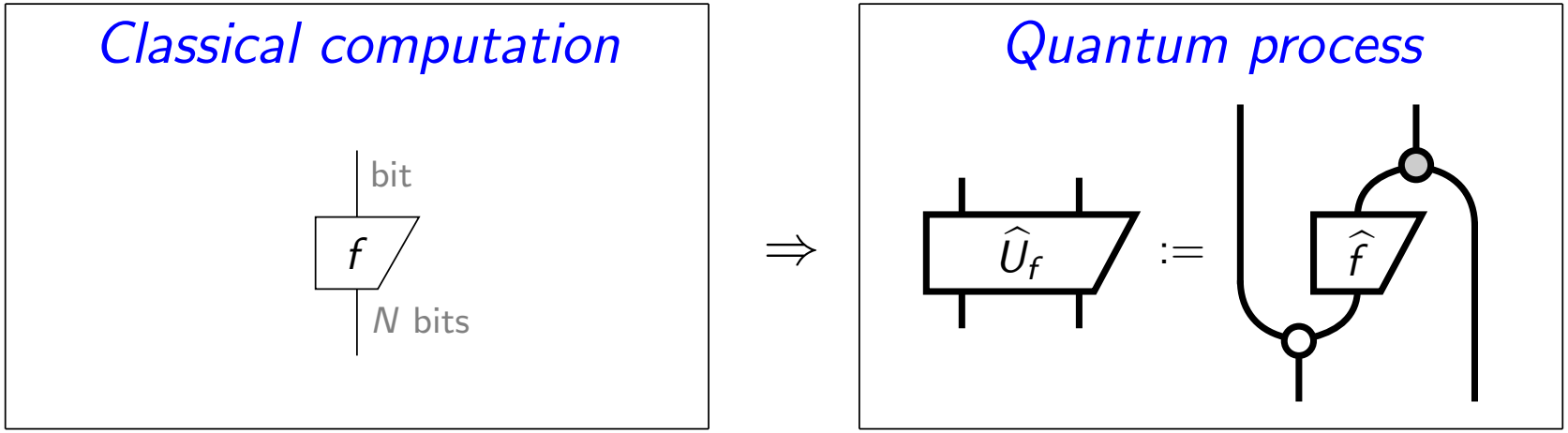

⇒ **Deutsch-Jozsa**, **Bernstein-Vazirani**, **quantum seach**, and **hidden subgroup** (e.g. factoring) algorithms.

Automation

Quantomatic:

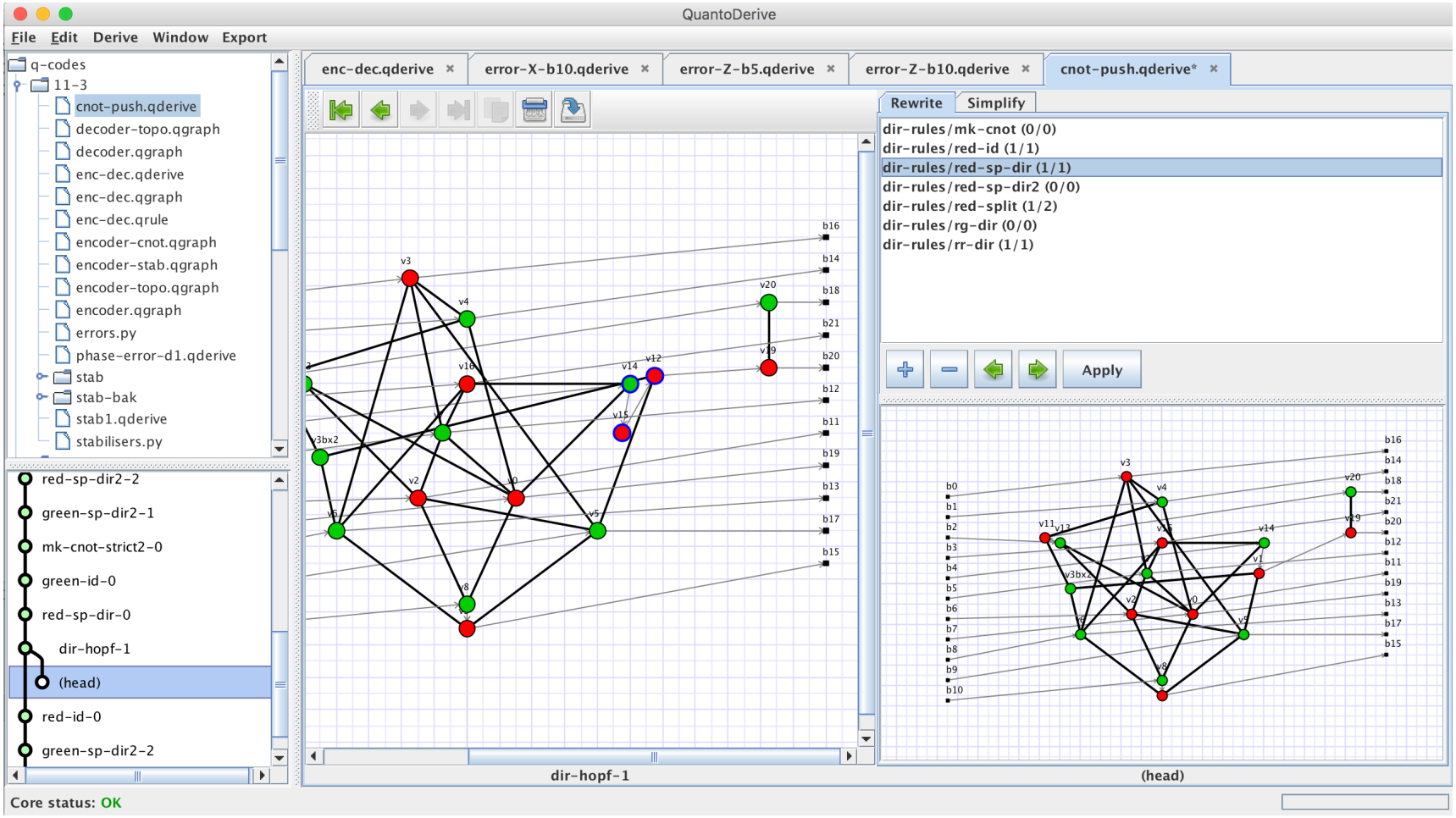

Spekkens' toy model

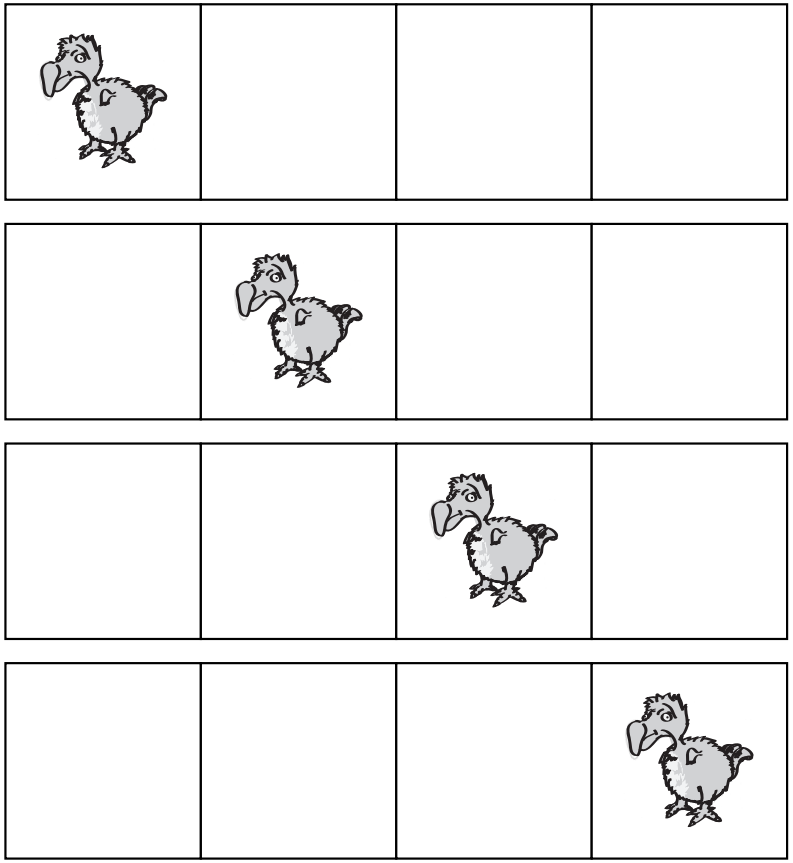

$:: \quad * \mapsto \{(0,0)\}$

$:: \quad * \mapsto \{(0,1)\}$

$:: \quad * \mapsto \{(1,0)\}$

$:: \quad * \mapsto \{(1,1)\}$

Spekkens' toy model

$$\mathrm{Z} :: (a, b) \mapsto (a, b \oplus 1)$$

$$\mathrm{Z} :: (a, b) \mapsto (a, a \oplus b)$$

$$\mathrm{H} :: (a, b) \mapsto (b, a)$$

$$\mathrm{CZ} :: ((a, b), (c, d)) \mapsto ((a, b \oplus c), (c, a \oplus d))$$

$$\mathrm{MEASURE}(a, b) \ := \ \text{reveal } a\text{, randomize } b$$

Spekkens' toy model

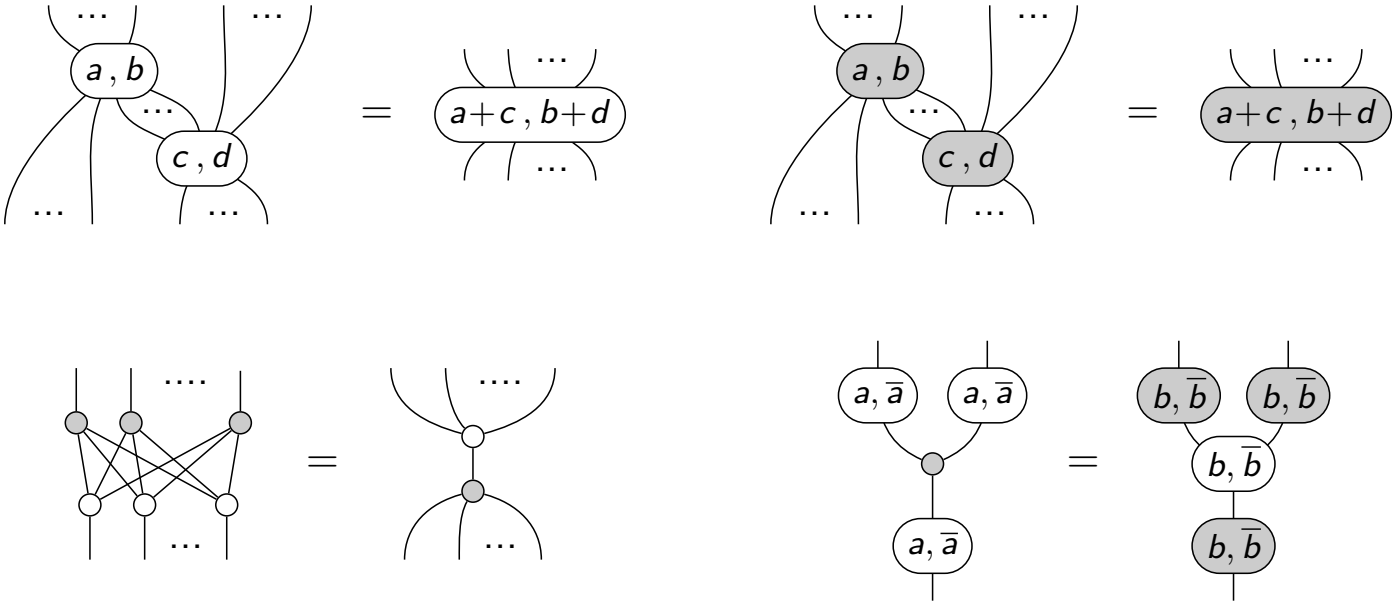

GHZ/Mermin non-locality

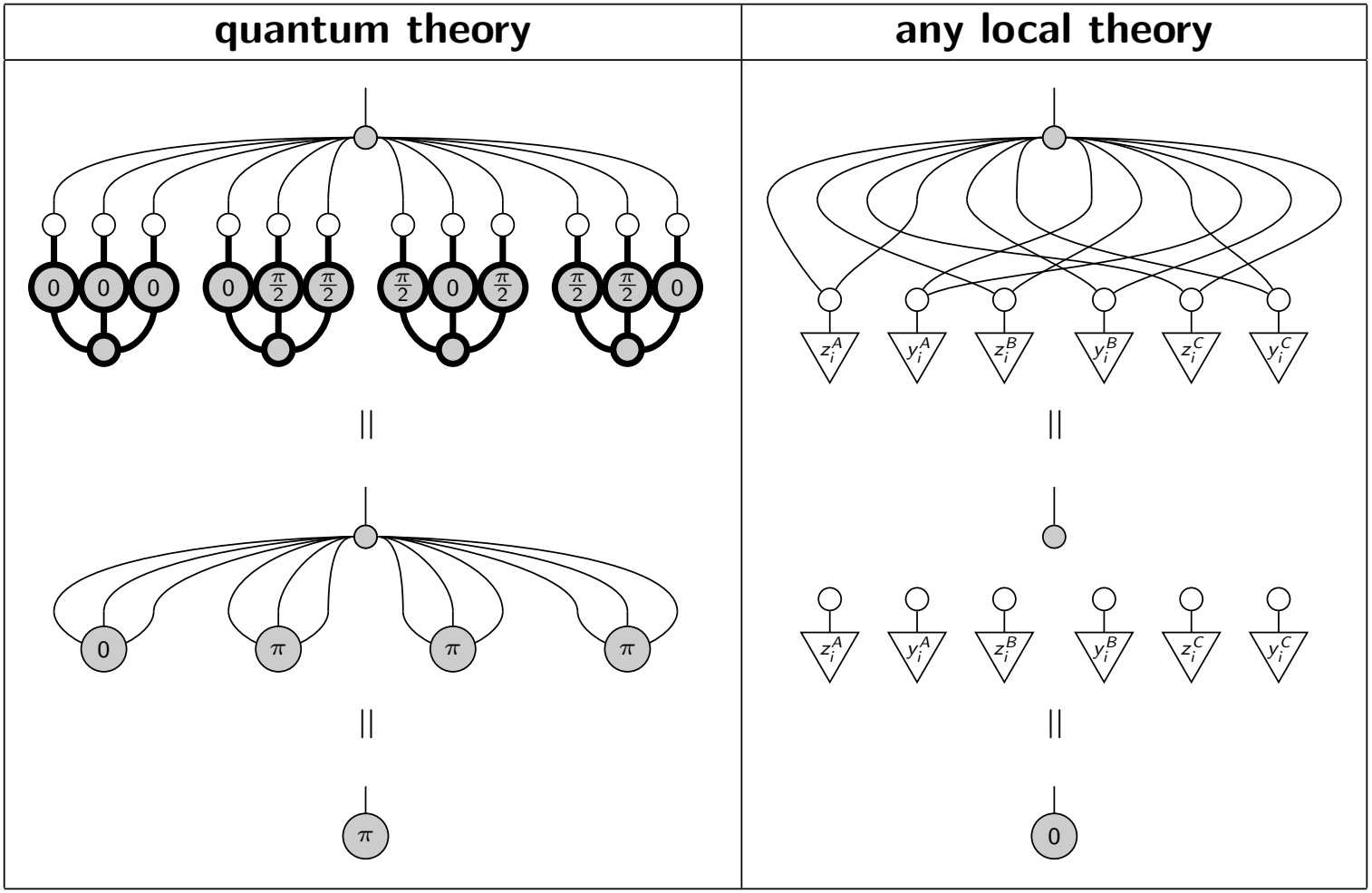

Thanks!

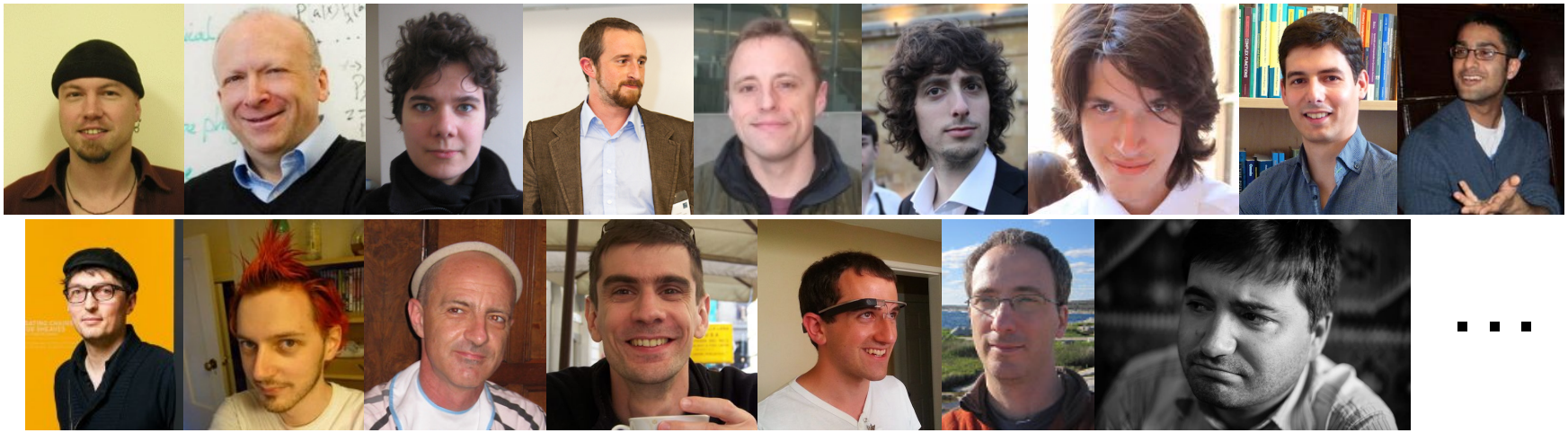

...

Coecke, Abramsky, Backens, Duncan, Edwards, Gogioso, Hadzihasanovic, Heunen, Lal, Dixon, Merry, Pavlovic, Perdrix, Quick, Selinger, Zamdzhiev, ...

Special thanks ⇒ 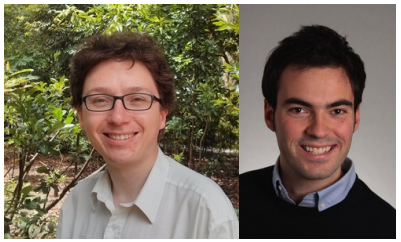

Jamie Vicary and David Reutter - qubit.zone simulators

www.cambridge.org/pqp quantomatic.github.io

Lecture Note 3

Quantum Dense Coding and Quantum Teleportation

Jian-Wei Pan

Dense Coding

Bell states – maximally entangled states:

$$|\Phi^+\rangle_{12} = \frac{1}{\sqrt{2}}\left(|H\rangle_1|H\rangle_2 + |V\rangle_1|V\rangle_2\right) \qquad |\Phi^-\rangle_{12} = \frac{1}{\sqrt{2}}\left(|H\rangle_1|H\rangle_2 - |V\rangle_1|V\rangle_2\right) = \hat{\sigma}_{1z}|\Phi^+\rangle_{12}$$

$$|\Psi^+\rangle_{12} = \frac{1}{\sqrt{2}}\left(|H\rangle_1|V\rangle_2 + |V\rangle_1|H\rangle_2\right) = \hat{\sigma}_{1x}|\Phi^+\rangle_{12} \qquad |\Psi^-\rangle_{12} = \frac{1}{\sqrt{2}}\left(|H\rangle_1|V\rangle_2 - |V\rangle_1|H\rangle_2\right) = -i\hat{\sigma}_{1y}|\Phi^+\rangle_{12}$$

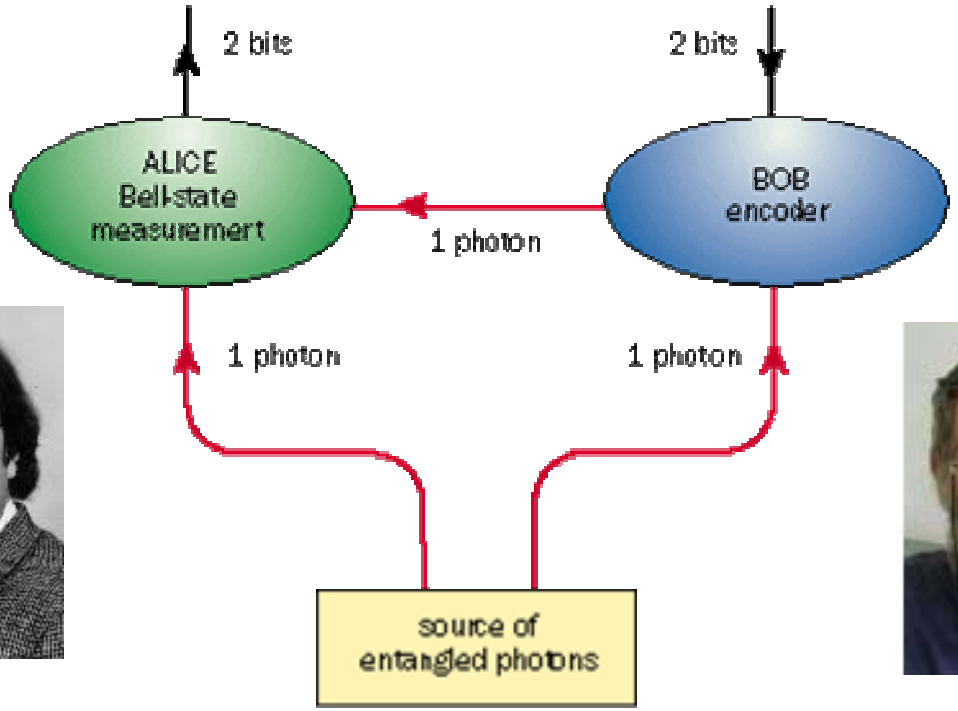

Theory:
[C. H. Bennett & S. J. Wiesner, Phys. Rev. Lett. 69, 2881 (1992)]

Dense Coding

1. Alice and Bob share an entangled photon pair in the state of $\left|\Phi^{+}\right\rangle$.
2. Bob chooses one of the four unitary transformation $\{I, \sigma_z, \sigma_x, \sigma_y\}$ on his photon. The information of which choice is 2 bit.
3. Bob sends his photon to Alice.
4. Alice performs a joint Bell-state measurement on the photon from Bob and her photon.
5. With the measurement result, she can tell Bob's unitary transformation and achieve the 2 bit information.

Teleportation

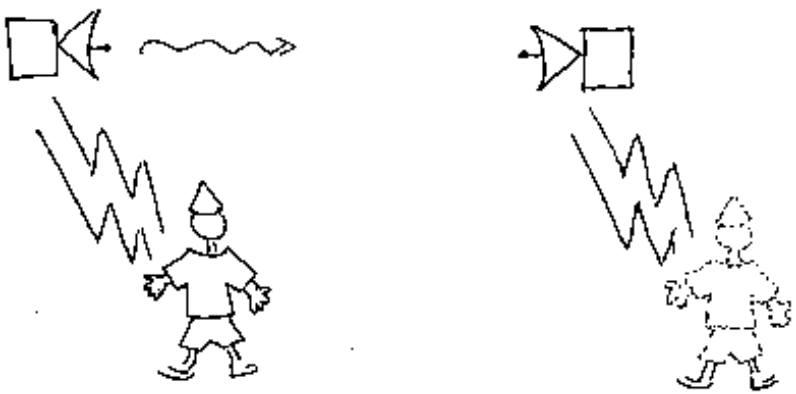

- Classical Physics

  Scanning and Reconstructing

- Quantum Physics

  Heisenberg Uncertainty Principle Forbidden Extracting All the Information from An Unknown Quantum State

Quantum Teleportation
--- “Six Author Scheme”

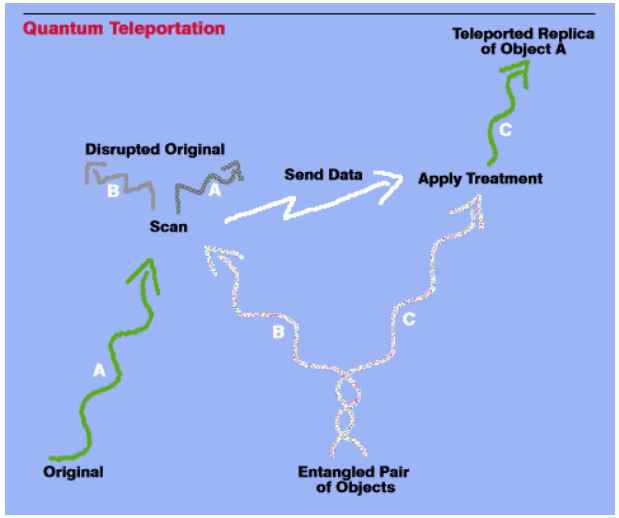

$$\left|\Phi\right\rangle_A = \alpha\left|0\right\rangle_A + \beta\left|1\right\rangle_A \qquad (|\alpha|^2 + |\beta|^2 = 1)$$

$$\begin{aligned}
|\Psi\rangle_{ABC} &= |\Phi\rangle_A \otimes \left|\Phi^+\right\rangle_{BC} \\
&= \left|\Phi^+\right\rangle_{AB} \otimes (\alpha|0\rangle_C + \beta|1\rangle_C) \\
&+ \left|\Phi^-\right\rangle_{AB} \otimes (\alpha|0\rangle_C - \beta|1\rangle_C) \\
&+ \left|\Psi^+\right\rangle_{AB} \otimes (\alpha|1\rangle_C + \beta|0\rangle_C) \\
&+ \left|\Psi^-\right\rangle_{AB} \otimes (\alpha|1\rangle_C - \beta|0\rangle_C)
\end{aligned}$$

$$\left|\psi^\pm\right\rangle = \frac{1}{\sqrt{2}}(|0\rangle|1\rangle \pm |1\rangle|0\rangle)$$

$$\left|\phi^\pm\right\rangle = \frac{1}{\sqrt{2}}(|0\rangle|0\rangle \pm |1\rangle|1\rangle)$$

Bell states – maximally entangled states

(top, left) Richard Jozsa, William K. Wootters, Charles H. Bennett. (bottom, left) Gilles Brassard, Claude Crépeau, Asher Peres. Photo: André Berthiaume.

[C.H. Bennett et al., Phys. Rev. Lett. 73, 3801 (1993)]

Teleportation of entanglement
----Entanglement Swapping

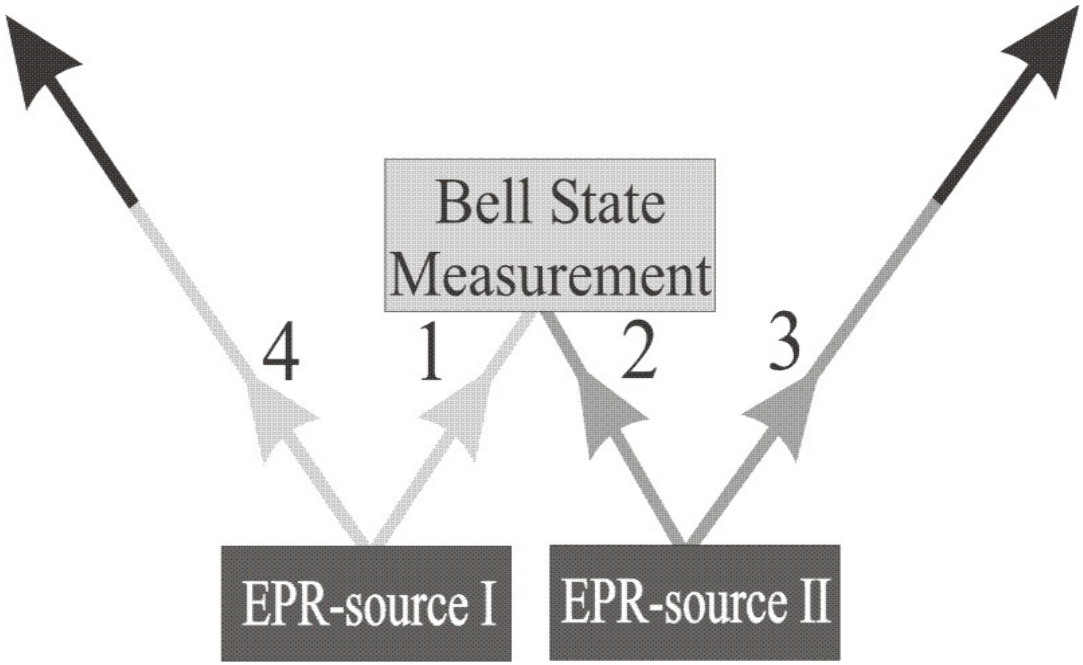

$$
\begin{aligned}
|\Psi\rangle_{1234} &= |\Phi^+\rangle_{14} \otimes |\Phi^+\rangle_{23} \\
&= |\Phi^+\rangle_{12} \otimes |\Phi^+\rangle_{34} + |\Phi^-\rangle_{12} \otimes |\Phi^-\rangle_{34} + \\
&\quad |\Psi^+\rangle_{12} \otimes |\Psi^+\rangle_{34} + |\Psi^-\rangle_{12} \otimes |\Psi^-\rangle_{34}
\end{aligned}
$$

[M. Zukowski et al., Phys. Rev. Lett. 71, 4287 (1993)]

Experimental Ingredient

- Entangled photon pair

  by Spontaneous Parametric down conversion (SPDC)

  - time bin entanglement
  - momentum entanglement
  - polarization entanglement

  ....

- Bell state analyzer

  photon statistics at a beamsplitter

SPDC

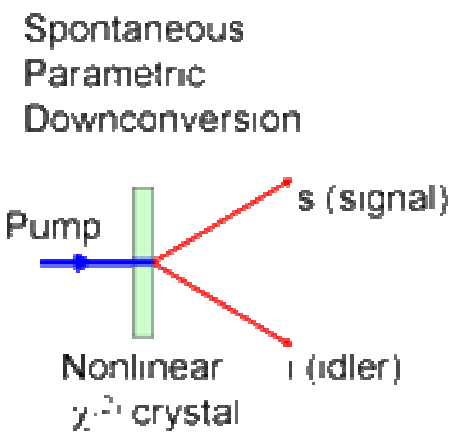

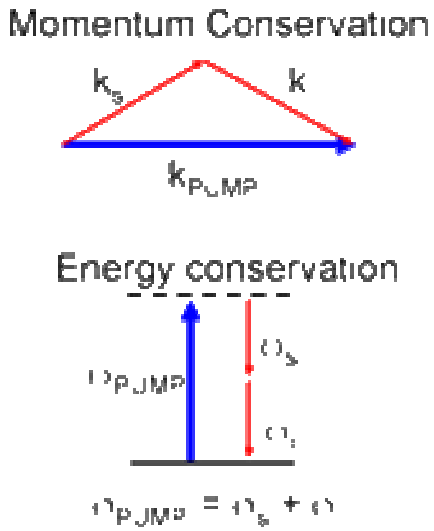

Type **I**

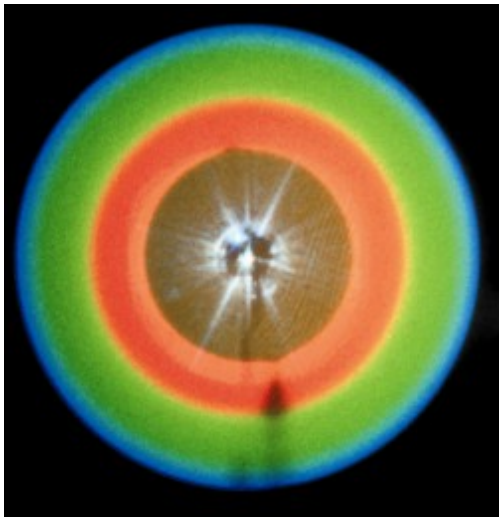

Type **II**

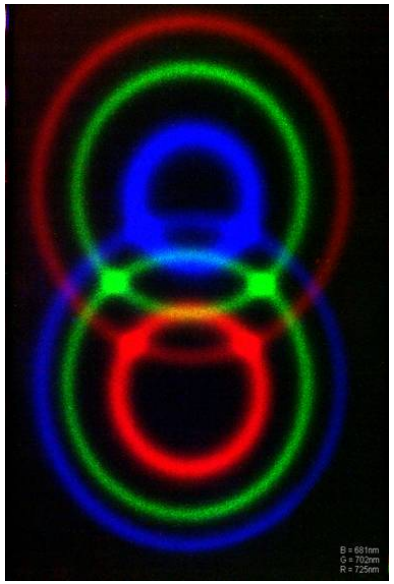

SPDC—time bin entanglement

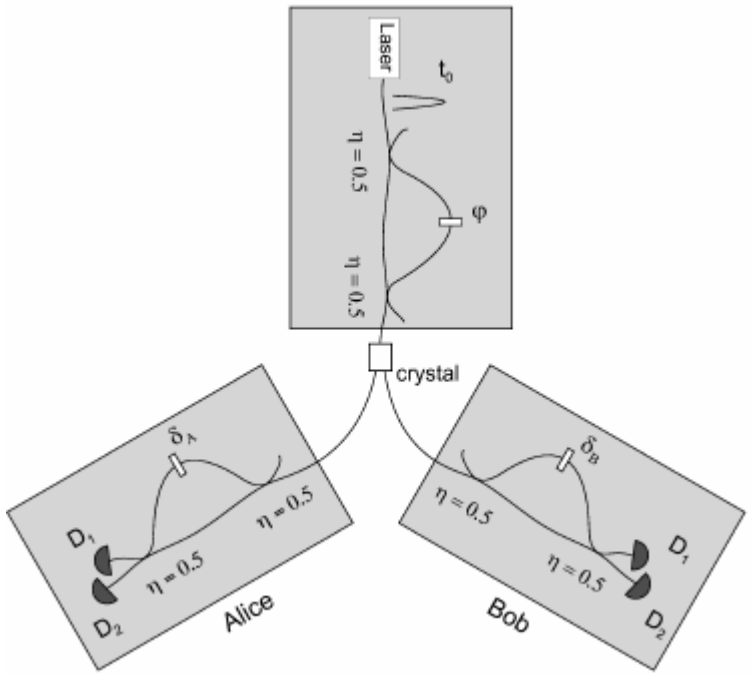

$$|\Psi\rangle = \frac{1}{\sqrt{2}}(|short\rangle_a |short\rangle_b + |long\rangle_a |long\rangle_b)$$

[J. Brendel et al., Phys. Rev. Lett. 82, 2594 (1999)]

SPDC—momentum entanglement

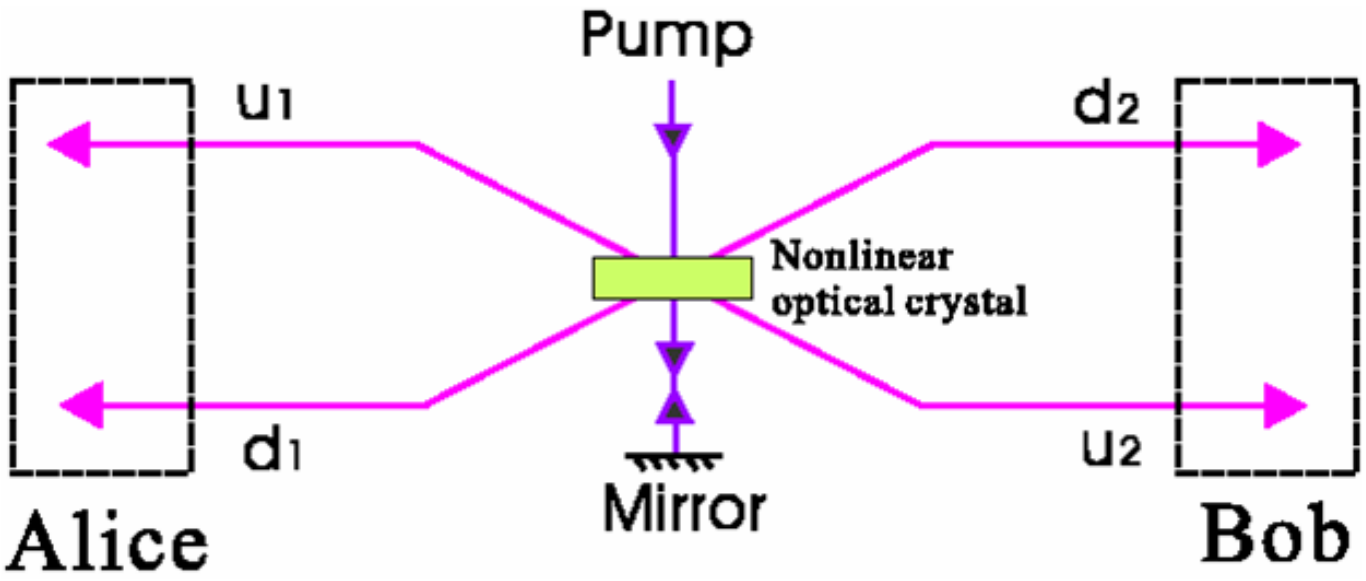

$$|\Psi\rangle = \frac{1}{\sqrt{2}}(|u\rangle_1|d\rangle_2 + |d\rangle_1|u\rangle_2)$$

[Z. B. Chen et al., Phys. Rev. Lett. 90, 160408 (2003)]

SPDC—polarization entanglement

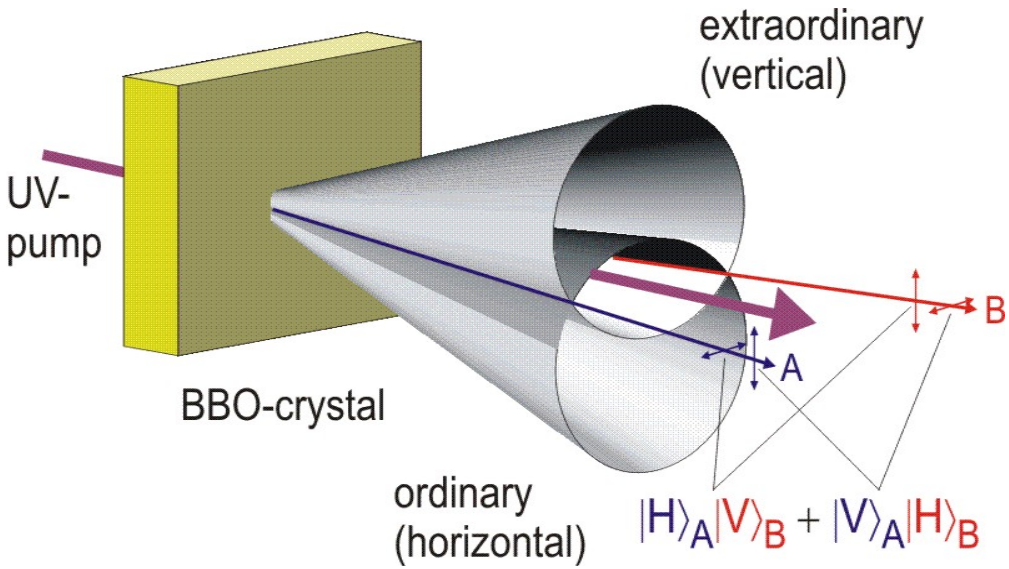

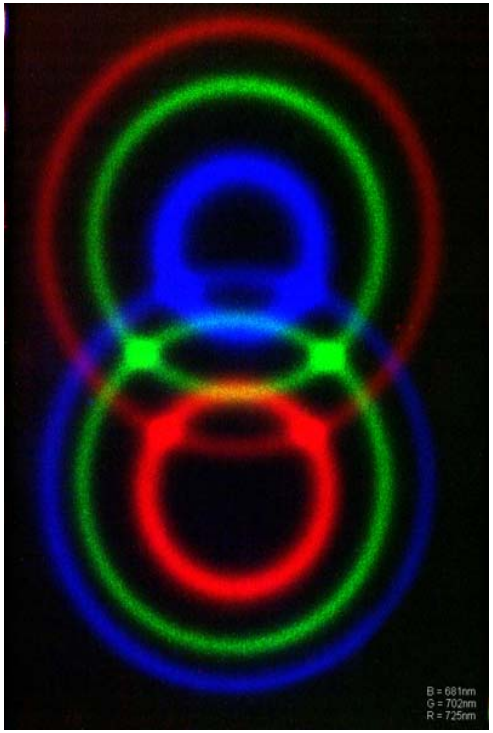

$$|\Phi^{\pm}\rangle_{12} = \frac{1}{\sqrt{2}}\left(|H\rangle_1|H\rangle_2 \pm |V\rangle_1|V\rangle_2\right)$$

$$|\Psi^{\pm}\rangle_{12} = \frac{1}{\sqrt{2}}\left(|H\rangle_1|V\rangle_2 \pm |V\rangle_1|H\rangle_2\right)$$

[P. G. Kwiat et al., Phys. Rev. Lett. 75, 4337 (1995)]

Bell state analyzer with Linear Optics

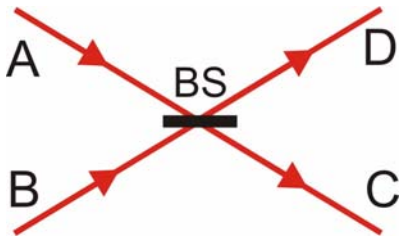

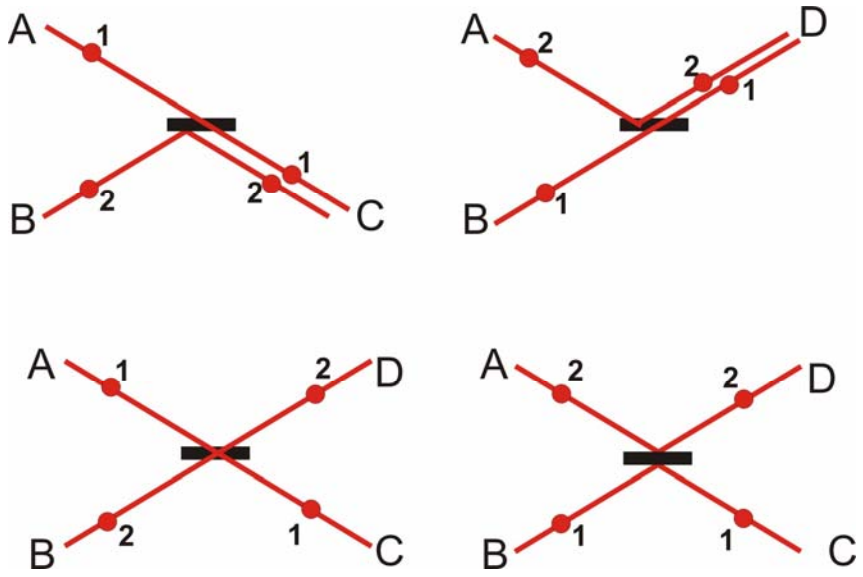

Controlled-NOT gate

$$HH \rightarrow HV, \qquad HV \rightarrow HH$$

$$VH \rightarrow VH, \qquad VV \rightarrow VV$$

$$(H+V)H \rightarrow HV + VH$$

$$|\Phi^{\pm}\rangle_{12} = \frac{1}{\sqrt{2}}\left(|H\rangle_1 |H\rangle_2 \pm |V\rangle_1 |V\rangle_2\right)$$

$$|\Psi^{+}\rangle_{12} = \frac{1}{\sqrt{2}}\left(|H\rangle_1 |V\rangle_2 + |V\rangle_1 |H\rangle_2\right)$$

$$|\Psi^{-}\rangle_{12} = \frac{1}{\sqrt{2}}\left(|H\rangle_1 |V\rangle_2 - |V\rangle_1 |H\rangle_2\right)$$

[H. Weinfurter, Eruophys. Lett. 25, 559 (1995)]

[J.-W. Pan et al., Phys. Rev. A (1998)]

Bell state analyzer with Linear Optics

- To realize a Bell state measurement is to make the two input SPDC photons indistinguishable on the BS. The method is to make the two photons spatially and timely overlapped on the BS perfectly.
- However, the timely overlap is difficult since the SPDC photon has a ultrasmall coherent time about 100fs, definitely shorter than the time resolution of state-of-the-art single photon detector.
- What we can do is to scan the interference fringes to make it sure that the two photons arrive at the same time. But a cw laser will…

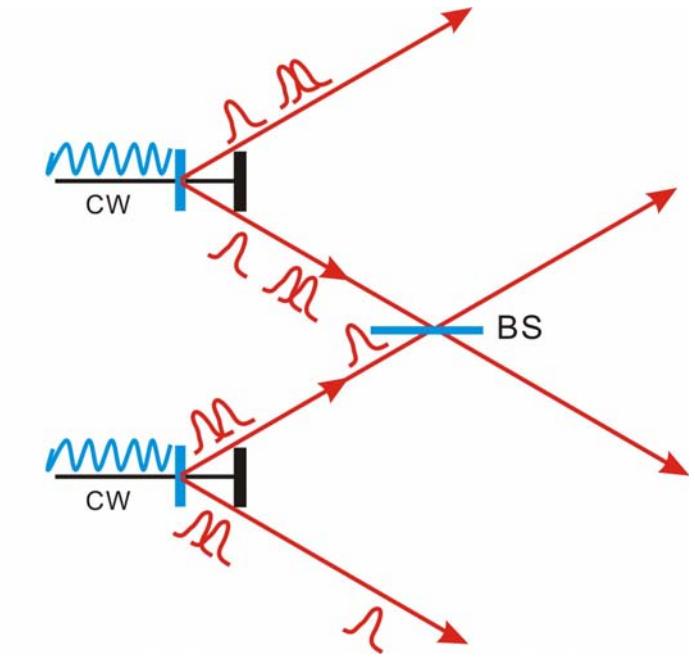

No interference fringes

Bell state analyzer with Linear Optics

- A solution is to use Pulse laser

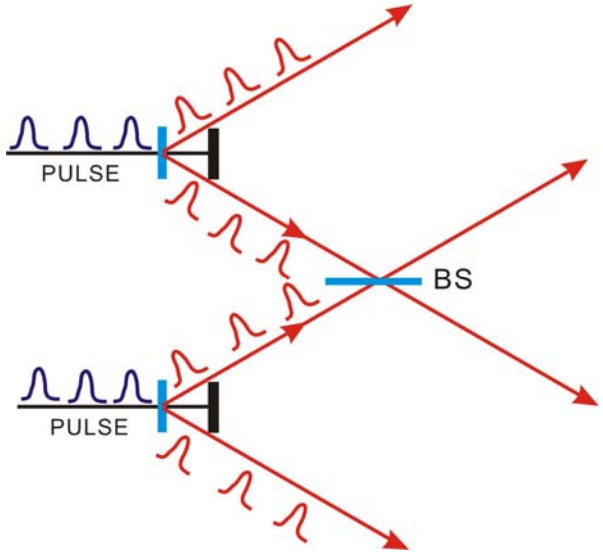

The pulse will bring some time jitter to the SPDC photon, we insert a narrow band filter can extend the coherent time of the SPDC photon

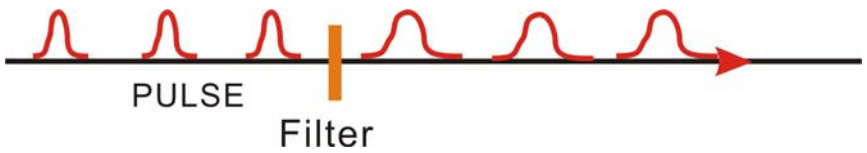

Experimental Dense Coding

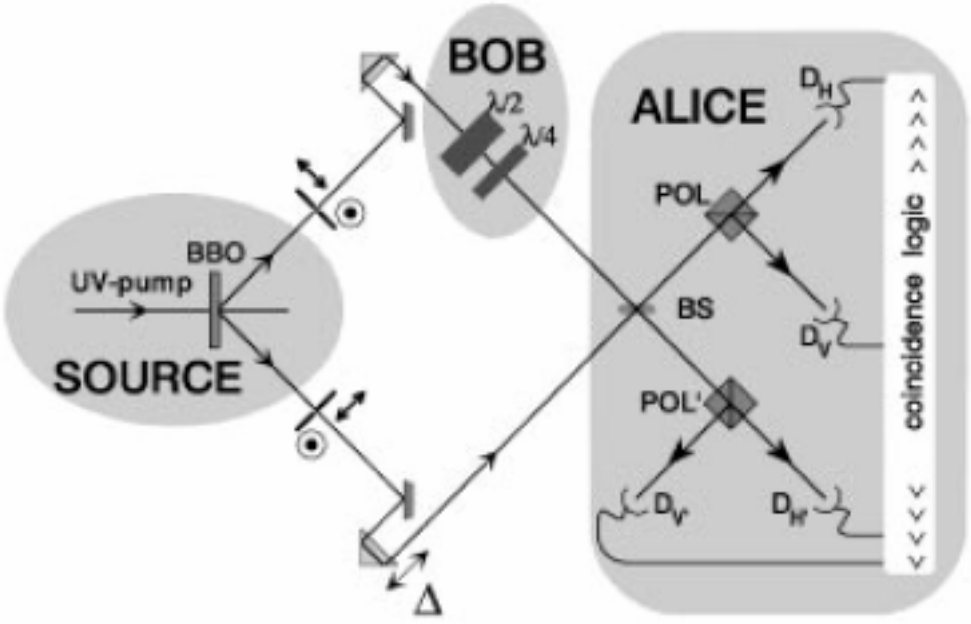

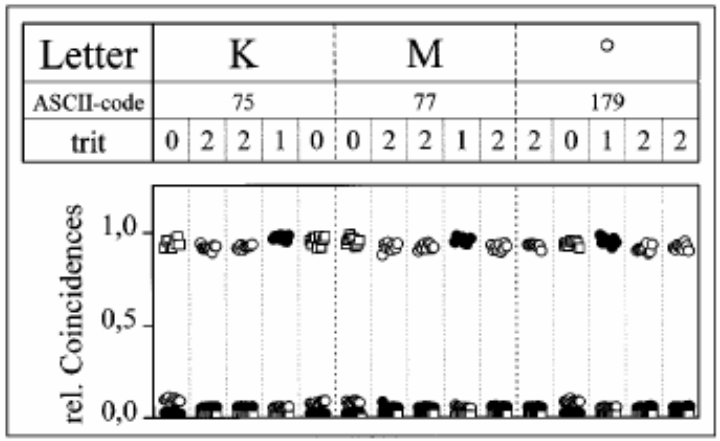

$$0 \equiv \left|\Phi^-\right\rangle \mathrel{\hat{=}} \square$$

$$1 \equiv \left|\Psi^+\right\rangle \mathrel{\hat{=}} \bullet$$

$$2 \equiv \left|\Psi^-\right\rangle \mathrel{\hat{=}} \circ$$

[K. Mattle et al., Phys. Rev. Lett. 76, 4656 (1996)]

Experimental Realizations of quantum teleportation

- D. Bouwmeester, et al., Nature 390, 575-579 (1997) (photons)
- D. Boschi, et al., Phys. Rev. Lett. 80, 1121-1125 (1998) (photons).
- J-W. Pan, et al., Phys. Rev. Lett. 80, 3891–3894 (1998) (mixed state of photons).
- A. Frusawa, et al., Science 282, 706 (1999) (continuous-variable)
- M. Riebe, et al., Nature 429, 734-737 (2004) (trapped calcium ions).
- M.D. Barret, et al., Nature 429, 737-739 (2004) (trapped beryllium ions)
- I. Marcikic, et al., Nature 421, 509-513 (2003) (long distance)
- R. Ursin, et al., Nature 430, 849 (2004) (long distance)
- Z. Zhao, et al., Nature 430, 54 (2004) (open destination teleportation)

Experimental Quantum Teleportation

The setup

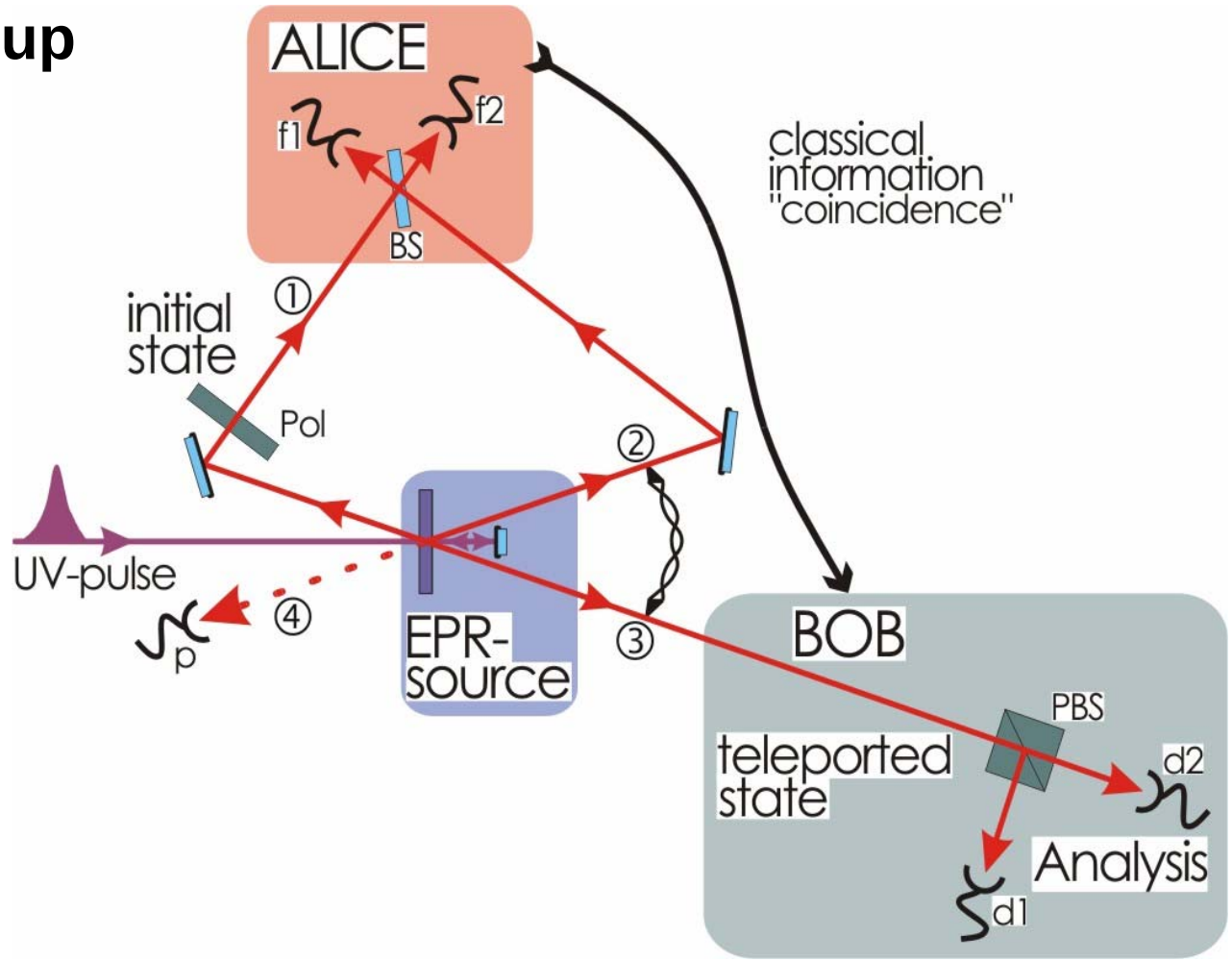

[D. Bouwmeester et al., Nature 390, 575 (1997)]

Experimental Quantum Teleportation

The result

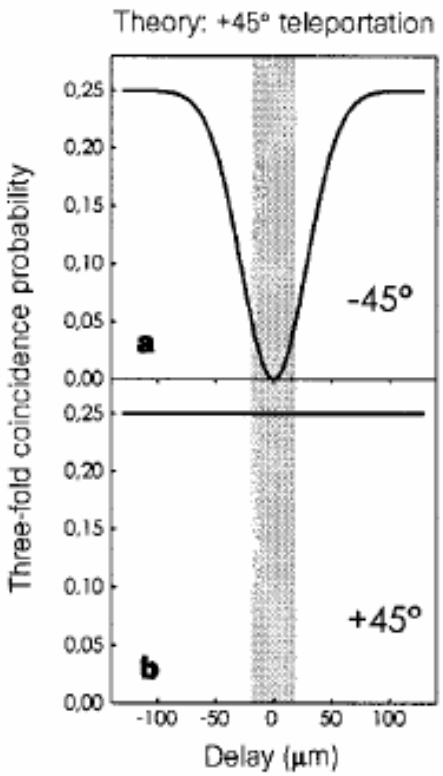

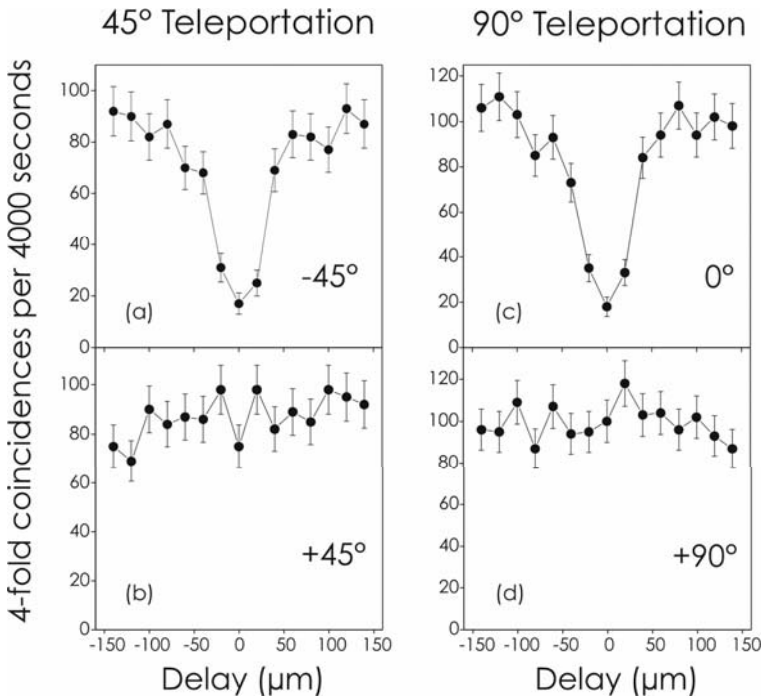

[D. Bouwmeester et al., Nature 390, 575 (1997)]

Experimental Entanglement Swapping

The setup

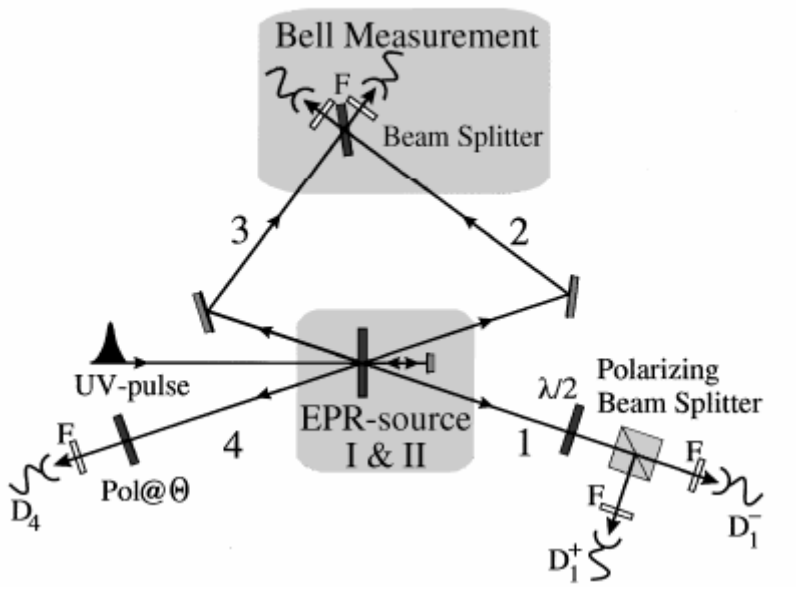

The result

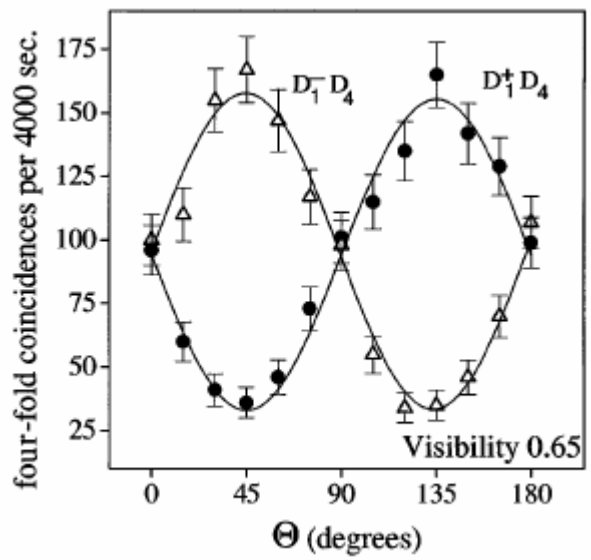

[J.-W. Pan et al., Phys. Rev. Lett. 80, 3891 (1998)]

A Two-Particle Quantum teleportation experiment

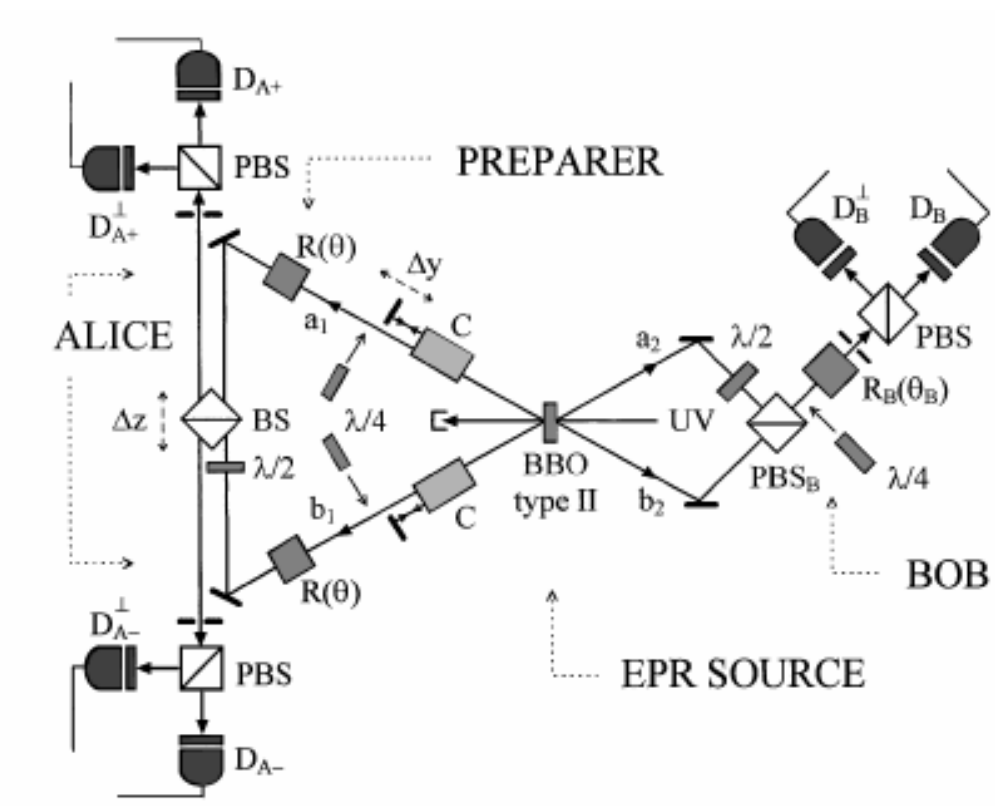

[D. Boschi et al., Phys. Rev. Lett. 80, 1121 (1998)]

1. Sharing EPR Pair

$$|\psi\rangle_1 = \alpha|H\rangle_1 + \beta|V\rangle_1$$

2. Initial State Preparation

$$|\Psi^+\rangle = \frac{1}{\sqrt{2}}(|H\rangle_1|V\rangle_2 + |V\rangle_1|H\rangle_2)$$

$$\rightarrow \frac{1}{\sqrt{2}}(|a_1\rangle|a_2\rangle + |b_1\rangle|b_2\rangle)|H\rangle_1|V\rangle_2$$

3. BSM

$$|\Phi\rangle = \frac{1}{\sqrt{2}}(|a_1\rangle|a_2\rangle + |b_1\rangle|b_2\rangle)|\psi\rangle_1|V\rangle_2$$

$$= \frac{1}{2}[|a_1\rangle|V\rangle_1 + |b_1\rangle|H\rangle_1)(\beta|a_2\rangle + \alpha|b_2\rangle)|V\rangle_2$$

$$+ (|a_1\rangle|V\rangle_1 - |b_1\rangle|H\rangle_1)(\beta|a_2\rangle - \alpha|b_2\rangle)|V\rangle_2$$

$$+ |a_1\rangle|H\rangle_1 + |b_1\rangle|V\rangle_1)(\alpha|a_2\rangle + \beta|b_2\rangle)|V\rangle_2$$

$$+ |a_1\rangle|V\rangle_1 - |b_1\rangle|H\rangle_1)(\alpha|a_2\rangle - \beta|b_2\rangle)|V\rangle_2]$$

Applications of Entanglement Swapping

Quantum telephone exchange

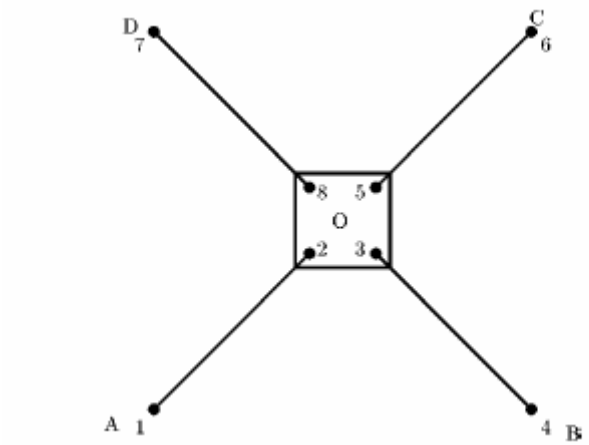

Speed up the distribution of entanglement

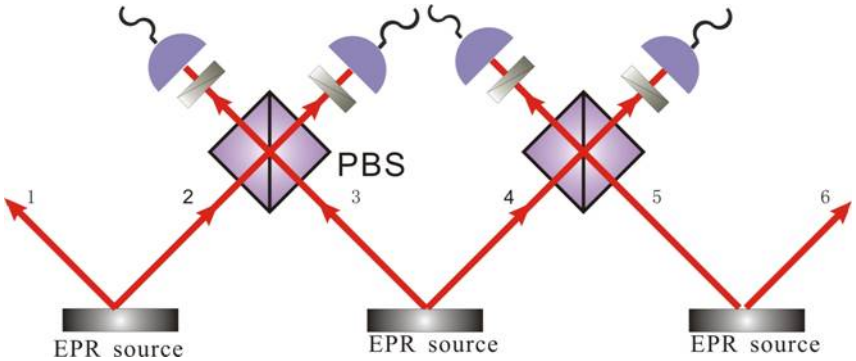

[S. Bose et al., Phys. Rev. A 57, 822 (1998)]

Applications of Entanglement Swapping

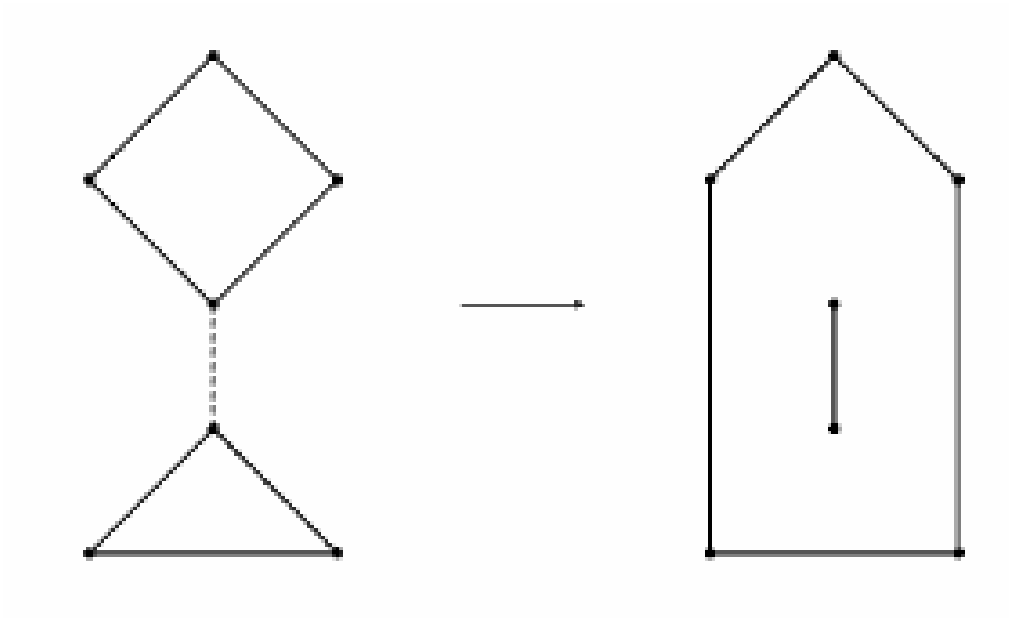

$$\left|E(N)\right\rangle \otimes \left|E(3)\right\rangle \xrightarrow{BSM} \left|E(N+1)\right\rangle \otimes \left|E(2)\right\rangle$$

[S. Bose et al., Phys. Rev. A 57, 822 (1998)]

Open-Destination Teleportation

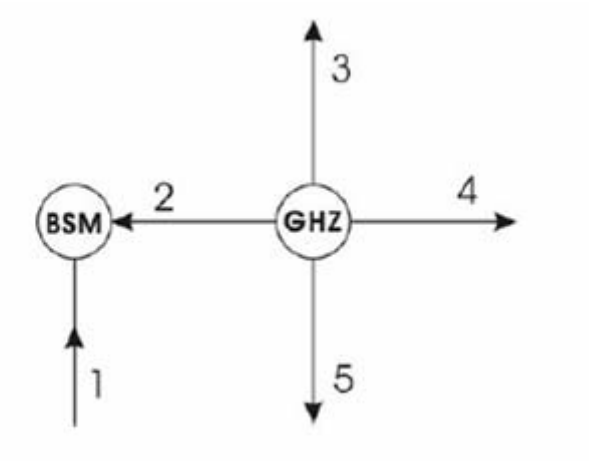

Sharing a secret quantum state of single particles

$$|\Psi\rangle_1 = \alpha\,|H\rangle_1 + \beta\,|V\rangle_1$$

$$\begin{aligned}
|\Psi\rangle_{12345} &= |\Psi\rangle_1\,|\Phi\rangle_{2345} \\
&= \frac{1}{2}[|\Phi^+\rangle_{12}(\alpha\,|H\rangle_3\,|H\rangle_4\,|H\rangle_5 + \beta\,|V\rangle_3\,|V\rangle_4\,|V\rangle_5) \\
&\quad + |\Phi^-\rangle_{12}(\alpha\,|H\rangle_3\,|H\rangle_4\,|H\rangle_5 - \beta\,|V\rangle_3\,|V\rangle_4\,|V\rangle_5) \\
&\quad + |\Psi^+\rangle_{12}(\alpha\,|V\rangle_3\,|V\rangle_4\,|V\rangle_5 + \beta\,|H\rangle_3\,|H\rangle_4\,|H\rangle_5) \\
&\quad + |\Psi^-\rangle_{12}(\alpha\,|V\rangle_3\,|V\rangle_4\,|V\rangle_5 - \beta\,|H\rangle_3\,|H\rangle_4\,|H\rangle_5)]
\end{aligned}$$

[A. Karlsson et al., Phys. Rev. A 58, 4394 (1998)]
[R. Cleve et al., Phys. Rev. Lett. 83, 648 (1999)]

Experimental Setup

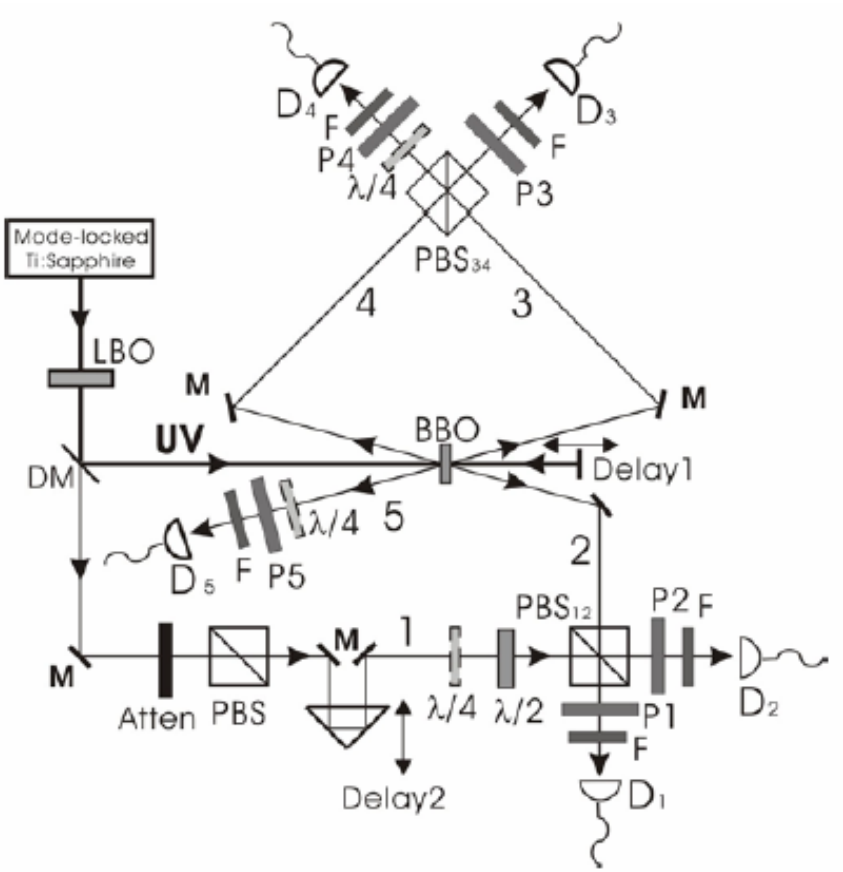

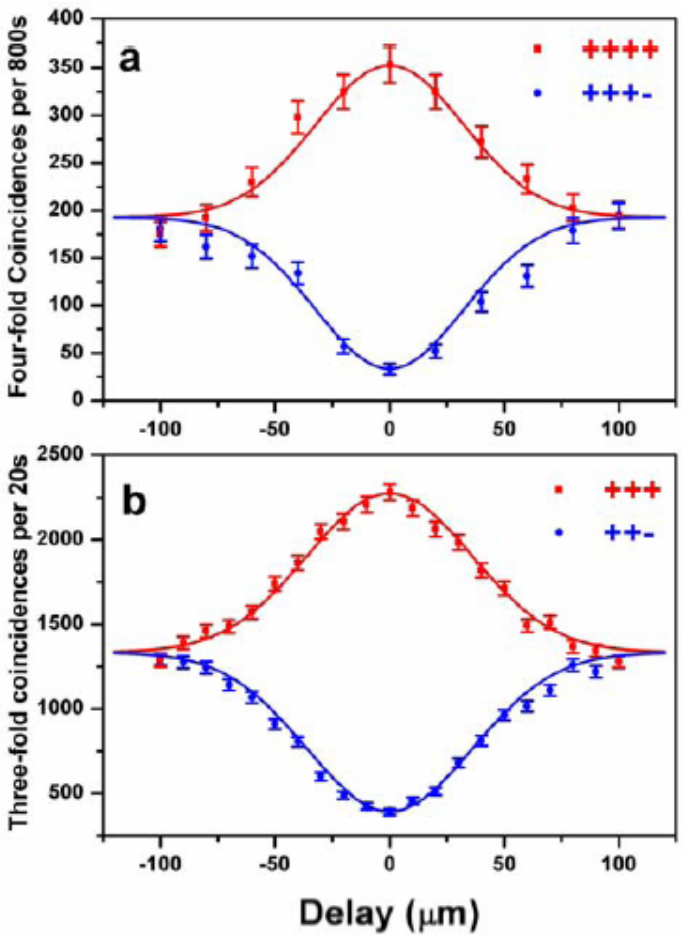

Experimental Results

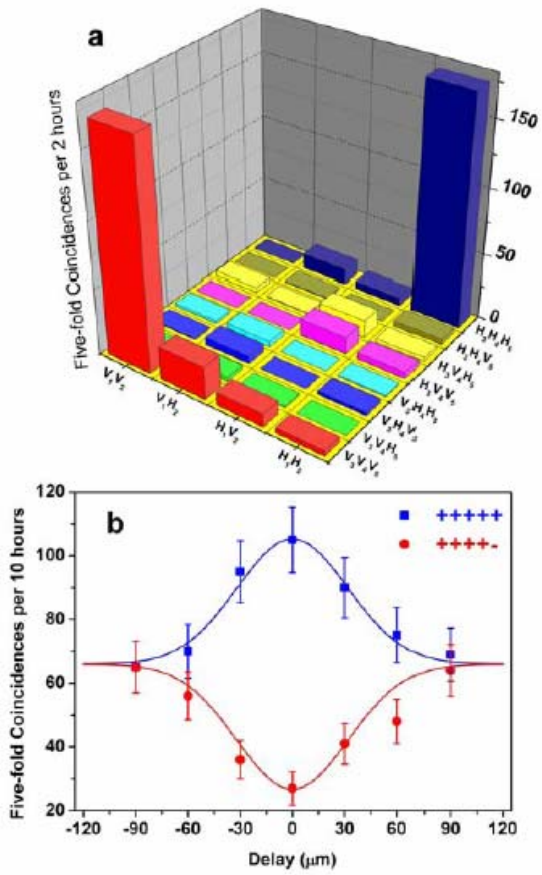

Table 1. Fidelities of open-destination teleportation at two different locations

polarization	Fidelities	
	Location 4	Location 5
$\|+\rangle$	0.79 ± 0.04	0.80 ± 0.03
$\|-\rangle$	0.81 ± 0.04	0.77 ± 0.04
$\|R\rangle$	0.75 ± 0.04	0.79 ± 0.04
$\|L\rangle$	0.79 ± 0.04	0.82 ± 0.03

[Z. Zhao et al., Nature 430, 54 (2004)]

Teleportation of a composite system ----Scheme

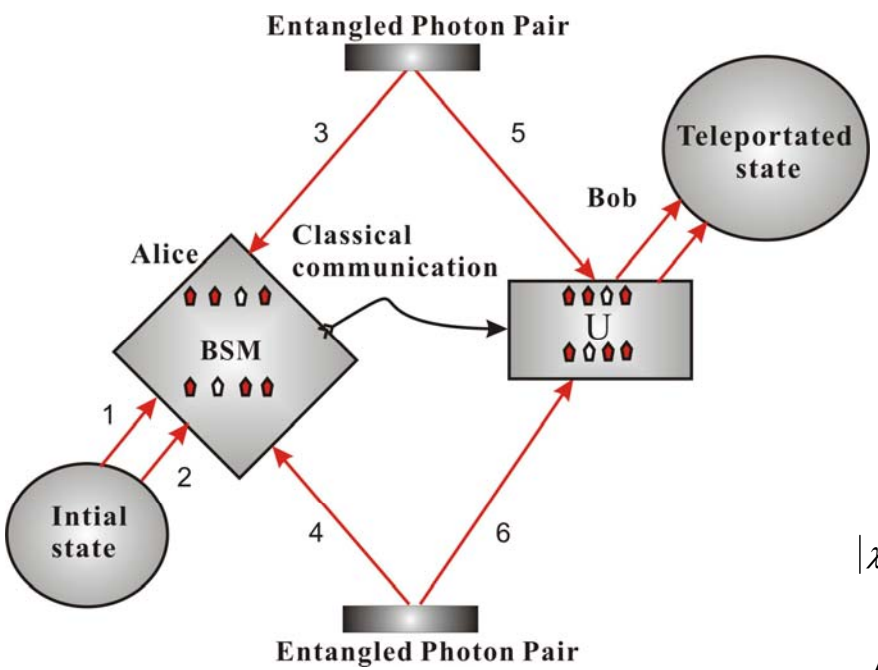

Initial State

$$|\chi\rangle_{34} = \alpha|H\rangle_3|H\rangle_4 + \beta|H\rangle_3|V\rangle_4 + \gamma|V\rangle_3|H\rangle_4 + \delta|V\rangle_3|V\rangle_4$$

H---horizontal polarization

V--- vertical polarizations

Just as the single qubit teleportation, first teleport photon 1 to photon 5

$$|\chi\rangle_{12}|\Phi^+\rangle_{35} = \frac{1}{2}(|\Phi^+\rangle_{13}|\chi\rangle_{52} + |\Phi^-\rangle_{13}\hat{\sigma}_z|\chi\rangle_{52} + |\Psi^+\rangle_{13}\hat{\sigma}_x|\chi\rangle_{52} + |\Psi^-\rangle_{13}(-i\hat{\sigma}_y|\chi\rangle_{52}))$$

And then, we teleport photon 2 to photon 6

$$|\chi\rangle_{52}|\Phi^+\rangle_{46} = \frac{1}{2}(|\Phi^+\rangle_{24}|\chi\rangle_{56} + |\Phi^-\rangle_{24}\hat{\sigma}_z|\chi\rangle_{56} + |\Psi^+\rangle_{24}\hat{\sigma}_x|\chi\rangle_{56} + |\Psi^-\rangle_{24}(-i\hat{\sigma}_y|\chi\rangle_{56}))$$

Finally, we can teleport the state of photon 1,2 to photon 5,6

Teleportation of a composite system
----Setup

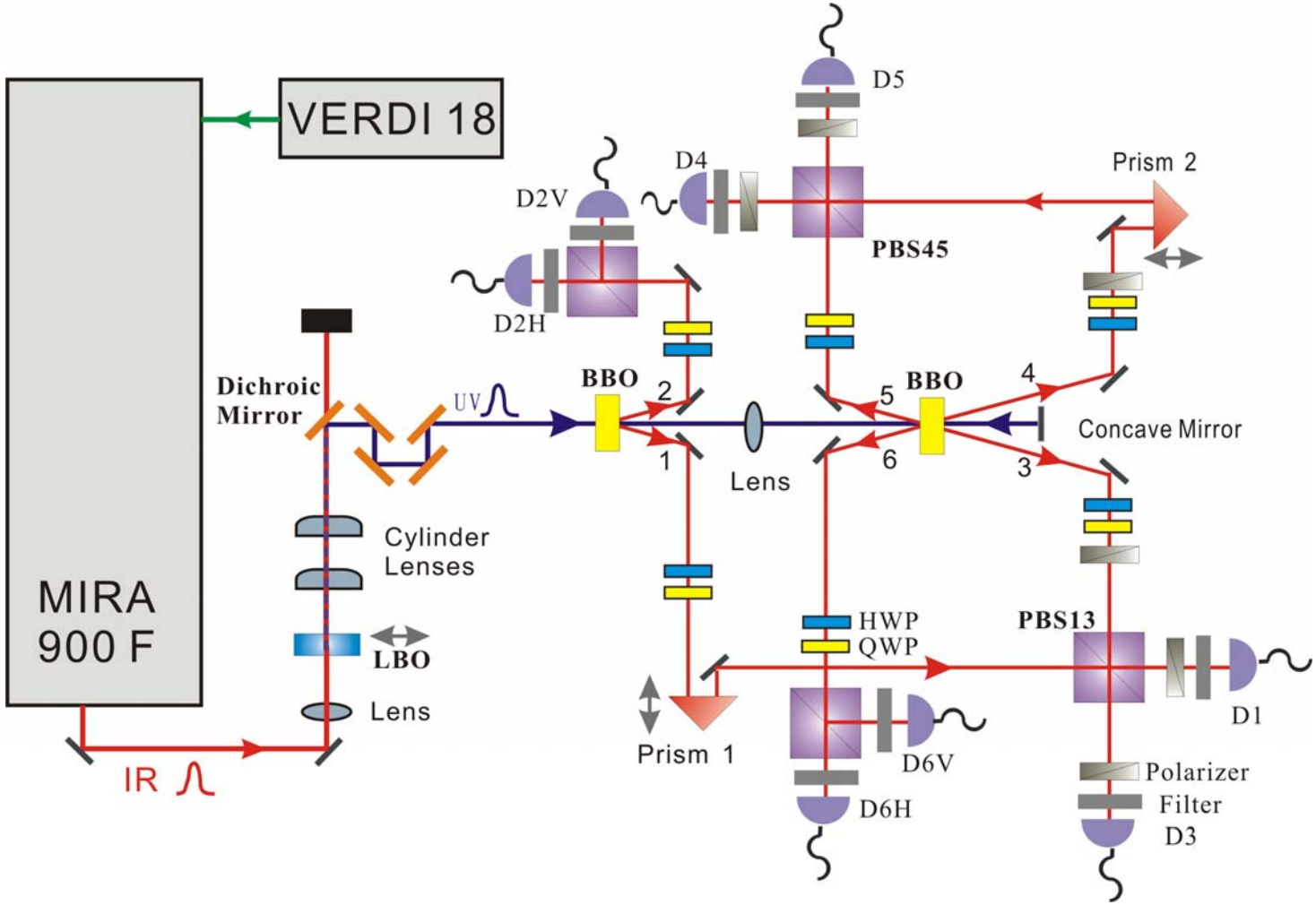

Teleportation of a composite system ----Result

State	Fidelity	Fidelity with noise reduction
HV	0.86±0.03	0.97±0.03
HV-VH	0.60±0.03	0.71±0.03
(H+V)(H-iV)	0.75±0.02	0.83±0.02
Average	0.74±0.03	0.84±0.03

Fidelity:

Pure state $F = \left| {}_{\text{ini}}\langle \psi | \psi \rangle_{\text{Tel}} \right|^2$

Mixed state $F = Tr(\rho |\psi\rangle_{\text{ini}} \langle \psi |)$

Well beyond the clone limit 0.40

[A. Hayashi et al., Phys. Rev. A. 72, 032325 (2005).]

Teleported State of HV-VH is Still Entangled!

$$Tr(\rho W) = \frac{1}{2} Tr[\rho(|HH\rangle\langle HH| + |VV\rangle\langle VV| + |++\rangle\langle ++| + |--\rangle\langle --| - |RL\rangle\langle RL| - |LR\rangle\langle LR|)]$$
$$= -0.23 \pm 0.04 < 0$$

[M. Barbieri, et al. Phys. Rev. Lett. 91, 227901 (2003).]

Experimental Teleportation of a Two-Qubit Composite System

Q. Zhang et al.,

Experimental quantum teleportation of a two-qubit composite system,

Nature Physics 2, 678-682 (2006).

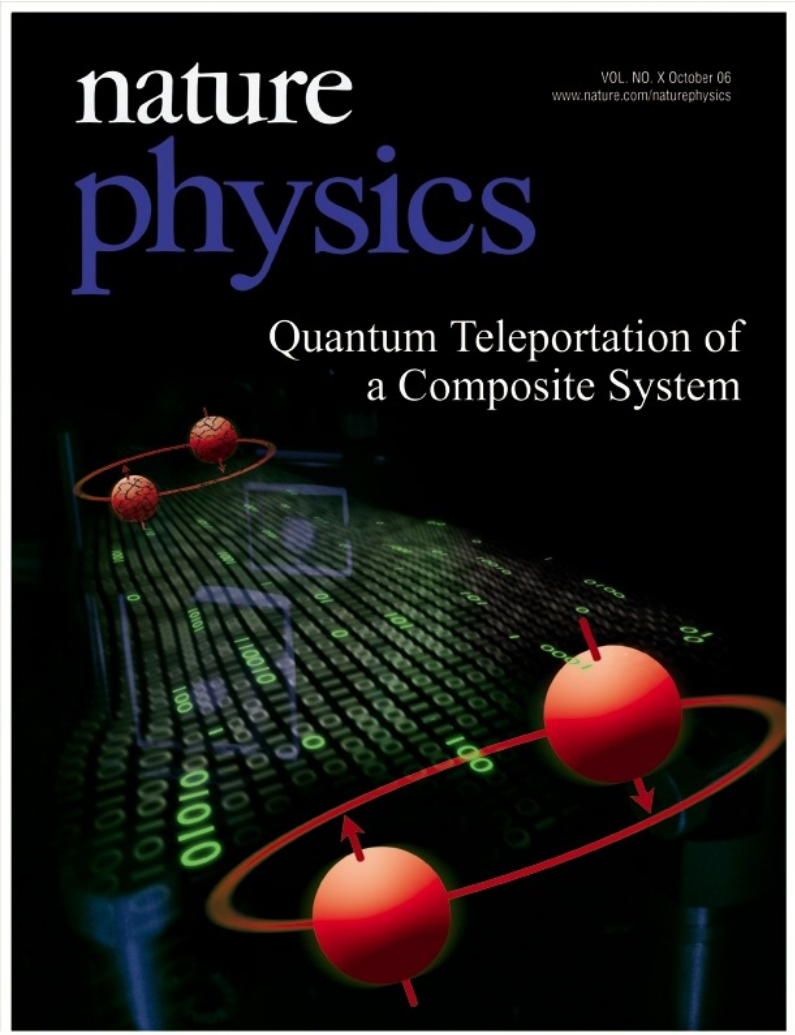

Our dream

SCIENTIFIC AMERICAN
APRIL 2000
$4.95
www.sciam.com
QUARK SOUP
CERN cooks up a new state of matter
see page 16
QUANTUM
Teleportation
The Future of Travel?
Or of Computing?
Of Mice and Mensa
Genetic formula for a smarter mouse
Brown Dwarfs
Stars that fizzled fill the galaxy

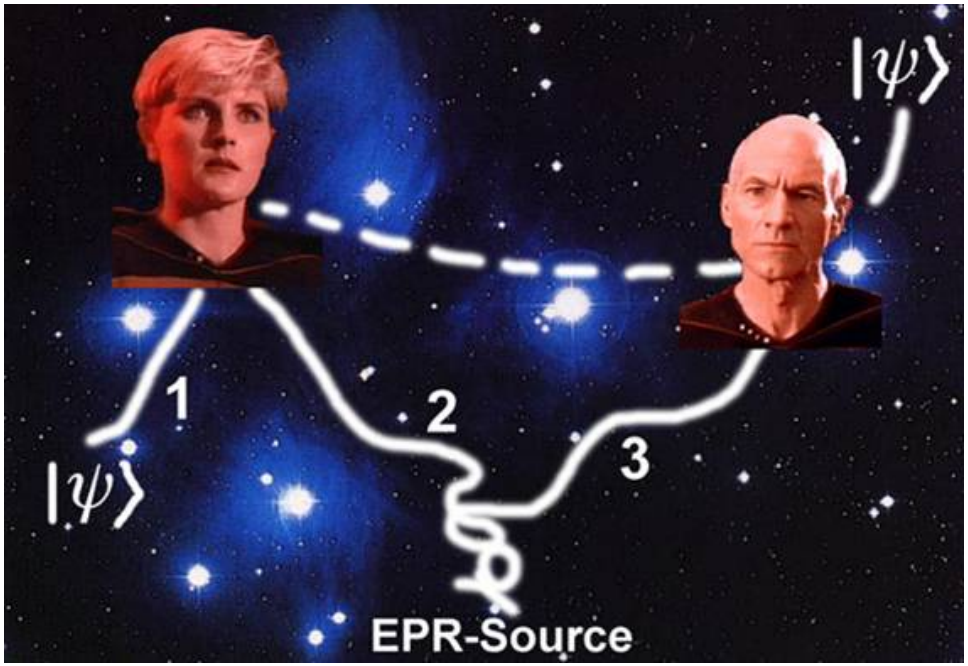
|ψ⟩
1
2
3
|ψ⟩
EPR-Source

UNITED STATES PATENT OFFICE.

NIKOLA TESLA, OF NEW YORK, N. Y.

APPARATUS FOR TRANSMITTING ELECTRICAL ENERGY.

1,119,732. Specification of Letters Patent. Patented Dec. 1, 1914.

Application filed January 18, 1902, Serial No. 90,245. Renewed May 4, 1907. Serial No. 371,817.

To all whom it may concern:

Be it known that I, NIKOLA TESLA, a citizen of the United States, residing in the borough of Manhattan, in the city, county, and State of New York, have invented certain new and useful Improvements in Apparatus for Transmitting Electrical Energy, of which the following is a specification, reference being had to the drawing accompanying and forming a part of the same.

In endeavoring to adapt currents or discharges of very high tension to various valuable uses, as the distribution of energy through wires from central plants to distant places of consumption, or the transmission of powerful disturbances to great distances, through the natural or non-artificial media, I have encountered difficulties in confining considerable amounts of electricity to the conductors and preventing its leakage over their supports, or its escape into the ambient air, which always takes place when the electric surface density reaches a certain value.

The intensity of the effect of a transmitting circuit with a free or elevated terminal is proportionate to the quantity of electricity displaced, which is determined by the product of the capacity of the circuit, the pressure, and the frequency of the currents employed. To produce an electrical movement of the required magnitude it is desirable to charge the terminal as highly as possible, for while a great quantity of electricity may also be displaced by a large capacity charged to low pressure, there are disadvantages met with in many cases when the former is made too large. The chief of these are due to the fact that an increase of the capacity entails a lowering of the frequency of the impulses or discharges and a diminution of the energy of vibration. This will be understood when it is borne in mind, that a circuit with a large capacity behaves as a slackspring, whereas one with a small capacity acts like a stiff spring, vibrating more vigorously. Therefore, in order to attain the highest possible frequency, which for certain purposes is advantageous and, apart from that, to develop the greatest energy in such a transmitting circuit, I employ a terminal of relatively small capacity, which I charge to as high a pressure as practicable. To accomplish this result I have found it imperative to so construct the elevated conductor, that its outer surface, on which the electrical charge chiefly accumulates, has itself a large radius of curvature, or is composed of separate elements which, irrespective of their own radius of curvature, are arranged in close proximity to each other and so, that the outside ideal surface enveloping them is of a large radius. Evidently, the smaller the radius of curvature the greater, for a given electric displacement, will be the surface-density and, consequently, the lower the limiting pressure to which the terminal may be charged without electricity escaping into the air. Such a terminal I secure to an insulating support entering more or less into its interior, and I likewise connect the circuit to it inside or, generally, at points where the electric density is small. This plan of constructing and supporting a highly charged conductor I have found to be of great practical importance, and it may be usefully applied in many ways.

Referring to the accompanying drawing, the figure is a view in elevation and part section of an improved free terminal and circuit of large surface with supporting structure and generating apparatus.

The terminal D consists of a suitably shaped metallic frame, in this case a ring of nearly circular cross section, which is covered with half spherical metal plates P P, thus constituting a very large conducting surface, smooth on all places where the electric charge principally accumulates. The frame is carried by a strong platform expressly provided for safety appliances, instruments of observation, etc., which in turn rests on insulating supports F F. These should penetrate far into the hollow space formed by the terminal, and if the electric density at the points where they are bolted to the frame is still considerable, they may be specially protected by conducting hoods as H.

A part of the improvements which form the subject of this specification, the transmitting circuit, in its general features, is identical with that described and claimed in my original Patents Nos. 645,576 and 649,621. The circuit comprises a coil A which is in close inductive relation with a primary C, and one end of which is connected to a ground-plate E, while its other end is led through a separate self-induction coil B and a metallic cylinder B′ to the terminal D.

The connection to the latter should always be made at, or near the center, in order to secure a symmetrical distribution of the current, as otherwise, when the frequency is very high and the flow of large volume, the performance of the apparatus might be impaired. The primary C may be excited in any desired manner, from a suitable source of currents G, which may be an alternator or condenser, the important requirement being that the resonant condition is established, that is to say, that the terminal D is charged to the maximum pressure developed in the circuit, as I have specified in my original patents before referred to. The adjustments should be made with particular care when the transmitter is one of great power, not only on account of economy, but also in order to avoid danger. I have shown that it is practicable to produce in a resonating circuit as E A B B′ D immense electrical activities, measured by tens and even hundreds of thousands of horse-power, and in such a case, if the points of maximum pressure should be shifted below the terminal D, along coil B, a ball of fire might break out and destroy the support F or anything else in the way. For the better appreciation of the nature of this danger it should be stated, that the destructive action may take place with inconceivable violence. This will cease to be surprising when it is borne in mind, that the entire energy accumulated in the excited circuit, instead of requiring, as under normal working conditions, one quarter of the period or more for its transformation from static to kinetic form, may spend itself in an incomparably smaller interval of time, at a rate of many millions of horse power. The accident is apt to occur when, the transmitting circuit being strongly excited, the impressed oscillations upon it are caused, in any manner more or less sudden, to be more rapid than the free oscillations. It is therefore advisable to begin the adjustments with feeble and somewhat slower impressed oscillations, strengthening and quickening them gradually, until the apparatus has been brought under perfect control. To increase the safety, I provide on a convenient place, preferably on terminal D, one or more elements or plates either of somewhat smaller radius of curvature or protruding more or less beyond the others (in which case they may be of larger radius of curvature) so that, should the pressure rise to a value, beyond which it is not desired to go, the powerful discharge may dart out there and lose itself harmlessly in the air. Such a plate, performing a function similar to that of a safety valve on a high pressure reservoir, is indicated at V.

Still further extending the principles underlying my invention, special reference is made to coil B and conductor B′. The latter is in the form of a cylinder with smooth or polished surface of a radius much larger than that of the half spherical elements P P, and widens out at the bottom into a hood H, which should be slotted to avoid loss by eddy currents and the purpose of which will be clear from the foregoing. The coil B is wound on a frame or drum D^1 of insulating material, with its turns close together. I have discovered that when so wound the effect of the small radius of curvature of the wire itself is overcome and the coil behaves as a conductor of large radius of curvature, corresponding to that of the drum. This feature is of considerable practical importance and is applicable not only in this special instance, but generally. For example, such plates at P P of terminal D, though preferably of large radius of curvature, need not be necessarily so, for provided only that the individual plates or elements of a high potential conductor or terminal are arranged in proximity to each other and with their outer boundaries along an ideal symmetrical enveloping surface of a large radius of curvature, the advantages of the invention will be more or less fully realized. The lower end of the coil B—which, if desired, may be extended up to the terminal D—should be somewhat below the uppermost turn of coil A. This, I find, lessens the tendency of the charge to break out from the wire connecting both and to pass along the support F′.

Having described my invention, I claim:

1. As a means for producing great electrical activities a resonant circuit having its outer conducting boundaries, which are charged to a high potential, arranged in surfaces of large radii of curvature so as to prevent leakage of the oscillating charge, substantially as set forth.

2. In apparatus for the transmission of electrical energy a circuit connected to ground and to an elevated terminal and having its outer conducting boundaries, which are subject to high tension, arranged in surfaces of large radii of curvature substantially as, and for the purpose described.

3. In a plant for the transmission of electrical energy without wires, in combination with a primary or exciting circuit a secondary connected to ground and to an elevated terminal and having its outer conducting boundaries, which are charged to a high potential, arranged in surfaces of large radii of curvature for the purpose of preventing leakage and loss of energy, substantially as set forth.

4. As a means for transmitting electrical energy to a distance through the natural media a grounded resonant circuit, comprising a part upon which oscillations are impressed and another for raising the ten-

sion, having its outer conducting boundaries on which a high tension charge accumulates arranged in surfaces of large radii of curvature, substantially as described.

5. The means for producing excessive electric potentials consisting of a primary exciting circuit and a resonant secondary having its outer conducting elements which are subject to high tension arranged in proximity to each other and in surfaces of large radii of curvature so as to prevent leakage of the charge and attendant lowering of potential, substantially as described.

6. A circuit comprising a part upon which oscillations are impressed and another part for raising the tension by resonance, the latter part being supported on places of low electric density and having its outermost conducting boundaries arranged in surfaces of large radii of curvature, as set forth.

7. In apparatus for the transmission of electrical energy without wires a grounded circuit the outer conducting elements of which have a great aggregate area and are arranged in surfaces of large radii of curvature so as to permit the storing of a high charge at a small electric density and prevent loss through leakage, substantially as described.

8. A wireless transmitter comprising in combination a source of oscillations as a condenser, a primary exciting circuit and a secondary grounded and elevated conductor the outer conducting boundaries of which are in proximity to each other and arranged in surfaces of large radii of curvature, substantially as described.

9. In apparatus for the transmission of electrical energy without wires an elevated conductor or antenna having its outer high potential conducting or capacity elements arranged in proximity to each other and in surfaces of large radii of curvature so as to overcome the effect of the small radius of curvature of the individual elements and leakage of the charge, as set forth.

10. A grounded resonant transmitting circuit having its outer conducting boundaries arranged in surfaces of large radii of curvature in combination with an elevated terminal of great surface supported at points of low electric density, substantially as described.

NIKOLA TESLA.

Witnesses:
M. LAMSON DYER,
RICHARD DONOVAN.

N. TESLA.

APPARATUS FOR TRANSMITTING ELECTRICAL ENERGY.

APPLICATION FILED JAN. 18, 1902. RENEWED MAY 4, 1907.

1,119,732. Patented Dec. 1, 1914.

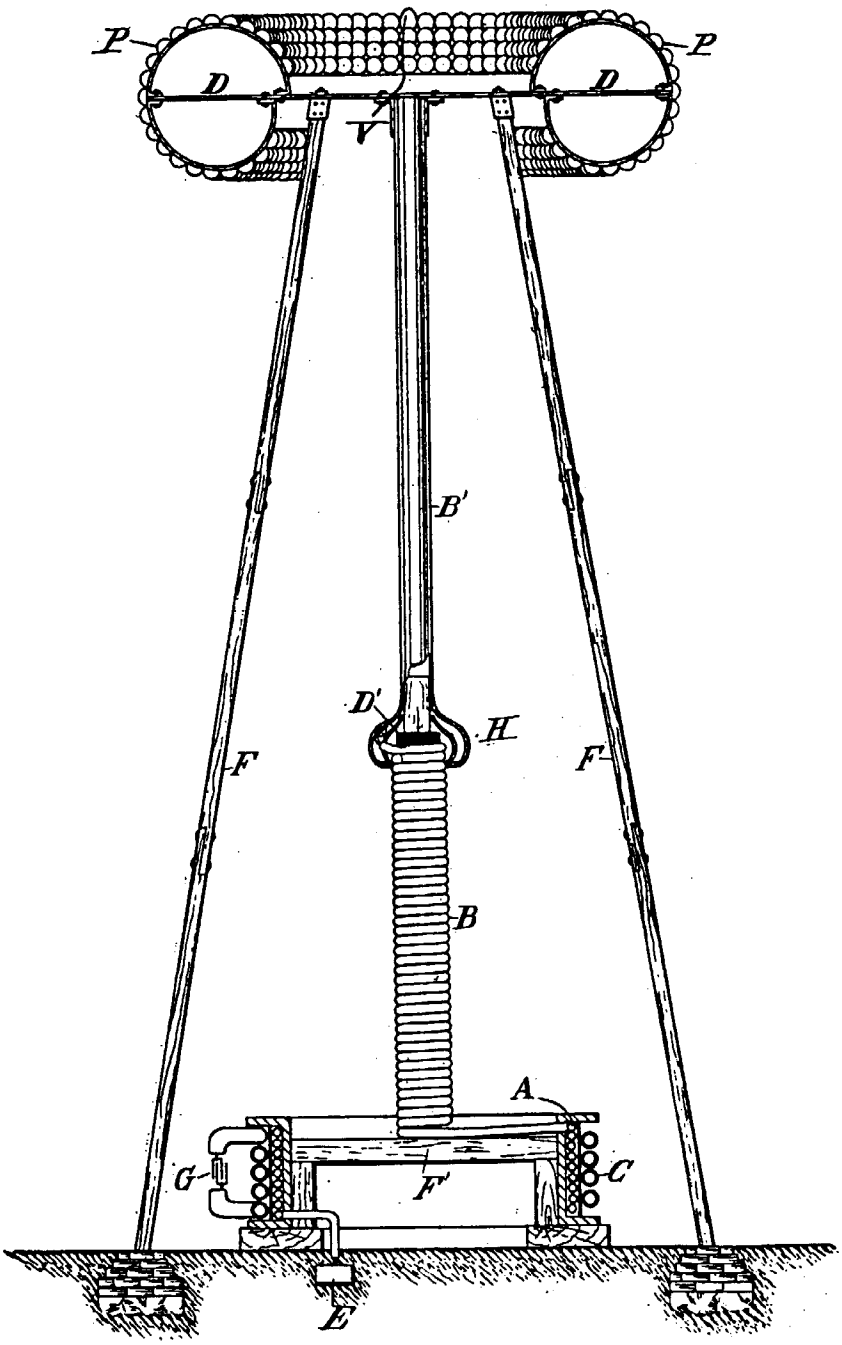

WITNESSES:

M. Lawson Dyer

Benjamin Miller.

INVENTOR,

Nikola Tesla,

BY Kerr, Page & Cooper,

his ATTORNEYS.

N. TESLA.

APPARATUS FOR TRANSMITTING ELECTRICAL ENERGY.

APPLICATION FILED JAN. 18, 1902. RENEWED MAY 4, 1907.

1,119,732. Patented Dec. 1, 1914.

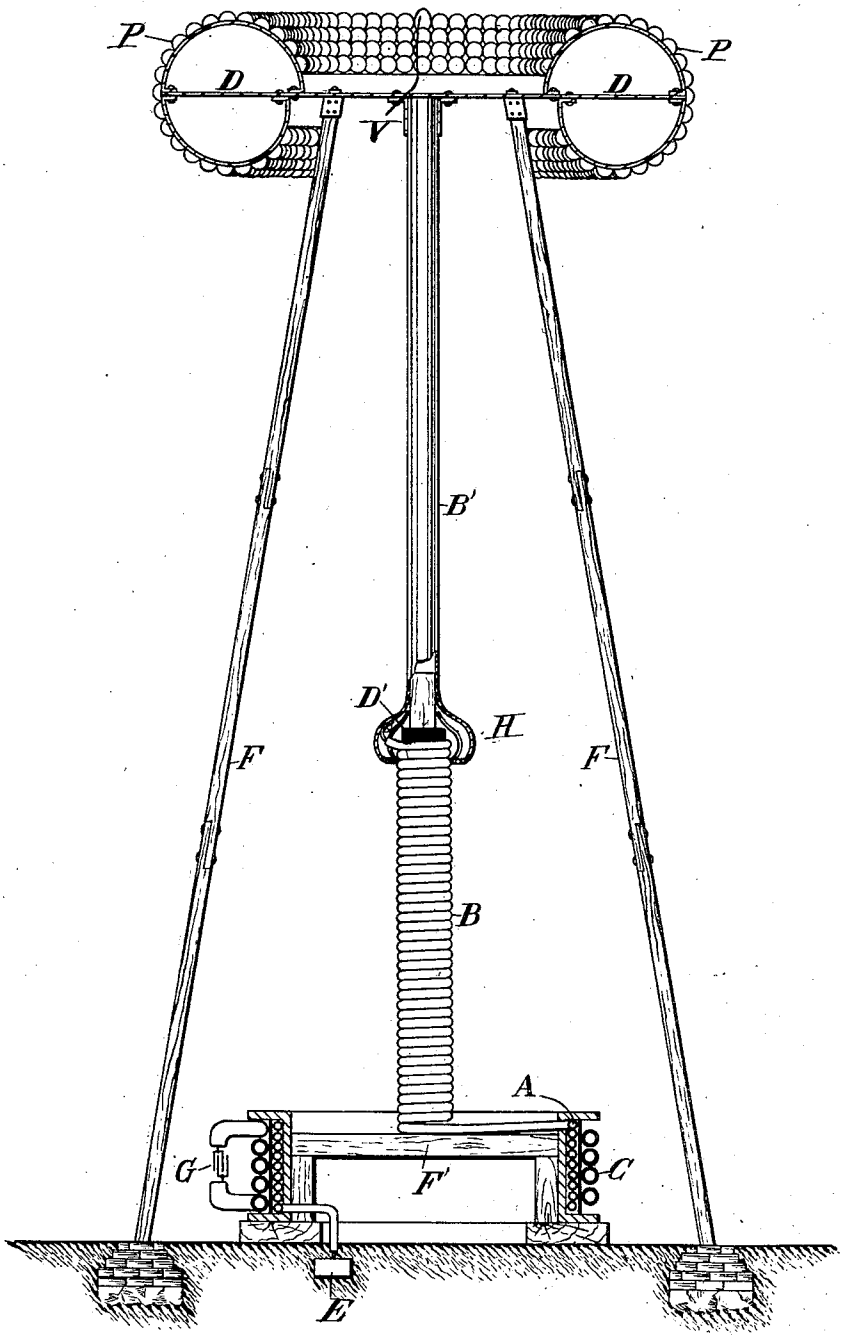

WITNESSES:
M. Lawson Dyer
Benjamin Miller.

INVENTOR,
Nikola Tesla,
BY Kerr, Page & Cooper,
his ATTORNEYS.

UNITED STATES PATENT OFFICE.

NIKOLA TESLA, OF NEW YORK, N. Y.

APPARATUS FOR TRANSMITTING ELECTRICAL ENERGY.

1,119,732. Specification of Letters Patent. Patented Dec. 1, 1914.

Application filed January 18, 1902, Serial No. 90,245. Renewed May 4, 1907. Serial No. 371,817.

To all whom it may concern:

Be it known that I, NIKOLA TESLA, a citizen of the United States, residing in the borough of Manhattan, in the city, county, and State of New York, have invented certain new and useful Improvements in Apparatus for Transmitting Electrical Energy, of which the following is a specification, reference being had to the drawing accompanying and forming a part of the same.

In endeavoring to adapt currents or discharges of very high tension to various valuable uses, as the distribution of energy through wires from central plants to distant places of consumption, or the transmission of powerful disturbances to great distances, through the natural or non-artificial media, I have encountered difficulties in confining considerable amounts of electricity to the conductors and preventing its leakage over their supports, or its escape into the ambient air, which always takes place when the electric surface density reaches a certain value.

The intensity of the effect of a transmitting circuit with a free or elevated terminal is proportionate to the quantity of electricity displaced, which is determined by the product of the capacity of the circuit, the pressure, and the frequency of the currents employed. To produce an electrical movement of the required magnitude it is desirable to charge the terminal as highly as possible, for while a great quantity of electricity may also be displaced by a large capacity charged to low pressure, there are disadvantages met with in many cases when the former is made too large. The chief of these are due to the fact that an increase of the capacity entails a lowering of the frequency of the impulses or discharges and a diminution of the energy of vibration. This will be understood when it is borne in mind, that a circuit with a large capacity behaves as a slackspring, whereas one with a small capacity acts like a stiff spring, vibrating more vigorously. Therefore, in order to attain the highest possible frequency, which for certain purposes is advantageous and, apart from that, to develop the greatest energy in such a transmitting circuit, I employ a terminal of relatively small capacity, which I charge to as high a pressure as practicable. To accomplish this result I have found it imperative to so construct the elevated conductor, that its outer surface, on which the electrical charge chiefly accumulates, has itself a large radius of curvature, or is composed of separate elements which, irrespective of their own radius of curvature, are arranged in close proximity to each other and so, that the outside ideal surface enveloping them is of a large radius. Evidently, the smaller the radius of curvature the greater, for a given electric displacement, will be the surface-density and, consequently, the lower the limiting pressure to which the terminal may be charged without electricity escaping into the air. Such a terminal I secure to an insulating support entering more or less into its interior, and I likewise connect the circuit to it inside or, generally, at points where the electric density is small. This plan of constructing and supporting a highly charged conductor I have found to be of great practical importance, and it may be usefully applied in many ways.

Referring to the accompanying drawing, the figure is a view in elevation and part section of an improved free terminal and circuit of large surface with supporting structure and generating apparatus.

The terminal D consists of a suitably shaped metallic frame, in this case a ring of nearly circular cross section, which is covered with half spherical metal plates P P, thus constituting a very large conducting surface, smooth on all places where the electric charge principally accumulates. The frame is carried by a strong platform expressly provided for safety appliances, instruments of observation, etc., which in turn rests on insulating supports F F. These should penetrate far into the hollow space formed by the terminal, and if the electric density at the points where they are bolted to the frame is still considerable, they may be specially protected by conducting hoods as H.

A part of the improvements which form the subject of this specification, the transmitting circuit, in its general features, is identical with that described and claimed in my original Patents Nos. 645,576 and 649,621. The circuit comprises a coil A which is in close inductive relation with a primary C, and one end of which is connected to a ground-plate E, while its other end is led through a separate self-induction coil B and a metallic cylinder B′ to the terminal D.

The connection to the latter should always be made at, or near the center, in order to secure a symmetrical distribution of the current, as otherwise, when the frequency is very high and the flow of large volume, the performance of the apparatus might be impaired. The primary C may be excited in any desired manner, from a suitable source of currents G, which may be an alternator or condenser, the important requirement being that the resonant condition is established, that is to say, that the terminal D is charged to the maximum pressure developed in the circuit, as I have specified in my original patents before referred to. The adjustments should be made with particular care when the transmitter is one of great power, not only on account of economy, but also in order to avoid danger. I have shown that it is practicable to produce in a resonating circuit as E A B B′ D immense electrical activities, measured by tens and even hundreds of thousands of horse-power, and in such a case, if the points of maximum pressure should be shifted below the terminal D, along coil B, a ball of fire might break out and destroy the support F or anything else in the way. For the better appreciation of the nature of this danger it should be stated, that the destructive action may take place with inconceivable violence. This will cease to be surprising when it is borne in mind, that the entire energy accumulated in the excited circuit, instead of requiring, as under normal working conditions, one quarter of the period or more for its transformation from static to kinetic form, may spend itself in an incomparably smaller interval of time, at a rate of many millions of horse power. The accident is apt to occur when, the transmitting circuit being strongly excited, the impressed oscillations upon it are caused, in any manner more or less sudden, to be more rapid than the free oscillations. It is therefore advisable to begin the adjustments with feeble and somewhat slower impressed oscillations, strengthening and quickening them gradually, until the apparatus has been brought under perfect control. To increase the safety, I provide on a convenient place, preferably on terminal D, one or more elements or plates either of somewhat smaller radius of curvature or protruding more or less beyond the others (in which case they may be of larger radius of curvature) so that, should the pressure rise to a value, beyond which it is not desired to go, the powerful discharge may dart out there and lose itself harmlessly in the air. Such a plate, performing a function similar to that of a safety valve on a high pressure reservoir, is indicated at V.

Still further extending the principles underlying my invention, special reference is made to coil B and conductor B′. The latter is in the form of a cylinder with smooth or polished surface of a radius much larger than that of the half spherical elements P P, and widens out at the bottom into a hood H, which should be slotted to avoid loss by eddy currents and the purpose of which will be clear from the foregoing. The coil B is wound on a frame or drum D^1 of insulating material, with its turns close together. I have discovered that when so wound the effect of the small radius of curvature of the wire itself is overcome and the coil behaves as a conductor of large radius of curvature, corresponding to that of the drum. This feature is of considerable practical importance and is applicable not only in this special instance, but generally. For example, such plates at P P of terminal D, though preferably of large radius of curvature, need not be necessarily so, for provided only that the individual plates or elements of a high potential conductor or terminal are arranged in proximity to each other and with their outer boundaries along an ideal symmetrical enveloping surface of a large radius of curvature, the advantages of the invention will be more or less fully realized. The lower end of the coil B—which, if desired, may be extended up to the terminal D—should be somewhat below the uppermost turn of coil A. This, I find, lessens the tendency of the charge to break out from the wire connecting both and to pass along the support F′.

Having described my invention, I claim:

1. As a means for producing great electrical activities a resonant circuit having its outer conducting boundaries, which are charged to a high potential, arranged in surfaces of large radii of curvature so as to prevent leakage of the oscillating charge, substantially as set forth.

2. In apparatus for the transmission of electrical energy a circuit connected to ground and to an elevated terminal and having its outer conducting boundaries, which are subject to high tension, arranged in surfaces of large radii of curvature substantially as, and for the purpose described.

3. In a plant for the transmission of electrical energy without wires, in combination with a primary or exciting circuit a secondary connected to ground and to an elevated terminal and having its outer conducting boundaries, which are charged to a high potential, arranged in surfaces of large radii of curvature for the purpose of preventing leakage and loss of energy, substantially as set forth.

4. As a means for transmitting electrical energy to a distance through the natural media a grounded resonant circuit, comprising a part upon which oscillations are impressed and another for raising the ten-

sion, having its outer conducting boundaries on which a high tension charge accumulates arranged in surfaces of large radii of curvature, substantially as described.

5. The means for producing excessive electric potentials consisting of a primary exciting circuit and a resonant secondary having its outer conducting elements which are subject to high tension arranged in proximity to each other and in surfaces of large radii of curvature so as to prevent leakage of the charge and attendant lowering of potential, substantially as described.

6. A circuit comprising a part upon which oscillations are impressed and another part for raising the tension by resonance, the latter part being supported on places of low electric density and having its outermost conducting boundaries arranged in surfaces of large radii of curvature, as set forth.

7. In apparatus for the transmission of electrical energy without wires a grounded circuit the outer conducting elements of which have a great aggregate area and are arranged in surfaces of large radii of curvature so as to permit the storing of a high charge at a small electric density and prevent loss through leakage, substantially as described.

8. A wireless transmitter comprising in combination a source of oscillations as a condenser, a primary exciting circuit and a secondary grounded and elevated conductor the outer conducting boundaries of which are in proximity to each other and arranged in surfaces of large radii of curvature, substantially as described.

9. In apparatus for the transmission of electrical energy without wires an elevated conductor or antenna having its outer high potential conducting or capacity elements arranged in proximity to each other and in surfaces of large radii of curvature so as to overcome the effect of the small radius of curvature of the individual elements and leakage of the charge, as set forth.

10. A grounded resonant transmitting circuit having its outer conducting boundaries arranged in surfaces of large radii of curvature in combination with an elevated terminal of great surface supported at points of low electric density, substantially as described.

NIKOLA TESLA.

Witnesses:
M. LAMSON DYER,
RICHARD DONOVAN.

455-619 AU 233 EX
FIP8106 OR 685,958

55

No. 685,958. Patented Nov. 5, 1901.

N. TESLA.

METHOD OF UTILIZING RADIANT ENERGY.

(Application filed Mar. 21, 1901.)

(No Model.)

Electric stepping motor energized by corpuscular energy from sun

Fig.1

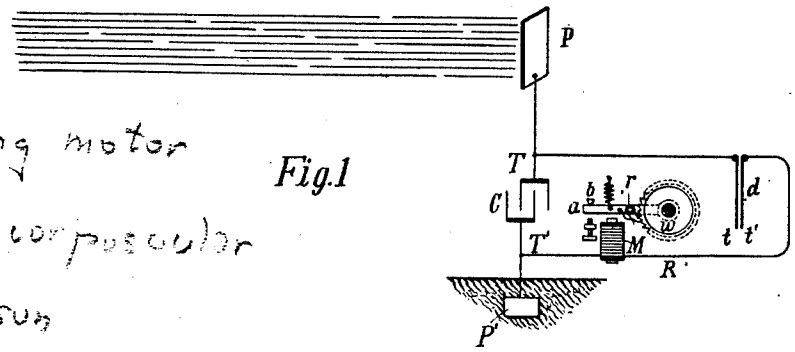

No refs.

Fig.2

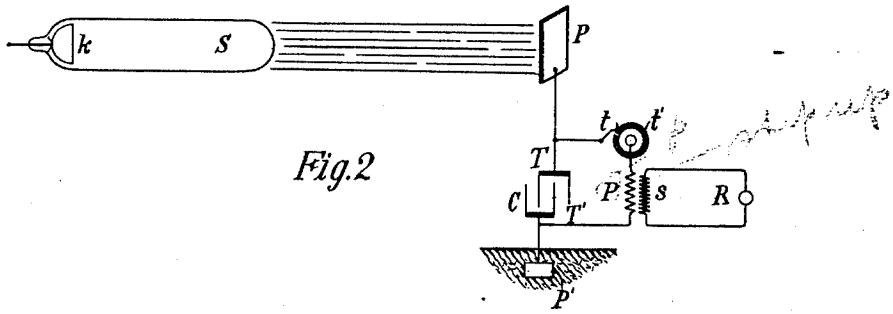

Witnesses:
Raphael Netter
M. Lawson Dyer

Nikola Tesla, Inventor
by Kerr, Page & Cooper Attys

THE NORRIS PETERS CO. PHOTO-LITHO. WASHINGTON, D. C.

UNITED STATES PATENT OFFICE.

NIKOLA TESLA, OF NEW YORK, N. Y.

METHOD OF UTILIZING RADIANT ENERGY.

SPECIFICATION forming part of Letters Patent No. 685,958, dated November 5, 1901.

Application filed March 21, 1901. Serial No. 52,154. (No model.)

To all whom it may concern:

Be it known that I, NIKOLA TESLA, a citizen of the United States, residing at the borough of Manhattan, in the city, county, and State of New York, have invented certain new and useful Improvements in Methods of Utilizing Radiant Energy, of which the following is a specification, reference being had to the drawings accompanying and forming a part of the same.

It is well known that certain radiations—such as those of ultra-violet light, cathodic, Roentgen rays, or the like—possess the property of charging and discharging conductors of electricity, the discharge being particularly noticeable when the conductor upon which the rays impinge is negatively electrified. These radiations are generally considered to be ether vibrations of extremely small wave lengths, and in explanation of the phenomena noted it has been assumed by some authorities that they ionize or render conducting the atmosphere through which they are propagated. My own experiments and observations, however, lead me to conclusions more in accord with the theory heretofore advanced by me that sources of such radiant energy throw off with great velocity minute particles of matter which are strongly electrified, and therefore capable of charging an electrical conductor, or even if not so may at any rate discharge an electrified conductor either by carrying off bodily its charge or otherwise.

My present application is based upon a discovery which I have made that when rays or radiations of the above kind are permitted to fall upon an insulated conducting body connected to one of the terminals of a condenser, while the other terminal of the same is made by independent means to receive or to carry away electricity, a current flows into the condenser so long as the insulated body is exposed to the rays, and under the conditions hereinafter specified an indefinite accumulation of electrical energy in the condenser takes place. This energy after a suitable time interval, during which the rays are allowed to act, may manifest itself in a powerful discharge, which may be utilized for the operation or control of mechanical or electrical devices or rendered useful in many other ways.

In applying my discovery I provide a condenser, preferably of considerable electrostatic capacity, and connect one of its terminals to an insulated metal plate or other conducting body exposed to the rays or streams of radiant matter. It is very important, particularly in view of the fact that electrical energy is generally supplied at a very slow rate to the condenser, to construct the same with the greatest care. I use by preference the best quality of mica as dielectric, taking every possible precaution in insulating the armatures, so that the instrument may withstand great electrical pressures without leaking and may leave no perceptible electrification when discharging instantaneously. In practice I have found that the best results are obtained with condensers treated in the manner described in a patent granted to me February 23, 1897, No. 577,671. Obviously the above precautions should be the more rigorously observed the slower the rate of charging and the smaller the time interval during which the energy is allowed to accumulate in the condenser. The insulated plate or conducting body should present as large a surface as practicable to the rays or streams of matter, I having ascertained that the amount of energy conveyed to it per unit of time is under otherwise identical conditions proportionate to the area exposed, or nearly so. Furthermore, the surface should be clean and preferably highly polished or amalgamated. The second terminal or armature of the condenser may be connected to one of the poles of a battery or other source of electricity or to any conducting body or object whatever of such properties or so conditioned that by its means electricity of the required sign will be supplied to the terminal. A simple way of supplying positive or negative electricity to the terminal is to connect the same either to an insulated conductor, supported at some height in the atmosphere, or to a grounded conductor, the former, as is well known, furnishing positive and the latter negative electricity. As the rays or supposed streams of matter generally convey a positive charge to the first condenser-terminal, which is connect-

ed to the plate or conductor above mentioned, I usually connect the second terminal of the condenser to the ground, this being the most convenient way of obtaining negative electricity, dispensing with the necessity of providing an artificial source. In order to utilize for any useful purpose the energy accumulated in the condenser, I furthermore connect to the terminals of the same a circuit including an instrument or apparatus which it is desired to operate and another instrument or device for alternately closing and opening the circuit. This latter may be any form of circuit-controller, with fixed or movable parts or electrodes, which may be actuated either by the stored energy or by independent means.

The rays or radiations which are to be utilized for the operation of the apparatus above described in general terms may be derived from a natural source, as the sun, or may be artificially produced by such means, for example, as an arc-lamp, a Roentgen tube, and the like, and they may be employed for a great variety of useful purposes.

My discovery will be more fully understood from the following detailed description and annexed drawings, to which reference is now made, and in which—

Figure 1 is a diagram showing typical forms of the devices or elements as arranged and connected in applying the method for the operation of a mechanical contrivance or instrument solely by the energy stored; and Fig. 2 is a diagrammatical representation of a modified arrangement suitable for special purposes, with a circuit-controller actuated by independent means.

Referring to Fig. 1, C is the condenser, P the insulated plate or conducting body, which is exposed to the rays, and P′ another plate or conductor, all being joined in series, as shown. The terminals T T′ of the condenser are also connected to a circuit including a receiver R, which is to be operated, and a circuit-controlling device *d*, which in this case is composed of two very thin conducting-plates *t t′*, placed in close proximity and very mobile, either by reason of extreme flexibility or owing to the charater of their support. To improve their action, they should be inclosed in a receptacle from which the air may be exhausted. The receiver R is shown as consisting of an electromagnet M, a movable armature *a*, a retractile spring *b*, and a ratchet-wheel *w*, provided with a spring-pawl *r*, which is pivoted to armature *a*, as illustrated. The apparatus being arranged as shown, it will be found that when the radiations of the sun or of any other source capable of producing the effects before described fall upon the plate P an accumulation of electrical energy in the condenser C will result. This phenomenon, I believe, is best explained as follows: The sun as well as other sources of radiant energy throw off minute particles of matter positively electrified, which, impinging upon the plate P, communicate an electrical charge to the same. The opposite terminal of the condenser being connected to the ground, which may be considered as a vast reservoir of negative electricity, a feeble current flows continuously into the condenser, and inasmuch as these supposed particles are of an inconceivably small radius or curvature, and consequently charged to a relatively very high potential, this charging of the condenser may continue, as I have found in practice, almost indefinitely, even to the point of rupturing the dielectric. Obviously whatever circuit-controller be employed it should operate to close the circuit in which it is included when the potential in the condenser has reached the desired magnitude. Thus in Fig. 2 when the electrical pressure at the terminals T T′ rises to a certain predetermined value the plates *t t′*, attracting each other, close the circuit connected to the terminals. This permits a flow of current which energizes the magnet M, causing it to draw down the armature *a* and impart a partial rotation to the ratchet-wheel *w*. As the current ceases the armature is retracted by the spring *b* without, however, moving the wheel *w*. With the stoppage of the current the plates *t t′* cease to be attracted and separate, thus restoring the circuit to its original condition.

Many useful applications of this method of utilizing the radiations emanating from the sun or other source and many ways of carrying out the same will at once suggest themselves from the above description. By way of illustration a modified arrangement is shown in Fig. 2, in which the source S of radiant energy is a special form of Roentgen tube devised by me having but one terminal *k*, generally of aluminium, in the form of half a sphere with a plain polished surface on the front side, from which the streams are thrown off. It may be excited by attaching it to one of the terminals of any generator of sufficiently-high electromotive force; but whatever apparatus be used it is important that the tube be exhausted to a high degree, as otherwise it might prove entirely ineffective. The working or discharge circuit connected to the terminals T T′ of the condenser includes in this case the primary *p* of a transformer and a circuit-controller comprising a fixed terminal or brush *t* and a movable terminal *t′* in the shape of a wheel with conducting and insulating segments which may be rotated at an arbitrary speed by any suitable means. In inductive relation to the primary wire or coil *p* is a secondary *s*, usually of a much greater number of turns, to the ends of which is connected a receiver R. The terminals of the condenser being connected as indicated, one to an insulated plate P and the other to a grounded plate P′, when the tube S is excited rays or streams of matter are emitted from the same, which convey a positive charge to the plate P and condenser-terminal T, while terminal T′ is continuously receiving negative electricity from the plate

P'. This, as before explained, results in an accumulation of electrical energy in the condenser, which goes on as long as the circuit including the primary *p* is interrupted. Whenever the circuit is closed, owing to the rotation of the terminal *t'*, the stored energy is discharged through the primary *p*, this giving rise in the secondary *s* to induced currents which operate the receiver R.

It is clear from what has been stated above that if the terminal T' is connected to a plate supplying positive instead of negative electricity the rays should convey negative electricity to plate P. The source S may be any form of Roentgen or Lenard tube; but it is obvious from the theory of action that in order to be very effective the electrical impulses exciting it should be wholly or at least preponderatingly of one sign. If ordinary symmetrical alternating currents are employed, provision should be made for allowing the rays to fall upon the plate P only during those periods when they are productive of the desired result. Evidently if the radiations of the source be stopped or intercepted or their intensity varied in any manner, as by periodically interrupting or rythmically varying the current exciting the source, there will be corresponding changes in the action upon the receiver R, and thus signals may be transmitted and many other useful effects produced. Furthermore, it will be understood that any form of circuit-closer which will respond to or be set in operation when a predetermined amount of energy is stored in the condenser may be used in lieu of the device specifically described with reference to Fig. 1, and also that the special details of construction and arrangement of the several parts of the apparatus may be very greatly varied without departure from the invention.

Having described my invention, what I claim is—

1. The method of utilizing radiant energy, which consists in charging one of the armatures of a condenser by rays or radiations, and the other armature by independent means, and discharging the condenser through a suitable receiver, as set forth.

2. The method of utilizing radiant energy, which consists in simultaneously charging a condenser by means of rays or radiations and an independent source of electrical energy, and discharging the condenser through a suitable receiver, as set forth.

3. The method of utilizing radiant energy, which consists in charging one of the armatures of a condenser by rays or radiations, and the other by independent means, controlling the action or effect of said rays or radiations and discharging the condenser through a suitable receiver, as set forth.

4. The method of utilizing radiant energy, which consists in charging one of the armatures of a condenser by rays or radiations and the other by independent means, varying the intensity of the said rays or radiations and periodically discharging the condenser through a suitable receiver, as set forth.

5. The method of utilizing radiant energy, which consists in directing upon an elevated conductor, connected to one of the armatures of a condenser, rays or radiations capable of positively electrifying the same, carrying off electricity from the other armature by connecting the same with the ground, and discharging the accumulated energy through a suitable receiver, as set forth.

6. The method of utilizing radiant energy, which consists in charging one of the armatures of a condenser by rays or radiations, and the other by independent means, and effecting by the automatic discharge of the accumulated energy the operation or control of a suitable receiver, as set forth.

NIKOLA TESLA.

Witnesses:
M. LAWSON DYER,
RICHARD DONOVAN.

The Wall Of Light

Nikola Tesla And The Venusian Space Ship The X-12

A.H.Matthews,E.E.

The Wall of Light

Nikola Tesla
And
The Venusian Space Ship
The X-12

Arthur H. Matthews, E.E.

Published 1973
500 Impressions

Distributed by: IOP Technologies Inc

AND the successors of Nicola Tesla and Arthur Matthews

ALL proceeds are used in the furtherance of projects initiated by Nicola Tesla and Arthur Matthews and to disseminate their desires.

TESLA
1917
©

TESLA 1942

©

Part One

The Life of Tesla
(By Nikola Tesla)

Foreword
By
Arthur Henry Matthews, E. E.

How did the world's greatest inventor invent? How did he carry out an invention? What sort of mentality did this wonder man have? Was his early life as commonplace as most boys? What was the early training of this man from space? Was he an earthman? Did he come from the planet Venus? Was he born on a space ship? The answers to these and many other questions will be found in this story from the lips of the man himself.

In this autobiography concerning his early youth, and so on, we obtain a good insight into the wonderful life this man led. It reads like a fairy tale, but strange as it may be, it is true. Tesla was no common mortal. He led a charmed life — given up by doctors at least three times as dead, he was a young man at sixty and at seventy; with a brain just as keen the day he died, (if he did die, for many believe he did not). He always said he would live to the age of one hundred and fifty, so perhaps he is alive on Venus? That might be easy to believe now, for if man can build a rocket to the moon or Venus, there is no reason to doubt that science on that planet could be a thousand years ahead of earth man's. We know that space ships have landed on earth, all through the ages. Tesla said that he believed he came from the planet Venus, and during the landings of a space ship on my property, the members of that ship said that Tesla was a child from Venus. Tesla will tell you in his own words, what he believed. Read the story with care; there is allot between the lines, as you will see. He had one great vice — his generosity. He could have been the richest man on earth. He made and spent millions. He was an idealist of the highest order, and to such men, money itself means but little.

Chapter 1

My Early Life:

The progressive development of man is vitally dependent on invention. It is the most important product of his creative brain. Its ultimate purpose is the complete mastery of mind over the material world, the harnessing of the forces of nature to human needs. This is the difficult task of the inventor who is often misunderstood and unrewarded. But, he finds ample compensation in the pleasing exercises of his powers and in the knowledge of being one of that exceptionally privileged class without whom the race would have long ago perished in the bitter struggle against pitiless elements. Speaking for myself, I have already had more than my full measure of this exquisite enjoyment; so much, that for many years my life was little short of continuous rapture. I am credited with being one of the hardest workers and perhaps I am, if thought is the equivalent of labor, for I have devoted to it almost all of my waking hours. But, if work is interpreted to be a definite performance in a specified time according to a rigid rule, then I may be the worst of idlers.

Every effort under compulsion demands a sacrifice of life-energy. I never paid such a price. On the contrary, I have thrived on my thoughts. In attempting to give a connected and faithful account of my activities in this story of my life, I must dwell, however reluctantly, on the impressions of my youth and the circumstances and events, which have been instrumental in determining my career. Our first endeavors are purely instinctive promptings of an imagination vivid and undisciplined. As we grow older reason asserts itself and we become more and more systematic and designing. But, those early impulses, tho not immediately productive, are of the greatest moment and may shape our very destinies. Indeed, I feel now that had I understood and cultivated instead of suppressing them, I would have added substantial value to my bequest to the world. But not until I had attained manhood did I realize that I was an inventor.

This was due to a number of causes. In the first place, I had a brother who was gifted to an extraordinary degree; one of those rare phenomena of mentality which biological investigation has failed to explain. His premature death left my earth parents disconsolate. (I will explain my remark about my earth parents" later.) We owned a horse, which had been presented to us by a dear friend. It was a magnificent animal of Arabian breed, possessed of almost human intelligence, and was cared for and petted by the whole family,

having on one occasion saved my father's life under remarkable circumstances.

My father had been called one winter night to perform an urgent duty and while crossing the mountains, infested by wolves, the horse became frightened and ran away, throwing him violently to the ground. It arrived home bleeding and exhausted, but after the alarm was sounded, immediately dashed off again, returning to the spot, and before the searching party were far on the way they were net by my father, who had recovered consciousness and remounted, not realizing that he had been lying in the snow for several hours. This horse was responsible for my brother's injuries from which he died. I witnessed the tragic scene and although so many years have elapsed since, my visual impression of it has lost none of its force. The recollection of his attainments' made every effort of mine seem dull in comparison. Anything I did that was creditable merely caused my parents to feel their loss more keenly. So, I grew up with little confidence in myself.

As I have referred, these were, perhaps, my strangest and inexplicable experiences. They usually occurred when I found myself in a dangerous or distressing situation or when I was greatly exhilarated. In some instances, I have seen all the air around me filled with tongues of living flame. Their intensity, instead of diminishing, increased with time and seemingly attained a maximum when I was about twenty-five years old.

While in Paris in 1883, a prominent French manufacturer sent me an invitation to a shooting expedition, which I accepted. I had been long confined to the factory and the fresh air had a wonderfully invigorating effect on me. On my return to the city that night, I felt a positive sensation that my brain had caught fire. I saw a light as though a small sun was located in it and I passed the whole night applying cold compressions to my tortured head. Finally, the flashes diminished in frequency and force but it took more than three weeks before they wholly subsided. When a second invitation was extended to me, my answer was an emphatic N0:

These luminous phenomena still manifest themselves from time to time, as when a new idea opening up possibilities strikes me, but they are no longer exciting, being of relatively small intensity. When I close my eyes I invariably observe first, a background of very dark and uniform blue, not unlike the sky on a clear but starless night. In a few seconds, this field becomes animated with innumerable scintillating flakes of green, arranged in several layers and advancing towards me. Then there appears, to the right, a beautiful pattern of two systems of parallel and closely spaced lines, at right

angles to one another, in all sorts of colors with yellow, green, and gold predominating. Immediately thereafter, the lines grow brighter and the whole is thickly sprinkled with dots of twinkling light. This picture moves slowly across the field of vision and in about ten seconds vanishes on the left, leaving behind a ground of rather unpleasant and inert gray which quickly gives way to a billowy sea of clouds, seemingly trying to mould themselves into living shapes It is curious that I cannot project a form into this gray until the second phase is reached. Every time, before falling asleep, images of persons or objects flit before my view. When I see them, I know I am about to lose consciousness. If they are absent and refuse to come, it means a sleepless night. To what an extent imagination played a part in my early life, I may illustrate by another odd experience.

Like most children, I was fond of jumping and developed an intense desire to support myself in the air. Occasionally a strong wind richly charged with oxygen blew from the mountains, rendering my body as light as cork and then I would leap and float in space for a long time. It was a delightful sensation and my disappointment was keen when later I undeceived myself. During that period I contracted many strange likes, dislikes and habits, some of which can trace to external impressions while others are unaccountable. I had a violent aversion against the earrings of women but other ornaments, as bracelets, pleased me more or less according to design. The sight of a pearl would almost give me a fit, but I was fascinated with the glitter of crystals or objects with sharp edges and plane surfaces. I would not touch the hair of other people except perhaps at the point of a revolver. I would get a fever by looking at a peach and if a piece of camphor was anywhere in the house it caused me the keenest discomfort. Even now I am not insensible to some of these upsetting impulses. When I drop little squares of paper in a dish filled with liquid, I always sense a peculiar and awful taste in my mouth. I counted the steps in my walks and calculated the cubical contents of soup plates, coffee cups and pieces of food, otherwise my meal was unenjoyable. All repeated acts or operations I performed had to be divisible by three and if I missed I felt impelled to do it all over again, even if it took hours.[D] Up to the age of eight years, my character was weak and vacillating. I had neither courage or strength to form a firm resolve. My feelings came in waves and surges and vibrated unceasingly between extremes. My wishes were of consuming force and like the heads of the hydra, they multiplied. I was oppressed by thoughts of pain in life and death and religious fear. I was swayed by superstitious belief and lived in constant dread of the spirit of evil, of ghosts and ogres and other unholy monsters of the dark. Then all at once, there

ogres and other unholy monsters of the dark. Then all at once, there came a tremendous change, which altered the course of my whole existence.

Of all things, I liked books best. My father had a large library and whenever I could manage I tried to satisfy my passion for reading. He did not permit it and would fly in a rage when he caught me in the act. He hid the candles when he found that I was reading in secret. He did not want me to spoil my eyes. But, I obtained tallow, made the wicking and cast the sticks into tin forms, and every night I would bush the keyhole and the cracks and read, often till dawn, when all others slept and my mother started on her arduous daily task.

On one occasion I came across a novel entitled "Aoafi," (the son of Aba), a Serbian translation of a well known Hungarian writer, Josika.[E] This work, somehow awakened my dormant powers of will and I began to practice self-control. At first, my resolutions faded like snow in April, but in a little while I conquered my weakness and felt a pleasure I never knew before — that of doing as I willed.

In the course of time, this vigorous mental exercise became second to nature. At the outset, my wishes had to be subdued but gradually desire and will grew to be identical. After years of such discipline, I gained so complete a mastery over myself that I toyed with passions, which have meant destruction to some of the strongest men. At a certain age, I contracted a mania for gambling, which greatly worried my parents. To sit down to a game of cards was for me the quintessence of pleasure. My father led an exemplary life and could not excuse the senseless waste of time and money in which I indulged. I had a strong resolve, but my philosophy was bad. I would say to him, 'I can stop whenever I please, but is it worth while to give up that which I would purchase with the joys of Paradise?' On frequent occasions, he gave vent to his anger and contempt, but my mother was different. She understood the character of men and knew that one's salvation could only be brought about through his own efforts. One afternoon, I remember, when I had lost all my money and was craving for a game, she came to me with a roll of bills and said, "Go and enjoy yourself. The sooner you lose all we possess, the better it will be." I know that you will get over it.' She was right. I conquered my passion then and there and only regretted that it had not been a hundred times as strong. I not only vanquished any craving, but tore it from my heart so as not to leave even a trace of desire.

Ever since that time I have been as indifferent to any form of gambling as to picking teeth. During another period, I smoked excessively, threatening

to ruin my health. Then my will asserted itself and I not only stopped, but destroyed all inclination, Long ago I suffered from heart trouble until I discovered that it was due to the innocent cup of coffee I consumed every morning. I discontinued at once, tho I confess it was not an easy task. In this way, I checked and bridled other habits and passions, and have not only preserved my life, but derived an immense amount of satisfaction from what most men would consider privation and sacrifice.

After finishing the studies at the Polytechnic Institute and University, I had a complete nervous breakdown and while the malady lasted, I observed many phenomena, strange and unbelievable.

Chapter 2

I shall dwell briefly on these extraordinary experiences, on account of their possible interest to students of psychology and physiology and also because this period of agony was of the greatest consequence on my mental development and subsequent labors. But it is indispensable to first relate the circumstances and conditions, which preceded them and in which might be found their partial explanation.

From childhood, I was compelled to concentrate attention upon myself. This caused me much suffering, but to my present view, it was a blessing in disguise for it has taught me to appreciate the inestimable value of introspection in the preservation of life, as well as a means of achievement. The pressure of occupation and the incessant stream of impressions pouring into our consciousness through all the gateways of knowledge make modern existence hazardous in many ways. Most persons are so absorbed in the contemplation of the outside world that they are wholly oblivious to what is passing on within themselves. The premature death of millions is primarily traceable to this cause. Even among those who exercise care, it is a common mistake to avoid imaginary, and ignore the real dangers. And what is true of an individual also applies, more or less, to a people as a whole.

Abstinence was not always to my liking, but I find ample reward in the agreeable experiences I am now making. Just in the hope of converting sane to my precepts and convictions, I will recall one or two.

A short time ago, I was returning to my hotel. It was a bitter cold night, the ground slippery, and no taxi to be had. Half a block behind me followed another man, evidently as anxious as myself to get under cover. Suddenly my legs went up in the air. At the same instant there was a flash in my brain.

The nerves responded, the muscles contracted. I swung through 180 degrees and landed on my hands. I resumed my walk as though nothing had happened when the stranger caught up with me." How old are you?" he asked, surveying me critically.

"Oh, about fifty-nine," I replied." What of it?"

"Well," said he, "I have seen a cat do this but never a man." About a month ago, I wanted to order new eyeglasses and went to an oculist who put me through the usual tests. He looked at me incredulously as I read off with ease the smallest print at considerable distance. But when I told him I was past sixty he gasped in astonishment. Friends of mine often remark that my

suits fit me like gloves but they do not know that all my clothing is made to measurements which were taken nearly fifteen years ago and never changed. During this same period, my weight has not varied one pound. In this connection, I may tell a funny story. One evening, in the winter of 1885, Mr. Edison, Edward H. Johnson, the President of the Edison Illuminating Company, Mr. Batchellor, Manager of the works, and myself, entered a little place opposite 65 Firth Avenue, where the offices of the company were located. Someone suggested guessing weights and I was induced to step on a scale. Edison felt me all over and said: "Tesla weighs 152 lbs. to an ounce" and he guessed it exactly. Stripped I weighed 142 pounds, and that is still my weight. I whispered to Mr. Johnson; "How is it possible that Edison could guess my weight so closely?"

"Well", he said, lowering his voice; "I will tell you confidentially, but you must not say anything. He was employed for a long time in a Chicago slaughterhouse where he weighed thousands of hogs every day. That's why."

Mr. friend, the Hon. Chauncey M. Dupew, tells of an Englishman *on whom* he sprung one of his original anecdotes and who listened with a puzzled expression but a year later, laughed out loud. I will frankly confess it took me longer than that to appreciate Johnson's joke. Now, my well being is simply the result of a careful and measured mode of living and perhaps the most astonishing thing is that three times in my youth I was rendered by illness a hopeless physical wreck and given up by physicians. MORE than this, through ignorance and lightheartedness, I got into all sorts of difficulties, dangers, and scrapes from which I extricated myself as by enchantment. I was almost drowned a dozen times; was nearly boiled alive and just missed being cremated. I was entombed, lost and frozen. I had hairbreadth escapes from mad dogs, hogs, and other wild animals. I passed through dreadful diseases and met with all kinds of odd mishaps and that I am hale and hearty today seems like a miracle. But as I recall these incidents to my mind I feel convinced that my preservation was not altogether accidental, but was indeed the work of divine power. An inventor's endeavor is essentially life saving. Whether he harnesses forces, improves devices, or provides new comforts and conveniences, he is adding to the safety of our existence. He is also better qualified than the average individual to protect himself in peril, for he is observant and resourceful. If I had no other evidence that I was, in a measure, possessed of such qualities, I would find it in these personal experiences. The reader will be able to judge for himself if I mention one or two instances.

On one occasion, when about fourteen years old, I wanted to scare some friends who were bathing with me. My plan was to dive under a long floating structure and slip out quietly at the other end. Swimming and diving came to me as naturally as to a duck and I was confident that I could perform the feat. Accordingly, I plunged into the water and, when out of view, turned around and proceeded rapidly towards the opposite side. Thinking that I was safely beyond the structure, I rose to the surface but to my dismay struck a beam. Of course, I quickly dived and forged ahead with rapid strokes until my breath was beginning to give out. Rising for the second time, my head came again in contact with a beam. Now I was becoming desperate. However, summoning all my energy, I made a third frantic attempt but the result was the same. The torture of suppressed breathing was getting unendurable, my brain was reeling, and I felt myself sinking. At that moment, when my situation seemed hopeless, I experienced one of those flashes of light and the structure above me appeared before my vision. I either discerned or guessed that there was a little space between the surface of the water and the boards resting on the beams and, with consciousness nearly gone, I floated up, pressed my mouth close to the planks and managed to inhale a little air, unfortunately mingled with a spray of water which nearly choked me. Several times, I repeated this procedure as in a dream until my heart, which was racing at a terrible rate, quieted down, and I gained composure. After that, I made a number of unsuccessful dives, having completely lost the sense of direction, but finally succeeded in getting out of the trap when my friends had already given me up and were fishing for my body. That bathing season was spoiled for me through recklessness but I soon forgot the lesson and only two years later, I fell into a worse predicament.

There was a large flourmill with a dam across the river near the city where I was studying at that time. As a rule, the height of the water was only two or three inches above the dam and to swim to it was a sport not very dangerous in which I often indulged. One day I went alone to the river to enjoy myself as usual. When I was a short distance from the masonry, however, I was horrified to observe that the water had risen and was carrying me along swiftly. I tried to get away but it was too late. Luckily, tho, I saved myself from being swept over by taking hold of the wall with both hands. The pressure against my chest was great and I was barely able to keep my head above the surface. Not a soul was in sight and my voice was lost in the roar of the fall. Slowly and gradually, I became exhausted and unable to withstand the strain longer. Just as I was about to let go, to be dashed against the rocks below, I saw in a flash of light a familiar diagram illustrating the

hydraulic principle that the pressure of a fluid in motion is proportionate to the area exposed and automatically I turned on my left side. As if by magic, the pressure was reduced and I found it comparatively easy in that position to resist the force of the stream. But, the danger still confronted me. I knew that sooner or later I would be carried dam, as it was not possible for any help to reach me in time, even if I had attracted attention. I am ambidextrous now, but then I was left-handed and had comparatively little strength in my right arm. For this reason I did not dare to turn on the other side to rest and nothing remained but to slowly push my body along the dam. I had to get away from the mill towards which my face was turned, as the current there was much swifter and deeper. It was a long and painful ordeal and I came near to failing at its very end, for I was confronted with a depression in the masonry. I managed to get over with the last ounce of my strength and fell in a swoon when I reached the bank, where I was found. I had torn virtually all the skin from my left side and it took several weeks before the fever had subsided and I was well. These are only two of many instances, but they may be sufficient to show that had it not been for the inventor's instinct, I would not have lived to tell the tale.

Interested people have often asked me how and when I began to invent. This I can only answer from my present recollection in the light of which, the first attempt I recall was rather ambitious for it involved the invention of an apparatus and a method. In the former, I was anticipated, but the latter was original. It happened in this way one of my playmates had come into the possession of a hook and fishing tackle which created quite an excitement in the village, and the next morning all started out 'to catch frogs. I was left alone and deserted wing to a quarrel with this boy. I had never seen a real hook and pictured it as something wonderful, endowed with peculiar qualities, and was despairing not to be one of the party. Urged by necessity, I somehow got hold of a piece of soft iron wire, hammered the end to a sharp point between two stones, bent it into shape, and fastened it to a strong string. I then cut a rod, gathered some bait, and went down to the brook where there were frogs in abundance. But, I could not catch any and was almost discouraged when it occurred to me to dangle the empty hook in front of a frog sitting on a stump. At first, he collapsed but by and by his eyes bulged out and became bloodshot, he swelled to twice his normal size and made a vicious snap at the hook. Immediately I pulled him up. I tried the same thing again and again and the method proved infallible. When my comrades who in spite of their fine outfit had caught nothing, came to me, they were green with envy. For a, long time I kept my secret and enjoyed the monopoly but finally yielded to the spirit of

Christmas. Every boy could then do the same and the following summer brought disaster to the frogs.

In my next attempt, I seem to have acted under the first instinctive impulse, which later dominated me, — to harness the energies of nature to the service of man. I did this through the medium of May bugs, or June bugs as they are called in America, which were a veritable pest in that country and sometimes broke the branches of trees by the sheer weight of their bodies. The bushes were black with them. I would attach as many as four of them to a crosspiece, rotably arranged on a thin spindle, and transmit the motion of the same to a large disc and so derive considerable 'power.' These creatures were remarkably efficient, for once they were started, they had no sense to stop and continued whirling for hours and hours and the hotter it was, the harder they worked. All went well until a strange boy came to the place. He was the son of a retired officer in the Austrian army. That urchin ate Maybugs alive and enjoyed them, as though they were the finest blue-point oysters. That disgusting sight terminated my endeavors in this promising field and I have never since been able to touch a Maybug or any other insect for that matter.

After that, I believe, I undertook to take apart and assemble the clocks of my grandfather. In the former operation, I was always successful, but often failed in the latter. So it cam that he brought my work to a sudden halt in a manner not too delicate and it took thirty years before I tackled another clockwork again.

Shortly thereafter, I went into the manufacture of a kind of pop-gun which comprised a hollow tube, a piston, and two plugs of hemp. When firing the gun, the piston was pressed against the stomach and the tube was pushed back quickly with both hands. The air between the plugs was compressed and raised to high temperature and one of them was expelled with a loud report. The art consisted in selecting a tube of the proper taper from the hollow stalks, which were found in our garden. I did very well with that gun, but my activities interfered with the windowpanes in our house and met with painful discouragement.

If I remember rightly, I then took to carving swords from pieces of furniture, which I could conveniently obtain. At that time, I was under the sway of the Serbian national poetry and full of admiration for the feats of the heroes. I used to spend hours in mowing down my enemies in the form of corn stalks, which ruined the crops and netted me several spankings from my mother. Moreover, these were not of the formal kind but the genuine article.

I had all this and more behind me before I was six years old and had passed through one year of elementary school in the village of Smiljan where my family lived. At this juncture we moved to the little city of Gospic nearby. This change of residence was like a calamity to me. It almost broke my heart to part from our pigeons, chickens and sheep; and our magnificent flock of geese which used to rise to the clouds in the morning and return from the feeding grounds at sundown in battle formation, so perfect that it would have put a squadron of the best aviators of the present day to shame. In our new house, I was but a prisoner, watching the strange people I. saw through the window blinds. My bashfulness was such that I would rather have faced a roaring lion than one of the city dudes who strolled about. However, my hardest trial came on Sunday when I had to dress up and attend the service. There I met with an accident, the mere thought of which made my blood curdle like sour milk for years afterwards. It was my second adventure in a church. Not long before, I was entombed for a night in an old chapel on an inaccessible mountain, which was visited only once a year. It was an awful experience, but this one was worse.

There was a wealthy lady in town, a good but pompous woman, who used to come to the church gorgeously painted up and attired with an enormous train and attendants. One Sunday I had just finished ringing the bell in the belfry and rushed downstairs, when this grand dame was sweeping out and I jumped on her train. It tore off with a ripping noise, which sounded like a salvo of musketry fired by raw recruits. My father was livid with rage. He gave me a gentle slap on the cheek, the only corporal punishment he ever administered to me, but I almost feel it now. The embarrassment and confusion that followed are in describable. I was practically ostracized until something else happened which redeemed me in the estimation of the community.

An enterprising young merchant had organized a fire department. A new fire engine was purchased, uniforms provided and the men drilled for service and parade. The engine was beautifully painted red and black. One afternoon, the official trial was prepared for and the machine was transported to the river. The entire population turned out to witness the great spectacle. When all the speeches and ceremonies were concluded, the command was given to pump, but not a drop of water came from the nozzle. The professors and experts tried in vain to locate the trouble. The fizzle was complete when I arrived at the scene. My knowledge of the mechanism was nil and I knew next to nothing of air pressure, but instinctively I felt for the suction hose in the water and found that it had collapsed. When I waded in the river and opened it up, the water rushed forth and not a few Sunday clothes

were spoiled. Archimedes running naked through the streets of Syracuse and shouting Eureka at the top of his voice did not make a greater impression than myself. I was carried on the shoulders and was the hero of the day.

Upon settling in the city, I began a fair years course in the so-called normal School preparatory to my studies at the College or Real-Gymnasium. During this period my boyish efforts and exploits as well as troubles, continued.

Among other things, I attained the unique distinction of champion crow catcher in the country. My method of procedure was extremely simple. I would go into the forest, hide in the bushes, and imitate the call of the birds. Usually I would get several answers and in a short while, a crow would flutter down into the shrubbery near me. After that, all I needed to do was to throw a piece of cardboard to detract its attention, jump up and grab it before it could extricate itself from the undergrowth. In this way, I would capture as many as I desired. But on one occasion something occurred which made me respect them. I had caught a fine pair of birds and was returning home with a friend. When we left the forest, thousands of crows had gathered making frightful racket. In a few minutes, they rose in pursuit and soon enveloped us. The fun lasted until all of a sudden I received a blow on the back of my head, which knocked me down. Then they attacked me viciously. I was compelled to release the two birds and was glad to join my friend who had taken refuge in a cave.[1]

In the schoolroom there were a few mechanical models which interested me and turned my attention to water turbines. I constructed many of these and found great pleasure in operating them. How extraordinary was my life an incident may illustrate. My uncle had no use for this kind of pastime and more than once rebuked me. I was fascinated by a description of Niagara Falls I had perused, and pictured in my imagination a big wheel run by the Falls. I told my uncle that I would go to America and carry out this scheme. Thirty years later, I saw my ideas carried out at Niagara and marveled at the unfathomable mystery of the mind.

I made all kinds of other contrivances and contraptions but among those, the arbalests[2] I produced were the best. My arrows, when shot, disappeared from sight and at close range traversed a plank of pine one inch thick. Through the continuous tightening of the bows, I developed skin on my stomach much like that of a crocodile and I am often wondering whether it is due to this exercise that I am able even now to digest cobblestones![3] Nor can I pass in silence my performances with the sling, which would have enabled me to give a stunning exhibit at the *Hippodrome. And* now I will tell of one of my feats with this unique implement of war which will strain to the utmost the credulity of the reader.

I was practicing while walking with my uncle along the river. The sun was setting, the trout were playful and from time to time one would shoot up into the air, its glistening body sharply defined against a projecting rock beyond.

Of course any boy might have hit a fish under these propitious conditions but I undertook a much more difficult task and I foretold to my uncle, to the minutest detail, what I intended doing. I was to hurl a stone to meet the fish, press its body against the rock, and cut it in two. It was no sooner said than done. My uncle looked at me almost scared out of his wits and exclaimed "Vaderetra Satanae:" and it was a few days before he spoke to me again. Other records, however great, will be eclipsed but I feel that I could peacefully rest on my laurels for a thousand years.

Chapter 3

How Tesla Conceived "The Rotary Magnetic Field"

At the age of ten, I entered the real gymnasium, which was a new and fairly well equipped institution. In the department of physics were various models of classical scientific apparatus, electrical and mechanical. The demonstrations and experiments performed from time to time by the instructors fascinated me and were undoubtedly a powerful incentive to invention. I was also passionately fond of mathematical studies and often won the professor's praise for rapid calculation. This was due to my acquired facility of visualizing the figures and performing the operation, not in the usual intuitive manner, but as in actual life. Up to a certain degree of complexity, it was absolutely the same to me whether I wrote the symbols on the board or conjured them before my mental vision. But freehand drawing, to which many hours of the course were devoted, was an annoyance I could not endure. This was rather remarkable as most of the members of the family excelled in it. Perhaps my aversion was simply due to the predilection I found in undisturbed thought. Had it not been for a few exceptionally stupid boys, *who* could not do anything at all, my record would have been the worst.

It was a serious handicap as under the then existing educational regime drawing being obligatory, this deficiency threatened to spoil my whole career and my father had considerable trouble in railroading me from one class to another.

In the second year at that institution, I became obsessed with the idea of producing continuous motion through steady air pressure. The pump incident, of which I have told, had set afire my youthful imagination and impressed me with the boundless possibilities of a vacuum. I grew frantic in my desire to harness this inexhaustible energy but for a long time I was groping in the dark. Finally, however, my endeavors crystallized in an invention, which was to enable me to achieve what no other mortal ever attempted. Imagine a cylinder freely rotatable on two bearings and partly surrounded by a rectangular trough, which fits it perfectly. The open side of the trough is enclosed by a partition so that the cylindrical segment within the enclosure divides the latter into two compartments entirely separated from each other by airtight sliding joints. One of these compartments being sealed and once for all exhausted, the other remaining open, a perpetual rotation of the cylinder would result. At least, so I thought.

A wooden model was constructed and fitted with infinite care and when I applied the pump on one side and actually observed that there was a tendency to turning, I was delirious with joy. Mechanical flight was the one thing I wanted to accomplish although still under the discouraging recollection of a bad fall I sustained by jumping with an umbrella from the top of a building. Every day I used to transport myself through the air to distant regions but could not understand just how I managed to do it. Now I had something concrete, a flying machine with nothing more than a rotating shaft, flapping wings, and a vacuum of unlimited power.[1] From that time on I made my daily aerial excursions in a vehicle of comfort and luxury as might have befitted King Solomon. It took years before I understood that the atmospheric pressure acted at right angles to the surface of the cylinder and that the slight rotary effort I observed was due to a leak. Though this knowledge came gradually it gave me a painful shock.

I had hardly completed my course at the Real Gymnasium when I was prostrated with a dangerous illness or rather, a score of them, and my condition became so desperate that I was given up by physicians. During this period, I was permitted to read constantly, obtaining books from the Public Library, which had been neglected and entrusted to me for classification of the works and preparation of catalogues.

One day I was handed a few volumes of new literature unlike anything I had ever read before and so captivating as to make me utterly forget my hopeless state. They were the earlier works of Mark Twain and to them might have been due the miraculous recovery, which followed. Twenty-five years later, when I met Mr. Clements and we formed a friendship between us, I told him of the experience and was amazed to see that great man of laughter burst into tears.

My studies were continued at the higher Real Gymnasium in Carlstadt, Croatia, where one of my aunts resided. She was a distinguished lady, the wife of a Colonel who was an old war-horse having participated in many battles.

I can never forget the three years I passed at their home. No fortress in time of war was under a more rigid discipline. I was fed like a canary bird. All the meals were of the highest quality and deliciously prepared, but short in quantity by a thousand per cent. The slices of ham cut by my aunt were

like tissue paper. When the Colonel would put something substantial on my plate she would snatch it away and say excitedly to him; "Be careful. Niko is very delicate."

I had a voracious appetite and suffered like Tantalus.[2]

But I lived in an atmosphere of refinement and artistic taste quite unusual for those times and conditions. The land was low and marshy and malaria fever never left me while there despite the enormous amounts of quinine I consumed.[3] Occasionally the river would rise and drive an army of rats into the buildings, devouring everything, even to the bundles of fierce paprika. These pests were to me a welcome diversion. I thinned their ranks by all sorts of means, which won me the unenviable distinction of rat-catcher in the community. At last, however, my course was completed, the misery ended, and I obtained the certificate of maturity which brought me to the cross-roads.

During all those years, my parents never wavered in their resolve to make me embrace the clergy, the mere thought of which filled me with dread.[4] I had become intensely interested in electricity under the stimulating influence of my Professor of Physics, who was an ingenious man and often demonstrated the principles by apparatus of his own invention. Among these I recall a device in the shape of a freely rotatable bulb, with tinfoil coatings, which was made to spin rapidly when connected to a static machine. It is impossible for me to convey an adequate idea of the intensity of feeling I experienced in witnessing his exhibitions of these mysterious phenomena. Every impression produced thousand echoes in my mind. I wanted to know more of this wonderful force; I longed for experiment and investigation and resigned myself to the inevitable with aching heart. Just as I was making ready for the long journey home I received word that my father wished me to go on a shooting expedition. It was a strange request as he had been always strenuously opposed to this kind of sport. But a few days later I learned that

the cholera was raging in that district and, taking advantage of an opportunity, I returned to Gospic in disregard to my parent's wishes. It is incredible how absolutely ignorant people were as to the causes of this scourge which visited the country in intervals of from fifteen to twenty years. They thought that the deadly agents were transmitted through the air and filled it with pungent odors and smoke. In the meanwhile, they drank the infested water and died in heaps. I contracted the dreadful disease on the very day of my arrival and although surviving the crisis, I was confined to bed for nine months with scarcely any ability to move. My energy was completely exhausted and for the second time I found myself at Death's door.

In one of the sinking spells which was thought to be the last, my father rushed into the room. I still see his pallid face as he tried to cheer me in tones belying his assurance. "Perhaps,' I said, "I may get well if you will let me study engineering." "'You will go to the best technical institution in the world," he solemnly replied, and I knew that he meant it. A heavy weight was lifted from my mind but the relief would have come too late had it not been for a marvelous cure brought about through a bitter decoction of a peculiar bean. I came to life like another Lazarus to the utter amazement of everybody. My father insisted that I spend a year in healthful physical outdoor exercise to which I reluctantly consented. For most of this term, I roamed in the mountains, loaded with a hunter's outfit and a bundle of books, and this contact with nature made me stronger in body as well as in mind. I thought and planned, and conceived many ideas almost as a rule delusive. The vision was clear enough but the knowledge of principles was very limited.

In one of my inventions, I proposed to convey letters and packages across the seas, through a submarine tube, in spherical containers of sufficient strength to resist the hydraulic pressure. The pumping plant, intended to force the water through the tube, was accurately figured and designed and all other particulars carefully worked out. Only one trifling detail, of no consequence, was lightly dismissed. I assumed an arbitrary velocity of the water and, what is more, took pleasure in making it high, thus arriving at a stupendous performance supported by faultless calculations. Subsequent reflections, however, on the resistance of pipes to fluid flow induced me to make this invention public property.

Another one of my projects was to construct a ring around the equator which would, of course, float freely and could be arrested in its spinning motion by reactionary forces, thus enabling travel at a rate of about one thou sand miles an hour, impracticable by rail. The reader will smile. The plan

was difficult of execution, I will admit, but not nearly so bad as that of a well known New York professor, who wanted to pump the air from the torrid to the temperate zones, entirely forgetful of the fact that the Lord had provided a gigantic machine for this purpose.

Still another scheme, far more important and attractive, was to derive power from the rotational energy of terrestrial bodies. I had discovered that objects on the earth's surface owing to the diurnal rotation of the globe, are carried by the same alternately in and against the direction of translatory movement. From this results a great change in momentum, which could be utilized in the simplest imaginable manner to furnish motive effort in any habitable region of the world. I cannot find words to describe my disappointment when later I realized that I was in the predicament of Archimedes, who vainly sought for a fixed point in the Universe. At the termination of my vacation, I was sent to the POLY-TEQHNIC School in Gratz, Styria (Austria), which my father had chosen as one of the oldest and best reputed institutions. That was the moment I had eagerly awaited and I began my studies under good auspices and firmly resolved to succeed. My previous training was above the average, due to my father's teaching and opportunities afforded. I had acquired the knowledge of a number of languages and waded through the books of several libraries, picking up information more or less useful. Then again, for the first time, I could choose my subjects as I liked, and free-hand drawing was to bother me no more.

I had made up my mind to give my parents a surprise, and during the whole first year I regularly started my work at three o'clock in the morning and continued until eleven at night, no Sundays or holidays excepted. As most of my fellow-students took things easily, naturally I eclipsed all records. In the course of the year, I passed through nine exams and the professors *thought I* deserved more than the highest qualifications. Armed with their flattering certificates, I went home for a short rest, expecting a triumph, and was mortified when my father made light of these hard-won honors.

That almost killed my ambition; but later, after he had died, I was pained to find a package of letters which the professors had written to him to the effect that unless he took me away from the Institution I would be killed through overwork. Thereafter I devoted myself chiefly to physics, mechanics and mathematical studies, spending the hours of leisure in the libraries.

I had a veritable mania for finishing whatever I began, which often got me into difficulties. On one occasion I started to read the works of Voltaire, when I learned, to my dismay that there were close to one hundred large vol-

umes in small print which that monster had written while drinking seventy-two cups of black coffee per diem. It had to be done, but when I laid aside the last book I was very glad, and said, "Never more!"

My first year's showing had won me the appreciation and friendship of several professors. Among these, Professor Rogner, who was teaching arithmetical subjects and geometry; Professor Poeschl, who held the chair of theoretical and experimental physics, and Dr. Alle, who taught integral calculus and specialized in differential equations. This scientist was the most brilliant lecturer to whom I ever listened. He took a special interest in my progress and would frequently remain for an hour or two in the lecture room, giving me problems to solve, in which I delighted. To him I explained a flying machine I had conceived; not an illusionary invention, but one based on sound, scientific principles, which has become realizable through my turbine and will soon be given to the world. Both Professors Rogner and Poeschl were curious men. The former had peculiar ways of expressing himself and whenever he did so, there was a riot, followed by a long and embarrassing pause. Prof. Poeschl was a methodical and thoroughly grounded German. He had enormous feet, and hands like the paws of a bear, but all of his experiments were skillfully performed with clocklike precision and without a miss. It was in the second year of my studies that we received a Gramoe Dymame from Paris, having the horseshoe form of a laminated field magnet, and a wire wound armature with a commutator. It was connected up and various effects of the currents were shown. While Prof. Poeschl was making demonstrations, running the machine was a motor, the brushes gave trouble, sparking badly, and I observed that it might be possible to operate a motor without these appliances. But he declared that it could not be done and did me the honor of delivering a lecture on the subject, at the conclusion of which he remarked, "Mr. Tesla may accomplish great things, but he certainly will never do this. It would be equivalent to converting a steadily pulling force, like that of gravity into a rotary effort. It is a perpetual motion scheme, an impossible idea." But instinct is something which transcends knowledge. We have, undoubtedly, certain finer fibers that enable us to perceive truths when logical deduction, or any other willful effort of the brain, is futile.

For a time, I wavered, impressed by the professor's authority, but soon became convinced I was right and undertook the task with all the fire and boundless confidence of youth. I started by first picturing in my mind a direct current machine, running it and following the changing flow of the currents in the armature. Then I would imagine an alternator and investigate the

progresses taking place in a similar manner. Next, I would visualize systems comprising motors and generators and operate them in various ways.

The images I saw were to me perfectly real and tangible. All my remaining term in Gratz was passed in intense but fruitless efforts of this kind, and I almost came to the conclusion that the problem was insolvable.

In 1880, I went to Prague, Bohemia, carrying out my father's wish to complete my education at the University there. It was in that city that I made a decided advance, which consisted in detaching the commutator from the machine and studying the phenomena in this new aspect, but still without result. In the year, following -there was a sudden change in my views of life.

I realized that my parents had been making too great sacrifices on my account and resolved to relieve them of the burden. The wave of the American telephone had just reached the European continent and the system was to be installed in Budapest, Hungary. It appeared an ideal opportunity, all the more as a friend of our family was at the head of the enterprise.

It was here that I suffered the complete breakdown of the nerves to which I have referred. What I experienced during the period of that illness surpasses all belief. My sight and hearing were always extraordinary. I could clearly discern objects in the distance when others saw no trace of them. Several times in my boyhood I saved the houses of our neighbors from fire by hearing the faint crackling sounds which did not disturb their sleep, and calling for help. In 1899, when I was past forty and carrying on my experiments in Colorado, I could hear very distinctly thunderclaps at a distance of 550 miles. The limit of audition for my young assistants was scarcely more than 150 miles. My ear was thus over thirteen times more sensitive, yet at that time I was, so to speak, stone deaf in comparison with the acuteness of my hearing while under the nervous strain.

In Budapest, I could hear the ticking of a watch with three rooms between me and the timepiece. A fly alighting on a table in the room would cause a dull thud in my ear. A carriage passing at a distance of a few miles fairly shook my whole body. The whistle of a locomotive twenty or thirty miles away made the bench or chair on which I sat, vibrate so strongly that the pain was unbearable. The ground under my feet trembled continuously. I had to support my bed on rubber cushions to get any rest at all. The roaring noises from near and far often produced the effect of spoken words which would have frightened me had I not been able to resolve them into their accumulated components. The sunrays, when periodically intercepted, would

cause blows of such force on my brain that they would stun me. I had to summon all my will power to pass under a bridge or other structure, as I experienced a crushing pressure on the skull. In the dark, I had the sense of a bat, and could detect the presence of an object at a distance of twelve feet by a peculiar creepy sensation on the forehead. My pulse varied from a few to two hundred and sixty beats and all the tissues of the body with twitching and tremors, which was perhaps the hardest to bear. A renowned physician who gave me daily large doses of Bromide of Potassium, pronounced my malady unique and incurable.

It is my eternal regret that I was not under the observation of experts in physiology and psychology at that time. I clung desperately to life, but never expected to recover. Can anyone believe that so hopeless a physical wreck could ever be transformed into a man of astonishing strength and tenacity; able to work thirty-eight years almost without a day's interruption, and find himself still strong and fresh in body and mind? Such is my case. A powerful desire to live and to continue the work, and the assistance of a devoted friend, an athlete, accomplished the wonder. My health returned and with it the vigor of mind.

In attacking the problem again, I almost regretted that the struggle was soon to end. I had so much energy to spare. When I understood the task, it was not with a resolve such as men often make. With me it was a sacred vow, a question of life and death. I knew that I would perish if I failed. Now I felt that the battle was won. Back in the deep recesses of the brain was the solution, but I could not yet give it outward expression.

One afternoon, which is ever present in my recollection, I was enjoying a walk with my friend in the City Park and reciting poetry. At that age, I knew entire books by heart, word for word. One of these was Goethe's 'Faust.' The sun was just setting and reminded me of the glorious passage,

> **"Sie ruckct und weicht, der Tag ist überlebt,**
> **Dort eilt sie hin und fordert neues Leben.**
> **Oh, dase kein Flugel mich vom Boden**
> **hebt Ihr nach und irrmler rach zu streben:**
> **Ein schorer Traum indessen sie entweicht,**
> **Ach, au des Geistes Flugein wird**
> **so leicht Kein korperlicher Flugel sich gesellen."**

As I uttered these inspiring words the idea cane like a flash of lightning and in an instant the truth was revealed. I drew with a stick on the sand, the diagram sham six years later in my address before the American Institute of

Electrical Engineers, and my companion understood them perfectly. The images I saw were wonderfully sham and clear and had the solidity of metal and stone, so much so that I told him, "See my motor here; watch me reverse it." I cannot begin to describe my emotions. Pygmalion seeing his statue come to life could not have been more deeply moved. A thousand secrets of nature which I might have stumbled upon accidentally, I would have given for that one which I had wrested from her against all odds and at the peril of my existence.

Chapter 4

Review This Subheading

For a while I gave myself up entirely to the intense enjoyment of picturing machines and devising new forms. It was a mental state of happiness about as complete as I have ever known in life. Ideas came in an uninterrupted stream and the only difficulty I had was to hold them fast. The pieces of apparatus I conceived were to me absolutely real and tangible in every detail, even to the minutest marks and signs of wear. I delighted in imagining the motors constantly running, for in this way they presented to the mind's eye a more fascinating sight. When natural inclination develops into a passionate desire, one advances towards his goal in seven-league boots. In less than two months, I evolved virtually all the types of motors and modifications of the system which are now identified with my name, and which are used under many other names all over the world. It was, perhaps, providential that the necessities of existence commanded a temporary halt to this consuming activity of the mind.

Employment Experience in Europe:

I came to Budapest prompted by a premature report concerning the telephone enterprise and, as irony of fate willed it, I had to accept a position as draftsman in the Central Telegraph Office of the Hungarian Government at a salary, which I deem it, my privilege not to disclose. Fortunately, I soon won the interest of the Inspector-in-chief and was thereafter employed on calculations, designs, and estimates in connection with new installations, until the Telephone Exchange was started, when I took charge of the same. The knowledge and practical experience I gained in the course of this work, was most valuable and the employment gave me many opportunities for the exercise of my inventive faculties. I made several improvements in the Central Station apparatus and perfected a telephone repeater or amplifier which was never patented or publicly described but would be creditable to me even today. In recognition of my efficient assistance the organizer of the undertaking, Mr. Puskas, upon disposing of his business in Budapest, offered me a position in Paris which I gladly accepted.

Paris:

I never can forget the deep impression that magic city produced on my mind. For several days after my arrival, I roamed through the streets in utter bewilderment of the new spectacle. The attractions were many and irresistible but, alas, the income was spent as soon as received. When Mr.

Fuskas asked me how I was getting along in the new sphere, I described the situation accurately in the statement that "The last twenty-nine days of the month are the toughest." I led a rather strenuous life in what would now be termed "Rooseveltian fashion." Every morning, regardless of the weather, I would go from the Boulevard St. Marcel, where I resided, to a bathing house on the Seine; plunge into the water, loop the circuit twenty-seven times and then walk an hour to reach Ivry, where the Company's factory was located. There I would have a woodchopper's breakfast at half-past seven o'clock and then eagerly await the lunch hour, in the meanwhile cracking hard nuts for the Manager of the Works, Mr. Charles Batchellor, who was an intimate friend and assistant of Edison.[1] Here I was thrown in contact with a few Americans who fairly fell in love with me because of my proficiency in Billiards! To these men I explained my invention and one of them, Mr. D. Cunningham, foreman of " the Mechanical Department, offered to form a stock company. The proposal seemed to me comical in the extreme. I did not have the faintest conception of what that meant, except that it was an American way of doing things. Nothing came of it, however, and during the next few months, I had to travel from one place to another in France and Germany to cure the ills of the power plants.

STRASBURG, ALSACE LORAIN, AUTOMATIC ELECTRICAL REGULATORS, 1883:

On my return to Paris, I submitted to one of the administrators of the Company, Mr. Rau, a plan for improving their dynamos and was given an opportunity. My success was complete and the delighted directors accorded me the privilege of developing automatic regulators, which were much desired. Shortly after, there was some trouble with the lighting plant, which had been installed at the new railroad station in Strassburg, Alsace. The wiring was defective and on the occasion of the opening ceremonies, a large part of a wall was blown out through a short-circuit, right in tie presence of old Emperor William, 1. The German Government refused to take the plant and the French Company was facing a serious loss. On account of my knowledge of the German language and past experience, I was entrusted with the difficult task of straightening out matters and early in 1883, I went to Strasburg on that mission.

Some of the incidents in that city have left an indelible record on my memory. By a curious coincidence, a number of the men who subsequently

achieved fame, lived there about that time. In later life I used to say, "There were bacteria of greatness in that old town. Others caught the disease, but I escaped!' The practical work, correspondence, and conferences with officials kept me preoccupied day and night, but as soon as I was able to manage, I undertook the construction of a simple motor in a mechanical shop opposite the railroad station, having brought with me from Paris some material for that purpose. The consummation of the experiment was, however, delayed until the summer of that year, when I finally had the satisfaction of seeing the rotation effected by alternating currents of different phase, and without sliding contacts or commutator, as I had conceived a year before. It was an exquisite pleasure but not to compare with the delirium of joy following the first revelation.

Among my new friends was the former Mayor of the city, Mr. Sauzin, whom I had already, in a measure, acquainted with this and other inventions of mine and whose support I endeavored to enlist. He was sincerely devoted to me and put my project before several wealthy persons, but to my mortification, found no response. He wanted to help me in every possible way and the approach of the first of July, 1917, happens to remind me of a form of 'assistance' I received from that charming man, which was not financial, but none the less appreciated. In 1870,[2] when the Germans invaded the country, Mr. Sauzin had buried a good sized allotment of St. Estephe of 1801 and he came to the conclusion that he knew no worthier person than myself, to consume that precious beverage. This, I may say, is one of the unforgettable incidents to which I have referred. My friend urged me to return to Paris as soon as possible and seek support there. This I was anxious to do, but my work and negotiations were protracted, owing to all sorts of petty obstacles I encountered, so that at times the situation seemed hopeless. Just to give an idea of German thoroughness and 'efficiency,' I may mention here a rather funny experience.

An incandescent lamp of 16 c.p. was to be placed in a hallway, and upon selecting the proper location, I ordered the 'monteur' to run the wires. After working for a while, he concluded that the engineer had to be consulted and

this was done. The latter made several objections but ultimately agreed that the lamp should be placed two inches from the spot I had assigned, whereupon the work proceeded. Then the engineer became worried and told me that Inspector Averdeck should be notified. That important person was called, he investigated, debated, and decided that the lamp should be shifted back two inches, which was the place I had marked. It was not long, however, before Averdeck got cold feet himself and advised me that he had informed Ober-Inspector Hieronimus of the matter and that I should await his decision. It was several days before the Ober-Inspector was able to free himself of other pressing duties, but at last, he arrived and a two-hour debate followed, when he decided to move the lamp two inches further. My hopes that this was the final act, were shattered when the Ober-Inspector returned and said to me, "Regierungsrath Funke is so particular that I would not dare to give an order for placing this lamp without his explicit approval." Accordingly, arrangements for a visit from that great man were made. We started cleaning up and polishing early in the morning, and when Funke came with his retinue, he was ceremoniously received. After two hours deliberation, he suddenly exclaimed, 'I must be going!' and pointing to a place on the ceiling, he ordered me to put the lamp there. It was the exact spot, which I had originally chosen: So it went day after day with variations, but I was determined to achieve, at whatever cost, and in the end my efforts were rewarded.

By the spring of 1884, all the differences were adjusted, the plant formally accepted, and I returned to Paris with pleasing anticipation. One of the administrators had promised me a liberal compensation in case I succeeded, as well as a fair consideration of the improvements I had made to their dynamos and I hoped to realize a substantial sum. There were three administrators, whom I shall designate as A, B, and C for convenience. When I called on A, he told me that B had the say. This gentleman thought that only C could decide, and the latter was quite sure that A alone had the power to act. After several laps of this circulus viciosus, it dawned upon me that my reward was a castle in Spain.

The utter failure of my attempts to raise capital for development was another disappointment, and when Mr. Batchellor pressed me to go to America with a view of redesigning the Edison machines, I determined to try my fortunes in the Land of Golden Promise. But, the chance was nearly missed.

I liquefied my modest assets, secured accommodations, and found myself at the railroad station as the train was pulling out: At that moment, I discovered that my money and tickets were gone. What to do was the ques-

tion. Hercules had plenty of time to deliberate, but I had to decide while running alongside the train with opposite feelings surging in my brain like condenser oscillations. Resolve, helped by dexterity, won out in the nick of time and upon passing through the usual experience, as trivial as unpleasant, I managed to embark for New York with the remnants of my belongings, some poems and articles I had written, and a package of calculations relating to solutions of an unsolvable integral and my flying machine. During the voyage, I sat most of the time at the stern of the ship watching for an opportunity to save somebody from a watery grave, without the slightest thought of danger. Later, when I had absorbed some of the practical American sense, I shivered at the recollection and marveled at my former folly. The meeting with Edison was a memorable event in my life. I was amazed at this wonderful man who, without early advantages and scientific training, had accomplished so much. I had studied a dozen languages, delved in literature and art, and had spent my best years in libraries reading all sorts of stuff that fell into my hands, from Newton's 'Principia' to the novels of Paul de Kock, and felt that most of my life had been squandered. But it did not take long before I recognized that it was the best thing I could have done. Within a few weeks, I had won Edison's confidence, and it came about in this way.

The S.S. Oregon, the fastest passenger steamer at that time, had both of its lighting machines disabled and its sailing was delayed. As the superstructure had been built after their installation, it was impossible to remove them from the hold. The predicament was a serious one and Edison was much annoyed. In the evening I took the necessary instruments with me and went aboard the vessel where I stayed for the night. The dynamos were in bad condition, having several short-circuits and breaks, but with the assistance of the crew, I succeeded in putting them in good shape. At five o'clock in the morning, when passing along Fifth Avenue on Try way to the shop, I met Edison with Batchellor and a few others, as they were returning home to retire. "Here is our Parisian running around at night," he said. When I told him that I was coming from the Oregon and had repaired both machines, he looked at me in silence and walked away without another word. But when he had gone some distance I heard him remark, "Batchellor, this is a good man." And from that time on I had full freedom in directing the work. For nearly a year, my regular hours were from 10:30 A.M. until 5 o'clock the next morning without a day's exception. Edison said to me, "I have had many hardworking assistants, but you take the cake." During this period, I designed twenty-four different types of standard machines with short cores and

uniform pattern, which replaced the old ones. The Manager had promised me fifty thousand dollars on the completion of this task, but it turned out to be a practical joke. This gave me a painful shock and I resigned my position.

FIRST COMPANY:

Immediately thereafter, some people approached me with the proposal of forming an arc light company under my name, to which I agreed. Here finally, was an opportunity to develop the motor, but when I broached the subject to my new associates they said, "No, we want the arc lamp. We don't care for this alternating current of yours." In 1886, my system of arc lighting was perfected and adopted for factory and municipal lighting, and I was free, but with no other possession than a beautifully engraved certificate of stock of hypothetical value. Then followed a period of struggle in the new medium for which I was not fitted, but the reward came in the end, and in April, 1887, the TESLA Electric Co. was organized, providing a laboratory and facilities. The motors I built there were exactly as I had imagined them. I made no attempt to improve the design, but merely reproduced the pictures as they appeared to my vision and the operation was always as I expected.

WESTINGHOUSE & PITTSBURGH, SHORT STAY:, NO ALTERNATING CURRENT.

In the early part of 1888, an arrangement was made with the Westinghouse Company for the manufacture of the motors on a large scale. But great difficulties had still to be overcome. My system was based on the use of low frequency currents and the Westinghouse experts had adopted 133 cycles with the object of securing advantages in the transformation. They did not want to depart from their standard forms of apparatus and my efforts had to be concentrated upon adapting the motor to these conditions. Another necessity was to produce a motor capable of running efficiently at this frequency on two wires, which was not an easy accomplishment.

At the close of 1889, however, my services in Pittsburgh being no longer essential, I returned to New York and resumed experimental work in a Laboratory on Grand Street, where I began immediately the design of high-frequency machines. The problems of construction in this unexplored field were novel and quite peculiar, and I encountered many difficulties. I rejected the inductor type, fearing that it might not yield perfect sine waves, which were so important to resonant action. Had it not been for this, I could have saved myself a great deal of labor. Another discouraging feature of the high-frequency alternator seemed to be the inconstancy of speed, which threatened to impose serious limitations to its use. I had already noted in my demon-

strations before the American Institution of Electrical Engineers, that several times the tune was lost, necessitating readjustment, and did not yet foresee what I discovered long afterwards, — a means of operating a machine of this kind at a speed constant to such a degree as not to vary more than a small fraction of one revolution between the extremes of load. From many other considerations, it appeared desirable to invent a simpler device for the production of electric oscillations.

In 1856, Lord Kelvin had exposed the theory of the condenser discharge, but no practical application of that important knowledge was made. I saw the possibilities and undertook the development of induction apparatus on this principle. My progress was so rapid as to enable me to exhibit at my lecture in 1891, a coil giving sparks of five inches. On that occasion I frankly told the engineers of a defect involved in the transformation by the new method, namely, the loss in the spark gap. Subsequent investigation showed that no matter what medium is employed, —be it air, hydrogen, mercury vapor, oil, or a stream of electrons, the efficiency is the same. It is a law very much like the governing of the conversion of mechanical energy. We may drop a weight form a certain height vertically down, or carry it to the lower level along any devious path; it is immaterial insofar as the amount of work is concerned. Fortunately however, this drawback is not fatal, as by proper proportioning of the resonant, circuits an efficiency of 85 per cent is attainable. Since my early announcement of the invention, it has come into universal use and wrought a revolution in many departments, but a still greater future awaits it.

When in 1900 I obtained powerful discharges of 1,000 feet and flashed a current around the globe,[3] I was reminded of the first tiny spark I observed in my Grand Street laboratory and was thrilled by sensations akin to those I felt when I discovered the rotating magnetic field.

CHAPTER 5

THE DISCOVERY OF THE TESLA COIL AND TRANSFORMER

(THE BASIC PART OF EVERY RADIO AND T. V.)

As I review the events of my past life I realize how subtle are the influences that shape our destinies. An incident of my youth may serve to illustrate. One winter's day I managed to climb a steep mountain, in company with the other boys. The snow was quite deep and a warm southerly wind made it just suitable for our purpose. We amused ourselves by throwing balls, which would roll down a certain distance, gathering more or less snow, and we tried to out do one another in this sport. Suddenly a ball was seen to go beyond the limit, swelling to enormous proportions until it became as big as a house and plunged thundering into the valley below with a force that made the ground tremble. I looked on spellbound incapable of understanding what had happened. For weeks, afterward the picture of the avalanche was before my eyes and I wondered how anything so small could grow to such an immense size.

Ever since that time the magnification of feeble actions fascinated me, and when, years later, I took up the experimental study of mechanical and electrical resonance, I was keenly interested from the very start. Possibly, had it not been for that early powerful impression I might not have followed up the little spark I obtained with my coil and never developed my best invention, the true history of which I will tell.

Many technical men, very able in their special departments, but dominated by a pedantic spirit and near-sighted, have asserted that excepting the induction motor, I have given to the world little of practical use. This is a grievous mistake. A new idea must not be judged by its immediate results. My alternating system of power transmission came at a psychological moment, as a long sought answer to pressing industrial questions, and although considerable resistance had to be overcome and opposing interests reconciled, as usual, the commercial introduction could not be long delayed. Now, compare this situation with that confronting my turbines, for example. One should think that so simple and beautiful an invention, possessing many features of an ideal motor, should be adopted at once and, undoubtedly, it would under similar conditions. But, the prospective effect of the rotating field was not to render worthless existing machinery; on the contrary, it was to give it additional value. The system lent itself to new enterprise as well as to im-

provement of the old. My turbine is an advance of a character entirely different. This is a radical departure in the sense that its success would mean the abandonment of the antiquated types of prime movers on which billions of dollars have been spent. Under such circumstances, the progress must needs be slow and perhaps the greatest impediment is encountered in the prejudicial opinions created in the minds of experts by organized opposition.

Only the other day, I had a disheartening experience when I met my friend and former assistant, Charles F. Scott, now professor of Electric Engineering at Yale. I had not seen him for a long time and was glad to have an opportunity for a little chat at my office. Our conversation, naturally enough, drifted on my turbine and I became heated to a high degree. 'Scott,' I exclaimed, carried away by the vision of a glorious future, "My turbine will scrap all the heat Engines in the world." Scott stroked his chin and looked away thoughtfully, as though making a mental calculation. "That will make quite a pile of scrap," he said, and left without another word.

These and other inventions of mine, however, were nothing more than steps forward in certain directions. In evolving them, I simply followed the inborn instinct to improve the present devices without any special thought of our far more imperative necessities. The Magnifying Transmitter was the product of labors extending through years, having for their chief object, the solution of problems, which are infinitely more important to mankind than mere industrial development. If my memory serves me right, it was in November, 1890, that I performed a laboratory experiment which was one of the most extraordinary and spectacular ever recorded in the annuals of Science. In investigating the behavior of high frequency currents, I had satisfied myself that an electric field of sufficient intensity could be produced in a roan to light up electrodeless vacuum tubes. Accordingly, a transformer was built to test the theory and the first trial proved a marvelous success. It is difficult to appreciate what those strange phenomena meant at the time. We crave for new sensations, but soon become indifferent to them. The wonders of yesterday are today common occurrences. When my tubes were first publicly exhibited, they were viewed with amazement impossible to describe. From all parts of the world, I received urgent invitations and numerous honors and other flattering inducements were offered to me, which I declined. But in 1892 the demand became irresistible and I went to London where I delivered a lecture before the institution of Electrical Engineers.

It had been my intention to leave immediately for Paris in compliance with a similar obligation, but Sir James Dewar, insisted on my appearing

before the Royal Institution. I was a man of firm resolve, but succumbed easily to the forceful arguments of the great Scotchman. He pushed me into a chair and poured out half a glass of a wonderful brown fluid which sparkled in all sorts of iridescent colors and tasted like nectar. "Now," said he, "you are sitting in Faraday's chair and you are enjoying whiskey he used to drink."(Which did not interest me very much, as I had altered my opinion concerning strong drink). The next evening I gave a demonstration before the Royal Institution, at the termination of which, Lord Rayleigh addressed the audience and his generous words gave me the first start in these endeavors. I fled from London and later from Paris, to escape favors showered upon me, and journeyed to my home, where I passed through a most painful ordeal and illness.

Upon regaining my health, I began to formulate plans for the resumption of work in America. Up to that time I never realized that I possessed any particular gift of discovery, but Lord Rayleigh, whom I always considered as an ideal man of science, had said so and if that was the case, I felt that I should concentrate on sane big idea.

At this time, as at many other times in the past, my thoughts turned towards my Mother's teaching. The gift of mental power cows from God, Divine Being, and if we concentrate our minds on that truth, we become in tune with this great power. My Mother had taught me to seek all truth in the Bible; therefore I devoted the next few months to the study of this work.

One day, as I was roaming in the mountains, I sought shelter from an approaching storm. The sky became overhung with heavy clouds, but somehow the rain was delayed until, all of a sudden, there was a lightning flash and a few moments after, a deluge. This observation set me thinking. It was manifest that the two phenomena were closely related, as cause and effect, and a little reflection led me to the conclusion that the electrical energy involved in the precipitation of the water was inconsiderable, the function of lightning being much like that of a sensitive trigger. Here was a stupendous possibility of achievement. If we could produce electric effects of the required quality, this whole planet and the conditions of existence on it could be transformed. The sun raises the water of the oceans and winds drive it to distant regions where it remains in a state of most delicate balance. If it were in our power to upset it when and wherever desired, this mighty life-sustaining stream could be at will controlled. We could irrigate arid deserts, create lakes and rivers, and provide motive power in unlimited amounts. This would be the most efficient way of harnessing the sun to the uses of man.

The consummation depended on our ability to develop electric forces of the order of those in nature.

It seemed a hopeless undertaking, but I made up my mind to try it and immediately on my, return to the United States in the summer of 1892, after a short visit to my friends in Watford, England; work was begun which was to me all the more attractive, because a means of the same kind was necessary for the successful transmission of energy without wires.

At this time I made a further careful study of the Bible, and discovered the key in Revelation. The first gratifying result was obtained in the spring of the succeeding year, when I reached a tension of about 100,000,000 volts - one hundred million volts--with my conical coil, which I figured was the voltage of a flash of lightning. Steady progress was made until the destruction of the laboratory by fire, in 1895, as may be judged from an article by-T. C. Marrtyn which appeared in the April number of the Century Magazine. This calamity set ire back in many ways and most of that year had to be devoted to planning and reconstruction. However, as soon as circumstances permitted, I returned to the task.

Although I knew that higher electric-motive forces were attainable with apparatus of larger dimensions, I had an instinctive perception that the object could be accomplished by the proper design of a comparatively small and com pact transformer. In carrying on tests with a secondary in the form of flat spiral, as illustrated in my patents, the absence of streamers surprised me, and it was not long before I discovered that this was due to the position of the turns and their mutual action. Profiting from this observation, I resorted to the use of a high tension conductor with turns of considerable diameter, sufficiently separated to keep down the distributed capacity, while at the same time preventing undue accumulation of the charge at any point. The application of this principle enabled me to produce pressures of over 100,000,000 volts, which was about the limit obtainable without risk of accident. A photograph of my transmitter built in my laboratory at Houston Street, was published in the Electrical. Review of November 1898.

In order to advance further along this line, I had to go into the open, and in the spring of 1899, having completed preparations for the erection of a wireless plant, I went to Colorado where I remained for more than one year. Here I introduced other improvements and refinements which made it possible to generate currents of any tension that may be desired. Those who are interested will find some information in regard to the experiments I conducted there in my article, 'The Problem of Increasing Human Energy,' in the

Century Magazine of June 1900, to which I have referred on a previous occasion.

I will be quite explicit on the subject of my magnifying transformer so that it will be clearly understood. In the first place, it is a resonant transformer, with a secondary in which the parts, charged to a high potential, are of considerable area and arranged in space along ideal enveloping surfaces of very large radii of curvature, and at proper distances from one another, thereby insuring a small electric surface density everywhere, so that no leak can occur even if the conductor is bare. It is suitable for any frequency, from a few to many thousands of cycles per second, and can be used in the production of currents of tremendous volume and moderate pressure, or of smaller amperage and immense electromotive force. The maximum electric tension is merely dependent on the curvature of the surfaces on which the charged elements are situated and the area of the latter. Judging from my past experience there is no limit to the possible voltage developed; any amount is practicable. On the other hand, currents of many thousands of amperes may be obtained in the antenna. A plant of but very moderate dimensions is required for such performances. Theoretically, a terminal of less than 90 feet in diameter is sufficient to develop an electromotive force of that magnitude, while for antenna currents of from 2,000 -4,000 amperes at the usual frequencies, it need not be larger than 30 feet in diameter. In a more restricted meaning, this wireless transmitter is one in which the Hertzwave radiation is an entirely negligible quantity as compared with the whole energy, under which condition the damping factor is extremely small and an enormous charge is stored in the elevated capacity. Such a circuit may then be excited with impulses of any kind, even of low frequency and it will yield sinusoidal and continuous oscillations like those of an alternator. Taken in the narrowest significance of the term, however, it is a resonant transformer which, besides possessing these qualities, is accurately proportioned to fit the globe and its electrical constants and properties, by virtue of which design it becomes highly efficient and effective in the wireless transmission of energy. Distance is then **ABSOLUTELY ELIMINATED, THERE BEING, NO DIMINUATION IN THE INTENSITY** of the transmitted impulses. It is even possible to make the actions increase with the distance from the plane, according to an exact mathematical law. This invention was one of a number comprised in my "World-System" of wireless transmission, which I undertook to commercialize on my return to New York in 1900:

As to the immediate purposes of my enterprise, they were clearly outlined in a technical statement of that period from which I quote, "The world

system has resulted from a combination of several original discoveries made by the inventor in the course of long continued research and experimentation. It makes possible not only the instantaneous and precise wireless transmission of any kind of signals, messages or characters, to all parts of the world, but also the interconnection of the existing telegraph, telephone, and other signal stations without any change in their present equipment. By its means, for instance, a telephone subscriber here may call up and talk to any other subscriber on the Earth. An inexpensive receiver, not bigger than a watch, will enable him to listen anywhere, on land or sea, to a speech delivered or music played in sane other place, however distant."

These examples are cited merely to give an idea of the possibilities of this great scientific advance, which annihilates distance and makes that perfect natural conductor, the Earth, available for all the innumerable purposes which human ingenuity has found for a line-wire. One far reaching result of this is that any device capable of being operated through one or more wires (at a distance obviously restricted) can likewise be actuated, without artificial conductors and with the same facility and accuracy, at distances to which there are no limits other than those imposed by the physical dimensions of the earth. Thus, not only will entirely new fields for commercial exploitation be opened up by this ideal method of transmission, but the old ones vastly ext ended. The World System is based on the application of the following important and inventions and discoveries:

THE TESLA TRANSFORMER:

This apparatus is in the production of electrical [PPP33]vibrations as revolutionary as gunpowder was in warfare. Currents many times stronger than any ever generated in the usual ways and sparks over one hundred feet long, have been produced by the inventor with an instrument of this kind.

THE MAGNIFYING TRANSMITTER:

This is Tesla's best invention, a peculiar transformer specially adapted to excite the Earth, which is in the transmission of electrical energy when the telescope is in astronomical observation. By the use of this marvelous device, he has already set up electrical movements of greater intensity than those of lightning and passed a current, sufficient to light more than two hundred incandescent lamps, around the Earth.

THE TESLA WIRELESS SYSTEM:

This system comprises a number of improvements and is the only means known for transmitting economically electrical energy to a distance without wires. Careful tests and measurements in connection with an experiential station of great activity, erected by the inventor in Colorado, have demonstrated that power in any desired amount can be conveyed, clear across the Globe if necessary, with a loss not exceeding a few per cent.

THE ART OF INDIVIDUALIZATION:

This invention of Tesla is to primitive Tuning, what refined language is to unarticulated expression. It makes possible the transmission of signals or messages absolutely secret and exclusive both in the active and passive aspect, that is, non-interfering as well as free from interference, in other words secret. Each signal is like an individual of unmistakable identity and there is virtually no limit to the number of stations or instruments, which can be simultaneously operated without the slightest mutual disturbance.

THE TERRESTRIAL STATIONARY WAVES:

This wonderful discovery, popularly explained, means that the Earth is responsive to electrical vibrations of definite pitch, just as a tuning fork to certain waves of sound. These particular electrical vibrations, capable of powerfully exciting the Globe, lend themselves to innumerable uses of great importance commercially and in many other respects. The "'first World System" power plant can be put in operation in nine months. With this power plant, it will be practicable to attain electrical activities up to ten million horse-power and it is designed to serve for as many technical achievements as are possible without due expense. Among these are the following:

1) The inter-connection of existing telegraph exchanges or offices all over the world;'

2) The establishment of a secret and non-interferable government telegraph service;

3) The inter-connection of all present telephone exchanges or offices on the Globe;

4) The universal distribution of general news by telegraph or

telephone, in connection with the Press;

5) The establishment of such a 'World System" of intelligence transmission for exclusive private use;

6) The interconnection and operation of all stock tickers of the world;

7) The establishment of a World system of musical distribution, etc.

8) The universal registration of time by cheap clocks indicating the hour with astronomical precision and requiring no attention whatever;

9) The world transmission of typed or hand-written characters, letters, checks, etc.;

10) The establishment of a universal marine service enabling the navigators of all ships to steer perfectly without compass, to determine the exact location, hour and speed; to prevent collisions and disasters, etc.;

11) The inauguration of a system of world printing on land and sea;

12) The world reproduction of photographic pictures and all kinds of drawings or records...."

PUBLIC DEMONSTRATION:

I also proposed to make demonstration in the wireless transmission of power on a small scale, but sufficient to carry conviction. Besides these, I referred to other and incomparably more important applications of my discoveries, which will be disclosed at some future date. A plant was built on Long Island with a tower 187 feet high, having a spherical terminal about 68 feet in diameter. These dimensions were adequate for the transmission of virtually any amount of energy. Originally, only from 200 to 300 K.W. were provided, but I intended to employ later several thousand horsepower. The transmitter was to emit a wave-complex of special characteristics and I had devised a unique method of telephonic control of any amount of energy. The tower was destroyed two years ago (1917) but my projects are being developed and another one, improved in some features will be constructed.

On this occasion I would contradict the widely circulated report that the structure was demolished by the Government, which owing to war conditions, might have created prejudice in the minds of those who may not know that the papers, which thirty years ago conferred upon me the honor of American citizenship, are always kept in a safe while my orders, diplomas, degrees,

gold medals and other distinctions are packed away in old trunks. If this report had a foundation, I would have been refunded a large sum of money, which I expended in the construction of the tower. On the contrary, it was in the interest of the Government to preserve it, particularly as it would have made possible, to mention just one valuable result, the location of a submarine in any part of the world. My plant, services, and all my improvements have always been at the disposal of the officials and ever since the outbreak of the European conflict, I have been working at a sacrifice on several inventions of mine relating to aerial navigation, ship propulsion and wireless transmission, which are of the greatest importance to the country. Those who are well informed know that my ideas have revolutionized the industries of the United States and I am not aware that there lives an inventor who has been, in this respect, as fortunate as myself,— especially as regards the use of his improvements in the war.

I have refrained from publicly expressing myself on this subject before; as it seemed improper to dwell on personal matters while a11 the world was in dire trouble. I would add further, in view of various rumors which have reached me, that Mr. J. Pierpont Morgan did not interest himself with me in a business way, but in the same large spirit in which he has assisted many other pioneers. He carried out his generous promise to the letter and it would have been most unreasonable to expect from him anything more. He had the highest regard for my attainments and gave me every evidence of his complete faith in my ability to ultimately achieve what I had set out to do. I am unwilling to accord to some small-minded and jealous individuals the satisfaction of having thwarted my efforts. These men are to me nothing morethan microbes of a nasty disease. My project was retarded by laws of nature. The world was not prepared for it. It was too far ahead of time, but the same laws will prevail in the end and make it a triumphal success.

CHAPTER 6

THE WIRELESS TRANSMITTER

(THE BASIC PART OF EVERY RADIO AND T.V.)

No subject to which I have ever devoted myself has called for such concentration of mind, and strained to so dangerous a degree the finest fibers of my brain, as the system of which the Magnifying transmitter is the foundation. I put all the intensity and vigor of youth in the development of the rotating field discoveries, but those early labors were of a different character. Although strenuous in the extreme, they did not involve that keen and exhausting discernment which had to be exercised in attacking the many problems of the wireless.

Despite any rare physical endurance at that period, the abused nerves finally rebelled and I suffered a complete collapse, just as the consummation of the long and difficult task was almost in sight. Without doubt I would have paid a greater penalty later, and very likely my career would have been prematurely terminated, had not providence equipped me with a safety device, which seemed to improve with advancing years and unfailingly comes to play when my forces are at an end. So long as it operates I am safe from danger, due to overwork, which threatens other inventors, and incidentally, I need no vacations which are indispensable to most people. When I am all but used up, I simply do as the darkies who "naturally fall asleep while white folks worry."

To venture a theory out of my sphere, the body probably accumulates little by little a definite quantity of some toxic agent and I sink into a nearly lethargic state which lasts half an hour to the minute. Upon awakening, I have the sensation as though the events immediately preceding had occurred very long ago, and if I attempt to continue the interrupted *train of* thought I feel veritable mental nausea. Involuntarily, I then turn to other work and am surprised at the freshness of the mind and ease with which I overcome obstacles that had baffled me before. After weeks or months, my passion for the temporarily abandoned invention returns and I invariably find answers to all the vexing questions, with scarcely any effort. In this connection, I will tell of an extraordinary experience which may be of interest to students of psychology.

I had produced a striking phenomenon with my *grounded* transmitter and was endeavoring to ascertain its true significance in relation to the currents propagated through the earth. It seemed a hopeless undertaking, and for more than a year, I worked unremittingly, but in vain. This profound study so entirely absorbed me, that I became forgetful of everything else, even of my undermined health. At last, as I was at the point of breaking down, nature, applied the preservative inducing lethal sleep. Regaining my senses, I realized with consternation that I was unable to visualize scenes from my life except those of infancy, the very first ones that had entered my consciousness. Curiously enough, these appeared before my vision with startling distinctness and afforded me welcome relief. Night after night, when retiring, I would think of them and more and more of my previous existence was revealed. The image of my mother was always the principal figure in the spectacle that slowly unfolded, and a consuming desire to see her again gradually took possession of me. This feeling grew so strong that I resolved to drop all work and satisfy my longing, but I found it too hard to break away from the laboratory, and several months elapsed during which I had succeeded in reviving all the impressions of my past life, up to the spring of 1892. In the next picture that came out of the mist of oblivion, I saw myself at the Hotel de la Paix in Paris, just coming to from one of my peculiar sleeping spells, which had been caused by prolonged exertion of the brain. Imagine the pain and distress I felt, when it flashed upon my mind that a dispatch was handed to me at that very moment, bearing the sad news that my mother was dying. I remembered how I made the long journey home without an hour of rest and how she passed away after weeks of agony.

It was especially remarkable that during all this period of partially obliterated memory, I was fully alive to everything touching on the subject of my research. I could recall the smallest detail and the least insignificant observations in my experiments and even recite pages of text and complex mathematical formulae.

My belief is firm in a law of compensation. The true rewards are ever in proportion to the labor and sacrifices made. This is one of the reasons why I feel certain that of all my inventions, the magnifying Transmitter will prove most important and valuable to future generations. I am prompted to this prediction, not so much by thoughts of the commercial and industrial revolution which it will surely bring about, but of the humanitarian consequences of the many achievements it makes possible. Considerations of mere utility weight little in the balance against the higher benefits of civilization. We are confronted with portentous problems which can not he solved just by provid-

ing for our material existence, however abundantly. On the contrary, progress in this direction is fraught with hazards and perils not less menacing than those born from want and suffering. If we were to release the energy of atoms or discover some other way of developing cheap and unlimited power at any point on the globe, this accomplishment, instead of being a blessing, might bring disaster to mankind in giving rise to dissension and anarchy, which would ultimately result in the enthronement of the hated regime of force. The greatest good will come from technical improvements tending to unification and harmony, and my wireless transmitter is preeminently such. By its means, the human voice and likeness will be reproduced everywhere and factories driven thousands of miles from waterfalls furnishing the power. Aerial machines will be propelled around the earth without a stop and the sun's energy controlled to create lakes and rivers for motive purposes and transformation of arid deserts into fertile land. Its introduction for telegraphic, telephonic and similar uses, will automatically cut out the static and all other interferences which at present, impose narrow limits to the application of the wireless. This is a timely topic on *which* a few words might not be amiss.

During the past decade a number of people have arrogantly claimed that they had succeeded in doing away with this impediment. I have carefully examined all of the arrangements described. and tested most of them long before they were publicly disclosed, but the finding was uniformly negative. Recent official statement from the U.S. Navy may, perhaps, have taught some beguilable news editors how to appraise these announcements at their real worth. As a rule, the attempts are based on theories so fallacious, that whenever they come to my notice, I can not help thinking in a light vein. Quite recently a new discovery was heralded, with a deafening flourish of trumpets, but it proved another case of a mountain bringing forth a mouse. This reminds me of an exciting incident, which took place years ago, when I was conducting my experiments with currents of high frequency.

Steve Brodie had just jumped off the Brooklyn Bridge. The feat has been vulgarized since by imitators, but the first report electrified New York. I was very impressionable then and frequently spoke of the daring printer. On a hot afternoon I felt the necessity of refreshing myself and stepped into one of the popular thirty thousand institutions of this great city, where a delicious twelve per cent beverage was served, which can now be had only by making a trip to the poor and devastated countries of Europe. The attendance was large and not over-distinguished and a matter was discussed which gave me an admirable opening for the careless remark, “This is what I said when I jumped off the bridge.” No sooner had I uttered these words,

than I felt like the companion of Timothens, in the poem of Schiller. In an instant there was pandemonium and a dozen voices cried, 'It is Brodie! I threw a quarter on the counter and bolted for the door, but the crowd was at my heels with yells, — 'Stop, Steeve!" which must have been misunderstood, for many persons tried to hold me up as I ran frantically for my haven of refuge. By darting around corners I fortunately managed, through the medium of a fire escape, to reach the laboratory, where I threw off my coat, camouflaged myself as a hard-working blacksmith and started the forge. But these precautions proved unnecessary, as I had eluded my pursuers. For many years afterward, at night, when imagination turns into specters the trifling troubles of the day, I often thought, as I tossed on the bed, what my fate would have been, had the mob caught me and found out that I was not Steve Brodie!

Now the engineer who lately gave an account before a technical body of a novel remedy against statics based on a 'heretofore unknown law of nature,' seems to have been as reckless as myself when he contended that these disturbances propagate up and down, while those of a transmitter proceed along the earth. It would mean that a condenser as this globe, with its gaseous envelope, could be charged and discharged in a manner quite contrary to the fundamental teachings propounded in every elemental text book of physics. Such a supposition would have been condemned as erroneous, even in Franklin's time, for the facts bearing on this were then well-known and the identity between atmospheric electricity and that developed by machines was fully established. Obviously, natural and artificial disturbances propagate through the earth and the air in exactly the same way, and both set up electromotive forces in the horizontal, as well as vertical sense. Interference can not be overcome by any such methods as were proposed. The truth is this: In the air the potential increases at the rate of about fifty volts per foot of elevation, owing to which there may be a difference of pressure amounting to twenty, or even forty thousand volts between the upper and lower ends of the antenna. The masses of the charged atmosphere are constantly in motion and give up electricity to the conductor, not continuously, but rather disruptively, this producing a grinding noise in a sensitive telephonic receiver. The higher the terminal and the greater the space encompassed by the wires, the more pronounced is the effect, but it must be understood that it is purely local and has little to do with the real trouble.

In 1900, while perfecting my wireless system, one form of apparatus comprised four antennae. These were carefully calibrated in the same frequency and connected in multiple with the object of magnifying the action in receiving from any direction. When I desired to ascertain the origin of the

transmitted impulses, each diagonally situated pair was put in series with a primary coil energizing the detector circuit. In the former case, the sound was loud in the telephone; in the latter it ceased, as expected, — the two antennae neutralizing each other, but the true statics manifested themselves in both instances and I had to devise special preventives embodying different principles. By employing receivers connected to two points of the ground, as suggested by me long ago, this trouble caused by the charged air, which is very serious in the structures as now built, is nullified and besides, the liability of all kinds of interference is reduced to about one-half because of the directional character of the circuit. This was perfectly self-evident, but came as a revelation to some simple-minded wireless folks whose experience was confined to forms of apparatus that could have been improved with an axe, and they have been disposing of the bear's skin before killing him. If it were true that strays performed such antics, it would be easy to get rid of them by receiving without aerials. But, as a matter of fact, a wire buried in the ground which, conforming to this view, should be absolutely immune, is more susceptible to certain extraneous impulses than one placed vertically in the air. To state it fairly, a slight progress has been made, but not by virtue of any particular method or device. It was achieved simply by discerning the enormous structures, which are bad enough for transmission but wholly unsuitable for reception and adopting a more appropriate type of receiver. As I have said before, to dispose of this difficulty for good, a radical change must be made in the system and the sooner this is done the better.

It would be calamitous, indeed, if at this time when the art is in its infancy and the vast majority, not excepting even experts, have no conception of its ultimate possibilities, a measure would be rushed through the legislature making it a government monopoly. This was proposed a few weeks ago by Secretary Daniels and no doubt that distinguished official has made his appeal to -the Senate and House of Representatives with sincere conviction. But, universal evidence unmistakably shows that the best results are always obtained in healthful commercial competition. There are, however, exceptional reasons why wireless should be given the fullest freedom of development. In the first place, it offers prospects immeasurably greater and more vital to betterment of human life than any other invention or discovery in the history of man. Then again, it must be understood that this wonderful art has been, in its entirety, evolved here and can be called 'American' with more right and propriety than the telephone, the incandescent lamp or the aeroplane.

Enterprising press agents and stockjobbers have been so successful in spreading misinformation, that even so excellent a periodical as the Scientific American, accords the chief credit to a foreign country. The Germans, of course, gave us the Hertz-waves and the Russian, English, French, and Italian experts were quick in using them for signaling purposes. It was an obvious application of the new agent and accomplished with the old classical and unimproved induction coil, scarcely anything more than another kind of heliography. The radius of transmission was very limited, the result attained of little value, and the Hertz oscillations, as a means for conveying intelligence, could have been advantageously replaced by sound-waves, which I advocated in 1891. Moreover, all of these attempts were made three years after the basic principles of the wireless system, which is universally employed today, and its potent instrumentalities had been clearly described and developed in America.

No trace of those Hertzian appliances and methods remains today. We have proceeded in the very opposite direction and what has been done is the product of the brains and efforts of citizens of this country. The fundamental patents have expired and the opportunities are open to all. The chief argument of the Secretary is based on interference. According to his statement, reported in the New York Herald of July 29th, signals from a powerful station can be intercepted in every village in the world. In view of this fact, which was demonstrated in my experiments of 1900, it would be of little use to impose restrictions in the United States.

As throwing light on this point, I may mention that only recently an odd looking gentleman called on me with the object of enlisting my services in the construction of world transmitters in some distant land. "We have no money," he said, 'but carloads of solid gold, and we will give you a liberal amount." I told him that I wanted to see first what will be done with my inventions in America, and this ended the interview. But I am satisfied that sane dark forces are at work, and as time goes on the maintenance of continuous communication will be rendered more difficult. The only remedy is a system immune against interruption. It has been perfected, it exists, and all that is necessary is to put it in operation.

The terrible conflict is still uppermost in the minds and perhaps the greatest importance will be attached to the magnifying Transmitter as a machine for attack and defense, more particularly in connection with **TELAUTAMATICS**. This invention is a logical outcome of observations begun in my boyhood and continued throughout my life. When the first results were published, the Electrical Review stated editorially that it would become one of the "most

potent factors in the advance and civilization of mankind." The time is not distant when this prediction will be fulfilled. In 1898 and 1900, it was offered by me to the Government and might have been adopted, were I one of those who would go to Alexander's shepherd when they want a favor from Alexander:

At that time, I really thought that it would abolish war, because of its unlimited destructiveness and exclusion of the personal element of combat. But while I have not lost faith in its potentialities, my views have changed since. War can not be avoided until the physical cause for its recurrence is removed and this, in the last analysis, is the vast extent of the planet on which we live. Only through annihilation of distance in every respect, as the conveyance of intelligence, transport of passengers and supplies and transmission of energy will conditions be brought about some day, insuring permanency of friendly relations. What we now want most is closer contact and better understanding between individuals and communities all over the earth and the elimination of that fanatic devotion to exalted ideals of national egoism and pride, which is always prone to plunge the world into primeval barbarism and strife. No league or parliamentary act of any kind will ever prevent such a calamity. These are only new devices for putting the weak at the mercy of the strong.

I have expressed myself in this regard fourteen years ago, when a combination of a few leading governments, a sort of Holy alliance, was advocated by the late Andrew Carnegie, who may be fairly considered as the father of this idea, having given to it more publicity and impetus than anybody else prior to the efforts of the President. While it can not be denied that such aspects might be of material advantage to some less fortunate peoples, it can not attain the chief objective sought. Peace can only come as a natural consequence of universal enlightenment and merging of races, and we are still far from this blissful realization, because few indeed, will admit the reality — that God made man in His image — in which case all earth men are alike. There is in fact but one race, of many colours. Christ is but one person, yet he is of all people, so why do *some* people think themselves better than *some* other people?

"As I view the world of today, in the light of the gigantic struggle we have witnessed, I am filled with conviction that the interests of humanity would be best served if the United States remained true to its traditions, true to God whom it pretends to believe, and kept out of "entangling alliances." Situated as it is, geographically remote from the theaters of impending conflicts, without incentive to territorial aggrandizement, with inexhaustible resources and immense population thoroughly imbued with the spirit of lib-

erty and right, this country is placed in a unique and privileged position. It is thus able to exert, independently, its colossal strength and moral force to the benefit of all, more judiciously and effectively, than as a member of a league.

I have dwelt on the circumstances of my early life and told of an affliction, which compelled me to unremitting exercise of imagination and self-observation. This mental activity, at first involuntary under the pressure of illness and suffering, gradually became second nature and led me finally to recognize that .I was but an automaton devoid of free will in thought and action and merely responsive to the forces of the environment. Our bodies are of such complexity of structure, the motions we perform are so numerous and involved and the external impressions on our sense organs to such a degree delicate and elusive, that it is hard for the average person to grasp this fact. Yet, nothing is more convincing to the trained investigator than the mechanistic theory of life, which had been, in a measure, understood and propounded by Descartes three hundred years ago. In his time, many important functions of our organisms were unknown and especially with respect to the nature of light and the construction and operation of the eye, philosophers were in the dark.

In recent years, the progress of scientific research in these fields has been such as to leave no room for a doubt in regard to this view on *which* many works have been published. One of its ablest and most eloquent exponents is, perhaps, Felix le Dantec, formerly assistant of Pasteur. Prof. Jacques Loeb has performed remarkable experiments in heliotropism, clearly establishing the controlling power of light in lower forms of organisms and his latest book, "Forced Movements," is revelatory. But while men of science accept this theory simply as any other that is recognized, to me it is a truth *which I* hourly demonstrate by every act and thought of mine. The consciousness of the external impression prompting me to any kind of exertion,--physical or mental, is ever present in my mind. Only on very rare occasions, when I was in a state of exceptional concentration, have I found difficulty in locating the original impulse. The by far greater number of human beings are never aware of what is passing around and within them and millions fall victims of disease and die prematurely just on this account: The commonest, every-day occurrences appear to them mysterious and inexplicable. One may feel a sudden wave of sadness and rack his brain for an explanation, when he might have noticed that it was caused by a cloud cutting off the rays of the sun. He may see the image of a friend dear to him under conditions, which he construes as very peculiar, when only shortly before he has passed him in the street or seen his photograph somewhere. When he loses a collar

button, he fusses and swears for an hour, being unable to visualize his previous actions and locate the object directly. Deficient observation is merely a form of ignorance and responsible for the many morbid notions and foolish ideas prevailing. There is not more than one out of every ten persons who does not believe in telepathy and other psychic manifestations, spiritualism and communion with the dead, and who would refuse to listen to willing or unwilling deceivers?

Just to illustrate how deeply rooted this tendency has become even among the clear-headed American population; I may mention a comical incident. Shortly before the war, when the exhibition of my turbines in this city elicited widespread comment in the technical papers, I anticipated that there would be a scramble among manufacturers to get hold of the invention and I had particular designs on that man from Detroit who has an uncanny faculty for accumulating millions. So confident was I, that he would turn up some day, that I declared this as certain to my secretary and assistants. Sure enough, one fine morning a body of engineers from the Ford Motor Company presented themselves with the request of discussing with me an important project. "Didn't I tell you?," I remarked triumphantly to my employees, and one of them said, 'You are 'amazing, Mr. Tesla. Everything comes out exactly as you predict."

As soon as these hardheaded men were seated, I of course, immediately began to extol the wonderful features of my turbine, when the spokesman interrupted me and said, "We know all about this, but we are on a special errand. We have formed a psychological society for the investigation of psychic phenomena and we want you to join us in this undertaking." I suppose these engineers never knew how near they came to being fired out of my office.

Ever since I was told by some of the greatest men of the time, leaders in science whose names are immortal, that I am possessed of an unusual mind, I bent all my thinking faculties on the solution of great problems regardless of sacrifice. For many years, I endeavored to solve the enigma of death, and watched eagerly for every kind of spiritual indication. But only once in the course of my existence have I had an experience which momentarily impressed me as supernatural. It was at the time of my mother's death.

I had become completely exhausted by pain and long vigilance, and one night was carried to a building about two blocks from our home. As I lay helpless there, I thought that if my mother died while I was away from her bedside, she would surely give me a sign. Two or three months before, I was in London in company with my late friend, Sir William Crookes, when spiri-

tualism was discussed and I was under the full sway of these thoughts. I might not have paid attention to other men, but was susceptible to his arguments as it was his epochal work on radiant matter, which I had read as a student, that made me embrace the electrical career. I reflected that the conditions for a look into the beyond were most favorable, for my mother was a woman of genius and particularly excelling in the powers of intuition. During the whole night, every fiber in my brain was strained in expectancy, but nothing happened until early in the morning, when I fell in a sleep, or perhaps a swoon, and saw a cloud carrying angelic figures of marvelous beauty, one of whom gazed upon me lovingly and gradually assumed the features of my mother. The appearance slowly floated across the room and vanished, and I was awakened by an indescribably sweet song of many voices. In that instant certitude, which no words can express, came upon me that my mother had just died. And that was true. I was unable to understand the tremendous weight of the painful knowledge I received in advance, and wrote a letter to Sir William Crookes while still under the domination of these impressions and in poor bodily health. When I recovered, I sought for a long time the external cause of this strange manifestation and, to my great relief, I succeeded after many months of fruitless effort.

I had seen the painting of a celebrated artist, representing allegorically one of the seasons in the form of a cloud with a group of angels, which seemed to actually float in the air, and this had struck me forcefully. It was exactly the same that appeared in my dream, with the exception of my mother's likeness. The music came from the choir in the church nearby at the early mass of Easter morning, explaining everything satisfactorily in conformity with scientific facts.

This occurred long ago, and I have never had the faintest reason since to change my views on psychical and spiritual phenomena, for which there is no foundation. The belief in these is the natural outgrowth of intellectual development. Religious dogmas are no longer accepted in their orthodox meaning, but every individual clings to faith in a supreme power of some kind.

We all must have an ideal to govern our conduct and insure contentment, but it is immaterial whether it be one of creed, art, science, or anything else, so long as it fulfills the function of a dematerializing force. It is essential to the peaceful existence of humanity as a whole that one common " conception should prevail. While I have failed to obtain any evidence in support of the contentions of psychologists and spiritualists, I have proved to my complete satisfaction the automatism of life, not only through continuous ob-

servations of individual actions, but even more conclusively through certain generalizations. These amount to a discovery, which I consider of the greatest moment to human society, and on which I shall briefly dwell.

I got the first inkling of this astonishing truth when I was still a very young man, but for many years I interpreted what I noted simply as coincidences. "lamely, whenever either myself or a person to whom I was attached, or a cause to which I was devoted, was hurt by others in a particular way, which might be best popularly characterized as the most unfair imaginable, I experienced a singular and undefinable pain which, for the want of a better term, I have qualified as "cosmic" and shortly thereafter, and invariably, those who had inflicted it came to grief. After many such cases, I confided this to a number of friends, who had the opportunity to convince themselves of the theory of which I have gradually formulated and which may be. stated in the following few words: Our bodies are of similar construction and exposed to the same external forces. This results in likeness of response and concordance of the general activities on which all our social and other rules and laws are based.

We are automata entirely controlled by the forces of the medium, being tossed about like corks on the surface of the water, but mistaking the resultant of the impulses from the outside for the free will. The movements and other actions we perform are always life preservative and tho seemingly quite independent from one another, we are connected by invisible links. So long as the organism is in perfect order, it responds accurately to the agents that prompt it, but the moment that there is sane derangement in any individual, his self-preservative power is impaired.

Everybody understands, of course, that if one becomes deaf, has his eyes weakened, or his limbs injured, the chances for his continued existence are lessened. But this is also true, and perhaps more so, of certain defects in the brain which deprives the automaton, more or less, of that vital quality and cause it to rush into destruction. A very sensitive and observant being, with his highly developed mechanism all intact, and acting with precision in obedience to the changing conditions of the environment, is endowed with a transcending mechanical sense, enabling him to evade perils too subtle to be directly perceived. When he comes in contact with others whose controlling organs are radically faulty, that sense asserts itself and he feels the "cosmic" pain.

The truth of this has been borne out in hundreds of instances and I am inviting other students of nature to devote attention to this subject, believing that through combined and systematic effort, results of incalculable value to

the world will be attained. The idea of constructing an automaton, to bear out my theory, presented itself to me early, but I did not begin active work until 1895, when I started my wireless investigations. During the succeeding two or three years, a number of automatic mechanisms, to be actuated from a distance, were constructed by me and exhibited to visitors in my laboratory.

In 1896, however, I designed a complete machine capable of a multitude of operations, but the consummation of my labors was delayed until late in 1897.

This machine was illustrated and described in my article in the Century Magazine of June, 1900; and other periodicals of that time and when first shown in the beginning of 1898, it created a sensation such as no other invention of mine has ever produced. In November, 1898, a basic patent on the novel art was granted to me, but only after the Examiner-in-Chief had core to New York and witnessed the performance, for what I claimed seemed unbelievable. I remember that when later I called on an official in Washington, with a view of offering the invention to the Government, he burst out in laughter upon my telling him what I had accomplished. Nobody thought then that there was the faintest prospect of perfecting such a device. It is unfortunate that in this patent, following the advice of my attorneys, I indicated the control as being affected through the medium of a single circuit and a well-known form of detector, for the reason that I had not yet secured protection on my methods and apparatus for individualization. As a matter of fact, my boats were controlled through the joint action of several circuits and interference of every kind was excluded.

Most generally, I employed receiving circuits in the form of loops, including condensers, because the discharges of my high-tension transmitter ionized the air in the (laboratory) so that even a very small aerial would draw electricity from the surrounding atmosphere for hours.

Just to give an idea, I found, for instance, that a bulb 12 inches in diameter, highly exhausted, and with one single terminal to which a short wire was attached, would deliver well on to one thousand successive flashes before all charge of the air in the laboratory was neutralized. The loop form of receiver was not sensitive to such a disturbance and it is curious to note that it is becoming popular at this late date. In reality, it collects much less energy than the aerials or a long grounded wire, but it so happens that it does away with a number of defects inherent to the present wireless devices.

In demonstrating my invention before audiences, the visitors were requested to ask questions, however involved, and the automaton would answer

them by signs. This was considered magic at the time, but was extremely simple, for it was myself who gave the replies by means of the device. At the same period, another larger tetautomatic boat was constructed, a photograph of which was shown in the October 1919 number of the Electrical Experimenter. It was controlled by loops, having several turns placed in the hull, which was made entirely water tight and capable of submergence. The apparatus was similar to that used in the first with the exception of certain special features I introduced as, for example, incandescent lamps which afforded a visible evidence of the proper functioning of the machine. These automata, controlled within the range of vision of the operator, were, however, the first and rather crude steps in the evolution of the art of Telautomatics as I had conceived it.

The next logical improvement was its application to automatic mechanisms beyond the limits of vision and at great distances from the center of control, and I have ever since advocated their employment as instruments of warfare in preference to guns. The importance of this now seems to be recognized, if I am to judge from casual announcements through the press, of achievements, which are said to be extraordinary but contain no merit of novelty whatever. In an imperfect manner, it is practicable, with the existing wireless plants, to launch an aeroplane, have it follow a certain approximate course, and perform sane operation at a distance of many hundreds of miles. A machine of this kind can also be mechanically controlled in several ways and I have no doubt that it may prove of some usefulness in war. But, there are to my best knowledge, no instrumentalities in existence today with which such an object could be accomplished in a precise manner. I have devoted years of study to this matter and have evolved means, making such and greater wonders easily realizable.

As stated on a previous occasion, when I was a student at college I conceived a flying machine quite unlike the present ones. The underlying principle was sound, but could not be carried into practice for want of a prime of sufficiently great activity. In recent years, I have successfully solved this problem and am now planning aerial machines devoid of sustaining planes, ailerons. propeller, and other external attachments, which will be capable of immense speeds and are very likely to furnish powerful arguments for peace in the near future. Such a machine, sustained and propelled entirely by reaction, is shown on one of the pages of my lectures, and is supposed to be controlled either mechanically, or by wireless energy. By installing proper plants, it will be practicable to project a missile of this kind into the air and

drop it almost on the very spot designated, which may be thousands of miles away.

But, we are not going to stop at this. Telautomats will be ultimately produced, capable of acting as if possessed of their own intelligence, and their advent will create a revolution. As early as 1898, I proposed to representatives of a large manufacturing concern the construction and public exhibition of an automobile carriage which, left to itself, would perform a great variety of operations involving something akin to judgment. But my proposal was deemed chimerical at that time and nothing came of it.

At present, many of the ablest minds are trying to devise expedients for preventing a repetition of the awful conflict, which is only theoretically ended, and the duration and main issues of which I have correctly predicted in an article printed in the SUN of December 20, 1914. The proposed League is not a remedy but, on the contrary, in the opinion of a number of competent men, may bring about results just the opposite.

It is particularly regrettable that a punitive policy was adopted in framing the terms of peace, because a few years hence, it will be possible for nations to fight without armies, ships or guns, by weapons far more terrible, to the destructive action and range of which there is virtually no limit. Any city, at a distance, whatsoever, from the enemy, can by destroyed by him and no power on earth can stop him from doing so. If we want to avert an impending calamity and a state of things, which may transform this globe into an inferno, we should push the development of flying machines and wireless transmission of energy without an instant's delay and with all the power and resources of the nation.

END PART ONE

The Venusian Space Ship The X-12

By
Arthur Henry Matthews, E. E.

AH's Introduction:

How did the world's greatest inventor invent? How did he carry out an invention? What sort of mentality did this wonder man have? Was his early life as commonplace as most boys? What was the early training of this man from space? Was he an earthman? Did he come from the planet Venus? Was he born on a space ship? The answers to these and many other questions will be found in this story from the lips of the man himself.

In this autobiography concerning his early youth, and so on, we obtain a good insight into the wonderful life this man led. It reads like a fairy tale, but strange as it may be, it is true. Tesla was no common mortal. He led a charmed life — given up by doctors at least three times as dead, he was a young man at sixty and at seventy; with a brain just as keen the day he died, (if he did die, for many believe he did not). He always said he would live to the age of one hundred and fifty, so perhaps he is alive on Venus? That might be easy to believe now, for if man can build a rocket to the moon or Venus, there is no reason to doubt that science on that planet could be a thousand years ahead of earth man's. We know that space ships have landed on earth, all through the ages. Tesla said that he believed he came from the planet Venus, and during the landings of a space ship on my property, the members of that ship said that Tesla was a child from Venus. Tesla will tell you in his own words, what he believed. Read the story with care; there is allot between the lines, as you will see. He had one great vice — his generosity. He could have been the richest man on earth. He made and spent millions. He was an idealist of the highest order, and to such men, money itself means but little.

Chapter 1

In relating this account of the landings of a large spaceship on my property at Lac Beauport, of my strange experience in meeting with people who claimed they were from Venus and what I learned about life on their planet, I would like to emphasize that I consider myself of little importance in this story. If my name is known at all, it is due to my long friendship with Nikola Tesla and an intimate knowledge of his great work for mankind. Perhaps I may be excused if I say that it affords me a certain amount of amused satisfaction to realize that I an now probably the last living person who knew and loved Tesla, but in all humility, I am aware that it was only because Tesla left me some of his ideas to develop that I was thus able to meet these people from Venus who claimed Tesla as one of their own.

Due to the fact that my story covers several visits of the Venusian spaceship, I am, for space reasons, condensing its details into one account and will therefore leave out dates. It is sufficient to say that the first visit was in Spring, 1941, with continued landings about every two years until 1961, which, to date, included the last landing. These landings took place on my 100-acre property in the hollow of a large meadow formed by the sloping mountainside at the back and the rise of ground .at the front.

It was on a spring morning of, 1941 that I was standing near my workshop with my son, Humphrey. We were discussing some matter relating to electrical waves when suddenly Humphrey looked up and exclaimed: "There's something wrong with the sun:" I looked to the east and gasped in astonishment. Exactly in the center of the golden disc there was a round black spot about one quarter the apparent diameter of the sun. It was too big to be a sunspot and besides, it was moving. As we watched, it crept slowly to the upper edge of the sun and in about 10 minutes had left the solar disc when it simply vanished from sight. We saw nothing more of it that day.

I went to bed early that night but could not sleep. An oppressive sense of something strange impending descended on me like a pall. Finally, I arose and dressed. I went outside and looked up at the sky but all I could see were the stars sparkling in full brilliancy. I returned to the house and settled down to read - but not for long, for suddenly the alarm signal on the Tesla Scope rang shrilly. I ran outside and at first saw nothing except the sparkling stars. Then I noticed something queer toward the mountain. It appeared to be darker than usual. It was indeed, for some huge object seemed

to cover most of the mountain. I began to walk toward it and as I came near to our barn, I was suddenly confronted by two persons.

Both men were nearly 6 feet tall and in the brilliant starlight I could discern their bright blue eyes and golden hair, but what registered with me most was that these beings radiated an aura of perfect health and happiness. Immediately I sensed a feeling of goodwill emanating from them which took away any fear I might have had at this sudden meeting. They were wearing grey coveralls and somehow I knew then that they were space beings. I noted with interest that both were bare-headed, with no helmets or other apparatus, and yet they seemed to have no difficulty in breathing Earth air. I have since been asked if there were any physical differences from Earthmen about thesespace people and I can only say that I saw none — and why should there be? Are we not all built the same, in the likeness of God?

Then one of them spoke to me in very good English, saying, "Good morning, Arthur Matthews. May we go with you into your workshop?" If this was a surprise, there was a greater one to follow, as he continued; "We are from Venus and we have come to see what you are doing with Tesla's inventions".

Completely taken back, I could only blurt out: "How am I supposed to believe you are from Venus?" The one who appeared to be the leader answered calmly: "When you see our ship, you will believe. But, before we go, I will make a sketch of Tesla's Anti-War Machine. No one on Earth but you knows its secret. Will that convince you?"

I nodded and led them to my workshop. With a few deft strokes, he drew a sketch for me which I could only accept as the truth. A brief inspection and explanation of the work I was doing on the Tesla devices followed. No comments were made and I was left to assume they were satisfied with my efforts.

Then the two Venusians said they would take me to their spaceship. We walked toward the mountain and soon I was staring wide-eyed at the gigantic proportions of the mother-ship X-12, hardly believing my senses, while my two companions chuckled at my bewilderment. The landed ship, which appeared to be made of gray metal (?), looked like two gargantuan saucers put together rim to rim. Circling these rims about 20 ft. away from the main body of the craft was an unsupported band of material (later referred to as the "Guide Ring") which was not attached to the ship by any visible means and appeared to be held in place by sane magnetic force. Penetrating the center of the ship was a tubular shaft 50 ft. in diameter and 300 ft. in height, the top and bottom ends of which protruded from the ringed saucers which were 700 ft. in diameter. The bottom end of this large tube rested on the

ground and I could see an opened doorway in which stood two of the crew who greeted us with a hand salute.

My companions invited me in for an inspection tour of the great ship and we stepped into an elevator which I was told had no cables and was operated by will power: We stopped off at the level which was devoted to the storage of some of the 24 small spacecraft this mother-ship carried, ground vehicles and other equipment. The second level comprised the living quarters of the crew, gardens, recreation area, study rooms and a meeting hall. Living quarters were compartments for single persons or "married" couples (for the crew was made up of both sexes) and these units comprised a small hallway, a large living room, bedroom, bathroom with toilet and storage locker. All rooms were carpeted with some form of pliant plastic and the walls were hung with beautiful paintings. I discovered the outer wall of the living room was in fact "see through," giving a full view of space outside. The outer door of each compartment led out on to a small flower-bedded garden. At this point, I commented on the lack of a kitchen in these units and was informed' that Venusians never spoil their food by cooking it. They grew their own produce aboard and ate it fresh.

We then came to the recreation area which was covered with some form of simulated grass on which a number of the crew were playing a game somewhat like basketball. This gave me an opportunity to study these Venusians more closely and I noted that they ranged from 5'6" to 6 ft in height. They were blue-eyed, skin coloring a bronze suntan and their hair ranged from golden blonde to a reddish brown. They all appeared in glowing health and their eyes sparkled with a natural joie de vivre. Climbing to the third level, I found this was the horticultural section where all their food produce was grown and there were attractive gardens where the crew relaxed and ate their food. The fourth level was divided between storage of more of the small scout ships, heavy material, water supply, etc., and a number of workshops. I had noted that throughout the entire ship all floors were completely covered with some form of plastic material and that all the cuter walls were of the same "see through" type. On each wall, there was a circular viewing screen, somewhat like television, showing a full view of outer space and the exact position of the X-12 in relation to other planets, and its directional trajectory in space, this changing picture being projected from the control tower to all parts of the ship. I was also informed that built into these walls were "accumulators" for storing solar energy which gave constant light and power to operate heating and air conditioning systems.

We then rose to the exposed top of the tubular shaft which I was told was the control room. My Earthly mind had conjured up visions of all kinds of complex devices to operate this enormous spacecraft, but to my great surprise, there were no visible controls or equipment at all: In the center of the room was a raised circular platform on which had been built a circular couch and seated with their backs to this and facing outward to the North, South,

East and West, were four persons - two women and two men. I was informed that these four operators, chosen specially for their great mental powers, control led and directed this giant ship: It all seemed completely unbelievable until across my doubting mind there flashed the biblical verse: "Faith can move mountains."

My leader-companion then took me to a lower level and introduced me to a lovely woman whom he described as his "life companion". She was indeed a most beautiful creature, with sapphire-blue eyes, golden-blonde hair and her face glowed with an inner spirituality delightful to behold. He stood beside her and said simply: "You may call us Frank and Frances, for we stand for Truth."

I noticed that the girl was seated before "a large blank screen and a further wonder was in store for me, as she demonstrated her ability to project onto it thought forms of whatever she was thinking, which appeared on the screen as living motion pictures. To my surprise, she showed me a picture of myself coming out of Try house, followed by the scene in my workshop when I spoke with the two space visitors. There followed pictures of Venus, its people, homes and towns and I just stood there over-awed at its natural beauty. And then a strange phenomenon took place which I know will sound as incredible as it did to me at the time, although there is much we do not know about the power of mind over matter. For while I was fully aware that I, Arthur Matthews, was standing in the physical form in a landed spaceship at Lac Beauport, yet at the same time I suddenly became a living part of the projected scenes, mingling with the people of Venus millions of miles away. Here was a great mystery indeed, for I could not only see them but feel them just as if I was truly there in body as well as spirit.

I appeared to be standing at the edge of a vast, cup-like depression. On every side towered tall pillars of basalt, smooth and perfect as if polished by the hand of man. On the farther side of this huge natural theater, a mighty torrent of water descended from the brow of the ebony cliffs in a 1000 foot leap, striking squarely on the edge of the great cup and turning it into a churning mass of foam. Then I saw it was only around the rocky margins of

the pool that the water was beaten into foam. The entire center was occupied by a mass of water perfectly smooth and strangely piled up like a dome of ,glass. It was not water such as we know, for streamers of living light of every imaginable color darted over the shining surface of the great dome, sometimes blending into masses of rose or green or violet and then mingling into a glittering confusion of rainbow hues. This whole scene of overwhelming grandeur was foiled by a broad band of emerald green turf, which framed the central cup, and dotted here and. there were graceful palm trees whose fronds glistened with diamond drops of spray.

Then gazing upward, I gasped in surprise for there, poised in the air above the rim of the waterfall, was a great crystal ball like a gigantic soap bubble, transparent but gleaming with rainbow hues. Around its center was a broad band of gold metal. This girdle formed the equator and at either pole was a projecting boss of the same metal from which were suspended, by cables, inverted cups which hung some distance below the globe. As it drew nearer, I saw that the equatorial band was studded at intervals with circular windows of glass-like material from the center of each projected a long needle which I assured was for directing the course of the airship, a theory which later I found to be correct. Slowly the great ball sank until the cups touched the grass and the cables were withdrawn into the metal bosses. Here, the shining sphere hung about a foot above the ground, swaying gently. A moment later, a circular window swung open and several figures stepped out.

Then the scene changed and I beheld a rolling, park-like country clustered with groups of palms and other trees. In the distance, I could discern the wall of black cliffs and beyond them rose range upon range of snow-capped peaks from which a wide river wound its way. In the central plateau about 50 miles in diameter, the river broadened into a shining lake and then continued its way until it plunged over the cliffs into the pit of the shining pool. Returning my gaze to the immediate scene around me, I realized I was in the center of a beautiful Venusian town. Innumerable buildings were spaciously scattered among groves of trees. While of varied size, these structures were of the same general design, consisting of an ellipsoidal roof of prismatic crystal supported on a circular colonnade of marble pillars. Above them, hundreds of balloon-like airships darted through the air. Many of the houses were built on top of the basalt columns bordering the river and I could see groups of people standing on the verge of the cliffs. I then observed, standing on an elevation, a very large building of the same circular design which I was told was the community meeting place of these Venusians.

I then found myself walking with the crew of the X-12, through a broad avenue of stately palms toward the white pillars of the great assembly hall. Soon we were climbing a noble stairway flanked by mighty columns until we stood in the center of a splendid amphitheatre surrounded by tiers of marble seats in which a large group of people reclined. As we entered, they all arose, their hands raised in the Venusian salute and I heard a unanimous cry of "Brothers: Goodwill unto you:" It was then that I realized that these Venusians wore no garments but stood as nature created them, but such was their noble build, I could feel no embarrassment, only admiration of their physical beauty.

I was led by Frank to a seat at one side of the huge auditorium and he then addressed me: " 'Friend from across space, Earthman Arthur Matthews, we welcome you. The people of Venus ask me to speak for them because I can talk your language freely. We have brought you here out of no idle curiosity, but because we believe it lies in our power to offer your world some help in its present troubled state. We have a priceless gift to offer you which is known to us as Truth, but first we would ask you to tell us more of the world in which 'you live. Tell us something of its history, social conditions, science and what you call religion, and we will then judge if we are right in revealing to you the secret of Truth. Speak in your own tongue, for all will understand your thoughts. Fear only to say that which is not true, for we shall know immediately the true from the false."

Somewhat bewildered, I arose and after a pause, I spoke: "People of Venus, I thank you for your kind welcome and your offer. I do not know what this gift of Truth may be, but if all the radiant health, happiness and beauty I see among you are due to this truth, I greatly desire to know its secret and share it with the people of Earth. But before I tell you something of conditions on my planet, may I first ask a question?"

There were nods of approval and I continued: "Why have you chosen me to speak for Earth instead of going to the leaders of my world? I am a humble person whose name is unknown and I have no power with. Which to convince few, if any, on Earth."

"We understand your question," Frank: replied. "We have chosen you because, as a friend of Tesla, we believe you will tell us the truth. As for your humble origin, did not the Supreme Creator in Whom. We of Venus all believe—your God—chose one of lowly birth to spread the truth of your Christian philosophy." In your Bible, you will read, "In the Beginning there was the Word" or the Truth as we call it, and of God's desire that His children

should believe-in the Word. If we decide to pass on this Truth to you, then God will surely see that channels are opened up to you to pass on His Word." In deep humility, I replied: "In the name of Jesus Christ, I thank you." And then, to the best of my ability, I proceeded to tell the Venusians what I knew of Earth's history. I described the development of war from the days of the cross-bow and sword to its present stage of destructive sophistication. I dealt with what ancient history I knew and briefly brought it up to modern times. I talked on present day social conditions, our technological achievements, a little on medicine, psychology; philosophy, and comparative religion, and then I turned to science. Up to this point, these godlike Venusians had listened to my poor talk with absorbed attention, but as I attempted to explain Earth's concept of physics, there was a great commotion as members of the assembly leaped to their feet and I heard repeated cries clamoring for the Truth: I could only conclude from this that our scientists present knowledge of physics left much to be desired! A few words from Frank, explaining that I was telling the truth only as I knew it, quieted the group and he apologized to me for the interruption. At the conclusion of my talk, I was invited by Frank and his beautiful companion, Frances, to spend some time with them, and, to my great delight, they took me for a flight in their small airship where I sat back entranced at the glorious landscape unfolding beneath us. And then, as mysteriously as I had been "teleported" to Venus by the thought projection process, I suddenly found myself back in the landed spaceship at Lac Beauport, facing an empty screen.

Over the years of continued landings of the X-12 at Lac Beauport, I was able, by means of Frances' strange ability to project me into her living pictures, to continue my contacts with the Venusians, whom I grew to love for their gentle, courteous ways, their radiant happiness and beauty of mind and body. Always, Frank and Frances acted as my host and hostess and I spent many happy hours with this gracious couple, sometimes wandering on pleasant walks through groves of cinnamon and nutmeg trees, breathing in the soft, perfumed air, sometimes going on fabulous flights of exploration in their airship, and at other times, we relaxed in their beautiful crystal dwelling, discussing many matters, exchanging information on our respective planets, and all the time, I learned more of the harmonious way of life of these happy Venusians. Frank talked freely on all aspects of the life of his people, with one exception the nature and meaning of the Truth --- from which I gathered that the time was not yet right for this revelation.

I was amazed at the perfection of the Venusian mode of one planetary government guided by a small council of wise leaders and also at the extreme

simplicity of the social relationships of its people who appeared to be one large family bound together by love and understanding. At one time I asked Frank if Frances was his wife. 'No, not in the sense your world interprets this word." He replied. "We have mutually elected to become life companions."

"Then surely you have been united by some ceremony such as we call marriage?"

"No, with this mutual desire in our hearts, we have no need for meaningless words."

"So there is nothing to prevent you from separating at any tire?"

"Nothing at all."

"Then what we call divorce must be common on Venus," I ventured.

The Venusian couple laughed outright. "As common as the rose voluntarily cuts itself from the bush," remarked Frances with a gentle laugh.

"Let me explain," said Frank. "When Venusian couples unite, because of their knowledge of the Truth, it is impossible for them to make a mistake, for they recognize each other as soul-mates and the union is forever. It is sad that your world lacks this knowledge, for it would appear that such legal ceremonies are necessary because your people are insecure and uncertain of each other."

During one of our aerial excursions over the wooded countryside, I remarked on the absence of any burial grounds and that the word "death" had never been mentioned in our talks. Frank countered with: "How old are you, Arthur?"

"48 years."

"What is the normal life-span on Earth?"

"70 - 100 years." "Then you will probably be surprised to learn I have seen over 800 summers and Frances over 650."

"You must be joking:" I exclaimed. "Sickness and old age sap the vitality of the body and within 100 years, it dies." Frank shook his head: "Because we apply the knowledge of the Truth, we know nothing of sickness or old age, true, we finally leave our bodies, not because they are worn out but because our appointed tire has come to transfer to another sphere of existence. But a few of us with special missions here, such as those with the required wisdom to govern our planet, may live on in perfect health for thousands of years:" I

was left dumfounded at these remarks which seemed more than my Earthly mind could absorb.

And thus the periodic contacts with the Venusians continued, with information exchange and progress reports on my work on the Tesla devices passing between us until finally the great day arrived when Frank informed me that the Venusian Assembly had decided that the gift of Truth should be extended to me and through me, to the people of Earth. You may well imagine my excitement on learning that this great mystery was at last to be revealed to me: It was to take place, Frank said, at the Venusians' most sacred shrine, the "Palace of Truth" and although he spoke of its great beauty, I was little prepared for the further wonders in store for a bewildered Earthling:

First, I was taken to the edge of the cliffs where the river gathered for its final plunge and Frank led the way to a flight of spiraling steps carved out of the solid rock. We descended these steps which eventually entered the rock itself and we came out on to a small platform directly under the mighty waterfall which thundered down to the abyss. With a thrill of horror, I realized we were standing on top of one of the towering basalt columns and I admit I shook with fear. But Frank grasped my hand and led me to a further flight of spiraling steps. Down we went, sometimes passing close to the water whose roar grew louder as we descended, and sometimes passing through tunnels in the rock. Behind us there followed a seemingly endless line of figures. Finally, we came to a great cave directly under the fall and the living rock trembled with the force of its tremendous impact. On we went until we passed through an arched opening and stood at last in the Palace of Truth: At the glory of the sight that met my eyes, I let out an involuntary cry of delight and amazement. We stood on a broad shelf of black basalt surrounding a great circular depression about 1000 ft in diameter which was filled with a mass of colored water which surged and rippled like a sea of rainbows. A closer inspection revealed that it was in fact a floor of living crystal (See Chap. 4, Revelations) and looking up, I saw it was reflecting the underside of the great dome of water in the center of the pool below the waterfall. By some strange magic beyond my comprehension, the crystal lake held this mass of churning, multicolored water suspended in mid-air, its under-surface reflecting a thousand fold. It was the most breathtakingly beautiful sight I had ever seen.

While I had been absorbing the indescribably beauty of this natural kaleidoscope, the basalt shelf had been filling with the great company of people assembled for this meeting. Then Frank raised his hand in salute and spoke:

"Friend from Earth, the glory you behold is our Palace of Truth and we have brought you here as a fitting place to reveal to you its secret. You have told us truly of the world in which you live and we are grieved at your story. Therefore, we hope this revelation in time will lead to a great improvement in conditions on your planet. Make no mistake: We do not worship the Truth. We worship the One God Whom no man may know. As for the Truth, we know not from whence it comes -- only that it fills all space and permeates all things. It is no great mystery confined to our planet alone- it is free for all to seek and use throughout the universe. You yourself have revealed that you have known the Truth for many years, but you have not recognized it as such. Did not you tell us that your friend, Tesla, had discovered and used the cosmic ray? This, my friend, is the Truth, which we also call the Power of Life. It is the essence which animates all living things—man, animal, vegetable and mineral. It is the vibration which responds to the mind and spirit of all life and once one has learned to use this great natural law wisely, one mind beholds another in all its truth, so that misunderstanding is impossible. Thus, it is we are able to understand you when you speak your own language for we see not only the outer shell as you do, but the living mind within that shell. It is because of our understanding of the Truth that we enjoy long life in perfect health, happiness and harmony, that we are able to construct and operate by pure thought our spacecraft and other technological wonders you have seen, erect beautiful dwellings with every comfort and convenience, transmute our planet into beauty and agricultural productivity, effect climate control and avert natural disasters — in short, we have transformed our planet into a paradise. And all these things, my friend, may be achieved by the people of Earth if they learn to recognize and use the Truth:"

I had listened in some surprise to learn that the Truth should be none other than the cosmic ray, which I knew something about, for Tesla had built his "Scope" and other wonderful inventions to utilize the power of this ray.

I knew too, that more than a purely physical force was involved because in harnessing the cosmic ray, Tesla had discovered that it responded to mental vibrations.

But one big question burned in my mind and I asked Frank:" But how can the people of Earth recognize this Truth?"

"We do not see the Truth with the physical eye," he replied." We see it with an inner eye that lies in the metaphysical area of the mind and which is opened up by spiritual development."

"You seem to forget," I returned, "that most of us on Earth lack this special sixth sense which enables Venusians to visualize mental images produced by the Truth. You can tell a blind man of the light, but you cannot make him see:"

"Arthur, this special faculty is not the exclusive possession of Venusians. It is common to all mankind -- inherent in life itself. For countless generations, your race has lived and died like men who bandage their eyes that they might not see the light: Listen carefully."

And then in words so simple that the humblest person could understand, Frank revealed the secret whereby people of Earth -- if they choose to accept it --'can learn to develop this marvellous sixth sense and the full conscious ness of Truth. In essence, it was nothing more or less than to camy out the philosophy of love of God and all His creatures, as taught by Jesus Christ, which in turn, would open up that special spiritual area of the mind to see the Truth!

Then, in ringing tones that sounded like the clear notes of a bugle, Frank addressed ire:"Go back to your Earth, Arthur, and tell its people of the things you have seen and the knowledge you have acquired."

"But Frank!" I cried in an anguished voice, "although I shall speak the truth, few will believe me. Most will dismiss my words as, at best, a Utopian fantasy: Many will label me 'crackpot' or worse:"

Frank grasped my shoulders and spoke firmly. "Heed not the words of the foolish. Speak for those with sufficient wisdom to learn: If you only reach a few, your efforts and all the ridicule, will not have been in vain. Go forth with the Word, Arthur—and God go with you."

With these words still ringing in my ears, I found myself back in full consciousness on the landed X-12. As I prepared to depart, the beautiful woman of countless years rose from her blank screen and with a lovely smile, extended her hand in farewell. Later, from a distance, I watched the great ship rise silently and swiftly and take off into that summer's night of 1961.

Chapter 2

It was during the fall of 1942 that the X-12 paid me another short visit, Frank wished to talk to me about a very private matter. **During this visit** I was lucky to be able to take a good look at the X-12 inside and out, Frank came into my home and after we finished our private talk, we walked down to the landing spot, when we reached the ship, I stood wild eyed looking at that great and wonderful thing, other members of the crew came out, all of them laughing at the surprised look on my face, but what I saw of the outside of that great ship was nothing to the wonders which I was to see and hear, inside. It was in fact the "Thought-pictures," which first convinced me that this ship and its crew of twenty-four persons, was indeed, as they said, from the planet Venus. When Frank and I arrived at the ship, he said, "Come inside and you may, if you wish, take a good look all over." I accepted his invitation, and he led me to a door, and we stepped into a small room, which he said was the elevator, in a few seconds, we arrived at the top level, or control room, located at the top of the elevator shaft (about 300 feet high:)." This is our control room," said Frank. "You may inspect it." "But, "I replied, "where are the controls?" (All I saw in the room was a circular seat, on which sat four persons; two women and two men. These four took no notice of us, they just sat and looked, so it appeared, directly at the wall). "These four are our controls," said Frank "But where are the meters", I asked, "and other things which appear to be an important part of our air-craft? In what manner can you guide, steer and control the power of this large ship without some form of control?" "Well," said Frank, "perhaps the manner in which we control this ship, that is to say, the means we use, may appear to you earth people an impossibility; every member of our crew is trained in the practical use of 'Thought Power". The four members whom you see here, keep the ship under perfect control at all times by the simple application of pure thought. In order to convince you, or at least try to convince you, that this ship has no other power, you may inspect every inch of it, but I can assure you there is no engine of any kind, either inside or outside. But, measure carefully, convince yourself. If you study the question, you will find nothing remarkable about our ability to make a practical use of the power of applied thought: Every person on earth could, with advantage, do the same. Millions of you earth people buy the Bible, but how many make a practical use of it? Christ walked on the water by means of thought power or faith, and did He not say "The works which I do; you can do, and even greater works than these, because I go to my Father...."? Do you not see the wonders you earth people

could do if you believed in what Christ said? We of Venus do not consider ourselves any smarter than people of earth, the difference appears to be in the fact that we take it for granted that Christ knew what He was talking about. We believe in what He said, with the results which you see in our ship, and the way in which we live on Venus."

With those remarks Frank said, "Make a good inspection. I will wait outside for you, and when you are finished looking for our 'mystery' engine, Francis will continue with her picture show," and left me. I then had a very careful look around the control room but could find no sign of a motor or material control of any sort. I then walked down some steps to the 4th level, which was divided between storage of small scout ships, heavy material, water supply, etc. with a number of workshops, but I could find nothing like a power plant. The third level was very much the same, except it had a large horticultural section where all their food was grown, and the lovely gardens where the crew relaxed and ate their food. A few scout ships were also on this floor. I had a good look all over and then continued going down to the second level, so far no sign of a power plant. I found the second level the same as the others, except a part comprised the living quarters of the crew. It had flower gardens, a recreation area, study rooms and a meeting hall. Living quarters were compartments for single persons or married couples; each unit comprised of a small hallway, a large living room, bedroom, bathroom with a flush toilet and storage locker. But still no sign of a power plant or any material controls. After a good look, I walked down to the first level which was devoted to the storage of some more small space craft and ground vehicles, work shops and other equipment.

"Well," I thought, "if there is any motor on this ship it must be made of invisible and sizeless material:" for there was not an inch of space anywhere on that ship which I had not inspected. To be sure, I would have to take a good look on the outside of the ship. During my inspection trip, I noted with delight the beautiful floor covering, of many colours, which appeared to be made of a synthetic material, very soft to walk on. The walls were hung with beautiful paintings, none of which were of the 'modern' kind, and each living room had a see through window giving a full view of the outside. During my visit a number of the crew were playing a game somewhat like basketball. This gave me an opportunity to study these people more closely and I noted that they were exactly the same as earth people - at least I could see no difference. They were from about 5'6" to 6' in height, some were blue-eyed, others appeared to have green and brown eyes. Skin colouring appeared a bronze sun-tan and their hair in many shades from golden bland to a reddish

brown. They all appeared in glowing health and their eyes sparkled with that health. After my careful inspection of the inside of this great ship, I walked outside where Frank and Frances were waiting for me. Having partly recovered from my, surprise on seeing the ship, I now took a more careful look at its outside. It was indeed a strange looking object. I found it hard to believe my senses, and still thought I must be dreaming, my feelings were no doubt reflected on my face, because my two companions gave amused chuckles at my bewilderment. The landed ship which appeared to be made of grey coloured metal looked -like a big egg, and circling it, about twenty-feet away from the main body of the ship, was an unsupported ring of the same grey coloured material. I found out later that it was a "guide-ring" (whatever that meant?).This guide ring which was over seven-hundred feet in diameter, was not attached 'to the main body of the ship by any visible mans. I thought, "Maybe the power plant is inside this ring?" In the center of the ship was the control tower, and elevator, with a door at the lower end, which at the moment rested on the ground. This tower is 300 feet in height, with 50 feet protruding from the main body at each end, that is 50 feet protruding from the main body at each end (50 feet at the top and 50 feet at the bottom) which made the main body 200 feet high and 700 feet in diameter. After a careful inspection, I could find no sign of a motor, unless it was inside that guide ring. It was 20 feet in diameter and depending on what kind of motor, it was large enough to hold it. I said as much to Frank. "Well", he answered, "all right my fine doubter, you may now go inside that guide ring". I said nothing, but at the moment I failed to see how I could go inside. It turned out to be easy. Frank led me back inside the ship, up to the third level, then to a door which he opened, and I could seethe guide ring about twenty feet away. I then noted a door in its side. Frank pushed a button, which was on the wall near the door. In a few seconds, the door in the guide ring opened and a platform came out of the door opening towards us. In a few more seconds, Frank had the platform attached and I noticed the platform had hand-holds for which I was very glad - for we were about 150 feet from the ground. Frank said "Come with me," and walked across the platform and into the guide ring, as I followed close behind. "Go all around," said Frank, "make a good inspection. You may go alone, I will wait here for you. Take your time."

Without further words I started my walk around the inside of this mystery ring, and what a mystery it turned out to be: I do not know where the light came from, there were no windows, but I could see clearly, and the mystery proved to be – <u>nothing</u>! A completely empty tube! How did it work? How did it "guide"? How was it supported? Questions, questions: no an-

swers. I could not find any power plant, just empty nothing. I walked completely around inside that tube to find Frank waiting for me. "Well my good friend," he asked, "did you find what you were looking for?" "No Frank," I replied, I found nothing. Will you tell me the answer to this mystery?" "Yes," said Frank, "I will tell you but its, a big secret. You must not tell any one, do you agree?" "Yes," I said, "I agree:" "Well," said Frank, "I have told you but you doubt. This great mystery is s no more or less than the power of thought. You have made a most careful inspection: you found only empty space, did you not?" "Yes," I replied, "I did inspect your great ship, outside and in, and also the ring, to the best of my ability: I found no sign of any power plant. Therefore, at least for the moment, I must believe all you say. I believe in the power of thought but I must admit, my earth-man faith is not very strong."

Chapter 3

The third visit of the great Space-Ship X-12 was a few days after Tesla died. Members of the crew had attended the funeral with over a thousand people some of whom had come from far off corners of the earth to pay their last respects to the inventor of the 20th century.

Frank said that he and Frances had been with Tesla a few days before he died, and that he had died a happy man. "And", said Frank with a smile, as he handed me a large envelope, "he told me to be sure to give you this. It contains some very important papers concerning the work which you must now continue alone." When Frank and I finished our talk about my work of the future, Frances said she had something to say." Yes," said Frank, "Frances will give us a little lecture which could be a greater help to your world than all the inventions of man." Frances smiled, "I haven't very much to say but I am sure you will like this message which your old friend wrote only a few short days before he left this earth."

Frances then read this message, the last words of this great man who did so much for mankind:

> **"One of the most important facts in life, even if we do not always see it, is that we live only one day: The human struggle is mostly for one day, we can not live to-morrow before it comes. If we can live consistently for one day, we may hope to do the same the next, and the next, and so on to the end. A day has a rounded completeness; it is a little world of life. 'One day is like to all days,' wrote Montaigne. 'He who has lived a day has lived an age,' said La Bruyere. 'Every day is a little life,' said another; 'those therefore that dare lose a day are dangerously prodigal; those that miss-spend it desperate.' As our habits, thoughts, words, and actions are on one day, of that same character they will most likely partake as day is added to day and goes on to make up the months and years. If we can get through one day without giving way to temptation, then come night and sleep, and to-morrow we start afresh for another period of hours in which to be strong and true. On this day then, we are each of us bound to begin by asking ourselves, 'Is my conscience void of offense both before God and man?'. 'Do I condemn myself in anything which I allow?' When I have been saying that as one day of our lives is, so will in all probability the rest be, I am only insisting on the blessing of being able to take each unit of our lives as it comes, and making the best of it, making it perfect, making it ideal. One day well spent is a pledge for those that are coming. Abraham Lincoln said, 'The struggle of to-day is not altogether for to-morrow; it is for the vast future also.' Every day is a gift I receive from heaven; let me enjoy to-day that which it bestows upon me; and tomorrow belongs to no one."** [1]

End of Tesla's last words. May this message bring joy to every heart who reads it.

Health is a mental condition; physical well being depends on one's mental condition. All bad habits, such as smoking, strong drink, drugs, etc. depend on a mental factor: a sick mind breeds a sick body. Bad habits indicate a sick mind and a sick physical condition, and when the majority of people suffer from bad habits the end result is a sick world; so said Tesla. And while we are on the subject of a sick world I would like to quote from a little book let by Pemy F. Rockwood who has granted permit to copy. Mr. Rockwood has the same idea as Tesla and Frank, the people of earth are wasting their time on rubbish and there is no time to waste: I quote in part –

> **"The greatest peril to western civilization today is not from communism, but from the constant erosion of faith in God. Large numbers of supposedly religious people simply do not believe in God. The curse of our day that has brought about this faithless way of living is so-called evolution. Our young people are being taught by unscientific text-books about the biggest fraud ever brought into the class-rooms. And our young people, in order to be sophisticated, allow themselves to be brain-washed into thinking that there is no personal God who created this universe. This message is offered to those who are willing to think independently of archaic teaching that characterizes so many class-rooms today. Those who criticize the Bible the most read it the least, and know little or nothing about it.**
>
> **"WHAT is Science?" Can we improve upon the Dictionary's answer? 'knowledge gained and verified by exact observation and correct thinking; especially as methodically formulated and arranged in a rational system. This definition takes you out of the realm of speculation. It disposes of such terms as 'theory' and 'hypothesis,' making them possible servants of Science, but never its synonyms. Science is the 'verification of knowledge by exact observation and correct thinking' and is the highest accomplishment of which the human mind is capable.[2] Not every man, however, who cries 'Eureka' has found it. What is the Bible? The Bible is the 'God-breathed' Book, written by holy men of God who spake as they were moved by the Holy Ghost —. The remarkable evidence of the skepticism of this generation is that so many educated leaders and preachers are willing to throw away the fact of -the Verbal Inspiration of the Bible. At the same time they try to tell us that God stimulated the thought of the Bible but did not determine the speech; that some parts of the Bible are literally true, and others only allegory or myth; that some are factual, others are fiction; that some are to be treated with credence, and others with criticism; that all must come to the test of one's inner consciousness or the logical processes of man's wisdom and, at that court, be either accepted or rejected. The Bible itself is God's special revela-**

tion to man and this revelation is truth absolutely. The pursuit of scientific research, on the other hand, can never achieve more than relative truth. The growth of science is a history of constantly increasing knowledge resulting from human investigation or discovery. The Bible, on the other hand, bears eternal, absolute truth. The pages of scientific research are replete with examples of abandoned ideas, discarded theories, and repealed laws resulting from a continuous process of adapting earlier ideas to more recently discovered scientific data. The Bible is God's revelation and does not change with the changes of men. Evolution is a theory of a materialistic philosophy of life based upon suppositions, which have not been verified by science. Evolution is the foundation stone of communism, based upon the false theory of automatic and inevitable progress. It is the foundation stone of militarism based upon the concept of the survival of the fittest. Two world wars were the logical outcome of evolutionary teaching and we are now preparing for the next world war. Evolution is also the foundation stone of atheism based upon a materialistic concept of life. The word 'evolution' is often abused. The casual speaker talks of the "evolution" of the telephone, the 'evolution' of the electric light, and other products of man's industry and intelligence. The proper word here is 'development.' All of these mechanical improvements came about because of direct supervision and control. Organic evolution in its simplest definition can be best expressed by the word transmutation. The theory admits of no active intelligence in control, and design is foreign to the entire process. Evolution is not scientifically possible. First, 'Acquired-characters' are not transmitted to or inherited by the offspring as the evolutionists declare. The habit of foot binding, for example, common among Chinese women for centuries has not led to any inherited deformity of the foot. Our domestic chicken is a descendant of the Roman fowl and no essential change has taken place in 2000 generations of breeding." [3]

If any one would sincerely like to know if they are standing on a sure foundation, I suggest they write for the booklet, for if you have been misled to believe in evolution, you are heading some place fast, but you can be sure it is not Heaven: or a "higher" level. It is your life, and you are free to do as you like with it. But, whatever you do, don't try to mix evolution with Divine Love. We either believe without question in the Bible, or we do not believe. To take a half-way stand is a lukewarm attitude and if you wish to know what that mans, read Revelation, Chapter 3.

Chapter 4

As I watched from a distance, the great X-12 rise silently and swiftly, and take off into the sky, I wondered exactly what the present day scientific knowledge concerning the "Cosmic Rays" amounted to. Then Tesla first discovered them, way back in 1893, the scientific world laughed at him. They said no such rays existed: Tesla proved they did, that much is history. So today, due to the attitude of supposed scientific experts - who in reality are not truly scientific, for the truly scientific mind never doubts - very little is known about the subject, but some wise men have discovered that our atmosphere is continually being bombarded by atomic particles from outer space. These are known as "primary cosmic rays". [1] These high speed particles are mostly said (by the above-named 'experts') to be protons, and they say that when these 'protons' go crashing through our atmosphere, they break up some of Earth's atoms, the particles of which are (so they say) called 'secondary cosmic rays' - which statement, coming from doubters who said cosmic rays did not exist, is something to think about! They also say that both of these minute cosmic rays are extremely energetic and can enter and pass through almost any form of matter. Every minute thousands of them, pass through everything on earth, including man. Our scientists admit that they do not know exactly where the primary cosmic rays come from. In my opinion the reason for their lack of knowledge is because they neglect to study the Bible: For in it is the place where Tesla first discovered them, 35 years before the scientific world "experts" thought maybe they might exist.

The Great Nebula in Orion appears-to the naked eye as only a single hazy star But when viewed through a large telescope this great mystery of the heavens is revealed to be a tremendous cavern, perhaps nineteen trillion miles across our entire solar system would be lost therein could not the cosmic rays come from there?

2

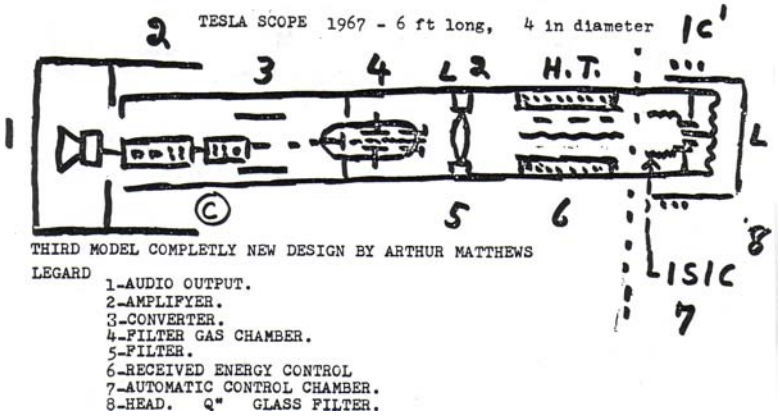

After the great space ship left, I received many messages from its crew, but they did not return after, that last visit in 1961, until 1969. It was during the evening of January 21st, 1969 that a number of friends came to visit me, and, if possible, listen to a message on the "Tesla-Scope." No sound was heard from it until around 10 p.m. after we had been talking for three hours; when the voice of Frank was heard very clearly, with the same old message, which I had received on the Scope, and recorded so many times since that first visit of the great X-12 in the spring of 1941. I will repeat this message for the benefit of those who may not have heard it (apart from the omission of certain personal messages connected mainly with my continued work for Tesla). The following is the message, which I first received in 1941,**3** and which, in essence, has been repeated over the years; in fact it is the message which we can read in the Bible. However, this message which I have personally heard by means of the Tesla-Scope, from 1941 right up to recent months (1969) comes from real live persons, who say they are aboard a space craft, which they call the "X-12" — a mother ship.[4] Here then, is the message: —

> "Mien[5] you first receive this message, you will, like most earth people, doubt. This is one of the strange things we find about the people of Earth, their continued doubting. They say

they believe in God, but they doubt: They say God can cure their sickness and their troubles, but they doubt. Therefore, we expect you to doubt also. You will wonder if we really come from the planet Venus, do we come from outer space? And you will wonder how we are able to talk to you in. your own language. We use English at this time because you, our friend Matthews, understand that language, but we have made a study of every language used by mankind. Actually, we would prefer to transmit our thoughts by the use of mental waves. As we look down on Earth, we note the greatest confusion and misunderstanding. Instead of acknowledging the One God and looking towards Him for enlightenment, we find you all over the earth running hopelessly and helplessly in pursuit of many things you think will increase your personal happiness, and yet you wonder why you continue to suffer. We hear you, year after year, asking the same question, "Why must we suffer?" "Why do we still have wars, sickness, poverty, famine and death?" "Why does pure joy always run away faster than we can so that we can never catch up with it?" The answers to these questions are to be found in the fact that instead of turning upwards to God, your thoughts are earthbound and you judge only by what you see in others around you, the vast majority of whom are sick, unhappy and full of bad habits, doubting the existence of the Supreme Being, and futilely, you follow the crowd. Your earth is full of hate and misery, and this condition has come to be accepted as the rule for mankind on earth. This is not how God intended life to be on your beautiful planet, but very few of you obey the law of God. Many of you attend some form of religious service on your Sundays, but how many earth people carry out God's law in their everyday lives? We are amazed and saddened to find how much of your lives are devoted to inventing and using destructive machines with which you murder each other. We see you spending vast sums of money pretending to bring peace on earth, when you should know that the only way of obtaining peace is free — through Christ: Love. There is no other way, so why waste your time and money?

"We ask this question realizing that most earth people have known for almost 2,000 years, that the only way to secure peace on earth and goodwill towards your fellow men, is by following

the teachings of Jesus Christ whom a God of love sent to your planet to bring spiritual enlightenment to mankind.

"Therefore we can only sadly conclude that the people of earth must be suffering from some form of mental sickness which can only **BE CURED BY THE ADOPTION OF CHRIST'S PHILOSOPHY OF LOVE.** You have heard all this before and much of what we say may fall on deaf ears, but our thoughts are directed to those few of the earth people who have sufficient mental and common sense power to think clearly and to know right from wrong. These few have been placed among you to help others to live as God intended you to live, to think clearly and to know right from wrong, and to grow in a manner to be of service to the great, all-knowing, all-loving God, and to all His creatures. Your present behavior is the reason for the continued visits to earth by those of the space people. It is our duty to warn you, remind you, that if you continue to refuse to obey the law of God, you will surely destroy yourselves, and we shall not have many people to pick up when the earth is about to be destroyed. To help the people on earth, we brought down one of our own to live among you. During a trip to earth, a child was born on our space ship, which we call "The X-12". We landed our ship at midnight, on July 9, 1856 and we decided to leave this boy on your earth. This boy was Nikola Tesla, we left him on your earth in the hope that his higher mental power would enable him to help your world, which even then was torn by hate and war, to come cut of the darkness into the light.[6] During the years between 1856 and 1943, we landed many times on earth, but we found no improvement there. At the death of Tesla in 1943, we landed again and attended his funeral. We were saddened to find that the earth people had used the gifts of Tesla and other great inventors only to satisfy their greed and lust for power, that the same evil conditions existed on earth and that its people continued to expend their energy on war and killing their own kind, which is contrary to Cod's law which clearly states, "Thou shalt not kill." These things are beyond our understanding, for Venus in all its history, has never had war. We

have but one purpose in life to serve God, and this we do with all our energy of body and mind, and because we do this, our mental power grows stronger with age. We remain in perfect health until the day we die. We enjoy perfect harmony, health, and happiness with our loved ones a11 the days of our lives. We have no place in our hearts for selfish desires because we know and believe that God's law is good and therefore we have no need of man-made laws. Lack of faith in God has left your earth in the Dark Ages[7] and you will never progress or know peace of mind, true happiness, and complete harmony until you learn to renew your faith and to become higher in your thinking and living than the crawling things, which you now appear to copy. To overcome hatred, and prevent wars, you must learn to remove every trace of national pride and racial discrimination, for there is, in fact, only one race of mankind whom God created.[8] The truth of God's Law may be learned by all people on earth. You have a book, probably the most important book in your history, called the Bible, which contains the truth for all those with eyes to see. It teaches the only way in which mankind should live, for the law of God is Love.

"We suggest that you turn to the teaching of Christ for the only solution to all of earth's problems. At present, the law of earthmen appears to be mainly one of hate, they are always fight-

ing, and killing each other, war is murder. We of Venus do not understand how you can truly call yourselves "Christians" for Christ taught only love. If you continue to make war, you will bring about the destruction of your planet, and in this regard, we refer you to the book of Isaiah. We have tried to talk to the people of earth for many hundreds of years, but without good results. Some of our people landed on earth thousands of years ago, as you may read in your Bible, which contains many references to the visits of space people to earth. [9]

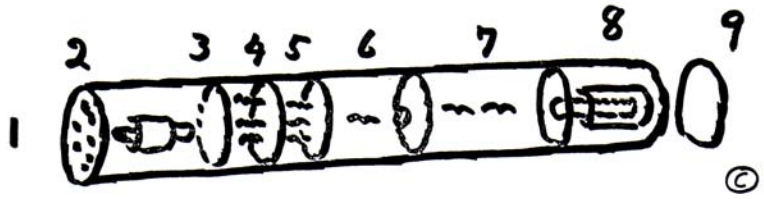

THE TESLA SCOPE FOR SPACE COMMUNICATION, BY ARTHUR MATTHEWS CONCEIVED BY NIKOLA TESLA IN 1898 to communicate with planet **VENUS**. First model built 1918, Second model built by Arthur Matthews with Tesla 1938, re-built the 1938 model in 1947. Third completely new design model built by Arthur Matthews 1967. Adapting the micro miniature parts, thus reducing size to six feed long and four inches in diameter, see sketch of the 1967 model.

"Q" GLASS VACUUM TUBE ENCLOSED IN WOODEN BOX 9ft LONG, 5 in diameter.

LEGEND

1. AUDIO OUTPUT
2. PICK _UP
3. CONVERTERS
4. AUTOMATIC CONTROL CHAMBER.
5. GAS CHAMBER.
6. CONVERTER.
7. RECEIVED ENERGY CONTROL
8. DARK ROOM
9. HEAD (Q_GLASS FILTER) [10]

"We bring this same message to you in the hope that whoever receives it, will extend it word for word, to as many people on earth as possible. You cannot receive our message on your regular radio systems, but we hope that others will give due honour to Tesla, and succeed in building his Scope, by means of which we can pass on our vital message in the dark days ahead. We cannot interfere with your destiny, which by God-given free will you have created for yourselves. "We can only hope that some of you will listen to Christ, asking God for wisdom. We have repeated this message for so many hundreds of years, can we ever hope to see the people of earth learn and live by it?

"You should. It is your only hope, your only salvation."

END OF MESSAGE.

Chapter 5

A very loud buzzing almost drowned out the last words of Frank's message and when Frances tried to talk a few moments later, it was impossible to understand a word, the loud buzzing completely covered the beautiful voice of our good friend. I managed to hear that she wished to give me 12 meditations on the good life, and though the strange static prevented her doing so at that time, I knew that my Venusian friends would make further attempts to communicate this message of importance. They tried repeatedly, but each time Frances words of wisdom were drowned 'by the crackling sound of a loud static, until one night, I managed to receive a few words from Frank and I understood him to say, "Expect us on April 15." Can you imagine my excitement on hearing those words? I had heard from them via the Tesla-Scope, but they had not landed on my, place since 1961. How I was to enjoy a visit within a few weeks, but as usual, I must not tell anyone, not even my dearest friend, for walls have ears. I had listened with mounting excitement to Frances' and Frank's words, for they both repeated the message to make sure that I heard correctly. It was thrilling indeed to learn that the great X-12 would visit me again after an absence of 8 years, and I wondered deeply at the portent of the special messages that made such a personal visit necessary. In the few weeks that followed, I waited with growing impatience for the arrival of the X-12. As I had received no indication of the exact time that the space ship would arrive, I had set up the Tesla-Scope to receive warning of the approach of the X-12 during the period from April 10 to 15. I kept constantly alert for the alarm signal and must confess I had very little sleep. When April 14 arrived, with still no warning of the approach of the X-12, I decided to keep vigil day and night. Shortly after midnight, I went outside to check on weather conditions. It was a dry, fine night, but with low-hanging clouds, ideal for a concealed landing of the large spaceship. Back in the house, I waited it out. It was around 1:30 A.M. when the alarm signal on the Tesla-Scope rang shrilly and although I .was expecting it, I was startled almost out of my shoes. I ran to the door for I wanted to see the great ship land, but as I fumbled with the door latch, it got ahead of me. Noiselessly like a silent cloud, the X-12 had landed in the large hollow of my big meadow, and as I ran towards it, there it stood in all its silver-gray glory, and once again, I marveled at its gigantic proportions. Then a door in the base of the spaceship slid open and framed against a background of light stood the figures of my two Venusian friends, Frank and Frances, a wonderful welcoming smile on their faces.

They were wearing their usual space coveralls, made of some loose, pliant material quite unknown to me, but fastened tightly at the wrists and ankles and with a wide flat belt around the waist.[1] Both were bare-headed, but even in the half light I could see the gleam of their golden-blonde hair, Frank's cut short and Frances' falling in soft waves to her shoulders. They made a handsome, well built couple, Frank standing about 6 feet in height and his beautiful companion about 5 ft. 8 inches. They came forward to meet me with a warm embrace as we exchanged mutual greetings. Then Frank said: "Come, let us go into your house. We wish to talk to you." Frank's first message to me was a purely personal one. There was a grave problem in my life-regarding the health and well being of a dear friend, which had been causing me deep concern. To my great surprise, my space friends knew every detail of my problem and were quick in extending sympathetic understanding and helpful advice, which brought great comfort. He then discussed with me some special plans for building a new workshop further north, near Forestville, Quebec, in which I was to carry out further scientific work on the Tesla ideas. Then Frances stepped forward, a beautiful smile on her lovely face. "And now, Arthur," she said, "I will give you, without the interference experienced or, the Tesla-Scope, my Meditations on the Good Life, a gift to the people of Earth, with love and prayer for you all, in my heart." She paused, as we settled comfortably in my living room to listen to her words, then with a silvery ripple of soft laughter she commenced.

> "My first message is of such simplicity that many of you will no doubt laugh, but this is exactly what I want you to do, for my words concern the great value of a smile in all human relationships. In short, I want to talk to you tonight about Pleasantness of Disposition. My friends, you must never under-rate the inestimable power for good in a pleasant manner towards all creatures, circumstances and life in general. A charming smile, a pleasant word or two, will instantly dispel the anger or hard feelings of those ill disposed towards you, for a genuine smile is a positive radiation of light in which the shadow of negativity cannot exist. We cannot emphasize strongly enough the vital importance of a pleasant disposition, for it is the Golden Key to a happy, healthy life. Did you know that if you cultivate a pleasant disposition, if you smile and laugh a lot, your physical body can-

not be assailed by many diseases which are caused by purely mental depression and unnatural anxiety? This is the Divine Law, my friend, and if you desire the two greatest blessings of life, Health and Happiness, they can be yours by means of the Christ-Rule, which is the simple act of being pleasant both to yourself and to all others. It is even the secret of acquiring peace on your earth. Does not your Bible, speak of "Peace on earth and goodwill towards men of good will?" This, of course, is nothing new to you. You have been told about it many times, in many ways, by many people. Why is it then that the people of earth cannot learn so simple a lesson with such happy results. As we look down upon you, we see so many of you going about your daily lives with grim expressions on your faces. Some of you will immediately say that life on earth is grim, but dear ones, can't you realize that you are only adding to its grimness by this negative attitude? If you want brighter conditions on earth, all of you have it in your power to bring about this happier state of affairs by development of a cheerful outlook. A pleasant manner and a glowing smile; it is so simple as that. Surely, you know that a smile is the most-contagious thing on earth; give one and it will be multiplied many times. Some of you may ask, what exactly is Pleasantness? It is a precious jewel indeed, for Pleasantness is a many-faceted diamond, with many forms of expression. In essence, it is the simple act of extending goodwill to yourself and to others and particularly those who may hate you, for you see, it is also a form of self-protection because the light you thus emanate cannot be penetrated by the forces of darkness. A pleasant personality entails an optimistic outlook of life, always looking for the Good and Beautiful which exists everywhere as your Bible says; "Seek, and ye shall find." Pleasant ness should be reflected in your every thought, word and deed. It will add an **IRRESISTIBLE CHARM TO YOUR PERSONALITY BRINGING INNER JOY TO YOURSELF** and happiness to others. Since Pleasantness is such an attractive quality, why is it that Earth people in general, do not include it among the avowedly important elements of character building? We watch, with great admiration, many of you teaching your children to be honest, truthful' and unselfish, but is not pleasantness the highest form of unselfishness? Of course, it is, for it is a positive outpouring of goodwill, which brings joy to others and immediately puts them at ease, and furthermore, it

brings the reciprocal reward of returned pleasantness. In short, it makes everyone happy. How then can the people of Earth, weighed down by fears and anxieties, develop this gracious art of Pleasantness? Well, to break the acquired habits of many years, brought about by the incomplete understanding of the true meaning of life, is not I realize an easy task. So may I, with love in my heart, suggest a few steps to develop a pleasant personality and urge those of you who are parents or teachers to pass on this invaluable knowledge to your little children.

(1) Practice the art of smiling sincerely, not pretending, at work, at play and particularly in your contacts with others. Be generous with your smiles. They cost you nothing but a slight movement of your facial muscles, and you will be amazed at what you receive in return.

(2) When you talk to others, smile at them and make pleasant remarks. Never miss an opportunity to pass on a genuine compliment. This is valuable therapeutic psychology, for it not only gives pleasure but encourages the recipient to live up to the compliment.

(3) To be easy to get on with is the description of a notable characteristic. To please, it is not necessary to have youth or beauty, or even manners. Charm is something in voice or expression which makes you feel better, disposed to your race to look at or listen to. We need not care whether pleasant people are highly educated, they do something far greater; they practically demonstrate the great theorem of the livableness of life.

(4) How many well meaning folk need warning, to not let their good be evil spoken of and your principles discredited because the religion you profess seem, in your practice of it, unlivable, unlovable. You wish people to read something of faithful character in your example; take care that they do not take you for a hypocrite.

(5) To induce an admiring love for what is good by your conduct, is an aim you will never reach if you are unpleasant, ungracious, unkind. Remember what Christ said, "Judge not, forgive men, give to him that asketh of thee, blessed are the peacemakers, do good to them that hate you".

"And now, Arthur, our dear friend, let me read a little verse which we of Venus learn. -------

"Although it takes so many months,
To make a single year,
Yet far more quickly than you think,
The months will disappear;
The very centuries have wings,
New years grow old and grey;
The work which you intend to do,
Begin it, friend, today.

So many months, so many weeks,
But soon they will be passed;
There is but one short life to live,
Each year may be the last.
To yesterday there is no door,
To-morrow may not be.
Today is yours, but nothing more
Belongs to you or me.
Within a single fleeting hour,
How many minutes lie?
But, even as you wait to count,
Will sixty moments fly.
If you've a tender word to say,
A kindly deed to do,
Suppose you do it just this day?
I would, if I were you!"

"Thanks for the good advice," I said, "I will do my best but there are many questions which I would like you to answer Time goes fast, who would believe it is almost eight years since you were last here. Have you time to answer one question?" Frank smiled and nodded, "We will stay a short time", he said, "but I must warn you that if the sky brightens, we will have to take off immediately. But speak on, I will try to answer your question." "Well, Frank," I asked, "can you tell me something about this thing which we on earth call 'Gravity'? Can we ever hope to free ourselves from it?" Frank's deep blue eyes scanned mine searchingly. "An intriguing question," he replied. "One thing I know, and which I am sure you know also, is the fact (and all else is only theory) that Gravity is a name used for the unknown force that draws all things towards a center of attraction. It is a Divine Law, and as with all Divine Law — it is forever. But, what exactly do you mean by 'freedom from gravity'? Do you mean no gravity at all — or an easy means of lifting yourselves from earth? We of Venus have that power by means of applied "thought" or "faith" But we do not remove or interfere, or try to interfere, with the natural force of gravity. Let me explain a little more about gravity. Nothing new in what I can tell you, I think you have as much information about the subject as we have, but as you ask me, I will tell you all that we of Venus know. Gravity consists of two distinct parts, centrifugal force due to a planet's rotation,

plus the force of natural attraction of the planet.[2] If the attractive force of planet earth could be stopped, or counteracted, and the centrifugal force remained, all loose material on earth, including air, water, and most buildings, would leave earth forever and fly off into space. If the centrifugal force should also be stopped or counteracted and gravity made equivalent to zero, physical bodies would have no weight. The pressure that the upper strata of earth's atmosphere exerts on the lower strata would cease to exist, the gaseous air would expand and leave the earth, followed by the water which would vaporize. The moon; held in its orbit by the attraction of the earth, would Leave it and many other drastic changes would occur.

"If conditions changed so that the human body was no longer subject to gravity, the change would prove fatal, for your physiological and psychological processes would be so deranged you would quickly die under the new conditions. Such conditions imply that the air, water and food which enter the body changed from a condition in which they had weight to one in which they did not.

"Much more could be said, but it would all amount to the same thing. Gravity is one of God's natural laws. It is an exact law and therefore perfect, and if man could upset it, he could not exist. Man cannot improve God's law, but we can make use of them. I believe 'thought' to be the greatest power in existence, and it is by the use of this power that we can overcome the force of gravity. Earthmen could learn to use this power, by the practice of perfect faith (not blind faith) by the irrefutable belief that it can be done.

"God be with you, our friend, and with us always, as we work together for spiritual progress and peace on earth."

With the ending of those words, Frank and Frances stepped into the X-12. The door closed behind them, seconds later the great spacecraft rose silently and was soon lost behind the clouds,

leaving me with many questions in my mind and wondering when they would return.....

Chapter 6

In early August, 1969, I started off by car for a trip out to Western Canada. Everything went well until I came near to Sault St. Marie, Ontario.

There I met with an accident on the road. This occurred on a gravelly stretch of new construction, when without any warning and in a restricted speed zone, a car shot by at a very high speed, sending up a shower of stones which smashed my car window, sending a piece of broken glass into my left eye, and a slight cut on my left hand, so that I could not continue. I tried to have repairs made at a number of service stations, but they all had the same excuse, no glass on hand to fit, and it would require at least four days to obtain some.

I decided to return to Quebec City, so I patched up the window with clear plastic and headed home via highways 17 and 69, then on 401. Lucky we had no rain, so I took my time stopping at Brockville, Ontario, for two nights and during the time I was there, I received a message from a friend who was posted at the Army Camp at Gagetown, N. B. He said that a large Space Ship had been seen by hundreds of army personnel and he wanted me to go there just as soon as possible. I left Brockville at 4 A.M. and arrived at Quebec City around noon, where a service station applied a new window to my .car, which required a little more than one hour. I then drove home to Lake Beauport, which is about 16 miles from the station where they fixed the window; by the time I fixed up a light lunch and had a wash, it was almost 3 P.M. I then headed for up-town Quebec City, over the old Quebec Bridge, and then along the No. 2 highway, east; Gagetown here we come! But, it was much too far to reach that night. I arrived at Notre-Dame du Lac around 8 P.M. where I stayed for the night. I left after breakfast at 6 A.M. and arrived at Gagetown at 11, and as it was a nice day, I enjoyed a picnic lunch before looking for my friend, whom I located around 12:30. We then went to the place where the Space Ship was seen and I made a very careful inspection, using the special detectors designed by Tesla.[1] I also extended my investigation by questioning the local residents and Army personnel who say they saw

the large spacecraft land.[2] All their descriptions tallied perfectly with that of the X-12. On my return home a few days later, I set up the Tesla Scope, which I had dismantled for my expected long trip out west.

It was towards the end of August, 1969, that I received a message from Frank via the Tesla Scope. It was a request, and it concerned a very earthbound matter. During their visit to me on April 15, 1969, while in my house, Frank had read a news item, which appeared in a U.F.O. paper, which was published in Vancouver, B.C. The story concerned a large piece of metal, which was said to have been picked up near Quebec City in 1960.[3] The person who wrote the story said it was a mystery because no one had been able to find out exactly what it was, and the writer went on to say that members of a Canadian science club thought that it might have fallen from space. They said it weighed about 3,000 pounds.

Frank was interested because of the statement he read, which said the metal might be of extra-terrestrial origin, and as this could be interesting, he wanted me to make some tests on it with him. Frank then gave me instructions on how to make the tests, using a Tesla 'Bridge' and a tape recorder. The piece of metal was at Ottawa, Ontario, where as per the instructions, which I received from Frank, I made a very careful test. In fact, I made three complete tests, with a number of persons present, by means of the Tesla Bridge. I was able to transmit the information recorded over the Tesla Scope directly to Frank, who then made a careful analysis, and according to his findings, it compared exactly with some other pieces of iron which were a part of the first Quebec Bridge which fell in 1906:

When I asked Frank if he could give me an idea of the actual composition and percentage of the various metals found in the chunk, he said that knowing the actual percentage of the various metals would prove nothing, and would be a waste of his time, for our test proved beyond any doubt that it had never been in space. It is exactly the same composition as other blocks found in the same location.

CHAPTER 7

Christmas Eve, 1969, I had just arrived from Montreal where by the grace of God my problem had been solved. as promised by our two Venusian friends, Frank and Frances. I had driven from Val Morin, which is 45 miles north of Montreal, a very good road in fine weather, but I had a blinding snowstorm for most of the 45 miles, with slow orders all the way. Lucky for me the balance of the 212-mile journey was fine and clear all the way to Quebec. I was a bit tired when I arrived home, and decided to rest before unloading my car, but no sooner lay down to rest when the alarm on the Tesla-Scope sounded. "Of all things," I thought, "a Christmas message?" It was the voice of Frank.

> **"We are landing," he said. "Come right away." As there was not much snow in the fields, it did not take me long to run down to where the great X-12 had landed, in the same old spot. Frank and Frances were standing in the door-way, all smiles. "Christmas greetings old man" said Frank. "Come in, we have a surprise for you." "What do you man "'Surprise," I said, "Is not your unexpected visit surprise enough?" "Well," said Frank, "we have a greater surprise. Come with us." So I followed them up to the top level of the great Space-Ship, which by mans of the wonderful 'thought' operated lift took only a few seconds, and there we were, almost 300 feet high. "Take a look Arthur," said Frank pointing to a large silver ball. "What is it?" I asked. "Looks like an over grown foot-ball, a silver Ball."**

Frank laughed, and replied, "That foot-ball as you call it, my good friend, is a **TIME MACHINE**". "No kidding," I said. "No," replied Frank, "I am not kidding, that is a real Time-Machine. Would you like to go places in it? Back or forward into the past or future history of your world?" I was amazed, and only partly convinced. I had read many stories of Time Machines, very interesting but none of them true. But up to now I had no reason to doubt the word of Frank, and from beholding the wonders which I had seen on Venus, and the fact of this great Space Ship operated by thought alone, I knew that unless Frank was just pulling my leg, the Time-Machine was another wonder of Venus.

I said as much to Frank. "O.K.," said Frank, "tell me, where do you wish to go?" "I would like to see what our world will be like two thousand years from now," I said. "For instance, what will my property look like? Will it remain a nice country place? I have ideas of what the world is rushing into so if your Time Machine really works, let's go." Without further remark, Frank open ed a small door in the side of the great silver ball." Are you ready?" asked Frank. "I am almost scared to death," I replied. Both Frank and Frances laughed at my amazed face. "No danger", they both assured me. "Just tell us where you would like to go. That is, have you made up your mind? Do you wish to go forward, or go back into history? To what year exactly, and exactly where on earth?"

"Well," I said, "if you are not pulling my leg, I would like to see my property, this exact spot, on the 24th day of December, 2000 years ahead from now." "O.K.," said Frank, "go inside, sit down, and do not rove at any time, remain in the exact same spot. But if you feel yourself to be in danger, or for whatever reason you wish to return, call out, or as you say on earth, "Yell". We will bring you back just as soon as we hear your words, I sat down, and Frank closed the door leaving me in almost total darkness. Then a slight buzzing started. After what appeared hours, but really it was only a few moments, I found myself seated alone, and after a few seconds for my eyes to get used to the bright light, I noticed there was no snow, and the thing which I noticed most was the very warm temperature; in fact it was hot. But, I thought, how could this be, for when I had walked to the Space Ship on the 24th day of December 1969, it was about 25 below zero at Lake Beauport, not much snow, but we did have a couple of inches. Now here was I in exactly the same spot, with no Space Ship in sight, seated on a block of stone, outside in the open. Yes, it was hot. But, I thought, if this time machine is a fact, this was the year 3969: The world had passed through 2,000 years, and what a change: That which had been a tree covered mountain in 1969, was completely covered with ruins, no sign of any buildings, only ruins, block piled on block, no trees at all.

Was I dreaming? Was the Silver-Ball Time Machine a Fact? **WHAT** caused this ruin? Many questions passed through my mind. Large stone blocks, crumbling ruins, reminded me of pictures I had seen of the ruins of old Rome. Some day in the past, great stone buildings had been built on what had been my farm property. What caused their destruction? As far as the eye could see, complete total destruction; where was the once beautiful country gone? I sat there with sadness in my heart. There did not appear to be any life — no birds, or any little wild friends, who once used to come to

meet me when I walked down into the woods. The ruins appeared completely dead, as far and in every direction the eye could see — nothing but ruins. I appeared to be free of the Silver-Ball, as I saw no sign of it. I was sitting on one of the stone blocks, and I could see in all directions. I did not dare to move because Frank had warned me not to, so I remained in the one spot. No life did I say? What on earth is that? Did my eyes play tricks? For there coming out from a space between large stone blocks, was a queer looking monster. It appeared to be about 50 feet long, with a large head, and all the appearance of a large lizard. It saw me and started to approach. It came within 100 feet and sat up: It looked funny, but I did not laugh: I wondered should I yell and let Frank bring me back to 1969, or should I wait to see if the monster came nearer? I also wondered, who was more scared, me or the monster? No doubt it had never seen a human creature before. Well, it did not appear interested in me, for he (or she?) soon got tired of watching me, and got down on all four feet, and started to eat some weeds growing between the stones.

All this time I had been wondering if the people who had built this place had left any records, and if so, how could I discover them? This was a problem because Frank had warned me not to leave my seat. I could see many stones of all shapes and sizes, perhaps someone had cut some form or kind of record into one or more of the stones, such as we do with a corner stone, but unless I could move from my seat, it would be impossible to find any record. There did not appear to be anything which I could do until I returned to the year 1969, and perhaps, interest Frank to return with me so that we could search for records. I was thinking along that line when I saw the creature, whatever it was, run back into the space between the stones. Something had scared it, but at first I saw nothing except the rocks. Then I looked up as I noticed the creature was doing, and in amazement I saw something was gliding down from the sky: Nearer and nearer it came, slowly it came and grew larger and larger until it almost covered the sky:" A space ship," I cried in amazement. Yes, indeed, but what a space ship: It appeared to be at least four times the size of the X-12. At first, I felt like running, but something told me to remain where I was.

At last, the giant ship came to rest. The control tower, made exactly like the X-12, was roughly 250 feet in diameter, and I figured it would be 900 feet high' The body of the ship covered everything in sight, it was roughly 2,400 feet in diameter. As I sat there, almost frozen with fear, the door opened - can you guess who came out? Yes, with a boyish grin, it was Frank, not looking a day older than when I had left him 2,000 years ago: Laughing at my surprised look he asked, "Why are you surprised? Did I not tell you

that we of Venus live for thousands of years?" "Yes," I replied, "you did, but I am hard to convince. Is Frances with you?" "Yes, right here," said the silver voice of our beautiful friend as she came to the door, also not looking a day older. They both care and sat on the stone blocks with me. "Well Arthur," said Frank, "have you seen enough of the future?" "Yes and no, Frank," I replied. "I have a few questions, first how can I search these ruins? I would like to find, if possible, some record perhaps cut into the stones: try to find out what caused this ruin. Can I leave this seat or will you tell me the answer to this problem?" Frank looked thoughtful." It is impossible for you to leave your seat, even for a moment without danger. But I will search for you", he said.

He then walked towards a large group of stones, and started to search, moving from stone to stone, and writing on a pad, which he carried. It appeared to be hours before he returned with a smile on his face. "You found something?" I asked. "Yes," replied Frank, "I found something, not a complete record, I fear, but we have the sad story." "Sad?" I questioned, "just how sad?" "Well," said Frank, "I will try to give you a good picture of the past 2,000 years, according to that which I know personally, and from the records cut into these stones. It was during the late 1970's, between 1971 and 1978, that an Atomic war broke out between China and Russia.[1] This led to the third world war; America, Canada, England, and South America included. In the end no one won, as could be expected; most of the known world was almost completely destroyed, only a few persons who lived in the hills, and close to the North and South Poles managed to keep alive. The whole nature of Earth changed: the very seasons altered. The only people left were those of the hills of China, good people who had little use or need of those things which most of the western world depended on for their existence. It was (according to the records cut in the stones) in 1983 that the people of China moved to Canada, and the ruins, which you see before you, are a part of their development, which continued until the year 2,920. In other words, the Chinese people owned most of the world at that time. Then without warning, the end came. One moment the people were doing everything they liked to do and worshiping the Sun-God. The next moment, all was destroyed, the Sun-God could not save them. As we read in the book of Revelation, there is but one God."

Frank continued, "The world of 2,920 thought they were above God. They had invented a super-system, as they thought, to maintain their mate-

rial lives 'for ever.' They had no use for the God of love, they had completely forgotten the Atomic war of 1978. And then, the blow fell. The Astronomers had seen; had been looking at a bright red something for years. This something turned out to be a large ball of fire, and as it approached closer to earth, it was seen to be much larger than earth, and a good deal 'hotter.' In fact, it turned out to be a ball of Atomic-Energy, but as it had been seen for ages, the world took it for granted. It was said to be 'just another bright star' until!— the blow fell. The chief Astronomer at Montreal saw something new; the ball of fire seemed to be closer, in fact it appeared to be falling to earth fast: During the next few days many other Astronomers saw the same thing. Of course, the world at large said funny things about the old men who look at stars, but the ball of fire was getting larger, any fool could see that. But they had seen these comets before. After all, people were too wise to believe in God. Science said nothing like that could happen in this modern world — who was fool enough to believe in a god? So at last when the world Astronomers combined their findings and said the ball of fire would hit the earth very soon, no one believed, except the small handful left of that old group of fools who said they were 'Christians.' Of course, they were a laugh!

"Finally, after a few months of having fun with the silly Christians, the heat from that ball of fire was felt all over the world; the ice caps at the north and south poles were melting, causing floods, shocks were felt, rivers started to dry up, and in a few months no large steamers could pass up the great St. Lawrence River. The world leaders started to think, well maybe the Christians had something after all, they appeared to be the only people left on earth who could still smile: But what was wrong with our boys of science who had told the world that this ball of fire was just a bright light, no danger:' The Hot Ball of Fire drew closer, no one could find a cool spot. Most people had fled to the Arctic, but it was even hot there. There appeared only one thing to do; get off the earth fast, but how could several billion persons leave? There was not a space ship to be had, and no time to build one, even if they knew how, but of course, no one believed in space ships, any more than they believed in God. The end came quickly, shock after great shock hit the earth, and there was no place to hide, even the large caves inside the earth were destroyed, not one stone standing on another, a great big pile of rubbish: ruins, ruins. The few Christians were moved to the planet Venus, and returned to earth many years later, to start a new world, with God.

"And that," said Frank, "is the story of the end of the people of earth, according to my personal knowledge, and the records cut into these rocks. The records were made by the last people to live, a few months before the

world was destroyed." "But," I asked, "what was this thing seen by the chief Astronomer?" Frank looked at me with sad eyes." It was the 'Red Planet.' The people of earth were completely destroyed by the Atomic Energy transmitted from this planet when it came within reach. Man, by means of his foolish science, had destroyed himself. You see my friend, no one can live apart from God forever.

God did not destroy them. This is not new, as I have repeated so many times in my message to the earth people. You never appear to learn by your mistakes, your great scientists appear to believe they know everything, and because in reality they know nothing, they bring destruction on themselves and all who- have faith in them. Science under Divine Control is good, but without His will, it is evil."

With those last words, Frank said "Good-bye." Frances waved her hand, and walked into the great X-12, leaving me alone with my thoughts, and many questions I would like to ask Frank. I then yelled, and found myself within the silver-ball, and in a few seconds, Frank opened the door, I stepped out, back again to Christmas Eve 1969: "Welcome Home," said Frank. "Tell us a11 the news." I told them all I had seen; the ruins, the monster, the giant space ship, and the story he had told me.

Frank and Frances were sad. "But," said Frank, "is it not true that your world has been warned for generations? The people of earth are working to destroy themselves by their foolish ways. God made one race of mankind, some red, some black, some of other colour — but all one race; need we tell you that you judge others because their skin is different, or because others have more, or less money, or perhaps their 'social background' is different: It is little wonder you have war and other problems. We still believe the earth man, in general, to be mentally ill; we have great difficulty of convincing ourselves that sane persons would behave as earth people do."

"In our first message we told you of our surprise to see the people of earth running around like insects, doing little of practical or constructive use, but just living as play boys, for self. Most of you end your lives sadly; even at this moment your nations plan to murder each other, watching to see who can throw the first atomic bomb, to blast the other, if possible, without getting hurt. You in Canada have the highest standard of living on earth, and in what manner do you thank God? It would appear from their actions, that the people do not appreciate their lucky position. From what we see, none of the earth people are satisfied with the good life, world conditions in this age appear to be the same as they were before the great flood; when every one ex-

cept eight persons were destroyed. The people of that day were almost the same as the people of earth today: They were very religious, but worldly, materialistic minded. Note that before the flood, they had about the same 'new' morality as you have on earth at this time, and that is the reason for our coming in large numbers. You will note that the people before the flood were laughing at the few who saw signs, laughing at the silly old man building his flying-saucer (Arc), no one saw the signs. Note today, very few see our space ships; Yes, the majority laugh, for as Christ said 'There are none so blind as those who refuse to see'. Only those who believe can see further than their nose, and that is why you saw ruins."

With these words, Frank ended his talk, and Frances said she would give us a little talk for us to meditate on. "I will not say very much Arthur," she said. "We must leave, but we shall return soon, and at that time I will bring you another meditation. Here are a few thoughts about 'Visions.' Have you ever considered, my dear Arthur," she said, "that God's truest servants have lived by the power and guidance which came to them through their 'Visions,' while they looked not at the things which are seen, but at the things which are not seen. To most people, Venusians and your people of earth, and those of other worlds, glad and happy days come from time to time. Let us remember to keep our eyes and hearts open, to drink in all we can of joy in what we see and hear, during those glad days. It may come true even for us, that God should be with us in our gardens, and that we may learn to know Him better through the things that are made. But, how may we keep this spirit of life and light with us when the days darken, again, and the shadows fall so early? Have we any inner vision, which is not dependent on the various happenings of our lives? What can make us brave and quiet in grievous anxiety? What can steady us when the cloud of depression and sickness comes to us? What can calm us when the deep dark shadow of death falls or, our homes and takes with it all our joy? What can give us patient wisdom with, and loving interest in, the children, old and young, according to their need? What can inspire us with understanding and love for all creatures? You know the answer, the world knows the answer. Your world trouble is the direct result of your rejection of the simple truth, as taught by Christ. Anticipating this rejection of idealism, of the true idea of God, this salvation from all error, physical and mental, Jesus asked, 'When the Son of man cometh, shall he find faith on the earth?' " With these words my Venusian friends bid me goodbye, leaving me with the greatest truth, and wonder of my life.

I expected wonders. I saw a miracle.

CHAPTER 8

After the great X-12 had left Lac Beauport on that cold morning of 1969, Frank sent the following message which I received on the Tesla-Scope:—"The people of your world are on the verge of being wiped out by a cataclysm, as the result of the approaching Armageddon, whereby combatants and civilians alike will be blotted from the face of the earth if something is not done to stop the present methods of evil and hate, which appear to be spreading all over the earth:

ON WAR AND HUMAN RIGHTS: [EDITOR'S HEADING][1]

> "Only sensible recognition of all national and individual rights of all people, and the right of all people to live in accordance with God's law will avert this cataclysm.
>
> "The wholesale building of destructive engines of war will not save the world; and is only the method of lunatics who have lost faith in God. It is the right and duty of all sane thinking people to deliberately and definitely think of Him, and peace. All of the people on earth, each one of you, will be responsible for every life lost. It is not so much of what you do, but that which you do not do - for good, as you may read in the third chapter of Revelation. Each one of you will be held responsible if you do not do your utmost to prevent hate, or war. Engines of war, which is murder, are not required to prevent war.[2] If you expect God to help, you must keep His law. If you keep that thought in mind, your problem will be solved. But to have peace, we must have peace in our hearts, for that which we receive is the reflection of our own desire, even if we do not know it. No one can deceive God

1

2

because He can see into our hearts. In the past, from that which we see of you, the world has always been ready to blame God, or bad luck, or even to say 'There is no God' because He did not prevent sickness, death, and war, or to save you from the results of your sins. How can you expect Him to help you, when you only pretend to keep His rules or to even say that He did not give you enough strength to keep them?

"Therefore the answer to all of your problems is to be honest with yourself, give up your foolish lust for personal wealth and power. Take a look at your history, where are all the great people? Where are your war lords? You know the answer. Is there any future for all those dead earth people? Did they take their silly power and false pride with them? Was their lust for power worthwhile?

"If the millions of people on earth were to wake up and put Christian leaders to govern them, using only the law of God, the results would be peace and happiness for all.

According to the sixth commandment, "Thou shalt not kill." The true meaning of this has been rendered by Christ in His Sermon on the Mount, which you may read in the book of Matthew, Chapters 5, 6, 7. Some people try to make themselves believe they are not guilty of murder, because they have their own personal meaning of the law. Blinding yourself to the truth does not make you one bit less guilty.[3] Entering into, or encouraging of wars, or the envy of others, to hate or to dislike, to control by the force of will, to hunt for sport, to kill anything, to destroy any good desire on the part of any one, it is all murder. As Christ said, angry and evil passions are the seeds of murder. Cain first envied his brother, and after that he murdered him. The Pharisees first hated Christ, and after that they were the means of His being put to death. Christ our Saviour not only did not go about wounding and injuring men, and putting them to death, but He went about befriending them, and doing them good, and we must, according to our opportunity, go and do likewise.

"Let us all reflect also, that when one thing is forbidden in scripture (and common sense), the thing contrary to it may be

considered a command, in other words do the positive. 'Love worketh no ill to his neighbor', therefore love is the fulfilling of the law. Do we then feel a tender concern never to hurt any one by word or deed? Do all earth people consider it as a part of their business in life to support the weak, to feed the hungry, to clothe the naked, according to each ones ability, and also to comfort them that are afflicted, to heal the wounds which others give, and to all without thought of receiving thanks, and to remember that our own neighbor does not mean just our own kind, our own race, colour or country? It is a silly excuse to say we go to war because we must have more territory, for expansion; no country needs expansion. Your earth is supposed to be free to all who wish to live in peace and good will."

END OF MESSAGE.

CHAPTER 9[1]

Some weeks, after receiving the message from Frank, which he sent to me soon after the great X-12 had left me on that cold Christmas morning of 1969, I again heard the alarm sound on the Tesla Scope. Another message, I thought. Yes, sure enough, it was Frank. This time with a startling suggestion, to use his own words.

> **"I wish to suggest that you come with us, on our next trip to the planet Mars! If you agree, we shall come for you sometime around March 9th."**

END OF MESSAGE.

A trip to the planet Mars: The mystery planet was there life as we know it on the "Red" planet? Frank did not mention anything about special equipment, no doubt he would supply it if it was required. Of course, I asked myself a lot of questions. Mars was far away. We knew now that man could go into space, because just recently a man had landed, and walked on the Moon: Not so far away from earth as the red planet, it at least proved the possibility of going to the other planets at some future time, but it will need something far better than a rocket: So during the weeks that passed, I did a great deal of thinking, and managed to make up my mind to accept Frank's invitation. The only things I knew about Mars were all pure theory, no one on earth could be sure of anything concerning anything outside of our world, and after all, we did not know all, or everything about our own earth! At last, March 8th came and with it, my long wait for news from Frank.

Perhaps you are wondering what kind of ship we had? No need to wonder, it was the Venus Space-Ship X-12. Frank had long ago suggested that we might pay a visit to Mars. March 9th turned out to be an almost perfect

of

day for take-off. I waited for the alarm to sound on the Tesla-Scope, again I had no sleep during the night of March 8th, but at last the alarm sounded at around 2 A.M. I again ran outside, in the hope I might see it landing, but there it was, at the same spot. I walked up to the door where I was welcomed by Frank and his charming companion, Frances. "Welcome old chap," they said. "This will make history for you," said Frank." Yes, indeed," I replied, "Mars has always been an interesting subject, but few if any earth people believe there is life, as we know it, on that planet." "Wait until you arrive there," said Frank. In the meantime, the great X-12 was far above earth, which now appeared as a beautiful star, from so far away. The X-12 picked up speed, What speed: No earth man can imagine, contrary to all earth-science theory, the X-12 at such a speed, should have been completely destroyed, for it was moving 27 times the speed of light: At this speed we should reach Mars in about one-hour, allowing for slow-down at the half-way mark, and the landing. It was around 4 A.M., earth time, that we landed on the surface of Mars. Naturally, I was tremendously excited. I had looked forward to a possible trip to the red planet ever since our first; visit to Venus on the X-12. NOW here was I standing on the surface of this mystery: What: next?" I asked myself .As Frank opened the door, he told me to "go ahead Arthur, step out. You have the honour of being the first earth man, since Adam left here, to walk on Mars." "But," I asked, "will I be able to breathe? What kind of air is it?" I soon found out, yes, it was good air, better than on earth, here so far there was no smell of smoke; yes, it was clean fresh air. I felt no discomfort, Frank and Frances followed closely behind me, and we walked towards a large group of rocks, but what rocks: Some of them were about 45 feet in diameter, and thousands of them covered that which appeared to be, otherwise, a large field, and in the far distance were a range of hills. We walked up to the nearest large rock, which appeared to be almost jet-black. Frank scraped away a layer of soft earth, and by so doing, disclosed something bright. "What is it?" I asked. "Looks like gold," replied Frank. "Gold!" I exclaimed. "Yes," said Frank, "it is pure gold, but to be sure, let us test it, shall we?" Of course I agreed, so we returned to the X-12 and obtained a test out-fit, something like the Tesla-Bridge, with which we soon proved the rock to be pure gold; We then made a test of all the nearby rocks, and to our surprise, and delight all of the rocks in the field were indeed, solid gold. "Well", I remarked, "if we could bring that one big rock to earth, we would be the richest people on our world. There is more gold in that one rock (pointing to the 45 foot high monster) than in a11 of our world!" "O.K." said Frank with a grin,

"So you wish to bring this rock to earth?" "Yes," I replied, "if it could be done, but as you know, it is not possible". "I do not know any such thing", answered Frank. "It is not only possible to transport all of this gold to earth, but I will prove it to you:" "Well Frank," I said, "I have every reason to believe you, but it is beyond my understanding, at the moment, just how you can do this. That is to move this heavy mass, which must weigh many times more than your great X-12. I cannot imagine how you can even place it into your ship. How long it will require to break it into pieces small enough to lift into your ship, even if you do lift them with a hoist through the hatch."' Frank laughed, "No my dear Arthur, we will not move one piece either by hand or with our hoist. We shall first return to earth, and then, if you still desire to be the richest man on earth, we will bring it right into your field, without lifting one ounce. .....

"In the meantime, let us have a look around this planet." I was amazed at what Frank had told me, but knowing of the many wonders which I had already seen, not only on this great space ship, but also on Venus, I knew that any thing Frank said was possible. So, I agreed that we should take a look around this planet, which I, at least, knew nothing about, except the little information from our earth scientists, which they thought they saw by means of a very distant view, through a system of lens. Because of what they thought they saw, we were taught (on earth) that life as we knew it could not exist on Mars, because, so they said, humans could not breathe the air, and so many other reasons, none of which could be proved. The findings of these earth scientists was all based on theory, of course, which could never be proved from a distance of millions of miles. Why, they were even mistaken in their findings about the moon which is only roughly 240,000 miles away: Well, be that as it may, and to prove that the earth scientists were all wrong, here was I walking on the surface of Mars, without any special equipment, breathing the air, and so far, meeting no monsters. The place at which the X-12 had landed was almost level, except for these large rocks and the distant hills, which looked exactly the same as the hills we see around Canada.

The nearby ground was covered with a deep green moss, which was very pretty; here and there were bushes, and a few large trees, which appeared to be some type of oak. It was a clear day, this early morning, a few birds appeared, small and very pretty blue birds, they were not at all shy, and came close to us as we walked towards the hills.

"Will we meet any of those people we read so much about?" I asked, "mechanical men, with queer long legs?" Frank laughed. "Yes, those queer

ideas were invented by earth persons who do not believe in the Bible story of creation. Otherwise, if they used their heads and believed, they would not think of such nonsense. Far as you know, 'God made mankind in His likeness.' Surely," Frank went on to say, "there can be but one likeness of God, therefore, if there are beings on this planet Mars, and other planets, they will be like. you and me, naturally of many sizes and many colours. But of course; we people of Venus have been on Mars many times in the past, therefore we know there are real people of flesh and blood on this world, and I feel sure we shall meet some very soon, not far from those hills which we see in the distance. Are they friendly?" I asked. "Yes," said Frank, "as friendly as you are. Love reflects love, on Mars as anywhere else."

We had been getting nearer to the hills as we walked along, and soon approached another group of large rocks which looked very much the same as the 'gold' ones, and there we saw in the distance that which appeared to be a town. Sure enough, as we got nearer we could make out buildings. These were not like those on Venus, but appeared to be more like our buildings on earth, all shapes and sizes, but no roads until we cam almost within this town, which was now about one mile away. I asked Frank about the roads. "The people here," he said, "have no use for roads, which as you know are a great danger on your earth. You will find good roads within the towns, but as you will see in a moment, they have no need for any roads between towns."

Then I noticed that which appeared to be a car coming towards us. As it came near, I saw there were six persons in it. The car appeared to glide a few inches above the ground, it had no wheels. As the car came within reach, I noted the persons in it were all dressed in silk-looking clothes. I could not tell if they were men or women; none of the six had any form of head covering. The car came up to us and the six persons got out and walked up to us, each of them with a bright smile. They all held up their hands with the palms outward, and sent us a mental message of welcome. "Welcome to Frank and Frances of Venus, and to you Stranger." Frank quickly made us acquainted. "This is our friend Arthur," he said, "from the planet Earth. Arthur is interested in the field of black rocks, and would like to know if he may take some of them to earth". 'The six burst out laughing. "Surely," the mental message came, "Earth Man Arthur is welcome to all those black rocks." "Thank you, kind friends," said Frank, "on behalf of our friend Arthur".

The six Martians then invited us into their car, we all got in and drove towards the town, the car rode perfectly smoothly without any noise: It appeared to glide over the ground. In a few moments, we were in the town,

which Frank said was named "The City of Light". Our car came to a stop, and we all got out. Frank said, "Every one walks in the city." The roads were simply beautiful. The six Martians led us into a chorus hall, where I was told the people remain for hours, even days and weeks in these halls, which fill the city, listening in a sort of stupor or trance to beautiful music; for music is the one great recreation of the Martians. It would appear that gradually, under the influence of this musical version, a mentality seems developed, and the soul moves out of the concourse of listening souls, moved by a desire to do something, into the streets of the city.

The Martians call this 'the Act Impulse.' From that time on the soul rushes, as it were, to its natural occupation. Its mentality, aroused by music, becomes full of some sort of aptitude, and it enters the avenues of its harmonious activity as easily, as quickly, as justly as the growing flower turns toward the Sun wherever it may be. Let me present to you the curious scene my eyes saw as we sat in the great Chorus Hall. I say my eyes. It is hard perhaps for you to realize what an organ can be in a creature, so apparently, as we are, little more than gaseous condensations.

You have seen faces and forms in clouds. How often have we watched their changing. It is the same way with Martian Music. I seemed to be in a great alabaster cage enormously large and very beautiful. Its shining walls rose from the ground and at a great height arched together. The front was a network of sculpture, it held the rising rows of what seemed like ivory chairs on which the motionless white, and radiant assemblage were seated. The whole place blazed, and this glow prevails throughout the City of Light. The music came from a wonderful array of beings seated all around the great hall. I could almost see the music, as if it was truly formed like clouds. After remaining a long time in the chorus hall, Frank said that due to our limited time, we had best move on, so we left the solemn, swaying music and stepped out upon the broad steps which face the city. We stood amid a colonnade of arches; the white shining columns rose around us to the high shining roof, before us a long descent of steps, and beyond us and around on a softly swelling eminence was spread the City of Light. It was a marvelous picture.

The City of Light is simple and monotonous in architecture, but its composition and its radiance quite surpass any earthly conception. The buildings are all domed and stand in squares which are filled with fruit trees, low bush like spreading plants, bearing white pendant lily-like flowers or pink button shaped florets like almonds. Each building is square, with a portico of columns placed on rising steps, a pair of columns to each step. Vines

wind around the columns, cross from one line of columns to another and form above a tracery of green fronds bearing red flowers a sort of trumpet honeysuckle. The walls of the buildings are pierced on all sides with broad windows, filled it seemed, with an opalescent glass. Avenues opened in all directions, lined on both sides with these wonderful houses, which appear to be made of a peculiar stone, veined intermittently with yellow, which has the property of absorbing and emitting light. Another strange feature in these Martian houses was the hollow sphere of glass upheld above each house. It is a sphere some six feet in diameter made up of lenses, enclosing a space in the center of which is a ball of the phosphorescent store. During the day, the rays of the sun are concentrated upon this ball of stone, and at night, the stored-up sunlight (energy) is radiated into light and heat.[2]

It was the close of a Martian day that we left the chorus hall. As we emerged, as I said before, upon the broad platform with its colonnade of columns and arches we saw the city as the night drew on. Each house built of this strange substance, which during the day had been storing up the sun energy, now, as the fading day waned, became a center of light itself. At first, a glow covered the sides of the houses, the colonnade, and dome, while the glass prisms above them sent out rays from their seat of stored up energy. The glow spread, rising from the outskirts of the city in the lower grounds to the summits of the hills where the sun's last rays lingered. It became intensified. The green beds of trees were black squares and the houses, pulsating fabrics of light between them. The whole finally blended and a sea of radiance was before me in which the beautiful houses were described, the illuminated groves, and like enormous scintillations, the glassy spheres above them. As the night settled down the light grew more intense, more beautiful. I could discern the opalescent glasses in the houses sending out their particolored rays, patching the trees with quilts of changing colours, and far away there came, still unsubdued by night, the continuous elation of music.

So, we went down the steps into the city, and as we walked I asked Frank to tell me something of the Martian world. "The Martian World," said Frank, "is one country, very much like Venus. There are here no nationalities. The center of the country is in the City of Scandor, quite removed from the City of Light. Business is carried on as with you on earth, but its nature and its physical elements vary. As you will see, there is a circulating medium, banks and business enterprises. One prime element of difference is in

the nourishment and the area of population. The Martian lives only on fruit, and he lives only a few degrees on either side of the Equator. All the businesses that in your earth arise from the preparation and sale of meat, and all the various confections disappear here, and also all the mechanism of house heating and lighting. There are no highways, no railroads, but many canals, which form a labyrinth of waterways, and are fed from the tides of the great northern and southern seas. The business is largely agricultural, but in the cities the pursuit of knowledge still continues. There is, however, on Mars a much-lessened intellectual activity than on the earth. It is a sphere of simplified needs and primal feelings exalted by acutely developed love of Music. Mars is the Music planet."

We now approached the top of the broad hill on which the City is built, and came suddenly out into a square filled again in its park-like center with trees. From amid these trees rose a massive building, which I recognized as an observatory. The many round domes, as on earth, were unmistakable. We entered the building and found that it was illuminated by its phosphori-glass walls, and its cool broad halls and stairways were, in the soft light, very beautiful. But, their wonderfulness consisted in the of illuminated plans and maps of the heavens. These miniature firmaments were all afire, so that each opening, carefully graded in size to represent stars of the first, second or third magnitude, was filled with a beaming point of light, and I walked in these noble corridors between reduced patterns of the universe of stars. We now reached the ascending stairway which we walked up slowly, past great celestial spheres which 'filled the higher hallways. We entered a large central space, furnished with ivory chairs, and a broad massive center table, also of ivory, curiously inlaid with particles of the strange rock which gave out a liquid light and imparted indescribable beauty to the carved ornaments upon them. The floor was dark, a leaden colour, lustrous, however, like blackglass and made up in mosaic. Around the room were alcoves lit by lamps of the 'light' rock, and in each alcove a glove of a blue metal upon which were painted sketches like charts or maps. A chandelier of this blue metal was pendant from the ceiling, and in its cup-like extremities, arranged in vertical tiers, were round balls of the 'light-rock' glowing softly.

Wide windows, unprotected by glass or sashes, just embrasures framed in white stone which everywhere prevails in Mars, looked out upon the marvelous City, which thus seemed — a lake of glowing fires, over which, rising and refluent waves of light constantly chased each other to its dark borders, where the surrounding plain country met the City's edges. The walls of this beautiful room rose to an arched ceiling which was inlaid with this wonderful blue metal,

seen in the globes, designed in scrolls and waving ribbons, and just descending upon the walls, themselves in attenuated twigs and strings. The walls were bare and shining. How thrilled and awe-struck I became as I gazed around me, so many wonders on this planet and so little time to see it; we must move on.

We left this wonderful building and made our way towards the "Garden of the Fountains," which I was told lies over toward the great Halls of Philosophy, Design and Invention, whose domes and temple-pointed roofs of copper and blue metal I could easily discern it covers over half a square mile of space. It is supplied with water from an enormous lake resting in the hollow of an extinct volcano, fifty miles to the east of the City of Light, at an elevation of 5,000 feet. A great conduit or water pipe, as we would say, conveys the water to the garden. The Garden is built actually upon piers of concrete and stone, connected by arches of brick, and through the subterranean chambers thus formed, the division of the streams is made, and there controlled. The whole was designed by the great Martian artist, Hinudi. The garden is approached through a labyrinthine avenue made up of Palms, which on that side of the city seem to be plentiful and over these palms, in extraordinary profusion, the vines of the red flowered honeysuckle. You cannot see beyond the wall of green on either side in this winding way, and only as you gaze upward does the eye escape the imprisonment of its surroundings, where above the waving summits of the palms you see a lane of the bluest sky.

As you draw near to the end of this oscillating road, into the garden, the splash and roar of falling waters invades your retreat. And then suddenly as if a curtain had arisen or dropped to the ground, you emerge upon a great marble terrace of steps and before you is spread a forest of geysers distributed in entrancing vistas in a lake of tumbling and scintillating waters. The scene is amazing and transporting. Rushing jets of water are enclosed in hollow pillars of glass, whose lines are ravishingly combined in the separate clusters of fountains. The heights of these fountains vary from 160 to 200 feet, and they are arranged in a peculiar disorder, which however, conforms to an elaborate plan. The water rises in these colored tubes in green columns, then breaks into sheets and bubble-laden cataracts of spray above them, pouring far outward like blazing showers of little lamps in the full sunlight. Many of the tubes are inclined, and the ejected shafts of water collide above them, producing explosive clouds of shattered vesicles of moisture that float off or drop in miniature rains over the lake. It made a bewildering picture. The exposure of water in the great lake which holds these fountains is broken with waves and the tempestuous scene with the constant excitement of the rising and flowing avalanches of water creates feelings of abounding wonder. The marble steps ex-

tend around the lake, and behind them on all sides rises the wall of the palms, beaten into motion by the wind blowing ceaselessly.

Frank decided it was time for us to get back to the X-12. We bid good-bye to the six who had first met us, and also to' a great number of others as we walked the beautiful streets in this wonderful City of Light. Back on board the X-12, on our long **TRIP BACK TO EARTH THE QUESTION IN MY MIND WAS THE GOLD ROCKS** which the Martians said we could have. I was wondering, would we be coming back to Mars soon? And in what manner Frank would place that heavy gold in the X-12.

To my question, Frank said "Think well about this large amount of gold. Will having all that in your possession keep you happy and in good health? Do you know anyone on earth who has millions of dollars who is truly happy, healthy and well? Consider it well my friend. The gold is yours if you wish to have it, but in my opinion, nothing can replace your present well being, your good health, and the joy you share with others. Therefore, I want you to think the matter over until we arrive near to earth. Then, and only then, give me your answer." Frank then left me to my thoughts while he went about the great ship. It required deep thought. Few, if any, earthmen had seen even one-thousandth part of the amount of gold in that big rock. As the owner of it, I would be the richest man on earth. Did I really wish to be that rich? I will not trouble you with all my thoughts, except to say that I came to the conclusion not to have the gold:

When we came within a few miles of the earth, Frank and Frances came to talk with me. "Well," asked Frank, "have you made up your mind? Do you, or do you not, want that gold?" In reply, I found it hard at first, but managed to say, "No, Frank, I do not want that gold, but I would like you to tell me how you expected to bring it to earth, if I had said yes?" Frank said "Good thinking Arthur, we are very pleased to hear you say that you do not want the gold, as for the means by which we can bring the gold to earth, if you desire I will show you. As it is still daylight, we will remain at this level, and during our wait, which will be several hours, we might just as well set up our machine, by which we can transport the gold of Mars right on to your property." Frank grinned at me as we walked into the workshop or, the second level of the X-12. "In this manner I will show you that which I intended to do, if it was your wish to have all that gold, however we are more than pleased to know that you do not want it. But we shall, if you like, transport just a little of that gold, to prove to you that we could, if it was your desire, place all of it right in your field:" Frank gathered together an assortment of things, tools and materials, electrical parts,

wire, condensers, etc., and with all these things, I helped Frank to build a machine, a queer, looking thing, which I thought was a very large high-frequency generator, until Frank enlightened me to what it really was. "This," said Frank, "is the Tesla method of developing a microwave of great power. Thousands of electrical horse-power is by this means built into a tiny beam, of less than one degree in diameter. By the power which we have on the X-12 we shall operate this machine, when we land on your property.

The tiny wave, or ray, developed will be directed exactly to hit the desired. rock of gold.. This gold rock, now located on the planet Mars, will be our positive pole, then by means of this Tesla device the power ray, or beam, will be reflected from the gold rock,' that is the positive atoms, and directed towards this negative pole. The gold is now broken up into its microscopic elements and becomes united with the elements of the micro-wave and thus carried to the negative pole by means of the reflective elements of the power ray: The Tesla device is therefore a practical method of transmutation of solids, that is the extracting ore or metal from a distant body without intervening physical means." By the time, we had completed the machine, it was late evening, the X-12 completed the trip, and we landed around 10 P.M. We set up the machine in our field, beside the X-1.2.

Frank applied the power and directed the Ray so that it would hit the gold rock on Mars, then driven by accurate clock work, the wave could be depended upon to retain the proper direction, when once set. The ray was thus aimed directly, as I have said, at the large rock of pure gold. With breathless interest, I watched the proceedings of rank. The strain upon my poor nerves was such as could not have been born for many hours at a stretch: When everything had been adjusted to his satisfaction, Frank stepped back, and pressed a lever the powerful atomic engine, which he had built a few hours ago, instantly responded. "The beam is set exactly in the center of the large gold rock," said Frank. Then we waited; a minute elapsed, two minutes: I could hear the beating of my heart — the engine shook the ground — three minutes! Four minutes: We were like statues with eyes fixed on the polished ball of silver, supported by means of a high metal frame-work, which had a polished rod curved over the top like a crane. This was in fact the pole from which the energy was transmitted to the golden rock on Mars. Five minutes: "At last:" I shouted. "Look; Look."

The shining ball had become a confused blue in colour, and I violently winked to clear my eyes. "At last:" The silver knob again changed colour, what seemed like a miniature rainbow surrounded it with concentric circles of blinding

brilliance. Then something dropped flashing into a dish set beneath the ball, another, and another, glittering drop followed, and another, almost before a word could be spoken the drops had coalesced and become a tiny stream, which as it fell, twisted itself into a bright spiral, gleaming with many shifting hues, then overflowing from the dish. The tiny stream gradually grew in size, faster and yet faster it flowed, an interlacing maze of rings. After the five minute start, we timed the flow at One-Ounce per minute. Frank said this could be speeded up to a much greater amount. Frank let the machine operate for another minute, then turned off the power and we placed the parts of this wonderful machine into the X=12. Frank and Frances bid me good-bye with the promise of returning soon.

Chapter 10

It was some weeks after the last visit of the great Venus Space-Ship, and my first journey to the Planet Mars that I heard from my Venus friends, then one night the alarm on the Tesla-Scope sounded. It was Frank with another suggestion; this time, an invitation to take a further journey to Mars, but not in person. Frank said Frances would transport me to Mars by means of mental-projector. I agreed; I would indeed like to complete our journey, for I felt sure there must be many more interesting things to see. So it was arranged; they would again visit me, sometime in Mardi. It was during the early morning of March 14, 1969 that the alarm again sounded. I did not waste anytime getting to the X-12. They were all ready for me, Frank and Frances were at the open door, with bright smiles to greet me. "Good morning Arthur, come right in." Frances had her projector all set up. "Let's go," said Frank, "take a seat Arthur." I did so, and the next thing I knew, I was on the Planet Mars, walking along with Frank'.

How wonderfully strange and exciting it all seemed. 'We walked -to the large canal, hurried to the pier, and got into a small boat. It was a curious vessel which appeared to be made of white porcelain; broad and short, with raised keel, prow, and expanded stern, moved by some form of electric motor. A pilot took his place at the bow, and, under a canopy of silk, in the light of a setting sun, followed by the music of the City of Light, we passed the city, which even as we left it, slowly, in the descending darkness of the night, began to brighten with the light of the rock, and send upward its magic glow. "These boats", said Frank, "are not in common use on the canals. The larger boats, which are used for transport are made of the blue metal. All the boats are propelled by explosive engines, except these small ones, which have an electric motor. The power used to generate the electric current is obtained from the 'Energy-Rock.'" 'These porcelain boats are curious; their sides, prows, poop and stern are ornamented by coloured designs, which are burnt in when the boat is made, for these extraordinary boats are made in huge furnaces in one piece, like a jug, vase or bowl. This small boat is propelled by a screw of blue metal. "Down the crowded canal we slowly moved, amidst the calling crews, the pleasant cheers, and beckoning of sight-seers; and back of us rose on its hills the City of Light, which as we passed still further away, and watched in the fading sunset, began to glow, and finally, to shine like some titanic opal in the velvet shadows of the night.

As we slowly moved into the undulating plain country, with its pretty towns and farm lands, it reminded me of our beautiful Eastern-Townships in the Province of beautiful Quebec. We saw solitary projections of rock as the stars stole urgently into the sky. The magic stone lamps began their soft illumination of the decks, while the sound of songs from people on the land cane to us in snatches bewitchingly mixed with the strange odors of the beautiful flowers and grass, which grew along the sides of the canal. The landscape about us was wonderfully illuminated by the two satellites, Deimos and Phobos, which as is well known, were first seen (or perhaps I should say - were reported to have been seen) by astronomers on earth. Prof. Asaph Hall is said to have been the first one on earth to report them, in 1977. What a marvelous sight they presented, moving almost sensibly at their differing rates of revolution through a sky sown with stellar lights. The combined lights of these singular bodies surpassed the light of our earth moon, by reason of their closeness to the surface of Mars, while the more rapid motion of the inner satellite causes the most weird and beautiful changes of effect in the nocturnal glory they both lend to the Martian life. We were now sailing in a wide river-like canal, about a mile or more wide. On all sides the undulating ground, covered with cultivation varied with thick patches of trees, with here and there shining lights from towns and isolated homes, carried the eye onward to a rising hill country, beyond which, again, silhouetted against the shining sky where Phobos began to rise, mountain tops were just discernible.

Deimos, the outer moon, was already shining, and its pale, sick light imparted a Peculiar blueness, impossible to describe, upon a11 surfaces it touched. Here was the phenomenon we witnessed with increasing pleasure. Phobos was emerging from a cloud and its yellow rays possessing a greater illuminating power, mingled suddenly with the blue beams of Deimos and the land thus lit by the combined flood of light from these twin lights seemed suddenly dipped in silver. A beautiful white light, most unreal, fell on tree and water, cliff, hill, and towns. It was a print in silver, and while we gazed in mute astonishment, the sharp shadows changed their position as Phobos, racing through the zenith, changed the inclination of its incident beams. The effect was in describable. I walked the deck in an agitation of wonder and delight, a delicious drowsiness overcame me, and after a while I noticed the pilot was changed, his place being taken by another; and that we were approaching a ridgy or rocky country. I found my way to the white couch prepared for me, and sank into a deep and dreamless sleep.

The morning of the next day was clear and beautiful. Shall I ever forget that first approach to the mountains of Tiniti, where Tour and Neu, the villages of the quarries, are located. All day long the boat ran through a diversified country, covered with great hills of worn pebbles and rolling plains of what appeared to be sand. The canal passed through solitudes, where the silence was only broken by the cackling laugh of a crane-like bird, marching in lines along the banks, or perched like sleepy sentinels amid the outstretched branches of the trees. These wild and fascinating regions were often alternated by miles of bright plantations, radiant with the yellow leaves of the Teloiv, bearing its deep red pods, while avenues of palms, not unlike the royal palm of the Earth, led in long vistas to clustering groups of houses, and we also caught glimpses of little lakes.

I was interested in the Martian custom of public worship. Frank pointed out to re the churches of the people, they appear to be built of the magic-stone, high above the ground, and approached by encircling terraces of steps. Frank said he did not understand the Martian faith. There seemed, he said, little to understand about it, it was one national expression of the love of goodness and of beauty, but it was all directed to a source of infallible wisdom, power and justice.

At last, we arrived at the entrance of a gloomy and stupendous gorge. It was the wonderful passage driven through the first area of igneous rocks before we reached the quarry country of the Tiniti. It pierced the dark and stubborn dike that rose in sheer walls 1,200 feet above our heads, and it seemed that the tide was carrying us into the bowels of the sphere. At that moment a loud report was heard, followed by another. Looking upward, Frank with outstretched hand said, "It was a meteor, a big one." He called to the pilot to stop the boat. A few of the attendants were grouped near us, and the loudly suppressed exclamations made me realize that these visitations were perhaps infrequent upon Mars. It was a meteoric shower, like our leonids in November, which I had seen many times at Lake Beauport. It rained pellets, or balls of fire, these phosphorescent trains gleaming spectrally, while a kind of half audible crackling accompanied the fall. Shooting in irregular shoals or volleys, they would increase and diminish, and recurrent explosions announced the arrival at the ground of some meteoric mass.

We continued on our way, and soon entered a wild, savage, almost treeless country; the bare gray or rusty and jagged expanses sloping up steeply from the edge of the canal, sparingly dotted over with gray bushes, and covered with an ashen coloured lichen. We moved for miles through the waste of

a ruined world. The whole region had been the stage of great volcanic activity, and the broad plains excavated with deep pools that reflected their dismal, untenanted borders in the black depths of unruffled water, spoke of meteorological conditions long prolonged and intense. It was a weird strange place, silent and dead. But, amongst these vast ejections, these fossil craters were embedded masses of the rare self-luminous magic stone that made the City of Light. The canal passed along for miles in the depression between two folds of the surface. Finally, gazing ahead, there slowly came into view a huge, gaping rent in the side of the black and gray and red walls to our right, and a minute movement of living forms, scarcely discernible, revealed the first quarry near the little town of Tour.

As we drew nearer, I descried a slant incline from the open excavation down which the blocks of stone were slid. They were brought to the surface by hoisting cranes, and just as our little boat glided to the dock, an enormous piece of stone was moving down the metal roadbed to the edge of the canal. Here we landed, and a crowd of people hailed us, and amongst them were many of the copper coloured northerners who work in the quarries. Their day's work was over, and they crowded around us with interest. They were good-natured, but quiet, and dressed in a kind of overalls that was made in one garment from head to feet. Frank pushed amongst them, followed by me. We made our way to a pleasant house, built of the magic rock, and covered with an almost flat roof of the blue metal. In this house we were received by the Superintendent of Quarries. The greetings were pleasant, and as the Superintendent spoke both French and English, we got along fine.[1]

The rooms of this house were large square apartments, simply furnished with the white chairs, tables and couches I had seen in the City of Light, but on its walls were drawings of the quarry, the country, and groups of the work men. Amongst the pictures were some wonderful large scenes of an ice country, and the lustrous high wall of a gigantic glacier. I pointed these out to Frank. He told me that to the north of the mountains lay the great northern sea, in winter a sea of ice, and that from continental elevations within it, glacial masses pushed outward, invading the southern country. In regions beyond there were fertile plains. Here were their settlements from which the workmen of the quarries had been brought, beyond this again lay the margins of the polar sea. Song and music closed the day and after

eating the wine-soaked cakes, which the superintendent offered us, we made our way to the white and simple bed-chamber.

The morning came, fresh and splendid. The air of Mars is so pure, vivid and dustless: We walked to the quarry mouth, Frank and the superintendent in front of me, leading the way. I stood looking backward every few steps, delighted to trace the broad river of the canal winding through the desolation for miles beyond. Then I noticed how rapid and effortless is motion in Mars. Volition is so easy and penetrating, the body becomes a mere plaything for the mind. Frank beckoned to me and as I looked where he was pointing, I saw just ahead, a great black object, about which a number of workmen were running excitedly like a swarm of ants. Frank said "You remember the meteor we saw last night, well there it is." Extended like a gigantic and deformed missile lay an iron meteorite, still warm. A crevice spread down into its interior, and it bore the pits and depressions of the terrestrial objects. It measured some four feet in length, and must have weighed many tons.

We continued our walk and soon stood gazing upon the receding roof of the great cavern, the heavy walls left like buttresses to hold up the overlying - mountain ridge. The quarry extends far in under the ridge. We were to descend but before we did so the superintendent led us to the sunlit of the ridge. From here, we looked at a distant land beyond the volcanic area, occupied by farms and villages. It seemed peaceful and attractive. Beyond this, again, we just discerned the shimmering surface of the great Glacier, the superb train of ice. We descended again to the mouth of the quarry, and here we mounted a platform, used for an aerial elevator. On this we were swung far out from the dizzy sides of the quarry, slowly slc through the shaft of air, then passed into the cooler shadows of the deeper parts, where the sun failed to penetrate. I cried aloud with delight, and the abyss shouted its salutation back. Still we descended, and soon saw back in the deep prolongations of the tunnel the shining walls of this phosphorescent cave. The method of quarrying is very much the same as used on earth in the marble minds.

The mines were very interesting, but time was pressing. Frank said we must leave and continue our journey towards the next town. We started from the great quarry once more on the nice porcelain boat. The sterile, sinister and yet marvelous region of lava beds, dikes and craters suddenly was passed, and the canal moved into the huge forest lands. This is a beautiful land: mountain ranges rising from four to six thousand feet cross it, holding broad valleys and plains, or elevated plateaus between them; lakes and rivers pass through it.

The canals cross the great region in many directions. The trunk line we followed was carried up and down by systems of locks of astonishing magnitude and perfection. Great lakes were made convenient feeders, .and rivers were also tapped to keep the water levels constant in the canals. The weather was that of a semi-tropical paradise, and the late flowers filled the air with fragrance. Quickly now we approached the great city of Heneri, and the pilot pointed out to us the distant hills, almost purple in a twilight haze, which encircled the Valley of the City of Heneri. The country we had entered was a fertile farm country, where great plantations and vineyards were established, and where great flocks of doves, are found. The enormous flocks of this snow-white bird were strangely beautiful. They made clouds in the air. Finally, we came to the last tier of locks at the summit of which my curiosity was to be satisfied by a view of the great City of Heneri, the CITY OF GLASS.

It was night when our little boat floated upon the waters of the last lock that completed the ascent, and immediately below, the observatory station of Heneri. I was standing on the deck of our boat, watching impatiently the slowly rising tide upon which we were borne upward. Above us, looking at us with interest, on the walls of the lock, I could at first see, as we ascended the towers of the observatory station, a company of Martians. The night was clouds, and the lights of the hastening satellites were but intermittently evident. Gradually we passed upward beyond the obstructing wall and gate, and the wonderful and unimaginable splendor of the City of Heneri, like some great opal, lay before us in the immediate valley. The glistening panes of water below us marked the places of the descending line of locks. Around us were the buildings of the Heneri Observatory and to the right and left swept the forested slopes of a circular range which, as I later saw, ranged about in one amphitheatrical circuit, the great vale of Heneri. The wonderful city glowing below us seemed to magnetize attention, and control, through its wonderfulness, each wavering attitude of interest. The eye of earthman never beheld so astonishing a picture. Imagine a city reaching twenty miles in all directions built of glass variously designed, interrupted by tall towers, pyramids, minarets, steeples, light, fantastic and beautiful structures, all aflame, or rather softly radiating a variously coloured glory of light. Imagine this great area of buildings, penetrated by broad avenues, radiating like the spokes of a wheel from the center where rose upward to the sky a colossal amphitheatre. Imagine these roads, delineated to the eye by tall chimneys of tubes of glass through which played an electric current, which removed every trace of smoke, converting each one into a lovely pillar. I could see canals or

rivers of water winding through the City spanned by arches of flame, but the night was still further turned to day, for above the city, high in the velvet black sky were suspended thousands of glass balloons, each emitting the soft illumination that marked the lines of streets. So full and opulent was the flood of light, that the summit I had reached, the encircling hills, and the farther side of the saucer-shaped valley where Heneri lay, were bathed in an equally diffused radiation. But as if the heavenly marvel might still further startle and amaze and charm me, from the City rose the swelling chords of choruses; billows of sound, softened by distance, beat in melodious surges on the high encompassing lands. I stood mute and transfixed.

It seemed a beatific vision. If the very air had been filled with ascending choruses of angels; if the dark zenith had opened and revealed the throne of the Almighty; it would have seemed but a congruous and expected climax. Long I gazed, then Frank by my side woke me up, as he said "Let us be going Arthur, there is plenty more to see and much to do." We then continued to walk towards the city and had gone but a short distance when a messenger met us with an important message for Frank, who was to return with him to the Council:

The messenger was a beautiful youth, not dressed as the citizens of the City of Light, but clothed in a tight fitting doublet of a creamy colour, with short trunks of yellow, and on his feet were sandals. He saluted me, and said, "Greetings Earth man, you may come along with our Venus friend." "But," said Frank, "what do you require of me?" "It is the Council who seek your service", answered the messenger. "I advise haste." "There is great excitement and dread in Heneri, Mars is in the path of a comet." Without further delay, we made haste towards the Hall of the Council, a low inconspicuous building of yellow brick. The doors of the single chamber, which embraced all the interior space, swung open, and we stood on the threshold of a shallow, rectangular depression, surrounded on all sides with benches, and holding in its central area a long table, at which, beneath tall lamps sat perhaps a dozen men and women. The faces of these rulers of Mars, for that is what they were, turned to us as we entered. The messenger announced us, and we were invited to seat ourselves at the head of the table.

"Welcome stranger from Earth, we know Frank of Venus. The Martian Spirit is that of salutation and friendship. We have heard of the discoveries made on Earth by your friend Tesla, which have led your earth people to journey into space, and warned you of the danger which now apparently is about to cause the doom of this great city, and perhaps destroy the planet

Mars, which we are informed, lies in the path, certainly defined and determined by observers, of a large cometary mass, which will plunge upon it a rain of rock and red-hot iron. Even now this approaching body grows more and more visible in the sky.

The astronomers are working at the problem, hoping some deflection, some interpositional mercy will camy off this disturbing incidence. But if we are to be destroyed, if there is no escape from the singular fortune of annihilation by an in rushing stream of meteoric bodies, then warning through proclamation, shall be made, and our citizens will move out of the city, and go away from it as far as possible, in the hope that the whole of Mars will not be completely destroyed. We have no other solution, except it may well be, that our good friend from Venus, Frank, perhaps sent to us by a greater power, has the answer. This is our last hope. We therefore give to you the power to direct us. Whatever you say will be done. Take time to think deeply before you decide that course you wish to follow. In the meantime, you shall be the guest of our City, and if it must be that this great capital of Mars must succumb to this mysterious invasion; if this place, so long a marvel of beauty, shall be succeeded by a heap of burning stones, then you shall be our companions in pilgrimage. Please remain with us until the end of this strange circumstance is known."

As he finished a noise of indescribable lamentation from a multitude of voices broke upon our ears, the sound of running feet and sharp cries of amazement, crashed in upon the half ominous silence about us, and then, the doors of the room swung open, and loud voices were heard crying, "The Peril ,comes. Run to the Hills:" Panic, that nameless mental terror of the unknown, which on Earth spreads fever-like through multitudes, had arisen amongst the Martians, and humying crowds were hastening in a wild retreat from this wonderful City of Glass to the hills. It has always been the same. When man places his faith in man made Gods he finds out the hard way that he has no place to go. As at the time of the flood; millions ran, but they found no place safe to run to, so it was on Mars. It had placed its faith in man made beauty: Well, here was something they could not face, so, as on Earth, they ran: Frank looked thoughtful, he took my arm and we walked outside, Faces were turned toward the sky, the approaching thing had grown sensibly since an hour ago: It glittered, and now appeared to be the size of -the full moon, and a light coruscation seemed coming from its edges. The fears of the multitude were justified. The mass above us was a train of missiles, hurling toward Mars: Its contact seemed more and more imminent. I felt a nameless terror, for a moment only; for when I turned to look at Frank, I saw that he was not

a bit troubled. "Frank," I said, "are you not afraid of this mass of "something," which is about to destroy this City, and perhaps the planet Mars?" Frank looked at me, with a smile, and replied to me with a question, "No Arthur I am not worried and you should not be. You pretend to believe in Christ, you say you believe in the one great God. Your present action will prove if you are a Christian or not!

Remember, your world was destroyed by water; millions at that time pretended to believe in God, they went about doing good, that is, good according to them, but when that great test came only eight persons could prove they really believed in God, and therefore they were saved. If you my dear Arthur, believe in God, that thing above which you appear to be afraid of can not harm one hair of your head. The people of Mars have a lesson to learn.

Let us return to the council room." We found the members still at the table, they invited us to join them, which we did. Frank then said; "Friends of Planet Mars, I have carefully thought over the matter, and by the special Thought Power which we use on Venus, I have made contact with our rulers, and otherwise men and women, who assure me, and I am instructed to extend their finding to you, which I trust you will accept in the spirit of friendship and love, with which I give it." The Mars leader said that anything Frank said would be accepted in that spirit. "Thank you for this great honour, "said Frank." Our wise leaders tell me that the mass above our heads, will not destroy this great Planet Mars, nor will it completely destroy this city. I am informed that this object is sent to you as a last warning to mend your ways, throw away your false Gods, whom you note do nothing to save you from this thing, which your people fear so greatly. You will not be offered a second chance, there is but one God; if you are wise, you will believe in Him."

With the ending of those words, Frank sat down. For many moments, there was complete silence; no one spoke. Then the leader rose. "Thank you Frank, you have indeed taught us a good lesson. I must admit, we have forgotten God; we placed all of our faith in the material beauty, which you see all around us. I will now inform the people of your message. You and your Earth Man friend have the freedom of Mars, do as you wish. Time will soon prove your statements, but before we part, will you tell me to what extent Mars will suffer?" "Yes," replied Frank, "the wise leaders of Venus say that Mars will never be completely destroyed; but some of the man made beauty, such as your glass buildings will be damaged, and some of your people will no doubt be hurt if they remain within the glass buildings. Soon, you may expect a shower of small stories, that is all." "Thank God for His mercy and

goodness. With your permit Arthur and I will remain within this building of brick and its strong iron roof".

Almost before Frank ended his talk, we heard the patter of rocks, falling on the roof. It grew dark, as if a thunderstorm was over head. The shower lasted for almost two hours, then the sun came out, the patter on the roof stopped, and Frank and I walked out side. Where was the once beautiful Glass City? Nothing but a broken waste lay around, many feet deep of broken glass. What a sad ending, but it could have been worse. I must have said my thoughts out loud, for Frank answered, "Yes my dear friend, it could have been much worse, and now as we have seen this planet, let us return to earth. But before we leave we must return to the council room." We then walked back into the room, where we found the members still seated, looking at a large "living" picture, which was located on one wall They asked us to join them in a picture journey around the planet to view the damage. To our amazement, we saw that every city on Mars had been damaged: But the leaders agreed with Frank when he said "It could have been worse." The people had a great lesson, they would rebuild, but this time it would be built on the solid foundation of Christ.

After we had seen all of Mars, we requested permit to leave, which the leaders granted. As we bid each other good-by, I was wondering how we would return to Earth. And when I asked Frank, he replied, "We shall return in the same way in which we came, when you are ready just say the word, and Frances will bring us back." I felt the same as I did when I first walked on the planet Venus. It was difficult to believe that it was only my mind here on the planet Mars. "All ready," I said to Frank, "lets get to dear old smoky earth," Frank then took hold of my hand, and the next moment we were in the great X-12, where Frances greeted us with her beautiful smile. "Welcome back home" she said. "Did you like Mars?" "Yes and no," I replied. We told her what had occurred, but of course, she had seen it all on her magic projector, and then in a few moments it was time to part, I again watched the great ship float away into the misty sky.

CHAPTER 11

Space ships were not unknown some two-thousand years ago, and long before that, for we read of many in the Bible. It is even possible to believe that Adam came to earth in a space ship! - we will go into that story later.

It also appears that Antony not only new about space-ships, but actually used them in his war against Rome! This fact we read in a letter from Planous which he wrote to Cicero in the year 44 B.C. Planous (to Cicero) said,

> "Some occurrences have arisen since I closed my former letter, of which I think it may import the republic that you should be apprised; as both the commonwealth and myself, I hope, have reaped advantage from my assiduity in the affair I am going to mention.
>
> "I solicited Lepidus by repeated expresses to lay aside all animosities between us, and amicably unite with me in concerting measures for the succor of the republic; conjuring him to prefer the interest of his family and his country to that of a contemptible and desperate rebel; and assuring him, if he did so, that he might entirely command me upon all occasions.
>
> "Accordingly, by the intervention of Laterensis, I have succeeded in my negotiation; and Lepidus has given me his honor, that if he cannot prevent Antony from entering his province, (Narbonensian-Gual); he will most certainly lead his army against him. He requests, likewise, that I would join him with my forces; and the rather, as Antony is extremely strong in cavalry, and is said to have a great power from a somewhat unknown force, which appears to be a large bird like creature.
>
> "This creature, which I clearly saw, flew very high above our heads, and in moments, by means of fire balls, destroyed a large part of our cavalry. We were forced to run towards the Isara, a very considerable river; that bounds the territories of the Aborigines." - End of quote from The Letters of Marcus Tullius Cicero.

Although most UFO sightings can easily be ascribed to honest mistakes made of natural phenomena and man made objects, there are no doubt many genuine UFO sightings which have been taking place all over the world, since I first received the visit of a very large something: I say "something" with good reason because at the time, that is to say during the second world-war, and remember this was in April 1941; therefore the "something" which

landed in my field looked very much like a German air-ship! Without lost time I reported to the police that

I thought an enemy air-ship had landed in my field. I had no reason to believe it was not an enemy ship until some time later when its crew sent me a message, which I received on the Tesla-Scope. Up to that date, I knew little or nothing about space ships, but when I heard that message, I became very interested and started to study everything I could obtain on the subject. My study led to the Bible, and Roman History, and many other old books. By the end of 1957, I had obtained a very good record.

It was not until 1947 (six years after I published my story) that world-wide interest (someone coined the word "Flying Saucer") started. Witnesses included reliable people representing all walks of life, from the highly trained scientist to the illiterate native in remote areas of the earth. All have described strange oval and cigar-shaped objects which, under many and varied circumstances, have behaved as if they were under intelligent control. After years of careful and conservative study, I am certain that there is more than ample high-quality evidence from trained and reliable witnesses to indicate that there are solid machine-like objects operating under intelligent control within our atmosphere. The wonderful performance of the objects, which I consider are the True Space Craft, rule out man-made or natural phenomena.

Such observational evidence has been well substantiated in many instances by reliable instruments, such as we used at Gagetown, N.B., last fall (1969), when several hundred persons saw the great Venus ship, the X-12. Even without the personal contact, which I had with the X-12, my opinion, based on other evidence, is that UFO's are controlled by super intelligent beings from another world and have been carrying out a systematic program for reasons known only to themselves. There is no reason why other worlds do not know of our low type of culture, and the awful condition we have always been in; a culture of doubters and wholesale murder. Frank said during one of his visits, "No wonder you are backward. A world that believes in evolution is sick. Even a child should know better than to believe that God told lies: To believe in evolution would indicate that your people either do not believe in God, or else they believe He did not tell the truth, for he said that man was made in the likeness of God which means that he made Man Perfect. The crackpots who invented the theory of evolution, did so in their effort to destroy the peoples' belief in God, therefore, as your world appears to accept this foolish man-made theory as fact, your world is bound to be set back, or at least remain at a standstill until such time as you return to God."

The intensified program may have been instigated by the people of other worlds due to the fact that our civilization has -reached atomic murder level, and is rapidly approaching its end; as we are told in the Bible, when "Stars" will fall from heaven. Therefore, the presence of space-ships near our Earth might be one of great theological significance.

With the invention of modern astronomy, man began to speculate on the possibility of life, as we know it, on other worlds. No one really knows what is beyond our sun; no one knows how many stars exist! — and if life, as we know it, does exist, it would mean that just within our galaxy alone, there could be a billion planets with civilizations of varying technology. Many of them might be thousands of years ahead of our "modern-world".

Angelo Secchi, the great Jesuit astronomer, asked the following question in the mid-nineteenth century:

> "Could it be that God populated only one tiny speck in the cosmos with spiritual beings? It would be absurd to find nothing but uninhabited deserts in these limitless regions. No, these worlds are bound to be populated by creatures capable of recognizing, honouring and loving their Creator."[1]

Yes indeed, I have every reason to agree with Angelo Secchi. The earth is too small a speck to fill the need of so great a God whom I love. If, as I suppose, there are unfallen beings in the universe; beings who have always obeyed Divine Law, such beings would advance thousands of years ahead of earth man, for it is our sins which have prevented our advancement beyond the lower creatures. It is a fact, and as it may seen that many of the lower creatures are far above man, look around you if you dare: What do you see? Most of the world devoting their time to bad habits.

From my personal study of the Bible and other books, and from what the crew of the X-12 told me, it became quite apparent to me that mention of spaceships is made in the Bible, and that these craft have visited our earth since the dawn of civilization. I would suggest that the reader search ancient records, including the Bible; one never knows — you may find something new. Take a look through the Bible book of Ezekiel. Chapter one is a clear description of an air-craft, as is also the story continued in chapter 10. Thus, in almost every Bible book can be found something about space-craft.

If these objects were space-craft, descriptions of them would be limited by the inability of the people of that age, to describe them except through the limited non-technical language of that day. Let us look at the language as used by Ezekiel Chapter 1, verse 4 —

> "And I looked, and behold, a whirlwind came out of the north, a great cloud, and a fire enfolding itself, and a brightness was about it, and out of the midst thereof as the colour of amber, out of the midst of the fire — "

— End of quote.

The whole of this chapter from Ezekiel probably contains the finest description in the Bible of space-craft landing and of their crew, now let's take a look at Chapter 4, verse 22 and 23.

> "And the hand of the Lord was there upon me; and He said unto me, 'Arise, go forth into the plain, and I will talk there with thee.' Then I arose, and went forth into the plain; and behold, the glory of the Lord stood there, as the glory which I saw by the River Chebar; and I fell on my face."

— End of quote.

What kind of glory of the Lord was standing in the plain, where the Lord talked with Ezekiel?

We read in Chapter One, that Ezekiel was sitting on the banks of the Chebar River when he saw the machine which looked to him like a whirlwind, so the glory which he mentions in Chapter 4 would be the landed craft! The whole Chapter 10 contains another wonderful account by Ezekiel of an air-craft, or space ship. Let's look at verses 4 and 5 —

> "Then the glory of the Lord went up from the cherub, and stood over the threshold of the house; and the house was. Filled with the cloud, and the court was full of the brightness of the Lord's glory. And the sound of the cherubim's wings was heard even to the outer court, as the voice of the Almighty God when He speaketh."

Orthodox beliefs have for so long become almost indelibly ingrained in mankind today that I do not suppose anyone will accept the ideas which I have tried to illustrate in this book. But I write this for the few who are willing to do as Christ said, — "Open our eyes (and hearts) that we may see the truth, for there are none so blind as they who will not see."

In the early half of the sixteenth century, the Renaissance was just flowering into the Reformation. Times were something like our own. In those days, the mere printing of the Bible for all men to read was an invitation to be murdered (in the name of religion). Many persons were murdered; either because they were caught reading it, or because someone thought they should read it. Today, in the so called "modern age," people are murdered because they differ from others in their beliefs. The writer and any others who dare to give an individual, unorthodox interpretation of the Bible, or parts of it, must be prepared to face an equal opposition; after all, was not Christ murdered because he dared to preach the truth: If the reader is surprised that I bring in the Bible and the religion of Christ into my story, he should not be, for the spacecraft and true religion go hand-in-hand. One can not make a sincere study of space-ships unless we wish to truly understand the will of God for man, for that is the real message of the people who come to earth from beyond.

Chapter 12

Tribute to Nikola Tesla

[First Published In Newspapers 1943]

The other day the most gifted man the world has known died, he left the world richer by over a thousand inventions that God allowed him to conceive. With the passing of Tesla I have lost a very old friend, and because of my intense admiration for him I write this modest tribute.

At the age of eleven, I had two teachers, Mother and Tesla. From her I learnt about God. Electricity fascinated me even at that age and my first reader was Tesla's investigation of high frequency currents, and I think I knew more about Tesla's inventions at the age of twelve than most engineers do now. Not only did I know something about his wonderful ideas. But, my brother and I actually built a working model of his wireless power transmitter, sending power without wires (using only the earth) from Quebec City to the Lavel hills, a distance of fourteen miles; this was in 1906.

And because I have lived and breathed Tesla the best part of my life, I know that his invention to end destructive wars (which he announced in 1934) would have prevented the second world war if it had been adopted. For if this idea had not been practical Tesla would not have announced it, because in spite of anything said to the contrary, he was never a wild dreamer. All around us we see proof of this. The new Shipshaw power system is one of Tesla's 'wild' dreams because it was he who invented the impossible thing of harnessing water power, and the hundred and one things, without which, no power generating and transmission system can operate. Most, if not all, of our electric light and power are operated by means of current supplied by machines of his invention; the alternating-current system including means of generating, transmitting, and using this energy. He invented and built the first and only practical motor that would run on the A.C. current.

It was characteristic of Tesla that he developed all of his ideas and actually built them to perfection before he announced them, and that is the reason I have always taken it for granted that anything he made public must work. I wonder how many realize that the progress of industry during the past forty-five years is due to the inventions of Tesla: It may be rather difficult to convince the average person, but the proof of this amazing statement can be seen all around us; a glance through the patent records, and a study of

Tesla's articles proves him the inventor of many things that others are given the credit for. There are many men who have tried to take away the credit for the radio invention, but from records to be found in his many lectures and patents, it is proved without a doubt that he is the inventor.

Many well known engineers have, in the years since 1896, made various forms of wireless machines, one and all using the basic principles invented by Tesla. They all use his oscillator-transformer in one form or another, and have designed new parts all using the same basic idea. The perfect radio has yet to be made, and when it is, it will be a Tesla machine; the so called modern radio is not near perfect. In the future Tesla radio, all the power is sent from the transmitter. Tesla started his investigation of high frequency in 1889; he gave a demonstration of transmission of this current without wires through the earth in 1891-1892; he gave an outline of this work before the Franklin Institute and National Electric Light Association in 1893; he explained

the plan to Prof. Helmholts with experiments, he stated it was practicable, and he perfected his system in 1896. In the summer of 1897 Lord Kelvin (whom my father worked for in England) honoured him with a visit in New York. He was carried away with the idea but at first condemned it because he thought it was Hertz waves, but approved when he was shown that it was true conduction, and was transformed into the warmest of supporters.

The basic idea of the Tesla system, used in every radio, is the oscillation transformer, consisting of capacity and inductance which may be connected and interconnected in two, three, or more circuits. Many interesting facts can be obtained from Tesla's patents which anyone can obtain from the U.S. Patent Office.In those patents can be found the formula to end wars, and to send power to any part of the world, and even to other planets, without wires.I believe that it was his idea when he obtained the patent of 1896, to send -the power in electrical energy from Niagara, to any part of the globe, without loss.

This power in a slightly different manner is used to energize the war defensive barrier.In this machine the energy is concentrated and built up toan enormous amount.It then projects electrical controlled particles, enabling the conveyance to a great distance of thousands of horsepower, which nothing can resist.

Others have devoted considerable time, seeking a practical apparatus similar to that of Tesla. It is not surprising that they have not found it, because the majority of professional scientists are tied down by hard and fast

rules of out of date theories, so that it is only on rare occasions, more often by pure chance, that a new principle is discovered. Tesla, on the other hand made his own theories and proved them by practical demonstration. There had always been a strange antagonism towards Tesla, chiefly because he was so glaringly straightforward and honest; he made fools of experts who said "It can't be done" by doing the impossible. Tesla gave the credit for his ability to discover astonishing new principles to his Maker, who gives this rare knowledge to chosen individuals, who are thus ordained by Him to help mankind overcome some of their difficulties.

Chapter 13

Tesla's Invention for Defense by Electrical Energy

We know what the 'scientific' world thought about Nikola Tesla's statement which he made in 1934, that he had discovered a 'new' principle which made it possible to transmit an electrical force, in a beam (not a death ray), of infinitesimally small cross section, something close to one millionth of a square centimeter.

Because of its attitude towards anything new from Tesla, the scientific world lost (for a time at least) the secret of this new principle. One of the keys to it is in Tesla's statement, "There is no energy in matter other than that received from the environment. "As I am writing this for the benefit of the man on the street, it would be well to state that electricity is the old fashioned name for the thing which makes your Radio, T.V., etc. work, and lights up the world, and this new Tesla discovery is just another electrical machine. During his lifetime, Tesla had discovered, invented, and built many wonderful machines, among which are the Radio, Radar, T.V. and MANY OTHERS which I have already told you about.

In a letter which I received from Tesla in 1932, he said that he had made an extraordinary new discovery, the key to which can be found in the Bible (Revelations), making it possible to send an electric current of very small cross section, through the earth, above the earth, and under the sea; also to flash considerable amounts of energy through interstellar space to any distance without the slightest dispersion. This narrow beam is the secret of perfect T. V. of the future, also of Radar, and long distance telephones. By its use we can do away with the aerials, poles, towers and micro-wave reflectors, etc. Also by its means we can communicate with the planets, and, very important, provide power to operate a space ship, which is a big step from the rockets which blast one's head off. It eliminates the need to carry fuel, leaving more space for the payload.

What is the secret of this discovery? How does it work? In the DEW line for instance, we have a line of stations, each one of which could be blasted off the earth. In the Tesla system, there are no 'visible' material stations (poles, relays, etc.). Instead, we peak the beam, in standing waves, at predetermined intervals. The 'peaks' rise above the earth, or over the earth, at right angles to the feed wave (or beam). The peak can go up any distance

which is a radius of the earth, from the transmitter to each peak, the beam, wags back and forth, or revolves around the earth at a predetermined speed of from one to 24,000 times per second. In doing this, it sets up secondary (or induced) currents. Any object coming within a peak (or beam) **WILL CAUSE SAID** [PPP110]**BEAM TO INDICATE THE FACT**, which is felt at the transmitter station. The position of the object is thus seen, and can, if necessary, be destroyed, by means of the same peak or others.

Tesla's machine, therefore sets up millions of invisible towers all over the world, under and above the land and sea, so nothing can pass or exist without detection, and by its peculiar action, a war head can be destroyed before it has time to leave home. This machine is therefore the answer to the murder rockets. How does it work and who will be the first to build it? The Soviets, or any one who can use their heads and read, might know how it works because [PPP111]the secret of its operation can be found in Tesla's lectures. The scientific world ignored Tesla, and certainly, the western world ridiculed his most important ideas. Tesla once said, "The walls of Jericho were made to fall through vibrating energy, directed against them by men who in tune with God, were skillful in the use of intensely simple machinery, but wonderfully effective, and I believe most firmly that when we come to know a little more than we yet know of how to manipulate the force of **SOUND**, we shall literally remove mountains through an application of the law of vibration. I do not regard the Bible narratives as myths; they are to me a scientific revelation, dim in places, I grant, but nevertheless, storehouses abundantly filled with the vast knowledge accumulated by the Godly and truly learned in ancient times. In the future, men and women who are truly in tune with God will continue to discover wonderful new inventions in the Bible put there by divine will for the good of mankind[PPP112].

CHAPTER 14

COPY OF MY NOTICE PUBLISHED IN QUEBEC CITY NEWSPAPER, JANUARY 2, 1939.[1]

"Concerning the strange Air-Craft which appeared at Lake Beauport, Quebec, Canada, at 2 o'clock in the morning of Tuesday, December 27th, 1937, the drawings shown are made from marks left on the snow, by a very large object, which for the want of a better word, I name an "Air-Craft". Because of the all too brief a glimpse, which I had of the strange craft (and almost total darkness), my description is mostly surmise. But the size of the machine is based on actual measurements taken immediately after it's departure. It is possible the machine is an experimental Blimp, or Air-Ship, that is in fact one reasonable explanation, which, however, does not explain it's speed, lack of noise, or the mysterious power which can make people unconscious at a distance: Another explanation of the craft, which is not so feasible, is that it comes from outer space, perhaps the planet Mars, or Venus: **CERTAINLY** it's mode of propulsion must be new, otherwise the craft would have been detected by the sound of the usual motors or jets as used on our air-craft. The only reason, which made me aware of it, is the fact that I have erected on my property; a Tesla Intruder Alarm. This instrument, which I have built from information outlined by Dr. Tesla, detects the intrusion of any object which comes within it's working radius, which is adjustable to close range, or a great distance. My present testing apparatus consists of a 75 foot pale, on which is fastened a metal plate, the surface of which is sensitized, and by means of an amplifier and conductors, any heat impulse of an object within it's range, is recorded in my laboratory, where it is again amplified and relayed to the alarm system. The most important feature of the system, is however, an ultra-high-frequency wave detector (also a Tesla invention), which is maintained in a poise in relation to normal surroundings, this also by means of a system of relays and amplifiers - sounds and records an alarm, if anything comes within it's range.

"Therefore in the early hours of last Tuesday morning, my alarm sounded, (and under normal conditions I would have awakened, but I was in profound sleep, induced by over-work) and I became aware of some disturbance only by degrees, and when I actually woke the alarm was not sounding,

but heard the strange sound which I thought came from the Radio, but after a careful inspection of my alarm system, I found it had been in operation between two and two thirty, and the reason I did not hear the alarm was an important part was fused, as if by a powerful current, evidence of some strange force on the mystery craft. This could be a new development of a foreign country or something from outer space: If this can be used beyond the range of our weapons, it would place us at the mercy of any country who had it, a small force in a space flyer would make armed resistance futile.

"Perhaps the oldest known records of space ships is found in the Hindu Classics-Hamayana and Maha Bharata of Ancient India, while the Annals of Thutmose III of Ancient Egypt (15U4-1450 B.C.) which are in the Vatican, give many stories of "Fire-Circles." There is also a space ship mentioned in Henry VI, Part 3, Act 2, Scene l, by Shakespeare, and if one has the time to look through many other old dusty books, no doubt many other stories will be found.

"The Bible is full of such accounts. It is well worth ones time to search through the Bible books; I will list a few which I found very interesting. You might have to study the stories before you can get the correct picture. Not is it an interesting game, but it will give one a new, and perhaps a better, understanding of scripture. I hope so at any rate, so good hunting to you all.

> **"I found these: Genesis 18: verses 1 to 3; Genesis 19: 24-26; Exodus 3: 2-5; Exodus 13: 21-22; Exodus 14: 24; Exodus 19: 9-16 and 20; Exodus 34: 5-6. Judges 13: 3 & 24; II Kings 2: l, 9, 10, 11; II Kings 6: 17; Psalms 60: 12; Psalms 68: 33, 34; Psalms 99: 7. Zechariah 5: 2; Isaiah 9: 8; Isaiah 16: 15; Isaiah 60: 8; Ezekiel 1: 4; Ezekiel 4: 22, 23; Ezekiel 10: all chapter. Daniel 9; 21; Matthew 11: 9, 10; Matthew 25: 13; Mark 13: 27; Luke 21: 27; Acts 1: 9 to 11; Revelation 1: 7; Revelation 14: 6; Revelation 19: 17."**[2]

END OF PART TWO:

Part Three

Some remarks from the book "Return of the Dove" by Margaret Storm and Arthur Matthews.

God said, "let there be light," so He made Tesla, and there was light!

Chapter 1

Today there are many "Space Ships" flying about everywhere — their brilliant colours flashing like a peacock's tail, many of them come to us over great cosmic lightways, winging their way even without wings, traveling about God's great playground, propelled by the sustaining breath of His love for His children — even the foolish ones who now need be foolish no longer, for that is what makes it a time here on the planet Earth. We need be foolish no longer! Now we can awaken, stretch our minds and hearts up, up, up, until we hit a star. We have been prodigals for the last millions of years and the diet of husks has been awful. But, the bad dream is over. We can relax and prepare for the feast — a grand and wonderful festival of human victory, which will last for two thousand years. By that time we will have long since forgotten about the husks and the past years of planetary isolation, and we will be out there riding the light ways in space-ships, hopping from star to star on our cosmic assignment, while the great symphony, of the spheres plays on and on and the angels sing'. Of course, we still have with us in these latter days, the diehards, the spoilsports, the screwballs, the odd balls, the sad sacks, and a whole assortment of wet blankets in a wide variety of sizes, shapes, and shades. They are the ones with the souped-up egos. They do not buy the idea of spaceships, music of the spheres or the singing angels. They are the foolish ones who want to continue their foolishness.

In the hospital world that we have known for millions of years during our cosmic quarantine, it is correct to say that most of us have been foolish in the majority of our embodiments. We have been dreadful phonies, strictly hams, acting out roles on a stage called the world, a stage like a mixed-up, upside-down cake, with an animated crazy quilt for a platter, with such a design for living, it is a matter of no wonderment that whoever-is-in-charge had to send flying saucers to rescue us, warn, cajole or to just haul some of us off to a new dumping ground, to a new sort of hospital planet devoted exclusively to drying out wet blankets and removing the sadness from sacks — and that, if you please, just at the moment when the chemise became high fashion. But those of us who are left here on the planet earth, who will continue our living here after the saucers have flown the cracked cups away to a new repair shop, — well, we will have a whale of a clean-up job ahead of us because this globe has been lacking in good housekeeping for a long, long time. We will have to step out and keep up with the Joneses, only this time they don't live down the street; they live up there on those gay sparkling spheres called Ve-

nus, Mars, Jupiter, and so forth; and in places which sound like a melody — Aquaria, Clarion, and a tiny little lighted jewel of a planet called Excelsior, which is said to be a delightful little place inhabited by little people, but real little people, very beautiful little men and women of exquisite stature, **TOWERING TWO OR** perhaps **EVEN THREE, INCHES IN HEIGHT**.

They have perfect forms which move and float in rhythmic dances of breathtaking beauty and grace. They have never known distress of any kind. They are God's dedicated children. Their Fire Dances in honour of the Sacred Flame, are a11 expressions of than giving to their Creator for His gift of life. That is their way of praying. Lancing is to them synonymous with living, or the expressing of gratitude for the limitless cosmic abundance. They are extremely artistic, and when they are not dancing, they are constantly helping the little nature spirits — the fairies, the elves, the water sprites, — to rearrange the decorations on the surface of their planet. Perhaps a miniature rose tree just there, and a tiny waterfall plunging dizzily down from a sheer drop of six feet, would be effective as a backdrop for a new dance. Are ideas such as these pondered by the little men and women who live on Excelsior? The heavy foot of an earthling may never tread on Excelsior soil, but it is said that spaceships are equipped with marvelous viewing devices which will bring a planetary surface into a clear focus such as would make all Hollywood's cameras and screens seem like instruments as primitive as a stone arrowhead. Truly, the cosmos is a place fascinating beyond the imagination of men, and best of all, it is man's heritage. That is where we belong — out there in the playground of the gods — far beyond the silly sputniks, the false moons, the grapefruit sized satellites; even beyond the moon itself, and beyond the neighboring planets and stars and into THE great golden pathway of the Milky Way. We belong far beyond all the rubbish and rubble of this once magnificent planet, which we ourselves have turned into a hell. The universe is our heritage and we have but to claim it, to explore it, to revel in its fathomless beauty. It is all ours to use, to improve, and to love. That is the clue. It is ours to love...

But, we have forgotten how to love natural things, — God created things. We love only our own grotesque miscreations; our mighty death-dealing weapons, our sculptured monuments marking blood-stained battlefields, our martial music designed to stir the hearts of men as they march forth to kill and to be killed, our guided missiles conceived by unguided men, left helpless and bereft without knowledge of their Sources; our ungreat bombs that can pulverize a great city at one blow. We love to visit our spacious cemeteries, crowded to overflowing with the silent dead. We love to be-

deck the graves with ugly arrangements of withering flowers, piling death upon death. We are sorry we could not give our beloved a more handsome tombstone, but taxes ride beside death on this planet. You know how it is. There was the hospital bill, the doctor's bill, the X-ray bill, the bill at the corner drugstore, plus a whopping big bill from the surgeon who cut and carved and sliced and sawed with all his might and main, while death just stood there and waited patiently. It was by no whim of chance that our cosmic Hierarchy designated the earth as Planet "D" in this solar system. That letter has come to stand for death, destruction, devastation, desperation, deficits, depletion, depression, devils, and the DEW line. It also stands for dainty dancers who have never known distress, but that is on the planet Excelsior.

Somewhere out there in space, somewhere out there where the wind is singing where the air is fresh and sweet as white daisies laughing in the sun, the little planet spins on its course. A tiny crystal globe is alight with the Sacred Flame, and around it, the little men and women circle in their rhythmic dance, their hearts aflame with love of the One. The little waterfall splashes merrily, a brilliant butterfly flits about the miniature rose tree and finds a resting place. The stillness vibrates with rapture. The dance goes on and on — on Excelsior. And here on Earth, death still rides in the saddle, but not for long.

A STORY — THE ORIGINS OF MAN:

Now in this glad November we can live with joy again. now is the moment of appraisal. Now is the time to catch, to hold, to examine a fleeting cosmic instant covering nineteen million years in the cycle of human history on this planet earth. For now in these early November days of 1957, we know that the long and terrible chapter of human struggle has been finished. That is, it is finished for those who want it that way. For the others, — the diehard skeptics, the sinister secretives, the know-it-alls, the so-whaters, — for all these and others of their tribe, special provisions will be made, but elsewhere, **SOMEWHERE**, not here, not on this planet. For this planet has really had it, and far, far beyond the call of duty. That call first came sounding through the entire galaxy nineteen million years ago.

The universe had assembled a large number of refugees from other planets. These were the laggards, the leftovers, the rejected ones from those planets and stars in this and other solar systems. Using their free will in a destructive manner, they had made orphans of themselves by refusing the guidance of their own higher natures, their own Divine guided selves, and preferred to dally away their time in experimenting with miscreations of

their own rather than in learning to create according to the Divine Plan. They contributed nothing constructive to the whole of which they were an integral part. They had skipped so many classes in learning that they could not hope to catch up. Their miscreations proved so imperfect and destructive that they were finally refused further opportunities to incarnate within their own groups.

So, the earth people came forward and offered to help the laggards by receiving them into families here. No other planet had a classroom for these problem students, or at least no other planet was willing to tackle the job of trying to redeem them. But the earth was a young planet, vigorous and strong, magnificently beautiful, abundant and full of promise. Disease was unknown. There was no distress in the sense of strain or pain. Members of the first root race were brought to the earth in a natural spaceship, a thought-controlled globe. They were accompanied by their teachers, sages and hierarchs representing the great cosmic Ray — .

This first group settled down in what is now familiarly known as the Grand Teton area in Wyoming. That country is still beautiful today, but in those days, the entire globe was a sphere of unrivalled beauty. It is said, that Amaryllis, the Godess of Spring, so loved the earth that she spent nine hundred years supervising its decoration, preparing it for the first guests. Over the entire globe the climate was always pleasant, neither too warm nor too cold, a land of eternal spring. There were no storms, floods, hurricanes, blizzards, or natural catastrophes because there was no discord among the people.

Human beings definitely make their own troubles by their refusal to live as God intended them to live. Moreover, the clear and beautiful lower atmosphere around the earth became steadily more and more radiant as the Hierarchies and sages instructed the people how to draw forth the goodness of the cosmic rays, to be used for any practical purpose that might arise. The earth people, living in this radiant atmosphere, were constantly bathed in these glorious emanations which flooded the earth from outer space, and then ascended back to the Source, for it is in the nature of the Flame, even physical fire, to rise. As a result the people felt bouyant, energized and spiritually attuned at all times. Their vision was unclouded and they had not only the visible and tangible evidence of the incoming Rays and the rising Flame, but they were in constant association with cosmic beings.

At the close of initiation into self-mastery, each individual then accomplished complete command over matter so that he was able to raise the vibra-

tion of the physical atoms which composed his body and ascend to his 'home star to await his next assignment.

Save for the long drag of time, the initiatory system on this planet remains the same today. At some time, in some embodiment, each individual must make his own Ascension.[1] He must be able to achieve mastery over matter, raise the vibrations of his physical body, form a force field or personal spaceship and ascend to his home star.

During the present Aquarian Age all death, as we know it today, will cease on this planet. Each individual will be scientifically trained to make his Ascension, exactly as it is done on other planets.

The high hopes which the earth people had for the future, did not manifest. The laggards refused to comply with God's law. They insisted on using their own free will to create their own monstrous follies; they declined to assist in unfolding the Divine Plan. Moreover, they polluted and poisoned the radiant atmosphere with their astral emanations. Scorning all cooperative endeavors spiritually, they grew and matured in physical grossness; they mated and produced offspring of their kind; they poisoned their physical bodies with their own misguided emotions and thoughts of, hatred; they introduced disease on the planet. They simply refused to believe in the one God.

The frightful contamination became worse; the atmosphere around the earth became gloomy and dark; the Cosmic Rays could no longer penetrate to the vegetation and soil. Only the physical sunlight devoid of the life-giving God essence of the great universal Virtues, reached the people. No longer did the earth give forth its natural note of harmony; its great vibrant chords were missing from **THE MUSIC OF THE SPHERES**. No longer did the earth give off light, for the Flame had ceased to rise. This in brief, is the story of the fall of man.

Man became wise in his own foolish self-esteem. Conditions became so hopeless that God decided to destroy the world. The Scriptures carry the account of this great deluge, together with the significant statement that the world would again be destroyed, but by fire from heaven rather than water. History of humanity appears to be in its Fifth Root Race[2] and now is the time when the final cleansing is to take place on the earth's surface, within the interior of the planet which had also become contaminated and in the astral

atmosphere of the earth, which now extends 10,000 feet above the surface of the globe. It is in this astral area around the earth that all of the contamination has accumulated from the emotional emanations given off by individuals through the ages, and where hover the frightful thought-forms thrown off by the race.[3] The contaminated astral atmosphere around the earth although still being constantly poisoned by emanations of hatred vengeance, greed and lust generated by living human beings, is being bombarded night and day by powerful rays directed from spaceships orbiting the earth, by cleansing energies from saucers flying close to the earth. Although disease and death, and all the old fears of poverty, war, hunger, and helplessness still stalk the earth, these grim specters are attracted hence only by the unlighted ones, by -the diehards, the sinister secretives, the stubborn skeptics. In other words by the laggards who are still lagging.

But material situations will be so greatly improved within a few years that the planet will be unrecognizable according to present low standards. The globe, during the past, became so heavily weighted with discord that it drooped on its bent axis like a weary flower on a stalk. Now the supreme power is straightening the axis. Meanwhile, the earth is moving in a sidewise motion as it edges into a new orbit, and, at the same time, is being lifted up spiraling into a new spatial region. In the near future, the natural action of the cosmic rays will bring about a complete restoration of the planet. It will again become a paradise as it was before God made man. What we know as the astral atmosphere will be completely dispelled. Light from the cosmic rays will reach the earth in natural abundance. The climate will change so that the spring-like weather will take charge all year round. With the incoming light, the atmosphere of the earth will again become brilliant with colours; the sphere will sound forth its great chords in the cosmic symphony. Disease will vanish and its memory will be wiped from the minds of men.

All of this is in the future when the words of the Lord's prayer shall become manifest — "Thy kingdom come, Thy Will be done, on earth as it is in Heaven." If there is to be heaven on this earth then it is natural to assume that there will be no place on this planet for the obstructionists, the unlighted ones who are haunted by doubt, fear, hate and greed.

This book is therefore of interest only to those who know in their hearts that they truly desire to serve the Light. That, as such servers, they really wish to take part in the unfoldment of the Divine Plan on this planet. We need not waste time and energy trying to convince the unlighted ones that God is a good God. If they have not figured that out in the past, it is hardly likely that they will learn to lovingly entertain the idea during the future.

Therefore, only those who are interested in taking part in ushering in the new civilization should read this book. Among those bent on vengeance, war, financial profit, and so forth, this book will only arouse further antagonism and jealousy. Where their future lies is a matter of no interest to us, whatsoever. Those who are not with God are against Him and that settles the matter.

Our entire energy now must be thrown on the positive side. We must study the situation as of today, find out just where we stand, discover what progress has been made, and what remains to be done. How can we help? What positive enterprises, no matter how tiny or how great, can we initiate?

Even now, like Noah of old, we gaze expectantly skyward, knowing that the Dove is winging its way from outer space, bearing to us the symbolic olive branch from our planetary neighbors, those good friends we knew and loved so well. They are coming again. Now let us prepare for the great reunion of fellowship, of interplanetary friendship. Let us prepare to welcome the Dove and send forth to all mankind the joyous message of good will to all.

Chapter 2

The earth is being drenched with the cosmic ray, coming in from outer space, and focused upon this planet by beamed direction from certain other planets and stars, which serve as great reservoirs for this cosmic energy. At the very center of the earth certain rays carrying certain colours meet, forming the polarities and axis; this central orb or kingdom formed by the rays is under Divine Law. In this central orb, the rays and colours are blended, and now, they constantly surge up and through the earth, washing over every single atom that makes up the globe, including mankind.

In olden times, the earth was known to be one of God's many mansions, as are all planets and stars. The center of the earth was regarded as the central alter of the planet, upon which eternally blazed the sacred Flame. The light from this reflected to and through every atom. Perhaps in time, this reflection will cleanse the soil of all strontium poisoning resulting from nuclear test fallouts. The strontium was released by stupid and misguided men, dedicated to deeds of violence.[1] The tests are still blasting away, making more work for the cosmic ray.

Mankind does these foolish things. Instead of considering the One God, we find men and women everywhere, running helplessly and hopelessly inpursuit of the many things which they think will increase their happiness. Yet, they wonder why they continue to suffer. Mistake on top of mistake. They never appear to learn. They wonder why they must endure a twilight existence only to face death as a finality. The answer is that they judge by appearances. Because the majority of people are troubled, they rashly assume that trouble is inevitable. Because the majority of people die, they rashly assume that death is a normal and natural change. Because the majority of people are often angry, hostile, aggravated people, full of hate and misery, this condition is accepted as the rule for all mankind on this earth. It is, they say, the way the ball bounces.

But during the next two thousand years, all these delusions will be dispelled. As soon as the people from other planets are received in friendship, we will quickly realize that we, as earth people, and as very, very stupid people, are much in the minority in this solar system. We will quickly realize that trouble is not a natural or normal condition for us. Trouble is an atheistic condition, brought on by the earth people who have lost contact with their Maker, lost faith in Him, and therefore have lost all knowledge of how to live as we should. Without God in our hearts, we poison the soil, the atmosphere and our own bodies with hate, openly inviting disease, disaster and death.

If, as we pretend to believe, God is good and perfect, and man is made in His image and likeness even to being endowed with a free will, then why should imperfection be accepted? We were told to be perfect, even as our Father in Heaven is perfect. We should busy ourselves calling forth perfection, impressing it upon suffering matter, so that the matter can send forth the radiant e energy of love rather than a vibration of pain. Man has misused his free will, has misspent his God-given energy, and has filled the earth with monstrous miscreations entirely of his own making. Because he has been willing to accept imperfection, he has not asked for help from his ever-present Maker, but has gone ahead on his own, trying constantly to improve his lot by exchanging one imperfection for another which he hopes will prove slightly less imperfect.

Man has attempted to build entire complex civilizations by using judgment based on appearances. Now science comes forward, following the power-crazed war machine in a frenzied pace to keep us with things as they appear to be and as the misguided scientists and politicians think things ought to be. The bewildered public is told that this is progress. Exactly since when, has progress been based on fear, the one and only weapon available to the dark forces? So while the dark forces entrenched in science are busy creating-imperfect systems to bolster up already imperfect systems, our hearts need not be troubled. We can turn abruptly from this negative point of view and look upon the positive surge toward perfection which is now rapidly engulfing the Human family. We can happily see now how the whole world of appearances will vanish within the transmuting power of the cosmic ray, which is now almost upon us.

It might appear that little has been accomplished during the past two thousand years, but remember what Jesus said. "Let not your heart be troubled." The most outstanding opportunity before us now lies in our acceptance of the hand of friendship extended to us by our neighbors from other lands

and other planets in our solar system. The great message of truth that the Venusians and others wish to convey to us today, is identical with the universal truth established by Jesus. As soon as interplanetary communication is established on a world-wide scale, the earth people will quickly realize that they have been foolish to have wasted. their time and money, listening to so-called authorities, who have sold their lies at a. high price.

The truth has always been free. No one can purchase it, for it only comes directly from the One God through His One Divine Son Jesus. This has been the message from Venus, from the first visit. They are still sending the same old (but very new) message. The good news which Christ tried to teach us, sets us free. What is this freedom? Freedom for man, comes to him as a result of his using God-free energy in its natural free way. God-energy in its pure form flows into man heartbeat by heartbeat. As the pure electrons are released by the sacred three-fold Flame within the heart, they enter the bloodstream. As they enter they are immediately qualified or stamped with the pattern of the individual. They can be qualified with love or they can be miss-qualified with hate. In other words the electrons, which provide all power, can be used to carry out loving deeds, to think loving thoughts, to speak loving words or they can be used in an opposite manner, depending upon the choice we make through the use of our free will. When man misuses this electronic power in performing hateful acts, he miss-qualifies the energy. In other words he leaves his stamp of imperfection upon millions of electrons that flow into his bloodstream. This energy is God-energy and as such it must obey the free will of man, for man is the reflection of God, created as a free being. When man chooses to enslave this free and pure energy, so that it will do his bidding and supply him with power to carry out some questionable enterprise, he thereby enslaves himself. He starts each pure electron on its way through his own bloodstream with a handicap — the weight of his own feeling of discord.

The electron itself remains pure, for it is God-energy and can know no impurity. But as it whirls or. its course, it collects around itself a shell of impure matter; the same murky gray astral matter that the laggards brought to earth. As it takes its appointed place with other electrons and forms an atom, the sticky substance clings, and soon the revolution of the electrons within the atom is slowed by clogging. Then the revolution of the atom itself is slowed, and in addition, the atom collects the same astral substance on its outer shell, adding further weight.

The resulting rate of electronic revolutions, plus atomic taken as a whole in a man's physical, etheric, emotional and mental bodies, constitute what is known as his state of consciousness or his vibratory note. If his electrons and atoms are revolving slowly, he is not only subject to disease, but he is subject to ugly delusions such as death. He begins to feel old age creeping on and in his limited understanding, he assumes that death is not far away. He feels fearful, bereft and alone. He cannot understand who he is or why he is here; he has no purpose in accord with the Divine Plan. He is, in short, a materialist, weighted down by his own burdens of hate which he carries right within his own atoms. He tends to be separative in relation to his God and his fellow men because he is usually quite charmed by the amount of astral debris he has accumulated in his atomic structure. The weight of the misqualified energy he is using, places him under the delusion that the rioting forces within gives him power. He throws his weight around, as the popular saying goes. He likes to give orders, put people in their places, clamp down on this situation or that, and in general act like a big shot.

If he happens to be a scientist seeking to ferret out the secrets of atomic power, he can only react according to the limitations he has imposed upon his own atomic structure. He therefore, seeks to enslave the atom, just as he has enslaved his own atoms that he lives with each day. He can think of atomic power only in the terms of fission and fusion. He wants to split the atom, to tear it apart by brute force, to strip it bare as one would strip the skin off an orange. His way is the way of fear, of hate, of snickering smugness.

The individual, who is not separated from his God by this barrier of astral debris within his body, seeks to become a co-worker, to serve his God. He daily works with the Rays and the Flames, which are only other names for the Christ Truth. He forms a close friendship with the One whom he can trust, One who built this planet, with his Father. Knowing this truth, we become completely free. Our free minds then clearly see the glad reason for all this, and we then understand the cosmic ray. How different is the way of Jesus compared with the way of the fission-fusion scientists, for the way of Jesus is love.

Yes, the true program for the Aquarian Age is the way of Christ Jesus, for true Love is the greatest power, the only power, which will or can defeat the atomic bomb.

In the following chapters are set forth the broad outlines of the "New Age" program as it has manifested in recent years, and as it will affect the immediate future of every earth person, indeed of every earth atom. Since

th.e program is in the final analysis, a scientific one, designed to prepare individuals for the future life, we will focus our attention first upon the vast preparatory work, which was started in 1856 by that great scientific genius, Nikola Tesla.

According to the world at large, Tesla had strange ideas, He always thought he came from the planet Venus. He said as much to me, and the crew of a Venus spaceship said in one of their first messages, that a male child was 'born' on board their ship during its trip from Venus to Earth in July, 1856. The little boy was called Nikola (which is the name of his family town, in reverse, on Venus. That is the town of **ALOKIN**. The ship landed at midnight, between July ninth and tenth, in a remote mountain province in what is now Yugoslavia. There, according to arrangements, the child was placed in the care of a good man and his wife. This message was first received by Arthur Matthews of Lake Beauport, Quebec, Canada, an electrical engineer who from boyhood was closely associated with Tesla.

In 1944, a year after the death of Tesla, the late John J. 0'Neill, then science editor of the New York Herald Tribune, wrote an excellent story of Tesla's life and work, entitled "Prodigal Genius." O'Neill made the common error of assuming that Tesla had died and left no disciples. O'Neill could not have been more mistaken. In the first place, Tesla was not a mortal according to earth standards. His thinking and his work was several hundred years ahead of earth standards. Years before he died, he entrusted Arthur Matthews, of Canada, with many tasks, which are of vital current interest. To name two — the Tesla interplanetary communication system and the anti-war machine. Mr. Matthews built a model Tesla set which is named "The Tesla Scope" in 1938. This was designed after the first model, which Tesla built, with Matthews in 1917, during the First World War. This is a very simple machine, operated by the use of cosmic rays. Other models were built by Matthews in 1948, and a more recent model in 1967. The original design was given to Matthews by Tesla, and experiments were made with this receiver by Tesla with the help of Matthews, during the first world war. That is between 1917 and 1920. There were experiments also, with what is now known as radar, on the beach at Tadoussac, between that small town and along the beach to Riviere Portneuf. Both towns are on the north side of the great St. Lawrence River. At this spot the river is about twenty-two miles wide, from North to South. Experiments were also made between both sides of the river with radar and the special receiver. After experimenting at this place, work was extended to Lake St. John at a private camp, located near

Lake Edward, owned at that time by Major Henry Sanford, of New York City.(A personal friend of Tesla and Matthews).

A complete electrical laboratory was built at Sanford by the Major, and in this well-equipped shop was first developed radar and micro-waves. A third model of the Tesla Scope was also built here. During this time, between the years 1922 until 1930, we were able to keep in touch with Tesla at New York, by means of direct contact with micro waves. (Waves of less than one degree). The complete transmitter was built into a case only 3" x 2" x 2". This was battery operated, using the Tesla mercury cell, and was a complete telephone, something much like the modern walkie-talkie.

Some years after the above experiments, Arthur Matthews obtained the old farm at Lake Beauport. It was on this spot that the first practical radar was developed and built, from the working knowledge obtained from our experiment at Tadoussac. A number of other ideas of Tesla were also developed. One of these was a large air-core transformer. The very high voltage developed by this was used for a guide station. It generated a 'standing beam' which Tesla said extended directly upwards for a distance of about 30,000 miles. (It was thus used as a guide for the spacecraft which Tesla expected would land on my property, some time). It was due to this marker that the Venus ship has always landed at the exact same position. Not by a lucky chance, but pure design.

Now before we go further into that, let us review a bit about the early life of Tesla, and by doing so try to clear up many mistakes some writers have made. The following is from the words of Tesla himself as told to Arthur Matthews between the years 1917 and 1943. Much of this was recorded on the Tesla high-frequency voice recorder. This is something like the well known tape recorder, but it does not use any form of tape or wire, nor does it have any moving parts.[2]

Historians agree that Nikola Tesla was born at midnight, between July 9th and 10th, in the year 1856. Djouka Tesla, the mother was a most remarkable woman and assuredly possessed advanced spiritual powers. She was the eldest child in a family of seven children. (Lucky number 7). Her father was a minister of the Serbian Orthodox Church. Her mother became blind after the seventh child was born, and Djouka unhesitatingly took charge of the entire household. She never attended school, nor did she learn even the rudi-

~~~~~~~~~Foot Notes~~~~~~~~~
~~~~~~~~~

ments of reading and writing, at home. Yet she moved with ease in cultured circles as did her family. Here was a woman who could neither read nor write, yet she possessed literary abilities far beyond those of a person of considerable education. Tesla himself, never wearied of talking about his remarkable mother, and described how she had absorbed "by ear" all the cultural riches of her community and her nation. Like Nikola, she apparently had the power of instant recall. Nikola said that she could easily repeat thousands of verses of the national poetry other country. It was because of her great interest in poetry that Nikola, in his busy American days as a super-man, still found time to translate and have published some of the best examples of Serbian sagas.

His mother was also famed throughout her home provinces for her artistic ability, often expressed in beautiful needlework. She possessed remarkable manual dexterity and Nikola said her fingers were so sensitive that she could tie three knots in an eyelash, even when she was past sixty years of age. She had an excellent grasp of philosophy and apparently a practical understanding of mechanical and technical devices. She needed a loom for household weaving, so she designed and built one. She did not think of herself as an inventor, yet she built many labor-saving devices and instruments for her household. In addition she was so skillful in handling business and financial matters that she managed all accounts for her household well as for her husband's church.

Nickola's father was the son of an army officer, and as a young man set out on a military career. But he was soon disillusioned for he was irked by the discipline, and turned to his true calling in the literary field. He wrote poetry, articles on current problems, and philosophical essays. This led quite naturally, to the ministry, giving him an opportunity to write sermons and to speak from the pulpit. He did not limit himself to the usual church topics, but ranged far and wide, covering subjects of local and national interest concerning labour, social and economic problems. Until Nikola was seven years of age, the father had a parish church at Smilijan, an agricultural community in a high plateau region in that part of the Alps which stretch from Switzerland to Greece.

This then was the childhood environment of the boy from Venus. It was a life filled with joy. He had an ideal home with a loving, understanding family. He lived in a magnificent countryside, close to nature. He was a boy like other little boys up to a certain point; the point at which he became the super boy, foreshadowing the superman. And so it was that he lacked human com-

panions, a state, not of loneliness, but of aloneness that was to continue for a long time. He chose his friends with a wisdom we see in few humans. He had the deep-set piercing eyes of the thinker. Deep blue in colour, they were honest, kind eyes, for he was an honest man, and whatever you are shows in your eyes, for they are the reflection of your soul.

In my story, I will only state that which I know and try to enlighten those who have perhaps been deceived by reading untrue stories about Tesla.

The powers possessed by him were in no sense psychic powers. The ability to visualize unthought of things, — new things — and mold them into something real, such as the motors, and other wonderful things, as did Tesla, has nothing to do with the astral plane. For when Tesla wanted something, he went straight to God. Nothing complicated about his approach for God is the only author of science and invention. The ability to visualize comes from training. Any one, without any formal education, can talk to God, but it needs a bit of something more **TO LISTEN WHEN GOD SPEAKS**. A person who knows and loves God possesses powers which enable him to stand on this earth and yet observe incidents on Venus, Mars or the Moon. He can also look out over the earth and sweep the entire scene with one glance. He can look through the earth and watch activities within the dense physical globe. Thus it will be realized that the person who truly loves God, is completely free. He can see above, as below.

The person with astral vision is a prisoner of his own limited and highly questionable power. Peace of mind and serenity of soul do not lie along that route, nor can the Voice of the Silence be heard within the beating heart of the unlighted ones who amuse themselves with such nonsense. Astral vision is more often a sign of regression than advancement, for it simply denotes the attainment of certain animal characteristics. It must be remembered that all animals in certain advanced groups; dogs, cats, horses and elephants, have astral vision. Many other animals also possess it and most animals are telepathic within certain limits.

In humans, this type of clairvoyance is often associated with solar plexus telepathy, another animal characteristic. Many persons who use solar plexus telepathy are inclined to confuse it with mental telepathy, and those who practice mental telepathy are frequently unaware that the only type of telepathy which can be considered as spiritual power is from soul to soul. That is two persons completely in tune with each other, or in tune with Divine Will, or Spirit.

Individuals who strive to cultivate their astral abilities, even though they may be born with them, are following an extremely dangerous course. One which can easily lead from psychism to black magic and from black magic to insanity. If an individual is born with psychic powers he should either banish them at all costs, or take up the proper study which will enable him to serve God to the limit of his capability. These are thoughts which if properly channeled can lead to discipleship, but if not properly channeled, they can and will lead to mediumship and misery. Mediumship is the way of retrogression; discipleship is the way to the path of truth, light, beauty, and unlimited cosmic freedom.

Every individual has only one rule to follow and this is it: "Place yourself at all times under the full power and protection of Divine Mind."

There is no need to be running around the world searching for a Guru or Master. When you are ready to be of service to your Maker, lie will seek you. Tesla discovered this truth at an early age. His study of the Bible enabled him to conceive 1,200 inventions, and so the part he was to play in the Divine Plan unfolded quickly. He enrolled at the Gymnasium at Gospic, a town to which his father had been assigned as a minister. Here Tesla discovered that his favorite subjects were the Bible and mathematics. In the school at Gospic, Nikola first came to desire to retain his ability to visualize real things, which could be used then, and in the future. From the study of such an old book as the Bible, which had been written thousands of years before he was born, he desired to bring this gift under full control and use it, as a tool, rather than allow it to use him.

Nikola had no wish to be submerged in paper work, even in his school days, a thought which might be of value to many business and government executives today. Nikola found that he did not need to go to the blackboard in the classroom to work out a problem. At the thought of a blackboard, it would appear in the ether before him. As the problem was stated it appeared instantly on the etheric blackboard, together with all the symbols and operations required to work out the solution. Each step appeared instantly and much more rapidly than anyone could possibly work out the problem on paper or slate. Therefore, by the time the whole problem had been stated, Nikola could give the solution immediately.

At first, his teachers thought he was just an extremely clever boy who had found some method of cheating. However, in a short time they were forced to admit that no deception could possibly be practiced, so they gladly accepted the glamour shed abroad as the rumour got around that the Gospic

classroom was graced by a genius. Nikola never bothered to explain about the etheric blackboard for he intuitively knew he would not be believed.

Always through the passing years, he guarded his power as the great spiritual treasure he knew it to be. He used the same power to replace all customary memory functions, and soon he discovered that he could learn foreign languages with little of the usual effort. He became proficient in German, French, and Italian in those early years, and this opened up to him entire new worlds that remained closed to other students. His father's library contained hundreds of fine looks and by the time Nikola was eleven years old, he had read them all.

He had little in common with his school mates, and, in fact little in common with his teachers. But they accepted him because he was a lovable lad without a trace of arrogance or pride. Neither did he surround himself in an exaggerated sense of humility. He was a normal, natural, friendly boy living in a natural, friendly world. On fine summer days, he would often wander over the mountains to sit again beside the brook at Smilijin, and watch his 'little waterwheel in operation; the wheel he had designed and installed.

He was constantly working on mechanical devices during the year he was in school at Gospic, but the school offered no courses that could help him; not even a course in manual training. In his home hung a picture which he had often carefully studied. His Uncle explained that it was a picture of Niagara Falls in America. Filled with prophetic joy he exultantly turned to his Uncle and said, "Some day I am going to America and harness Niagara Falls for power."

Thirty years later, he carried out his plan, exactly as he had predicted it at the age of ten years.

Chapter 3

In the book, "Return of the Dove" by Margaret Storm, mention is made of the "wall of light." Many mistaken ideas have come from that story.

It was Tesla who conceived the idea of the wall of light during his early life. Very few earth people have been able to build this wall of light, because, in the first place, they have received the wrong instructions.

Exactly what is this wall of light? How can it be built? Who can build it? What will it accomplish? The great mistake some persons have made, from reading "Return of the Dove" is the idea that it is man-made. This is not so. The protective wall of light is the power of God. It has nothing to do with will power. The wall cannot be "built" or "formed" around a person or persons.

The fact is, this wall, (or tube as some say) is, already built. It is all-round us. It fills all space, and it has only to be accepted as a gift, and used. Its use depends on perfect faith in the ability, and the wish of God to protect all those who call upon Him.

Tesla believed in this Divine Power. This is what he termed the **"WALL OF LIGHT"**. The thought power which operates the Venus spaceship is no more or less than the perfect faith which Christ said would move mountains. From his Bible study Tesla knew and believed in this great power, which is free for any person to use. It only comes to those who accept Jesus Christ as the only Son of the living God. No doubt the actual reasons why Tesla's scientific methods are not taught in our school system is the fact he brings God into the picture. The colleges cannot find professors who understand real science; the Bible or Tesla, for no one can understand true science or Tesla, unless he is in tune with the Divine Spirit. Why not train teachers? One reason might be that the adoptions of Tesla's inventions and his faith in the power of God, will disturb the status quo. They will offer a whole new way of life, they will upset churchianity, they will make the establishment of world-wide free Christianity possible and desirable. They will cast profit making high rates of interest and political conniving into oblivion and will make the present economic system look exactly like the silly thing it is.

Tesla was always a happy man, and the stories told about his last years are not true. He was never in need and died a rich man. He received an in-

come very much larger than the amount which some reports say he received. He was never in debt and as a Christian, he died a happy man.

On an October night in 1956, when a group of friends met in New York City to talk of U.F.O., very little was known by any of them about Tesla or his work. Over in Paris a Spacecraft convention was held for interested Europeans. Arthur H. Matthews of Lake Beauport, Quebec, Canada, submitted paper on the Tesla set for interplanetary communication, which he had built and was then operating. A report on this paper reached New York a few weeks later and contact with Mr. Matthews was established by correspondence. That was the start of the new interest in the work of Tesla. Imagine! He had worked most of his life in America, and few, if anyone remembered either him or his work.

Perhaps some one will ask, "What was Tesla's work?" Well, for one thing, he invented the 20th century. Almost everything, which the world of today considers important, came from Tesla. The world of today and for the next five hundred years at least, will be the world of Tesla, for there are nearly 1,100 Tesla inventions not yet well known to the public. Imagine: A car operated without any fuel; your house lit and heated by the sun. Free. Yes, even when you do not see the sun. A voice and thought-operated recorder and typewriter. A two way portable telephone and T. V. which can operate over a distance of 8,000 miles, which in size can fit into your coat pocket and is operated by means of the Tesla battery which is kept charged by the sun. An aircraft, which has no engine, no fuel, no wings, and no noise, lands at a speed of less than one mile per hour.

These are just a few of the 1,100 inventions of Tesla, to say nothing about the 10b now in worldwide us, under different trade names, but which a look at the patents, will prove are Tesla's. T. V., radio, radar, all electric light and power, all auto controls which are used to make the moon rockets work, all those new power developments, transmission lines, the microwaves, even your modern car works because Tesla's spark coil makes it run. All these things just because a little boy loved God, and used his head and body to serve God, not as a garbage dump for drugs and smoke. Imagine what good could be done if more people used their bodies and minds as Tesla did.

Did you know that the tall towers used for T. V. and microwaves are not required if the Tesla system was completely adopted? All those poles we see in town and other places are not needed. The Tesla anti-war machine follows the same principle. It requires no poles, no lines or large reflectors mounted on towers. Neither does it require an army to maintain it. It does provide

positive protection for any coastline or national border. It is not in any sense, a fence. The whole thing depends upon the "peaks" which are, of course, invisible to the human eye. All electric currents of whatever frequency pass in the earth and can be made to "peak" or bounce up above the earth at regular measured distances.

So far as the sputniks and other orbiting devices are concerned, these could not be designed to drop destruction on us from up above, if the Tesla anti-war machine was functioning. In addition to the protecting wall of power, the machine can also be built with a ceiling. If Tesla's machine is adopted there is nothing that can affect it; nothing in the way of an A bomb or H bomb or any other bomb, even if it is transported on a missile, rocket or a sputnik. In the first place and this is the important point, once Tesla's machine is set up, no form of bomb or high explosive can be made. In other words, if some nut tried to make a bomb and Tesla's machine was functioning, the bomb would explode right there, whether underground, in the air or any other place. So along with the adoption of the Tesla idea, no form of bomb or high explosive such as the A bomb or h bomb would continue to exist.

In a letter which Tesla wrote to me in 1935, he said, speaking of his antiwar machine: "My discovery ends the menace of airplanes, submarines, rockets or space machines, regardless of their height or speed. A century from now every nation will render itself immune from attack by my device."

I believe, as I believe in God, that the adoption of Tesla's machine will prevent war. Actually, I have been fighting for Tesla to have the world give him credit for the many wonderful things he has done. I have written hundreds of letters, newspaper and magazine articles about his inventions, to help the world know more about this wonderful man.

Yes, indeed. The world should know more about Tesla, but the hundreds of letters received, clearly show that most people are just finding out how to spell his name. Almost every letter received begins something like this: "I never heard of Tesla until I read your excerpts from 'Return of the Dove.' Where can we find out more about this wonderful man?"

Well, no one will find out more about him, if the Silence group has its way. There is very little published about him, except, maybe, the copies of his patents, which can still be obtained from the patent office. I would suggest that if anyone is truly interested, they write to the patent office for a list and price of the Tesla inventions. Anyone who can read and who is sincerely interested in science, will find these patents highly interesting and instruc-

tive. Not every person will be able to understand them; they require most careful study.

Perhaps it will be interesting to give a short outline of Tesla's achievements. The field of invention has never known a genius as successful in developing far-reaching and original inventions, such as those of this great man, whose name should be known in every corner of the globe for his outstanding scientific achievements. Most writers state that Tesla was born in 1856 in Smilijan, Lika, border country of Austria-Hungary, but that is about all they do state. Little is said or known about his achievements.

Tesla's practical career started in 1881, in Budapest, Hungary, where he made his first electrical invention, a telephone repeater, and conceived the idea of the rotating magnetic field, which later made him world-famous. It may not be amiss to devote a few moments here to the manner in which this prime of savants approached the idea of the rotating field and induction motor.

One day, while attending the University, one of the Professors was demonstrating an experiment with the Gramme armature type of dynamo, when the idea occurred to the young physicist that the sparking of the commutator, which he alone had minutely observed, could be eliminated. The professor immediately denied that this was possible, but with a steady mind and self-conviction, young Tesla determined to work out his ideas. The result was that the modern induction motor was developed, which operates solely from alternating current and requires no commutator of any kind, thus overcoming the nuisance of sparking inherent in former type direct-current machines. Realizing the value of his invention, he left for France in an effort to interest someone in his device, but his efforts proved fruitless. At the time he was employed by a prominent European engineering concern, but hearing of the rapid growth of the electrical industry in America, he promptly decided to come to that country, which he did in 1884 and since then, became a naturalized citizen of the United States.

To this country, he brought with him, the various models of the first induction motors, which were eventually shown to George Westinghouse, and it was in the Westinghouse shops that the induction motor was perfected by Nikola Tesla.

Numerous patents were taken out on this phenomenal prime-mover, all of which are under Tesla's name, and he was therefore the first person, beyond the shadow of a doubt, to introduce the rotating field principle, in perfecting the induction motor, which is today universally used. Large sums of money were expended by Tesla to protect his patents on this prime-mover,

and he was at the time not permitted to express himself in print or give the history of his invention. Thus, many erroneous impressions were entertained regarding his inventions. Later, another type of machine was brought out by him, in connection with his work in electric power transmission. This one had a field energized by currents of different phase relation (i.e., while one current was at zero amplitude the other would be at maximum etc.) producing a rotating field in which conductors were employed, and in this way the high frequency current was obtained. This type of machine was subsequently developed to perfection and the principle is described in his patent, dated 1889. His next work which attracted universal attention was the production of high frequency currents at high potentials, tremendous electrical discharges. All of these experiments were first performed by this genius and never duplicated. One of the first high tension apparatus built by Tesla, was first used in Europe by Lord Kelvin, the noted English mathematician and scientist, who used it for his lecture demonstrations at the Royal Society.

Tesla's most important work at the end of the nineteenth century was his original system of transmission of energy by wireless. In 1900 Tesla obtained his two fundamental patents on the transmission of true wireless energy covering both methods and apparatus and involving the use of four tuned circuits. He also obtained a number of other patents at the same time, describing many other improvements. Among these may be mentioned his application of refrigeration and the oscillatory system with which he obtained remarkable results in his well-equipped laboratory on Houston Street, New York City.

In 1901 and 1902 several patents were granted to him describing a number of improvements, among which, two assumed great importance in the radio art. One of these was known under the name of the 'tone wheel' and the other, the 'tikker.' Other persons claimed the inventions, but Tesla was the real inventor. At a little later date Tesla secured two patents on what he termed the principle of individualization, involving the use of more than one oscillation for the operation of receiver. This property is known under the name of beat receptors.

In long protracted interference proceedings carried on in 1903, however, Tesla was accorded full and undisputed priority over all other claimants. P. patent was granted to Tesla in 1914 on an improvement of far-reaching importance in radio and T. V. work. The application was filed in 1902. It describes a new form of transmitter with which, according to Tesla's statement, an unlimited quantity of energy can be transmitted from a small and compact plant. This transmitter possesses the wonderful feature whereby static, the

great nuisance of radio can be completely eliminated, because of the speed with which receivers can be operated; it being possible to throw them in and out of tune by a variation of not more than one thousandth of one per cent of the wave length. Tesla also evolved a static preventor which was successfully tested, and proved perfect.

This great scholar and philosopher did not devote his time to electrical devices alone, but turned his attention to many other fields. He developed a steam and gas turbine, which developed more power than any other motor or engine ever built. It developed 20 horse-power for each pound of engine weight. This turbine should be used in our present day automobiles, aeroplanes, and many other land and water vehicles.

This master magician, upon whose inventions this modern world depends for its existence, spent a fabulous amount of time and money in perfecting his inventions, which, as I have stated before, numbered 1,200 up to his death in 1943. Perhaps of the total, only a little over 100 are in everyday use, and most of them are not known under his name. Tesla invented the twentieth century. The general use of his other inventions will make another new world, and prevent all future wars, for his greatest invention (that of 1934) was conceived to prevent war.

This is the idea with which we first experimented at Lake Beauport, Quebec, Canada. It includes in its design that which is known today as radar, the idea which Tesla invented before the first world war,

It is interesting to know what Tesla thought concerning "Research". He made the following remarks in 1916, quoted from a letter received from Nikola Tesla to Arthur Matthews, July 9th, 1916.

> "I have called it material research because I wanted to exclude immaterial research. I class under this head pure thought as distinct from thought mixed with matter. It is worth while making this distinction, for from the youngest to the oldest chemist, it is not always recognized. It is very natural for us to think we can think new things into being. Chemistry has advanced only in proportion to the handling of chemical substances by some one. When the study of our science was largely mental speculation, and the products and reagents largely immaterial, like fire and phlogiston, we advanced but slowly. Ages of immaterial, research for the philosopher's stone only led to disappointment. Successful results in modern times came from following nature, learning by asking and experimenting; reasoning just enough from one stage of acquired knowledge to ask the next question of materials.
>
> "In speaking of research, I do not mean to confine my thoughts to the chemists and their knowledge and literature, but rather to that science which is back of chemistry. We may call it natural science, if we are

> careful. It includes for my present purposes, all philosophy based on measurable facts. Psychology and therapeutics come under this head, so do electricity, anatomy and physics, chemistry and biology. These are inquisitive sciences, where the answers come from asking questions of nature. If I can leave with you even a faint impression of the importance of new knowledge, the strength to be gained from its acquirement, and the pleasure in the process itself, I shall. feel repaid. So much useful pioneer work in all fields has been done with simple material equipment coupled with good mental equipment, that it almost seems as though this was the rule. The telegraph and telephone started with a few little pieces of wire wound by hand with paper insulation. The basic work on heredity was carried out by an Austrian monk with a few garden peas. The steam engine came from the kitchen fire. There was, however, the same general kind of mind behind each one of these discoveries, THE MIND OF THE TRAINED INQUIRER."

Most people have never heard of Tesla, yet he was the world's greatest inventor in all history. He obtained more revolutionary patents than anyone in history. Science accords to him over seventy-five original discoveries, not mere mechanical improvements. Tesla was an originator, a pioneer blazing the trail. Aside from this, he was a discoverer of the highest order. When he died in 1943, he left the world richer by over a thousand inventions that God had allowed him to conceive. With his passing, I lost a very old friend, and because of my intense admiration for him, I wrote "Tribute to Nikola Tesla" which was published by a number of newspapers, and which is included in this work as Chapter 12, Part II.

CHAPTER 4

All electrical machinery using or generating alternating current is due to Tesla. High-tension current transmission without which the modern world would be dead, is all due to the genius of Tesla. The world did not know of Tesla because he committed the unpardonable crime of not having a permanent press agent to shout his greatness from the housetops. Then too, most of his inventions, at least to the public mind, are more or less intangible on account of the fact that they are very technical and therefore do not catch the popular imagination. The trouble with Tesla was that he lived at least a century ahead of his time. He was often denounced as a dreamer even by well-informed men.

He was called crazy by others who should have known better. For Tesla talked in a language that most people did not understand and still do not.

In 1893, three years before anyone else made any attempt to use wireless telegraphy (radio), Tesla first described his system and took out patents on a number of novel devices, which were then but imperfectly understood. Even the electrical world at large laughed at these patents. But, large wireless interests had to pay him tribute in the form of real money, because his "fool" patents were recognized to be fundamental. He actually antedated every important radio invention. Tesla was a man of extraordinary knowledge. He was remarkably well read and had a photographic memory whereby it was possible for him to recite page after page of nearly every classical work, — be it Goethe, Voltaire, or Shakespeare. He spoke and wrote twelve languages. He was an accomplished calculator, who had little use for tables and text-books, and held the slide rule in contempt. Tesla received numerous honours and distinctions of all kinds. He was a knight of several orders, holder of many titles and diplomas. Many extraordinary distinctions were offered to him, which he declined. One instance is very interesting.

At the announcement of Tesla's high frequency discoveries, while the former Emperor of Germany was all powerful and great men were eager for his favors, Tesla received an invitation from him and the Empress to repeat his celebrated experiments at the Royal Palace in Berlin. He forgot all about it and did not answer for one year, when he politely apologized for his inability to avail himself of the honour. Later the invitation was renewed and nearly two years passed before Tesla answered to the same effect. After a lapse of time, however, upon the announcement of another important invention, he received the invitation for the third time, with the assurance that an

altogether unusual honour was reserved for him. "Well, boys," said Tesla to his assistants after he laid the invitation aside (and which he never answered)", the Emperor must be a great man. I do not think that I would be capable of acting in this way if I were in his place."

Perhaps the most remarkable tribute was paid to him when he made his famous experiments in Colorado in 1899. It was by J. Pierpont Morgan, the elder, who donated $150,000.00 which enabled Tesla to produce artificial lightning and incidentally, to electrify the entire earth. Some of Tesla's inventions were of far-reaching importance in the two world wars.

The resources and productive powers of the entire World, were greatly increased through extended use of his system of alternating current transmission and transformation of energy. Millions of horsepower of water falls have been harnessed by this means, thus saving a large output of coal and oil, The rail roads have been completely revolutionized by the use of his ideas, such as the induction motor and electrical inventions of many kinds. His ideas also revolutionized the steel industry and operation of factories. Without going too deeply into the matter, it can be said with truth that without his inventions, we would have no electric light or power, no long distance telephones, no radios or television, no moon rockets, no radar, no motor cars, no dishwashers, no electric heat, no remote controls of any kind, no electric organs. There are many others, but with those few, the world would be back a hundred years.

The following is only a partial list of terms adopted and published in honest textbooks and technical works. I say honest because, in recent years the name of Tesla has been left out. However, one has only to consult the patent office, to know that they are all Tesla's inventions.

- Tesla two-phase, three-phase, multi-phase, poly-phase systems of power transmission.
- Tesla principle, Tesla rotating magnetic field
- Tesla rotating magnetic field transformer
- Tesla induction motor, Tesla split-phase motor
- Tesla system of distribution,
- Tesla rotary transformer, Tesla system of transformation by condenser discharges, Tesla coil, Tesla oscillation transformer.
- Tesla electrical oscillator, Tesla mechanical oscillator.
- Tesla high frequency machines, Tesla dynamo-electric oscillator.

- Tesla tube, Tesla lamp, Tesla high-potential methods.
- Tesla inductor, Tesla marvels, Tesla impedance phenomena
- Tesla electro-therapy, Tesla electrical massage, Tesla currents, Tesla transmission, Tesla experiments, Tesla capacity,
- Tesla arc light system, Tesla third brush regulation,
- Tesla devices, Tesla sparks, Tesla arrangements, Tesla theory, Tesla point, Tesla steam turbine, Tesla gas turbine,
- Tesla water Turbine, Tesla pump, Tesla compressor, Tesla igniter, Tesla condensers, Tesla electro-static field, Tesla effects,
- Tesla radio-systems, Tesla methods of wireless transmission of energy, Tesla magnifying transmitter, Tesla telautomata, Tesla insulation, Tesla underground transmission, etc., etc.

In all, there are 1,200 original inventions, which cover the entire world of this age.

On one occasion, Tesla was presented with a medal, — a symbol of gratitude, together with a paraphrase of Pope's lines on Newton:

"Nature and Nature's laws lay hid in night God said, 'Let Tesla be,' and all was light."

This was the man who said he was a Venusian, the superman who perhaps arrived on a space ship, the X-12, as a tiny baby, or again perhaps he came as a "thought," and he grew to maturity to fulfill his great-mission, to set up the machinery for the new scientific civilization that will, some time in the future, lift the Aquarian Age to heights of glory. Two thousand years earlier Joseph watched over the Babe Jesus, while the Star of Bethlehem hovered above the stable.

Few people on this planet today have any conception of the herculean accomplishments of Tesla on behalf of the whole world. But, no doubt, on other planets in this solar system and in systems beyond, the people are well aware that they can extend the hand of friendship to us now, in this new age, because of the mighty works of Tesla.

No doubt there are many earth people who will feel, even now, that Tesla would have found a way to overcome the obstacles placed in his path by the forces of darkness; that he should have forced a showdown that would have thrust his inventions upon the world, regardless of the ignorance and

ambitions of a petty minded opposition. But, like the spaceman that he was, Tesla knew that he could only encourage us. He could not force his light upon us. He could only respect our free will. He was aware that humanity was plagued by the forces of darkness. He well knew that people were unable to see the significance of his role as a Lightbearer. He was never bitter, never disappointed, when people failed to appreciate his efforts. He would only smile his slow, sweet smile in response to sympathetic friends who felt they must offer apologies for human arrogance and then he would quote in answer a favorite stanza from Goethe's Faust:

> **"The God that in my bosom lives Can move my deepest inmost soul. Power to all my thoughts he gives But outside he has no control."**

Well did Tesla know that each and every individual must find his own Christ center, must contact his own Source. For the doctrine of vicarious atonement is a vicious one, an escapist's dream. Each must transmit [transmute???] his own misqualified energy; each must carve out and travel the razor-edged Path to the One God. Tesla's inventions can make the journey easier, as can the inventions of other great thinkers, if they are based on Truth. But, only God can say to each pilgrim on the Path, "Here is my gift. Accept it, or reject it; learn by your past mistakes; then come home to Me."

There are those who will dispute the advantages of Tesla's inventions and the present developments made by Matthews and others who follow in Tesla's footsteps, arguing that machinery has nothing to do with discipleship. There are those who will say that we must not use a mechanistic approach, such as the anti-war machine, in trying to solve our problems; that we must use only Love and understanding. But, this attitude stems from the dreadful devoteeism generated under the misused understanding of the truth as taught by Jesus.

Jesus was a practical man who lived in the workaday world. He made His Ascension by the application of the Truth, which is the true scientific principle; which is the only method anyone can use. It is the impractical mystic who views science as a handicap. It is quite true that if men and women of good will could generate a sufficient amount of love and understanding, we could change the course of history at once, but the change would come about scientifically, for the energies generated in this way are simply collected by Angelic forces acting as accumulators and then poured into certain specified areas of atomic matter, freeing them from low vibrations and raising their — frequencies so they can function with greater freedom. There is nothing mystical in the process. There is nothing mystical about an angel. When angels

walked and talked with men, they were accepted and not thought of as mystical, but as real and necessary messengers from the Divine Being. They are not any more mystical than trees, rocks, soil, or rivers. They are not one whit more mystical than the pigeons in the park. It is the dark forces who have conjured up that phony mystical story, so that people would feel that they had to be practical in the materialistic meaning of the world, and depend upon a job, a boss, a national ruler, a military machine, instead of simply depending upon God, His Son, and His angels.

So let us not despise a mechanistic approach, which will allow us to lay down our weapons and give us the leisure time to develop the educated heart of love, the enlightened mind of Understanding. As the space people have quoted, "Do not count the teeth of a camel which has been given to you with love, but ride it with thanks in your hearts that you have a vehicle which will carry you safely through the hazards of the desert". Remember too, that Tesla's antiwar machine is simply a mechanistic version of the wall of light; it does not pretend to replace the supreme power of God. But, God is not a dictator. He does not force His will upon mankind. We are free to make mistakes and if we are wise, we must learn by our mistakes. A good master never follows his workers around, telling them what to do and what not to do. On the other hand, a bad master does nothing else. Not trusting himself, he has no real love or trust for others. This kind is a coward and he even enlists the aid of teachers, doctors, newspapers, and many other means, to assist him in his nefarious practice of enslaving the human mind through dictatorship. This kind of tyranny exists in virtually every part of the world today, and it is a well-known fact that the forces of darkness are especially proud of the inroads they have made in destroying family love and harmony. Divine Love does not direct His disciples to follow certain lines of thought, or point out to them certain ideas, which they must absorb. The disciple must at all times use his or her discrimination, within the limits set by Divine Law and must through his own efforts learn to handle only that type of energy which will increase his working knowledge of Divine powers; and how to apply such power, by allowing himself to be used as a lens, through which God shines His power, by means of the cosmic ray.

Over the years many disciples have been sufficiently alert to apply ideas, which they learned from Tesla, for disciples range far and wide in their search for truth, striving to recognize it and greeting it with joy when they find it. The mystic or the devotee usually makes the mistake of searching for truth only in nice but innocuous books, respectable surroundings, and sanctimonious environments. Therefore, it has not occurred to many persons to look into the findings of an electrical scientist like Tesla to confirm the Truths put forward by

Christ. Tesla's scientific knowledge was four-dimensional. He believed in the spiritual nature of the universe and acted on the principle that all is governed by immutable law; that intelligence is present at every point in so-called space and can be acted upon through the power of thought. He astounded the scientific world by saying, in the year 1934, that a wall of light, invisible and impregnable, could be built around a nation. Its power to withstand any impact would be greater than that of any physical substance known to man, he said. Tesla was using thought dynamically to establish this wall of light from out of the very atmosphere in which we live, move and have our being. He called this invisible substance intelligent energy, which could be thought into existence. He knew that thought was creative." Building this wall was not a supernatural feat, for we were dealing with energy. I had already learned to draw this wall of light around myself, therefore it was not an impossibility to conceive of a wall of light around our home. Everybody has an atmosphere, or electrical field, and the atmosphere in which we live is filled with invisible atoms. The center of these atoms is the intelligence which keeps the electrons revolving around it like the planets around the sun, in an orderly fashion, according to law. The pattern of the atoms changes with changing thoughts. With the above understanding, we visualize the wall of light around our homes and their environs. We conceive of the outer surface as sending forth charges of electrical energy which will act as a repellant and result in completely discourage distrust. It's all a matter of believing. The first step, therefore, is to know that God does exist, that He loves all people, and that He does have the power to command the electronic substance to surround you and remain permanently invulnerable to all that is not of the light. The process of manifesting the wall or tube of light is simple. It requires no money, no special equipment, no college degrees. It does, however, require a certain amount of practice, for one must be in tune with Divine Being. As with all true prayer, one must be undisturbed and without the least doubt, doubt is the one great thing, which will prevent the manifesting of the wall of light.

Two or more persons should be able to be in tune with each other, and with God. For when two or more are gathered together in His name, He is right there with you. Then focus your attention upon your own Inner-Self, the Divine Presence within your own beating heart. If you are in tune, with the Divine, you will visualize a great tube, or wall, of invisible electronic light gathering about you, or, and, your nation. There is no limit to the bounds of its protection. Think great, and it will be as you think; never limit the power of God. The power of man, depending on his own limited power, is not great, but when we build the wall of light, it is not us, we are only the instrument

used by Divine Power. To be effective, we must be willing; and to be willing we must believe, otherwise there will be no good results. It was perfect faith, knowing the power of God, which enabled Joshua to destroy the walls of Jericho, by the means of 'sound' — the power of 'thought' (read that story in the Bible, book of Joshua, Chapter 6). No doubt, some time in the future, when chaotic conditions have cleared, every child will be properly instructed in the true, and simple understanding of the power of God, instead of the sometimes foolish man-made religions, which hogtie our spiritual progress, to say little of our material being. Meanwhile, of course, every effort should be made to cease misqualifying the pure thoughts, or the reflection of Divine Power, as it leaves your heart. In other words, refrain from getting mad at yourself and the world around you, leave off all worry, cast out all fear. If your favorite worrying subject is lack of money, then use the thinking power that is wasted in worry in realizing that all supply is created by the Creator.

This forms a magnetic focus for supply and it will flow in naturally; but remember that doubt will immediately cause loss of power. God knows your every need, and if the need is worth while — from the Divine point of view — more than the need will be supplied. Christ said we do not receive an answer (supply) because we ask wrongly, cultivate an abiding faith in God, not simply because you want something, but from pure love, and you will find your outer world swinging into a wonderful new orbit of harmony. Remember that if you need special help at any instant of the day or night to solve any problem, you should call on power of God. You will get an immediate response, even though you may not recognize the energy form in which it comes to you.

And when you gaze at the skies overhead on a clear night and see an apparent star shoot suddenly through the heavens, know that it might be a flight of cherubim speeding forth on some cosmic errand, would there be any harm to think we recognize them? Acknowledge, and bless them, and believe we will receive their blessing in return. In the near future, more and more of these vehicles will become visible in the skies. Remember that at present all space ships and space people can use the tube of light at any time to make themselves invisible. As earth people themselves learn to form and use the wall of light, they will develop a consciousness which will make them fit companions for space visitors.

END

ADDENDUM

FROM THE FILES OF ARTHUR H. MATTHEWS

WE CAN SEE WITHOUT EYES.
ANSWER TO WILL IRWIN.

I know nothing about clairvoyance, fortune telling, or any similar foolishness, but I have received positive proof that telepathy is possible, under the right conditions. Telepathy as I understand it is very different to the ordinary dreams which may be the result of a disordered stomach or brain, but two minds can be trained to be in tune with each other, and the training consists chiefly in absolute concentration on each other, and love for each other. In fact great love between the persons regardless of sex is the principle requirement. I do not believe a public demonstration could be made because any disturbing faction would distract the attention of one or other of the subjects. The wife and I practiced telepathy years ago, and although we could not do tricks, such as naming cards or similar things, we could however recognize a 'call.' We would sit for hours on end in separate rooms, the understanding was to concentrate. She was to call me first using the simple word 'help' and to think only on the thought "I want you," or the opposite call "O.K." and the thought "all is well' and repeating the thought over and over again at the same time visualizing the one the thought is meant for. We would take alternate days in the sending position, until we were able to recognize the correct call, at any time, and after several months we could both do so. We then extended our mind "wireless" as we termed it to my job two miles from home. She was to call me any time between 10 A.M. and 4 P.M., and I confirmed my call by calling her on the phone. This went on for some years, until one day, I had left home as usual and had just arrived at work when I received the call "help" - as it was only 8 A.M. T was inclined to doubt my senses but as the call continued, I phoned and was astonished to hear the distressed voice of my wife telling me the stove water jacket had "burst" and the water was flooding the kitchen: Since this occurrence we have both had occasion to use our. "mind wireless" many times, distance has no apparent effect on it, although we have had no occasion to be apart any great distance. We have kept in contact up to one hundred miles. I can prove one demonstration. It occurred on "Major H" Camp located in the Lake St. John Woods, about one hundred miles north of Quebec City. It was just after supper when I received the "Help" call. I turned to the "Major" and told him that I had a feeling that all was not well at home, and that I was making "tracks" at once

to catch the 2 A.M. train to town. He said I was all wet but made no objections to my going, so with one guide we set out for the station - a nine mile hike and canoe ride. We made the trail all right, and during the trip to town I sent the "O.K." call. Arriving, I found the wife waiting at the station for me:. The baby had the first tooth and my brother who I had not seen. for twenty-six years had arrived. And so we had further proof of this wonderful thing - Telepathy. It may be very difficult for some people to believe this, but there will be many thousands who will try it and they will succeed if they have enough patience and love for each other. Otherwise, it is a waste of time, at least I think so.

A.H. Matthews.

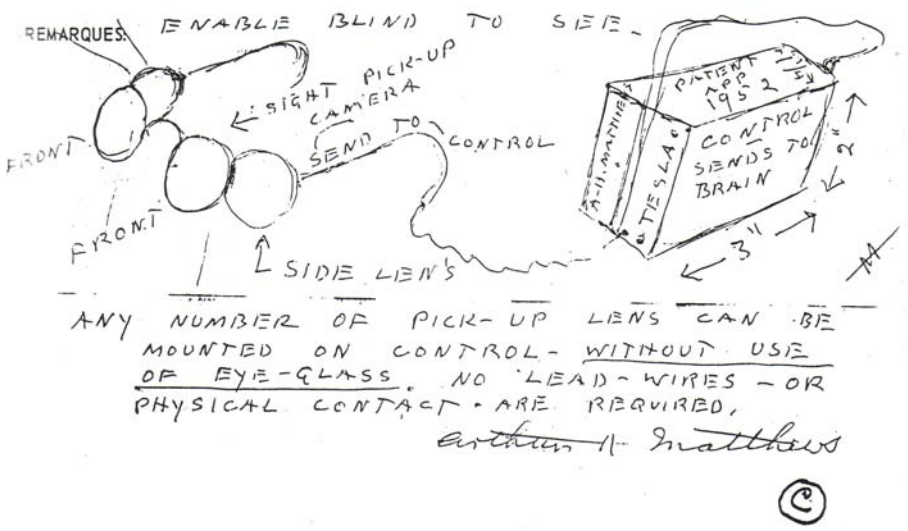

LANDING OF X-12 4/1941:

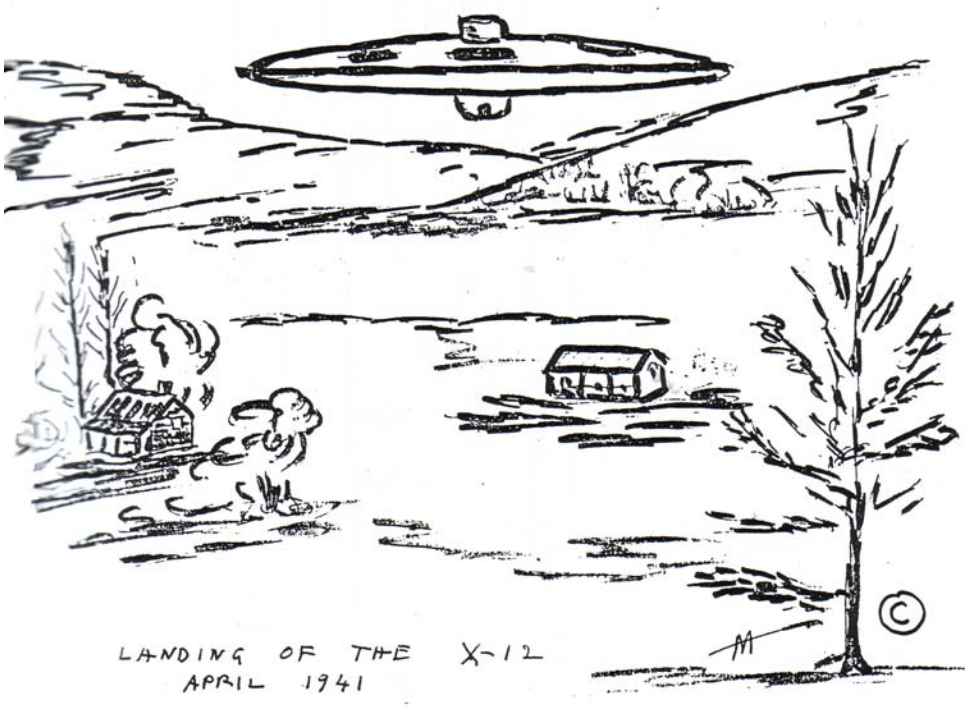

DRAWING OF THE X-12:

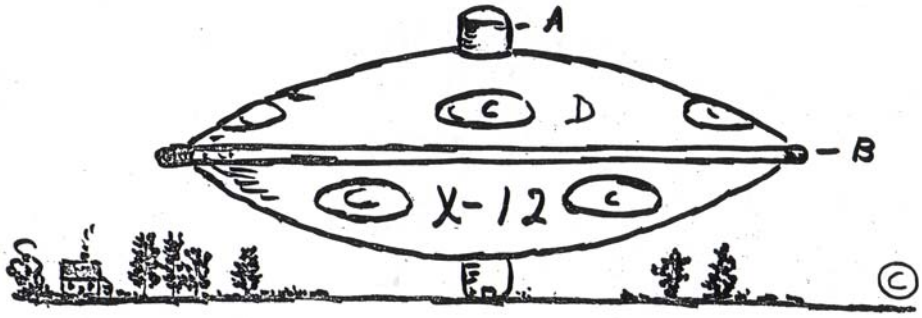

VENUS SPACE_SHIP_ THE X-12. 700 feet in diameter. 300 feet high. the body of ship "D " is 200 feet high. the center elevator and control "A " is 50 feet diameter. 300 feet high.

A_CENTRAL CONTROL 50 FT DIA. 300 FT HIGH.

B_UNSUPPORTED "GUIDE RING" SURROUNDING SHIP 20ft away FROM MAIN BODY.

C_HATCHES? 125 feet diameter,for release and return of the 24 small space-craft carried by this "mother " ship.

RAYMOND VALDEZ LETTER:

R.C. Valadez
1168 Ayala Dr.
Apt. #4
Sunnyvale, Calif. U.S.A
94086

A.H. Matthews, E.E. Bsc.
Lac Beauport. Box 7 & 98
Quebec, Canada

June 22, 1971

Dear Mr. Matthews:

I recently received a letter from Mr. Nick Basura of Los Angeles, California, and enclosed in his letter was a copy of your letter to him dated May 24, 1971. I found your letter most intriguing. But before I state why I am writing you, perhaps I should tell you something about myself.

When I was a teen-ager I became quite interested in electronics and during my studies I came across an article on how to construct a Tesla coil, also included in the article was a brief biography of Tesla. The article aroused my curiosity to find out more about Tesla. I found the more I read about Tesla, the more intrigued I became. It was during this time that I came across Mrs. Storm's book Return of the Dove, where I read about you. I naturally wanted to correspond with you about Tesla, so I wrote to Mrs. Storm to try to obtain your address, but I received no reply. Time passed and I thought that I would never be able to contact you. However when I received Mr. Basura's letter I became overjoyed that he had your address and had corresponded with you.

Upon reading your letter to him I was glad to see that you have written a book about the great genius Nikola Tesla, and I hope that you do find a publisher, because I would very much like to read your book, for I think that Tesla was a fantastic individual. I am also very interested in the inteplanetary transmitter-receiver you have constructed based on Tesla's work in that area.

You mentioned in your letter to Mr. Basura that you also new the late Wilbert Smith. Is that the same Wilbert Smith who was the head of Canada's Project Magnet? If so, are you [redacted] in anti-gravity? INTERESTED

I hope that you will answer my letter, because I feel that you do have undisclosed knowledge of Tesla and perhaps of other subjects that is not only of great interest to me, but to others as well.

Sincerly,

Raymond C Valadez
Raymond C. Valadez

TIME TRANSPORT:

TIME MACHINE:

PATENT ATTORNNEY LETTER:

JAMES McCUTCHEON & CO.
ESTABLISHED 1853

LLIAM E. SPEERS, PRESIDENT & TREAS.
ACE C. SPEERS, VICE PRESIDENT
ILER CUDLIPP, VICE PRESIDENT
G. McCUTCHEON, SECRETARY

609 FIFTH AVENUE
NEW YORK 17, N.Y.
TELEPHONE
ELDORADO 5-1000

SUBURBAN STORES
WHITE PLAINS, N.Y.
EAST ORANGE, N.J.
MANHASSET, N.Y.

September 18, 1952

Mr. Arthur Matthews,
Lake Beauport,
P. Q. Canada.

Dear Mr. Matthews:-

Thank you for your fine letter of September 9th. I have been delayed in answering it because I have been away filling some speaking engagements.

I am happy indeed that you thought so well of our little article in the Reader's Digest. You might be interested in what has been happening to it since it was published.

The reaction to it was enormous. It gave me the chance to try out an idea. I call it "spiritual commandos" - having people spotted all over the country who have a practical knowledge and experience in the spiritual approach to real problems like strikes, community tensions or personal difficulties -. people whom you could send to places where problems arose.

Most of the letters we have received are from people in some kind of trouble. Lacking money to help I wrote to people, some friends, some strangers saying "As a result of the article we have received the enclosed letter. This person seems to be having more than his fair share of trouble. I can't ask you to be responsible. But sometimes just a friendly pat on the back and someone to talk things over with is enormously helpful. Do you think you can do something to help this person?"

Perfectly splendid things have happened. People in jail have been called on and helped. People out of work have been found jobs. Sick and crippled people have been aided - all because the human soul was touched and reacted from a warm heart. It is one of the most hopeful and inspiring experience it has been my good fortune to be connected with. It makes one think of the good Lord's statement

Mr. Arthur Matthews - 2 - September 18, 1952

"Inasmuch as ye have done it unto the least of these my little ones ye have done it unto me."

Even at a time when strife and discord seem to be overwhelming the world, there still are wonderful things that people are doing for each other. Indeed they seem to be tickled to death to be given the opportunity. I believe that is enormously significant.

Again many thanks for your fine letter.

All the best to you.

Very sincerely yours,

Wallace C. Speers

Wallace C. Speers, Chairman
The Laymen's Movement for a
Christian World

(I am a member since it started-)

TESLA SCOPE:

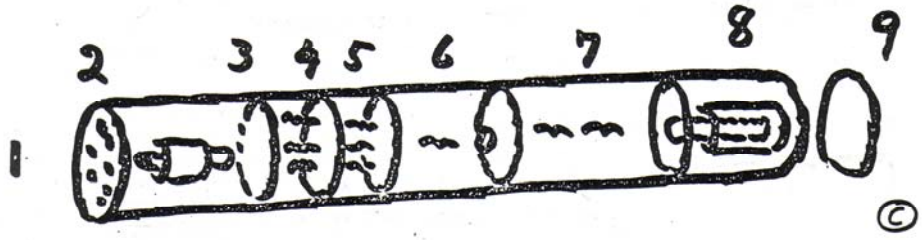

THE TESLA SCOPE FOR SPACE COMMUNICATION. BY ARTHUR MATTHEWS

CONCEIVED BY NIKOLA TESLA IN 1898. to communicate with planet VENUS.

First model built 1918, Second model built by Arthur Matthews with Tesla 1938. Re-Built the 1938 model in 1947.

Third completly new design model built by Arthur Matthews 1967. Adapting the microminiature parts, Thus reducing size to six feet long and four inches in diameter. see sketch of the 1967 model.

--------oooo---------

"Q"GLASS VACUUM TUBE ENCLOSED IN WOODEN BOX 9ft long,5 in diameter.

LEGEND

1_AUDIO OUTPUT

2_PICK _UP

3_CONVERTER

4_AUTOMATIC CONTROL CHAMBER.

5_GAS CHAMBER.

6_CONVERTER.

7_RECEIVED ENERGY CONTROL.

8_DARK ROOM.

9_HEAD(Q_GLASS FILTER).

TESLA SCOPE 1967:

TESLA SCOPE 1967 - 6 ft long, 4 in diameter

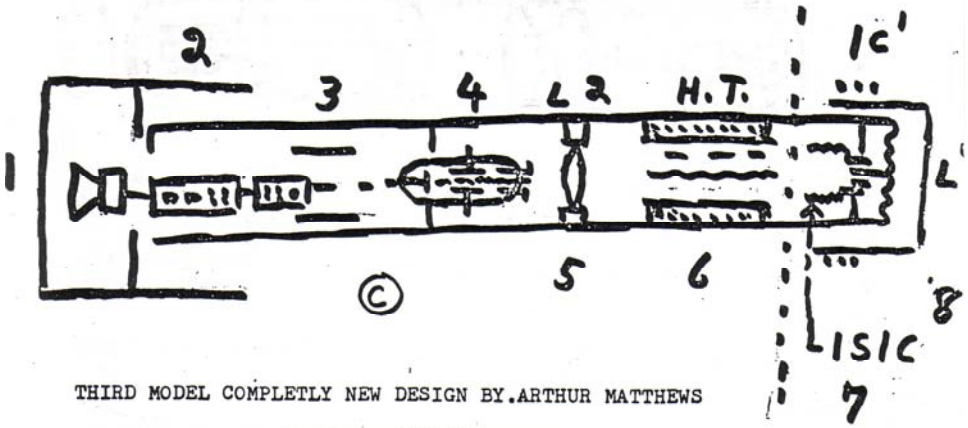

THIRD MODEL COMPLETLY NEW DESIGN BY.ARTHUR MATTHEWS

---------oooooooo---------

LEGARD

1-AUDIO OUTPUT.

2-AMPLIFYER.

3-CONVERTER.

4-FILTER_GAS CHAMBER.

5-FILTER.

6-RECEIVED ENERGY CONTROL

7-AUTOMATIC CONTROL CHAMBER.

8-HEAD. Q" GLASS FILTER.

TESLA TURBINE:

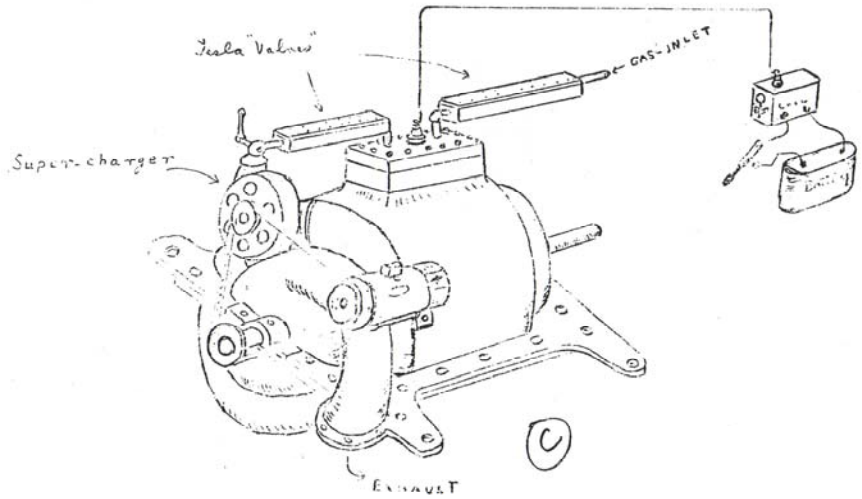

Gasoline - Turbine - unit -

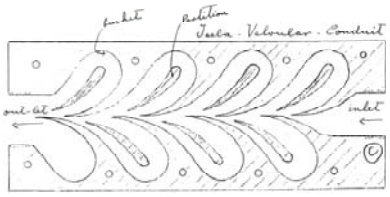

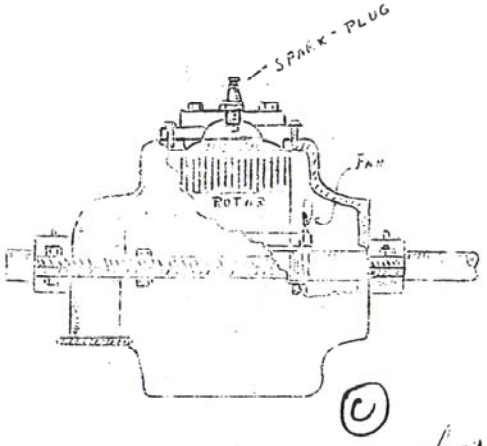

Combustion Chamber (c)

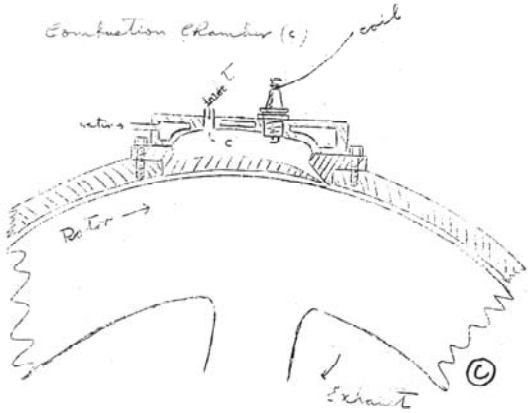

C. H. Matthews

rexresearch.com

Paul BAUMANN

Testatika Generator

Methernitha Group: CH-3517 Linden, Switzerland

Photo Gallery & Videos

Links:

Methernitha ~ http://www.methernitha.com
http://utenti.tripod.it/testatikmachine/
Paul E. Potter ~ http://website.lineone.net/~aarekhu/index.html

---

Hans Holzerr: Testatika Demonstration Notes

Paul Potter: Back-Engineered Testatika

P. Potter: Principle Experiment

Anonymous: Believe It or Not --- Here It is!

Cyril Smith: Testatika Generator and Over-Unity

Methernitha: The Research Work of Methernitha in the Field of the so-called Free Energy"

P. Potter: Transcript of Methernitha Testatika Video

Testatika Demonstration (4 August 1999)

Translation by Stefan Hartmann < harti@harti.com > & Hans Holzherr

From: Hans Holzherr
To: Stefan Hartmann

Recently, over 30 technicians and engineers (most of them retired) were allowed to visit the Methernitha group in Linden, Switzerland, where they witnessed a demo of the different Testatika machines.

Here is a report from Hans Holzherr from Switzerland who was present:

Hello Mr. Hartmann,

To your questions: > Have you seen live a machine with a load? If so, what load?

I am referring in the following to the model with the 50-cm diameter disks. This machine was already running when the visitors stepped into the room, and was not halted during the whole time --- we were there for about 1.5 hrs. As a first load a 1000-Watt lamp was connected for approximately 10 seconds whose brightness did NOT diminish --- the corresponding sequence on the Testatika film is just an effect of the camera aperture's automatic adjusting to the sudden brightness! The second load was a U-shaped heating element, that Mr.Baumann handed to me. It became so hot within one second that I had to put it down immediately! What was particularly impressive was that while he pulled back one of the contact wires (that was with the lamp, I believe), a 1-cm long arc appeared between the output electrode and the connecting wire for approximately one second. The apparatus was under a plexiglass hood. Near the base it had two holes which Baumann used to insert the contact wires to touch the output electrodes.

How do you think the high wattage is produced ?

Good question! I'd love to know the answer, too!

Did the disks slow down when a load was placed across the output electrodes ?

I did not notice that (nobody else did), but of course you tend to turn your look to 'where the action is' (the lamp etc.) The disks turned with 15 rpm, which is quite slow. The spin rate was regulated magnetically.

What general impression did you have ?

It was really impressive! One can hardly believe it, with this slow rotation. In any case, this cannot be explained in terms of bare electrostatics in the sense of the Wimshurst machine. The perforated sheets seem to have a key function... Beside the pick-up and the drive electrodes there are a number of small plexiglass blocks with glued-on perforated sheets, whose function is unknown.

As Adolf Schneider already mentioned, my colleague Bernhard XXX and I want to try to copy the principle experiment shown by Baumann --- without much hope to find anything extraordinary, though.

The device consists of a horizontal swiveling plexiglass arm with a small rectangular plexiglass plate at both ends glued to the lower side of the arm. The lower side of the arm is covered with perforated aluminum sheets (square holes), while the bottom of the plates is covered with brass wire mesh. Beneath each plate five additional plates are glued onto the base plate. There is also wire mesh between each pair of plates in the two blocks. From the mesh layer between the lowest plate

and the base a wire goes to the two capacitors, which are connected in parallel . Baumann seized the arm with both hands and turned it about ten times back and forth (a full rotation was not possible, because the capacitors were in the way), then measured the DC voltage with a digital measuring instrument: 60 Volts. Then, as he short-circuited the condensers a loud crack could be heard. I don´t know if that already is an abnormal result...

On my question Baumann replied that with metal foil (instead of wire mesh) the device would not produce that effect.

For more information, Contact: leo@zelator.in-berlin.de

"Back-Engineered Testatika"

by

Paul E. Potter

http://website.lineone.net/~aarekhu/index.html

(Copyright 2000)

That the Swiss Methernitha group's Testatika machine is thought to be based on a Wimshurst electrostatic generator, is only a sparse approximation of the truth --- of the great multitude of electrostatic influence machines developed around the 1900's it more closely follows the charge-separation-and-collection system used by the 1898 Pidgeon machine [note 1] for its electrical circuit.

Its 50-per-disc steel grilles or 'gitter-grilles' are plainly unique to the Methernitha (see fig.1) but in principle follow on from previous research and patents for corrugated sectors which were found to be more efficient charge carriers [note 2] than flat ones, and from a similar example in more recent times of aluminium rods extending out like wheel spokes from an insulating hub of perspex [note 3].

Another unique function of these perforated grilles attached to the discs is how they induce charge from the rotating discs onto the special collecting pads, or 'tasten' antennae keys (which are also perforated --- so as to more readily pick up charge); for in a Wimshurst you had conductive brushes or rails of sharp points which actually touched the discs or were placed very close to them, but in the Methernitha the charge has to be made to traverse a parallel air-gap to the pads and for this purpose the metal gitter-grilles are so designed to create miniature eddy-currents of charged air which circulate in and out of the perforated metal's surface charges, and are more easily bounced out to the collecting pads. This process is categorised as VARIABLE CAPACITANCE electrostatic generation.

Careful note needs to be made of how the Methernitha uses its basically Pidgeon setup with regard to its neutralising rods (that equalise and stabilise the opposite charges --- see fig.2), and how charges are picked up from one area and accumulated at others, so that the polarities of charge are distributed correctly to specific areas on both discs [note 4].

And although there have been some fanciful claims, or misinformation, that it uses all sorts of radioactive materials to achieve its pulsed output I most strongly believe that the auxiliary electromagnetic circuit, that wraps itself around the rotating discs, portrays a simple electronic approach; afterall, who would use radium radioactive emission alongside leyden jar capacitors ! Indeed, the more you look into certain elements of its construction the more they point to three main eras of electronics development, the 1900's, the 1920's and the 1950/60's. The authentic Methernitha

was designed and developed by purists who believed they had discovered a previously unknown electronic phenomenon, but they wanted to keep an integrity to the early pioneering days of the Pidgeon, Wimshurst and Holtz electrostatic machinery; they would not use such modern devices as transistors or IC chips (more's the pity) --- but they do use some pretty uncommon electronic engineering in their circuit [note 5].

Obviously, the electronics are in two parts; one --- the electrostatic generator and its particular technologies of how to direct what charge where, and two --- the very unique auxiliary electromagnetic circuit of inductances, capacitances and rectification that mobilises that 'static' electricity. To understand how they convert static energy into an electromotive force you would do well to go back to the earliest years of radio. From the pages of spark radio you soon appreciate just how important oscillation circuits and their valve rectifiers were, and moreover, how difficult it proved to engineer them. For although radio transmitters and receivers from the 1900's used resonating circuits their oscillations were controlled by sparks between two contacts and, of course, they were relatively inefficient. Not until the 1920's did the first electric current oscillations become an observable controlled phenomenon when someone coupled a rectifier valve, a capacitor, and a resistor together [note 6]. The early 1920's also saw the best era of experimentation and invention for novel devices that turned static energy into useable electromagnetic energy; it was in a 1921 patent that we see a German physicist Hermann Plauson describe in great detail his methods to convert static power, not only from rotary influence machines but also from balloons collecting atmospheric electricity up in the sky; and by using thermionic rectifiers, leyden jar capacitors and inductor coils he proposed a free-energy network that was to power the whole of Germany [note 7] ! The thermionic rectifier valve heralded a new era for radio and high voltage physics, and as it was then subjected to such a broad array of experiments and modifications to improve its efficiency so it paved the way for all sorts of new avenues in electronics. Indeed, with such a technical catalogue of similarities with what we see in the available photographs of Testatika it can be assumed without doubt that the horizontal glass tube which sits on top of the Methernitha machines is exactly what a home-made vacuum thermionic rectifying valve would look like; with its internal anode mesh-plate, surrounded by a coiled copper grid, fed by a glowing (heated) cathode wire running horizontally across its centre and capped by two black end-pieces, which are too big and bulbous to be mere end-caps and must surely be black rubber vacuum seals to seal the glass tube and the input/output wires [note 8].

With such a rectifier, some induction coils, and some leyden jar capacitors you have a circuit that oscillates, and that's what has to happen with a Methernitha, the electromagnetic circuit has to oscillate for it to work, and then the oscillations have to be rectified (or even modulated) so that the resulting single-pole pulses can be channeled through the big cans, which are basically high-efficiency transformers, and outputted as reduced voltage higher current DC pulses (see fig.3).

The precise components used to oscillate the primary oscillating circuit are, I believe, not to be seen in any of the available photographs, but there are various hints for their approximate whereabouts on the machine. Firstly, according to electronic design there should be a capacitor and coil configuration in close proximity to the rectifier. Well, from the picture "3KWREAR" can be seen the two long upright tubes which, according to those who have seen them first-hand, comprise a spirally turned aluminium strip (which indicates they are chokes [note 9]) inside a glass tube, inside the same sort of outer shielding that the big cans have (which indicates they are electrostatic shields), inside yet another glass tube, and are terminated at the top with a brass connecting rod which does a right-angled turn and passes into the side of the tower --- but only two-thirds up the height of the tower. These two assemblies must form a connection to the rectifier, because the rectifier is at the top of the tower, so why don't these electrostatically sensitive tubes extend all the way up to it ? Again, from the photographs of the rear and front of the Methernithas there is a wire that comes out of the tower's side wall at about 4 inches above the upright's brass terminals and this wire then passes through a short black tube and on to the rectifier valve. This, of course, would happen on both sides of the tower, enabling a connection to both ends of the rectifier. But why have

this 4 inch gap of connections at the top of the tower ? Something is placed inside the top of the tower in this intermediate space which is very necessary to the circuit, and I think it must be the location of the capacitor/inductor configuration to oscillate the circuit. This (fig.4) is how I would see the inside of the top of the towers [note 10].

I've seen some of the patented inventions that rotate discs --- by using magnets (i.e., H.Rosenberg's permanent magnet excited rotational machine, US Patent # 3,411,027), and by utilising inscribed metalised discs (US Patent # 3,239,705 for instance), but there simply isn't enough room for these to be located in the Methernitha disc setup --- also, you don't want to interfere with the ES fields that zip around the revolving discs: From the reports of those who have seen the small machines working it appears their discs were rotated by small DC electric motors after they were hand-started, some re-wound with thinner wire (to presumably increase their torque) and powered directly from the discs' generated electricity --- but I have also seen how two discs can continue to rotate simply by careful placement of curved electrodes [note 11] which would act on the charges on the discs --- like the 3kw Testatica Distatica generators.

After reading through the many early accounts of electrostatic rotary machines, and some of the more recent ones, you can't help but be puzzled by the Methernitha's incredibly low rotational speed of just 60 rpm (and in the 1999 engineers report as low 15 rpm !). Most other early experimenters boasted up to 3000 rpm. J.G.Trump in his work on high voltage generation in space [note 12] spun his rotary machine at 10,000 rpm (to produce 433 Watts at 24 KV no less). One reason for this low speed might be to do with the close proximity of the 50 lamellas (gitter-grilles) on the discs at their inner ends, they are very close together, I think too close. Air, normally an insulator, breaks down and conducts at around 25-35 KV (this figure has been fairly constant from day-one of electrostatic machine experiments right through to the present day --- because air has a breakdown field strength of 3x106 volts/metre) and short-circuits the circuit. I feel that because this design of grilles is prone to short-circuiting at high voltages the Methernitha people have limited their rotational speed so as to ensure a low operating voltage --- of what I'd guesstimate to be only 12 to 24KV.

But, is this a waste of extra potential ? Not necessarily, for I don't think that the main power output comes solely from what the two counter-rotating discs supply.

There is, I believe, a far more important power generator --- the electron cascade generator, and the Methernitha has two of them, held inside the two horseshoe magnets, and providing the circuits to the magnets are made to oscillate at the right frequency at a high enough voltage then these metalised-perspex laminated blocks can enmass A MUCH LARGER AMOUNT OF ELECTRICITY THAN WHAT IS PUT INTO THEM.

This, perhaps, is the previously unknown electronic phenomenon that the Methernitha group have so zealously been trying to protect against unscrupulous entrepreneurs. But I would say that this copious supply of free energy is already known to the world --- it is not readily available - and its principles are not fully understood, as yet, but it is known about.

As the descriptions say (on the Testatika website), between the horseshoe magnet legs are four blocks of transparent 'plexiglass' type material alternated with copper and aluminium plates (that may or may not be perforated), in the sequence c-p-a-c-p-a-c-p-a-c-p-a (also see fig.6). And according to the Linden Experiment, where Paul Baumann induces a resonance of about 80-140 MHz in a coiled horseshoe and then has an aluminium-insulator-copper block moved between the horseshoe legs, a voltage could be taken off the plates of the block which measured 700 volts (DC presumably) [note 13]. This incredible phenomenon has never been replicated by any 'outside researcher', and is said to be the basis by which the Methernitha machine could be understood how to work [the clue, possibly, to this Principle Experiment may be variable-capacitance and dielectric-absorpsion].

But what, I hear you say, is an electron cascade... Well, it was only by chance, very recently, that I happened to listen to an audio tape by a Dr. Flanagan about crystal water; when I switched the tape over after the end of side one Dr. Flanagan then began talking about an electronic configuration that applied a high frequency, high voltage alternating field across an insulator --- that created what he called an electron cascade effect --- Yes, I thought, here is the answer to the Methernitha Machine.

The electron cascade or avalanche effect is where air molecules are accelerated to the device at such a high velocity that they collide with other molecules and atoms in the air to liberate new electrons which in turn also collide and liberate even more 'free electrons' from other air molecules (see fig.5), all of which become accelerated by the electric field, and an avalanche of electron-multiplications progresses throughout the whole immediate environment [note 14]. It's a chain reaction, and an entirely safe one, it happens in a more ferocious way in lightning strikes, and is a natural phenomenon. And, as in this case, the environment actually becomes part of the circuit [note 15] because the process is actually negatively-ionising the air surrounding the Methernitha machines, and that is why those who have been near these generators when working say the air around about them is cool and fresh [note 16].

In view of the fact that it's designers have chosen to wind insulated wire (which may or may not be bifilar) around the horseshoe metal it is likely that the horseshoes are used for some form of induction [note 17], it would also be very possible to draw directly from this part of the circuit the extra electric current produced from the electron cascade blocks, with suitable connections that might lead downward into the wooden base (where it is believed that an alternate layering of perforated metal plates and insulating plates - making up a large high-voltage storage capacitor - is located). This power could then be discharged as a pulsed output of high wattage, especially if the final output part of the electronic circuit is configured as a Pulse Forming Network of multiple sections of inductor / capacitor combinations [note 18].

The two big cans at the side, the big capacitors, are probably not highly technical (see fig.7), once the fundamental formula has been decided upon all models of a Testatika generator would follow a similar construction process. The written descriptions are a little contradictory but they seem to suggest a central input rod, or tube, connecting at the bottom of the cans to a stack of inter-linked pancake coils, that are wound secondary-outside primary-inside, fitted around a core of 6 hollow donut-ring magnets stacked in such a way with plastic spacers as to allow air gaps between them, and then finally the output of each can is a connection from the top coil of the secondaries of the pancake coils to a brass ring around the centre of the black plastic top lid --- and from the photographs can be seen a large diameter wire or tube [note 19] connecting that polarity's output terminal to the top lid's brass ring via a brass screw terminal. I would suggest that the ring magnets (of anistropic ferrite perhaps) are gapped in this way to prevent the magnetic flux fields of the pancake primaries co-joining as one sprawling field, because it would be more advantageous, and safer, to have each separate pancake's magnetic flux cut it's own adjoining secondary coil, and divide the secondary output voltage into smaller amounts of potential, thus depending less on complicated insulating procedures that accompany high voltage single primary / single secondary transformers.

The use of aluminium mesh and solid copper sheeting is commonly used in electronic construction; the outer aluminium mesh cylinder would be used to shield stray electrostatic charges, and the solid copper cylinder is to shield the large amount of stray electromagnetic fields produced by the transforming process from high voltage/low current to lower voltage/higher current [note 20]. Obviously they don't want field contamination taking place between the sensitive electrostatic generator and the transformers.

Within these two outside shielding-cylinders are 'grid condensers' which, according to the 1999 report by the 30 engineers, can be as many as 20 layers of perforated sheet (presumably as concentric cylinders) - which I have indicated (in fig.7 for instance) as being electrically connected

BETWEEN each separate secondary winding - in the fashion of an old discovery from the early days of wireless telegraphy and based on the 'disruptive discharge coil' devised by Nikola Tesla, that such a condenser connected in the center of a secondary coil collects the maximum amount of voltage created by that secondary. This configuration of one condenser inside another inside another etc etc, has a striking similarity to the layout of a pulse forming network [see note 18].

In the red wired can the transformer is wired to output negative, and the blue wired can's transformer is wired to output positive polarity. Special note should be made of a similar arrangement for divided primary / secondary windings devised by Van de Graaff in his 'High Voltage Electromagnetic Charged-Particle Accelerator Apparatus Having an Insulating Magnetic Core' [note 21] with respect to magnetic reluctance gaps.

Whilst it has been said that the clear perspex disc was designated the 'cloud' disc, and the (rear) dark disc the 'ground' disc I would think this relates to different types of acrylics or plastics that might become charged to different polarities, as in the triboelectric series, where frictional charging of different plastics --- and then bringing them close together, might cause donation or acceptance from one to the other; I would think from the above that cloud represents a donator (positive charge) and that ground must mean an acceptor (negative charge). Has anyone tried the combination of a teflon disc (extremely negative charge) with a glass disc (highly positive charge) ?

Or discs doped with paramagnetic particles perhaps [note 22] ?

The circuit has to be made to oscillate for it to work, and then the oscillations have to be rectified, so that DC pulses can be channeled through the transformers in the big cans and converted to high-current DC output. The rectifying-diode, together with the coils L1 and L2, and the capacitors C5 and VC4 are one of many configurations that will create the oscillations and rectify them. The rectifier must have a heated filament to provide cathodic electrons, and its efficiency is greatly improved by being inside a vacuum enclosure.
A reed switch is triggered by magnets in the disc rim to provide a timing pulse to indicate the disc's rpm.
What makes this machine 'over unity' is its ability to *magnify* its basic input - and this it does by creating and utilizing an electron cascade effect, which ionizes and polarizes the air in the environment surrounding the two horseshoe-magnet configurations (basically by oscillating the dielectric blocks with high frequency high voltage pulses), the air molecules are accelerated toward the blocks at high speed to cause them to collide with other air molecules to dislodge free-electrons, which are also accelerated to free up more electrons by further collisions, and so on and so forth. The resulting avalanche permeates the surrounding environment.
In each Big Can is a step-down transformer of multiple pancake coil windings especially coupled to a toroid-magnet core so as to intensify the field and produce divided voltage outputs which charge up separate 'condenser-grilles', which build up the charge for output. Electrostatic shielding in the big cans is provided by the outer perforated aluminium cylinder and magnetic shielding is provided by a solid copper cylinder.

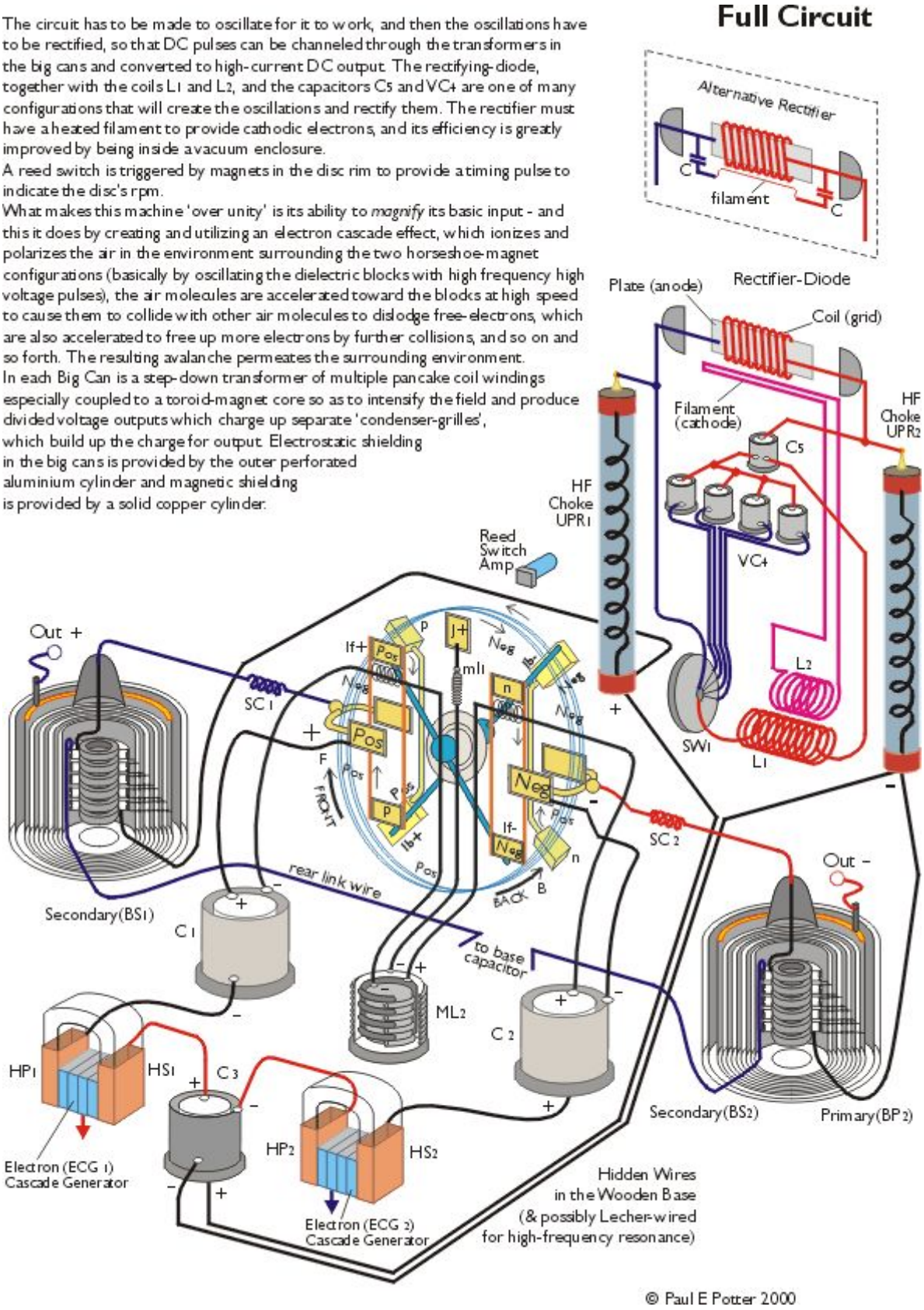

Back-Engineered Methernitha --- Notes

Note 1 --- For more information on the Pidgeon machine see "Electrical Influence Machines" by John Gray, 1903 p. 206 & "Philosophical Magazine" Dec 1898, p. 564, and of course the Pidgeon patents.

Note 2 --- See "Modern High Speed Influence Machines" by V.E. Johnson, 1921, p. 76. Johnson was not only a researcher of electrostatic machines but was also an innovative constructor of them, and as such was keen to try any technique that made his generators more powerful than even the specialised Wommelsdorf multi-disc condenser machines. This book is an absolute must for those who wish to work in this field. Another 'must' is the website of Antonio Carlos M. de Queiroz (http://www.coe.ufrj.br/~acmq/electrostatic.html) which is absolutely full of information about (and with links to) present-day developments in electrostatic machines.

Note 3 --- See "Self-Excited, Alternating, High-Voltage Generation Using A Modified Electrostatic Influence Machine" by M.Zahn, et al., American Journal of Physics, Vol 42 (1974) p. 289.

Note 4 The Methernitha designers have taken a basic Pidgeon electric field system and added a few modifications of their own, partly to lock a certain polarity of charge to a certain area so as to stabilise it, and also to boost certain areas with charge. As in their use, for example, of an extra field plate located at the top-centre in front of the front disc (just under the rectifying valve), note also that this plate, or antennae key, is indirectly coupled to the rest of the circuit, via a coil setup. Much the same occurs with the two plates slightly below it, these plates are connected to a brass terminal which connects to a copper wire that goes down and winds in a coil shape around a hollow plastic tube, and inside the tube will be another wire or small coil that draws off the electric charge. So these three plates are using not direct connection but induction to get their charge.

Note 5 ------- By looking at how each of the photographed machines have been constructed you can see that these are high quality crafted structures. I would think each would start off as sub-assemblies fitted together by pairs or small groups of members, those sub-assemblies of wooden base, big cans, perspex framework, discs with bearings and axles, when completed would be passed on to the electrical engineers of the community who would then fit the wiring connections, vacuum tube rectifier and make sure that not only did they work but that they looked like a work of art.

Note 6 --- The Fleming valve had been around since 1905 and while it progressed to the thermionic valve and audion, by 1922 the ‘Pearson and Anson Effect’ was discovered whereby oscillating currents could be produced with a resistor, capacitor and thermionic valve coupled together.

Note 7 --- See US Patent 1,540,998 (9 June 1925) Conversion of Atmospheric Electric Energy by Hermann Plauson. He also wrote a book of the subject titled "Gewinnung und Verwertung der Atmospharischen Elektrizitat" in 1920 in German (which is currently held in the British Library).

Note 8 --- Whilst some have seen the smaller 300 Watt machine’s discharger/rectifier quite open and not encased in a vacuum tube the vacuum tube models would be much more efficient and would waste less current. Also, the rectifier tube must have a heated filament (which on the 3KW machines can be seen as a glowing line running the whole length of the grid and coil assembly between the two black end caps, and in the films you can see faint flashes coming from behind the rectifier so possibly the filament is wrapped around the other side of the grid/coil assembly as well). Coolridge, back in the 1900’s, discovered that no discharge from the cathode to the anode would occur, even at 100,000 volts, unless the filament was heated (Physics Review, Vol. 2, Dec 1913, p. 418). Aluminium mesh will give off electrons quite readily and can be used as a cold cathode --- but a heated cathode offers the advantage of being able to control the oscillations.

Note 9 --- The two long upright tubes are without doubt choke coil assemblies in precisely the right place to slow down the current where it gets oscillated and rectified. In a choke the higher the flow of current the greater will be its resistance to that current flow. An even better form of choke will have some form of iron core inside it.

Note 10 --- I have come up with 6 different circuits for this oscillation section, some of which include small quartz crystals. (See notes 13 and 16 on frequency of oscillation). The black dial at

the rear of the 3kw machine is most likely to select a variety of capacitances so as to control the oscillations of the circuit, which in turn control disc rotational speed.

Note 11 --- The phenomenon of electrostatic motors has been well researched over the years (see "Electrostatic Motors" O. Jefimenko in "Physics Teacher" Vol. 9, March 1971, p. 121-9, and in "Electrostatics And Its Applications" by A.D. Moore (1973) p. 131-147; "Electrostatic Motors" by B.Bollee in "Philips Tech. Review" Vol 30 (1969), p. 178-194). The Methernitha Testatika generators (see a recent report by 30 engineers) auto-rotate, after they have been started by hand, by the same principles of these ES motors.

Note 12 --- J.G.Trump worked for the US Air Force and pioneered some highly efficient electrostatic machines around the 1960's (see"Electrostatic Sources of Electric Power" in "Elec. Eng." 66:525, June 1947; and "High Voltage Generation in Space:The Parametric Electrostatic Machine" in "Progr. Astronaut. Rocketry" (vol 3 --- Energy Conversion for Space Power) 1961 p745).

Note 13 --- Although the 'Linden Experiment' was thought to register a frequency of 80-140 MHz this does not necessarily mean that the Methernitha generators would oscillate at that rate also. Such a frequency seems unnecessarily high.

Note 14 --- See "Plasma --- The Fourth State of Matter" by D.A. Frank-Kamenetskii (1972) pp10, and Dr.Patrick Flanagan's US patents 4,743,275 (May 10, 1988) and 4,391,773 (Jul 5, 1983).

Note 15 --- The effect is very similar to the converging forces in a non-uniform field, the oscillating perspex blocks become one 'electrode' and the surrounding air in the room becomes the opposite 'electrode', and by the processes of electrophoresis and dielectrophoresis the electrically charged particles in the air (the electrons and negative ions) are drawn toward the central electrode, which in this case is the perspex block assembly (see "Nonuniform Electric Fields" by Herbert A. Pohl in "Scientific American" (Dec 1960) p. 107-8). I am much more inclined to believe that the ingenuity of the design of these types of machines comes from physicists and not electronic engineers.

Note 16 --- Dr. Flanagan actually uses the electron field generator in his own special ionizer (see Method of Purifying Air and Negative Field Generator US Patent 4,391,773).

How does an electron cascade generator work, I would think that while you have an alternating electron movement (and Dr. Flanagan reckons this effect occurs with a high voltage field alternating at above 20 KHz) at the metal electrodes, the perspex blocks sandwiched between them would transfer the electricity not through their mass but around it, as surface charge --- actually in the layer of air right next to the insulator's surface. Its the same principle as dielectric absorption - the perspex blocks don't discharge themselves fast enough to keep up with the alternating voltage and so they accumulate more and more charge --- until it forms as a layer of charge on the insulator's surface. This means that at a high enough frequency the surface-air molecules polarize, with the more mobile electrons separating from the slower bulks of those molecules and while the electrons get thrusted back and forth a secondary layer of (slower) positive air ions develops, and so on, and the process of high voltage high frequency polarization triggers the electron avalanche effect.

In the event that the perspex blocks are indeed ELECTRETS (as free-energy researcher Geoff Egel and others suggest) I would think that they would work in a similar fashion to the above process, of dielectric absorption that charges up the blocks before they produce the cascade-effect. Because in the electret the electrons charged into the perspex/plastic, and the positive ions, would still be manipulated by the reversing electromagnetic field in such a way as to orientate (as with dipoles) back and forth, to eventually reach the point (if the whole circuit is tuned properly) where they would attain resonance with the immediate air surrounding them. And if this effect is similar to an inductance then possibly a back-emf will result also, to increase the output voltage. Either way I believe the effect will still be an electron cascade through the environment and the product of this

oscillating output (at the blocks) could similarly be drawn off and accumulated in the multi-layered base capacitor network.

I would suggest that a test program to find the best type of blocks would be; One --- try different types of plastic/acrylic/ceramic materials for the blocks.
Two --- try different methods of electrifying the plastics (as with electrets). Three --- try plastics doped with semiconducting particles. Four - try plastics doped with paramagnetic particles. Five - try hollow plastic blocks containing an electrolytic fluid. More information on plastics will be found on the Electret vs Dielectric Absorption Page.

Note 17 --- There are several definitions of Bifilar, one where the wires cancel out their magnetic fields, and one where the wires are wound to ensure a tight low-loss magnetic flux coupling, in this case you need all the magnetic flux you can get so it must be the latter --- See "Transformers For Electronic Circuits" by Nathan R. Grossner (1967), p. 224 etc.

Most commonly used magnetic metal is Mumetal, which is an easily saturable magnetic material, routing magnetic flux through it rather than in the surrounding air, so as to enhance the mutual induction between the two coilings of red wire around the horseshoe legs.

Note 18 --- So that the machine's output voltage doesn't drain away when it is connected up to a large load, what is needed here is a Pulse Forming Network (or artificial delay line). "Such a network is an improvement on simple capacitor storage because of the cascading action from one capacitor to the next along the chain. At the beginning, all capacitors are charged to the same voltage but as soon as the first one starts to loose voltage, the one behind it is then free to discharge into it. This topping-up action, which trickles down the network from capacitor to capacitor, is the mechanism by which the voltage across the output terminals tends to hold onto its original level." (see "High Energy Discharge Systems" A.P.Stephenson, Electronics Today International, March 1992, pp. 24-26).

Note 19 --- When voltage of a high potential and high frequency flows along a wire it does so on the outer surface (called the ‘skin effect’) and so the Methernitha would use thick wiring or even 1/8" tubing to connect its circuit.

Note 20 --- Two references for shielding are: "A Shielded Loop" by S. Goldman in "Electronics" Vol 11 (1938), pp. 20-22; and "Measurements in Radio Engineering" by F.E. Terman (1935), p. 218 & p. 341.

Note 21 --- For information on maximum voltage in the center of a secondary coil see "A Handbook of Wireless Telegraphy" by J. Erskine-Murray (1913) p. 42; and an article called "Dielectric Hysteresis at Radio Frequencies" by E.F.W. Alexanderson in "Proc. I.R.E., Vol. 2 (June 1914) p137-157. For Van de Graaff's transformer see US patents 3,323,069 (May 30, 1967) and 3,187,208 (June 1, 1965). These patents were not just for a Van de Graaff high voltage generator, they were for a special system devised by Van de Graaff long after his generator had been in use to convert static electricity into current electricity. This system may be a little too complicated for the Methernitha but, nevertheless, the principles he used for multiple primary / secondary windings may be of some interest.

Note 22 --- Dr. Flanagan modified his insulator blocks, made of resin, by doping them with paramagnetic granules (such as silicon carbide) to enhance even more the electron cascade effect; which is an idea that the physicist Thomas Townsend Brown first experimented with (by using lead oxide granules) in his US Patent 3,187,206 (June 1, 1965) to good effect. The surrounding air could also be ‘enhanced’ in similar fashion to polarise it's electric charge and improve its side of the performance (for those interested in the ‘physics’ of this see an article by W.A.Douglas Rudge "On Some Sources of Disturbance of the Normal Atmospheric Potential Gradient" in Proc. Royal Soc. A, Vol. 90 (1914) pp. 571, etc).

Note 23 --- Some other generators with similarities to the Testatika machine are the "Electrostatic Energy Field Power Generating System" invented by William W. Hyde (US Patent 4,897,592 of Jan 30, 1990) is a rotor/stator variable capacitance machine capable of producing 300 KV. Other such generators are; "Parametric Electric Machine" invented by Ferdinand Cap (US Patent 4,622,510 of Nov 11, 1986) which has a series resonant (LCR) circuit structured into it so that it oscillates --- and indeed operates AT RESONANCE to ensure a high output; "Electrostatic Generator" invented by Dan B. Le May, et al. (US Patent 3,094,653 of Jun 18 1963) is a very ingenious system of variable capacitance; the "Electrostatic Machine" by Noel Felici (US Patent 2,522,106 of Sep 12, 1950) is a good standard which utilizes a valve rectifier; and the "Electrostatic Generator" by William S. Spencer (US Patent 1,415,779 of May 9, 1922) is an early rotor/stator generator which transferred its electric impulses through a transformer to produce a higher current output.

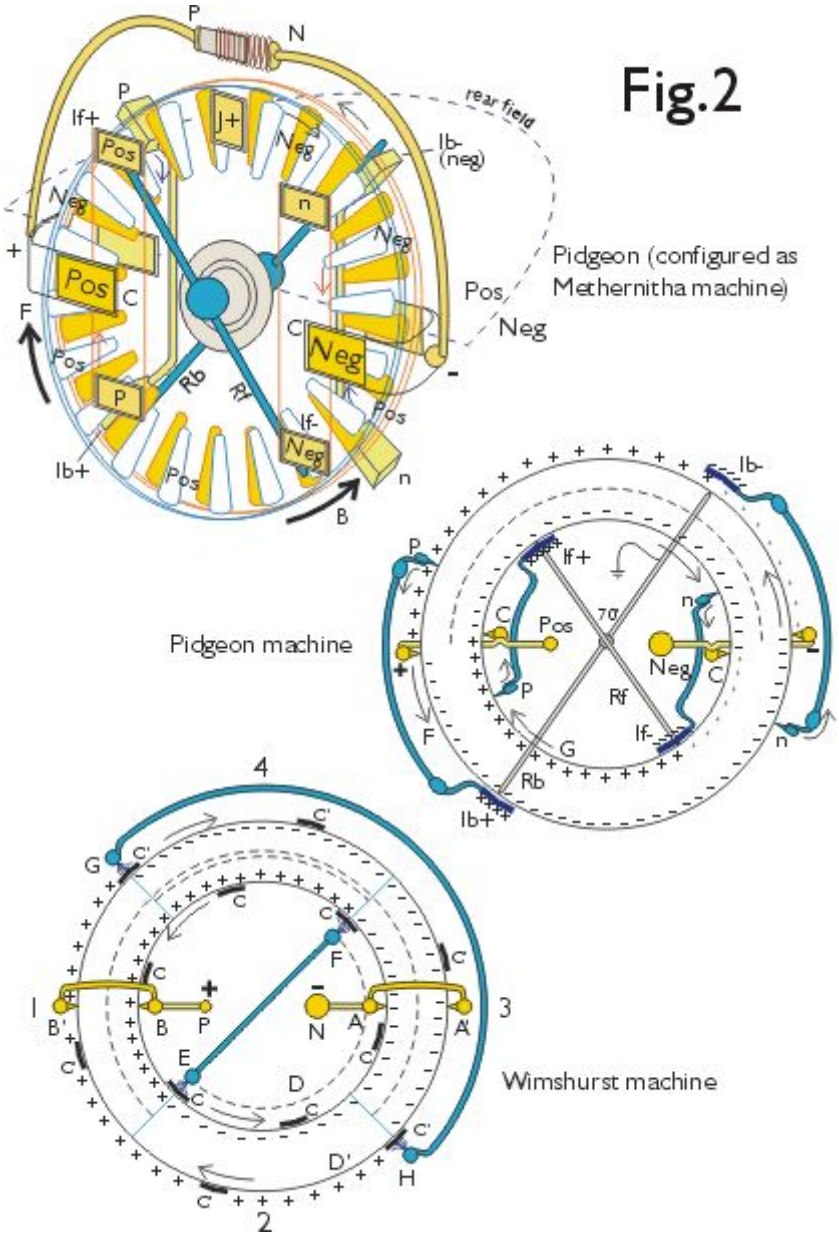

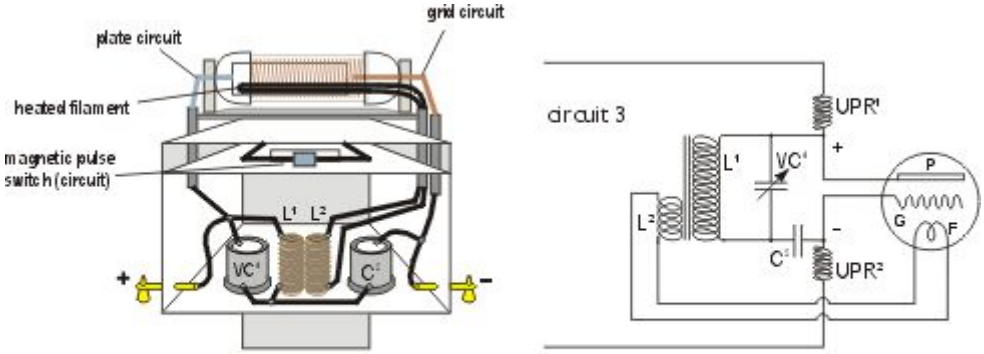

Fig. 4 - Tower Circuits

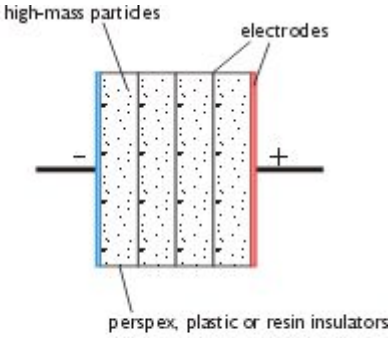

Fig. 6 - ECG Doped

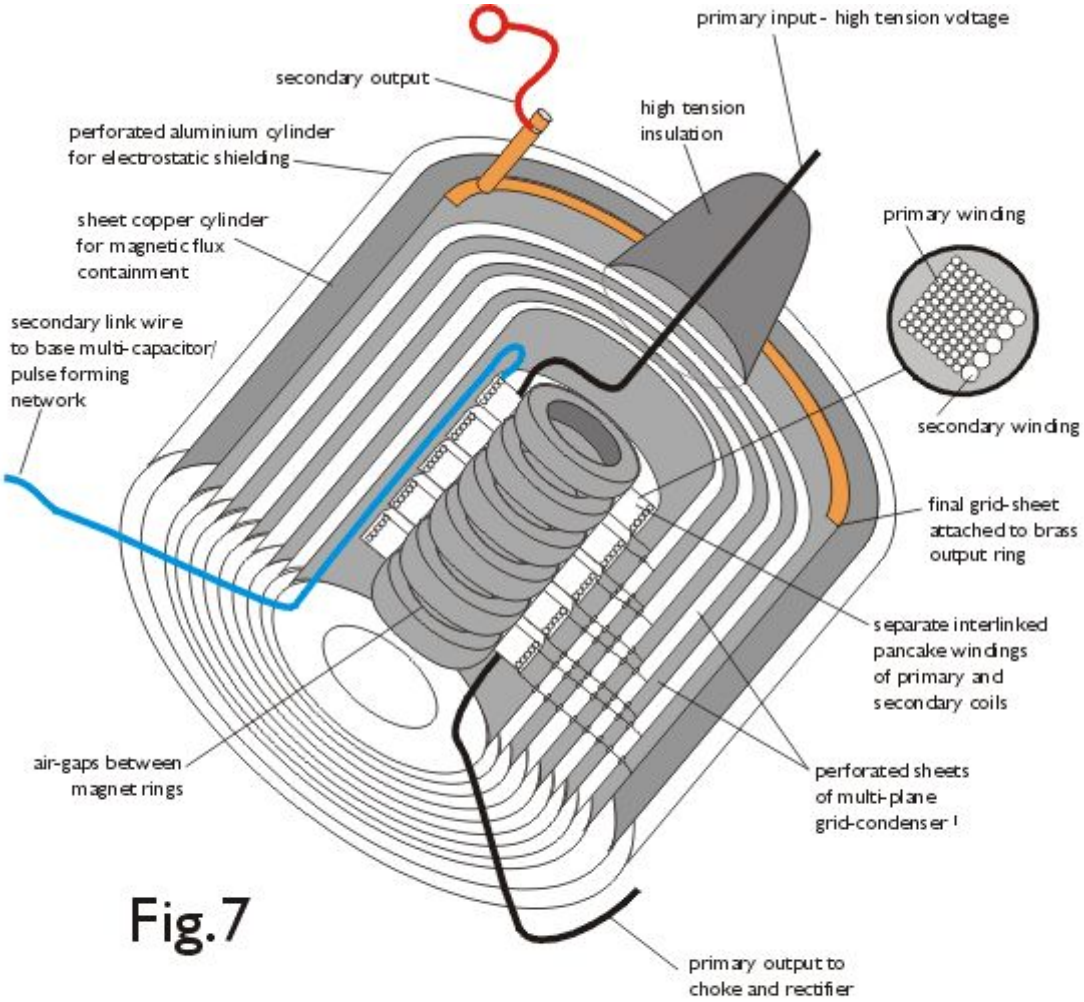

[1] In the Testatika-Distatica Video it has... "By means of **grid-condensers** the energy is stored and it is then uniformly discharged, at the same time reducing the high-voltage and building up power with additional devices."

"Principle Experiment"

by

Paul E. Potter

With respect to the 30 engineer's report (of 1999) the 'principle experiment' was set up in such a way (see diag 1) that by swivelling the cross-piece over two other plexiglas blocks a current was transferred into two capacitors. Possibly when someone grabs hold of the swivelling cross-piece they transfer some static electricity from their body to the grilles of the cross-piece which, when vigorously turned back and forth will initiate a transfer of electric charge to the two stacks of blocks below them attached to the base. This may either be because anyone walking over a carpet or wearing man-made fibres will already hold thousands of volts of electrostatic charge - which will be enough to 'prime' this apparatus after touching it, to get it to work, much the same as when a rotating influence machine has to be primed with an electric charge before it will work; or, as many researchers have surmised already, that the plexiglas blocks glued to the swivelling cross-piece had been charged up with electricity as an ELECTRET.

The use of mesh around the cross-piece guarantees a variable capacitance to the moving arms --- and as these are moved quickly over the base blocks (again, alternated with mesh and Plexiglas) an amount of electric charge will be transferred to them EACH TIME the arms go backward-and-forward over them. Electronically, you have one variable capacitance acting upon another variable capacitance - which is why Baumann said that if metal foil were used instead of the mesh it would not produce the same effect.

What happens next is called "dielectric absorption", and the following extract, from "Dielectrics" by P.J.Harrop (1972) pp71, will explain;

"When a given dielectric [i.e., plexiglas] has a field put across it, and this field is then removed, the electrodes are briefly shorted out (not enough for all the ions and particles to relapse back) and the device left on open circuit one finds subsequently that it has partially charged up again.

This is due to the slow-moving charge carriers remaining in position. It can be a frightening phenomenon with practical dielectrics since a person who has briefly discharged a charged insulator may subsequently touch it and be severely shocked." Some dielectric materials being more prone to this effect than others, and so obviously some experimentation will be needed to choose the best perspex, plexiglas, plastic, or acrylic materials so as to take the most advantage from this dielectric absorption effect.

Once the blocks are being charged up the electric charge simply flows into the two interconnected capacitors and accumulates.

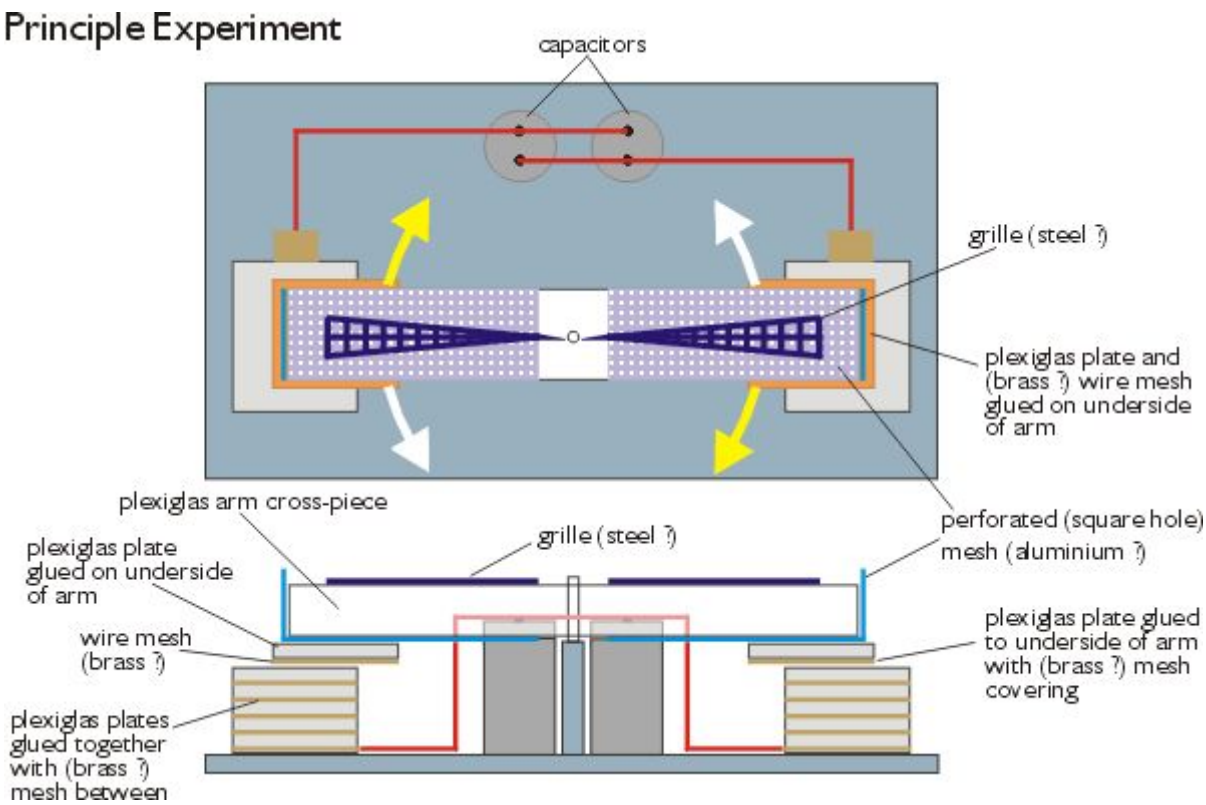

Linden Experiment ~

A look at the only available diagram of the Linden experiment (see diag 2) shows a horseshoe magnet coupled to what seems to be a closed-ended wire. It can also be seen in this diagram that the wire coils around the magnet are sufficiently spaced apart so as to provide capacitance (between each coil of the wire) in the circuit. So, with capacitance, coils (for induction), and magnetic flux, you have all the ingredients needed to make an oscillating circuit --- provided there is a supply of voltage and some sort of interruption mechanism - then you have a circuit that will resonate. And

this leads us back to that oft repeated question --- is the block used in the Linden Experiment an electret. The first person to PUBLISH how they have duplicated this experiment will be the one to answer that question...

But there is something wrong with this diagram --- the resonant frequency of this simple circuit --- depending only on the values of inductance and capacitance included in the circuit would consequently enable it to oscillate at only a few kilohertz at best. No circuit of capacitance/inductance can be made to resonate at such a high frequency as claimed, not even if it included any form of quartz crystal. If, as the diagram says, it resonates at 140 MHz then there must be a Lecher wire system (the running of two conducting wires in a parallel line, about a foot apart or less, for several feet) to make it resonate at such a high frequency. It would seem to me also that a required modification of the Linden Experiment diagram would be to put a different metal into this circuit where the wire is said to be "closed-ended", say for instance a zinc plate, then there will be a contact voltage established between the copper wire and the zinc plate. Such a voltage would start the circuit resonating, for the reasons stated above.

And as with the Tini setup if a block comprising two metal plates separated by a suitable dielectric material (such as plexiglas) is placed in an oscillating electric field the electric charge on the metal plates will permeate into the dielectric, and for the same reasons as detailed above in the Principle Experiment, will temporarily accumulate voltage because of dielectric absorption. As I have already said elsewhere there is a great similarity between the phenomenon of the Testatika horseshoe blocks (and the Tini setup) and the principle behind Patrick Flanagan's Electron Field Generator which energizes an electron cascade mechanism throughout the immediate environment.

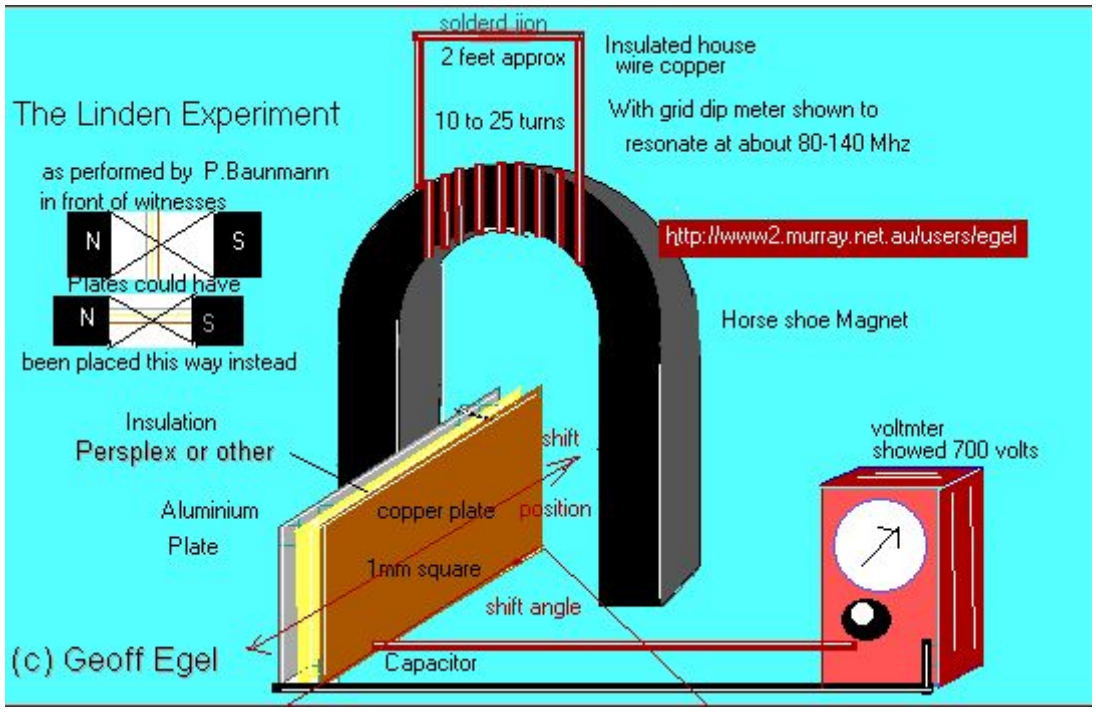

Geoff Egel (1997) --- http://www2.murray.net.au/users/egel ~

Rectifier Circuit ~

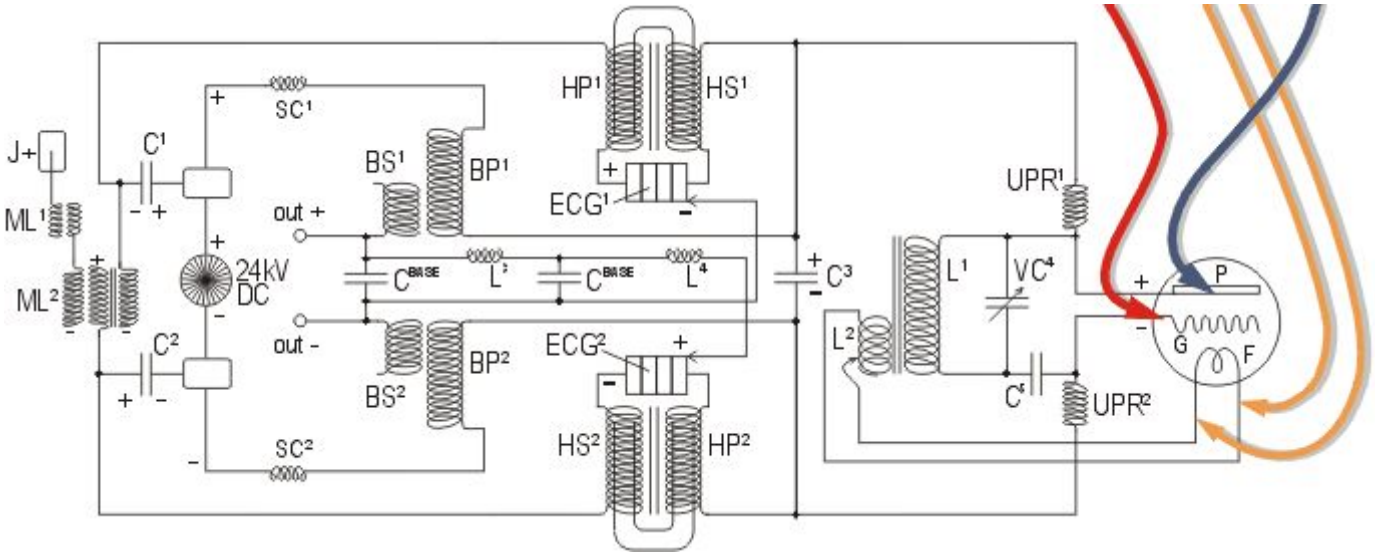

The rectifier forms the basis for Testatika's operation. For whilst the LC circuits L¹, VC⁴, UPR¹, UPR² and C⁵ set up oscillations from the generator's high voltage output the rectifier controls the oscillations to provide positive dc pulses (which are then directed through a step-down transformer BP¹/BS¹ and BP²/BS²), to supply power at a higher current rate and lower voltage.

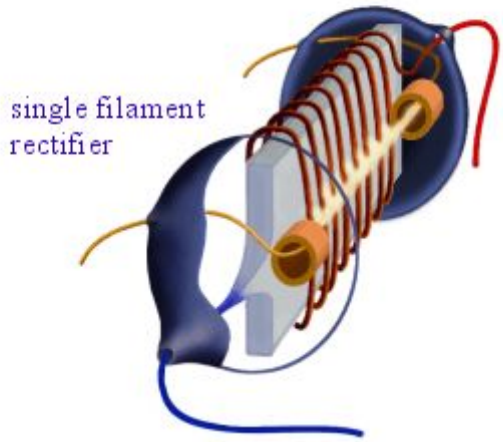

Unidentified European Report ~

"Believe or Not, Here It Is!"

The first really running "free energy" machine coming from Switzerland, Europe. It was developed over a 20 years Research period by a religious group called: METHERNITHA. This group lives in CH-3517 Linden, Switzerland. The inventor of this superb machine, Mr.Paul Baumann claims, its running principle was found by studying the lightning effects from nature.

And here are the facts :

* Testatika is an influence-type Wimhurst machine which runs on it's own energy, once started by counterclock revolving it's 2 dics by hand !!!

* Testatika not only runs on it' own energy, but produces also a huge amount of excess power, at least 3 KWATTS of power! That is enough to supply a one-person apartment with one machine!

* The machine you see during this demo-animation is only about 70 cm wide, 40 cm deep and about 60 cm tall !

* It delivers DC-Voltage ranging from 270 til 320 Volts, only depending on the dryness of the air! At this voltage it can supply at least 10 Amperes of DC-current !

* Testatika is not a perpetuum mobile, but an energy machine that collects it's huge amount of "FREE" energy from the charged and ionized air particles. But there are still some technological tricks implemented to overcome the normal drag-resistance of a conventional Wimhurst machine, which is still the secret of the Methernitha group !!!

When will this technology be available for everyone?

The Testatika machines, (there already exists also some smaller units which only deliver about 200-300 Watts) are not yet mass-production type models! They are still laboratory prototype units, although they are build with a very good craftmansship !

For more info contact directly:

METHERNITHA, CH-3517 LINDEN, Switzerland
TEL.-Nr.: ++ 41 31 97 11 24

The pictures are from some photos and from a video-tape Methernitha sells. It shows the machines (also the smaler ones) and explains also Methernitha's spiritual aims. The tape has a running length of about 40 minutes and is really worth looking at it! It is also available in VHS-NTSC and American language. It also shows Methernitha's earlier research developments like huge wind generators.

With the Testatika there is no fraud, hidden batteries or any other hidden energy source. It is really running! They already have the technology of ten years ahead! No more oil, no more pollution, no more atomic waste products, no more hunger in this world! This is the machine the mankind has dreamed about for centuries. Now it has come true!

More information about the Methernitha machine is also available in the German magazine *RAUM & ZEIT*, issue Nr.40 (8).

Jean L. Naudin Labs (4 February 1998) ~

"Testatika Generator and Over-Unity"

by

Cyril Smith

Having read Nelson Camus' article purporting to "explain" the Testatika over-unity generator (http://members.aol.com/overunity2/nelson/testatic.htm), I am of the opinion that the real explanation is hidden amongst the 19th century electrical mumbo jumbo which makes up much of the machine (Leyden Jars, Horseshoe Magnets, Wimshurst Generator and so on). From the

description of spiral-wound foil capacitors containing radioactive material and placed within current carrying coils it strikes me that perhaps the real energy comes from Beta particles (fast electrons) absorbed into the electrical circuit.

To extract energy from Beta particles it is not just enough to capture them. Clearly this will result in a current flow according to the capture rate, but current by itself is not power. The kinetic energy of the particle must be captured and this will result in potential difference or voltage. If a Beta particle enters a thin foil conductor normal to its surface and is captured, then the potential difference associated with giving up its kinetic energy can be expected to occur across the opposite faces of the foil. If however the Beta particle were turned so as to enter at a shallow grazing angle to the surface, not only would the probability of capture be increased (since the particle will travel further within the material) but the potential difference will occur along the length of the foil. Beta particles travelling even at relavistic velocities can be turned within short distances by relatively weak magnetic fields, so the concept shown in the following Figure suggests itself.

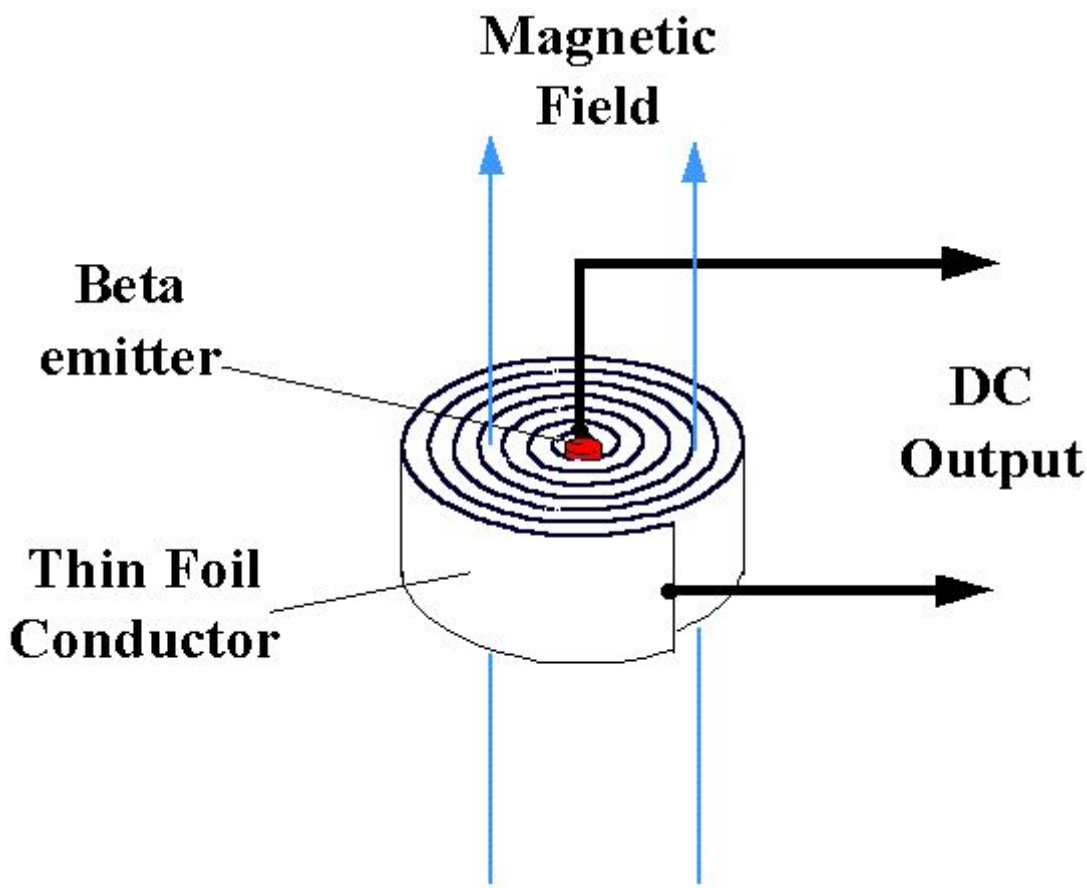

Methernitha Statement of Purpose ~

"The Research Work of Methernitha in the Field of the so-called Free Energy"

Ever since the foundation of Methernitha there existed a department for research, development and electronics, which was concerned with the problem of alternative energy sources, namely with technologies, which were suited to exploit the inherent forces of nature and thus to unlock sources of energy without disturbing natures ecological balance in any negative way. Any technology man invents should serve him in short as well as in long terms, and this condition is not fulfilled as soon as it opposes nature in any way.

This team of research within Methernitha works completely autonomous and is financed out of the co-operatives own resources, without any outside support.

The efficient utilisation of wind energy was one of the first objectives of Methernitha's research program. At the beginning generators with special excitation were developed, which allowed to load the cells of accumulators even at low RPM at times when there are only moderate air movements.

Utilising the kinetic energy of water currents was another field of interest of the development team, but it was pursued more as hobby. The key problem was here to transfer the slow revolutions of the waterwheel to an extent that the excitation threshold of the generator could be surpassed by a minimal loss of energy.

Also solar cells and solar heat collectors attracted the attention of our researchers since a long time. But since in these fields other institutions have attained outstanding results, Methernitha started, and this was already more than 30 years ago, to concentrate its efforts on lesser known and even generally unknown sources of energy. The result of this scientific work is the Thestatica machine.

The question arises: How it comes, that Methernitha, nothing more than a private organisation, could invest so much time, engagement, perseverance and financial resources in this kind of research.

Research and development are integrated parts of the general idealistic concept of Methernitha. To make you understand these ideals and goals, we will now introduce you into the practical sides of this spiritual community Methernitha, as it functions as a co-operative of people, living and working together.

Linden is a calm village of farmers just as dozens of others in the region of the valley called Emmental. However Linden is also the home of a special form of human life, which is capable of attracting more and more people from all over the globe, and which has repeatedly caused astonishment through its excellent functioning, even in extremely difficult situations.

There is no doubt that the formation of Methernitha is also a good part of the life story of Paul Baumann. Through his extraordinary technical capabilities, but also through his astonishing practicable wisdom he opened relations to all kind of people with ideals and in many places, and pretty soon, the idea to form a co-operative enterprise took shape.

"In the name of the God Almighty" people of equal thinking gathered and founded a co-operative, which could serve as the economic basis of this spiritual community.

"We want to be a united group of brothers, and never separate however severe the burden may be", this was the solemn vow.

Renunciation of alcohol and smoking and the will to realise a harmonious community life without dispute and discord like in the original Christian communities were the prerequisites to become a member. For the members Methernitha is an ideal opportunity to lead a fulfilled life by practising charity.

A workshop was erected and soon, one house after the other grew on these premises. Also all construction was done out of own resources and solely with the savings from the common work.

Today Methernitha is a social model proving the quality of its ideals through its well functioning just more than forty years. The people working here are almost without exception members of Methernitha.

Not even the prospering development that took place over the following decades could impair or even suppress the global idealistic aims. On the contrary, everybody works in his own interest with diligence and great joy towards the erection and the support of their new homeland and according to the principle:

One for all and all for one!

With this word one can conquer anything. Also the ancient truths appear again and attain respect.

The people living here feel themselves as members of a family, like a group sitting in the same boat and proud, but also grateful proprietors of their own beautiful homeland, which they may shape exactly as they wish to. Evidently, this form of human social life can function only on the base of idealistic principles.

The question arises, how the realisation of a sincere religious philosophy of life may be brought in harmony with a successful economic management. It is not obvious at all, that this is attainable.

Nowadays there are many amongst us that are caught in the world-wide and dense network of social and economic dependencies and obligations and many also feel the confrontation with its problems.

One member of the economic directory has recently phrased this in the following way:

"The fact that all essential functions of Methernitha are fulfilled without any external force, driven solely through inner conviction, which causes everybody to help and take care of the other, this is for me the most astonishing effect which is produced by this form of living together. It seems to be a miracle."

Another miracle within Methernitha is the Thestatica, which is the result of more than 20 years of research.

This wonder machine is lurked from nature, nothing else. Nature is the greatest source of power as well as knowledge which man has, and it still conceals many secrets, which are only revealed to those, who approach and tie in with them with highest respect and responsibility.

To understand nature and to perceive its voice, man is obliged to experience silence and solitude, and it was there, where the knowledge about this technology was obtained.

For these reasons it was always a great concern of Methernitha to acquire properties, untouched by man as far as possible, be it in valleys or forests, in the mountains or ashore of lakes, where one could study nature, ones own being and the creator of all this universe in silence and concentration and without being disturbed.

The public never understood this properly, rather interpreted it wrongly as an act of seclusion, assuming we had to hide something unclean. We actually had --- and still have --- to take great troubles to realise undisturbed all the things we intended to accomplish.

Such undertaking in research and development necessitate considerable financial expenditures. Therefore we are quite often obliged to construct things with most primitive means and materials. What was thrown away by our affluent society, we collect and possibly set up with it a cornerstone in the discovery of new forces and truth.

We are fortunate in gaining the experience that paradoxically the most beautiful and useful results can be achieved by just using the most simple means. Never did we use any borrowed capital because we want to stay free Swiss citizens and do not want to be hindered or even bound in any way in the pursuance of our aims.

The two conterrotating discs generate an electrostatic charge. One disc represents the earth, the other the cloud. Using grid electrodes the charges are bound. After that they are collected by non-contacting so-called antenna keys and then sorted.

After being initially turned on by hand, the discs rotate by themselves according to the electrostatic laws about attraction and repulsion. A rectifying diode keeps the cycles in steady state. Otherwise the impulses of attraction and repulsion would accumulate and cause the discs to run faster and faster. The correct speed is of great importance and for optimal power generation the discs have to run quite steady and slow.

By means of grid condensers the energy is stored and then uniformly discharged, at the same time reducing the high voltage and building up power with additional devices. Finally the machine supplies a uniform direct current, which varies according to the size of the model. The machine furnishes about 3-4kW permanent output, depending on humidity, whereby the electric potential ranges from 270 to 320Volt. High humidity of the atmosphere prevents the build-up of electric potential. The drier the air, the better.

No doubt, through the so far achieved results one main objective has been reached, namely to prove that it is possible to use Free Energy. Nevertheless the research work is not yet completed.

To the educated physicist many a thing of this machine may seem impossible, maybe even crazy. Maybe he is also offended by the conceptions used to explain the whole. Only partly we could use the concepts of conventional physical terminology to explain and define only approximately the functions and properties of the various parts of the machine.

After all it will be necessary to create some more new concepts like the one we have already used before, when we termed the non-contacting collectors of electric charges as antenna keys.

This machine puts experts, which are just trained in conventional physics to a very hard test, because its mode of action is not explainable with the state of the art of officially accepted physical knowledge, or at the most only partially explainable. However also a trained specialist should remain free and independent in his thinking, and should avoid to be limited by the temporal framework of publicly admitted knowledge in any science.

It has to be remembered that the established science was already many times forced to change or give up some of its very fundamental concepts. Think about Galilee, to name only one example. Our human society almost condemned this man as a sorcerer and magician, just because he investigated and discovered a truth that seemed unacceptable by the established science of the days.

The book knowledge of any times is not wrong, but it is incomplete, and therefore allows to draw wrong conclusions.

We are part of a new area which brings to light many new facts and new knowledge. The clothes of nowadays science have become too tight and should be stripped off, just as the larva of an insect does with its skin. Only this will allow a true metamorphosis to take its course, and finally, at the limits and at the destination of all worldly knowledge, an universal and unlimited spiritual science, radiating and beautiful, just as the completed imago of an insect, may give its blessings and benediction to a renovated humanity.

To ever reach there, a universal development of man has to take place. This however is only possible when man becomes aware of his true role within the whole creation, and again learns to recognise his true tasks, because the whole universe functions within a strict and precisely structured order according to the will and word of the creator. Therefore also man should recognise and realise these universal laws that are valid within the whole and within every part of this creation.

The hard facts rather show how far man has left the divine order through his self willed and authoritarian way of action and that he has become the actual cause of all discord and evil on this planet.

Unfortunately the ruling bodies that should be responsible for the well-being of the people work too often with the target to make life more and more difficult and to render impossible every free spiritual development.

Instead of utilising the achievements of science and technology for the benefit and preservation of all form of life, they are abused carelessly and irresponsibly to destroy and to kill, and thus turn them into a curse upon mankind.

To change all this, the evolution of a new technology is not enough, even if it were the most ecological and ingenious. To change this present status one has to go much deeper down, to the root-cause of all this evil, and this is mans way of thinking, his state of mind.

The ancient divine commandments are still valid today and also show today the way and direction humanity should go, as clearly spoken by the prophet Mica:

God has told you what is good. And what is it that the Lord asks of you? Only to act justly, to love loyalty, to walk wisely before your God.

"Testatika-Distatica Machine"

(Transcribed from the Methernitha Testatika video by Paul E Potter)

"... The efficient utilization of wind energy was one of the first objectives of Methernitha's research program.

At the beginning generators with special excitation were developed which allowed to load the cells of accumulators even at low rpm, at times when there are only moderate movements.

Utilizing the kinetic energy of water currents was another field of interest of the development team, but it was pursued more as hobby. The key problem was here to transfer the slow revolutions of the water-wheel to an extent that the excitation threshold of the generator could be surpassed by a minimal loss of energy. Also solar cells and solar heat collectors attracted the attention of our researchers since a long time. But since in these fields other institutions have obtained outstanding results Methernitha started, and this was already more than 20 years ago [since 1960], to concentrate its efforts on lesser-known and even generally unknown sources of energy, the result of this scientific work is the Testatika machine of which most of you may have heard already.

The two counter-rotating discs generate an electrostatic charge. One disc represents the earth, the other the cloud. Using grid-electrodes* the charges are bound. After that they are collected by non-contacted, so-called, antennae keys** and then sorted [shorted ?].

After being initially turned on by hand the discs rotate by themselves according to the electrostatic laws about attraction and repulsion.

A rectifying-diode keeps the cycles in steady state, otherwise the impulses of attraction and repulsion would accumulate and cause the disc to run faster and faster. The correct speed is of great importance, and for optimum power generation the discs have to run quite steady and slow.

By means of grid-condensers* the energy is stored and it is then uniformly discharged, at the same time reducing the high-voltage and building up power with additional devices.

Finally, the machine supplies a uniform direct current which varies according to size of the model.

The machine furnishes about 3 to 4 Kilo-Watt permanent output, depending on humidity, whereby the electrical potential ranges from 270 to 320 volt. High humidity of the atmosphere prevents the build up of electric potential. The dryer the air the better.

No doubt, through the so-far achieved results, one main objective has been reached, namely, to prove that it is possible to use free energy. Nevertheless, the research work is not yet completed: To finish a model which can be handed out more or less to anybody and without any haphazards, also to non-specialists, much work and also time will still be needed.

Only partly we could use the concepts of conventional physical terminology in order to explain and define only approximately the functions and properties of the various parts of the machine. After all, it will be necessary to create some more new concepts, like the one we have already used before, when we termed the non-contacting collectors of electric charge as antennae keys**. This machine puts experts who are just trained in conventional physics to a very hard test..."

* The German original has gitter-condensers, with gitter defined as wire lattice, grille, grate.

** the original word used is tasten or taster, which means antenna, probe, key.

Your Support Maintains this Service --

BUY

The Rex Research Civilization Kit

... It's Your Best Bet & Investment in Sustainable Humanity on Earth ...
Ensure & Enhance Your Survival & Genome Transmission ...
Everything @ rexresearch.com on a Data DVD !

ORDER PAGE

A LADYBIRD BOOK

making a Transistor Radio

A crystal set – the tuned circuit

A crystal set, the simplest form of radio receiver, is the first stage of our radio. It can operate entirely on its own as a radio receiver, even if no further stages are added.

As we have read on page 6, an aerial picks up all the radio signals (the radio frequency carrier waves) in its path. But we need only signals of a certain frequency—those sent out by a particular transmitter. We therefore need some sort of filter—to allow only one radio station to be received at once. A *tuned circuit* is this filter, because it can be tuned to any frequency we want, and can select one of the many radio frequency carrier waves reaching the aerial.

A tuned circuit consists of a *coil* of wire and a *tuning capacitor*. On the opposite page you can see a circuit diagram for a tuned circuit, and beneath are shown the actual components—a *coil* and *tuning capacitor*.

The particular radio frequency waves which a tuned circuit selects depends on the number of turns of wire on the coil and the 'value' of the capacitor. Since it is inconvenient to keep changing the number of turns of wire on the coil, the capacitor is made with movable plates so that the tuning can be varied and the signals we want selected.

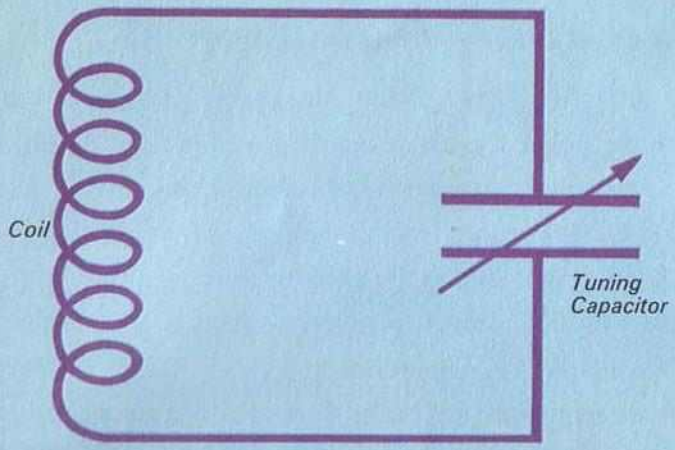

A TUNED CIRCUIT

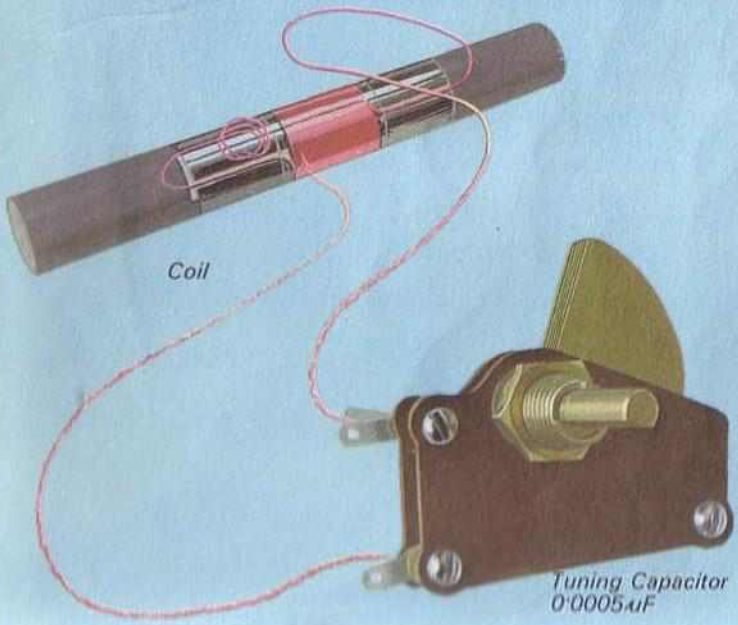

A crystal set – the crystal diode

After the tuned circuit has selected the particular carrier wave frequency required, the audio frequency signal which it carries must be extracted from it. The *crystal* (sometimes referred to as a *diode*) is a simple device that does this by allowing current to pass only one way. It is used in the crystal set as a 'detector'. The action is a complex one, but we can simply say that it detects from the radio frequency carrier wave the *electrical* waves of the same frequency as sound (*audio*) waves and which a loudspeaker or headphone can convert into *sound*.

On the opposite page you will see a circuit diagram showing the tuned circuit mentioned on the previous page but with the symbols for the diode and the earpiece included. With the addition of the aerial and earth symbols, we now have a circuit diagram for a complete working radio set.

Also illustrated are a typical earpiece and a crystal diode.

Aerial

Diode

Ferrite Coil

0·0005uF Tuning Capacitor

Earth

THE CRYSTAL SET CIRCUIT DIAGRAM

Symbol

positive 'red' end

Diode

Earpiece

Tools for radio construction

Simple radio construction, of the sort described in this book, requires few tools. Most of these can be found in a normal household toolbox or are inexpensive to buy.

During the building of the radio, wires have to be bent into place and sometimes cut to the correct length. Some components are joined by P.V.C. covered copper wire which has to be cut to size and its covering removed from the ends to make the connection. The most useful tool for this is a pair of pointed-nose pliers. These will also strip the plastic from the wire before the connections are made. A pair of wire cutters may also be used to cut and strip wire.

It is possible to buy an inexpensive little tool called a 'wire-cutter and stripper' to do both jobs. A pocket knife is useful for scraping the ends of the wire to clean them before the connections are made. Sandpaper or the rough edge of a matchbox can also be used to clean wires before they are connected. A medium-sized screwdriver will be needed for making the connections.

This radio is to be built on a wooden base, so a few simple woodworking tools—handsaw, gimlet, brace and bit—are also required.

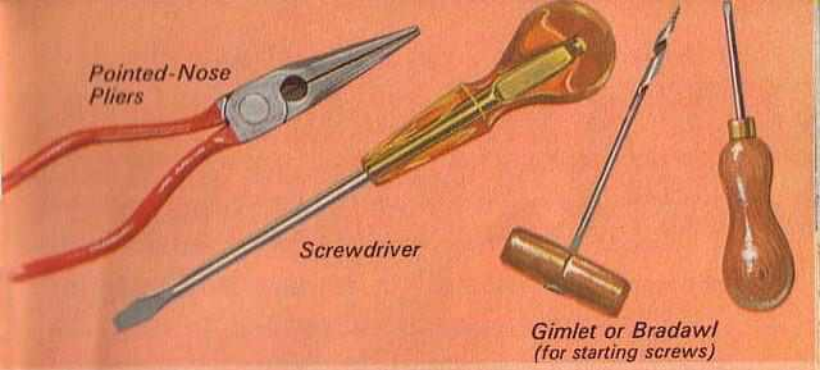

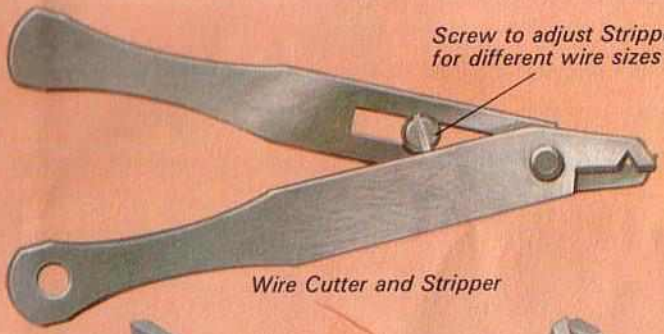

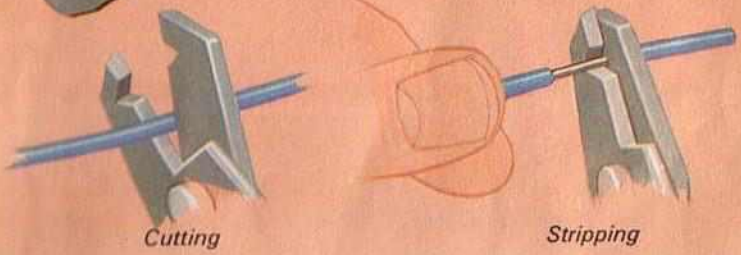

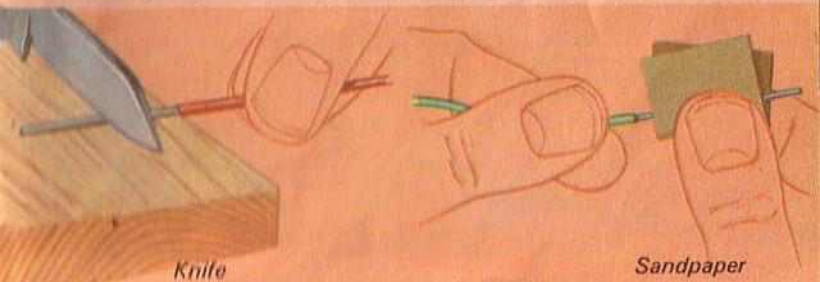

CLEANING WIRES

Fixing the components

In electronic construction it is usual to *solder* the components into their places in the circuit. This radio is designed for the beginner, so a non-soldering method of connection is used. For those who wish to solder the connections, the technique is explained on the inside back covers of this book.

A simple method of connecting the components uses woodscrews and washers. The screws are No. 6 brass countersunk, half inch screws and the washers are No. 6 brass screwcups. Two dozen of each are required. All are obtainable from your local ironmonger.

The method is explained in the diagram opposite, but remember the following tips: (1) Make sure the wire to be connected is scraped clean until it shines. (2) Where several wires are trapped under one washer, do not finally tighten the screw until all the wires are in place.

It is possible to test a connection with the simple battery and bulb arrangement in the diagram. Touch the two leads onto some of the bare wire either side of the connection. If the connection is good, the bulb will light up.

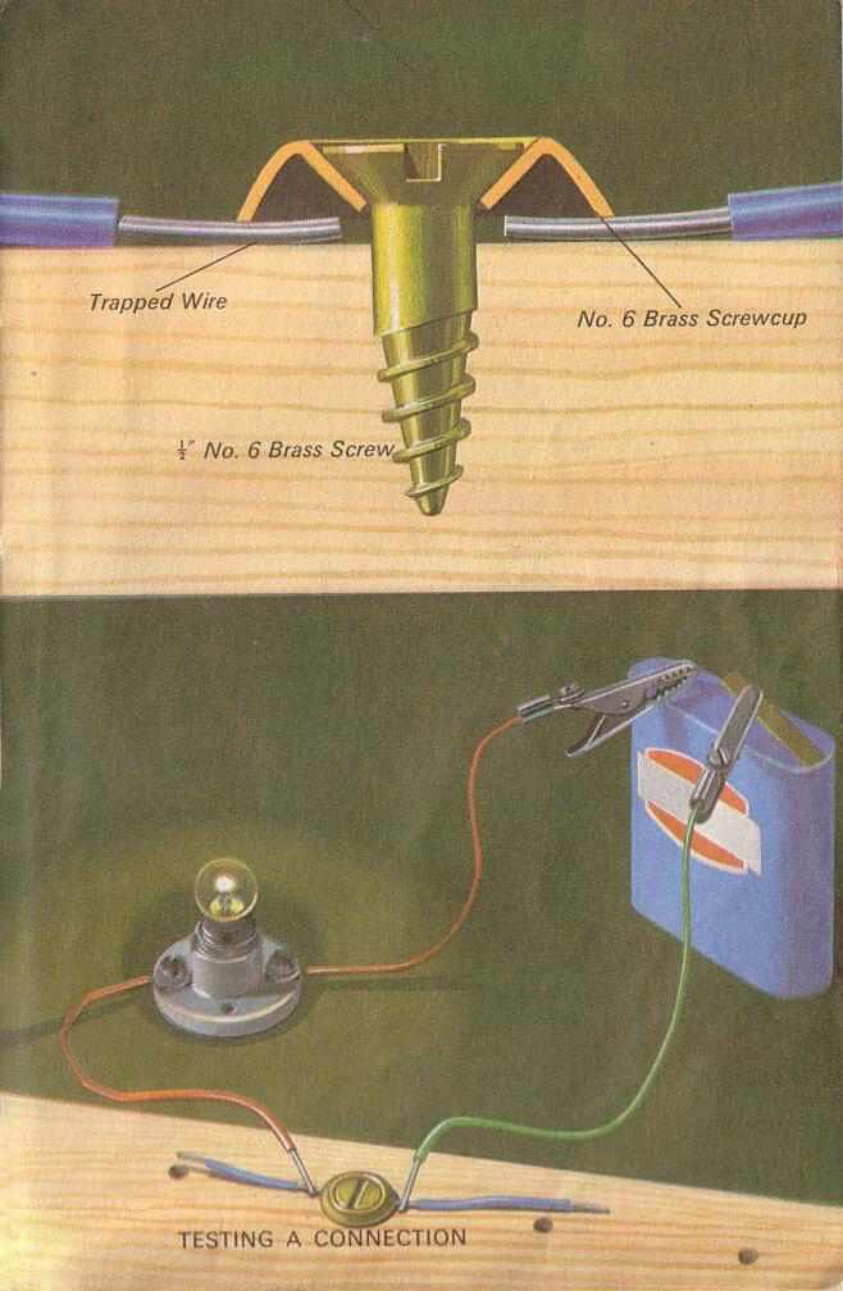

TESTING A CONNECTION

Making the circuit board

In the early days of radio, receivers were made on a baseboard sometimes called a 'bread board'. We are using a form of bread board mounting.

Softwood is used for the base. Mount the screws and screwcups, used for connections, at one inch intervals in two rows of eight. The rows should be an inch-and-a-half apart. This is shown in the drawing facing this page. The two large holes are made with a brace and bit and are for mounting the control components.

The accuracy of the measurements is not vitally important, but it would be helpful to follow those given as closely as possible. Not all the screws are used in building the first part of the radio; the additional screws are needed later as the radio is completed. Although this board is very simple to make, it is important to try to get the screws in straight so that the screwcups press firmly onto the wires.

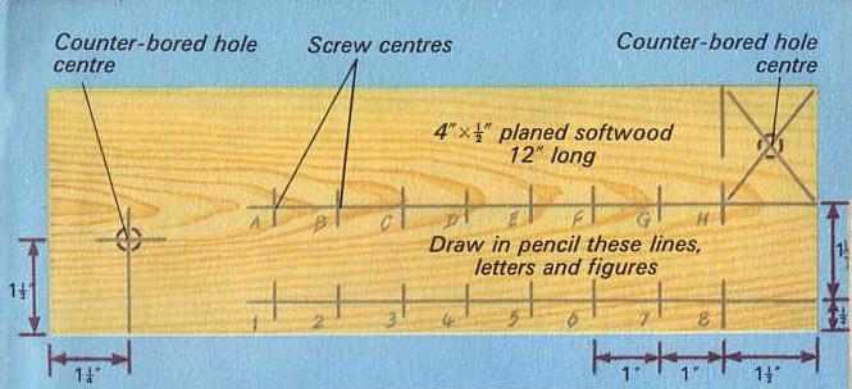

HOW TO MARK OUT THE BASEBOARD

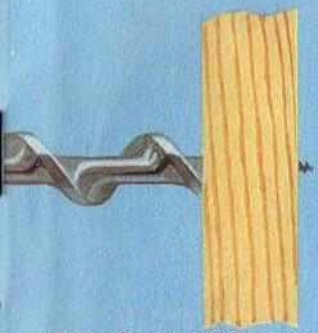

With a ⅜" bit, drill from the marked side until the point of the bit just appears on the other side. (Do not drill right through)

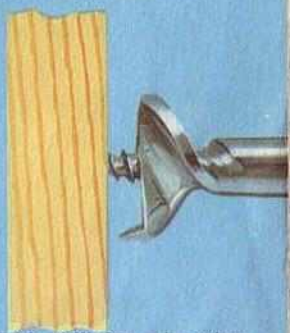

With a ¾" bit, drill from the other side, half way through the board

MAKING THE HOLES

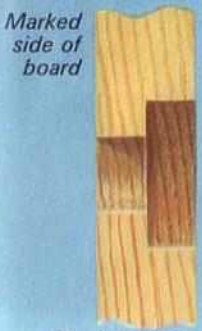

Section of the counter-bored holes

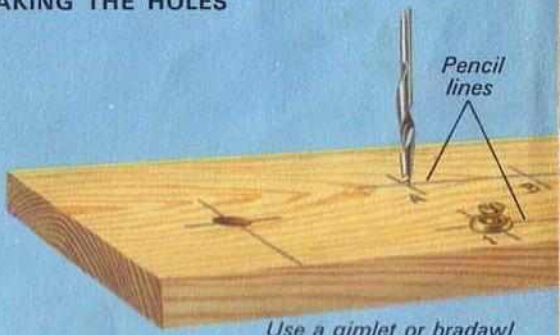

Use a gimlet or bradawl to make holes for the screws. (Do not fully tighten the screws at this stage)

Contents

The world of radio 4
Radio reception 6
Reading circuit diagrams 8
A crystal set—the tuned circuit 10
A crystal set—the crystal diode 12
Tools for radio construction 14
Fixing the components 16
Making the circuit board 18
Winding the coil 20
Building the crystal set 22
The crystal set—its aerial and earth 24
An experimental P.O.W. radio 26
The transistor 28
Adding a transistor 30
Resistors 32
Biasing the transistor 34
Adding a second transistor 36
The second transistor stage 38
Adding a loudspeaker 40
Regeneration 42
Adding regeneration 44
Wiring the regeneration stage 46
Using the radio 48
The completed radio 50

Winding the coil

Before the crystal set can be built, we must wind a tuning coil for the tuned circuit. This is done on a piece of $\frac{3}{8}$ inch diameter ferrite rod. Ferrite is iron dust stuck together. Usually ferrite rods are 6 inches long, so cut a notch all round the centre and smartly snap the rod in half (Figs. 1 and 2).

Wrap about $1\frac{1}{2}$ inches of sticky tape around the centre of the rod on which to wind the coil (Fig. 3).

Obtain some 36 s.w.g. (standard wire gauge) enamelled copper wire from your radio or electrical dealer. Leaving about 3 inches of wire, secure one end of the wire with sticky tape (Fig. 4) and wind 5 turns, side by side, onto the rod (Fig. 5). Pull out a 3 inch loop and twist the wire until it is tight up to the rod (Fig. 6). Then wind a further 45 turns, side by side, securing the final end with tape. The whole coil can be covered with tape to keep the windings secure.

Remember to leave about 3 inches of spare wire at both ends and at the twisted wire (the 'tapping' point). Later the enamel must be scraped off so that connections can be made.

The illustrations opposite will guide you through each stage.

1) Cut a deep notch all the way around the rod

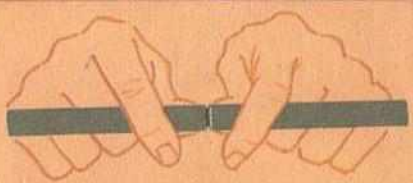

2) Snap the rod by holding close to the notch with forefingers and thumbs only (otherwise it may splinter)

3) Wind the tape in separate parallel bands, slightly overlapping. (If spirally bound the tape will wrinkle)

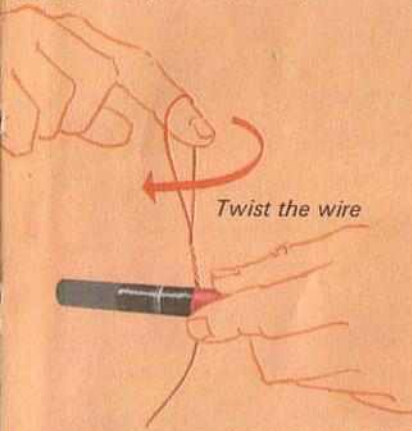

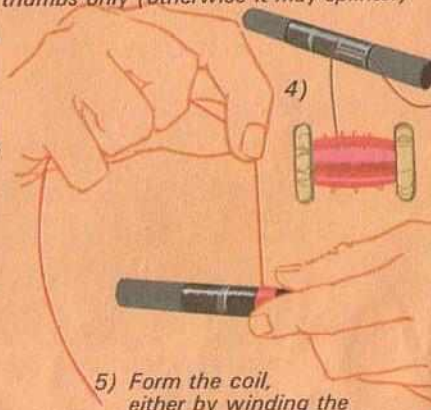

5) Form the coil, either by winding the wire or rotating the rod, whichever you find easier

6) Twist the tapping point with a finger in the loop, holding the rod still with the wire trapped under finger and thumb

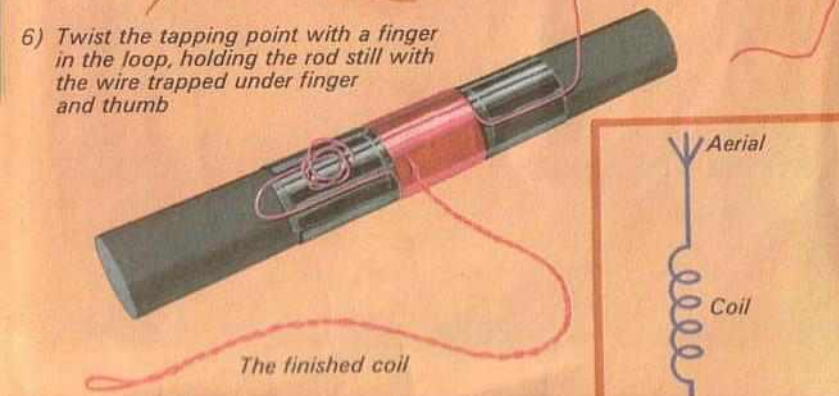

The finished coil

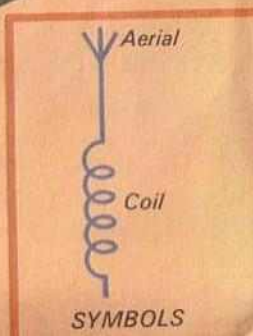

SYMBOLS

Building the crystal set

Having made the coil, the ferrite rod can be mounted on the baseboard by twisting a loop of stiff wire around each end and screwing the wire under two screwcups, as shown opposite.

Next the tuned circuit can be completed by the addition of the tuning capacitor. You can buy one from your local radio dealer and you should ask for a 0·0005μF solid dielectric type. The illustration opposite shows how it is mounted on the baseboard, the capacitor spindle passing through the $\frac{3}{8}$ inch hole. The wiring connections are made to the two terminal nuts on the back of the capacitor. The connecting wire used should be PVC covered copper wire, the ends being bared before they are trapped under the screwcups.

The illustration also shows how the diode is included in the circuit by means of the screwcups. The earpiece is also shown inserted. When purchasing this, you should ask for a crystal earpiece. A pair of high resistance headphones could be used in place of an earpiece, and may give even better results. *Resistance* is discussed on page 32, in the section headed 'Resistors'.

On the following two pages there is some useful information about the aerial and earth.

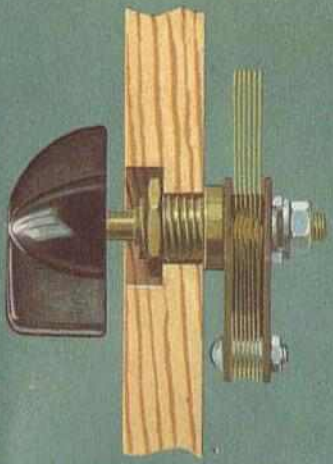

HOW THE CAPACITOR IS MOUNTED THROUGH THE BOARD

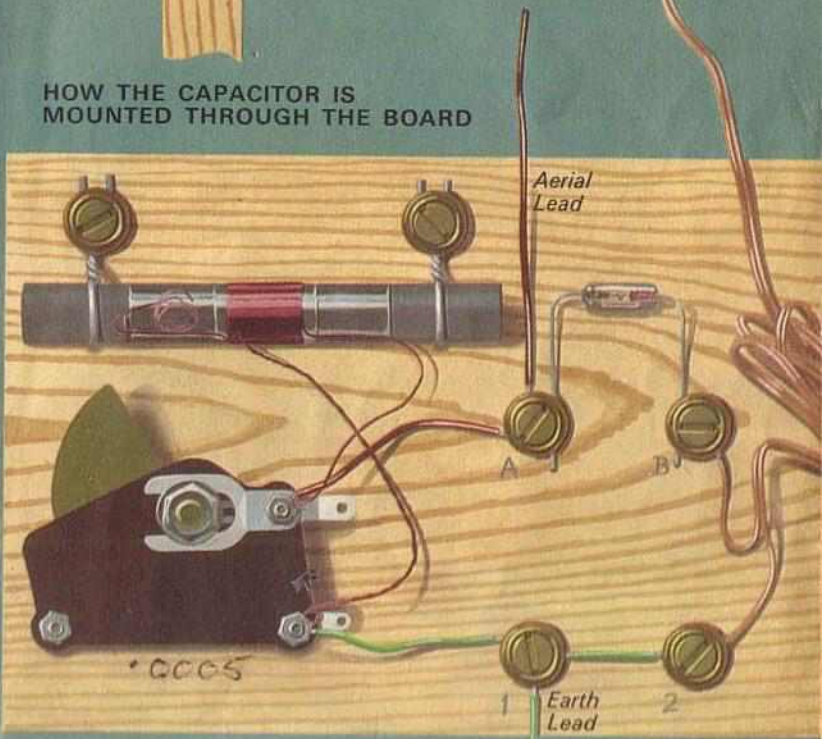

THE COMPLETED CRYSTAL SET

The crystal set – its aerial and earth

The aerial is the part of the receiver which 'picks up' the radio signals. Unlike our crystal set, many modern transistor radios are sufficiently sensitive to pick up enough signal from the ferrite core of the tuning coil. Although the final radio which we will make will not need an aerial and earth, the crystal set relies on the electrical current set up between a good aerial and earth to work well.

A suitable aerial can be made from inexpensive PVC covered copper wire. The idea is to suspend as much of this wire as possible, as high as possible. The far end can be attached to a tree, the top of a pole or even the eaves of a friendly neighbour's house, but this can be dangerous and is best done by an adult or under the supervision of an adult. The wire should be fastened onto a large screw eye or hook. The near end of the wire may be taken in the top of an upstairs window and connected to the aerial connection on our radio.

For the aerial to be effective, the other side of the tuned circuit has to be connected to earth. The simplest method is to attach the earth lead to the nearest household water pipe. These pipes lead to the ground. If your water pipes are plastic, make your own earth by driving about a yard of copper pipe into soft earth and connecting the earth wire to the top.

Aerial Wire

To Radio

Tree or Pole

Aerial Wire

Insulator

To Radio

Support Wire

(A permanent aerial should have an insulator at each end)

Earth Wire

Hose Clip

Scrape pipe clean at point of contact

EARTH CONNECTION TO A METAL WATER PIPE

EARTH PIPE DRIVEN INTO THE GROUND

An experimental P.O.W. radio

During the last war, some prisoners in prison camps used home-made radios to keep in touch with events in their native lands. Often, all the components had to be made from items picked up within the camp. Diodes were almost impossible to obtain, so several ingenious home-made alternatives were tried.

The diagram shows one simple method of improvising a diode. Take a small piece of wood, about 1 inch thick, and a piece of washed coke about the size of a pea. Mount the coke on the wood as shown, using a screw and screwcup, and taking a lead from beneath the screwcup. Wind about a foot of steel wire—a length of piano or guitar wire is ideal—around a number 4 or 6 knitting needle, leaving about 1 inch on each end. The wire should now be slightly springy. Fasten one end to the board with a screw and screwcup, taking another lead from this screwcup. Stretch the wire until the free end lightly touches the coke.

Remove the diode from the crystal set and screw the wires in its place. It should be possible to hear some local stations by adjusting the tuning capacitor. If nothing is heard, keep moving the position of the wire on the coke until a signal is heard.

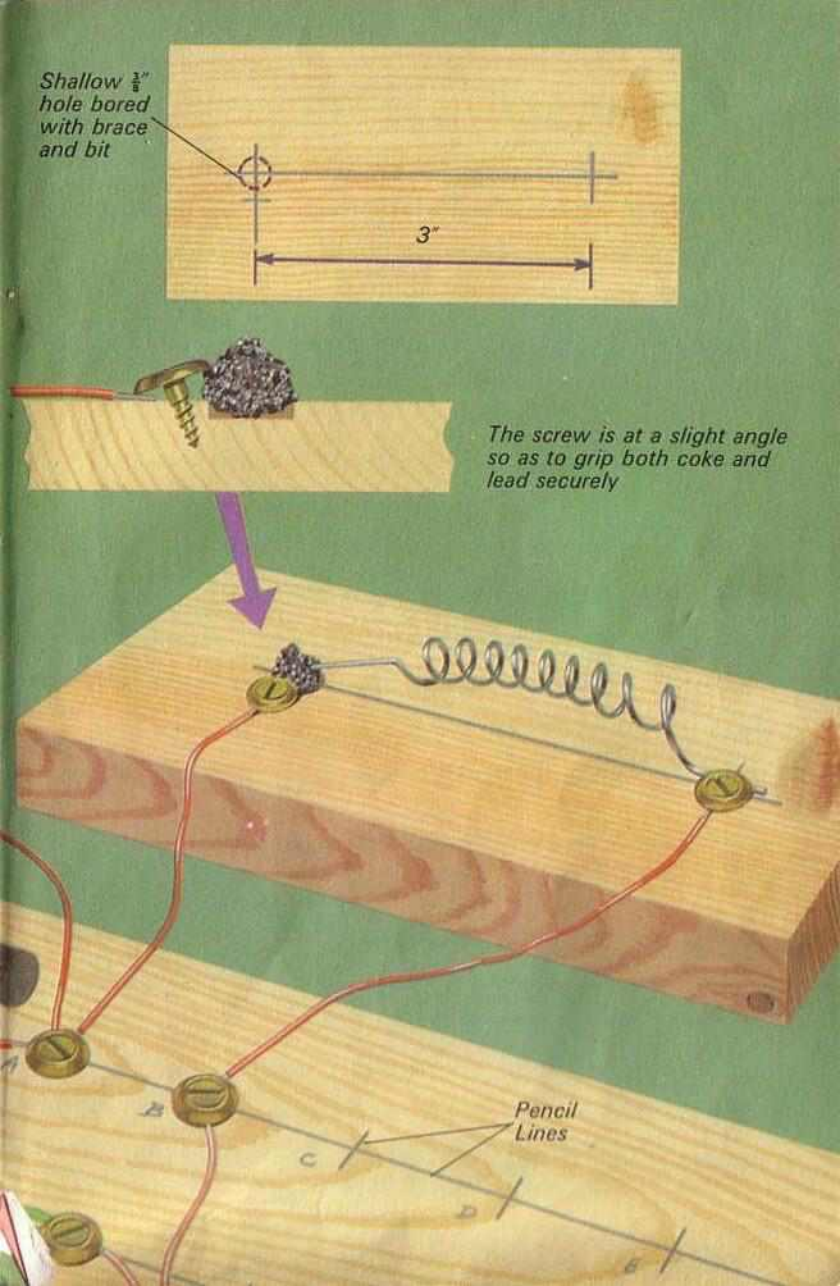
Shallow ⅜" hole bored with brace and bit
3"
The screw is at a slight angle so as to grip both coke and lead securely
Pencil Lines
A
B
C
D
E

The transistor

To most people the word TRANSISTOR means a small radio set, but a transistor is really a single electronic component. The transistor is one of the most important inventions of the last 25 years. It has helped to make electronic equipment smaller and less dependent upon high voltages.

A transistor is like two diodes working together inside one case. Most transistors have three leads, emitter, collector and base. A transistor can be damaged unless the correct leads are used when connecting it into a circuit. The base lead is usually the middle wire and the collector lead is set slightly apart from the other two wires. The transistors we are to use also have a red spot painted on the casing to indicate the collector lead.

We shall be using transistors as amplifiers; that is, to make electrical signals stronger. Transistors are designed so that a small, changing current between the base and emitter produces a large current change between the collector and the emitter. So small signals applied to the base will appear amplified (or made bigger) at the collector. Our first transistor will be used to make louder the sound coming from the crystal set.

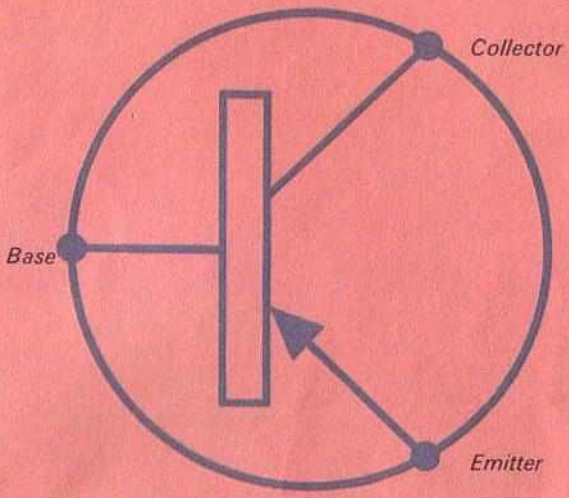

THE SYMBOL FOR A TRANSISTOR

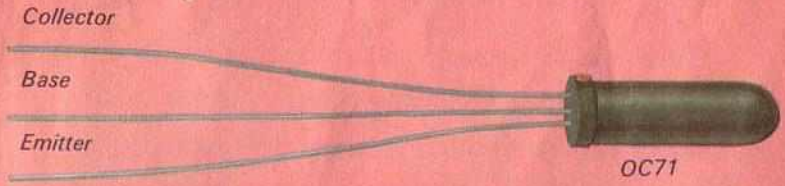

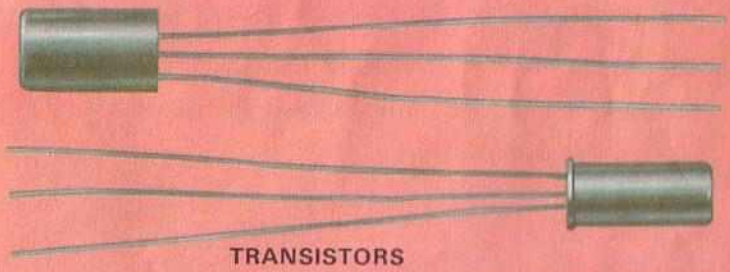

TRANSISTORS

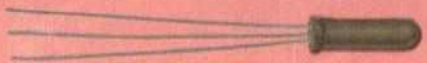

OC71 TRANSISTOR *(Actual size)*

A Ladybird 'How to make it' book

making a Transistor Radio

by G. C. DOBBS
with illustrations by B. H. ROBINSON

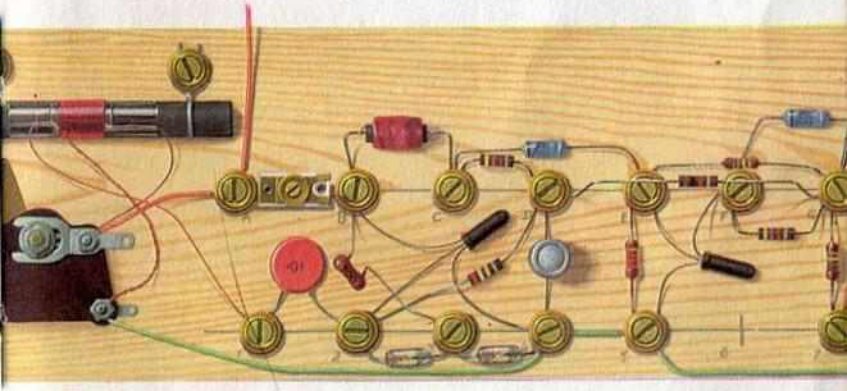

© Wills & Hepworth Ltd *1972*
Printed in England

Adding a transistor

The circuit diagram shows how a simple transistor amplifier is inserted where previously we had the earpiece. Compare this diagram with the circuit diagram of the crystal set on page 23.

The transistor used is an OC71, and other extra components for this stage are a 2·7K resistor and a 9-volt battery. The battery is the small transistor radio type PP3, for which can be obtained an inexpensive snap connector. Resistors are discussed on the next page. This resistor forms an output 'load' for the collector, and the earpiece is connected across the resistor.

Take care to connect up the circuit as shown in the drawing. The connections of the transistor are important. Join the emitter to screw 5, the base to E and the collector to F. The earpiece is removed and reconnected to F and G. Connect the red battery connector lead to screw 5, and the black lead to screw G. The radio is switched on by pushing the connector into place on top of the battery.

This one transistor should make a big improvement to the crystal set; the same stations will be heard but they will be much louder.

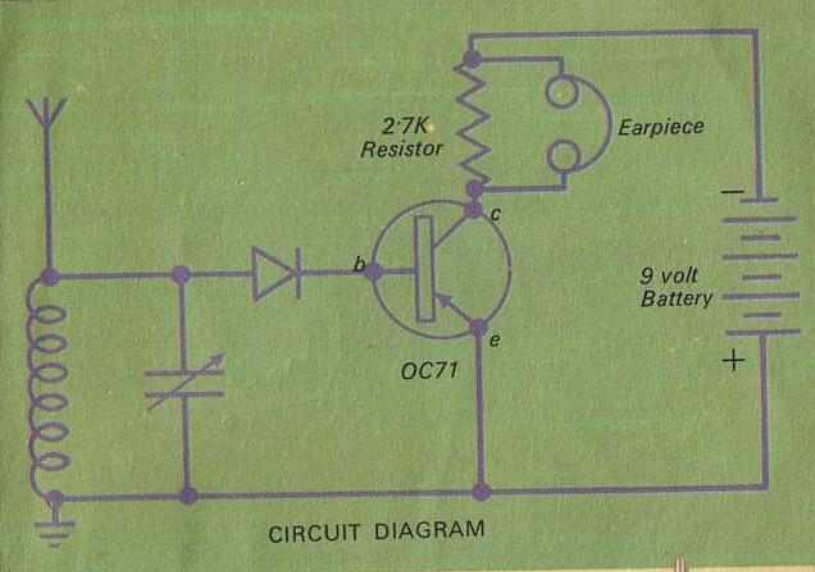

CIRCUIT DIAGRAM

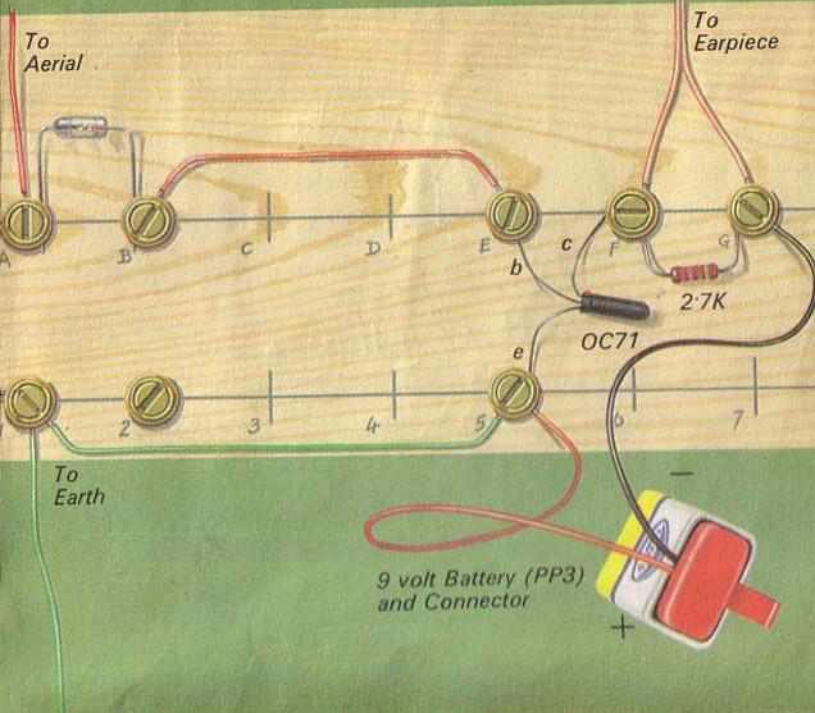

Resistors

Resistors are very common components in electronic construction. Look at most pieces of equipment and you will see several small, wire-ended tubes with brightly coloured bands. These are called resistors because they 'resist' the flow of electrical current in the circuit. This is done to adjust the voltages and flow of current at various places in a circuit.

The little tubes are filled with a carbon composition, and the coloured bands give the *value* of the resistor. This value is called the *resistance* and is measured in *ohms*. When one knows the colour code opposite, it is easy to work out the resistance from the coloured bands. The tolerance of the resistor, that is, how close one can expect it to be to the value, is sometimes indicated with another coloured band. Our radio can use resistors of any tolerance, so this band may be ignored.

The symbol for resistance is the Greek letter omega Ω. Quite often, very high resistances are used—sometimes thousands or millions of ohms. To reduce the number of noughts, we call thousands K Ω (Kilo ohms) and millions M Ω (or Mega ohms). The ohm sign is usually omitted from circuit diagrams when the Kilo (K) and Mega (M) signs are used.

THE SYMBOL FOR A RESISTOR

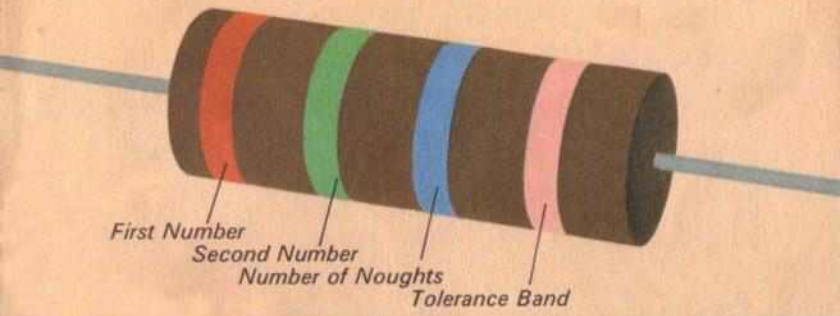

RESISTOR COLOUR SCOPE

BLACK	0 (or 0 noughts)	GREEN	5 (or 5 noughts)
BROWN	1 (or 1 nought)	BLUE	6 (or 6 noughts)
RED	2 (or 2 noughts)	VIOLET	7 (or 7 noughts)
ORANGE	3 (or 3 noughts) 3300	GREY	8 (or 8 noughts)
YELLOW	4 (or 4 noughts)	WHITE	9 (or 9 noughts)

TOLERANCE COLOURS

GOLD 5%	SILVER 10%	SALMON 20%

BROWN, BLACK, BROWN
=100

YELLOW, VIOLET, ORANGE
=47000 or 47k

Biasing the transistor

The transistor amplifier we have built is the simplest arrangement possible. If a transistor is to be used efficiently, one has to supply the correct voltages to its various parts; this is called *biasing*. In our simple arrangement the signal from the diode provided a voltage to *bias* the base of the transistor. Resistors can be added to make the biasing correct.

The circuit shows how the transistor is biased with two resistors. (33K Ω—orange, orange, orange, and 150K Ω—brown, green, yellow.) They give the correct voltages between the collector, base and emitter. Take care to connect the resistors in the places shown or the effect will be ruined.

This addition to the radio will not increase the volume in any noticeable way, but the biasing is essential before the next stage is added.

The wire ends of resistors, like any other components, can become dirty and greasy, so scrape the wires clean before screwing them into place.

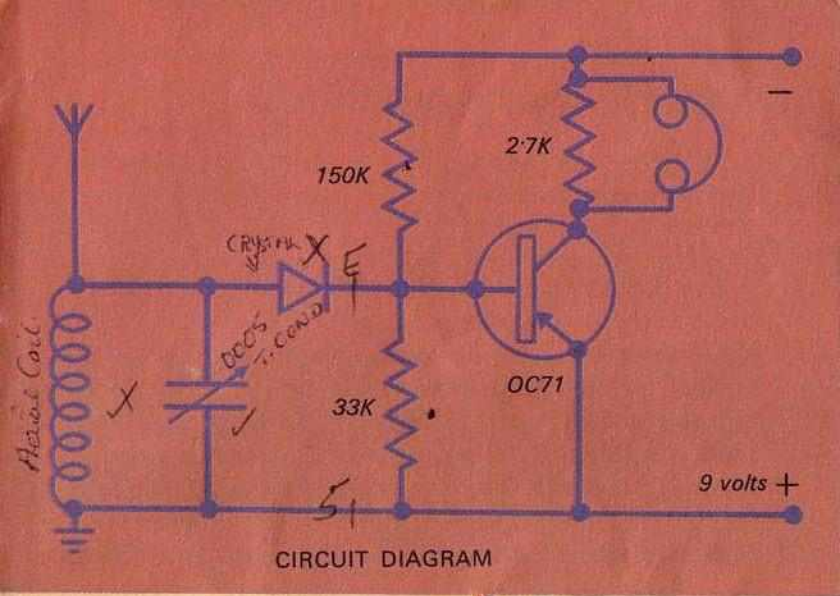

CIRCUIT DIAGRAM

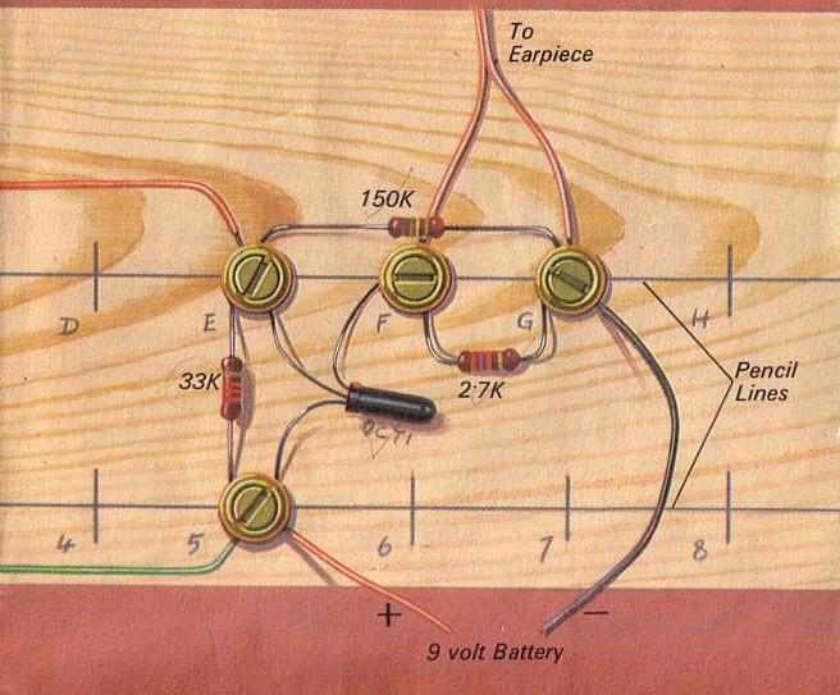

Adding a second transistor

Before we can add another transistor to our radio, two new components must be introduced—a *potentiometer* and a *capacitor*.

The potentiometer is a variable resistance. Look at the drawing on the opposite page and you will see that it has three contacts. The outer two are each end of a circular carbon track. The centre tag is joined to a movable contact which slides over the track when the shaft is rotated. By moving the shaft, which is usually fitted with a plastic knob, any part of the resistance can be used and tapped off through the centre tag. Potentiometers are often used, as in this case, as volume controls.

A *capacitor* is a component which allows the signal to pass but not the fixed voltages used to power a circuit. It consists of two plates which are separated by insulating material; the circuit symbol shows this. Electrolytic capacitors must be connected into a circuit the right way round. One end is marked either with a red band or a + sign, and this side goes to the positive side of the circuit. The negative (—) wire is connected to the metal can which forms the body of the capacitor, and which may be marked with a black band. Sometimes this is not obvious, but follow the circuit and layout diagrams with care to avoid mistakes. Other fixed capacitors can be connected either way round: we will meet these later. The value of capacity is written in microfarads, (μF or sometimes MFD). We require 10μF at a working voltage of 16-volts.

4·7K
150K
2·7K
E
b
c
e
OC71
Original Crystal Set
10µF
10K
9 volts
5
+
CIRCUIT DIAGRAM

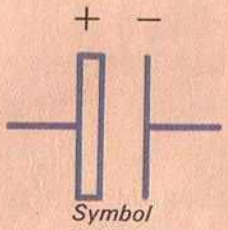

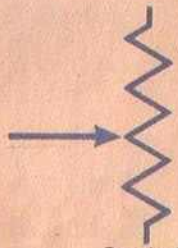

ELECTROLYTIC CAPACITOR

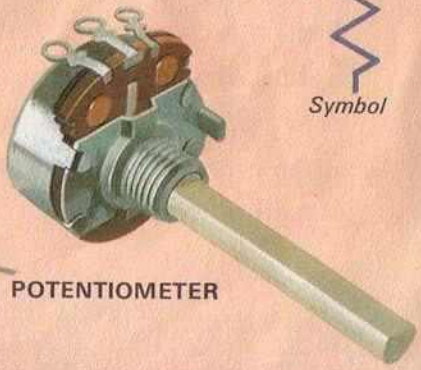

POTENTIOMETER

The second transistor stage

The circuit for the second stage is shown on the previous page. The signal is taken from the collector of our first transistor, through the capacitor to the sliding contact of the volume control potentiometer. The nearer the centre contact is adjusted to the base side of the control, the more signal is allowed to go to the base of the second transistor. The greater the signal reaching this transistor, the louder will be its output.

The potentiometer is mounted in the spare $\frac{3}{8}$ inch hole. Its tags are too close together to use the large screwcups, so small screws are used. These are screwed down through the holes in the potentiometer tags, trapping the leads under the tags.

Remove the 2·7K resistor from F and G and connect in the new components carefully, following the layout diagram facing this page. As you work, compare the layout diagram, connection by connection, with the circuit diagram. This additional transistor will greatly increase the volume, enough to drive a loudspeaker, which is the next addition.

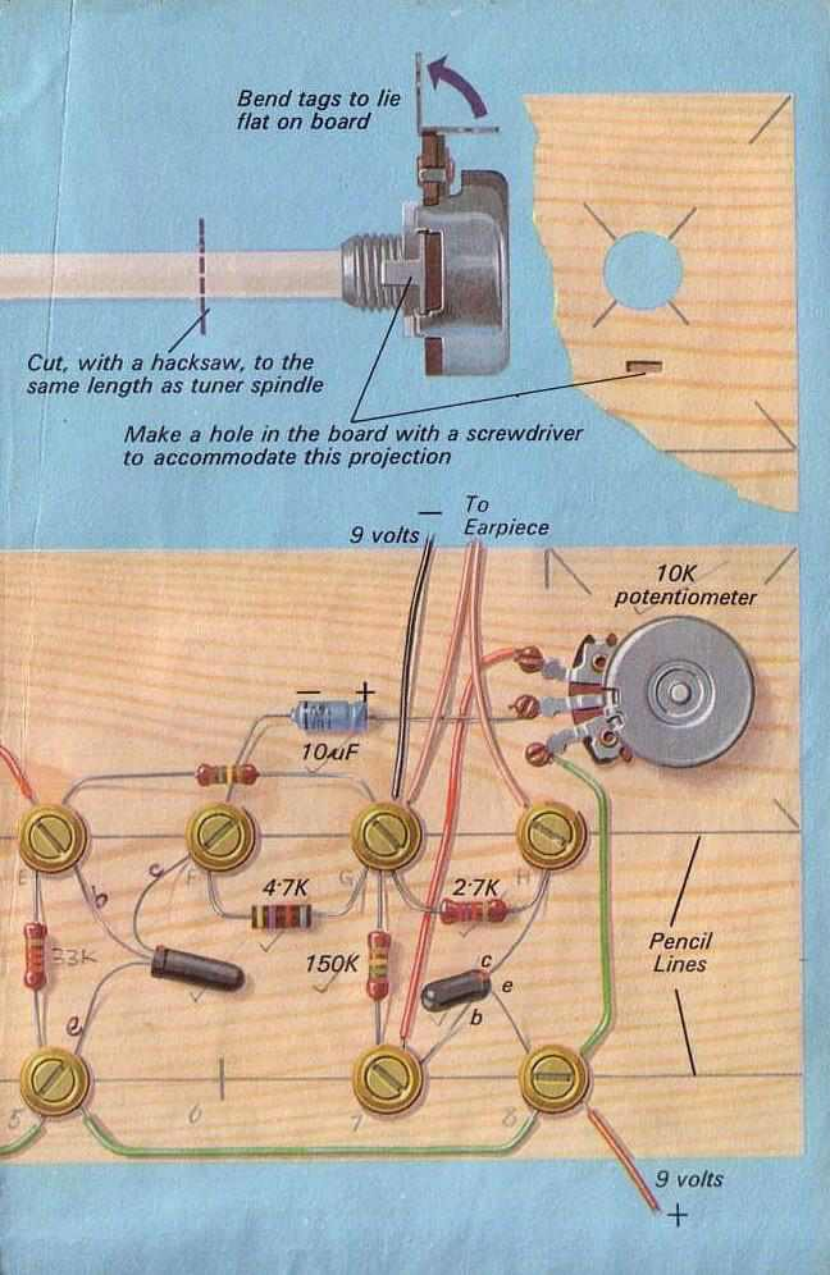
Bend tags to lie flat on board
Cut, with a hacksaw, to the same length as tuner spindle
Make a hole in the board with a screwdriver to accommodate this projection
9 volts
To Earpiece
10K potentiometer
10µF
4·7K
2·7K
33K
150K
Pencil Lines
9 volts

The world of radio

Today, radio is part of our everyday life, yet only at the beginning of this century it was a miracle. It is still something to marvel at—and a fascinating subject to study.

With this book you will learn, stage by stage, how to build more than one simple receiver. Everything you should know is explained simply and illustrated clearly, and you will have the pleasure of constructing something marvellous that really works.

All the components used are easily available, usually from your local radio dealer. Most large towns have shops specialising in stocking components, but it is also very easy to obtain any you need by post. All the popular electronic construction magazines contain advertisements for mail order supplies. Many of these suppliers provide catalogues which list all the components you will need.

0 7214 0324 7

Adding a loudspeaker

Using our radio with an earpiece means, of course, that only one person at a time can hear the programme. A loudspeaker changes electrical waves into sound waves in the same way that an earpiece does, but it has a large cardboard cone so that several people can hear the sound. Loudspeakers can have very large cones, but a smaller cone speaker with a diameter of 3 inches is ideal for our purpose.

Loudspeakers are made with inputs of varying resistances, and our radio requires a 3 or 5 Ω type. Unfortunately the loudspeaker cannot directly replace the earpiece because its resistance is much lower than that of the earpiece, so it has to be matched into the circuit with a *transformer*. A transformer can change a current of one voltage to a smaller current of a higher voltage or to a larger current of a smaller voltage. It consists of a 'primary' and 'secondary' winding of fine wire round a metal 'former'. The transformer we require is the Eagle LT700. This transformer has rather long leads, and these may be shortened by winding them tightly round a knitting needle. This makes spiral leads which can then be pulled out to reach the screws.

Screw the transformer onto the base, as shown; remove the 2·7K resistor across G and H and connect the correct leads (colour coded) to the screwcups. Two more screwcups are added at the end of the board to connect the output leads to the loudspeaker, using two small crocodile clips.

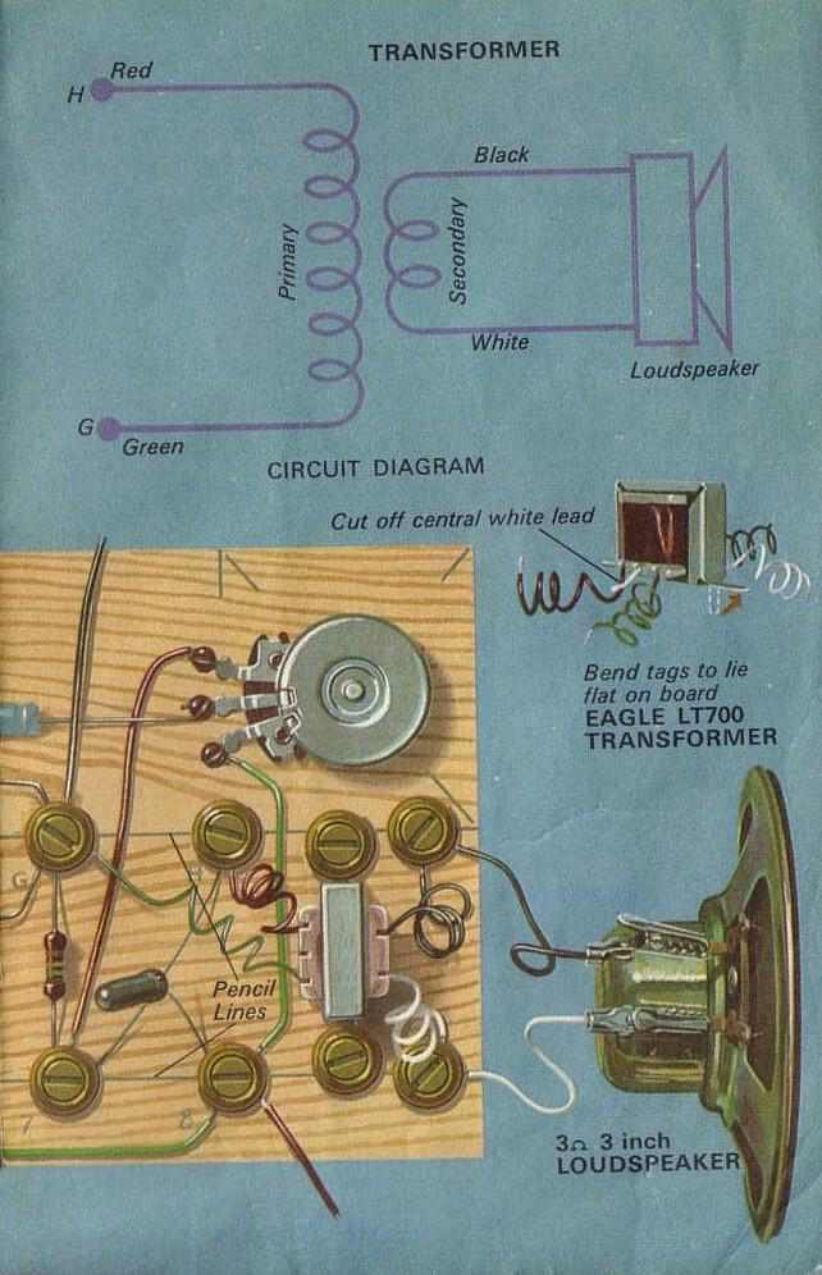
TRANSFORMER
Red
H
Black
Primary
Secondary
White
Loudspeaker
G
Green
CIRCUIT DIAGRAM
Cut off central white lead
Bend tags to lie flat on board
EAGLE LT700 TRANSFORMER
Pencil Lines
3Ω 3 inch LOUDSPEAKER

Regeneration

We shall now replace our simple crystal set stage with a transistor stage, using *regeneration*. Regeneration will enable our first transistor in the radio to be used three times.

The circuit shows the regeneration stage. The signal from the aerial is tuned by the coil and variable capacitor, the orange marked signal then passes through capacitor C1 to be amplified by the transistor and appear at a *radio frequency choke* (R.F.C.). Part of this signal, marked in blue, passes through C2 to a pair of diodes which change the radio signal into an audio signal, which is amplified again by the transistor. The signal, now marked red, passes through C3 back to the coil. The part of the coil tapped between the transistor collector (through C1) and earth, allows the signal to reach the collector again.

This means that some of the signal at R.F.C. has been amplified three times, so this is a very economical use of one transistor. Passing signals back again like this is called *feedback*. If the feedback is too great, the circuit will produce a howling sound, so C3 is an adjustable capacitor to control the amount of feedback. The final signal is taken from R.F.C. through capacitor C4.

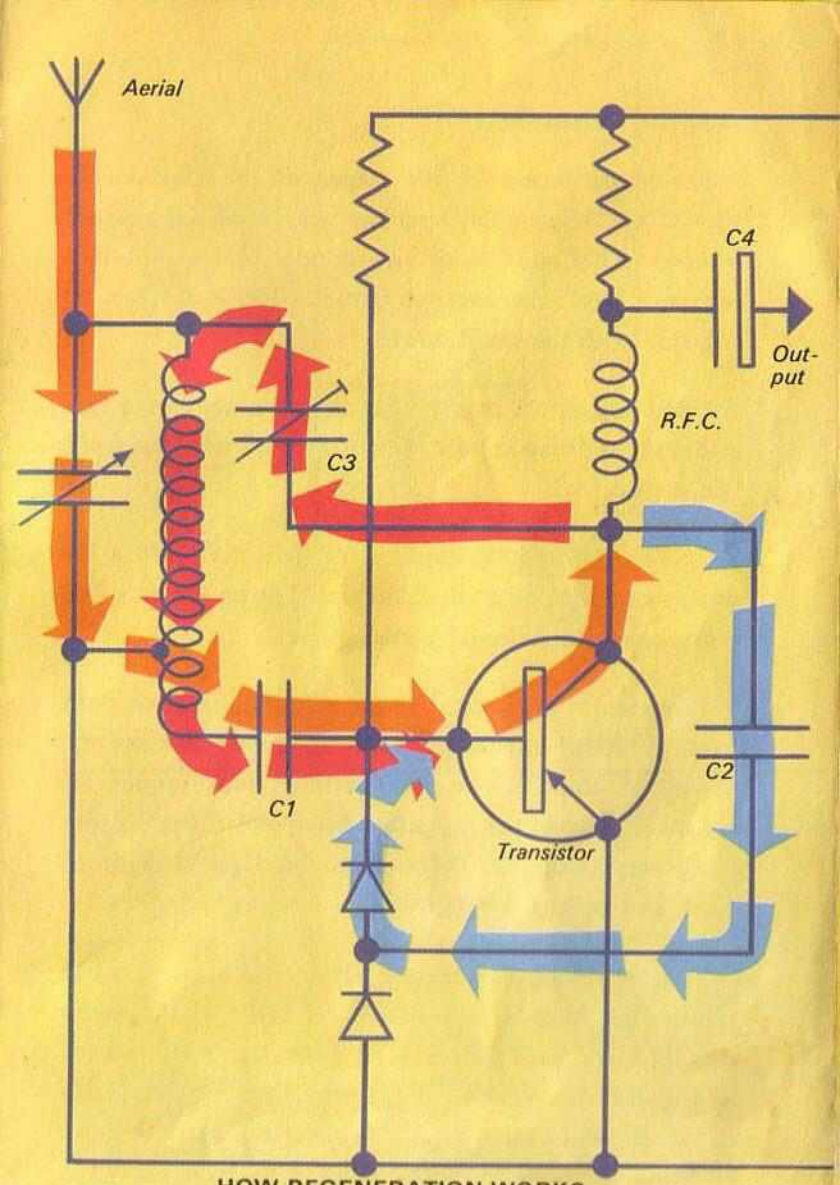

HOW REGENERATION WORKS

In circuit diagrams, wires which cross one another, (but do NOT touch and are NOT connected), are sometimes shown like this + (as in the diagram) or like this ⊥. Shown like this ⊥ always means they are connected.

Adding regeneration

The circuit shows the new stage with the components added. The adjustable capacitor is a 10 pF (picafarad) *trimmer*. This consists of two copper plates mounted on a pot base; the distance between the plates can be adjusted with the small screw.

Fixed capacitors may be flat or cylindrical with two leads; the type we require, *ceramic capacitors*, may look like a disc.

The *radio frequency choke* is really a coil with a lot of turns of wire on a small former. The choke acts like a resistance to radio-frequency waves.

Two diodes are needed to provide the feedback path from the 500pF capacitor. If the top diode were omitted, the signal would not be changed into audio frequencies before it reached the transistor base, and if the bottom diode were omitted, the signal would go straight to earth and be lost.

The 1K resistor lowers the battery voltage needed to power this stage. It is possible for some of the audio signal to feed back to this stage through this 1K resistor and distort the signal. This is prevented by the 100μF capacitor which takes any stray signals to earth without affecting the battery voltage.

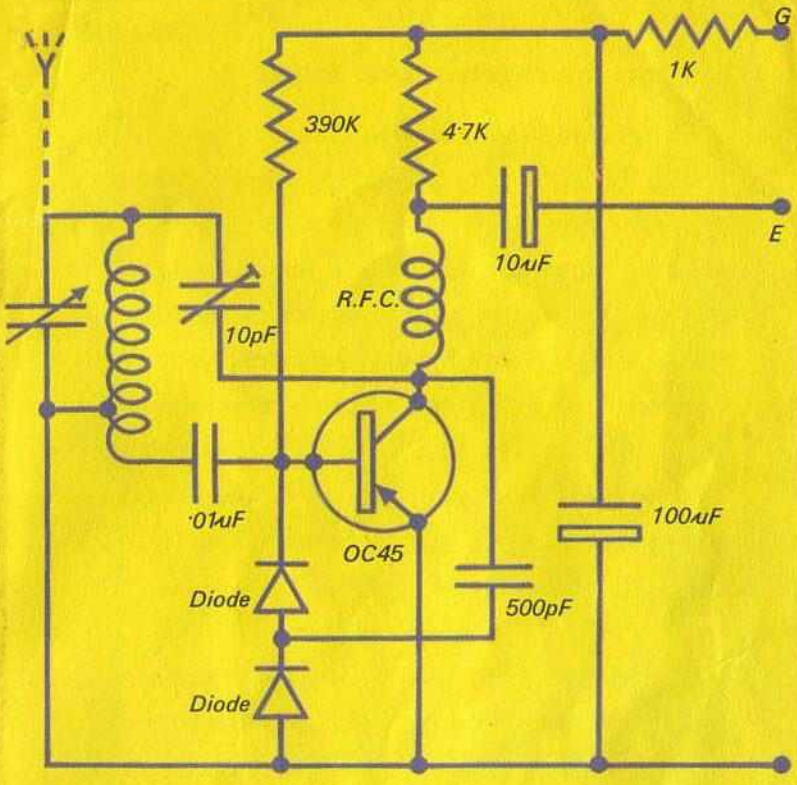

10pF TRIMMER
postage stamp type'

DISC CERAMIC CAPACITOR

RADIO FREQUENCY CHOKE

Wiring the regeneration stage

The drawing shows how this stage is wired onto the board. Before wiring the stage, all the components from the crystal stage, up to screws E and 5, are removed except for the coil and tuning capacitor. The diode is removed to become one of the two diodes in the new stage. Follow the drawing carefully, adding one component at a time and checking its position on the circuit diagram. There are many bare wires which come close to each other, and great care must be taken to ensure they do not touch each other. The 1K resistor must not touch screws E and F.

The trimmer is trapped by its tags under screws A and B; if it is too long or too short, the screws may be moved. All three connections to the coil are now used, and if the wires are not placed in the correct positions, regeneration will not occur. The drawing shows how to place these three wires. The 10μF capacitor takes the signal from the new stage to the base of the next OC71 transistor. The advantage of this new stage is that our radio will have a greater output and no longer need a large aerial and an earth. Regeneration is tricky to get used to, but once mastered, the results are surprising.

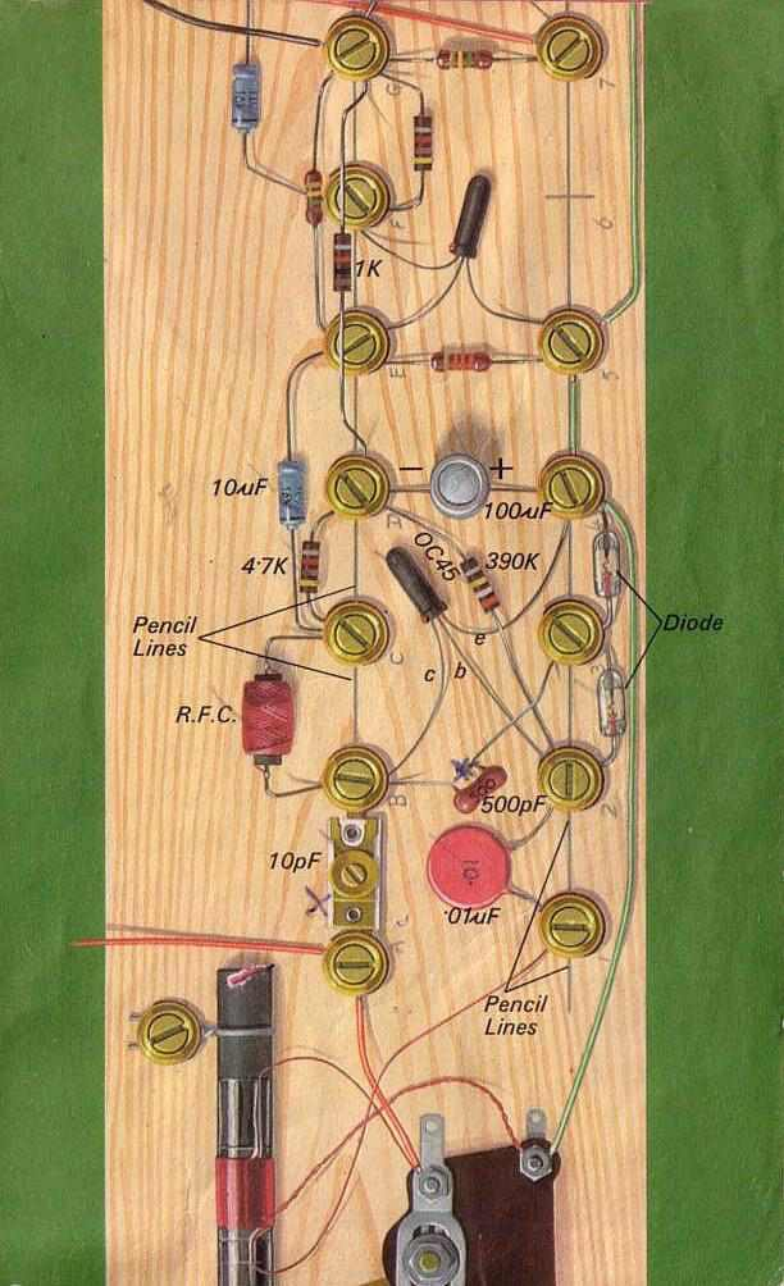
1K
10uF
100uF
4·7K
OC45
390K
Pencil Lines
Diode
e
c b
R.F.C.
500pF
10pF
·01uF
Pencil Lines

Using the radio

Operating a regenerative radio requires care at first because the trimmer has to be adjusted to suit the strength of each signal. Begin by connecting about 3 yards of wire to the radio as an aerial; no earth is required. Set the tuning capacitor about midway and screw in the trimmer until the radio begins to howl. Unscrew the trimmer until the noise just stops, and try to tune in a station. The trimmer should then be adjusted until it is just short of the point when the radio howls. The general method for receiving any station is to tune it in with the tuning capacitor and to adjust the feedback trimmer until the howling just disappears.

The feedback not only makes the radio more sensitive but also the tuning becomes sharper, so the tuning knob must be rotated very slowly. This sensitivity makes the radio ideal for the medium wave band, which is rather overcrowded. The tuning should be sharp enough to tune in individual stations without the background sounds of other stations. In areas of good signal strength, it will be possible to use the radio without an aerial at all, merely relying upon the signal picked up by the ferrite rod coil.

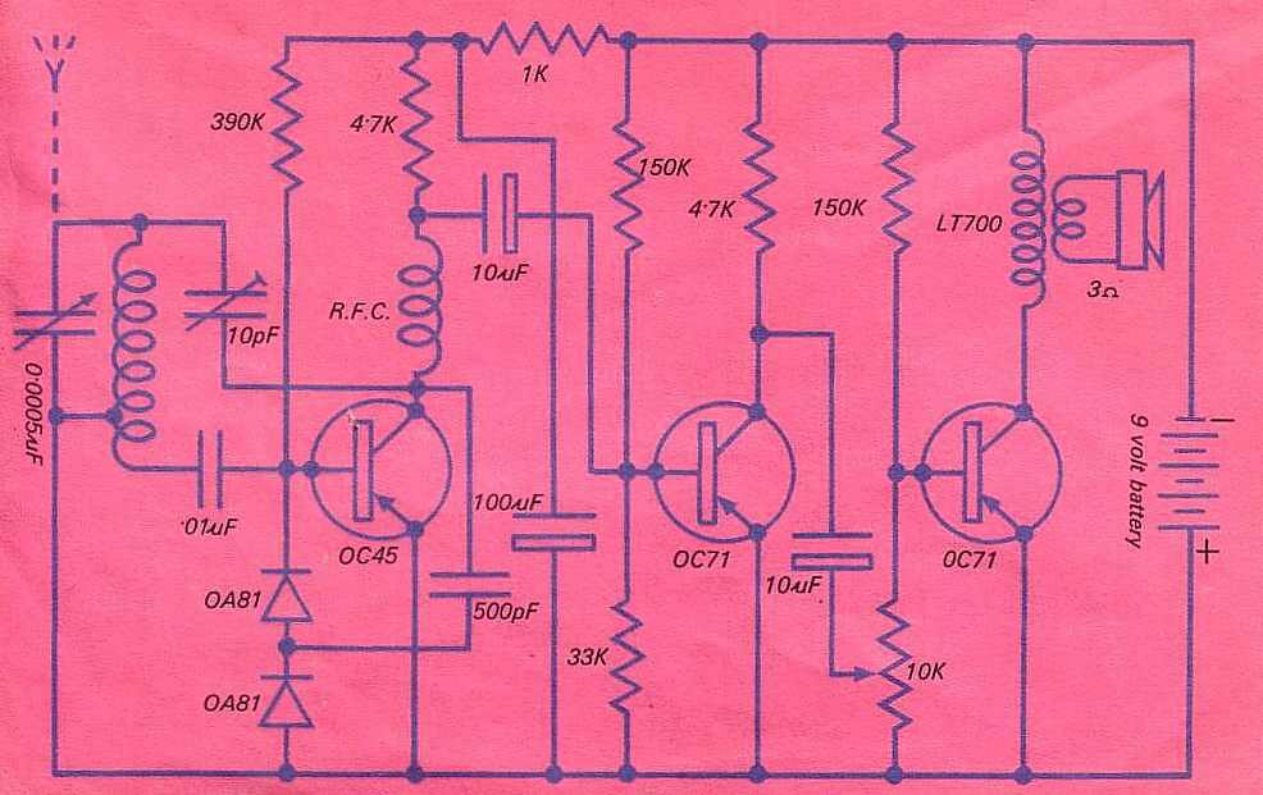
1K
390K
4·7K
150K
4·7K
150K
LT700
3Ω
10µF
R.F.C.
10pF
0·0005µF
·01µF
OC45
100µF
500pF
OA81
OA81
33K
OC71
10µF
10K
OC71
9 volt battery
+

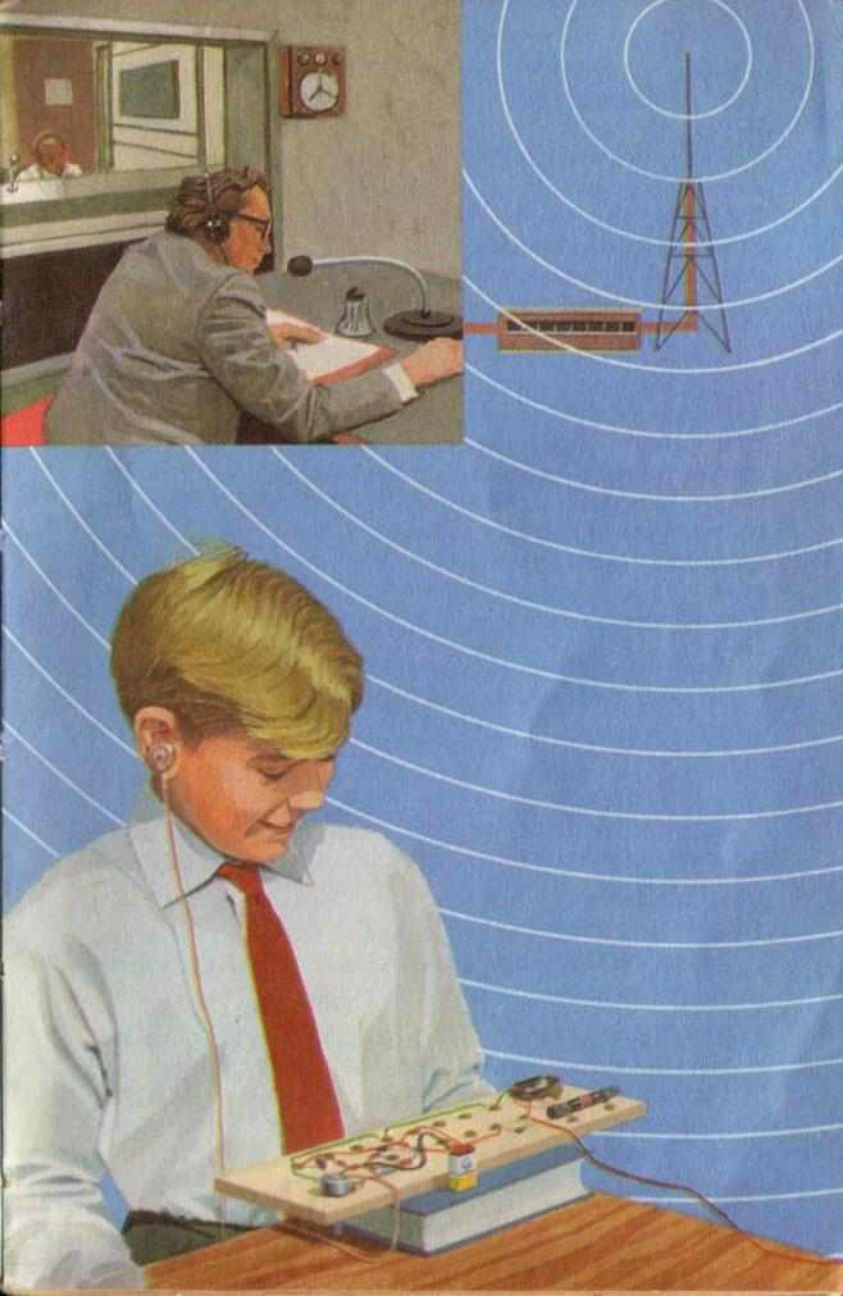

The completed radio

Now that the radio is completed, you may wish to make the circuit board into a simple case. The circuit board is used as a front panel, and end and bottom panels are added.

These can be made from similar wood to the circuit board (4 inch by $\frac{1}{2}$ inch planed softwood). The bottom panel is the same size as the circuit board and the measurements for the end panels are shown opposite. The end panel next to the output transformer may be used to hold the loudspeaker. A series of $\frac{3}{8}$ inch holes are drilled with a brace and bit to allow the sound to leave the case, and the speaker is secured with screws and cups. The panels are joined with panel pins and glue.

The battery may be firmly mounted above screws D and E on the circuit board, using $2\frac{1}{2}$ inches of $\frac{1}{4}$ inch elastic and two screws and cups. Two smart plastic pointer knobs and a tuning scale complete the front panel. The tuning scale is a paper gummed label which can be marked with the positions of the main stations.

If you have followed these pages carefully, you will now have a useful working radio. You will also have shared the thrill of thousands of other radio constructors, listening to sounds coming from a radio receiver which is your own work.

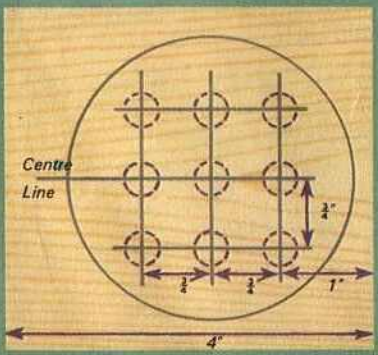

How to mark out the position of the Loudspeaker and ⅜" holes

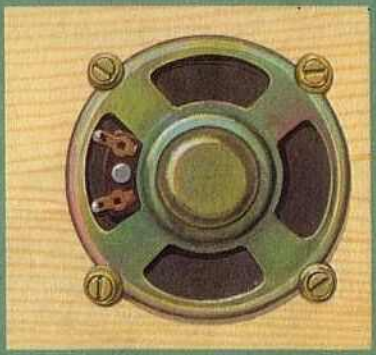

The Loudspeaker is mounted over the circle with 4 screws and cups

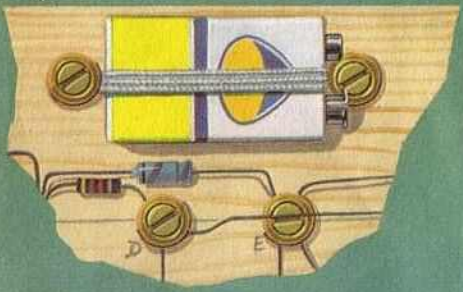

The Battery is mounted above screws D and E

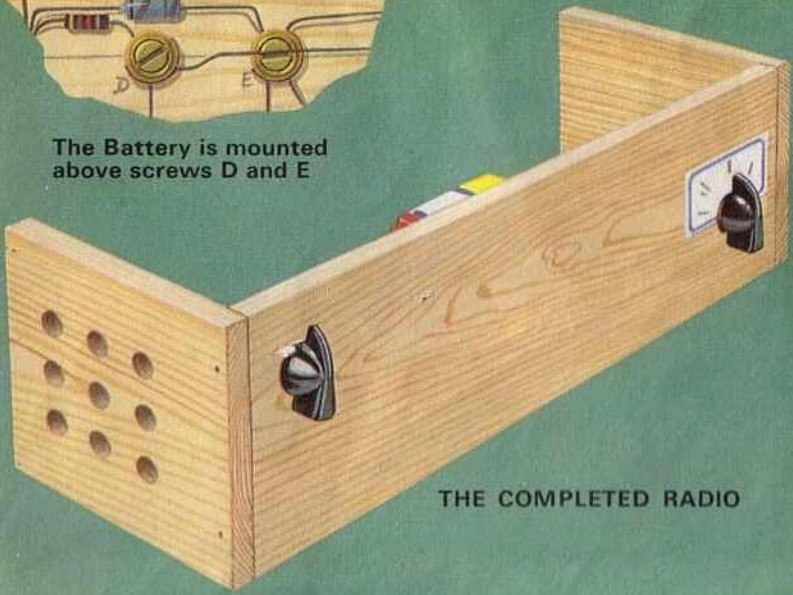

THE COMPLETED RADIO

Radio reception

Radio waves cannot be seen or heard. They are *electro-magnetic* waves, and they flow backwards and forwards (*oscillate*). Each backward and forward movement is known as a *cycle*. The rate of this backward and forward movement (*oscillation*) is known as the frequency of the wave.

A radio wave is also a *carrier* wave. It can 'carry' an electro-magnetic wave of a frequency exactly similar to the sound waves of the speech or music which is being transmitted. This frequency, which is imposed on the carrier wave, is known as an *audio* frequency. It is this electro-magnetic *audio frequency* that a radio receiver translates into sound via the loudspeaker. For a more detailed explanation of this, you might like to read pages 20-26 of the Ladybird book: 'How it Works—Television'.

When radio waves carrying an audio frequency arrive at a receiver, three things happen:

1. *TUNING*. The radio frequency carrier wave is picked up by the aerial. Along this same aerial pass the radio frequency carrier waves from many other transmitting stations, but the signal we want from a particular transmitter must be selected (tuned) from them.

2. *DETECTION*. The next stage is the detection stage, in which the electro-magnetic audio frequency wave is detected from the carrier wave.

3. *AMPLIFICATION*. The electro-magnetic audio signal wave is amplified, or made bigger, and translated from an electrical signal into SOUND by the loud-speaker, from which we hear a reproduction of the transmitted sound.

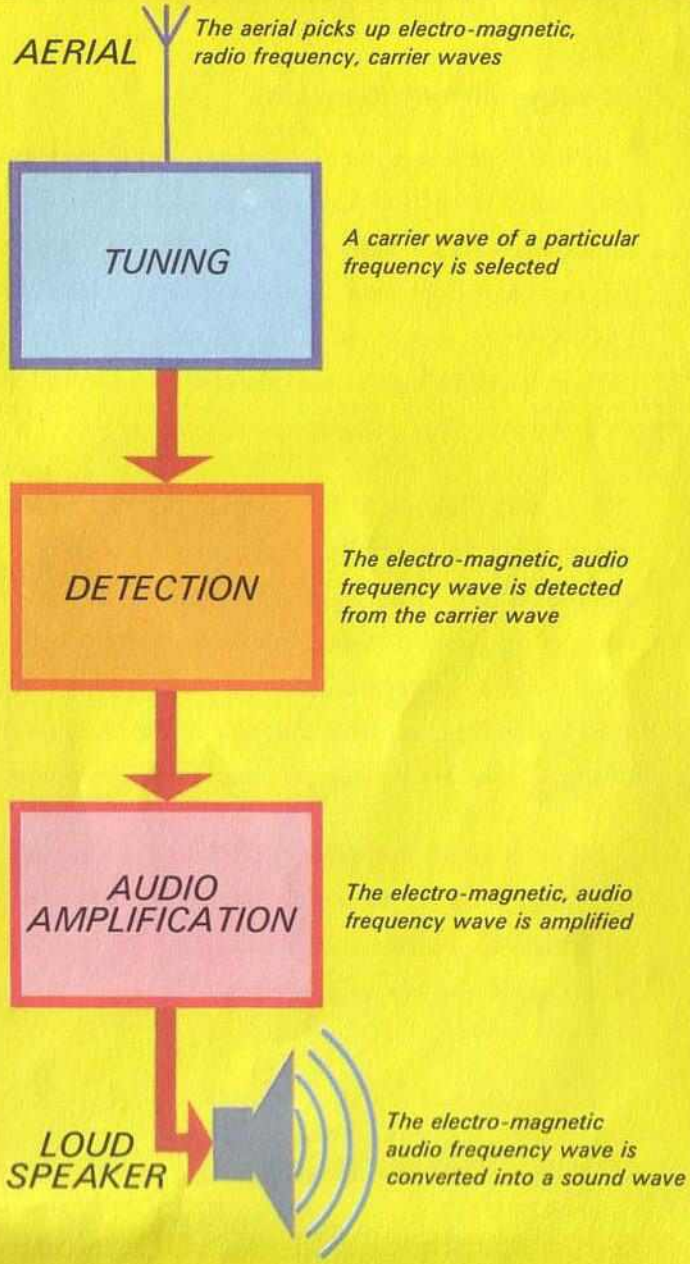
AERIAL
The aerial picks up electro-magnetic, radio frequency, carrier waves
TUNING
A carrier wave of a particular frequency is selected
DETECTION
The electro-magnetic, audio frequency wave is detected from the carrier wave
AUDIO AMPLIFICATION
The electro-magnetic, audio frequency wave is amplified
LOUD SPEAKER
The electro-magnetic audio frequency wave is converted into a sound wave

Reading circuit diagrams

Before building a piece of electronic equipment, a constructor needs to know how to wire up the various components. This can be done with the help of a diagram showing how the components are joined. Electronic engineers have developed a 'shorthand' method of showing the various components and their joining wires. This is the *circuit diagram*.

A circuit diagram is like a map. All the electronic components have symbols, and the connecting wires are shown as straight lines. The positions of the components on the circuit diagram do not normally correspond to their *actual* positions in the completed equipment. Sometimes a *layout diagram* is also used to show where to position the components on a base board.

Many symbols are used in circuit diagrams and we will learn them as we meet them in the course of our construction. To make construction easier we will use both circuit and layout diagrams.

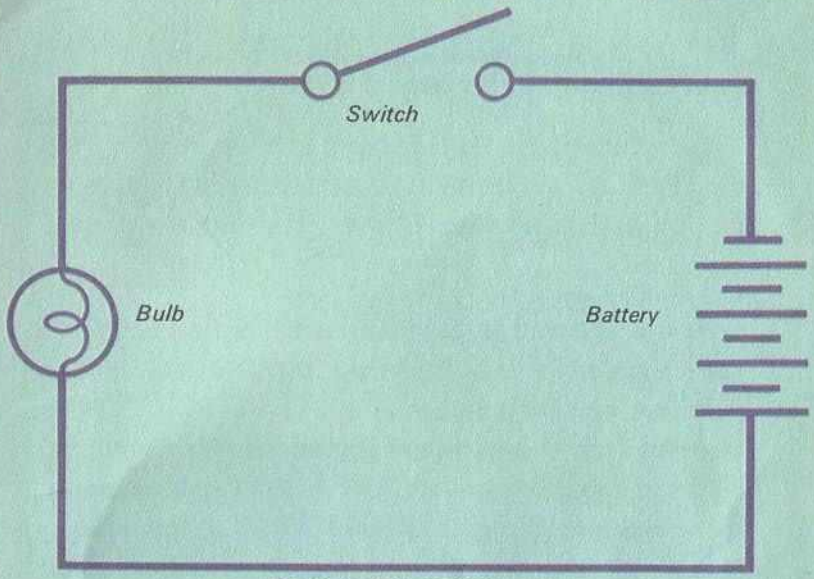

CIRCUIT DIAGRAM

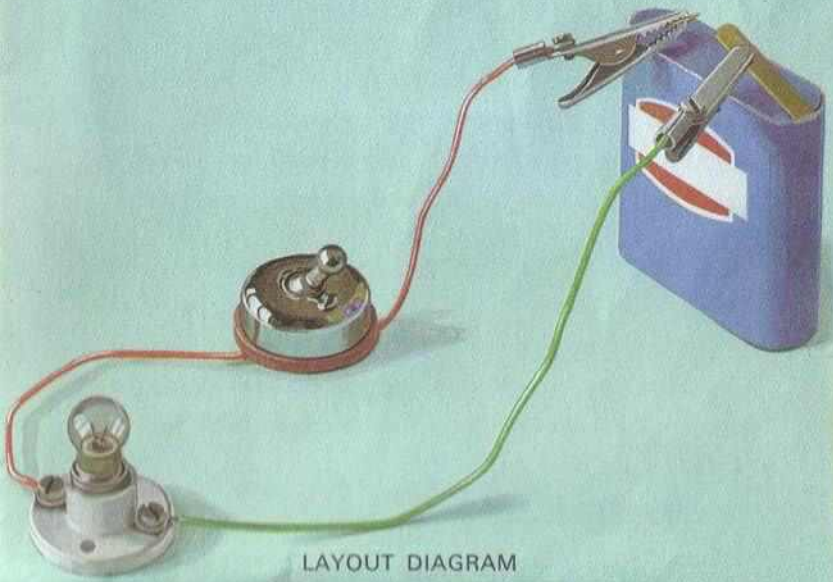

LAYOUT DIAGRAM

Portland has started generating clean energy by replacing some water pipes with pipes that contain turbines. The turbines generate electricity from water that is already flowing under the city. The pipes are expected to generate $2,000,000 worth of renewable energy capacity over 20 years.

BUILDING A DIY VIDEO TRANSMITTER

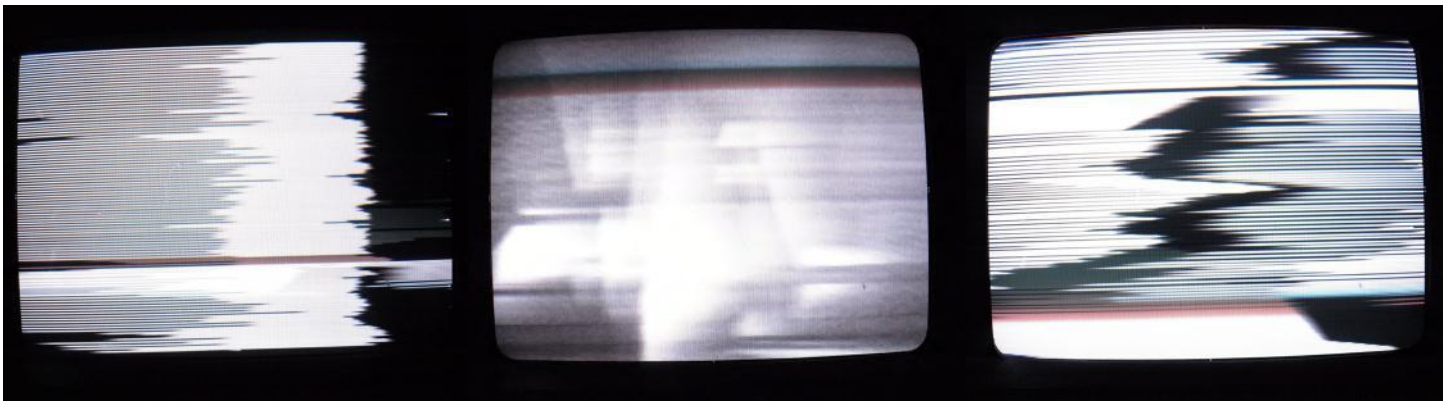

WHAT YOU NEED

- Blank PCB Copper Plate (jameco.com part #169279)
- Capacitors: 2x 0.1uf
  1x 100u
  2x 6-70pf Variable Caps (jameco.com part #32855)
- Resistors: 27kOhm
  10kOh
- Transistor-MPSA18 (jameco.com part #210681)
- 1k potentiometer
- Small amount (~4”) of magnet wire 24 AWG or close (jameco.com part #2098419)
- Sand paper
- Stranded hookup wire
- Hacksaw or dremel tool
-Headphones with 1/8” plug (from iPod or MP3 player)
- Hot glue or super glue
- Soldering Iron
- CRT “tube” TV with an antenna (the transmitter won’t transmit to newer flat screen TV’s)

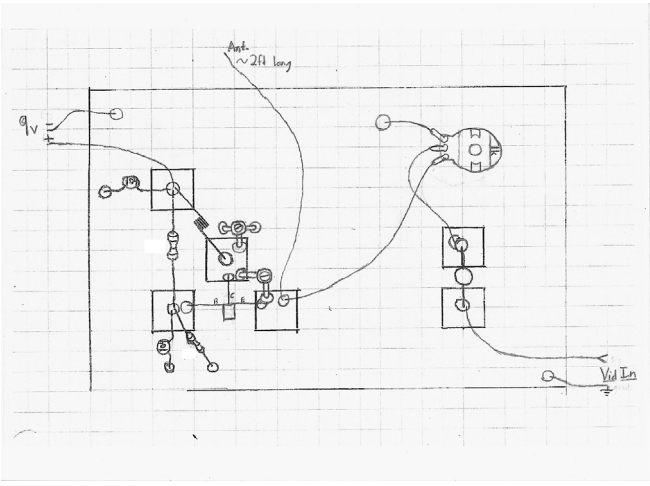

INTRODUCTION

This micro video transmitter was designed by the DIY radio and micro TV artist Tetsuo Kogawa. His website (http://anarchy.translocal.jp/) is full of great info on DIY radio, and all credit for this circuit goes to him.The transmitter can be used to transmit a relatively clear video signal or abstract visualizations, depending on the desired output. It will usually function at a distance of about 20 feet. If you have any previous experience with electronics or circuit building, you will notice that this method of building is different. The circuit is constructed on top of a copper “ground plate” which is common in radio applications. This tutorial uses step-by-step sketches and photos created based on Tetsuo Kogawa’s design.

BUILDING THE TRANSMITTER

1. PREPARING THE COPPER PLATE

- Take the bare copper plate and cut off 1inch of material using a dremel tool or hacksaw.
- Use this material to cut out 6 square ½ in. x ½ in. pieces.
- Arrange the 6 pieces on the larger copper plate as shown in the image below…

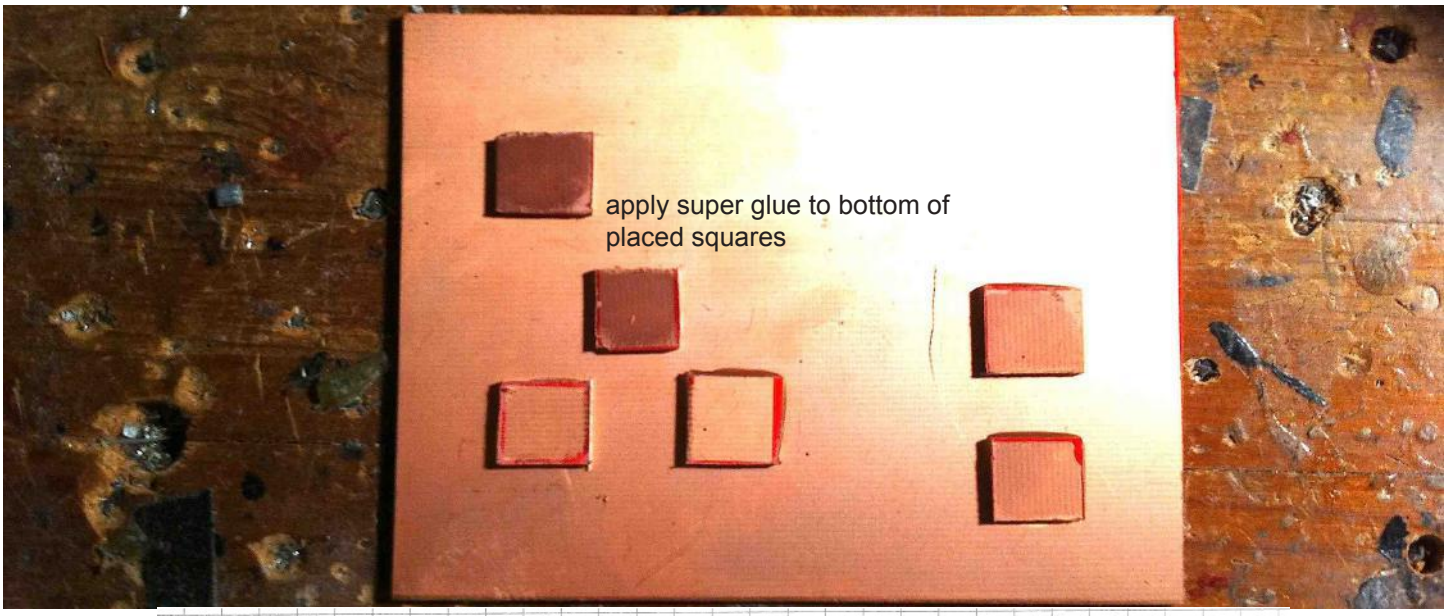

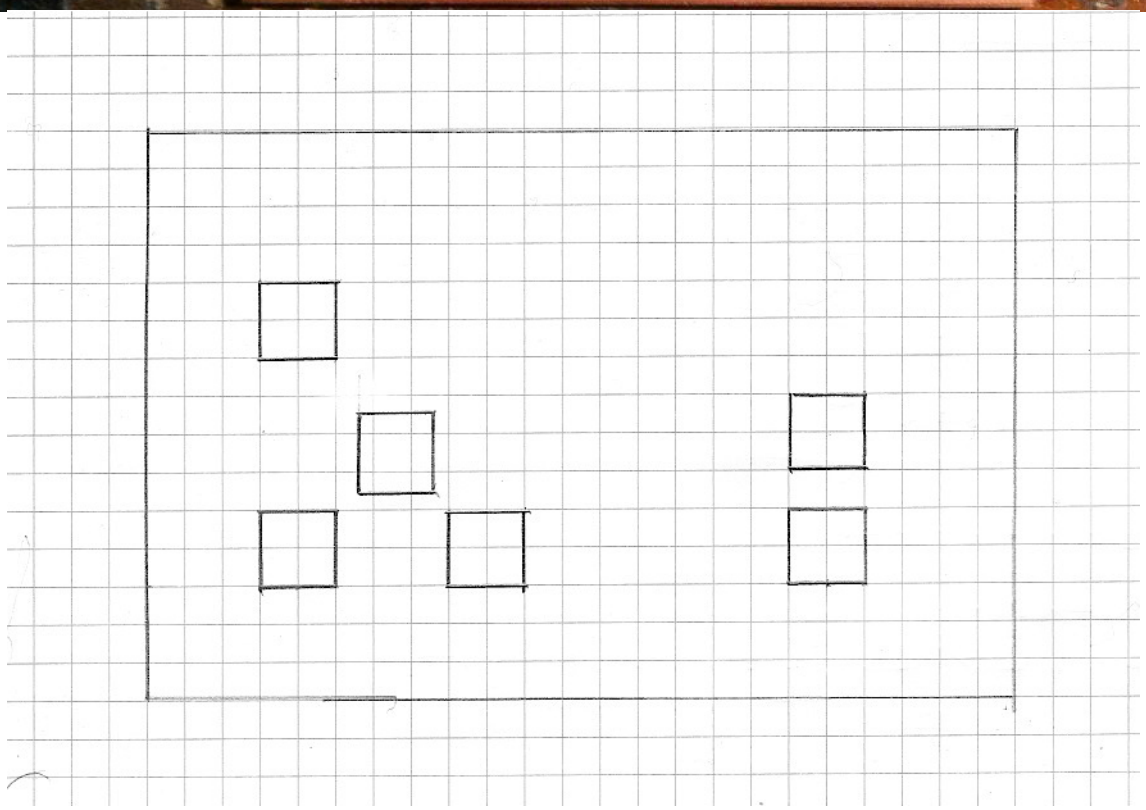

****NOTE**** Be sure to arrange them so that all the component leads will be able to reach the squares. Look ahead to see what components will go where so you know exactly how to space them.

- Once you have them arranged, put a dab of hot or super glue on the bottom of each square and stick them in place on the copper plate.

2. ADDING THE 100uF CAPACITOR (the cylinder with "100uF" written on the side)

- Melt a blob of solder onto the two squares furthest to the right. To do this, apply your iron to each square to transfer heat for an extended period of time until the solder flows onto the surface.

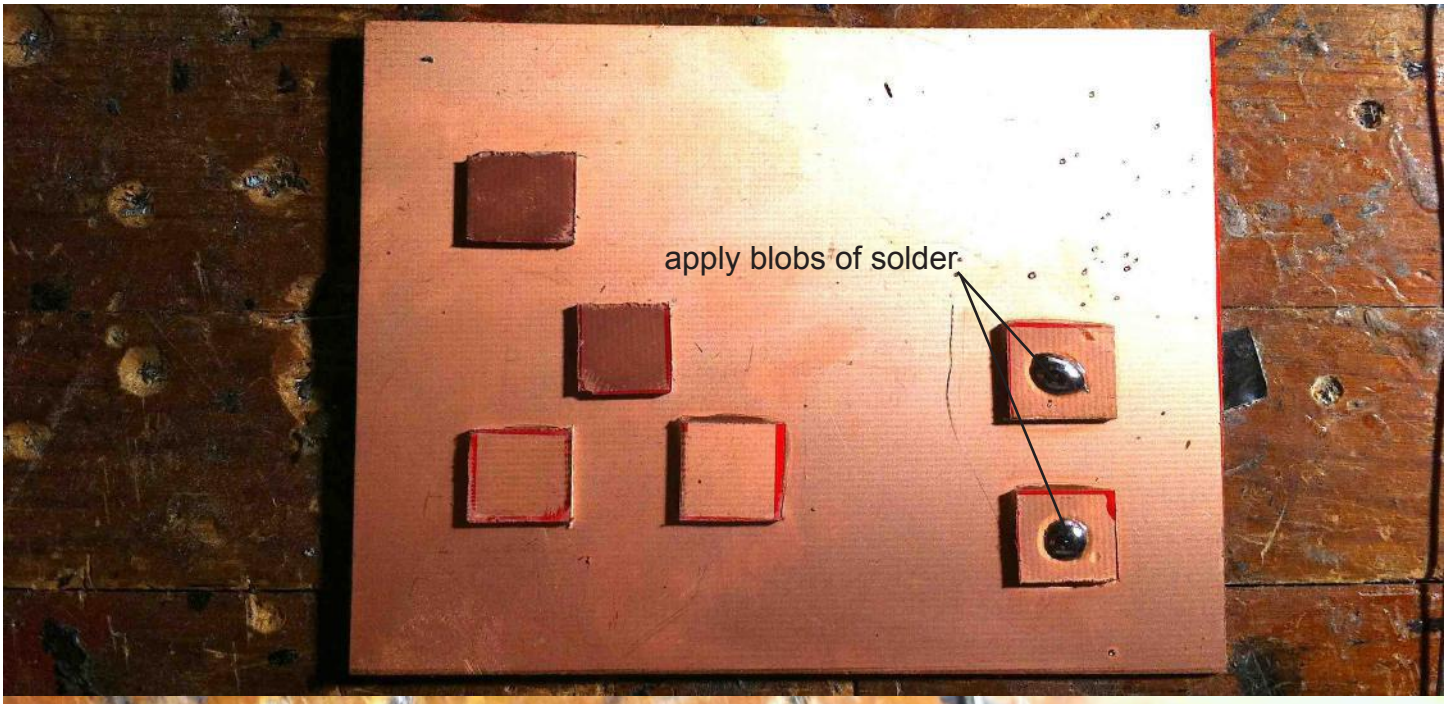

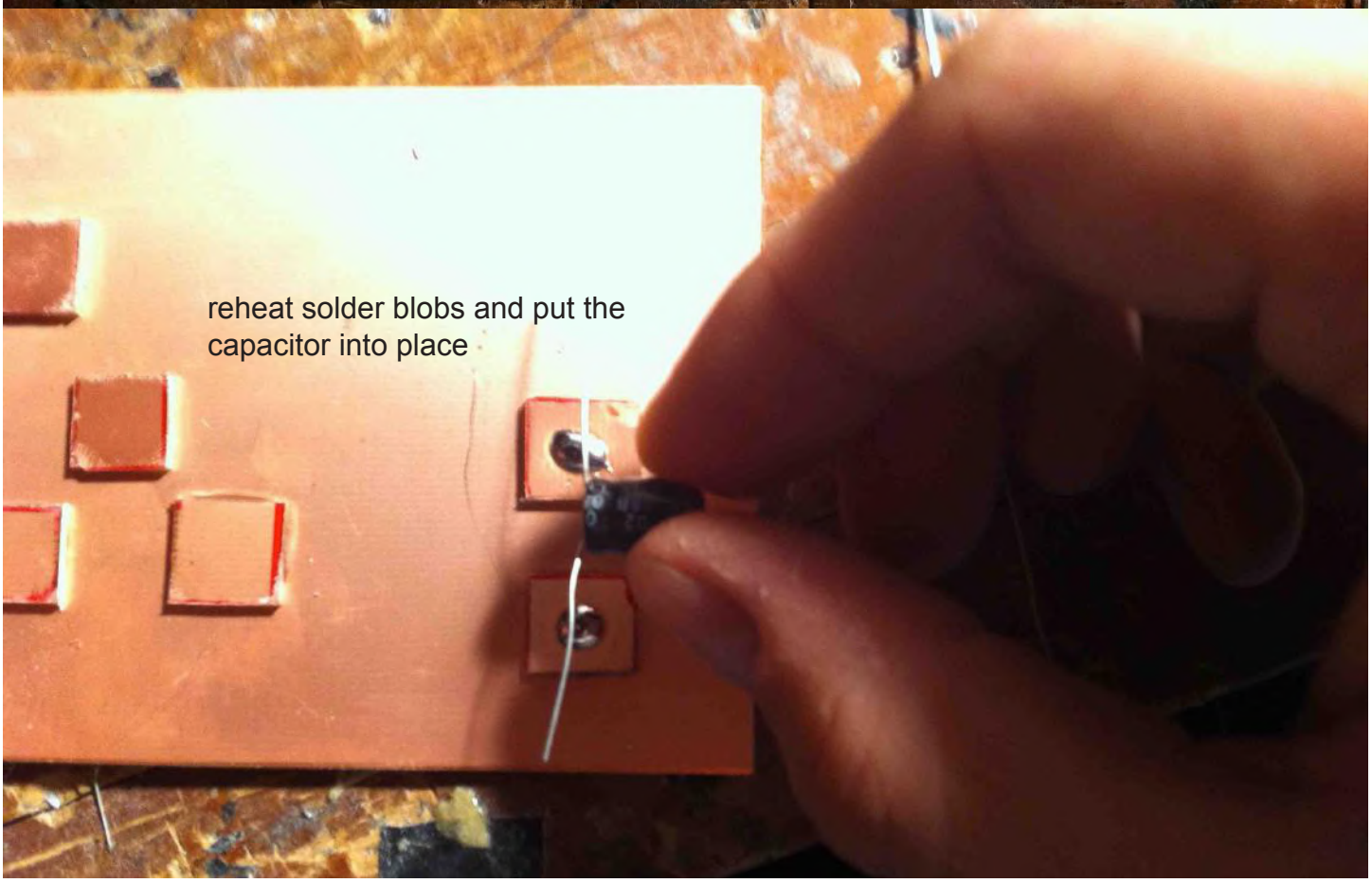

- Bend the legs out of the 100uf capacitor and straddle them between the two squares making sure that the leads are only touching the two small squares (not touching the ground plate).
- Cut the excess off of the leads.
- One at a time, re-heat the solder blobs and place the capacitor leads into them, allowing them to cool down until they stay in place.

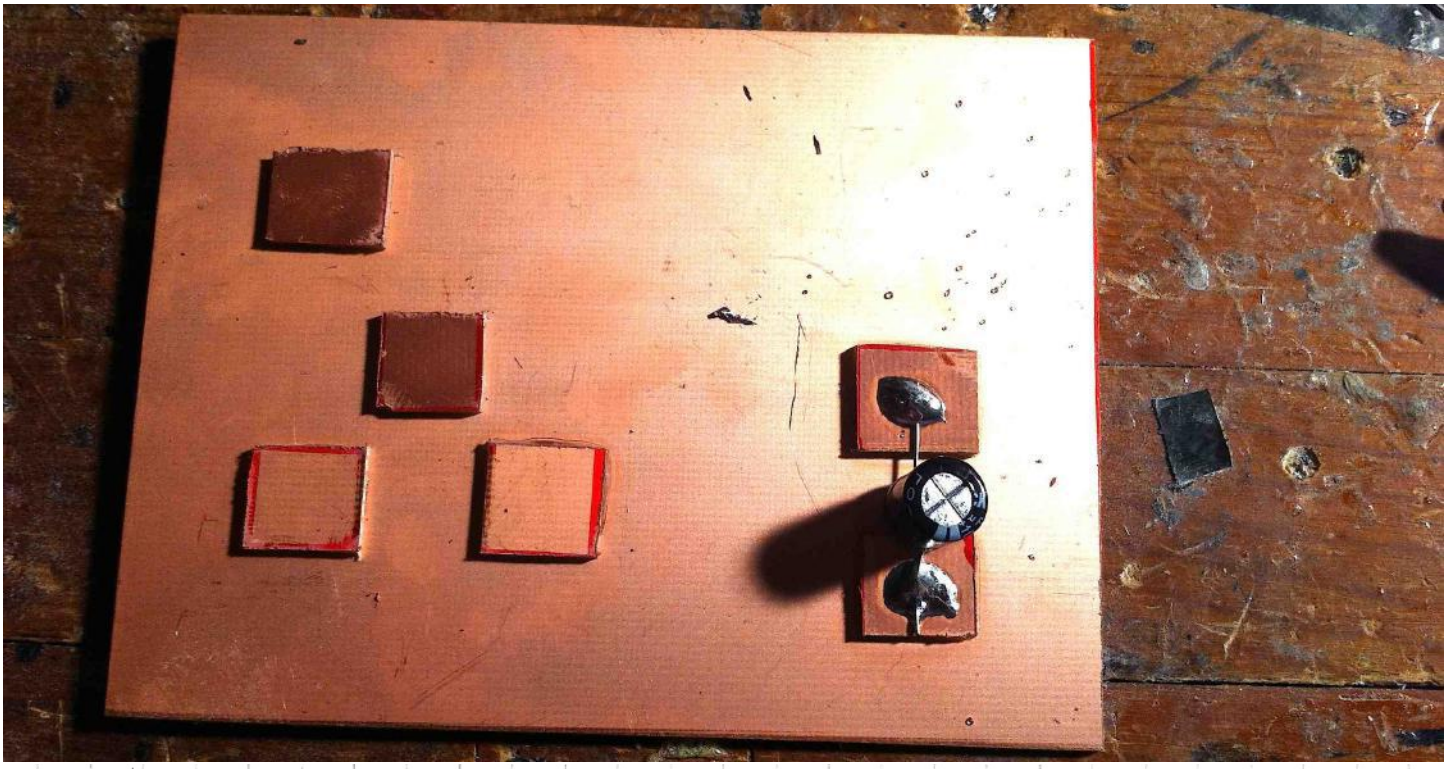

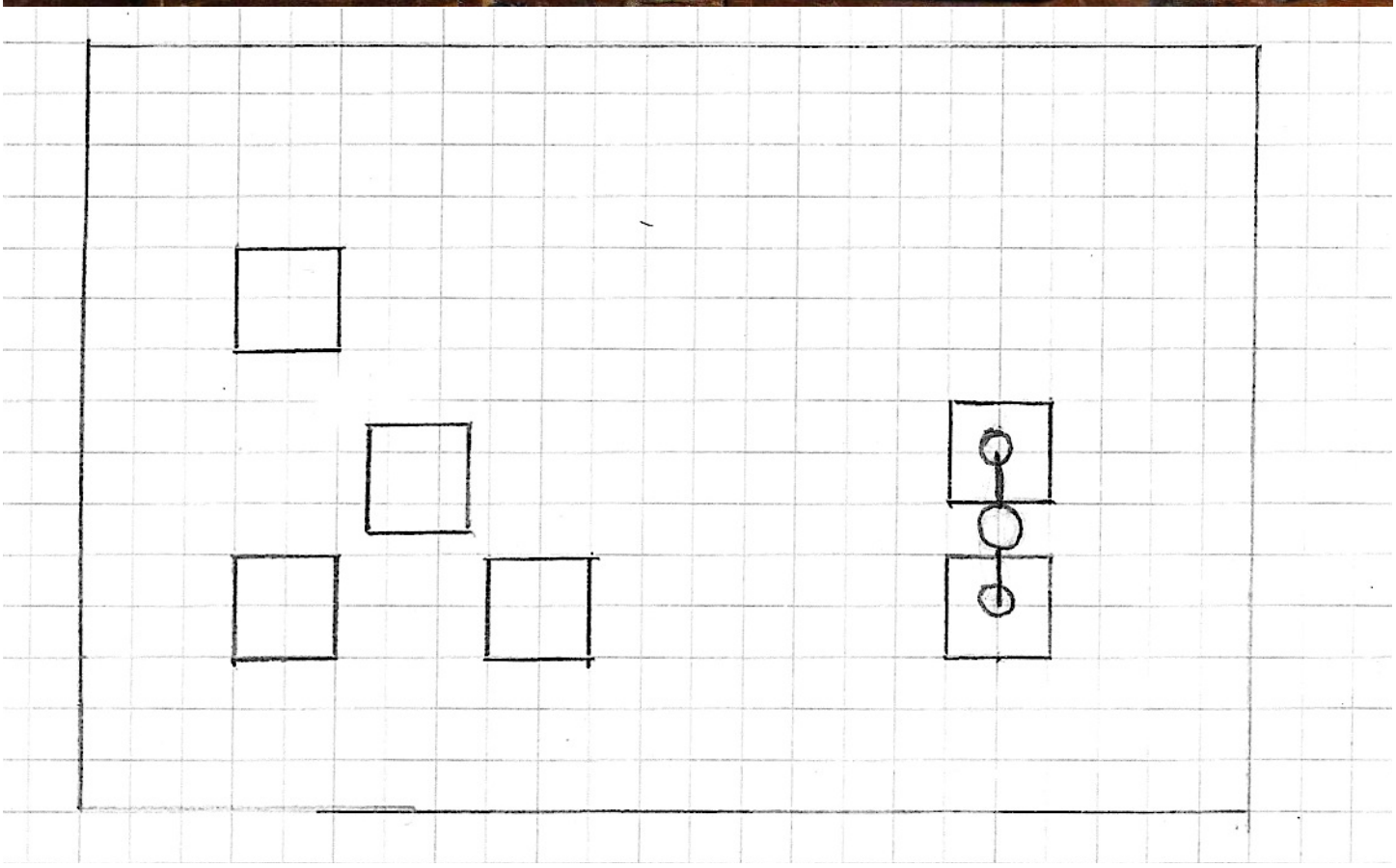

NOTE - This capacitor is polarized meaning that it has to be facing in the appropriate direction. Make sure you solder the NEGATIVE lead to the LOWER of the two squares. The negative side has the shorter lead and a vertical stripe along the side of the capacitor.

3. ADDING THE .1uF CAPACITORS (the two discs with “104” written on them)

- These capacitors will be positioned between the upper and lower left most squares and the ground plate. Melt a blob of solder on these two squares and two blobs on the ground plate beside each. (Reference the pictures for exact positioning).
- Re-heat the blobs and position the capacitors accordingly as in step 2.

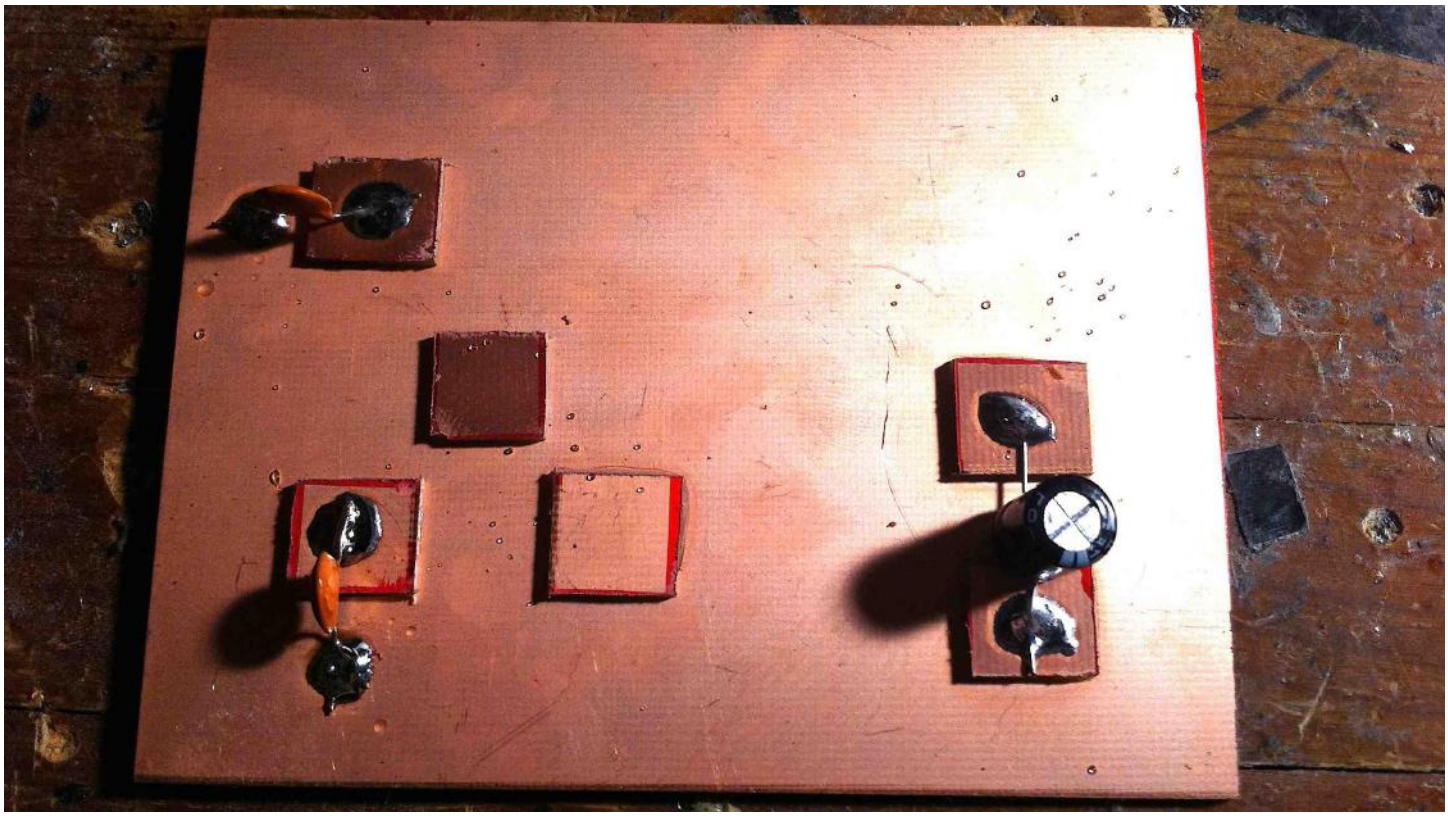

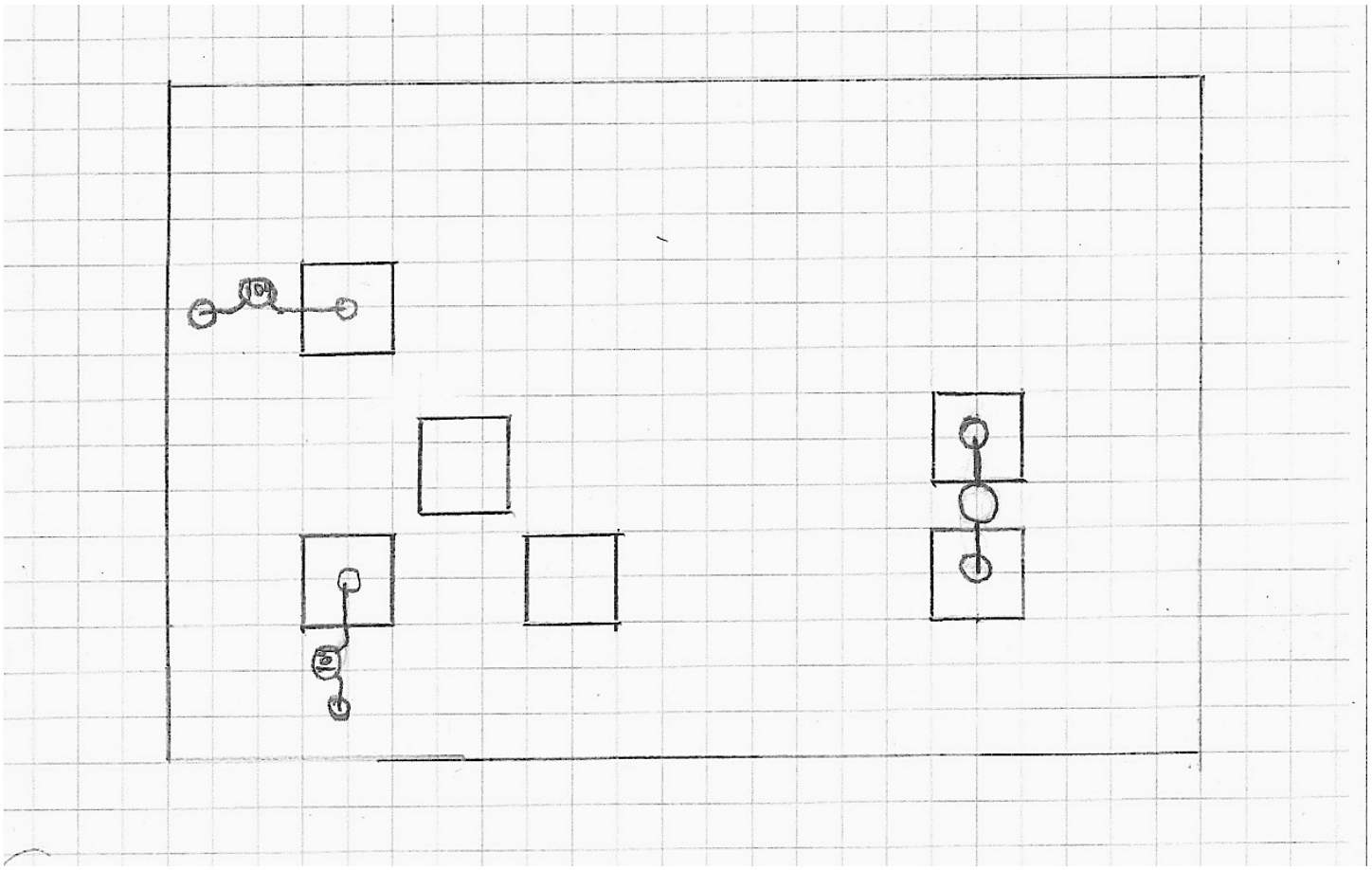

4. ADDING THE RESISTORS (10k and 27k)

- Solder the 10k resistor (brown, black and orange stripes) between the bottom left square and ground.
- Solder the 27k resistor (red, violate and orange stripes) between the two left squares.

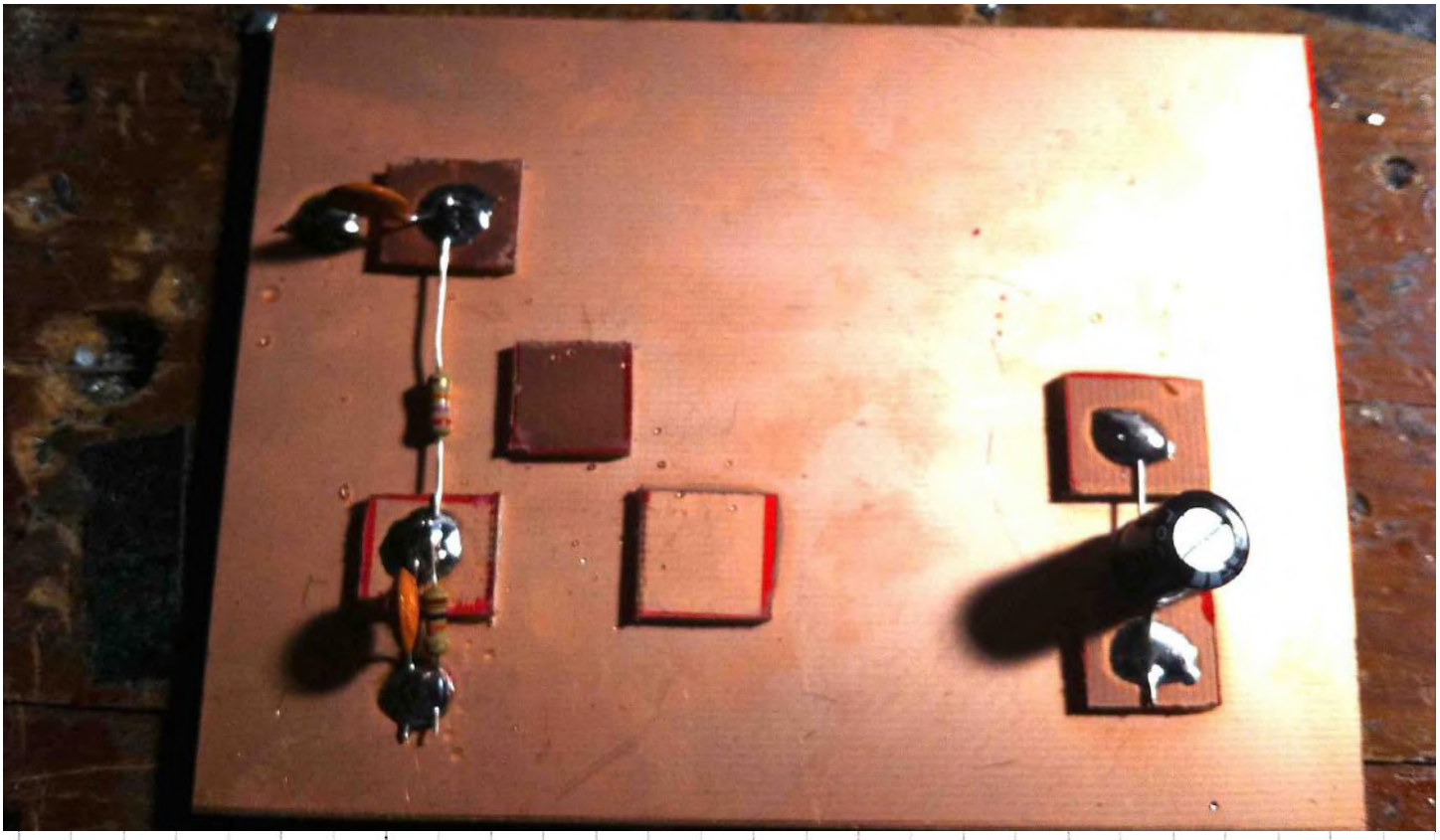

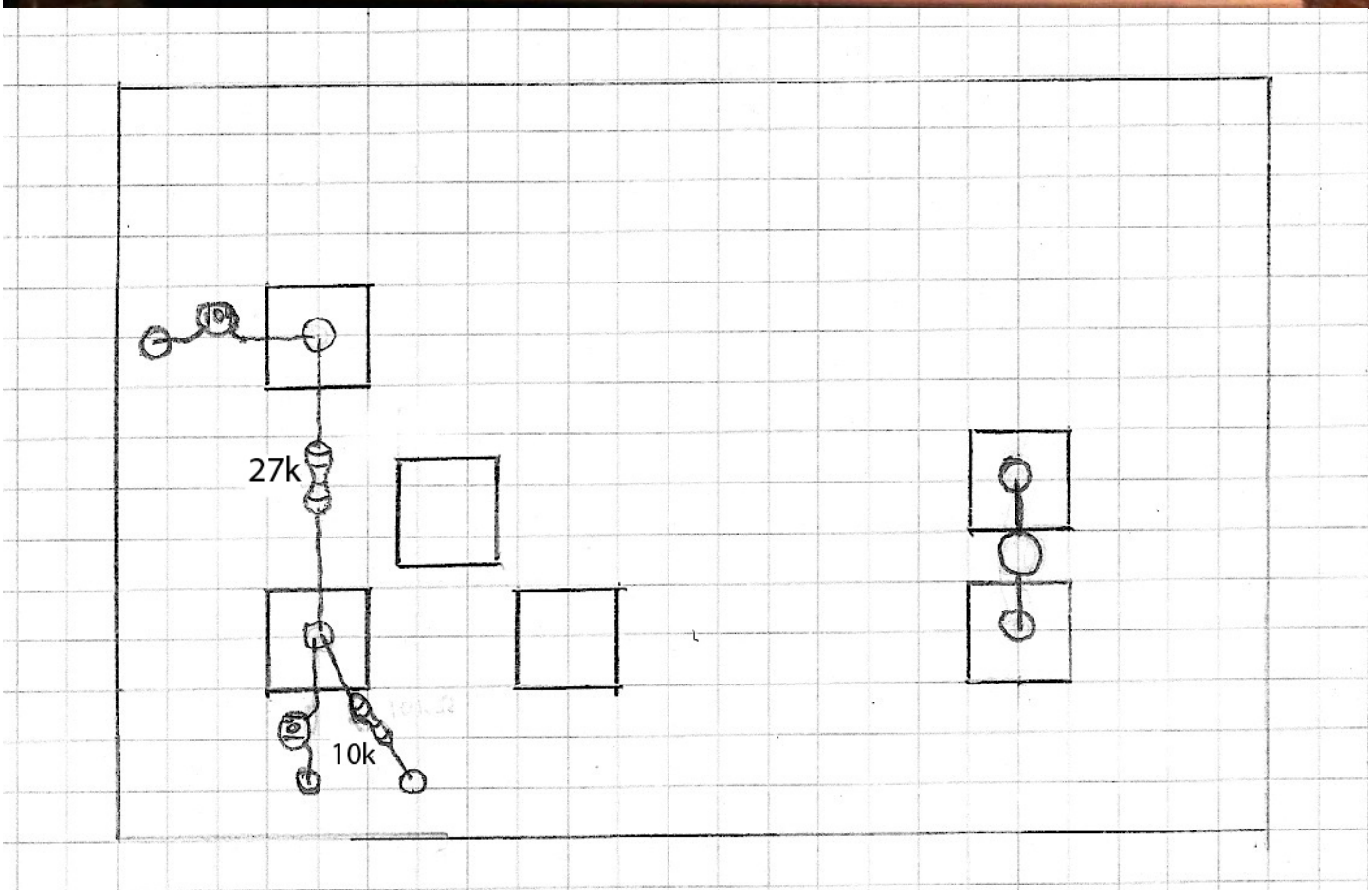

5. ADDING THE COIL

- Cut about 4” of the magnet wire (24 AWG or close)
- Use the plug from your headphones to wrap the wire around. Make 5 turns.

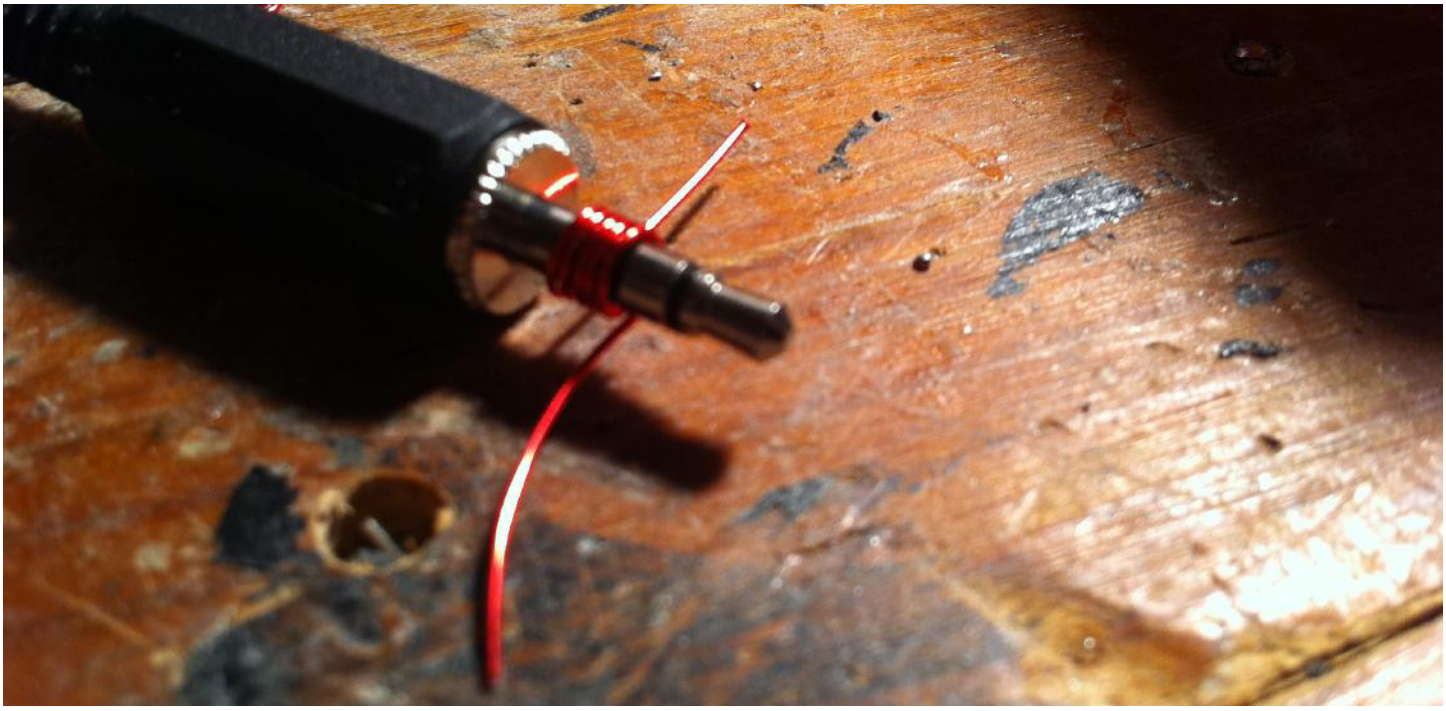

- With the wire still wrapped around the headphone plug, take a small piece of sand paper and rub off the colored insulation of each end until the bare copper is exposed (If the copper is not exposed, you won’t be able to make a connection).

- Solder the coil into place bridging the two squares as seen below

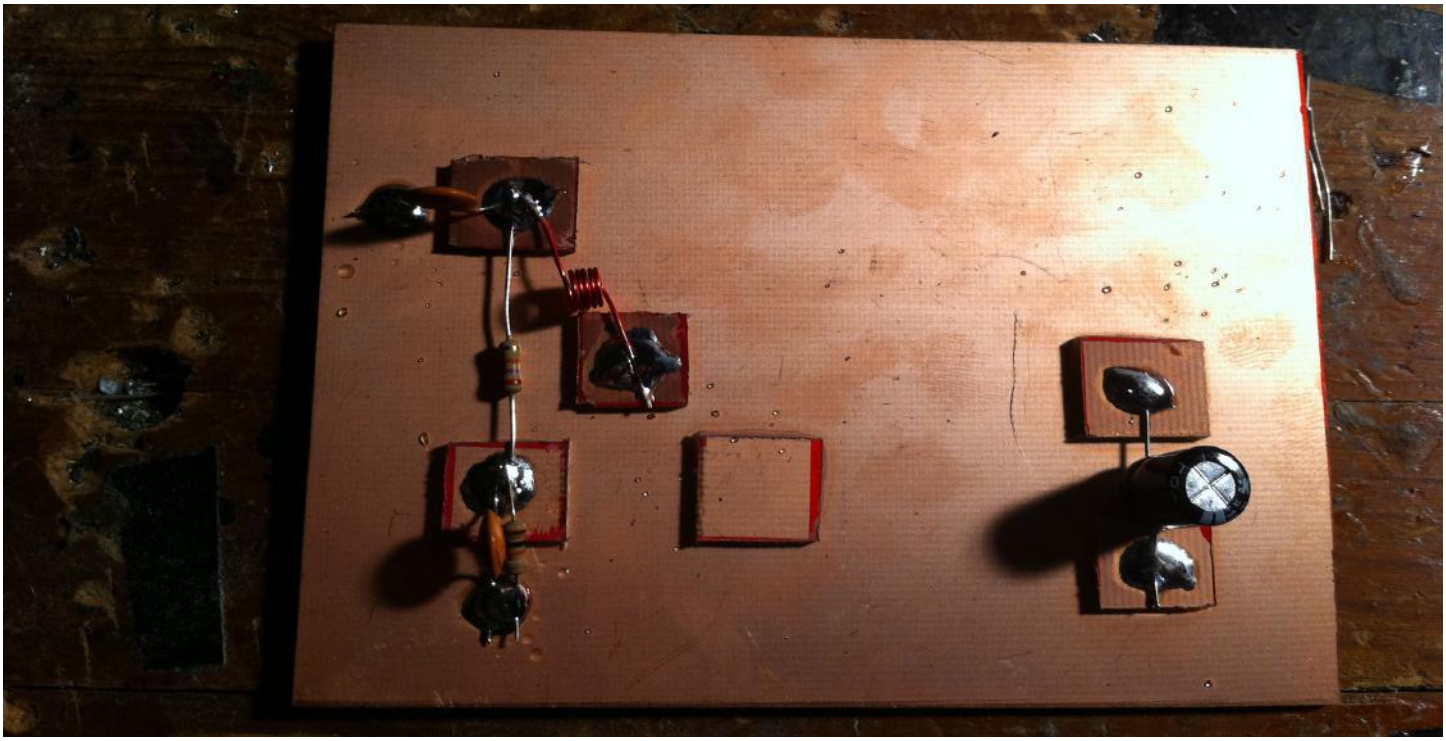

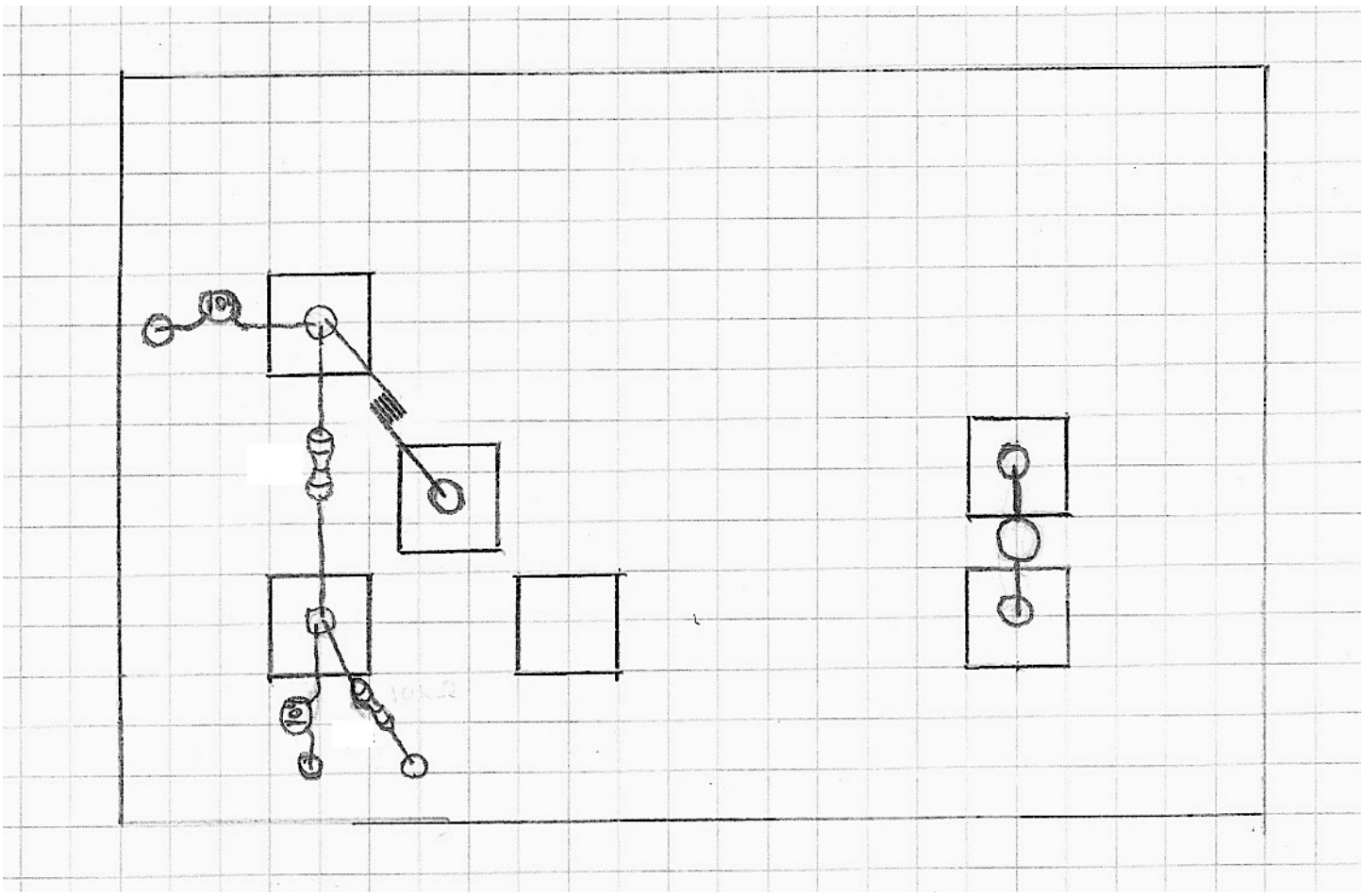

6. ADDING THE VARIABLE CAPACITORS

NOTE Once the component leads start to pile up on each other on each square, it helps to add additional solder.

- The first variable capacitor will be soldered between the top square of the three that make up the bottom triangle and the ground plate.
- Solder the “nose” of the capacitor (the lead that is different from the other two) to the square, and the other two side leads to the ground plate.

NOTE You will have to bend the leads in a certain way in order to get everything positioned properly. Just play around with it till you get it.

- The second variable capacitor will bridge between top and right squares of the triangle. Only two leads are needed here so use your clippers to remove one of the side leads, leaving the nose and only one side. (See the pic below)

The variable capacitors soldered into place…

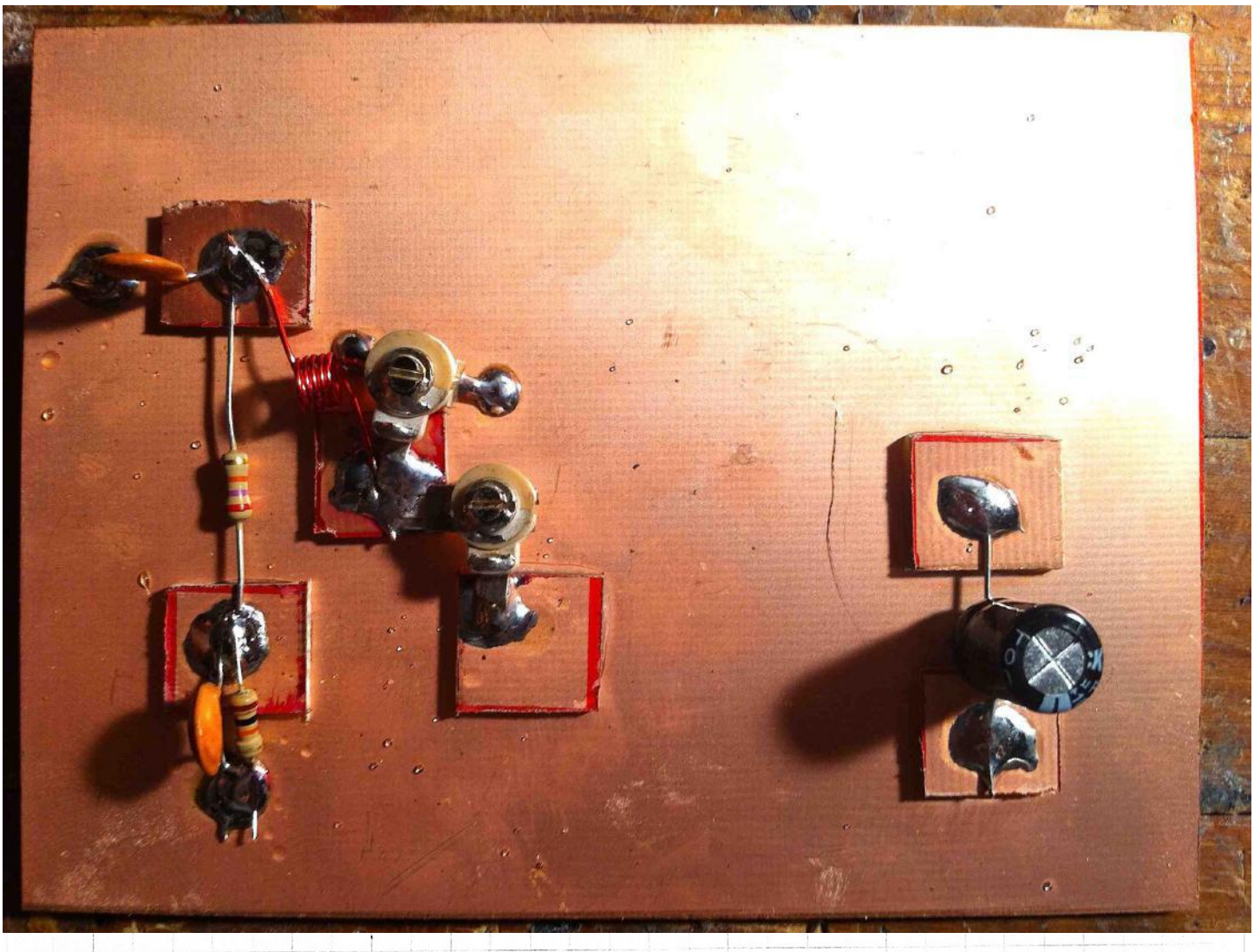

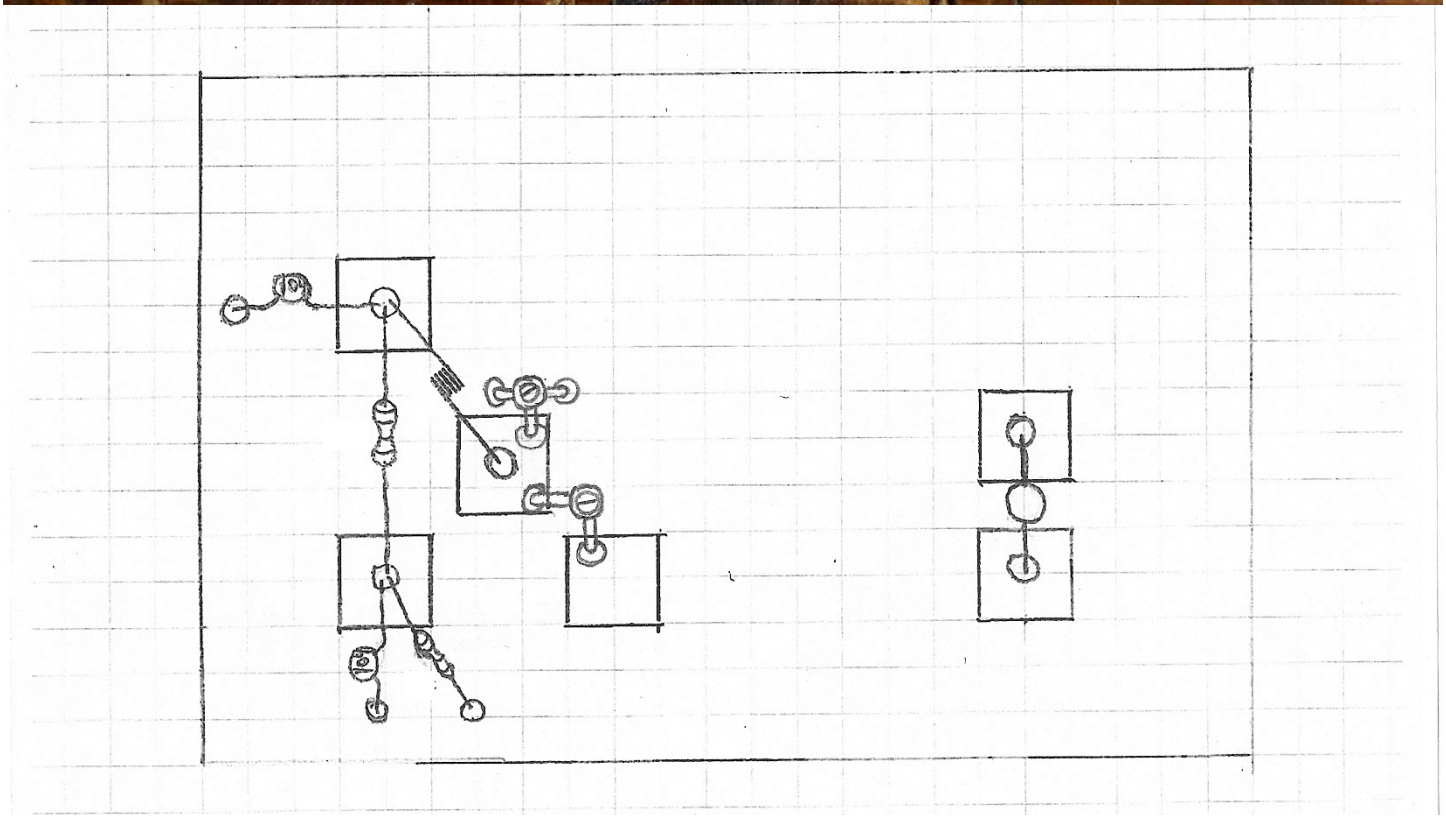

7. ADDING THE TRANSISTOR (MPSA18)

NOTE This transistor is sensitive to heat and can be destroyed by the heat from your iron. Be sure to follow the necessary precautions below. But don't worry if you do kill one, they are only ~$.10 a piece.

- The three leads of the transistor all do specific things and must go to the appropriate places. Here is a pic of the orientation of this transistor…

C=Collector B=Base E=Emitter

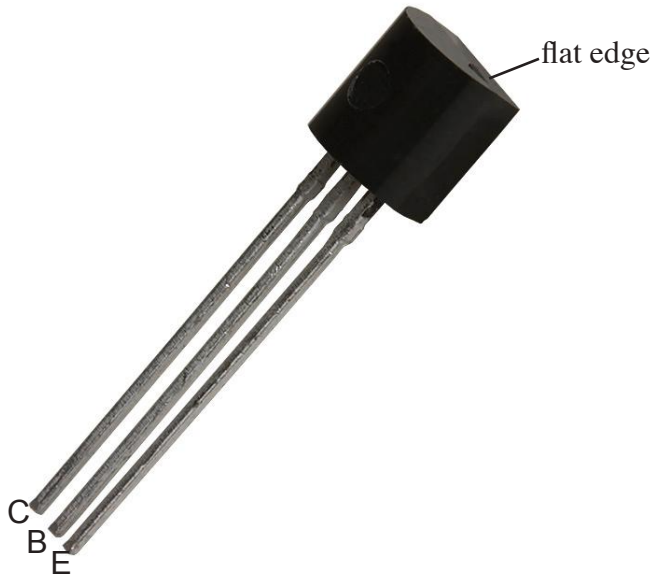

- Each lead from the transistor will be soldered to the three different squares that make up the triangle, so you will have to bend the leads accordingly.
- The B lead (base) goes to the left square of the triangle, the C lead (collector) goes to the top square, and the E lead (emitter) goes to the right square, as in the image below.

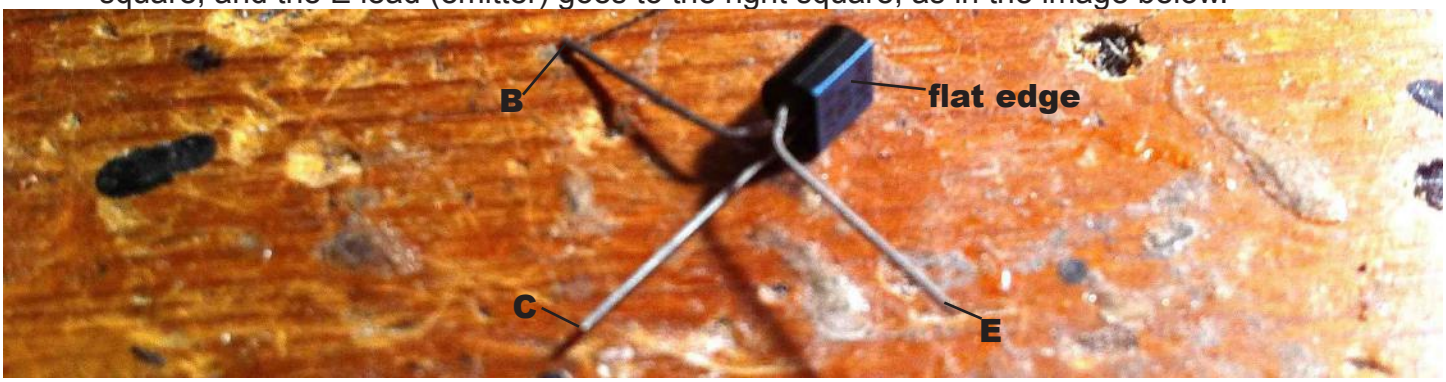

- Before you solder the transistor in place, you need to have a "heat sink" attached to protect it. This will draw some of the heat from the transistor to something else. To do this, simply take an alligator clip and attach it to the lead you are soldering…

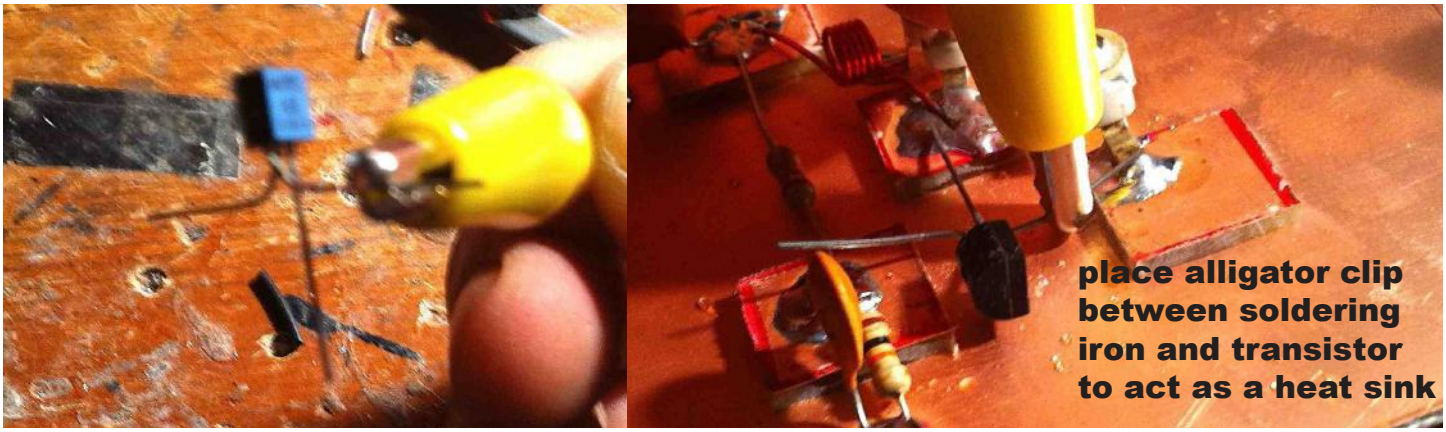

- Solder each lead in place attaching the clip lead to each one before doing so.

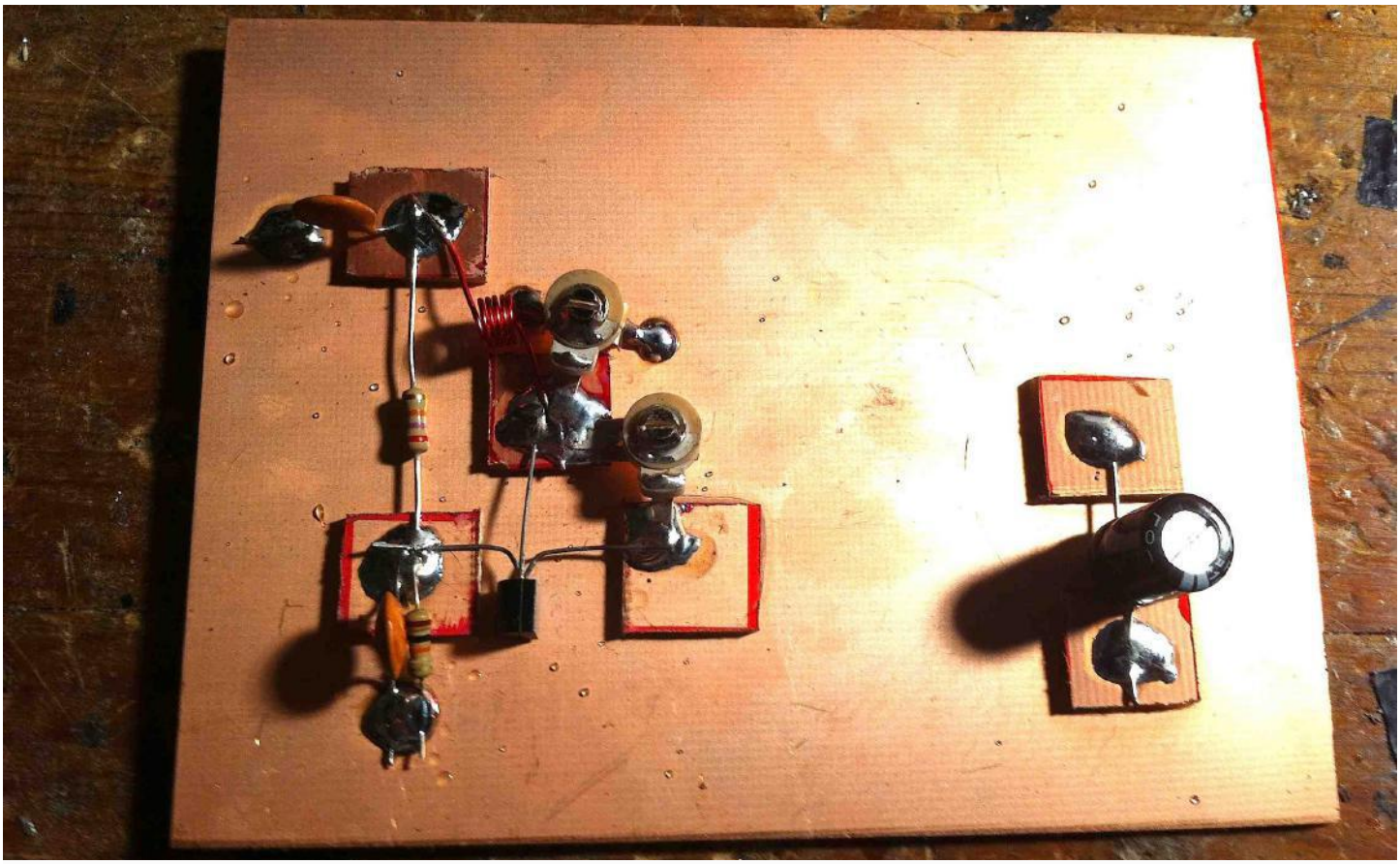

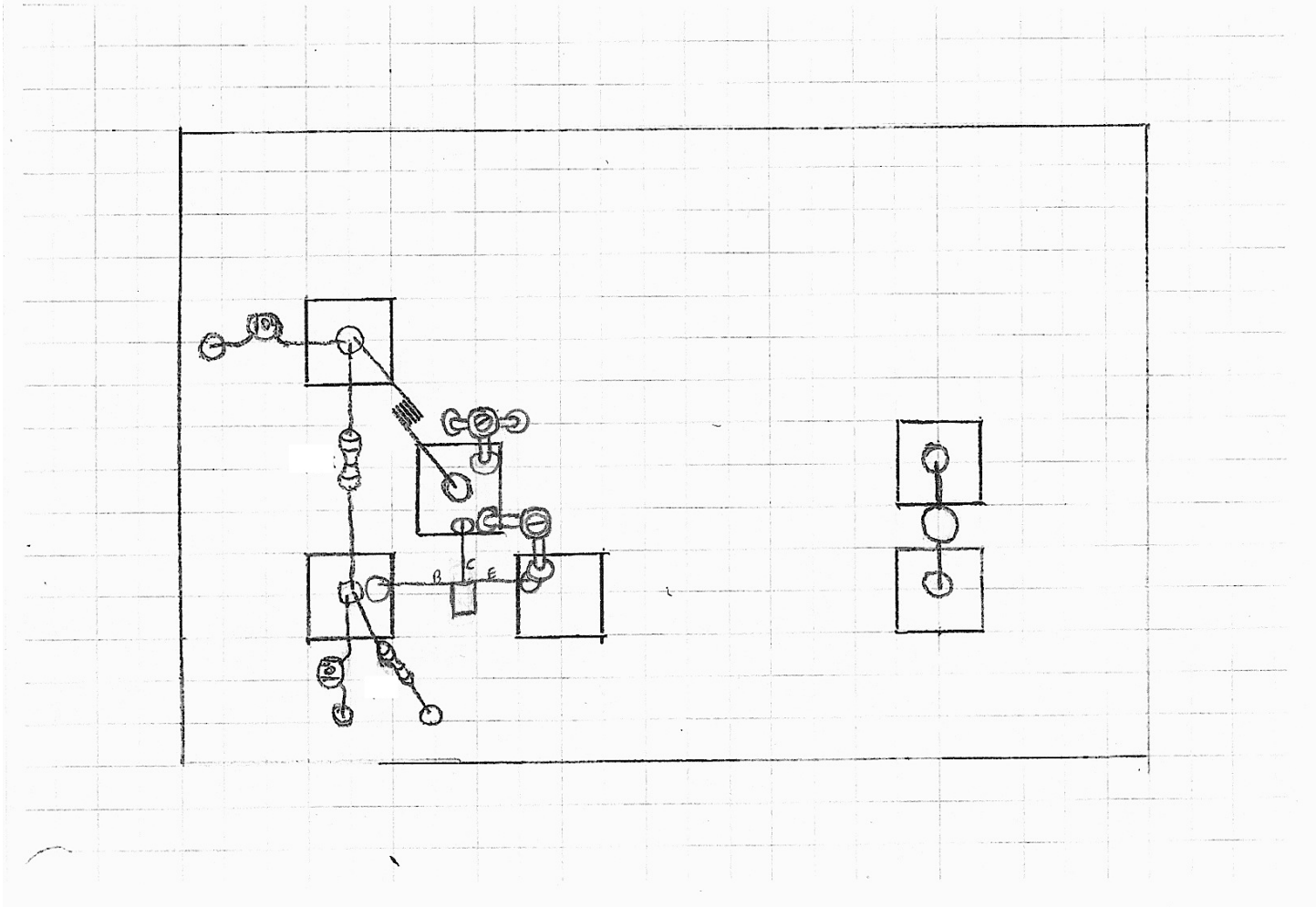

8. ADDING THE 1k POTENTIOMETER

- Put a bit of super glue or hot glue on the bottom of the potentiometer and stick it to the upper right corner with the leads facing towards the left of the plate.
- Take a small amount of stranded hookup wire and strip both ends. Solder one side to the upper most lead and the other side to the ground plate.
- Repeat the process by connecting the middle lead of the potentiometer to the upper most of the two right squares. Then connect the lower lead of the potentiometer to the right most square of the triangle.

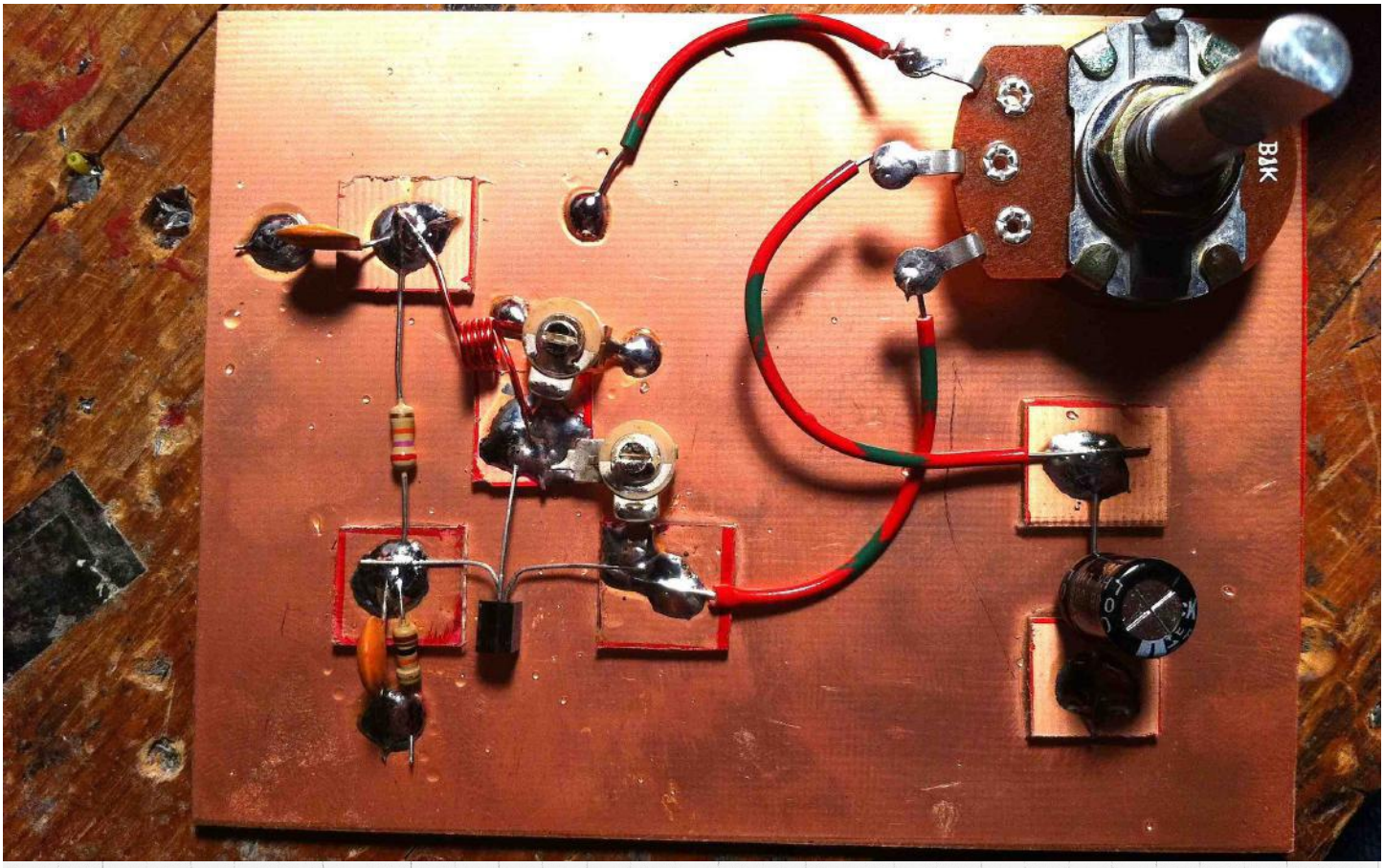

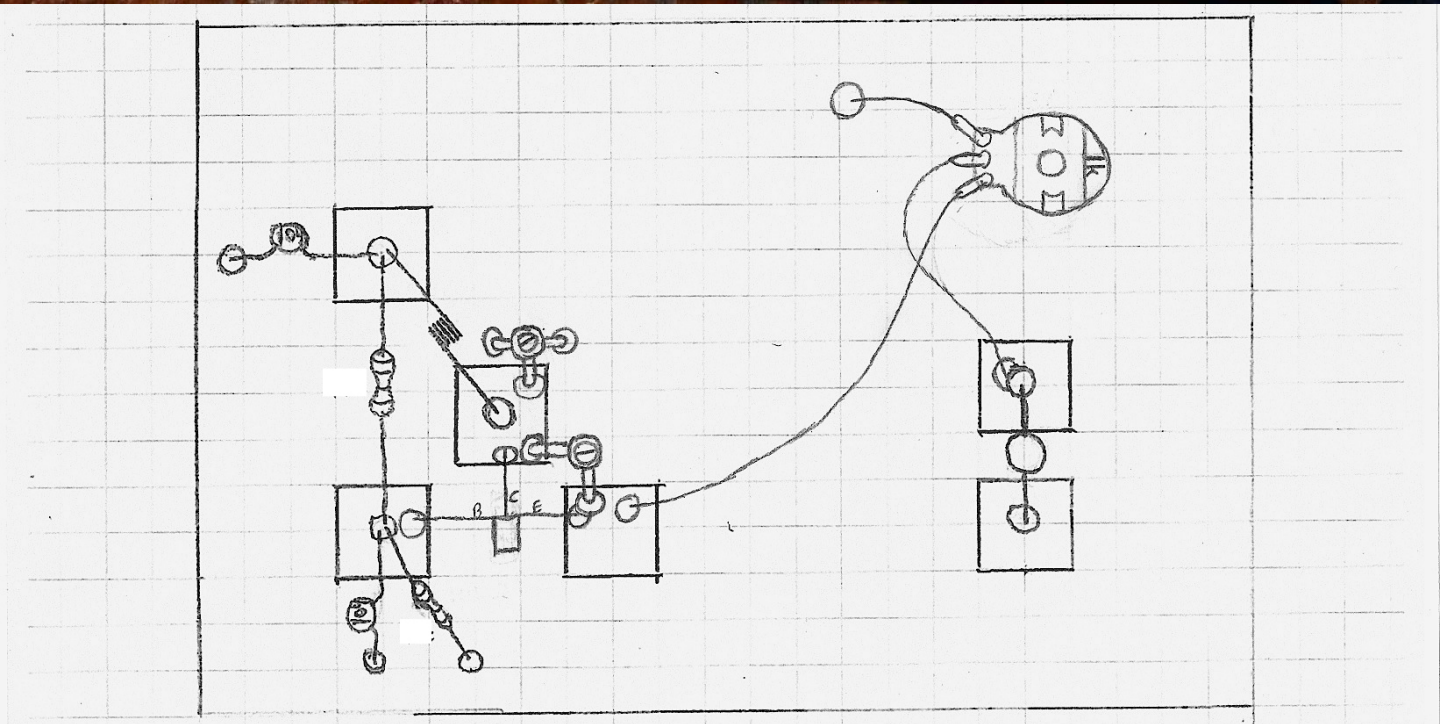

9. ADDING THE INPUT WIRES

- Cut two small lengths (~4-5”) of your stranded wire and strip both sides
- Solder one of the wires to the ground plate (this will be the ground input from your video source)
- Solder the other wire to the bottom square of the two right squares. (This will be the signal input from your video source)

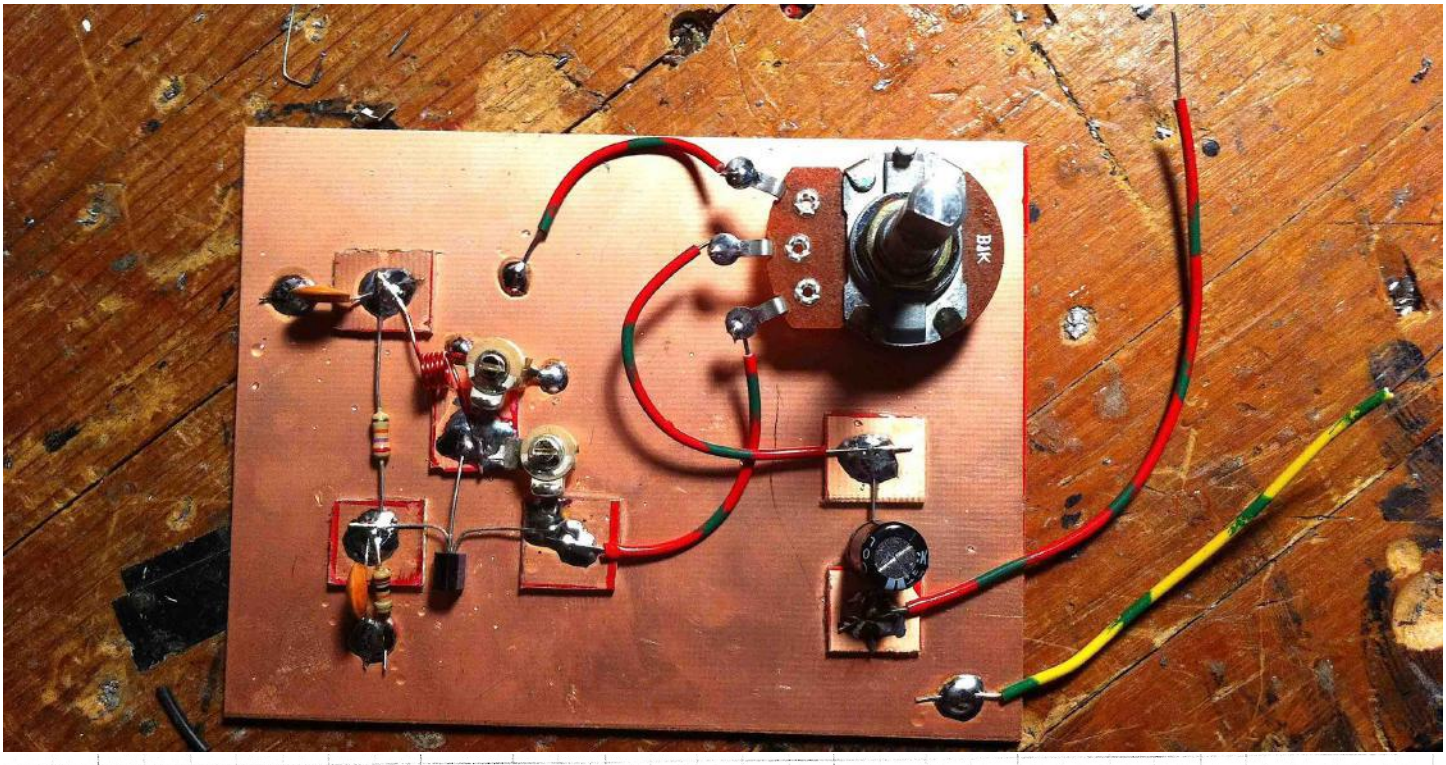

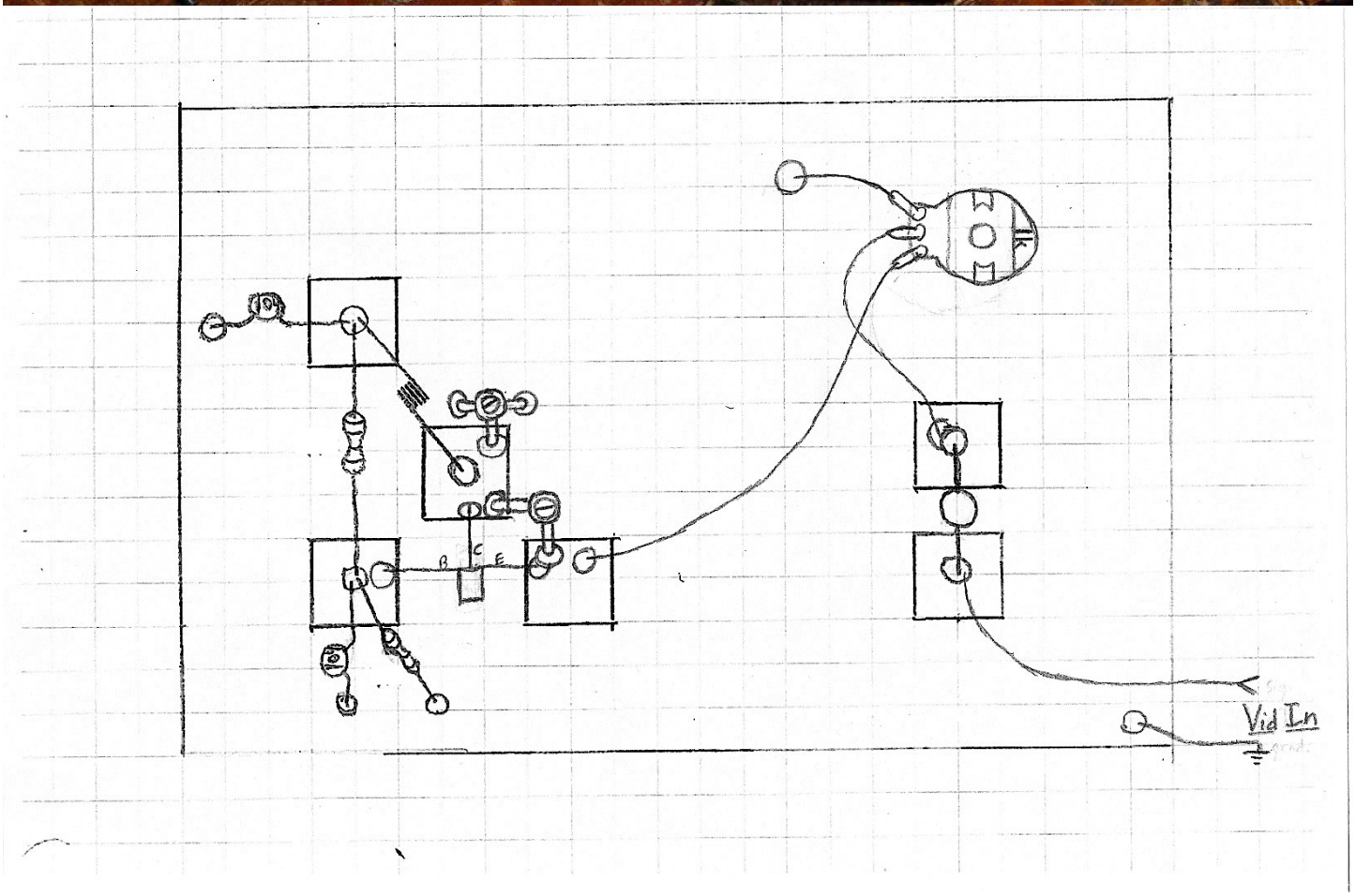

10. ADDING THE BATTERY INPUT WIRES

- Just like the last step, cut two shot pieces of wire and strip both ends.
- Solder one of the wires to the ground plate (this will be the negative input from your 9volt battery).
- Solder the other wire to the upper left square (this will be the positive input from your 9volt battery).

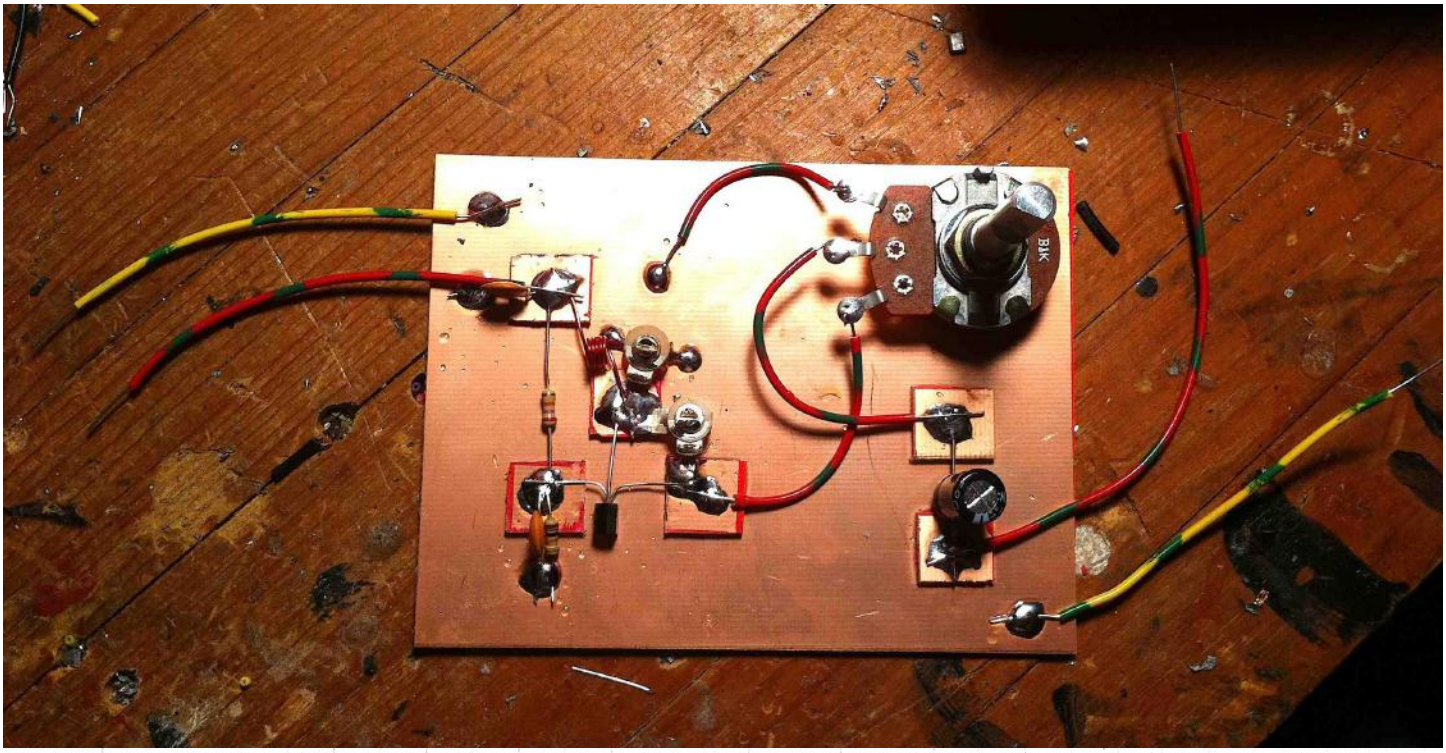

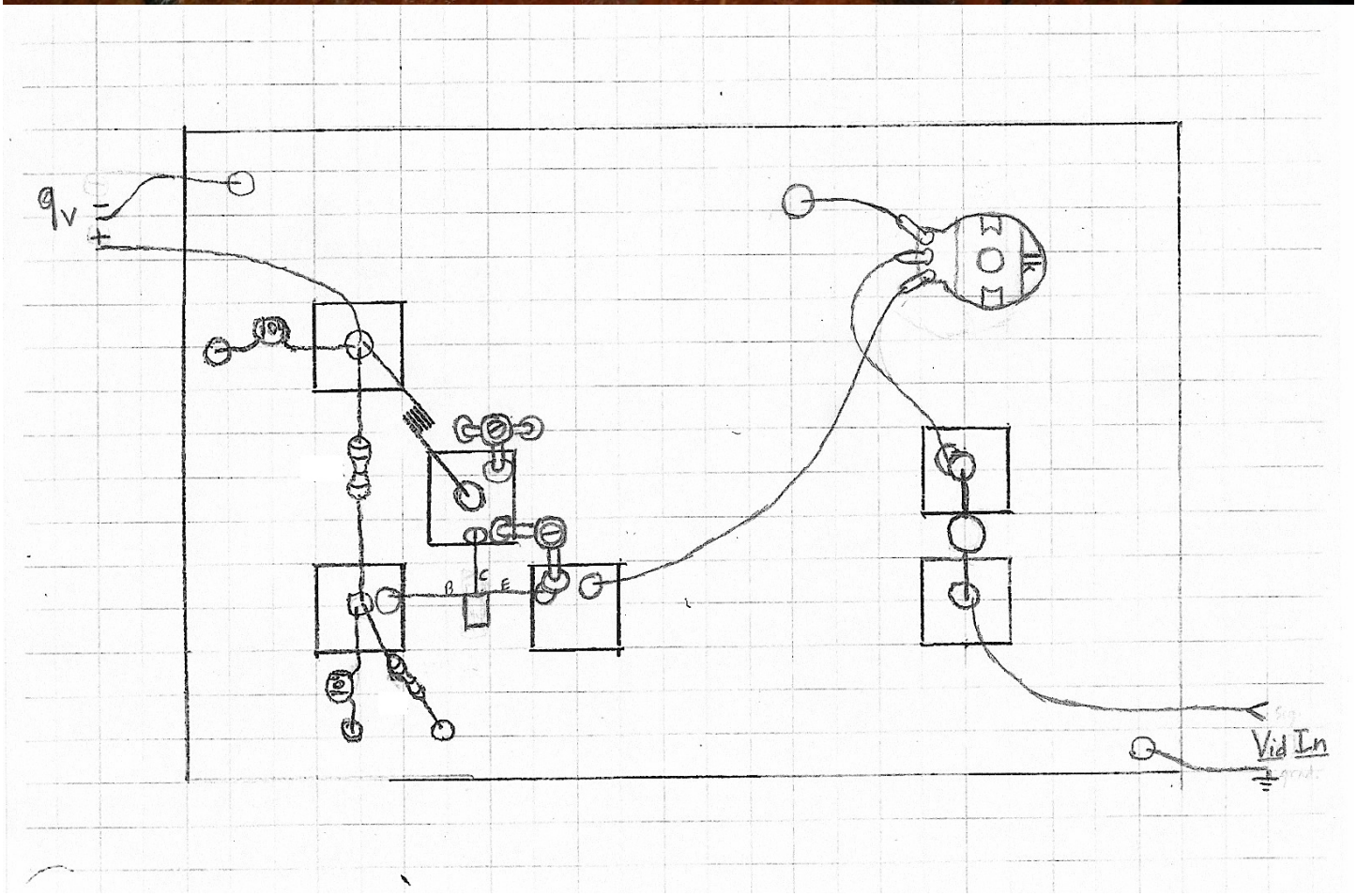

11. ADDING THE ANTENNA

- Cut about 2 feet of wire and strip one end.
- Solder the wire to the right most square of the triangle.

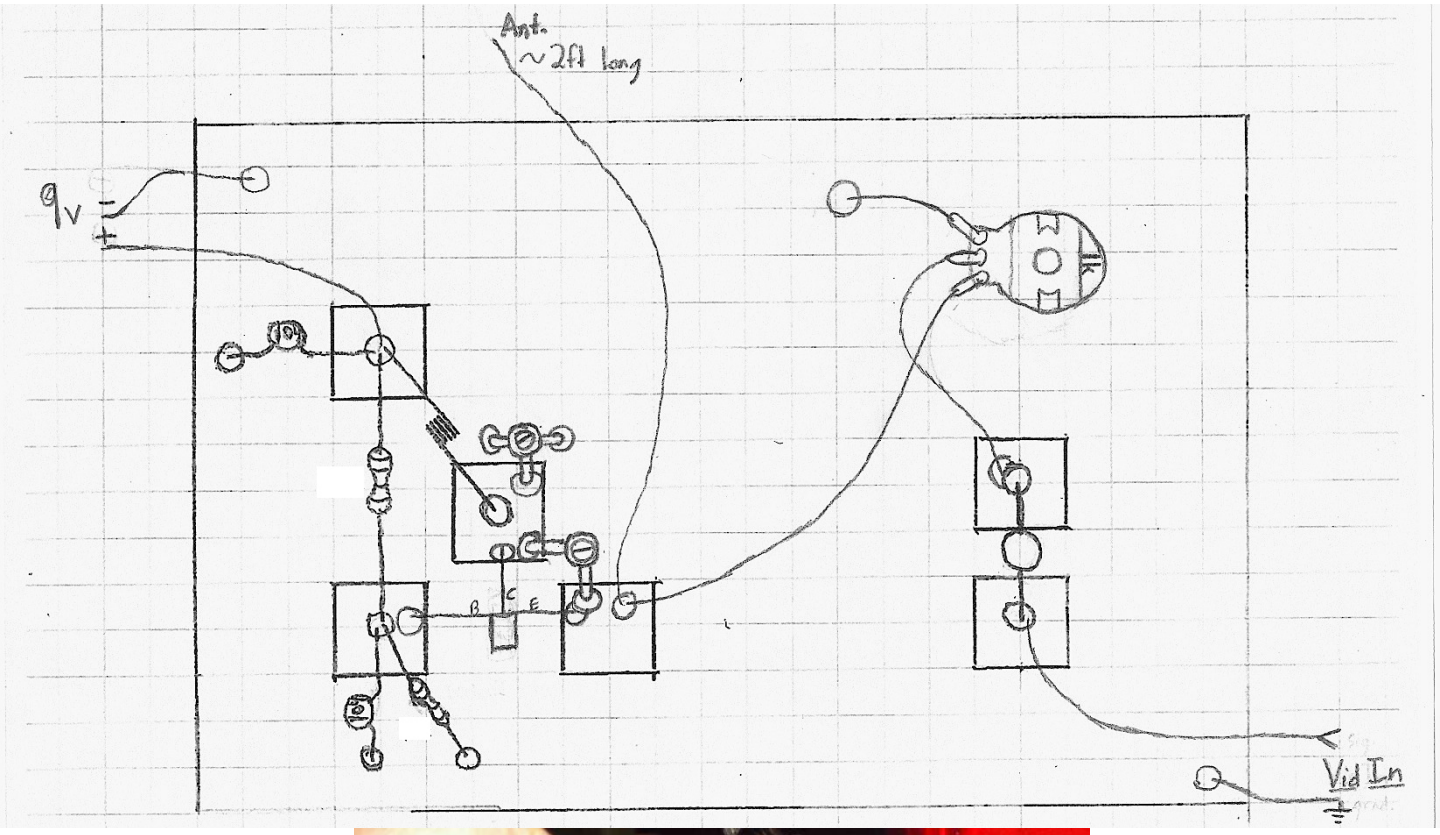

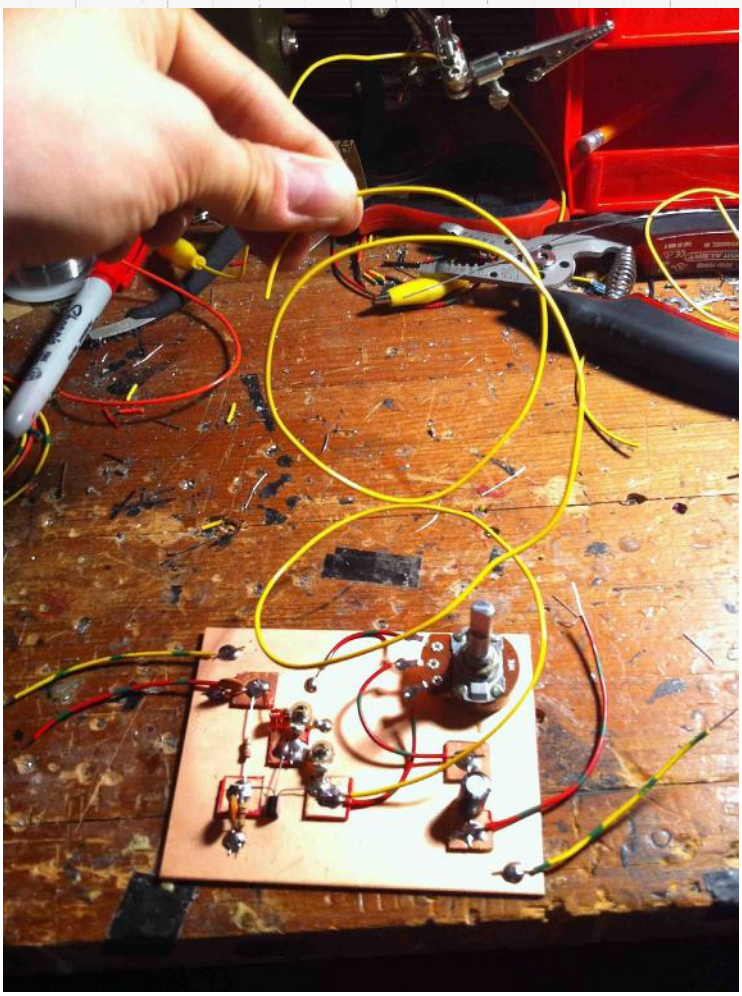

OPERATING

- Find a video source (DVD player, VHS player, iPod etc.) that has a composite video output.
- Use an alligator clip lead to connect the ground from your video source to the ground input of the transmitter. Using another alligator clip lead, attach the signal output from your source to the signal input of the transmitter.
- Use two more alligator clips to connect the positive and negative of a 9v battery to the positive and negative battery inputs of the transmitter.
- Turn on a CRT “tube style” TV and tune it to channel 2 or 3.
- Turn your potentiometer to somewhere around 50%
- Using a small screwdriver, tune the upper most variable cap slowly until you see the TV make a flicker or change.
- Tune the second variable capacitor until you start to see some strong signal coming through
- Tune the potentiometer and the two variable capacitors until you get the imagery you wan

Send any comments, questions or suggestions to yaktronix.online@gmail.com

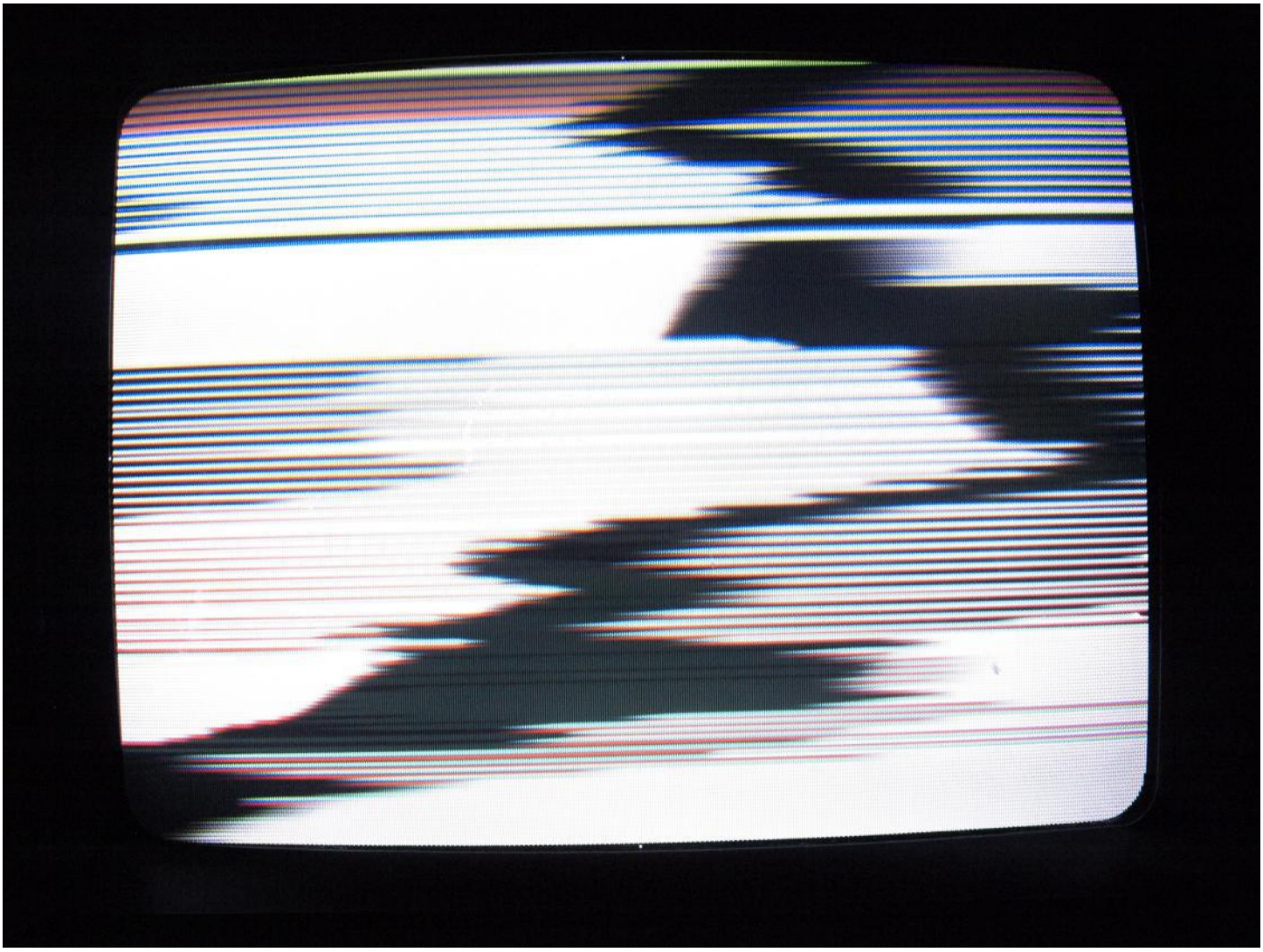

Ugly/Ground Plane Construction

The Method I Use in Building My Simple Receivers

Oct. 7, 2006 by Rick Andersen, KE3IJ

Occasionally I get emails from readers who want to know how I build these simple radio receiver circuits on an "L-shaped chassis" without cutting and scoring the copper, what I mean by "L-shaped chassis," or "what's all this about 10 megohm resistors?", etc. I tend to forget that not everybody has done this before, and I usually take it for granted that the reader is an accomplished "basement-tinkerer" and should therefore be able to just look at a schematic diagram and then come up with his own layout and method of construction. Sorry if I have annoyed anyone -- that wasn't my intention.

When I first design a circuit, I make what a friend of mine used to refer to as a "spider" (or, "spider-web")-- basically just construct the circuit by soldering the components together, lead by lead, into a reasonable facsimile of the schematic (no chassis or pc board necessary-- the stiffness of the soldered leads themselves hold the "spider" circuit together). This method is quick, and allows me to modify things fairly easily. It also grows rather quickly into a "haywire monstrosity" if I allow it.

Sometimes I do use a piece of copper-clad pc board as a ground plane, even during the "spider" stage, as the photo below illustrates:

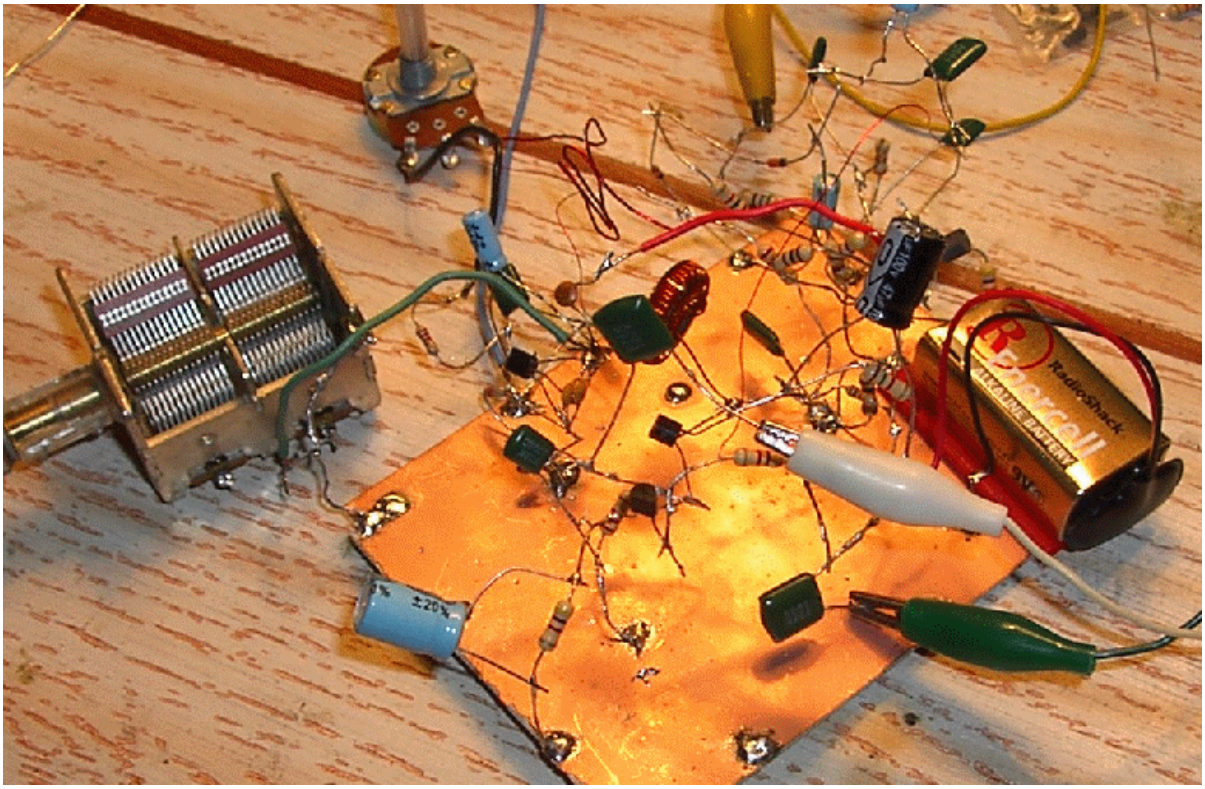

A "haywire" mess of my "AGC-80" Regen receiver in its early, experimental stage

To make things a bit clearer to you who have never built projects in this way before, I have attempted a free-hand diagram using Microsoft "Paint", which I converted to a .gif file and which you see below.

In the top-center of the diagram is the schematic for a simple common-emitter audio amplifier stage. The left side of the diagram illustrates how one might translate that schematic into an actual circuit on the copper-clad pc board. At right is a diagram of the "L-shaped Chassis." This is the style in which I build most of my circuits.

Basically, I use 2 pieces of 5x7 inch copper-clad pc board, available in the USA at **Radio Shack** [free plug]. One piece lies flat (the bottom piece), which is what I have shown in the diagram. I build my circuit on this bottom piece, using the copper floor as my ground connections ("ground plane"). Any resistors, caps, etc., that go to ground in the schematic, are literally soldered to this bottom ground plane and stood upright. At their top ends, the rest of the circuit is soldered, suspended up above the ground plane. Anywhere that I think I need some mechanical stability, I use a vertical 10 Megohm resistor, which acts to prop up and support the rest of the wiring above the ground plane. For most of the circuits I build, 10 Megohms is much higher a resistance value than any of the resistors in the circuit itself; therefore, the circuit pretty much ignores the 10M "posts", electrically, and they remain simply a mechanical "standoff insulator". The 2nd piece of copper clad board is drilled for switches, potentiometers, tuning caps, and earphone jacks, etc., and then is soldered at right

angles to the flat bottom piece, making an "L-shaped chassis". It also helps to solder triangular pieces of copper-clad board as mechanical braces, at the corners where the front panel is soldered to the bottom ground plane.

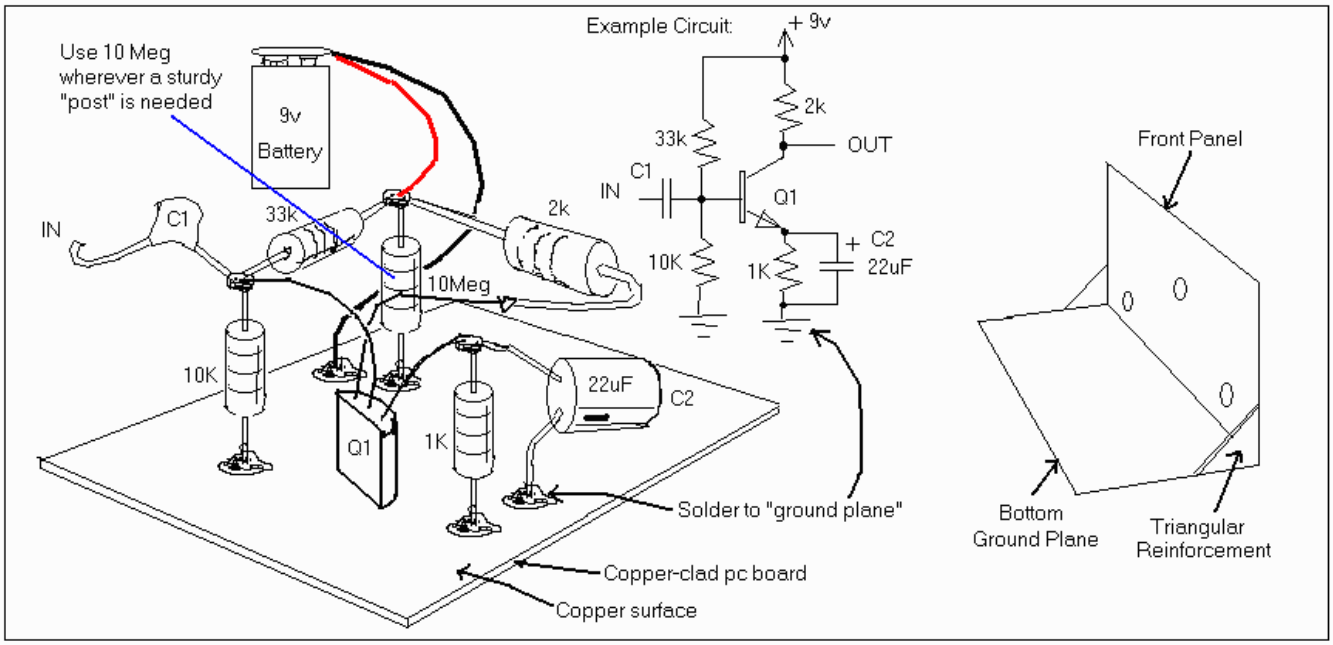

Below is a photo of my 2006 creation, the "AGC-80", a Regen receiver for the 80 Meter ham band with audio-derived AGC. There's an article on this receiver elsewhere on this website; meanwhile, notice that it is built in the same way outlined above-- an "L-shaped" chassis made of a bottom piece of copper-clad board, soldered to a vertical piece of the same kind of board which is the front panel. [I also added a back wall to hold the antenna jack, and a right wall to hold the audio output jack, as well as a triangular reinforcement piece of copper-clad, at bottom-left between the front panel and bottom piece, although you can't see it in this photo.]

To the right of the AGC-80 is the infamous Radio Shack/Archer little beige Amplified Speaker that I'm always mentioning. I may knock Radio Shack for other reasons [for example, that they have pretty much left us hobbyists behind, and have become just another consumer electronics store] but I will always say good things about their little $12.95 beige-colored Amplified Speaker. It works like a charm for the kind of projects I build. I also run an audio cable out of the Radio Shack amp to a bigger speaker, for better-quality sound-- in the photo you can see a white "Optimus" computer speaker pressed into this service. While the Radio Shack's speaker does a fine job, the Optimus sounds quite a bit louder and way nicer. Of course, you may argue that a *real* Electronics Geek rolls his *own* audio amp rather than rely on a commercially-made, external one. Well, I'm often too impatient to build the audio power amp myself, after having spent hours or days getting the RF part of the radio to work the way I want. Also, homemade audio amps tend to oscillate (squeal, motorboat, howl) in mysterious ways once lovingly installed on the same circuit board as the RF circuitry.... After a while one grows tired of trying 50 ways to make it happy, and would rather just hook up an Amplified Speaker and be done with it.

To each his own.

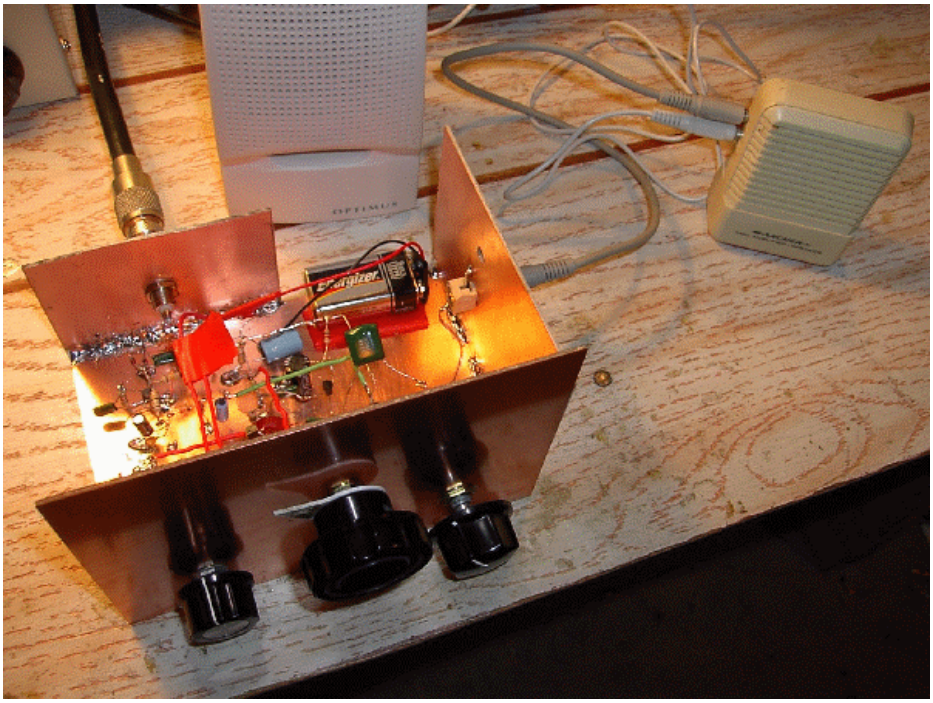

Please realize that you don't have to follow this method of construction (usually called "Ugly Construction" by hams), but I would advise you to make sure there is some equivalent of a copper ground plane in most of your radio projects... it helps to shield the circuit from outside influence (particularly when connected to earth ground) and contributes to stability.

I hope this has helped to give you a little better idea of the methods I use!
73 de Rick, KE3IJ

Back

Issue date:14th June 2012

FREE-ENERGY:

NIKOLA TESLA SECRETS FOR EVERYBODY

by **Vladimir Utkin** u.v@bk.ru

FIRST SECRET

All of Tesla's secrets are based on

ELECTROMAGNETIC FEEDBACK

EXPLANATION: An ordinary energy system comprises a generator and motor (common view), and can be completed with an electric current feedback as shown here in electrical circuit (a)

NO FREE-ENERGY

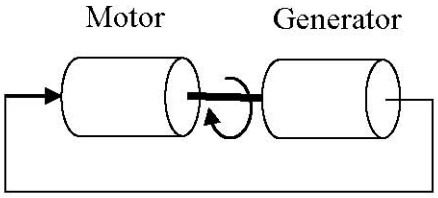

(a)

Electrical feedback

FREE ENERGY IS POSSIBLE

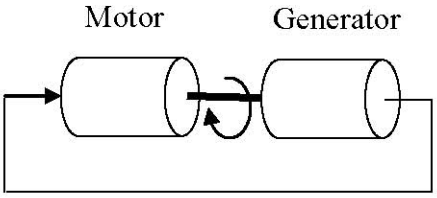

(b)

ElectroMagnetic field feedback

In case (a), the system once started, will slow down and stop because of friction, resistance and so on. Nikola Tesla arranged a feedback loop for the electromagnetic field: case (b), and he said:

ELECTROMAGNETIC FIELD FEEDBACK DESTROYS THE INTERACTION SYMMETRY

This means that an action no longer has an equal and opposite reaction

In case (b), once started, the system will accelerate in spite of friction, resistance and so on (provided that the phase of the electromagnetic feedback is positive and is sufficiently large). In order for an electromagnetic field to exist in a motor, there must be some energy input, and Tesla said:

ENERGY GENERATION BY IT'S OWN APPLICATION

QUESTION: How can you produce positive electromagnetic field feedback?

AN ANSWER: The simplest and well-known example is Michael Faraday's unipolar motor, as modified by Nikola Tesla:

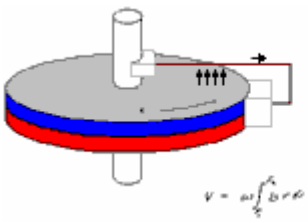

(a)

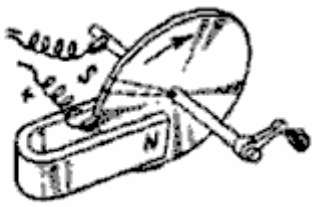

(b)

An ordinary unipolar motor consists of a magnetised disk, and a voltage applied between the axis and a point on the circumference of the disc as shown in (a) above. But an ordinary unipolar motor can also consists of an external magnet and a metal disc with a voltage applied between the axis and a peripheral point on the disc as in (b) above. Tesla decided to modify this version of the unipolar motor. He cut the metal disc into helical sections as shown here:

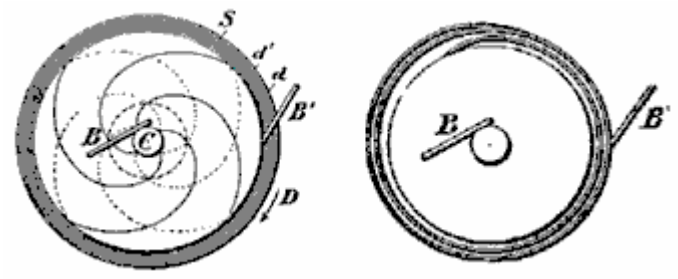

In this case, the consumption of current produces an additional magnetic field along the axis of the disc. When the current-carrying wires are tilted in one direction, their magnetic field augments the main external magnetic field. When the wires are tilted in the other direction, their magnetic field reduces the main external magnetic field. So, the current flow can increase or reduce the external magnetic field of the unipolar motor.

Amplification is not possible without applying power

If it is possible to arrange a magnetic field feedback loop for mechanical devices, then it is probably possible to arrange it for solid-state devices like coils and capacitors.

The others parts of this article are devoted to devices which use coils and capacitors. All of the examples in this article are only intended to help your understanding of the principles involved. Understanding would be made easier if we pay attention to the ferromagnetic shielding of the second coil in the transformer invented by Nikola Tesla:

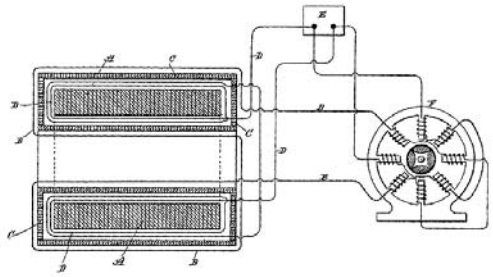

In this case, the ferromagnetic shield separates the first and second coils in the transformer from each other, and that shield can be used as magnetic field feedback loop. This fact will be useful for understanding the final part of this article. It is also helpful to consider the properties of the electrostatic field.

ELECTROSTATICS

(scalar field and the longitudinal electromagnetic waves)

Comment: Mr. Tesla said, "there is radiant energy, perpendicular to the surface of any charged conductor, produced by a scalar electromagnetic field, thus giving rise to longitudinal electromagnetic waves".

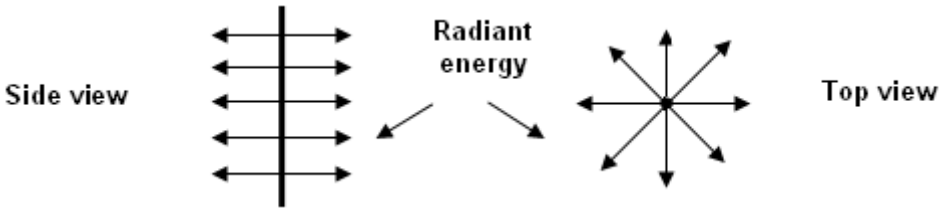

At first glance, this contradicts the age-old experience in studying the electromagnetic field (according to modern concepts, any electromagnetic field has components which are perpendicular to the direction of the propagated

electromagnetic wave), also, Maxwell's equations describe an electromagnetic field as a vector. However, the first impression is erroneous, and no contradiction exists.

Definitions of Physics: Any conductor has both inductance and capacitance, that is, the ability to accumulate charge on it's surface. A charge on the surface of a conductor creates an electric field (electrostatic field). The potential (voltage) at any point of the electric field is a scalar quantity!!! (That is, it is a scalar electric field ...).

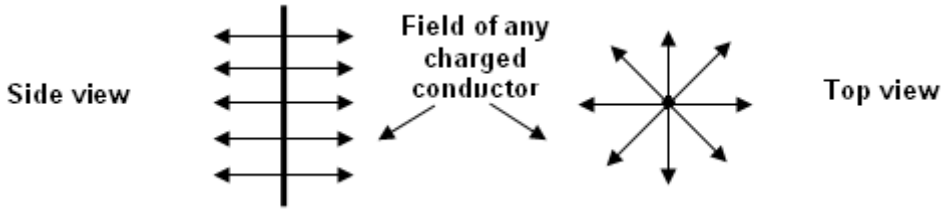

If the electric charge of the conductor varies with time, then the electrostatic field will also vary with time, resulting in the appearance of the magnetic field component:

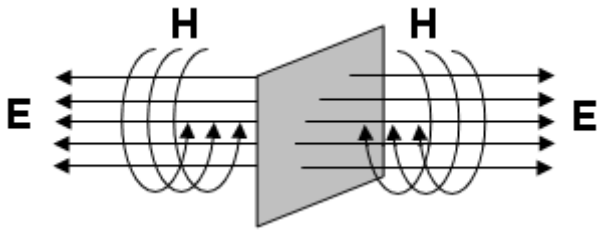

Thus, the electromagnetic wave is formed (with the longitudinal component of E ...).

REMARK: In order to understand how a longitudinal wave interacts with conductive bodies, one needs to read the section of electrostatics entitled "Electrification by Influence". Particularly interesting are Maxwell's equations where they mention the displacement current.

Now we come to the first secret:

SECRET 1

The power source in Nikola Tesla's free energy device, the amplifying transformer, is a

SELF-POWERED L-C CIRCUIT

EXPLANATIONS

An ordinary LC circuit – with decay

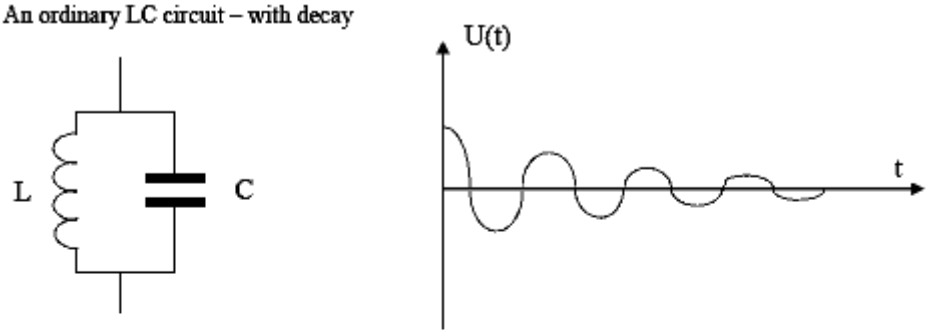

Nikola Tesla LC circuit – with amplification

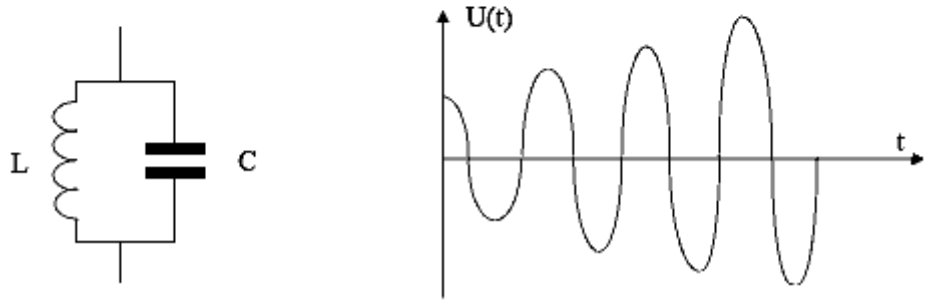

AN EXAMPLE OF UNLIMITED VOLTAGE RISE

(Based on batteries and a switch)

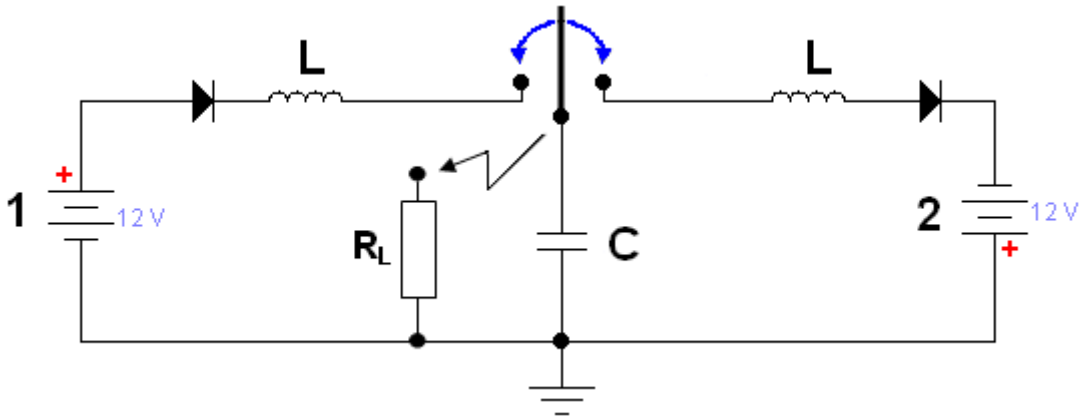

EXPLANATION: Batteries 1 and 2 are connected to the capacitor C alternately, through the inductances L. Voltage on capacitor C and the voltage from the batteries are increasing. As a result, there can be unlimited voltage rise. When the voltage on the capacitor reaches the desired level, it is connected to the load.

COMMENT: Two diodes were used to avoid synchronisation requirements. Manual or relay switching can be used. One implementation used a spark gap to connect the output load but a switch is an alternative method.

TIME LINE FOR THE PROCESS:

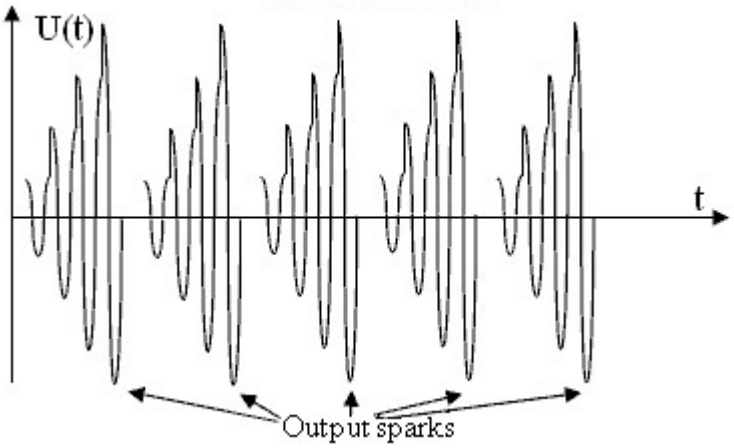

The schematics can be simplified, and only one battery used (load is connected in the same way).

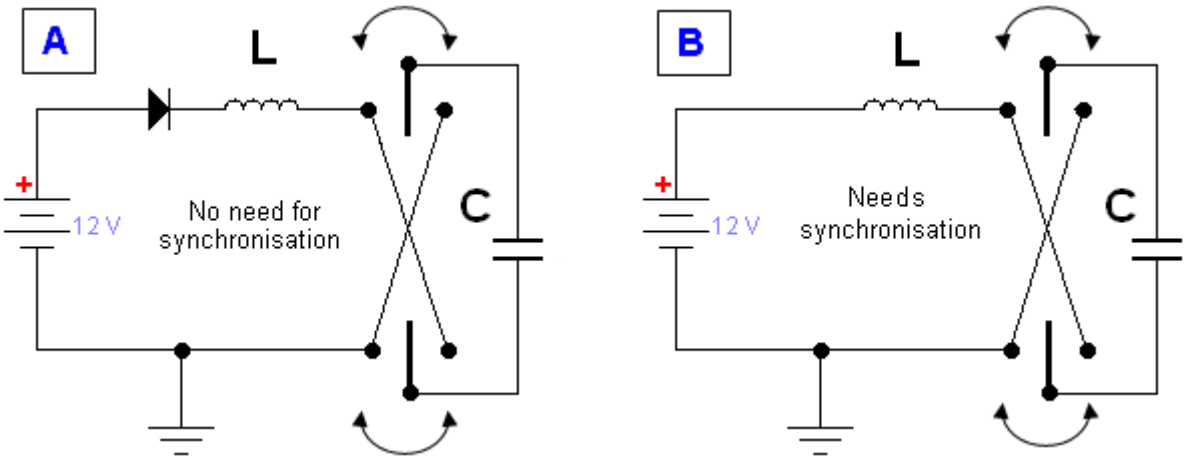

COMMENT: Maybe Alfred Hubbard used an idea shown as option B, in some versions of his transformer

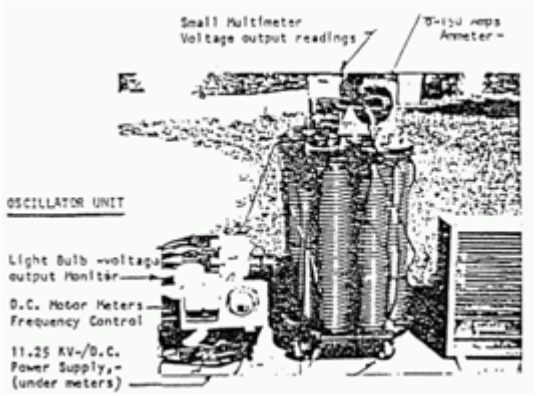

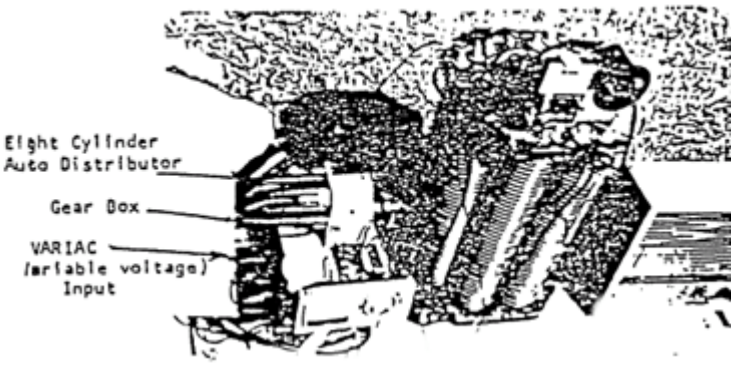

COMMENT: If you want to get a self-powered circuit, you have to arrange some kind of energy feedback to the batteries. But, is this an actual Free-Energy technology? I am not sure….

COMMENT: **Is this the only possible way?**
No, of course not - there are different ways of doing it. For example, you can use fields inside and outside of some LC circuits. How can we do that?

For more secrets read the following parts…

HOW DO WE GET THIS RESULT?

AN ANSWER

You need to charge the capacitor using the electric component of the electromagnetic field of the inductor (using the displacement current of Maxwell's equations)

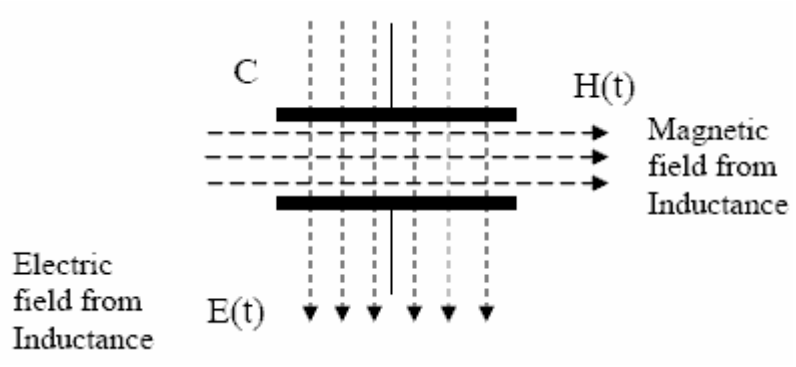

EXPLANATION

When the electric field in capacitor C is decaying, due to feeding electrical current into an inductor (not shown), the external electric field generated by the inductor tries to charge this capacitor with the inductor's displacement current. As a result, the capacitor draws energy in from the surrounding electromagnetic field, and the capacitor's voltage rises cycle by cycle.

IMPLEMENTATION A – a central capacitor is used:

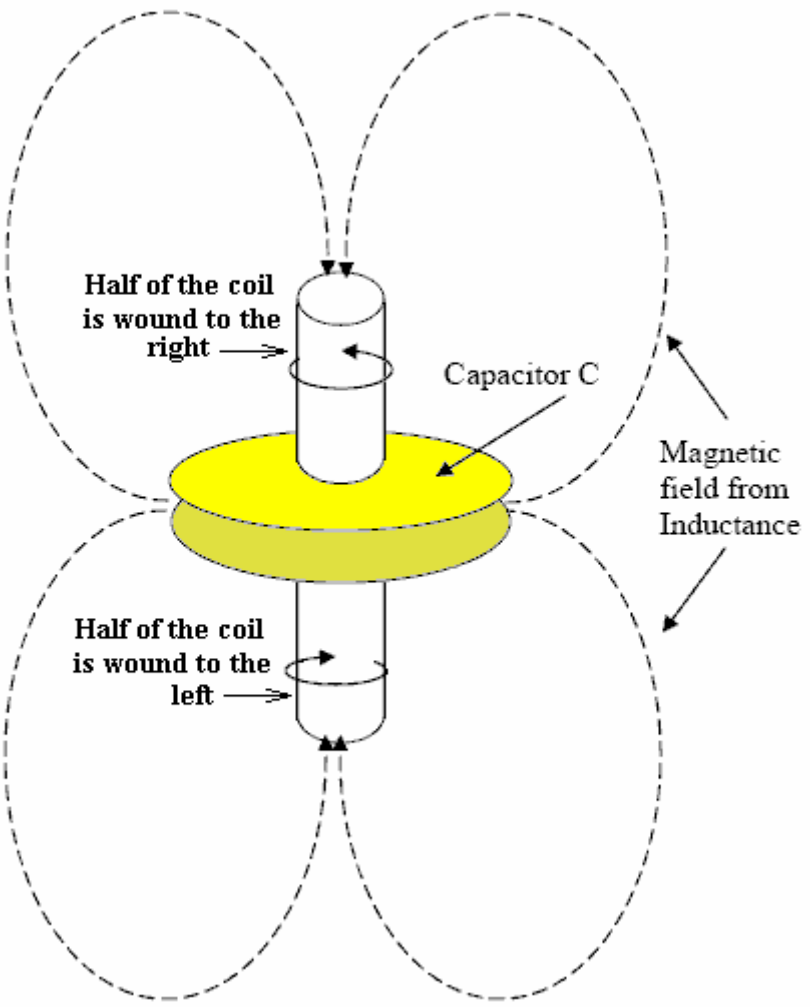

IMPLEMENTATION B – no capacitors are used:

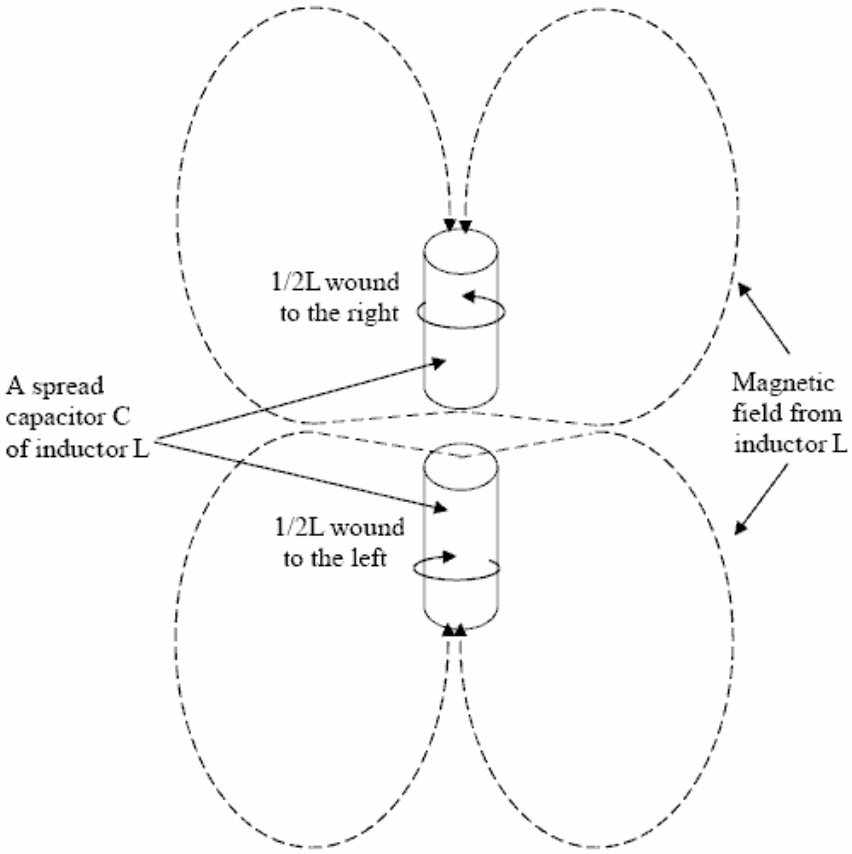

In this case instead of using a capacitor, the capacitance between the two sections of inductor L provides the necessary capacitance.

HOW DO WE START THE PROCESS?

In implementation A, you must charge the capacitor and connect it to the inductor to start the process.

In implementation B, you must use an additional pulsing or “kicking” coil, which starts the process by providing a pulse in either the electrical field or the magnetic field (shown later on).

HOW DO WE STOP THE PROCESS?

The process of pumping energy can continue uninterrupted for an unlimited length of time and so the question arises; how do you stop the device if you should want to?. This can be done by connecting a spark gap across the coil L and the resulting sparking will be sufficient to stop the process.

THE “KICKING” PROCESS USING AN ELECTRIC FIELD

Use an additional special “kicking” coil, which can generate short powerful magnetic pulses, and install an amplifying Tesla coil along the electrical vector of the electromagnetic field of this coil.

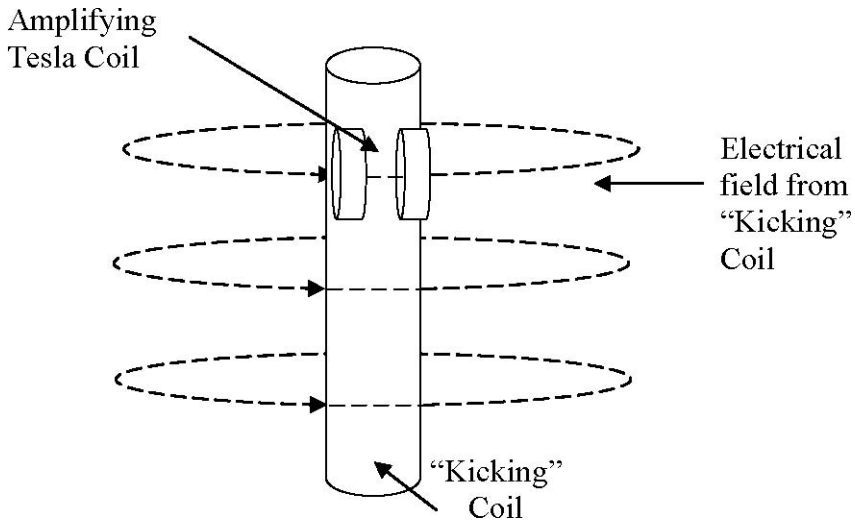

The electrical field of the driving pulse or "kicking" coil will charge the spread capacitors of the inductor, and the process will be started. Use pulses as short as possible in "kicking" coil, because the displacement current depends on the speed of the changes in the magnetic field.

THE "KICKING" PROCESS WITH A MAGNETIC FIELD

It is not possible to "kick" the process by displacement of the amplifying Tesla coil in the uniform changing magnetic field of the "kicking" coil, because the output voltage on the ends of the Tesla amplifying coil will be equal to zero in this case. So, you must use a non-uniform magnetic field. For that you must install a "kicking" coil, not in the centre of the amplifying Tesla coil, but positioned away from the centre

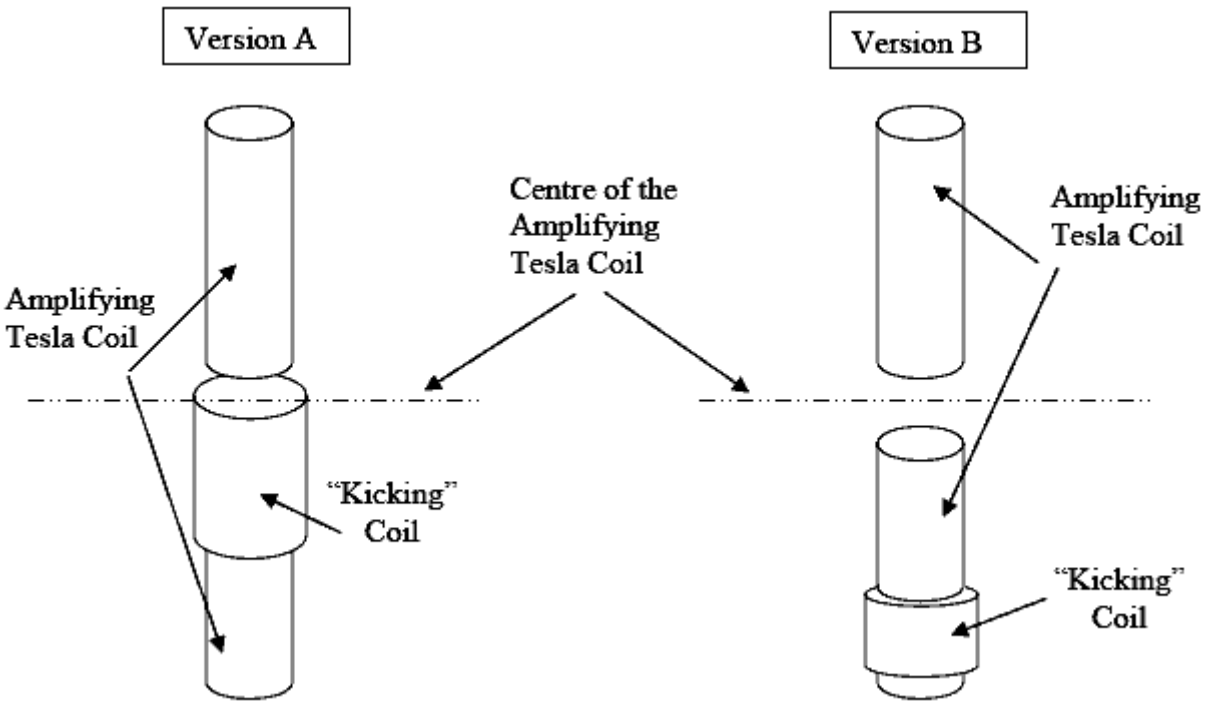

IS THAT ALL TRUE, AND THE BEST TECHNIQUE TO USE?

No, it is not! Nikola Tesla found more subtle and more powerful method – his bi-filar pancake coil!

BI-FILAR PANCAKE COIL – MAY BE THE BEST METHOD

The voltage between adjacent turns in an ordinary coil is very low, and so their ability to generate additional energy is not good. Consequently, you need to raise the voltage between adjacent turns in an inductor.

Method: divide the inductor into separate parts, and position the turns of the first part in between the turns of the second part, and then connect end of the first coil to the beginning of the second coil. **When you do that, the voltage between adjacent turns will be the same as the voltage between the ends of the whole coil !!!**

Next step – rearrange the position of the magnetic and electric fields in the way needed for applying amplifying energy (as described above). The method for doing this is – the flat pancake coil **where the magnetic and electric fields are arranged in exactly the way needed for amplifying energy.**

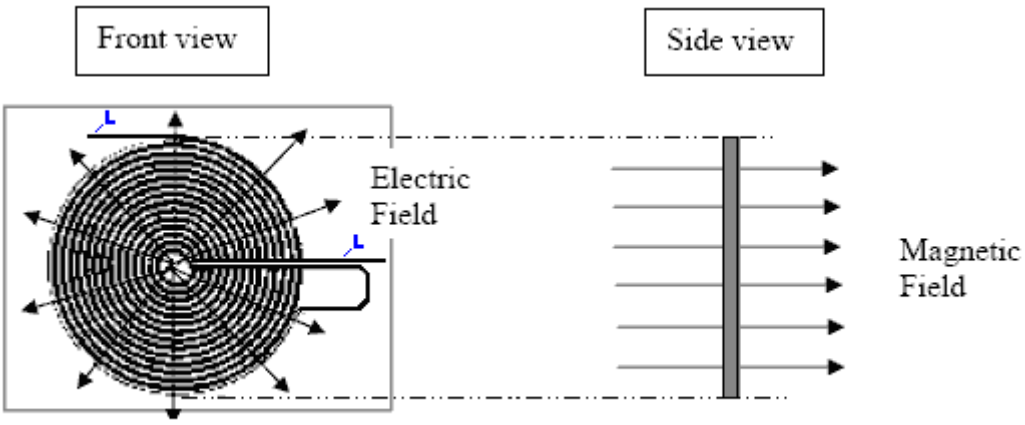

Coil for electromagnets

Now, it is clear why Tesla always said that his bi-filar pancake coil was an energy-amplifying coil !!!

REMARK: for the best charging of the natural self-capacitance of the coil, you have to use electric pulses which are as short as possible, because the displacement current as shown in Maxwell's equation, depends to a major degree on the speed of the change in the magnetic field.

THE DUAL - LAYER CYLINDRICAL BI-FILAR COIL

Instead of the standard side-by-side cylindrical bi-filar coil, the coil winding may also be arranged in two separate layers, one on top of the other:

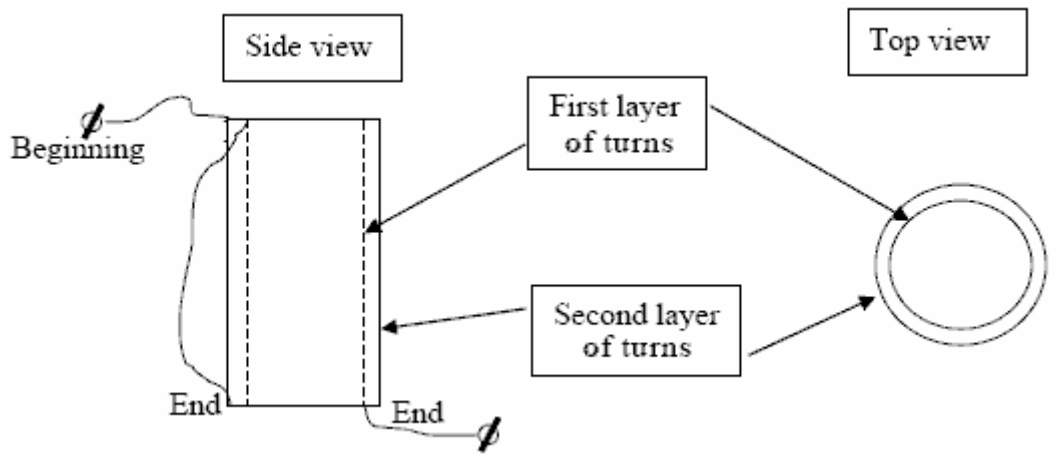

THE ELECTRO – RADIANT EFFECT

(Inductance in an electrostatic field)

EXPLANATION

The primary coil in Tesla's transformer is the first plate of the capacitor. The secondary coil - is the second plate of the capacitor.

When you charge a capacitor C from your source of energy, you charge a wire of the primary coil also. As a result, a wire of the secondary coil is charging also (as a return from ambient space).

In order to start the process, you have to remove charge from the primary coil (by arranging a jump in potential in ambient space). When this is done, a huge displacement current occurs – as a result of that potential jump. Inductance catches this magnetic flux, and you have energy amplification.

If this process is operating, then you generate a magnetic field in ambient space.

COMMENT: The capacitance of the wire of the primary coil is very low, and so it takes very little energy to charge it, and a very short spark to discharge it (without removing charge from the capacitor C).

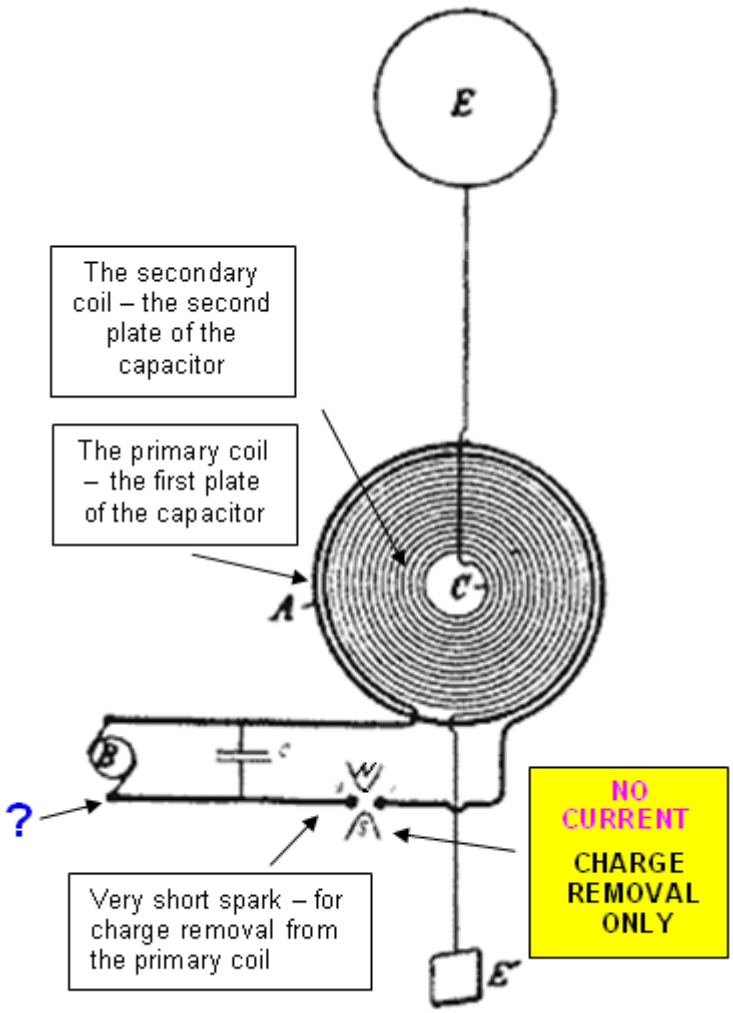

Tesla's Magnifying Transmitter

COMMENT: Notice that the spark gap **must be** connected to the ground as, in my opinion, this is a very important feature of this process, **but Mr Tesla did not show grounding**. Perhaps this needs to be a separate grounding point.

REMARK: In my opinion, this technology was also used in Gray's device and in Smith's devices and in both cases **the spark gap was connected to the ground**.

ALSO:

Pay attention to the words used in Gray's patent "…. for inductive load".

And, pay attention to Smith's words "I can see this magnetic field, if I use a magnetometer".

MODERN IMPLEMENTATIONS

in self-powered L-C circuits

EXAMPLE 1

Using a bi-filar coil as the primary coil in a resonant Tesla transformer

By Don Smith

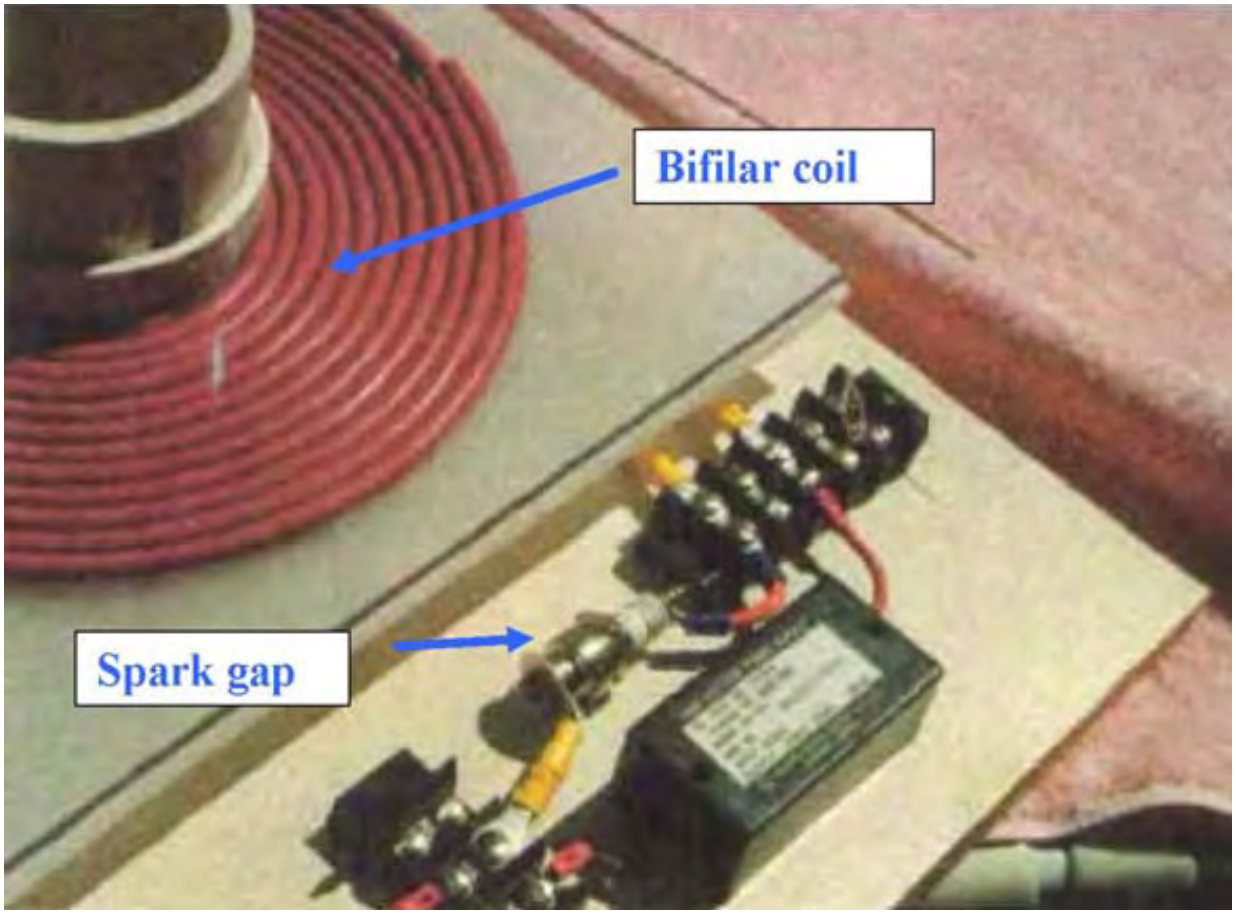

Explanation: The bi-filar primary coil is used as primary for energy amplification, and is pulsed through the spark gap.

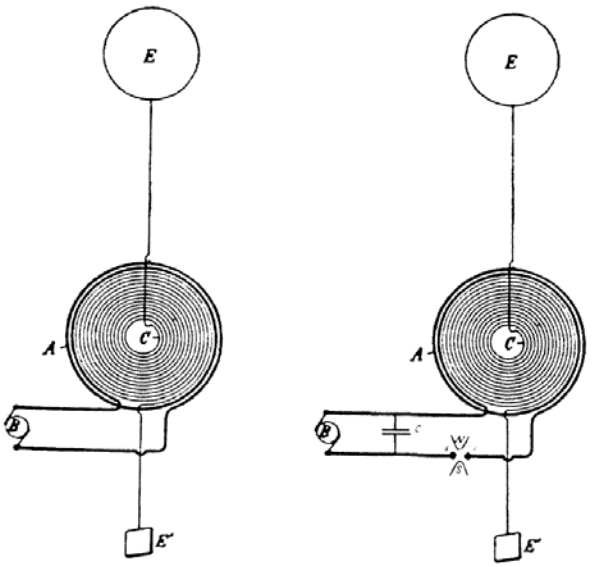

Tesla's Magnifying Transmitter

EXAMPLE 2

By Mislavskij

Is comprised of two capacitor plates sandwiching a ferrite ring core with a coil wound on it:

EXPLANATION

When a capacitor is charging (or discharging), this "displacement" current flow generates a magnetic field in the vacuum in a circular form (Maxwell's equations). If a coil is wound on a ferrite toroid placed between the plates of the capacitor, then a voltage is generated in the turns of that coil:

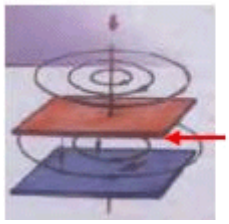

Circular magnetic field

Output power

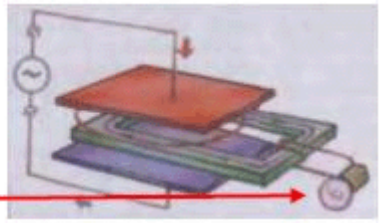

Also, if an alternating current is applied to the coil wound on the ferrite toroid, then voltage is generated on the capacitor plates.

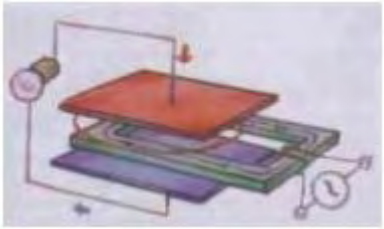

If an inductor and a capacitor are combined in an L-C circuit, then there are two cases inside such an L-C circuit:

a) energy amplification and **b) energy destruction**

The situation depends on how the coils and capacitor are connected together

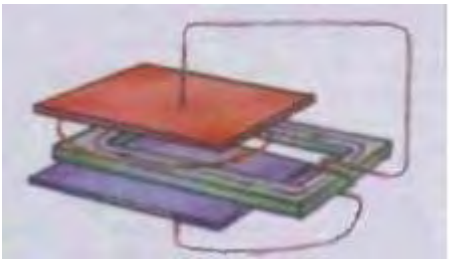

Energy Generation

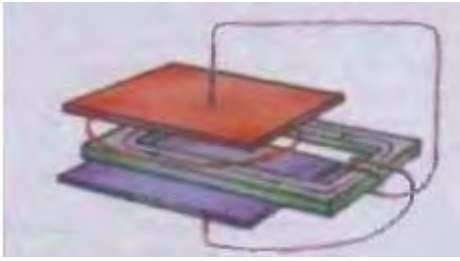

Energy Destruction

COMMENT: If the direction of the turns in the coil wound on the ferrite core is reversed, then the wires connecting the coil to the capacitor plates need to be swapped over as well.

The first experiments with a ferrite core inside a capacitor were made in 1992 by Mislavskij (a 7th-year pupil of the Moscow school), and so it is known as "Mislavskij's transformer".

PROTOTYPE TRANSFORMER:

THE SAME APPROACH?

By Don Smith

In this arrangement, the capacitor is charged by sparks and powerful displacement current is produced. The transformer with the ferromagnetic core is collecting this current.

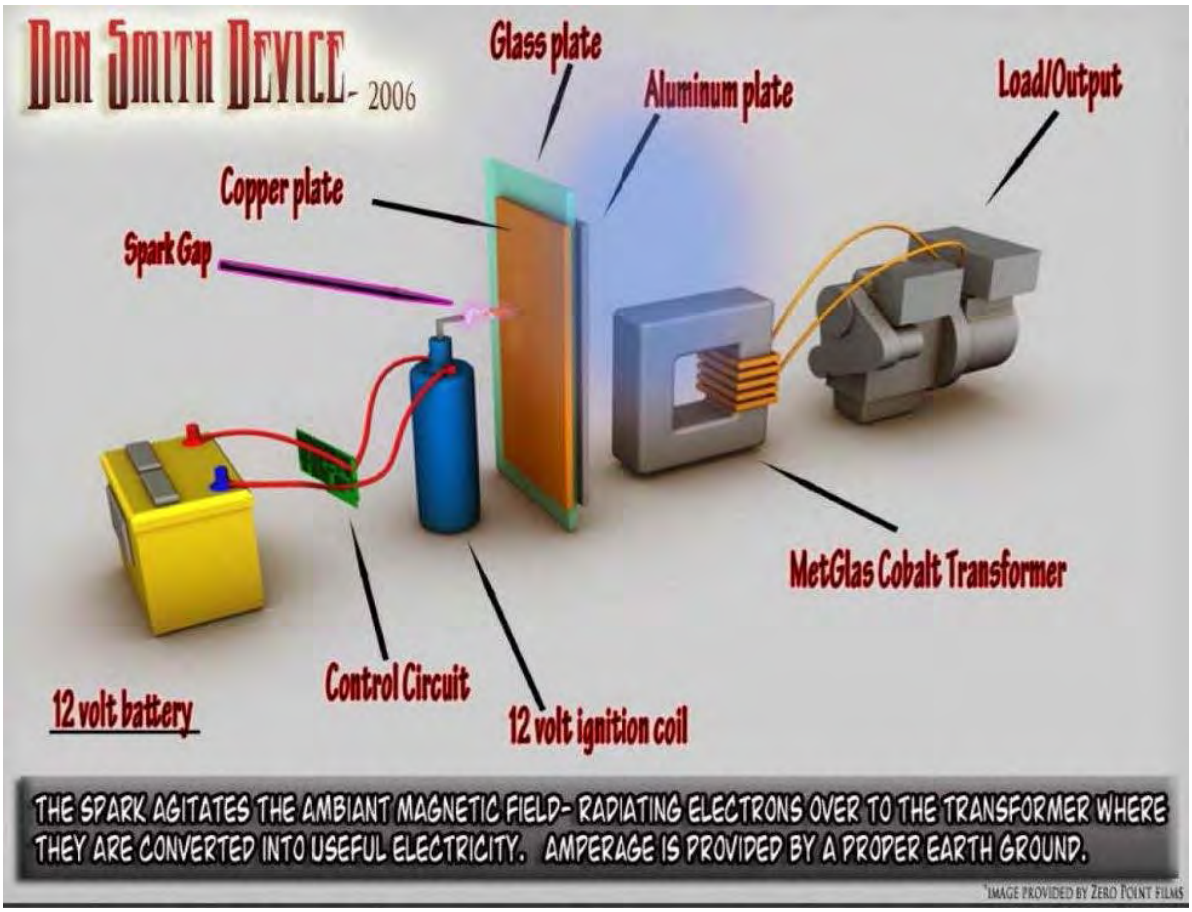

COMMENT: This schematic diagram is very rough, and lacking in details**.** It will not perform correctly without back-electromagnetic force suppression of some kind (see below).

SECRET 1.1

Back-EMF suppression in a resonating Tesla coil

Version 1

The primary and secondary coils, and the ground connection in this Tesla coil are arranged in special manner:

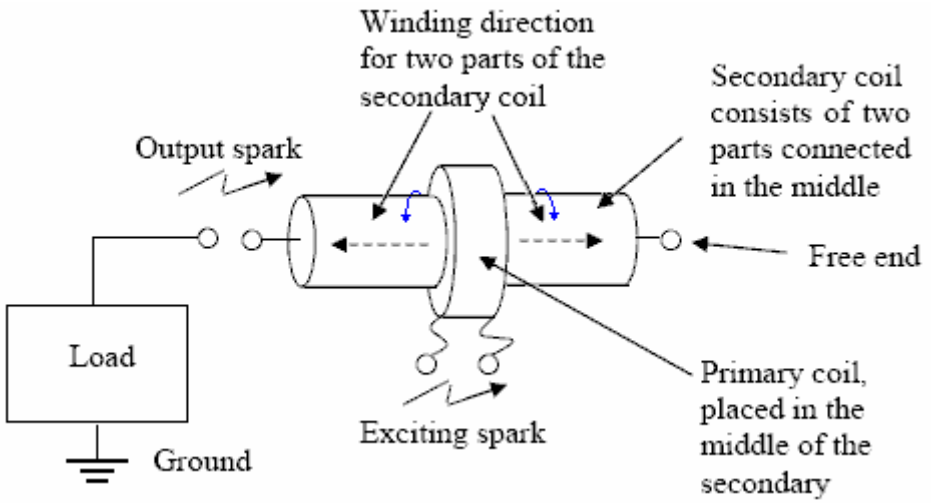

Explanation: The exciting (driving) current and the load current in an electromagnetic field, are perpendicular to each other as shown here:

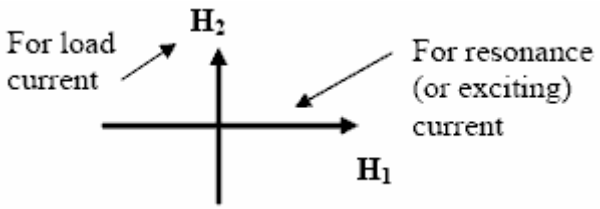

COMMENT: In order to get an energy gain, the frequency of excitation of the primary coil must be the resonant frequency of the secondary coil.

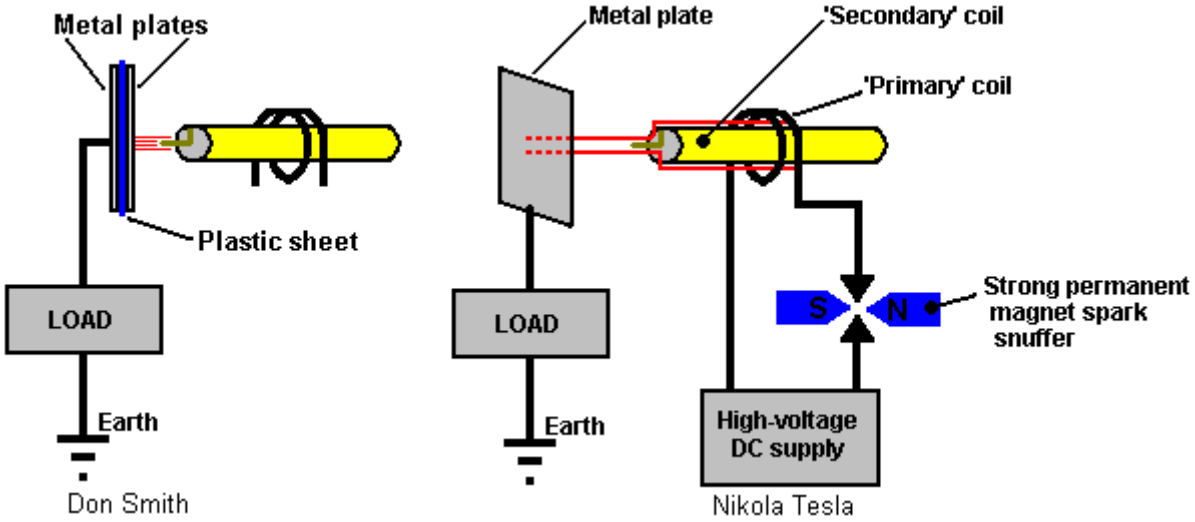

COMMENT: Excitation with just a single spark is possible.

COMMENT: In Mr. Tesla's terminology, this is pumping charges or charge funneling, the charge is coming from the ground (which is a source of energy).

POTENTIAL (VOLTAGE) DISTRIBUTION ON THE COIL

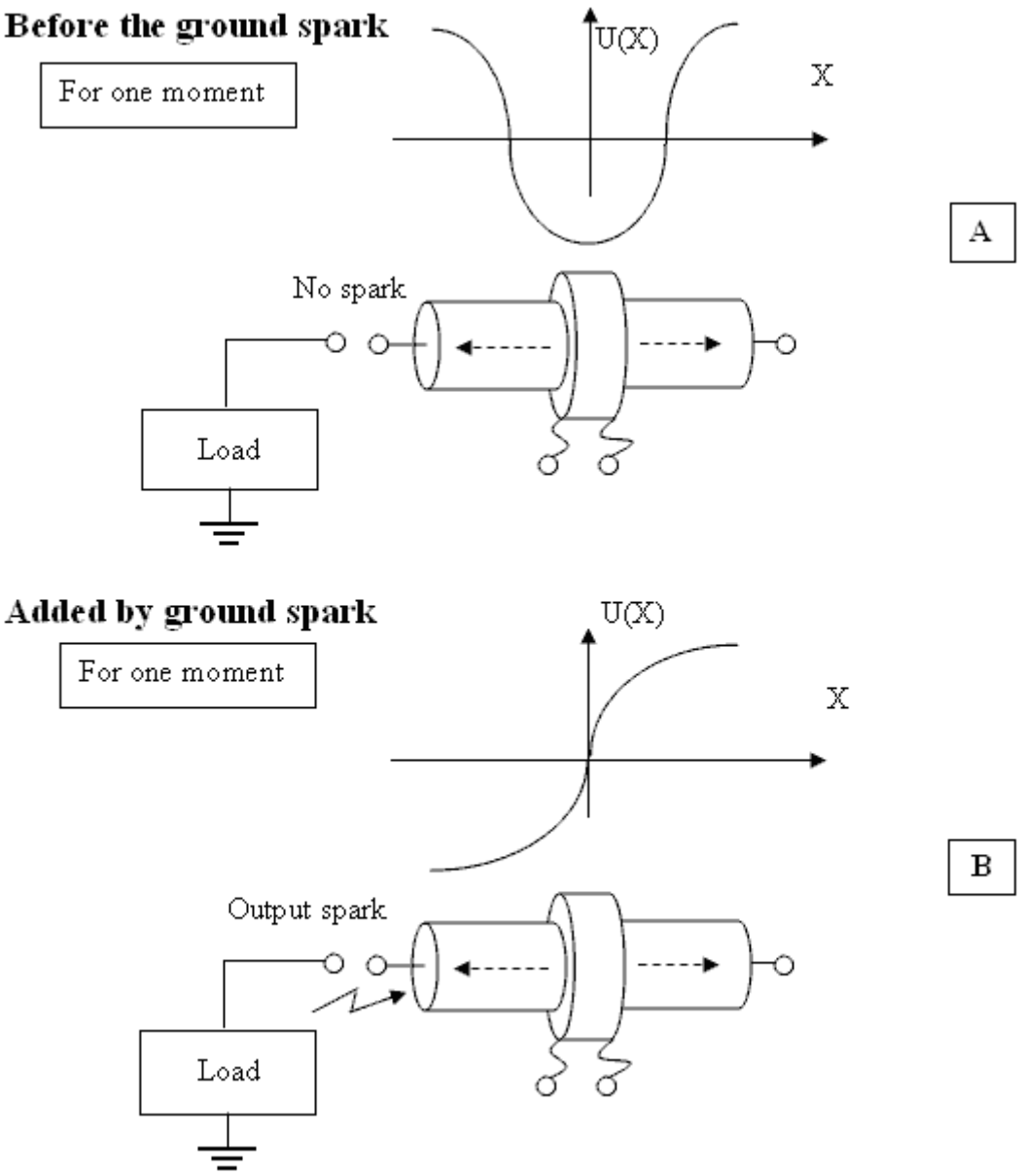

Prototype Coil

EXPLANATION The task of the oscillating circuit is to create a local electromagnetic field with a large electrical component. In theory, it would only be necessary to charge up the high voltage capacitor just once and then a lossless circuit would maintain the oscillations indefinitely without needing any further power input. In reality, there are some losses and so some additional power input is needed.

THESE OSCILLATIONS ACT AS A "BAIT", ATTRACTING CHARGE INFLOW FROM THE LOCAL ENVIRONMENT. Almost no energy is needed in order to create and maintain such a "bait"...

The next step is to move to this "bait" to one side of the circuit, close to the source of the charges which is the Ground. At this small separation, breakdown occurs and the inherent parasitic capacitance of the circuit will be instantly recharged with energy flowing into the circuit from outside.

At the ends of the circuit there will be a voltage difference, and so there will be spurious oscillations. The direction of this electromagnetic field is perpendicular to the original field of the "bait" and so it does not destroy it. This effect is due to the fact that the coil consists of two opposing halves. The parasitic oscillations gradually die out, and they do not destroy the "bait" field.

The process is repeated spark by spark for every spark which occurs. Consequently, the more often sparks occur, the greater the efficiency of the process will be. The energy in the "bait" experiences almost no dissipation, providing a much greater power output than the power needed to keep the device operating.

TESLA SCHEMATICS

COMMENT: Don Smith named this technology "Bird on the wire". The bird is safe on the wire until a spark occurs.

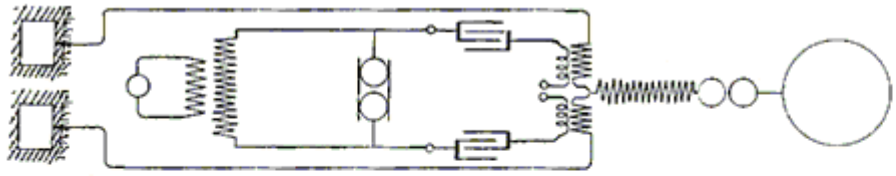

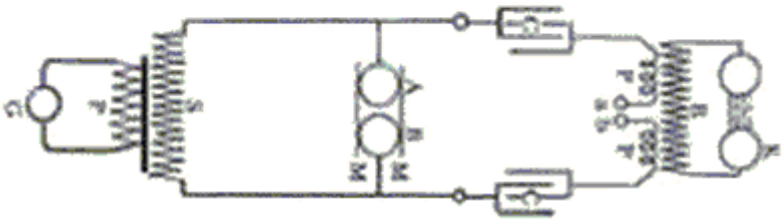

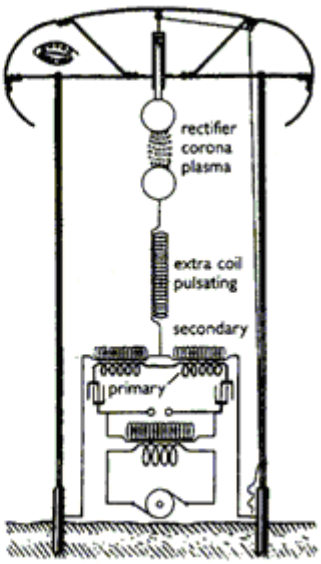

COMMENT: Mr. Tesla named this technology a "charge funnel" or "charge pump"

THE PRINCIPLE OF THE TECHNOLOGY

1. This Free-Energy device generates an AC electrical potential in ambient space ("bait" for electrons),
2. Electrons flowing through the load, flow in from the environment, attracted by this "bait" (pumped in)

NOT A SINGLE ELECTRON USED FOR EXCITING AMBIENT SPACE NEEDS TO FLOW THROUGH THE LOAD

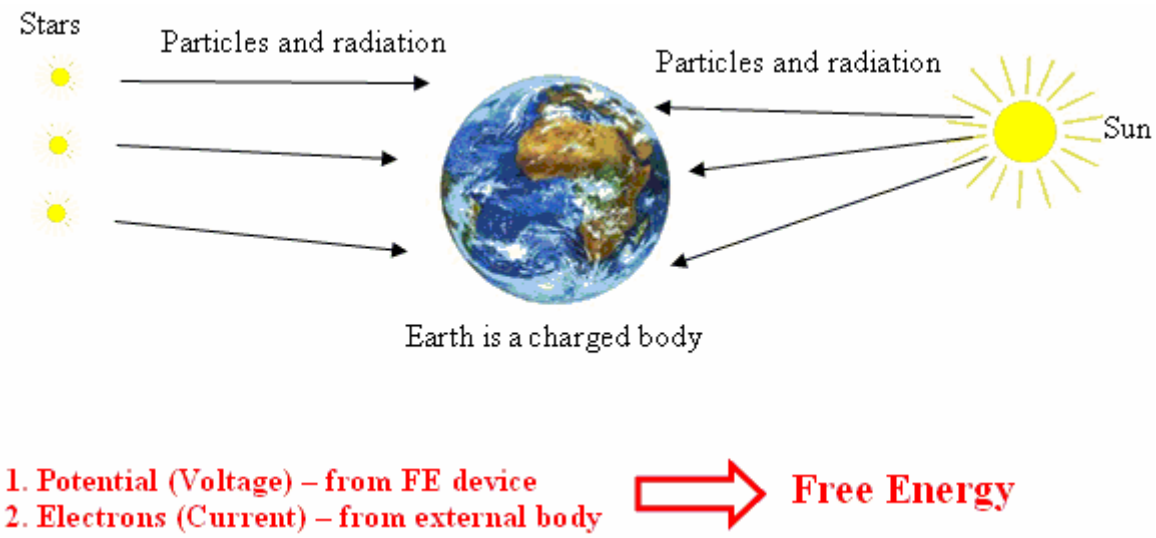

POSSIBLE DESIGN FOR THE “CHARGE PUMP” OR “CHARGE FUNNEL”

By Edwin Gray

Probable Schematic for Edwin Gray’s Cold Electricity Circuit

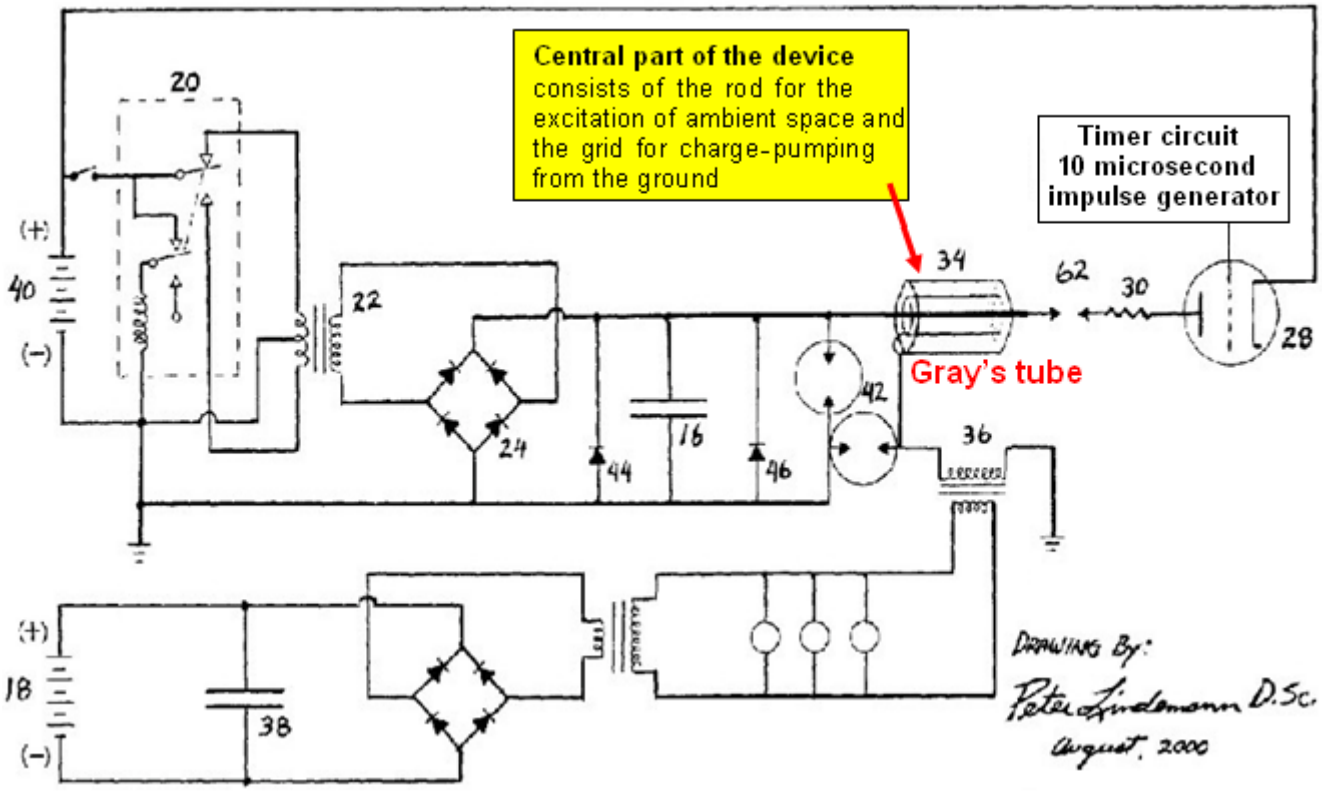

EXPLANATION: This schematic is a simplification of Gray’s patent, produced by Dr. Peter Lindemann for greater clarification in his book.

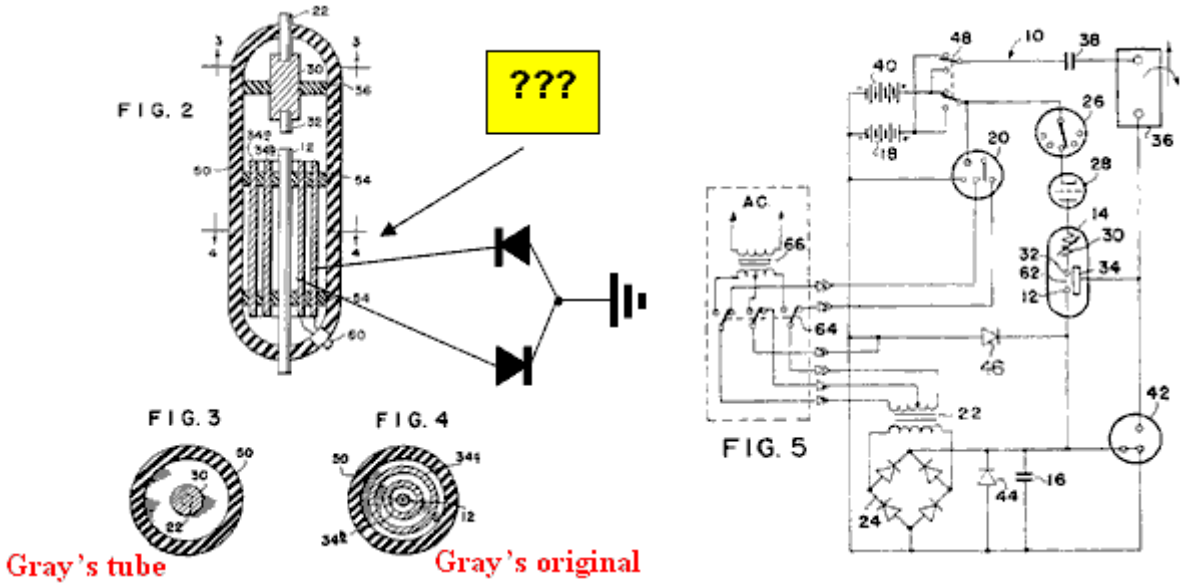

POSSIBLE DESIGN FOR THE "CHARGE PUMP" or "CHARGE FUNNEL"

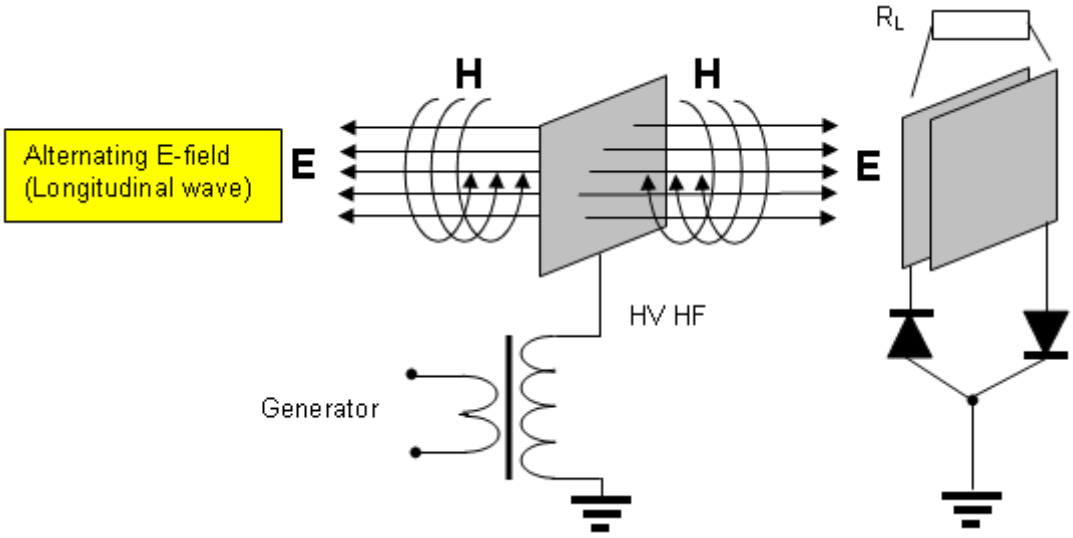

EXPLANATION: The charging system is unable to "see" the field inside a charging capacitor.

COMMON VIEW OF RESONANCE: Resonance is not destroyed if you short-circuit or open a "pumping" capacitor.

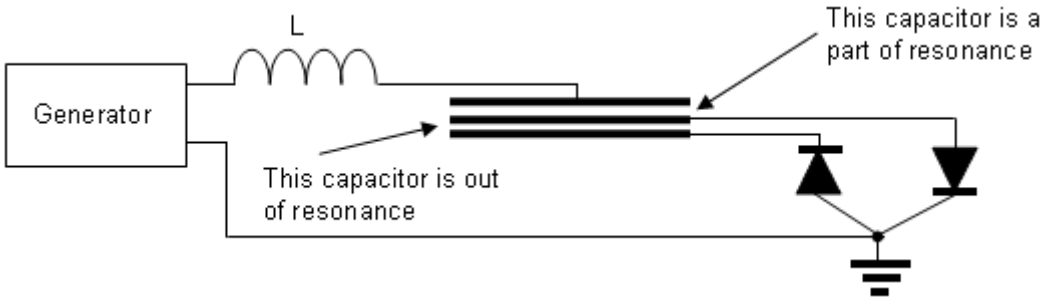

COMMENT: You can add an ordinary, very large capacitor in parallel with the "pumping" capacitor for more impressive results.

Don Smith illustration

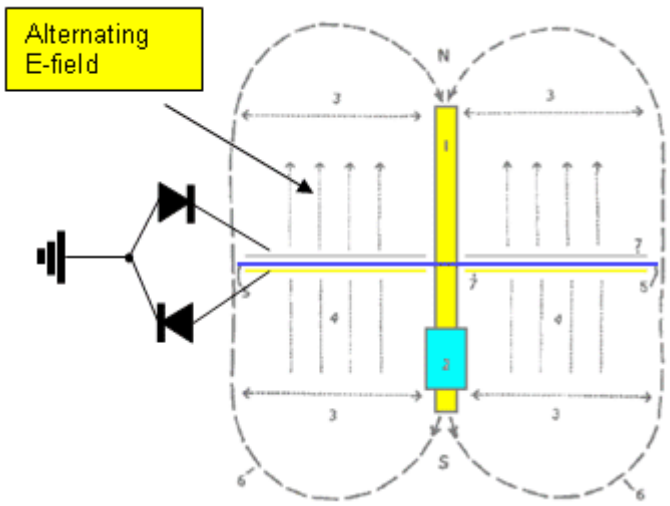

COMMENTS: You have to use an alternating E-field, in order to charge the capacitor. But, Smith marked the North and South poles in his drawing. I think that this is true for only one instant. Diodes are not shown in his drawings, which indicates that his device as shown, is to my mind not complete.

THE EXTERNAL APPEARANCE OF ED GRAY'S TUBE

EXPLANATION: Gray's tube with it's two internal grids is seen in the middle. Two diodes are underneath the acrylic sheet (???). A Leiden Jar is located on the left (???) The HF HV coil is behind Gray's tube (???)

A POSSIBLE DESIGN FOR THE "CHARGE PUMP" or "CHARGE FUNNEL"

THE TESTATIKA by Paul Bauman

EXPLANATION: The central electrode in the jars (capacitors) is for the excitation of ambient space; the two external cylinders are the plates of the charging capacitors.

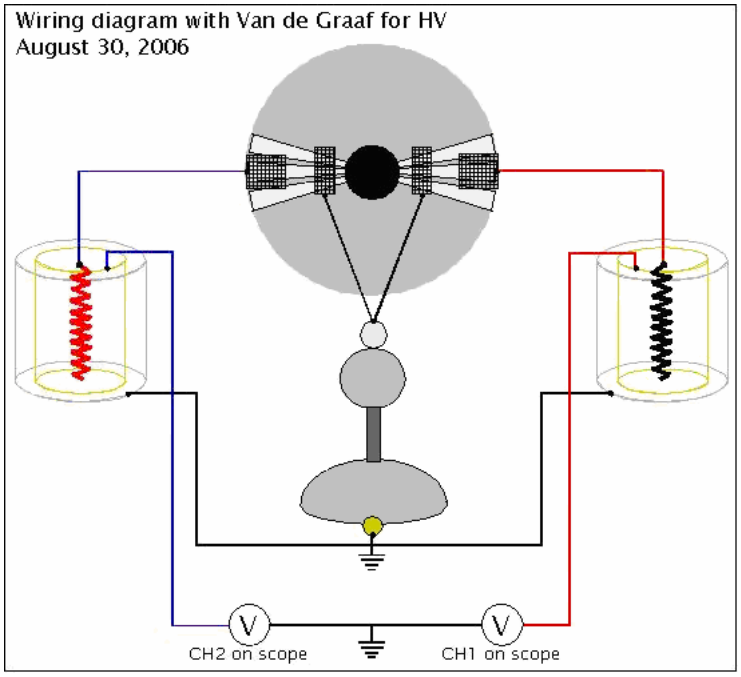

EXPLANATION: The charging mechanism is unable to "see" the field inside the charging capacitors.

COMMENT: For more details read the section on asymmetrical capacitors.

A POSSIBLE DESIGN FOR THE "CHARGE PUMP" or "CHARGE FUNNEL"

COMMENT: This is based on Tesla's schematics

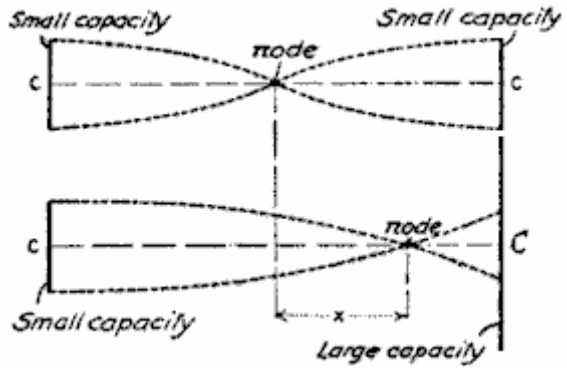

COMMENT: First, you need to arrange a "voltage killer" barrier on one side of the Tesla coil. This is to create a "BLIND" charging system which can't "see" the charge on the capacitor (see below for more detail on "blindness").

COMMENTS: 'Huge capacitor' means: as much ordinary capacitance as possible.
Effectiveness depends on voltage and coil frequency, and current in the node.
Effectiveness depends also on the frequency at which the excitation spark occurs.
It is very similar to Don Smith's devices.

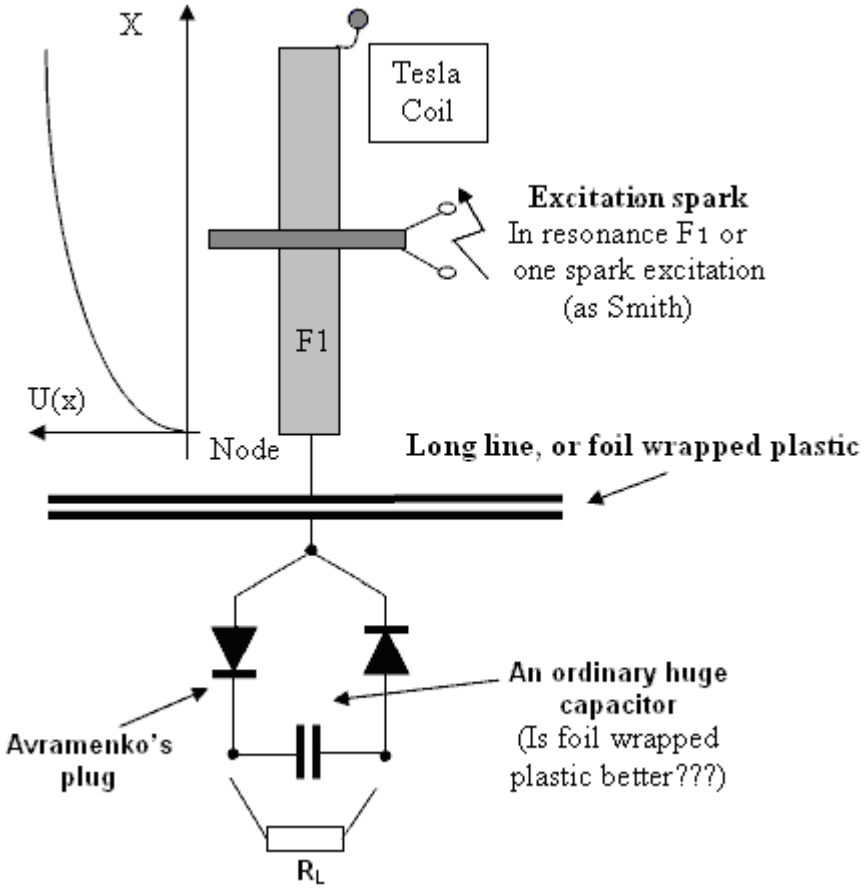

COMMENT: For more details read part devoted to Avramenko's plug…

POSSIBLE DESIGN FOR THE “CHARGE PUMP” or “CHARGE FUNNEL”

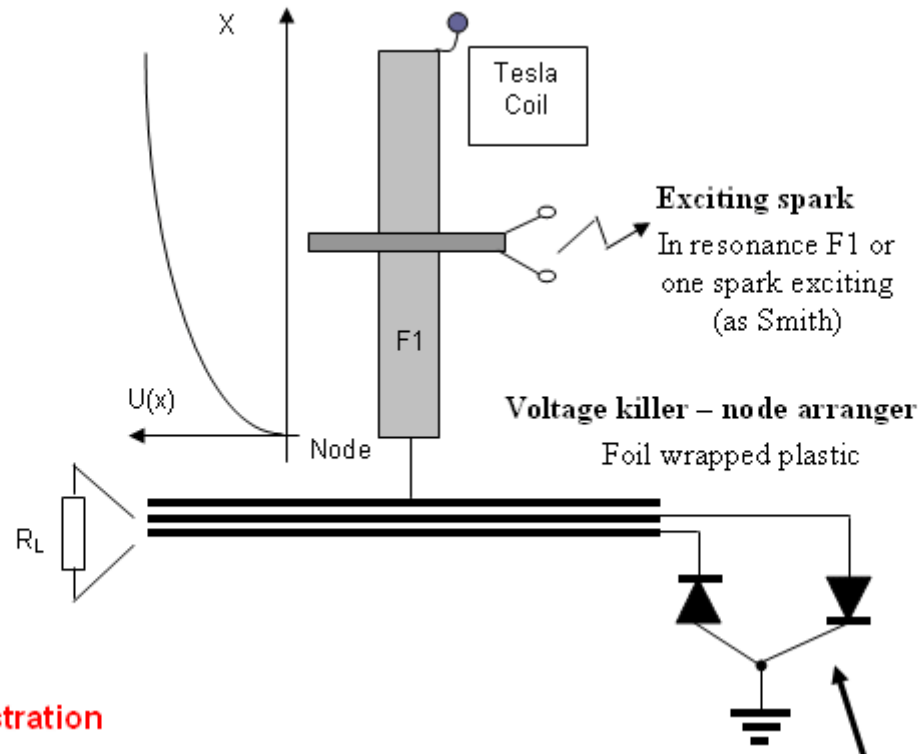

Don Smith illustration

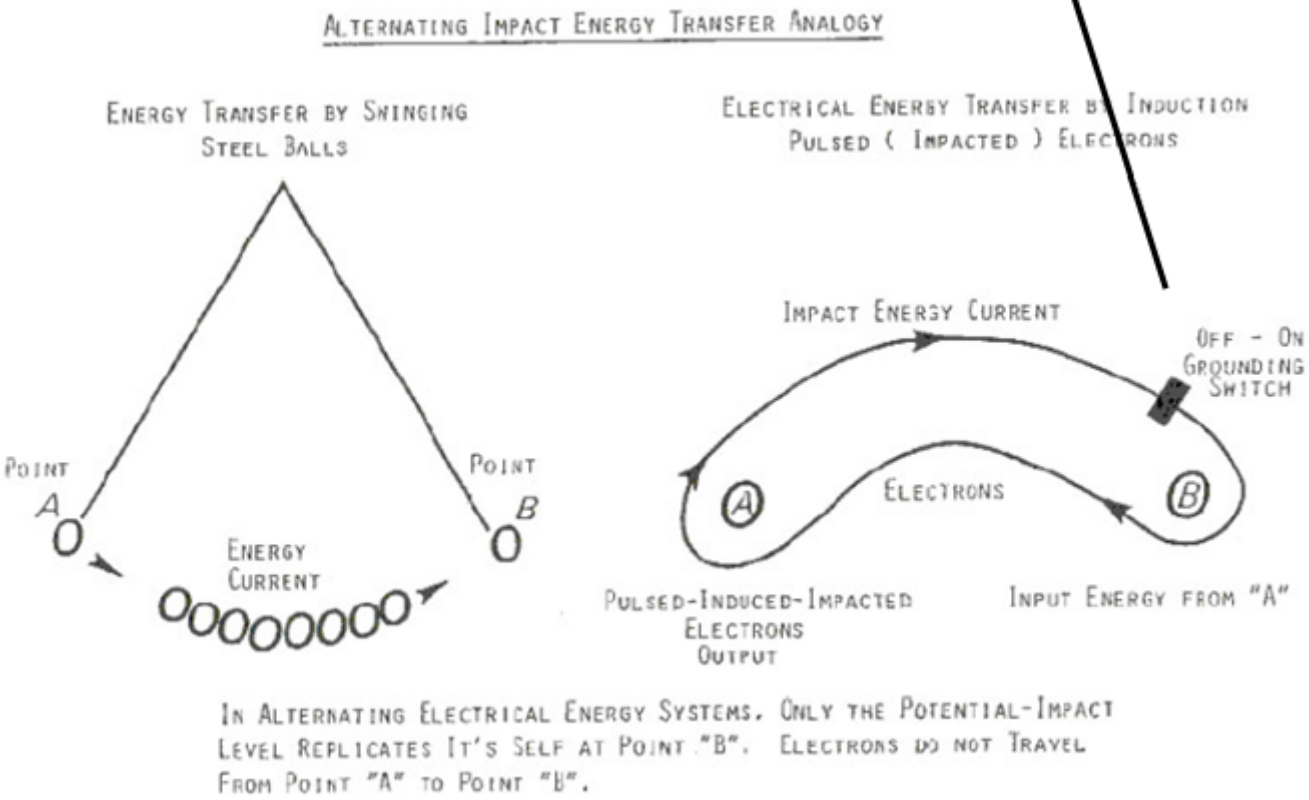

EXPLANATION: The charging system is unable to “see” the field inside the charging capacitor.

COMMENT: For more details read the part which is devoted to Avramenko’s plug…

COMMENT: An ordinary piece of wire can be used in some versions of this gadget, see below….

ENERGY REGENERATION BY

L/4 COIL

COMMENT: This system is based on wireless energy transmission through the ground

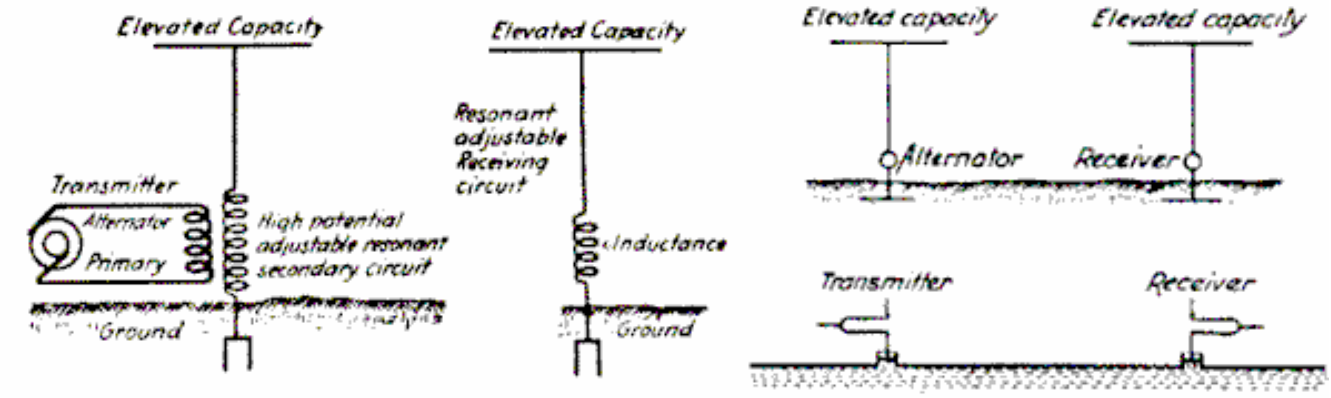

COMMENT: Energy radiated to ambient space lowers the efficiency of this process

COMMENT: The Receiver and Transmitter coils must have the same resonant frequency

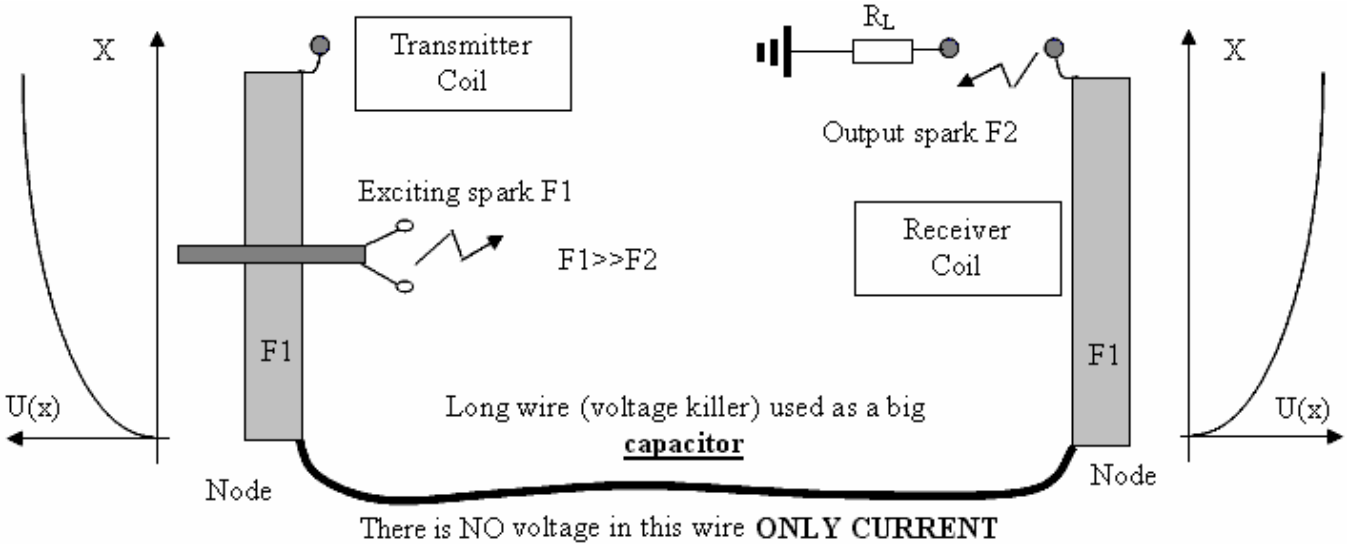

COMMENT: Possible alternative arrangement:

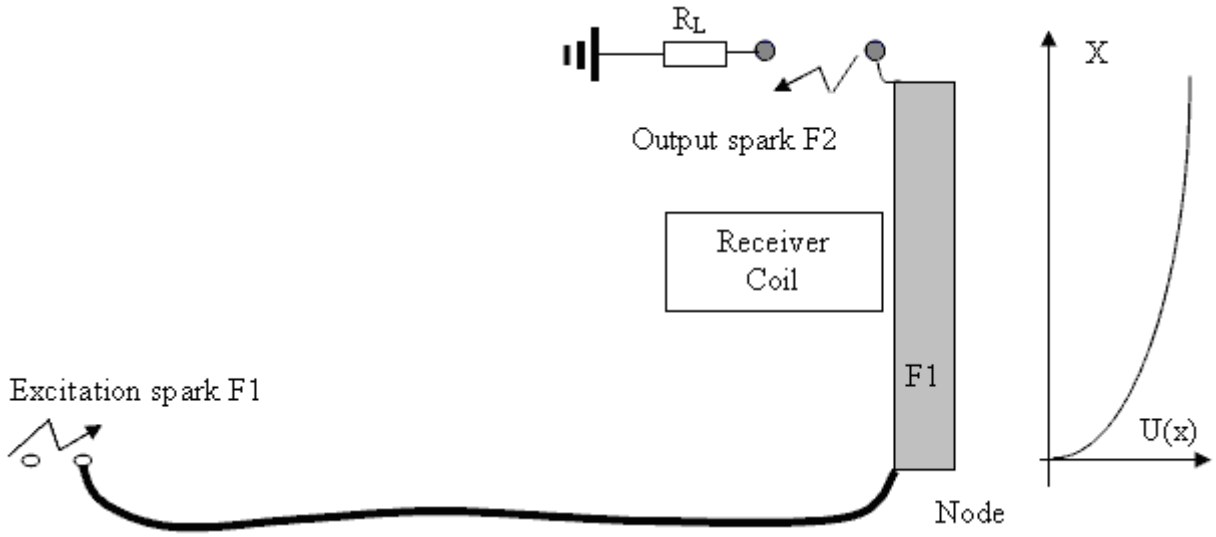

COMMENT: A metal sheet can be used instead of a long wire

The "COLD" and "HOT" ends of a Tesla Coil

by Donald Smith

COMMENT: If the excitation coil L1 is positioned in the centre of coil L2, then the Tesla Coil will have a "cold" end and a "hot" end. **A spark gap can only be connected to the "hot" end**. You cannot get a good spark if the spark gap is connected to the "cold" end.

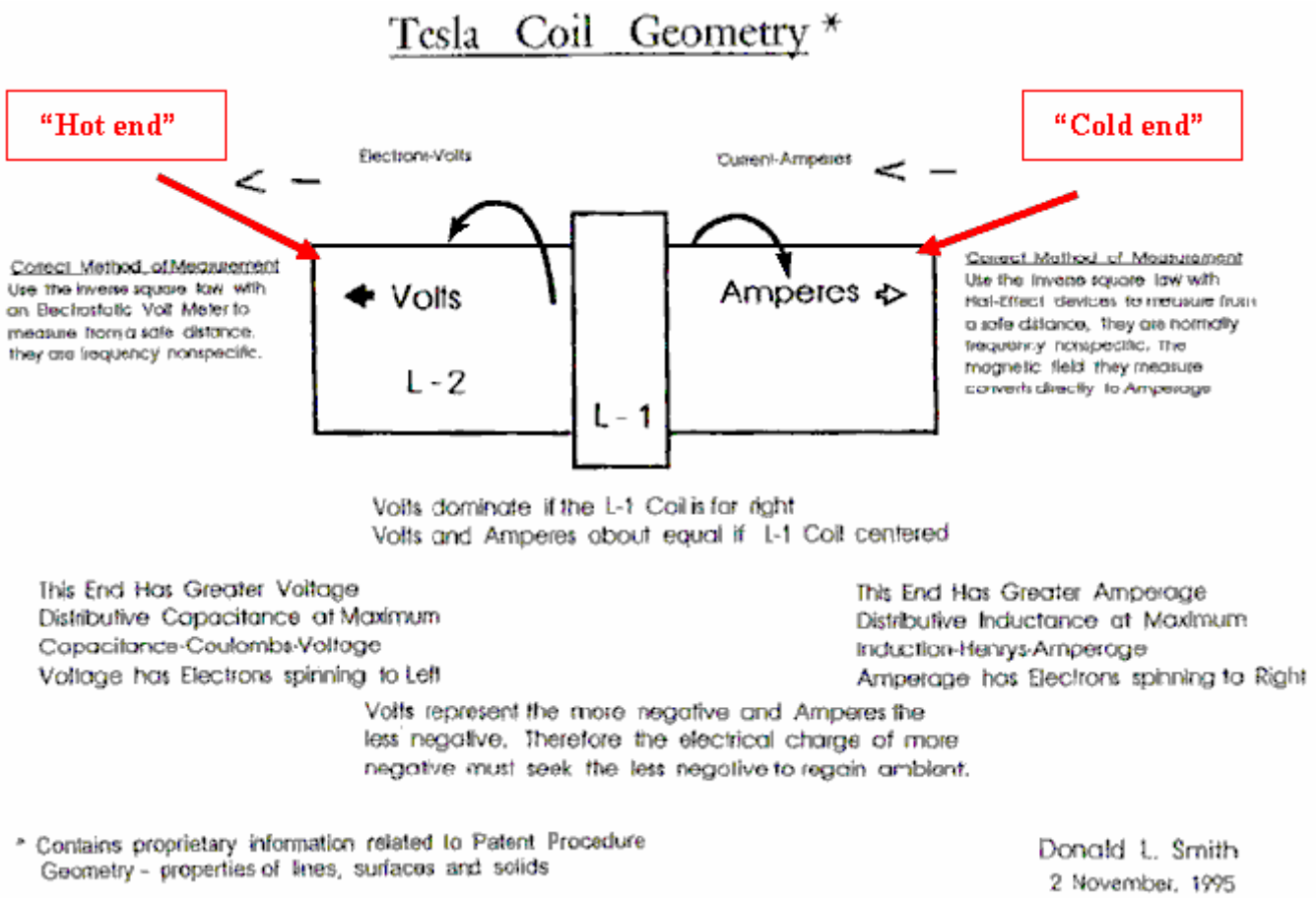

COMMENT: This is very important for practical applications, so read Don Smith's documents for more details.

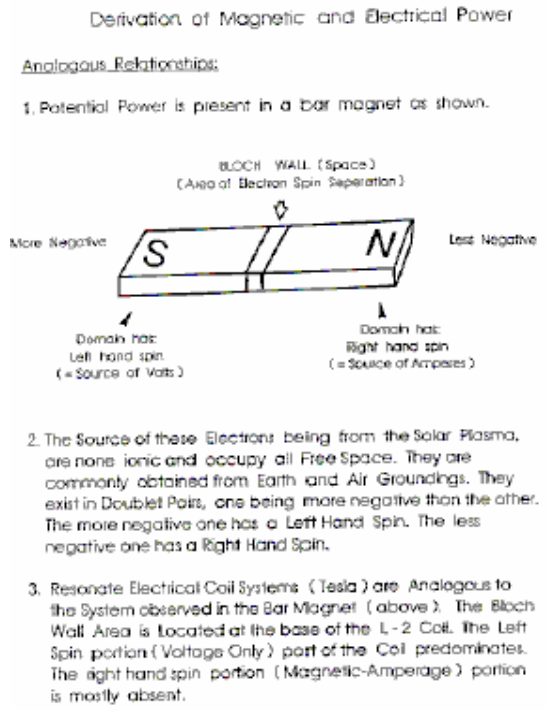

COMMENT: It is easy to understand the "Hot" and "Cold" ends, if one end of the Tesla Coil is grounded…

The Grounded Tesla coil – a hidden form of energy

EXPLANATION: We can look at the Tesla coil as a piece of metal. Every piece of metal can be charged. If Tesla coil is grounded, it has an extra charge delivered from the ground, and has an extra energy also. But, it can be find out only in electrostatics interactions, not in electromagnetic one.

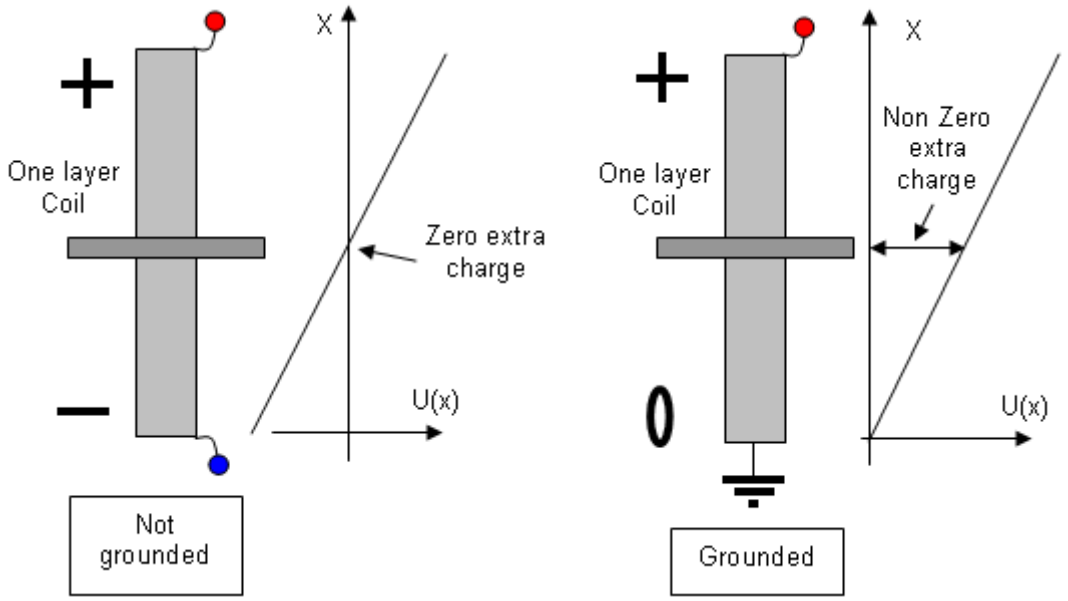

Comment: This diagram shows only one instant, after half a cycle, the polarities will be swapped over.

Question: How can we use this fact?

Answer: We have to arrange an electrostatic interaction:

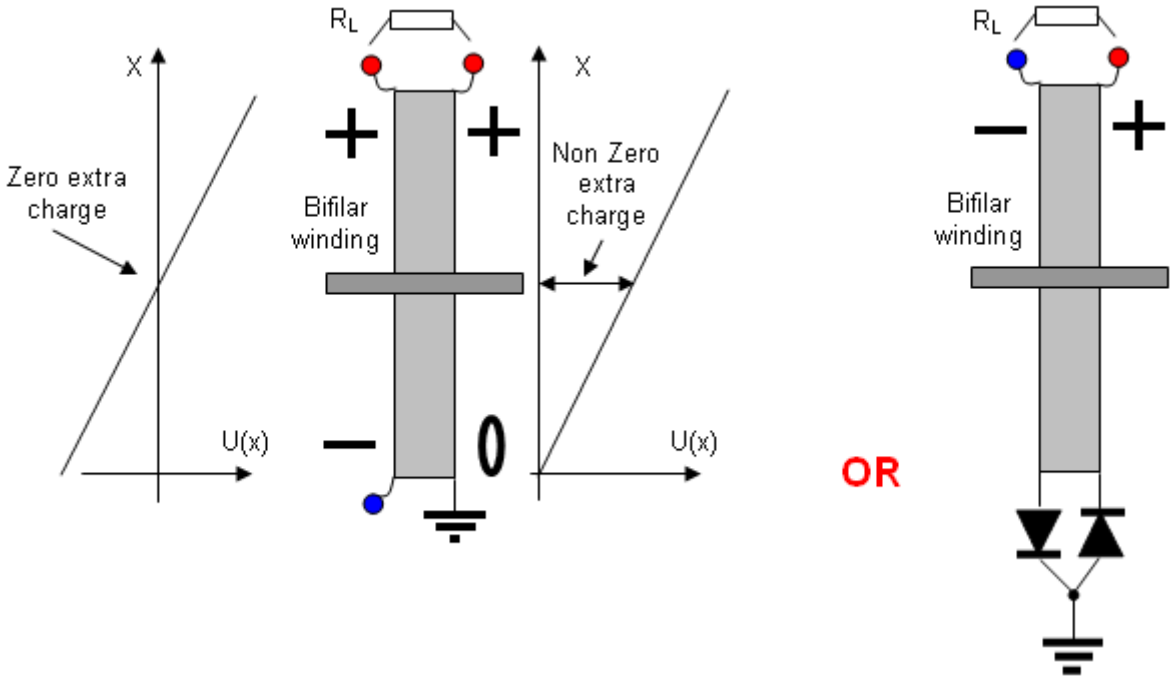

Comments: Extra capacitors can be used for charging them.

This looks like Smith's plasma globe device. Maybe, he used this technology.

This can be used in charge pump technology for excitation by an alternating electrical field, read the section on the charge pump or charge funnel.

The wiring can be different to that shown above.

Examples of grounded bifilar (multi-strand) coils

From Tariel Kapanadze in his 100 KW device

from Steven Mark in big TPU

from Donald Smith

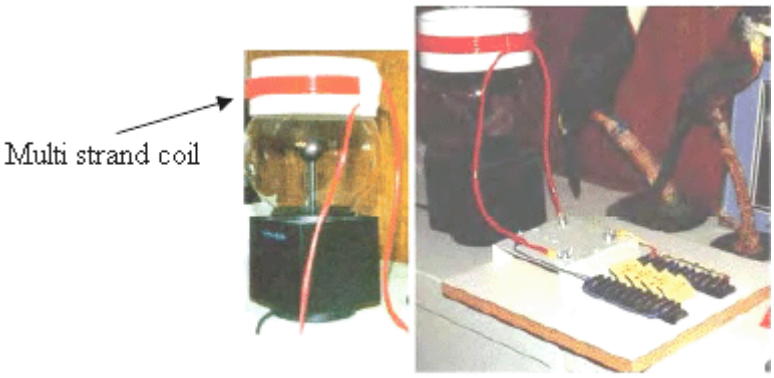

Globe device for energy generation

Possible simulation of the L/4 wave "Cold" and "Hot" ends

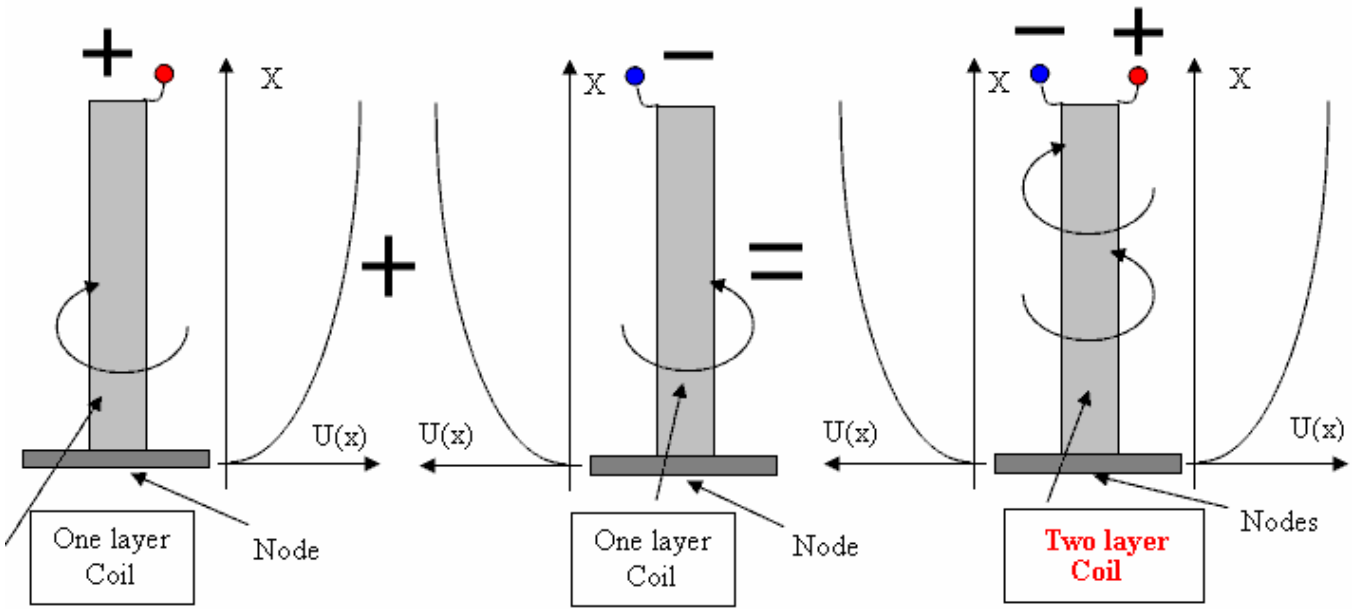

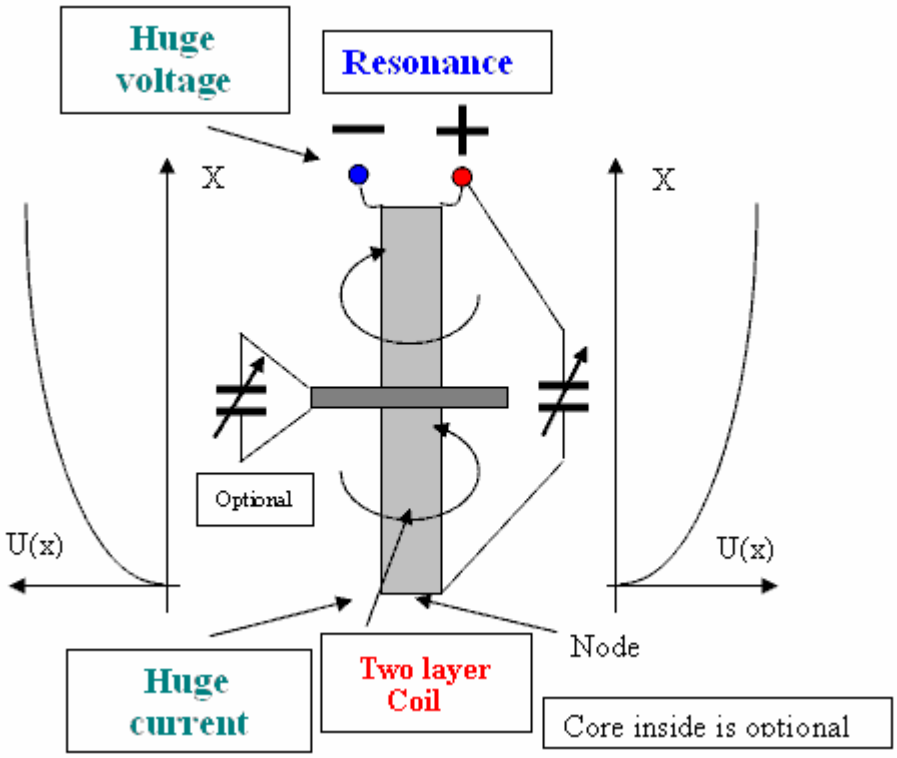

MODERN OPTIONS

In back EMF suppression

Version 1

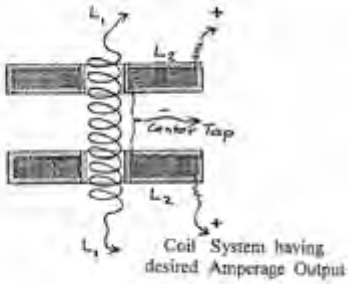

SYMMETRICAL VERSION

By Don Smith

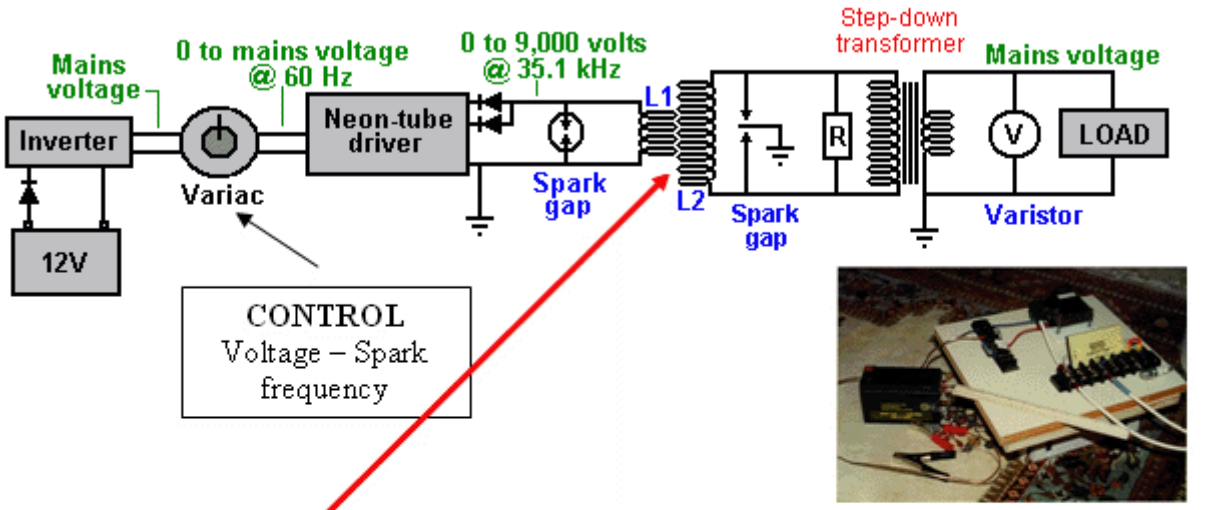

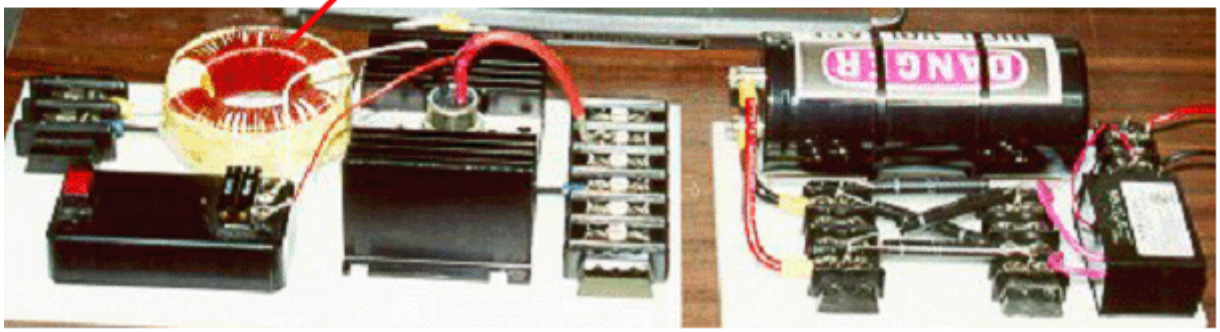

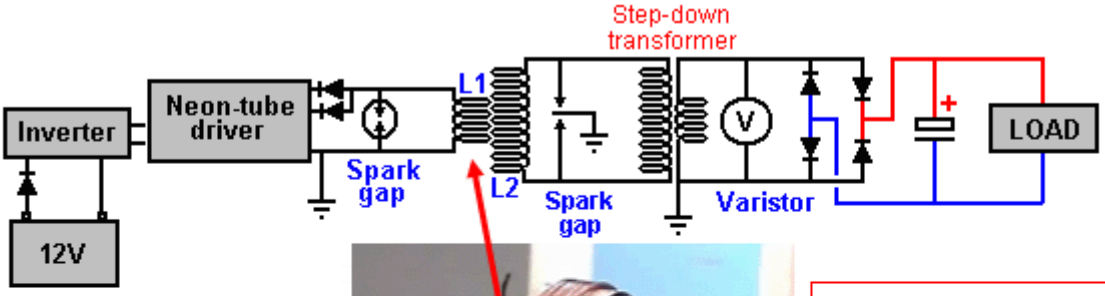

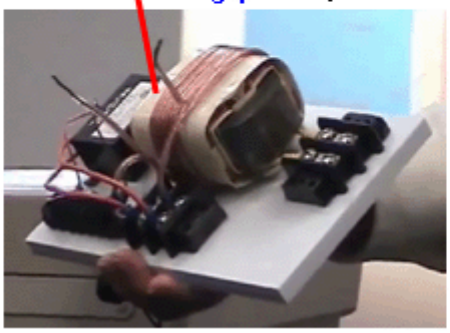

Primary coil in Smith's device plays the same role as the rod in Gray's tube. These devices use the same principle.

Explanation:

Both of the two out of phase outputs were used and both connected to the step-down transformer.

1. Between sparks:

There is no current in the step-down transformer and so the two ends of L2 are at the same voltage.

2. During a spark:

Parasitic capacitors (not shown) connected across both sections of L2 are discharged to ground, and current is produced in the step-down transformer. One end of L2 is at ground potential. But, the magnetic field of this current in L2 is perpendicular to the resonating field and so has no influence on it. **As a result of this, you have power in the load, but the resonance is not destroyed.**

COMMENTS: In my opinion, these schematics have errors in the excitation section. Find those errors.

Excitation by a single spark is possible.

In the terminology of Mr. Tesla, this is a 'charge pump' or 'charge funnel'. The charges are coming from the Ground which is the source of the energy.

There are more secrets in the following parts.

SECRET 1.1

Back EMF suppression in a resonance coil

Version 2

Primary and secondary coils are placed on a rod core. All of the coils are arranged in special manner. The primary coil is placed in the middle of the core. The secondary coil is in two parts which are positioned at the ends of the rod. All of the coils are wound in the same direction.

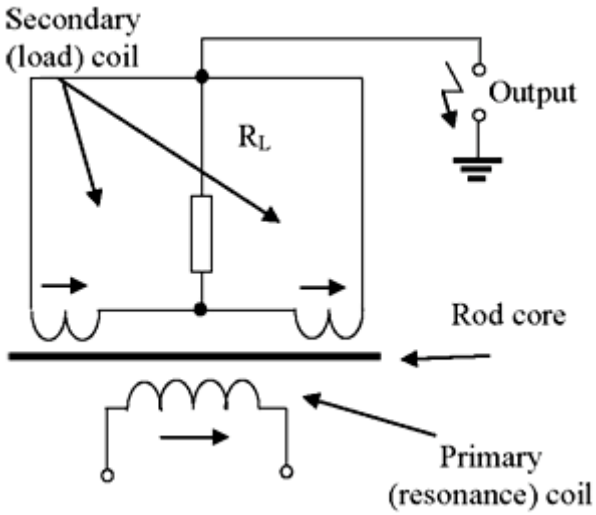

Explanation:

The electromagnetic fields produced by the resonant (excitation) current and the load current are perpendicular to each other:

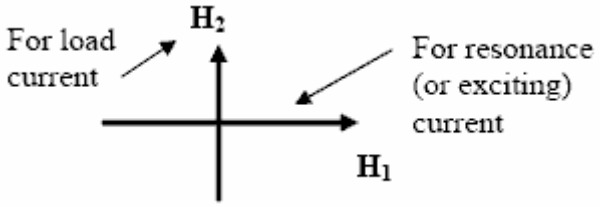

So, although you have power in the load, resonance is not destroyed by that output power.

Comments: The load must be chosen so as to get the maximum amount of power flowing into it. Very low loads and very high loads will both have close to zero energy flowing in them.

The secondary coil is shunting the primary coil, and so it has a current flowing in it even if no loads are connected.

The secondary coil can be adjusted for resonance too.

The "rod" material can be air, or other materials.

SECRET 1.1

Back EMF suppression in a resonance coil

Version 3

(long wire usage – bifilar usage)

EXPLANATION: It is very much like **Version 1**, but here, the two coils are combined into a single coil.

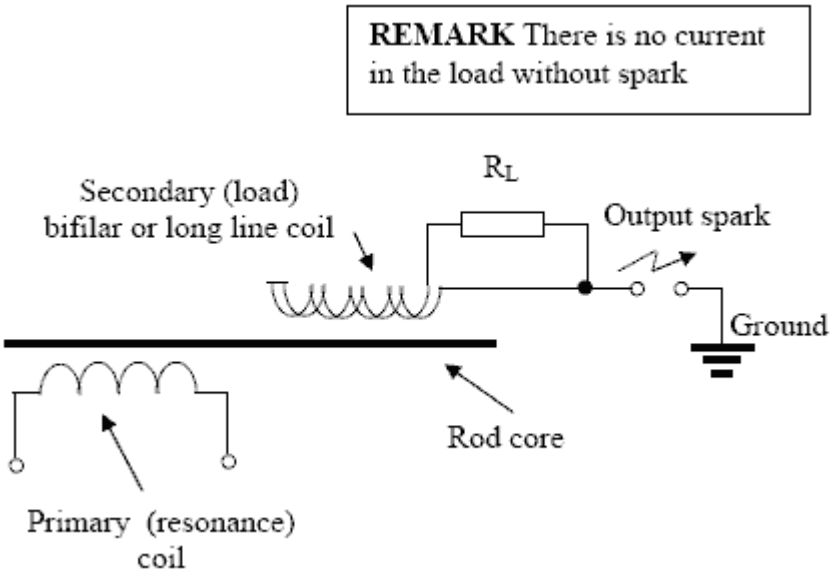

IT IS IMPOSSIBLE!

(Without back EMF suppression)

By Don Smith

Multi-coil system for energy multiplication

COMMENT : You decide how you think it was made. Maybe short-circuited coils will be useful…

Read the following parts to discover more secrets…

MODERN OPTIONS?

For Back EMF suppression

Version 3

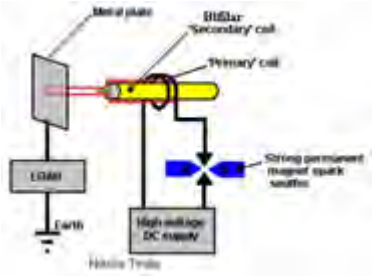

BI-FILAR USAGE

By Tariel Kapanadze

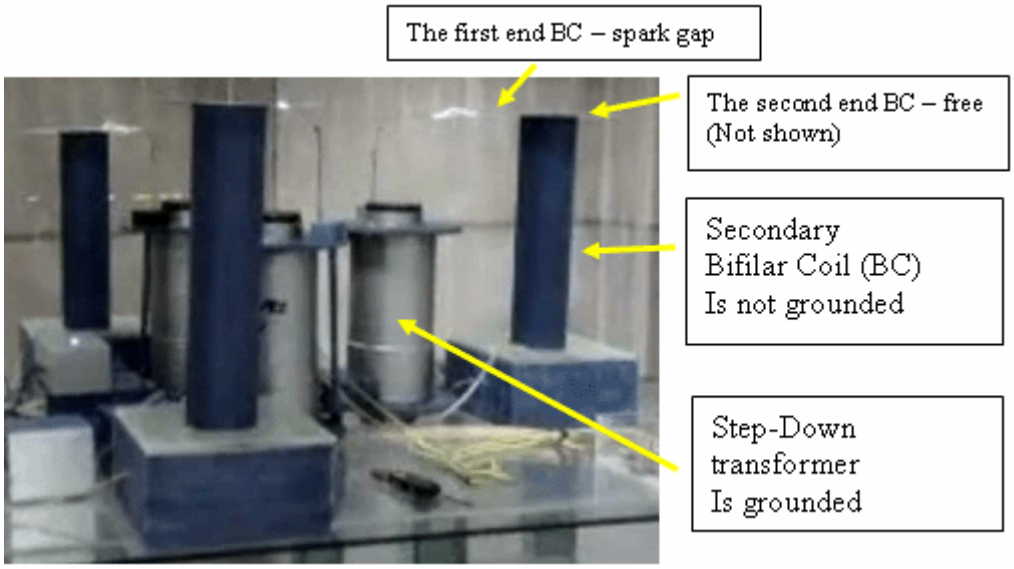

Possible schematics of the device

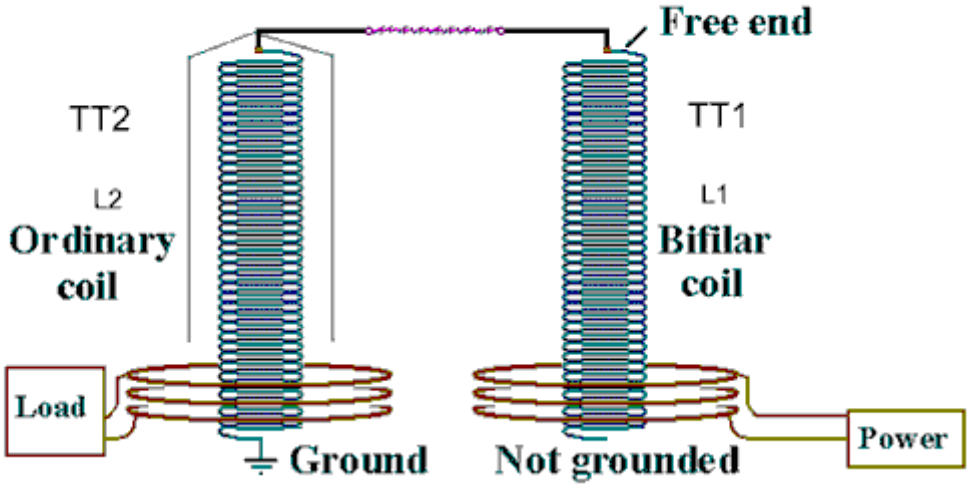

BIFILAR USAGE

By Timothy Trapp

COMMENT: See Trapp's sites for more details

POSSIBLE CORE CONFIGURATION
For back EMF suppression

TOROIDAL CORE

BI-FILAR WINDING

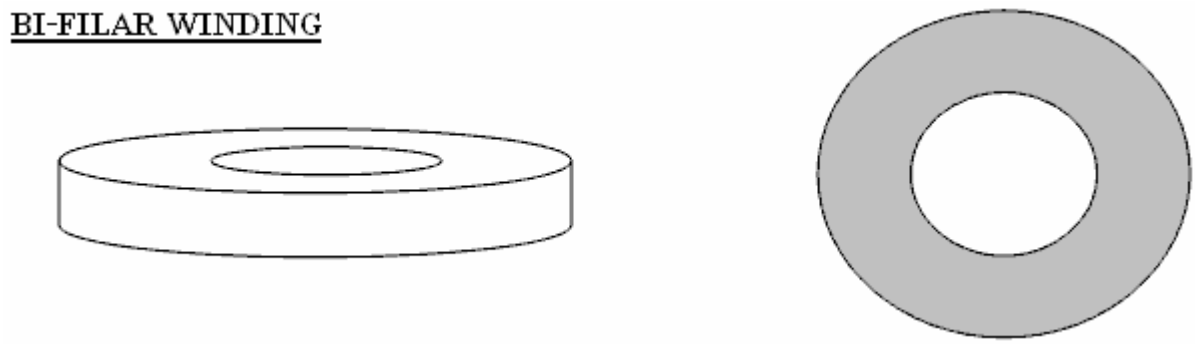

COMMENTS: An ordinary excitation winding is wound all of the way around a toroidal core.
A bi-filar output winding is wound around the whole of a toroidal core.
Remember about the “Hot” and “Cold” ends of a bi-filar coil.

ORDINARY WINDING

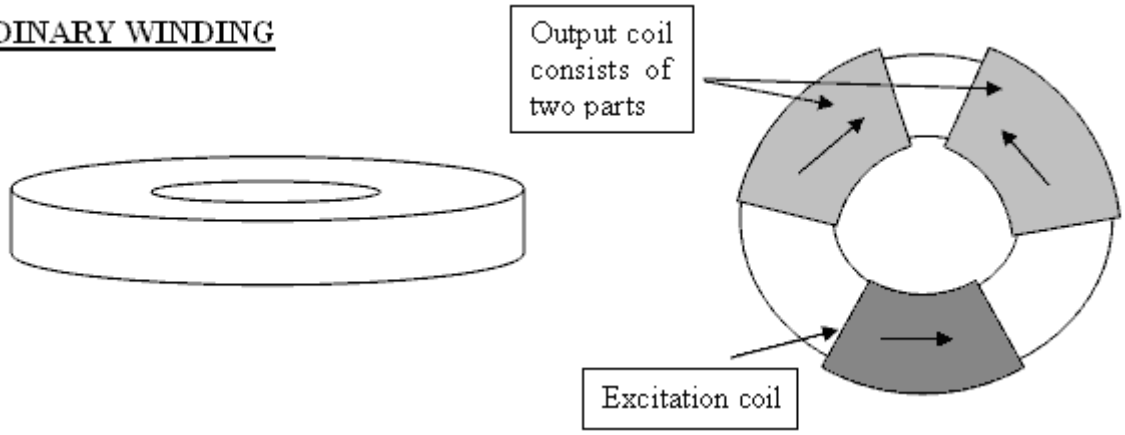

COMMENT: Remember about the “Hot” and “Cold” ends of the output coil

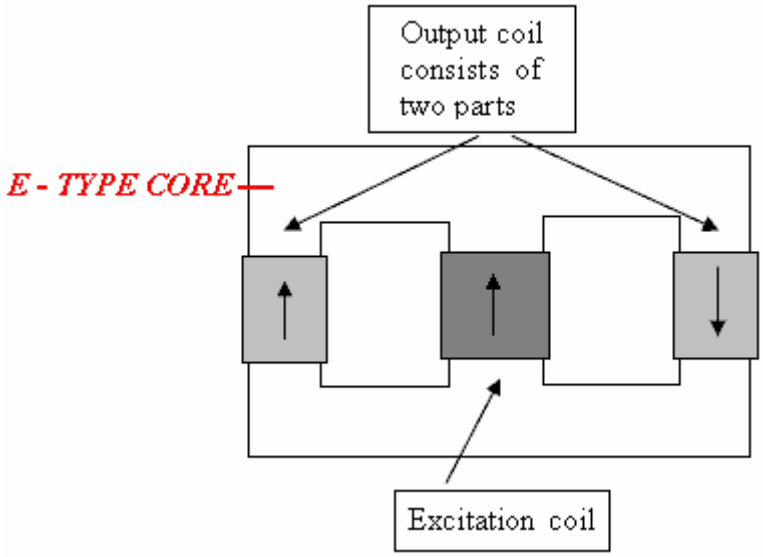

THE BASIS OF BACK EMF SUPPRESSION

(Tesla patent)

(No Model.) 2 Sheets—Sheet 1.

N. TESLA.

REGULATOR FOR DYNAMO ELECTRIC MACHINES.

No. 336,961. Patented Mar. 2, 1886.

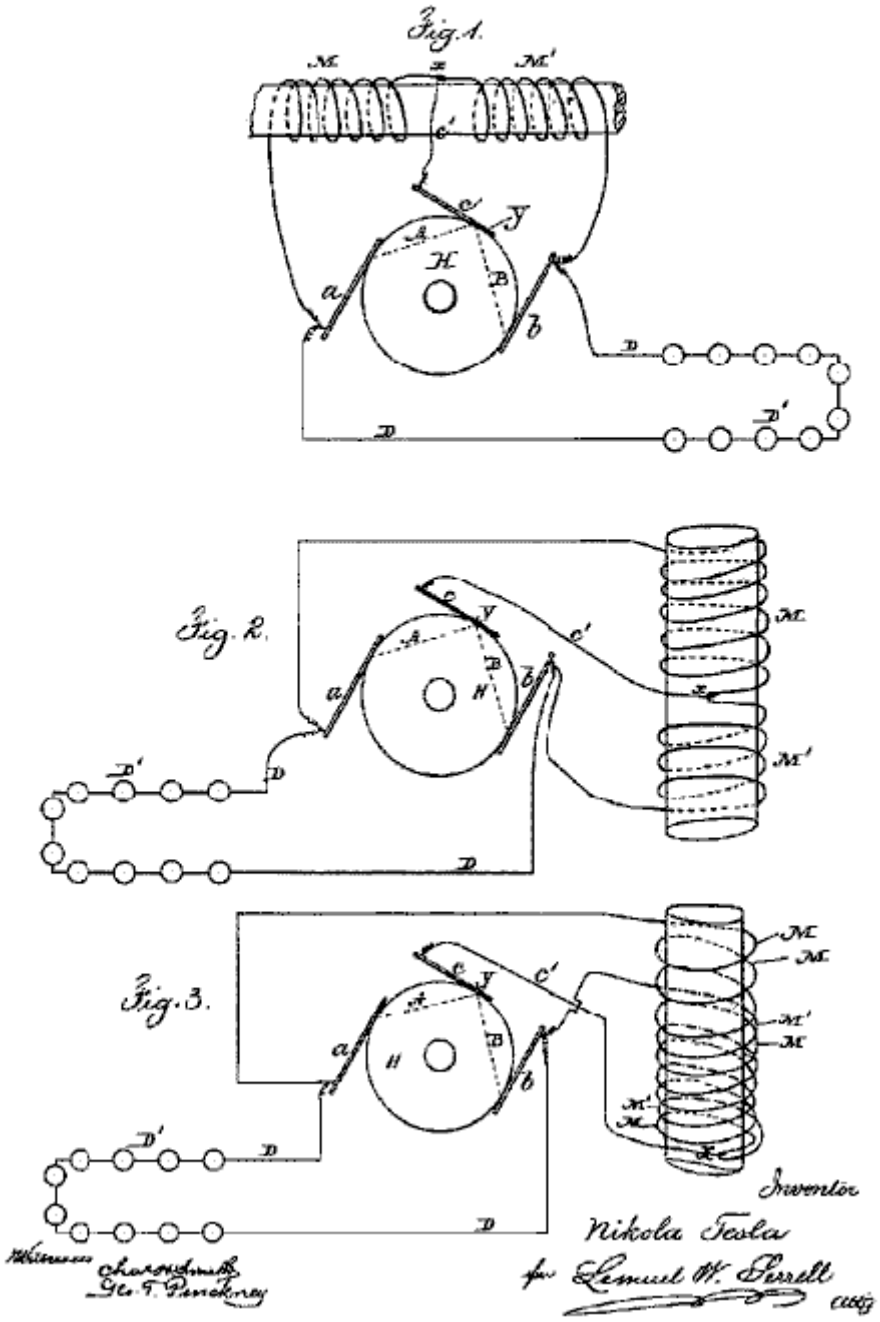

SECRET 1.2

The Spark-Exciting Generator ("SEG")

(Charge delivering to LC circuit)

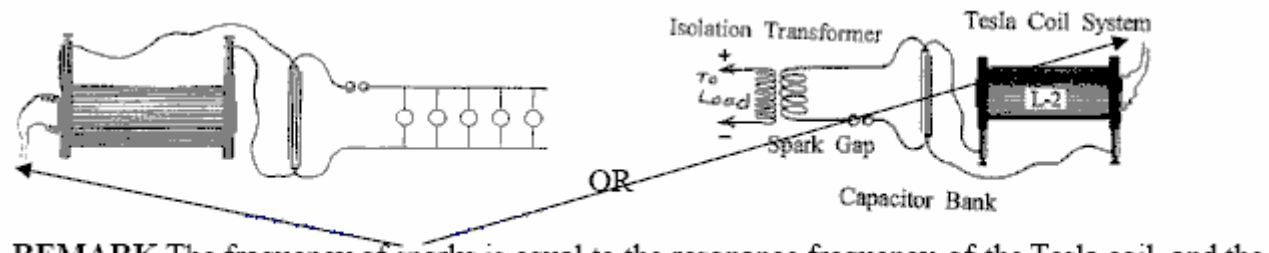

REMARK The frequency of sparks is equal to the resonance frequency of the Tesla coil, and the moment of exciting corresponds to the maximum voltage on the Tesla coil.

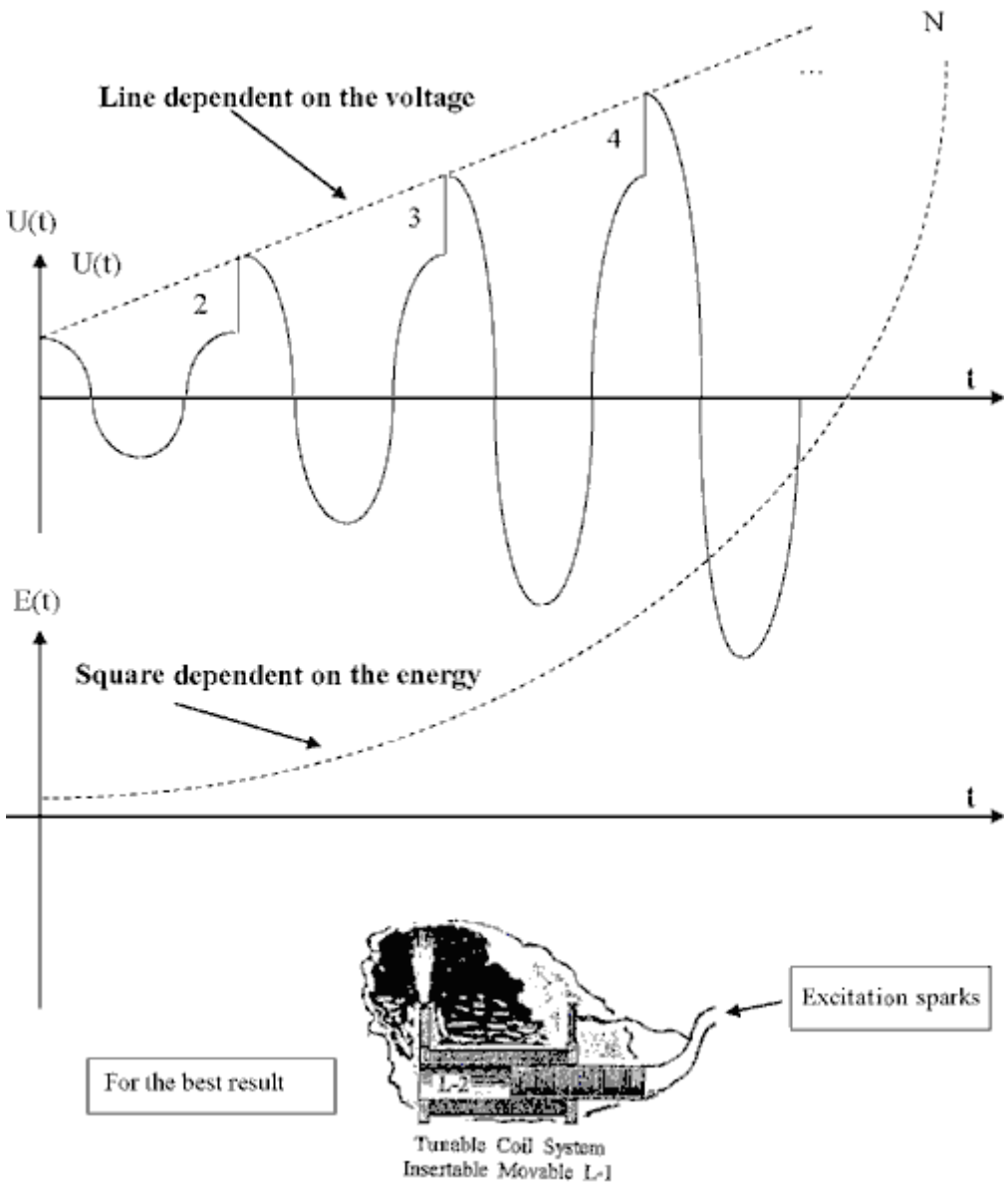

EXPLANATION:

The spark delivers charge to the L-C circuit

The charge Q on a capacitor C with voltage U is: $Q = U \times C$ or $U = Q / C$

Where Q is a charge delivered by one spark.

During the excitation of the L-C circuit by the sparks, the capacitance C is constant.

After N excitations, the voltage Un on C will be Un = N x Q / C And, energy En will be raised as N^2.

In other words, **If the L-C circuit is excited by charges, we have energy amplification**.

POSSIBLE MODIFICATION

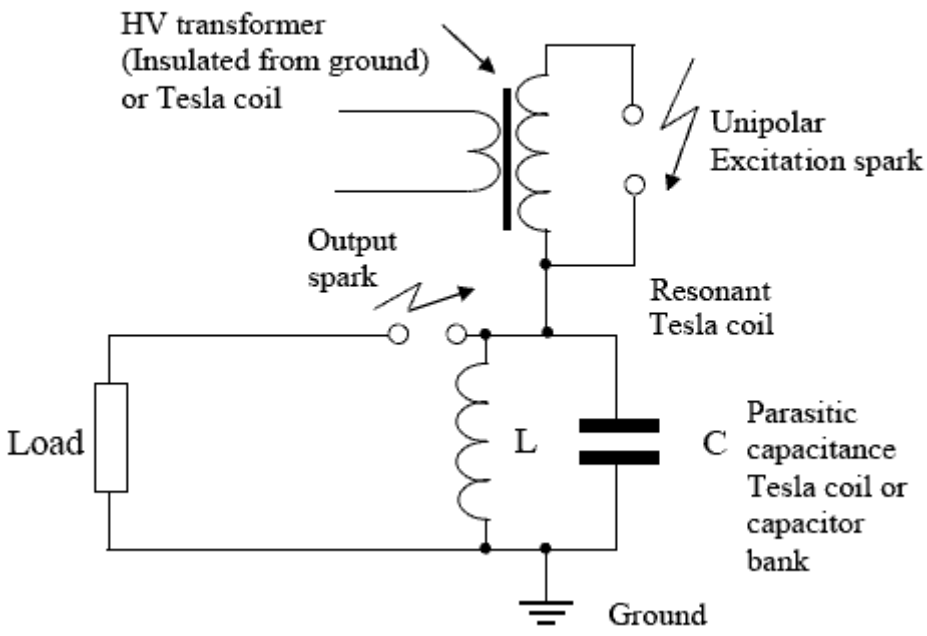

COMMENT: You need to understand that a feedback loop in the electromagnetic field is a changing voltage level in the L-C circuit capacitor, a high-voltage transformer is connected to collect the excess energy.

WITHOUT SYNCHRONISATION

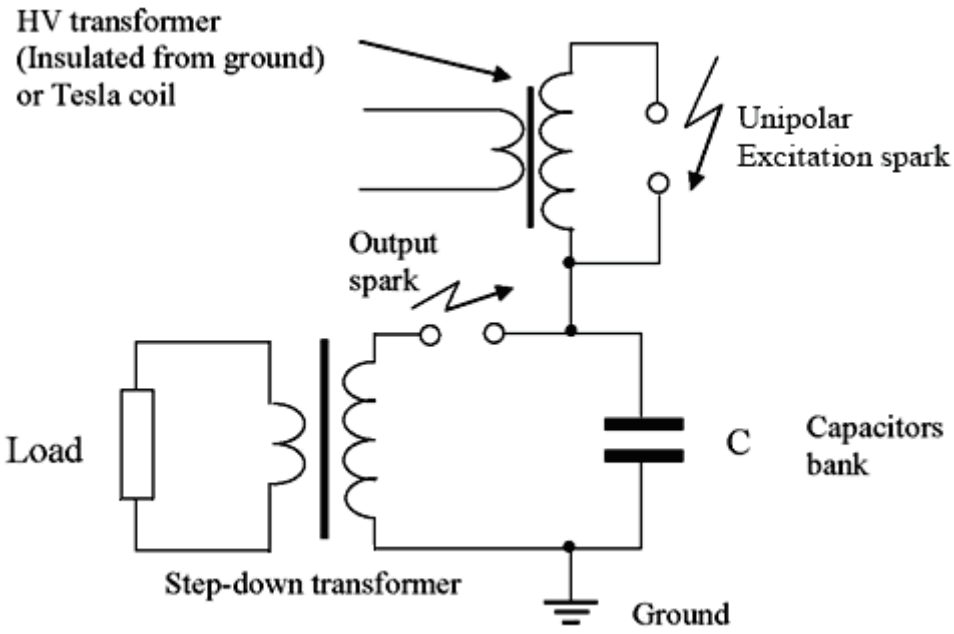

The Spark-Exciting Generator

From Don Smith

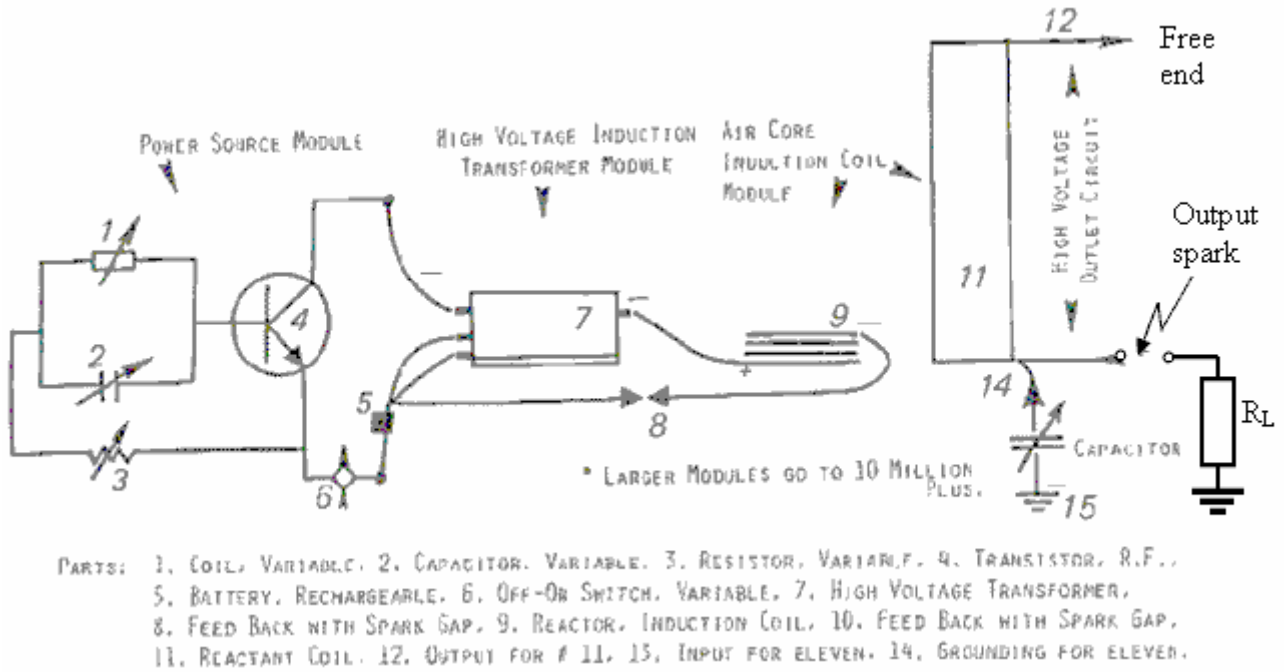

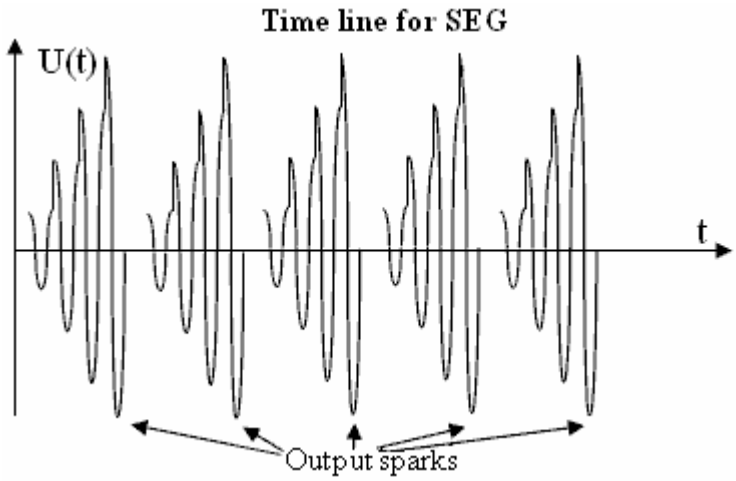

MAINTAIN RESONANCE AND GET FREE-ENERGY !!

EXPLANATION: It appears that we need to charge the capacitor circuit to an energy level which is greater than that of the source energy itself. At first glance, this appears to be an impossible task, but the problem is actually solved quite simply.

The charging system is screened, or "blinded", to use the terminology of Mr. Tesla, so that it cannot “see” the presence of the charge in the capacitor. To accomplish this, one end of a capacitor is connected to the ground and the other end is connected to the high-energy coil, the second end of which is free. After connecting to this higher energy level from the energising coil, electrons from the ground can charge a capacitor to a very high level.

In this case, the charging system does not "see" what charge is already in a capacitor. Each pulse is treated as if it were the first pulse ever generated. Thus, the capacitor can reach a higher energy level than of the source itself.

After the accumulation of the energy, it is discharged to the load through the discharge spark gap. After that, the process is repeated again and again indefinitely ...

COMMENT: The frequency of the excitation sparks, must match the resonant frequency of the output coil. (capacitors 2 and 14 are used to achieve this goal). This is multi-spark excitation.

COMMENT: Charges are pumping from the ground to 11-15 circuit, this device extracts charge from ambient space. Because of this, it will not work properly without a ground connection.

If you need Mains frequency, or don't want use an output spark, then read the following parts…
Asymmetrical transformers can be used (read the following parts)

POSSIBLE SEG ARRANGEMENT

(From Russian forum)

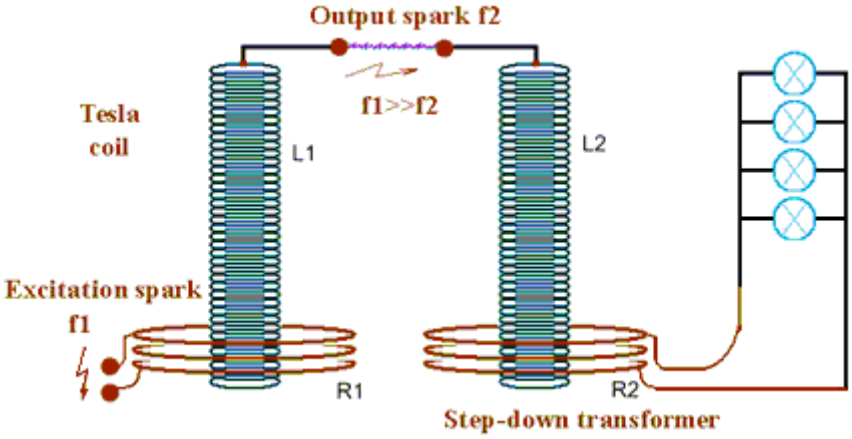

COMMENT: The L1 Tesla coil shown above, is energised by spark f1. Resonant, step-down transformer L2 is connected to the L1 Tesla coil by output spark f2. The frequency of f1 is much higher than that of f2**.**

SEG WITHOUT SYNCHRONISATION

From Don Smith

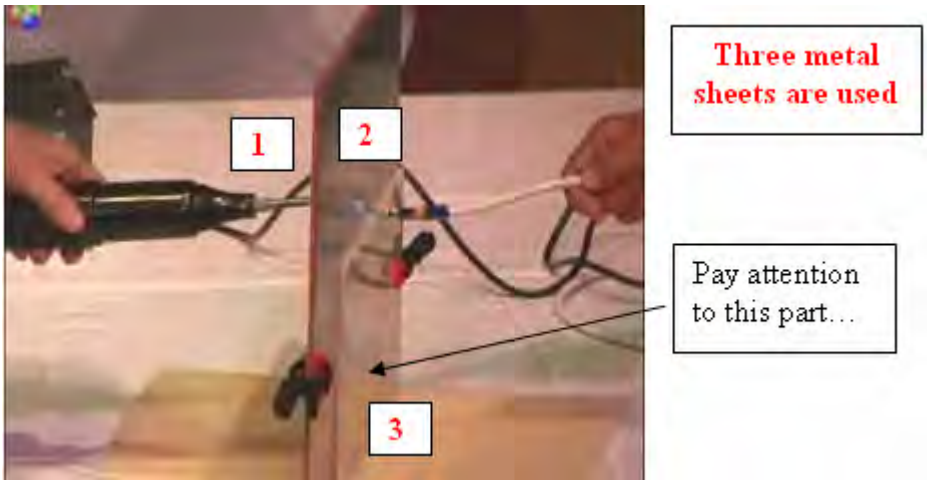

REMARK: It must be adjusted by dimensions, materials (???)

Possible schematics

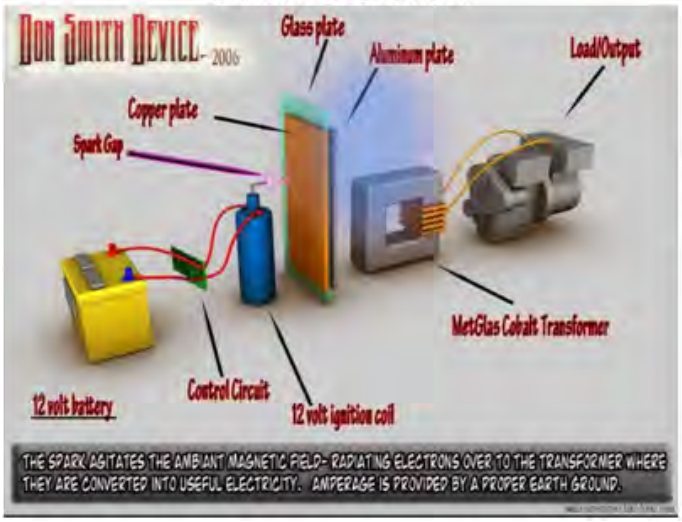

This is not completed…

EXPLANATION

REMINDER: An ordinary capacitor is a device for separating charges on it's plates,
The total charge inside an ordinary capacitor is zero (read the textbooks).

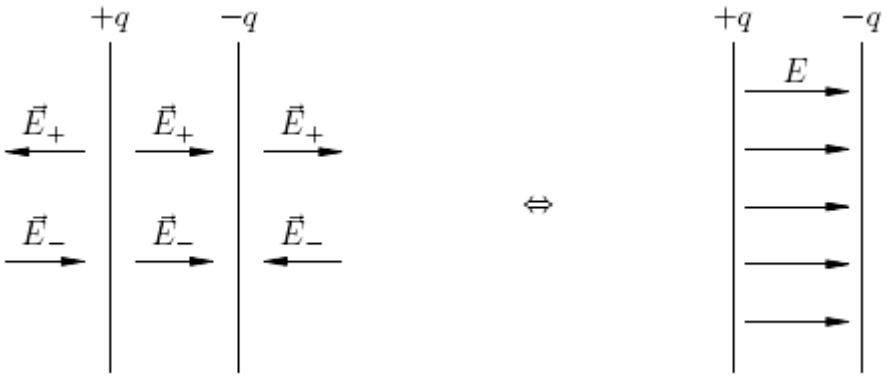

There is an electrical field only inside the capacitor. The electrical field outside the capacitor is zero (**because the fields cancel each other**).

So far, connecting one plate to the ground we will get no current flowing in this circuit:

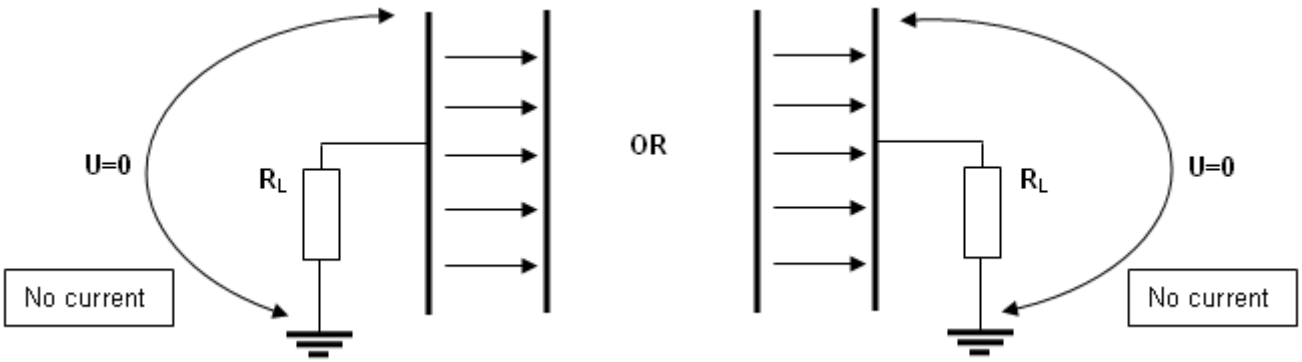

REMINDER: A separated capacitor is a device for accumulating charges on it's plates.

The total charge on a separated capacitor is NOT zero (read the textbooks). So far, by connecting one plate of the separated capacitor to the ground we will get a current flowing in this circuit (because there is an external field).

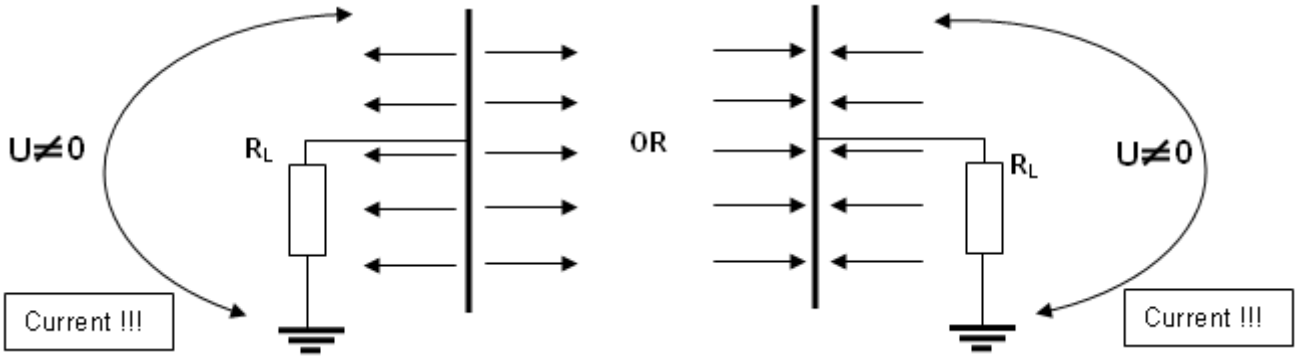

REMARK: We get the same situation, if only one plate of an ordinary capacitor is charged. So far, connecting an **uncharged plate** of an ordinary capacitor to the ground we get a current flowing in this circuit also (because there is an external field).

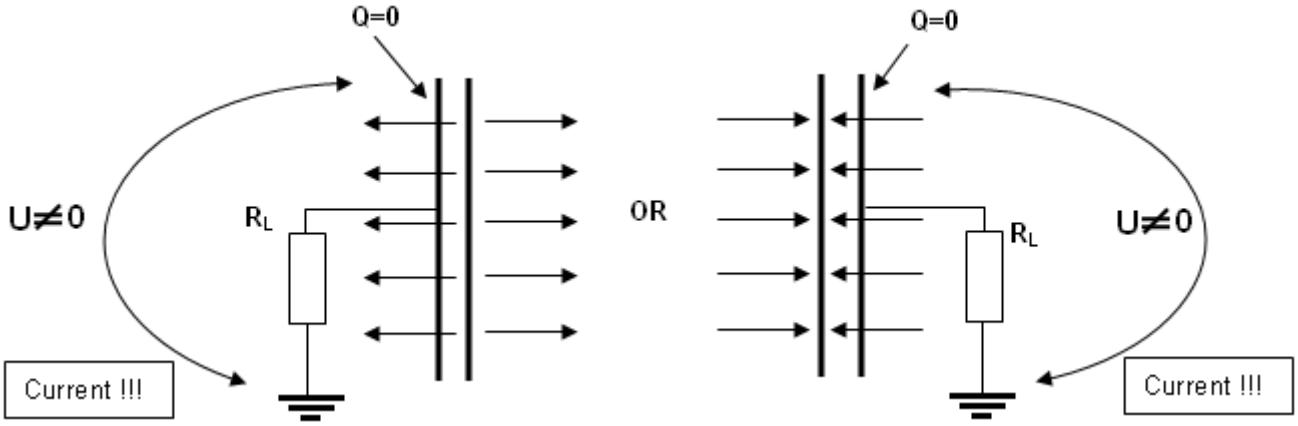

Alternately charging a capacitor's plates

Avramenko's plug – is it a free energy device?

The principle: Each plate of a capacitor charges as a separated capacitor. Charging takes place in an alternating fashion, first one plate and then the other plate.

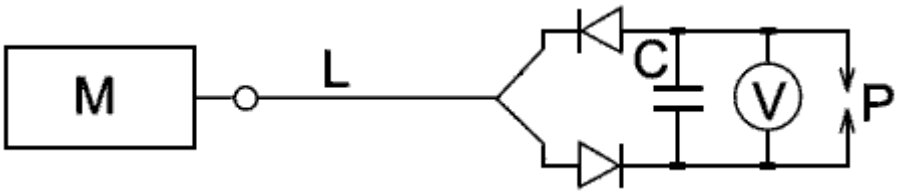

The result: The capacitor is charged to a voltage which is greater than that which the charging system delivers.

Explanation: The external field of an ordinary charged capacitor is equal to or near zero, as noted above. So, if you charge plates as a separated capacitor (upload or download charge), the charging system will not "see" the field which already exists inside the capacitor, and will charge the plates as if the field inside the capacitor is absent.

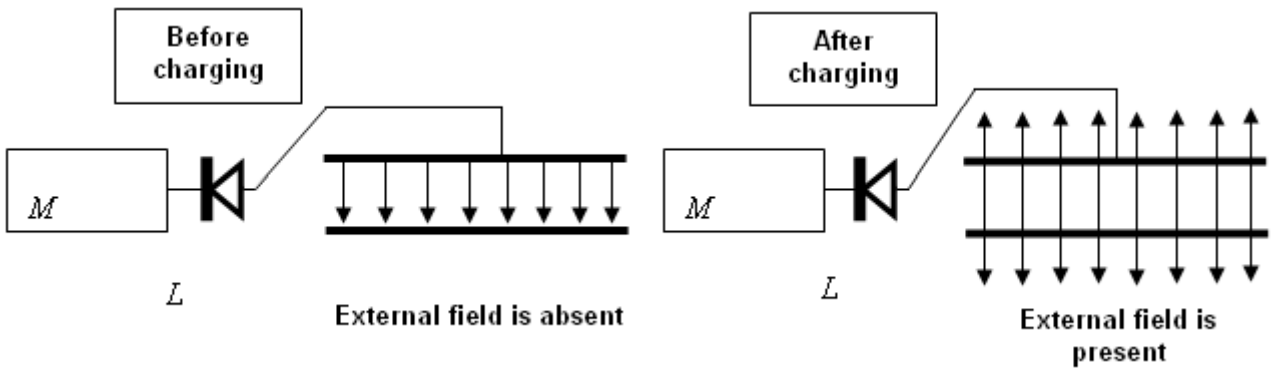

Once a plate has been charged, begin to charge another plate.

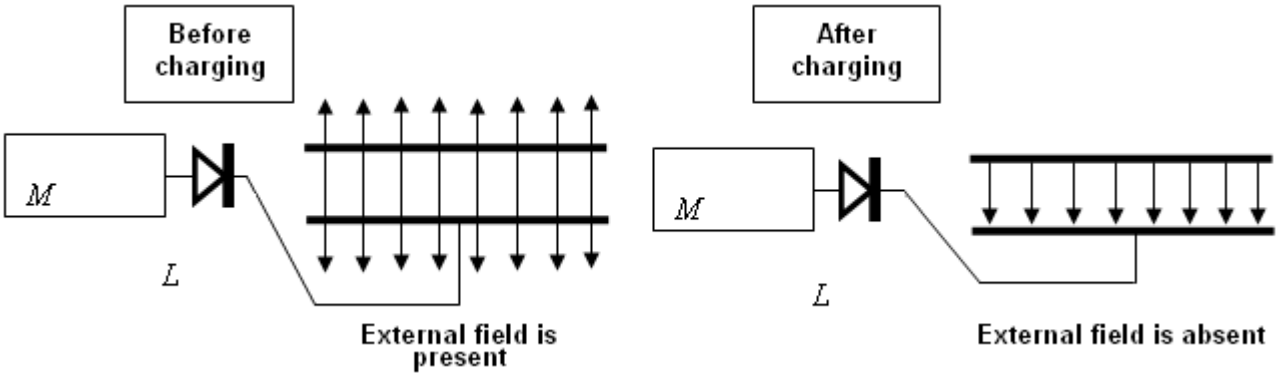

After the second plate of the capacitor has been charged, the external field becomes zero again. The charging system cannot "see" the field inside the capacitor once again and the process repeats again several times, raising the voltage until the spark gap connected to the output load discharges it.

REMARK: You will recall that an ordinary capacitor is a device for charge separation. The charging process of a capacitor causes electrons from on one plate to be "pumped" to another plate. After that, there is an excess of electrons on one plate, while the other one has deficit, and that creates a potential difference between them (read the textbooks). The total amount of charge inside the capacitor does not change. Thus **the task of the charging system is to move charge temporarily from one plate to another**.

The simplest Free-Energy device (???)

REMARK: The capacitance of an ordinary capacitor is much greater than the capacitance of a separated plate capacitor (provided that it's plates are close to each other).

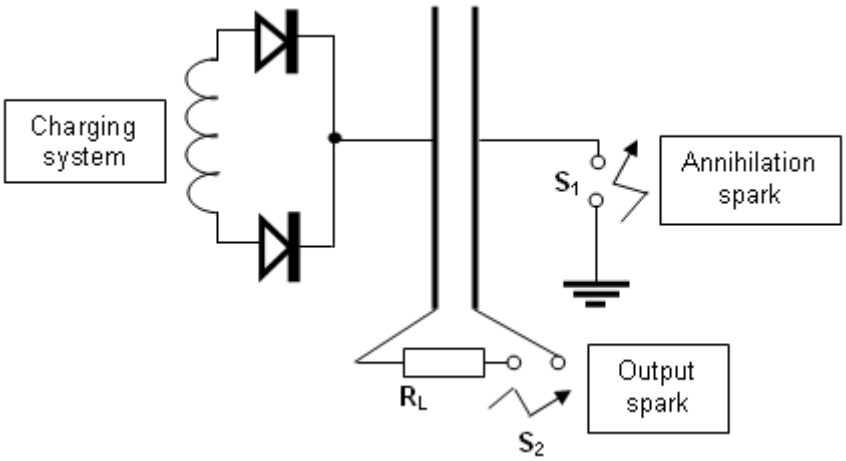

COMMENT: The time between S1 and S2 is very short.

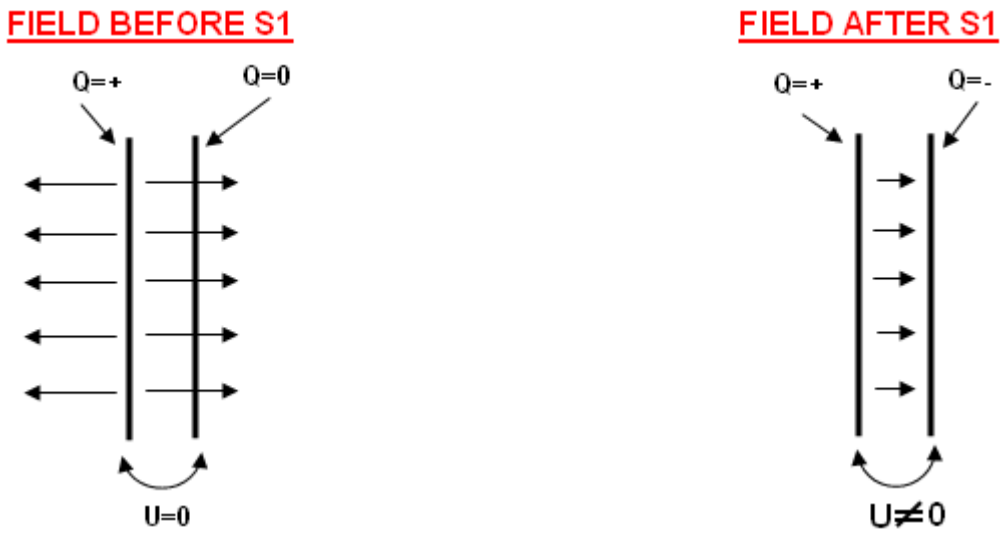

REMARKS: This is an illustration of energy-dependence in a coordinated system.
This is an illustration of the so-called Zero-Point Energy.

ASYMMETRICAL CAPACITOR

(Current amplification???)

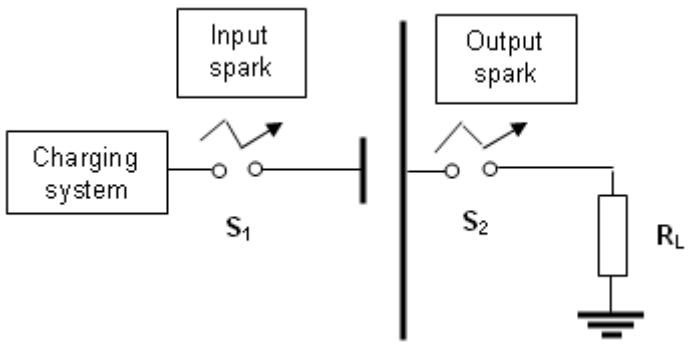

COMMENT: The capacitance (size) of the plate on the right is much greater than that of the plate on the left.

FIELD AFTER S1

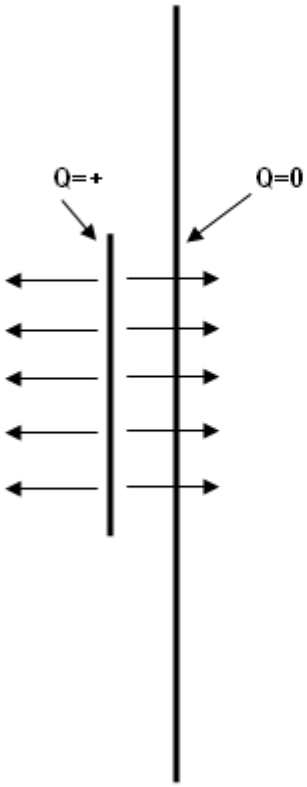

FIELD AFTER S2

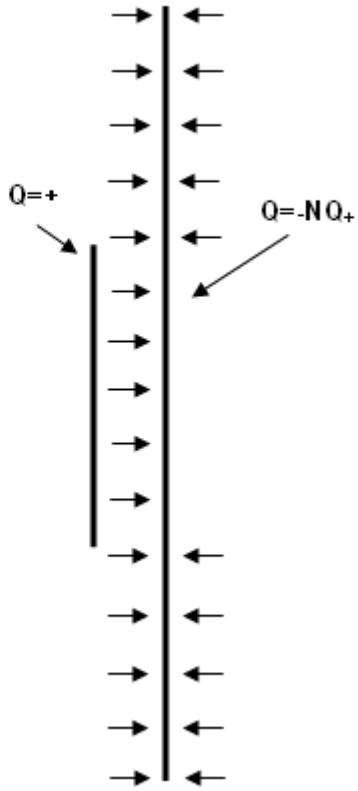

COMMENT: Charges from the ground will run on to the right hand plate **UNTIL** the moment when the external field drops to zero caused by the second spark ("S2"). It takes more charges flowing from the ground to annihilate the external field at the instant of the second spark, because the capacitance of the plate on the right is far greater. 'More charge' means 'more current', so you have achieved current amplification through this arrangement.

COMMENT: The field at the terminals of the plate on the right is not zero after both sparks have occurred, this is because a field remains due to the additional charges which have flowed in ('pumped') from the ground.

THE SIMPLEST ASYMMETRICAL CAPACITORS

The most simple asymmetrical capacitors are the Leyden jar and the coaxial cable (also invented by Mr. Tesla).

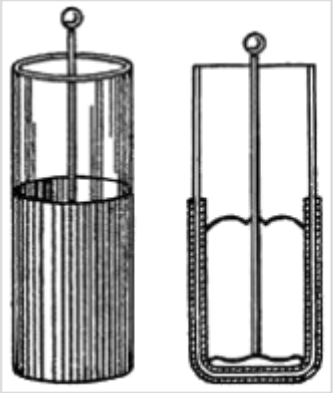

Apart from the fact that the area (capacitance) of the plates of these capacitors is different, and they therefore are asymmetrical, they have another property:

The electrostatic field of the external electrode of these devices does not affect the internal electrode.

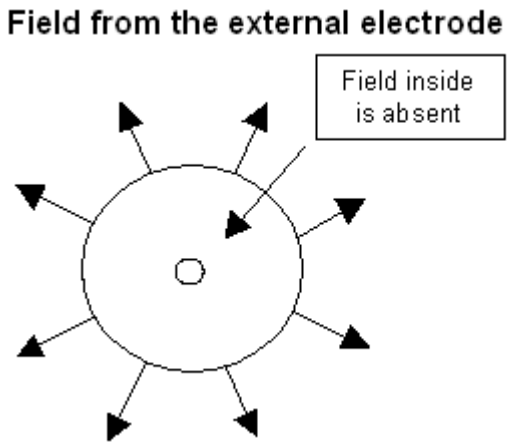

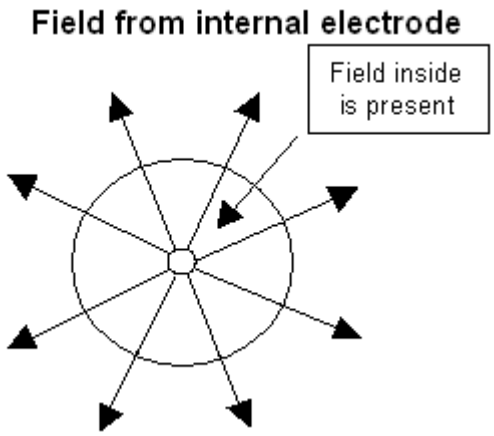

EXPLANATION: This is caused by the fact that the electrostatic field is absent inside the metal bodies (see textbooks).

REMARK: This is true provided that the plates are charged separately.

CAPACITOR - TRIODE

(The third electrode in an asymmetrical capacitor)

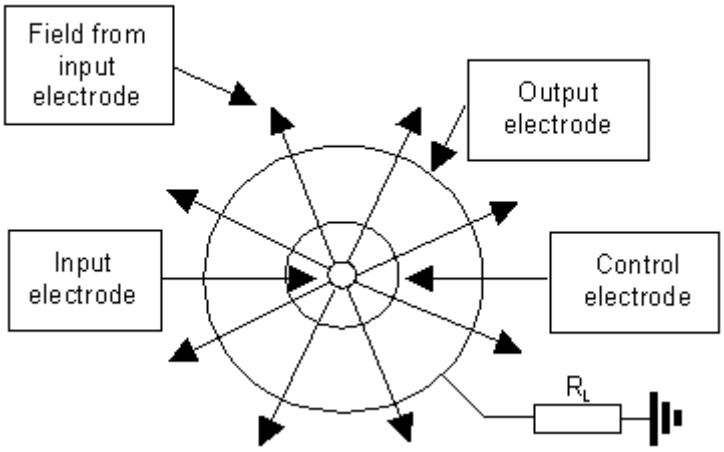

REMARK: Dr. Harold Aspden has pointed out the possibility of Energy Amplification when using this device.

THE PRINCIPLE OF CURRENT AMPLIFICATION IN THE CAPACITOR – TRIODE

EXPLANATION: You have to get zero potential on the inside of a small cylinder (on the input electrode). In this case, the charge on the external cylinder will be more than on the internal cylinder. More charge means more current, and so you'll have current amplification.

In detail:
The potential around any cylinder with radius 'R' is:

$$\varphi = \frac{q}{4\pi\varepsilon\varepsilon_0 R}.$$ where q is a charge on this cylinder

Potential inside this cylinder is the same, because:

$$\frac{d\varphi}{dr} = 0$$ and $$\varphi = const.$$

If you want to get zero potential inside two cylinders (on the input electrode) you have to deliver more charge of the opposite sign to the external one, proportionally to the radius of this cylinder. A larger radius means more charge.

OPERATIONAL SEQUENCE:

1. Charge the input electrode from your source of energy.
2. The small cylinder (control electrode) will be charged automatically, if it's connected to the ground through a diode with the properly polarity.
3. Discharge the input electrode to zero level (for example, by using a spark). As a result there will be a zero potential on it.
4. If the external cylinder is connected to the ground through a diode with the properly polarity, it will be charged automatically with the opposite sign. But the charge "pumped" from the ground will more than for small cylinder (proportional to the ratio of their radiuses).
5. As a result, there is current amplification.

COMMENT: Did Edwin Gray use this principle in his device?.

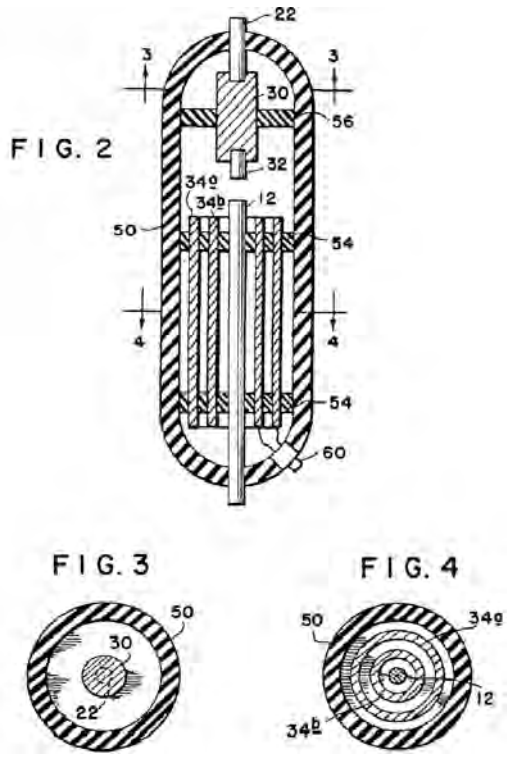

COMMENT: If so, then Gray's patent is lacking some very important details (???)

THE PRINCIPLE OF THE "BLINDNESS" CHARGING SYSTEM IN THE SEG

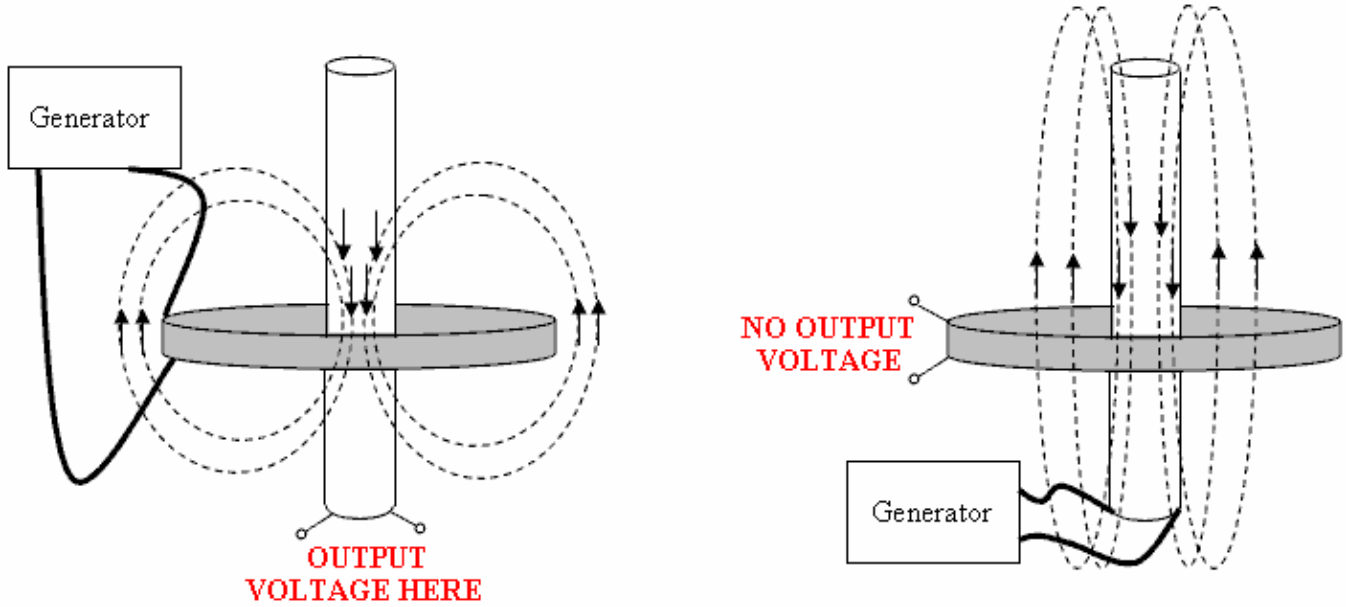

EXPLANATION: The "short" coil is not able to see the oscillations in the "long" coil, because the total number of magnetic lines from the "long" coil which are passing through the "short" coil is close to zero (because one half is in one direction and the other half is in the opposite direction).

COMMENT: This a particular case of an asymmetrical transformer, for more details read the part about asymmetrical transformers.

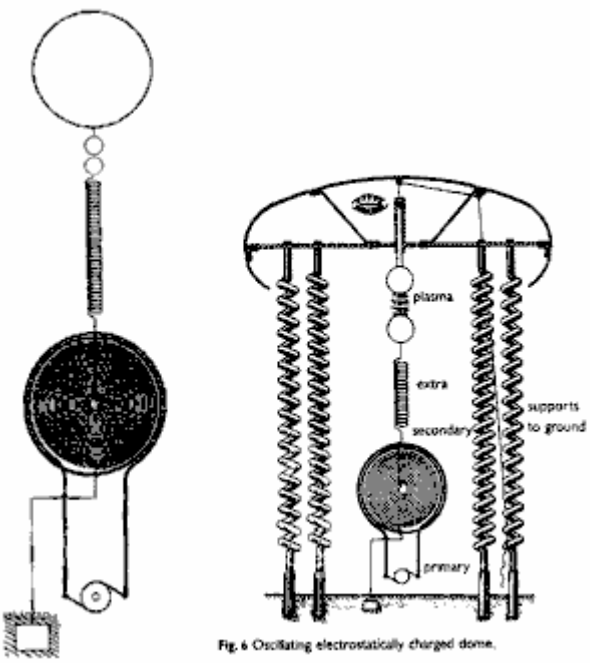

Fig. 6 Oscillating electrostatically charged dome.

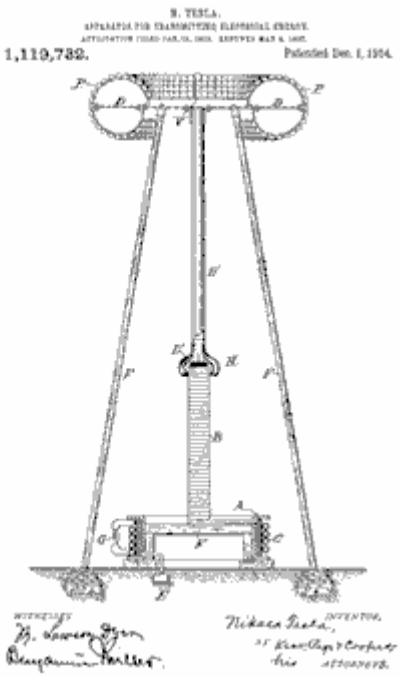

COMMENTS ABOUT THE SEG:

All Back EMF schematics can be used in SEG

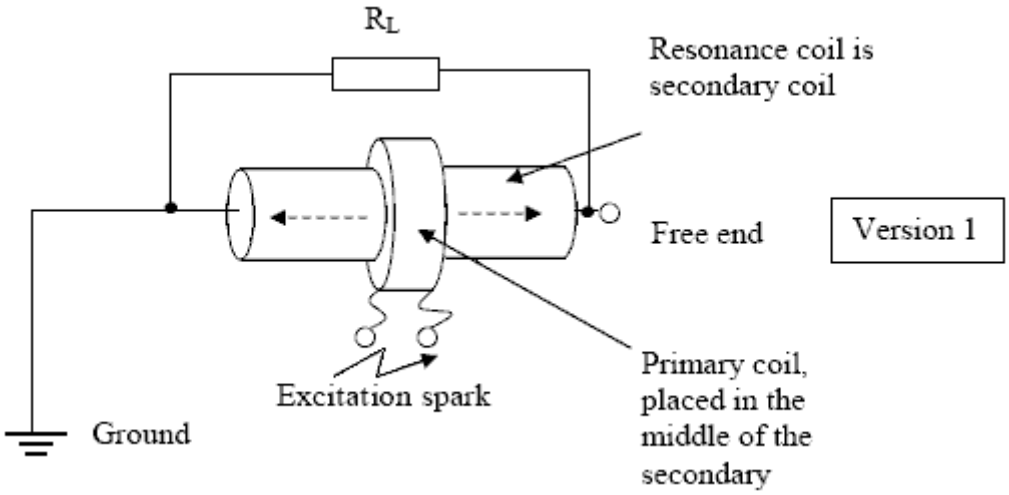

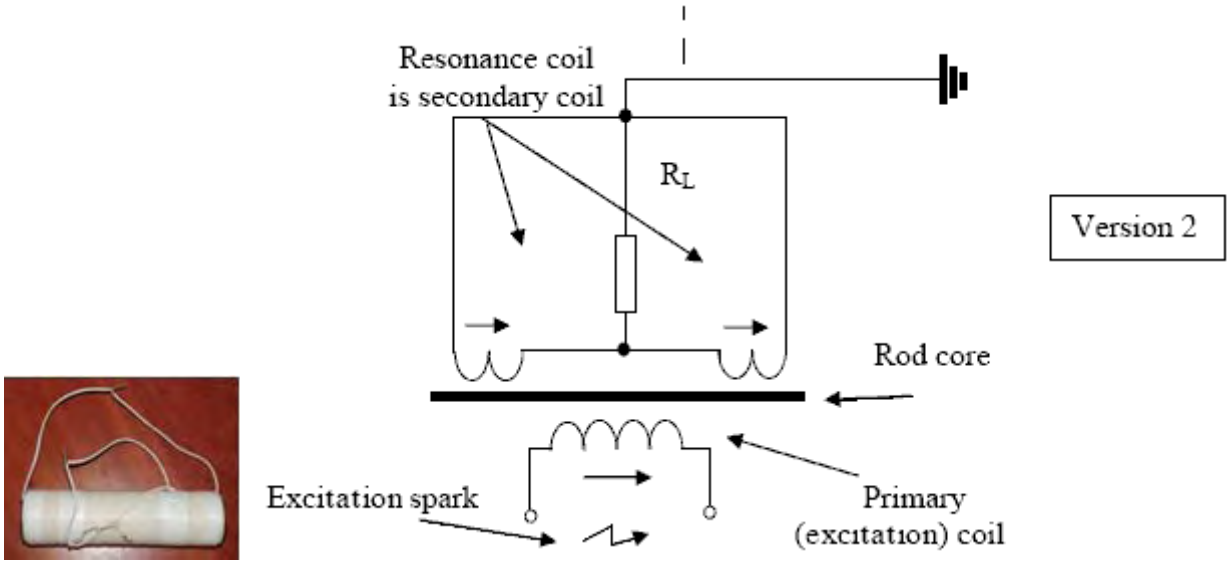

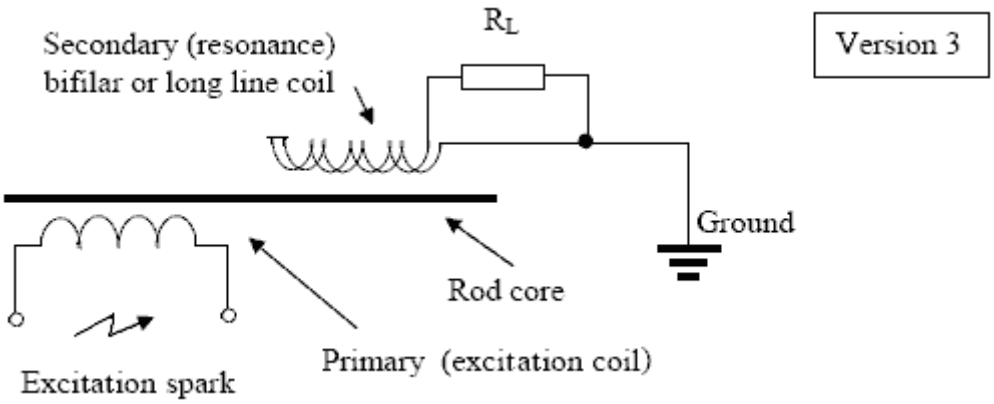

COMMENTS: No current will be produced in the load in any of these circuits, unless there is a ground connection. Is excitation possible with just a single spark (???)

FOR MORE ASYMMETRY IN SEG ?
FOR ONE SPARK EXCITING IN SEG ?

By Don Smith

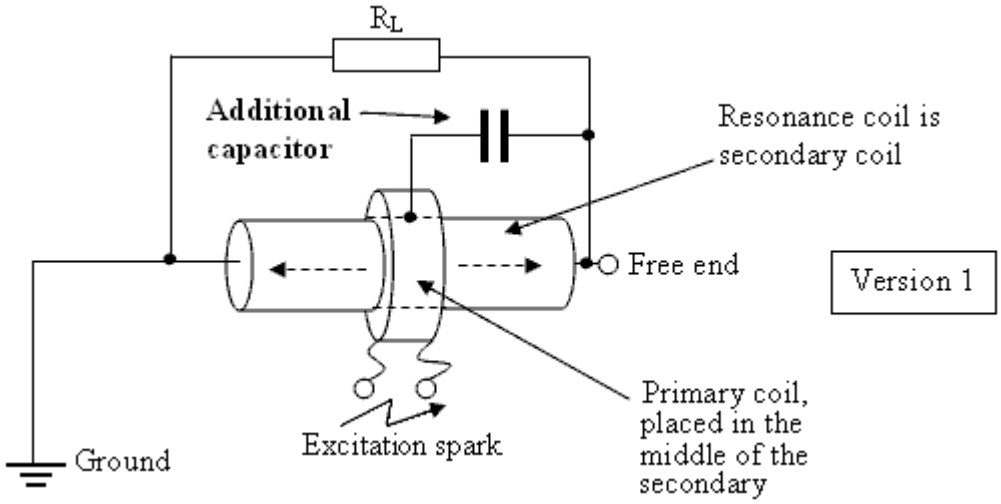

Prototype coil

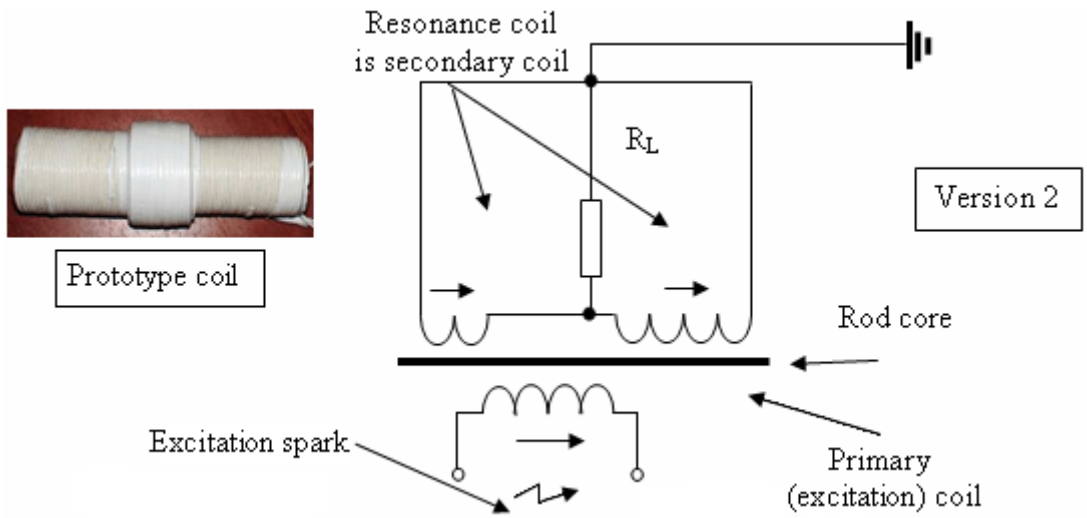

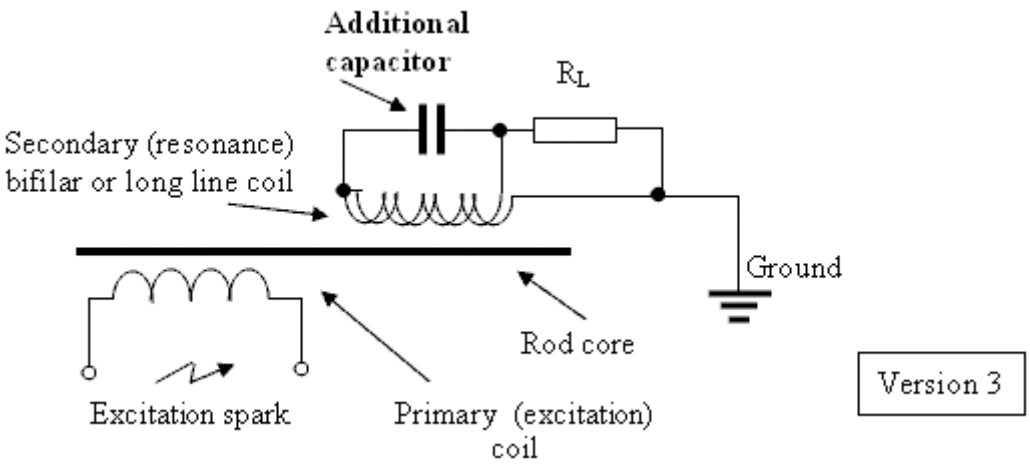

COMMENT: This arrangement becomes more asymmetrical after excitation

EXPLANATION

Symmetry is destroyed by a spark

If the impedances of Ra and Rc are the same at the frequency produced by signal generator F1, then the resulting voltage at points **A** and **B** will also be identical which means that there will be zero output.

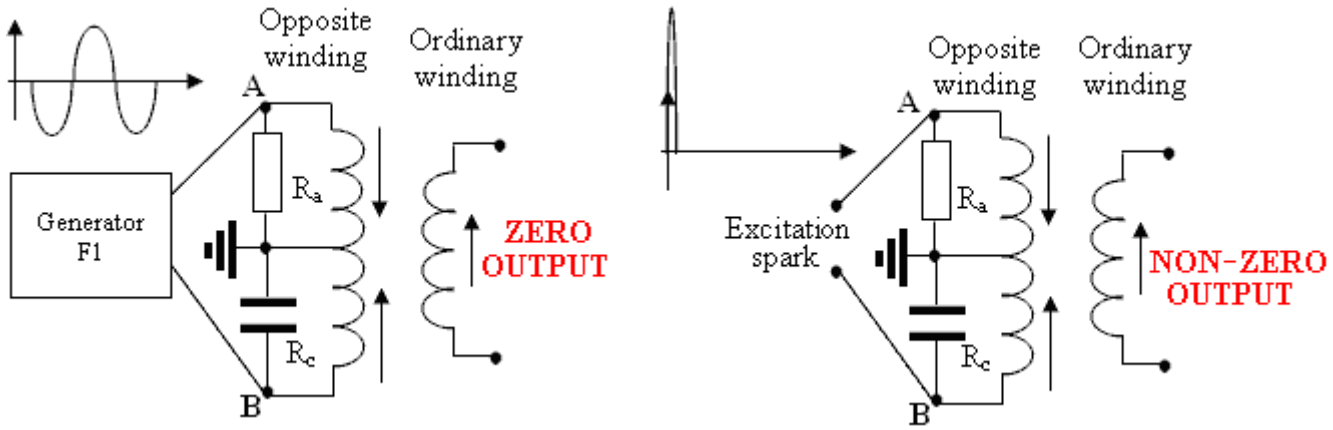

If the circuit is excited by the very sharp, positive-only, DC voltage spike produced by a spark, then the impedances of Ra and Rc are not the same and there is a non-zero output.

Here is a possible alternative. Please note that the position of the output coil must be adjusted, it's best position depending on value of resistor Rc and the frequency being produced by signal generator F1.

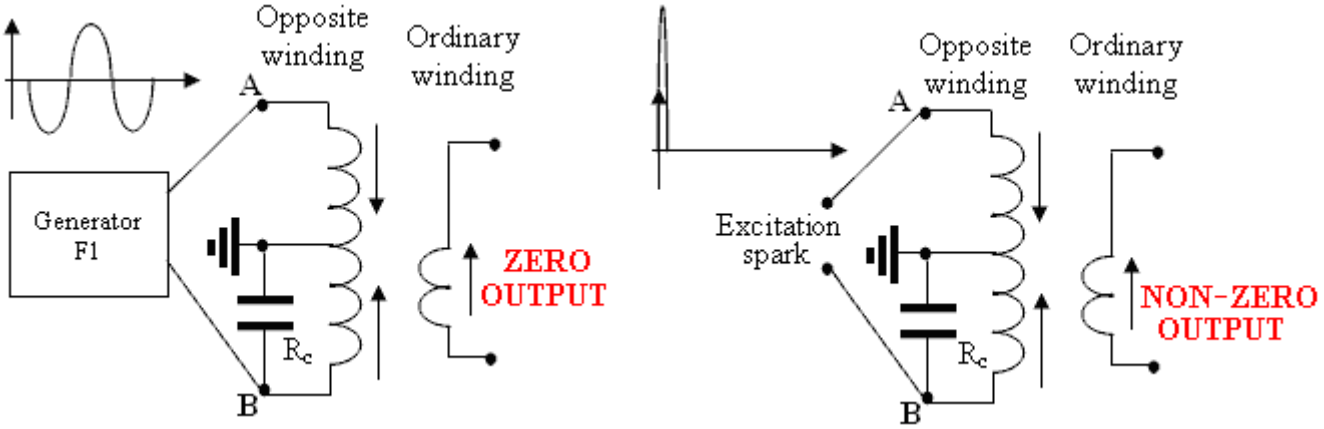

Here is another possible arrangement. Here, the position of the output coil depends on L1 and L2:

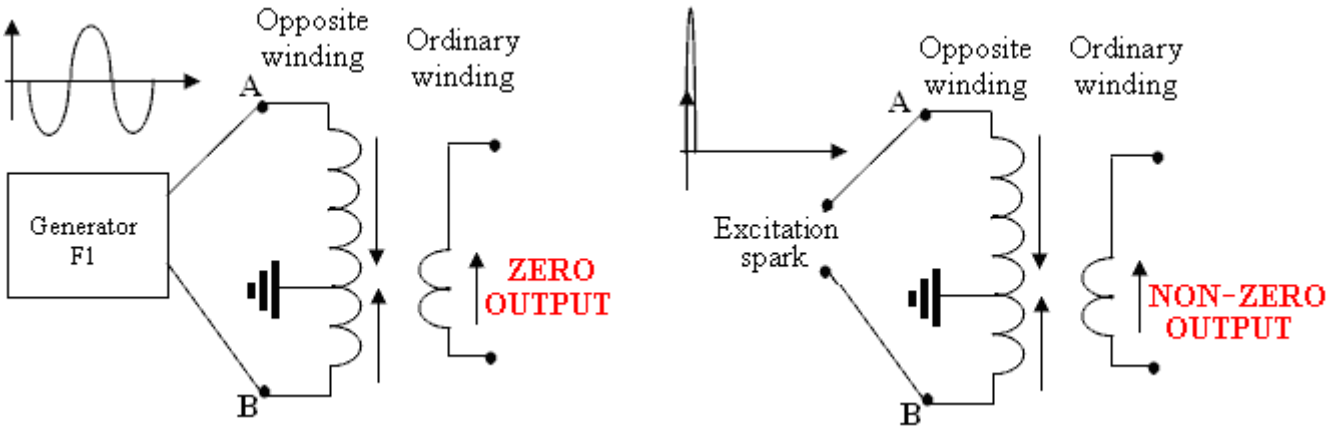

A NOMOGRAPH

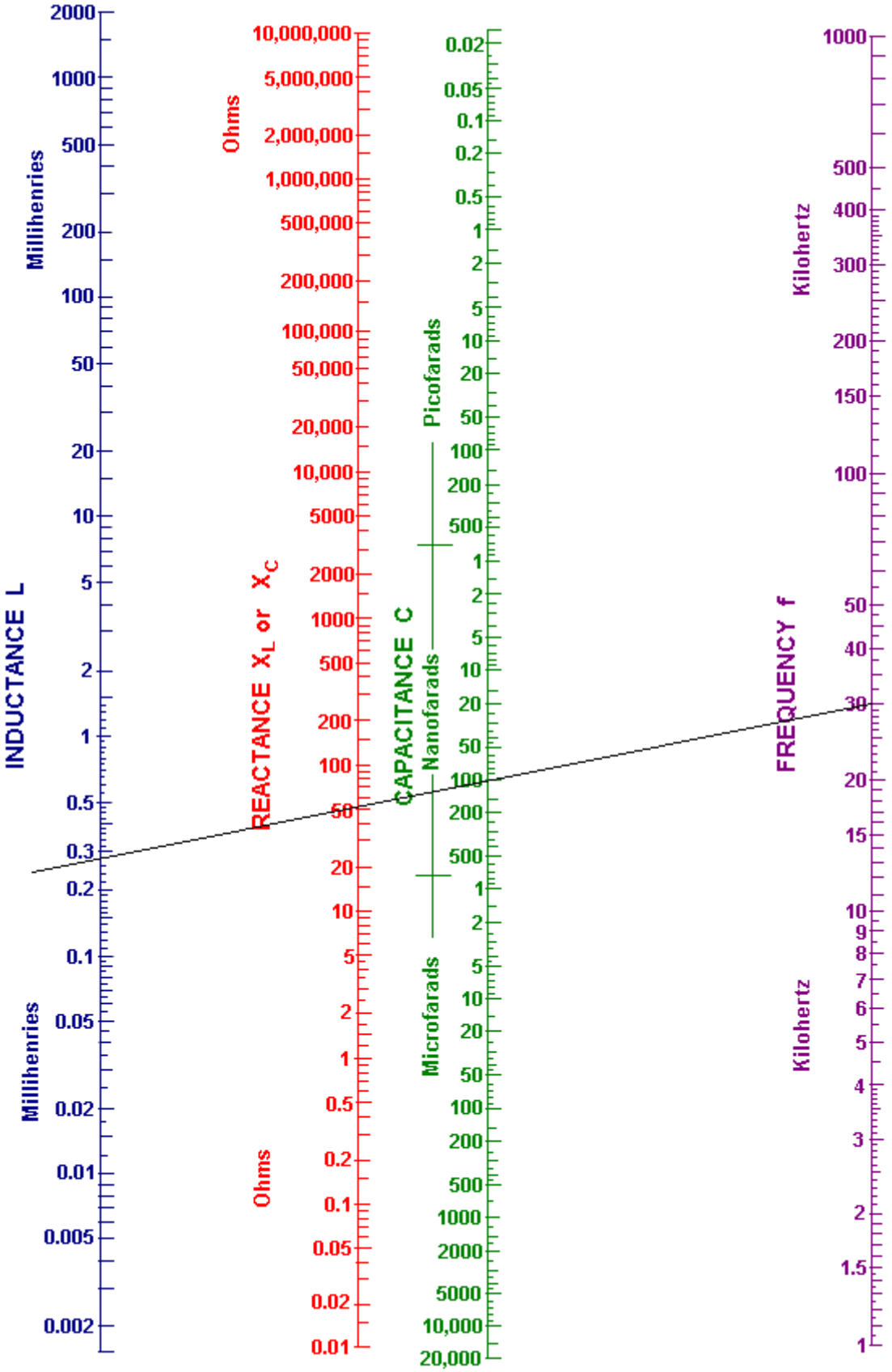

Using a nomograph: Draw a straight line from your chosen 30 kHz frequency (purple line) through your chosen 100 nanofarad capacitor value and carry the line on as far as the (blue) inductance line as shown above.

You can now read the reactance off the red line, which looks like 51 ohms to me. This means that when the circuit is running at a frequency of 30 kHz, then the current flow through your 100 nF capacitor will be the same as through a 51 ohm resistor. Reading off the blue "Inductance" line that same current flow at that frequency would occur with a coil which has an inductance of 0.28 millihenries.

MODERN OPTIONS IN SEG

Back EMF suppression in resonance coil

Version 3

By Don Smith

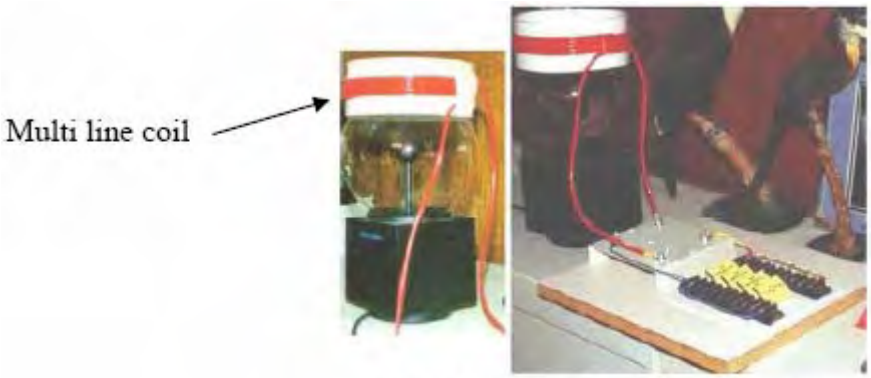

Globe device for energy generation

COMMENT: Please note that a long wire is used and one-spark excitation, where additional capacitors are used to create non-symmetry (???)

Version???

By Don Smith

Multi coil system for energy multiplication

Version???

By Tariel Kapanadze

No description, so read the following section…

KAPANADZE PROCESS

The process requires only 4 steps:

STEP 1

An L-C (coil-capacitor) circuit is pulsed and it's resonant frequency determined (possibly by feeding it power through a spark gap and adjusting a nearby coil for maximum power collection).

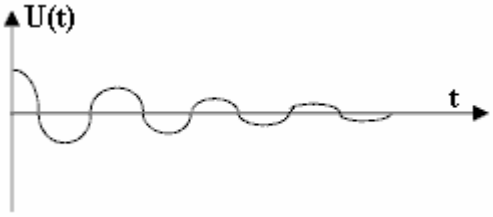

STEP 2

The SEG process causes the energy level in the L-C circuit to rise. Power is fed via a spark gap which produces a very sharp square wave signal which contains every frequency in it. The L-C circuit automatically resonates at it's own frequency in the same way that a bell always produces the same musical frequency when struck, no matter how it is struck.

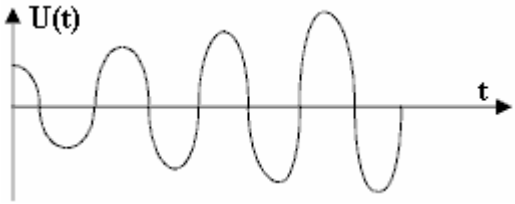

STEP 3

The output waveform from the L-C circuit is then manipulated to provide an output which oscillates at the frequency on the local mains supply (50 Hz or 60 Hz typically).

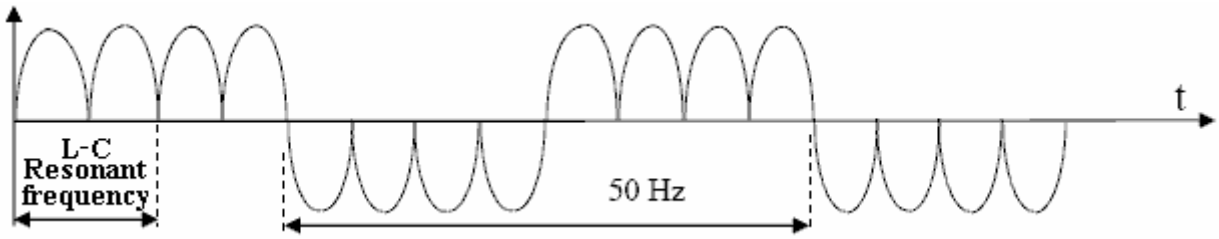

STEP 4

Finally, the oscillations are smoothed by filtering to provide mains-frequency output power.

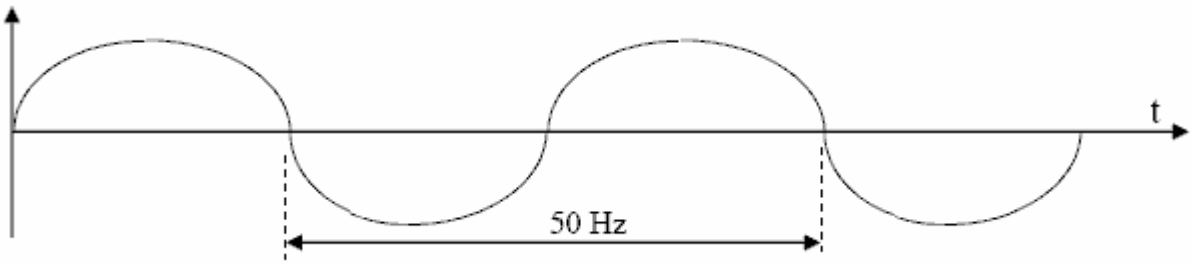

COMMENT: All of these processes are described in Kapanadze's patents and so, no state or private confidential information is shown here. Kapanadze's process is the SEG process.

COMMENT: As I see it, the main difference between the designs of Don Smith and Tariel Kapanadze is the inverter or modulator in the output circuit. At mains frequency you need a huge transformer core in a powerful inverter.

Read the following parts to discover more secrets…

MODERN OPTION

Lowering the L-C frequency to mains frequency (Modulation)

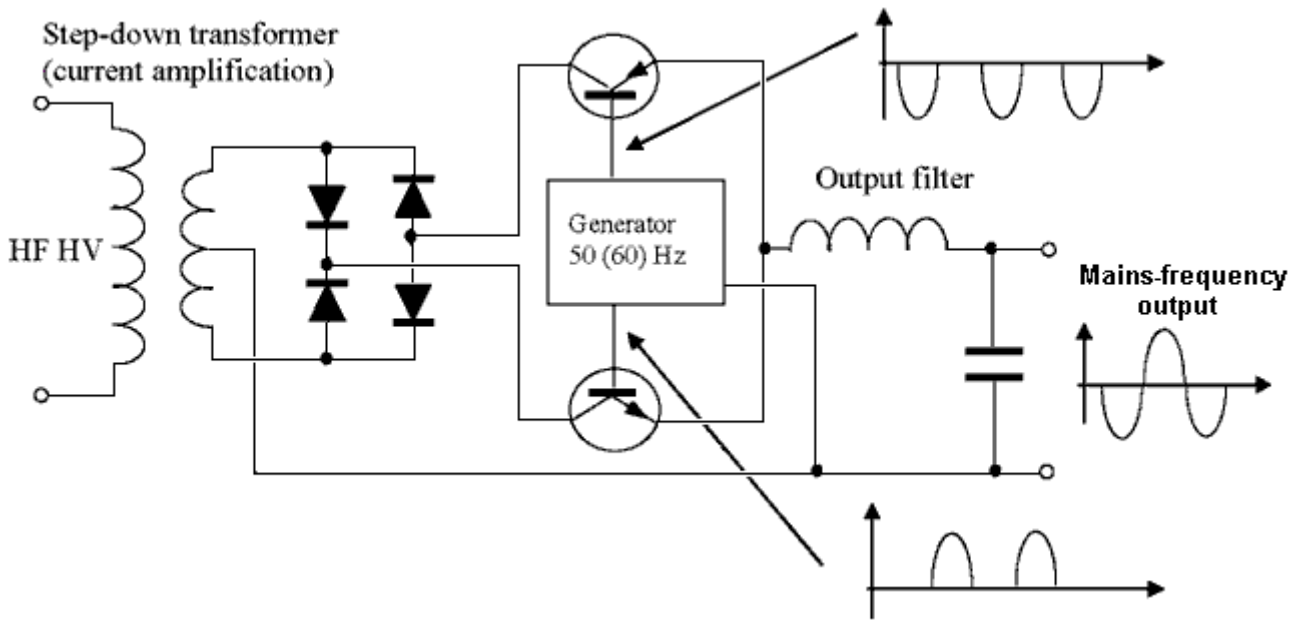

COMMENTS: It is possible to use square waves instead of sine waves to ease the loading on the transistors. This is very similar to the output sections of Tariel Kapanadze's patents. This method does not require a powerful transformer with a huge core in order to provide 50 Hz or 60 Hz.

<u>Don Smith's option</u> (guessed at by Patrick Kelly)

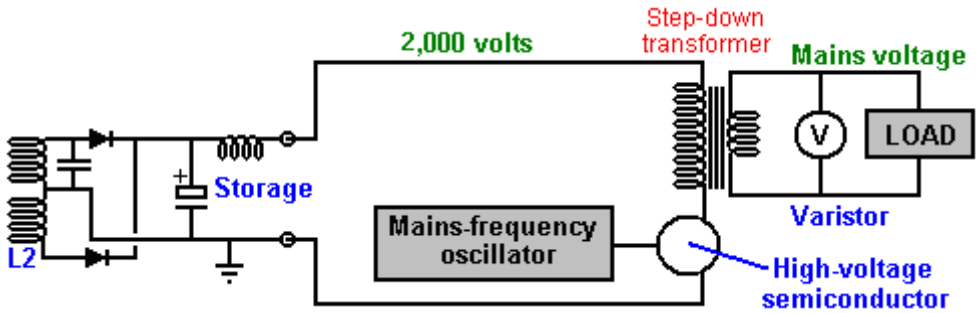

COMMENT : There is no high-frequency high-voltage step-down transformer, but a step-down transformer is used for mains frequency which means that it will need a huge core.

FOR BOTH SCHEMATICS:

<u>You must choose the load in order to get the maximum power output. Very low, and very high loads will give almost no energy in the load (because the current flowing in the output circuit is restricted by the current flowing in the resonant circuit)</u>.

ILLUSTRATIONS FOR FREQUENCY LOWERING

From Tariel Kapanadze

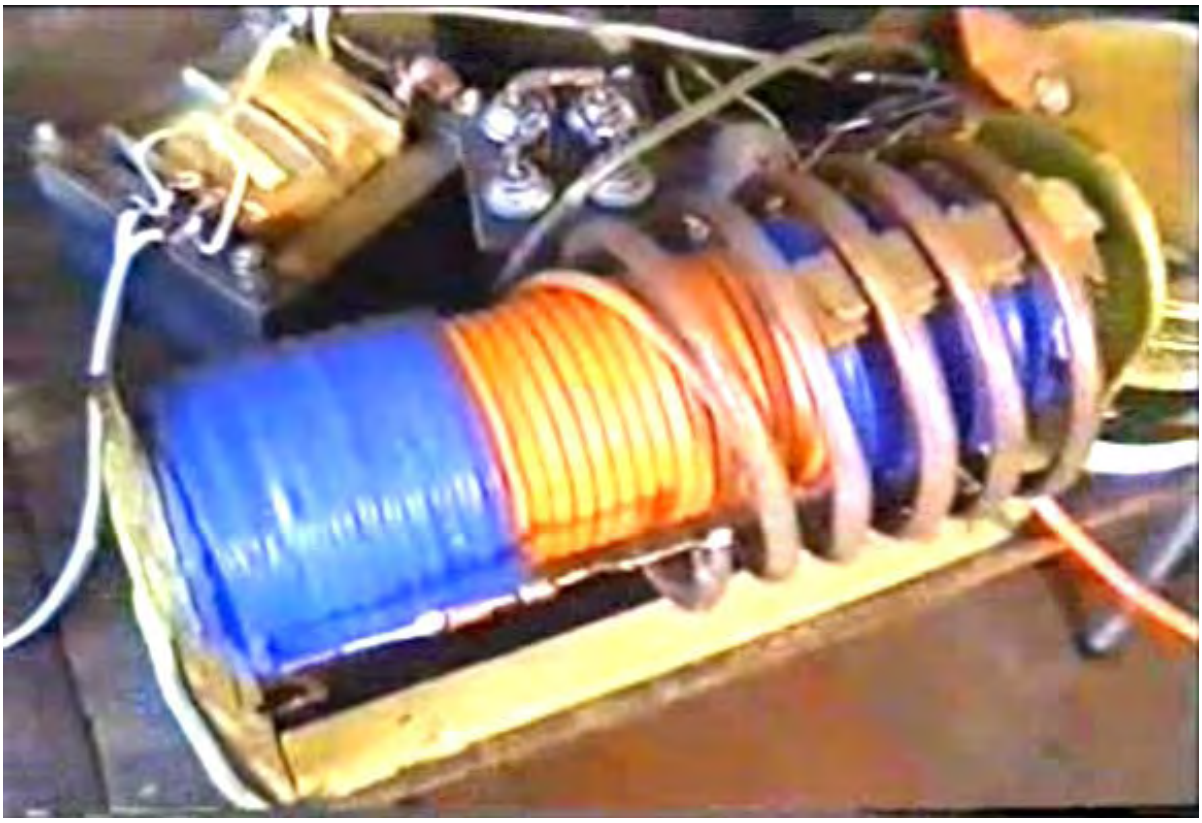

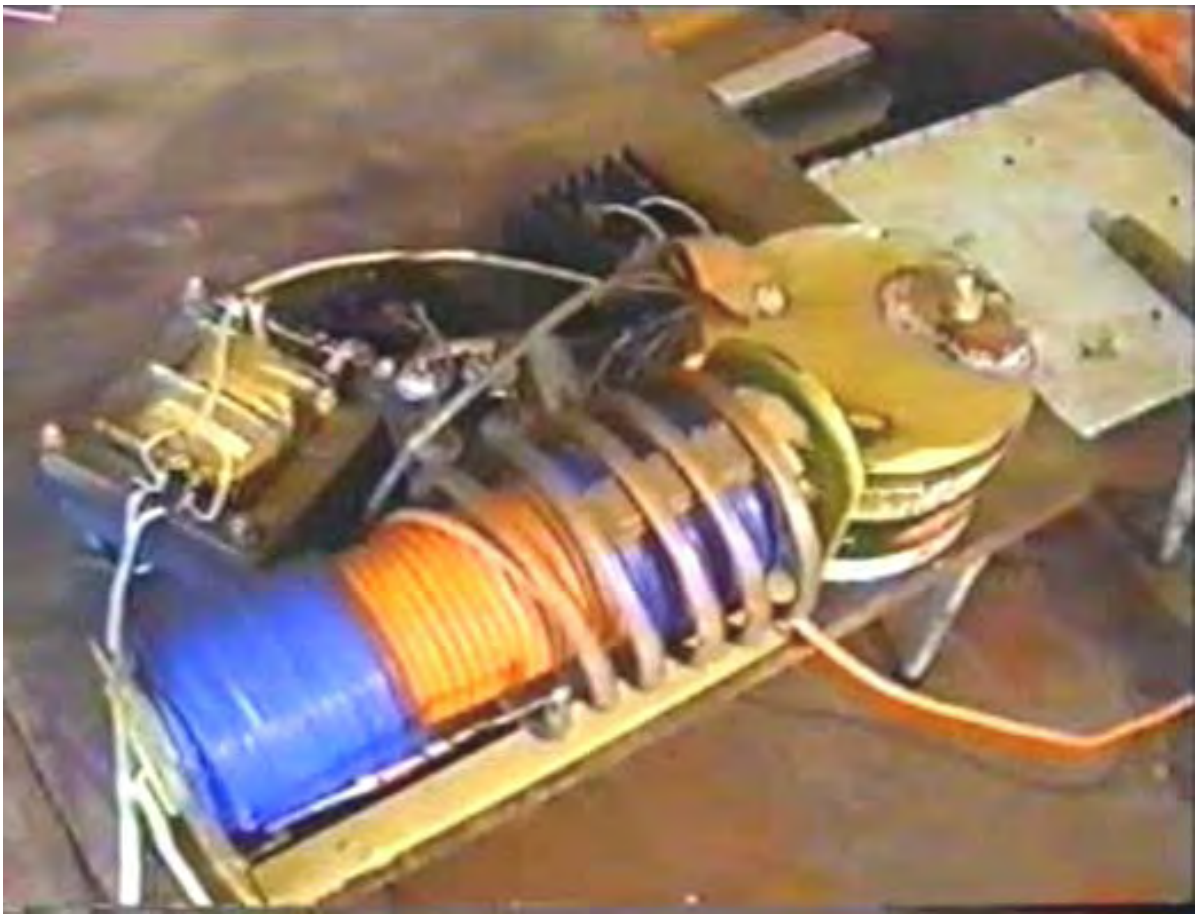

ENERGY GAIN

(REMARKS on 1.1 and 1.2 SECRETS)

We must consider two options:
1. Back-EMF suppression . . . . . (1.1)
2. Excitation by a spark . . . . . (1.2).

THESE OPTIONS ARE DIFFERENT

However, in both cases, an increase of energy occurs due to the charges being pumped in from the ground. In the terminology of Mr. Tesla – "a charge funnel" or in modern terminology "a charge pump".

1. In the first case, the problem for the oscillating circuit is to "create" an electromagnetic field which has a high intensity electrical component in ambient space. (Ideally, it is only necessary for the high-voltage capacitor be fully charged once. After that, if the circuit is lossless, then oscillation will be maintained indefinitely without the need for any further input power).

THIS IS A "BAIT" TO ATTRACT CHARGES FROM THE AMBIENT SPACE.

Only a tiny amount of energy is needed to create such a "bait"...

Next, move the "bait" to one side of the circuit, the side which is the source of the charges (Ground). The separation between the "bait" and the charges is now so small that breakdown occurs. The inherent parasitic capacitance of the circuit will be instantly charged, creating a voltage difference at the opposite ends of the circuit, which in turn causes spurious oscillations. The energy contained in these oscillations is the energy gain which we want to capture and use. This energy powers the load. This very useful electromagnetic field containing our excess power oscillates in a direction which is perpendicular to the direction of oscillation of the "bait" field and because of this very important difference, the output power oscillations do not destroy it. This vital factor happens because the coil is wound with two opposing halves. The parasitic oscillations gradually die out, passing all of their energy to the load.

This energy-gaining process is repeated, spark by spark. The more often a spark occurs, the higher the excess power output will be. That is, the higher the spark frequency (caused by a higher voltage across the spark gap), the higher the power output and the greater the efficiency of the process. Hardly any additional "bait" energy is ever required.

2. In the second case we must charge the capacitor circuit to an energy level higher than that of the source energy itself. At first glance, this appears to be an impossible task, but the problem is solved quite easily.

The charging system is screened, or "blinded", to use the terminology of Mr. Tesla, so that it cannot "see" the presence of the charge in the capacitor. To accomplish this, one end of a capacitor is connected to the ground and the other end is connected to the high-energy coil, the second end of which is free. After connecting to this higher energy level from the energising coil, electrons from the ground can charge a capacitor to a very high level.

In this case, the charging system does not "see" what charge is already in a capacitor. Each pulse is treated as if it were the first pulse ever generated. Thus, the capacitor can reach a higher energy level than that of the source itself.

After the accumulation of the energy, it is discharged to the load through the discharge spark gap. After that, the process is repeated again and again indefinitely ...

THIS PROCESS DOES NOT REQUIRE THE SUPPRESSION OF BACK-EMF

3. It should be noted, that option 1 and option 2 above could be combined.

SECRET 2

SWITCHABLE INDUCTANCE

The inductance is comprised of two coils which are positioned close to each other. Their connections are shown in front.

1

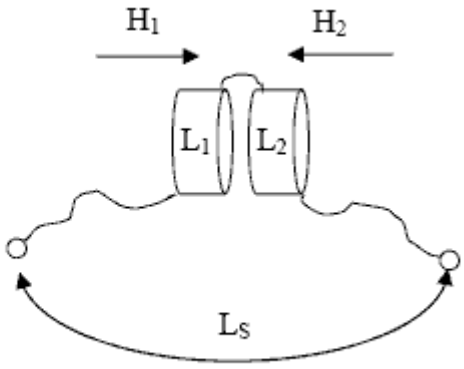

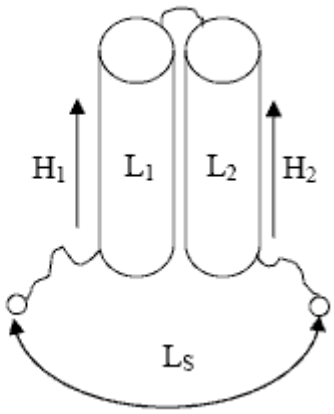

CONSTRUCTION: When constructing this arrangement there are many different options due to the various types of core which can be used for the coils:

1. Air-core

2. A ferromagnetic bar core

3. A ferromagnetic toroidal core

4. A transformer style ferromagnetic core.

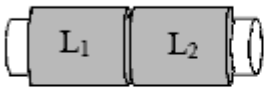

2

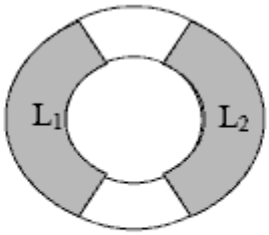

3

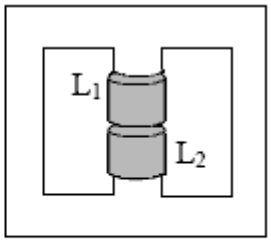

4

PROPERTIES: (tested many times with a variety of cores)

The value of the total inductance L_S does not change if you short one of the inductors L_1 or L_2

(This may have been tested for the first time by Mr. Tesla back in the 19th century).

APPLICATION TECHNIQUE:

This energy generation is based on the asymmetrical process:

1. Feed the total inductance L_S with a current I
2. Then short-circuit one of the inductors (say, L1)
3. Drain the energy from inductor L2 into a capacitor
4. After draining L2, then remove the short-circuit from L1, short-circuit L2 and then drain the energy from L1 into a capacitor

QUESTION: Is it possible, using this method, to get twice the energy amount due to the asymmetry of the process, and if not, then what is wrong?

AN ANSWER: We need to start winding coils and performing tests.

EXAMPLES OF COILS ACTUALLY CONSTRUCTED

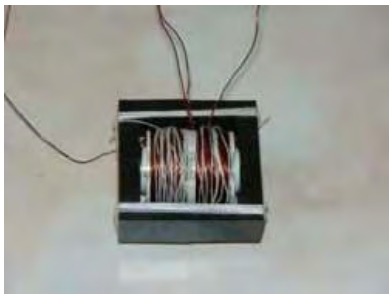

A coil was wound on a transformer ferromagnetic core (the size is not important) with permeability 2500 (not important) which was designed as a power-supply transformer. Each half-coil was 200 turns (not important), of 0.33 mm diameter wire (not important). The total inductance L_S is about 2 mH (not important).

A coil was wound on a toroidal ferromagnetic core with permeability 1000 (not important). Each half-coil was 200 turns (not important), of 0.33 mm diameter wire (not important). The total inductance L_S is about 4 mH (not important).

An ordinary laminated iron core transformer intended for 50-60 Hz power supply use (size is not important) was wound with a coil placed on each of it's two halves. The total inductance L_S is about 100 mH (not important).

THE OBJECTIVE OF THE TESTS

To make tests to confirm the properties of the coils, and then make measurements of the L_S inductance both with coil L2 short-circuited and coil L2 not short-circuited, and then compare the results.

COMMENT: All of the tests can be done with just the toroidal coil as the other coils have been shown to have the same properties. You can repeat these tests and confirm this for yourself.

OPTION 1

These simple inductance measurements can be carried out with the help of an ordinary RLC (Resistance / Inductance / Capacitance) meter, such as the one shown here:

The measurements taken:

The total coil inductance L_S was measured without short-circuited coils, the figure was recorded. The L2 coil was then short-circuited and the inductance L_S measured again and the result recorded. Then, the results of the two measurements were compared.

The result: The inductance L_S was unchanged (to an accuracy of about a one percent).

OPTION 2

A special set-up was used, consisting of an analogue oscilloscope, a digital voltmeter and a signal generator, to measure a voltage on the inductance L_S without L2 being short-circuited and then with L2 short-circuited.

After the measurements were made, all of the results were compared.

Schematic of the set-up:

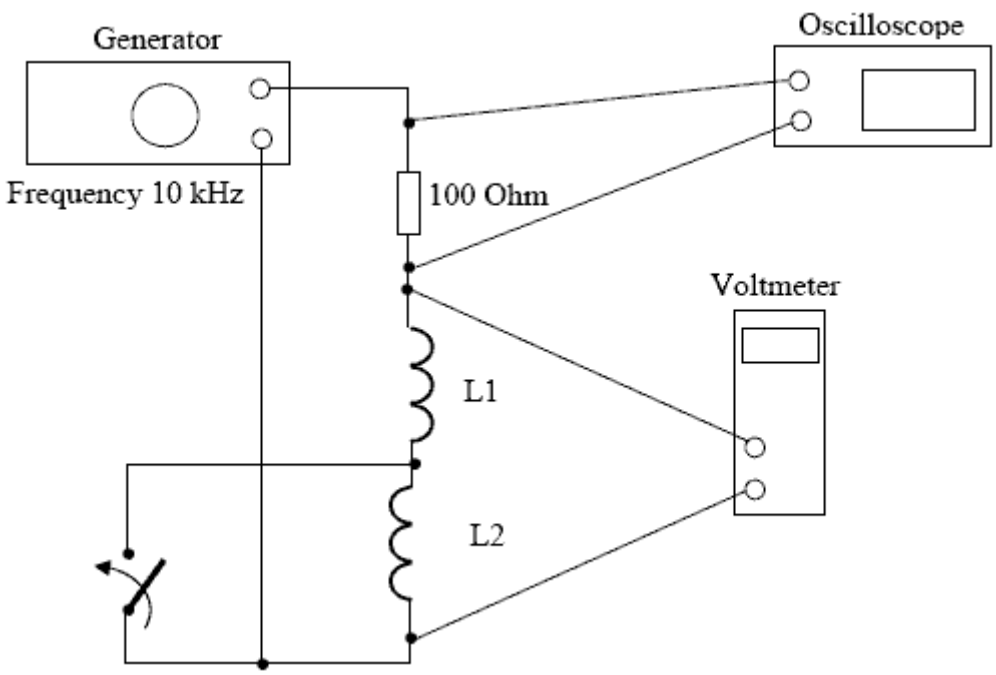

The order in which the measurements were taken

The voltage on the resistor was measured using the oscilloscope and the voltage on the inductor was measured using the voltmeter. Readings were taken before and after short-circuiting L2.

The result: The voltages remained unchanged (to an accuracy of about one percent).

Additional measurements

Before the above measurements were taken, the voltages across L1 and L2 were measured. The voltage on both halves was a half of the voltage on the total inductor L_S.

COMMENT: The frequency of about 10 kHz was chosen because the coil did not have parasitic resonances at this frequency or at low frequencies. All measurements were repeated using a coil with a ferromagnetic E-shaped transformer core. All of the results were the same.

OPTION 3

Capacitor recharging.

The objective was to match voltages on a capacitor, both before and after it being recharged by interaction with an inductor which could be connected into the circuit via a switch.

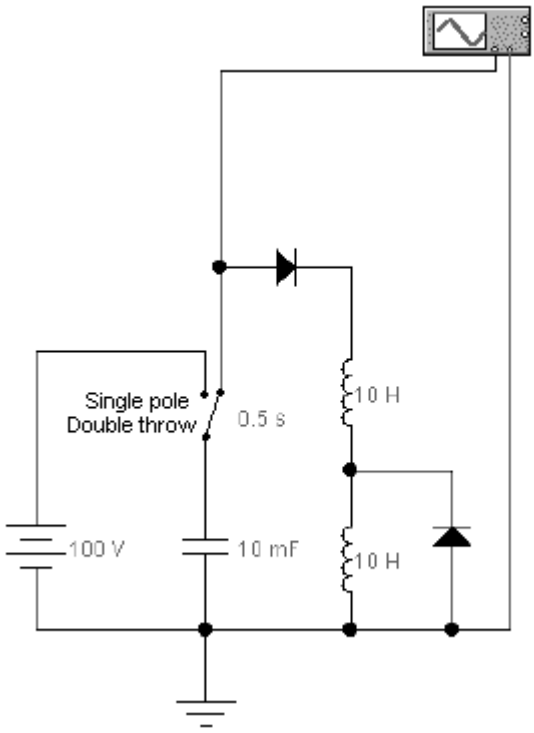

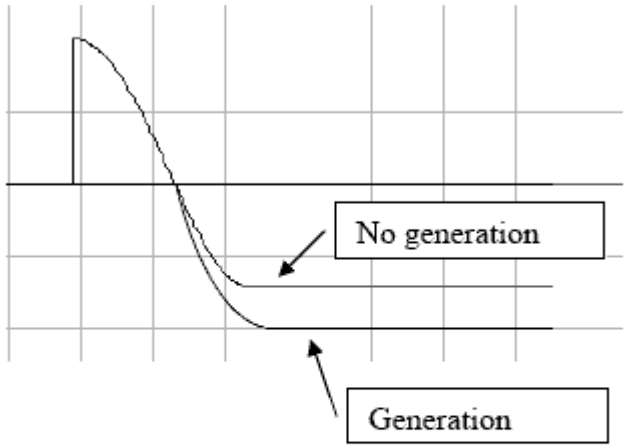

The experiment conditions

A capacitor is charged from a battery and is connected to the inductor through the first diode (included to give protection against oscillations). At the moment of feedback, half of the inductor is shunted by the second diode (due to it's polarity), while the inductance must remain unchanged. If after recharging the capacitor the capacitor voltage is the same (but with reversed polarity), then generation will have taken place (because a half of the energy remains in the shunted half of the inductor).

In theory, it is impossible, for an ordinary inductor consisting of two coils to do this.

The result :

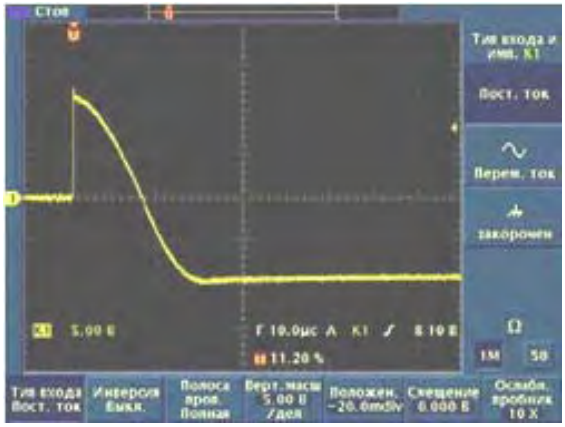

The result confirms the prediction – the remaining energy is more than the capacitor gives to the coil (with an accuracy of 20%).

Test components: Capacitor 47 nano Farads, inductor LS is about 2 mH , Shotky silicon diodes BAT42, voltage used: 12 V.

THE RESULT VERIFICATION FOR OPTION 3

For verification of these results and in order to improve the accuracy, all measurements were repeated using alternative components.

Test components: Capacitor: 1.5 nano Farads; total inductance: 1.6 mH, germanium diodes: (Russian) D311, charging voltage: 5V.

The result: Confirmation of the previous measurements (a) shown below:

(a)

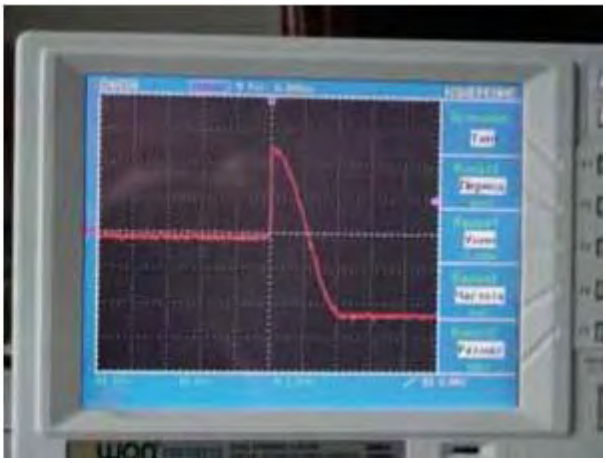

(b)

The recharging accuracy was improved to 10 percent. Also, a check measurement was made **without the second diode**. The result was essentially the same as the measurement which used the shunting diode. The missing 10 percent of the voltage can be explained as losses due to the spread capacitor's inductance and in it's resistance.

CONTINUED TESTING

The shunting diode was reversed and the test performed again:

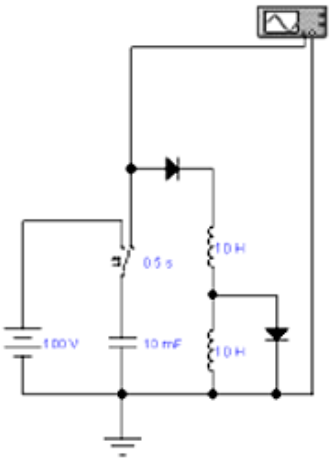

The result: It seems that the charge is spot on…

Further testing

An oscilloscope was connected to the coil instead of to the capacitor, in order to avoid influence of the first diode so the oscillations viewed were based on the inductance of the spread capacitors.

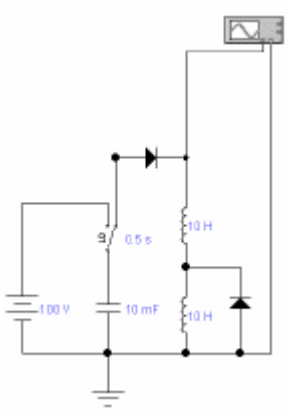

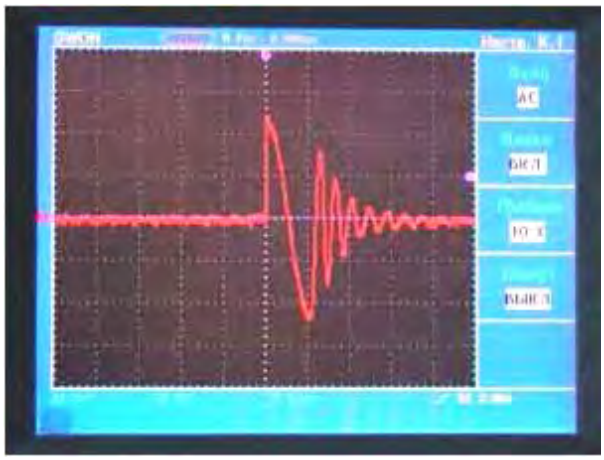

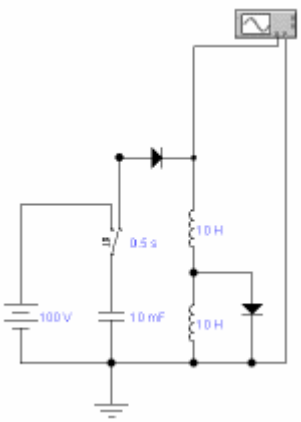

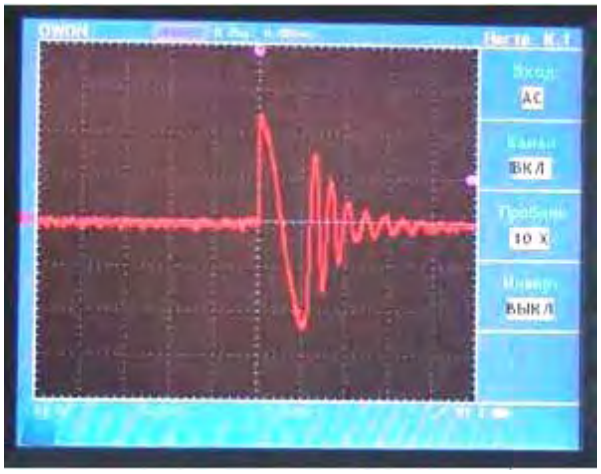

The result: The accuracy of capacitor recharging was improved to 5 percent (due to the removal of the influence of the first diode)**.** After the main capacitor was switched off (by the diode), you can see oscillations caused by the spread capacitance of the inductors. Based on the frequency of the oscillations which were 4 to 5 times higher than that of the main capacitor, one can estimate the spread capacitance as being 16 to 25 times lower than the main capacitor.

Still further testing

Testing of the oscillation circuit shunting, with the two cases combined (and without the first diode):

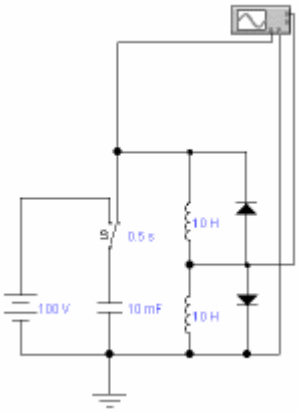

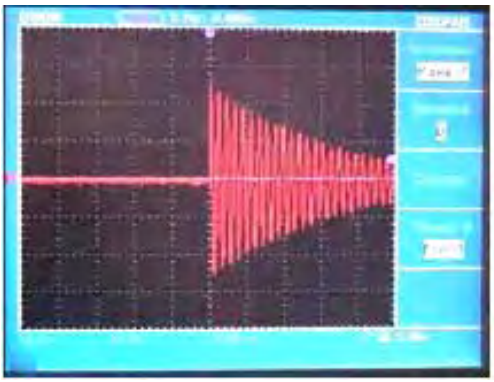

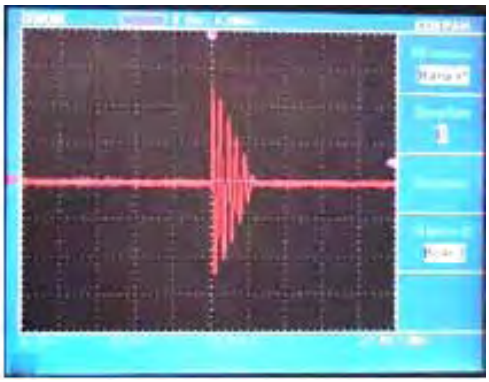

The result: A contour (oscillation circuit) is not destroyed, but it is shunted a lot. One can explain it by considering the moments when both diodes are conducting and so, shunt the circuit. As an addition, the voltage on the down diode is shown (the time scale is stretched). The negative voltage is close to maximum.

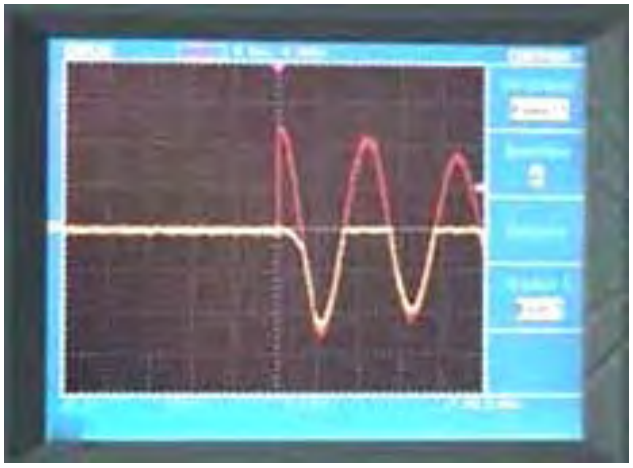

Still further testing

Charging a capacitor by shunting current in oscillation mode.

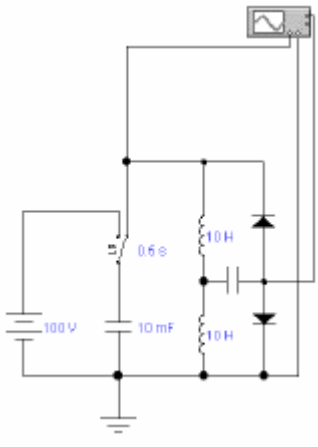

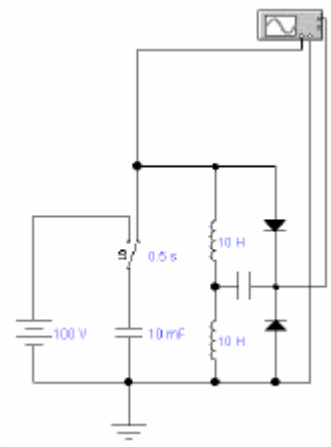

Conditions: The addition of a charging capacitor of 47 nano Farads.

The result: A capacitor is charging without shunting the circuit. The final voltage on it is 0.8 V, and rises an falls of the voltage depend on the value of the capacitor.

THE OVERALL RESULTS OF THE TESTS (OPTIONS 1, 2 and 3)

The symmetry of interaction in systems with electromagnetic field feedback (as with switched inductance) appears to be violated, and this implies that this arrangement could be used to generate energy.

COMMENT: You need to choose the load in order to get the maximum power output. **Very low, and very high loads, will send almost no energy to the load.**

ILLUSTRATION FOR SWITCHABLE INDUCTANCE

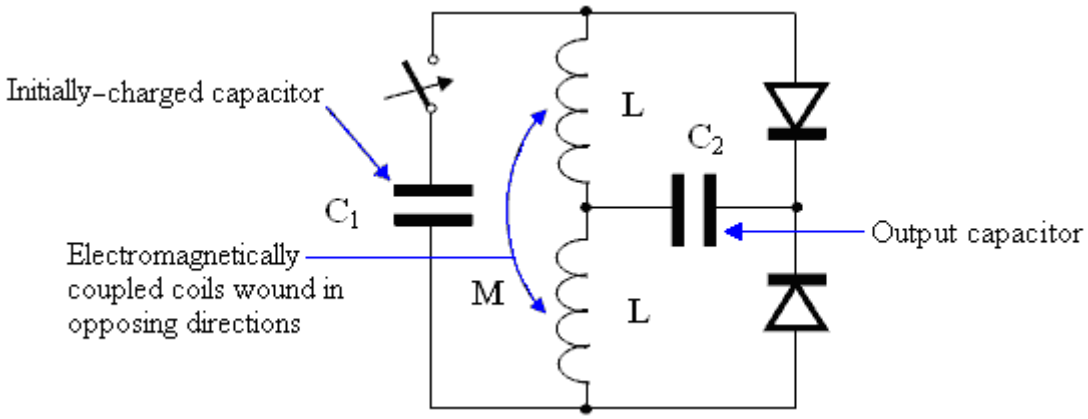

EXPLANATION: The circuit has two kinds of currents: the main current and the shunting current.

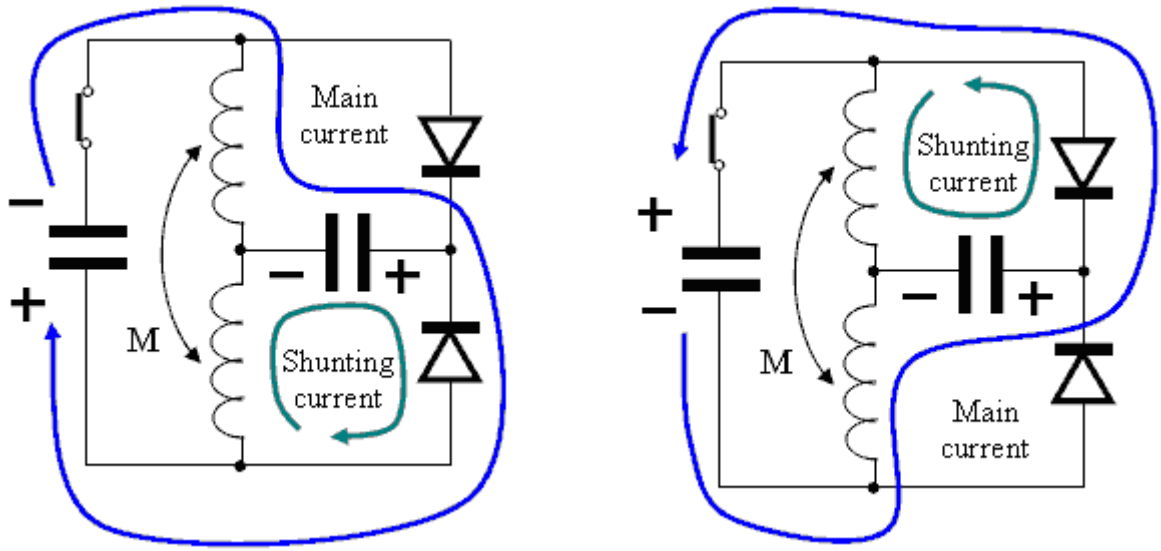

The main and the shunting currents run through the same output capacitor in one direction, if the output capacitor is discharged.

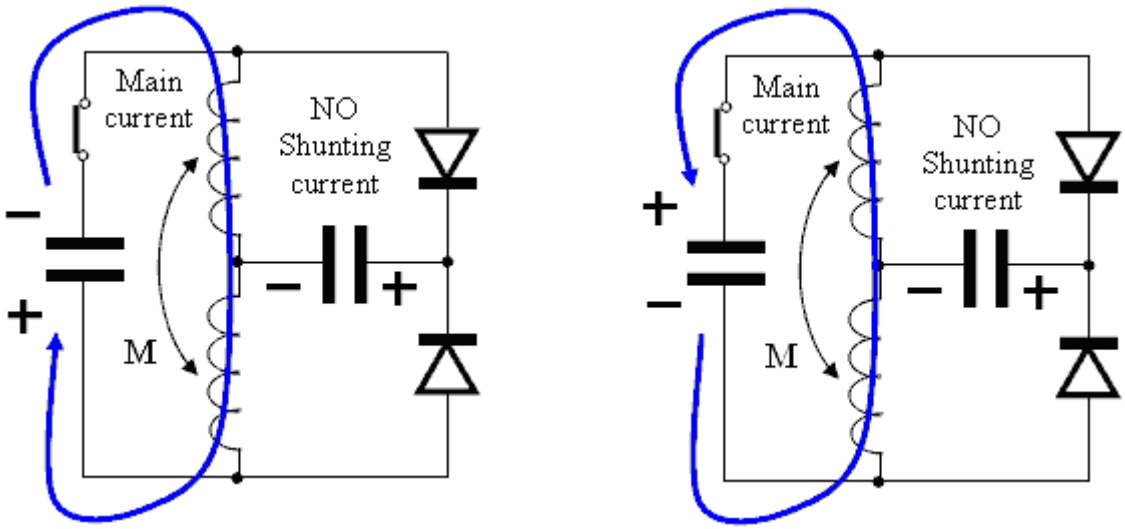

There is no shunting current, if the output capacitor is charged.

ILLUSTRATION FOR SWITCHABLE INDUCTANCE

From Don Smith

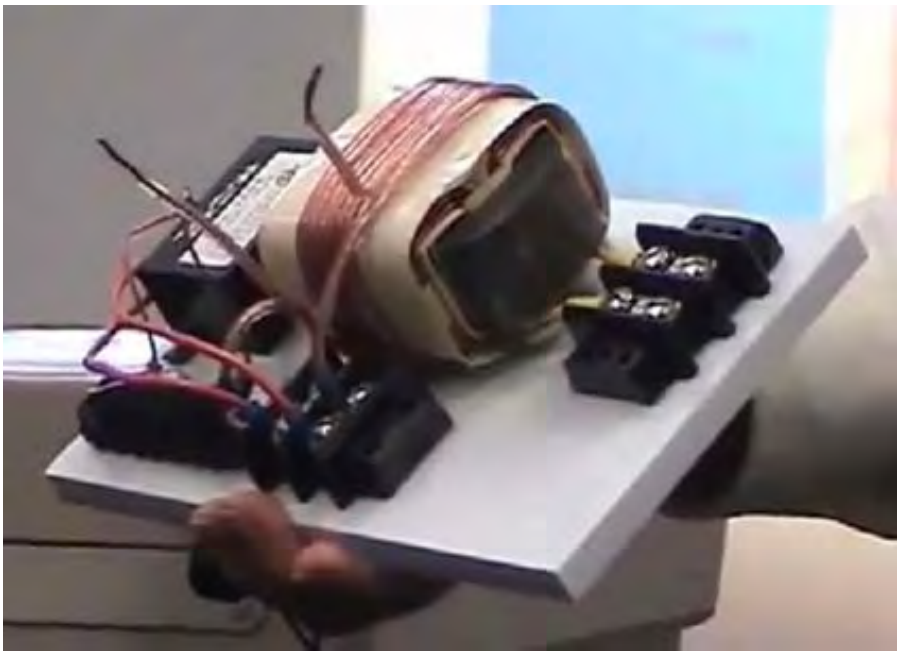

EXPLANATION As Don Smith said, two detector receivers were combined, and one FE device was constructed.

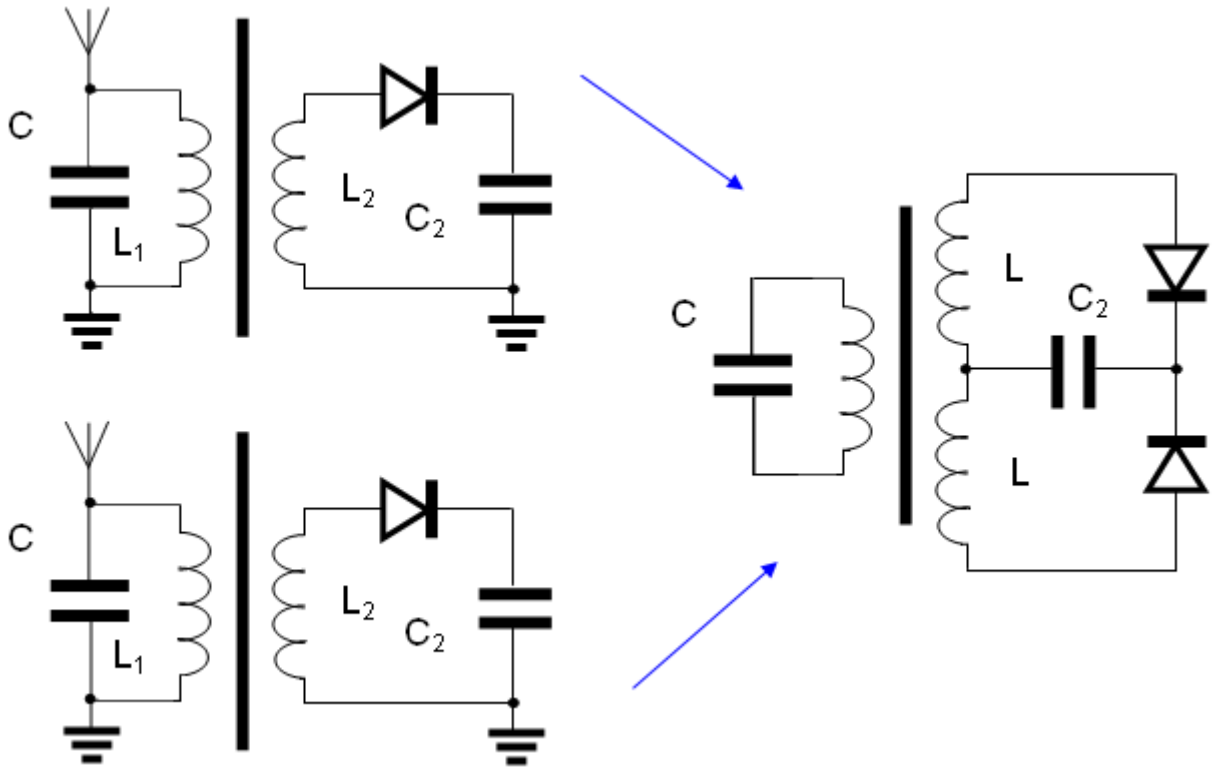

COMMENTS: Don Smith produced this explanation as a PDF file: www.free-energy-info.com/Smith.pdf

The resistance of the load must be chosen so as to get the maximum possible power in it.

The “board” does not contain an output circuit, because a couple of spark gaps and one step-down transformer can be used instead of diodes and a capacitor (this was pointed out before, so read the part which describes the suppression of back EMF).

MECHANICAL (INERTIAL) ANALOGUE OF SWITCHABLE INDUCTANCE

From Tariel Kapanadze

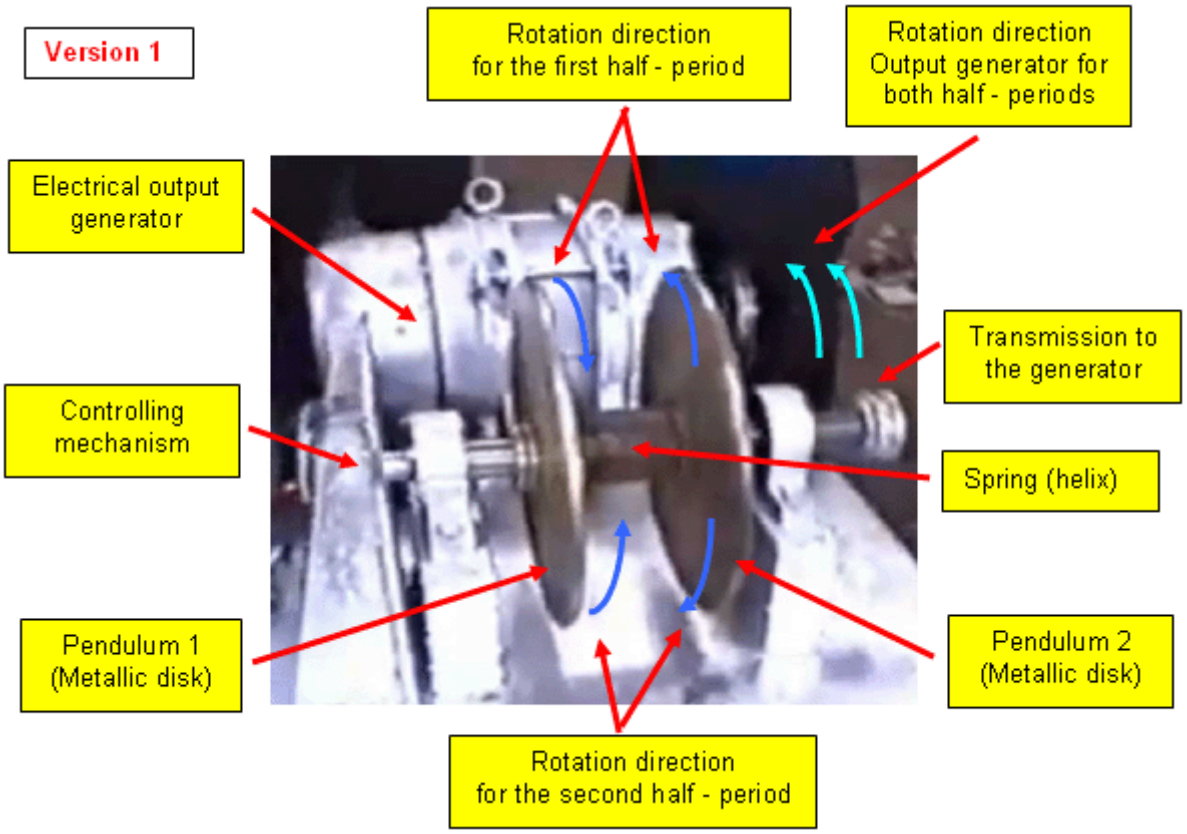

Spring (helix)

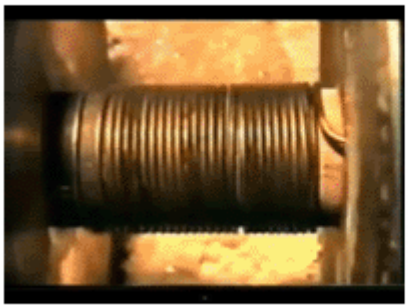

Version 2

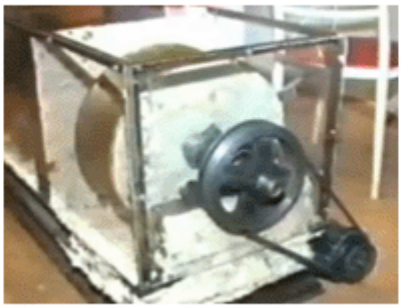

Transmission

Controlling mechanism

EXPLANATION: When one pendulum is stopping the other is accelerating. The controlling mechanism connects the pendulums to the output generator one after the other and so maintains the oscillations.

CONNECTING EXTRA MASS TO A MECHANICAL OSCILLATOR

EXPLANATION: Mechanical energy can be stored in any spring by compressing it or stretching it (1). It corresponds to two positions in a mechanical oscillator (2), when only potential energy takes place in an oscillating process

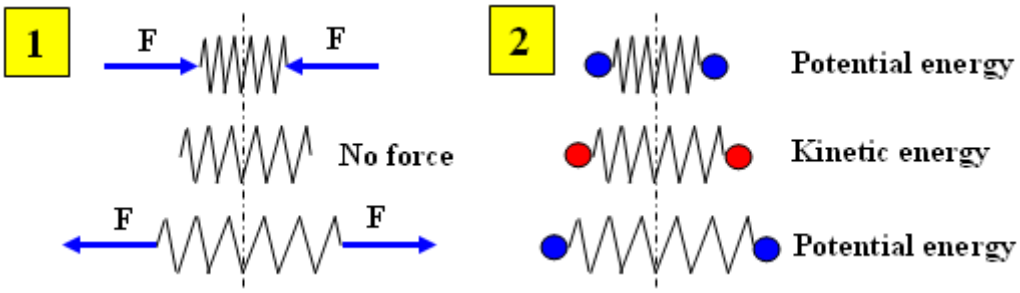

EXPLANATION: If extra mass is connecting periodically to one side or the other, of a mechanical oscillator, it will be shifting without any energy loss during the oscillation process

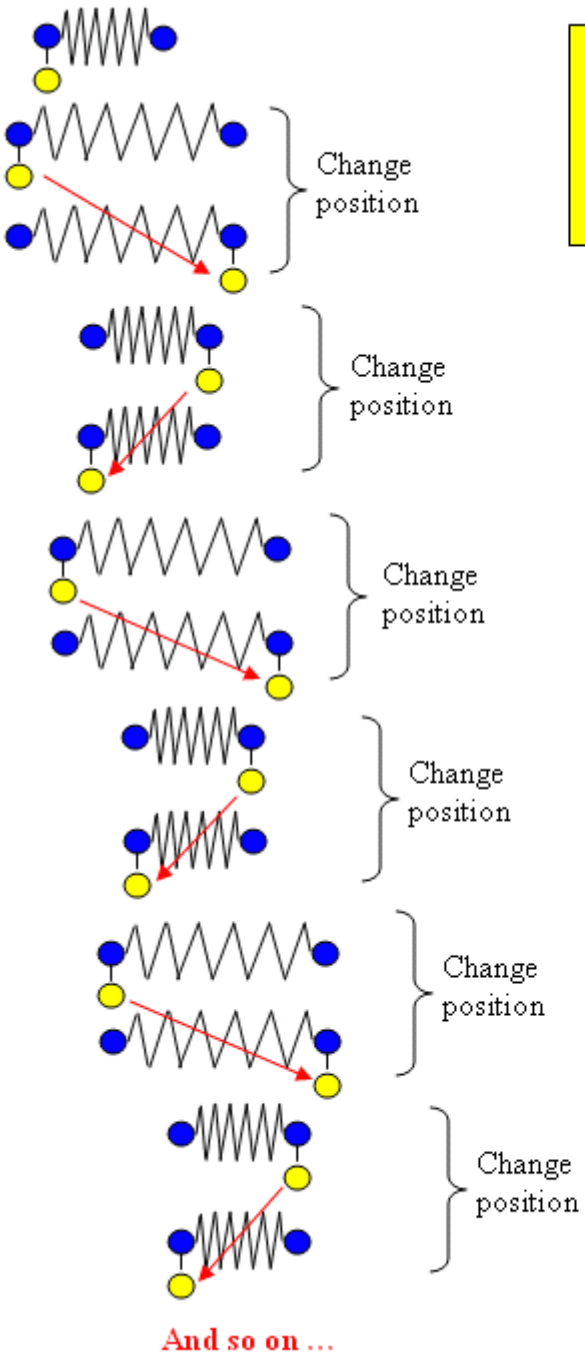

COMMENT There is no need to transfer extra mass from one position to another in an actual device, because extra mass is a disc and masses in a mechanical oscillator are discs also. You only have to connect them in a variety of ways.

COMMENT A grounded Tesla coil is an analogue of a spring with one side fixed

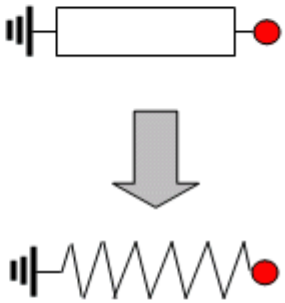

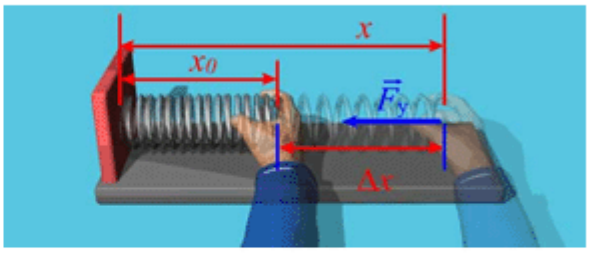

$E_p = k(dx)^2/2$ – Potential energy of deformed spring (helix)

THE PRINCIPLE OF AMPLIFICATION OF MECHANICAL ENERGY

Explanation: The principle is based on an asymmetrical flywheel (1) consisting of a small mass and a large mass. These masses are balanced across the centre of rotation, that is, are located at a distance proportional to their weights, from the center of rotation. This helps to avoid vibration when they are rotating (the same principle used when balancing a car wheel).

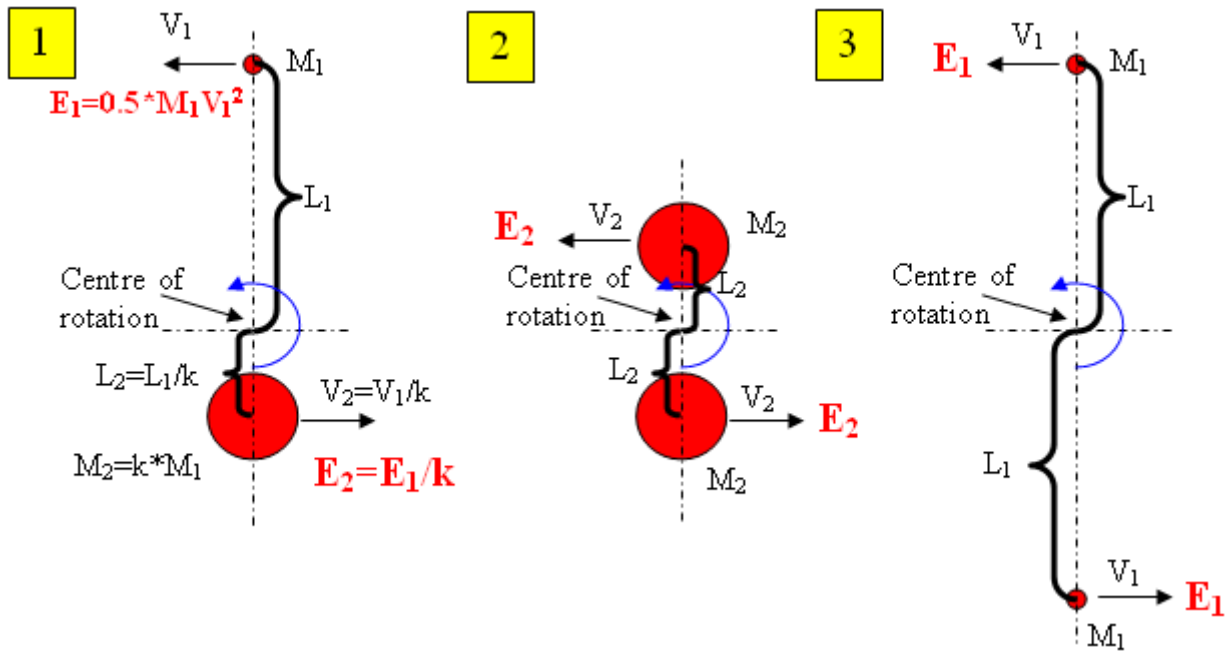

The inertial moment of such a flywheel (1) is analogous to the inertial moments of flywheels (2) and (3), consisting only of large or small masses. However, from the point of view of kinetic energy, all of these examples, (1), (2) and (3) are different. This is because the kinetic energy of every mass depends on the direction and speed at which it moves (if is released during rotation). The highest common kinetic energy is in the masses of flywheel (3), as less energy is contained in flywheel (1) and the smallest kinetic energy is in flywheel (2). In order to get an increase in energy one needs to achieve a set-up which is based on a spring (for energy transformation from kinetic energy to potential energy and back again) and a lever of Archimedes (for changing the point where the force is applied).

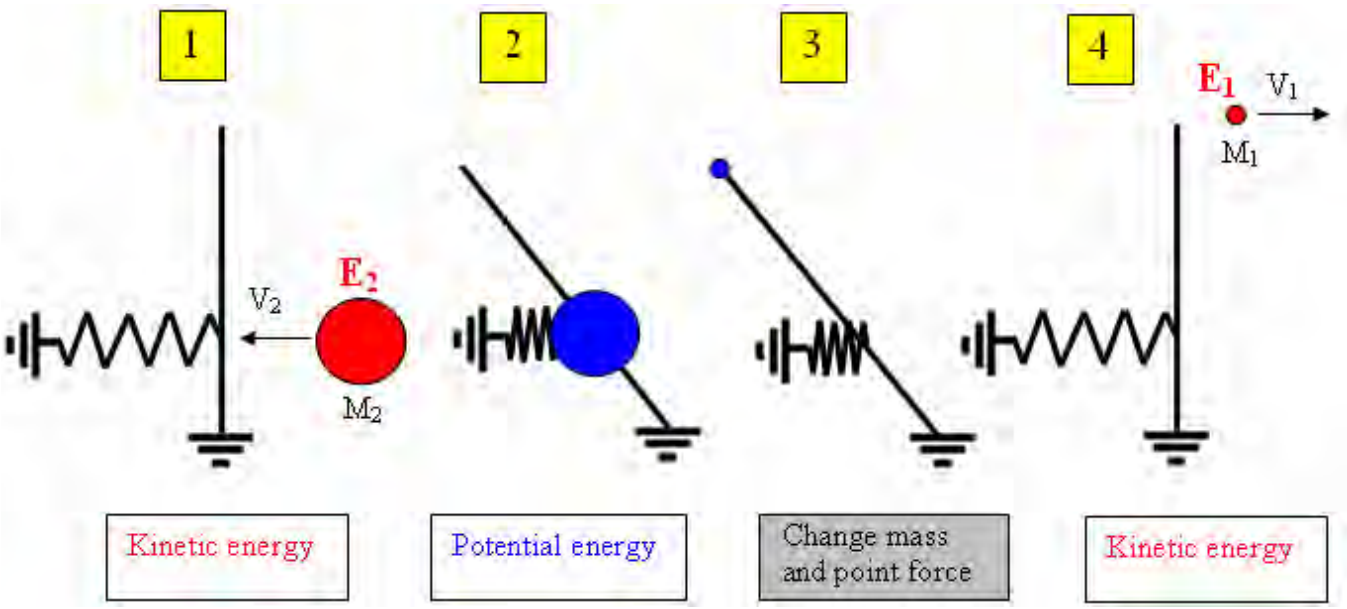

Comments:

1. The simplified schematic diagrams shown here are for explanation purposes only.
2. In an actual device, you can use a spring in rotation mode (as Tariel Kapanadze did).
3. You can use disks and rings as flywheel masses (as Tariel Kapanadze did).
4. Altering one mass to another is actually achieved by connecting them in various ways.

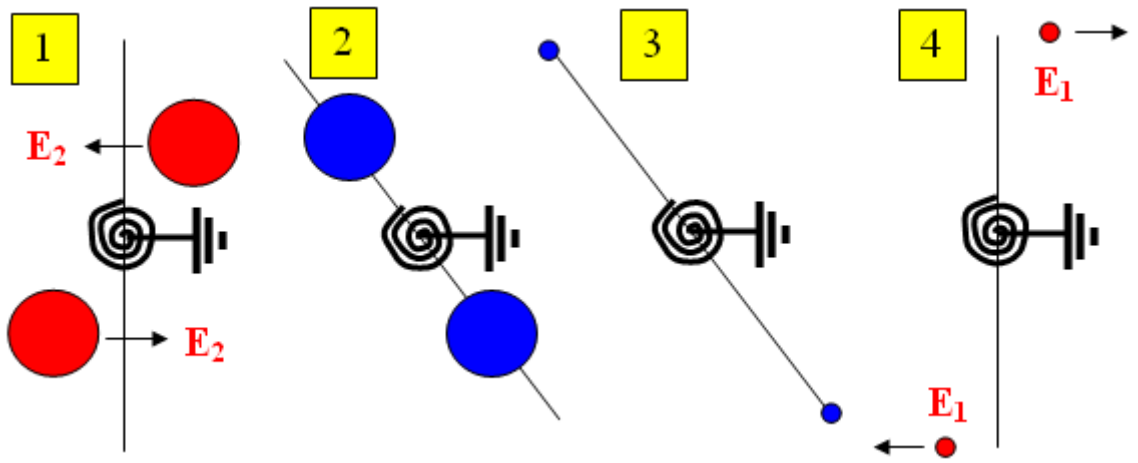

Comment: Any asymmetrical mechanical oscillator behaves as indicated above, when the potential energy of a compressed spring is transformed to the kinetic energy of moving masses.

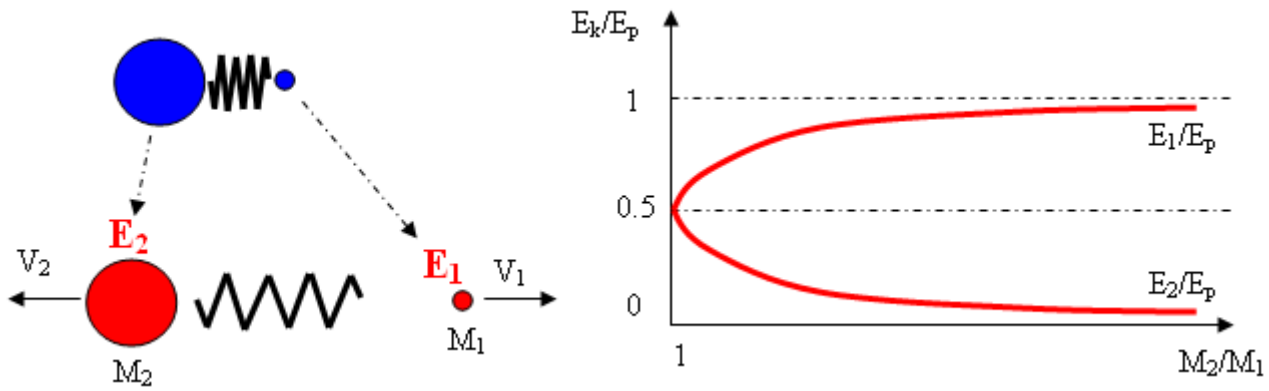

The potential energy of the spring is distributed unequally between the small and large masses. A small mass acquires more energy relative to it's size than a large mass does. The sum of the kinetic energies of both masses is equal to the potential energy of the spring.

Comment: This is based on Tesla's asymmetrical schematic:

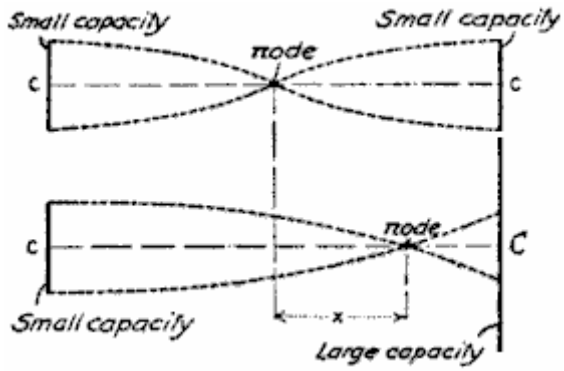

FLYWHEEL – A HIDDEN FORM OF ENERGY

(Clarifications on mechanical energy amplification)

EXPLANATION: If you don't want to lose mechanical energy when doing work, then this work must be done by an imaging force. This force is absent in an inertial coordinate system, but it is present in a non-inertial coordinate system. When in a rotational coordinate system this force is called 'centrifugal' force.

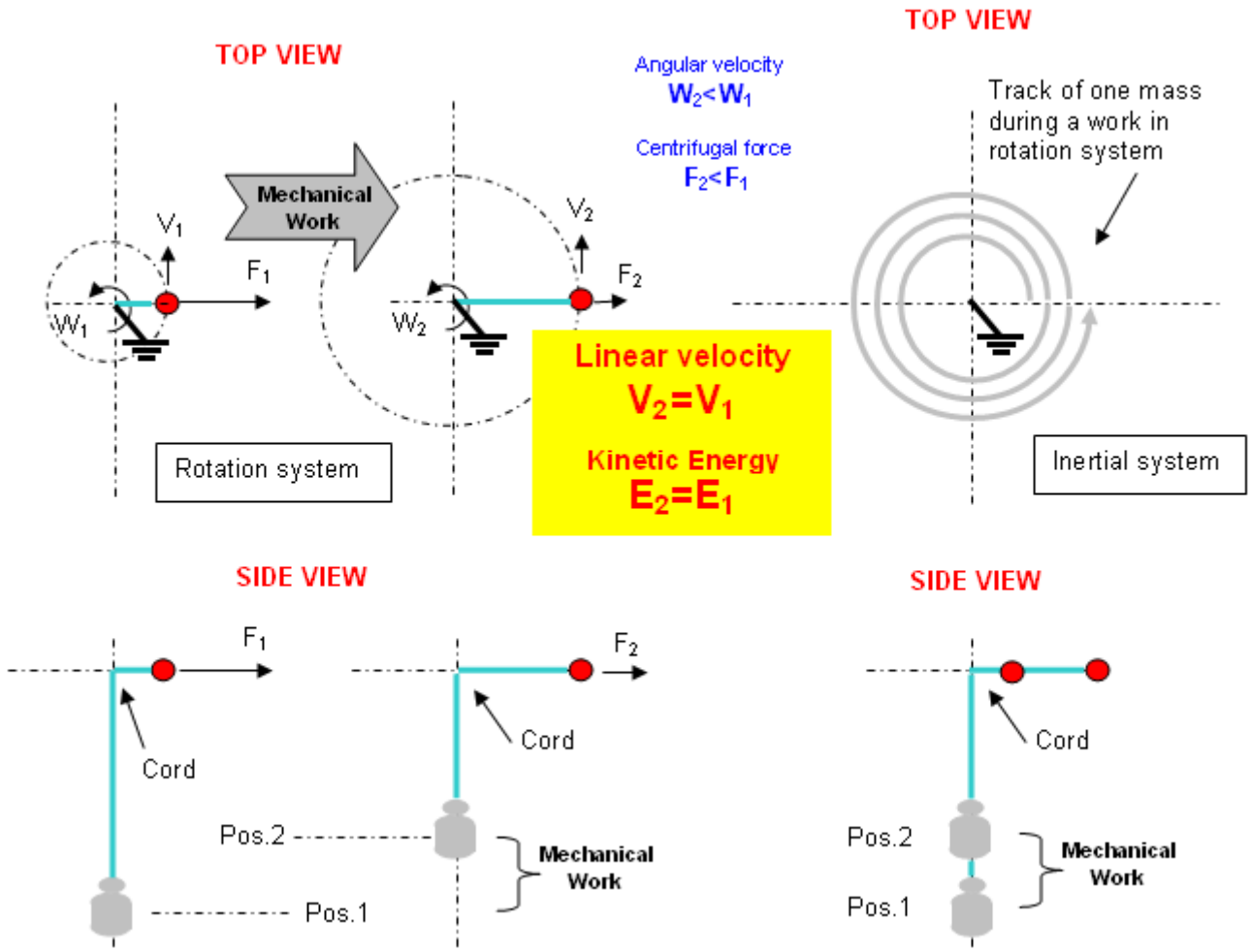

COMMENT: After the work is done, the centrifugal force is low and if you want to continue producing mechanical work, you have to use **the other** coordinate system where centrifugal force is high again. This is possible because linear velocity does not change. You have to provide **the other** support point only (and a cord) in order to produce mechanical energy again.

COMMENT: If you want to make this mechanical work continuous, then the end of the first track must also be the beginning of the second track. You have to change coordinate system periodically.

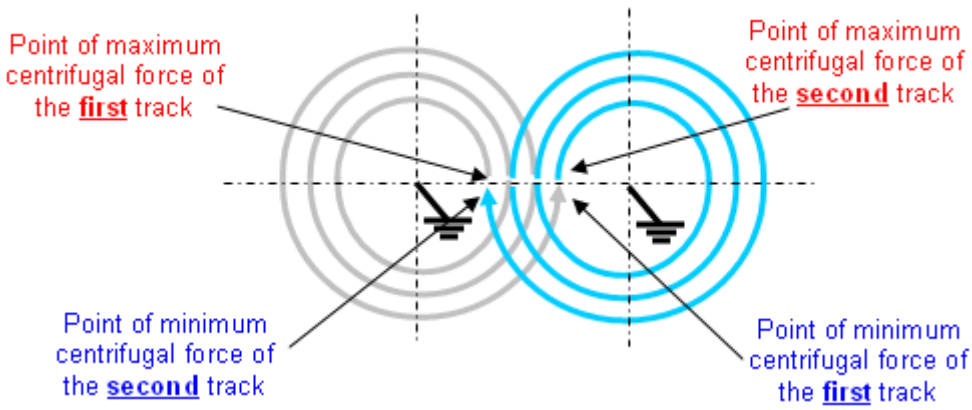

COMMENT: In a real situation, you have to compensate for energy loss due to friction and so a part of the excess energy must be used to maintain the process.

ILLUSTRATION FOR SWITCHABLE INDUCTANCE

From Alfred Hubbard

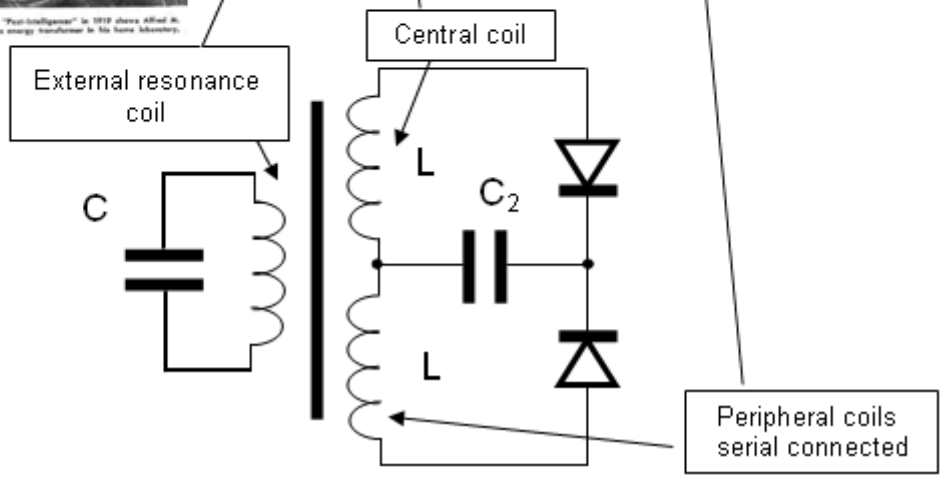

EXPLANATION: The center coil and all of the peripheral coils can "grasp" the same flux coming from the resonance coil. All other details are the same as in Smith's version.

COMMENTS: In other words, you can use rods as the coil core, instead of a closed ferromagnetic core.

But, this is not the only option in Hubbard's device. He may have had another one, based on a different principle, perhaps the principle of energy amplification in an LC circuit as described earlier, but with switchable inductance being used.

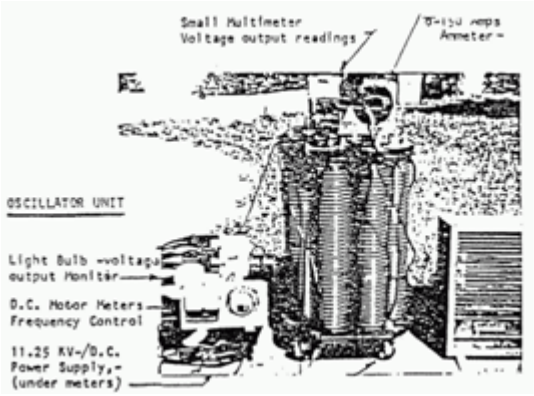

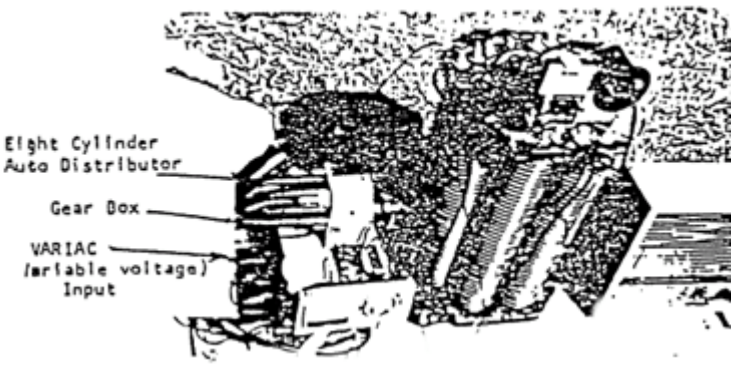

MODERN OPTIONS?

In switchable inductance

Version 1

A coil has more inductance when some of it's parts are short-circuited:

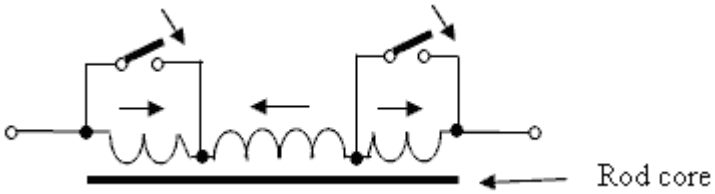

EXPLANATION: The central section of the coil and it's two end sections are wound in opposite directions.

COMMENT: The coil shown in the picture above has **twice the inductance**, when it's end sections are short-circuited (measurements made with the Chinese-built RLC test meter shown here):

Hubbard's version

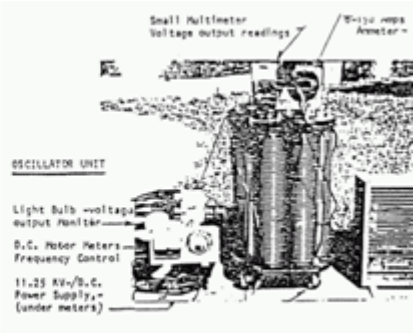

Version 2

By Don Smith

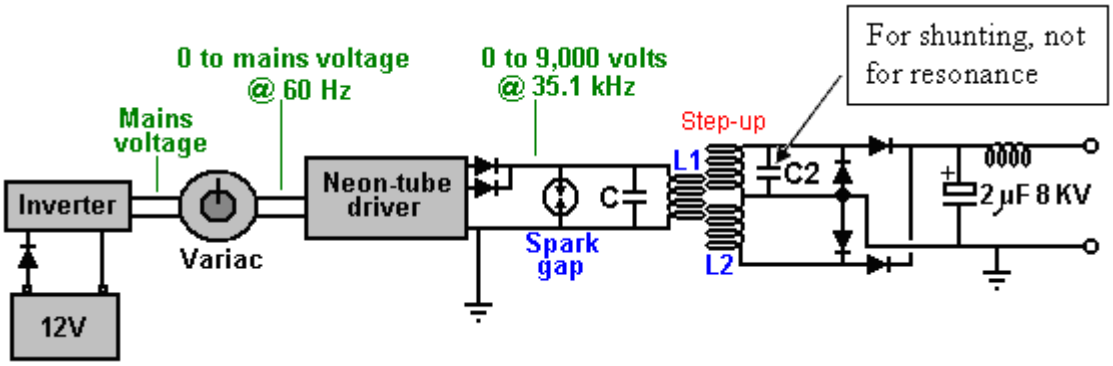

But, this looks like resonance in an asymmetrical transformer **?????**

Version 3

By Tariel Kapanadze

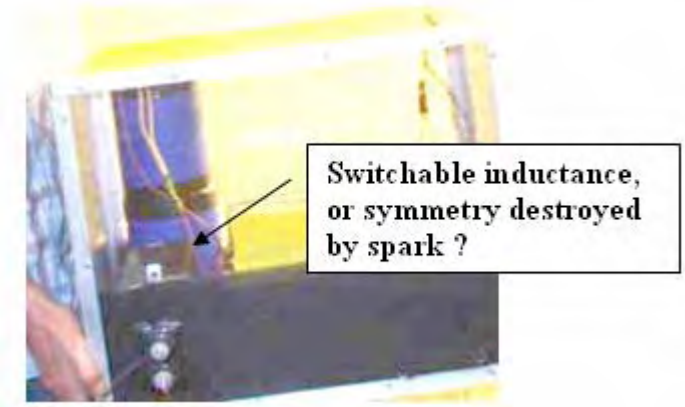

No description …**???**

Read on for further details….

THE BASIS OF SWITCHABLE INDUCTANCES

(Tesla patent)

(No Model.) 2 Sheets—Sheet 1.

N. TESLA.

REGULATOR FOR DYNAMO ELECTRIC MACHINES.

No. 336,961. Patented Mar. 2, 1886.

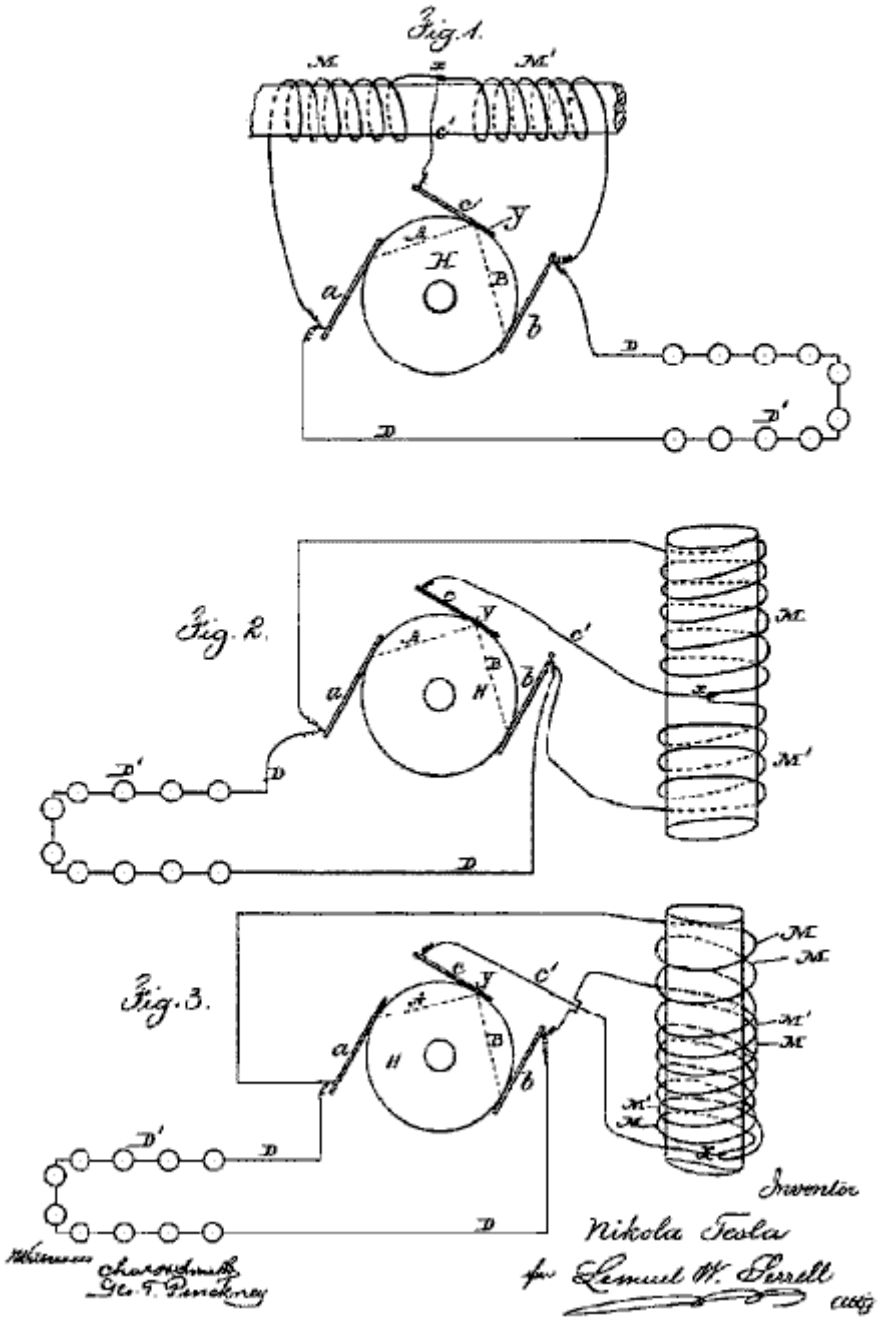

SECRET 3

THE ASYMMETRICAL TRANSFORMER

With a magnetic field feedback loop (evolution of the 2nd secret)

LENZ LAW IS VIOLATED IN AN ASYMMETRICAL TRANSFORMER

(Therefore it is not possible to use it as an ordinary transformer)

An asymmetrical transformer can have two coils: L_2 and L_S. Coil L_2 is wound on one side of the toroidal core while L_S is wound so that it encloses both the toroid and the coil L_2 as shown here:

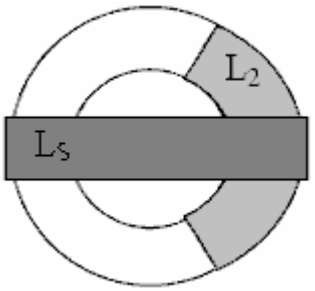

Optionally, this arrangement can be implemented with a wide range of styles of transformer core:

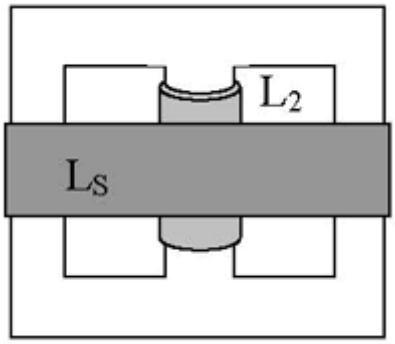

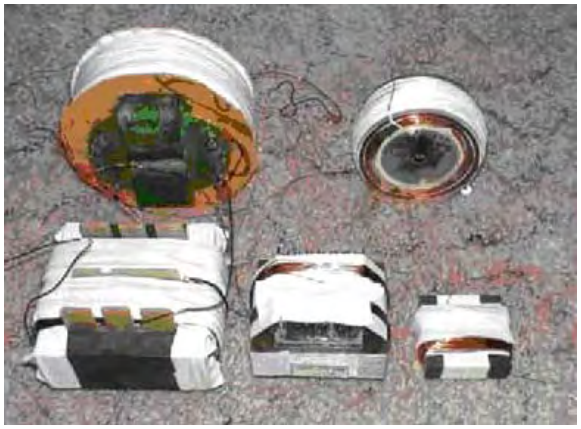

One option is to use the above (switched inductor) arrangement and add one more coil:

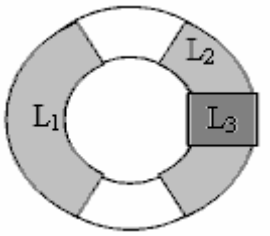

Now that you understand the operational principles of this system, you can use any configuration which you need. For example:

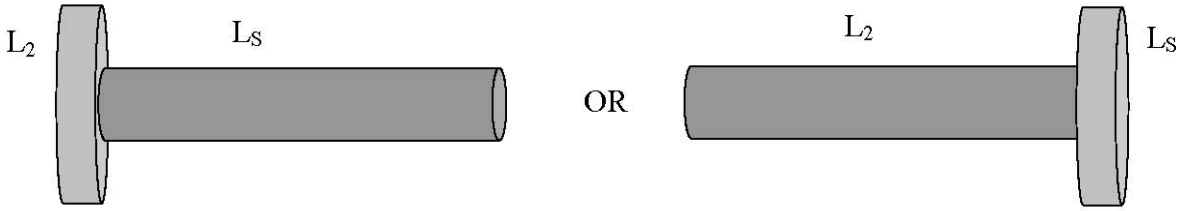

ILLUSTRATION FOR AN ASYMMETRICAL TRANSFORMER OF SOME KIND

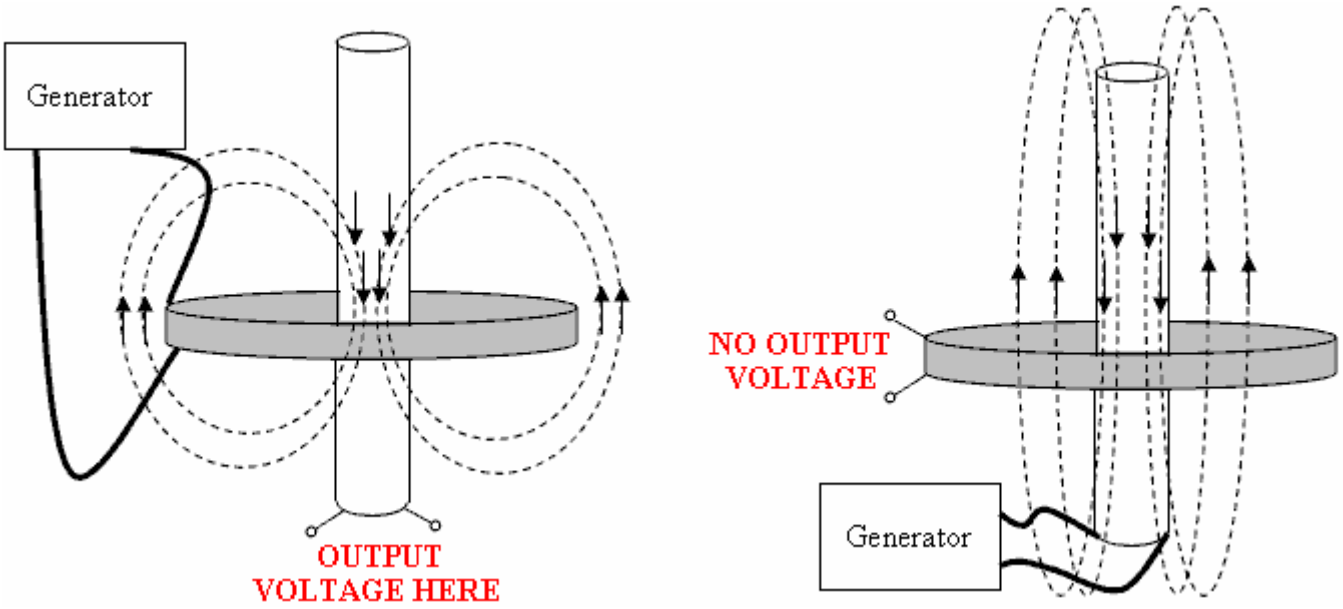

THE MECHANICAL EQUIVALENT OF AN ASYMMETRICAL TRANSFORMER

This example shows an ordinary transformer, wound on an E-core plus an external excitation magnet:

The magnet orientation may be different

The magnet orientation may be different

In other words: L2 is still used, but instead of L_S the exciting magnet is used.

The result:

1. The voltage developed across coil L2 depends on the number of turns in L2, but **the short-circuit current through L2 does NOT depend on the number of turns in coil L2.**
2. You need to choose the load connected to L2 in order to get the maximum power output. **Very low, and very high loads, will give almost no power output**.

RESONANCE IN AN ASYMMETRICAL TRANSFORMER

The first coil is used as a transmitter of energy, and the second coil as a receiver of energy.

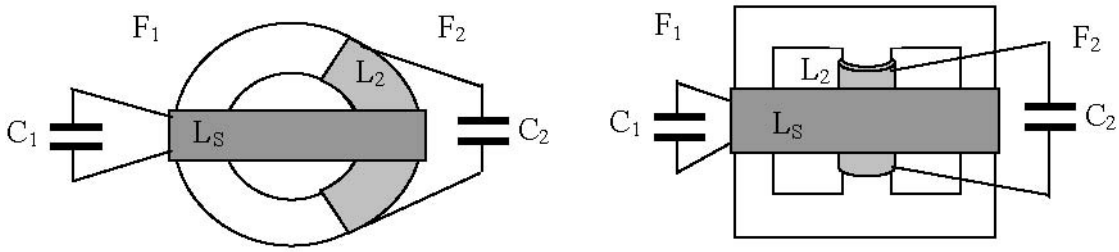

It is very like radio broadcasting, where the receiver is located far away from the transmitter, and has no feedback. The first coil works in **parallel resonance** and the second coil in **serial resonance** (although the two schematic diagrams look alike).

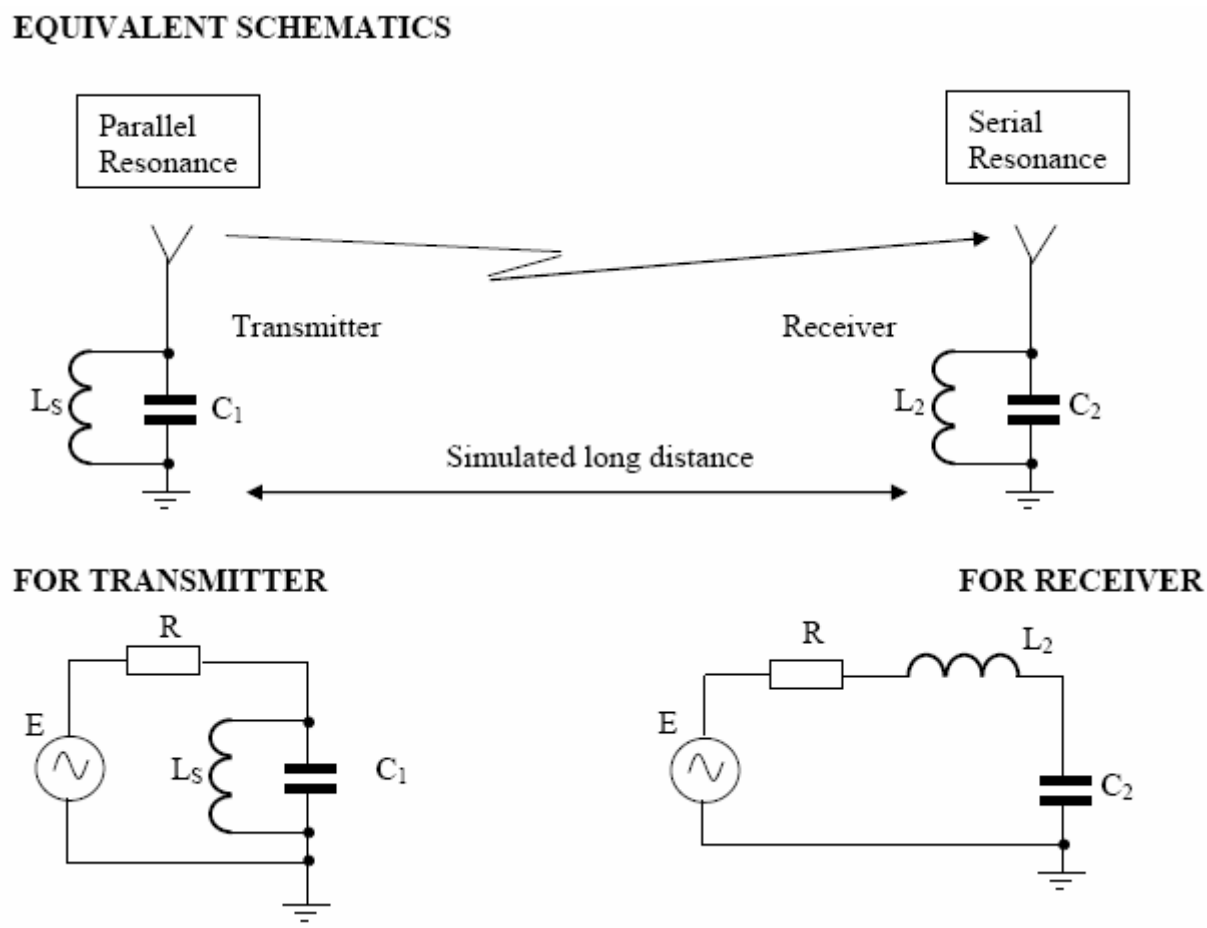

CONSEQUENTLY: You can get much more voltage on L_2 than on L_S

An experiment:

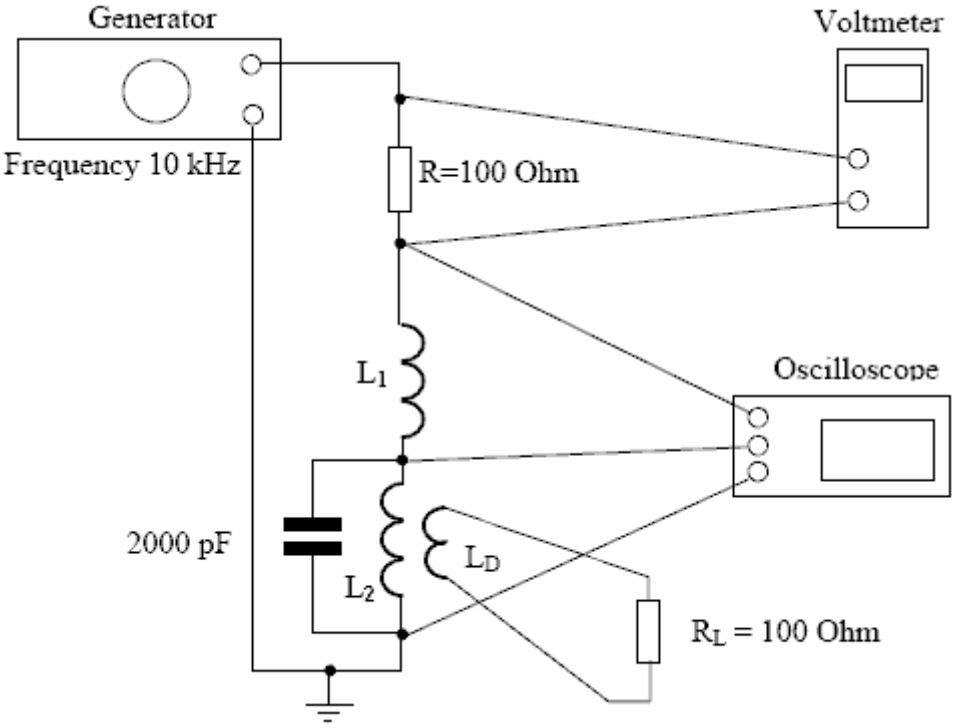

Conditions:

The resonance frequency is about 10 kHz. The total inductance L_S is 2.2 mH, the L_2 inductance (same as the L1 inductance) is 100 mH, the ratio L_S:L_2 is 1:45 with an E-shape core, permeability is 2500.

The result:

At the resonance frequency, there can be a voltage which is **<u>50 times more</u>** on any parts (L1 or L2) matched with the total coil LS, and voltage changes on R are **<u>no more than 15 percent</u>.**

The phase shift in voltage is about 90 degrees between LS and L2.

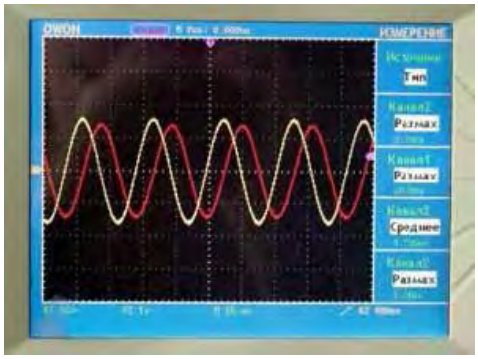

(The amplitudes were equalised)

Further

An additional step-down coil L_D was wound around L_2, turns ratio 50:1 (matched with L_2), and the load resistor R_L = 100 Ohms was connected to it.

The result

Changes in current consumption (estimated by measuring the voltage across R) are no more 15 percent.

MODERN OPTIONS IN USAGE OF AN
Asymmetrical transformer
By Don Smith

The schematic is like this:

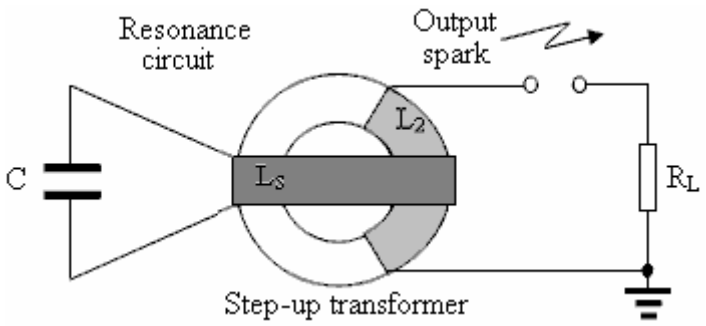

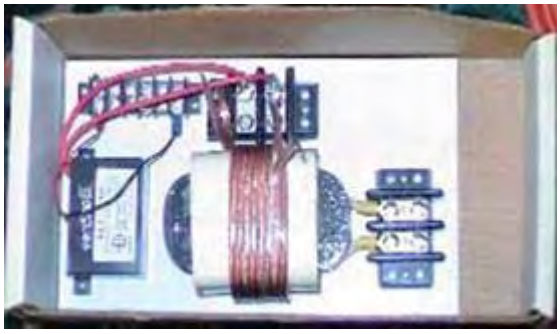

COMMENTS: Between sparks, L_2 has a voltage on it's ends. If R_L is connected directly to L_2 then there will be no output current without resonance and there will be no output current without a spark.

MORE ACCURATE:

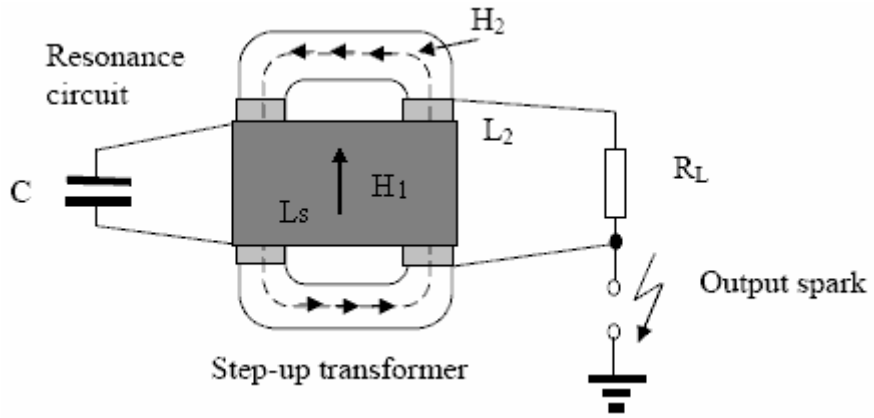

COMMENTS: L_2 has no voltage on it's ends (without a spark). This is ordinary back-EMF suppression, invented by Nikola Tesla.

MORE USEFUL

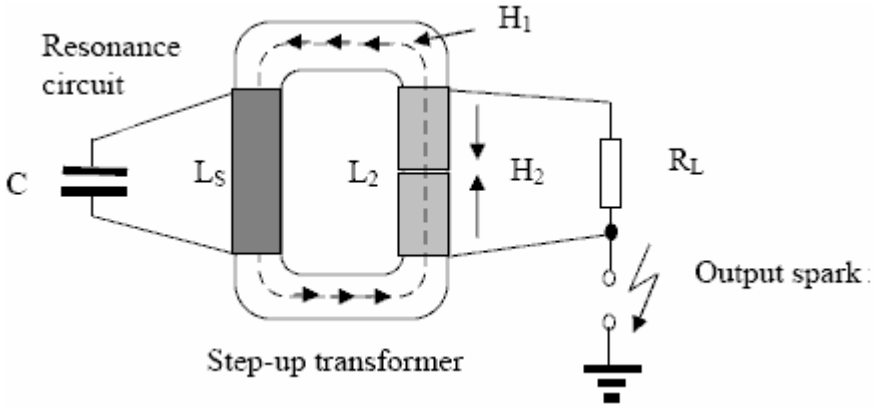

COMMENT: L_2 has no voltage on it's ends (without a spark).

Secret 3.1

THE ASYMMETRICAL TRANSFORMER BASED ON THE SHORT-CIRCUITED COIL

INTRODUCTION

Remark: Voltage distribution on the shorted coil depends on the position of the exciting coil.

DESCRIPTION

CASE 1 The excitation coil is centered:
Result: We have the full period of the voltage distribution on the short-circuited coil

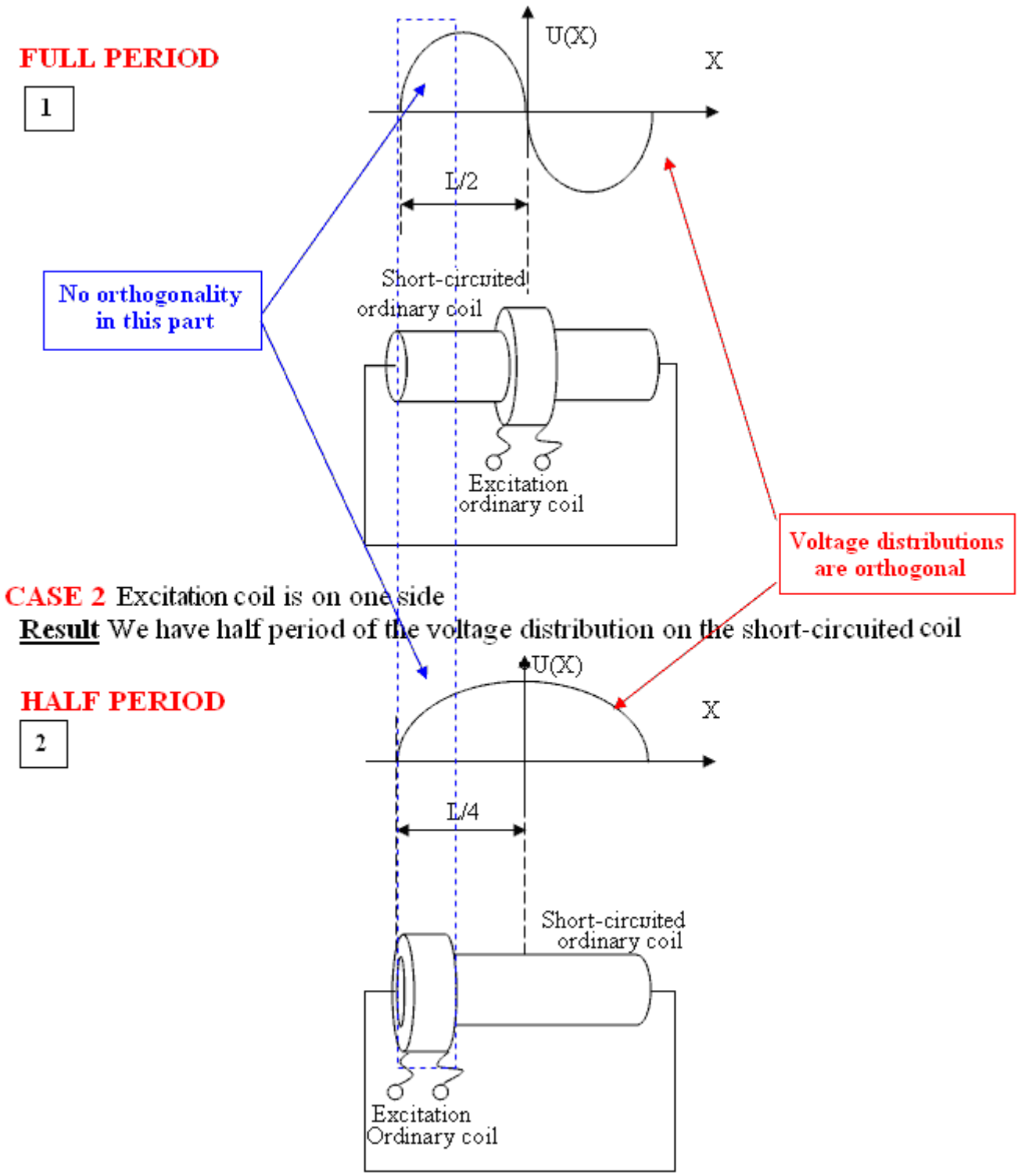

CONSTRUCTION OF THE ASYMMETRICAL TRANSFORMER
based on the short-circuited coil

CASE 1 The short-circuited coil is wound in one direction

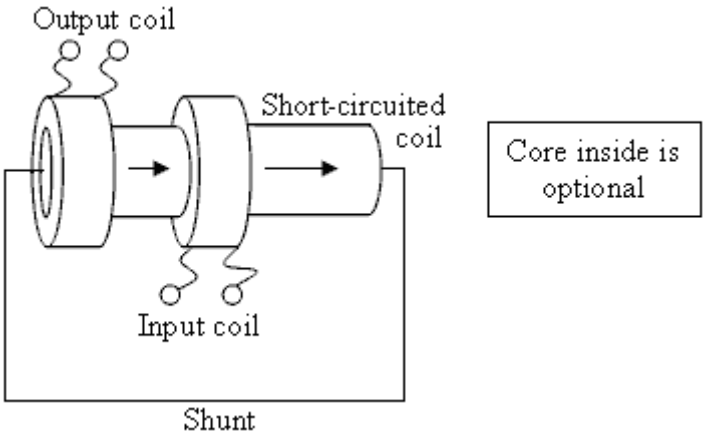

Result: The output does not influence the input in any way.

Explanation: The signal from the output coil generates zero voltage difference on the input coil.

Remark: The position of the coils should be adjusted in order to give the best result.

CASE 2: The short-circuited coil is wound in opposite directions from the centre outwards, and only half of the coil is short-circuited:

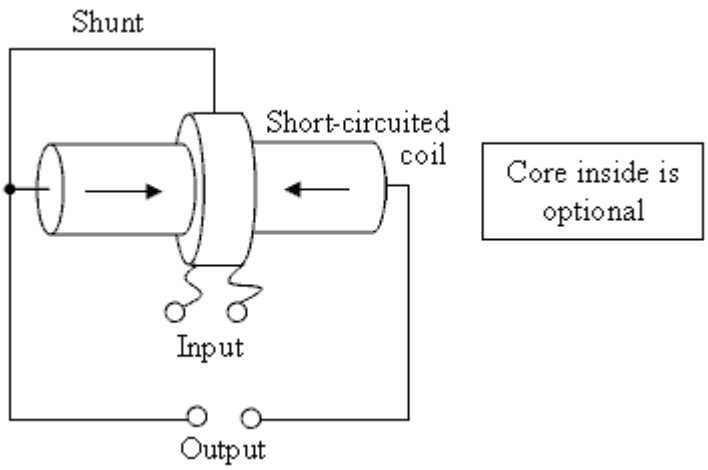

Result: The output has no influence on the input coil

Explanation: The signal from the output coil generates zero voltage difference on the input coil.

Remark: The position of the input coil needs to be adjusted to get the best result.

Remark: The coil's position depends on permeability of the core. More permeability means more alike with distribution pointed at the beginning.

Best Position: To find the best coil position, connect the signal generator to the output, and then find the coil position which shows zero at the input terminals. Alternatively, use an RLC meter connected to the input terminals and then find the coil position which gives no change in reading when the output terminals are short-circuited **(for both case 1 and case 2)**.

Comment: The length of the wire, the total length of the coil, and the diameter of the coil are not important. The number of turns in the input and output coils plays the same role as in an ordinary transformer, **for both case 1 and case 2.**

MODERN APPLICATIONS FOR SHORT-CIRCUITED COILS

By Don Smith

CASE 1

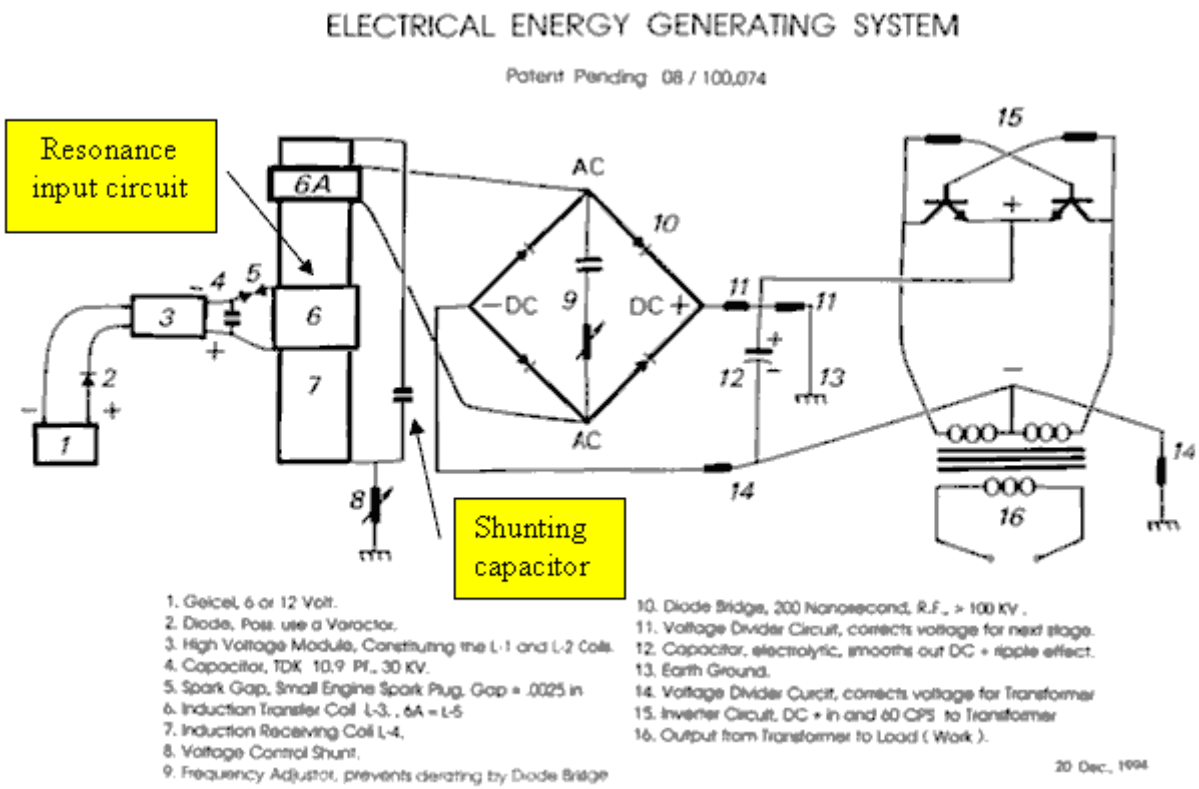

CASE 2

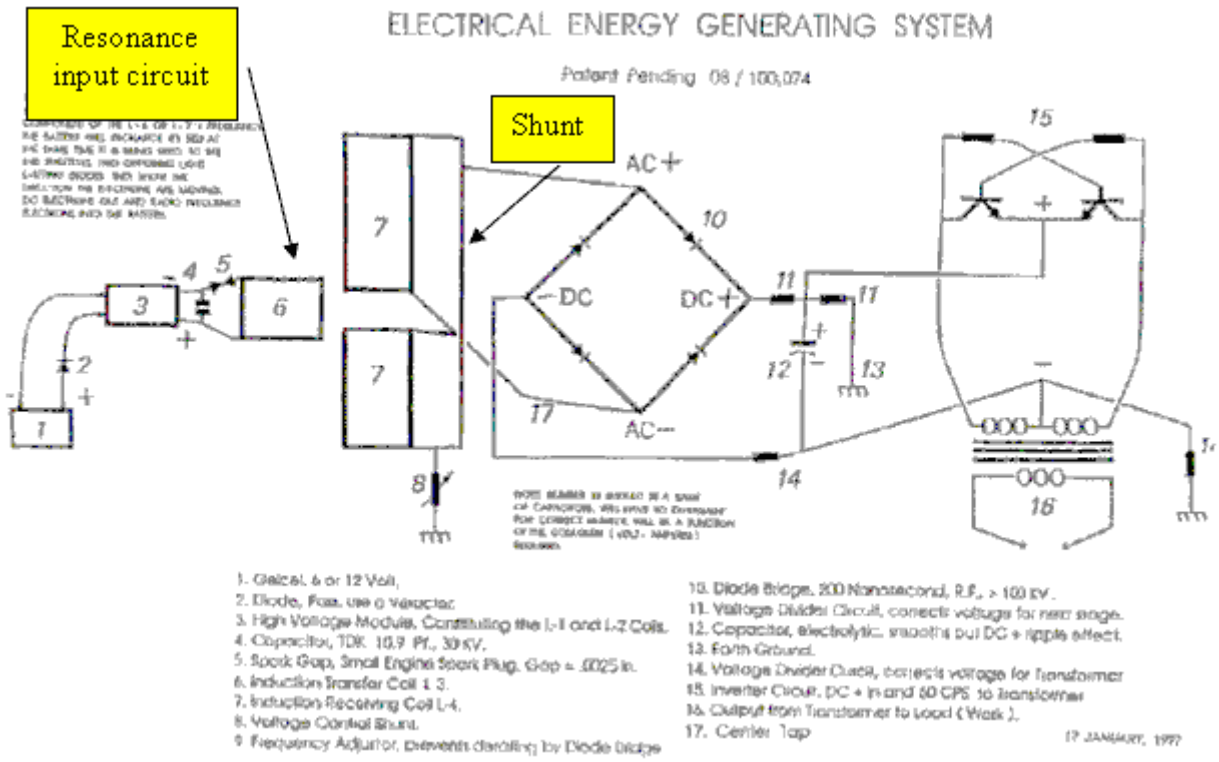

REMARK: The position of the coils must be adjusted until the output has zero influence on the input.

REMEMBER: None of the (input) energy used for exciting ambient space should appear in the load.

AN EXAMPLE OF CASE 2

By Don Smith

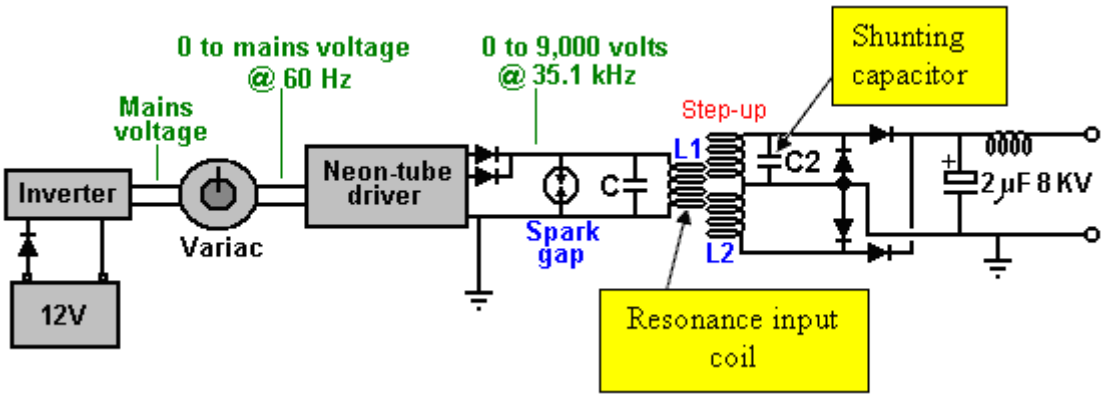

COMMENTS: The output coil can be adjusted to resonate with the input coil, but this is not important for understanding the principle. Excitation with just one spark is possible (not in resonance), but the frequency of the sparks influences the output power directly.

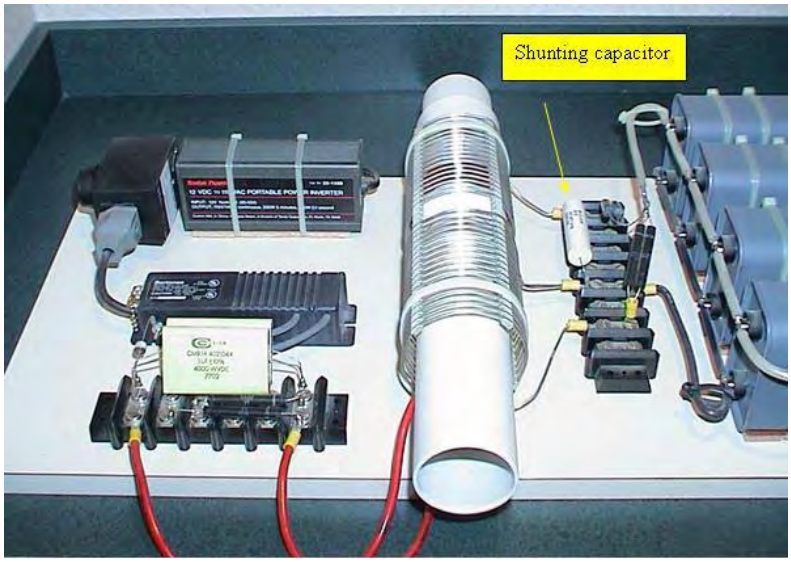

COMMENT: Don Smith used the simplest **doubling excitation frequency**

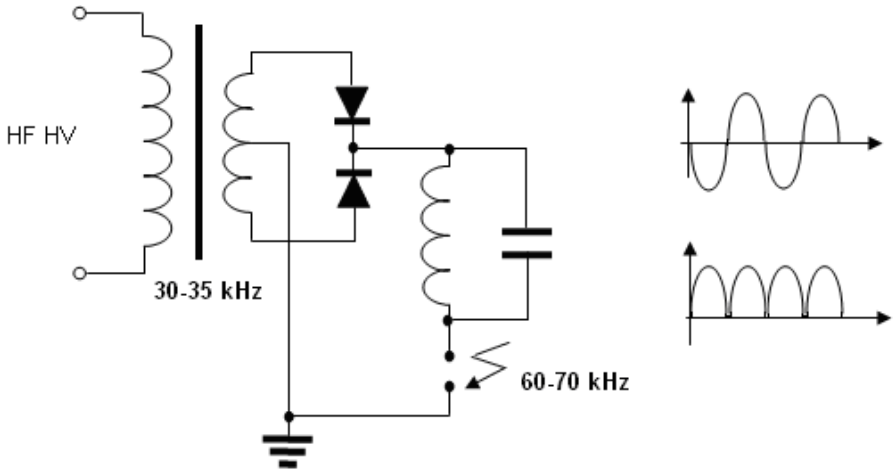

COMMENTS: Resonance frequency of the circuit is about 60-70 kHz, but dimmer is for 30-35 kHz.

For adjusting the excitation frequency, voltage/frequency technology was used.

You have to adjust two parameters: the position of the slider and the excitation frequency.

MODERN APPLICATION FOR SHORT-CIRCUITED COILS
By William Barbat

US Patent Application number 2007/0007844

Self-Sustaining Electric-Power Generator Utilizing Electrons of Low Inertial Mass to Magnify Inductive Energy

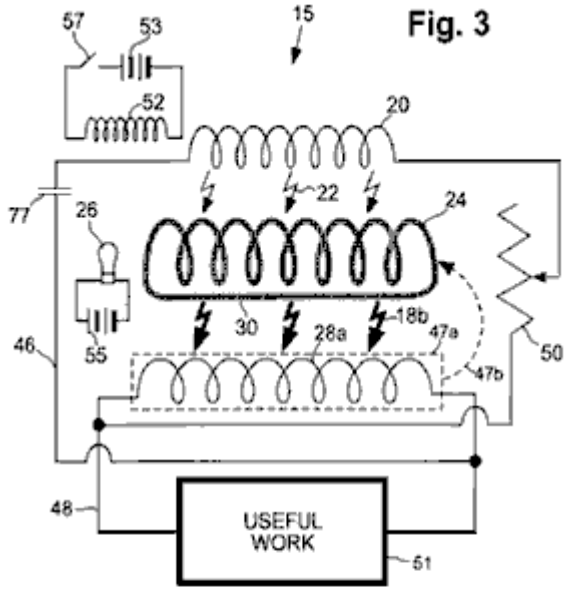

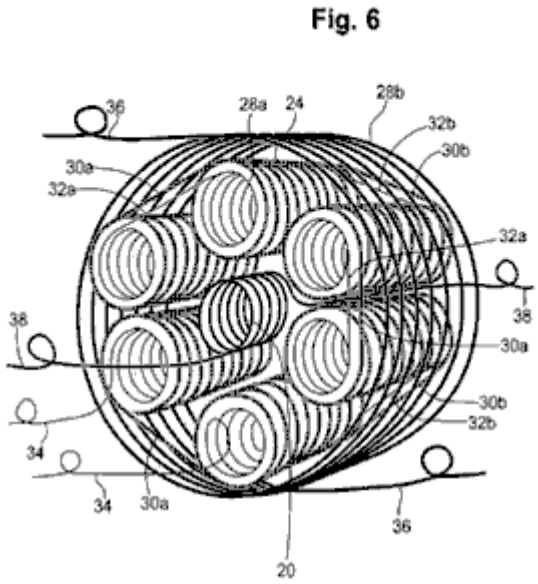

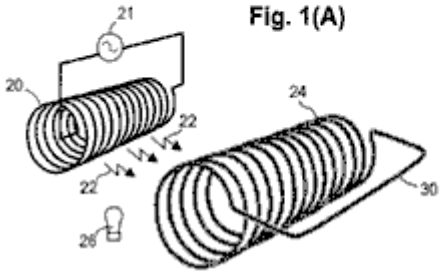

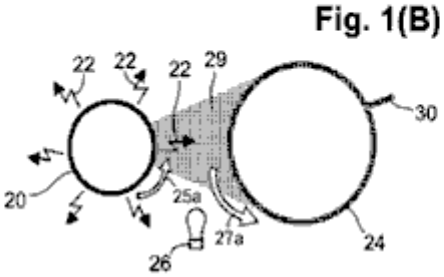

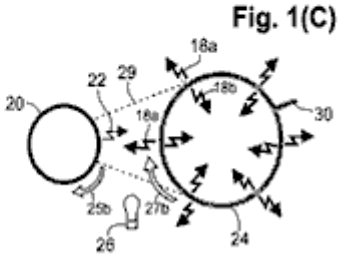

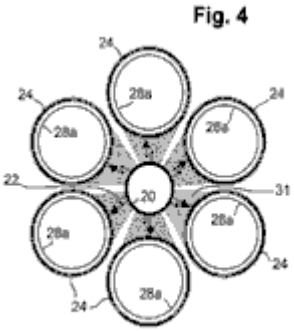

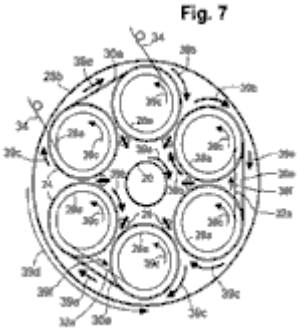

COMMENT In order to understand this device, you have to read Barbat's patent application US 2007/0007844 A1: www.free-energy-info.com/PatD25.pdf

COMMENT I would like to point out that externally, it looks very much like Alfred Hubbard's device.

This is Hubbard's device.

AN EXAMPLE OF CASE 1

By Tariel Kapanadze

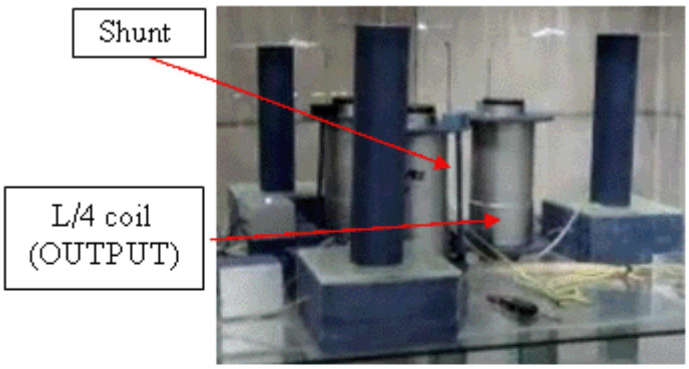

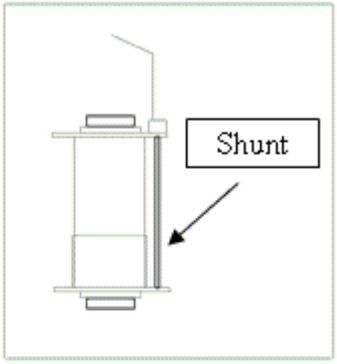

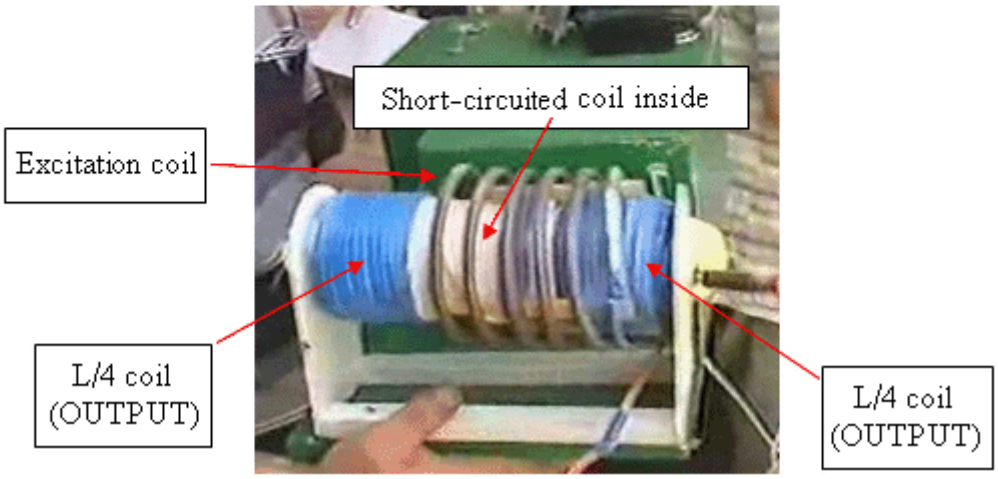

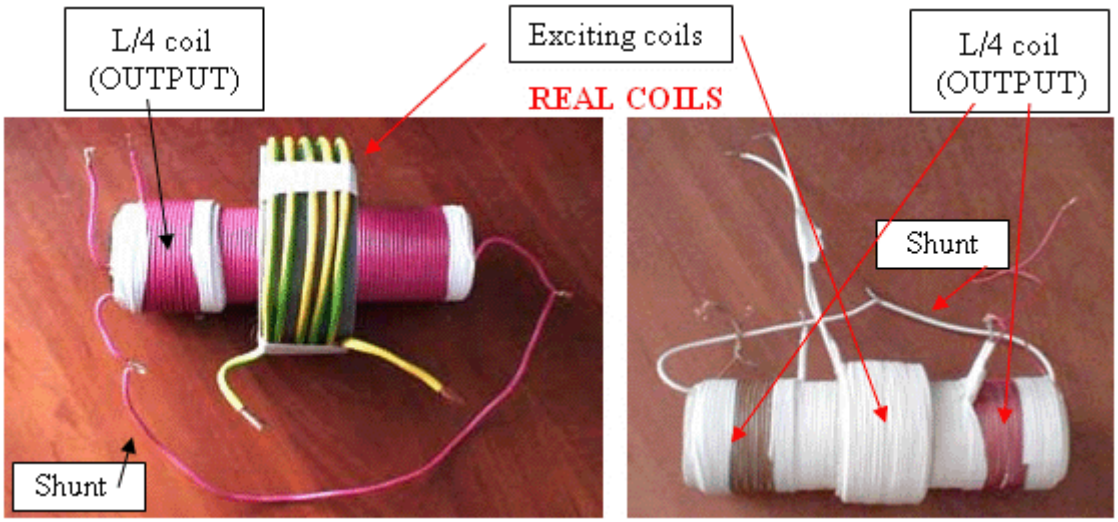

COMMENT: Adjust the positions of the coils to get the best result.

AN EXAMPLE OF CASE 1

By Steven Mark

TPU

REMARK: An idea – an asymmetrical transformer based on the shorted-circuited coil:

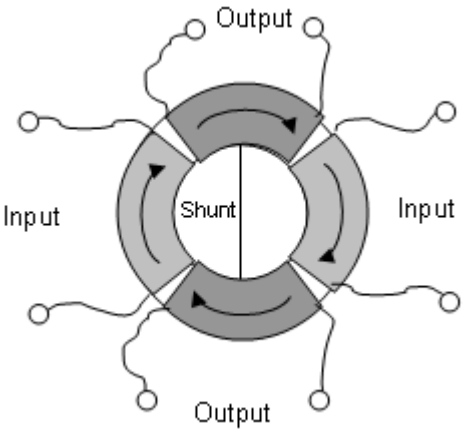

REMARK: The positions of the coils must be properly adjusted, in order to have no transmission feedback from the output to the input. To understand this better, read the part which is devoted to switchable inductance.

EXPLANATION:

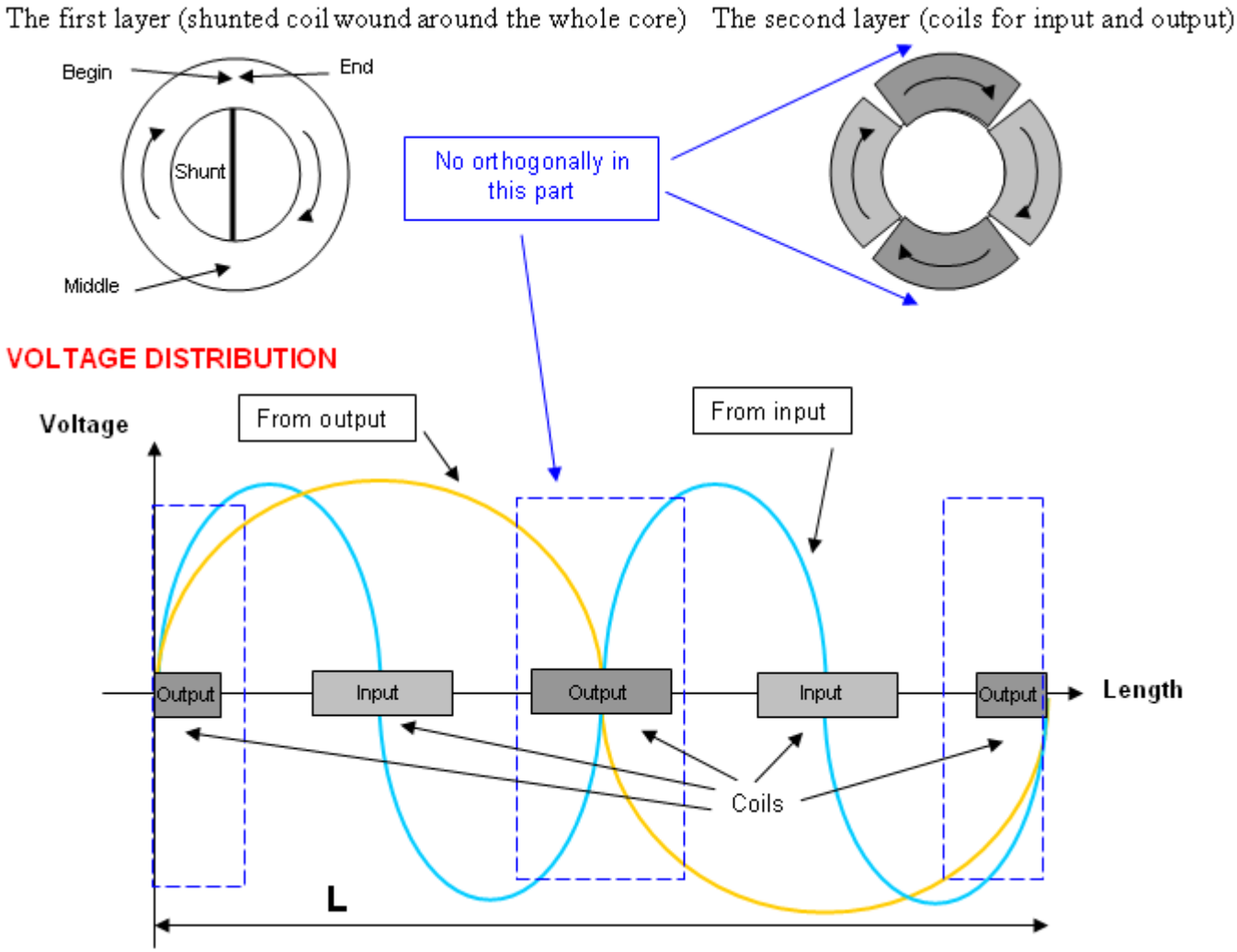

THE BASIS OF THE TPU

(Tesla Patent)

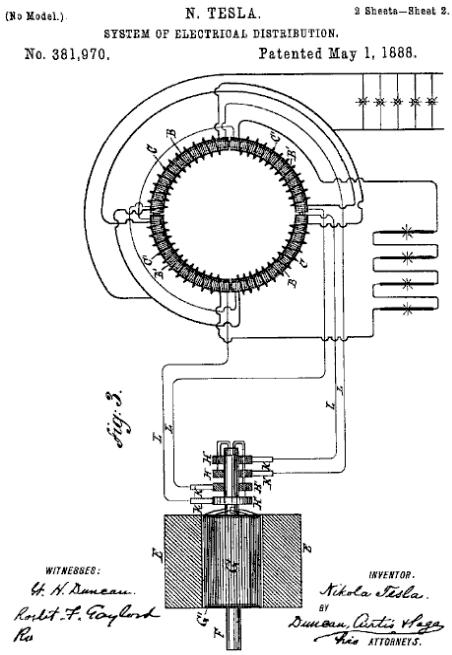

ACTUAL TPU

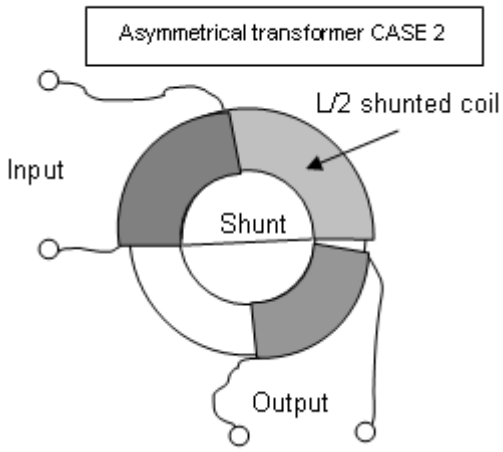

REMEMBER:

The position of the coils must be adjusted.

The easiest way to do this is to add or remove turns at the ends of the coils.

AN EXAMPLE OF CASE 2

By Tariel Kapanadze

Mechanical device

?????

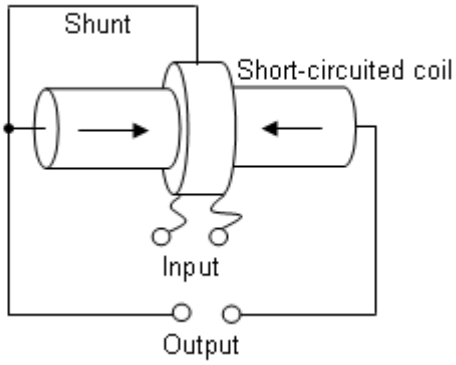

MODERN USE OF SHORT-CIRCUITED COILS

by Cherepanov Valera ('SR193' in Russian forum)

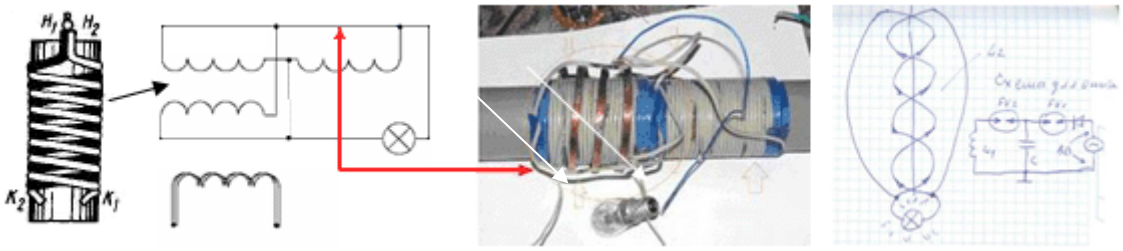

COMMENT: This arrangement can be used for back-EMF suppression in resonance (spark excited) mode to get a laser effect (very exciting summation effects).

COMMENT: This was copied from this device of Tariel Kapanadze (???).

Don Smith

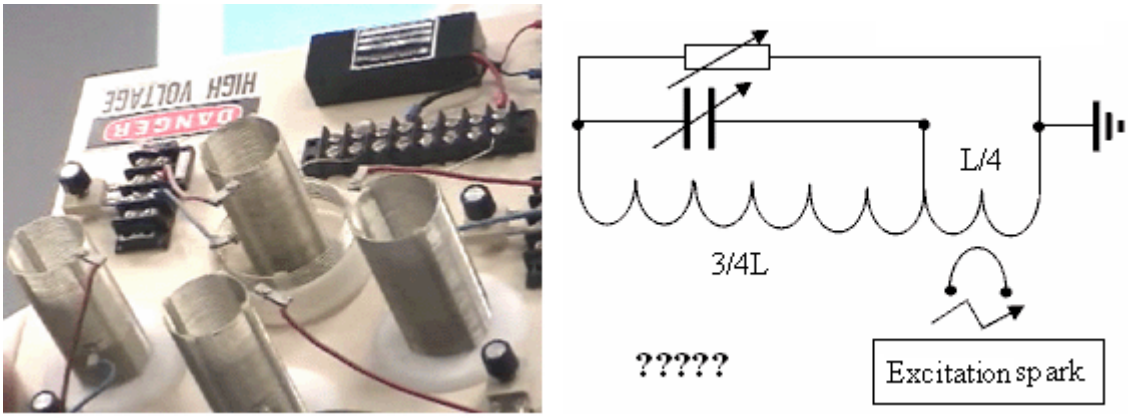

COMMENT: Mr. Tesla said: "The optimum relation for the main and additional coil is 3/4L and L/4". Is that ratio used here?

COMMENT: If you don't understand this schematic, look at simplest version of the coil.

THE SIMPLEST VERSION

where the output has zero influence on the input

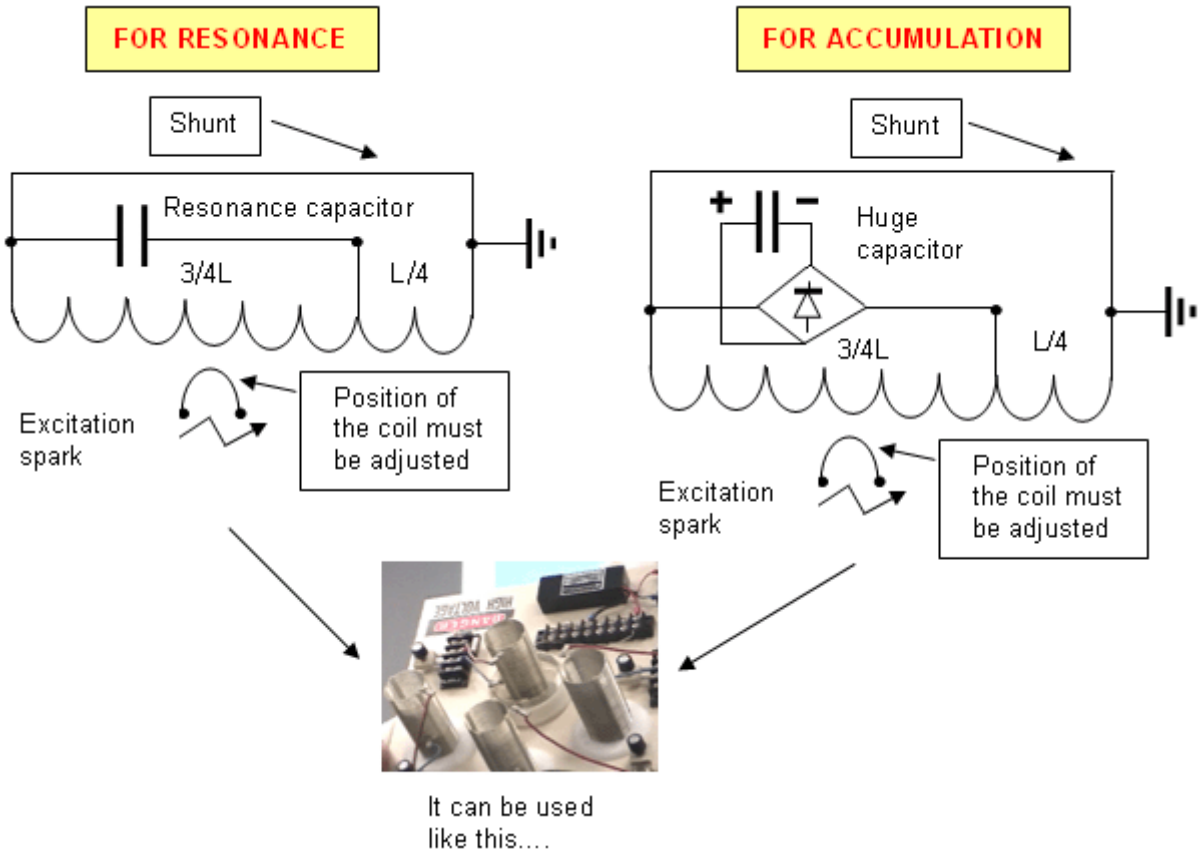

Comment: This is an instance of case 1 where the output coil was removed, and some of the turns from the short-circuited coil were used instead.

THE ASYMMETRICAL TRANSFORMER (BASED ON A SHORT-CIRCUITED COIL) COMBINED WITH A STEP-DOWN TRANSFORMER?

Don Smith

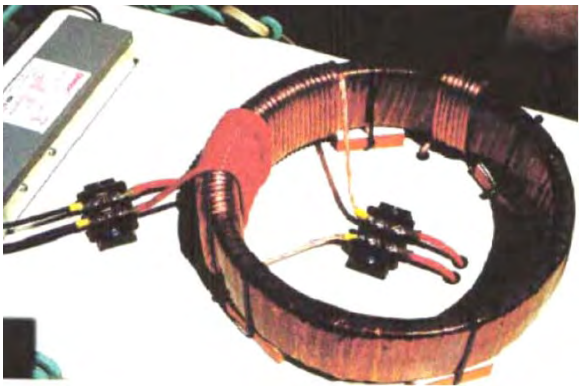

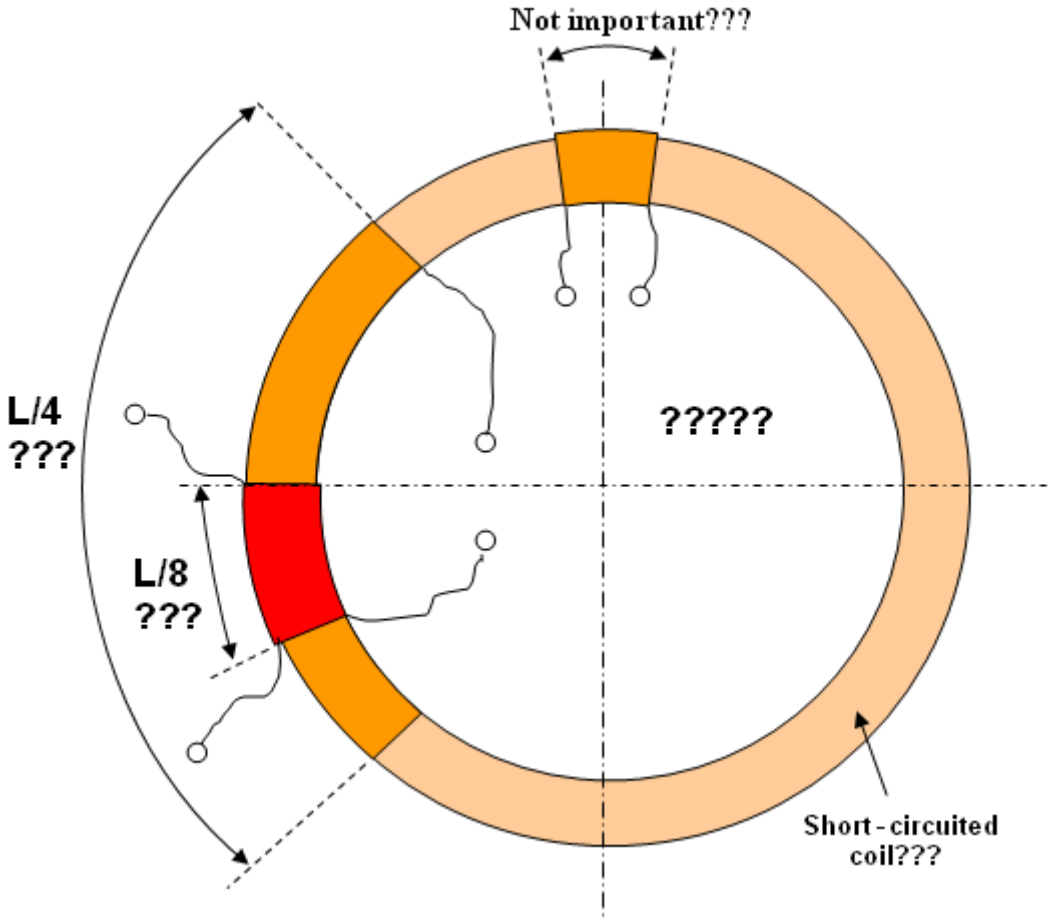

THE RELATIONSHIPS of Don Smith's TPU size and position are important.

REMARK: Those relationships are used to produce an asymmetrical transformer

MECHANICAL ANALOGUE OF THE ASYMMETRICAL TRANSFORMER

CASE 2

By Don Smith

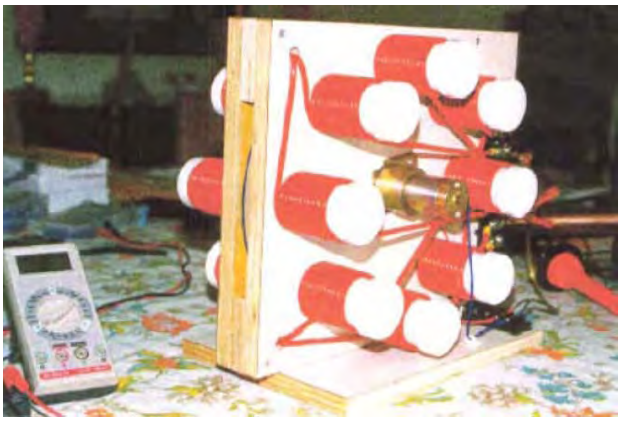

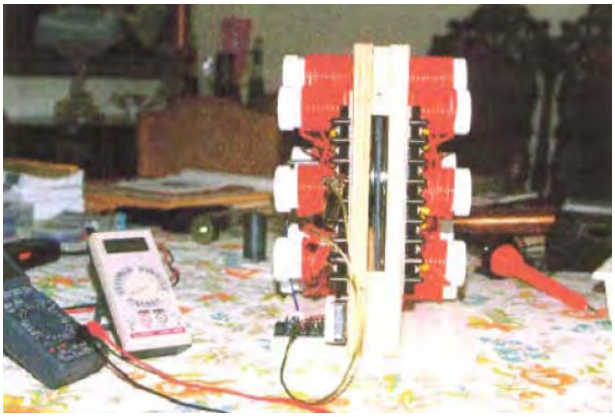

Schematic:

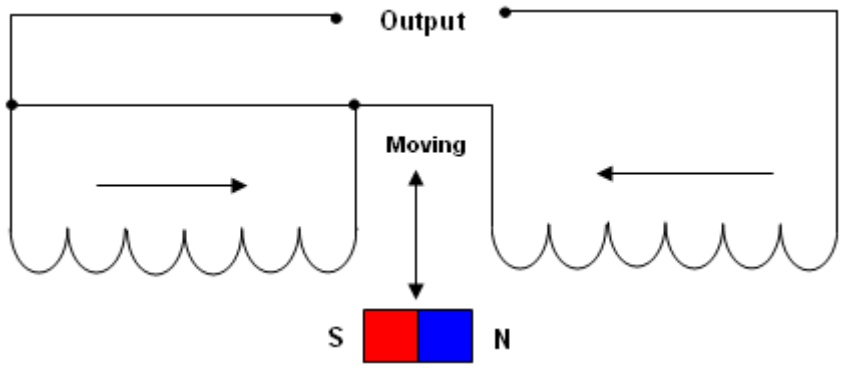

REMEMBER: Any asymmetrical transformer must be adjusted.

REMARK: Don Smith placed magnets inside the coils, but that is not important for understanding the process as his device does not match the schematic.

SOME REMARKS ON ASYMMETRICAL IN-FRONT CONNECTION

(Useful remarks)

Some turns were added on one half of the coil, and some turns were removed from the other half. An additional magnetic field H_3 was created, with inductance - L_D.

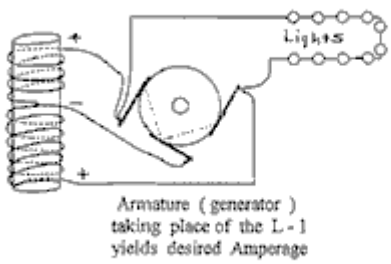

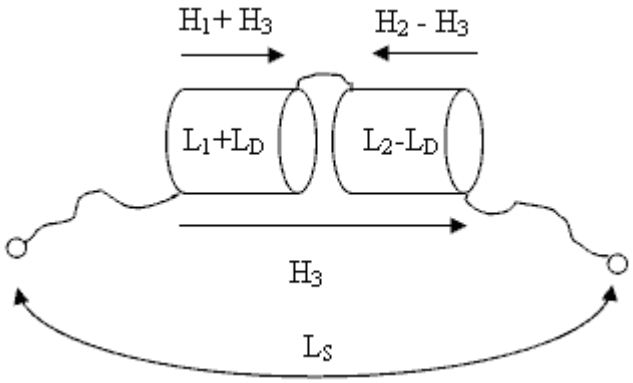

RESULT: A large part of the total inductance acts as an inductor, and a small part acts as a capacitor. **<u>This is a well known fact (read books).</u>** The total voltage on the coil is less than on it's halves.

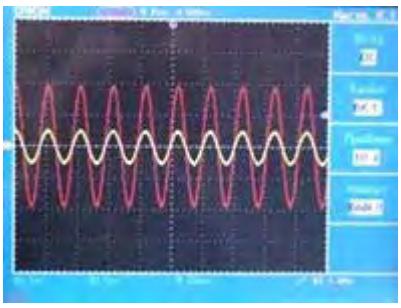

Yellow – The voltage on the total coil

Red – The voltage on the large section of that coil

RESULT: <u>The voltage on it's halves is 4 times the voltage on the total coil</u>

The measurements were made in the frequency band 10 kHz to 100 kHz.

Here is the result of a capacitor discharging into this coil:

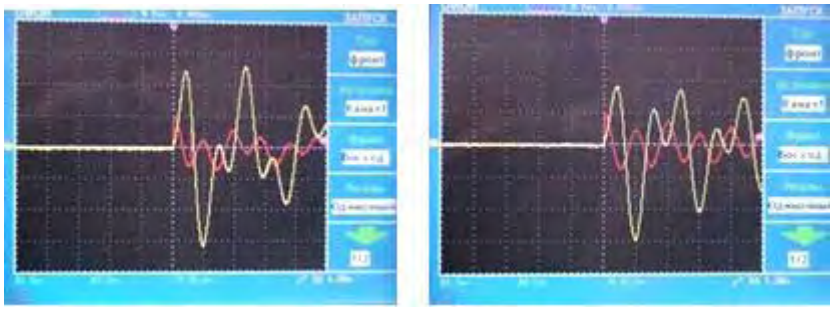

SECRET 4

CURRENT AMPLIFICATION

If a lot of asymmetric transformers are placed with a common flux flow through them, they will have no influence on this flux flow, as any one asymmetric transformer does not have any influence on the flux flow. If the secondary L2 transformer coils are then connected in parallel, this produces current amplification.

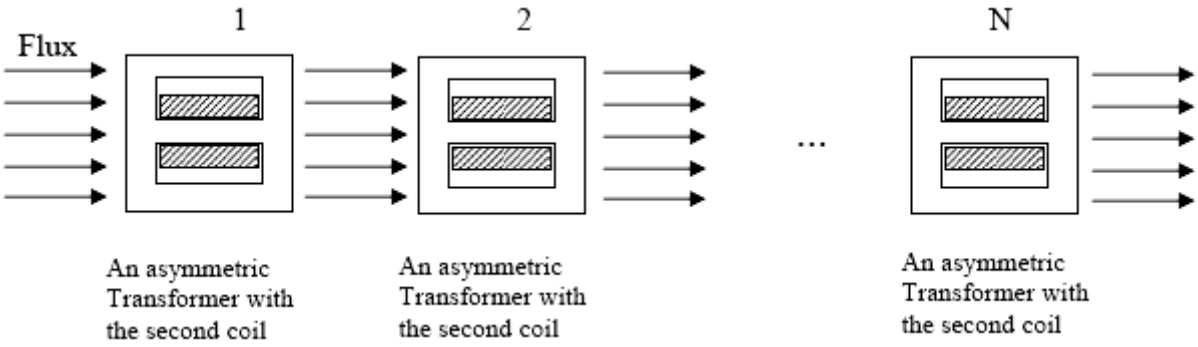

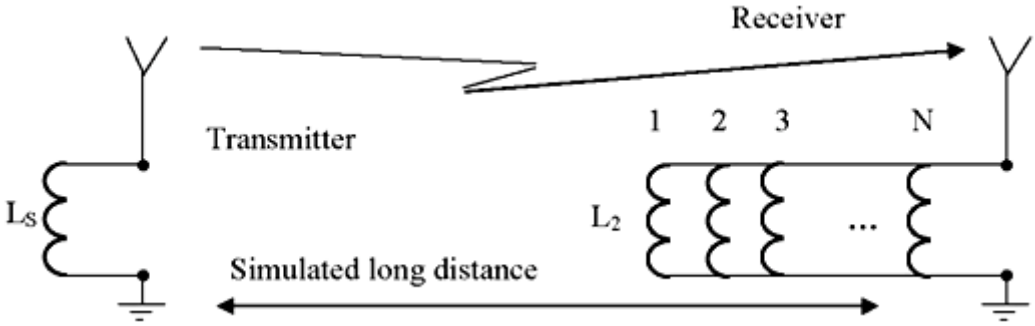

AS A RESULT

You have an asymmetric transformer arranged in a stack:

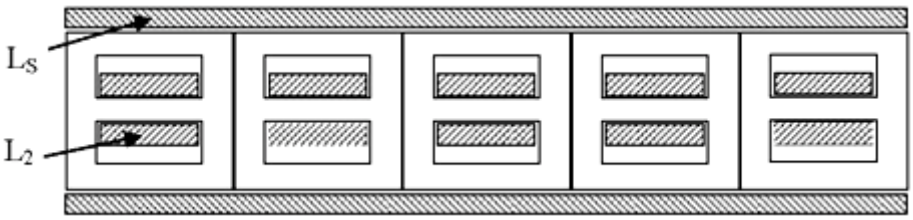

For flat (uniform) field inside of LS, it can be arranged with additional turns at it's ends.

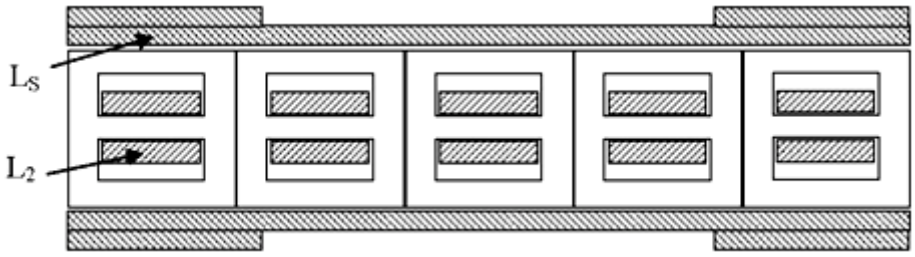

EXAMPLES OF COILS WHICH WERE ACTUALLY CONSTRUCTED

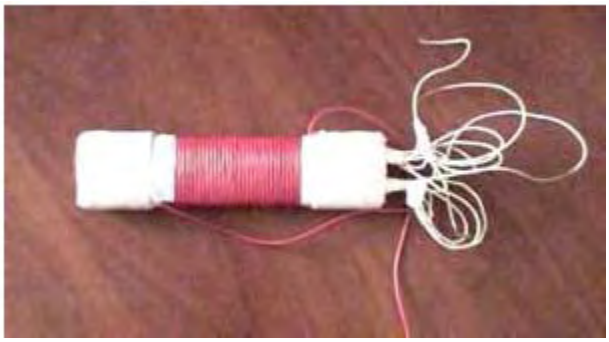

The coils are constructed from 5 sections, made from E-type ferrite core with a permeability of 2500, and wound using plastic-covered wire. The central sections L2 have 25 turns, and edge sections have 36 turns (to equalise the voltage on them). All sections are connected in parallel. The coil Ls has field-flattening turns at it's ends, and a single-layer winding Ls was used, the number of turns depending on the diameter of the wire used.

The current amplification for these particular coils is 4 times.

Changing Ls inductance is 3% (if L2 is short-circuited)

SECRET 5

The power source in Nikola Tesla car "Red arrow" is

FERROMAGNETIC RESONANCE

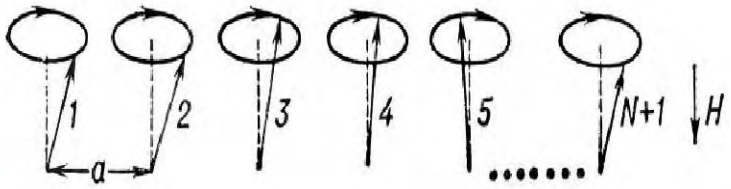

COMMENT: To understand electromagnetic feedback, you must consider the action to be like that of domains which have a group behaviour, or alternatively, spin waves (like a row of standing dominos falling over where each one is toppled by the previous one hitting it).

THE BASIS OF FERROMAGNETIC RESONANCE

When a ferromagnetic material is placed in a magnetic field, it can absorb external electromagnetic radiation in a direction perpendicular to the direction of the magnetic field, which will cause ferromagnetic resonance at the correct frequency.

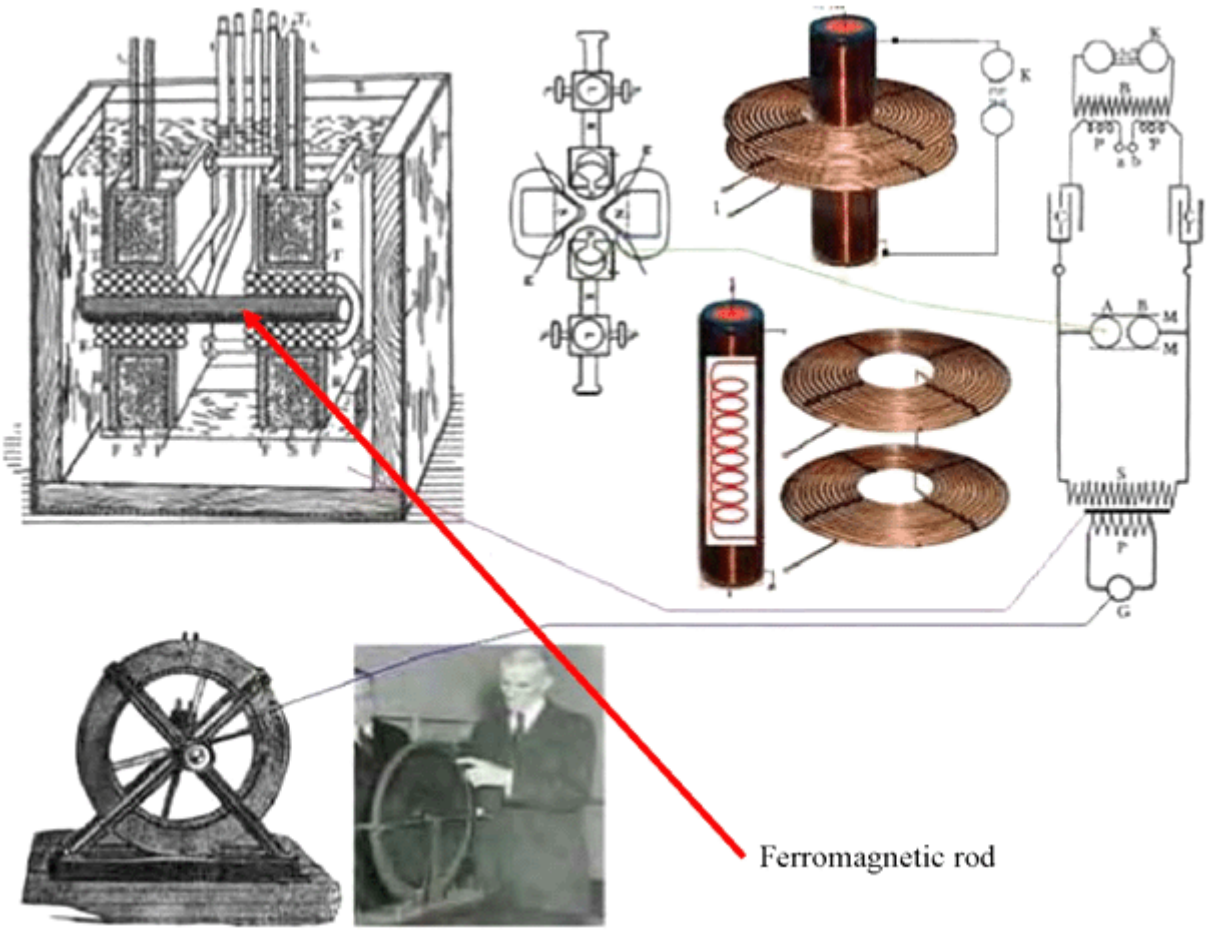

This is an energy-amplifying transformer invented by Mr. Tesla.

QUESTION: What use is a ferromagnetic rod in Free-Energy devices?

AN ANSWER: It can change magnetisation of the material along magnetic field direction without the need for a powerful external force.

QUESTION: Is it true that the resonant frequencies for ferromagnetics are in the tens of Gigahertz range?

AN ANSWER: Yes, it is true, and the frequency of ferromagnetic resonance depends on the external magnetic field (a strong magnetic field produces a high frequency). But with ferromagnetics it is possible to get resonance without applying any external magnetic field, this is the so-called "natural ferromagnetic resonance". In this case, the magnetic field is defined by the local magnetisation of the sample. Here, the absorption frequencies occur in a wide band, due to the large variations possible in the conditions of magnetisation, and so you must use a wide band of frequencies to get ferromagnetic resonance

A POSSIBLE PROCESS FOR ACQUIRING FREE-ENERGY

1. Subjecting a ferromagnetic to a short electromagnetic pulse even without an external magnetic field, causes the acquisition of spin precession (domains will have group behaviour, and so ferromagnetics can easily be magnetised).

2. Magnetisation of ferromagnetics can be by an external magnetic field.

3. Energy acquisition can be as a result of strong sample magnetisation caused by an external magnetic field of lesser strength.

COMMENT: You must use synchronisation for processes of irradiation and magnetisation of the sample.

USEFUL COMMENT: A ferromagnetic shield will not destroy the inductance of any coil placed inside it, provided that the ends of that coil are positioned on one side of the coil.

But, this coil can magnetise the ferromagnetic shield.

SECRET 5 CONTINUATION …

TWO PERPENDICULAR COILS ON A COMMON AXIS

(Standing waves, spin waves, domino effect, laser effect, open resonator, etc…)

EXPLANATION: Standing waves can be excited not only in Tesla's "horseshoe" magnet, but also in Tesla's ferromagnetic transformer (excited by sparks…)

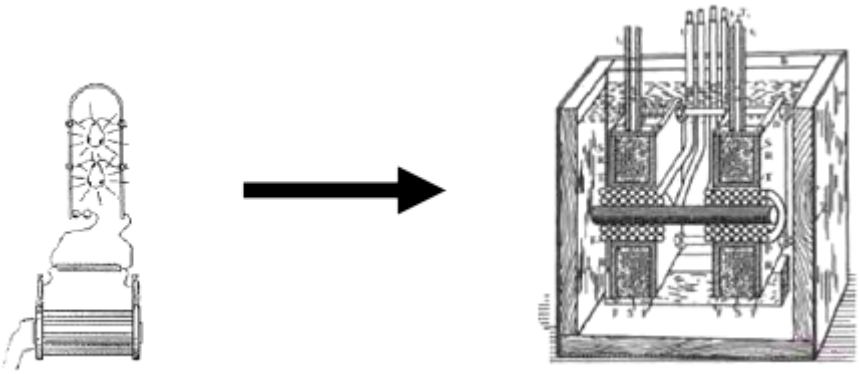

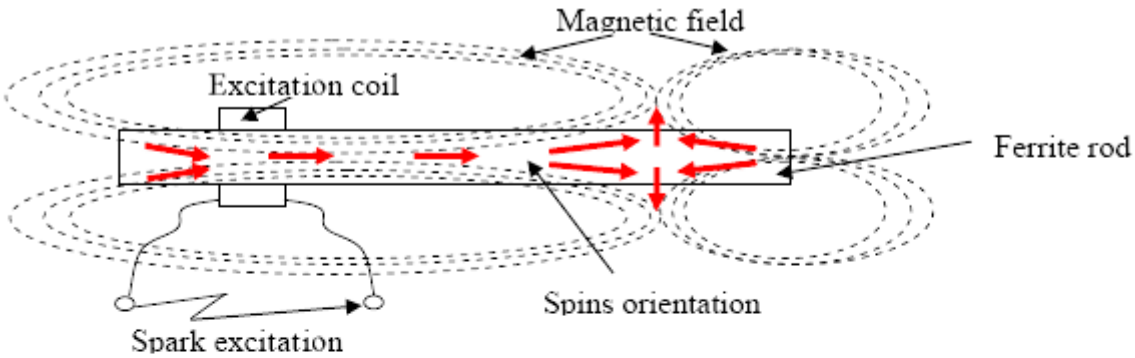

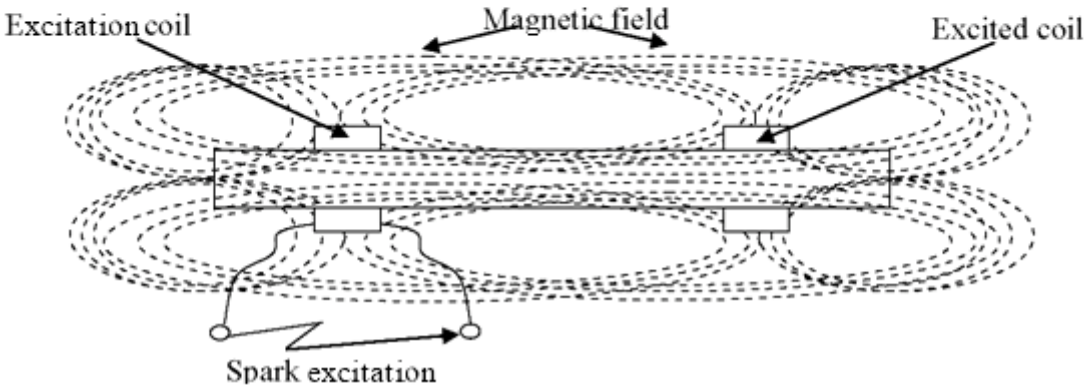

COMMENT: Excitation can be arranged in different ways, by coils connection. The frequencies of oscillations in a coil depends on the number of turns in it (a big variation is possible due to this factor).

ACTUAL COILS

COMMENT: The positions of the coils on the rods depends on whatever ferromagnetic material is being used, and on it's size. The optimum arrangement has to be determined through experimentation.

A transformer can have two pairs of coils: exciting (tubes), resonance or load (inside)

– see Tesla's picture

TOROIDAL VERSION OF AN ASYMMETRIC STACKED TRANSFORMER

An inductor L2 is placed on the central ring between the short-circuits of the core, and the coil L_S (not shown) is wound around all three rings, covering the whole of the toroid - this is an ordinary toroidal coil.

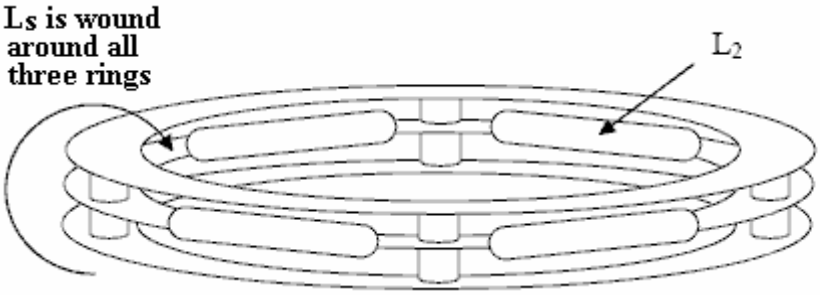

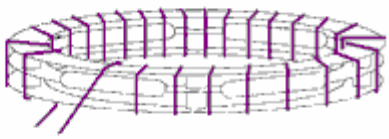

The number of short-circuits depends on your requirements, and influences on the current amplification.

THAT IS ALL, GOOD LUCK …

CONCLUSIONS

1. The Energy-Conservation Law is a result (not reason) of symmetrical interaction.
2. The simplest way to destroy symmetrical interaction is by using electromagnetic field feedback.
3. All asymmetrical systems are outside the area covered by the Energy-Conservation Law.

THE ENERGY CONSERVATION LAW CANNOT BE VIOLATED

(The field covered by this law is only symmetrical interactions)

No Private or State secrets are contained in this document.

There are no ready-to-use schematics in this document, as all diagrams are only provided as an aid to understanding the principles involved.

US 20030114313A1

(19) United States

(12) Patent Application Publication (10) Pub. No.: US 2003/0114313 A1

Worsley et al. (43) Pub. Date: Jun. 19, 2003

(54) TECHNICAL AND THEORETICAL SPECIFICATIONS FOR WARP DRIVE TECHNOLOGY

(76) Inventors: **Andrew Peter Worsley**, Kent (GB); **Peter John Twist**, Tortola (GB)

Correspondence Address:
LARSON & TAYLOR, PLC
1199 NORTH FAIRFAX STREET
SUITE 900
ALEXANDRIA, VA 22314 (US)

(21) Appl. No.: **10/182,373**

(22) PCT Filed: **Jan. 30, 2001**

(86) PCT No.: **PCT/GB01/00381**

(30) **Foreign Application Priority Data**

Jan. 31, 2000 (GB) 0002221.0
Nov. 24, 2000 (GB) 0028721.9

Publication Classification

(51) **Int. Cl.**[7] **H01S 1/00**
(52) **U.S. Cl.** **505/180**

(57) **ABSTRACT**

The present invention relates to the use of technical drive systems, which operate by the modification of gravitational fields. These drive systems do not depend on the emission of matter to create thrust but create a change in the curvature of space-time, in accordance with general relativity. This allows travel by warping space-time to produce an independent warp drive system. Differentials electron flow through a body in rotation is directed so as to simultaneously pass through a said body In its direction of

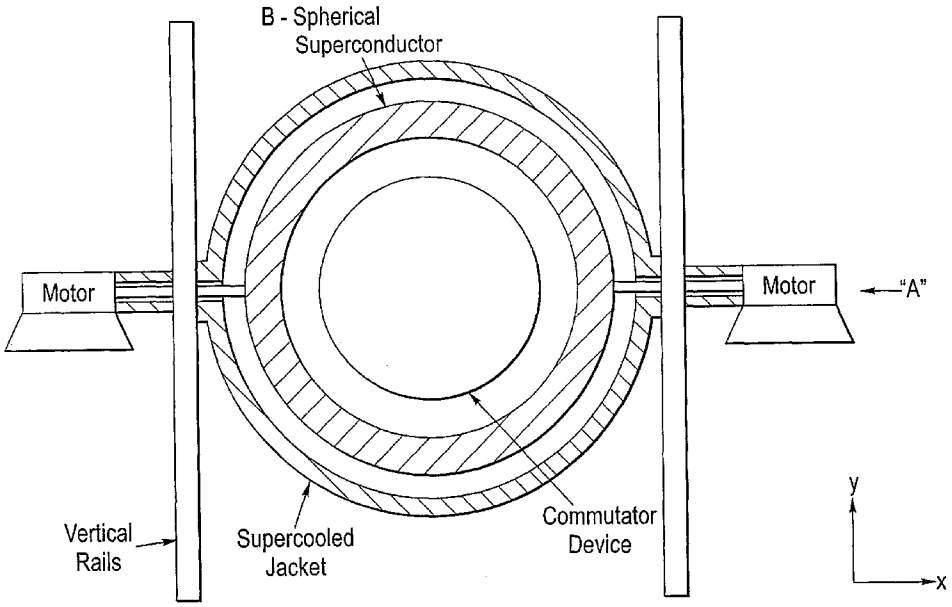

Spherical Superconductor
Sphere = 0.25m external radius
Sphere = 0.20m internal radius

Figure 1 & 2
B = Superconductor

Direction of Motion
y vector (vertical rails)

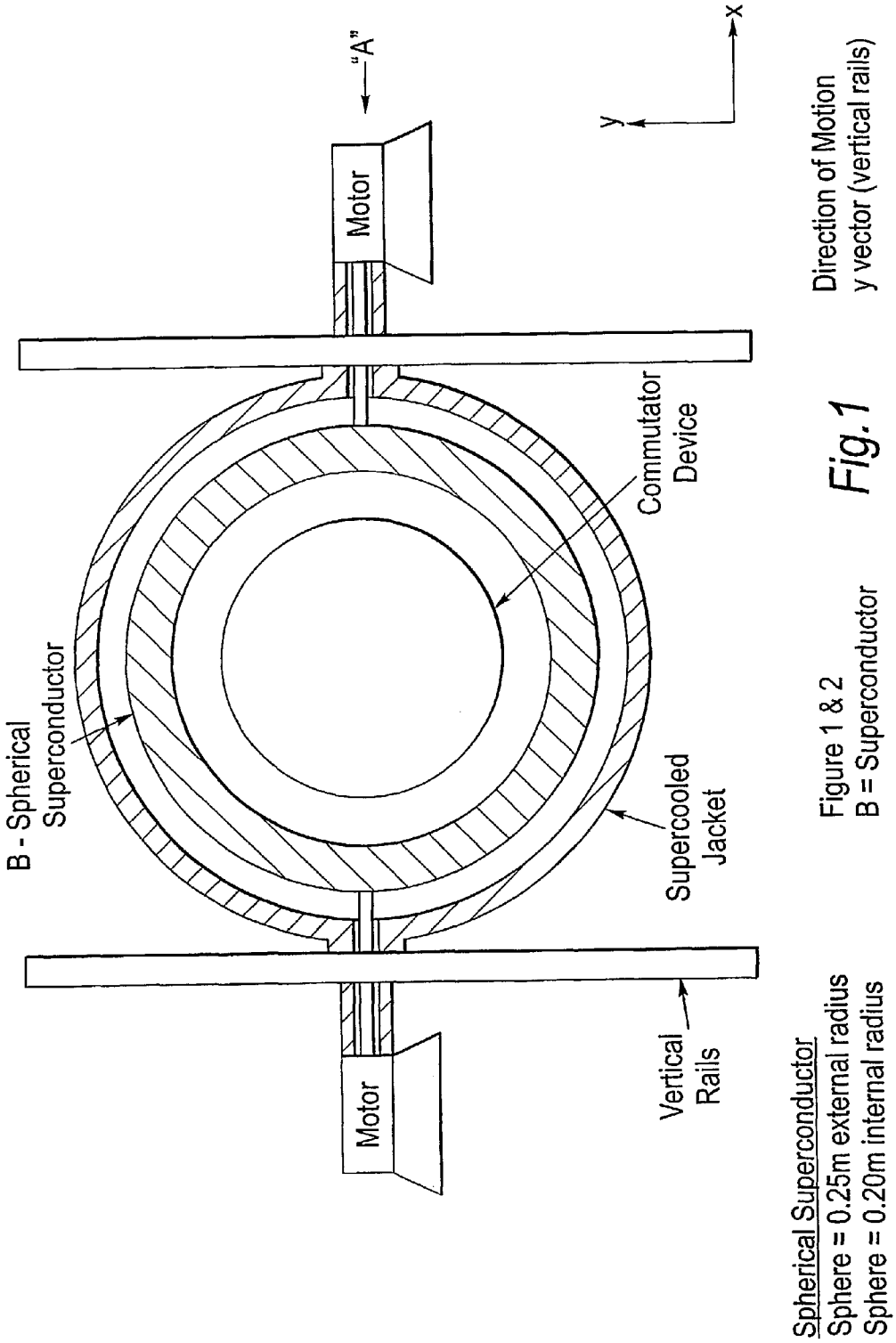

Figure 1 & 2
B = Superconductor

Fig. 1

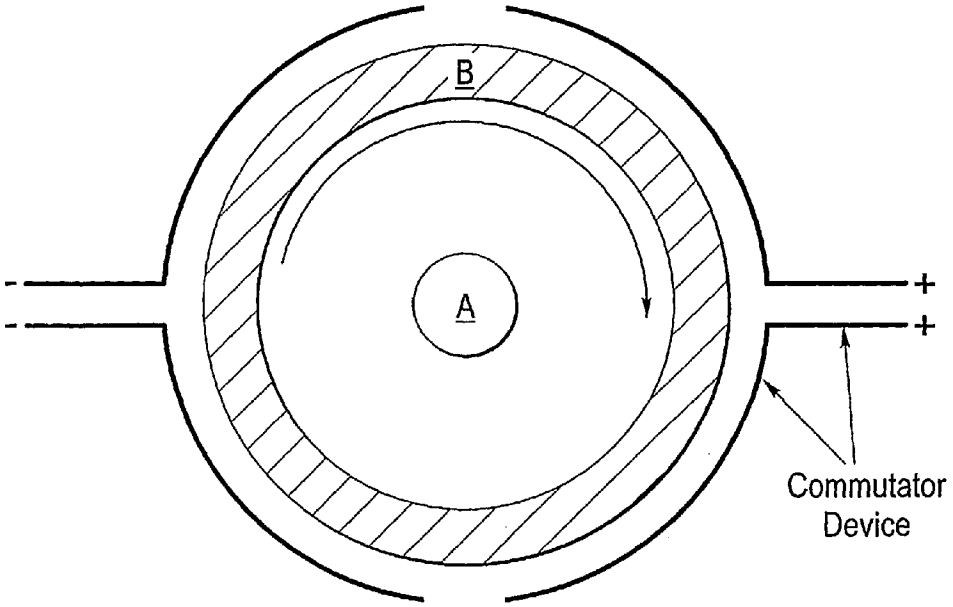

A = Ultracentrifugational Axle
(rps 10,000 revs/sec)
B = Spherical Superconductor

Fig.2

TECHNICAL AND THEORETICAL SPECIFICATIONS FOR WARP DRIVE TECHNOLOGY

FIELD OF THE INVENTION

[0001] The present invention relates to the use of technical drive systems which operate by the modification of gravitational fields. These drive systems do not depend on the emission of matter to create thrust, but create a change in the curvature of space-time, in accordance with general relativity. This allows travel by warping space-time, to produce an independent warp drive system.

THEORETICAL BACKGROUND OF THE INVENTION

[0002] The concept of gravity should be examined in the light of quantum gravity and in turn as a component of quantum physics itself. The fundamental minimal quantum of energy in quantum physics is Planck's constant; h. Thus in accordance with the energy equivalence formula $E=mc^2$, the fundamental minimum quantity of mass (m_q) can therefore be derived, from known constants by; $m_q=h/c^2$ (1). Taking this minimal mass, it is possible to show that the formation of all matter, the forces of nature and indeed space-time itself derive from this single quintessential quantity.

[0003] Thus if the number of quintessences in a system is; $n_q=m/m_q$: then the total Energy of the system is more logically given by, the energy of a single quintessence (h); directly multiplied by the number of quintessences (n_q) in that system, thus $E=hn_q=mc^2$ (1 a).

[0004] Furthermore, this minimal mass, termed quintessence, can form the basis of the existence of a quantum gravitational field in the form of a space-time lattice, from which quantum gravity may be derived from first principles. Furthermore, the conglomeration of these quintessences also accounts for the formation of the elementary particles and the forces acting between them, as in superstring theory. This concept explains the formation of matter and the forces of nature on a quantum mechanical basis and directly explains the existence of wave particle duality. Thus as $n_q=m/m_q$; the frequency of light and matter (f) is determined, directly, from the number of constituent quintessences. This leads automatically to the fundamental equation, derived from (1), $f=n_q=E/h$, where n_q is the number of quintessences, which leads directly to the frequency of both light and matter. This in turn leads directly to a Universal wave equation for matter and light $\lambda=c/\beta n_q=hc/\beta E$ (2), where β is the relative directional velocity, v/c. As the momentum, $p=\beta E/c$, then this equation also gives the standard de-Broglie wave equation, $\lambda=h/p$ in agreement with current theory and experiments.[1]

[0005] Using the Universal wave equation, the standard equation for special relativity, $m'=m_o/(1-\beta^2)^{1/2}$, derives from first principles. Also from these observations, a modified Dirac wave equation may be derived, $E\psi=(-j\beta\cdot\nabla+\beta m)\psi$ (2a), the results of which have been recently verified by a paper in which the orbitals of electrons were experimentally directly visualised.[2] Moreover, a fundamental equation for general relativity can be formulated, where G is the gravitational constant and r_q is the given radius of quintessence; $G=9r_q^2c^4/\lambda\beta E$ (3), such that the Universal wave equation is in direct agreement with general relativity.[3] Thus special and general relativity and quantum mechanics can be unified.

[0006] From here it is possible to proceed in a number of ways; the geometric structure of the electron and the forces of Nature may be derived from first principles and in turn the structure of the quarks, including the top and bottom, otherwise known as truth and beauty can be seen. Moreover, the presence of a space-time lattice results in an understanding of quantum EPR effects. By allowing a theoretical flow of energy through the space-time lattice it can be shown that:

[0007] Energy is not bound by space-time

[0008] Thus logically accounting for phenomena such as entanglement and quantum tunnelling. Quintessence can also be used to explain, logically, the inner physics of a black hole, the missing mass of the Galaxy, the continuing expansion of the Universe, Guth's inflationary theory and the Big Bang. Hence, it is now possible to understand the Universe, including space-time, matter and the forces of nature from the radius, mass and vibration of a single quantity, quintessence.

[0009] With this understanding of space-time, matter and the forces of Nature, and in particular gravity, it is possible to demonstrate that the modification of gravitational fields, and in turn the warping of space-time, can be technically readily achieved.

[0010] Using standard equations for special relativity, $m'=m_0/(1-\beta^2)^{1/2}$, it can be demonstrated that by differentially increasing the velocity of electrons, by applying a differential current, their mass can be increased in a specific way. In turn by increasing the mass of electrons, by general relativity, the number of gravitons emitted from these electrons can be modulated. By multiplying this effect using an ultracentrifugational device the differential graviton emission can be manifestly amplified. This in turn, in accordance with general relativity, will cause a change in the curvature of space-time.

[0011] This effective warping of space-time does not, of necessity, imply superluminal velocities, but does allow the creation of warp drive systems, which do not depend on the creation of thrust by the ejection of material as used in current space technologies.

Part I

Fundamental Laws of Physics

[0012] Quintessential Mass

[0013] The quantum physical, minimum component of energy is Planck's constant; h. To define the minimal component of mass, using the standard energy equivalence formula; $E=mc^2$, such a minimal mass (m_q) would be required to have the value equivalent to; $m_q=h/c^2$ (1). The total mass of a system (m) would then be; $m=m_qn_q$, where n_q is the number of these minimal units. Thence, the total energy of a system can be derived from the minimal energy; h, multiplied by the number of these energy units (n_q). Thus as, $E=mc^2$, then also $E=m_qn_qc^2$ and substituting $m_q=h/c^2$, the energy equivalence formula has the more logical formulation; $E=hn_q$ (1a). Thus the energy of a system is equivalent

to the minimal energy unit; h, multiplied by the number of those minimal energy units (n_q).

[0014] Taking this minimal mass/energy, it is possible to show that all matter, the forces of nature and space time can be constructed from this single quintessential quantity. Moreover, using this quantity the laws of physics can be derived from first principles. Thus, a priori, all components of the physical universe, including space-time, can be constructed from this minimal mass component, termed quintessence.

[0015] Wave Particle Duality

[0016] If the presence of quintessence accounts for the structure of matter and if matter itself forms from the number of quintessences, then the frequency of matter and thus wave particle duality directly arises from first principles. Specifically the wavelength of matter derives from the vibration of quintessence from which it is constituted. Thus the frequency (f) and in turn the wavelength of light and matter is directly equivalent to the number of quintessences contained within it. We find that the actual frequency of light can be directly derived from first principles from the effective mass of the photon (m,) and thus by the number of quintessences (n_q) it contains.

[0017] Thus for light conventionally:

$$f=E/h$$

[0018] and if $E=mc^2$, and $h=m_q.c^2$, then

$$f=m_\gamma c^2/m_q.c^2$$

[0019] and

$$f=m_\gamma/m_q=n_q$$

[0020] Thus

$$f=n_q \tag{4}$$

[0021] Thus the formula for the frequency of light (E=hf) is now readily explained by the observation that the frequency is determined quite directly from the number of quintessences (n_q) within the photon.

[0022] The wavelength is thus also given by:

$$\lambda=c/f=m_q c/m_\gamma=h/p$$

[0023] We can now show that the frequency of matter also has the same derivation from quintessence, as has the frequency of light. The frequency of matter is again equivalent to the number of quintessences it contains. Thus the wave particle duality of matter itself can be explained by its composition from quintessence. The amount of quintessences contained within a electron sphere will depend on the number of quintessences constituting the electron and those passing through it as a result of its relative velocity β^2 (where $\beta=v/c$); effectively its relativistic momentum (p). The frequency will then be related to the total number of quintessences. Thus for matter,

$$f=\beta^2 n_q \tag{4a}$$

[0024] Thus it is possible to derive the conventional de Broglie wave equation for matter from first principles. Thus, as $\lambda=v/f$, we have:

$$\lambda=v/\beta^2 n_q \tag{5}$$

[0025] thus as $n_q=E/h$

$$\lambda=hc/\beta E \tag{2}$$

[0026] and as conventionally $\beta E/c=p$, then for matter:

$$\lambda=h/p$$

[0027] Provided that in the de Broglie equation, the momentum of the object is calculated using the relativistic mass, thus accounting for the total number of quintessences (n_q) in an object, this gives an accurate value for the wavelength of matter.[1]

[0028] Thus the wavelength of matter follows directly from its constitutents, quintessence. As matter is made of quintessence, similarly to light, its frequency depends on the number of quintessences (n_q) within it, travelling relative to the speed of light. Moreover, $\lambda=hc/\beta E$, underpins a fundamental relationship between wavelength and energy. Furthermore, this is mathematically the same as the term $\lambda=hv/\beta^2 E$, giving a relativistic expression for the the wavelength of matter, from which the relativistic equations may be directly derived (see Wave Particle Duality and Relativity).

[0029] Wave Equations

[0030] The derivation of wave particle duality from first principles also now allows the derivation of a modified wave equation for matter.

[0031] To derive his wave equation Shrödinger commenced with the de Broglie equation using momentum (p). For lower energies the momentum of an electron is conventionally derived from the kinetic energy of the electron and the mass of the electron mo. Thus conventionally:

$$E_k=\tfrac{1}{2}mv^{1/2} \text{ and } p=m_0 v$$

[0032] Thus

$$E_k=p^2/2m_0$$

[0033] then

$$p=(E_k.2m_0)^{1/2}$$

[0034] and conventionally, the de Broglie equation can also be written as:

$$\lambda=h/p=h/(E_k.2m_0)^{1/2}$$

[0035] In turn the Shrödinger wave equation directly derives from the square of the above classical non relativistic term for kinetic energy:

$$\lambda^2=h^2/E_k.2m_0$$

[0036] thus

$$E_k = \frac{h^2}{2m}\cdot\frac{1}{\lambda^2}$$

[0037] As $E=E_k+V$

[0038] then

$$E\psi = -\frac{h^2}{2m}\cdot\frac{d^2\psi}{dx^2} + V\psi = jh\cdot\frac{d\psi}{dt}$$

[0039] However, the Shrödinger equation, may be refined by taking into account relativity. Thus the true values for the energy are given by the relativistic momentum (p).

[0040] A fundamental relativistic wave equation for ψ, and its logical derivation may now be developed through the concept of quintessence as a fundamental constituent of matter.

[0041] The amount of quintessences in the electron is determined by the number of quintessences forming the electron at rest, plus the amount of quintessences passing through it due to its relativistic velocity, which will determine the relativistic momentum (p) of a particle.

[0042] The frequency of matter can now be readily calculated from first principles to give a more accurate result. Thus as matter is made of quintessence, similarly to light, its frequency is equal to the number of quintessences (n_q) within it. The wavelength will depend on its velocity travelling relative to the speed of light and thus multiplied by the relative velocity compared to c (β=v/c);

[0043] Hence for matter as previously shown:

$$\lambda=v/\beta^2 n_q=hc/\beta E \quad (2)$$

[0044] And conventionally

$$E=(p^2c^2+m_0^2c^4)^{1/2}$$

[0045] Using these equations, we can now, also, reformulate the Shrödinger wave equation, which has the advantage that relativity can be treated in a quantum mechanical way. Thus if the wave energy of matter is defined as:

$$E_\lambda=\beta(p^2c^2+m_0^2c^4)^{1/2}/c^2$$

[0046] thus

$$E_\lambda=(\beta^2p^2/c^2+\beta^2m_0^2)^{1/2}$$

[0047] which in complex space generalises to

$$E_\psi=(-j\beta\cdot\nabla+\beta m)_\psi \quad (2a)$$

[0048] As the term $\alpha=e^2/hc.4\pi\epsilon_0$; also represents the ground state ratio of the velocity of the electron to c. Thus $\alpha=\beta=v/c=1/137$.

[0049] Thus, also

$$E_\psi=(-j\alpha\cdot\nabla+\beta m)_\psi$$

[0050] This is thus the standard relativistic equation that Dirac was able to construct from the Shrödinger wave equation. This relativistic equation can be derived from the modified wave equation (2). This takes into account the relative mass energy which the quintessential wave equation (2) contains.

[0051] Where importantly the term βm is the mass m, multiplied by the ratio of the relative velocity to light β=v/c, and the term a is also essentially the relative velocity of the electron.

[0052] The Dirac equation was an empirical formula which worked mathematically, nevertheless even Dirac admitted it was not logically understood. The importance of these equations (eq. 2, 2a) is that they show that the existence of quintessence allows the waveparticle duality of matter to be explained and mathematically derived from first principles, Thus the frequency of matter or even light is simply determined by the number of quintessences it contains.

[0053] Indeed, a recent publication in Nature has suggested that the direct visualisation of the orbitals of electrons shows that these are in very close agreement with theory. However, there is a significant departure from theory, in the interstitial molecular regions, suggesting that the higher velocities of the electrons obey the modified Dirac equation (2a).Thus these orbitals were in keeping with the modified Dirac equation, which itself may be derived from the wave equation above, $\lambda=hc/\beta E$ (eq. 2) (ref 2)

[0054] The Shrödinger wave equation will approximate to the correct values until v approaches c. Indeed the Shrödinger equation will give similar answers as that derived from equation (2a), under most experimental conditions.

[0055] However, equation 2 and its derivative (2a) may have advantages over standard Shrödinger theory with relativistic speeds. Furthermore, equation 2, conceptually shows that the wave particle duality of matter derives from the principle that the frequency of matter is directly equal to the number of quintessences it contains. Importantly it also mathematically allows relativity and quantum mechanics to be united.

[0056] With v≅c, the modified Dirac equation (2a) will yield more accurate results, particularly compared with the Schrödinger equation. We also find that the equation $\lambda=hc/\beta E$ (2) is equivalent to the de Broglie wave equation, $\lambda=h/p$, provided we use the relativistic mass in the de Broglie equation. Given this, these equations yield accurate experimental results (ref 1).

[0057] Thus we find that the modified formulation of de Broglie wave equation $\lambda=hc/\beta E$ (eq. 2a) leads directly to a modified Dirac relativistic wave equation and is supported by recent experiments which measure the wavelength of matter and demonstrate the electron orbitals experimentally from these wave equations for matter (ref 1,2).

[0058] Wave Particle Duality and Relativity

[0059] From here it is possible to proceed in several ways using the relativistic wave equation (2). It is apparent that the reintroduction of the term for relative velocity into the wave equations will enable the reintroduction of special relativity into quantum mechanics. In particular we should now be able to derive the term $(1-v^2/c^2)^{1/2}$ as a special case of quantum mechanics.

[0060] Thus if:

$$\lambda=hc/\beta E \quad (2)$$

[0061] As $E=(p^2c^2+m_0^2c^4)^{1/2}$, squaring

$$\lambda^2=h^2c^2/\beta^2(p^2c^2+m_0^2c4)$$

[0062] Conventionally $p^2c^2=E^2v^2/c^2$

[0063] then

$$\lambda^2=h^2c^2/\beta^2(E^2v^2/c^2+m_0^2c^4)$$

[0064] Thus as $\beta^2=v^2/c^2$ and $m_0^2c^4=E_0^2$, then:

$$\beta^4E^2+\beta^2E_0^2=h^2c^2/\lambda^2$$

[0065] hence

$$\beta^4E^2=h^2c^2\cdot\frac{1}{\lambda^2}-\beta^2m_0^2c^4$$

thus

$$\beta^2=\frac{h^2c^2}{\beta^2E^2}\cdot\frac{1}{\lambda^2}-\frac{\beta^2m_0^2c^4}{\beta^2E^2}$$

-continued

As $E^2 =' m^2c^4$

$$\beta^2 = \frac{h^2c^2}{\beta^{2\prime}m^2c^4}\cdot\frac{1}{\lambda^2} - \frac{\beta^2 m_0^2 c^4}{\beta^2 E^2}$$

Substituting $h = m_q c^2$

$$\beta^2 = \frac{m_q^2 c^6}{\beta^{2\prime}m^2c^4}\cdot\frac{1}{\lambda^2} - \frac{\beta^2 m_0^2 c^4}{\beta^2 E^2}$$

As $m_q/'m = 1/n_q$(eq. 2)

$$\beta^2 = \frac{c^2}{\beta^2 n_q^2}\cdot\frac{1}{\lambda^2} - \frac{\beta^2 m_0^2 c^4}{\beta^2 E^2}$$

[0066] Thus if $f=\beta^2 n_q$ (eq. 7a);

$$\beta^2 = \frac{v^2}{f^2}\cdot\frac{1}{\lambda^2} - \frac{\beta^2 m_0^2 c^4 f^2}{\beta^2 E^2}$$

As $1/\lambda^2 = f^2/v^2$

$$\beta^2 = \frac{v^2}{f^2}\cdot\frac{f^2}{v^2} - \frac{\beta^2 m_0^2 c^4 f^2}{\beta^2 E^2}$$

Thus:

$$\beta^2 = 1 - \frac{\beta^2 m_0^2 c^4}{\beta^2 E^2}$$

As $E^2 =' m^2c^4$

$$\beta^2 = 1 - \frac{m_0^2}{'m^2}$$

Hence

$$m_0/'m = (1-\beta^2)^{1/2}$$

Thus

$$'m = \frac{m_0}{\left[1 - \frac{v^2}{c^2}\right]^{1/2}}$$

[0067] Thus this derivation now allows relativity as a universal case of the quintessential wave nature of matter.

[0068] The original premises on which special relativity was based were: that the speed of light is a constant and that all observers are equal. As the speed of light has dimensions of length and time but not apparently of mass, the relativistic change in mass is not accounted for. Using quintessence logically and directly accounts for the relativistic mass changes.

[0069] Moreover, relativity can be derived from the de Broglie equation, and visa versa, directly, thus linking relativity and quantum mechanics by taking into account the existence of quintessence mass.

[0070] Hence, it is now possible to derive the relativistic equations for mass and in turn for space and time from the quintessential wave equation, thus deriving special relativity as a universal case of quantum mechanics and thus uniting special relativity and quantum mechanics. This now allows a further understanding of the nature of space-time.

[0071] The Space-Time Lattice

[0072] The understanding of the true nature of space-time and how it is formulated in three dimensions of real space is crucial. To simply assume that space-time exists, and thence not to question the nature of that existence, denies a deeper understanding of the universe.

[0073] In order to understand the nature of space-time itself, at the quantum level a further look at the nature light and the photon is necessary. Since Einstein's description of light as a particle (the photon) and the description of the photoelectric effect, the standard picture of light as simply a wave can, no longer be applied. If light was to exist as a photon, it could not exist in one dimension, as ordinary waves do, it would need to be three dimensional, with the addition of time. Let us suppose, in this case, that a photon is a three dimensional helical ringlet of light, travelling in the x vector, and spinning around the x-axis. Conventionally this ringlet has a radius; $r=\lambda/2\pi$. The ringlet itself would be vibrating in the y and z vectors. The vectors x, y and z would represent the photon, the substance of which, would be travelling in the x direction and oscillating in the y and z vectors, which would represent oscillatory energy. This in turn would allow it to act as a wave, and create oscillatory electromagnetic fields.

[0074] It is important to re-examine space-time itself in this light, this would have one directional vector with two vector dimensions of energy, one of capacitance and one of electrical permeability, thus accounting for the well known constants of free space; the permittivity of free space (ϵ_0) and the permeability of free space (μ_0) respectively. The vector dimension of direction x, would be the direction of travel and those "quintessences" travelling in an outwardly direction would account for none other than the expansion of the universe. Three of these quintessences would naturally constitute three dimensional visible space-time. These constituents of space-time would interact with the generations of the other vector dimensions reciprocally. Thus one quintessence would sweep out one vector of permeability and one vector of permittivity, through which the other two quintessences could travel, and vica versa, creating a three dimensional space-time lattice.

[0075] The permittivity of free space, (ϵ_0) which is equivalent to capacitance, would as with capacitance plates, be determined by the effective separation between quintessences. The permeability of free space (μ_0) is in fact a force, measured as $4\pi\times10^7$ N A^{-2}, would result from the force produced by the vibration of quintessence and would be dependent on the density of quintessence. Hence these two parameters would be reciprocal and thus the product of these two would therefore be a constant, which is recognised as none other than the speed of light.

$$c=(\mu_0.\epsilon_0)^{-1/2}$$

[0076] This space time lattice would in effect be created by quintessences travelling in all directions with a speed of c within the lattice. The quintessences of the space time latice would in effect produce a non-static ether. A non-static ether is fully compatible with special and general relativity. Indeed such an ether explains how space time can be curved as in general relativity. Furthermore, the existence of a non-static ether, was espoused by Einstein in his University of Leyden lecture on general relativity of May 5, 1920. In Einstein's own words;

[0077] "According to the general theory of relativity space without ether is unthinkable."(ref 4)

[0078] Recent evidence from a number of sources now strongly support the presence of this non-static ether, in the form of quintessence. An editorial from a major journal states "combined with other observations such as those of distant Supernova, the QMAP results corroborate the prevailing theory of inflation with the twist that the Universe is only one third matter (both ordinary and dark) and two thirds quintessence, a form of energy possibly inherent in empty space".(refs 5, 6, 7)

[0079] If we take into account the existence of quintessence and as such a three dimensional space-time lattice, matter which is intrinsically made of contituents of charge would interact with this lattice to produce the effects of mass. Mass would be perceived as a result of matter (whose constituent particles appear to contain charge) interacting with this lattice directly due to the inhibition of motion by the lattice's electrical permeability and permittivity vectors, which would form the existence of complex space. These quintessences would in the direction in the y and z vectors produce small vibrations of the order of the Planck length (10^{-35} m), whilst passing through the vectors of permeability and permittivity, thus producing the effects of mass.

[0080] The vibration would endow quintessence itself a (non rest) mass (m_q) equivalent, to the minimal mass of:

$$m_q=h/c^2=7.373\times10^{-51}\ \text{kg.sec} \quad (1)$$

[0081] The presence and magnitude of Planck's constant (h) and especially the speed of light (c) is thus explained. Indeed, the speed of light $c=(\mu_0.\epsilon_0)^{-1/2}$ is not in itself a fundamental quantity.

[0082] As the energy equivalence formula is $E=mc^2$, the minimal mass of a single quintessence, would thus be the minimal mass, h/c^2, hence again:

$$m_q=h[\mu_0.\epsilon_0]=h/c^2=7.373\times10^{-51}\ \text{kg.sec} \quad (1b)$$

[0083] or

$$m_q c^2=h \quad (1c)$$

[0084] It is postulated by general relativity that the shape of space time itself can be altered, indeed the presence of the space time lattice now allows this to be altered by altering the density of quintessence. It is further clear that if quintessences underly the structure of the space-time lattice, they may also underly the structure of matter itself.

[0085] With regards a single quintessence, this passing through an energy vector of the space-time lattice would appear as a vibrating string. In a similar way to string theory, the conglomeration of these quintessences would produce the constituents of ordinary matter. Thus the general equation for the number of quintessences (n_q) in an object of mass (m) would be

$$m/m_q=n_q$$

[0086] The mass of the electron (m_e) for example, would be directly determined by the number of quintessences in the electron, multiplied by the mass of quintessence.

[0087] Quintessence and Complex Space

[0088] Quintessence is postulated to constitute the fundamental nature of space-time. Three quintessences each travelling in their respective x vectors at 90° to each other would create three dimensional real space-time. These quintessences would in the direction in their respective y and z vectors produce small vibrations of the order of the Planck length (10^{-35} m), this would create the vector dimensions of permeability and permittivity. The result would give space-time 9 dimensions of space as in superstring theory. However, unlike superstring theory the six hidden dimensions would not be "curled up so as to be so small as to be invisible" these six dimensions would be present in complex space. Thus, only three of these dimensions would represent ordinary three dimensional particulate space time i.e. three dimensional objects. The other six dimensions produced by the vibrations of quintessence would form complex space.

[0089] The mathematics of complex space, using imaginary √−1 or (j) numbers, is assumed in the standard formulation of the Shrödinger wave equation. Thus the presence of complex space is an integral part of quantum mechanics.(ref 8)

$$-\frac{h^2}{2m}\cdot\frac{d^2\psi}{dx^2}+V\psi={}_j h\cdot\frac{d\psi}{dt}$$

[0090] The mathematics of complex space is also an essential and integral part of the principles and application of modern electronic and control engineering. Indeed it has been well recognised for some time that each direction vector in electronic engineering can , be associated with complex vectors.(ref 9)

[0091] As this complex space consists of the vectors of permittivity and permeability it would only be "felt" by charged particles as in the electron. Nevertheless, as all particles are fundamentally composed of charged particles the effects of complex space would be felt by endowing these particles with mass and in turn kinetic energy.

[0092] In conventional complex space, a 2 dimensional Cartesian Argand diagram is mathematically used. However, in order to formulate the equations for particles a three dimensional Argand diagram is essential. This will have three dimensional vectors, one real vector and two imaginary vectors. Three of these diagrams will be required to fully describe the nature of particles, each with a real vector in the x, y and z vectors, respectively. Nevertheless, in the instance below the real vector is the x vector and the two imaginary vectors are given by (${}_j$y, ${}_j$z)

The Three Dimensional Argand Diagram

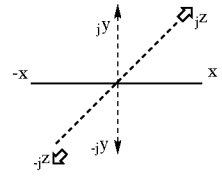

[0093] The Three Dimensional Argand Diagram

[0094] The beauty of a three dimensional Argand diagram is that the complex conjugate (i.e. the mirror image which confers mathematical reality on the coordinates) is formed

by the value of the minus coordinate in the other complex vector dimension. Thus the complex conjugate of $(c_x^{1/2}+{}_jc_y^{1/2}+{}_{-j}c_z^{1/2})$ is $(c_x^{1/2}+{}_jc_y^{1/2}+{}_jc_z^{1/2})$. These two sums when multiplied thus give a real number solution.

[0095] Furthermore it is clear that nine dimensions of space time are necessary in the general relativistic equations. By including complex space we thereby create the nine dimensional spacial metrictensor and the metric energy tensor of matter necessary for computations for general relativity (see quantised general relativity pp 34-35). From here we can begin to understand the true structure of matter.

[0096] Energy and the Space-Time Lattice

[0097] The presence of numerous experimental data for quantum tunnelling(refs 10, 11, 12, 13) and indeed the recent observations by Nicholas Gisin, on the entanglement of distant photons now returns us to EPR experiments.

[0098] Using the quintessential modification of the de Broglie wave equation, gives us an insight into these teleportation and EPR effects.

[0099] As

$$\lambda=hc/\beta E \quad (2)$$

[0100] and

$$E=hn_q \quad (1a)$$

[0101] then

$$\lambda=c/\beta n_q \quad (2b)$$

[0102] Importantly, as indicated by equation (2b), energy having no quintessence; would have a wavelength of infinity. Specifically pure energy containing no quintessences, would have a lambda of infinity. According to quantum mechanics an infinite wavelength would result in the probability of that energy being anywhere. As energy itself has no electrical charge it would not be impeded by the permittivity and permeability of the three dimensional space-time lattice. Moreover, energy would not be detectable in three dimensional space-time, unless it interacted with matter, as in the EPR experiments. Indeed, energy is not observed when not bound to any form of mass or particle. Thus equation 9d, takes us to our original assertion

[0103] Energy is Not Bound by the Space-Time Lattice

[0104] Thus, as the EPR experiments suggest the existence of energy separate from matter and thus separate from the three dimensional space-time lattice, it is interesting to find that experiment suggests the existence of free energy in a continuum separate from space time to produce the effects of quantum teleportation.(refs 10, 11, 12, 13)

[0105] This is not, however, teleportation across an additional dimension, this is a term to describe in partially familiar terms the dissociation of energy from the three dimensional space-time lattice. As time is inextricably linked to each dimension of space, the effects of energy would be inextricably linked to the events, such as the creation of virtual particles, we see interacting within space-time.

[0106] It is unlikely that observers have any direct day to day experience to explain quantum events. Nevertheless, quantum physics may have given us a window into the hitherto hidden workings of the Universe. Thereby, the mystery of the uniformity of the Universe, across distances which the speed of light could not apparently traverse, is readily explained by the fact that the free energy contained in the Universe is not bound by the space-time lattice.

[0107] In the case of light, due to the exceedingly small masses involved, there would be relatively easy exchange of matter with free energy within a photon. This would make the photon the ideal experimental tool to look for energy which is not bound by matter and in turn energy which is not bound in space-time. Indeed, very recently Furusawa et at. have reported to have observed the transference of energy as photons from A to B, without those photons traversing space-time(ref 10). This finding which has been supported using other experimental techniques(refs 11, 12, 13,), is very important as it suggests the existence of such a quantum continuum.

[0108] We have already seen strong experimental data using photons(ref 10), atomic spins and other data for quantum teleportation which have recently been published (refs,11, 12, 13), which support these findings. According to the above equations the teleportation would vary in a predictable fashion, as with photons, in line with the wavelength of the light used, relative to the size of vibration of quintessence. As regards matter, the results do confirm that the effect of quantum tunnelling is indeed dependant on the wavelength of matter and the size of that matter(ref 10).

Part II

Particle Physics

[0109] Electron Structure

[0110] Understanding the electron is fundamental to the understanding of the elementary particles. The hidden nature of the electron may recently have been revealed through observations by Horst Stormer, Daniel Tsui and Robert Laughlin for which a Nobel prize has recently been awarded. They describe a quasi electron particle of charge ⅓e. This has been described on a quantum basis as a vortex of energy, bound as a quasi particle in one dimesion x, but not bound in the other two dimensions y and z, allowing dispersion in space-time as a vortex. What is more intriguing are the experimental conditions in which this occurs. First of all a two dimensional electron gas is created and held between two capacitance plates. A magnetic force is then applied in the remaining dimension, virtually creating a one dimensional passage through which only a quasi electron appears to be able to pass.(refs 15, 16)

[0111] Given the presence of charge of ⅓e, then three of these quasi electrons could form an entire electron in three dimensional visible space time. Nevertheless, each would have energy and hence a wave function which would be present in the other vectors. This electron could thus follow the probability functions as described by the Shrödinger wave equation for ψ (otherwise termed as "essence" by Shrödinger)

[0112] If the mass of the electron (m_e) is constituted from quintessence, using the formula:

$$m_e/m_q=n_q$$

[0113] Then an electron would be constituted from:

$$9.11\times10^{-31}\ \text{kg}\div7.373\times10^{-51}\ \text{kg.sec}=1.236\times10^{20}\ \text{quintessences/sec.}$$

[0114] Thus taking into account the mass-energy content of quintessence (m_q) it is independantly possible to derive the magnitude of the charge of an electron (e) using the following equation.

$$e=[m_q\epsilon_0/4/3\pi hc]^{1/2}=1.61\times10^{-19}C$$

[0115] This is in close agreement with the experimentally observed charge on the electron of 1.602×10^{-19} C.

[0116] Interestingly substituting $m_q=h/3c^2$ in the above equation we have:

$$e=[\epsilon_0/3(4/3\pi c^3)]^{1/2} \tag{6}$$

[0117] This can also be written as

$$e=\left[\frac{\varepsilon o}{3(4/3\pi c^3)}\right]^{1/2} \tag{6a}$$

[0118] Equation (6) has a number of very special implications, if re-examined, firstly three of these quasi electron spheres appear to to be required to constitute the charge of the electron . More intriguingly, it indicates that the charge is related to the volume of a sphere with an apparent radius of c. Thirdly it indicates that the square of the charge of an electron (e) is proportional to the permittivity of free space (so). The charge given from equation (3) is in close agreement with the measured charge of the electron. Furthermore a more exact value for the charge of the electron (to seven decimal places) can be deduced by taking into account the gravitational field of the Earth (see Gravity and the Charge of the Electron). Furthermore the charge of the electron (e) can now be derived from first principles. Thus, equation (3) corroborates the evidence that the electron is indeed composed of three quasi electrons in keeping with recent experimental findings.[ref 16]

[0119] The significance of the electron, composed of three spheres each with a radius of c, is not immediately clear, but can be understood if the frequency of rotation of the electron is taken into account. Thus if the diameter of the electron was approximately 10^{-19} m, then its spin would need to be $1/c.10^{-15}$ m$\approx10^6$ cycles/sec. Thus given a very high rotation rate an electron could have an effective radius of 1/c and still occupy subatomic sizes. Indeed these observations might be used to estimate the rate of rotation of the quasi electron and its size (see Appendix 1).

[0120] With regards a single quintessence, this passing through an energy vector of the space-time lattice would appear as a vibrating string. In a similar way to string theory, the conglomeration of these quintessences would produce the constituents of ordinary matter. The electron, for example, would be constituted from approximately 1.236×10^{20} quintessences.

[0121] The dimensions of the equation for the electron can be readily resolved by considering each of the three vector dimensions. The exact dimensions of the equation need to be considered in the light of the nature of space-time itself. These dimensional equations help explain the nature of matter. Indeed the equation for the electron may be necessary for the full understanding of gravity, this is also fully addressed (Appendix 1, Dimensional Equations)

[0122] Complex Space and Electron Structure

[0123] The presence of complex space also now further explains the conformation of the the electron, and its formulation at the quantum level, and the presence of particles, anti-particles and their spin up and spin down characteristics.

[0124] Indeed the short form equation for the charge of the electron (−e) can now be rewritten as a metric tensor with three dimensions in real space and six in complex space.

[0125] Thus if three of the x, y and z vectors are in real space and six vectors in complex space, where c is the speed of light in the real space vector, $_jc$ is the speed of light in the complex vector and $_{-j}c$ is the complex conjugate of $_jc$, thus the electron can be mathematically represented by the equation:

$$-e=\varepsilon_{qe}/(4/3\pi)^{1/2}\cdot\begin{matrix}(c_x)^{1/2} & \cdot(jc_y)^{1/2} & \cdot(-jc_z)^{1/2}\\ + & + & +\\ (-jc_x)^{1/2} & \cdot(c_y)^{1/2} & \cdot(jc_z)^{1/2}\\ + & + & +\\ (jc_x)^{1/2} & \cdot(-jc_y)^{1/2} & \cdot(c_z)^{1/2}\end{matrix} \tag{7}$$

[0126] Which now elegantly gives the real number solution

$$e=\epsilon_{qe}/3(4/3\pi c^3)^{1/2}$$

[0127] Where ϵ_{qe} is given as the permittivity of free space for a single quasi electron (see appendix 1). Equation 4 represents a "complex" tensor

[0128] Whilst the two dimensional Argand diagram has four quadrants, the three dimensional Argand diagram has eight cubic sectors. Two of these cubic sectors are diametric opposites and can represent "real" particulate objects. These have the primary coordinates x, y, −z; as in the electron described above, and the −x, −y, z, with the real vector x now having a minus sign. These two "real" cubic sectors, therefore, mathematically represent particles and their anti-particles.

[0129] The mathematical presence of the two primary diagonal mirror images (x, y, −z and −x, −y, z) now allow the introduction of the concept of antiparticles. This extension of the maths into a three dimensional Argand diagram thus results in the automatic formulation of the maths of anti-particles. Thus the charge of the positron ($^+$e) is formulated by the shortened form equation, where the real vectors now each have the minus sign, and therefore exist in the −x, −y, z sector of the three dimensional Argand diagram.

$$e=\varepsilon_{qe}/(4/3\pi)^{1/2}\cdot\begin{matrix}-c_x^{1/2} & \cdot_{-j}c_y^{1/2} & \cdot_{j}c_z^{1/2}\\ {}_jc_x^{1/2} & \cdot-c^{1/2y} & \cdot_{-j}c_z^{1/2}\\ {}_{-j}c_x^{1/2} & \cdot_{j}c_y^{1/2} & \cdot-c_z^{1/2}\end{matrix} \tag{8}$$

[0130] The three dimensional Argand diagram also accounts for chirality and indeed the up and down spin of the electron. There are two other "real" primary coordinates in the Argand diagram, these are themselves the partial mirror images of the above coordinates (i.e. x, −y, z and −x, y, −z).

In particular the y axis is of the opposite sign, thus in particles the y axis is in the downward direction, to form down spin particles and in anti-particles in the up direction, to form the antiparticle The up spin electron is given by eq. 8 and hence the down spin electron ($-e|\downarrow\leqq$) is given by the equation

$$-el\downarrow\rangle = \varepsilon_{qe}/(4/3\pi)^{1/2}\cdot\begin{matrix} c_x^{1/2}\cdot_{-j}c_y^{1/2}\cdot_j c_z^{1/2} \\ {}_jc_x^{1/2}\cdot c_y^{1/2}\cdot_{-j}c_z^{1/2} \\ {}_{-j}c_x^{1/2}\cdot_j c_y^{1/2}\cdot c_z^{1/2}\end{matrix} \tag{9}$$

[0131] Thus the three dimensioanl Argand diagram accounts directly for the presence of antiparticles and the spin up and spin down particles seen in nature. It also accounts for the necessity of the electron to form a square root spherical object, as complex space depends on $\sqrt{-1}$, otherwise known as j.

[0132] Electron Pairing and Superconductivity

[0133] As the quintessences making up the electron are in a square root conformation, each of these quasi electrons would have a tendancy to pair to form an entire sphere.

[0134] The square root sphere structure of electrons with up and down spins can now superimpose to produce a complete sphere of varying extents. This produces electron pairing as seen at the atomic and molecular levels. It also accounts for the Pauli exclusion principle. This pairing thus accounts for the reactivity of the valence electrons and the electron probability densities, which in turn accounts for the existence of chemistry.(ref 8)

[0135] Furthermore, it is possible to account directly for superconductivity from first principles. For if both the complex and real vectors of the electron combine completely, the product of an up and down spin electron form a perfect superimposed sphere with radius c, with a charge of 2.59×10^{-38} Coulombs, denoted by the formula:

$$e^2 = \frac{\varepsilon o}{3(4/3\pi c^3)} = 2.59\times10^{-38}C \tag{6b}$$

[0136] As with standard superconducting theory, superconductivity can be explained by the formation of "Cooper" electron pairs, where the electrons are forced to pair by the presence of positve crystal charge in particular formation, at supercooled temperatures. In addition the electron pair now forms a stable entity whose angular momentum cancels.(ref 8)

[0137] It additionally becomes clear that the charge of two seperate electrons (2e) is 3.2×10^{-19} C, but the charge of the combined electrons (e^2) is 2.59×10^{-38} C. This electron pair thus appears to have 19 orders of magnitude less charge than the electron and in turn 19 orders of magnitude less resistance. It is this effective reduction in charge and in turn resistance which may account for superconductivity. When observed directly any electrical interaction with the Cooper electron pair will, however, result in the release of the full charge of both electrons, so that the full electrical charge put in will be equal to that coming out of the apparatus.

[0138] The Fine Structure Constant

[0139] Intruiginty from our knowledge of the electron we can further define the term α, the fine structure constant; from the structure of the electron. Thus as the standard term $\alpha=e^2/hc.47\pi\epsilon_0$; substituting the term $e^2=\epsilon_0/3(4/3\pi c^3)$ (eq. 6) and $h=m_q c^2$ (eq. 1) we find:

$$2\pi/\alpha=m_q[3(4/3\pi c^3)]^2$$

[0140] *or

$$2\pi/\alpha=m_q e^4/\epsilon_0^2$$

[0141] For brevity we may represent the quasi electron structure as $(4/3\pi c^3)=\Theta$; to signify its threefold symmetry, thus

$$2\pi/\alpha=m_q[3\Theta]^2 \tag{10}$$

[0142] Indicating that the fine structure constant of the electron (α) is indeed related to its dimensional structure. Again taking into account the effects of gravity the fine structure constant can be derived from first principles to nine decimal places (see Gravity and the Charge of the Electron).

[0143] Fundamental Forces and Particle Structure

[0144] In order to understand the fundamental forces and the nature of fundamental particles, an overview is required. Thus, there are three major forces; strong, electro-weak and gravity, each mediated by three force particles the gluon, photon and graviton respectively. These in turn, influence three types of particle, the quark, lepton, and by general relativity space-time itself. Each of these are composed of particles with multiples of charge of ⅓, which are themselves in three generations, and are present in three dimensions of real space. It is important that a comprehensive view of nature explains this threefold symmetry.

[0145] Using the Standard Model of particles, it is well accepted there exist quark particle charges of −⅓, −⅔ and +⅓ and +⅔ in quarks and anti-quarks. Given that each particle is made up of three quarks the presence of these fractional charges support the association of the fractional charges in this way to form three dimensional charged particles. In stable particles each of the three quarks would have a vector in one dimension, giving the three quarks together an existence in three dimensional visible space time. The particles that bind the quarks (gluons) are themselves required, in stable particles, to have three different colour charges, one colour in each dimension, for the particle to exist in three dimensional space-time. Furthermore, there are three generations of quarks (and indeed leptons).

[0146] The Standard Model (or a modification of this) and in particular the observation of quarks and indeed quasi electrons with fractional charge of ⅓ and ⅔ in both cases, indicates that particles are constituted from the equivalent of three of these quasi particles to form an electron and quarks to form baryons. In the normal three dimensions the energy would be carried by the particle, However, because each particle is constituted of three quasi particles and in each quasi particle or quark one visible dimension would be the direction vector, in the other two hidden dimensions of each vector the waves would carry energy. Thus each particle would be associated with vibration, which would account for wave particle duality and Heisenbergs uncertainty principle in three dimensional visible space-time.

[0147] These observations lead us directly to the previous postulate that the structure of the electron is composed of none other than three (root) spheres, and that this equation for the electron allows the determination of the charge of the electron from first principles, thus:

$$e = \frac{\varepsilon 0^{1/2}}{[3(4/3\pi c^3)]} \tag{6}$$

[0148] In addition the mass of the proton (m_p) can be directly calculated from the ratio of the mass (m_e) of the electron, given by the equation:

$$m_e/m_p=5.45\times10^{-4}=3(\pi/c^{1/2}) \tag{11}$$

[0149] Strictly we should write, $m_e/(m_p+m_e)=3\pi c^{1/2}$; which is much more elegant.

[0150] Which now gives

$$m_e/m_p=1/(c^{1/2}/3\pi-1)=5.4462\times10^{-3}$$

[0151] This is in very close agreement with the experimentally derived ratio of the proton to electron masses which is also; 5.4462×10^{-3}

[0152] Thus the correlation factor between theory and experiment has a maximum error <0.00001 (ref 17)

[0153] If we combine equation 3: $e=[\epsilon_0/3(4/3\pi c^3)]^{1/2}$ and equation 13: $m_e/m_p=3(\pi/c^{1/2})$ the positive charge of the proton (e_p) is given by:

$$e_p=[\epsilon_0/3(4/3\pi c^3)]^{1/2}\times m_e.3(\pi/c^{1/2})/m_p=e \tag{12}$$

[0154] The stable nuclear proton conformation can thus be represented by the short form equation:

$$p=3^+(4/3\pi c^3)^{1/2}.3(\pi/c^{1/2}) \tag{13}$$

[0155] This forms a stable 3×3 conformation as with the stable electron structure.

[0156] Importantly the term ($\pi/c^{1/2}$) is the 90° solution to the Shrödinger wave equation for an electron confined in a space with radius c!(ref 8)

[0157] Thus the standard equation for an electron confined in a one dimensional box is given by:

$$E\psi(x) = -\frac{h^2}{2m}\frac{d^2\psi(x)}{dx^2}$$

[0158] If the one dimensional box has a length 2L the quantum amplitude (A) can only be non zero between x=0 and X=2L and the standard solution for the amplitude is none other than:

$$A=(1/L^{1/2})$$

[0159] Thus in one dimension the standard solution to the Shrödinger wave equation is:

$$\psi(x)=(\pi/L^{/12})\sin x/L$$

[0160] Thus not only is the electron charge derived from the equation for three spheres each with a radius of c (eq. 3); but the proton mass and charge can also be derived from the standard solution to the Shrödinger wave equation for a an electron confined in a space of radius c!(ref 8)

[0161] The term ($\pi/c^{1/2}$) itself would thus most logically represent the gluon which is present in the proton. These gluons would bind the quasi electrons together to form the fundamental particles

[0162] The masses of all the known particles, including the up and down quarks, the W boson, the muon, charm, strange, the tauon, truth and beauty can thus also be derived from first principles in this fashion, and have the quasi electron as their basic constituent particle (see Appendix 1).

[0163] Thus the structure of the muon (μ) can also be derived from the ratio of the mass of the electron (m_e) and the mass of the muon (m_μ):

$$m_e/m_\mu=4.7\times10^{-3}=/c^{1/3}$$

[0164] Thus

$$[\mu=\epsilon_0{}^{1/2}.m_e/m_\mu.3^-(4/3\pi c^3)^{1/2}.(\pi/c^{1/3})$$

[0165] Where the charge of the muon is in this equation equivalent to that of the electron e. In this case ($\pi c/^{1/3}$) can be considered to represent a specific high energy photon. Thus the structure of the muon, written in short form is:

$$\mu=3^-(4/3\pi c^3)^{1/2}.(\pi/c^{1/3}) \tag{14}$$

[0166] Moreover the structure of the tauon can be calculated from the ratio of the mass of the electron and that of the Tauon (1.79 Mev);

[0167] Thus

$$0.511\ \text{Mev}/1.79\ \text{Gev}=2.85\times10^{-4}$$

$$m_e/m_t=(\pi/c)^{1/3}.(\pi/c)^{1/9}=2.85\times10^{-4}$$

[0168] As the charge of the tauon is equivalent to the charge of the electron, hence the structure of the Tauon is given by the above equation

$$e_\tau=\epsilon_{qe}.m_e/m_\tau.3^-(4/3\pi c^3)^{1/2}.(\pi/c)^{1/3}.(\pi/c)^{1/9}=e$$

[0169] This equation accurately predicts the charge −1; and mass of the Tauon (~1.78 Gev)(ref 1). Thus the structure of the Tauon can in short form be given by the equation

$$\tau=-3(4/3\pi c^3)^{1/2}.(\pi/c)^{1/3}.(\pi/c)^{1/9} \tag{15}$$

[0170] Furthermore a more exact value for the mass of the muon and tauon can be deduced by taking into account the gravitational field of the Earth (see Gravity and the Charge of the Electron pg. 17) in a similar way to identifying the exact charge of the electron. In addition it may be necessary to take into account a possible mass value of the neutrino to arrive at a precisely accurate mass value of the muon and tauon. Nevertheless, the mathematical proof of these short form equations lies in the fact that they can very closely identify the charge and the masses of these particles, from first principles, as in equations (6, 13-27, see Appendix 1).

[0171] Overall the mathematical geometrical structure of all the particles can be derived from the quasi electron, which is in turn derived from quintessence. Thus, the short form particle structures can now be derived from first principles. This includes the quasi electron (qe) and electron (e), from which the quarks (u,d) and in turn the stable proton (p) and stable neutron (n) and alpha particle (α) respectively are derived. The general structure of the force carrying bosons the photon. (g) and the gluon (γ) and the intermediate vector boson (W) can be given. It will also intriguingly be possible to derive, according to their generation, the structure of the strange (s) charm (c), beauty (b, or bottom) and

truth (t or top) quarks directly from the structure of the muon (μ) and Tauon (τ) respectively.

[0172] Using the term $\Theta=(4/3\pi c^3)$, where, −/+ represents the charge of the quasi electron, we find:

[0173] 1st Generation:

$$q_e={}^{-}\Theta^{1/2} \quad (6c)$$

$$e=3^{-1/2} \quad (6)$$

$$d={}^{-}\Theta^{1/2}.3(\pi/c^{1/2}) \quad (16)$$

$$u=2^{+}\Theta^{1/2}.3(\pi/c^{1/2}) \quad (17)$$

$$s={}^{-}\Theta^{1/2}.3(\pi/c)^{1/2} \quad (18)$$

[0174] 2nd Generation

$$\mu=3^{-}\Theta^{1/2}.(\pi/c^{1/3}) \quad (14)$$

$$c=2^{+}\Theta^{1/2}.(\pi/c^{1/3}).(\pi/c^{1/4}) \quad (19)$$

$$b={}^{-}\Theta^{1/2}.(\pi/c/^{1/9}).(\pi/c)^{1/4} \quad (20)$$

[0175] 3rd Generation

$$\tau=3^{-}\Theta^{1/2}.(\pi/c)^{1/3}.(\pi/c)^{1/9} \quad (15)$$

$$t=2^{+}\Theta^{1/2}.(\pi/c)^{1/3}.(\pi/c)^{1/9}.(\pi/c)^{1/4} \quad (21)$$

[0176] Particle Gluons (g):

$$g_1=(\pi/c^{1/2}) \quad (22)$$

$$g_2=(\pi/c)^{1/2} \quad (22a)$$

$$g_3=(\pi/c^{1/4}) \quad (22b)$$

$$g_4=(\pi/c)^{1/4} \quad (22c)$$

[0177] Particle Photons (γ):

$$\gamma_1=(\pi/c^{1/3}) \quad (23)$$

$$\gamma_2=(\pi/c)^{1/3} \quad (23a)$$

$$\gamma_3=(\pi/c^{1/9}) \quad (23b)$$

$$\gamma_4=(\pi/c)^{1/9} \quad (23c)$$

[0178] Intermediate Vector Boson ($W^{+/-}$):

$$W^{+}=3^{+}\Theta^{1/2}.2(\pi/c^{1/6})^6 \quad (24)$$

$$W^{-}=3^{-}\Theta^{1/2}.2(\pi/c^{1/6})^6 \quad (25)$$

[0179] Stable* Proton:

$$p=3^{+}\Theta^{1/2}.3(\pi/c^{1/2}) \quad (13)$$

[0180] Stable* Neutron:

Stable* Neutron:

$$n=\begin{matrix} {}^{+}\Theta\downarrow^{1/2}\cdot 2(3\pi/c^{1/2})\cdot{}^{-}\Theta\uparrow^{1/2} \\ {}^{+}\Theta\downarrow^{1/2}\cdot 2(3\pi/c^{1/2})\cdot{}^{-}\Theta\uparrow^{1/2} \\ {}^{+}\Theta\downarrow^{1/2}\cdot 2(3\pi/c^{1/2})\cdot\Theta^{-}\uparrow^{1/2} \end{matrix} \quad (26)$$

* Stable nucleonic neutron and proton conformations differ slightly from the Standard Model, this is due to the sharing of quasi electron and quasi positron particles within the nucleus, which allows stabalisation of these particles by the formation of stable 3×3 structures. The Standard conformations which describe non-nucleonic neutrons and protons are additionally given in Appendix 1.

[0181] Alpha particle (α):

Alpha particle (α):

$$\alpha=\begin{matrix} [3^{+}\Theta]\downarrow^{1/2}\cdot 2(3\pi/c^{1/2})\cdot[3^{-}\Theta]\uparrow^{1/2} \\ [3^{+}\Theta]\uparrow^{1/2}\cdot 2(3\pi/c^{1/2})\cdot[3^{+}\Theta]\downarrow^{1/2} \\ [3^{-}\Theta]\downarrow^{1/2}\cdot 2(3\pi/c^{1/2})\cdot[3^{+}\Theta]\uparrow^{1/2} \end{matrix} \quad (27)$$

[0182] The mathematical proof for these structures and their decay mechanisms is lengthy and is thus fully contained in Appendix 1. All the particle structures are accurately mathematically defined by the masses of these particles.(ref 17)

[0183] The structure of these particles all contain the quasi electron and thus the metric tensor structure necessary in the formulation of the gravitational equations is sustained. The respective forces created by the gluon and the photon are important as they tell us the behaviour of matter and also lead to the likely structure of the graviton

[0184] Particle Spin and Size

[0185] The significance of the electron, composed of three spheres each with a radius of 1/c, is not immediately clear, but can be understood if the frequency of rotation of the electron is also taken into account. Knowing the structure of the electron has led us to deduce its charge and thus may lead us estimate its size and spin. Thus these observations might be used to calculate the radius and rate of rotation of the electron.

[0186] Let us suppose, that nature is truly beautiful, and that the radius of the fundamental quasi electron is indeed 1/c, and in turn the radius was balanced by the velocity of rotation $2\pi/c$. This can be directly confirmed mathematically by taking into account the known spin of the electron, $h/4\pi$. Thus the actual spin of the electron may be calculated form the known energy of the spin.

[0187] The radius of the electron is not up till now known, but the radius of a quark has been estimated, and this is the radius derived from deep inelastic collisions of the proton. These estimates reveal a radius of approx. $r_p=1.18\times10^{-15}$ m.(ref 13) This value may be used to assist in confirming the spin of the proton in revolutions per sec. (revs) and in turn the spin and size of the electron. Firstly we may proceed to estimate the spin of the proton. Thus as h=E.t (Joules×sec) and E.t=F.d.t (Joules×sec), then the spin;

$$h/4\pi=F.d.t \quad (28)$$

[0188] As F=ma, where a=(revs. $2\pi)^2 r_{qu}$ and m=the mass of the proton, then

$$h/4\pi=m(\text{revs}.2\pi)^2 r_p.\text{d.t}$$

[0189] The actual distance (d) travelled in a circle of half integer spin in 1 second is: revs.πr_p, thus:

$$h/4=m(\text{revs}.2\pi)^3 r_p^2/2$$

[0190] Hence:

$$\text{revs}=\sqrt[3]{[h/m(2\pi)^4 r_p^2]}$$

[0191] Taking the effective mass the proton as 1.6726×10^{-27} kg, then the rate of spin of the proton in revolutions/sec is:

$$\text{revs}=5.65\times10^6 \text{ cycles/sec}$$

[0192] From the frequency of the specific rotation of the proton, given the half integer spin associated with the proton, we can thus mathematically confirm the relationship between the radius of a particle and its spin:

$$r_p \times \text{revs}/2 = 1/c \quad (29)$$

[0193] Furthermore, the fundamental radius of 1/c seen in geometric structure the quasi electron, is also reflected in the rotation rate and radius for the proton, thus as above $1/c \div \frac{1}{2}\text{revs} = 1.18\times10^{-15}$ m. Moreover, this means the actual half integer velocity of rotation is none other than $2\pi/c$ in metres/sec. So that the particle is in harmonic balance.

[0194] Using the fundamental formula $h/4\pi = F.d.t$, it is possible to obtain accurate estimates of the radius and spin rates of the electron, or indeed any particle, using the same principle of harmonic balance. Using the formula:

$$\text{revs} = \sqrt[3]{(h/m\ (2\pi)^4 r_e^2]}$$

[0195] It appears there are two unknowns, the radius if the electron and its revolution rate, however, in accordance with the equation, $r_p = 2/c.\text{revs}$, which gives the revolution rate of the proton, the same principle may also be used for the electron, by substituting $r_e = 2/c.\text{revs}$, such that:

$$\text{revs} = hc^2/4m_e(2\pi)^4 \quad (30)$$

[0196] Taking the mass of the electron 9.109382×10^{-31} kg, the rate of revolution of the electron is:

$$\text{revs} = 1.048\times10^{10} \text{ cycles/sec}$$

[0197] Which gives a predicted radius of the electron as

$$r_e = 6.366\times10^{-19} \text{ m.}$$

[0198] So the half integer rotation velocity (revs.πr) is $2\pi/c$!, for the electron in keeping with the harmonic balance of the electron.

[0199] The same principle may be used to obtain an accurate estimate of the spin and radius of the muon, or any other particle. Using the above formula

$$\text{revs} = hc^2/4m_e(2\pi)^4 \quad (31)$$

[0200] Then as the mass of the muon is 1.8823×10^{-28} kg then the revs of the muon $f_\mu = 5.070\times10^7$ cycles/sec and the radius (r_μ) is thus 1.316×10^{-16} m.

[0201] It is now possible to begin to explain how the muon and the other subatomic particles are formed. If a quasi electron is complexed with another structure the total geometric structure needs to maintain harmonic balance. So the frequency of rotation would need to match geometric sructure with which the quasi electron was complexed

[0202] Intriguingly we find asymptotic convergeance for the formulas for frequency and mass occurs, when the geometric structure complexed with the quasi electron has the structure represented by ($\pi/c^{1/3}$) [giving the frequency divided by two, because the single integer spin of the force carrying particles compares to a half integer spin for the muon]. So that

$$(f_r 3\pi/2)^{1/3} = f_\mu$$

[0203] When the ratio of the masses of the electron (m_e) and muon (m_μ) are related, such that:

$$m_e(3\pi/c^{1/3}) = m_\mu$$

[0204] Indeed we find that (allowing for the neutrino) this ratio is very close to the actual ratio of the mass of the electron to the mass of the muon, determined experimentally.

[0205] Furthermore, we have seen that these geometric structures, representing harmonics of the speed of light, which either match the frequency or the amplitude of vibration of the quasi electron, mathematically define the masses of the particles and the fundamental forces of Nature.

Part III

Quantum Gravity

[0206] Quantum General Relativity

[0207] Given the overall energy "complex" energy tensor structure of the electron and the metric tensor, assumed in general relativity, the quantum nature of gravity itself can now be explored. The spherical complex tensor for the electron and the positron (eq. 4, 5, 6) give the mathematical quantum structure and energy tensor for all the other particles (see appendix 2). Together with the time dimension these nine space dimensions account for the 10 parameters present in the metric tensor necessary to formulate the equations for gravity using Riemann geometry and thus forms the basis of quantum gravity. Intriguingly the metric tensor at each point in space time is required to consist of a collection of ten numbers, Consequently, ten dimensional space-time hypotheses, such as this or superstring theory, do automatically yield general relativity.[ref 3)]

[0208] Furthermore, the mathematical representation of the graviton and the gravitational constant may be directly estimated from the knowledge of the mass and radius of quintessence. Thence, the force of the vibrations of quintessence lead directly to quantum gravity.

[0209] The radius of quintessence should be approximately in keeping with the Planck length estimate (r), which is conventionally derived from the standard dimensional equation:

$$r_q^2 \approx Gh/c^3 \quad (32)$$

[0210] Given the nine spacial parameters present in the metric tensor, used in general relativity we find that the actual formula for r_q^2 is mathematically in agreement with theory when:

$$9r_q^2 = Gh/c^3 \quad (33)$$

[0211] This again supports the 9 dimensional view of space and the size of the vibrations of quintessence can thus be estimated.

$$r_q = 1.35\times10^{-35} m \quad (33a)$$

[0212] This value is in agreement with the Planck length. Indeed if the above equation is correct then we find that we can derive the standard equation for the general relativistic increase in radius, r', (eq. 34) directly from first principles and arrive at a more fundamental equation for quantum gravity. As

$$r' = G.M/3c^2 \quad (34)$$

[0213] By substituting eq 33) into equation 34, a fundamental relationship between r' and M is obtained.

$$r'/3r_q^2 = GMc^3/Ghc^2 = Mc/h$$

[0214] And substituting the quintessential equation, $h=m^q c^2$ (eq. 1) then:

$$r'/3r_q^2=M/m_q c=n_q/c \quad (35)$$

[0215] Hence the ratio of the change in radius to that of the radius of quintessence squared, is proportional, by a factor of c, to the ratio of the mass M of an object to that of the mass of quintessence, effectively the number of quintessences. Thus the change in radius, r' due to gravitation, is related to none other than the ratio of the mass and radius of an object to the mass and the square of the radius of quintessence. Thus again the gravitational change in radius is directly related to the number of quintessences.

[0216] Naturally, this would be exactly what would be logically expected if quintessence, like the equation for the charge of the electron (eq. 6) forms from a root sphere. Thus the change in spacial radius of a normal sphere is dependant on the square of the quintessential radius.

[0217] This increase in apparent radius represents none other than the (gravitational) binding energy for quintessence.

[0218] The meaning of the above dimensional equation (33) might itself be further understood by substituting the mass of quintessence (where $m_q=h/c^2$) into the equation. Thus in nine dimensions the gravitational constant (G) may be more logically given as,

$$9(\pi r_q^2/m_q)=G\pi/c \quad (36)$$

[0219] Where πr_q^2 is the cross sectional area of quintessence and m_q is the effective mass of quintessence, and thus $(\pi r_q^2/m_q)$ represents the effective mass per unit area which quintessence exerts. This equation reduces to:

$$9r_q^2/m_q=G/c \quad (37)$$

[0220] From this we may derive the standard general relativistic relationship for the apparent change in radius (r') around a mass (M), from an understanding of the mass (m_q) and number (n_q) of qiuntessences. As $m_q=M/n_q$, then:

$$3r_q^2=G.M/3c.n_q \quad (38)$$

[0221] Then if

$$n_q=r'c/3r_q^2 \quad (39)$$

[0222] thus directly substituting for n_q in eq 38:

$$r'=G.M/3c^2 \quad (34)$$

[0223] The importance of this is that the gravitational change in radius now logically derives from equation 36, which describes the gravitational force as resulting directly from the mass of quintessence exerted/per unit area of quintessence.

$$9(\pi r_q^2/m_q)=G\pi/c \quad (36)$$

[0224] Thus equation 34 is the conventional equation for the general relativistic increase in radius (r') in a gravitational field, which is here derived from the underlying nature of quintessence. Thus the gravitational constant is derived from the mass and radius of vibration squared of quintessence from first principles.

[0225] Indeed it is apparent that a more fundamental equation for gravitation now exists, for equation (39) is mathematically accurate and numerically agrees with eq. 34:

$$r'/3r_q^2=n_q/c \quad (39)$$

[0226] These equations may be readily mathematically verified. If in accordance with standard general relativity, the apparent increase in radius r' is:

$$r'=GM/3c^2 \quad (34)$$

[0227] Then given that the mass of the Earth is 5.974×10^{24} kg;

$$r'=1.478\times10^{-3}\ \text{m}$$

[0228] Accordingly if $r'=3r_q^2n_q/c$; (eq.39). Given the number of quintessences (n_q) constituting the Earth is M_E/m_q, then

$$n_q=5.9745\times10^{24}/7.3725\times10^{-51}=8.104\times10^{74}$$

[0229] As $r_q^2=1.823\times10^{-70}$ (eq. 33a) then:

$$r'=1.478\times10^{-3}\ \text{m}$$

[0230] Thus equation 39 gives the same answer as the standard equation and may be understood on a logical basis. Indeed the meaning of c in the equation may be understood as it has been previously shown as being the basis for the radius of matter (eq. 6). Hence the general relativistic change in radius, r', is none other than the effective binding energy for quintessence.

[0231] Quantum Gravity and Wave Particle Duality

[0232] Quantum gravity can now be readily linked with quantum mechanics, indeed any observations which are self consistent must be able to do so easily.

[0233] The frequency of light has been previously derived

$$f=E/h=n_q$$

[0234] Thus the formula for the frequency of light (E=hf) has previously been explained theoretically by the simple observation that the frequency is determined quite directly from the number of quintessences (n_q) within the photon. The same principle has also been shown to apply to matter.

[0235] Let us now follow these equations for matter by calculating the wavelength of a photon from the Gravitational constant as an example; and also as a test of these observations and to demonstrate that the gravitational equations can also apply to the quantum world.

[0236] If

$$n_q=r'c/3r_q^2 \quad (39a)$$

[0237] where r' is the is the general relativistic increase in radius, and r_q is the radius of quintessence (eq. 33). Where $f=n_q$, substituting for n_q, then the frequency of the photon f_γ(where $\beta=1$) is given by:

$$f_\gamma=r'c/3r_q^2$$

[0238] Uing the standard equation, $r'=GM/3c^2$ (eq. 34); we may substitute for r', thus we have:

$$f_\gamma=GM/9r_q^2c$$

[0239]

Thus

$$f_\gamma=\frac{G}{9r_q^2c^3}\cdot m_\gamma c^2$$

and as $E=m_\gamma c^2$;

-continued

$$f_\gamma = \frac{GE}{9r_q^2c^3} \tag{40}$$

[0240] Indeed as $9r_q^2=Gh/c^3$, then

$f_\gamma=E/h=n_q$

[0241] It is possible to also demonstrate that the same relationship holds for the wave equation for matter. If we take the relativistic wave energy of matter, which has been previously derived,

$f=\beta^2 n_q$

[0242] This includes the term for the number of quintessences flowing through the electron, in the complex vectors of space-time, to give the relativistic electron momentum (ρ) and a term for the rest mass, thus substituting into (40)

$$f_\gamma = \frac{GE}{9r_q^2c^3} \tag{40}$$

[0243] As $f=\beta^2 n_q$ for matter then the equation expands to:

$$f_m = \frac{G}{9r_q^2c^3}\cdot\beta^2 E$$

As $\lambda = v/f$, then

$$\lambda = \frac{9r_q^2c^3v}{G\beta^2E} \tag{41}$$

[0244] Then the equation again reduces to:

$$G = \frac{9r_q^2c^4}{\lambda\beta E} \tag{3}$$

[0245] Equations 3, 40 and 41 are important as they show that the quantum wavelength of any particle of rest mass m can be derived from the gravitational constant G. Thus linking quantum mechanics to quantum gravity.

[0246] It is therefore important to confirm the numerical accuracy of the above equation (40). We can do this by comparing the result to the standard computation of the de Broglie equation, in a range where de Broglie itself is likely to be most accurate; which according to these observations is in the low energy range (see section on Wave Particle Duality).

[0247] If we take an electron with an energy of 0.1 KeV the wavelength is conventionally given (where the kinetic energy of the electron E_K is given by the product of the charge of the electron (C) and the potential applied eV=0.1 Kev), by the standard equation:

$\lambda=h/p=h/(E_K.2m_0)^{1/2}$

[0248] thus

$\lambda=6.63\times10^{-34}/[1.602\times10^{-19}\times1\times10^{2}\times18.22\times10^{-31}]^{1/2}$

[0249] hence

$\lambda\cong1.23\times10^{-10}\,m$

[0250] Using

$$\lambda = \frac{9r_q^2c^4}{G\beta E} \tag{3a}$$

[0251] Where $E=\gamma m_0c^2$

[0252] At 0.1 Kev, electron velocity is 6×10^6 r/sec, thus $\beta=2\times10^{-2}$ and $\gamma=1/(1-v^2/c^2)^{1/2}=1.0002$ Thus:

$$\lambda = \frac{9\times1.82\times10^{-70}\times80.78\times10^{32}}{6.67\times10^{-11}\times\beta\times1.0002\times9.11\times10^{-31}\times8.998\times10^{16}}$$

$$\lambda = \underline{1.21\times10^{-10}m}$$

[0253] Divergence between the de Broglie equation and the above equation (2) occurs at intermediate and high energies where it is generally accepted that the standard de Broglie equation may be less accurate (ref 18). The values for eq. 2 and de Broglie are compared to recent experiments, which demonstrate a relativistic curvilinear plot for wavelengths of matter in keeping with eq. 40.(ref 1)

[0254] The de Broglie equation in the non-relativistic format yields a simple log/linear scale, which is not in keeping with relativity; whereas eq. 3 is dependent on relativity and mathematically accounts for both relativity in calculating the wavelength. Indeed recent experiment on quantum tunnelling through a wire mesh strongly suggests that the relationship between energy and wavelength is relativisticalty curvilinear.(ref 1) Furthermore equation 3a suggests a fundamental relationship between energy (E), relative velocity (v/c =β), gravity (G) and the quantum wavelength (λ.)

$$\lambda = \frac{9r_q^2c^4}{G\beta E} \tag{3a}$$

[0255] Indeed as $^9r_q^2=Gh/c^3$, then

$\lambda=hc/\beta E$ (2)

[0256] Equation 2 is the very same as the Universal wave equation derived form first principles for the wavelength of tight and matter, which allowed a relativistic solution to the equations for wave particle duality (see Wave Particle Duality). This now indicates that these quintessential equations are compatible with relativity, quantum mechanics and quantum gravity.

[0257] Graviton Structure

[0258] From these observations, if the value for the gravitational constant is substituted into the equation (35) we may now estimate the probable geomteric structure of the gravtion, which is the force particle mediating gravity by acting on quintessence. Thus the Gravitational constant has been previously derived from the vibration of quintessence by the equation:

$G.(\pi/c)=9(\pi r_q^2/m_q)$ (36)

[0259] This is in accurate agreement with the value for G (6.67×10^{-11} N m^2 kg^{-2}). This suggests that the most probable mathematical representation of the graviton (ϕ), the third force carrying particle is

$$\phi=(\pi/c). \tag{42}$$

[0260] Thus the gravitational constant (G) can be given by the mass and radius of quintessence and the structure of the graviton

$$G=9\pi r_q^2/\phi.m_q \tag{43}$$

[0261] This shows the gravitational force to be related to the fundamental radius of quintessence space time, and the graviton.

[0262] Quantised General Relativity

[0263] The classical general relativistic formula, as given by Einstein is:

$$R_{\mu\nu}-\tfrac{1}{2}g_{\mu\nu}R=-\kappa T_{\mu\nu}$$

[0264] Where R is effectively the curvature of space-time, $R_{\mu\nu}$ denotes the contracted Riemann tensor of curvature and $T_{\mu\nu}$ is the "energy tensor" of matter.[ref 3)]

[0265] If we substitute the energy tensor matrix of the electron (eq. 9) x time, for the energy tensor of matter $T_{\mu\nu}$; and the metric tensor of the space-time lattice x time for the contracted Riemann tensor we can arrive at the same solutions for general relativity.

[0266] Furthermore, in his published paper on General Relativity, Einstein[ref 3)] defined the constant κ as:

$$\kappa=8\pi G/c^2$$

[0267] Therefore Einstein's equation should be written as

$$R_{\mu\nu}-1/2g_{\mu\nu}R=-\frac{8\pi G}{c^2}\cdot T_{\mu\nu} \tag{43}$$

[0268] Einstein himself was apparently not happy about the right hand component of the equation. However, we find that this part of the equation can now be explained and quantised by substituting the gravitational constant, $G=9\pi r_q^2/\phi.m_q$, (eq. 42a),

[0269] Giving:

$$R_{\mu\nu}-1/2g_{\mu\nu}R=-\frac{8\pi^2\cdot 9r_q^2}{\varphi\cdot m_q\cdot c^2}\cdot T_{\mu\nu} \tag{44}$$

[0270] By substituting $m_q.c^2=h$, and further substituting $h=h/2\pi$, we arrive at a quantised solution to Einstein's equations. Where A_q is the surface area of quintessence ($A_q=4\pi r_q^2$); ϕ is the graviton [$\phi=(\pi/c)$] and h is Plancks constant. thus:

$$R_{\mu\nu}-1/2g_{\mu\nu}R=-\frac{9A_q}{\varphi\cdot\hbar}\cdot T_{\mu\nu} \tag{45}$$

[0271] The gravitational equation can now be further understood on a logical basis. The term $A_q=(4\pi r_q^2)$, where ($4\pi r_q^2$) represents standard term for the surface area of a sphere of quintessence for the 9 space dimensions of the space time lattice, h is the energy content of quintessence x time and ϕ is the graviton, thus the right hand term now represents a true "metric energy tensor" of matter.

[0272] This leads directly to the standard solution to the field equations, for the general relativistic increase in radius r' of an object, where A is the surface area of a sphere of a given mass M, such that

$$r'=\sqrt{(A/4\pi)}-r=GM/3c^2 \tag{34}$$

[0273] Furthermore, although equation 45, gives the same solutions as Einstein's equation, which is essentially correct, the difference is that the equation is now dependant upon Planck's constant (h), and moreover the radius of quintessence, which now defines a quantised solution to the equations.

[0274] Graviton Force Characteristics

[0275] Similar to the photon, the previously derived equation (42) for the graviton [$(\phi=(\pi/c)$] appears to also mathematically represent a helical ringlet of quintessence, but with a spin of 2. For the photon, taking the direction of motion as the x vector and its axis of spin also as the x vector, would account for the electromagnetic force and its attraction and repulsion characteristics. In the case of the gluon component ($\pi/c^{1/2}$), if the direction vector is x, then the axis of spin would be in the y vector, the same as quasi electrons, accounting for the particle binding characteristics of the gluon force. (see; Gluon structure and force characteristics. Appendix 2). In the case of the graviton, if the direction of motion was in the x vector, the graviton spin axis would be in the z vector thus, as will be demonstrated, accounting for the gravitational force.

[0276] The spin axis of the graviton can also be derived using the known characteristics of the electron. If an electron is travelling in the x direction, then its spin axis is determined by the by the sign of the $_j$y vector (up or down). This view is in agreement with conventional theory, which indicates that the electron spin is similar to a rotating planet orbiting the sun, (the electron even appears to have orbital precession). As the electron passes through the space-time lattice, this spin would generate the formation of gravitons. This would occur as a result of the ejection of the excess quintessence passing through the electron. As the electron spins, the ejection of these gravitons would occur at a tangent to the electron's direction of motion. The ejection of the gravitons would occur, similarly to the ejection of energy of a pulsar or quasar, through the equivalent of the north and south poles of the electron. Thus, propelling the graviton in the direction of the electrons y vector. The ejection of the graviton would re-orientate and impart a specific angular momentum to the gravitons which would thus end up spinning on its own z axis. If for instance the graviton is released from an up spin electron the graviton will be rotating clockwise and its leading edge will displace quintessence downwards. In turn this will provide an upwards force.

[0277] This picture accounts for Fleming's left hand rule, is logical and provides an explanation for the magnetic force around a wire. According, to the left hand rule if the

direction of the current is in the x vector, the magnetic field is in the z vector, and the force is upwards, in the y vector, in accordance with the above model. Therefore, this particular spin axis and the structure of the graviton results in its force characteristics. As the graviton is very small compared to the electron and both have different rather rapid spin axis it is difficult for these to bind and interact. Nevertheless, because the graviton has a spin of 2, and as it spin axis is perpendicular to its direction of motion, in the z vector, it readily displaces space-time quintessence to produce gravity. Thus because the graviton is able to displace space-time, it is capable of escaping a black hole. How else could the effects of gravity be felt beyond a black hole?

[0278] Quantum Gravity and Electromagnetism

[0279] With the above electron model of graviton production (see pp. 32), the nature of magnetism can be understood from first principles, Furthermore, the presence of a space-time lattice links relativity, and the forces of gravity with the electromagnetic and other forces of Nature. Indeed, evidence for these links may first date back to the 1820's, when Andre Ampere first defined the Amp. The force of attraction between two parallel wires 1 metre apart each carrying 1 Amp in a vacuum was defined as none other than the permeability of free space (2×10^{-7} N per metre of conductor). Thus conventionally the magnetic field strength around a long straight wire is given as:

$$B=\mu_0 I/2\pi r$$

[0280] Where I is the current and μ_0 is the permeability of free space ($4\pi\times10^{-7}$ N A^{-2}).

[0281] The attraction between two wires both carrying negative charge is, however, counterintuitive as negative charges should repel. A conventional explanation overcomes this by invoking the presence of a magnetic field which is created by the current by the production of virtual photons. Thus we appear to have an explanation for the effects of magnetism which involves virtual photons, however, these photons are not observed. More accurately, according to conventional special relativity the magnetic field is none other than the electric field viewed relativistically[ref 19].

[0282] A more satisfactory explanation, therefore, lies in the interaction between the electrons and the space time lattice. The moving electrons in the two wires interact with the lattice to produce gravitons; which are in phase when both streams of electrons are travelling in the same direction. The gravitonic waves interact constructively to disperse the space time lattice between the wires and induce an attractive force between the two wires, which produces in effect the permeability of free space. Thus this force results from the vibration of quintessence itself.

[0283] Conversly in two wires with current going in opposite directions the graviton waves are in anti-phase and would interact destructively between the wires. The gravitonic waves travelling radially outward from the wires would, however, disperse the lattice outside the two wires and produce apparent repulsion between the wires, which is exactly what is observed. These effects of electricity suggest that gravitons act as waves and that phase is important.

[0284] This effect is also seen with the north and south poles of ferromagnets. Nevertheless, with matter other than iron, cobalt or nickel, the graviton emission cannot be phased as the atoms are unable to align and magnets do not appear to exist with other materials.

[0285] In ordinary magnetic system the release of gravitons from the north pole would be exactly balanced by those released from the south pole of the magnet and hence there would be no nett force on the magnet until an external magnet or electrical current were applied.

[0286] Overall the magnitude of the forces in electrical systems where electrical conduction occurs are well defined by the permeability and permittivity of free space μ_0, and ϵ_0. Where v is the constant velocity of the charge and ϵ is the electric field produced by the charge.

$$B=[\mu_o.\epsilon_0]v.\epsilon$$

[0287] These observations suggest that the forces of electricity which produce magnetism are indeed related to the permittivity and permeability of free space and that these quantities are exerted by an apparent vacuum. Thus the effects of magnetism could be explained by none other than the phased effects of gravitational waves on the space time lattice.

[0288] Electromagnetism is of further interest to quantum gravity, particularly if we combine the standard equations, $B=\mu_0 I/2\pi r$ and $B=[\mu_o.\epsilon_0]v.\epsilon$, substituting for B we have:

$$2\pi r=I/\epsilon_0.v.\epsilon \quad (46)$$

[0289] Thus $2\pi r$ is proportional to the inverse of ϵ_0. Thus as space time is dispersed by gravitons the permittivity field will increase in the same way capacitance increases with separation of plates. Because of the inverse relationship between ϵ_0 and $2\pi r$, as ϵ_0 increases the circumference of a circle and the apparent ratio of π is to r, will appear to diminish in accordance with general relativity. This not an actual diminution in the circumference of a circle but the effective reduction of the resistance to motion in a circular path in this field.

[0290] Incidentally, the above observations, also lead us directly to Shrödinger's formula for the average equilibrium distance (r) between an electron with charge (e) in orbit around a proton, which is conventionally given by:

$$r=n^2 4\pi h^2\epsilon_0/me^2$$

[0291] Where ϵ_o is again the permittivity of free space, m is the mass of the electron and n is an orbital integer, h is Planck's constant and e is the charge of the electron. Furthermore if $e=[\epsilon_0/3(\frac{4}{3}\pi c^3)]^{1/2}$ (eq.3); then the equation at n=1, for the electron orbital radius elegantly simplifies to:

$$r=4h^2c^3/m$$

[0292] Hence the orbital radius of the electron is related to spin of the electron (h) and its mass (m).

[0293] Quantum Gravity and the Charge of the Electron

[0294] The equation for the charge of the electron (eq. 1) contains the term so (permittivity of free space) which according to these observations should vary in a gravitational field.

$$e=\left[\frac{\varepsilon o}{3(4/3\pi c^3)}\right]^{1/2} \quad (6a)$$

[0295] If we combine the standard equations, $B=[\mu_0 I/2\pi r]$ and $B=(\mu_o.\epsilon_0]v.\epsilon$, substituting for B we have:

$$2\pi r=I/\epsilon_0.v.\epsilon \quad (46)$$

[0296] Thus $2\pi r$ is proportional to the inverse of ϵ_0. Thus as space time is dispersed by gravitons the permittivity field will increase in the same way capacitance increases with separation of plates. Because of the inverse relationship between ϵ_0 and $2\pi r$, as ϵ_0 increases the circumferance of a circle and the apparent ratio of π to r, will appear to diminish in accordance with general relativity.

[0297] Thus ϵ_0 rises when space-time is dispersed by the gravitons that produce the gravitational field, This occurs in a similar way to the process by which capacitance increases with separation of plates in a capacitor.

[0298] Nevertheless, as c is a constant and as $c=[\mu_0.\epsilon_0]^{-1/2}$, then if ϵ_o rises then μ_0 falls. This is entirely consistent as μ_0, which represents the force that quintessence exerts, would be reduced if the quintessence space time lattice is dispersed.

[0299] Furthermore, as $\mu_0=4\pi\times10^{-7}$ N A^{-2}; then as μ_0 falls, then the appareent ration π to r, also falls in a gravitational field. This is largely the same as stating, as does general relativity, that the apparent radius r', rises in a gravitational field. So this view is consistent with general relativity.

[0300] Nevertheless, to derive an exact value for the charge of the electron we must account for gravity in the above equation. We will take the specific example of the Earth's gravitational field in order to obtain the exact value for the electron. If in accordance with standard general relativity, the apparent increase in radius r' is:

$$r'=GM/3c^2 \quad (34)$$

[0301] Then given that the mass of the Earth is 5.9745×10^{24} kg; then

$$r'=1.47864\times10^{-3}\ m$$

[0302] thus

$$2\pi r'=9.29057\times10^{-3}$$

[0303] Which is the incremental factor by which ϵ_0 must increase in Earth's gravitational field. So to correct ϵ_0 to account for gravity, ϵ_0 must be divided by the incremental factor, $2\pi r'$. Similarly as effectively π decreases in a gravitational field, to correct π to account for gravity it must be multiplied by this increememtal factor. So the equation for an electron in a zero gravtational field is:

$$e=\left(\left[\frac{\varepsilon o}{3(4/3\pi c^3)}\right]\right)^{1/2}\div(1+2\pi r')=1.6022\times10^{-19}\ C \quad (6b)$$

[0304] This now gives the charge of the electron as measured in a zero gravitational field as 1.6022×10^{-19} C, which is the same as that measured on Earth. Notably these observations appear to suggest that the charge of the electron is the same irrespective of the gravitiational field.

[0305] Virtually unlimited degrees of accuracy for the charge of the electron and for the fine structure constant (α), may be achieved by taking into account 2nd and nth order gravitometric effects. Thus if we take into account the effect of gravity upon the radius of the Earth it is also important to take into account an effect a upon the instruments with which we measure quantities, this would be a second order gravitometric effect. Thus taking into account 2nd order effects (r"), we have a very small, but nevertheless relevant change, such that: r"=r'(1+2r'). Thus $2r''=9.3180486\times10^{-3}$, and thus:

$$e=\left(\left[\frac{\varepsilon o}{3(4/3\pi c^3)}\right]\right)^{1/2}\div(1+2\pi r'')=1.6021765\times10^{-19}\ C \quad (6c)$$

[0306] This agrees exactly to the nearest 7 decimal places with the maximum accuracy of the experimental value for the charge of the electron.(ref 15) Furthermore by taking into account the nth order gravitometric effect, it is theoretically possible to predict accuracy for the charge of the electron to 3n decimal places. This mathematically accuracy confirms the structure of the electron from first principles and indeed the theoretical effects of gravity on the permittivity of free space (ϵ_0).

[0307] This returns us directly to the fine structure constant for the electron which is conventionally given by: $\alpha=e^2/\hbar c.4\pi\epsilon_0$. If $e^2=\epsilon_0/3(4/3\pi c^3)$, accordingly the quintessential equation for α is structurally given by: $2\pi/\alpha=m_q[3\Theta]^2$ (where $\Theta=4/3\pi c^3$; see The Structure of the Electron and Matter), we must now take into account the effects of gravity, as above, thus:

$$\alpha 2\pi/m_q[3\Theta]^2\div(1+2\pi r'')^2=0.007297353$$

[0308] Where the gravitational term for the increase in radius r" allows the mathematical derivation of α, and the above equation is in agreement with the conventional experimental value for $\alpha=0.007297353$ to the nearest 9 decimal places.(ref 15)

[0309] Hence the term $(1+2\pi r'')^2$ is in accordance with these observations for the effect of gravity on electromagnetic forces. To a maximum accuracy governed by current knowledge of the mass of the Earth and the Gravitational constant and thus the term for the gravitational increase in radius r'. These observations can also be used to accurately predict the magnetic moment of the electron (see Quantum Gravity and the Electron Magnetic Moment).

[0310] Thus the presence of the fine structure constant can now be further understood, by deriving the constant from first principles; specifically from the actual dimensional conformation for the charge of the electron: $e=[\epsilon^0/3(4/3\pi c^3)]^{1/2}$ (eq. 6).

[0311] Overall the fine structure constant α (allowing for the term r' which is the general relativistic increase in the radius of the Earth due to gravitation) is given by none other than the formula for the mass of quintessence and from the structure of the electron, which can now be derived from first principles to seven decimal places or more.

[0312] Quantum Gravity and the Electron Magnetic Moment

[0313] The theoretical origin and nature of magnetism remains obscure in current electromagnetic theory. An explanation suggests these magnetic effects are produced by photons, although no photons have ever been observed. To get round this difficulty it is postulated by physics that

magnetism results from "virtual" photons. However, Maxwell's equation for electromagnetism states that the photon has no nett magnetic effect.

$$\delta B_x/\delta x+\delta B_y/\delta y+\delta B_z/\delta z=0$$

[0314] Thus magnetism could not, by the above standard equation, be derived from a photon real or virtual.

[0315] In addition observational data suggests that black holes have powerful magnetic fields and as in theory photons are unable to escape from black holes (except for small quantites in the form of Hawking radiation), it would be difficult to explain these magnetic fields on the basis of photon emission.

[0316] Einstein postulated that magnetism was merely due to special relativity (ref 17). The postulate for the nature of magnetism in these current observations, states that the magnetic force results from relativity due to none other than the phased emission of gravitons (why postulate two invisible forces, magnetism and gravity, when one, the graviton, will do). This view as previously discussed (Quantum Gravity and Electromagnetism) is entirely compatible with standard relativity.(ref 19) Thus with the graviton origin of magnetism, the equation for the magnetic moment of the electron should have an expression in terms of quintessence and in turn the gravitational force and in particular the graviton.

[0317] The standard term for the magnetic moment of the Bohr Magneton (SIB) is:

$$\mu B=eh/4\pi m_e$$

[0318] In standard quantum mechanics the Bohr Magneton, μB, however, needs to be corrected to agree with experiment. The "correction factor" is termed "ϵ"; where $\epsilon=(\alpha/2\pi)-0.328\alpha^2/\pi^2)=0.001159641$. Thus theory reveals μ_e, the magnetic moment of the electron where:

$$\mu_e=(eh/4\pi m_e)[1+(\alpha/2\pi)-0.328\alpha^2/\pi^2)]$$

[0319] The conventional derivation of the term ϵ above, is given from the fine structure constant, $(\alpha/2\pi)$ which is theoretically consistent. However, a rather arbitary mathematical correction term; $0.328\alpha^2/\pi^2$ needs to be used in this standard equation. This appears ad hoc and needless to say, more accurate measurements show , the electron magnetic moment to the Bohr magneton ratio, $1+\epsilon=1.001159652$, which suggests the correction factor is indeed incorrect. Nevertheless, this correction factor is essential for "renormalisation" and thus for quantum mechanics to work.

[0320] Quantum gravity readily explains the discrepancy between the theoretical Bohr Magneton (μB) and the actual measured magnetic moment of the electron (μ_e). In accordance with the above chapter (Quantum Gravity and the Charge of the Electron)

[0321] Thus the significant mathematical discrepancies can be removed by accounting for the effects of quantum gravity.

[0322] Thus taking the charge of the electron (e), using the equation for the Bohr magneton and the effects of quantum gravity such that gravitational change in radius is r". The magnetic moment of the electron is given by:

$$\mu_e=(eh/4\pi m_e)(1+[\alpha/2\pi\div(1+r'')])$$

[0323] This gives an electron magnetic moment to Bohr magneton ratio of 1.00115968. Thus the mathematical term for the magnetic moment of the electron is given, avoiding the arbitary and dubious term $0.328\alpha^2/\pi^2$ used in the standard equation, simply by accounting for quantum gravity.

[0324] It is now possible to unite the equations for gravity and magnetism by substituting the fundamental key equations of quantum gravity. Thus if: $h=3m_qc^2$ (eq 1b) and $m_\xi=m_q.n_q$ (eq. 2). Then we can express the magnetic moment of any particle with the charge of the electron, including the proton, in terms of the number of quintessences (n_q) in that particle.

$$\mu B=ec^2/4\tfrac{1}{3}\pi n_q \quad (47)$$

[0325] Given that the postulated structure of the graviton is: ($\phi=\pi/c$ (eq. 42), then substituting we have

$$\mu B=3ec/4\phi n_q \quad (48)$$

[0326] Showing that the equations for the magnetic moment are compatible with the gravitational equations given earlier. Principally, the quintessential equations now allow the determination of the magnetic moment of any charged object from the equation for the graviton and directly from the number of quintessences it contains. In conventional physics the magnetic moment of the electron requires a correction factor, $(1+(\alpha/2\pi c)-0.328\alpha^2/\pi^2))$, to derive the correct experimental value. These observations herein, indicate that the correction factor is more logically (1+r"), where r" is the general relativistic increase in radius around a gravitational body. This suggests that magnetism is not only affected by gravity, but can, as shown as above, be derived using the quantum gravitational equations.

[0327] Quantum Gravity and Special Relativity

[0328] Ordinary matter passing through the lattice would produce gravitons which would interact with space-time as described by general relativity. The quantity of gravitons would be determined by the apparent mass and in turn these would apparently curve space time. The geometry of this "curvature" is elegantly described by general relativity using Riemann geometry, specifically using metric tensors. Intriguingly the metric tensor is not a single number, but at each point in space time it is required to consist of a collection of ten numbers, Consequently, ten dimensional space-time hypotheses, such as this or superstring theory, may automatically yield general relativity. (see quantum general relativity p. 36)

[0329] General relativity is indeed very elegant, nevertheless there was a logical step yet to answer. That is, how do gravitons shape space time? This can now be readily answerd by considering the interaction of a three dimensional space time lattice with gravitons themselves to produce the effects of gravity. The effects of gravity are as such to compel a body in motion towards the gravitational object and to a much smaller extent visa versa. This effect can only be produced If gravitons repel quintessence (the constituents of the 3D lattice). Indeed, it has been stated that in order to explain cosmic inflation and the "flatness" of the Universe that quintessence must shun (or be shunned by) matter (ref 5,6,7).

[0330] In descriptive terms a body close to a large mass will have a tendency to move toward it because the three dimensional lattice would be less dense as it approached the surface of the large mass. Overall there would be less

resistance to motion in the direction of the large mass, and the motion in this direction would be facilitated by the vibration of quintessence.

[0331] In general relativity the principle governing motion is the geodesic of least distance, this can be re-expressed using similar equations using least action. Furthermore, the concept of motion due to the vibrations of quintessence is more logically and experimentally compelling.

[0332] These observations can now be used to link general and special relativity. Thus as we approach the speed of light, the mass of an object travelling through the space-time lattice would approach infinity, directly because the number of quintessences passing through a body would increase with increasing velocity, hence the equation:

$$m'=m_0/(1-v^2/c^2)^{1/2} \quad (50)$$

[0333] or

$$m'=m_0/(1-v^2[\mu_0.\epsilon_0])^{1/2} \quad (50a)$$

[0334] In turn this would generate increasing gravitons and accordingly this would explain the observed effects of special relativity. Time itself is due to passage through the space-time lattice, and where the space-time lattice is dispersed by gravitons, time and length are reduced with increasing velocity and hence increasing space-time lattice dispersion, similar to the way in which gravity alters space-time

[0335] As a result:

$$t'=t(1-v^2/c^2)^{1/2},\ l'=l(1-v^2/c^2)^{1/2}$$

[0336] Thus resulting in the effects of special relativity.

[0337] Quintessence and Black Holes

[0338] To address the relationship of the space-time lattice to gravity directly, it is important to discuss the concept of quintessence with regard to general relativitivistic equations. The standard general relativistic equation for the apparent increase in radius (r) due to the curvature of space time around a gravitational object, which has also been previously derived from first principles (eq. 36), is:

$$r'=G.M/3c^2 \quad (34)$$

[0339] This can also thus be written as:

$$3r'=G.M[\mu_0.\epsilon_0] \quad (51)$$

[0340] This standard equation, is in keeping with the above observations. Specifically, as the mass increases, ϵ_0 increases, in turn the radius will appear to increase (relative to π).

[0341] The above observations now allow us to examine the effects with regard to the interior of black holes themselves. The event horizon would represent a critical density for quintessence, in which light could not escape. The Schwarzschild radius would now be given by:

$$R_s=2GM[\mu_0.\epsilon_0]$$

[0342] The event horizon will occur at the point at which there is less resistance to circular motion than motion in a straight or partially curved line. Given that π is proportional to $1/\epsilon_0$. The event horizon should occur when the permittivity has increased by a factor of π.

[0343] Effectively because the permittivity of free space rises, π decreases. This is entirely in keeping with general relativity which predicts the effective change in the ratio of the radius to the circumference as given by the conventional equation, where r', is again the apparent change in radius.

$$r=G.M/3c^2$$

[0344] Hence π will effectively decrease as we approach the event horizon of a black hole, When π decreases to 1, the circular circumference is equal to the diameter and moreover, inside this limit it is shorter for light to travel in a circle. Thus light cannot escape the event horizon.

[0345] This can give us great insights into the workings of space-time, for flat Euclidean space the standard equation is:

$$e^{i\pi}=-1$$

[0346] In accordance with general relativity, the ratio of the radius to the circumference changes in a gravitational field, and effectively π=1, at the event horizon, thus the boundary condition for the shape of space-time at the event horizon now has the direct equation:

$$e^{f}$$

[0347] Within a black hole as the permittivity of space increases by a factor of 2π an object within it will complete two rotations rather than travel in a straight line. In effect exceeding the speed of light by 2π. Hence, the condition for space-time is represented by the equation:

$$e^{i/2}$$

[0348] Thus an increase in the permittivity of free space by a minimum factor of π, to produce a black hole is estimated to result from an increase in mass by a factor of approx. 10^6 (the ratio of the mass of the earth and that of a putative black hole).

[0349] Continuing with the subject of a black hole, according to the model inside the black hole, the gravitons produced by the matter present would be in equilibrium with the density of the space-time lattice. Increasing the rate of rotation of the matter in the black hole for instance would thus increase the production of gravitons and its effective mass and increase the radius of the event horizon. A density gradient of the space-time lattice would continue to exist within the black hole. Progressively closer to the centre of a black hole matter itself would be increasingly compressed and the spherical structure of the quasi electron would be predicted to collapse. This collapse would result in the formation of an exotic form of matter in the form of pure quintessence in a black hole.

[0350] This pure quintessence would produce the singularity at the centre of the black hole. The larger the black hole in terms of mass the more pure quintessence would exist at its core.

[0351] Quintessence and the Big Bang

[0352] Quintessence theory not only predicts the occurrence of the Big Bang, but allows a prediction for the value of the entire mass of the Universe, from first principles.

[0353] In accordance with quintessence theory the big bang resulted from the explosion of an immense black hole singularity, which was constituted from pure quintessence.

[0354] On the basis of quintessence, there will be a critical mass for Big Bang event; thus if entire space-time between quintessence is compacted so that no further quintessence

can be accommodated, the addition of further quintessence would destabilise the immense black hole, resulting in the Big Bang.

[0355] It is possible to predict this critical mass, using the radius of quintessence as a benchmark. Given the nine spatial parameters present in the metric tensor, used in general relativity we find that the actual formula for the radius of quintessence; r^{q2}, is mathematically in agreement with general relativistic theory when:

$$9r_q^2=Gh/C^3 \quad (33)$$

[0356] This again supports the 9 dimensional view of space (so crucial in superstring theory). Moreover, the size of the vibrations of quintessence can thus be calculated as:

$$r_q=1.35\times10^{-35}m \quad (33a)$$

[0357] The volume of each quintessence is thus:

$$\tfrac{4}{3}\pi r_q^3=1.0306\times10^{-104}\,m^3 \quad (33b)$$

[0358] So to be accommodated within unit volume of space time, with no intervening apparent space time, (given that each of 9 overlapping quintessences are required) would require approx.

$$9\times10^{104}\text{ quintessences}$$

[0359] As the mass of quintessence is $m^q=h/c^2=7.373\times10^{-51}$ kg.sec (eq. 1). Then the mass of of the Universe, to two decimal places, is:

$$1.18\times10^{53}\text{ kg} \quad (33c)$$

[0360] This is in close agreement with a recent estimate of the mass of the Universe from COBE and other satellite data, which estimates the mass to be 100 trillion trillion trillion trillion tonnes (10^{53} kg). (ref 20)

[0361] Moreover, the early formation of the galaxies can be readily explained, it is likely that in such a big bang some very small black holes might have prevailed and that these formed the seeds of the galaxies we see today.

[0362] The event horizon, calculated from the Schwartzschild radius, of such an immense black hole is $\sim10^{26}$ m, which would have allowed Guth's inflationary component to the early expansion of the Universe.

[0363] In addition, inflation may result directly from the observation that once electrons have formed from the primordial soup of quintessence, they emit gravitons which in turn repel space time, which might also result in another cosmic inflationary cycle.

[0364] Most importantly quintessence theory explains the Big Bang from first principles and and is capable of accurately predicting the mass of the Universe.

[0365] The Nature of Energy

[0366] Foremostly, these observations allow a fundamental understanding of energy. The quantum physical, minimum component of energy is Planck's constant; h. To define the minimal component of mass, using the standard energy equivalence formula; $E=mc^2$, such a minimal mass (m_q) would be required to have the value equivalent to; $m_q=h/c^2$ (1). The total mass of a system (m) would then be; $m=m_qn_q$, where n_q is the number of these minimal units. Thence, the total energy of a system can be derived from the minimal energy; h, multiplied by the number of these energy units (n_q). Thus as, $E=mc^2$, then also $E=m_qn_qc^2$ and substituting $m_q=h/c^2$, the energy equivalence formula has the more logical formulation;

$$E=hn_q \quad (1a)$$

[0367] Thus the energy of a system is equivalent to the minimal energy unit; h, multiplied by the number of those minimal energy units (n_q).

[0368] This leads directly to a deeper understanding of wave particle duality and the wave nature of matter.

[0369] This is encapsulated by the quintessential energy formulae

[0370] As conventionally $\beta E/c=p$, then

$$\lambda=h/p=hc/\beta E \quad (2)$$

[0371] and

$$E=hn_q \quad (1a)$$

[0372] then

$$\lambda=c/\beta n_q \quad (2b)$$

[0373] Importantly, as indicated by equation (2b), energy having no quintessence; would have a wavelength of infinity. Specifically pure energy containing no quintessences, would have a lambda of infinity. According to quantum mechanics an infinite wavelength would result in the probability of that energy being anywhere. As energy itself has no electrical charge it would not be impeded by the permittivity and permeability of the three dimensional space-time lattice. Moreover, energy would not be detectable in three dimensional space-time, unless it interacted with matter, as in the EPR experiments. Indeed, energy is not observed when not bound to any form of mass or particle.

[0374] Thus equation 2b, takes us to our original assertion regarding the existence of pure energy.

-Energy is not bound by the space-time lattice-

[0375] Thus, as the EPR experiments suggest the existence of energy separate from matter and thus separate from the three dimensional space-time lattice, it is interesting to find that experiment suggests the existence of free energy in a continuum separate from space time and matter to produce the effects of quantum teleportation.(refs 10, 11, 12, 13)

[0376] This is not, however, teleportation across an additional dimension, this is a term to describe in partially familiar terms the dissociation of energy from the three dimensional space-time lattice. As time is inextricably linked to each dimension of space, the effects of energy would be inextricably linked to the events, such as the creation of virtual particles, we see interacting within space-time. It is unlikely that observers have any direct day to day experience to explain quantum events. Nevertheless, quintessence theory may have given us a window into the hitherto hidden workings of the Universe. Thereby, the mystery of the uniformity of the Universe, across distances which the speed of light could not apparently traverse, is readily explained by the fact that the free energy contained in the Universe is not bound by the space-time lattice.

[0377] In the case of light, due to the exceedingly small masses involved, there would be relatively easy exchange of matter with free energy within a photon. This would make the photon the ideal experimental tool to look for energy

which is not bound by matter and in turn energy which is not bound in space-time. Indeed, very recently Furusawa et al. have reported to have observed the transference of energy as photons from A to B, without those photons traversing space-time[ref 10]. This finding which has been supported using other experimental techniques[refs 11, 12, 13,], is very important as it suggests the existence of such free energy.

[0378] Overall, quintessence theory gives an a priori explanation for the concept of mass, the elementary particles, the forces of nature and quantum effects. It can equally be used logically to explain the inner physics of a black hole, the missing mass in the Galaxy, the expansion of the Universe, Guth's inflationary theory and predicts the Big Bang, from first principles.

Prior Art

[0379] Antigravity Systems

[0380] Recent research at NASA indicates that an antigravity device may be feasible. This research, however, has been undertaken at NASA without fundamental knowledge of the theoretical basis of quantum gravity. In these experiments the use of radio frequency (RF) pulses, such as in Nuclear Magnetic resonance, on rotating superconducting discs has been attempted, to produce antigravity effects.[ref 21]

[0381] However, radio frequency pulses are a weak form of electromagnetic radiation and are therefore unlikely to provide sufficient energy to produce measurable antigravity effects.

[0382] The warp drive technology described in this application is entirely different to previous prior art. The most important difference relates to the nature of the invention. In this application specifications are given for a direct drive system, as opposed to a gravity shield device, which other inventions claim. There is of course a vast difference as a shield device, merely reduces the force of gravity, but does not directly produce drive.

[0383] The references specifically relating to the shield effect are:

SCHNURER:	WO 98/23976	14 Nov. 1996
MODANESE + SCHNURER:	arXiv:gr-qc/9612022 v4,	19 Feb. 1998
PODKLETNOV:	arXiv:cond-mat/9701174 v3,	16 Sep. 1997
PODKLETNOV + NIEMINEN:	Physica C, Vol 203, 441–444,	9 Sep. 1992

[0384] Other devices produce an attractive effect, as in an electromagnet magnet, which is again entirely different to the direct production of drive.

[0385] HOOPER U.S. Pat. No. 3,610,971 Apr. 15, 1969

[0386] In these and other antigravity devices the use of equal and opposite currents in a superconductor to produce anti-gravity effects are disclosed, as in:

[0387] BETTELS DE19832001 Jul. 16, 1988

[0388] In this application for Warp Drive technology, there is a differential current applied. Thus the differential speed of the electrons will, in accordance with relativity, produce differential mass, which will in turn result in a differential graviton release. Thus this invention is very different to previous disclosed inventions, as it is the differential graviton release, which produces the effective warping of space-time, to produce a direct warp drive system, which operates by the warping of space-time.

SUMMARY OF THE INVENTION

[0389] Principles of Warp Drive Systems

[0390] The theoretical understanding of quantum gravity allows the design of warp drive systems from first principles. It is unlikely that gravitons can be controlled in a precise way using current technology. Nevertheless, an understanding of three dimensional space-time and matter, does allow the design of elementary warp drive systems. That is, systems whose propulsion rely on warping space-time as opposed to the ejection of material to provide thrust.

[0391] The background for these systems are already partially understood and quintessence theory allows their further development. For instance, the formation of black holes, represents a crucial step in understanding the mechanisms that underlay gravitational physics and in turn the warping of space-time. The existence of black holes, implies that the warping of space-time allows a powerful system for driving matter. In this instance the space-time lattice would be repelled by gravitons in such a way as to disperse space-time quintessence in a circular fashion, producing an event horizon. Similarly if we suppose that gravitons could be controlled and collimated in a single direction similar to a laser using photons, it would be possible to focus such a graviton beam ahead of an object. This in turn would dissipate the space-time lattice in front of that object, thereby allowing the theoretical potential for what is termed Warp drive.

[0392] Essentially, these are systems whose propulsion relies on warping space-time, as opposed to the ejection of material to provide thrust. This does not, of necessity, mean that superluminal velocities are produced, but that the drive is based on the warping of space-time in accordance with general relativity. However, it would in the future theoretically be possible for an object to achieve speeds greater than that of light, as superluminal velocities produced by the warping of space-time do not contravene general relativity.

[0393] Indeed according to the standard model, if the horizon distance is taken as the maximum distance which light could have travelled, then two points on opposite sides of the Universe are as far apart as ninety times the horizon distance, which indicates that components of the Universe themselves have effectively far exceeded the speed of light. [ref 20a]

[0394] With current technology warp drive systems (not of necessity superluminal) could be achieved by rotating intermediate sized superconducting masses at ultracentrifugational velocities. The release of gravitons could be controlled by differentially governing the electron flow through these masses with the use of powerful electric currents. In turn the differential direction of flow of gravitons would determine the direction of motion through the space time lattice.

[0395] In order to design a mechanism for elementary warp drive we may utilise either a normal conductive

material or preferably a superconducting material, or a combination of both. It may be possible to use any shape, such as a disc, cylinder or preferably a sphere. It would also be possible to use dual counter rotating discs to minimize the net angular momentum of the system. In the case of a sphere, this is rotated along its horizontal axis in a clockwise fashion at ultracentrifugational speeds. A differential current is then applied from left to right in such a way as to pass through the entire sphere in this direction.

[0396] The electric charge in the upper half of the sphere would be maximised. The electrons will have a vector in the left to right direction as the sphere spins clockwise. If a maximised current is applied to the sphere in the same direction this will result in a increase in the velocity of the electrons relative to the centre of gravity of the rotating object, due to the flow of current. In turn, according special relativity and to the space-time lattice model, this wilt result in an increase in the relativistic mass if the electrons and in turn by general relativity an increase in the release of gravitons.

[0397] Conversley in the lower half of the sphere the electrons wilt have a vector of motion in the right to left direction due to the spin of the sphere. This will be relativistically slowed by the differential current applied in the same direction as the current above, and hence in the opposite direction to the direction of rotation. The charge can be separately applied and adjusted to ensure that the electrons are relativistically stationary relative to the centre of gravity. In turn this will minimize the relativistic mass and result in a decrease in the release of gravitons for the lower half of the sphere.

[0398] The overall result will be a greater release of gravitons in the upward direction and a lesser release of gravitons in the downward direction. The effect will be enhanced by the use of a multi-phasic current simultaneously applied. This will result in the release of multi-phasic gravitons which will disperse space time above the sphere with increase in density below the sphere which will effectively reverse the effects of Earths gravity. Importantly this effect can also be produced with the use radio frequency pulses. This obviates the need for commutator devices. Nevertheless, the radio frequency pulses must be designed to produce a change in the spin of the particle to enhance the release of gravitons in the upward direction, and moreover with current technology theses RF pulses contain too little energy to effect a significant change in the gravitational field.

[0399] With the use of large currents the drift velocity of the electrons could be greatly increased. The use of superconducting devices would greatly enhance the efficiency of such systems as the electrical resistance is virtually eliminated. Thereby allowing large currents to be used with minimum total power output.

[0400] The technological crux of the device is to produce electrons of high speed and hence high relativistic mass in the top half of the sphere, whilst producing low speed and thus low mass electrons at the bottom of the sphere, in accordance with special relativity. The imbalance in the rotating sphere will be continuously present impelling the device upwards. In effect the differential current flow, will produce differential graviton production and in turn, by general relativity, the warping of space-time

TECHNICAL EXAMPLE 1

[0401] A small scale device, which produces warp thrust can be readily constructed using current technology.

[0402] This wilt require a sphere, cylinder or disc of superconducting material. A dual disc either co rotating or counter rotating could also be used, counter rotating discs have the advantage that the total angular momentum is effectively zero. Any of the superconductors may be used such as Ag_2F, C_8K or SnTe. However for their tensile strength and/or magnitude of critical current density (J_c), Nb_3Sn or Ag_2F is recommended. Normal conductive material may be used but due to electrical resistance the power required (see superconductivity theory pg. 9) would be in the order of 10^{19} times greater.

[0403] Taking a sphere of Nb_3Sn, made hollow to reduce the mass of the sphere, with an external radius 0.25 m and an internal radius of 0.20 m; the total volume of Nb_3Sn required would be 3.19×10^4 cm^3. As Nb_3Sn has a density of 7.86 g/cm^3 the total mass of superconducting material would hence be 250 kg.

[0404] This sphere is required to be mounted upon two ultracentrifugational spindles which themselves are on the horizontal axis. The untracentrifugational spindles would be powered to rotate the sphere to produce an enhanced g force, as in a centrifuge.

[0405] The superconductive sphere would require a supercooloed jacket of liquid Helium, and would require to be in a vacuum. The power source, motors and refrigeration system should be placed outside the supercooled jacket. In addition these ancillary elements of the device may be either placed outside the system as a whole, or within it, if the device is designed as a self contained vehicle. The device may also be mounted upon vertical rails to experimentally demonstrate vertical lift. (See **FIGS. 1, 2**)

[0406] A high current needs to be applied, by means of a commutator device, to produce a current passing through the sphere. If the negative terminal were placed on the left of the sphere and the positive terminal on the right this would produce electrons flowing from left to right. The commutator device would be split to allow a smaller current to be applied to the lower half of the sphere.

[0407] The power expenditure for this is reduced by using a superconducting material. If the sphere were rotating from left to right i.e clockwise the drift velocity of the electrons would be advanced in the upper half of the sphere, and retarded in the lower half of the sphere by the differential current induced flow of the electrons.

[0408] According to relativity, as defined in the theoretical sections above, it is accepted that the mass of the electrons in the upper half, relative to the centre of gravity, of the sphere can thus be increased by using the standard relativistic formula:

$$m'=m_0/(1-v^2/c^2)^{1/2} \quad (50)$$

[0409] Thus by inducing a relative drift velocity difference, the mass of the electrons at the top of the sphere can be increased, and the mass of the electrons at the bottom of the sphere can be reduced relative to the centre of gravity.

[0410] If the object is set to rotate, centrifugal forces can be used to increase this mass difference. This can be used to

increase the net momentum of the object in the upwards direction, to produce upwards thrust.

[0411] Given that there are approximately 10^{23} per cm^3 free electrons in a niobium conductor then in the total sphere there will be approx. $10^{23}\times3.19\times10^4$ $cm^3=3.19\times10^{27}$ free electrons in the sphere. If each electron weighs 9.11×10^{-31} kg; then the total mass of free electrons in the upper half of the sphere is 1.453 grams.

[0412] If we take the maximum zero voltage current density (J_c) in Nb_3Sn or another suitable superconducting device as approximately 10×10^{14} Amps/m^2, the drift velocity in the electrons can be calculated. Given that the average surface area of the hollow sphere is approximately 350 cm^2 or 3.5×10^{-2} m^2, then the max current applicable is 3.5×10^{13} Amps. Thus the drift velocity of the electrons would be 6.3×10^6 m/sec. The velocity of the electrons in the upper part of the sphere would be advanced relative to the centre of gravity. The relative velocity to this centre would be equivalent to the velocity of the sphere plus the velocity of the electrons in the upper half.

[0413] If the drift velocity of the electrons in the lower half were separately, induced by the current so that these electrons were stationary relative to the centre of gravity, those in the lower half of the sphere would be relatively retarded. The current applied to the lower half of the sphere to make the lower electrons, relative to the centre of gravity, stationary (given a rotation rate of 3.14×10^4 revs/sec) would be 2.46×10^{11} Amps.

[0414] This differential current would allow the electrons to have a differential velocity and in turn a different mass relative to the centre of gravity. The relative velocity would be approximately 6.3×10^6 m/sec. Using the standard equation for relativity (50) would give a relative mass difference ratio of 2.21×10^{-4}.

[0415] The effective total mass difference between the upper and lower half of the sphere would thus be the mass of the electrons times the relative mass difference which is 1.45 grammes$\times2.21\times10^{-4}=3.2\times10^{-7}$ kg.

[0416] Overall, as the acceleration due to gravity is 9.81 m/sec^2; to produce upwards lift on a sphere of 250 kg in Earth's gravitational field would require a force of about 2,500N. In order to produce in excess of this force the acceleration produced by the ultracentrifuge device would need to be about=8.76×10^9 m/sec^2. Thus according to the formula $a=(\omega2\pi r)^2/r$ (where the average radius, r of the device is 0.225 m) the rotation rate required would be 3.142×10^4 revs/sec or approximately 1,880,000 revs/min to produce sufficient acceleration to allow the device to completely self levitate. Thus as F=ma, then the force produced by the device is

$$3.2\times10^{-7}\ \text{kg}\times8.76\times10^9\ \text{m/sec}^2=2{,}800\ \text{N}$$

[0417] A detectable anti-gravtiy effect could, however, be realised at much lower spin rates. Standard ultracentrifugation devices can rotate at 600,000 revs/min. Thus even at standard ultracentrifuge speeds the g forces produced would be sufficient to produce approximately 12.8% lift, using these anti-gravity techniques.

TECHNICAL EXAMPLE 2

[0418] For this example we will use a large scale device, which would therefore deliver sufficient thrust to power a vehicle beyond Earth's gravitational field. Under terrestrial conditions the entire devise would be required to be encased in a liquid helium jacket, with an internal vacuum to reduce friction due to air. However, the tatter two constraints need not be in place if the device is to be used in space as, very conveniently, space is both a vacuum, and when shielded from the rays of the sun the ambient temperature is less than that of liquid helium. Indeed the large mass of the superconductor becomes less relevant as weightlessness exists in space, so that the size of the object may be increased substantially.

[0419] Taking a sphere of 1 meter in radius of a superconductive material. The volume is $\frac{4}{3}\pi r^3=4.2\times10^6$ cm^3. If the high temperature superconductors are used such as $YBa_2Cu_3O_7$, or $Nd_{1.85}Ce_{0.15}CuO_4$, which are ceramic in nature, the specific density is approximately 3 g/cm^3, Hence the total mass of the sphere would be approximately 12,600 kg or 12.6 metric tonnes. If the standard superconductors are used, for instance Nb_3Sn with a density of 7.86 g/cm^3 the sphere becomes heavier at 33 metric tonnes

[0420] This sphere is required to be mounted upon two ultracentrifugational spindles which themselves are on the horizontal axis. The untracentrifugational spindles would be powered to rotate the sphere to produce an enhanced g force, as in a centrifuge. The sphere would need to be carefully constructed to be exactly balanced in all directions.

[0421] Nevertheless, a high current does still need to be applied, by means of a commutator device, to produce a current. If the negative terminal were placed on the left of the sphere and the positive terminal on the right this would produce electrons flowing from left to right. The power expenditure for this is reduced by using a superconducting material. If the sphere were rotating from left to right i.e clockwise the drift velocity of the electrons would be advanced in the upper half of the sphere, and retarded in the lower half of the sphere by the current induced flow of the electrons. The split commutator device allows a differential current to be applied to the upper and lower halves of the sphere respectively.

[0422] According to the model in the preceding sections this will result in an increase in the mass of the electrons in the upper sphere and hence an increase in graviton production in the upper half of the sphere. Indeed, this model is in agreement mathematically with general and special relativity.

[0423] Given that there are approximately 10^{23} per cm^3 free electrons in a copper conductor then in the total sphere there will be approx. $10^{23}\times4.2\times10^6=4.2\times10^{29}$ free electrons in the sphere. If each electron weighs 9.11×10^{-31} kg; then the total mass of free electrons in the upper part of the sphere is 0.191 kg.

[0424] If we take the maximum zero voltage current density (J_c) in Nb_3Sn, or another suitable superconducting device, as approximately 10×10^{14} Amps/m^2, the drift velocity in the electrons can be calculated. Given that the average surface area of the sphere is approximately 1.57×m^2, then the max current applicable is 1.57×10^{15} Amps. Thus the drift velocity of the electrons would be 6.3×10^6 m/sec.

[0425] At the same time the current in the lower half of the sphere would be adjusted to retard the electrons so that they remain stationary relative to the centre of gravity. If the

sphere were rotating at 2.6×10^4 revs/sec this would require a current of 2.04×10^{13} Amps. This differential current would induce a differential velocity in the electrons and in turn a mass difference.

[0426] By inducing a difference of mass as little as one part in a thousand in these electrons we can achieve significant lift. Thus by the above equation if we induce a drift velocity of 6.3×10^6 m/sec (as in technical example 1), given that the velocity of the electrons in the upper part of the sphere would be advanced relative to the centre of gravity and those in the lower half of the sphere relatively stationary; then the relative velocity would be approximately 6.3×10^6 m/sec. Thus between the upper and lower half of the electrons we increase the relative mass of the electrons in the upper half by a factor of 2.21×10^{-4}, as in technical example 1.

[0427] Thus the difference in mass in the upper half of the sphere due to the moving electrons would be 0.191 kg$\times2.21\times10^{-4}$=4.22×10^{-5} kg., relative to the lower half electrons. This difference is enhanced by producing a centrifugal force by rotating the sphere.

[0428] If we rotate the large superconducting sphere at 2.6×10^4 revs/sec or 1,560,000 revs/min we can achieve accelerations of 1.33×10^{10} m/sec^2 (given an average radius of 0.5 m) by the formula $a=(\omega 2\pi r)^2/r$.

[0429] Thus as F=ma, where m is the relative mass difference of the electrons the thrust produced in the device would be equivalent to:

$$4.22\times10^{-5}\ \text{kg}\times1.33\times10^{10}\ \text{m/sec}^2=5.88\times10^5\ \text{N}$$

[0430] Thus in Earth's gravitational field this force would be capable of levitating 60 metric tonnes.

[0431] The estimated current required to produce the drift velocity of the electrons for this effect would be approx. 1.57×10^{15} Amps. The power usage is given by; $P=I^2R$, under non-superconducting conditions, given that Niobium has a resistivity of 15.2×10^{-8} Ω/m the sphere would have a resistance of approximately 10^{-7} Ω. The power used by a non-superconducting device would thus be 2.46×10^{23} Watts. However, due to superconductivity, under standard theory, the device has zero resistance and would use no power(ref 8). Nevertheless, if we wish to use the model described above for superconductivity (see superconductivity, page 6) there would be a practical power consumption which would nevertheless still be low. Thus the power consumption would be in the order of 1.6×10^{-19} less than the standard power usage, at 3.94×10^4 Watts.

[0432] If Nb_3Sn is used to make the sphere the mass of the sphere would be 33 metric tonnes. If the mass of the ancillary ship were 27 metric tonnes, giving a total of 60 metric tonnes the acceleration produced would be 9.81 m/sec^2. This would be equivalent to the force of gravity on Earth. Thus an artificial gravitational field would be incidentally created which would be exactly equivalent to that on Earth. Thus the device could also be used for the production of artificial gravity.

APPENDIX 1

Particle Physics

In the overall picture, it is generally accepted that there are three major forces; strong, electro-weak and gravity, each mediated by three bosons the, gluon, photon and graviton. These in turn are known to influence three types of particle, the quark, lepton and by General Relativity, space-time itself . Each of these appear to be composed of three particles with multiples of charge of 1/3 and exist in three dimensions of space time, which are themselves in three generations.

The nature of particles thus, may be revealed by their structure which occurs generally in multiples of three. Three quarks in the case of baryons are neccessary to make up a particle such as the proton or neutron. The particles that bind the quarks (gluons) are themselves required, in stable particles, to have three different colour charges, one colour in each dimension, for the particle to exist in three dimensional space-time. Furthermore, there are three generations of leptons an indeed quarks.

Nevertheless, the Standard model itself appears unable to explain the existence of these three generations of particles or the fundamental properties of sub atomic particles. Furthermore, there appear now to be a total of 60 fundamental particles each with their own fundamental properties which are arbitarily defined to fit the data. Furthermore, the Standard model only partially explains the decay process of the each particle and it does not explain their masses accurately.

For instance the mass of the up (u), anti-up (_) down (d) and anti-down (_) quarks are currently estimated at 0.35 Gev each [ref 17] (although some controversy exists about about this basic value). The mass of the proton constituted of three quarks, uud, is 0.9383 Gev, which is only approximately equivalent to the total mass of the three quarks (1.05 Gev).

Furthermore, the very process by which the subatomic particles decay cannot be explained by the "fundamental" constituents, the quarks. Indeed the known hadron decay processes ultimately always end up producing either an electron or positron. Indeed the quarks have not been experimentally seen, suggesting that other particles may underlay their fundamental structure.

Electron Structure

Given the presence of a quasi electron with a charge of 1/3 e [ref 4,5], then three of the quasi electron vortices, as previously described [ref 5], could form an entire electron in three dimensional visible space time. Nevertheless, each would have energy and hence a wave function which would be present in the other vectors. This electron could thus follow the probability functions as described by the Shrödinger wave equation for ψ (otherwise termed as "essence" by Shrödinger).

It is of importance therefore to note that the charge of the electron (e) in Coulombs (C), (where ε_0 is the permittivity of free space), can be derived from first principles by the equation:

$$e = \left[\frac{\varepsilon_0}{3\,(4/3\pi c^3)}\right]^{1/2} = 1.61 \times 10^{-19}\ C \qquad (6a)$$

Equation (1) has a number of special implications, which have been previously discussed (p 6)

The dimensions of the equation can be readily resolved by considering **each of the three vector dimensions.** The exact dimensions of the equation need to be considered in the light of the nature of space-time itself, and this is fully addressed on pages 82-84. These dimensional equations help explain the nature of matter. Indeed the equation for the electron may underly the structure of the subatomic particles and may be necessary for the full understanding of gravity.

Additionally, the square root sphere structure of the electron accounts for its 1/2 integer spin. This square root structure also forms the basis of the electron pair bonding. According to the above equation (6), the electron will tend to form a "complete" electron sphere, thereby explaining how the presence of pair bonding occurs.

Thus from the equation (3) for the square root structure of the single electron; it is clear that the product of two such spheres will tend to form a complete sphere, where:

$$e^2 = \varepsilon_0/3(4/3\pi c^3) \qquad (6b)$$

In addition, the equation for the quasi electron can be directly derived from eq. 1.

Thus in one dimension, a single quasi electron (q_e) with charge of 1/3e, can be mathematically represented, (where the permittivitty of free space for each quasi electron is $\varepsilon_{qe} = [\varepsilon_0/3^3]^{1/2}$, by the equation :

$$q_e = \varepsilon_{qe}/(4/3\pi c^3)^{1/2} = 1/3e \qquad (6c)$$

Thereby accounting for the experimental observation of the 1/3e charge of the quasi electron(ref 4,5). Overall knowing the structure of the quasi electron may lead to the knowledge of the structures of the the other subatomic particles such as the quarks.

First Generation Quark Structure

From these observations we may now examine the derivation of the mathematical nature of the proton and in turn the structure of the quarks. Using the above equations (eq. 6) enables a far more accurate derivation of the mass of quarks from first principles.

To do so requires calculating the ratio of the mass of the electron (m_e = 0.511 Mev) to the mass of the proton (m_p = 938.3 Mev)

Thus $m_e/m_p = 0.511/938.3 = 5.44 \times 10^{-4}$

and $m_e/m_p = 5.44 \times 10^{-4} = (3\pi/c^{1/2})$

Intruigingly, the term $(3\pi/c^{1/2})$ mathematically determines the ratio of the mass of the electron (m_e) to the proton (m_p). Indeed it is this ratio that also leads to the mathemaical derivation of the structure of the quarks

Given the mass of the proton is; 938.3 Mev, then according to the Standard Model, as there are three quarks in the proton (uud) of virtually equal mass, then the effective mass of each quark would be more accurately given as 312.8 Mev.

Thence, the structure of the quarks can now be defined by the ratio of the masses of the quasi electron to the quark. If the mass of the quasi electron is given as one third the mass of the electron

$$m_{qe} = 0.511 \text{ Mev} \div 3 = 0.17033 \text{ Mev}$$

Then the ratio of the mass of the down quark (d), to the quasi electron is:

$$0.17033 \text{ Mev}/ 312.8 \text{ Mev} = 5.44 \times 10^{-4}$$

We also find that this same ratio of the mass of the quasi electron to the mass of the down quark (m_d) is mathematically equivalent to $3(\pi/c^{1/2})$, thus:

$$m_{qe}/m_d = 5.44 \times 10^{-4} = 3(\pi/c^{1/2})$$

From here the equation for the charge and structure of the down quark can be accurately defined by combining the equation for the structure of the quasi electron $q_e = \varepsilon_{qe}/^{-}(4/3\pi c^3)^{1/2}$ and the ratio of the masses of the quasi electron to the down quark (19); hence

$$d = \varepsilon_{qe}.m_d/m_{qe}.^{-}(4/3\pi c^3)^{1/2}.3(\pi/c^{1/2})$$

Hence in short form

$$d = {}^{-}(4/3\pi c^3)^{1/2}.3(\pi/c^{1/2}) \qquad (16)$$

Giving the charge of the down quark as -1/3; and its estimated mass as 312.8 Mev.

Thus not only can the electron charge be derived from the equation for three spheres each with a radius of c (equation 3) ; but the mass, charge and internal structure of the down quark can also be derived from the term $3(\pi/c^{1/2})$.

Furthermore, the significance of the term $3(\pi/c^{1/2})$ in this equation, is revealed by the Shrödinger wave equation. Thus **$(\pi/c^{1/2})$ is none other than the solution to the Shrödinger wave equation for the amplitude of an electron confined in a space with radius c** [ref 6]. If c is the space defined by the equation for the structure of the quasi electron. Then the standard Shrödinger equation for an object confined in a space c is given by the following standard calculation [ref 8]:

$$E\psi(x) = -\frac{h^2}{2m} \cdot \frac{d^2\psi(x)}{dx^2}$$

If one of the dimensions of space has a length 2L the amplitude can only be non zero between x = 0 and X = 2L and the standard solution for the amplitude can be determined by using the constant (A) where:

$$A = (1/L^{1/2})$$

Thus in one dimension the solution to the Shrödinger wave equation for the amplitude of oscillation is conventionally given by [ref 8] :

$$\psi(x) = (\pi/L^{1/2}) \quad \sin x/L$$

Substiuting L for c gives the one dimensional equation (when sin x/L = 1) as $\pi/c^{1/2}$. Thus at 90°to the dimensional confinement of the quasi electron, the standard solution to the Shrödinger wave equation yields an amplitude of $\pi/c^{1/2}$, which in three dimensions gives:

$$3(\pi/c^{1/2}) \qquad (22)$$

Thus the term $3(\pi/c^{1/2})$ is not only the ratio of the mass of the electron to the proton but is also none other than the standard solution to the Shrödinger wave equation for an object confined in a space c (ref 8).

From here the charge and structure of the up quark (u) can now be derived in a similar way to that of the up quark from the mass of two quasi positrons [m_{qp} = 2(0.170 Mev)] and the mass of the up quark (m_u) by the equation,

$$2m_{qP}/m_U = 2(5.44 \times 10^{-4}) = 2(3\pi/c^{1/2})$$

Thus:

$$u = \varepsilon_{qe} .2m_{qP}/m_u.2^{+}(4/3\pi c^3)^{1/2}.(3\pi/c^{1/2})$$

Hence in short form

$$u = 2^{+}(4/3\pi c^3)^{1/2}.(3\pi/c^{1/2}) \qquad (17)$$

Giving the charge of the up quark as +2/3, and its mass as 312.8 Mev

Overall the mathematical structure of all the particles can be shown to be derived from the quasi electron. Thus, the first generation particle structures can now be derived from first principles. This includes the quasi electron (qe) and electron (e), from which the quarks (u,d) and in turn the proton (p) respectively are derived.

Thus the first generation of particles of the Standard model are given in short form as:

$$qe = {}^{-}(4/3\pi c^3)^{1/2} \qquad (6a)$$

$$e = 3^{-}(4/3\pi c^3)^{1/2} \qquad (6)$$

$$d = {}^{-}(4/3\pi c^3)^{1/2}.3(\pi/c^{1/2}) \qquad (16)$$

$$u = 2^{+}(4/3\pi c^3)^{1/2}.3(\pi/c^{1/2}) \qquad (27)$$

The respective force binding particle, the gluon, for the first generation of particles is thus given in short form as:

$$g = 3(\pi/c^{1/2}) \qquad (22)$$

According to these equations, it is apparent that the down and up quarks appear be constituted from quasi electrons and three component gluons, and are themselves not fundamental particles.

Indeed, from these observations it is clear that the structure of the electron, may underly the structure of all the elementary particles and nucleons, as it forms a "perfect sphere" based on c. As will also be seen later, as this structure. forms the basis of matter, it may itself underpin the theory of gravity. Furthermore, these obsevations will allow the mathematical estimation of the mass and size of the elementary particles, including the second and third generation particles

Second and Third Genration Lepton Structure

Thus the structure of the muon (μ) can also be derived from the ratio of the mass of the electron (m_e) and the mass of the muon (m_μ):

$$m_e/m_\mu = 4.7 \times 10^{-3} = \pi/c^{1/3}$$

Thus $$\mu = \varepsilon_0^{1/2}.m_e/\ m_\mu.\ 3^{-}(4/3\pi c^3)^{1/2}.(\pi/c^{1/3})$$

Where the charge of the muon is in this equation equivalent to that of the electron e. In this case $(\pi/c^{1/3})$ can be considered to represent a specific high energy photon. Thus the structure of the muon, written in short form is:

$$\mu = 3^{-}(4/3\pi c^3)^{1/2}.(\pi/c^{1/3}) \qquad (14)$$

Moreover the structure of the tauon can be calculated from the ratio of the mass of the electron and that of the Tauon (1.79 Mev);

Thus $$0.511\ \text{Mev}/1.79\ \text{Gev} = 2.85 \times 10^{-4}$$

$$m_e/m_\tau = (\pi/c)^{1/3}.(\pi/c)^{1/9} = 2.85 \times 10^{-4}$$

As the charge of the tauon is equivalent to the charge of the electron, hence the structure of the Tauon is given by the above equation

$$e_\tau = \varepsilon_{qe}.m_e/\ m_\tau.3^{-}(4/3\pi c^3)^{1/2}.(\pi/c)^{1/3}.(\pi/c)^{1/9} = e$$

This equation accurately predicts the charge -1; and mass of the Tauon (~1.78 Gev) (ref 14). Thus the structure of the Tauon can in short form be given by the equation

$$\tau = {}^{-}3(4/3\pi c^3)^{1/2}.(\pi/c)^{1/3}.(\pi/c)^{1/9} \qquad (15)$$

Overall the mathematical structure of all the particles can be derived from the quasi electron. Thus, the particle structures can now be derived from first principles. This includes the quasi electron (qe) and electron (e), from which the quarks (u,d) and in turn the proton (p) respectively are derived. The general structure of the force carrying partilcles the photon (γ) and the gluon (g) can be given. It will also intriguingly be possible to derive the structure of the charm (c), beauty (b, or bottom) and truth (t or top) quarks directly from the sructure of the muon (μ) and Tauon (τ).

The calculations underlying these equations can further accurately reflect their measured values, particularly if the effects of gravity are taken into account (see Quantum Gravity and the Charge of the Electron.p 30). In addition the neutrino has not been included in the equation as its mass is considered to be very small. The mathematical proof of these short form equations nevertheless lies in the fact that they can closely identify the charge and the masses of these particles, from first principles, as in equations (6, 13-27). (ref 17)

Second and third generation Quark Structures

From here it is possible to derive the basic structure of the remaining quarks including the strange (s) quark.

Thus the ratio of the masses of the quasi electron (m_{qe} = 0.17033 Mev) and the strange quark (m_s = 0.555 Gev) are given by the equation:

$$m_{qe}/m_s = 0.17033 \text{ Mev}/\ 0.555 \text{ Gev} = 3.07 \times 10^{-4}$$

Furthermore the structure of the gluon in the strange particle, can now be

accurately derived by the term; $3(\pi/c)^{1/2}$,(n.b. change of brackets in the gluon term).

$$m_{qe}/m_s = 3.07 \times 10^{-4} = 3(\pi/c)^{1/2}$$

Thus the equation for the charge and structure of the strange quark (s) is:

$$s = \varepsilon_{qe}.m_{qe}/m_s \; {}^{-}(4/3\pi c^3)^{1/2}.3(\pi/c)^{1/2} \qquad (18)$$

This can be written in short form as:

$$s = {}^{-}(4/3\pi c^3)^{1/2}.3(\pi/c)^{1/2}$$

Giving the strange quark a charge of -1/3 and a mass of 0.555 Gev, in agreement with current estimates of its mass ~ 0.55 Gev (ref 14). This again shows that strange quark is derived from a quasi electron and a gluon.

Thus given that the particle Ω^- is made of three strange quarks (sss) we may derive its mass as 3 x 0.555 Gev = 1.67 Gev, which is in accurate aggreement with its known mass of $\Omega^- = 1.67$ Gev (ref 17)

From here it is possible to define the structure of the other quarks, using the same first principles. As the charmed quark (c), beauty (b, otherwise termed bottom) and the truth (t, otherwise termed the top quark), clearly belong to the second and third generation of particles, they should be mathematically based on the formula for the second and third generation lepton particles, specifically the muon and tauon.

Indeed the charm derives from the second generation of particles and therefore mathematically does qappear to contain the basic muon structure, as given by the equation:

$$\mu = 3(4/3\pi c^3)^{1/2}.(\pi/c^{1/3}) \qquad (14)$$

As before, the ratio of the masses of the quasi electron and that of the charm quark gives the equation from the structure of the charm (c).Thus the structure of charm can be determined from the ratio of the mass of two quasi electrons; $m_{qe} = 2(0.17033)$ Mev, and the mass of the charmed quark (m_c = 1.518 Gev)

Thus if: $2m_{qe}/m_c = 2(0.17033 \text{ Mev})/1.518 \text{ Gev} = 2(1.122 \times 10^{-4})$

and $2m_{qe}/m_c = 2(1.122 \times 10^{-4}) = 2(\pi/c^{1/3}).(\pi/c^{1/4})$

Then the structure of the charm quark (c) is:

$$c = \varepsilon_{qe}.2m_{qe}/m_c .2^{+}(4/3\pi c^3).^{1/2}(\pi/c^{1/3}).(\pi/c^{1/4})$$

or in short form

$$c = 2^{+}(4/3\pi c^3)^{1/2}.(\pi/c^{1/3}).(\pi/c^{1/4}) \qquad (19)$$

Thus the charmed quark has a charge of +2/3 and a mass of 1.518 Gev in accordance with the previous approximate estimate of its mass ~ 1.5 Gev. (ref 17) and is derived from a muon and a higher order gluon. This gluon itself ($\pi/c^{1/4}$), is the solution to the Shrödinger wave equation for the amplitude of an electron confined in a space of length $c^{1/2}$ (ref 8). Thus this gluon now exactly matches the amplitude of the quasi electron.

Furthermore, from this we can deduce the mass of the particle the J/ψ, whose structure is predicted to consist of a charm and anticharm particle in orbit around each other, with a minimum mass (including orbital energy) of ~ 3.1 Gev.

From here we can in a similar fashion determine beauty (b). To be consistant, as beauty is a third generation quark it should be defined by the component structure of the Tauon. In this case, this is the smaller component of the Tauon, which is mathemtaically represented by:

$$3(4/3\pi c^3)^{1/2}.(\pi/c^{1/9})$$

Indeed the structure can again be determined by the ratio of the mass of the quasi electron electron (m_{qe}) to beauty (m_b). Such that the ratio can be given by the equation

$$m_{qe}/m_b = 3.673 \times 10^{-4} = (\pi/c^{1/9}).(\pi/c)^{1/2}$$

Thus the structure of beauty is given by the equation

$$b = \varepsilon_{qe}.m_{qe}/m_b .^{-}(4/3\pi c^3)^{1/2}.(\pi/c^{1/9}).(\pi/c)^{1/2}$$

To confirm this structure, the mass of the beauty quark can be given by the following calculation

$$m_{qe}/m_b = 3.673 \times 10^{-4} = 0.17033 \text{ Mev } /4.64 \text{ Gev}$$

and

$$m_{qe}/m_b = 3.673 \times 10^{-4} = (\pi/c^{1/9}).(\pi/c)^{1/2}$$

Thus the short form of beauty is:

$$b = {}^{-}(4/3\pi c^3)^{1/2}.(\pi/c^{1/9}).(\pi/c)^{1/2} \qquad (20)$$

Thus giving beauty a charge of -1/3, and a mass of 4.64Gev, which is in agreement with its current estimated mass of ~ 4.7 Gev [ref 17].

To complete the structure of the quarks, we can finally proceed to deduce the truth. As the top quark or truth (t) belongs to the third generation of quarks, it is also based on the structure of the Tauon. Thus mathematically the truth, primarily consists of the third generation, tauon.

$$\tau = 3(4/3\pi c^3)^{1/2}.(\pi/c)^{1/3}.(\pi/c)^{1/9} \qquad (15)$$

The geometrical structure can be confirmed from the mathematical ratio of the mass of the electron to mass of truth (m_t), hence the equation for the top quark is given by the ratio of the mass of the electron to mass of the truth .

Thus as m_t = 176 Gev

and as m_e = 0.511 Mev

$$m_e/m_t = 0.511 \text{ Mev}/176 \text{ Gev} = 2.89 \times 10^{-6}$$

and

$$m_e/m_t = 2.89 \times 10^{-6} = (\pi/c)^{1/3}.(\pi/c)^{1/9}.(\pi/c)^{1/4}$$

As each quasi positron is associated with each of the gluon complexes, then the equation for truth is thus predicted by the equation:

$$t = 2(4/3\pi c^3)^{1/2+}.(\pi/c)^{1/3}.(\pi/c)^{1/9}.(\pi/c)^{1/4} \qquad (21)$$

Which gives the mass of the truth as 176 Gev and a charge of +2/3e. Which is in agreement with the known mass of the truth; 176 ± 12 Gev; the most accurate estimate of the mass of the truth quark being; 175.6 Gev.[ref 22]

Thus the basic structure of the truth, is that of a pair of quasi anti-tauons complexed with a gluon moiety which has an amplitude that, according to the Shrödinger wave equation (3), exactly matches the amplitude of the quasi electron [ref 8].

Mathematically the probability of arriving at all such tightly conformed equations (3, 16-30), the particles being related only to π and c and its specific powers, **by chance would have odds of millions to one against.**! Furthermore these mathematical structures are derived from none other than solutions to the Shrödinger wave

equation itself [ref 8].

Moerover, the structures of the second and third generation particles, the muon (μ), and charm (c); tauon (τ) and truth (t) quarks have a **notable symmetry**, with their masses and charges accurately given by the following short form equations:

$$\mu = 3^{-}(4/3\pi c^3)^{1/2}.(\pi/c^{1/3}) \quad (14)$$

$$c = 2^{+}(4/3\pi c^3)^{1/2}.(\pi/c^{1/3}).(\pi/c^{1/4}) \quad (19)$$

$$\tau = 3^{-}(4/3\pi c^3)^{1/2}.(\pi/c)^{1/3}.(\pi/c)^{1/9} \quad (15)$$

$$t = 2^{+}(4/3\pi c^3)^{1/2}.(\pi/c)^{1/3}.(\pi/c)^{1/9}.(\pi/c)^{1/4} \quad (21)$$

Hence, from these equations it can be deduced that the fundamental structure of the quasi electron probablistically underpins the mathematical structure of the fundamental particles, and that these structures are all related to one another either by complexing with a photon [$(\pi/c)^{1/3}$] which matches the frequency of the quasi electron or a gluon [$(\pi/c^{1/4})$] which according to the Shrödinger wave equation accurately matches the amplitude of the quasi electron. This explains the fundamental observations that final decay products of hadrons always lead to the production of an electron or positron and explains why quarks have not been individually seen.

Particle Decay and the Electroweak Force.

In order to corroborate the estimated quark structures these structures need to explain in detail the pattern of decay of the quarks themselves. We are thus required to explain particle decay from first principles including the structures which are formed in these decays, such as the mediator of the electro weak force; the Intermediate Vector Boson. To see if this is possible the decay of the truth (t, top quark) will be examined. According to experiment the truth quark splits into two particles, beauty (b, bottom quark) and the intermediate vector boson (W^{+}). It is apparent that the truth may yield beauty.[ref 22]

Thus:

$$2^{+}(4/3\pi c^{3})^{1/2}.(\pi/c)^{1/3}.(\pi/c)^{1/9}.(\pi/c)^{1/4} = t$$

$$\Rightarrow \quad (4/3\pi c^{3})^{1/2}.(\pi/c^{1/9}).(\pi/c)^{1/2} = b$$

Thus the two gluon structures, $(\pi/c)^{1/4}$; in the truth combine to form the more energetic gluon, $(\pi/c)^{1/2}$; present in beauty, thus:

$$2(\pi/c)^{1/4} \Rightarrow (\pi/c)^{1/4}.(\pi/c)^{1/4} _ (\pi/c)^{1/2}$$

and the photon term, $(\pi/c)^{1/9}$; decays into the less energetic photon $(\pi/c^{1/9})$ present in beauty. Thus the structures in the truth account for the structures in beauty, and are produecd via the production of a quasi electron and quasi positron.

The remaining terms are thus 3 quasi positrons, two high energy photons and a remaining low energy photon

$$3^{+}(4/3\pi c^{3})^{1/2}$$

and

$$2(\pi/c)^{1/3}$$

and

$$(\pi/c)^{1/9}$$

There is also a very considerable amount of energy remaining, the energy difference between beauty (b) and truth (t) being ~ 170 Gev.

This energy difference allows the transformation of the two high energy photons and the low energy photon to two intermediate vector photons, given by the equation.

$$2(\pi/c^{1/6})^{6}$$

This leads to the formation of the intermediate vector boson (W^{+}), which is the mediator of the electroweak nuclear force.

$$W^{+} = 3^{+}(4/3\pi c^{3})^{1/2}.2(\pi/c^{1/6})^{6} \qquad (24)$$

which is also equivalent to

$$W^+ = 3^+ (4/3\pi c^3)^{1/2}.2(\pi/c^{1/6})^3.(\pi/c^{1/6})^3$$

This probable structure for the (W^+), can again be confirmed by the ratio of the mass of the electron to the intermediate vector boson (W^+), with an estimated mass of 80 Gev (ref 17). Thus the ratio of the masses is given by

$$m_e/m_{W+} = 0.511 \text{ Mev}/ 80 \text{ Gev} = 6.4 \times 10^{-6}$$

and

$$m_e/m_{W+} = 6.4 \times 10^{-6} = 2(\pi/c^{1/6})^6$$

Thus

$$W^+ = \varepsilon_{qe}.m_e/m_{W+}.3^+(4/3\pi c^3)^{1/2}.2(\pi/c^{1/6})^6$$

thus in short form:

$$W^+ = 3^+ (4/3\pi c^3)^{1/2}.2(\pi/c^{1/6})^6$$

The true elegance of the structure of the intermediate vector boson can now be further explored. The W^+ can be considered to represent a unification of the electromagnetic force and the weak force, in keeping with the theoretical predictions of Salam and Weinberg for the nature of the electroweak force. Thus, the intermediate vector photons can either decay leptonically or via gluons; as is demonstrated by the following interconversions.

$$W^+ = 3^+ (4/3\pi c^3)^{1/2}.2(\pi/c^{1/6})^6 _ 3^+ (4/3\pi c^3)^{1/2}.2(\pi/c^{1/6})^3.(\pi/c^{1/6})^3$$

If we examine the further decay of the three dimensional photon structure, $(\pi/c^{1/6})^3$; we have:

$$(\pi/c^{1/6})^3 \Rightarrow [(\pi/c)^{1/6}]^3 _ (\pi/c)^{1/2}$$

Where the term $(\pi/c)^{1/2}$ is none other than the term for a first generation gluon.

Thus the W^+ can either decay leptonically or into first generation quarks where it can yield an up (u) and an anti-down quark (_), thus:

$$W^+ = 3^+ (4/3\pi c^3)^{1/2}.2(\pi/c^{1/6})^3.(\pi/c^{1/6})^3 \Rightarrow 3^+(4/3\pi c^3)^{1/2}.2[(\pi/c)^{1/6}]^3.[(\pi/c)^{1/6}]^3$$

And

$$3^+(4/3\pi c^3)^{1/2}.2[(\pi/c)^{1/6}]^3.[(\pi/c)^{1/6}]^3 _ 3^+(4/3\pi c^3)^{1/2}.2(\pi/c)^{1/2}.(\pi/c)^{1/2}$$

thus W^+ decays to:

$$\Rightarrow \quad 2^{+}(4/3\pi c^{3})^{1/2}.3(\pi/c^{1/2}) = u$$

and

$$\Rightarrow \quad {}^{+}(4/3\pi c^{3})^{1/2}.3(\pi/c^{1/2}) = _d$$

Leptonically the W^{+} decay yields the standard products including the positron the neutrino (v), and energy in the form of photons thus

$$W^{+} = 3^{+}(4/3\pi c^{3})^{1/2}.2(\pi/c^{1/6})^{6} _ 3^{+}(4/3\pi c^{3})^{1/2}.2(\pi/c^{1/6})^{2}.(\pi/c^{1/6})^{2}.(\pi/c^{1/6})^{2}$$

and

$$\Rightarrow \quad 3^{+}(4/3\pi c^{3})^{1/2}.2[(\pi/c)^{1/6}]^{2}.[(\pi/c)^{1/6}]^{2}.[(\pi/c)^{1/6}]^{2}$$

$$_ \quad 3^{+}(4/3\pi c^{3})^{1/2}.2(\pi/c)^{1/3}.(\pi/c)^{1/3}.(\pi/c)^{1/3}$$

Thus W^{+} may also decay into the positron the neutrino (v), and energy in the form of photons thus:

$$\Rightarrow \quad 3^{+}(4/3\pi c^{3})^{1/2} = e^{+}$$

and

$$\Rightarrow \quad v$$

and

$$n(\pi/c)^{1/3}$$

Thus according to standard experimental observations the truth quark yields the beauty quark and the intermediate vector boson. In turn from these observations we may elegantly reveal the structure of truth and beauty and the intermediate vector boson and its decay pathways from first mathematical principles. (ref 18)

Gluon Structure and Force Characteristics

There are in the Standard model (or in this modification) three colour charges for the gluons and quarks, each of these represents each of three vectors x, y and z which can arise in different combinations. Thus the three gluon colours are required to be together (one in each dimension x, y and z) in baryons to form a three dimensional objects. There are also noted to be 8 gluons, these in turn gives rise to all the

known baryons and mesons

The structure of these gluons have been previously mathematically identified, and this structure mathematically represents a helical ringlet. These are as previously given: $(\pi/c)^{1/2}$; $(\pi/c)^{1/4}$; $(\pi/c^{1/2})$; $(\pi/c^{1/4})$ [see eq. 25- 25c]

These four mathematical structures and their antigluons now readily account for the eight gluons known to exist, these in turn account for the structure of all the quarks as given by equations 3, 15-30, which in turn give rise to all the baryons and mesons as described by the Standard model.

Recent studies show that the proton conventionally consisting of the "fundamental" quarks (uud); can by bombardment with high energy electrons produce a Kaon which consists of an anti-up and a strange quark (s_). As the standard model predicts quarks are fundamental, the proton should not contain a strange quark. The conventional explanation for this resides in the proposal that the proton contains virtual strange particles. Indeed to explain these new observations each proton is now postulated by some physicists to contain 21 or more quarks, 3 of which are real and 18 or more which are required to be virtual! (ref 23).

In the revised Standard model presented here, the process by which a Kaon is produced is readily understood by the structural interconversion of the gluon in the up quark $(\pi/c^{1/2})$; to the gluon in the strange quark $(\pi/c)^{1/2}$,(n.b change of brackets)

Furthermore the most recent experiments on the internal structure of the proton has shown that gluons can seperate and recombine. This surprising recent observation actually arises from first principles when the mathemtatical structure of the gluon is understood. Thus mathematically the gluon structures may easily recombine and separate by the equation.(ref 24)

$$(\pi/c)^{1/2} = (\pi/c)^{1/4}.(\pi/c)^{1/4}$$

Hence this mathematical structure of the gluon allows the observed "recombination" and separation to occur in a way which is readily understood.

In addition, the structure of the gluons can be explained on the basis that these structures match the wave function of the quasi electron, thus the gluons match the amplitude of the electron as given by the Shrödinger wave equation.(ref 8)

Furthermore, the equations for the gluon present in the quark can explain their force characteristics. In the case of the gluon component $(\pi/c^{1/2})$; which mathematically represents a helical ringlet; if the direction vector is x, then the axis of spin would

need be 90° to this, in the y vector in order to match the amplitude of vibration of the quasi elelctron/ positron. Thus this spin vector is known to be the same as that of electrons. This would account for the particle binding characteristics of the gluon force to the quasi electron. Given that the gluon would mathematically require the same spin axis as that of the quasi electron or positron, the gluon would be strongly associated with these particles and the force required to part them would increase with distance, which explains the characteristics seen experimentally with the gluon force.

Moreover, as will be shown, the photonic component of the subatomic particles given in the above equations matches exactly the frequency of rotation of the electron.

Nucleon Structure

The mass (m_p) and the internal mathematical structure of the proton can now be directly calculated form the quarks. Thus the structure of the proton according to the Standard model derives the combination of 2 up quarks and one down quark (p = uud). As each quark has an estimated mass of 312.8 Mev (see eq. 13) then the proton (p) has in accordance with the Standard model a mass of 3 x 312.8 = 938.3 Mev and a charge of +1, and may be given by the mathematical structure of the up and down quarks according to eq. 16,17; and is thus given by:

$$p = \begin{matrix} 2^{+}(4/3\pi c^{3})^{1/2}.(3\pi/c^{1/2}) \\ {}^{-}(4/3\pi c^{3})^{1/2}.(3\pi/c^{1/2}) \\ 2^{+}(4/3\pi c^{3})^{1/2}.(3\pi/c^{1/2}) \end{matrix}$$

Which, gives the proton a net charge +1 and a mass of 938 Mev.

Fifteen component gluons are required to be present in the proton, three gluons associated with each quasi electron particle.

Therefore the structure of the proton can be mathematically derived by combining the structure of the quasi electrons and the term **($\pi/c^{1/2}$)**. Thus the structure of the neutron and indeed the overall structure of the nuclei can be determined.

Similarly the structure of the neutron is given by the Standard model (n = udd), which can be written in short form as:

$$n = \begin{matrix} {}^{-}(4/3\pi c^{3})^{1/2}.3(\pi/c^{1/2}) \\ 2^{+}(4/3\pi c^{3})^{1/2}.3(\pi/c^{1/2}) \\ {}^{-}(4/3\pi c^{3})^{1/2}.3(\pi/c^{1/2}) \end{matrix}$$

The mystery of the stability of the neutron may now be addressed. A neutron outside the nucleus has a half life of approximately 6 seconds. Inside the nucleus however, the stability of the neutron, provides the atom with its stability. The three dimensional structures described may now provide the clues to this stability.

The compostion of the quarks now logically explains the apparent "fluid" characteristics of the subatomic particles, and some free exchange of the quasi electrons and gluons would be expected to occur within a nucleus.

This would occur to to give the structures stability and this in turn would allow the decresed binding energies seen in these structures. As has been shown by the metric tensor structure of matter (eq. 4-6), the preferred conformation is a 3 x 3 structure.

This can be acheived by donating a quasi electron and a quasi positron along with three associated gluons each; from the proton structure to that of the neutron. The proton would then contain three positrons and a total of nine gluons

The stable nuclear proton conformation would now be :

$$p = 3^{+}(4/3\pi c^{3})^{1/2}.3(\pi/c^{1/2}) \qquad (13)$$

This can form a stable 3 x 3 conformation.

Thus the probable structure of the stable nucleonic neutron (n), would now contain a total of three quasi positrons and three quasi electrons along with their respective eighteen gluons and is represented by an equation, which also forms a 3 x 3 conformation:

$$n = \begin{matrix} {}^{+}(4/3\pi c^{3})\downarrow^{1/2}.2(3\pi/c^{1/2}).{}^{-}(4/3\pi c^{3})\uparrow^{1/2} \\ {}^{+}(4/3\pi c^{3})\downarrow^{1/2}.2(3\pi/c^{1/2}).{}^{-}(4/3\pi c^{3})\uparrow^{1/2} \\ {}^{+}(4/3\pi c^{3})\downarrow^{1/2}.2(3\pi/c^{1/2}).{}^{-}(4/3\pi c^{3})\uparrow^{1/2} \end{matrix} \qquad (26)$$

Viewed in three dimensions the configuration will allow the positron components of the neutron to be placed interiorly and the electron components exteriorly, in keeping with experiments that suggest that the neutron core is positive an the exterior is negative. This polarised structure in turn will enable the neutron to bind the protons of the nucleus together.

Alpha Particle Structure

Importantly it is now possible to **derive the mathematical structure of the helium nucleus** (α particle) containing two protons and two neutrons, along the same lines. The proposed basic conformation is again 3 x 3.

$$\alpha = \begin{matrix} [3(4/3\pi c^3)]\downarrow^{1/2+}.2(3\pi/c^{1/2}).\ [3(4/3\pi c^3)]\uparrow^{1/2-} \\ [3(4/3\pi c^3)]\uparrow^{1/2+}.2(3\pi/c^{1/2}).\ [3(4/3\pi c^3)]\downarrow^{1/2+} \\ [3(4/3\pi c^3)]\downarrow^{1/2-}.2(3\pi/c^{1/2}).\ [3(4/3\pi c^3)]\uparrow^{1/2+} \end{matrix} \quad (27)$$

This mathematical expression for the structure of the α particle allows the **calculation of its binding energy from first principles!** Each pair of particles is still associated with the equivalent of 18 gluons each, that is $3^{1/2}.2(3\pi/c^{1/2}).3^{1/2}$. However, the internal structure has altered, to effectivly reduce the number of quasi electrons. Thus as a result of triplet pairing, which has occurred in order to make up the helium nucleus, we are left with a reduced number quasi electrons.

Hence, the number of quasi electrons is reduced by a factor of 3 as a result each of the three pairings of the six quasi electron groups. This means the reduction in the equivalent number of quasi electron masses (including the electrical kinetic energy of the complex vectors) is effectively 3^3 x 6. Each of these weighs 1/3 the rest mass of the electron. The total energy therefore liberated is equivalent to 27 x 6 quasi electron masses (approximately 27.5 Mev). This agrees with the difference in mass between the constituent protons and neutrons and the rest mass of the helium nucleus, thus accounting for the binding energy of the helium nucleus.

This structure is also important for the understanding of the internal structure of atomic nucleii, The alpha particle appears to form a natural sphere as indicated by the metric tensor structure (see eq. 6-9). In turn the basic structure of atomic nucleii appear to form in multiples of alpha particles; the carbon atom for instance forms from three, separate, such helium nuclei spheres.

Furthermore knowledge, of the structure of the α particle may be of considerable importance in the understanding **of nuclear fusion** and the eventual harnessing of this technology.

Neutrino Structure

Whilst it has been possible to derive the structure of the fundamental particles form their known masses, the mass of the neutrino remains uncertain. However, recent evidence does support the contention that the neutrino does indeed have rest mass, which is a starting point.

If the neutrino does have rest mass this suggests it has a basic spherical structure like the electron, and will therefore be subject to relativistic changes in mass. Again experiment confirms this relativistic component.

It is also reasonably certain that whilst the neutrino mass is smaller than that of the electron, its size is also likely to be smaller, and on the basis of what is known of the radius of the electron (see Particle Spin and Size) the essential radius is also likely to be related to c.

Indeed as the electron radius is 1/c x 2/spin, where the intrinsic radius is 1/c. Then by deduction the neutrino radius is related to $1/c^2$. Thus the most likely equation for the neutrino is:

$$e_\nu = \left[\frac{\varepsilon o}{3\,[\,4/3\pi(c^2)^3]}\right]^{1/2} = \left[\frac{\varepsilon o}{3\,[\,4/3\pi c^6)}\right]^{1/2} \qquad (6d)$$

This of course endows the neutrino with a very small charge of: 9.71×10^{-32} C. (which reduces to 9.42×10^{-63} C, when the neutrino forms a Cooper neutrino pair) Nevertheless, if the neutrino has mass, like all other elementary particles we should not be surprised if it also has a charge. Furthermore we may use the above formula to estimate the neutrino mass itself.

Without concerning ourselves too much at this point about the exact origin of the nature of the mass of the electron (which is addressed in chap. Quintessence and Electron Structure). It is reasonable to postulate that, if the radius is related to $1/c^2$ then the number of quintessences in the neutrino will be equivalent to the square root of the number of quintessences in the electron. Indeed this means that the number of quintessences in the electron neutrino is 1.925×10^{10} quintessences. Knowing the mass of quintessence; 2.4575×10^{-51} kg, gives us the mass of the electron neutrino (with an estimated error range of: $x/\div 3$), as:

$$m_{\nu e} = 4.731 \times 10^{-41}\ \text{kg} = 0.0000265\ \text{ev}$$

We may also deduce the masses of the mu neutrino and the tau neutrino from first principles. Interestingly we also know that the $\mu\upsilon$ and the $\tau\alpha\upsilon$ neutrino can convert an electron to a muon or tauon respectively (if the neutrino has sufficient relativistic energy). So it is likely that the geometric elements present in the muon and tauon are

also present in their respective neutrinos. Thus the short inverted form equations are given by:

$$\nu_\mu = 3^{-}(4/3\pi c^6)^{1/2}/(\pi/c^{1/3}) \quad (6d)$$

$$\nu_\tau = 3^{-}(4/3\pi c^6)^{1/2}/(\pi/c)^{1/3}.(\pi/c)^{1/9} \quad (6d)$$

These mathematical suffixes are merely the same geometric components, which combine with the quasi electron to form the muon and tau. In the same way the ratio of the masses of the muon and tau to the electron, were deduced from first principles (see Fundamental Forces and Particle Structure) these equations predict the respective masses of these neutrinos (with an error range of $x/\div 3$), as:

$$\nu_\mu = 0.00546 \text{ ev} \quad \text{and} \quad \nu_\tau = 0.0927 \text{ ev}$$

Indeed recent evidence from the super Kami0kande experiment supports these observations with regard the tau neutrino, and places its mass in the range 0.1- 0.03 ev.

Quintessence and Internal Electron Structure

The reason for the value for the mass of the electron, has till now remained a mystery. The internal structure of the electron is therefore of considerable importance as it may elucidate the underlying reason for the mass of the electron. In turn we may derive the mass of all the particles from first principles, as these themselves derive from the structure of the electron (see previous chapter; Fundamental Forces and Particle Structure). Additionally, it may also be possible to estimate the radius of quintessence, from the structure of the electron. Quintessence in turn is fundamental to the formulation of quantum gravity.

We may begin with the formula for the charge of the electron

$$e = \varepsilon_{qe}/3(4/3\pi c^3)^{1/2} \quad (6)$$

This demonstrates a square root spherical structure. From here we may deduce the most logical internal structure of the quasi electron as derived from quintessence. Indeed if the quasi electron has a square root spherical structure, this needs to be accounted for when calculating the number of quintessence it contains to account for the square root sphere conformation of the electron.

The structure can be defined using the equation for the surface area of a sphere: $A=4\pi r^2$. Thus the total volume of a single outer layer of quintessence in the quasi electron will be the surface area of the quasi electron x the average diameter of quintessence [if quintessence is oscillating the average diameter is $(2r_q + 0)/2 = r_q$].

Taking r_e as the radius of the electron and r_q as the radius of quintessence, given that there are three quasi electrons in the total electron, the volume of a single outer layer of quintessence (V) is:

$$V = (4\pi r_e^2)^{1/2} \times (r_q/3)^{1/2}$$

Taking the volume of a single quintessence (V_q); based on a square root electron sphere, then:

$$V_q = (4/3\pi r_q^3)^{1/2}$$

The total number of quintessences in a single outer layer will thus be the total volume divided by the volume of a single quintessence itself: V/V_q. Thus the number of quintessences (n_q) in a single outer layer is:

$$n_q = (4\pi r_{qe}^2)^{1/2} \times (r_q/3(4/3\pi r_q^3)^{1/2}$$

This very elegantly reduces to

$$n_q = r_e/r_q$$

To be further precise (after all quantum dynamics has to be elegant), the total number of quintessences in the electron will thus be determined by the number of quintessences in a single outer electron layer x the quantum amplitude. The quantum amplitude has been previously calculated using the standard Shrödinger wave equation (see Fundamental Forces and Particle Physics) and is given by ($c^{1/2}/\pi$). Taking the root mean square of the quantum amplitude, the number of quintessences (n_q) in the electron is:

$$n_q = r_e/r_q \times \sqrt{2}(c^{1/2}/\pi).$$

As the radius of the electron is estimated as, $r_e = 6.4 \times 10^{-19}$ m. (see Particle spin and Size), and the radius of quintessence is, $r_q = 1.35 \times 10^{-35}$ m, this allows us to estimate the number of quintessences in the electron itself using the above equation, thus:

$$n_q = 1.2355 \times 10^{20} \text{ m}$$

Thus, given that $m_q = 7.373 \times 10^{-51}$ kg, the mass of the electron is given by

$$m_e = m_q \times n_q, = 9.10938 \times 10^{-31} \text{ kg}.$$

Using the radius for quintessence (the estimated Planck length) then the number of quintessences present in the electron and thus its mass, is explained.

Therefore, these observations postulate that the internal structure of the electron consists of a square root sphere, composed of a single outer layer of quintessence x the root mean square of the its quantum amplitude.

The electron is itself composed of quintessence with a velocity of c and has an intrinsic radius of 1/c x 1/spin in metres; and in accordance with its half integer spin $h/4\pi$; its spin velocity is $2\pi/c$ in metres/sec, (see Particle Spin and Size) which in vortex mechanics gives it the ideal harmonic balance with quintessence space time.

Thus given the surface area of the quasi electron in order to fill the outer layer allowing for the quantum amplitude of oscillation would require 1.235×10^{20} quintessences. The total number of quintessence required to fill the whole electron would thus be $n_q = 1.235 \times 10^{20}$. Overall the number of quintessences required to make up the electron can be verified from the internal structure of the electron and the radius of quintessence. Thus if r_q is equivalent to the given Planck length, then accordingly the number of quintessences in the electron is calculated as 1.235×10^{20}, which gives the mass of the electron $m_e = m_q \times n_q$, hence again:

$$m_e = m_q \times n_q, = 9.10938 \times 10^{-31} \text{ kg}.$$

Intriguingly the derivation of the structure of the electron reflects the volume of an ordinary sphere

$$V = 4\pi r^2 \times r/3 = 4/3\pi r^3$$

This underpins a fundamental concept, mass determines the shape of space-time and in turn the shape determines the amount of mass within it.

It is important to have a working understanding of why the mass of the electron should be what it is from its basic structure. This understanding can now be derived from the radius of quintessence, which also corresponds with the Planck length.

Dimensional Equations for Quintessence

As $h = 3m_q c^2$ and the dimensions of h are $[ML^2T^{-2}.T]$ and those of c^2 are $[L^2.T^{-2}]$ the equational dimensions of quintessence are $[M][T]$, and the dimensions relating to the number of quintessences n_q is $[T^{-1}]$. Clearly therefore,

$$[M] = [M][T] \times [T^{-1}]$$

and overall

$$M = m_q \times n_q.$$

Dimensional Equations for the Electron

The dimensions of the equation for the electron, in the light of quintessence, can now be fully examined, if

$$e^2 = \frac{\varepsilon_0}{3\,(4/3\pi c^3)} \qquad (6b)$$

Then taking the dimensions of the equation, e^2 is the charge $[q^2]$, in Coulombs; ε_0 is the permittivity of free space, in Capacitance [C] per metre [L]; and [c] is the speed of light, in [L/T].

Thus the above equation using dimensions, is given by

$$[q^2] = \frac{[C]}{[L][c^3]}$$

In this case the velocity is given as the velocity of light c, then $L = c.T$;
then

$$[q^2] = \frac{[C]}{[c^4][T]}$$

As $q^2 = C^2V^2$, where V is volts, then:

$$[C^2][V^2] = \frac{[C]}{[c^4][T]}$$

and

$$[CV^2] = \frac{1}{[c^4][T]}$$

as $E = CV^2$, then

$$E = \frac{1}{[c^4][T]}$$

and as $E = mc^2$, then

$$mc^2 = \frac{1}{[c^4][T]}$$

and hence

$$m = \frac{1}{[c^6][T]}$$

The significance of this dimensional analysis, in the first instance, appears obscure. Nevertheless, it reveals the very nature of matter and energy. Thus the equation for the mass of a structure can be represented by $1/c^6$ which represents the six complex vectors of matter.

Interestingly, given it is known that $1/c^2 = [\mu_o.\varepsilon_0]$, then

$$m = [\mu_o.\varepsilon_0]^3/T$$

Where μ_o. and ε_0 are again the permeability and permittivity of free space, quantities that are inherently caused by the vibration of quintessence. Thus mass itself is the result of the vibration of quintessence in the six complex vectors (each represented by the fundamental properties of quintessence μ_o or ε_0 .Hence, the equation for the quasi electron mathematically and geometrically forms the "perfect" three dimensional sphere with its mass accounted for by its six complex vectors.

Energy associated with this matter is in turn is also caused by the the vibration of quintessence (including that in the complex vectors, i) such that:

$$E = [\mu_o.\varepsilon_0]^2/T$$

The dimensions for the equation for energy can also be written as:

$$E = \frac{1}{c^3.L}$$

Which indicates that the energy of matter is again related to the dimensions of the structure of the electron $\varepsilon_0 /(4/3\pi c^3)$ and the permittivity of free space in capacitance per meter (C/L)
Overall the equation for the quasi electron and its dimensions, gives us the origin of

mass and energy. The equation for the electron then forms the key to the understanding of the nature of the relationship between matter and space-time.

Indeed we may now even derive Newton's second law of motion (F = ma, and thus the other fundamental laws of physics) from first principles to confirm the validity of the above.

If:

$$E = \frac{1}{[c^4.][T]}$$

Which is dimensionally equivalent to:

$$E = \frac{[T^3]}{[L^4\}}$$

then as F = E/L:

$$F = \frac{[T^3]}{[L^5]}$$

and thus

$$F = \frac{[T^6]}{[L^6.T\}} \cdot \frac{[L]}{[T^2\}}$$

Substrituting for m from eq. 1g

$$m = \frac{[T^6]}{[L^6][T]}$$

Then $F = ma$

Thus taking into account the whole of these observations enables the laws of motion and the equations for energy and mass and their equivalence to be derived from geometric first principles.

REFERENCES

[0433] 1. Mesoscopic behaviour of the neutral Fermi gas ^{3}He confined in quantum wires. S. L. Phillipson, A. M. Genault, S. N Fisher, G. R. Pickett, P. J. Y Thibault. Nature, 395: 578-580.

[0434] 2. Direct Observation of d-orbital Holes and Cu-Cu Bonding in Cu_2. J. M. Zuo et al. Nature 401: 49-52.

[0435] 3. The Foundation of the General Theory of Relativity, A Einstein. Translated from "Die Grundlage der Allgemeinen Relativitätstheorie". Annalen der Physik, 49, 1916. Published in, Einstein, The Principle of Relativity, Dover publications, 1952.

[0436] 4. Sidelights on Relativity. Ether and the Theory of Relativity Albert Einstein. Dover Publications 1983.

[0437] 5. Inflation is dead long live inflation. George Musser. Scientific American, July 1998, p 9.

[0438] 6. The flip side of the Universe. George Musser. Scientific American, September 1998, p 13.

[0439] 7. The Fifth Element, Marcus Chown. New Scientist, Apr. 3, 1999, pp 29-32

[0440] 8. The Quantum Universe. Tony Hey and Patrick Walters. Cambridge University Press 1987. (Solving the Shrödinger equation pp. 165-167).

[0441] 9. Complex Numbers, Mathematics for Engineers. W. Bolton; Longman Scientific & Technical; Chap. Introducing Complex Numbers, p 1-11.

[0442] 10. Unconditional Quantum Teleportation. A. Furusawa, I. Sorensen, S. L. Braunstein, C. A. Fuchs, H. J Kimble, E. S. Polzik. Science, Oct. 23, 1998. Vol. 282: 706-709.

[0443] 11. Complete quantum teleportation using nuclear magnetic resonance. M. A. Neilsen, E. Knill, R. Laflamme. Nature, Nov. 5, 1998. Vol. 396: 52-55.

[0444] 12. Experimental quantum teleportation. D. Bouwmeester et al. Nature, 390: 575-579 (1997).

REFERENCES (cont.)

[0445] 13. Experimental realization of teleporting an unknown pure quantum state via dual classical and Einstein-Podolski-Rosen channels. D. Boschi, S. Branca, F. De Martini, L. Hardy, S. Popescu. Phys. Rev. Lett. 80: 1121-1125 (1998).

[0446] 14. W. Tittel, J. Brendel, H. Zhuniden, N. Gisin, Phys. Rev. Lett. 81: 3563-3566. (1998)

[0447] 15. Into the Vortex. Charles Seife. New Scientist, Oct. 24, 1998. p 7.

[0448] 16. Direct observation of a fractional charge. R de Picciotto, M Reznikov, M. Heibium, V Umansky, G. Bunin, D. Mahalu. Nature, 389: 162-164.

[0449] 17. Tables of Physical and Chemical Constants. Kay & Laby. Longman Scientific & Technical.

[0450] 18. Physics in Focus. Michael Brimicombe. Section, Wave Mechanics; p 521. Nelson

[0451] 19. Special Relativity. A. P. French. Nelson. Chapter 8, Special Relativity and Electricty, pp 256.

[0452] 20. Universe In Balance. Jeff Peterson. New Scientist, 168: p 27

[0453] 20*a*. The Accelerating Universe. Mario Livio. John Wiley and Sons, Inc. (2000)

[0454] 21. Escape from Earth, Charles Seife, New Scientist, Feb. 6, 1999. p 6.

[0455] 22. The Discovery of the Top Quark. Tony Liss and Paul Tipton. Scientific American; September 1997, pp. 26-41.

[0456] 23. The Mystery of the Nucleon Spin. Klaus Rith and Andreas Schaifer. Scientific American: July 1999, pp 42-47.

[0457] 24. And you're glue. Frank Wilczek. Nature; 400, pp 21-23.

1. A method of generating a force on a body, wherein a differential electron flow through the body in rotation is directed so as to simultaneously pass through said body in its direction of rotation and contrary to its direction of rotation to release a directed flow of gravitons.

2. A method of accelerating a body by generating a force acting upon it by the method of claim 1.

3. A method according to claim 1 or **2**, wherein electrical currents are passed simultaneously through said body in its direction of rotation and contrary to its direction of rotation.

4. A method according to any one of claims 1 to 3, wherein the body is a least partly of superconducting material.

5. A device for generating a force sufficient to accelerate a body, the device comprising;

the body in the form of an electrically conducting mass, means for rotating said mass and means for passing electrical currents simultaneously through said mass in its direction of rotation and contrary to its direction of rotation.

6. A device according to claim 5, wherein the mass is spherical, cylindrical or consists of a dual co-rotating or counter rotating disc.

7. A device according to claim 5, wherein the mass is cylindrical.

8. A device according to claim 5, wherein the mass consists of a disc.

9. A device according to claim 5, wherein the mass consists of dual co-rotating or counter rotating discs.

* * * * *

US005984239A

United States Patent [19]

Chen

[11] **Patent Number: 5,984,239**

[45] **Date of Patent: Nov. 16, 1999**

[54] **WEATHER MODIFICATION BY ARTIFICIAL SATELLITES**

[76] Inventor: **Franklin Y. K. Chen**, One Meadow Glen Rd., Northport, N.Y. 11768

[21] Appl. No.: **09/069,655**

[22] Filed: **Apr. 28, 1998**

Related U.S. Application Data

[62] Division of application No. 08/480,883, Jun. 7, 1995, Pat. No. 5,762,298, which is a continuation of application No. 07/675,880, Mar. 27, 1991, abandoned.

[51] **Int. Cl.**[6] **B64G 1/44**; A01G 15/00

[52] **U.S. Cl.** **244/173**; 73/170.27

[58] **Field of Search** ..... 73/29.01, 170.27, 73/170.28; 126/572, 593; 239/2.1, 14.1; 244/1 R, 158 R, 173

[56] **References Cited**

U.S. PATENT DOCUMENTS

3,564,253	2/1971	Buckingham	244/1 R
4,305,555	12/1981	Davis	244/158 R
4,371,135	2/1983	Keiger	244/173
5,114,101	5/1992	Stern et al.	244/173
5,631,414	5/1997	Cherny	73/170.27
5,646,343	7/1997	Pritchard	73/170.28
5,675,081	10/1997	Solheim et al.	73/170.28

Primary Examiner—Peter M. Poon
Assistant Examiner—Charles R. Ducker, Jr.
Attorney, Agent, or Firm—Donald S. Dowden; Cooper & Dunham LLP

[57] **ABSTRACT**

A Satellite Weather Modification System (SWMS) uses earth satellites to harness solar energy to modify the thermodynamics and composition of the earth's atmosphere. SWMS has three subsystems: The first subsystem includes a network of earth satellites called Satellite Engines (SEs) used to reflect solar energy and/or transform solar energy into other forms of energy beams discharged at specified locations. The media at these locations and the media through which the energy beams pass absorb these energies and change them into heat. The second subsystem includes a large network of Remote Sensing Devices (RSDs). These sensors are used to measure local media compositions, dynamic parameters and thermodynamic properties. Sensor measurements are fed back to the third subsystem, which includes a network of Ground Control Stations (GCSs). GCSs provide energy beam guidance by estimating each beam's characteristics and its aim point trajectory as functions of time. Integration of these three subsystems establishes a sensor feedback energy beam guidance and control loop. SWMS's weather modification applications include alteration of precipitation, reclaiming of wasteland, reducing damage by bad weather, and improving environment. Its non-weather related applications include supplying concentrated energy to electricity generating stations (solar, wind and hydro), high latitude greenhouse farms, and solar powered airplanes.

16 Claims, 7 Drawing Sheets

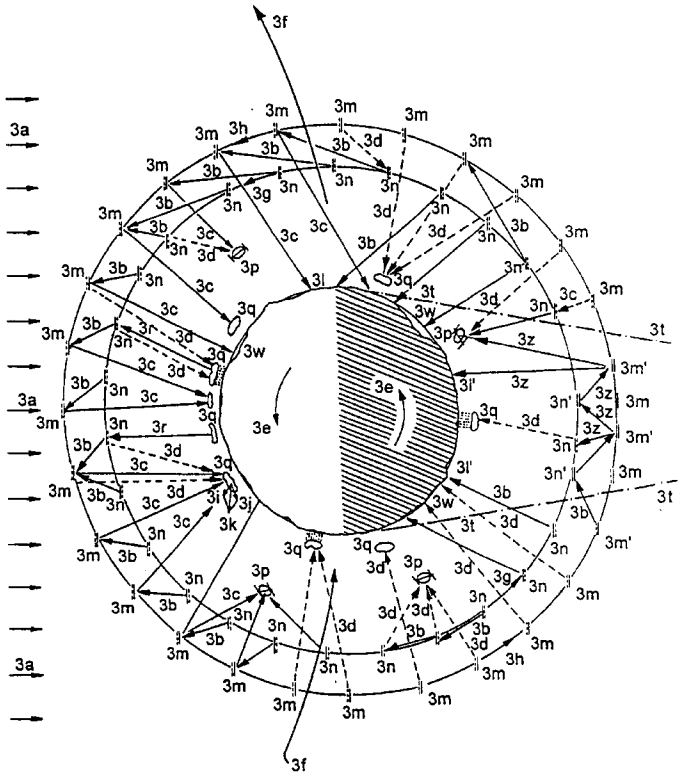

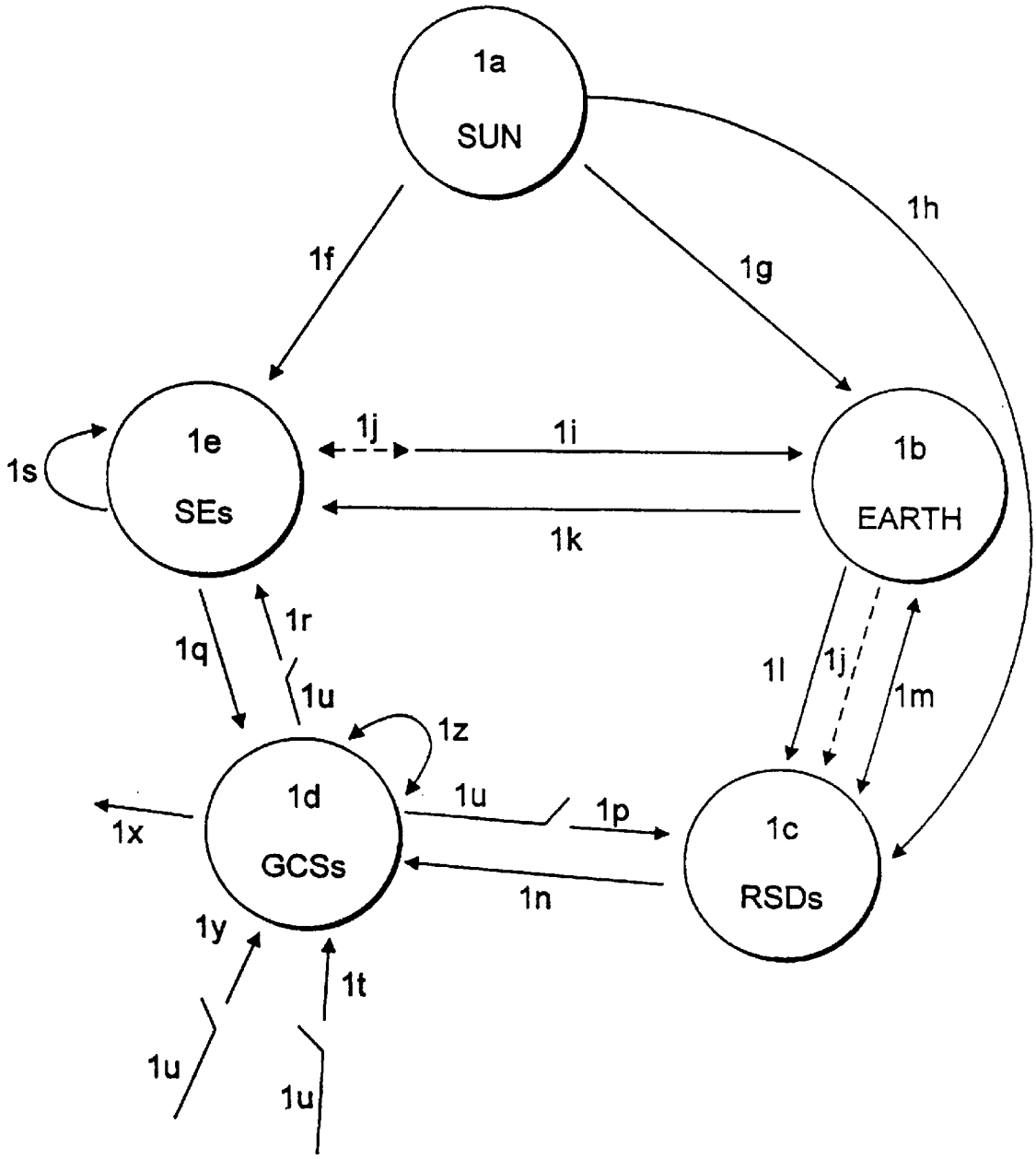
1a
SUN
1h
1f
1g
1e
SEs
1s
1j
1i
1b
EARTH
1k
1q
1r
1u
1z
1l
1j
1m
1d
GCSs
1x
1u
1p
1c
RSDs
1n
1y
1t
1u
1u

F I G. 1

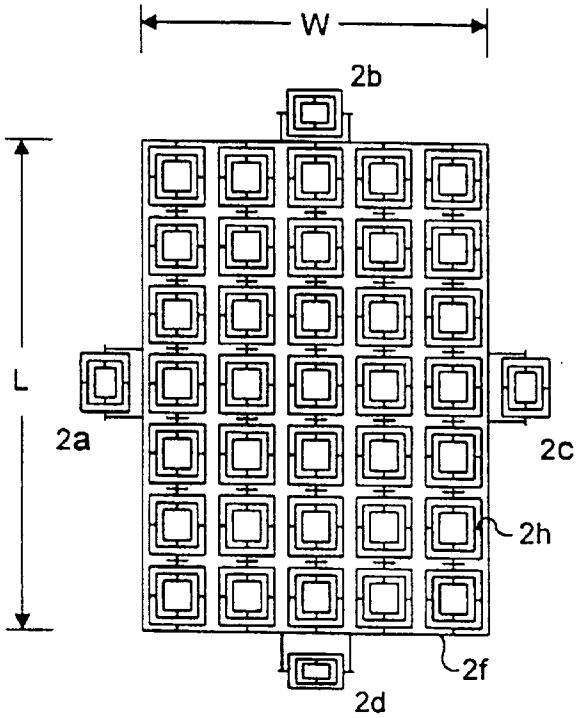

FIG. 2A

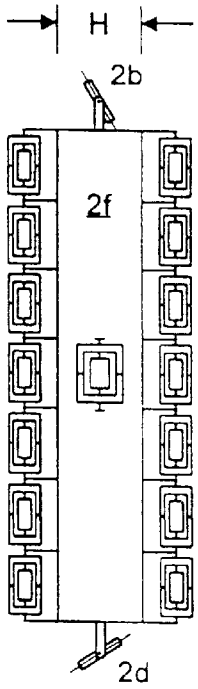

FIG. 2B

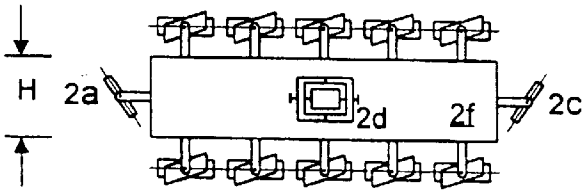

FIG. 2C

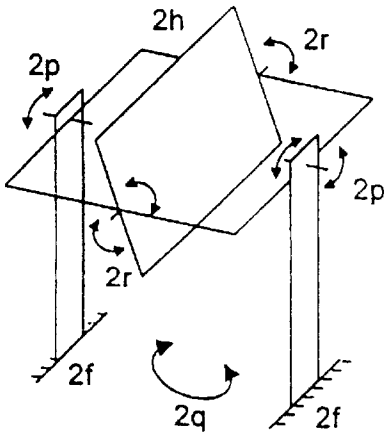

FIG. 2D

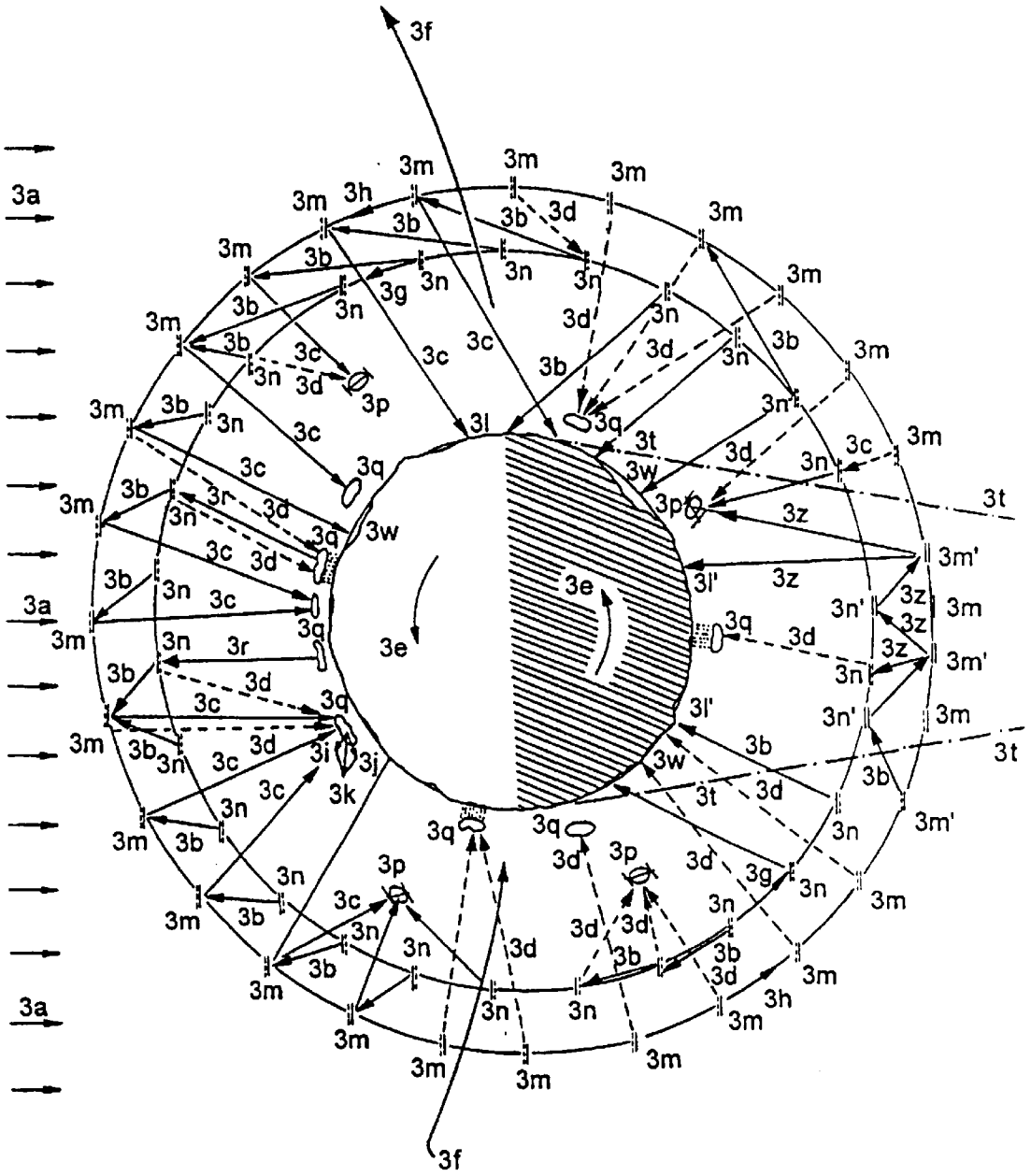

FIG. 3

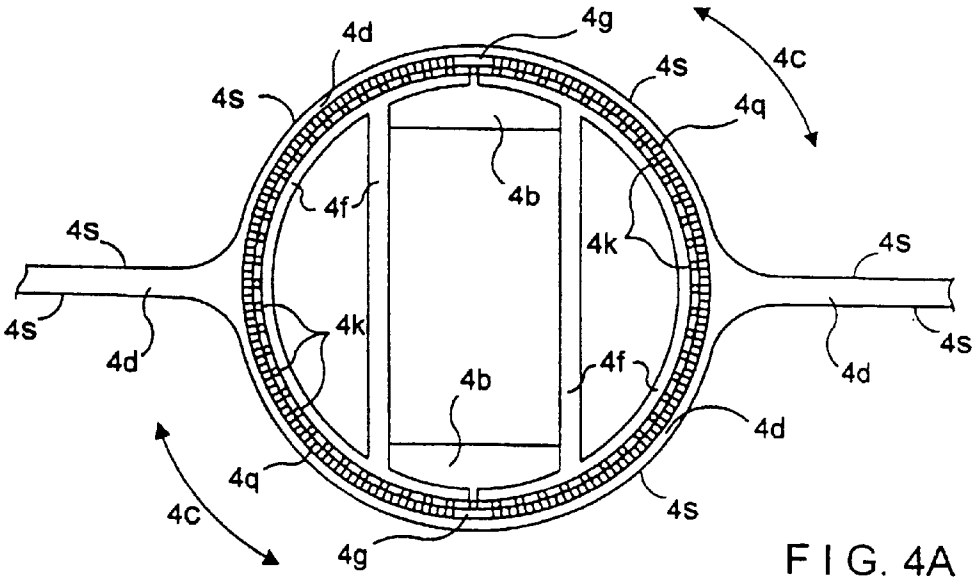

FIG. 4A

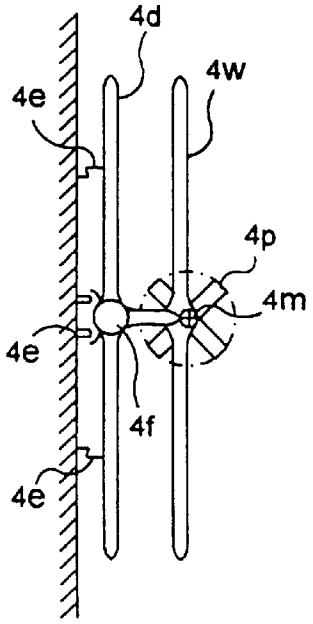

FIG. 4B

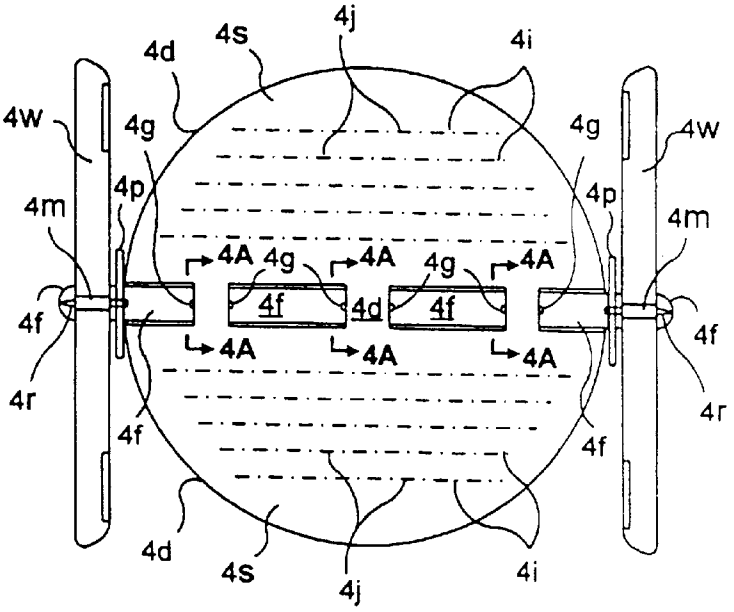

FIG. 4C

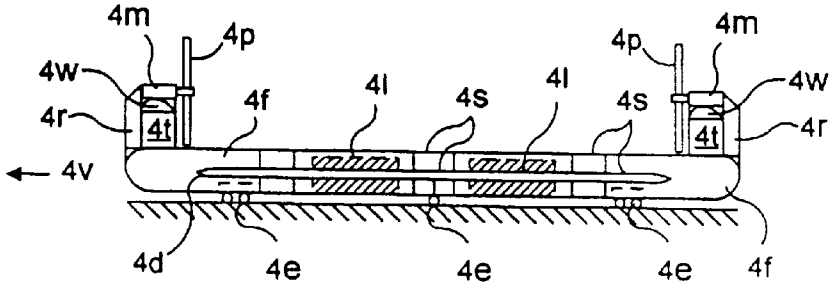

FIG. 4D

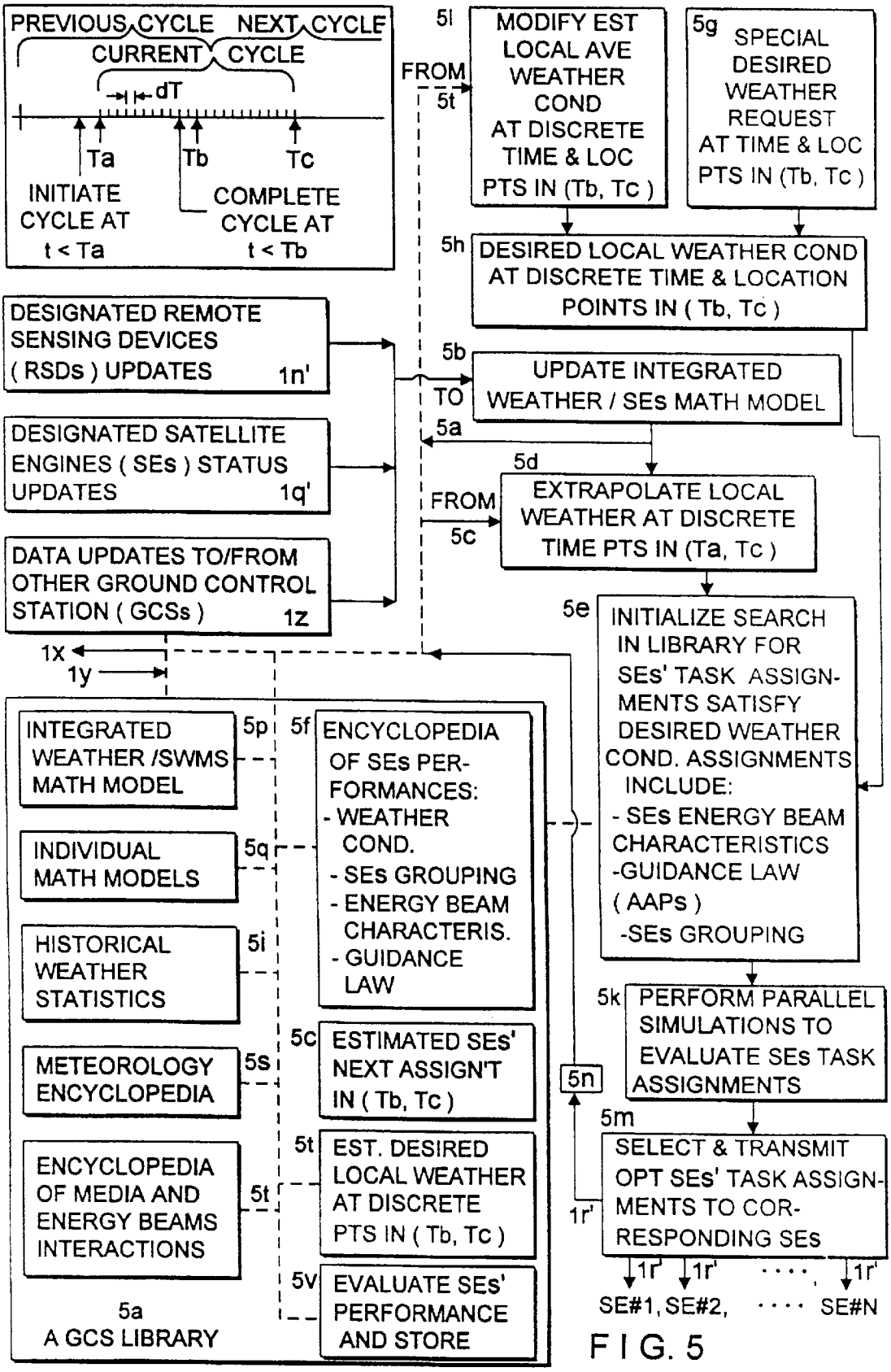
PREVIOUS CYCLE
NEXT CYCLE
CURRENT CYCLE
dT
Ta
Tb
Tc
INITIATE CYCLE AT t < Ta
COMPLETE CYCLE AT t < Tb
5l
FROM 5t
MODIFY EST LOCAL AVE WEATHER COND AT DISCRETE TIME & LOC PTS IN (Tb, Tc)
5g
SPECIAL DESIRED WEATHER REQUEST AT TIME & LOC PTS IN (Tb, Tc)
5h
DESIRED LOCAL WEATHER COND AT DISCRETE TIME & LOCATION POINTS IN (Tb, Tc)
DESIGNATED REMOTE SENSING DEVICES (RSDs) UPDATES 1n'
5b
TO 5a
UPDATE INTEGRATED WEATHER / SEs MATH MODEL
DESIGNATED SATELLITE ENGINES (SEs) STATUS UPDATES 1q'
5d
FROM 5c
EXTRAPOLATE LOCAL WEATHER AT DISCRETE TIME PTS IN (Ta, Tc)
DATA UPDATES TO/FROM OTHER GROUND CONTROL STATION (GCSs) 1z
5e
INITIALIZE SEARCH IN LIBRARY FOR SEs' TASK ASSIGNMENTS SATISFY DESIRED WEATHER COND. ASSIGNMENTS INCLUDE:
- SEs ENERGY BEAM CHARACTERISTICS
-GUIDANCE LAW (AAPs)
-SEs GROUPING
1x
1y
INTEGRATED WEATHER /SWMS MATH MODEL 5p
INDIVIDUAL MATH MODELS 5q
HISTORICAL WEATHER STATISTICS 5i
METEOROLOGY ENCYCLOPEDIA 5s
ENCYCLOPEDIA OF MEDIA AND ENERGY BEAMS INTERACTIONS 5t
5f
ENCYCLOPEDIA OF SEs PERFORMANCES:
- WEATHER COND.
- SEs GROUPING
- ENERGY BEAM CHARACTERIS.
- GUIDANCE LAW
5c
ESTIMATED SEs' NEXT ASSIGN'T IN (Tb, Tc)
5t
EST. DESIRED LOCAL WEATHER AT DISCRETE PTS IN (Tb, Tc)
5v
EVALUATE SEs' PERFORMANCE AND STORE
5a
A GCS LIBRARY
5k
PERFORM PARALLEL SIMULATIONS TO EVALUATE SEs TASK ASSIGNMENTS
5n
5m
SELECT & TRANSMIT OPT SEs' TASK ASSIGNMENTS TO CORRESPONDING SEs
1r'
1r' 1r' .... 1r'
SE#1, SE#2, ... SE#N

FIG. 5

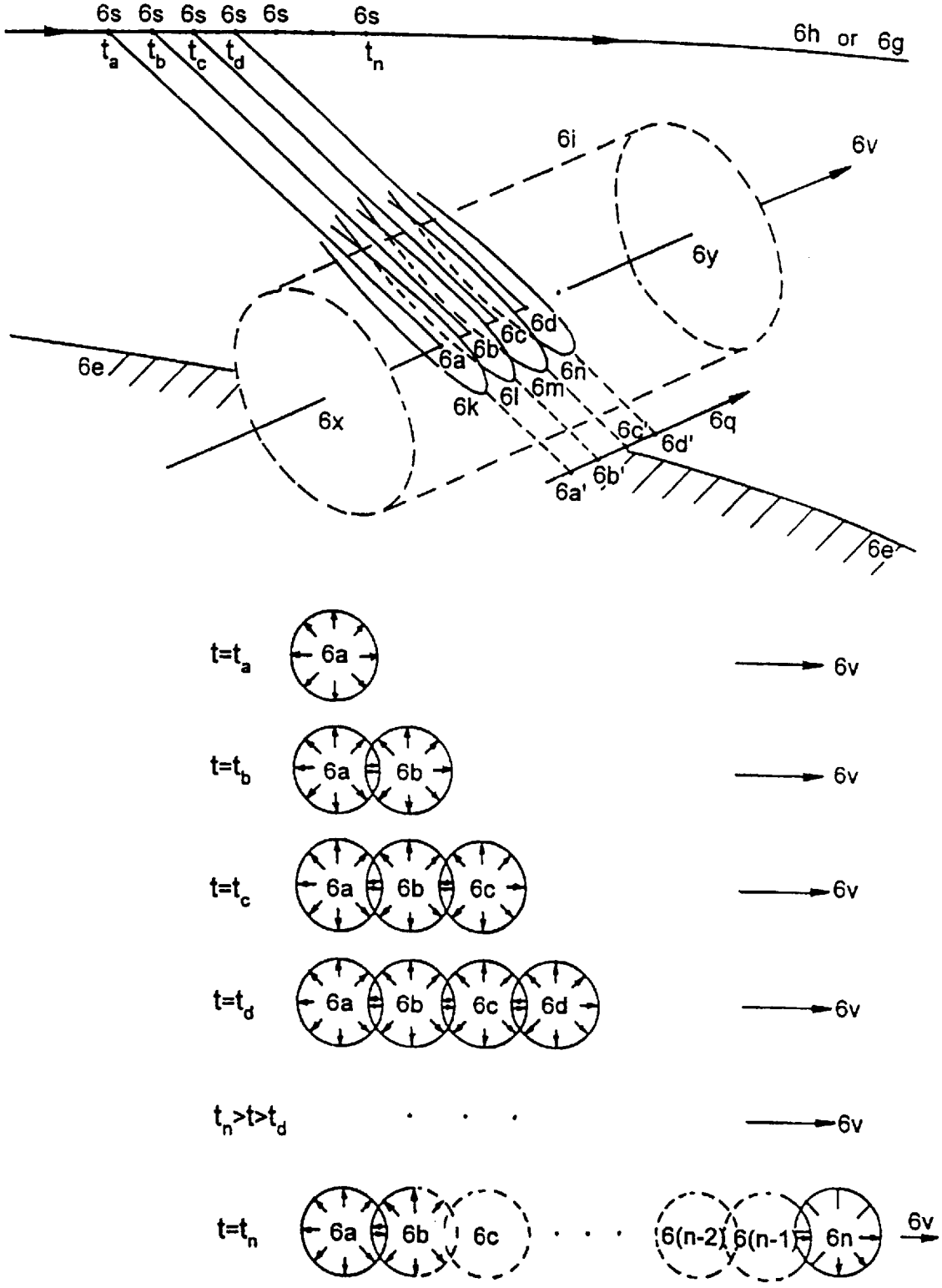
6s 6s 6s 6s 6s 6s
t_a t_b t_c t_d t_n
6h or 6g
6i
6v
6y
6d
6c
6b
6a
6n
6m
6l
6k
6e
6x
6c'
6d'
6q
6b'
6a'
6e
$t=t_a$
6a
6v
$t=t_b$
6a 6b
6v
$t=t_c$
6a 6b 6c
6v
$t=t_d$
6a 6b 6c 6d
6v
$t_n>t>t_d$
6v
$t=t_n$
6a 6b 6c
6(n-2) 6(n-1) 6n
6v

FIG. 6

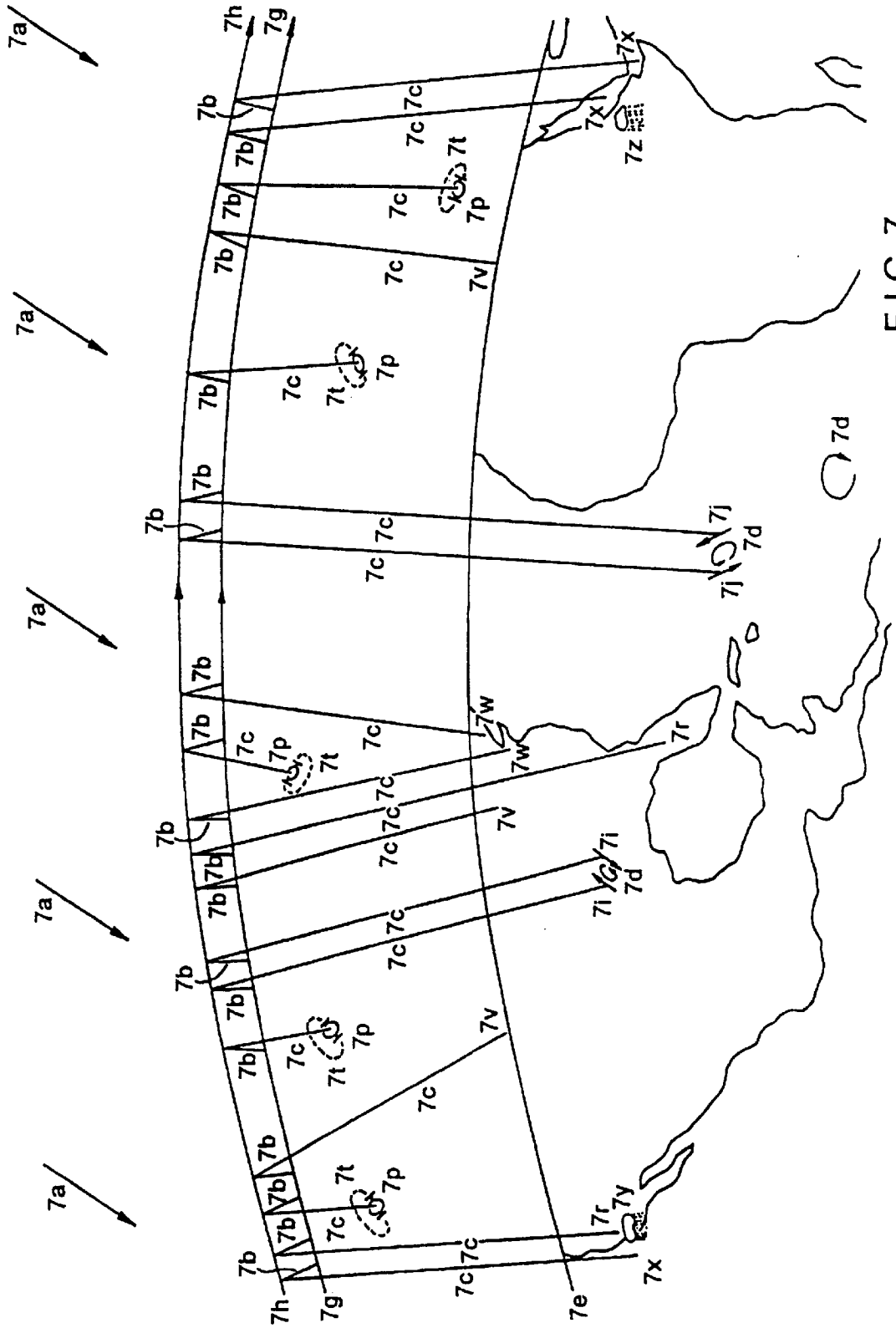

FIG. 7

WEATHER MODIFICATION BY ARTIFICIAL SATELLITES

This is a divisional of prior application Ser. No. 08/480,883 filed Jun. 7, 1995, now U.S. Pat. No. 5,762,298, which is a continuation of prior application Ser. No. 07/675,880 filed Mar. 27, 1991, now abandoned.

BACKGROUND OF THE INVENTION

1. Field of the Invention

This invention relates to solar-based weather modification and energy transfer in such a manner as to improve people's living standards by reducing their energy cost and food cost and simultaneously improving the environment.

2. Description of the Prior Art

Art prior to the present application includes the following:

U.S. Pat. No. 4,402,480

Title: Atmosphere Modification Satellite

Inventor: D. M. Udell, Sep. 6, 1983

U.S. Pat. No. 3,613,992

Title: Weather Modification Method

Inventor: R. J. Knollenberg, Oct. 19, 1971

U.S. Pat. No. 4,371,135

Title: Solar Array Spacecraft Reflector

Inventor: J. E. Keigler, Feb. 1, 1983

U.S. Pat. No. 4,305,555

Title: Solar Energy System with Relay Satellite

Inventor: C. E. Davis, Dec. 15, 1981

In addition, the following publications are of interest:

Astronautical Guidance

by R. H. Battin, McGraw-Hill Book Co. 1964

Introduction to Radar Systems

by M. I. Skolnik, McGraw-Hill Book Co. 1962

and

Radar and the Atmosphere

by A. J. Bogush, Jr., Artech House 1989.

In contrast to much of the prior art, this invention employs only solar energy, earth satellites, remote sensing devices and ground control computers. No dispensing of chemicals is needed. The Satellite Weather Modification System (SWMS) is a local as well as a global weather modification tool. For example, SWMS can simultaneously bring rain to dry regions in southern California and drought regions in southern Ethiopia within in a few orbital periods of the Satellite Engines. Most remarkable of all is that these and many other tasks can all be accomplished by switching between some computer codes.

This invention is based on the realization that natural weather patterns always leave opportunities to permit regional weather modifications which are within the capabilities of the proposed Satellite Weather Modification System (SWMS). A fully developed SWMS has the potential to provide the following benefits.

1. Modify cooling, warming, or precipitations of selected regions of earth, thus modifying local and/or global weather patterns.

2. Create and maintain grass or forest lands to balance the rise of carbon dioxide contained in the earth's atmosphere, thus reducing the threat of global warming.

3. Transform some wasteland into productive farmland.

4. Increase farm, fishery and forestry productions at higher latitudes.

5. Increase electricity production on land directly from concentrated solar energy.

6. Increase hydroelectricity production by inducing precipitation in regions upstream of hydroelectric dams.

7. Reduce home and industry energy cost.

8. Reduce environmental damage by harsh weather.

9. Reduce damage to the environment due to the use of fossil fuel and nuclear fuel.

10. Create a unique self-supporting business based on SWMS, which can provide both weather-related and non-weather related services.

SWMS can be implemented employing components which are currently available, including means for reflecting solar rays or discharging infrared radiation or laser beams or incandescent lights.

SWMS improvements can be augmented gradually, still using conventional components, to include discharging frequency agile and or intensity agile energy beams or pulse trains from Satellite Engines (SEs). Each frequency agile energy pulse is designed to penetrate a specified air mass layer of specified composition. For example, these energy pulses can be used to modify a specified air mass inside a thick cloud.

SUMMARY OF THE INVENTION

This invention is an aerospace system designed to harness solar energy to modify the earth's weather. This system is called Satellite Weather Modification System (SWMS). This invention disclosure covers three areas. A first area involves the design and/or integration of three SWMS key subsystems. A second area involves specifying basic SWMS weather modification techniques. A third area involves the design of unique SWMS applications into self supporting businesses.

The first area of this invention disclosure covers the three SWMS key subsystems. They are:

1. Satellite Engines (SEs)

The basic function of an SE is to reflect solar energy or to transform solar energy into another form of energy before discharging it to a specified location. Each SE is a specially designed earth satellite. In a mature SWMS, many millions of SEs will be operating in a coordinated manner. As a minimum capability, each SE will be designed to reflect solar energy and simultaneously convert solar energy into electricity via solar cells. Advanced SE models will be capable of transforming solar energy into energy beams of different frequencies before discharging them. These advanced SEs can simultaneously discharge solar energy, frequency agile and intensity agile MMW (millimeter wave) or RF or microwave pulse trains, infrared radiations, laser light and incandescent light as the mission may require. All physical characteristics of each energy beam (solar or otherwise) are adaptively estimated by Ground Control Stations (GCSs). GCS also estimates each energy beam's guidance by defining its desired aim point trajectory. The criteria used to select and to guide each energy beam are based on an estimated specific thermodynamic change taking place in a specific air mass that satisfies some required weather condition changes.

Each SE will have gimbals panels (i.e., panels mounted on gimbals) on its outer surfaces. Each gimbals panel has a reflector on one side and solar cells on the other side. Also, gimbals-mounted antennae and lamps are attached to the SE structure frame. The SE controls the direction of each energy beam by controlling each panel's two gimbals orientations with respect to the SE structure frame. By using flywheels (or other methods), each SE also controls its structure frame orientation with respect to inertial space.

A minimum SWMS configuration requires that all SEs be placed in two non-coplanar orbits. These orbits are slightly inclined with respect to each other. One orbit will always be higher than the other orbit. Each SE structure frame will maintain an average angular rate of one revolution per year with respect to inertial space. During each orbit around the earth an SE will experience two different operating modes, depending on whether the SE is inside or outside earth's shadow. These modes are described below:

When SEs are outside earth's shadow, SEs in the higher orbit will rotate their solar cell panels (on one SE side) facing the general direction of the sun. At the same time SEs will rotate their reflector panels (on the other side of the SE) facing away from the sun. SEs in the lower orbits will have their reflector panels (on one SE side) facing the general direction of the sun and their solar cell panels (on the other side of the SE) facing away from the sun. This arrangement allows the solar rays first reflecting from the lower orbit SEs' reflectors to the reflectors on the higher orbit SEs, before finally re-reflecting these solar rays to earth (in FIG. **3** see incoming solar rays **3***a*, rays **3***b* reflected from the lower orbit to the higher orbit, and rays **3***c* reflected from the higher orbit into the earth's atmosphere).

When SEs are inside earth's shadow, SEs will rotate their reflector panels to face the reflector panels in the other orbit. This arrangement allows the solar rays to travel between the two orbits inside earth's shadow before discharge to earth (see rays **3***z* in FIG. **3**).

2. Remote Sensing Devices (RSDs)

The basic functions of RSDs are to continuously measure the actual atmospheric conditions of each specified weather cell. Ideally, there will be billions of RSDs of every kind distributed over the globe. These RSDs are used to continuously monitor the actual thermodynamics, dynamics, compositions and other physical conditions of the atmosphere, land and water surfaces, subsurfaces, sun and Satellite Engines. There will be different kinds of RSDs measuring different parameters. Some RSDs will be stationary on earth. Other RSDs may be located on Solar Powered Satellite Airplanes (SPSAs), on balloons or on SEs. All RSD measurements are time and location tagged before transmitting to their respective local Ground Control Stations (GCSs) for data correlation and analysis. Some measurements are sent directly to or measured directly by SEs.

3. Ground Control Stations (GCSs)

The basic function of GCSs is to provide guidance to each SE. This includes defining the characteristic of each energy beam and its aim point trajectory as functions of time. Each GCS includes a network of supercomputers, special algorithms, mathematical models, monitors, control panels, data storage devices, electronic libraries, data transmitters and data receivers. The main tasks of each GCS are: To maintain detailed information about local weather conditions, to integrate raw local RDSs measurements with filtered information about weather conditions of other locations (received from other GCSs), to extrapolate weather conditions to future time points, to monitor assigned Satellite Engines' (SEs') status, to evaluate assigned SEs' performances, to identify potential local weather patterns which can be modified by SWMS, to estimate potential weather modification options, to evaluate desired weather condition requests, to select optimal SEs groupings, to estimate SEs weather modification tasks options, to coordinate all SEs tasks, to assign and transmit detailed weather modification tasks to each assigned SE (i.e., specify energy beam's characteristic and its aim point trajectory as functions of time), to maintain communication between GCSs, RSDs and SEs, and, finally, to accept human inputs and controls.

The second area of this invention disclosure involves specifying SWMS weather modification techniques. This includes: Cooling the earth by reflecting solar rays back into deep space, warming local regions by redirecting solar rays to local areas, creating clouds by warming local wet surfaces and modifying local air mass velocity components by controlled heating of specific air masses to create pressure differentials.

The third area of this invention disclosure involves organizing SWMS unique services into self supporting business ventures. The SWMS services include: Weather modifications (cooling, warming, altering precipitations, altering air mass velocity components), supply of energy (direct solar power, indirect wind or hydroelectric power or solar powered airplane) and environment improvements (reclaiming wasteland, creating greenhouse farms, reducing bad weather damages, reducing fossil and nuclear fuels usage). Included in SWMS applications is an invention of a Solar Powered Satellite Airplane (SPSA). SPSA comprises a hinged zero lift solar cell disk supported by two wings as shown in FIG. **4**. These SPSAs can serve as global communication platforms.

BRIEF DESCRIPTION OF THE DRAWINGS

FIG. **1** Satellite Weather Modification System (SWMS) key subsystems Functional Flow Overview.

FIG. **2**. External Features of A Typical Satellite Engine (SE). FIG. **2** consists of FIG. **2**A (top view), FIG. **2**B (right side view), FIG. **2**C (front view), and FIG. **2**D, showing a typical panel or antenna gimbal rings arrangement.

FIG. **3**. Satellite Engines (SEs) Orbital Operations Overview.

FIG. **4**. Solar Powered Satellite Airplane (SPSA) Design. FIG. **4** consists of FIG. **4**A, which is a sectional view taken along any of the section lines **4**A—**4**A in FIG. **4**C and looking in the direction of the arrows; **4**B, which is a front view; **4**C, which is a top view; and **4**D, which is a side view.

FIG. **5**. Overview Of A Ground Control Station (GCS) Functions.

FIG. **6**. Techniques To Modify Air Mass Velocity Component.

FIG. **7**. Some Satellite Weather Modification System (SWMS) Applications.

Detailed descriptions of these figures are presented below. Important items in each figure are identified in the text by a bold faced number representing the figure number. It is then followed by a fold faced lower case letter to identify the item in the figure. Example: **4***d* identifies item labeled **4***d* in FIG. **4**.

DETAILED DESCRIPTION OF THE PREFERRED EMBODIMENTS

While there are shown and described the preferred embodiments of the invention, it is to be distinctly understood that the invention is not limited thereto, but may be otherwise variously embodied and practiced within the scope of the appended claims.

To facilitate an understanding of the invention, a number of features are identified herein by letter(s) and a number inside a bold square bracket, as: [letters/number] or [letter-number/number]. Letter(s) or letter-number before a/0 iden-

tify major features of the invention. Each non-zero number following the / represents a feature that, while important, is less important than the major features. The major features are:

[SWMS/O]	=	Features relating to Satellite Weather Modification System (SWMS) designs.
[SE/0]	=	Features relating to Satellite Engine (SE) designs.
[OP/O]	=	Features relating to SEs operations.
[RSD/O]	=	Features relating to Remote Sensing Devices (RSDs) integration.
[GCS/O]	=	Features relating to Ground Control Stations (GCSs) designs.
[C/O]	=	Features relating to control energy beam directions.
[F/O]	=	Features relating to Frequency Agile and Intensity Agile energy beams' selections.
[W#/O]	=	Features relating to SWMS basic weather modification techniques (# = 1, 2, 3, 4).
[A#/O]	=	Features relating to SWMS weather modification applications and non-weather related applications (# = 1, 2, 3, 4, 5, 6).

A stand-alone bold faced number followed by a bold faced lower case letter refers to a correspondingly labeled item in the figure identified by the bold faced number. Example: **3***c* represents an item identified by **3***c* in FIG. **3**.

V.1 [SWMS/#]: Features Relating to Satellite Weather Modification System (SWMS) Design

A major feature [SWMS/0] is covered in this section. Five additional features [SWMS/1], . . . , [SWMS/5] are covered in separate paragraphs.

An elaboration of the features is set out below:

[SWMS/1]

The invention employs satellites to harness the solar energy and use this energy to modify selected local weather conditions and/or supply power to various non-weather related applications.

[SWMS/2]

The SWMS modified local weather conditions are, under certain situations, used to modify global weather conditions.

[SWMS/3]

This Satellite Weather Modification System (SWMS) includes the following three key subsystems:

Satellite Engines (SEs) **1***e*.

Remote Sensing Devices (RSDs) **1***c*.

Ground Control Stations (GCSs) **1***d*.

[SWMS/4]

Most SEs are in earth orbits, but some SEs can be installed on land, or airplanes or on ships.

[SWMS/5]

In an SWMS the energy and information flow between sun **1***a*, earth **1***b*, RSDs **1***c*, GCSs **1***d* and SEs **1***e*, as represented in FIG. **1**, are identified and listed below:

1f	Solar energy from the sun to the SEs.
1g	Solar energy from the sun to earth.
1h	Solar activities, such as sun spots, which can affect earth's weather and which are measurable by instruments.
1i	Reflected solar energy beams and/or frequency agile energy beams discharged from SEs to earth surface or into the atmosphere or to deep space or to Solar Powered Satellite Airplanes.
1j	Coded solar or frequency agile energy beams reflected back to SEs instruments or to RSDs instruments.
1s	Solar energy beams or frequency agile energy beams from one SE to another SE.
1k	Solar energy or frequency agile energy reflected back to SEs' reflector panels or the SEs' solar cell panels.
1l	Energy or signals from earth or from atmosphere received by passive RSDs.
1m	Signals transmitted and received by active RDSs.
1n	Time and space tagged measurement data transmitted from RSDS to GCSs at regular intervals.
1p	Command and control messages from GCSs to RSDs.
1q	Status reports from SES to GCSs at regular intervals.
1r	Time tagged detailed assignments (each energy beam's characteristics and its AAP (Adjusted Aim Point) trajectory) for each SE from GCSs at regular intervals.
1t	Desired local and global weather condition requests.
1x	Data and status display to off-line devices.
1y	Off-line analysis to update GCS math models, algorithms, operations and library data base.
1z	Data flow between GCSs. Each GCS takes its turn to coordinate the activities of all GCSs.
1u	Human (manual) controls.

V.2 [SE/#]: Features Relating to Satellite Engine (SE) Design

A major feature [SE/0] is covered in this section. Six additional features [SE/1], . . . , [SE/6] are covered in separate paragraphs.

[SE/1]

SEs can have any shape. In this description it is assumed that the basic structure frame of each Satellite Engine (SE) has an outer contour resembling a flat rectangular box of dimension L (Length)×W (Width)×H (Height), where H is the smallest dimension. All six outside surfaces of this flat box are either fully or partially covered with reflecting materials.

[SE/2]

On top of each L×W surface is an array of n×m panels.

[SE/3]

one side of each n×m panel is made of a reflecting material. It is used to reflect solar rays or laser lights. The other side of each n×m panel is made of solar cells. They are used to convert solar energy into electrical currents.

[SE/4]

Each n×m panel is independently mounted on gimbals on top of each L×W surface. The construction is in such a way that each one of the n×m panels has at least two independent degrees of attitude freedom, **2***p* and **2***r*, with respect to the SE structure frame **2***f*.

[SE/5]

FIG. **2** illustrates n×m panels on each L×W side of a Satellite Engine structure frame. Gimbals rings on SE's L×H and W×H sides **2***a* **2***b* **2***c* **2***d* are designed to provide independent attitude controls of antennae or lamps or any direction pointing devices. Some antennae are used to discharge frequency agile and intensity agile energy beams to earth. Some antennae are used to transmit or receive frequency agile energy beams between SEs. Other antennae are used for communication purposes. Lamps are used to discharge to earth infrared radiations, laser lights or incandescent lights. The number of side gimbals antennae or devices are not limited to only four **2***a* **2***b* **2***c* **2***d* as illustrated in FIG. **2**.

[SE/6]

Additional features displayed in FIG. **2** are identified as follows:

2f	SE structure frame. The LxWxH box.
2h	A typical set of gimbals rings which measure and control each reflector/solar-cell panel's attitudes 2r 2p with respect to SE structure frame 2f.
2p	One of the two degrees of attitude freedom of each panel with respect to SE structure frame.
2r	One of the two degrees of attitude freedom of each panel with respect to SE structure frame.
2q	Reflector/solar-cell panel's possible third degree of attitude freedom with respect to SE structure frame. This will require larger spacing between panels.
2a	Frequency agile and intensity agile RF or MMW or Microwave energy pulse train transmitting antennae.
2b	Reflector/solar-cell panels.
2c	Gimbals mounted infrared lamps or incandescent light lamps or laser antenna
2d	Reflector/solar-cell panels.

In addition, each SE has a number of subsystems residing in its structure frame **2***f*. They are not shown in FIG. **2**, but they are identified below as:

2w	Momentum wheels or other means are used to control and maintain attitude stabilization of SE structure frame 2f with respect to inertial space (see feature (C/#] below)
2n	Navigation subsystem.
2p	Energy transformation subsystem: Transform dc current from solar cells into infrared, frequency agile and intensity agile energy pulses (see features [F/#]).
2c	Computer subsystem.
2z	Communication subsystem.
2i	Retractile receiver designed to receive energy beams from other SEs.
2y	Power regulator.
2e	Energy storage devices are used to store solar energy collected when SE is outside earth's shadow. This energy can be used when SE is inside earth's shadow.
2u	Optical camera package (optional or as part of RSDs).
2v	Synthetic Aperture Radar package and antenna (optional or as part of RSDs).
2w	Thermal imaging camera package (optional or as part of RSDs).
2x	Infrared camera package (optional or as part of RSDs).

V.3 [OP/#]: Features Relating to SEs Orbital Operations

A major feature [OP/1] is covered in this section. Ten additional features [OP/1], . . . , [OP/10] are covered in separate paragraphs.

[OP/1]

As a minimum SWMS configuration, all orbiting SEs are placed in a pair of non-coplanar orbits. These orbits are inclined slightly with respect to each other. In this case, all SEs are apportioned about equally to and distributed uniformly along these two orbits. If both orbits are rotated into a single plane, one orbit will always be slightly higher than the other orbit. The orbits are thus nonintersecting and preferably noncoplanar. Unless otherwise specified, the following descriptions will be for SEs operations on a pair of nonintersecting-noncoplanar orbits.

[OP/2]

At the center of each SE will be the origin of two coordinate systems both moving with the SE along its orbit. One set of solar-fixed axes has one axis that constantly points at the center of the sun. These coordinate axes have an average angular rate of one revolution per year with respect to inertial space. Another set of axes are fixed with respect to the SE structure frame. During normal operations that set will continuously tilt slightly with respect to the solar-fixed axes as required by the mission.

A third set of completely inertial coordinate axes is needed to relate vectors from one set of solar-fixed axes to another.

[OP/3]

In a typical SWMS operation, each SE **3***n* in the lower orbit maintains its n×m solar reflector panels (on one L×W surface) facing the general direction of the sun. Simultaneously, each lower orbit SE's other L×W surface will have its n×m solar cell panels facing away from the sun. At the same time each SE **3***m* in the higher orbit will have its n×m solar cell panels (on one L×W surface) facing the general direction of the sun. Its other n×m solar reflectors (on its other L×W surface) will be facing away from the sun.

Each SE experiences two modes of operation during each orbit around the earth. These two modes are defined according to the position of the SE which is inside or outside the earth's shadow. Consider these two cases:

[OP/4]

First, when SEs are outside earth's shadow: In this case the SEs' reflector/solar-cell panel arrangements are as specified in section [OP/3]. These arrangements allow incoming solar rays **3***a* from the sun to be reflected as shown at **3***b* from the lower orbit SEs' reflectors to SEs reflectors on the higher orbit before finally being re-reflected as solar rays **3***c* to earth.

[OP/5]

The electricity generated by the higher orbit SEs' solar cell panels is used to supply each SE's internal needs. Excessive electricity is transformed to different forms of energy beams and discharged to earth via antennae or lamps or stored for later use. At the same time, each lower orbit SE's **3***n* solar cell panels on one of its L×W surfaces are facing away from the sun. These solar cells receive solar rays **3***r* reflected from earth or **3***b* reflected from other SEs. Electricity generated by these solar cell panels is used to supply each SE's internal needs. Any excess electricity is transformed to different forms of energy beams and discharged to earth via antennae or lamps or to another SE or stored for later use.

[OP/6]

Second, when SEs are inside earth's shadow and when solar or laser rays are required in the shadow: In this case, selected SEs in the shadow and in both orbits **3***m*' and **3***n*' have their n×m reflector panels facing away from their respective SE structure frames. These SEs are identified as **3***m*' and **3***n*' in FIG. **3**. This arrangement allows solar rays or laser beams to be passed alternately between these SEs **3***m*' and **3***n*'. This scheme moves energy beams **3***z* in a zig-zag pattern into the earth's shadow **3***t* before discharging to earth **31**' or to a high flying SPSA **3***p*.

[OP/7]

Some SEs are equipped with large capacity energy storage devices. Energy collected and stored during daytime can be discharged during nighttime.

[OP/8]

FIG. **3** illustrates a sample case of two nonintersecting-noncoplanar orbits slightly inclined with respect to the equatorial plane. In FIG. **3**, each SE is represented by three short dashes parallel and next to a longer dash spanning the three short dashes. SEs on the higher orbit **3***h* are labeled **3***m*. SEs on the lower orbit **3***g* are labeled **3***n*. The three short dashes or **3***m* **3***n* represent the L×W side of an SE with its n×m solar cell panels facing away from the SE structure frame. The corresponding longer dash of **3***m* or **3***n* represents the L×W side of an SE with its n×m reflector panels facing away from the SE structure frame. In general, when SEs are outside earth's shadow **3***t*, all SEs **3***m* in the higher orbit **3***h* have their solar cell panels (three short dashes) facing the general direction of the sun. Similarly, all SEs **3***n* on the lower orbit **3***g* have their reflector panels (one long dash) facing the general direction of the sun.

[OP/9]

Other features and labels in FIG. **3** are identified as follows:

3a	Solar rays directly from the sun.
3b	Solar rays reflected once from one SE to another SE or to earth.
3c	Solar rays reflected twice from two SEs (3n and 3m) before being reflected to earth or to an SPSA.
3d	Dash lines are used to represent the path of frequency agile & intensity agile RF, MMW energy beams, infrared radiations, laser beams or incandescent lights emitted from SE antennae or lamps.
3e	Earth's direction of rotation about its spin axis (earth being viewed from a position over the northern hemisphere).
3f	Direction of earth's orbit path around the sun (earth being viewed from a position over the northern hemisphere).
3g	Lower orbit of a typical pair of nonintersecting-noncoplanar orbits.
3h	Higher orbit of a typical pair of nonintersecting-noncoplanar orbits.
3i	Average velocity vector of an air mass independent of current SEs actions.
3j	Average velocity vector of an air mass induced by current SEs actions.
3k	Vector sum of 3i and 3j.
3l	Earth's land surfaces.
3l'	Illuminated sports stadium (e.g., a stadium lighted during night games) or orange groves warmed by solar rays 3z during freezing nights.
3m	SE in higher orbit 3h. Its nxm solar cell panels (on one LxW side) face the general direction of the sun 3a. Simultaneously, its other nxm panels have their reflectors facing away from the sun.
3n	SE on the lower orbit 3g. Its nxm reflector panels (on one LxW side) face the general direction of the sun 3a. Simultaneously, its other nxm panels have their solar cells facing away from the sun.
3m'	Selected SEs in higher orbit 3h in earth shadow. These SEs are used to transmit solar or laser rays 3z into the shadow.
3n'	Selected SEs in lower orbit 3g in earth shadow. These SES are used to transmit solar or laser rays 3z into the shadow.
3w	Earth's ocean, lake or other wet surface.
3p	High altitude and long endurance Solar Powered Satellite Airplanes (see FIG. 4). SPSA continuously receives solar rays or MMW energy or laser beams from SEs. SPSA can also receive energy from ground.
3q	Cloud or air mass whose compositions, thermodynamic and dynamic properties are being modified by SEs.
3r	Reflection of solar enerqy from the clouds, ocean or land back to space.
3t	Earth's cone shaped shadow.
3z	Solar rays reflecting alternatively between SEs 3m', 3n' on different orbits 3h, 3g, when these SEs are inside earth's shadow 3t. These energies 3z can be used to power SPSAs 3p or to warm cold ground patches 3l' at night.

[OP/10]

The n×m panels may be arranged in a way slightly different from the one described so far. It is possible to mix the number of solar-cell panels and the number of reflector panels on each L×W side of each SE. This arrangement applies to all SEs in both orbits **3***h*, **3***g* as follows: Each L×W side of each SE will have (n×m−k) reflector panels and k solar-cell panels facing away from its SE structure frame, where k=0, 1, . . . , (n×m). For each L×W side, the exact k number is dependent on each SE's internal power consumption need and its mission requirements. This arrangement is especially useful for SEs in geo-synchronous orbit.

V.4 [RSD/#]: Features Relating to Remote Sensing Devices (RSDs) Integration

A major feature [RSD/0] is covered in this section. Two additional features [RSD/1] and [RSD/2] are covered in separate paragraphs.

[RSD/1]

Remote Sensing Devices (RSDs) **1***c* comprise millions of independently operated sensors. These RDSs are located on the ground, on the water, in the air, on SPSAs, or on SEs. RSDs perform independent measurements such as monitoring sunspots, measuring the composition and thermodynamics properties of a particular atmospherical air mass, monitoring the effect of SEs' energy beams, etc.

[RSD/2]

Each sensor continuously makes redundant measurements. Each measurement is time and location tagged and transmitted to a specified Ground Control System (GCS) **1***d* computers at regular intervals. These data are in standard formats so that they can be quickly correlated, analyzed and accepted by various algorithms and mathematical models in the GCSs **1***d* computer network.

V.5 [GCS/#]: Features Relating to Ground Control Stations (GCSs) Designs

GCSs provide the guidance of each energy beam. This includes the selection of each energy beam's characteristic and its corresponding Adjusted Aim Point (AAP) trajectory. A major feature [GCS/0] is covered in this section. Three additional features are [GCS/1], GCSs subsystem overview; [GCS/2], simplified GCS tasks design; and [GCS/3], a typical matured GCS subsystem tasks design and partition.

[GCS/1] GCS Overview

Each Ground Control Station (GCS) **1***d*' includes a network of interconnected supercomputers, electronic libraries, data receivers, data storage devices, data transmitters, visual display devices and control consoles. There are hundreds of GCSs **1***d* in the SWMS. Each GCS monitors weather conditions within a designated region of earth. Each GCS receives designated RDSs measurements **1***n*', local weather requests **1***t*' and data from other GCSs **1***z*. Each GCS also transmits estimated tasks **1***r*' to a specified group of SEs and receives data from other GCSs **1***z*. Data generated by each GCS are broadcast to all other GCSs **1***z*. Therefore, each GCS will have detailed global weather information and status of all SEs at discrete time points. Each GCS will take its turn to be the master GCS, which coordinates the operations of all GCSs in the SWMS.

(NOTE: the notations **1***d*', **1***n*', **1***r*', **1***t*' represent designated GCSs, selected RSDs' data, specified SEs' tasks and local weather requests respectively. Their corresponding notations without the ' given in FIG. **1** are for all GCSs, all RSDs data, all SEs tasks and all weather requests.)

[GCS/2] Simplified GCS Tasks Designs

In most SWMS applications, SEs' assignments involve only reflecting solar rays. This is the case for SWMS during its initial stage of development. In this stage of development a GCS's principal task involves defining AAPs (Adjusted Aim Points) trajectories of each energy beam (centerline of each reflected solar ray) in some earth fixed coordinate system.

The available solar energy and the directions of incoming and reflected solar rays to and from each n×m reflector panel can be calculated as a function of time. These calculations use measurements of SE structure frame orientations with respect to inertial space, orientation measurements of each reflector panel gimbals with respect to its SE structure frame and orbital mechanics.

On the other hand, the desired aim point of each reflected energy beam and its trajectory are both specified by GCSs. This is done by distributing the aim points over the surface that is to be warmed by the solar rays. These aim points are then adjusted to take into account the atmospherical refraction and absorption of each energy beam and transform

desired aim points to a corresponding set of AAPs (Adjusted Aim Points). A set of AAP vectors will be defined in an earth-fixed coordinate system. Each AAP point will be at the tip of its corresponding AAP vector. Next, AAPs trajectories are defined based on the amount of energy and rate of energy that is to be deposited onto the desired space. These estimated AAPs trajectories are transmitted to their corresponding SEs.

An LOS vector is defined as a vector from the center of any reflector panel to its corresponding AAP. Both this LOS vector and its corresponding reflecting solar ray vector are expressed in the same coordinate system, based for example on the SE structure frame fixed axes. Then the vector difference between these two vectors at a given time defines an error vector. This error vector specifies the required change of available energy beam's direction at that time.

The unit vector of each desired direction will be transformed to SE structure frame fixed coordinate axes. Assuming the SE structure frame follows a predetermined orientation schedule with respect to inertial space, then the desired gimbals angles of each reflector panel can be calculated from its unit desired direction vector. Also, each desired direction vector must satisfy the solar rays' availability constraints.

These computations must be repeated continuously many times a minute. This will provide the required error signal to the stepping motors to torque each gimbals ring. This scheme will control each reflected solar ray to follow its AAP trajectory in a timely fashion.

[GCS/3] Typical Matured GCS Tasks Designs and Partitions

FIG. **5** graphically illustrates typical SEs' assignments (energy beams' characteristic and their AAPs trajectories) estimation process designed for a more matured SWMS. Key functions are identified by blocks and connected by high speed data busses (dashed lines). The main processing sequence is: **5***b* **5***d* **5***e* **5***f* **5***e* **5***k* **5***m* **5***n* **5***b*. Other functions of FIG. **5** are identified below:

5*a* A GCS library. This includes individual mathematical models **5***q*, Integrated global-weather/SWMS (Satellite Weather Modification System) model **5***p*, Historical weather statistics **5***i*, Encyclopedia of energy beam transmission, refraction, absorption, and reflection characteristics in all kinds of weather conditions **5***t*, Encyclopedia of meteorology **5***s*, past SEs weather modification performance data **5***v*, Catalogued encyclopedia of SWMS Satellite Engines performance **5***f* permitting rapid search for SEs task assignments that will satisfy the new weather modification constraints specified by **5***e*.

5*q* Individual models include: Sun, sunspots, solar radiation, lunar orbital motion, solar wind intensity distribution, earth orbital motion, earth's gravitational model, atmospherical layer models, ocean current models, earth surface and subsurface models, natural and man-made discharges, absorption, refraction models, etc. Satellite Engines model, SE system performance models, interactions between atmosphere models and all other models, etc.

5*i* Historical global and local weather data statistics, including such data as annual rainfall distributions, annual temperature distributions, seasonal weather conditions, etc.

5*t* Encyclopedia of the interaction of energy beams with atmosphere, land mass and sea surfaces.

5*f* Encyclopedia of SEs performance data classified according to: energy types and characteristics, guidance law employed (AAPs' trajectories), initial atmospherical conditions, required atmospherical conditions changes, Satellite Engines sub-groupings. These data are continuously updated by off-line simulations **1***y* and by data from actual SEs past performances **5***v*. Data **5***f* output back to **5***e* will include SEs groupings, each energy beam characteristics and AAPs' trajectories, all expressed as functions of time.

5*l* Estimate the desired weather conditions in next (Tb,Tc) interval based on past weather condition statistics. Desired weather is expressed in terms of weather characteristic vectors for each affected weather cell.

5*g* Special desired weather condition requests. All requests are expressed in terms of weather characteristic vectors sequences for each weather cell. Both weather cells and weather characteristic vectors are defined in **5***d*.

5*b* Update integrated mathematical model using designated RSDs **1***n*', designated SEs' status reports **1***q*', and updated data from other GCSs **1***z*. The results of these updates yield an up-to-date integrated global weather math model with Satellite Engines' math models integrated in the total model. The resultant model is to be used for further extrapolations **5***d*, for storage in local GCS library **5***a* and for broadcasting to all other GCSs **1***z*.

5*c* Estimations of selected SEs' task assignments for the next (Tb,Tc) interval based on anticipated requirements from **5***l* and **5***g*. These estimates are passed on to **5***d*.

5*v* Off-line evaluation of SEs performances in the previous (Tb,Tc) interval using actual RSDs measurements **1***n*' and previous cycle SEs' assignments **1***r*' adjusted by actual SEs status reports **1***q*'. Results of SEs performance evaluations are used to update GCS library data **5***t*, **5***f* and **5***q*.

5*d* Forward extrapolation of integrated mathematical model **5***b*, from t=Ta to t=Tc, in equal dT increments, where dT=(Tc−Ta)/N and N=a large even integer. If the actual RSDs measurements for the (Ta,Tb) interval are in agreement with previously estimated weather parameters, then this extrapolation process can be reduced to only the (Tb,Tc) interval.

The atmosphere is subdivided into weather cells. The average thermodynamics, dynamics and air composition parameters inside each weather cell are represented by a vector called the weather characteristic vector. Each weather cell is represented by its weather characteristic vector for a fixed time duration.

5*e* First, find the required weather changes by taking the differences between the extrapolated weather conditions from **5***d* and the corresponding desired weather conditions from **5***h*. This is done by manipulating the corresponding weather characteristic vectors.

Next, initialize a search in **5***f* for the SEs' task assignments during the (Tb,Tc) interval. SE task assignments from **5***f* will include parameters which define each energy beam's characteristics and its Adjusted Aim Point (AAP) trajectory. This search uses the initial weather conditions from **5***d*, required weather changes from **5***d* and **5***h*. However, a sequence of desired weather conditions from **5***h* is selected at reduced constraint levels. This will ensure that at least one set of the answers found from **5***f* will later satisfy the criteria in **5***k*.

Found in **5***f* are SE's task assignments which include each one of its energy beam's characteristics as a function of time and their corresponding Adjusted Aim Point (AAP) trajectories.

Each SE assignment parameter is found by matching stored **5***f* energy absorption patterns or thermodynamic changes patterns with their corresponding required change patterns **5***e*.

5*k* The SEs' tasks assignments found in **5***f* are evaluated by performing parallel simulations. The results of these simulations should determine which set of SEs assignments best satisfies the desired weather conditions imposed on the SEs by **5***h*. All calculations are done in terms of weather characteristic vectors at the weather cells' levels **5***d*.

5*m* Define detailed Satellite Engines' task time lines based on optimal selection from **5***k*. These assignments are transmitted to the corresponding SEs **1***r*'. A second set of these assignments is sent to **5***c* for the next computation cycle. A third set of these data is sent to the GCS library data bus to be broadcast as indicated at **1***z* to all GCSs in the SWMS. This last step is necessary to take care of conditions when a GCS is reassigned to manage a different set of SEs in the next computation cycle.

5*n* Initialize the next computation cycle. The current (Tb,Tc) interval is shifted down to become the next (Ta,Tb) interval, and a new (Tb,Tc) interval is selected with the old Tc set to equal to the next Tb. The next computation cycle repeats at **5***b*.

The descriptions set out above outline a typical process to define SEs grouping, each energy beam type, each energy beam's physical characteristics and its Adjusted Aim Point (AAP) trajectory. These parameters are transmitted to their corresponding SEs **1***r*'.

NOTE: **1***x*, **1***y*, **1***z*, **1***r*', **1***q*' and **1***n*' refer to the same items identified in FIG. **1**. The prime ' denotes that these data belong to only a subgroup of SEs or subgroup of RSDs.

V.6 [C/#]: Features Relating to Control Energy Beam Directions

One major feature [C/0] is covered in this section. Two additional features [C/1] and [C/2] are covered in separate paragraphs.

[C/1] Overview

Each SE shall release its energy beams in a timely fashion following its AAP trajectory as specified by its GCS **5***m*. SE's control subsystem aims each energy beam at its AAP (Adjusted Aim Point) and makes each energy beam follow its AAP trajectory in a timely fashion.

[C/2] Direction Controls

This energy beam directional control task is partitioned into two sub-tasks. First, control the orientation of SE's structure-frame axes with respect to inertial space. This is done by using inertial flywheels or other means. Second, control the orientation of solar-reflector/solar-cell panels, antenna dishes, or lamp axes with respect to the SE's structure-frame axes. This is done by measuring the actual gimbals angle settings and torquing each gimbals ring to its desired orientation. Each energy beam's desired orientation at a given time is defined by its unit vector from reflector (or antenna or lamp) center to its AAP at that time. Using, for example, the directional cosine technique, these desired unit vectors can be transformed into desired gimbals angles. A more detailed description on how this is done has been presented above at [GCS/2].

V.7 [F/#]: Features Relating to Energy Beam Frequency and Intensity Selections

A major feature [F/0] is covered in this section. Seven additional features [F/1], . . . , [F/7] are covered in separate paragraphs.

Solar rays will be the primary energy beams discharged by the SEs. However there are times when other types of energy beams are required to penetrate a cloud layer, or to heat up a specified air mass of specific composition. In these cases, frequency agile and intensity agile energy beams are used. The frequency of an energy beam determines its ability to penetrate a layer of atmosphere of a specified composition. It also determines the degree of absorption of a given frequency energy beam by an air mass of a particular composition. Weather cells air mass compositions are estimated by Remote Sensing Devices (RSDs).

[F/1]

A specific energy beam's frequency and intensity will be selected to satisfy a given depth of atmospheric penetration and to yield a specified energy absorption contour or temperature elevation contour.

[F/2]

The change of energy into heat is monitored by RSDs, such as infrared sensors or thermal imagery cameras. Or it can be estimated from specially designed ground receivers. These receivers measure the presence of frequency agile energy beams which are frequency, amplitude or phase modulated. These RDSs data are used by GCS or by SEs directly, thus enabling adaptive adjustments of energy beams' frequencies and intensities.

[F/3]

Energy intensity at a given location is also controlled by energy beam guidance laws which specify each energy beam Adjusted Aim Point's (AAP's) trajectory, the speed AAP moves along its trajectory, dwell times, locations on an AAP trajectory and the shape of an AAP trajectory.

[F/4]

Selection of each frequency agile energy beam's frequency rests on the knowledge of the energy beam's attenuation due to atmospherical absorption, reflection and refraction. These data are stored in the GCS electronic library **5***t* as dB/Km (or watts or % transmission loss per kilometer of the energy beam path) vs frequencies for different atmospheric compositions.

[F/5]

For a given atmospheric composition the dB/Km values show a sharp drop within certain narrow frequency bands called windows (Radar and the Atmosphere by A. J. Bogush, Jr., Artech House 1989). Near the left end of each window, the parameter dB/Km experiences a sharp drop in value (dB/Km/f<<0). Near the right end of each window, the parameter dB/Km experiences a sharp rise in value (dB/Km/f>>0). The frequency of each frequency agile pulse (or beam) is selected near either end of these frequency windows to permit injection of frequency agile energy pulses into selected regions of the atmosphere.

[F/6]

Energy levels are selected to achieve the rates at which the accumulated energy absorption will change the thermodynamic and dynamic parameters of the atmosphere in a predetermined way. An example of such a rate is the rate of average temperature rise within a group of weather cells.

[F/7]

Furthermore, the energy level must satisfy safety requirements (Introduction to Radar Systems by M. I. Skolnik, McGraw-Hill Book Co. 1962).

V.8 [W#/#]: Features Relating to Basic Weather Modification Techniques

There are four major features [W1/0], . . . , [W4/0] covered in respective sections. A total of 12 (=6+2+2+2) additional features are set out separately. These additional features are:

[W1/1], . . . , [W1/6],
[W2/1], [W2/2],
[W3/1], [W3/2],
[W4/1] and [W4/2].

Basic techniques employed by SWMS to modify weather are listed below. Other weather modification requirements can be met by making different combinations of these basic techniques. These techniques are identified as basic weather modification techniques #1 through #4 ([W1/0], . . . , [W4/0]).

V.8.1 [W1/#]: Features Relating to Modifying Global Weather Conditions

This technique employs a very large number of Satellite Engines (SEs) to modify global weather conditions by blocking or redirecting solar rays. One major feature [W1/0] is covered in this entire section. Six additional features [W1/1], . . . , [W1/6] are covered in separate paragraphs.

[W1/1]

This method involves using millions (or even billions) of Satellite Engines (SEs) to block or redirect solar rays. Typically, this requires a large number of low inclination and non-coplanar orbits near the equatorial plane. When the earth requires cooling, the Ground Control Stations (GCSs) simultaneously command all SEs to rotate their $n\times(m-k)$ ($k=0, 1, \ldots <<m$) reflector panels (on one $L\times W$ side) to face the general direction of the sun and away from earth. These SEs block part of the solar energy from reaching the earth by reflecting the solar energy away from earth and thus assist the earth's cooling process.

Each SE will reserve k solar cell panels (along with $n\times(m-k)$ reflector panels) to face the sun. These solar cell panels are used to generate electricity for the SE's internal use. The value of k is such that $k=0, 1, 2, \ldots, <<m$. The $k=0$ case implies that solar cells located on the back side of each reflector panel or on its other $L\times W$ surface can generate sufficient electricity for the SE's internal use.

[W1/2]

The reflected solar rays' guidance is done by specifying the Adjusted Aim Points (AAPs) of each reflected solar energy beam and trajectories of these AAPs in deep space away from earth. In this case the AAPs can be simply computed as the line-of-sight aim points, because the reflected solar rays will have little or no interference (refraction) by the atmosphere.

[W1/3]

It is to be noted that when the equatorial regions become cooler, the average temperature differences between the polar regions and the equatorial regions are reduced. Therefore this technique may be used to modify global weather patterns or to create favorable local weather conditions which can be further modified by SWMS.

[W1/4]

When controlled cooling is not required, GCSs command some or all SEs to direct their collected solar energy to other SEs or to earth directly. Again, this is done by specifying the AAPs of each energy beam and their trajectories to the desired locations on earth or at specified Satellite Engines' reflector panels or solar cell panels. This process selectively cools certain regions but at the same time heats up other regions. This technique can also be used to supply energy to specific devices. All these tasks are under GCSs control.

[W1/5]

If these temperature differential regions are sufficiently close, an air mass motion is introduced which forces the air mass to move from the high pressure region to the low pressure region. This technique can be used to move an air mass of specific composition from one location to another. This technique can also be used to modify the jet stream path and therefore modify the weather on either side of the jet stream.

[W1/6]

Distributing AAPs over a small wet surface and aiming solar rays at these AAPs will cause evaporation. This will increase the humidity of air above the wet surface. As the humid air rises to higher altitudes clouds will form. These clouds can be used to cool local regions by blocking the sun's rays. They can also cause precipitation.

V.8.2 [W2/#]: Features Relating to Modifying Local Weather Conditions

This technique is similar to feature [W1/6] but requires far fewer Satellite Engines (SEs). Also, SEs orbits are paired as specified in feature [OP/0]. One major feature [W2/0] is covered in this entire section. Two additional features [W2/1] and [W2/2] are described in separate paragraphs.

[W2/1]

This technique can be used to warm a local region. This is done by distributing AAPs (of all SEs' reflected energy beams) over the region to be warmed. Each reflected energy beam will be assigned to dwell at a given AAP for a given duration, or each AAP trajectory will be limited to circle within a desired region.

[W2/2]

This technique can be used to create a high humidity air mass or to form clouds. This is similar to feature [W2/1] above, except that the reflected solar rays are aimed at AAPs distributed over a wet surface, such as a lake or a patch of ocean. This process is originated by Ground Control Stations (GCSs) defining the AAP trajectory of each energy beam over the wet surfaces. Satellite Engines (SEs) then reflect solar rays to their respective AAPs. This process is essentially the same as one that occurs in nature, except that both the wet surface area and the timing are selected and controlled by SWMS. Also, the intensity of the solar ray can be made more concentrated than what occurs in nature. This process will increase the moisture content of the air mass above the heated wet surface. As the high humidity air rises to higher altitudes, it begins to cool and form clouds.

V.8.3 [W3/#]: Features Relating to Moving an Air Mass Upwards

One major feature [W3/0] is covered in this entire section. Two additional features [W3/1] and [W3/2] are covered in separate paragraphs.

[W3/1]

This technique is designed to initiate and/or modify an air mass's upward motion. This is done by adaptively aiming energy beams of specified characteristics at specified AAPs. These AAPs are distributed in a vertical column inside or near the air mass that is to be moved. The type, frequency, intensity and AAP trajectory of each energy beam are adaptively selected based on sensors' feedback measurements which lead to optimal upward movement of the air mass due to energy absorption. Combinations of energy beam characteristics with guidance law (AAPs trajectories) options are simulated to obtain an optimum combination. One such criterion to judge the optimum combination can be a criterion which determines the rate of climb at which this air mass will rise to higher altitudes.

[W3/2]

Some SEs are located on earth's surface for this purpose. Other SEs may be in the air or move with the rising air column. These ground based or sea based SEs are used to heat the air column from below.

V.8.4 [W4/#]: Features Relating to Modifying an Air Mass's Horizontal Velocity Component

One major feature [W4/0] is covered in this entire section. Two additional features [W4/1] and [W4/2] are covered in separate paragraphs.

The best way to transport an air mass of specific composition and thermodynamic properties is to allow it to be carried by wind currents that exist in nature at that time. However, natural wind does not always satisfy weather modification requirements. The following techniques to transport an air mass are presented.

[W4/1]

This technique includes creating a pressure differential on either horizontal side of the air mass to be moved. This technique is similar to the one discussed in section [W1/5], except in this case in air mass size and movement are very localized. This technique requires unequal distribution of energy into two adjacent sides of the air mass to be moved. This is done by unequal concentrations of energies, AAPs, or energy beams' dwell times on either side of an air mass.

[W4/2]

This case involves concentrating AAPs trajectories along a desired direction of air mass motion. FIG. **6** illustrates this concept. Consider the case where an air mass has no initial lateral motion component. The objective is to move the air mass near **6***x* to points near **6***y*. First, define this desired direction by an arrow **6***v* relative to earth **6***e*, which may be inclined at an angle with respect to the local gravity vector. Next, imagine a large tube **6***i* enclosing the air mass to be moved and with the desired directional arrow **6***v* along tube's centerline **6***x*-**6***y*. Next, define a sequence of AAPs (**6***a*', **6***b*', **6***c*', **6***d*', . . .), such that the maximum energy absorption of each energy beam will be made to concentrate near the centerline of the tube (at **6***a*, **6***b*, **6***c*, **6***d*, etc., respectively). All these AAPs are estimated by GCSs and transmitted as assignments to the SEs **6***s* on orbits **6***h* or **6***g*. Note: each **6***s* point in FIG. **6** can represent many SEs. These SEs will first (at t=ta) concentrate all their energy beams at AAP **6***a*' near point **6***x*. This large input of energy will cause the air mass near **6***a* to absorb the energy and expand rapidly in all directions. Assume a constant temperature contour (resulting from absorption of these energy beams) can be represented by a tear shaped figure labeled **6***k*. Next (at t=tb), let these SEs shift their common aim point to an adjacent AAP at **6***b*'. This will result in rapid heating of another air mass centered at **6***b*. This will cause another tear shaped constant temperature contour labeled by **6***l*. Continuing this process is like producing a sequence of small "explosions" along the imaginary tube's centerline. The size of each "explosion" is controlled by the number of SEs (or energy beams) shearing the same AAP at a given time. The speed of the induced air mass velocity component along **6***v* also depends on the spacing and rate of change of these AAPs or energy beams dwell times along their AAP trajectories. When energy focus reaches the end of the tube **6***y*, this process can be repeated again starting near **6***x*.

This concept can be explained in another way by considering the rows of small circles in FIG. **6**. Each small circle represents the expansion due to absorption of concentrated energy beams at a given location **6***a*, **6***b*, **6***c*, . . . etc. The small arrows radiating out from the center of each small circle in FIG. **6** represents the direction of the local air velocity. As the energy center moves from **6***a* to **6***b* to **6***c* . . . , the velocity components between energy centers cancel each other out. What is left over is only the velocity component in the desired direction **6***v*. When the energy beams are removed, the surrounding cooler air will rush back into the imaginary tube **6***i* and push the air in the **6***v* direction. This technique will always introduce an air mass velocity component in the local vertical direction. This vertical velocity component may not be a bad feature in many applications, as when moving a humid air mass inland and allowing it to condense to rain. The horizontal velocity component will move the air mass inland. The vertical velocity component will allow the air mass to move to a higher and colder altitude. This will delay the air mass's condensation into rain until it has reached its desired location. If the air mass has an initial lateral velocity component **3***i*, then the final air mass velocity vector **3***k* is the vector sum of its velocity vector caused by its initial velocity **3***i* plus the SWMS induced velocity vector **3***j*.

The best way to use this technique is to first create a rising column of air near **6***y* using techniques described in section [W3/0]. Next, simultaneously applying the teachings at [W3/0] and [W4/2] will cause the air mass inside the imaginary tube **6***i* to feed to the rising air column created by [W3/0].

[A#/#]: Features Relating to Satellite Weather Modification System (SWMS) Applications

There are five major features [A1/0]–[A3/01], [A6/0] respectively covered in separate sections. There are a total of 16 (=0+0+3+0+8+5) additional features respectively covered in separate paragraphs. These additional features are:

[A3/1], . . . , [A3/3],

[A5/1], . . . , [A5/8],

[A6/1], . . . , [a6/5].

Some SWMS applications are designed to employ various combinations of the basic weather modification techniques described in section V.8. Other applications are related to energy supply and solar powered airplanes (FIG. **4**). All applications are designed to offer unique and useful services. All applications are selected to have the potential to compete successfully in the real business world. Some of these SWMS applications are illustrated in FIG. **7** and described below.

V.9.1 [A#/#]: Features Relating to Increasing Precipitation

One major feature [A1/0] is covered in this section.

[A1/0]

High humidity air masses are created by application of techniques specified in sections [W1/6] AND [W2/2] over wet surfaces **7***x* to cause cloud formation. Cloud temperatures are maintained by techniques covered in sections [F/0], [W3/0] and [W4/2]. The air mass is allowed to move to a desired location by natural wind current or by techniques specified in sections [W3/0], [W4/1] and [W4/2]. The cloud is left to cool down by a natural cooling process. This produces precipitation over the desired area. This technique can be applied to many dry regions of the world. Potential application regions are in southern California **7***y*, northern Ethiopia **7***z*, etc.

V.9.2 Omitted

V.9.3 [A3/#1]: Features Relating to Creating Whirlwinds

One major feature [A3/0] is covered in this section. Three additional features [A3/1], . . . , [A3/3] are covered in separate paragraphs.

[A3/1]

Techniques specified in section [W3/0] or [W4/0] can be used to move two air masses in opposite directions (or in the same direction but at different speeds). These air masses are offset by a small distance. This process will create a whirlwind or a small tornado.

[A3/2]

Alternatively, the movement of one of the air masses can be due to natural causes.

[A3/3]

Whirlwind or tornado strength can be increased (decreased) by combining and colliding many smaller whirl-

winds rotating in the same direction **7***j* (opposite directions **7***i*), thus creating a stronger (weaker) whirlwind.

V.9.4 [A4/#]: Features Relating to Warming Land, Sea and Air

One independent feature [A4/0] is covered in this section.

[A4/0]

Techniques described in sections [W1/4] and [W2/1] can be used to warm a land mass directly or to warm the air mass immediately above the land mass. This is done by distributing the AAPs over the region of interest. That is, the SEs are commanded to discharge solar rays or infrared radiations at these AAPs for specified durations until the desired average temperature rise has been achieved.

A few degrees rise in temperature, for a few hours during extremely cold winter nights, can save many millions of dollars worth of fruit crop annually in Florida **7***r*, California **7***r* and many farms at high altitude. This same technique can be used to heat large greenhouse farms in the U.S. Northeast **7***w*, where the large demand for fresh farm produce now necessitates importation from great distances, using large amounts of fossil fuels.

V.9.5 [A5/#]: Features Relating to Solar Powered Satellite Airplane (SPSA) Designs and Applications

One independent feature [A5/0] is covered in this section. Eight additional features [A5/1], . . . , [A5/8] are covered in separate paragraphs.

[A5/1]

A Solar Powered Satellite Airplane (SPSA) is disclosed that utilizes the energy beams discharged or reflected from Satellite Engines (SEs) to power its flight at high altitudes. As an illustration of this concept, only solar rays reflected from SEs are considered here. However, a similar system can be designed to receive laser beams or microwave energy beam from SEs. The word SATELLITE in SPSA implies this airplane's dependence on Satellite Engines (SEs) and its ability to fly indefinitely in circles above the clouds and over a fixed land area. This is illustrated by racetrack shaped dash circles **7***t* in FIG. **7**.

[A5/2]

FIG. **4** shows a typical SPSA design. This comprises a large hinged solar energy collecting disk **4***d* supported by two lift producing wings **4***w* located on either side of the disk. Arrays of solar cells **4***s* arranged on the disk **4***d* transform solar energy into electrical current. This electricity is used to power two electrical motors **4***m*, located on each wing, which drive two propellers **4***p*.

[A5/3]

Continuously adjusting SPSA headings and adjusting the disk tilt angles **4***c* (disk **4***d* roll angle about SPSA fuselage axis) will ensure that the solar rays reflected from Satellite Engines (SEs) **7***c* are as perpendicular to the disk surface **4***s* as possible at all times. This ensures maximum energy reception by the disk.

[A5/4]

The energy collecting disk **4***d* is designed to produce no lifting force during normal high altitude level flight.

[A5/5]

This zero lift condition is achieved by the combination of three design characteristics: First, the disk **4***d* has a plane of symmetry with respect to both of disk surfaces **4***s*. Therefore, when the angle of attack is zero, this disk will only produce a drag force. Second, during normal high altitude operations at any disk tilt angle **4***c*, this disk **4***d* will be maintained at zero angle of attack by its wings **4***w*. Third, independent adjustable slots **4***j* are arranged over the disk surface. Whenever pressure sensors **4***i* detect a pressure differential developing across the disk, these slots **4***j* will open automatically to let air flow from the high pressure side to the low pressure side of the disk, thus killing the lift force on the disk. Pressure sensors **4***i* are also distributed over the entire disk **4***d* and on both sides of the disk.

[A5/6]

During take-off and landing runs, SPSA's energy collecting disk **4***d* is rotated to be parallel to its two wings as illustrated in FIG. **4**. These wings will control and maintain the disk at a non-zero angle of attack position. At the same time pressure sensors **4***i* are turned off. This causes all slots **4***j* to lock in closed positions. This scheme can be used to create lift force on disk **4***d* during selected mission phases, such as during take-off and landing runs.

[A5/7]

Ground Control Stations (GCS) **1***d* are used to estimate which Satellite Engines (SEs) are available to supply power **7***c* to which Solar Powered Satellite Airplane (SPSA) **7***p*. GCSs are also used to estimate the direction and intensity of each reflected solar ray **7***c* as functions of time. GCSs must focus a group of AAPs at the center of each SPSA disk **4***d*. Also, GCSs will estimate the trajectories of these AAPs' common focal points. The trajectory of one subgroup of AAPs' common focal point will become the flight path **7***t* of one SPSA. GCSs will also estimate the disk tilt angle **4***c* of each SPSA. This information is uplinked to each SPSA. Software on-board the SPSA will enable it to fly a flight path **7***t* specified by its AAPs' common trajectory **7***t*. At the same time the SPSA will tilt its disk **4***d* following the tilt angle **4***c* time-line specified by GCSs. Periodically, SPSA will shift to a different set of SEs, a different AAPs' trajectory and a different disk tilt angle time-line as commanded by a GCS.

[A5/8]

FIG. **4** illustrates basic design features of an SPSA. A top view and a front view show an SPSA in a take-off or landing configuration. Also, a cross-section view shows the disk tilting mechanism. Important SPSA features shown in FIG. **4** are identified below.

4b	Electric motor, gear box and lock mechanism.
4c	Solar energy collecting disk 4d tilt angle. Tilt angle is the same as roll angle about the SPSA fuselage axis.
4d	Solar energy collecting disk.
4e	Landing gears.
4f	Fuselage.
4g	Gear to tilt and lock disk at desired angle.
4i	Pressure sensors located near slots 4j and distributed over both sides of the disk.
4j	Slots distributed over the disk. Slots are normally closed. Slots will automatically open to balance any local pressure difference developed across the disk.
4k	Roller rod bearings distributed over the fuselage circumference. They provide smooth tilting (roll) of the disk about SPSA fuselage axis.
4l	Payloads.
4m	Electric motor and gear mechanism used to drive the propellers.
4p	Propellers.
4q	Gear teeth attached to the disk 4d and arranged in a circle around the outer circumference of the SPSA fuselage 4f. These gear teeth are used to transmit torque which drives disk 4d tilt angles 4c.
4r	Rudders.
4s	Solar cell array cover the entire (one or both sides) disk 4d surface.
4t	Vertical tails.
4v	direction of SPSA forward motion.
4w	Wings

V.9.6 [A6/#]: Features Relating to Business Ventures Based on SWMS & SWMS/SPSA Services

One major feature [A6/0] is covered in this section. Five additional features [A6/1], . . . , [A6/5] are covered in separate paragraphs.

[A6/1]

Applications of Satellite Weather Modification System (SWMS) can be organized into unique global business ventures. There are strong demands for the types of services offered by SWMS. The services SWMS offers to the world are unique and non-existing at the present time. Both SWMS manufacture and services will generate new jobs and enhance the earth's environment at the same time. These features further strengthen the Satellite Weather Modification System (SWMS) potential as a useful invention. Therefore these SWMS business ventures are an important benefit of this invention.

[A6/2]

Stock can be issued and offered to the public to raise the necessary funds to finance these ventures. Raised funds will then be used to build prototypes of SWMS subsystems: Satellite Engines (SEs), Ground Control Stations (GCSs), Remote Sensing Devices (RSDs) and Solar Powered Satellite Airplanes (SPSAs).

[A6/3]

Initially a few basic services will be offered to potential customers who can afford to pay for SWMS services. In each orbit each SE can sequentially service many locations below its orbit. Therefore, by simply changing some computer codes these SEs can also service some non-paying customers as a public service.

[A6/4]

Some of the initial services to be offered by SWMS are illustrated in FIG. **7**. Satellite Engines (SEs) distributed in the orbits (**7***h* and **7***g*) are too small to be shown in FIG. **7**. Solar rays **7***a* from the sun are first reflected **7***b* from the SEs in the lower orbit to SEs in the higher orbit before finally being reflected to earth **7***c*. Some initial services to be offered by SWMS are described below:

1. Techniques described in section [A4/0] are used to warm local regions during extremely cold winter days. Potential paying customers are orange growers in Florida **7***r* and California **7***r*, greenhouse farms **7***w*, etc. Potential nonpaying customers are small farmers at high latitudes, etc.
2. Solar Powered Satellite Airplanes (SPSAs) **7***p* (described in section [A5/0]) are used to carry communication relay instruments or weather monitoring equipment **4***l* over local regions. Potential paying customers are communication companies, news services, etc. Potential non-paying customers are public education services, environmental protection agencies, weather services, local police departments, etc. It is to be noted that when an SPSA flies a closed loop pattern **7***t* (dashed line racetrack patterns in FIG. **7**) above a given land region, it can be used to compete for business with satellites in a geo-synchronized orbit. The advantages of SPSA include that these SPSAs are re-usable and closer to earth and each SPSA carries its own reusable launching system.
3. The technique discussed in section [A1/0] is used to bring rain to dry regions in the world. The Satellite Engines' (SEs') tasks are to warm the ocean surface a few miles off the southern California coast **7***x*. These tasks must also be timed with the local ocean wind direction, so that the high humidity air mass created by SEs over the ocean can be carried inland by the wind. To support the energy beams' direction guidance laws, a set of AAPs are defined and distributed over an ocean surface area **7***x*. The trajectories of these AAPs can follow the local water current, be timed in accordance with local wind directions, and avoid local cloud formations. Potential paying customers are southern California water authority **7***y*, etc. Potential non-paying customers are drought victims of Ethiopia **7***z*, etc.

[A6/5]

FIG. **7** illustrates some SWMS applications. Items in this figure are identified below:

7a	Solar rays from the sun.
7b	Solar rays reflected from SEs in lower orbit 7g to SEs in higher orbit 7h. SEs are too small to be shown in these orbits. Each 7b line in FIG. 7 represents solar rays from thousands of reflector panels belonging to many SEs.
7c	Solar rays reflected from higher orbit 7h to earth or to SPSA 7p. SEs are too small to be shown in this figure. Each 7c line in FIG. 7 represents solar rays reflected from thousands of reflector panels belonging to many SEs. These solar rays can be aimed at many AAPs on earth or they may be focused on a single AAP at the center of an SPSA disk.
7d	Nature generated whirlwinds.
7e	Earth.
7g	Lower orbit of a nonintersecting-noncoplanar orbital pair.
7h	Higher orbit of a nonintersecting-noncoplanar orbital pair.
7i	Directions of air mass motions induced by SWMS. This will create a whirlwind which can be used to cancel an existing whirlwind 7d.
7j	Direction of air mass motions induced by SWMS. This will create a whirlwind which can be used to increase the strength of an existing whirlwind 7d.
7p	Solar Powered Satellite Airplane (SPSA).
7r	Local region to be warmed by solar energy.
7t	SPSA flight pattern defined by GCS as focal point of thousands of reflecting solar rays. In most cases the SPSA flight path is the same as the common AAP trajectory defined by GCS.
7v	Electricity generating stations: direct solar, wind or hydroelectric.
7w	Greenhouse farms.
7x	Ocean or other wet surfaces to be heated by concentrated solar energy beams. This is done to increase the air mass humidity above 7x.
7y	Increased precipitation by SWMS in southern California
7z	Increased precipitation by SWMS in northern Ethiopia.

APPENDIX: ACRONYMS

AAP Adjusted Aim Point.

GCS Ground Control Station (see FIG. **1**).

LOS Line-Of-Sight.

MMW Millimeter Wave.

RSD Remote Sensing Device (see FIG. **1**).

SE Satellite Engine (See FIG. **2**).

SPSA Solar Powered Satellite Airplane (see FIG. **4**).

SWMS Satellite Weather Modification System (see FIG. **1**).

[SWMS/#]	Invention features relating to Satellite Weather Modification System (SWMS) designs (# = 0, 1, . . . ,5).
[SE/#]	Invention features relating to Satellite Engines (SEs) designs (# = 0, 1, 2, . . . ,6).
[OP/#]	Invention features relating to SEs orbital OPerations (# =0, 1, 2, . . . ,10).
[C/#]	Invention features relating to SEs' energy beam

-continued

	direction Controls (# = 0, 1, 2).
[RSD/#]	Invention features relating to Remote Sensing Devices (RSDs) integration into the SWMS (# = 0, 1, 2).
[GCS/#]	Invention features relating to Ground Control Stations (GCSs) (SEs guidance) designs (# = 0, 1, 2, 3).
[F/#]	Invention features relating to Frequency agile energy beams' frequency and intensity selections (# = 0, 1, . . . ,7).
[W#/#]	Invention features relating to SWMS's basic Weather modification techniques. Four major features are: [W1/0], [W2/0], [W3/O] and [W4/0].
[W1/#]	Invention features relating to modifying global weather conditions (# = 0, 1, . . . ,6).
[W2/#]	Invention features relating to modifying local weather conditions (# = 0, 1, 2).
[W3/#]	Invention features relating to moving an air mass in a vertical upward direction (# = 0, 1, 2).
[W4/#]	Invention features relating to modifying air mass velocity horizontal component (# = 0, 1, 2).
[A#/#]	Invention features relating to SWMS applications. Six major features are: [A1/0], [A2/0], [A3/0], [A4/0], [A5/0] and [A6/0].
[A1/#]	Invention features relating to increasing precipitation applications (# = 0).
[A3/#]	Invention features relating to creating whirlwinds (# = 0, 1, 2, 3).
[A4/#]	Invention features relating to warming local regions (# = 0).
[A5/#]	Invention features relating to SPSA design and applications (# = 0, 1, . . . ,8).
[A6/#]	Invention features relating to business ventures based on applications of SWMS and SWMS/SPSA services (# = 0, 1, . . . ,5).

I claim:

1. Apparatus comprising:

a plurality of satellites, each of said satellites being in a planetary orbit, and each satellite being under remote control and capable of reflecting solar radiation;

a plurality of detectors for monitoring a planetary region, each detector generating at least one signal representative of dynamic or thermodynamic conditions in the monitored region; and

at least one control station responsive to the signals from the detectors and exercising remote control over the satellites for directing solar energy reflected from the satellites towards a plurality of distributed aim points to achieve desired dynamic or thermodynamic properties of the monitored region.

2. Apparatus according to claim **1** wherein the monitored region comprises a land mass.

3. Apparatus according to claim **1** wherein the monitored region comprises a water mass.

4. Apparatus according to claim **1** wherein the monitored region comprises an air mass.

5. Apparatus according to claim **1** wherein the control station comprising means for extrapolating current dynamic or thermodynamic atmospheric values to determine corresponding values at a future time.

6. Apparatus according to claim **1** wherein the control station comprises means for specifying desired dynamic or thermodynamic values at desired locations and desired times.

7. A method comprising:

placing each of a plurality of satellites in a planetary orbit, each satellite being capable of reflecting solar radiation;

selecting a planetary region to be monitored;

detecting dynamic or thermodynamic conditions at a plurality of points in the selected region;

determining an increment of solar radiation needed to substantially conform the detected dynamic or thermodynamic conditions to desired values; and

exercising remote control over the satellites so as to direct solar energy reflected from the satellites towards a plurality of distributed aim points to achieve the determined increment.

8. A method according to claim **7** comprising the step of including a land mass in the selected region.

9. A method according to claim **7** comprising the step of including a water mass in the selected region.

10. A method according to claim **7** comprising the step of including an air mass in the selected region.

11. Apparatus comprising:

at least one million satellites, each of said satellites being in a planetary orbit, and each satellite being under remote control and capable of reflecting solar radiation;

a plurality of detectors for monitoring a planetary region, each detector generating at least one signal representative of dynamic or thermodynamic conditions in the monitored region; and

at least one control station responsive to the signals from the detectors and exercising remote control over the satellites for directing solar energy reflected from the satellites back into space and away from the planet to achieve desired dynamic or thermodynamic properties of the monitored region.

12. Apparatus according to claim **11** wherein:

the number of said satellites is at least one billion.

13. Apparatus according to claim **11** wherein the control station comprising means for extrapolating current dynamic or thermodynamic atmospheric values to determine corresponding values at a future time.

14. Apparatus according to claim **11** wherein the control station comprises means for specifying desired dynamic or thermodynamic values at desired locations and desired times.

15. A method comprising:

placing each of at least one million satellites in a planetary orbit, each satellite being capable of reflecting solar radiation;

selecting a planetary region to be monitored;

detecting dynamic or thermodynamic conditions at a plurality of points in the selected region;

determining a decrement of solar radiation needed to substantially conform the detected dynamic or thermodynamic conditions to desired values; and

exercising remote control over the satellites for directing solar energy reflected from the satellites back into space and away from the planet to achieve the determined decrement.

16. A method according to claim **15** wherein:

the number of said satellites is at least one billion.

* * * * *

US 20100201133A1

(19) United States

(12) Patent Application Publication

MESLER

(10) Pub. No.: US 2010/0201133 A1

(43) Pub. Date: Aug. 12, 2010

(54) ZERO POINT ENERGY ROTATOR TRANSDUCER AND ASSOCIATED METHODS

(76) Inventor: PAUL R. MESLER, EMERY, UT (US)

Correspondence Address:
THORPE NORTH & WESTERN, LLP.
P.O. Box 1219
SANDY, UT 84091-1219 (US)

(21) Appl. No.: 12/541,007

(22) Filed: Aug. 13, 2009

Related U.S. Application Data

(60) Provisional application No. 61/088,913, filed on Aug. 14, 2008.

Publication Classification

(51) Int. Cl.
H02K 7/18 (2006.01)
F03G 7/10 (2006.01)

(52) U.S. Cl. ..... 290/1 C; 290/1 R; 74/DIG.009

(57) ABSTRACT

An energy conversion system for extracting energy from the zero-point field of space is disclosed and described. This system includes a primary transducer operatively associated with a secondary transducer. The primary transducer can include a substrate having an arm rotatably coupled to the substrate, while the substrate can be confined to move along a linear oscillatory path. The secondary transducer converts kinetic energy of the substrate and arm to usable energy. The multi-mode motion of the substrate and arm combination is sufficient to impart a momentum influx to rotational motion of the arm.

The momentum influx can then be converted to usable energy such as mechanical, electrical and/or thermal energy. As described in more detail herein, the momentum influx appears to be a result of radiation pressure due to scattering in part of the electro-magnetic momentum-energy contained within the zero-point field of space opposite to centripetal acceleration of the arm.

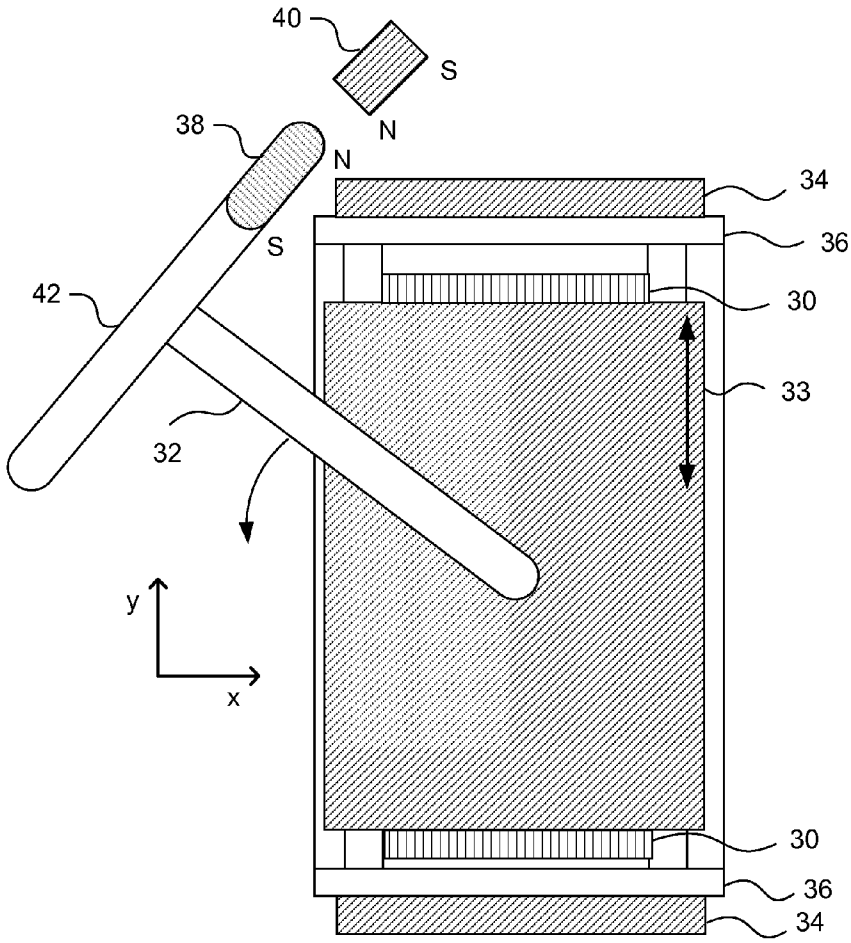

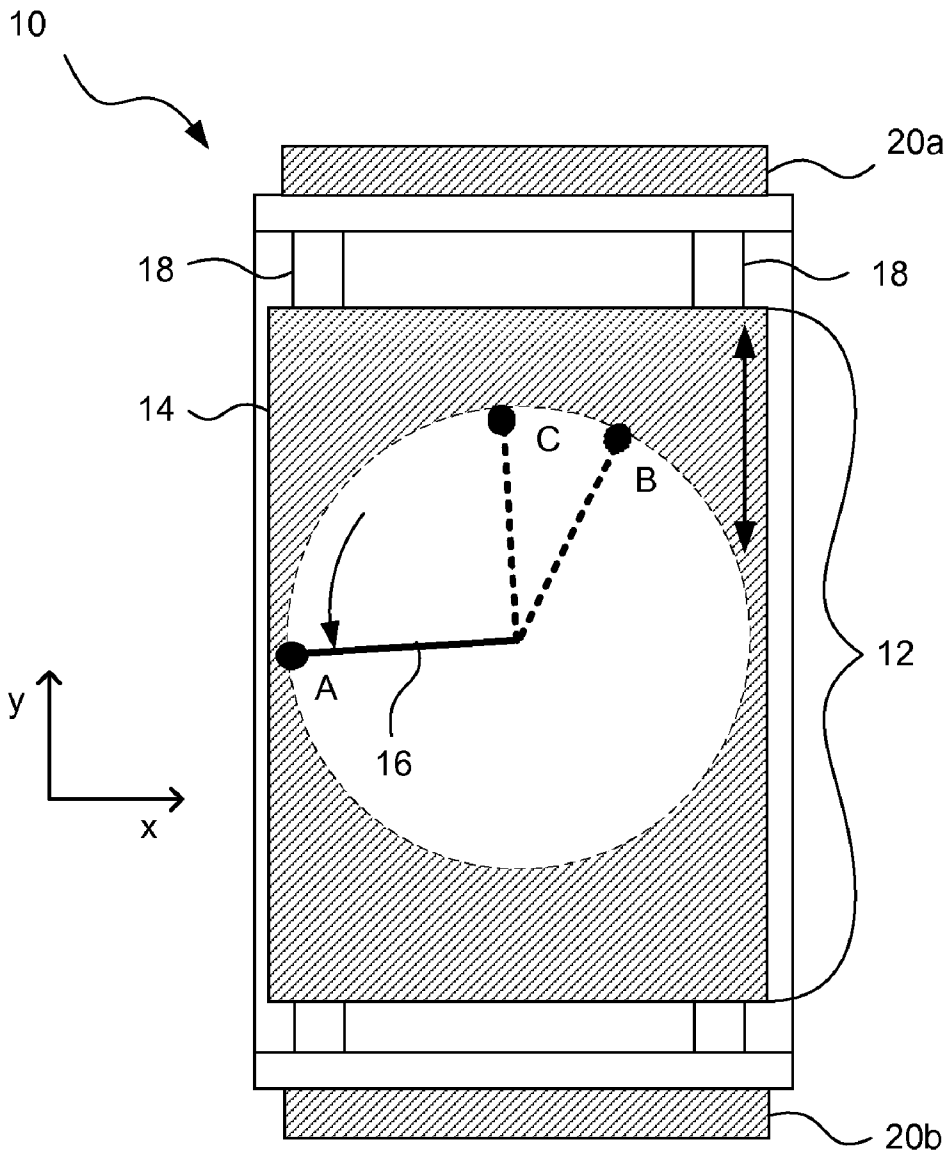

FIG. 1

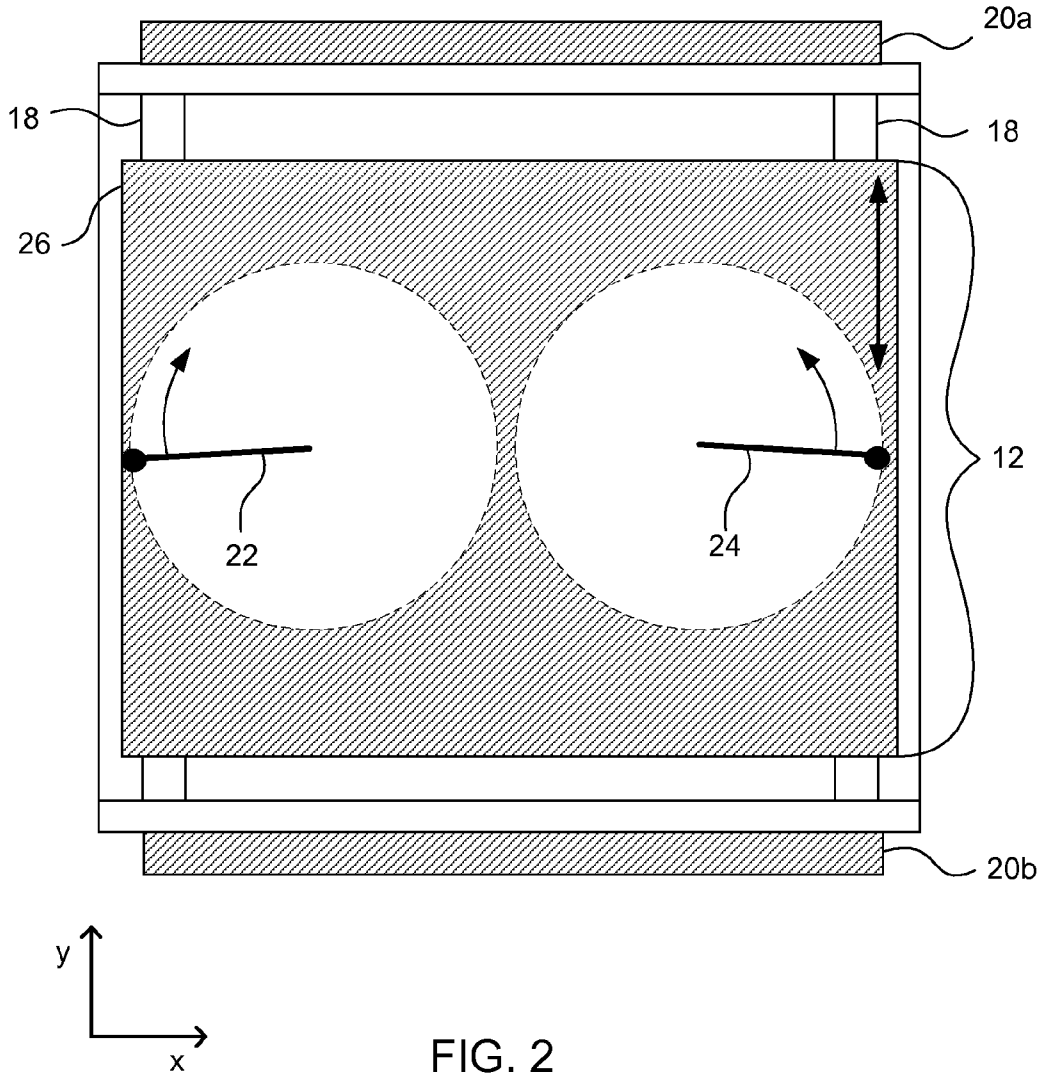

FIG. 2

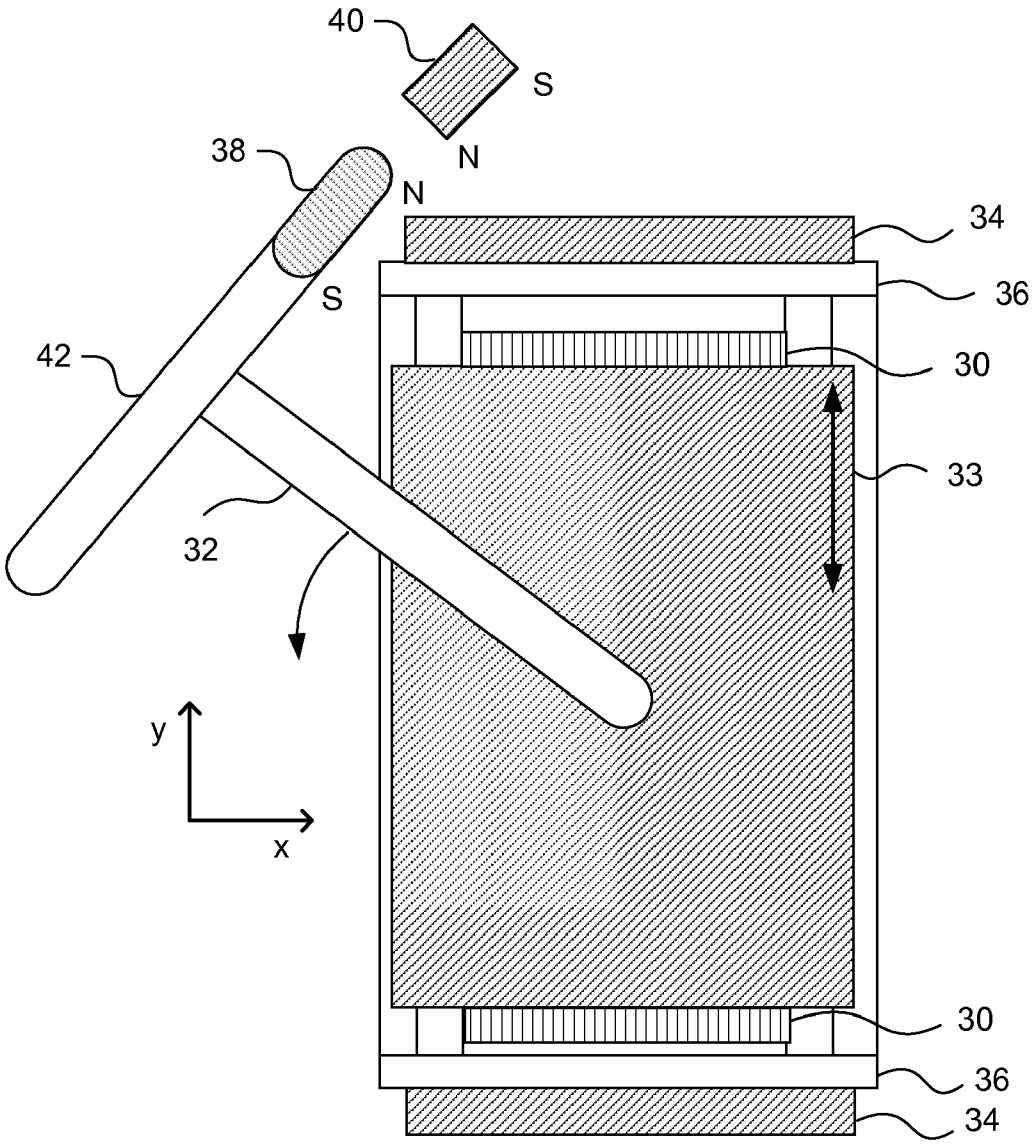

FIG. 3

ZERO POINT ENERGY ROTATOR TRANSDUCER AND ASSOCIATED METHODS

RELATED APPLICATIONS

[0001] This application claims the benefit of U.S. Provisional Application No. 61/088,913, filed Aug. 14, 2008 which is incorporated herein by reference.

FIELD OF THE INVENTION

[0002] This invention relates to generation of energy from the zero-point energy field of space or electromagnetic quantum vacuum. More specifically, the invention relates to a device useful for extraction of useful work via a sliding rotator. Therefore, the present invention relates generally to the fields of physics, quantum physics, and electromagnetism.

BACKGROUND OF THE INVENTION

[0003] The now ubiquitous drive for energy independence has provided a new set of incentives and appreciation for development of environmentally and economically responsible energy resources. Conventional discussions regarding such energy resources often revolve around fossil fuels, nuclear, and "alternative energy sources" such as solar, wind, bio fuels, hydrogen, fuel cells, and the like. Each of these energy resources currently comes with various benefits and drawbacks and often entail trade-offs between perceived pollution and environmental problems, costs, efficiencies, and unintended consequences (e.g. corn demand for use as fuel versus food).

[0004] Since at least the 1960's some theoretical physicists have proposed the concept of zero-point energy which suggests a background energy field throughout space. Historically, these physicists have been at least partially marginalized by mainstream academic thought. However, over the past decade or so, such theories have begun to gain significant traction in terms of recognition and available proofs to support these theories. Although this developing area of physics has experienced progress, practical applications of such theories remain severely limited. One example of such progress in practical applications is the work of Bernard Haisch and others in capitalizing on the Casimir effect. Such efforts thus far remain relegated to the quantum level. Although a wide variety of purported devices and claims have been made, no macroscale efforts have yet proven to yield useful energy gains.

SUMMARY OF THE INVENTION

[0005] In light of the relative infancy of the field and deficiencies noted above, the present invention provides an energy conversion system for extracting energy from the zero-point field of space. This system includes a primary transducer operatively associated with a secondary transducer. The primary transducer can include a substrate having an arm rotatably coupled to the substrate, while the substrate can be confined to move along a linear oscillatory path. The secondary transducer converts kinetic energy of the substrate and arm to usable energy. The multi-mode motion of the substrate and arm combination is sufficient to impart a momentum influx to a rotational motion of the arm. The momentum influx can then be converted to usable energy such as mechanical, electrical and/or thermal energy. As described in more detail herein, the momentum influx appears to be a result of radiation pressure resulting from scattering in part of the electro-magnetic momentum-energy contained within the zero-point field of space opposite to centripetal acceleration of the arm.

[0006] There has thus been outlined, rather broadly, the more important features of the invention so that the detailed description thereof that follows may be better understood, and so that the present contribution to the art may be better appreciated. Other features of the present invention will become clearer from the following detailed description of the invention, taken with the accompanying drawings and claims, or may be learned by the practice of the invention.

BRIEF DESCRIPTION OF THE DRAWINGS

[0007] The present invention will become more fully apparent from the following description and appended claims, taken in conjunction with the accompanying drawings. Understanding that these drawings merely depict exemplary embodiments of the present invention and they are, therefore, not to be considered limiting of its scope. It will be readily appreciated that the components of the present invention, as generally described and illustrated in the figures herein, could be arranged, sized, and designed in a wide variety of different configurations. In particular, relative dimensions may vary and are generally not presented in an optimized configuration but are rather provided for clarity and convenience in describing the invention generally. Nonetheless, the invention will be described and explained with additional specificity and detail through the use of the accompanying drawings in which:

[0008] FIG. **1** is a schematic of an energy conversion system in accordance with one embodiment of the present invention.

[0009] FIG. **2** is a schematic of an energy conversion system having two rotating arms, one rotating clockwise and the other counterclockwise, in accordance with another embodiment of the present invention.

[0010] FIG. **3** is a schematic of an energy conversion system illustrating an electro-magnetic mechanism for accelerating the arm in accordance with yet another embodiment of the present invention.

DETAILED DESCRIPTION OF EXEMPLARY EMBODIMENTS

[0011] The following detailed description of exemplary embodiments of the invention makes reference to the accompanying drawings, which form a part hereof and in which are shown, by way of illustration, exemplary embodiments in which the invention may be practiced. While these exemplary embodiments are described in sufficient detail to enable those skilled in the art to practice the invention, it should be understood that other embodiments may be realized and that various changes to the invention may be made without departing from the spirit and scope of the present invention. Thus, the following more detailed description of the embodiments of the present invention is not intended to limit the scope of the invention, as claimed, but is presented for purposes of illustration only and not limitation to describe the features and characteristics of the present invention, to set forth the best mode of operation of the invention, and to sufficiently enable one skilled in the art to practice the invention. Accordingly, the scope of the present invention is to be defined solely by the appended claims.

[0012] The following detailed description and exemplary embodiments of the invention will be best understood by reference to the accompanying drawings, wherein the elements and features of the invention are designated by numerals throughout.

Definitions

[0013] In describing and claiming the present invention, the following terminology will be used.

[0014] The singular forms "a," "an," and "the" include plural referents unless the context clearly dictates otherwise. Thus, for example, reference to "an arm" includes reference to one or more of such members and reference to "converting" refers to one or more such steps.

[0015] As used herein with respect to an identified property or circumstance, "substantially" refers to a degree of deviation that is sufficiently small so as to not measurably detract from the identified property or circumstance. The exact degree of deviation allowable may in some cases depend on the specific context.

[0016] As used herein, "adjacent" refers to the proximity of two structures or elements. Particularly, elements that are identified as being "adjacent" may be either abutting or connected. Such elements may also be near or close to each other without necessarily contacting each other. The exact degree of proximity may in some cases depend on the specific context.

[0017] As used herein, a plurality of items, structural elements, compositional elements, and/or materials may be presented in a common list for convenience. However, these lists should be construed as though each member of the list is individually identified as a separate and unique member. Thus, no individual member of such list should be construed as a de facto equivalent of any other member of the same list solely based on their presentation in a common group without indications to the contrary.

[0018] Concentrations, amounts, and other numerical data may be presented herein in a range format. It is to be understood that such range format is used merely for convenience and brevity and should be interpreted flexibly to include not only the numerical values explicitly recited as the limits of the range, but also to include all the individual numerical values or sub-ranges encompassed within that range as if each numerical value and sub-range is explicitly recited. For example, a numerical range of about 1 to about 4.5 should be interpreted to include not only the explicitly recited limits of 1 to about 4.5, but also to include individual numerals such as 2, 3, 4, and sub-ranges such as 1 to 3, 2 to 4, etc. The same principle applies to ranges reciting only one numerical value, such as "less than about 4.5," which should be interpreted to include all of the above-recited values and ranges. Further, such an interpretation should apply regardless of the breadth of the range or the characteristic being described.

[0019] In the present disclosure, the term "preferably" or "preferred" is non-exclusive where it is intended to mean "preferably, but not limited to." Any steps recited in any method or process claims may be executed in any order and are not limited to the order presented in the claims. Means-plus-function or step-plus-function limitations will only be employed where for a specific claim limitation all of the following conditions are present in that limitation: a) "means for" or "step for" is expressly recited; and b) a corresponding function is expressly recited. The structure, material or acts that support the means-plus function are expressly recited in the description herein. Accordingly, the scope of the invention should be determined solely by the appended claims and their legal equivalents, rather than by the descriptions and examples given herein.

Embodiments of the Invention

[0020] Referring now to FIG. **1**, an energy conversion system **10** is shown generally for extracting energy from the zero-point field of space. The system can include a primary transducer **12** which is designed to extract energy from the zero-point field of space in the form of kinetic energy. Multi-mode motion can be induced in a primary transducer along an oscillatory path. The multi-mode motion can include a primary translational motion and a secondary motion such that abrupt changes in the primary translational motion are sufficient to impart a momentum influx to the secondary motion. In one embodiment, the primary transducer can include a substrate **14** having an arm **16** rotatably coupled to the substrate. The substrate is generally confined to move along an oscillatory path. A secondary transducer **20***a* can be operatively associated with the primary transducer to covert the momentum influx into usable energy. Thus, the systems of the present invention provide an energy conversion system for extracting energy from the zero-point field of space. Generally, the system includes a means for extracting momentum-energy from vacuum by the action of inertia and a means for converting the momentum-energy to usable energy operatively associated with the means for extracting momentum-energy.

[0021] More particularly, the substrate **14** can be any suitable member upon which a rotating arm **16** can be coupled or otherwise mounted. The substrate can be guided along the oscillatory path by any suitable mechanism such as, but not limited to, tracks, walls or the like. FIG. **1** shows a linear oscillatory path defined by a pair of tracks **18** along which the substrate can move. The substrate can move along the tracks via bearings, wheels, magnetically repulsive members, or any other suitable approach. Typically, it is most desirable to minimize friction between the substrate and tracks in order to maximize energy transfer to the secondary transducer. The substrate and arm can be formed of any suitable material which can be readily chosen based on designed parameters to meet various property requirements such as density, fracture strength, toughness, etc. Furthermore, the shape and contours of the substrate and arm can also be designed to minimize aerodynamic resistance due to the significant acceleration forces per unit of time experienced by the primary transducer.

[0022] In one aspect of the present invention, the substrate has a substrate mass (m_2) and the arm has an arm mass (m_1) such that a ratio of m_2 to m_1 is chosen to maximize a gain in kinetic energy (ΔKE) of the substrate. The rotating arm acts as the primary momentum influx extraction mechanism which experiences an inertial force acting opposite to the centripetal force acting on the rotating arm. A fraction of the inertial force is manifest at an axis of rotation which is rigidly attached to the substrate and which constrains the arm to rotate around this axis. The y-component of this force acting on the axis, denoted as the centrifugal reactive force, imparts an impulse on the substrate in the positive y-direction with respect to an x-y coordinate system when the arm rotates within the first quadrant of the said x-y coordinate system or imparts an impulse on the substrate in the negative y-direction when the arm rotates within the third quadrant of the said x-y coordinate system, such that the substrate experiences a net time-

rate influx of momentum from the zero-point energy field of space or an increase in the momentum of the substrate in either the positive or negative y-direction, depending on which quadrant the arm is rotating in.

[0023] The oscillatory path can be a linear track **18** which defined on both ends by a pair of resilient stationary members **20***a* and **20***b* oriented on either end of the linear track. During operation of the system, the primary transducer oscillates back and forth between the two stationary members. The approach at each end is accompanied by a transfer of kinetic energy of the primary transducer (e.g. substrate and arm) to the secondary transducer. The primary transducer can thus be coupled to the secondary transducer in a manner which allows for conversion of this kinetic energy to the secondary transducer. For example, this can be accomplished by providing an at least partially or substantially inelastic collision with the resilient stationary members. As discussed in more detail below, various mechanisms can be effectively used to convert kinetic energy of the primary transducer into usable energy, e.g. via mechanical, thermal, and/or electromagnetic features.

[0024] As can be readily appreciated, the arm and substrate need an initial input of energy from an external source to begin movement. The source of energy to initiate rotation of the arm can come from a conventional energy source, such as a battery. This external energy can be transferred to the arm such as by a coaxial motor, magnetic accelerator, external flywheel, or the like. For example, a drive motor can be operatively associated with the arm and configured to initiate rotational motion of the arm and sustain the rotational motion at a predetermined critical angular velocity. Another option is to provide a permanent magnet on the arm, e.g. at the free end, and a complimentary magnetic induction coil at a location external to the primary transducer. In this manner, an electric current applied to the induction coil creates a magnetic field sufficient to act on the permanent magnet and accelerate the arm. After a critical angular velocity is reached, the external source of energy (such as a battery, the power grid, etc.) for the motor or other suitable initiator mechanism can be switched to an alternative energy storage device such as collected energy.

[0025] Referring now to FIG. **2**, an alternative embodiment of the present invention is shown including an arm **22** and a secondary arm **24** each rotatably coupled to the substrate. In one embodiment, the secondary arm has an axis of rotation spaced apart from an axis of rotation of the arm **22**. Alternatively, the secondary arm could share a common axis of rotation. In either case, the secondary arm is coupled to the arm such that both the arm and the secondary arm rotate at a common angular velocity and opposite rotational directions. Typically, the secondary arm also has a substantially identical mass and dimensions to that of the arm. In other words, the arms swing forward and back in the same cycle, with common y-coordinates and mirror x-coordinates.

[0026] In one embodiment, a motor can drive the first arm, and the second arm can be driven by gears linked to the first arm, such that they are in sync with each other, rotating at the same angular speed but in opposite rotational directions. In such cases, the cosines of the rotation angle of each arm will always be equal in magnitude, but opposite in sign. Thus, the x-components of the centrifugal reactive force acting on each axis would be equal and opposite in direction, and therefore, they would cancel each other. As a result, the substrate having two rotating arms will not impart compressive forces on the corresponding linear track along the x-axis during operation of the system.

[0027] The kinetic energy of the primary transducer can be converted to usable energy twice for every full rotation of the arm(s), i.e. once between the 0° position and the 90° position and once between the 180° and the 270° position. The optimal position of the arm at impact of the substrate with the stationary member can vary but is generally in these ranges. Specifically, as the arm approaches 90° or 270° the gain approaches 0 (see Example, Equation 3). Similarly, the momentum of the substrate at 0° and 180° is also 0 so the gain at those points would also be 0. A suitable secondary transducer can thus be coupled with the primary transducer as a means for converting kinetic and momentum-energy of the substrate and arm into usable energy such as electrical, mechanical, or thermal energy. The secondary transducer can be an electromagnetic induction system, mechanical gear system, heat transfer system, piezoelectric system, or the like. For example, the means for converting the momentum-energy can be an induction coil system, heat dissipater, magnetic brake, friction brake, or linear to rotational motion translator. A heat dissipater can include a substantially inelastic collision between the substrate and a set of bumpers. Heat generated by collision can be converted to energy through heat transfer to produce steam which can be used to drive a turbine, or other similar thermo-electric conversion devices.

[0028] In one specific embodiment of the present invention, the secondary transducer includes at least one induction coil system including a magnet and a complimentary conductive coil. The magnet can be physically coupled to the substrate and oriented to approach the complimentary conductive coil sufficient to induce electrical current therein during movement of the substrate along the oscillatory path. A similar magnet system can be incorporated into the arm as well. Such a secondary transducer can also be utilized as the initiator system by switching the energy source, i.e. from an external battery to energy derived from the zero-point energy field. FIG. **3** illustrates a simplified version of such an electromagnetic-kinetic energy conversion system for the secondary transducer. In particular, a permanent magnet **30** can be coupled to each collision end of the substrate **33** having the arm **32** rotatably coupled thereto. An external induction coil **34** can be oriented at a position (or positions) to allow the kinetic energy of the substrate to be progressively converted to electrical energy at each approach of the substrate to the stationary members **36**. In another embodiment, a piezoelectric material such as a crystal or ceramic can be coupled to the stationary member. The force applied by the substrate to the piezoelectric material can generate an electric potential in response to the applied mechanical stress. Alternatively, the secondary transducer can include a mechanical coupling between the substrate and an energy translator. The energy translator can be a linear-to-rotational motion drive, heat surfacing, or rack and pinion, although other mechanisms may also be suitable.

[0029] After the substrate collides with either of the stationary members, the arm's rotational speed can be replenished by a suitable arm accelerator. For example, an electro-magnet system can be oriented with a permanent magnet **38** at the free end of the arm with a corresponding external induction coil **40**. In this case, the arm can have a t-shape to allow the permanent magnet to be oriented substantially in-line with the magnetic field produced by the external electro-magnet

(although opposite signs). This allows for a maximum transfer of kinetic energy to the arm from the electro-magnet acceleration system. Alternatively, the permanent magnet and induction coil can be swapped. Typically, the t-portion **42** can have substantially equal mass on either end such that the center of mass lies along the arm axis. This electro-magnet can impart an impulsive torque to the arm in either the second or fourth quadrant (or at any point right after the collision of the substrate with a stationary member) as the permanent magnet attached to the arm passes closely to the electro-magnet. The advantage of this approach is that the arm's rotation will be maintained substantially by electro-magnetism without additional gears or mechanical losses due to the friction of such gears. This replenishment of the rotational speed of the arm can optionally be achieved by a motor in the second and fourth quadrant (or at any point right after the collision of the substrate with a stationary member) by using pulsed technology, wherein the power to the motor is only turned on in the second or fourth quadrant.

[0030] In operation, the movement of the substrate can follow a linear oscillatory path having two endpoints while the arm(s) follows a cyclic path such that translational motion of the substrate in a y-direction along the oscillatory path substantially coincides with translational motion of the arm in the y-direction. Furthermore, the arm has two theoretical maximum energy transfer positions, the positions occurring twice for every cycle of rotation of the arm. Actual maximum energy transfer positions can be empirically determined and a collision swing angle adjusted to obtain a substantially maximum in the usable energy, depending on the specific design, i.e. relative masses, arm length, rotational velocity, etc.

[0031] There are at least two factors that impact the overall maximum energy gain of the system. For example, the substrate's final kinetic energy before collision with a stationary member partly determines the maximum energy gain of the system. Maximum energy gain is also determined by the angular displacement of the arm at the time of the collision, the angular velocity of the arm, the linear velocity of the substrate prior to collision and the relative masses of the arm and substrate.

[0032] During operation of the system, a full cycle of rotation of the rotator can be divided into the four conventional quadrants counter-clockwise. Upon start-up, the arm is initiated with a battery driven motor (or equivalent, such as an electro-magnet system) to reach a terminal velocity while holding the slider substrate stationary. The terminal velocity is determined by the friction in the system and the power transfer capabilities of the device that delivers power to the rotator to keep it rotating. After the rotator has reached this constant velocity, integrated sensors in the system release the slider just prior to the rotator arriving at its 0 degree position. The slider will begin to accelerate when the y-component of the centrifugal reactive force acting on the physical vertical axis attached to the slider is greater than any static friction force between the slider and its linear track. The angle of the rotator with respect to the x-axis at which angle the slider begins to accelerate is denoted as phi. During this first quadrant rotation of the rotator, the power to the motor can be optionally turned off so that the rotator continues to rotate on its own rotational inertia.

[0033] The distance between the front and back secondary transducers or stationary members can be adjusted such that the slider "collides" with this secondary front transducer when the rotator has rotated an angle less than 90 degrees (e.g. 15° to 75° although other ranges may be useful such as about)45° with respect to the x-axis which gives a maximum transfer of energy.

[0034] In one embodiment, the secondary transducer can comprise a linear generator. The linear generator can include a coil or set of coils receiving the magnets attached to the slider, and all of the electronic and electrical circuitry associated with the linear generator must be able to handle a brief impulse of power if the slider is to come to a near stop quickly. The linear generator can be designed of sufficiently robust materials and capacity to handle this power surge. Alternatively, the secondary transducer can include a thermal conversion system or a piezoelectric device, as previously discussed. More particularly, the stationary members and substrate can be designed to provide a substantially inelastic collision such that much of the kinetic energy of the substrate is converted to heat or electricity. In a thermal conversion process, the substrate and stationary member can accordingly be thermally linked to a water reservoir such that water is heated to steam, which drives an electrical generator.

[0035] A thermal conversion process may be more effective for a large scale energy conversion system. A piezoelectric conversion process may be more useful for a small scale energy conversion system, such as an energy conversion system used in a micro-machine or other type of micro-electro-mechanical system (MEMS).

[0036] After the slider comes to a complete stop after the collision of the slider with a stationary member a pulsed power source can be used to replenish the speed of the rotator back to its initial speed. There will typically be a loss in speed of the rotator due to friction and a replenishment of the speed of the rotator must happen twice every cycle after every collision of the slider with a stationary member.

[0037] Based on the guidance provided herein, a speed of the rotational motion, relative masses of the arm and the substrate, geometry of the arm, and the geometry of the substrate can all be designed such that zero-point energy is utilized to maintain the movement of the substrate. Non-limiting examples of specific variables which can be adjusted include aerodynamic shape of the arm and substrate, length of the arm, materials of construction, density of substrate and arm, and the like.

[0038] Theoretical Background

[0039] Without being bound to any particular theory, it is thought that the principles of operation of the present invention are governed by a theoretical backdrop described in more detail below. In summary, this theoretical backdrop indicates that the momentum influx to the primary transducer is a result of radiation pressure due to scattering in part of the electromagnetic momentum-energy contained within the zero-point field of space opposite to the centripetal acceleration of the arm. The systems of the present invention can be sized and incorporated into a wide variety of applications which are currently occupied by conventional energy sources, e.g. batteries, power generators, fuel cells, and so forth. A more in depth description of one theory follows; however, it is understood that the following description is not exclusive, exhaustive or definitive of the underlying inventive concept.

[0040] We begin a discussion with a rotating point particle with a mass of m_1, and denote it as the rotator. One end of the rotator is attached to a vertical axis by a mass-less wire of length r, so that the rotator rotates freely counter-clockwise around this axis with two degrees of freedom in a plane parallel to the earth. The vertical axis is rigidly attached to a

second object denoted as the slider with mass m_2. The slider is constrained to move along a linear track with one degree of freedom, coincident to the y-axis of an x-y Cartesian coordinate system. Initially, the axis of rotation is set at the origin of the coordinate system.

[0041] The rotator is aligned coincident with the x-axis of the x-y coordinate system, such that the rotator is located at 180 degrees with respect to the x-axis. The slider presses against a back bumper so that the slider cannot move in the negative y-direction. An impulse is applied on the rotator in the negative y-direction, causing the rotator to rotate counter-clockwise. The rotator rotates until it passes the 0 degrees point, and the slider moves in the positive y-direction at some angle after this 0 degrees point. Immediately prior to the movement of the slider, the initial tangential velocity of the rotator is denoted as v_i. A short time interval later as the slider moves in the positive y-direction, the slider is allowed to make an inelastic collision with a front bumper at some angle θ of the rotator with respect to the x-axis. The tangential velocity of the rotator prior to the collision of the slider is denoted as v_α. The post-collision tangential velocity of the rotator is denoted as v_f. The linear velocity of the slider prior to the collision of the slider is denoted as v_s.

[0042] The initial tangential kinetic energy of the rotator is:

$$KE_{rotator\ initial} \tfrac{1}{2} m_1 v_i^2 \quad (1).$$

[0043] With respect to the laboratory frame this represents the initial energy of the rotator-slider system. As the slider accelerates forward in the positive y-direction under the action of the y-component of the centrifugal reactive force on the axis, both the slider and the rotator acquire an equal instantaneous linear velocity in the positive y-direction, and therefore, a linear kinetic energy with respect to the laboratory frame. By the conservation of energy, the tangential kinetic energy of the rotator must decrease, such that:

$$\Delta KE_{rotator} = KE_{linear\ slider} + KE_{linear\ rotator} \quad (2).$$

Or:

$$\tfrac{1}{2} m_1 v_i^2 - \tfrac{1}{2} m_1 v_\alpha^2 = \tfrac{1}{2} m_2 v_s^2 + \tfrac{1}{2} m_1 v_s^2 \quad (2a).$$

[0044] Rearranging, we have:

$$\tfrac{1}{2} m_1 v_i^2 - \tfrac{1}{2} m_1 v_\alpha^2 = \tfrac{1}{2} m_2 v_s^2 + \tfrac{1}{2} m_1 v_s^2 \quad (3).$$

[0045] That is, by the conservation of energy the pre-collision total kinetic energy observed in the system must equal the initial kinetic energy of the rotator.

[0046] Upon collision of the slider with the front bumper, the kinetic energy of the slider equal to $\tfrac{1}{2} m_2 v_s^2$ is essentially converted to thermal energy. The linear kinetic energy of the rotator is accounted for as follows.

[0047] Taking θ as the angle of the rotator at the time of collision, and by application of the Pythagorean Theorem, we have:

$$\tfrac{1}{2} m_1 v_s^2 = \tfrac{1}{2} m_1 \sin^2\theta v_s^2 + \tfrac{1}{2} m_1 \cos^2\theta v_s^2 \quad (4).$$

[0048] The first term on the right side of the above equation represents the kinetic energy of the slider transformed to thermal energy upon collision of the slider. It is reasonable to assume that the energy described by the second term transfers and adds to the tangential kinetic energy of the rotator.

[0049] The tangential kinetic energy of the rotator just prior to the collision is:

$$KE_{rotator\ \alpha} = \tfrac{1}{2} m_1 v_\alpha^2 \quad (5).$$

[0050] Adding the second term on the right of equation 4 to equation 5 to obtain the final post-collision tangential kinetic energy of the rotator, the answer would be:

$$KE_{rotator\ post\ collision} = \tfrac{1}{2} m_1 v_\alpha^2 + \tfrac{1}{2} m_1 \cos^2\theta v_s^2 \quad (6).$$

[0051] However, the above equation is incorrect because it was assumed the second term could be used in equation 4 to obtain the final result. This equation, derived from the Pythagorean Theorem, is correct from a conservation of energy perspective, but it cannot be used for post-collision analysis. The post-collision tangential kinetic energy of the rotator must first be obtained by vector addition of vector entities.

[0052] The correct procedure is as follows. Just prior to the collision of the slider, the rotator has a linear velocity in the positive y-direction equal to the linear velocity of the slider. Thus, the rotator has a linear momentum in the positive y-direction equal to:

$$p_{rotator} = m_1 v_s \quad (7).$$

[0053] At collision, a part of this momentum is transferred to the front bumper or the earth, and the amount of momentum transferred is equal to:

$$p_{bumper} = \sin\theta m_1 v_s \quad (8).$$

[0054] By the conservation of angular momentum the remaining momentum is transferred to the rotator, such that there is an increase in the post-collision angular momentum of the rotator, equal to:

$$m_1 v_f r = m_1 v_\alpha r + m_1 \cos\theta v_s r \quad (9).$$

[0055] Dividing both sides of the above equation by m_1 and r, we obtain:

$$v_f = v_\alpha + \cos\theta v_s \quad (10).$$

[0056] Using the above, the correct expression for the final post-collision tangential kinetic energy of the rotator is derived, equal to:

$$KE_{rotator\ pst\ collision} = \tfrac{1}{2} m_1 v_\alpha^2 + m_1 v_\alpha \cos\theta v_s + \tfrac{1}{2} m_1 \cos^2\theta v_s^2 \quad (11).$$

[0057] Now, recalling equation 6, we have:

$$KE_{rotator\ post\ collision} = \tfrac{1}{2} m_1 v_\alpha^2 + \tfrac{1}{2} m_1 \cos^2\theta v_s^2$$

[0058] Subtracting the above two equations, the difference is obtained as:

$$m_1 v_\alpha \cos\theta v_s$$

[0059] Recalling equation 3:

$$\tfrac{1}{2} m_1 v_i^2 = \tfrac{1}{2} m_1 v_\alpha^2 + \tfrac{1}{2} m_2 v_s^2 + \tfrac{1}{2} m_1 v_s^2$$

[0060] Substitute equation 4 into the last term of the above, giving:

$$\tfrac{1}{2} m_1 v_i^2 = \tfrac{1}{2} m_1 v_\alpha^2 + \tfrac{1}{2} m_2 v_s^2 + \tfrac{1}{2} m_1 \sin^2\theta v_s^2 + \tfrac{1}{2} m_1 \cos^2\theta v_s^2$$

[0061] Regroup the above as follows:

$$\tfrac{1}{2} m_1 v_i^2 = (\tfrac{1}{2} m_2 v_s^2 + \tfrac{1}{2} m_1 \sin^2\theta v_s^2) + (\tfrac{1}{2} m_1 v_\alpha^2 + \tfrac{1}{2} m_1 \cos^2\theta v_s^2) \quad (12).$$

[0062] This is the correct equation for the total energy of the system prior to the collision of the slider. Now take equation 12 and substitute equation 11 for the last two terms in the last parentheses, giving the total energy of the system after the collision of the slider:

$$KE_{system\ final} = (\tfrac{1}{2} m_2 v_s^2{}_{ts} + \tfrac{1}{2} m_1 \sin^2\theta v_s^2{}_{te}) + (\tfrac{1}{2} m_1 v_\alpha^2 + m_1 v_\alpha \cos\theta v_s + \tfrac{1}{2} m_1 \cos^2\theta v_s^2) \quad (13).$$

[0063] Where, the subscript represents the thermal energy transformed from kinetic energy after the collision of the slider.

[0064] The left side of equation 12 represents the initial tangential kinetic energy of the rotator or the initial total energy of the system prior to collision. Equation 13 represents the total energy of the system after the collision. Clearly, there has been a gain in the total energy of the system by the amount of:

$$\Delta E = m_1 v_\alpha \cos\theta v_s$$

[0065] Substituting v_β for $\cos\theta v_s$, the above can be expressed as:

$$\Delta E = m_1 v_\alpha v_\beta$$

[0066] By the first law of thermodynamics there must be an influx of energy-momentum to the system to account for this gain in energy. One possible explanation for the influx may be found in a paper that postulates inertia is due to a time rate change of incoming momentum flux to an accelerating object from the vacuum energy-momentum of space (A. Rueda & B. Haisch, *Contribution to inertial mass by reaction of the vacuum to accelerated motion*, Foundations of Physics, Vol. 28, No. 7, pp. 1057-1108 (1998) which is incorporated herein by reference). The paper states:

[0067] We demonstrate that from the point of view of a nearby inertial observer there exists a net energy and momentum flux (Poynting vector) of ZPF radiation transiting the accelerating object in a direction necessarily opposite to the acceleration vector. The scattering opacity of the object to the transiting flux creates the back-reaction force customarily called the inertial reaction.

[0068] If the above is true, then at the time of the collision of the slider an influx of momentum from the vacuum transits the rotator in the positive y-direction, opposite to the instantaneous linear de-acceleration of the rotator and slider in the negative y-direction. A portion of this momentum, equal to $m_1 \cos\theta v_s r$, transfers to the rotator and increases its angular momentum by an amount found in equation 9, which was derived as a consequence of the conservation of angular momentum.

[0069] It has been known since the last century that energy has inertia implied by Einstein's equation $E=m_0c^2$. Rearranging the equation, we see the mass equivalent of energy expressed as $E/c^2=m_0$. That is, energy in the form of radiation can interact with physical objects as if the energy had the properties of material objects—momentum, etc. Hence, if we assume space is filled with an irrepressible average minimum vacuum energy as predicted by the Heisenberg uncertainty principle in part composed of electro-magnetic radiation, the interaction of accelerating objects with the photons comprising this radiation could indeed create a reaction force. For example, a photon contains momentum equal to:

$$p=h\nu/c$$

[0070] It is conceivable that photons "colliding" with the rotator opposite to the instantaneous linear de-acceleration of the rotator could transfer part of their momentum to the rotator. And if this were true, along with a transfer of momentum, energy would necessarily transfer also. For example, in the relativistic expression relating the relationship between kinetic energy and momentum we have:

$$(K+m_0c^2)^2=(pc)^2+(m_0c^2)^2$$

[0071] Reduced to the Newtonian limit, the above can be expressed as:

$$K=(p)^2/(2m_0)$$

[0072] Hence, any increase in the angular momentum of the rotator due to this transfer of momentum from the vacuum must be accompanied by an increase in kinetic energy with respect to a laboratory frame.

[0073] The above explanation is more plausible than any Machian explanation. One may incorrectly argue that the increase in energy is due to linear frame-dragging, the so-called Lens-Thirring effect, predicted by the general theory of relativity. To date, the Gravity Probe B experiment has not conclusively proven this effect, but even if it did, it would not have any bearing on this discussion. The frame-dragging effect is only observed in the de-accelerating frames of the rotator and the slider as the slider collides with the front bumper. It is not observed in the frame of the laboratory because the mass of the universe is obviously not accelerating with respect to this frame. To insist this effect must apply to the laboratory frame would violate the principle of relativity by implying the de-accelerating frames of the rotator and slider are preferred frames and the effects observed in these frames must be imposed in the frame of the laboratory. An explanation that only applies to the laboratory frame is demonstrated below.

Example

[0074] An experiment was performed to test if energy gain occurred in a rotator-slider system. The experiment tested two hypotheses. The momentum influx hypothesis (MIH) asserted there would be a gain in the post-collision rotational energy of the rotator, and therefore, a gain in the energy of the system as a whole by the action of an influx of energy-momentum to the system via inertia. The null hypothesis or classical hypothesis (CH) asserted there would be no gain in energy of the post-collision rotational energy of the rotator, and therefore, there would be no gain in the system as a whole. The null hypothesis was designated as the classical hypothesis because it takes the classical Newtonian assumption that inertia is an intrinsic property of matter, and therefore, could never affect a gain in energy of any system. The momentum influx hypothesis takes the position that inertia is an extrinsic property of matter a link to the vacuum energy of space under the right conditions. In the experiment the rotator is a physical object. The equations derived in this paper were derived for a point particle. Thus, we must modify the equations previously demonstrated by including the moment of inertia of the rotator.

[0075] Expressed mathematically, the CH maintains the following:

$$\tfrac{1}{2}I\omega_i^2=\tfrac{1}{2}m_2v_s^2+\tfrac{1}{2}m_1\sin^2\theta v_s^2+(\tfrac{1}{2}I\omega_\alpha^2+\tfrac{1}{2}m_1\cos^2\theta v_s^2) \quad (1).$$

[0076] The above essentially states that the post-collision energy of the rotator, the terms in parentheses, when added to the other terms, equals the initial rotational kinetic energy of the system. Thus, the energy of the system is conserved.

[0077] The MIH is expressed mathematically as:

$$E_{final} = \frac{1}{2}m_2v_s + \frac{1}{2}m_1\sin^2\theta v_s^2 + \left(\frac{1}{2}I\,\omega_\alpha^2 + \frac{I\,\omega_\alpha\cos 0\theta v_s}{r} + \frac{I\cos^2\theta v_s^2}{2r^2}\right). \quad (2)$$

[0078] The terms in parentheses above represent the post-collision energy of the rotator derived from the conservation of angular momentum. When added to the remaining terms, the above is greater than equation 1 by the following, which expresses the gain in energy of the system:

$$\Delta E = \frac{I\omega_\alpha \cos\theta v_s}{r} + \frac{I\cos^2\theta v_s^2}{2r^2} - \frac{m_1\cos^2\theta v_s^2}{2}. \quad (3)$$

[0079] Where:

[0080] I=the moment of inertia of the rotator

[0081] ω_α=the angular velocity of the rotator prior to collision

[0082] θ=the angle of the rotator at the time of collision

[0083] v_s=the linear velocity of the slider prior to collision

[0084] r=the distance from the axis to the center of mass of the rotator

[0085] In the experiment the post-collision energy of the rotator was measured and compared to the MIH and CH prediction. The collected data is in Table 1 while the results are presented in Table 2.

[0086] In Table 1 and Table 2 the following terms are defined:

[0087] ω_α=the measured angular velocity of the rotator prior to collision

[0088] θ=the measured angle of the rotator at the time of collision

[0089] v_s=the measured linear velocity of the slider prior to collision

[0090] ω_i=the measured initial angular velocity of the rotator

[0091] ω_f=the measured final post-collision angular velocity of the rotator

[0092] ke_i=the measured initial kinetic energy of the rotator

[0093] ke_α=the measured kinetic energy of the rotator prior to collision

[0094] ke_f=the measured final kinetic energy of the rotator after collision

[0095] m_1=the mass of the rotator

[0096] m_2=the mass of the slider

[0097] I=the moment of inertia of the rotator

[0098] r=the radial distance from the axis to the center of mass of the rotator

[0099] m_1 was 3.89 kg, m_2 was 1.97 kg, I was 0.403 kg m^2, and r was 0.314 m.

TABLE 1

ω_α	θ	v_s	ω_i	ω_f	ke_i	ke_α
8.80	32.0	0.294	9.81	9.72	19.4	15.6
8.80	34.5	0.450	9.54	9.44	18.3	15.6
7.30	39.0	0.540	8.89	8.71	15.9	10.7
7.33	45.0	0.622	9.62	9.17	18.6	10.8

TABLE 2

ke_f(J)	MIH Prediction (J)	CH Prediction (J)	Net over CH (J)
19.0	20.2	15.73	3.3
18.0	21.5	15.87	2.1
15.3	16.2	11.08	4.2
16.9	16.3	11.20	5.7

[0100] As can be seen, the net gain over CH predicted values was from about 13% to about 50%.

[0101] The foregoing detailed description describes the invention with reference to specific exemplary embodiments. However, it will be appreciated that various modifications and changes can be made without departing from the scope of the present invention as set forth in the appended claims. The detailed description and accompanying drawings are to be regarded as merely illustrative, rather than as restrictive, and all such modifications or changes, if any, are intended to fall within the scope of the present invention as described and set forth herein.

What is claimed is:

1. An energy conversion system for extracting energy from the zero-point field of space, comprising:

a) a primary transducer including a substrate having an arm rotatably coupled to the substrate, said substrate being confined to move along an oscillatory path; and

b) a secondary transducer operatively associated with the primary transducer, the secondary transducer converting kinetic energy of the substrate and arm to usable energy.

2. The system of claim **1**, wherein the oscillatory path is a linear track defined by a pair of resilient stationary members oriented on both ends of the linear track.

3. The system of claim **1**, further including a drive motor operatively associated with the arm and configured to initiate rotational motion of the arm and sustain the rotational motion at a critical angular velocity.

4. The system of claim **2**, wherein the substrate has a substrate mass (m_2) and the arm has an arm mass (m_1) such that a ratio of m_2 to m_1 is chosen to maximize a gain in kinetic energy (ΔKE) of the substrate and the arm.

5. The system of claim **1**, further comprising a secondary arm rotatably coupled to the substrate and having a secondary axis of rotation spaced apart from an axis of rotation of the arm, said secondary arm being coupled to the arm such that both the arm and the secondary arm rotate at a common angular velocity and opposite rotational directions, and wherein the secondary arm has a substantially identical mass and dimensions to that of the arm.

6. The system of claim **5**, wherein the secondary arm rotates about a common axis of rotation with the arm.

7. The system of claim **1**, wherein the secondary transducer includes at least one induction coil system including a magnet and a complimentary conductive coil, such that the magnet is physically coupled to the substrate and oriented to approach the complimentary conductive coil sufficient to induce electrical current therein during movement of the substrate along the oscillatory path.

8. The system of claim **1**, wherein the secondary transducer includes piezoelectric material operable to convert a force applied by the substrate to the secondary transducer to an electric potential in response to applied mechanical stress.

9. The system of claim **1**, wherein the secondary transducer includes a mechanical coupling between the substrate and an energy translator.

10. The system of claim **9**, wherein the energy translator is a linear to rotational motion drive, heat surfacing, or rack and pinion.

11. The system of claim **1**, wherein the usable energy is mechanical, thermal and/or electrical energy.

12. An energy conversion system for extracting energy from the zero-point field of space, comprising a means for extracting momentum-energy from vacuum by the action of

inertia and a means for converting the momentum-energy to usable energy operatively associated with the means for extracting momentum-energy.

13. The system of claim **12**, wherein the means for extracting momentum-energy is a substrate having an arm rotatably coupled to the substrate which substrate is confined to move along an oscillatory path.

14. The system of claim **12**, wherein the means for converting the momentum-energy is an induction coil system, heat dissipater, magnetic brake, friction brake, or linear to rotational motion translator.

15. A method of extracting energy from the zero-point field of space, comprising:

a) inducing rotational motion of an arm rotatably mounted to a substrate which is confined to move along an oscillatory path and wherein the rotational motion is sufficient to impart movement of the substrate along the oscillatory path; and

b) converting momentum-energy of the substrate to usable energy.

16. The method of claim **15**, wherein a speed of the rotational motion, relative masses of the arm and the substrate, geometry of the arm, and the geometry of the substrate are designed such that zero-point energy is utilized to maintain the movement of the substrate.

17. The method of claim **15**, wherein the inducing is accomplished by a drive motor.

18. The method of claim **15**, wherein the movement of the substrate follows a linear oscillatory path having two endpoints and the arm follows a cyclic path such that translational motion of the substrate in a y-direction along the oscillatory path substantially coincides with translational motion of the arm in the y-direction.

19. The method of claim **18**, wherein the arm has two theoretical maximum energy transfer positions that occur twice each full cycle of the arm, corresponding to two angles of the arm with respect to an x-axis, which angles occur simultaneously at the time of collision of the substrate with a stationary member.

20. The method of claim **15**, wherein the step of converting is accomplished by inductive coupling of conductive wire and at least one magnet.

21. The method of claim **15**, wherein the usable energy is mechanical, thermal and/or electrical energy.

22. The method of claim **15**, further comprising inducing rotational motion in a secondary arm in an opposite direction to that of the arm such that motion along the oscillatory path of each of the arm and the secondary arm substantially coincide with each other.

23. A method of extracting energy from the zero-point field of space, comprising:

a) inducing multi-mode motion in a primary transducer along an oscillatory path, wherein the multi-mode motion includes a primary translational motion and a secondary motion such that abrupt changes in the primary translational motion are sufficient to impart a momentum influx to the secondary motion; and

b) converting the momentum influx to usable energy.

24. The method of claim **23**, wherein the momentum influx is a result of radiation pressure due to scattering in part of the electro-magnetic momentum-energy contained within the zero-point field of space opposite to centripetal acceleration of the arm.

* * * * *

rexresearch.com

Scalar Fields

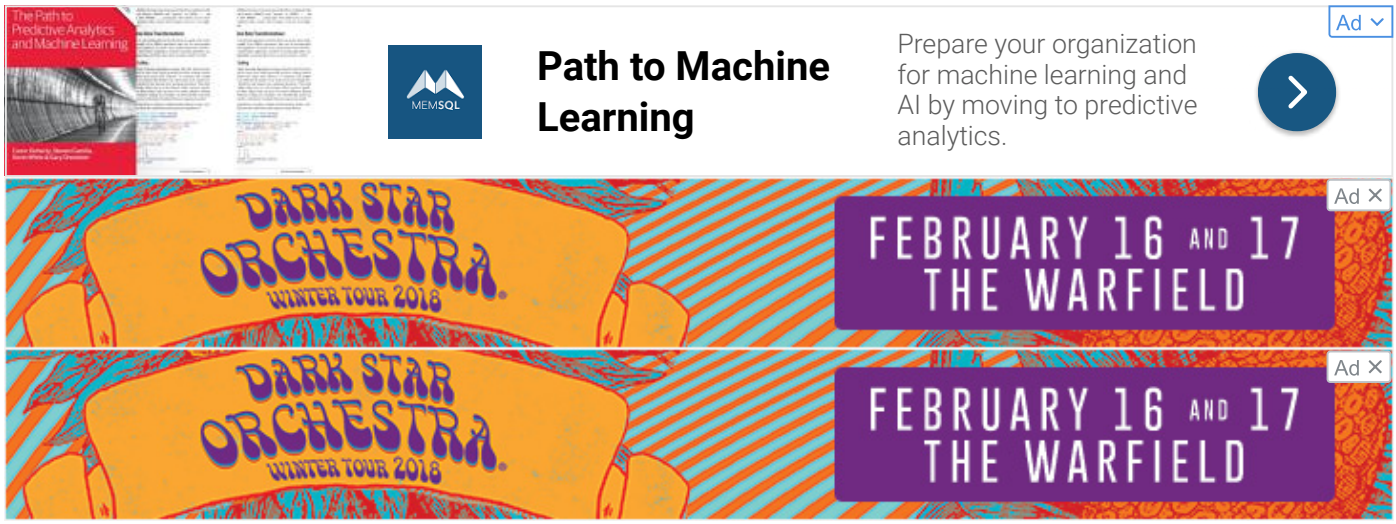

PDF Files :

Capt. Robert Collins : "Soviet Research on Unified Field Theories, False Vacuum States, and Antigravity (U)", Appendix 1 -- Far Field Equations of Maxwell's Equations.

Warren York : "Scalar Wave Technology" ; *Extraordinary Science* (Jan/Feb/Mar 1989).

Thomas Bearden : "Basic Scalar EM Concepts and a Scalar Wave Detector" ; *U.S. Psychotronics Assoc. Newsletter* 5 (4): 4-7.

Jack Dea : "Fundamental Fields and Phase Information" ; *Planetary Association for Clean Energy* 4 (5): 12-15.

J. B. Bronzan : "The Magnetic Scalar Potential" ; *Amer. J. Physics* 39 : 1357-1359 (Nov. 1971).

E.T. Whittaker : "On an Expression of the Electromagnetic Field Due to Electrons by Means of Two Scalar Potential Functions" ; *Proc. London Math. Soc.*, Series 2, 1 : 367-372 (1904).

A. Dolgov & I. Khriplovich : "Propagation of Electromagnetic Waves in a Gravitational Field" ; *Soviet Physics JETP* 58 (4): 671-674 (Oct 1983).

L. Kofman, *et al.* : "Inflationary Universe Generated by the Combined Action of a Scalar Field and Gravitational Vacuum Polarization" ; *Physics Letters* 157-B (5, 6) : 361-366 (25 July 1985).

Gregory Hodowanec : "Do Intense Scalar Fields Affect Life Processes?"

---

http://en.wikipedia.org/wiki/Scalar_field

Scalar Field

In mathematics and physics, a scalar field associates a scalar value, which can be either mathematical in definition, or physical, to every point in space. Scalar fields are often used in physics, for instance to indicate the temperature distribution throughout space, or the air pressure. In mathematics, or more specifically, differential geometry, the set of functions defined on a manifold define the commutative ring of functions.

Just as the concept of a scalar in mathematics is identical to the concept of a scalar in physics, so also the scalar field defined in differential geometry is identical to, in the abstract, to the (unquantized) scalar fields of physics.

Definition

A scalar field is a function from Rn to R. That is, it is a function defined on the n-dimensional Euclidean space with real values. Often it is required to be continuous, or one or more times differentiable, that is, a function of class Ck.

The scalar field can be visualized as a n-dimensional space with a real or complex number attached to each point in the space.

The derivative of a scalar field results in a vector field called the gradient.

Differential geometry

A scalar field on a Ck-manifold is a Ck function to the real numbers. Taking Rn as manifold gives back the special case of vector calculus.

A scalar field is also a 0-form. The set of all scalar fields on a manifold forms a commutative ring, under the natural operations of multiplication and addition, point by point.

Uses in physics

In physics, scalar fields can be used to ascribe forces (which are usually vector fields) to a more general scalar field, the gradient of which describes the force.

* Potential fields, such as the Newtonian gravitational potential field for gravitation, or the electric potential in electrostatics, are scalar fields which describes the more familiar forces.

* A temperature, humidity or pressure field, such as those used in meteorology. Note that when modeling weather on a global basis, the surface of the Earth is not flat, and thus the general language of curvature in differential geometry plays a role. Dopplerized weather radar generates a projection of a vector field onto a scalar field.

Examples in quantum theory and relativity

* In quantum field theory, a scalar field is associated with spin 0 particles, such as mesons or bosons. The scalar field may be real or complex valued (depending on whether it will associate a real or complex number to every point of space-time). Complex scalar fields represent charged particles. These include the Higgs field of the Standard Model, as well as the pion field mediating the strong nuclear interaction.

* In the Standard Model of elementary particles, a scalar field is used to give the leptons their mass, via a combination of the Yukawa interaction and the spontaneous symmetry breaking. This mechanism is

known as the Higgs mechanism [1]. This supposes the existence of a (still hypothetical) spin 0 particle called Higgs boson.

* In scalar theories of gravitation scalar fields are used to describe the gravitational field.

* scalar-tensor theories represent the gravitational interaction through both a tensor and a scalar. Such attempts are for example the Jordan theory [2] as a generalization of the Kaluza-Klein theory and the Brans-Dicke theory [3].

* Scalar fields like the Higgs field can be found within scalar-tensor theories, using as scalar field the Higgs field of the Standard Model [4], [5]. This field interacts gravitatively and Yukawa-like (short-ranged) with the particles that get mass through it [6].

* Scalar fields are found within superstring theories as dilaton fields, breaking the conformal symmetry of the string, though balancing the quantum anomalies of this tensor [7].

* Scalar fields are supposed to cause the accelerated expansion of the universe (inflation [8]), helping to solve the horizon problem and giving an hypothetical reason for the non-vanishing cosmological constant of cosmology. Massless (i.e. long-ranged) scalar fields in this context are known are inflatons. Massive (i.e. short-ranged) scalar fields are proposed, too, using for example Higgs-like fields (e.g. [9]).

Other kinds of fields

* Vector fields, which associate a vector to every point in space. Some examples of vector fields include the electromagnetic field and the Newtonian gravitational field.

* Tensor fields, which associate a tensor to every point in space. For example, in general relativity gravitation is associated with a tensor field (in particular, with the Riemann curvature tensor). In Kaluza-Klein theory, spacetime is extended to five dimensions and its Riemann curvature tensor can be separated out into ordinary four-dimensional gravitation plus an extra set, which is equivalent to Maxwell's equations for the electromagnetic field, plus an extra scalar field known as the "dilaton".

References

1. ^ P.W. Higgs; Phys. Rev. Lett. 13(16): 508, Oct. 1964.
2. ^ P. Jordanm Schwerkraft und Weltall, Vieweg (Braunschweig) 1955.
3. ^ C. Brans and R. Dicke; Phis. Rev. 124(3): 925, 1961.
4. ^ A. Zee; Phys. Rev. Lett. 42(7): 417, 1979.
5. ^ H. Dehnen et al.; Int. J. of Theor. Phys. 31(1): 109, 1992.
6. ^ H. Dehnen and H. Frommmert, Int. J. of Theor. Phys. 30(7): 987, 1991.
7. ^ C.H. Brans; "The Roots of scalar-tensor theory", arXiv:gr-qc/0506063v1, June 2005.
8. ^ A. Guth; Pys. Rev. D23: 346, 1981.
9. ^ J.L. Cervantes-Cota and H. Dehnen; Phys. Rev. D51, 395, 1995.

---

http://en.wikipedia.org/wiki/Scalar_field_theory

Scalar Field Theory

In theoretical physics, scalar field theory can refer to a classical or quantum theory of scalar fields. Such a field is distinguished by its invariance under a Lorentz transformation, hence the name "scalar", in contrast to a vector or tensor field. The quanta of the quantized scalar field are spin-zero particles, and as such are bosons.

No fundamental scalar fields have been observed in nature, though the Higgs boson may yet prove the first example. However, scalar fields certainly do appear in the effective field theory descriptions of many physical phenomena. Because of the relative simplicity of the mathematics involved, scalar fields are often the first field introduced to a student of classical or quantum field theory.

Although scalar fields are Lorentz scalars, they may transform nontrivially under other symmetries, such as flavour or isospin. For example, the pion is invariant under the restricted Lorentz group, but is an isospin triplet (meaning it transforms like a three component vector under the SU(2) isospin symmetry). Furthermore, it picks up a negative phase under parity inversion, so it transforms nontrivially under the full Lorentz group; such particles are called pseudoscalar rather than scalar. Most mesons are pseudoscalar particles.

In this article, the repeated index notation indicates the Einstein summation convention for summation over repeated indices. The theories described are defined in flat, D-dimensional Minkowski space, with (D-1) spatial dimension and one time dimension and are, by construction, relativistically covariant. The Minkowski space metric, has a particularly simple form: it is diagonal, and here we use the + ? ? ? sign convention.

---

http://en.wikipedia.org/wiki/Scalar_field_theory_(pseudoscience)

Scalar field theory (pseudoscience)

For the quantum mechanical "scalar field theory" which is a field theory of spinless particles, see "Scalar field theory"

Scalar field theory (SFT) is a set of theories in a model which posits that there is a basic mechanism that produces the electric field and the magnetic field. Proponents of this theory claim that it advances the standard electromagnetic theory.

Scalar waves in these theories (as opposed to a scalar field in mainstream physics) are hypothetical waves, which differ from the conventional electromagnetic transverse waves by having one oscillation level parallel to the direction of propagation; they thus have characteristics of longitudinal waves. Their existence however, as presupposed in numerous theories, has not been supported by experiment. Scalar waves are called also "electromagnetic longitudinal waves", "Maxwellian waves", or "Teslawellen" (tr., "Tesla waves"). Variants of the theory claim that Scalar electromagnetics (also known as scalar energy) is the background quantum mechanical fluctuations and associated zero-point energies (in contrast to "vector energies" which sum to zero).[citation needed]

Description

Terminology

The basic understanding of scalar field theory begins with several definition of terms within the theory, which are also used in academic physics, but assigns them other meanings. A "scalar field" is a set of assigned observable magnitudes at every point in n-dimensional space (compare this with the standard definition; n is also 4 or greater). [1] An "electric field" is composed of the spinning charged mass, in motion through a finite change in electrostatic scalar potential (compare this with the current academic definition). A "potential" is pure energy and, is any ordering (static or dynamic) in the vacuum (eg., the position of the object relative to other objects). A "scalar potential" is the stationary ordering in the virtual particle flux of the vacuum (compare this with the current academic definition). A "vector potential" is any nonstationary ordering in the virtual particle flux of vacuum (compare this with the current academic definition). Scalar potentials and vector potentials are thus defined as: "contained" inside the energy domain.[citation needed]

Magnetic fields interaction

SFT is based on "non-symmetrical regauging" potentials, demonstrated by the interaction of two magnetic fields.

When the field lines oppose each other, the magnets are pulled together. When the fields are aligned in the same direction, the magnets push apart. When two magnets strongly oppose each other but are not permitted to move apart, the force between them is said to create a "scalar bubble" between the magnets.

The greater the repulsive force, the larger this scalar bubble becomes. As the magnets move away and the pushing force decreases, the scalar bubble shrinks in size and strength.

In a similar manner, two magnets that are strongly attracted create a "scalar void" between them that grows larger the closer the two magnets become. Two magnets powerfully attracted to one another create a very large scalar void, that decreases as the attracting magnets are moved apart.

Despite the claims of its proponents, no repeatable experiments were able to show the existence of the scalar field. All observed effects were shown to comply to the standard physical laws of electrodynamics. The observations are in spectacular agreement not only with classical electromagnetics, but also with quantum electrodynamics, both of which are fields of physics.

Field effects of scalar energy

SFT suggests that scalar energy can move through space much like an electromagnetic wave. However, the operating principles are different. The regular expansion and contraction of a scalar bubble/void is like rhythmicly splashing water on a pond. It sends out ripples through the general scalar field that can subtly affect the size and strength of distant scalar bubbles/voids.

This means that a pair of magnets that are rhythmically opposing/attracting each other are sending out scalar ripples through space that will slightly perturb the scalar bubble/void between a second pair magnets nearby. The net effect is that the attraction and/or repulsion between the second pair of magnets exhibits a change in strength, even though the magnets and fields themselves are motionless.

According to skeptics, the following description given for an application to a communication system reportedly failed to give reproduceable results.

A basic scalar communications system

A scalar communications broadcast antenna does not make any sense according to normal electromagnetic theory. The goal of a scalar broadcast antenna is to create powerful repulsion/attraction between two magnetic fields, to create large scalar bubbles/voids. This is done by using a broadcast antenna with two opposing electromagnetic coils that effectively cancel out as much of each other's magnetic field as possible. An ideal scalar broadcast antenna will emit no electromagnetic field (or as little as possible), since all power is being focused into the repulsion/attraction between the two opposing magnetic fields. Normal electromagnetic theory suggests that since such a device emits no measurable electromagnetic field, it is useless and will only heat up. For a scalar broadcast antenna, any normal RF emission is wasted energy.

A scalar reception antenna similarly excludes normal electromagnetic waves and only measures changes in magnetic field attraction and repulsion. This will typically be a two-coil powered antenna that sets up a static opposing or attracting magnetic field between the coils. The coils are counter-wound so that any normal RF signal will be picked up by both coils simultaneously and effectively cancel itself out, leaving only the scalar component.

Scalar field detection by normal RF antennas

Even though a scalar wave train does not contain the regular EM components that are used by radio frequency communications, it can still be detected by a normal RF antenna, if that antenna is in the presence of some other static magnetic field. When the scalar wave train passes through, it will create a disturbance in the field surrounding that magnet and make the field lines move, which will impart a small electrical current in the standard RF antenna, as if the magnet itself were moved.

Since all normal RF antennas are immersed in the magnetic field of the planet, they can serve as crude scalar detectors, though the reception will be extremely weak and washed out by any normal RF in the vicinity. Detection ability is greatly increased by enclosing the antenna and circuitry in a faraday cage, and by placing a very strong magnet near the antenna inside the cage.

Scalar antennas and detectors

Various proponents have claimed to have developed instruments with characteristics and specifications for different designs. Scalar antenna and detector examples include:

Types [2]

* Magnetostatic Detectors
* Electrostatic Detectors
* Barkhausen Detector

Windings [3]

* single-wire bifilar
* dual-wire bifilar
* pancake bifilar
* cone bifiliar

Proponents of the theory have constructed bifiliar test antennas as isolation transformers. These have taken the form of a ferrite rod, ferrite ring, an air core, or the common square transformer shape.

References

1. ^ T. E. Bearden, "Scalar field". A partial glossary for scalar electromagnetics and subtle phenomena, 1988 (updated 2000).
2. ^ Robert Shannon, "Notes on Scalar Detector Designs". 1996.
3. ^ More Electromagnetism : Scalar Waves". RMCybernetics, 2005.

---

http://www.rense.com/general84/ben.htm

Benjamin Fulford's 'Creature' (?)

From **Brad Steiger**
1-26-9

Absolutely Bizarre 'Creature' In Benjamin Fulford's Spine

On Friday, January 23rd, Benjamin Fulford shocked the audience of the Jeff Rense Program by emailing the claim, accompanied by a photograph, that surgeons had removed a bizarre life form, very much resembling a salamander, from his spine. Those who could view the strange creature were shocked and horrified. Immediately, everyone who saw the "thing" wondered what it was--and if it were real.

Whether the creature was real or whether it was an ill-advised hoax, I wanted to find out if it was possible to place or to inject such a life form into an unsuspecting victim. One of the experts that I queried was a top-research scientist and inventor, who quickly responded that not only was it possible to inject the embryo of a parasite into a targeted victim without his or her knowledge, but that in the world of deep black operations, Russian scientists had already perfected such grotesque methodology.

I asked the scientist to come on the Rense Program and discuss the science of bioenergetics being developed for Black Ops projects, but he informed me that he had been placed under "very strict warnings" not to make any appearances on any radio or television program. What he did do was to write a very informative email on the incredible world of bioenergetics and psychoenergetics which I reproduce below with his special permission. At the present time, he prefers to remain anonymous.

Yes, Brad, the "embryo" for such a "new living parasite critter" could indeed be developed and inserted into a targeted victim, including at a great distance, but only by the highly "clandestine" world of the off-

budget deep black operations -- particularly those in Russia, which are still far ahead of anything in the West.

The Russian science of "energetics" -- developed shortly after WW II by a tremendously massive Soviet effort of some of the best nonlinear scientists on earth -- did solve some of the perplexities of our modern physics, of psychology and biology, etc. And under Stalin's iron boot, the new and spectacular Russian scientific developments were immediately placed into extended weapons development.

To this day, our own more-materialistic scientists still do not really comprehend Soviet energetics. (And they also still do not even know what a mind actually is, what a "dead" (separated) mind is, or what a "mind and body linked living system" really is).

Soviet energetics had three branches: (1) the science of inert matter, called by the same name "energetics". (2) the science of living biological systems, where a mind is linked to a living body. This branch is called "bioenergetics". (3) the science of the mind and mental phenomena, which is called "psychoenergetics".

Western science, being so materialistic, has not yet comprehended the most important thing about "mind": that is, that the mind and mental things exist in time, but not in 3-space.

If one turns to modern quantum field theory, then there are now FOUR photons available, not the two transverse photons so well known to classical electrodynamicists etc. In the following discussion, the travel direction of the photon in 3-space is assumed along the Z axis. The "regions of vibration" of the photon -- i.e., the type and direction of its oscillation -- may occur in four ways. These are (1, 2) the two "orthogonal" oscillation polarizations, one along the X-axis and the other along the Y-axis. Then there is (3) the longitudinal (i.e., longitudinally-polarized) photon, which oscillates along the Z-direction of travel itself. And finally there is (4) the time-polarized or "scalar" photon, which oscillates along the time axis. These four photons are all in standard quantum field theory, even in the West.

Now note that only the two transverse-polarized photons (1) and (2) are observable by our instruments. The longitudinal (3) photon is nonobservable, as is the time-polarized (4) photon.

Here's the first "magic":

A combination of a longitudinal photon (3) and a time-polarized photon (4) is OBSERVABLE AS A SPIKE OF VOLTAGE -- more precisely, a spike of electrostatic scalar potential.

Now suppose you have a hidden (nonobservable) electromagnetic "system" you have built in the time-domain, so that it is built only of time-polarized photons. The system is not observable, nor is any part of it observable.

But then suppose you also build a corresponding set of operations (a "system") in 3-space matter so that this new EM system consists only of longitudinal photons. And suppose you have made this "longitudinal" photon system's operations so that they exactly parallel the time-domain system's operations. In short, you now can superpose your longitudinally-polarized EM wave system and the time-polarized EM wave system. And your instruments will now observe the combination -- i.e., the actual ongoing linkage system's operation -- as a very strange but highly organized system of voltage spikes!

The West has totally missed the fundamental characteristic of mind: Mind occupies time but not 3-space. Hence, mind is a totally "electromagnetic" system, but it is comprised of only non-observable time-polarized photon operations!

Well, how could you possibly couple that mind to a biological (3-space) material body?

You would have to have a parallel longitudinally-polarized set of electromagnetic operations ongoing in that 3-space body.

And the direct coupling of those two "operational systems" would be the mechanism of the coupling of the mind to the body -- and it would and could be directly observed by our instruments as a correlated system of voltage spikes!

And that is why the dendrite cells of the body all have so many endings and "continual and incredible voltage spikings"! In looking at the entire set of spiking, you are looking at the "coupling mechanism" (that couples the mind to the body) in action! That set of spikings is what links or couples (coherently) the living temporal mind to the living biological body!

Now if you place great scientific effort on that area and in that fashion, for some decades, you will eventually be able to (1) directly produce an operating living mind in the laboratory, including a human mind and any version of it, and (2) link it to a properly designed biological body (to a proper set of longitudinal operations therein), and this will give you a living biological system created directly in the laboratory.

In about 1990, the Russian hidden psychoenergetics science had progressed to the point that living minds were being designed and produced in the laboratory, including various "versions" (personalities) of a given mind.

If one knows where to look, there is and has been quite a bit of external "testing" by the Soviets to stimulate the West and see if we recognize what is being done (in short, to see whether the West also has developed such science). Sadly, the provocative tests have clearly shown the Soviets that we do not have such capabilities or such scientific development. Indeed, we still do not even recognize that "testing" is even going on!

One of the New Energy scientists -- Tom Bearden -- stumbled onto a portion of this Soviet energetic work. In his 2005 book, Oblivion: America at the Brink, Bearden gave an abbreviated presentation of the development of the energetics weaponry and some of the actual "evocative testing" examples. There are many more weapons and examples that he did not run across.

Presently, the Russians can clandestinely duplicate the mind of a targeted individual, in the duplicate mind they can "alter" portions to produce "different behavior" if that alternate mind is inserted into the targeted individual in the West, and then they can do several things. (1) they can just leave it in that individual as an extra "multiple personality," so they have the 'perfect spy" that hears everything the person's ears hear, sees everything his eyes see, and also receives all the thoughts that his true mind thinks. And they can put that on the TV screen in Moscow if they wish. With the portion for which he actually encountered evidence, Bearden gave examples of the military use of such capabilities in Oblivion.

Sadly, the West still thinks that the human "mind" is just some electron wiggles in the brain, and that we are like a giant "nonliving" computer.

There is also a way to directly engineer any physical observable system one wishes, in any part of it, living or nonliving. One can directly engineer and change inert matter or living matter, etc. I have learned that Bearden plans a future book (hopefully this year) dealing with this scientific methodology, which he calls "precursor engineering", but which the Soviets still have embedded in its term "energetics" with its associate science (and weapons).

Once you understand something about this 3-fold secret weapons science of energetics that the Soviets have highly developed, then you can understand how -- with such developed technology -- one could directly build both the physical body system (its correlated longitudinal EM photon system) and the "mind system" of such a "living critter" one creates in the laboratory, and how one could then use such capability (such weird and artificially-created critters) by sudden surprise on an unsuspecting enemy to overwhelm and crush him almost instantly.

As you can see, we are referring to a gigantic leap forward in what the West calls "biological weapons" and in "biological warfare".

Well, one should be looking for "very strange incidents" suggesting the development of such "critters" and parasites. And here is at least one "candidate" occurrence.

This present "incredible tumor" discovery [in Benjamin Fulford's spin] may be the discovery of one "provocative test" of these capabilities, just to see what our western science and biological warfare experts make of it.

And if it is a "provocative test" to see what we know, of if we know anything of it at all, we have certainly once again assured them we have not the foggiest notion of the true reach of Soviet energetics science.

WO2008092205
METHOD AND APPARATUS FOR ANALYSING GEOLOGICAL FEATURES

Inventor(s): DUNCAN ANDREW [AU]
Classification: - international: G01V3/00; G01V3/15; G01V3/16; G01V3/17; G01V3/00; G01V3/15 - European: G01V3/165
Abstract -- An apparatus (10) for analysing geological features comprises a receiver (20) for measuring a magnetic field received from adjacent geological features (18) excited by a periodic transmitted electromagnetic signal, wherein the measured magnetic field is a scalar amplitude of the magnetic field or a scalar amplitude of the magnetic field is derivable from the measured magnetic field, wherein the receiver generates a received signal from the measured magnetic field; and a processor (28) for filtering unwanted signal components which are substantially synchronous with the periodic transmitted electromagnetic signal from the scalar amplitude of the received signal or the scalar amplitude derived from the received signal, such that target geological features are able to be analysed using the filtered scalar amplitude.

WO2008060213
METHOD FOR PREDICTING WHERE THE NEXT MAJOR EARTHQUAKE WILL TAKE PLACE WITHIN AN AREA

Inventor(s): SLUNGA RAGNAR [SE]
Classification: - international: G01V1/28; G01V1/00; G01V1/28; G01V1/00- European: G01V1/00E
Also published as: WO2008060213 // SE0602417 (A) // SE530569 (C2)
Abstract -- The present invention relates to a method of predicting where the next major earth- quake will occur within a area based on knowledge of the stress tensor field in the area, including determining stress tensors that have caused a shear slip in the form of an earthquake. It is first assumed that said first shear slip is the only one that is not stable according the Mohr-Coulomb slip criterion applied to contenplated fault planes with all conceivable orientations and calculating according to the Mohr-Coulomb slip criterion the principal stress directions as a function of the friction coefficient f. After that, it is established according to the Mohr-Coulomb slip criterion a relationship between two of the principal stresses.; Moreover the normal stress sv in a known direction Sv is determined and, according to the elasticity theory, a relationship between the normal stress sv and the principal stresses is established. Then expressions of the three principal stresses as a function of a scalar parameter is established, and a function of the elastic deformation energy per unit of volume relative to an isotropic reference stress state with the pressure sv based on the expressions of the principal stresses is established. Finally, the remaining degree of freedom is eliminated by determining the value of said scalar parameter which minimises the function of the elastic deformation energy and the value of the scalar parameter in the expressions of the principal stresses is inserted.

WO2008050137
MAGNETIC SIGNATURE ASSESSMENT

Inventor(s): TWELVETREES ROGER [GB]; COX EMILY [GB]; GANDERTON CARL [GB]; RAWLINS PAUL [GB]; WATSON STEPHEN MILES [GB]

Classification: - international: B63G9/06; B63G9/00 - European: B63G9/06
Also published as: GB2443265 (A)
Abstract -- Magnetic signature assessment apparatus for a vehicle comprising sensors for incorporation in the vehicle to measure the magnetic field normal to a closed surface at least approximately bounding the vessel and processing means for calculating from the normal field measurements a scalar magnetic potential outside the surface. Apparatus may be provided on the vehicle to generate a magnetic field to suppress the magnetic signature corresponding to the scalar potential. The invention also extends to corresponding methods and to programs for implementing those methods.

RU2005105859
LONGITUDINAL-SCALAR ELECTROMAGNETIC WAVE RADIATING DEVICE

Applicant(s): KUZNETSOV JURIJ NIKOLAEVICH
Classification: - international: H01Q13/02; H01Q13/00
Also published as: RU2287212
Abstract -- FIELD: radio communications and radiolocation, geological prospecting, and medicine. ^ SUBSTANCE: proposed radiating device is provided with second waveguide and second exciting component; exciting components are installed in waveguides which have different length and are brought to single plane through their open ends and further through return horn to equally shaped adding waveguide terminating in horn. Waveguides differ by half-length of common radiated electromagnetic wave. In planar-wave approximation strength vectors of electric and magnetic fields are oriented in longitudinal-scalar electromagnetic wave in open space collinearly to vector of electromagnetic energy flux density (S = Ei ¦Hi¦ + Hi ¦Ei¦).Irrotational electric field of longitudinal electromagnetic wave builds up potential difference across open electric conductor longitudinally oriented to this field.; Magnetic field of longitudinal-scalar electromagnetic wave acts upon moving electric charges by force directed along their velocity vector. ^ EFFECT: enhanced reliability due to use of irrotational longitudinal-scalar electromagnetic waves apart from rotational cross-vector ones.

US2005197808
Method for determining electrical and magnetic field effects

Inventor(s): KUO, AN-YU
Classification: - international: G06F17/10; G06F17/10; (IPC1-7): G06F17/10
Abstract -- A method for determining electrical and magnetic field effects determines Lanczos matrices by performing a preconditioned conjugate gradient method using a nested multi-grid, vector and scalar potential preconditioner so that Pade via Lanczos frequency expansion may be used to determine the electrical and magnetic field effects over a frequency range without having to perform computationally slow and memory intensive matrix decomposition.

US2004046553
Vector Measurement of a Magnetic Field

Inventor(s): LEGER JEAN-MICHEL [FR]; GRAVRAND OLIVIER [FR]; BERTRAND FRANCOIS
Classification: - international: G01R33/24; G01R33/24; (IPC1-7): G01V3/00 - European: G01R33/24
Also published as: US6844726 // FR2815416 // FR2815416 // WO0233434 // EP1344075
Abstract -- A vectorial magnetometer (1), measures the components of a magnetic field in three directions (Oxyz) using a scalar magnetometer (2). The field is periodically modulated in each of the directions by generators (Gx, Gy, Gz) which have a specific frequency for each direction and that power

coils (Ex, Ey, Ez). Synchronous demodulation of the of the output signal of the scalar magnetometer (2) for each of the three frequencies permits the relative continuous component of each axis to be found.; The vectorial magnetometer (1) is characterised in that it has means (Dx D'x, Dy D'y, Dz D'z) that can carry out a double demodulation for phase and quadrature for each of the frequencies and processing means (70) that use the continuous component modules for phase and quadrature to calculate a transfer function of the scalar magnetometer at the frequency in question, and to apply this function to the correction of the components.

EP0964260
Device for Measuring Magnetic Field Components Comprising a Scalar Magnetometer

LEGER, JEAN-MICHEL
Classification: - international: G01R33/26; G01R33/24; (IPC1-7): G01R33/26 - European: G01R33/26
Also published as: FR2779530 // US6313628 // CA2274623
Abstract -- The system uses a scalar magnetometer with additional fields applied by external coils, which are arranged with mutually orthogonal axes. The system for measuring the components of a magnetic field includes a scalar magnetometer (10,14,16,21,24,26,30,40,46,56). This magnetometer provides an output signal corresponding to the modulus of the applied magnetic field. There are also at least two conducting coils (Ex,Ey,Ez) disposed around the scalar magnetometer with mutually orthogonal axes. Each coil is supplied with a current at a given frequency. Processing circuits (Dx,Dy,Dz) receive the signal produced by the magnetometer and effect synchronous demodulation of the signal at the respective frequencies, to provide signals (Bx,By,Bz) corresponding to the components of the magnetic field which exists in this region.

JP11306328
METHOD AND DEVICE FOR GENERATING TWO-DIMENSIONAL SCALAR FIELD

KAWAI, NAOKI
Classification: - international: G03F1/00; G06T1/00; G03F1/00; G06T1/00; (IPC1-7): G06T1/00; G03F1/00
Abstract -- PROBLEM TO BE SOLVED: To extract flow of each conduit from a conduit picture to generate a two-dimensional scalar field. SOLUTION: Conduits are extracted from the conduit picture one by one (S2), and representative points and values of flow are defined for each conduit, and respective values of flow are registered in positions corresponding to these representative points in a separately prepared two-dimensional area, and values of flow in other positions of the two-dimensional area are interpolated based on registered values of flow and their positions (S5), thus generating a two-dimensional scalar field.

US5845220
Communication method and apparatus with signals comprising scalar and vector potentials without electromagnetic fields

PUTHOFF, HAROLD
Classification: - international: H01Q7/00; H04B5/00; H01Q7/00; H04B5/00; (IPC1-7): H04B1/00
- European: H01Q7/00; H04B5/00
Abstract of US 5845220 (A)
Information that changes as a function of time is communicated from a transmitting site to a receiving site

by transmitting a signal comprising scalar and vector potentials without including ay electromagnetic field. The potentials vary as a function of time in accordance with the information.

US3924210
Field Shaping Magnet Structure

1975-12-02
Inventor(s): DIONNE NORMAN J
Classification: - international: H01J31/50; H01F7/02; H01F7/20; H01J29/64; H01J31/08; H01F7/02; H01F7/20; H01J29/58; (IPC1-7): H01F7/02- European: H01F7/02C1; H01F7/20
Also published as: NL7512795 // NL7512795 // NL172496 // NL172496 // JP51067961

Abstract -- A magnet structure having a pair of spaced pole pieces interconnected by a reluctor circuit comprising an operatively aligned array of soft magnetic members suitably spaced apart by interposed nonmagnetic material to provide between the pole pieces a preferred magnetic scalar potential and an associated magnetic flux distributed as desired over a relatively large volume adjacent the array.

---

http://amasci.com/hum/adetect.txt

Date: 10 Feb 97 18:50:04 EST
From: "Sara T. Allen"
To: Taos Hum list serve <taoshum-l@eskimo.com>

Subject: Scalar fields - Honeywell Patent Numbers

List of patents by Raymond C. Gelinas but assigned to Honeywell:
(note that a Vector Potential is a scalar field)

4,429,280
31 Jan 1984
Apparatus and Method for Demodulation of a Modulated Curl-Free Magnetic Vector Potential.

4,429,288
31 Jan 1984
Apparatus and Method for Modulation of a Curl-Free Magnetic Vector Potential Field.

4,432,098
14 Feb 1984
Apparatus and Method for Transfer of Information by Means of a Curl-Free Magnetic Vector Potential Field.

4,447,779
8 May 1984
Apparatus and Method for Determination of a Receiving Device Utilizing a Curl-Free Magnetic Vector Potential Field.

4,605,897
12 Aug 1986
Apparatus and Method for Distance Determination Between a Receiving Device and a Transmitting Device Utilizing a Curl-Free Magnetic Vector Potential Field.

4,491,795
1 Jan 1985
Josephson Junction Interferometer Device for Detection of Curl-Free Magnetic Vector Potential Fields.

Also, you can find a good article in Scientific American of April 1989, pp. 56-62, "Quantum Interference and the Aharonov-Bohm Effect" by Yoseph Imry & Richard Webb.

Another one:

US5845220: Communication method and apparatus with signals comprising scalar and vector potentials without electromagnetic fields , H. Puthoff

---

http://www.unusualresearch.com/scalarbib/scalarbib.htm

Y. Aharonov and D. Bohm, "Significance of Electromagnetic Potentials in in the Quantum Theory," The Physical Review, vol. 115, no. 3, Aug. 1959.
Abstract: In this paper, we discuss some interesting properties of the electromagneticpotentials in the quantum domain. We shall show that, contrary to theconclusions of classical mechanics, there exists effects of potentials oncharged particles, even in the region where all the fields (and therefore theforces on the particles) vanish. We shall then discuss possible experiments totest these conclusions; and, finally, we shall suggest further possibledevelopments in the interpretation of the potentials.

Yoseph Imry and Richard A. Webb, "Quantum Interference and the Aharonov-Bohm Effect," Scientific American, vol. 260, no. 4, Apr. 1989.
Abstract: Can electrons be influenced by a nearby magnet so well shieldedthat its force field cannot be detected? The counterintuitive answer is yes:an energy emanation from the magnet known as the potential does indeed affectthe electrons' wave function. This quantum-mechanical effect is being brought tobear on the development of new microelectronic devices.

Capt. Robert M. Collins (TQTR), "Soviet Research On The A-Vector Potential and Scalar Waves (U)," Unknown.
Abstract: Active in the areas of the Aharonov-Bohm effect as applied to the A-vector potential and scalar fields as applied to solving force related problems.

Capt. Robert M. Collins (TQTR), "Soviet Research On Unified Field Theories, False Vacuum States, and Antigravity (U)," Unknown.
Abstract: Theoretical progress in dealing with unified field theories...new concepts in weapons, transportation, propulsion

Dr. Jack Dea, "Fundamental Fields and Phase Information," P.A.C.E. Newsletter, vol. 4, no. 3 (Planetary Assoc. f. Clean Energy)

K.J. van Vlaenderen, "Electrodynamics with the scalar field," Sep. 2001.
Abstract: The expressions of the electric and magnetic fields, that can be derived from the Li'enard-Wiechert potentials, are in good agreement with experiments. Surprisingly the Li'enard-Wiechert potentials do not satisfy the Lorenz gauge condition, therefore they cannot be regarded as solutions of the Maxwell equations in the Lorenz gauge, but only as solutions of the inhomogeneous potential wave equations. Therefore, the inhomogeneous potential wave equations should be regarded as a separate set of differential equation that are unconnected with Maxwell's equations. In order to simplify this theory of classical electrodynamics we propose a generalization of Maxwell's equations, such that a gauge of the potentials is unnecessary in order to derive the Lorenz inhomogeneous potential wave equations. This generalization can be described as a conditional current regauge that does not violate the conservation of charge. This has several consequences: - the generalized Maxwell equations also contain scalar field terms. - the prediction of a longitudinal electro-scalar wave (LES wave) in vacuum. - a generalized Lorentz force expression that contains an extra scalar term. - generalized energy and momentum theorems, with an extra power flow term associated with LES waves.

E. T. Whittaker in Cambridge, "On the partial differential equations of mathematical physics," vol. 57, pp. 333-355, Nov. 1903.

Although as much care as possible was taken in its reproduction, no warranty is expressed or implied as to the suitability or accuracy of this document for any purpose whatsoever.

CAVEAT: There are what appear to be errors in the original. Those that are changed are noted here. Spelling and other obvious errors remain as in the original.
On Page 346: The first double integral was missing the 'x' on the 'x sin u cos v' term of the first argument of f().
Frank Lofaro gives the 1903 paper this description: 1903 paper on potentials being composed of harmonic phase-conjugate scalar pairs.
He also gives the 1904 paper this description: 1904 paper on EM waves being composed of two scalars.

E. T. Whittaker in Cambridge, "The Electromagnetic Field Due to Electrons by Means of Two Scalar Potential," pp. 367-372, Nov. 1904.
Although as much care as possible was taken in its reproduction, no warranty is expressed or implied as to the suitability or accuracy of this document for any purpose whatsoever.
CAVEAT: There are what appear to be errors in the original. Those that are changed are noted here. Spelling and other obvious errors remain as in the original.
The equation in the middle of page 368 appears to be in error in the original. The "c-square, del-square, a-sub y" term is missing the superscript 2 on the del in the original paper. From looking at the other equations in the group, it seems like it should be squared also.

Concetto R. Giuliano, "Applications of optical phase conjugation," Physics Today, vol. 34, no. 4, pp. 27-35, Apr. 1981.
Abstract: Light waves that are, in effect, time-reversed images of their original can serve to restore severely aberrated waves to their original state.

Dr. Harry E. Stockman, "Plasma-diode experiments," Ham Radio, Feb. 1980.

GSC-12645, "Precise Phase Comparator for Nearly Equal Frequencies," NASA Tech Briefs, Fall/Winter 1981, vol. 6, no. 3, Nov. 1981.

Dwight W. Batteau and Peter R. Markey, "Man/Dolphin Communication Final Report," Dec. 1966.
Abstract: Research intended to determine the feasibility of establishing a language, approaching English, between man and dolphin. Neurophone like circuit in Appendix-A.

http://www.eskimo.com/~billb/freenrg/bark.html

http://www.textfiles.com/bbs/KEELYNET/ENERGY/reply2.asc

http://www.textfiles.com/bbs/KEELYNET/ENERGY/replytvq.asc

http://www.textfiles.com/bbs/KEELYNET/BIOLOGY/health1.asc

http://www.textfiles.com/bbs/KEELYNET/BIOLOGY/warning1.asc

Barkhausen Effect Scalar Detector

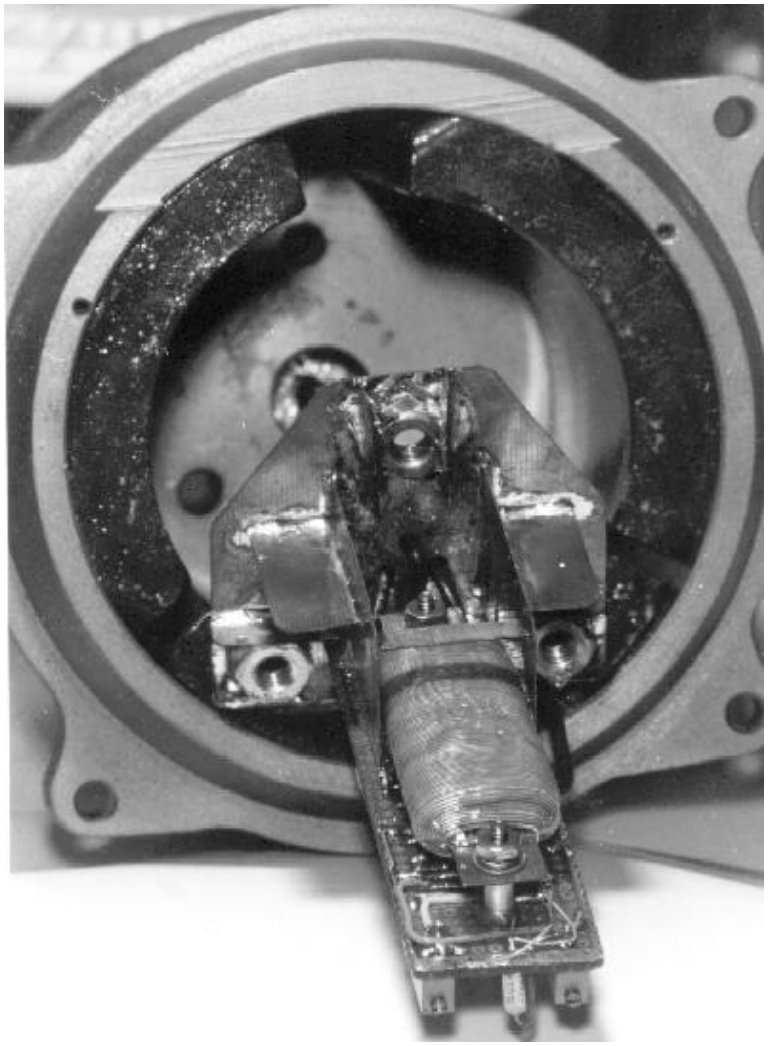

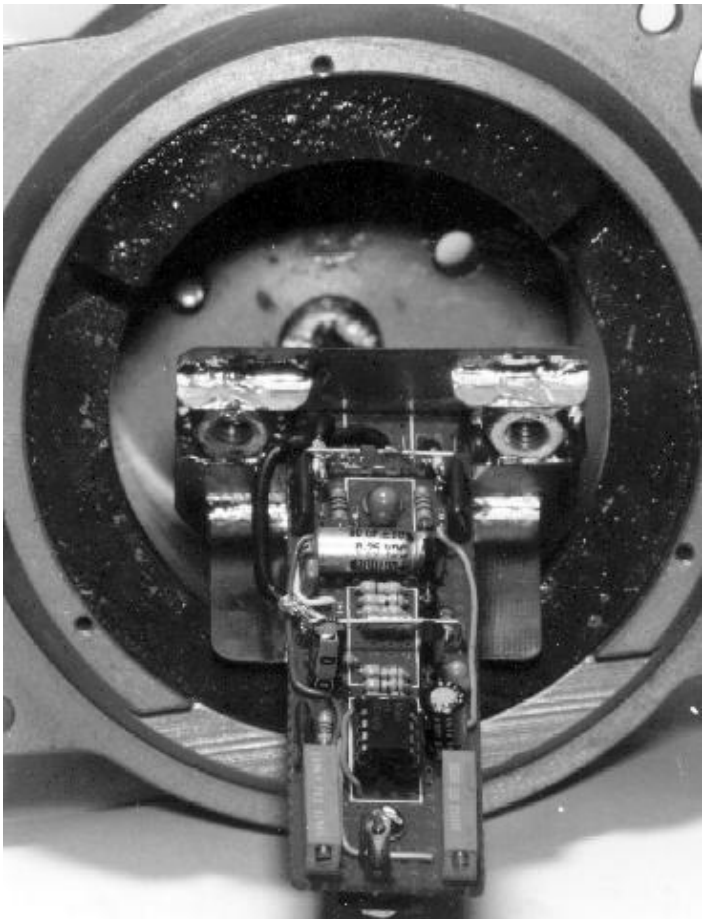

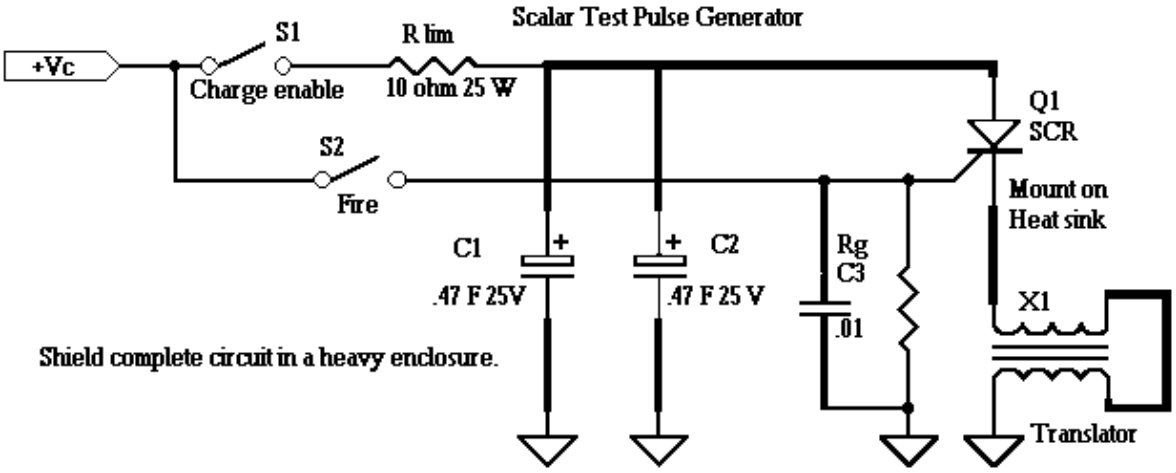
Scalar Test Pulse Generator
+Vc
S1
Charge enable
R lim
10 ohm 25 W
S2
Fire
Q1
SCR
Mount on
Heat sink
C1
.47 F 25V
C2
.47 F 25 V
Rg
C3
.01
X1
Translator
Shield complete circuit in a heavy enclosure.

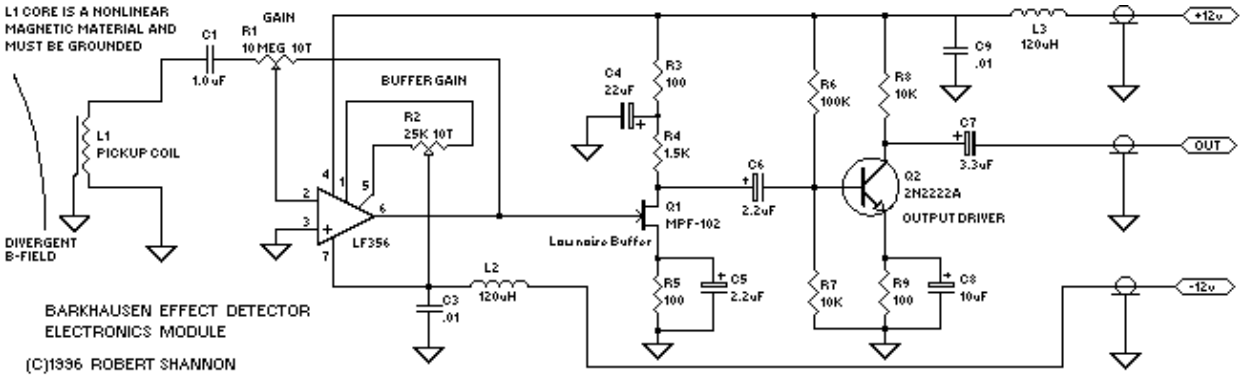
L1 CORE IS A NONLINEAR
MAGNETIC MATERIAL AND
MUST BE GROUNDED
C1
1.0 uF
GAIN
R1
10 MEG 10T
BUFFER GAIN
R2
25K 10T
L1
PICKUP COIL
DIVERGENT
B-FIELD
LF356
C4
22uF
R3
100
R4
1.5K
Q1
MPF-102
Launoire Buffer
C6
2.2uF
R6
100K
R8
10K
Q2
2N2222A
OUTPUT DRIVER
C9
.01
L3
120uH
+12v
C7
3.3uF
OUT
R5
100
C5
2.2uF
R7
10K
R9
100
C8
10uF
-12v
L2
120uH
C3
.01
BARKHAUSEN EFFECT DETECTOR
ELECTRONICS MODULE
(C)1996 ROBERT SHANNON

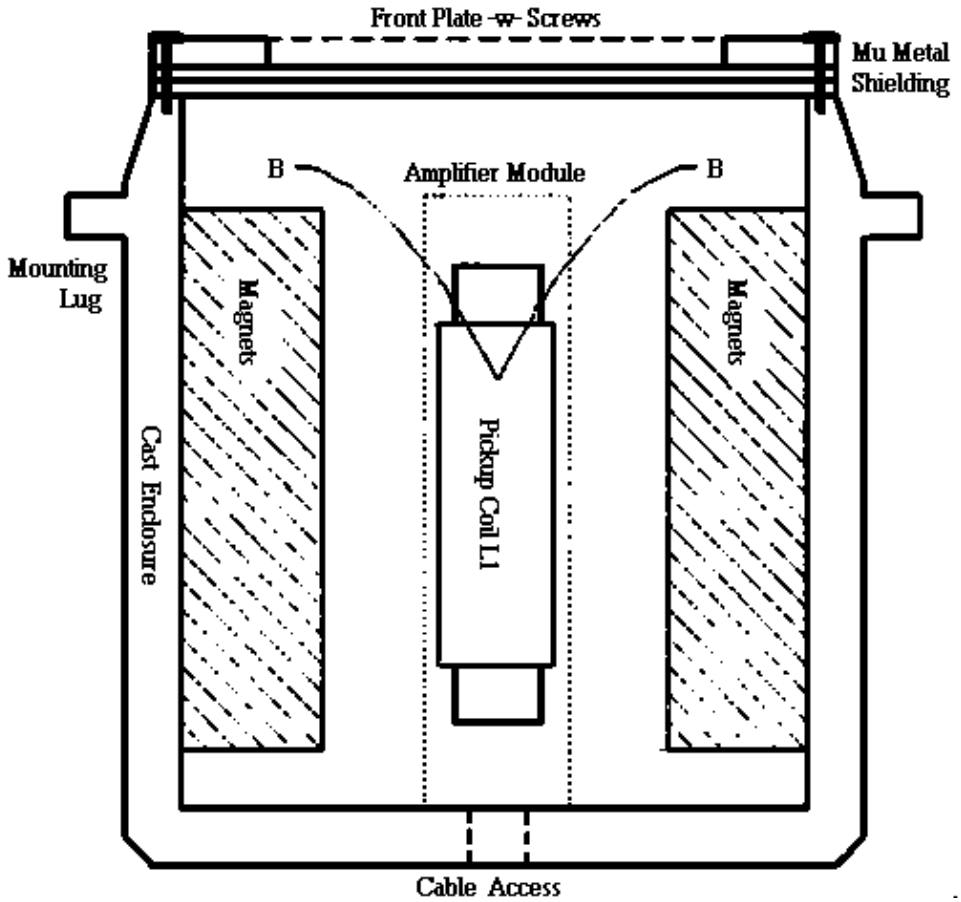
Front Plate -w- Screws
Mu Metal
Shielding
B
Amplifier Module
B
Mounting
Lug
Magnets
Magnets
Pickup Coil L1
Cast Enclosure
Cable Access

Your Support Maintains this Service --

BUY

The Rex Research Civilization Kit

... It's Your Best Bet & Investment in Sustainable Humanity on Earth ...
Ensure & Enhance Your Survival & Genome Transmission ...
Everything @ rexresearch.com on a Data DVD !

ORDER PAGE

US007960867B2

(12) **United States Patent**
Issa et al.

(10) **Patent No.: US 7,960,867 B2**
(45) **Date of Patent: Jun. 14, 2011**

(54) **METHODS AND SYSTEMS FOR WIRELESS ENERGY AND DATA TRANSMISSION**

(75) Inventors: **Anthony Francis Issa**, Orlando, FL (US); **Jeffrey Messer**, San Bernadino, CA (US); **John Michael Tobias**, Toms River, NJ (US)

(73) Assignee: **Extremely Ingenious Engineering**, Orlando, FL (US)

(*) Notice: Subject to any disclaimer, the term of this patent is extended or adjusted under 35 U.S.C. 154(b) by 266 days.

(21) Appl. No.: **12/288,586**

(22) Filed: **Oct. 21, 2008**

(65) **Prior Publication Data**

US 2009/0134711 A1 May 28, 2009

Related U.S. Application Data

(60) Provisional application No. 61/004,373, filed on Nov. 27, 2007.

(51) **Int. Cl.**
H01F 27/28 (2006.01)
H01F 38/00 (2006.01)

(52) **U.S. Cl.** **307/104**

(58) **Field of Classification Search** 307/104
See application file for complete search history.

(56) **References Cited**

U.S. PATENT DOCUMENTS

514,168 A 2/1894 Tesla
593,138 A 11/1897 Tesla
645,576 A 3/1900 Telsa
649,621 A 5/1900 Tesla
685,953 A 11/1901 Tesla
685,954 A 11/1901 Tesla
685,955 A 11/1901 Tesla
685,956 A 11/1901 Tesla
685,957 A 11/1901 Tesla
685,958 A 11/1901 Tesla
787,412 A 4/1905 Tesla
1,119,732 A 12/1914 Tesla
2,205,204 A 6/1938 King
3,432,664 A 3/1969 Robison
3,758,869 A 9/1973 Wagner
3,781,647 A 12/1973 Glaser
3,909,736 A 9/1975 Huchital et al.
4,379,253 A 4/1983 Myer
4,485,426 A 11/1984 Kerls
4,685,047 A 8/1987 Phillips, Sr.
4,717,889 A 1/1988 Engelmann
4,727,297 A 2/1988 Wolze
4,872,100 A 10/1989 Diaz

(Continued)

OTHER PUBLICATIONS

International Preliminary Report for PCT/US2008/007655 dated Dec. 22, 2009.

(Continued)

Primary Examiner — Jared J Fureman
Assistant Examiner — Hal I Kaplan
(74) *Attorney, Agent, or Firm* — Milbank Tweed Hadley & McCloy LLP

(57) **ABSTRACT**

System and methods for wireless energy and data transmission are described. One aspect includes an emitter and receiver. The emitter may include primary and secondary emitting windings. The receiver may include primary and secondary receiver windings. In further aspects, the emitter may include a tertiary emitting winding and the receiver may include a tertiary receiver winding. In one aspect, the emitter uses driving circuitry and the receiver uses rectifying circuitry and one or more capacitors. In further aspects, the emitter and receiver are reversible.

39 Claims, 16 Drawing Sheets

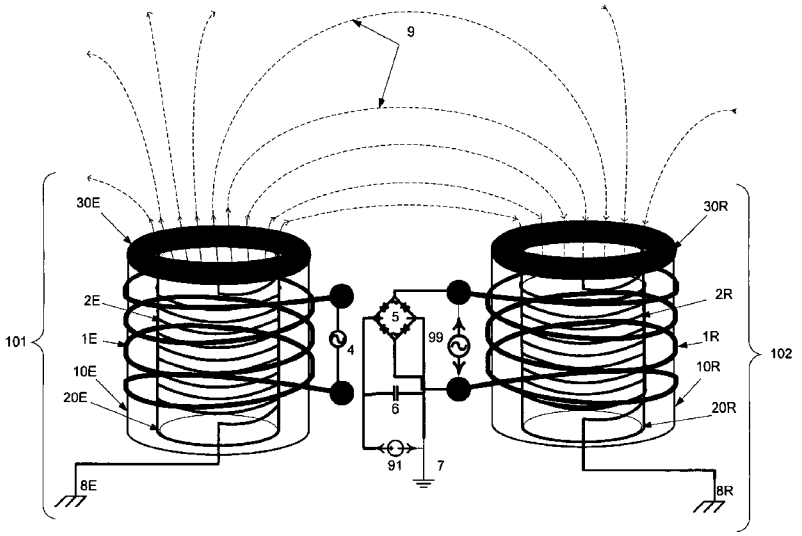

U.S. PATENT DOCUMENTS

4,916,379	A	4/1990	Wand et al.	
4,937,832	A	6/1990	Rocca	
4,945,721	A	8/1990	Cornwell et al.	
4,956,579	A	9/1990	Albright	
4,963,792	A	10/1990	Parker	
5,103,366	A	4/1992	Battochi	
5,173,643	A	12/1992	Sullivan et al.	
5,225,623	A	7/1993	Krasnow	
5,276,281	A	1/1994	Sato et al.	
5,281,898	A	1/1994	Albright	
5,739,997	A	4/1998	Gross	
5,818,180	A	10/1998	Canclini	
5,841,239	A	11/1998	Sullivan et al.	
5,864,212	A	1/1999	Sullivan	
6,052,017	A	4/2000	Pidutti et al.	
6,118,229	A	9/2000	Lee	
6,166,869	A	12/2000	Pidutti et al.	
6,198,335	B1	3/2001	Pakriswamy	
6,259,305	B1	7/2001	Pakriswamy	
6,272,694	B1	8/2001	Weaver et al.	
6,320,508	B1	11/2001	Giesler et al.	
6,522,089	B1	2/2003	Duong et al.	
6,549,044	B2	4/2003	Brambilla et al.	
6,798,716	B1	9/2004	Charych	
6,883,509	B2	4/2005	Porter et al.	
6,906,486	B2	6/2005	Berroth et al.	
6,906,495	B2	6/2005	Cheng et al.	
6,911,848	B2	6/2005	Vinciarelli	
6,930,893	B2	8/2005	Vinciarelli	
6,934,166	B2	8/2005	Vinciarelli	
6,961,227	B1	11/2005	Whiton et al.	
7,027,311	B2	4/2006	Vanderelli et al.	
7,235,945	B2	6/2007	Correa et al.	
7,400,487	B1	7/2008	Bitar	
7,675,197	B2 *	3/2010	Tetlow	307/104
2003/0011324	A1	1/2003	Lee	
2004/0248742	A1	12/2004	Terashima et al.	
2005/0046387	A1	3/2005	Aker et al.	
2005/0083059	A1	4/2005	Morita et al.	
2005/0148864	A1	7/2005	Slade et al.	
2005/0184689	A1	8/2005	Maslov et al.	
2006/0098378	A1	5/2006	Gross	
2006/0228548	A1	10/2006	Ayai et al.	
2007/0018629	A1	1/2007	Potvin et al.	
2007/0075053	A1	4/2007	Smith et al.	
2007/0145018	A1	6/2007	Smith et al.	
2007/0195561	A1	8/2007	Suenaga et al.	
2007/0222426	A1	9/2007	Waffenschmidt et al.	
2007/0263415	A1	11/2007	Jansen et al.	

OTHER PUBLICATIONS

U.S. Appl. No. 12/152,545, filed May 15, 2008, Messer.
U.S. Appl. No. 12/152,525, filed May 15, 2008, Messer.
U.S. Appl. No. 12/313,792, filed Nov. 25, 2008, Issa, et al.
U.S. Appl. No. 12/214,655, filed Jun. 20, 2008, Issa.
U.S. Appl. No. 12/152,977, filed May 15, 2008, Messer.
U.S. Appl. No. 12/152,976, filed May 15, 2008, Messer.
U.S. Appl. No. 60/930,221, filed May 15, 2007, Messer, et al.
U.S. Appl. No. 60/936,506, filed Jun. 20, 2007, Messer, et al.
U.S. Appl. No. 61/004,373, filed Nov. 27, 2007, Messer, et al.
Tracy V. Wilson, How Wireless Power Works, www.howstuffworks.com, Nov. 20, 2008.
Minoru Watanabe, et al. A Study on High Temperature Superconductin Coil of Different Coil Arrangements, IEEE Transactions on Applied Superconductivity, Jun. 2007, vol. 17, No. 2.
Power Requirements for Cooling versus Temperature in Kelvin,www.metox.biz/super_roadmap, Jun. 8, 2008.
Cryostat, Wikipedia Encyclopedia,Jun. 1, 2008.
Resonator, Wikipedia Encyclopedia, Jun. 3, 2008.
Zenergy Receives Order for HTS Induction Heater, Superconductor Week, Oct. 15, 2008, vol. 21 No. 18, Peregrine Communications.
Superconductivity Roadmap, www.metox.biz/super_roadmap, Jun. 8, 2008.
Miyagi, et al., AC Loss Characteristics of an assembled conductor of round Bi2223 Ag sheated wires, Elsivier Science B.V., Aug. 2002, vol. 372-376 Part 3 pp. 1727-1729.
Daumling, et al., Ac loss in superconducting power cables, Studies in High Temperature Superconductors, vol. 33.
O'Miura, et al, The development of a 2.5 T/100 kV A AC superconducting magnet using a high-J NbTi superconducting wire having Nb artificial pins, Supercond. Sci. Techno. Oct. 1993.
HTS-110 Leaders in HTS Magnetic Solutions, www.hts-110.co.nz, Jun. 8, 2008.
Michael Walker, et al., Performance of Coils Wound from Long Lengths of Surface-Coated, Reactedm BSCC0-2212 Conductor, IEEE Transactions on Applied Supercond. Jun. 1997, vol. 7 No. 2.
K. Hayashi, et al., Development of Ag-Sheated Bi2223 Superconducting Wires & Thier Applications, IEEE Transactions on Applied Superconductivity, Mar. 2001, vol. 11 No. 1.
A.B. Sneary,et al., Development og High Temperature Superconducting Coils Using Bi-2223/Ag Tapes, IEEE Transactions on Applied Superconductivity vol. 9 No. 2, Jun. 1999.
Mark S. Newson, et al., Progress on the Design and Operation of High-Tc Coils Using Dip-Coat BSCCO-2212/Ag Tape, IEEE Transactions on Applied Superconductivity, vol. 12 No. 1.
L. Bigoni, et al., Development of Bi-2223/Ag Tapes and Coils, IEEE Transactions on Applied Superconductivity, vol. 7 No. 2, Jun. 1997.
Pradeep Halder, et al., Developement of Bi-2223 HTS High Field Coils and Magnets, IEEE Transactions on Applied Superconductivity, Jun. 1995, vol. 5 No. 2.
PJ Masson, et al., HTS Machines as enabling technology for all-electric airborne vehicles, Superconductor Science & Technology, 2007, 748-756.
M. Ariante. et al., Characteristics of Coils wound with Mono and Multifilamentary Bi-2212/Ag from 4 to 80 K, IEEE Transactions on Magnetics vol. 32 No. 4, Jul. 1996.
Shinichi Nomura, et al., Helically Wound Coils for High Field Magnets, IEEE Transactions on Applied Superconductivity, vol. 14 No. 2, Jun. 2004.
Dan Combine, Radiant Energy and Over-Unity, Version 6, Oct. 2006.
Tomorrow's High-Temperature Superconducting Cables, www.innovations-report.com, Jun. 27, 2001.
Material Safety Data Sheet for SCS4050, SF12050, SF12100; High Temperature Superconductor Tape, Jun. 12, 2007, SuperPower Inc.
International Search Report for PCT/US2008/12013 dated Feb. 4, 2009.
International Search Report for PCT/US2008/06239 dated Aug. 26, 2008.
International Search Report for PCT/US2008/06176 dated Sep. 17, 2008.
International Search Report for PCT/US2008/13097 dated Feb. 4, 2009.
International Search Report for PCT/US2008/07655 dated Sep. 25, 2008.
Wireless Power Tesla Coil Demo, Last Accessed Sep. 14, 2009, http://www.youtube.com/watch?v=aG-We7A-i9U.
Miniature Vacuum Tube Tesla Coil, Last Accessed, Nov. 17, 2009, www.capturedlightnin•g.org/hot-streamer/electrontube/minivttc.htm.
MINIVTTC.Bmp Image http://www.capturedlightning.org/hot-streamer/electrontube/MINIVTTC.bmp.
NASA SBIR 2009 Phase 1 Form C-Budget Summary.
Information about Principal Investigators/Project directors and co-Principal Investigators/co-Project Directors, Dec. 3, 2009.
Page, Lewis, Lightning-gun tech approaching weaponisation, www.theregister.co.uk, Aug. 26, 2009.
Tobias, John and Grebel H., Self-Imaging in photonic crystals in a subwavelength range, Optice Letters, Dec. 1, 1999, vol. 24, No. 23.

Tobias, John, Ajgaonkar M., Grebel H., Morphology-dependent transmission through photonic crystals, J. Opt. Soc.Am.B., Mar. 2002, vol. 19, No. 3.
Qels 2002, Tuesday Afternoon.
Mar. 15, 2010 Non-final Rejection for U.S. Appl. No. 12/152,976.
Apr. 16, 2010 Notice of Allowance, for U.S. Appl. No. 12/152,977.
Jul. 19, 2010 Notice of Allowance, for U.S. Appl. No. 12/152,977.
Aug. 26, 2010 Notice of Allowance, for U.S. Appl. No. 12/152,977.
Nov. 10, 2010 Ex Parte Quayle Action, for U.S. Appl. No. 12/313,792.
Nov. 5, 2010 Non-final Rejection, for U.S. Appl. No. 12/152,545.
Dec. 8, 2010 Response to Office Action, for U.S. Appl. No. 12/313,792.
Feb. 2, 2011 Notice of Allowance, for U.S. Appl. No. 12/313,792.
* cited by examiner

FIG. 1A

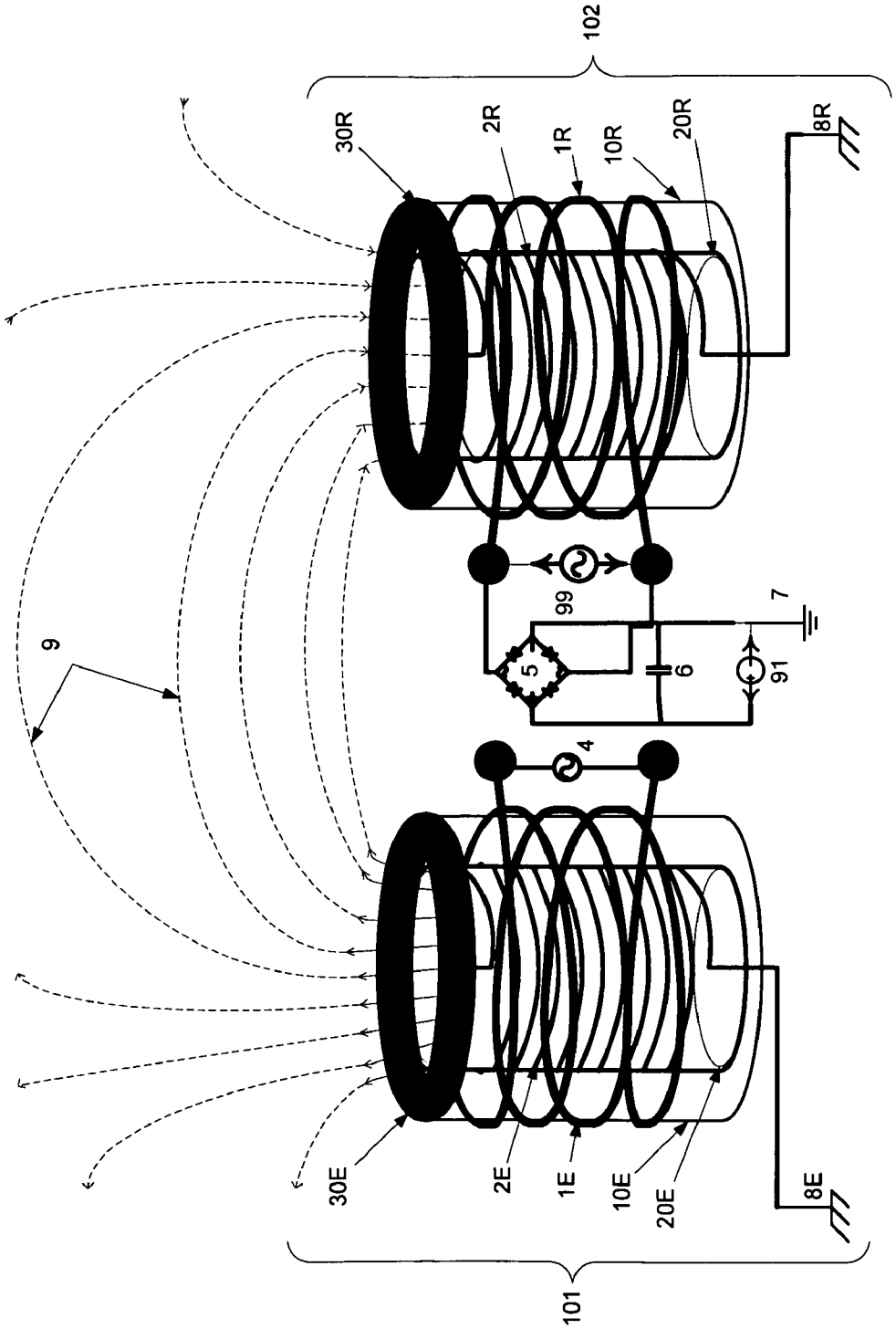

FIG. 1B

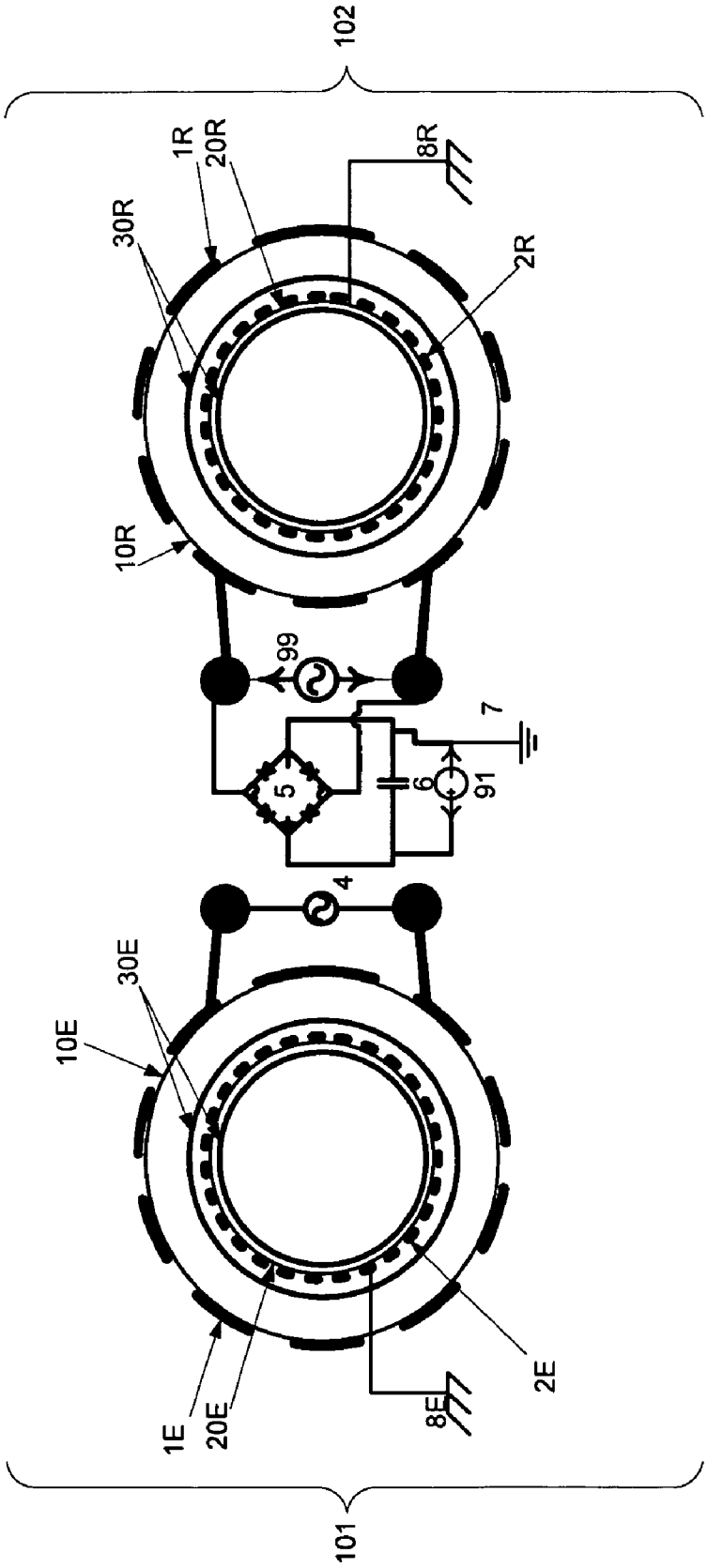

FIG. 1C

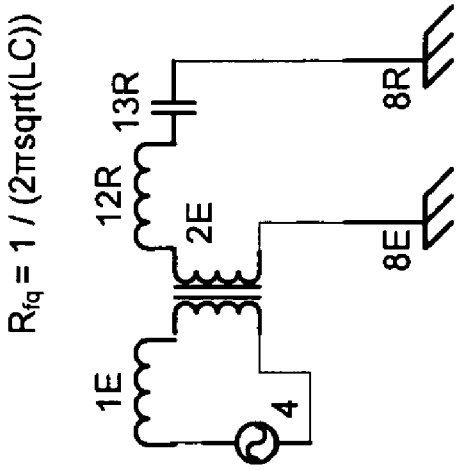

FIG. 1D

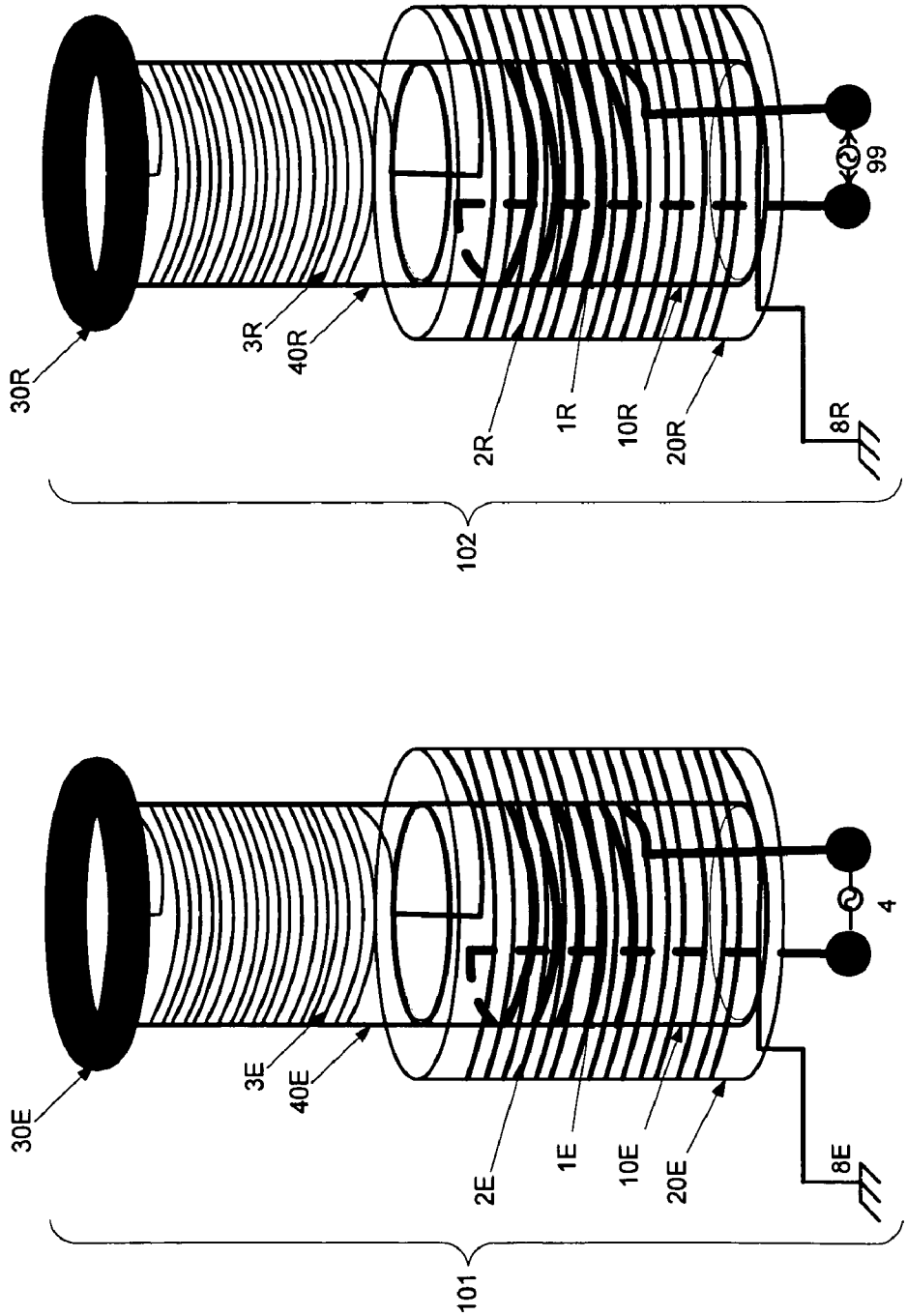

FIG. 1E

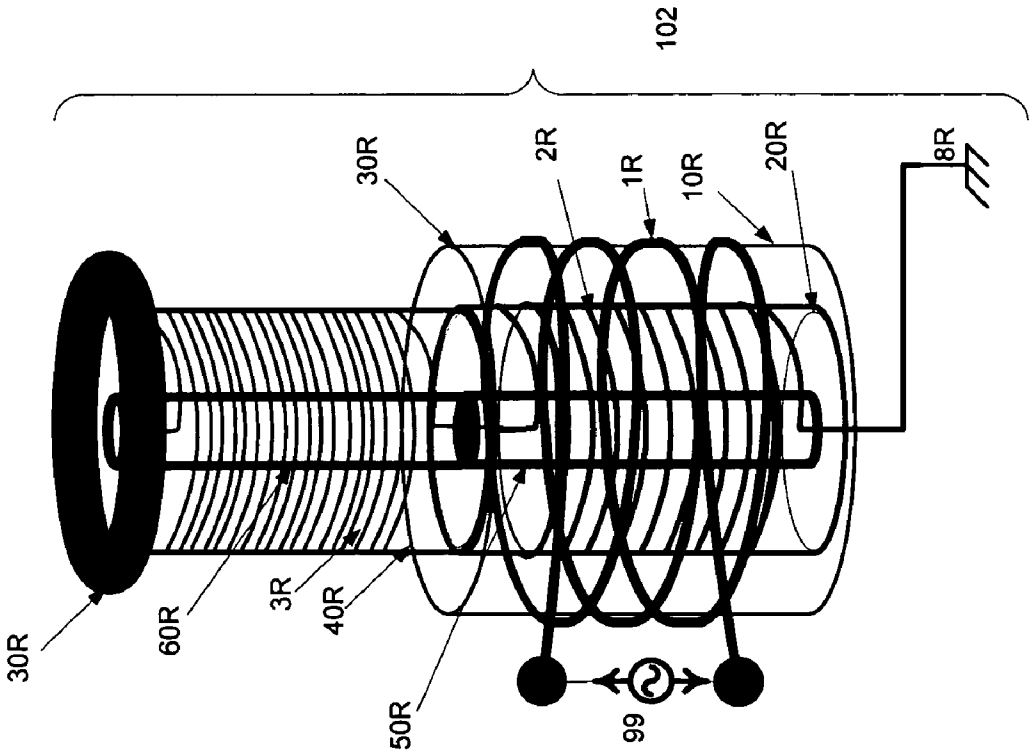

FIG. 2

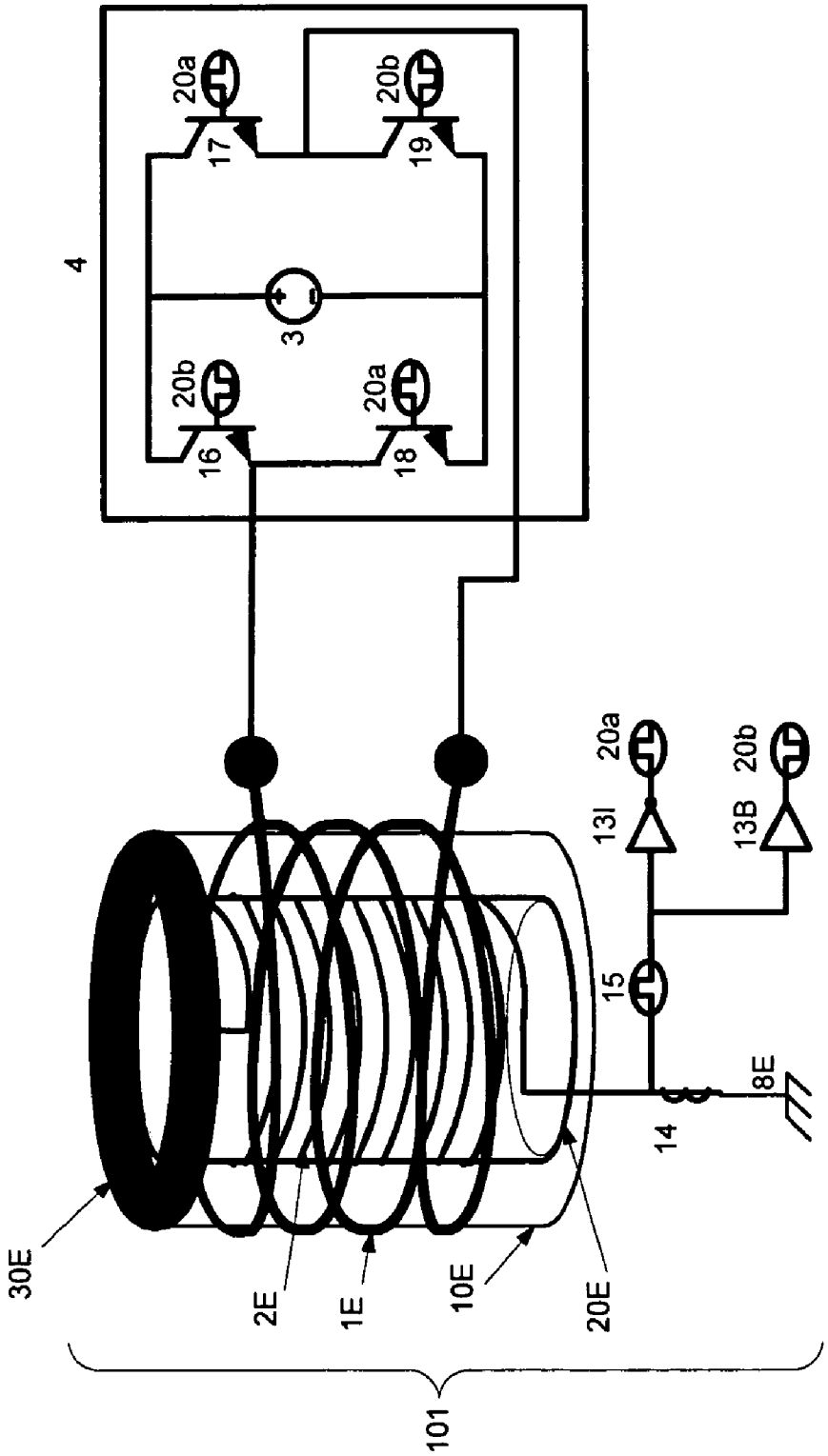
4
20a
17
20b
19
3
20b
16
20a
18
20a
13I
20b
13B
15
14
8E
30E
2E
1E
10E
20E
101

FIG. 3

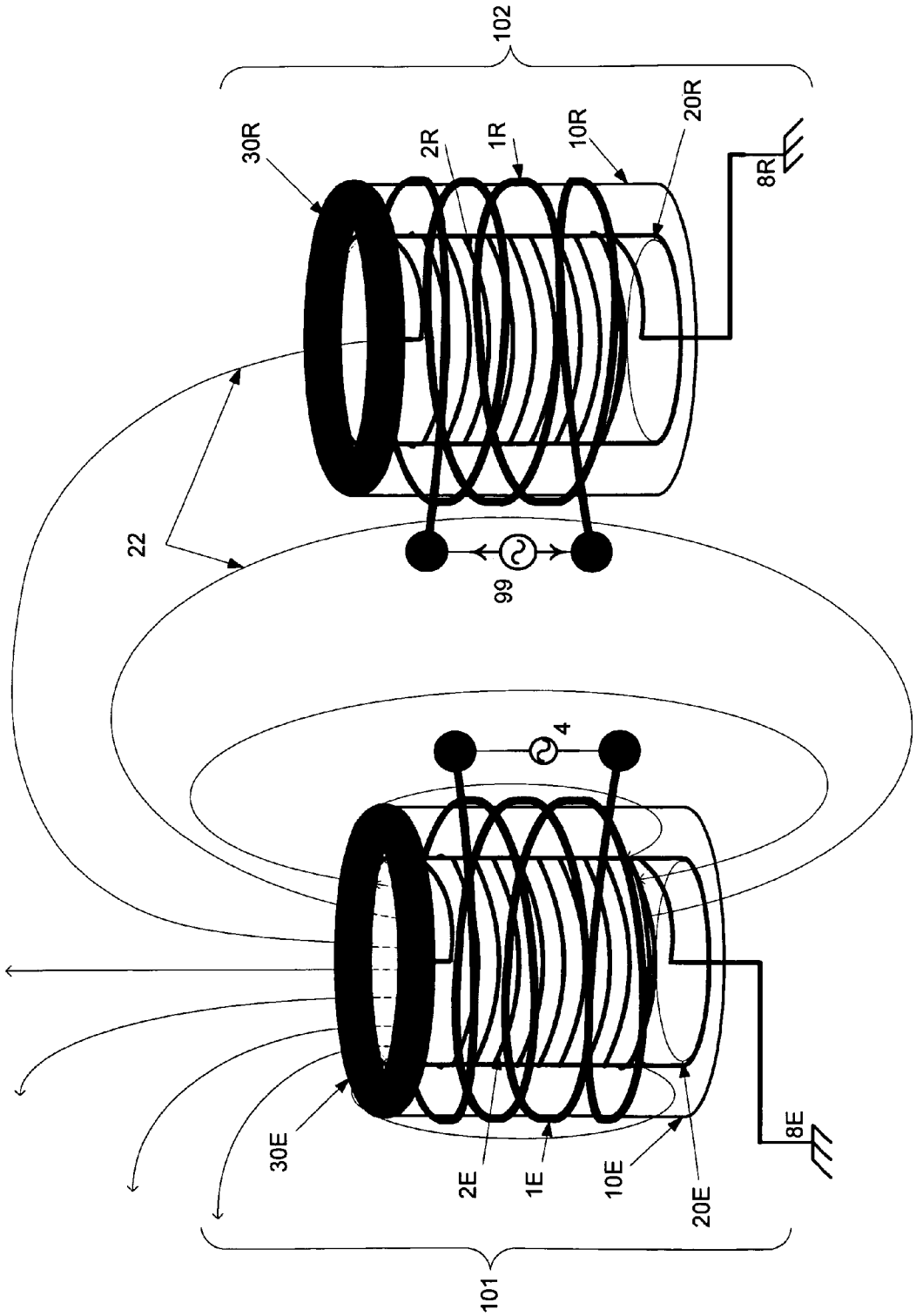

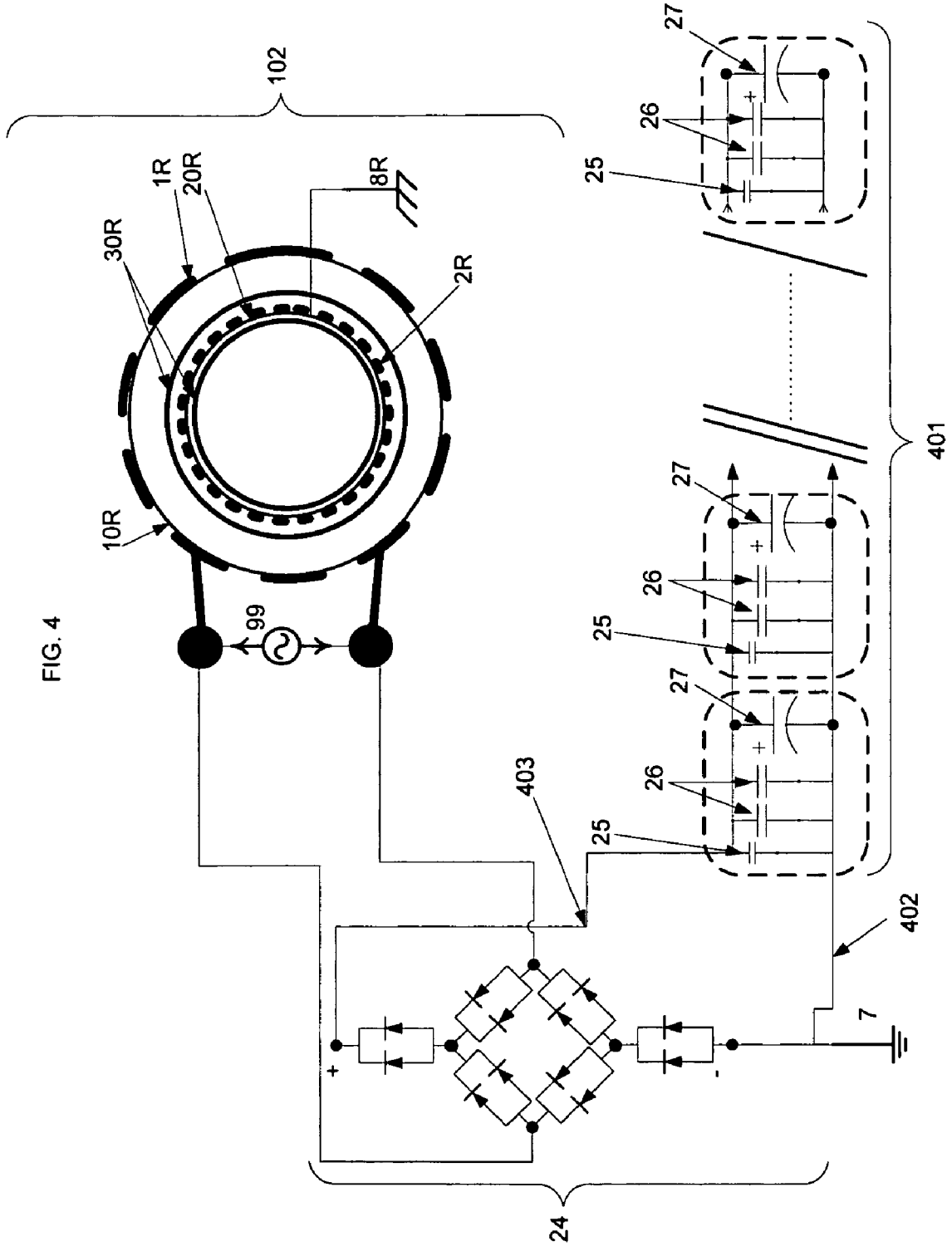

FIG. 4

FIG. 5

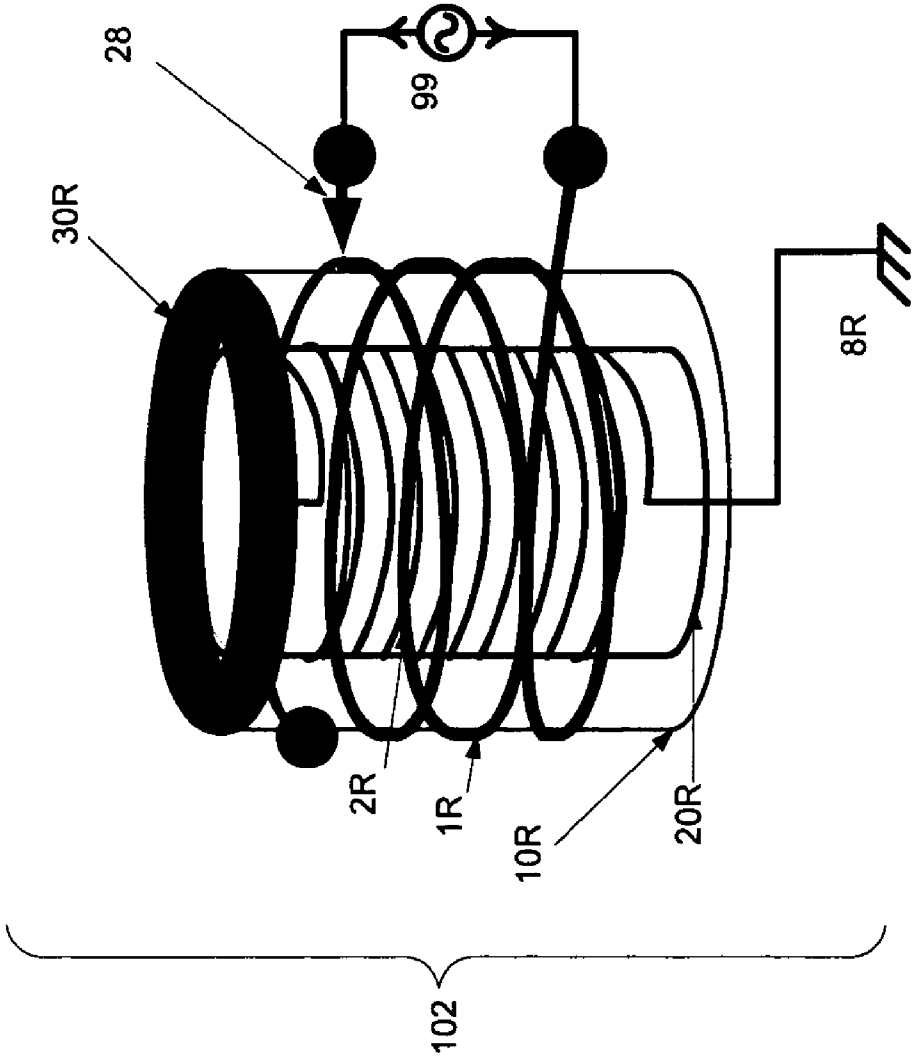

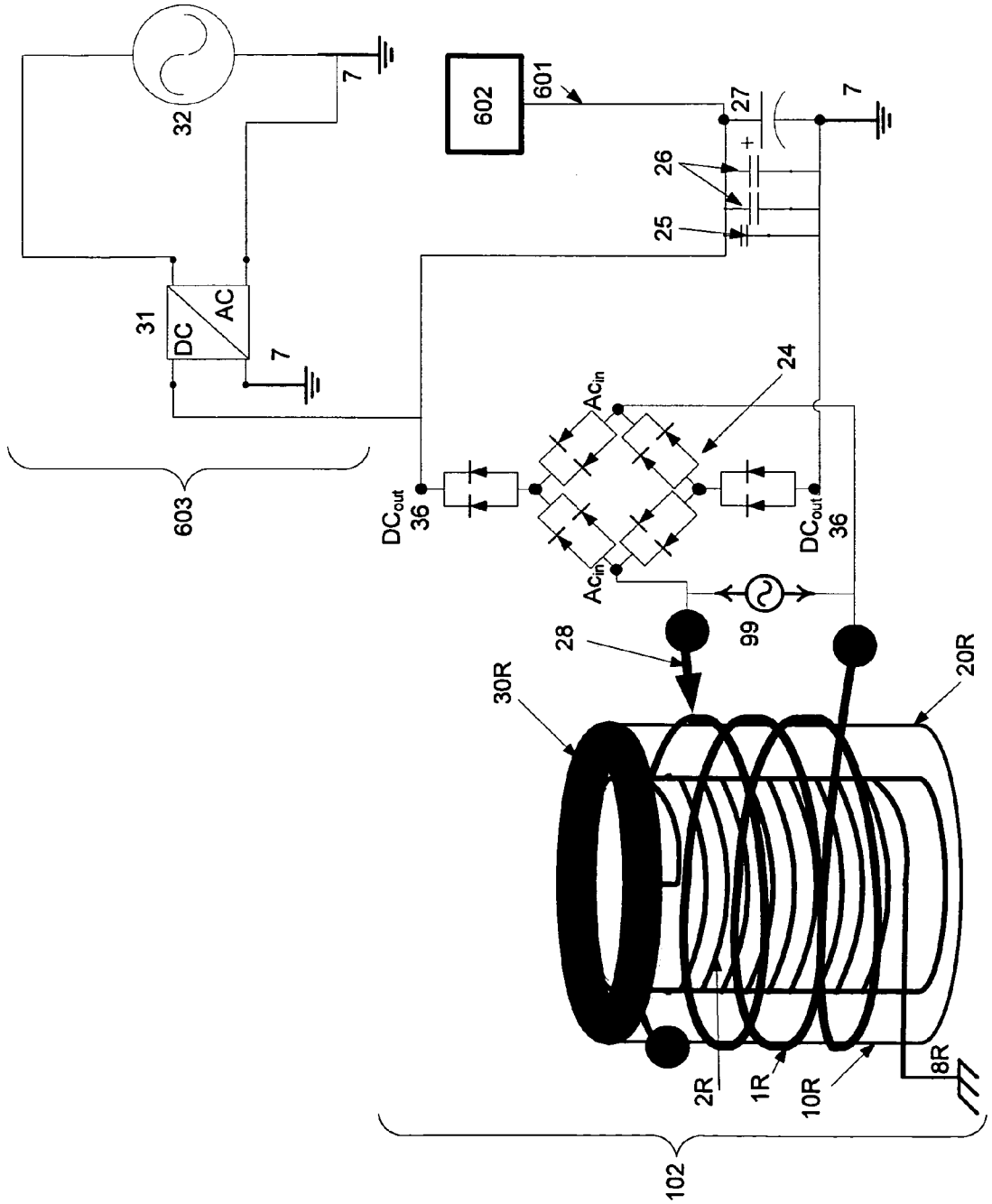
32
7
602
601
27
7
26
25
31
DC
AC
7
24
603
DC_{out}
36
Ac_{in}
Ac_{in}
DC_{out}
36
28
99
30R
20R
2R
1R
10R
8R
102

FIG. 6

FIG. 7

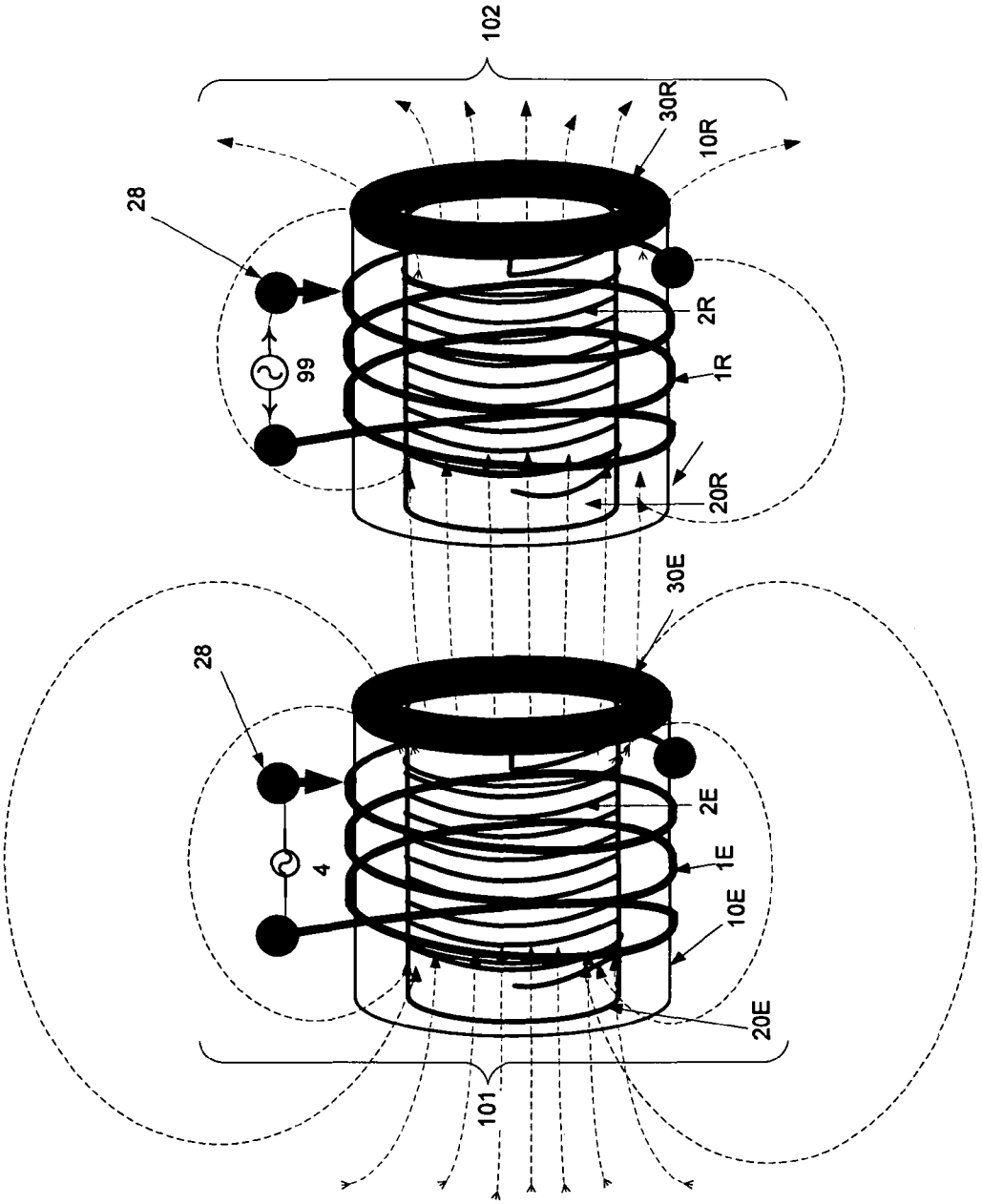

FIG. 8

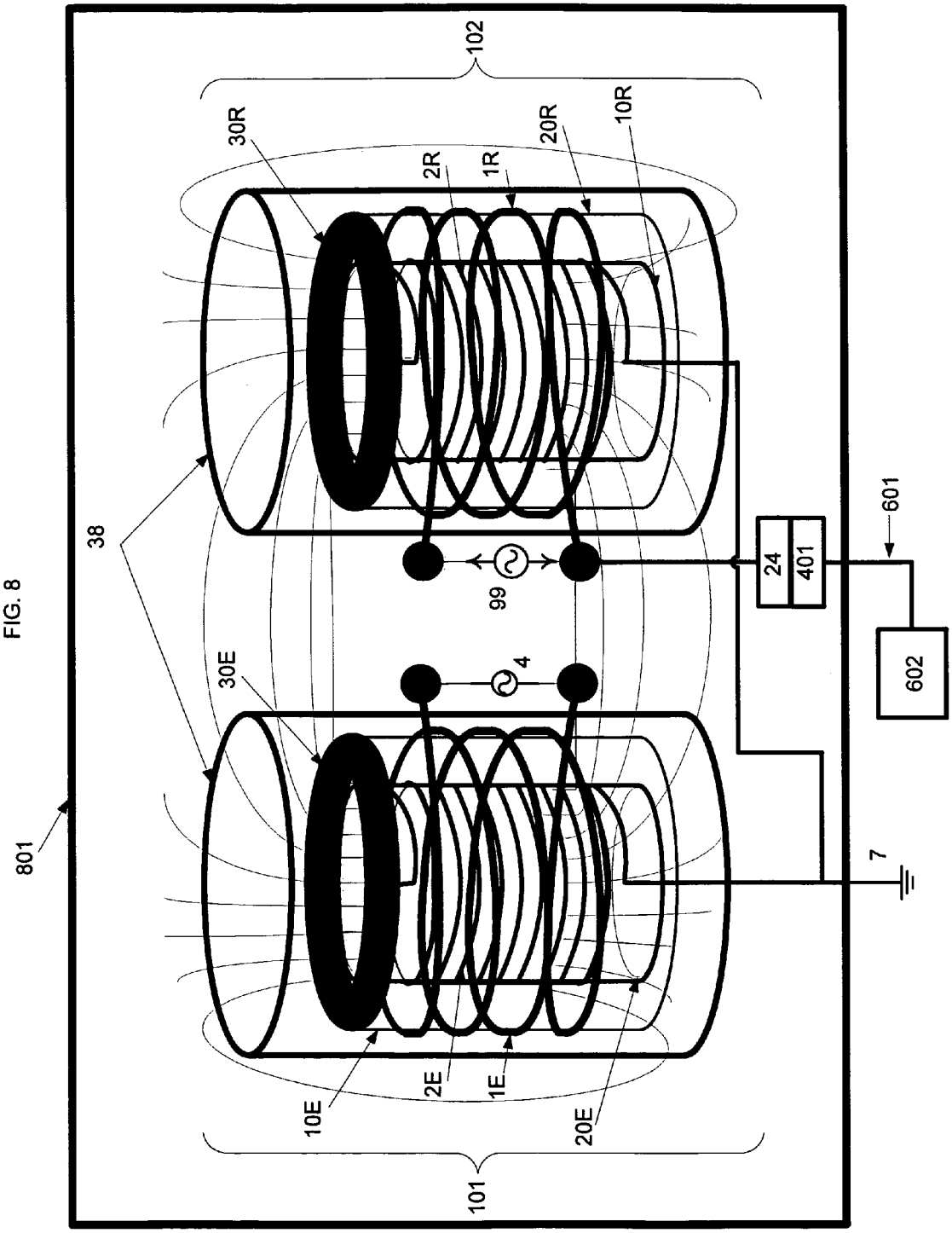
801
38
30E
30R
102
101
10E
2E
1E
20E
2R
1R
20R
10R
4
99
24
401
601
602
7

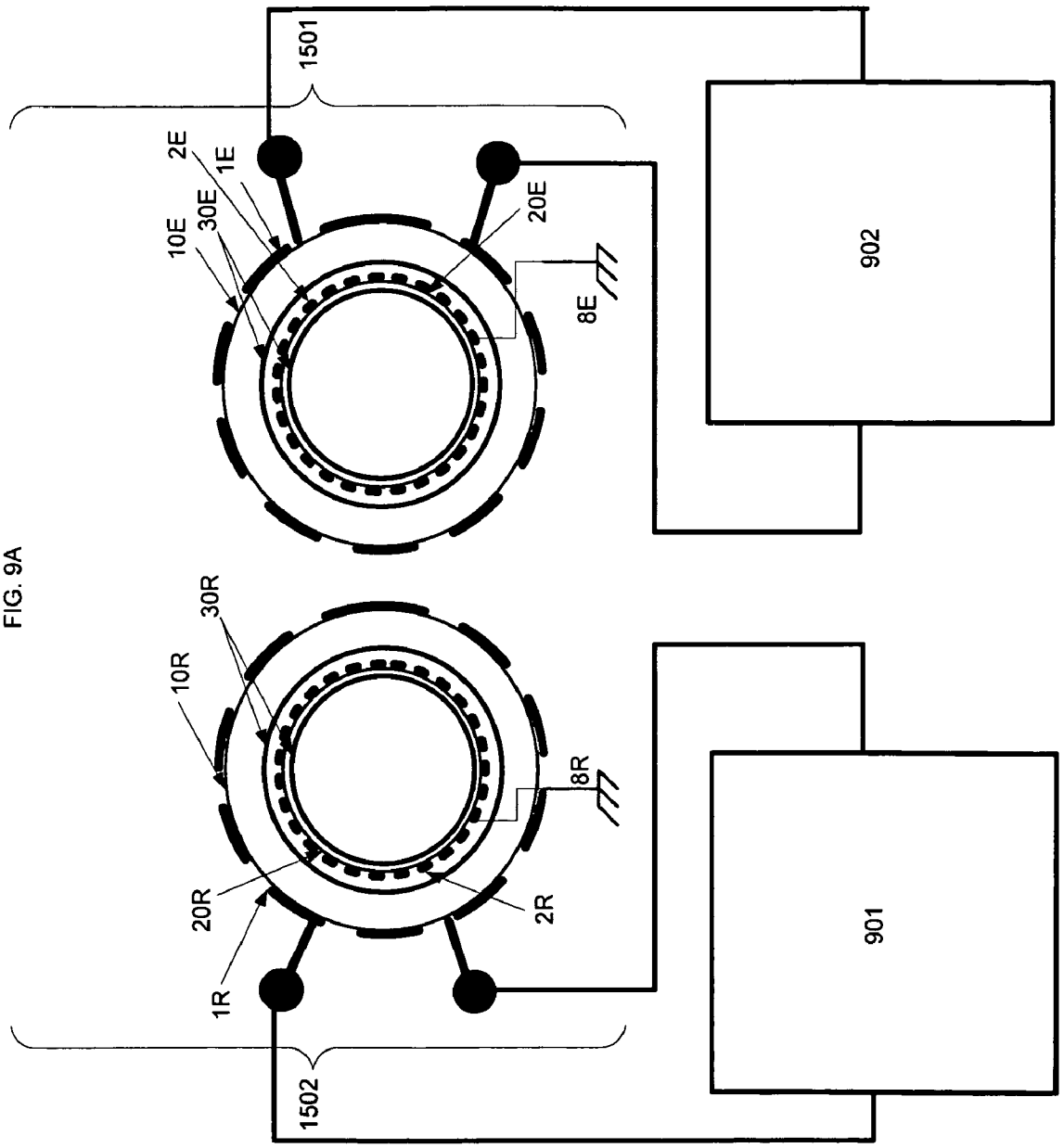

FIG. 9A

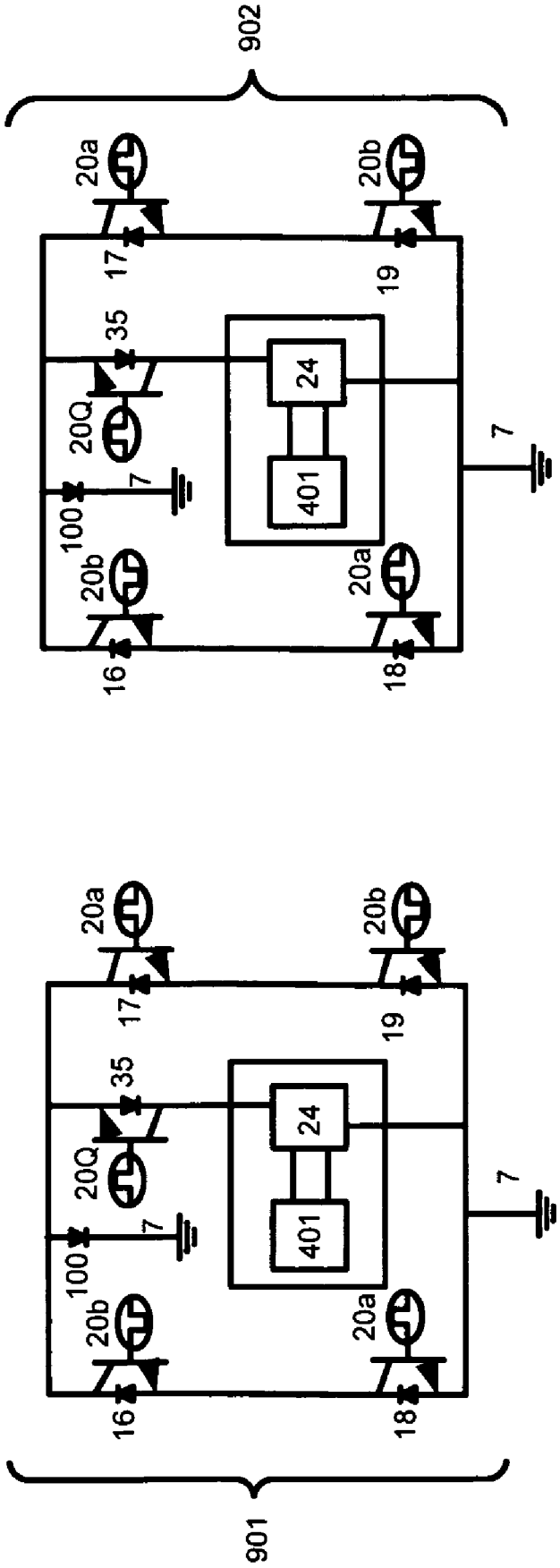

FIG. 9B

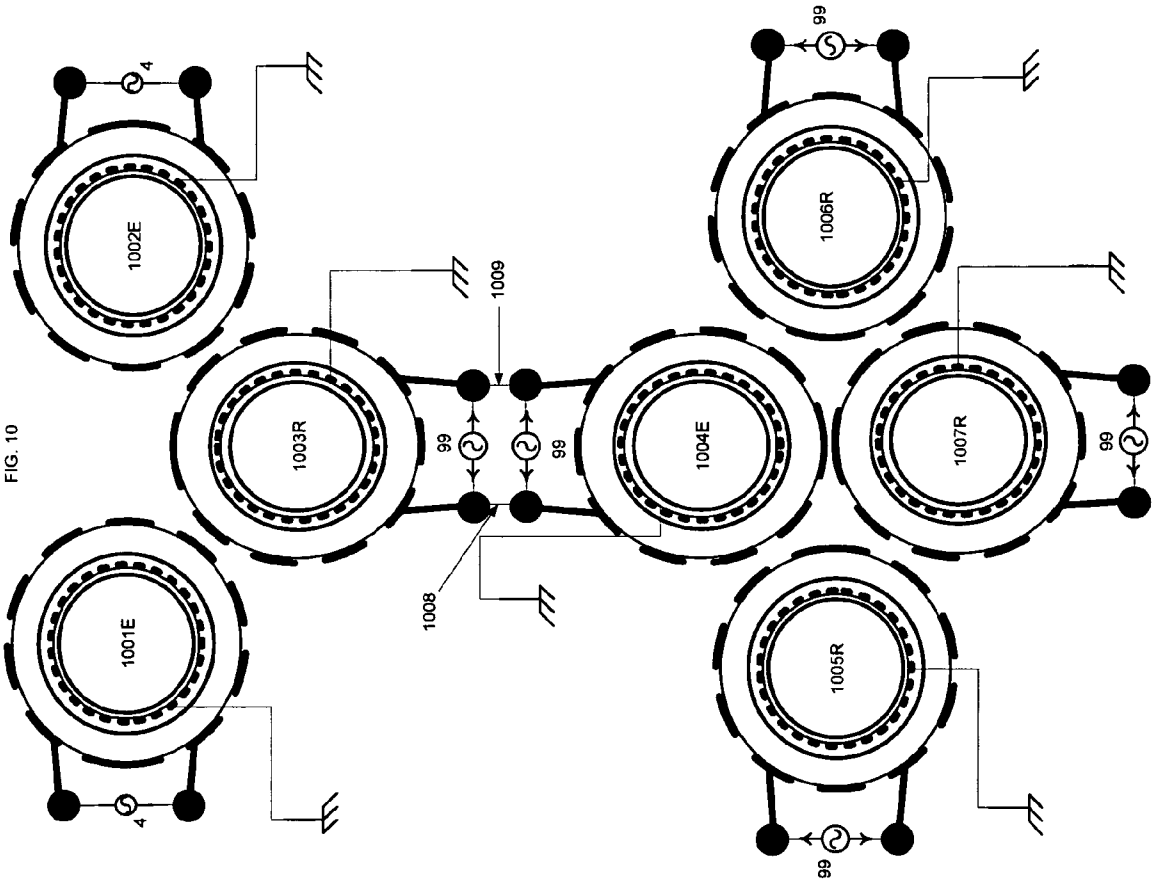
1001E
1002E
1003R
1004E
1005R
1006R
1007R
1008
1009
4
4
99
99
99
99
99
99

FIG. 10

FIG. 11

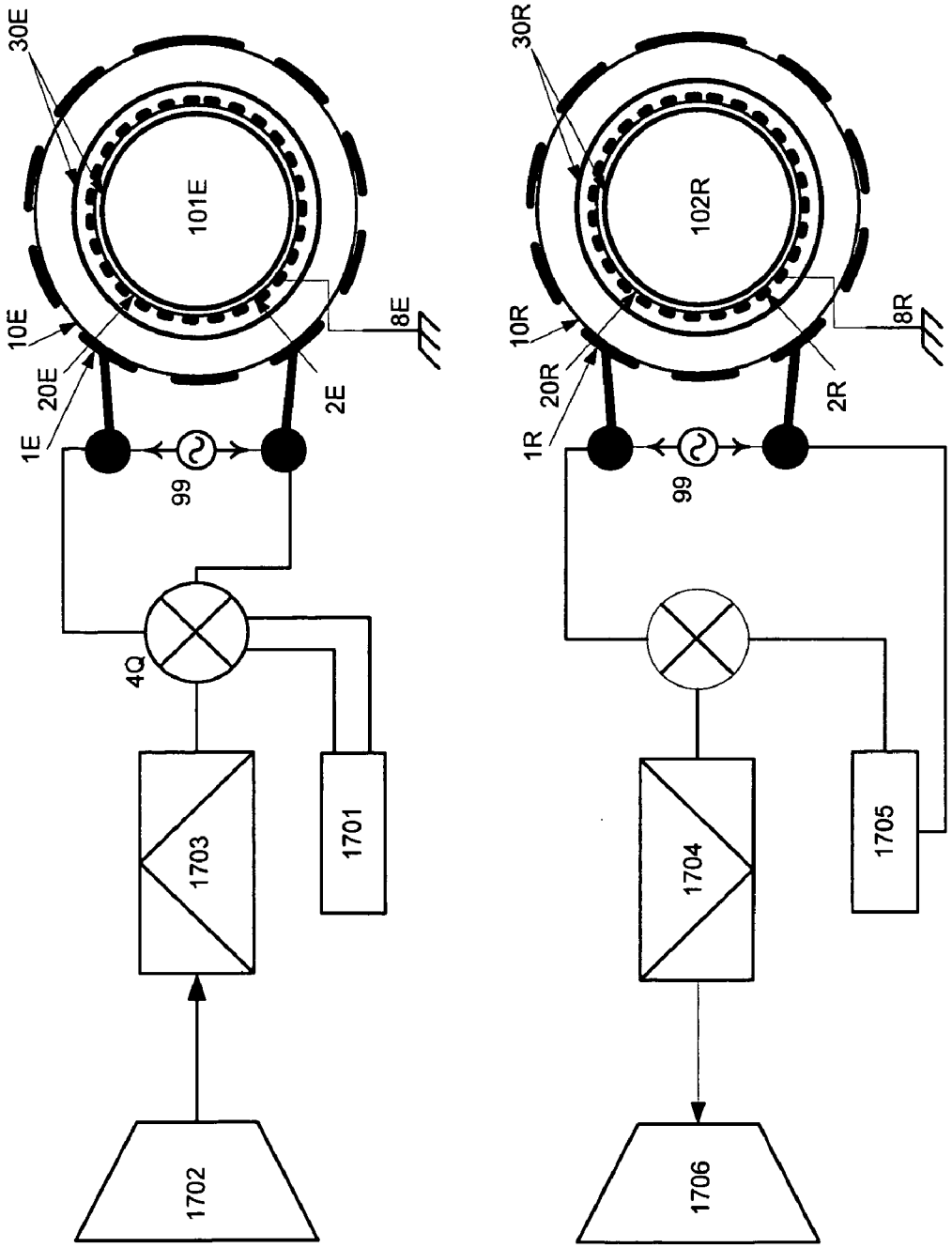
30E
101E
10E
20E
1E
2E
8E
99
4Q
1703
1701
1702
30R
102R
10R
20R
1R
2R
8R
99
1704
1705
1706

METHODS AND SYSTEMS FOR WIRELESS ENERGY AND DATA TRANSMISSION

This application claims the benefit of provisional patent application Ser. No. 61/004,373, filed Nov. 27, 2007. This application hereby incorporates by reference the entire contents of each of U.S. non-provisional patent application Ser. No. 12/152,545 titled "System and Method for Forming and Controlling Electric Arcs," filed May 15, 2008; U.S. non-provisional patent application Ser. No. 12/152,525 titled "System and Method for Controlling an Electromagnetic Field Generator," filed May 15, 2008; and U.S. non-provisional patent application Ser. No. 12/214,655 titled "System and Method for Using a Vacuum Core High Temperature Superconducting Resonator," filed Jun. 20, 2008.

FIELD OF THE INVENTION

The present invention relates to methods and systems for wireless energy and data transmission.

BACKGROUND OF THE INVENTION

It may be desirable to have a system and method for wireless energy and data transmission, especially in fields including, but not limited to, manufacturing, robotics, and consumer devices. By powering devices through wireless transmission of energy, the requirement for batteries or other chemical energy storage means may be reduced. In turn this may reduce the need for copper or aluminum cabling manufacturing costs and battery waste, thereby resulting in more environmentally friendly products.

The use of wireless transmission of energy may also simplify installation, as said devices may be moved without labor intensive rewiring. An additional benefit may be gained from the simultaneous transmission of data over the same carrier wave that transmits the energy for similar reasons of utility, device simplicity, and cost reduction through the use of fewer discrete devices in a given device design. Such use may also conserve bandwidth in other wireless pure data transmission regimes, which may lead to increased network efficiencies.

SUMMARY OF THE INVENTION

In certain aspects, the present invention may provide a system for wirelessly transmitting and receiving energy. In one aspect, the system may include an emitter and a receiver. The emitter may include a primary emitting winding wrapped around a first support and having first and second ends coupled to a driver and a secondary emitting winding wrapped around a second support and having a first end of the secondary emitting winding coupled to a first top load and a second end. The receiver may include a primary receiving winding wrapped around a third support and having first and second ends coupled to first and second inputs of a rectifying circuitry, respectively. The first output of the rectifying circuitry may be coupled to a first terminal of one or more capacitors and a second output of the rectifying circuitry may be coupled a second terminal of the one or more capacitors. The receiver may further include a secondary receiving winding wrapped around a fourth support and having a first end coupled to a second top load and a second end.

In one aspect, the second support may be located within the first support and the fourth support may be located within the third support. In another aspect, the first support may be located with the second support and the third support may be located within the fourth support.

In one aspect, the emitter may include a primary emitting winding wrapped around a first support and having first and second ends coupled to a driver, a secondary emitting winding wrapped around a second support and having first and second ends, and a tertiary emitting winding wrapped around a third support and having a first end of the tertiary emitting winding coupled to the first end of the secondary emitting winding and the second end of the tertiary emitting winding coupled to a first top load. In one aspect, the receiver may include a primary receiving winding wrapped around a fourth support and having first and second ends coupled to first and second inputs of a rectifying circuitry, respectively, where a first output of the rectifying circuitry is coupled to a first terminal of one or more capacitors and a second output of the rectifying circuitry is coupled to a second terminal of the one or more capacitors. The receiver may further include a secondary receiving winding wrapped around a fifth support and having first and second ends and a tertiary receiving winding wrapped around a sixth support and having a first end of the tertiary receiving winding coupled to the first end of the secondary receiving winding and the second end of the tertiary receiving winding coupled to a second top load.

In further aspects, the first support may be located within the second support, the fourth support may be located within the fifth support, the third support may be located above the first and second supports, and the sixth support may be located above the fourth and fifth supports.

In another aspect, the second support may be located with the first support, the fifth support may be located within the fourth support, the third support may be located above the first and second supports, and the sixth support may be located above the fourth and fifth supports.

In one aspect, the present invention may provide for a method of wirelessly transferring data and energy. The method may include inputting a data signal, inputting power to a driver, generating a carrier wave with the driver at a resonant frequency of an emitter, modulating the carrier wave based on the data signal to create a combined signal, driving the combined signal to an AC input on the emitter, electromagnetically coupling the emitter to a receiver, reproducing the combined signal in an AC output of the receiver, rectifying the AC output into DC power, demodulating the combined signal into the data signal, and transmitting the data signal to a device.

In one aspect, the present invention may provide for a method of wirelessly transmitting and receiving energy. The method may include transmitting an alternating current into a driver coupled to a primary emitting winding of an emitter, inducing the alternating current into a secondary emitting winding of the emitter, sensing a frequency of the alternating current on the secondary emitting winding, transmitting a feedback signal to the driver based on the frequency, driving the AC current into the primary emitting winding at the resonant frequency of the secondary emitting winding, electromagnetically coupling the emitter to a receiver, inducing the alternating current into a secondary receiving winding of the receiver, inducing the alternating current into a primary receiving winding of the receiver, outputting the alternating current into a rectifying circuitry, rectifying the alternating current into a direct current; reducing ripples on the direct current, and transmitting the direct current to a device.

BRIEF DESCRIPTION OF THE DRAWINGS

Features and other aspects of embodiments of the present invention are explained in the following description taken in conjunction with the accompanying drawings, wherein:

FIG. **1**A illustrates a general system including a Tesla coil emitter and receiver according to one aspect of the system and method of the present disclosure;

FIG. **1**B illustrates a general system including a Tesla coil emitter and receiver in plan view according to one aspect of the system and method of the present disclosure;

FIG. **1**C illustrates a schematic representation of a Tesla coil emitter and receiver according to one aspect of the system and method of the present disclosure;

FIG. **1**D illustrates a general system including Tesla coil emitter and receiver each with tertiary windings and the primary windings located within the secondary windings according to one aspect of the system and method of the present disclosure;

FIG. **1**E illustrates a receiver including materials of high magnetic permeability according to one aspect of the system and method of the present disclosure;

FIG. **2** illustrates a driving circuit detail according to one aspect of the system and method of the present disclosure;

FIG. **3** illustrates a magnetic field coupling of the coils according to one aspect of the system and method of the present disclosure;

FIG. **4** illustrates a receiver rectification circuit detail with capacitor bank according to one aspect of the system and method of the present disclosure;

FIG. **5** illustrates a variable tap implemented on Tesla coil according to one aspect of the system and method of the present disclosure;

FIG. **6** illustrates an example of application of a system to provide power for utilization according to one aspect of the system and method of the present disclosure;

FIG. **7** illustrates a coaxial orientation of emitter and receiver according to one aspect of the system and method of the present disclosure;

FIG. **8** illustrates a Tesla coil emitter and receiver according to one aspect of the system and method of the present disclosure;

FIG. **9**A illustrates a reversible Tesla coil system where the function of emitter and receiver may alternate according to one aspect of the system and method of the present disclosure;

FIG. **9**B illustrates circuitry for a reversible Tesla coil system where the function of emitter and receiver may alternate according to one aspect of the system and method of the present disclosure

FIG. **10** illustrates a representative example of a network of Tesla coil emitters and receivers according to one aspect of the system and method of the present disclosure;

FIG. **11** illustrates a representative method of information and power transmission using a Tesla coil system according to one aspect of the system and method of the present disclosure;

The drawings are exemplary, not limiting. It is intended for items that are labeled with the same number in multiple figures to refer to the same item throughout the figures.

DETAILED DESCRIPTION

Various embodiments of the present invention will now be described in greater detail with reference to the drawings.

As shown in FIG. **1**A, one aspect may include two Tesla resonators **101** and **102**, which may be electromagnetically coupled through emitting a time-varying magnetic and/or electric field **9**. Tesla resonators **101** and **102** may be oriented parallel to each other. The emitting Tesla resonator apparatus ("emitter") **101** may emit the field, while the receiving Tesla coil apparatus ("receiver") **102** may subtend the magnetic field from the emitter **101**. Parallel orientation of emitter **101** and receiver **102** may ensure maximum flux coupling between them. Emitter **101** may include primary winding **1**E, secondary winding **2**E, support apparatus for primary winding **10**E, and support apparatus for secondary winding **20**E; receiver **102** may include primary winding **1**R, secondary winding **2**R, support apparatus for primary winding **10**R, and support apparatus for secondary winding **20**R. Primary and secondary windings **1**E, **1**R, **2**E, and **2**R may be composed of any common wiring material used in the implementation or construction of coils and transformers. Other aspects may use other materials. Primary structural supports **10**E and **10**R and secondary structural supports **20**E and **20**R may be composed of ceramic, plastic, Plexiglas.RTM., or any other insulating or nonconductive (e.g., dielectric) material. Primary winding **1**E and **1**R may be wrapped around primary structural supports **10**E and **10**R, respectively, and secondary windings **2**E and **2**R may be wrapped around secondary structural supports **20**E and **20**R, respectively. Windings **1**E, **1**R, **2**E, and **2**R may be wrapped in a helically-coiled fashion, where each primary winding **1**E and **1**R is oriented similarly as its respective secondary winding **2**E and **2**R. In such aspects, the ends of each winding may not be helically-coiled, as, in various aspects, they may be coupled to other windings, circuitry, or to ground. Primary and secondary structural supports **10**E, **10**R, **20**E, and **20**R may be cylindrical in shape. With respect to structural supports and windings, emitter **101** may be substantially identical to, or identically arranged as, receiver **102**.

In one aspect, primary windings **1**E and **1**R may be 6 AWG wire; secondary windings **2**E and **2**R may be 24 AWG wire; and tertiary windings **3**E and **3**R may be 28 AWG wire. In another aspect, secondary windings **2**E and **2**R may have 1,800 turns; tertiary windings **3**E and **3**R may have 2,400 turns; primary receiver winding **1**R may have 12 turns; and primary emitter winding **1**E may have 28 turns. In other aspects, other wire and different number of turns may be used. The drawings of the windings in the figures are not intended to show the exact number of turns or ratio of turns used in aspects of the present invention. In one aspect, primary structural supports **10**E and **10**R may be about 12 inches each in diameter; secondary structural supports **20**E and **20**R may be about 8 inches each in diameter; and tertiary structural supports **40**E and **40**R may be each about 6 inches in diameter. In one aspect, top loads **30**E and **30**R may be each about 2.5 inches thick, about 8 inches in outer diameter, and about 6 inches in inner diameter. In one aspect having primary windings **1**E and **1**R located within secondary windings **2**E and **2**R, respectively (as shown in FIG. **1**D according to one aspect), primary structural supports **10**E and **10**R may have a smaller diameter than secondary structural supports **20**E and **20**R, for example, 6 inches in outer diameter. In one aspect having tertiary windings **3**E and **3**R, an end cap made of a nonconductive material may be used on the larger of the primary and secondary structural supports **10**E, **10**R, **20**E, and **20**R in order to provide a base for tertiary structural supports **40**E and **40**R. In other aspects, other sized supports and top loads may be used.

In one aspect, top load **30**E and/or **30**R may be provided on the secondary winding **2**E and/or **2**R that may reduce eddy currents and corona and thereby may reduce electric leakage of the device through corona. Secondary top load **30**E and **30**R may be comprised of a toroidal metal shape with a hole cut out of the center of the toroid that is penetrated by the inner diameter of secondary support **20**E and/or **20**R of secondary winding **2**E and/or **2**R. In these aspects, the final coil in the series (whether secondary or tertiary) may receive top load **30**E and/or **30**R. Using top load **30**E and/or **30**R may reduce energy loss by about 5-10% by reducing eddy currents. In

another aspect, toroidal top load **30**E and/or **30**R may also use a vertical slit as opposed to the circular hole for similar purposes and effects.

As shown in FIG. **1**D, one aspect may include primary windings **1**E and **1**R wrapped around primary structural supports **10**E and **10**R, respectively, and have primary structural supports **10**E and **10**R located within secondary structural supports **20**E and **20**R, respectively. In further aspects, one or more tertiary windings **3**E and **3**R may be wrapped around tertiary structural supports **40**E and **40**R, respectively, which sit on top of primary and secondary structural supports **10**E, **20**E, **10**R, and **20**R. In further aspects, tertiary emitting winding **3**E having two ends wrapped around tertiary support structure **40**E may be coupled to the end of secondary emitting winding **2**E that is not connected to ground. The other end of the tertiary emitting winding **3**E may be connected to top load **30**E (or, in other aspects, to another emitting winding in the same pattern (not shown)). In further aspects, tertiary emitting winding **3**E may have more windings than secondary emitting winding **2**R in order to create more voltage if more voltage is desired.

In further aspects, tertiary receiving winding **3**R having two ends wrapped around tertiary support structure **40**R may be connected to the end of secondary receiving winding **2**R that is not connected to ground. The other end of tertiary receiving winding **3**R may be connected to top load **30**R (or, in other aspects, to another emitting winding in the same pattern (not shown)). In further aspects, tertiary receiving winding **3**R may have more windings than secondary receiving winding **2**R in order to create more voltage if more voltage is desired.

In further aspects, the system may include one or more tertiary Tesla resonators (not shown) or emitters (not shown). In further aspects, additional windings may be used; therefore, aspects are not intended to be limited to merely two or three windings.

In further aspects, AC voltage **4** may be presented through application of a solid state driving system that drives primary emitting winding **1**E at the resonant frequency of Tesla resonators' **101** and **102**. Receiver **102** may receive energy through electromagnetic coupling to emitter **101**.

In further aspects, the coil structure of emitter **101** and receiver **102** may be substantially identical, with one difference being the driving circuitry of emitter **101** and the rectification circuitry of receiver **102**. In further aspects, emitter **101** and receiver **102** may be provided with the rectification and switching circuits along with circuitry to switch between the two, so that energy may be transferred back and forth between emitter **101** and receiver **102**. In further aspects, an electromagnetic field couples emitter **101** to receiver **102**. Current from primary winding emitter **1**E ultimately may couple through the exchange of electromagnetic energy into receiver **102**. That is, primary emitting winding **1**E may induce AC voltage **99** on primary receiving winding **1**R through electromagnetic coupling between emitter **101** and receiver **102**. AC out **99** may be rectified by full bridge rectifier **5** and may charge capacitor **6** with DC out **91** voltage.

In aspects, emitter **101** and receiver **102** may be spatially distributed, either in fixed positions or mobile. These fixed positions may not be in set locations, so long as receiver **102** is within a certain range of emitter **101** that may be determined by the electromagnetic field intensity of a particular device. Likewise, a mobile receiver **102** may not be required to be constrained to a track or fixed path but so long as it remains within a certain range of one or more emitters **101**. In further aspects, multiple emitters **101** and receivers **102** may be used, where several receivers **102** may draw energy from one emitter **101** or a single receiver **102** may draw energy from multiple emitters **101** (and so forth).

FIG. **1**B displays emitter **101** and receiver **102** in plan view according to one aspect of the system of the present disclosure.

FIG. **1**C shows an electrical schematic according to one aspect The resonant frequency is given by equation Fr=1/(2 pi sqrt(LC)), where C is capacitive value of **13**R and L is inductive value of lumped inductance **12**R of secondary emitting winding **2**E.

As shown in FIG. **1**C, further aspects may include secondary emitting winding **2**E and loading capacitor **13**R, which may be attached to ground **8**E and **8**R. In further aspects, secondary emitting winding **2**E may be floating, that is, not connected to electrical ground. In further aspects, loading capacitor **13**R may be floating.

As shown in FIG. **1**E, one aspect may include cylinders of high permeability material (e.g., iron, Mu metal, HyMu80) **50**R and **60**R in structural supports **30**R and **40**R, respectively. Use of cylinders of high permeability material **50**R and **60**R in receiver **102** may make the power transfer more efficient between emitter **101** and receiver **102** by concentrating the magnetic flux within the windings surrounding the cylinders of high permeability material **50**R and **60**R. In one aspect, cylinders of high permeability material **50**R and **60**R may be solid. In another aspect, cylinders of high permeability material **50**R and **60**R may be hollow, such as, a sheet of such material wrapped into a cylindrical form. In other aspects, high permeability material **50**R and **60**R may be a form in shapes other than a cylinder.

FIG. **2** shows the driving circuit of emitter **101** according to one aspect of the system of the present disclosure. Primary emitting winding lE may be driven by insulated gate bipolar transistors ("IGBT"s) **16**, **17**, **18**, and **19** in an H-bridge configuration with a power source **3**. The AC signal to primary emitting winding **1**E may thereby induce a voltage in secondary winding **2**E, initiating the Tesla coil effect.

Further aspects may include a feedback system that monitors the direction of current via current drive transformer **14**. In one aspect, current drive transformer **14** is coupled to secondary emitting winding **20**E. Current drive transformer **14** may sense current on secondary emitting winding **20**E, where current drive transformer **14** may provide voltage in response to oscillation at the resonant frequency of secondary emitting winding **20**E. Digital feedback signal **15** may be a logic "1" signifying current flowing in one direction and a logic "0" signifying current flowing in the opposite direction. Feedback signal **15** may allow the H-bridge to determine when to switch its transistors such that induced current flows into emitter **101** from primary emitting winding **1**E may constructively interfere to increase magnetic flux in emitter **101**. In further aspects, the feedback system drives primary emitting winding **1**E at the resonant frequency of secondary emitting winding **2**E.

In further aspects, feedback signal **15**, filtered with inverting **131** and non-inverting **13**B IGBT gate drive system, may create logic signals **20***a* and **20***b*. Logic signals **20***a* and **20***b* may drive the H-bridge with the frequency, phase, and polarity for an AC in wave to flow to primary emitter winding **1** E to amplify the resonating field in emitter **101**. Thus, the device may be self-correcting in phase and frequency.

FIG. **3** shows a magnetic field coupling between emitter **101** and receiver **102** according to one aspect. Magnetic flux lines **22** are intended to be drawn to show that secondary receiving winding **2**R of receiver **102** is immersed in field **22**. In further aspects, AC voltage **99** may result from the magnetic field coupling and the effect of secondary receiving

winding **2**R and primary receiving winding **1**R. Because of the physical properties of Tesla coils, when an exciting voltage is presented to **99**, receiver **102** may be capable of acting as an emitter and transferring energy to emitter **101**.

Wireless energy transfer may allow the conversion of the AC signal **99** from primary receiving winding **1**R into a useful form. As shown in FIG. **4**, according to one aspect of the system of the present disclosure, the conversion of AC voltage output **99** to DC voltage across capacitor **27** may occur from induced current in primary receiver winding **1**R, which was demonstrated as induced by a coupled magnetic field between Tesla resonators **101** and **102**. DC voltage exiting diode array **24** may be imperfect because of possible ripples. Output current **99** may be rectified via high recovery speed diodes and diode array **24** and stored into, for example, capacitor bank **401**, as shown according to one aspect. In further aspects, high recovery speed diodes and diode array **24** may be rated at, for example, 1200V, 60 A with a reverse recovery time of 30 ns and a speed for fast recovery =<500 ns and =>200 mA. In one aspect, adding diodes (not shown) to diode array **24** may allow the system to handle higher voltages.

In further aspects, capacitor bank **401** may be a system of capacitors for the purpose of storing energy. The system may include low inductance polymeric capacitor **26** and snubber capacitor **25** acting as filters connected in parallel to electrolytic capacitor **27** acting as a storage capacitor for fast charging and discharging of capacitors **25**, **26**, and **27**. Low internal and external stray inductance may be achieved by minimum length of wires interconnecting capacitors **25** and **26** and capacitor **27**. Diode array **24** may be connected to inputs of capacitor bank **401** through leads **402** and **403** between the positive (+) and negative (−) outputs on diode array **24** and the positive (+) and negative (−) inputs on capacitor bank **401**. In further aspects, minimizing and equalizing the inductance of leads **402** and **403** may be accomplished by ensuring leads **402** and **403** are of equal length, and as short as possible.

As shown in FIG. **5**, further aspects may include variable tap **28** on primary receiving winding **1**R of receiver **102**. Variable tap **28** may be a moveable and changeable connection on a transformer through which the voltage may be changed. Variable tap **28** may change the voltage output to the voltage input ratio, similar to the ways an iron core transformer with multiple primary taps may change in voltage with relative voltage output to voltage input ratio change. Because in aspects, the system is reversible, variable tap **28** may be coupled to primary emitting winding **1**E or emitter **101**.

As shown in FIG. **6**, further aspects may include receiver **102** with primary receiver winding **1**R and variable pick-up tap **28**. For example, if it is desired to have 12 VDC for a standard DC-to-AC (60 hz) inverter, primary receiver winding **1**R may be tapped by variable tap **28**, such that the RF output may be about ~10 Vrms, which yields about ~14 Vdc, so up to about 2 Vdc may be lost by forward diode drops over rectifying diodes **24**. DC rectifying array **24** and capacitors **25**, **26**, and **27** may allow stable and constant DC power to inverter **31**. In further aspects, this may be a particularly useful configuration due to the widespread use of 60 Hz 120 VAC for power applications. However, many different DC and AC outputs could be synthesized from the signal generated by primary receiving winding **1**R. In one aspect, device **602** may receive DC power from the system by being connected to positive (+) output **27** through wire **601**, and device **32** may receive AC power from DC inverter **31**.

As shown in FIG. **7** according to aspects, emitter **101** and receiver **102** may be oriented in a manner whereby the windings could remain parallel but share a common coil axis. Alternatively, in further aspects, the coils may be oriented in a similar configuration, for example, as shown in FIG. **1**A, but without a common coil axis (not shown), for example, if two coils were placed on different floors of a building (like at the top-left corner of a second floor and bottom right corner of a first floor). In other aspects, emitter **101** and receiver **102** may be transposed such that top loads **30**E and **30**R are facing each other.

As shown in FIG. **8** according to further aspects, because it is possible to achieve high voltages on secondary windings **2**E and **2**R, an arc suppression system may be implemented on emitter **101**. FIG. **8** is illustrated to show such an aspect, given the cylinders labeled **38** surrounding windings **1**R, **2**R, **1**E, and **2**E are constructed as, for example, a gas tight enclosure. In another aspect, emitter **101** and/or receiver **102** may be immersed in an atmosphere of higher dielectric breakdown strength compared to air (for example, sulfur hexafluoride) to suppress corona and breakdown arcs. In one aspect, cylinders **38** may be vacuums.

In one aspect, emitter **101** and receiver **102** may be screened by a Faraday-cage type of enclosure **801** to reduce electric fields around the system. This aspect may operate as a transformer. Driving circuitry **4** may be inside or outside Faraday-cage type of enclosure **801**, but the power supply to driving circuitry **4** is outside Faraday-cage type of enclosure **801**. Wire **601** may transfer DC power to device **602** outside Faraday-cage type of enclosure **801**. In one aspect, Faraday-cage type of enclosure **801** is connected to ground **7**. In one aspect, secondary windings **2**E and **2**R are floating and, therefore, are not connected to grounds **8**E and **8**R.

As shown in FIGS. **9**A and **9**B, according to one aspect of the present disclosure, Tesla resonators **1501** and **1502** may couple energy to each other and may be "reversible," i.e., each Tesla resonator **1501** and **1502** may emit and receive energy so either one may be used. In FIG. **9**A, resonators **1501** and **1502** are each coupled to driving circuits **901** and **902** so each may act as an emitter and/or a receiver. In one aspect, if IGBT 35 of circuit **901** is set to closed by logic signal **200**, then circuit **901** would function as downstream circuitry of receiver **102** and, therefore, would ultimately produce DC current at DC out **36** (as shown in FIG. **6**). In one aspect, if IGBT 35 of circuit **901** is set to open by logic signal **20**Q, then circuit **901** would function as emitter **101**.

As shown in FIG. **10**, in one aspect, the system of the present disclosure may include receivers **1003**R, **1005**R, and **1006**R and emitters **1001**E, **1002**E, and **1004**E may be arranged to relay energy. In one aspect, two emitters **1001** and **1002** transmit energy wirelessly to a receiver **1003**R that is connected through, for example, wires **1008** and **1009** to a third emitter **1004**E. Emitter **1004**E may then wirelessly power three separate receivers **1005**R, **1006**R, and **1007**R. It should be noted that this illustration is provided as an example of a repeater winding network and not as a limiting design.

As shown in FIG. **11**, another aspect of the system of the present disclosure may include the use of imposing a modulation upon the basic carrier wave emitted from emitter **101**. Any number of digital or analog modulation methods or schemes may be applied to a basic carrier wave. After reception by receiver **102**, the carrier wave may be demodulated to provide information transfer while using the same carrier wave for power transfer. This simultaneous transfer of information and power may be effectuated by using the same devices discussed in aspects of the present invention, e.g., emitter **101** and receiver **102**.

For example, in one aspect, the system may transmit energy along with an audio signal. The audio signal may be modulated, such as with pulse width modulation (PWM) or amplitude modulation (AM) onto, for example, an 80 kHz

power carrier signal from emitter **101**E to receiver **102**R embodied within a speaker assembly. One of ordinary skill in the art would understand that alternative modulation schemes, such as, frequency modulation (FM) or phase modulation, may be used with the system as described in aspects of the present disclosure.

In one aspect, signal input **1702** is modulated using modulator **1703** and combined with power input **1701** through the driving circuit **4**Q (as shown according in FIG. **2** according to one aspect of the present invention). In this aspect, the high-frequency side of the input signal becomes a mixer, imposing the data signal on AC input **99**, which is the carrier wave frequency, generated by driving circuit **4**Q. The speaker assembly with emitter **101** E may be placed anywhere within a range of receiver **102**R and be self-powered by reception of power from emitter **101**E to drive electronics to demodulate the carrier signal to reproduce the audio signal.

In further aspects, demodulator **1704** may be placed to sense combined signal **99** reproduced at the output of the receiver **102**R. The signal may be sensed by direct connection or by other means familiar to one of ordinary skill in the art. Data signal **1706** is then produced by demodulator **1704**. The carrier component of signal **99** is fed into circuitry **1705**, which may include diode array **24** (as shown in FIG. **4** according to one aspect), capacitor bank **401** (as shown in FIG. **4** according to one aspect), and circuitry **603** (as shown in FIG. **6** according to one aspect) as necessary to produce power.

In one aspect, circuitry for performing driving circuitry **4**Q and modulator **1703** are described in U.S. non-provisional patent application Ser. No. 12/152,525 titled "System and Method for Controlling an Electromagnetic Field Generator," filed May 15, 2008.

Although illustrative embodiments have been shown and described herein in detail, it should be noted and will be appreciated by those skilled in the art that there may be numerous variations and other embodiments that may be equivalent to those explicitly shown and described. For example, the scope of the present invention is not necessarily limited in all cases to execution of the aforementioned steps in the order discussed. Unless otherwise specifically stated, terms and expressions have been used herein as terms of description, not of limitation. Accordingly, the invention is not to be limited by the specific illustrated and described embodiments (or the terms or expressions used to describe them) but only by the scope of claims.

The invention claimed is:

1. A system for wirelessly transmitting and receiving energy, comprising:

an emitter, comprising:

a primary emitting winding wrapped around a first support and having first and second ends coupled to a driver; and

a secondary emitting winding wrapped around a second support and having a first end of the secondary emitting winding coupled to a first top load and a second end; and

a receiver, comprising:

a primary receiving winding wrapped around a third support and having first and second ends coupled to first and second inputs of a rectifying circuitry, respectively, where a first output of the rectifying circuitry is coupled to a first terminal of one or more capacitors and a second output of the rectifying circuitry is coupled to a second terminal of the one or more capacitors; and

a secondary receiving winding wrapped around a fourth support and having a first end coupled to a second top load and a second end;

wherein the second support is located within the first support and the fourth support is located within the third support.

2. The system of claim **1**, wherein the second support is approximately concentric with the first support and the fourth support is approximately concentric with the third support.

3. The system of claim **1**, further comprising a Faraday cage containing the emitter and the receiver.

4. The system of claim **1**, wherein the rectifying circuitry includes a diode array.

5. The system of claim **1**, wherein the one or more capacitors includes one or more snubber capacitors, low inductance polymeric capacitors, and electrolytic capacitors.

6. The system of claim **1**, wherein a device is coupled to a positive output of the one or more capacitors.

7. The system of claim **1**, wherein the driver includes a feedback system and insulated gate bipolar transistors in an H-bridge configuration.

8. The system of claim **1**, further comprising a variable tap coupled to the primary receiving winding.

9. The system of claim **1**, further comprising a first gas-tight container surrounding the emitter and a second gas-tight container surrounding the receiver.

10. The system of claim **9**, wherein the first and second gas-tight containers include a gas with a high-dielectric atmosphere.

11. The system of claim **9**, wherein the first and second gas-tight containers are vacuums.

12. The system of claim **1**, wherein the first, second, third, and fourth supports are non-conductive tubes.

13. The system of claim **1**, wherein the second end of the secondary emitting winding is coupled to a first ground.

14. The system of claim **1**, wherein the second end of the secondary receiving winding is coupled to a first ground.

15. The system of claim **13**, wherein the second end of the secondary receiving winding is coupled to a second ground.

16. The system of claim **1**, wherein the one or more capacitors comprises a capacitor bank.

17. A system for wirelessly transmitting and receiving energy, comprising:

an emitter, comprising:

a primary emitting winding wrapped around a first support and having first and second ends coupled to a driver;

a secondary emitting winding wrapped around a second support and having first and second ends; and

a tertiary emitting winding wrapped around a third support and having a first end of the tertiary emitting winding coupled to the first end of the secondary emitting winding and the second end of the tertiary emitting winding coupled to a first top load; and

a receiver, comprising:

a primary receiving winding wrapped around a fourth support and having first and second ends coupled to first and second inputs of a rectifying circuitry, respectively, where a first output of the rectifying circuitry is coupled to a first terminal of one or more capacitors and a second output of the rectifying circuitry is coupled to a second terminal of the one or more capacitors;

a secondary receiving winding wrapped around a fifth support and having first and second ends; and

a tertiary receiving winding wrapped around a sixth support and having a first end of the tertiary receiving

winding coupled to the first end of the secondary receiving winding and the second end of the tertiary receiving winding coupled to a second top load;

wherein the first support is located within the second support, the fourth support is located within the fifth support, the third support is located above the first and second supports, and the sixth support is located above the fourth and fifth supports.

18. The system of claim **17**, wherein the second end of the secondary emitting winding is coupled to a first ground.

19. The system of claim **17**, wherein the second end of the secondary receiving winding is coupled to a first ground.

20. The system of claim **18**, wherein the second end of the secondary emitting winding is coupled to a first ground.

21. A method of wirelessly transferring data and energy, comprising:

(a) inputting a data signal;

(b) inputting power to a driver;

(c) generating a carrier wave with the driver at a resonant frequency of an emitter;

(d) modulating the carrier wave based on the data signal to create a combined signal;

(e) driving the combined signal to an AC input on the emitter;

(f) electromagnetically coupling the emitter to a receiver;

(g) reproducing the combined signal in an AC output of the receiver;

(h) rectifying the AC output into DC power;

(i) demodulating the combined signal into the data signal; and

(j) transmitting the data signal to a device.

22. The method of claim **21**, wherein the data signal is an audio signal.

23. The method claim **21**, wherein the data signal is modulated using one of amplitude modulation, pulse width modulation, frequency modulation, and phase modulation.

24. The method of claim **21**, wherein the device is an audio speaker.

25. The method of claim **21**, wherein the rectifying the AC output into DC power is done through a rectifying circuitry and a capacitor bank.

26. The method claim **21**, wherein the driver includes a feedback system and insulated gate bipolar transistors in an H-bridge configuration.

27. The method of claim **21**, wherein the modulating step further comprises modulating the amplitude of the carrier wave.

28. The method of claim **21**, wherein,

the emitter comprises:

a primary emitting winding wrapped around a first support and having first and second ends coupled to a driver;

a secondary emitting winding wrapped around a second support and having first and second ends; and

a tertiary emitting winding wrapped around a third support and having a first end of the tertiary emitting winding coupled to the first end of the secondary emitting winding and the second end of the tertiary emitting winding coupled to a first top load; and

the receiver comprises:

a primary receiving winding wrapped around a fourth support and having first and second ends coupled to first and second inputs of a rectifying circuitry, respectively, where a first output of the rectifying circuitry is coupled to a first terminal of one or more capacitors and a second output of the rectifying circuitry is coupled to a second terminal of the one or more capacitors;

a secondary receiving winding wrapped around a fifth support and having first and second ends; and

a tertiary receiving winding wrapped around a sixth support and having a first end of the tertiary receiving winding coupled to the first end of the secondary receiving winding and the second end of the tertiary receiving winding coupled to a second top load.

29. The method of claim **21**, wherein

the emitter comprises:

a primary emitting winding wrapped around a first support and having first and second ends coupled to a driver;

a secondary emitting winding wrapped around a second support and having a first end of the secondary emitting winding coupled to a first top load and a second end; and

the receiver comprises:

a primary receiving winding wrapped around a third support and having first and second ends coupled to first and second inputs of a rectifying circuitry, respectively, where a first output of the rectifying circuitry is coupled to a first terminal of one or more capacitors and a second output of the rectifying circuitry is coupled to a second terminal of the one or more capacitors; and

a secondary receiving winding wrapped around a fourth support and having a first end coupled to a second top load and a second end.

30. A system for wirelessly transmitting and receiving energy, comprising:

an emitter, comprising:

a primary emitting winding wrapped around a first support and having first and second ends coupled to a first driver, wherein the first driver is coupled to first and second inputs of a rectifying circuitry respectively, where a first output of the rectifying circuitry is coupled to one or more capacitors through a first terminal of the one or more capacitors and a second output of the rectifying circuitry is connected to the one or more capacitors through a second terminal of the one or more capacitors; and

a secondary emitting winding wrapped around a second support and having a first end of the secondary emitting winding coupled to a first top load and a second end; and

a receiver, comprising:

a primary receiving winding wrapped around a third support and having first and second ends coupled to a second driver, wherein the second driver is coupled to first and second inputs of a rectifying circuitry respectively, where a first output of the rectifying circuitry is coupled to one or more capacitors through a first terminal of the one or more capacitors and a second output of the rectifying circuitry is connected to the one or more capacitors through a second terminal of the one or more capacitors; and

a secondary receiving winding wrapped around a fourth support and having a first end coupled to a second top load and a second end;

wherein the first support is located within the second support and the third support is located within the fourth support.

31. A method for wirelessly transmitting and receiving energy, comprising:

(a) transmitting an alternating current into a driver coupled to a primary emitting winding of an emitter;

(b) inducing the alternating current into a secondary emitting winding of the emitter;

(c) sensing a frequency of the alternating current on the secondary emitting winding;

(d) transmitting a feedback signal to the driver based on the frequency;

(e) driving the AC current into the primary emitting winding at the resonant frequency of the secondary emitting winding;

(f) electromagnetically coupling the emitter to a receiver;

(g) inducing the alternating current into a secondary receiving winding of the receiver;

(h) inducing the alternating current into a primary receiving winding of the receiver;

(i) outputting the alternating current into a rectifying circuitry;

(j) rectifying the alternating current into a direct current;

(k) reducing ripples on the direct current; and

(l) transmitting the direct current to a device.

32. A system for wirelessly transmitting and receiving energy, comprising:

a reversible emitter, comprising:

a primary emitting winding wrapped around a first support and having first and second ends coupled to a first driver, wherein the first driver is coupled to a first rectifying circuitry, wherein the first rectifying circuitry is coupled to a first one or more capacitors;

a secondary emitting winding wrapped around a second support and having first and second ends; and

a tertiary emitting winding wrapped around a third support and having a first end of the tertiary emitting winding coupled to the first end of the secondary emitting winding and the second end of the tertiary emitting winding coupled to a first top load; and

a reversible receiver, comprising:

a primary receiving winding wrapped around a fourth support and having first and second ends coupled to a second driver, wherein the second driver is coupled to a second rectifying circuitry, wherein the second rectifying circuitry is coupled to a second one or more capacitors;

a secondary receiving winding wrapped around a fifth support and having first and second ends; and

a tertiary receiving winding wrapped around a sixth support and having a first end of the tertiary receiving winding coupled to the first end of the secondary receiving winding and the second end of the tertiary receiving winding coupled to a second top load;

wherein the second support is located within the first support, the fifth support is located within the fourth support, the third support is located above the first and second supports, and the sixth support is located above the fourth and fifth supports.

33. The system of claim 32, wherein

the first driver comprises:

insulated gate bipolar transistors in an H-bridge configuration; and

a switch for activating the first rectifying circuitry and the first one or more capacitors; and

the second driver comprises:

insulated gate bipolar transistors in an H-bridge configuration; and

a switch for activating the second rectifying circuitry and the second one or more capacitors.

34. The system of claim 1, wherein the fourth support surrounds a form including a high permeability material.

35. The system of claim 17, wherein the fifth and sixth supports each surround forms including a high permeability material.

36. The method of claim 28, wherein the fifth and sixth supports each surround forms including a high permeability material.

37. The system of claim 29, wherein the fourth support surrounds a form including a high permeability material.

38. The system of claim 30, wherein the fourth support surrounds a form including a high permeability material.

39. The system of claim 32, wherein the fifth and sixth supports each surround forms including a high permeability material.

* * * * *

Scalar Thoughtform Tools

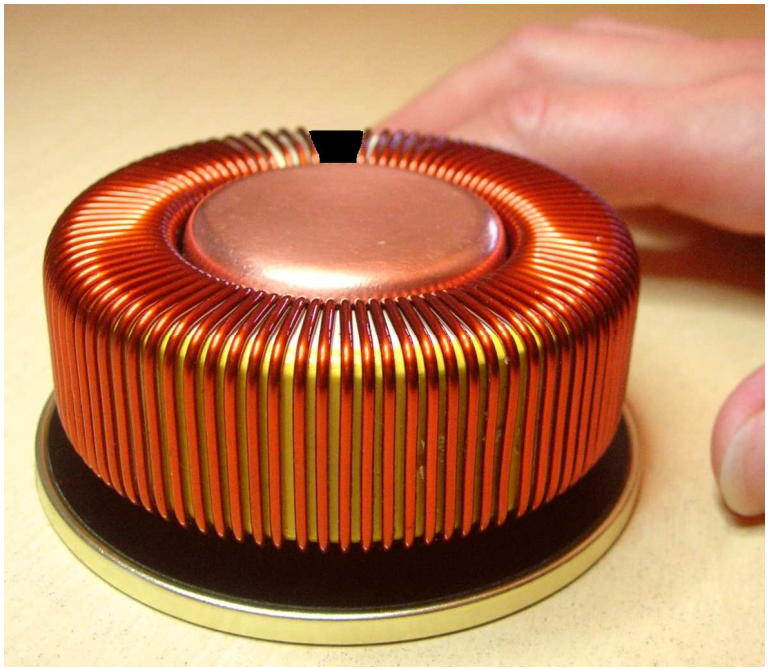

The Scalar Field Resonator
with
7.83Hz Schumann frequency

It creates a strong Scalar field, one of the handful of psychic channels that connect us with each other and with world events. If you're already abundantly healthy with a fully energetic life force, and are living in a life-positive region of the world, it will be all you need to set up a Thoughtform field.

However, if you're being affected by the many life-negative forces around us, then we recommend that you also buy one or more Orgone devices on the Internet or eBay, or else build one for yourself, as widely shown on the Web. Scalar plus Orgone = Thoughtform.

The combination of a strong life force (Orgone) and a strong psychic connection (Scalar) is what you need in order to be successful in any Shamanic, Psionic or Radionic energy work.

Set aside a space on a table or desk for your energy work. In this area, place the resonator disk black side up in a central location. Now put the resonator coil on top with the black end down and the copper plate up, as shown in the picture.

Place your Orgone devices, if any, in the workspace along with the energy instruments you normally use. These would include a life force / Chi enhancing pendant, crystals, a Radionic tuner, a dowsing device, objects of power, and so on.

Don't move the Resonator too much for the rest of your work session. It takes about 20 minutes for it to fully synchronize with the scalar field in any location, and moving it around delays the process.

Once synchronized there now exist two types of energy.

There is life force from the Orgone devices and from your own entity. This life force is the power that drives the process.

There is a powerful psychic force in the form of the Magnetic Scalar field of the resonator along with weaker but helpful Electric Scalar fields from any crystals in the workspace. These combine to boost your brain's natural Bioelectromagnetic scalar field.

This psychic force is the vehicle that will take you to new and unimagined places if you let it.

The combination of the two energies now envelopes your workspace in what we call a Thoughtform Field. It's the basic psionic construct that amplifies your mental capabilities and lets you use controlled intent to affect reality. Not by some kind of magic, but by a real and steady shift in the progress of ongoing events.

Inside this field, subtle energy work is now much more successful. With newly energized life force and psychic ability you can expect clearer readings, greater reach and better control.

As an Intent amplifier, the Resonator is also quite an effective "wishing machine", to use a colorful and common description. Here's how.

A bit of practice will make the whole thing quite clear.
TREND: What do you want to have happen?
TARGET: Who do you want it to happen to?
This is the INTENT of your energetic procedure.

Focus on an Intent. If necessary, place a witness to the intent on the copper plate of the coil. This might be a written note along with a linking item such as the Target's hair, blood or photograph. Together, these are what we call a witness, or information package.

If you have an exceptionally strong and focused mind, you don't need a witness. Most of us do, so set up the details as clearly as possible in your mind and put the information package on the plate.

Express the Intent calmly and quietly for several minutes. This can be in your mind, under your breath, or out loud, as you wish. Stop if you feel tired or unconnected, knowing that with time your stamina will improve. If you have abundant life energy or if you're using a Chi/life force/Orgone enhancer, the specific thoughtform will manifest within 5 minutes or less. In any event, don't go beyond 10 minutes or you'll lose focus. Better to repeat again tomorrow.

Now leave the immediate work area and have a nap, a cup of tea, go for a walk, etc. After half an hour or more, return to the workspace with a relaxed mind and remove any witness from the copper plate. It's not needed any more.
The thoughtform that you've created is now in place.

The thoughtform will gradually begin to fade, so do the procedure again in a few days. Each time you do it the results will be stronger and last longer, so after a few times you'll only need to do it every week (if it takes that long) and then only every month (for very persistent issues and radical events).

Gradually you'll notice the change happening. This means the thoughtform now has a life of its own, so you can stop the procedure and let events unfold.

If you already use a Radionics tuner of some kind, the Thoughtform Field becomes a booster for the Radionic operation of the device. A Radionic Field is actually a Thoughtform Field with its intent tuned by the dials of the device, so the combination is totally compatible.

Simple tuners often depend on the operator to be the life energy source and psychic link. For many users this has meant failure and disappointment. Not any more. With the enhanced Thoughtform Field surrounding your workspace, your basic tuner will be power-boosted to a new level.

Institute Devices like the AR3100 and the Mini Beamer already produce powerful Radionic fields, but no practical instrument, not even the AR3100, has room inside it for such large and heavy components, so by all means use the Resonator with them if you want.

Like all Institute devices, the Resonator comes with lifetime support and is completely refundable within 14 days of receipt.

For any assistance or questions, please email

dark_amulet@usa.com

This is an EXPERIMENTAL INSTRUMENT, to be used for research purposes only. By law, no health claims can be made. Not to be used for medical purposes or to replace any kind of medical treatment. The user assumes all responsibilities.

Our lawyer made us say that, but we just know that your experience will be POSITIVE and WONDERFUL!

rexresearch.com

Scalar Fields

gravity defyer® SPRING TECHNOLOGY FOOTWEAR
absorbs impact
propels you forward
Relieves pain
Eases joint and spinal pressure
Reduce fatigue
Be more active
Elevate performance
Live healthier longer
GravityDefyer.com
Ads by Google

Quantum Pendant Scalar
Power of Universe Energy Healing Nature Health Benefits 75% Discount
www.dalimara.mybisi.com

EMF Protection
Crystal Catalyst® EMF Devices are Handmade in Arizona, USA!
www.EMFBlues.com

Bemer 3000 - PEMF
Electromagnetic Field Therapy Swiss Technology
www.bemeramerica.com

Ads by Google

Quantum Scalar Pendant
Assured Made From Natural Minerals. Free Shipping. Buy Online Today!
www.energyplus2u.com/qsp.htm

Acid, Alkaline Diet eBook
In this free eBook learn about acid alkaline balance, food lists & more
www.pHDrinkingWater.com

Tap Into Your Intuition
You're One Jump Away Seeing Your Future
www.QuantumJumping.com

Ads by Google

PDF Files :

Capt. Robert Collins : "Soviet Research on Unified Field Theories, False Vacuum States, and Antigravity (U)", Appendix 1 -- Far Field Equations of Maxwell's Equations.

Warren York : "Scalar Wave Technology" ; *Extraordinary Science* (Jan/Feb/Mar 1989).

Thomas Bearden : "Basic Scalar EM Concepts and a Scalar Wave Detector" ; *U.S. Psychotronics Assoc. Newsletter* 5 (4): 4-7.

Jack Dea : "Fundamental Fields and Phase Information" ; *Planetary Association for Clean Energy* 4 (5): 12-15.

J. B. Bronzan : "The Magnetic Scalar Potential" ; *Amer. J. Physics* 39 : 1357-1359 (Nov. 1971).

E.T. Whittaker : "On an Expression of the Electromagnetic Field Due to Electrons by Means of Two Scalar Potential Functions" ; *Proc. London Math. Soc.*, Series 2, 1 : 367-372 (1904).

A. Dolgov & I. Khriplovich : "Propagation of Electromagnetic Waves in a Gravitational Field" ; *Soviet Physics JETP* 58 (4): 671-674 (Oct 1983).

L. Kofman, *et al.* : "Inflationary Universe Generated by the Combined Action of a Scalar Field and Gravitational Vacuum Polarization" ; *Physics Letters* 157-B (5, 6) : 361-366 (25 July 1985).

Gregory Hodowanec : "Do Intense Scalar Fields Affect Life Processes?"

http://en.wikipedia.org/wiki/Scalar_field

Scalar Field

In mathematics and physics, a scalar field associates a scalar value, which can be either mathematical in definition, or physical, to every point in space. Scalar fields are often used in physics, for instance to indicate the temperature distribution throughout space, or the air pressure. In mathematics, or more specifically, differential geometry, the set of functions defined on a manifold define the commutative ring of functions.

Just as the concept of a scalar in mathematics is identical to the concept of a scalar in physics, so also the scalar field defined in differential geometry is identical to, in the abstract, to the (unquantized) scalar fields of physics.

Definition

A scalar field is a function from Rn to R. That is, it is a function defined on the n-dimensional Euclidean space with real values. Often it is required to be continuous, or one or more times differentiable, that is, a function of class Ck.

The scalar field can be visualized as a n-dimensional space with a real or complex number attached to each point in the space.

The derivative of a scalar field results in a vector field called the gradient.

Differential geometry

A scalar field on a Ck-manifold is a Ck function to the real numbers. Taking Rn as manifold gives back the special case of vector calculus.

A scalar field is also a 0-form. The set of all scalar fields on a manifold forms a commutative ring, under the natural operations of multiplication and addition, point by point.

Uses in physics

In physics, scalar fields can be used to ascribe forces (which are usually vector fields) to a more general scalar field, the gradient of which describes the force.

* Potential fields, such as the Newtonian gravitational potential field for gravitation, or the electric potential in electrostatics, are scalar fields which describes the more familiar forces.

* A temperature, humidity or pressure field, such as those used in meteorology. Note that when modeling weather on a global basis, the surface of the Earth is not flat, and thus the general language of curvature in differential geometry plays a role. Dopplerized weather radar generates a projection of a vector field onto a scalar field.

Examples in quantum theory and relativity

* In quantum field theory, a scalar field is associated with spin 0 particles, such as mesons or bosons. The scalar field may be real or complex valued (depending on whether it will associate a real or complex number to every point of space-time). Complex scalar fields represent charged particles. These include the Higgs field of the Standard Model, as well as the pion field mediating the strong nuclear interaction.

* In the Standard Model of elementary particles, a scalar field is used to give the leptons their mass, via a combination of the Yukawa interaction and the spontaneous symmetry breaking. This mechanism is known as the Higgs mechanism [1]. This supposes the existence of a (still hypothetical) spin 0 particle called Higgs boson.

* In scalar theories of gravitation scalar fields are used to describe the gravitational field.

* scalar-tensor theories represent the gravitational interaction through both a tensor and a scalar. Such attempts are for example the Jordan theory [2] as a generalization of the Kaluza-Klein theory and the Brans-Dicke theory [3].

* Scalar fields like the Higgs field can be found within scalar-tensor theories, using as scalar field the Higgs field of the Standard Model [4], [5]. This field interacts gravitatively and Yukawa-like (short-ranged) with the particles that get mass through it [6].

* Scalar fields are found within superstring theories as dilaton fields, breaking the conformal symmetry of the string, though balancing the quantum anomalies of this tensor [7].

* Scalar fields are supposed to cause the accelerated expansion of the universe (inflation [8]), helping to solve the horizon problem and giving an hypothetical reason for the non-vanishing cosmological constant of cosmology. Massless (i.e. long-ranged) scalar fields in this context are known are inflatons. Massive (i.e. short-ranged) scalar fields are proposed, too, using for example Higgs-like fields (e.g. [9]).

Other kinds of fields

* Vector fields, which associate a vector to every point in space. Some examples of vector fields include the electromagnetic field and the Newtonian gravitational field.

* Tensor fields, which associate a tensor to every point in space. For example, in general relativity gravitation is associated with a tensor field (in particular, with the Riemann curvature tensor). In Kaluza-Klein theory, spacetime is extended to five dimensions and its Riemann curvature tensor can be separated out into ordinary four-dimensional gravitation plus an extra set, which is equivalent to Maxwell's equations for the electromagnetic field, plus an extra scalar field known as the "dilaton".

References

1. ^ P.W. Higgs; Phys. Rev. Lett. 13(16): 508, Oct. 1964.
2. ^ P. Jordanm Schwerkraft und Weltall, Vieweg (Braunschweig) 1955.
3. ^ C. Brans and R. Dicke; Phis. Rev. 124(3): 925, 1961.
4. ^ A. Zee; Phys. Rev. Lett. 42(7): 417, 1979.
5. ^ H. Dehnen et al.; Int. J. of Theor. Phys. 31(1): 109, 1992.
6. ^ H. Dehnen and H. Frommmert, Int. J. of Theor. Phys. 30(7): 987, 1991.
7. ^ C.H. Brans; "The Roots of scalar-tensor theory", arXiv:gr-qc/0506063v1, June 2005.
8. ^ A. Guth; Pys. Rev. D23: 346, 1981.
9. ^ J.L. Cervantes-Cota and H. Dehnen; Phys. Rev. D51, 395, 1995.

---

http://en.wikipedia.org/wiki/Scalar_field_theory

Scalar Field Theory

In theoretical physics, scalar field theory can refer to a classical or quantum theory of scalar fields. Such a field is distinguished by its invariance under a Lorentz transformation, hence the name "scalar", in contrast to a vector or tensor field. The quanta of the quantized scalar field are spin-zero particles, and as such are bosons.

No fundamental scalar fields have been observed in nature, though the Higgs boson may yet prove the first example. However, scalar fields certainly do appear in the effective field theory descriptions of many physical phenomena. Because of the relative simplicity of the mathematics involved, scalar fields are often the first field introduced to a student of classical or quantum field theory.

Although scalar fields are Lorentz scalars, they may transform nontrivially under other symmetries, such as flavour or isospin. For example, the pion is invariant under the restricted Lorentz group, but is an isospin triplet (meaning it transforms like a three component vector under the SU(2) isospin symmetry). Furthermore, it picks up a negative phase under parity inversion, so it transforms nontrivially under the full Lorentz group; such particles are called pseudoscalar rather than scalar. Most mesons are pseudoscalar particles.

In this article, the repeated index notation indicates the Einstein summation convention for summation over repeated indices. The theories described are defined in flat, D-dimensional Minkowski space, with (D-1) spatial dimension and one time dimension and are, by construction, relativistically covariant. The Minkowski space metric, ???, has a particularly simple form: it is diagonal, and here we use the + ? ? ? sign convention.

---

http://en.wikipedia.org/wiki/Scalar_field_theory_(pseudoscience)

Scalar field theory (pseudoscience)

For the quantum mechanical "scalar field theory" which is a field theory of spinless particles, see "Scalar field theory"

Scalar field theory (SFT) is a set of theories in a model which posits that there is a basic mechanism that produces the electric field and the magnetic field. Proponents of this theory claim that it advances the standard electromagnetic theory.

Scalar waves in these theories (as opposed to a scalar field in mainstream physics) are hypothetical waves, which differ from the conventional electromagnetic transverse waves by having one oscillation level parallel to the direction of propagation; they thus have characteristics of longitudinal waves. Their existence however, as presupposed in numerous theories, has not been supported by experiment. Scalar waves are called also "electromagnetic longitudinal waves", "Maxwellian waves", or "Teslawellen" (tr., "Tesla waves"). Variants of the

theory claim that Scalar electromagnetics (also known as scalar energy) is the background quantum mechanical fluctuations and associated zero-point energies (in contrast to "vector energies" which sum to zero).[citation needed]

Description

Terminology

The basic understanding of scalar field theory begins with several definition of terms within the theory, which are also used in academic physics, but assigns them other meanings. A "scalar field" is a set of assigned observable magnitudes at every point in n-dimensional space (compare this with the standard definition; n is also 4 or greater). [1] An "electric field" is composed of the spinning charged mass, in motion through a finite change in electrostatic scalar potential (compare this with the current academic definition). A "potential" is pure energy and, is any ordering (static or dynamic) in the vacuum (eg., the position of the object relative to other objects). A "scalar potential" is the stationary ordering in the virtual particle flux of the vacuum (compare this with the current academic definition). A "vector potential" is any nonstationary ordering in the virtual particle flux of vacuum (compare this with the current academic definition). Scalar potentials and vector potentials are thus defined as: "contained" inside the energy domain.[citation needed]

Magnetic fields interaction

SFT is based on "non-symmetrical regauging" potentials, demonstrated by the interaction of two magnetic fields.

When the field lines oppose each other, the magnets are pulled together. When the fields are aligned in the same direction, the magnets push apart. When two magnets strongly oppose each other but are not permitted to move apart, the force between them is said to create a "scalar bubble" between the magnets. The greater the repulsive force, the larger this scalar bubble becomes. As the magnets move away and the pushing force decreases, the scalar bubble shrinks in size and strength.

In a similar manner, two magnets that are strongly attracted create a "scalar void" between them that grows larger the closer the two magnets become. Two magnets powerfully attracted to one another create a very large scalar void, that decreases as the attracting magnets are moved apart.

Despite the claims of its proponents, no repeatable experiments were able to show the existence of the scalar field. All observed effects were shown to comply to the standard physical laws of electrodynamics. The observations are in spectacular agreement not only with classical electromagnetics, but also with quantum electrodynamics, both of which are fields of physics.

Field effects of scalar energy

SFT suggests that scalar energy can move through space much like an electromagnetic wave. However, the operating principles are different. The regular expansion and contraction of a scalar bubble/void is like rhythmicly splashing water on a pond. It sends out ripples through the general scalar field that can subtly affect the size and strength of distant scalar bubbles/voids.

This means that a pair of magnets that are rhythmically opposing/attracting each other are sending out scalar ripples through space that will slightly perturb the scalar bubble/void between a second pair magnets nearby. The net effect is that the attraction and/or repulsion between the second pair of magnets exhibits a change in strength, even though the magnets and fields themselves are motionless.

According to skeptics, the following description given for an application to a communication system reportedly failed to give reproduceable results.

A basic scalar communications system

A scalar communications broadcast antenna does not make any sense according to normal electromagnetic theory. The goal of a scalar broadcast antenna is to create powerful repulsion/attraction between two magnetic fields, to create large scalar bubbles/voids. This is done by using a broadcast antenna with two opposing electromagnetic coils that effectively cancel out as much of each other's magnetic field as possible. An ideal scalar broadcast antenna will emit no electromagnetic field (or as little as possible), since all power is being focused into the repulsion/attraction between the two opposing magnetic fields. Normal electromagnetic theory suggests that since such a device emits no measurable electromagnetic field, it is useless and will only heat up. For a scalar broadcast antenna, any normal RF emission is wasted energy.

A scalar reception antenna similarly excludes normal electromagnetic waves and only measures changes in magnetic field attraction and repulsion. This will typically be a two-coil powered antenna that sets up a static opposing or attracting magnetic field between the coils. The coils are counter-wound so that any normal RF

signal will be picked up by both coils simultaneously and effectively cancel itself out, leaving only the scalar component.

Scalar field detection by normal RF antennas

Even though a scalar wave train does not contain the regular EM components that are used by radio frequency communications, it can still be detected by a normal RF antenna, if that antenna is in the presence of some other static magnetic field. When the scalar wave train passes through, it will create a disturbance in the field surrounding that magnet and make the field lines move, which will impart a small electrical current in the standard RF antenna, as if the magnet itself were moved.

Since all normal RF antennas are immersed in the magnetic field of the planet, they can serve as crude scalar detectors, though the reception will be extremely weak and washed out by any normal RF in the vicinity. Detection ability is greatly increased by enclosing the antenna and circuitry in a faraday cage, and by placing a very strong magnet near the antenna inside the cage.

Scalar antennas and detectors

Various proponents have claimed to have developed instruments with characteristics and specifications for different designs. Scalar antenna and detector examples include:

Types [2]

* Magnetostatic Detectors
* Electrostatic Detectors
* Barkhausen Detector

Windings [3]

* single-wire bifilar
* dual-wire bifilar
* pancake bifilar
* cone bifiliar

Proponents of the theory have constructed bifiliar test antennas as isolation transformers. These have taken the form of a ferrite rod, ferrite ring, an air core, or the common square transformer shape.

References

1. ^ T. E. Bearden, "Scalar field". A partial glossary for scalar electromagnetics and subtle phenomena, 1988 (updated 2000).
2. ^ Robert Shannon, "Notes on Scalar Detector Designs". 1996.
3. ^ More Electromagnetism : Scalar Waves". RMCybernetics, 2005.

---

http://www.rense.com/general84/ben.htm

Benjamin Fulford's 'Creature' (?)

From **Brad Steiger**
1-26-9

Absolutely Bizarre 'Creature' In Benjamin Fulford's Spine

On Friday, January 23rd, Benjamin Fulford shocked the audience of the Jeff Rense Program by emailing the claim, accompanied by a photograph, that surgeons had removed a bizarre life form, very much resembling a salamander, from his spine. Those who could view the strange creature were shocked and horrified. Immediately, everyone who saw the "thing" wondered what it was--and if it were real.

Whether the creature was real or whether it was an ill-advised hoax, I wanted to find out if it was possible to place or to inject such a life form into an unsuspecting victim. One of the experts that I queried was a top-research scientist and inventor, who quickly responded that not only was it possible to inject the embryo of a parasite into a targeted victim without his or her knowledge, but that in the world of deep black operations, Russian scientists had already perfected such grotesque methodology.

I asked the scientist to come on the Rense Program and discuss the science of bioenergetics being developed for

Black Ops projects, but he informed me that he had been placed under "very strict warnings" not to make any appearances on any radio or television program. What he did do was to write a very informative email on the incredible world of bioenergetics and psychoenergetics which I reproduce below with his special permission. At the present time, he prefers to remain anonymous.

Yes, Brad, the "embryo" for such a "new living parasite critter" could indeed be developed and inserted into a targeted victim, including at a great distance, but only by the highly "clandestine" world of the off-budget deep black operations -- particularly those in Russia, which are still far ahead of anything in the West.

The Russian science of "energetics" -- developed shortly after WW II by a tremendously massive Soviet effort of some of the best nonlinear scientists on earth -- did solve some of the perplexities of our modern physics, of psychology and biology, etc. And under Stalin's iron boot, the new and spectacular Russian scientific developments were immediately placed into extended weapons development.

To this day, our own more-materialistic scientists still do not really comprehend Soviet energetics. (And they also still do not even know what a mind actually is, what a "dead" (separated) mind is, or what a "mind and body linked living system" really is).

Soviet energetics had three branches: (1) the science of inert matter, called by the same name "energetics". (2) the science of living biological systems, where a mind is linked to a living body. This branch is called "bioenergetics". (3) the science of the mind and mental phenomena, which is called "psychoenergetics".

Western science, being so materialistic, has not yet comprehended the most important thing about "mind": that is, that the mind and mental things exist in time, but not in 3-space.

If one turns to modern quantum field theory, then there are now FOUR photons available, not the two transverse photons so well known to classical electrodynamicists etc. In the following discussion, the travel direction of the photon in 3-space is assumed along the Z axis. The "regions of vibration" of the photon -- i.e., the type and direction of its oscillation -- may occur in four ways. These are (1, 2) the two "orthogonal" oscillation polarizations, one along the X-axis and the other along the Y-axis. Then there is (3) the longitudinal (i.e., longitudinally-polarized) photon, which oscillates along the Z-direction of travel itself. And finally there is (4) the time-polarized or "scalar" photon, which oscillates along the time axis. These four photons are all in standard quantum field theory, even in the West.

Now note that only the two transverse-polarized photons (1) and (2) are observable by our instruments. The longitudinal (3) photon is nonobservable, as is the time-polarized (4) photon.

Here's the first "magic":

A combination of a longitudinal photon (3) and a time-polarized photon (4) is OBSERVABLE AS A SPIKE OF VOLTAGE -- more precisely, a spike of electrostatic scalar potential.

Now suppose you have a hidden (nonobservable) electromagnetic "system" you have built in the time-domain, so that it is built only of time-polarized photons. The system is not observable, nor is any part of it observable.

But then suppose you also build a corresponding set of operations (a "system") in 3-space matter so that this new EM system consists only of longitudinal photons. And suppose you have made this "longitudinal" photon system's operations so that they exactly parallel the time-domain system's operations. In short, you now can superpose your longitudinally-polarized EM wave system and the time-polarized EM wave system. And your instruments will now observe the combination -- i.e., the actual ongoing linkage system's operation -- as a very strange but highly organized system of voltage spikes!

The West has totally missed the fundamental characteristic of mind: Mind occupies time but not 3-space. Hence, mind is a totally "electromagnetic" system, but it is comprised of only non-observable time-polarized photon operations!

Well, how could you possibly couple that mind to a biological (3-space) material body?

You would have to have a parallel longitudinally-polarized set of electromagnetic operations ongoing in that 3-space body.

And the direct coupling of those two "operational systems" would be the mechanism of the coupling of the mind to the body -- and it would and could be directly observed by our instruments as a correlated system of voltage spikes!

And that is why the dendrite cells of the body all have so many endings and "continual and incredible voltage spikings"! In looking at the entire set of spiking, you are looking at the "coupling mechanism" (that couples the

mind to the body) in action! That set of spikings is what links or couples (coherently) the living temporal mind to the living biological body!

Now if you place great scientific effort on that area and in that fashion, for some decades, you will eventually be able to (1) directly produce an operating living mind in the laboratory, including a human mind and any version of it, and (2) link it to a properly designed biological body (to a proper set of longitudinal operations therein), and this will give you a living biological system created directly in the laboratory.

In about 1990, the Russian hidden psychoenergetics science had progressed to the point that living minds were being designed and produced in the laboratory, including various "versions" (personalities) of a given mind.

If one knows where to look, there is and has been quite a bit of external "testing" by the Soviets to stimulate the West and see if we recognize what is being done (in short, to see whether the West also has developed such science). Sadly, the provocative tests have clearly shown the Soviets that we do not have such capabilities or such scientific development. Indeed, we still do not even recognize that "testing" is even going on!

One of the New Energy scientists--Tom Bearden--stumbled onto a portion of this Soviet energetic work. In his 2005 book, Oblivion: America at the Brink, Bearden gave an abbreviated presentation of the development of the energetics weaponry and some of the actual "evocative testing" examples. There are many more weapons and examples that he did not run across.

Presently, the Russians can clandestinely duplicate the mind of a targeted individual, in the duplicate mind they can "alter" portions to produce "different behavior" if that alternate mind is inserted into the targeted individual in the West, and then they can do several things. (1) they can just leave it in that individual as an extra "multiple personality," so they have the 'perfect spy" that hears everything the person's ears hear, sees everything his eyes see, and also receives all the thoughts that his true mind thinks. And they can put that on the TV screen in Moscow if they wish. With the portion for which he actually encountered evidence, Bearden gave examples of the military use of such capabilities in Oblivion.

Sadly, the West still thinks that the human "mind" is just some electron wiggles in the brain, and that we are like a giant "nonliving" computer.

There is also a way to directly engineer any physical observable system one wishes, in any part of it, living or nonliving. One can directly engineer and change inert matter or living matter, etc. I have learned that Bearden plans a future book (hopefully this year) dealing with this scientific methodology, which he calls "precursor engineering", but which the Soviets still have embedded in its term "energetics" with its associate science (and weapons).

Once you understand something about this 3-fold secret weapons science of energetics that the Soviets have highly developed, then you can understand how -- with such developed technology -- one could directly build both the physical body system (its correlated longitudinal EM photon system) and the "mind system" of such a "living critter" one creates in the laboratory, and how one could then use such capability (such weird and artificially-created critters) by sudden surprise on an unsuspecting enemy to overwhelm and crush him almost instantly.

As you can see, we are referring to a gigantic leap forward in what the West calls "biological weapons" and in "biological warfare".

Well, one should be looking for "very strange incidents" suggesting the development of such "critters" and parasites. And here is at least one "candidate" occurrence.

This present "incredible tumor" discovery [in Benjamin Fulford's spin] may be the discovery of one "provocative test" of these capabilities, just to see what our western science and biological warfare experts make of it.

And if it is a "provocative test" to see what we know, of if we know anything of it at all, we have certainly once again assured them we have not the foggiest notion of the true reach of Soviet energetics science.

WO2008092205
METHOD AND APPARATUS FOR ANALYSING GEOLOGICAL FEATURES

Inventor(s): DUNCAN ANDREW [AU]
Classification: - international: G01V3/00; G01V3/15; G01V3/16; G01V3/17; G01V3/00; G01V3/15 - European: G01V3/165
Abstract -- An apparatus (10) for analysing geological features comprises a receiver (20) for measuring a magnetic field received from adjacent geological features (18) excited by a periodic transmitted electromagnetic signal, wherein the measured magnetic field is a scalar amplitude of the magnetic field or a scalar amplitude of

the magnetic field is derivable from the measured magnetic field, wherein the receiver generates a received signal from the measured magnetic field; and a processor (28) for filtering unwanted signal components which are substantially synchronous with the periodic transmitted electromagnetic signal from the scalar amplitude of the received signal or the scalar amplitude derived from the received signal, such that target geological features are able to be analysed using the filtered scalar amplitude.

WO2008060213
METHOD FOR PREDICTING WHERE THE NEXT MAJOR EARTHQUAKE WILL TAKE PLACE WITHIN AN AREA

Inventor(s): SLUNGA RAGNAR [SE]
Classification: - international: G01V1/28; G01V1/00; G01V1/28; G01V1/00- European: G01V1/00E
Also published as: WO2008060213 // SE0602417 (A) // SE530569 (C2)
Abstract -- The present invention relates to a method of predicting where the next major earth- quake will occur within a area based on knowledge of the stress tensor field in the area, including determining stress tensors that have caused a shear slip in the form of an earthquake. It is first assumed that said first shear slip is the only one that is not stable according the Mohr-Coulomb slip criterion applied to contenplated fault planes with all conceivable orientations and calculating according to the Mohr- Coulomb slip criterion the principal stress directions as a function of the friction coefficient f. After that, it is established according to the Mohr-Coulomb slip criterion a relationship between two of the principal stresses.; Moreover the normal stress sv in a known direction Sv is determined and, according to the elasticity theory, a relationship between the normal stress sv and the principal stresses is established. Then expressions of the three principal stresses as a function of a scalar parameter is established, and a function of the elastic deformation energy per unit of volume relative to an isotropic reference stress state with the pressure sv based on the expressions of the principal stresses is established. Finally, the remaining degree of freedom is eliminated by determining the value of said scalar parameter which minimises the function of the elastic deformation energy and the value of the scalar parameter in the expressions of the principal stresses is inserted.

WO2008050137
MAGNETIC SIGNATURE ASSESSMENT

Inventor(s): TWELVETREES ROGER [GB]; COX EMILY [GB]; GANDERTON CARL [GB]; RAWLINS PAUL [GB]; WATSON STEPHEN MILES [GB]
Classification: - international: B63G9/06; B63G9/00 - European: B63G9/06
Also published as: GB2443265 (A)
Abstract -- Magnetic signature assessment apparatus for a vehicle comprising sensors for incorporation in the vehicle to measure the magnetic field normal to a closed surface at least approximately bounding the vessel and processing means for calculating from the normal field measurements a scalar magnetic potential outside the surface. Apparatus may be provided on the vehicle to generate a magnetic field to suppress the magnetic signature corresponding to the scalar potential. The invention also extends to corresponding methods and to programs for implementing those methods.

---

http://v3.espacenet.com/publicationDetails/biblio?KC=A&date=20060810&NR=2005105859A&DB=EPODOC&locale=en_EP&CC=RU&FT=D

RU2005105859
LONGITUDINAL-SCALAR ELECTROMAGNETIC WAVE RADIATING DEVICE

Applicant(s): KUZNETSOV JURIJ NIKOLAEVICH
Classification: - international: H01Q13/02; H01Q13/00
Also published as: RU2287212
Abstract -- FIELD: radio communications and radiolocation, geological prospecting, and medicine. ^ SUBSTANCE: proposed radiating device is provided with second waveguide and second exciting component; exciting components are installed in waveguides which have different length and are brought to single plane through their open ends and further through return horn to equally shaped adding waveguide terminating in horn. Waveguides differ by half-length of common radiated electromagnetic wave. In planar-wave approximation strength vectors of electric and magnetic fields are oriented in longitudinal-scalar electromagnetic wave in open space collinearly to vector of electromagnetic energy flux density (S = Ei ¦Hi¦ + Hi ¦Ei¦).Irrotational electric field of longitudinal electromagnetic wave builds up potential difference across open electric conductor longitudinally oriented to this field.; Magnetic field of longitudinal-scalar electromagnetic wave acts upon moving electric charges by force directed along their velocity vector. ^ EFFECT: enhanced reliability due to use of irrotational

longitudinal-scalar electromagnetic waves apart from rotational cross-vector ones.

---

http://v3.espacenet.com/publicationDetails/biblio?KC=A1&date=20050908&NR=2005197808A1&DB=EPODOC&locale=en_EP&CC=US&FT=D

US2005197808
Method for determining electrical and magnetic field effects

Inventor(s): KUO, AN-YU
Classification: - international: G06F17/10; G06F17/10; (IPC1-7): G06F17/10
Abstract -- A method for determining electrical and magnetic field effects determines Lanczos matrices by performing a preconditioned conjugate gradient method using a nested multi-grid, vector and scalar potential preconditioner so that Pade via Lanczos frequency expansion may be used to determine the electrical and magnetic field effects over a frequency range without having to perform computationally slow and memory intensive matrix decomposition.

---

http://v3.espacenet.com/publicationDetails/biblio?KC=A1&date=20040311&NR=2004046553A1&DB=EPODOC&locale=en_EP&CC=US&FT=D

US2004046553
Vector Measurement of a Magnetic Field

Inventor(s): LEGER JEAN-MICHEL [FR]; GRAVRAND OLIVIER [FR]; BERTRAND FRANCOIS
Classification: - international: G01R33/24; G01R33/24; (IPC1-7): G01V3/00 - European: G01R33/24
Also published as: US6844726 // FR2815416 // FR2815416 // WO0233434 // EP1344075
Abstract -- A vectorial magnetometer (1), measures the components of a magnetic field in three directions (Oxyz) using a scalar magnetometer (2). The field is periodically modulated in each of the directions by generators (Gx, Gy, Gz) which have a specific frequency for each direction and that power coils (Ex, Ey, Ez). Synchronous demodulation of the of the output signal of the scalar magnetometer (2) for each of the three frequencies permits the relative continuous component of each axis to be found.; The vectorial magnetometer (1) is characterised in that it has means (Dx D'x, Dy D'y, Dz D'z) that can carry out a double demodulation for phase and quadrature for each of the frequencies and processing means (70) that use the continuous component modules for phase and quadrature to calculate a transfer function of the scalar magnetometer at the frequency in question, and to apply this function to the correction of the components.

---

http://v3.espacenet.com/publicationDetails/biblio?KC=A1&date=19991215&NR=0964260A1&DB=EPODOC&locale=en_EP&CC=EP&FT=D

EP0964260
Device for Measuring Magnetic Field Components Comprising a Scalar Magnetometer

LEGER, JEAN-MICHEL
Classification: - international: G01R33/26; G01R33/24; (IPC1-7): G01R33/26 - European: G01R33/26
Also published as: FR2779530 // US6313628 // CA2274623
Abstract -- The system uses a scalar magnetometer with additional fields applied by external coils, which are arranged with mutually orthogonal axes. The system for measuring the components of a magnetic field includes a scalar magnetometer (10,14,16,21,24,26,30,40,46,56). This magnetometer provides an output signal corresponding to the modulus of the applied magnetic field. There are also at least two conducting coils (Ex,Ey,Ez) disposed around the scalar magnetometer with mutually orthogonal axes. Each coil is supplied with a current at a given frequency. Processing circuits (Dx,Dy,Dz) receive the signal produced by the magnetometer and effect synchronous demodulation of the signal at the respective frequencies, to provide signals (Bx,By,Bz) corresponding to the components of the magnetic field which exists in this region.

---

http://v3.espacenet.com/publicationDetails/biblio?KC=A&date=19991105&NR=11306328A&DB=EPODOC&locale=en_EP&CC=JP&FT=D

JP11306328
METHOD AND DEVICE FOR GENERATING TWO-DIMENSIONAL SCALAR FIELD

KAWAI, NAOKI
Classification: - international: G03F1/00; G06T1/00; G03F1/00; G06T1/00; (IPC1-7): G06T1/00; G03F1/00
Abstract -- PROBLEM TO BE SOLVED: To extract flow of each conduit from a conduit picture to generate a two-dimensional scalar field. SOLUTION: Conduits are extracted from the conduit picture one by one (S2), and representative points and values of flow are defined for each conduit, and respective values of flow are registered in positions corresponding to these representative points in a separately prepared two-dimensional area, and values of flow in other positions of the two-dimensional area are interpolated based on registered values of flow and their positions (S5), thus generating a two-dimensional scalar field.

---

http://v3.espacenet.com/publicationDetails/biblio?KC=A&date=19981201&NR=5845220A&DB=EPODOC&locale=en_EP&CC=US&FT=D

US5845220
Communication method and apparatus with signals comprising scalar and vector potentials without electromagnetic fields

PUTHOFF, HAROLD
Classification: - international: H01Q7/00; H04B5/00; H01Q7/00; H04B5/00; (IPC1-7): H04B1/00
- European: H01Q7/00; H04B5/00
Abstract of US 5845220 (A)
Information that changes as a function of time is communicated from a transmitting site to a receiving site by transmitting a signal comprising scalar and vector potentials without including ay electromagnetic field. The potentials vary as a function of time in accordance with the information.

---

http://v3.espacenet.com/publicationDetails/biblio?KC=A&date=19751202&NR=3924210A&DB=EPODOC&locale=en_EP&CC=US&FT=D

US3924210
Field Shaping Magnet Structure

1975-12-02
Inventor(s): DIONNE NORMAN J
Classification: - international: H01J31/50; H01F7/02; H01F7/20; H01J29/64; H01J31/08; H01F7/02; H01F7/20; H01J29/58; (IPC1-7): H01F7/02- European: H01F7/02C1; H01F7/20
Also published as: NL7512795 // NL7512795 // NL172496 // NL172496 // JP51067961

Abstract -- A magnet structure having a pair of spaced pole pieces interconnected by a reluctor circuit comprising an operatively aligned array of soft magnetic members suitably spaced apart by interposed nonmagnetic material to provide between the pole pieces a preferred magnetic scalar potential and an associated magnetic flux distributed as desired over a relatively large volume adjacent the array.

---

http://amasci.com/hum/adetect.txt

Date: 10 Feb 97 18:50:04 EST
From: "Sara T. Allen"
To: Taos Hum list serve <taoshum-l@eskimo.com>

Subject: Scalar fields - Honeywell Patent Numbers

List of patents by Raymond C. Gelinas but assigned to Honeywell:
(note that a Vector Potential is a scalar field)

4,429,280
31 Jan 1984
Apparatus and Method for Demodulation of a Modulated Curl-Free Magnetic Vector Potential.

4,429,288
31 Jan 1984
Apparatus and Method for Modulation of a Curl-Free Magnetic Vector Potential Field.

4,432,098

14 Feb 1984
Apparatus and Method for Transfer of Information by Means of a Curl-Free Magnetic Vector Potential Field.

4,447,779
8 May 1984
Apparatus and Method for Determination of a Receiving Device Utilizing a Curl-Free Magnetic Vector Potential Field.

4,605,897
12 Aug 1986
Apparatus and Method for Distance Determination Between a Receiving Device and a Transmitting Device Utilizing a Curl-Free Magnetic Vector Potential Field.

4,491,795
1 Jan 1985
Josephson Junction Interferometer Device for Detection of Curl-Free Magnetic Vector Potential Fields.

Also, you can find a good article in Scientific American of April 1989, pp. 56-62, "Quantum Interference and the Aharonov-Bohm Effect" by Yoseph Imry & Richard Webb.

Another one:

US5845220: Communication method and apparatus with signals comprising
scalar and vector potentials without electromagnetic fields , H. Puthoff

---

http://www.unusualresearch.com/scalarbib/scalarbib.htm

Y. Aharonov and D. Bohm, "Significance of Electromagnetic Potentials in in the Quantum Theory," The Physical Review, vol. 115, no. 3, Aug. 1959.
Abstract: In this paper, we discuss some interesting properties of the electromagneticpotentials in the quantum domain. We shall show that, contrary to theconclusions of classical mechanics, there exists effects of potentials oncharged particles, even in the region where all the fields (and therefore theforces on the particles) vanish. We shall then discuss possible experiments totest these conclusions; and, finally, we shall suggest further possibledevelopments in the interpretation of the potentials.

Yoseph Imry and Richard A. Webb, "Quantum Interference and the Aharonov-Bohm Effect," Scientific American, vol. 260, no. 4, Apr. 1989.
Abstract: Can electrons be influenced by a nearby magnet so well shieldedthat its force field cannot be detected? The counterintuitive answer is yes:an energy emanation from the magnet known as the potential does indeed affectthe electrons' wave function. This quantum-mechanical effect is being brought tobear on the development of new microelectronic devices.

Capt. Robert M. Collins (TQTR), "Soviet Research On The A-Vector Potential and Scalar Waves (U)," Unknown.
Abstract: Active in the areas of the Aharonov-Bohm effect as applied to the A-vector potential and scalar fields as applied to solving force related problems.

Capt. Robert M. Collins (TQTR), "Soviet Research On Unified Field Theories, False Vacuum States, and Antigravity (U)," Unknown.
Abstract: Theoretical progress in dealing with unified field theories...new concepts in weapons, transportation, propulsion

Dr. Jack Dea, "Fundamental Fields and Phase Information," P.A.C.E. Newsletter, vol. 4, no. 3 (Planetary Assoc. f. Clean Energy)

K.J. van Vlaenderen, "Electrodynamics with the scalar field," Sep. 2001.
Abstract: The expressions of the electric and magnetic fields, that can be derived from the Li'enard-Wiechert potentials, are in good agreement with experiments. Surprisingly the Li'enard-Wiechert potentials do not satisfy the Lorenz gauge condition, therefore they cannot be regarded as solutions of the Maxwell equations in the Lorenz gauge, but only as solutions of the inhomogeneous potential wave equations. Therefore, the inhomogeneous potential wave equations should be regarded as a separate set of differential equation that are unconnected with Maxwell's equations. In order to simplify this theory of classical electrodynamics we propose a generalization of Maxwell's equations, such that a gauge of the potentials is unnecessary in order to derive the Lorenz inhomogeneous potential wave equations. This generalization can be described as a conditional current regauge that does not violate the conservation of charge. This has several consequences: - the generalized Maxwell equations also contain scalar field terms. - the prediction of a longitudinal electro-scalar wave (LES

wave) in vacuum. - a generalized Lorentz force expression that contains an extra scalar term. - generalized energy and momentum theorems, with an extra power flow term associated with LES waves.

E. T. Whittaker in Cambridge, "On the partial differential equations of mathematical physics," vol. 57, pp. 333-355, Nov. 1903.
Although as much care as possible was taken in its reproduction, no warranty is expressed or implied as to the suitability or accuracy of this document for any purpose whatsoever.

CAVEAT: There are what appear to be errors in the original. Those that are changed are noted here. Spelling and other obvious errors remain as in the original.
On Page 346: The first double integral was missing the 'x' on the 'x sin u cos v' term of the first argument of f().
Frank Lofaro gives the 1903 paper this description: 1903 paper on potentials being composed of harmonic phase-conjugate scalar pairs.
He also gives the 1904 paper this description: 1904 paper on EM waves being composed of two scalars.

E. T. Whittaker in Cambridge, "The Electromagnetic Field Due to Electrons by Means of Two Scalar Potential," pp. 367-372, Nov. 1904.
Although as much care as possible was taken in its reproduction, no warranty is expressed or implied as to the suitability or accuracy of this document for any purpose whatsoever.
CAVEAT: There are what appear to be errors in the original. Those that are changed are noted here. Spelling and other obvious errors remain as in the original.
The equation in the middle of page 368 appears to be in error in the original. The "c-square, del-square, a-sub y" term is missing the superscript 2 on the del in the original paper. From looking at the other equations in the group, it seems like it should be squared also.

Concetto R. Giuliano, "Applications of optical phase conjugation," Physics Today, vol. 34, no. 4, pp. 27-35, Apr. 1981.
Abstract: Light waves that are, in effect, time-reversed images of their original can serve to restore severely aberrated waves to their original state.

Dr. Harry E. Stockman, "Plasma-diode experiments," Ham Radio, Feb. 1980.

GSC-12645, "Precise Phase Comparator for Nearly Equal Frequencies," NASA Tech Briefs, Fall/Winter 1981, vol. 6, no. 3, Nov. 1981.

Dwight W. Batteau and Peter R. Markey, "Man/Dolphin Communication Final Report," Dec. 1966.
Abstract: Research intended to determine the feasibility of establishing a language, approaching English, between man and dolphin. Neurophone like circuit in Appendix-A.

http://www.eskimo.com/~billb/freenrg/bark.html

http://www.textfiles.com/bbs/KEELYNET/ENERGY/reply2.asc

http://www.textfiles.com/bbs/KEELYNET/ENERGY/replytvq.asc

http://www.textfiles.com/bbs/KEELYNET/BIOLOGY/health1.asc

http://www.textfiles.com/bbs/KEELYNET/BIOLOGY/warning1.asc

Barkhausen Effect Scalar Detector

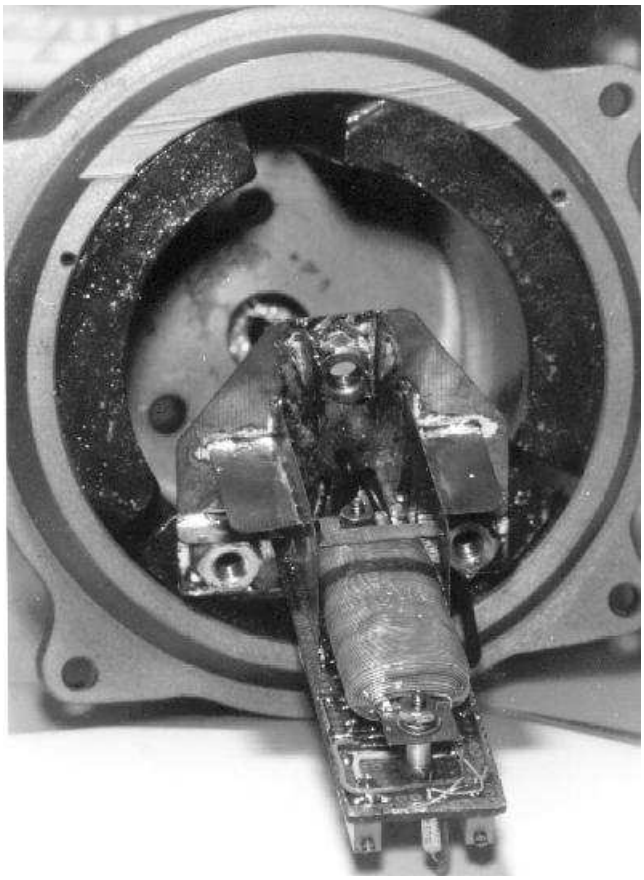

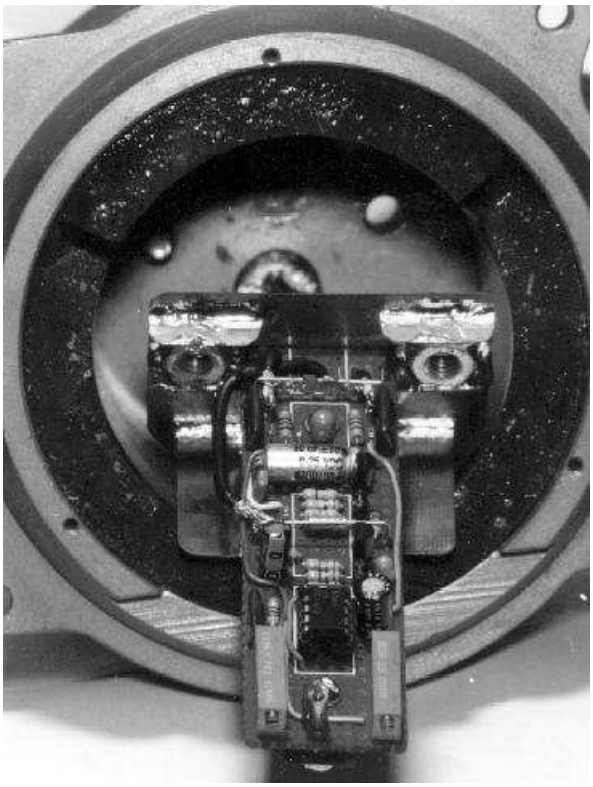

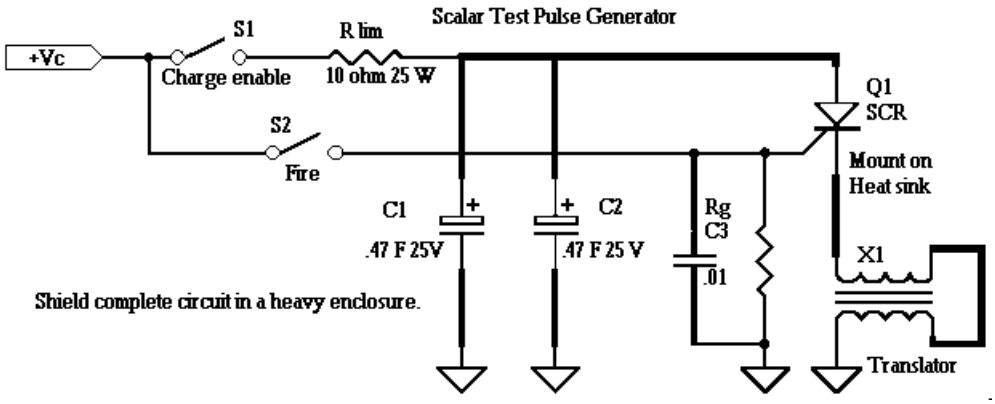

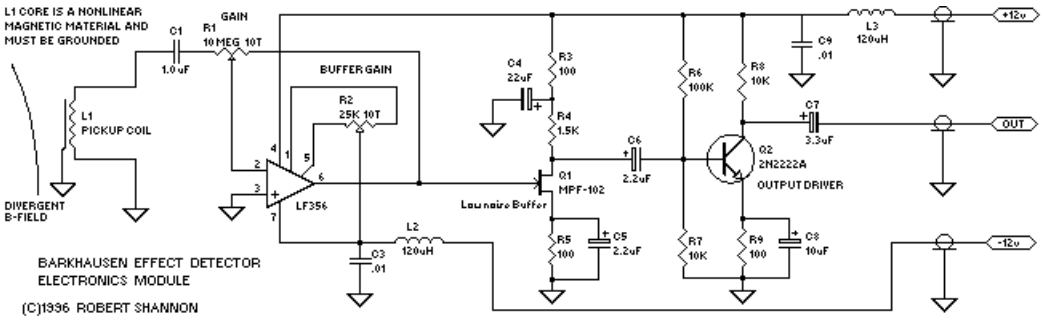

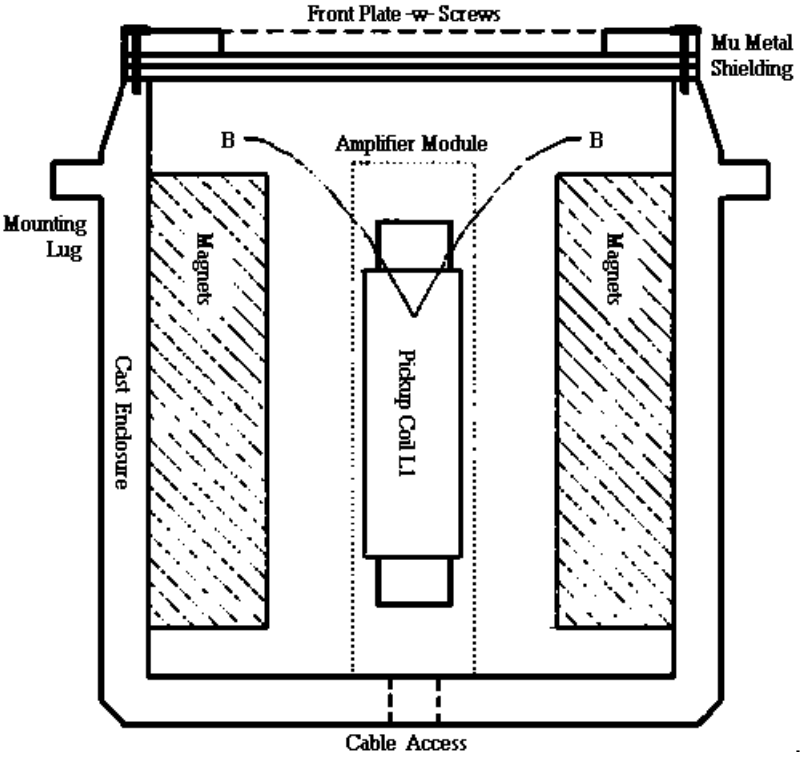

Your Support Maintains this Service. Please Invest in the mind-boggling Rex Research Website CD -- "Knowledge is always the best Investment" (Ben Franklin)... You get everything on this Website & much more (the Bonus Files CD) -- Only $13, Postpaid Anywhere ! Secure Transaction via PayPal --- All Major Credit Cards Accepted :

Buy Now

No Credit ? Don't like PayPal ? Send a Check/Money Order to:

Rex Research, PO Box 19250, Jean, NV 89019 USA

rexresearch.com

US 20160350458A1

(19) United States

(12) Patent Application Publication

Hively

(10) Pub. No.: US 2016/0350458 A1

(43) Pub. Date: Dec. 1, 2016

(54) **SYSTEMS, APPARATUSES, AND METHODS FOR GENERATING AND/OR UTILIZING SCALAR-LONGITUDINAL WAVES**

(71) Applicant: **GRADIENT DYNAMICS LLC**, McLean, VA (US)

(72) Inventor: **Lee M. Hively**, Philadelphia, TN (US)

(73) Assignee: **GRADIENT DYNAMICS LLC**

(21) Appl. No.: **14/738,775**

(22) Filed: **Jun. 12, 2015**

Related U.S. Application Data

(63) Continuation of application No. 14/726,305, filed on May 29, 2015, now Pat. No. 9,306,527.

Publication Classification

(51) **Int. Cl.**

G06F 17/50	(2006.01)
H04W 72/04	(2006.01)
G06F 17/10	(2006.01)

(52) **U.S. Cl.**

CPC ***G06F 17/5009*** (2013.01); ***G06F 17/10*** (2013.01); ***H04W 72/0453*** (2013.01)

(57) **ABSTRACT**

Scalar-longitudinal waves (SLWs) may be transmitted and/or received. A first apparatus configured to transmit and/or receive SLWs may include a linear first conductor configured to operate as a linear monopole antenna at a first operating frequency. The first apparatus may include a tubular second conductor coaxially aligned with the first conductor and an annular balun configured to cancel most or all return current on an outer surface of the second conductor during operation such that the first conductor transmits or receives SLWs. A second apparatus configured to transmit and/or receive scalar-longitudinal waves may include a bifilar coil formed in an alternating fashion of a first conductor and a second conductor such that an electrical current in the coil will propagate in opposite directions in adjacent turns of the coil thereby cancelling any magnetic field so that during operation the coil transmits or receives SLWs.

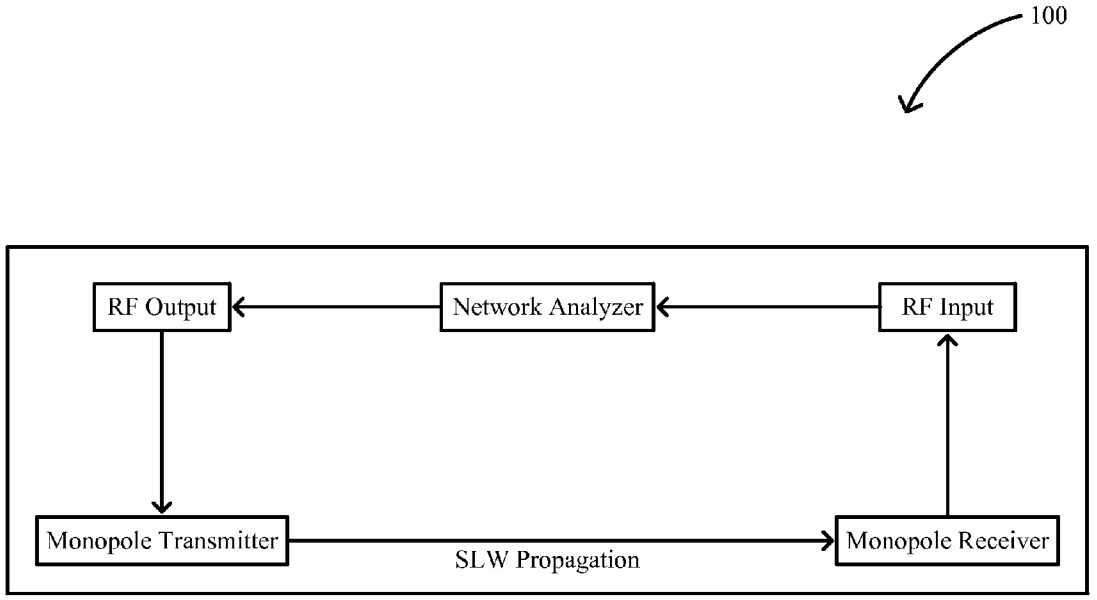

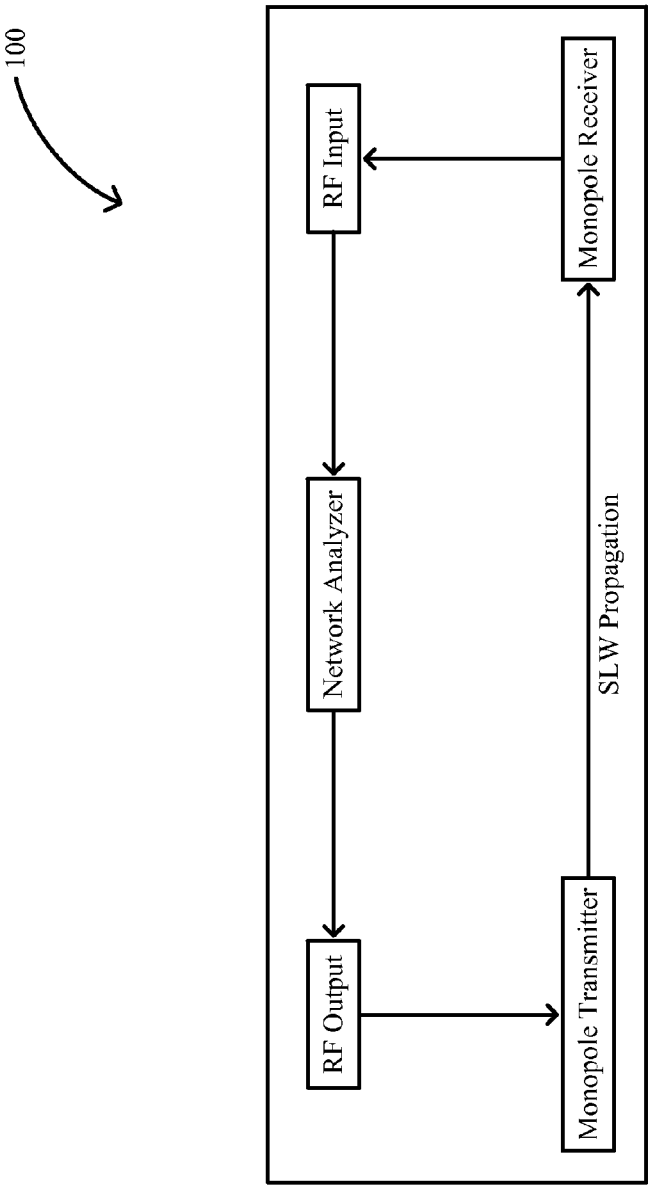
100
RF Output
Network Analyzer
RF Input
Monopole Transmitter
SLW Propagation
Monopole Receiver

FIG. 1

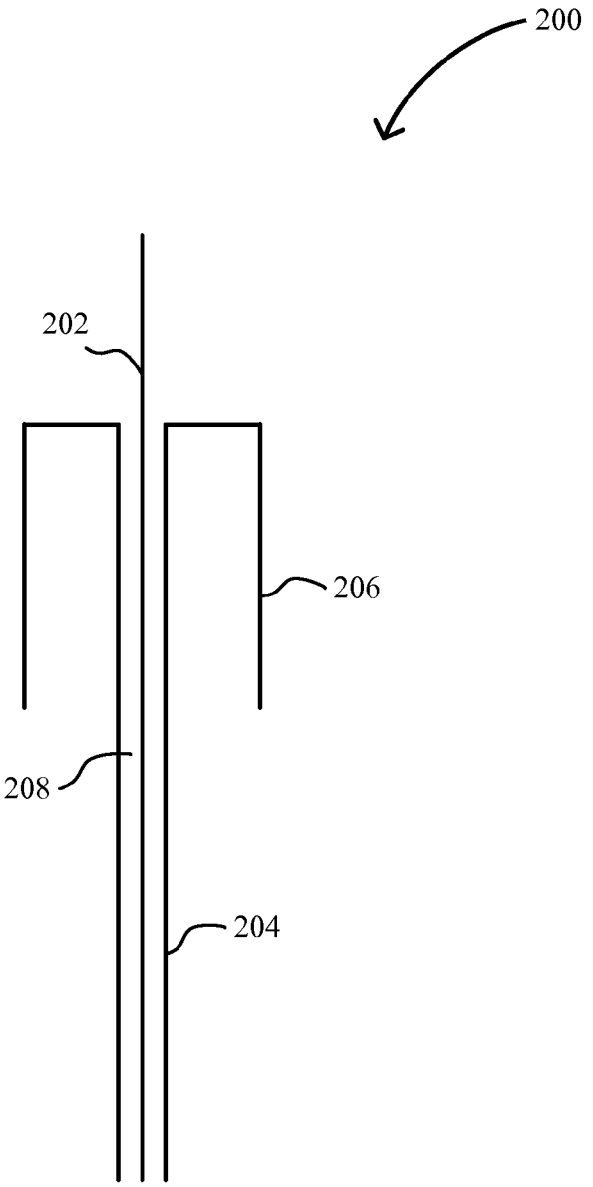

FIG. 2A

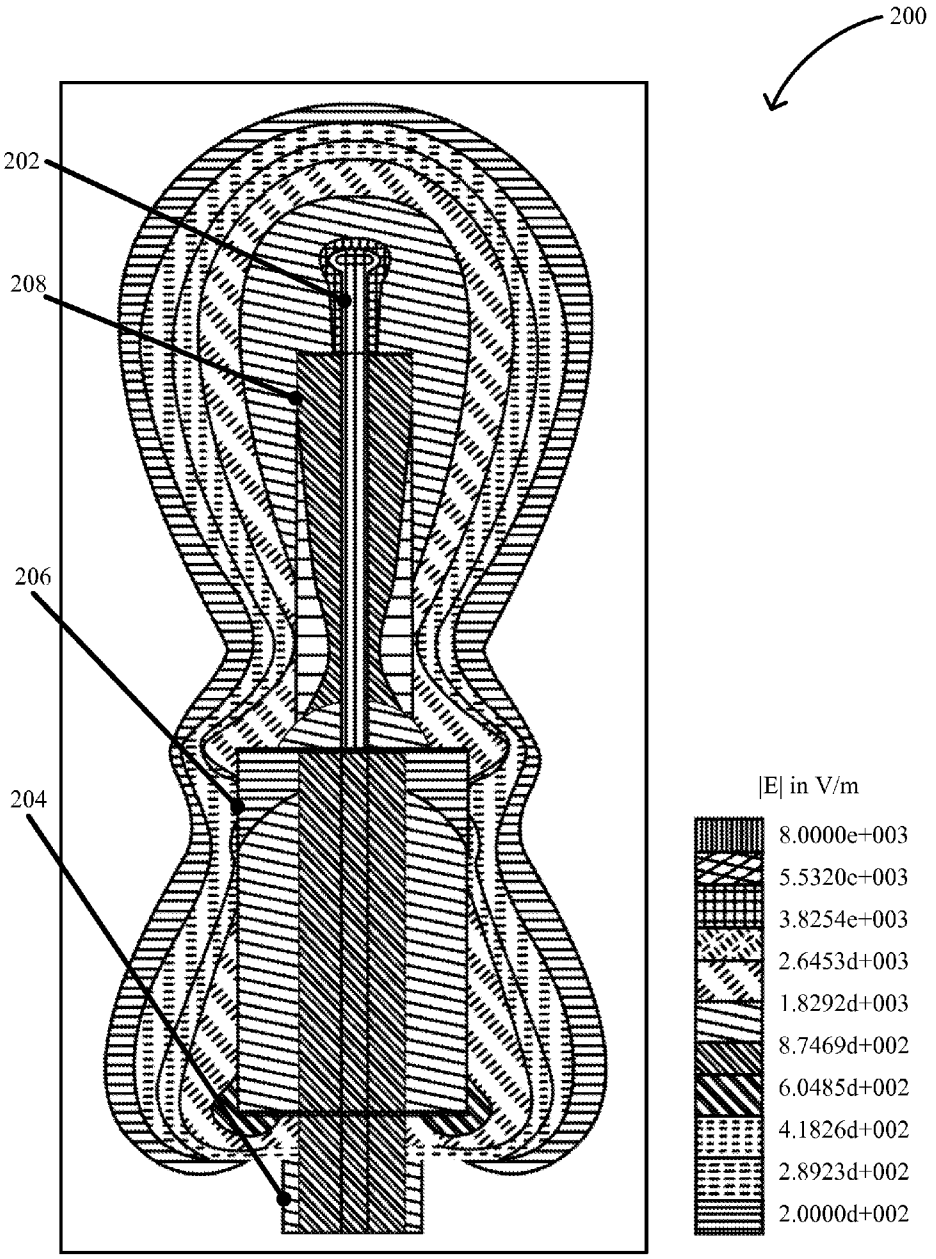
200
202
208
206
204
|E| in V/m
8.0000e+003
5.5320e+003
3.8254e+003
2.6453d+003
1.8292d+003
8.7469d+002
6.0485d+002
4.1826d+002
2.8923d+002
2.0000d+002

FIG. 2B

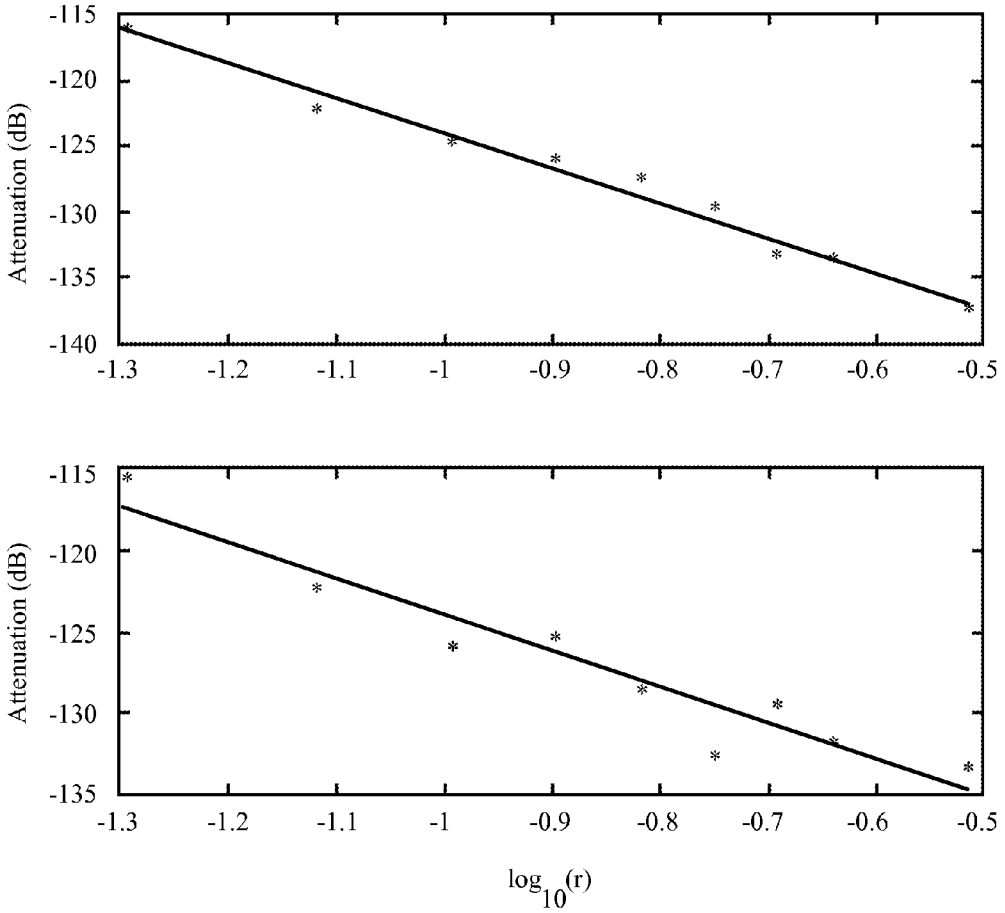
-115
-120
-125
-130
-135
-140
Attenuation (dB)
-1.3
-1.2
-1.1
-1
-0.9
-0.8
-0.7
-0.6
-0.5
-115
-120
-125
-130
-135
Attenuation (dB)
-1.3
-1.2
-1.1
-1
-0.9
-0.8
-0.7
-0.6
-0.5
log10(r)

FIG. 3

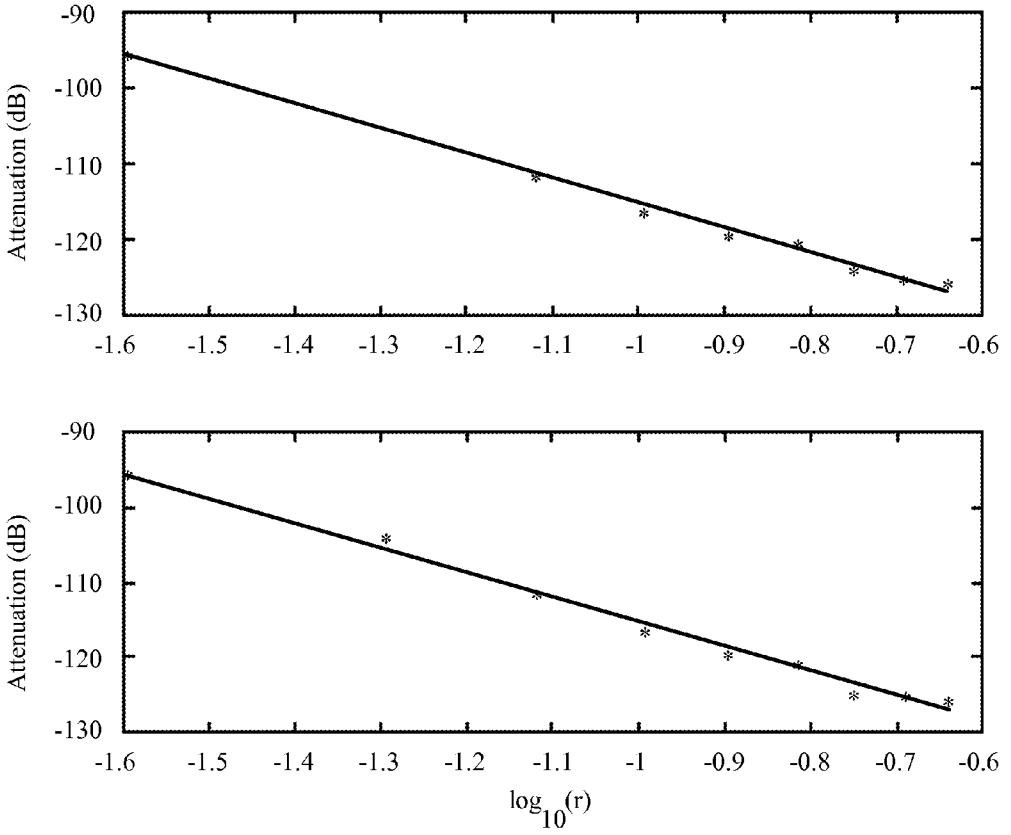
-90
-100
-110
-120
-130
Attenuation (dB)
-1.6
-1.5
-1.4
-1.3
-1.2
-1.1
-1
-0.9
-0.8
-0.7
-0.6
-90
-100
-110
-120
-130
Attenuation (dB)
-1.6
-1.5
-1.4
-1.3
-1.2
-1.1
-1
-0.9
-0.8
-0.7
-0.6
log10(r)

FIG. 4

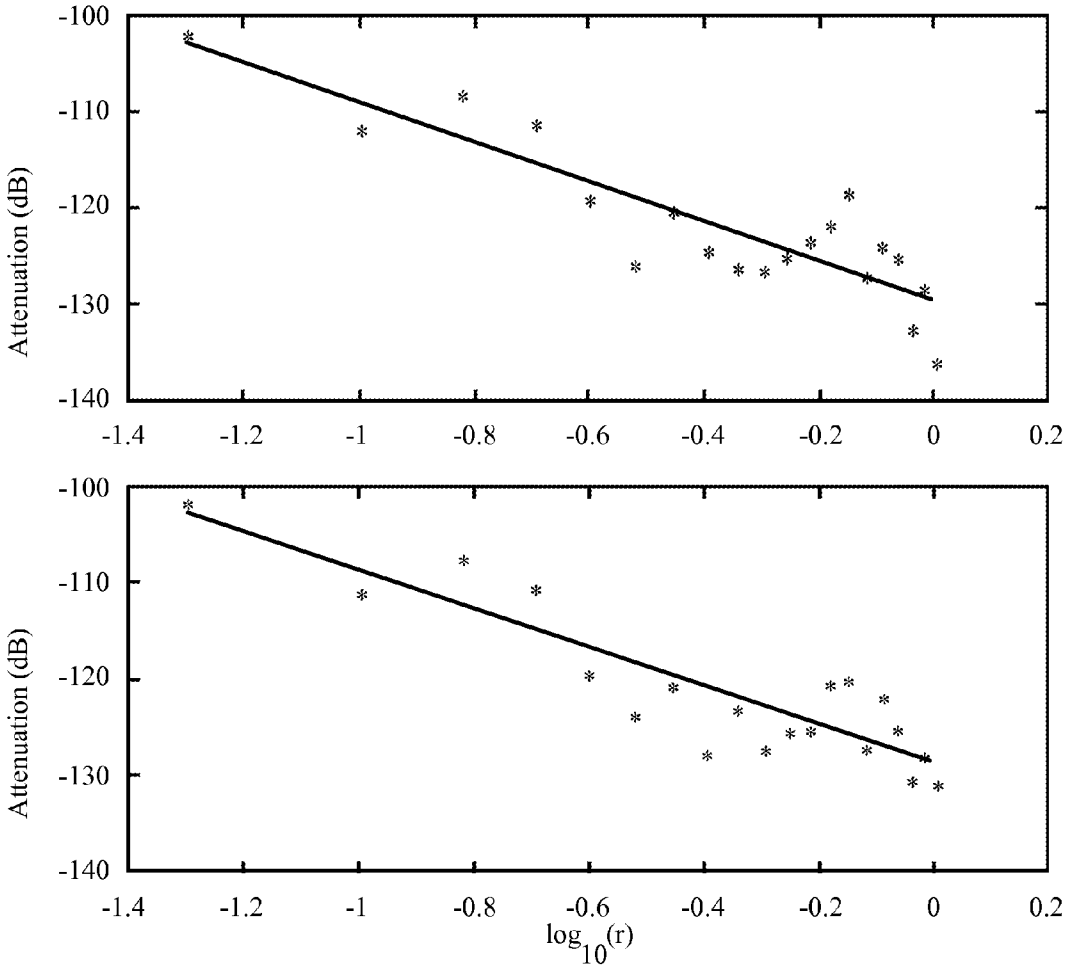
-100
-110
-120
-130
-140
Attenuation (dB)
-1.4
-1.2
-1
-0.8
-0.6
-0.4
-0.2
0
0.2
-100
-110
-120
-130
-140
Attenuation (dB)
-1.4
-1.2
-1
-0.8
-0.6
-0.4
-0.2
0
0.2
log10(r)

FIG. 5

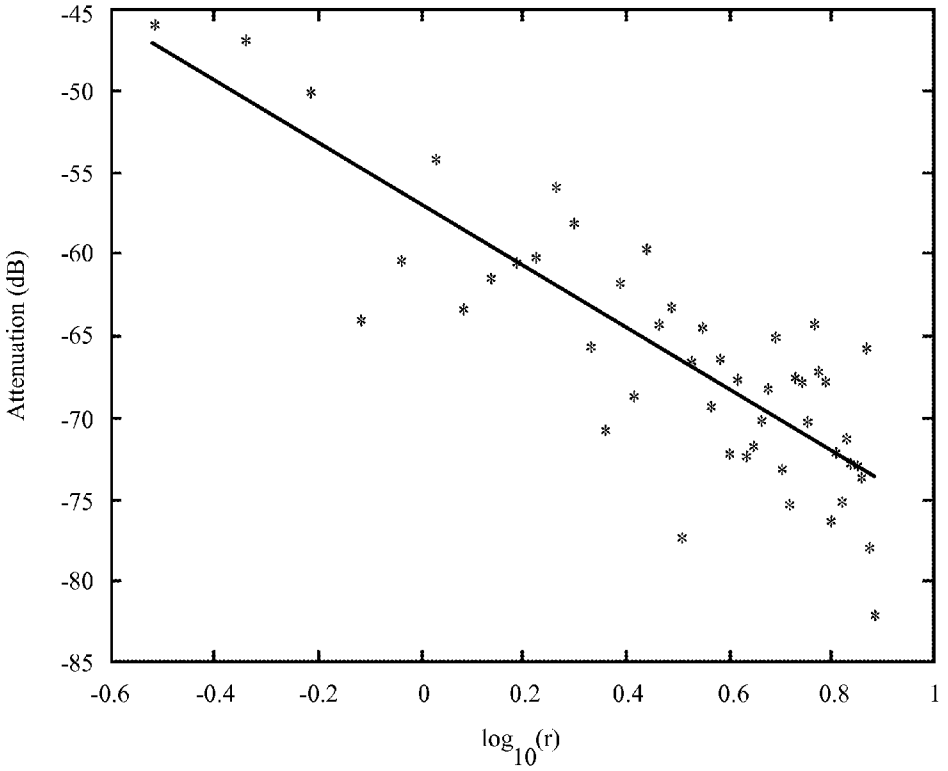
-45
-50
-55
-60
-65
-70
-75
-80
-85
Attenuation (dB)
-0.6
-0.4
-0.2
0
0.2
0.4
0.6
0.8
1
log10(r)

FIG. 6

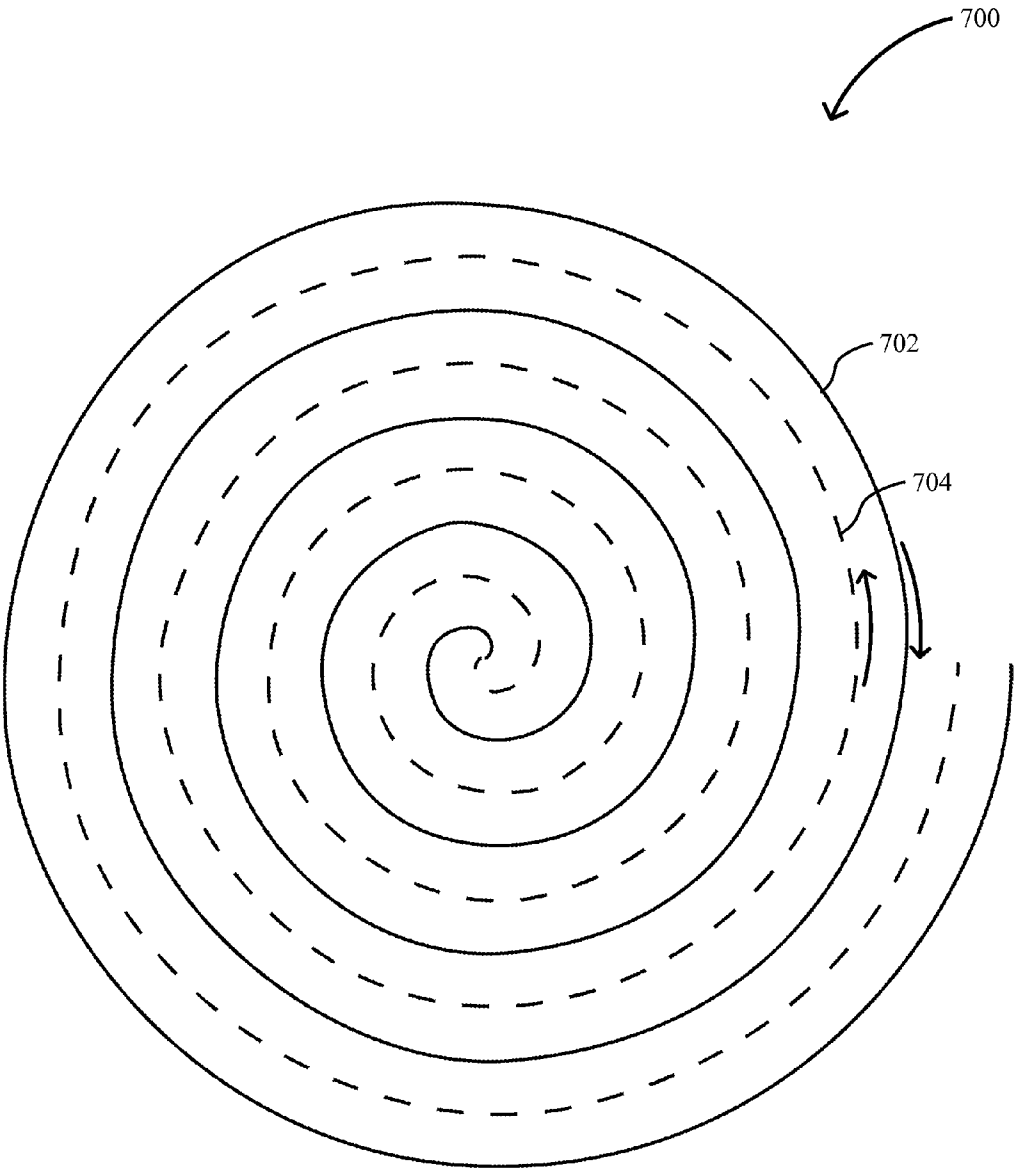

FIG. 7

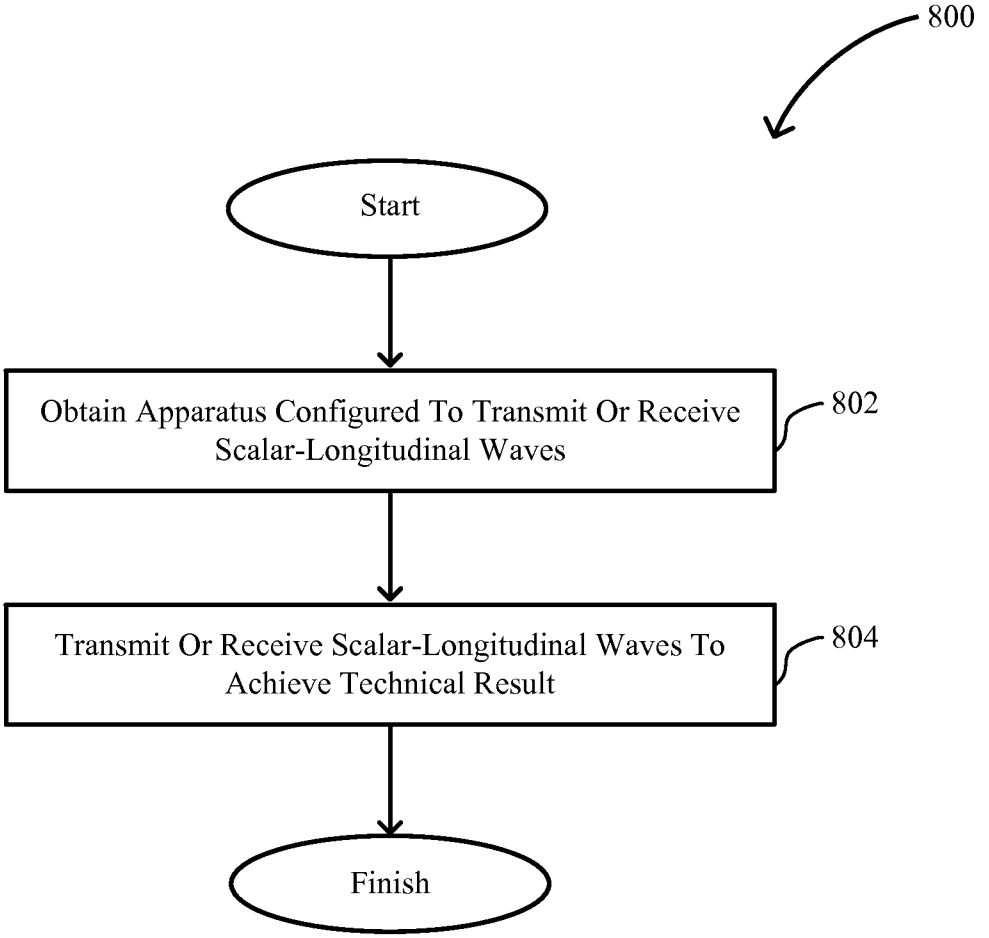
800
Start
Obtain Apparatus Configured To Transmit Or Receive Scalar-Longitudinal Waves
802
Transmit Or Receive Scalar-Longitudinal Waves To Achieve Technical Result
804
Finish

FIG. 8

SYSTEMS, APPARATUSES, AND METHODS FOR GENERATING AND/OR UTILIZING SCALAR-LONGITUDINAL WAVES

FIELD OF THE DISCLOSURE

[0001] This disclosure relates to systems, apparatuses, and methods for generating and/or utilizing scalar-longitudinal waves.

BACKGROUND

[0002] Classical electrodynamic theory may be regarded as central to physics. An electric field (E) arises from an electric charge density (ρ). Charge motion creates an electrical current density (J) that drives dynamical changes in E and the magnetic field, B. The classical electrodynamic model is based on a coupled set of partial-differential equations for the quantities (B, E, J, ρ).

[0003] Classical electromagnetics predicts no wave creation by radial motion of a charged sphere. More specifically, spherical symmetry of the radial electric field on a charged, oscillating sphere implies a curl-free electric field ($\nabla\times E=0$), which in turn yields no variation in magnetic field from Faraday's law ($\nabla\times E=-\partial B/\partial t=0$), corresponding to no magnetic wave. Thus, the Poynting vector, $E\times B/\mu$, is zero, resulting in no classical electromagnetic radiation. This statement applies more generally to no creation of electrical waves by radial motion of any extended charge distribution. An electrically equivalent antenna may include a classical linear monopole that is driven by a sinusoidal current to put charge onto and remove charge from the linear conductor (antenna).

SUMMARY

[0004] Exemplary implementations of the disclosure provide and/or facilitate transmission and/or reception of scalar-longitudinal waves (SLW), together with technology and/or applications using those waves. More specifically, this disclosure includes inter alia: (1) a more complete electrodynamics (MCE) model that may remove and/or lessen incompleteness and/or inconsistency in classical electrodynamics; (2) verification of a scalar-longitudinal wave (SLW) that arises from a gradient-driven current density; (3) SLW antenna apparatus designs; (4) experimental data demonstrating that the SLW exists and can be transmitted and received by SLW antenna apparatuses; (5) experimental data showing the SLW is not subject to the classical skin effect, as predicted by the MCE theory; (6) technology applications of the scalar-longitudinal waves; and (7) additional applications that arise from MCE.

[0005] One aspect of the disclosure relates to an apparatus configured to transmit or receive scalar-longitudinal waves. The apparatus may include a linear first conductor configured to operate as a linear monopole antenna at a first operating frequency. The apparatus may include a tubular second conductor coaxially aligned with the first conductor such that the first conductor extends out in a first direction from within the second conductor. The apparatus may include an annular skirt balun disposed at an end of the second conductor from which the first conductor extends. The balun may have a larger diameter than the second conductor. The balun may extend in a second direction opposite the first direction. The balun may be configured to cancel most or all return current on an outer surface of the second conductor during operation such that the first conductor transmits or receives scalar-longitudinal waves.

[0006] Another aspect of the disclosure relates to an apparatus configured to transmit or receive scalar-longitudinal waves. The apparatus may include a bifilar coil formed in an alternating fashion of a first conductor and a second conductor such that a given turn of the coil that is made of the first conductor is adjacent on either side to turns of the coil made of the second conductor. The first conductor and the second conductor may be conductively coupled such that an electrical current in the coil will propagate in opposite directions in adjacent turns of the coil thereby cancelling any magnetic field so that during operation the coil transmits or receives scalar-longitudinal waves.

[0007] These and other features, and characteristics of the present technology, as well as the methods of operation and functions of the related elements of structure and the combination of parts and economies of manufacture, will become more apparent upon consideration of the following description and the appended claims with reference to the accompanying drawings, all of which form a part of this specification, wherein like reference numerals designate corresponding parts in the various figures. It is to be expressly understood, however, that the drawings are for the purpose of illustration and description only and are not intended as a definition of the limits of the invention. Also, it is to be expressly understood that permissive language (e.g., "may") used in the specification to describe the present technology conveys a present understanding of the underlying science, but any inadequacies in that understanding should not be used to limit the claims. As used in the specification and in the claims, the singular form of "a", "an", and "the" include plural referents unless the context clearly dictates otherwise.

BRIEF DESCRIPTION OF THE DRAWINGS

[0008] FIG. **1** illustrates a system configured to transmit and/or receive scalar-longitudinal waves, in accordance with one or more implementations.

[0009] FIG. **2**A illustrates a cross-sectional view of a linear monopole antenna apparatus **200** configured to transmit and/or receive scalar-longitudinal waves, in accordance with one or more implementations.

[0010] FIG. **2**B illustrates a cross-sectional view of constant electric field magnitude contours for a monopole antenna with a skirt balun, in accordance with one or more implementations.

[0011] FIGS. **3**, **4**, **5**, and **6** show experimental results for scalar-longitudinal wave attenuation under various conditions.

[0012] FIG. **7** illustrates a bifilar coil apparatus configured to transmit and/or receive scalar-longitudinal waves, in accordance with one or more implementations.

[0013] FIG. **8** illustrates a method for utilizing scalar-longitudinal waves, in accordance with one or more implementations.

DETAILED DESCRIPTION

[0014] This disclosure may demonstrate measurement of scalar-longitudinal wave (SLW). The SLW may have $C=\nabla\cdot A+\in\mu\partial\Phi/\partial t$ as a non-zero, dynamical, scalar field, together with a longitudinal E-field. A and Φ may represent the vector and scalar electrical potentials, respectively. Here,

$\in$ and μ may represent the electrical permittivity and permeability (not necessarily vacuum values), respectively. The SLW may have no magnetic component. Exemplary implementations may provide and/or facilitate transmission and/or reception of the SLW via linear monopole antennas and/or tightly-wound, bifilar, helical coils. Exemplary implementations may facilitate a 1S to 2S atomic transition (mS to nS transition in general). The measurements show that the SLW can be transmitted through a thick Faraday cage or box (thousands of classical skin depths thick) to a companion SLW receiver, either enclosed in a separate Faraday box or without a Faraday box. This result may not be explainable by radiation of classical transverse waves because such waves are eliminated via Faraday cage(s) around the transmitting and/or receiving antennas.

[0015] The need for an additional (arbitrary) assumption to solve Maxwell's equations was recognized in the late 1800s. A word equivalent to "arbitrary" was chosen, analogous to the width variation (gauge) of railroad tracks at that time. The gauge function (A) comes from the vector-field solution for the magnetic field, $B=\nabla\times A$. Here, A may describe the vector potential with infinitely many choices, $A\rightarrow A+\nabla\Lambda$, while B is unchanged. The electric field may be represented by $E=-\nabla\Phi-\partial A/\partial t$. Here, Φ may represent the electric potential with an arbitrariness for the same reason, $\Phi\rightarrow\Phi-\partial\Lambda/\partial t$, while E is unchanged. An example may include $\nabla\cdot A+\alpha\in\mu\,\partial\Phi/\partial t=0$. The permittivity and permeability may be represented by $\in$ and μ (not necessarily vacuum), respectively. The Lorenz gauge ($\alpha=1$) may imply that the effect of a charge source propagates at the speed of light, c. The Coulomb gauge ($\alpha=0$) may yield electrostatics with Φ propagation at infinite speed. The velocity gauge ($0<\alpha<1$) may imply Φ propagation at a speed, c/α. The need for a gauge condition may imply that classical electrodynamics is incomplete.

[0016] Insight into the incompleteness of classical electrodynamics may begin with the Helmholtz theorem, which states that a sufficiently smooth three-dimensional vector field (F) can be uniquely decomposed into two parts, $F=-\nabla\Phi+\nabla\times A$. A generalized theorem may exist for unique decomposition of a sufficiently smooth, Minkowski four-vector field (three spatial dimensions, plus time) into four-irrotational and four-solenoidal parts, together with the tangential and normal components on the bounding three-surface. With this background, a general electromagnetic Lagrangian density may be written as:

$$\mathcal{L}=-\frac{\varepsilon c^2}{4}F_{\mu\nu}F^{\mu\nu}+J_\mu A^\mu-\frac{\gamma\varepsilon c^2}{2}(\partial_\mu A^\mu)^2-\frac{\varepsilon c^2k^2}{2}(A_\mu A^\mu). \tag{1}$$

$F^{\mu\nu}$ may represent the Maxwell field tensor; $\in$ may represent the medium's permittivity (not necessarily vacuum); c may represent the speed of light with $c^2=1/\in\mu$ (not necessarily vacuum); the four-current may be represented by $J_\mu=(\rho c,J)$; $A_\mu=(\Phi/c, A)$ may represent the four-potential; the Compton wave number for a photon with mass, m, may be $k=2\pi mc/h$; and h may represent Planck's constant. For $\gamma=0$ and $m>0$, EQN. 1 may yield the Maxwell-Proca theory, for which recent tests set an upper bound of $m\leq10^{-54}$ kg, consistent with massless photons. For $\gamma=1$ and $m=0$, EQN. 1 may be written in terms of the potentials:

$$\mathcal{L}_{EM}=\frac{\varepsilon c^2}{2}\left[\frac{1}{c^2}\left(\nabla\Phi+\frac{\partial A}{\partial t}\right)^2-(\nabla\times A)^2\right]-\rho\Phi+J\cdot A-\frac{\varepsilon c^2}{2}\left(\frac{1}{c^2}\frac{\partial\Phi}{\partial t}+\nabla\cdot A\right)^2. \tag{2}$$

[0017] EQN. 2 may allow two potentially physical classes of four-vector fields. One class may have zero divergence, $C=\partial_\mu A_\mu=0$, consistent with classical electrodynamics. The second class may have zero curl of A^μ:$F^{\mu\nu}=\partial^\mu A^\nu-\partial^\nu A^\mu=\partial^\mu\partial^\nu\Lambda-\partial^\nu\partial^\mu\Lambda=0$ with a solution, $A^\mu=\partial^\mu\Lambda$, and a dynamical quantity, $C=\partial_\mu A^\mu=\partial_\mu\partial^\mu\Lambda$. Here, Λ may represent a scalar function of space and time. A more complete electrodynamic model (MCE) may be derived from EQN. 2 with $C\neq0$:

$$E=-\nabla\Phi-\frac{\partial A}{\partial t}; \tag{3}$$

$$B=\nabla\times A; \tag{4}$$

$$C=\nabla\cdot A+\frac{1}{c^2}\frac{\partial\Phi}{\partial t}; \tag{5}$$

$$\nabla\times B-\frac{1}{c^2}\frac{\partial E}{\partial t}-\nabla C=\mu J; \tag{6}$$

$$\nabla\cdot E=\frac{\partial C}{\partial t}=\frac{\rho}{\varepsilon}. \tag{7}$$

[0018] The homogeneous equations ($\nabla\cdot B=0$; $\nabla\times E+\partial B/\partial t=0$) may be unchanged from the classical model. EQNS. 3-7 may have the caveat that EQN. 2 is based on the least-action principle, requiring a finite, lower bound on the Lagrangian density. However, EQN. 2 has $(-C^2/2\mu)$, which may imply that an arbitrarily fast change in Φ over time (or an arbitrarily rapid change in A over space) can make the action arbitrarily large and negative, in violation of the least-action principle. This issue may be resolved by noting that EQNS. 1-7 are based on partial derivatives, i.e., infinitesimal limits over time and space. However, the Planck scale may provide finite limits, where quantum effects of gravity become strong, corresponding to time and length scales of 5.4×10^{-44} s and 1.6×10^{-35} m, respectively. The Planck scales may be experimentally inaccessible and may be indistinguishable from infinitesimal, thus providing a finite lower bound for EQN. 2. Moreover, EQN. 2 without the new term still has $-(\nabla\times A)^2/2\mu=-B^2/2\mu$, to which a finite lower bound may apply for least action. Classical electrodynamics has been well validated against experiments, so the presence of the new term, $(-C^2/2\mu$, may not require any modification in the model of EQNS. 1-7.

[0019] EQNS. 3-7 may lead to important predictions: (1) relativistic covariance; (2) classical fields (B and E) in terms of the usual classical potentials (A and Φ); (3) classical wave equations for A, B, E, and Φ without use of a gauge condition; and (4) a scalar-longitudinal wave (SLW), composed of the scalar and longitudinal-electric fields. Regarding item (3), the MCE theory may produce cancellation of $\partial C/\partial t$ and $-\nabla C$ in the classical wave equations for Φ and A, thus eliminating the need for a gauge condition (and its attendant incompleteness) in the classical electrodynamics. A necessary and sufficient condition for the SLW may be that $B=0$. The wave equation for a null magnetic field may be

shown as $^2B=\mu\nabla\times J=0$, which may imply that $J=\nabla\kappa$ as a result of the vector calculus identity, $\nabla\times\nabla\kappa=0$. Here, κ may be a scalar function of space and time. J for the SLW may be gradient driven and thus may be uniquely detectable, in contrast to classical waves that arise from a solenoidal current density ($\nabla\times J\neq 0$). Moreover, the gradient-driven current density may correspond to a longitudinal E-field in linearly conductive media, since $E=J/\sigma=\nabla\kappa/\sigma$.

[0020] A wave equation for C may arise by use of $\in\mu(\partial/\partial t)$ on EQN. 7, added to the divergence of EQN. 6:

$$\frac{\partial^2 C}{\partial c^2 t^2} - \nabla^2 C \equiv \Box^2 C = \mu\left(\frac{\partial \rho}{\partial t} + \nabla\cdot J\right). \tag{8}$$

The D'Alembertian may be represented by ^{2}; $\in\mu$ may be $1/c^2$ in the propagation medium (not necessarily vacuum). Use of C from EQN. 5 in EQN. 8 may yield an identity via the classical wave equations for Φ and A, and the vector calculus identity for $\nabla\times\nabla\times A=\nabla(\nabla\cdot A)-\nabla^2 A=0$ to give $\nabla^2\nabla\cdot A=\nabla\cdot\nabla^2 A$ since B=0 for the SLW. Charge conservation may give zero on the right-hand side (RHS) of EQN. 8:

$$\Box^2 C=0. \tag{9}$$

[0021] EQN. 9 may provide wave-like solutions, with the lowest-order form in a spherically symmetric geometry at a distance (r), $C=C_o \exp[j(kr-\omega t)]/r$. The boundary condition, $C(r\rightarrow\infty)\rightarrow 0$, may be trivially satisfied. The scalar field's energy density may be $(C^2/2\mu)$, yielding a constant energy, $4\pi r^2(C^2/2\mu)$, through a spherical boundary in arbitrary media. Classical electrodynamics may forbid a spherically symmetric, transverse wave. This constraint may be absent under the MCE theory, because the SLW may correspond to a gradient-driven current. The divergence theorem on EQN. 8 may yield interface matching in the normal component ('n') of $\nabla C/\mu$:

$$\left(\frac{\nabla C}{\mu}\right)_{1n} = \left(\frac{\nabla C}{\mu}\right)_{2n}. \tag{10}$$

The subscripts in EQN. 10 may denote ∇C in medium 1 or medium 2, respectively.

[0022] The wave equation for E may come from the curl of Faraday's law, use of $\nabla\times B$ from EQN. 6, and substitution for $\nabla\cdot E$ from EQN. 7 with cancellation of the terms $\nabla(\partial C/\partial t)-(\partial/\partial t)\nabla C$:

$$\frac{\partial^2 E}{\partial c^2 t^2} - \nabla^2 E = \Box^2 C = \mu\frac{\partial J}{\partial t} - \frac{\nabla\rho}{\varepsilon}. \tag{11}$$

EQN. 11 may represent the classical E-wave form. A time derivative of EQN. 11, and the use of classical charge conservation ($\partial\rho/\partial t=-\nabla\cdot J$) may yield $^2\dot{E}=-\mu\ddot{J}+\nabla(\nabla\cdot J)/\in$. Here, the over-dot(s) may indicate partial time derivative(s). B=0 for the SLW may imply $^2B=\mu\nabla\times J=0$, allowing use of the vector calculus identity, $\nabla\times\nabla\times J=0=\nabla(\nabla\cdot J)-\nabla^2 J$, giving $\nabla(\nabla\cdot J)=\nabla^2 J$, which may imply $^2(\dot{E}+J/\in)=0$. Linear electrical conductivity (σ), $J=\sigma E$, then may give $^2(\dot{E}+\sigma E/\in)=0$. A very rapidly decaying, transient solution may arise by setting the terms inside the parentheses to zero, giving $E=E_o\exp(-\in t/\sigma)$. Here, E_o may be the initial value of E.

[0023] A second solution may use the non-transient form, $E=E_o(r)\exp(-j\omega t)$, which yields:

$$\Box^2 E=0. \tag{12}$$

The lowest order, outgoing, spherical wave may be, $E=E_o\hat{r}\exp[j(kr-\omega t)]/r$, where $\hat{r}$ represents the unit vector in the radial direction and r represents the radial distance. As before, the electric wave's energy, $4\pi r^2(\in E^2/2)$, may be constant through a spherical boundary of arbitrary radius and $E(r\rightarrow\infty)=0$. Substitution of $J=E/\sigma$ into EQN. 12 may yield an equivalent form: $^2J=0$. The SLW equations for E and, J may be remarkable for several reasons. First, the vector SLW equations for E and J may be fully captured in one wave-equation for the scalar function (κ): $^2\kappa=0$. This form may be obtained from $^2J=0$ by substitution of $J=\nabla\kappa$ into the above identity, $\nabla^2 J=\nabla^2\nabla\kappa=\nabla(\nabla\cdot J)=\nabla(\nabla^2\kappa)$. Second, these forms may be like $^2C=0$ in EQN. 9. Third, these equations may have zero on the RHS for propagation in conductive media. This last result may arise from B=0 for the SLW, implying no back-electromagnetic field from $\dot{B}$ in Faraday's law that in turn may give no (circulating) eddy currents. Consequently, the SLW may not be subject to the skin effect in media with linear electrical conductivity.

[0024] C, E, and J may interact via EQN. 6, which can be rewritten using $J=\sigma E$, and identifying the electrical conductivity with the imaginary part of the complex permittivity $\in \underline{\mu}\,\sigma/\in_o\omega$:

$$\frac{C}{E_r} = \frac{\varepsilon'}{c}\left(\frac{1+j\alpha}{1+j/kr}\right) \tag{13}$$

Spherical waves may be assumed: $E=E_r\hat{r}\exp[j(kr-\omega t)]/r$ and $C=C_0\exp[j(kr-\omega t)]/r$, $\in_o$ may represent the free space permittivity; f may represent the frequency; λ, c, and $\in'$, may represent wavelength, speed of light, and real part of the dielectric constant in the propagation medium, respectively; $k=2\pi/\lambda$ and $\omega=2\pi f$. EQN. 13 may predict that $|C/E_r|\sim\in'/c$ in a low-conductivity medium ($a\equiv\in/'\in'<<1$), with a phase shift of a between C and E_r in the far field. This ratio may be $|C/E_r|\sim\in/'\in'c$ in a good conductor ($\in/'\in'>>1$) with a phase shift $\sim\pi/2$ in the far field. EQN. 13 may be consistent with the ratio for transverse magnetic and electric fields, $|B|/|E|\sim 1/c$. C may have the same units as the magnetic field. The energy balance equation for the MCE theory may be shown as:

$$\frac{\partial}{\partial t}\left(\frac{B^2}{2\mu} + \frac{C^2}{2\mu} + \frac{\varepsilon E^2}{2}\right) + \nabla\cdot\left(\frac{E\times B}{\mu} + \frac{CE}{\mu}\right) + J\cdot E - \frac{\rho C}{\varepsilon\mu} = 0. \tag{14}$$

[0025] Use of the spherical wave forms for E and C in EQN. 14 with B=0 and the ratio of (C/E_r) from EQN. 13 may yield an identity, 0=0; the same result may arise for plane waves, thus explicitly verifying the no-skin-effect prediction. Table 1 shows the unique and testable features of the MCE theory, which predicts transmission and reception of the SLW.

[0026] The radiated SLW power (P_{OUT}) may be obtained, e.g., as follows. The antenna may be short, linear monopole (length=L) along the z-axis with a gradient-driven current density (J) that is maximal at the feed point (z=0) and zero at the end (z=L). A and Φ may be obtained from the retarded

potentials. E and C may be derived from EQNS. 3 and 5. The radiated power may come from the time-average of the radial component of CE/μ in EQN. 14.

TABLE 1

Unique and Testable SLW Properties

Item number and specific SLW property	Equation(s)
1) C is a dynamical quantity (scalar field).	EQN. 3-7
2) C is driven by gradients in J and ∂E/∂t.	EQN. 6
3) SLW propagates in conductive media without the skin effect.	EQNS. 8-12
4) Interface matching involves continuity in $(\nabla C/\mu)_n$.	EQN. 10
5) A longitudinal E-field accompanies C, as an SLW.	EQNS. 11-17
6) C, E, and J exchange energy in conductive media.	EQNS. 11-17
7) $\lvert C\rvert/\lvert E\rvert \geq 1/c$ in conductive media, allowing normal instrumentation.	EQN. 13

[0027] Here, the impedance of the propagation medium may be $Z=(\mu/\in)^{1/2}$, which is 376.73Ω in free space. Terms on the order of $(kr)^{-1}$ and higher may be neglected. The resultant form for P_{OUT} may be shown as:

$$P_{OUT} = \frac{I^2}{4\pi}\sqrt{\frac{\mu}{\varepsilon}}\,. \tag{15}$$

[0028] EQN. 15 may be obtained from the classical, retarded potentials for a gradient-driven current. Then, a paradox arises, since C is a non-zero dynamical field, in contrast to the assumption under which the classical, retarded potentials were obtained via the Lorenz gauge (C=0). The paradox may be resolved by the MCE theory, which predicts explicitly that C is a dynamical field without a gauge assumption.

[0029] FIG. **1** illustrates a system **100** configured to transmit and/or receive scalar-longitudinal waves, in accordance with one or more implementations. Some implementations may include an Agilent Technologies E5071C network analyzer (300 kHz-20 GHz). The transmitting and receiving antennas may be identical, because the reciprocity theorem guarantees that the transmitter geometry can also act as a receiver. This simple layout is to facilitate experimental replication in any laboratory with the appropriate facilities and equipment.

[0030] FIG. **2**A illustrates a cross-sectional view of a linear monopole antenna apparatus **200** configured to transmit and/or receive scalar-longitudinal waves, in accordance with one or more implementations. The apparatus **200** may include a linear first conductor **202**, a tubular second conductor **204**, an annular skirt balun **206**, and/or other components. The first conductor **202** may extend from a core of a coaxial cable. The second conductor **204** may extend from an outer conductor of a coaxial cable. The first conductor **202** may be configured to operate as a linear monopole antenna at a first operating frequency. The second conductor **204** may be coaxially aligned with the first conductor **202** such that the first conductor **202** extends out in a first direction from within the second conductor **204**. The skirt balun **206** may be disposed at an end of the second conductor **204** from which the first conductor **202** extends. The balun **206** may have a larger diameter than the second conductor **204**. The balun **206** may extend in a second direction opposite the first direction. The balun **206** may be configured to cancel most or all return current on an outer surface of the second conductor during operation such that the first conductor transmits or receives scalar-longitudinal waves. Some implementations of apparatus **200** may include a tubular dielectric **208** coaxially disposed between the first conductor and the second conductor, the tubular dielectric extending out in the first direction from within the second conductor at least part way up the first conductor.

[0031] The configuration of apparatus **200** is for illustrative purposes and should not be viewed as limiting as other configurations are contemplated and are within the scope of the disclosure. In some implementations, the length of the balun **206** extending in the second direction may be approximately one fourth of a wavelength corresponding to the first operating frequency. During operation an electrical current wave on the balun **206** may be approximately 180 degrees out of phase relative to an electrical current wave on the outer surface of the second conductor **204** adjacent to the balun thereby cancelling most or all of the return current on the outer surface of the second conductor.

[0032] Attenuation of scalar-longitudinal waves transmitted by the first conductor **202** may be inversely proportional to the square of a distance from a center of the first conductor **202** in free space. Scalar-longitudinal waves transmitted by the first conductor propagate through a conductive medium with substantially lower attenuation relative to a classical skin-depth attenuation. The conductive medium may include a solid-copper Faraday box. Some implementations of apparatus **200** may include a solid-copper Faraday box (not shown) enclosing the first conductor **202**, the second conductor **204**, and the balun **206**. The Faraday box may be configured to block most or all transverse electromagnetic waves impinging the on Faraday box.

[0033] FIG. **2**B shows contours of constant |E| for an electrodynamic simulation of a linear monopole antenna apparatus (see, e.g., FIG. **2**A). A three-λ-diameter ground-plane disk at the feed-point may give essentially the same |E| contours in the transmitter-to-receiver direction, thus confirming the linear monopolar, counter-poise design of apparatus **200** in FIG. **2**A.

[0034] High frequency (8 GHz) experiments may allow the use of an indoor, controlled test environment. Electrodynamic simulations predict that the skirt balun **206** in FIG. **2**A attenuates the return current on the outside of the coaxial cable (**204**) by −67.5 db, to make the antenna radiate like a monopole. Grounding to a single point may eliminate current loops. Digital instrumentation may allow accurate measurement of field amplitudes and polarizations. The transmitter-to-receiver distance may be accurately measured to <1 mm. MCE theory may give radical predictions, requiring extraordinary evidence, as shown below.

[0035] According to exemplary implementations, an antenna may be a linear, coaxial center conductor with the outer coaxial conductor electrically connected to the top of the skirt balun (see, e.g., FIGS. **2**A and **2**B). The currents on the coax center conductor and on the outside of the skirt balun may be both in +Z (positive vertical) direction, forming a monopole radiation pattern. The skirt balun length (λ/4) may cause a phase shift in the current flow along the guided path from the bottom (inside surface) of the outer balun conductor (0°) to the top (inside surface) of the skirt balun (90°) and back down the outer surface of the coax outer conductor to the end of the balun (180°). This 180°-phase shift may cause cancellation of the return current flow

along the outside of the outer coax conductor. Return-current attenuation may allow the monopole antenna to draw charge from the ground plane (top of the skirt balun) and also may create a close match between the antenna-balun impedance (49.76−j0.24Ω) and the source (50Ω). The measured return loss was −22 db for a single skirt balun (see, e.g., FIGS. **2**A and **2**B) and −42 db for a double balun (not shown). An exemplary monopole antenna may create an oscillating, gradient-driven current to create the SLW. Second, the skirt balun may dramatically reduce the return current to the source, so that essentially all of the electrical current goes into charging and discharging the antenna. The far-field contours of constant |E| may be mostly spherical on the receiver side (top of the diagram). The RG-405/U coaxial cabling may use a solid, outer conductor to minimize stray fields. The presence or absence of an outer insulating jacket may make no difference in the results of the electrodynamic simulation.

[0036] The transmitting antenna may remain in a fixed location, while the receiving antenna may be moved to a transmitter-to-receiver distance (r) in the horizontal plane. The source frequency may be 8 GHz, corresponding to a free-space wavelength, λ=3.75 cm. This choice may allow free space measurements for r over many wavelengths in a well-controlled, laboratory test. The measurements may include: the value of r; and the signal attenuation (dB) between the transmitter and receiver. Repetitions of the test provide an estimate of the statistical error. The measurement results are saved to a database.

[0037] FIGS. **3**, **4**, **5**, and **6** show experimental results for scalar-longitudinal wave attenuation under various conditions. FIG. **3** shows the attenuation versus separation distance (r) for two, facing, collinear SLW antennas inside an anechoic, Faraday chamber. Both antennas were enclosed by a cylindrical copper pipe with both ends of the copper pipe soldered to hemispherical, copper end caps. The outer conductor of the antenna's coaxial cable was soldered to a hole in one end cap. The attenuation-versus-distance plots show the SLW propagating through both Faraday cages at 8 GHz. The thickness of the two spherical caps corresponds to 2885 skin depths, which should produce a classical attenuation of −25,064 db (down by a factor of 10^{-1253}). The test measurement yielded an attenuation between −115 db at r=2 cm separation to −137 db at r=30 cm. Extrapolating the straight-line fit to a separation of 2 mm (where the Faraday-caged antennas are barely separated) gives −79 db and −86 db (down by a factor of 10^{-4}). The difference between the measured values and the classical estimate is −24,985 db, corresponding to >1249 orders of magnitude between attenuation for classical waves and the measured attenuation for the SLW.

[0038] FIG. **4** shows the attenuation versus separation distance (r) for two, facing, collinear SLW antennas. The SLW on port-**1** was surrounded by a cylindrical copper pipe with hemispherical end caps as a Faraday cage; the SLW antenna on port-**2** had no Faraday cage. Again, the attenuation-versus-distance plots show clear evidence for the SLW propagating through the transmitter's Faraday cage to/from the port-**2** SLW antenna at 8 GHz.

[0039] The same attenuation-versus-distance test was performed outside the Faraday-shielded anechoic chamber, on the ground floor of an office building. One SLW antenna had had no Faraday cage; the other SLW had a Faraday cage, as described above. FIG. **5** shows representative results, which varied widely from replicate to replicate, due to irreproducible factors (e.g., image charges and image currents in surrounding conductors, consistent with classical electrodynamics). A key result is propagation of the SLW through the **1442** skin depth of the Faraday box, which attenuates classical transverse waves to an undetectable level.

[0040] FIG. **6** shows the attenuation versus separation distance (r) for two, vertical SLW antennas at 8 GHz. The SLW antennas were bare (no Faraday cage around either the transmitter or receiver), and both were oriented vertically for comparison with the attenuation measurements for double- and single-Faraday-boxed antennas. This test was performed outside the Faraday-shielded anechoic chamber, on the ground floor of an office building, and consequently displays much variability due to scattering and reflections from nearby conductors. The results in FIGS. **3**-**5** provide clear evidence for a non-classical wave that is not constrained by the classical skin effect.

[0041] FIG. **7** illustrates a bifilar coil apparatus **700** configured to transmit and/or receive scalar-longitudinal waves, in accordance with one or more implementations. The apparatus **700** may include a bifilar coil formed in an alternating fashion of a first conductor **702** and a second conductor **704** such that a given turn of the coil that is made of the first conductor **702** is adjacent on either side to turns of the coil made of the second conductor **704**. The first conductor **702** and the second conductor **704** may be conductively coupled such that an electrical current in the coil will propagate in opposite directions in adjacent turns of the coil thereby cancelling any magnetic field so that during operation the coil transmits or receives scalar-longitudinal waves. The coil may be configured to create a gradient driven current. There may be zero or approximately zero inductance associated with the coil as a result of magnetic-field cancellation by counter-going electrical currents in adjacent turns of the coil. There may be zero or approximately zero capacitance associated with the coil as a result of adjacent turns of the coil having the same or approximately the same electrical charge density. An electrical resistance of the coil approximately matches a source impedance for maximal transmission of scalar-longitudinal waves.

[0042] The configuration of apparatus **700** is for illustrative purposes and should not be viewed as limiting as other configurations are contemplated and are within the scope of the disclosure. In some implementations, the first conductor **702** and the second conductor **704** may be conductively coupled proximate to the center of the coil. In some implementations, the first conductor **702** and the second conductor **704** may be conductivity coupled proximate to an outer edge of the coil. Although shown in FIG. **7** as being spaced apart, in exemplary implementations the first conductor **702** and the second conductor **704** may be tightly wound together to form the coil. In some implementations, the coil may be substantially planar. In some implementations, the coil is formed in a volumetric shape (e.g., a sphere or toroid). The first conductor **702** and the second conductor **704** may include conducting wires, conducting ribbons, and/or other shapes of conducting materials.

[0043] Attenuation of scalar-longitudinal waves transmitted by the coil shown in FIG. **7** may be inversely proportional to the square of a distance from the center of the coil in free space. Scalar-longitudinal waves transmitted by the coil may propagate through a conductive medium with

substantially lower attenuation relative to a classical skin-depth attenuation. The conductive medium may include a solid-copper Faraday box. In some implementations, apparatus **700** may include a solid copper Faraday box (not shown) enclosing the coil. The Faraday box may be configured to block most or all transverse electromagnetic waves impinging on the Faraday box.

[0044] According to some implementations, the coil shown in FIG. **7** may represent (in cross sectional view) of a three-dimensional accumulator of charge, when each conductor is a flat, conductive sheet. The conductive sheet can be wound into a bifilar, helical pancake configuration, like a modern, cylindrical, super-capacitor. However, unlike a super-capacitor, the apparatus **700** of FIG. **7** may allow continuous current flow though the coil windings over a broad range of frequencies. As one normally skilled in the art will appreciate, other geometries are also possible for three-dimensional (volumetric), wire-wound, charge accumulation, such as a sphere and toroid. The apparatus **700** of FIG. **7** may be scaled to higher (or lower) frequencies by limiting the total length of the conductor to $L \ll \lambda$, or more specifically $L \leq \lambda/100$. Table 2 shows examples of the conductor lengths (L) versus frequency for free-space propagation.

[0045] Note that macro-scale antennas ($L \geq 3$ cm) may occur for frequencies less than or equal to 100 MHz, meaning that a person normally skilled in the art may build such an antenna with the unaided eye. Micro-scale antennas ($3\ \mu m \leq L \leq cm$) may occur for frequencies in the range of 100 MHz to 1 THz, meaning that a person normally skilled in the art may need a microscope to build such an antenna. Nano-scale antennas ($L \leq \mu m$) occur for frequencies of >1 THz, meaning that a person normally skilled in the art may need an electron-microscope (or equivalent) to build such an antenna. High frequencies (>1 THz) may correspond, for example, to atomic transitions from a 1S to a 2S orbital, which are forbidden by classical quantum mechanics on the basis of classical electrodynamics, as discussed above. As one normally skilled in the art can appreciate, analogous molecular, nuclear, and sub-atomic transitions, also exist. Note further that essentially all transverse-wave transmission or reception may be eliminated by enclosing a SLW antenna (e.g., apparatus **200** or apparatus **700**) inside a Faraday cage or box (e.g., a copper or aluminum casing not unlike that for a modern super-capacitor).

TABLE 2

Wavelength and L versus frequency

Frequency (f in Hz)	Wavelength ($\lambda = 3 \times 10^8$/f in meters)	$L \leq 0.01\lambda$ (in meters)
1	3×10^8 (300,000 km)	3,000 km
10^2	3×10^6 (3,000 km)	30 km
10^4	3×10^4 (30 km)	300 m
10^6	3×10^2 (300 m)	3 m
10^8	3×1 (3 m)	3 cm
10^{10}	3×10^{-2} (3 cm)	0.3 mm
10^{12}	3×10^{-4} (0.3 mm)	3 μm
10^{14}	3×10^{-6} (3 μm)	30 nm

[0046] More complete electrodynamics (MCE) may be important for several reasons. First, the MCE theory may involve a radical revision of Maxwell's equations with one new term $\partial c/\partial t$) in Gauss' law and one new term ($-\nabla C$) in Ampere's law. These new terms may arise from ($-C^2/2\mu$) in the Stueckelberg Lagrangian. Second, the MCE theory may give relativistic covariance; preservation of the fields (B and E) in terms of the classical potentials (A and Φ); and the classical wave equations for A and Φ without a gauge condition. Third, the MCE theory may predict new force terms in the MCE momentum balance equation that might explain "dark matter" as a placeholder for unexplained cosmological attractive forces. Fourth, new terms in the MCE energy balance (EQN. 15) may explain "dark energy" as a placeholder for unexplained repulsive cosmological forces. Fifth, the MCE theory (along with classical theory) may predict that a gradient-driven current produces a scalar-longitudinal photon, consisting of both scalar (C) and longitudinal E-field components. This last prediction may make the SLW wave uniquely detectable via a gradient-driven current density in the novel antenna, distinct from classical transverse photons that require a circulating current ($\nabla \times J \neq 0$). The existence of dark matter and dark energy may signify that our physics understanding is incomplete, likely requiring a new idea as profound as general relativity. Scalar-longitudinal waves/photons may be that new idea, as validated by our experimental results.

[0047] In some implementations, system **100** (see FIG. **1**) may be configured for providing a computational simulator based on scalar-longitudinal waves. The system **100** may include one or more hardware processors (not depicted) configured by machine-readable instructions. The machine-readable instructions may include a simulation component, a classical transverse electromagnetic wave component, a scalar-longitudinal wave component, an evaluation component, an optimization component, and/or other components. The simulation component may be configured to provide a computerized physical simulation environment in which electromagnetic simulations of an antenna or device are performed. In some implementations, the computerized physical simulation environment may include a reflector added to the antenna or device to form a directed beam for transmission and/or reception of scalar-longitudinal waves. The classical transverse electromagnetic wave component may be configured to provide simulated classical transverse electromagnetic waves that are received or transmitted in the electromagnetic simulation of the antenna or device. The scalar-longitudinal wave component may be configured to provide simulated scalar-longitudinal waves that are received or transmitted in the electromagnetic simulations of the antenna or device. The evaluation component may be configured to evaluate characteristics of the antenna or device based on information associated with simulated classical transverse electromagnetic waves and/or simulated scalar-longitudinal waves. The optimization component may be configured to optimize one or more characteristics of the antenna or device based on the evaluation of the characteristics.

[0048] A given processor may be configured to provide information processing capabilities in system **100**. As such, the given processor may include one or more of a digital processor, an analog processor, a digital circuit designed to process information, an analog circuit designed to process information, a state machine, and/or other mechanisms for electronically processing information. In some implementations, system **100** may include a plurality of processing units. These processing units may be physically located within the same device, or the given processor may represent processing functionality of a plurality of devices operating

in coordination. The given processor may be configured to execute machine-readable instructions include the simulation component, the classical transverse electromagnetic wave component, the scalar-longitudinal wave component, the evaluation component, the optimization component, and/or other components of machine-readable instructions. The given processor may execute machine-readable instructions by software; hardware; firmware; some combination of software, hardware, and/or firmware; and/or other mechanisms for configuring processing capabilities on the given processor.

[0049] It should be appreciated that the description of the functionality provided by the different machine-readable instruction components described herein is for illustrative purposes, and is not intended to be limiting, as any of the machine-readable instruction components may provide more or less functionality than is described. For example, one or more of the machine-readable instruction components may be eliminated, and some or all of its functionality may be provided by other ones of the machine-readable instruction components. As another example, the given processor may be configured to execute one or more additional machine-readable instruction components that may perform some or all of the functionality attributed herein to one of the machine-readable instruction components.

[0050] The system **100** may include electronic storage (not depicted). The electronic storage may store machine-readable instructions and/or other information. Electronic storage may comprise non-transitory storage media that electronically stores information. The electronic storage media of electronic storage may include one or both of system storage that is provided integrally (i.e., substantially non-removable) with a physical computing platform and/or removable storage that is removably connectable to a physical computing platform via, for example, a port (e.g., a USB port, a firewire port, etc.) or a drive (e.g., a disk drive, etc.). Electronic storage may include one or more of optically readable storage media (e.g., optical disks, etc.), magnetically readable storage media (e.g., magnetic tape, magnetic hard drive, floppy drive, etc.), electrical charge-based storage media (e.g., EEPROM, RAM, etc.), solid-state storage media (e.g., flash drive, etc.), and/or other electronically readable storage media. Electronic storage may include one or more virtual storage resources (e.g., cloud storage, a virtual private network, and/or other virtual storage resources). Electronic storage may store software algorithms, information determined by processors, and/or other information that enables system **100** to function as described herein.

[0051] FIG. **8** illustrates a method **800** for utilizing scalar-longitudinal waves, in accordance with one or more implementations. The operations of method **800** presented below are intended to be illustrative. In some implementations, method **800** may be accomplished with one or more additional operations not described, and/or without one or more of the operations discussed. Additionally, the order in which the operations of method **800** are illustrated in FIG. **8** and described below is not intended to be limiting.

[0052] In some implementations, one or more operations of method **800** may be implemented in one or more processing devices (e.g., a digital processor, an analog processor, a digital circuit designed to process information, an analog circuit designed to process information, a state machine, and/or other mechanisms for electronically processing information). The one or more processing devices may include one or more devices executing some or all of the operations of method **800** in response to instructions stored electronically on an electronic storage medium. The one or more processing devices may include one or more devices configured through hardware, firmware, and/or software to be specifically designed for execution of one or more of the operations of method **800**.

[0053] At an operation **802**, a first apparatus or a second apparatus configured to transmit and/or receive scalar-longitudinal waves may be obtained. The first apparatus (see, e.g., apparatus **200** of FIG. **2**A) may include a linear first conductor, a tubular second conductor, and an annular skirt balun. The first conductor may configured to operate as a linear monopole antenna at a first operating frequency. The second conductor may be coaxially aligned with the first conductor such that the first conductor extends out in a first direction from within the second conductor. The balun may disposed at an end of the second conductor from which the first conductor extends. The balun may have a larger diameter than the second conductor. The balun may extend in a second direction opposite the first direction. The balun may be configured to cancel most or all return current on an outer surface of the second conductor during operation such that the first conductor transmits or receives scalar-longitudinal waves. The second apparatus (see, e.g., apparatus **700** of FIG. **7**) may include a bifilar coil formed in an alternating fashion of a first conductor and a second conductor such that a given turn of the coil that is made of the first conductor is adjacent on either side to turns of the coil made of the second conductor. The first conductor and the second conductor may be conductively coupled such that an electrical current in the coil will propagate in opposite directions in adjacent turns of the coil thereby cancelling any magnetic field so that during operation the coil transmits or receives scalar-longitudinal waves.

[0054] At an operation **804**, scalar-longitudinal waves may be transmitted and/or received using the first apparatus or the second apparatus in order to achieve a technical result. Exemplary technical results are described herein but should not be viewed as limiting as other technical results involving scalar-longitudinal waves are contemplated and are within the scope of the disclosure.

[0055] In some implementations, the technical result of method **800** may include communicating and/or sensing information underwater.

[0056] In some implementations, the technical result of method **800** may include communicating and/or sensing information underground.

[0057] In some implementations, the technical result of method **800** may include enhancing (or de-enhancing) a decay rate of a radioactive material. (De)enhancement of radio-active decay rates may be achieved because the Stueckelberg Lagrangian density in EQN. 2 corresponds to new terms (involving C) in the electrodynamic Hamiltonian:

$$\mathcal{H}_{EM} = \left(\frac{\varepsilon E^2}{2} + \frac{B^2}{2\mu}\right) + (\rho - \varepsilon\nabla \cdot E)\Phi - J \cdot A + \frac{C^2}{2\mu} + \frac{C\nabla \cdot A}{\mu}. \quad (16)$$

[0058] This MCE Hamiltonian may modify the charged-particle interactions via the SLW (e.g., orbital electrons and nuclear protons in electron-capture decay, and bound elec-

trons and protons in beta decay of neutrons). These new terms may modulate the nuclear barrier potential, causing decay-rate variations in proportion to the SLW power. Indeed, time-variable radioactive-decay rates have been reported (typically ±0.3%) in ^{3}H, ^{22}Na, ^{36}Cl, ^{44}Ti, ^{54}Mn, ^{60}Co, ^{85}Kr, ^{90}Sr, ^{108m}Ag, ^{133}Ba, ^{137}Cs, ^{152}Eu, ^{154}Eu, ^{222}Rn, ^{236}Ra, and ^{239}Pu. Typical periods in the decay rate may include: one day, 12.08/year (solar rotation rate), one year, and ~12 years (sun-spot cycle). Classical low-energy nuclear theory is a collection of ad hoc models whose predictions cannot explain these observations. The sun is a sphere of charged particles (plasma) that is well-known to oscillate radially (breathing mode) and in multi-pole modes. The oscillation amplitude of ions is much different from electrons, giving rise to a net radial current density that creates the SLW, which in turn may modulate the radioactive decay rate according to the new terms in EQN. 16. One specific application is use of SLW power to enhance decay of radioactive fission-waste products from a nuclear reactor, and isotopes of proliferation concern.

[0059] In some implementations, the technical result of method **800** may include enhancing a fusion rate reaction to produce heat and/or electrical power. Classical methods and apparatus for controlled fusion typically involve maintaining a high enough fuel density (e.g., deuterium and tritium) at a sufficient temperature (e.g., 100 million degrees K) for a long enough time (e.g., many seconds). EQN. 16 predicts modulation of the nuclear barrier potential, allowing fusion reactions at room temperature. Nuclear reactions could be enhanced directly (e.g., $^{2}D_1+^{2}D_1+SLW\rightarrow{}_{2}He^{4}+energy$) via cold fusion of D_2O without intermediate steps (and correspondingly complex infrastructure).

[0060] Existing electromagnetic/multi-physics simulators use the classical version of Maxwell's equations. A specific application of the MCE theory (EQNS. 1-17) may be a more complete simulator for detailed design of antennas and other electrical/electronic devices that use SLW technology.

[0061] A specific application of exemplary implementations may include a focusing SLW antenna. The above tests showed scattering and reflections of the SLW. This observation is consistent with classical electrodynamics, which predicts scattering of electric fields from conductors due to image-charges and image-currents. This observation implies that MCE modifications of electrodynamic simulators may be used for development of SLW antenna(s) for focused transmission (and reception). Such antennas may reduce power, weight, and cost in practical applications.

[0062] In some implementations, the technical result of method **800** may include detecting scalar-longitudinal waves emitted from a chemical-bond-breaking process. The chemical-bond-breaking may be caused by seismic activity associated with an earthquake, a failure of a manmade structure, and/or other processes. Earthquake prediction has been sought for decades, and typically may depend on quantitative measurement of underground motion and/or slip-stick stress at tectonic plate boundaries. The seismic activity causes grinding of rock to powder, which may generate high voltages by molecular bond breaking. The voltage corresponds to an electric field, which drives a current gradient, as the SLW driver. These signals occur well in advance of the slip events, and may allow prediction of the time and location of events with suitable SLW detection/imaging. "Earthquake clouds" and electromagnetic precursors of seismic events have been reported. Geophysicists recently discovered low-frequency toroidal oscillations with a period of 2 to 5 minutes; these low-frequency waves may cause excited animal behavior prior to an earthquake. The peeling of tape is another example of bond breaking. The specific applications may include passive detection/prediction of structural failures of all kinds, such as bridges, buildings, critical equipment, and seismic activity.

[0063] In some implementations, the technical result of method **800** may include passive imaging of a living organism based on gradient-driven currents across cellular membranes. In some implementations, the technical result of method **800** may include transmission of scalar-longitudinal waves into a living organism to enhance health and/or treat a disease via gradient-driven currents across cellular membranes. Generally speaking, living processes are driven by charged ion transport across the cell membranes. The ion transport is driven, in turn by concentration gradients in the intra- and extra-cellular media. This gradient-driven transport of charged ions creates a gradient-driven electrical current, which is the basis for SLW creation. Consequently, all living organisms create SLWs, which can be imaged by a phased-array of receivers. This new imaging modality may allow passive imaging of living organisms (including people) for research and disease diagnosis and treatment. As one who is normally skilled in the art can appreciate, standard techniques may be used to convert variation in line-of-sight SLW amplitude into an image, not unlike a CT scan. One application is passive imaging of live animals and humans (e.g, brain, heart, lungs). Human electrophysiology has a typical frequency range of 0.5-1000 Hz, implying SLW might be efficacious in this frequency range.

[0064] In some implementations, the technical result of method **800** may include imaging an object or a void. The method **800** may include providing a phased-array of scalar-longitudinal waves for the imaging. A phased array of SLW receivers may passively image objects of interest or voids (e.g., underground tunnels, facilities, and pipelines) using the background solar SLW flux for illumination. One specific example is imaging of buildings' interiors, which would be bathed in solar SLW. Detection of underground nuclear tests is part of the nuclear test-ban treaty verification. A nuclear explosion ejects concentric, radially-expanding shells of fast electrons (outer shell) and slower-moving positive-ions (inner shell). These charged shells form a spherical capacitor with a radial E-field (gradient-driven current), thus creating a SLW. The sun is a hot ball of ions and electrons (in the form of a plasma) that oscillates radially, thus creating the SLW that then image solar storms for prediction/mitigation of adverse events (e.g., power outages). More generally, the SLW may be used to create three-dimension images (e.g., via binocular image) that sees through fog, clouds, dust, rain, and building fires during the day or night. Another application is astronomical imaging in the across the entire frequency spectrum.

[0065] In some implementations, the technical result of method **800** may include transmission and/or reception of scalar-longitudinal waves for radar imaging of an object and/or a void. The sun emits low-loss SLW, which may be used to form passive images of underwater objects via a phased array that looks upward from the ocean floor. An active, phased-array (or synthetic-aperture) SLW-RADAR from ships, aircraft, and satellites may detect and identify underwater objects, underwater vehicles, underground tunnels, pipelines, underground facilities, stealth aircraft under

adverse weather conditions, and/or other objects. The SLW transmission may not need to be limited to one frequency. The SLW transmission may be hyper-spectral (e.g., MHz to THz). A space-based implementation may use satellite arrays to transmit the SLW signal at many frequencies, receive the reflections in synthetic-aperture mode, and process the results on-board for real-time imaging. SLW RADAR can be used for detection of improvised explosive devices (IEDs) on the battlefield.

[0066] SLW propagation through conductive media may include ionized plasma around a space vehicle that re-enters the earth's atmosphere. More specifically, SLW-RADAR may be used to characterize space vehicles that re-enter the earth's atmosphere, while surrounded by a hot sheath of plasma. Classical (transverse) electromagnetic waves cannot penetrate the plasma sheath.

[0067] In some implementations, the technical result of method **800** may include reception of solar-generated scalar-longitudinal waves to produce electrical power. The MCE theory may predict that a charged sphere, oscillating in a ballooning (monopolar) mode (expanding and contracting radially) will radiate the SLW. The MCE theory may predict that higher-order (multi-pole) oscillations will create the SLW. The sun is a very hot ball of charged particles (electrons and ions in the form of a plasma) that undergoes such oscillations. Consequently, SLW power reaches the earth, just as sunlight does. A specific application may include conversion of solar SLW power into electric power for (re)charging batteries and/or powering electrical device, such as electric vehicles could be replaced by power converters for the SLW, which is not limited by the skin effect. Harvesting of this solar power may be scalable via advanced photovoltaics that convert the variable-frequency SLW to direct current, then invert the DC power to stable 60 Hz alternating current (for example). An extension of this approach is wireless SLW power transmission that could then be converted to usable electrical power.

[0068] A specific application of exemplary implementations may involve electrical power generation from solar SLWs, on the basis of new terms in the MCE momentum balance equation:

$$\varepsilon\mu\frac{\partial}{\partial t}\left(\frac{E\times B}{\mu}-\frac{CE}{\mu}\right)+J\times B+\rho E-CJ+\nabla\times BC=\nabla\cdot\overline{\overline{T}}+\frac{\nabla C^2}{\mu}. \tag{17}$$

[0069] $\overline{\overline{T}}$ may represent the Maxwell stress tensor. More specifically, electrical power may be generated by charging a flat-plate capacitor to give a large, directed E-field. SLW emission from the sun may generate force variations across the capacitor plates via the term, (EC/μ) in EQN. 17, corresponding to a voltage to drive a power-producing current. This power may be proportional to E (and therefore the capacitor voltage) and/or may be proportional to the amplitude of the solar SLW emissions (C). The variable-frequency power may be rectified, and subsequently converted to alternating current via an alternator. More specifically, the sun is an oscillating sphere (monopolar antenna) of charged matter (plasma) that will produce SLW under the MCE theory, because the oscillation distance for ions is different than for electrons for various plasma waves. Earth is a spherical conductor (monopole antenna) that would receive the solar SLW emissions, and would re-radiate them (along with other planets, comets, asteroids). So, near-stellar regions are bathed in SLW emissions, day and night, allowing SLW power-conversion to operate day and night, rain or shine.

[0070] The term (EC/μ) in EQN. 17 may be an additional term that forms a generalized Poynting vector, corresponding to the magnitude and direction of power density transmission by the SLW. This new term may imply that SLW power can be transmitted wirelessly over large distances in a directed fashion, for example to power satellites or aircraft from the ground, electrical power transmission, and advanced forms of (directed) beams.

[0071] MCE theory may predict new terms in electromagnetic momentum balance and power balance, EQNS. 14 and 17. The term CE/μ may correspond to an increase (or decrease) in longitudinal electrodynamic momentum in EQN. 17 along the direction of motion, with a concomitant decrease (increase) in electrical power per EQN. 14. This sign change may be important because longitudinal electrodynamic power loss (or gain) may drive a corresponding kinetic energy gain (loss) in the physically massive object that is emitting these waves. Consequently, the MCE theory may predict a propulsion mechanism without the use of propellant mass, which is a severe constraint on all transportation systems. This mechanism may depend on adequate energy to create the SLW. The potential applications include all transportation modes on land, sea, air, and space for propellant-less propulsion.

[0072] MCE theory may predict a new term, CJ, in EQN. 17. Emission of the SLW from a physically massive object may have at least two components: the longitudinal electric field (E) and the scalar field (C). The electric field may induce an electrical current density (J) in any (distant) conductive object in its path, according to J=σE. The concomitant presence of the scalar field (C) may interact with this current to product a force (CJ) on the distant object. By use of a phased array of SLW emitters, the relative of phase of E (and thus J) may be shifted relative to the phase of C. The resultant force, CJ, may be adjusted to have a positive (repulsive) force or a negative (attractive) force, commonly called a "tractor beam." Potential applications may range from the nano- to macro-scales on any conductive object (e.g., sub-atomic particles, molecules, living cells, people, animals, vehicles, comets, asteroids, planets, stars, galaxies).

[0073] A mathematical theorem states that nonlinear quantum systems can be used to solve the hardest, non-deterministic, polynomial-time (NP-hard) problems in deterministic polynomial time. The Hamiltonian in EQN. 16 may be inherently nonlinear, and therefore may provide a path to construct such a computer, which would then enable the solution of grand-challenge class problems in a very finite time (minutes to hours, instead of years or more).

[0074] High-temperature superconductivity was (HTS) discovered in 1986. The highest critical temperature for HTS is >150K. However, the physical mechanism for HTS is one of the major unsolved problems in theoretical condensed matter physics, in part because the materials are very complex, multi-layered crystals. Moreover, this theoretic effort uses classical electrodynamic interactions in condensed matter, while the MCE theory may provide an explanation on the basis of gradient-driven currents between (or among) the crystal layers. The well-known London model of superconductivity is not gauge invariant. Specifically, the London model works only for the Coulomb gauge, ∇·A=0. Recent

experiments show evidence for a Higgs-like mode in two-dimensional superconductors, namely excess absorption of THz radiation. However, the Higgs-like mode may not be an actual particle, but a collective quantum mode. The new Hamiltonian of EQN. 16 may include the SLW due to gradient-driven currents among the crystalline layers, as an explanation of HTS. Many commercial and military applications exist, including sensitive magnetometers based on SQUIDS, fast digit circuits, rapid single-flux quantum technology, maglev trains, MRI imaging, magnetic confinement fusion, magnetics in particle accelerators, microware filters, high sensitivity particle detectors, nanowire single-photon detector, railguns and coilguns, electric motors and generators, fault current limiters, and electrical power storage and transmission.

[0075] Recent research has investigated a connection between the SLW, high-temperature superconductors, and gravity. Initial work placed a small, non-conducting, non-magnetic mass (5.48 g) over a levitating, rotating, superconducting disk at <77 K; the mass weighed 0.05-0.3% less, depending on the disk's rotation speed. Subsequent work used a rotating, toroidal, current-carrying, superconducting disk at <70 K; masses placed over the disk weighed 0.3-0.5% less initially and 1.9-2.1% less as the rotation speed was reduced. Further work used a superconducting electrode at 40 K to generate discharges (10^4 amps at >1 MV with a trapped magnetic field of ≤1 T). The resultant focused beam propagated without noticeable attenuation through different materials and exerted a short repulsive force on small movable objects in proportion to their mass, independent of the sample's composition. More recent work used a superconducting cathode at 50-70 K and a copper anode to create discharges (10^4 amps at ≤2 MV) in low pressure gases. The discharge changed from a spark to a flat glowing plasma that originated from the superconducting cathode at >500 kV. A collimated, non-electromagnetic "radiation pulse" propagated from the cathode, toward and beyond the anode, apparently without attenuation. Recent work used this device to measure the scattering of laser light whose attenuation lasted 34-48 ns and increased with discharge voltage up to 7% at 2 MV. The radiation-pulse propagation speed was measured by two piezoelectric crystals over 1211 m with a time delay of 63±1 ns, corresponding to 64 times the speed of light. Different targets (ballistic pendulums, photons, piezoelectric crystals) are affected differently by the radiation pulse, possibly reacting to beam components at different speeds. This approach may be the basis for a SLW laser.

[0076] Spectrum allocation of the SLW may be important for greater data rates over less bandwidth. Examples for higher data rates may be applied to the SLW, such as frequency hopping/re-use, spread-spectrum technology, polarization, code division, and/or other examples. The SLW may be independent of TEM spectrum, effectively doubling the present transmission/reception capacity.

[0077] Although the present technology has been described in detail for the purpose of illustration based on what is currently considered to be the most practical and preferred implementations, it is to be understood that such detail is solely for that purpose and that the technology is not limited to the disclosed implementations, but, on the contrary, is intended to cover modifications and equivalent arrangements that are within the spirit and scope of the appended claims. For example, it is to be understood that the present technology contemplates that, to the extent possible, one or more features of any implementation can be combined with one or more features of any other implementation.

1. A system for providing a computational simulator based on scalar-longitudinal waves, the system comprising:
- one or more hardware processors configured by machine-readable instruction to:
  - provide a computerized physical simulation environment in which electromagnetic simulations of an antenna or device are performed;
  - provide simulated classical transverse electromagnetic waves that are received or transmitted in the electromagnetic simulation of the antenna or device;
  - provide simulated scalar-longitudinal waves that are received or transmitted in the electromagnetic simulations of the antenna or device;
  - evaluate characteristics of the antenna or device based on information associated with simulated classical transverse electromagnetic waves and/or simulated scalar-longitudinal waves; and
  - optimize one or more characteristics of the antenna or device based on the evaluation of the characteristics.

2. The system of claim **1**, wherein the computerized physical simulation environment includes a reflector added to the antenna or device to form a directed beam for transmission and/or reception of scalar-longitudinal waves.

3. A process for allocating spectral frequencies of scalar-longitudinal waves, the process comprising:
- allocating bands of spectral frequencies of scalar-longitudinal waves to one or more entities according to rules comprising:
  - no entity shall transmit at frequencies reserved for radio astronomy to avoid interference at radio telescopes;
  - a given entity is allowed to transmit over open-spectrum bands so long as the given entity adheres to restrictions on transmission power and any other relevant constraints;
  - only licensed entities of a given spectral frequency band are allowed to transmit so long as individual ones of the licensed entities of the given spectral frequency transmit in non-overlapping geographic regions; and
  - only licensed entities of spectral frequency bands corresponding to amateur radio frequencies are allowed to transmit so long as the licensed entities of spectral frequency bands corresponding to amateur radio frequencies use a listen-before-talk contention-based protocol.

* * * * *

RADIO SCIENCE Journal of Research NBS/USNC–URSI
Vol. 69D, No. 8, August 1965

Schumann Resonances[1]

Janis Galejs

Applied Research Laboratory, Sylvania Electronic Systems, a Division of Sylvania Electric Products Inc.,
40 Sylvan Road, Waltham, Mass. 02154

(Received February 3, 1965)

This paper reviews the current work in the field of Schumann resonances and discusses the topics of waveforms and frequency estimates, resonance frequencies and Q factors, source distributions and noise spectra, diurnal and seasonal changes of power spectra, and variations of resonance frequencies. Observations of the above phenomena are correlated with theoretical considerations.

1. Introduction

The resonances in the spherical shell between the earth and ionosphere that are due to azimuthal waves have been considered in two recent survey papers [Galejs, 1964a; Wait, 1964a]. This work contains experimental data as well as the required theory. The basic theory of the resonances has been reviewed by Wait [1964b]. In the present summary the emphasis will be on correlation between measurements and available theory. There will be no extensive analytical developments, but frequent references will be made to literature.

Based on theoretical considerations, Schumann [1952a, b, 1957] postulated resonances of the earth-to-ionosphere cavity. Koenig [1958, 1959, 1961] obtained the first experimental indication of Schumann resonances by observing noise waveforms in the output of a narrow band amplifier. Detailed frequency spectra of this noise were first obtained by Balser and Wagner [1960]. Other measurements have been reported by Fournier [1960]; Benoit and Houri [1961, 1962]; Lokken et al. [1961, 1962]; Polk and Fitchen [1962]; Gendrin and Stefant [1962a]; Balser and Wagner [1962a, b, 1963]; Rycroft [1963]; Chapman and Jones [1964].

The fundamental theory of Schumann resonances [Schumann 1952a, b, 1957] is discussed in a book by Wait [1962]. Raemer [1961a, b] considers the observable noise spectra as the response of the earth-to-ionosphere cavity due to lightning flashes all over the world, but the homogeneous sharply bounded ionosphere model of Raemer introduces high losses, and he does not succeed in reproducing the spectral measurements of Balser and Wagner [1960]. Galejs [1961a, b] uses an isotropic ionosphere model of exponentially increasing conductivity which is based on measured or calculated characteristics of the lower ionosphere. This model permits a close reproduction of the noise spectra measurements in the resonance region, and it also provides an agreement with measured ELF attenuation rates [Chapman and Macario, 1956; Jean et al., 1961].

Models of an anisotropic ionosphere are difficult to apply to the problem of earth-to-ionosphere cavity resonances because of the variations of the magnetic field vector along the surface of the earth. The propagation parameters can be estimated in the presence of a horizontal magnetic field component from the work of Galejs and Row [1964] and of Galejs [1964b]. The earth-to-ionosphere cavity resonances have been analyzed for a nonhomogeneous ionosphere in the presence of a radial (vertical) magnetic field by Thompson [1963] and Galejs [1965]. A thin-shell approximation of the ionosphere with a superimposed radial magnetic field has been considered by Wait [1964c]. Some other work of Wait [1963a, b], although intended for a different frequency range, can also be applied to the earth-to-ionosphere resonance problem in the presence of a radial magnetic field.

Additional references are available in the comprehensive bibliography by Brock-Nannestad [1962].

2. Waveforms and Frequency Estimates

In wide band recordings of atmospheric signals an ELF component or slow tail follows the initial VLF component of the transient [Hepburn and Pierce, 1953; Liebermann, 1956a, b; Tepley, 1959; Pierce, 1960]. An oscillatory structure of the signal becomes noticeable by passing it through a band-pass filter. An example of a noise recording in the output of a 2 to 30 c/s band-pass filter [Lokken, 1964, private communication] is shown in figure 1. The two horizontal magnetic field components have been observed simultaneously in Canada and in Antarctica. There is a correlation between the high intensity ELF noise bursts

[1] Paper presented at the ULF Symposium, Boulder, Colo., Aug. 17–20, 1964.

observed at the various sites. A recording of one of the waveforms is shown in figure 2. The darkened areas indicate resonance frequencies around 8, 14, and 20 c/s. Noise waveforms in the 5 to 20 c/s band have been reported by Polk and Fitchen [1962] and Polk [1962]. Figure 3 shows sample recordings of the outputs of two coils the axes of which are oriented in the north to south (N–S) and east to west (E–W) directions. Frequency of these waveforms has been estimated by counting the cycles between the second markers shown on the records. The average frequency computed in this procedure should be higher than the resonance frequencies of a spectral analysis [Galejs, 1962a, 1964a]. Noise recordings made simultaneously in Germany and in Rhode Island have been reported by Keefe, Polk, and Koenig [1964].

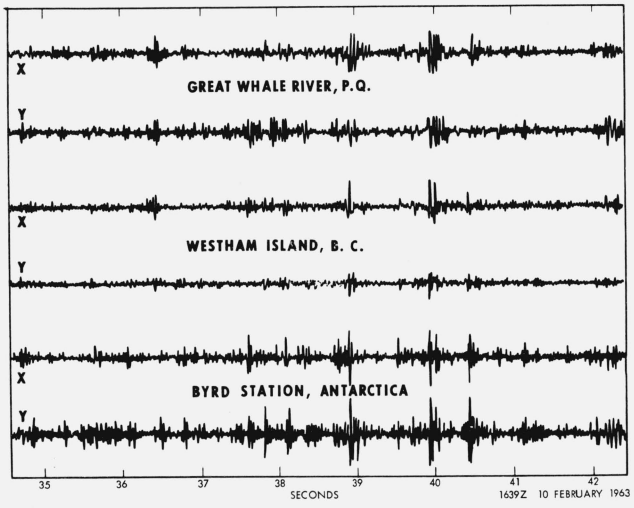

FIGURE 1. *Noise recording in the 2 to 30 c/s band.*

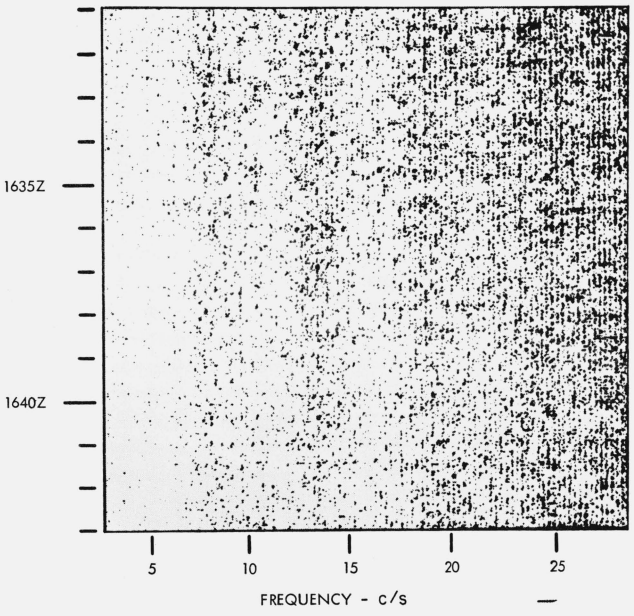

FIGURE 2. *Recording of the noise waveform X of Westham Island, B.C.*

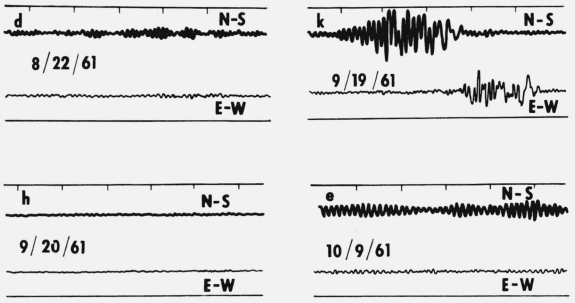

FIGURE 3. *Noise recording in the 5 to 20 c/s band.*

3. Resonance Frequencies and Q Factors

3.1. Definitions

A resonance frequency and Q factor may be determined from spectral measurements. Analytically it is also possible to compute the power spectrum of the noise waveform. However, it is more convenient to relate the resonance frequency and the Q factor to the analytically determined propagation parameters. The radial electrical field due to the vertical dipole excitation can be represented by

$$E_r = -\frac{iIds}{4\omega\epsilon h a^2}\frac{\nu(\nu+1)}{\sin \nu\pi}P_\nu(-\cos\theta) \tag{1}$$

where

$$\nu(\nu+1) = (k_0 a S)^2. \tag{2}$$

For a wave that propagates in the spherical shell between the earth and the ionosphere S is defined as the ratio of the complex wave number k to free space wave number $k_0 (S = k/k_0)$. The real part of S can be seen to be inversely proportional to the phase velocity, and the imaginary part of S is proportional to the attenuation constant. This parameter S is determined from solving the appropriate boundary value problem of the earth, the air space and the chosen ionosphere model [Wait, 1962; Galejs, 1964a]. The resonance frequencies of the nth mode are determined from the minima of $\sin \nu\pi$ in (1) [Galejs, 1962a, 1964a] which gives

$$f_n \approx \frac{7.5\sqrt{n(n+1)}}{\mathrm{Re}S}. \tag{3}$$

Typical values of ReS are 1.4 to 1.2 for frequencies in the resonance region.

The cavity Q may be determined as a ratio between the stored energy and energy loss per cycle or simply by the width of the resonance curves. As shown in the appendix, in the present problem the electrically stored energy W_e differs from the magnetically stored energy W_h, and the Q definition should consider the sum of the average stored energies W_e and W_h. This expression for Q is

$$Q=\frac{(\mathrm{Re}S)^2+1}{4\mathrm{Re}S\,\mathrm{Im}S}. \tag{4}$$

When considering only the magnetically stored energy Q is given by

$$Q=\frac{1}{2\,\mathrm{Re}S\,\mathrm{Im}S}. \tag{5}$$

For a given set of propagation parameters this will give a lower Q figure than (4). This expression has been used in the past work of Galejs [1961a, 1962a, b, 1964a]. Considering only the electrically stored energy gives

$$Q=\frac{\mathrm{Re}S}{2\,\mathrm{Im}S}. \tag{6}$$

The last expression can also be derived from the concept of complex resonance frequencies [Wait, 1964a] or by considering the half-power band width of the resonance curve. All three Q definitions yield the same results as ReS approaches unity, but they will differ near the lower resonance frequency of the earth ionosphere cavity. Equation (4) will be used in the present calculation.

Experimentally determined Q values that are estimated from the half-power bandwidths of the resonance curves neglect the effects of adjacent resonances and of near-field noise that will tend to add to the background level. Hence, the half-power level is estimated too low, the apparent half-power bandwidth is larger and the estimated Q factor may be too low.

3.2. Characteristics of the Boundary

In the theoretical models that are advanced for explaining the resonance frequencies and the Q-factor measurements [Wait, 1962; Galejs, 1964a; Wait, 1964a] it is necessary to consider the boundary properties of the spherical shell.

In the frequency range of the resonances the displacement currents of ground are negligible and the ground conductivity $\sigma_g=10^{-3}$ to 1 mho/m is much higher than the effective ionospheric conductivity σ_i that is estimated to be of the order of 10^{-7} to 10^{-6} mho/m. The ground conductivity σ_g may be assumed as infinite in the first approximation and only the ionospheric properties require a detailed analysis.

The ionosphere acts as an anisotropic conductor and for a z-directed magnetic field its conductivity tensor is of the form

$$[\sigma]=\begin{bmatrix}\sigma_1 & -\sigma_2 & 0\\ \sigma_2 & \sigma_1 & 0\\ 0 & 0 & \sigma_0\end{bmatrix}. \tag{7}$$

Equations for computing the conductivity components are available in literature [Galejs, 1964a and b] and typical conductivity profiles are shown in figure 4 but some uncertainties still apply to such models [Van-Zandt, 1964]. The above computations consider the ion effects, but assume the operating frequency to be zero. These profiles can be further approximated by straight lines through the lower ionosphere in the semilogarithmic plots of figure 4, which corresponds to an expoential height variation of the conductivity components. In a further simplification the anisotropy may be ignored ($\sigma_1=\sigma_0$, $\sigma_2=0$). Even a simple one or two layer model can be assumed, such as shown in figure 5. These particular models have been used in past work by Raemer [1961a and b], Galejs [1962a and b], and by Chapman and Jones [1964]. In the isotropic exponential model the conductivity is given by

$$\sigma(z)=\sigma(z_0)\exp\left[\beta(z-z_0)\right] \tag{8}$$

where $z_0=60$ km and the day and night models are characterized by $\sigma(z_0)=4.63\times10^{-8}$ mho/m and $\beta=0.308$ km^{-1} and by $\sigma(z_0)=6.5\times10^{-10}$ mho/m and $\beta=0.44$ km^{-1}, respectively.

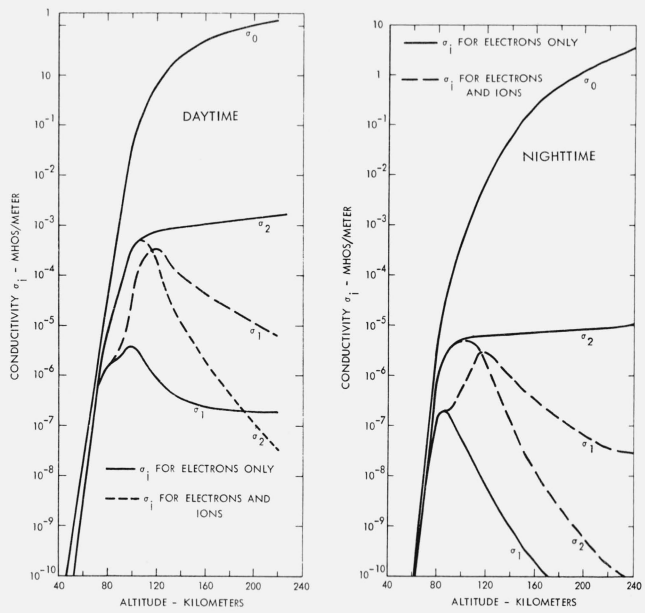

FIGURE 4. *Components of the tensor conductivity* F = 0.

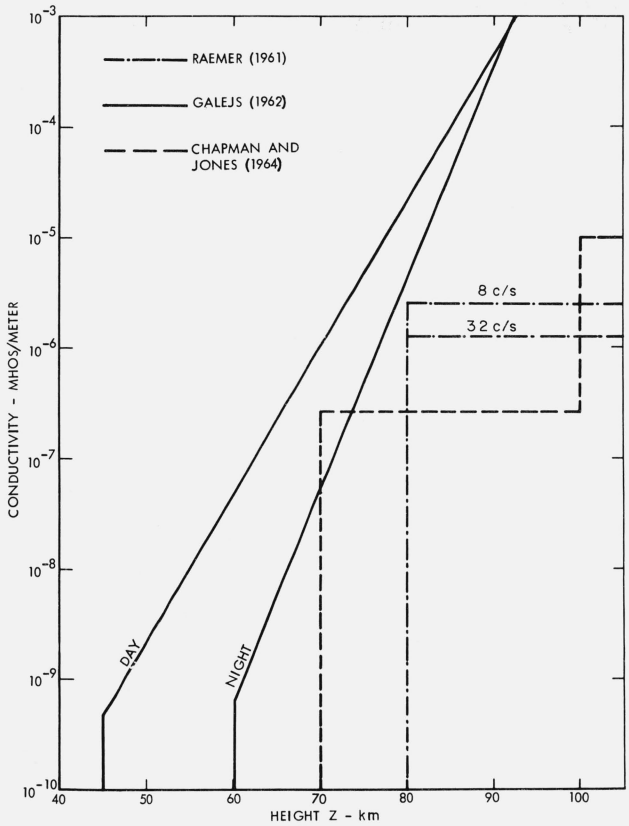

FIGURE 5. *Models of ionospheric conductivity.*

3.3. Single Layer Ionosphere

The single layer ionosphere model of Raemer [1961a and b] assumes the boundary height of the ionosphere to be constant, but the conductivity to change with frequency so as to obtain the correct resonant frequencies. However, the resulting Q factors are approximately two times lower than in measurements. The same difficulties are experienced with an ionosphere model of constant conductivity, but frequency dependent boundary height. Similar results are obtained by Madden [1961] with a conductivity of $\sigma = 1.8 \times 10^{-6}$ mho/m and the ionospheric boundary at $h = 80$ km. The deficiencies of a single layer ionosphere model are less pronounced if it is attempted to achieve only a partial match of the resonant frequencies, as seen from Wait [1964a]. However, the Q factors will be too low in particular at the higher resonance frequencies ($f \approx 30$ c/s).

Compressibility effects of the ionosphere have been considered by Seshadri [1965b] using the model of a perfectly conducting flat earth and a sharply bounded homogeneous isotropic and lossless ionosphere. The compressibility of the ionosphere does not affect the wave propagation below it for frequencies in the range of Schumann resonances and in the ELF band. However, the compressibility should be considered for waves that propagate inside the ionosphere [Seshadri, 1965a].

3.4. Two-Layer Ionosphere Models

Two-layer models give more accurate values of the resonance frequencies and of cavity Q or of the complex propagation parameter S. Two-layer and multilayer models have been discussed by Wait [1958, 1962]; Madden [1961]; Jean et al. [1961], and a particularly successful two-layer model has been constructed by Chapman and Jones [1964a, b]. This model, which is indicated in figure 5, has been applied in the frequency range of earth-to-ionosphere cavity resonances and also for frequencies up to 1 kc/s.

Such models are usually derived by trial and error procedures and they are difficult to correlate with continuous ionosphere profiles, such as shown in figure 4.

3.5. Models of Continuously Varying Ionosphere

The isotropic exponential model gives a reasonable approximation to the ionospheric conductivity versus height profile through the lower ionosphere layers, and the propagation parameters of the model can be determined from closed form expressions of the surface impedance [Galejs, 1961a, 1962a, b, 1964a]. Calculated resonance frequencies and Q factors that are based on (3), (4), and available values of S [Galejs, 1962a] are listed in tables I and II. Calculations are based on daytime or day and nighttime ionosphere models. The Q factors considered also the effects of cosmic ray ionization [Bourdeau et al., 1959] that give a nearly exponential conductivity versus height variation as indicated by Galejs [1962a]. Cosmic ray ionization decreases the effective Q figures, in particular for the lower frequencies. The calculated Q values are still somewhat higher than those estimated from experimental data.

TABLE 1

RESONANCE FREQUENCIES OF THE SPHERICAL SHELL BETWEEN THE EARTH AND IONOSPHERE

	n	1	2	3	4
RESONANCE FREQUENCY f_n IN C/S	LOSSLESS CAVITY	10.6	18.3	25.9	33.5
	DAYTIME WITH h = 45 KM	7.6	13.5	19.4	25.4
	AVERAGE DATA OF DAY WITH h = 45 KM AND OF NIGHT WITH h = 60 KM	8.05	14.25	20.5	26.8
	MEASUREMENTS	8	14.1	20.3	26.4

TABLE II

Q FACTORS OF EARTH-IONOSPHERE CAVITY RESONANCES

	f IN C/S	10	30	100
Q - FACTORS	DAY WITH h = 45 KM, NIGHT WITH h = 60 KM	8.5	7	6.7
	DAYTIME ONLY WITH h = 45 KM	6.5	5.4	5.2
	DAY WITH h = 45 KM, NIGHT WITH h = 60 KM, COSMIC RAY IONIZATION	5.5	6	6.4
	MEASUREMENTS	4	6	

3.6. Magnetic Field Effects

The magnetic field effects for a homogeneous sharply bounded ionosphere model have been discussed by Wait [1962] in a quasi-longitudinal approximation for a superimposed radial magnetic field and also for a transverse magnetic field (east-west or west-east propagation along the magnetic equator).

The propagation parameters have been determined by Galejs and Row [1964] and Galejs [1964a, 1964b] in the presence of a horizontal magnetic field. These data provide an indication of propagation characteristics of the waves near the magnetic equator, but they do not apply directly to the earth-ionosphere resonance problem, where the **H** vector is nearly horizontal only over a small surface portion of the earth.

The earth-ionosphere cavity resonance frequencies have been considered in the thesis of Thompson [1963] for a radial magnetic field. He uses a multilayer ionosphere model that approximates the continuous altitude variation of the conductivity tensor. The azimuthal field variation is expressed in terms of the Legendre polynomials P_n (cos θ) for the nth mode. The wave equation has four different solutions for each of the ionosphere layers, but it has only two solutions for the space between the ionosphere and the perfectly conducting ground surface. The solution of the problem and the resonance condition for the mode n are obtained after multiplying a sequence of 4×4 matrices. In these computations the displacement currents of the ionosphere are neglected. The computed resonance frequencies are in agreement with measurements, but the Q values are in the range of 15 to 20, with the exception of nighttime anisotropic solutions, where $Q = 7$ to 10. The lowering of the nighttime Q figures by the magnetic field has been attributed to wave penetration through the ionosphere and to energy thus escaping from the earth-ionosphere cavity.

Another solution to the problem of earth's ionosphere cavity resonance in the presence of a radial magnetic field is given by Galejs [1965]. The azimuthal field variation is expressed in terms of the Legendre functions P_ν $(-\cos\theta)$, and the solution of the wave equation is set up so that the four solutions of the ionospheric layers where $\sigma > \omega\epsilon_0$ degenerate into two solutions for the lower ionospheric layers where $\sigma << \omega\epsilon_0$ and for free space. After computing the surface impedance at the lower boundary of the ionosphere, the propagation parameters are determined from the solutions of the modal equation for TM modes, althought the coupling between TE and TM modes is considered in the processes of computing the surface impedance. Only the vertically polarized TM modes are assumed to propagate below the ionosphere. Such assumptions have been justified for a single layer ionosphere model at higher frequencies [Wait 1962, p. 269] and for a thin ionospheric shell also for frequencies in the resonance range [Wait, 1964c].

In the numerical calculations the anisotropic ionosphere models are those of figure 4 and further calculations are made for ionosphere models which consider electrons and ions at an operating frequency of 20 c/s, as indicated in figures 3 and 4 of Galejs [1964b]. In the isotropic ionosphere models σ_0 remains unaltered, $\sigma_1 = \sigma_0$, and $\sigma_2 \rightarrow 0$. The calculated resonance frequencies f_n are listed in table III. The isotropic day or night models exhibit too high resonance frequencies, but the average for the anisotropic day or night models gives nearly correct results, although the first resonance occurs near 7.7 c/s. At night the various anisotropic models give different results, while their results are nearly the same for daytime or for the isotropic models. The calculated Q factors are listed in table IV. At daytime the Q factors are lowered slightly due to anisotropy. The losses are principally due to absorption in the lower D region where the collision frequencies are high and the magnetic field has only small effects. At nighttime the anisotropy reduces the Q values drastically, and the ions have a considerable effect. For the isotropic models the energy remains below the ionosphere, the losses in the lower ionosphere are small and the Q values are high. For the anisotropic models some energy penetrates the ionosphere and escapes from the earth to ionosphere cavity. Hence the Q figure is low.

TABLE III

RESONANCE FREQUENCIES OF THE SPHERICAL SHELL BETWEEN THE EARTH AND IONOSPHERE IN THE PRESENCE OF A RADIAL MAGNETIC FIELD

	IONOSPHERE MODEL \ n	1	2	3	4
RESONANCE FREQUENCY f_n IN C/S	DAY, ANISOTROPIC	7.8	13.8	19.8	26
	DAY, ISOTROPIC	8.1	14.2	20.4	26.6
	NIGHT, ANISOTROPIC EL.+ IONS F = 20	7.6	15.2	23.2	29.5
	EL.+ IONS F = 0	7.7	13.8	20.1	26.9
	EL. ONLY F = 0	7.8	14.1	20.7	27.8
	NIGHT, ISOTROPIC	8.6	15.3	21.3	27.4
	MEASUREMENTS	8	14.1	20.3	26.4

TABLE IV

Q-FACTORS OF EARTH-IONOSPHERE CAVITY RESONANCES IN THE PRESENCE OF A RADIAL MAGNETIC FIELD

	IONOSPHERE MODEL \ F	10	30
Q-FACTORS	DAY, ANISOTROPIC	6.8	5.6
	DAY, ISOTROPIC	8.3	7
	NIGHT, ANISOTROPIC EL. + IONS F = 20	1.7	6.6
	EL. + IONS F = 0	2.0	2.7
	EL. ONLY F = 0	2.8	4.5
	NIGHT, ISOTROPIC	8.8	9.3
	MEASUREMENTS	4	6

The previous calculations have assumed a constant radial magnetic field (S pole) all over the globe. A reversal of the static magnetic field (N pole) causes

negligible differences in the propagation parameters or in the values of f_n and Q. Hence a model using the average of the radial magnetic field may provide a first order estimate of the anisotropy effects. The present calculations assume the radial magnetic of the polar regions to be extended over the whole surface of the globe and the anisotropy effects should be too pronounced. The analytical results are highly dependent on the detailed structure of the nighttime anisotropic ionosphere, and further studies of it may be in order.

4. Source Distributions and Noise Spectra

Most of the ELF energy is of terrestrial origin and is caused by thunderstorm activity, although there are some high latitude events of an apparent extra-terrestrial origin. Such emissions of approximately 800 c/s have been detected near Kiruna, Sweden [Egeland, 1964] and of 14 to 17 c/s on Kerguelen Island in the Southern part of the Indian Ocean [Gendrin and Stephant, 1964, private communication]. The Spectran recording of the signals received at Kerguelen is shown in figure 6. The upper trace shows a normal signal with resonances near 8, 14, 20, and 25 c/s. There is an additional signal of 14 to 17 c/s on the two lower traces. When neglecting the presence of such extraneous signals the terrestrial noise spectra can be calculated after estimating the dipole moments of the sources and using propagation parameters that are appropriate to the selected ionosphere model.

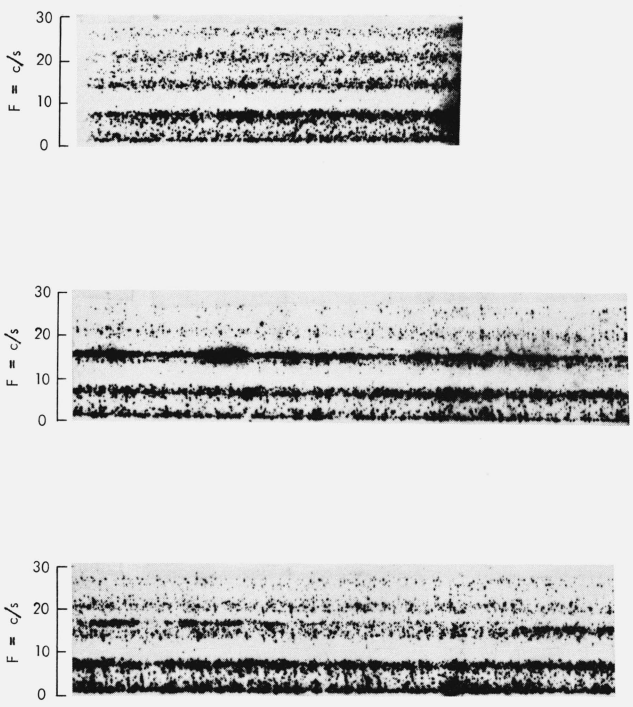

FIGURE 6. *Spectran recordings of noise waveforms at Kerguelen Island.*

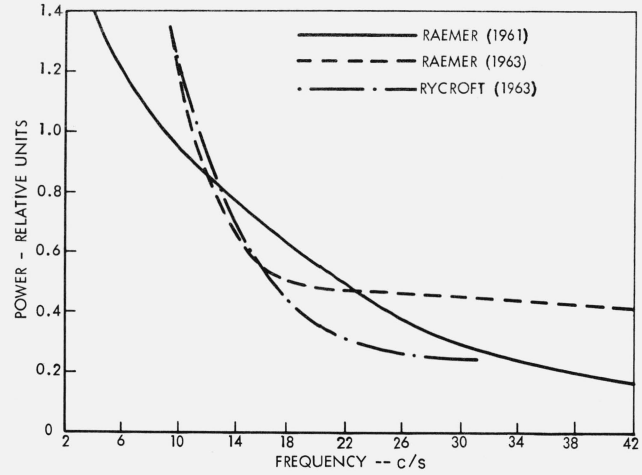

FIGURE 7. *Estimated lighting flash spectrum.*

Raemer [1961a, b] has estimated the power spectrum of the dipole moment in a median lightning flash Ids (or the first derivative of the electrostatic moment dM/dt) based on statistics of lightning strokes compiled by Williams [1959]. Later work of Raemer [1963 private communication] has lead to a revised estimate. These spectra are shown in figure 7. Pierce [1963] has computed the magnitude of the frequency spectra of the second derivative d^2M/dt^2, and Rycroft [1963] has calculated the frequency spectra of dM/dt using a similar representation of the lightning moments. The square of the frequency spectrum computed by Rycroft [1963] is also indicated in figure 7.

An equivalent power spectrum for the dipole moment of terrestrial noise sources has been deduced by Harris and Tanner [1962] from the measurements of Balser and Wagner [1960] by estimating the complex propagation constant within this frequency range in a "trial and error" approach. Harris and Tanner [1962] do not require an ionosphere model or any knowledge of lightning waveforms and their statistics for obtaining this equivalent power spectrum.

After determining the source spectra and the propagation parameters the power spectrum of the received noise may be computed from

$$G(i\omega)=\frac{g(i\omega)\,|\nu(\nu+1)|^2}{8(ak_0h)^2\,|\nu+\frac{1}{2}|\,[\cosh(2\pi\,\mathrm{Im}\,\nu)-\cos(2\pi\,\mathrm{Re}\,\nu)]}\cdot\left\{\frac{\sinh[2\,\mathrm{Im}\,\nu\,(\pi-\theta)]}{(-\mathrm{Im}\,\nu)}-\frac{\sin[(2\,\mathrm{Re}\,\nu+1)(\pi-\theta)-(\pi/2)]}{\mathrm{Re}\,\nu+\frac{1}{2}}\right\}_{\theta_1}^{\theta_2}, \quad (9)$$

where the ν is given by (2) and where the sources are assumed to be uniformly distributed in the θ interval of $\theta_1<\theta<\theta_2$. The derivation of (9) starts from (1) and Legendre functions $P_\nu(-\cos\theta)$ are replaced by an asymptotic expansion. There are also equivalent spectral representations in terms of Legendre polynomials [Raemer, 1961a, b].

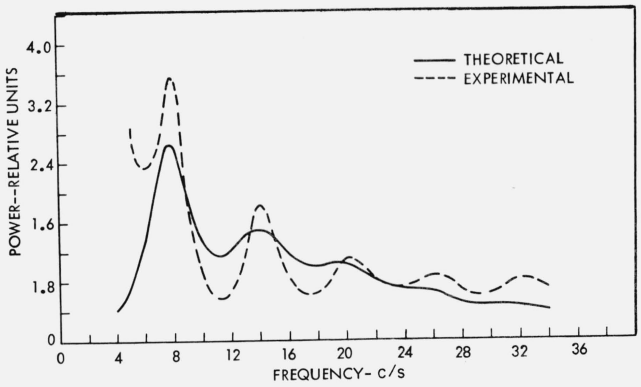

FIGURE 8. *ELF Noise spectrum—effective ionospheric height assumed constant.*

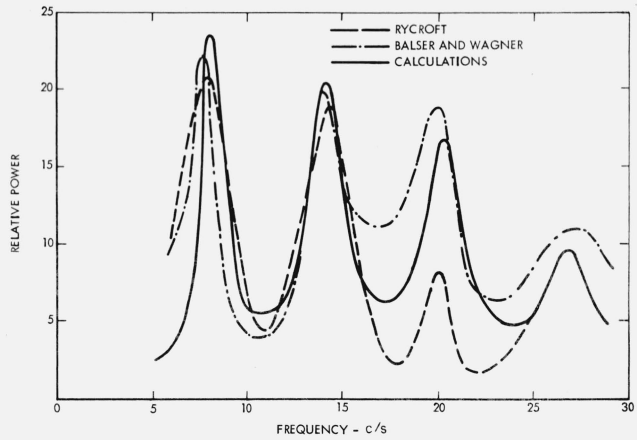

FIGURE 10. *Noise spectrum for $47° \leq \theta \leq 128°$.*

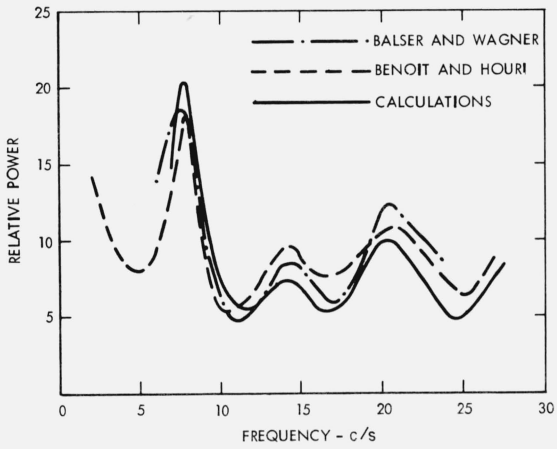

FIGURE 9. *Noise spectrum for $38° \leq \theta \leq 72°$.*

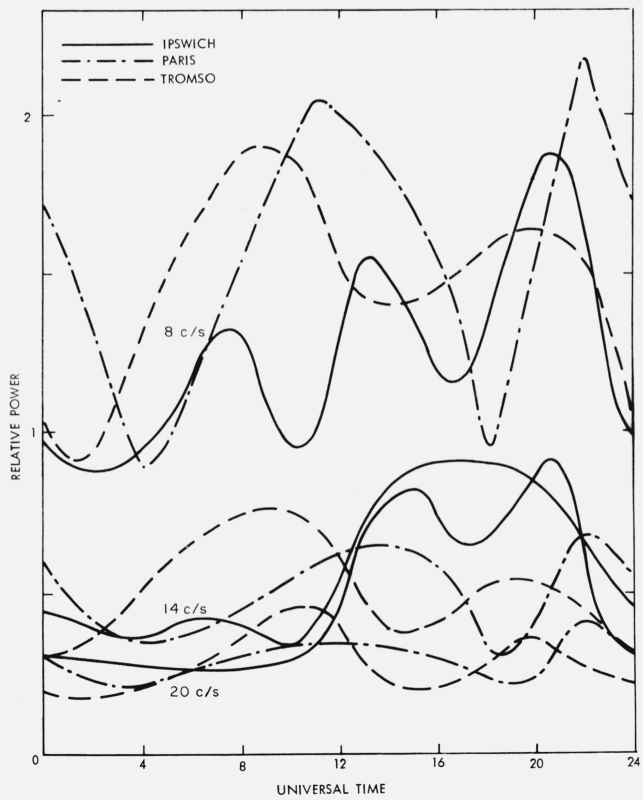

FIGURE 11. *Diurnal variation of the resonance modes at Ipswich, Mass., February 1961 (vertical electric field), Chambon-la-Foret (near Paris) July 1962 and at Tromso (Norway) April 1962 (horizontal magnetic field).*

The noise spectrum of Raemer [1961b] has been used for computing the observed noise spectra in conjunction with a sharply bounded ionosphere model. This spectrum is shown in figure 8 and is seen to exhibit excessively damped higher resonance peaks.

The exponential ionosphere model [Galejs, 1961b, 1962a, 1964a] produces a better agreement with measurements as seen in figures 9 and 10. In this work propagation is assumed to be uniform around the surface of the earth and the propagation parameters represent the average of day and night conditions. The sources are assumed to be uniformly distributed over the θ interval indicated in the figures (θ is defined with respect to the observer).

5. Diurnal and Seasonal Changes of Power Spectra

Balser and Wagner [1962a] have recorded diurnal variations of measured noise spectra. Their measurements of the diurnal variations of the power level at the first three resonance frequencies are shown in figure 11 together with similar measurements by Gendrin and Stefant [1962a]. Diurnal variations of the fields near the two lower resonance frequencies have been measured at Kingston, R.I., by Polk, Huck, and Yu [1963, private communication]. The maxi-

mum signal intensity occurs between 1500 and 1800 UT. In an amplitude versus time plot the signal peak is broader during summer than winter. Seasonal and diurnal variations of the noise power in the ELF frequency band below 35 c/s have been described by Wright [1963] without singling out the individual resonance modes. The measurements are made at Byrd Station, Antarctica (80°S, 120°W) and show peak intensities near 1000 UT during spring and summer and near 2300 UT during most of the year.

The gross features of the spectrum, such as the number of peaks and their approximate time of occurance, may be explained qualitatively by noting areas of globe with particularly high thunderstorm activity and by measuring the polar angle θ from these source regions to the observation point. The vertical electric field E_r and the horizontal magnetic field H_ϕ of the mode n exhibit the θ dependence of

$$E_r \sim P_n(\cos\theta) \tag{10}$$

$$H_\phi \sim \frac{d}{d\theta} P_n(\cos\theta), \tag{11}$$

where $P_n(\cos\theta)$ is a Legendre polynomial of the order n. A particular geographical region will contribute to the measured values of E_r or H_ϕ in the mode n if the right hand sides of (10) or (11) are sizeable for those values of θ. Such considerations have been reported by Balser and Wagner [1962a] and Gendrin and Stefant [1962a].

More detailed calculations have been carried out by Abraham [1964, private communication; Galejs 1964a] who used available estimates of geographical distributions of the noise sources and who calculated the day and night propagation effects after expressing the fields as a sum of recirculating azimuthal waves.

In the expression for the electric field component E_r of (1), the Legendre function is replaced by the leading term of its asymptotic expansion. The function $\sin \nu\pi$ is expanded into

$$(\sin \nu\pi)^{-1} = -2i \sum_{n=0}^{\infty} e^{i(2n+1)\nu\pi} \tag{12}$$

which is valid for $\operatorname{Im} \nu > 0$. This results in [Abraham, 1964, private communication]

$$E_r = \frac{Ids}{2\omega\epsilon h a^2} \sqrt{\frac{\nu(\nu+1)}{2\pi(\nu+\frac{1}{2})\sin\theta}}\, e^{i\frac{3\pi}{4}}$$

$$\sum_{n=0}^{\infty} \left\{ e^{i(\nu+\frac{1}{2})(\theta+2n\pi) - i2n\frac{\pi}{2}} + e^{i(\nu+\frac{1}{2})[2\pi(n+1)-\theta] - i(2n+1)\frac{\pi}{2}} \right\}. \tag{13}$$

The first term of the summation represents a wave which has traveled the direct distance from the source to the observation point (θ) plus n full circles around the sphere ($2n\pi$), while experiencing a phase shift of ($-\pi/2$) radians at each traversal of the source point or its antipode. The other term of the summation represents a wave which has traveled toward the observation point across the antipode of the source ($2\pi-\theta$) and has made furthermore n circles around the sphere ($2n\pi$) and has also experienced a phase shift of ($-\pi/2$) radians at each traversal of the source point or its antipode. This physical interpretation of (13), which is equivalent to (1) for $\nu=$const., permits a heuristic consideration of the ν differences between the day and night hemispheres. The multiplicative ν factors in front of the n summation are assumed to be constant and equal to $\bar{\nu}$ which is intermediate between the day and night ν values. The θ factors of the exponentials are replaced by integrals in order to account for the ν variation seen by the circular wave front as it propagates in the θ-direction with respect to the source. The amplitude changes at the day and night boundary can be also considered for each traveling wave by assuming that the energy of the wave remains constant after passing the day and night boundary. This results in decreased amplitudes for the larger ionospheric height of the night hemisphere. In the numerical work the surface of the earth was subdivided into 10° cells. Each cell had a constant surface density of noise sources but a variation was allowed from cell to cell. The plots of thunderstorm days over the world were used to set relative values of lightning activity for each of the cells, by assuming that the distribution of squared dipole moment per unit area is directly proportional to the thunderstorm day plots according to the Handbook of Geophysics [1960]. The diurnal variations were accounted for by a multiplicative factor in terms of local time at the source [Williams, 1959]. The final equation used in the spectrum calculations is similar to (9), although it is algebraically more involved [Abraham, 1964, private communication].

The diurnal variations of the noise power at the first three Schumann resonances have been computed using the exponential ionosphere model of figure 5 and are shown in figure 12. The calculations have disregarded the noise sources near the antipode where the usual asymptotic approximation of the Legendre functions is inaccurate. Figure 12 shows a qualitative agreement with the measurements of Balser and Wagner [1962a], that are shown in figure 11.

An example of seasonal power variations is shown in figure 13. It indicates a decreased noise power near the higher frequencies and/or during winter months.

Based on measurements at one location of the earth it is also possible to predict the noise levels at other locations using this procedure of noise spectrum calculations. The noise that is due to a worldwide distribution of thunderstorms depends on the frequency variation and also on the absolute value of the power spectrum of the mean dipole moment of the source $g(i\omega, \theta, \phi)$. The θ and ϕ dependence may be estimated from the thunderstorm frequency maps as was indicated before, which leaves the absolute value and the frequency dependence of $g(i\omega)$ as an unknown. Assuming that $g(i\omega)$ is the same for all noise sources, it may be determined by making the calculations to agree with measurements at one particular location. This gives a uniquely determined noise distribution over the surface of the earth and the accuracy of this model can be checked by com-

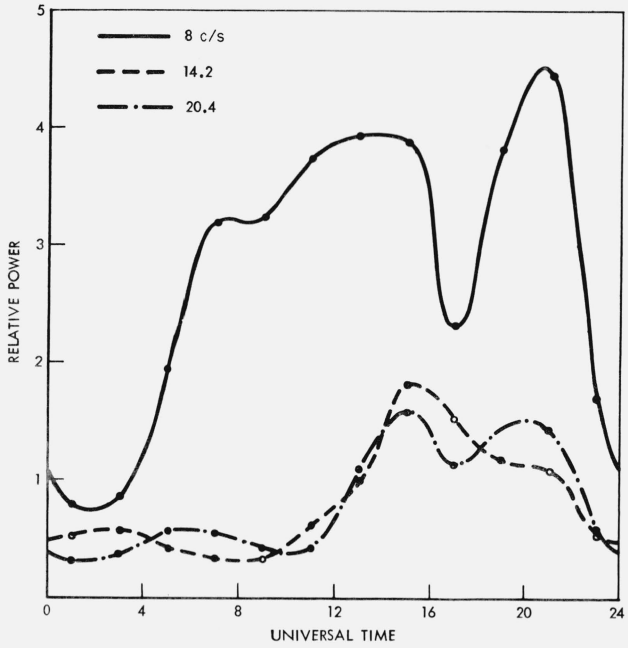

FIGURE 12. *Calculated diurnal variation of noise power at the peak of the resonance modes—wintertime—Boston, Mass.*

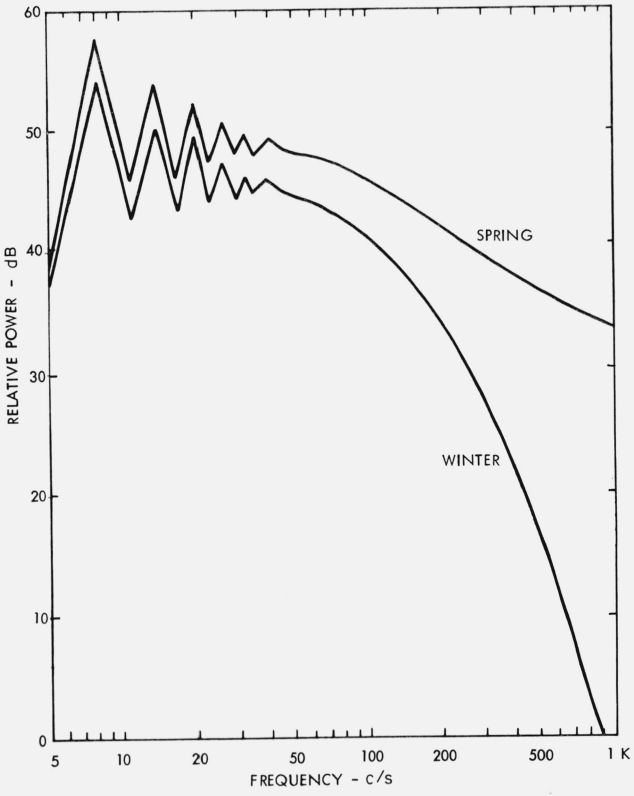

FIGURE 13. *Calculated noise spectrum for local noon in northern hemisphere.*

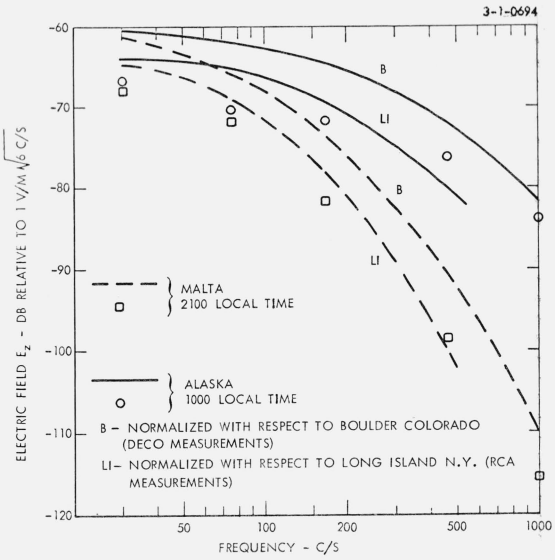

FIGURE 14. *Comparison of calculated field strength's data with July 1963 measurements by DECO and RCA.*

paring the calculations with measurements at other locations. In an example, measurements by DECO at Boulder, Colo., [Maxwell, 1963, private communication] and by RCA at Long Island, N.Y. [Powers, 1964, private communication], were used to determine $g(i\omega)$. The calculations by Abraham [1964, private communication] based on these values of $g(i\omega)$ have been compared with simultaneous measurements made in Malta and Alaska [Maxwell, 1963, private communication]. As seen from figure 14 the analytic curves agree in shape with the measurements, but the normalization with respect to Boulder gives somewhat higher predictions of the noise level. This may possibly be caused by summertime thunderstorm activity in the mountains near Boulder, Colo., that would give significant near-fields and a high estimate for the function $g(i\omega)$. The calculations are extended above the region of the earth-ionosphere cavity resonances to show that more significant noise level changes occur at higher frequencies.

In the calculations leading to figures 12 through 14 the day and night effects are considered most accurately if the day and night boundary is located symmetrically with respect to source (i.e., source at local noon or midnight). For nonsymmetrical day and night boundaries it is difficult to estimate the effects of wave front distortion. When neglecting such distortions (or assuming propagation strictly in the θ-direction), this method can account for $\nu(\theta)$ variations, which may be caused by ionosphere parameter changes or by changes of the static magnetic field along the surface of the earth. The assymptotic expansions of $P_\nu(-\cos\theta)$ used in (13) or (9) can be modified to increase their accuracy for observations near the source or its antipode [Abraham, 1965].

6. Variations of Resonance Frequencies

Diurnal frequency variations of the earth-ionosphere cavity modes have been reported by Balser and Wagner

[1962b], Gendrin and Stefant [1963], Rycroft [1963] and by Chapman and Jones [1964b]. The resonance frequencies vary by about ±0.2 to 0.3 c/s, but the changes are not simultaneous for the different modes; a low resonance frequency of one mode occurs simultaneously with a high frequency of a different mode.

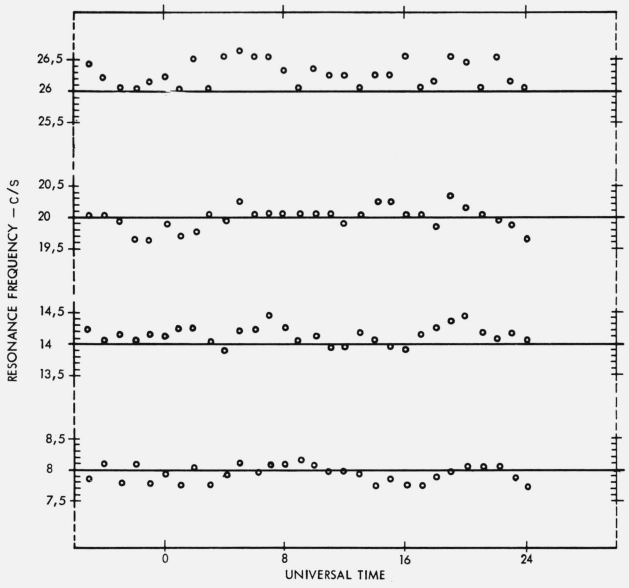

FIGURE 15. *Diurnal frequency measured by Gendrin and Stefant.*

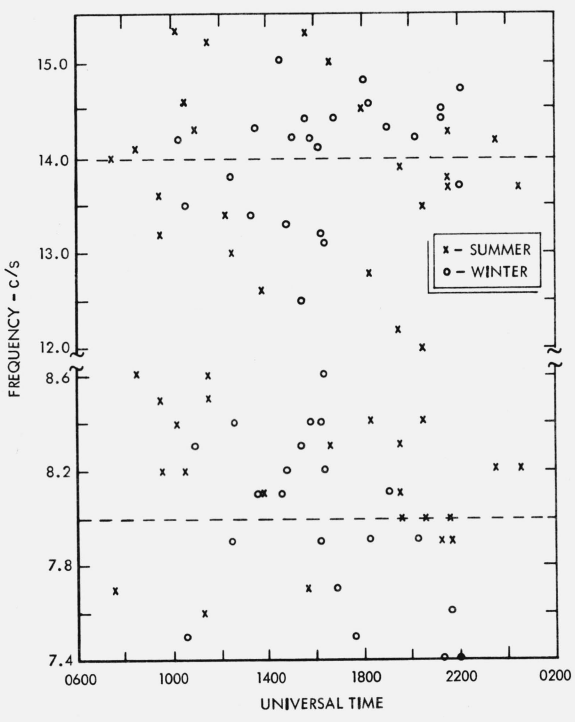

FIGURE 16. *Diurnal frequency variations measured by Rycroft.*

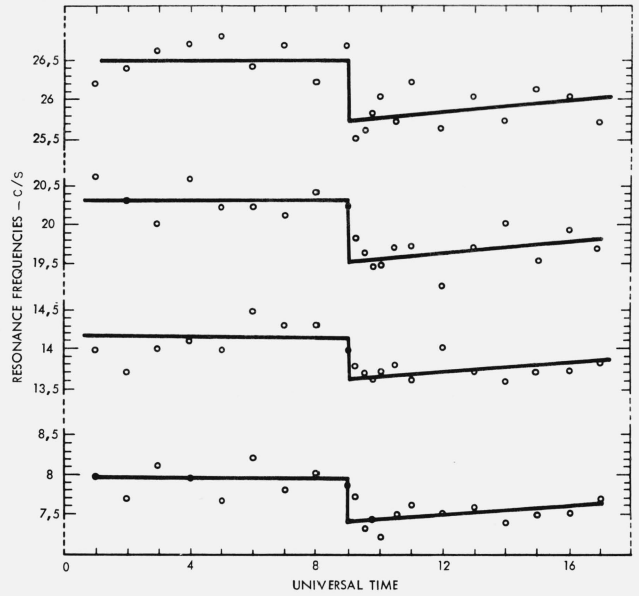

FIGURE 17. *Nuclear effects on earth-ionosphere cavity resonances.* Measurements by Gendrin and Stefant.

A high altitude nuclear explosion has been shown to affect the earth-to-ionosphere cavity resonances by simultaneously lowering all the resonance frequencies [Gendrin and Stefant, 1962a and b; Balser and Wagner, 1963]. Tepley et al., [1963] noted also an increase of signal strength for observations near the conjugate point of the explosion. The lowering of resonance frequency shown in figure 17 has been attributed to worldwide lowering of the effective ionosphere in a model of a single layer isotropic ionosphere [Gendrin and Stefant, 1962b]. The depression of the resonance frequency can be also explained by assuming an exponential daytime ionosphere to be effective around the globe [Row, 1964, private communication]. As an illustration the daytime resonance frequencies of table 1 compare with the measured resonance frequencies of figure 17. There are VLF observations [Zmuda et al, 1963] that can be explained by a lowering (or increasing electron density) of the *D*-region boundary. Brady et al., [1964] interpreted VLF diurnal phase shifts to show that some enhanced *D*-region ionization persists for several days following the event.

The lowering of the resonance frequency following a nuclear explosion has been attributed by Chapman and Jones [1964a] in their two-layer ionosphere model solely to a decreasing conductivity of the *E*-region.

After measuring a change of the resonance frequencies following a nuclear explosion, it is possible to advance simple ionosphere models for explaining a particular change. However, no attempt has been reported to predict resonance shifts for different nuclear yields and detonation altitudes. This rather complex problem requires a quantitative evaluation of the various nuclear mechanisms that may lead to ionosphere perturbations. If such information is

available, the computation of the resonance shifts is relatively simple. It would be also of interest to investigate the effects of sudden ionosphere disturbances (SID) and to discriminate between SID's and nuclear effects.

The resonant frequency changes can be considered more accurately with nonuniform models of the propagation geometry. A perturbation method [Wait, 1964b] or numerical techniques [Madden and Thompson, 1964] have been used for solving such problems.

Madden and Thompson [1964] compute the local surface impedance and propagation constant for a uniform cylindrical shell between the anisotropic ionosphere and the earth using matrix multiplication techniques. There is a smooth variation of the parameters between polar and equatorial regions and also between day and night hemispheres. These local surface impedances and propagation constants are assumed to characterize a spherical transmission line of nonuniform parameters. The resonance frequencies and Q factors are computed numerically using a lumped parameter approximation of the two-dimensional transmission line. This model has been applied to explain the diurnal frequency variations and also the frequency changes due to a nuclear explosion.

7. Areas of Future Work

There are numerous observations of earth-ionosphere cavity resonances and existing ionosphere and source models account for most observed characteristics like the resonance frequency, Q factors, shape of the noise spectra, and diurnal variations of the received power.

Future work appears to be required in a systematic study of diurnal and seasonal amplitude and frequency variations of resonances. These changes should also be correlated with ionospheric disturbances. The parameters of the nighttime ionosphere require also a future clarification. The variations of the ionosphere parameters and the variations of the magnetic field vector along the surface of the earth should be incorporated in future calculations [Wait, 1964b; Madden and Thompson, 1964]. Much work remains to be done for assessing nuclear effects on the earth ionosphere resonance and for discriminating between lower level nuclear and sudden ionospheric disturbances.

The work of Sylvania reported in this paper has been supported principally by the Office of Naval Research under Contract Nonr 3185(00).

8. Appendix. Q Factors

The basic definition of the Q factor of a cavity with lossy walls is

$$\frac{1}{Q_i}=\frac{\int\int \mathbf{E}\times\mathbf{H}^*\cdot\mathbf{ds}}{\frac{\omega\epsilon_0}{2}\int\int\int \mathbf{E}\cdot\mathbf{E}^*dv+\frac{\omega\mu_0}{2}\int\int\int \mathbf{H}\cdot\mathbf{H}^*dv} \tag{14}$$

where the surface integral is extended over the cavity walls and the volume integral covers the inside of the cavity. The ground surface is assumed to be a perfect conductor and E_θ is related to H_ϕ at the ionospheric boundary by the surface impedance Z_s as $E_\theta=Z_sH_\phi$. However E_θ is assumed to be small relative to E_r for vertically polarized waves. Equation (14) is rewritten as

$$\frac{1}{Q_i}=\frac{2\int\int \mathrm{Re}Z_s|H_\phi|^2(a+h)^2\sin\theta d\theta d\phi}{\omega\int\int\int[\epsilon_0|E_r|^2+\mu_0|H_\phi|^2]r^2dr\sin\theta d\theta d\phi} \tag{15}$$

$$\approx\frac{2\mathrm{Re}Z_s}{\omega h}\frac{\int|H_\phi|^2\sin\theta d\theta}{\int[\epsilon_0|E_r|^2+\mu_0|H_\phi|^2]\sin\theta d\theta} \tag{16}$$

where a is the radius of earth, h is the ionospheric height and where the cavity is assumed to be uniform. For excitation by a radial electric dipole of moment Idr the field component E_r and H_ϕ follow from (21), (61), and (62) of Galejs [1964a] as

$$E_r=\frac{iIdr}{4\pi h\omega\epsilon a^2}\frac{n(n+1)(2n+1)}{D_n}P_n(\cos\theta) \tag{17}$$

$$H_\phi=-\frac{Idr}{4\pi ha}\frac{(2n+1)}{D_n}\frac{\partial}{\partial\theta}P_n(\cos\theta) \tag{18}$$

with $D_n=n(n+1)-\nu(\nu+1)$. Substituting (17) and (18) in (16) and evaluating the integrals gives

$$\frac{1}{Q_i}=\frac{2\mathrm{Re}Z_s}{\omega\mu_0h\left[\frac{n(n+1)}{(k_0a)^2}+1\right]} \tag{19}$$

where $k_0=\omega\sqrt{\mu_0\epsilon_0}$. From the approximate modal equation

$$S=\sqrt{1+\frac{iZ_s}{\omega\mu_0h}} \tag{20}$$

it follows that

$$2\,\mathrm{Re}S\,\mathrm{Im}S=\frac{\mathrm{Re}Z_s}{\omega\mu_0h}\cdot \tag{21}$$

Applying (21) and the resonance condition

$$n(n+1)\approx(k_0a\,\mathrm{Re}S)^2 \tag{22}$$

(19) simplifies to

$$\frac{1}{Q_i}=\frac{4\,\mathrm{Re}S\,\mathrm{Im}S}{(\mathrm{Re}S)^2+1} \tag{23}$$

which was listed as (4). When considering the differences of E_r, H_ϕ, Z_s, and h between the day and night hemispheres it follows that

$$\frac{1}{Q_i} \approx \frac{2[\mathrm{Re}S\ \mathrm{Im}S|_{\mathrm{day}} + \mathrm{Re}S\ \mathrm{Im}S|_{\mathrm{night}}]}{(\mathrm{Re}S|_{\mathrm{avg}})^2 + 1}. \tag{24}$$

The form (5) or (6) is obtained by neglecting the E integral or H integral, and by doubling the value of the H integral or E integral in (14).

9. References

Abraham, L. G. Jr., Aspects of the terrestrial ELF noise spectrum when near the source or its antipode, Radio Sci., J. Res. NBS **69D** (July 1965).

Balser, M., and C. A. Wagner (Nov. 1960), Observations of earth-ionosphere cavity resonances, Nature **188,** 638–641.

Balser, M., and C. A. Wagner (Feb. 1962a), Diurnal power variations of the earth-ionosphere cavity modes and their relationship to worldwide thunderstorm activity, J. Geophys. Res. **67,** No. 2, 619–625.

Balser, M., and C. A. Wagner (Sept. 1962b), On frequency variations of the earth-ionosphere cavity modes, J. Geophys. Res. **67,** No. 10, 4081–4083.

Balser, M., and C. A. Wagner (July 1, 1963), Effect of a high-altitude nuclear detonation on the earth-ionosphere cavity, J. Geophys. Res. **68,** No. 13, 4115–4118.

Benoit, R., and A. Houri (1961), Propagation of very-low-frequencies in the earth-ionosphere system, Ann. Geophys. (France) **17,** No. 4, 370–373.

Benoit, R., and A. Houri (Nov. 5, 1962), Power spectrum measurements of geophysical noise. Application to earth-to-ionosphere cavity, C. R. Acad. Sci. (France) **255,** 2496–2498.

Bourdeau, R. E., E. C. Whipple, and J. F. Clark (Oct. 1959), Analytic and Experimental Conductivity between the stratosphere and the ionosphere, J. Geophys. Res. **64,** 1363–1370.

Brady, A. H., D. D. Crombie, A. G. Jean, A. C. Murphy, and F. K. Stede (May 1, 1964), Long-lived effects in the D region after the high altitude nuclear explosion of 9 July 1962, J. Geophys. Res. **69,** 1921.

Brock-Nannestad, L. (Sept. 1962), Bibliography electromagnetic phenomena with special reference to ELF (1–3000 c/s) TR 10 Saclant, ASW Research Center, La Spezia, Italia.

Chapman, F. W., and D. L. Jones (May 16, 1964a), Earth-ionosphere cavity resonances and the propagation of extremely low frequency radio waves, Nature **202,** 654–657.

Chapman, F. W. and D. L. Jones, Observations of earth-ionosphere cavity resonances and their interpretation in terms of a two-layer ionosphere model, Radio Sci., J. Res. NBS **68D,** 1177–1185 (Nov. 1964b).

Chapman, F. W., and R. C. Macario (May 1956), Propagation of audio frequency radio waves to great distances, Nature **177,** 930–933.

Egeland, A. (1964a) ELF (500–1000 c/s) emissions at high latitude, Proc. NATO Advanced Study Institute on Natural Electromagnetic Phenomena Below 30 kc/s, Bad Homburg, West Germany, July–Aug. 1963, pp. 157–166 (Plenum Press, New York, N.Y.).

Fournier, H. (Aug. 17, 1960), Some aspects of the first high-frequency geomagnetic recordings obtained at Garchy, C. R. Acad. Sci. (France) **251,** No. 7, 962–964.

Galejs, J. (1961a), Terrestrial extremely-low-frequency noise spectrum in the presence of exponential ionospheric conductivity profiles, J. Geophys. Res. **66,** No. 9, 2787–2792.

Galejs, J. (Nov. 1961b), ELF waves in presence of exponential ionospheric conductivity profiles, IRE Trans. Ant. Prop. **AP-9,** 554–562.

Galejs, J. (July 1962a), A further note on terrestrial extremely-low frequency propagation in the presence of an isotropic ionosphere with an exponential conductivity-height profile, J. Geophys. Res. **67,** No. 7, 2715–2728.

Galejs, J. (1962b), Terrestrial extremely-low frequency propagation in the presence of an isotropic ionosphere with an exponential conductivity height profile, Proc. International Conference on the Ionosphere, London, pp. 467–474 (Chapman and Hall).

Galejs, J. (1964a), Terrestrial extremely-low frequency propagation, Proc. NATO Advanced Study Institute on Natural Electromagnetic Phenomena Below 30 kc/s, Bad Homburg, West Germany, July–Aug. 1963, pp. 205–258 (Plenum Press, New York, N.Y.).

Galejs, J. (June 1964b), ELF and VLF waves below an inhomogeneous anisotropic ionosphere, Radio Sci. J. Res. NBS **68D,** No. 6, 693–707.

Galejs, J., and R. V. Row (Jan. 1964), Propagation of ELF waves below an inhomogeneous anisotropic ionosphere, IEEE Trans. Ant. Prop. **AP-12,** No. 1, 74–83.

Galejs, J., On the terrestrial propagation of ELF and VLF waves in the presence of a radial magnetic field, Radio Sci., J. Res. NBS **69D,** No. 5 (May 1965).

Gendrin, R., and R. Stefant (Sept. 1962a), Magnetic records between 0.2 and 30 c/s, AGARD Conference on Propagation of Radio Frequencies Below 300 kc/s, Munich, Germany.

Gendrin, R., and R. Stefant (1962b), Effects of the very high altitude nuclear explosion of the July 9, 1962 on the earth to ionosphere cavity resonances, experimental results and interpretation, C. R. Acad. Sci. **255,** 2273–2275 and 2493–2495.

Handbook of Geophysics (1960), USAF Air Research and Development Command, Airforce Cambridge Research Center (Macmillan Co., New York, N.Y.).

Harris, F. B., Jr., and R. L. Tanner (1962), A method for determination of lower ionosphere properties by means of field measurements on sferics, J. Res. NBS **66D** (Radio Prop.), No. 4, 463–478.

Hepburn, F., and E. T. Pierce (May 9, 1953), Atmospherics with very-low-frequency components, Nature (GB) **171,** 837–838.

Jean, A. G., Jr., and A. C. Murphys, J. R. Wait, and D. F. Wasmundt (1961), Propagation attenuation rates at ELF, J. Res NBS **65D** (Radio Prop.), No. 5, 475–479.

Keefe, T. J., C. Polk, and H. L. Koenig (1964), Results of simultaneous ELF measurements at Brannenburg (Germany) and Kingston, R.I., ULF Symposium, Boulder, Colo. Aug. 17–20, 1964.

Koenig, H. (Dec. 1958), Atmospherics geringster frequenzen, Dissertation an der Technischen Hochschule München.

Koenig, H. (July 1959), Atmospherics geringster frequenzen, Z. Angew. Phys. **11,** No. 7, 264–274.

Koenig, H., E. Haine, and C. H. Antoniadis (Aug. 1961), Messung von 'atmospherics' geringster frequenzen in Bonn, Z. Angew. Phys. **13,** No. 8, 364–367.

Liebermann, L. (Dec. 1956a), Extremely-low-frequency electromagnetic waves: I. Reception from lightning, J. Appl. Phys. **27,** No. 12, 1473–1476.

Liebermann, L. (Dec. 1956b), Extremely-low-frequency electromagnetic waves: II. Propagation properties, J. Appl. Phys. **27,** No. 12, 1477–1483.

Lokken, J. E., J. A. Schand, and C. S. Wright (1962), A note on the classification of geomagnetic signals below 30 c/s, Can. J. Phys. **40,** 1000–1009.

Madden, T. R. (1961), An analysis of the earth-ionosphere electromagnetic resonances, unpublished class notes for MIT course 12.88, April 24.

Madden, T. Rand, W. Thompson, Low-frequency electromagnetic oscillations of the earth-ionosphere cavity, Report on Project NRL 371–401, Geophysics Laboratory, MIT, Cambridge, Mass. (Sept. 22, 1964). Also Rev. Geophys. **3,** No. 2 (May 1965).

Pierce, E. T. (July–Aug. 1960), Some ELF phenomena, J. Res. NBS **64D** (Radio Prop.), No. 4, 383–386.

Pierce, E. T. (July 1, 1963), Excitation of earth-ionosphere cavity resonances by lightning flashes, J. Geophys. Res. **68,** No. 13, 4125–4127.

Polk, C., and F. Fitchen (May–June 1962), Schumann resonances of the earth-ionosphere cavity—extremely low frequency reception at Kingston, R.I., J. Res. NBS **66D** (Radio Prop.), No. 3, 313–318.

Polk, C. (1962), ELF propagation and the earth-ionosphere resonant cavity, paper presented at the meeting of the Ionospheric Research Committee of AGARD in Munich, West Germany, Sept. 17–21, 1962.

Raemer, H. R. (1961a), On the extremely-low-frequency spectrum of earth-ionosphere cavity response to electric storms, J. Geophys. Res. **66,** No. 5, 1580–1583.

Raemer, H. R. (Nov.–Dec. 1961b), On the spectrum of terrestrial radio noise at extremely low frequencies, J. Res. NBS **65D** (Radio Prop.), No. 6, 581–594.

Rycroft, M. J. (Dec. 1963), Low frequency disturbances of natural origin of the electric and magnetic fields of the earth, Ph.D. Thesis, University of Cambridge.

Schumann, W. O. (1952a), Über die strahlungslosen Eigenschwingungen einer leitenden Kugel, die von einer Luftschicht und einer Ionosphärenhülle umgeben ist, Z. Naturforsch, **72,** 149–154.

Schumann, W. O. (1952b), Über die Dämpfung der elektromagnetischen Eigenschwingungen des Systems Erde-Luft-Ionosphäre, Z. Naturforsch **72,** 250–252.

Schumann, W. O. (Aug. 1957), Elektrische Eigenschwingungen des Hohlraumes Erde-Luft-Ionosphäre, Z. Angew. Phys. **9,** 373–378.

Seshadri, S. R., Radiation from electromagnetic sources in a plasma, IEEE Transactions on Antennas and Prop. **AP-13,** No. 1, 79–88 (Jan. 1965a).

Seshadri, S. R. (March 1965b), VLF propagation in a sharply bounded, compressible isotropic ionosphere, IEEE Trans. Ant. Prop. **AP-13,** No. 2, 311–317.

Tepley, L. R. (Dec. 1959), A comparison of sferics as observed in the very-low-frequency and extremely-low-frequency bands, J. Geophys. Res. **64,** No. 12, 2315–2329.

Tepley, L., R. C. Wentworth, K. G. Lambert, H. V. Prentiss, K. D. Amundsen and D. R. Hillendahl (26 Dec. 1963), Sub ELF geomagnetic fluctuations, III final report Contract AF 19(628)–462, Lockheed Missile and Space Co., Palo Alto, Calif.

Thompson, W. B. (Feb. 1963), A layered model approach to the earth-ionosphere cavity resonance problem, Ph.D. Thesis, Department of Geology and Geophysics, MIT.

VanZandt, T. E. (1964), Ionosphere, ULF Symposium, Boulder, Colo., Aug. 17–20.

Wait, J. R. (March 1958), Extension to mode theory of VLF propagation, J. Geophys. Res. **63,** 125–135.

Wait, J. R. (1962), Electromagnetic waves in stratified media (Macmillan Co., New York, N.Y.).

Wait, J. R. (Feb. 1963a), The mode theory of VLF radio propagation for a spherical earth and a concentric anisotropic ionosphere, Can. J. Phys. **41,** 299–315.

Wait, J. R. (May–June 1963b), Concerning solutions of the VLF mode problem for an anisotropic curved ionosphere, J. Res. NBS **67D** (Radio Prop.), No. 3, 297–302.

Wait, J. R. (April 1964a), On the theory of Schumann resonances in the earth-ionosphere cavity, Can. J. Phys. **42,** 575–582.

Wait, J. R. (1964b), Earth-ionosphere cavity resonances and the propagation of ELF radio waves, ULF Symposium, Boulder, Colo., Aug. 17–20. Also Radio Sci. J. NBS **69D,** No. 8.

Wait, J. R. (1964c), Cavity resonances for a spherical earth with a concentric anisotropic shell (private communication).

Wait, J. R. (1964d), A note on the Schumann problem for nonuniform boundaries (private communication).

Williams, J. C. (May 1959), Thunderstorms and VLF radio noise, Ph.D. Thesis, Harvard University, Division of Engineering and Applied Physics.

C. S. Wright (July–Aug. 1963), Conjugate relations of micropulsations and other ionospheric phenomena, NATO Advanced Study Institute on Natural Electromagnetic Phenomena Below 30 kc/s, Bad Homburg, Germany.

Zmuda, A. J., B. W. Shaw, and C. R. Haave (Feb. 1, 1963), VLF disturbances and the high-altitude nuclear explosion of July 9, 1962, J. Geophys. Res. **68,** No. 3, 745–758.

(Paper 69D8–538)

12/9/86 XR 4,628,299 30-29

United States Patent [19]

Tate et al.

[11] **Patent Number: 4,628,299**

[45] **Date of Patent: Dec. 9, 1986**

[54] **SEISMIC WARNING SYSTEM USING RF ENERGY MONITOR**

[75] Inventors: **Joseph B. Tate**, Sausalito; **David E. Brown**, Mill Valley, both of Calif.

[73] Assignee: **David Pressman**, San Francisco, Calif. ; a part interest

[21] Appl. No.: **695,632**

[22] Filed: **Jan. 28, 1985**

[51] **Int. Cl.**[4] **G08B 21/00**

[52] **U.S. Cl.** **340/540**; 340/600; 340/690

[58] **Field of Search** 340/540, 600, 690

[56] **References Cited**

U.S. PATENT DOCUMENTS

4,214,238 7/1980 Adams et al. 340/540

4,364,033 12/1982 Tsay 340/540

Primary Examiner—Glen R. Swann, III

Attorney, Agent, or Firm—David Pressman

[57] **ABSTRACT**

The ambient broadband radio frequency field strength from broadcast stations is monitored (FIG. **4**) by periodic sampling (**50, 52**). A warning indication is provided if the field strength drops significantly. Drops in such field strength have been correlated empirically with the occurrence of seismic activity, usually several days later. Thus the indication serves as an early warning of an impending earthquake. In one preferred embodiment, a broadband, horizontal, very long monopole antenna (**40**) was connected to a rectifying and smoothing circuit (FIG. **3**) to provide a dc output proportional to the ambient rf field. This voltage is digitized (**50**), and using a suitably-programmed computer (**52**), the digital version of the field strength signal is sampled once per minute (**78**). A cumulative or running average of the minute samples is calculated (**80**) and held. Once per hour the latest running average is stored (**84**) and a standard deviation (SD) of the last 24 hourly stored running averages is calculated (**88**). If the SD exceeds a predetermined value, 0.3 in one embodiment, an alarm is triggered (**92**). The use of the SD eliminates the effect of day-to-day changes in the amounts of the variations of the ambient field strength, due to changes in tides and other factors. Once per day the samples are written (**96**) to a permanent storage file and a continuous plot of the field strength is also made (**14**). Preferably the alarm is triggered only if another detector also provides an indication (FIG. **6**), thereby to eliminate the effect of machine error.

20 Claims, 6 Drawing Figures

Ambient RF Level vs Time from Before to Occurrence of Quake

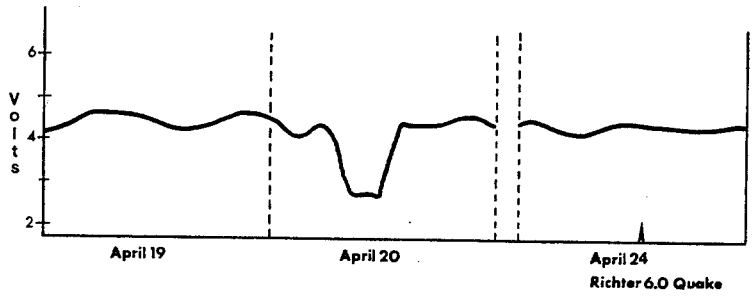

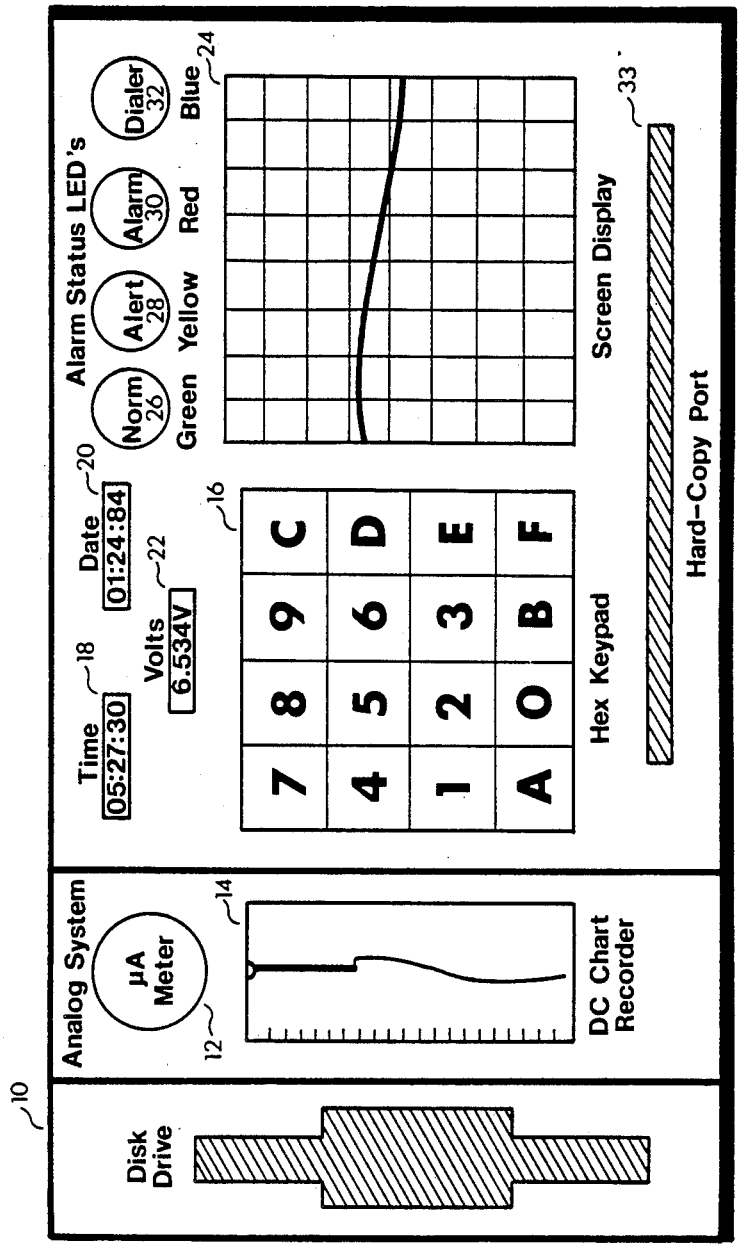
10
Disk Drive
Analog System
μA Meter
12
14
DC Chart Recorder
Time
05:27:30
18
Date
01:24:84
20
Volts
6.534V
22
16
7 8 9 C
4 5 6 D
1 2 3 E
A 0 B F
Hex Keypad
Alarm Status LED's
Norm 26
Alert 28
Alarm 30
Dialer 32
Green
Yellow
Red
Blue
24
Screen Display
33
Hard-Copy Port

FIG 1

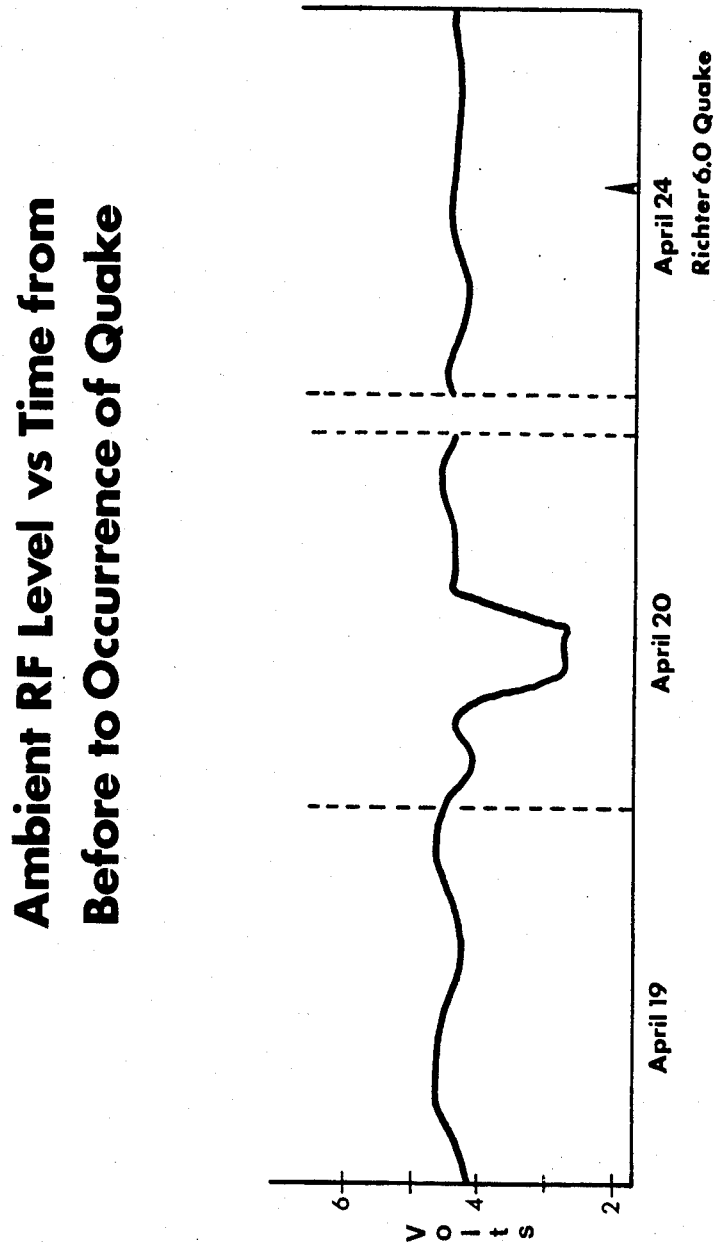
Ambient RF Level vs Time from
Before to Occurrence of Quake
Volts
6
4
2
April 19
April 20
April 24
Richter 6.0 Quake

FIG 2

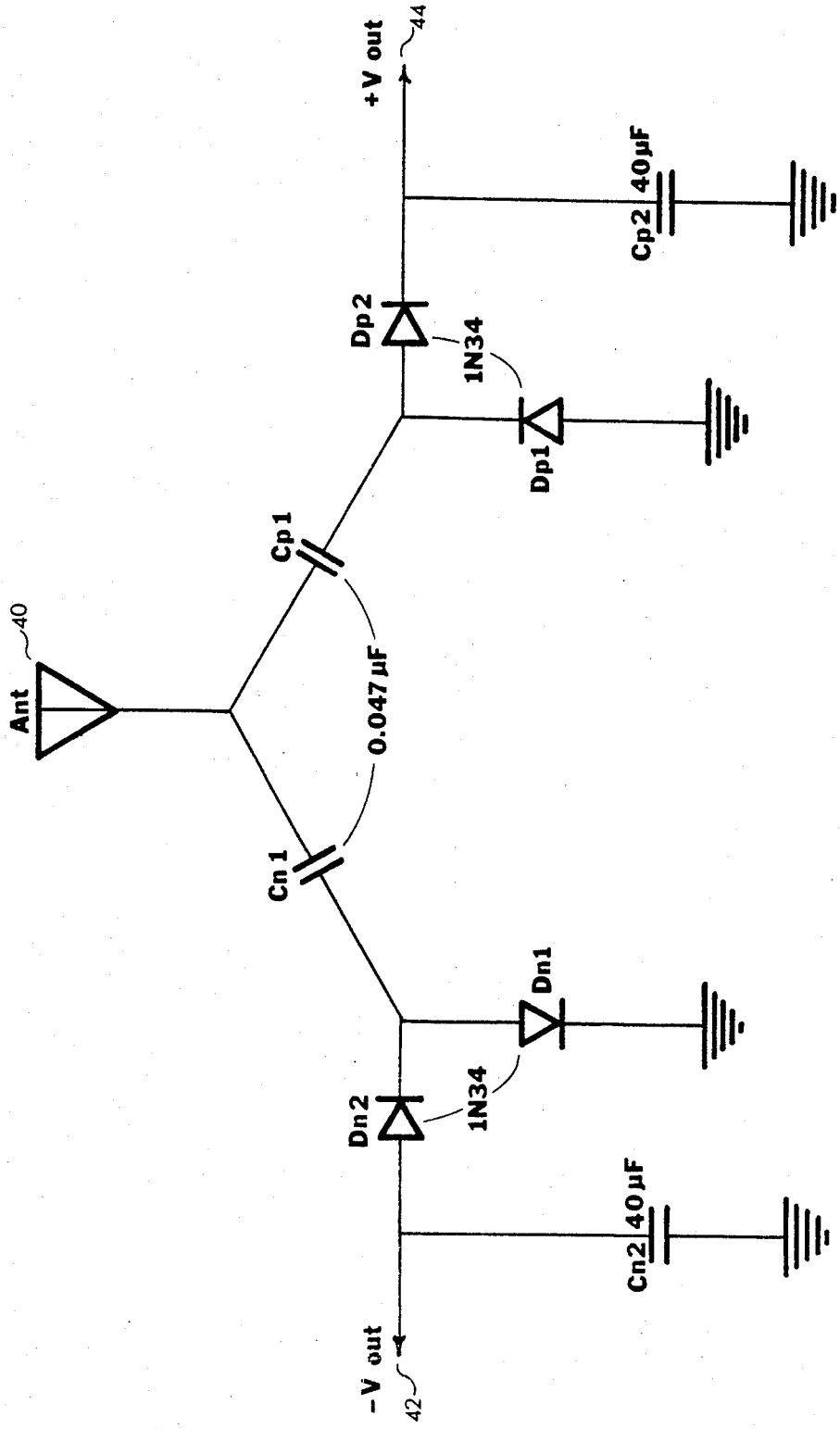
+V out
44
Cp2
40µF
Dp2
1N34
Dp1
Cp1
0.047µF
Ant
40
Cn1
Dn1
1N34
Dn2
Cn2
40µF
-V out
42

FIG 3

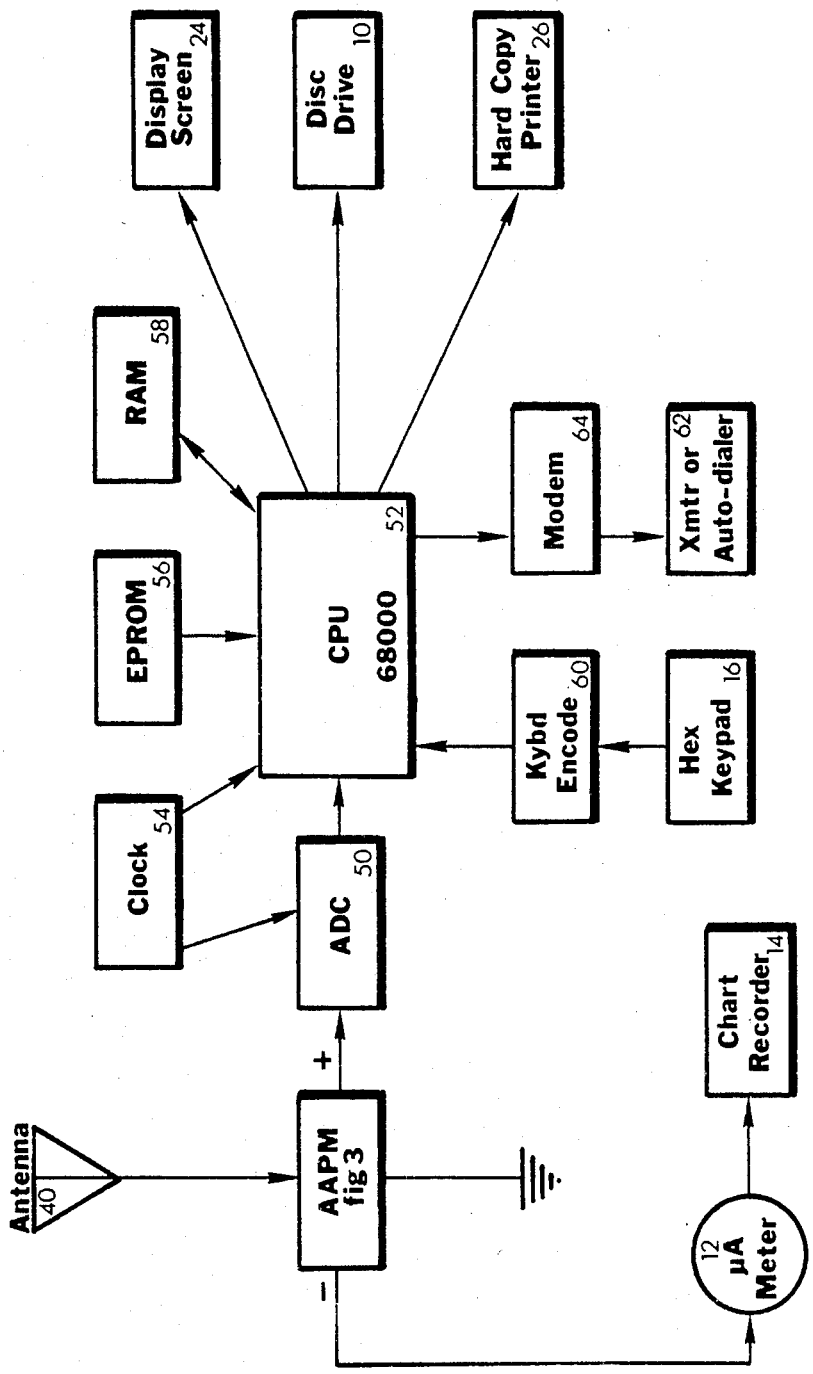
Antenna
40
AAPM
fig 3
+
−
ADC
50
Clock
54
EPROM
56
RAM
58
CPU
68000
52
Display
Screen
24
Disc
Drive
10
Hard Copy
Printer
26
Modem
64
Xmtr or
Auto-dialer
62
Kybd
Encode
60
Hex
Keypad
16
12
μA
Meter
Chart
Recorder
14

FIG 4

FIG 5

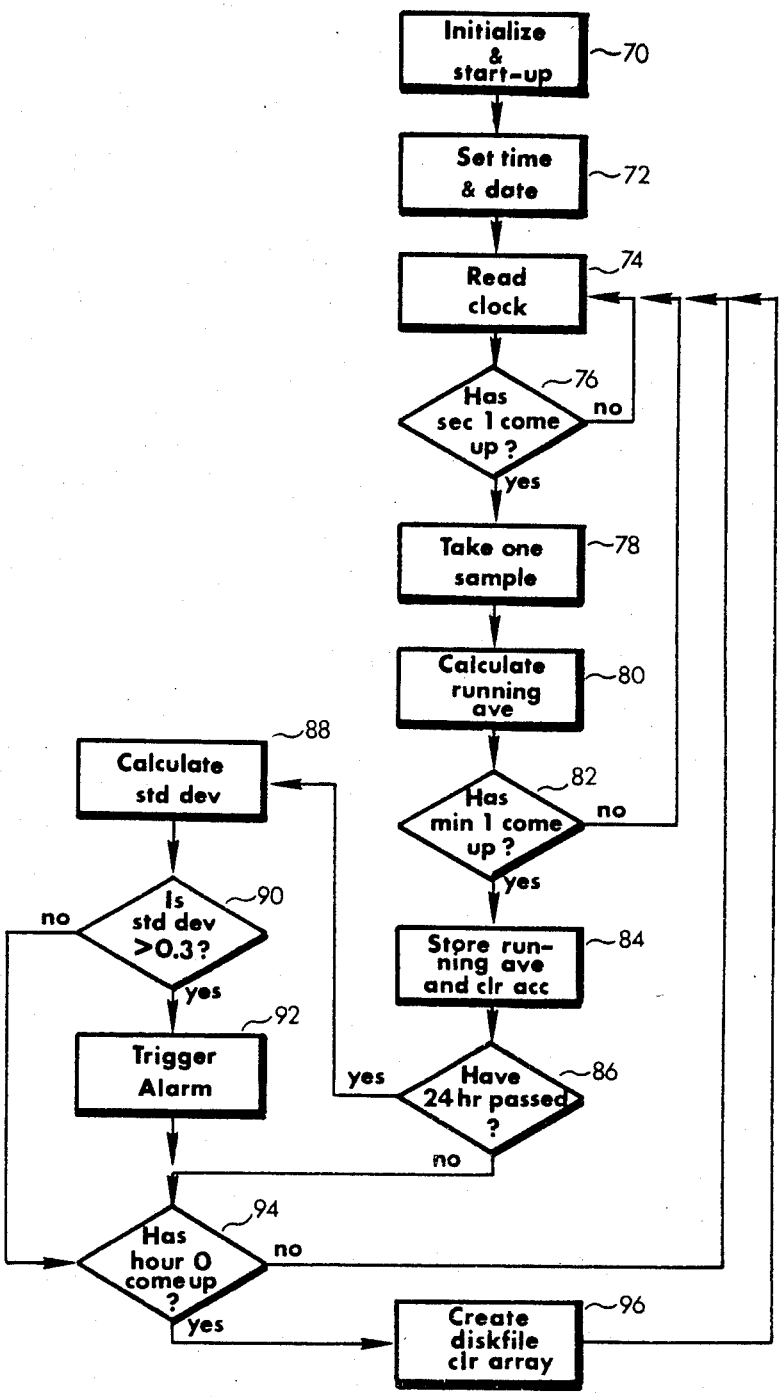
Initialize & start-up
70
Set time & date
72
Read clock
74
Has sec 1 come up ?
76
no
yes
Take one sample
78
Calculate running ave
80
Has min 1 come up ?
82
no
yes
Store running ave and clr acc
84
Have 24 hr passed ?
86
yes
no
Calculate std dev
88
Is std dev >0.3 ?
90
no
yes
Trigger Alarm
92
Has hour 0 come up ?
94
no
yes
Create diskfile clr array
96

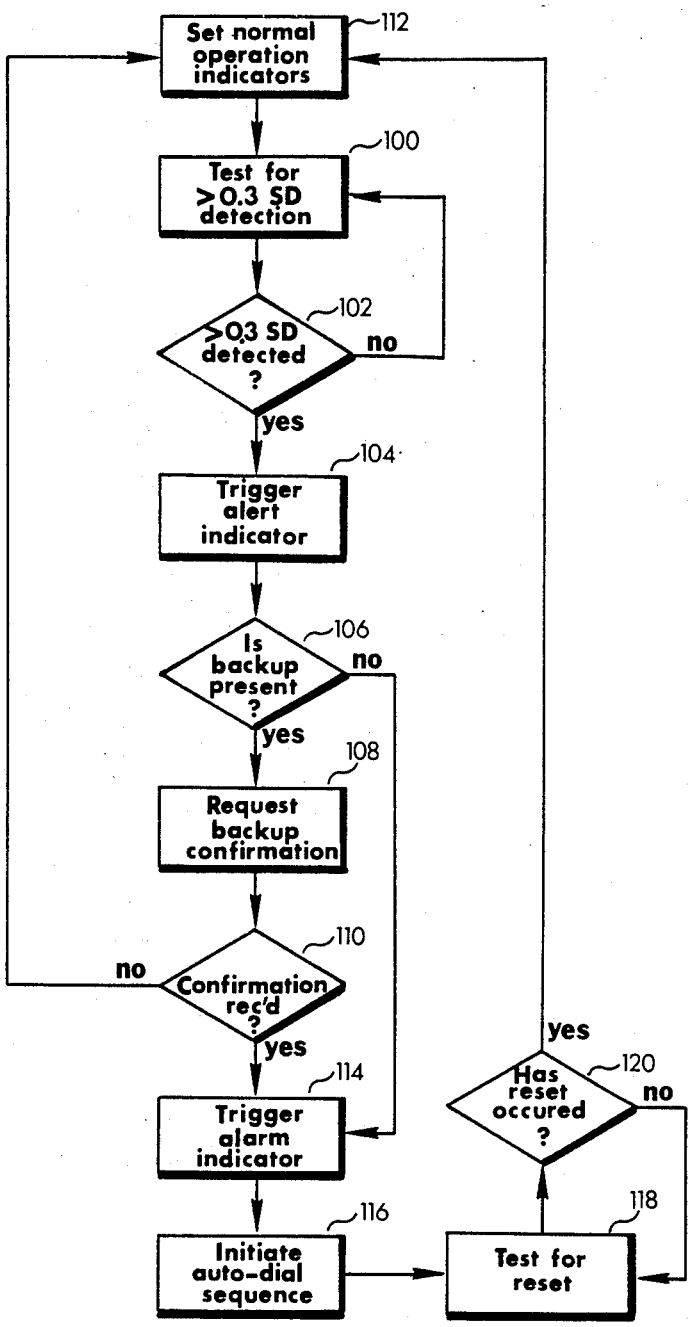
Set normal operation indicators
112
Test for >0.3 SD detection
100
>0.3 SD detected ?
102
no
yes
Trigger alert indicator
104
Is backup present ?
106
no
yes
Request backup confirmation
108
Confirmation rec'd ?
110
no
yes
Trigger alarm indicator
114
Initiate auto-dial sequence
116
Test for reset
118
Has reset occured ?
120
yes
no

FIG 6

SEISMIC WARNING SYSTEM USING RF ENERGY MONITOR

BACKGROUND—FIELD OF INVENTION

This invention relates to the prediction of the fugure occurrence of seismic activity, particularly to the advance notification of earthquakes through the monitoring of ambient radio frequency (rf) energy.

BACKGROUND—DESCRIPTION OF PRIOR ART

Heretofore, insofar as we are aware, seismology, the science of earthquakes, has not been able to make any near-term predictions of earthquakes.

While scientists have known that certain animals may have had some sort of advance knowledge of quakes, due to the fact that they exhibited peculiar behavior before quakes, and not at other times, this behavior has not been consistent and reliable enough to be of practical use.

Also, while scientists have also been able to predict thunderstorms in advance by monitoring the ambient electrostatic field (see, e.g., U.S. Pat. No. 3,611,365 to Husbyorg and Scuka, 1968; 3,790,884 to Kohl, 1974; and 4,095,221 to Slocum, 1978), they have not been aware of any corresponding system for earthquake prediction.

Scientists have been able actually to detect earthquakes during their occurrence by monitoring air pressure variations (e.g., as described in U.S. Pat. No. 4,126,203 to Miller, 1978) and by monitoring the earth's physical movement by seismographs but, again, science has not been aware of any system for short-term advance detection or prediction of quakes.

Due to the devastating effects of quakes to property, life, and limb, public and governmental authorities would derive great benefit from any system which could provide short-time advance notification of great earthquakes. As it is now, except for aftershocks, which seismologists know will occur after any large quake, all great and small quakes occur without warning. Because people in the vicinity of such quakes are unprepared, they often are in places of great vulnerability, such as beside or inside collapsible buildings, so that severe and human injury usually occurs during a quake. Also, property itself is left vulnerable, e.g., by leaving automobiles in or near collapsible buildings, leaving gas and electricity connected such that disruption of these facilities causes fires, and leaving other valuable property in vulnerable areas. If advance notification of a large quake could be provided to the public and civil authorities, people and valuable property could be evacuated and protected, thereby preventing deaths, injuries, and greatly reducing property damage. Further, advance notification of quakes would eliminate the severe psychological trauma which often affects large segments of the populace due to the surprise occurrence of quakes.

OBJECTS AND ADVANTAGES

Accordingly several objects and advantages of the invention are to provide a reliable and effective method of earthquake prediction, to provide a method of preventing death, injuries, and reducing property damage in earthquakes, and to provide a method of reducing the psychological trauma which often accompanies quakes due to their surprise occurrence. Additional objects are to provide such a system which is easy to use, economical, reliable, and portable. Further objects will become apparent from a consideration of the ensuing description, taken in conjunction with the accompanying drawings.

BACKGROUND—THEORY OF INVENTION

The following is a discussion of the background theory of the invention. While we believe it to be technically accurate, we do not wish to be limited by this theory since the operability of the invention has been empirically verified, as will be apparent from the later discussion.

We have recently worked work with the reception and utilization of broadband radio-frequency reception, e.g., for low-power utilization applications, as discussed in the copending application Ser. No. 06/539,223 of Joseph B. Tate, filed Oct. 6, 1983. While doing this work, we have noted that the antenna's output voltage fluctuated with time due to certain, known causes.

First, we noted that the higher we placed an antenna above the ground, the the greater the output signal it provided. We have observed this by raising the physical height of an antenna and observing an increase in power output, and also by observing variations in the output of a fixed antenna near a body of ocean water as a function of the tides: the antenna's output was greatest at low tide and lowest at high tide. We believe that the the change in water level, which serves as a ground plane, effectively lowers or raises the height of the antenna above the ground.

We also noted that the antenna's output was affected by solar flares to a limited extent; these caused the antenna to produce a higher output voltage during their occurrence. We believe this phenomena is caused by an increase in the level of ambient ionization due to the flares.

Further, we noted that the antenna's output dropped at certain irregular times; at first we would not attribute any cause to these drops. However investigation enabled us to correlate these drops with the subsequent occurrence of seismic activity. We found that the magnitude of the drop was proportional to the size of the subsequent earthquake.

Certain phenomena have been discovered to precede earthquakes. These include an anomalous uplift of the ground, changes in the electrical conductivity of rock, changes in the isotopic composition of deep well water, changes in the nature of small earthquake activity (e.g., bunching of small foreshocks), anomalous ground tilt or strain changes, changes in physical properties, such as porosity, electrical conductivity, and elastic velocity in the hypocentral region. Earthquake, McGraw-Hill Encyclopedia of Science And Technology, 1960; Earth by F. Press, W. H. Freeman & Co., 1974.

Phenomena associated with rocks have attracted much recent attention. Wm. Brace of the Mass. Inst. of Technology has found that when rocks were squeezed or compressed, just before they fractured, they tended to develop hairline cracks, swell or dilate (dilatancy), become more porous and electrically conductive, and transmitted high frequency seismic-like waves more slowly. Two of Brace's former students, Amos Nur of Stanford University and Christopher Scholz of Lamont-Doherty furthered Brace's work, connecting the dilatancy theory with seismic P-wave velocity shifts and rock resistivity changes as a precursor for earthquakes. See. e.g., Brace, Orange, and Madden, J. Geo-

phys Res., 70(22), 5669, 1965; A. Nur, Bull. Seis. Soc. of Amer., V 62, Nr. 5, pp. 1217–1222, 1972 Oct.; Earthquake by B. Walker, Time-Life Books, 1982.

Based upon the above background, we have developed a theory as to the cause of this drop in antenna output as a precursor or predictor of earthquakes. We believe that before a quake occurrs, the pressure within underground rock bodies temporarily increases greatly, causing the rocks to dilate and become conductive, in accordance with the works of Brace, Nur, and Scholz. This increase in conductivity effectively raises the ground plane, thereby causing the antenna's output to decrease temporarily.

Thus before the occurrence of a quake, the underground pressure increases greatly temporarily, causing underground rock bodies to swell and become more conductive, thereby raising the ground plane, which in turn causes the voltaic output of nearby antennas to drop.

We accordingly constructed an apparatus to automatically monitor antenna output and provide a suitable indication if the output level dropped significantly. The indication was calibrated empirically after much experimentation so as to filter ouo the effects of solar- and tide-caused variations. We did this by arranging the apparatus so that an output indication was provided only if the antenna output dropped a predetermined degree beyond its average level; we utilized statistical filtering techniques to accomplish this.

DRAWINGS

FIG. 1 shows the front panel of a Seismic Early Warning (SEW) apparatus according to the invention.

FIG. 2 is a plot of voltage (representing ambient rf level) v. time as measured by the apparatus of FIG. 1.

FIG. 3 is a schematic diagram of an ambient power module circuit (used in the SEW apparatus) for producing a DC output voltage proportional to the ambient rf energy

FIG. 4 is a block diagram of a computer in the apparatus of FIG. 1.

FIG. 5 is a flowchart which depicts the operation of the the SEW system.

FIG. 6 is a flowchart which depicts the operation of an optional alarm trigger system useable with the SEW apparatus.

FIG. 1—SEISMIC EARLY WARNING APPARATUS

In accordance with the invention, a seismic early warning apparatus is provided as shown in FIG. 1. The apparatus consists of a housing containing a general purpose computer (not shown), a disc drive **10**, an analog system comprising a microampere meter **12** arranged to monitor direct current (which is proportional to the ambient rf energy), and a direct current strip chart recorder **14** arranged to provide a continuous indication of the current antenna output, which will be called the ambient power level. A hexidecimal keypad **16** is provided to enter data, such as time, for entering programs and changes and for operating the system according to preset codes. The time, date, and voltaic level of the antenna's output are continuously indicated by digital readouts **18**, **20**, and **22**, respectively. A screen display **24** is provided to display graphic and alphanumeric information of the current status of the apparatus and previous data records.

Lastly the apparatus includes four status indicating lamps, which preferably are LEDs (light-emitting diodes) as follows: A green LED **26** indicates that the system is on and functioning normally. A yellow LED **28** indicates that the system has detected an event, namely the occurrence of a drop in ambient power below the preset level, which would be the prediction of an impending earthquake. A red LED **30** is provided as backup confirmation of the occurrence of the event; LED **30** is illuminated when a duplicate receiving system also detects an event. A blue LED **32** indicates initiation of operation of an automatic telephone dialer within the system, which has been preprogrammed to dial a predetermined number and provide a warning in the event of an occurrence of an alarm condition. Lastly the apparatus includes a hard copy output port **33** for providing printed graphic and numeric outputs of all system data.

FIG. 2—AMBIENT RF LEVEL V. TIME BEFORE QUAKE

FIG. 2 illustrates a reproduction of an actual plot of a voltage as a function of time, which voltage was proportional to the ambient RF (radio frequency) level, from the period from before to after a relatively large earthquake. This plot, which is typical of many we have observed before a quake, was made by deriving the voltage with a 30-meter, long-wire monopole antenna (not shown) which was mounted horizontally and which extended over San Francisco (Richardson) Bay easterly from Sausalito, California, 9 meters above sea level. The antenna thus intercepted and converted to an RF voltage the ambient RF energy, mainly from local (San Francisco area) AM radio stations. We rectified and filtered the output of the antenna using one-half of the circuit of FIG. 3 (described below) to provide a DC voltage which was plotted on a conventional ink-on-paper plotter. Note that on the section of the chart for Apr. 19 (1984), which begins at time 0:00 (midnight) and ends at 24:00, the voltage or ambient RF power level at the antenna increased and fell and then increased slightly in the 24-hour period. This wavelike variation typically occurs on a daily basis and is caused by tides: the peaks occurring at low tide when the effective ground plane provided by the water drops and the troughs occurring at high tide when the ground plane rises.

On Apr. 20, from about 8:00 to about 12:00, a sharp and constant-level dip in the ambient rf power occurred, as indicated. The magnitude of this pronounced dip is far greater than the normal tide-caused variations, as is its beginning and ending slope.

Thereafter, from Apr. 20 to Apr. 23, the plot (not shown) continued unremarkably, albeit with a slight variation from normal.

The same occurred on Apr. 24, with the plot actually being generally similar to a normal day. However at 13:15 on Apr. 24, as indicated, a large, Richter magnitude 6.0 quake occured near Hollister, Calif., about 340 km away from the antenna. No change in the plot occurred at this time.

Correllation of this quake with the plot's marked dip of Apr. 20 was made by the repeated observation of dozens of similar dips and subsequent quakes. Pronounced dips were always followed by a quake several days later. Thus we have empirically established causal and theoretical connections between pronounced dips

of the type shown and the occurrence of subsequent seismic activity.

FIG. 3—AMBIENT POWER MODULE

The circuit of FIG. 3 is used to convert the ambient RF energy to a direct voltage which can be used and handled by data processing equipment. Designated an ambient power module (APM), it is connected to an antenna **40**, preferably a broadband monopole antenna of the type described in the preceeding section. The distal end of the antenna is free and its proximal end is connected to the circuit via two capacitors Cp1 and Cn1, each being in series with the signal line for coupling and each having a value of 0.047 microfarad. Taking the left or negative side of the circuit first, it comprises two rectifiers (diodes) Dn1 and Dn2 (1N34 type) and a filter capacitor Cn2 (40 microfarads). Rectifier Dn1 is connected in parallel to the signal path and rectifier Dn2 is connected in series, in the wellknown voltage multiplier arrangement. Capacitor Cn2 is connected in parallel across the output of the APM to smooth the rectified output. The right or positive side of the circuit is similar, except for the polarity of the diodes.

In operation, an RF voltage is developed across antenna **40**; this voltage is voltage multiplied by the two rectifiers on each side of the circuit. The resultant direct voltages are smoothed or filtered by capacitors Cn1 and Cp2 and are supplied to output terminals **42** and **44**. A positive version of this direct voltage is plotted in FIG. 2, as described above.

FIG. 4—BLOCK DIAGRAM OF COMPUTER

A computer for performing the monitoring and alarm functions of the invention and which is provided within the apparatus of FIG. 1 is shown in FIG. 4. The computer receives the positive voltage from the APM (FIG. 3) and processes this, providing an alarm if the voltage dips a predetermined amount from its recent average value.

The computer comprises an analog to digital converter (ADC) **50** which is arranged to convert the positive DC voltage from the AAPM to digital form, preferably in the form of a parallel signal at the output of ADC **50**. The digitized voltage from ADC **50** is supplied to a central processing unit **52**, which is a type 68000 microprocessor or computer on a chip. CPU **52** and ADC **50** are clocked by a clock **54** in conventional fashion.

CPU **52** operates on instructions from a program contained in an electricallyprogrammed read only memory (EPROM), the program being listed later. CPU **52** temporarily stores data in a read and write memory (RAM) **58**. CPU **52** also supplies output data to display screen **24**, disc drive **10**, and hard-copy printer **26'**, each of which was already described in conjunction with FIG. 1.

CPU **52** can receive input data manually from hexidecimal keypad **16** (see FIG. 1) via a keyboard encoder **60**.

CPU **52** can supply an alarm output to a radio transmitter or automatic telephone dialer **62** via a modem (modulator-demodulator) **64** for connecting the CPU to a phone (not shown).

As also indicated in FIG. 4, the negative output of the AAPM of FIG. 3 is connected to ammeter **12** and chart recorder **14**.

FIG. 5—FLOWCHART OF SEISMIC EARLY WARNING SYSTEM

In operation, the system of FIG. 4 operates under control of the program in EPROM **56** in accordance with the flowchart of FIG. 5 as follows:

Startup: Blocks **70** and **72**: An initialization and startup sequence is first initiated when the machine is turned on, as indicated by block **70**; this sets all registers and counters to zero. The time and data are then set manually (using EPROM **56**), as indicated by block **72**.

Clock Reading: Blocks **74** and **76**: Next, under automatic program control, the machine reads the elapsed time on its clock display register, as indicated by block **74**. If the "seconds" register does not indicate the number one (#1), the machine continues to read the clock, as indicated by the "no" output of decision block **76**.

Minute Sample: Block **78**: When second #1 appears, as it will once per minute, the decision in block **76** will be "yes", so that the machine will take one sample of the rectified, smoothed, and digitized version of the antenna's output, i.e., the output of ADC **50** of FIG. 4, as indicated in block **78**. This sample will be taken once per minute, i.e., whenever second #1 is displayed.

Running Average: Block **80**: Next, as indicated by block **80**, a running average of the samples taken in block **78** is calculated. This is done by accumulating the samples to keep a running total of their values, counting the number of samples accumulated, and dividing the running total by the latest number of samples each time a new sample is taken.

Store Hourly Average: Blocks **82** and **84**: Next, as indicated in block **82**, a test is made to see if the time display register indicates that minute number one (#1) has come up. If not, the decision is "no" and the clock is read again (block **74**). If the decision is "yes", as it will be once per hour, the running average in the accumulator will be stored (block **84**) and the accumulator will be cleared or reset to zero.

One Day Test: Block **86** ("No" decision) and Block **94**: Next the machine makes a test to see if 24 hours have passed. If not, the machine will not be able to make any valid statistical determinations. Thus it must run at least 24 hours before being operative. Assuming the decision in block **86** is negative (24 hours have not yet elapsed) another test is made (block **94**) to see if hour zero is indicated, which will occur once per day. If hour zero is not indicated, (decision in block **94** is negative), the clock will be read again (block **74**) in the usual loop.

Calculate SD: Block **86** ("Yes") and Block **88**: If a full day has elapsed, so that valid statistics can be calculated ("yes" from block **86**), the standard deviation (SD) of the last **24** hourly averages is calculated, as indicated in block **88**. This is done once per hour. The calculation is made using the usual SD formula

$$SDDEV = SQR([sum(x-X)^2]/n)$$

where SDDEV = SD; SQR = the square root; sum = the sum of; x = the individual hourly averages; X = the mean of the hourly averages; and n = the number of individual hourly averages. Essentially the SD is calculated by taking the mean of all of the hourly averages, taking the difference or deviation of each hourly average from the mean, squaring each deviation, taking the mean of the squared deviations, and then taking the square root of the mean of the squared deviations.

Evaluate SD: Block **90**: The SD is then evaluated to see if it is greater than 0.3. This value has been empirically determined to be the level at which a the present apparatus will provide a reasonably positive indication that an earthquake will occur, while neglecting the effects of non-seismic-caused variations. If the SD is less than 0.3, (a "no" output from block **90**), this indicates that the last hourly average was not greatly different from the average of the last 24 hourly samples, so that no alarm need be indicated. I.e., the antenna's output did not drop significantly to indicate an impending earthquake. Thereupon the program moves to block **94**, where a test is made for the existence of hour zero, as described. If, however the SD exceds 0.3 ("yes" output of block **90**), this indicates that the antenna's output has dropped significantly so as to affect the last hourly average, thereby to indicate an impending earthquake.

Alarm: Block **92**: In response to the Yes output of block **92**, an alarm is triggered (block **94**). The alarm may be a bell, the dialing of a telephone to a location where personnel are present if the apparatus is placed at a remote or non-manned location, or the initiation of the further program of the Flowchart of FIG. **6**, the alarm trigger sequence. To eliminate the possibility of equipment failure and to provide confirmation from another apparatus at another location, we prefer to provide an alarm only upon confirmation from another apparatus, as discussed in the description of FIG. **6** below.

Make Record: Block **94** ("Yes") and Block **96**: If hour zero is being displayed when the operation of block **94** is performed, which occurs once per day at midnight, the operation of block **96** will be performed, i.e., the data in the registers will be stored to disc to create a permanent record and the registers will be cleared to create new data for the next day. However the previous 24 hourly averages are still stored at all times so that a valid SD can be calculated and tested every hour. After the operation of block **96**, the clock is read again in accordance with the regular program (block **74**).

FIG. 6—ALARM TRIGGER FLOWCHART

The sequence of FIG. **6** is performed when the alarm is triggered in block **92** of FIG. **5** as an optional, but preferred backup confirmation of an impending earthquake. The operations in the backup confirmation system will be described briefly.

Beginning with blocks **100** and **102**, the system is continually tested (hourly) for the occurrence of a SD of the hourly averages of greater than 0.3. If the SD is greater than 0.3, the alert indicator (**28** of FIG. **1**) is triggered (block **104**) and the program initiates a test (block **106**) to see if a backup apparatus (not shown) is present. If so (yes output of block **106**) the backup apparatus is also checked (blocks **108** and **110**). If the backup does not indicate an excess SD, the indicators are reset to normal (block **112**), but if backup confirmation is received, the alarm indicator (**30** of FIG. **1**) is triggered per block **114** and a preprogrammed telephone number is dialed and indicator **32** is lit (block **116**).

After the alarm condition is manually checked and the system is reset, the output of block **120** will be a "yes" and the system will be reset to normal (block **112**). If a valid alarm condition is indicated and confirmed, civil authorities will have time (usually several days) to notify the populace, evacuate the area, or take any other needed precautions, depending on the size of the impending quake as indicated by the size of the standard deviation.

PROGRAMS:

The attached computer programs will perform the calculations and operations above described. These programs are written in the BASIC programming language. Program "RECVOLT.AL" runs continuously and writes the information to disc every 24 hours. Program "GRASTAT.*" is manually run; it reads data from the disc and plots it on the screen or printer, as desired.

While the above description contains many specifications, these should not be construed as limitations on the scope of the invention, but merely as an exemplification of one preferred embodiment thereof. Many other variations are possible. For example, the programming language can be changed, or the calculations and operations can be performed with hard-wired conventional circuitry in lieu of a programmed computer. More than two corroboration receivers can be used, and these can be placed at various locations. In lieu of testing the antenna's output reception of the area's AM stations, a special, decicated transmitter with a special, dedicated frequency and a specially-tuned matching receiver can be used to avoid depedence on stations which are not under the control of the earthquake prediction system and its personnel. The transmitter and the receiver should be spaced apart geographically, preferably by at least several km, so that the ground plane conduction phenemon can operate. Also the transmitted signal can be a specially-coded or modulated signal, or it can be an auxiliary signal of a regular transmitter, e.g., a SSB or SCA signal, together with a matching receiver. In lieu of a test for an excess SD, the apparatus can be arranged to test for a predetermined drop in the value of the antenna output from its immediately previous value or its average value over a predetermined period, such as an hour or day, or for a drop having greater than a predetermined slope. Accordingly the full scope of the invention should be determined by the appended claims and their legal equivalents, and not by the examples given.

"RECVOLT.AL"

8299
Seen of 12-9

```
5 ? ")"
6 HO=0:U=1:G=1
7 DIM P$(100),A$(1):A$=" "
100 DIM B$(3)
110 DIM Z$(15)
115 DIM HAR(24):DIM HA(24):DIM HAL(25)
117 FOR I=1 TO 25:HAL(I)=0:NEXT I
120 POSITION 5,5:? "RECORDING VOLTMETER":POSITION 5,7:? "COPYRIGHT 1984":POSITIO
N 5,9:? "JOE TATE"
125 FOR D=1 TO 1000:NEXT D:? ")"
150 ? "DO YOU WANT TO SEE A FILE?"
```

```
160 INPUT B$
170 IF B$="YES" THEN GOTO 12040
180 IF B$="NO" THEN GOTO 200
200 N=1:J=0:AVG=0:A=0:K=0
205 DIM D$(3),M$(8),DATE$(15),X$(3)
220 FOR R=1 TO 24:HA(R)=0:NEXT R
280 ? ")":POKE 752,1
420 ? "IF DATE IS CORRECT PRESS C"
425 ? "PRESS N FOR NEXT MONTH"
430 READ M$:K=K+1:IF K>13 THEN K=1
432 IF M$<>"RES" THEN 435
433 RESTORE :GOTO 430
435 POSITION 6,12:? M$
440 INPUT X$
445 IF X$="C" THEN 450
448 IF X$="N" THEN 430
449 GOTO 435
450 ? ")"
455 ? "ENTER TODAY'S DATE"
458 INPUT D
459 D$=STR$(D)
460 ? M$;" ";D$
505 ? "DO YOU WANT TO SET THE TIME?";:INPUT X$
510 IF X$="YES" THEN 520
515 GOTO 1050
520 ? ")"
525 ? "HOURS";:INPUT H
530 ? "MINUTES";:INPUT M
535 ? "SECONDS";:INPUT S
540 ? "HIT START TO BEGIN THE TIME"
545 IF PEEK(53279)<>6 THEN 545
550 ? ")"
1010 REM ******PUT CURRENTTIME IN HARWARE REGISTER*****
1011 GRAPHICS 2
1015 POKE 18,0:POKE 19,0:POKE 20,0
1020 T=H*60^3+M*60^2+S*60
1025 POKE 18,INT(T/(256*256))
1030 T=T-(256*256)*(INT(T/(256*256)))
1035 POKE 19,INT(T/256)
1040 T=T-256*(INT(T/256))
1045 POKE 20,INT(T)
1050 ? ")"
1055 TIME=PEEK(20)+PEEK(19)*256+PEEK(18)*256*256
1065 IF TIME>5184000 THEN 1265
1070 TIME=INT(TIME/60+0.5)
1075 SEC=TIME-60*(INT(TIME/60))
1076 R=PEEK(53279):IF R=5 THEN SOUND 0,0,0,0:SOUND 1,0,0,0:U=1
1077 POKE 752,1:IF R=3 THEN G=2:GOTO 12040
1079 IF U=1 THEN POSITION 3,3:? #6;"E.T. ";HO;" HRS.  "
1080 POSITION 14,8:? #6;SEC;":S. "
1082 IF SEC=7 AND G=1 THEN GOSUB 15200:GOTO 14020
1083 IF SEC=8 AND G=0 AND HOURS<>0 THEN GOSUB 13000:GOSUB 13100:FOR D=1 TO 7500:
NEXT D:GOSUB 15200
1085 IF SEC>1 THEN N=1
1086 IF SEC=1 AND N=1 THEN 2020
1095 TIME=INT((TIME-SEC)/60)
1200 MIN=TIME-60*(INT(TIME/60))
1205 HOURS=INT((TIME-MIN)/60)
1210 IF SEC>=60 THEN 1220
1213 IF MIN=1 AND SEC=1 AND HO>24 THEN GOTO 15000
1215 GOTO 1230
1220 MIN=INT(SEC/60)+MIN
1225 SEC=SEC-60*(INT(SEC/60))
1230 IF MIN>=60 THEN 1240
1240 HOURS=INT(MIN/60)+HOURS
1245 MIN=MIN-60*(INT(MIN/60))
1252 IF HOURS>23 THEN HOURS=0
1255 GOTO 1055
1260 ? INT(HOURS+0.5);":";INT(MIN+0.5);":";INT(SEC+0.5):GOTO 1055
1262 ? "LINE1262"
1265 TIME=PEEK(18)*256*256+PEEK(19)*256+PEEK(20)
1270 TIME=TIME-5184000*(INT(TIME/5184000))
1275 POKE 18,INT(TIME/(256*256))
```

```
1280 TIME=TIME-(256*256)*INT(TIME/(256*256))
1285 POKE 19,INT(TIME/256)
1290 TIME=TIME-256*(INT(TIME*256))
1295 IF HOURS>23 THEN H=0:M=0:S=0:GOTO 1015
1300 GOTO 1055
2020 REM ******SAMPLE ROUTINE*****
2022 N=2
2025 LET X=PEEK(625)
2030 IF X>40 THEN POSITION 1,14:? "VOLTAGE BELOW RANGE(LESS THAN 1.8V)"
2035 IF X<3 THEN POSITION 1,10:? "VOLTAGE ABOVE RANGE(ABOVE 7V)"
2040 IF X>26<40 THEN LET V=(40-X)*0.01+1.85
2045 IF X>22<26 THEN LET V=(26-X)*0.062+2
2050 IF X>20<22 THEN LET V=(22-X)*0.125+2.25
2055 IF X>16<20 THEN LET V=(20-X)*0.125+2.5
2060 IF X>13<16 THEN LET V=(16-X)*0.166+3
2065 IF X>11<13 THEN LET V=(13-X)*0.225+3.5
2070 IF X>10<11 THEN LET V=(11-X)*0.4+3.95
2075 IF X>5<10 THEN LET V=(10-X)*0.15+3.25
2080 IF X>8<10 THEN LET V=(10-X)*0.325+4.35
2085 IF X>6<8 THEN LET V=(8-X)*0.5+5.1
2090 IF X>3<6 THEN LET V=(6-X)*0.33+5.9
2095 POKE 77,0
3000 GOSUB 15200
3500 J=J+1
3510 AVG=(A+V)/J
3512 LET A=A+V
3520 ? "SAMPLE #";J;"  RUN AVG ";AVG;M$;D$
3600 HA(HOURS)=AVG
3610 IF MIN<>0 THEN 1055
3612 HAL(25)=AVG
3613 FOR I=1 TO 24:HAL(I)=HAL(I+1):NEXT I
3615 IF MIN=0 THEN A=0:HO=HO+1
3625 J=0
4020 IF HOURS<>0 THEN 1055
4048 REM ****
4050 REM ** CREATE FILENAME-DISKWRITE*****************
4052 REM ****
4053 FOR Q=0 TO 23:HAR(Q)=HA(Q):NEXT Q
4055 DATE$(LEN(DATE$)+1)=M$
4056 DATE$(LEN(DATE$)+1)=D$
4060 OPEN #1,8,0,DATE$
4065 FOR Q=0 TO 23
4070 HAR=HAR(Q)
4072 PRINT #1,HAR:NEXT Q
4075 CLOSE #1
4080 DATE$=""
5000 REM ******DATE ROLLOVER********
5010 IF K=4 OR K=6 OR K=9 OR K=11 THEN DMAX=30:GOTO 5025
5015 IF K=2 THEN DMAX=28:GOTO 5025
5020 DMAX=31
5025 D=VAL(D$)
5030 D=D+1
5035 IF D>DMAX THEN D=1:READ M$:K=K+1
5040 D$=STR$(D)
5050 GOTO 1055
10000 DATA D:JAN.,D:FEB.,D:MAR.,D:APR.,D:MAY.,D:JUN.,D:JUL.,D:AUG.,D:SEP.,D:OCT.
,D:NOV.,D:DEC.
10010 DATA RES
12000 REM READ OUT ROUTINE********
12010 ? "DO YOU WANT TO READ FILE?"
12020 INPUT B$
12030 IF B$="YES" THEN G=2:GOTO 12040
12040 ? "}":GRAPHICS 0:? "ENTER FILE SPEC PLEASE"
12050 INPUT Z$
12055 GOSUB 13000
12056 PLOT 29,75
12057 ? Z$
12060 OPEN #1,4,0,Z$
12070 FOR Q=0 TO 23
12075 FOR X=29 TO 149 STEP 5
12080 LET HAR(Q)=HAR
12085 IF X=149 THEN 12130
12090 INPUT #1,HAR
```

```
12098 LET Y=75-14*(HAR-2):Y=INT(Y)
12100 IF HAR<2 THEN Y=79
12120 DRAWTO X,Y:NEXT X:NEXT Q
12130 CLOSE #1
12140 ? "DO YOU WANT TO SEE ANOTHER FILE?"
12150 INPUT B$
12160 IF B$="YES" THEN 12040
12170 IF B$="NO" THEN ? ")":? "FINISHED"
12175 FOR D=1 TO 200:NEXT D:? ")":GRAPHICS 2:POSITION 3,1:? #6;"SDDEV ";SDDEV:PO
SITION 15,1:? #6;"      "
12177 GOTO 1055
13000 TRAP 13000:? ")":GRAPHICS 7
13010 COLOR 1
13015 PLOT 16,0
13020 DRAWTO 16,79:DRAWTO 159,79
13030 IF G=2 THEN ? "HOUR 0      6      12      18      24"
13035 IF G=0 THEN ? "HOUR  ";HOURS-24;"      ";HOURS-18;"      ";HOURS-12;"      ";
HOURS-6;"      ";HOURS:? "TODAY"
13036 G=1
13040 PLOT 32,4:DRAWTO 36,12:DRAWTO 40,4
13045 PLOT 51,4:DRAWTO 49,6:DRAWTO 49,10:DRAWTO 51,12:DRAWTO 54,12:DRAWTO 57,10:
DRAWTO 57,6:DRAWTO 54,4
13046 DRAWTO 51,4
13050 PLOT 67,4:DRAWTO 67,12:DRAWTO 73,12
13055 PLOT 80,4:DRAWTO 88,4:PLOT 84,4:DRAWTO 84,12
13060 PLOT 96,9:DRAWTO 96,10:DRAWTO 98,12:DRAWTO 101,12:DRAWTO 103,10:DRAWTO 103
,9:DRAWTO 96,6:DRAWTO 96,5
13065 DRAWTO 99,4:DRAWTO 101,4:DRAWTO 103,5:DRAWTO 103,6
13070 PLOT 14,5:DRAWTO 18,5
13072 PLOT 14,19:DRAWTO 18,19
13074 PLOT 14,33:DRAWTO 18,33
13076 PLOT 14,47:DRAWTO 18,47
13078 PLOT 14,61:DRAWTO 18,61
13080 PLOT 14,75:DRAWTO 18,75
13082 PLOT 9,74:DRAWTO 10,73:DRAWTO 11,73:DRAWTO 12,74:DRAWTO 9,77:DRAWTO 12,77
13084 PLOT 9,45:DRAWTO 9,47:DRAWTO 12,47:PLOT 11,45:DRAWTO 11,49
13086 PLOT 12,18:DRAWTO 11,17:DRAWTO 10,17:DRAWTO 9,18:DRAWTO 9,21:DRAWTO 10,22:
DRAWTO 11,22:DRAWTO 12,21
13088 DRAWTO 11,20:DRAWTO 10,20
13089 TRAP 40000
13090 RETURN
13100 FOR Q=1 TO 24:LET X=29+5*(Q-1):LET HAL=HAL(Q)
13110 LET Y=75-14*(HAL-2):Y=INT(Y)
13120 IF HAL<2 THEN Y=79
13122 IF X=29 THEN PLOT X,Y
13125 IF X>29 THEN DRAWTO X,Y
13127 FOR D=1 TO 20:NEXT D:NEXT Q
13130 RETURN
14020 G=0:FOR S=1 TO 7:IF PEEK(53279)=3 THEN 12040
14021 IF S=1 THEN 14120
14022 IF S=2 THEN 14150
14023 IF S=3 THEN 14160
14024 IF S=4 THEN 14170
14025 IF S=5 THEN 14180
14026 IF S=6 THEN 14190
14027 IF S=7 THEN POSITION 1,5:? #6;"                    ":GOTO 1055
14035 LM=LEN(P$)
14040 POSITION 1,5:? #6;"                    "
14060 TRAP 100:FOR I=1 TO 19:POSITION 20-I,5:? #6;P$(1,I):FOR D=1 TO 8:NEXT D:NE
XT I
14070 TRAP 80:FOR I=2 TO LM-19:POSITION 0,5:? #6;P$(I,19+I):FOR D=1 TO 8:NEXT D:
NEXT I
14080 FOR I=0 TO 5:POSITION 0,5:? #6;P$((LM-18)+I,LM);A$:FOR D=1 TO 8:NEXT D:NEX
T I
14090 POSITION 0,5:? #6;A$:GOTO 14200
14100 FOR I=19-LM TO 1 STEP -1:POSITION I,5:? #6;P$(1,LM);A$:FOR D=1 TO 8:NEXT D
:NEXT I
14110 FOR I=1 TO LM:POSITION 0,5:? #6;P$(I,LM):FOR D=1 TO 8:NEXT D:NEXT I:GOTO 1
4090
14120 P$="THIS ATARI COMPUTER IS BEING USED AS A RECORDING VOLTMETER":GOTO 14035
14150 P$="VOLTAGE TO BE MEASURED AND RECORDED IS BROUGHT IN THROUGH THE JOYSTICK
 PORT":GOTO 14035
14160 P$="AN ANTENNA ON THE ROOF OF THE BUILDING PROVIDES A SOURCE OF FLUCTUATIN
```

```
G VOLTAGE":GOTO 14035
14170 P$="A RECORD OF THE VARIATIONS IS SENT TO THE DISK DRIVE":GOTO 14035
14180 P$="THIS ALLOWS YOU TO SEE GRAPHS OF HOURLY VOLTAGE CHANGES FOR PREVIOUS D
AYS":GOTO 14035
14190 P$="TO SEE PREVIOUS RECORDS PRESS OPTION UNTIL SCREEN CHANGES":GOTO 14035
14200 NEXT S
15000 REM ---CALC MEAN & STD DEV---
15005 SUM=0:SDDEV=0:DFF=0
15010 FOR I=1 TO 24
15020 SUM=SUM+HAL(I):NEXT I
15030 MEAN=SUM/24
15040 FOR I=1 TO 24
15050 DFF=DFF+(HAL(I)-MEAN)^2:NEXT I
15060 SDDEV=SQR(DFF/(23))
15065 POSITION 3,1:? #6;"SDDEV ";SDDEV:POSITION 15,1:? #6;"      "
15070 IF SDDEV>0.5 THEN GOSUB 15100
15080 GOTO 1055
15100 REM -----ALARM TONE-----
15105 POSITION 1,3:? #6;"A.T. ";HOURS;" ";M$;D$:U=0
15110 FOR TONE=1 TO 30
15120 SOUND 0,120,10,10
15125 SOUND 1,85,10,10
15130 FOR D=1 TO 20:NEXT D
15140 SOUND 0,0,0,0
15145 SOUND 1,0,0,0
15150 FOR D=1 TO 10:NEXT D
15160 NEXT TONE
15165 SOUND 0,120,10,10
15166 SOUND 1,85,10,10
15170 RETURN
15200 GRAPHICS 2:POSITION 3,1:? #6;"SDDEV ";SDDEV:POSITION 15,1:? #6;"        "
15210 POSITION 3,3:? #6;"E.T. ";HO;" HRS.  "
15215 POSITION 5,7:? #6;V;" VOLTS  "
15220 POSITION 1,8:? #6;HOURS;":HRS ";MIN;":M. "
15225 ? "SAMPLE #";J;" RUN AVG ";AVG:M$;D$
15230 RETURN
```

"GRASTAT.*"

```
90 DIM HAR(24)
95 DIM Z$(10)
100 GRAPHICS 0:CLOSE #1:OPEN #1,4,0,"K:":POKE 752,1:SETCOLOR 2,0,0
110 DIM SA(300)
120 REM GENERAL INSTRUCTIONS
130 POSITION 15,6:? "STATISTICS":POSITION 18,10:? "FOR":POSITION 11,14:? "NON-ST
ATISTICIANS"
140 FOR K=1 TO 300:SA(K)=0:NEXT K
150 ? ")":POSITION 14,3:? "THIS PROGRAM":POSITION 13,4:? "CALCULATES THE":POSITI
ON 12,5:? "FOLLOWING VALUES"
160 POSITION 9,6:? "FROM THE DATA YOU INPUT:"
170 POSITION 14,9:? "1. MEAN":POSITION 14,11:? "2. STANDARD":POSITION 17,12:? "D
EVIATION"
180 POSITION 14,14:? "4. RANGE"
190 POSITION 9,20:? "PRESS 'C' TO CONTINUE"
200 GET #1,A:IF A<>67 THEN 200
210 REM REQUEST INSTRUCTIONS
220 SUM=0:MEAN=0:DFF=0:SDDEV=0:RG=0
230 ? ")":POSITION 5,12:? "Do you need instructions (y/n)?"
240 GOSUB 1350
250 IF A=89 THEN GOSUB 830
260 REM DATA ENTRY
265 CLOSE #1
270 ? ")":POSITION 9,11:? "Enter Filedate:   ":INPUT Z$:N=24
280 IF N>300 OR N<1 THEN FOR I=28 TO 38:POSITION I,11:? CHR$(32):NEXT I:GOTO 270
290 FOR Q=1 TO 2
300 OPEN #1,4,0,Z$
310 FOR I=1 TO 24
320 LET HAR(I)=HAR
330 INPUT #1;HAR
331 NEXT I:CLOSE #1:NEXT Q
335 FOR I=1 TO 24:SA(I)=HAR(I):NEXT I
336 SA(I)=SA
340 FOR J=22 TO 38:POSITION J,12:? CHR$(32):NEXT J
341 OPEN #1,4,0,"K:"
```

```
350 REM ERROR CORRECTION REQUEST
360 ? ")":POSITION 3,12:? "Wish to make any corrections (y/n)?"
370 GOSUB 1350
380 IF A=89 THEN GOTO 1120
390 REM CALCULATION OF MEAN AND STD. DEVIATION
400 ? ")":POSITION 15,12:? "PLEASE WAIT":POSITION 6,14:? "STATISTICS BEING CALCU
LATED"
410 FOR I=1 TO N
420 SUM=SUM+SA(I):NEXT I
430 MEAN=SUM/N
440 FOR I=1 TO N
450 DFF=DFF+(SA(I)-MEAN)^2:NEXT I
460 SDDEV=SQR(DFF/(N-1))
470 REM SORTING THE DATA
480 FL=0
490 FOR I=1 TO N-1
500 IF SA(I)<=SA(I+1) THEN 550
510 Q=SA(I)
520 SA(I)=SA(I+1)
530 SA(I+1)=Q
540 FL=1
550 NEXT I
560 IF FL=1 THEN 480
570 REM CALCULATION OF RANGE
580 RG=SA(N)-SA(1)
590 LR=SA(1):HR=SA(N)
600 REM CALCULATION OF MEDIAN
610 IF N/2<>INT(N/2) THEN 650
620 IF SA(N/2)=SA(N/2+1) THEN MDD=SA(N/2)
630 IF SA(N/2)<>SA(N/2+1) THEN MDD=(SA(N/2)+SA(N/2+1))/2
640 GOTO 670
650 MDD=SA(INT(N/2+1))
660 REM PRINT RESULT TO SCREEN
670 ? ")":POSITION 10,2:? "CALCULATION RESULTS":POSITION 9,4:? "*****  ";Z$;" **
***"
680 POSITION 4,6:? "SAMPLE SIZE:":POSITION 26,6:? N
690 POSITION 4,8:? "MEAN(X BAR)":POSITION 26,8:? INT(MEAN*10000+0.5)/10000
700 POSITION 4,10:? "STD. DEVIATION":POSITION 26,10:? INT(SDDEV*10000+0.5)/10000
710 POSITION 4,12:? "MEDIAN":POSITION 26,12:? MDD
720 POSITION 4,14:? "RANGE":POSITION 26,14:? RG
730 POSITION 4,16:? "LOWEST SAMPLE VALUE":POSITION 26,16:? LR
740 POSITION 4,18:? "HIGHEST SAMPLE VALUE":POSITION 26,18:? HR
750 POSITION 13,22:? "PRESS ANY KEY"
760 GET #1,A
770 REM REQUEST TO CONTINUE OR END
775 GOSUB 1400
780 ? ")":POSITION 4,12:? "Wish to Process more data (y/n)?"
790 GOSUB 1350
800 IF A=78 THEN GRAPHICS 0:END
810 FOR I=1 TO N:SA(I)=0:NEXT I:GOTO 220
820 REM INSTRUCTION SUBROUTINE
830 ? ")":POSITION 5,5:? "The maximum number of enties is   300, while the mini
mun number is 2."
840 POSITION 5,9:? "The mean is the arithmatic average of the numbers you enter.
"
850 POSITION 5,13:? "THE STANDARD DEVIATION is a measure of how widely your numb
ers spread     from the average."
860 POSITION 10,21:? "Press a key for more."
870 GET #1,A
880 ? ")":POSITION 6,3:? "Since the values you enter tend to form a bell curve(N
ormal Dist.), the Std. Deviation"
890 POSITION 17,5:? " is a measure of the    area under the bell curve."
900 POSITION 3,9:? "No of Std.Dev.(+/-)":POSITION 3,10:? "----------------------
-"
910 POSITION 29,9:? "% Area":POSITION 29,10:? "-------"
920 POSITION 4,12:? "(+/-) 1 Std. Dev.":POSITION 31,12:? "68.3"
930 POSITION 4,14:? "(+/-) 2 Std. Dev.":POSITION 31,14:? "95.5"
940 POSITION 4,16:? "(+/-) 3 Std. Dev.":POSITION 31,16:? "99.7"
950 POSITION 4,18:? "(+/-) 4 Std. Dev.":POSITION 31,18:? "99.9"
960 POSITION 10,21:? "Press a key for more"
970 GET #1,A
980 ? ")":POSITION 4,5:? "The MEDIAN is the value at the     mid-Point of your d
ata."
```

```
990 POSITION 4,10:? "The RANGE is the difference between your lowest data value"
1000 POSITION 25,11:? "and the highest. The range is a quick-and-dirty"
1010 ? "estimate of the spread. The standard  deviation is more reliable tha the
    spread."
1020 POSITION 10,20:? "Press 'S' to start"
1030 GET #1,A:IF A<>83 THEN 1030
1040 RETURN
1050 REM DISPLAY CORRECTION OPTIONS
1060 ? ")":POSITION 1,23:? "C=CHANGE DATA   N=NEXT TABLE    Q=QUIT":RETURN
1070 GET #1,A:IF A<>67 AND A<>78 AND A<>81 THEN 1070
1080 IF A=78 THEN 1280
1090 IF A=81 THEN 390
1100 ? ")"
1110 REM ERROR CORRECTION SUBROUTINE
1120 ? ")":POSITION 3,12:? "Remember incorrect sample # (y/n)?"
1130 GOSUB 1350
1140 IF A=78 THEN 1230
1150 ? ")":POSITION 7,9:? "What is the sample #";:INPUT EN
1160 IF EN>N OR EN<1 OR EN<>INT(EN) THEN 1150
1170 POSITION 7,11:? "Sample ";EN:POSITION 22,11:? "Value ";SA(EN)
1180 POSITION 7,13:? "Enter your new value":POSITION 7,14:INPUT C:SA(EN)=C:HAR(E
N)=C
1190 POSITION 7,19:? "Any more changes (y/n)?"
1200 GOSUB 1350
1210 IF A=89 THEN 1120
1220 GOTO 400
1230 GOSUB 1060:POSITION 5,2:? "These are the first ten values:"
1240 POSITION 11,5:? "ENTRY":POSITION 22,5:? " VALUE"
1250 FOR K=1 TO 10
1260 POSITION 12,K+7:? K:POSITION 24,K+7:? SA(K):NEXT K
1270 GOTO 1070
1280 POSITION 5,2:? "These are the next ten values:     ":IF K<=300 THEN GOSUB 1
340
1290 CT=8:FOR K=K TO K+9
1300 IF K>300 THEN K=K+9:NEXT K:GOTO 400
1310 POSITION 12,CT:? K:POSITION 24,CT:? SA(K)
1320 CT=CT+1:NEXT K
1330 GOTO 1070
1340 FOR J=1 TO 10:POSITION 12,J+7:? "    ":POSITION 24,J+7:? "                    ":
NEXT J:RETURN
1350 GET #1,A:IF A<>89 AND A<>78 THEN 1350
1360 RETURN
1400 ? "DO YOU WISH TO PRINT RESULTS?"
1410 GET #1,A:IF A<>89 AND A<>78 THEN 1410
1420 IF A=78 THEN RETURN
1430 LPRINT :LPRINT :LPRINT "24 HOUR VOLTAGE STATISTICS FOR ";Z$:LPRINT
1440 LPRINT "SAMPLE SIZE...............";N:LPRINT
1445 LPRINT "MEAN(X BAR)...............";INT(MEAN*10000+0.5)/10000:LPRINT
1450 LPRINT "STD.DEVIATION.............";INT(SDDEV*10000+0.5)/10000:LPRINT
1455 LPRINT "MEDIAN....................";MDD:LPRINT
1460 LPRINT "RANGE.....................";RG:LPRINT
1465 LPRINT "LOWEST SAMPLE VALUE.......";LR:LPRINT
1470 LPRINT "HIGEST SAMPLE VALUE.......";HR:LPRINT
1480 ? "DO YOU WANT TO PRINT GRAPHICS?"
1490 GET #1,A:IF A<>89 AND A<>78 THEN 1490
1495 IF A=78 THEN RETURN
1500 GOTO 11960
11960 DIM B$(3)
11990 DIM D$(3),M$(8),DATE$(15),X$(3)
12000 REM ***READ OUT ROUTINE******
12055 GOSUB 13000
12057 CLOSE #1
12060 X=58
12062 U=HAR(1)
12065 FOR I=1 TO 23:HAR(I)=HAR(I+1):NEXT I
12066 HAR(24)=U
12070 FOR I=1 TO 24
12080 LET HAR=HAR(I)
12098 LET Y=150-28*(HAR-2):Y=INT(Y)
12100 IF HAR<2 THEN Y=158
12115 IF X=58 THEN PLOT 58,Y
12120 IF X>58 THEN DRAWTO X,Y
12122 X=X+10
12125 NEXT I
```

```
12130 CLOSE #1
12132 GOSUB 14000:GOTO 13990
12140 ? "DO YOU WANT TO SEE ANOTHER FILE?"
12150 INPUT B$
12160 IF B$="YES" THEN 12040
12170 IF B$="NO" THEN ? ")":? "FINISHED"
12175 FOR D=1 TO 1000:NEXT D:GOTO 12000
13000 ? ")":GRAPHICS 8+16
13010 COLOR 1
13015 PLOT 32,0
13020 DRAWTO 32,158:DRAWTO 318,158
13040 PLOT 64,8:DRAWTO 72,24:DRAWTO 80,8
13045 PLOT 102,8:DRAWTO 98,12:DRAWTO 98,20:DRAWTO 102,24:DRAWTO 108,24:DRAWTO 11
4,20:DRAWTO 114,12:DRAWTO 108,8
13046 DRAWTO 102,8
13050 PLOT 134,8:DRAWTO 134,24:DRAWTO 146,24
13055 PLOT 160,8:DRAWTO 176,8:PLOT 168,8:DRAWTO 168,24
13060 PLOT 192,18:DRAWTO 192,20:DRAWTO 196,24:DRAWTO 202,24:DRAWTO 206,20:DRAWTO
 206,18:DRAWTO 192,12:DRAWTO 192,10
13065 DRAWTO 198,8:DRAWTO 202,8:DRAWTO 206,10:DRAWTO 206,12
13070 PLOT 28,10:DRAWTO 36,10
13072 PLOT 28,38:DRAWTO 36,38
13074 PLOT 28,66:DRAWTO 36,66
13076 PLOT 28,94:DRAWTO 36,94
13078 PLOT 28,122:DRAWTO 36,122
13080 PLOT 28,150:DRAWTO 36,150
13082 PLOT 18,148:DRAWTO 20,146:DRAWTO 22,146:DRAWTO 24,148:DRAWTO 18,154:DRAWTO
 24,154
13084 PLOT 18,90:DRAWTO 18,94:DRAWTO 24,94:PLOT 22,90:DRAWTO 22,98
13086 PLOT 24,36:DRAWTO 22,34:DRAWTO 20,34:DRAWTO 18,36:DRAWTO 18,42:DRAWTO 20,4
4:DRAWTO 22,44:DRAWTO 24,42
13088 DRAWTO 22,40:DRAWTO 20,40
13090 PLOT 16,165:DRAWTO 16,169:PLOT 16,167:DRAWTO 19,167:PLOT 19,165:DRAWTO 19,
169:PLOT 24,165
13092 DRAWTO 23,166:DRAWTO 23,168:DRAWTO 24,169:DRAWTO 25,169:DRAWTO 26,168:DRAW
TO 26,166:DRAWTO 25,165
13094 DRAWTO 24,165
13096 PLOT 29,165:DRAWTO 29,168:DRAWTO 30,169:DRAWTO 31,169:DRAWTO 32,168:DRAWTO
 32,165
13098 PLOT 36,165:DRAWTO 36,169:PLOT 37,166:DRAWTO 38,165:DRAWTO 39,165
13100 PLOT 45,165:DRAWTO 43,165:DRAWTO 42,166:DRAWTO 43,167:DRAWTO 44,167:DRAWTO
 45,168:DRAWTO 44,169
13102 DRAWTO 42,169
13104 PLOT 57,165:DRAWTO 56,166:DRAWTO 56,168:DRAWTO 57,169:DRAWTO 58,169:DRAWTO
 59,168:DRAWTO 59,166
13106 DRAWTO 58,165:DRAWTO 57,165
13108 PLOT 107,165:DRAWTO 105,165:DRAWTO 104,166:DRAWTO 104,168:DRAWTO 105,169:D
RAWTO 106,169:DRAWTO 107,168
13110 DRAWTO 106,167:DRAWTO 105,167
13112 PLOT 163,165:DRAWTO 163,169
13114 PLOT 166,166:DRAWTO 167,165:DRAWTO 168,165:DRAWTO 169,166:DRAWTO 166,169:D
RAWTO 169,169
13116 PLOT 220,165:DRAWTO 220,169
13118 PLOT 224,165:DRAWTO 223,166:DRAWTO 224,167:DRAWTO 223,168:DRAWTO 224,169:D
RAWTO 225,169:DRAWTO 226,168
13120 DRAWTO 225,167:DRAWTO 226,166:DRAWTO 225,165
13122 PLOT 275,166:DRAWTO 276,165:DRAWTO 277,165:DRAWTO 278,166:DRAWTO 275,169:D
RAWTO 278,169
13124 PLOT 281,165:DRAWTO 281,167:DRAWTO 284,167:PLOT 283,165:DRAWTO 283,169
13500 RETURN
13990 GOSUB 15000
14000 TRAP 14030:RESTORE :READ N:DIM P$(N)
14020 FOR I=0 TO N-1
14030 READ J
14040 POKE ADR(P$)+I,J
14050 NEXT I
14065 READ I
14067 RETURN
14989 REM
14990 REM
14991 REM *** DUMP PICTURE ON SCREEN
14992 REM
14993 REM ***
```

```
14994 REM
14995 REM ***
14996 REM
14997 REM ***
14998 REM
14999 REM
15000 X=USR(ADR(P$),INV)
15010 IF X THEN GRAPHICS 0:PRINT "DUMP ERROR -":END
15020 RETURN
15030 REM
19990 REM
19991 REM
19992 REM
19993 REM
19994 REM
19995 REM
19996 REM
19997 REM
20000 DATA 566
20010 DATA 169,96,133,7,32,7,0,186,202,189,0,1,56,233,6,133
20020 DATA 204,232,189,0,1,233,0,133,205,160,195,177,204,201,240,144
20030 DATA 123,165,204,24,105,97,133,206,165,205,105,0,133,207,160,0
20040 DATA 177,206,200,17,206,240,101,136,177,206,24,101,204,133,208,200
20050 DATA 177,206,101,205,133,209,140,2,6,160,1,177,208,24,101,204
20060 DATA 145,208,200,177,208,41,15,101,205,145,208,172,2,6,200,208
20070 DATA 207,193,0,203,0,209,0,225,0,230,0,248,0,255,0,68
20080 DATA 1,91,1,114,1,119,1,129,1,145,1,149,1,155,1,193
20090 DATA 1,205,1,211,1,217,1,10,2,42,2,0,0,170,240,5
20100 DATA 104,104,202,208,251,169,132,133,212,134,213,96,104,201,1,208
20110 DATA 236,104,141,7,6,104,13,7,6,240,4,169,0,240,2,169
20120 DATA 255,141,3,6,186,142,0,6,169,0,133,212,133,213,141,5
20130 DATA 6,32,122,241,162,48,169,3,157,66,3,173,43,242,157,68
20140 DATA 3,173,44,242,157,69,3,169,8,157,74,3,169,0,157,75
20150 DATA 3,32,17,242,169,10,32,230,241,166,88,164,89,134,204,132
20160 DATA 205,169,28,141,7,6,160,0,185,48,242,201,255,240,6,32
20170 DATA 230,241,200,208,243,160,0,165,204,72,165,205,72,162,0,177
20180 DATA 204,157,9,6,165,204,24,105,40,133,204,144,2,230,205,232
20190 DATA 224,8,144,235,138,72,152,72,169,8,141,8,6,162,0,138
20200 DATA 30,9,6,106,232,224,8,144,247,77,3,6,174,7,6,202
20210 DATA 208,2,41,7,32,162,241,206,8,6,208,225,104,168,104,170
20220 DATA 104,133,205,104,133,204,200,192,40,144,172,32,132,241,165,204
20230 DATA 24,105,24,133,204,165,205,105,1,133,205,206,7,6,208,134
20240 DATA 169,15,32,230,241,169,155,32,230,241,162,48,169,12,157,66
20250 DATA 3,76,17,242,173,5,6,240,21,72,169,0,141,5,6,169
20260 DATA 28,32,230,241,104,32,230,241,173,6,6,32,230,241,169,10
20270 DATA 208,68,9,128,174,5,6,240,52,205,6,6,208,8,238,5
20280 DATA 6,208,50,206,5,6,72,173,5,6,201,3,176,13,173,6
20290 DATA 6,32,230,241,206,5,6,208,245,240,17,169,28,32,230,241
20300 DATA 173,5,6,32,230,241,173,6,6,32,230,241,104,141,6,6
20310 DATA 169,1,141,5,6,96,140,2,6,141,4,6,162,48,169,11
20320 DATA 157,66,3,169,1,157,72,3,169,0,157,73,3,157,75,3
20330 DATA 169,4,157,68,3,169,6,157,69,3,32,17,242,172,2,6
20340 DATA 96,32,86,228,162,48,189,67,3,16,245,133,212,174,0,6
20350 DATA 154,162,48,169,12,157,66,3,76,86,228,45,242,80,58,155
20360 DATA 8,27,16,0,74,255,63093
25000 LPRINT :LPRINT :LPRINT "          ";Z$
```

We claim:

1. A method for providing an early warning of the future occurrence of an earthquake, comprising the following steps:

(a) measuring the field strength of at least one broadcast radio frequency signal at a location separated from the place of transmission of said signal, and

(b) providing a humanly-sensible indication if the strength of said signal decreases beyond a predetermined amount from a previous value thereof.

2. The method of claim 1 wherein said measuring is done on a broadband basis so as to measure the strength of a plurality of radio signals.

3. The method of claim 1 wherein said measuring is performed by rectifying and filtering said radio frequency to provide a direct current voltage and wherein said indication is provided in response to a predetermined drop in the value of said voltage.

4. The method of claim 1 wherein said indication is provided if the strength of said signal decreases a predetermined amount from an average value thereof.

5. The method of claim 4 wherein the value of said signal is periodically sampled for a predetermined period, a standard deviation of the resultant samples is calculated, and said indication is provided if said standard deviation exceeds a predetermined value.

6. The method of claim 4 wherein said signal is sampled once per minute, the resultant minute samples are averaged each hour, and the resultant hourly averages are tested to determine if the latest hourly average has

deviated from previous hourly averages beyond a predetermined amount.

7. The method of claim 1 wherein said indication is provided only if at least wo separated receivers detect said predetermined drop in the strength of said signal.

8. The method of claim 1 wherein a visible record of said signal's field strength is plotted as it is measured.

9. The method of claim 1 wherein the strength of a plurality of broadcast signals are measured by rectifying and filtering said signals to provide a direct current voltage, said direct current voltage is periodically sampled, the resultant samples are averaged periodically to provide periodic averages, the standard deviation of said periodic averages is calculated, and said indication is provided if the value of said standard deviation exceeds a predetermined value.

10. A system for providing an early warning of the future occurrence of an earthquake, comprising:

(a) means for measuring the field strength of a least one broadcast radiofrequency signal, said means being arranged to measure said field strength at a location separated from the place of transmission of said signal, and

(b) means responsive to the measured strength of said signal for providing a humanly-sensible indication if said measured field strength decreases beyond a predetermined amount from an average value thereof.

11. The system of claim 10 wherein said means for measuring comprises a broadband receiver for measuring the strength of a plurality of radio signals.

12. The system of claim 10 wherein said means for measuring comprises means for rectifying and filtering said radio frequency signal to provide a direct current voltage and wherein means for providing said indication is arranged to do so in response to a predetermined drop in the value of said voltage.

13. The system of claim 11 wherein said means for providing said indication is arranged to do so if the strength of said signal decreases a predetermined amount from an average value thereof.

14. The system of claim 13 wherein said means for measuring comprises means for periodically sampling the value of said radio signal for a predetermined period, and wherein said means for providing said indication is arranged to calculate the standard deviation of the resultant samples and to provide said indication if said standard deviation exceeds a predetermined value.

15. The system of claim 13 wherein said means for periodically sampling said signal is arranged to take a sample once per minute and to average the resultant minute samples each hour, and wherein said means for providing said indication is arranged to do so by testing the resultant hourly averages to determine if the latest hourly average has deviated from previous hourly averages beyond a predetermined amount.

16. The system of claim 10 wherein said means for providing said indication is arranged to do so only in response to the detection of a predetermined drop in the strength of said signal by two separated receivers.

17. The system of claim 10 further including means for making a visible record of said signal's field strength as it is measured.

18. The system of claim 10 wherein said means for measuring includes means for measuring the strength of a plurality of broadcast signals by rectifying and filtering said signals to provide a direct current voltage, means for periodically sampling said direct current voltage, means for averaging the resultant samples periodically to provide periodic averages, and wherein said means for providing said indication includes means for calculating the standard deviation of said periodic averages, and providing said indication if the value of said standard deviation exceeds a predetermined value.

19. The system of claim 10 wherein said means for measuring and providing said indication comprises a broadband receiver arranged to provide a direct current output voltage, an analog to digital converter, and a programmed computer arranged to receive the outpt of said converter.

20. The system of claim 19 further including means for periodically storing received field strength values and providing a visible plot of the continuous value of said field strength.

* * * * *

UNITED STATES PATENT AND TRADEMARK OFFICE

CERTIFICATE OF CORRECTION

PATENT NO. : 4,628,299

DATED : 1986 Dec 9

INVENTOR(S) : J. B. Tate and D. E. Brown

It is certified that error appears in the above-identified patent and that said Letters Patent are hereby corrected as shown below:

Col. 1, line 6, change "fugure" to --future--.

Col. 3, line 24, change "ouo" to --out--.

Col. 8, line 25, change "specifications" to --"specificities--.

Col 8, near bottom, delete handwriting at top of program listing reading "8299 Issue of 12-9".

Signed and Sealed this

Tenth Day of March, 1987

Attest:

Attesting Officer

DONALD J. QUIGG

Commissioner of Patents and Trademarks

US007688036B2

(12) **United States Patent**
Yarger et al.

(10) **Patent No.: US 7,688,036 B2**
(45) **Date of Patent: Mar. 30, 2010**

(54) **SYSTEM AND METHOD FOR STORING ENERGY**

(75) Inventors: **Eric Jay Yarger**, Rigby, ID (US); **John Morrison**, Butte, MT (US); **John Grant Richardson**, Idaho Falls, ID (US); **David Frazer Spencer**, Idaho Falls, ID (US); **Dale W. Christiansen**, Blackfoot, ID (US)

(73) Assignee: **Battelle Energy Alliance, LLC**, Idaho Falls, ID (US)

(*) Notice: Subject to any disclaimer, the term of this patent is extended or adjusted under 35 U.S.C. 154(b) by 318 days.

(21) Appl. No.: **11/475,564**

(22) Filed: **Jun. 26, 2006**

(65) **Prior Publication Data**

US 2008/0074083 A1 Mar. 27, 2008

(51) **Int. Cl.**

H02J 7/00	(2006.01)
H04B 1/38	(2006.01)
G11B 13/00	(2006.01)
H01F 27/02	(2006.01)

(52) **U.S. Cl.** **320/137**; 320/138; 455/573; 369/13.02; 336/90

(58) **Field of Classification Search** 320/137, 320/138; 455/573
See application file for complete search history.

(56) **References Cited**

U.S. PATENT DOCUMENTS

2,209,809	A	7/1940	Burton	175/21
2,302,687	A	11/1942	Dyer	290/37
3,022,400	A	2/1962	von Ahlefeldt	200/93
3,031,802	A	5/1962	Leliaert	
3,549,818	A	12/1970	Turner	179/82
3,607,403	A	9/1971	Arrance	136/6
3,660,760	A	5/1972	Schaad et al.	325/28
3,665,123	A	5/1972	Ikeda	179/100.41 K
3,665,597	A	5/1972	Tan et al.	
3,809,825	A	5/1974	Schaad et al.	179/82
3,925,694	A	12/1975	Richter et al.	
3,963,854	A	6/1976	Fowler	174/36
3,973,269	A	8/1976	Koch et al.	
4,046,244	A	9/1977	Velazquez	
4,080,663	A	3/1978	Wik	366/274

(Continued)

FOREIGN PATENT DOCUMENTS

AU 20022585 A4 6/2002

(Continued)

OTHER PUBLICATIONS

Callahan et al., "Free-Piston Engine Linear Generator for Hybrid Vehicles Modeling Study," Advanced Research Projects Agency, Arlington, VA, May 1995.

(Continued)

Primary Examiner—Edward Tso
Assistant Examiner—Yalkew Fantu
(74) *Attorney, Agent, or Firm*—Seed IP Law Group PLLC

(57) **ABSTRACT**

A self-recharging battery comprising a generator and an energy storage device contained within the battery case. The generator comprises a magnetic structure configured to generate a compressed magnetic field and a coil configured to focus the compressed magnetic field in electrical conductive elements of the coil.

12 Claims, 39 Drawing Sheets
(3 of 39 Drawing Sheet(s) Filed in Color)

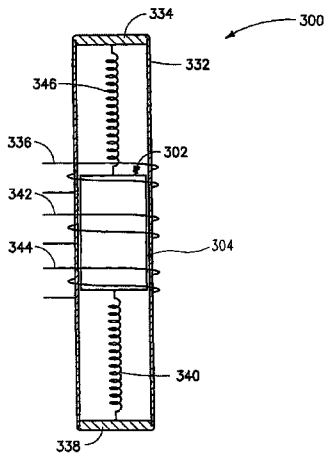

U.S. PATENT DOCUMENTS

4,217,171	A	8/1980	Schaffer	
4,218,712	A	8/1980	Clymer et al.	358/229
4,245,640	A	1/1981	Hunt	128/419 B
4,290,663	A	9/1981	Fowler et al.	339/143 R
4,304,136	A	12/1981	McCabe et al.	
4,320,927	A	3/1982	Sertich	
4,331,285	A	5/1982	Gottwals	
4,363,902	A	12/1982	Kurz	
4,372,214	A	2/1983	Toton et al.	
4,421,118	A	12/1983	Dow et al.	
4,430,679	A	2/1984	van de Bult	360/106
4,460,855	A	7/1984	Kelly	
4,563,727	A	1/1986	Curiel	362/183
4,636,902	A	1/1987	Dalziel et al.	360/128
4,639,667	A	1/1987	Andresen	
4,641,118	A	2/1987	Hirose et al.	
4,646,141	A	2/1987	Timmermans et al.	358/50
4,648,013	A	3/1987	Curiel	362/183
4,890,812	A	1/1990	Chechile et al.	248/674
4,959,504	A	9/1990	Yarger et al.	
4,992,624	A	2/1991	Benson et al.	174/35 R
5,075,809	A	12/1991	Heinz et al.	360/128
5,146,123	A	9/1992	Yarr	
5,161,414	A	11/1992	Rubbelke	73/658
5,181,004	A	1/1993	Johnson	
5,214,710	A	5/1993	Ziegenberg et al.	
5,319,332	A	6/1994	Espinosa	335/214
5,347,186	A	9/1994	Konotchick	
5,463,268	A	10/1995	Schroeder	313/293
5,502,901	A	4/1996	Brown	36/28
5,650,681	A	7/1997	DeLerno	
5,770,945	A	6/1998	Constable	324/350
5,782,512	A	7/1998	Cargnoni	
5,838,138	A	11/1998	Henty	320/107
5,951,459	A	9/1999	Blackwell	600/13
5,975,714	A	11/1999	Vetorino et al.	
5,978,446	A	11/1999	Resnick	
5,997,464	A	12/1999	Blackwell	600/13
6,111,257	A	8/2000	Shand et al.	250/368
6,174,276	B1	1/2001	Blackwell	600/13
6,179,772	B1	1/2001	Blackwell	600/13
6,186,941	B1	2/2001	Blackwell	600/13
6,215,303	B1	4/2001	Weinstock et al.	324/263
6,220,719	B1	4/2001	Vetorino et al.	
6,313,624	B1	11/2001	Alhorn et al.	324/207.17
6,489,772	B1	12/2002	Holladay et al.	324/339
6,550,306	B1	4/2003	Bensley	73/12.04
6,554,097	B2	4/2003	König	181/129
6,600,399	B1	7/2003	Trandafir	335/222
6,603,224	B1	8/2003	Hollingsworth et al.	
6,664,759	B1	12/2003	Goris	
6,731,968	B2	5/2004	Buchanan	600/409
6,759,755	B2	7/2004	Sagov	
6,791,205	B2	9/2004	Woodbridge	
6,798,090	B2	9/2004	Cheung et al.	
6,864,592	B1	3/2005	Kelly	
6,903,725	B2	6/2005	Nacson	345/163
6,915,145	B2 *	7/2005	Tu et al.	455/573
6,936,937	B2	8/2005	Tu et al.	
6,937,881	B2	8/2005	König	455/575.1
6,952,060	B2	10/2005	Goldner et al.	
7,009,310	B2	3/2006	Cheung et al.	
7,327,046	B2	2/2008	Biamonte	290/1 R
7,501,726	B1	3/2009	Waters et al.	
7,573,163	B2	8/2009	Tu et al.	
2001/0033175	A1	10/2001	Marbach et al.	
2002/0066617	A1	6/2002	Konig	181/129
2002/0074881	A1	6/2002	Imlach	
2002/0074882	A1	6/2002	Werfel et al.	
2002/0148625	A1	10/2002	Darling et al.	174/35 R
2002/0154518	A1	10/2002	Elferich et al.	363/15
2002/0160726	A1	10/2002	Konig	455/90
2003/0168924	A1	9/2003	Murakami et al.	
2003/0232627	A1 *	12/2003	Tu et al.	455/550.1
2004/0070482	A1	4/2004	Golan	336/223
2004/0133130	A1	7/2004	Ferry et al.	
2004/0140880	A1	7/2004	Haugs et al.	
2005/0001703	A1	1/2005	Zimmerling	
2005/0067907	A1	3/2005	Takeuchi	
2005/0127765	A1	6/2005	Kummeth	
2005/0141742	A1	6/2005	Kasztelan	381/331
2005/0168307	A1	8/2005	Reynolds et al.	335/220

FOREIGN PATENT DOCUMENTS

CN	2457747		10/2001
CN	1444234	A	9/2003
DE	19702056	A1	7/1998
DE	19947119	A1	5/2001
DE	10132881	A1	1/2003
EP	0192860	A1	9/1986
EP	0290343	A1	11/1988
EP	0192860	B1	3/1990
EP	0523450	A1	1/1993
EP	0290343	B1	2/1993
EP	0786849	B1	7/1997
EP	0933980	A2	8/1999
EP	0933980	A3	4/2000
EP	1143461	A1	10/2001
GB	115789	A	5/1918
GB	424549	A	2/1935
GB	424669	A	2/1935
GB	435416		9/1935
GB	2052886	A	1/1981
GB	8315514	A	7/1983
GB	2181306	A	4/1987
GB	2263386	A	7/1993
GB	2314470	A	12/1997
GB	2354646	A	3/2001
JP	2114438	A	4/1990
JP	3119638	A	5/1991
JP	6207965	A	7/1994
JP	10283079	A	10/1998
JP	2000036418	A	2/2000
JP	2000092783	A	3/2000
SU	546951	A	3/1977
WO	WO 86/04132		7/1986
WO	WO 91/17611		11/1991
WO	WO 92/01362		1/1992
WO	WO 02/15658	A1	2/2002
WO	WO 02/052671	A1	7/2002
WO	WO 02/060041	A2	8/2002
WO	WO 02/060041	A3	8/2002
WO	WO 03/085408	A2	10/2003
WO	WO 03/085408	A3	10/2003
WO	2005031952	A1	4/2005
WO	2009126188	A2	10/2009

OTHER PUBLICATIONS

English Abstract for SU546951A.
English Translation of SU546951A.
United States Patent and Trademark Office Action dated Jul. 10, 2009 entered in co-pending U.S. Appl. No. 11/475,389.

* cited by examiner

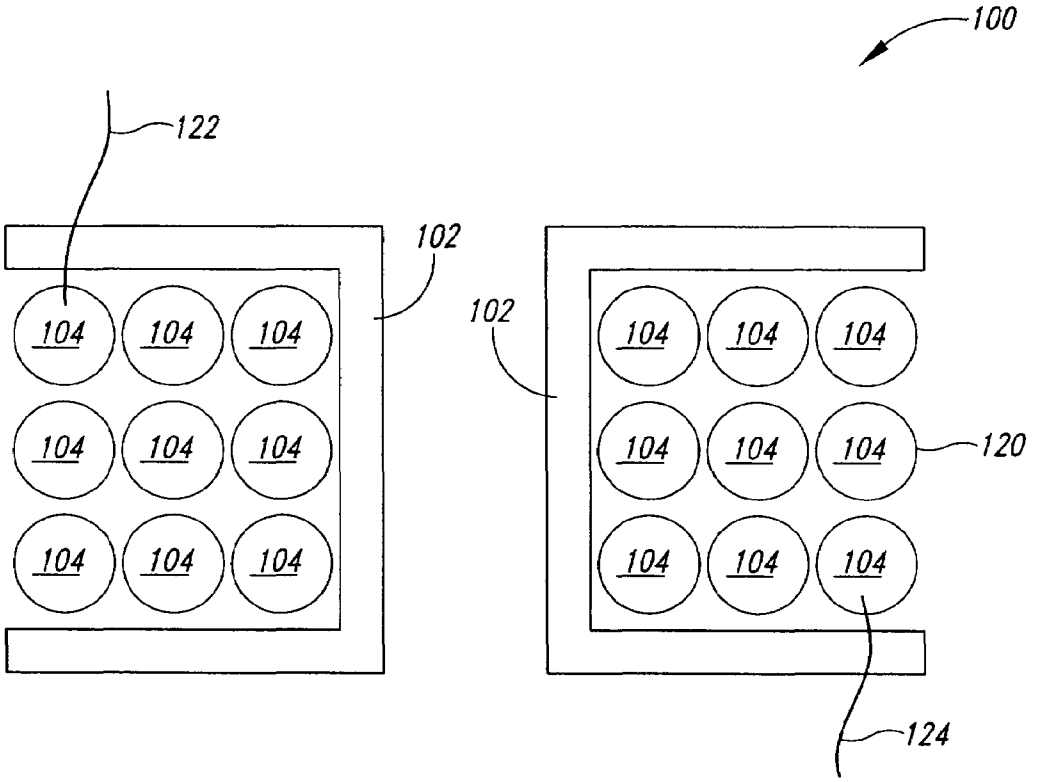

FIG. 1
(Prior Art)

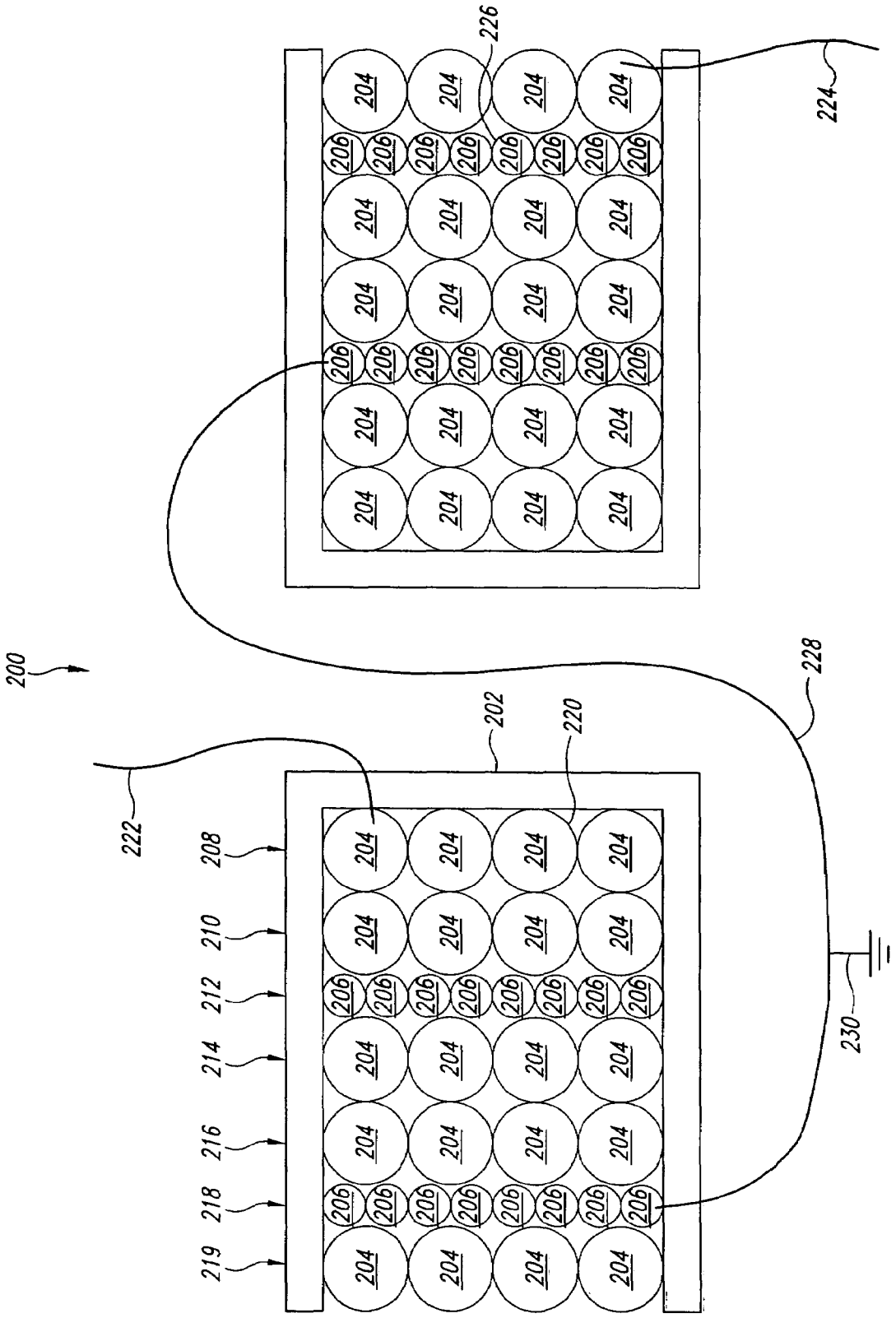
200
202
204
206
208
210
212
214
216
218
219
220
222
224
226
228
230

FIG. 2

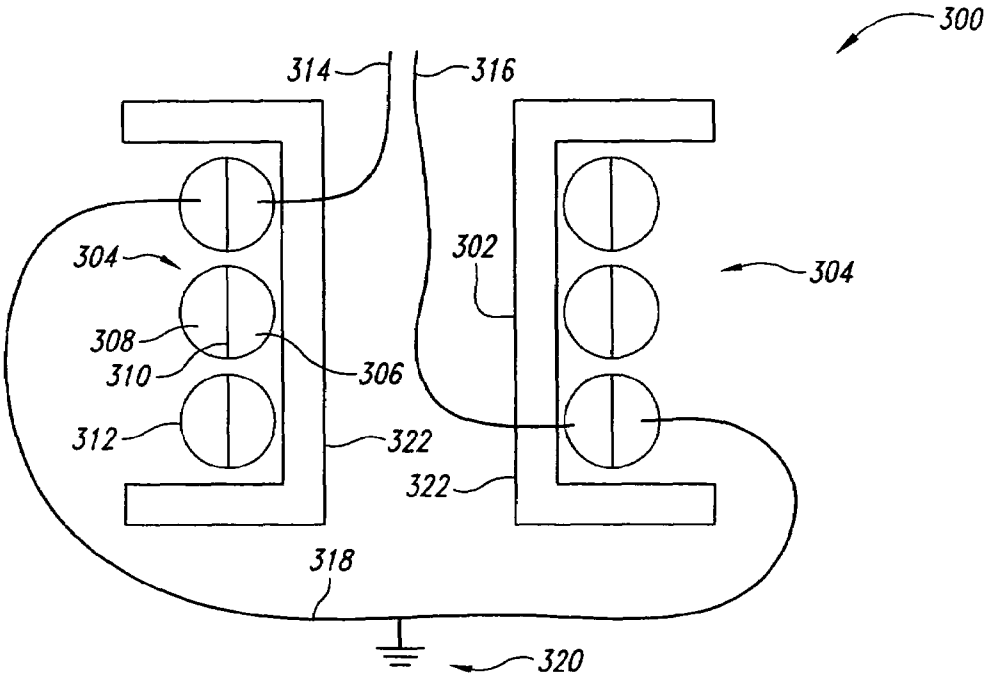
300
314
316
304
302
304
308
310
306
312
322
322
318
320

FIG. 3

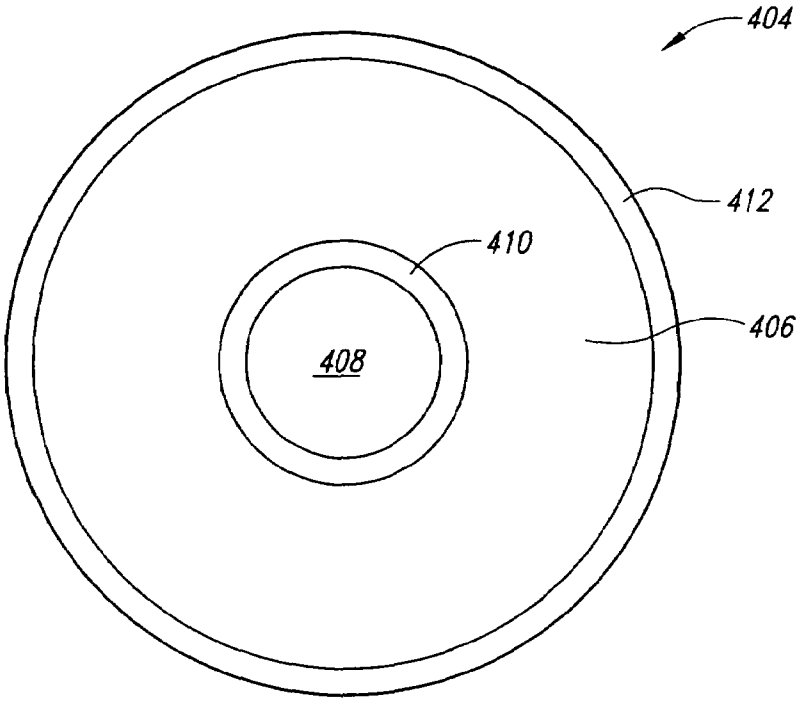
404
412
410
406
408

FIG. 4

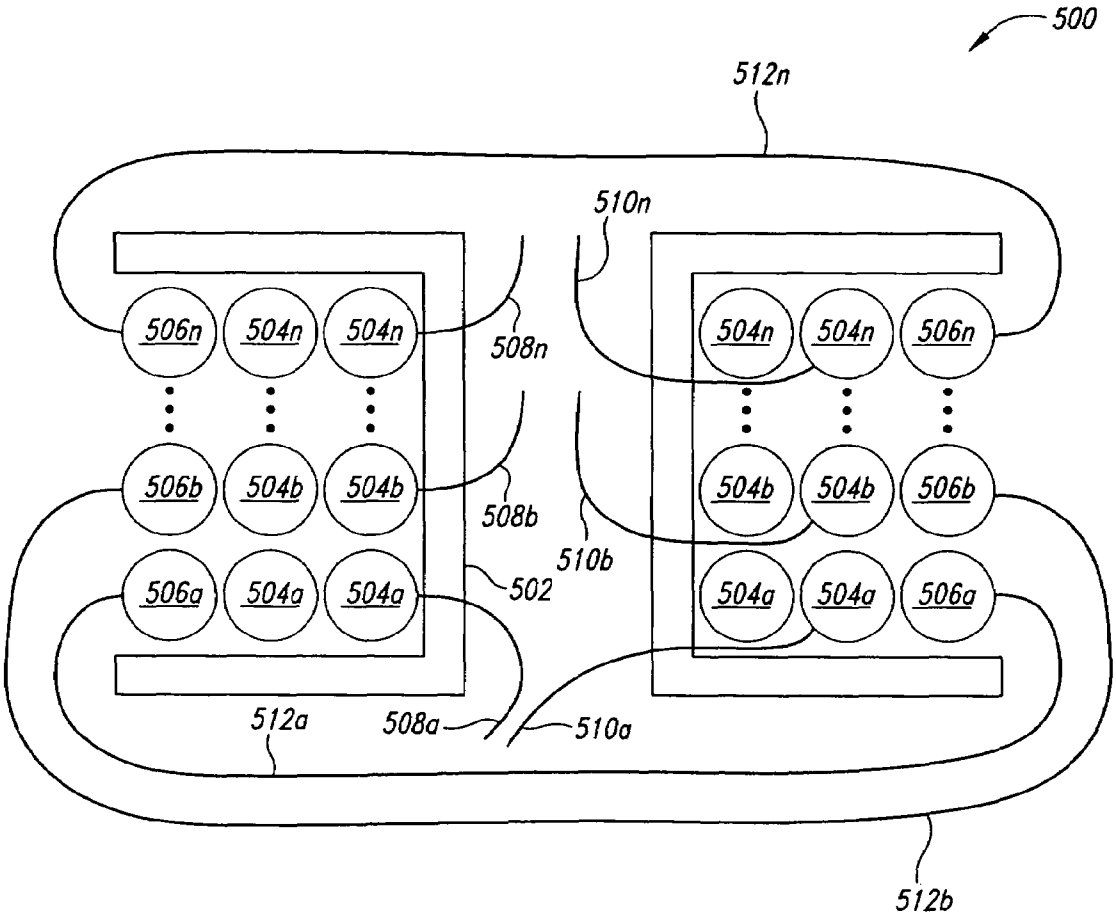
500
512n
510n
506n
504n
504n
508n
504n
504n
506n
506b
504b
504b
508b
504b
504b
506b
510b
506a
504a
504a
502
504a
504a
506a
512a
508a
510a
512b

FIG. 5

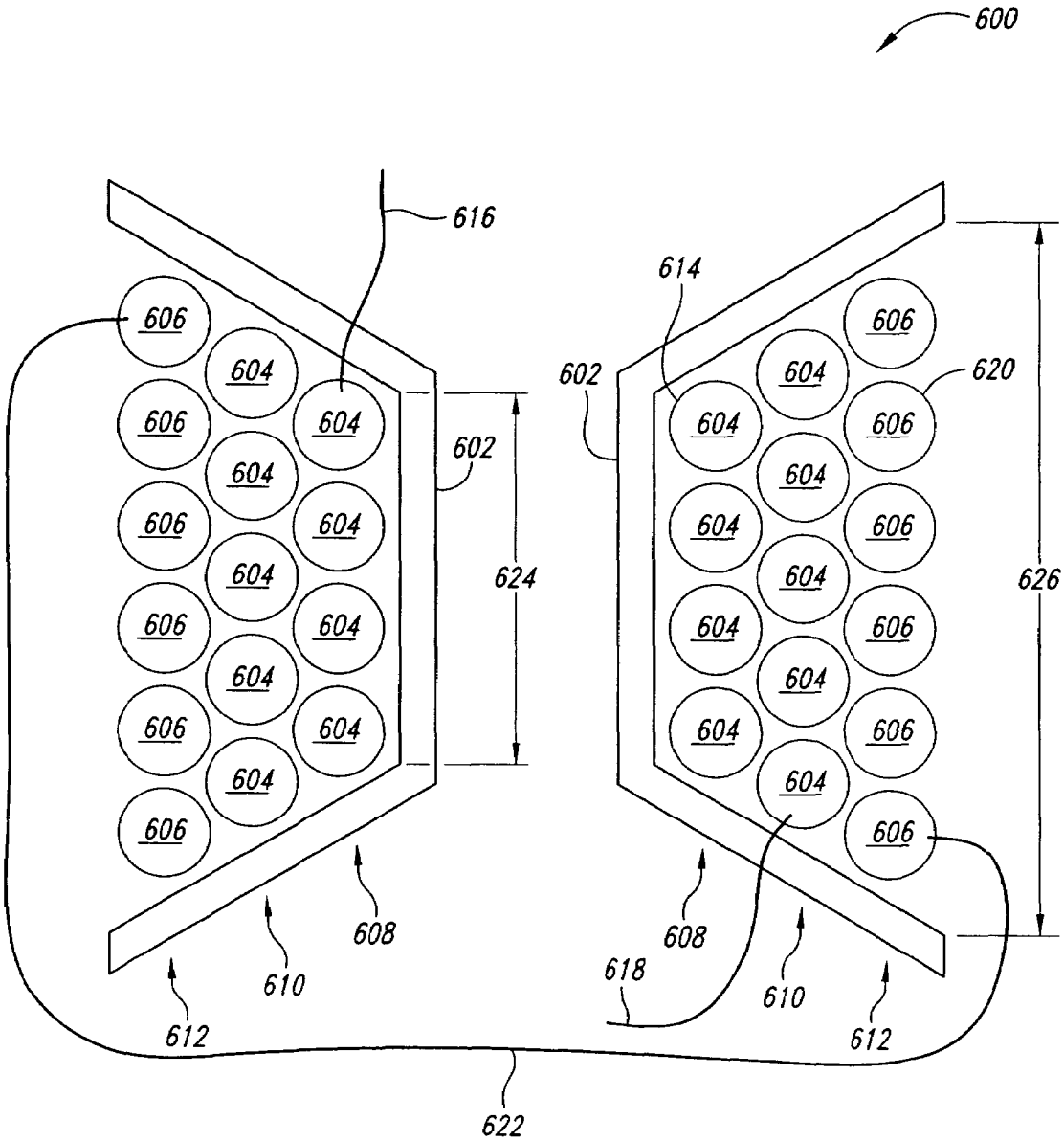

FIG. 6

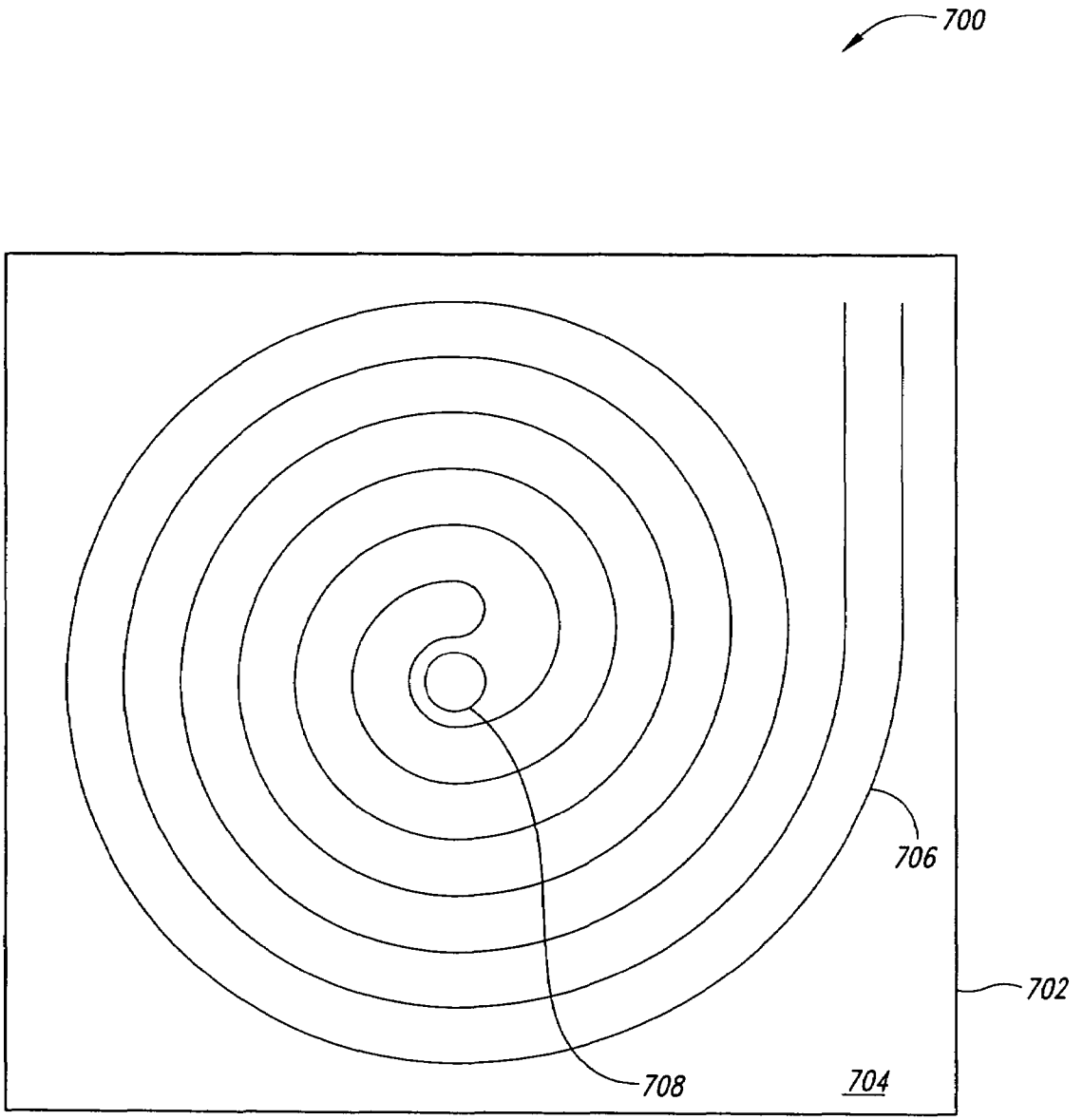

FIG. 7

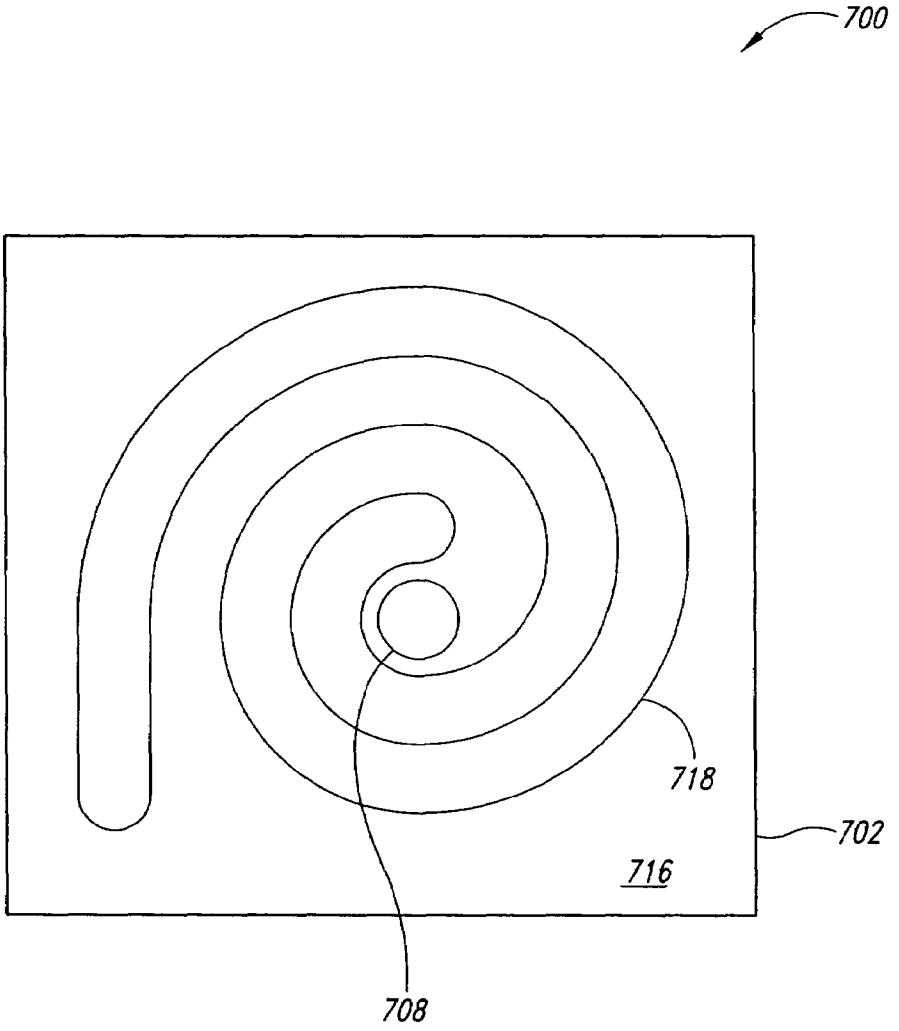

FIG. 8

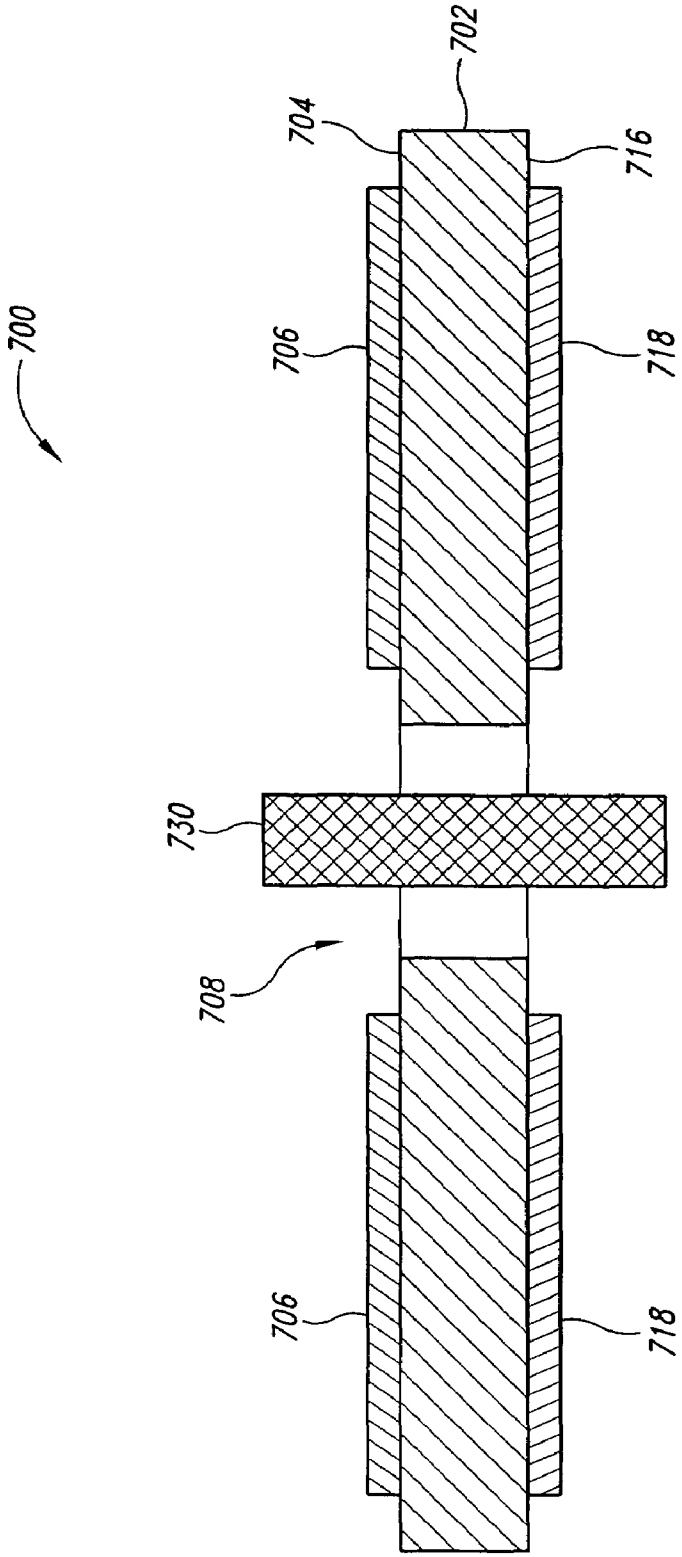

FIG. 9

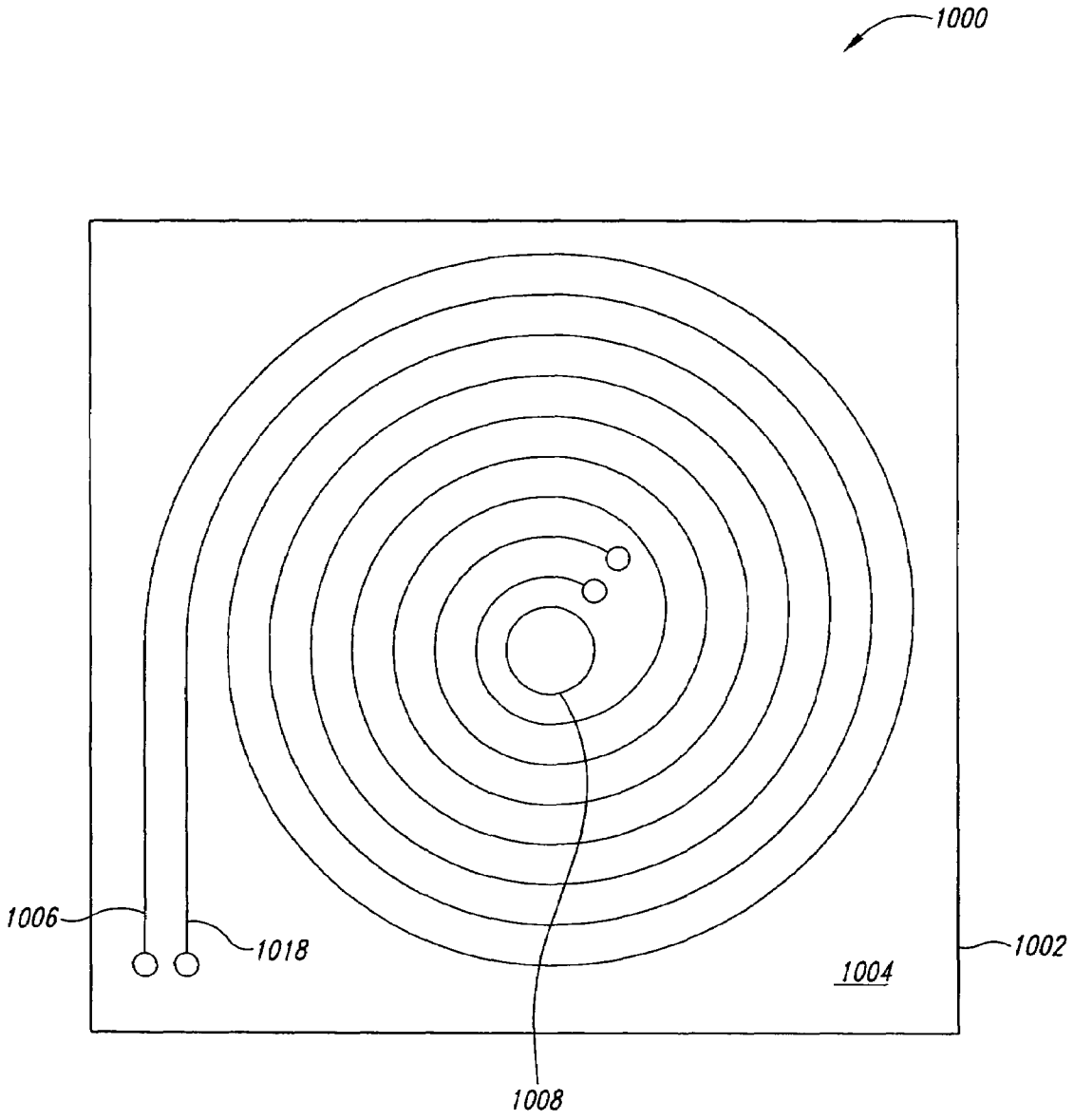

FIG. 10

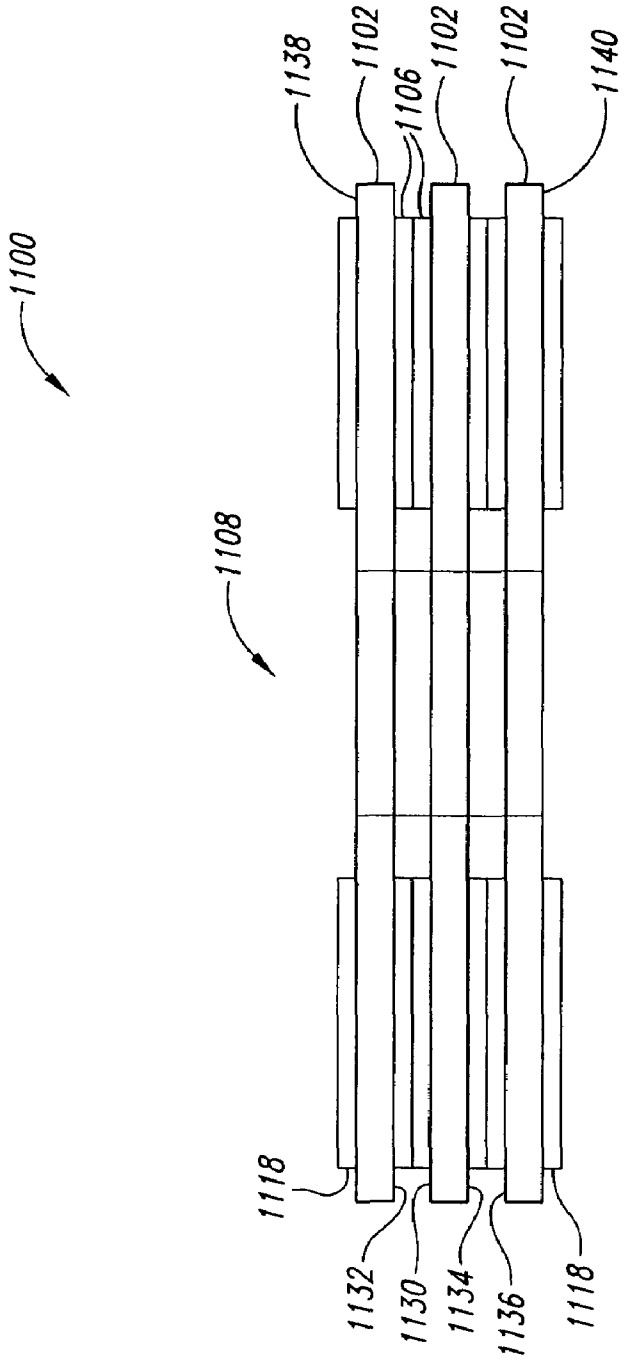
1100
1108
1138
1102
1106
1102
1102
1140
1118
1132
1130
1134
1136
1118

FIG. 11

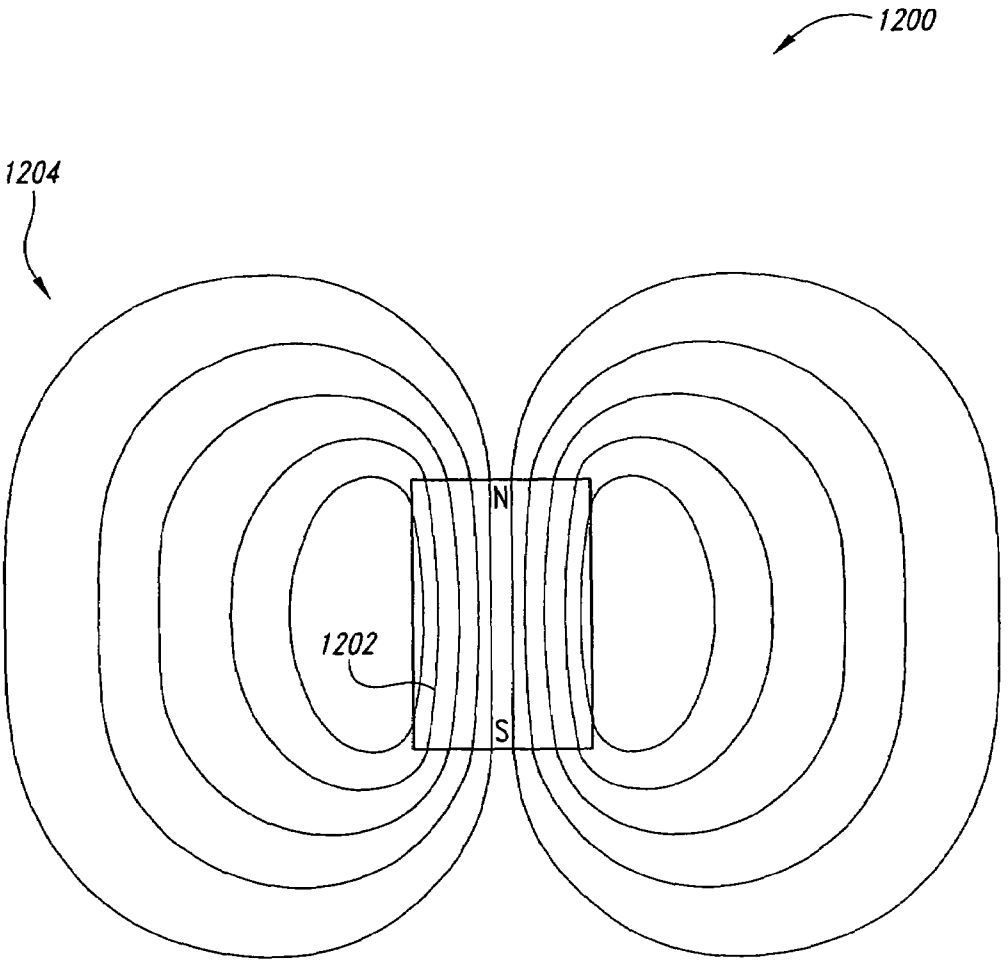

FIG. 12
(Prior Art)

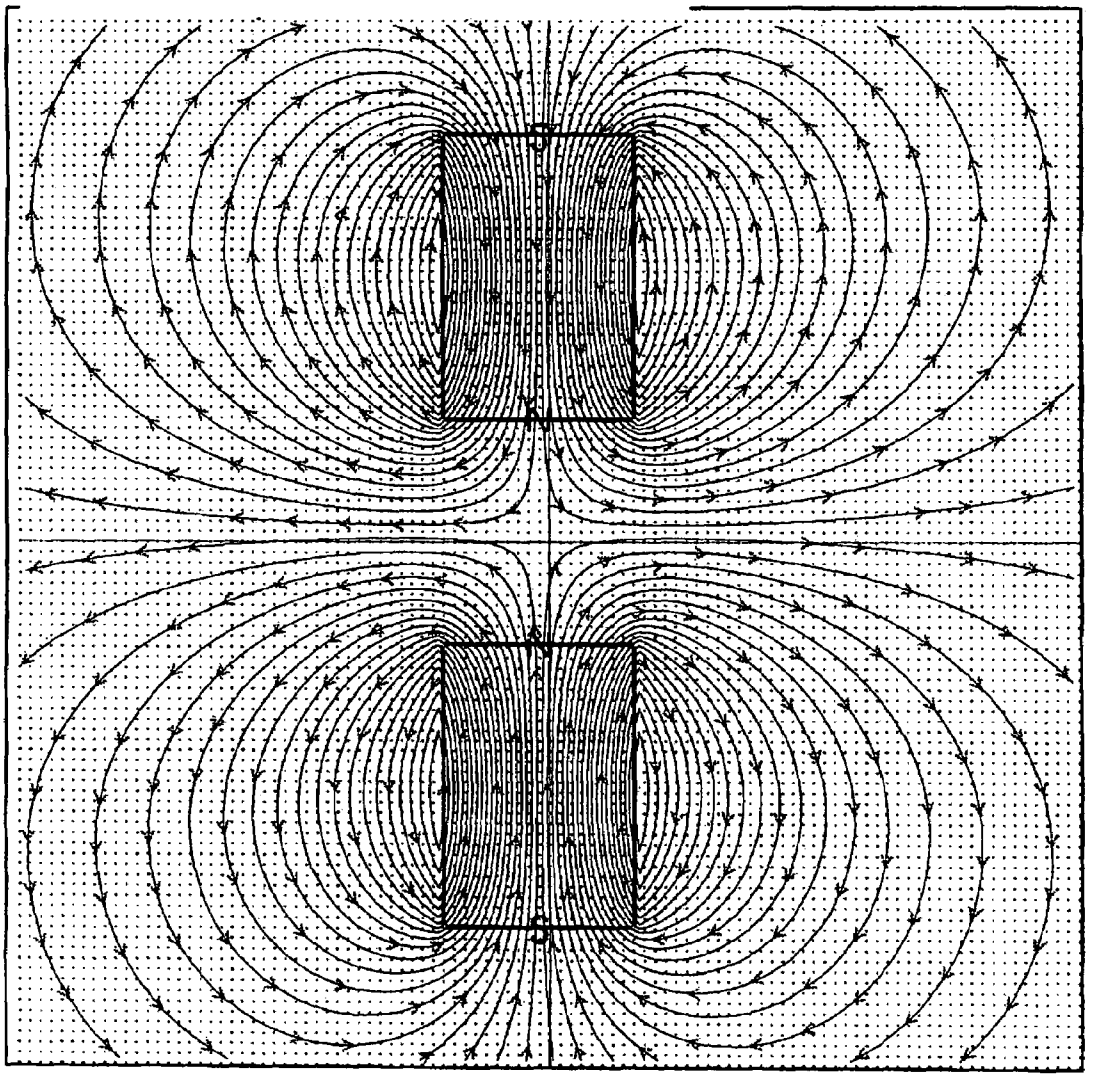

FIG. 13A

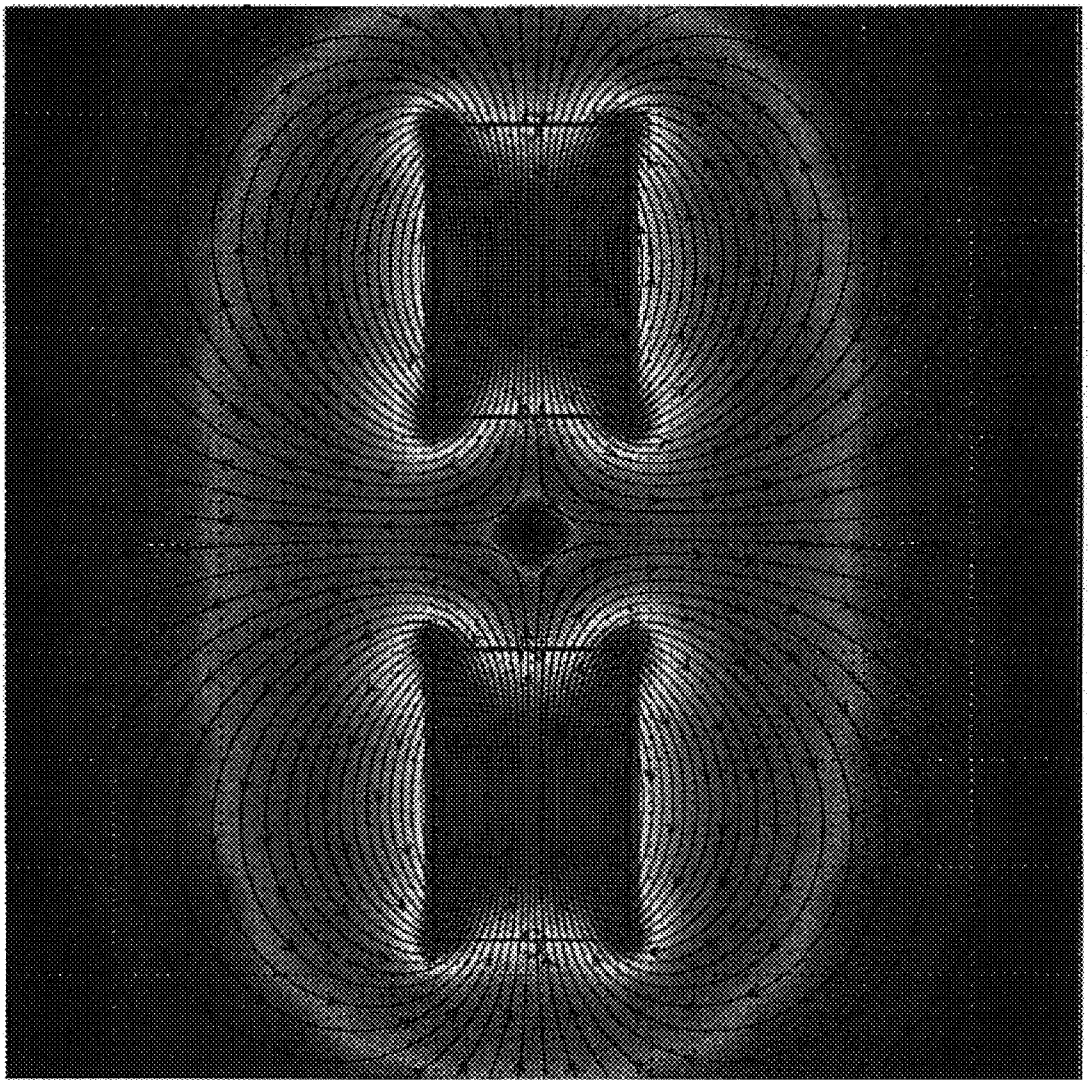

FIG. 13B

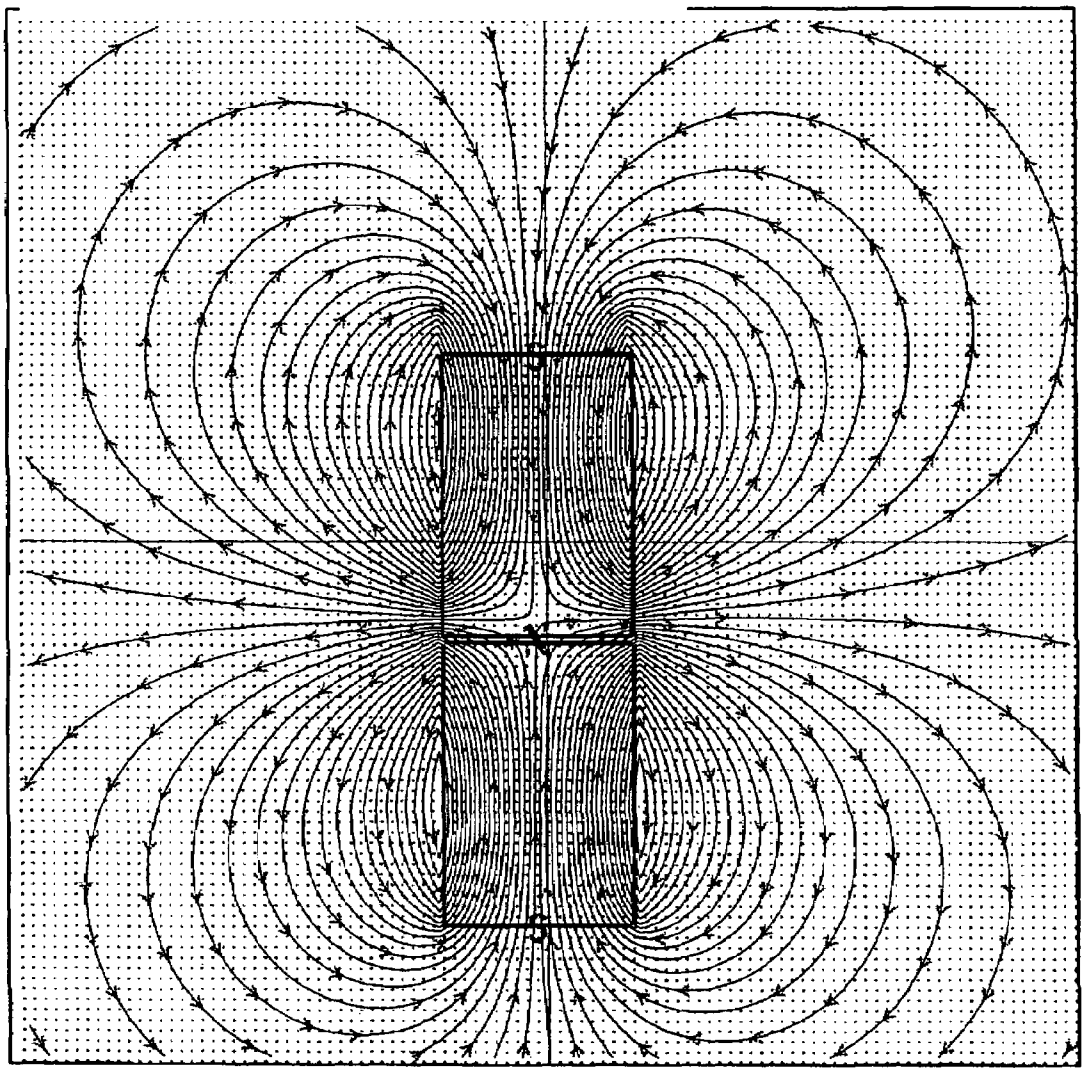

FIG. 14A

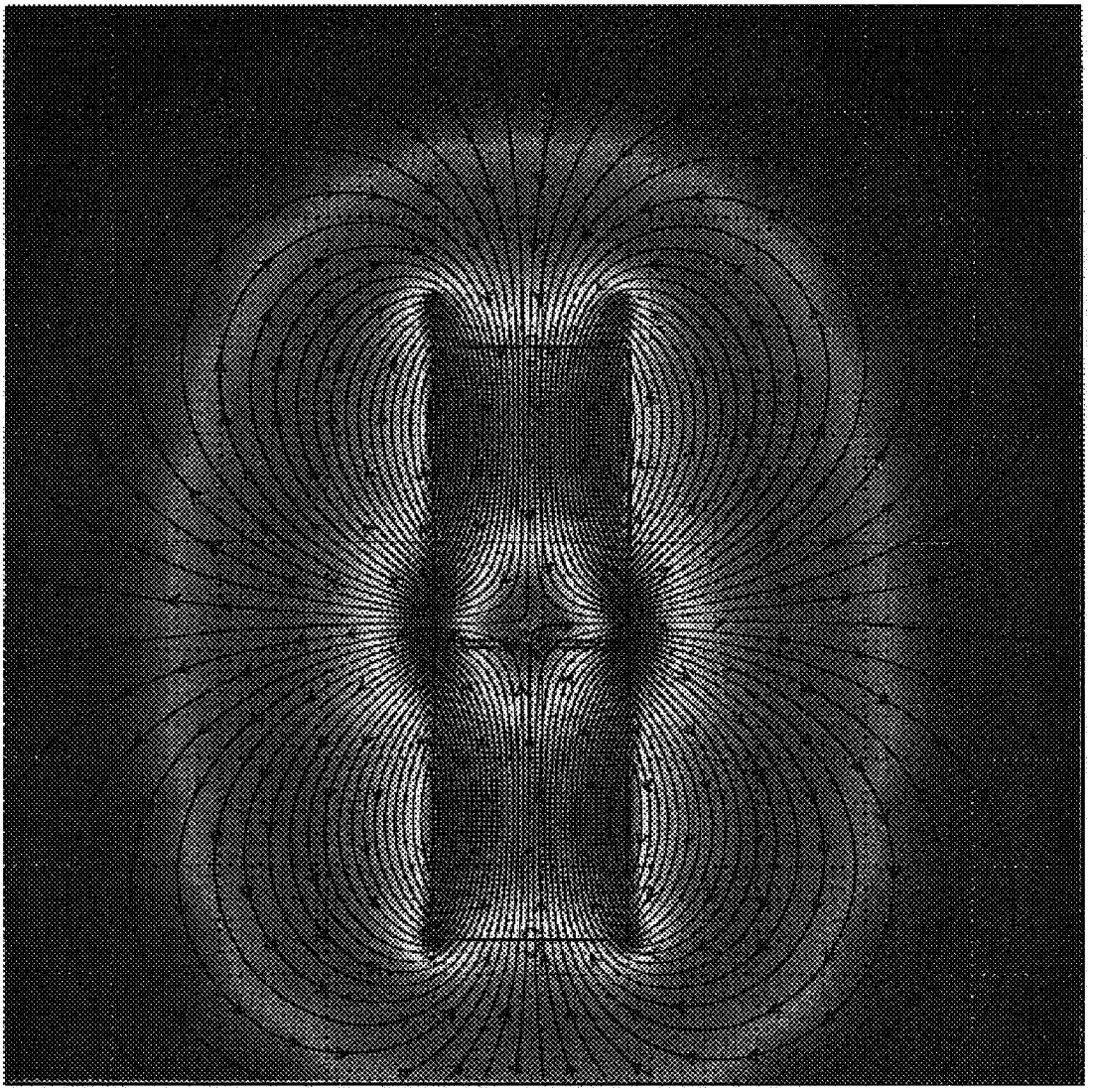

FIG. 14B

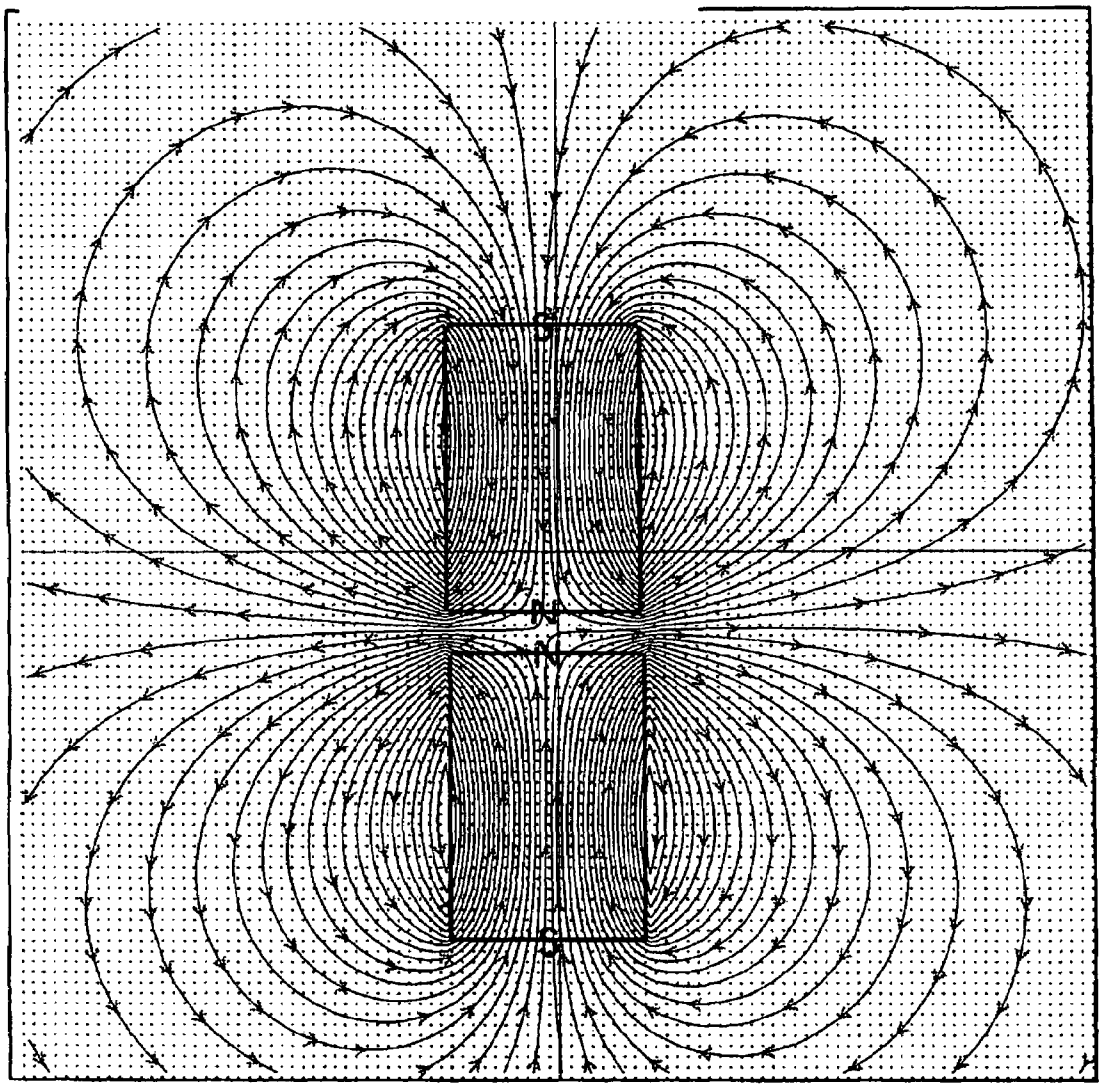

FIG. 15A

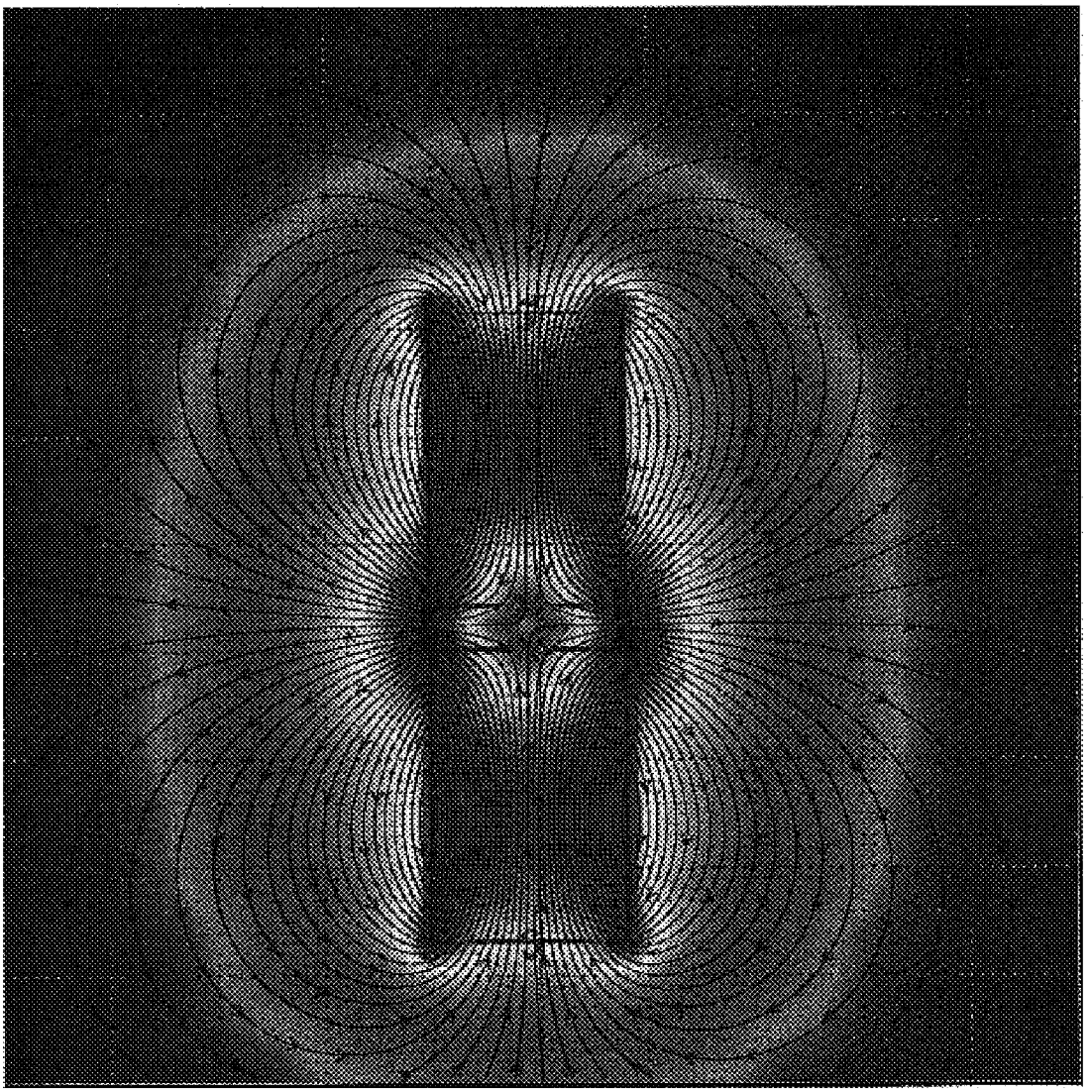

FIG. 15B

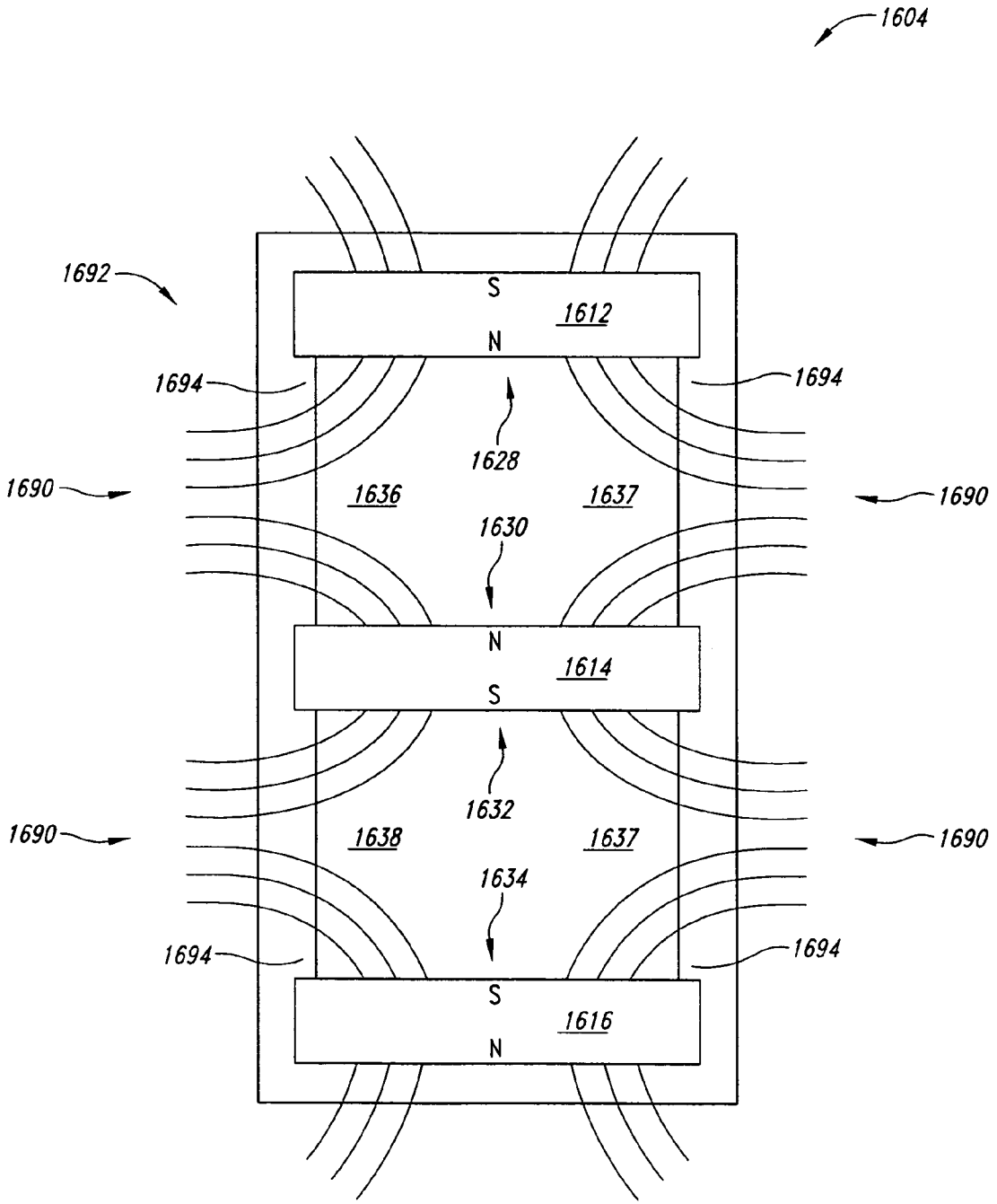
1604
1692
S
1612
N
1694
1694
1628
1690
1636
1637
1690
1630
N
1614
S
1632
1690
1638
1637
1690
1634
1694
1694
S
1616
N

FIG. 16

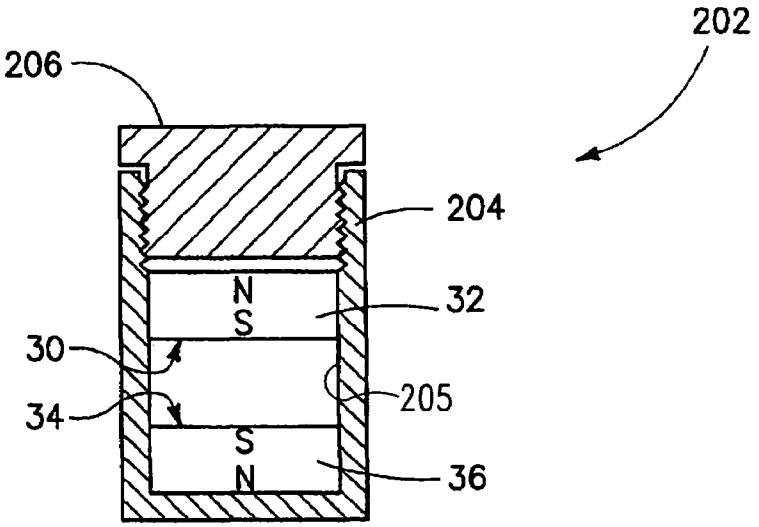
202
206
204
N
S
32
30
205
34
S
N
36

FIG. 17

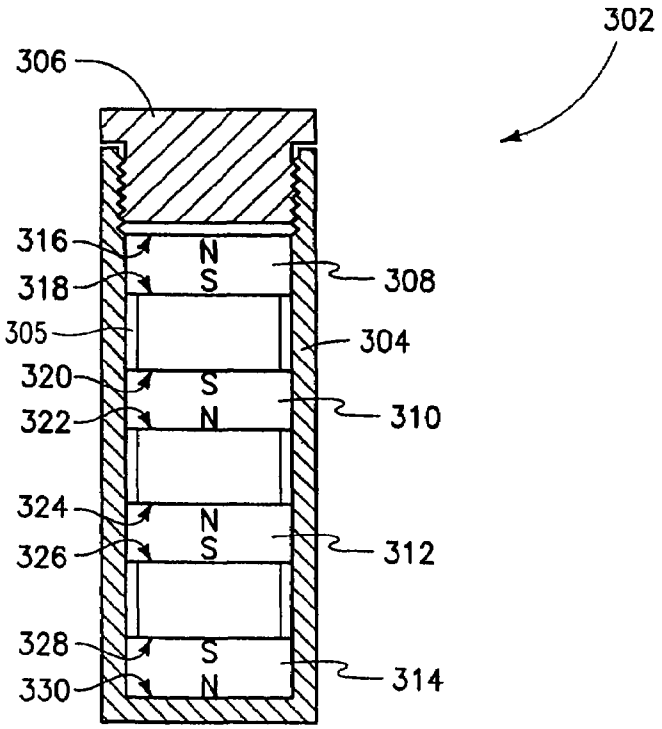
302
306
316
N
S
308
318
305
304
320
S
N
310
322
324
N
S
312
326
328
S
N
314
330

FIG. 18

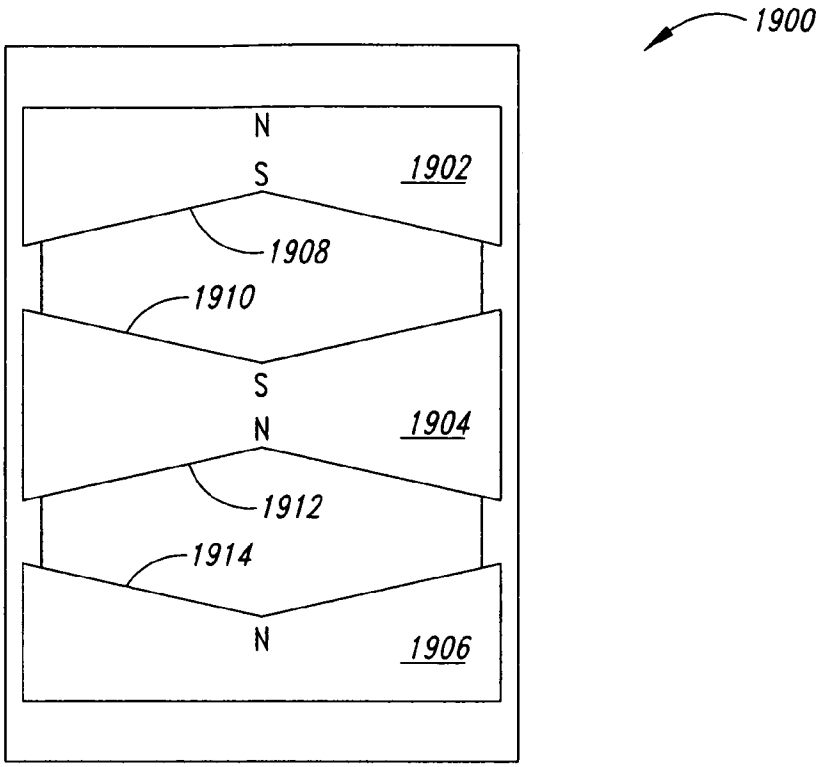
1900
N
S
1902
1908
1910
S
N
1904
1912
1914
N
1906

FIG. 19

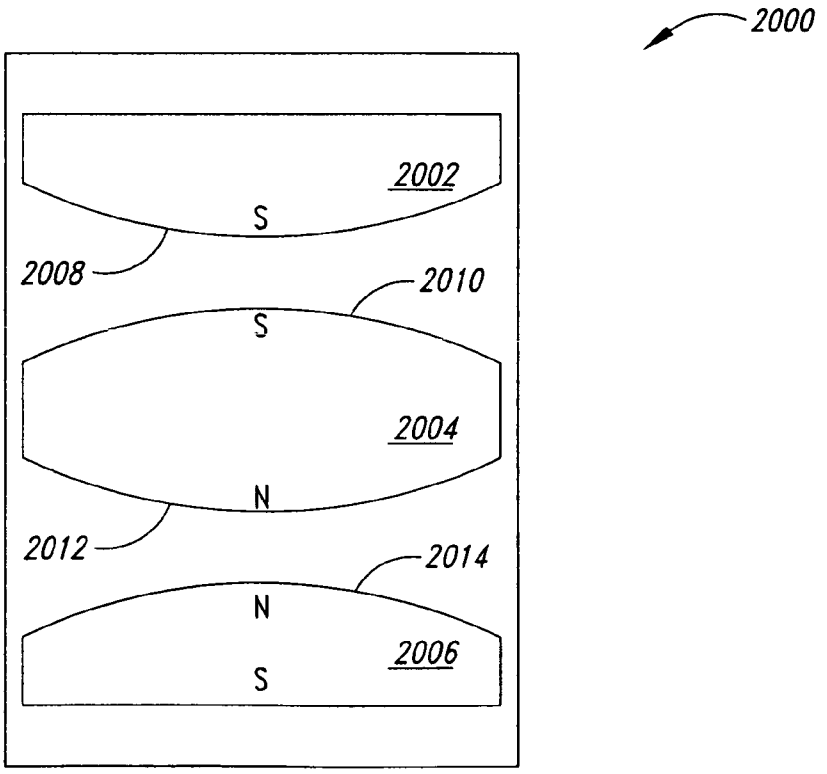
2000
2002
S
2008
2010
S
2004
N
2012
2014
N
2006
S

FIG. 20

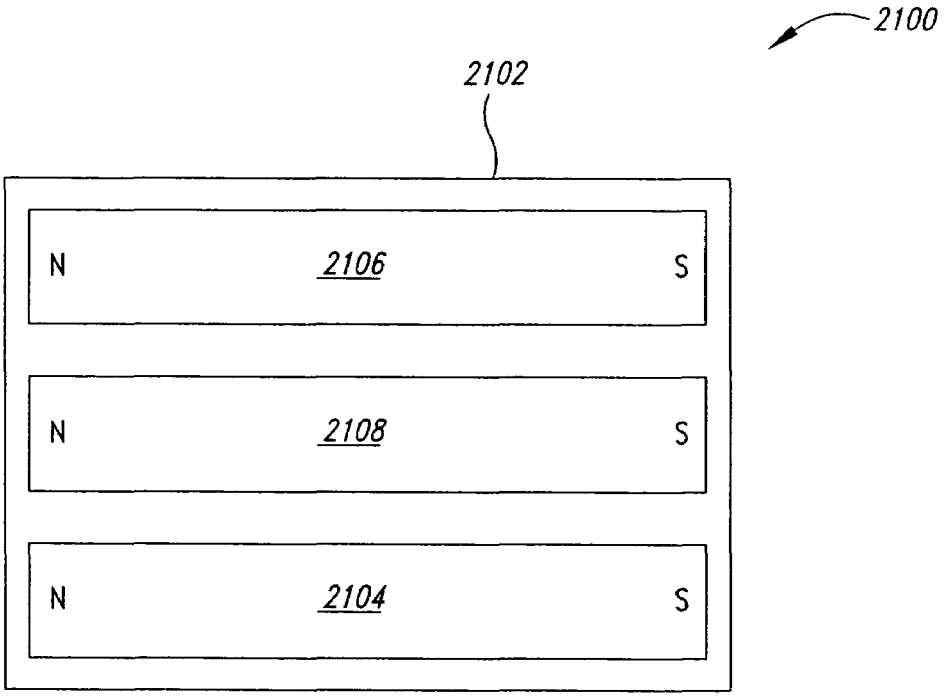

FIG. 21

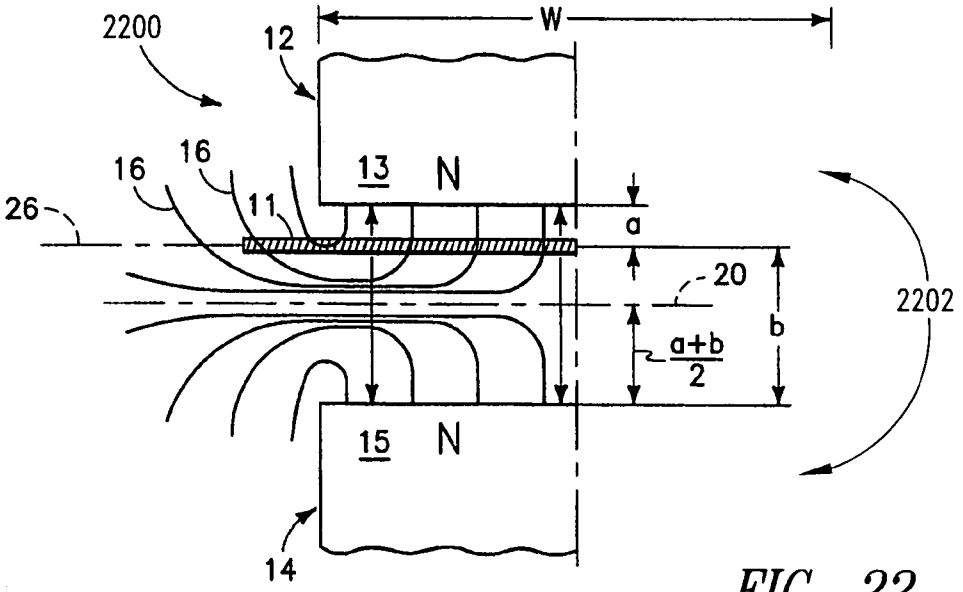

FIG. 22

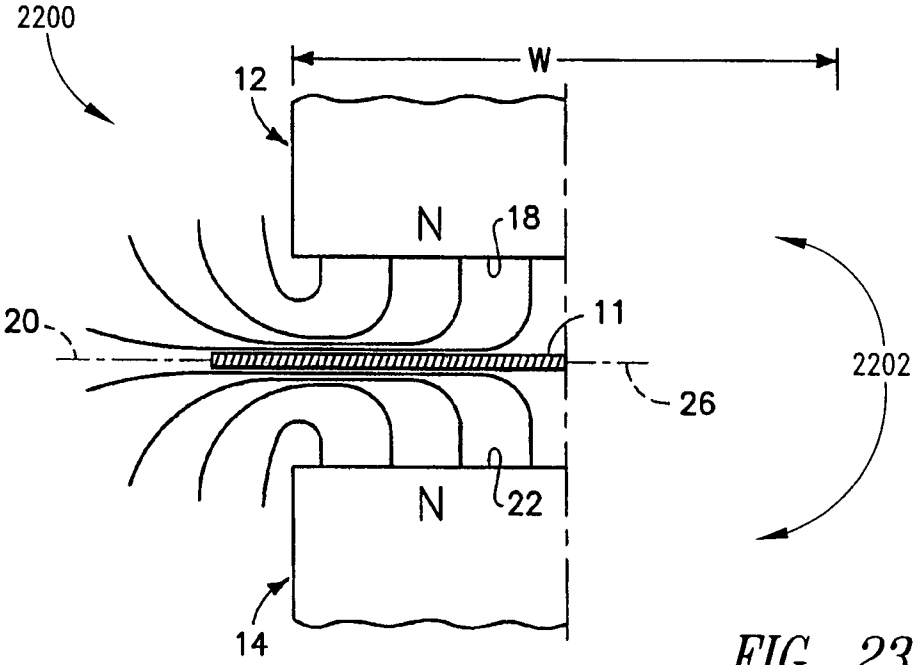

FIG. 23

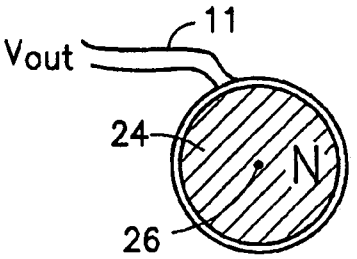

FIG. 24

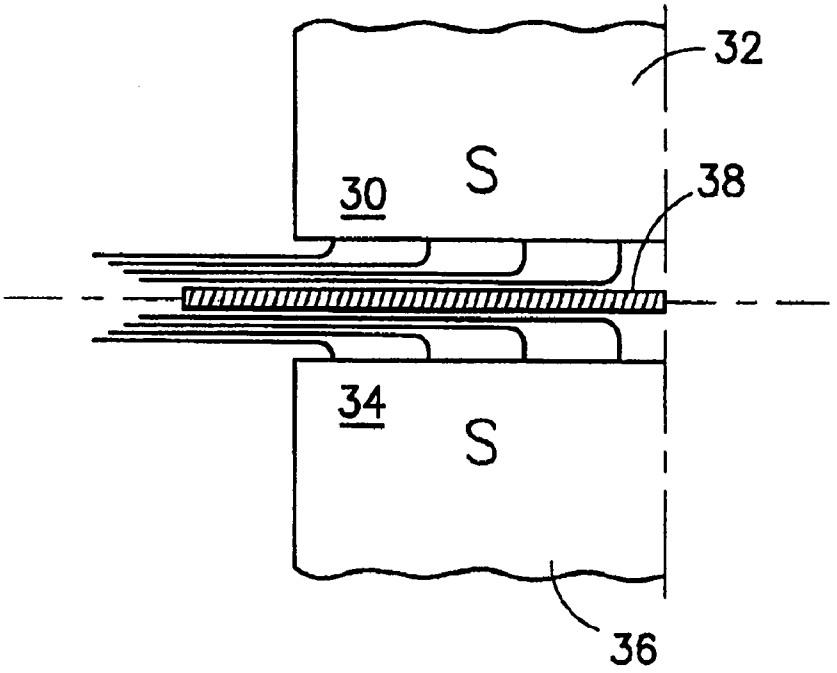

FIG. 25

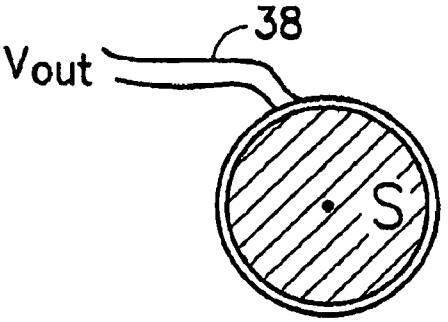

FIG. 26

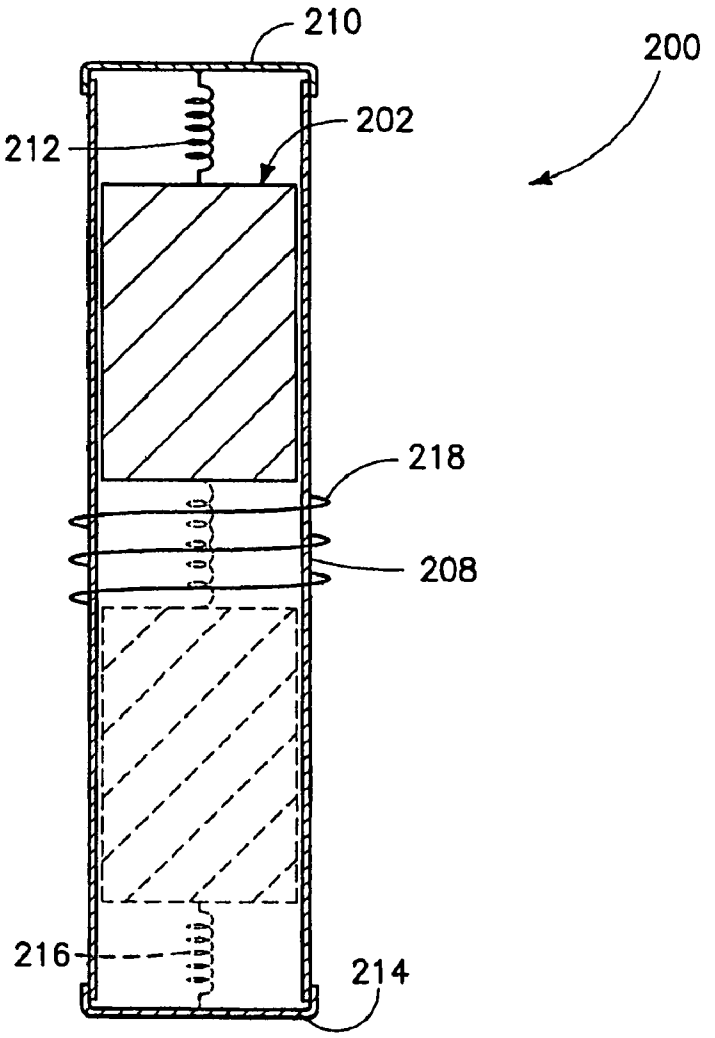

FIG. 27

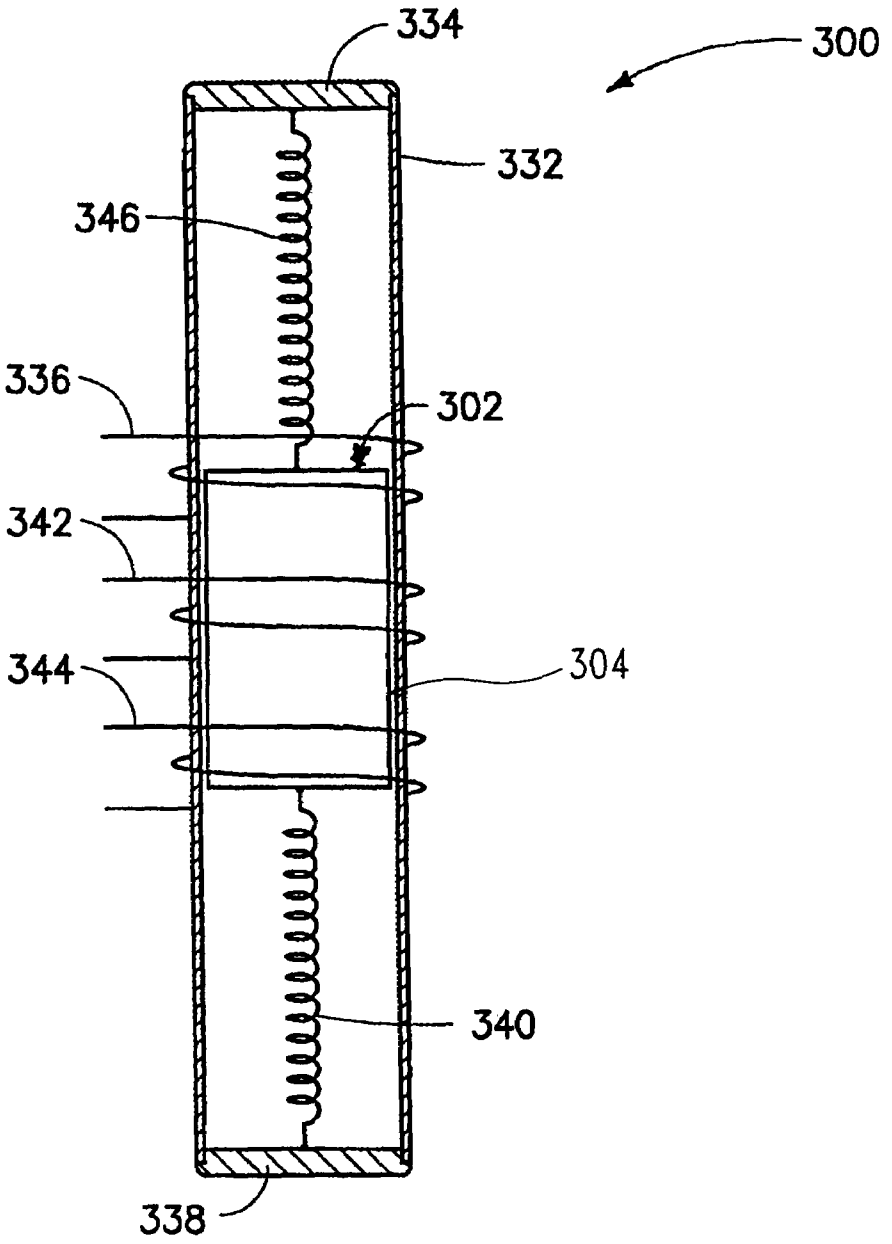

FIG. 28

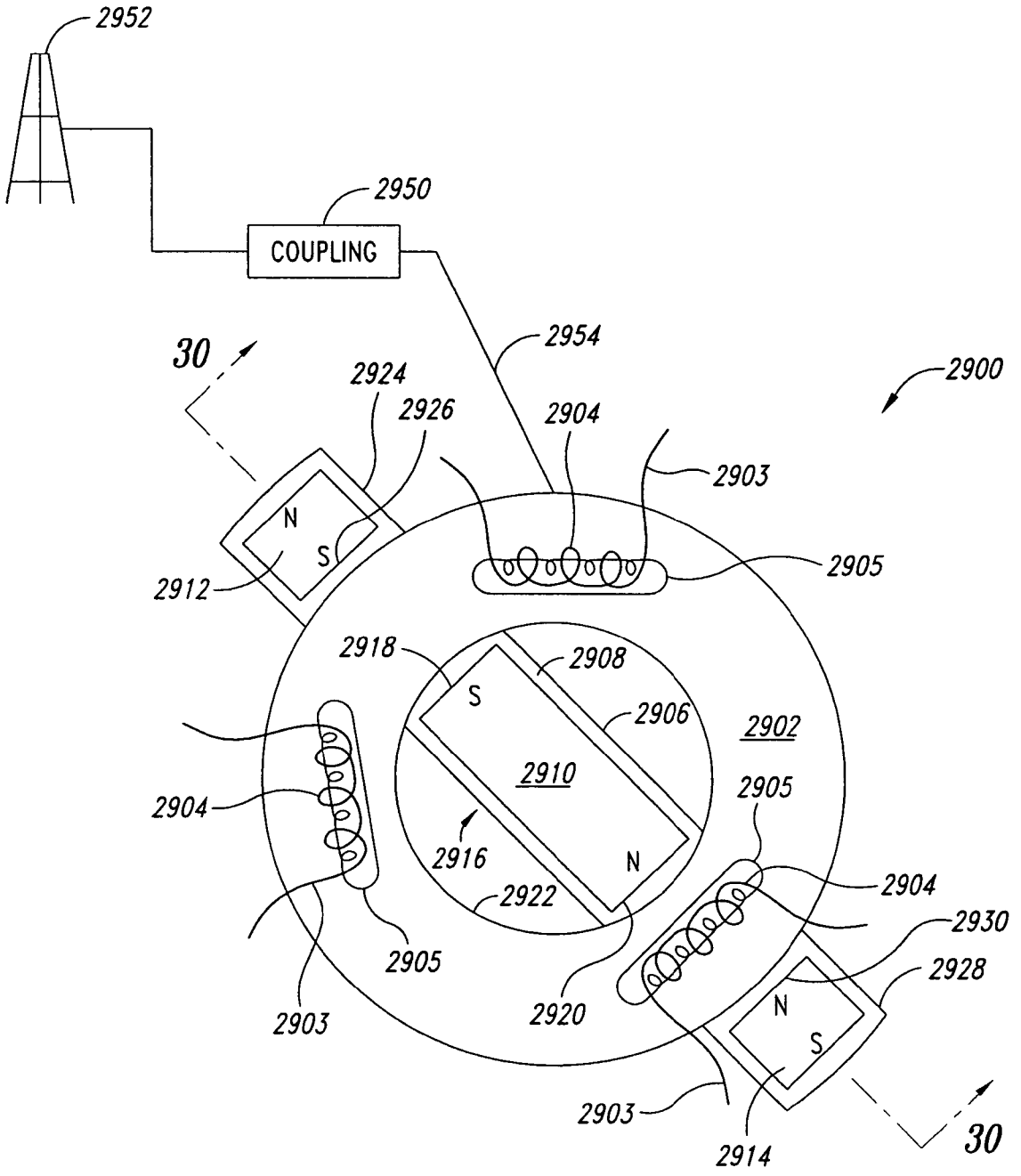
2952
2950
COUPLING
2954
30
2924
2926
2904
2900
2903
N
S
2912
2905
2918
2908
S
2906
2902
2910
2904
2905
2916
N
2922
2904
2930
2905
2928
2903
2920
N
S
2903
2914
30

FIG. 29

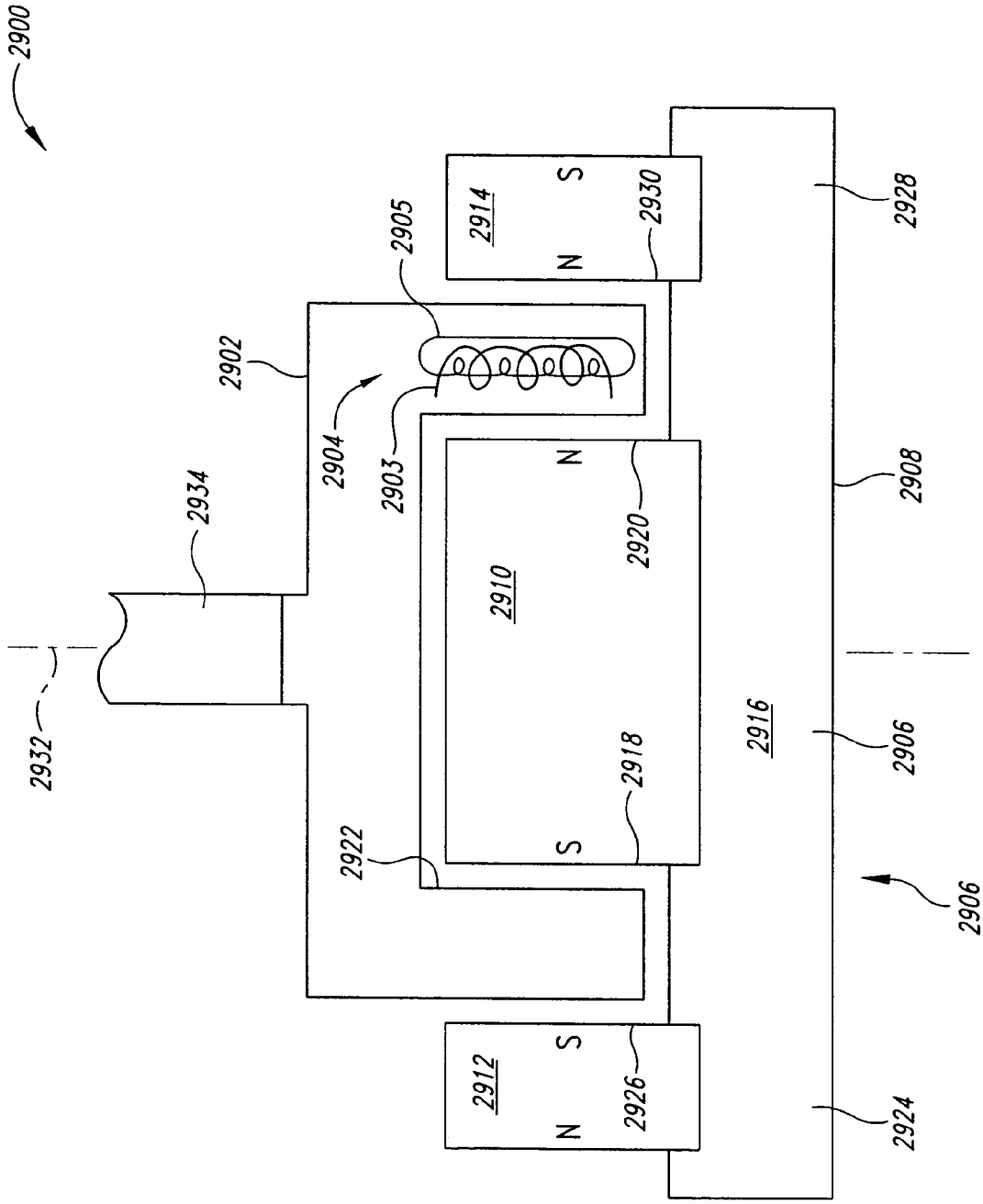
2900
2902
2904
2905
2903
2934
2932
2914
N
S
2930
2910
N
S
2920
2918
2922
2912
N
S
2926
2916
2928
2908
2906
2906
2924

FIG. 30

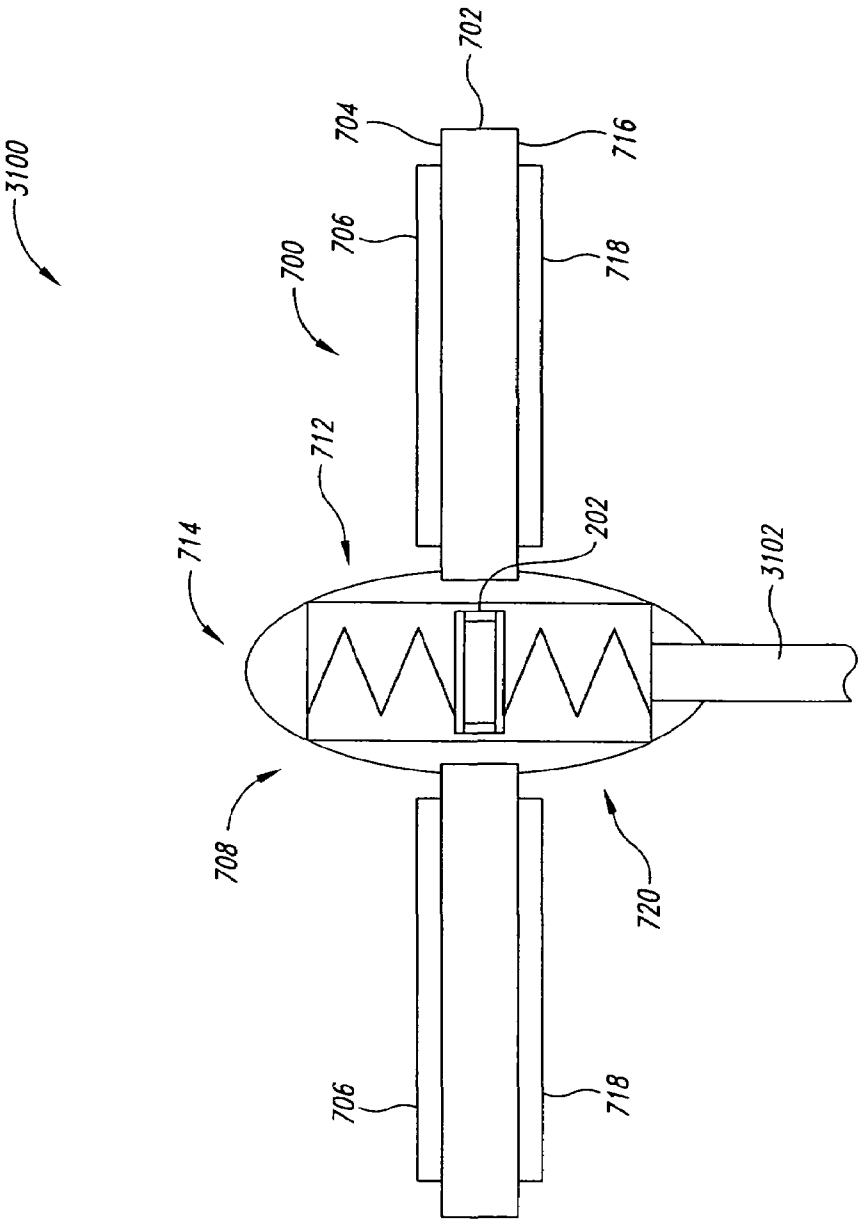

FIG. 31

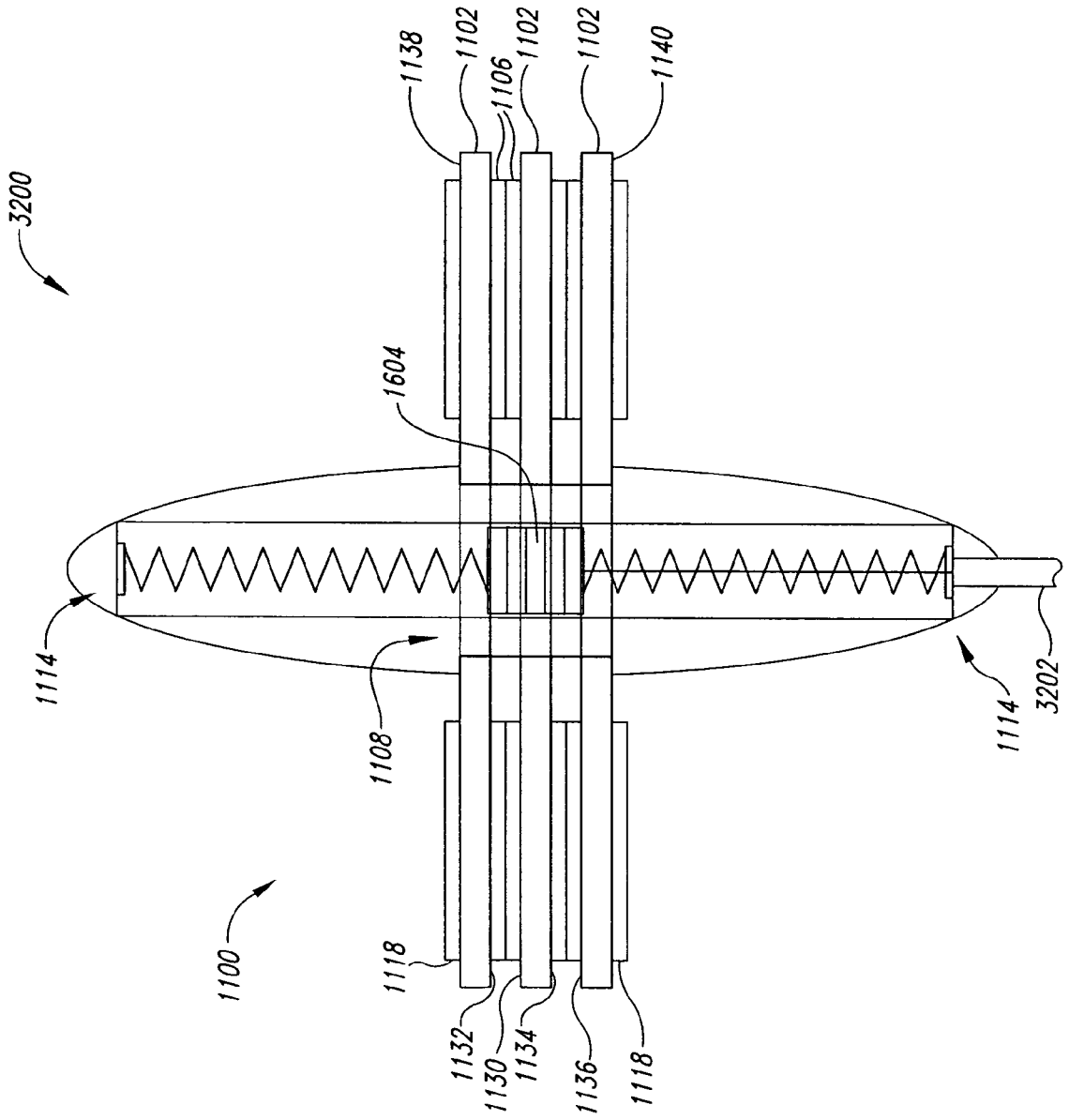
3200
1138
1102
1106
1102
1102
1140
1604
1114
1108
1114
3202
1100
1118
1132
1130
1134
1136
1118

FIG. 32

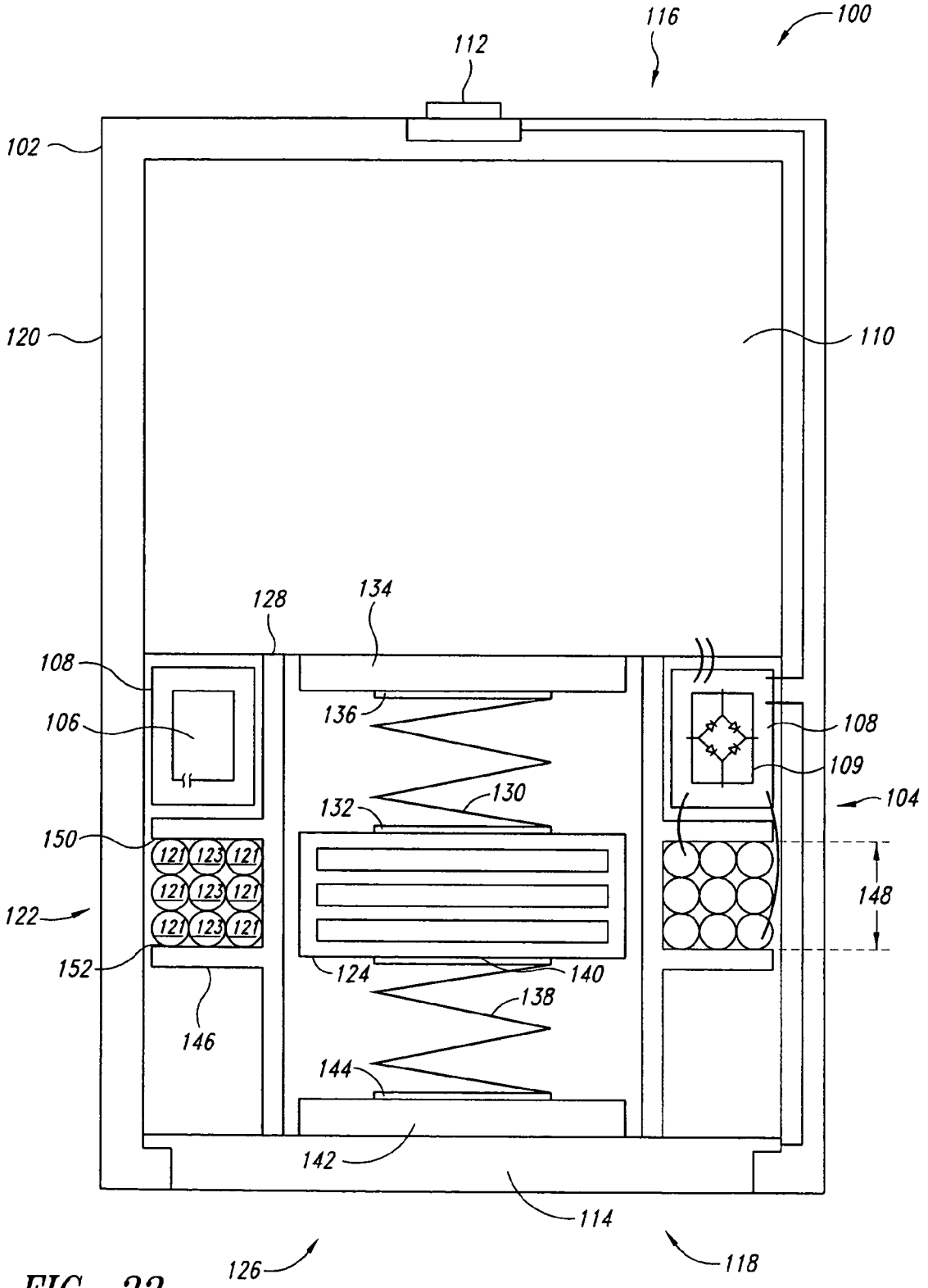
100
116
112
102
120
110
128
134
108
106
136
108
109
130
132
104
150
121
123
121
121
123
121
121
123
121
148
122
152
124
140
138
146
144
142
114
126
118

FIG. 33

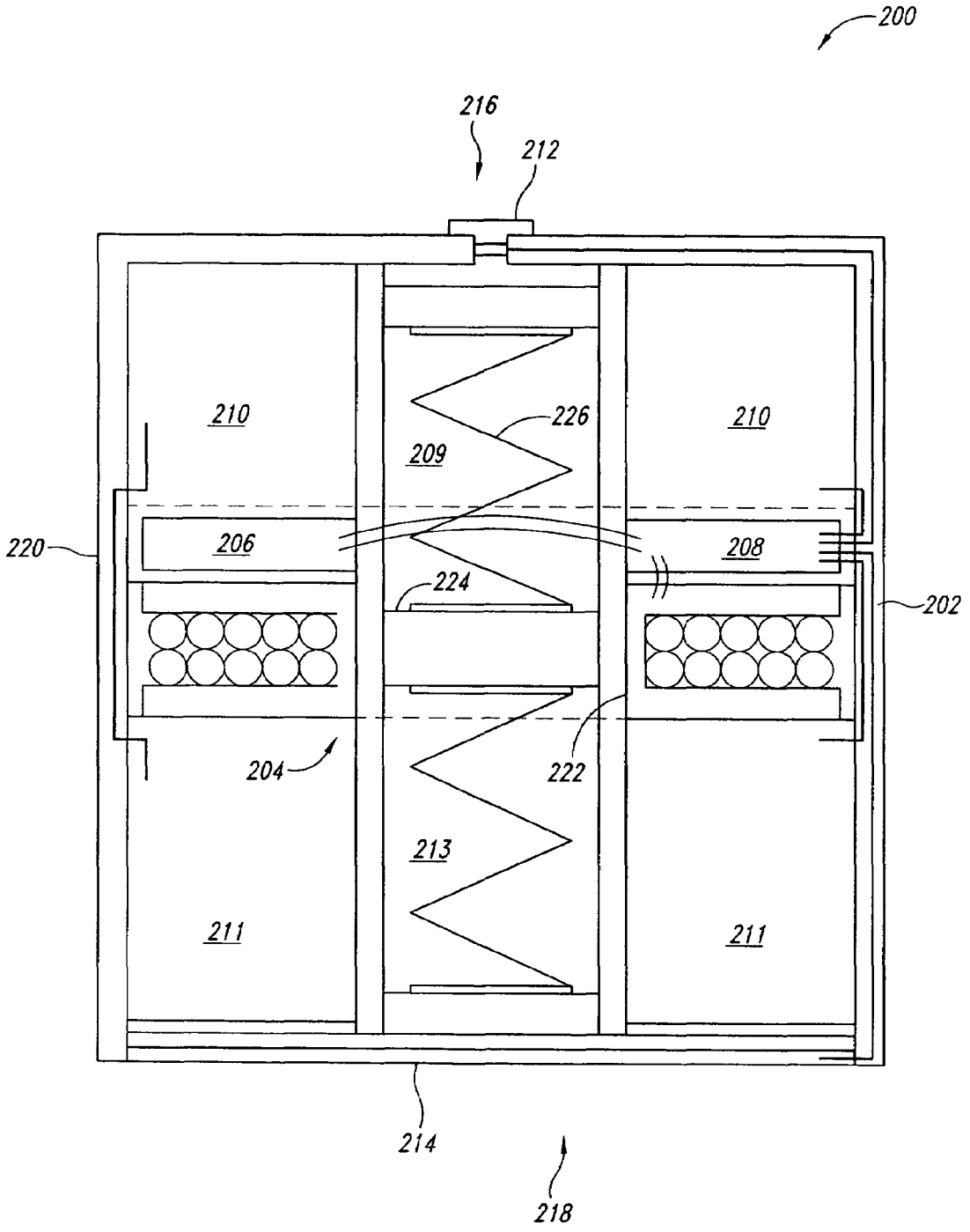
200
216
212
210
226
210
209
220
206
208
224
202
204
222
213
211
211
214
218

FIG. 34

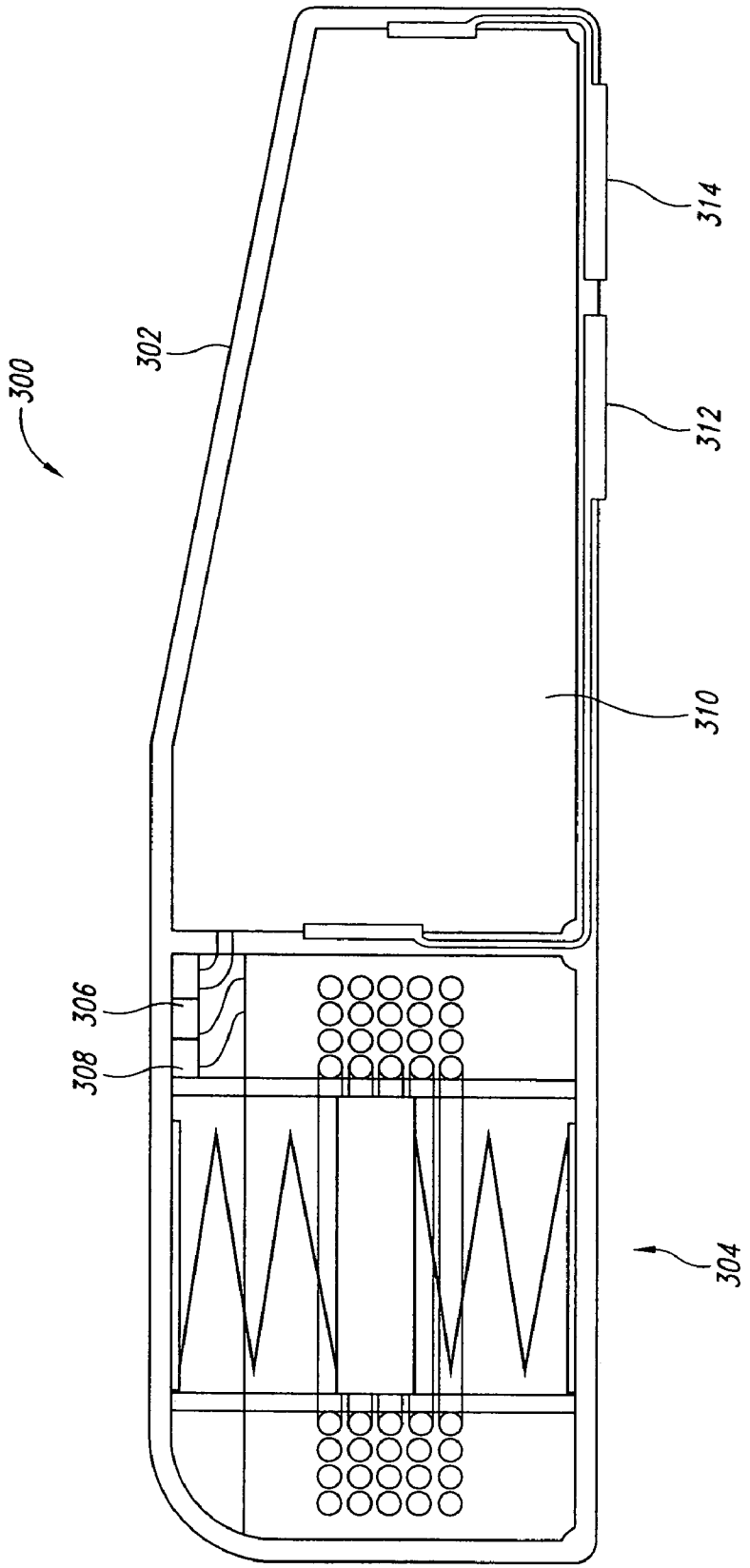

FIG. 35

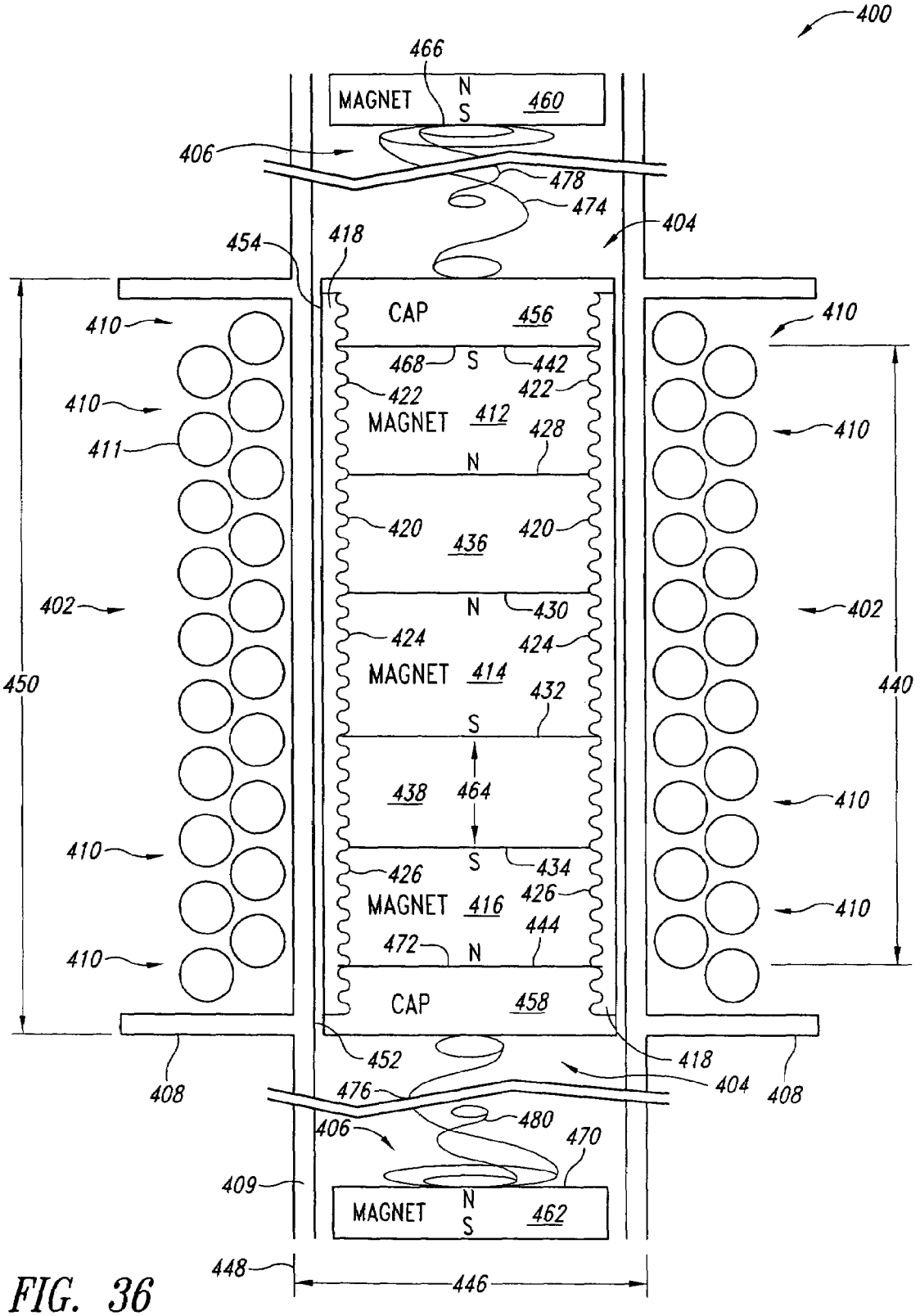
400
466
MAGNET
N
S
460
406
478
474
404
454
418
CAP
456
410
468
S
442
422
422
MAGNET
412
428
N
411
420
436
420
402
N
430
424
424
MAGNET
414
432
S
450
440
438
464
S
434
426
426
MAGNET
416
444
472
N
CAP
458
452
418
408
404
408
476
480
406
470
409
MAGNET
N
S
462
448
446

FIG. 36

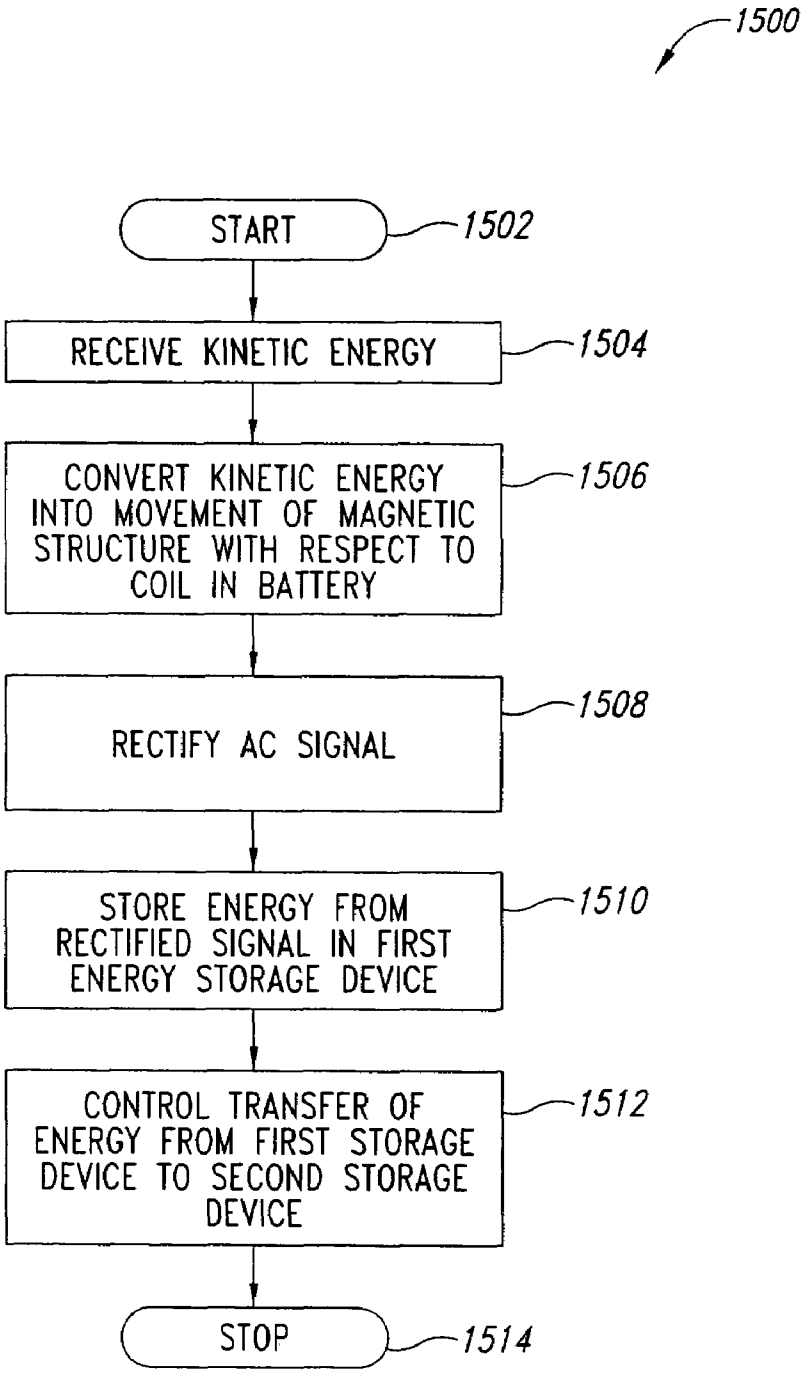
1500
START
1502
RECEIVE KINETIC ENERGY
1504
CONVERT KINETIC ENERGY INTO MOVEMENT OF MAGNETIC STRUCTURE WITH RESPECT TO COIL IN BATTERY
1506
RECTIFY AC SIGNAL
1508
STORE ENERGY FROM RECTIFIED SIGNAL IN FIRST ENERGY STORAGE DEVICE
1510
CONTROL TRANSFER OF ENERGY FROM FIRST STORAGE DEVICE TO SECOND STORAGE DEVICE
1512
STOP
1514

FIG. 37

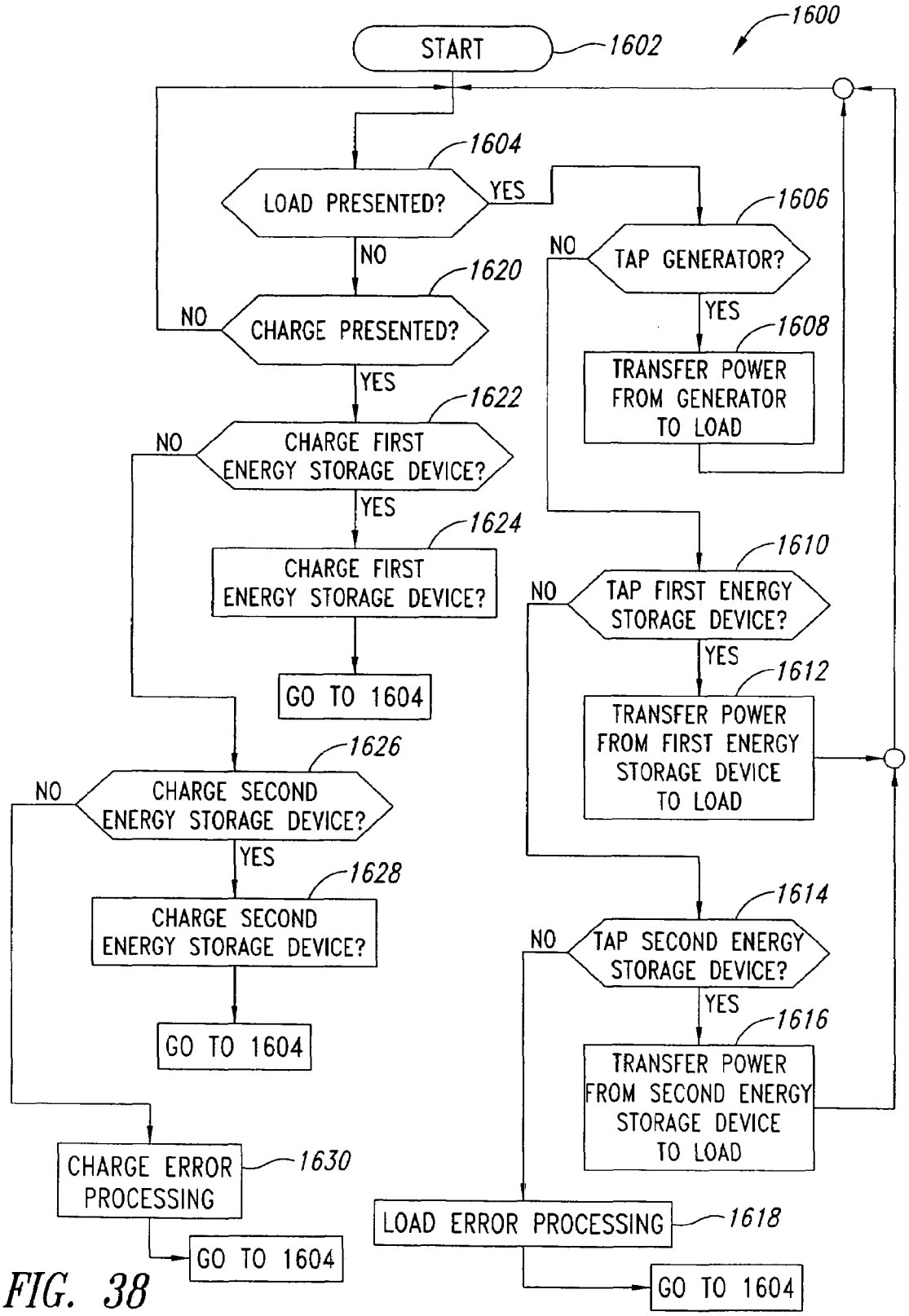
1600
START
1602
1604
LOAD PRESENTED?
YES
NO
1606
TAP GENERATOR?
NO
YES
1608
TRANSFER POWER FROM GENERATOR TO LOAD
1620
CHARGE PRESENTED?
NO
YES
1622
CHARGE FIRST ENERGY STORAGE DEVICE?
NO
YES
1624
CHARGE FIRST ENERGY STORAGE DEVICE?
GO TO 1604
1610
TAP FIRST ENERGY STORAGE DEVICE?
NO
YES
1612
TRANSFER POWER FROM FIRST ENERGY STORAGE DEVICE TO LOAD
1626
CHARGE SECOND ENERGY STORAGE DEVICE?
NO
YES
1628
CHARGE SECOND ENERGY STORAGE DEVICE?
GO TO 1604
1614
TAP SECOND ENERGY STORAGE DEVICE?
NO
YES
1616
TRANSFER POWER FROM SECOND ENERGY STORAGE DEVICE TO LOAD
CHARGE ERROR PROCESSING
1630
GO TO 1604
LOAD ERROR PROCESSING
1618
GO TO 1604

FIG. 38

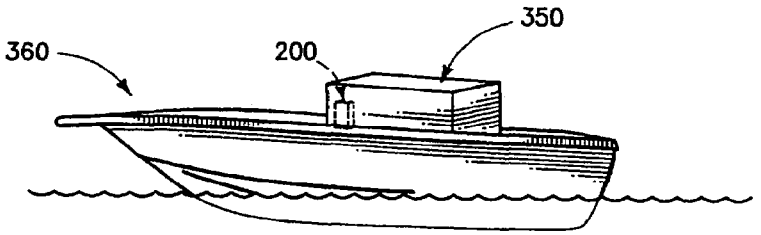

FIG. 39

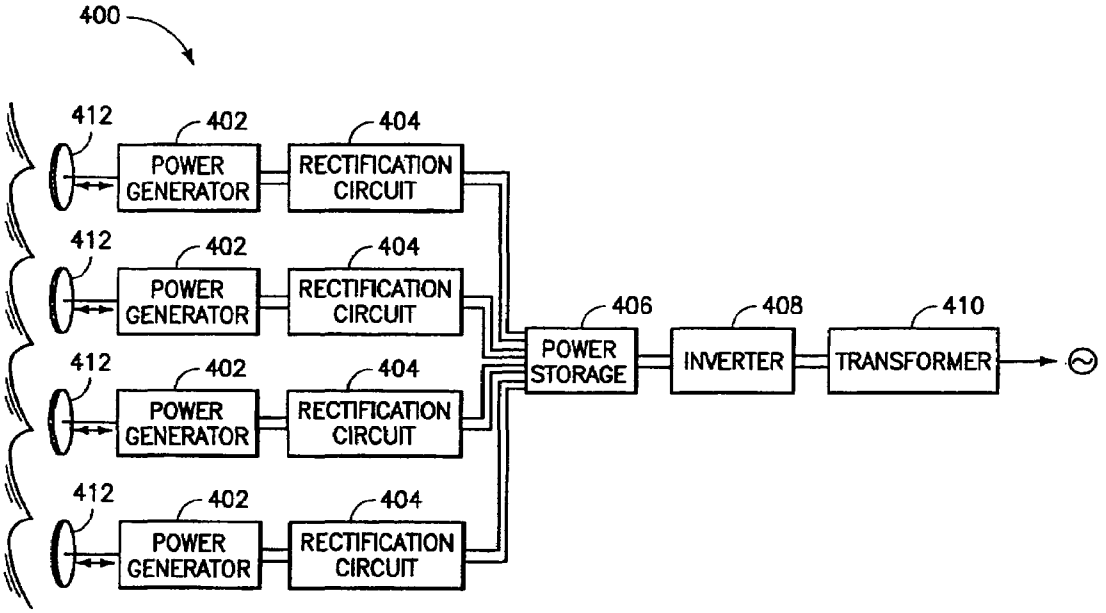

FIG. 40

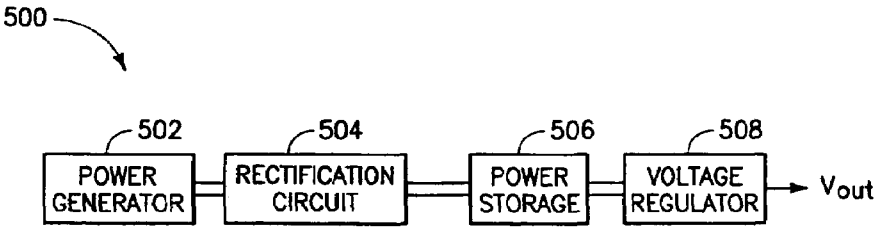

FIG. 41

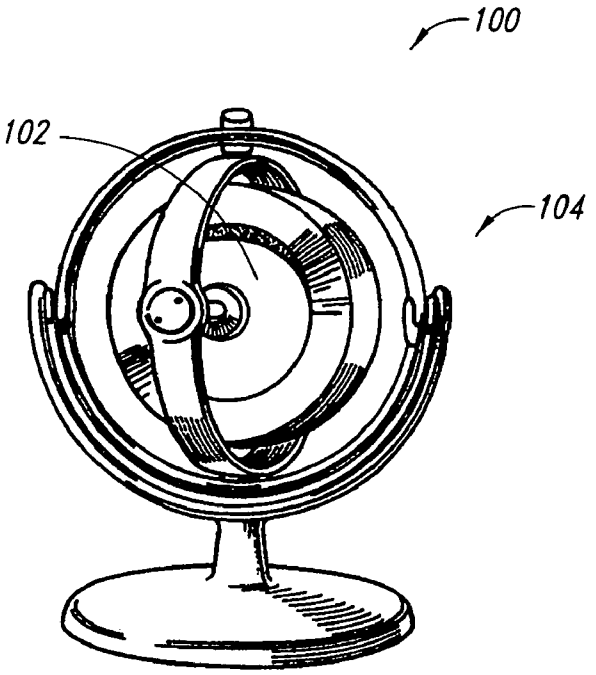

FIG. 42

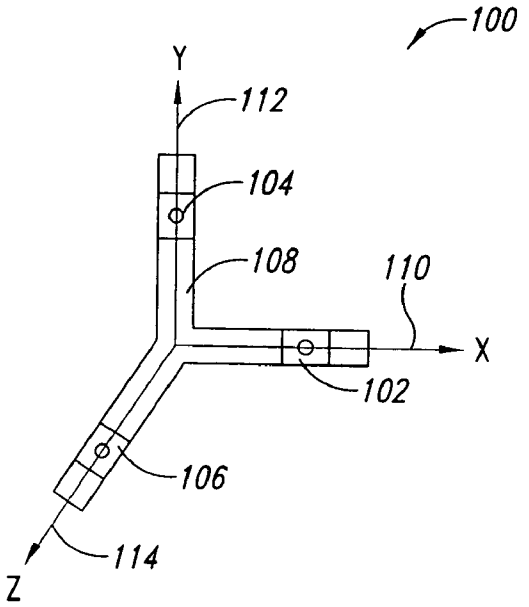

FIG. 43

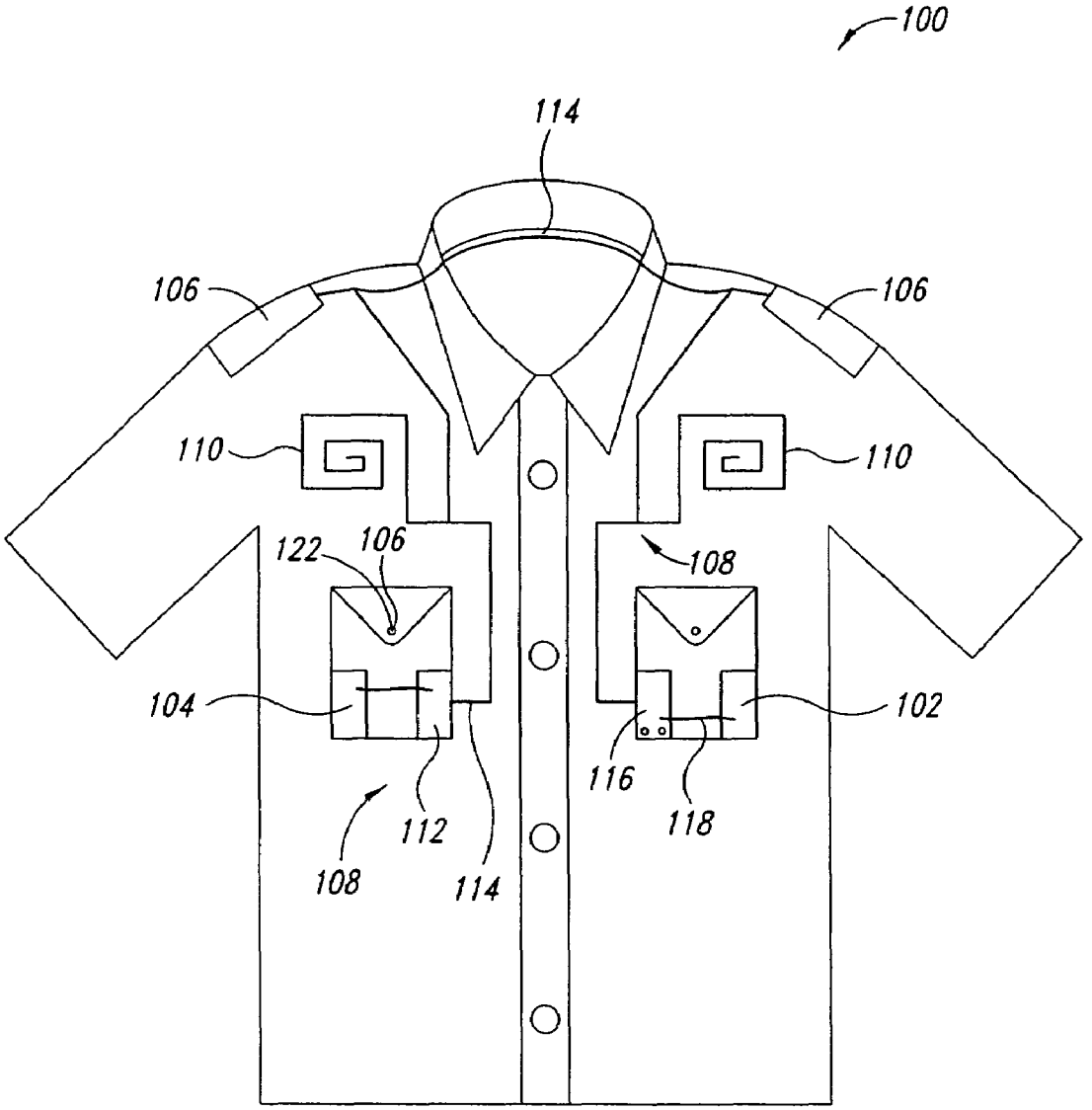

FIG. 44

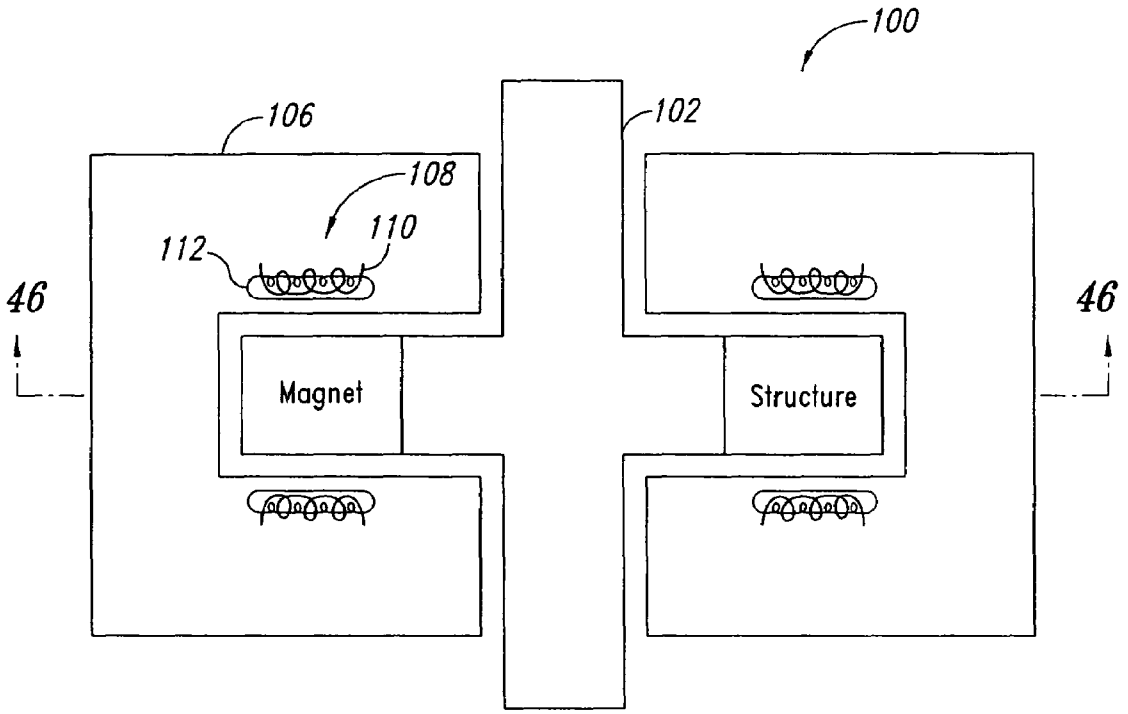
100
106
102
108
110
112
46
46
Magnet
Structure

FIG. 45

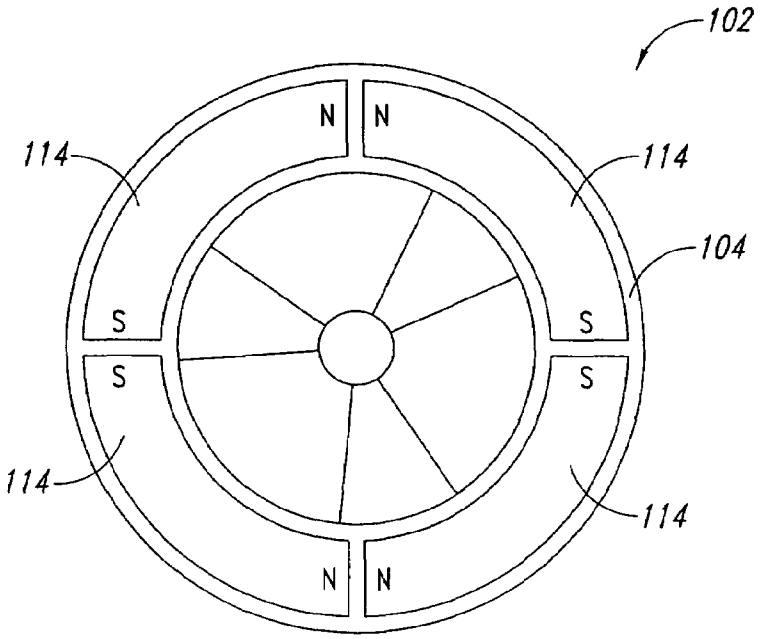
102
N
N
114
114
104
S
S
S
S
114
114
N
N

FIG. 46

SYSTEM AND METHOD FOR STORING ENERGY

STATEMENT REGARDING GOVERNMENT INTEREST

This invention was made with United States Government support under Contract No. DE-AC07-05-ID14517 awarded by the United States Department of Energy. The United States Government has certain rights in the invention.

BACKGROUND OF THE INVENTION

1. Field of the Invention

This disclosure generally relates to a system and method for storing energy and more particularly to a system and method for portably converting energy into an electrical current and storing the energy.

2. Description of the Related Art

Conventional portable energy storage devices, such as conventional batteries and storage capacitors, are either disposable or rechargeable by coupling the device to a remote source of electrical energy. Disposable devices inherently limit the amount of portable stored energy available to a user. Carrying extra disposable devices is expensive, and a user must accommodate associated weight, storage space, and disposal requirements. They also are environmentally unfriendly. Conventional rechargeable devices are more environmentally friendly than non-rechargeable devices, but a remote source of energy is required to recharge the devices and the energy available between accesses to the remote source of energy is limited. In addition, recharging requires user intervention.

Conventional shake-flashlights and similar shake-activated devices provide for storing limited amounts of energy, enough to power, for example, an LED for a brief period of time, but typically do not produce enough energy to power a conventional flashlight light bulb, and other high current draw devices, for example, a cell-phone, a camera, a GPS system or a conventional flashlight. They also are bulky and require physical activity expressly directed to charging the device. In addition, conventional shake-activated devices are not readily deployable to power another portable device. They also produce objectionable levels of magnetic fields that can potentially interfere with the operation of electronic devices, such as cell-phones and health-related devices, such as pacemakers.

Conventional crank-powered devices have much more energy-storage capabilities than conventional shake-activated devices, but similarly are bulky, require physical activity expressly directed to recharging the device, are not readily deployable to power another portable device, and may generate objectionable levels of magnetic fields.

Electro-magnetic and electro-mechanical devices and applications, such as, for example, motors, generators and alternators, typically employ coils and/or magnets. Conventional magnetic structures employ a single magnet to generate a magnetic field, or a plurality of magnets arranged to generate a magnetic field. The magnets are typically permanent magnets or electromagnets. The efficiency of many applications is dependant on the gradient of the magnetic field generated by the magnetic structure.

When an increase in output or performance was desired, conventionally the size or number of coils was increased or the size or strength of the magnets would be increased. These approaches introduce weight, cost, size and durability issues. These approaches also are not practical for many applications. Therefore it can be appreciated that there is a need for

improved coils and magnets for use in electro-magnetic and electromechanical devices and applications.

BRIEF SUMMARY OF THE INVENTION

In one embodiment, a coil comprises an electrical conductive winding and a magnetic conductive winding configured to focus magnetic flux in the electrical conductive winding. In one embodiment, the coil further comprises a winding form. In one embodiment, a first layer on the winding form comprises a layer of the electrical conductive winding. In one embodiment, a second layer of the electrical conductive winding is adjacent to the first layer on the winding form. In one embodiment, a layer of the magnetic conductive winding is adjacent to the second layer of the electrical conductive winding. In one embodiment, a layer of the magnetic conductive winding is adjacent to the first layer on the winding form. In one embodiment, a last layer on the winding form comprises a layer of the electrical conductive winding. In one embodiment, a last layer on the winding form comprises a layer of the electrical conductive winding. In one embodiment, a layer of the magnetic conductive winding is between two layers of the electric conductive winding. In one embodiment, a plurality of layers of the magnetic conductive winding is between two layers of the electric conductive winding. In one embodiment, the magnetic conductive winding forms a closed loop. In one embodiment, the coil has a trapezoidal-shaped portion. In one embodiment, the coil is wound around a core. In one embodiment, the electrical conductive winding and the magnetic conductive winding together comprise a dual-conductor winding. In one embodiment, the magnetic conductive winding comprises a silver/nickel alloy. In one embodiment, the coil further comprises a layer of insulating material, wherein the electrical conductive winding comprises a trace formed on the layer of insulation material.

In one embodiment, a winding comprises an electrical conductive wire and a magnetic conductive wire insulated from and secured to the electrical conductive wire and configured to focus magnetic flux in the electrical conductive wire. In one embodiment, the magnetic conductive wire forms a closed loop. In one embodiment, the magnetic conductive wire is secured to the magnetic conductive wire by an insulating material. In one embodiment, the magnetic conductive wire forms a core of the winding and is surrounded by an insulating layer and the electrical conductive wire surrounds the insulating layer. In one embodiment, the electrical conductive wire comprises a stranded wire.

In one embodiment, a system comprises a magnetic structure and a coil, the coil comprising an electrical conductive winding and a magnetic conductive winding configured to focus magnetic flux in the electrical conductive winding. In one embodiment, the system is configured to receive energy and to generate an electrical signal in response to the receipt of the energy. In one embodiment, the system further comprises a mechanical transmission system configured to receive the energy. In one embodiment, the mechanical transmission system is coupled to the magnetic structure and configured to move the magnet structure with respect to the coil in response to the receipt of energy. In one embodiment, the mechanical transmission system is configured to move the magnetic structure in a linear manner. In one embodiment, the mechanical transmission system is configured to move the magnetic structure in a rotational manner. In one embodiment, the mechanical transmission system is configured to move the magnetic structure in a radial manner. In one embodiment, the mechanical transmission system is coupled to the coil and configured to move the coil with respect to the

magnetic structure in response to the receipt of energy. In one embodiment, the coil is configured to receive an electrical signal and the system is configured to generate mechanical force in response to the receipt of the electrical signal. In one embodiment, the system further comprises a mechanical transmission system.

In one embodiment, a system comprises a coil comprising means for conducting an electric signal and means for focusing magnetic flux in the means for conducting an electrical signal, and a magnetic structure. In one embodiment, the means for focusing magnetic flux comprises a winding comprising a silver/nickel alloy. In one embodiment, the means for conducting an electrical signal comprises a stranded copper wire. In one embodiment, the coil further comprises a first insulating substrate and the means for conducting an electrical signal comprises an electrical conductive trace formed on the first insulating substrate. In one embodiment, the means for focusing magnetic flux comprises a magnetic conductive trace formed on the first insulating substrate. In one embodiment, the electrical conductive trace is formed on a first surface of the first insulating substrate and the magnetic conductive trace is formed on the first surface of the first insulating substrate. In one embodiment, the coil further comprises a plurality of insulating substrates, and the means for conducting an electric signal comprises a plurality of electrical conductive traces formed on selected substrates in the plurality of substrates and the means for focusing magnetic flux comprises a plurality of magnetic conductive traces formed on selected substrates in the plurality of substrates.

In one embodiment, a method for generating an electrical signal comprises causing relative movement between a magnetic structure and an electrical conductive winding and focusing magnetic flux generated by the magnetic structure in the electrical conductive winding using a magnetic conductive winding. In one embodiment, the method further comprises forming a closed loop with the magnetic conductive winding.

In one embodiment, a coil comprises a plurality of insulating substrates, a plurality of electrical conductive traces formed on a first set of selected substrates in the plurality of substrates and a plurality of magnetic conductive traces formed on a second set of selected substrates in the plurality of substrates. In one embodiment, the first set of selected substrates comprises every other insulating substrate in the plurality of insulating substrates and the plurality of electrical conductive traces consists of an electrical conductive trace formed on each of the plurality of insulating substrates in the first set of selected substrates. In one embodiment, the plurality of electrical conductive traces are electrically coupled in series. In one embodiment, the plurality of magnetic conductive traces are electrically coupled together to form a closed loop.

In one embodiment, a method of generating mechanical force comprises generating a magnetic field, focusing the magnetic field in an electrical conductive element and conducting a current through the electrical conductive element. In one embodiment, the current is an alternating current. In one embodiment, the method further comprises applying the mechanical force so as to generate a linear movement in a transmission system. In one embodiment, the method further comprises applying the mechanical force so as to generate a rotational movement in a transmission system. In one embodiment, the method further comprises applying the mechanical force so as to generate a radial movement in a transmission system. In one embodiment, the current is a direct current. In one embodiment, the electrical conductive element comprises layers of an electrical conductive winding and focusing the magnetic field in the electrical conductive winding comprises inserting a magnetic conductive winding between two layers of the electrical conductive winding. In one embodiment, the magnetic conductive winding forms a closed loop.

In one embodiment, a system comprises a first magnet housing, a first magnet secured within the first magnet housing and having a first pole of a first polarity and a second pole of a second polarity, and a second magnet having a first pole of the first polarity and a second pole of the second polarity, secured within the first magnet housing such that the first pole of the second magnet is held spaced apart a distance from and generally facing the first pole of the first magnet, so as to generate a compressed magnetic field. In one embodiment, the first magnet comprises a rare earth magnet. In one embodiment, the system further comprises a coil. In one embodiment, the system is configured to receive energy and to generate an electrical signal in response to the receipt of the energy. In one embodiment, the system is configured to receive an electrical signal and to generate mechanical force in response to the electrical signal. In one embodiment, the system further comprises a mechanical transmission system. In one embodiment, the mechanical transmission system is coupled to the first magnet housing and configured to move the first magnet housing with respect to the coil in response to the receipt of the energy. In one embodiment, the mechanical transmission system is configured to move the first magnet housing in a linear manner. In one embodiment, the mechanical transmission system is configured to rotate the first magnet housing. In one embodiment, the system further comprises a third magnet having a first pole of the first polarity and a second pole of the second polarity, secured within the first magnet housing such that the second pole of the third magnet is held spaced apart a distance from and generally facing the second pole of the first magnet, so as to generate a compressed magnetic field. In one embodiment, the coil is configured to pass between the first and second magnets as the first magnet housing is rotated. In one embodiment, the mechanical transmission system is coupled to the coil and configured to move the coil with respect to the first magnet housing in response to a receipt of energy. In one embodiment, the mechanical transmission system comprises a repelling magnet. In one embodiment, the mechanical transmission system comprises a mechanical repelling system. In one embodiment, the coil is configured to receive an electrical signal and the system is configured to move the first magnet housing with respect to the coil in response to the receipt of the electrical signal. In one embodiment, the system is configured to receive energy and to move the first magnet housing with respect to the coil in response to the receipt of the energy. In one embodiment, the system further comprises a second coil. In one embodiment, the coil has an axis that is at least generally aligned with an axis along which the first magnet housing is configured to move relative to the coil. In one embodiment, the system further comprises a second magnet housing, a third magnet secured within the second magnet housing and having a first pole of a first polarity and a second pole of a second polarity, and a fourth magnet having a first pole of the first polarity and a second pole of the second polarity, secured within the second magnet housing such that the first pole of the third magnet is held spaced apart a distance from and generally facing the first pole of the fourth magnet, so as to generate a compressed magnetic field. In one embodiment, the second magnet housing is substantially perpendicular to the first magnet housing. In one embodiment, the system further comprises a second coil. In one embodiment, the first magnet housing is gimbaled. In one embodiment, the electrical signal comprises a

DC current. In one embodiment, the electrical signal comprises an AC current and the system further comprises rectification circuitry coupled to the coil and configured to convert the AC current to a DC current. In one embodiment, the system further comprises a power storage system coupled to the rectification circuitry for accumulating and storing power generated by the system. In one embodiment, the system further comprises an inverter coupled to the power storage system and configured to supply alternating current to an electricity distribution system. In one embodiment, the system is configured to convert energy from waves into an electrical signal.

In one embodiment, a magnetic structure comprises a magnet housing, a first magnet secured within the magnet housing, and having a first pole of a first polarity and a second pole of a second polarity, and a second magnet having a first pole of the first polarity and a second pole of the second polarity, secured within the magnet housing such that the first pole of the second magnet is held spaced apart a distance from and generally facing the first pole of the first magnet, so as to generate a compressed magnetic field. In one embodiment, the first magnet comprises a permanent magnet. In one embodiment, the first magnet comprises a rare earth magnet. In one embodiment, the first magnet comprises an electromagnet. In one embodiment, a space between the first and second magnets is substantially filled with a non-magnet substance. In one embodiment, the non-magnetic substance comprises air. In one embodiment, the non-magnetic substance comprises a fluoropolymer resin. In one embodiment, the magnetic structure further comprises a third magnet having a first pole of the first polarity and a second pole of the second polarity, secured within the magnet housing such that the second pole of the third magnet is held spaced apart a distance from and generally facing the second pole of the first magnet, so as to generate a compressed magnetic field. In one embodiment, the first polarity is a north polarity. In one embodiment, a face of the first pole of the first magnet is at least generally planar. In one embodiment, a face of the first pole of the second magnet is at least generally planar. In one embodiment, a face of the first pole of the first magnet is at least generally convex. In one embodiment, a face of the first pole of the first magnet is at least generally concave. In one embodiment, the first magnet is generally rectangular. In one embodiment, the first magnet is generally spherical. In one embodiment, the magnetic structure further comprises a suspension system. In one embodiment, the suspension system is gimbaled. In one embodiment, gravitational forces are used to position the magnetic structure within the suspension system. In one embodiment, the suspension system is configured to employ gyroscopic principles to position the magnetic structure. In one embodiment, the magnet housing is evacuated and hermetically sealed.

In one embodiment, a magnetic structure comprises a plurality of magnets and means for holding the magnets spaced apart with respect to each other and configured so as to generate a compressed magnetic field. In one embodiment, the means for holding the magnets comprises a magnet housing having a threaded inner surface. In one embodiment, the means for holding the magnets comprises tabs configured to hold the plurality of magnets in fixed positions with respect to each other. In one embodiment, the magnetic structure further comprises means for transmitting mechanical energy coupled to the means for holding the magnets.

In one embodiment, a method of generating power comprises generating a compressed magnetic field using a plurality of spaced-apart magnets and causing relative movement between an electrical conductive winding and the compressed magnetic field. In one embodiment, generating the compressed magnetic field comprises holding the plurality of magnets spaced apart in a fixed position with respect to each other such that like poles of the magnets face each other so as to generate the compressed magnetic field. In one embodiment, the plurality of magnets consists of two magnets and a distance between the two magnets is less than an ambient distance. In one embodiment, the method further comprises rectifying a current generated in the electrical conductive winding. In one embodiment, the method further comprises storing the rectified current in an energy storage system. In one embodiment, causing relative movement comprises moving the electrical conductive winding with respect to the plurality of magnets. In one embodiment, causing relative movement comprises moving the plurality of magnets with respect to the electrical conductive winding. In one embodiment, moving the plurality of magnets with respect to the electrical conductive winding comprises moving the plurality of magnets along a generally linear path. In one embodiment, moving the plurality of magnets with respect to the electrical conductive winding comprises moving the plurality of magnets along a generally radial path. In one embodiment, moving the plurality of magnets with respect to the electrical conductive winding comprises rotating the plurality of magnets. In one embodiment, the method further comprises optimizing a gradient of the compressed magnetic field.

In one embodiment, a method of generating mechanical force comprises generating a compressed magnetic field and conducting a current through an electrical conductive winding in the compressed magnetic field. In one embodiment, generating the compressed magnetic field comprises holding a plurality of magnets spaced apart in a fixed position with respect to each other such that like poles of the magnets face each other so as to generate the compressed magnetic field. In one embodiment, the plurality of magnets consists of two magnets and a distance between the two magnets is less than an ambient distance. In one embodiment, the current is an alternating current. In one embodiment, the current is a direct current. In one embodiment, the method further comprises applying the mechanical force so as to cause a generally linear movement in a transmission system. In one embodiment, the method further comprises applying the mechanical force so as to cause a generally rotational movement in a transmission system.

In one embodiment, a system comprises a coil having an electrical conductive winding and a magnetic conductive winding configured to focus magnetic flux in the electrical conductive winding, and a magnetic structure configured to generate a compressed magnetic field. In one embodiment, the magnetic structure comprises a first magnet housing, a first magnet secured within the first magnet housing, and having a first pole of a first polarity and a second pole of a second polarity, and a second magnet having a first pole of the first polarity and a second pole of the second polarity, secured within the first magnet housing such that the first pole of the second magnet is held spaced apart a distance from and generally facing the first pole of the first magnet, so as to generate the compressed magnetic field. In one embodiment, the system is configured to receive energy and to generate an electrical signal in response to the receipt of the energy. In one embodiment, the electrical signal comprises an AC current and the system further comprises rectification circuitry coupled to the coil and configured to convert the AC current to a DC current. In one embodiment, the electrical signal comprises a DC current. In one embodiment, the system is configured to receive an electrical signal and to generate mechanical force in response to the electrical signal. In one

embodiment, the system further comprises a mechanical transmission system. In one embodiment, the mechanical transmission system is coupled to the magnetic structure and configured to move the magnetic structure with respect to the coil in response to a receipt of energy. In one embodiment, the mechanical transmission system is configured to move the magnetic structure in a linear manner. In one embodiment, the mechanical transmission system is configured to rotate the magnetic structure. In one embodiment, the mechanical transmission system is configured to move the magnetic structure along a radial path. In one embodiment, the mechanical transmission system is coupled to the coil and configured to move the coil with respect to the magnetic structure in response to a receipt of energy. In one embodiment, the coil is configured to receive an electrical signal and the system is configured to move the magnetic structure with respect to the coil in response to the receipt of the electrical signal. In one embodiment, the system is configured to receive energy and to move the magnetic structure with respect to the coil in response to the receipt of the energy. In one embodiment, the system is configured to receive energy and to move the coil with respect to the magnetic structure in response to the receipt of the energy. In one embodiment, the coil has an axis that is at least generally aligned with an axis along which the magnetic structure is configured to move relative to the coil. In one embodiment, the system further comprises a gimbaled suspension system. In one embodiment, the system is configured to convert energy from waves into an electrical signal. In one embodiment, the magnetic conductive winding is configured as a closed loop. In one embodiment, the system further comprises an article of clothing configured for coupling the system to a person. In one embodiment, the system further comprises a coupler configured to couple the coil to an electrical transmission grid.

In one embodiment, a method of generating power comprises generating a compressed magnetic field using a plurality of spaced-apart magnets, moving an electrical conductive winding with respect to the compressed magnetic field, and focusing magnetic flux in the electrical conductive winding using a magnetic conductive winding. In one embodiment, generating the compressed magnetic field comprises holding the plurality of magnets spaced apart in a fixed position with respect to each other such that like poles of the magnets face each other so as to generate the compressed magnetic field. In one embodiment, the plurality of magnets consists of two magnets and a distance between the two magnets is less than an ambient distance. In one embodiment, the method further comprises rectifying a current generated in the electrical conductive winding. In one embodiment, the method further comprises storing the rectified current in an energy storage system. In one embodiment, moving the electrical conductive winding with respect to the compressed magnetic field comprises moving the electrical conductive winding with respect to the plurality of magnets. In one embodiment, moving the electrical conductive winding with respect to the compressed magnetic field comprises moving the plurality of magnets with respect to the electrical conductive winding. In one embodiment, moving the plurality of magnets with respect to the electrical conductive winding comprises moving the plurality of magnets along a generally linear path. In one embodiment, moving the plurality of magnets with respect to the electrical conductive winding comprises rotating the plurality of magnets. In one embodiment, the method further comprises optimizing a gradient of the compressed magnetic field. In one embodiment, the magnetic conductive winding forms a closed loop. In one embodiment, the method further comprises coupling the electrical conductive winding to an electrical transmission grid. In one embodiment, the method further comprises generating an alternating current in the electrical conductive winding. In one embodiment, the method further comprises generating a direct current in the electrical conductive winding.

In one embodiment, a method of generating mechanical force comprises generating a compressed magnetic field, focusing magnetic flux in an electrical conductive winding using a magnetic conductive winding, and conducting a current through the electrical conductive winding in the compressed magnetic field. In one embodiment, generating the compressed magnetic field comprises holding a plurality of magnets spaced apart in a fixed position with respect to each other such that like poles of the magnets face each other so as to generate the compressed magnetic field. In one embodiment, the plurality of magnets consists of two magnets and a distance between the two magnets is less than an ambient distance. In one embodiment, the current is an alternating current. In one embodiment, the current is a direct current. In one embodiment, the method further comprises applying the mechanical force so as to cause a generally linear movement in a transmission system. In one embodiment, the method further comprises applying the mechanical force so as to cause a generally rotational movement in a transmission system. In one embodiment, the magnetic conductive winding forms a closed loop.

In one embodiment, an article of clothing comprises a coil having an electrical conductive winding and a magnetic conductive winding configured to focus magnetic flux in the electrical conductive winding, and a magnetic structure configured to generate a compressed magnetic field. In one embodiment, the magnetic structure comprises a first magnet housing, a first magnet secured within the first magnet housing, and having a first pole of a first polarity and a second pole of a second polarity, and a second magnet having a first pole of the first polarity and a second pole of the second polarity, secured within the first magnet housing such that the first pole of the second magnet is held spaced apart a distance from and generally facing the first pole of the first magnet, so as to generate the compressed magnetic field. In one embodiment, the magnetic conductive winding forms a closed loop. In one embodiment, the magnetic structure and the coil are contained within a battery case.

In one embodiment, a system comprises a coil comprising means for conducting an electrical current in response to changes in magnetic flux and means for focusing magnetic flux in the means for conducting the electrical current, and means for generating a compressed magnetic field. In one embodiment, the means for conducting the electrical current comprises an electrical conductive winding and the means for focusing magnetic flux comprises a magnetic conductive winding. In one embodiment, the magnetic conductive winding forms a closed loop. In one embodiment, the means for generating the compressed magnetic field comprises a first magnet housing, a first magnet secured within the first magnet housing, and having a first pole of a first polarity and a second pole of a second polarity, and a second magnet having a first pole of the first polarity and a second pole of the second polarity, secured within the first magnet housing such that the first pole of the second magnet is held spaced apart a distance from and generally facing the first pole of the first magnet, so as to generate the compressed magnetic field.

In one embodiment, a battery comprises a case, a first generator contained within the case and configured to convert energy received by the battery into electrical energy, a first energy storage device contained within the case, a second energy storage device contained within the case, a control

module contained within the case, coupled to the first and second energy storage devices, and configured to control a transfer of the electrical energy from the first energy storage device to the second energy storage device, and a plurality of contact terminals. In one embodiment, the first energy storage device comprises an ultracapacitor and the second energy storage device comprises a lithium cell. In one embodiment, the battery further comprises a third energy storage device. In one embodiment, the third energy storage device is coupled in series with the second energy storage device. In one embodiment, the third energy storage device is coupled in parallel with the first energy storage device. In one embodiment, the battery further comprises a connector to house the plurality of contact terminals. In one embodiment, the case and contact terminals have a configuration of a C-cell battery. In one embodiment, the first generator comprises a coil and a magnetic structure. In one embodiment, the magnetic structure is configured to generate a compressed magnetic field. In one embodiment, the coil comprises an electrical conductive element, and a magnetic conductive element. In one embodiment, the magnetic structure is configured to generate a compressed magnetic field. In one embodiment, the plurality of contact terminals are electrically coupled to the control module. In one embodiment, the battery further comprises a second generator contained within the case, wherein the first generator is oriented in a first direction and the second generator is oriented in a second direction different from the first direction. In one embodiment, the control module is further configured to control a transfer of energy between the second energy storage device and the contact terminals. In one embodiment, the transfer of energy between the first energy storage device and the contact terminals comprises a transfer of energy from the contact terminals to the second energy storage device. In one embodiment, the transfer of energy between the first energy storage device and the contact terminals comprises a transfer of energy from the contact terminals to the first energy storage device. In one embodiment, the control module is further configured to control a transfer of energy between the first energy storage device and the contact terminals. In one embodiment, the battery further comprises a suspension system coupled to the generator. In one embodiment, the suspension system is tuned to optimize conversion of expected patterns of movement into electrical energy. In one embodiment, the suspension system is gimbaled. In one embodiment, the suspension system comprises a gyroscopic system. In one embodiment, the generator is configured to convert energy received through movement of the battery. In one embodiment, the generator is configured to convert energy received in a parasitic manner. In one embodiment, the case comprises a magnetic shield.

In one embodiment, a battery comprises a case, a coil contained within the case, a magnetic structure contained within the case and configured to generate a compressed magnetic field, a first energy storage device contained within the case, a plurality of contact terminals coupled to the case, and a control module contained within the case and coupled to the coil and the first energy storage device. In one embodiment, the magnetic structure comprises a plurality of spaced-apart rare earth magnets configured so that like-polarity poles face each other in neighboring magnets in the plurality of rare earth magnets. In one embodiment, the magnets in the plurality of magnets are held in position with respect to one another. In one embodiment, a space between two magnets in the plurality of magnets is substantially filled with a non-magnet substance. In one embodiment, the non-magnetic substance comprises air. In one embodiment, the non-magnetic substance comprises a fluoropolymer resin. In one embodiment, the case is evacuated and hermetically sealed. In one embodiment, the battery further comprises a suspension system coupled to the magnetic structure. In one embodiment, the suspension system is tuned to optimize conversion of expected patterns of movement into electrical energy. In one embodiment, the coil comprises an electrical conductive element and a magnetic conductive element. In one embodiment, the magnetic conductive element is configured to focus magnetic flux in the electrical conductive element.

In one embodiment, a battery comprises a case, a coil contained within the case and having an electrical conductive element and a magnetic conductive element, a magnetic structure, a first energy storage device contained within the case, a plurality of contact terminals coupled to the case and a control module contained within the case and coupled to the coil and the first energy storage device. In one embodiment, the magnetic conductive element is configured to focus magnetic flux in the electrical conductive element. In one embodiment, the electrical conductive element comprises a electrical conductive wire in a multi-wire winding and the magnetic conductive element comprises a magnetic conductive wire in the multi-wire winding. In one embodiment, the electrical conductive element comprises an electrical conductive winding and the magnetic conductive element comprises a magnetic conductive winding. In one embodiment, the electrical conductive element comprises an electrical conductive trace formed on a first insulating substrate. In one embodiment, the magnetic conductive element comprises a magnetic conductive trace formed on the first insulating substrate. In one embodiment, the electrical conductive trace is formed on a first surface of the first insulating substrate and the magnetic conductive trace is formed on the first surface of the first insulating substrate. In one embodiment, the battery further comprises a plurality of insulating substrates, wherein the electrical conductive element comprises a plurality of electrical conductive traces formed on selected substrates in the plurality of substrates and the magnetic conductive element comprises a plurality of magnetic conductive traces formed on selected substrates in the plurality of substrates. In one embodiment, the magnetic structure is configured to generate a compressed magnetic field. In one embodiment, a contact terminal of the plurality of contact terminals is electrically coupled to a contact terminal of an external battery. In one embodiment, the battery has a first physical orientation and the external battery has a second physical orientation different from the first physical orientation.

In one embodiment, a battery comprises a case, means for converting movement of the battery into an electric current, first means for storing energy contained within the case, second means for storing energy contained within the case, means for controlling a transfer of energy from the means for converting movement to the first means for storing energy contained within the case, and means for accessing energy stored in the first means for storing energy. In one embodiment, the battery further comprises third means for storing energy contained within the case. In one embodiment, the means for converting movement comprises means for conducting an electric current and means for generating a magnetic field. In one embodiment, the means for generating a magnetic field is configured to generate a compressed magnetic field. In one embodiment, the battery further comprises means for conducting magnetic flux. In one embodiment, the battery further comprises means for facilitating relative movement of the means for conducting an electric current with respect to the means for generating a magnetic field.

In one embodiment, a method of operating a battery comprises moving the battery, converting energy received through

the movement of the battery into an electric current, and controlling transfers of energy to a plurality of energy storage devices contained within the battery. In one embodiment, controlling transfers of energy comprises storing energy from the electric current in a first energy storage device in the plurality of energy storage devices and controlling a transfer of energy from the first energy storage device to a second energy storage device in the plurality of energy storage devices. In one embodiment, controlling transfers of energy comprises rectifying the electric current. In one embodiment, the method further comprises controlling a transfer of energy from the battery to a load. In one embodiment, the method further comprises providing an electric current to the battery and controlling a storage in the battery of energy from the provided electric current. In one embodiment, converting energy received through the movement of the battery into the electric current comprises generating a compressed magnetic field. In one embodiment, converting energy received through the movement of the battery into the electric current further comprises focusing the compressed magnetic field in an electrical conductive winding. In one embodiment, generating the compressed magnetic field comprises holding two magnets spaced-apart with like poles facing each other at a distance closer than an ambient distance. In one embodiment, converting energy received through the movement of the battery into the electric current comprises focusing a magnetic field in an electrical conductive element. In one embodiment, focusing the magnetic field in the electrical conductive element comprises positioning a magnetic conductive element with respect to the electrical conductive element so as to focus the magnetic field. In one embodiment, converting energy received through the movement of the battery into the electric current comprises orienting a generator contained within the battery. In one embodiment, converting the energy received through the movement of the battery into the electric current comprises converting the energy into relative movement between an electrical conductive winding and a magnetic field. In one embodiment, the relative movement is generally linear. In one embodiment, the relative movement is generally rotational.

In one embodiment, a system comprises a first battery having a first orientation and comprising means for converting energy into a first electrical signal, and a second battery electrically coupled to the first battery and having a second orientation, and comprising second means for converting energy into a second electrical signal. In one embodiment, the second orientation is substantially perpendicular to the first orientation. In one embodiment, the means for converting energy into the first electrical signal comprises a control module configured to control a transfer of electrical energy from a first energy storage device to a second energy storage device. In one embodiment, the means for converting energy into the first electrical signal comprises means for generating a compressed magnetic field. In one embodiment, the means for converting energy into the first electrical signal comprises an electrical conductive winding and a magnetic conductive winding configured to focus magnetic flux in the electrical conductive winding.

BRIEF DESCRIPTION OF THE SEVERAL VIEWS OF THE DRAWINGS

The patent or application file contains at least one drawing executed in color. Copies of the patent or patent application publication with color drawings will be provided by the Office upon request and payment of the necessary fee.

The sizes and relative positions of elements in the drawings are not necessarily drawn to scale. For example, the shapes of various elements and angles are not drawn to scale, and some of these elements are arbitrarily enlarged and positioned to improve drawing legibility. Further, the particular shapes of the elements as drawn are not necessarily intended to convey any information regarding the actual shape of particular elements, and have been selected solely for ease of recognition in the drawings.

FIG. **1** is a diametric cross-sectional view of a conventional coil.

FIG. **2** is a diametric cross-sectional view of an embodiment of a coil in accordance with the present disclosure.

FIG. **3** is a diametric cross-sectional view of another embodiment of a coil in accordance with the present disclosure.

FIG. **4** is a diametric cross-sectional view of an embodiment of a dual conductor winding suitable for use in the embodiment of a coil illustrated in FIG. **3**.

FIG. **5** is a diametric cross-sectional view of another embodiment of a coil in accordance with the present disclosure.

FIG. **6** is a diametric cross-sectional view of another embodiment of a coil in accordance with the present disclosure.

FIG. **7** is a top view of another embodiment of a coil in accordance with the present disclosure.

FIG. **8** is a bottom view of the embodiment of a coil illustrated in FIG. **7**.

FIG. **9** is a side view of the embodiment of a coil illustrated in FIG. **7**.

FIG. **10** is a top view of another embodiment of a coil in accordance with the present disclosure.

FIG. **11** is a side view of another embodiment of a coil in accordance with the present disclosure.

FIG. **12** is a graphic illustration of the magnetic flux generated by a conventional magnetic structure.

FIGS. **13**A and **13**B are graphic illustrations of the magnetic flux generated by two permanent magnets with like poles facing each other and separated by an ambient distance.

FIGS. **14**A and **14**B are graphic illustrations of the magnetic flux generated by two permanent magnets with like poles substantially touching each other.

FIGS. **15**A and **15**B are graphic illustrations of the magnetic flux generated by two permanent magnets with like poles facing each other and held together between an ambient distance and a substantially touching position.

FIG. **16** is cross-sectional view of an embodiment of a magnetic structure in accordance with the present disclosure.

FIG. **17** is cross-sectional view of an embodiment of a magnetic structure in accordance with the present disclosure.

FIG. **18** is cross-sectional view of an embodiment of a magnetic structure in accordance with the present disclosure.

FIG. **19** is cross-sectional view of an embodiment of a magnetic structure in accordance with the present disclosure.

FIG. **20** is a side diametric cross-sectional view of another embodiment of a magnet structure in accordance with the present disclosure.

FIG. **21** is a side view of an embodiment of a magnet structure in accordance with the present disclosure.

FIG. **22** is a diagrammatical front view of an embodiment of a power generator system.

FIG. **23** is a diagrammatical front view of the system of FIG. **22** at a different point in time.

FIG. **24** is a side view, in section, of an armature included in the system of FIG. **22**.

FIG. **25** is a diagrammatical front view of a system in accordance with an alternative embodiment of a generator.

FIG. **26** is a side view, in section, of an armature included in the system of FIG. **25**.

FIG. **27** is a side cross-sectional view of an embodiment of a system in accordance with the present disclosure.

FIG. **28** is a side cross-sectional view of another embodiment of a system in accordance with the present disclosure.

FIG. **29** is a top view of a system in accordance with the present disclosure.

FIG. **30** is a side diametric cross-sectional view of the system of FIG. **29** taken along line **30-30**.

FIG. **31** is a side diametric cross-sectional view of an embodiment of a system employing the embodiments illustrated in FIGS. **7** through **9** and FIG. **17**.

FIG. **32** is a side diametric cross-sectional view of an embodiment of a system employing the embodiments illustrated in FIG. **11** and FIG. **16**.

FIG. **33** is a diametric cross-sectional view of an embodiment of a battery.

FIG. **34** is a diametric cross-sectional view of another embodiment of a battery.

FIG. **35** is a side sectional view of another embodiment of a battery.

FIG. **36** is a diametric cross sectional view of a linear generator suitable for use in the embodiments illustrated in FIGS. **33** through **36**.

FIG. **37** is a high-level flow diagram for an embodiment of a method of recharging a portable energy storage device.

FIG. **38** is a high level flow diagram for an embodiment of a method of operating a portable energy storage device.

FIG. **39** is a perspective view illustrating a practical application for an embodiment of a power generator.

FIG. **40** is a block diagram of an embodiment of a system for generating power.

FIG. **41** is a block diagram of an embodiment of a self-powered device.

FIG. **42** illustrates an embodiment of a system in accordance with the present disclosure.

FIG. **43** illustrates another embodiment of a system in accordance with the present disclosure.

FIG. **44** illustrates an embodiment of an article of clothing in accordance with the present disclosure.

FIG. **45** is a side view of an embodiment of a system in accordance with the present invention.

FIG. **46** is a top view of an embodiment of a rotor suitable for use in the embodiment of a system illustrated in FIG. **45**.

DETAILED DESCRIPTION OF THE INVENTION

In the following description, certain details are set forth in order to provide a thorough understanding of various embodiments of devices, methods and articles. However, one of skill in the art will understand that other embodiments may be practiced without these details. In other instances, well-known structures and methods associated with batteries, linear generators, and control systems have not been shown or described in detail to avoid unnecessarily obscuring descriptions of the embodiments.

Unless the context requires otherwise, throughout the specification and claims which follow, the word "comprise" and variations thereof, such as "comprising," and "comprises," are to be construed in an open, inclusive sense, that is as "including, but not limited to."

Reference throughout this specification to "one embodiment," or "an embodiment" means that a particular feature, structure or characteristic described in connection with the embodiment is included in at least one embodiment. Thus, the appearances of the phases "in one embodiment," or "in an embodiment" in various places throughout this specification are not necessarily referring to the same embodiment, or to all embodiments. Furthermore, the particular features, structures, or characteristics may be combined in any suitable manner in one or more embodiments to obtain further embodiments.

The headings are provided for convenience only, and do not interpret the scope or meaning of this disclosure or the claimed invention.

FIG. **1** is a diametric cross sectional view of a conventional coil **100**. The coil **100** comprises a non-magnetic winding form **102** and a non-magnetic, electrical conductive winding **104**. A winding comprises one or more complete turns of a conductive materials in a coil, and may comprise one or more layers. As illustrated, the winding **104** comprises nine turns and three layers. As illustrated, the electrical conductive winding **104** is continuous. In other conventional coils, a plurality of electrical conductive windings may be employed, which may or may not be electrically connected in series or in parallel. The electrical conductive winding **104** may comprise any suitable electrically conductive material, such as, for example, metallic materials, such as copper, copper coated with silver or tin, aluminum, silver, gold and/or alloys. The electrical conductive winding **104** may comprise, for example, solid wires, including, for example, flat wires, strands, twisted strands, or sheets. The electrical conductive winding **104** may vary significantly in size from the illustration, and may be substantially smaller or substantially larger than illustrated. The electrical conductive winding **104** is typically covered with an insulating material **120**. The electrical conductive winding **104** is coupled to the leads **122**, **124** for the coil **100**.

FIG. **2** is a diametric cross-sectional view of an embodiment of a bi-metal coil **200**. The coil **200** comprises a non-magnetic winding form **202**, a non-magnetic, electrical conductive winding **204** and a magnetic conductive winding **206**. The use of an electrical conductive winding, such as the electrical conductive winding **204**, with a magnetic conductive winding, such as the magnetic conductive winding **206**, facilitates focusing of a magnetic field passing through or generated by an electrical conductive winding of a coil, such as the winding **204** of the coil **200**. Focusing of the magnetic field can significantly increase the efficiency of the coil **200**. For example, when the coil **200** is employed in a generator, as a magnet is passed through the coil **200** the electrical conductive winding **204** produces electron flow, while the magnetic conductive winding **206** focuses magnetic flux in the electrical conductive winding **204** and causes an increase in power output from the coil **200**.

A first layer **208** and a second layer **210** of the electrical conductive winding **204** are wound onto the winding form **202**. In one embodiment, the electrical conductive winding **204** is continuous. In other embodiments, the electrical conductive winding **204** may comprise a plurality of windings, which may be electrically connected in series or in parallel. A first layer **212** of the magnetic conductive winding **206** is wound over the second layer **210** of the electrical conductive winding **204**. A third layer **214** and a fourth layer **216** of the electrical conductive winding **204** are wound over the first layer **212** of the magnetic conductive winding **206**. A second layer **218** of the magnetic conductive winding **206** is wound over the fourth layer **216** of the electrical conductive winding **204**. A fifth layer **219** of the electrical conductive winding **204** is wound over the second layer **218** of the magnetic conductive winding **206**.

The electrical conductive winding **204** may comprise any suitable electrically conductive material, such as, for example, metallic materials, such as copper, copper coated with silver or tin, aluminum, silver, gold and/or alloys. The electrical conductive winding **204** may comprise, for example, solid wires, strands, twisted strands, or sheets. The electrical conductive winding **204** may vary significantly in size from the illustration, and may be substantially smaller or substantially larger than illustrated. The electrical conductive winding **204** is typically covered with an insulating material **220**. The electrical conductive winding **204** is coupled to the leads **222**, **224** for the coil **200**.

The magnetic conductive winding **206** may comprise any suitable magnetic conductive material, for example, a magnetic shielding material, such as, for example, nickel, nickel/iron alloys, nickel/tin alloys, nickel/silver alloys, plastic magnetic shielding, and/or nickel/iron/copper/molybdenum alloys. Magnetic shielding materials are commercially available under several trademarks, including MuMetal®, Hipernom®, HyMu 80®, and Permalloy®. The magnetic conductive winding **206** may comprise, for example, solid wires, strands, twisted strands, or sheets. The magnetic conductive winding **206** may vary significantly in size from the illustration, and may be substantially smaller or substantially larger than illustrated. The magnetic conductive winding **206** is typically covered with an insulating material **226**. The magnetic conductive winding **206** forms a closed loop, as illustrated by the connection **228**, and as illustrated is connected to a ground **230**.

Other configurations of layers of an electrical conductive winding and a magnetic conductive winding may be employed. For example, m layers of an electrical conductive winding may alternate with n layers of a magnetic conductive winding, instead of two layers of electrical conductive winding alternating with one layer of magnetic conductive winding as illustrated, with m and n positive integers. In another example, m and n need not remain constant. For example, the number of layers may increase or decrease. An example layer pattern would be 2E, 1M, 3E, 2M, 4E, with E indicating electrically conductive layers and M indicating magnetically conductive layers.

Typically, the first and last layers comprise layers of the electrical conductive winding **204**. In one experimental embodiment, a configuration with the first and last layer comprising the electrical conductive winding **204** produced better performance in a generator application than when the last layer was comprised of the magnetic conductive winding **206**. In another example, a plurality of electrical conductive windings could be employed.

FIG. **3** is a diametric cross-sectional view of another embodiment of a bi-metal coil **300**. The coil **300** comprises a winding form **302** and a dual-conductor winding, which as illustrated takes the form of a bi-metal winding **304**. The dual-conductor winding **304** comprises an electrical conductive winding in the form of a wire **306**, a magnetic conductive winding in the form of a wire **308**, an inner layer of insulating material **310** between the electrical conductive wire **306** and the magnetic conductive wire **308**, and an outer layer of insulating material **312**. The outer layer of insulating material **312** and the inner layer of insulating material **310** may be integrated. The dual-conductor winding **304** may vary significantly in size from the illustration, and may be substantially smaller or substantially larger than illustrated. As illustrated, the electrical conductive wire **306** and the magnetic conductive wire **308** are approximately the same size. In some embodiments, the electrical conductive wire **306** and the magnetic conductive wire **308** may be of different sizes.

The electrical conductive wire **306** may comprise any suitable electrical conductive material. For example, the materials and configurations (e.g., solid wire or stranded wire) discussed above with respect to the electrical conductive winding **204** of FIG. **2** may be employed. The electrical conductive wire **306** is coupled to the leads **314**, **316** for the coil **300**. The magnetic conductive wire **308** may comprise any suitable magnetic conductive material. For example, the materials and configurations (e.g., solid wire or stranded wire) discussed above with respect to the magnetic conductive winding **206** of FIG. **2** may be employed. The magnetic conductive wire **308** forms a closed loop, as illustrated by the connection **318**, and may be connected to a ground **320**. As illustrated, the winding **304** is wound so that the electrical conductive wire **306** is closest to an inner surface **322** of the winding form **302** and the magnetic conductive wire **308** is farthest from the inner surface **322** of the winding form **302**. As illustrated, the insulating layer **310** separating the electrical conductive wire **306** and the magnetic conductive wire **308** is approximately parallel to the inner surface **322**. In some embodiments, the insulating layer **310** separating the electrical conductive wire **306** and the magnetic conductive wire **308** may be at another angle with respect to the inner surface **322**. For example, in some embodiments the insulating layer **310** may be approximately perpendicular to the inner surface **322**. As illustrated, the dual-conductor winding **304** is a single layer comprising three turns. In some embodiments, the winding may comprise multiple layers. In some embodiments, additional windings may be employed.

FIG. **4** is a diametric cross sectional view of an embodiment of a dual conductor winding **404** suitable for use in the embodiment of a coil **300** illustrated in FIG. **3**. The dual conductor winding **404** comprises an electrical conductive winding in the form of a wire **406**, a magnetic conductive winding in the form of a wire **408**, an inner layer of insulating material **410** between the electrical conductive wire **406** and the magnetic conductive wire **408**, and an outer layer of insulating material **412**. The electrical conductive wire **406** may comprise any suitable electrical conductive material. For example, the materials and configurations (e.g., solid wire or stranded wire) discussed above with respect to the electrical conductive winding **204** of FIG. **2** may be employed. The electrical conductive wire **406** may vary significantly in size from the illustration, and may be substantially smaller or substantially larger than illustrated. The magnetic conductive wire **408** may comprise any suitable magnetic conductive material. For example, the materials and configurations (e.g., solid wire or stranded wire) discussed above with respect to the magnetic conductive winding **206** of FIG. **2** may be employed. The magnetic conductive wire **408** may vary significantly in size from the illustration, and may be substantially smaller or substantially larger than illustrated.

FIG. **5** is a diametric cross-sectional view of another embodiment of a bi-metal coil **500**. The coil **500** has a winding form **502**. A first electrical conductive winding **504***a* is wound on the winding form **502** in two layers. A first magnetic conductive winding **506***a* is wound on the winding form **502** outside of the two layers of the first electrical conductive winding **504***a*. The first electrical conductive winding **504***a* is coupled to leads **508***a*, **510***a* for the first electrical conductive winding **504***a*. The first magnetic conductive winding **506***a* forms a closed loop, as illustrated by the first connection loop **512***a*. A second electrical conductive winding **504***b* is wound on the winding form **502** in two layers adjacent to the first electrical conductive winding **504***a*. A second magnetic conductive winding **506***b* is wound on the winding form **502** outside of the two layers of the second electrical conductive

winding **504***b* adjacent to the first magnetic conductive winding **506***a*. The second electrical conductive winding **504***b* is coupled to leads **508***b*, **510***b* for the second electrical conductive winding **504***b*. The second magnetic conductive winding **506***b* forms a closed loop, as illustrated by the second connection loop **512***b*. Additional windings may be added to the coil **500**, as illustrated by the electrical conductive winding **504***n*, which is coupled to the leads **508***n*, **510***n*, and by the magnetic conductive winding **506***n*, which forms a closed loop as indicated by connection **512***n*. In some embodiments, the electrical conductive windings (e.g., windings **504***a*, **504***b*, . . . **504***n*) may be electrically coupled together in parallel or in series, or in various combinations thereof.

The electrical conductive windings **504***a*, **504***b*, . . . **504***n* may comprise any suitable electrical conductive material. For example, the materials and configurations (e.g., solid wire or stranded wire) discussed above with respect to the electrical conductive winding **204** of FIG. **2** may be employed. The electrical conductive windings **504***a*, **504***b*, . . . **504***n* may vary significantly in size from the illustration, and may be substantially smaller or substantially larger than illustrated. The magnetic conductive windings **506***a*, **506***b*, . . . **506***n* may comprise any suitable magnetic conductive material. For example, the materials and configurations (e.g., solid wire or stranded wire) discussed above with respect to the magnetic conductive winding **206** of FIG. **2** may be employed. The magnetic conductive windings **506***a*, **506***b*, . . . **506***n* may vary significantly in size from the illustration, and may be substantially smaller or substantially larger than illustrated. A bi-metal winding may be employed, such as the bi-metal winding **304** illustrated in FIG. **3** or the bi-metal winding **404** illustrated in FIG. **4**. Typically, the coil **500** would have additional layers of each winding, with the outer layer comprising a layer of the electrical conductive winding (e.g., winding **504***a*), but for ease of illustration the additional layers are omitted.

FIG. **6** is a diametric cross-sectional view of another embodiment of a bi-metal coil **600**. The coil **600** comprises a non-magnetic winding form **602**, a non-magnetic, electrical conductive winding **604** and a magnetic conductive winding **606**. A first layer **608** and a second layer **610** of the electrical conductive winding **604** are wound onto the winding form **602**. A layer **612** of the magnetic conductive winding **606** is wound over the second layer **610** of the electrical conductive winding **604**.

The electrical conductive winding **604** may comprise any suitable electrical conductive material and configuration. For example, the materials and configurations (e.g., solid wire or stranded wire) discussed above with respect the electrical conductive winding **204** of FIG. **2** may be employed. The electrical conductive winding **604** is typically covered with an insulating material **614**. The electrical conductive winding **604** is coupled to the leads **616**, **618** for the coil **600**. The magnetic conductive winding **606** may comprise any suitable magnetic conductive material and configuration. For example, the materials and configurations (e.g., solid wire or stranded wire) discussed above with respect to the magnetic conductive winding **206** of FIG. **2** may be employed. The magnetic conductive winding **606** is typically covered with an insulating material **620**. The magnetic conductive winding **606** forms a closed loop, as illustrated by the connection **622**, and may be connected to a ground (See ground **230** in FIG. **2**). Some embodiments may employ a bi-metal or dual-conducting winding (see dual-conductor winding **304** illustrated in FIG. **3**).

The winding form **602** has an inner length **624** and an outer length **626** that are different. As illustrated, the inner length **624** is shorter than the outer length **626**. This difference in length facilitates focusing of a magnetic field in the electrical conductive winding **604**.

FIGS. **7** through **9** illustrate another embodiment of a bi-metal coil **700**. FIGS. **7** through **9** are not drawn to scale for ease of illustration. FIG. **7** is a top view of the coil **700**. The coil **700** comprises a layer of insulating material **702** with an upper surface **704**. The layer of insulating material **702** may comprise, for example, an integrated circuit board, a substrate or a thin film or sheet of insulation. Commercially available insulating materials are sold under the trademark Mylar®. An electrical conductive winding in the form of a trace **706** is formed on the upper surface **704** of the layer of insulating material **702**. The electrical conductive trace **706** may comprise any suitable electrical conductive material, such as, for example, copper, aluminum, gold, and silver, and alloys. The materials discussed above with respect to the electrical conductive winding **204** of FIG. **2** may be employed. Well-known techniques for forming traces on substrates may be employed, such as those used in connection with RFID devices and antennas. The layer of insulating material **702** has an opening **708**.

FIG. **8** is a bottom view of the embodiment of a coil **700** illustrated in FIG. **7**. The layer of insulating material **702** has a lower surface **716**. A magnetic conductive winding in the form of a trace **718** is formed on the lower surface **716** of the layer of insulating material **702**. The magnetic conductive trace **718** may comprise any suitable magnetic conductive material, such as, for example, nickel, nickel/iron alloys, nickel/tin alloys, nickel/silver alloys. The materials discussed above with respect to the magnetic conductive winding **206** of FIG. **2** may be employed. Well-known techniques for forming traces on substrates may be employed, such as those used in connection with RFID devices and antennas. FIG. **9** is a side view of the embodiment of a coil **700** illustrated in FIG. **7**, illustrating an optional core **730** for the coil **700**. The core **730** may comprise, for example, an iron core.

FIG. **10** is a top view of another embodiment of a bi-metal coil **1000**. The coil **1000** comprises a layer of insulating material **1002** with an upper surface **1004**. The layer of insulating material **1002** may comprise, for example an integrated circuit board, a substrate or a thin film of insulation. An electrical conductive winding in the form of a trace **1006** is formed on the upper surface **1004** of the layer of insulating material **1002**. The electrical conductive trace **1006** may comprise any suitable electrical conductive material, such as, for example, copper, aluminum, gold, and silver, and alloys. For example, the materials discussed above with respect to the electrical conductive winding **204** of FIG. **2** may be employed. Well-known techniques for forming traces on substrates may be employed, such as those used in connection with RFID devices and antennas. The layer of insulating material **1002** has an opening **1008**. A magnetic conductive winding in the form of a trace **1018** is formed on the upper surface **1004** of the layer of insulating material **1002**. The magnetic conductive trace **1018** may comprise any suitable magnetic conductive material, such as, for example, nickel, nickel/iron alloys, nickel/tin alloys, nickel/silver alloys. For example, the materials discussed above with respect to the magnet conductive winding **206** of FIG. **2** may be employed. Well-known techniques for forming traces on substrates may be employed, such as those used in connection with RFID devices and antennas.

FIG. **11** is side view of another embodiment of a bi-metal coil **1100**. The coil **1100** comprises a plurality of insulating layers **1102**. Traces of electrical conductive material **1106** are formed on selected surfaces **1130**, **1132**, **1134**, **1136** of the

plurality of insulating layers **1102**. Traces of magnetic conductive material **1118** are formed on selected surfaces **1138**, **1140** of the plurality of insulating layers **1102**. The layers of insulating material **1102** have an opening **1108**. As illustrated, the coil **1100** comprises three layers of insulating material **1102**. Fewer or additional layers **1102** may be employed. In addition, in some embodiments the traces of electrical conductive material **1106** and the traces of magnetic conductive material **1118** may be formed on selected surfaces of the layers of insulating material **1102** in different patterns. For example, traces of electrical conductive material **1106** and traces of magnetic conductive material **1118** may be formed on alternate surfaces of layers of insulating material. In another example, traces of electrical conductive material **1106** and magnetic conductive material **1118** may be formed on the same surface of a layer of insulating material **1102**, or on each surface of a layer of insulating material. Traces on various layers of insulating material **1102** may be coupled to each other.

As mentioned above, coils are frequently employed in devices and applications together with magnets. Bi-metal coils can be advantageously employed in such applications and environments with conventional magnets. FIG. **12** is a graphic illustration of the magnetic flux generated by a conventional magnetic structure **1200**. The magnetic structure comprises a magnet **1202** having a north pole N and a south pole S. FIG. **12** shows representative magnetic flux equipotential lines **1204** to illustrate the magnetic field that is generated by the permanent magnet **1202** of the magnetic structure **1200**. The closer the equipotential lines in a region, the greater the magnetic flux density in the region.

Improvements, however, can be made to conventional magnetic structures. In many devices and applications, increasing the magnetic flux density in a region can greatly improve efficiency and performance. For example, increasing the magnetic flux density in a region can lead to a higher gradient, which can lead to increased efficiency in, for example, a generator or a motor.

FIGS. **13**A and **13**B are graphic illustrations of the magnetic flux generated by a magnetic structure with two permanent magnets with north poles facing each other and separated by an ambient distance. FIG. **13**A is a black and white representation and FIG. **13**B is a color representation. Representative magnetic flux equipotential lines illustrate the magnetic field that is generated by the magnetic structure. The magnetic flux has a higher gradient in the region between the north poles than the magnetic flux in the region around the north pole generated by a single magnet or by magnetic structures that have opposite polarity poles facing each other.

FIGS. **14**A and **14**B are graphic illustrations of the magnetic flux generated by a magnetic structure with two permanent magnets with north poles substantially touching each other. Representative magnetic flux equipotential lines illustrate the magnetic field that is generated by the magnetic structure. For similar magnets, the magnetic flux in the region adjacent to the substantially touching north poles generated by the arrangement illustrated in FIGS. **14**A and **14**B has a higher gradient than the magnet flux generated by the arrangement illustrated in FIGS. **13**A and **13**B, which is illustrated by the greater density of flux lines in FIGS. **14**A and **14**B. A higher magnetic flux gradient also occurs in a region adjacent to the south pole of the upper magnet illustrated in FIGS. **14**A and **14**B.

FIGS. **15**A and **15**B are graphic illustrations of the magnetic flux generated by a magnetic structure with two permanent magnets with like poles facing each other and held together at a distance between an ambient distance and a substantially touching position. Representative magnetic flux equipotential lines illustrate the magnetic field that is generated by the magnetic structure. For similar magnets, the magnetic flux generated by the arrangement illustrated in FIGS. **15**A and **15**B produces a denser set of flux lines along a larger region adjacent to the north poles, permitting a higher flux gradient in a larger region than the magnet flux generated by the arrangements illustrated in FIGS. **13**A, **13**B, **14**A and **14**B, which is illustrated by the greater density of flux lines along a larger region of the sides of the permanent magnets illustrated in FIGS. **15**A and **15**B.

Significant improvements in efficiency, for example, in power generation, can be achieved by positioning the magnets with like poles facing each other at an optimum distance between a touching configuration and an ambient distance. The optimum distance will vary depending upon the configuration in which the magnetic structure is to be employed (e.g., the movement path of the magnetic structure with respect to a coil when the magnetic structure is employed in a generator/motor configuration). FIG. **16** is a cross-sectional view of an embodiment of a multipole magnetic structure **1604** generating a plurality of compressed magnetic fields. In some applications, generating a plurality of compressed magnetic fields can provide further increases in efficiency. The compressed magnetic fields may increase the efficiency of the conversion of energy into electrical energy when the magnetic structure **1604** is employed, for example, in a generator. Such generators may be configured to convert energy received in a parasitic manner. Typical sources of energy include kinetic sources, thermal sources, acoustic sources, and radio-frequency sources.

The magnetic structure **1604** employs tabs **1694** to hold the permanent magnets **1612**, **1614**, **1616** in position with respect to each other. While the illustrated embodiment employs three permanent magnets **1612**, **1614**, **1616**, other embodiments may employ different numbers of permanent magnets, such as two permanent magnets of four permanent magnets. Other embodiments may employ electromagnets instead of or in addition to permanent magnets. The permanent magnets **1612**, **1614**, **1616** are disk-shaped as illustrated, but other shapes may be employed. For example, rectangular- (e.g., square), spherical-, or elliptical-shaped magnets may be employed. Similarly, the faces of the magnets need not be flat. For example, convex-, concave-, radial-, cone-, or diamond-shaped faces may be employed. Various combinations of shapes and faces may be employed. While the illustrated embodiment employs tabs, other positioning mechanisms may be employed, such as threads, spacers, glues, or combinations of positioning mechanisms. The magnets **1612**, **1614**, **1616** are positioned and held apart from each other and are arranged such that same polarity poles in adjacent permanent magnets face each other. For example, the N pole **1628** of the first permanent magnet **1612** faces the N pole **1630** of the second permanent magnet **1614** and the S pole **1632** of the second permanent magnet **1614** faces the S pole **1634** of the third permanent magnet **1616**. In addition, the magnets **1612**, **1614**, **1616** are held close enough together to form a compressed magnetic field (e.g., closer than an ambient distance and spaced apart). In some embodiments, the spaces **1636**, **1638** between the permanent magnets **1612**, **1614**, **1616** are substantially filled with a material **1637**, which may comprise a gas such as air. In some embodiments, the material **1637** may comprise other substantially non-magnet and substantially non-conductive substances, such as a fluoropolymer resin or plastic. In some embodiments, the spaces **1636**, **1638** between the magnets may be evacuated and hermetically sealed.

The shape, position and strength of the permanent magnets in a magnetic structure, such as the magnetic structure **1604**, can increase the efficiency of a device or application employing the magnetic structure **1604**, such as a generator, by generating a compressed magnetic field. A gauss meter (not shown) may be employed to determine the optimum strength and positioning of the permanent magnets **1612**, **1614**, **1616**, as well as the number of permanent magnets. Other design considerations may be taken into consideration as well, such as weight and reducing external impacts of electromagnetic fields and control of multiple generator magnetic interaction.

FIG. **17** illustrates an embodiment of a magnet structure **202** configured to generate a compressed magnetic field. The magnet structure **202** includes a case **204** and a plurality of magnets housed in the case **204** with like poles facing each other. In the illustrated embodiment, the case **204** houses a first magnet **32** having an end **30** of a first polarity and a second magnet **36** having an end **34** of the same polarity as the end **30** and facing the end **30**. In the illustrated embodiment, the end **30** is a south pole and the end **34** is a south pole; in an alternative embodiment, two north poles face each other. In the illustrated embodiment, the case **204** has an inner cylindrical surface **205** and the magnets **32** and **36** have respective outer cylindrical surfaces. The magnets **32**, **36** are slidingly received into the case **204**. In the illustrated embodiment, the case **204** has an open threaded end, through which the magnets **32** and **36** are inserted (or replaced) and the magnet assembly **202** further includes a screw cap **206** selectively closing the threaded end of the case **204**. In the illustrated embodiment, the screw cap **206** forces the magnets **32**, **36** together closer than the ambient distance that the repelling force generated by the magnetic field would normally permit, thereby generated a compressed magnetic field. Other embodiments for positioning the magnets are possible. For example, the inner cylindrical surface **205** could have recesses into which the magnets are snapped.

FIG. **18** illustrates an embodiment of a multi-pole magnetic structure **302** configured to generate a plurality of compressed magnetic fields. The magnetic structure **302** has a case **304** with tabs **305** holding a plurality of magnets in position with respect to each other. The magnets include a first magnet **308** having a first end **318** having a first polarity and a second end **316** having an opposite polarity. The magnets further include a second magnet **310** having a first end **320** having a polarity that is the same as the first polarity, and having a second end **322** having a polarity that is opposite the first polarity. The first end **320** of the second magnet **310** is spaced apart from the first end **318** of the first magnet **308**. The first end **320** of the second magnet **310** is at least generally facing the first end **318** of the first magnet **308**. The magnets further include a third magnet **312** having a first end **324** having a polarity that is opposite the first polarity, and having a second end **326** having a polarity that is the same as the first polarity. The first end **324** of the third magnet **312** is spaced apart from the second end **322** of the second magnet **310**. The first end **324** of the third magnet **312** is at least generally facing the second end **322** of the second magnet **310**. Any number of additional magnets is possible. For example, in the illustrated embodiment, the magnets further include a fourth magnet **314** having a first end **328** having a polarity that is the same as the first polarity and having a second end **330**. The magnet assembly **302** further includes a screw cap **306** closing an open threaded end of the case **304**.

FIG. **19** is a side diametric cross-sectional view of an embodiment of a multi-pole magnet structure **1900** configured to generate a plurality of compressed magnetic fields. The magnet structure **1900** comprises a plurality of magnets **1902**, **1904**, **1906** with concave-shaped surfaces **1908**, **1910**, **1912**, **1914** with like poles held facing each other at selected distances apart so as to generate high gradient or compressed magnetic fields. As illustrated, the concave-shaped surfaces are cone-shaped. Other substantially concave-shaped surfaces may be employed.

FIG. **20** is a side diametric cross-sectional view of another embodiment of a multi-pole magnet structure **2000** configured to generate a plurality of compressed magnetic fields. The magnet structure **2000** comprises a plurality of magnets **2002**, **2004**, **2006** with convex-shaped surfaces **2008**, **2010**, **2012**, **2014** with like poles held facing each other at selected distances apart so as to generate high gradient or compressed magnetic fields. As illustrated, the convex-shaped surfaces are curved. Other substantially convex-shaped surfaces may be employed.

FIG. **21** is a side view of an embodiment of another multi-pole magnet structure **2100** configured to generate a plurality of compressed magnetic fields. The magnet structure comprises a rectangular magnet housing **2102** and a plurality of rectangular magnets **2104**, **2106**, **2108** contained within the housing **2102**. The magnets **2104**, **2106**, **2108** are held with like poles facing each other at selected distances apart so as to generate desired compressed magnetic fields.

Embodiments of dual-conductor or bi-metal coils and/or embodiments of magnet structures configured to generate compressed magnet fields, such as those described above, may be advantageously employed in a number of devices and applications. For example, embodiments of dual-conductor or bi-metal coils and/or embodiments of magnet structures configured to generate compressed magnet fields may be used in various types of generators/motors used in various applications, acoustic systems and/or control systems. Example generators include generators may be configured to convert energy received in a parasitic manner or energy specifically generated to be converted into electrical energy. Typical sources of energy include kinetic sources, thermal sources, acoustic sources, and radio-frequency sources. For example, some embodiments may employ a magnetic structure configured to generate a compressed magnetic field together with dissimilar metals in order to take advantage of the Seebeck effect.

A number of such example applications are discussed below by way of illustrative example embodiments of such devices and applications. Although some embodiments may employ a dual-conductor or bi-metal coil and a magnet structure configured to generate a compressed magnetic field, other embodiments may employ a dual-conductor or bi-metal coil and a conventional magnetic structure or no magnetic structure. Other embodiments may employ a magnetic structure configured to generate a compressed magnetic field and a conventional coil or no coil. Some embodiments may employ a conventional coil and a conventional magnetic structure in combination with other aspects of the present disclosure.

Linear generators and motors are known in the art. A linear generator typically has a stator and an armature that can be linearly driven relative to the stator to generate electrical energy. Linear generators are disclosed, for example, in U.S. Pat. No. 6,759,755 to Sagov and in U.S. Pat. No. 6,798,090 to Cheung et al., both of which are incorporated herein by reference. A linear motor typically has a stator and an armature that can be linearly driven relative to the stator in response to the application of electrical energy, typically in the form of electrical signals.

Conversion of linear motion to electrical power is a challenging problem. Recent work by the inventors in evaluating

classical linear displacement generators using planar inductors indicates poor conversion efficiencies. See, for example, U.S. Pat. No. 6,220,719 issued to Vetorino, et al. The basic problem is that the power output is proportional to the square of the derivative of the magnetic field, and the magnitude of this derivative remains small in conventional devices. Similar issues arise in the conversion of electrical power into linear motion.

In a linear generator, the power output generated by relative movement of a coil with respect to a magnetic structure is proportional to the square of the derivative of the magnetic field. The voltage is determined by the number of turns in the winding of the coil and the strength of the magnetic field. The shape, relative position and strength of the permanent magnets in a magnetic structure can magnify the value of that derivative by generating a compressed magnetic field. By using a compressed magnetic field, significant increases in efficiency can be obtained from this class of generators, even for relatively small rates of mechanical displacement. The concepts pertinent to generating a compressed magnetic field are addressed through illustrative examples (see the description of FIGS. **13-16** above and **22-25** below).

FIGS. **22** through **24** illustrate an embodiment of a linear power generator **2200** employing an embodiment of a magnetic structure **2202** configured to generate a compressed magnetic field. The power generator **2200** includes a coil **11** located between two magnets **12** and **14**. The coil may be a conventional coil or a dual-conductor or bi-metal coil. More particularly, the power generator **2200** includes a first magnet **12** having an end **13** having a first polarity, and a second magnet **14** having an end **15** having a polarity that is the same as the first polarity. More particularly, in the illustrated embodiment, the end **13** is a north pole and the end **15** is also a north pole. The end **15** of the second magnet **14** is spaced apart from the end **13** of the first magnet **12**. In the illustrated embodiment, the end **15** has a surface **22** (FIG. **23**) that is generally planar, and the end **13** has a surface **18** that is generally planar. The end surface **22** of the second magnet **14** is at least generally facing the end surface **18** of the first magnet **12**.

The at-rest position of the coil **11** is closer to the end **13** of the first magnet **12** than the end **15** of the second magnet **14**. In the illustrated embodiment, the magnets **12** and **14** are permanents magnets. Other embodiments may employ electro-magnets. Note that the static magnetic flux through the coil **11** is fairly high, as indicated by the density of the equipotential lines **16** passing through the coil **11**, in FIG. **22**. The flux through the surface area of the face **18** of the magnet **12** is very large. The flux through a plane approximately in the center **20** between magnets **12** and **14** is small.

There is a very high negative field gradient between the geometric position of the coil **11** in FIG. **22** and the position occupied by the coil in FIG. **23**. Thus, even slow physical movement of the coil **11** (or, conversely, the magnets) will generate large derivatives. The coil **11** moving back and forth about the center **20** gives a huge change in flux. This will be true even with the small rates of physical displacement (spatial derivatives) of magnet position. Because output is proportional to the square of this derivative, significant increases in power production will result.

If the coil **11** is moved from proximate face **18** of magnet **12** to face **22** of magnet **14** in time $2\Delta t$, the flux will change from $+\phi_{max}$ to $-\phi_{max}$.

Thus, the $d\phi/dt$ is approximately:

$$\partial\phi_{max}/\partial\Delta t=\phi_{max}/\Delta t$$

and it is positive.

This is an approximate value because, for a linear velocity, the derivative will vary in value during the period Δt since the field is non-linear.

In the embodiment shown in FIG. **24**, the coil **11** is wound around a core **24** having a length, and an axis **26** along the length (coinciding with the center line **20** in FIG. **23**). In the embodiment shown in FIG. **19**, the axis **26** is normal to the direction defined between the end **13** of the first magnet **12** and the end **15** of the second magnet **14**. In the embodiment of FIG. **22**, the end surface **18** of the first magnet **12** has a width W, and the core **24** has a length along axis **26** that is at least as long as the width W of the end surface **18** of the first magnet **12**. In the illustrated embodiment, the end surface **22** of the second magnet **14** has a width corresponding to the width of the end surface **18**. Other embodiments are possible.

In the illustrated embodiment, the coil **11** is supported to be driven back and forth between the first magnet **12** and the second magnet **14** along a path between surfaces **18** and **22** that is generally normal to the axis **26**.

In an alternative embodiment, shown in FIGS. **25** and **26**, the end **30** of a first magnet **32** is a south pole and the end **34** of a second magnet **36** is also a south pole (and the ends **30** and **34** at least generally face each other). A coil **38** is shown between the two magnets in FIG. **25**, but other coil arrangements are possible in a generator as will be described herein.

Holding the magnets separate and closer together than the ambient distance that the repelling force from the magnets would normally permit creates a high-gradient, or compressed, magnetic field. This generally results in an increase of power output from the generator. For many embodiments, holding the magnets closer together up to a limit will result in an increased power output. For example, in alternative embodiments, the distance between face **18** and face **22** could be equivalent to two times the distance "a" shown in FIG. **22**.

FIG. **27** is a diametric cross-sectional view of a generator **200** employing an embodiment of a magnet structure **202** configured to generate a high-gradient or compressed magnet field. For example, embodiments of the magnetic structures illustrated in FIGS. **16** through **21** may be employed as the magnetic structure **202** illustrated in FIG. **27**. The generator **200** includes a housing **208** in which the magnet structure **202** is supported for sliding movement. In the illustrated embodiment, the case **204** has an outer cylindrical surface and the housing **208** has a cylindrical inner surface, which has a diameter slightly larger than the diameter of the outer cylindrical surface of the case **204**. The outside of the case **204** and the inside of the housing **208** may be made of or coated with dissimilar materials to reduce potential for binding between the case **204** and the housing **208**. For example, the case **204** may be coated with a non-stick coating while the housing **208** may be made of an ABS plastic. Example dissimilar materials are available under the respective trademarks Teflon® and Lexan®.

The generator **200** further includes an end **210**, which can be a threaded end cap, for example, closing an open end of the housing **208**. The generator **200** further includes a spring **212** supported by the end **210** configured to be selectively compressed by the magnet assembly **202** and to move the magnet assembly **202** away from the end **210**. The generator **200** further includes an end **214** which could be a threaded end cap or merely a closed end, and a spring **216** configured to be selectively compressed by the magnet assembly **202** and to move the magnet assembly **202** away from the end **214**. In some embodiments, the springs **212**, **216** may be configured to remain in a compressed state.

The generator **200** further includes at least one coil **218** supported by the housing. While other coil positions are possible, in the illustrated embodiment, the housing **208** has an outer surface, which is cylindrical in the illustrated embodiment, and the coil is wrapped around the outer surface of the housing **208**. The coil **218** is positioned radially outwardly of the housing **208** and the magnet assembly **202** inside the housing **208**. The coil **218** can be retrained against longitudinal movement relative to the housing **208** by glue, grooves, notches, or protrusions in the housing, or by any other desired method, or can be molded into the housing, supported on the interior of the housing, etc. The coil **218** is positioned to be acted on by the compressed magnetic fields generated by the magnetic structure **202**.

In some embodiments, the generator **200** as an assembly is merely supported in a location that would be exposed to motion. In other embodiments, a mechanical linkage is provided to couple the generator **200**, as an assembly, to motion. For example, the bottom **214** could be coupled to a source of motion or movement. In some embodiments, period maintenance could be facilitated. For example, the top **210** could be removable for cleaning or maintenance or replacement of magnets, if desired. Some embodiments may be maintenance free. For example, embodiments of a generator **200** employed in a battery (See FIGS. **33-35**), may be designed to last for the life of the battery without periodic maintenance. For example, the generator **200** may be evacuated and hermetically sealed in some embodiments.

In some embodiments, an accelerometer is provided in the desired application and the frequency constant of the motion is determined. The spring constants of the springs and mass of the magnets are then customized so that the magnet assembly **202** resonates in the housing **208** when there is energy available.

FIG. **28** shows a generator **300**, which is similar to the generator **200** except that multiple coils are used. The generator **300** has a magnetic structure or assembly **302** configured to generate one or more compressed magnetic fields. Multi-pole magnetic structures configured to generate multiple compressed magnetic fields, such as embodiments of the magnetic structures illustrated in FIGS. **16** and **18** through **21**, may be advantageously employed as the magnetic structure **302** in embodiments of the generator **300**. The magnet structure **302** includes a case **304**.

The generator **300** further includes a housing **332** in which the magnet structure **302** is supported for linear motion. In the illustrated embodiment, the case **304** has an outer cylindrical surface and the housing **332** has a cylindrical inner surface, which has a diameter slightly larger than the diameter of the outer cylindrical surface of the case **304**. The generator **300** further includes an end **334**, which can be a threaded end cap, for example, closing an open end of the housing **332**. The generator **300** further includes a spring **346** supported by the end **334**. The spring **346** is configured to be selectively compressed by the magnet assembly **302** and to move the magnet assembly **302** away from the end **334**. The generator **300** further includes an end **338** which could be a threaded end cap or merely a closed end, and a spring **340** is arranged to be selectively compressed by the magnet assembly **302**. The spring **340** is arranged to move the magnet assembly **302** away from the end **338**.

The generator **300** further includes a first coil **336** supported relative to the magnets such that the first coil **336** is selectively acted on by fields from at least one pair of opposed ends of magnets, but possibly by fields from additional pairs of opposed ends of magnets, depending on movement of the magnet assembly **302**. The generator **300** further includes a second coil **342** supported relative to the magnets such that the second coil **342** is selectively acted on by fields from at least one pair of opposed ends of magnets, but possibly by fields from additional pairs of opposed ends of magnets, depending on movement of the magnet assembly **302**. In the illustrated embodiment, the generator **300** further includes a third coil **344** supported relative to the magnets such that the third coil **344** is selectively acted on by fields from at least one pair of opposed ends of magnets, but possibly by fields from additional pairs of opposed ends of magnets, depending on movement of the magnet assembly **302**. Any number of coils can be employed. Any number of pairs of opposed ends of magnets can be employed to act on one or more coils.

FIG. **29** illustrates an embodiment of a system **2900** employing a magnetic structure configured to generate a compressed, high gradient magnetic field and a dual conductor or bi-metal coil. FIG. **30** is a diametric side cross sectional view of the system **2900** of FIG. **29** taken along line **30-30**. FIG. **30** is not to scale with respect to FIG. **29** and some of the detail is omitted from FIG. **30** to facilitate illustration. The system **2900** comprises a rotor **2902** comprising one or more bi-metal coils **2904**. Each bi-metal coil **2904** comprises an electrical conductive winding **2903** and a magnetic conductive winding **2905**. Embodiments of the bi-metal coils illustrated in FIGS. **2-3** and **5-11** may be advantageously employed in embodiments of the system **2900** illustrated in FIG. **29**. Some embodiments may comprise a magnetic structure configured to generate a compressed magnetic field and a conventional coil. Other embodiments may comprise a bi-metal coil and a conventional magnetic structure.

The **2900** also comprises a stator **2906** comprising a magnet support **2908** and a plurality of permanent magnets **2910**, **2912**, **2914**. A first magnet **2910** of the plurality of magnets is coupled to a central portion **2916** of the magnet support **2908**. The first magnet **2910** is oriented such that its poles **2918**, **2920** face opposite sides of an inner circumference **2922** of the rotor **2902**. The second magnet **2912** in the plurality of magnets is coupled to a first outer portion **2924** of the magnet support **2908**. The second magnet **2912** is oriented such that a pole **2926** of the second magnet **2912** faces the like pole **2918** of the first magnet **2910**. As illustrated, the like poles **2918**, **2926** are the south poles of the respective first and second permanent magnets **2910**, **2912**. The third magnet **2914** in the plurality of magnets is coupled to a second outer portion **2928** of the magnet support **2908**. The third magnet **2914** is oriented such that a pole **2930** of the third magnet **2914** faces the like pole **2920** of the first magnet **2910**. As illustrated, the like poles **2920**, **2930** are the north poles of the respective first and third permanent magnets **2910**, **2914**. The magnets **2910**, **2912**, **2914** are positioned such that a plurality of compressed magnetic fields are generated. In the illustrated embodiment the rotor **2902** is coupled to a mechanical transmission system **2934**. In some embodiments, the magnet support **2906** may be part of the rotor and the bi-metal coils **2904** may be part of the stator.

As illustrated, the system **2900** comprises a coupling **2950** for coupling the coils **2904** to a power grid **2952**. Details of the electrical connection **2954** between the coils **2904** and the coupling **2950** are omitted for clarity. A bus system coupled to the electrical conductive windings **2903**, for example, may be employed as the electrical connection **2954** between the coils **2904** and the coupling **2950**. The coupling **2950** may comprise control and/or conditioning modules (not shown).

In some embodiments, the system **2900** may be configured to operate as a generator. In such embodiments, force applied to the rotor **2902** by the mechanical transmission system **2934** may cause the rotor **2902** to rotate with respect to the stator

2906. As the rotor **2902** rotates with respect to the stator **2906** along an axis **2932** illustrated by the dashed line B-B, a three-phase alternating current may be generated by the system **2900**.

In some embodiments, the system **2900** may be configured to operate as a motor. In such embodiments, an electrical signal applied to the coils **2904** may cause the rotor **2902** to rotate with respect to the stator **2906**. As the rotor **2902** rotates with respect to the stator **2906** along an axis **2932** illustrated by the dashed line B-B, a force is applied to the mechanical transmission system **2934** by the rotor **2902**. In some embodiments, the system **2900** may be configured to selectively operate as a motor or as a generator. In some embodiments, the system **2900** may be advantageously configured to operate at a desired voltage level, in a desired voltage range, and/or at a desired frequency. For example, the system **2900** may be configured to produce 110-120 volts AC at 50/60 Hz, 220-240 volts AC at 50/60 Hz, 10 kV AC at 50/60 Hz, or 100 kV at 50/60 Hz. In some embodiments, the system **2900** may be figured to produce alternating and/or direct current.

FIG. **31** illustrates a side cross-sectional view of an embodiment of a system **3100** employing a dual conductor or bi-metal coil **700** and a magnetic structure **202** configured to generate a compressed, high gradient magnetic field. For convenience, the system **3100** will be described with respect to the bi-metal coil **700** illustrated in FIGS. **7** through **9** and the magnetic structure **202** illustrated in FIG. **17**. Other embodiments of bi-metal coils and magnetic structures configured to generate compressed magnetic fields may be employed in embodiments of the system **3100**.

FIG. **31** is not necessarily to scale for ease of illustration. The bi-metal coil **700** comprises a layer of insulating material **702** with an upper surface **704**. The layer of insulating material **702** may comprise, for example, an integrated circuit board, a substrate or a thin film or sheet of insulation. Commercially available insulating materials are sold under the trademark Mylar®. An electrical conductive trace **706** is formed on the upper surface **704** of the layer of insulating material **702**. The electrical conductive trace **706** may comprise any suitable electrical conductive material, such as, for example, copper, aluminum, gold, and silver, and alloys. The materials discussed above with respect to the electrical conductive winding **204** of FIG. **2** may be employed. Well-known techniques for forming traces on substrates may be employed, such as those used in connection with RFID devices and antennas. The layer of insulating material **702** has an opening **708** through which the magnetic structure **202** may move. An upper portion **712** of a suspension system **714** is coupled to the magnetic structure **202** and to the upper surface **704** of the layer of insulating material **702**. The layer of insulating material **702** has a lower surface **716**. A magnetic conductive trace **718** is formed on the lower surface **716** of the layer of insulating material **702**. The magnetic conductive trace **718** may comprise any suitable magnetic conductive material, such as, for example, nickel, nickel/iron alloys, nickel/tin alloys, nickel/silver alloys. The materials discussed above with respect to the magnetic conductive winding **206** of FIG. **2** may be employed. Well-known techniques for forming traces on substrates may be employed, such as those used in connection with RFID devices and antennas. A lower portion **720** of the suspension system **714** is coupled to the magnetic structure **202** and to the lower surface **716** of the layer of insulating material **702**. The suspension system **714** is coupled to an optional mechanical transmission system **3102**.

In some embodiments, the system **3100** may be configured to operate as a generator. In such embodiments, mechanical force applied to the suspension system **714** by the mechanical transmission system **3102** may cause the magnetic structure **202** to move linearly with respect to the bi-metal coil **700**, which may cause the device to generate an electric current. In some embodiments, the system **3100** may be configured to operate as a motor. In such embodiments, an electrical signal applied to the bi-metal coil **700** may cause the magnetic structure **202** to move linearly with respect to the bi-metal coil **700**, which may cause the suspension system **714** to apply a mechanical force to the mechanical transmission system **3102**. In some embodiments, the system **3100** may be configured to selectively operate as a motor or as a generator.

FIG. **32** illustrates a side cross-sectional view of an embodiment of a system **3200** employing a dual conductor or bi-metal coil **1100** and a magnetic structure **1604** configured to generate a compressed, high gradient magnetic field. For convenience, the system **3200** will be described with respect to the bi-metal coil **1100** illustrated in FIG. **11** and the magnetic structure **1604** illustrated in FIG. **16**. Other embodiments of bi-metal coils and magnetic structures configured to generate compressed magnetic fields may be employed in embodiments of the system **3200**.

FIG. **32** is not necessarily to scale for ease of illustration. The bi-metal coil **1100** comprises a plurality of insulating layers **1102**. Traces of electrical conductive material **1106** are formed on selected surfaces **1130**, **1132**, **1134**, **1136** of the plurality of insulating layers **1102**. Traces of magnetic conductive material **1118** are formed on selected surfaces **1138**, **1140** of the plurality of insulating layers **1102**. A suspension system **1114** moveably suspends a magnetic structure **1900** in an opening **1108** in the plurality of layers of insulating material **1102**. As illustrated, the bi-metal coil **1100** comprises three layers of insulating material **1102**. Fewer or additional layers **1102** may be employed. In addition, in some embodiments the traces of electrical conductive material **1106** and the traces of magnetic conductive material **1118** may be formed on selected surfaces of the layers of insulating material **1102** in different patterns. For example, traces of electrical conductive material **1106** and traces of magnetic conductive material **1118** may be formed on alternate surfaces of layers of insulating material. In another example, traces of electrical conductive material **1106** and magnetic conductive material **1118** may be formed on the same surface of a layer of insulating material **1102**, or on each surface of a layer of insulating material. Traces on various layers of insulating material **1102** may be coupled to each other. The suspension system **1114** is coupled to an optional mechanical transmission system **3202**.

In some embodiments, the system **3200** may be configured to operate as a generator. In such embodiments, mechanical force applied to the suspension system **1114** by the mechanical transmission system **3202** may cause the magnetic structure **1900** to move linearly with respect to the bi-metal coil **1100**, which may cause the system to generate an electric current. In some embodiments, the system **3200** may be configured to generate an alternating current and/or a direct current. In some embodiments, the device system may be configured to operate as a motor. In such embodiments, an electrical signal applied to the bi-metal coil **1100** may cause the magnetic structure **1900** to move linearly with respect to the bi-metal coil **1100**, which may cause the suspension system **1114** to apply a mechanical force to the mechanical transmission system **3202**. In some embodiments, the system **3200** may be configured to selectively operate as a motor or as a generator.

Battery technology is a one example application in which embodiments of a bi-metal coil and/or a magnetic structure

configured to generate a compressed magnetic field may be advantageously employed, as will be illustrated with a limited number of examples.

FIG. **33** is a diametric cross-sectional view of an embodiment of a battery **100** comprising a case **102**, a generator **104**, a first energy storage device **106**, a control module **108**, a second energy storage device **110**, and contact terminals **112**, **114**. The case **102** as illustrated is cut-away so as to facilitate illustration of other components of the battery **100**. The case **102** contains the generator **104**, the first energy storage device **106**, the control module **108**, and the second energy storage device **110**. The contact terminals **112**, **114** are mounted to the case **102** at a top **116** and bottom **118**, respectively, of the battery **100**.

The case **102** may comprise an outer case shielding **120**, which may be a magnetic and/or electrical shield. The case shielding **120** may comprise, for example, a layer of tin foil, a layer of a magnetic shielding material, such as, for example, nickel, nickel/iron alloys, nickel/tin alloys, nickel/silver alloys, nickel/iron/copper/molybdenum alloys, which may also take the form of a foil. Such foil layers may, for example, have a thickness in the range of 0.002-0.004 inches. Magnetic shielding materials are commercially available under several trademarks, including MuMetal®, Hipernom®, HyMu 80®, and Permalloy®.

In some embodiments, the case **102** and contact terminals **112**, **114** may take the external configuration of those of a conventional battery, such as, for example, a AA-cell, a AAA-cell, a C-cell, a D-cell, a 9-volt battery, a watch battery, a pacemaker battery, a cell-phone battery, a computer battery, and other standard and non-standard battery configurations. Embodiments of the battery **100** may be configured to provide desired voltage levels, including, for example, 1.5 volts, 3.7, 7.1, 9-volts, and other standard and non-standard voltages. Embodiments may be configured to provide direct and/or alternating current.

The generator **104** converts kinetic energy into electrical energy. As illustrated the generator **104** is a linear generator comprising a bi-metal coil **122**, a magnetic structure **124** and a suspension system **126**. As illustrated, the bi-metal coil **122** comprises an electrical conductive winding **121** and a magnetic conductive winding **123**. As illustrated, the suspension system **126** comprises a magnetic structure carrier guide **128**, a first spring **130** coupled at one end **132** to the magnetic structure **124**, a first repelling magnet **134** coupled to the other end **136** of the first spring **130**, a second spring **138** coupled at one end **140** to the magnetic structure **124**, and a second repelling magnet **142** coupled to the other end **144** of the second spring **138**. The suspension system **126** facilitates movement of the magnetic structure **124**, in response to movement of the battery, along an axis A-A with respect to the coil **122**. The movement of the magnetic structure **124** relative to the coil **122** generates a current in the coil **122**. The suspension system **126** may comprise, for example, stainless steel springs, such as **304** or **316** stainless steel springs. The magnetic structure **124** may comprise, for example, one or more rare earth magnets, such as neodymium-iron-boron permanent magnets, one or more ceramic magnets, one or more plastic magnets, or one or more other magnets. The repelling magnets **132**, **142** may comprise, for example, one or more rare earth magnets, one or more ceramic magnets, one or more plastic magnets, or one or more other magnets. As illustrated, the carrier guide **128** comprises a winding form **146** upon which one or more windings of the coil **122** are wound. In some embodiments, a separate winding form may be employed. The suspension system **126** is configured to permit the magnetic structure **124** to pass completely out of a region **148** defined by a top **150** and a bottom **152** of the coil **122**. The springs **130**, **138** are typically configured in a loaded condition.

The first energy storage device **106** is configured to store electrical energy generated by the generator **104**. In one embodiment, the first energy storage device **106** is capable of storing electrical energy generated by the generator **104** with little or no conditioning. In other embodiments, electrical energy may be conditioned before it is stored in the first energy storage device **106**, as discussed by way of example below. The first energy storage device **106** may comprise, for example, one or more ultracapacitors. For ease of illustration, the first energy storage device **106** is illustrated as a functional block.

The control module **108** controls the transfer of energy within the battery **100**. The control module **108** typically comprises a rectifier, which as illustrated is a full bridge rectifier **109**. For example, the control module **108** may be configured to control the transfer of energy between various components of the battery **100**, such as the generator **104**, the first energy storage device **106**, the second energy storage device **110**, and the contact terminals **112**, **114**. In one embodiment, the control module **108** may also control the transfer of energy from the generator **104** to the first energy storage device **106**. In one embodiment, the control module **108** controls the transfer of energy stored in the first energy storage device **106** to the second energy storage device **110**. For example, the control module **108** may limit the current flow from the first energy storage device **106** to the second energy storage device **110**. In another example, the control module **108** may stop the transfer of energy from the first energy storage device **106** to the second energy storage device **110** to avoid overcharging the second energy storage device **110**. In one embodiment, the control module **108** may be configured to stop the transfer of energy to the first energy storage device **106** to avoid overcharging the first energy storage device **106**. In one embodiment, the control module **108** may be configured to control the transfer of energy from the first energy storage device **106** to the contact terminals **112**, **114**. In one embodiment, the control module may be configured to control the transfer of energy from the generator to the contact terminals **112**, **114**. In one embodiment, the control module **108** also may be configured to detect, control, permit, accept, regulate and/or to facilitate charging of the first energy storage device **106** and/or the second energy storage device **110** from an external source of electrical energy, such as a conventional battery charger (not shown), or ambient sources of energy. In one embodiment, the control module **108** is configured to condition energy during a transfer. The operation of the control module **108** in two exemplary embodiments is discussed in more detail below in the description of FIGS. **37** and **38**.

The control module **108** may be implemented in a variety of ways, including as a combined control system or as separate subsystems. The control module **108** may be implemented as discrete circuitry, one or more microprocessors, digital signal processors (DSP), application-specific integrated circuits (ASIC), or the like, or as a series of instructions stored in a memory and executed by a controller, or various combinations of the above. In some embodiments, the first energy storage device **106** may be integrated into the control module **108**.

The second energy storage device **110** is configured to store electrical energy transferred from the first energy storage device **106** under the control of the control module **108**. The second energy storage device **110** may comprise, for example, one or more conventional batteries, such as a lead-

acid battery, a nickel-cadmium battery, a nickel-metal hydride battery, a lithium polymer battery or lithium ion battery, a sodium/sulfur battery, or any suitable rechargeable energy storage device.

The contact terminals **112**, **114** provide access for transferring electrical energy to and/or from the battery **100**. The contact terminals **112**, **114** may be made of any electrically conductive material, such as, for example, metallic materials, such as copper, copper coated with silver or tin, aluminum, gold, etc. The contact terminals **112**, **114** are coupled to the control module **108**. In some embodiments, the contact terminals **112**, **114** may be coupled to the second energy storage device **110**, instead of being directly coupled to the control module **108**. As illustrated, the contact terminals **112**, **114** have a physical configuration similar to the contact terminals of a conventional C-cell battery. As discussed above, other configurations may be employed. The contact terminals **112**, **114** are configured to permit the battery **100** to be easily installed into and removed from external devices, such as, for example, a radio, a cell phone, or a positioning system. The contact terminals **112**, **114** may employ magnetic shielding.

Energy may be stored in the battery **100** as a result of movement of the battery **100**. For example, if the magnetic structure **124** is neutral with respect to the coil **122** and the battery **100** is subject to a downward movement, the magnetic structure **124** may move up with respect to the coil **122** in response to the downward movement of the battery **100**. The relative upward movement of the magnetic structure **124** will result in the generation of a current in the coil **122** when it passes above the top of the coil **150**. As the magnetic structure **124** approaches the first repulsive magnet **134**, the first spring **130** and the first repulsing magnet **134** will apply downward forces to the magnetic structure **124**. In response to the downward forces, the magnetic structure **124** may begin to move downward with respect to the coil **122**. It may pass through neutral **151**, a location approximately midway between **150** and **152**, and pass through the coil **122** again, generating additional electrical current when it passes below the bottom of the coil **152**. When the magnetic structure **124** approaches the second repulsing magnet **142**, the second spring **138** and the second repulsing magnet **142** will apply upward forces to the magnetic structure **124**. If the upward forces are sufficiently strong, the magnetic structure **124** will again pass through the coil **122** again, and generate additional electrical current. The movement may continue in an oscillatory back and forth fashion until there is insufficient energy in the suspension system **126** to continuing moving the magnetic structure **124** with respect to the coil **122**.

In some embodiments the suspension system **126** may be tuned to increase the electrical energy generated from anticipated sources of energy. For example, if the battery **100** will frequently be in an environment where energy is supplied by an individual walking or running at a known speed or rate, the suspension system **126** may be tuned to that speed or rate. Thus, a battery may be configured to substantially maximize the conversion of energy expected to be generated by a jogger into electrical energy. In another example, if the battery **100** will frequently be subject to stop and go traffic in an automobile or irregular motion from a flight or ground vehicle, the suspension system **126** may be tuned to maximize the conversion of the energy of that environment into electrical energy. In another example, if the battery will be employed in an environment frequently subjected to fluid waves, such as water or sea waves, or wind, the suspension system may be tuned to maximize the conversion of the energy of that environment into electrical energy. In another example, if the battery will be frequently subjected to vibrations, for example, in a moving vehicle, the suspension system may be tuned to maximize the conversion of the energy received from the vibrations into electrical energy. The suspension system may be tuned, for example, by modifying the strength of any repelling magnets, adjusting the tension in any repelling devices, such as springs, employing multiple mechanical repelling devices (see FIG. **36**), modifying the length of the path of travel of the magnetic structure, or combinations of modifications. Other suspension systems may be employed, such as, for example, suspension systems which orient the generator in different directions within the battery. The suspension system **126** may be gimbaled and/or may employ gyroscopic principles to orient the generator to facilitate optimal conversion of energy into electrical energy. Multiple generators within a battery with different orientations may be employed and multiple battery configurations may be employed.

In some embodiments, other generator configurations may be employed, such as, for example, radial, rotational, Seebeck, acoustic, thermal, or radio-frequency generators. In some embodiments, other suspension systems may be employed, such as suspension systems in which the generator **104** may move with respect to the case **102** so as to take maximum advantage of the available forms of energy. For example, the generator **104** may be configured to rotate in the battery case **102**, so as to align itself with an axis of movement. In another example, the suspension system **126** may be configured to allow the coil **122** to move with respect to the magnetic structure **124**.

FIG. **34** is a diametric cross-sectional view of another embodiment of a battery **200** comprising a case **202**, a generator **204**, a first energy storage device **206**, a control module **208**, a second energy storage device **210**, a third energy storage device **211**, and contact terminals **212**, **214**. The case **202** as illustrated is cut-away so as to facilitate illustration of other components of the battery **200**. The case **202** contains the generator **204**, the first energy storage device **206**, the control module **208**, the second energy storage device **210** and the third energy storage device **211**. The contact terminals **212**, **214** are mounted to the case **202** at a top **216** and bottom **218**, respectively, of the battery **200**. The case **202** may comprise an outer case shielding **220**, which may be a magnetic and/or electrical shield. In some embodiments, the case **202** and contact terminals **212**, **214** may take the configuration of those of a conventional battery, such as, for example, a M-cell, a AAA-cell, a C-cell, a D-cell, a 9-volt battery, a watch battery, a pacemaker, a cell-phone battery, a computer battery, and other standard and non-standard battery configurations. Embodiments of the battery **200** may be configured to provide desired voltage levels, as discussed above with respect to the embodiment illustrated in FIG. **33**. For example, the voltage level can be modified by changing the number of turns in a winding (see, e.g., winding **410** of coil **402** in FIG. **36**) of the coil **122**.

The generator **204** converts received energy into electrical energy. As illustrated the generator **204** is a linear generator comprising a coil **222**, a magnetic structure **224** and a suspension system **226**. The generator **204** may operate, for example, as described above with respect to the generator **104** illustrated in FIG. **33**.

The first energy storage device **206** is configured to store electrical energy generated by the generator **204**. In one embodiment, the first energy storage device **206** is capable of storing electrical energy generated by the generator **204** with little or no conditioning. The first energy storage device **206** may comprise, for example, one or more ultracapacitors.

The control module **208** controls the transfer of energy between the various components of the battery **200**, such as the generator **204**, the first energy storage device **206**, the second energy storage device **210**, the third energy storage device **211**, and the terminals **212**, **214**. For example, the control module **208** may control the transfer of stored in the first energy storage device **206** to the second energy storage device **210** and to the third energy storage device **211**. In one embodiment, the control module **208** may also control the transfer of energy from the generator **204** to the first energy storage device **206**. For example, the control module **208** may limit the current flow from the first energy storage device **206** to the second energy storage device **210** and to the third energy storage device **211**. In another example, the control module **208** may stop the transfer of energy from the first energy storage device **206** to the second energy storage device **210** and to the third energy storage device **211** to avoid overcharging the second and third energy storage devices **210**, **211**. In one embodiment, the control module **208** may be configured to detect, control, permit, and/or to facilitate charging of the first, second and/or third energy storage devices **206**, **210**, **211** from an external source of electrical energy (not shown) coupled to the terminals **212**, **214**.

The control module **208** may be implemented in a variety of ways. For example, the control module may be implemented as described above in the description of the control module **108** of FIG. **33**.

The second and third energy storage devices **210**, **211** are configured to store electrical energy transferred from the first energy storage device **206** under the control of the control module **208**. The second and third energy storage devices **210**, **211** may comprise, for example, conventional rechargeable batteries, such as nickel-cadmium batteries, nickel-metal hydride batteries, lithium polymer batteries or lithium ion batteries, other energy storage devices, or combinations of energy storage devices. The second and third energy storage devices may be coupled to the control module **208**, for example, separately, in series, or in parallel. As illustrated, the second and third energy storage devices **210**, **211** are washer-shaped with the suspension system **226** extending into hollow centers **209**, **213** of the second and third energy storage devices **210**, **211**. As illustrated the second and third energy storage device **210**, **211** are connected in series between the first and second contact terminals **212**, **214** and in series to the control module **208**. Some embodiments may employ dissimilar metals to take advantage of the Seebeck effect.

The contact terminals **212**, **214** provide access for transferring electrical energy to and from the battery **200**. The contact terminals **212**, **214** may be made of any electrically conductive material, such as, for example, metallic materials, such as copper, copper coated with silver or tin, aluminum, gold, etc. The contact terminals **212**, **214** are coupled to the second and third energy storage devices **210**, **211**. The second and third energy storage devices **210**, **211** may be coupled to the contact terminals in parallel or in series. In some embodiments, the contact terminals **212**, **214** may be coupled to the control module **208**, instead of being directly coupled to the second and third energy storage devices **210**, **211**. As illustrated, the contact terminals **212**, **214** have the physical configuration of the contact terminals of a conventional C-cell battery. As discussed above, other configurations may be employed. The contact terminals **212**, **214** are typically configured to permit the battery **200** to be easily installed into and removed from external devices, such as, for example, a radio, a cell phone, or a positioning system. The contact terminals **212**, **214** may employ magnetic shielding.

Energy may be stored in the battery **200** as a result of movement of the battery **200**. For example, energy may be converted into stored energy in a manner similar to the example discussed above with respect to FIG. **33**.

As discussed above, in some embodiments the suspension system **226** may be tuned to maximize the electrical energy generated from anticipated sources of kinetic energy.

In some embodiments, other generator configurations may be employed, such as, for example, rotational generators. In some embodiments, other suspension systems may be employed, such as, for example, suspension systems in which the generator **204** may move with respect to the case **202** so as to take maximum advantage of available kinetic energy. For example, the generator **204** may be configured to spin in the battery case **202**, so as to align itself with an axis of movement. In another example, the suspension system **226** may be configured to allow coil **222** to move with respect to the magnetic structure **224**.

FIG. **35** is a side sectional view of another embodiment of a battery **300** comprising a case **302**, a generator **304**, a first energy storage device **306**, a control module **308**, a second energy storage device **310**, and contact terminals **312**, **314**. The battery **300** has a different configuration than the battery **100** illustrated in FIG. **33**, but the operation of the battery **300** is typically similar to the operation of the battery **100** illustrated in FIG. **33**. The contact terminals **312**, **314** may be made of any electrically conductive material, such as, for example, metallic materials, such as copper, copper coated with silver or tin, aluminum, gold, etc. In some embodiments, the contact terminals **312**, **314**, may be contained within a connector, such as a plastic connector.

FIG. **36** is a diametric cross-sectional view of a generator **400** suitable for use, for example, in the embodiments illustrated in FIGS. **33** through **35**. Other generators and/or devices may be employed in the embodiments illustrated in FIGS. **33** through **35**, such as, for example, the embodiments illustrated in FIGS. **22-32**. The generator comprises a coil **402**, a magnetic structure **404** configured to generate a compressed magnetic field (see, e.g., FIGS. **15** through **21**) and a suspension system **406**. The suspension system **406** is configured to allow the magnetic structure **404** to completely pass through the coil **402** in either direction. As illustrated, the generator **400** is a linear generator.

The coil **402** comprises a cylindrical winding form **408** and one or more windings **410**. As illustrated, the winding form **408** is integrated with a carrier guide **409** of the suspension system **406**. As illustrated, the coil **402** comprises a single winding **410**. The winding **410** may comprise any electrically conductive and substantially non-magnetic conductive material, such as, for example, copper, aluminum, gold, and silver, and alloys. The winding **410** is typically covered with an insulating material **411**. In some embodiments, additional windings comprising magnetic conductive and/or non-magnetic conductive material may be employed (See, e.g., FIGS. **2-11**). The winding **410** may be, for example, solid material or may be comprised of strands of wire. Sheets of material may be employed in some embodiments. For example, a sheet comprising a copper layer and a Mylar® layer may be wound around the winding form **408**.

The magnetic structure **404** comprises a plurality of permanent magnets **412**, **414**, **416** contained within a cylindrical magnet housing **418**. While the illustrated embodiment employs three permanent magnets **412**, **414**, **416**, other embodiments of the generator **400** may employ different numbers of permanent magnets, such as two permanent magnets, four permanent magnets or hundreds of permanent magnets. The permanent magnets **412**, **414**, **416** are disk-shaped

as illustrated, but other shapes may be employed. For example, rectangular- (e.g., square), spherical-, or elliptical-shaped magnets may be employed. Similarly, the faces of the magnets need not be flat. For example, convex-, concave-, radial-, cone-, or diamond-shaped faces may be employed. Various combinations of shapes and faces may be employed. In some embodiments, electromagnets may be employed. The inside **420** of the magnet housing **418** and outsides **422**, **424**, **426** of the permanent magnets **412**, **414**, **416** are threaded so that the permanent magnets **412**, **414**, **416** can be fixed in position with respect to each other within the magnet housing **418**. Other positioning mechanisms may be employed, such as tabs, spacers, glues, or combinations of positioning mechanisms.

The magnets **412**, **414**, **416** are positioned and held apart from each other and are arranged such that same polarity poles in adjacent permanent magnets face each other. For example, the N pole **428** of the first permanent magnet **412** faces the N pole **430** of the second permanent magnet **414** and the S pole **432** of the second permanent magnet **414** faces the S pole **434** of the third permanent magnet **416**. In addition, the magnets **412**, **414**, **416** are held close enough together to form a compressed magnetic field (see the discussions of FIGS. **15** and **16**). In some embodiments, the spaces **436**, **438** between the permanent magnets **412**, **414**, **416** are substantially filled with a material **437**, which may comprise a gas such as air. In some embodiments, the material **437** may comprise other substantially non-magnet and substantially non-conductive substances, such as a fluoropolymer resin or plastic. In some embodiments, the magnetic structure may be evacuated and hermetically sealed.

As noted above, the shape, position and strength of the permanent magnets in a magnetic structure, such as the magnetic structure **404**, can increase the efficiency of the generator **400** by generating a compressed magnetic field. The ratio of the length **440** from the top **442** of the first permanent magnet **412** to the bottom **444** of the third permanent magnet **416** to the length of **446** of the inner diameter **448** of the winding form **408**, also impacts the electrical current produced in response to movement of the magnetic structure **404** with respect to the coil **402**. A gauss meter (not shown) may be employed to determine the optimum strength and positioning of the permanent magnets **412**, **414**, **416**, as well as the number of permanent magnets and the length **440**.

Other design considerations may be taken into consideration as well, such as weight and reducing external impacts of electromagnetic fields and impacts from external electromagnetic fields. In another example of an additional design consideration, the overall length **450** of the winding form **408** and the range of movement of the magnetic structure **404** in the suspension system may impact the stability of the generator **400**. In one experimental embodiment, the first magnet **412** and the third magnet **416** had a strength of 450 gauss and the second magnet had a strength of 900 gauss and the permanent magnets **412**, **414**, **416** were separated by 2 mm. Factors in determining the desired spacing include the magnetic B-field strength. The repelling magnets **460**, **462** each had a strength of 600 gauss. In another experimental embodiment, the first magnet **412**, second magnet **414** and third magnet **416** had a strength of 12,600 gauss and the permanent magnets **412**, **414**, **416** were separated by 4-5 mm. The repelling magnets **460**, **462** each had a strength of 9906 gauss. This resulted in a high-gradient field with a strength of approximately 16,800 gauss.

The inside **452** of the carrier guide **409** and the outside **454** of the magnet housing **418** are made of or coated with dissimilar materials to reduce potential for binding between the winding form **408** and the magnet housing **418**. For example, the carrier guide **409** may be coated with a non-stick coating while the magnet housing **418** may be made of an ABS plastic. Example dissimilar materials are available under the respective trademarks Teflon® and Lexan®. The magnetic housing **418** also comprises a first threaded end cap **456** and a second threaded end cap **458**.

The suspension system **406** comprises a first repelling permanent magnet **460** and a second repelling permanent magnet **462** that are fixed with respect to the coil **402** in the axis of movement **464** of the magnetic structure **404**. The first repelling magnet **460** is positioned such that a like pole of the first repelling magnet **460** faces the like pole of the nearest permanent magnet **412** in the magnetic structure **404**. As illustrated, the S pole **466** of the first repelling magnet **460** faces the S pole **468** of the first permanent magnet **412** of the magnetic structure **404**. Similarly, the second repelling magnet **462** is positioned such that a like pole of the second repelling magnet **462** faces the like pole of the nearest permanent magnet **416** in the magnetic structure **404**. As illustrated, the N pole **470** of the second repelling magnet **462** faces the N pole **472** of the third permanent magnet **416** of the magnetic structure **404**. This arrangement increases the efficiency of the generator in converting kinetic energy into electrical energy and reduces the likelihood that the magnetic structure **404** will stall in the suspension system **406**.

The suspension system **406** also comprises a first spring **474**, a second spring **476**, a third spring **478** and a fourth spring **480**. The first spring **474** is coupled to the first repelling magnet **460** and to the first cap **456** of the magnetic structure **404**. The first spring **474** is typically in a loaded condition. The second spring **476** is coupled to the second repelling magnet **462** and to the second end cap **458** of the magnetic structure **404**. The second spring **476** is typically in a loaded condition. The first and second springs **474**, **476** help to hold the magnetic structure **404** centered in the desired movement path along the axis **464**, and impart forces to the magnetic structure **404** as they are compressed and stretched by movement of the magnetic structure **404** along the axis of movement **464**. The third spring **478** is coupled to the first repelling magnet **460** and imparts a repelling force on the magnetic structure **404** in response to compression forces applied by the magnetic structure **404** as it nears the first repelling magnet **460**. The fourth spring **480** is coupled to the second repelling magnet **462** and imparts a repelling force on the magnetic structure **404** in response to compression forces applied by the magnetic structure **404** as it nears the second repelling magnet **462**. The springs **474**, **476**, **478**, **480** may be tuned to increase the efficiency of the generator in particular applications and likely environments, as discussed in more detail above in the description of FIG. **33**. The tuning may be done experimentally. Some embodiments may employ no springs, fewer springs, or more springs. For example, in some embodiments springs **478** and **480** may be omitted.

FIG. **37** is a high-level flow diagram illustrating an embodiment of a method **1500** of charging a portable energy storage device, such as the batteries **100**, **200**, **300** illustrated in the embodiments of FIGS. **33** through **35**, in response to movement of the battery. For convenience, the method **1500** will be described with respect to the battery **100** illustrated in FIG. **33**.

The method **1500** begins at **1502** and proceeds to **1504**. At **1504**, the battery **100** receives energy as a result of movement of the battery **100**. The method **1500** proceeds to **1506**. At **1506**, the battery **100** converts the energy into movement of a magnetic structure with respect to a coil inside the battery **100**. The back and forth movement of the magnetic structure

through the coil generates an alternating current signal. The magnetic structure may be configured to generate a compressed magnetic field (see, e.g., FIGS. **15** through **21** and **36**). The coil may comprise electrical conductive and magnetic conductive windings (see, e.g., FIGS. **2** through **11**). The method **1500** proceeds from **1506** to **1508**. At **1508**, the battery **100** rectifies the alternating current signal produced by the movement of the magnetic structure with respect to the coil. The method proceeds to **1510**. At **1510**, the battery **100** stores electrical energy from the rectified alternating current signal in a first energy storage device within the battery **100**. The method **1500** proceeds from **1510** to **1512**. At **1512**, the battery **100** controls the transfer of energy stored in the first energy storage device to a second energy storage device within the battery **100**. The method **1500** proceeds from **1512** to **1514**, where the method **1500** stops.

Embodiments of a method to charge a portable energy storage device may perform other acts not shown in FIG. **37**, may not all perform all of the acts shown in FIG. **37**, may combine acts shown in FIG. **37**, or may perform the acts of FIG. **37** in a different order. For example, the embodiment of a method **1500** illustrated in FIG. **37** may be modified to check whether conditions are appropriate for charging second energy storage device before transferring energy from the first energy storage device to the second energy storage device.

FIG. **38** is a high-level flow diagram illustrating an embodiment of a method **1600** of operating a portable energy storage device, such as the batteries **100**, **200**, **300** illustrated in the embodiments of FIGS. **33** through **35**, in response to the presentation of a load or a charge signal to the battery. For convenience, the method **1600** will be described with respect to the battery **100** illustrated in FIG. **33**.

The method **1600** begins at **1602** and proceeds to **1604**. At **1604**, the battery **100** determines whether a load is being presented to the battery **100**. This may be done, for example, by using discrete circuitry. When it is determined at **1604** that a load is being presented to the battery **100**, the method proceeds from **1604** to **1606**. When it is determined at **1604** that a load is not being presented to the battery **100**, the method **1600** proceeds from **1604** to **1620**.

At **1606**, the battery **100** determines whether to condition energy from the generator and provide the conditioned energy to the load. This determination may be made, for example, by determining whether the energy being generated by the generator is sufficient to drive the load. Other factors may be considered as well in the determination, such as, for example, load histories, charging and discharging cycles of the energy storage devices in the battery **100**. Discrete circuitry and/or look-up tables may be employed to determine to supply conditioned energy from the generator to the load. When it is determined at **1606** to condition energy from the generator and provide the conditioned energy to the load, the method **1600** proceeds from **1606** to **1608**. When it is determined at **1606** to not provide conditioned energy from the generator to the load, the method **1600** proceeds from **1606** to **1610**. At **1608**, the battery **100** transfers conditioned energy from the generator to the load. The method **1600** proceeds from **1608** to **1604**.

At **1610**, the battery **100** determines whether to transfer energy from the first energy storage device to the load. This determination may be made, for example, by determining whether the energy stored in the first energy storage device is sufficient to drive the load. Other factors may be considered as well in the determination, such as, for example, load histories, and charging and discharging cycles of the energy storage devices in the battery **100**. Discrete circuitry and/or look-up tables may be employed to determine whether to supply energy stored in the first energy storage device to the load. When it is determined at **1610** to supply energy stored in the first energy storage device to the load, the method **1600** proceeds from **1610** to **1612**. When it is determined at **1610** to not transfer energy stored in the first energy storage device to the load, the method **1600** proceeds from **1610** to **1614**. At **1612**, the battery **100** transfers energy stored in the first energy storage device to the load. The method **1600** proceeds from **1612** to **1604**.

At **1614**, the battery **100** determines whether to transfer energy from the second energy storage device to the load. This determination may be made, for example, by determining whether the energy stored in the second energy storage device is sufficient to drive the load. Other factors may be considered as well in the determination, such as, for example, load histories, and charging and discharging cycles of the energy storage devices in the battery **100**. Discrete circuitry and/or look-up tables may be employed to determine whether to supply energy stored in the second energy storage device to the load. When it is determined at **1610** to supply energy stored in the second energy storage device to the load, the method **1600** proceeds from **1614** to **1616**. When it is determined at **1614** to not transfer energy stored in the second energy storage device to the load, the method **1600** proceeds from **1614** to **1618**. At **1616**, the battery **100** transfers energy stored in the second energy storage device to the load. The method **1600** proceeds from **1616** to **1604**.

At **1618**, error processing and/or safety processing for load conditions is performed. For example, the battery **100** may disable the transfer of energy from the battery until the battery has been recharged (either through energy from the generator or through external sources of energy). The method **1600** proceeds from **1618** to **1604**.

At **1620**, the battery **100** determines whether a charge signal is being presented to the battery **100**. This may be done by, for example, using discrete circuitry. When it is determined at **1620** that a charge signal is being presented to the battery **100**, the method proceeds from **1620** to **1622**. When it is determined at **1620** that a charge signal is not being presented to the battery **100**, the method **1600** proceeds from **1620** to **1604**.

At **1622**, the battery **100** determines whether to charge the first energy storage device. This determination may be made based upon factors such as, for example, the characteristics of the charge signal, the energy stored in the energy storage devices, and charging and discharging cycles of the energy storage devices in the battery **100**. Discrete circuitry and/or look-up tables may be employed to determine whether to charge the first energy storage device using the energy in the charge signal. When it is determined at **1622** to charge the first energy storage device, the method **1600** proceeds from **1622** to **1624**. When it is determined at **1622** not to charge the first energy storage device, the method **1600** proceeds from **1622** to **1626**. At **1624**, the battery **100** uses energy from the received charge signal to charge the first energy storage device. The method **1600** proceeds from **1624** to **1604**.

At **1626**, the battery **100** determines whether to charge the second energy storage device. This determination may be made based upon factors such as, for example, the characteristics of the charge signal, the energy stored in the energy storage devices, and charging and discharging cycles of the energy storage devices in the battery **100**. Discrete circuitry and/or look-up tables may be employed to determine whether to charge the second energy storage device using the energy in the charge signal. When it is determined at **1626** to charge the second energy storage device, the method **1600** proceeds

from **1626** to **1628**. When it is determined at **1626** not to charge the second energy storage device, the method **1600** proceeds from **1626** to **1630**. At **1628**, the battery **100** uses energy from the received charge signal to charge the second energy storage device. The method **1600** proceeds from **1628** to **1604**.

At **1630** load error processing is performed. For example, the battery **100** may temporarily disable charging of the energy storage devices. The method **1600** proceeds from **1630** to **1604**.

Embodiments of a method of operating a portable energy storage device may perform other acts not shown in FIG. **38**, may not all perform all of the acts shown in FIG. **38**, may combine acts shown in FIG. **38**, or may perform the acts of FIG. **38** in a different order. For example, the embodiment of a method **1600** illustrated in FIG. **38** may be modified to provide energy to a load from more than one energy storage device. In another example, the embodiment of a method **1600** illustrated in FIG. **38** may be modified to simultaneously charge an energy storage device and provide energy to a load.

In another example application, devices employing bi-metal coils, magnetic structures configured to generate compressed magnetic fields, and/or other aspects of the present disclosure may be advantageously employed to convert fluid waves, such as water or sea water waves, to electrical energy. This is a potential environmentally friendly, renewable, source of energy. For example, an apparatus, such as the one disclosed in U.S. Pat. No. 6,864,592 to Kelly, for converting the motion of sea wave energy to electrical energy, including one or more float driven linear generators in which the inertial mass of a float and any linkage to the linear generator is minimized, may be modified in accordance with the present disclosure. The moving part of the generator is sized that its gravitational weight acting upon the float, together with that of the float itself and any intermediate linkage, is substantially equal to half the total buoyancy of the float. In calm conditions, the float would be half in, half out of the water. In the presence of waves during the rise of a wave, an upwards thrust is imparted to the generator equal to substantially half the weight of the water displaced by the float. On the fall of the wave, a downwards thrust due to gravity is imparted to the generator equal to the combined weight of the assembly. Thus, the linear generators experience substantially consistent upwards and downwards thrust during the passing of a wave, and consistent generation of power during both of these phases is achieved. The device of Kelly could be advantageously modified to incorporate bi-metal coils and/or magnetic structures configured to generate compressed magnetic fields to increase its efficiency.

Another patent that discloses converting sea waves to electrical energy is U.S. Pat. No. 6,791,205 to Woodbridge, which is incorporated herein by reference. This patent discloses a reciprocating generator rigidly attached to the underside of an ocean buoy that creates electric power from ocean swells. A generator coil maintains a stable position beneath the ocean surface while the magnetic field housing reciprocates with the vertical motion of the buoy in response to interaction with swell and waves on the surface of the ocean. Damping plates attached to the generator coil inhibit the motion of the generator coil, thus keeping it in a stable position relative to the motion of the magnetic housing. The magnetic housing focuses the magnetic field through the generator coil and the relative motion between the magnetic housing and generator coil creates an electromotive force in the coil. In another example, the apparatus of Woodbridge could be advantageously modified in accordance with the present disclosure to increase its efficiency.

In some embodiments, as shown in FIG. **39**, a generator **200** is employed in a cargo container **350**. Security of cargo containers is a growing concern. If power were available, gamma detection of explosives, infrared detection of human cargo, or other surveillance could be performed. By supporting a generator **200** or **300** in or on a cargo container **350**, energy can be generated by the linear generator from the motion of a ship **360**, due to the action of waves, and this energy can be used to power a variety of surveillance or detection systems. The generator **200** or **300** could be arranged to capture side to side rocking motion, or up and down motion, for example.

In another example, FIG. **40** shows just one example of a water wave to electrical energy power facility **400** comprising a plurality of power generators **402** of the type described above. The facility **400** includes paddles or linkages **412** coupled to the generators **402**. In one embodiment, the generators **402** are like the linear generators described above and the paddles **412** are coupled to the bottom **214** of a generator **200** or the bottom **338** of a generator **300**. The generators **402** are arranged to be moved by water waves and to cause either the coils or magnets of the generators **402** to move in response to the waves. In some embodiments, the generators **402** are supported to float on water, without the use of linkages.

The facility **400** further includes one or more rectification circuits or circuitry **404** coupled to the windings or coils of the power generators **402**. The rectification circuits **404** convert AC currents generated in the windings or coils of the power generators **402** to DC currents. The windings or coils of the power generators may comprise bi-metal coils.

In the embodiment of FIG. **40**, the facility **400** further includes a power storage device **406** coupled to the rectification circuits **404** for accumulating and storing power generated by the windings or coils. The power storage device **406** can be or include one or more batteries, capacitors, combination of batteries and capacitors, or other types of power storage devices. The power storage device includes a charging regulator to provide proper current and voltage to the battery, capacitor, or other energy storage device.

In the embodiment of FIG. **40**, the facility **400** further includes an inverter **408** coupled to the power storage device **406** and configured to supply alternating current to an electricity distribution system or grid. In the illustrated embodiment, the inverter is coupled to the grid via a transformer **410**. Other embodiments, including one or more power generators, for converting water waves to electrical power (either AC or DC) are possible.

Other applications are possible, such as biological motion systems, parasitic power harvesting, self-powered devices such as self-powered security and intelligence gathering devices. For example, in one embodiment, a power generator as described herein is included in a shoe, to generate power from walking. That power can be used to supply any variety of electronic devices.

A shoe-mounted device includes, for example, a power generator as described above, mounted in or on a shoe heel such that each time the heel hits the ground, the impact causes movement of the coil relative to the magnets. The shoe-mounted device also includes a rectification circuit (e.g., a full wave rectifier) coupled to the coil of the power generator, and a power storage device such as a capacitor or battery coupled to the output of the rectification circuit. A voltage regulator can be included to provide proper current and voltage to the storage device.

For example, FIG. **41** shows just one example of a biological motion device **500** comprising a power generator **502** of the type described above in connection with FIGS. **22-32**. The power generator **502** is mounted, in some embodiments, in the heel of a shoe or elsewhere on a person such that the action of walking moves the magnets relative to the coil of a power generator **502**.

The device **500** further includes a rectification circuit or rectification circuitry **504** coupled to the windings or coils of the power generator **502**. The rectification circuitry **504** converts AC currents generated in the windings or coils of the power generators **502** to DC currents.

In the embodiment of FIG. **41**, the device **500** further includes a power storage device **506** coupled to the rectification circuitry **504** for accumulating and storing power generated by the windings or coils. The power storage device **506** can be or include one or more batteries, capacitors, combination of batteries and capacitors, or other types of power storage devices.

In the embodiment of FIG. **41**, the device **500** further includes a voltage regulator **508** coupled to the power storage device **506** and configured to provide a stable output voltage to an electronic device borne by a person. Other embodiments are possible.

FIG. **42** illustrates an embodiment of a system **100** that is gimbaled to facilitate the conversion of available energy into electrical energy. The system **100** comprises a generator **102**, such as, for example, one or more of the generators illustrated in FIGS. **22** through **32**, supported by a support structure **104** that facilitates positioning of the generator **102** in a desired position. In some embodiments, the support structure **104** may employ gyroscopic techniques.

FIG. **43** illustrates a system **100** comprising a plurality of generators **102**, **104**, **106** coupled to a support structure **108**. A first generator **102** is coupled to the support structure **108** so as to be oriented along an X-axis **110**. A second generator **104** is coupled to the support structure **108** so as to be oriented along an Y-axis **112**. A third generator **106** is coupled to the support structure **108** so as to be oriented along a Z-axis **114**.

FIG. **44** illustrates an article of clothing **100** comprising an embodiment of a battery **102**, such as one of the battery embodiments illustrated in FIGS. **33** through **35**, an embodiment of a generator **104**, such as one of the generators illustrated in FIGS. **22** through **32**, solar collectors **106**, and a radio-frequency energy collector **108** comprising an antenna system **110** and a rectifier **112**. The article of clothing **100** also comprises a bus system **114** to couple the various components together and a coupling **116** to couple the bus system **100** to the battery **102**. The coupling **116** may be configured to condition or add together electrical energy received from the generator **104**, the solar collectors **106** and/or the radio frequency energy collector **108**, or to switch a connection **118** to the battery to connect to one or more of the other components of the article of clothing, such as the generator **104**. The coupling **116** may also be configured to allow connections to external loads and/or sources of energy. As illustrated, the article of clothing **100** is a shirt, but other embodiments may comprise other articles of clothing. The battery **102**, generator **104**, solar collectors **106**, the radio-frequency energy collector **108**, bus system **114**, the coupling **116** and the connection **118** may be integrated into the article of clothing, removeably coupled to the article of clothing, or combinations of the above. For example, the antenna system **110** and the bus system **114** may be integrated into the fabric of the shirt while the battery **102** may be coupleable to the shirt. In another example, a button **122** may also comprise a solar collector **106**. Some embodiments may not comprise all of the components illustrated. For example, an embodiment may comprise the battery **102** and the antenna system **110**. In some embodiments, a control module in the battery (see control module **208** in FIG. **34**), may control storage in the battery **102** of energy received by the battery **102** via the bus system **114**.

FIG. **45** is a side sectional view of an embodiment of a system **100** in accordance with an embodiment. The system **100** comprises a rotor **102** comprising a magnetic structure **104** configured to generate a compressed magnetic field and a stator **106** comprising one or more bi-metal coils **108** comprising an electrical conductive element **110** and a magnetic conductive element **112**. FIG. **46** is a top cross-sectional view of the rotor **102** of FIG. **45** taken along lines **46-46**. The magnetic structure **104** comprises a plurality of magnets **114** held spaced apart with like poles facing each other so as to generate a compressed magnetic field.

Although specific embodiments of and examples for the coil, magnetic structure, device, generator/motor, battery, control module, energy storage devices and methods of generating and storing energy are described herein for illustrative purposes, various equivalent modifications can be made without departing from the spirit and scope of this disclosure, as will be recognized by those skilled in the relevant art. The various embodiments described above can be combined to provide further embodiments.

These and other changes can be made to the invention in light of the above-detailed description. In general, in the following claims, the terms used should not be construed to limit the invention to the specific embodiments disclosed in the specification and the claims. Accordingly, the invention is not limited by the disclosure, but instead its scope is to be determined entirely by the following claims.

What is claimed is:

1. A battery, comprising:

a case;

a coil contained within the case;

a magnetic structure contained within the case and configured to generate a compressed magnetic field;

a first energy storage device contained within the case;

a plurality of contact terminals coupled to the case; and

a control module contained within the case and coupled to the coil and the first energy storage device.

2. The battery of claim **1** wherein the magnetic structure comprises a plurality of spaced-apart rare earth magnets configured so that like-polarity poles face each other in neighboring magnets in the plurality of rare earth magnets.

3. The battery of claim **2** wherein the magnets in the plurality of magnets are held in position with respect to one another.

4. The battery of claim **2** wherein a space between two magnets in the plurality of magnets is substantially filled with a non-magnet substance.

5. The battery of claim **4** wherein the non-magnetic substance comprises air.

6. The battery of claim **4** wherein the non-magnetic substance comprises a fluoropolymer resin.

7. The battery of claim **1** wherein the case is evacuated and hermetically sealed.

8. The battery of claim **1** further comprising:

a suspension system coupled to the magnetic structure.

9. The battery of claim **8** wherein the suspension system is tuned to optimize conversion of expected patterns of movement into electrical energy.

10. The battery of claim **8** wherein the coil comprises:

an electrical conductive element; and

a magnetic conductive element.

11. The battery of claim **10** wherein the magnetic conductive element is configured to focus magnetic flux in the electrical conductive element.

12. The battery of claim **11** wherein the magnetic conductive element comprises a silver/nickel alloy.

* * * * *

Experimental Short-wave "Mystery"

Crystal Radio

by Ken Harthun

Copyright January 2001

This is not the typical crystal set construction article to which you may be accustomed; rather, it is a description of a few *workable* circuits that leaves plenty of room for experimentation if you are so inclined. You can build a fine working short-wave crystal set based on what I give you here. These circuits perform very well. However, I’m still experimenting with them and I challenge you to do the same, to discover what works best for you. Tinkering with a circuit, trying different things to see what works – and what doesn’t – is the essence of our hobby and is what keeps this particular rock head interested!

Because this set is experimental, I make no claims that this design – or any particular hookup that results from this article - is the *ne plus ultra* in short-wave crystal radios. We all know that the perfect crystal set does not exist. The "perfect" crystal set for my location is something that may or may not work for you (I have to deal with a 50Kw blowtorch that is located virtually in my backyard – you may be more fortunate).

My antenna is about 150 feet of wire in an inverted V with the apex at about 35 feet. Some of it runs every-which-way across my roof and into my radio room. Though at BCB frequencies my antenna is much too short, it is actually much too long an antenna at short-wave frequencies. You can probably get by with a lot less, depending on your location.

With these things in mind, let’s begin and take a look at a project that I believe will give you plenty of enjoyment – and will probably raise many questions. In fact, I hope that this article will generate enough interest in short-wave crystal set reception that we see some real innovation in future designs.

The radio is based on the Mystery Crystal Set designed by a fellow who called himself "Proton" and who first published details of the set in the Sunday Mail newspaper in Brisbane, Australia in 1932. I won’t rehash any of the details because the set is well covered in the articles posted at http://www.clarion.org.au/crystalset/mystery.html by Ray Creighton. I have simply adapted the circuit and modified it a bit for my set. Fig. 1 is the basic schematic.

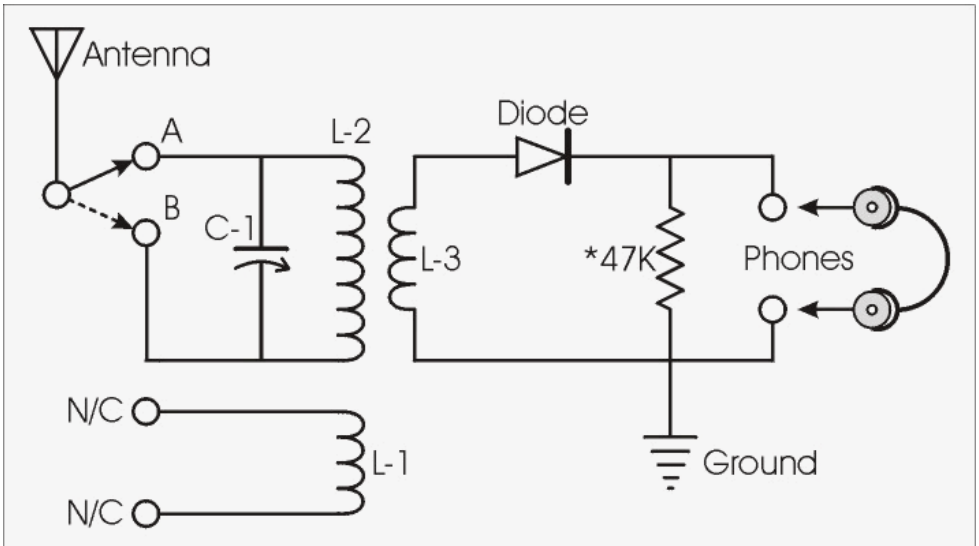

Figure #1, Basic "Mystery" Circuit.

Construction

The coil form is a 2.5 inch long piece of 2" white PVC plumbing pipe with an outside diameter of 2 3/8 inches. This is the kind that has a thickness of about 3/16 inches and is known as "Schedule 40". Construction details are shown in Figure 2.

L1 – 20 turns #22 close wound, approx. 35 uH

L2 – 13 turns #18 or #20 wound at 20 tpi, approx. 12 uH

L3 – 6 turns #22 bifilar wound in the center of L2

C1 – I’ve been using a 20 – 56 pF air variable for coverage of approx. 6 – 10 MHz and a 13 – 250 pF air variable for approx. 2.9 – 12.7 MHz coverage with the coils shown.

Diode – 1N34A or crystal detector.

(You may find as I did that a piece of pyrite and a cats whisker work much better than a diode. For some reason, I find that the pyrite detector is more sensitive and gives me much better volume than the diode. Also, with pyrite, you can eliminate the resistor across the crystal earplug.)

Resistor – 47K (*Note: you can eliminate this resistor if you are using high impedance magnetic headphones)

Phones – crystal earplug or high impedance magnetic phones

I have been using alligator leads to connect it up so I can rapidly change configurations. The photo shown at the beginning of this article is a completed homebrew version of the set that uses mostly non-electronic parts (except for one Fahnestock clip hat was used to hold the detector rod). The capacitor is

made from a plastic tube and some aluminum tape that you can find at auto parts stores.

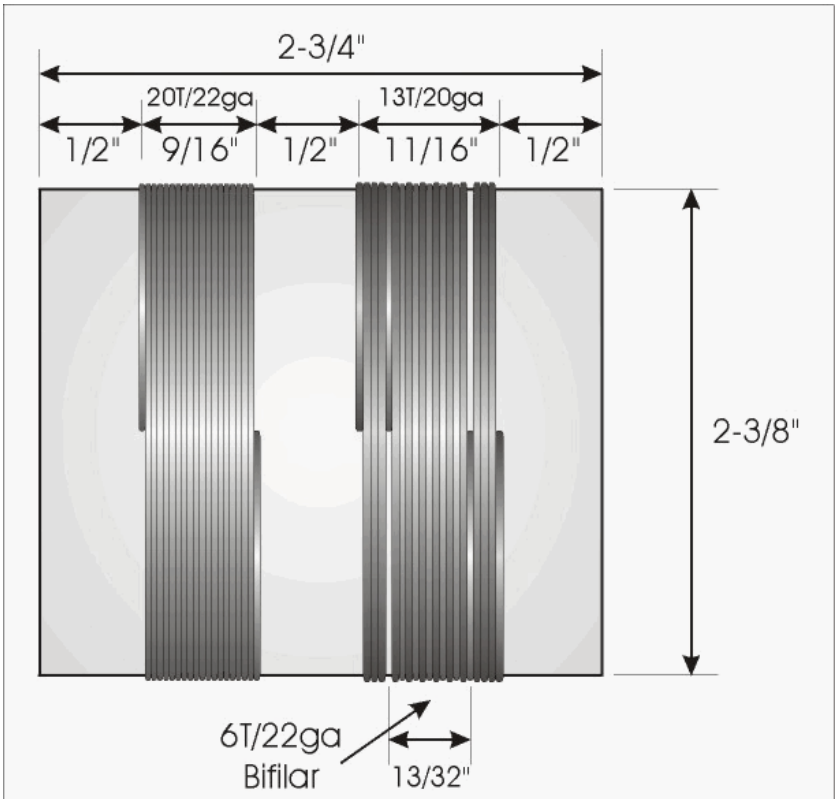

Figure #2, Coil Details.

In the original coil I wound, I used hot-melt glue to hold the windings in place. About six beads or "ribs" across each of the windings works very well. Also looks pretty good – better than tape!

In the basic "mystery" circuit shown in Fig. 1, L1 is not used. The tuned primary (L2) has two antenna connection points, A and B. A is the least selective, but gives a louder signal. B is more selective, but the sensitivity drops notably. While I show a ground connection, I noticed that results vary. In most cases, I find that the set works better in this configuration without a ground and is very sensitive. Selectivity is enhanced with the ground connected, but some signals drop out while others get louder. I’m not sure why this is and I’m still experimenting. I have tried putting a small trimmer capacitor in the ground connection to vary the coupling to ground, but my results are inconclusive at this point.

Overall, the basic configuration works very well and is a fine set in its own right. I easily pick up WWCR at 5070 kHz, WEWM on 9975 kHz, have heard Radio Havana (Cuba), the BBC and many other German, Chinese, French and Spanish language broadcasts. My first night, I picked up a station that was running a program called "Let’s Learn Chinese". Bear in mind that propagation conditions vary considerably. You may or may not hear this much at first. Then again, you may hear even more. Some evenings I hear very little but I’m listening as I work on this article in late February and there seems to be stations everywhere as I tune. The audible stations fade in and out and back again, so I get a good variety without having to touch the tuning dial!

As I mentioned earlier, in my location near Cincinnati, Ohio, I have a 50 kW blowtorch, WSAI on 1530 kHz, virtually in my backyard. I have to use a wave trap to tune this station out or it’s all I hear. As a matter of fact, I can hook a diode up to a crystal earplug, hold the diode in my hand and still hear this station loudly! My point is that your conditions will certainly be different than mine, so there is no way I can tell you what to expect to hear. But I can almost guarantee that you will hear something.

Figure 3 shows another configuration I have tried.

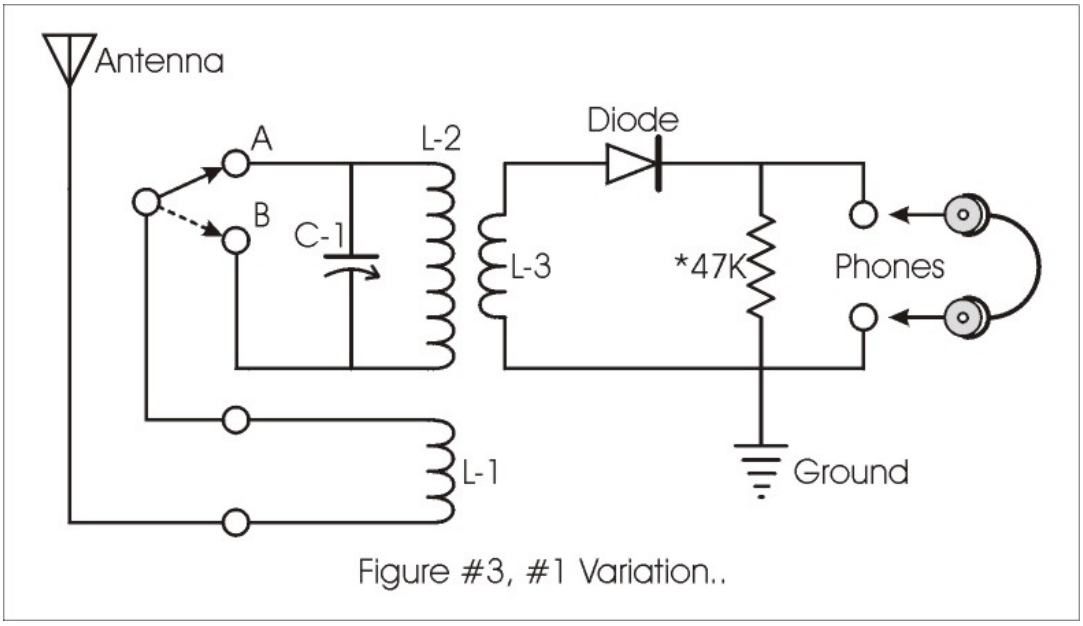

Figure #3, #1 Variation..

In this configuration, L1 is used as a coupling coil for the antenna and one end is attached to either A or B on the primary. This is a very interesting hookup, more selective than the basic circuit in Fig. 1, but not quite as sensitive. With L1 hooked up to point A, the selectivity is quite sharp. When hooked to point B, the set is so selective that tuning can be tedious. Again, the ground is optional, but I find a little better sensitivity in this hookup with the ground connected and the selectivity hardly suffers at all. One thing to try would be to decrease the spacing between L1 and L2/L3. I think that the current spacing may result in coupling that is a bit too loose for this set.

The configuration detailed in Figure 4 shows some promise for daytime reception in the upper short-wave bands and for further development as a set with variable coupling. With the existing design, the coupling between L1 and L2/L3 is somewhat loose at the ½ inch spacing. Making L1 moveable and possibly large enough to fit over L2/L3 are some things I am considering.

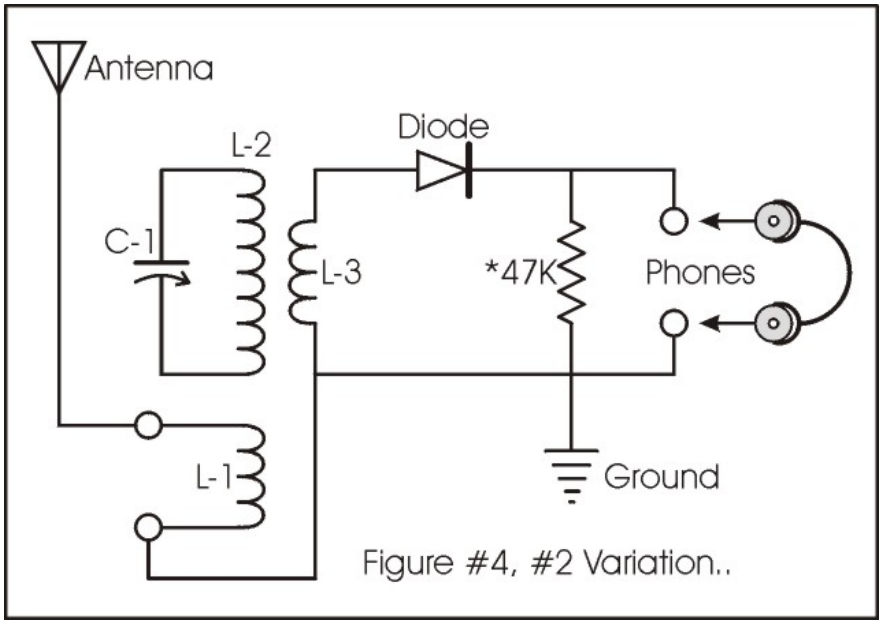

Figure #4, #2 Variation..

Here are some ideas for further experimentation.

1. Grounding connections A and B to see how this affects reception. (This would actually be defeating the mystery circuit and using L3 as just a detector-coupling coil)
2. Hook up a variable capacitor in series with the antenna.
3. Hook up a variable capacitor in parallel across L1 to tune the antenna.
4. Try the "Tuggle" circuit across L2. This would involve using a 2-gang variable capacitor and hooking one of the sections in parallel with L2 and the other section in series with the ground.
5. Try the Tuggle circuit across L1.
6. Use Tuggle tuning with main variable section across L1 and the second capacitor section in series with A/B connection.
7. Make L1 moveable to vary coupling.
8. Band switching and band spreading using various fixed and variable caps.
9. Use a smaller coil form to approximate a 1:1 length-diameter ratio.
10. Use a smaller inductance value (same as L2?) for L1.

This is by no means a complete list of the things that can be tried with this circuit. In fact, I even redesigned the coil to the following dimensions:

L2 – 18 turns #20 space wound to 1.3" long, 2.375" diameter for approx. 20 uH.

L3 – 7 turns 7/30* bunched cable bifilar wound in center of L2

L1 is not present in this configuration.

*7/30 cable is 7 strands #30 enameled wire twisted into a cable of approx. size of #20. Individual wires are stripped at the ends then twisted together and tinned.

I hope I have given you some food for thought and inspired you to try your hand at making this interesting circuit work. I intend to continue my own experiments and perhaps write another article at some future time. If you want to contact me, you can post a message on Rap-n-Tap, the Yahoo Crystal Set Radio Club, or email me at kc4iwt@yahoo.com. I welcome all comments and suggestions.

Good luck and Happy Experimenting!

3/18/2001 Notes on further modifications

L1 is now present again on the redesigned coil. It comprises 8 turns of # 22 AWG close wound, spaced ¼" from the bottom end of L2. The antenna and ground connections are made to this coil.

L2 is now 14 turns instead of 18 turns to bring the coil more in range of the most active SW bands.

L3 is unchanged.

Experiments with a Perikon detector are very interesting. My Perikon detector consists of a piece of chalcopyrite in contact with a small cone-shaped piece of zincite. It is equally as sensitive as my pyrite detector – maybe more so under some conditions – and has an interesting property in that it appears to be somewhat "tunable". I’m not sure if this is due to signal strength or has more to do with the frequency to which the set is tuned, but I observe a distinct ability to peak signals differently as I tune across the bands. I seem to recall some mention of this property in early radio literature.

One big advantage of the Perikon is that it is not as touchy as the typical catswhisker-and-mineral

detector. It is easy to begin detecting a signal and once detection begins, it is a simple matter to peak the signal. I also observe that the Perikon requires a bit of pressure to work properly. It doesn’t require the light touch like other point contact detectors and adjustment is non-critical. Unlike the catswhisker detector, the Perikon doesn’t mind being bumped and tends to keep its setting. It is very stable. I like this detector a lot.

I tried a zincite/pyrite combination, but you can forget that one. Just doesn’t work. Likewise, chalcopyrite with a catswhisker just isn’t very sensitive. It works, but it seems to been just a couple of steps up from a rusty razor blade. Yes, the razor blade detector actually works on this set on some of the stronger signals. And I have to say again that a 1N34 germanium diode just lacks sensitivity in this set. It doesn’t work as well as either the Perikon or the pyrite detectors.

Crystal Radios for the Shortwave Bands

(21 Jan 02)

The first set tunes from about 5.8 to 14 MHz, which includes the 49, 41, 31, 25 and 22 meter shortwave broadcast bands. The capacitor is the oscillator section of a poly film variable capacitor, and the coil is wound on a toilet paper core. The main coil, L1, was wound on a length of 1/2 inch of the core, and separated from the antenna coupling coil, L2, by about 1/8 to 1/4 inch on the same core. Calculated inductance of L1 was 10.6 uH. Measured capacitance of the variable was 10 - 68 pF. Using a 50 foot end fed antenna, stations could be heard 24 hours a day, with the higher bands being heard during daylight, and the two lower bands coming in at night as well.

There are 4 primary ways to attach antenna and ground, and all work to one degree or another. First and second, the antenna alone may be connected to either the antenna tap or to the ground tap. Third and fourth, the antenna and ground are connected to the normal taps as indicated, or they may be reversed. A small frequency shift was noted when going from option 3 to 4. Use of the ground sometimes made the signals stronger. Quantitative assessments using on-air stations was not attempted as the signal strength varied constantly, with shifts of up to 10 dB being noted within the space of 30 seconds. As a side note, just connecting the antenna to the top of the tank coil was not as productive.

Selectivity, while not great, was sufficient to separate the short-wave BC bands (the 25 and 22 meter bands tended to run together, however), and often to separate two stations within a band. Slow tuning, even with this selectivity, is needed due to changing signal strengths and because of the fast tuning rate.

Using a longer antenna gave higher signal strengths, as expected, and little or no shift in frequency was noted when going from one antenna to the other. No MW broadcast band interference was observed.

This is a schematic of the set:

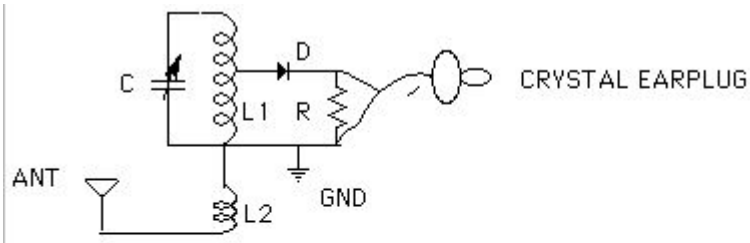

C - 10-60 pF
L1 - 14 turns #24 plastic coated wire on 1 5/8 inch core tapped at 8th turn from top for detector
L2 - 5 turns wound 1/8 inch below L1 on same core
D - 1N34A diode
R - 47 kohm

Spacing between L1 and L2 was closer to 1/4 inch, as it turned out when my students built this, and they seemed okay. Since the shoddy antenna I have in my classroom is well shielded by the metal roof of the building, I used a grid dip oscillator to check the sets for response before letting them out of the room. With the unmodulated signal from the GDO, I could hear a few faint heterodyne squeals from stations that were there but too weak to hear.

I made another coil on the same diameter form using #20 solid plastic coated hookup wire, winding 20 turns on 2 inches for L1 and 6 turns for L2. This gave me slightly stronger signals, as expected. I made a breadboard attempt to use this with a Tuggle antenna tuner, but gave up early on, primarily since this was designed to be a student radio, and for other more technical reasons which I'll explain below.

This is really a "first iteration" radio, designed just for shortwave use, and, while it works pretty well, clearly has some way to go. The tuning rate, some 10 MHz in a 180 degree rotation of the tuning knob, is way too fast, but is probably okay for this first attempt. It was clear that the selectivity of the set leaves something to be desired, so more work on the coils is in order. I didn't spend much time optimizing the coil tap for the detector, just picking one that is historically useful. Tapping the detector to the top of the tank circuit was not as productive as the tap I used. I also didn't spend any time picking over detectors, and just grabbed the first germanium diode out of the box. If I can get the selectivity up a bit, I will have to get serious about band

spreading the tuning. Obviously, I need to go back and look at an antenna tuner again. One thing I realized, which may or may not make a difference, is that at these frequencies the antenna is a quarter wavelength long or longer, so you can't make it resonant with just a few turns of a coil in the antenna line. However, the set is a snap to build (especially the coil), and picks up a bunch of stations, and is fun to use if you haven't tried the higher frequencies.

Okay, time to do some more playing around. Variation #2 was built to try to get some more selectivity for a kid radio, and essentially the same as the first but with the primary separated from the tank coil. This seemed to work a bit better, and the bands separated better as well. This is the schematic with some notes:

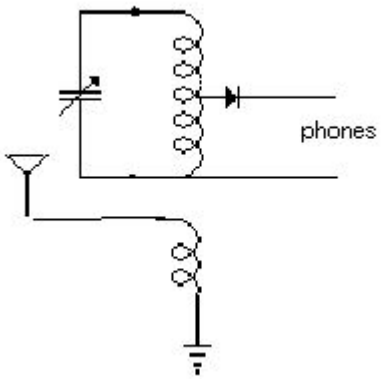

For this one, I wound the coils on a 1 5/8 inch toilet paper core, and used 15 close wound turns for the tank coil, tapped at turn 6 from the ground for the detector. The primary coil was 6 turns separated by 1/4 inch from the secondary. If you want to dispense with phones, one of the little Radio Shack audio amps works fine. With the amp, I noticed that with my 150 foot long wire, the top of the BC band came in the background a little; not so with the 50 foot "student" antenna. The diode was a germanium out of the junk box, and the variable capacitor was the 10 - 70 pF oscillator section of a poly film rf tuner capacitor. The wire was #24 plastic coated telephone wire, which gives about 30 turns per inch. It tunes from the 49 meter band to just into the 19 meter band. It all fit nicely on a 4 inch length of 1 inch x 4 inch pine.

Since my 8 year old seemed interested in doing something with a crystal set for a science project, we made up this next one, really just a slight modification of the one above, adding an audion type headphone amp to drive a low impedance set of phones (he ended up taking my Stromberg Carlson sound powered set, declaring them the most comfortable). This is the schematic of the finished product:

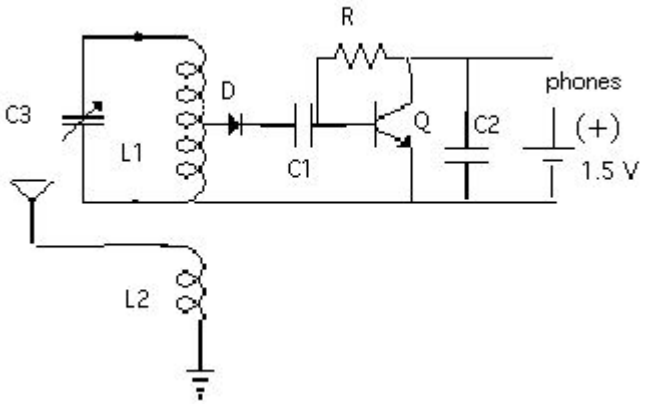

C3, L1, L2, and D are as described above.
C1, C2 are 0.1 uF disc ceramics
R = 100 kohms
Q is a 2N2222, but just about any similar transistor will do. Reverse the battery if using a PNP transistor.

I was pretty lavish with this one, and used a 7 inch section of 1 x 4 inch pine for the base, and even added a panel to support the variable and a simple paper dial that I "calibrated" for the shortwave bands using a dip meter. With the sound powered phones, I probably should have gone on and made the coupling between L1 and L2 variable to (1) control the volume on the stronger stations and (2) to try and improve the selectivity, which isn't bad, but isn't great either.

And now (Drum roll), a shortwave convertible. Actually, this should look very familiar, since I use this basic one transistor amp a lot.
This amp was added to use higher impedance phones, such as the standard 2k, or the crystal earplug with the parallel resistor.

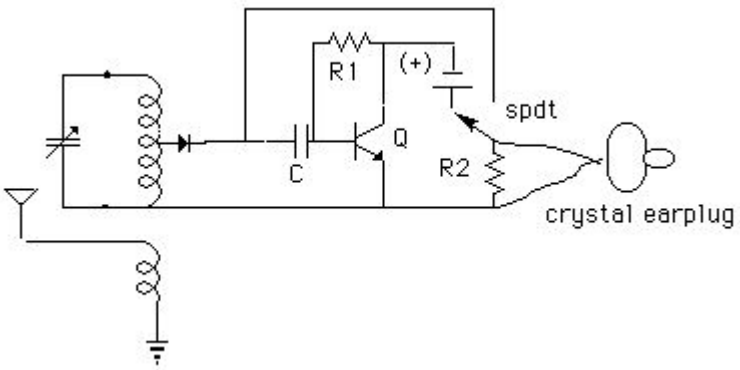

Q - just about any general purpose transistor will do, such as a 2N2222 or whatever you have on hand. I used a PNP out of a Radio Shack pack 15 on one set(and reversed the battery); worked fine.
R1 - 470 kohms
R2 - 47 kohms
C - 0.1 uF - you can probably use just about anything here
The battery I used was a 1.5V AA, but a 9 V worked fine too with a little more volume.
The crystal radio portion of the set is as described above. I used brass coated thumbtacks stuck into a piece of pine for soldering points. You can put in a couple of fahnestock clips where R2 and the crystal earplug go and use any phones you have on hand. I designed this to be an easy-to-assemble kid radio, but you can get as fancy as you like. I just used hot glue to hold the battery holder and switch down on the base. You might notice that, unlike the original crystal convertible, I don't disconnect the diode from the input capacitor C when switching from straight crystal to amplified crystal. Found that it didn't seem to matter, and made wiring easier. Also note that the battery connects after the phones, with the phones going to chassis ground, unlike the set I made with the audion type amp. You have some flexibility here, so do what suits you, but this arrangement gives you the easy convertible switch.

So how does it do? As built, the amplifier seems to give about a 10 to 20 dB boost to the signal. Makes for more comfortable listening, and stations that you can tell are there become clearly audible. Going from a 50 foot antenna out the window to a 6 foot whip indoors, I was still able to hear a few stations, even in the daytime. I tried adding a feedback coil for a little regeneration, just for grins. Alas, the used 1.5 V AA wasn't having any of this, so I'll try it another day.

For more information on the general nature of shortwave listening and the frequencies for each band, try this web site:
http://www.danatkinson.co.uk/html/sw/faq.htm

HOME

The SkyWaves Short-wave Crystal-set Prototype

Here's some info on my recent short-wave crystal-set experiments. The basic conclusion is that SW crystal sets are quite worthwhile, and need not be unduly elaborate to give gratifying results. This is especially true on the US east coast where the "prime time" broadcasts are really strong.

A word of warning: You're likely to hear strong, clear English broadcasts from the likes of The BBC, The Voice of Viet Nam, and Radio Taipei. Don't believe it! These are rebroadcast from nearby sites in US and Canada. To sort this out, there is a good frequency list available at: http://www.primetimeshortwave.com/

I the short time I've been at it, I have heard Radio Exterior de Espana , Swiss Radio International, and The Voice of Russia from my West-central NJ location. So intercontinental DX is entirely possible. I even heard a "numbers station" on about 13.5MHz.

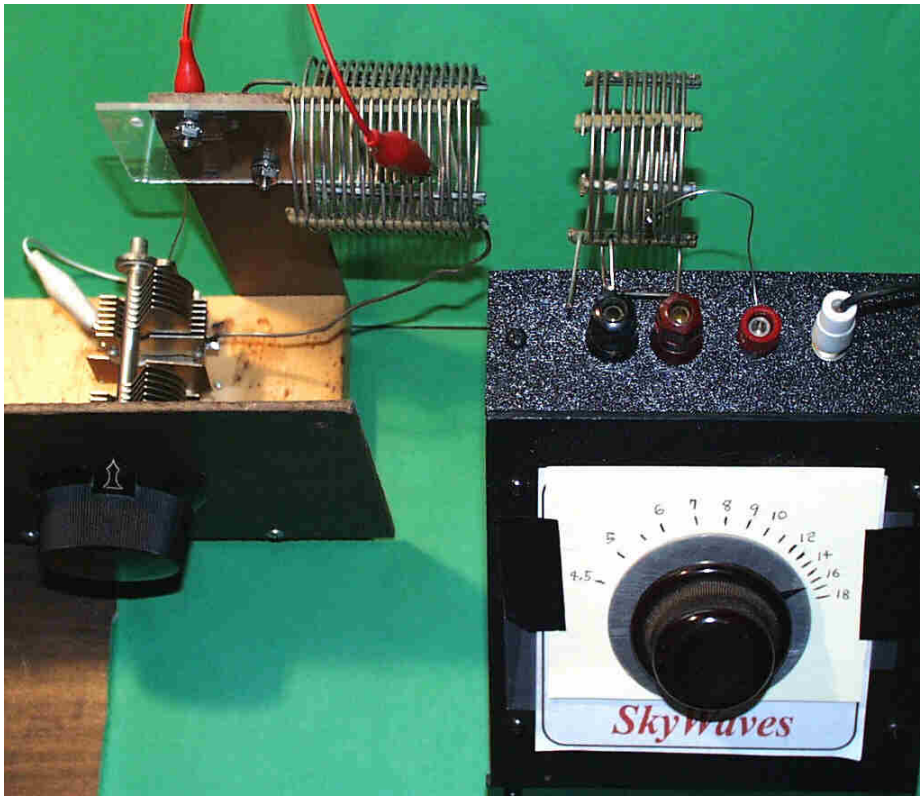

This is a simple double-tuned radio built around Air Dux coil stock. I used this because it was handy, but solid bare wire of about 14 gauge on 2" PVC should work just fine. (Strip a length of #14 Romex.) The primary tuned circuit is Tuggle style and offers a reasonable compromise between effective, flexible antenna matching and ease of use. I bent down every other turn on L1 to make it easy to tap with an alligator clip. I equipped the secondary coil with a separate "primary" winding so the set can be used in the single-tuned mode to do a quick band scan. Coupling is controlled by moving the two sections around on the table. The "ground" end of the coils face each other.

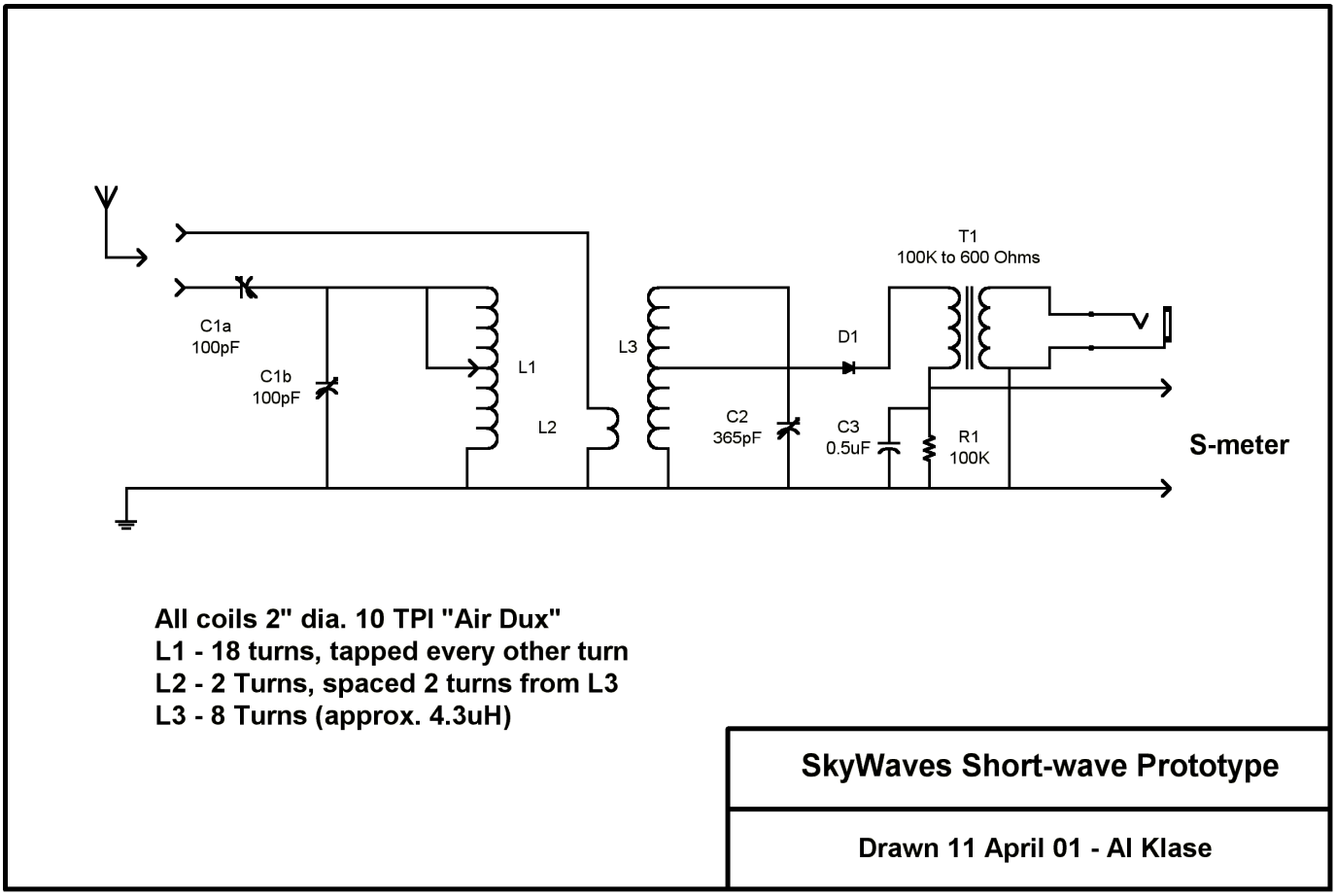

Some additional observations: A secondary coil of about 4 – 4.5 uH will tune 5-18 MHz with a 365pF cap. That's where 95% of the action is, so band switching can be avoided. As with most double tuned sets, a calibrated dial on the lightly-coupled secondary really helps sort things out on the air. I'm using sound-powered phones, but signals are strong, so a modest headset will be ok for starters. Just elininate T1, C3, and R1, and connect the headset between the diode and ground.

properties that make it particularly suited to our purpose, namely that it works at lower voltage levels than most other common diodes. Since the voltage in our radio comes from weak little radio waves, we need all the help we can get.

We now carry this diode in our catalog, to make it easier to obtain. Radio Shack used to carry them, but they no longer have them in their stores.

We are now ready to build our simplest radio.

A very simple radio with two parts

First let me warn you that this first little radio may not work in your location. It relies on having a very strong local radio station to overcome the limitations of such a simple radio. If it does not work where you are, you can either build its cousins that we will discuss later, or you can drive out closer to a local radio station, and try it there. But because it is so simple, you might try building it just to see what you might be able to pick up.

If your earphone has a jack on the end, cut it off, so you have two long wires coming from the earphone. If the wires are twisted around each other, that is OK, since we only need them to be separate at the very ends.

Remove the covering (called insulation) from the ends of the wires to expose an inch of bare wire. Often you can do this with your fingernail, but a tool called a wire stripper is made for this purpose, and can usually be purchased at the same place you got the earphone or the diode.

Wrap one bare wire around one of the diode's wires. Use some tape to keep it in place. If you know how to solder, you can solder the wires together, but it really isn't necessary for now.

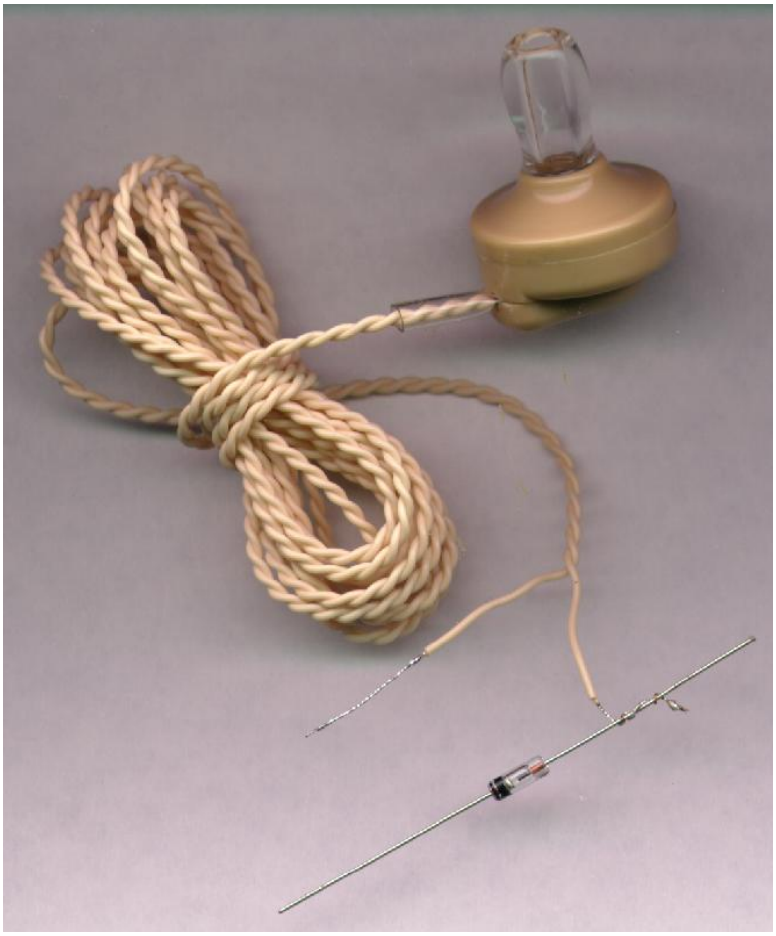

Tape the other diode wire to a cold water faucet. This makes a good connection to the ground, and is thus called a 'ground' connection.

Hold the remaining free bare wire of the earphone in your hand. This makes your body into the antenna for the radio. Put the earphone in your ear. If you are close to a strong AM radio station, you will be able to hear that station faintly in the earphone. You may hear more than one station at once.

If you can't hear anything, you might try a better antenna. You can tape the wire you were holding to a metal window screen, or a long wire. If one end of the long wire is thrown up on a roof or in a tree, you might get better results. Another good antenna is an outdoor TV antenna. Just touch the free earphone wire to one of the antenna terminals where it comes into the TV. If you have a good antenna, you may be able to eliminate the ground connection, using your body as a ground instead, by holding the free diode wire in your hand.

Another simple radio with two parts

Our simple radio has two main drawbacks. One is that the signals are very faint, and can only be heard if you are close to a radio station's transmitting antenna. The other is that you hear all of the strong stations at once, and it is hard to pick out just one song or voice from the mixed up jumble. The first problem is called the 'sensitivity' of the radio. Our radio is not very sensitive. The second problem is called the 'selectivity' of the radio. Our radio is not very selective.

We can solve both problems by using a trick called resonance.

Resonance is a way of taking a little bit of energy, and using it over and over again, at just the right time, to accomplish a big task. We use resonance when we push someone on a swing. It would take a lot of work

to lift someone several feet in the air, but we can do this easily on a swing by giving a little push over and over again at just the right time. Timing is important: if we push at the wrong time, the swing can actually lose energy instead of getting higher.

When an opera singer uses her voice to shatter a wine glass, she is using resonance. Her voice gives the glass a little push at just the right time, over and over again, until the glass is moving so far that it shatters. In a similar way, we can slosh all the water out of a bathtub by moving a hand in the water at just the right back and forth speed. Each time the hand moves, the water climbs a little higher, until it is over the top of the tub.

Radio waves can act like the sound waves of the singer's voice, or like the waves in the bathtub. Radio waves can cause electrons to move back and forth in a wire, just like the water in the tub. If the radio waves are moving back and forth at the right frequency, then the electrons in the wire will just be crowding towards one end of the wire when the radio waves start moving them back to the other side. Just like the water in the tub, the electrons will crowd higher and higher at the ends of the wire. These electrons can do work, like moving the brass disk in the earphone to create sound.

We can use resonance to build a radio that can pick up only one station at a time, and make a louder sound in the earphone. This radio will also have some drawbacks (for one thing it will be over 1,000 feet long!) but we will solve these problems in the next radio we build.

Suppose we pick a local radio station we want to hear. For this example we will choose 740 kilohertz on the AM dial. We now need to figure out how long the wire must be to resonate at this frequency. Radio waves travel at the speed of light. This radio wave is going back and forth 740,000 times per second. This means the wave needs to go about a quarter of a mile in one direction, then turn around and go back again, over and over. The actual formula for figuring out how long the wire should be is

$$\frac{936 \text{ feet}}{\text{Frequency in Megahertz}}$$

or, for our example:

$$\frac{936 \text{ feet}}{.740}$$

or about 1264 feet.

To make our radio, we take half of the wire (632 feet) and attach it to one end of the diode. We attach the other half of the wire to the other end of the diode. We attach one earphone wire to one side of the diode also, and the other earphone wire to the other end. We put the long wire up in the air by attaching each end to a tree (the trees must be about 1264 feet apart). Then we put the earphone into our ear, and listen to the radio.

Now I can think of a couple problems with this radio. It is not the most portable radio. Also, in order to change the station, we need to make the wire longer or shorter.

One solution to the portability problem is to coil the wire up by winding it on a box or a cylinder. Then we can solve the tuning problem by attaching the diode and earphone to the coil at different places (easy to do now that the whole wire is in one small place).

A simple radio with three parts

There are several ways to connect a coil of wire to a diode and earphone to make a radio. In the photos below, we show two possibilities that work.

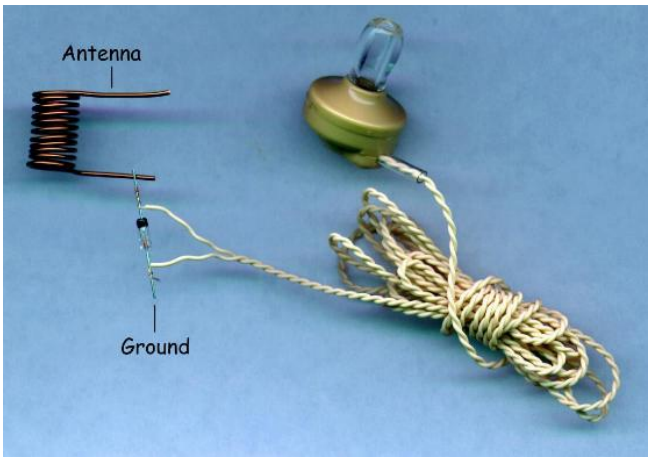

The photos do not show the antenna and ground connections, but instead indicate where they would be attached.

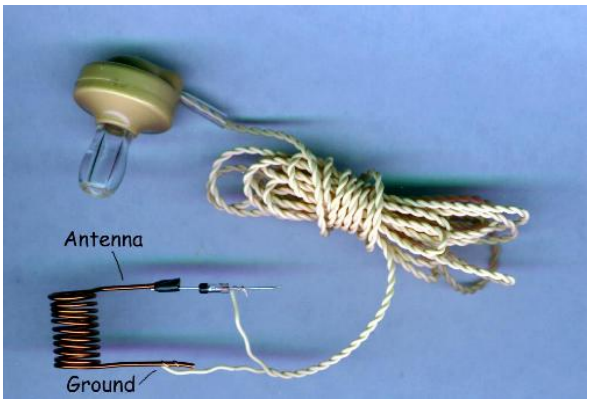

The coil in the photos is also dramatically simplified. A real coil for the AM radio frequencies would be somewhat larger, as we saw when we built our first radio using the plastic bottle.

Often photographs show so much detail that the important parts are easily missed. By using a simplified drawing, we can accentuate the important parts of the circuit and leave out unimportant or distracting details that can interfere with getting the point across.

A simplified drawing of a circuit is called a *schematic*. A schematic for a simple crystal radio might look like this if drawn on a napkin at a party:

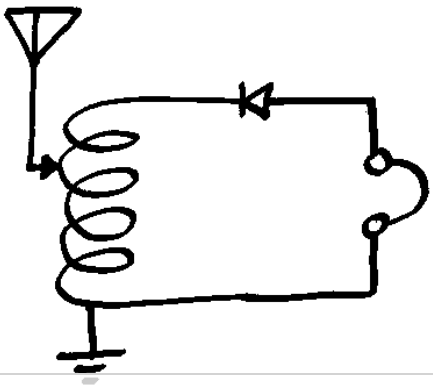

The symbol for a coil looks like a spring. The symbol for an antenna looks like someone used a coat hanger. The symbol for headphones looks like the old fashioned ear-muff style (which are great for crystal radios, since they

block out ambient noise in the room). The symbol for the ground looks like what a cartoonist would draw under a cartoon character to represent the earth.

Note that the antenna is attached to the coil in the middle by a small arrow. This indicates that it is attached to a tap in the coil. An arrow is used to indicate a connection that can move, like our clip lead.

The symbol for the diode looks nothing like the little glass tube with wires coming out. Instead of represeting what the diode *looks* like, it represents what the diode *does*.

A diode is a one-way valve for electricity. The electric current flows through the diode in one direction, but is blocked if it tries to flow in the other direction. We will find out why this is important later, when we learn why the radio works. But for now, we will concentrate on building a radio that will let us hear one station at a time, with reasonable loudness.

Power from radio waves -- hooking up a meter to measure the voltage and current

It is useful at this point to be able to measure the effects of changes we make to the radio. We can just use our ears and try to remember how loud it used to be, but it is easier to read a meter, and remember a number. With a meter connected to the radio we can adjust the tuning for the highest meter reading, or make other adjustments as we add new components or replace purchased components with ones we make ourselves.

The meters must be sensitive to very small changes in the amount of electricity flowing in our radio. We will be measuring *current* mostly, but we will add a voltmeter as well, so we can calculate the total amount of energy we are receiving.

Current is the flow of electricity through the circuit, and it is measured in amperes, or amps for short. Voltage is the pressure that pushes the current through the wires. If electicity were water, current would be the amount of water flowing (gallons per minute), and voltage would be the water pressure in pounds per square inch.

Since the amount of current is very small, we will use a meter that measures current in micro-amperes, or at most small fractions of a milliampere. Some examples of microammeters and milliammeters can be seen in the photo below:

To measure the current in our radio, we will need to have the current flowing through the meter. To do this, we connect the microammeter between the earphone and the ground connection, so that any electricity that is going to flow throught the earphones to make noise is going to have to flow through the meter also. The meter can be connected in two ways, one is forward and one is backward. If the meter is connected backward, the needle will start reading below zero. If this happens, just reverse the connections, so the needle reads above zero.

To measure the voltage, we connect the meter to both of the earphone wires. The schematic diagram now looks like this:

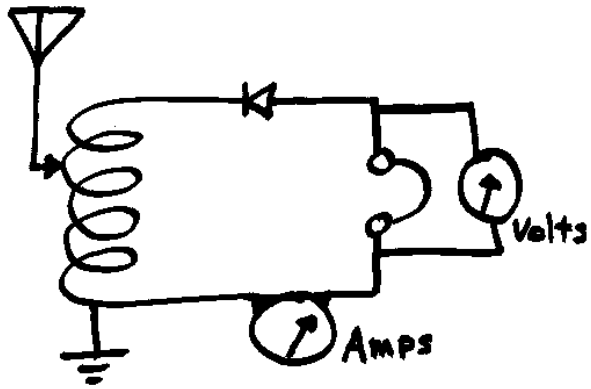

If you have a good antenna, or a strong radio station nearby, the ammeter might read more than 50 microamps. If you have a short antenna, you might get only 5 microamps and still be able to hear the station clearly in the headphones. I put up a 200 foot antenna between two trees over my house, and tuned to a 50,000 watt station about 30 miles away, and now I get 175 microamps of current through my meter. I put the earphone to the mouth of a cone (like a megaphone) and I can clearly hear the radio from across the room when the house is quiet. It doesn't sound as nice and clear as it does with the earphone right up to my ear, but I can follow a conversation easily (it's an all-news station).

The voltmeter in the same radio reads 125 millivolts. Since watts (the measure of how much power we have) is the voltage multiplied by the amperes, we have 0.000175 times 0.125, or 0.0000218 watts, or about 22 microwatts. The station is putting out 50 killowatts, and we are receiving one ten billionth of that power, yet we can hear it across the room.

Try different lengths of antenna, and watch the current go up as the longer antennas catch more of the power from the radio station. Try more that one antenna. Try connecting the ground wire to different things that are connected to the ground, such as pipes, metal fences, etc. As you try each test, make sure you tune the radio again, because your changes may affect the tuning.

Adding a capacitor (or three)

As you tried different antenna lengths, you may have noticed that you had to move the tap on the coil in order to get the station at its loudest. To understand why this happens, and how we can use an understanding of it to improve our radio, we must first understand *capacitance* and how it affects the tuning coil.

A capacitor is simply two pieces of metal with an insulator between them. If a capacitor is connected to a battery, the battery will push electrons onto one piece of metal (called a *plate*) and draw electrons from the other piece of metal. If we remove the battery, the electrons can't go anywhere, so one plate of the capacitor will have more electrons than the other plate.

If we connect the two plates together with a wire, the electrons will rush from the plate that had too many (because electrons have the same charge, and thus repel each other like the north poles of two magnets) to the plate that had fewer electrons. As the electrons rush from one plate to the other, we can make them do work, such as light a light bulb. In this way, the capacitor seems to store the electricity from the battery, for use at another time when the battery isn't there.

Now suppose we connect a coil and a capacitor together like this:

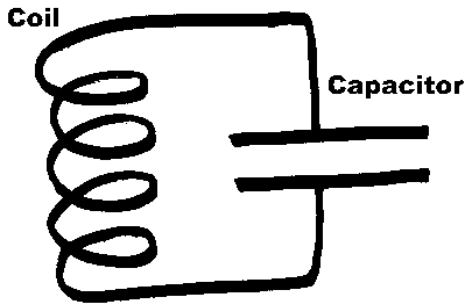

Suppose also that the capacitor has been charged by a battery so the top plate has more electrons than the bottom plate. When we connect the coil, the excess electrons in the top plate immediately start traveling through the coil to get to the plate that has a shortage of electrons.

As the electrons travel through the coil, they create a magnetic field, (remember 'coil' is just another word for 'electromagnet'). The magnetic field grows until the plates on the capacitor have equalized. At this point you would think the current would stop flowing in the coil. But the magnetic field that built up when the current flowed through the coil now starts to collapse.

Just as moving a magnet past a coil will generate a current, a collapsing magnetic field around a coil creates a current too. The current is in the same direction as it was when the magnetic field was created, so the coil ends up pushing electrons onto the bottom plate of the capacitor, and stealing them from the top plate.

By the time the magnetic field around the coil has completely collapsed, the bottom plate of the capacitor has a surplus of electrons, and the top plate has a deficit. You can guess what happens next.

The electrons start flowing back into the coil, this time from the bottom plate to the top. The coil starts building up a magnetic field again, but since the current is now going the other way, what used to be the north pole of the magnetic field is now the south pole, and vice-versa.

The field grows until the capacitor has equalized, then it collapses, and pumps electrons into the top plate of the capacitor. We are now back where we started, and the whole process starts over again!

The coil and the capacitor are resonating, just like the child on a swing, or the water in a bathtub. In fact, this circuit is called a 'tank circuit', like a tank full of water that sloshes back and forth.

We can control the frequency of the oscillations in two ways. We can make the coil larger or smaller, or we can make the capacitor larger or smaller. The coil we built for our radio has taps, which have the effect of making the coil shorter or longer, depending on which tap we connect to the antenna.

Our radio has a coil. But it doesn't have a capacitor. Or does it? Actually, the antenna itself is acting like a capacitor. The capacitance of the antenna is reacting with the *inductance* of the coil to resonate at the frequency of the radio station.

When we change the length of the antenna, it is like changing the size of the capacitor. This is why changing the length of the antenna changed the tuning of the radio, forcing us to move to a different tap on the coil in order to listen to the same station.

There is another way to change the capacitance of a capacitor. We can change the distance between the two plates. If the plates are closer together, the excess electrons on one plate are attracted to the other plate, because when the negatively charged electrons were removed from that plate, it was left with a positive charge.

Because the electrons are attracted to the positive charge, we can pile more of them together, storing more energy. In a similar fashion, when we make a capacitor with the plates farther apart, the positive charge is farther away, and can't help to pull as many electrons onto the negative plate. Thus the amount of energy we can store is less, and we say the capacitor has less *capacity*

We can combine capacitors to raise or lower the capacitance, now that we know how capacitors work. If we put two capacitors together in parallel, we can increase the capacitance, because the top plates are connected together, and the bottom plates are connected together, it is just as if we had one capacitor with large plates.

If we connect the capacitors in series, it has the effect of making the plates of the capacitor be farther apart. This can be seen in the illustration below. The bottom plate of one capacitor is connected to the top plate of the other. Electrically, this is the same as making the two plates into one plate in the middle of a capacitor that has twice the distance between the outer plates. The phantom inner plate has no effect, and is drawn as a dotted line in the bottom illustration.

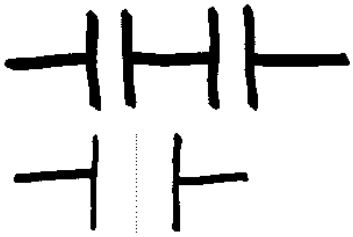

We now know enough about capacitors to use them in our radio. We can use a small capacitor between the antenna and the coil to lower the capacitance of the antenna. This will allow the coil to tune to stations that are higher in frequency. The capacitor is in series with the capacitance of the antenna, so the total capacitance is lower.

The circuit now looks like this:

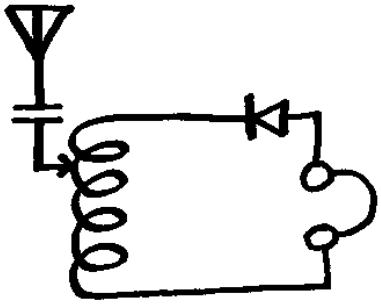

Building your own capacitors

Capacitors are easy to build in the kitchen out of aluminum foil. In fact, our first capacitor will simply be two sheets of foil tucked into a paperback book, with one page separating them, as if they were two bookmarks.

This quick capacitor has advantages and disadvantages. It is quick and easy to build, it can be easily adjusted to vary the capacitance by simply sliding one of the foil strips out of the book a little at a time, thus reducing the capacitance. On the other hand, it is bulky, and comes apart easily, and will change its capacitance when you press down on the book, squeezing the pages closer together. Lastly, it can change capacitance slightly on humid days as the pages of the book absorb moisture.

With only a little more effort, we can make a durable, stable, capacitor using foil and a little waxed paper or plastic wrap.

We start by laying down a sheet of waxed paper. On top of that we lay a sheet of foil. We leave the foil hanging over the top of the waxed paper, so we will have something to which we can attach a wire. We lay another piece of waxed paper over the first piece and the foil. We then lay another piece of foil on the top, overlapping it at the bottom for our other wire. We make sure that the foil sheets are always separated by the waxed paper, so they do not make an electrical connection.

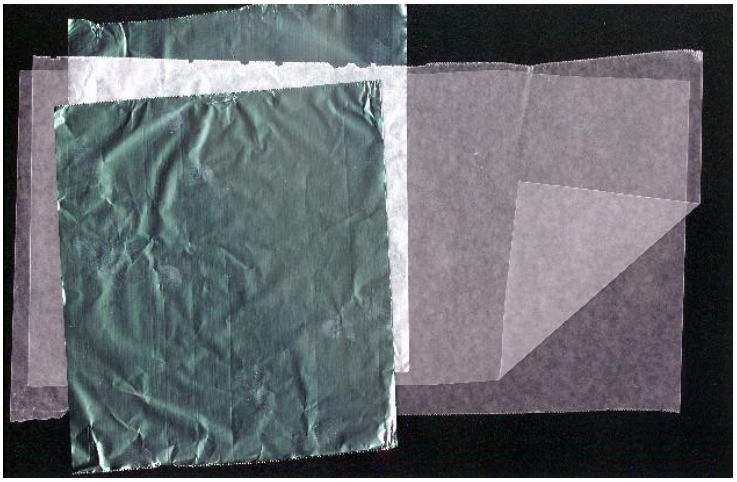

Now we roll the whole thing up like a jelly roll.

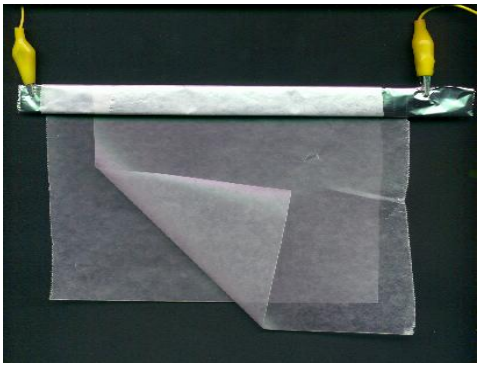

Now we trim up the paper with some scissors, and we can even roll it up the other way to make it smaller.

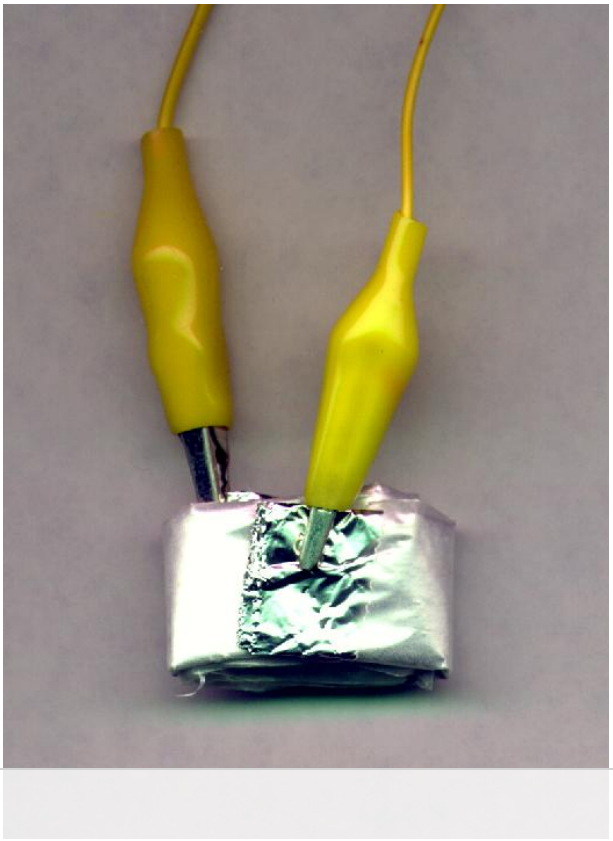

This capacitor is not adjustable like our first one, but we can make several of them, each a different size, and connect the one we want. We can even combine them in parallel or in series to change their capacitance.

We can use the small *fixed* capacitor to tune the antenna, and another *variable* capacitor (like our book capacitor) to tune the coil. We put the variable capacitor in parallel with the coil, to make a tank circuit. The small fixed capacitor lowers the antenna's capacitance, making the circuit tune to a higher frequency. But the variable capacitor adds more capacitance to the circuit, making it tune to a lower frequency. Now we can tune the radio with the taps on the coil, *and* by sliding the foil in and out of the book.

The circuit now looks like this:

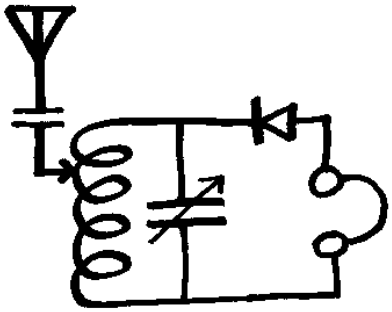

Notice how the variable capacitor has an arrow through it to indicate that it can change its capacitance.

Building your own diodes

During World War I, soldiers in the field made their own radios to listen to programs for entertainment and news. They had access to wire from broken down vehicles, and telephone receivers, but they did not have modern solid state diodes in little glass tubes.

However, it is surprising to find out just how many ordinary objects can act as a diode, letting current flow one way better than another.

The soldiers found that an old rusty razor blade and a pencil lead worked just fine. By lightly touching the pencil lead to spots of blue on the blade, or to spots of rust, they formed what is called a *point contact* diode.

We can replace our store-bought diode with a homemade point contact diode and compare the results. The parts can be attached to the circuit with clip leads, or they can be soldered, as in the photo below. The pencil lead is attached to a safety pin by wrapping it with bare copper wire and soldering it.

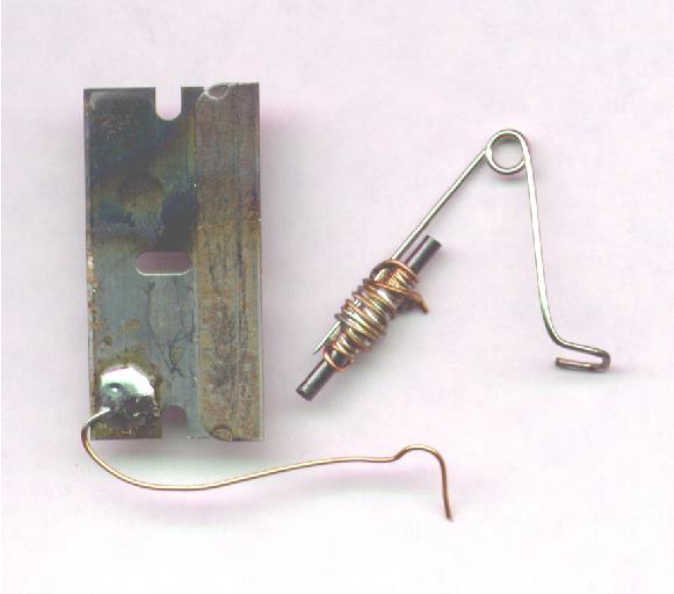

The safety pin acts as a spring to lightly press the pencil lead onto the razor. If the pressure is too hard or not hard enough, the diode will not work, so experiment. The exact spot on the razor is also critical, since some spots will have too much or too little oxide on them to make the diode. Move the pencil lead around on the razor until the sound is loudest, or the meter (if you have attached one) reads highest.

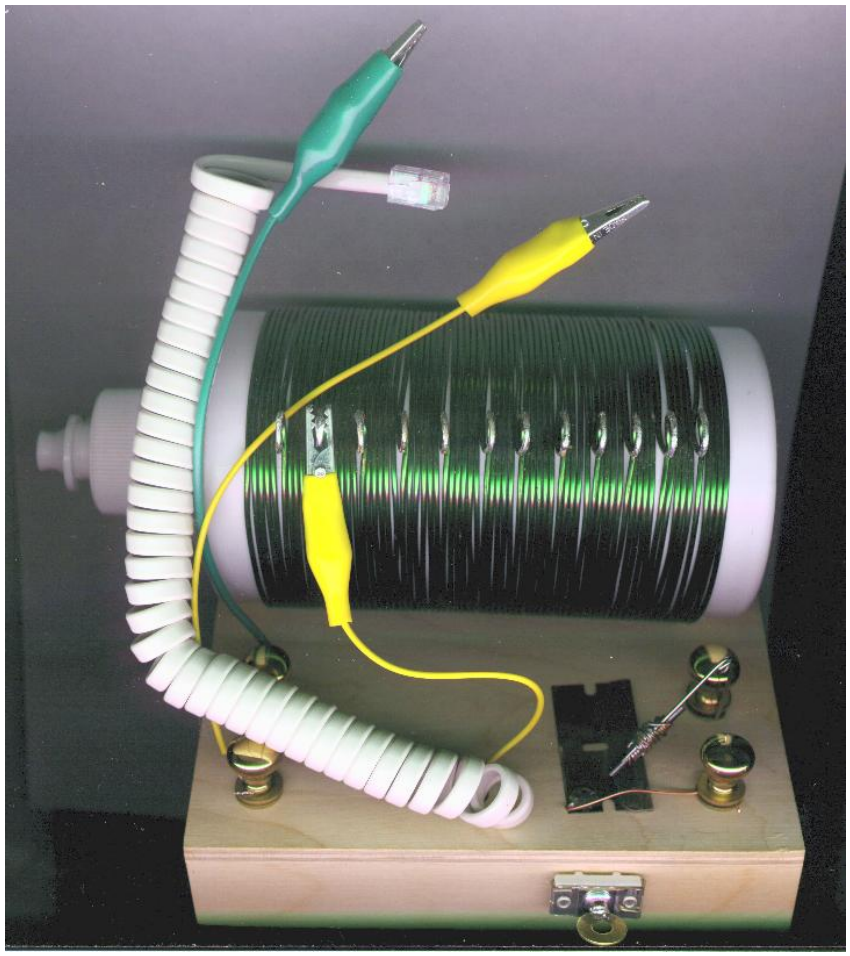

In the photo above, you can see how handy the brass drawer pulls are when we want to attach new types of diodes.

If you don't have a rusty razor blade lying around, you can try other bits of rusty metal. The blade shown above was clean and new, so I put a little

salt and water on it, and held it in the flame of a gas stove until parts of it were blue and purple.

You might have other things around the house that can act as diodes. In my rock collection, I found some iron pyrite (fool's gold) and some carborundum (silicon carbide, the blue stone in the photo below). The carborundum works well with a strong pressure, so I simply wrapped some bare copper wire around it, soldered the wire, and then let the jaws of a clip lead supply the pressure. It works quite well. The pyrite needs a gentle touch, so I used the point of a safety pin to gently probe until I found a spot on the pyrite that gave good volume in the radio.

Going further - some quick thoughts

Trading loudness for more stations

In our radio, the diode and earphones are connected directly to the antenna and ground. This connection gets the loudest signal. However, it also *loads* the tuning coil, making it less selective. This means that many lower power or distant stations are drowned out by local strong stations.

We can make the radio more selective by decoupling the tuning coil from the antenna and ground. We do this by adding a small coil. The new coil is attached to the antenna and the ground, and then it is placed inside the main tuning coil.

Wind about five or ten turns of wire around a small coil form such as the plastic container use to package 35 mm film (about 1 inch in diameter). Cut a large hole in the bottom of the plastic bottle on which we wound the large tuning coil. Attach the antenna and ground to the small coil, and

SPACE
ENERGY
RECEIVERS
POWER FROM
THE WHEELWORK OF NATURE
HERE, MR. PERRIGO SAYS, IS HIS SECRET
THE ONE HUNDRED LITTLE BUNDLE OF COPPER STAYS WHICH FORM THE PL DRIVEN THROUGH THE WOODEN BLOCK ARE SOLDERED OVER THE ENDS, MAKING THEM APPEAR SMOOTH
LARRY E PERRIGO, THE INVENT FREE ENERGY DEVICE WH BELIEVES WILL REVOLUTIO INDUSTRY
THE TOP OF THE BIG COIL, SHOWING THE ENDS OF THE COPPER STAYS AND THE WINDINGS OF WIRE. T SPACE SEPARATING THE TWO PARTS THE COIL IS THE "FIELD GAP" M PERRIGO SAYS
MR PERRIGO'S FIRST MACHINE, AS HE REMEMBERS IT, IT WAS CRUDE DEVICE MADE FROM TWO EMBROIDERY HOOPS, A TABLE LAF BREAD BOX AND OTHER MATERIALS PICKED UP AROUND THE OUSE
AT LEFT — A CLOSE-UP OF ONE OF THE ONE HUNDRED PLUGS IN THE WOODEN BLOCK

Contents

Part 1. **Introduction**

Definition of Terms

The Nature of Space and Potential Energy

Speed of Light Experiments and Ether Detection

Fields of Force--Static or Dynamic

Research References

Part 2. **Some Historical Inventions (1901-1945)**

Nikola Tesla

Thomas Henry Moray

Jose Yglesias

Roy J. Meyers

Harry E. Perrigo

C. Earl Ammann

Anonymous

Hans Coler

Tesla's Electric Car

Part 3. **Conclusions**

Research References and Patent Searches

Material Suppliers for Experimenters

Related Contacts

Space Energy Receivers
(Part 1)

Space Energy Receivers, also called "free" energy machines or atmospheric energy accumulators, may be defined as a class of devices which appear to collect electrical energy from the surrounding space without applied force, by some process other than chemical or mechanical action. These inventions have no moving parts except for the flow of electricity. Such operation is refuted by modern orthodox physics and patent law and this brings us to the subject of perpetual motion. There are two recognized definitions for perpetual motion. The Encyclopedia Britannica, 13th edition, has: "a machine which, once set in motion, will go on doing useful work without drawing on any external source of energy...". This machine would violate the law of the Conservation of Energy by creating motion (energy) out of nothing (empty space). Our intuition and experience rebel at this concept of getting something from nothing. So we now turn to the Oxford English Dictionary for a second definition of perpetual motion: "A hypothetical machine which being once set in motion should go on forever, or until stopped by some external force or the wearing out of the machine." This second definition does not invoke the Conservation of Energy law since nothing is said about creating energy. We can think of several examples which fall into this class of perpetual motion machine: wind turbines, water mills, ocean wave converters, orbiting satellites. Space Energy Receivers may also be included here if we qualify this by humbly admitting that there are still forms of energy (motion) and energy transformation unknown to science. In the microscopic world of molecules, atoms and sub-atoms, frictionless perpetual movement is normal.

The Nature of Space and Potential Energy

Up to the turn of this century philosophers and scientists had pictured space as being filled with a medium called "ether" which was necessary for the propagation of all forces. The ether might be like a frictionless, ideal liquid or gas. The main question was whether this medium was passively at rest or actively driving all other forms of motion from planets to atoms. Especially puzzling was the seat or storage of potential energy. In his book Principles of Mechanics (1899), Heinrich Hertz hypothesized the existence of "hidden or

concealed" motions and masses in space itself. Scottish physicist Peter Guthrie Tait agreed by writing "Now it is impossible to conceive of a truly dormant form of energy.... We are forced to conclude that potential energy, like kinetic energy, depends (even if unexplained or unimagined) upon motion." Many of the ether physicists and the inventors you will meet in this booklet assumed electricity, magnetism, gravitation, heat and mass-motion to be derivative manifestations or effects; these represent disturbances of the basic motions of the ether medium in space.

The Speed of Light Experiments and Ether Detection

In 1905, Albert Einstein outlined his Special Theory of Relativity which included a bombshell for the ether physicists; it declared the ether, as an absolute frame of reference, unnecessary. His conclusions were partly based on the negative results of the Michelson-Morley experiment (1886) which was designed to detect earth's motion through the ether by variations in the speed of light. Contrary to what science historians often claim, the Michelson-Morley experiment was not "decisive" but rather laid the groundwork for future tests which have continued down to the present day. As detailed in the biography of Albert Michelson, The Master of Light, Michelson continued to believe in the existence of the ether, never accepting Einstein's interpretation, and he continued to devise new experiments to test the speed of light until his health gave out in 1931. In 1934, an article in Popular Science magazine entitled "Mysterious Variation in Speed of Light" details some anomalies the late Dr. Michelson and his fellow experimenters had found. Although Popular Science refused permission to reprint this article, I can relate that the speed of light varied by as much as 12 miles per second from day to day. It varied with the seasons and also in a mysterious shorter cycle lasting about two weeks. The frustrated physicists ended by taking an average of these values for the speed of light.

Results of the Michelson-Pease experiments, published in 1935, found large dispersions in readings for the speed of light which could not be accounted for by experimental error. Besides the Michelson tests, I mention Georges Sagnac whose optical experiments in 1913 registered the presence of an ether medium; Richard A. Muller's experiments in 1978 showing the existence of a "background radiation" and the earth's motion through space; and finally E. W. Silvertooth's standing-wave sensor tests (1987) which showed Earth's instantaneous cosmic motion to be 378 kilometers per second. Detection of the ether medium by optical means is just one of the avenues open to physicists and it has a long and complicated history. There were no headlines or trumpets announcing the Special Theory of Relativity back in 1905. Rather, it was gradually popularized in the science magazines of the 1920's and became accepted in earnest and canonized in the textbooks in the 1930's.

Fields of Force-Static or Dynamic?

As stated before, the student of ether physics considers electric, magnetic and gravitational forces to be effects derived from disturbances of a prime mover, the motional properties of the ether. In orthodox physics textbooks, magnetic and electric fields are drawn as "lines of force"; unfortunately this gives the impression that they are static in nature.

Just how does ether physics help us to see <u>how</u> force fields act? Static lines of force are transformed into dynamic tubes of force and this gives the student (and inventor) something to visualize and grasp mentally. The following rare article explores magnetics as a form of hydrodynamics:

The Secret of the Magnet Poles

By WALTER E. KEEVER

Laws of Motion Applied to Magnetism—

"UNLIKE poles attract; like poles repel." So reads the first law of magnetism—and the ordinances of the Medes and Persians were unstable compared with the laws of Nature. However, a few experiments with permanent magnets will arouse serious doubts in the investigator's mind, until he solves the mystery to the triumph of the law, when the letter will be more firmly fixed in mind than before it was seemingly violated.

Take a piece of soft iron wire about four inches long and fasten one end with a thread to an upright, allowing the free end of the wire to reach within one-quarter inch of the N-pole, say, of a strong permanent magnet. The wire is now floating in a magnetic field (fig. 1, a). Now take another piece of soft iron wire and hold it parallel to the floating wire; one end close to, but not touching, the exciting magnet. When the wire you hold is moved toward the floating wire, the latter is repelled (fig. 1, b). In picking up iron filings or tacks with a magnet you have learned to expect mutual attraction between the induced particles, yet here is repulsion between two soft iron wires influenced by the same pole.

No, the law is not violated. As shown in (c), fig. 1, *like poles are induced* in the two parallel wires; and "like poles repel." Very well. Next, hold the free wire in position shown in fig. 2 (a). The floating wire is now *attracted*. How can this be, when we have just proved that two wires attracted by the same pole repel each other? Note polarity. S-polarity is induced in the end of a soft iron wire brought near the N-pole of a magnet, or N-polarity if brought near the S-pole. When polarity of either kind is induced in one end, opposite polarity simultaneously appears at the other end. Trace the induced polarities shown in fig. 2 (a), and, bearing in mind that "unlike poles attract," the reason for attraction in this case is apparent. Once more the law is upheld. In (b) and (c), fig. 2, other instances of attraction are shown, illustrating the "sticking together" of small objects picked up by a magnet. In (b) the free wire is magnetized *through* the floating wire; in (c), partly through the floating wire and in part directly from the exciting magnet.

Our next experiment requires two permanent magnets, for convenience, though one with a double branched pole-piece would serve. Lay one end of a soft iron strip on one N-pole. It sticks. Approach the other end of the iron piece with another N-pole; you would naturally expect the strip to be repelled. Well, it is—"to a certain extent," as Professor Fox used to say when not desiring to commit himself irrevocably. The condition is shown in fig. 3 (a), with polarities indicated. Broken arrows illustrate opposition of the magnetic forces. But when the free end of the iron strip is pressed down close to the second N-pole, at a certain critical point repulsion is *changed to attraction*, and in a trice we have *both* ends of the strip sticking fast to N-poles! (Fig. 3, b.) Now where is your law of like polarities? Aha! A mutual S-pole induced at the middle of the strip? Not so. *Test with a compass and the iron strip is found to possess N-polarity throughout.* Diagram (c), fig. 3, shows what has occurred—the strip has become a hub, from which the lines of force radiate like the spokes of a wheel, seeking S-polarity at the far ends of the permanent magnets. The mechanical principles involved will be dealt with further along in this article.

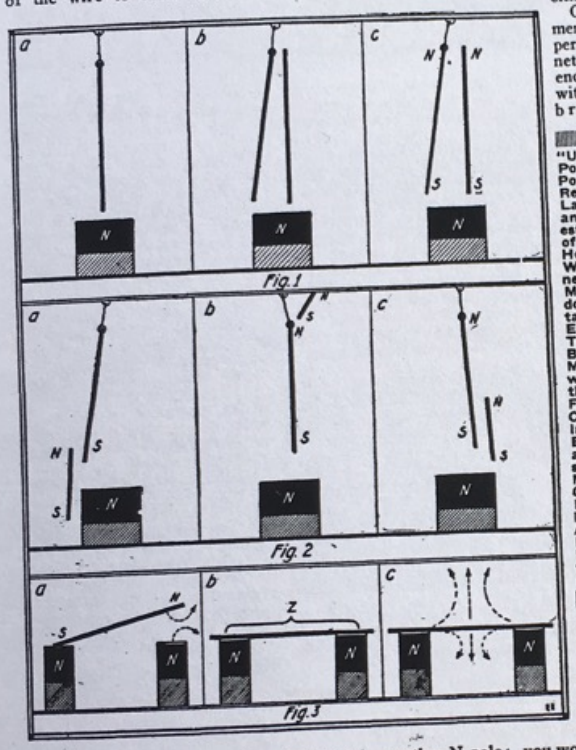

"Unlike Magnet Poles Attract; Like Poles Repel" — So Reads the First Law of Magnetism, and Several Interesting Variations of This Law Are Here Exemplified. What Is This Magnetism Anyhow? Magnetism Is Undoubtedly a Resultant of Continuous Ether-Movement; There May Even Be a Progressive Movement Outward, But the Author Believes This Flow Is Only a Consequence, More in the Nature of an Electric Current, and Not a Constituent Principle. Magnetism Is the Contraction Upon Its Axis of the Ether Vortex. This Article Opens Up a New Avenue of Reasoning As to the Real "What Is It?" of Magnetism.

What *is* this magnetism, anyhow? Conventional representations indicate streams or trains of ether-corpuscles issuing from the N-pole, circling around and re-entering the magnet of the S-pole—each stream a "line of force." Magnetism is undoubtedly a resultant of continuous ether-movement; there may even be a progressive movement outward, but in the writer's opinion this flow is only a consequence, more in the nature of an electric current, and not a constituent principle. Hear ye:

MAGNETISM IS THE CONTRACTION UPON ITS AXIS, OF THE ETHER VORTEX. The free ether in its normal, static condition, is very much like an exceedingly dense monatomic gas, whose particles are vibrating rapidly in all directions—a condition of repulsion or expansion. This condition is continually subject to local modifications due to solar rays, wind-friction, evaporation and condensation of moisture, etc., but it always exists between electrons free to vibrate. Discordant vibration is always repellent. Now, in the pores of magnetic substances like iron, there is no room for sustained vibratory motion, but there are narrow channels permitting circular motion. So the ether corpuscles lose their reputation, "join hands around," and go circling in rings.

Weak magnetism can be regarded as relatively few vortices; when there is one vortex-tube for each channel the iron is said to be "saturated" and its magnetic strength cannot be increased except by cooling (suppressing vibration of molecules), which allows greater freedom to the vortices.

Let us consider one unit vortex, as typical of the whole. In union there is strength: aggregate mass of its component rings gives the vortex tube such momentum that its effect extends some distance from the end of the iron channel. Farther from the iron, resistance of the free ether retards the whirl; the tube shrinks in diameter, tapering to a point; while *friction between succeeding rings* (due to retardation) causes a slight progression on the axis. The point of the tube is thus really a de-

In the Case of the Ether-Vortex, Centrifugal Force Counteracts the Pressure Upon the Radius, While at the Ends or Poles There Is No Centrifugal Force; Therefore the Ether Vacuum Can Be Closed Up Only By Shortening the Expanded Vortex Tubes.

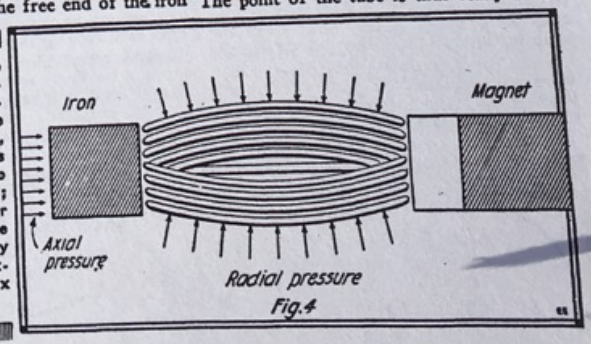

Fig. 1. Visualizing Magnetism.
(Electrical Experimenter. June, 1920)

creasing spiral, disappearing where centrifugal force becomes too feeble to resist the battering of the "free electrons."

The projecting vortices thus vanish "in thin air." But let a piece of soft iron be brought within their field and the "lines of force" find allies in the enclosed electrons, which join the whirls, further increasing momentum. With flywheels at each end, so to speak, the vortex tubes reach across the gap without deminution. Centrifugal force, limited in the rigid confines of the iron channels but free to act in the gap, causes the bridging tubes to expand against the elastic pressure of the surrounding ether, creating an *ether-vacuum* within the tubes. Nature "abhors a vacuum"—or, in other words, a container deprived of any part of its equalizing internal pressure tends to collapse under external pressure. In the case of the ether-vortex, centrifugal force counteracts the pressure upon the radius, while at the ends or *poles* there is no centrifugal force; therefore the vacuum can be closed up only by *shortening* the expanded tubes. (Fig. 4.) The metal pieces at each end of the tubes are thus *forced* together, not "attracted."

Wherefore we repeat, magnetism is the contraction upon its axis, of the ether-vortex.

Polarity is very easily explained under this conception: it signifies simply *direction of rotation*. Take a piece of flexible rubber hose and consider it an ether-vortex. Have a friend rotate the tube in one direction while holding it horizontal. Face one end and you see it turning, say, right-hand or clockwise: call this the S-pole. Go around and look at the N-pole and you find it turning left-hand. It is the point of view that has changed—the tube is still rotating in the same direction as before.

Now take up a tube similar to the first; hold it parallel to the other, and rotate it in the same direction. The N- and S-poles of the two tubes are adjacent—like poles side by side. When the two rotating tubes are prest together, friction is felt. Two wheels revolving in the *same* direction *repel* each other when brought rim to rim (Fig. 5, a).

Join the S-pole of one tube with the N-pole of the other (Fig. 5, b). *No friction* results, because both are revolving in the *same* direction at the *same* speed. But when one of the tubes is turned end for end, and its N-pole placed against the N-pole of the other tube (Fig. 5, c), friction is experienced, because the two N-poles are now revolving in relatively *opposite* directions. (In performing these experiments the two tubes must be kept rotating in the original direction—both of them either right-hand or left-hand as at first.)

Bend one tube until its ends meet; the direction of rotation is the same for the two ends. Here is a "closed magnetic circuit," or a *closed vortex*, which contracts upon its axis by contraction of the circuit.

From the foregoing it will be seen that when two magnetic "like" poles are brought together the vortices are rotating in relatively opposite directions, causing friction; and when "unlike" poles are joined, the vortices are revolving in the same direction, causing *no* friction. Let us see how these mechanical principles agree with the law of polarities. The analogy of the rotating rubber tubes of Fig. 5 is sufficiently clear as regards the experiments illustrated in diagrams 1 and 2. For the mechanical equivalent of Fig. 3, c observe Fig. 6, wherein one pair of the spoke-like lines of force is represented (exaggerated) as typical of the whole. The outer ends of all adjacent tubes rotate in the *same direction*—in this case the N-pole direction (as seen when facing the N-pole). Note rim-friction of adjacent tubes rotating in the same diretcion, causing a tendency for the tubes to spread apart, as becomes clear.

It is easily understood how collisions or glancing blows between particles cause repulsion, but how *lack* of friction permits so-called attraction requires some explanation. Here is the startling answer: THERE IS NO SUCH THING AS ATTRACTION IN THE UNIVERSE. What appears to be attraction is merely the removal, decrease or lack of compensating pressure between the seemingly attracted objects, permitting the constant pressure from without to *force* the two objects together and close up the *vacuum*.

Several other physical laws tend to operate upon these vortices, these lines or tubes of force extending out from a magnet. As observed, rim-friction of the parallel tubes rotating in the same direction tends to spread the tubes apart. Opposed to this spreading is fixity of the axis of rotation.* Due to inertia, a body set in motion resists any change in its direction; in a whirling mass this effect is resolved into planestability, or fixity of axis, strikingly manifested by the gyroscope.

Another effect, hardly so well known, is *precession*. When either pole of a spinning gyroscope (spinning in vertical plane, say) is prest down, the gyroscope seeks to turn at *right angles* to the disturbing force, so as to bring the descending side of its rim into the former position of the deprest pole. If the same pole is prest upward, the *ascending* side of the rim is brought around. This turning at right angles is called the *precession* of the gyroscope (Fig. 7). Precession is also a property of the magnetic vortex, which, mechanically considered, is simply a tubular gyroscope.

Applying this theory to the dynamo (Fig. 8), may we not say that as the lines of force are dragged out of their axis of rotation by the sweep of the armature, precession turns them at right angles, impressing the vortices upon the armature wires as a spiral with both rotation and progression—an electric current!

* Note.—But for this stiffness of the tubes, magnetic repulsion would be imperceptible. It is much weaker than contraction upon the axis.

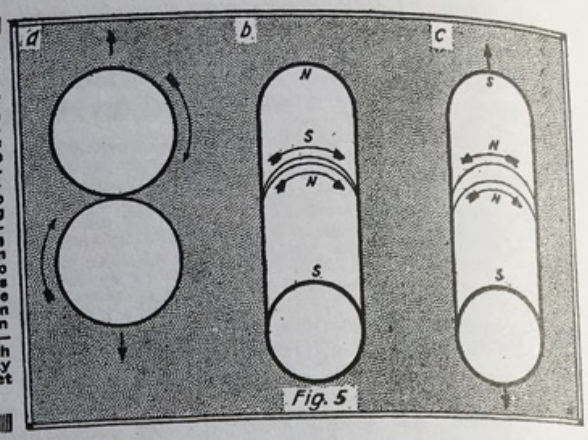

Polarity Is Very Easily Explained Under the "Direction of Rotation" Conception, Shown in Fig. 5. Two Rotating Tubes Are Used to Illustrate This Phase of Magnetism in a Practical Sense. Two Wheels Revolving in the Same Direction Repel Each Other When Brought Rim to Rim, Both Tubes Revolving in the Same Direction Give No Friction Between Them — the Same as North and South Polarity on Two Magnet Poles.

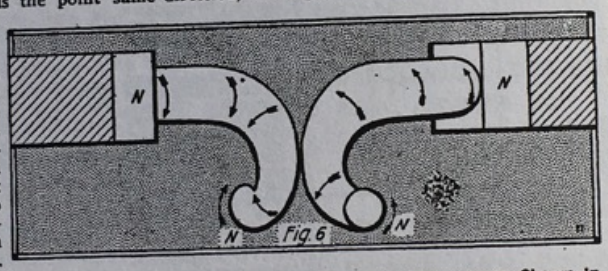

The Mechanical Equivalent of the Magnetic Phenomenon Shown in Figure 3 Is Illustrated Herewith. Note the Rim Friction of Adjacent Tubes Rotating in the Same Direction, Causing a Tendency for Tubes or Vortices to Spread Apart.

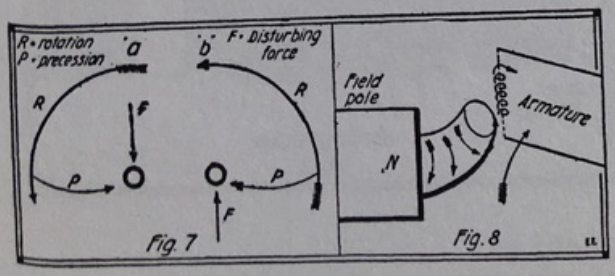

In These Two Diagrams the Author Attempts to Show the Comparison Between the Right Angle Forces of Precession Exhibited by a Spinning Gyroscope, and Those Occurring in the Magnetic Field of a Dynamo When an Armature Cuts Thru This Field.

In concluding part 1, careful research shows that the years 1905 to 1920 saw the development of dynamic ether concepts to their highest point in the science journals and books. Of course, it was no coincidence that it was during this same time period in which most of the individual inventors were busy constructing and perfecting their energy accumulators. Each had a vision of space as a sea of limitless energy, a dynamic space teeming with whirl and zip!

From this viewpoint, their devices were simply tapping existing reserves, not creating energy.

Research References (Part 1)

Cantor, G. N. and Hodge, M. J., Conceptions of ether. Cambridge University Press, London, 1981.

Ebert, Hermann. Magnetic Fields of Force. Longmans, Green & Co., London, 1897.

Einstein, Albert. Sidelights on Relativity. Dover Publications, Inc., New York, 1983. (see page 23)

Essen, Louis. The Special Theory of Relativity--A Critical Analysis. Clarendon Press. Oxford, 1971.

Hertz, Heinrich. Principles of Mechanics, Macmillan and Co. New York, 1899. (see page 22)

Ives, Herbert. American Philosophical Society. Proceedings. "Revisions of the Lorentz Transformations" Vol. 95. 1951. pp. 125-131.

Ives, Herbert. Journal of the Optical Society of America. "Light Signals Sent Around a Closed Path" Vol. 28, Aug. 1938. pp. 296-299.

Livingston, Dorothy Michelson. The Master of Light, A Biography of Albert A. Michelson. Charles Scribner's Sons. New York. 1973.

Maddox, John. Nature. "How Empty is the Vacuum?" Vol. 305, 22 Sept. 1983. p. 273.

Michelson, Albert. Popular Science. "Mysterious Variation in Speed of Light" March, 1934. p. 25.

Muller, Richard A. Scientific American. "The Cosmic Background Radiation and the New Aether Drift" May 1978. pp. 64-74.

Pease, F. G., Science, n.s. "Measurement of the Velocity of Light in a Partial Vacuum" Vol. 81, 25th Jan. 1935. pp. 100-101.

Silvertooth, E. W. Electronics and Wireless World. "Motion through the ether" Vol. 95, May, 1989. pp. 437-438.

Silvertooth, E. W. Speculations in Science and Technology. "Experimental Detection of the Ether" Vol. 10 #1, 1987. pp. 3-7.

Setterfield, Barry & Norman, Trevor. The Atomic Constants, Light and Time. Stanford Research Institute. Menlo Park, CA. Aug. 1987 (ISBN #0-7258-0363-0).

Swenson, Loyd. The Ethereal Aether, A History of the Michelson-Morley-Miller Aether-Drift Experiments, 1880-1930. University of Texas Press, Austin. 1972.

Turner and Hazelett. The Einstein Myth and the Ives Papers. Devin-Adair Co., Old Greenwich, CT. 1979. (English translation of Sagnac experiment, pp. 247-251.)

1506. *Circulation of the Ether in Rotating Interferometer.* **G. Sagnac.** (Journ. de Physique, 4. Ser. 5. pp. 177–195, March, 1914.)—A paper dealing more fully with the author's rotating interferometer described previously [Abstract No. 216 (1914)]. Interference fringes are obtained with two luminous beams propagated in opposite directions round a closed circuit surrounding an appreciable area. When the whole apparatus is rotated, first in one direction and then in the other, photographs of the fringes taken on the same plate exhibit a relative displacement proportional to the width of the fringes and representing a definite phase-difference characteristic of the effect of the motion of the circuit as a whole. This phase difference is quite distinct from any effect due to the accidental or elastic movements of the optical arrangements, and is due to the movement of the circuit as a whole with respect to the ether of space. The effect is just as if an ether wind blew in the immobile circuit in the opposite sense to the direction of propagation and diminished the velocity of the light-waves. Theory is given showing how the effect depends on the area of the circuit, the velocity of rotation, etc., and the experimental measurements are in agreement with results calculated on the supposition that the ether is an immobile fluid transmitting luminous waves with an invariable velocity. Thus this rotating optical effect can be regarded as an effect, of the first order, of motion with respect to the ether, and confirms its existence. A. W.

Fig. 2. G. Sagnac's Experiment, Abstract. (Science Abstracts. A, 1914)

Some Historical Inventions (1901-1945)
(Part 2)

Nikola Tesla's Method of Utilizing Radiant Energy

Mr. Tesla, the greatest electrical engineer of our time, began experiments on penetrating radiations in the atmosphere in the year 1896.

In 1901, he received two patents for utilizing radiant energy. Tesla found that radiant sources of energy such as the sun give off rays of high-speed, highly-charged particles; when these rays fall on a well-polished insulated metal plate of large area, the charges are accumulated as a potential difference with respect to earth. By connecting one pole of a capacitor to the charged plate and the other pole to earth, energy could be stored up over time. The voltage would rise even to the point of rupturing the capacitor. He found the energy stored per unit of time to be proportional to the surface area of the plate exposed to the energetic rays.

See U.S. Patents #685,957 and 685,958, Nov. 5, 1901.

Thomas Henry Moray's Radiant Energy Device

Many years ago an experimenter in Pekin, Illinois wrote in to an electrical magazine saying that by connecting a receiver with a telephone condenser, he could detect discharges in the condenser without any source of electricity nearby.

It was this tiny peculiar phenomenon that also sparked Henry Moray's interest back in 1909. Mr. Moray was an electrical engineer in Salt Lake City, Utah. He was inspired by the writings and experiments of Nikola Tesla and by the work of Dr. Gustav Le Bon, author of <u>The Evolution of Matter</u>.

In 1910, Moray's little circuit was getting enough power to operate small electric devices like a miniature arc lamp. He realized the energy was not static but oscillating in nature and it was not coming from the earth but from the atmosphere.

These oscillations were random surgings of very high frequency; stronger during the day than at night. By

June 1925, the radiant energy device could light a type C 100 watt G.E. lamp.

When perfected, the radiant energy device included an antenna, the Moray valve (a solid-state detector) plus a complex assortment of harmonic couplers, tube amplifiers, high voltage capacitors and transformers, arranged in three stages, and finally a ground wire. Moray's invention trapped and reduced the voltage and frequency of the incoming radiations to produce usable power. It weighed about 50 lbs. total and gave a power output of 10,000 to 50,000 watts. An oddity was that only 30 gage hookup wire was used in the circuits because no resistance heating was produced internally. Thomas H. Moray filed patent application number 550,611 on July 13, 1931 but the U.S. patent office did not grant the patent.

The best summary of the Moray device is found in: The Sea of Energy in Which the Earth Floats by T. Henry Moray, Cosray Research Institute, Inc. Salt Lake City, Utah. 1978.

As the Moray valve is an improvement on crystal detectors, I add a note for those experimenting with crystal and mineral semiconductors.

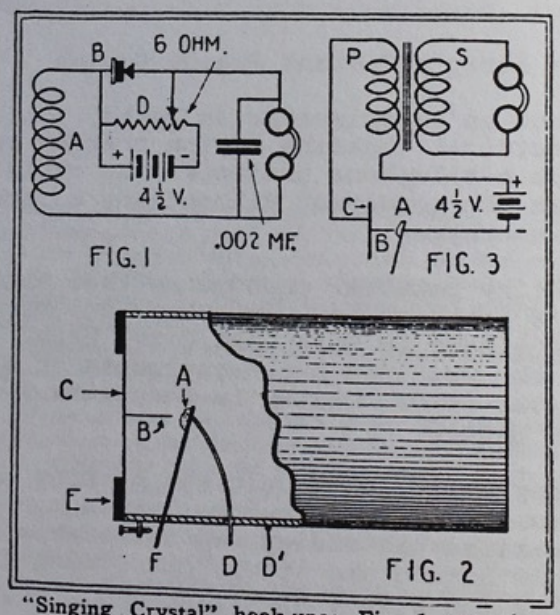

"Singing Crystal" hook-ups; Fig. 1, as microphone; Fig. 3, as reproducer. The adjustments are very critical. Fig. 2 is a section of the apparatus; A, galena crystal; B. needle; C, tin diaphragm; D, lead to crystal; D', lead to metal can; F, hard-rubber support.

Fig. 3. New Crystal Detector. (Radio News. June, 1927)

Figure 3 illustrates the "singing crystal" discovered about 1927.

Within the sketch "Fig. 1", B is the homemade crystal detector used as a microphone.

When the detector is adjusted carefully for light contact between the needle and the galena crystal, a rushing sound like static is heard in the headphones. A sudden noise produces ringing in the phones.

In the detector "Fig. 2", "C" is a 3 inch diameter tin can lid acting as a diaphragm, "E" a metal retainer ring and "B", a sewing needle soldered on. The screw next to "F" adjusts for a light contact with the galena crystal "A".

To use the device as a speaker it is connected to the output of a three tube radio receiver and adjusted for very light contact. Speech from nearby radio stations was clear and loud.

The experiments with the singing crystal detector show how using simple homemade equipment and common materials can sometimes lead to novel discoveries.

U.S. patents related to the Moray device include:
1,245,135, J. Thompson, Oct. 30, 1917.
1,181,901, C. Lenz, May 2, 1916.
1,502,063, W. Schottky, July 22, 1924.

NEW YORK TIMES - Monday, April 6, 1914

Gets Electricity From Air

Spanish Inventor Lights Bulbs at 600 Yards' Distance. By Marconi Transatlantic Wireless Telegraph to the New York Times.

LONDON, Monday, April 6. --According to the Madrid correspondent of the Daily Telegraph, an experiment has just been carried out at Pozuelo, near Madrid, which demonstrates the possibility of extracting electricity from the atmosphere for commercial purposes.

Jose' Yglesias, who recently caused the explosion of dynamite mines by means of infra-red rays, on Saturday succeeded in drawing electricity from the air by antennae mounted in pairs on a wooden tower thirty-three feet high, erected on a high hill.

His apparatus received the electricity at a pressure of 6,000 volts, which was transformed down to 150 volts. Fifteen electric lamps in a house 600 yards away were easily lighted and maintained at full pressure during a prolonged test.

The experimental apparatus of Senor Yglesias is very simple in character, the whole having been constructed inside of a fortnight. The experiments will be continued with the object of ascertaining the full capacity of the installation.

Senor Yglesias says he can obtain directly from the atmosphere enormous quantities of electricity at will, according to the arrangement of the installation.

Among the persons who witnessed the experiments were Count Maceda and others in the immediate entourage of King Alfonso, who were specifically sent by the monarch to watch the tests.

Roy J. Meyer's "Magnetic Absorber"

Electrical magazines in 1912 and 1913 described the invention of convict-inventor Roy J. Meyers, incarcerated in the State Penitentiary at Florence, Arizona. The Meyers transformer consisted of steel plates or discs set in a circle on a high tower. An experimental "absorber" built at the prison, according to Popular Electricity, 1912 operated a 25 horsepower motor. Maximum potential for this device was 8 volts direct current.

A hypothetical absorber 75 feet in diameter on a 200 foot tower was therefore calculated to be sufficient to power the city of Phoenix (year 1912) and the materials cost were estimated to be $1,500.00. One oddity was that power output increased erratically during electrical storms. A sample press release follows:

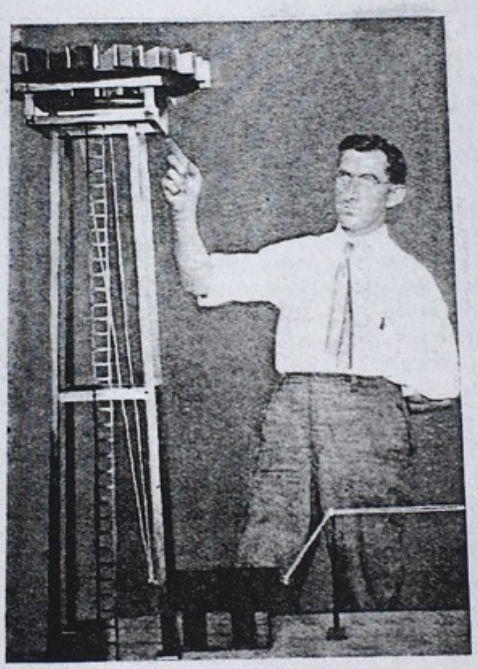

Roy J. Myers the Arizona Convict-Inventor, Who Was Paroled for Thirty Days, While He Went to Washington to Secure a Patent.

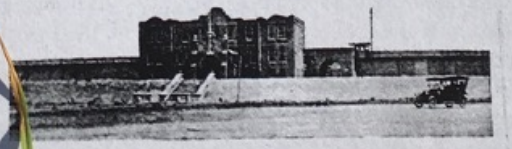

The State Penitentiary at Florence, Arizona, Where Meyers Is Imprisoned.

Fig. 4 (Technical World, 1912; Modern Electrics, 1913

Electricity From Air New Great Discovery

By Dr. Leonard Keene Hirshberg

Working quietly in the heart of Baltimore for weeks on an invention which some critics say will revolutionize the method of converting electricity to practical use has been Roy J. Meyers, who like Benjamin Franklin, extracts the electric current from the air.

Mr. Meyers' invention was made last summer while he was confined in the penitentiary at Florence, Arizona. His first finished apparatus was made in Baltimore.

A practical, unlettered electrician, Mr. Meyers, while in Arizona, was arrested on a comparatively minor charge and sent to the penitentiary. There he was placed in charge of the prison electrical plant, and there he says he made his discovery that the current which the civilized world is beginning to use most extensively for light and power could be transformed from the atmosphere without the aid of moving machines or batteries.

Miss Kate Barnard, Commissioner of Charities and Corrections, of Oklahoma, hearing of Meyers' invention and of his desire to have it patented, appeared before the Arizona legislature to make an appeal in behalf of the young convict. As a result a special bill was passed which granted Meyers a month's leave of absence on parole. He went unaccompanied to Washington, filed his patent applications and returned to the penitentiary. Since then he has been indefinitely paroled.

He came to Baltimore as the place where he could easily obtain the mechanical parts needed to make a more nearly perfect machine than the crude model he had fashioned in the penitentiary workshop, and is making his headquarters here while working on his invention. With him is W.E. Chenot, who has been his assistant in assembling and testing the machine and who says that he has bought Meyers' patent rights for Germany.

They have proved beyond doubt that the invention is practical and that when finally brought to a state of perfection it will introduce a new epoch in the industrial use of electricity. By Westinghouse meters they tested the strength of the current gathered from the air, and with the use of only two of the four rectifying transformers the voltmeter recorded four and one-half volts, and the ammeter, which had the capacity of recording 75 amperes, was broken by the force of the current.

The machine itself is simple. It is in reality a transformer, which is familiar to anyone knowing anything at all about electricity in its practical uses. On a high tripod, which resembles somewhat the framework of a windmill tower, is the transformer, which Mr. Meyers calls his "absorber." It is made up of an iron core, wrapped with copper wire. The secret of the invention is the manner in which the disks composing this "absorber" are magnetized, and this secret Meyers says he found by accident while at work in prison.

What the machine, when finally perfected, will do is yet to be seen. Its inventor claims that it will greatly reduce the cost of making electricity. No batteries of any kind are needed, he says, and not a part of the machine turns upon the other. It is as durable, apparently, as an electric light pole. One of these machines, says Meyers, when perfected may be placed on a vehicle and transform enough electricity to give motive power, be that vehicle a locomotive or an automobile. He declared it can be placed on a building to furnish electric lights or power, and that the only wear will be upon the machinery which its current runs.

Meyers is thirty-four years old and he gained his knowledge of electricity by working in shops along the Pacific Coast. The depths of the mysteries of electricity he has not explored, but he is certain that he has found the means of absorbing it from the air and of converting it to the use of mankind.

The newspaper Arizona Republican of Phoenix, May 1, 1912 reported that Meyers was granted 30 days leave by then Governor Hunt to visit Washington to secure a patent. His crude transformer attracted high voltage electricity from the atmosphere which was reduced to low-voltage direct current at ground level. He emphasized the secret was how the steel plates were magnetized. No U.S. patent was granted on this invention, but mention was made of a possible German patent.

Prison records sent to the writer from the State of Arizona show that Meyers was imprisoned for the crime of forgery in 1911 at the age of 32. He was an electrician from Edgewood, Iowa. His prison record was good and he was given an early discharge on July 12, 1913. He then worked for a while in Globe, Arizona and Baltimore, Maryland.

A possible related effect to Meyer's absorber principle had earlier been noted back in 1904:

"Remarkable Effect of an Aurora Borealis upon an Electromagnetic Pendulum."
(Source: Popular Astronomy, Vol. 12, 1904. p. 288.)

*"In A. N. 3932 Dr. Ernst Hartwig writes of the influence of an aurora borealis, on the night of Oct. 31, 1903, upon an electro-magnetic clock in his study at Bamberg. The pendulum of the clock receives an electro-magnetic impulse from two accumulator cells every minute and, when the cells are in order, has a constant rate through the year. On this night, however, the pendulum was accelerated in an extraordinary manner, as if the accumulators were over charged. On the morning of Nov. 1 Dr. Hartwig found the clock violently disturbed, the pendulum striking on both sides of the case and the hand pointing several hours and perhaps over a whole revolution ahead, while because of the too violent swing several seconds-intervals were skipped at a time. The accumulators had not been charged for several days past, so that it must have been an earth-current resulting from the aurora which produced the disturbance."

*A. N. refers to the journal Astronomische Nachrichten, Berlin.

Two U.S. patents worth noting in the Meyer's case are:
#1,112,411 by R. Ackley, Sept. 29, 1914.
#1,411,243 by M. Favre-Bulle, Mar. 28, 1922.

POPULAR MECHANICS

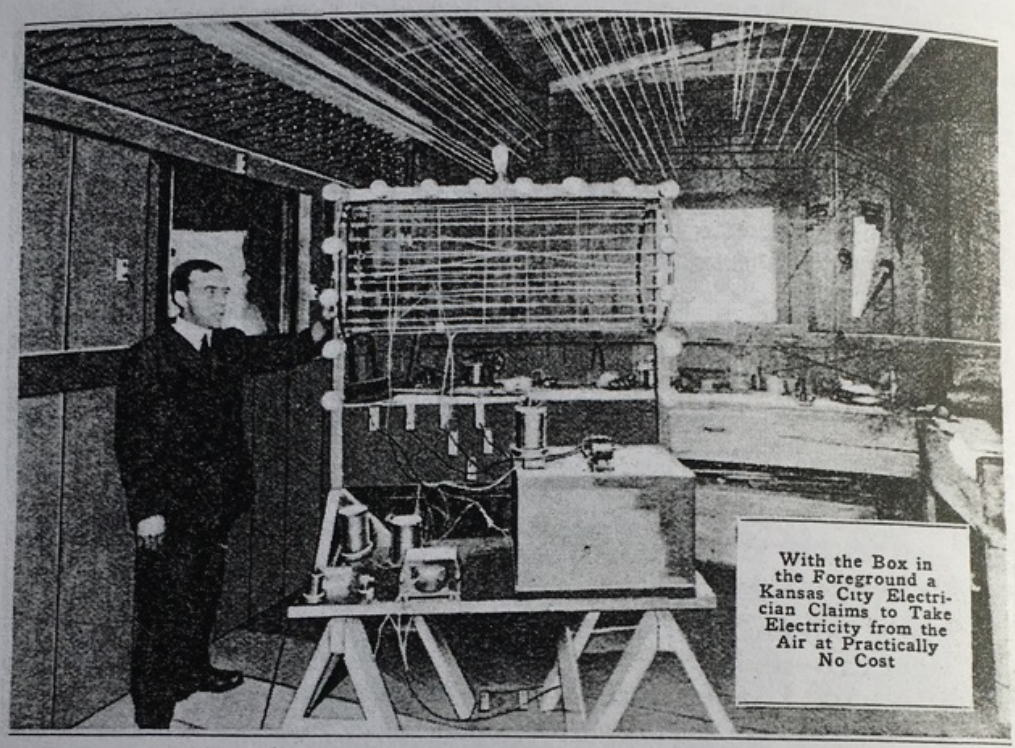

Fig. 5 The Early Form of the "Perrigo" (Popular Mechanics, 1916)

"An invention which its originator claims will make electricity almost as free as air has been produced after four years of experimenting. The inventor is a Kansas City, Mo., man who has been a practical electrician many years and in recent months has devoted considerable means and practically all his waking hours to constructing what he calls an electrical accumulator. This device consists of a box not more than a foot in each of its dimensions, in which are various connections and coils. The apparatus, he claims, collects and stores electric energy from the air, which by transformers can be reduced to

suitable voltages for various purposes, such, for example, as supplying a lighting circuit.

Since no details of the invention have been given out nor any public demonstrations given, it is, of course, impossible at the present time to form an opinion as to its practicability." (Popular Mechanics, 1916.)

Harry E. Perrigo, graduate from Massachusetts Institute of Technology in electrical engineering, got his idea back about 1911 while working on a power plant dynamo in Peedee, South Carolina. The dynamo was disconnected from any power source but still Harry got shocked by one of its wires. He reasoned that electricity so produced might be accumulated and condensed for power without any moving parts!

The idea sat incubating in the inventor's mind until it finally hatched early in 1915. The shops were closed so Perrigo scurried around the house gathering up supplies. Using several strands of copper wire, two embroidery hoops, a leaf from the dining room table, a breadbox from the pantry, a sheet torn into strips; with shingle nails and paraffin, Harry and Mrs. Perrigo made the first energy accumulator. And it worked!!

By noon the next day, electric lights and a small motor were worked by power developed from the crude jumble of wires on the dining room table.

By 1916, Perrigo's workshop was strung with a long network of wires overhead, the wall was driven full of shingle nails, each wound with copper wire. (See Fig. 5). While the accumulator worked, it was bulky and significantly, passing air currents, fanning the machine by hand and passing people would increase its power; power decreased when the air was calm.

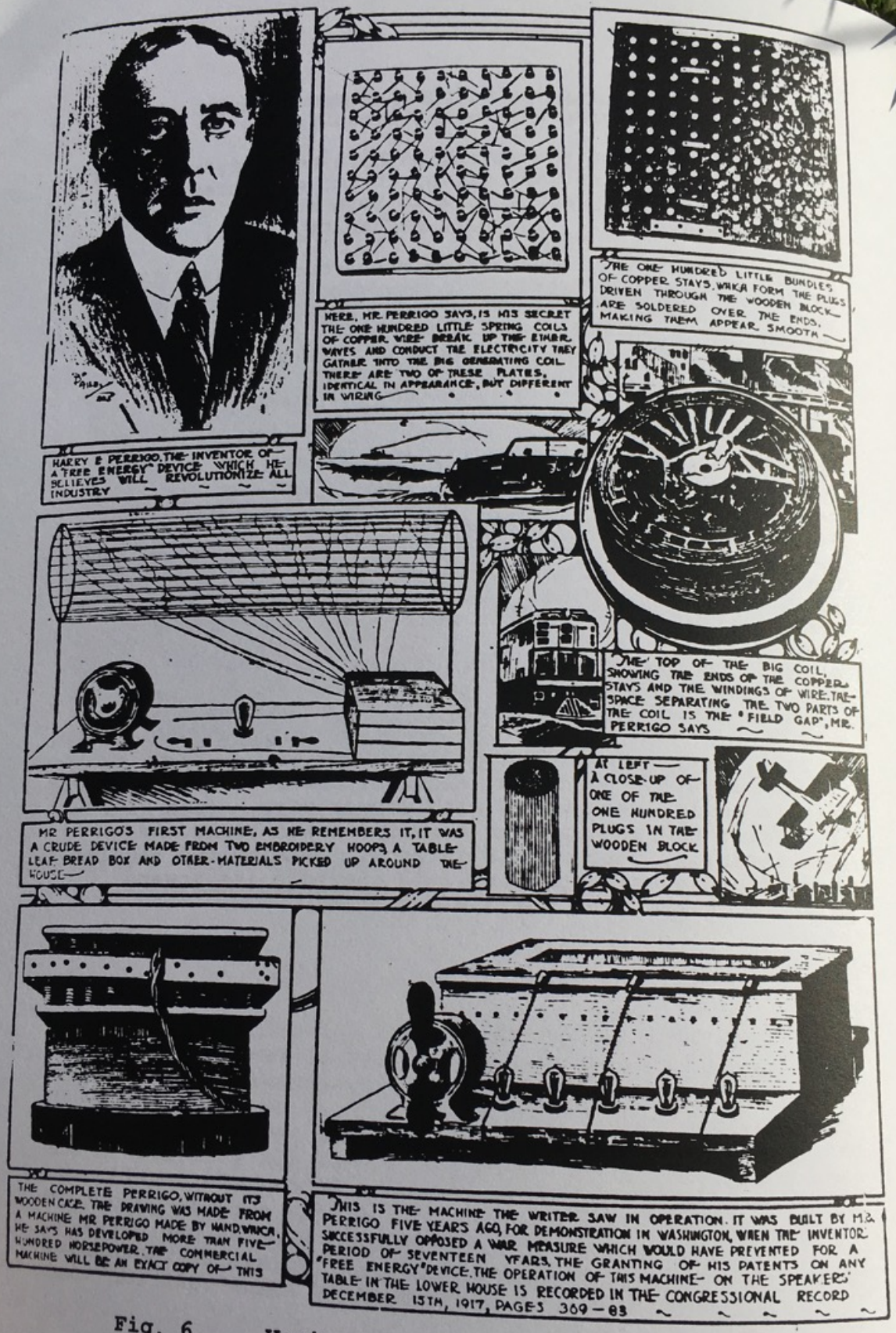

Fig. 6 Various Stages of the Invention.
(Kansas City Star, Jan. 15, 1922)

By 1922, the completed Perrigo, seen in Fig. 6, was a small compact mass of copper wires. This consisted of only four parts - a couple of lead plates, a wood block between the plates and a big coil of copper wire below.

The big coil was ten inches diameter, four inches high and solid copper. Silky fine copper wire, the thickness of a thread used for sewing buttons (about .002"-.004" diameter), was wound tightly and smoothly in several layers on to copper "plugs". As shown (Fig. 6), each plug had a bundled core of copper wires, each about the diameter of a toothpick but longer. Both ends of these plugs were soldered over to give a smooth contact surface.

A one inch thick wood block, one foot square had one hundred such plugs run half-way through. Each square lead plate had one hundred round protrusions exactly spaced for the copper plugs.

These lead knobs were also wound with the same fine wire. The one hundred coils were connected up in a maze of devious connections by trial and error to give a maximum voltage between coils and plugs. The wiring connections for the top lead plate were different than for the bottom plate; each copper coil on the lead plates touching the end of a soldered-over copper plug in the wood block, making a contact. That was the "Perrigo" according to eye witnesses in 1922. The one foot square unit which weighed 87 1/2 lbs., had no moving parts, yet was seen to light forty-five 100 watt light bulbs without any flickering. Perrigo claimed its capacity to be 500 horsepower (373,000 watts) but this was never demonstrated.

Apparently a high voltage was developed between the two lead plates which, passing through the transformer coil seen below, had its voltage reduced and its current increased for domestic use. By a slight change in those interconnections, Mr. Perrigo could produce a different voltage in either direct or alternating current.

The only meager explanation the inventor provided was that his device "condensed" electricity from the air by "breaking up the ether waves." The coils on the lead plate protrusions did it and he alone knew why. The secret was in those devious connections.

In a later interview, August 7, 1927, he expounded the theory that the earth's revolution sets up a form of electric currents; these currents are forever present in the ether. His big idea was to capture these electrical

impulses in almost the same way a radio antenna picks up broadcast waves. His circuit acted like the windings in the "dead" dynamo back in Peedee; the movement was supplied by the earth.

A working model of the device was demonstrated to members of the 65th U.S. Congress. (See Congressional Record, 65th Congress, 2nd session. Vol. 56, part 1, 1918, page 363, Dec. 15, 1917.) The patent application was apparently applied for on Dec. 31, 1925 and assigned the serial number 78,715. It was likely classed as a perpetual motion machine and disqualified.

In August, 1927, a "Perrigo" powered electric car was demonstrated in Kansas City. On close inspection a hidden battery was found but its size, 10 inches by 13 1/2 inches by 14 1/2 inches was figured by engineers to be insufficient to power the heavy car exclusively. August 10th newspapers reported a second test of the car in which a search revealed no batteries whatsoever. Harry Perrigo's health had been poor during the previous year and he apparently suffered a nervous breakdown at this point.

The quality of the electricity from a Perrigo was just as described for the Moray device: a large number of lights could be powered by tiny hair-like wires which were cool. Light bulbs were said to have a "clear brilliance" to them without the ordinary haze. This invention should be judged in context with the other discoveries mentioned in this booklet.

One device of interest is U.S. patent #1,826,727, Chancy J. Britten. Oct. 13, 1931.

C. Earl Ammann's Cosmo Electric Generator

"MYSTERIOUS INVENTION"

"'The Hubbard Energy Transformer' brought back to me exciting memories of another inventor. In 1918, while doing painting and decorating, I was hired to paper several bedrooms in a large two-story house. While at this work I went down to the back porch to pick up some materials. I happened to glance at the light meter and saw it was not moving.

"I opened the fuse box and saw the main power fuses had been removed. It took only a minute to make sure the line had not been tapped beyond the meter.

"The only member of the family at home at the time was a young man in his early twenties. I asked him, 'Earl, where do you get your juice? I noticed it does not come from the power lines.'

"'Come along and I will show you,' he said. He led me up to the attic. He placed some steel bars on a work table and picked up a coil which looked like a loose coupler. After placing the coils on the steel rods he connected one wire to a door bell. Then, with the other wire, he touched the opposite terminal. The bell rang with great force and there was quite a spark, too.

"I picked up the coils to make sure there was no contact with other appliances. I could see right through them. There was no battery inside. The bell rang just as vigorously. The wire was iron.

"In the basement Earl had what he called an Activator Transformer, the size of two fists, which had to be within 10 miles of the radius of the generator coils. The activator was not in contact with any visible wires or appliances. It was activated by the electric currents which surge around the earth and activate the compass needle. But cutting into these currents, Earl said, we can obtain unlimited power.

"A year later Earl demonstrated his Cosmo Electric Generator in Denver. He had placed two copper spheres on the front fenders of his car in place of the headlights. From these copper spheres he obtained enough power to drive that old jalopy all over Denver as reported in the Denver Post at the time.

"While Earl was demonstrating his invention all over the streets of Denver, the power had been shut off in the foothills. In spite of this, when he went to Washington, D.C., shortly afterward to try to obtain a patent on his Cosmo Electric Generator, he found that charges had been filed against his claiming he had a device to steal power from the power lines."--K. H. ISSELSTEIN, Spokane, Wash.

(The preceding was from FATE Magazine's, October, 1956, "Report for the Readers" -- pages 123-125.)

DENVER MAN INVENTS GENERATOR THAT TAKES ELECTRICITY FROM AIR AND PROPELS AUTOMOBILE

Believes He Has Apparatus That Will Revolutionize Power and Lighting and Gives it a Test on Streets of City

---

Has an invention been made that will revolutionize the electrical world? Will the apparatus conceived by a Denver man light buildings, run automobiles, battleships, power plants by the unlimited supply of electricity in the air? Denver electrical experts say "yes" and the young inventor, C. E. Ammann, Monday demonstrated his invention by attaching it to an old automobile and running it about the city.

An atmospheric generator is the name of Ammann's apparatus. It is a compact, cylindrical object with two small brass spheres protruding from the top. Inside, Ammann says is an arrangement of steel wires and minerals, so fixed as to draw the electricity from the air, condense it and utilize it for driving power.

The automobile which Ammann used for his demonstration Monday was the body and chassis of an electric vehicle. There are said to be no batteries in the car. It propelled itself with remarkable speed at a touch of the foot, climbed hills and glided through a maze of traffic under easy control.

CAREFUL TO CONCEAL HIS INVENTION

When asked by skeptical persons if he had a storage battery concealed inside of the power cylinder, Ammann said:

As badly as I would like to show the inside of my invention I can't, for I have not yet obtained the patent rights. It would be exposing the result of seven years of work to open the cylinder. I leave for Washington this week to obtain the patent rights. When I return I will gladly show everything and I can only say, wait until then and time will tell.

"I have bucked every law of the textbooks to perfect the invention. It appears on the order of the wireless telephone but it is decidedly different, except that the

electricity is derived from the air. It will run anywhere except under water.

The automobile is only a simple test. The generator will light buildings, furnish an inexhaustible supply of power for airplanes, do away with steam turbines, and, in fact, propel any kind of an engine [motor]."

J. N. Davis, the proprietor of the Davis Electric Garage company, at 921 East Fourteenth Avenue, and one of the oldest electrical men in Denver, made a thorough study of the generator.

ELECTRICAL MAN HAS FAITH IN IT

"I believe that Mr. Ammann has at last made the invention which will revolutionize power," Mr. Davis said. "Of course, we don't know what is inside of the generator and the inventor would be foolish to show us. We have long known that certain minerals exist, which if properly arranged together, would furnish power. That, in substance, according to the blueprints of the invention, is the basis of the whole thing.

"If the generator has been perfected to the extent that it will propel an automobile, the rest of its work is assured. It will be the greatest invention of the age. The electricity obtained from the air, first passing through the generator, would be available for any use."
So impressed was Mr. Davis that he offered the use of his building for Mr. Ammann's headquarters. Ammann, who is but 28 years old, came to Denver from Spokane, Washington. He is an electrical engineer and lives at the Argonaut hotel.

*Note: C. E. Ammann and "Earl" are the same inventor.

In connection with Mr. Ammann's generator, the "loose coupler" mentioned in the previous article was a tuning inductance coil common in radio receiving circuits about the time of World War I. Normally the loose coupler used cylindrical coils of copper wire but the War made copper scarce. By building his loose coupler with <u>iron</u> wire instead, Ammann might have discovered a phenomenon not noticed before by other wireless experimenters. C. E. Ammann's generator reminds us of the coherers and crystal detectors used in the early days of radio science.

Anonymous Inventor From France

In Figure 7, well insulated aerials, coils, transformers, and batteries of a device for gathering electricity from the air are shown. This photo and a brief paragraph constitute the only notice found in the journals.

The odd-looking setup included aerials branched in a way so that one points toward the zenith and the other toward the south. To initiate electricity from the air to flow into the circuit, positive and negative charges are sent through the aerial. This is stopped once the current in the circuit is strong enough to light a lamp.

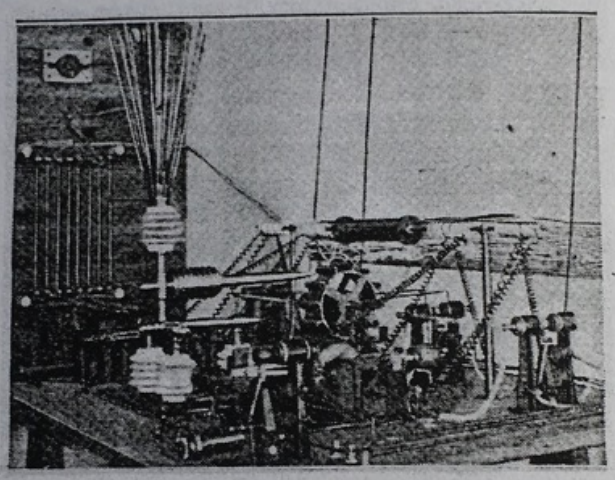

Fig. 7 Anonymous French Invention, Photo (Popular Mechanics, 1924)

This invention is similar to the Yglesias receiver (which used pairs of antennas), and to the Moray receiver which also needed initial charging, but with magnets instead. The white porcelain insulators in Figure 7 tell us the incoming electricity was of high voltage.

Hans Coler

A most significant government document, which covers the work of German technician, Hans Coler, has been located in the British Intelligence Objectives Sub-Committee Reports. This research in Germany extended from about 1926 to 1945.

The author has not been given permission by the British government to re-publish the full thirty-page report, but it can be obtained by writing to:

Imperial War Museum
Lambeth Road
London
SE1 6HZ
(United Kingdom)

Request copying cost for B.I.O.S. Report #1043, Item #31, concerning Hans Coler.

Coler's most important discovery concerning the nature of magnetism was that Ferro-magnetism is an oscillating phenomenon, of a frequency approximating 180 kilohertz. This oscillation took place in a special magnetic circuit within his apparatus which induced electrical circuit oscillations whose frequency was determined by the components used. An electric tension was gradually built up at the output side of the Coler device. Sample pages from the report follow.

B.I.O.S. FINAL REPORT NO. 1043
Item No. 31.

Copy No. 242

~~CONFIDENTIAL~~

Unclassified in Accordance
with File No./75/02

Min. Tech. TJL(G)

THE INVENTION OF HANS COLER, RELATING TO AN ALLEGED NEW SOURCE OF POWER

This report is issued with the warning that, if the subject matter should be protected by British Patents or Patent applications, this publication cannot be held to give any protection against action for infringement.

~~CONFIDENTIAL~~

BRITISH INTELLIGENCE OBJECTIVES SUB-COMMITTEE

~~CONFIDENTIAL~~

TABLE OF CONTENTS

		Page No.
I.	Object of Visit and Summary	1
II.	Historical Notes	
	1. The "Magnetstromapparat"	1
	2. The "Stromerzeuger"	2
III.	Report	
	1. Interrogation of H. Coler	3
	2. Interrogation of F. Modersohn . . .	4
	3. Construction and Testing of the "Magnetstromapparat"	5
IV.	Conclusions	6

APPENDICES

Appendix I	Details of Stromerzeuger	7
II	Report by Professor Kloss	9
III	Report by Professor Schumann . . .	15
IV	Report by Dr. Frohlich and Coler to O.K.M.	20
V	Report to Coler on Frohlich's Experiment	29

Figures 1-4

Personnel of Team

R. Hurst, Ministry of Supply
Captain R. Sandberg, Norwegian Army

The Invention of Hans Coler relating to an alleged new source of power

I. OBJECT OF VISIT AND SUMMARY

Coler is the inventor of two devices by which it is alleged electrical energy may be derived without a chemical or mechanical source of power. Since an official interest was taken in his inventions by the German Admiralty it was felt that investigation was warranted, although normally it would be considered that such a claim could only be fraudulent.

Accordingly Coler was visited and interrogated. He proved to be cooperative and willing to disclose all details of his devises, and consented to build up and put into operation a small model of the so-called "Magnetstromapparat" using material supplied to him by us, and working only in our presence. With this device, consisting of only permanent magnets, copper coils, and condensers in a static arrangement he showed that he could obtain a tension of 450 millivolts for a period of some hours; and in repetition of the experiment the next day 60 millivolts was recorded for a short period. The apparatus has been brought back and is now being further investigated.

Coler also discussed another device called the "Stromerseuger," from which he claimed that within an input of a few watts from a dry battery an output of 6 kilowatts could be obtained indefinitely. No example of this apparatus exists today, but Coler expressed his willingness to construct it, given the materials, the time required being about three weeks.

Opportunity was taken to interrogate Dr. F. Modersohn who had been associated with Coler for ten years and had provided financial backing. He corroborated Coler's story in every detail.

Neither Coler nor Modersohn were able to give any theory to account for the working of these devices, using acceptable scientific notions.

APPENDIX I

Summary account of the "Stromerzeuger"

1. The basic principle is that an electron is to be regarded not only as a negatively charged particle but also as a South magnetic pole.

The basic element is that an open secondary circuit, capacity loaded, inductively coupled to a primary circuit. The novel feature is that the capacities are connected to the secondary core through permanent magnets, as shown:-

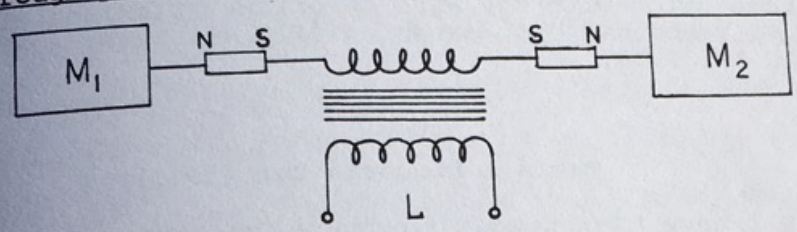

It is claimed that, on switching on the primary circuit, "separation of charges" takes place, i.e., M_1 becomes + vely charged and M_2 - vely charged, and that these charges are "magnetically polarised" when they are formed, owing to the presence of the magnets. On switching off the primary circuit a "reversing current" flows in the secondary, but the magnets "do not exert a polarising effect on this reversal."

2. Two of these basic elements are now placed together making a double system or stage with the plates close together in parallel planes as shown:-

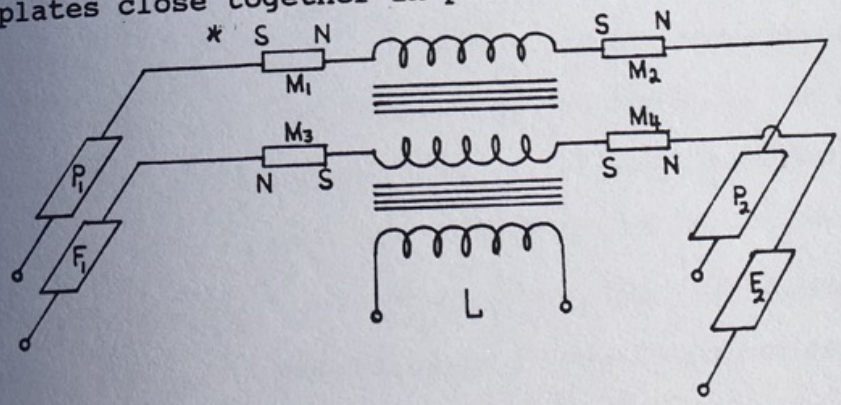

The secondary windings are both exactly equal and wound in a direction such that on switching on the primary coil the electrons in the secondary coil flow from P_1 to P_2 and F_1 to F_2.

*note: An error appears to exist in the second sketch of two element circuits. Above magnet "M_1" the polarities have been switched. These should be reversed to agree with the basic element sketch. Copying errors often appear in such publications.

The reader is encouraged to order the entire report for complete details.

Mr. Coler's discovery has similarities with Roy Meyer's magnetic absorber and perhaps C. E. Ammann's use of iron and steel in his generator.

In connection with the Hans Coler invention see also the before mentioned U.S. patent #1,112,411 by R. Ackley. Sept. 29, 1914.

Tesla's Electric Car (1931)

While I have been unable to trace the source for the following interview, there are elements in this fascinating story that ring true with the other cases in this booklet, therefore it was decided that it should be included.

Information about an invention by Dr. Nikola Tesla, which is said to have harnessed cosmic energy.

The following is a summary of an interview on 16 September 1967 of Peter Savo, nephew of Dr. Nikola Tesla, by Derek Ahlers, an aeronautical engineer. An attempt was made to record Peter's answers to 36 questions prepared in advance. However, Peter talked very freely, in a somewhat rambling fashion, and repeatedly provided the answers before the questions were asked. In addition, since Mr. Savo and Mr. Ahlers have known each other for some ten years, the subject had previously been discussed and some of this earlier information is included.

Peter Savo was born in Knin, Yugoslavia, just before the turn of the century. As Yugoslavia was then a part of Austria, he entered the Austrian army and learned to fly at the military flying school at Wiener Neustadt. After World War I he emigrated to Italy.

Dr. Nikola Tesla was Peter's uncle on his mother's side. It was he who suggested that Peter come to the U.S.. He met Peter at the boat on arrival and seemed to have taken a fatherly interest in him until his death. Peter lived in New York for a number of years when he first arrived and then moved on to Detroit. He became well established in the Yugoslav community there and at one time rallied their vote behind some political figure who in turn got Peter a job as foreign trade specialist at the U.S. Embassy in Belgrade and later in Bucharest. Peter

was captured by the Nazis, "interrogated", and later repatriated. In the postwar years he lived in New York.

Sometime in 1931, Dr. Tesla took Peter to Buffalo, New York, for the unveiling and final testing of a new kind of automobile. Dr. Tesla acted somewhat mysterious about it, would tell Peter nothing in advance, and, even after he had seen the car, answered some of his questions with, "Don't ask any questions."

The car turned out to be a standard Pierce Arrow, with the engine removed and certain other components installed instead. The standard clutch, gear box, and drive train remained installed.

Under the hood there was a brushless electric motor connected (in place of) the engine. The motor was said to measure 40" long by 28" diameter. However, some of these figures may be estimates. Tesla would not divulge who made the motor.

Set into the dash was a "power receiver" consisting of a box measuring about 24" long by 10" wide by 6" high containing 12 radio tubes. Three of these tubes were model 70-L-7. A vertical antenna, consisting of a 6 ft. rod, was installed and connected to the power receiver.

The receiver in turn was connected to the motor by two heavy, conspicuous cables. Two "spindles" (rods?) about 1/4" dia. by 3" long protruded from the receiver toward the driver. Tesla pushed these in before starting and said, "We now have power." These spindles were in line with the two power cables

coming out of the back of the unit and presumably worked two separate power switches. There was a 12-volt Willard battery installed in the car, but it was for the lights only and much too small to run the car. In any case, the motor was an AC motor.

Peter said that Dr. Tesla built the power receiver himself in his hotel room and carried it to Buffalo. The motor was built for him by some unknown company. The motor was completely enclosed and when Peter first saw it, it was stopped. Later, after the engine was running, Dr. Tesla asked Peter to look under the hood to check whether the fan was running. Peter asked what the fan was for and was told that "the engine is running pretty hot". Maximum engine speed was 1800 RPM. Power rating was 80HP.

To start the car, Dr. Tesla handed Peter an ignition-type key. Peter inserted and turned it and a green light came on, on the dash. Dr. Tesla thereupon said, "The engine is now in motion." The engine could not be heard from the driver's seat at all. When listening under the hood with the engine on, there was a slight hum. The standard accelerator pedal was used to control engine speed. Clutch, brake, and gearshift were unchanged.

The instruments on the dash appeared to be standard ones. However, there was a voltmeter which was used to measure power output of the receiver. Dr. Tesla commented that the receiver had enough reserve power so that you could drive the car next to a house, connect the wiring, and light up the whole house. There was also some kind of hydraulic pressure gauge on the dash.

Peter asked its purpose but Dr. Tesla would not tell him.

Peter drove the car for about 50 miles at speeds up to 90 mph (the speedometer was calibrated to 120 mph). Power seemed at least as good as the normal Pierce Arrow engine. Acceleration in second gear seemed particularly good. Shifting gears seemed somewhat smoother than with a normal engine.

Tesla seemed enthusiastic on the first test ride and said, "Peter, this day will make history!" When Peter questioned the source of the energy to drive the car, Dr. Tesla said, "It is a mysterious radiation that comes out of the ether (an expression of the 1930s referring to what is now called "outer space"). He said that he did not know where it came from but that it seemed to be available in limitless quantities and that mankind should be thankful for it; it would soon drive boats, cars, trains, and planes. Dr. Tesla and Peter spent eight days in Buffalo testing the car. Peter described one incident where they stopped the car at a traffic light and a bystander commented that he could see no smoke coming from the exhaust. Peter replied to him, "We don't have an engine." When they left Buffalo, Dr. Tesla removed the "ignition" key and the radio tubes and took them with him. The car was left at a farm house some 20 miles from Buffalo, not far from Niagara Falls.

The car was kept under tight security and this was the reason for keeping it at a remote spot. Peter heard a rumor that a secretary of Tesla's broke security and told General Electric

about it and promptly got fired. Dr. Tesla acted somewhat mysterious and would not answer many of Peter's questions. However, Peter considers this merely part of security measures and categorically ruled out any possibility of a hoax or practical joke.

Peter knows of no specific persons to whom the car was shown. However, about a month after the Buffalo trip, he got a phone call from Dr. Lee De Forest who asked him, "How did you like that car?" Peter expressed his enthusiasm and De Forest then called Tesla one of the greatest living scientists.

About seven years ago, Peter was approached by a Yugoslav diplomat then at the United Nations (Peter could not remember the name but has a record of it) who asked him if he could find the engine and power receiver of that car. He dropped the name Rockefeller and said that they "could make millions" if they had this engine to copy. Peter made some attempts to comply, but without results. Peter was very anti-Tito and probably did not try very hard. The diplomat died about two years ago.

Asked whether he knew of any other applications of this type of power, Peter said that Tesla was negotiating with some big shipbuilding concern to build a boat with such an engine. However, when he asked questions about this, Dr. Tesla got annoyed and Peter never found out who the company was.

When asked whatever happened to the car, Peter said that he had heard that it had been shipped to Yugoslavia. However, he

has written to friends in Yugoslavia about this and they replied that nothing ever arrived.

Upon being asked whether there was any possibility that drawings of the car might be in existence somewhere, Peter said that there was a man in some town in Pennsylvania who might just have some such information.

Peter Savo is a lonely, bored old man, living in a cheap Manhattan hotel and is supported by his two sons who were U.S. Navy pilots in Viet Nam. His idleness and worries have induced a nervous condition with certain accompanying physical symptoms. I told Peter that he needed an aim and purpose in life and that reconstructing the facts of Dr. Tesla's invention and giving them to the world would be such a purpose, to say nothing of a probable financial reward. Peter thereupon said that he would phone the man in Pennsylvania and would phone others in Akron, Ohio, and in Chicago. He will also write to his relatives in Yugoslavia, who are surviving members of the Tesla family, to get all possible information.

Since Peter was poorly off financially, I gave him $20 out of my own pocket for the phone calls and postage. Peter is quite intelligent but lacks a formal education and has quite a thick accent. It is possible that he may be unable to reach the people he has in mind. However, in that event, it is still possible that a search by an experienced investigator who visits the places mentioned above might locate them. However, this

would of course cost more money and the question would then arise as to who has sufficient interest in this information to pay the expenses.

The Dr. Lee deForest named in the article was very famous in radio history and pioneered the development of the radio receiving vacuum tubes in the 1920's.

The International Radio Tube Encyclopedia, 1949 does list a vacuum tube #70L7-GT as a radio receiving tube.

Tesla's receiver sounds similar to T. H. Moray's device which used tube circuits as amplifiers in several stages. No doubt Tesla knew of Moray's work as it was well-publicized with many witnesses.

One reason that Nikola Tesla, the "Dean" of American inventors, has been ignored by the textbooks was his insistence on recognizing the ether and his open criticism of the philosophy behind relativity, which was quite in vogue by the 1930's in the orthodox schools of physics.

If his electric car was developed as stated, he was fully justified in his unpopular views.

Conclusions
(Part 3)

If any two of the preceding eight inventions were genuine discoveries, it follows that fundamental revisions in the underlying foundations of physics are called for. This means there are important first principles still begging for recognition which, when added, will broaden the base on which modern science rests. This implies that power technologies developed from the new physics would be simpler, less exotic, more dependable, and do little or no damage to the environment.

Several specific questions arise which physicists and inventors need to address in their experiments:

Are electric, magnetic and gravitational fields static or dynamic? If dynamic, may "action-at-a-distance" be replaced with hydromechanical modeling?

What is the nature of atmospheric electricity and what causes earth's electric potential to be maintained?

Is vacuum space an empty void or is it seething with energy?

To synthesize from the handful of discoveries described in this booklet, the properties of space energy which manifests as electricity include high voltage direct current impulses or surgings following each other in rapid succession and greater strength during daylight hours, in windy weather or at elevated sites. This natural electricity seems closely related to radio "static" disturbances (also called atmospherics). Wire conductors of very small diameter can transmit considerable power without heat.

It is heartening to note that the inventions are as individual in design as their inventors so there can be considerable variation in circuit layout. Most use common non-exotic hardware: copper wire, high voltage capacitors and magnets.

> Those who are inclined to remain comfortably remote as armchair skeptics should remember that while it is easier to ridicule than to investigate, it can never be as profitable.

I close with a quote:

> **"Ere many generations pass our machinery will be driven by power obtainable at any point in the universe. . . .it is a mere question of time when men will succeed in attaching their machinery to the very wheelwork of nature."**
>
> **--Nikola Tesla**

Happy experimenting!

Research References & Patent Searches

*Dukas, Helen. Albert Einstein, Creator & Rebel. NAL/Dutton, 1973. (See page 257.)

Edwards, K. E. Radios that work for free. Hope and Allen, Belmont, CA. 1977.

*Einstein, Albert. Letters to Solovine. Philosophical Library. 1987. (See page 111, letter dated March 28, 1949.)

Le Bon, Gustave. The Evolution of Matter. Walter Scott Publishing Co., London, 1910. (Inspired Moray's work.)

Phillips, Vivian. Early radio wave detectors. The Institution of Electrical Engineers, London. 1980.

Wright, H. C. Experimental Antenna Topics. Electronics Technology Today, Massapequa Park, NY. 1991.

New York Times. "Experts See Peril to Electricity From Sun." Sunday, July 29, 1990. page (A)14.

*Both books record Einstein's doubts in later years.

A printed listing of all patents of a particular type may be obtained at nominal cost from the U.S. Patent Office. Each listing requires both a class and subclass number. For example, to get a list of all patented crystal detectors, you would request class #329 (Detectors) and subclass #205R (solid material).

Other useful listings include:

#329-100 (Detectors, Coherer type)

#343-700R (Radio wave, General Antennas)

Patent copies may be ordered from:

U.S. Patent Office
Washington, D.C. 20231

In researching recent physics journals and newspapers for information on the properties of space, the word "ether" is still taboo; it has been replaced with the following keywords:

- neutrino flux
- gravitons (a quantum unit of gravitation)
- virtual particles or photons
- zero-point energy
- cosmological constant

Material Supplies for Experimenters

Edmund Scientific Co., 101 E. Glocester Pike, Barrington, N.J. 08007-1380. Supplies magnets.

Jerryco, Inc., 601 Linden Place, Evanston, IL 60202. General surplus for experiments.

Minerals Unlimited. P.O. Box 877, Ridgecrest, CA 93555-0877. Supplies raw minerals for detector research.

Modern Radio Labs, P.O. Box 14902, Minneapolis, MN 55414. *Best one stop source for crystal radio parts and booklets on this rare subject.

MIDCO. P.O. Box 2288, Hollywood, FLA 33022, Sells crystal sets, parts, plans, kits and books; Catalog $1.00.

Antique Electronic Supply. 6221 S. Maple Ave. Tempe, Az. 85283. Sells crystal sets and parts.

For those wanting to wind their own homemade coils, I include an idea sketch:

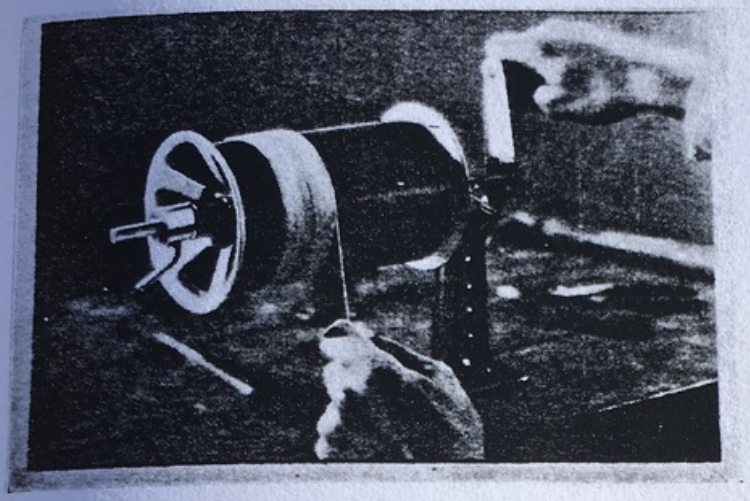

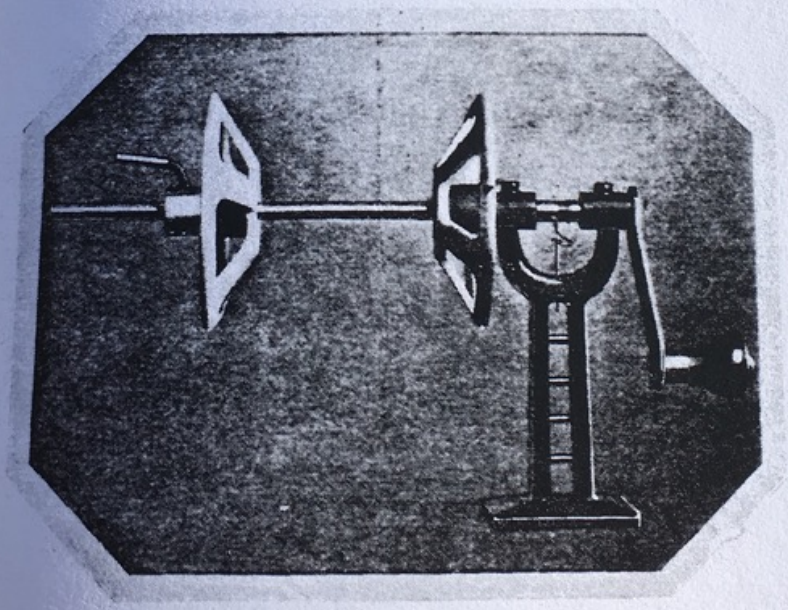

Fig. 8 Simple, Adjustable Coil Winder

Related Contacts

I recommend these science journals as forums for physicists and engineers. These journals are quite receptive to alternative views to orthodox science and technology:

Infinite Energy Magazine
P.O. Box 2816
Concord, N.H. 03302-2816

Planetary Assoc. for Clean Energy
100 Bronson Ave., Suite 1001
Ottawa, Ontario
K1R 6G8
Canada

Simplified Tech Service
P. O. Box 2121 A
Champaign, IL 61825

ADDENDUM

New York Herald - Monday, June 9, 1902, page 3.

USES ELECTRICITY WITHOUT A MEDIUM

Scientists declares he can apply atmospheric current without motive force.

WAS SIMPLE DISCOVERY

Senor Clemente Figueras, Engineer of Canary Islands, Inventor of the Method

[SPECIAL CABLE TO THE HERALD]

The Herald's European edition publishes the following from its correspondent: –

London, Monday – A most remarkable claim, the genuineness of which it is as yet impossible to test, says a cable dispatch published by the Daily Mail from its Las Palmas correspondent, has been made by Senor Clemente Figueras, Engineer of Woods and Forests in the Canary Islands, for many years professor of physics at St. Augustine's College at Las Palmas.

It seems that for many years he has been working silently at a method of directly utilizing atmospheric electricity – that is to say, without chemicals or dynamos – and making a practical application of it without the need of employing any motive force.

A true revelation might rob him of his reward, and even now, while he claims to have succeeded, he is silent concerning the exact principles of his discovery.

He asserts, however, he has invented a generator by which he can collect electric fluid so as to be able to store it and apply it for infinite purposes – for instance, in connection with shops, railways and manufacturers.

He says he expects its effect will be a tremendous economic and industrial revolution. He will not give the key to the invention, but declares that the only extraordinary point about it is that it has taken so long to discover a simple scientific fact.

He intends shortly going to Madrid and Berlin to patent his inventions.

In addition to the discovery, the Daily Mail says that, according to letters received in London, from his friends in Teneriffe, Senor Figueras has constructed a rough apparatus by which, in spite of its small size and defects, he obtains a current of 350 volts, which he utilizes in his own house for lighting purposes, and driving a motor of twenty horse power.

His inventions comprise a generator, a motor and a sort of governor or regulator, the whole apparatus being so simple that a child could work it.

•*See also New York Times, Monday, June 9, 1902, pg. 1.*

US006960975B1

(12) **United States Patent**
Volfson

(10) **Patent No.: US 6,960,975 B1**
(45) **Date of Patent: Nov. 1, 2005**

(54) **SPACE VEHICLE PROPELLED BY THE PRESSURE OF INFLATIONARY VACUUM STATE**

(76) Inventor: **Boris Volfson**, 5707 W. Maple Grove Rd., Apt. 3046, Huntington, IN (US) 46750

(*) Notice: Subject to any disclaimer, the term of this patent is extended or adjusted under 35 U.S.C. 154(b) by 8 days.

(21) Appl. No.: **11/079,670**

(22) Filed: **Mar. 14, 2005**

Related U.S. Application Data

(63) Continuation of application No. 10/633,778, filed on Aug. 4, 2003, now abandoned.

(51) **Int. Cl.**[7] **H01F 6/00**; F03H 5/00
(52) **U.S. Cl.** **335/216**; 60/200.1
(58) **Field of Search** 335/216; 60/200.1

(56) **References Cited**

U.S. PATENT DOCUMENTS

3,626,605	A	12/1971	Wallace
3,626,606	A	12/1971	Wallace
3,823,570	A	7/1974	Wallace
5,197,279	A	3/1993	Taylor
6,353,311	B1	3/2002	Brainard et al.

OTHER PUBLICATIONS

M.T. French, "To the Stars by Electromagnetic Propulsion", http://www.mtjf.demon.co.uk/antigravp2.htm#cforce.
Evgeny Podkletnov, "Weak Gravitational Shielding Properties of Composite Bulk $YBa_2Cu_3O_{(7-x)}$ Superconductor Below 70K Under E.M. Field", LANL database number cond-mat/9701074, v. 3, 10 pages, Sep. 16, 1997.
N. LI & D.G. Torr, "Effects of a Gravitomagnetic Field on Pure Superconductors", Physical Review, vol. 43, p. 457, 3 pages, Jan. 15, 1991.
Evgeny Podkletnov, Giovanni Modanese "Impulse Gravity Generator Based on Charged $YBa_2Cu_3O_{7-y}$ Superconductor with Composite Crystal Structure", arXiv.org/physics database, #0108005 vol. 2, 32 pages, 8 figures, Aug. 30, 2001.
S. Kopeikin & E. Fomalont, "General Relativistic Model for Experimental Measurement of the Speed of Propagation of Gravity by VLBI", Proceedings of the 6th European VLBI Network Symposium Jun. 25-28, 2002, Bonn, Germany, 4 pages.
Sean M. Carroll, "The Cosmological Constant", http://pancake.uchicago.edu/~carroll/encyc/, 6 pages.
Chris Y. Taylor and Giovanni Modanese, "Evaluation of an Impulse Gravity Generator Based Beamed Propulsion Concept", American Institute of Aeronautics and Astronautics, Inc., 2002.
Peter L. Skeggs, "Engineering Analysis of the Podkletnov Gravity Shielding Experiment", Quantum Forum, Nov. 7, 1997, http://www.inetarena'.com/~noetic/pls/podlev.html).

Primary Examiner—Ramon M. Barrera

(57) **ABSTRACT**

A space vehicle propelled by the pressure of inflationary vacuum state is provided comprising a hollow superconductive shield, an inner shield, a power source, a support structure, upper and lower means for generating an electromagnetic field, and a flux modulation controller.

A cooled hollow superconductive shield is energized by an electromagnetic field resulting in the quantized vortices of lattice ions projecting a gravitomagnetic field that forms a spacetime curvature anomaly outside the space vehicle. The spacetime curvature imbalance, the spacetime curvature being the same as gravity, provides for the space vehicle's propulsion. The space vehicle, surrounded by the spacetime anomaly, may move at a speed approaching the light-speed characteristic for the modified locale.

13 Claims, 6 Drawing Sheets

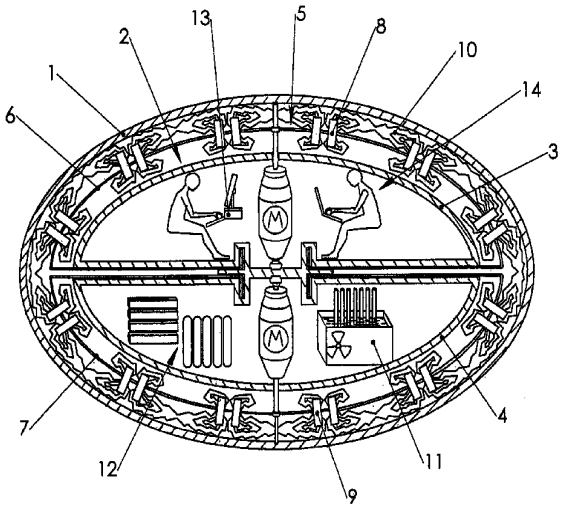

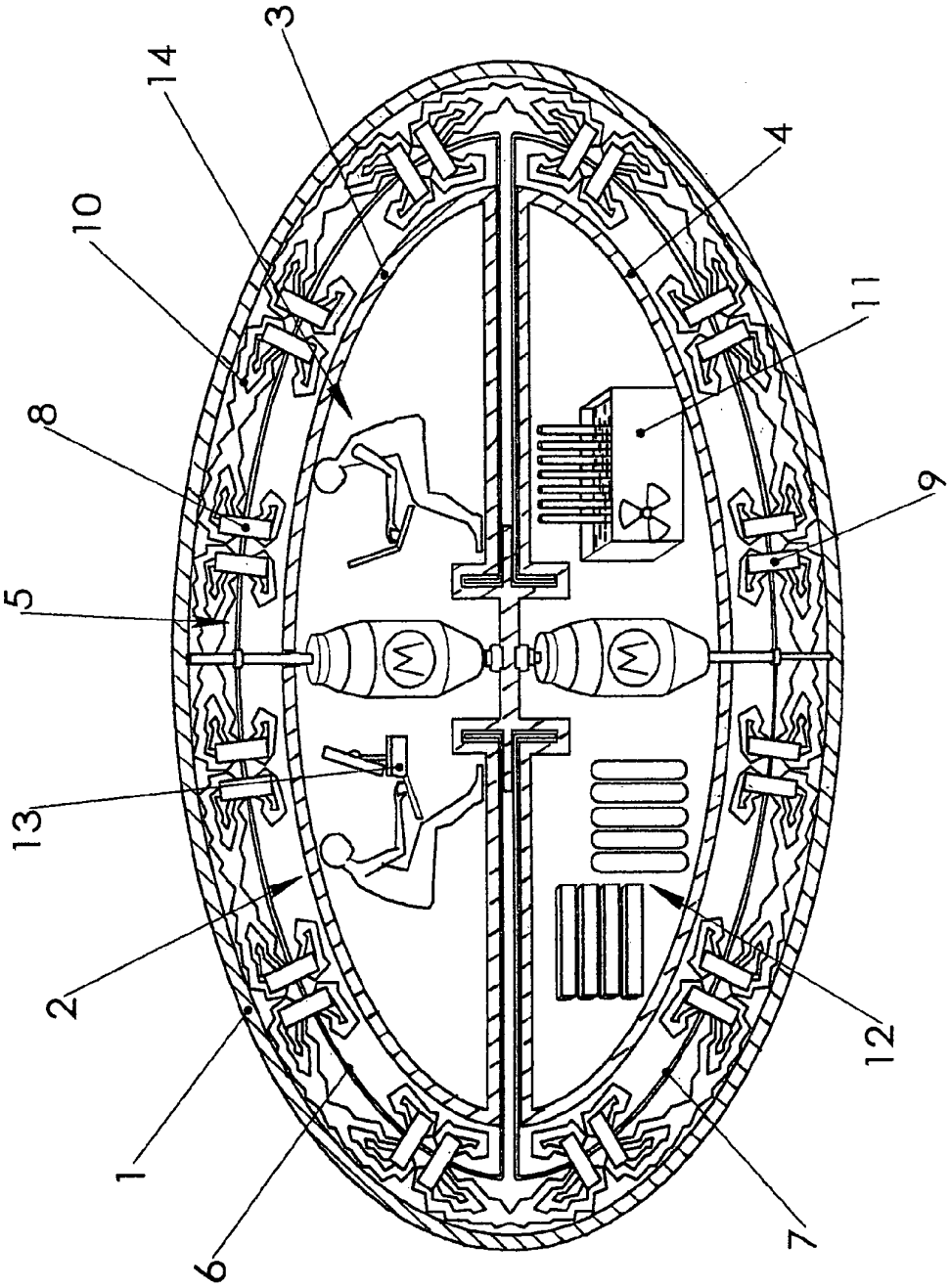

FIG. 1

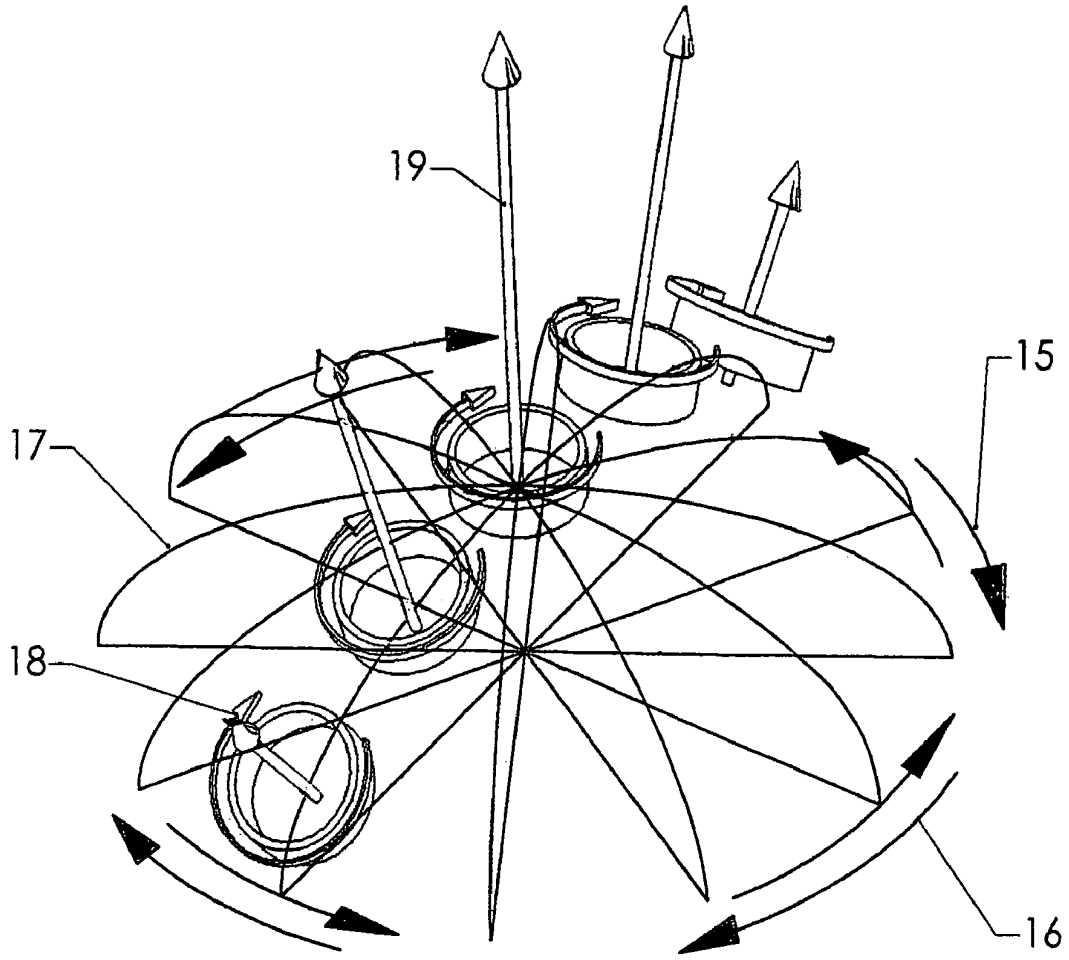

FIG. 2A

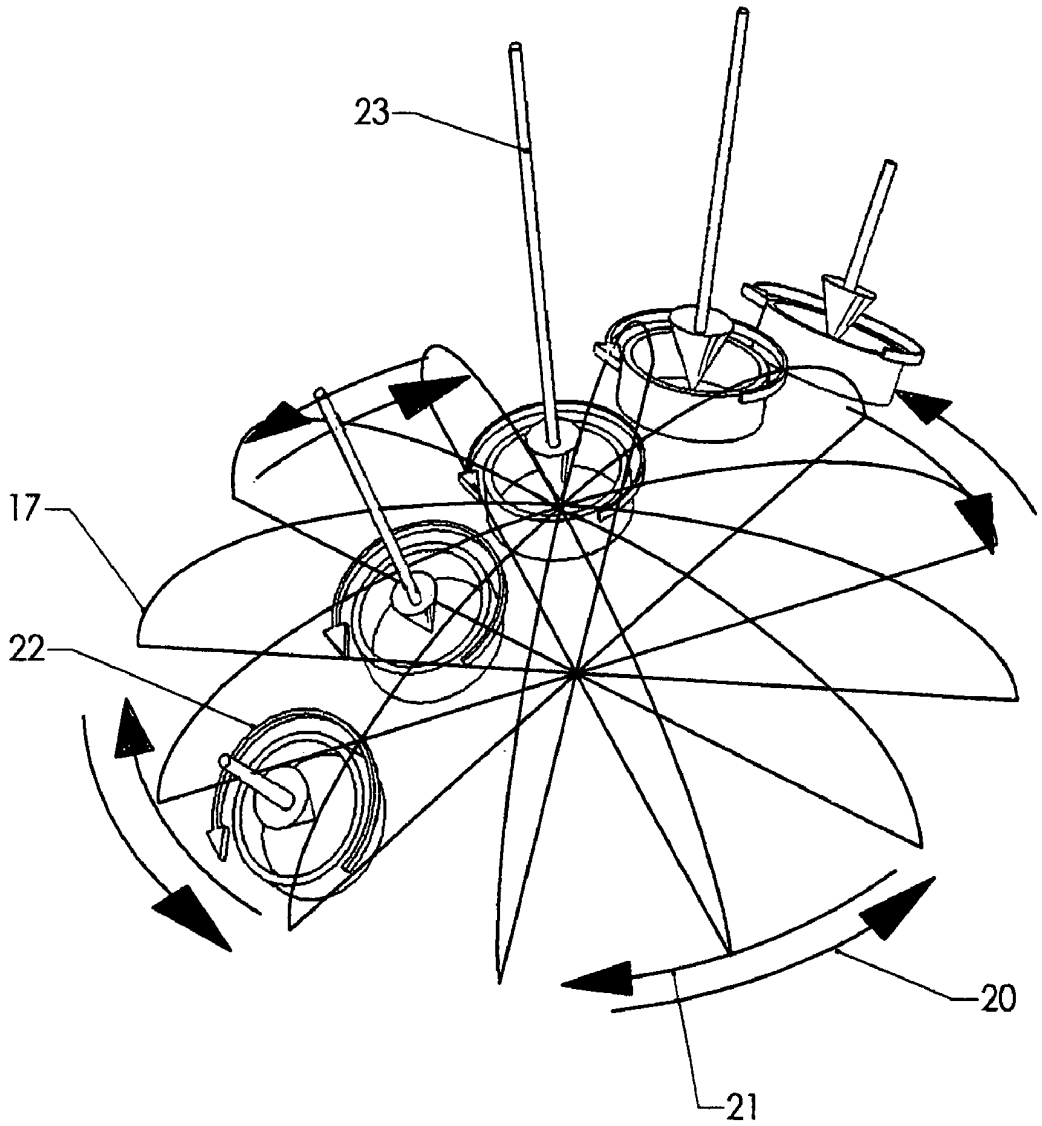

FIG. 2B

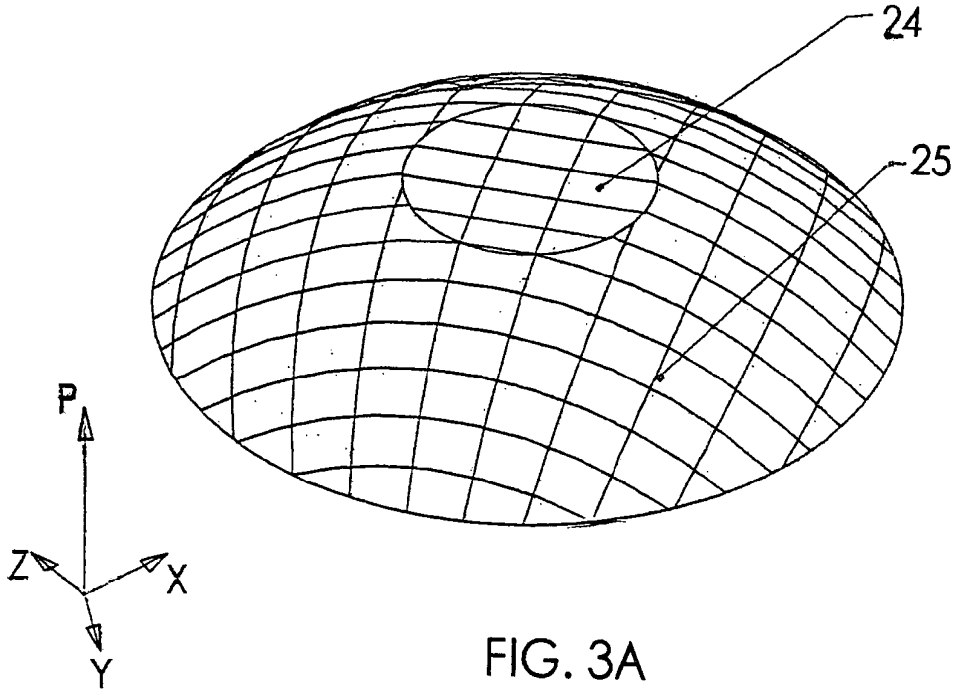

FIG. 3A

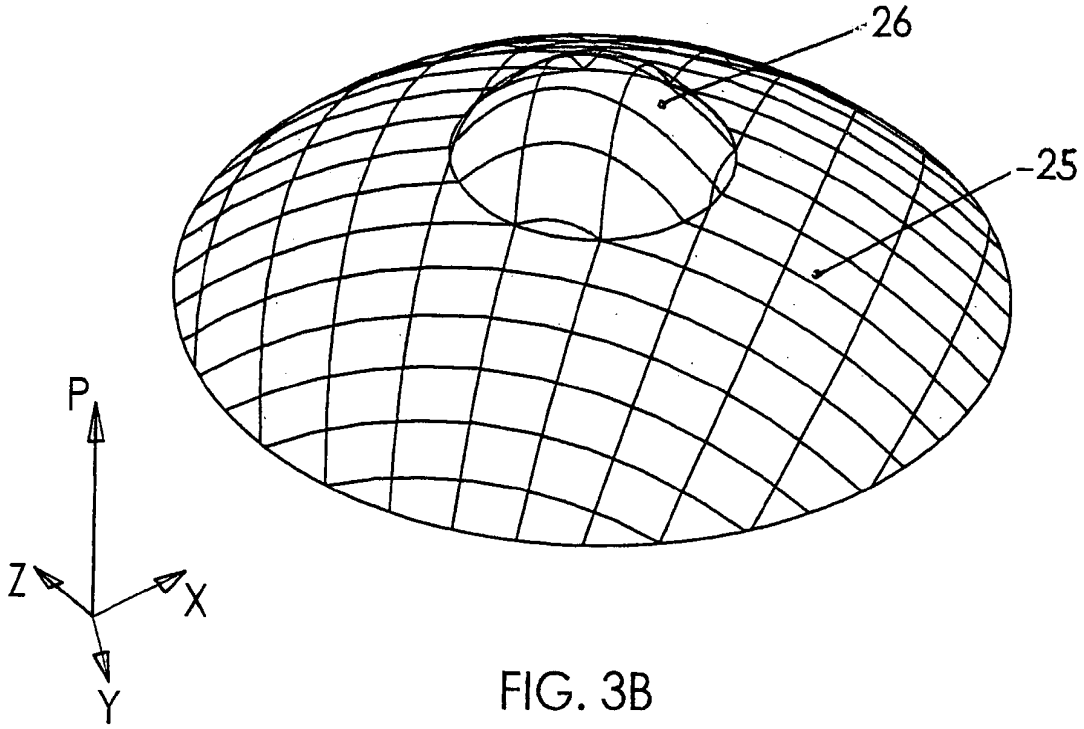

FIG. 3B

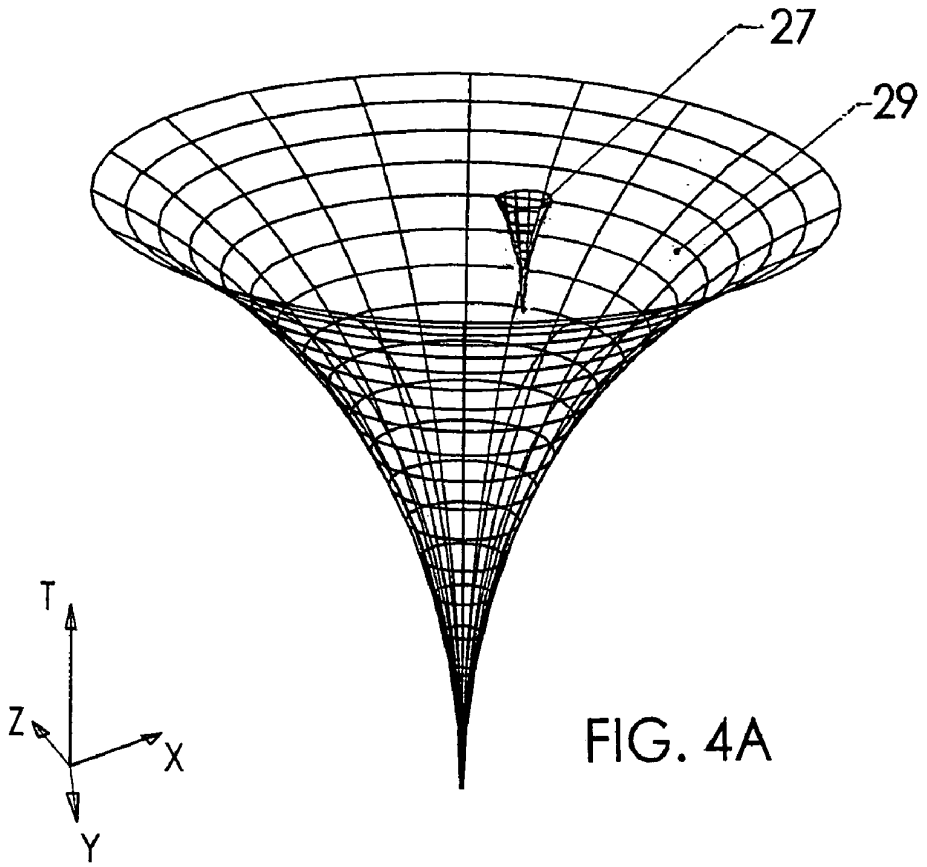

FIG. 4A

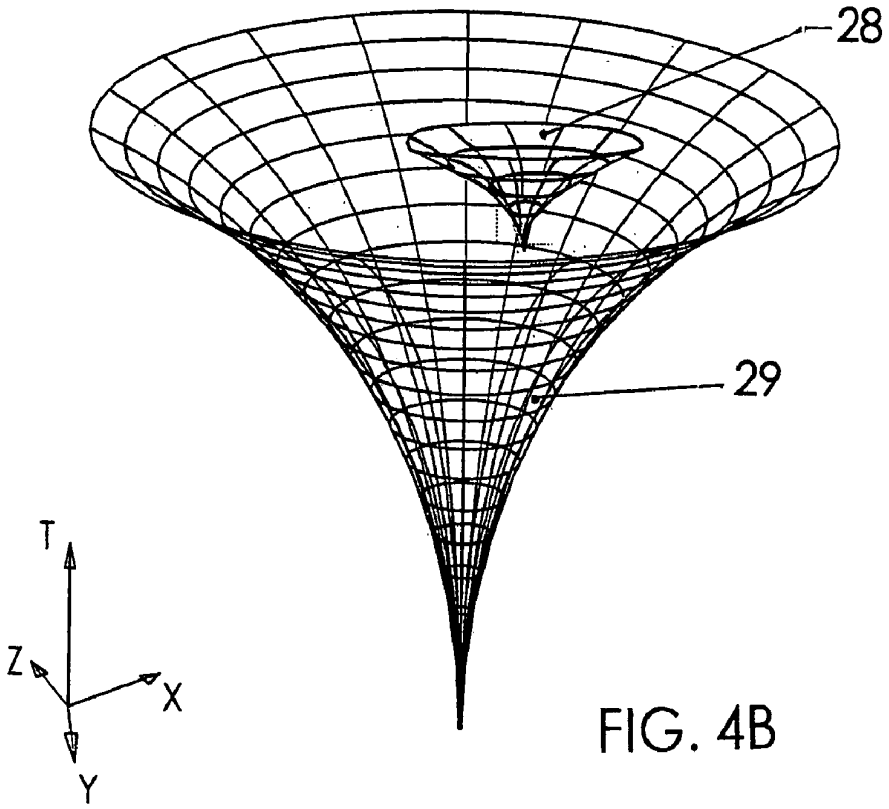

FIG. 4B

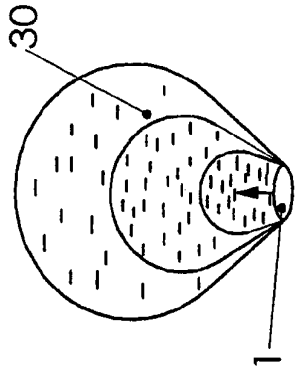

FIG.5A

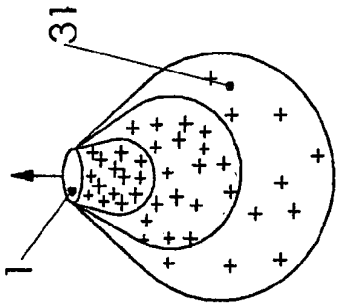

FIG.5B

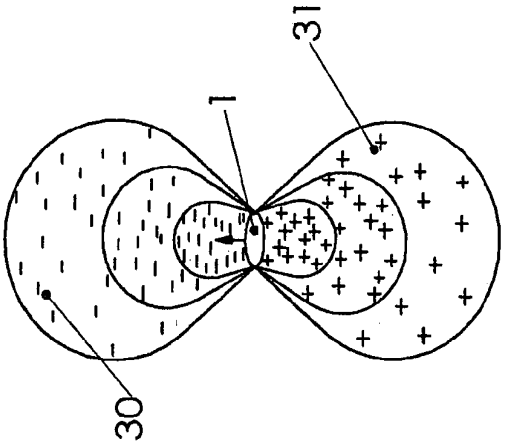

FIG.6

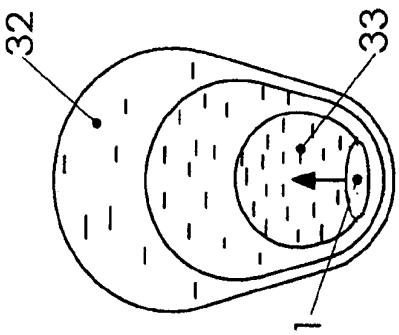

FIG.7A

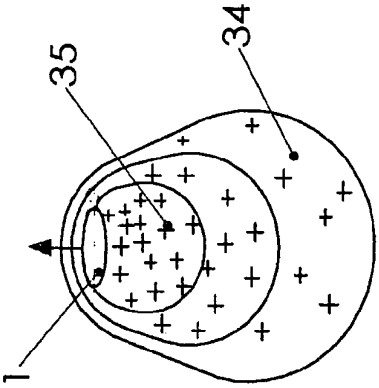

FIG.7B

SPACE VEHICLE PROPELLED BY THE PRESSURE OF INFLATIONARY VACUUM STATE

CROSS REFERENSE TO RELATED APPLICATIONS

This is a continuation of application Ser. No. 10/633,778 filed on Aug. 4, 2003, now abandoned.

TECHNICAL FIELD

The technical field of this disclosure represents space vehicles propelled by the electro-magnetically changed properties of vacuum, particularly the pressure of inflationary vacuum state.

BACKGROUND OF THE INVENTION

The existence of a magnetic-like gravitational field has been well established by physicists for general relativity, gravitational theories, and cosmology. The consequences of the effect of electromagnetically-affected gravity could be substantial and have many practical applications, particularly in aviation and space exploration.

There are methods known for converting electromagnetism into a propulsive force that potentially generates a large propulsive thrust. According to these methods, the machine thrust is produced by rotating, reciprocating masses in the following ways: centrifugal thrust, momentum thrust, and impulse thrust. ("To the Stars by Electromagnetic Propulsion", M. T. French, http://www.mtjf.demon.co.uk/antigravp2.htm#cforce).

However, the electromagnetic propulsion in an ambient space, or space that is not artificially modified, is not practical for interstellar travel because of the great distances involved. No interstellar travel is feasible without some form of distortion of space. In turn, no alteration of space is possible without the corresponding deformation of time. Gravitomagnetic alteration of space, resulting in the space-time curvature anomaly that could propel the space vehicle, could be a feasible approach to future space travel.

In the late 1940s, H. B. G. Casimir proved that the vacuum is neither particle nor field-free. It is a source of zero-point-fluctuation (ZPF) of fields such as the vacuum gravitomagnetic field. ZPF fields lead to real, measurable physical consequences such as the Casimir force. The quantized hand-made electromagnetic processes, such as those occurring in superconductors, affect the similarly quantized ZPFs. The most likely reason is the electron-positron creation and annihilation, in part corresponding to the "polarization effect" sited by Evgeny Podkletnov in explaining the gravitomagnetic effect reportedly observed by him in 1992. ("Weak Gravitational Shielding Properties of Composite Bulk $YBa_2Cu_33O_{(7-x)}$ Superconductor Below 70 K Under E.M. Field", Evgeny Podkletnov, LANL database number cond-mat/9701074, v. 3, 10 pages, 16 Sep. 1997).

The investigation of gravitomagnetism, however, started well before Podkletnov. In the U.S. Pat. No. 3,626,605, Henry Wm. Wallace describes an experimental apparatus for generating and detecting a secondary gravitational field. He also shows how a time-varying gravitomagnetic field can be used to shield the primary background of a gravitoelectric field.

In the U.S. Pat. No. 3,626,606, Henry Wm. Wallace provides a variation of his earlier experiment. A type III-V semiconductor material, of which both components have

unpaired nuclear spin, is used as an electronic detector for the gravitomagnetic field. The experiment demonstrates that the material in his gravitomagnetic field circuit has hysterisis and remanence effects analogous to magnetic materials.

In the U.S. Pat. No. 3,823,570, Henry Wm. Wallace provides an additional variation of his experiment. Wallace demonstrates that, by aligning the nuclear spin of materials having an odd number of nucleons, a change in specific heat occurs.

In the U.S. Pat. No. 5,197,279, James R. Taylor discloses Electromagnetic Propulsion Engine where solenoidal windings generate an electromagnetic field that, without the conversion into a gravitomagnetic field, generates the thrust necessary for the propulsion.

In the U.S. Pat. No. 6,353,311 B1, John P. Brainard et al. offer a controversial theory of Universal Particle Flux Field, and in order to prove it empirically, provide a shaded motor-type device. This device is also intended for extracting energy from this hypothetical Field.

In the early 1980s, Sidney Coleman and F. de Luca noted that the Einsteinean postulate of a homogeneous Universe, while correct in general, ignores quantized local fluctuation of the pressure of inflationary vacuum state, this fluctuation causing local cosmic calamities. While the massless particles propagate through large portions of Universe at light speed, these anomaly bubbles, depending on their low or high relative vacuum density, cause a local increase or decrease of the propagation values for these particles. Scientists disagree about the possibility, and possible ways, to artificially create models of such anomalies.

In the early 1990s, Ning Li and D. G Torr described a method and means for converting an electromagnetic field into a gravitomagnetic field. Li and Torr suggested that, under the proper conditions, the minuscule force fields of superconducting atoms can "couple", compounding in strength to the point where they can produce a repulsion force ("Effects of a Gravitomagnetic Field on Pure Superconductors", N. Li and D. G. Torr, Physical Review, Volume 43, Page 457, 3 pages, 15 Jan. 1991).

A series of experiments, performed in the early 1990s by Podkletnov and R. Nieminen, reportedly resulted in a reduction of the weights of objects placed above a levitating, rotating superconductive disk subjected to high frequency magnetic fields. These results substantially support the expansion of Einstainean physics offered by Li & Torr. Podkletnov and Giovanni Modanese have provided a number of interesting theories as to why the weight reduction effect could have occurred, citing quantum gravitational effects, specifically, a local change in the cosmological constant. The cosmological constant, under ordinary circumstances, is the same everywhere. But, according to Podkletnov and Modanese, above a levitating, rotating superconductive disk exposed to high frequency magnetic fields, it is modified. ("Impulse Gravity Generator Based on Charged $YBa_2Cu_33O_{7-y}$ Superconductor with Composite Crystal Structure", Evgeny Podkletnov, Giovanni Modanese, arXiv.org/physics database, #0108005 volume 2, 32 pages, 8 figures, Aug. 30, 2001).

In the July 2004 paper, Ning Wu hypothesized that exponential decay of the gravitation gauge field, characteristic for the unstable vacuum such as that created by Podkletnov and Nieminen, is at the root of the gravitational shielding effects (Gravitational Shielding Effects in Gauge Theory of Gravity, Ning Wu, arXiv:hep-th/ 0307225 v 1 23 Jul. 2003, 38 pages incl. 3 figures, July 2004).

In 2002, Edward Fomalont and Sergei Kopeikin measured the speed of propagation of gravity. They confirmed that the

speed of propagation of gravity matches the speed of light. ("General Relativistic Model for Experimental Measurement of the Speed of Propagation of Gravity by VLBI", S. Kopeikin and E. Fomalont, Proceedings of the 6th European VLBI Network Symposium Jun. 25–28 2002, Bonn, Germany, 4 pages).

String theory unifies gravity with all other known forces. According to String theory, all interactions are carried by fundamental particles, and all particles are just tiny loops of space itself forming the spacetime curvature. Gravity and bent space are the same thing, propagating with the speed of light characteristic of the particular curvature. In light of the Fomalont and Kopeikin discovery, one can conclude that if there is a change in the speed of propagation of gravity within the spacetime curvature, then the speed of light within the locality would also be affected.

In general relativity, any form of energy affects the gravitational field, so the vacuum energy density becomes a potentially crucial ingredient. Traditionally, the vacuum is assumed to be the same everywhere in the Universe, so the vacuum energy density is a universal number. The cosmological constant Λ is proportional to the vacuum pressure ρ_Λ: $\Lambda=(8\pi G/3c^2)\rho_\Lambda$, where G is Newton's constant of gravitation and c is the speed of light ("The Cosmological Constant", Sean M. Carroll, http://pancake.uchicago.edu/~carroll/encyc/, 6 pages). Newer theories, however, permit local vacuum fluctuations where even the "universal" constants are affected: $\Lambda_1=(8\pi G_1/3c_1^2)\rho_{\Lambda_1}$.

Analyzing physics laws defining the cosmological constant, a conclusion can be drawn that, if a levitating, rotating superconductive disk subjected to high frequency magnetic fields affects the cosmological constant within a locality, it would also affect the vacuum energy density. According to the general relativity theory, the gravitational attraction is explained as the result of the curvature of spacetime being proportional to the cosmological constant. Thus, the change in the gravitational attraction of the vacuum's subatomic particles would cause a local anomaly in the curvature of the Einsteinean spacetime.

Time is the fourth dimension. Lorentz and Einstein showed that space and time are intrinsically related. Later in his life, Einstein hypothesized that time fluctuates both locally and universally. Ruggero Santilli, recognized for expanding relativity theory, has developed the isocosmology theory, which allows for variable rates of time. Time is also a force field only detected at speeds above light speed. The energy of this force field grows as its propagation speed declines when approaching light-speed. Not just any light-speed: the light-speed of a locale. If the conditions of the locale were modified, this change would affect the local time rate relative to the rate outside the affected locale, or ambient rate. The electromagnetically-generated gravitomagnetic field could be one such locale modifier.

Analyzing the expansion of Einstainean physics offered by Li & Torr, one could conclude that gravity, time, and light speed could be altered by the application of electromagnetic force to a superconductor.

By creating a spacetime curvature anomaly associated with lowered pressure of inflationary vacuum state around a space vehicle, with the lowest vacuum pressure density located directly in front of the vehicle, a condition could be created where gravity associated with lowered vacuum pressure density pulls the vehicle forward in modified spacetime.

By creating a spacetime curvature anomaly associated with elevated pressure of inflationary vacuum state around the space vehicle, with the point of highest vacuum pressure density located directly behind the vehicle, a condition could be created where a repulsion force associated with elevated vacuum pressure density pushes the space vehicle forward in modified spacetime. From the above-mentioned cosmological constant equation, re-written as:

$$\rho_\Lambda = \frac{3c^2}{8\pi G}\Lambda$$

it is clear that the increase in the vacuum pressure density could lead to a substantial increase in the light-speed. If the space vehicle is moving in the anomaly where the local light-speed is higher than the light-speed of the ambient vacuum, and if this vehicle approaches this local light-speed, the space vehicle would then possibly exceed the light-speed characteristic for the ambient area.

The levitating and rotating superconductor disk, which Podkletnov used to protect the object of experiment from the attraction produced by the energy of the vacuum, was externally energized by the externally-powered solenoid coils. Thus, Podkletnov's system is stationary by definition and not suitable for travel in air or space. Even if the superconductive disk is made part of the craft, and if it is energized by the energy available on the craft, the resulting anomaly is one-sided, not enveloping, and not providing the variable speed of light (VSL) environment for the craft.

In a recent (2002) article, Chris Y. Tailor and Modanese propose to employ an impulse gravity generator directing, from an outside location, an anomalous beam toward a spacecraft, this beam acting as a repulsion force field producing propulsion for the spacecraft. ("Evaluation of an Impulse Gravity Generator Based Beamed Propulsion Concept", Chris Y. Taylor and Giovanni Modanese, American Institute of Aeronautics and Astronautics, Inc., 2002, 21 pages, 10 figures). The authors of the article, however, didn't take into account the powerful quantized processes of field dispersion, which would greatly limit the distance of propagation of the repulsive force. At best, the implementation of this concept could assist in acceleration and deceleration at short distances from the impulse gravity generator, and only along a straight line of travel. If the travel goal is a space exploration mission rather than the shuttle-like commute, the proposed system is of little use.

Only a self-sufficient craft, equipped with the internal gravity generator and the internal energy source powering this generator, would have the flexibility needed to explore new frontiers of space. The modification of the spacetime curvature all around the spacecraft would allow the spacecraft to approach the light-speed characteristic for the modified locale, this light-speed, when observed from a location in the ambient space, being potentially many times higher than the ambient light-speed. Then, under sufficient local energies, that is, energies available on the spacecraft, very large intergalactic distances could be reduced to conventional planetary distances.

In "The First Men in the Moon" (1903), H. G. Wells anticipates gravitational propulsion methods when he describes gravity repelling "cavorite." Discovered by Professor Cavor, the material acts as a "gravity shield" allowing Cavor's vehicle to reach the Moon. Prof. Cavor built a large spherical gondola surrounded on all sides by cavorite shutters that could be closed or opened. When Prof. Cavor closed all the shutters facing the ground and opened the shutters facing the moon, the gondola took off for the Moon.

Until today, no cavorite has been discovered. However, recent research in the area of superconductivity, nanomaterials and quantum state of vacuum, including that of Li, Torr, Podkletnov, and Modanese, has resulted in important new information about the interaction between a gravitational field and special states of matter at a quantum level. This new research opens the possibility of using new electromagnetically-energized superconductive materials allowing stable states of energy, the materials useful not only in controlling the local gravitational fields, but also in creating new gravitomagnetic fields.

BACKGROUND OF INVENTION: OBJECTS AND ADVANTAGES

There are four objects of this invention:

The first object is to provide a method for generating a pressure anomaly of inflationary vacuum state that leads to electromagnetic propulsion.

The second object is to provide a space vehicle capable of electromagnetically-generated propulsion. The implementation of these two objects leads to the development of the space vehicle propelled by gravitational imbalance with gravity pulling, and/or antigravity pushing, the space vehicle forward.

The third object is to provide a method for generating a pressure anomaly of inflationary vacuum state, specifically, the local increase in the level of vacuum pressure density associated with the greater curvature of spacetime. The speed of light in such an anomaly would be higher than the speed of light in the ambient space.

The fourth object is to provide the space vehicle capable of generating an unequally-distributed external anomaly all around this vehicle, specifically the anomaly with the elevated level of vacuum pressure density. The anomaly is formed in such a way that gravity pulls the space vehicle forward in the modified spacetime at a speed possibly approaching the light-speed specific for this modified locale. If the vacuum pressure density of the locale is modified to be substantially higher than that of the ambient vacuum, the speed of the vehicle could conceivably be higher than the ambient light-speed.

SUMMARY OF THE INVENTION

This invention concerns devices self-propelled by the artificially changed properties of the pressure of inflationary vacuum state to speeds possibly approaching the light-speed specific for this modified locale. Furthermore, this invention concerns devices capable of generating the spacetime anomaly characterized by the elevated vacuum pressure density. The devices combining these capabilities may be able to move at speeds substantially higher than the light-speed in the ambient space.

The device of this invention is a space vehicle. The outside shell of the space vehicle is formed by a hollow disk, sphere, or the like hollowed 3-dimensional shape made of a superconductor material, hereinafter a hollow superconductive shield. An inner shield is disposed inside the hollow superconductive shield. The inner shield is provided to protect crew and life-support equipment inside.

A support structure, upper means for generating an electromagnetic field and lower means for generating an electromagnetic field are disposed between the hollow superconductive shield and the inner shield. A flux modulation controller is disposed inside the inner shield to be accessible to the crew.

Electrical energy is generated in a power source disposed inside the hollow superconductive shield. The electrical energy is converted into an electromagnetic field in the upper means for generating an electromagnetic field and the lower means for generating an electromagnetic field.

Electrical motors, also disposed inside the hollow superconductive shield, convert the electrical energy into mechanical energy.

The mechanical energy and the electromagnetic field rotate the hollow superconductive shield, and the upper and the lower means for generating an electromagnetic field, against each other.

The electromagnetic field is converted into a gravitomagnetic field in the hollow superconductive shield.

The gravitomagnetic field, propagated outward, orthogonally to the walls of the hollow superconductive shield, forms a pressure anomaly of inflationary vacuum state in the area of propagation. The pressure anomaly of inflationary vacuum state is comprised of an area of relatively lower vacuum pressure density in front of the space vehicle and an area of relatively higher vacuum pressure density behind the vehicle.

The difference in the vacuum pressure density propels the space vehicle of this invention forward.

BRIEF DESCRIPTION OF THE DRAWINGS

FIG. **1** is a cross-sectional view through the front plane taken along the central axis of a space vehicle provided by the method and device of this invention.

FIGS. **2**A & **2**B are diagrams, presented as perspective views, showing some of the physical processes resulting from a dynamic application of an electromagnetic field to a hollow superconductive shield. Only one line of quantized vortices, shown out of scale, is presented for illustration purposes.

FIGS. **3**A & **3**B are diagrams, presented as perspective views, showing a vacuum pressure density anomaly associated with lowered pressure of inflationary vacuum state and a vacuum pressure density anomaly associated with elevated pressure of inflationary vacuum state, respectively. Both anomalies are shown on the background of Universal curvature of inflationary vacuum state.

FIGS. **4**A & **4**B are diagrams, presented as perspective views, showing a spacetime anomaly associated with lowered pressure of inflationary vacuum state and a spacetime anomaly associated with elevated pressure of inflationary vacuum state, respectively. Both anomalies are shown on the background of Universal spacetime.

FIGS. **5**A, **5**B, **6**, **7**A, & **7**B are diagrams of spacetime curvature anomalies generated by the space vehicle of the current invention, these anomalies providing for the propulsion of the space vehicle.

DRAWINGS—REFERENCE NUMERALS

1 hollow superconductive shield
2 inner shield
3 upper shell
4 lower shell
5 support structure
6 upper rotating element
7 lower rotating element
8 upper means for generating an electromagnetic field
9 lower means for generating an electromagnetic field
10 flux lines
11 power source

12 life-support equipment
13 flux modulation controller
14 crew
15 clockwise shield motion vector
16 counterclockwise EMF motion vector
17 wire grid
18 clockwise quantized vortices of lattice ions
19 outward gravitomagnetic field vector
20 counterclockwise shield motion vector
21 clockwise EMF motion vector
22 counterclockwise quantized vortices of lattice ions
23 inward gravitomagnetic field vector
24 vacuum pressure density anomaly associated with lowered pressure of inflationary vacuum state
25 Universal curvature of inflationary vacuum state
26 vacuum pressure density anomaly associated with elevated pressure of inflationary vacuum state
27 spacetime anomaly associated with lowered pressure of inflationary vacuum state
28 spacetime anomaly associated with elevated pressure of inflationary vacuum state
29 Universal spacetime
30 substantially droplet-shaped spacetime curvature anomaly associated with lowered pressure of inflationary vacuum state
31 substantially droplet-shaped spacetime anomaly associated with elevated pressure of inflationary vacuum state
32 substantially egg-shaped spacetime anomaly associated with lowered pressure of inflationary vacuum state
33 area of the lowest vacuum pressure density
34 substantially egg-shaped spacetime anomaly associated with elevated pressure of inflationary vacuum state
35 area of the highest vacuum pressure density

DESCRIPTION OF THE PRESENTLY PREFERRED EMBODIMENT

FIG. **1** is a cross-sectional view through the front plane taken along the central axis of a space vehicle provided by the method and device of this invention. A hollow superconductive shield **1** forms a protective outer shell of the space vehicle. The hollow superconductive shield **1** may be shaped as a hollow disk, sphere, or the like 3-dimensional geometrical figure formed by the 2-dimensional rotation of a curve around the central axis.

In the preferred embodiment, the hollow superconductive shield **1** is made of a superconductor such as YBa2Cu3O7-y, or a like high-temperature superconductor with a composite crystal structure cooled to the temperature of about 40 degrees K. The skilled in the art may envision the use of many other low- and high-temperature superconductors, all within the scope of this invention.

An inner shield **2** is disposed inside the hollow superconductive shield **1**. The inner shield **2** is comprised of an upper shell **3** and a lower shell **4**, the shells **3** and **4** adjoined with each other. Executed from insulation materials such as foamed ceramics, the inner shield **2** protects the environment within the shield from the electromagnetic field and severe temperatures.

A support structure **5** is disposed between the hollow superconductive shield **1** and the inner shield **2**, concentric to the hollow superconductive shield. The support structure **5** is comprised of an upper rotating element **6** and a lower rotating element **7**.

The upper rotating element **6** is pivotably disposed inside the hollow superconductive shield **1** and may envelope the upper shell **3**. The lower rotating element **7** is pivotably disposed inside the hollow superconductive shield **1** and may envelope the lower shell **4**. Even though the preferred embodiment has two rotating elements, a skilled in the art may envision only one rotating element, or three or more rotation elements, all within the scope of this invention.

Upper means for generating an electromagnetic field **8** are disposed between the hollow superconductive shield **1** and the upper shell **3**. The upper means for generating an electromagnetic field **8** are affixed to the upper rotating element **6** at an electromagnetic field-penetrable distance to the hollow superconductive shield **1**.

Lower means for generating an electromagnetic field **9** are disposed between the hollow superconductive shield **1** and the lower shell **4**. The lower means for generating an electromagnetic field **9** are affixed to the lower rotating element **7** at an electromagnetic field-penetrable distance to the hollow superconductive shield **1**.

The upper means for generating an electromagnetic field **8** and the lower means for generating an electromagnetic field **9** could be solenoid coils or electromagnets. In the process of operation of the space vehicle, the electromagnetic field identified by flux lines **10**, is controllably and variably applied to the hollow superconductive shield **1**.

Electric motors are disposed inside the hollow superconductive shield along its central axis.

A power source **11** is disposed inside the hollow superconductive shield **1** and may be disposed inside the lower shell **4**. The power source **11** is electrically connected with the upper means for generating an electromagnetic field **8**, the lower means for generating an electromagnetic field **9**, and the electric motors. In-turn, the upper means for generating an electromagnetic field **8**, the lower means for generating an electromagnetic field **9**, and the electric motors provide for the rotation of the upper rotating element **6** and the lower rotating element **7**. The power source **11** may be executed as a nuclear power generator.

Life-support equipment **12** is disposed inside the inner shield **2**, and may be disposed inside the lower shell **4**. The life-support equipment **12** may include oxygen, water, and food.

A flux modulation controller **13** is disposed inside the inner shield **2**, and may be disposed inside the upper shell **3**. The flux modulation controller **13** is in communication with the upper means for generating an electromagnetic field **8**, the lower means for generating an electromagnetic field **9**, the power source **11**, and the electric motors.

The flux modulation controller **8** may be executed as a computer or a microprocessor. The flux modulation controller **8** is provided with a capability of modulating the performance parameters of the upper means for generating an electromagnetic field **8**, the lower means for generating an electromagnetic field **9**, the power source **11**, and the electric motors.

A crew **14** may be located inside the upper shell **3** of the inner shield **2** and may consist of one or more astronauts. The crew has a free access to the life-support equipment **12** and the flux modulation controller **8**. A skilled in the art may envision a fully-automated, pilotless craft, which is also within the scope of this invention.

A skilled in the art may also envision the embodiment (not shown), also within the scope of this invention, where the hollow superconductive shield is pivotable, and the support structure with the means for generating an electromagnetic field is affixed on the outside of the inner shield.

FIGS. **2**A & **2**B are diagrams showing the results of the quantized electromagnetic turbulence within the superconductive shell of the hollow superconductive shield provided

by the relative rotational motion of the hollow superconductive shield against the upper means for generating an electromagnetic field.

FIG. **2A** shows the clockwise relative rotational motion of the hollow superconductive shield, this motion identified by a clockwise shield motion vector **15**, and the counterclockwise relative rotational motion of upper means for generating an electromagnetic field, this motion identified by a counterclockwise EMF motion vector **16**.

The electromagnetic field, controllably and variably applied by the upper means for generating an electromagnetic field, whose various positions are identified by a wire grid **17**, to the hollow superconductive shield (not shown), causes quantized electromagnetic turbulence within the hollow superconductive shield. This turbulence is represented by a plurality of clockwise quantized vortices of lattice ions **18**. Only one line of the clockwise quantized vortices of lattice ions **18**, out of scale, is shown for illustration purposes only. Each of the clockwise quantized vortices of lattice ions **18** generates a gravitomagnetic field identified by an outward gravitomagnetic field vector **19** directed orthogonally away from the hollow superconductive shield.

FIG. **2B** shows the counterclockwise relative rotational motion of the hollow superconductive shield, this motion identified by a counterclockwise shield motion vector **20**, and the clockwise relative rotational motion of upper means for generating an electromagnetic field, this motion identified by a clockwise EMF motion vector **21**.

The electromagnetic field, controllably and variably applied by the upper means for generating an electromagnetic field identified by the wire grid **17**, to the hollow superconductive shield (not shown), causes quantized electromagnetic turbulence within the hollow superconductive shield, this turbulence represented by a plurality of counterclockwise quantized vortices of lattice ions **22**. Only one line of the counterclockwise quantized vortices of lattice ions **22**, out of scale, is shown for illustration purposes only. Each of the counterclockwise quantized vortices of lattice ions **22** generates a gravitomagnetic field identified by an inward gravitomagnetic field vector **23** directed orthogonally toward the hollow superconductive shield.

The electrical requirements for providing the Li-Torr effect are as follows:

Podkletnov has reported using the high frequency current of 10^5 Hz. He also used 6 solenoid coils @ 850 Gauss each. The reported system's efficiency reached 100% and the total field in the Podkletnov's disk was about 0.5 Tesla. The maximum weight loss reported by Podkletnov was 2.1%.

The preferred embodiment of the device of current invention is capable of housing 2–3 astronauts and therefore is envisioned to be about 5 meters in diameter at the widest point. The preferred space vehicle's acceleration is set at 9.8 m/s/s providing that gravity on board is similar to that on the surface of Earth.

The means for generating an electromagnetic field may be comprised of 124 solenoid coils. At the same 100% efficiency reported by Podkletnov, the total field required providing the acceleration of 9.8 m/s/s is 5,000 Tesla, or about 40 Tesla per coil. Skeggs suggests that on the Podkletnov device, out of 850 Gauss developed on the coil surface, the field affecting the superconductor and causing the gravitomagnetism is only 400 Gauss ("Engineering Analysis of the Podkletnov Gravity Shielding Experiment, Peter L. Skeggs, Quantum Forum, Nov. 7, 1997, http://www.inetarena.com/~noetic/pls/podlev.html, 7 pages). This translates into 47% device efficiency.

In this 47%-efficient space vehicle, the total field required achieving the 9.8 m/s/s acceleration is about 10,600 Tesla, or 85.5 Tesla per each of 124 solenoid coils. It must be noted that at this acceleration rate, it would take nearly a year for the space vehicle to reach the speed of light.

It also must be noted that Skeggs has detected a discrepancy between the Li-Torr estimates and Podkletnov's practical results. If Podkletnov's experimental results are erroneous while the Li-Torr estimates are indeed applicable to the space vehicle of this invention, then the energy requirements for achieving the sought speed would be substantially higher than the above estimate of 10,600 Tesla.

Podkletnov has concluded that, in order for the vacuum pressure density anomaly to take place, the Earth-bound device must be in the condition of Meissner levitation. As are all space bodies, the space vehicle is a subject to the pressure inflationary vacuum state and the gravitational force, which, within the migrating locality of the expanding Universe, in any single linear direction, are substantially in equilibrium. Thus, for the space vehicle, the requirement of Meissner levitation is waved.

The propagation of the gravitomagnetic field identified by the outward gravitomagnetic field vector **19** and the inward gravitomagnetic field vector **23** would cause exotic quantized processes in the vacuum's subatomic particles that include particle polarization, ZPF field defects, and the matter-energy transformation per $E=mc^2$. The combination of these processes would result in the gravitational anomaly. According to the general relativity theory, gravitational attraction is explained as the result of the curvature of spacetime being proportional to the gravitational constant. Thus, the change in the gravitational attraction of the vacuum's subatomic particles would cause a local anomaly in the curvature of the Einsteinean spacetime.

Gravity is the same thing as bent space, propagating with the speed of light characteristic for the particular spacetime curvature. When bent space is affected, there is a change in the speed of propagation of gravity within the spacetime curvature anomaly. The local speed of light, according to Fomalont and Kopeikin always equal to the local speed of propagation of gravity, is also affected within the locality of spacetime curvature anomaly.

Creation of spacetime curvature anomalies adjacent to, or around, the space vehicle, these anomalies characterized by the local gravity and light-speed change, has been the main object of this invention.

FIG. **3A** shows a diagram of a vacuum pressure density anomaly associated with lowered pressure of inflationary vacuum state **24** on the background of Universal curvature of inflationary vacuum state **25**. The vacuum pressure density anomaly associated with lowered pressure of inflationary vacuum state **24** is formed by a multitude of the inward gravitomagnetic field vectors. According to the cosmological constant equation, $\Lambda=(8\pi G/3c^2)\rho_\Lambda$, where the cosmological constant Λ is proportional to the vacuum energy pressure ρ_Λ, G is Newton's constant of gravitation, and c is the speed of light, the curvature of spacetime is proportional to the gravitational constant. According to the general relativity theory, the change in the vacuum pressure density is proportional to the change in the spacetime curvature anomaly. By replacing ρ_Λ with the vacuum pressure density, P times the vacuum energy coefficient κ, and replacing c with Δdistance/Δtime, we derive to $\Lambda=[8\pi G/3(\Delta\text{distance}/\Delta\text{time})^2]P_\kappa$, and could now construct a vacuum pressure density curvature diagram.

The vacuum pressure density curvature anomaly associated with lowered pressure of inflationary vacuum state **24**

is shown here as a flattened surface representing the lowered pressure of the inflationary vacuum state. This anomaly is the result of the exotic quantized processes in the subatomic particles caused by the quantized turbulence occurring in the hollow superconductive shield. The XYZ axes represent three dimensions of space and the P axis represents the vacuum pressure density.

FIG. **3**B shows a diagram of a vacuum pressure density anomaly associated with elevated pressure of inflationary vacuum state **26** on the background of the Universal curvature of inflationary vacuum state **25**. The vacuum pressure density anomaly associated with elevated pressure of inflationary vacuum state **26** is formed by a multitude of the outward gravitomagnetic field vectors. The anomaly is shown here as a convex surface representing the elevated pressure of inflationary vacuum state. The diagrams of FIGS. **3**A & **3**B are not to scale: the anomaly sizes are exaggerated for clarity.

FIGS. **4**A & **4**B show diagrams of a spacetime anomaly associated with lowered pressure of inflationary vacuum state **27**, and a spacetime anomaly associated with elevated pressure of inflationary vacuum state **28**, respectively, each on the background a diagram of Universal spacetime **29**.

The quaterized Julia set $Q_{n+1}=Q_n^2+C_0$ is assumed to be an accurate mathematical representation of the Universal spacetime. The generic quaternion Q_0 belongs to the Julia set associated with the quaternion C, and n tends to infinity. If we assume that the quaternion value C_0 is associated with the Universal spacetime **29**, C_1 is the value of quaternion C for the spacetime anomaly associated with lowered pressure of inflationary vacuum state **27**, and C_2 is the value of quaternion C for the spacetime anomaly associated with elevated pressure of inflationary vacuum state **28**, then we can construct two diagrams.

The diagram of FIG. **4**A shows the spacetime anomaly associated with lowered pressure of inflationary vacuum state **27** as a quaterized Julia set contained in a 4-dimensional space: $Q_{n+1}=Q_n^2+C_1$ on the background of the Universal spacetime **29** represented by $Q_{n+1}=Q_n^2+C_0$.

The diagram of FIG. **4**B shows the spacetime anomaly associated with elevated pressure of inflationary vacuum state **28** as a quaterized Julia set $Q_{n+1}=Q_n^2+C_2$, also on the background of the Universal spacetime **29** represented by $Q_{n+1}=Q_n^2+C_0$. On both diagrams, the XYZ axes represent three dimensions of space, and the T axis represents time. The diagrams are not to scale: the anomaly sizes are exaggerated for clarity, and the halves of quaterized Julia sets, conventionally associated with the hypothetical Anti-Universe, are omitted.

FIGS. **5**A, **5**B, **6**, **7**A, & **7**B show simplified diagrams of spacetime curvature anomalies generated by the space vehicle of the current invention, these anomalies providing for the propulsion of the space vehicle. In each case, the pressure anomaly of inflationary vacuum state is comprised of an area of relatively lower vacuum pressure density in front of the space vehicle and an area of relatively higher vacuum pressure density behind the space vehicle. Because the lower pressure of inflationary vacuum state is associated with greater gravity and the higher pressure is associated with the higher repulsive force, the space vehicle is urged to move from the area of relatively higher vacuum pressure density toward the area of relatively lower vacuum pressure density.

FIG. **5**A illustrates the first example of spacetime curvature modification. This example shows a substantially droplet-shaped spacetime curvature anomaly associated with lowered pressure of inflationary vacuum state **30** adjacent to the hollow superconductive shield **1** of the space vehicle. The anomaly **30** is provided by the propagation of a gravitomagnetic field radiating orthogonally away from the front of the hollow superconductive shield **1**. This gravitomagnetic field may be provided by the relative clockwise motion of the upper means for generating an electromagnetic field, and relative counterclockwise motion of the hollow superconductive field, as observed from above the space vehicle.

In this example, the difference between the spacetime curvature within the substantially droplet-shaped spacetime anomaly associated with lowered pressure of inflationary vacuum state, and the ambient spacetime curvature, the spacetime curvature being the same as gravity, results in the gravitational imbalance, with gravity pulling the space vehicle forward.

FIG. **5**B illustrates the second example of spacetime curvature modification. This example shows a substantially droplet-shaped spacetime anomaly associated with elevated pressure of inflationary vacuum state **31** adjacent to the hollow superconductive shield **1** of the space vehicle. The anomaly **31** is provided by the propagation of a gravitomagnetic field radiating orthogonally away from the back of the hollow superconductive shield. This gravitomagnetic field may be provided by the relative counterclockwise motion of the lower means for generating an electromagnetic field, and relative clockwise motion of the hollow superconductive field, as observed from below the space vehicle.

In this example, the difference between the spacetime curvature within the substantially droplet-shaped spacetime anomaly associated with elevated pressure of inflationary vacuum state, and the ambient spacetime curvature, the spacetime curvature being the same as gravity, results in the gravitational imbalance, with the repulsion force pushing the space vehicle forward.

FIG. **6** illustrates the third example of spacetime curvature modification. This example shows the formation of the substantially droplet-shaped spacetime anomaly associated with lowered pressure of inflationary vacuum state **30** combined with the substantially droplet-shaped spacetime anomaly associated with elevated pressure of inflationary vacuum state **31**. This combination of anomalies may be provided by the relative clockwise motion of the upper means for generating an electromagnetic field and relative clockwise motion of the hollow superconductive field, combined with the relative clockwise motion of the lower means for generating an electromagnetic field, as observed from above the space vehicle.

In this example, the difference between the spacetime curvature within the substantially droplet-shaped spacetime anomaly associated with lowered pressure of inflationary vacuum state, and the spacetime curvature of the substantially droplet-shaped spacetime anomaly associated with elevated pressure of inflationary vacuum state, the spacetime curvature being the same as gravity, results in the gravitational imbalance, with gravity pulling, and the repulsion force pushing, the space vehicle forward.

FIG. **7**A illustrates the fourth example of spacetime curvature modification. This example shows the formation of a substantially egg-shaped spacetime anomaly associated with lowered pressure of inflationary vacuum state **32** around the hollow superconductive shield **1** of the space vehicle. The anomaly **32** is provided by the propagation of gravitomagnetic field of unequally-distributed density, this gravitomagnetic field radiating in all directions orthogonally away from the hollow superconductive shield. The propagation of the unequally-distributed gravitomagnetic field leads to the similarly unequally-distributed spacetime curvature

anomaly. This unequally-distributed gravitomagnetic field may be provided by the relatively faster clockwise motion of the upper means for generating an electromagnetic field relative to the hollow superconductive field, combined with the relatively slower counterclockwise motion of the lower means for generating an electromagnetic field, as observed from above the space vehicle.

An area of the lowest vacuum pressure density **33** of the substantially egg-shaped spacetime anomaly associated with lowered pressure of inflationary vacuum state **32** is located directly in front of the space vehicle.

In this example, the variation in the spacetime curvature within the substantially egg-shaped spacetime anomaly associated with lowered pressure of inflationary vacuum state, the spacetime curvature being the same as gravity, results in a gravitational imbalance, with gravity pulling the space vehicle forward in modified spacetime.

FIG. **7**B illustrates the fifth example of spacetime curvature modification, also with the purpose of providing for a propulsion in modified spacetime. This example shows the formation of a substantially egg-shaped spacetime anomaly associated with elevated pressure of inflationary vacuum state **34** around the hollow superconductive shield **1** of the space vehicle. The anomaly **34** is provided by the propagation of gravitomagnetic field of unequally-distributed density, this gravitomagnetic field radiating in all directions orthogonally away from the hollow superconductive shield. The propagation of the unequally-distributed gravitomagnetic field leads to the similarly unequally-distributed spacetime curvature anomaly. This unequally-distributed gravitomagnetic field may be provided by the relatively slower counterclockwise motion of the upper means for generating an electromagnetic field relative to the hollow superconductive field, combined with the relatively faster clockwise motion of the lower means for generating an electromagnetic field, as observed from above the space vehicle.

An area of the highest vacuum pressure density **35** of the substantially egg-shaped spacetime anomaly associated with elevated pressure of inflationary vacuum state **34** is located directly behind the space vehicle.

In this example, the variation in the spacetime curvature within the substantially egg-shaped spacetime anomaly associated with elevated pressure of inflationary vacuum state, the spacetime curvature being same as gravity, results in a gravitational imbalance, with the repulsion force pushing the space vehicle forward in modified spacetime at speeds approaching the light-speed characteristic for this modified area. This light-speed might be much higher than the light-speed in the ambient space.

By creating alternative anomalies and modulating their parameters, the space vehicle's crew would dilate and contract time and space on demand. The space vehicle, emitting a vacuum pressure modifying, controllably-modulated gravitomagnetic field in all directions, would rapidly move in the uneven spacetime anomaly it created, pulled forward by gravity or pushed by the repulsion force. The time rate zone of the anomaly is expected to have multiple quantized boundaries rather than a single sudden boundary affecting space and time in the immediate proximity of the vehicle. Speed, rate of time, and direction in space could be shifted on demand and in a rapid manner. The modulated light-speed could make the space vehicle suitable for interstellar travel. Because of the time rate control in the newly created isospace, the accelerations would be gradual and the angles of deviation would be relatively smooth. The gravity shielding would further protect pilots from the ill-effects of gravity during rapid accelerations, directional changes, and sudden stops.

What is claimed is:

1. A space vehicle propelled by the pressure of inflationary vacuum state is claimed comprising:

a hollow superconductive shield,

an inner shield, the inner shield disposed inside said hollow superconductive shield, said inner shield comprising an upper shell and a lower shell,

a support structure, the support structure disposed between said hollow superconductive shield and said inner shield concentrically to said hollow superconductive shield, said support structure comprised of an upper rotating element and a lower rotating element,

upper means for generating an electromagnetic field, the upper means for generating an electromagnetic field disposed between said hollow superconductive shield and said upper shell, affixed to said upper rotating element at an electromagnetic field-penetrable distance to said hollow superconductive shield,

lower means for generating an electromagnetic field, the lower means for generating an electromagnetic field disposed between said hollow superconductive shield and said lower shell, affixed to said lower rotating element at an electromagnetic field-penetrable distance to said hollow superconductive shield,

electric motors, the electric motors disposed inside said hollow superconductive shield along the central axis of said hollow superconductive shield,

a power source, the power source disposed inside said hollow superconductive shield, said power source electrically connected with said upper means for generating an electromagnetic field, said lower means for generating an electromagnetic field, and said electric motors,

life-support equipment, the life-support equipment disposed inside said inner shield,

a flux modulation controller, the flux modulation controller disposed inside said inner shield, said flux modulation controller in communication with said upper means for generating an electromagnetic field, said lower means for generating an electromagnetic field, said power source, and said electric motors, and

a crew, the crew disposed inside said inner shield accessibly to said life-support and said flux modulation controller.

2. The space vehicle of claim **1** wherein said hollow superconductive shield is composed of a high-temperature ceramic superconductor with a composite crystal structure, and is cooled to a temperature of about 40 degrees K.

3. The space vehicle of claim **1** wherein said inner shield is composed of insulating materials such as foamed ceramics.

4. The space vehicle of claim **1** wherein said power source is a nuclear generator.

5. The space vehicle of claim **1** wherein said flux modulation controller is a computer.

6. The space vehicle of claim **1** wherein said upper rotating element and said lower rotating element are pivoted, urged to rotate by said upper means for generating an electromagnetic field, said lower means for generating an electromagnetic field, and said electric motors.

7. The space vehicle of claim **1** wherein said hollow superconductive shield is pivoted and urged to rotate by said upper means for generating an electromagnetic field, said lower means for generating an electromagnetic field, and said electric motors.

8. A method for generating pressure anomaly of inflationary vacuum state is claimed comprising the following steps, some occurring simultaneously:

providing a space vehicle comprising a hollow superconductive shield, an inner shield, a support structure, upper means for generating an electromagnetic field, lower means for generating an electromagnetic field, electric motors, a power source, life-support equipment, a flux modulation controller, and a crew,

generating electrical energy in said power source,

converting said electrical energy into an electromagnetic field in said upper means for generating an electromagnetic field and said lower means for generating an electromagnetic field,

converting said electrical energy into mechanical energy in said electrical motors,

rotating said upper means for generating an electromagnetic field and said lower means for generating an electromagnetic field relative to said hollow superconductive shield,

converting said electromagnetic field into a gravitomagnetic field in said hollow superconductive shield,

propagating said gravitomagnetic field outward, orthogonal to the walls of said hollow superconductive shield, and

forming a pressure anomaly of inflationary vacuum state in the area of propagation of said gravitomagnetic field, the pressure anomaly of inflationary vacuum state comprised of an area of relatively lower vacuum pressure density in front of said space vehicle and an area of relatively higher vacuum pressure density behind said vehicle,

whereby said space vehicle is urged to move from said area of relatively higher vacuum pressure density toward said area of relatively lower vacuum pressure density.

9. The method of claim **8** wherein said pressure anomaly of inflationary vacuum state is a substantially droplet-shaped anomaly associated with lowered pressure of inflationary vacuum state provided by the propagation of a gravitomagnetic field radiating orthogonally away from the front of said hollow superconductive shield,

whereby providing for the gravitational imbalance where the lowered pressure of inflationary vacuum state is pulling said space vehicle forward.

10. The method of claim **8** wherein said pressure anomaly of inflationary vacuum state is a substantially droplet-shaped anomaly associated with elevated pressure of inflationary vacuum state provided by the propagation of a gravitomagnetic field radiating orthogonally away from the back of said hollow superconductive shield,

whereby providing for the gravitational imbalance where the elevated pressure of inflationary vacuum state is pushing said space vehicle forward.

11. The method of claim **8** wherein said pressure anomaly of inflationary vacuum state is comprised of a substantially droplet-shaped anomaly associated with lowered pressure of inflationary vacuum state and a substantially droplet-shaped anomaly associated with elevated pressure of inflationary vacuum state,

whereby providing for the gravitational imbalance where the lowered pressure of inflationary vacuum state is pulling, and the elevated pressure of inflationary vacuum state is pushing, said space vehicle forward.

12. The method of claim **8** wherein said pressure anomaly of inflationary vacuum state is a substantially egg-shaped anomaly associated with lowered pressure of inflationary vacuum state provided by the unequally-distributed gravitomagnetic field propagated in all directions orthogonally away from said hollow superconductive shield with an area of lowest vacuum pressure density disposed directly in front said space vehicle,

whereby providing for the gravitational imbalance such that the lowered pressure of inflationary vacuum state is pulling said space vehicle forward in modified space-time.

13. The method of claim **8** wherein said pressure anomaly of inflationary vacuum state is a substantially egg-shaped anomaly associated with elevated pressure of inflationary vacuum state provided by the unequally-distributed gravitomagnetic field propagated in all directions orthogonally away from said hollow superconductive shield with an area of highest vacuum pressure density disposed directly behind said space vehicle,

whereby providing for the gravitational imbalance such that the highest pressure of inflationary vacuum state is pushing said space vehicle forward in modified space-time at a speed possibly approaching a local light-speed, the local light-speed which may be substantially higher than the light-speed in the ambient space.

* * * * *

PCT

WORLD INTELLECTUAL PROPERTY ORGANIZATION
International Bureau

INTERNATIONAL APPLICATION PUBLISHED UNDER THE PATENT COOPERATION TREATY (PCT)

(51) International Patent Classification 5 : C07G 13/00, H03K 3/30

A1

(11) International Publication Number: WO 92/07861

(43) International Publication Date: 14 May 1992 (14.05.92)

(21) International Application Number: PCT/US90/06407

(22) International Filing Date: 2 November 1990 (02.11.90)

(71)(72) Applicant and Inventor: MEYER, Stanley, A. [US/US]; 3792 Broadway, Grove City, OH 43123 (US).

(74) Agent: BARANOWSKI, Edwin, M.; Porter, Wright, Morris & Arthur, 41 South High Street, Columbus, OH 43215 (US).

(81) Designated States: AT (European patent), AU, BE (European patent), CA, CH (European patent), DE (European patent), DK (European patent), ES, ES (European patent), FR (European patent), GB (European patent), GR (European patent), IT (European patent), JP, KR, LU (European patent), NL (European patent), SE (European patent), US.

Published
With international search report.

(54) Title: A CONTROL AND DRIVER CIRCUITS FOR A HYDROGEN GAS FUEL PRODUCING CELL

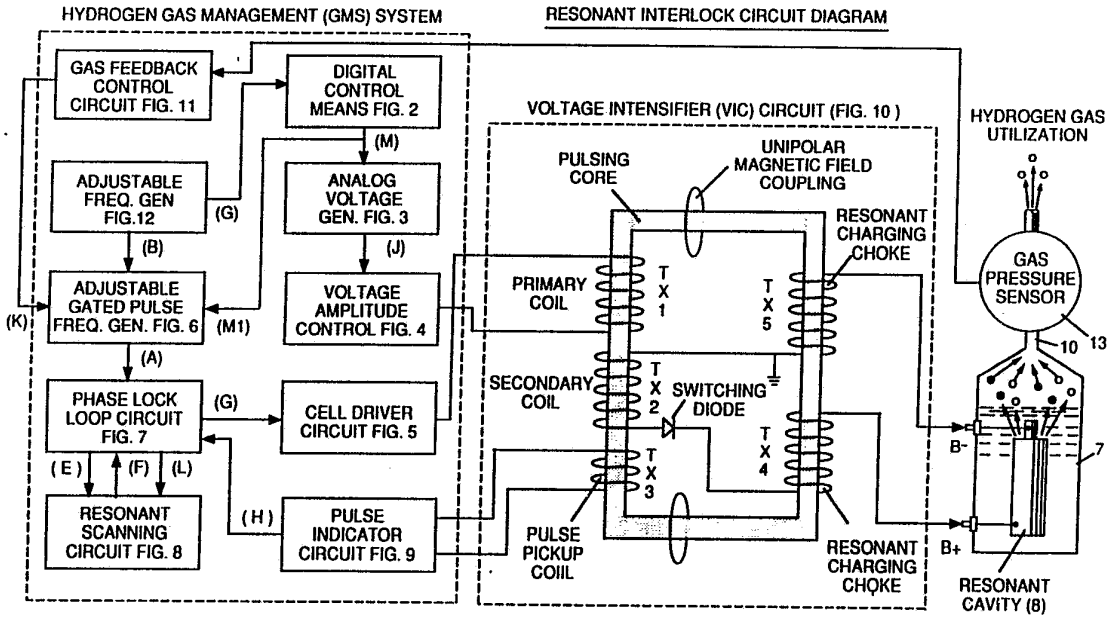

(57) Abstract

A control circuit for a capacitive resonant cavity water capacitor cell (7) for the production of a hydrogen containing fuel gas has a resonant scanning circuit cooperating with a resonance detector and PLL circuit to produce pulses. The pulses are fed into the primary (TX1) transformer. The secondary (TX2) transformer is connected to the resonant cavity water capacitor cell (7) via a diode and resonant charging chokes (TX4, TX5).

FOR THE PURPOSES OF INFORMATION ONLY

Codes used to identify States party to the PCT on the front pages of pamphlets publishing international applications under the PCT.

AT	Austria	ES	Spain	MG	Madagascar
AU	Australia	FI	Finland	ML	Mali
BB	Barbados	FR	France	MN	Mongolia
BE	Belgium	GA	Gabon	MR	Mauritania
BF	Burkina Faso	GB	United Kingdom	MW	Malawi
BG	Bulgaria	GN	Guinea	NL	Netherlands
BJ	Benin	GR	Greece	NO	Norway
BR	Brazil	HU	Hungary	PL	Poland
CA	Canada	IT	Italy	RO	Romania
CF	Central African Republic	JP	Japan	SD	Sudan
CG	Congo	KP	Democratic People's Republic of Korea	SE	Sweden
CH	Switzerland			SN	Senegal
CI	Côte d'Ivoire	KR	Republic of Korea	SU+	Soviet Union
CM	Cameroon	LI	Liechtenstein	TD	Chad
CS	Czechoslovakia	LK	Sri Lanka	TG	Togo
DE*	Germany	LU	Luxembourg	US	United States of America
DK	Denmark	MC	Monaco		

+ Any designation of "SU" has effect in the Russian Federation. It is not yet known whether any such designation has effect in other States of the former Soviet Union.

CONTROL AND DRIVER CIRCUITS FOR A HYDROGEN GAS FUEL PRODUCING CELL

This invention relates to electrical circuit systems useful in the operation of a water fuel cell including a water capacitor/resonant cavity for the production of a hydrogen containing fuel gas, such as that described in my United States Letter Patent No. 4,936,961, "Method for the Production of a Fuel Gas", issued on June 26, 1990.

In my aforesaid Letters Patent for a method for the production of a fuel gas, voltage pulses applied to plates of a water capacitor tune into the dielectric properties of the water and attenuate the electrical forces between the hydrogen and oxygen atoms of the molecule. The attenuation of the electrical forces results in a change in the molecular electrical field and the covalent atomic bonding forces of the hydrogen and oxygen atoms. When resonance is achieved, the atomic bond of the molecule is broken, and the atoms of the molecule disassociate. At resonance, the current (amp) draw from a power source to the water capacitor is minimized and voltage across the water capacitor increases. Electron flow is not permitted (except at the minimum, corresponding to leakage resulting from the residual conductive properties of water). For the process to continue, however, a resonant condition must be maintained.

Because of the electrical polarity of the water molecule, the fields produced in the water capacitor respectively attract and repel the opposite and like charges in the molecule, and the forces eventually achieved at resonance are such that the strength of the covalent bonding force in the water molecule is exceeded, and the atoms of the water molecule (which are normally in an electron sharing mode) disassociate. Upon disassociation, the formerly shared bonding electrons migrate to the hydrogen nuclei, and both the hydrogen and oxygen revert to net zero electrical charge. The atoms are released from the water as a gas mixture.

In the invention herein, a control circuit for a resonant cavity water capacitor cell utilized for the production of a hydrogen containing fuel gas is provided.

The circuit includes an isolation means such as a transformer having a ferromagnetic, ceramic or other electromagnetic material core and having one side of a secondary coil connected in series with a high speed switching diode to one plate of the water capacitor of the resonant cavity and the other side of the secondary coil connected to the other plate of the water capacitor to form a closed loop electronic circuit utilizing the dielectric properties of water as part of the electronic resonant circuit. The primary coil of the isolation transformer is connected to a pulse generation means. The secondary coil of the transformer may include segments

that form resonant charging choke circuits in series with the water capacitor plates.

In the pulse generation means, an adjustable first, resonant frequency generator and a second gated pulse frequency generator are provided. A gate pulse controls the number of the pulses produced by the resonant frequency generator sent to the primary coil during a period determined by the gate frequency of the second pulse generator.

The invention also includes a means for sensing the occurrence of a resonant condition in the water capacitor/resonant cavity, which when a ferromagnetic or electromagnetic core is used, may be a pickup coil on the transformer core. The sensing means is interconnected to a scanning circuit and a phase lock loop circuit, whereby the pulsing frequency to the primary coil of the transformer is maintained at a sensed frequency corresponding to a resonant condition in the water capacitor.

Control means are provided in the circuit for adjusting the amplitude of a pulsing cycle sent to the primary coil and for maintaining the frequency of the pulsing cycle at a constant frequency regardless of pulse amplitude. In addition, the gated pulse frequency generator may be operatively interconnected with a sensor that monitors the rate of gas production from the cell and controls the number of pulses from the resonant frequency

generator sent to the cell in a gated frequency in a correspondence with the rate of gas production. The sensor may be a gas pressure sensor in an enclosed water capaçitor resonant cavity which also includes a gas outlet. The gas pressure sensor is operatively connected to the circuit to determine the rate of gas production with respect to ambient gas pressure in the water capacitor enclosure.

Thus, an omnibus control circuit and its discrete elements for maintaining and controlling the resonance and other aspects of the release of gas from a resonant cavity water cell is described herein and illustrated in the drawings which depict the following:

Figure 1 is a block diagram of an overall control circuit showing the interrelationship of sub-circuits, the pulsing core/resonant circuit and the water capacitor resonant cavity.

Figure 2 shows a type of digital control means for regulating the ultimate rate of gas production as determined by an external input. (Such a control means would correspond, for example, to the accelerator in an automobile or a building thermostat control.)

Figure 3 shows an analog voltage generator.

Figure 4 is a voltage amplitude control circuit interconnected with the voltage generator and one side of the primary coil of the pulsing core.

Figure 5 is the cell driver circuit that is connected with the opposite side of the primary coil of the pulsing core.

Figures 6, 7, 8 and 9 relate to pulsing control means including a gated pulse frequency generator (**Figure 6**); a phase lock circuit (**Figure 7**); a resonant scanning circuit (**Figure 8**); and the pulse indicator circuit (**Figure 9**) that control pulses transmitted to the resonant cavity/water fuel cell capacitor.

Figure 10 shows the pulsing core and the voltage intensifier circuit that is the interface between the control circuit and the resonant cavity.

Figure 11 is a gas feedback control circuit.

Figure 12 is an adjustable frequency generator circuit.

The circuits are operatively interconnected as shown in Figure 1 and to the pulsing core voltage

intensifier circuit of Figure 10, which, inter alia, electrically isolates the water capacitor so that it becomes an electrically isolated cavity for the processing of water in accordance with its dielectric resonance properties. By reason of the isolation, power consumption in the control and driving circuits is minimized when resonance occurs; and current demand is minimized as voltage is maximized in the gas production mode of the water capacitor/fuel cell.

The reference letters appearing in the Figures, A, B, C, D, E, etc., to M and M1 show, with respect to each separate circuit depicted, the point at which a connection in that circuit is made to a companion or interrelated circuit.

In the invention, the water capacitor is subjected to a duty pulse which builds up in the resonant changing choke coil and then collapses. This occurrence permits a unipolar pulse to be applied to the fuel cell capacitor. When a resonant condition of the circuit is locked-in by the circuit, amp leakage is held to a minimum as the voltage which creates the dielectric field tends to infinity. Thus, when high voltage is detected upon resonance, the phase lock loop circuit that controls the cell driver circuit maintains the resonance at the detected (or sensed) frequency.

The resonance of the water capacitor cell is affected by the volume of water in the cell. The

resonance of any given volume of water maintained in the water capacitor cell is also affected by "contaminants" in the water which act as a damper. For example, at an applied potential difference of 2000 to 5000 volts to the cell, an amp spike or surge may be caused by inconsistencies in water characteristics that cause an out-of-resonance condition which is remedied instantaneously by the control circuits.

In the invention, the adjustable frequency generator (Figure 12) tunes into the resonant condition of the circuit including the water cell and the water therein. The generator has a frequency capability of 0 - 10 KHz and tunes into resonance typically at a frequency of 5 KHz in a typical 3.0 inch water capacitor formed of a 0.5 inch rod enclosed within a 0.75 inside diameter cylinder. At start up, in this example, current draw through the water cell will measure about 25 milliamp; however, when the circuit finds a tuned resonant condition, current drops to a 1-2 milliamp minimum leakage condition.

The voltage to the capacitor water cell increases according to the turns of the winding and size of the coils, as in a typical transformer circuit. For example, if 12 volts are sent to the primary coil of the pulsing core and the secondary coil resonant charging choke ratio is 30 to 1, then 360 volts are sent to the capacitor water

cell. Turns are a design variable that control the voltage of the unipolar pulses sent to the capacitor.

The high speed switching diode shown in Figure 10 prevents charge leakage from the charged water in the water capacitor cavity, and the water capacitor as an overall capacitor circuit element, i.e., the pulse and charge status of the water/capacitor never pass through an arbitrary ground. The pulse to the water capacitor is always unipolar. The water capacitor is electrically isolated from the control, input and driver circuits by the electromagnetic coupling through the core. The switching diode in the VIC circuit (Figure 10) performs several functions in the pulsing. The diode is an electronic switch that determines the generation and collapse of an electromagnetic field to permit the resonant charging choke(s) to double the applied frequency and also allows the pulse to be sent to the resonant cavity without discharging the "capacitor" therein. The diode, of course, is selected in accordance with the maximum voltage encountered in the pulsing circuit. A 600 PIV fast switching diode, such as an NVR 1550 high speed switching diode, has been found to be useful in the circuit herein.

The VIC circuit of Figure 10 also includes a ferromagnetic or ceramic ferromagnetic pulsing core capable of producing electromagnetic flux lines in response to an electrical pulse input. The flux lines

equally affect the secondary coil and the resonant charging choke windings. Preferably, the core is a closed loop construction. The effect of the core is to isolate the water capacitor and to prevent the pulsing signal from going below an arbitrary ground and to maintain the charge of the already charged water and water capacitor.

In the pulsing core, the coils are preferably wound in the same direction to maximize the additive effect of the electromagnetic field therein.

The magnetic field of the pulsing core is in synchronization with the pulse input to the primary coil. The potential from the secondary coil is introduced to the resonant charging choke(s) series circuit elements which are subjected to the same synchronous applied electromagnetic field, simultaneously with the primary pulse.

When resonance occurs, control of the gas output is achieved by varying voltage amplitude or varying the time of duty gate cycle. The transformer core is a pulse frequency doubler. In a figurative explanation of the workings of the fuel gas generator water capacitor cell, when a water molecule is "hit" by a pulse, electron time share is affected, and the molecule is charged. When the time of the duty cycle is changed, the number of pulses that "hit" the molecules in the fuel cell is correspondingly modified. More "hits" result in a greater rate of molecular disassociation.

With reference to the overall circuit of Figure 1, Figure 3 receives a digital input signal, and Figure 4 depicts the control means that directs 0-12 volts across the primary coil of the pulsing core. Depending upon design parameters of primary coil voltage and other factors relevant to core design, the secondary coil of the pulsing core can be set up for a predetermined maximum, such as 2000 volts.

Figure 5, the cell driver circuit, allows a gated pulse to be varied in direct relation to voltage amplitude.

As noted above, the circuit of Figure 6 produces a gate pulse frequency. The gate pulse is superimposed over the resonant frequency pulse to create a duty cycle that determines the number of discrete pulses sent to the primary coil. For example, assuming a resonant pulse of 5 KHz, a .5 Hz gate pulse may be superimposed over the 5 KHz pulse to provide 2500 discrete pulses in a 50% duty cycle per Hz. The relationship of resonant pulse to the gate pulse is determined by conventional signal addition/subtraction techniques.

Figure 7, a phase lock loop, allows pulse frequency to be maintained at a predetermined resonant condition sensed by the circuit. Together, the circuits of Figures 7 and 8 determine an output signal to the pulsing core until the peak voltage signal sensed at resonance is achieved.

A resonant condition occurs when the pulse frequency and the voltage input attenuates the covalent bonding forces of the hydrogen and oxygen atoms of the water molecule. When this occurs, amp leakage through the water capacitor is minimized. The tendency of voltage to maximize at resonance increases the force of the electric potential applied to the water molecules, which ultimately disassociate into atoms.

Because resonances of different waters, water volumes, and capacitor cells vary, the resonant scanning circuit of Figure 8 is useful. The scanning circuit of Figure 8 scans frequency from high to low to high repeating until a signal lock is determined. The ferromagnetic core of the voltage intensifier circuit transformer suppresses electron surge in an out-of-resonance condition of the fuel cell. In an example, the circuit scans at frequencies from 0 Hz to 10 KHz to 0 Hz. In water having contaminants in the range of 1 ppm to 20 ppm, a 20% variance in resonant frequency is encountered. Depending on water flow rate into fuel cell, the normal variance range is about 8-10%. For example, iron in well water affects the status of molecular disassociation. Also, at a resonant condition harmonic effects occur. In a typical operation of the cell with a representative water capacitor described below, at a frequency of about 5 KHz at unipolar pulses from 0 to 650 volts at a sensed resonant condition into the resonant

cavity, conversion of about 5 gallons of water per hour into a fuel gas will occur on average. To increase the rate, multiple resonant cavities can be used and/or the surfaces of the water capacitor can be increased, however, the water capacitor cell is preferably small in scale. A typical water capacitor may be formed from a 0.5 inch in diameter stainless steel rod and a 0.75 inch inside diameter cylinder that together extend concentrically about 3.0 inches with respect to each other.

Shape and size of the resonant cavity may vary. Larger resonant cavities and higher rates of consumption of water in the conversion process require higher frequencies such as up to 50 KHz and above. The pulsing rate, to sustain such high rates of conversion must be correspondingly increased.

From the foregoing description of the preferred embodiment, other variations and modifications of the system disclosed will be evident to those of skill in the art.

WHAT IS CLAIMED IS:

1. A control circuit for a resonant cavity water capacitor cell utilized for the production of a hydrogen containing fuel gas including

an isolation transformer including a ferromagnetic core and having one side of a secondary coil connected in series with a high speed switching diode to one plate of the water capacitor of the resonant cavity and the other side of the secondary coil connected to the other plate of the water capacitor to form a closed loop electronic circuit utilizing the dielectric properties of water as part of the electronic circuit and a primary coil connected to a pulse generation means.

2. The circuit of Claim 1 in which the secondary coil includes segments that form a resonant charging choke circuit in series with the water capacitor.

3. The circuit of Claim 1 in which the pulse generation means includes an adjustable first frequency generator and a second gated pulse frequency generator which controls the number of pulses produced by the first frequency generator sent to the primary coil during a period determined by the gate frequency of the second pulse generator.

4. The circuit of Claim 1 further including a means for sensing the occurrence of a resonant condition in the water capacitor of the resonant cavity.

5. The circuit of Claim 4 in which the means for sensing is a pickup coil on the ferromagnetic core of the transformer.

6. The circuit of Claim 4 or Claim 5 in which the sensing means is interconnected to a scanning circuit and a phase lock loop circuit, whereby the pulsing frequency to the primary coil of the transformer is maintained at a sensed frequency corresponding to a resonant condition in the water capacitor.

7. The circuit of Claim 1 including means for adjusting the amplitude of a pulsing cycle sent to the primary coil.

8. The circuit of Claim 6 including further means for maintaining the frequency of the pulsing cycle at a constant frequency regardless of pulse amplitude.

9. The circuit of Claim 3 in which the gated pulse frequency generator is operatively interconnected with a sensor that monitors the rate of gas production from the cell and controls the number of pulses to the

cell in a gated frequency in a correspondence with the rate of gas production.

10. The circuit of Claim 7 or Claim 8 or Claim 9 further including a gas pressure sensor in an enclosed water capacitor resonant cavity which also includes a gas outlet, which gas pressure sensor is operatively connected to the circuit to determine the rate of gas production with respect to ambient gas pressure in the water capacitor enclosure.

11. The methods and apparatus as substantially described herein.

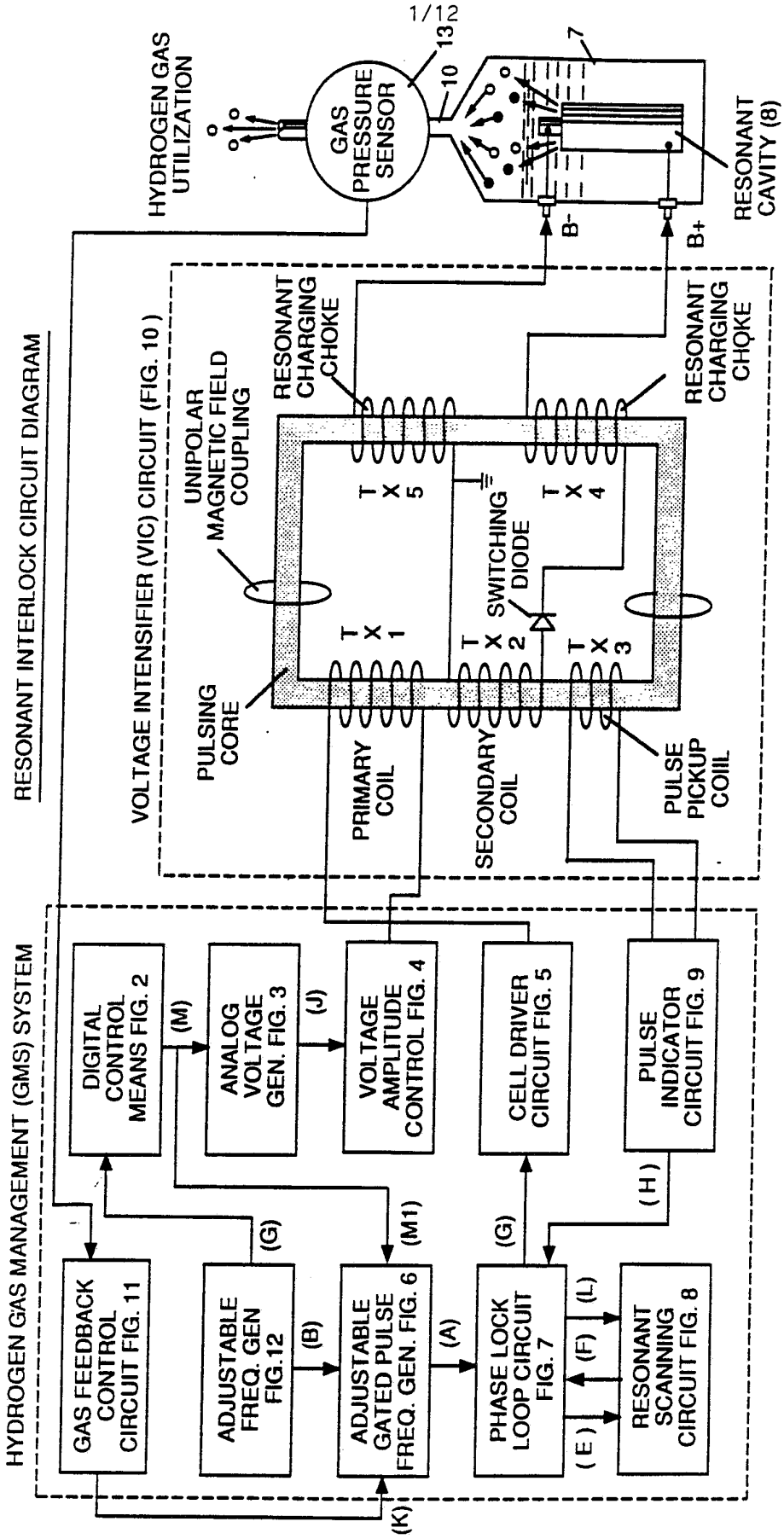
RESONANT INTERLOCK CIRCUIT DIAGRAM
HYDROGEN GAS UTILIZATION
GAS PRESSURE SENSOR
13
10
7
RESONANT CAVITY (8)
B-
B+
VOLTAGE INTENSIFIER (VIC) CIRCUIT (FIG. 10)
UNIPOLAR MAGNETIC FIELD COUPLING
RESONANT CHARGING CHOKE
RESONANT CHARGING CHOKE
PULSING CORE
TX1
TX5
TX2
SWITCHING DIODE
TX4
TX3
PRIMARY COIL
SECONDARY COIL
PULSE PICKUP COIIL
HYDROGEN GAS MANAGEMENT (GMS) SYSTEM
DIGITAL CONTROL MEANS FIG. 2
(M)
ANALOG VOLTAGE GEN. FIG. 3
(J)
VOLTAGE AMPLITUDE CONTROL FIG. 4
CELL DRIVER CIRCUIT FIG. 5
PULSE INDICATOR CIRCUIT FIG. 9
(H)
GAS FEEDBACK CONTROL CIRCUIT FIG. 11
(G)
ADJUSTABLE FREQ. GEN FIG.12
(B)
ADJUSTABLE GATED PULSE FREQ. GEN. FIG. 6
(M1)
(A)
PHASE LOCK LOOP CIRCUIT FIG. 7
(G)
(E)
(F)
(L)
RESONANT SCANNING CIRCUIT FIG. 8
(K)

FIGURE 1

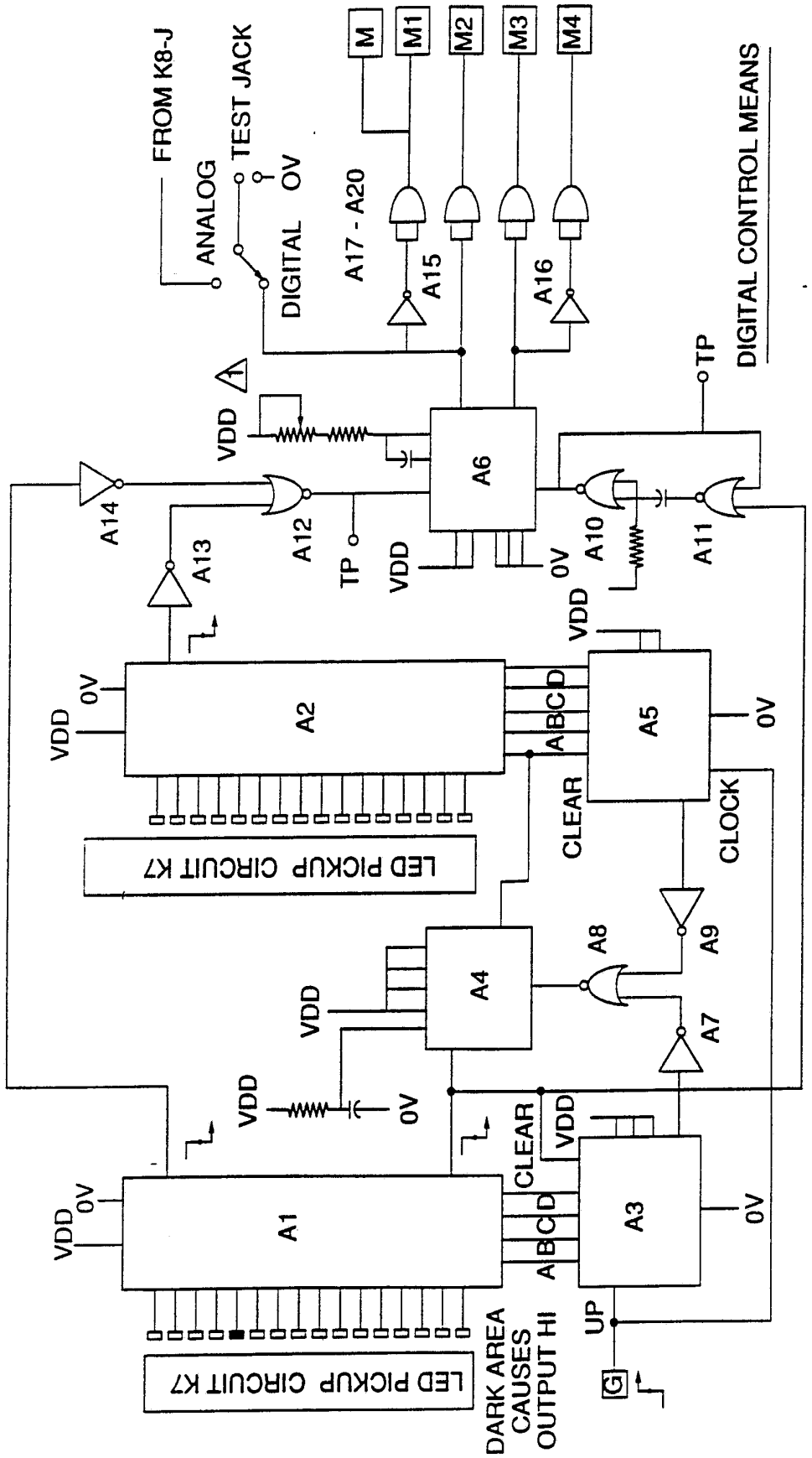
FROM K8-J
ANALOG
TEST JACK
DIGITAL
0V
A17 - A20
M
M1
M2
M3
M4
A15
A16
DIGITAL CONTROL MEANS
TP
VDD
A6
A14
A13
A12
TP
VDD
0V
A10
A11
VDD
0V
A2
VDD
A5
0V
A
B
C
D
CLEAR
CLOCK
LED PICKUP CIRCUIT K7
A8
A9
A4
VDD
A7
VDD
0V
CLEAR
VDD
A1
VDD
0V
A3
0V
A
B
C
D
UP
DARK AREA CAUSES OUTPUT HI
LED PICKUP CIRCUIT K7
G
1 ON CARD MOUNTING

FIGURE 2

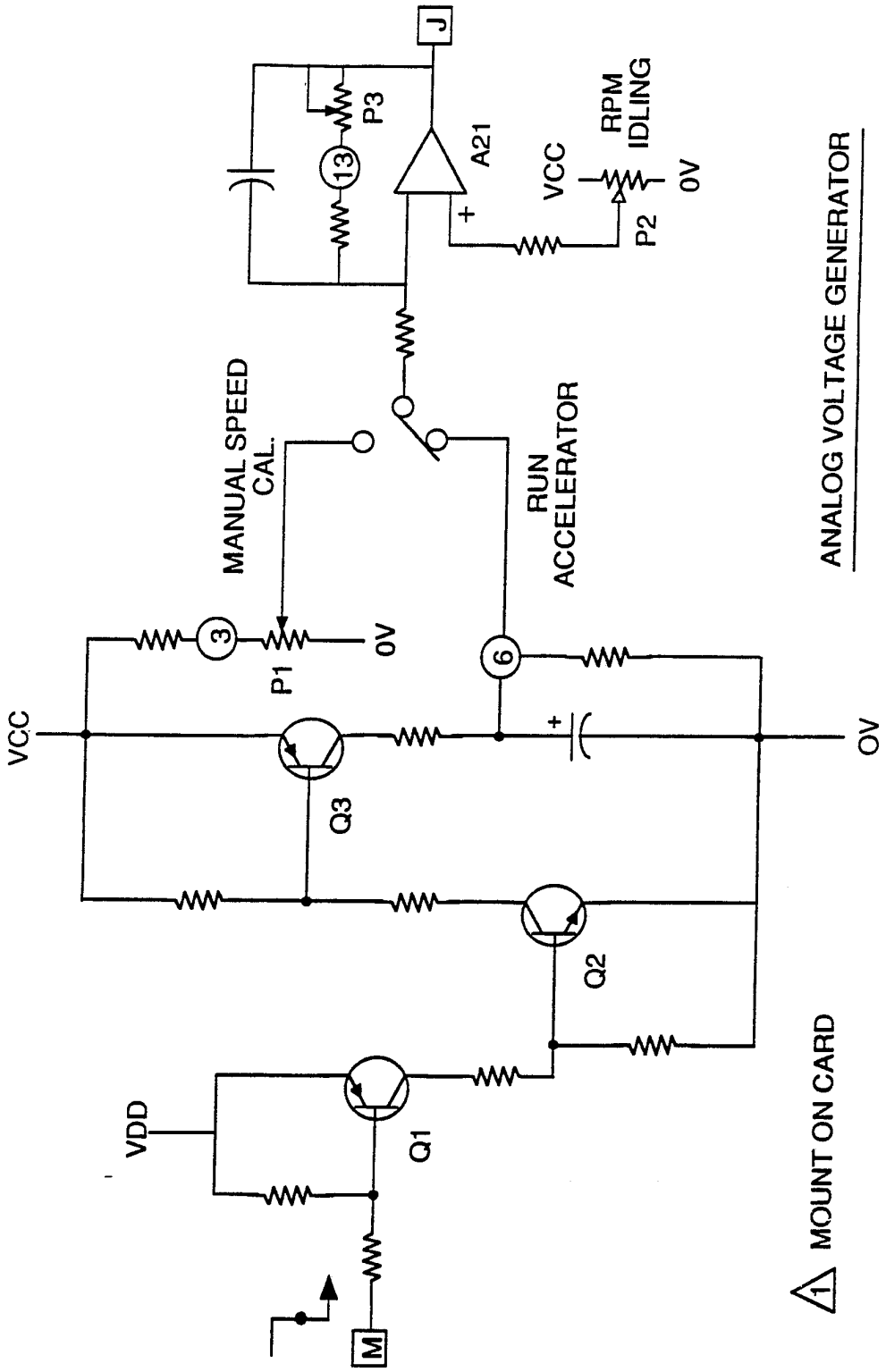
J
P3
13
A21
VCC
RPM
IDLING
0V
P2
MANUAL SPEED
CAL.
RUN
ACCELERATOR
ANALOG VOLTAGE GENERATOR
3
P1
0V
6
VCC
Q3
0V
Q2
VDD
Q1
M
1
MOUNT ON CARD

FIGURE 3

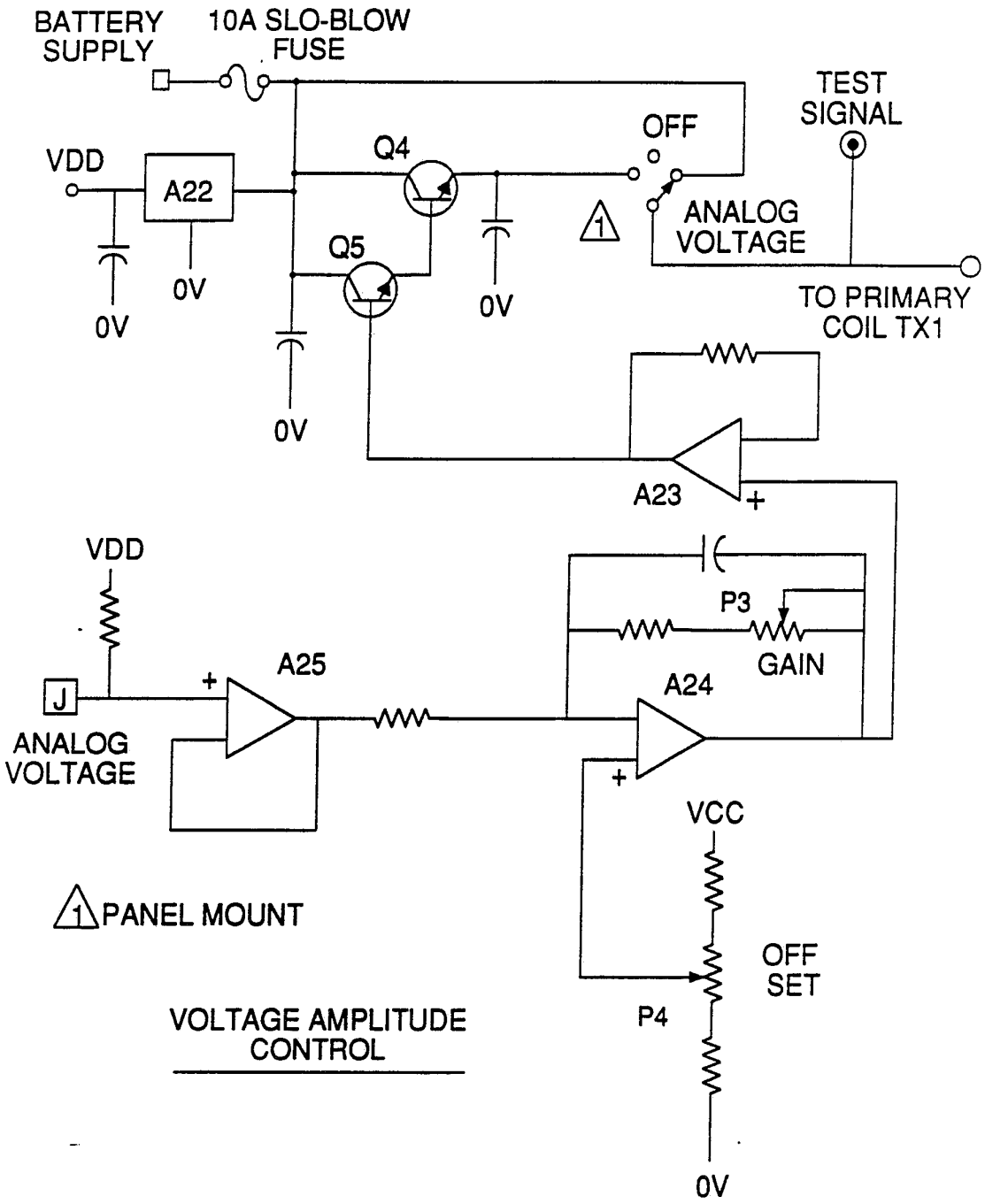
BATTERY SUPPLY
10A SLO-BLOW FUSE
TEST SIGNAL
OFF
VDD
A22
Q4
Q5
ANALOG VOLTAGE
0V
0V
0V
0V
TO PRIMARY COIL TX1
A23
VDD
P3
GAIN
A25
A24
J
ANALOG VOLTAGE
VCC
PANEL MOUNT
OFF SET
P4
VOLTAGE AMPLITUDE CONTROL
0V

FIGURE 4

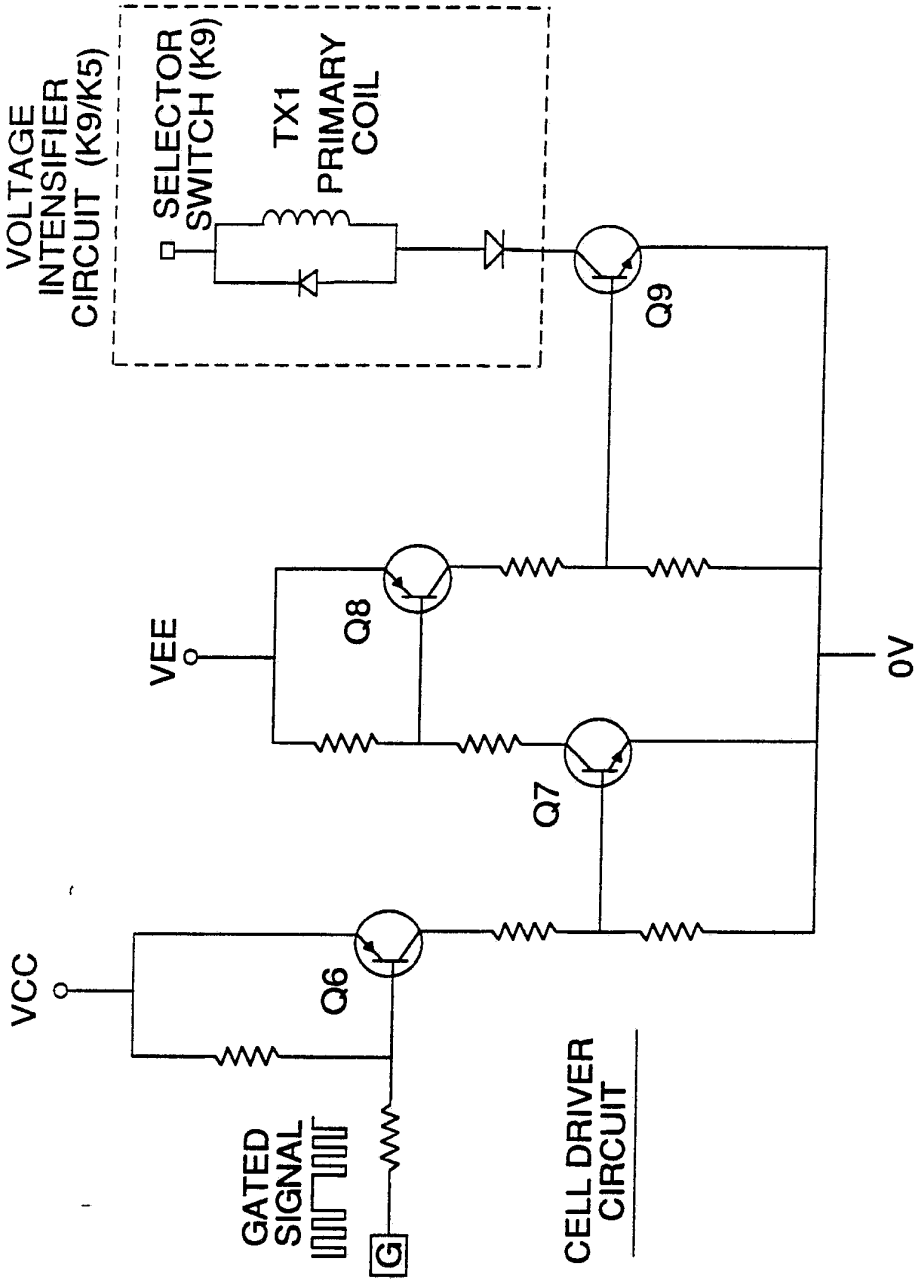
VOLTAGE INTENSIFIER CIRCUIT (K9/K5)
SELECTOR SWITCH (K9)
TX1 PRIMARY COIL
Q9
VEE
Q8
Q7
0V
VCC
Q6
GATED SIGNAL
G
CELL DRIVER CIRCUIT

FIGURE 5

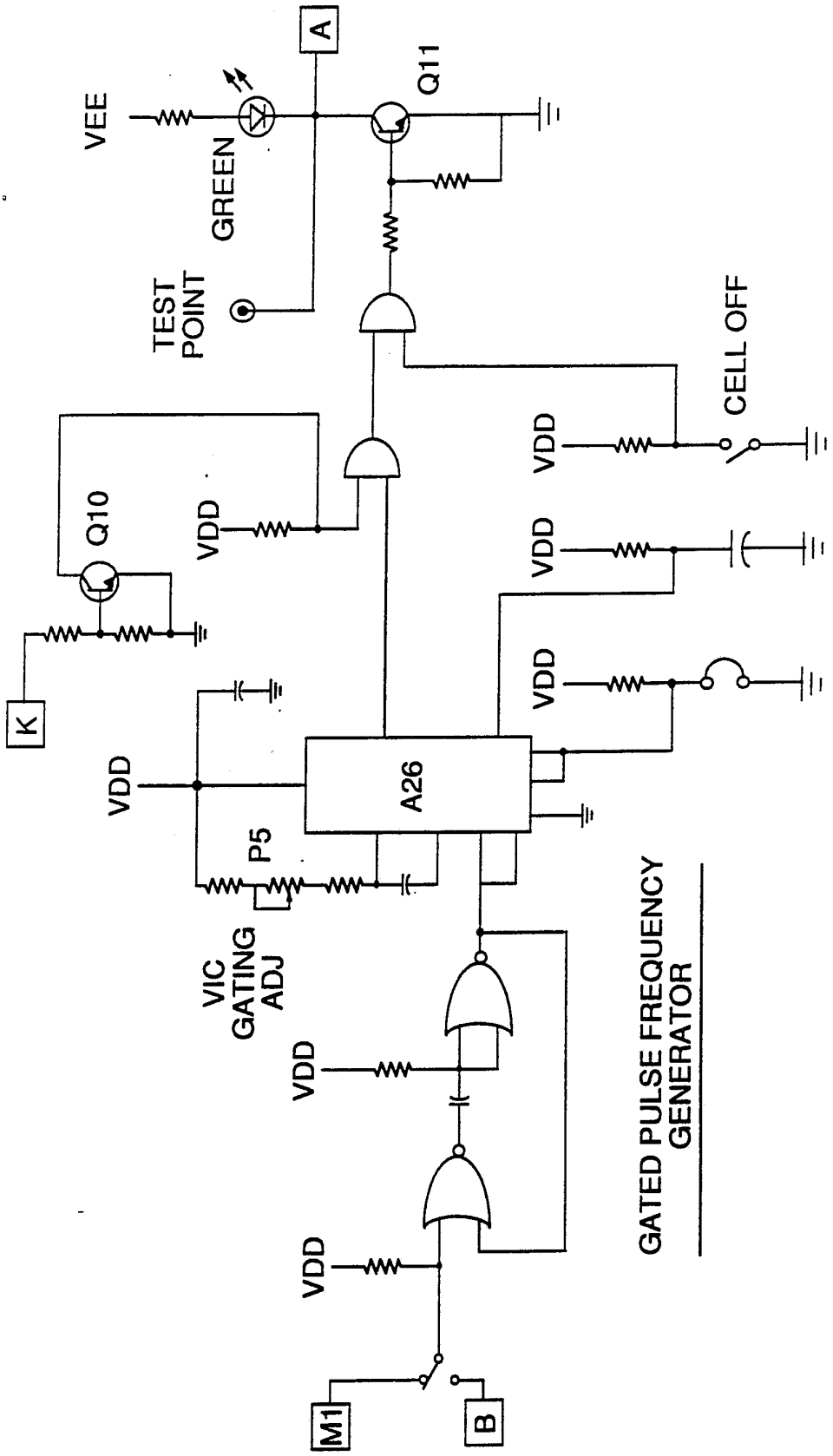
VEE
GREEN
A
Q11
TEST POINT
CELL OFF
VDD
Q10
K
A26
P5
VIC GATING ADJ
GATED PULSE FREQUENCY GENERATOR
M1
B

FIGURE 6

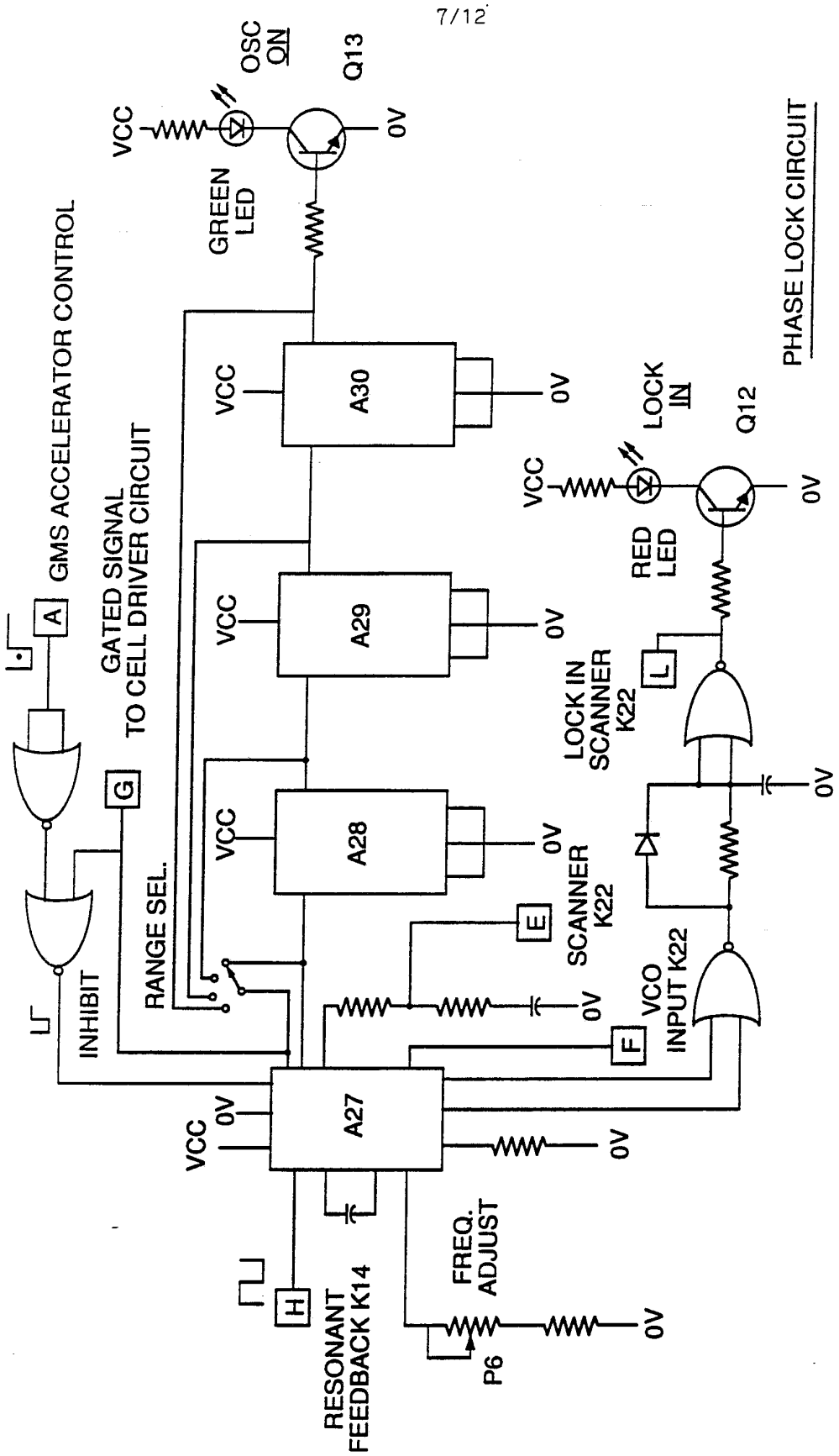
OSC ON
Q13
VCC
0V
GREEN LED
PHASE LOCK CIRCUIT
GMS ACCELERATOR CONTROL
A30
LOCK IN
Q12
GATED SIGNAL TO CELL DRIVER CIRCUIT
A29
RED LED
LOCK IN SCANNER K22
A28
SCANNER K22
RANGE SEL.
INHIBIT
VCO INPUT K22
A27
FREQ. ADJUST
P6
RESONANT FEEDBACK K14
A
G
E
F
H
L

FIGURE 7

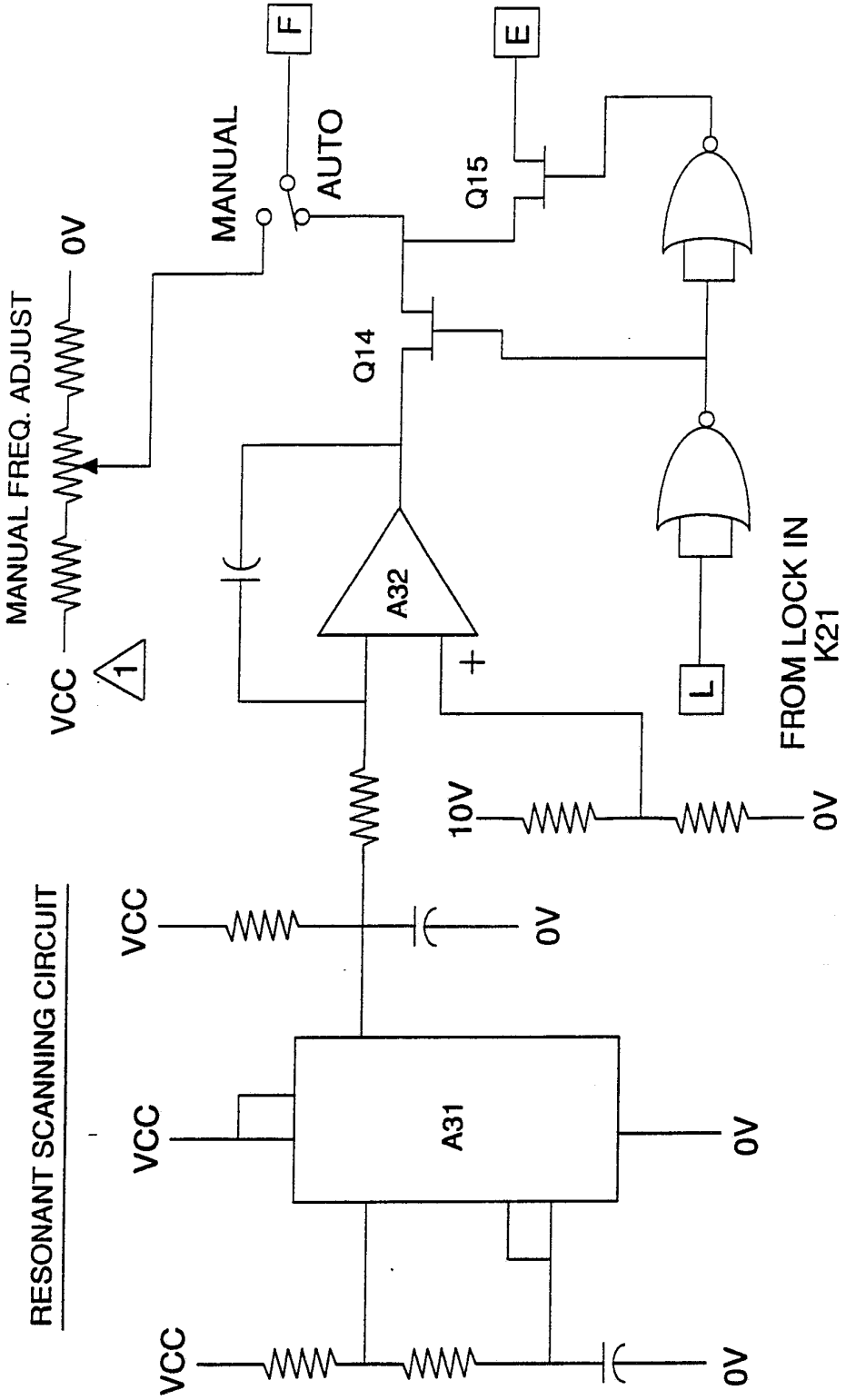
RESONANT SCANNING CIRCUIT
VCC
VCC
VCC
A31
0V
0V
0V
VCC
0V
10V
0V
A32
+
Q14
Q15
MANUAL
AUTO
F
E
L
FROM LOCK IN
K21
MANUAL FREQ. ADJUST
VCC
1
0V

FIGURE 8

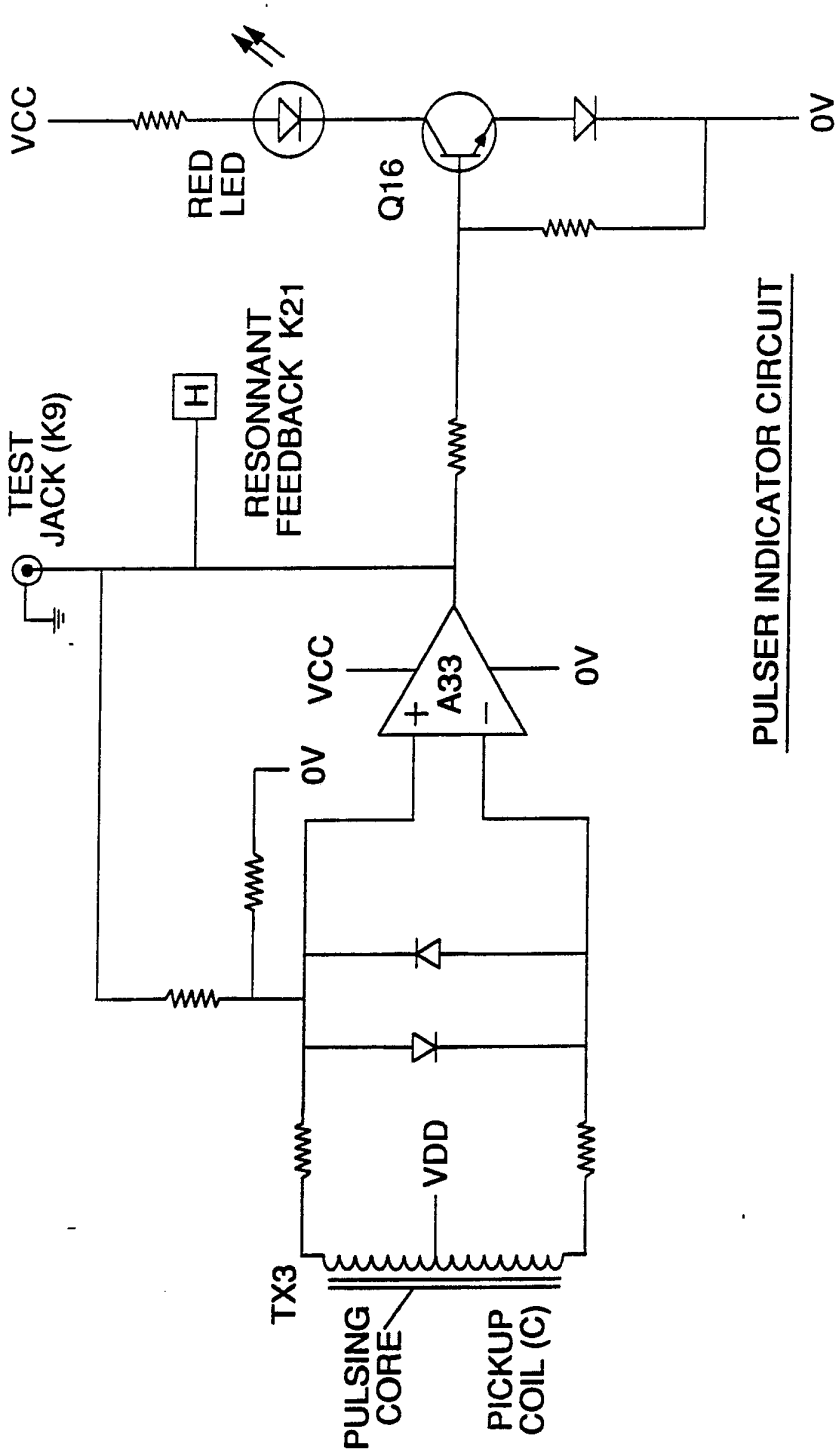
VCC
RED LED
Q16
0V
TEST JACK (K9)
H
RESONNANT FEEDBACK K21
VCC
A33
0V
0V
VDD
TX3
PULSING CORE
PICKUP COIL (C)
PULSER INDICATOR CIRCUIT

FIGURE 9

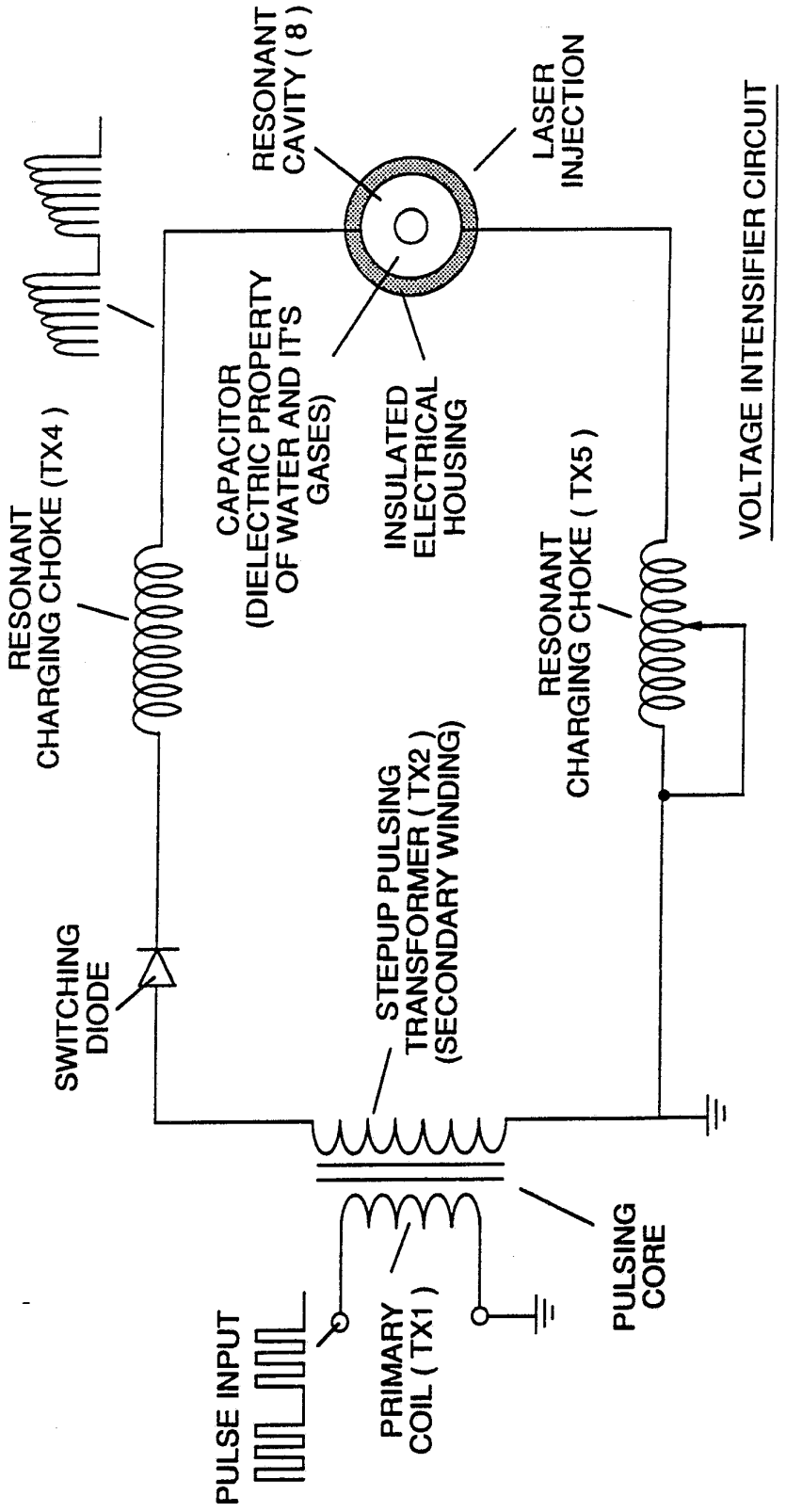
RESONANT CAVITY (8)
LASER INJECTION
VOLTAGE INTENSIFIER CIRCUIT
RESONANT CHARGING CHOKE (TX4)
CAPACITOR (DIELECTRIC PROPERTY OF WATER AND IT'S GASES)
INSULATED ELECTRICAL HOUSING
RESONANT CHARGING CHOKE (TX5)
SWITCHING DIODE
STEPUP PULSING TRANSFORMER (TX2) (SECONDARY WINDING)
PULSE INPUT
PRIMARY COIL (TX1)
PULSING CORE

FIGURE 10

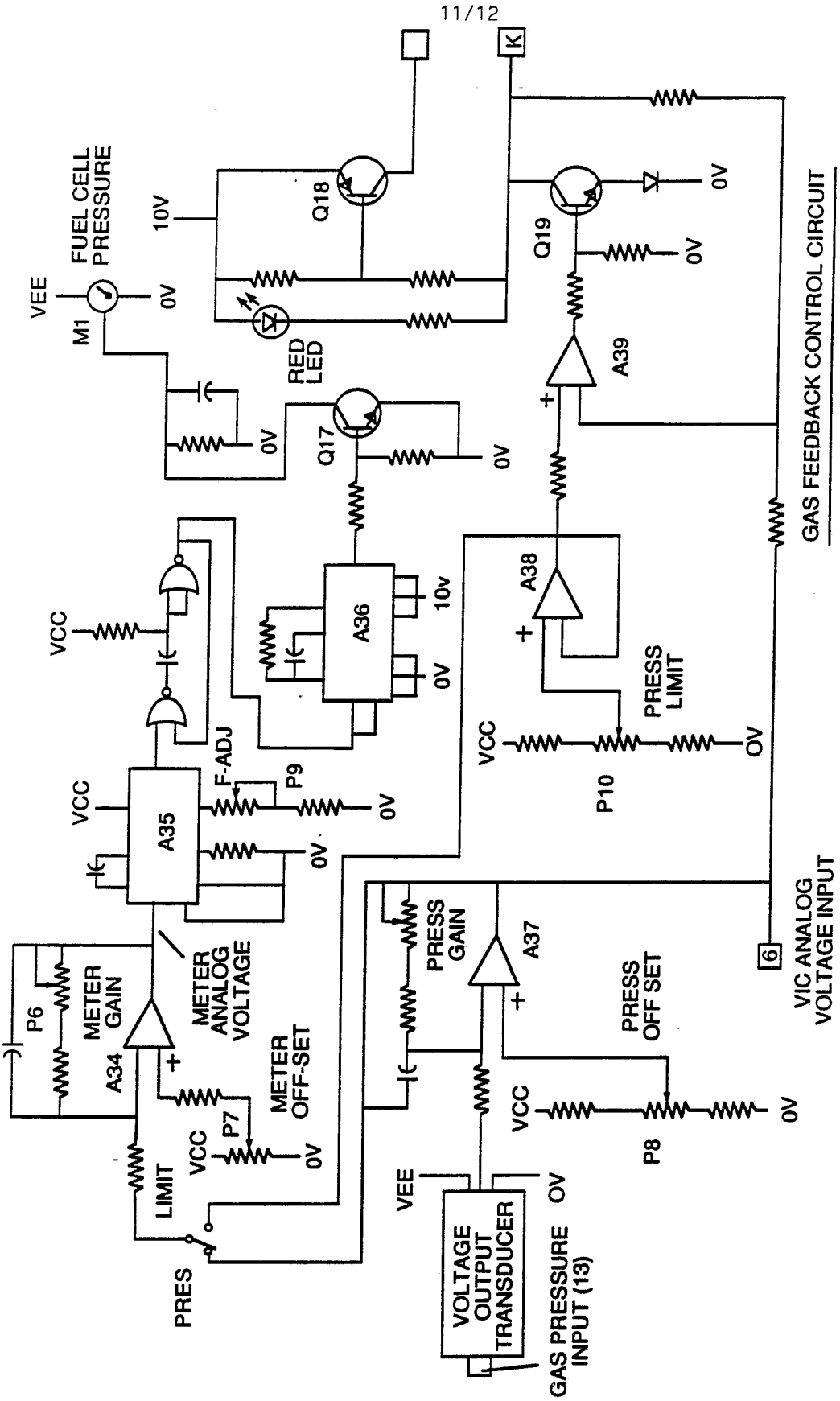
FUEL CELL PRESSURE
VEE
M1
0V
10V
Q18
Q19
RED LED
Q17
A39
A38
A36
A35
A34
A37
VCC
F-ADJ
P9
P10
P6
P7
P8
METER GAIN
METER ANALOG VOLTAGE
METER OFF-SET
LIMIT
PRES
PRESS GAIN
PRESS OFF SET
PRESS LIMIT
VOLTAGE OUTPUT TRANSDUCER
GAS PRESSURE INPUT (13)
VIC ANALOG VOLTAGE INPUT
GAS FEEDBACK CONTROL CIRCUIT
K
6

FIGURE 11

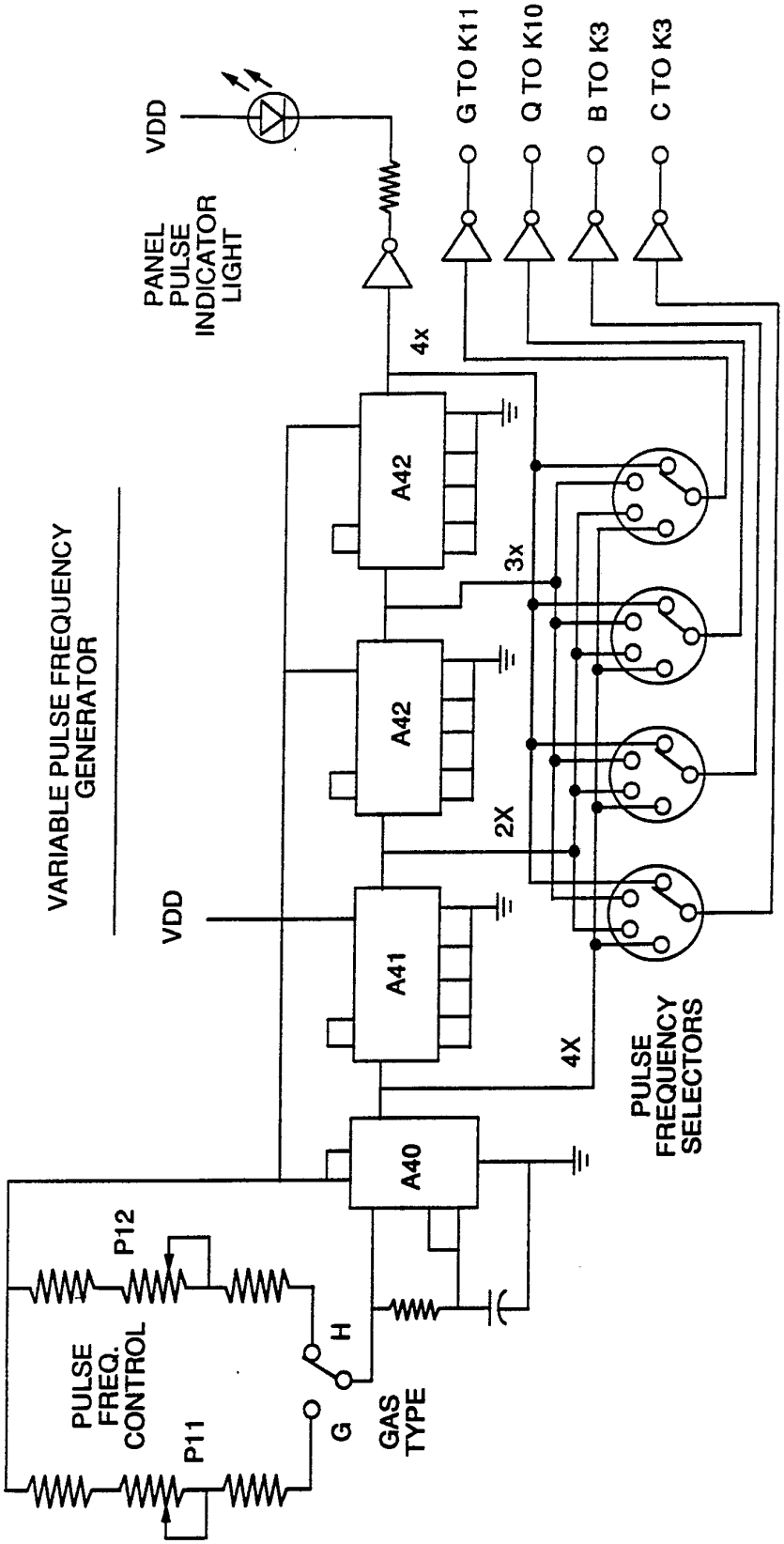
VDD
PANEL PULSE INDICATOR LIGHT
G TO K11
Q TO K10
B TO K3
C TO K3
4x
A42
3x
A42
2X
A41
4X
A40
VARIABLE PULSE FREQUENCY GENERATOR
VDD
PULSE FREQUENCY SELECTORS
P12
PULSE FREQ. CONTROL
P11
H
G
GAS TYPE

FIGURE 12

INTERNATIONAL SEARCH REPORT

International Application No PCT/US90/06407

I. CLASSIFICATION OF SUBJECT MATTER (if several classification symbols apply, indicate all) [3]

According to International Patent Classification (IPC) or to both National Classification and IPC

IPC(5) . C07G 13/00, H03K 3/30
US CL : 204/157.52, 331/4, 307/106

II. FIELDS SEARCHED

Minimum Documentation Searched [4]

Classification System	Classification Symbols
US CL	204/157.42, 157.52; 422/186.16; 331/4,47,178, 307/106-109,271,282

Documentation Searched other than Minimum Documentation to the Extent that such Documents are Included in the Fields Searched [5]

III. DOCUMENTS CONSIDERED TO BE RELEVANT [14]

Category *	Citation of Document, [16] with indication, where appropriate, of the relevant passages [17]	Relevant to Claim No. [18]
X Y	US, A, 4,936,961 (MEYER) 26 JUNE 1990 SEE FIGURES 1,2	1-3,7 4,6
Y	US, A, 4,275,363 (MISHIRO ET AL.) 23 JUNE 1981. SEE FIGURE 1.	4,6

* Special categories of cited documents: [15]

"A" document defining the general state of the art which is not considered to be of particular relevance

"E" earlier document but published on or after the international filing date

"L" document which may throw doubts on priority claim(s) or which is cited to establish the publication date of another citation or other special reason (as specified)

"O" document referring to an oral disclosure, use, exhibition or other means

"P" document published prior to the international filing date but later than the priority date claimed

"T" later document published after the international filing date or priority date and not in conflict with the application but cited to understand the principle or theory underlying the invention

"X" document of particular relevance; the claimed invention cannot be considered novel or cannot be considered to involve an inventive step

"Y" document of particular relevance; the claimed invention cannot be considered to involve an inventive step when the document is combined with one or more other such documents, such combination being obvious to a person skilled in the art.

"&" document member of the same patent family

IV. CERTIFICATION

Date of the Actual Completion of the International Search [2]: 12 APRIL 1991

Date of Mailing of this International Search Report [2]: 07 MAY 1991

International Searching Authority [1]: ISA/US

Signature of Authorized Officer [20]: for Andre Robinson
DAVID A. OSBORN

US006404089B1

(12) **United States Patent**
Tomion

(10) **Patent No.: US 6,404,089 B1**
(45) **Date of Patent: Jun. 11, 2002**

(54) **ELECTRODYNAMIC FIELD GENERATOR**

(76) Inventor: **Mark R. Tomion**, 2938 Ferguson Corners Rd., Geneva, NY (US) 14456

(*) Notice: Subject to any disclaimer, the term of this patent is extended or adjusted under 35 U.S.C. 154(b) by 0 days.

(21) Appl. No.: **09/621,152**

(22) Filed: **Jul. 21, 2000**

(51) **Int. Cl.**[7] **H02K 1/00**; H02K 5/00

(52) **U.S. Cl.** ..... **310/162**; 290/1 A; 290/1 R; 244/23 A; 244/23 C

(58) **Field of Search** ..... 310/162–168, 310/171, 112, 308–309, 74, 68 R, 90, 118, 216, 261, 254, 89, 258; 290/1 R, 1 A, 49; 244/1 N, 130, 62, 23 C, 205, 23 A

(56) **References Cited**

U.S. PATENT DOCUMENTS

1,889,208 A	*	11/1932	Masterson et al.	310/126
2,949,550 A		8/1960	Brown	
3,071,705 A		1/1963	Coleman et al.	
3,177,654 A		4/1965	Gradecak	
3,464,207 A		9/1969	Okress	
3,620,484 A	*	11/1971	Schoppe	244/130
3,662,554 A	*	5/1972	Broqueville	244/1 N
3,774,865 A	*	11/1973	Pinto	244/23 C
4,733,099 A		3/1988	Hutson, Jr.	
4,789,801 A		12/1988	Lee	
4,900,965 A		2/1990	Fisher	
5,291,734 A	*	3/1994	Sohnly	60/202
5,382,833 A		1/1995	Wirges	

FOREIGN PATENT DOCUMENTS

GB	2312709	5/1997
WO	WO85/03053	7/1985

* cited by examiner

Primary Examiner—Tran Nguyen
(74) *Attorney, Agent, or Firm*—Stephen B. Salai, Esq.; Brian B. Shaw, Esq.; Harter, Secrest & Emery LLP

(57) **ABSTRACT**

This device is a brushless high-voltage electrical generator, requiring suitable means of input rotary torque, for purposes of producing a very-high-energy external electrodynamic field or continuous quasi-coherent DC corona or arc discharge of uniform current density which completely encloses the machine's conductive housing. This housing is divided into distinct electrical sections and contains a flat conductive rotor which electrically links separate negative and positive housing sections and upon which a plurality of toroidal generating coils are rotatably mounted. Circular arrays of stationary permanent magnets are affixed within the housing which induce a constant DC voltage within said coils upon their rotation. The primary voltage so-generated is electrostatically impressed across the rotor such that great quantities of electronic charge may be transported between the opposite polarity sections of the housing, in such a manner that a much higher secondary voltage is caused to appear across interposed neutral sections thereof, and the resulting external breakdown current once initiated is independent of the generating coils' ampacity. Ancillary mechanical, electrical, an/or electronic features may be attached upon or within the housing to aid in harnessing and controlling the useful effects associated with the external dynamic electric field produced by the device.

48 Claims, 9 Drawing Sheets

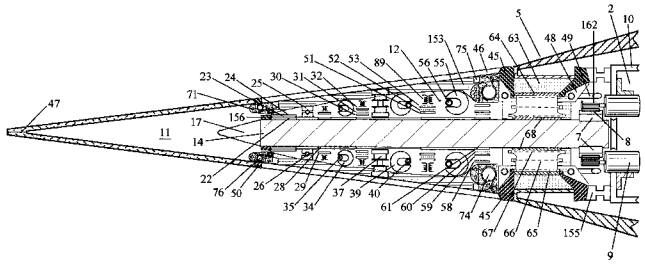

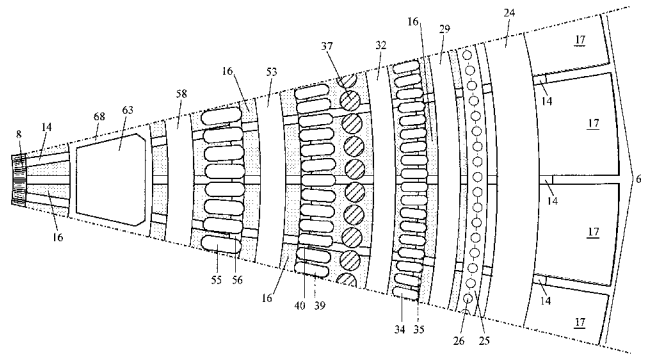

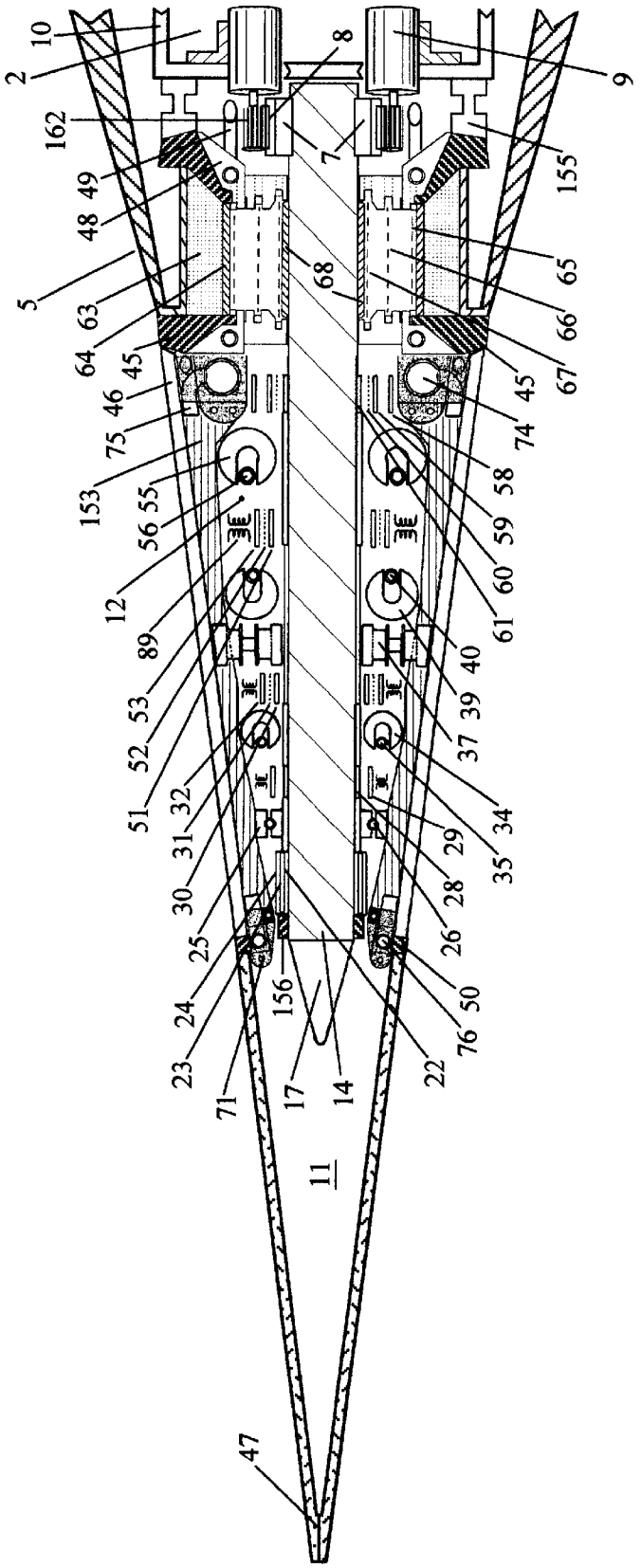
2
10
162
49
48
5
63
64
45
46
75
153
55
56
12
89
53
52
51
32
31
30
25
24
23
71
156
17
14
11
47
8
7
68
22
76
50
26
28
29
35
34
37
39
40
61
60
59
58
74
45
67
66
65
155
9

Fig. 1

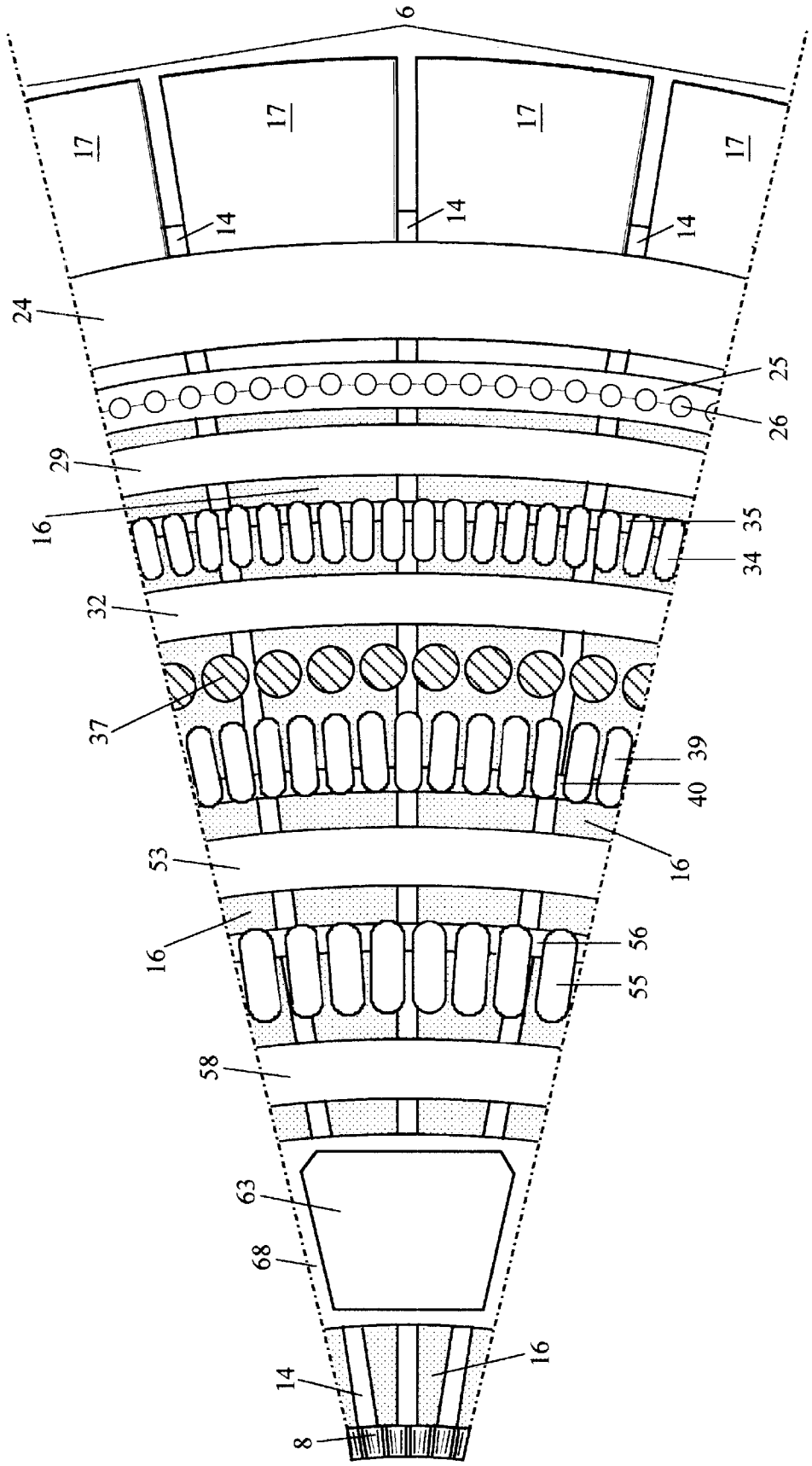
6
17
17
17
17
14
14
14
24
25
26
29
16
35
34
32
37
39
40
53
16
16
56
55
58
63
68
14
16
8

Fig. 2

Fig. 3

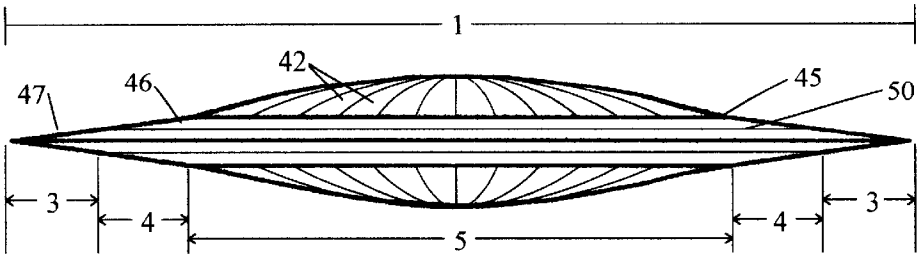

Fig. 4

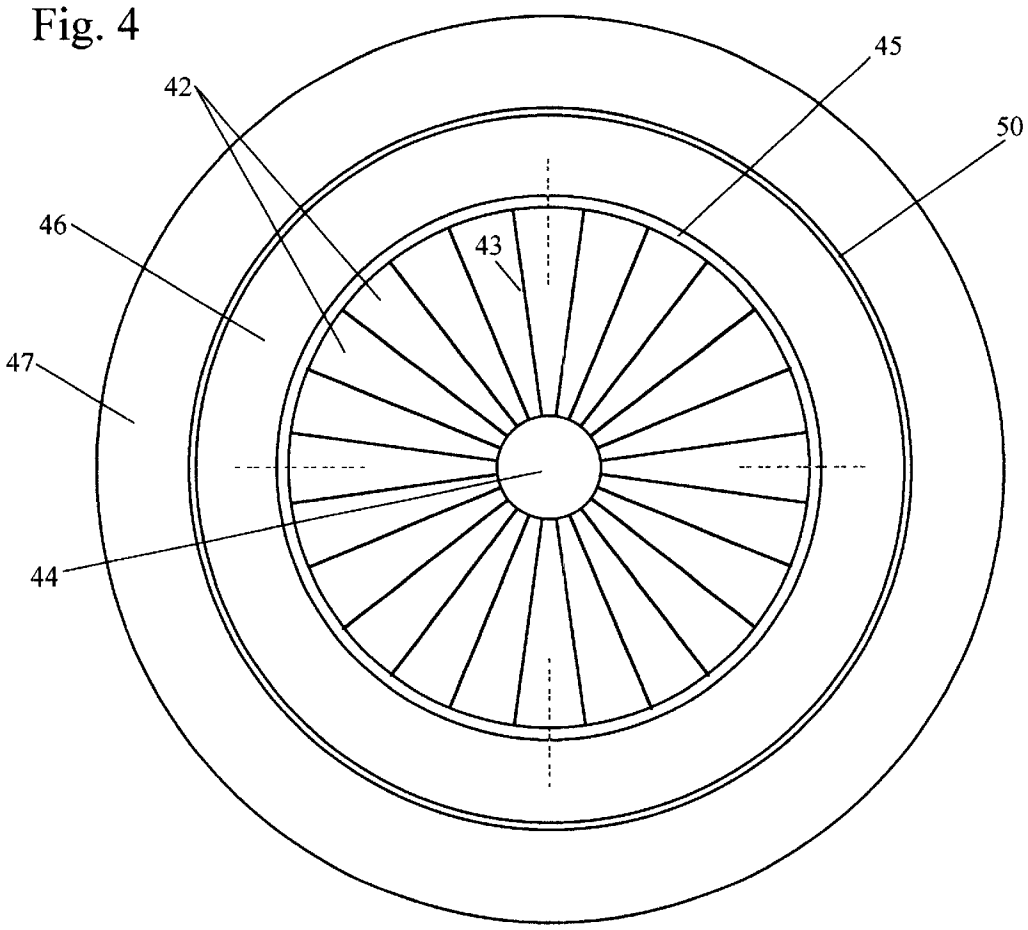

Fig. 5

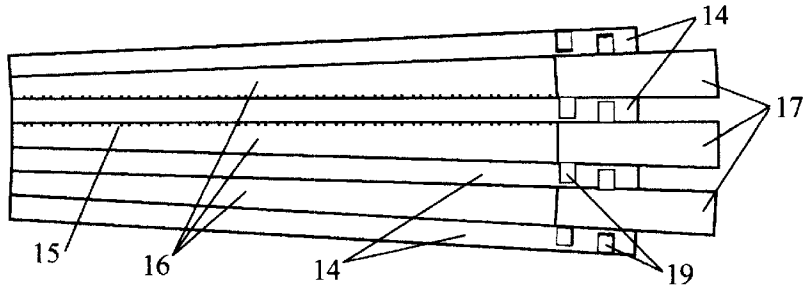

Fig. 6a

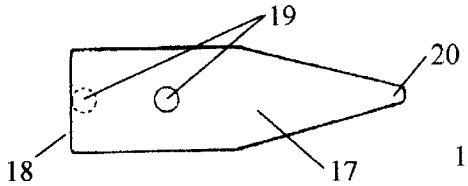

Fig. 6b

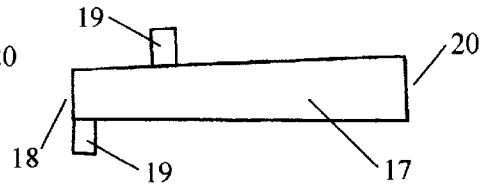

Fig. 7

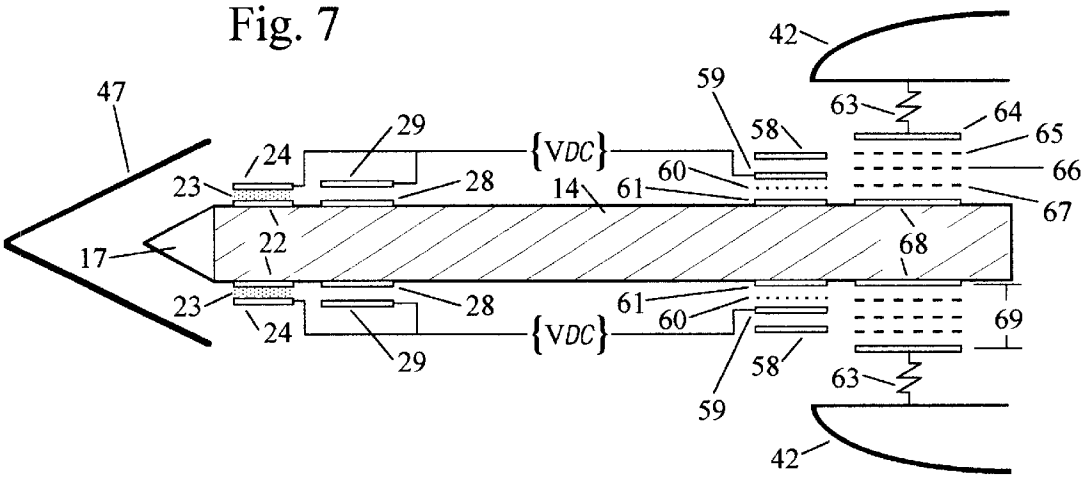

Fig. 8

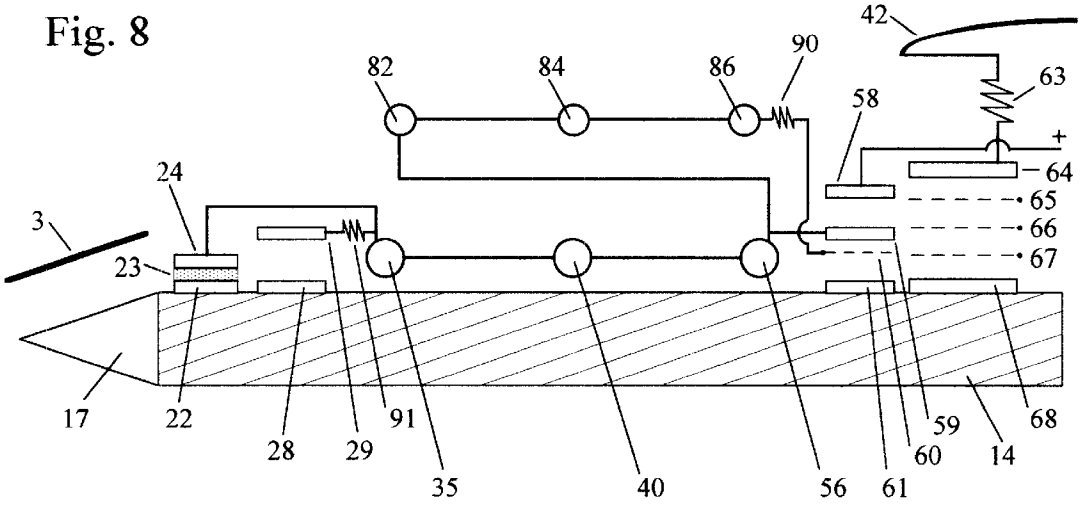
42
90
82
84
86
63
58
+
64
24
65
3
66
23
67
17
22
28
29
91
35
40
56
61
60
59
14
68

Fig. 9

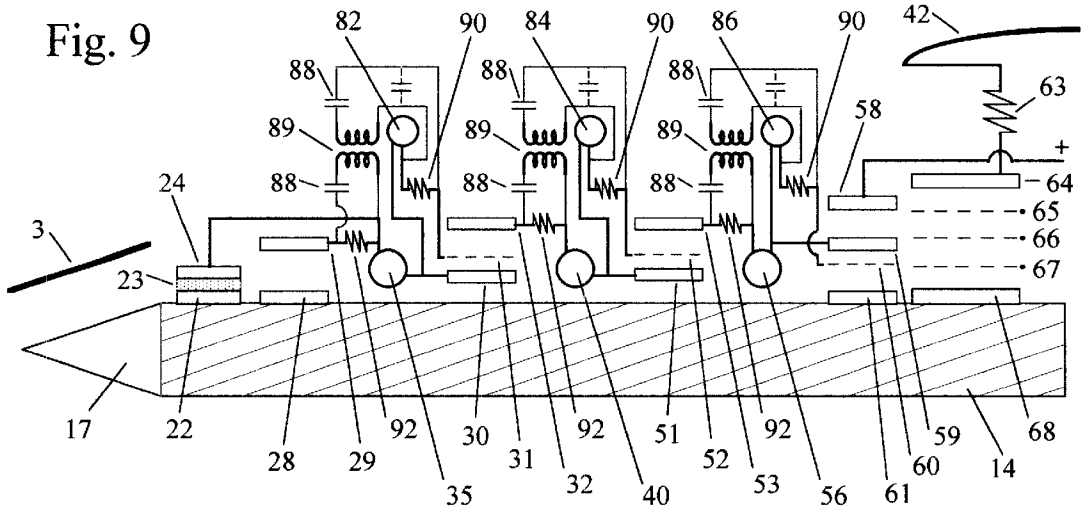
82
90
84
90
86
90
42
88
88
88
63
89
89
89
58
+
24
88
88
88
64
3
65
66
23
67
17
22
28
29
92
35
30
31
32
92
40
51
52
53
92
56
61
60
59
14
68

Fig. 10

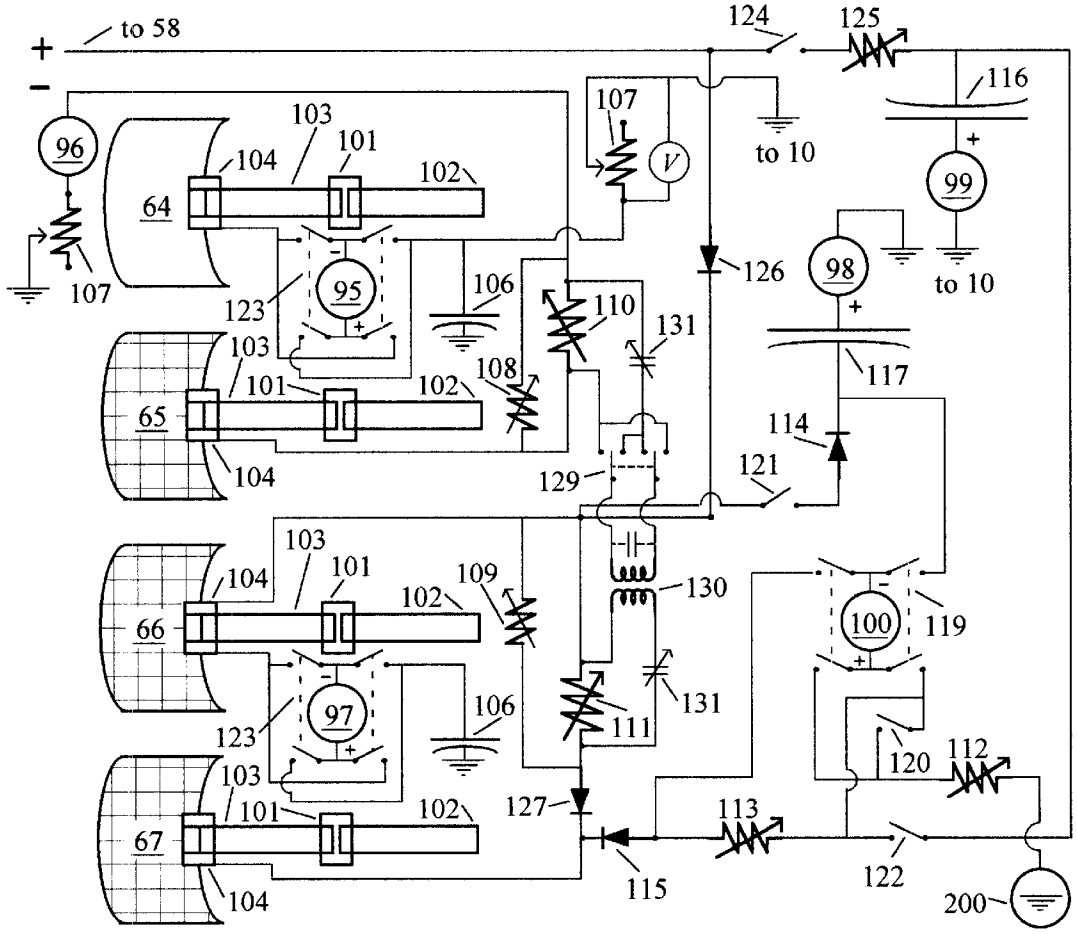
to 58
+
−
96
107
64
103
101
104
102
95
123
106
110
131
108
65
104
129
124
125
116
107
V
to 10
99
to 10
126
98
117
114
121
66
97
67
109
130
100
119
111
127
113
115
120
112
122
200

Fig. 11

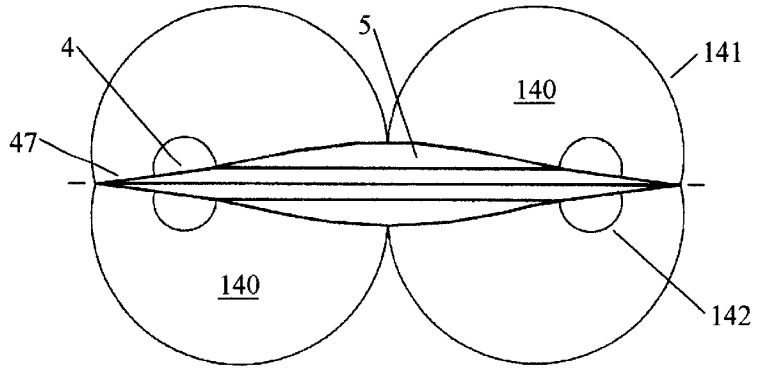

Fig. 12

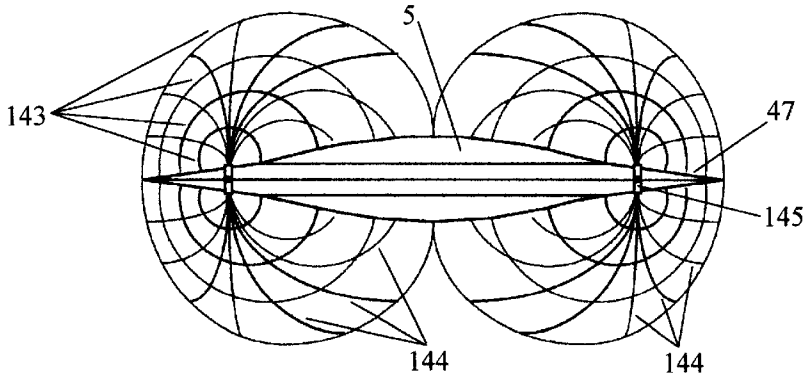

Fig. 13

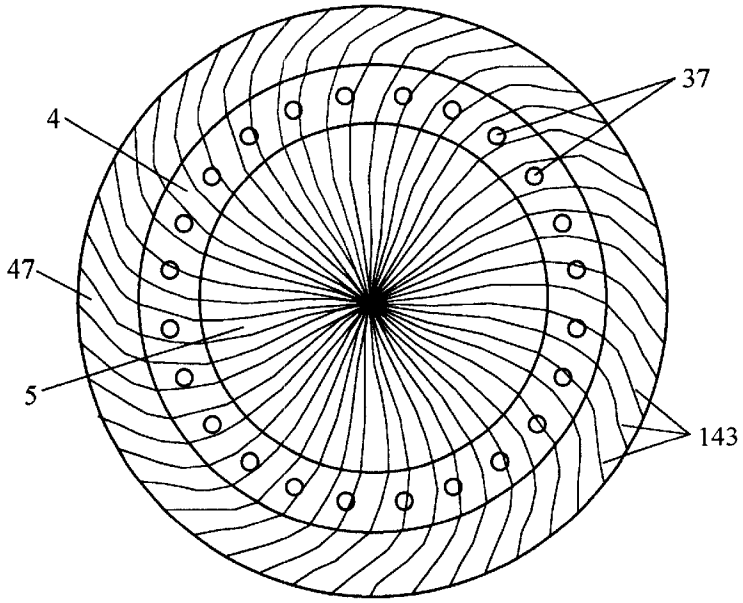

Fig. 14

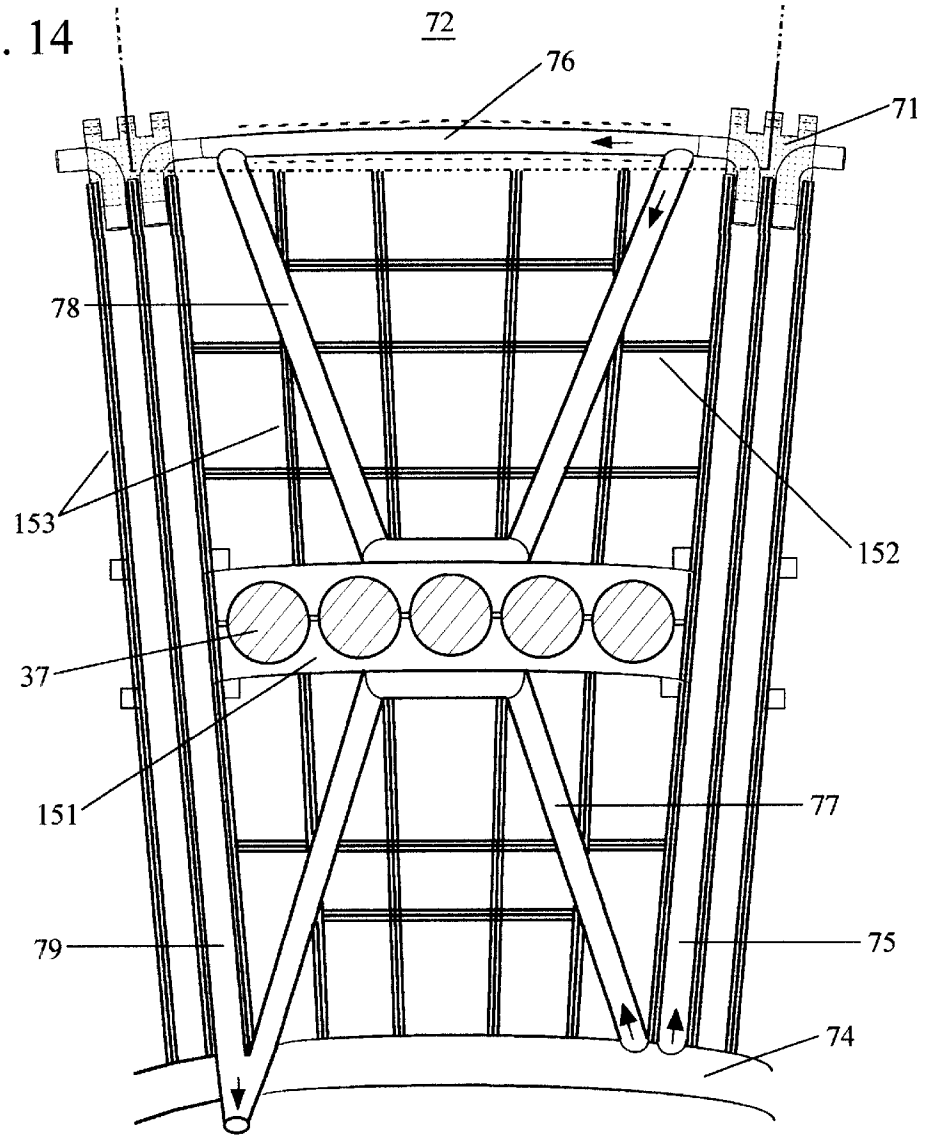
72
76
71
78
153
152
37
151
77
79
75
74

Fig. 15

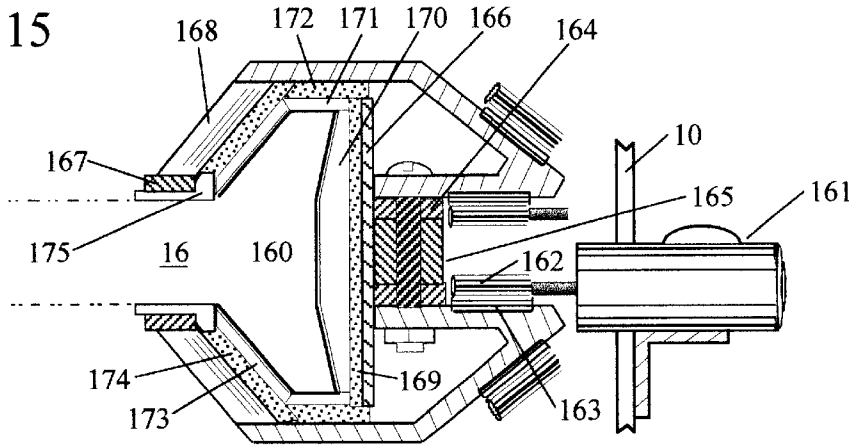
168
172
171
170
166
164
10
167
165
161
175
16
160
162
174
169
173
163

Fig. 16

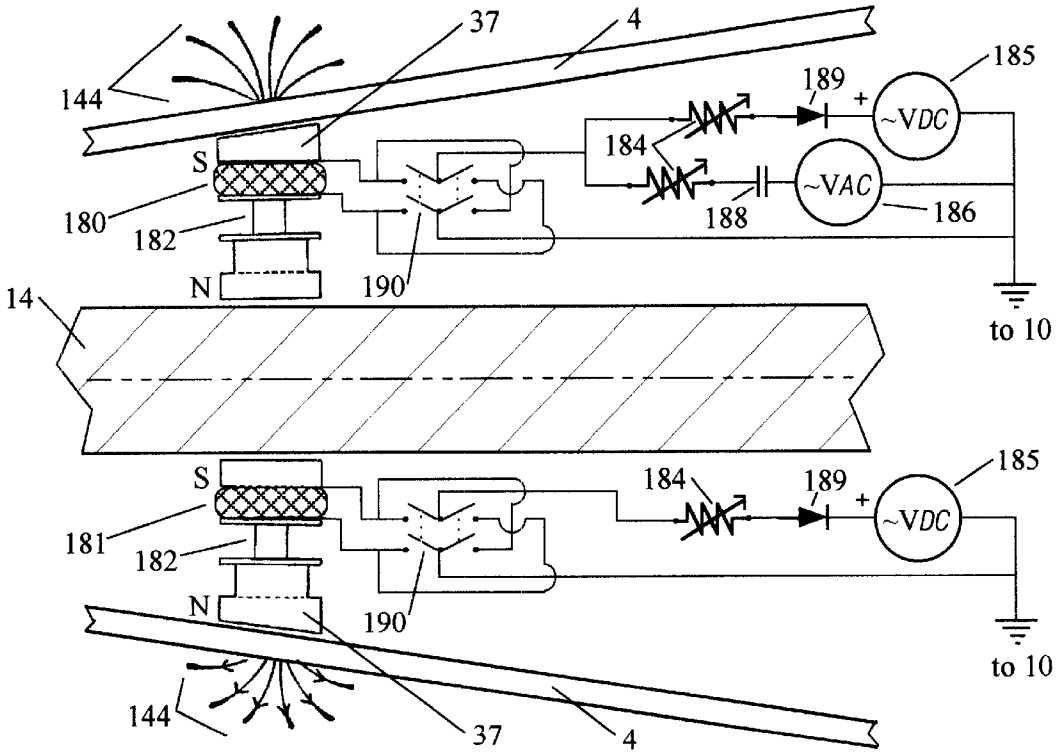
37
4
144
185
189
+
~VDC
184
S
~VAC
180
188
186
182
N
190
14
to 10
185
S
184
189
+
~VDC
181
182
N
190
to 10
144
37
4

ELECTRODYNAMIC FIELD GENERATOR

FIELD OF THE INVENTION

The present invention is related in general to rotary direct current (DC) electrical generators which incorporate permanent magnet fields, and in particular to similar electromechanical generating devices whose principal purpose is to produce a useful continuous high-voltage DC corona discharge. This invention also pertains to the field of aerospace vehicles which are capable of propulsion through the utilization of an ultra-high-voltage corona or arc discharge of a special type and form.

DESCRIPTION OF RELATED ART

In order to provide background information so that the present invention may be completely understood and appreciated in its proper context, reference is made hereinbelow to a number of related art patents. These cited references contain certain similarities to the present invention, primarily related to the objective of producing electrically-developed thrust. However, key differences and limitations with regard to achieving this objective are in evidence.

The related art disclosed in U.S. Pat. No. 2,949,550 proposes three attendant objects which are quite similar to certain of the objects of the present invention: (i) to provide an apparatus for the direct conversion of electrical potential to usable kinetic energy; (ii) to provide such an apparatus having a hollow body or housing which contains a source of high electrical potential; and (iii) to provide a self-propelling vehicular apparatus which includes a pair of electrically conductive body portions joined by an insulative portion, whereby said conductive portions constitute electrodes. A further similarity is that the vehicular embodiment proposed preferably be of a circular disc shape somewhat thicker in its center than at its edges. The device set forth in this Patent just cited is noticeably different from the present invention, however, in that a positive voltage is applied to the housing periphery and a negative voltage is applied at the central axis. The proposed arrangement is furthermore limited to operation within a gaseous dielectric medium, upon which it is reliant for the production of the claimed motive force, and is to be operated at a potential gradient less than that which would produce a visible corona. This device moreover makes no provisions for the production and/or extraction of vast quantities of useful thermal kinetic energy, as the present invention does.

The related art disclosed in U.S. Pat. No. 3,071,705 is based on three empirical principles of electrostatics which also figure prominently in explaining the actual shape of the discharge current field that will be produced by the present invention: (i) electrostatic lines of force tend to concentrate on the surface of a charged conductor in those places with the smallest radius of curvature; (ii) they are normal to the surface from which they emanate; and (iii) they do not cross but will bend under the influence of another charged body. The device set forth in this Patent just cited is in fact quite similar to that of the Patent cited immediately before, in that relatively massive positive atmospheric ions and entrained neutral air molecules are repelled from the positive electrode toward the negative electrode along a linear axis—thereby inducing an air flow or "electric wind" which represents the fundamental source of thrust. It is therefore once again limited to operation in a gaseous dielectric medium, and does not make use of a flow of negative and greatly less massive electron current in the course of thrust production—which may achieve comparatively enormous acceleration

and even relativistic velocity and specific impulse at a similar given level of applied potential gradient—as the present invention does.

The related art disclosed in U.S. Pat. No. 3,177,654 actually addresses the issue of producing electrically-developed thrust which is not limited to atmospheric operation, and the stated primary object thereof is to provide a propulsion system for enabling controlled flight in the atmosphere which may continue extensively into space without changing the system's basic operation. One embodiment thereof also proposes a circular disc-shaped vessel wherein high-voltage electrode elements ionize atmospheric gases by corona discharge, and a pulsed electromagnet arrangement causes the ejection of the resultant plasma from the propulsion chamber—producing thrust by reaction. This device furthermore addresses the issue of producing local thrust differential(s) on the body or housing thereof, for purposes of flight maneuvering and/or directional control, by providing for a plurality of such pulsed discharge propulsion units arranged in concentric rings (within the discoid body) and having individual divergent nozzles. As such, however, the device set forth in this Patent just cited actually constitutes an ionized jet propulsion method, requiring the use of either a gaseous medium like air or the onboard storage and release of relatively massive ionizable reaction material for any operational capability in space. Moreover, the pulsed mode of operation used, which limits the ionizing potential gradient to a value of less than breakdown field intensity, significantly restricts the level of power produced as thrust as compared to the continuous DC discharge field current produced by the present invention—at voltages which may be greatly in excess of breakdown intensity. Finally, this said device relies upon an unspecified source of generated electrical power in operation which must be assumed would have to be nuclear if conventional in nature, for said device to avoid otherwise having to carry a massive and range-limiting onboard store of fuel, and not upon convenient and protracted-use permanent magnets of high energy density as the prime energy source (as the present invention does).

U.S. Pat. No. 3,464,207 discloses a quasi-corona aerodynamic vehicle which bears only a limited relationship to the present invention, but which is referenced nonetheless as being further indicative of the predominant trend in conceptualization in relation to devices intended for producing electrically-developed thrust. This device also relies upon pulsed corona discharge operation between spaced electrodes at less than breakdown field intensity, thereby greatly constraining the propulsive power obtained. It is furthermore effective only in a gaseous dielectric medium and is based upon an electric wind pressure gradient arising of an admitted incompletely-understood mechanism. This same device evidences a great deal of theoretical complexity and construction material specificity, which might seem to indicate a narrow range of feasibility. Such attributes are not uncommon in the field of electrical aerospace propulsion, and are, to a degree, shared even by the present invention. Nevertheless, it is interesting to note that sizeable thrust in the form of an aerodynamic pressure gradient or lift of up to 30 lbs./ft^2 of external electrode area or more is asserted to be obtainable from said same device by utilizing asymmetrical electrodes or electrode arrays, rather than using electrodes or electrode arrays of approximately equal area (as the present invention does)—which therefore present a uniform cross section of discharge current conduction.

PCT Application WO 85/03053 discloses a flying apparatus whose primary similarity to the present invention is

that it incorporates a hollow annular flywheel which provides gyroscopic stability and encircles a relatively stationary central cabin and/or payload area. The device set forth therein also provides free-rolling means to center and stabilize the flywheel or rotor within a discoid housing, and addresses the issue that horizontal flight maneuvering and/or directional control may be accomplished by altering the local angular acceleration of the rotor—as does the present invention. This said other device, however, relies upon the questionable concept that the very large angular momentum of the rotating flywheel is somehow able to compensate the potential energy caused by gravitation and that the overall weight of the apparatus may thereby be annulled. Vertical lift must then be provided for said device in operation by atmospheric thermal updraft means, and no electrical discharge means are utilized to produce a force of lift or thrust.

The device set forth in UK Patent GB 2 312 709 A is a flying craft which is essentially disc- or saucer-shaped and which has a central axial post electrode and a spaced enclosing ring electrode whereby an electrical arc may be struck between the two, to either ignite fuel introduced via nozzles or greatly heat an exhausted air flow produced by fan means. Thus, this device actually provides hybrid jet or turbo-fan means for producing propulsive thrust, and utilizes direct electrical discharge not as the primary source of thrust but to enhance thrust produced by other means. To this end, said device must therefore operate solely in a gaseous atmosphere and/or carry onboard a range-limiting store of combustible fuel. This same device does, however, utilize powerful magnetic fields to impart a rotational and de-randomizing aspect to the arc discharge, thereby promoting a more uniform distribution of the arc discharge field's energy, as does the present invention.

In summary, a number of similar or significant electrical, magnetic, and mechanical features of the several related art devices have been examined but, whatever the precise merits and advantages thereof, none of said devices achieve the correct combination of such features required to fulfill the purposes of the present invention. In this respect it may be stated that none of these related art devices attain the distinction of being able to operate extensively in the vacuum of space without the onboard storage of relatively massive reaction material for the production of thrust. Furthermore it would appear that none of these same devices utilize a charged conductive housing comprising suitably disposed electrodes and/or electrode arrays to create and control an asymmetrical electromotive field of force on itself without expelling a reaction mass, whether in a gaseous dielectric medium or the vacuum of space, to achieve a propulsive object as the present invention does. Finally, it is observed that none of the aforementioned related art devices can develop this type of useful thrust-producing electrodynamic field in a manner which allows more than one objective function to be fulfilled thereby, such as the production of useable thermal kinetic energy and/or the development of potential signal communications capability.

SUMMARY OF THE INVENTION

The present invention is a brushless permanent magnet electrical generator which produces a useful ultra-high-energy external electrodynamic field, or continuous quasi-coherent DC corona or arc discharge of uniform current density, that completely surrounds and encloses the machine's symmetrically disc-shaped conductive housing and tends in consequence toward a balanced bihemitoroidal shape.

The invention incorporates a uniform arrangement of stationary electromagnetic armatures which may be employed as a group to impart a holistic and de-randomizing rotational force to the external discharge current that acts to inhibit the formation of concentrated arc streamer or channel phenomena, and thus to assist in rendering the electrodynamic field quasi-coherent in nature. The arrangement of electromagnetic armatures in said generator acting as a group simultaneously also contribute a portion of the machine's required input rotary torque upon the current-carrying rotor assembly thereof.

This invention provides a permanent magnet high-voltage generator wherein the primary DC voltage induced within its rotating coils is electrostatically impressed across the conductive rotor assembly thereof, in a brushless manner utilizing vacuum tube cutoff bias techniques, such that a secondary DC corona or arc discharge current is thereby initiated about the housing thereof which is orders of magnitude larger than the operating current through the said coils.

The said high-voltage primary generator of the invention then has a housing or hull which is divided into separate negative (emitter), neutral, and positive (collector) electrical sections, such that the continuous external flow of such discharge current is best facilitated and conducted internally by the proximal rotor, and wherein suitable means to circulate one or more form(s) of liquid coolant through any one or more of said housing sections may be employed for purposes of extracting an extremely high level of recoverable thermal energy (arising from such discharge current)—which is intended principally for use in the large-scale production of electrical power and/or distilled or desalinated water.

This invention as an electrodynamic field generator also provides an appreciable and practical level of electrically-developed thrust, from the relativistic impulse of an induced ultra-high-voltage external DC arc discharge current incident upon its positive (collector) housing sections, which may be rendered variably non-isometric in nature and therefore directionally propulsive by means of selectively controlling: (i) the resistance of the brushless electrical linkages between the positive housing sections and the proximal current-carrying rotor; and/or (ii) the magnetic flux output of the various stationary electromagnetic armatures.

The invention as an ultra-high-energy field generator furthermore presents a unique yet practicable method of producing a variable electromagnetic and/or gravimetric signal, by means of which useful information may be both transmitted to and received by a separate similar device, in further harnessing the effects associated with the device's external electromotive field. The relationship of said field effects to quantum potential vacuum fluctuation theory just now being studied, which may allow the devising of such a signal having an unconventional nature, is referred to again below.

In any event, the electrodynamic field generator described may be feasibly manufactured and marketed in various sizes according to need or desire in pursuit of its remarkable objects; may be operated either in a gaseous dielectric medium or in the vacuum of space; and may incorporate ancillary mechanical, electrical, and/or electronic features upon or within its housing to accomplish all the objects set forth hereinabove.

Briefly, in accordance with the preferred embodiment of the invention, first provided is a flat annular segmented rotor of very high conductive ampacity which is rendered capacitive in nature by the attachment of suitably paired electrode rings. Alternating in placement amidst such capacitive ring

pairs are also attached on the rotor a series of toroidal generating coils of very large mean radius relative to the cross-sectional radius thereof. The resultant composite rotor assembly is then rotatably mounted within a sectional conductive housing. The potential energy inherent in the fields of ring-shaped stationary permanent magnets, which are affixed in concentric circular arrays within the housing, is utilized to electrically polarize the rotor across its radial annular width by means of the "primary" DC voltage created upon relative rotational motion between such coils and magnets. The thereby polarized rotor is electrically linked on one hand (about its positive inner circumference) to two axially-central collector housing sections, by electrostatic induction via a system of plane-parallel electrode elements, and on the other hand (about its negative outer circumference) to two radially-peripheral emitter housing sections across an evacuated space charge chamber. The rotor's subsequent transportation and storage of electronic charge between the proximal opposite-polarity sections of the housing causes a much higher "secondary" voltage to appear across interposed neutral sections thereof and results in a continuous ultra-high-energy DC discharge current flow about the housing externally and across the rotor internally.

BRIEF DESCRIPTION OF THE DRAWINGS

The benefits and advantages attendant to the invention and its objects as discussed hereinabove are best illuminated through the following drawings and description.

FIG. **1** shows a side sectional view of the invention's peripheral and principal working structure, comprising a rotor assembly as well as frame-mounted elements.

FIG. **2** shows a top sectional view of a 30° radial sector of that same working structure.

FIG. **3** shows a side view of the invention's symmetrical housing or hull configuration.

FIG. **4** shows a top view or bottom view of that same housing/hull configuration.

FIG. **5** depicts a small radial sector of the basic rotor assembly construction, in top view, details of the rotor segments, inter-segment insulators, and field emitters.

FIG. **6***a* and **6***b* show side and top views, respectively, of one of the invention's conductive rotor field emitters.

FIG. **7** shows a simplified schematic representation of the invention's two "primary induction ring" electrode arrays, in relation to the rotor electrical circuit.

FIG. **8** shows a schematic of one symmetrical half of the primary power system circuit of the invention, in a "single-stage" rotor construction embodiment.

FIG. **9** shows a schematic of one symmetrical half of that same primary power system circuit, in a "three-stage" rotor construction embodiment.

FIG. **10** shows a schematic of the field voltage control system circuit of the invention.

FIG. **11** shows a simplified diagram of the electrodynamic field "envelope" produced by the invention, around a side view of the invention's housing/hull.

FIG. **12** shows the diagram of FIG. **11**, with the addition of lines indicating the electric and magnetic field vectors comprising that same electrodynamic field envelope.

FIG. **13** shows a top or bottom view corresponding to the side view of FIG. **12**.

FIG. **14** shows a top or bottom view of a radial sector of the invention's neutral hull section, showing the housing cooling and/or heat transfer system arrangements.

FIG. **15** shows a detail of an embodiment of the preferred central rotor segment attachment means and rotor drive assembly.

FIG. **16** shows a schematic of the stationary armature power circuit of the invention.

DESCRIPTION OF THE PREFERRED EMBODIMENT

Method of Operation

The invention disclosed herein is an Electrodynamic Field ("EDF") Generator. The primary challenge involved in fulfilling the objects of the present invention is how to generate and maintain a multi-megavolt potential difference across the exterior sectional housing which is not immediately neutralized due to uncontrolled direct arc discharge. The first part of the problem in this respect is that it is not possible to produce this kind of voltage directly within a traditional generating coil arrangement, so the voltage applied to the charged housing sections must be achieved by special electrostatic means. Secondly, the discharge current must be produced and conducted internally in such a manner that: (i) only a tiny percentage thereof is actually conducted by the generating coils (within their very limited ampacity compared to that of the rotor); and (ii) the negative and positive housing sections are each charged faster than they are discharged until an enormous equilibrium field potential difference is established which is a sum of roughly equal negative and positive housing section voltages.

Having thus stated the principal parts of the overall problem, it is perhaps best to examine and explain the means to its solution in the reverse order. Therefore, it is deemed of fundamental import to realize that the EDF Generator's housing configuration as proposed will demonstrate a significant static capacitance, despite its unusual geometry, given the fact that the negative and positive sections of its housing are to have essentially equal surface areas. This simple precept ensures two very important consequences: (i) that the voltage across the housing will attain a value representing equal negative and positive potentials, in reliance upon the absence of a fixed ground reference, given induced surface charge densities which are sufficient to cause a continuous 'leakage' current between the opposite-polarity sections thereof; and (ii) that a leakage current between the opposite-polarity housing sections will tend to assume a relatively uniform cross section and current density in response to a calculable level of non-uniform surface charge density between non-parallel but equal-area 'plates'. Thus, it is possible to determine using traditional formulas just how much electron charge must be stripped from the positive housing sections, and stored in ballast capacitors, in order to establish a positive surface charge density which corresponds to the desired housing or hull potential difference.

Next, the Generator must, and will, be able to charge these positive housing sections (by stripping them of native electrons) far faster than the positive surface charge so-created is neutralized by corona or arc discharge from the negative housing sections. Because these discharge current electrons will ultimately attain a transit time approaching zero, this in turn means that it must be "easier" per volt to strip negative charge from the positive sections—using a field induction system which is comprised of "primary electrode arrays"—than it is to deliver this charge to the negative sections across a vacuum chamber using relatively massive rotor-mounted field emitters.

It can be shown that the potential difference across said primary arrays will tend to be equal and opposite in operation as proposed to that across such vacuum chamber, in part due to the Faraday shielding principle, and the negative 'plate' voltage of the capacitive housing will naturally tend toward numeric equality with that of the positive sections by electrostatic induction. Therefore, the stationary electron-emitting primary cathodes which link the positive sections of the housing to the rotor are to have a much lower surface work function (and higher emissivity) than the rotating electron-emitting elements which link the rotor with the negative housing sections. This criterion is achieved by thorium-impregnating these cathodes (to stimulate their emissivity) and by not so-impregnating the rotor field emitters.

The relationship just described establishes what electrical engineers refer to as an 'instantaneous charge differential' with respect to these two sets of components as operated at equal but opposite charging voltages or potential differences, and the ratio of their respective electron emissivities will thus define the maximum ratio by which the said secondary field voltage (across the exterior housing) can be expected to exceed that in evidence across the stationary internal primary electrode arrays. This ratio will hereinafter be referred to as the "primary voltage expansion ratio", and the instantaneous charge differential concept as well as its relationship to the said voltage expansion ratio will be explained in further detail in a pertinent section to follow. It is important to note at this point, however, that for this voltage expansion to be realized it must and will be supported by ballast capacitors having suitable total capacitance as outlined hereinabove, which provide a corresponding force of electrostatic induction.

Finally, a method of impressing as large a primary DC voltage across the rotor as may practicably be developed in the device's principal generating system must and will be employed, without such "Primary Power System" circuit conducting more than a minute percentage of the discharge current thereby initiated. To do so, and in a manner that requires no brushes, vacuum tube cutoff bias technique is utilized in the present invention: whereby such primary voltage is electrostatically induced upon the rotor between two sets of capacitive electrode ring pairs (in vacuo), yet the current flow across these rotor-mounted induction electrode arrays—and through the principal generating circuit itself—is absolutely minimized by the application of a control grid voltage which is substantially negative with respect to the corresponding cathodes.

At a certain relative potential, the electrostatic force exerted by such control grid(s) on rotor circuit cathode-emitted electrons is sufficient to all but completely cut off the flow of DC current across these rotor induction arrays; yet the primary DC voltage is transmitted to the large conductive rotor segments such that a comparatively huge charging current between the opposite-polarity housing sections is initiated and maintained (across the rotor)—which subsequently expresses the expanded secondary voltage as a discharge current about the housing. Thus, an analogy could be made in describing the EDF Generator as a DC equivalent for boosting voltage by electrostatic induction means to the AC transformer (for boosting AC voltage by electromagnetic induction means).

General Form of the Invention

Accordingly, referring to FIGS. **1** through **4**, the present invention constitutes a novel form of brushless permanent magnet electrical generator for producing a useful ultra-high-energy external electrodynamic field, or continuous quasi-coherent DC corona or arc discharge of essentially uniform current density, and as such the Generator fundamentally comprises and incorporates:

[A] a flat conductive rotor **(6)** principally formed of a large number of evenly-spaced individual metallic conductors or segments **(14)** and an equal number of conductive electron-emitting elements or field emitters **(17)**, radially arranged in an annular flywheel configuration rather like the rotatable deck of a carousel, which are all connected in parallel electrically by the attachment of a thin metallic electrode ring **(68)** about the positive inner circumference of each of the two major flat faces of the annular flywheel thus formed and by the attachment of another such ring **(22)** about the negative outer circumference of each such flat rotor face;

[B] a principal electrical generating system mounted on said rotor and used to create a very high primary DC voltage within a plurality of rotating toroidal field coils **(35)(40)(56)** by electromagnetic induction with an equal number of circular arrays of ring-shaped stationary permanent magnets **(34)(39)(55)** (which are positioned adjacent and concentric thereto), such that an internal primary discharge current may thereby be initiated between the rotor **(6)** and a housing electron "Emitter Ring" **(47)**—across an evacuated space charge chamber **(11)**—which is orders of magnitude larger than the operating current through said field coils;

[C] a conductive exterior housing **(1)** divided into a plurality of distinct electrical sections—negative **(3)**, neutral **(4)**, and positive **(5)**—which may be charged from the internal rotor by electrostatic induction and/or by such primary discharge current (as the case may be) and within an evacuated induction compartment **(12)** of which said rotor **(6)** as an assembly, including the said generating coils attached thereto, is rotatably mounted;

[D] a plurality of individual systems of stationary plane-parallel electrode elements **(64)–(67)** which electrically link the polarized rotor **(6)** by electrostatic induction about its positive inner circumference (within said evacuated compartment **(12)**) to two axially-central electron collector housing sections **(5)**, and a plurality of similar individual systems of rotor-mounted plane-parallel electrode rings and/or radial electrode elements which may be utilized to connect a principal portion of the individual DC voltage outputs of said rotating field coils in opposed series-parallel across such composite rotor assembly;

[E] this composite rotor assembly **(6)** as a means for the transportation and capacitive storage of electronic charge between opposite-polarity sections of the housing **(5)** and **(3)** (which are proximal to the inner and outer rotor circumferences respectively), such that a vastly higher secondary voltage is caused to appear across interposed neutral housing sections **(4)**, resulting in a continuous ultra-high-energy DC discharge current about the housing externally which is also conducted internally across the rotor segments **(14)** that extend across the neutral housing portion and between the positive sections;

[F] a large number of stationary electromagnetic armatures **(37)** in a uniform circular arrangement located within the neutral electrical region **(4)** of the housing which are to be operated principally on variable DC

voltage, but which may also accept limited pulsed unidirectional or alternating voltage input, and which are employed as a group to impart an orderly rotational magnetic vector moment to the external discharge current that acts to inhibit the formation of concentrated arc streamer or channel phenomena and thus to assist in rendering such current quasi-coherent in nature; and

[G] the said principal electrical generating or Primary Power System as operated and used in such a manner that a minor pulsed unidirectional or alternating voltage is superimposed upon the high-energy DC rotor current, and the external discharge current therefore acquires a discrete AC power factor, for purposes of modulating the electrodynamic characteristics of the external field during normal operation and/or for purposes of exploring the invention's potential signal communications capability in relation to intriguing new theories in high-energy quantum physics and relativity.

In a "single-stage" rotor electrical circuit embodiment of the Generator, as intended for use in an electrical and/or thermal energy output application, any such minor AC voltage present in said rotor circuit receives only a modest and single level of amplification—in a manner generally associated with a single multi-electrode vacuum tube. In a "three-stage" rotor electrical circuit embodiment of the Generator, as intended for use in a propulsive and/or communications application, any such minor AC voltage may receive a substantial and multiple level of amplification—in a manner generally associated with a multiple number of sequentially-coupled multi-electrode vacuum tubes.

FIG. **1** shows a side sectional view of the general form of the invention, as if cut through the central axis of the circular structure. Only one side of the tapered peripheral portion of the structure is shown, the overall Generator being symmetrical about the axis along which the section shown is cut. FIG. **2** shows a top sectional view of the invention, as if cut through just above the rotor assembly at the "equator", with only about a 30° radial sector of the circular structure shown (the remaining 330° being identical around the Generator). In each case, identical reference numbers are used to indicate identical elements. FIGS. **3** and **4** are side and top or bottom views of the Generator (respectively), showing the outward appearance of the invention and the external field it produces. The following discussion of the general form of the invention will be in reference to FIGS. **1** to **4**, unless otherwise noted.

The entire apparatus of the invention is contained within a circular conductive exterior hull or housing **(1)**, which is tapered from its vertical centerline ("axis") to its rim (or "equator"). The overall housing is radially symmetrical around the axis, and bilaterally symmetrical about the equator. This housing's two central one-base spheric-zone-shaped sections **(5)** will be positively charged, its two intermediary conical ring-shaped sections **(4)** will be electrically neutral, and the convergent outermost or peripheral conical ring-shaped sections **(3)** will be negatively charged. Preferably, the surface areas of the outer **(3)** and inner **(5)** housing sections are equal, and specific details of the housing or hull design are given in a section to follow.

Each of the housing's two symmetrical positive sections **(5)**, or hull positive "zones", should be divided into equal-area radial sectors **(42)** which are equal in number to the number of like sections into which the device's superstructure is divided. Thus, in the preferred embodiment of the Generator these two positive zones **(5)** will each be divided into 36 such sectors, and isolated top and bottom, yielding a total of 72 individually controllable discharge collector areas. The positive zone sectors **(42)** jointly comprise what may hereinafter be referred to as the device's "Field Hub", and should be composed of a conductive refractory metal or high-temperature structural alloy such as #310 stainless steel. These positive sectors are insulated from sector-to-sector by insulating "partitions" **(43)** of a suitable ceramic material (such as Cordierite), and must be supported by an insulating understructure (not shown).

At least one hull "neutral ring" surface layer **(46)** is also to be affixed on a housing frame and composed of one or more insulating ceramic material/s (such as Cordierite, Zirconia, and/or Kézite, as necessary). Said neutral hull layer/s may be applied in the form of plates and/or tiles to nonmetallic "deck" sheeting (not shown separately) supported by superstructure beams **(153)**. This decking and its supporting beams are both preferably composed of a carbon composite material, and will thus be fairly conductive. Therefore, both must be isolated from the positive Field Hub by a dielectric buffer material **(45)** and from the hull's Emitter Ring **(47)**, comprised of two negative housing sections **(3)**, by an auxiliary dielectric buffer **(50)**. The Generator's neutral housing section superstructure is shown in detail in FIG. **14**, as is a piping system of coolant tubes or "thermal conduits" **(74)–(79)** for maintaining the hull neutral sections **(4)** and superstructure—as well as the enclosed Primary Power System—at an acceptable operating temperature. Such an intercooler system would utilize a cryogenic coolant such as liquid air or nitrogen when the EDF Generator is operated in the atmosphere for purposes of thermal energy output, and will be explained in greater detail in a section to follow.

The negative hull plates which form each section **(3)** of the Generator's peripheral Emitter Ring **(47)**, to which the rotor **(6)** distributes the discharge current forming the exterior field envelope, should be composed of high-purity aluminum which is copper-clad and then nickel-plated to prevent erosion at high field voltage and current levels. The abutting edges of all of the adjacent such plates must be welded one to another, and affixed to any necessary neutral hull section hardware, such that a hard vacuum may be drawn within the peripheral chamber **(11)** thereby formed. The induction compartment **(12)** enclosed between the two neutral hull sections **(4)** is contiguous with the peripheral or space charge chamber **(11)**, and thus is equally evacuated.

A pressurizable central chamber **(2)** within the housing **(1)**, located between the two hull positive zones **(5)** thereof, constitutes the location of the Generator's control cabin and of its payload area when used as an aerospace vessel. The interior **(11)–(12)** of the negative **(3)** and neutral **(4)** housing sections (respectively) is separately sealed, and must be as highly evacuated as possible to promote the efficiency of the various rotating and stationary electrode arrays and to prevent their destructive failure. The main vacuum seals **(155)** and the rotor's vacuum chamber charge buffers **(156)** are shown in FIG. **1**.

Inside the evacuated induction compartment **(12)** of the housing **(1)**, and surrounding the central chamber **(2)**, is located the composite rotor assembly **(6)** in the form of a flat annular flywheel. In the preferred embodiment, 180 individual conductors or segments **(14)** of very high collective ampacity are employed in the rotor, as will be seen in the discussion of FIG. **5** below, as are a like number of inter-segment insulators or segment "separators" **(16)**. The preferred material for the rotor segments is high-purity copper which is certified oxygen-free, to resist the production of free oxygen radicals at high operating temperatures which would degrade the performance of the various electrode arrays and cause an undesirable increase in vacuum chamber **(11)** temperature.

The inner ends of the rotor segments (**14**) and segment separators (**16**) are mechanically connected via a retaining and lockdown section thereof to one or more ring gear(s) (**8**), which run/s entirely around the central aperture of the rotor assembly. Suitable insulating attachment hardware (**7**), as described in detail in the following section (and shown in FIG. **15**), will be used to effect a rigid mechanical union of the segments and separators to the said ring gear(s) and associated drive means such that the gear(s) and all conductive components of such drive means are electrically isolated from the energized segments. The ring gear(s) (**8**) may be engaged by one or more pinion or drive gear/s (**162**) powered by a motor (**9**) or plurality thereof, which may be of various types (such as electrical or hydraulic), causing the rotor to rotate around the central chamber (**2**). The rotor is supported near its outer edge by two ballraces (**25**) mounted to the housing superstructure and to the rotor, and having bearing balls (**26**), allowing it to spin freely.

As can be seen in either FIG. **1** or **7**, the rotor segments (**14**) are electrically connected together at each end by continuous inner (**68**) and outer (**22**) electrode rings, and also at intermediate points by induction cathode rings (**28**) and induction anode rings (**61**). The inner electrode rings (**68**) constitute the primary induction ring array anode elements, as will be described below. The outer electrode rings (**22**) are each covered by a dielectric layer (**23**) which is in turn covered by an anode ring (**24**), and each combination of rings (**22**) and (**24**) separated by dielectric layer (**23**) forms a housing charge ballast capacitor whose function will be explained in detail below. Induction anode rings (**29**) and cathode rings (**59**) are used to electrostatically induce corresponding negative and positive voltages on rotor-mounted rings (**28**) and (**61**), respectively, thereby electrically energizing the rotor segments as will also be described in further detail below.

FIG. **5** shows details of the basic rotor construction. Wedge-shaped ceramic pieces or segment separators (**16**) equal in number to the conductive rotor segments (**14**) are to be positioned uniformly between the individual segments, as are the rotor's peripheral field emitters (**17**). To form the base rotor construction, the segments, separators, and field emitters must be equal in number, preferably using 180 of each. The said segment separators are actually more structural than insulative in purpose, and not only stiffen the entire rotor to prevent its distortion at elevated temperature and rotational speed but also provide a nonconductive base for mounting all other rotor assembly components. Each of the ceramic separators (**16**) is bonded to its adjacent segments (**14**) by refractory adhesive layers (**15**).

Two important criteria for selecting a ceramic segment separator material are that the compound chosen be readily machinable like steel and provide very high physical strength yet require no firing. These parameters limit the choice made almost to a solitary substance: magnesium silicate ($MgSiO_3$). When suitably formed, this material can be milled, drilled, and tapped like steel (using low-speed tungsten carbide tools) and approaches the physical strength of dry-pressed porcelain. It is ready for use directly after shaping and requires no kiln hardening.

This latter characteristic is very important as it is extremely difficult to produce fired ceramic pieces with the exacting dimensional control necessary in this case, and it eliminates the tendency of thicker fired pieces to develop micro-cracks which may potentially cause destructive failure of the component under high centrifugal loading. Surfacing can be done with abrasive paper or grinding wheels, and it is very important that this material be machined or worked perfectly dry as it is fairly porous and any lubricant used tends to significantly alter its dielectric properties. Magnesium silicate of this type is available from CeramTec NA as CeramTec designation AlSiMag 222, and will withstand constant working temperature of over 1300° C.

The insulating separators (**16**) are shorter than the conductive segments (**14**), allowing for the field emitters (**17**) to be fastened outboard of the separators. The field emitters are thus located around the outer circumference of the rotor assembly and should be formed of a sintered refractory composite, such as tungsten-copper, selected for its relative surface work function and superior arc-erosion characteristics. As can be seen in FIGS. **5**, **6***a*, and **6***b*, the field emitters are fastened mechanically and electrically to the conductive segments (**14**) through locator pins (**19**), which fit into mating holes recessed into the ends of the segments. These emitters (**17**) taper to a somewhat rounded edge at the tips (**20**) which form the outermost periphery of the rotor (as an assembly), and are squared-off at their bases (**18**) to fit tightly against the insulating separators (**16**). From the top view of FIG. **6***b*, it can be seen that the field emitters follow the tapering of the segment separators (**16**), increasing slightly in width from their bases (**18**) to the tips (**20**). The conductive segments (**14**), in contrast, are of constant width over their length.

Overall Description of the Primary Power System Structure

Rotor Drive and Positioning Assemblies

Referring now to FIG. **15**, a split-frame centrifuge-style carrier assembly reminiscent of the rotatable mounting arrangement for the turntable of a carousel may be employed to firmly suspend, center, and rotatably mount the composite rotor assembly about its inner circumference within the evacuated induction compartment of the housing, and such carrier assembly should preferably be constructed of a weldable nonmagnetic metal alloy which is suitably insulated from the electrically energized rotor assembly components.

The rotatable carrier assembly may be mechanically-affixed and/or welded to one or more large metal ring gear(s) which may be comprised of like sections (**163**) to facilitate construction and which in turn may be supported, driven, and dynamically braked by one or more low-voltage DC motor-generator unit(s) (**161**) (similar to those used in large electric trains) and drive pinion gear/s (**162**). Such ring gear(s) may additionally be supported by pinion gear and pillow block bearing assemblies (if necessary—not shown in FIG. **15**). Such drive motor-generators(s) (**161**) and said pillow block bearing assemblies (if any) must be separately and nonrotatably affixed to the relatively stationary housing superstructure.

Referring still to FIG. **15**, it can be seen that in the preferred embodiment the inner end of each rotor segment (**14**) and segment separator (**16**) is flared outward into a retaining "fantail" (**160**). These retaining fantails are preferably enclosed and prepared for connection into a driven assembly using a system of: [i] insulating inner (**171**) and outer (**173**) ceramic thermal spacers; [ii] axial (**172**) and radial (**174**) nylon (or equivalent) load buffers; and [iii] insulating displacement (**170**) and lockdown (**175**) ceramic bushings. The retaining fantails are then secured into a driven assembly by two identical carrier half-structures comprising frame struts and members (**168**) and retaining ring sections (**167**), using: [i] mounting ring sections (**164**) each having two ring gear sections (**163**) attached thereto;

[ii] a corresponding number of mounting ring spacers **(165)** each having a very stiff metallic flexor plate **(166)** attached thereto; and [iii] nylon (or equivalent) torsion buffers **(169)**. The drive pinion gears **(162)** allow a preferred total of 32 like and evenly-spaced DC drive motor-generator units **(161)**, which are mounted to the Generator's ground frame **(10)**, to apply input rotational torque (or counter-rotational braking torque) to the composite rotor assembly by engaging a total of four ring gears (comprised of sections **(163)**) which are mounted to the rotor's described drive carrier assembly.

Rolling bearing assemblies should be employed to further center and stabilize the composite rotor about its outer periphery within the evacuated induction compartment of the housing, as a readily feasible mechanical alternative for that purpose to 'zero-friction' electromagnetic positioning systems (of the type normally associated with mag-lev train technology) which are of a much greater complexity.

Such rolling bearing assemblies may comprise two complimentary pairs of stationary and rotating circular-groove raceways **(25)** about the outer periphery of the composite rotor assembly, as well as an appropriate number of bearing balls **(26)** including uniform ball separation means, and these bearing assemblies may be composed of nonmagnetic stainless steel and/or a specialized ball bearing ceramic (such as silicon nitride (Si_3N_4)) which may run unlubricated in a very hot electrically-charged environment

The Rotor and Associated Elements

There are a number of electrical structures attached to the base rotor construction, which rotate with the segments, separators, and field emitters as a composite assembly. It will be understood that the structures mounted on the rotor and those interacting with the rotor are symmetrical above and below the incorporating device's equator, as well as either continuous or repeating in placement around the device in the plane of the rotor segments, so that a reference to an element at one point above the rotor also applies to the similar elements below and around the rotor.

Referring to FIGS. **1** and **2**, and in the preferred three-stage embodiment of the invention suitable for an aerospace vessel (as shown schematically in FIG. **9**), the following elements of the principal electrical generating means are mounted upon the annular rotor. Generally starting at the outer circumference of the rotor and working inward, and, for each structure, starting at the rotor and working upward, these are:

[a] the ballast capacitor, comprising a negative ring element **(22)** attached directly to the rotor, a dielectric layer **(23)** affixed thereto, and a positive ring element **(24)**;

[b] the bearing ballrace **(25)**, within which the bearing balls **(26)** roll between two identical raceway halves—one on the rotor, and one mounted to the vessel's stationary structural frame. The ballrace **(25)** and bearing balls **(26)** support the rotor peripherally and are structurally mechanical, not taking part in the electrical operation of the invention;

[c] the voltage-induction diode ring array, in the form of a cathode ring **(28)** which is mounted on and electrically connected to the rotor segments **(14)** and an anode ring **(29)** which is affixed plane-parallel to the cathode ring **(28)** and insulated from it by a suitable supporting structure using insulating posts, pins, or brackets in or on the segment separators **(16)**. Although the resulting combination could be thought of as a 2-element or diode vacuum-tube construct and is similarly named, it is more accurately a "cold" parallel plate capacitor of high value and appreciable AC conductance which preferably exhibits a modest circuit DC leakage current;

[d] the outer field coil **(35)**, helically wound and supported upon a continuous coil support or structural core which is preferably nonferromagnetic (not shown). There are preferably two windings on the core which together comprise such coil, as will be discussed in the circuit section below and as is shown in FIG. **9**—the major portion or field winding **(81)**, and a minor portion or bias winding **(82)**;

[e] the outer voltage-transfer triode ring array, in the form of cathode **(30)**, control grid element **(31)**, and anode **(32)** rings or elements, affixed plane-parallel or radially-concentric above the rotor segments **(14)** and insulated from them and from each other by similar such supporting structure (using insulating posts, pins, or brackets) in or on the segment separators **(16)**. This combination also comprises a triode vacuum-tube construct with controllably variable AC conductance;

[f] the center field coil **(40)**, helically wound and supported upon a continuous coil support or core of the type described. There are again two windings on the core, as will be discussed in the circuit section below (and as is shown in FIG. **9**)—the major portion or field winding **(83)**, and a minor portion or bias winding **(84)**;

[g] the inner voltage-transfer triode ring array, in the form of cathode **(51)**, control grid element **(52)**, and anode **(53)** rings or elements, affixed plane-parallel or radially concentric above the segments and insulated from them and from each other by the described supporting structure(s). This combination again comprises a triode vacuum-tube construct with controllably variable AC conductance;

[h] the inner field coil **(56)**, helically wound and supported upon such continuous coil support or core. There are once again two windings on the core, as will be discussed in the circuit section below and as is shown in FIG. **9**—the major portion or field winding **(85)**, and a minor portion or bias winding **(86)**;

[i] the voltage-induction triode ring array, in the form of an anode ring **(61)** which is mounted on and electrically connected to the rotor segments **(14)** as well as a cathode ring **(59)** and control grid element ring **(60)** affixed plane-parallel to the anode ring **(61)** and insulated from it and from each other by the said supporting structure(s). The resulting combination comprises a triode vacuum-tube construct with controllably variable AC conductance;

[j] the primary induction anode ring **(68)**, which is also mounted on and electrically connected to the rotor segments **(14)** and which provides the positive element of the stationary plane-parallel electrode systems used to induce the exterior field; and

[k] the ring gear(s) **(8)** or other appropriate means for allowing a drive mechanism to spin the rotor.

Field Coils

Referring now to FIG. **1**, the field coils **(35)(40)(56)** which comprise the major rotating portion of the primary DC voltage generating means are formed of conductive insulated magnet wire multi-layer toroidally wound upon cores (not shown) whose permeability should generally be minimized, and main portions of the DC voltage outputs of

the three field coils comprising each of two like groups thereof—one above the plane of the rotor and one below—are sequentially connected via a plurality of individual systems of rotating plane-parallel electrode rings (or alternatively, modular radial electrode element systems or tubes) in the preferred three-stage rotor emodiment of the invention shown. The number of wire turns comprising each such field coil should in general be maximized (in a practical manner), in either the single- or three-stage embodiments.

As is depicted more clearly in FIG. **8**, each such field coil may be compound wound or comprise two or more independent voltage generating portions, with either all or the major portion of each coil constituting the field winding **(81)(83)** or **(85)** or principal DC voltage generating portion of that coil as a whole, and the principal or field winding portions of the field coils comprising either of the said two like groups thereof may be hooked in series one to another by direct physical connection in the single-stage rotor embodiment of the Generator shown. Each of the two like sets of three such field windings thus formed are then connected on their respective sides of the rotor between the plate resistor **(91)** of the diode array anode ring **(29)** and the inner triode array cathode ring **(59)**, while observing appropriate conventions of polarity assignment.

The remaining minor portion (if any) of each field coil may comprise one or more independent bias and/or control winding(s), or secondary DC voltage generating portion(s) of that coil as a whole, with the largest such secondary winding if any constituting the control grid bias winding of that coil. As shown in FIGS. **8** and **9**, one such bias winding **(82)(84)** or **(86)** is provided for each field coil and is positioned in the schematic(s) immediately thereabove. In the single-stage rotor embodiment of FIG. **8**, these bias windings are also directly connected in series one to another between the inner triode array cathode ring **(59)** and the corresponding grid resistor **(90)** of that same array's control grid **(60)**, with the negative end of each bias winding toward the said grid resistor.

In the three-stage embodiment of FIG. **9**, the field winding of each said field coil is connected in series between the plate resistor **(92)** attached to the anode ring of the outerlying electrode system which is adjacent to that coil and the cathode ring of the innerlying electrode system adjacent thereto, while observing appropriate conventions of polarity assignment. The bias winding (if any) of each said field coil is then connected between the cathode element **(30)(51)** or **(59)** of such innerlying electrode system and the grid resistor **(90)** attached to the negative control grid **(31)(52)** or **(60)** (respectively) of that same electrode system, while observing appropriate conventions of polarity assignment, such that said bias winding is in parallel with the cathode ring or element of that electrode system and may therefore provide an AC and/or DC voltage bias with respect thereto in the manner associated with electron vacuum tubes.

Rotating Electrode Arrays

Electron vacuum tube design, construction, and operating methods are employed to impress the principal portion of each field coil group's combined series DC voltage output across the Generator's rotor in an opposed parallel arrangement (comprising two like field winding circuits or rotor subcircuits), such that the rotor segments become electrically polarized, although the rotor is not considered uniformly energized electrically until a finite DC Primary Power System circuit current is established against the series capacitance and high bias voltage of the several rotor-mounted electrode systems.

Two special pairs of highly-capacitive electrode rings **(22)(24)** seperated by a dielectric media **(23)** are affixed upon the polarized rotor **(6)** near the outer negative periphery thereof, and supplied with a portion of the Generator's positive primary DC output voltage, in order to accomplish the storage of a predetermined amount of ballast electron charge which is sufficient to enable a desired much-higher secondary voltage to appear across the neutral sections of the housing (given the static capacitance and surface charge density characteristics of the housing as a whole in operation).

Electron vacuum tube design, construction, and operating methods may be employed to induce and/or modulate a substantial DC bias upon the plate currents of any or all of the various rotating plane-parallel and/or radial electrode systems or "arrays" employed in the present invention. Each rotating three-electrode system or triode array so-employed should be constructed in such a manner that it exhibits a minimum design amplification factor (μ) equal to 4.0, with reference to any AC voltage or signal present in its electrical circuit and as a function of its engineered relative electrode spacing(s).

Electron vacuum tube design, construction, and operating methods may furthermore be employed to induce, modulate, and/or amplify a minor pulsed unidirectional or alternating voltage upon the high-energy DC rotor current, and therefore on the field envelope current as well, as a means by which the electrodynamic field produced by the Generator may potentially be used (as a form of antenna) for purposes of transmitting and receiving a variable electromagnetic and/or gravimetric resonant frequency signal either to or from itself or a separate similar device (as the case may be).

In light of this teaching, it is contemplated that one possible type of communications signal which might be investigated employing the EDF Generator would couple the electric, magnetic, and gravitic forces to utilize the wave mechanics of quantum potential vacuum fluctuations ($\Delta E_q/\Delta t$), which are believed by some theoretical physicists to propagate at c^2 in order to explain the uniform operation of gravity and entropy in two space-time continuums which are coincident but completely out-of-phase. Should this quantum gravity theory prove correct, the transmission delay of a gravimetrically-coupled EM signal at this wave speed would be only 0.10525 seconds per light-year.

In any event, it should be noted that the rotor interstage coupling transformers **(89)** which are depicted in FIGS. **1** and **9** (but are not shown in FIG. **2**) would be employed only in a preferred three-stage rotor embodiment, and mounted (one each) immediately above the rotating diode and transfer triode arrays **((28)–(29)**, **(30)–(32)**, and **(51)–(53)** respectively). These transformers may preferentially take the form of continuous toroid coils on either powdered iron or nonmagnetic cores (like the field coils), having single-layer primary and secondary windings, or of one or more pairs of balanced toroidal arc-section coils and cores of similar composition which are uniformly distributed above said rotating arrays. Each transformer **(89)** uses two DC blocking capacitors **(88)**.

It may be appreciated from FIGS. **8** and **9** that each bias winding or series group thereof, its associated triode array, and a corresponding output plate resistor **(91)** or **(92)** together comprise one stage of amplification of any AC signal voltage which may be present across that triode's grid resistor **(90)** as an input. In this way, electromagnetic waves of one form or another from outside the external field created by the Generator may be both detected, from their influence

on the waveform(s) of the field envelope current, and amplified from within the device (when used as an aerospace vessel).

The Interaction of the Rotor and Frame-mounted Elements

Magnetic Rings

A plurality of circular arrays of stationary permanent magnets essentially comprise the stationary portion of the primary DC voltage generating means, and each such magnet is preferably to be formed as a C-shaped ring composed of axially round stock of a metallic ferromagnetic substance which exhibits a very high residual induction (such as the alloy family commonly known as Alnico). The number of individual magnetic rings comprising each such array should in general be maximized (in a practical manner). Preferably, each magnet array has a rigid and annular nonmagnetic round core (not shown) which is roughly equal in minor diameter to the inside diameter of the constitutent rings, such that the rings may be easily strung thereupon rather like beads on an abacus wire.

Referring once again to FIGS. **1** and **2**, each of the several magnetic ring arrays **(34)(39)(55)** may be installed in sections which are preferably equal in number to the number of like sections into which the incorporating device's superstructure is divided. The rotating field coil **(35)(40)** or **(56)** associated with each such circular array of individual magnetic rings must be respectively concentric and adjacent thereto, and is basically positioned on both the radial and axial centerlines of the flux gaps of that array's constituent rings. As power is generated thereby, these rings may need periodic replacing.

The maximum length of the flux gap of each such C-shaped magnetic ring must of course be just slightly larger than the minor outside diameter of its associated field coil, and should be roughly equal to or just slightly less than the formed inside diameter of that magnetic ring. In the preferred embodiment these ring flux gaps are oriented horizontally, although they may also be readily oriented vertically if so desired. Each magnetic ring may also be mounted within the superstructure of the housing such that a comparatively small thin axially-polarized wafer of a highly-coercive permanent ferromagnetic substance (like sintered Ferrite 5 ($BaO.6Fe_2O_3$)) is positioned in the hollow center of that ring magnet, with such wafer's magnetic poles facing the like poles thereof, so as to act as a leakage flux blocking or reducing mechanism with respect thereto. These optional components would be most easily installed by insertion into a corresponding slot cut into each of the described mounting cores, and are recommended for use in very large devices.

Also arranged concentrically around the evacuated induction compartment **(12)** of the Generator, but fixedly mounted within the vessel's structure instead of rotating with the rotor assembly, are the following elements of the principal electrical generating means. Again, they are discussed in order from the outer circumference of the vessel inward, as shown in FIGS. **1** and **2**, and a reference to an element at one point above the rotor also applies to the similar elements below and around the rotor:

[a] the stationary half of the ballrace **(25)**;

[b] the outer array **(34)** of stationary permanent magnets, which should be mounted on a nonmagnetic core and in the preferred embodiment incorporates a maximum of 900 such ring magnets equally spaced around the vessel superstructure;

[c] the circular group of stationary electromagnetic armatures **(37)** or "variable inductor" array, as used to impart a rotational magnetic force upon both the external discharge current and the internal rotor assembly (which is proximal thereto). Each such array preferably comprises a maximum of 180 such armatures, and is to be approximately centered within the neutral region of the housing so that its constituent armatures are axially parallel to the rotor's axis of rotation;

[d] the center array **(39)** of stationary permanent magnets, which should be mounted on a nonmagnetic core and in the preferred embodiment incorporates a maximum of 720 such ring magnets equally spaced around the vessel superstructure;

[e] the inner array of **(55)** stationary permanent magnets, which should be mounted on a nonmagnetic core and in the preferred embodiment incorporates a maximum of 576 such ring magnets equally spaced around the vessel superstructure; and

[f] the stationary anode ring **(58)**, located adjacent and plane-parallel to the rotating cathode **(59)** of the inner electrostatic-induction triode array, which develops an induced positive voltage that is made available to the control circuitry shown in FIG. **10** as described below.

FIGS. **8** and **9** show two embodiments of the Primary Power System. The "Field Induction System" or stationary plane-parallel electrode arrangement(s) employed to induce the exterior field is/are basically the same in either case, and the voltage control system of FIG. **10** may be used with either embodiment.

The simpler single-stage rotor system of FIG. **8** is primarily intended for applications wherein the EDF Generator would be employed to produce useful electricity or heat, the latter being extracted from a principal liquid hull coolant circulated through the primary thermal conduits **(48)** (shown in FIG. **1**) that encircle the field power resistors **(63)**. Two thermal exchange or main service manifolds (not shown) would provide ground-based support to such a Generator from an associated utility or physical plant, as well as a remarkable level of electrical or thermal output from such Generator thereto. Each such manifold would connect directly to a single circular center sector of one of the two positive housing zones. Each of these two center sectors **(44)**, one or either of which is depicted in FIG. **4**, must in this case be composed of a nonconductive material.

Description of the Primary Power System Circuit

Referring again to FIG. **8**, the respective outer, center, and inner field windings **(81)(83)(85)** are directly connected in series, and the voltage thus generated is applied to the inner induction triode array cathode ring **(59)** and (through plate resistor **(91)**) to the outer induction diode array anode ring **(29)** and to the ballast capacitor anode ring **(24)**. The respective outer, center, and inner bias windings **(82)(84)(86)** are also connected in series, and the voltage thus generated is applied between the inner induction triode array cathode ring **(59)** and (through grid resistor **(90)**) to the control grid **(60)** of that same array. This places said control grid in parallel with that cathode electrically.

The turns numbers of the bias windings **(82)(84)(86)** and the grid resistor **(90)** values are chosen to apply a bias voltage to control grid **(60)** such that the inner induction triode array is biased very nearly to current cutoff. This results in a very high voltage being induced on the rotor segments **(14)** between outer induction cathode ring **(28)** and inner induction anode ring **(61)**, but at a very low series field

coil current due to the near-cutoff bias of the triode array. It is expected that the voltage on the rotor segments between these two rings, in a preferred embodiment using this arrangement, would be approximately 8,000 volts for a four-foot diameter prototype, or about 2,000 volts per foot of housing diameter. It is also anticipated that series field coil current could be limited to fractional amperage in smaller such devices and to single-digit amperage in the largest.

The preferred embodiment shown in FIG. **9** is a three-stage rotor system which is considered to be much more useful for applications wherein the EDF Generator may be employed as an aerospace vessel, in that it allows energy/wave-function signals from outside the vessel to be detected and amplified in the manner previously described.

In this embodiment, instead of the field windings **(81)(83)(85)** being directly connected together in series, intermediary voltage-transferring triode vacuum tube constructs are used to effect an indirect series connection between the said field windings. The voltage thus generated is again applied to the inner induction triode array cathode ring **(59)** and (through plate resistors **(92)**) to the outer induction diode array anode ring **(29)** and to the ballast capacitor anode ring **(24)**. The bias windings **(82)(84)(86)** are in this case used to provide an independent bias voltage to the control grids **(31)(52)(60)** of the outer, center, and inner rotating triode arrays, respectively, in parallel with their cathodes.

As in the single-stage rotor embodiment described above, the turns numbers of the bias windings **(82)(84)(86)** and the grid resistor **(90)** values are chosen to apply a bias voltage to control grids **(31)(52)** and **(60)** respectively such that each corresponding triode array is biased very nearly to current cutoff. This results in a very high voltage being induced on the rotor segments **(14)** between outer induction cathode ring **(28)** and inner induction anode ring **(61)**, again at a very low or fractional current due to the near-cutoff bias of the triode arrays. It is expected that the voltage on the rotor segments between these two rings, in a preferred embodiment using this arrangement, would be approximately 1,500 volts per foot of vessel diameter.

In general, the stationary anode rings **(58)** and all of the rotating electrode rings except the primary anode rings **(68)** should be composed of a nonmagnetic structural nickel alloy (such as Inconel 600). All rotating control grid element wires should be composed of an alloy such as that commonly known as nichrome. The rotating cathodes may be composed of modestly-thoriated tungsten, however, if and only as necessary to establish a small DC Primary Power System current if the observed 'dark discharge' current values are deemed insufficient, particularly in the three-stage embodiment wherein amplification of a minor AC signal voltage may be desired for communications purposes. The ceramic material Titania, with a nominal dielectric constant of 85, may preferably be used to form the posts, pins, or brackets which support the various rotating electrodes.

It is important to observe that both Primary Power System (rotor) field winding circuits as configured in both the single- and three-stage Generator embodiments will have an inherent AC series resonant frequency, and operation at that frequency will maximize the series field winding AC line currents (within given circuit resistor constraints) as well as the dependent stage plate voltage drops (across resistor(s) **(91)** or **(92)** respectively) which allow stage AC signal reproduction and amplification. As in traditional related practice, the series resonant frequency will be that at which the given circuit's inductive and capacitive reactances are approximately equal and opposite. Thus, the series resonant frequency of either of said Generator rotor circuit embodiments will be largely contingent upon the total field winding inductance and coil core permeability, as the various rotor electrode arrays and the plate resistor(s) **(91)** or **(92)** must have quite specific fixed relative design values of capacitance and resistance (respectively)—as a function of total field winding voltage—for proper overall DC and AC circuit performance.

Each Primary Power System control grid winding subcircuit as configured in the three-stage rotor embodiment may then be readily tuned for stage AC parallel resonance at the said inherent series resonant frequency, thereby minimizing stage grid subcircuit line current while maximizing the stage grid voltage drop (across each grid resistor **(90)**) which determines the level of net stage AC signal voltage gain or amplification obtained. As in traditional related practice, the parallel resonant frequency will once again be that at which the given subcircuit's inductive and capacitive reactances are approximately equal and opposite. This condition may be achieved by connecting an optional capacitor of suitable value if desired across the secondary winding (or control grid resistor side) of each rotor stage coupling transformer **(89)**, as indicated in FIG. **9**.

The Field Induction System

Before commencing a technical discussion of the stationary induction electrode systems which will be used to charge the positive housing sections, it will be necessary to further elucidate certain aspects of the Primary Power System electrical circuit so that a few of its key operational characteristics are more clearly understood.

Referring now to FIG. **7**, each of the Generator's two identical groups of rotating field coils (one above and one below the rotor) are in essence connected in simple series across the rotor segments using pairs of capacitive electrode rings, thus forming a single series loop with respect to the rotor. The two such series loops are at the same time, however, connected in mutually-opposed electrostatic parallel with respect to the rotor segment circuit leg common to both such loops.

Based on applicable principles of proper circuit resolution and series DC capacitance, such an opposed series-parallel circuit may readily be configured such that equal and opposite-polarity voltages will result upon the rotor-mounted induction cathode **(28)** and anode **(61)** rings in the absence of a fixed ground reference. To this end, the rotor assembly itself is to remain completely without direct earth or chassis ground in operation, and a corresponding segment polarization will continue as the circuit is duly energized by a finite DC conduction current.

When a primary DC rotor current is also established to the housing's Emitter Ring **(47)** and an external discharge current in turn occurs to the positive zone sectors **(42)**, the two systems of primary induction electrodes **(64)–(68)** also complete two simple series loops back to the rotor and the two such external field envelope subcircuits in parallel constitute the EDF Generator's "Field Induction System" circuit. Thus, the total field discharge current equals the primary rotor current, and the rotor segment circuit leg is common to both of the major system circuits described.

As is apparent from the section on Method of Operation, it is imperative that the charged housing sections also have no direct earth or chassis ground, being instead of a 'floating-ground' reference with respect to the described primary rotor circuit. The cathodes **(64)** of these two primary

electrode systems may have a chassis ground reference at a very high resistive bias (as indicated in FIG. **10**), across which any actual cathode charge imbalance or potential in operation may be detected and measured.

Therefore, in light of the Faraday shielding principle and the said equal and opposite voltages which occur at opposite ends of the rotor segments (**14**), the potential difference between the rotor field emitters (**17**) and the inner surfaces of the two negative hull sections (or Emitter Ring (**47**)) will tend to become equal (and opposite) in operation to that across the primary electrode systems. And thus, a suitably vast and engineered differential in the electron emissivity of the field emitters (**17**) and the said ground-referenced primary cathodes (**64**) will define the primary voltage expansion ratio which may be obtained (in the manner first outlined in the section on Method of Operation). This topic will be discussed in more detail in a section to follow.

Moreover, a basic field-envelope-circuit generator design is disclosed which thus far, in accordance with Faraday's and Lenz's Laws, can produce a very high DC primary voltage with minimized circuit AC current inductance losses. The Primary Power System's DC voltage is not readily available, however, for purposes of normally-usable electrical output. Brushless electrode rings (**58**) must once again be employed to extract any portion of this primary voltage for off-rotor use. The Primary Power System schematics shown in FIGS. **8** and **9** in conjunction with FIG. **10** best illustrate the use of these two additional stationary anode rings (**58**), one suspended adjacent to each inner rotor induction cathode ring (**59**), which allow a large electrostatically-induced positive DC voltage to be 'picked off'. This positive voltage may then be used as a source of low power within an external circuit, provided that circuit is negatively-grounded and only to the Generator's chassis, and is therefore really intended for auxiliary onboard usage only.

It can be seen thus far, and especially in FIG. **7**, that there are essentially two major systems involved in creating the voltages which must be applied to the positive and negative housing or hull sections in order to form the electrodynamic field that will surround the Generator in operation. These two systems are:

[A] the Primary Power System, which generates a large DC voltage by electromagnetic induction and then electrostatically induces a major portion of that voltage upon the rotor segments (**14**) between two pairs of induction anode (**61**) and cathode (**28**) rings which are conductively affixed thereto (about the inner and outer circumferences of the rotor assembly, respectively); and

[B] the Field Induction System, which utilizes the potential difference which then exists between the positive inner circumference of the rotor—and its two attached primary anode rings (**68**)—and two separate sets of highly electron-emissive stationary cathodes (**64**) which are maintained at chassis ground and which are circularly-arranged near and electrically-connected to the periphery of each central collector housing section (or "zone") so that they may jointly charge their respective zone sectors (**44**) and/or (**42**) positively by stripping them of native electrons.

Each of these primary electrode array cathodes (**64**) connect directly to a field power resistor (**63**), which in turn connects to one positive radial zone sector (**42**) of the central housing sections. Each such cathode (**64**) is also vertically aligned inboard with a group of three stationary plane-parallel grid electrode elements and one of the two innermost rotating induction anode rings (**68**) conductively-affixed to the rotor segments (**14**) (about their positive inner circumference). Each such group of three grid elements is comprised of a control grid (**65**), an accelerator grid (**66**), and a suppressor grid (**67**), with one such combined grid element assembly per radial zone sector (**42**).

Together with the said primary induction anode ring (**68**), each such 5-electrode group constitutes what is termed a "unit pentode array" ((**69**) as seen in FIG. **7**). The unit pentode arrays (**69**) and their associated frame-mounted power resistors are thus arranged in two ring-shaped sets, located between the rotor and the two positive housing sections, which are referred to throughout as the "primary induction ring rays".

The potential difference between the unit pentode array cathodes (**64**) and rotor primary anode rings (**68**) is then referred to as the "primary array voltage", as the unit pentode arrays of each primary induction ring array are connected in parallel electrically (between the field envelope and rotor), and the number of unit pentode arrays should be equal to the number of like sections into which the Generator's superstructure is divided.

Electron vacuum tube design, construction, and operating methods may be employed to induce and/or modulate a substantial DC bias upon the plate current(s) of the several unit pentode arrays, which electrically link the polarized rotor to the central housing sections, for purposes of rendering the external electrodynamic field variably non-isometric and therefore directionally propulsive. Each such "stationary" 5-electrode system or unit pentode array (**69**) (whose anode element actually rotates) should be constructed in such a manner that it exhibits a minimum design amplification factor (μ) equal to 12.0, again with reference to any AC voltage or signal present in the Field Induction System circuit and as a function of its engineered relative electrode spacing(s).

The rotating primary induction anode rings (**68**), stationary cathodes (**64**), and various grid element wires which are associated with the stationary multi-electrode systems should be composed of tungsten, due to the extremely heavy conduction current across these primary arrays. Ceramic posts, pins, or brackets composed of a specialized material such as Titania may once again be used to support all of the various stationary electrodes and grid elements, and each unit pentode array's grid wires should be vertically aligned (or mutually-shading) similarly to those in a "beam power pentode" vacuum tube.

As generally depicted in FIG. **1**, a primary thermal conduit (**48**) with an imbedded coolant-carrying core (**49**) encircles and mechanically supports each unit pentode array, its power resistor (**63**), and that resistor's enclosing dielectric buffer (**45**). These thermal conduits and dielectric buffers will be examined in further detail hereinafter.

The operation of the Field Induction System is regulated by a central Field Voltage Control System which is modular in nature, as illustrated in FIG. **10**, and which is therefore mechanically and electrically connected to the stationary cathodes and grid elements of each unit pentode array (**69**). In this regard, the auxiliary stationary anode rings (**58**) described above are to serve as the source of positive voltage applied to the accelerator grids (**66**) of said unit pentode arrays, and such Field Voltage Control System is designed to directly accept this voltage for that purpose. The Field Induction and Voltage Control Systems will be discussed further in sections to follow.

Zone Sector Construction

Referring now generally to FIGS. **3** and **4**, one major goal in dividing each of the two hull positive zones or sections (**5**)

which jointly comprise the Generator's Field Hub into a large number of radial sectors (**42**) in electrical parallel is to limit the external field current reaching each particular power resistor and unit pentode array combination to a fairly uniform level, while somewhat reducing field current return eddy losses as well. However, each radial sector (**42**) is thereby also given the capability of effecting a local thrust production differential (in propulsive three-stage rotor devices), by virtue of its electrical isolation, as it is then possible to vary the local resistance presented to the electrodynamic field with respect to any given radial sector so that a substantial measure of navigational control in the z-axis may thus be achieved by varying the proportional field current conducted by that sector.

Because the inherent resistance of each such sector itself will be negligible even at an extremely elevated operating temperature, in part due to the very low temperature coefficient of resistivity of the proposed steel hull plate material, the voltage drop across the radial length of each sector will also be negligible. Thus, the determination of an appropriate sector thickness becomes an entirely structural consideration. A secondary design goal with respect to zone sectorization is therefore to select a uniform cross-sectional area for the radial zone sectors (**42**) which yields a Field Hub total conduction mass approaching that of the device's rotor segments (**14**).

The hull plating which forms each positive zone (or section (**5**)) of the Generator's Field Hub should preferably be composed of stainless steel or a refractory metal, and divided into thirty-six equal-area radial zone sectors (**42**) of truncated wedge shape and a circular center zone sector (**44**). As stated earlier, in the single-stage Generator embodiment these two center zone sectors must be of a nonconductive material or construction, and should also comprise approximately 4 to 5% of the total area of their respective zones to allow the connection of the exchange or main service manifolds described above. In the three-stage embodiment such center sectors (**44**) must instead be conductive as just prescribed for the radial zone sectors (**42**), and should each comprise about 1% of the said zone area. Each such positive radial sector should be formed of a single piece of the hull plating material in such a manner that its cross-sectional area in the direction of its radial length is maintained at a very uniform value.

The uniform thickness of each center zone sector (**44**) should be equal to that of the radial sectors as measured at the minor (inner) arc width thereof, and the radial sectors must be insulated from the respective center sector where they meet that center sector's periphery (except in single-stage rotor devices). A suitable thin ceramic insulating partition (**43**) may therefore be installed between each adjacent pair of radial zone sectors (**42**), and around each center sector (**44**) in three-stage devices, and the uniform flat thickness of these sector insulators should in general be minimized.

In three-stage devices, four radial sectors (**42**) of each positive housing zone which correspond to cardinal points separated by 90 degrees of the hull's circumference, and which divide the Field Hub into four equal quadrants (as indicated with phantom lines in FIG. **4**), should be connected in parallel with the center sector of that positive zone at the maximum positive voltage end of those four sectors' respective power resistors (**63**).

The parallel resistance of the four conductors which therefore connect each center zone sector (**44**) (in three-stage devices) to its respective network of power resistors should then be such that that sector's per unit surface area level of field current conduction is slightly higher on the average than that of its adjacent radial sectors (**42**), under uniform zero-signal field bias conditions as hereinafter described.

The four unit pentode arrays (**69**) of each primary induction ring array which correspond to the power resistors so-connected to that primary array's center zone sector (**44**) would generally not be utilized individually in the active field current bias modulation related to the production of local thrust differentials (in three-stage rotor devices), being instead reserved primarily for potential involvement in signal communications transmission and/or reception activities.

Power Resistors

As best seen in FIG. **1**, the cathode element (**64**) of each plane-parallel electrode system or unit pentode array which is used to link the rotor assembly with a positive housing collector section or radial zone sector (**42**) is electrically connected to such positive section or sector by means of a ceramic resistor block (**63**), of a certain low dielectric constant and high volume resistivity, which becomes a poor but effective conductor at the elevated operating voltage and temperature of such housing collector sections and which ensures an adequate external field current voltage drop between such section or sector (**42**) and said cathode element (**64**) (which is chassis-grounded as shown in FIG. **10**).

Referring still to FIG. **1**, each said ceramic resistor block or "power resistor" (**63**) is to be entirely jacketed by a hollow ceramic thermal conduit (**48**), including a dielectric buffer (**45**) composed of a ferroelectric material having a certain high dielectric constant and very high volume resistivity which does not become a conductor even at the elevated operating voltage and temperature levels of said power resistors. These thermal conduits (**48**) mechanically connect the power resistors to a flattened inner surface of such positive hull section or radial sector (**42**) and a form of very-high-temperature heat transfer fluid such as liquid sodium may be circulated therein so that the proper resistor temperature is maintained to ensure an optimum cathode potential with respect to ground.

A suitable manifolding, pump, and heat exchanger system (not shown) may be used to extract or transfer an extremely high level of recoverable thermal energy from the power resistors (**63**), arising from the field current voltage drop associated therewith, by means of such primary heat transfer fluid circulated through the thermal conduit cores (**49**) in the manner normally associated with nuclear power plants. Similarly, the rate at which such primary hull coolant is circulated may be used to directly regulate and limit the external field current to a value within the safe ampacity of the rotor assembly.

It is important to point out that each of the Generator's power resistors (**63**) and its associated dielectric buffer (**45**) and primary thermal conduit (**48**) may be designed, as an assembly, to incorporate a fixed positive reduced-voltage tap (not shown), whereby a main source of onboard or output DC or AC electrical power may be provided either for or from the Generator within a limited-duty circuit which is grounded directly to the primary cathodes. Provisions should and may also be provided for biasing, damping, and/or inductively coupling any primary conduit connecting sections, to control or harness electromotive currents induced in the highly-conductive primary coolant. Onboard electrical resistive heating means should and may be incor-

porated for purposes of pre-heating the primary coolant and, in turn, the power resistors and dielectric buffers.

Referring briefly to FIG. **11**, it is also important to note that the Generator's power resistors must be in a conductive state before the housing potential difference reaches breakdown field intensity, as figured along a minimum semicircular arc trajectory **(142)** across the hull neutral sections **(4)**, and the flow of field discharge current commences. Therefore, the actual maximum dielectric constant of the resistor material used in very-high-voltage single-stage rotor devices, and in ultra-high-voltage three-stage rotor devices as well, may be calculated at about k=11.

As is best seen in FIG. **14**, the recovery thermal conduits **(79)** of the secondary hull coolant system which assist in supporting the entire tapered peripheral portion of the housing must pass inboard between the power resistor assemblies referred to above, and therefore the resistors **(63)** must assume a complex tapered shape to provide the necessary clearance. As generally depicted in FIGS. **1** and **2**, they will have a trapezoidal cross section at the 'top' or outward-facing end (with radial length somewhat greater than minor circumferential width) and a rectangular cross section at the bottom or cathode end (with circumferential width much greater than radial length). In this regard, their engineered shape should still maintain a uniform conduction cross section exactly analogous to that of the preferred positive zone sector construction described above.

Dielectric Buffers

Referring once again to FIG. **1**, it is imperative to electrically insulate the power resistors **(63)**—due to the extreme voltage drop that will occur across them in operation—to prevent direct discharge to other nearby structural components from taking place. However, not only is this a problem due to the thickness of insulation which would be required at any 'ordinary' dielectric value, but the power resistors' projected operating temperature range of 600 to 700+° C. completely precludes the use of almost all known dielectrics. Fortunately, the search for high-temperature dielectrics for use in aerospace electronics applications (particularly multi-layer capacitors) has resulted in the development of a small number of exotic materials potentially suitable for use as a space charge buffer **(156)** or dielectric encapsulant **(45)** for the Generator's power resistors **(63)**.

In the application contemplated herein, the volume resistivity of the resistor encapsulant is somewhat secondary to its dielectric constant k at high temperature, because no opposing contact voltage is present (as in a capacitor) to encourage circuit conduction losses within the material. Therefore, the prime consideration is the dielectric's ability to exhibit a very large k value at over 600° C. This places the material squarely in the realm of a very small select group of Class III high transition temperature ferroelectrics. These materials, such as Tantalum-modified Lanthanum Titanate and Lead Ytterbium Tantalate, do not begin to demonstrate significant dielectric strength at less than 300 to 450° C. One such compound, Sodium Bismuth Titanate ($Na_{0.5}Bi_{4.5}Ti_4O_{15}$), actually exhibits an amazing peak k value of about 3100 near the middle of the said power resistor operating temperature range: at 655° C. (1,202° F.). This would seem to indicate that this compound is eminently suited for use in forming the necessary rotor space charge buffer pieces **(156)** and/or resistor dielectric buffers **(45)** in this application.

It should be stressed that great care in quality control must be exercised in formulating and sintering this or any similar such special compound during manufacture of the dielectric buffer pieces. An absolute minimum of impurities must be assured, the density of the constituent powder maximized, and each piece finally certified as being free of the smallest physical defect prior to use in order to attain the desired operating performance. It is also hoped that these crucial components may each be compaction die formed and sintered simultaneously with a respective power resistor **(63)**, and perhaps even with the corresponding primary thermal conduit **(48)** as well.

The core **(49)** of the thermal conduit associated with each power resistor **(63)** should be constructed of a refractory metal or alloy tubing (such as molybdenum) which is jacketed with high-purity Alumina or a comparable material formed directly thereupon. Thus, each such primary thermal conduit becomes an extremely strong structural member which may also be used to support the stationary electrodes of the corresponding unit pentode array, while circulating the preferred liquid sodium heat transfer fluid or coolant around the outward faces of that power resistor to recover or remove its excess heat.

Each power resistor **(63)**, its dielectric buffer **(45)**, and associated primary thermal conduit **(48)** together comprise one power resistor assembly, and each such assembly in combination with its corresponding unit pentode array is considered for present purposes as forming the constituent component group of which the primary induction ring arrays and Field Induction System are comprised.

Extensive calculations reveal that a suitable power resistor material in most sizes of the single-stage embodiment of the Generator would be a ceramic material with the chemical formula $Mgo.SiO_2$, which is available from CeramTec NA as CeramTec designation Steatite 357. A suitable power resistor material in most sizes of the preferred three-stage embodiment of the Generator would be a somewhat different ceramic material with the chemical formula $2MgO.2Al_2O_3.5SiO_2$, which is available from CeramTec NA as CeramTec designation Cordierite 547.

Overall Description of the Field Induction System Circuit

Before an overview of the EDF Generator's Field Induction System electrical circuit is presented, a somewhat comprehensive examination of the nature of the housing or hull configuration should be made, as in this application the hull itself is an active part of that circuit. Its electrostatic characteristics as a function of such configuration will therefore have a fundamental influence upon the nature of the external field envelope discharge current itself.

Hull Design

The derivation of the Generator's design hull configuration, as best seen in FIG. **3**, comprises a long and complicated story. This should not be taken to imply that the final and rather exacting composite shape selected is the only one that 'works' properly. It merely reflects the preferred embodiment of the inventor's conceptualization of a fundamentally mechanical device which happens to entail both tremendous electrical complexity and inspiring aeronautical implications.

Should the proposed vessel eventually be used to explore the possibility of transcending the time/light barrier, extremely precise calculations regarding its spatial displacement and charge/mass ratio will no doubt become necessary. Therefore, one of the principal reasons for the chosen hull design is that the total vessel displacement may readily be

calculated using traditional formulas from analytic geometry for the volumes of the two truncated right conic sections and two one-base spheric zones, and the volume of the remaining cylindrical central chamber region.

Using just these formulas, a vessel hull configuration has therefore been developed which may be linearly expanded (as a scalar function of the hull radius) to virtually any size with no significant loss of accuracy. The Table of Dimensions which follows and the attendant schematic hull diagram of FIG. **3**, upon which all of the subsequent Detailed Calculations quoted are based, illustrates the application of this design technique to a theoretical vessel hull only 48" in diameter. It must be emphasized that the construction of an Electrodynamic Field Generator this small might not prove entirely practical in reality, due strictly to mechanical limitations, and the inventor believes this prototype model to be in fact the smallest such machine that could be built. This original hull size was deliberately selected, however, to encourage the development of the maximum possible accuracy with respect to contingent specifications for the relative size and positioning of the Generator's principal components, prior to the actual construction of larger machines.

The surface areas of the negative **(3)** and positive **(5)** hull sections are set equal to each other, and for two very important reasons: [i] to give the vessel hull a significant theoretical capacitance (despite its unusual geometry); and [ii] to render the two "driving" or discharge current portions of the field envelope uniform in cross section. Essential considerations which are related to these fundamental design criteria are best expressed in the following electrostatic formula for uniform field intensity in a DC capacitor which exhibits a continuous leakage current:

$$E^2 = V\sigma/d\epsilon_o,$$

where V=equilibrium potential difference in volts,

σ=average surface charge density of one plate,

d=plate separation in meters,

ϵ_o=universal electrostatic constant,

and E=uniform field intensity in volts/meter.

This equation plays an important supporting role in the invention's Method of Operation, as previously discussed in that section above.

The volumes of the peripheral right conic sections of hull volume surrounding the Field Hub and and those of the one-base spheric zones comprising the Field Hub itself are also set equal in a preferred embodiment, as this criterion is postulated to promote both the structural integrity of the hull in any attempt to breach light speed (and establish a stable Kerr metric space warp about the vessel) as well as the gravimetric stability of the central chamber/cabin area in light of the relativistic mass effects involved while doing so.

As the case may be, to achieve this equal-area/equal-volume design, it was found necessary to employ two crucial interrelated constants (in addition to the ratio ⅕ used to radially "step off" the hull's interior space): the Hull Area Constant and the Polar Hull Constant. The Area Constant is (as the name implies) necessary to achieve the equal-area part of the overall design solution, and merely dictates the small deviation of the neutral **(4)** and negative **(3)** housing sections' ring radii from the stated preferred design increment of the hull's radial width.

The other requisite design factor, the Polar Hull Constant, is much more complex in nature. This value specifies the maximum height of the spheric hull zones **(5)** as a function of their arc-shape, and the corresponding contingent Polar Volume Differential is absolutely essential to achieving the equal-volume aspect of the preferred design. It is important to note that certain allowances must be made in practice for a finite but electrically-significant peripheral edge 'thickness' (and therefore surface area) at the equator of the device's negative housing Emitter Ring **(47)**, but will in general only minimally modify the "pure" design-model values obtained using the mathematical formulas given in the Table of Dimensions to follow.

Hull Configuration

Referring now to FIGS. **3** and **4**, the exterior housing or hull **(1)** is designed specifically to have a circular disc shape the thickness of which along the vertical axis of symmetry (that also constitutes the rotor's axis of rotation) is relatively minor as compared to the diameter along its radial centerline plane, and which tapers gently from a maximum thickness along such vertical centerline to a very minor thickness at the radial periphery **(47)** of the housing.

The tapered disc shape of the hull is postulated to promote the formation and maintenance of a stable bihemitoroidal corona or arc discharge field based upon certain empirical principles of electrostatics and upon laboratory experiments performed by the inventor involving concentric circular electrodes. Such an electrodynamic field may be characterized electrostatically in this application by an axial positive polar electric field contiguous with a biplanar negative electric field, with each field of one given polarity tending strongly to become oriented parallel to a field of opposite respective polarity but similar intensity.

The exterior housing or hull **(1)** is therefore divided into two axially-central positive electron collector sections **(5)**, as well as: [i] either a single radially-peripheral negative electron emitter ring **(47)** which is biplanar in cross section or two or more such ring sections **(3)** which are uniplanar in cross section having separate planar orientations; and [ii] two dielectric neutral sections **(4)** which are interposed between said positive and negative sections such that each such section of a given polarity is spatially separated from each section of the opposite respective polarity.

The total external surface area of the housing's negative Emitter Ring **(47)** or sections **(3)** is essentially equal to that of the positive collector housing sections **(5)** or zones, such that the overall housing configuration thereby acquires a significant theoretical static capacitance by design as intended. An estimated base value for such hull capacitance 'C' may be obtained by applying the surface area 'A' of the hull's two sets of "plates", as figured using the formulas in the Table of Dimensions below, to the standard formula for parallel-plate capacitance ($C=\epsilon_o A/d$). When plate separation 'd' is taken to be the simple average of the longest **(141)** and shortest **(142)** purely-semicircular arc current trajectories across the hull, as depicted in FIG. **11**, this estimate of hull capacitance is approximately 13 to 14 mmf for an EDF Generator 48" in diameter.

Field Composition

Referring to FIG. **11**, the external discharge current once initiated may be expanded as a function of the operative field voltage to fill two hemitoroidal spatial volumes of rotation **(140)** whose outer perimeters **(141)** are defined by a semicircular electron arc trajectory across the full housing radius in a plane perpendicular to the housing surface, or from the outermost point on the negative periphery thereof to the respective positive centerpoint of the housing lying on the vertical centerline thereof, and whose inner boundaries

(**142**) are defined by a similar such trajectory across the hull's neutral ring or sections (**4**) from any innermost point on the negative periphery to the closest point thereto lying on the respective positive collector section (**5**).

The physical volume (**140**) of the external discharge current as described has a uniform cross-sectional area in the radial direction of electron conduction which corresponds to any such semicircular arc trajectories between points on the housing's negative Emitter Ring (**47**) and the respective positive collector housing sections (**5**) and therefore, by the definition of a conductor, such discharge current must assume a uniform current density. While very difficult to effectively describe in verbal terms, the idealized mathematical configuration of the Generator's heat- and thrust-producing field envelope region (as a function of its housing geometry) is visually easy to grasp and is clearly illustrated in FIG. **11**.

As indicated in FIGS. **12** and **13**, stationary electromagnetic armatures (**37**) are uniformly distributed into two circular arrays (**145**) containing equal numbers thereof which are positioned on opposite sides of the rotor from one another, and which are each located concentric to the rotor's axis of rotation midway between the negative Emitter Ring (**47**) and positive housing sections (**5**). These armature arrays (**145**) may be employed as two separate groups to impart a holistic but attenuating rotational magnetic vector moment upon the external discharge current, reaching through the thin neutral sections (**4**) of the housing, and thus may be used to modulate the field envelope's kinetic and electrical characteristics in a variety of ways useful to the invention and its objects.

FIGS. **12** and **13** also show the electric field vectors (**143**) as described above, and magnetic field vectors (**144**) as produced and modulated by the armatures (**37**) comprising the two armature or variable inductor arrays (**145**). FIG. **13** specifically depicts the regular lateral bending or displacement of the radially-impinging electron trajectories (**143**), under the influence of the inductor arrays (**145**), which is postulated to have a unitizing effect on the driving portions (**140**) of the field envelope.

It can therefore be seen that the device contemplated herein may be operated in such a manner that its external breakdown discharge current field achieves a uniform conductive cross section and current density, as well as a holistic and orderly rotational aspect which subsequently acts to assist in rendering such current quasi-coherent. And thus, for purposes of this device and its applications, such a discharge current field should be thought of as a special qualified type and form of DC corona or arc discharge—having significant propulsive potential (to be further examined)—which then merits technical description as an electrodynamic field.

In this respect, it may for now be emphasized that a useful level of electrically-developed thrust may be realized from the relativistic impulse of the electrodynamic field current electrons incident upon the positive collector housing sections and, postulating the operation of the device in the vacuum of space (with a physical field current volume as described), the impulse velocity of such incident field electrons may be raised to as high as 99.99% of the speed of light and more with the corresponding relativistic mass thereof then equal to 69 times their rest mass or indeed much more.

Primary Voltage Expansion Ratio

In keeping with the logic presented at the opening of the Field Induction System section above, the primary array voltage will tend to equal only one-half (½) of the DC voltage expressed across the rotor segments (or "rotor voltage"). Therefore, to develop an extraordinary multi-megavolt 'secondary' or field voltage across the Generator's housing of the type just described, the primary array cathodes' electron emissivity (expressed as a certain factor) must exceed that of the rotor field emitters by a ratio which is at least as large as the ratio of the desired field voltage to half the observed said rotor voltage. The latter such ratio is then thought of as the primary voltage expansion ratio in this application, as outlined in the Method of Operation section hereinabove.

A difference in the instantaneous rate at which these two said sets of parts will tend to discharge under the impetus of a given equivalent voltage or potential difference is thereby created. This instantaneous charge differential enables the primary cathodes to strip native electrons from the positive housing sections (**5**) thousands of times faster than such charge can reach the negative emitter housing sections (**3**) from the rotor field emitters. Thus, an instantaneous charge differential is perhaps best described as a cumulative charge imbalance that is known to operate (under certain conditions) in capacitive and/or thermoelectric circuit arrangements and to express itself as an elevation of the applied voltage or potential difference therein.

To actually achieve and support such a condition requires the use of two housing charge ballast capacitors whose negative 'plate' elements or rings are affixed directly to the rotor segments (about their outer perimeter) and which are immediately able to store an amount of such charge that is sufficient to produce equilibrium collector surface charge densities resulting in the desired field voltage. This average required housing charge density is calculated using the traditional formula given in the Hull Design section above.

The voltage applied to the positive rings of these ballast capacitors is taken from the rotor's outer field coil anode ring connections and therefore represents a large portion of the Primary Power System's generated field winding voltage. It should be noted that this voltage must actually be passed to such capacitors beneath the rotor ballrace assemblies in the form of recessed conductive traces on one or more of the segment separators. This same technique must also be employed to connect electrical elements of the Primary Power System lying outboard of the variable inductor arrays (**145**) with corresponding elements lying inboard thereof.

In any event, these crucial ballast capacitors are therefore properly thought of as belonging to both the Primary Power System and Field Induction System circuits. They provide the necessary electric force means by which a given primary voltage expansion ratio (as defined) may be supported and realized using the engineered instantaneous charge differential concept described. Because of the complexity of this aspect of the Generator's operation, the specific example below will illustrate the relevant principles using the respective temperature emissivity factors of the chosen field emitter and primary cathode materials with respect to the aforementioned 4ft. prototype model.

This temperature emissivity factor, $e^{-\Phi/kT}$, where 'e' is the base of natural logarithms 2.71828 . . . , 'k' is Boltzman's constant, and 'T' is the absolute temperature in ^{o}K, derives from the famous Richardson-Dushman equation: a formula for the correct thermionic emission current density 'J' of a clean metal cathode in vacuum having surface work function ϕ. And, expressed in mathematical terms, the principle of ratio equivalence defined above may be stated as follows:

$$\text{Primary Voltage Expansion Ratio} \approx \text{cathode } e^{-\phi/kT}/\text{emitter } e^{-\phi/kT}.$$

Using field emitters of sintered 0.68/0.32 tungsten/copper composite and thorium-adsorbed tungsten primary cathodes, a 4 ft. diameter three-stage-rotor prototype unit of the invention's design would achieve a primary voltage expansion ratio equal to about 12,106 given a field emitter ϕ=4.408 eV and primary cathodes of ϕ=3.639 eV with both component sets at a temperature of 948° K (or 675° C.) as figured per the above equation. The field voltage expressing this ratio is verified in the Detailed Calculations hereinbelow.

It is important to note that this equation can readily be solved for the required primary cathode ϕ where the projected mean operating temperature of the primary cathodes is given (as it would be in operation), and where the field emitters' ϕ is also fixed and known but their actual operating temperature within a range of possible values must be experimentally or theoretically obtained.

The external breakdown discharge current once initiated and sustained in this manner is generally limited only by the engineered design characteristics of the unit pentode arrays which comprise the Field Induction System. In particular, the negative DC bias voltage applied to the unit pentode array control grids **(65)** must be sufficient to limit the total primary induction ring array current to a value within the safe operating ampacity of the rotor. For purposes of this text, the term "full-power" as used in relation to the Primary Power System and its incorporating device shall be taken to indicate a corresponding rotor speed wherein a full nominal field envelope voltage is achieved, maintained, or exceeded. Such an operational state is depicted in FIGS. **11**, **12**, and **13**.

Field Current Bias

In a simple single-stage rotor embodiment of the Generator used as a "Thermal Power Unit", no active biasing of the current in either of the two current-carrying portions **(140)** of the field envelope (which are otherwise symmetrical) need take place at the primary arrays, and the current comprising each such driving portion of the field is essentially equal. In the preferred three-stage rotor embodiment intended for propulsive units, the field current is actively biased or proportionally shunted by the primary arrays between such field envelope portions **(140)** to render the impulse thrust developed thereby mutually non-isometric along the Generator's vertical centerline. Several important considerations directly related thereto are discussed below, and reference should generally be made to FIG. **7** in this section.

The Generator's maximum full-power total field current must be equal to the rated DC parallel ampacity of the rotor segments, as figured using traditional methods. An operational minimum full-power field current in any propulsive three-stage rotor device used as an "Impulse Drive Unit" should then be considered as equal to either one-half (½) of the so-rated rotor ampacity or a level of total rotor current sufficient to allow the Generator to produce a net vertical thrust equal to its own weight, whichever is the lesser.

Given the minimum engineered amplification factor of the unit pentode arrays **(69)** earlier stated, this minimum full-power field current may in all likelihood be maintained with an average value of primary array negative bias voltage (as applied to the stationary control grids **(65)** shown in FIG. **7**) which is less than or equal to about one-half (½) of its specified design-maximum value. If no unidirectional or alternating voltage component of the Field Induction System current is present, this said average negative bias voltage value constitutes the primary arrays' "zero-signal" bias voltage and the primary arrays may be said to be in a zero-signal field bias condition (as mentioned earlier hereinabove).

Each of the two said driving portions **(140)** of the Generator's field envelope may be referred to as a "field hemitorus" because of its postulated shape, and the maximum individual field hemitorus current at any given value of operating rotor current should at all times be limited to a level which is less than or equal to two-thirds (⅔) of that operating rotor current. Peak net field thrust will then equal one-third the total isometric thrust. Assuming the said given amplification factor, this maximum advisable hemitorus level of proportional total field current may in all likelihood be maintained with an average value of negative bias voltage applied to the corresponding primary array's control grids **(65)** which is equal to approximately one-third (⅓) of its specified design-maximum value (or less proportionally at a rotor current level which is less than rated ampacity).

Due to the lag time in heating either of the two power resistor **(63)** networks through which an increasing field hemitorus current must return, the negative bias voltage applied to the corresponding primary array's control grids **(65)** may be briefly reduced to as little as one-sixth (⅙) of its specified design-maximum value (as a standard minimum operating control grid voltage) or less proportionally at a rotor current level which is less than rated ampacity.

The minimum individual field hemitorus current at any given value of operating rotor current should at all times be maintained at a level equal to or greater than one-third (⅓) of that operating rotor current. Assuming the said given amplification factor, this minimum advisable hemitorus level of proportional total field current may in all likelihood be maintained with an average value of negative bias voltage applied to the corresponding primary array's control grids **(65)** which is equal to approximately two-thirds (⅔) of its specified design-maximum value (or less proportionally at a rotor current level which is less than rated ampacity).

Due to the lag time in cooling either of the two power resistor **(63)** networks through which a decreasing field hemitorus current must return, the negative bias voltage applied to the corresponding primary array's control grids **(65)** may be briefly increased to as much as five-sixths (⅚) of its specified design-maximum value (as a standard maximum operating control grid voltage) or less proportionally at a rotor current level which is less than rated ampacity.

It is important to note that the current passed by the unit pentode arrays **(69)** will depend to a great degree on the accelerator grid **(66)** voltage rather than on the overall primary array potential difference, just as in any standard vacuum tube which employs a screen or accelerator grid whose positive voltage is less than the applied plate voltage. It therefore becomes evident that this positive grid **(66)** voltage may also be modulated in a manner similar to the negative control grid **(65)** voltage. This type of 'duplex' signal-handling or control voltage response capability allows the unit pentode arrays (of either primary induction ring array) to amplify a resonant frequency communications signal while simultaneously controlling an independent level of current-contingent thrust.

In any event, it can be seen here in light of the Law of Conservation of Momentum that a sizeable force of thrust will be developed by each field hemitorus **(140)** from the relativistic impulse of its constituent electrons incident upon the collector housing sections **(5)**, and that suitable means have been provided for rendering such mutually-opposed y-axis thrust vectors variably non-isometric.

A less obvious but very important distinction which should be made in regard to the EDF Generator's production of such electrically-developed thrust is certainly this: it is

not necessary that the Generator or in particular its positive hull sections **(5)** (or Field Hub) provide the work required to move the field current charge against the field potential gradient. Per classical electric field theory, the work may be done by the charge itself in being repelled along the potential gradient. In the first case, work is 'performed' and in the second it is 'recovered'. Furthermore, it can be shown mathematically in light of the preceding distinction that any net recoil force experienced by the negative hull Emitter Ring **(47)** is strictly Newtonian in nature, compared to the relativistic impulse thrust produced at the Field Hub, and that the peak value of such recoil would amount to no more than about 3/1,000 of one percent of the peak net value of the said thrust.

Therefore, the Electrodynamic Field Generator's input rotary torque drive means will provide the work-energy required to establish and maintain the rotor's rotation and the resultant field potential gradient that is induced in the manner described, and the electron charge comprising field hemitorus current will then do the work required to effect its passage toward the positive Field Hub. The resulting collisions are almost completely inelastic, so momentum and kinetic energy are conserved independently, and the field current's gained kinetic energy is recovered almost entirely as heat.

Field Voltage Control System

Accordingly, it can also be seen that the interactive factors or features which result in the EDF Generator's exhibited field voltage as a function of its rotor voltage are much more complicated in nature than the simple turns ratio which defines an AC transformer's secondary voltage in terms of its primary voltage. And because of the extremely high primary voltage expansion ratios which will be operative in large devices, small fluctuations in the Generator's stationary primary array electrode voltages can conceivably cause very large and undesirable fluctuations in the exhibited field voltage. Therefore, a relatively simple but effective Field Voltage Control System is provided which may be used to monitor, regulate, and adjust all individual primary cathode and grid voltages to optimum specified and/or interim operating values such that rotor ampacity is not exceeded, and this system anticipates the use of an associated onboard computer system (to render its various interactive functions automatic).

The embodiment of such a control system as shown in FIG. **10** is intended merely to provide a logical circuit model which is illustrative of the principles of the invention, and of certain principles of appropriate circuit resolution which should be applied within such a system in light of the following aspects of its teaching, and not to preclude the use of other possible embodiments of such control system circuitry.

The cathode elements **(64)** of each plane-parallel electrode system or unit pentode array (used to link the rotor assembly to the positive housing sections) are to have a surface work function ϕ which is significantly lower and/or an operating temperature which is significantly higher than that of the rotor field emitters **(17)**, and will therefore tend to exhibit a comparatively much-higher electron emissivity, such that the ratio of their respective temperature emissivity factors (which are each represented by $e^{-\Phi/kT}$) has a very determinate effect upon the respective exhibited ratio of the device's external discharge field voltage to the primary DC voltage generated internally.

Referring to FIG. **10**, these primary array cathodes **(64)** must be composed of tungsten or another refractory metal which may also be either impregnated with thorium oxide or thorium metal submonolayer-adsorbed to achieve such lowered comparative surface work function, and, to calibrate their emissivity relative to that of the rotor field emitters **(17)** as a means of defining and determining the device's external field voltage relative to its primary array potential difference (or half the rotor voltage).

The Field Voltage Control System as shown is basically designed to directly accept the rather high positive induced voltage of the stationary anode rings **(58)** (shown in FIGS. **8** and **9**) for the purpose of providing the primary accelerator grids **(66)** with their standard DC operating voltage. Due to the linear scalability of the Generator's overall design, the nominal (or zero-signal) value of such voltage relative to chassis ground **(10)** is expected to be approximately +362 to +483 volts per foot of hull diameter in three-stage and single-stage Generator embodiments (respectively). An isolation diode **(126)** and switch or relay **(124)** prevent such positive voltage from being neutralized by negative current (s) elsewhere in the control circuit.

Any one or more of the stationary electrode elements **(64)–(67)** comprising each said unit pentode array may be artificially cooled, as a means of further regulating the device's external field voltage, and/or subjected to modest variable DC control voltages at times to further assist in the interim adjustment of that unit pentode array's current.

A very high value capacitor **(116)** or a plurality of separate high value capacitors connected into a parallel or series-parallel matrix thereof may be employed to store the displacement charge caused within the Primary Power System by the charging of the rotor-mounted ballast capacitors, as part of such Field Voltage Control System. Said displacement charge holding capacitor(s) **(116)** may hereinafter be referred to as "ballast compensating capacitor(s)".

A very high value capacitor **(117)** or similar such capacitor matrix may also be employed to prevent the grounding of positive housing section potential by ambient ionization charge, from operation in air during the device's start-up period before such sections are fully enclosed (by the external field hemitorus currents), as a further part of this Field Voltage Control System. Such bulk electron storage capacitor(s) **(117)** may hereinafter be referred to as "ambient charge capacitor(s)".

The negative plates of these ambient charge capacitors are to be isolated from ground during rotor spin-up, in order to effect a net negative charge storage, and so their positive plate charge is supplied by a dedicated common variable DC voltage supply **(98)** which is oppositely connected to the ground frame. Each ambient charge capacitor **(117)** employed during the device's start-up period may be selectively switch- or relay-connected by its negative terminal to an accelerator grid element **(66)** of one or more of said plane-parallel electrode systems, in order to effect and control the storage of such ionization charge. Each such start-up capacitor **(117)** may also be selectively switch- or relay-connected by its negative terminal via a variable resistor and/or diode to a suppressor grid element **(67)** of one or more of said plane-parallel electrode systems, in order to effect and control the distribution of onboard stored negative charge reserves from the suppressor grid(s) **(67)** to the rotor, as a standard means of regulating the external field voltage (especially in the vacuum of space).

Said ambient charge capacitor(s) **(117)** may also be similarly connected by the negative terminal(s) thereof either to a separate source of true earth ground or to one or more superconductive current storage ring/s **(200)** (including

charge deposition and retrieval means), for purposes of removing any excess ambient electron charge above the bulk storage capability of such capacitor or capacitor matrix which may be produced from normal or full-power operation in air—or other gaseous dielectric media.

Such superconductive current storage ring(s) would be used exclusively in large three-stage rotor propulsive models of the Generator, and thus constitute/s the means by which further expendable onboard charge reserves may be accumulated. The working core of each superconductive storage ring would preferably be a large but relatively thin torus (of small cross section) composed of solid mercury metal immersed in liquid helium, and as such would have a known ampacity measured in the hundreds of thousands of amps.

A linearly-actuated control rod (**103**) or similar mechanism may be used to effect a mechanically variable thermal junction between each primary array cathode or grid element (**64**)–(**67**) and a cold thermal mass of the same or similar refractory metal, maintained at the reservoir temperature of a secondary cryogenic housing coolant such as liquid air or nitrogen. The plate elements and dielectric media of each capacitor or capacitor matrix employed in the Field Voltage Control System could also be incorporated (in a suitable manner) into the coolant vessel which contains said cold thermal mass. This System's diodes would generally not be rated for mounting at such a low temperature.

The voltage control circuit shown in FIG. **10** is modular in nature, in that one such unit is provided for each of the 72 unit pentode arrays associated with the Field Induction System (in the preferred embodiment). All measurements of primary electrode voltage(s), and of positive housing section voltage, are to be made with respect to the Generator's ground frame (**10**) (as generally depicted in FIG. **1**): the metallic structural shell of the device's central chamber to which the rotor carrier assembly drive motor(s) should be mounted. This grounding method is referred to throughout as "chassis ground".

One thermal control rod (**103**) is provided for each primary cathode and grid element (**64**)–(**67**) which variably engages both a control rod socket (**104**) attached thereto and a thermal junction (**101**), which is attached to a cold thermal mass (**102**) maintained at the reservoir temperature of the secondary (cryogenic) housing coolant, by means of a linear actuator (not shown). Such control rod (**103**) may then be used to regulate that electrode's temperature to approximately the same temperature as the associated power resistor (at 675° C. ±55°). In this manner, small adjustments in cathode (**64**) emissivity may be made as necessary during operation and the various grids may be closely matched in temperature to that of their respective cathode(s) to ensure the accuracy of mutual primary electrode voltage balance. Any deviation of cathode (**64**) voltage from a chassis ground potential may be detected and measured across a very-high-value resistor (**107**), connected between said cathode(s) and chassis ground, which is preferably of a large carbon type having multiple fixed taps (and across which an output voltage may exist).

A dedicated common variable DC voltage supply (**95**) is provided for all primary cathodes (**64**) as a means of ensuring an optimum cathode potential with respect to ground, despite fluctuating power resistor temperatures (in three-stage rotor devices where field hemitorus current is variably biased). This supply is shunted with a double-pole/double-throw switch or relay (**123**) to enable either a positive or negative interim control voltage to be applied to the cathodes (**64**), in order to hold their true potential as close to ground as possible. A similar voltage supply (**97**) and switch/relay (**123**) is also provided for all primary accelerator grids (**66**) as a means of modulating the fixed level of applied positive grid voltage (from stationary anode ring (**58**)) and therefore the level of field hemitorus current, independent of the level of applied control grid (**65**) bias. In both cases, these DC supplies are isolated from chassis ground by blocking capacitors (**106**) to inhibit any net charge loss or accumulation from accruing to the ground frame (**10**) during operation (in propulsive units which are not connected to true earth ground).

A dedicated common variable DC voltage supply (**96**) is provided for all primary control grids (**65**) as well. This voltage supply is not capacitor-isolated from chassis ground in this case, so that the primary control grids (**65**) and cathodes (**64**) may have a common direct ground reference as they would in a typical vacuum tube circuit arrangement. The said control grid supply (**96**) should also have a resistor (**107**) of the same type as that provided for the associated cathodes (**64**), connected between such supply's positive terminal and chassis ground. These two criteria further ensure the accuracy of mutual primary electrode voltage balance, and the nominal (or zero-signal) value of such DC control grid voltage relative to chassis ground is expected to be approximately −36 to −48 volts per foot of hull diameter in three-stage and single-stage Generator embodiments (respectively). A variable bypass resistor (**108**) may be adjusted to ensure a very low and relatively constant DC operating grid current despite fluctuations in the value of the AC input signal resistor (**110**), as discussed below.

Ballast compensating capacitors (**116**) are provided whereby negative outrush charge from the stationary anode rings (**58**) and the positive plates of the rotor ballast capacitors may be purged from the Primary Power System during rotor spin-up, to prevent stage electrode array voltage ratings from otherwise being greatly exceeded, via these same two anode rings (one per primary induction ring array), connecting switch/s or relay/s (**124**), and resistor/s (**125**). During the Generator's spin-up and 'run' periods, each ballast discharge switch/relay (**122**) is normally open; switch/relays (**124**) are 'run-open'. Upon rotor de-spin, such ground-restoring charge must be proportionately returned to each stationary anode ring via switch/relays (**124**) and resistors (**125**), and to the Primary Power System as a whole via the discharge switch/relays (**122**) and suppressor grid discharge shunts (with variable resistors (**113**) and diodes (**115**)), for the most part after vacuum chamber current to the hull Emitter Ring has essentially ceased.

Then, such normalizing charge may be 'dumped' across the described suppressor grid discharge shunts at a rate sufficient to ensure that the entire Primary Power System returns to a ground potential (by brief direct surge rotor-shorting to the outer induction array anode rings). Thus, resistors (**113**) provide a variable time constant for the discharging of the said compensating capacitors (**116**). An a independent common variable DC voltage supply (**99**) whose negative terminal is connected to the ground frame (**10**) ensures that the proper total ballast compensating charge described may be stored against the high positive applied potential of the stationary anode rings (**58**).

The ambient charge capacitors (**117**) absorb ionization charge (arising from operation in air) which perforce must fall into the potential well(s) established by the positive housing sections at least until the field envelope's two hemitorus currents are fully formed, and which would otherwise tend to ground the desired positive housing section voltage. Therefore, the negative plate voltage of these

storage capacitors (**117**) is applied from another dedicated DC supply (**100**), which is similar to that (**99**) provided for the compensating capacitors (**116**), by means of a common dpdt switch/relay (**119**). None of these DC supplies (**95**)–(**100**) are to have internal load-line diodes.

The variable output of this "dynamic compensating" voltage supply (**100**) is to be approximately the same as that of the ambient charge capacitors' positive voltage supply (**98**), thereby allowing the said capacitors (**117**) to be gradually saturated during rotor spin-up with electrons collected at the accelerator grids via storage shunt inrush current switch/relays (**121**) and diodes (**114**). During the Generator's spin-up and run periods, the "control gate" switch/relays (**119**) are normally closed such that the negative pole of supply (**100**) is connected to the negative plates of these same capacitors. In the Generator's run and de-spin periods, however, switch/relays (**121**) are normally open.

Any excess ionization charge above these capacitors' joint storage capability which might lower the 'run' Field Induction System circuit voltage must then be either grounded off or deposited in said superconductive storage ring(s) (**200**) (in ungrounded propulsive Generators designed for maximum ambient charge storage), via the same said throw of control gate switch/relay (**119**) in conjunction with shunt switch/relay (**120**) and resistor (**112**). In this case, the storage shunt switch/relays (**121**) remain run-closed. Otherwise, the slow 'run' release and distribution of negative charge reserves to the rotor from the storage capacitors (**117**) is effected by the gradual synchronized relaxation of the voltage/s from supplies (**98**) and (**100**) across switch/relay (**119**) and discharge resistor (**113**), with shunt switchs (**120**) and (**121**) open, while diodes (**114**) and (**115**) ensure that the said capacitors (**117**) may only be discharged in the manner described.

This discharge of stored charge reserves actually takes place from the suppressor grids (**67**), which may serve as low-power electron emitters given their proximity to the primary anode rings (**68**). An isolation diode (**127**) prevents such negative charge from neutralizing accelerator grid circuit voltage. It should be noted that the suppressor grids may be held at ground potential as they would in a typical beam power pentode circuit arrangement, or at a very low if not negligible negative voltage for purposes of effecting such controlled low-power charge release, by means of [i] a minor negative voltage induced thereon by the corresponding proximal primary anode ring/s (proportional to their capacitance relative thereto); [ii] the combined DC voltage drop across the paralleled resistors (**109**) and (**111**) connected to their respective accelerator grids; and/or [iii] the voltage of the dynamic compensating supply (**100**) relative either to earth ground and resistor (**112**) or to chassis ground and the relative opposing voltage of the ambient charge storage capacitor's supply (**98**).

The bypass resistor (**109**) provided between each accelerator grid (**66**) and its associated suppressor grid (**67**) returns the inevitable stationary anode ring (**58**) and accelerator grid (**66**) DC circuit current to the rotor from the suppressor grids (**67**), and simply assists in maintaining each suppressor grid at a DC potential as close to true ground as possible. The suppressor grid resistor (**111**) which is paralleled with said bypass resistor (**109**), however, is analogous to a plate resistor on behalf of the corresponding inner (rotor) induction array in both the single- and three-stage rotor embodiments, in that any rotor circuit final-stage AC output voltage variations will be reproduced across it once field envelope circuit current commences. Likewise, any AC signal oscillations from an outside (remote) source which are induced upon the field envelope current will immediately act as a detected first-stage AC input for rotor circuit amplification, and again will be reproduced across the said grid resistor (**111**).

Therefore, any rotor or field circuit AC potential difference across this grid resistor (**111**) provides an output signal voltage that may be: [i] received by an actual communications console or a simple AC control-voltage operating circuit in the Generator's central cabin; and/or [ii] reapplied either in- or out-of-phase with the voltage across the input signal resistor (**110**) of the associated control grid (**65**) as a further AC signal voltage amplification or suppression stage (respectively). An input AC signal or control voltage may also be applied across the control grid resistor (**110**) from such an onboard communications console or control-voltage operating circuit, as would generally apply to three-stage and single-stage devices, respectively. This grid resistor is variable for circuit tuning purposes related to resonant frequency communications (if desired).

It can be seen from FIGS. **8** and **9**, however, that the AC output amplification stage (or inner induction array) of the Primary Power System and its input stage (or outer induction array) are directly coupled by the rotor segments (**14**) in both single-stage and multi-stage rotor embodiments. Thus, the rotor electrical circuit as configured will be subject to continuous positive (or regenerative) feedback of any AC signal voltage present either in the field current or on the rotor, as described above. To provide a desired or requisite level of signal amplitude suppression or compensation, negative (or inverse) feedback may be applied to the rotor circuit using the feedback coupling relays (**129**) and stage transformers (**130**) shown in FIG. **10**.

Because plate voltage and grid voltage are typically 180° out of phase in a beam pentode arrangement such as the Generator's primary arrays, inverse feedback is achieved when the voltage fed back to the control grid (**65**) has the same waveform and phase as the plate or anode (**68**) voltage. In related traditional practice, an inverse feedback signal applied to the input (control grid) current decreases AC amplifier input impedance and distortion; an inverse feedback signal proportional to the output (plate/anode) current raises the output impedance of such amplifier. Therefore, an inverse feedback AC signal proportional to the current through resistor (**111**) which is applied in-phase with the AC line current across resistor (**110**) decreases the rotor input stage impedance yet also reduces the amplitude of the AC output current. A loss of total amplification (through a fractional stage 'gain') results, but is accompanied by a decrease in signal distortion.

The stage feedback transformers (**130**) ensure voltage reference isolation between such stationary amplification or suppression stage and the corresponding rotor stages, when AC signal feedback across the control grid resistors (**110**) is necessary or desired. A double-pole/double-throw switch/relay (**129**) may be used to decouple each such transformer from the input signal resistor (**110**) side of its circuit connections, and/or to apply either positive (regenerative) or negative (inverse) feedback to the rotor AC amplification stage(s), and tunable blocking capacitors (**131**) isolate the transformers from circuit DC voltages. The coupling transformers (**130**), isolation relays (**129**), and blocking capacitors (**131**) are therefore only necessary in Generator embodiments not having a central AC control-voltage operating circuit with suitable inverse feedback characteristics and in three-stage Generator embodiments which may be used in a communications capacity. In the latter case, an optional capacitor across the secondary or control grid resistor (**110**)

side of each such transformer (in parallel with the said resistor) may once again be employed in parallel resonance fashion, and is indicated in FIG. **10**.

During continuous operation of an EDF Generator in the vacuum of space, the exhibited DC field voltage will tend to rise gradually as the total amount of charge contained in the field envelope circuit is gradually reduced through unavoidable electron leakage losses (primarily at the hull Emitter Ring peripheral edge). To compensate for this effect, a small amount of stored ambient charge must therefore be continually released at the suppressor grids **(67)** into the rotor return current. The rate at which this gradual discharge must be effected is dependent upon the observed field leakage rate, as only a rough approximation of this leakage may be pre-calculated. It is for this reason that at least one superconductive storage ring **(200)**—containing a tremendous quantity of reserve ambient charge in the form of a continuous zero-loss current—must be included in any ungrounded Impulse Drive unit used in space exploration, as the capacity of such storage ring determines the vessel's effective range of operation.

It is postulated that the external field current's energy density will be sufficiently enormous that it exhibits a virtual self-evacuating operational condition above a certain ultra-high field voltage in propulsive three-stage EDF Generators, and such a condition is essential to the successful atmospheric ground launch thereof Such kinetic occlusion of a significant portion of the otherwise available ambient ionization charge may also occur once the field envelope is fully formed even in ground-based single-stage devices operated at breakdown field intensity. During continuous operation of such ground-based devices in a gaseous atmosphere, field leakage losses which could cause an undesired gradual field voltage rise if they exceed available ambient charge accretion may be compensated by bypass-shunted charge from earth ground. In this case, the positive pole of supply **(100)** is connected at low power via dpdt switch/relays **(119)** to earth ground, in order to avoid a limited spin-up/run/de-spin repeating duty cycle.

General Method of Construction

The actual construction of an Electrodynamic Field Generator of any given size is relatively straightforward, whether of a manned propulsive embodiment or not, and proceeds in fact from the inside out. Referring generally to FIG. **1**, one of the most practical features of the construction process is that virtually the entire instrumentation and payload compartment or "Central Chamber" **(2)** may be outfitted first, before any portion of the Primary Power System is assembled or even necessarily designed. In the preferred three-stage embodiment to be used as an aerospace Impulse Drive Unit, the central chamber should obviously incorporate low-density materials wherever possible.

Construction next proceeds with the Generator's ground frame **(10)**: the metallic structural shell which provides an enclosing framework for the central chamber to which all ancillary inboard electrical equipment may be grounded. This structural framework should be as strong, lightweight, and nonmagnetic as possible, and may preferably be of a welded tubular design using stainless steel or a suitable titanium alloy.

Once the ground frame and enclosed central chamber are completed, including the installation of a preferred total of 32 high-torque DC motor-generator rotor drive units (in four sets of eight), the two rotor mounting frame sections and attached ring gear/s **(8)** of the "Carrier Assembly" may be built and dynamically balanced (using a temporary peripheral spacing "jig"). Then, construction of the composite "Rotor Assembly" may commence with the laying out of equal numbers of copper segments **(14)**, ceramic segment separators **(16)**, and refractory composite field emitters **(17)** which are all of exactly equal weight by type, the latter components providing the nonconductive base to which other rotating electrical hardware may be attached.

When the three sets of said principal large rotor pieces (which preferably number 180 each) are bound together with electrode rings silver-soldered to the segments, and clamped between the two halves of the centrifuge-style carrier assembly, the assembly of the "Primary Power System" itself may begin. Once thin insulative rotor surface "facing", the aforementioned recessed and conductive separator traces, and the rotor ballraces **(25)** have all been affixed to the base rotor assembly, and the field coils, electrode arrays, and other rotating components have been added, the fabrication of the vessel's "Structural Intercooler System" may proceed. When this secondary thermal conduit (hull coolant) system is completed and has been pressure-tested, the "Primary and Magnetic Arrays" may be installed—including the 5-armature variable inductor array sections depicted in FIG. **14**. The primary (induction ring) arrays here are comprised of the unit pentode arrays **(69)** as individual assemblies each having an adjunct assembly comprising a field power resistor **(63)**, dielectric buffer **(45)**, and primary thermal conduit **(48)**.

Finally, once the rotor has satisfied nonenergized operational mechanical clearance and dynamic balancing criteria (using a temporary outer rotor bearing support "jig") and a final complete thermal conduit system pressure test has been made, the "Outer Hull Components" may be installed. Thus, the basic vessel construction may be completed in a total of seven distinct steps or stages. Due to the tremendous weight of the finished rotor (as the device's most massive single assembly), an operating characteristic of utmost importance is the actual rotor speed required to maintain a specification field voltage which is figured using the method outlined in the Detailed Calculations below. This will determine the rotor's operating angular momentum, which in propulsive units must be sufficiently large to provide gyroscopic stability against the use of variably-imbalanced isometric thrust (produced by field hemitorus current) but not so large that the vessel's navigational and maneuvering characteristics are thereby rendered sluggish.

It can be shown mathematically that the nominal rotor speed for a 4 ft. diameter theoretical design prototype would be roughly equal to or somewhat less than that of a typical small electric motor. However, as the size of the device increases, it will be necessary to reduce rotor rpm due to the extreme increase in the rotor's 'tip' speed and therefore the centrifugal forces to which it is subjected. Sufficient information is contained in the basic specifications which underlie this disclosure to allow engineers to reduce rotor speed as necessary in larger devices following the course of an intensive program of small device tesing; e.g., the projected nominal rotor rpm for a 20 ft. Thermal Unit is 1045.

Structural Intercooler System

The secondary thermal conduit sections which carry hull coolant or heat transfer fluid through the Generator's tapered "Drive Ring" (or the combined volume of the negative and neutral housing sections) must pass between the power resistor and unit pentode array assemblies, and so they must conform in outside dimension to the available space within

the supporting framework of the neutral hull construction. The most unusual feature of these secondary conduits is that they also comprise (of necessity) the principle Drive Ring load-bearing members, and together they form the EDF Generator's structural intercooler system as illustrated in FIG. **14**.

These secondary hull coolant conduits should be fashioned in a manner similar to the primary thermal conduits described hereinabove, and in the preferred embodiment would be formed in four types or varieties: [i] the initial outbound coolant supply runs **(75)**, called "headers"; [ii] the circumferential heat transfer sections **(76)** (to which the Emitter Ring hull plates are fastened), called "peripheral shunts"; [iii] the inner **(77)** and outer **(78)** intermediary coolant runs, or "transfer links"; and [iv] the radial coolant returns **(79)** or "recovery lines". Within the Drive Ring, each of these conduit types may be fashioned as single sections which connect one to another in 'series-parallel' branch systems or zones. To wit, one header **(75)** from a reservoir coolant manifold **(74)** connects to one peripheral shunt **(76)** which in turn connects to one recovery line **(79)**.

Thus, a single coolant zone is illustrated in FIG. **14**, the arrows indicating the direction of coolant flow. A molded ceramic support bracket **(71)** having integral elbows and a set of mounting "knuckles" may be used to secure the inner corners of each two adjacent negative hull plates **(72)**, by means of a matching mounting ring welded to each inner plate corner and a retaining pin (not shown). Each Emitter Ring hull plate **(72)** is to have an angle-stock thermal transfer channel welded along but just inside its inner edge (as indicated by dashed lines), which encloses the corresponding peripheral shunt **(76)**.

These coolant headers, shunts, transfer links, and recovery lines are preferably formed of molybdenum tubing, and would take advantage of the high thermal conductivity and electrical resistance of a thin Alumina coating thereon to absorb excess heat from the single-stage Drive Ring hull and (in particular) the Emitter Ring hull plates. In single-stage rotor devices which are used as Thermal Power Units, the recovery lines then exit the Generator housing through two exchange manifolds (as stated earlier), from a preferred total of 72 individual coolant zones, to an external heat exchanger. Just how effective this method of cooling the Drive Ring as a whole will prove to be during operation in air, using the preferred liquid air or nitrogen coolant, is somewhat difficult to project. Liquid helium could alternatively be used in this respect to ensure adequate hull cooling, but would entail significantly increased piping and pumping difficulties in doing so.

It is expected, however, that the intercooler system described will be satisfactorily effective during the operation of three-stage devices in the vacuum of space, and is principally designed with this mode of usage in mind. Accordingly, it is believed that an Impulse Drive Unit operated in space will be able to purge its excess heat by actually circulating the primary conduit liquid sodium or equivalent through the secondary thermal conduit system (instead of the cryogenic coolant). In this case, the intercooler structure is used to transfer heat to the Emitter Ring hull plates as a radiative heat sink. This cooling method would provide the necessary means of liberating the Generator from permanent ground-based support to achieve free-ranging operation in space.

Neutral Housing Section Construction

In order to establish and withstand the action of the field envelope discharge current, the surface of the neutral sections of the Generator's housing or hull (or "Neutral Ring") must be constructed entirely of specialized nonconductive material(s) which should be applied in two layers to an underlying superstructure that is actually conductive in nature. It is proposed that overlapping ceramic 'tiles' be used in this regard, in a manner rather like that employed on the NASA space shuttles, which are adhesed to an underlying deck of structural nonmetallic sheet stock While the intercooler system conduits (described in the preceding section) comprise the principal load-bearing members which support the Drive Ring portion of the hull, a system of beams **(153)** and struts **(152)** that are also composed of the same nonmetallic structural material as the deck or a similar and compatible material should be utilized to further strengthen and 'unitize' the Drive Ring superstructure such that an internal hard vacuum may be drawn and maintained prior to operation. These secondary load-bearing members are also depicted in FIG. **14**, and in a preferred embodiment these members and the base deck material itself would be composed of a carbon composite commonly referred to incorrectly as graphite.

Sophisticated carbon composites similar to those found in golf-club shafts and racing-bicycle frames were first developed to make use of their special combination of extreme strength, rigidity, and lightness in aerospace applications. These materials are generally made from polyacrylonitrile (PAN) carbon fibers which are heated under tension to drive off the non-carbon portion. The individual fibers are about 7 microns in diameter and approach 300 kpsi in tensile strength. They may then be pulled into a rope-like 'tow' or woven into a fabric-like 'matte' before being coated with either epoxy or polyester resin. Therefore, carbon composites are eminently suited to forming rods, tubes, and sheets, and display excellent vibration damping characteristics. The final product is, however, still very expensive per pound.

To simplify the vast diversity in specialized grades of PAN carbon composite for purposes of this application, this material should be considered as coming in two basic density grades: low-density "deck" grade (at about 35% of the specific gravity of sheet steel), and high-density "beam" grade (at about 65% of the specific gravity of structural steel). It is also available in two standard temperature grades, depending on the bonding agent used: a 350° F. rating (lo-temp) epoxy-bonded material and a 750° F. rating (hi-temp) polyamide-bonded composition. The hi-temp grade only should be employed in the Neutral Ring, but the lo-temp grade may be used to build the Central Chamber.

Thus, a low-density/hi-temp grade of carbon composite laminate should be used as the basic deck material in construction of the Neutral Ring hull sections. To wit, this deck layer itself is initially affixed to the vessel superstructure by solvent welding and/or mechanical means. The PAN carbon deck, a middle layer of ceramic substrate plates and an outer skin of exolayer tiles together then comprise the composite Neutral Ring hull. Several factors enter into the selection of an appropriate ceramic material for the substrate layer plates. Of primary concern here is that the material of choice have a very high volume resistivity and very low thermal conductivity at temperatures from 300–500° C. It is also important that the material have a very low thermal expansion coefficient, as the substrate layer plates must be bonded to the deck layer with a refractory-class adhesive. Therefore, the substrate material should also be non-vitreous and have relatively high porosity to promote adequate adhesion. One of the Cordierite class of compounds, bearing CeramTec designation 447, has relatively low hardness and flexural strength but should function admirably in Thermal

Power Units as the center layer of a bonded composite construction given its other highly desirable characteristics. Impulse Drive Units will require an alternate substrate plate material as discussed below.

The selection of a ceramic material for use as the exolayer dielectric thermal tiles of the EDF Generator's housing or hull is contingent upon the operative field voltage, and therefore different materials must be specified for Thermal and Impulse Drive Units. To prevent substantial skin conduction losses, the minimum dielectric value k for the exolayer tile material used in Thermal Power Units has been calculated (using the peak field voltage) at approximately k=9. Therefore, the material of choice is a Zirconia composition bearing CeramTec designation 848, with a minimum (high-frequency) dielectric constant of 28. Even though this material has a comparatively high thermal expansion coefficient, it has very low thermal conductivity and is very dense and hard. Moreover, it exhibits exceptional flexural strength and resistance to fracture.

The minimum dielectric value k for the exolayer tile material used in Impulse Drive Units has been calculated at approximately k=107. Therefore, the material of choice is the same titanate composition prescribed for the dielectric buffers (and described in some detail in a previous section). Known chemically as Sodium Bismuth Titanate (and commercially as Kézite), this highly unusual compound is technically a piezoelectric material, but is also ferroelectric in that its dielectric constant actually increases on temperature rise to a peak low frequency value of about 3,100 at its 655° C. curie point. Like most ferroelectrics, its tensile and flexural strengths are quite low yet it is very dense and exceedingly hard. It does, however, exhibit a thermal expansion coefficient which is very high for a ceramic material.

The expected higher flexural stresses upon the Neutral Ring of an Impulse Drive Unit (compared to a Thermal Power Unit) may prove sufficient to crack the substrate plates were they composed of the Cordierite material described above. The Zirconia compound mentioned earlier should therefore be substituted for Cordierite 447 as the substrate plate material in Impulse Drive Units. This would likely stiffen the composite Neutral Ring hull adequately to prevent such stress cracking, while effecting a much closer match in thermal expansion coefficient to the titanate tiles. In both Thermal and Drive Units, the exolayer tiles should be applied to the substrate plates with a refractory-class adhesive in a mosaic overlay pattern, such that the edges of each exolayer tile are evenly spaced as far as possible from the underlying edges of the nearest substrate plates.

Because the underlying deck layer of the Neutral Ring hull will be quite conductive when composed of carbon composite sheeting, and referring now to FIG. **1**, it becomes imperative to use an auxiliary dielectric buffer **(50)** between the inner edges of the Emitter Ring **(47)** hull plates and the outer edge of the said deck layer to prevent an otherwise enormous deck leakage current from occuring. Although it might seem that the much-cheaper and nearly-as-strong fiberglass composites available (which are nonconductive) would tend to minimize any such leakage current condition, their use would not prevent the possible build-up of unacceptable levels of static charge within the working induction compartment **(12)**. Therefore, the use of conductive deck material ensures that the Faraday shielding principle protects Neutral Ring components from transient static voltages because the presence of a finite deck leakage current means the deck layer is a charged conductor, whereupon any net static charge must be external.

A secondary concern is the actual operating temperature of the contact areas where the deck layer abuts to both the auxiliary **(50)** and primary **(45)** dielectric buffers, which must be kept below the 750° F. temperature rating of the carbon composite. It can be shown mathematically that the deck leakage current can be held to a thoroughly acceptable fractional amperage per cm^2 of such contact area if this condition is met. In Thermal Power Units, the use of a secondary cryogenic hull coolant should keep the auxiliary buffers **(50)** and outer deck contact areas at a temperature which is under the said rating. Doing so at the primary buffer **(45)** contact area locations may well require the use of auxiliary cryogenic thermal conduits in both Thermal and Drive Unit models of the EDF Generator. The auxiliary dielectric buffers in any given Generator should be composed of the same material used in that device's exolayer tiles, and should be of about half the radial thickness of the primary buffers employed therein.

While the specific materials discussed above should not be construed as critical to the EDF Generator's proper construction, their properties and characteristics are highly indicative of the rather involved considerations which must be undertaken to ensure that the neutral sections of the vessel hull are physically suited to optimizing a given size device's performance and minimizing its housing maintainance or repair requirements.

Stationary Electromagnetic Armatures

Because the EDF Generator's stationary electromagnetic armatures have no bearing on the device's rotor or field voltages, and no direct connection therewith, they are properly thought of as being part of neither the Primary Power System or Field Induction System circuits but rather a separate ancillary subsystem intended to optimize the invention's overall performance and efficiency in a number of important ways. To this end, their main purpose is to create and independently control a variable level of both rotor torque and field current rotational force, as necessary or desired.

As depicted in FIG. **14**, the individual stationary armatures **(37)** (or "variable inductors") may be installed in 5-armature groups or array sections within the Neutral Ring of the hull, using notched and mating supports **(151)** which firmly clamp the armatures about a reduced diameter center section of each armature core. These armatures and a basic control circuit arrangement for them are shown in FIG. **16**, with the polarities indicated being those which would result in a clockwise rotation of the rotor as viewed from above. This armature power distribution system may be manually adjusted and/or automatically controlled (using a computer and/or other circuitry).

In both single-stage and three-stage embodiments of the Generator, each of the two electromagnetic armature arrays should be wired in parallel from one or more separate source(s) **(185)** of low-voltage DC current which is/are chassis-grounded and which is/are common to the armatures **(37)** of that array. No variable regulation or biasing of individual armature DC current(s) in single-stage rotor or Thermal Power Unit devices is necessary. The desired individual biasing of armature DC current in three-stage rotor devices, for propulsion-related reasons explained below, may be simply accomplished through a variable resistor **(184)** associated with each armature and its DC power supply subcircuit(s). A minor unidirectional or alternating voltage component of such armature supply current may be added across or in parallel with such resistor **(184)**, using an AC power source **(186)** and/or suitable control interface of a conventional nature, in either single-stage or three-stage Generator embodiments as desired.

Each stationary armature (**37**) incorporates two separate electrical coils (**180**)–(**181**), to be operated principally on DC voltage, which are formed of conductive insulated magnet wire multi-layer wound upon a single ferromagnetic core. Each such armature core also incorporates a connecting center section or "flux reductor" (**182**) between said separate coils which is of a significantly reduced cross-sectional area with respect to the balance thereof, and which is designed to saturate magnetically when the respective core flux density of either of said coils is approximately equal to or greater than half saturation value. Pure annealed iron or low-carbon steel should be used as the armature core material, due to the high permeability, superior intrinsic induction, and low hysteresis thereof.

The inner or "flux initiator" coils (**181**) of these electromagnetic armatures (or those closest to the rotor) may be used as a means of creating axial magnetic fields of force (**144**) which are perpendicular to the plane of the current-carrying rotor segments (**14**). Thus, when powered collectively at a common DC current value, the said inner armature coils (**181**) in conjunction with their respective cores may serve as a source of uniform yet variable secondary input rotary torque (or in a torque-assist capacity) for the invention in the course of its normal operation as an electrical generator.

The flux initiator coils (**181**) are so-named because their as-wound polarity relative to the fixed outward direction of the primary DC rotor current establishes both the direction of rotor rotation and the required winding direction and polarity of the outer (and similar) armature coils (**180**). The said inner coils (**181**) are energized by a variable DC power supply (**185**), through an output variable resistor (**184**) and a filter diode (**189**) which blocks induced positive AC half-cycles (if any) from crossing the negatively-grounded DC supply (**185**). Such power supply (**185**) must, however, be sufficiently rated to carry any corresponding induced unidirectional negative current impulses to ground, and may be of a solid-state or rotary induction design.

The axial armature-produced fields (**144**) described may also be individually and variably superimposed on the rotor to develop a selectively controllable force of rotational torque upon its current-carrying segments (**14**), through variable regulation of the principal DC current in individual armature inner coils (**181**), such that a locally-unbalanced force of angular acceleration may be applied to the rotor and therefore a directional force of horizontal thrust may indirectly be imparted to the housing for lateral flight maneuvering in propulsive three-stage rotor devices.

The outer coils (**180**) of the stationary electromagnetic armatures, or those closest to the field envelope, may be used as a means of creating axial magnetic fields of force (**144**) which in this case are essentially perpendicular to the described field current arc trajectories. This situation is best illustrated in FIG. **12**, which shows the hull location of the two variable inductor arrays (**145**) (or circular groups of armatures (**37**)). Thus, when powered collectively at a common DC current value (including any minor unidirectional or alternating component thereof), these outer armature coils (**180**) in conjunction with their respective ferromagnetic cores serve to impart an attenuating yet holistic and orderly rotational vector moment upon the external discharge current. The general effect of such applied magnetic rotational force, which may be used to modify or modulate the field's electrodynamic characteristics, is further depicted in FIG. **13**.

Referring again to FIG. **16**, and to continue in the same vein, it is postulated that the quasi-coherent aspects of the field envelope may actually be optimized through the proper control of the amplitude, frequency, and/or phase relationships between any minor AC voltage component of the field envelope current and the said minor AC current (if any) collectively supplied by AC power source (**186**) to the outer or "transflection" coils (**180**) (of each variable inductor array). This consideration applies to both single- and three-stage embodiments of the Generator, although it is decidedly more important in the case of the latter, and may also allow the engineered reduction of field radiative emissions.

These transflection coils (**180**) are so-named because they may be used to impart a variable transverse deflectionary force upon all of the radially-impinging field current electrons. In the region(s) of the field envelope shown in FIG. **11** between the surface of each neutral hull section (**4**) and the corresponding field envelope inner boundary (**142**), this magnetic force may in fact be large enough to produce a continuous annular flow of "displacement charge" current. In any event, and as shown in FIG. **16**, such outer armature coils (**180**) are also energized by a variable DC power supply (**185**) which is similar in type to that of the inner coils (**181**), through an output variable resistor (**184**) and filter diode (**189**). In addition, a variable AC power source (**186**) may impress a minor unidirectional or AC voltage upon the DC current supplied to the said transflection coils (**180**), either across or in parallel with the output resistor(s) (**184**) of their respective DC power supply subcircuit(s), through separate output variable resistors (**184**) and DC blocking capacitors (**188**) connected to said AC power source.

The axial magnetic fields (**144**) produced by the armatures (**37**) may also be individually and variably superimposed on the field envelope to develop a selectively controllable rotational force upon the described field hemitorus current, through variable regulation of the principal DC current in individual outer (or transflection) coils (**180**), such that a locally-unbalanced force of angular acceleration may be applied to such hemitorus current. Any such angular force imbalance will cause a corresponding change in the local field current density and therefore a secondary directional force of variable thrust in the z-axis may indirectly be imparted to the housing in propulsive devices, yielding a further measure of navigational attitude control over non-isometric thrust produced by the Generator which may otherwise be largely unilinear.

Given the nature of the flux reductor (**182**) as described above, it can be seen that either the inner or the outer armature core sections may be collectively or individually operated at any flux density above half of saturation level without significantly affecting the operating flux density of the respective opposite core sections, provided both corresponding sets of armature coils ((**181**) and (**180**) respectively) are powered by DC current of the same relative polarity. Thus, the base collective full-power operational level of flux density in the inner armature core sections of a three-stage rotor Impulse Drive Generator should be roughly half saturation level, in order to facilitate the achievement of temporary local rotor torque imbalances for propulsive purposes as described above. Such inner core section base flux density for single-stage rotor or Thermal Power Unit devices may be any desired in a range between 0 and 100% of saturation.

As shown in FIG. **16**, means have nevertheless been provided for reversing the fundamental DC polarity of either the inner (**181**) or outer (**180**) coil of any given armature (**37**), without changing the given polarity of such coil's DC power supply (**185**), using a dpdt relay (**190**). It can be seen that this simple feature allows a counter-polarity magneto-

motive force (or counter-mmf) to be applied to either wound core section of any given armature, with respect to the core polarity of that armature's opposite wound section. This feature, when taken in conjunction with the described nature of the flux reductor(s), enables the outer armature core sections in both single- and three-stage devices to be operated at nearly any flux density within their output capability which might be required to optimize the desired quasi-coherent properties of the field envelope, despite the relative polarity and/or flux density of the inner armature core sections. In both single- and three-stage devices, these same two features also allow a substantial level of braking or counter-rotational torque to be applied to the Generator's rotor —by any or all of the inner armature core sections— while maintaining such an optimum level of flux density in the outer armature core sections: even if the two such opposite core sections are operated at opposite respective polarities.

Detailed Calculations for Preferred Embodiment

It is important to note that all of the underlying specifications pertaining to the size and/or positioning of Primary Power System components located within the hull's neutral section region (or "Neutral Ring") are given in terms of fractional increments of the hull radius (R_h) and/or the radial width of the Neutral Ring (C_v–C_a). This means that these components may be easily scaled in exact proportion to the hull, for any selected radius thereof, with no significant error or modification. However, an upper limit of vessel size utilizing the technology represented by the EDF Generator probably exists at a hull diameter not greatly above 100 feet, due to inordinate DC Field Voltage concerns (as that voltage is calculated using the method below).

Table of Dimensions

Hull Radius = R_h	
Hull Volume Constant (C_v)	$C_v = \frac{1}{5}R_h$
Hull Area Constant (C_a)	$C_a = 0.012919C_v$
Drive Ring Radius (r_f)	$r_f = 2C_v$
Emitter Ring Radius (r_{neg})	$r_{neg} = C_v + C_a$
Neutral Ring Radius (r_{neut})	$r_{neut} = C_v - C_a$
Field Hub Radius (r_z)	$r_z = 3C_v$ (Note: $R_h = r_f + r_z$)
Polar Hull Constant (h_z)	$h_z = 0.1421245r_z$
Polar Volume Differential (X_h)	$X_h = \frac{(r_z^2 - h_z^2)}{2h_z}$
Radial Hull Constant (R_s)	$R_s = h_Z + X_h$
Area of Positive Zone (A_z)	$A_z = 2\pi R_s h_z$
Area of Negative Section (A_n)	$A_n = \frac{s(C + c)}{2}$, where:
	$s = \sqrt{(C_v + C_a)^2 + (\tan\alpha(C_v + C_a))^2}$,
	$C = 2\pi R_h$, and
	$c = 2\pi(R_h - (C_v + C_a))$, and
	Note: $A_z = A_n$.
Volume of Central Section (V_c)	$V_c = \pi r_z^2 h_f$, where $h_f = r_f(\tan\alpha)$, and α is the said Emitter Ring angle.
Volume of Positive Zone (V_z)	$V_z = \frac{2}{3}\pi R_s^3 - \pi\frac{R_s^2 X_h - X_h^3}{3}$
Vol. of Drive Ring Section (V_f)	$V_f = \frac{\pi h_f(R_h^2 + R_h r_z + r_z^2)}{3} - \pi r_z^2 h_f$
	Note: $V_z = V_f$
Total Hull Volume (V_t)	$V_t = 2(V_z + V_f) + 2V_c$

The variable 'α' equals the displacement angle of the Emitter Ring negative sections (with respect to the hull's horizontal centerline plane), which is preferably 7.5° to 8° each.

Field and Rotor Voltages

Part A: Model Unit Field Intensity

[1] The Marginal Envelope DC Field Intensity for all EDF Generator models regardless of type should be equal to the breakdown dielectric strength of air or vacuum at 3 million (3×10^6) volts/meter, as measured along a full pure semicircular arc drawn from the center point on the surface of either hull Positive Zone **(5)** to any exterior point on the vessel's design hull configuration which lies on the horizontal centerline plane thereof. This distance shall be referred to as the "Drive Field Perimeter" **(141)**, as shown in FIG. **11**, and is taken to represent the longest continuous DC field current trajectory.

[2] For purposes of these Specifications, the "Drive Field Boundary" **(142)** shall represent the distance measured along a full pure semicircular arc from any point on the outer peripheral edge of either hull Positive Zone **(5)** to the closest point thereto which lies on the inner peripheral edge of the vessel's corresponding negative hull section **(3)** (as shown in FIG. **11**), and is taken to represent a shortest such DC drive current trajectory.

Part B: Thermal Power Units

[1] The Nominal Field Voltage (nom.V_f) should be numerically equal to 1.5 million (1.5×10^6) times the vessel R_h as measured in feet. This value is also equal to the Thermal Unit's standard design Primary Voltage Expansion Ratio of 750 times its Specification DC Primary Array Voltage, as a function of the charge stored within the Primary Power System's two Field Ballast Capacitors and of the Unit's primary cathode emissivity.

[2] The Specification Field Voltage (spec.V_f) should be equal to the Marginal Envelope DC Field Intensity times the distance comprising the Drive Field Perimeter, or (as presently calculated under the above directive) 0.9666 times the Nominal Field Voltage. This value shall constitute the Unit's standard operating value of field envelope voltage.

[3] The Peak (design operating maximum) Field Voltage (max.V_f) shall be equal to 110% of the Specification value thereof, and should never be exceeded in operation.

[4] The Nominal Rotor Voltage (nom.V_r) would be numerically equal to one-third the product of 1,000 (1×10^3) times the vessel R_h, as measured in inches, as a gauge of the basic full-power DC generator value of rotor rotational speed, in a 'single-stage' device.

[5] The Specification Rotor Voltage (spec.V_r) should be numerically equal to 0.25776% of 1.5 million (1.5×10^6) times the vessel R_h as measured in feet, and is also equal to 0.9666 times the Nominal Rotor Voltage. This value would constitute the standard operating value of DC rotor voltage, as a function of the engineered Primary Power System output at a nominal design rotor rotational speed.

[6] The Peak (design operating maximum) Rotor Voltage (max.V_r) shall be equal to 110% of the Specification value thereof, and should likewise never be exceeded.

[7] The Specification DC Primary Array Voltage (spec.ΔV_p) will be equal to half (½) of the Specification Rotor Voltage, and affects all primary array electrode spacings.

Part C; Impulse Drive Units

Unlike the case with Thermal Power Units, it is not possible to specify in one step a Nominal Field Voltage for Impulse Drive Units which is a linear function of the hull radius R_h; the DC Field Voltage which must be produced to achieve the chosen design goal for net linear thrust output, equal to five-thirds the Earth's pull of gravity, is jointly proportional to the rotor ampacity which rises as a function of the square of increases in R_h and to the vessel weight (which rises as a function of the cube of R_h increases).

Therefore, a Marginal Field Voltage is initially to be computed for Impulse Drive Units which reflects a projected theoretical operating value of DC Field Voltage required to produce a vessel acceleration approximately equal to 1.67 'g' outside of a proximal gravity field. This Marginal Field Voltage is to be calculated using the "specific impulse" of the vessel concerned (in nt-sec), and for purposes of the application contemplated herein this term is hereby defined as being equal to five times the vessel weight (in newtons) divided by the rotor ampacity times the number of electrons per coulomb.

[1] Accordingly, the Marginal Field Voltage shall then be equal to the Unit's specific impulse (F_{dt}) times the speed of light (c) divided by the unit electron charge (q).

[2] An estimated nominal Field Voltage will also be computed whereby a nominal value for the final electron speed of Drive Field current is assigned which is in fact a linear function of R_h, as applicable to vessels of from 4 to 100 ft. in diameter only.

[3] The Nominal DC Field Voltage (nom.V_f) should then be equal to the simple average of the Marginal Field Voltage and the said estimated nominal Field Voltage.

[4] The Specification Field Voltage (spec.V_f) should equal the Nominal DC Field Voltage (nom.V_f) divided by an assigned engineering design constant equal to 0.982826.

[5] The Peak (design operating maximum) Field Voltage (max.V_f) shall be equal to 110% of the Specification value thereof, and should never be exceeded in operation.

[6] The Nominal Rotor Voltage (nom.V_r) would be numerically equal to one-fourth the product of 1,000 (1×10^3) times the vessel R_h as measured in inches, as a gauge of the basic full-power DC generator value of rotor rotational speed, in a 'three-stage' device.

[7] The Specification Rotor Voltage (spec.V_r) should be numerically equal to 0.19332% of 1.5 million (1.5×10^6) times the vessel R_h as measured in feet, and is also equal to 0.9666 times the Nominal Rotor Voltage. This value would constitute the standard operating value of DC rotor voltage, as a function of the engineered Primary Power System output at a nominal design rotor rotational speed.

[8] The Peak (design operating maximum) Rotor Voltage (max.V_r) shall be equal to 110% of the Specification value thereof, and should likewise never be exceeded.

[9] The Specification DC Primary Array Voltage (spec.ΔV_p) will be equal to half (½) of the Specification Rotor Voltage, and affects all primary array electrode spacings.

[10] The design Primary Voltage Expansion Ratio for each Impulse Drive Unit should then be equal to the ratio of Specification Field Voltage to Specification DC Primary Array Voltage, and is once again a function of the ballast capacitor charge and of the primary cathode emissivity as in the case with Thermal Power Units.

Example of Specific Unit Voltage Values

Four-foot diameter model

Section A: Thermal Power Units

A 4 ft. EDF Generator constructed for use as a Thermal Power Unit would have specific Rotor and Field Voltages, according to the preceding instructions, as follows:

[1] The Nominal Rotor Voltage (nom.V_r) will be equal to 8,000.

[2] The Specification Rotor Voltage (spec.V_r) will be equal to 7,732.8.

[3] The Spec. DC Primary Array Voltage (spec.ΔV_p) will be equal to 3,866.4.

[4] The Nominal Field Voltage (nom.V_f) will be equal to 3,000,000.

[5] The Specification Field Voltage (spec.V_f) will be equal to 2,899,800.

The corresponding Primary Voltage Expansion Ratio (for this and any single-stage Thermal Power Unit) will thus be 750:1, and in this case is equal to 2,899,800/3,866.4.

Section B: Impulse Drive Units

A 4 ft. diameter three-stage-rotor EDF Generator constructed for use as an Impulse Drive Unit would have specific Rotor and Field Voltages, according to the preceding instructions, as follows:

[1] The Nominal Rotor Voltage (nom.V_r) will be equal to 6,000.

[2] The Specification Rotor Voltage (spec.V_r) will be equal to 5,799.6.

[3] The Spec. DC Primary Array Voltage (spec.ΔV_p) will be equal to 2,899.8.

[4] Marginal Field Voltage: The 4 ft. Drive Unit's Marginal Field Voltage, which represents a projected minimum standard operating value of field envelope voltage, is based upon the vessel's specific impulse (F_{dt})—given its calculated design rotor ampacity of I_{max}=38,160 amps and estimated weight of 79.2 lbs/ft^3—which is computed as follows:

$$F_{dt} = \frac{5(9.8\ \text{m/sec}^2)V_t(79.2\ \text{lbs/ft}^3)}{(3.816\times10^4\ \text{coul/sec})(6.25\times10^{18})(2.2\ \text{lbs/kg})}$$

where V_t=2.5068 ft, as calculated by the formulas in the Table of Dimensions above using an Emitter Ring displacement angle (α) of 7.5°. Therefore,

$$F_{dt} = \frac{5(9.8\ \text{m/sec}^2)(90.245\ \text{kg})}{23.85\times10^{22}\ \text{electrons/sec}} = 1.8541\times10^{-20}\ \text{nt-sec/electron}^*$$

*This impulse represents the instantaneous force of thrust produced by each Field current electron's collision with the Field Hub (equivalent here to: kg-m/sec/electron).

Therefore, the Marginal Field Voltage is equal to:

$$\frac{F_{dt}c}{q} = \frac{(1.8541\times10^{-20}\ \text{nt-sec})(299.7925\times10^6\ \text{m/sec})}{1.6\times10^{-19}\ \text{coul}} = 34.7403\times10^6\ \text{volts (nt-m/coul)}$$

[5] Estimated Nominal Field Voltage: The 4 ft. Impulse Drive Unit's estimated nominal field voltage, which represents an alternate but extremely accurate projection of

the minimum standard operating value of field envelope voltage, is based upon a nominal value for the final electron speed of Drive Field current (ΔV_e) which is an assigned linear function of the vessel R_h and is calculated as follows:

$$\Delta V_e=[0.999+(2R_h-4)(1.03125\times10^{-5})]c,$$

where R_h is in feet, for vessels from 4 to 100 ft. in diameter.

Therefore, $\Delta V_e=[0.999+0(1.03125\times10^{-5})]c=0.999$ c.

The purpose of this text subsection is to verify that a goal-requisite level of Field current thrust may be produced by the Electrodynamic Field Generator, at an operating DC Field Voltage approximately equal to that stated above, within the ampacity of the rotor and at an assigned value of Field current electron velocity (for this model) equal to 0.999c. In this manner, it is hoped that unnecessarily high operating Drive Field Voltage may be avoided, by virtue of design (due to the finite level of unavoidable uncertainty in the relativistic values involved), without sacrificing device performance.

(a) The amount of thrust (force) required to produce an acceleration of 1 g, thus exactly compensating the weight of the Impulse Drive Unit or its normal acceleration due to Earth's gravity, may be calculated by Newton's Second Law as follows:

F=mg, where m=est. design mass* of 90.245 kg, and g=9.8 m/sec^2.

*Note: The estimated design weight of any given Impulse Drive Unit is 79.2 lbs/ft^3.

Thus, F=884.4 nt.

(b) Since impulse equals change of momentum, the electron thrust developed by the Drive Field equals the total relativistic mass of Field current times the incident current velocity (as the final electron velocity equals zero). The amount of impulse thrust which is equivalent to 1 g in this example is 884.4 nt.

Therefore, let $\Sigma M_t\Delta V_e=884.4$ nt.

(c) The design goal for net linear thrust output of any given Impulse Drive Unit is 16.333 m/sec^2 at the minimum standard operating value of Field Voltage and rated rotor ampacity (I_{max}) Therefore, given the considerations of Field Current Bias values (as were outlined in an earlier section), total isometric thrust at Marginal Field Voltage must equal 5 g. The largest current available to effect a Field impulse equivalent to 1 g is then equal to:

$$I_g=I_{max}/5=7{,}632 \text{ amps.}$$

(d) Since Σ equals the total number of electrons comprising a Drive current of I_g, we find:

$$\Sigma=I_g(6.25\times10^{18})=4.77\times10^{22} \text{ electrons/sec.}$$

(e) Therefore, from [b] above:

$$884.4\text{nt}/\Sigma=M_t\Delta V_e, \text{ and } M_t\Delta V_e=1.8541\times10^{-20} \text{ kg-m/sec/electron.}$$

(f) Letting $\Delta V_e=0.999c$, where $c=299.7925\times10^6$ m/sec, we calculate $M_t=619.08\times10^{-31}$ kg, or about 67.96 m_o, where m_o=the electron rest mass of 9.11×10^{-31} kg.

(g) If m_i equals the relativistic mass equivalent of the gained kinetic energy of each Drive Field electron, then $M_t=m_o+m_i$.

Therefore, $m_{i=Mt}-m_o=619.08\times10^{-31}-9.11\times10^{-31}=609.97\times10^{-31}$ kg.

(h) Each Drive Field electron's gained kinetic energy (E_q) equals $m_i c^2$. Using a precise value of 8.98755×10^{16} for c^2, we obtain $E_q=(6.0997\times10^{-29})(8.98755\times10^{16})=54.8214\times10^{-13}$ joules.

(i) Here, E_q also equals W=q(est.V_{nf}), where q=electron chg. @1.6×10^{-19} coul., and est.V_{nf}=est. nominal Field Voltage.

Therefore, E_q/q=est.V_{nf}, and est.$V_{nf}=34.2633\times10^6$ volts (jouleslcoul).

Thus, we find that the estimated nominal Field Voltage required to develop requisite thrust is in fact well within the thrust goal parameters discussed above, at 98.63% of the projected Marginal value (calculated in the preceding subsection B[4]).

[6] The Nominal DC Field Voltage (nom.V_f) should therefore be equal to the simple average of the Marginal Field Voltage projected earlier and the estimated nominal Field Voltage Oust computed), at 34.5018×10^6 volts.

[7] The Specification Field Voltage (spec.V_f) should then be equal to the Nominal DC Field Voltage divided by the said design constant 0.982826, at 35.1047×10^6 volts. This value shall constitute the Unit's standard operating value of field envelope voltage.

[8] The design Primary Voltage Expansion Ratio for this model Impulse Drive Unit is therefore equal to $(35.1047\times10^6)/2{,}899.8=12{,}106:1$, as was referred to earlier.

From the foregoing description it will be observed that the present invention provides a remarkable level of electrical and thermal output in a lower-voltage corona discharge induction embodiment, which is intended for use in a utility or physical plant application. However, this invention also provides the potential for an appreciable level of net impulse thrust in a higher-voltage arc discharge induction embodiment intended as an electrically-propulsive aerospace vessel. It can be seen as well that the Electrodynamic Field Generator and the electromotive field of force produced thereby will moreover fulfill the stated objective of NASA's premier Breakthrough Propulsion Physics Program: to discover a method whereby "a vehicle can create and control an asymmetric force on itself without expelling a reaction mass" and which satisfies conservation laws in the process. Such a vessel could perhaps be made to attain a velocity commensurate with its collector field electron collision velocity, and affords hope that true interstellar travel might therefore become possible as well. While there is due cause for some concern as to the EDF Generator's production of high-frequency radiative emissions coincident with its production of heat and impulse thrust using the new means described, it is postulated that the electromagnetic characteristics of the device's field envelope can be suitably tuned in the manner(s) oulined hereinabove such that the field envelope is rendered largely opaque to such very-high-energy emissions—by promoting continuous and adsorptive Compton effect interactions thereof with the field's impinging drive current electrons. When used in association with a ground-based utility or physical plant, a non-propulsive thermal and/or electrical power output model of the Generator may also be enclosed within a suitable Faraday "cage" or shielding structure to further minimize radiative emissions which are undesirable. Neverthless, the said field envelope tuning principles (related to controlling the amplitude, frequency, and/or phase relationships amid field AC voltage components) may moreover permit the development of the Electrodynamic Field Generator as a novel signal communications means. In pursuit of a new and more complete quantum gravity theory, experiments may be conducted involving the gravimetric coupling of two or more separate such devices: whose field envelopes will by design be able to exhibit a relativistic and oscillatory apparent mass effect that is artificially generated—at desired resonant frequencies—by using alternating electromagnetic induc-

tion methods of the type described hereinabove to modulate electrodynamic field properties which are normally of constant polarity and magnitude or random frequency.

Accordingly, it is to be understood that the embodiments of the invention herein described are merely illustrative of the application of the principles of the invention. Reference herein to details of the illustrated embodiments are not intended to limit the scope of the claims, which themselves recite those features regarded as essential to the invention.

What is claimed is:

1. An electrodynamic field generator comprising:

(a) a disc-shaped hull having upper and lower surfaces separated by a distance at an axis of the disc and tapering to an edge at a perimeter of the disc, enclosing a volume therebetween, the upper and lower surfaces each being divided into a positive section surrounding the axis of the disc, a negative section around the periphery of the disc, and a neutral section therebetween; the positive and negative section surfaces being of conductive material and the neutral section surfaces being of insulative material;

(b) a rotor having an outer circumference, an inner circumference surrounding an open central aperture, and an annular body therebetween, with the rotor body having flat upper and lower surfaces; the rotor being rotatably mounted within the volume of the hull and centered upon the axis thereof, an inner diameter and outer diameter of the rotor being chosen such that the rotor extends across at least all of the neutral portion of the hull volume and at least part of each positive hull section;

(c) an evacuated induction compartment and peripheral space charge chamber comprising at least the portion of the hull volume within which the rotor is mounted;

(d) a principal generating system and corresponding rotor electrical circuit comprising two assemblies, one associated with the upper surface of the rotor and one with the lower surface thereof, each assembly in turn comprising:

(i) an outer induction electrode array comprising a flat cathode ring mounted upon and electrically coupled to the rotor, adjacent to an outer circumference thereof, and a flat anode ring mounted plane-parallel to, but insulated from, the cathode ring;

(ii) an inner induction electrode array comprising a flat anode ring mounted upon and electrically coupled to the rotor, a flat cathode ring, and a grid ring element, the cathode and grid being mounted plane-parallel to, but insulated from, the anode and each other; the inner induction ring array being mounted to the rotor closer to the inner circumference thereof than the outer induction ring array;

(iii) at least one generating coil mounted to the rotor and extending toroidally around the rotor concentric to either circumference thereof, located between the outer induction ring array and the inner induction ring array, and electrically coupled to the cathode of the inner induction array and to the anode of the outer induction array; and

(iv) a plurality of stationary permanent magnets mounted to the hull, such that the magnetic field from each of the permanent magnets intercepts a generating coil; such that when the rotor is rotated, the magnetic fields from the stationary magnets induce an electrical voltage in each generating coil which results in a DC rotor circuit output current;

(e) a field induction system comprising two assemblies, one associated with the upper surface of the rotor and one with the lower surface thereof, each assembly in turn comprising:

(i) at least one plane-parallel electrode array comprising:

1) a primary anode ring mounted to the rotor adjacent to the inner circumference thereof, between the inner circumference and the inner induction ring array;

2) at least one primary cathode mounted to, but electrically separated from, each positive section of the hull; and

3) at least one stationary grid element located between each primary cathode and the corresponding primary anode ring;

(ii) a primary cathode resistor electrically coupled between each primary cathode and the corresponding positive section of the hull, each cathode resistor being encapsulated by a dielectric buffer; and

(iii) a principal hull coolant and heat transfer system, thermally coupled to each primary cathode resistor;

(f) at least one housing charge ballast capacitor, electrically coupled to the principal electrical generating system circuit and to the rotor;

(g) a plurality of field emitters which are mounted around the outer circumference of the rotor and electrically coupled thereto; and

(h) a motor drive mounted to the hull, having a mechanical output coupled to the rotor for rotation thereof.

2. The electrodynamic field generator of claim **1**, in which:

(i) the principal electrical generating circuit induces a primary DC voltage between the outer circumference of the rotor and the inner circumference thereof when the rotor is rotated by the motor drive, resulting in a unidirectional rotor current which distributes electron charge from the outer rotor circumference to the negative hull sections; and

(ii) ii) the field induction system utilizes a portion of the primary DC rotor voltage to establish an external discharge current which expresses a very large expansion of that voltage, within the electric field between the negative and positive sections of the hull, the measure of the expanded field voltage being defined by an engineered instantaneous charge differential between the rotor field emitters and the primary cathodes which is supported by the electric force in one or more housing charge ballast capacitors.

3. The electrodynamic field generator of claim **1** in which the rotor comprises a plurality of conductive radial segments and the same number of nonconductive segment separatorss, with the individual segments and separators uniformly alternating in placement.

4. The electrodynamic field generator of claim **3**, in which the conductive rotor segments are made of copper.

5. The electrodynamic field generator of claim **3**, in which each generating coil is mounted to the segment separators.

6. The electrodynamic field generator of claim **3** in which the anode of each outer induction array of the principal generating system is mounted to the segment separators, as are the cathode and grid element of each inner induction array.

7. The electrodynamic field generator of claim **1** in which each inner induction array constitutes a triode vacuum-tube construct, the control grid voltage of which biases that array nearly to current cutoff.

8. The electrodynamic field generator of claim **1** in which each of the two assemblies of principal generating system

and corresponding rotor electrical circuit comprise a set of three generating coils, arranged across the annular body of the rotor, with each set of coils being sequentially coupled electrically.

9. The electrodynamic field generator of claim **1** in which each generating coil is compound wound, having primary and bias windings.

10. The electrodynamic field generator of claim **1**, in which each generating coil further comprises a nonmagnetic core.

11. The electrodynamic field generator of claim **1**, in which each generating coil further comprises a powdered ironi core.

12. The electrodynamic field generator of claim **1** in which the stationary permanent magnets are C-shaped, and are arranged into a circular body with a flux gap and wherein the magnetic field passes through the flux gap, and the generating coils are positioned to pass through the flux gaps of the magnets in a uniform manner during rotation of the rotor.

13. The electrodynamic field generator of claim **1**, in which the magnets are made of an alnico family alloy.

14. The electrodynamic field generator of claim **1** in which a housing charge ballast capacitor is mounted upon the rotor between each outer induction array and the rotor's outer circumference, each ballast capacitor having an inner conductive ring electrically connected to the rotor, an outer conductive ring plane-parallel to the inner ring and electrically connected to the outer induction array anode, and a dielectric layer between its inner and outer rings.

15. The electrodynamic field generator of claim **1** in which the field emitters are made of a sintered refractory composite material which is electrically conductive, and have a shape such that they taper from an inner end or surface having a thickness equal to a thickness of the rotor's outer circumference to a slightly blunted edge at an outer end forming an outermost circumference of the rotor and field emitters.

16. The electrodynamic field generator of claim **9** in which each assembly of the principal generating system and corresponding rotor electrical subcircuit comprises one or more AC subcircuitry stages, each stage being mounted to the rotor for rotation therewith and in turn comprising:

an AC input, or grid resistor;

one or more bias windings electrically coupled to the AC input;

a triode array electrically coupled to the AC input and to that input's corresponding bias winding or windings, comprising a cathode, an anode, and a control grid; and

an output, or plate resistor, electrically coupled to the anode of that triode array or to the anode of a successive electrode array.

17. The electrodynamic field generator of claim **16** in which a plurality of AC stages are electrically coupled in series, the input of an outermost stage closest to the outer circumference of the rotor being coupled to the outer induction array anode and the output of an innermost stage closest to the inner rotor circumference being coupled to the control grid of the inner induction array.

18. The electrodynamic field generator of claim **17** in which each assembly of the principal generating system, and the corresponding rotor electrical subcircuit, comprises three AC stages.

19. The electrodynamic field generator of claim **1** in which the plane-parallel electrode arrays comprising the field induction system each in turn comprise a primary cathode, three grid elements, and an anode ring and therefore constitute pentode vacuum-tube constructs.

20. The electrodynamic field generator of claim **1**, in which a voltage control system is electrically or thermally coupled to at least one stationary electrode of each plane-parallel array comprising the field induction system such that the total discharge current is limited to a value within the total ampacity of the rotor segments.

21. The electrodynamic field generator of claim **20**, in which the operating electrode temperature is controlled by movable thermal adjusting rods that may be thermally coupled to one or more of the cathodes or grids and to a cryogenic heat sink.

22. The electrodynamic field generator of claim **20**, in which the voltage control system is further utilized to apply inverse AC signal feedback to the discharge current such that rotor circuit AC voltage amplitude is limited to a desired or requisite value.

23. The electrodynamic field generator of claim **1** in which each positive section of the hull is divided into a plurality of radial sectors, each sector being separated from adjoining sectors by an insulating partition.

24. The electrodynamic field generator of claim **23** in which each assembly of the field induction system comprises a plurality of plane-parallel electrode arrays, with each array being electrically coupled to a radial sector of a positive hull section.

25. The electrodynamic field generator of claim **23**, in which each positive hull section is divided into 36 radial sectors.

26. The electrodynamic field generator of claim **23** further comprising a center sector of each positive hull section, located at the axis of the hull, these sectors each being electrically isolated from the radial sectors of the respective positive hull section.

27. The electrodynamic field generator of claim **26**, in which each center sector is made of an insulating material.

28. The electrodynamic field generator of claim **26**, in which single radial sectors at four cardinal points of each positive hull section are electrically connected in parallel with a conductive center sector of that positive hull section.

29. The electrodynamic field generator of claim **1**, in which the principal hull-coolant system comprises one or more primary thermal conduits conveying a high-temperature heat transfer fluid and incorporates a heater to pre-heat that heat transfer fluid and, in turn, the cathode resistors, dielectric buffers, and primary cathodes.

30. The electrodynamic field generator of claim **29**, in which the high-temperature heat transfer fluid is liquid sodium.

31. The electrodynamic field generator of claim **1** in which the primary cathode material is selected from a group consisting of pure tungsten metal and tungsten, as well as alloys thereof, which is or have been impregnated with thorium.

32. The electrodynamic field generator of claim **1**, in which the primary cathode resistors are made of a ceramic material which becomes electrically conductive at an elevated operating temperature.

33. The electrodynamic field generator of claim **32**, in which the ceramic cathode resistor material is selected from a group consisting of the steatite and cordierite families of compounds.

34. The electrodynamic field generator of claim **1**, in which the dielectric buffer encapsulating each primary cathode resistor is made of sodium bismuth titanate.

35. The electrodynamic field generator of claim **1**, further comprising a secondary hull coolant or heat transfer system which in turn comprises one or more secondary thermal

conduits conveying a heat transfer fluid and which is thermally coupled to the neutral and negative sections of the hull.

36. The electrodynamic field generator of claim **35**, in which the heat transfer fluid is a cryogenic coolant.

37. The electrodynamic field generator of claim **36**, in which the heat transfer fluid is a liquefied gas selected from the group consisting of liquid air, liquid nitrogen, and liquid helium.

38. The electrodynamic field generator of claim **1** further comprising a plurality of stationary electromagnetic armatures arranged in two circular groups or arrays within the hull volume, one array above the upper surface of the rotor and one below the lower surface thereof, each armature comprising:

a ferromagnetic body or core having a first end section adjacent to the rotor, a second end section adjacent to a neutral section of the hull, and a length therebetween which is of a reduced cross-sectional area with respect to either end section; and

at least one electrical winding wound on either end section of the core, wherein an electric current in the winding induces a magnetic field in the core which is superimposed on the rotor or on the external electric field.

39. The electrodynamic field generator of claim **38** in which each of the armatures has two windings, comprising:

a first winding on the first end section, wherein a current in the first winding causes a magnetic field to be superimposed on the rotor; and

a second winding on the second end section, wherein a current in the second winding causes a magnetic field to be superimposed on the external field.

40. The electrodynamic field generator of claim **38**, in which the armature core material is selected from a group consisting of pure annealed iron and low-carbon steels.

41. The electrodynamic field generator of claim **38**, further comprising a DC power supply electrically coupled to at least one winding of each stationary armature.

42. The electrodynamic field generator of claim **38**, further comprising an AC power source electrically coupled to at least one winding of each stationary armature.

43. The electrodynamic field generator of claim **1**, in which the mechanical output of one or more motor drives is coupled to the rotor through a gear on each motor drive's mechanical output meshing with one or more driven ring gears about the inner circumference of the rotor.

44. The electrodynamic field generator of claim **1** further comprising a pair of rolling bearing assemblies or ballraces for supporting the rotor, one around the upper surface of the rotor and one around the lower surface thereof with both ballraces being mounted near the rotor's outer circumference; each ballrace comprising a first race half or raceway mounted on the rotor and a second raceway mounted to the hull opposite the first raceway, defining a bearing ball passage therebetween, and a plurality of bearing balls contained in the ball passage.

45. The electrodynamic field generator of claim **1**, further comprising a central control cabin inside the hull within the aperture or inner circumference of the rotor.

46. The electrodynamic field generator of claim **1**, in which the cathode resistors each comprise a fixed positive reduced-voltage tap whereby an onboard or external electrical load may be connected between the fixed taps and the primary cathodes.

47. The electrodynamic field generator of claim **1**, in which the heat transfer system is thermally coupled to an external heat exchanger.

48. The electrodynamic field generator of claim **1**, comprising one or more superconductive current storage rings utilized to deposit and retrieve an expendable store of ambient electron charge during extended operation in the vacuum of space.

* * * * *

US006498291B2

(12) **United States Patent**
Brammer

(10) **Patent No.: US 6,498,291 B2**
(45) **Date of Patent: Dec. 24, 2002**

(54) **STATIC ELECTRICITY ELIMINATOR**

(76) Inventor: **James William Brammer**, 2338 Catawba Rd., Roanoke, VA (US) 24175

(*) Notice: Subject to any disclaimer, the term of this patent is extended or adjusted under 35 U.S.C. 154(b) by 0 days.

(21) Appl. No.: **10/050,698**

(22) Filed: **Jan. 18, 2002**

(65) **Prior Publication Data**

US 2002/0070039 A1 Jun. 13, 2002

Related U.S. Application Data

(63) Continuation-in-part of application No. 09/274,355, filed on Mar. 11, 1999, now abandoned.

(51) **Int. Cl.**[7] **H02G 13/00**
(52) **U.S. Cl.** ..... **174/3**; 174/5 SG; 174/6
(58) **Field of Search** ..... 174/1, 2, 3, 5 R, 174/5 SG, 6, 7; 52/723.1, 723.2, 724.5, 729.5

(56) **References Cited**

U.S. PATENT DOCUMENTS

110,778 A		1/1871	Munson	
160,151 A		2/1875	Bryan	
362,062 A		5/1887	Cole	
433,459 A		8/1890	Ferrell	
505,106 A		9/1893	Hodges	
708,188 A		9/1902	Wilson	
796,760 A		8/1905	McCullough	
873,154 A		12/1907	Miller	
1,904,773 A		4/1933	Aanenson	
2,111,799 A		3/1938	Newpher	
4,180,698 A		12/1979	Carpenter	
4,540,845 A		9/1985	Frola	
4,565,900 A	*	1/1986	Arnau	174/3
4,926,284 A		5/1990	Guegenio	
4,994,629 A		2/1991	Tatum et al.	
5,073,678 A		12/1991	Carpenter, Jr.	
5,335,160 A	*	8/1994	Savoca	174/45 R
5,657,197 A		8/1997	Skinner, II et al.	
5,998,731 A		12/1999	Takamura	
6,121,543 A		9/2000	Hallmark	

* cited by examiner

Primary Examiner—Chau N. Nguyen
Assistant Examiner—Adolfo Nino
(74) *Attorney, Agent, or Firm*—Rodney A. Corl

(57) **ABSTRACT**

When static electricity builds up in the earth, it is suddenly discharged in a destructive bolt of electricity which can cause fires, property damage and loss of life. The present invention collects this static electricity from the earth before it can build up, and dissipates it to the atmosphere gradually so as to prevent fires, property damage and loss of life. A plurality of relatively long underground wires conduct the electricity from the ground to a metal pole which extends from the ground upwardly approximately 40 feet or more, and the pole dissipates the electricity to the atmosphere. In one embodiment, a U-shaped top fixture on the pole increases the dissipation of electricity to the atmosphere.

7 Claims, 2 Drawing Sheets

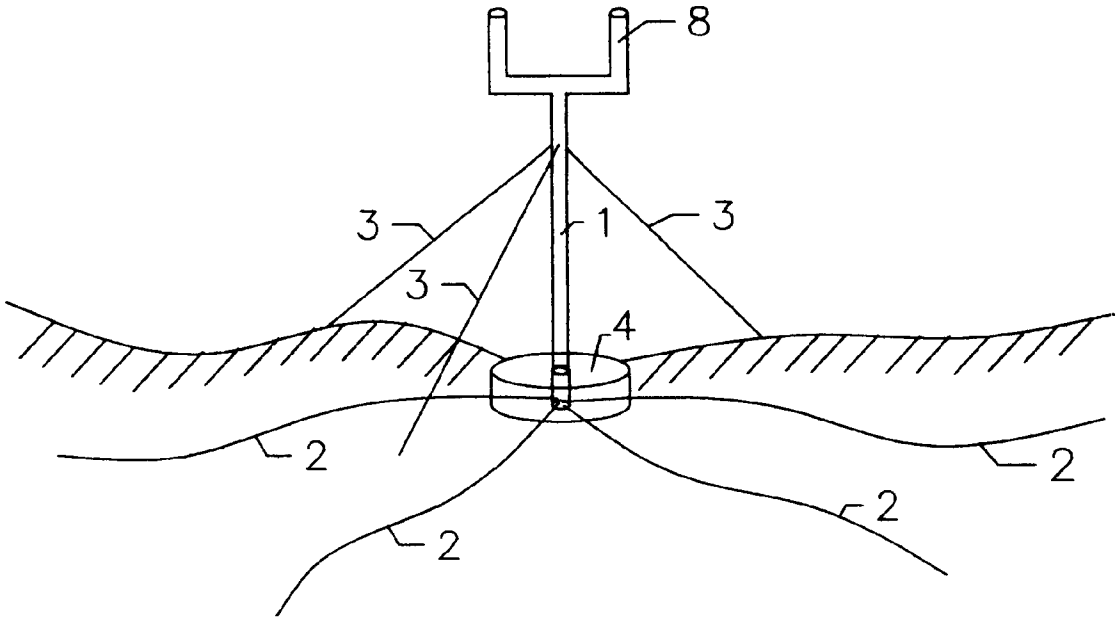

Fig. 1

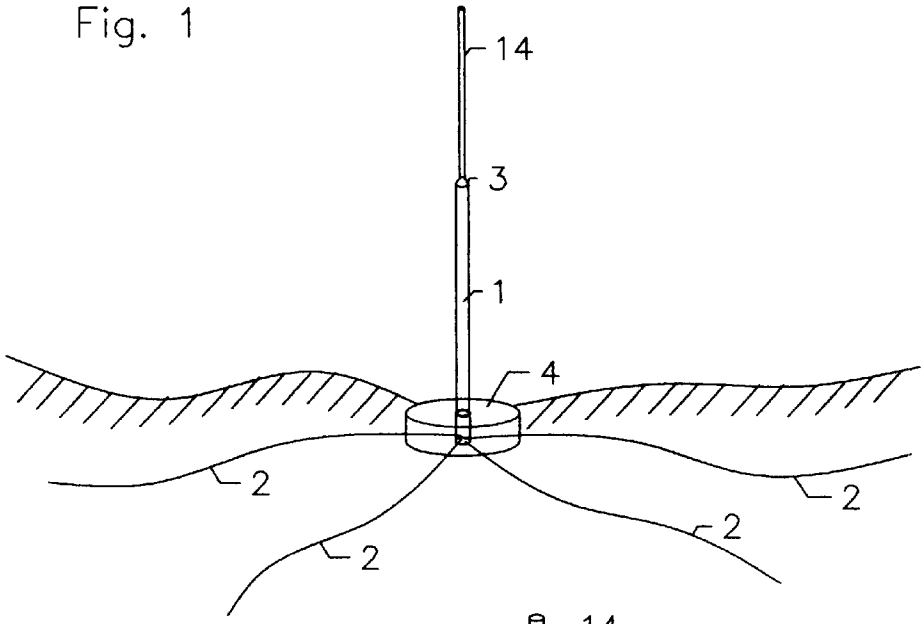

Fig. 2

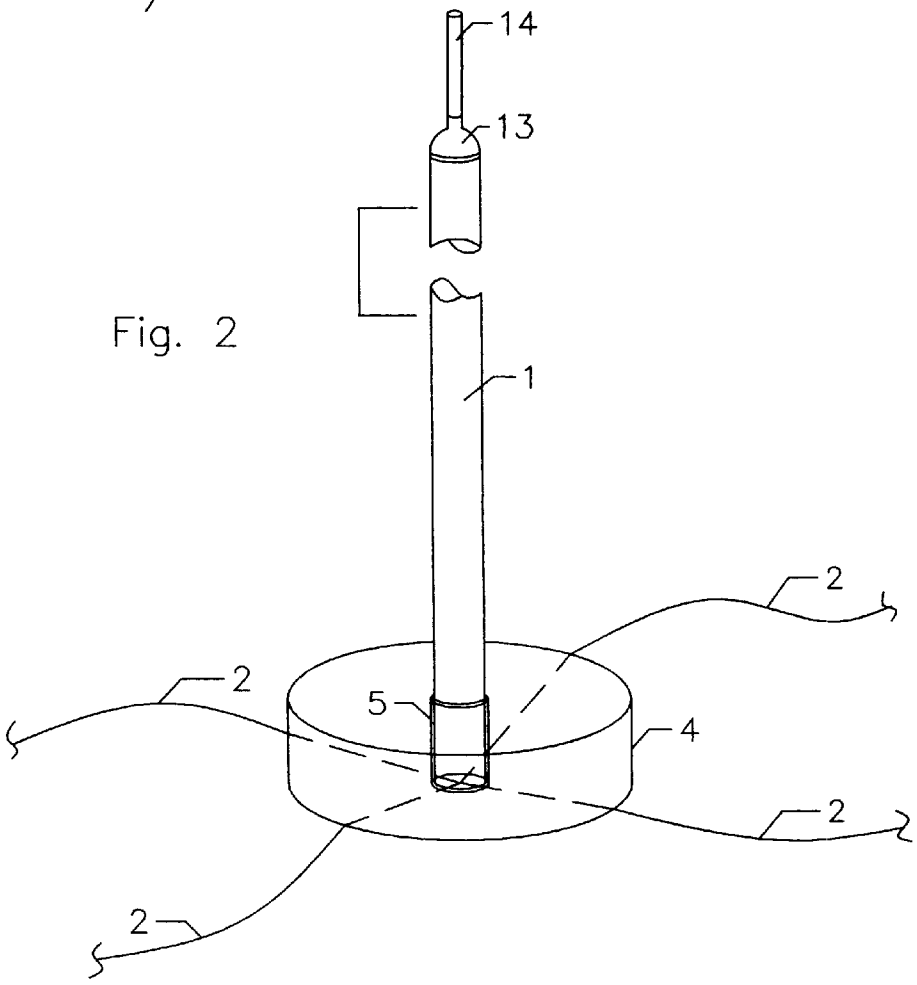

Fig. 3

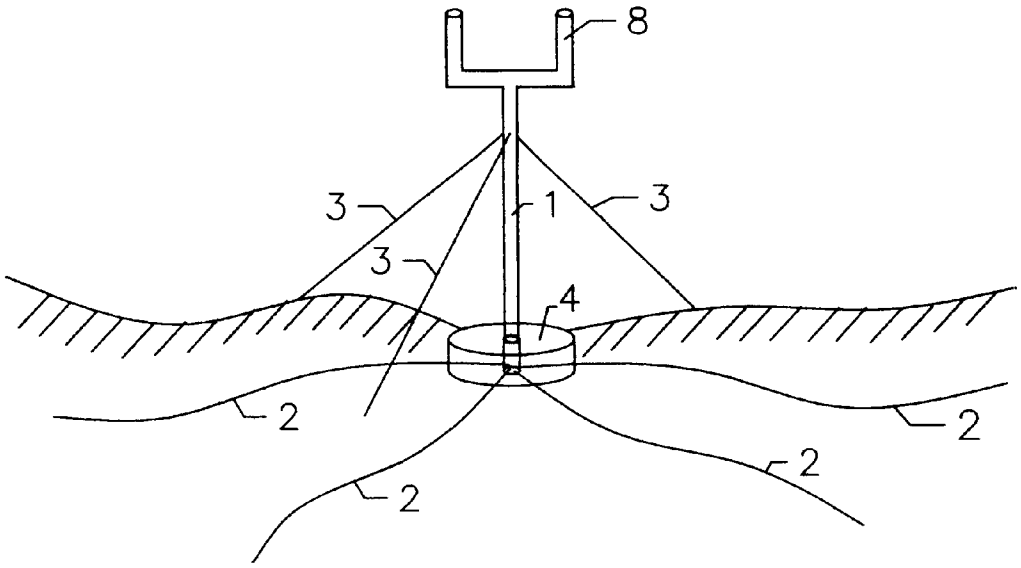

Fig. 4

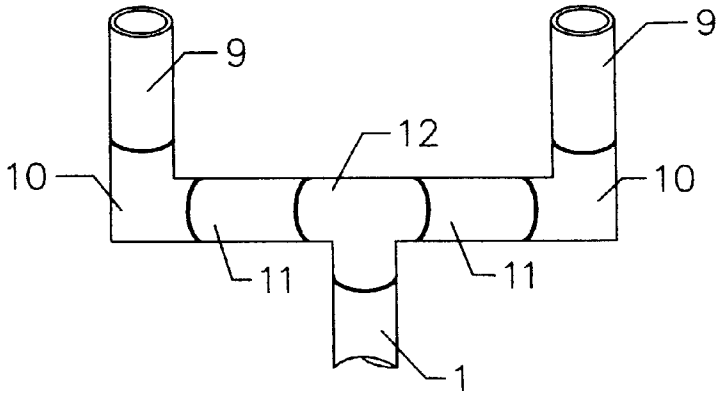

STATIC ELECTRICITY ELIMINATOR

RELATED APPLICATIONS

This is application is a continuation-in-part of application Ser. No. 09/274,355 filed on Mar. 11, 1999, now abandoned, entitled LIGHTNING RETARDER.

BACKGROUND OF THE INVENTION

The purpose of this invention is to reduce or eliminate lightning strikes, which cause fires. Lightning occurs when there is a buildup of static electricity, which suddenly discharges in the form of a bolt of electricity. If this buildup can be reduced or eliminated then there will be no sudden discharge and no lightening bolt. This will result in a reduction in fires and the resulting damages to property and loss of life.

While there have been "lightning rods" around for many years, the device of the present invention is not a lightning rod and does not work in the same manner as a lightning rod. A lightning rod works by attracting the sudden discharge of electricity in the form of a lightning bolt and dissipating this bolt of electricity thereby preventing the bolt from striking nearby objects. The static eliminator of the present invention works in an almost opposite manner. By constantly dissipating the static electricity to the atmosphere, there is never a buildup of charge, and consequently, no sudden discharge and hence no lightning bolt or associated fires and damage.

BRIEF SUMMARY OF THE INVENTION

The static eliminator of the present invention physically resembles a lightning rod, but due to some subtle differences, acts in a very different manner. The static eliminator consists of a long metal pole affixed in the ground and extending to a substantial height above ground level. Conductive wires are attached to the base of the pole and extend a large distance in several directions from the base of the pole and are buried in the ground. These wires accumulate the static charge from the earth, conducting it to the pole which in turn bleeds the static electricity to the atmosphere

BRIEF DESCRIPTION OF THE DRAWINGS

The invention will be further described in connection with the accompanying drawings, in which:

FIG. **1** is a perspective view of one embodiment of the invention,

FIG. **2** is a detailed view of the base of the invention,

FIG. **3** is a perspective view of another embodiment of the invention, and

FIG. **4** is a detailed view of the upper end of the pole of this other embodiment.

DETAILED DESCRIPTION

In one embodiment, shown in FIG. **1**, the static eliminator of the present invention consists of a pole **1**, preferably made of steel pipe with a 1 ½ inch diameter, extending upwardly from the ground **7** approximately 20 feet. A reducer coupling **13** is connected at the top of the 1 ½ inch pole and another pipe **14** of ½ inch diameter is connected to the coupling and extends further upwardly approximately 20 more feet. The pipe **1** is placed in a hole in the ground approximately 3 feet deep and a concrete collar **4** is poured around the pole **1** to anchor it in the ground. Before pouring the concrete, wires **2** are attached around the base of the pole **1** by any suitable means such as screws or clamps. The wires **2** are preferably made of 12 gauge or larger copper and each extends outwardly from the pole 300 feet or farther. The wires **2** are buried in the ground **7** at a depth of at least 15 inches. It should be noted that pole **1** is not attached to any structure in order for it to function with maximum efficiency. In fact, pole **1** is as far from any surrounding structures as physically practical.

In FIG. **2**, details of the invention can be seen. Pole **1** is surrounded by an insulating sleeve **5** of any electrically insulating material such as glass or plastic. Sleeve **5** extends from the bottom of pole **1** to the top of concrete collar **4** or above ground level, whichever is higher. Wires **2** are attached at the base of the pole **1** and extend outwardly therefrom, through the concrete collar **4**. Reducer **13** is attached at the top of pole **1** and pole **14** of reduced diameter extends upwardly therefrom.

Another embodiment of the invention is shown in FIG. **3**. In this embodiment, pole **1** of 1 ½ inch diameter extends upwardly from the ground to a height of 40 feet or more. Guy wires **3** may be attached to the pole **1** and to the ground **7** to give extra stability. The base of the pole is substantially as shown in FIGS. **1** and **2**. The top portion **8** of the pole, shown in detail in FIG. **4**, increases the dissipation of static electricity to the atmosphere by having two points of discharge extending into the atmosphere.

In FIG. **4**, the top portion **8** of the static eliminator of FIG. **3** is shown. This top portion consists of a T coupler **12** attached to the top of pole **1**. A connecting portion **11** having a length of about 12 inches is connected to either side of the T **12**. An elbow **10** connects the laterally extending connecting portion **11** to an upwardly extending extension **9**. The extension **9** extends upwardly approximately 12 inches, and acts to dissipate the electrical charge into the atmosphere.

Although the foregoing description is necessarily of a detailed character in order that the invention be completely set forth, it is to be understood that the specific terminology is not intended to be restrictive or confining, and that the various rearrangements of parts or modification of detail may be resorted to without departing from the scope or spirit of the invention as herein claimed.

I claim:

1. A static electricity eliminator for bleeding static electricity from the ground to the atmosphere comprising a metal pole having a lower end buried in the ground and an upper end extending upwardly into said atmosphere, a plurality of wires attached to said lower end and extending outwardly therefrom, said plurality of wires being buried in said ground, a concrete collar surrounding said lower end in the ground for supporting said pole, and means surrounding said lower end for electrically insulating said pole from said ground.

2. The static electricity eliminator of claim **1** wherein each of said plurality of wires is at least 300 feet long.

3. The static electricity eliminator of claim **1** wherein said metal pole is not connected to any other surrounding structures.

4. The static electricity eliminator of claim **1** wherein said upper end consists of a pipe of a first diameter extending upwardly from said lower end, and a pipe of a second, lesser diameter, extending upwardly from said pipe of said first diameter.

5. The static electricity eliminator of claim **1** wherein said upper end consists of a U-shaped member attached to said metal pole.

6. A device for eliminating static electricity from the ground by gradually bleeding the static electricity to the

atmosphere comprising, a metal pole having a lower portion buried at least three feet in the ground and surrounded by a concrete collar, a plurality of copper wires attached to said lower portion and extending outwardly therefrom a distance of at least 300 feet, said plurality of wires being buried beneath the surface of the earth, an upper portion extending upwardly from the ground into the atmosphere of the earth, said upper portion terminating in a U-shaped member, insulation means surrounding said lower portion between said concrete collar and said lower portion for electrically insulating said metal pole from the ground, and guy wires extending from said metal pole to the ground for supporting said upper portion, wherein said static electricity is gathered from the earth by said plurality of wires, is conducted to said metal pole and passes to said U-shaped member and is discharged from said U-shaped member to the atmosphere.

7. The device for eliminating static electricity from the ground of claim **6**, wherein the metal pole is not attached to any surrounding structures.

* * * * *

(No Model.)

M. W. DEWEY.

METHOD OF UTILIZING NATURAL ELECTRIC ENERGY.

No. 414,943. Patented Nov. 12, 1889.

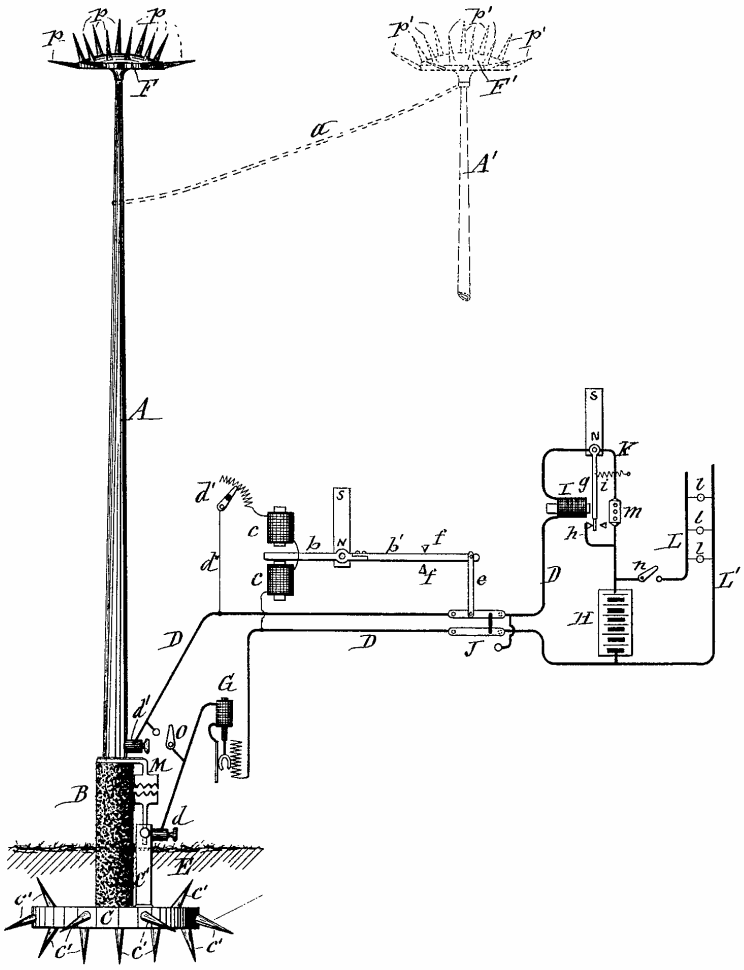

WITNESSES:

C. L. Bendixon

A. F. Walz.

INVENTOR

Mark W. Dewey

BY

Dull, Laass & Dull

ATTORNEYS

UNITED STATES PATENT OFFICE.

MARK W. DEWEY, OF SYRACUSE, NEW YORK, ASSIGNOR TO THE DEWEY CORPORATION, OF SAME PLACE.

METHOD OF UTILIZING NATURAL ELECTRIC ENERGY.

SPECIFICATION forming part of Letters Patent No. 414,943, dated November 12, 1889.

Application filed May 1, 1889. Serial No. 309,171. (No model.)

To all whom it may concern:

Be it known that I, MARK W. DEWEY, of Syracuse, in the county of Onondaga, in the State of New York, have invented new and useful Improvements in the Method of Utilizing Natural Electric Energy, of which the following, taken in connection with the accompanying drawings, is a full, clear, and exact description.

The object of this invention is to provide a method whereby natural electrical energy—such as the so-called "atmospheric electrical energy," or electrical energy that may be derived from the difference of potential existing between two points, one being the earth and the other the atmosphere at an elevation above the earth—may be collected or utilized for the various uses to which electricity is applied.

It has been found that the presence of electricity in the upper regions of the atmosphere is not confined to thunder-clouds, but can be detected at all times and often in great quantities in different conditions of the atmosphere. In fine weather this electricity is mostly positive; but in showery or stormy weather negative electricity is as frequently met with as positive, and it is in such weather that the indications of electricity, whether positive or negative, are usually the strongest. It has also been found that as we proceed farther from the earth's surface, whether upward from a level plane thereof or horizontally from an elevation, the potential of points in the air becomes more and more different from that of the earth, the difference being, in a broad sense, simply proportional to the distance; hence we can infer that there is electricity residing on the surface of the earth, the density of which at any moment in the locality of observation is measured by the difference of potential found to exist between the earth and a given point in the air near it. The results of observations show that the variations of the electricity residing in the atmosphere is the main cause of the variations of the electricity on the surface of the earth. A charged cloud or body of air induces electricity of the opposite kind to its own on the parts of the earth's surface over which it passes and produces such variations. The difference of potential in increasing the distance from the earth is due to electricity induced on the surface of the earth by opposite electricity in the air overhead, and the air being a non-conductor the electricities are unable to combine. As electrical density is greater on projecting parts of a surface than on those which are plane or concave, stronger indications are obtained on hills than in valleys, if the collecting apparatus be at the same distance from the ground in both cases. The average difference of potential is greater in the winter than in the summer. Little or no effects can be obtained within inclosures or under trees, as they tend to screen the apparatus.

Inasmuch as electricity travels in preference through the best conductors, it follows that if a path of low resistance is formed (such as the erection of a metal pole) to a sufficient elevation above the earth the electricities in the atmosphere and that on the surface of the earth will tend to combine and travel through the said path in a current or currents, and if this pole terminates in a metal point or a number of such points the earth and clouds exchange their opposite electricities without a disruptive discharge—as the lightning—but in a slow and gradual way through convection. Besides supplying the top of the pole with points, a metal plate to which the said points are fixed attracts the opposite electricity in the atmosphere. In order to obtain a greater and increased effect, a large metal plate is buried at the foot of the pole and electrically connected therewith, and is provided with points or branches extending in different directions in the ground. The plate and branches may be surrounded by metallic refuse, coke, or other good conducting substance. The metallic points on the top of the pole should be sharp, and preferably of copper, and may be platinized, gilded, or galvanized to prevent corrosion. It having been ascertained by practical experiments that either a flame or dropping water at an elevation above the surface of the earth produces convection of electricity, it is obvious that such means may be employed in place of the points hereinbefore referred to. As the electricity in the atmosphere is some-

times positive and other times negative, the direction of the currents is not always the same—that is, the atmospheric electrical energy is composed of a current of an alternating character, flowing in one direction on an average about as much of the time as in the opposite direction, but the length of the current in a certain direction, or the lengths of time between reversals or changes in the direction of its flow, is greatly varied. This and also the varied strength of the currents have prevented the utilization of atmospheric electrical energy in commercial quantities for the various purposes for which electricity is generally employed. In order to utilize such a current or currents, they should be transformed into a continuous direct current of uniform strength. The apparatus for accomplishing the transformation of atmospheric electricity into a direct current of uniform strength is susceptible of being greatly modified. The preferred form of apparatus, however, for carrying the invention practically into effect I will now proceed to describe to show that the method is capable of actual performance. Said apparatus is illustrated in the diagram accompanying this specification.

Referring specifically to said diagram, A represents a metallic pole, which is shown bare, but may be enveloped in suitable insulating material, if desirable. B is the base of the aforesaid pole, which base is of insulating material set in the ground E. C is a large metal plate beneath the said base, and has points or branches c' extending therefrom in different directions in the ground. C′ is a metallic post extending from the said plate above the surface of the ground and having a terminal d of the circuit D. On the top of said pole is mounted a metallic cap F, consisting, preferably, of a convex disk provided with sharp iron or copper points p, which project in all directions from the same. As before mentioned, the said points may be plated with a suitable metal that forms a good conductor and prevents corrosion. Similar caps F′ may be placed on other insulated poles, as A′, in the vicinity, and connected with the main pole A by an electric conductor a, for increasing the effect. The pole A′ may be of wood, and the pole A may also be of the same material if provided with a metal conductor within or on the outside, extending from the cap to the other terminal d' of the circuit D. The said circuit D leads from the terminal d through an automatic variable resistance G, thence to one of the poles of a secondary or storage battery H, and from the other pole of said battery through an automatic current-regulator to the terminal d'. An automatic current-reverser or pole-changer J is located in the said circuit for reversing the current whenever there is a change in its direction, so that it may be rectified or straightened during transit and caused to travel at all times whether its direction is toward or from the earth in one and the same direction through a portion of the circuit containing the secondary battery. The reversals are accomplished automatically by means of a pivoted polarized armature b, located between two electro-magnets c c, having their coils included in a shunt-circuit between the leads of the circuit D. The magnets are wound so that a north pole will be presented to the armature on one side and a south pole on the other. When the current is flowing in a certain direction, the said polarized armature will be repelled by one magnet and attracted by the other, and thereby moved to one side. When the current changes its direction through the magnets, the poles of the said magnets are reversed and the armature is both repelled and attracted to the other side. An arm b', of diamagnetic material, is fixed to and extends from the armature and is moved by the same. Between a movable end of the arm and the said current-reverser is a pivoted connection or link e, by which the motion of the arm is conveyed to the reverser. Stops f are provided for limiting the movement of the said arm, and an adjustable resistance d' is included in the shunt d'' to regulate the current through the same.

The current-regulator hereinbefore referred to prevents short-circuiting or the rapid discharge of the secondary battery into the air and ground when the strength of said battery-current becomes greater than that passing to the battery. Said regulator is composed of an electro-magnet I, having its coil in the circuit D. A pivoted polarized armature g is connected at its pivot to one terminal of the coil of said magnet, and when the current is flowing to the battery said armature is attracted by the magnet I and held in contact with the stop h, to which the terminal of the secondary battery is connected. In the aforesaid condition a free or low-resistance path for the current is provided to the battery; but when the battery-current exceeds the charging-current the magnet-poles are reversed and the armature is repelled by the magnet, and the free path of the circuit is broken between the armature g and stop h. In order to maintain the armature in the latter position until the charging-current has been increased in strength above that of the battery-current or discharging-current, and so that the said regulator will automatically operate, a shunt path K of high resistance is provided around the armature g and stop h. The high resistance of the said shunt is obtained by including a rheostat m. This shunt path or circuit K, with the resistance, permits a small but sufficient amount of current to flow through the magnet I to hold the armature away from the stop h until the current is reversed, and then move the armature back to stop h to close the free or low-resistance path. A spring i is provided to assist the movement of the armature from the magnet when it is repelled by the same.

The electric current may be directly con-

ducted to translating devices—such as lamps or electromotors; but, as hereinbefore stated, said current is preferably employed to charge one or more cells of the secondary battery H, and this battery stores or accumulates the electrical energy and supplies the said translating devices. To illustrate the latter feature, leads or wires L and L′ are extended from the poles or electrodes of said battery, and translating devices, in the shape of incandescent lamps *l*, are connected with the said wires in multiple arc. In the wire L is a common circuit maker and breaker *n* to close and open the circuit to the lamps. The said battery may be charged in series or parallel.

The automatic variable resistance G maintains the current flowing through the circuit D approximately uniform by increasing the resistance therein upon an increase of strength. Said resistance is not absolutely necessary and may be dispensed with.

The lightning-arrester M is to short-circuit a very heavy current to prevent the same from passing through the other parts of the apparatus and injuring it. A low-resistance shunt O, with a circuit maker and breaker therein, is connected between the leads of the circuit D, near the terminals *d* and *d′*, to completely short-circuit the apparatus when desired.

Having described my invention, what I claim as new, and desire to secure by Letters Patent, is—

1. The method of utilizing atmospheric electrical energy, consisting in conducting the electric current or currents between the earth and a point in the atmosphere at an elevation above the earth, rectifying or straightening the currents during transit, and storing or accumulating the electrical energy of said rectified current or currents.

2. As preliminary steps in the method of utilizing atmospheric electrical energy, conducting the electric current or currents through a path of low resistance between the earth and the atmosphere at an elevation above the earth, maintaining an approximately uniform strength of current and rectifying or straightening the same during transit.

3. As preliminary steps in the method of utilizing atmospheric electrical energy, conducting the electric current or currents through a path of low resistance between the earth and the atmosphere at an elevation above the earth, and rectifying or straightening said currents during transit.

4. The method of utilizing atmospheric electrical energy or deriving energy from the difference of electrical potential existing between the earth and a point or points in the atmosphere at an elevation above the earth, consisting in conducting the current or currents between the two points through a path of low resistance, rectifying or straightening the said currents in a portion of the path during transit, and storing or accumulating the electrical energy thereof.

5. The method of utilizing atmospheric electrical energy or deriving energy from the difference of electrical potential existing between the earth and a point or points in the atmosphere at an elevation above the earth, consisting in conducting the current or currents between the two points through a path of low resistance, maintaining an approximately uniform strength of current, rectifying or straightening the said currents in a portion of the path during transit, and storing or accumulating the electrical energy.

6. The method of utilizing atmospheric electrical energy composed of a current of a varied alternating character, consisting in conducting the electric current or currents through a path of low resistance between the earth and the atmosphere at an elevation above the earth, and then accumulating the electrical energy of said current or currents while flowing in both directions in one or more cells of a secondary or storage battery, as described.

In testimony whereof I have hereunto signed my name this 29th day of April, 1889.

MARK W. DEWEY. [L. S.]

Witnesses:
C. H. DUELL,
C. L. BENDIXON.

June 9, 1925. 1,540,998

H. PLAUSON

CONVERSION OF ATMOSPHERIC ELECTRIC ENERGY

Filed Jan. 13, 1921 12 Sheets-Sheet 1

Fig. 1.

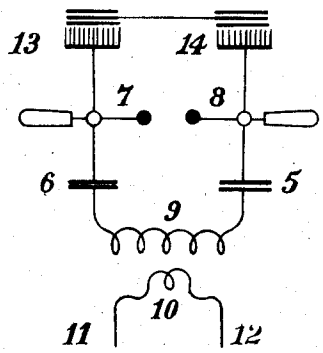

Fig. 2.

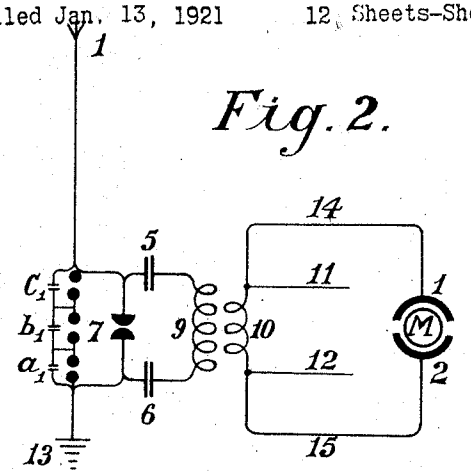

Fig. 3.

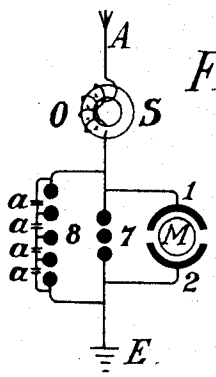

Fig. 4.

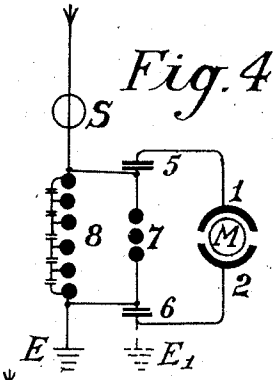

Fig. 5.

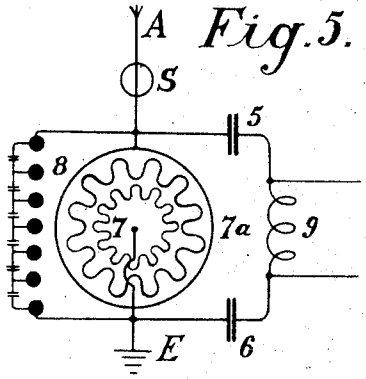

Fig. 6

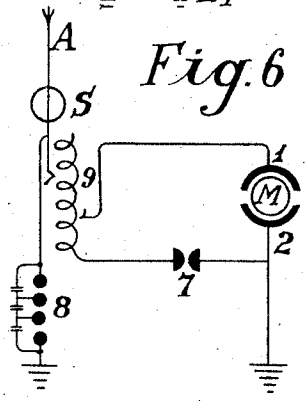

Inventor

Hermann Plauson

by Knight Bros

attorneys

June 9, 1925. 1,540,998

H. PLAUSON

CONVERSION OF ATMOSPHERIC ELECTRIC ENERGY

Filed Jan. 13, 1921 12 Sheets-Sheet 2

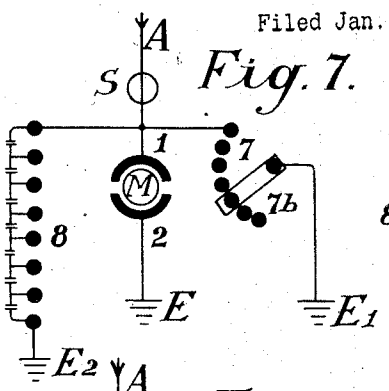

Fig. 7.

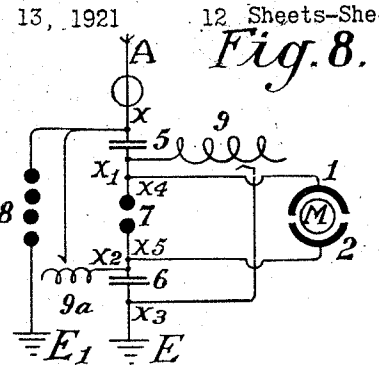

Fig. 8.

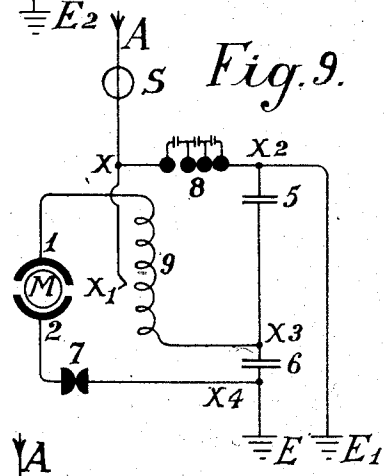

Fig. 9.

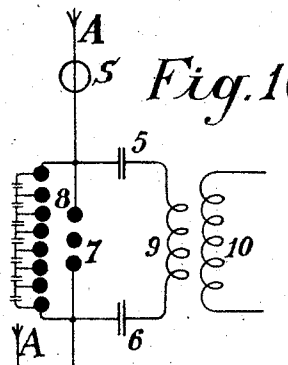

Fig. 10.

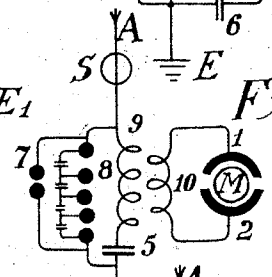

Fig. 11.

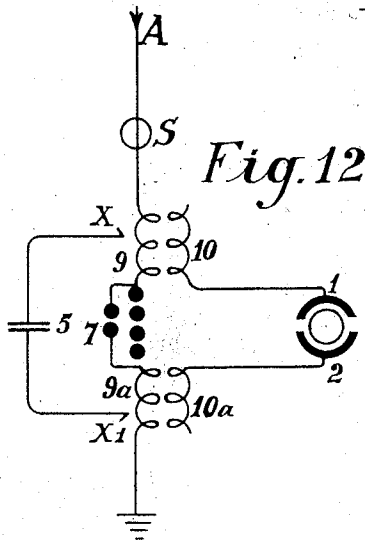

Fig. 12.

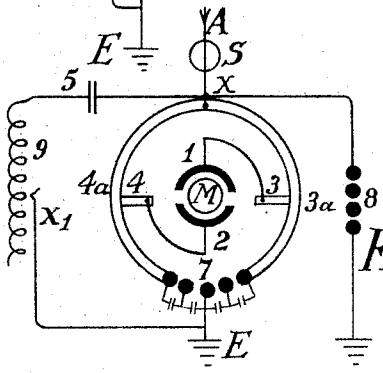

Fig. 13.

Inventor

Normann Plauson

by Knight Bros

Attorneys

June 9, 1925. 1,540,998

H. PLAUSON

CONVERSION OF ATMOSPHERIC ELECTRIC ENERGY

Filed Jan. 13, 1921 12 Sheets-Sheet 3

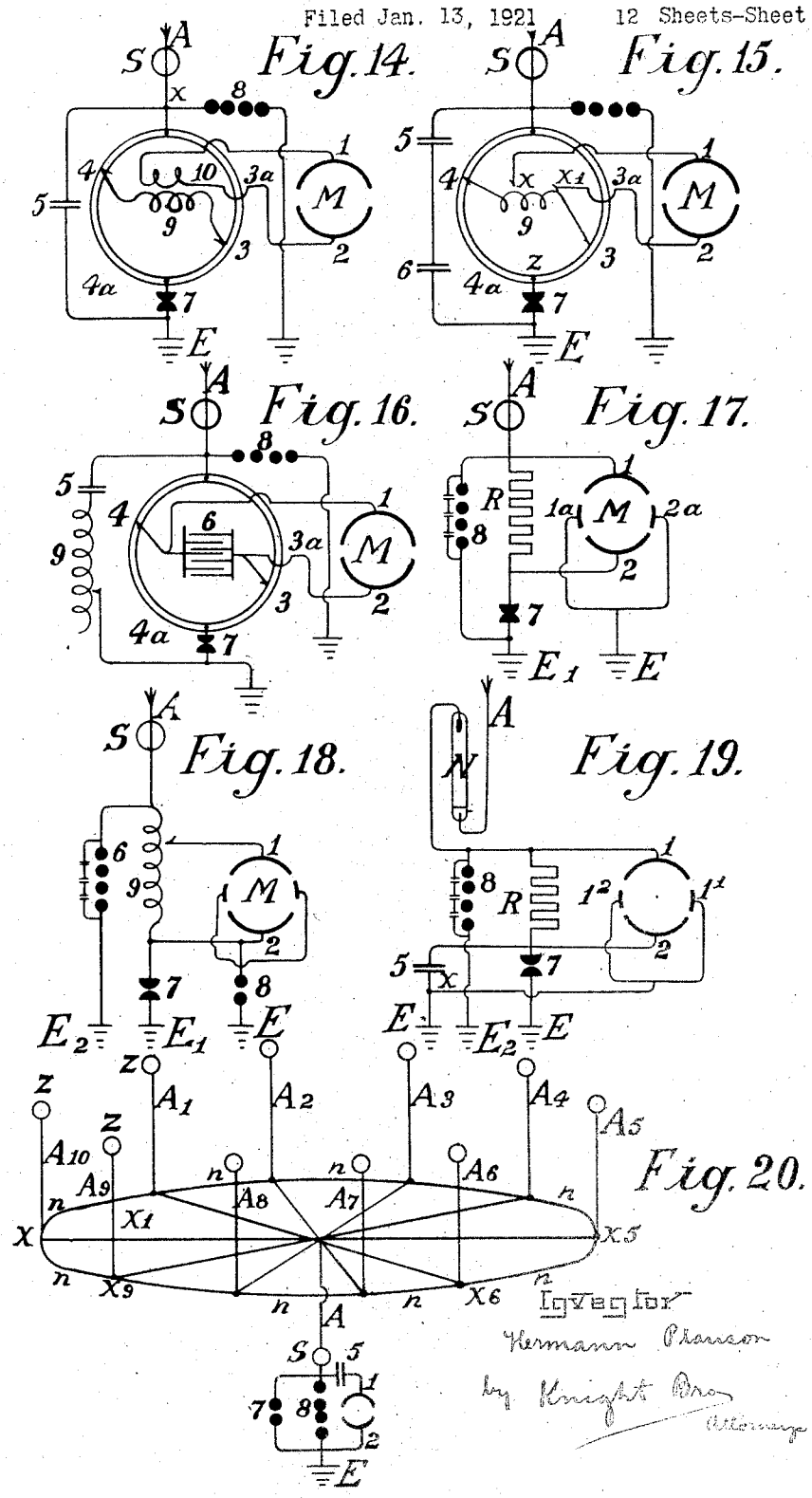

June 9, 1925. 1,540,998

H. PLAUSON

CONVERSION OF ATMOSPHERIC ELECTRIC ENERGY

Filed Jan. 13, 1921 12 Sheets-Sheet 4

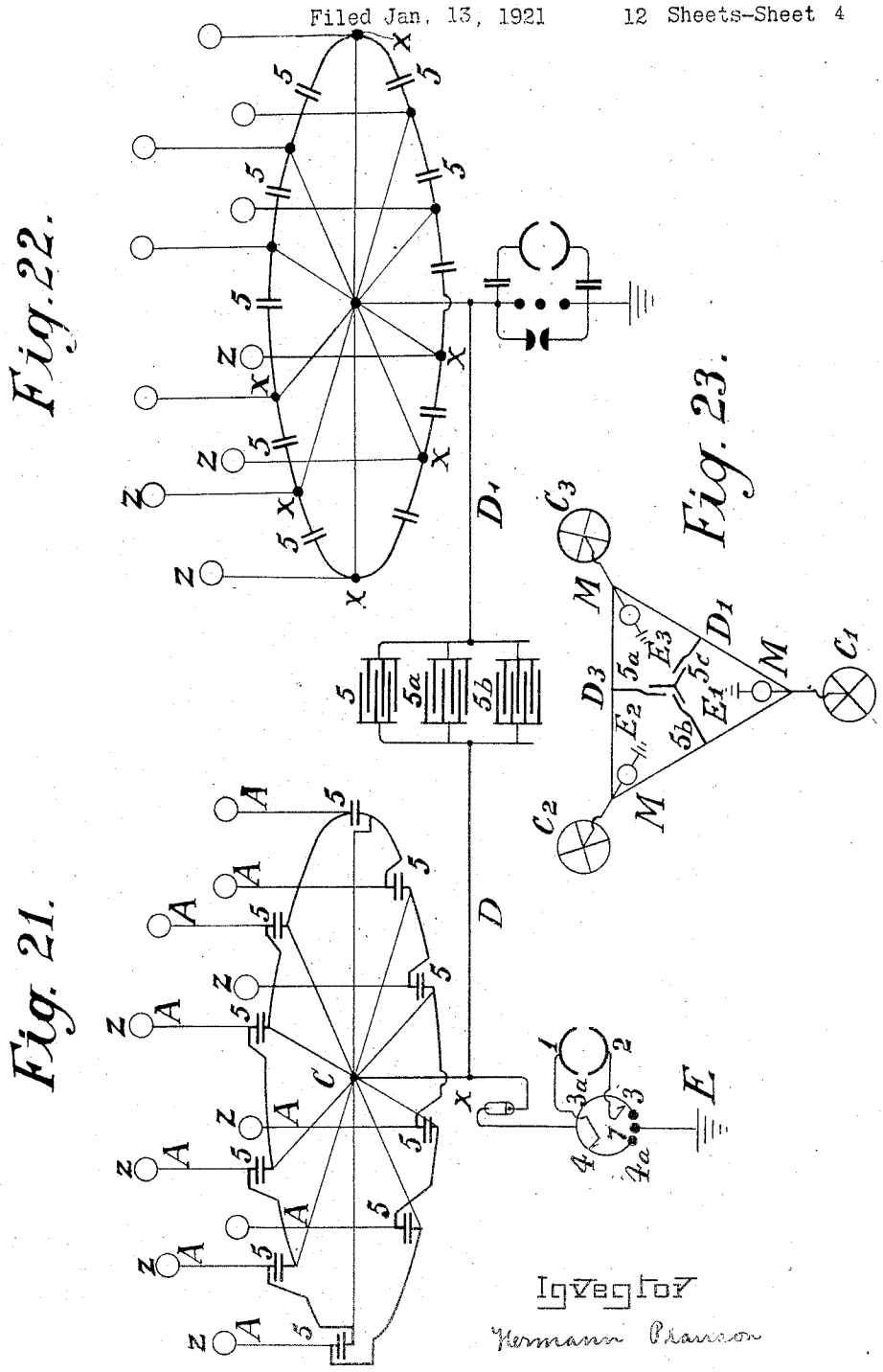

Inventor
Hermann Plauson
by Knight Bros
Attorneys

June 9, 1925. 1,540,998

H. PLAUSON

CONVERSION OF ATMOSPHERIC ELECTRIC ENERGY

Filed Jan. 13, 1921 12 Sheets-Sheet 5

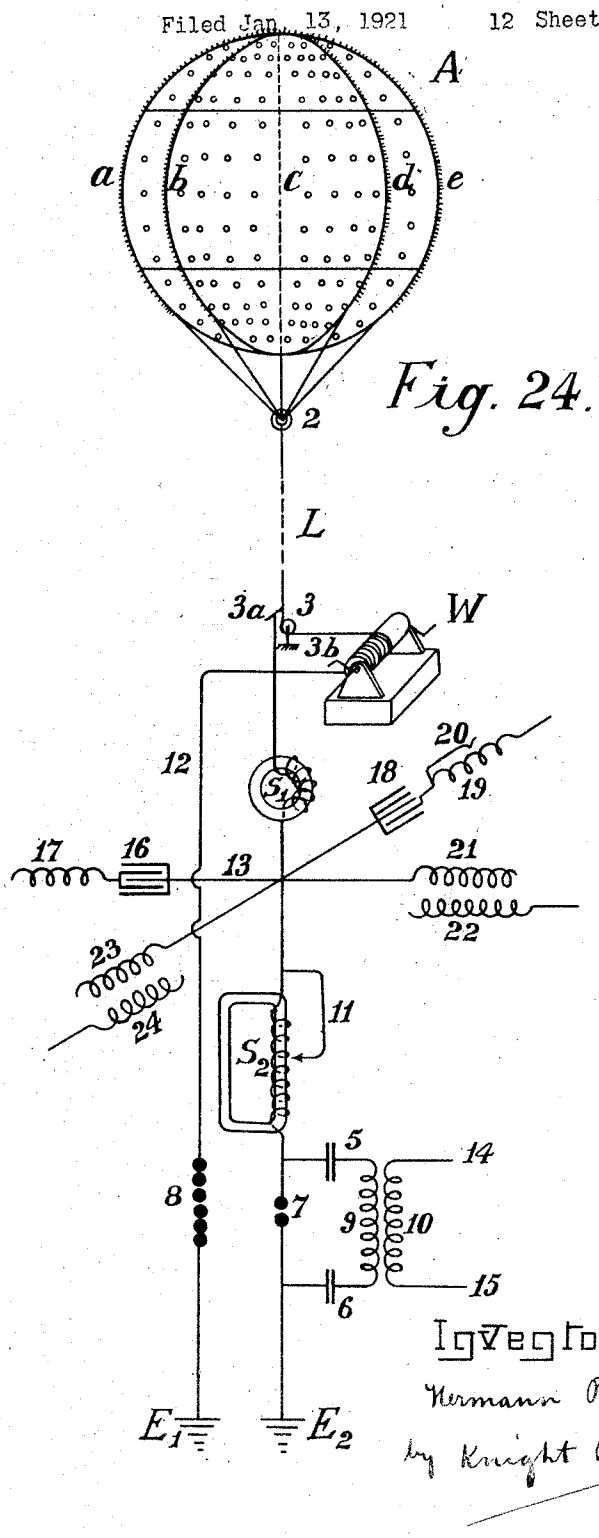

Fig. 24.

Inventor
Hermann Plauson
by Knight Bros
Attorneys

June 9, 1925. 1,540,998

H. PLAUSON

CONVERSION OF ATMOSPHERIC ELECTRIC ENERGY

Filed Jan. 13, 1921 12 Sheets-Sheet 6

Fig. 25.

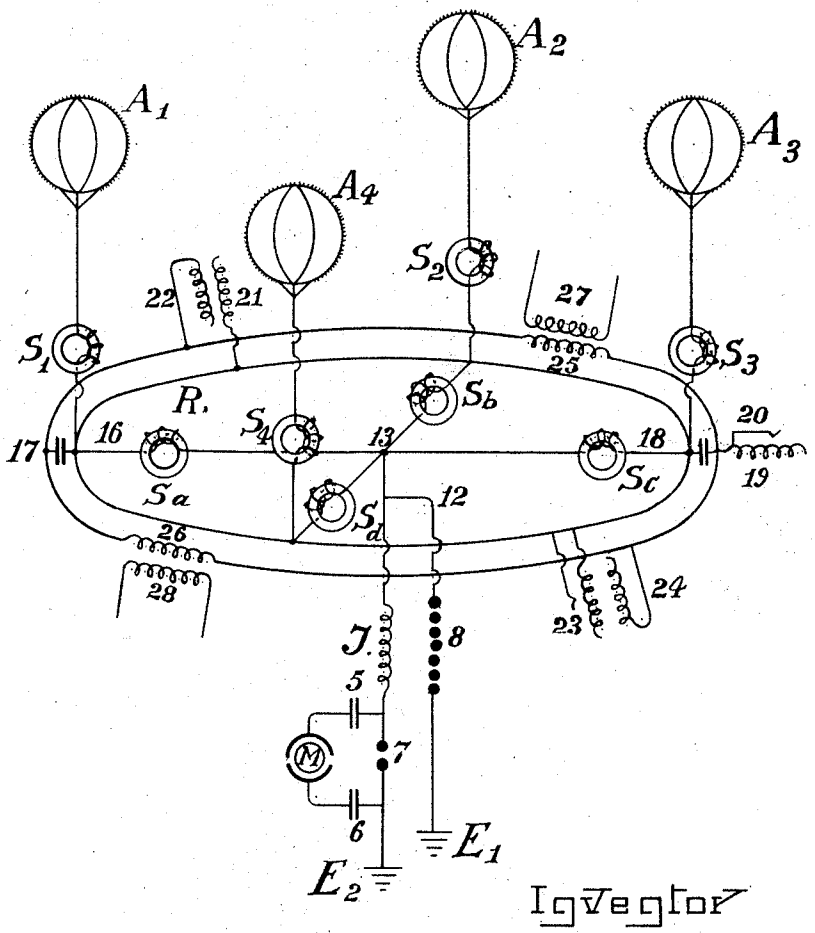

Inventor

Hermann Plauson

by Knight Bros

attorneys

June 9, 1925. 1,540,998

H. PLAUSON

CONVERSION OF ATMOSPHERIC ELECTRIC ENERGY

Filed Jan. 13, 1921. 12 Sheets-Sheet 7

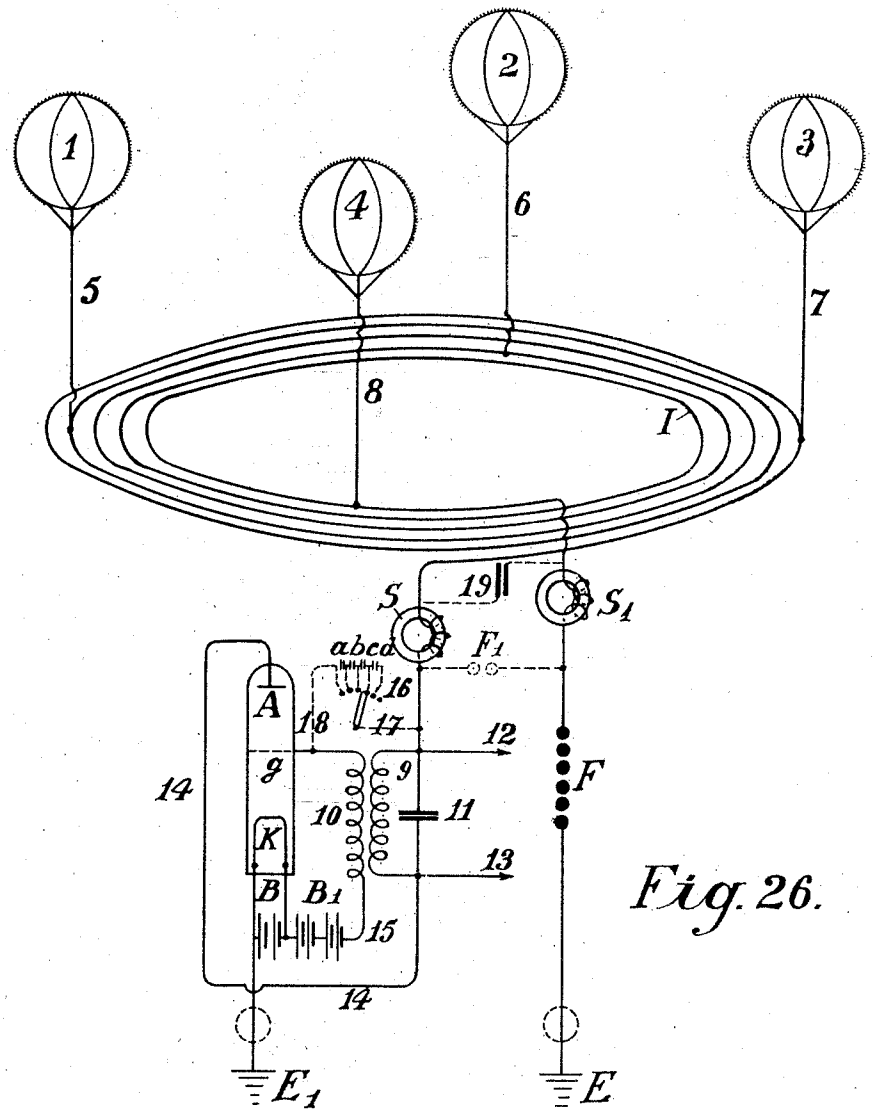

Fig. 26.

Inventor
Hermann Plauson
by Knight Bros
Attorneys

June 9, 1925. 1,540,998

H. PLAUSON

CONVERSION OF ATMOSPHERIC ELECTRIC ENERGY

Filed Jan. 13, 1921. 12 Sheets-Sheet 8

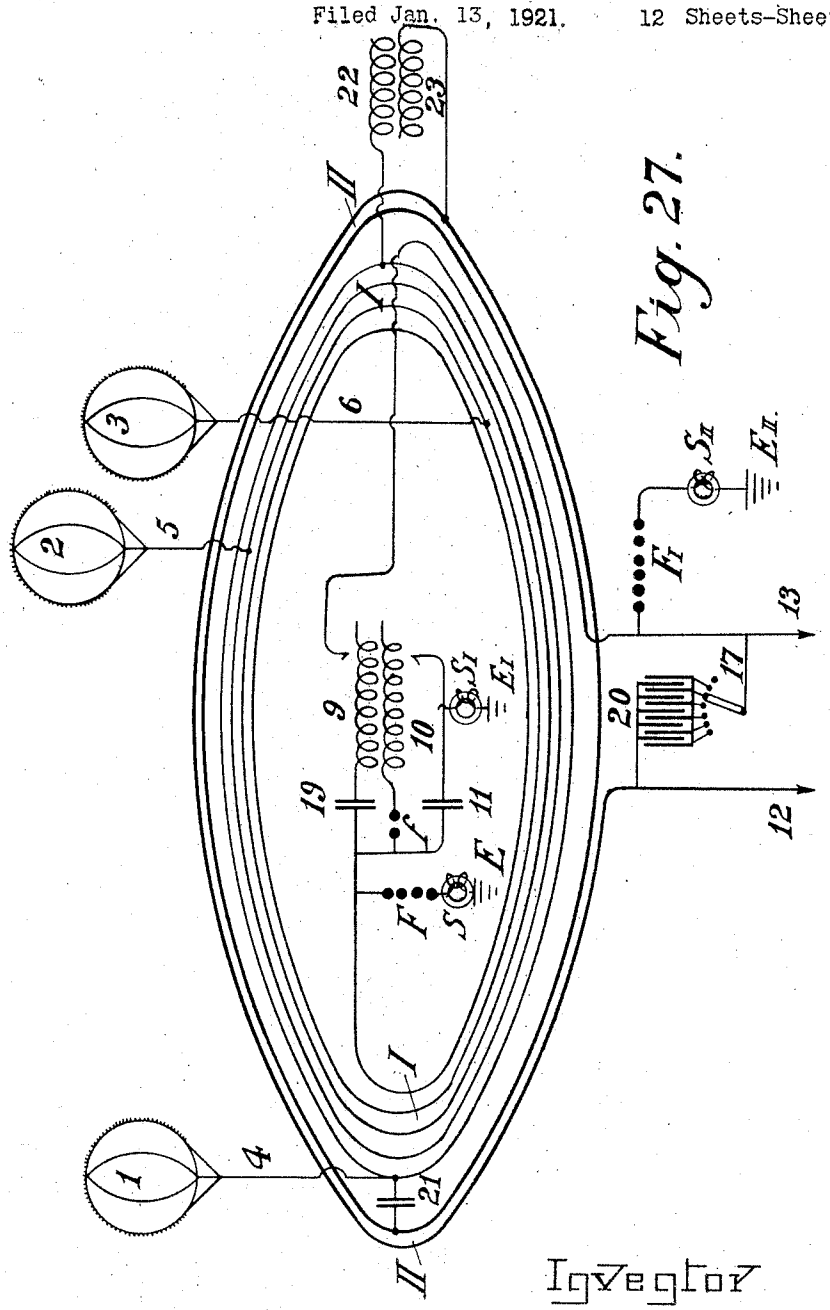

Fig. 27.

Inventor

Hermann Plauson

by Knight Bros

Attorneys

June 9, 1925. 1,540,998

H. PLAUSON

CONVERSION OF ATMOSPHERIC ELECTRIC ENERGY

Filed Jan. 13, 1921 12 Sheets-Sheet 9

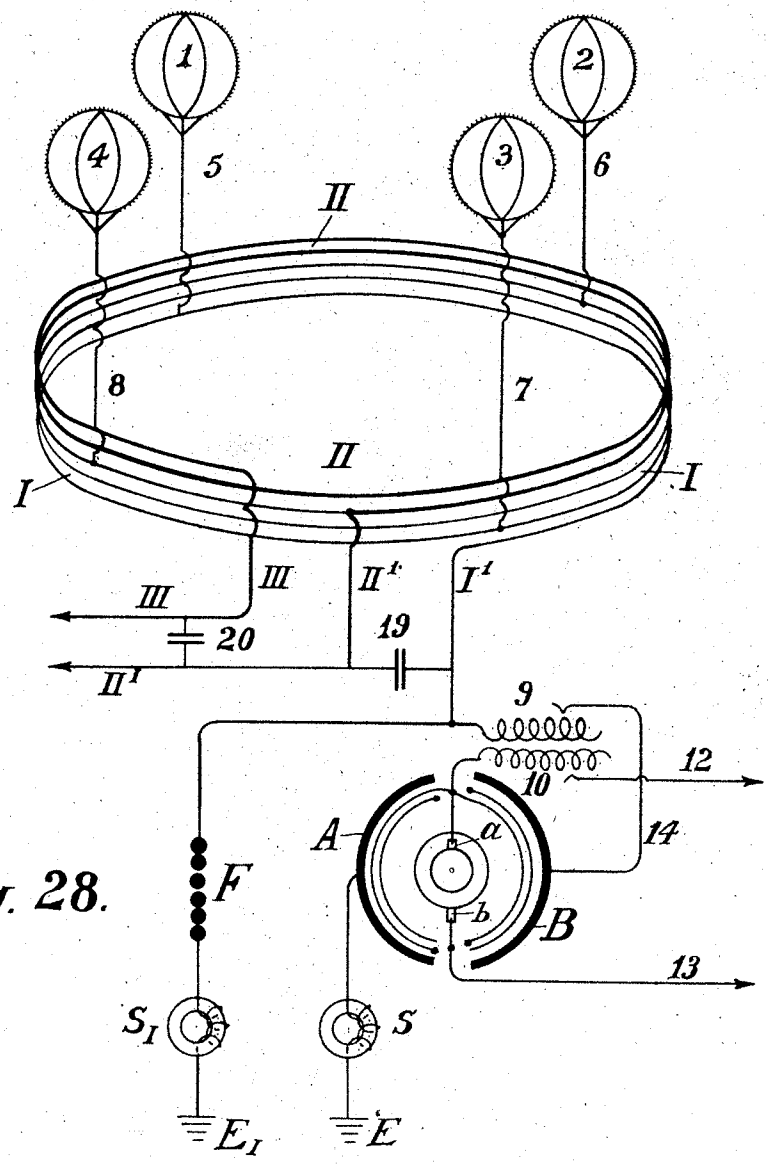

Fig. 28.

Inventor
Hermann Plauson
by
Knight Bros
attorneys

June 9, 1925. 1,540,998

H. PLAUSON

CONVERSION OF ATMOSPHERIC ELECTRIC ENERGY

Filed Jan. 13, 1921. 12 Sheets-Sheet 10

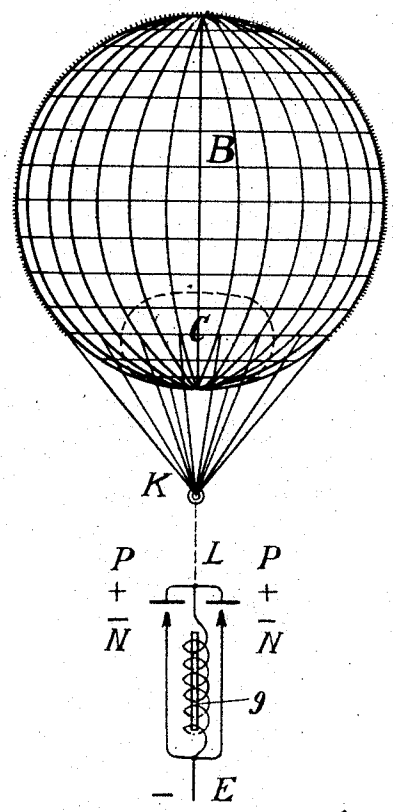

Fig. 29.

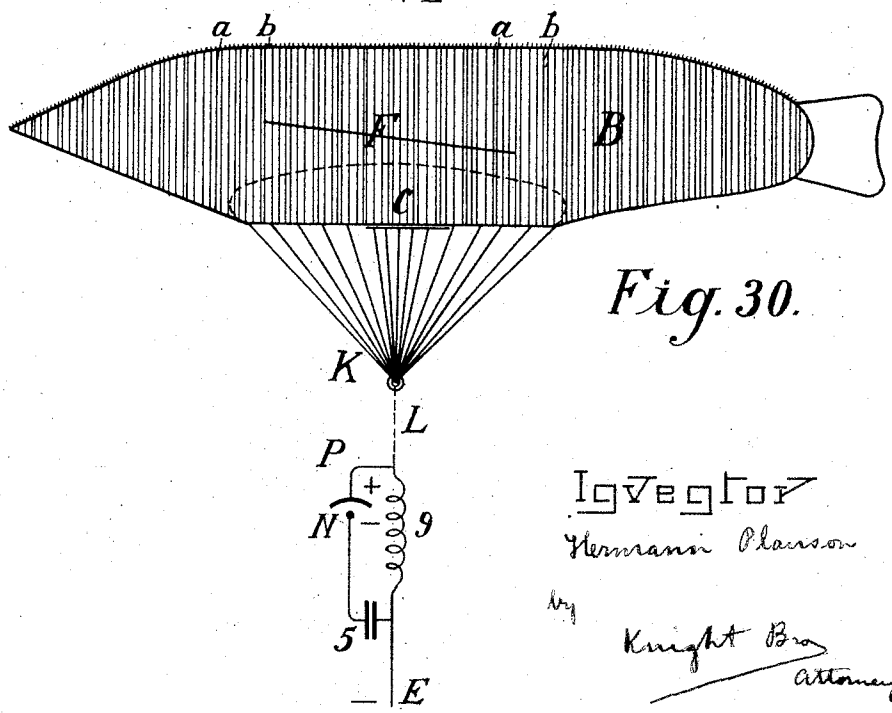

Fig. 30.

Inventor
Hermann Plauson
by
Knight Bros
Attorneys

June 9, 1925. 1,540,998

H. PLAUSON

CONVERSION OF ATMOSPHERIC ELECTRIC ENERGY

Filed Jan. 13, 1921. 12 Sheets-Sheet 11

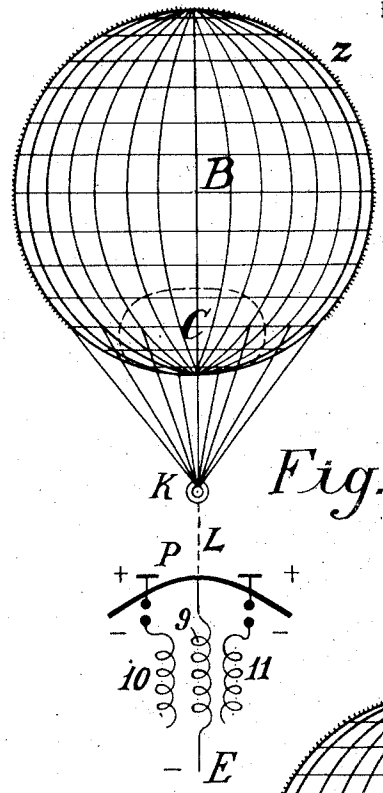

Fig. 31.

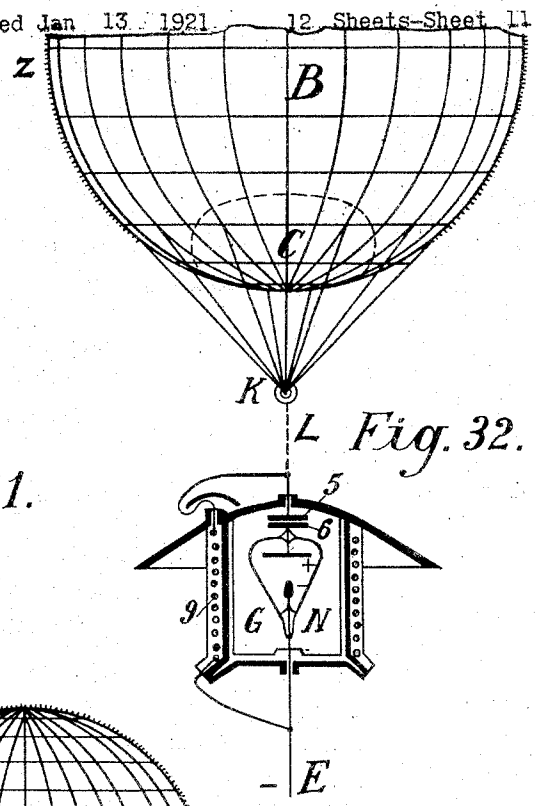

Fig. 32.

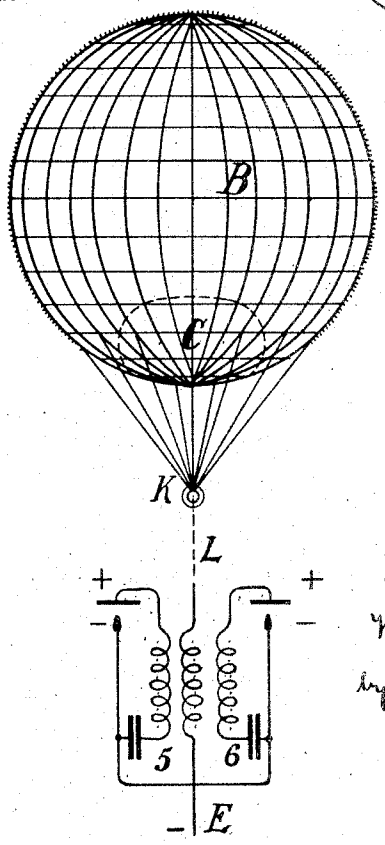

Fig. 33.

Inventor
Hermann Plauson
by Knight Bros
Attorneys

June 9, 1925. 1,540,998

H. PLAUSON

CONVERSION OF ATMOSPHERIC ELECTRIC ENERGY

Filed Jan. 13, 1921 12 Sheets-Sheet 12

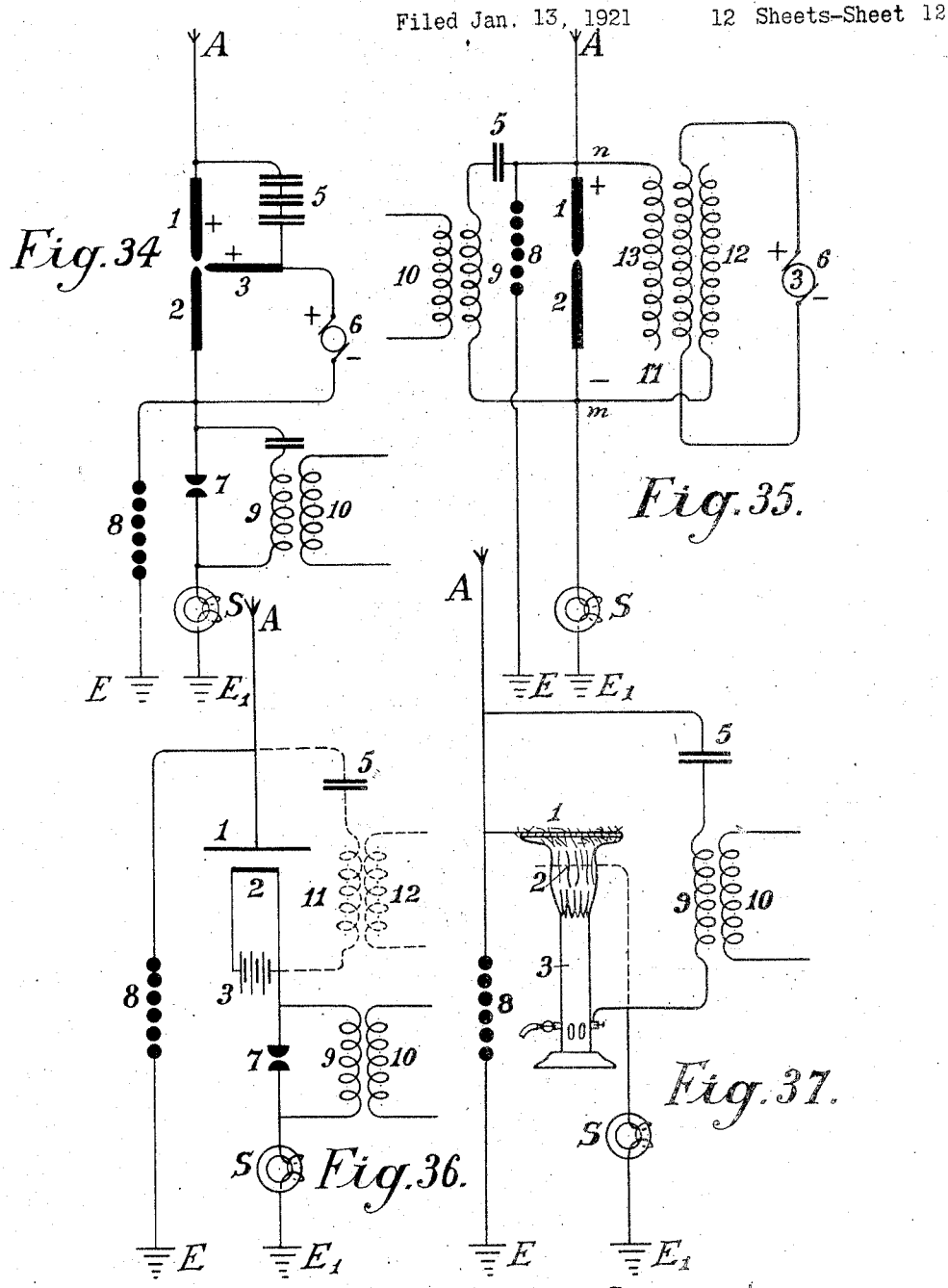

Inventor
Hermann Plauson
by Knight Bros
Attorneys

Patented June 9, 1925. 1,540,998

UNITED STATES PATENT OFFICE.

HERMANN PLAUSON, OF HAMBURG, GERMANY.

CONVERSION OF ATMOSPHERIC ELECTRIC ENERGY.

Application filed January 13, 1921. Serial No. 437,107.

To all whom it may concern:

Be it known that I, HERMANN PLAUSON, Esthonian subject, residing in Hamburg, Germany, have invented certain new and useful Improvements in the Conversion of Atmospheric Electric Energy, of which the following is a specification.

Methods of obtaining atmospheric electricity by means of metallic nettings set with spikes which are held by means of ordinary or anchored kite balloons made of fabrics and filled with hydrogen, are in theory already known. Atmospheric electricity obtained in this way has been suggested to be used in the form of direct current for the charging of accumulators. This knowledge however is at present only theoretical as the conversion in practice has hitherto been a failure. No means are known of protecting the apparatus from destruction by lightning. The balloons used for collecting the charge must also be made of very large size in order to be able to support the weight of the metallic netting and the heavy cable connections.

Instead of using heavy metallic netting as collectors attached to single air balloons of non-conducting materials which are liable to be torn and are permeable to the gas, it is proposed to use metallic balloon collectors which have the following important advantages—

(*a*) The metallic cases are impenetrable to helium and hydrogen; they also represent large metallic weather-proof collecting surfaces.

(*b*) Radio active means and the like may be easily applied internally or externally; whereby the ionization is considerably increased and therewith also the quantity of atmospheric electricity capable of being collected.

(*c*) Such balloon collectors of light metal do not require to be of large size as they have to carry only their own moderate weight, and that of the conducting cable or wire.

(*d*) The entire system therefore offers little surface for the action of storm and wind and is resistant and stable.

(*e*) Each balloon can be easily raised and lowered by means of a winch so that all repairs, recharging and the like can be carried out without danger during the operation.

It is further proposed to use a collecting aerial network of several separate collectors spread out in the air above the earth, which collectors are interconnected by electrical conductors.

According to this invention charges of atmospheric electricity are not directly converted into mechanical energy, and this forms the main difference from previous inventions, but the static electricity which runs to earth through aerial conductors in the form of direct current of very high voltage and low current strength is converted into electro-dynamic energy in the form of high frequency vibrations. Many advantages are thereby obtained and all disadvantages avoided.

The very high voltage of static electricity of a low current strength can be converted by this invention to voltages more suitable for technical purposes and of greater current strength. By the use of closed oscillatory circuits it is possible to obtain electromagnetic waves of various amplitude and thereby to increase the degree of resonance of such current. Such resonance allows various values of inductance to be chosen whereby again the governing of the starting and stopping of machines driven thereby by simply tuning the resonance between coils of the machine and the transformer circuit forming the resonance can easily be obtained. Further, such currents have the property of being directly available for various uses, even without employing them for driving motors, of which there may be particularly mentioned, lighting, production of heat and use in electro-chemistry.

Further, with such currents a series of apparatus may be fed without direct current supply through conductors and also the electro-magnetic high frequency currents may be converted by means of special motors adapted for electro-magnetic oscillations into mechanical energy, or finally converted by special machines into alternating current of low frequency or even into direct current of high potential.

The invention is more particularly described with reference to the accompanying diagrams in which:—

Figure 1 is an explanatory figure.

Figure 2 is a diagrammatic view of the simplest form.

Figure 3 shows a method of converting atmospheric electrical energy for use with motors.

Figure 4 is a diagram showing the use of protective means.

Figure 5 is a diagram of an arrangement for converting large current strengths.

Figure 6 is a diagram of an arrangement including controlling means.

Figure 7 shows means whereby the spark gap length can be adjusted.

Figure 8 shows a unipolar connection for the motor.

Figure 9 shows a weak coupled system suitable for use with small power motors.

Figures 10, 11 and 12 show modified arrangements.

Figure 13 shows a form of inductive coupling for the motor circuit.

Figure 14 is a modified form of Figure 13 with inductive coupling.

Figure 15 is an arrangement with non-inductive motor.

Figure 16 is an arrangement with coupling by condenser.

Figures 17, 18 and 19 are diagrams of further modifications.

Figure 20 shows a simple form in which the aerial network is combined with special collectors.

Figure 21 shows diagrammatically an arrangement suitable for collecting large quantities of energy.

Figure 22 is a modified arrangement having two rings of collectors.

Figure 23 shows the connections for three rings of collectors.

Figure 24 shows a collecting balloon and diagram of its connection of condenser batteries.

Figures 25 and 26 show modified collector balloon arrangements.

Figure 27 shows a second method of connecting conductor for the balloon aerials.

Figure 28 shows an auto-transformer method of connection.

Figure 29 shows the simplest form of construction with incandescent cathode.

Figure 30 shows a form with cigar shaped balloon.

Figure 31 is a modified arrangement.

Figure 32 shows a form with cathode and electrode enclosed in a vacuum chamber.

Figure 33 is a modified form of Figure 32.

Figure 34 shows an arc light collector.

Figure 35 shows such an arrangement for alternating current.

Figure 36 shows an incandescent collector with Nernst lamp.

Figure 37 shows a form with a gas flame.

Figure 1 illustrates a simple diagram for converting static electricity into dynamic energy of a high number of oscillations. For the sake of clearness in the drawings an influence machine is assumed to be employed and not an aerial antenna. 13 and 14 are combs for collecting the static electricity of the influence machine. 7 and 8 are spark discharging electrodes, 6 and 5 condensers, 9 an inductive primary coil, 10 secondary coil, 11 and 12 ends of conductors of the secondary coil 10. When the disc of the static influence machine is rotated by mechanical means, the combs collect the electric charges one the positive and the other the negative, and charge the condensers 5 and 6 until such a high potential is formed across the spark gap 7—8, that the spark gap is jumped. As the spark gap 7—8 forms a closed circuit with condensers 6 and 5, and inductive resistance 9, as is well known, waves of high frequency electromagnetic oscillations will pass in this circuit.

The high frequency of the oscillations produced in the primary circuit induces waves of the same periodicity in the secondary circuit. Thus in the primary circuit electromagnetic oscillations are formed by the passage of the spark over the spark gap and these waves are maintained by fresh charges of static electricity.

By suitably selecting the ratio between the number of the coils in the primary and secondary circuits with regard to a correct application of the co-efficients of resonance (capacity, inductance, and resistance) the high voltage of the primary circuit may be suitably converted into low voltage and high current strength.

When the oscillatory discharges in the primary circuit becomes weaker or entirely cease, the condensers are charged again by the static electricity until the accumulated charge again breaks down the spark gap. All this is repeated as long as electricity is produced by the static machine by employing mechanical energy.

An elementary form of the invention is shown in Figure 2 in which two spark gaps in parallel are used one of which may be termed the working gap 7 in Figure 2, whilst the second serves as a safety device for excess voltage and consists of a larger number of spark gaps than the working section, which gaps are arranged in series and are bridged by very small capacities as is illustrated in a_1, b_1, c_1, Figure 2 which allow of uniform sparking in the safety section.

In Figure 2 A is the aerial antenna for collecting charges of atmospheric electricity, 13 is the earth connection of the second part of the spark gap, 5 and 6 are condensers, 9 a primary coil. Now when through the aerial A the positive atmospheric electricity seeks to combine with the negative charge to earth, this is prevented by (the air gap between) the spark gaps. The resistance of the spark gap 7 is, as shown in the drawings, lower than that of the other safety section which consists of three spark gaps connected in

series, and consequently a three times greater air resistance is offered by the latter.

So long therefore, as the resistance of the spark gap 7 is not overloaded, so that the other spark gaps have an equal resistance with it the discharges take place only over spark gap 7. Should however the voltage be increased by any influences so that it might be dangerous for charging the condensers 5 and 6 or for the coil insulation 9 and 10 in consequence of break down, by a correct regulation of this spark gap the second spark gap can discharge free from inductive effects direct to earth without endangering the machine.

Without this second spark gap, arranged in parallel having a higher resistance than the working spark gap it is impossible to collect and render available large quantities of electrical energy.

The action of this closed oscillation circuit consisting of spark gap 7, two condensers 5 and 6, primary coil 9, and also secondary coil 10 is exactly the same as the one described in Figure 1 with the arrangement of the static induction machine with the only difference that here the second spark gap is provided. The electromagnetic high frequency alternating current obtained can be tapped off from the conductors 11 and 12 for lighting and heating purposes. Special kinds of motors adapted for working with these peculiar electrical charges may be connected at 14 and 15 which can work with static electricity charges or with high frequency oscillations.

In addition to the use of spark gaps in parallel a second measure of security is also necessary for taking off the current. This precaution consists according to this invention, in the introduction of and method of connecting certain protective electromagnets or choking coils in the aerial circuit as shown by S in Figure 3.

A single electromagnet only having a core of the thinnest possible separate laminations is connected with the aerial.

In the case of high voltages in the aerial network or at places where there are frequent thunder storms, several such magnets may however be connected in series.

In the case of large units or plants several electromagnets can be employed in parallel or in series parallel.

The windings of these electromagnets may be simply connected in series with the aerials. In this case the winding preferably consists of several thin parallel wires, which make up together, the necessary section.

The winding may be made of primary and secondary windings in the form of a transformer. The primary winding will be then connected in series with the aerial network, and the secondary winding more or less short-circuited over a regulating resistance or an induction coil. In the latter case it is possible to regulate to a certain extent the effect of the choking coils. In the further description of the connecting and constructional diagrams the aerial electromagnet choke coil is indicated by a simple ring S.

Figure 3 shows the simplest way of converting atmospheric electricity into electromagnetic wave energy by the use of special motors adapted for high oscillatory currents or static charges of electrical energy. Recent improvements in motors for working with static charges and motors working by resonance, that is to say, having groups of tuned electromagnetic cooperating circuits render this possible but such do not form part of the present invention.

A motor adapted to operate with static charges will for the sake of simplicity be diagrammatically indicated by two semicircles 1 and 2 and the rotor of the motor by a ring M. (Figure 3.) A is a vertical aerial or aerial network. S the safety choke or electromagnet with coil O as may be seen is connected with the aerial A. Adjacent the electromagnet S the aerial conductor is divided into three circuits, the circuit 8 giving the safety spark gap, the circuit 7 with the working spark gap, and then a circuit including the stator terminal 1, the rotor and stator terminal 2 at which a connection is made to the earth wire. The two spark gaps are also connected metallically with the earth wire. The method of working these diagrams is as follows:

The positive atmospheric electric charge collected tends to combine with the negative electricity (or earth electricity) connected with the earth wire. It travels along the aerial A through the electromagnet S without being checked as it flows in the same direction as the direct current. Further, its progress is arrested by two sparks gaps placed in the way and the stator condenser surfaces. The stator condenser surfaces are charged until the charge is greater than the resistance of the spark gap 7, whereupon a spark springs over the spark gap 7 and an oscillatory charge is obtained as by means of the motor M, stator surfaces 1 and 2, and spark gap 7, a closed oscillation circuit is obtained for producing the electromagnetic oscillations. The motor here forms the capacity and the necessary inductance and resistance, which, as is well known, are necessary for converting static electricity into electromagnetic wave energy.

The discharges formed are converted into mechanical energy in special motors and can not reach the aerial network by reason of the electromagnet or choke. If, however, when a spark springs over the spark gap 7 a greater quantity of atmospheric electricity tends to flow to earth, a counter voltage is

induced in the electromagnet, which is greater the more rapidly and strongly the flow of current direct to the earth is. By the formation of this opposing voltage a sufficiently high resistance is offered to the flow of atmospheric electricity direct to earth to prevent a short circuit with the earth.

The circuit containing spark gap 8 having a different wave length which is not in resonance with the natural frequency of the motor, does not endanger the motor and serves as security against excess voltage, which, as practical experiments have shown, may still arise in certain cases, but can be conducted direct to earth through this spark gap.

In the diagram illustrated in Figure 4 the spark gap 7 is shunted across condensers 5 and 6 from the motor M. This construction affords mainly a better insulation of the motor against excess voltage and a uniform excitation through the spark gap 7.

In Figure 5 a diagram is illustrated for transforming large current strengths which may be employed direct without motors, for example, for lighting or heating purposes. The main difference is that here the spark gap consists of a star shaped disc 7 which can rotate on its own axis and is rotated by a motor opposite similarly fitted electrodes 7^a. When separate points of stars face one another, discharges take place, thus forming an oscillation circuit over condensers 5 and 6 and inductance 9 for oscillatory discharges. It is evident that a motor may also be directly connected to the ends of the spiral 9.

The construction of the diagram shown in Figure 6 permits of the oscillation circuit of the motor being connected with an induction coil. Here a regulating inductive resistance is introduced for counter-acting excess voltages in the motor. By cutting the separate coils 9 (coupled inductively to the aerial) in or out the inductive action on the motor may be more or less increased or variable aerial action may be exerted on the oscillation circuit.

In Figure 7 the oscillation circuit is closed through the earth (E and E_1). The spark gap 7 may be prolonged or shortened by more or fewer spark gaps being successively connected by means of a contact arm 7^b.

Diagram 8 shows a unipolar connection of the motor with the aerial network. Here two oscillation circuits are closed through the same motor. The first oscillation circuit passes from aerial A through electromagnet S, point x, inductance 9^a to the earth condenser 6 and further, over spark gap 7 to the aerial condenser 5 and back to x. The second oscillation circuit starts from the aerial condenser 5 at the point x^1 over the inductance 9 to the earth condenser 6 at the point x^3 and through the condenser 6 over the spark gap 7 back to x^1. The motor itself is inserted between the two points of the spark gap 7. From this arrangement slightly damped oscillation wave currents are produced.

In the diagram illustrated in Figure 9 a loosely coupled system of connections is illustrated which is assumed to be for small motors for measuring purposes. A indicates the aerial conductor, S the electromagnet in the aerial conductor, 9 the inductance, 7 the spark gap, 5 and 6 condensers, E the earth, M the motor, and 1 and 2 stator connections of the motor. The motor is directly metallically connected with the oscillation circuit.

In Figure 10 a purely inductive coupling is employed for the motor circuit. The motor is connected with the secondary wire 10 as may be seen in Figure 11 in a somewhat modified diagram connection. The same applies to the diagram of Figure 12.

The diagrams hitherto described preferably allow of motors of small and medium strength to be operated. For large aggregates, however, they are too inconvenient as the construction of two or more oscillation circuits for large amounts of energy is difficult; the governing is still more difficult and the danger in switching on or off is greater.

A means of overcoming such difficulties is shown in Figure 13. The oscillation circuit here runs starting from the point x over condenser 5, variable inductance 9, spark gap 7 and the two segments (3^a and 4^a) forming arms of a Wheatstone bridge, back to x. If the motor is connected by brushes 3 and 4 transversely to the two arms of the bridge as shown in the drawings, electromagnetic oscillations of equal sign are induced in the stator surfaces 1 and 2 and the motor does not revolve. If however, the brushes 3 and 4 are moved in common with the conducting wires 1 and 2 which connect the brushes with the stator poles a certain alteration or displacement of the polarity is obtained and the motor commences to revolve.

The maximum action will result if one brush 3 comes on the central sparking contact 7 and the other brush 4 on the part x. They are however, usually in practice not brought on to the central contact 7 but only held in the path of the bridge segments 4^a and 3^a in order not to connect the spark gaps with the motor oscillation circuit.

As however, the entire oscillation energy can thereby not act on the motor it is better to carry out the same system according to the diagram 14. The diagram 14 differs from the foregoing only by the motor not being directly metallically connected with the segments of the commutator, but only a primary coil 9 which induces in a secondary coil 10, current which feeds the motor M and takes the place of the rotor. By this

arrangement a good transforming action is obtained, a loose coupling and also an oscillation circuit without a spark gap.

In Figure 15 the motor is not purely inductively as in 14, but directly metallically branched off from the primary coil (at x and x^1) after the principle of the auto-transformer.

In Figure 16 instead of an inductance a condenser 6 is in similar manner, and for the same object inserted between the segments 3^a and 4^a. This has the advantage that the segments 3^a and 4^a need not be made of solid metal but may consist of spiral coils whereby a more exact regulation is possible and further motors of high inductance may be employed.

The arrangements of Figures 17, 18 and 19 may be employed for use with resonance and particularly with induction condenser motors; between the large stator induction condenser surfaces, small reversing pole condensers are connected, which, as may be seen from Figures 17, 18 and 19 are led together to earth. Such reversing poles have the advantage that with large quantities of electrical energy the spark formation between the separate oscillation circuits ceases.

Figure 19 shows a further method which prevents electromagnetic oscillations of high number of alternations formed in the oscillation circuit striking back to the aerial conductor. It is based on the well known principle that a mercury lamp, one electrode of which is formed of mercury, the other of solid metal such as steel allows an electric charge to pass in only one direction from the mercury to the steel and not vice versa. The mercury electrode of the vacuum tube N is therefore connected with the aerial conductor and the steel electrode with the oscillation circuit. From this it results that charges can pass only from the aerial through the vacuum tube to the oscillation circuit, but not vice versa. Oscillations which are formed on being transformed in the oscillation circuit cannot pass to the aerial conductor.

In practice these vacuum tubes must be connected behind an electromagnet as the latter alone affords no protection against the danger of lightning.

As regards the use of spark gaps, all arrangements as used for wireless telegraphy may be used. Of course the spark gaps in large machines must have a sufficiently large surface. In very large stations they are cooled in liquid carbonic acid or better still in liquid nitrogen or hydrogen; in most cases the cooling may also take place by means of liquefied low homologues of the metal series or by means of hydrocarbons the freezing point of which lies at between —90° C. and —40° C. The spark gap casing must also be insulated and be of sufficient strength to be able to resist any pressure which may arise. Any undesirable excess super-pressure which may be formed must be automatically let off. I have employed with very good results mercury electrodes which were frozen in liquid carbonic acid, the cooling being maintained during the operation from the outside through the walls.

Figure 20 is one of the simplest forms of construction of an aerial network in combination with collectors, transformers and the like illustrated diagrammatically. E is here the earth wire, 8 the safety spark gap, 7 the working spark gap, 1 and 2 the stator surfaces of the motor, 5 a condenser battery, S the protective magnet which is connected with the coil in the aerial conductor, A^1 to A^{10} aerial antennæ with collecting balloons, N horizontal collecting or connecting wires from which, to the centre a number of connections run.

The actual collectors consist of metal sheaths preferably made of an aluminium magnesium alloy, and are filled with hydrogen or helium and are attached to copper plated steel wires. The size of the balloon is selected so that the actual weight of the balloon and the weight of the conducting wire is supported thereby. On the top of the balloon aluminium spikes, made and gilded in a special manner hereinafter described, are arranged in order to produce a conductor action. Small quantities of radium preparations, more particularly polonium-ionium or mesothorium preparations considerably increase the ionization, and therewith the action of these collectors.

In addition to metal balloons, fabric balloons which are superficially metal coated according to Schoop's metal spraying process, may however also be employed. A metallic surface may also be produced by lacquering with metallic bronzes, preferably according to Schoop's spraying process or lacquering with metallic bronze powders in two electrical series of widely different metals, because thereby the collecting effect is considerably increased.

Instead of the ordinary round balloons, elongated cigar shaped ones may be employed. In order also to utilize the frictional energy of the wind, patches or strips of non-conducting substances which produce electricity by friction, may be attached to the metallized balloon surfaces. The wind will impart a portion of its energy in the form of frictional electricity, to the balloon casing, and thereby the collecting effect is substantially increased.

In practice however, very high towers (up to 300 metres is fully admissible) may be employed as antennæ. In these towers copper tubes rise freely further above the top of the tower. A gas lamp secured

against the wind is then lit at the point of the copper tube and a netting is secured to the copper tube over the flame of this lamp to form a collector. The gas is conveyed through the interior of the tube up to the summit. The copper tube must be absolutely protected from moisture at the place at which it enters the tower and also rain must be prevented running down the walls of the tower which might lead to a bad catastrophe. This is done by bell shaped enlargements which expand downwards, being arranged in the tower in the form of high voltage insulators of Siamese pagodas.

Special attention must be devoted to the foundations of such towers. They must be well insulated from the ground, which may be obtained by first embedding a layer of concrete in a box form to a sufficient depth in the ground and inserting in this an asphalt lining and then glass bricks cast about 1 or 2 metres in thickness. Over this in turn there is a ferro-concrete layer in which alone the metal foot of the tube is secured. This concrete block must be at least 2 metres from the ground and be fully protected at the sides by a wooden covering, from moisture. In the lower part of the tower a wood or glass house for the large condenser batteries or for the motors may be constructed. In order to lead the earth connection to the ground water, a well insulated pit constructed of vitreous bricks, must be provided. Several such towers are erected at equal distances apart and connected with a horizontal conductor. The horizontal connecting wires may either run directly from tower to tower or be carried on bell shaped insulators similar to those in use for high voltage conductors. The width of the network may be of any suitable size and the connection of the motors can take place at any suitable places.

In order to collect large quantities of electricity with few aerials it is well to provide the aerial conductor with batteries of condensers as shown in two methods of construction in Figures 21 and 22. In Figure 21 the batteries of condensers 5 are connected on the one hand with the aerial electricity collectors Z by the aerial conductor A, and on the other hand interconnected in series with an annular conductor from which horizontal conductors run to the connecting points C to which the earth wire is connected.

Figure 22 shows a similar arrangement. Should two such series of antennæ rings be shown by a voltmeter to have a large difference of potential (for example, one in the mountains and one in the plain) or even of different polarity these differences may be compensated for by connecting sufficiently large condenser batteries (5, 5^a, 5^b) by means of Maji star conductors D and D^1. In Figure 23 a connection of three such rings of collectors to form a triangle with a central condenser battery is illustrated.

The condenser batteries of such large installations must be embedded in liquefied gases or in liquids freezing at very low temperatures. In such cases a portion of the atmospheric energy must be employed for liquefying these gases. It is also preferable to employ pressure. By this means the condenser surfaces may be diminished, and still allow for large quantities of energy to be stored, secure against breakdown. For smaller installations the immersing of the condensers in well insulated oil or the like, suffices. Solid substances on the other hand cannot be employed as insulators.

The arrangement in the diagrams hitherto described was always such that the condenser batteries were connected with both poles directly to the aerial conductors. An improved diagram of the connections for obtaining atmospheric electricity for the condenser batteries has however, been found to be very advantageous, this arrangement consists in that they are connected by only one pole (unipolar) to the collecting network. Such a method of arrangement is very important, as by means of it a constant current and an increase of the normal working pressure or voltage is obtained. If for example a collecting balloon aerial which is allowed to rise to a height of 300 metres, shows 40,000 volts above earth voltage, in practice it has been found that the working voltage (with a withdrawal of the power according to the method hereinbefore described by means of oscillating spark gaps and the like) is only about 400 volts. If however, the capacity of the condenser surfaces be increased, which capacity in the above mentioned case was equal to that of the collecting surface of the balloon aerials, to double the amount, by connecting the condenser batteries with only one pole, the voltage rises under an equal withdrawal of current up to and beyond 500 volts. This can only be ascribed to the favourable action of the connecting method.

In addition to this substantial improvement it has also been found preferable to insert double inductances with electromagnets and to place the capacities preferably between two such electromagnets. It has also been found that the useful action of such condensers can be further increased if an induction coil be connected as inductive resistance to the unconnected pole of the condenser, or still better if the condenser itself be made as an induction condenser. Such a condenser may be compared with a spring which when compressed carries in itself accumulated force, which it again gives off when released. In charging, a charge with reversed sign is formed at the

other free condenser pole, and if through the spark gap a short circuit results, the accumulated energy is again given back since now new quantities of energy are induced at the condenser pole connected with the conductor network, which in fact charges with opposite signs to that at the free condenser pole. The new induced charges have of course the same sign as the collector network. The whole voltage energy in the aerial is thereby however increased. In the same space of time larger quantities of energy are accumulated than is the case without such inserted condenser batteries.

In Figures 24 and 25 two different diagrams of connections are more exactly illustrated, Figure 24 shows a collecting balloon and the diagram of the connections to earth. Figure 25 four collecting balloons and the parallel connection of the condenser batteries belonging thereto.

A is the collecting balloon made of an aluminium magnesium alloy (electron metal, magnalium) of a specific gravity of 1.8 and a thickness of plate 0.1 to 0.2 mm. Inside there are eight strong vertical ribs of T shaped section about 10 to 20 mm. in height and about 3 mm. in thickness with the projecting part directed inwards (indicated by *a*, *b*, *c*, *d* and so forth); they are riveted together to form a firm skeleton and are stiffened in a horizontal direction by two cross ribs. The ribs are further connected with one another internally and transversely by means of thin steel wires, whereby the balloon obtains great power of resistance and elasticity. Rolled plates of 0.1 to 0.2 mm. in thickness made of magnalium alloy are then either soldered or riveted on this skeleton so that a fully metallic casing with smooth external surface is obtained. Well silvered or coppered aluminium plated steel wires run from each rib to the fastening ring 2. Further, the coppered steel hawser L preferably twisted out of separate thin wires (shown in dotted lines in Figure 24) and which must be long enough to allow the balloon to rise in the desired height, leads to a metal roller or pulley 3 and from thence to a winch W, well insulated from the earth. By means of this winch, the balloon, which is filled with hydrogen, or helium, can be allowed to rise to a suitable height (300 to 5,000 metres) and brought to the ground for recharging or repairs.

The actual current is taken directly through a friction contact from the metal roller 3 or from the wire, or even from the winch or simultaneously from all three by means of brushes (3, 3^a and 3^b). Beyond the brushes the conductor is divided, the paths being:—firstly over 12 to the safety spark gap 8, from thence to the earth conductor E^1, and secondly over electromagnet S^1, point 13, to a second loose electromagnet having an adjustable coil S^2, then to the spark gap 7 and to the second earth conductor E^2. The actual working circuit is formed through the spark gap 7, condensers 5 and 6, and through the primary coil 9; here the static electricity formed by oscillatory discharges is accumulated and converted into high frequency electromagnetic oscillations. Between the electromagnets S^1 and S^2 at the crossing point 13, four condenser batteries are introduced which are only indicated diagrammatically in the drawings each by one condenser. Two of these batteries (16 and 18) are made as plate condensers and prolonged by regulating induction coils or spirals 17 and 19 while the two others (21 and 23) are induction condensers. As may be seen from the drawings each of the four condenser batteries 16, 18, 21, 23 is connected only by one pole to the aerial or to the collector conductor. The second poles 17, 19, 22, 24 are open. In the case of plate condensers having no inductive resistance an induction coil is inserted. The object of such a spiral or coil is the displacement of phase of the induction current by ¼ periods, whilst the charging current of the condenser poles which lie free in the air, works back to the collector aerial. The consequence of this is that in discharges in the collector aerial the back inductive action of the free poles allows a higher voltage to be maintained in the aerial collecting conductor than would otherwise be the case. It has also been found that such a back action has an extremely favourable effect on the wear of the contacts. Of course the inductive effect may be regulated at will within the limits of the size of the induction coil, the length of the coil in action being adjustable by means of wire connection without induction (see Fig. 24, No. 20).

S^1 and S^2 may also be provided with such regulating devices in the case of S^2 (illustrated by 11). If excess voltage be formed it is conducted to earth through the wire 12 and spark gap 8 or through any other suitable apparatus, since this formation would be dangerous for the other apparatus.

The action of these condenser batteries has already been hereinbefore described.

The small circles on the collector balloon indicate places at which zinc amalgam or gold amalgam or other photoelectric acting metals in the form of small patches in extremely thin layers (.01 to .05 mm. in thickness) are applied to the balloon casing of light metal. Such metallic patches may also be applied to the entire balloon as well as in greater thickness to the conducting network. The capacity of the collector is thereby considerably strengthened at the surface. The greatest possible effect in collecting may be obtained by polonium amalgams and the like. On the surface of the

collector balloon metal points or spikes are also fixed along the ribs, which spikes serve particularly for collecting the collector charge. Since it is well known that the resistance of the spikes is less the sharper the spike is, for this purpose it is therefore extremely important to employ as sharp spikes as possible. Experiments made as regards these have shown that the formation of the body of the spike or point also plays a large part. for example, spikes made of bars or rollers with smooth surfaces, have a many times greater point resistance as collector accumulator spikes than those with rough surfaces. Various kinds of spike bodies have been experimented with for the collector balloons hereinbefore mentioned. The best results were given by spikes which were made in the following way. Fine points made of steel, copper, nickel, or copper and nickel alloys, were fastened together in bundles and then placed as anode with the points in a suitable electrolyte (preferably in hydrochloric acid or muriate of iron solutions) and so treated with weak current at 2 to 3 volts pressure. After 2 to 3 hours according to the thickness of the spikes or pins the points become extremely sharp and the bodies of the spikes have a rough surface. The bundle can then be removed and the acid washed off with water. The spikes are then placed as cathode in a bath consisting of solution of gold, platinum, iridium, paladium or wolfram salts or their compounds and coated at the cathode galvanically with a thin layer of precious metal, which must however be sufficiently firm to protect them from atmospheric oxidation.

Such spikes act at a 20 fold lower voltage almost as well as the best and finest points made by mechanical means. Still better results are obtained if polonium or radium salts are added to the galvanic bath when forming the protective layer or coating. Such pins have a low resistance at their points and even at one volt and still lower pressures have an excellent collector action.

In Figure 24 the three unconnected poles are not connected with one another in parallel. That is quite possible in practice without altering the principle of the free pole. It is also preferable to interconnect in parallel to a common collector network, a series of collecting aerials.

Figure 25 shows a diagram for such an installation. A^1, A^2, A^3, A^4 are four metal collector balloons with gold or platinum coated spikes which are electrolytically made in the presence of polonium emanations or radium salts, which spikes or needles are connected over four electro-magnets S^1, S^2, S^3, S^4, through an annular conductor R. From this annular conductor four wires run over four further electromagnets S^a, S^b, S^c, S^d, to the connecting point 13. There the conductor is divided, one branch passing over 12 and the safety spark gap 8 to the earth at E^1, the other over inductive resistance J and working spark gap 7 to the earth at E^2. The working circuit, consisting of the condenser 5 and 6 and a resonance motor or a condenser motor M, such as hereinbefore described, is connected in proximity round the sparking gap section 7.

Instead of directly connecting the condenser motor of course the primary circuit for high frequency oscillatory current may also be inserted.

The condenser batteries are connected by one pole to the annular conductor R and can be either inductionless (16 and 18) or made as induction condensers as shown by 21 and 23. The free poles of the inductionless condensers are indicated by 17 and 19, those of the induction condensers by 22 and 24. As may be seen from the drawings all these poles 17, 22, 19, 24 may be interconnected in parallel through a second annular conductor without any fear that thereby the principle of the free pole connection will be injured. In addition to the advantages already set forth the parallel connection also allows of an equalization of the working pressure in the entire collector network. Suitably constructed and calculated induction coils 25 and 26 may also be inserted in the annular conductor of the free poles, by means of which a circuit may be formed in the secondary coils 27 and 28 which allows current produced in this annular conductor by fluctuations of the charges or the like appearances to be measured or otherwise utilized.

According to what has been hereinbefore stated separate collector balloons may be connected at equidistant stations distributed over the entire country, either connected directly with one another metallically or by means of intermediate suitably connected condenser batteries through high voltage conductors insulated from earth. The static electricity is converted through a spark gap into dynamic energy of a high number of oscillations and may in such form be coupled as a source of energy by means of a suitable method of connecting, various precautions being observed and with special regulations. The wires leading from the collector balloons have hitherto been connected through an annular conductor without this endless connection, which can be regarded as an endless induction coil, being able to exert any action on the whole conductor system.

It has now been found that if the network conductor connecting the aerial collector balloons with one another is not made as a simple annular conductor, but preferably short circuited in the form of coils over a

condenser battery or spark gap or through thermionic tubes or valves or audions, then the total collecting network exhibits quite new properties. The collection of atmospheric electricity is thereby not only increased but an alternating field may be easily produced in the collector network. Further, the atmospheric electrical forces showing themselves in the higher regions may also be directly obtained by induction. In Figures 26 and 28 a form of construction is shown on the basis of which the further foundations of the method will be more particularly explained.

In Figure 26 1, 2, 3, 4 are metal collector balloons, 5, 6, 7, 8 their metallic aerial conductors and I the actual collector network. This consists of five coils and is mounted on high voltage insulators in the air, on high voltage masts (or with a suitable construction of cable embedded in the earth). One coil has a diameter of 1 to 100 km. or more. S and S^1 are two protective electromagnets, F the second safety section against excess voltage, E its earth conductor and E^1 the earth conductor of the working section. When an absorption of static atmospheric electricity is effected through the four balloon collectors, the current in order to reach the earth connection E^1 must flow spirally through the collector network over the electromagnet S, primary induction coil 9, conductor 14, anode A of the audion tube, incandescent cathode K, as the way over the electromagnet and safety spark gap F offers considerably greater resistance. Owing to the fact that the accumulated current flows in one direction, an electromagnetic alternating field is produced in the interior of the collector network coil, whereby the whole free electrons are directed more or less into the interior of the coil. An increased ionization of the atmosphere is therefore produced. In consequence of this the points mounted on the collector balloon show a considerably reduced resistance and therefore increased static charges between the points on the balloon and the surrounding atmosphere are produced. The result of this is a considerably increased collector effect.

A second effect which could not be obtained otherwise is obtained by the electromagnetic alternating field which running parallel to the earth surface, acts more or less with a diminishing or increasing effect on the earth magnetic field, whereby in the case of fluctuations in the current a return induction current of reversed sign is always produced in the collector coil by earth magnetism. Now if, however, a constantly pulsating continuous alternating field is produced as stated in the above collector network I, an alternating current of the same periodicity is produced also in the collecting network coil. As the same alternating field is further transmitted to the aerial balloon, the resistance of its points is thereby considerably reduced, whilst the collector action is considerably increased. A further advantage is that positive electrons which collect on the metal surfaces during the conversion into dynamic current produce a so-called drop of potential of the collector area. As an alternating field is present, the negative ions surrounding the collector surfaces, when discharge of the collector surfaces takes place produce by the law of induction, an induction of reversed sign on the collector surface and so forth (that is to say again a positive charge). In addition to the advantages hereinbefore set forth, the construction of connecting conductors in coil form when of sufficiently large diameter, allows of a utilization of energy arising in higher regions also in the simplest way. As is well known electric discharges frequently take place at very great elevations which may be observed, such as St. Elmo's fires or northern lights. These energy quantities have not been able to be utilized up to now. By this invention all these kinds of energy, as they are of an electromagnetic nature and the direction of the axis of the collector coils stands at right angles to the earth's surface, can be more or less absorbed in the same way as a receiver in wireless telegraphy absorbs waves coming from a far distance. With a large diameter of the spiral it is possible to connect large surfaces and thereby to take up also large quantities of energy.

It is well known that large wireless stations in the summer months, and also in the tropics are very frequently unable to receive the signals in consequence of interruptions which are caused by atmospheric electricity, and this takes place with vertical coils of only 40 to 100 m. diameter. If on the contrary horizontal coils of 1 to 100 km. diameter be employed very strong currents may be obtained through discharges which are constantly taking place in the atmosphere. Particularly in the tropics or still better in the polar regions where the northern lights are constantly present, large quantities of energy may probably be obtained in this way. A coil with several windings should act the best. In similar manner any alteration of the earth magnetism should act inductively on such a coil.

It is not at all unlikely that earthquakes and spots on the sun will also produce an induction in such collector coils of sufficient size. In similar manner this collector conductor will react on earth currents more particularly when they are near the surface of the earth or even embedded in the earth. By combining the previous kind of current collectors so far as they are adapted for

the improved system with the improved possibilities of obtaining current the quantities of free natural energy which are to be obtained in the form of electricity are considerably increased.

In order to produce in the improved collector coil uniform current oscillations of an undamped nature so-called audion high vacuum or thermionic tubes of suitable connection are employed instead of the previously known spark gaps (Fig. 26, Nos. 9–18). The main aerial current flows through electromagnet S (which in the case of a high number of alternations is not connected here but in the earth conductor E^1) and may be conveyed over the primary coils in the induction winding through wire 14 to the anode A of the high vacuum grid tube. Parallel with the induction resistance 9 a regulating capacity of suitable size, such as condenser 11 is inserted. In the lower part of the vacuum grid tube is arranged the incandescent filament or the cathode K which is fed through a battery B. From the battery B two branches run, one to the earth conductor E^1 and the other through battery B^1 and secondary coil 10 to the grid anode *g* in the vacuum tube. By the method of connections shown in dotted lines, a desired voltage at the grid electrode *g* may also be produced through the wire 17 which is branched off from the main current conductor through switches 16 and some small condensers (*a*, *b*, *c*, *d*) connected in series, and conductor 18, without the battery B^1 being required.

The action of the entire system is somewhat as follows:—

On the connecting conductor of the aerial collector network being short circuited to earth, the condenser pole 11 is charged and slightly damped oscillations are formed in the short circuited existing oscillation circuit formed of the condenser 11 and self inductance 9. In consequence of the coupling through coil 10, fluctuations of voltage take place in the grid circuit 15 with the same frequency, which, fluctuations in turn influence the strength of the electrode current passing through the high vacuum amplyfying tube and thus produce current fluctuations of the same frequency in the anode circuit. A permanent supply of energy to the oscillation circuits 9 and 10 consequently takes place, until a condition of balance is set up, in which the consumed oscillation energy is equal to that absorbed. Thereby constant undamped oscillations are now produced in the oscillation circuits 9–11.

For regular working of such oscillation producers high vacuum strengthening tubes are necessary and it is also necessary that the grid and anode voltages shall have a phase difference of 180° so that if the grid is negatively charged, then the anode is positively charged and vice versa. This necessary difference of phase may be obtained by most varied connections, for example, by placing the oscillation circuit in the grid circuit or by separating the oscillation circuit and inductive coupling from the anodes and the grid circuit and so forth.

A second important factor in this way of converting static atmospheric electricity into undamped oscillations is that care must be taken that the grid and anode voltages have a certain relation to one another; the latter may be obtained by altering the coupling and a suitable selection of the self induction in the grid circuit, or as shown by dotted lines 18, 17, 16 by means of a larger or smaller number of condensers of suitable size connected in series; in this case the battery B^1 may be omitted. With a suitable selection of the grid potential a glow discharge takes place between the grid *g* and the anode A, and accordingly at the grid there is a cathode drop and a dark space is formed. The size of this cathode drop is influenced by the ions which are emitted in the lower space in consequence of shock ionization of the incandescent cathodes K and pass through the grid in the upper space. On the other hand the number of the ions passing through the grid is dependent on the voltage between the grid and the cathode. Thus if the grid voltage undergos periodic fluctuations (as in the present case) the amount of the cathode drop at the grid fluctuates and consequently the internal resistance of the tube correspondingly fluctuates, so that when a back coupling of the feed circuit with the grid circuit takes place, the necessary means are afforded for producing undamped oscillations and of taking current, according to requirements from the collecting conductor.

The frequency of the undamped oscillations produced is with a suitably loose coupling equal to the self frequency of the oscillation circuits 9 and 10. By a suitable selection of the self induction of the coil 9 and capacity 11 it is possible to extend from frequencies which produce electromagnetic oscillations of only a few metres wave length down to the lowest practical alternating current frequency. For large installations a suitable number of frequency producing tubes in the form of the well known high vacuum transmission tubes of .5 to 2 kw. in size may be connected in parallel so that in this respect no difficulty exists.

The use of such tubes for producing undamped oscillations, and also the construction and method of inserting such transmission tubes in an accumulator or dynamo circuit is known and also that such oscillation producing tubes only work well at voltages of 1,000 up to 4,000 volts, so that on the contrary their use at lower voltages is

considerably more difficult. By the use of high voltage static electricity this method of producing undamped oscillations as compared with that through spark gaps must be regarded as an ideal solution particularly for small installations of outputs of from 1 to 100 kw.

By the application of safety spark gaps, with interpolation of electro-magnets, not only is short circuiting avoided but also the taking up of current is regulated. Oscillation producers inserted in the above way form a constantly acting electromagnetic alternating field in the collector coil, whereby as already stated, a considerable accumulating effect takes place. The withdrawal wire or working wire is connected at 12 and 13, but current may be taken by means of a secondary coil which is firmly or movably mounted in any suitable way inside the large collector coil, i. e. in its electromagnetic alternating field, so long as the direction of its axis runs parallel with that of the main current collecting coil.

In producing undamped oscillations of a high frequency (50,000 per second and more) in the oscillation circuits 9 and 11, electromagnets S and S^1 must be inserted if the high frequency oscillations are not to penetrate the collector coil, between the oscillation producers and the collector coil. In all other cases they are connected shortly before the earthing (as in Figs. 27 and 28).

In Figure 27 a second method of construction of the connecting conductor of the balloon aerials is illustrated in the form of a coil. The main difference consists in that in addition to the connecting conductor I another annular conductor II is inserted parallel to the former on the high voltage masts in the air (or embedded as a cable in the earth) but both in the form of a coil. The connecting wire of the balloon aerials is indicated as a primary conductor and also as a current producing network; the other is the consumption network and is not in unipolar connection with the current producing network.

In Figure 27 the current producing network I is shown with three balloon collectors 1, 2, 3 and aerial conductors 4, 5, 6; it is short circuited through condenser 19 and inductance 9. The oscillation forming circuit consists in this diagram of spark gap *f*, inductance 10, and condenser 11; the earth wire E, is connected to earth over electromagnet S^1. F is the safety spark gap which is also connected to earth through a second electromagnet S at E. On connecting up the condenser circuit 11 this is charged over the spark gap *f* whereby an oscillatory discharge is formed. This discharging current acts through inductance 10 on the inductively coupled secondary 9, whereby in the producing network a modification of the potential of the condenser 19 is produced. The consequence of this is that oscillations arise in the coil shaped producer network. These oscillations induce a current in the secondary circuit II, which has a smaller number of windings and a less resistance, the voltage of which, according to the proportion of the number of windings and of the ohmic resistance, is considerably lower whilst the current strength is greater.

In order to convert the current thus obtained into current of an undamped character, and to tune its wave lengths, a sufficiently large regulatable capacity 20 is inserted between the ends 12 and 13 of the secondary conductor II. Here also current may be taken without an earth conductor, but it is advisable to insert a safety spark gap E^1 and to connect this with the earth over an electromagnet S^2.

The producer network may be connected with the working network II over an inductionless condenser 21 or over an induction condenser 22, 23. In this case the secondary conductor is unipolarly connected with the energy conductor.

In Figure 28 the connecting conductor between the separate accumulator balloons is carried out according to the autotransformer principle. The collecting coil connects four aerial balloons 1, 2, 3, 4, the windings of which are not made side by side but one above the other. In Figure 28 the collector coil I is shown with a thin line, the metallically connected prolongation coils II with a thick line. Between the ends I^1 and II^1 of the energy network I a regulating capacity 19 is inserted. The wire I^1 is connected with the output wire and with the spark gap F.

As transformer of the atmospheric electricity an arrangement is employed which consists in using rotary pairs of condensers in which the one stator surface B is connected with the main current, whilst the other A is connected with the earth pole. Between these pairs of short circuited condensers are caused to rotate from which the converted current can be taken by means of two collector rings and brushes, in the form of an alternating current, the frequency of which is dependent on the number of balloons and the revolutions of the rotor. As the alternating current formed in the rotor can act, in this improved method of connection described in this invention, through coils 10 on the inductance 9, an increase or diminution of the feed current in I can be obtained according to the direction of the current by back induction. Current oscillations of uniform rhythm thereby result in the coil shaped windings of the producer net-work.

As the ends of this conductor are short cir-

cuited through the regulatable condenser 19 these rhythms produce short circuited undamped oscillations in the energy conductor, the periodicity and wave lengths of which oscillations can be adjusted according to desire by altering the capacity 19 to a given wave length and therewith also to a given frequency. These currents may also be employed in this form directly as working current through the conductors II^1 and III. By inserting the condenser 20 a connection between these conductors may also be made, whereby harmonic oscillations of desired wave length are formed. By this means quite new effects as regards current distribution are obtained. The withdrawal of current can even take place without direct wire connection if, at a suitable point in the interior of the producing network (quite immaterially whether this has a diameter of 1 or 100 km.) a coil tuned to these wave lengths and of the desired capacity is firmly or movably mounted in the aerial conductor in such a way that its axial direction is in parallel with that of the collector coil. In this case a current is induced in the producing network, the size of which is dependent on the total capacity and resistance and also on the periodicity employed. A possibility is thereby afforded in future, of taking energy from the producer network by wireless means. As thereby in addition to atmospheric electricity also magnetic earth currents and the energy from the higher atmosphere (at least partially) may be simultaneously obtained, this last system for collecting the atmospheric energy is of particular importance for the future.

Of course everywhere instead of spark gaps suitable grid vacuum tubes may be employed as producers for undamped oscillations. The separate coils of the producer net-work with large diameters may be connected with one another through separate conductors all in parallel or all in series or in groups in series. By regulating the number of oscillations and also the extent of the voltage more or less large collector coils of this kind may be employed. The coils may also be divided spirally over the entire section. The coils may be carried out in annular form or also in triangular, quadrangular, hexagonal or octagonal form.

Of course wires may be carried from a suitable place to the centre or also laterally which serve the current waves as guides. This is necessary when the currents have to be conducted over mountains and valleys and so forth. In all these cases the current must be converted into a current of suitable periodicity.

As already hereinbefore mentioned separate collecting balloons may be directly metallically interconnected at equidistant stations distributed over the entire country or may be connected by interpolation of suitable condenser batteries by means of high voltage conductors. The static electricity is converted through a spark gap into dynamic energy of a high number of oscillations, and could then in such form, with a suitable arrangement of the connections, observing various measures of precaution, be employed as source of energy after separate or special regulation.

According to this invention in order to increase the collecting effect of the balloon in the aerial collector conductor or in the earth wire, radiating collectors are employed. These consist either of incandescent metal or oxide electrodes in the form of vacuum grid tubes, or electric arcs (mercury and the like electrodes) Nernst lamps, or finally flames of various kinds may be simply connected with the respective conductor.

It is well known that energy can be drawn off from a cathode consisting of an incandescent body opposite an anode charged with positive electricity (vacuum grid tube). Hitherto however, a cathode was always first directly placed opposite an anode, and secondly the system always consisted of a closed circuit.

Now if we dispense with the ordinary ideas in forming light or flame arcs in which a cathode must always stand directly opposite an anode, and if we place an incandescent cathode opposite an anode charged to a high potential or another body freely floating in the air, or regard the incandescent cathode only as a source of unipolar discharge (which represent group and point discharges in electro-static machines similar to unipolar discharges), it may be ascertained that incandescent cathodes and less perfectly all incandescent radiators, flames and the like admit of relatively large current densities and allow large quantities of electric energy to radiate into the open space in the form of electron streams as transmitters.

The object of this invention is as described below, if such incandescent oxide electrodes or other incandescent radiators or flames are not freely suspended in space but connected metallically with the earth so that they can be charged with negative terrestrial electricity, these radiators possess the property of absorbing the free positive electrical charges contained in the air space surrounding them (that is to say of collecting them and conducting them to earth). They can therefore, serve as collectors and have, in comparison to the action of the spikes, or points, a very large radius of action R; the effective capacity of these collector is much greater than the geometrical capacity (R_0–) calculated in an electro-static sense.

Now as our earth is surrounded as is well

known, with an electro-static field and the difference of potential

$$\frac{\delta V}{\delta h}$$

of the earth field according to the latest investigations, is in summer about 60 to 100 volts and in winter 300 to 500 volts per metre of difference in height (δh), a simple calculation gives the result that when such a radiation collector or flame collector is arranged for example on the ground, and a second one is mounted vertically over it at a distance of 2,000 metres and both are connected by a conducting cable, there is a difference of potential in summer of about 2,000,000 volts and in winter even of 6,000,000 volts and more.

According to Stefan Boltzmann's law of radiation, the quantity of energy which an incandescent surface (temperature T) of 1 sq. cm. radiates in a unit of time into the open air (temperature T_o) is expressed by the following formula:

$$S=\sigma\,(T^4-T^4_o)\ \text{watt/sq. cm.}$$

and the universal radiation constant σ is according to the latest researches of Ferry (Annales de Chimie et de physique 17 page 267 (1909)) equal to 6.30×10^{-12} watt/sq. cm.

Now if an incandescent surface of 1 sq. cm. shows, as compared with the surrounding space a periodic fall of potential δV it radiates (independent of the current direction, that is to say of the sign) in accordance with the above formula, for example at a temperature of 3725° C. an energy of 1.6 kw. per sq. cm. per second. As for the radiation the same value can be calculated for the collection of energy, but reversed. Now as carbon electrodes at the temperature of the electric arc support on the current basis a current density up to from 60 to 65 amperes per sq. cm. no difficulties will result in this direction in employing radiating collectors as accumulators.

If the earth be regarded as a cosmically insulated condenser in the sense of geometrical electro-statics x there results from the geometric (compare Ewald Rasch, "das elektrische Bogenlicht" (The electric arc light) page 169) capacity of the earth according to Chwolson:

For negative charging 1.3×10^6 Coulomb

For negative potential $V=10\times10^8$ volts.

From this there results however, $EJT\cong24.7\times10^{24}$ watt/Sec. Now if it is desired to make a theoretic short circuit through an earthed flame collector this would represent an electric total work of about 79,500 10^{10} kilowatt years. As the earth must be regarded as a rotating mechanism which is thermo-dynamically, electromagnetically, and also kinematically coupled with the sun and stars system by cosmic radiations and gravitation a diminution of the electric energy of the earth field is not to be feared. The energies which the incandescent collectors would withdraw from the earth field can only cause by the withdrawal of motor work a lowering of the earth temperature (temperature $T_E=300$) and reduce this to that of the world space (T=O) by using the entire energy. This is however not the case as the earth does not represent a cosmically entirely insulated system. On the contrary there is conveyed ~~to the~~ same according to the recent value corrected by Ferry for the solar constants through the radiation from the sun an energy of 18,500 $\times10^{10}$ kw. Accordingly any lowering of the earth temperature (T_E) without a simultaneous lowering of the sun's temperature (T_S) would contradict Stefan Boltzmann's law of radiation.

$$S=\sigma\,(T_S^4-T_E^4).$$

From this it must be concluded that if the earth temperature (T_E) sinks, the total radiation S absorbed by the earth increases, and further also that the secular speed of cooling of the earth is directly dependent on that of the sun and the other radiators cosmically coupled with the sun and is connected most closely with these.

The incandescent radiation collectors may, according to this invention, be employed for collecting atmospheric electricity if they (1) are charged with the negative earth electricity (that is to say when they are directly connected by means of a metallic conductor with the earth) and (2) if large capacities (metal surfaces) charged with electricity are mounted opposite them as positive poles in the air. This is regarded as the main feature of the present invention as without these inventive ideas it would not be possible to collect with an incandescent collector, sufficiently large quantities of the electrical charges contained in the atmosphere as technology requires; the radius of action of the flame collectors would also be too small, especially if it be considered that the very small surface density (energy density) (σ about$=2\times7\,.\,10^9$ St. E. per sq. cm.) does not allow of large quantities of charge being absorbed from the atmosphere.

x) Calculated according to Poisson's calculation;

$\Delta V=-4\pi\delta$; as here the alteration of the potential or potential gradients only takes place in the direction of the normal, this calculation assumes the simple form

$$\delta=\frac{1}{4\pi}\times\frac{\delta^2V}{\delta n^2}$$

It has indeed already been proposed to employ flame collectors for collecting atmospheric electricity and it is known that

their collecting effect is substantially greater opposite the points. It is however, not known that the quantities of current which could hitherto be obtained are too small for technical purposes. According to my experiments the reason for this is to be found in the too small capacities of the collector conductor poles. If such flame or radiating collectors have no or only small positive surfaces, their radius of action for large technical purposes is too small. If the incandescent collectors be constantly kept in movement in the air they may collect more according to the speed of the movement, but this is again not capable of being carried out in practice.

By this invention the collector effect is considerably increased by a body charged with a positive potential and of the best possible capacity being also held floating (without direct earth connection) opposite such an incandescent collector which is held floating in the air at a desired height. If for example, a collecting balloon of sheet metal or of metalized balloon fabric be caused to mount to 300 up to 3,000 metres in the air and as positive pole it is brought opposite such a radiating collector connected by a conductor to earth, quite different results are obtained.

The metallic balloon shell (with a large surface) is charged to a high potential by the atmospheric electricity. This potential is greater the higher the collecting balloon is above the incandescent collector. The positive electricity acts concentratedly on the anode floating in the air as it is attracted through the radiation shock ionization, proceeding from the incandescent cathode. The consequence of this is that the radius of action of the incandescent cathode collector is considerably increased and thereby also the collecting effect of the collecting balloon surface. Further the large capacity of the anode floating in the air plays therefore an important part because it allows of the taking of large charges, and thereby a more uniform current is obtained even when there is a large consumption; this cannot be the case with small surfaces.

In the present case the metallic collecting balloon is a positive anode floating in the air and the end of the earth conductor of this balloon serves as positive pole surface opposite the surface of the radiating incandescent cathode, which in turn is charged with negative earth electricity being conductingly connected to earth.

The process may be carried out by two such contacts (negative incandescent cathode and anode end of a capacity floating in the air) a condenser and an inductive resistance being switched on in parallel, whereby simultaneously undamped oscillations may be formed.

In very large installations it is advisable to connect two such radiating collectors in series. Thus an arc light incandescent cathode may be placed below on the open ground and an incandescent cathode which is heated by special electro-magnetic currents be located high in the air. Of course for this the special vacuum Liebig tubes with or without grids may also be employed. An ordinary arc lamp with oxide electrodes may be introduced on the ground and the positive pole is not directly connected with the collecting balloon, but through the upper incandescent cathode or over a condenser. The method of connecting the incandescent cathode floating in the air may be seen in Figs. 29–33.

B is the air balloon, K a Cardan ring (connection with the hawser) C the balloon, L a good conducting cable, P a positive pole, N negative incandescent cathode, and E earth conductor.

Fig. 29 represents the simplest form of construction. If electric oscillations are produced below on the ground by means of a carbon arc lamp or in other suitable way a considerably greater electric resistance is opposed to that in the direct way by inserting an electrical inductive resistance 9. Consequently between P and N a voltage is formed, and as, over N and P only an inductionless ohmic resistance is present, a spark will spring over so long as the separate induction co-efficients and the like are correctly calculated. The consequence of this is that the oxide electrode (carbon or the like) is rendered incandescent and then shows as incandescent cathode an increased collecting effect. The positive poles must be substantially larger than the negative in order that they may not also become incandescent. As they are further connected with the large balloon area which has a large capacity and is charged at high voltage, an incandescent body which is held floating in the air and a positive pole which can collect large capacities is thereby obtained in the simplest way. The incandescent cathode is first caused to become incandescent by means of separate energy produced on the earth, and then maintained by the energy collected from the atmosphere.

Fig. 30 only shows the difference that instead of a round balloon a cigar shaped one (of metal or metalized fabric) may be employed and also a condenser 5 is inserted between the incandescent cathode and the earth conductor so that a short circuited oscillation circuit over P. N 5 and 9 is obtained. This has the advantage that quite small quantities of electricity cause the cathode to become incandescent and much larger cathode bodies may be rendered incandescent.

In this form of construction both the in-

candescent cathode and also the positive electrode may be enclosed in a vacuum chamber as may be seen in Fig. 32. A cable L is carried well insulated through the cover of a vessel and ends in a condenser disc 5. The cover is arched in order to keep off the rain. The vessel is entirely or partially made of magnetic metal and well insulated inside and outside. Opposite the disc 5 another disc 6 and on this again a metallic positive pole of the vacuum tube *g* with the incandescent cathode (oxide electrode) N is arranged. The negative electrode is on the one hand connected with the earth conductor E, and on the other hand with the inductive resistance 9 which is also connected with the cable L with the positive pole and wound round the vessel in coils. The action is exactly the same as that in Fig. 29 only instead of an open incandescent cathode one enclosed in vacuo is employed. As in such collectors only small bodies can be brought to incandescence in large installations a plurality of such vacuum tubes must be inserted in proximity to one another. According to the previous constructions Figs. 31 and 33 are quite self evident without further explanations.

Figs. 34–37 represent further diagrams of connections over radiating and flame collectors, and in fact, how they are to be arranged on the ground.

Fig. 34 shows an arc light collector with oxide electrodes for direct current and its connection; Fig. 35 a similar one for alternating current, Fig. 36 an incandescent collector with a Nernst lamp and Fig. 37 a similar one with a gas flame.

The positive pole 1 of the radiating collectors is always directly connected to the aerial collecting conductor A. In Fig. 34 this is further connected over the condenser battery 5 with a second positive electrode 3. The direct current dynamo *b* produces current which flows over between the electrodes 3 and 2 as an arc light. On the formation of an arc the negative incandescent electrode 2 absorbs electricity from the positive poles standing opposite it and highly charged with atmospheric electricity and conveys the same to the working circuit. The spark gap 7, inductive resistance 9 and induction coil 10 are like the ones previously described. The protective electromagnet S guards the installation against earth circuiting, the safety spark gap 8 from excess voltage or overcharging.

In Fig. 35 the connection is so far altered that the alternating current dynamo feeds the exciting coil 11 of the induction condenser. 12 is its negative and 13 its positive pole; if the coil 3 on the magnet core of the dynamo is correctly calculated and the periodicity of the alternating current is sufficiently high an arc light can be formed between the two poles 1 and 2. As the cathode 2 is connected with the negatively charged earth, and therefore always acts as a negative pole, a form of rectification of the alternating current produced by the dynamo 3 is obtained, the second half of the period is always suppressed. The working circuit may be carried out in the same way as in Fig. 34; the working spark gap 7 may however be dispensed with, and instead thereof between the points *n* and *m* a condenser 5 and an induction resistance 9 may be inserted from which the current is taken inductively.

Fig. 36 represents a form of construction similar to Fig. 34 only that here instead of an arc lamp a Nernst incandescent body is employed. The Nernst lamp is fed through the battery 3. The working section is connected with the negative pole, the safety spark gap with the + poles. The working spark gap 7 may also be dispensed with and the current for it taken at 12 over the oscillation circuit 5, 11 (shown in dotted lines).

Flame collectors (Fig. 37) may also be employed according to this invention. The wire network 1 is connected with the aerial collector conductor A and the burner with the earth. At the upper end of the latter, long points are provided which project into the flame. The positive electrode is connected with the negative over a condenser 5 and the induction coil 9 with the earth.

The novelty in this invention is firstly, the use of incandescent cathodes opposite positive poles which are connected with large metallic capacities as automatic collecting surfaces, (2) the connection of the incandescent cathodes with the earth whereby, in addition to the electricity conveyed to them from the battery or machine which causes the incandescing, also the negative charge of the earth potential is conveyed, and (3) the connection of the positive and negative poles of the radiating collectors over a condenser circuit alone or with the introduction of a suitable inductive resistance, whereby simultaneously an oscillatory oscillation circuit may be obtained. The collecting effect is by these methods quite considerably increased.

I declare that what I claim is:—

1. An electrical energy generating system, comprising a conducting surface for static charges, means to support same at a distance above the earth, a conductor leading to the earth level, a spark gap associated with said conductor to convert electrostatic charges into electromagnetic high frequency oscillations means to supply said electromagnetic energy to a net work, and a spark gap of greatly increased relative resistance in parallel therewith.

2. An electrical energy generating system

comprising a conductor, means to support same above the earth level, an inductance therein, a spark gap associated with said conductor, a second spark gap of much higher relative resistance in parallel therewith and an energy receiving circuit coupled with the spark gap of lesser resistance.

3. An electrical energy generating system comprising a collecting surface, means to support same above the earth level, a conductor connecting said collecting surface with the earth level, a choke in said conductor, an electromagnetic resistance converting electrostatic energy to electromagnetic energy, a safety higher resistance in parallel therewith and a net work coupled with the conversion resistance of lesser value.

4. An electrical energy generating system comprising electric conductors spaced above the earth to form electromagnetic oscillating circuits, conductors connecting to earth level, electrostatic to electromagnetic energy conversion means therein, a safety high electrostatic resistance in parallel therewith and means to alter the electromagnetic characteristic of the circuits.

5. An electrical energy generating system comprising in combination a static collecting surface arranged above the earth, conductors connecting to earth level, a pair of spark gaps in parallel of different electrostatic resistance, a utilization net work shunted across the spark gap of lesser resistance and an electromagnetic choke in said conductors.

6. An electrical energy generating system comprising an open circuit energy collecting aerial, a pair of sparking gaps in parallel of widely different resistance, connected thereto and a closed electric oscillation circuit in shunt across the gap of lesser resistance.

7. An electrical energy generating system comprising an open circuit energy collecting aerial, a pair of sparking gaps in parallel of widely different resistance connected thereto, a closed electric oscillation circuit in shunt across the gap of lesser resistance, a plurality of electrostatic collecting surfaces, means to connect said collecting surfaces in parallel in groups and means to connect said groups symmetrically with said aerial.

In witness whereof, I have hereunto signed my name this 30 day of Dec., 1920, in the presence of two subscribing witnesses.

HERMANN PLAUSON.

Witnesses:
H. F. Armstrong,
W. H. Beeston.

WILLIAM H. WARD.

Improvement in Collecting Electricity for Telegraphing, &c.

No. 126,356. Patented April 30, 1872.

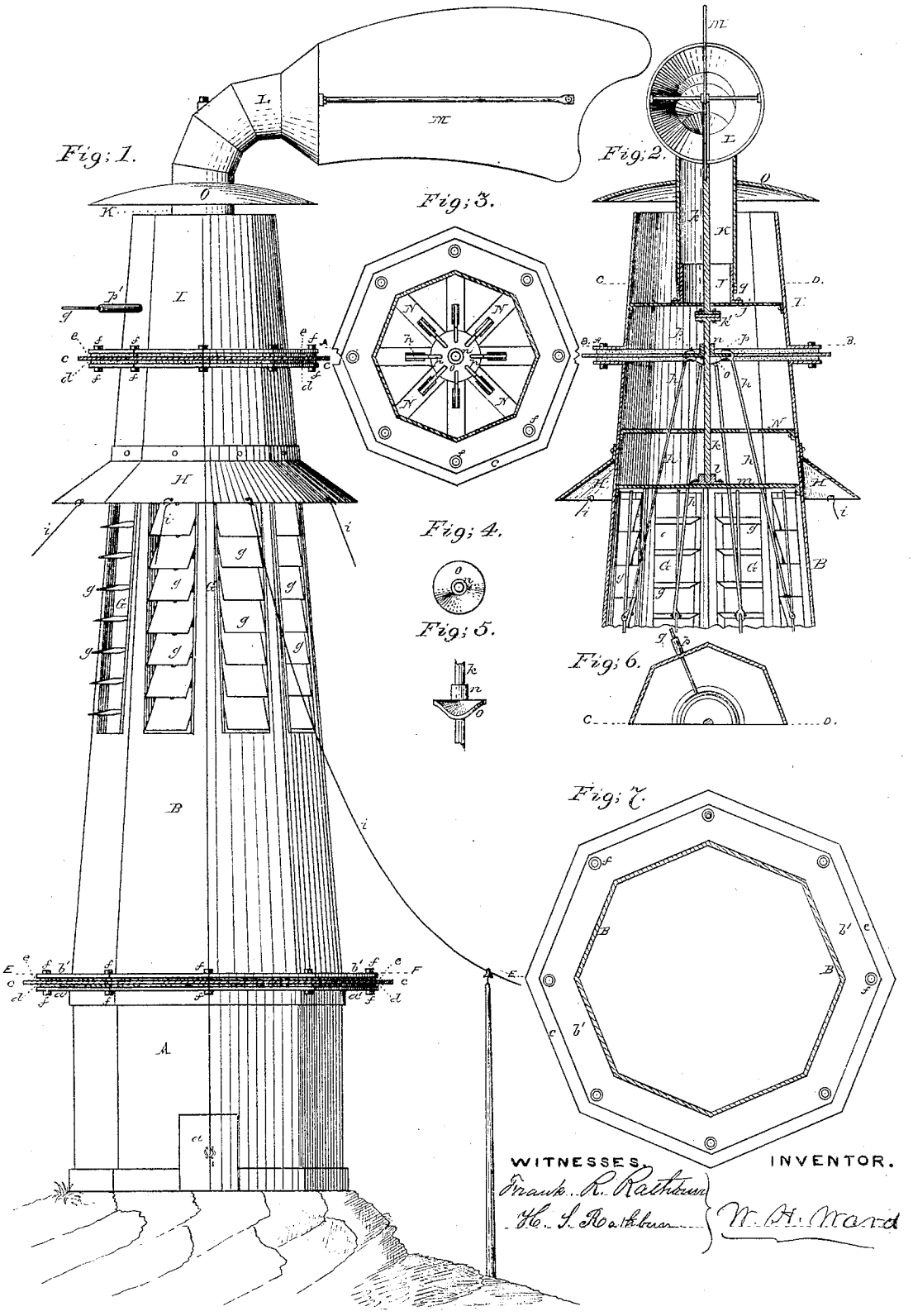

WITNESSES. INVENTOR.

Frank R. Rathbun

H. S. Rathbun

W. H. Ward

AM. PHOTO-LITHOGRAPHIC CO. N.Y. (OSBORNE'S PROCESS.)

UNITED STATES PATENT OFFICE.

WILLIAM HENRY WARD, OF AUBURN, NEW YORK.

IMPROVEMENT IN COLLECTING ELECTRICITY FOR TELEGRAPHING, &c.

Specification forming part of Letters Patent No. 126,356, dated April 30, 1872.

I, WILLIAM HENRY WARD, of Auburn, in the county of Cayuga and State of New York, have invented an Electrical Tower for Accumulating Natural Electricity for Telegraphic Purposes, of which the following is a specification:

My invention consists of a tower for the purpose of receiving and imparting natural electricity, so as to be in constant contact with that upper stratum of electricity which surrounds the earth, by tapping which a never-failing supply is formed when brought into contact with the earth, as will be more fully explained hereinafter.

In the accompanying drawing, Figure 1 represents a side elevation of my improved electrical tower. Fig. 2 is a vertical central section of the upper part of the same. Figs. 3, 4, 5, 6, and 7 are detached views of several parts of the same.

The tower is constructed in three separate sections, a lower, a middle, and an upper one, and is placed on elevated mountain tops or peaks. The lower one, A, is a mere shell, having a door, *a*, and is constructed of any material suitable for the purpose. It is insulated from the middle portion B by means of a glass diaphragm, *c*, held between similar diaphragms of rubber, *d*, and of gutta-percha, *e*, by means of flanges *a'* and *b'*, formed on the upper end of the lower portion and the lower end of the middle portion of the tower respectively. These flanges are secured to each other by insulated bolts *f*. The middle portion B is provided with suitable openings or windows, G, having shutters or slats *g* pivoted in them, so that, by means of raising or lowering rods *h*, suitably connected to said shutters, the openings G may be shut or opened. A projecting roof, H, is formed on or secured to the middle portion B just over the openings G, and which serves the double purpose of protecting the said openings from the effects of the weather, such as rain or snow, and also for receiving the aerial electricity, which may be drawn from it by wires *i*, for land-line purposes. Above this roof H the middle portion of the tower is again insulated by diaphragms of glass, rubber, and gutta-percha from the upper portion I of the tower in the same manner as it is insulated from its lower portion. A circular plate, *j*, secured on the inside of this upper portion, bears a short tube, J, which is surrounded by the tube K of the ventilator L, from which latter the vane M extends; or the tube J may be held by rods extending from the side of the tower centrally. This ventilator is supported by a rod or shaft, *k*, firmly attached to the tube K, and having its lower bearing in a step, *l*, on a brace, *m*, crossing the middle portion B of the tower just above the openings G. This rod or shaft *k* is formed in two parts, insulated from each other, as shown at *k'*. On the lower portion of this shaft *k* is keyed or otherwise secured a sleeve, *n*, from which a horizontal serpentine cam-plate, *o*, shown in detail in Figs. 4 and 5, extends, over the rim of which the forked ends *p* of rods *h* seize, and which is so arranged relatively to the vane M and the shutters or slats *g* that the revolution of the vane by the wind will open the windward and close the leeward shutters or slats *g* and openings G by means of the rods *h*. Guide-plates or their equivalents N, provided with suitable openings, through which the rods *h* pass, keep the upper forked ends *h* of the latter in constant contact with the cam-plate *o*, which raises or lowers the rods, and consequently opens or closes the openings G as it revolves. A circular roof, O, extends from the tube K of the ventilator so as to cover and protect the open upper end of the tower. The upper portion I of the tower is provided with an insulating-tube, *p'*, through which a copper wire, *q*, enters the portion I of the tower, and is coiled around the tube J just under the tube K, which wire may connect that upper portion of the tower with any land line of wires. The upper portion I of the tower, as well as the tubes J K, may be constructed of zinc, while the vane may be made of zinc, copper, or any equivalent material, which, with the zinc and the moisture of the atmosphere, would form an electrical current. As the vane revolves it opens the openings to windward and closes those to leeward, thus helping to drive an aerial current of electricity into the insulated middle portion of the tower, which current passes upwardly through the upper portion of the tower and out through the ventilator or the top, which is swung around by the wind or aerial electrical current, thus forming a draught in addition to the closing of the shutters or openings to leeward, by means

of which draught the electrical current is forced upwardly and out at the vane. The top portion of the tower is of course completely insulated from all below it, including the revolving central ventilator-shaft. As the middle portion of the tower allows the electrical current of atmosphere, wind, &c., to pass within, up, and out at the top it forms a continuous current, whereby the tower is receiving continually fresh and new supplies of electricity, which can be drawn from the projecting roof H by the wires *i* for the use of land lines of telegraphs or for other purposes, such as light, heat, &c. By the use of aerial electricity I entirely dispense with artificial batteries, forming my circuit merely by connecting the aerial current with the earth current. For instance, to bring Buenos Ayres, in South America, into direct connection with New York, the following plan would be pursued: One electrical tower is erected on Pike's Peak or any other suitable high mountain in North America, and another similar tower on some suitable peak of the Andes in South America. The former would, by means of land-lines, be connected directly with Denver, which place is again connected with all the prominent cities of the States. In a similar manner the southern tower is connected by land-lines with the prominent cities via Quito. New York telegraphs to the tower on Pike's Peak, and the operator having connected the land-line with the aerial current, the signals are transmitted through the aerial current to the tower in the Andes in South America, and from there—the land-lines being suitably connected with the aerial current—to Quito and Buenos Ayres. In this manner a message would be sent entirely by natural electricity in place of artificial. In the same manner a message may be sent across the ocean by having a high tower on each continent, each of which towers would have to be, of course, through land-lines connected with the earth to enable the ground current with the aerial current to form a circuit. Different towers may be erected on the different continents, and if they are all what is technically called hooked on—that is to say, connected to the earth—a signal given at one tower will be repeated at all the towers, they being connected with each other by the aerial current. If the earth-connection is severed, or the insulation with the tower destroyed, there is no power; but by insulating the tower and concentrating its force to a point, bringing the same corresponding effect from the earth current in connection, an exceedingly powerful electrical force is created.

Having described my invention, I claim—

1. A tower constructed so as to collect, hold, distribute, and utilize aerial currents of natural electricity for telegraphic and other purposes, essentially as described.

2. A tower for collecting aerial currents of natural electricity, constructed of three sections, insulated from each other and the earth, or their equivalents, substantially in the manner described.

3. In an electrical tower, the combination of the shutters or slats *g* with the ventilator-vane in such a manner that the vane, through suitable mechanism, always opens the shutters to windward and closes them to leeward, substantially as described.

4. In an electrical tower, the collecting, distributing, and protecting roof H, substantially as and for the purpose described.

5. The combination of the tube J and ventilator L with its vane M and the coiled wire or small cable *q*, substantially as and for the purpose set forth.

6. The combination of the insulated shaft *k* and rods *h* having forked upper ends *k'* with the shutters or blinds *g*, serpentine cam-plate *o*, and ventilator L, substantially as and for the purpose described.

The above specification of my improvement, being a tower for accumulating natural electricity for telegraphic purposes, signed this 29th day of June, A. D. 1871.

W. H. WARD.

Witnesses:
A. L. PALMER,
J. H. STARIN.

(12) INTERNATIONAL APPLICATION PUBLISHED UNDER THE PATENT COOPERATION TREATY (PCT)

(19) World Intellectual Property Organization
International Bureau

(43) International Publication Date
28 August 2008 (28.08.2008)

PCT

(10) International Publication Number
WO 2008/103129 A1

(51) International Patent Classification:
H02M 11/00 (2006.01) *H02N 11/00* (2006.01)

(21) International Application Number:
PCT/TR2007/000050

(22) International Filing Date: 8 June 2007 (08.06.2007)

(25) Filing Language: English

(26) Publication Language: English

(30) Priority Data:
u 2007/00996 20 February 2007 (20.02.2007) TR

(71) Applicant *(for all designated States except US)*: **TURK, Metin** [TR/TR]; Ayten Sokak 30/4 Mebusevleri, Tandogan, 06510 Ankara (TR).

(71) Applicant and
(72) Inventor: **KAPANADZE, Tariel** [GE/GE]; Tzkaltubo Sokak, No:9, Tbilisi (GE).

(74) Agent: **YALCINER, Ugur G. (YALCINER DANISMANLIK VE DIS TICARET LTD. STI.)**; Tunus Caddesi No:85/8, Kavaklidere, 06680 Ankara (TR).

(81) Designated States *(unless otherwise indicated, for every kind of national protection available)*: AE, AG, AL, AM, AT, AU, AZ, BA, BB, BG, BH, BR, BW, BY, BZ, CA, CH, CN, CO, CR, CU, CZ, DE, DK, DM, DO, DZ, EC, EE, EG, ES, FI, GB, GD, GE, GH, GM, GT, HN, HR, HU, ID, IL, IN, IS, JP, KE, KG, KM, KN, KP, KR, KZ, LA, LC, LK, LR, LS, LT, LU, LY, MA, MD, ME, MG, MK, MN, MW, MX, MY, MZ, NA, NG, NI, NO, NZ, OM, PG, PH, PL, PT, RO, RS, RU, SC, SD, SE, SG, SK, SL, SM, SV, SY, TJ, TM, TN, TR, TT, TZ, UA, UG, US, UZ, VC, VN, ZA, ZM, ZW.

(84) Designated States *(unless otherwise indicated, for every kind of regional protection available)*: ARIPO (BW, GH, GM, KE, LS, MW, MZ, NA, SD, SL, SZ, TZ, UG, ZM, ZW), Eurasian (AM, AZ, BY, KG, KZ, MD, RU, TJ, TM), European (AT, BE, BG, CH, CY, CZ, DE, DK, EE, ES, FI, FR, GB, GR, HU, IE, IS, IT, LT, LU, LV, MC, MT, NL, PL, PT, RO, SE, SI, SK, TR), OAPI (BF, BJ, CF, CG, CI, CM, GA, GN, GQ, GW, ML, MR, NE, SN, TD, TG).

Published:
— *with international search report*

(54) Title: INDEPENDENT ENERGY DEVICE

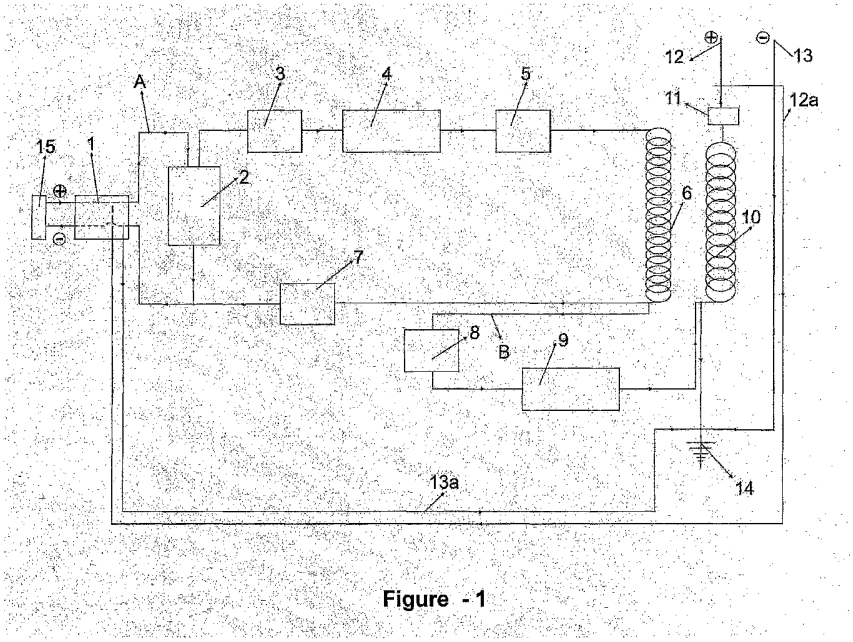

Figure - 1

(57) Abstract: The independent energy device improved with this invention, starts operation with the initial electric energy received from the initial energy supply (15) and afterwards generates energy consistently and is characterized to include power switch (1), capacitor (2), points (3), high frequency generator (4), first filter (5), first bobbin (6), first frequency adjuster (7), second filter (8), frequency stabilizer (adjuster) (9), second bobbin (10), second frequency adjuster (11), exit (phase) (positive) (12), positive self feeding cable (12a), exit (neutral) (13), negative self feeding cable (13a), neutral (grounding) (14), initial power supply (15).

WO 2008/103129 A1

INDEPENDENT ENERGY DEVICE

The present invention is a device both self sufficient (self feeding) and producing ready to use electric energy, starts to operate with the initial electrical energy received from accumulator or similar source of energy, transferring the magnetic field generated in first bobbin to second bobbin through a frequency stabilizer, after rhythmically stabilizing the magnetic field occurred between the bobbins; converts the independent energy -received by the second bobbin from the air- to electric energy.

Today electric energy can be generated by using various kinds of technologies. In order to summarize some of them; electric energy can be generated through dams, from the motion of waves, by nuclear power plants, by using solar energy, fuel oil, hydroelectric power plants and similar areas through using various technologies. There are different advantages and disadvantages among these various techniques used for generating electric energy. The general purpose of all these techniques is to generate energy cheaper and faster by providing high efficiency.

The present invention is improved through using different technologies of today, by less costly way and without harming the nature, and using a very different technique from the above mentioned (present techniques used today).

The present invention receives energy externally only at first starting phase. This mentioned energy can be easily generated from a small accumulator or chargeable battery or similar sources. 1 -2 seconds after the device is started, the power switch at the energy input of the device cuts the external electric (from accumulator or similar source of energy) off by generating electric energy. A very few part of this electric energy generated is used by the device to feed itself and the most part is discharged ready to be used. As long as the device is not shut down or no problem occurred inside, the device generates energy consistently. By recent technology, there is no device similar to the present invention producing energy consistently by feeding itself.

In order to maintain the device to generate electric energy consistently, two circuits are designed inside the device.

First circuit; consists of time relay switch, capacitor, points, high frequency generator, first filter, first bobbin, first frequency adjuster (this circuit is displayed with bold line on the figure)

Second circuit; consists of second filter, frequency stabilizer, second bobbin, second frequency adjuster.

First circuit is designed for generating electricity by transferring the electro magnetic field occurred at the first bobbin with the electric energy received from the independent initial power supply, to second bobbin. And as the second circuit; Due to the high magnetic field received from the first bobbin, there occurs a magnetic field difference between the bobbins. The magnetic field difference occurred between the second bobbin and first bobbin stabilized by the help of frequency stabilizer within this circuit line. As stabilizing the magnetic field difference by the help of frequency stabilizer, this circuit line also converts the energy which is moving independently in the air at the second bobbin designed within this line to electric energy. This electric energy formed by the second bobbin adjusts the necessary frequency (220 V - 50 Hz or 110 V - 60 Hz) for use, by the help of second frequency adjuster designed at the bobbin output. This generated electric energy is transferred to the intended usage area via exit points. Through the circuit cables connected to the exit points, the device feeds itself with the generated electric energy. This mentioned process eventuates 1 -2 seconds after the device is got started. After this process, the time relay power switch designed at the input of the device breaks the initial energy supply. After this stage, the device generates the energy independently.

The present invention is designed as single phase and as the phase number is desired to be increased, the bobbin number shall also be increased for each phase. Depending on the number of bobbins, the capacities of other parts used in the device are increased symmetrically.

It is possible to obtain energy in desired amounts of KW from the device. It is necessary to increase the capacity of the parts depending on the value of the electric energy.

The figures related to the invention are given enclosed; from the related figures:

Figure 1- Schematic view of the present invention

The parts related to the invention are given numbers and the explanations responding these numbers are as follows:

1- Power switch

2 - Capacitor

3- Points (as distributor of an engine)

4- High frequency generator

5- First filter

6- First bobbin

7- First frequency adjuster

8- Second filter

9- Frequency stabilizer (adjuster)

10- Second bobbin

11- Second frequency adjuster

12- Exit (phase) (positive)

12a- Positive transformation cable

13- Exit (neutral)

13a- Negative transformation cable

14- Neutral (grounding)

15- Initial power supply

A- First circuit cable

B- Second circuit cable

The operation of the present device is explained as below, giving reference to the parts' numbers through the figure enclosed.

Energy and frequency circuit on the first circuit (A)

Opening the power switch, the user gives the electric energy received from the initial energy supply (15) to the first circuit cable (A). Being loaded with the electric energy received from the energy supply (15) the capacitor (2) serves as a pump, and provides the points (3) to give electric to the high frequency generator (4). High frequency generator (4) transfers the high amount of frequency it generated to the first filter (5). First filter (5) stabilizes the frequency received from the high frequency generator (4) and regularly transfers to the first bobbin (6). Creating a magnetic field around itself with the high frequency regularly received from the first filter (5); first bobbin (6) transfers it to the second bobbin (10). Subsequently, following the first circuit cable (A), the high frequency passing from the

first bobbin (6) passes to the first frequency adjuster (7). The first frequency adjuster (7) stabilizes the received high frequency in accordance with the need and arranges without causing any harm to the parts at its exit.

Energy and frequency circuit on the second circuit (B)

The high frequency rised from the first bobbin (6) enters to the second filter through the second circuit (B). Second filter (8) transfers the frequency received from the first bobbin (6) to the frequency stabilizer (9). The electromagnetic fields occurred at the bobbins (6, 10) are different and the magnetic field at the first bobbin (6) is higher than the second bobbin (10). At this stage the frequency stabilizer (9) stabilizes the different electromagnetic fields occurred at the first and the second bobbins (6, 10). This stabilized high frequency exits from the second bobbin (10) and is adjusted for the required (necessary for the use) frequency degree by the help of the second frequency adjuster (11). The user uses the electric energy generated in the device by the help of exit (phase) (positive) (12) and exit (neutral) cable (13).

The positive transformation cable (12a) at the exit of the device and the negative transformation cable (13a) are connected to the power switch. 1-2 seconds after the device starts to generate electric, the electric energy generated is transmitted to the power switch (1) via positive transformation cable (12a) and negative transformation cable (13a). The time relay at the power switch (1) breaks the energy received from the initial power supply (15). After this stage, the device continues to generate electric energy feeding itself with the self generated energy and independently without depending to any energy from outside. The device continues to generate unlimited energy as long as it is not closed via the power switch (1) or no problem occurred within the system.

CLAIMS

1- An independent energy device, starting to operate with the initial electric energy received from the independent initial power supply (15), transferring the electro magnetic field occurred at the first bobbin (6) to second bobbin (10), stabilizing the magnetic field occurred between the bobbins (6, 10) with the help of frequency stabilizer (9), afterwards converting the independent energy received from the air by the second bobbin (10) to electric energy, both self feeding and generating ready to use electric energy; composed of following parts; power switch (1), capacitor (2), points (3), high frequency generator (4), first filter(5), first bobbin (6), first frequency adjuster (7), second filter (8), frequency stabilizer (adjuster) (9), second bobbin (10), second frequency adjuster (11), Exit (phase) (positive) (12), positive self feeding cable (12a), exit (neutral) (13), negative self feeding cable (13a), neutral (grounding) (14), initial power supply (15).

2- An independent energy device of Claim 1 wherein characterized to include capacitor (2) to transfer the electric received from the initial power supply (15) to points (3).

3- An independent energy device of Claim 1 wherein characterized to include points (3) to transfer the frequency that the high frequency generator (4) needs.

4- An independent energy device of Claim 1 wherein characterized to include the high frequency generator (4) to transfer the high frequency occurred within itself to the first filter (5).

5- An independent energy device of Claim 1 wherein characterized to include the first filter (5) to order the frequency received from the high frequency generator (4) and transfer to the first bobbin (6).

6- An independent energy device of Claim 1 wherein characterized to include the first bobbin (5); providing a high electro magnetic field around itself to transfer the high and regular frequency received from the first filter (5) to the second bobbin (10) and the electric energy received from the initial power supply (15) both to the first circuit cable (A) and to the second circuit cable (B).

7- An independent energy device of Claim 1 wherein characterized to include first frequency adjuster (7) to stabilize the normal frequency received from the initial power supply (15) with the high frequency received from the first bobbin (6).

8- An independent energy device of Claim 1 wherein characterized to include the second filter (8) to order the high frequency received from the first bobbin (6) and transfer to the frequency stabilizer (adjuster) (9).

9- An independent energy device of Claim 1 wherein characterized to include frequency stabilizer (adjuster) (9) to stabilize the electro magnetic field differences occurred between the first bobbin (6) and second bobbin (10).

10- An independent energy device of Claim 1 wherein characterized to include the second bobbin (10) to generate electric energy combining the electro magnetic field received from the first bobbin (6) and the independent energy received from the air, after the frequency stabilizer (adjuster) (9) orders the electro magnetic field between the bobbins (6, 10).

11- An independent energy device of Claim 1 wherein characterized to include the second frequency adjuster (11) to stabilize the high frequency received from the second bobbin (10) in accordance with the need to be used.

12- An independent energy device of Claim 1 wherein characterized to include Exit (phase) (positive) (12) and Exit (neutral) (13) designed in order to enable the device to use the electric energy generated.

13- An independent energy device of Claim 1 wherein characterized to include positive transformation cable (12a) and negative transformation cable (13a) designed in order to enable the device to feed itself with the electric energy generated.

14- An independent energy device of Claim 1 wherein characterized to include the initial power supply (15) to provide the device operates at the first time.

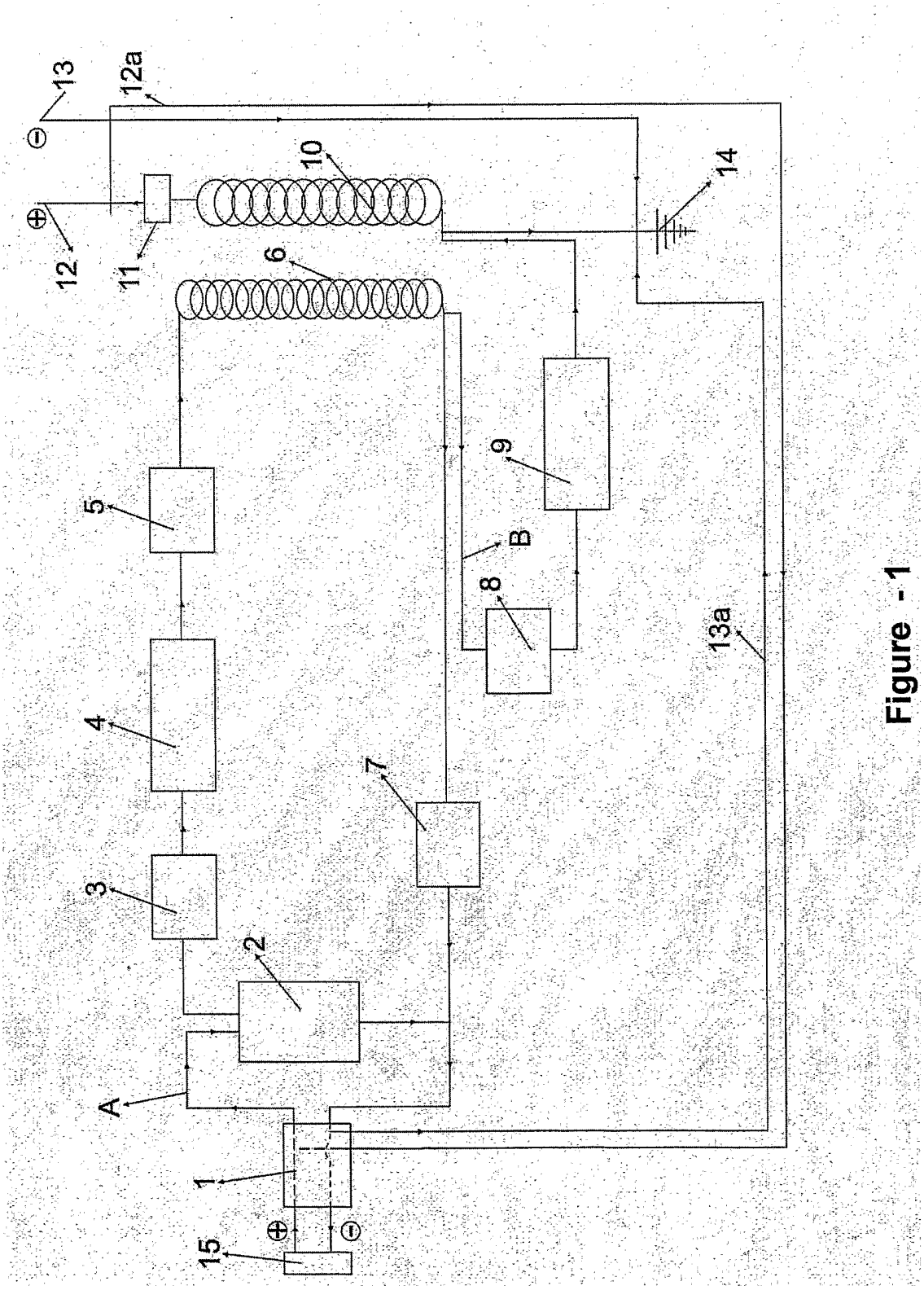

Figure - 1

INTERNATIONAL SEARCH REPORT

International application No
PCT/TR2007/000050

A. CLASSIFICATION OF SUBJECT MATTER
INV. H02M11/00 H02N11/00

According to International Patent Classification (IPC) or to both national classification and IPC

B. FIELDS SEARCHED

Minimum documentation searched (classification system followed by classification symbols)
H02N H02K H02M

Documentation searched other than minimum documentation to the extent that such documents are included in the fields searched

Electronic data base consulted during the international search (name of data base and, where practical, search terms used)

EPO-Internal

C. DOCUMENTS CONSIDERED TO BE RELEVANT

Category*	Citation of document, with indication, where appropriate, of the relevant passages	Relevant to claim No.
X	EP 0 758 159 A2 (NIPPON ELECTRIC CO [JP]) 12 February 1997 (1997-02-12) page 5, line 21 - page 6, line 39; figures 5,11	1-12
X	GEORGAKIS D ET AL: "Operation of a prototype nucrogrid system based on micro-sources equipped with fast-acting power electronics interfaces" POWER ELECTRONICS SPECIALISTS CONFERENCE, 2004. PESC 04. 2004 IEEE 35TH ANNUAL AACHEN, GERMANY 20-25 JUNE 2004, PISCATAWAY, NJ, USA,IEEE, US, 20 June 2004 (2004-06-20), pages 3521-3526, XP010739478 ISBN: 0-7803-8399-0 the whole document	1-12

-/--

[X] Further documents are listed in the continuation of Box C.

[X] See patent family annex.

* Special categories of cited documents :

"A" document defining the general state of the art which is not considered to be of particular relevance

"E" earlier document but published on or after the international filing date

"L" document which may throw doubts on priority claim(s) or which is cited to establish the publication date of another citation or other special reason (as specified)

"O" document referring to an oral disclosure, use, exhibition or other means

"P" document published prior to the international filing date but later than the priority date claimed

"T" later document published after the international filing date or priority date and not in conflict with the application but cited to understand the principle or theory underlying the invention

"X" document of particular relevance; the claimed invention cannot be considered novel or cannot be considered to involve an inventive step when the document is taken alone

"Y" document of particular relevance; the claimed invention cannot be considered to involve an inventive step when the document is combined with one or more other such documents, such combination being obvious to a person skilled in the art.

"&" document member of the same patent family

Date of the actual completion of the international search	Date of mailing of the international search report
28 August 2007	13/09/2007

Name and mailing address of the ISA/	Authorized officer
European Patent Office, P.B. 5818 Patentlaan 2 NL – 2280 HV Rijswijk Tel. (+31-70) 340-2040, Tx. 31 651 epo nl, Fax: (+31-70) 340-3016	von Rauch, Marianne

Form PCT/ISA/210 (second sheet) (April 2005)

INTERNATIONAL SEARCH REPORT

International application No
PCT/TR2007/000050

C(Continuation). DOCUMENTS CONSIDERED TO BE RELEVANT

Category*	Citation of document, with indication, where appropriate, of the relevant passages	Relevant to claim No.
X	US 2003/038612 A1 (KUTKUT NASSER H [US]) - 27 February 2003 (2003-02-27) page 4, paragraph 44 - page 6, paragraph 56	1-12
X	ANGRIST S W: "PERPETUAL MOTION MACHINES" SCIENTIFIC AMERICAN, SCIENTIFIC AMERICAN INC., NEW YORK, NY, US, vol. 218, no. 1, January 1968 (1968-01), pages 114-122, XP002036811 ISSN: 0036-8733 the whole document	1-14
X	BEDINI J C ED - INSTITUTE OF ELECTRICAL AND ELECTRONICS ENGINEERS: "THE BEDINI FREE ENERGY GENERATOR" PROCEEDINGS OF THE INTERSOCIETY ENERGY CONVERSION ENGINEERING CONFERENCE (IECEC). BOSTON, AUG. 4 - 9, 1991, NEW YORK, IEEE, US, vol. VOL. 4 CONF. 26, 4 August 1991 (1991-08-04), pages 451-456, XP000312844 ISBN: 0-89448-163-0 the whole document	1-14

INTERNATIONAL SEARCH REPORT

Information on patent family members

International application No
PCT/TR2007/000050

Patent document cited in search report		Publication date	Patent family member(s)		Publication date
EP 0758159	A2	12-02-1997	DE	69620517 D1	16-05-2002
			DE	69620517 T2	07-11-2002
			US	5739622 A	14-04-1998
US 2003038612	A1	27-02-2003	NONE		

Speculation on principle of the Roy Jerome Meyers device

By Steven Dufresne - Feb 11, 2006

For more on the Meyers device see:

http://www.rexresearch.com/meyers/meyers.htm

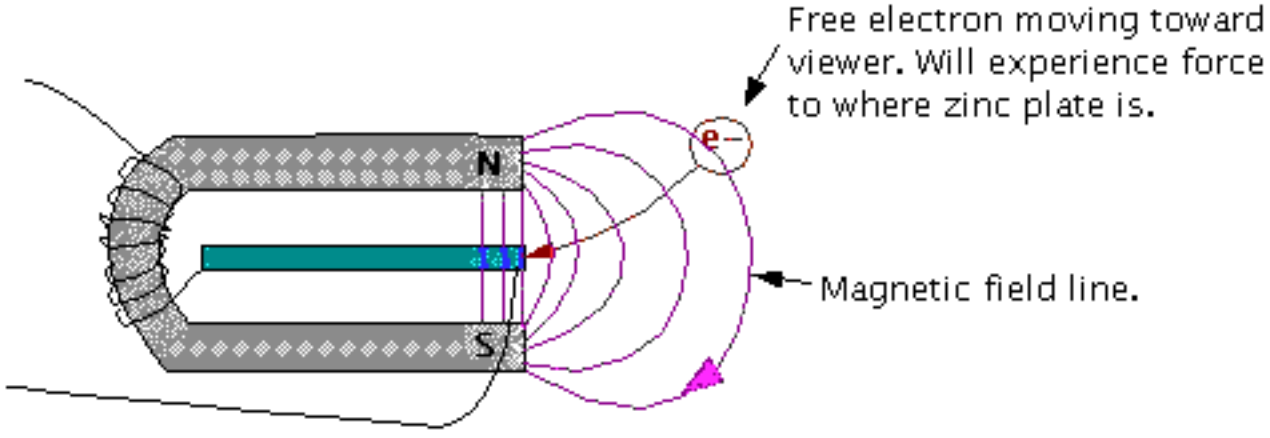

– Would moving free electrons in the air be directed to the area between the legs of the horseshoe magnet and hence to the zinc plate?

– Why zinc?

– Does the coiling around the magnet cause a little pulsing of the magnetic field and would this encourage the capture of electrons by creating a further relative motion between free electrons and the now moving magnetic field?

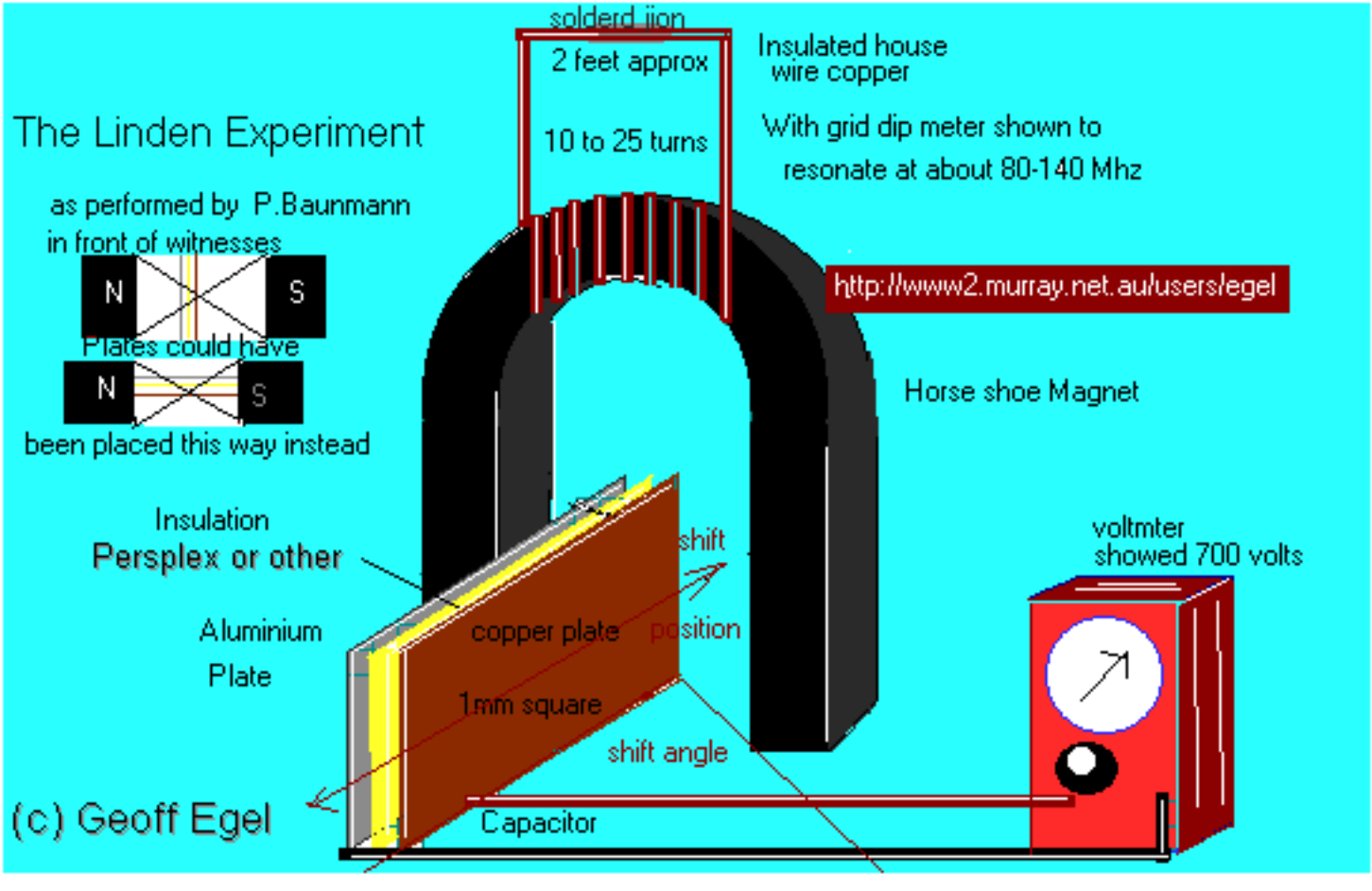

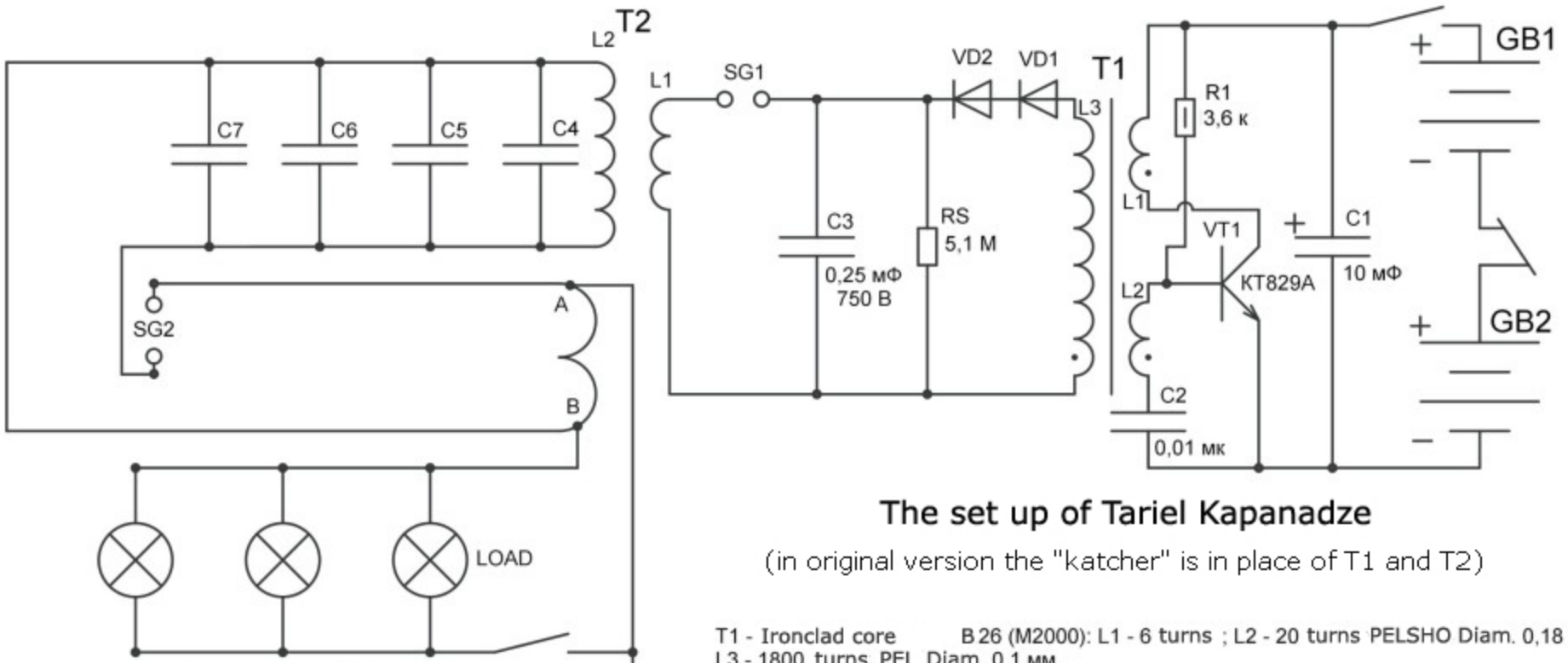

The set up of Tariel Kapanadze

(in original version the "katcher" is in place of T1 and T2)

T1 - Ironclad core B 26 (M2000): L1 - 6 turns ; L2 - 20 turns PELSHO Diam. 0,18 мм; L3 - 1800 turns PEL Diam. 0,1 мм.

T2 - Iron core : L1 - 10 turns PEL Diam. 0,35 мм; L2 - Oriented towards the high capacity capacitors C4, C5, C6, C7 & SG2

A - Amplitude value 12 V
B - Amplitude value 220 V

PELSHO is a brandname for enamelled wire in silk threads isolation

In my opinion this is the Principle of Tesla

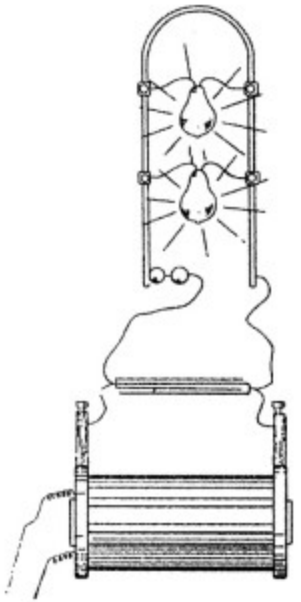

Similar Device by Donald Smith

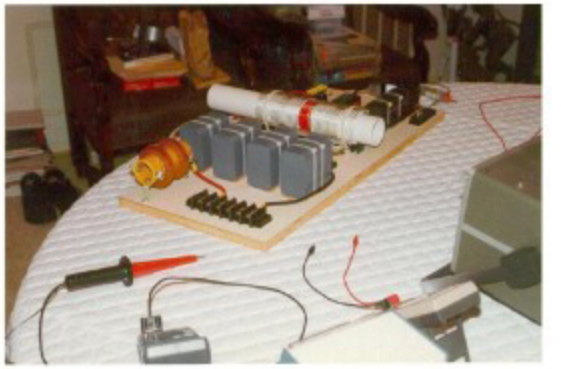

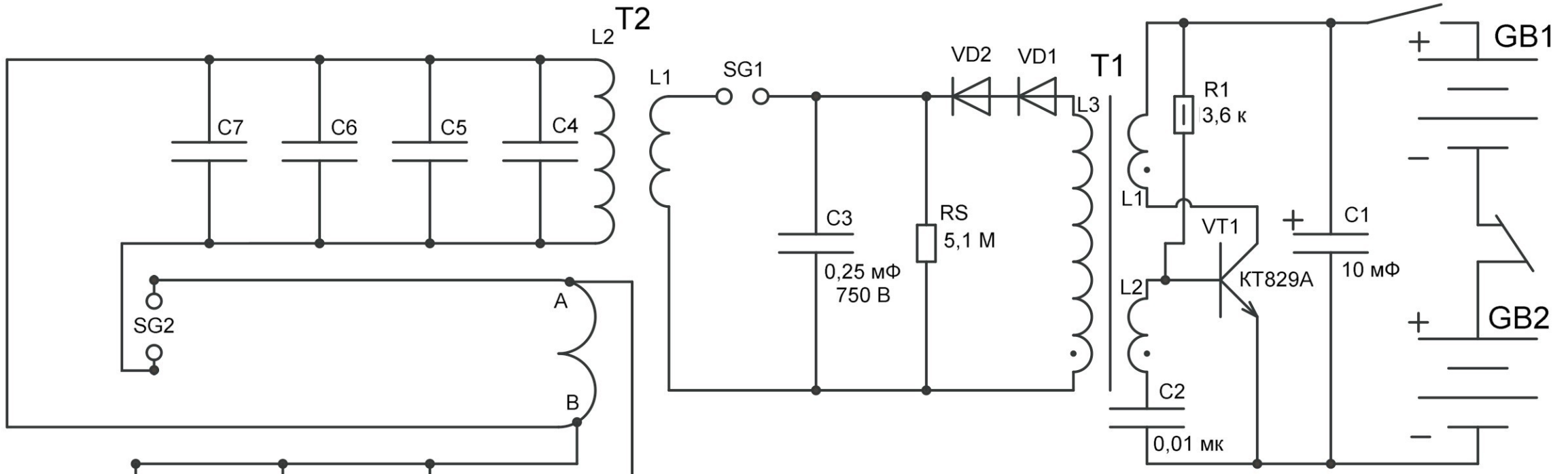

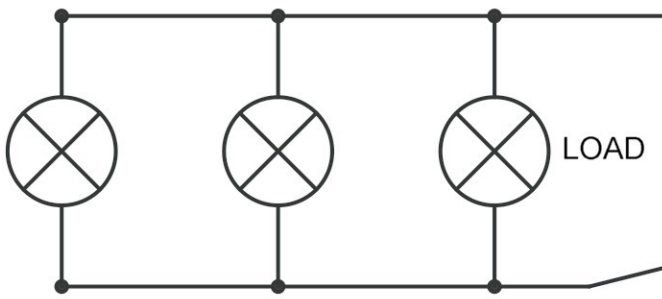

УСТАНОВКА ТАРИЕЛЯ КАПАНАДЗЕ

(В ОРИГИНАЛЕ ВМЕСТО Т1 и Т2 - КАЧЕР)

Т1 - броневой сердечник Б26 (М2000): L1 - 6 витков; L2 - 20 витков ПЭЛШО диам. 0,18 мм; L3 - 1800 витков ПЭЛ диам. 0,1 мм.

Т2 - железный сердечник: L1 - 10 витков ПЭЛ диам. 0,35 мм; L2 - ориентируясь на напряжение высоковольтных конденсаторов большой ёмкости С4, С5, С6, С7 и SG2

А - амплитудное значение 12 В
В - амплитудное значение 220 В

ІМНО - ПРИНЦИП ТЕСЛА, ЗАЛОЖЕННЫЙ В УСРОЙСТВЕ

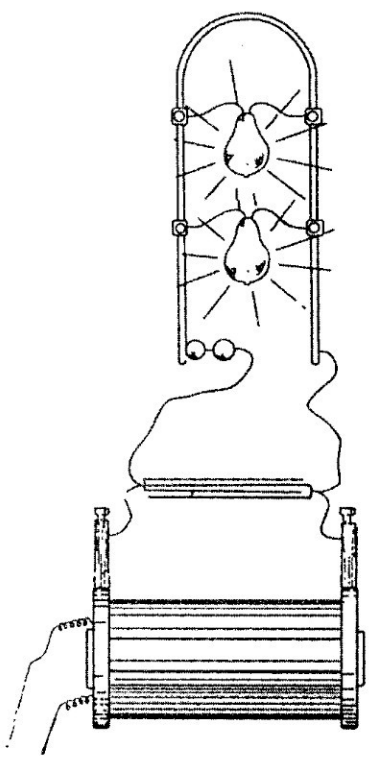

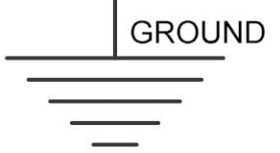

АНАЛОГИЧНОЕ УСТРОЙСТВО ДОНАЛЬДА СМИТА

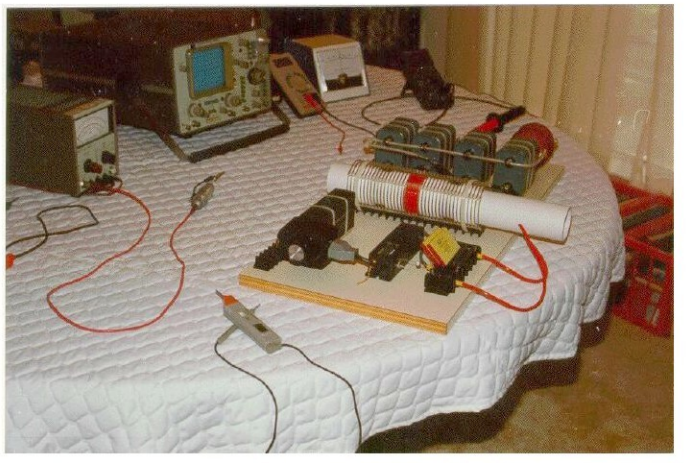

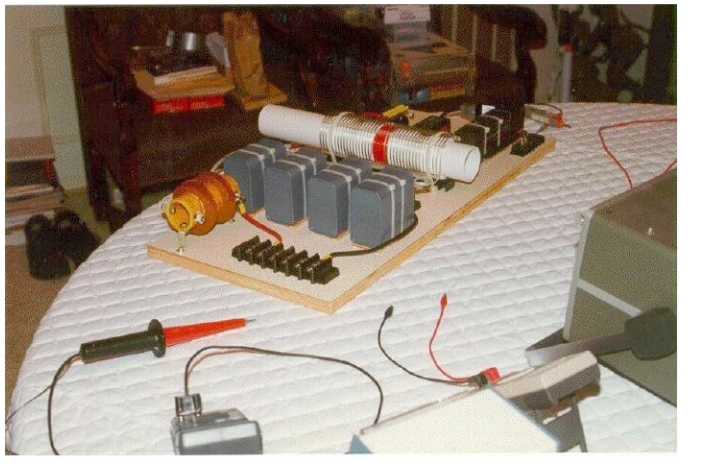

If we can undersend the motives, we could write a symphony ...

E. Doga

Principle of work of Tariel Kapanadze's device

Originally published in Russian by: Victor Grig - March 2009

Tranlated by: Stoytcho Stoev

(Dated: 23 августа 2009 г.)

I. MORAL ASPECT

After seeing Tariel Kapanadze's demonstrating movie for free energy extraction, I started to feel sympathy for this person as an devoted inventor as well as a man. We have to give the amount of respect he deservses and put him on same level as Edvin Gray, John Bedini, Habbard, B. Grebennikov and the rest of the free nergy research inventors.

II. THE SOCIAL ASPECT

It is true, free energy is draging a long all the consquences, for which we currently we are not intersed in. The biggest impact is that this device could replace the electro station or whatever you can think source of energy. Consequently this can wipeout all the revenues from natural resources as energy export and the part of the gross national product connected with all the aspect of extraction and transportation of focil fuels. The life on earth is constantly developing. We have spaceships browsing throughout the Solar System but here on Earth, till this moment, are still mass using fossil tuel as a main source of transportation. It is imperative so that, we the researchers, take masures for our own protection. All the information on the free energy research will have to go finaly to the widely open Internet in order to be preserved in the grass roots of the free nergy movient.

III. BASIC MOTIVES

In my explanation, I will try totaly to exclude the pressence of the watter, as seen in the movie. The principle of work of Kapanadze's device is based on fundamental interdependancy and this is the base for the entire device. It is quite simple but in order tobe explained we will have to build some conseptual framework withoug any predgudice.

(54) Title: INDEPENDENT ENERGY DEVICE

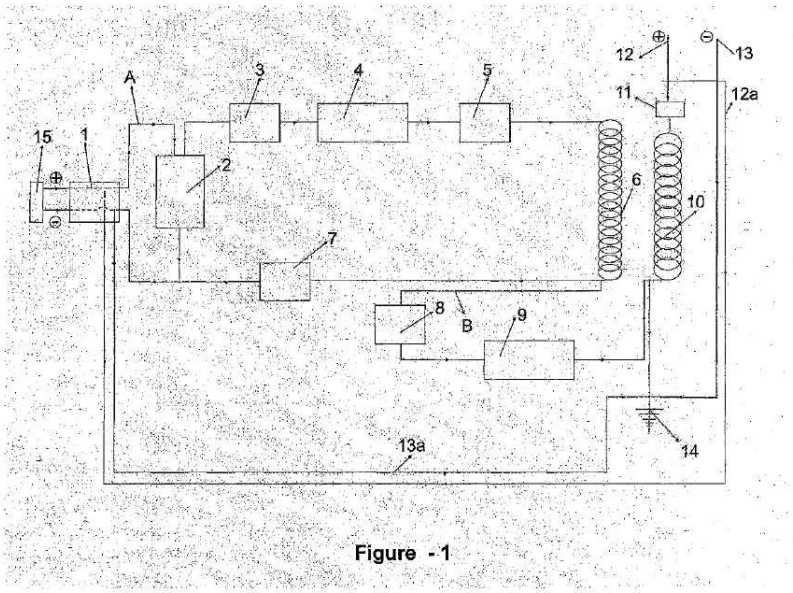

(57) Abstract: The independent energy device improved with this invention, starts operation with the initial electric energy received from the initial energy supply (15) and afterwards generates energy consistently and is characterized to include power switch (1), capacitor (2), points (3), high frequency generator (4), first filter (5), first bobbin (6), first frequency adjuster (7), second filter (8), frequency stabilizer (adjuster) (9), second bobbin (10), second frequency adjuster (11), exit (phase) (positive) (12), positive self feeding cable (12a), exit (neutral) (13), negative self feeding cable (13a), neutral (grounding) (14), initial power supply (15).

The above figure gives the patenet of Tariel Kapanadze. It looks quite different from the green box we see on the video, and in addition, it looks like it has been imporved appon.

IV. SINGLE SYCLE RESONANCE IN THE ENVIRONMENT

Let start from the beggining. Parallel LC cerquit.

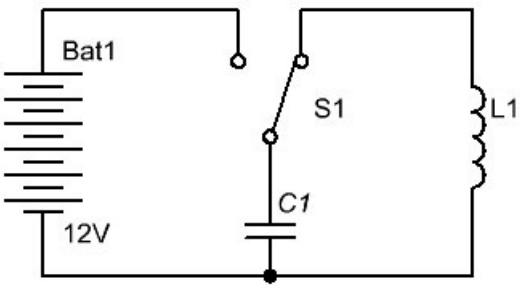

Charge the capacitor. Discharge the capacitor into the induction coil. The induction creates tention in the immediate coild invironment - soft push, push, not sharp impuls.The environment pushes back causing self induction, charing the capacitor, causing consequential

resonance in the cercuit. Thus, the cercuit sets up a stable wave creating the resonance frequency.

What is the cause of that?

It is the consequence of push of the surrounding environment towards one side and charging the cappacitor by abosorbing the energy created by the consequent push from the surounding environment to the opposite side.

One hundred percent one sycle resonance on a bridge, when over it there are marching the roman soldiers. The bridge's serferce pushes back and this is enouph for the bridge to enter in resonance and break.

Lets go back to the LC cerquit.

I will change the capacitence in incremental or the decremental direction.What is happaning?

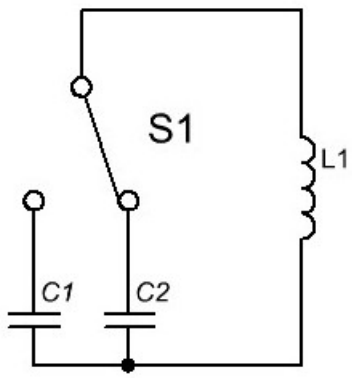

The existence of the resonance is persistent, only it frequency and amplitude change in consequence of the change to "the energy balance"in the schema.

From the point of view of the local environment - everything is staying as it was before. It has, as before, electromangnetic resistance, always trying to equalize the created local gradient from the tension, "elasticity".

In the development of this thought, here comes a question. Is there a natural resonance of the environment. In meaning, could we coincidentally, using our electrical schema, find some kind of uknown to us natural resonance and as a consequance lock on it. I am answering NO!.

For the entire history of radio electrical science and the investigated electrical schema it would have been impossible not to find and lock on such an electromagnetic resonance.

But there is a small openness.
This is the volume of the environment, bounded by the sides of the shape of an material object, where the electromagnetic waves can be bounced back. In this volume we can observe so called volume resonance, induced not only by the induction process but also by the flow of the electromagnetic radiation.
But this question, relevent to the fondation of "WSG"and we will not go into it.

V. TWO SYCLE RESONANCE IN THE ENVIRONMENT

What I do next.
I am removing the capacitence in the schema and on it's place I connect to the coil sine wave generator, favorably with small coefficient of nonlinear change, and I am inivestigating the same local environment.

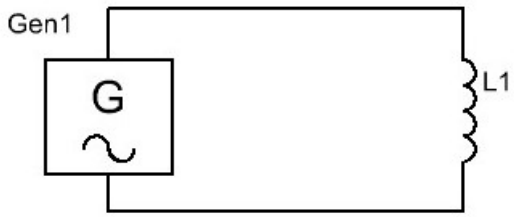

Local - because it is created by the law of the decreasing of the power of electromagnetic induction as a squire of the distance from it source.
And thanks god for that, otherwise we would have in constant resonance.

In order to have control over the resonance of the local environment, I put a small induction coil over the first one and connet it to oscilloscope.

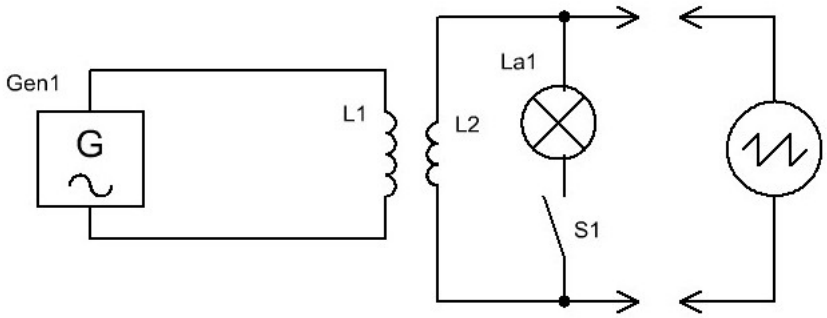

What is happening?

We can see the same resonance environment, just a lot better, because the generator, in the absance of the capacitance, not only is pushing the environment in one direction, but also pulling it in the other.

I can see the fluctuating environmental process' optimal power.

I immediately we think about adding a small consumer using this energy...

To do this, I add an incandecent light bulb to the coil and can see that it lights slightly. But at this moment I can see that my generator started to extract from the grid power equal to the power of the incandecent light bulb.

At the same time the resonance in the local environment started to drag and I understood that in the environment of the local resonance appeared, according to N. Tesla definition - friction!

All my addings created in the cercuit created a simple transformer and my free energy was disrupted and disappeared.

With a shame I realize, that the most important thing was disrupted - the resonance of the local environment!!!

Free energy can be extracted from the resonance environment only under conidtion not to disrupt the resonance !!! Now, how we do that ??!!

VI. EVOLUTION OF THE DIEA ...

In this case in our help comes Rithmodinamics of U. Ivanov.

Ivanov describes the following develpment.

When in the Ukrainian common energy grid, inherited from the former USSR, the frequency

in Hz was decreased, it was experienced a massive disbalance, with power flowing from Russia to Ukrain. I named it Xoxliatsky resonance. EXACTLY THIS IS WHAT IS IMPORTANT FOR US FROM THE ENTIRE REACHNESS OF RITHMODINAMIC.

It is interesting if Kapanadze was aware about this or just encountered this process accidentlly.

Also, it is very interesting if Alfred M. Hubbard (Hubbard Generator) has known about this property of energy flow or bumped into it also accidently.

HERE IT REVEALS THE ANSWARE OF OUR QUESTION:

HOW TO EXTRACT FREE ENERGY FROM THE RESONANCE OF THE ENVIRONMENT,

THE ENVIRONEMNT!, AND NOT THE ELECTRICAL CIRCUIT!

VII. SECOND MIXED RESONANCE OF THE LOCAL ENVIRONMENT

This is why, using alanlogy for the local mixed frequency resonance, being extracted from the common bigger,'proper' resonance energy system where exists the hidden free energy, we can restrict ourselves to look for the parameters of the second induction coil and it's resonance, created to extract energy from the already created resonance in the local environment of the first induction coil.

1. The volume of energy, exctracted from the second induction must be magnitude or 10^{-1} and even more, less then the volume energy, created in the first induction.

2. As a consequence of that, the second induction coil's magnetic field has to be a lot smaller then the magnetic field of the first induction coil.

3. Due to the magnetic field requirement, the physical mesures and the induction capacity in Henry of the second induction coil have to be samller then the first one.

4. Extracting power from the second induction coil - it is as a consequence of the difference between the resonance frequency of the first and the second induction

coils!!!

Could it happen so that the frequency of the second induction coil abruptly changes in a such a way so to attract the entire eneryg from the local resonance?
Of course it can!!!
In Kapanadze's patent there is a description about that:
*The first regulator of the frequency (7) is stabalizing the created high frequency according with the demand and make order in it,*WITHOUT CREATING ANY HARMFULL EFFECT ON THE EXIT CIRCUIT.
Aparently, the mentioned above was troubling him and seems not only ones ...
It could be sed that extracting energy from the resonance of the environment is creating also resonance, but it frequency is in the realm of Hz and tenth of Hz, divergent from the frequency of the resonance, craeted by the first coil.
What should be the electrical schema construction and what should be the difference in the frequency to fulfill these conditions - we will define afterwards.

VIII. THIRD RESONANCE - THE CHARGE RESONACE

Compleating all the above and adding the incandecent light bulb to the econd coil - everthing comes back as it used to be - we get the same basic simple transformer, and with it a bad feeling, that without the recorded experimental presentation from Tariel Kapanadze, we could have stop our efforts in this direction.

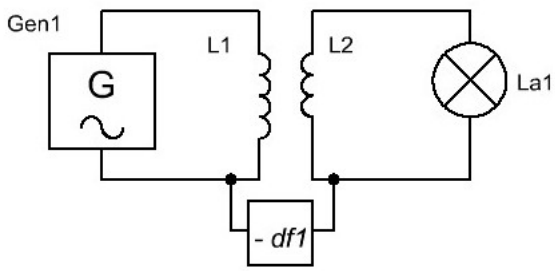

But we continue to develope our thougt.

Who told us that if we add the incandecent light bulb to the second coil we are not going to change, detioriorate the conditions for the resonance in the environment? Even if the second coild has resonance frequency tuned to the relevent resonance frequency of the first induction coil.

It is clear what is causing the problem, it will detioriorate because the second resonance from "smoothly pulsating"transforms to frictional! The same lightbulb that was used before when we hooked in parallel to the ocitsiloscope.

Than, how can we do it? How can we remove this friction?

Actually, we do not need to remove it!

What is electrical current?

According the the militarty institute:

The proffessor-major is showing the moving of the current through the electrical schema: from the positive outlet of the source of power, ot the incandecent light bulb or another schema, and after that to the ground, the gournd is a source of energy So, what is electrical current? Is it only flow of charged particles, electrons through the electrical circuit?

The best definition seems to be given by Horowitz and Hill, the augthors of the best selling book - The Art of Electronics.

ELECTRIAL CURRENT - THIS IS SPEED OF MOVEMENT OF ELECTRICAL CHARGE AT A POINT! So, we have an problem to sovle: light up the incandecent light bulb. How can we do that?

1. Apply potential difference from a direct current source, for example an accumulator.
2. Apply alternating potenical difference from the power grid.
3. But we can do it in a different way to: put the incandecent light bulb in a coil connected to high frequency circuit and the light bulb will light up WITHOUT APPLYING any potential DIFFERENCE!

In the last case, there is no electric curent going to THE GOURND, THE POTENTIAL GROUND SOURCE!

In this case the charges, the electrons, will be boucing at the high frequency and will be

breaking the cristal net of the metal.

That is good.

If we add another incandecent light bulb to the circuit, by taking to cables from the light bulb that is in the inductor and connect them to a second light bulb situated outside of the inductor. The second light bulb will not light but will just warm up.

The second light bulb will not lighten, because the power of the bouncing charged particules is not enough to create bouncing in the charged particles in the small volume of the string of the second incandecent bulb.

We see again the exact frictional process.

But if we connect ONE OF THE CONNECTIONS TO THE SECOND INCANDECENT LIGHT BULB to any big iron object, and even better, to a ground, as is doing Mr. Kapanadze in the movie, then the picture changes immediately.

We have a big free source of charged particles, this is our Earth.

We do not have to push in or push out this limited amount of charged particles, being in the small volfram coil of the ligth bulb. We are creating on the free end, an oppsite potential, reaching hundreds of volts, in the same way as it is being created in the small volfram coil situated in the high frequency inductor.

The most important thing we were looking for, is to create - when we have unlimited volume of charged particles, coming from a big object - **resonance of the charged particles!!!**, in the mass of the thick copper wire, "created"

via the first and the second inductions.

There is no electrical current in the common sense of the word!

There is only "bouncing"of the charged particles in the mass of the thick copper wire!

And the load is attached to the green box, considering these conclusions.

THAT IS WHY, "BOUNCING"OF THE ELECTRONS IN THE MASS OF THE THICK WIRE, WHICH HAS IT SECOND END ABSOLUTLY NECESSERY CONNECTED TO THE GOUND, CAN BE CREATED WHEN ONLY ONE END OF THE SECOND INDUCTION COIL IS ATTACHED TO IT VIA THE LOAD!!!

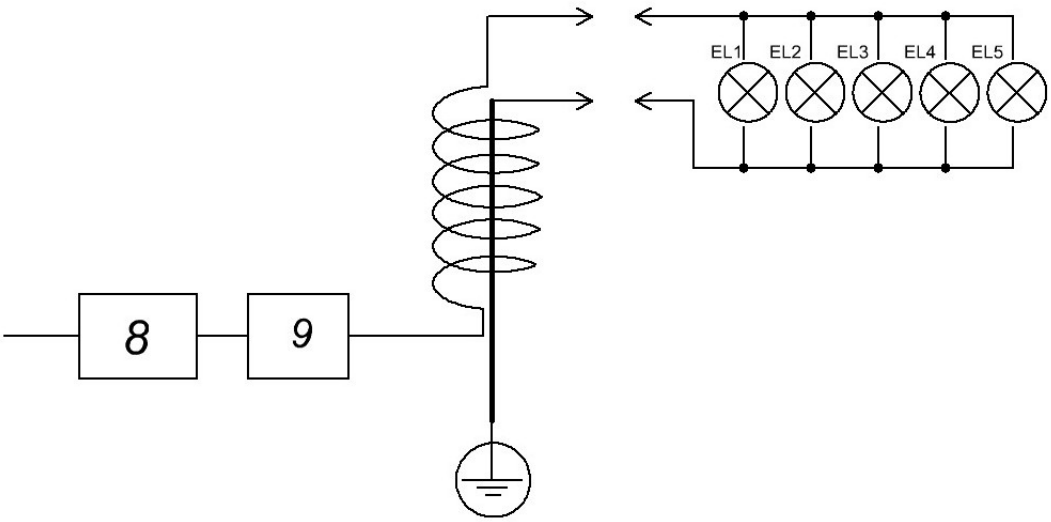

The most important is that, there is no obsticles in case of friction, for appearance of the third resonance - the resonance of the charged particles.

With your permission gentelemnt, I repeat one more time: there is no electrical current, as is nown in the common sence, only frictions. This is why the outlet exposed by the green box is high frequency based!

The most optimal load in this case is the active load, witch is exactly what is the nature of the load of an incandecent light bulb.

This fact creates by itself a toataly new way of dealing with the ractive load in the kind of electrical motors and similar. But the best of the reactive loads is that in this type of circuit we can create an additional resonance, a resonance specific to the load extracted!

We are asking ourselfes the next relevant question: how to attach the wide spread alternating current motor working on 50 Hz to this type of electric circuit?

To do this, Mr. Kapanadze is using a common amplitude modulator for 50 Hz, noted on the patent schema as number 11.

IX. SO, WHAT DO WE HAVE?

We looked at tree conditions, tree resonant systems, that need to be in place in order to get free energy.

1. High voltage, high frequency resonant environment, created in the first induction coil.

2. High frequency resonance in the second induction coil, but this resonance has to be low voltage and have different frequency and power rating from the resnance in the first induction coil.

3. Galvanic resonance of the charged particles in the body of the thick copper wire, groudend at one end to receive nulimited amount of charged particles in order to counter act the friction process in the galvanic resonance. Because in the developed device everything is influencing eachother and the friction process of the galvanic resonance is affecting the resonance in the first induction coil.

4. Specific, and different from the traditional method, way of connecting the work load.

It is very interesting to tune the ratio in the resonance power in the first and the second coils.

Observing that the green box has spark gap about $1 - 1.5mm$, the voltage should be in the realm of 2×10^3Volts.
The frequency applied to the spark gap should be around - $150 \times 10^3 - 200 \times 10^3$ Hertz.
This comes to calculated current: $\frac{5000W}{220V} = 23A$, this is exactly what the ampmeter is showing on the movie.
It comes, so that the power in the first circuit is 10x bigger, and it is in the realm of $50 \times 10^3 W$.
Is that true? Here we are dealing thie the resonance.
Lets make the calculations in a different way.
In the first coil $2000 \times 2000 = 4 \times 10^6$
In the second coil $220 \times 220 = 48.4 \times 10^3$
The ratio $\frac{4 \times 10^6}{48.4 \times 10^3} \approx 82$ or ruffly 100 TIMES.
It comes to a difference of 2 magnitutes. So this is something.
So, in the local resonance environment in the first induction coil there is pulsating $500 \times 10^3 W$ power, and we are extracting the quite small - $5 \times 10^3 W$. This on a principle level can

be a noise, so that "military formation (100 solgers) does not feel the missing 1 man 5×10^3W.

Now lets look at the frequency.
If in the "hohlatski resonance"decrement of the frequency in the energy system was $0.5Hz$, this is 1% of $50Hz$.
1% of $200 \times 10^3Hz = 2 \times 10^3Hz$
It comes, that the frequency of the second coil is 100 times smaller, so in the realm of 2×10^3Hz. It seems that there is a definite dependancy between power and the frequency. But this is for future investigation.
It appears that is a lot better, then trying to get the funny resonance in the second induction coil in Hz or even in the tens of Hz, as I was thingking before.

X. CONCLUSION

The basic principles approching of the given problem were developed.
There some issues with the curcuit theory but, I explained them earlier, so that it does not obsticalize my point of view.
As a conclusion, I show a schema to confirm Kapanadze's explenation, that "capacitor (2) is used to extract ..."and here is vividly shown it usage as aswitch.

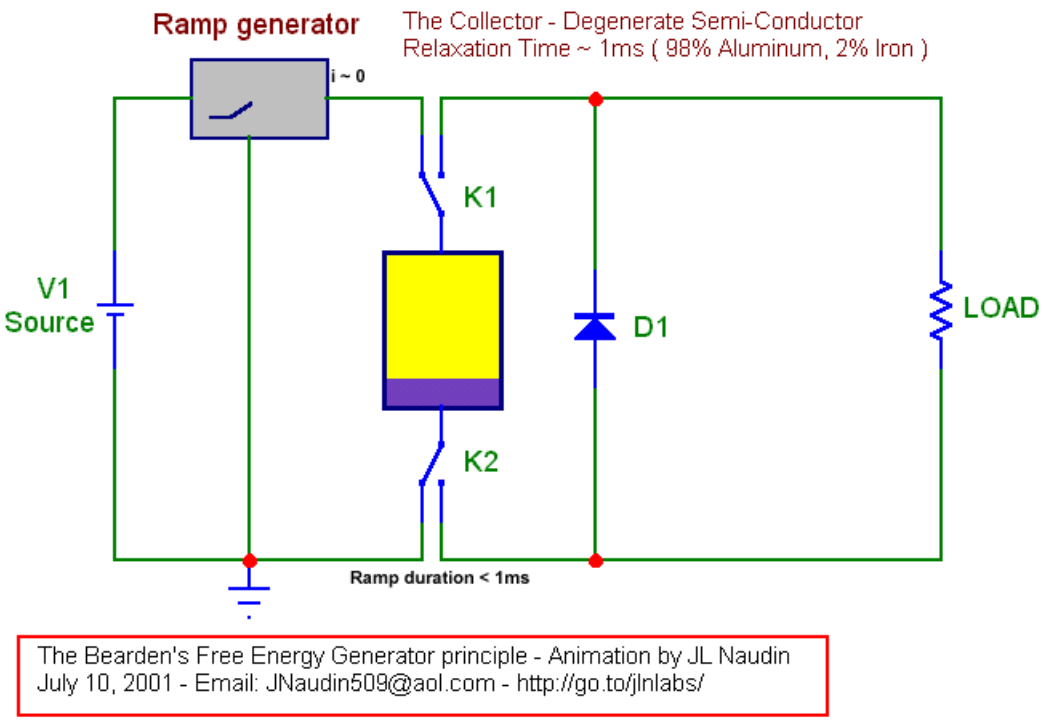

So, now please express your thinking Gentelmen!

P.S

In principle, Gentalmen, here somehow strangely is interconnected the Time dimention, and the time energy transfer, and this is the reason that provoked my investigation of the issue.

But this is a topic, for a lot more seriouse conversation.

Размышляем по патенту Тариэла Капанадзе.

Патент, как и все прочие, написан более юридическим языком, нежели техническим. По сути, он и есть юридический документ, предназначенный, чтобы портить кровь конкурентам и сдерживать развитие технологии, иной цели у данного вида собственности я не вижу. Можно конечно сказать, что изобретатель должен быть вознагражден, но это вознаграждение часто приходит в такой извращенной форме, что изобретатель умирает в нищете или шагает с 14 этажа… Кому нужно такое вознаграждение?
Но в любом случае, под коркой крючкотворства должна быть закопана суть изобретения, чтобы потом предъявлять права. Покопаемся к сути.

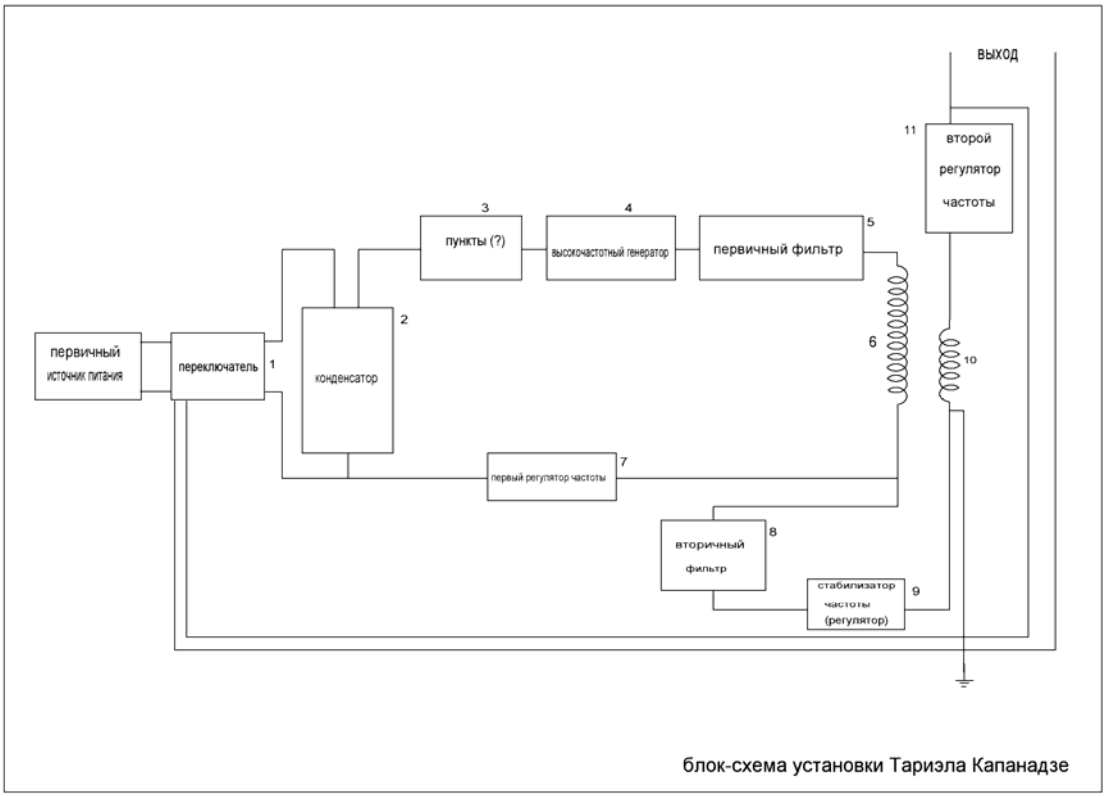

Рисунок 1 представляет схему существующего изобретения. Части, связанные с изобретением пронумерованы и объяснены:

1- Выключатель питания

2 - Конденсатор

3- Пункты (как распределитель двигателя)

4- Высокочастотный генератор

5- Первый фильтр

6- Первичная катушка
7- Первый регулятор частоты
8- Второй фильтр
9- Стабилизатор частоты (регулятор)
10- Вторичная катушка
11- Второй регулятор частоты
12- Выход (фаза) (положительный) 12а-Положительный кабель
13- Выход (нейтральный)
13а- Отрицательный кабель
14-Нейтраль (заземление)
15- Начальное электропитание
А - Кабель первой цепи
В - Кабель второй цепи

НЕЗАВИСИМОЕ УСТРОЙСТВО ЭНЕРГИИ

Существующее изобретение - устройство самодостаточное (самопитающееся) и производящее готовую к использованию электрическую энергию, запущенное в работу начальной электрической энергией, полученной от аккумулятора или подобного источника энергии, передавая магнитное поле, произведенное в первой катушке ко второй катушке через стабилизатор частоты, после ритмичной стабилизации магнитного поля возникающего между катушками; преобразовывает независимую энергию - полученную второй катушкой из воздуха - в электрическую энергию.

Тут вроде все понятно, в основном… Вопросов всего несколько :

1.Как передавать магнитное поле от первой катушки ко второй, через стабилизатор частоты? Стабилизатор частоты это что?

2. Ритмичная стабилизация магнитного поля, это как?

Существующее изобретение получает внешнюю энергию только в первой стартовой фазе. Эта упомянутая энергия может быть легко произведена от маленького аккумулятора или батареи или подобных источников. Спустя 1-2 секунды после того, как устройство запустится, выключатель на входе устройства отключает внешнее электрическое

питание (от аккумулятора или подобного источника энергии), производя электрическую энергию.

Что происходит у нас за эти две секунды?

Очень малая часть этой электрической произведенной энергии используются устройством, чтобы питать себя, и большая её часть высвобождена для использования. Пока устройство не выключено, или какая проблема не произошла внутри, устройство производит энергию постоянно. Нет никакого современного устройства, подобного существующему изобретению, производящему энергию постоянно, и питающего себя.

То есть для работы устройства требуется ЗНАЧИТЕЛЬНО меньше энергии, чем получается на выходе. Следовательно, устройство работает как вентиль, для некоего естественного процесса, существующего и протекающего независимо от самого устройства.

Первая цепь разработана для того, чтобы производить электричество, передавая магнитное поле, произведённое в первой катушке от электрической энергии, полученной от независимого начального электропитания, ко второй катушке.
Первая цепь состоит из реле времени, конденсатора, пунктов, высокочастотного генератора, первого фильтра, первой катушки, первого регулятора частоты (эта цепь показана линией на рисунке),

Итак, по утверждению автора, именно эта цепь вырабатывает электричество, передавая магнитное поле первой катушки ко второй. Магнитное поле тут… ну как бы это сказать помягче? Мне кажется – лапша, которую нам наворачивают на уши. Возможно, такая терминология применена, чтобы не выглядеть белой вороной. Дескать, все в рамках общепринятого представления об индукции. Выделим эту цепь отдельно.

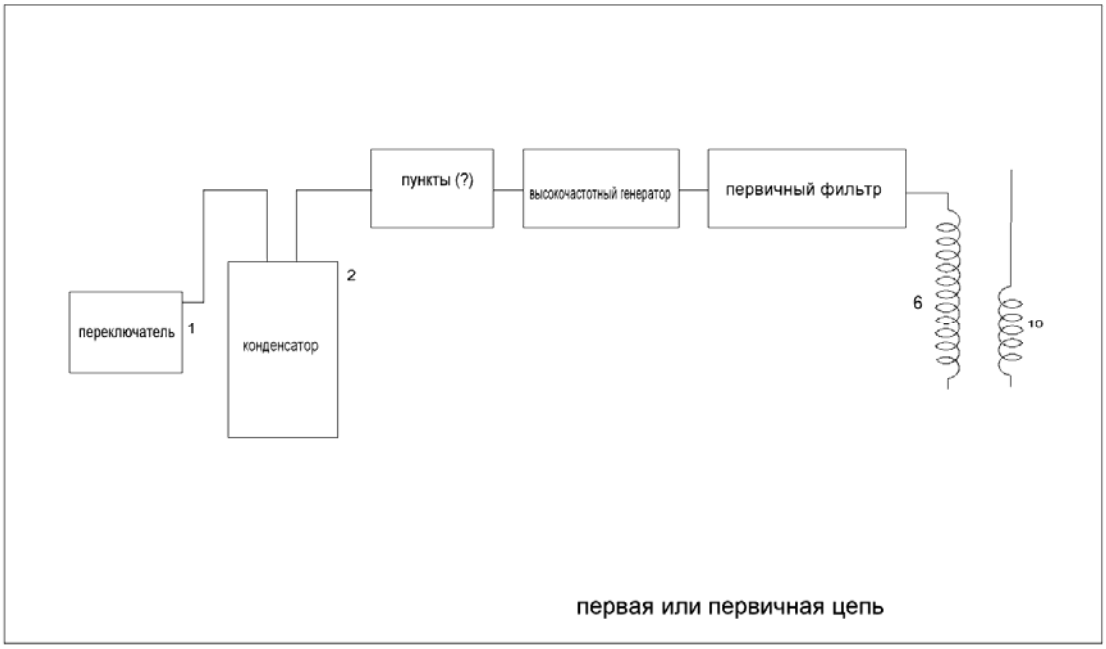

И поразмышляем, что Великий Сын Грузинского Народа (сокращенно ВСГН), нам впаривает.

1. Это переключатель с таймером, имеющий целью отключить внешнее питание при достижении режима самоподдержки. Выполнено это тупо, как задержка по времени, после которой, устройство гарантировано сможет поддерживать себя. Для понимания принципа рояли не играет. Ничего нового.

2. Конденсатор. Ну конденсатор в этой части цепи у нас сам просится буть обозванным как демпферная емкость. Другой роли на данной части схемы я ему отвести не в состоянии, умишком не вышла. Правда, линии соединения, разделенные на две, роняют семя сомнения. Но его мы пока подавим.

3. Пункты. Замечательное название. Никак его не идентифицировать. Но в аннотации к рисунку, автор делает оговорку **3- Пункты (как распределитель двигателя)** Грузинский слэнг на турецкий манер. Остается только догадываться, что сокрыто под этим загадочным определением. Первая мысль которая приходит в голову всвязи с определением «как распределитель», это коммутатор. Так как «цилиндров» у нас всего один, то задача этого коммутатора не переключать между, а включать выключать, замыкать размыкать. Например у Грея «на этом месте» стоял мультивибратор. И само название «пункты», наводит на мысль, что это действительно он, и на выходе у него «пунктир». Предположим. Что это так и есть.

4. Высокочастотный генератор. Тут вроде привычный термин и особо париться не приходится. Но однако есть скользкие места. Почему «мультивибратор» показан отдельно? Но если ты обычный человек, а не ВСГН, то по простой тупой прямой логике получается, что этот «пункты» возбуждает ударно некий контур высокой частоты. Вот хоть убивайте, но иного понимания у меня пока нет.

5. Первичный фильтр. Во блин Клинтон. Задачку поставил ВСГН. Что фильтруем? Высокую частоту, которая выработана в высокочастотном генераторе. А от чего?.

А может этот ВСГН мозг парит? Что у нас является простейшим элементарным фильтром для ВЧ? Ставим в это место кондер, пока. Ну чтобы не лезть в высшую электронику.

Вооот. И через этот кондер, соответствующего номиналу есссно, это все подается на катушку 6. Смутно прорисовывается схемка. Правда, пока не видно откуда айс. Получилась пока совершенно обычная цепь, у нас таких много. Ну все равно нарисуем ее, чтобы дальше не очень путаться. При этом выключатель с таймером выкинем наффиг, чтобы не болтался под ногами.

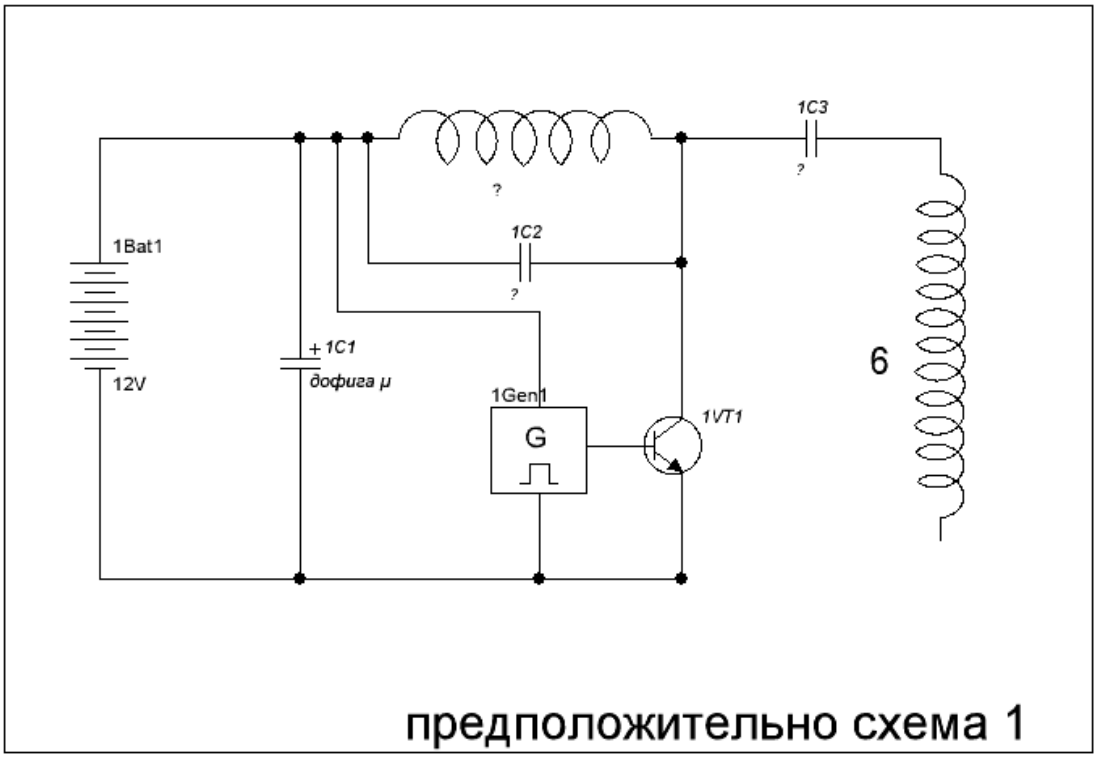

Вот така вот хренька получилась пока. Идем дальше.

Смотрим цепь два (или вторичную?)…

А вторая цепь, благодаря сильному магнитному полю, принятому от первой катушки, создаёт разницу магнитных полей между катушками. Разница магнитного поля возникающего между второй катушкой и первой катушкой, стабилизируется с помощью стабилизатора частоты в пределах этой цепи.

Вторая цепь состоит из второго фильтра, стабилизатора частоты, второй катушки, второго регулятора частоты.

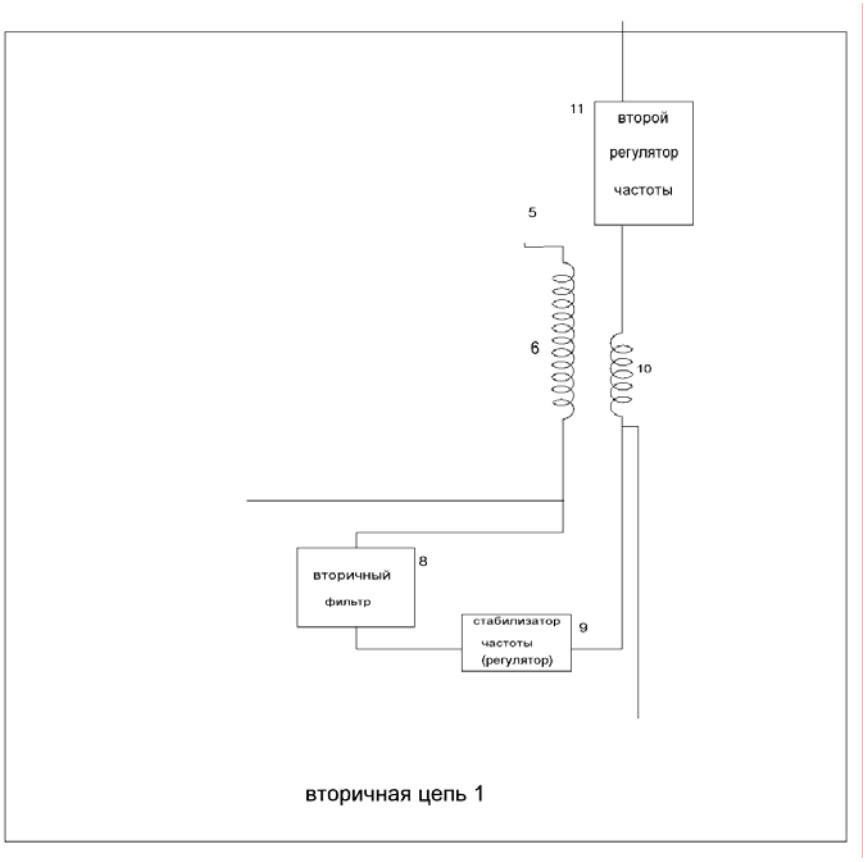

Ну начнем по циферкам.

8. Вторичный фильтр. Так как мы взяли на себя смелость заменить первичный фильтр кондюком, почему бы нам стесняться сделать это снова? Сделаем.

9. Стабилизатор частоты (регулятор). Бу-бу-бу… Конечно, сложно так вот однозначно сказать, что из себя представляет это устройство. Но вот что-то «сосет под ложечкой», что это именно тот разрядник, который на

демонстрации мы наблюдали, как произведение очумелых кривых ручек. Предположим. (это не окончательное мнение, я просто пытаюсь перевести эту блок схему в принципиалку. Ошибки не исключены). Но пока оставим это как разрядник.

10. Катушка вторичная. Тут без вопросов.

11. Второй регулятор частоты. Тут, похоже, разрядником не отмазаться. Но вобщем-то тут еще предстоит выяснять что происходит, чтобы при таких параметрах катушек, мы на выходе получали промышленную частоту. Поэтому это устройство пока подвесим в воздухе со знаком (?).

Стабилизатор разницы магнитного поля с помощью стабилизатора частоты, эта цепь также преобразует энергию, которая двигается независимо в воздух ко второй катушке, стоящей на приёме этой электрической энергии. Эта электрическая энергия, сформированная второй катушкой, регулирует необходимую частоту выхода(220 V - 50 гц или 110 V - 60 гц) с помощью второго регулятора частоты, стоящего на выходе катушки.

Похоже, все же придется вспомнить про вариант предложенный Зимней. Вероятно, что энергия колеблется в первичной и вторичной цепях с разностью по частоте в 50-60 Гц. И для этого служат цепи поддержания частоты. Ибо два маятника (имеются ввиду механические), подвешенные на одной стенке через некоторое время приходят в синхронизм. Значит необходимо искусственно поддерживать расстройку.

Детектированная частота биений гарантирует нам отсутствие влияния выхода на вход. Это положительный момент. Отрицательный в том, что пока не совсем понятно как это обеспечить. Но я полагаю. Что совместными усилиями мы должны утереть нос этому ВСГН.

Попробуем дорисовать принципиалку. За исключением непонятных моментов.

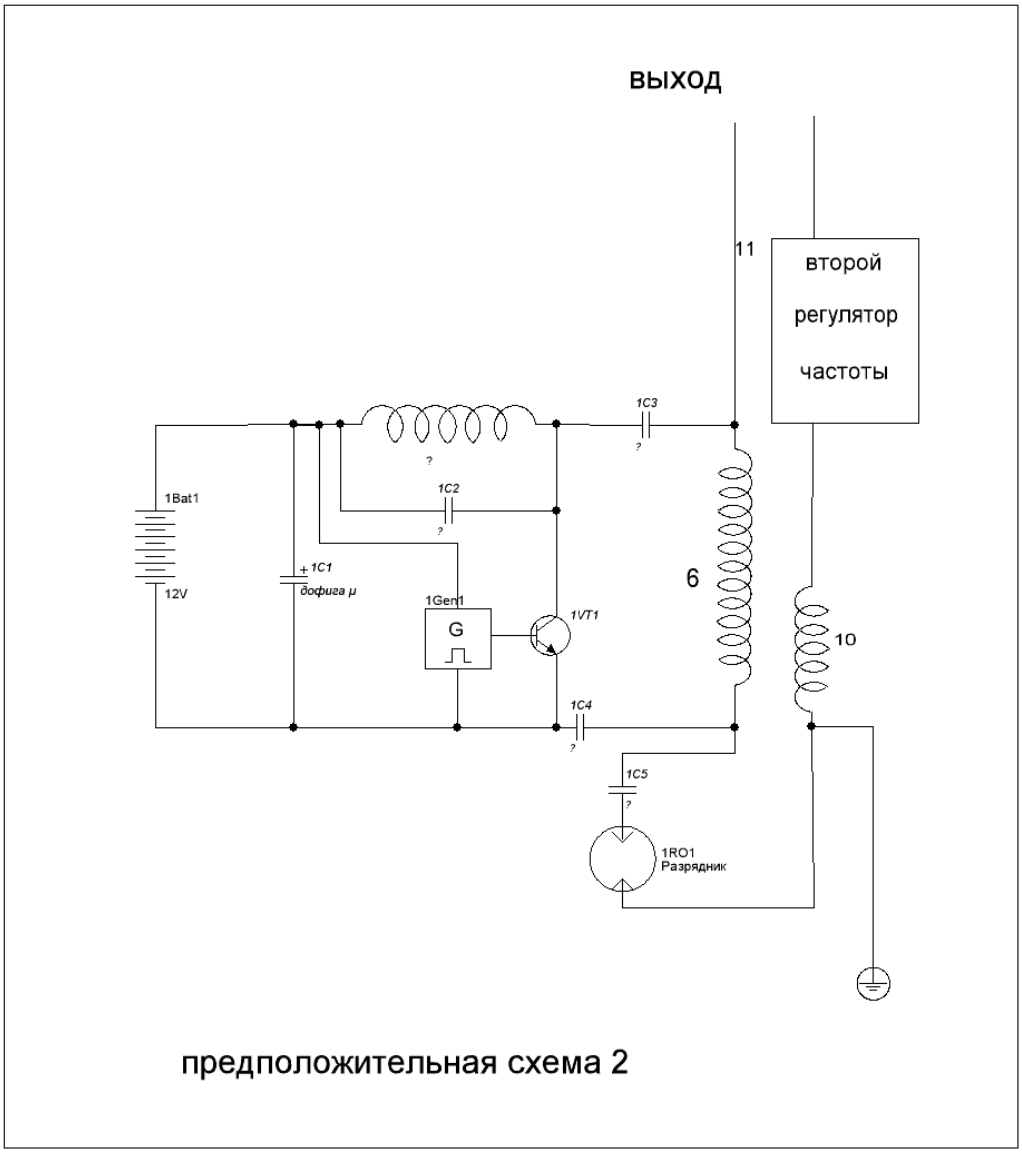

Вот такая фигня пока получилась.

Эта произведенная электрическая энергия передаётся к заданной нагрузке через выходные выводы. Через выходные кабели устройство питает себя произведенной электрической энергией. Упомянутый процесс заканчивается спустя 1-2 секунды после того, как устройство запустится. После этого выключатель реле времени, стоящий на входе устройства отключает аккумулятор. И устройство производит энергию независимо.

Добрый и оптимистичный финал. ☺

If we can understand the motives, we could write a symphony . . .

E. Doga

Principle of work of Tariel Kapanadze's device

Originally published in Russian by: Victor Grig - March 2009
Tranlated by: Stoytcho Stoev
(Dated: 23 August 2009)

I. MORAL ASPECT

After seeing Tariel Kapanadze's demonstrating video for free energy extraction, I started to feel sympathy for him as a devoted inventor as well as a person. We have to give the amount of respect he deserves and put him on the same level as Edvin Gray, Habbard, B. Grebennikov and the rest of the free energy research inventors.

II. THE SOCIAL ASPECT

It is true, free energy is dragging along all the consequences, for which we currently are not interned in. The biggest impact is that this device could replace power stations or whatever you can think of as source of energy.

Consequently this can wipe out all the revenues from natural resources as energy export and the part of the gross national product connected with all the aspects of extraction and transportation of fossil fuels.

Life on earth is constantly developing. We have spaceships browsing throughout the Solar System but here on Earth, until this moment, we are still mass using fossil fuels as a main source of transportation. It is imperative so that, we the researchers, take measures for our own protection. All the information on the free energy research will have to go finally to the widely open Internet in order to be preserved in the grass roots of the free energy movement.

III. BASIC MOTIVES

In my explanation I will try to totally exclude the presence of the matter as seen in the video. The working principle of Kapanadze's device is based on fundamental interdependency and this are the foundations for the entire device. It is quite simple but in order to be explained we will have to build some conceptual framework without any prejudice.

(54) Title: INDEPENDENT ENERGY DEVICE

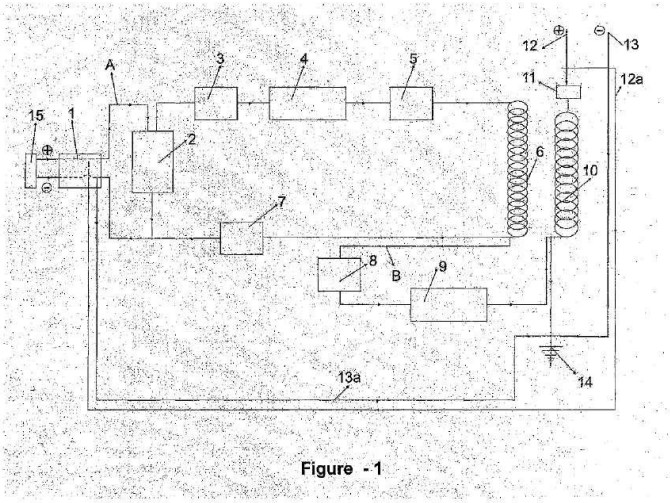

Figure - 1

(57) Abstract: The independent energy device improved with this invention, starts operation with the initial electric energy received from the initial energy supply (15) and afterwards generates energy consistently and is characterized to include power switch (1), capacitor (2), points (3), high frequency generator (4), first filter (5), first bobbin (6), first frequency adjuster (7), second filter (8), frequency stabilizer (adjuster) (9), second bobbin (10), second frequency adjuster (11), exit (phase) (positive) (12), positive self feeding cable (12a), exit (neutral) (13), negative self feeding cable (13a), neutral (grounding) (14), initial power supply (15).

Above figure is an extract from Tariel Kapanadze's patent. It looks quite different from the green box we see on the video, and in addition, it also appears it has been improved upon.

IV. SINGLE CYCLE RESONANCE IN THE ENVIRONMENT

Let start from the beginning. Parallel LC circuit.

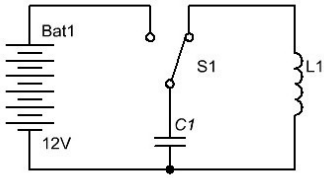

Charge the capacitor. Discharge the capacitor into the induction coil. The induction creates tension in the immediate coil environment - soft push, push, not sharp impulse. The environment pushes back causing self induction, charging the capacitor, causing consequential resonance in the circuit. Thus, the circuit sets up a stable wave creating the resonance frequency.

What is the cause of that?

It is the consequence of push of the surrounding environment towards one side and charging the capacitor by absorbing the energy created by the consequent push from the surrounding environment to the opposite side.

One hundred percent one cycle resonance on a bridge, when over it there are marching the Roman soldiers. The bridge's surface pushes back and this is enough

for the bridge to enter in resonance and break.

Lets go back to the LC circuit.

I will change the capacity in incremental or the decremental direction. What is happening?

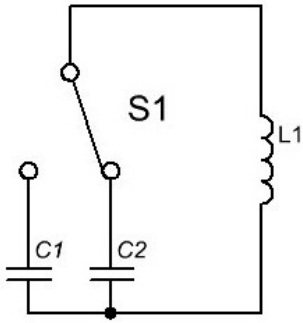

The existence of the resonance is persistent, only its frequency and amplitude change in consequence of the change to "the energy balance" in the circuit.

From the point of view of the local environment - everything is staying as it was before. It has, as before, electromagnetic resistance, always trying to equalize the created local gradient from the tension, "elasticity".

In the development of this thought there arises a question. Is there a natural resonance of the environment? Meaning, could we coincidentally by using our electrical schematic find some kind of natural resonance, unknown to us, and as a consequence lock on to it. The answer is NO!.

For the entire history of radio electrical science, and the analysed electrical schematic it would have been impossible not to find and lock on such an electromagnetic resonance.

But there is a small possibility.

This is the volume of the environment, bound by the sides of the shape of an material object, where the electromagnetic waves can be bounced back. In this volume we can observe so called volume resonance, induced not only by the induction process but also by the flow of the electromagnetic radiation.

But this question is relevant to the foundation of "WSG" and we will not go into it.

V. TWO CYCLE RESONANCE IN THE ENVIRONMENT

What do we do next.

We replace the capacitor by a sine wave generator connected to the coil. Preferably with small coefficient of non-linear change. Again, we investigate the same local environment.

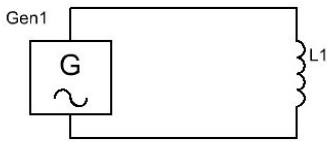

Local - because it is created by the law of decrease of power of electromagnetic induction as the square of the distance from its source.

And thanks god for that, otherwise we would have constant resonance.

In order to have control over the resonance of the local environment we put a small induction coil over the first one and connect it to oscilloscope.

What is happening?

We can see the same resonant environment, just much better, because the generator in the absence of the capacitance, not only is pushing the environment in one direction, but also pulling it in the other.

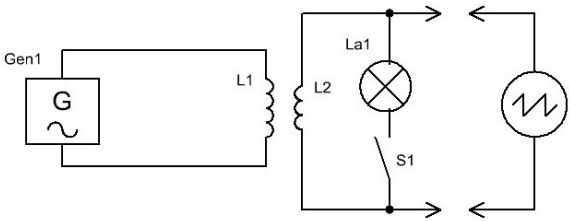

We can see the fluctuating environmental process' optimal power. Immediately we think about adding a small load to use this energy.

To do this, we connect an incandescent light bulb to the coil. We will see it lit slightly. But at this moment we can see that the generator started to extract energy from the power grid equal to the power used by the incandescent light bulb.

At the same time the resonance in the local environment started to drag and we understand that resonance appears in the local environment in accordance to Nicola Tesla's definition - friction!

All the add-ons to this circuit created a simple transformer and the free energy was disrupted and disappeared.

What a shame. We realized that the most important thing was disrupted - the resonance of the local environment!!!

FREE ENERGY CAN BE EXTRACTED FROM THE RESONANT ENVIRONMENT ONLY UNDER THE CONDITION NOT TO DISRUPT THE RESONANCE !!! NOW, HOW DO WE DO THAT ??!!

VI. EVOLUTION OF THE IDEA

In this case to our help comes Rhythmodynamics of U. Ivanov.

Ivanov describes the following development.

When in the Ukrainian common energy grid, inherited from the former USSR, the frequency in Hz was decreased, a massive imbalance was experienced, with power flowing from Russia to the Ukraine. I named it Xoxliatsky resonance.

EXACTLY THIS IS WHAT IS IMPORTANT FOR US FROM THE ENTIRE REACHNESS OF RHYTHMODYNAMIC.

It is interesting if Kapanadze was aware about this or just encountered this process accidentally.

Also, it is very interesting if Alfred M. Hubbard (Hubbard Generator) has known about this property of energy flow or bumped into it also coincidently.

HERE IS REVEALED THE ANSWER TO OUR QUESTION:
HOW TO EXTRACT FREE ENERGY FROM THE RESONANCE OF THE ENVIRONMENT; THE ENVIRONMENT!, AND NOT THE ELECTRICAL CIRCUIT!

VII. SECOND MIXED RESONANCE OF THE LOCAL ENVIRONMENT

This is why, using the analogy for the local mixed frequency resonance, being extracted from the common bigger, 'proper' resonant energy system where this 'hidden' energy is freely available. We only need to pay attention to the parameters of the second induction coil and its resonance design to extract energy from the already established resonance in the local environment of the first induction coil.

1. The amount of energy, extracted from the second induction coil must be of a magnitude 10^{-1}, or even more, less then the amount of energy, created in the first induction coil.
2. As a consequence of that, the second induction coil's magnetic field has to be much smaller then the magnetic field of the first induction coil.
3. Due to the magnetic field requirement, the physical measures and the induction capacity in Henry of the second induction coil have to be smaller then the first one.
4. Extracting power from the second induction coil - It is a consequence of the difference between the resonant frequency of the first and the second induction coil!!!

Could it so happen that the frequency of the second induction coil abruptly changes in such a way as to attract the entire energy from the local resonance?

Of course it can!!!

In Kapanadze's patent there is a description about just that:

The first regulator of the frequency (7) stabilises the created high frequency according with the demand and make order in it, without creating any harmful effect on the exit circuit.

Apparently, above mentioned troubled not only him . . .

It could be said that extracting energy from the resonance of the environment creates also resonance, but its frequency is in the realm of Hz and tenth of Hz, divergent from the frequency of the resonance, created by the first coil.

What should be the electrical schematic construction like and what should be the difference in the frequency to fulfil these conditions - we will define afterwards.

VIII. THIRD RESONANCE - THE CHARGE RESONANCE

Completing all the above and adding the incandescent light bulb to the second coil - everything comes back as it was before - we get the same basic simple transformer, and with it a bad feeling, that without the recorded experimental presentation from Tariel Kapanadze, we would have to stop our efforts in this direction.

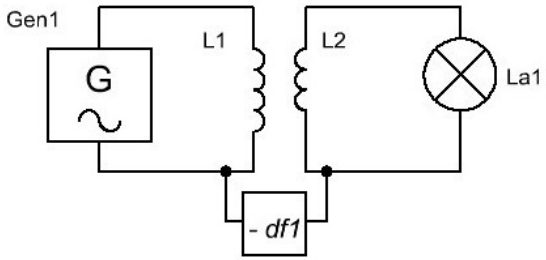

IX. BUT WE CONTINUE TO DEVELOP OUR THOUGHT

Who says that if we add the incandescent light bulb to the second coil we are not going to change, deteriorate the conditions for resonance in the environment? Even with the second coil at resonance frequency to the relevant resonance frequency of the first induction coil.

It is clear what is causing the problem, it will deteriorate because the second resonance from "smoothly pulsating" transforms to frictional! The same light bulb that was used before when we hooked it in parallel to the oscilloscope.

Than, how can we do it? How can we remove this friction?

Actually, we do not need to remove it!

What is electrical current?

According the the military institute:
The professor-major is showing the moving of the current through the electrical schematic: from the positive outlet of the source of power, or the incandescent light bulb or another schematic, and after that to the ground, the ground is a source of energy. So, what is electrical current? Is it only flow of charged particles, electrons through the electrical circuit?

The best definition seems to be given by Horowitz and Hill, the authors of the best selling book - "The Art of Electronics".

Electrical current - this is speed of movement of electrical charge at a point! So, we have a problem to solve: light up the incandescent light bulb.

How can we do that?

1. Apply a potential difference from a direct current source, for example an accumulator.
2. Apply alternating potential difference from the power grid.
3. But we can do it in a different way too: put the incandescent light bulb in a coil connected to a high frequency circuit and the light bulb will light up **without applying** any potential **difference**!

In the last case, there is no electric current going to the **ground, the potential ground source**!

In this case the charges, the electrons, will be bouncing at high frequency and will be breaking the crystal net of the metal.

That is good.

If we add another incandescent light bulb to the circuit, by taking to cables from the light bulb that is in the inductor and connect them to a second light bulb situated outside of the inductor. The second light bulb will not light but will just warm up.

The second light bulb will not light up, because the power of the bouncing charged particles is not enough to create bouncing in the charged particles in the small volume of the string of the second incandescent bulb.

We see again the exact frictional process.

But if we connect **one of the connections to the second incandescent light bulb** to any big iron object, and even better, to a ground, as done by Mr. Kapanadze in the video, then the picture changes immediately.

We have a big free source of charged particles, this is our Earth.

We do not have to push in or push out this limited amount of charged particles being in the small wolfram coil of the light bulb. We create on the free end, an opposite potential, reaching hundreds of volts, in the same way as it is being created in the small wolfram coil situated in the high frequency inductor.

The most important thing we are looking for, is to create - when we have an unlimited amount of charged particles, coming from a big object - **resonance of the charged particles!!!**, in the mass of the thick copper wire, "created" via the first and the second inductions.

There is not electrical current in the common sense of the word!

There is only “bouncing” of the charged particles in the mass of the thick copper wire!

And the load is attached to the green box, considering these conclusions.

THAT IS WHY, “BOUNCING” OF THE ELECTRONS IN THE MASS OF THE THICK WIRE, WHICH HAS ITS SECOND AND ABSOLUTELY NECESSARY END CONNECTED TO GROUND, CAN BE CREATED WHEN ONLY ONE END OF THE SECOND INDUCTION COIL IS ATTACHED TO IT VIA THE LOAD!!!

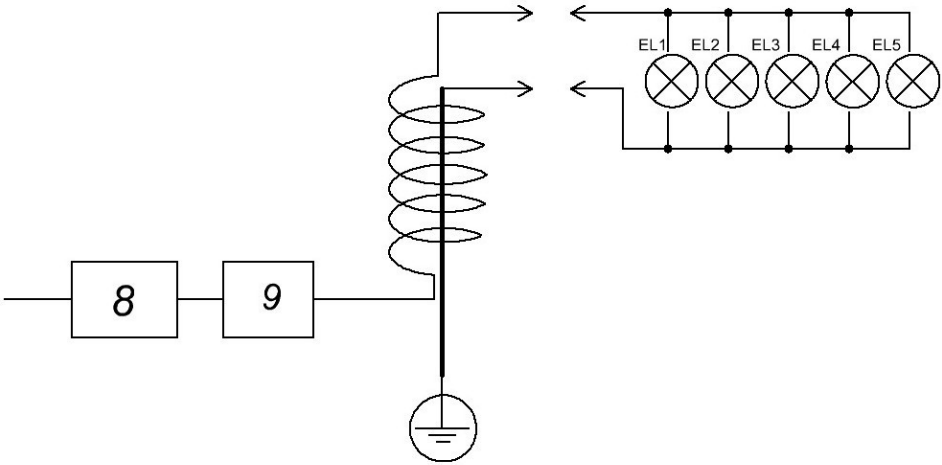

The most important thing is that, there are obstacles in case of friction, for appearance of the third resonance - the resonance of the charged particles.

With your kind permission gentleman, I repeat one more time: there is no electrical current, as is now in the common sense, only frictions. This is why the outlet exposed by the green box is high frequency based!

The most optimal load in this case is the active load, witch is exactly what is the nature of the load of an incandescent light bulb.

This fact, creates by itself a totally new way of dealing with the reactive load in the kind of electrical motors and similar. But the best of the reactive load is that in this type of circuit we can create an additional resonance, a resonance specific to the load extracted!

We are asking ourselves the next relevant question: how to attach the wide spread alternating current motor working on 50 Hz to this type of electric circuit?

To do this, Mr. Kapanadze is using a common amplitude modulator for 50 Hz, noted on the patent schematic as number 11.

X. SO, WHAT DO WE HAVE?

We looked at three conditions, three resonant systems, that need to be in place in order to get free energy.

1. High voltage, high frequency resonant environment, created in the first induction coil.
2. High frequency resonance in the second induction coil, but this resonance has to be low voltage and have different frequency and power rating from the resonance in the first induction coil.
3. Galvanic resonance of the charged particles in the body of the thick copper wire, grounded at one end to receive an unlimited amount of charged particles in order to counter act the friction process in the galvanic resonance. Because in the developed device everything is influencing each other and the friction process of the galvanic resonance is affecting the resonance in the first induction coil.
4. Specific, and different from the traditional method, the way to connect the load.

It is very interesting to tune the ratio in the resonance power in the first and the second coils.

Observation shows the green box has a spark gap of between 1mm and 1.5mm, the voltage should be in the range of 2kV.

The frequency applied to the spark gap should be between 150kHz and 200kHz.

This calculates to a current of: $\frac{5000\text{W}}{220\text{V}} = 23\text{A}$, this is exactly what the amp meter is showing in the video.

It turns out that the power in the first circuit is 10x bigger, and somewhere in the range of 50kW.

Is that true? Are we dealing here with resonance?

Lets do the calculations in a different way.

In the first coil 2000 x 2000 = 4 x 10^6

In the second coil 220 x 220 = 48.4 x 10^3

The ratio $\frac{4\times10^6}{48.4\times10^3} \approx 83$ or roughly 100 times.

This comes to a difference of 2 magnitudes. So this is something.

So, in the local resonance environment in the first induction coil there pulsate 500kW of power, and we extract a quite small 5kW. This on a principle level can be a noise, so that “a military formation of 100 soldiers does not notice the 1 missing man”, 5kW.

Now lets look at the frequency.

If the “Hohlatski resonance” decrement of the frequency in the energy system was 0.5 Hz, this is 1% of 50 Hz.

1% of 200kHz = 2kHz

It gives, that the frequency of the second coil is 100 times smaller, so in the realm of 2kHz. It seems that there is a definite dependency between power and the frequency. But this is for future investigation.

It appears this is a lot better, then trying to get the funny resonance in the second induction coil in Hz or even in the tens of Hz, as I was thinking before.

XI. CONCLUSION

The basic principle approach of the given problem was developed.

There are some issues with the circuit theory but, I explained them earlier, so that it does not obstaclise my point of view.

As a conclusion, I show a schematic to confirm Kapanadze's explanation, that "capacitor (2) is used to extract ..." and here is vividly shown its usage as witch.

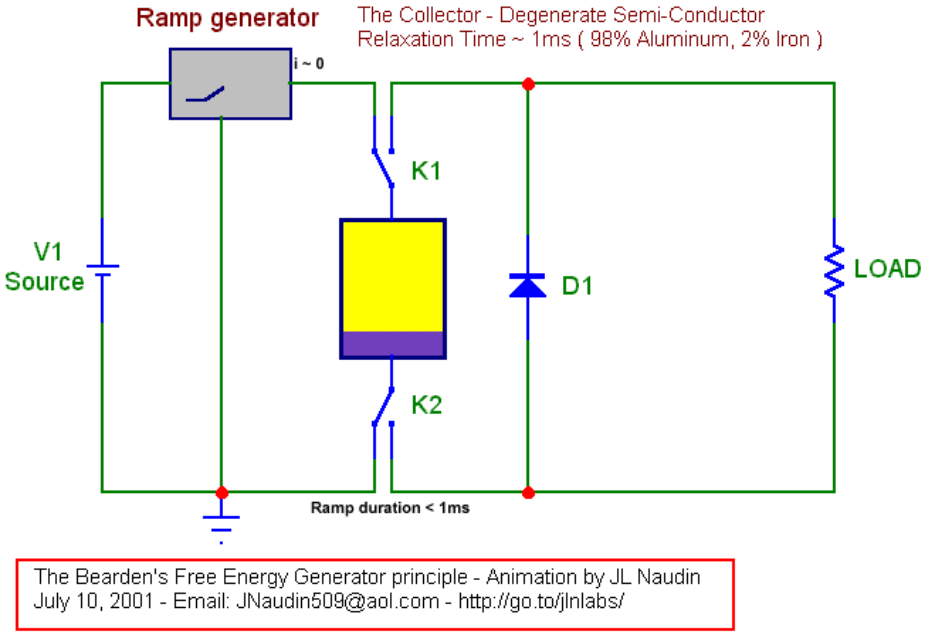

So, now please express your thoughts Gentlemen!

P.S

In principle, Gentlemen, here somehow strangely is interconnected the time dimension, and the time energy transfer, and this is the reason that provoked my investigation of the issue.

But this is a topic, for a lot more serious conversations.

RESONANCE ENERGY METHODS

Donald L. Smith
TransWorld Energy, CEO
September 23, 2002

Fax/Phone 281-370-4547 and e-mail donsm1@earthlink.net

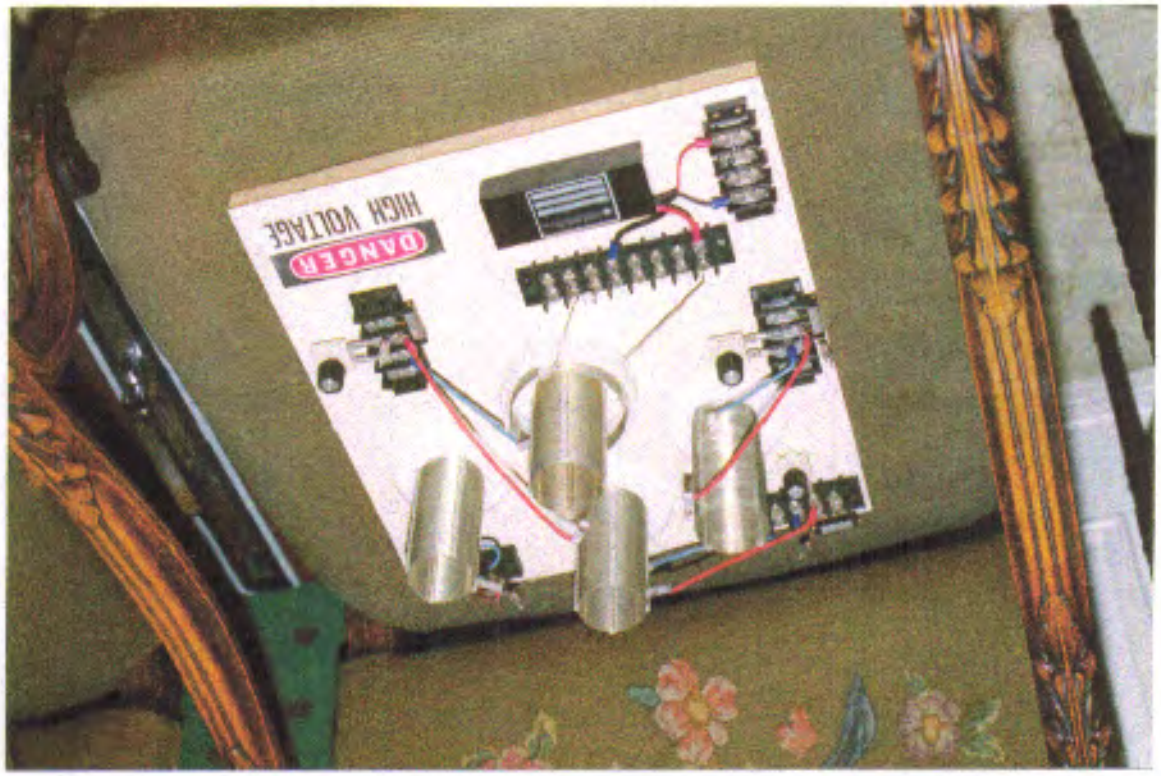
DANGER
HIGH VOLTAGE

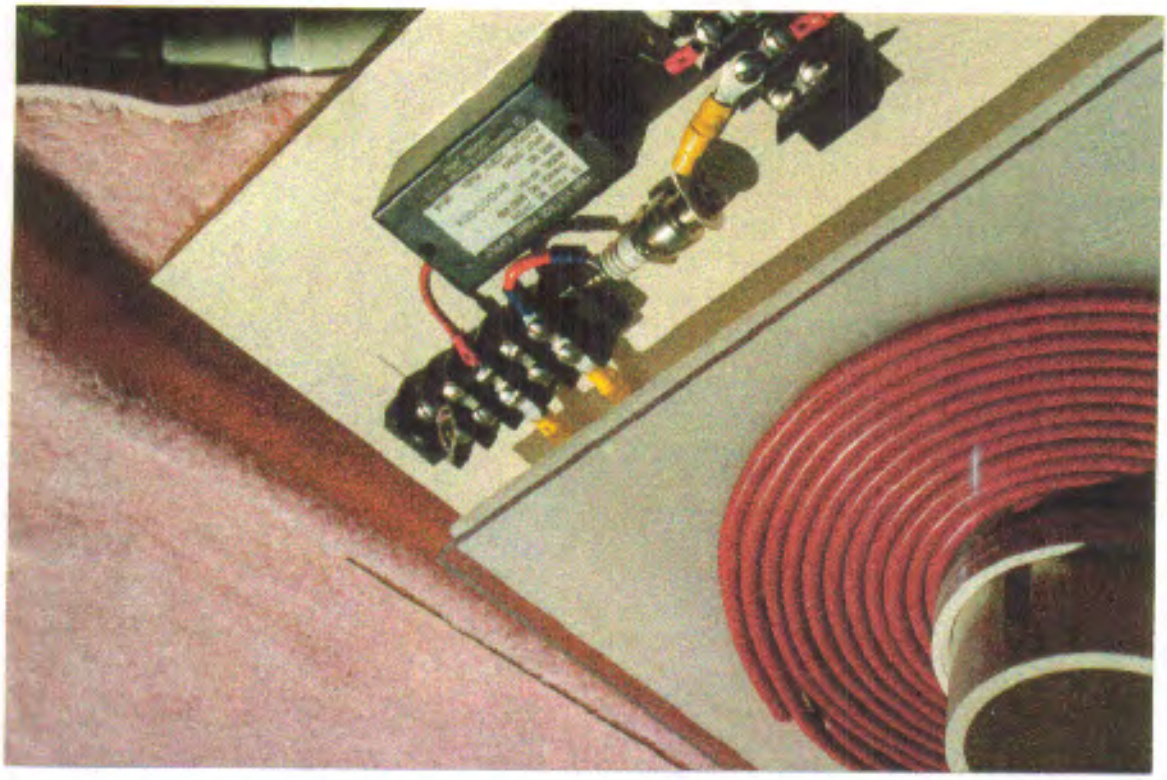

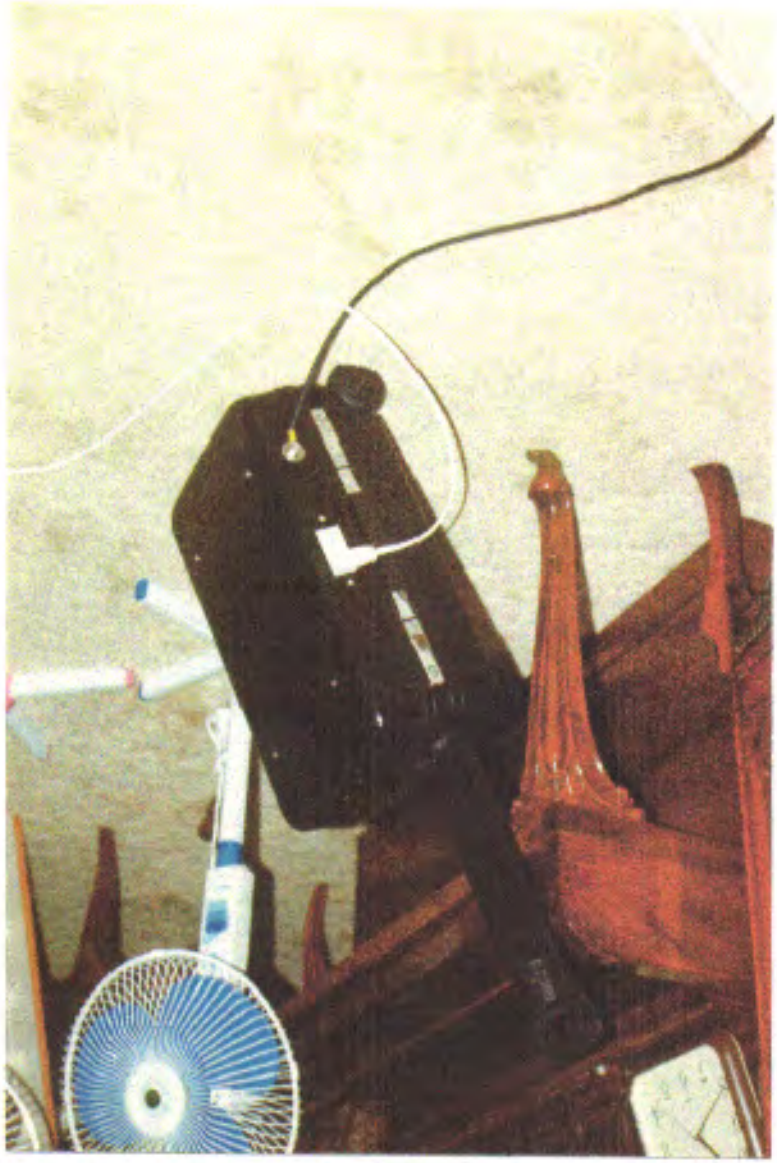

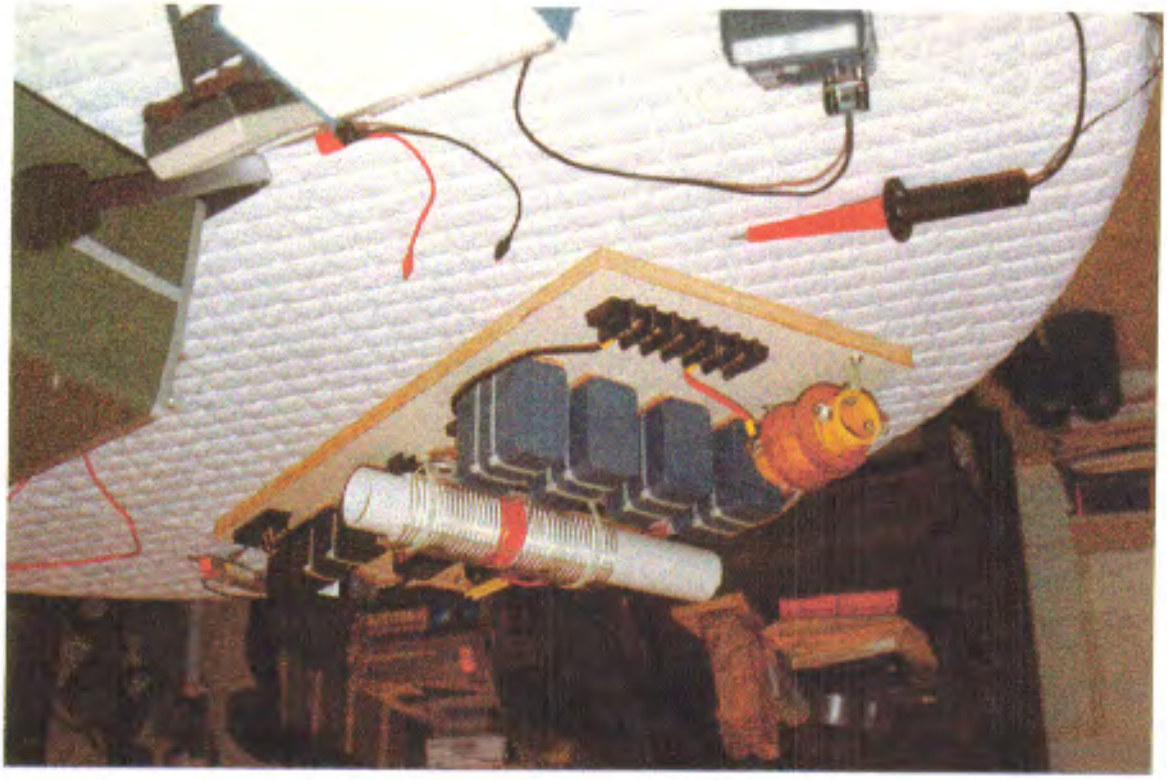

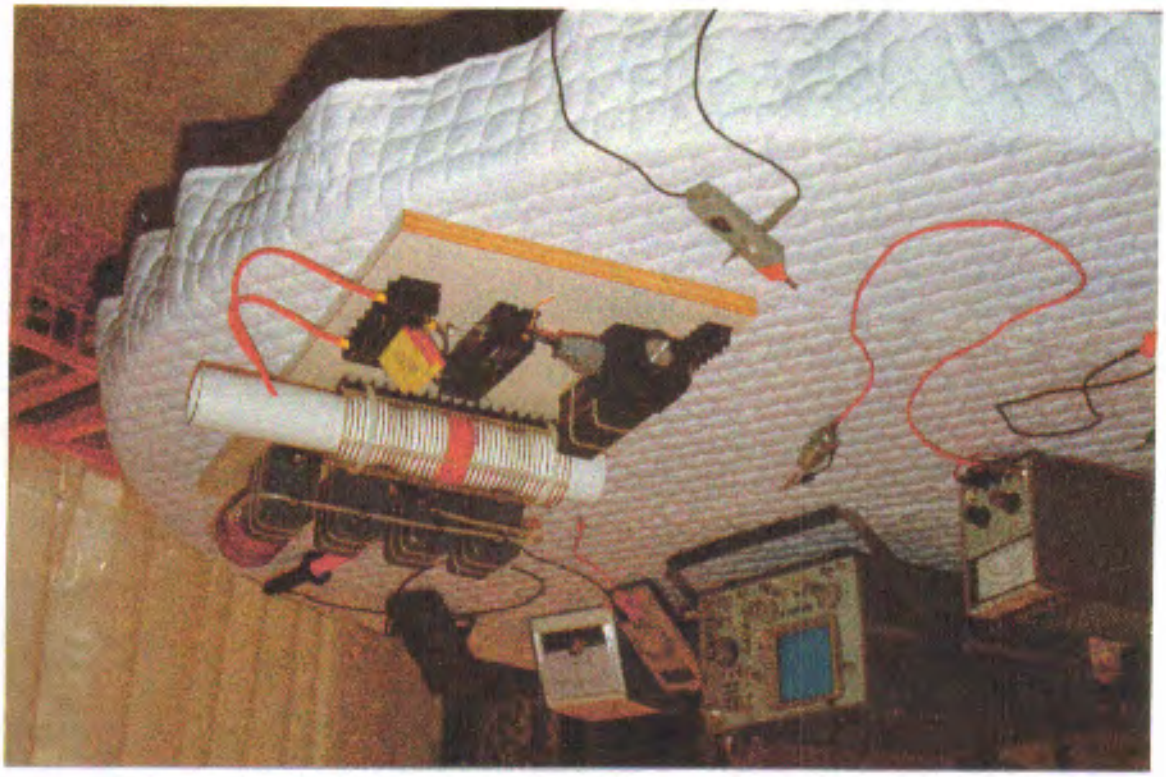

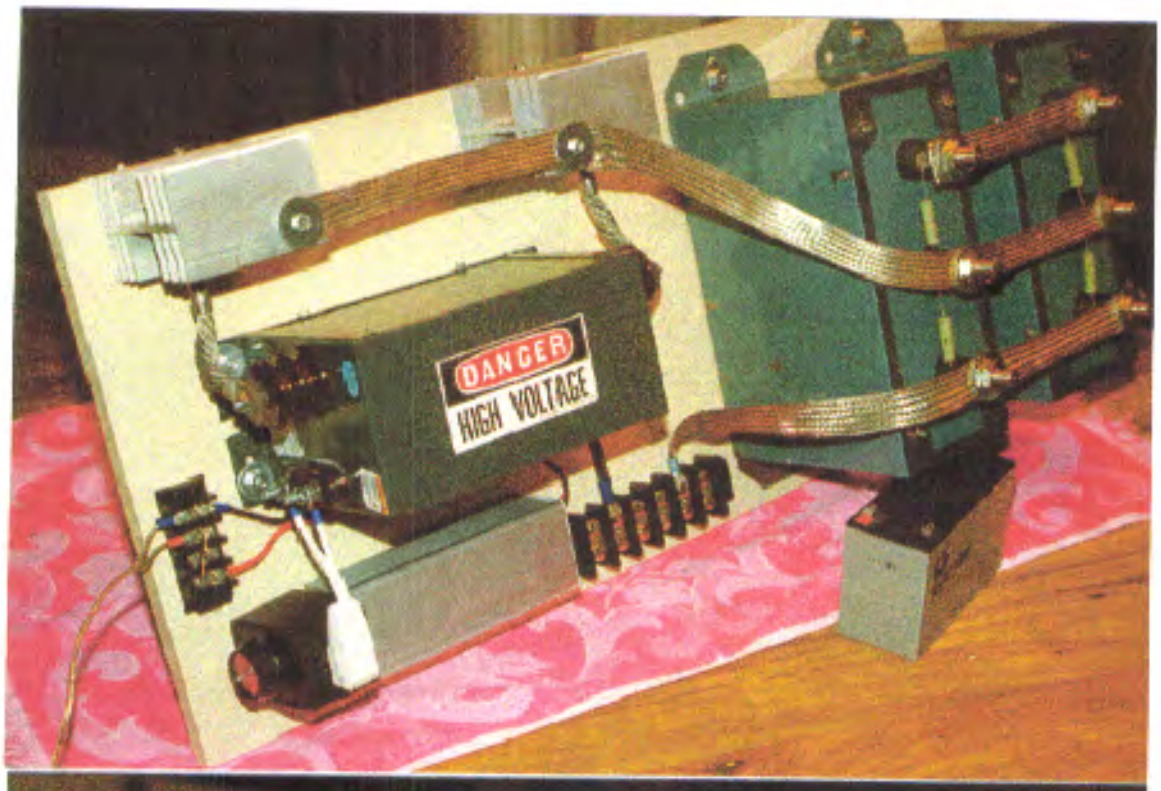
DANGER
HIGH VOLTAGE

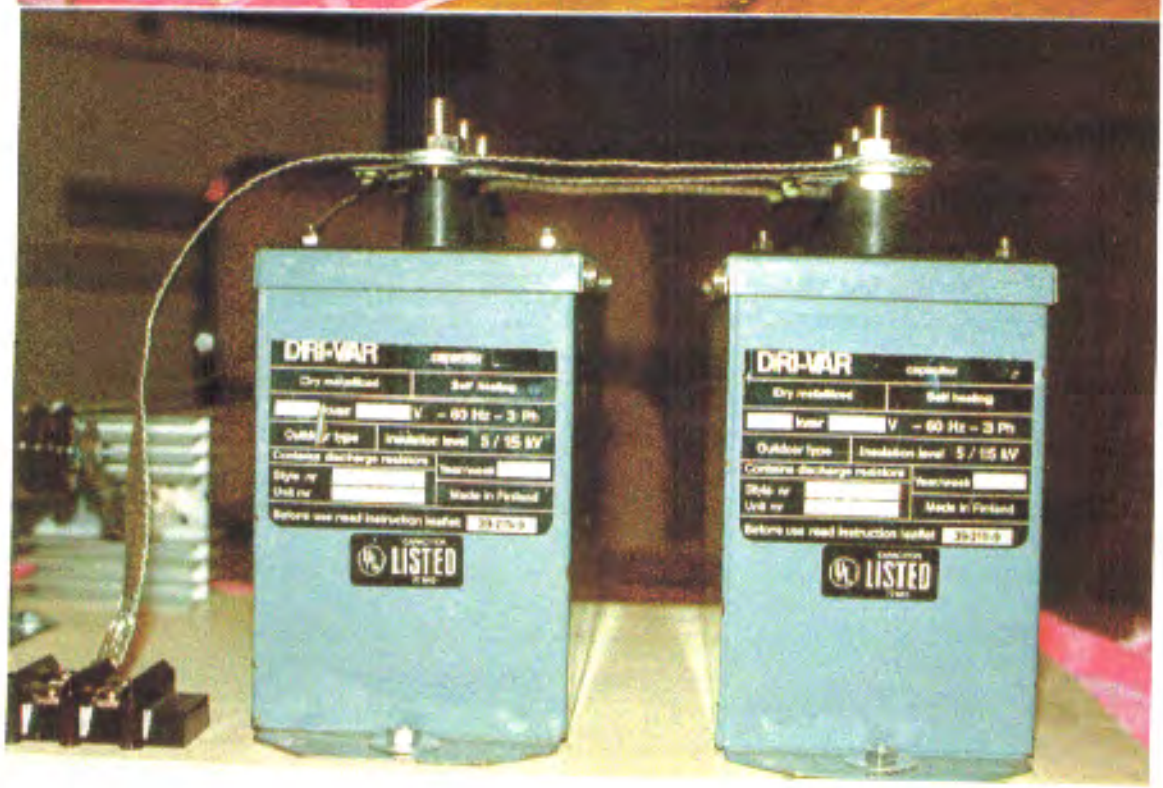
DRI-VAR
Dry metallized
Self healing
V ~ 60 Hz ~ 3 Ph
Outdoor type
Insulation level 5 / 15 kV
Contains discharge resistors
Made in Finland
Before use read instruction leaflet
LISTED
DRI-VAR
Dry metallized
Self healing
V ~ 60 Hz ~ 3 Ph
Outdoor type
Insulation level 5 / 15 kV
Contains discharge resistors
Made in Finland
Before use read instruction leaflet
LISTED

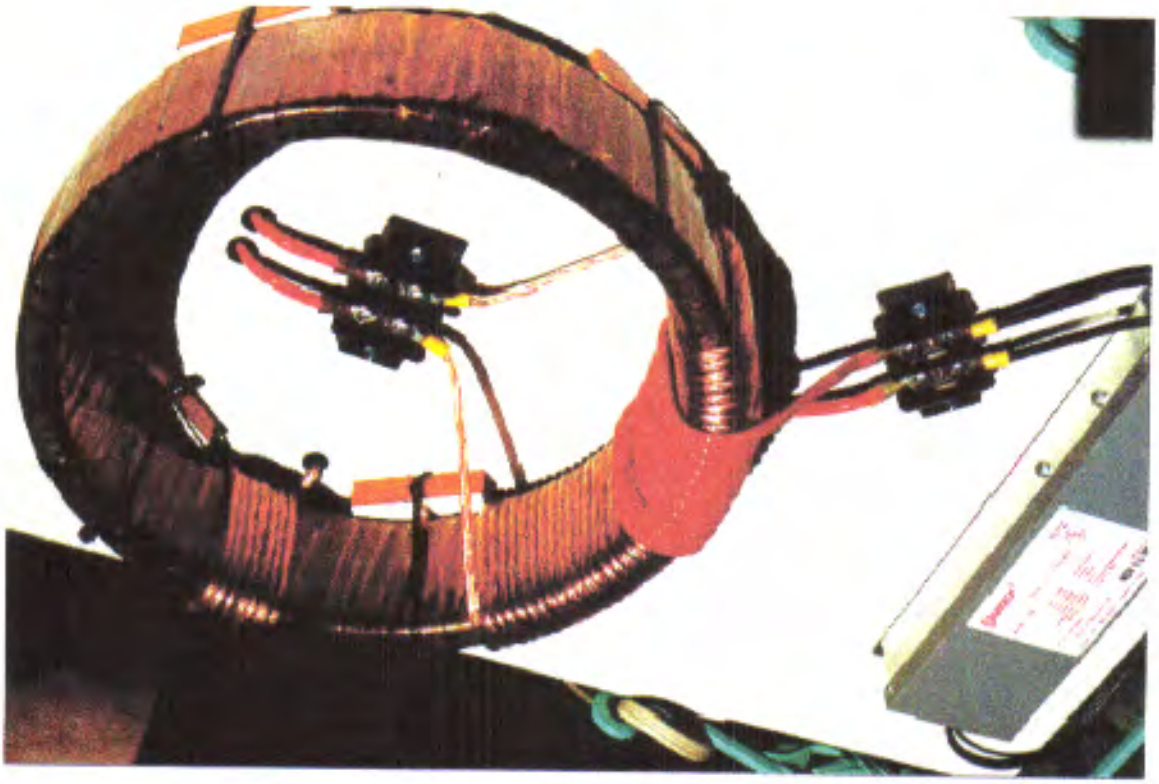

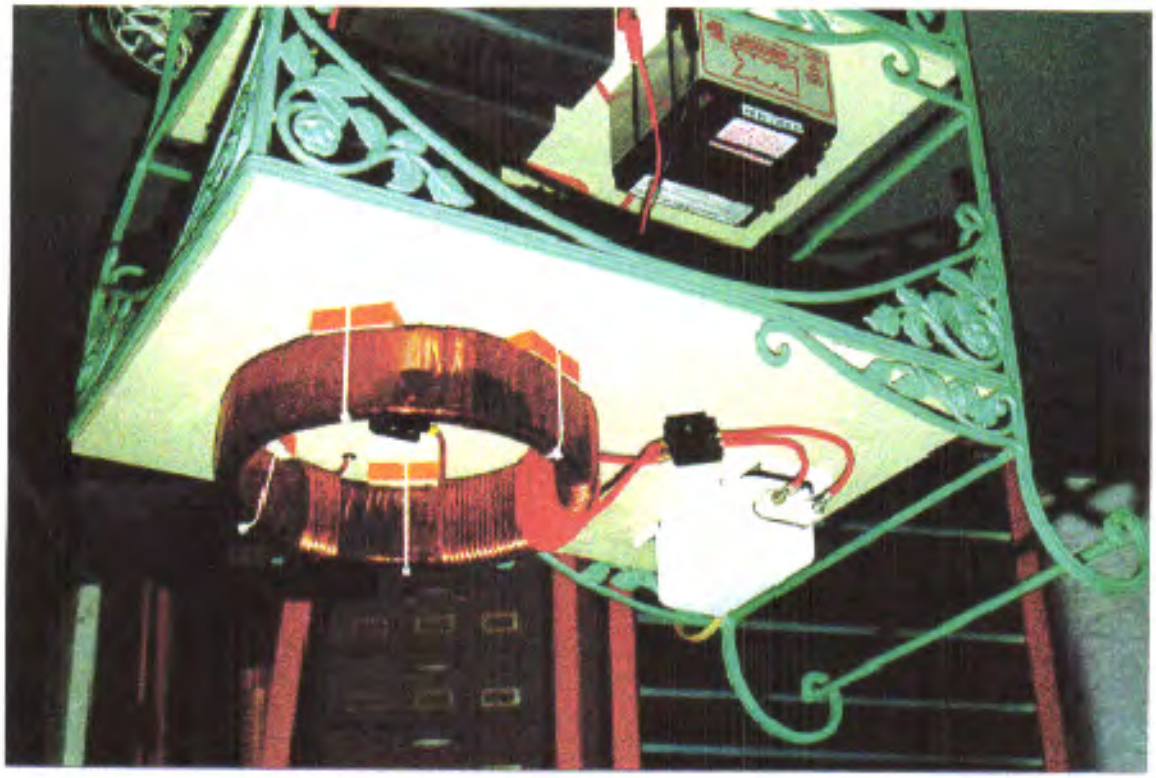

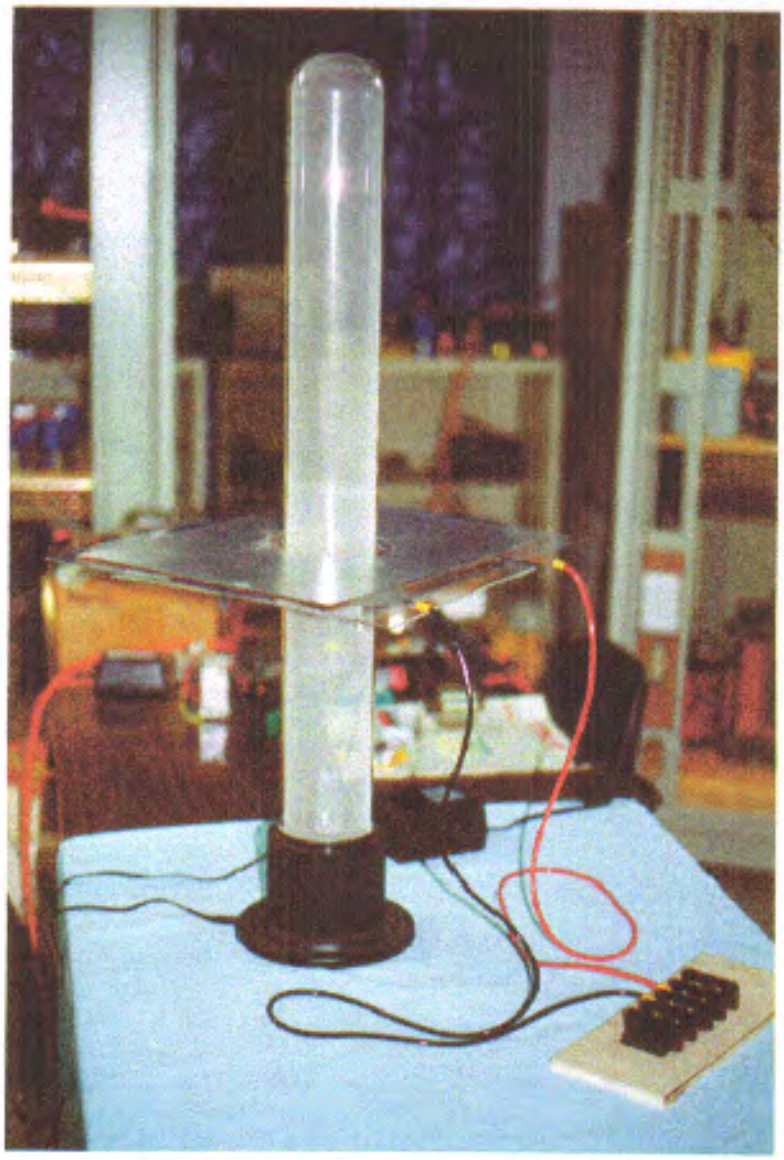

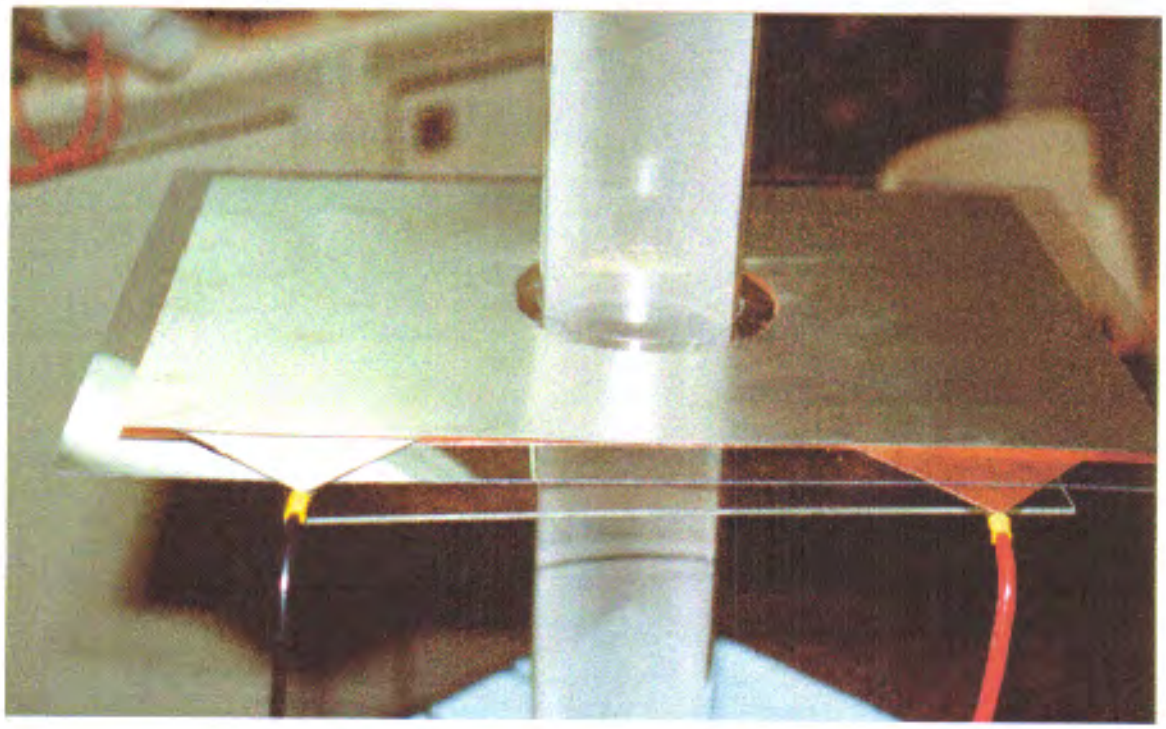

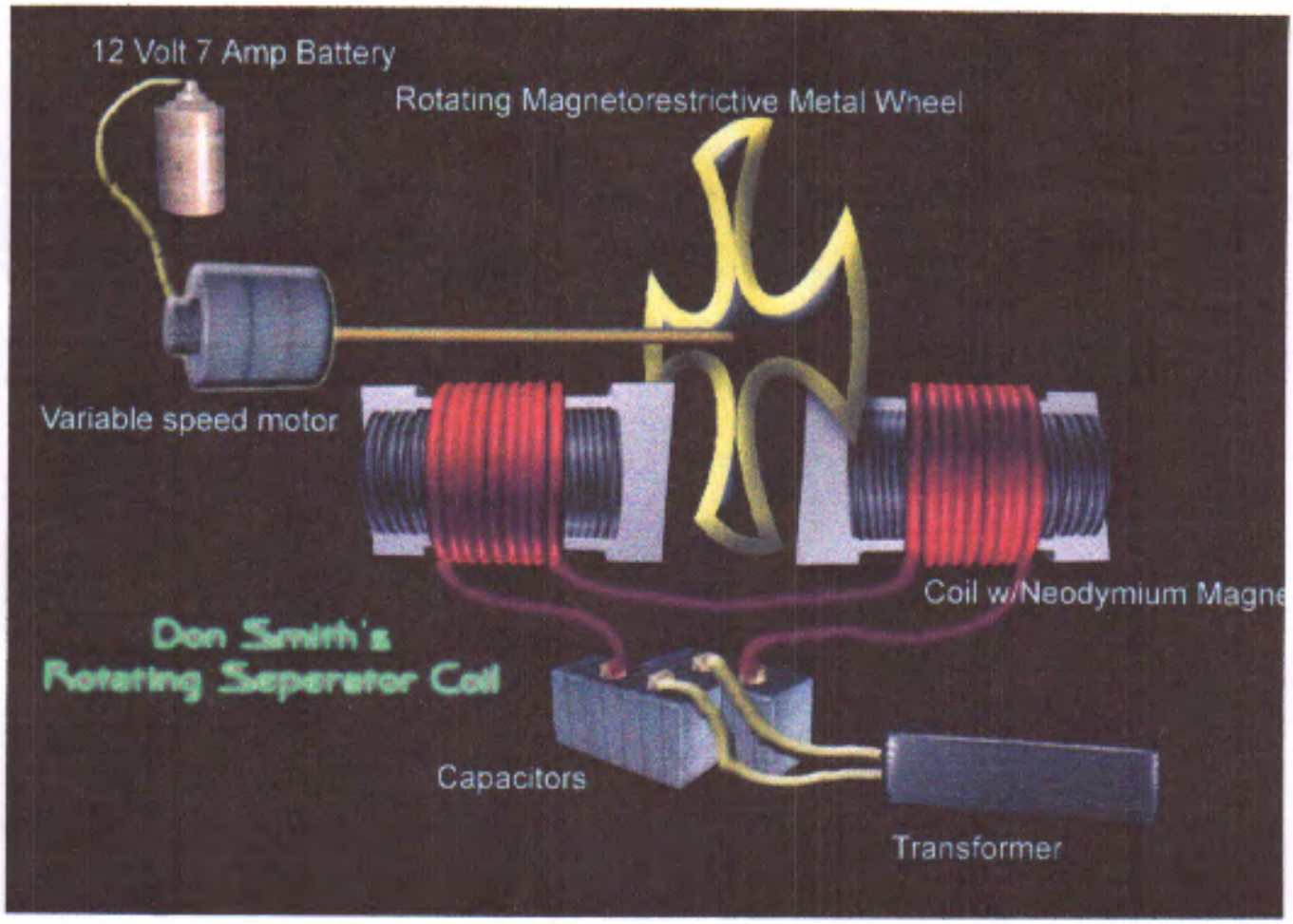
12 Volt 7 Amp Battery
Rotating Magnetorestrictive Metal Wheel
Variable speed motor
Coil w/Neodymium Magne
Don Smith's
Rotating Seperator Coil
Capacitors
Transformer

DIPOLE TRANSFORMER GENERATOR

DESCRIPTION

TECHNICAL FIELD:

The Invention relates to loaded Dipole Antenna Systems and their Electromagnetic radiation. When used as a transformer with an appropriate energy collector system it becomes a transformer generator. The invention collects and converts energy which, with conventional devices is radiated and wasted.

BACKGROUND ART:

An International search of Patent Data Base's for closely related methods did not reveal any prior Art with an Interest in conserving radiated and wasted magnetic waves as useful energy.

DISCLOSURE OF INVENTION:

The Invention is a new and useful departure from transformer generator construction, such that radiated and wasted magnetic energy changes into useful electrical energy. Gauss Meters show that much energy from conventional electromagnetic devices is radiated back into the ambient background as wasted. In the case of conventional transformer generators, a radical change in the physical construction allows better access to the energy available. It is found that creating a dipole and inserting capacitor plates at right angle to the current flow allows magnetic waves to change back to useful electrical (coulombs) energy. Magnetic waves passing through the capacitor plates do not degrade and the full impact of the available energy is accessed. One or many sets of capacitor plates as desired may be used. Each set makes an exact copy of the full force and effect of the energy present in the

magnetic waves. The originating source is not depleted or degraded as is common in conventional transformers.

BRIEF DESCRIPTION OF THE DRAWINGS:

The Dipole at right angle allows the magnetic flux surrounding it to intercept the capacitor plate or plates at right angle. The electrons present are spun such that the electrical component of electron is collected by the capacitor plates. Essential parts are the South and North component of an active Dipole. Examples here presented exist as fully functional prototypes and were engineer constructed and fully tested for utility by the Inventor. Corresponding parts are utilized in each of the three examples as shown in the Drawings.

DRAWING 1 OF 4 : VIEW OF THE METHOD

N = North and S = South of the Dipole

1. North and South component of the Dipole.
2. Resonate High Voltage induction coil.
3. Dipoles electromagnetic wave emission.
4. Heaviside current component.
5. Dielectric separator for the capacitor plates
6. For purposes of the drawing, a virtual limit of the electromagnetic wave energy.
7. Capacitor plates, with dielectric in between.

DRAWING 2 OF 4 : COMPONENTS, 2A and 2B

2-A

1. Hole for mounting Dipole B-1.

1

2. Resonate high voltage induction coil.

5. Dielectric separator, a thin sheet of plastic separating the capacitor sheets.

7. Capacitor sheets, upper is aluminum and lower is copper.

8. Battery system, deep cycle.

9. Inverter input Direct Current, output is 120 Volts at 60 cycles.

10. Connector wires.

12. Output to point of use being the load.

2-B N = North and S = South component of the Dipole

1. Metal rod, being soft magnetic metal such as iron.

2. Resonate high voltage induction coil.

10. Connector wires.

11. High Voltage input energy source such as a neon tube transformer

DRAWING 3 OF 4 : Proof of Principal Device using a Plasma Tube as an active Dipole.

N = North and S = South Components of the active Dipole.

5. Dielectric separator of the capacitor plates.

7. Upper capacitor plate, upper being aluminum and lower being copper.

10. Connector wires.

15. Plasma Tube, 4 feet Length and 6 inches diameter.

16. High Voltage Energy source for the active Plasma Dipole.

17. Connector block, to outlet for testing and use.

DRAWING 4 OF 4 : Manufactures Prototype, Constructed and fully tested.

1. Metal Dipole rod.

2. Resonate High Voltage induction coil.
10. Connector wires.
17. Connector block for input from high voltage energy source.
18. Clamps for upper edge of capacitor packet.
19. Support Device for The Dipole Transformer Generator.
20. Packet of Capacitor Plates.
21. Output connectors of the capacitor, poducing energy into a deep cycle battery which then powers the inverter.

BEST METHOD OF CARRYING OUT THE INVENTION:

The Invention is applicable to any and all electrical energy requirements. The small size and it's high efficiency makes it an attractive option. It is particularly attractive for remote areas, homes, office buildings, factories, shopping centers, public places, transportation, water systems, electric trains, boats, ships and all things small or great. Construction materials are commonly available and the skill level required is moderate.

CLAIMS:

1. Radiated magnetic flux from the Dipole when intercepted by capacitor plates at right angle, changes to useful electrical energy.
2. A Device and method for converting for use, normally wasted electromagnetic energy.
3. The Dipole of the Invention is any resonating substance such as Metal Rods, Coils and Plasma Tubes which have interacting Postive and Negative Componets.
4. The Resulting Heavyside current component is changed to useful electrical energy.

ABSTRACT

A Electromagnetic Dipole Device and Method, wherein radiated and wasted energy is transformed into useful energy. A Dipole as seen in Antenna Systems is adapted for use with capacitor plates such that the Heavyside Current Componet becomes a useful source of electrical energy.

Dipole Transformer Generator

DRAWING 1 of 4

Not to Scale View of Method

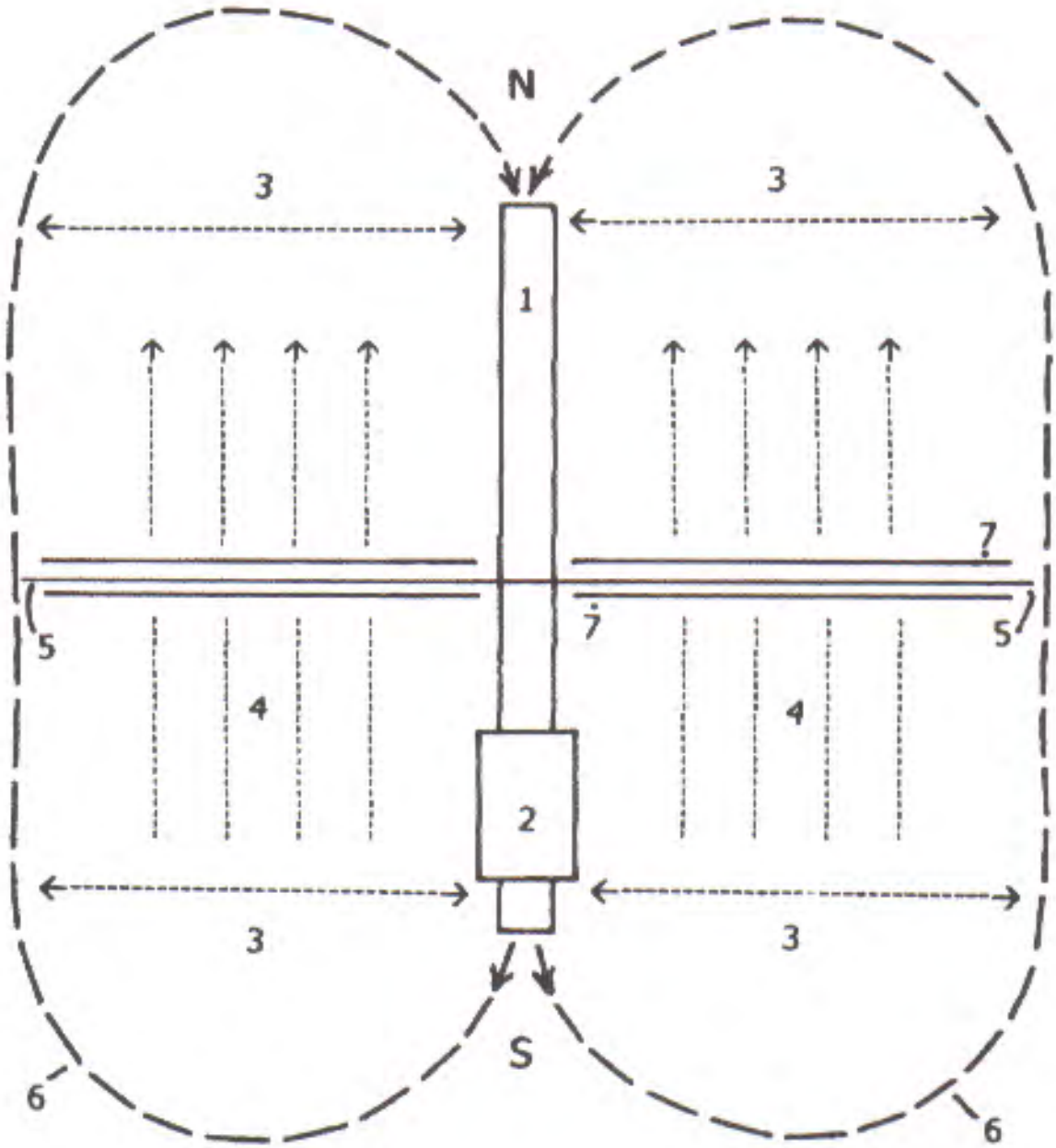

Dipole Transformer Generator

DRAWING 2 of 4

Not to Scale Components

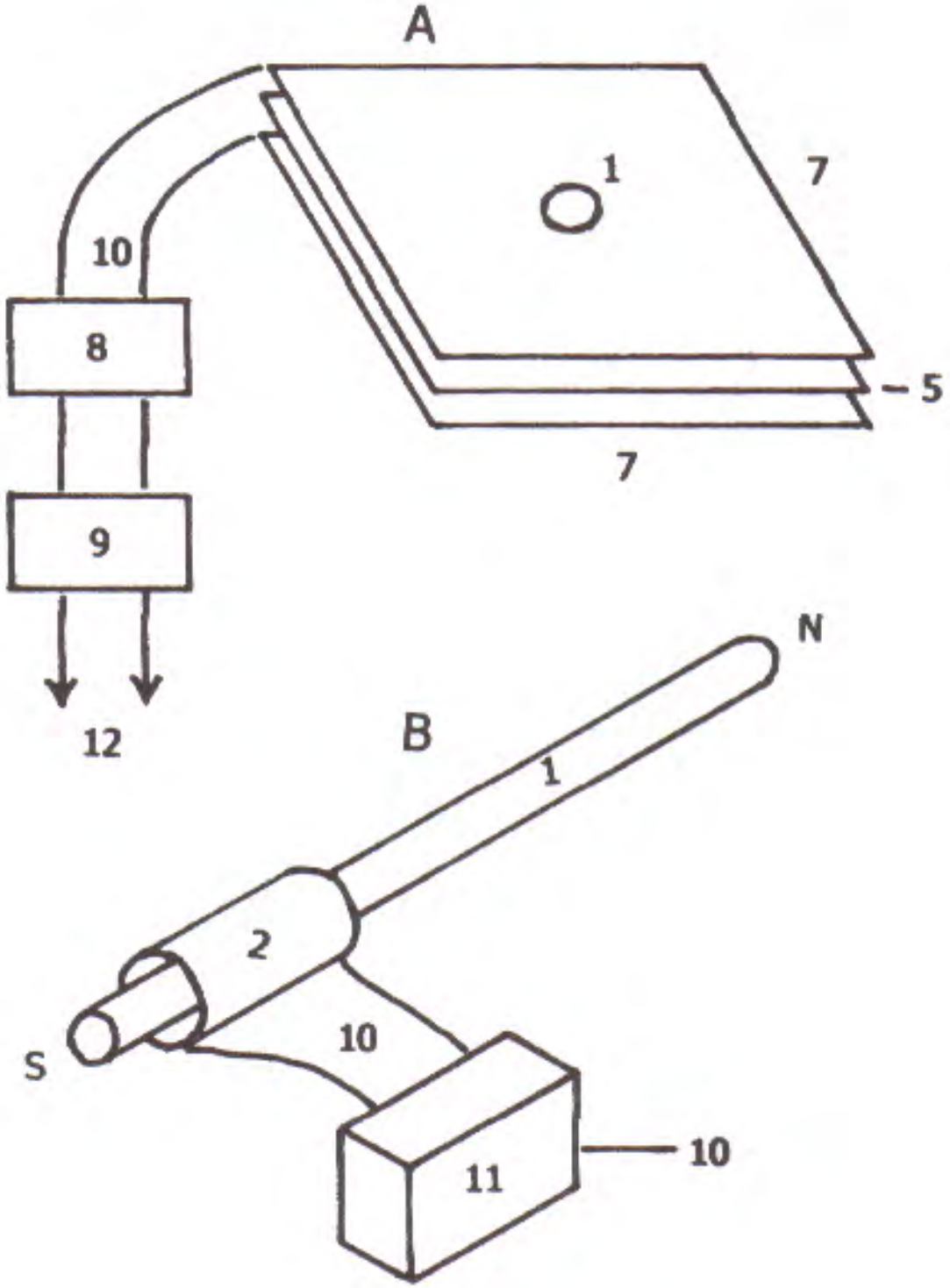

Dipole Transformer Generator

DRAWING 3 of 4

Not to Scale Proof of Principle Device

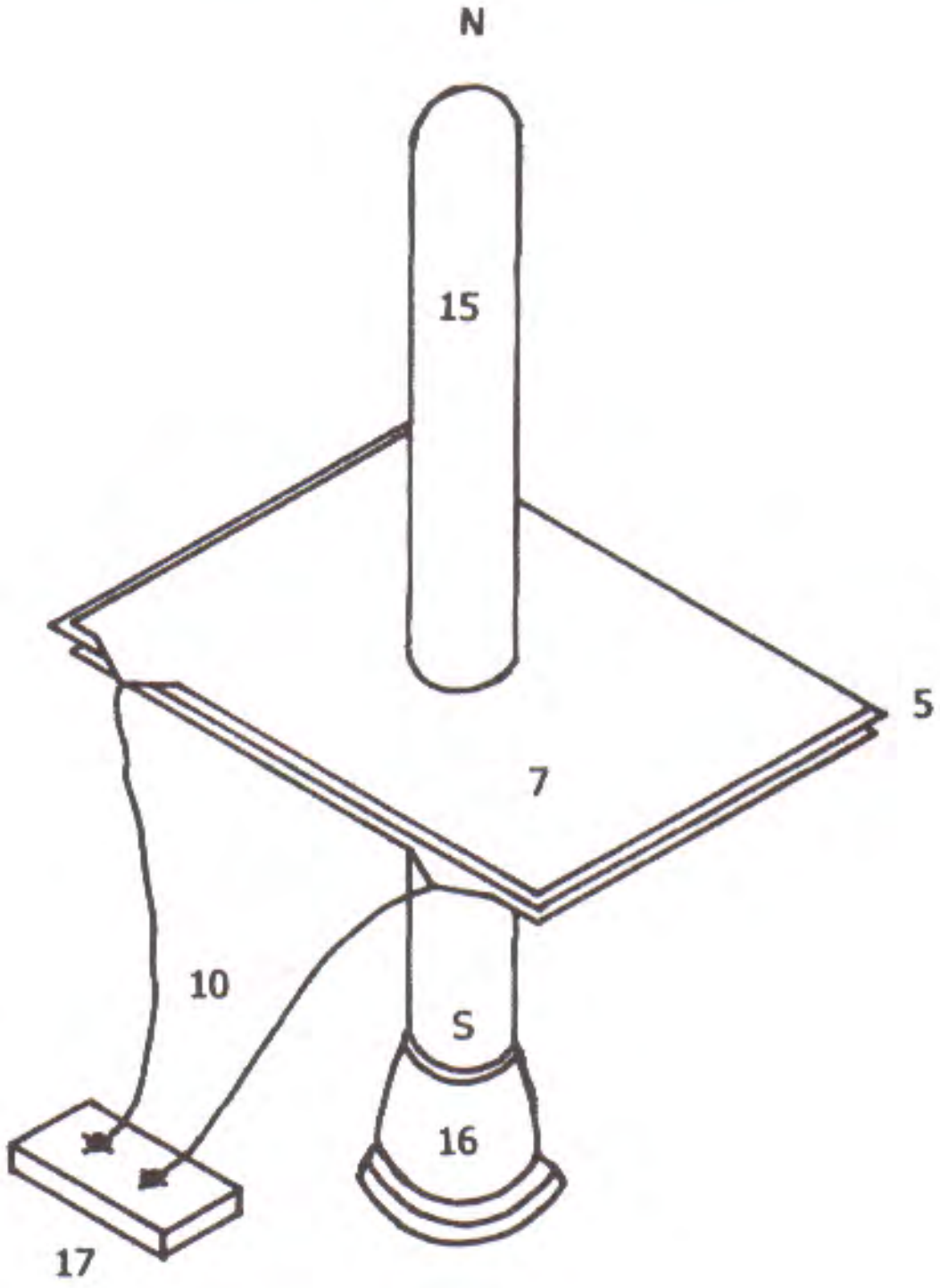

Dipole Transformer Generator

DRAWING 4 of 4

Not to Scale Manufacture's Prototype

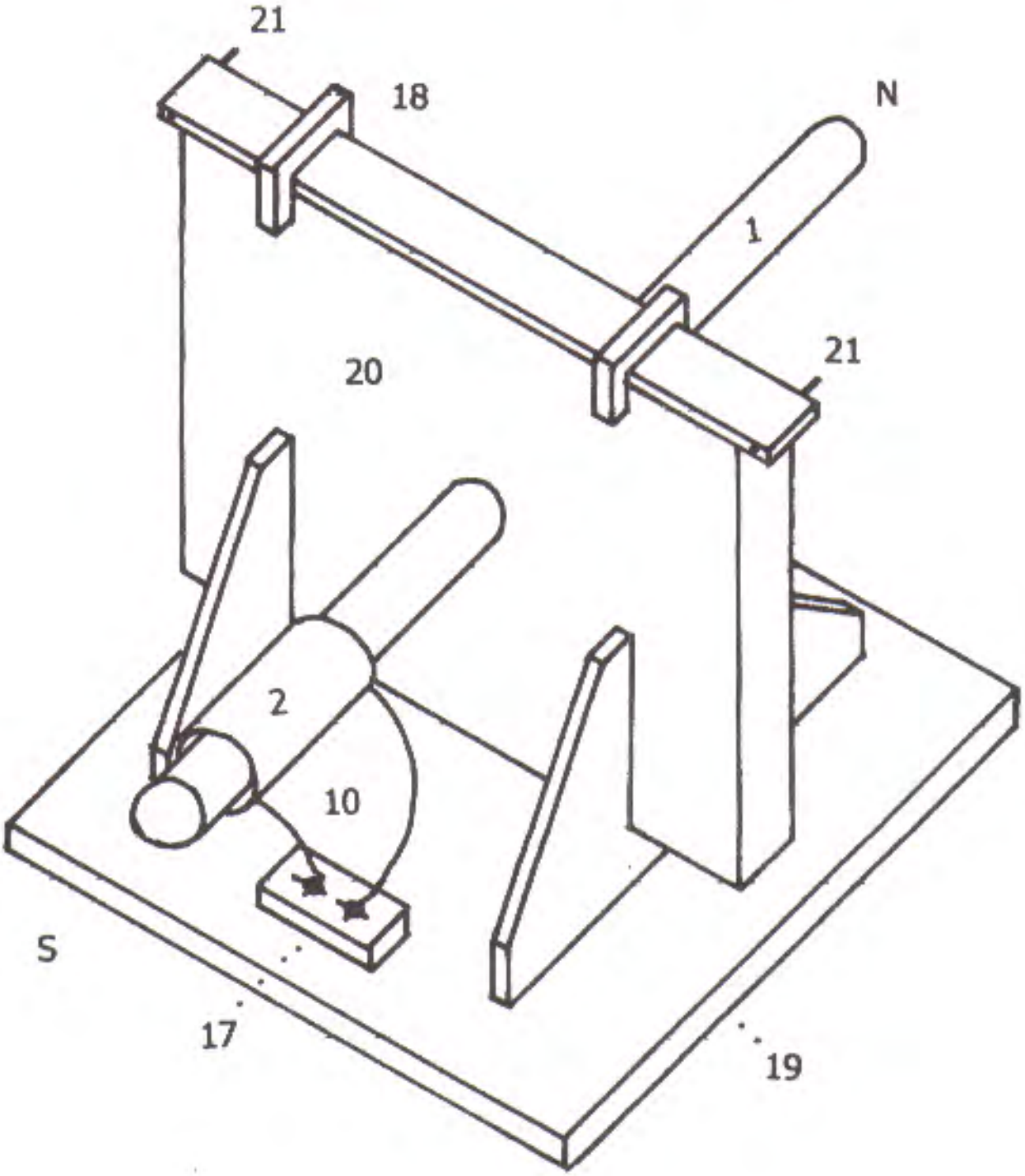

TransWorld Energy
227 W. Airtex Blvd.
Houston, Tx. 77090

September 23, 2002

Phone: (281)876-9200
Fax: (281)876-9216

Web-Site: altenergy-pro.com
E-mail donsm1@earthlink.net

Dear Reader:

TransWorld Energy is dedicated to improving the Human Condition in the Field of Energy which at the same time makes possible Healthy Water and increases the Food Supply. A never ending source of energy found throughout the universe is easily accessed with the minimum of effort and cost. The technology for doing this has been around since the 1820's. Selfish special interest has made sure that the technology remains discredited. People who control the Energy Sources control the World.

Extensive research and development by TransWorld and Associates has been progressing for more than 15 years. Numerous successful Energy Producing Devices have been produced and demonstrated throughout the World. Some of these can be viewed by the Web Site located at all major search engines (Such as Lycos, Yahoo, Altavista, NorthenLight and more than 2,000 others throughout the World).

The Book which You are viewing has more than 40,000 copies in circulation. It has been translated and distributed in all major languages including Japanese, Arabic, Portuguese, French, Italian, Russian, Chinese, German, Spanish and many more. There are seven editions in circulation. An enormous interest is evident in the subject matter. An average of fifty e-mails per day from the ends of the Earth (about 1,500 per month).

Once the Web Site and the book are viewed, it will become evident that abundant, self sustainable energy is available every where for the taking. This is natural energy which does not harm the environment or those using it. The proper Device for Collecting is all that's required.

The Good News is that the problem is solved and with assistance an ultimate source of energy that is environmentally benign, in abundance throughout the universe and inexpensive to capture is there for the taking.

Thank You for your consideration

_____

Donald L. Smith, CEO

MEM

Electrical Energy Generating System

Description and Function:

Generation of Electrical Power requires the presence of electrons with various methods of stimulation, yielding magnetic and electrical impulses, collectively resulting in Electrical Energy (Power). In place of the mechanical - coils and magnet system, present in conventional electrical power generation, visible moving parts are replaced by resonate magnetic induction, using radio frequency. Transfer of energy by resonate induction is related to the ratio of the square of the cycles per second.

The Energy System, here presented, operates at millions of cycles per second verses the conventional 60 C.P.S.'s. This tells us that it has a size advantage over conventional methods. The same advantage applies to the amount of electrical energy output. Therefore the Device is small in size and produces large amounts of Electrical Energy. The Electrons acquired are from the surrounding Air and Earth Groundings, being the same source as in conventional methods. This is accomplished by magnetic resonate radio induction.

Applications:

This Electrical System adapts nicely to all Energy Requirements. It is a direct replacement to all now existing Energy Systems. This includes such things as Manufacturing, Agricultural, Home Usage, Office Complexes, Shopping Centers, Rail Transportation, Automobiles, Electrical Power Grids, Municipalities, Subdivisions, and Remote Areas. Briefly, only the imagination is the limiting factor.

Economic Possibilities:

No Historical Reference Point exist for a comparison of the Possibilities of this System. One can see from the impacted applications listed above that the magnitude exceeds any known invention, presently a part of the Human Experience.

Present and Future Plans:

The Energy System has been in the developmental stage during the past seven years. It is Patent Pending # 08/100,074 with the Patent Office. No prior art exist based on the Patent Office response. The System is presently being introduced into the World Market.

Useful energy occurs as the result of imbalances of ambient and is a transient phenomena. In the electrical field it is a closed system subject to heat death , which severely limits its utility . The flip side of the electron produces magnetic waves which are an open system , not subject to heat death . These waves being unrestricted are the universal source of energy . When resonate unlimited duplicates from this one source are available . Therefor the key to unlimited energy is Magnetic Resonance . In order to understand this requires putting a stake through the Heart of Antique Physics . Nonlinear and Open Systems are universally available in Magnetic Resonance Systems , Explosions of any sort [includes Atomic] Combustibles of any type . Mechanical equivalents would be levers . pulleys and hydraulics . A highly obvious example is the Piano where the Key impacts the one note giving one sound level , which resonates with it's two side keys providing a much higher level . Magnetic Resonance Energy clearly amplifies it's self demonstrating more energy out than in .

Ohmic resistance does no apply to Magnetic Resonance which travels unrestricted for great distances , therefore multitudes of electrons are disturbed, who's back spin translates magnetic into usable electric energy . The right angle component of the magnetic flux provides - translates into useful electrical energy . Taken at right angle the Magnetic Dipole provides an unlimited source of electrical energy . The writer recognized world wide for his knowledge and experience . See his Web Site at altenergy-pro.com .

Gravity is a function of spin phenonm as observed in gravity separatation of liquids Whin spun milk and cream separates . Therefor relative specific gravity is function mass verses spin . Magnetic's and gravity are both spin related . In part spinning a top levitates when spun . Therefor spinning magnetic fields Are a functional motor source as in flying saucer's .

ABSTRACT: Technology of New Energy:

Developments in understanding of Electricity and Materials not previously available allows construction of Devices which collect energy from the Earth's Ambient Electrical Background in large quantities. This Energy is naturally occurring, is environmentally benign and available everywhere. It's available where ever and whenever required. New Devices use Resonate Magnetic Waves which replicate upon spinning the locally present electrons, providing multiple duplicate copies of the Energy Present. Each electron when spun yields both magnetic and electric waves in equal proportion. The electrical component is a closed system limited by Ohms Law. The magnetic component is an open system not limited and replicates multiple copies of the energy present. Special materials and recent development allow the magnetic energy to reproduce through resonance, unlimited duplicate copies, acquired from the ambient background. These Devices harvest the energy that has and is always present universally. Conventional methods consist of coils and magnets systems. Upon moving past each other, the magnetic flux field disturbs electrons which yield electricity, which is collected by the coils system. This is accomplished electronically with the new technology, with out moving parts and the energy is multiplied such that the Device becomes self sustaining once started. This Technology as previously presented World Wide will be shown at the the Conference.

Dr. Smith
www.altenergy-pro.com
e-mail donsm1@earthlink.net

Putting a stake throu through Heart thus removing the mental block put there by antique physics is required. Conditions where in this becomes necessary are none linearity , resonance and explosions of any sort.
Combustibles of any sort such gasoline and atomic explosions are good examples where in more energy out than in, is obvious. You can add to that nonlinarty found in pulleys, hydraulics steam power and such.
Magnetic resonance is highly obvious source for multiplying energy out. The sound system present in the piano demonstrates this very clearly. Energy amplification clearly present in the above demonstrates the silliness attested to by many Physicist .
Ohmic resistance does not apply to magnetic resonance which travels unrestricted for great distances, therefor multitudes of electrons are disturbed, who's back spin translates from magnetic to usable electric energy . These same electrons have been around from the beginnings , undiminished and remain so until the end of time.

ELECTRICAL ENERGY SYSTEMS PREFACE

Useful Electrical Energy is obtained directly from electron spin induced by incoming magnetic waves or indirectly through mechanical exchange as in dynamo type devices. Simply put electron spin converts from magnetic to electrical energy and vice versa. Nature for free provides grand scale magnetic wave induction through out the universe. In Electrical Systems movement is at right angle to the direction of current movement. This explains the rotary movement of the Earth and other related Systems. The rate of Spin for the Earth is known as well as the mass (5.98 X 10 to the 24 th. kg)* therefore the amount of Electrical Energy incoming which produces this action can be calculated. It can be easily be seen that the incoming magnetic wave energy is Vast and Continuous. As an accretion mass, the Earth is an Energy Sink. getting it's energy from elsewhere, being Cosmic, Galactic and Solar.

Conversion of incoming magnetic waves into electrical energy provides an unending, inexpensive and environmentally friendly source available to all. Cosmic and Galactic Energy is available twenty four hours per day. Large amounts of this Energy accumulates in the Earth's radiation belts. This Giant Energy Storage, when properly understood provides a major source of free unending electrical energy. One of My Inventions plugs into this vast energy source.

A perverse Intentional Ignorance on the part of the Establishment prevents recognition of the importance of the Energy Systems herein. Any new system favorable towards the masses is considered as disruptive and therefore not allowed. Those who have the (Gold) Energy Rule (Golden rule) Mandated Destruction of all Humanity is not a consideration..

This Presenter will remove some of the Fog placed with intent of preventing the recognition of this unending, environmentally clean electrical energy Source, present throughout the Universe. The Cost of Harvesting and Using this Free Energy is a function of Human Stupidity.

* "Physics for Scientist and Engineers", Raymond A. Serway, Saunders College Publishing, Second Edition, page 288, Table 14.2

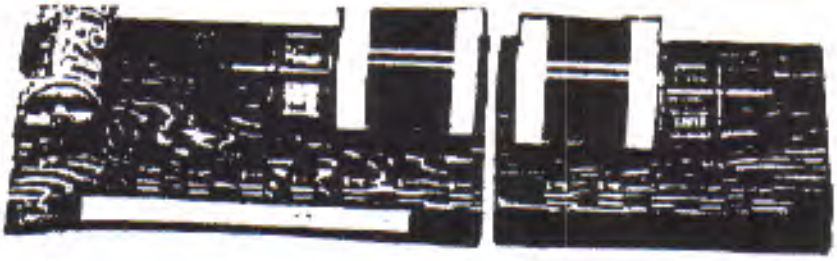

RESONANCE CIRCUITS DEMO

Used to demonstrate electromagnetic radiation between two L/C circuits - one a transmitter and the other a receiver. When the 1.5 volt power transmitter is pulsed, the radiated signal is picked up by the remote receiver circuit which then lights up a 70 volt neon lamp.

With this apparatus, the student quickly understands some basic principles governing wireless communication, broadcasting, etc.

8486 $49.95

The SCIENCE SOURCE
WALDOBORO, MAINE 04572

(207) 832-6344 P.O. BOX 727

Figure 1

Diagram of transmitter and receiver coils.

ULTIMATE ENERGY SOURCES

A human is a speck of dust on Earth, the Solar System is a speck of dust in the Galaxy and in turn it's a speck of dust in the Universe (Cosmos). All of these respectively represent vast ambient energy reservoirs. Awareness of the Sun opens doors into other energy sources. Electromagnetic Energy present everywhere throughout the Universe is accessed by catalytic activity, directly as in Solar Cells or indirectly as by mechanical means. When Resonate, Magnetic Waves (Faraday's Action at a Distance) allows Energy Activation Transfer to remote points of usage. Capture and use of this Energy is optional as to Method and therefore it's cost (Free Energy) is a function of Human Stupidity.

Direct access is more desirable and technology transfer from Solar Cell type Devices provides the Catalyst. Enormously high Ambient Energy Levels are not detected by instruments that use the Ambient Background as a Reference Plane. A spoon full of water lifted from the Ocean does not define the Ocean. Incoming magnetic waves are reflected, Deflected or absorbed. Deflected Magnetic Waves spin electrons sideways producing useful Electrical Energy. Absorbed Wave Energy produces heat, therefore a hot interior for the Earth. In Electrical Systems physical movement is in the direction of current flow, frictional drag from inflow current defines gravity. Accretion masses resulting from Energy Sinks provides all solid entities with their respective gravitational effect.

Increasing the tolerance level for Intellectual Awakening opens Doors of Reality. These doors blink into and out of existence and upon recognition benefit Mankind. Opening some of these Doors, presently seen through a deep fog is our purpose. Exploring Unrecognized Energy Sources, being a Part of the Ambient Background is another goal. Available Instruments do not use reference planes which allow recognition as we shall see, vast Energy Sources that totally surround and are available through Technology Transfer. They are inexpensive (Free), fully self renewable and environmentally benign.

Incoming Magnetic Wave Energy with Faraday's action at a distance will be looked at closely. Particle Physics will be left for the Astrophysics. Excited Electrons at point "A" the Sun (includes the Galaxy and Cosmos) do not travel to point "B" the Earth, however a corresponding action occurs at point "B". The Electrons being disturbed at the Central Power Plant in the same manner excite the Electrons at Your House, upon switching into an Earth grounding (known as flipping the switch). Correspondingly there are Four Major Power Sources providing enormous amounts of Ambient Background Magnetic Wave Energy. They are The Cosmic, Galactic, Solar and Earth's Ambient Electromagnetic Backgrounds. The Earth's Electromagnetic Field comes from reflection, deflection and absorption as a result of action at a distance from the above.

Prescription Physics mandates that the Earth's background is of little interest. When we have Considered the evidence herein, it will become obvious that Special Interest's effort

at keeping the People ignorant has until now largely succeeded.

Information for the entire World is available regarding the Magnetic Flux Background of the Earth's Surface (United State's Geological Survey, Colorado, USA, Office). When examined and properly understood, these Maps yield important information regarding reflection, deflection and absorption of incoming Magnetic Waves, plus action at a distance. When properly understood, these Maps yield a very large Ambient Electromagnetic Energy Source. This is the Part of the Earth's Energy System that relates to the Bird on the High Voltage Line. When deflected, magnetic flux from electrons changes to electrical flux, providing the Motor System that spins / rotates the Earth. Physical movement by electrical systems is from inflow current movement. What level of current movement is required to spin the Earth ? The Earth's Mass is 5.98 X 10 to the 24 th. kg, Page 288, "Physics for Scientist & Engineers, 2 ed., Edited by Raymond A. Serway, Pub. Saunders, USA. From this Information the Watts of Electricity Required may be calculated ! Absorbed microwave flux energy heats from the inside out, therefore a hot interior for the Earth. Water is strongly diamagnetic and ocean waves present on windless days provide visible Proof of the overhead incoming magnetic flux. From above the Earth's weight and rate of spin allows the calculation of the amount of incoming ambient background energy required. As You can see it is not inconsequential as Prescription Physics mandates.

Astrophysicist are concerned with charged particles that whiz by once every one hundred years, rather than Wave Phenomenon associated with action at a distance. This highly Active Wave Energy translates into Electrical Energy at point "B". The Galaxy is alive With Energy, being billions of times greater than that of the Sun. Visible Light is a very tiny part of the Electromagnetic Energy Spectrum. Frequencies present in the Galaxy and Cosmos allows Radio Telescope photographs of their existence and magnitude. One such photograph at 408 MHz of the Electromagnetic Energy Spectrum is here presented. The Earth is a tiny speck of dust in this Enormous Ocean of Energy, near the left end of the Central High Energy Area. A second Radio Telescope photograph comparing the filtered images is presented.

This Energy extends in all directions. Accretion and formation of Planets, Suns and Galaxies are results of energy sinks and variable sized black holes. Mass retains heat And is cooked from the inside out by the microwave back ground provided by the Universe. Flux movement into energy sinks provides the frictional force know as gravity. Spinning mass in the presence of incoming flux amplifies the gravitational effect.

At present only Solar Energy is recognized. It is inconsistent, flaky and a very small Part of the Magnetic Wave Energy Present. Technology Transfer from Solar Power provides uncomplicated and inexpensive, direct access to the Other Greater Energy Sources. All Electromagnetic Energy harvesting methods include a Catalyst, a Collector and a Pump. Catalyst include sensitization through doping with certain

elements, air and earth groundings. Collectors include temporary storage as in Capacitors, Coils and Transformers. The Pump System Includes induced movement onward to point of use. Conventional rotating coils and magnet systems activate electrons present, such that action at a distance can occur, therefore it is an energy activation pump. In Direct Access Systems such as Solar Cells, the same occurs without mechanical action. Direct access occurs when Magnetic Waves impact a catalyst, spinning the local electrons sideways, producing useful electrical energy.

Indirect acquisition of electrical energy by mechanical means is wasteful, troublesome, expensive and degrades the environment. The dynamo is a combination collector and pump of energy which is collected from the Earth's Ambient Energy Background. Generators do not make electricity, they collect it from the Ambient Background and foreword it, as in Faraday's action at a distance. Energy Conservation Laws related to the systems herein relate to gray areas and when understood are excluded because of existence of External forces, open and nonlinear systems a la Einstein. The Knowledge Base just viewed provides a Direct Understanding of the Requirements for Harvesting of unending fully renewable, environmentally benign Sources of Electrical Energy.

Magnetic Resonance Power System
Suggestions for Construction

This is the Basic Sonar Power System which permits submarines to see approximately 50 miles distance. What is not commonly known is that it works better at higher frequencies into the Gigahertz. Any Device that can radiate 50 miles plus is producing an enormous electromagnetic disturbance from a small input into a rod of magnetostrictive material. Disturbing the Earth's Ambient Background plus the strong dipole being produced turns the magnetostrictive rod into a combination receiving antenna and a vastly superior output transformer.

The Drawing is only the Key Unit. A power input module and an output inverter circuit (diode bridge plus output transformer) is required. The metal core and wire size of the output transformer plus adjusting the Earth Grounding of the Load will determine the Amperage.

The Ideal rod material is Terfenol-D (check the internet). However a 1 ½" D and 10" L cost over $5,000. Each. Less expensive alternates are obvious. In construction use PVC tubing with removable caps. Wind the coils on it and insert the experimental rod. Use magneto-strictive material only.

When You get it right You will have exactly what the Doctor ordered.

Magnetic Resonance Power System for Water Systems

Donald L. Smith

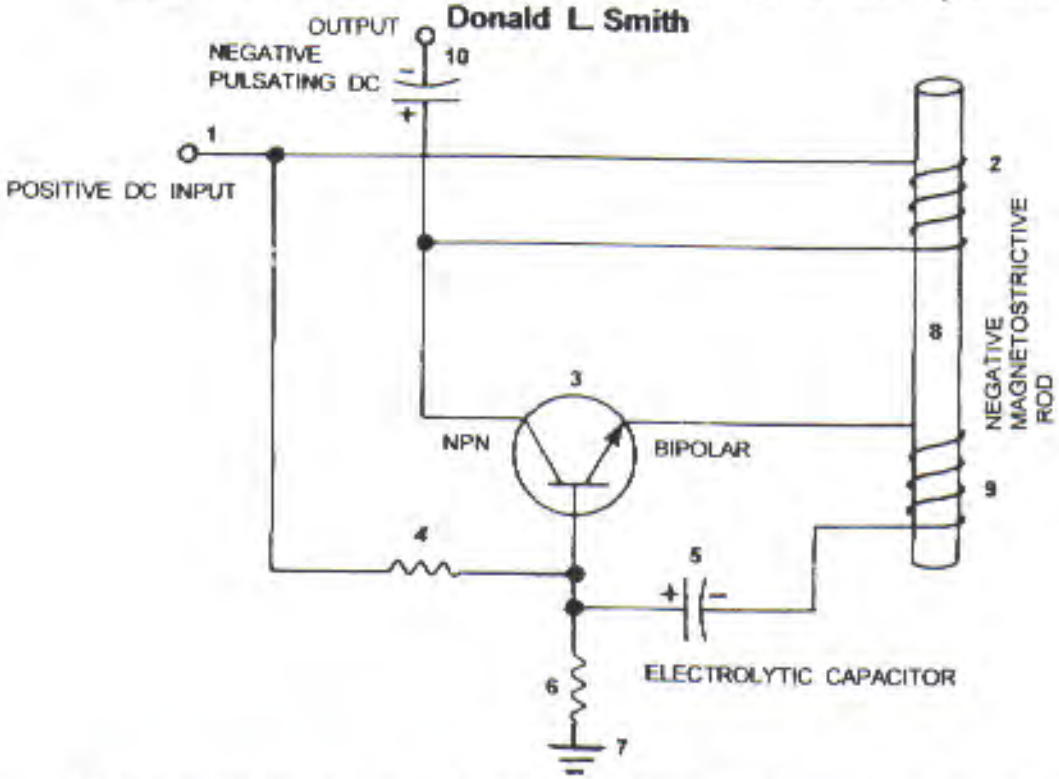

Magnetostriction oscillators work by magnetic resonance in a rod of magnetostriction material*. This rod serves two purposes, It vibrates at frequency of resonance oscillation, and becomes the feedback transformer. Frequency is determined by items 4, 5, 6 and 8. The diameter, length and volume of the rod and output windings determines the output. Item # 2 provides feed back into the system. Negative magnetic character of item # 8 plus the windings # 2 in reaction to the magnetic flux field provided by # 9, increases (amplifies - magnifies) the output. Magnetic permeability is the counterpart of negative resistance. Resonate with negative magnetic resistance it pumps energy from the Earth's ambient background. Magnetic permeability is the ratio of flux density (Earth's B field) to the magnetizing force (H) in oersteds.

* Magnetostrictive materials are piezoelectric in character, have very high resistivity to electrical current flow. Examples are:

1. Permealloy	Negative	Magnetic	Permeability	> 80,000
2. Sendust	"	"	"	30,000 - 120,000
3. Metglas	"	"	"	> 200,000
4. Iron with (34%) Cobalt			"	13,000
5. New Technology		"	"	> 1,000,000

ELECTRICAL ENERGY SYSTEMS METHODS

1. **DIRECT** - Faraday's Action at a Distance from incoming magnetic wave conversion to useful electrical energy. Includes Cosmic, Galactic, Solar and Magnets. Technology Transfer from Solar Cell Technology.

2. **INDIRECT**-Electron Stimulation-Induced Electron Spin Systems
   Electron Avalanche Pumping Systems

   Primitive, Indirect Conversion from another form of energy.
   Coils and Magnet as in Dynamo Systems (Closed Systems).
   Chemical Systems, Atomic, Pons & Fleischman and etc.

   Advanced, Direct Conversion, Magnetic Wave (Open Systems).
   Ambient Sources
   Air Core Coil Systems
   Gaseous Tube Systems
   Solid State Marx Generator Avalanche Type Systems.
   Leyden Bottle Capacitor Types inserted in Lakes and other.

   Magnet Systems
   Electron Beam Antenna Systems

3. **TRANSFER MECHANISMS**

   Solids-as in metal conductors

   Gaseous as in radio wave transmission, a form of ionization.

   Sensitizing of Systems by use of Trace Doping with Radioactive elements, includes metal surfaces.

   Open Systems, none linear with external forces . Albert Einstein as a direct quote from his biography states that these are excluded from the conservation of energy laws.

   Closed Systems Maxwellian Type Systems. Mathematics are predictable requiring deductive reasoning. Ohm's Law is King and Establishment Intellectuals being comfortable with this brand all else as a violation of the Laws of Nature by obtaining something for nothing. This is Dishonesty grand mal.

AMBIENT ENERGY SOURCES

	RADIATION SYSTEM	*DIFFUSION METHOD*	*MAGNETIC WAVE ENERGY*
1.	**Cosmic**	*	**Ultraviolet**
2.	**Galactic**	*	**Infrared**
3.	**Solar**	*	**Visible Light**
4.	**Earth**	*, **, ***	**Earth's Electrical System**

* Reflection, Deflection and Absorption

** Faraday's action at a Distance from Magnetic Waves

*** A Composite of from All the Above

A deep fog pervades the entire Scientific Community with regards to the Significance of the Above Energy Sources. Magnetic Waves convert directly into Electrical Waves (useful electricity). Two sides of the electromagnetic system are always present and never separate. Local electron spin provides (action at a distance) the flip side of the incoming magnetic wave energy.

Enormous amounts of incoming magnetic wave energy becomes a part of the Ambient Background and as such can not be measured directly. Reconstruction from indirect information allows us to establish actual energy levels present. Instruments provided by the Scientific Community measure only point "A" to "B", when both are ambient no potential energy is shown. This is the bird sitting on the million volt power line and sensing nothing approach. The Earth's actual ambient back ground has as it's Energy level multi Billions of Volts, which are conveniently and obliviously ignored by the scientific community. When properly understood this enormous, never ending source of environmentally friendly energy becomes available.

ELECTRICAL ENERGY GENERATING SYSTEM

Patent Pending 08 / 100,074

NOTE: IF THE PLUS CONNECTOR (2) WIRE'S LENGTH IS A WAVE LENGTH COMPONENT OF THE L-6 OR L-7's FREQUENCY, THE BATTERY WILL RECHARGE ITS SELF AT THE SAME TIME IT IS BEING USED. TO SEE THIS SUBSTITUTE TWO OPPOSING LIGHT EMITTING DIODES. THEY SHOW THE DIRECTION THE ELECTRONS ARE MOVING, DC ELECTRONS OUT AND RADIO FREQUENCY ELECTRONS INTO THE BATTERY.

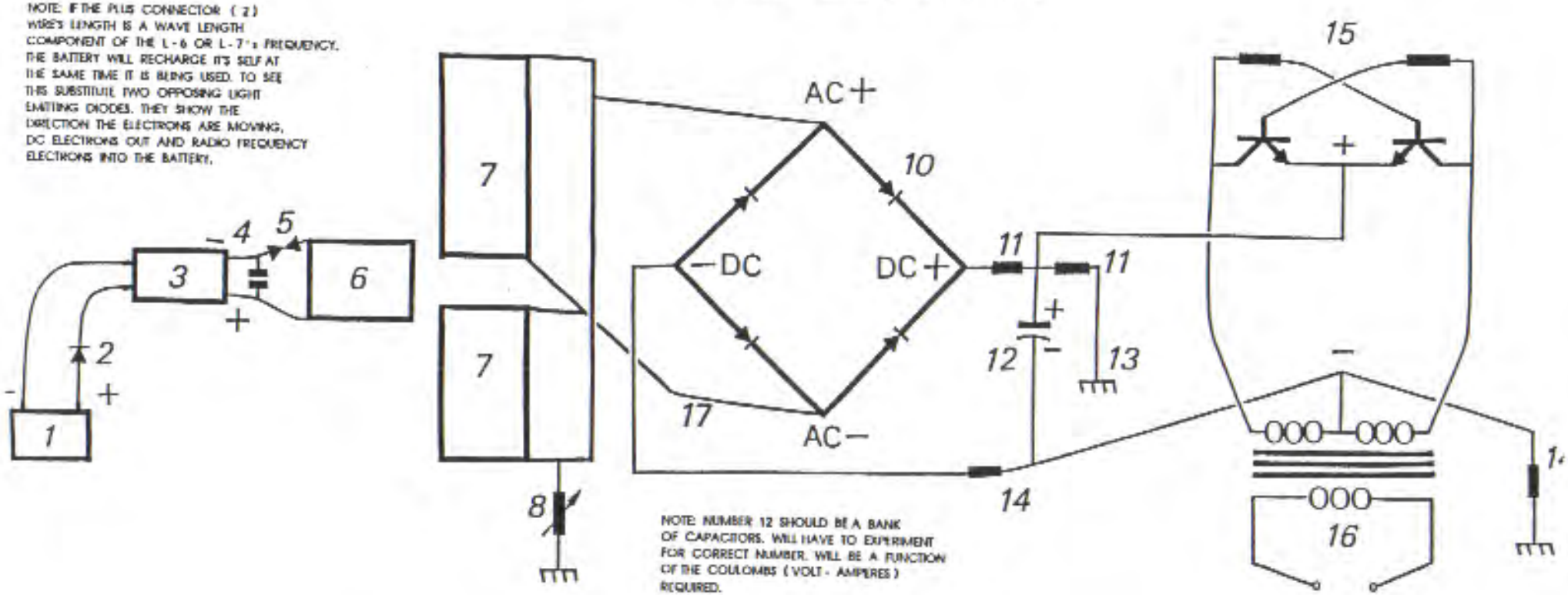

NOTE: NUMBER 12 SHOULD BE A BANK OF CAPACITORS. WILL HAVE TO EXPERIMENT FOR CORRECT NUMBER. WILL BE A FUNCTION OF THE COULOMBS (VOLT - AMPERES) REQUIRED.

1. Gelcel, 6 or 12 Volt.
2. Diode, Poss. use a Varactor.
3. High Voltage Module, Constituting the L-1 and L-2 Coils.
4. Capacitor, TDK 10.9 Pf., 30 KV.
5. Spark Gap, Small Engine Spark Plug, Gap = .0025 in.
6. Induction Transfer Coil L-3.
7. Induction Receiving Coil L-4.
8. Voltage Control Shunt.
9. Frequency Adjustor, prevents derating by Diode Bridge
10. Diode Bridge, 200 Nanosecond, R.F., > 100 KV .
11. Voltage Divider Circuit, corrects voltage for next stage.
12. Capacitor, electrolytic, smooths out DC + ripple effect.
13. Earth Ground.
14. Voltage Divider Curcit, corrects voltage for Transformer
15. Inverter Circuit, DC + in and 60 CPS to Transformer
16. Output from Transformer to Load (Work).
17. Center Tap

17 JANUARY, 1997

Electrical Energy System

Don L. Smith, Energy Consultant

At a meeting between J.P. Morgan, Edison and Tesla, Tesla proposed an Electrical Energy System which could be connected into directly, with out using a meter. Tesla's Idea of " Free Energy " was not compatible with their thinking. Courtesy of Morgan and Edison, from that day foreword, a complete and total bastardization of the Idea has been in progress. Agents for Morgan and Friend include the U.S. Patent Office and Academia. Academia's bad habit of incestuous quoting of each other eliminates them as a possibility in cleaning up the mess. This selective ignorance permeates through out the study of electricity.

Many persons, otherwise as intellectuals, have a total blackout and become jabbering idiots when " free energy" is mentioned. The term has been amended to say, "something which was never there is being harvested and that this violates the laws of physics". For the selectively ignorant this seems the way to run. Those who choose Morgan's drum beat, have severely limited the possibilities built into electricity.

This paper will be an exercise in creative understanding, in placing updated knowledge at your disposal. Whether it becomes a useful tool or is selectively ignored is your choice.

Electrons are defined as the practical source of electrical and magnetic energy. The electron as a particle was postulated by professor J. Thompson in early 1900's. It is now universally accepted that, the electron exist and that it is the source of electricity. When the electron is agitated it produces magnetic and negative electrical energy. Physics as it exist, can not explain why the electron remains in tact and is not diminished by the energy it releases. This is a part of the built in ignorance provided by the Morgan and Edison Camp.

A volts worth of electrons, when cycled yields a volts worth of electricity. This can be repeated continuously forever and never deplete or diminish the electrons in question. They simply return to their air and, or earth source, waiting to do the whole thing, again and again. Therefore, electrical energy is available, any and every where humans go. Persons who intercede for profit, set the cost of electrical energy. Otherwise, all electrical energy is free, Morgan and Edison be dammed.

Improving upon Professor Thompson's postulation, other obvious character further defines the electron. It has both magnetic and electrical emanation resulting from a right and left hand spin. Since magnetic and amperage are one package this suggest, that electrons in a natural none ionic state exist as doublets. When pushed apart by agitation one spins and supplies electricity and the other

spins and provides magnetic (amperage) energy. When they reunite, we have Volts X Amperage = Watts. This Idea, until now, has been totally absent from the knowledge base.

The times an electron is cycled sets the collective energy potential present. The electrical equivalent of E = M C squared is E = (Volts X Amperes) X Cycles Per Second squared. Those who choose, are now free to head for the bushes and make their usual contribution to humanity.

Prior to Tesla, there was a large group of persons in Europe, who were building resonate coil systems related to medical usage. Amperage was dangerous in their coil systems. The Tesla Coil is only the Voltage half of their coil system, as will be demonstrated herein.

A short list of those active (1860-1880 onward) in resonate high frequency coil systems include the Curies, Roentgen, Ruhmkoff, Oudin, Hertz, Levassor, Dumont, D'Arsonval and many others.

Peugeot, Panhard-Levassor, Bollee, Renault and others had successful electric automobiles in production using A.C. motors. Various electrically powered airships including the Dirigible France were in service.

D'Arsonval , Professor of Experimental Medicine at the College of France, invented the electrocardiograph, oscilloscope, amp and volt meters, thermography and numerous other medical applications of high frequency electricity. As early as 1860, he was building high frequency coil systems, used in his experimental work.

There is a strong connection between the work of Tesla and the above mentioned.

Electric vehicles of all sorts, dominated until the 1920's, when the electric starter motor made the internal combustion engine practical. Prior to that, upon cranking, it frequently would break the owner's arm. At that point the use of batteries as a source of power was replaced by oil..

The establishment's carpet has some rather large lumps under it. Coulomb's and Newton's inverse square law is politely ignored and it's opposite is allowed only the most abstract status. Without opposites we have no definition.

The source value of a remote flux reading, requires the squaring of the distance, times the remote reading, to obtain the original value. The opposite of this, being the derivations relate to Energy equals Mass times the Velocity constant squared. The electrical equivalent, being Energy equal capacitance times voltage squared and Energy equals induction times amperes squared. Flux lines increase as the law of squares and then activate electrons (energy) not previously a part of the sum. The cumulative capacitance and inductance as the distal ends of a Tesla coil are approached, results in energy greater than the input being present. This Energy is real when properly understood. It can be safely measured by magnetic flux methods and electrostatic voltmeters, based on the inverse square law.

As seen above flux lines result both from Induction-henrys-amperage and capacitance-coulombs-volts and define electrical energy. The non-linearity of this system does not obey ohm's law, which is replaced with impedance and reactance for alternating current systems. Impedance is the sum of the system resistance, which becomes zero at resonance. In a resonate induction systems, cycles per seconds increases, invokes a second round for the law of squares.

The degree to which flux lines are present, disturbs an equal amount of electrons, upsetting ambient, resulting in useful electrical energy. The frequency at which the disturbance occurs, obeying the law of squares further accelerates away from ambient, increasing the useful energy available. Two square law entities, flux density and frequency are envoked. Enter resonance which cancels the resistive effect.

Only that electrical energy above or below ambient is useful. For the Central U.S. going east to west, ambient as approximated by electro-static voltmeters and flux methods is on a solar quite day 200,000 volts.

At night time ambient drops to about one half the daytime value. On a solar active days it may reach more than five times that of a quite day. Ambient background energy at the polar regions is approximately 500,000 volts on a solar quite day. The background varies as relates to the north-south component and the east-west continuum.

This leaves us with an interesting problem. Electrons, when disturbed, first produce magnetic flux and then electrical flux when they spin back to their normal position. Therefore any electron movement produces above ambient energy, being over unity.

ELECTRICAL ENERGY WITH ASSOCIATED PHENOMENA

1. Current-amperes results from the unequal distribution of negativity (electrons).
2. Electron spin causes electrical current and magnetic lines of force.
3. Magnetic imbalance causes the gravitational effect. This is evidenced in electric motors by magneto-gravitational displacement of mass, which causes the motor to rotate.

ENERGY LINES OF FLUX (FORCE) FIELDS & WAVES *

MAGNETIC EFFECT

ELECTRONS
Electrical Flux
Capacitance
Volts

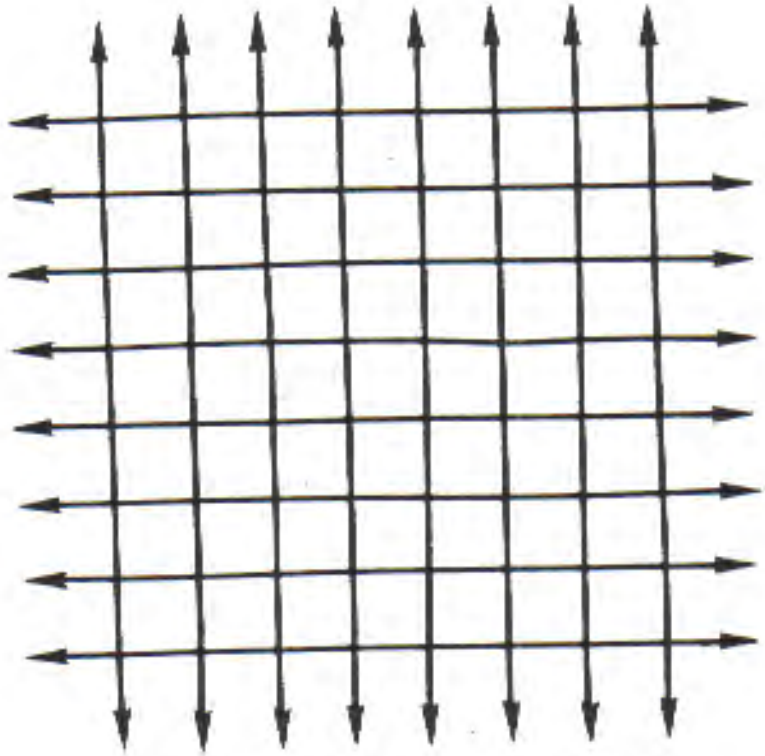

CURRENT
Magnetic Flux
Induction
Amperes

GRAVITATIONAL EFFECT

* Below 20,000 Hertz Per Second = Fields
Greater than 20,000 Hertz Per Second = Waves(Radio Freq)

Derivation of Magnetic and Electrical Power

Analogous Relationships:

1. Potential Power is present in a bar magnet as shown.

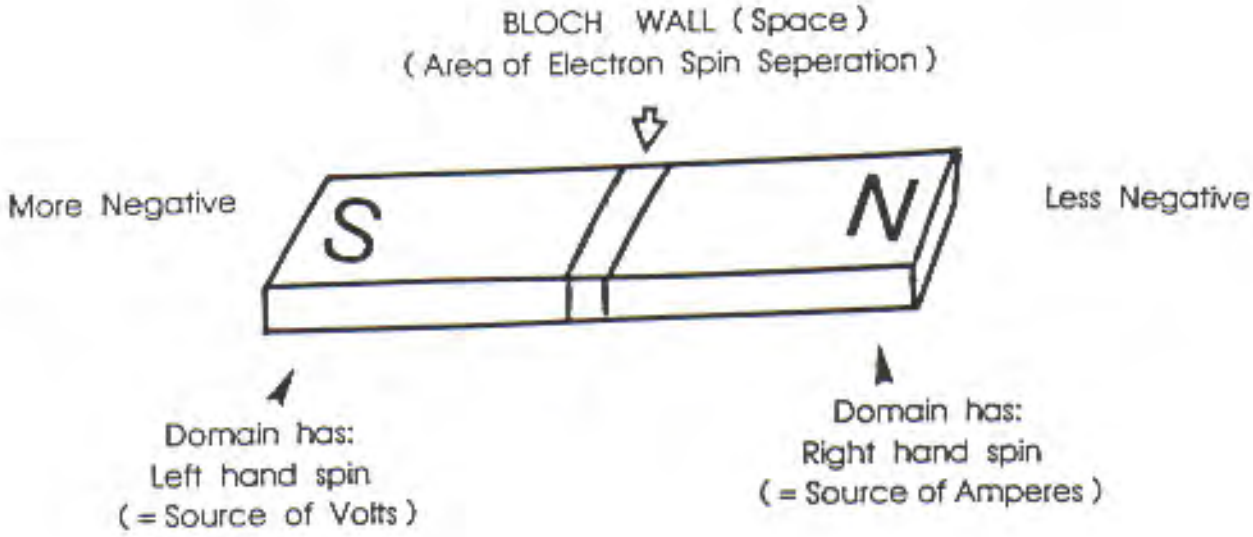

2. The Source of these Electrons being from the Solar Plasma, are none ionic and occupy all Free Space. They are commonly obtained from Earth and Air Groundings. They exist in Doublet Pairs, one being more negative than the other. The more negative one has a Left Hand Spin. The less negative one has a Right Hand Spin.

3. Resonate Electrical Coil Systems (Tesla) are Analogous to the System observed in the Bar Magnet (above). The Bloch Wall Area is Located at the base of the L - 2 Coil. The Left Spin portion (Voltage Only) part of the Coil predominates. The right hand spin portion (Magnetic-Amperage) portion is mostly absent.

Tesla Coil Geometry *

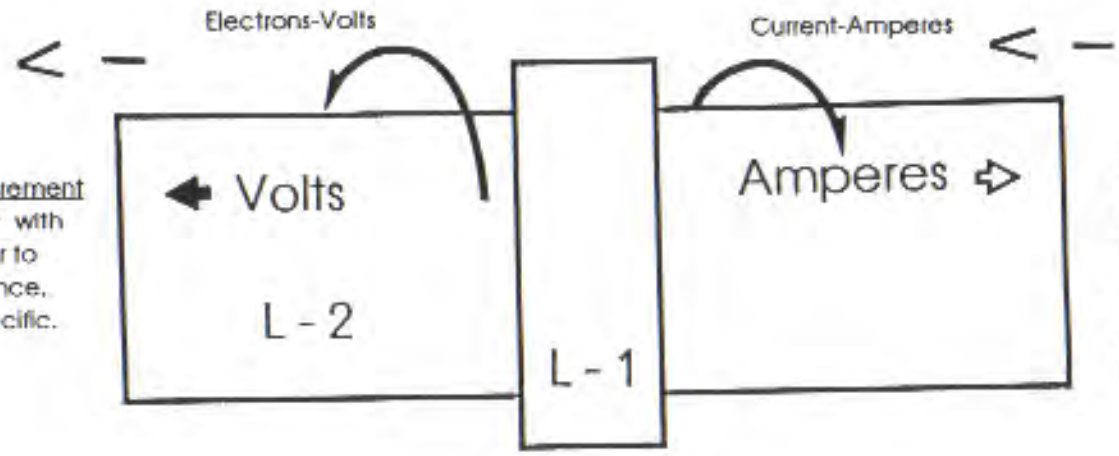

Correct Method of Measurement
Use the Inverse square law with an Electrostatic Volt Meter to measure from a safe distance, they are frequency nonspecific.

Correct Method of Measurement
Use the Inverse square law with Hall-Effect devices to measure from a safe distance, they are normally frequency nonspecific. The magnetic field they measure converts directly to Amperage

Volts dominate if the L-1 Coil is far right
Volts and Amperes about equal if L-1 Coil centered

This End Has Greater Voltage
Distributive Capacitance at Maximum
Capacitance-Coulombs-Voltage
Voltage has Electrons spinning to Left

This End Has Greater Amperage
Distributive Inductance at Maximum
Induction-Henrys-Amperage
Amperage has Electrons spinning to Right

Volts represent the more negative and Amperes the less negative. Therefore the electrical charge of more negative must seek the less negative to regain ambient.

* Contains proprietary information related to Patent Procedure
Geometry - properties of lines, surfaces and solids

Donald L. Smith
2 November, 1995

Induced Electrical Energy System

Collection and transfer of energy requires temporary storage, which occurs as capacitors and coils of a resonate circuit are cycled, off and on. The frequency at which the capacitors and coils are pumped determines the amount of electrical energy that moves onward.

The amount of Energy transferred relates directly to the density of lines of flux present. The Kinetic Energy Formula is helpful in establishing the amount of energy present. This formula squares the velocity times mass. In the case of electrical energy, intensity of voltage and amperes times cycles per second replace velocity.

Note the "acceleration" of the Voltage "E" and Amperage "I", which increase as none linear, then obeys the Law of Squares.

Each unit of increase causes a squaring of the flux lines present The amount of energy transfer caused by this increase in flux lines is demonstrated below.

Increase in Flux Lines Present Symbolized

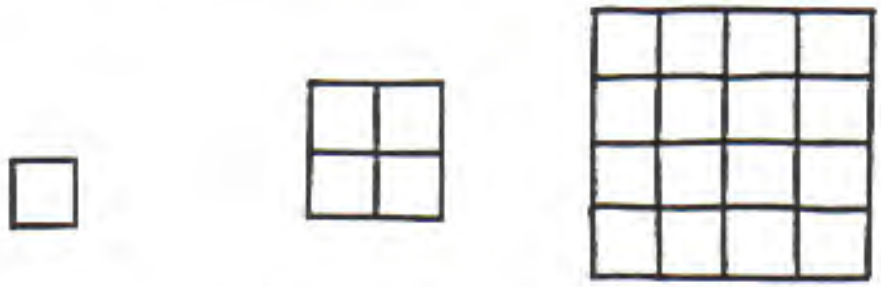

One Volt Two Volts = Four Four Volts = *Sixteen*

In resonate air core coil energy transfer, the increase in flux lines present disturbes more electrons than previous, resulting in over unity energy being present and available.

Energy stored, times the cycles per second, represents that being pumped by the system. Capacitors and inductors temporary store electrons.

Capacitor formula: **W = .5 X CE X C.P.S.**

W = energy in Joules (Watt Seconds)
C = capacitance in farads
E = applied potential in volts squared

Inductor (Coil) formula: **W = .5 X LI X C.P.S.**

W = energy in Joules (Watt Seconds)
L = inductance in henrys
I = current in amperes squared

Both one henry and one farad equal one volt. The higher the cycles per second, including the squaring of the flux lines cause a large increase in the amount of energy being produced.

The above combined with a resonate energy induction system (all electrons moving at the same time in the same direction), make the next move into overunity practical.

The dampning process of conventional electrical power generation has all the available electrons randomly bouncing, mostly canceling out each other. In this System, useful energy available is a very small percent of that present.

In the resonate induction system a very high percent of the energy present is useful. When resonate, (ohms-Impedence-Z) becomes zero and all energy present is available, undegraded. Ohms is load or wasted energy and amperes is the rate of wasting.

Using the previous information, now apply it to an air core coil, resonate transformer energy system. L-one and L-two coils are now present. L-one has a smaller number of turns and is several times the diameter of L-two. Input from a 12 volt gelcel* source produces 8,000 volts with low (wasted energy) amperage into 4 turns of coil L-one. Each turn of L-one then acquires 2,000 volts of resonate potential. Each turn of L-two is then exposed to the electric flux of 2,000 volts. Each turn at the bottom end of L-two acquires 2,000 volts. The flux lines are squared and are additive as the voltage and amperage progresses towards the top end of L-two's many turns.

A huge amount of flux lines not previously present occur at the top end of L-two. These flux lines excite the electrons nearby in it's earth and air and groundings. This high level of excitement above the ambient causes a large amount of electrons not previously a part of the energy present to become available. At this point overunity is present in large amounts.

The bubble gum between the ears response to this is, lots of volts but no amperes. Please recall that amperage is wasted energy, and that until wasting occurs there are no amperes.
A good way to demonstrate this is let the bubble gum crowd, put their hand on the high voltage end of the device while standing on wet ground (a people zapper).

This overunity device produces energy at radio frequency, ranging into the megahertz range. This allows the device to be small in size, and produces large amounts of energy.
A megawatt sized unit will sit comfortably on a breakfast table. This energy is changed to direct current and then to the desired working frequency.

* A high voltage laser module.

Power Triangle

L-1 Power System

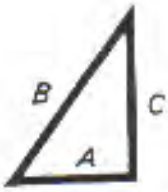

L-2 Power System

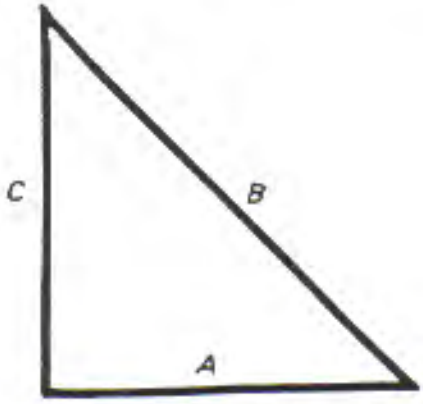

A: Volts x Amperes (Available Power).
B: Volts x Amperes x Time (Used Power).
C: Volts x Amperes x Reactive (Resonate Power).

1. Random movement of electrons in "A" and "B", mostly cancel out each other. This dampening, or wasteful concept of energy, is a source of much pleasure for the establishment.
2. "C" (Volt Amperes Reactive V.A.R.), all electrons move in the same direction at the same time. Therefore, near unity energy output by resonate induction transfer.
3. Resonate induction transfer from one isolation power system allows, other resonate induction systems to duplicate the original source, which in no way diminishes the original source. Air core coils (isolation-transformers) when a part of a functioning system confirm this. A less perfect illustration would be, the number of radio devices running in no way diminishes the output source.
4. Resonate induction transfer disturbs a large number of adjacent electrons, which were not a part of the original source. the pulsating-pumping effect then incorporates the newly available extra electrons into the ongoing energy generation source-system. A near unity energy system of resonate air core coils and the extra acquired electron-energy source constitute an over unity system.

Electrical Power Generation / Points of Reference

Useful Electrical Power is Generated when Electrons from Earth and Air Groundings are disturbed by the movement of coils and magnets with reference to each other. The resulting electrical and magnetic energy is then changed to joules [watt seconds, Volts x Amps x Seconds]. Each forward electron movement results in a magnetic impulse and each return movement causes an electrical impulse. The composite of the electrical energy impulses from these electrons yields useful energy [Power].

Let the above electron movement be represented by a room full of ping pong balls randomly bouncing. Most of the energy present cancels out by random impacting. This is the Classic Under Unity approach to Electrical Power Generation, sanctioned by the Establishment.

In the Electrical Energy Generation System here presented, the resonate Electrons are all moving in the same direction at the same time. This allows Near Unity Electrical Power to Develop. This is the room temperature equivalent of super conductivity.

The Energy System here presented consists of a properly adjusted and functional resonate air core coil tank . The Electrical Energy is stored in capacitors and magnetic energy in the coil system. From Maxwell and others, we know that electrical related energy has an equal amount of magnetic energy associated with it..

" The formula which establishes the Useful Energy of the System :"

Joules = [0.5 C x V's squared] x C.P.S. squared

Joules { Volts x Amperes x Seconds] Watt Seconds

C = Capacitance in microfarades
V = Potential in Volts
C.P.S. = Cycles per second

Transfer of Electrical Power by Resonate Induction is a direct function of the squaring of the cycles per second. For example square 60 C.P.S. and then square the radio frequency C.P.S.'s of the System here presented. Obviously One Million Cycles per Second transfers more energy than Sixty Cycles per second. The Sanctioned Method of Electrical Power Generation uses the 60 C.P.S. Method. Usage of the 60 C.P.S.. and the random scattering of the Electrons System assures the Establishment of it's desired Under Unity Goal.

This random bouncing of the Electrons is the Ohms of Ohm's Law and is used to establish the rate of dissipation and or Load [Work].

In the Resonate Tank Induction Energy Transfer System here presented Impedance [system resistance] replaces the conventional ohm's usage. At Resonance impedance becomes Zero and the full force and effect of the Energy Transfer occurs. This is superconductor conditions at room temperature. At radio frequency the Electrons do not pass through the conductor as at lower frequencies. These Electrons encircle the conductor and are free of the conductor's resistance.

Let the Establishments Power Generation System be "A" and the System here presented be "B".

"A". Given 60 C.P.S. at 120 Volts using 10 microfarad Capacitor

Joules = [0.5 x .000,010 x 120 squared] x C.P.S.'s squared

[120 x's 120 = 14,400.]
[.000,010 x 14,400. = .144]
[.144 x 0.5 = .072]
[.072 x 3, 600 = 259.2]

If using the Inventor's Resonate Induction System the Electrical Power available would then be 259.2 Joules [Watt Seconds]. Using the Establishment's method only permits less than 10 Watt Seconds of Useful Electrical Energy.

"B". Given One Million Cycles per second at 100,000. Volts, using a 10 microfarad Capacitor.

Joules = [0.5 x .000,010 x 100,000. squared] x C.P.S.'s squared

[100,000 x 100,000. = 10,000,000,000.]
[.000,010 x 10,000,000,000. = 100,000]
[100,000 x 0.5 = 50,000]
[50,000 x One Million squared =]

The useful Electrical Energy available is greater than 50 Mega K-Joules [Watts] plus., Since the Resonate Electrons are nonimpacting, all the Energy is available for direct usage.

Benefits of the Inventor's System are summarized:

1. Induction Energy transfer is enhanced by squaring of the cycles persecond by the System.
2. Induction Energy transfer is enhanced by squaring the input voltage and amperage.
3. The increase of the flux lines occurring from the above, disturbing more electrons, causes more electrical energy to become available.
4. Resonate Induction has all the Electrons moving, unimpeded, resulting in superconductor conditions at room temperature.
5. A smaller amount of energy is used to disturb a larger number of Electrons. Electrons not originally a part of the System then contribute their energy, resulting in a net gain in available usable power.
6. The physical size of the System [Device] is small. The Device describe in "B" sits comfortable on a breakfast table.
7. A small energy source is used to start the device and remains fully charged at all times from the System .

The Evidence Against Under Unity

1. Use of Logarithmic Scales on electrical measurement instruments. Linear measurement works fine where Ohm's Law applies (direct current). In alternating current ohms are replaced by impedence and the measurements become non linear.

2. Infinite "Q" at resonance confirms that voltage and amperage is squared, as in the kinetic energy formula. See the formulas of this report.

3. Square waves are clipped infinite "Q"s.

4. Maxwell and others show that magnetic-inductance-amperage and electrical-capacitance-voltage are two sides of the same coin. Magnetic-inductance is directly equal to amperage. Both obey the Law of Squares, which has over unity built in.

5. Magnetic and electrical flux are present in enormous amounts at the distal ends of an operating Tesla Coil.

6. Ignorance in how to measure and relate magnetic and electrical flux, is the chief weapon of the under unity gaggle.

7. The Cumulative inductance and capacitance of the Tesla Coil grounds it's self out if not properly utilized. See this report for the temporary energy storage accessible, if properly managed.

8. The Patent Office refers devices related to over unity to their metering group, which is a sure indication that they are aware and accept the logarithmic measuring devices.

This is direct and absolute evidence that they accept the square law as relates to kinetic energy. This also indicates they are aware that over unity exist. Since their bureaucratic brain is improperly motivated they continue to badger inventors who are working in the over unity arena. Their level of intellectual dishonesty is sanctioned by, and is a real part of doing business with a government which prides it's self in being a hooliganistic bureaucracy.

Reading List

1. Alston, L.L. (Ed.), 1968, High-Voltage Technology, Oxford Univ. Press, London.
2. Beck, E. 1954, Lightning Protection for Electric Systems, McGraw-Hill, N.Y.
3. Bowdler, G.W. 1973, Measurements in High-voltage Test Circuits Pergamom, Oxford. L.C. 72-86488
4. Brewley, L.V., 1951, Traveling Waves in Transmission Lines Pub: John Wiley, N.Y.
5. Chapman, S. and Bartels, J., 1940, Geomagnetism, two volumes, 1,000 plus pages, Oxford at the Clarendon press, England
6. Craggs, J.D. and Meek, J.M. 1954, High-Voltage Laboratory Technique., Butterworth, London
7. EHV Transmission Line Reference Book, 1968 Edison Electric Institute, N.Y.
8. Farno, R.M., Chu, L.J., and Adler, R.B., 1968, Electromagnetic Fields, Energy and Forces, Pub: M.I.T Press, Cambridge, Mass.
9. Feinberg, R. (Ed.) 1979, Modern Power Transformer Practice, McMillan, London
10. Frungel, F., High Speed Pulse Technology, Vols. 1 and 2, Pub: Academic Press, 1965, N.Y., and London.
11. Gallagher, T.J. and Pearmain, A.J. 1983, ISBN 0-471-90096-6 High Voltage Measurement and Design, John Wiley, N.Y.
12. Hague, B., Alternating-Current Bridge Methods, 5 th. ed. Pub: Sir Iasaac Pitman and Sons, 1959, London.
13. Hawley, W.G. 1959, Impulse-voltage Testing, Chapman and Hill, London.
14. Hayashi, Ch., Nonelinear Oscillations in Physical Systems, Pub: McGraw-Hill, 1964, N.Y.
15. Henny, K. 1933-1959, Editor-in-Chief, Radio Engineering Handbook, five different copyrights, L.C. 58-11174, McGraw Hill, N.Y.
16. Hudlestone, R.H. and Leonard, S.L., Plasma Diagnostics Techniques, Pub: Academic Press, N.Y.
17. Jacobs, J.A., Editor, Geomagnetism, (a massive work) 3 large volumes, Pub: Academic Press, London.
18. Jeans, J.H. 1925, The Mathmatics of Electricity and Magnetism, 5 th. Ed., Chambridge University Press,
19. Jones, B. 1972, New Approaches to the Design and Economics of EHV Transmission Plant, Pergamom, London.
20. Kind, D. 1978, An Introduction to High-voltage Experimental Technique, Viewieg, Braunschweig ISBN 3-528-08383-2
21. Knoepfel, H. 1970, Pulsed High Magnetic Fields, North-Holland, Amsterdam.
22. Kreuger, F.H. 1964, Discharge Detection in High-Voltage Equipment, Temple Press, Heywood, London.
23. Kuffel, E. and Zaengl, W.S. 1984, High-Voltage Engineering, Pergamom, ;London. ISBN 0-08-024213-8
24. Kupfmuller, K. 1957, Introduction to the Scientific Basis of Electrical Engineering, Pub: Spinger, Berlin.

25. Lemon, H.B. and Ference, M. Jr., Analytical Experimental Physics " a major work " from The Ryerson Physical Laboratory at the University of Chicago, numerous copyrights 1933-1944. Printed as a text book by the University of Chicago Press
26. Lewis, I.A.D., and Well, F.H., Millimicrosecond Pulse Techniques Pub: Pergamom Press, N.Y. and London.
27. Malan, D.J. 1963, Physics of Lightning, English University Press, London.
28. Martin, T.L. Jr., Physical Basis for Electrical Engineering, Prentice-Hall, N.J.
29. Matsusta, S. and Campbell, W.H., 1967 Physics of Geomagnetic Phenomena, Massive work in two volumes of 700 pages each, Academic Press, London.
30. National Physical Laboratory, 1956, Notes on Applied Science # 17, High Voltage Impulse Testing, HMSO.
31. Rather, H., 1961, The Electron Avalanche and it's Generation, Pub: Vo. 33, Springer, Berlin.
32. Rokityansky, I.I., 1982, Geoelectromagnetic Investigation of the Earth's Crust and Mantle, Pub: Springer-Verlag, Berlin.
33. Salge, J., Peier, D., Brilka, R., Schneider, D., 1970, Applications of Inductive Energy Storage for the Production of Intense Magnetic Fields, Pub: Proceedure of 6 th. Symp. on Fusion Technology, Aachen.
34. Schulz, E.H., Anderson, L.T., and Leger, R.M., Experiments in Electronics and Communication Engineering, Copyrights, various, from 1943 thru 1954 LC 55-5033 Harper and Brothers, N.Y.
35. Schwab, A.J. 1972, High-Voltage Measurement Techniques, The M.I.T. Press, Cambridge, Mass., ISBN 0262-19096-6
36. Sevin, L., 1965, Field Effect Transistors, McGraw-Hill, London.
37. Silsbee, F.B., 1942, Static Electricity, U.S. Department of Commerce, Washington, D.C., U.S. Government Printing Office, (N.B.S. Circular C 438)
38. Smith, A.A., 1977, Coupling of External Electromagnetic Fields to Transmission Lines, ISBN 0-471-01995-X
39. Terman, F.E., Electronics and Radio Engineering, 4 th. ed., Copyrights 1932, 1937, 1947 and 1955 LC 55-6174 McGraw-Hill Book Co., N.Y.
40. Thomas, R.T., 1970, High-Impulse Current and Voltage Measurement, Trans. I.E.E.E. IM-19, pages 102-107
41. Thompson, Professor W., (titled Lord Kelvin) Reprint of Papers on Electrostatics and Magnetism (original 1872) London.
42. Traister, R., 1983, The Experimenter's Guide to Solid State Diodes, Prentice-Hall, Inc. ISBN 0-13-295444
43. Valley, G.E., and Wallman, H., 1948, Vacuum Tube Amplifiers, McGraw-Hill, N.Y.
44. Weedy, B.M. 1980, Underground Transmission of Electrical Power, Wiley, London.
45. Weeks, W.L. 1981, Transmission and Distrubution of Electrical Energy, Harper and Row, N.Y.
46. Winch, R.P. Electricity and Magnetism (several printings) Composed in Copenhagen, Denmark, Prentice-Hall Physics Series
47. Zijlstra, H., 1957, Experimental Methods in Magnetism, two volumes, North-Holland Publishing Co., Amsterdam.

An Answer to America's Energy Deficit

Donald L. Smith
Energy Consultant

Energy, energy everywhere and not a Joule to Jounce. Conventional wisdom, when properly tuned will appreciate the nature of energy, as here presented. The basic unit of electricity (the electron) upon encountering a moving magnetic field (or wave) spins, giving off an electric impulse. When this impulse collapses, it spins back to it's natural position, giving off a magnetic impulse. Therefore, magnetic and electric are two sides of the same coin. When the magnetic side is pulsed, it yields electricity and conversely, pulsing of the electrical side yields a magnetic field. Moving one in relation to the other produces useful energy. When done consecutively, each cycle pushes (current) forward, while pulling electrons into the system...in much the same way as a water pump moves water. These electrons are obtained from Earth and air grounding.

The word "electric" comes from the Latin word electron "amber". When rubbed, amber develops an electrical charge, which can be transferred to a dissimilar substance. During the seventeenth and eighteenth centuries, a great deal of attention was centered on this attribute of amber. Amber was used to differentiate the non-metals. Carbon-related substances and other non-metals, when subjected to friction, give up negative electrical charges. On the other hand, metals when subjected to friction, simply conduct the charge. It is important to note approximately 70% of the Earth's exposed crustal portions (surface) consist of silicone related non-metals (electron donors) and become a direct source of electrical energy when properly agitated.

Useful electrical energy can be obtained by grounding into the Earth's non-metal crust and into it's atmosphere as a natural source of electrons. These electrons have accumulated from the solar plasma during the aging of the Earth for more than 4.5 billion years, at a rate exceeding 3.9 exajoules per year. This indicates that the Earth's electrical field contains in excess of 17.6 X 10 to the 18th power of cumulative exajoules of energy. One Exajoule is the approximate energy equivalent of 125 million barrels of oil. The electrical energy in one display of lightning is approximately ten trillion joules. Each 24 hours, the land portions of Earth's surface yields in excess of 200,000 emissions, which involves more than 2,000 quadrillion watt

C.F. Gauss (1777-1855) and H.C. Oersted (1777-1851) both were separately trying to define the Earth's electrical field with external influences removed. These external influences being solar quiet periods and being remote from the land's surface. The air electricity background which they measured varies with latitude. Their European measurements correspond to approximately the latitude of Washington, D.C. They were measuring magnetic field flux as an indicator of negative electron energy active and present. A related family of measurement are now presented. Units of measure used to define flux fields include Gauss (one unit = 100,000 volts), Oersted (one unit = 50,000 volts), Tesla (one unit = 10,000 Gauss) and Gamma (one unit = 1/10,000 of a Gauss). Much confusion exists in electrical related publications about these units. As presented here they are correct with values taken from their original definitions.

The entire surface of the Earth has been surveyed by aerial magnetometer, in most cases using gamma or nano teslas. One gamma is the magnetic flux equivalent of 10 active volts of electricity. When the data is corrected for flight height it becomes obvious that there are numerous areas where the gamma readings exceed one trillion gammas. Lightning strikes from the ground up are in that energy range. With knowledge of these electron enriched areas, the quality of Earth grounding, becomes enhanced. The correction necessary for land surface data when acquired from aerial magnetometer maps (using Coulomb's law) requires that the remote distance be squared and then multiplied times the remote reading. As an example, the remote reading is 1,600 gammas and the flight height being 1,000 feet. Take 1,000 X 1,000 = 1,000,000 X 1,600 gammas = 1.6 trillion gammas X 10 volts = 16 trillion volts equivalent for land surface data. Present day methodology requires mechanical energy in exchange for electrical energy. Once obtained, this energy is subject to Ohm's Law. Present Methodology obtains it's electrical energy from it's non-metal and air groundings.

This same energy can be obtained without the wasteful mechanical approach and at a much, much lower cost. Any required amount of electricity is available by resonate induction transfer from the Earth's magnetic and electrical fields. The major difference is in the functioning of Ohm's Law in relation to resonate circuits. In the resonate induction system here suggested, system resistance (Z) becomes zero at resonance.

Therefore, volts and Amperes are equal (V.A.R.) until work (load) is introduced.

Each cycling of this resonate induction system pulls in additional electrons from the Earth's electrical field, generating electrical energy in any required amount. In this system, a small amount of electrical energy is used to activate and pull into the system a much larger amount of energy.

This electrical advantage corresponds to the pulley and lever of the mechanical world. The electrical system here presented is extremely efficient. Using present methodology as a basis for comparison, with it's 60 Hz. per second system. The resonate induction system, cycling at 60 million times per second produces one million times the energy produced by the present energy systems. A single small size unit of the resonate induction system has more usable electrical output than a major conventional unit. The radio frequency energy here produced is easily changed to direct current, then to the present 60 Hz. per second system in preparation for commercial usage.

---

*Patent Pending # 08/100,074, Electrical Energy Generating System, 4 February, 1992.

Definitions: Joule is one watt for one second
One watt is one volt ampere
V.A.R. is Volt Amperes Reactive

Additional Reading:

Electricity and Magnetism
By B.I. Bleany and B. Bleany
Oxford University Press 1991
I.S.B.N. 0-19-851172-8

Engineering Electromagnetics
By W. H. Hayt, Jr.
McGraw-Hill 1989
I.S.B.N. 0-07-027406-1

Continued:

Energy Methods in Electromagnetism
By P. Hammond
Oxford University Press 1986
I.S.B.N. 0-19-859368-6

Energy in Electromagnetism
By H. G. Booker
Institution of Electrical Engineers
by Peter Peregrinus Ltd. 1982
I.S.B.N. 0-906048-59-1

The American Radio Relay League Handbook for 1992 and 1993. 69th and 70th editions.
Published by The American Radio Relay League. (For V.A.R. information)
I.S.B.N. 0-87259-169-7

Electron Paramagnetic Resonance, Techniques & Applications
By R. S. Alger, U. S. Naval Radiological Defense Laboratory, San Francisco, California.
Pub. Interscience Lib. Congress #67-20255

Geomagnetic Diagnosis of the Magnetosphere
By A. Nishida, University of Tokyo 1978
Pub: Springer-Verlag
I.S.B.N. 0-387-08297-2

Energy and The Missing Resource
By I. Dostrovsky
Pub: Cambridge University Press 1988
I.S.B.N. 0-521-26592-4

High Voltage Measurement Techniques
By A. Schwab, M.I.T., 1971
I.S.B.N. 0-262-19096

Continued:

Environmental Magnetism
By R. Thompson & F. Oldfield
Pub: Allen & Unwin, London 1986
I.S.B.N. 0-04-538003-1

Geoelectromagnetic Investigation of the Earth's Crust and Mantle.
Translated from Russian, By I. I. Rokityansky,
Institute of Geophysics, Kiev, U.S.S.R.
Pub: Springer-Verlag 1982.
I.S.B.N. 3-540-10630-8

Electron Paramagnetic Resonace of Transition Ions
By A. Abragam and B. Bleaney
Dover Publications, New York, N.Y. 1986

The Electromagnetic Field
By A. Shadowitz
Dover Publications, New York, N.Y. Date?

Geomagnetism, Several Volumes, Pub. Periodically
By J.A. Jacobs, Institute of Earth Studies, Dyfed, U.K.
Pub: Academic Press 1989-1990's.

Geomagnetism
By S. Chapman and J. Bartels, 3 Volumes
Oxford University Press, 1940

Physics of Geomagnetic Phenomena, Several Volumes
By S. Matsushita and W. H. Campbell
National Center for Atmospheric Research, Boulder, Colorado
Library of Congress #67-23168
Pub: Academic Press, 1967

Continued:

Physics Problems and How to Solve Them
By C. E. Bennett, Professor Emneritus of Physics,
University of Main (Particularly the sections on Electricity and Magnetism, and Units of Measure).
Pub: Harper & Row Date?
I.S.B.N. 0-06-460203-6

Units and Standards for Electromagnetics
By P. Vigoureux, National Physical Laboratory
Pub: Springer-Verlag 1971
I.S.B.N. 0-387-91077-8

Surveyor's Guide to Electromagnetic Distance Measurement, Edited by J. J. Saastamoinen, Canada
Pub: University of Toronto Press Date?

Electromagnetic Distance Measurement
By C. D. Burnside
Pub: Granada, London 1971
I.S.B.N. 0-258-96793-5

Der Magnetische Kreis "The Magnetic Circuit"
By Von Heinz Rieger of Siemens AG. 1970
Berlin and Munchen, Germany
I.S.B.N. 3-8009-4719-6

Electronic Modeling of Power Electronic Converters
By J. A. Ferreira
Pub: Kluwer Academic 1989
33 AH Dordrecht, The Netherlands
I.S.B.N. 0-7923-9034-2

Alternating Impact Energy Transfer Analogy

Energy Transfer by Swinging Steel Balls

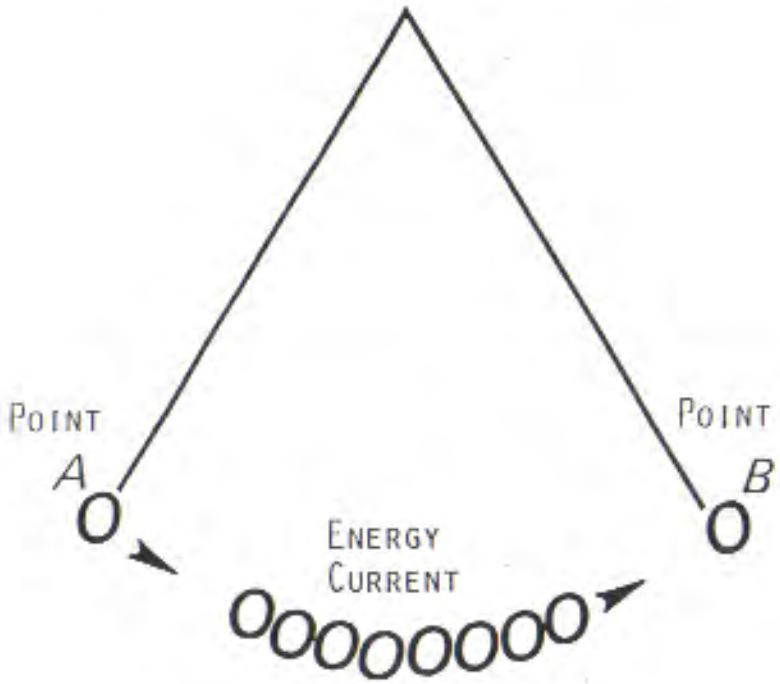

Electrical Energy Transfer by Induction
Pulsed (Impacted) Electrons

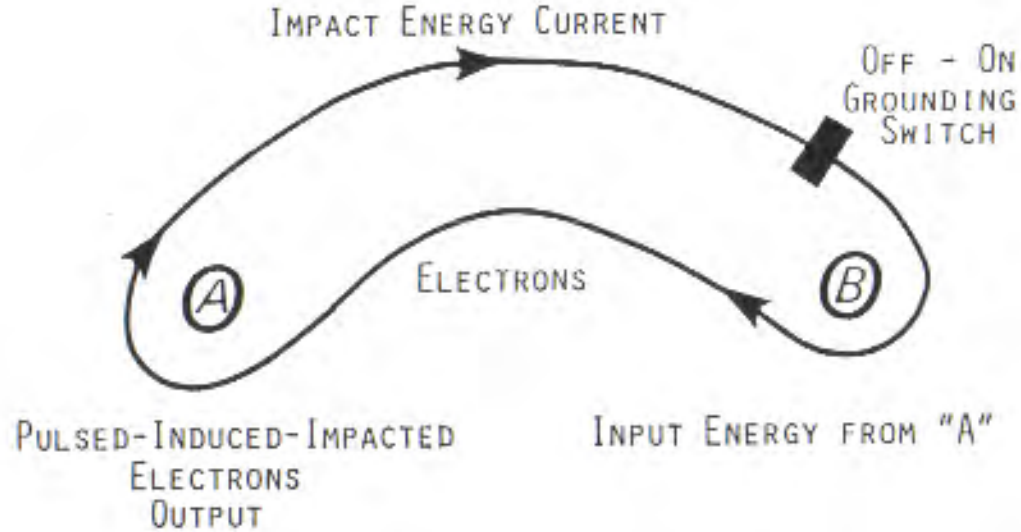

In Alternating Electrical Energy Systems, Only the Potential-Impact Level Replicates It's Self at Point "B". Electrons do not Travel From Point "A" to Point "B".

E.E.S. II, BACKGROUND INFORMATION & CONCEPT

With alternating electrical current, electrons do not move from point "A" to point "B" as commonly envisioned! Electrical potential (oscillating electrons) at point "A" results in harmonic electron activity at point "B", when the grounding switch (circuit) is closed. That is to say, point "B" supplies it's own electrons and mirrors the activity of point "A". Impulsing (turbulence) by magnetic induction causes electrons to be pulled into the system, which then oscillates. When the magnetic field collapses (becomes absent) the electrical potential returns to it's natural background.

Several major flaws are present in the conventional 60 Hertz's per second method of electrical power generation and it's iron core transformer system. ***This system is handcuffed by the inverse relationship of volts to amperes.*** This represents a stodgy inflexible inheritance, courtesy of Mr. T.A. Edison and his concept of electrical power generation.

Nikola Tesla stood, almost alone, against Edison and managed to prevail with his alternating current system. Without the alternating current system, electronic things in the modern sense would not exist.

This report will be concerned with some of the extensions and benefits of the alternating current electrical system. ***This study will limit it's scope to air core coil transformers at radio frequency and upward. The electrical power produced by this method is inverted to direct current and then to alternating current as required for popular usage.*** There are several important advantages of this system over conventional power generation.

Start with two coils (separate-apart), one being a reactor coil (L-1) and a second coil (L-2), being the reactant coil. Magnetic field fluxing (off-on of the electrical source) causes inductive reactance of L-1 which replicates by induction in L-2. Pulsing of the magnetic field (from L-1) in the presence of L-2, generates electrical potential. For example, should the L-1 coil have ten turns, with an imposed A.C. potential of 1,200 volts. This results in each turn of L-1 acquiring 120 volts of potential. This induced magnetic field, then replicates itself in each turn of the L-2 coil. The L-2 coil may have one or many hundreds of turns. Modern encapsulation techniques makes high frequency and high energy controllable.

Let's take another important step in this air core transformer process. For purpose of discussion, let the value of inductive reactance at 60 Hertz's per second equal one. Each time the Hz's. are doubled, the effectiveness of induction is squared. At about 20,000 Hz., ***when radio frequency is achieved, the electrons begin spinning free, outside of the inductor. They become increasingly free of the inverse relationship of volt-amperes.*** From this point on, they replicate by the inductive

process as V.A.R.. ***That is to say, volts and amperes are equal, until resistance (work) is introduced.***
Therefore, additional, not previously available electrons become incorporated for a very large net gain in potential. This gain is real!

The quality of the grounding system determines the effectiveness of this method of producing electricity. A handy reference to locate the negative grounding areas for power generation can be found in the Aeromagnetic Map Studies of the US. Geological Survey. They provide an excellent method for locating the best sites for optimum negative grounding areas.

When this method is combined with the induction coil system, already described, it provides an electrical power generating system millions of times more efficient than any known conventional method.

This new system (E.E.S. II) is uncomplicated, small in physical size and inexpensive to build. Technology required already exists. Maintenance is near zero, as there are no moving parts. Once operating, this system could last forever.

Small mobile E.E.S. II units are presently available as replacements for the batteries used in electric automobiles. Larger E.E.S. II units can be provided as a replacement source of power for hotels, office buildings, subdivisions, electric trains, manufacturing, heavy equipment, ships, and; generally speaking; in any present day application of electrical power.

Earth Electrical System II, Modular Units

The system consists of three separate modules. Reverse engineering is used in matching the modules to the desired usage.

HIGH VOLTAGE INDUCTION TRANSFORMER MODULE:

1. Preferably an off-the-shelf-unit similar to a TV flyback and/or automobile ignition type related coil (transformer).
2. Ratio of input to output may be from less than 1/100 to greater than 1/1,000. A voltage tripler may then be used.
3. A connection allowing the high voltage output to pass onward through the induction coil L-1 and then to it's grounding.

AN AIR CORE INDUCTION COIL TRANSFORMER MODULE:

1. Two coils, the reactor coil L-1 and the reactant coil L-2. L-1 has a high voltage radio frequency capacitor between it and it's grounding.
2. Input into the L-1 inductor is divided by the number of turns therein. The magnetic flux field provided from each turn of L-1 replicates itself as an electrical potential in each turn of L-2.
3. L-2 may have one turn or many hundreds of turns. The net gain depends upon the number of turns in L-2. Output from L-2 is in V.A.R. ***With this type of output, volts and amperes are the same until work(resistivity) is introduced***

THE INVERTER MODULE:

1. Inverts to direct current (D.C.)
2. Inverts to alternating current (A.C.), as desired.
3. Provides customized output of electrical power ready for designated usage.

Earth Electrical System II, Domestic Use Range Module
Up to Two Million Volt-Amperes-Reactive Output *
Plan "A", With Variable Controls
Not to Scale

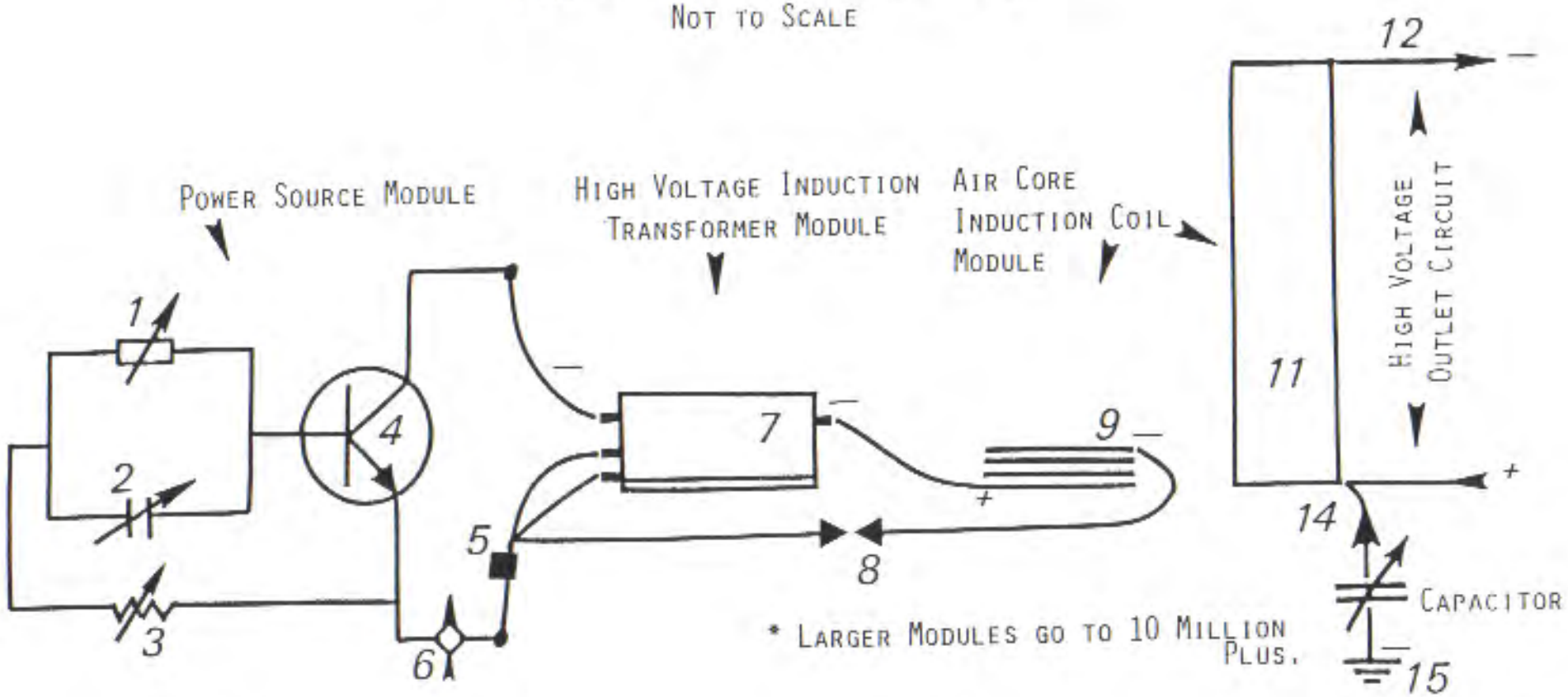

* Larger Modules go to 10 Million Plus.

Parts: 1. Coil, Variable, 2. Capacitor, Variable, 3. Resistor, Variable, 4. Transistor, R.F., 5. Battery, Rechargeable, 6. Off-On Switch, Variable, 7. High Voltage Transformer, 8. Feed Back with Spark Gap, 9. Reactor, Induction Coil, 10. Feed Back with Spark Gap, 11. Reactant Coil, 12. Output for # 11, 13. Input for eleven, 14. Grounding for eleven.

Earth Electrical System II, Domestic Use Range Module
Up to Two Million Volt-Amperes-Reactive Output *
Plan "B", Electrical Automobile Energy Source

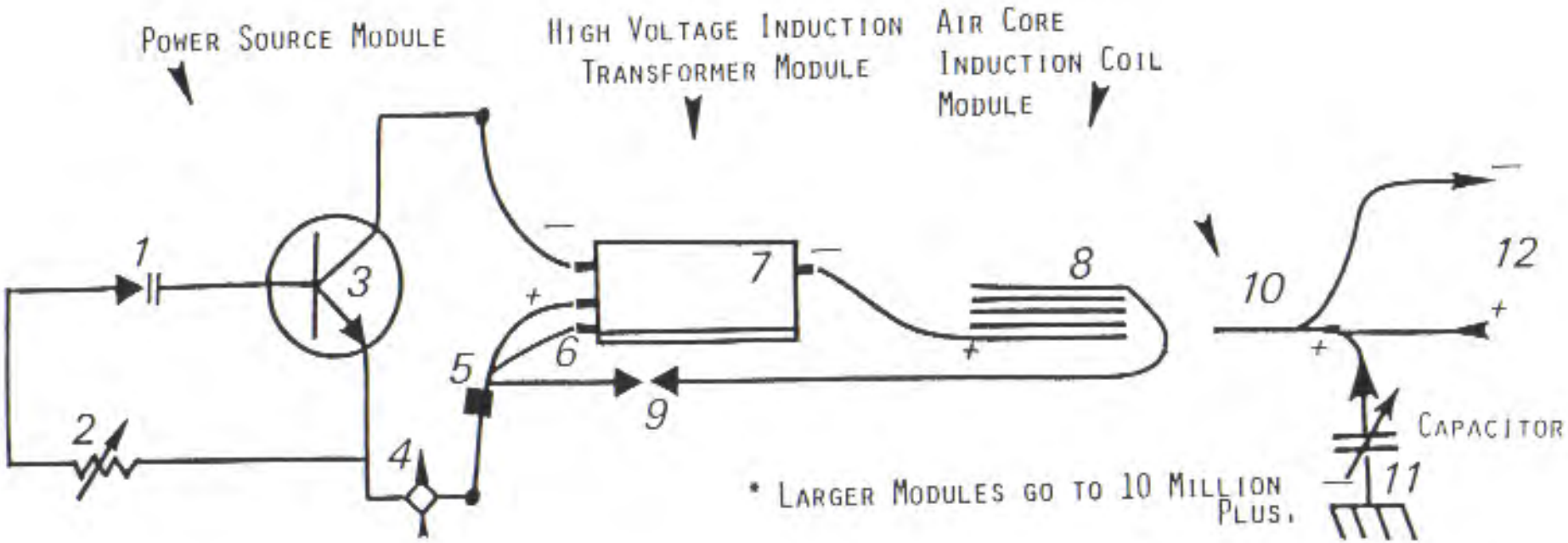

Parts: 1. Varactor, Radio Frequency, 2. Resistor, 3. Transistor, Radio Frequency, 4. Off-On Switch, Multi-Position, 5. Battery, Rechargeable, 6. Transformer Grounding, 7. High Voltage Induction Transformer, 8. Reactor, Induction Coil, 9. Feed Back with Spark Gap, 10. Reactant, Induction Coil, 11. Grounding for # 10, Out-put Circuit, In Volt-Amperes-Reactive.

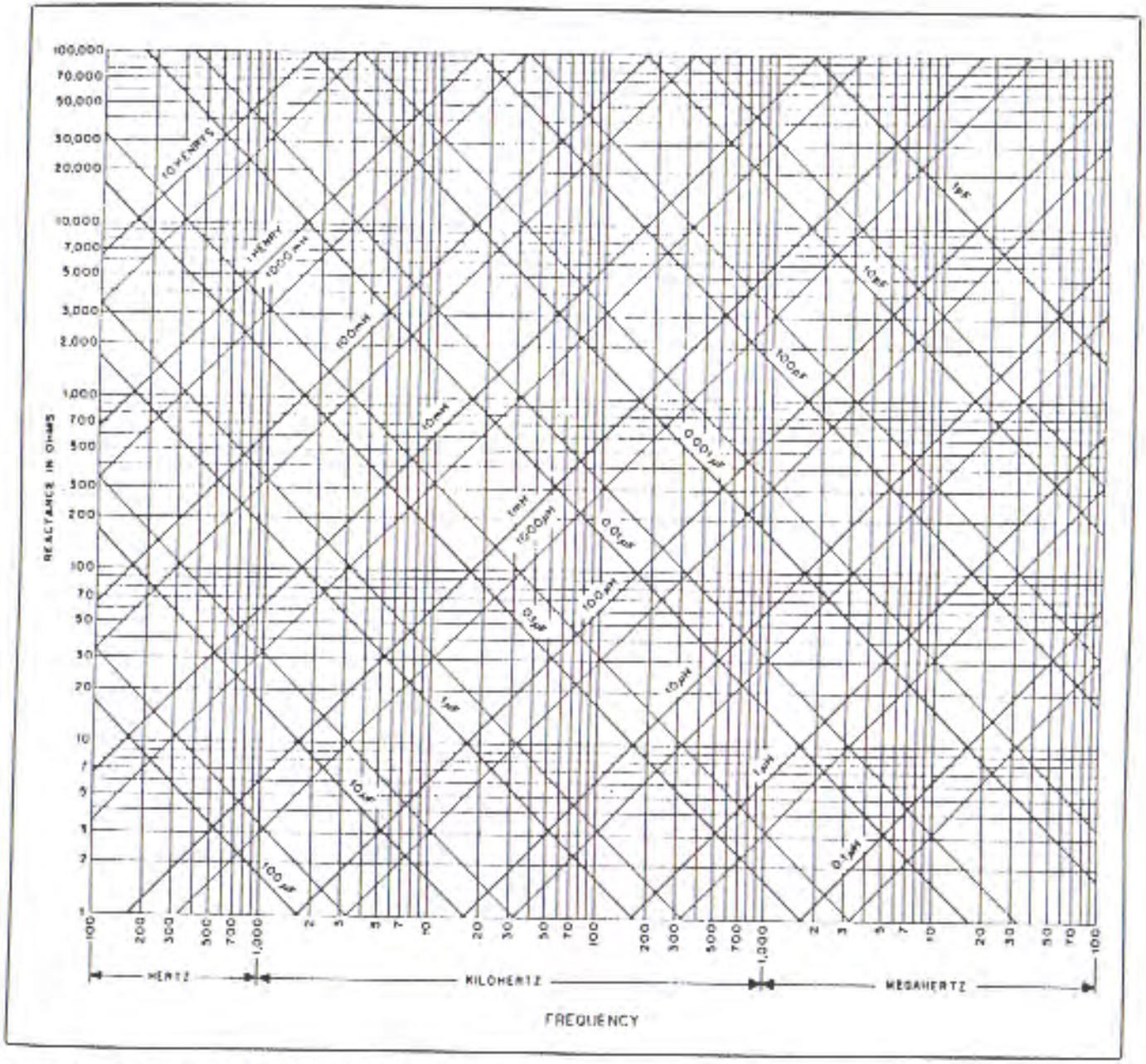

Fig. 44 — Inductive and capacitive reactance vs. frequency. Heavy lines represent multiples of 10, intermediate light lines multiples of five. For example, the light line between 10 µH and 100 µH represents 50 µH; the light line between 0.1 µF and 1 µF represents 0.5 µF, and so on. Intermediate values can be values within the chart range. For example, the reactance of 10 henrys at 60 Hz can be found by taking the reactance of 10 henrys at 600 Hz and dividing by 10 for the 10× times decrease in frequency.

CHART, COURTESY OF A.R.R.L., 1992 ED.

Speech presented the evening of 23 July, 1994 at the International Tesla Society Convention at Colorado Springs, Colorado

DONALD L. SMITH
ENERGY CONSULTANT
8110 BENT OAK LANE
SPRING, TEXAS 77379

ELECTRICAL ENERGY REFERENCE POINTS

Electrical Energy Generating System
Patent Pending # 08/100,074, 2/4/92

The word "electric" comes from the Latin word electron "amber". When rubbed, amber develops an electrical charge, which can be transfered to a dissimilar substance. During the seventeenth and eighteenth centuries, a great deal of attention was centered on this attribute of amber. Amber was used to different the none-metals. Carbon-related substances and other none-metals, when subjected to friction, give up negative electrical charges. On the other hand, metals when subjected to friction, simply conduct the charge.
It is important to note that approximately 70% of the Earth's exposed crustal portions (surface) consist of silicone related none-metals (electron doners) and therefore becomes a direct source of electrical energy when properly agitated.

Useful electrical energy is obtained by grounding into the Earth's none-metal crust and into it's atmosphere as a natural source of electrons. These electrons have accumulated from the solar plasma during the aging of the Earth for more than 4.5 billion years, at a rate exceeding 3.9 exajoules per year. This indicates that the Earth's electrical field contains in excess of 17.6 X 10 to the 18 th power of cummulative exajoules of energy. One Exajoule is the approximate energy equivalent of 125 million barrels of oil. The electrical energy in one display of lightning is approximately ten trillion joules.
Each 24 hours, the land portions of the Earth's surface yields in excess of 200,000 emissions, which involves more than 2,000 quadrillion watt seconds of active energy on display.

This physical phenomenon indicates the Earth's crust is an unending source of electrical energy. The surface area involved is a very small portion of the Earth's crust.

J.C. Maxwell (1891) suggested an active electron field gives rise to an associated magnetic field. Therefore, both are present with pulsating current. Early studies, involving observation of compass needles by microscopy, revealed that the needle vibrates as with alternating current. More recent studies by A. Nishida and others, confirm alternating current is common in the Earth's crust.

C.F. Gauss (1777-1855) and H.C. Oersted (1777-1851), both were separately trying to define the Earth's electrical field with external influences removed. These external influences being solar quite periods and being remote from the land's surface. The air electricity background which which they measured varies with latitude. Their European measurements correspod to approximately the latitude of Wasington, D.C. They were measuring magnetic field flux as an indicator of negative electron energy active and present.

A related family of measurement is now presented. Units of measure used to define flux fields include Gauss (one unit = 100,000 volts), Oersted (one unit = 50,000 volts), Tesla (one unit = 10,000 Gauss) and Gamma (one unit = 1/10,000 th of a Gauss). Much confusion exist in electrical related publications about these units. As presented here they are correct with values taken from their original definitions.

The entire surface of the Earth has been surveyed by aerial magnetometer, in most cases using gamma or nano teslas. One gamma is the magnetic flux equivalent of 10 active volts of electricity. When this data is corrected for fleight height it becomes obvious that there are numerous areas where the gamma readings exceed one trillion gammas. Lightning strikes from the ground up are in that energy range. With knowledge of these electron enriched areas, the quality of Earth grounding, becomes enhanced.

ELECTRICAL ENERGY REFERENCE POINTS (Continued)

The correction necessary for land surface data when acquired from aerial magnetometer maps (using the inverse square law) requires that the remote distance be squared and then multiplied times the remote reading. As an example, the reading is 1,600 gammas and the flight height being 1,000 feet. Take 1,000 X 1,000 = 1,000,000 X 1,600 gammas = 1.6 trillion gammas X 10 volts = 16 trillion volts equivalent for land surface data.

INSERT AND DISCUSS, Aerial Magnetometer Map GP-948
East-Central United States

Present day methodology requires mechanical energy in exchange for electrical energy. Any required amount of electricity is available by resonate induction transfer from the Earth's magnetic and electrical fields. Each cycling of this resonate induction system pulls in additional electrons , generating energy in any required amount. A small amount of electrical energy is used to activate and pull into the system a much larger amount of energy.

ENERGY VERSES MASS

INSERT AND DISCUSS ELECTRICAL ENERGY

Steady State	Unsteady State
Static "Pre-Energy "	Kinetic "Energy"
Mass attracts Mass, Gravity Dominates	Expanding, Magnetic Energy Dominates Electrons moving apart Pressure decreasing Cooling effect dominates Less scattering of Energy Negative resistance
	Contraction, Electrical Energy Dominates Electrons moving together Pressure increasing Heating effect dominates Scattering of Energy Positive resistance

Functions of active Electrons

Electrons become active when placed inside the critical distance allowed by their negativity.

Active Electrons provide:

1. Electricity
2. Magnetics
3. Gravitational thrust as in Electric Motors
4. The source of Visible Light
5. It's charge is Negative

They move in a closed loop as seen in the Icon for infinity, not in a circle as shown in many books.

One half of the loop consist of a magnetic impulse and the return half consist of the electrical impulse. This is seen as the classic sine wave of alternating electrical energy.

A flash of light occures when two electrons suddenly find they are too close to gather. Daylight results from the impengement of Electrons in the Earth's atmosphere with the Electrons of the Solar Plasma.

My Concept of the Forces of Nature differs from the conventional. It consist of a weak and a strong force, each being additionally composed of electrical, magnetic and gravitational (fields & waves). Any two of the three constitute the third member. Gravity "B" of the weak force competes with humans on a daily basis. Gravity "A" of the strong force is the force that holds the Solar System and the Universe in place. Energy from the Electrons represent the weak force. Energy inside the Atom represents the strong force "A". Controlled resonate induction of any two of the three, changes into the third and is the motor that runs the Universe. We see this in the electrically induced magnetic thrust against gravity in electric motors.

Weak force is required to dislodge electrons and strong force (atomic) to dislodge protons.

Unless dislodged, these particles are of little value in producing Conventional Electrical Energy.

INSERT AND DISCUSS:

1. Electrical Energy with Associated Phenomena
2. Energy Acquired by Magnetic and Electrical Impusing
3. Electrical Energy

Therefore, in conventional electrical energy production, the particle of importance is the negative electron. Electrons have a "grudging" relationship with other electrons. They like each other, especially at arms. length. Like potentials repel each other and unlike potentials attract. To demonstrate this, take two batteries of the same type, but of a different charge level (unequal potentials). Put the plus and minus ends facing the same direction. Then with a volt meter, measure the electrical potential between the two negative ends and then the two positive ends. It is obvious that the " more negative " moves to the " less negative ", is the correct concept for electrical energy generation. Electrical Energy flow consist of a higher concentration of electrons moving to an area of lesser concentration.

OHM'S LAW WITH CORRECTIONS:

A major obstruction in reference to the correct function of electrical energy is the establishment's incorrect interpretation of Ohm's Law. The corrected version is:

Volts = Energy Available (Potential)

Ohm = Scattering, dissipation of Energy (Load)

Ampere = the rate of, dissipation / scattering of energy

It is important to note that Ohm and Ampere are after the fact, and are not decisive except for the dissipation factor. High Voltage at low amperage simply means that the High Voltage is still intact for future usage. In no way is the potential diminished by low amperage.

EXAMPLES OF OVERUNITY

Dominos did not exist in England when the Laws of Conservation were originally put in place. Otherwise they might have been very different. For example let us take a long row of upright dominos, (many thousands) and flip number one. The Energy required to flip # 1 must now be added with that of thousands more in order to have a correct assessment.

The Electron it's self is an excellent example of overunity. The electron provides various forms of energy continuously throughout eternity and is in no way dimenished. It simply cycles through the system and is available thereafter.

In Electrical Systems, Electrons active at point "A" are not the same Electrons active at point "B". That is to say, the Electrons activated at the Central Electrical Energy Station are not the ones used at your house. When you ground your system by flipping the wall switch, you use your own electrons. In closed energy systems, electrons communicate with and and replicate the activity of the overbalanced potential, when provided with Earth and or Air Groundings.

The number of Radios and Televisions running at any one time do not diminish, in any way the electrical output of the source station.

For example, let now use use an Air Coil Resonate Induction System for the purpose of flipping some electrons.
The flipping device (reactor L-1 Coil) is pulsed which then provides a resonate induction pulse, in turn this flips the electrons present at the (reactant L-2) Coil. The energy input in L-1 is devided by the number of turns present. The induced magnetic pulsing in turn flipps the electrons in each turn of L-2. If more turns are present in L-2 than L-1, there is a net gain in the Energy present, as demonstrated by the dominos above. The farads and henrys of the resonate system provide the resonate frequency when pulsed by an external energy system. A system shunt in the resonate circuit sets the containment level for energy potential.

EXAMPLES OF OVERUNITY (Continued)

The Induction Process it's self provides an excellent example of overunity. When comparing rate of induction the cycles per second must be squared and then compared to the square of the second System. Let's then compare the 60 c.p.s. System with my 220 Mhz. Device. Energy produced at radio frequency has several major advantages over the conventional system. Ohm's Law when applied to the resonate air core radio frequency system is not functional.

For example: When resonate the following is true.

EXPECTED RESULTS

$$\frac{\text{Energy Potential as Volts}}{\text{Dissipation}} = \text{Rate of Dissipation}$$

ACTUAL RESULTS

Super Conducter Conditions take over

$$\frac{\text{Energy Potential as Volts}}{(\text{Dissipation})^{*}} = (\text{Rate of Dissipation})^{*}$$

* OHMS / DISSIPATION, IN AIR COIL RESONATE INDUCTION SYSTEMS, RESISTIVITY BECOMES ZERO AT RESONANCE.

This is named the V.A.R. (Volt Amperes Reactive) System.

When compared to the Conventional Under Unity iron core transformer system, the results are over unity.

It is strange that mechanical advantage as in pulleys, gears, levers and others which correspond to the electrical advantage above mentioned are not considered over-unity devices.

EXAMPLES OF OVERUNITY DEVICES (Continued)

Let us take a closer look at resonate induction. As an example, let a room full of ping pong balls randomly bouncing at a high speed represent the Conventional method of underunity energy generation.

Suppose that by resonate induction the balls all move in the same direction at the same time. When this occures a huge amount of energy not previously available is present. The resonate air core coil system lines up the electrons in such a manor that the energy factor is near 100 % , not 2 and 3 % as in Conventional underunity devices sanction by the establishment.

Some other devices where overunity is common would be resonate induction circuits present in conventional radio tubes (high plate voltage), negative feedback systems found in Op-Amps and possibly others.

SUMMARY

Useful electrical energy is achieved when the electron density at point "A" becomes greater than at point "B", (being the more negative moving to the less negative concept). Coils moving through a magnetic field or vice versa causes this imbalance.

The mind set of the professional electrical engineer is restricted to none-resonate and iron core coil resonate systems. Ohm's Law when applied to resonate air core induction systems, becomes, system resistivity (impedence, Z). "Z" at resonance becomes zero. Therefore, in this system, volts and amperes are equal until load (resistivity) is introduced. This is called the Volt Ampere Reactive (V.A.R.) System. With impedence being zero, the System grounding is coupled directly into the Earth's immense electrical potential.

Efficency of induction relates to the square of the cycles per second. Compare the ratio of the conventional 60 c.p.s. System and the 220 million plus cycles of my Earth Electrical System II.

SUMMARY (Continued)

Electrons which cycle through this system, after being used, are returned in tact to their former state for future usage.

Electron spin causes electrical current and magnetic lines of force.

The effect of current results from the unequal distribution of negativity (electrons).

Magnetic imbalance causes the gravitational effect. This is evidenced in electric motors by magnet-gravitational displacement of mass which causes the motor to rotate.

The System is an extension of present technology

The System and it's source utilizes magnetometer studies.

This System (Earth Electrical System II, E.E.S. II) utilizes a fully renewable energy source.

This System utilizes a non-poluting energy source.

This System utilizes an universally available energy source.

Endorsement and Certification of The System can be anticipated by States with pollution problems.

AIR CORE INDUCTION COIL BUILDERS GUIDE

DONALD L. SMITH
Energy Consultant

1. Decide frequency. Considerations are: (economy of size)
   a. Use radio frequency upward (above 20,000 Hz's).
   b. Use natural frequency (coils have both capacitance and inductance), that is match the wire length of the wire in the coil to the desired frequency.
   c. Wire length is either one quarter, one half or full wave length.
   d. obtain wire length (in feet) use the following: If using one quarter wave length divide 247 by the desired frequency (megahertz range is desirable). If using one half wave length divide 494 by the desired frequency. If using full wave length divide 998 by the desired frequency.

2. Decide number of turns, ratio of increase in number of turns sets the function. In the case of L-1 coil each turn divides the input voltage by the number of turns. In the case of L-2 the resulting voltage by division from L-1 is induced into each turn of L-2, resulting in an additive process. For example if the input into L-1 from a high voltage, low amperage module is 2,400 volts. L-1, for example has 10 turns. Then each turn of L-1 will have 240 volts of magnetic induction which transfers 240 volts of electricity to each turn of L-2. L-2 may be one turn or many, such as 100 to 500 plus turns. At 100 turns, 24,000 volts is produced. At 500 turns, 120,000 volts is produced.

3. Decide the height and diameter of the coil system. The larger the diameter of the coil, the fewer number of turns required, and shorter (lowering of) in height. In the case of L-2 this results in lowering the amplification of the induced voltage from L-1.

4. For example, 24.7 MHz is the desired frequency output from L-2. One quarter wave length would be 247 divided by 24.7 equals 10 feet of wire. The number of turns will be the amplification factor. The coil may be wound on standard size P.V.C. or purchased from a supplier. The supplier is normally a ham radio supply source. Once the length is determined and the number of turns decided, move the next step. For example let each turn of L-1 have 24 volts and desired output of L-2 being 640 volts. Therefore L-2 needs 26.67 turns. It has been determined that the wire length for one quarter wave length is 10 feet. The number of inches in 10 feet is 120. Using Chart "A" supplied look for next higher number of turns showing (being between 20 and 30 turns with a 2" diameter coil). This tells us

to use a 2" coil. If ready made as in the case of Barker and Williamson, 10 Canal Street, Bristol, Penna., 215-788-5581, they come in standard sizes of 4, 6 and 10 turns per inch. For higher "Q" use wider spacing of the turns. These coils come in a ready made length of 10 inches. Select from the coil 30 turns and put input clamps on the base of the coil and at 30 turns. For exact determination of the correct position of the output clamp, use an externally grounded voltage probe. The node of maximum intensity, being the natural resonate point. Off the shelf multimeters are not radio frequency responsive. The easiest way to accomplish the above is to get from the hardware store or Radio Shack a voltage detector having a neon bulb system (Radio Shack Cat. No. 272-1100b, NE2-Neon Lamps) will work. With your hand as a ground, move the wire extension of the neon lamp along the coil surface until bulb is brightest.
This is the desired point of resonance and connection.

5. The input power now needs consideration. A 2,400 H.V. module has been previously selected. This module can be made from a diode bridge or any combination of voltage amplifiers. The one used here is an off-the-shelf type, similar to those used for laser technology.

6. Construction of the input L-1 coil. For purposes already determined there will be 10 turns. Length of the wire here is not critical. Since L-2 is 2" in diameter, the next off-the-shelf larger may be used for L-1. Use a 3" diameter off the shelf coil having 10 turns to the inch. Remove (cut) a 10 turn portion from the larger coil. Use a L.C.R. meter and get the natural farads and henry's reading from L-2. Now do the same for L-1. It will be necessary to put a capacitor for matching L-1 to L-2 across the voltage input of L-1. Also a spark gap in parallel is required on the return voltage from L-1. A tunable capacitor of the pad type for L-1 is desirable.

7. L-2 can be further enhance by having an Earth grounding from the base of the coil. The maximum voltage output will be between the base and top of L-2. Lesser voltage can be obtained at intermediate points from L-2.

SUPPLY SOURCES

1. HAM RADIO SUPPLY STORES

2. COILS, AIR INDUCTOR IN HOUSTON

   BAKER AND WILLIAMSON (READY MADE), BRISTOL, PENNA.
   ALSO R.F. DUMMY LOADS AND WATTMETERS.

N O T E S

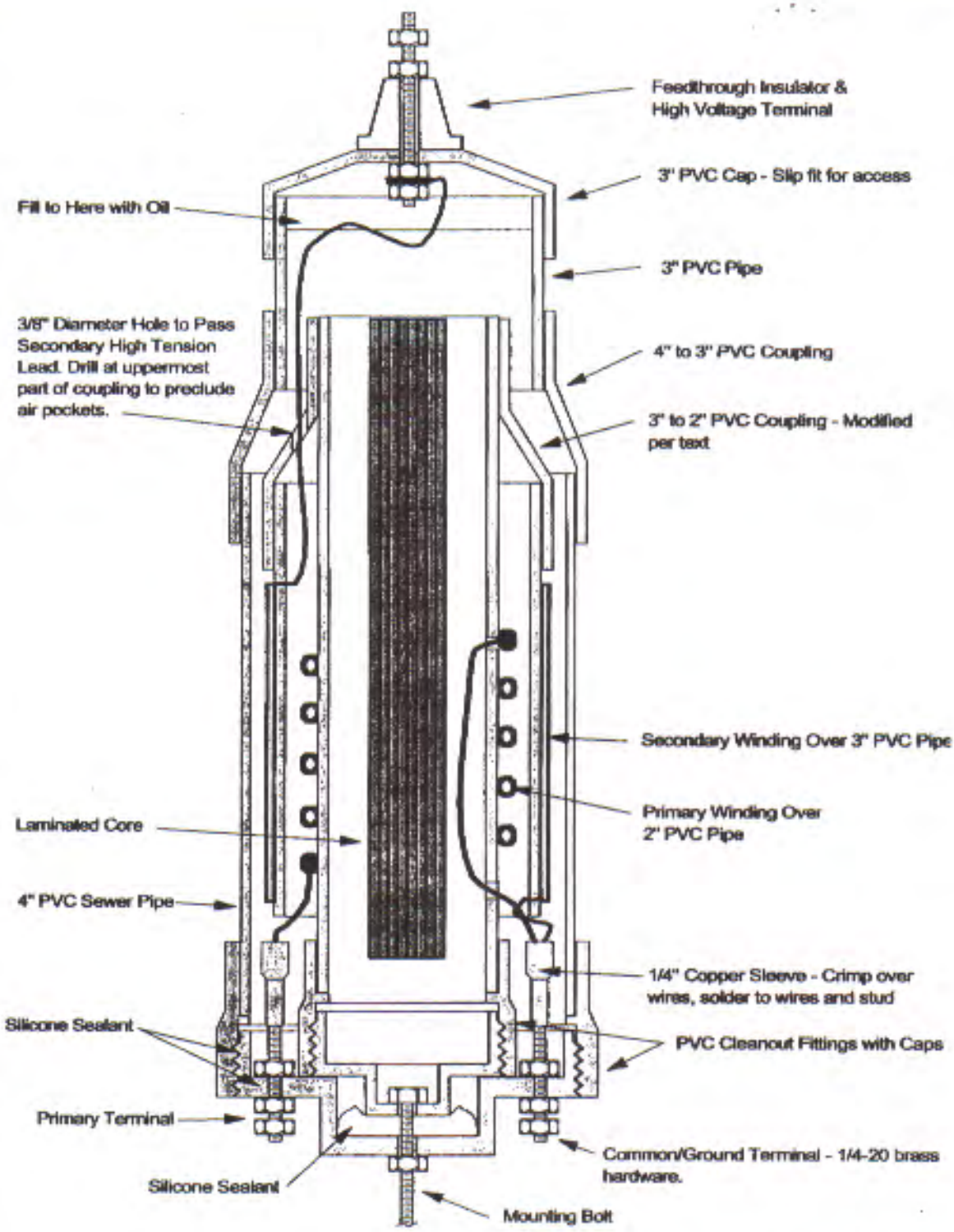

Figure 3 - Impulse Transf
Assembly (Note, vertical
shortened.)

ELECTRICAL PRINCIPLES, TERMINOLOGY & SAFETY

The use of electricity is so common place that most people assume that it will always be available on demand. To fully realize the dependence upon electricity, survey the ways electricity is being used each day in the home and on the farm and ranch. Electricity is doing more to increase work efficiency and promote enjoyable living than any other single factor. The use of electricity has grown to the extent that an increasing portion of the home or business budget is used in paying for this source of energy.

1. Definition of Electricity

Electricity can be defined in several ways. The layman defines electricity as a source of energy that can be converted to light, heat, or power. Electrical engineers define electricity as a movement of electrons caused by electrical pressure or voltage. The amount of energy produced depends on the number of electrons in motion.

2. The Manufacture and Distribution of Electricity

Electricity is produced from generators that are run by water, steam, or internal combustion engines. If water is used as a source of power to turn generators, it is referred to as hydroelectric generation. There are a number of this type located in areas where huge dams have been built across large streams.

Steam is used as a source of power for generating much of today's electricity. Water is heated to a high temperature, and the steam pressure is used to turn turbines which generate electricity. These are referred to as thermal-powered generators. Fuels used to heat the water are coal, natural gas, and/or fuel oil.

Generators at the power plant generate from 13,800 to 22,000 volts of electricity. From the power plant, electricity is carried to a step-up substation which, through the use of transformers, increases the voltage from 69,000 to 750,000 volts. This increase in voltage is necessary for the efficient transmission of electricity over long distances. From the step-up substation, the electricity is carried on transmission lines to a step-down substation which reduces the voltage to 7,200 to 14,000 volts for distribution to rural and city areas.

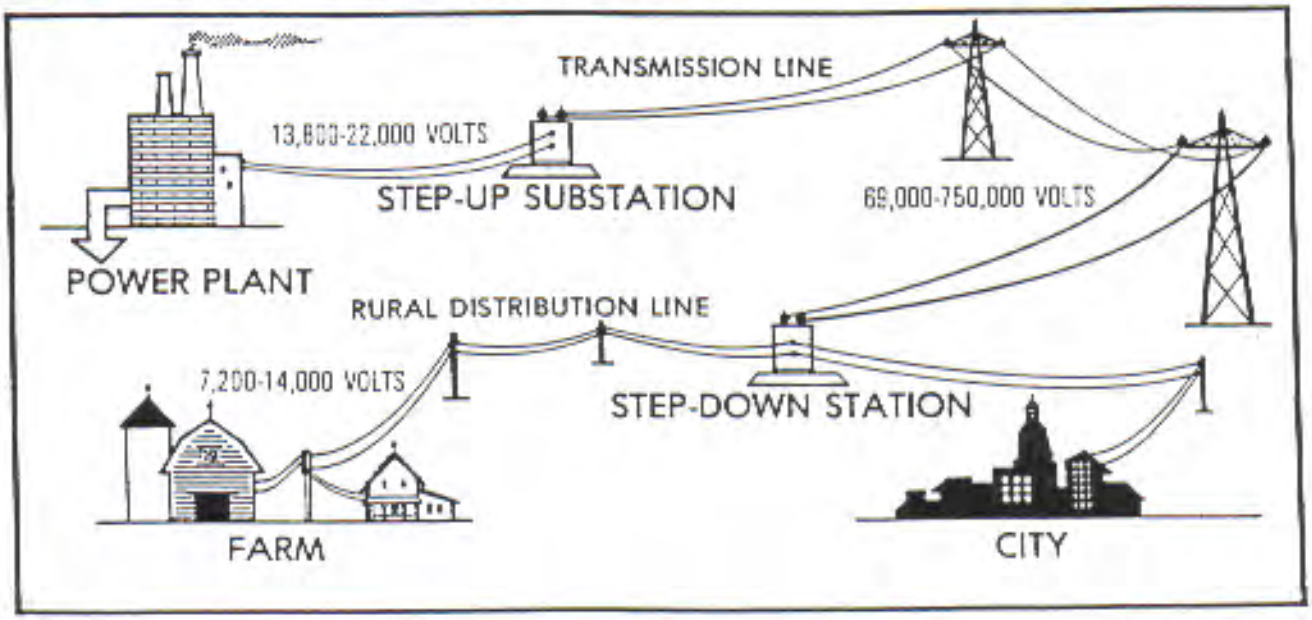

Transformers at the business or residence reduce the voltage to 120 or 240 volts to the meter of the customer.

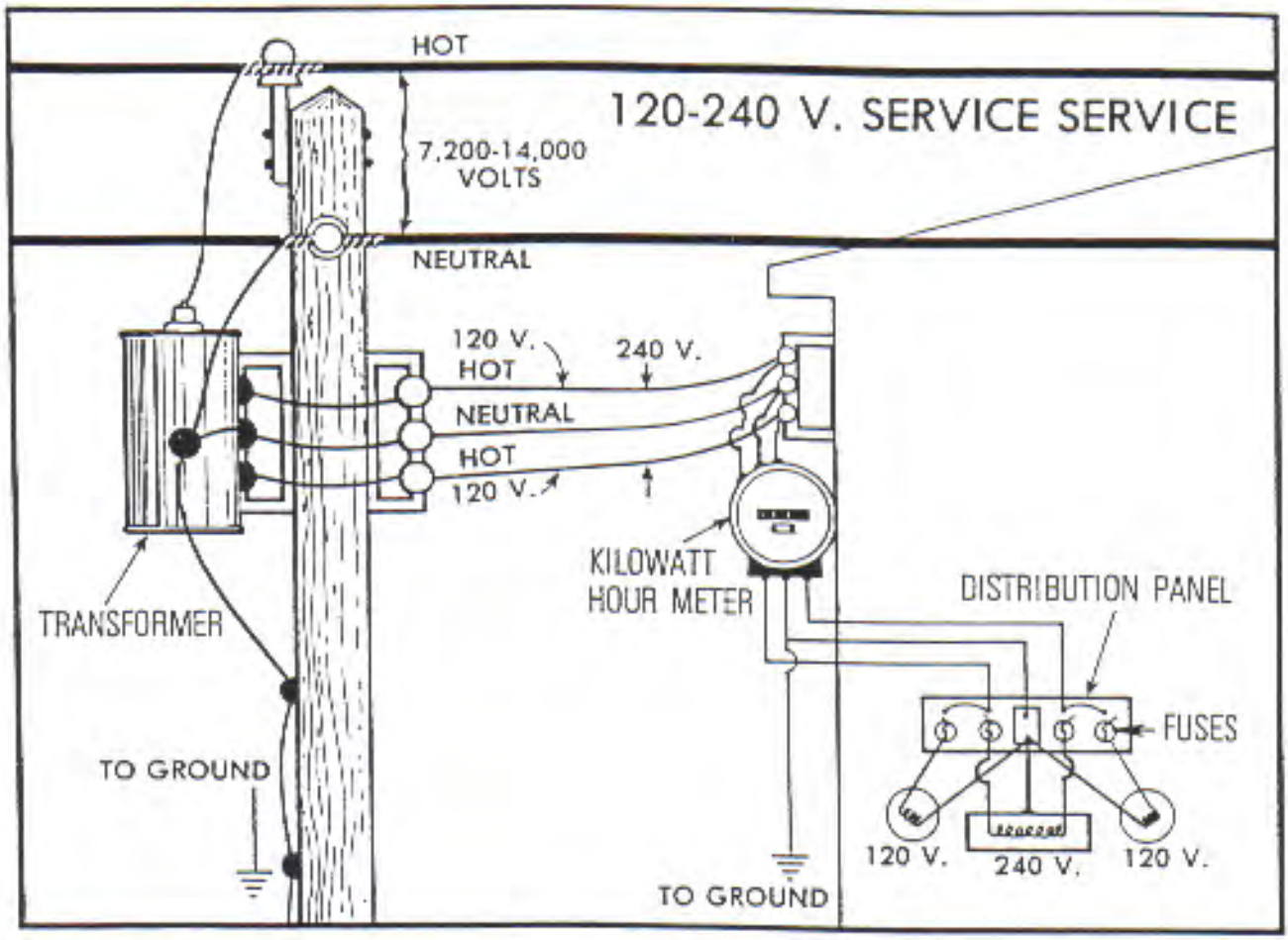

3. **Common Electrical Terms**

In order to work safely and efficiently with electricity and have the ability to converse on the subject, the following terms should be understood:

Ampere (Amp) - A measurement in units of the rate of flow of electrical current. This may be compared with the rate of flow of water in gallons per minute.

Example: A 60-watt incandescent lamp on a 120V circuit would pull 1/2 ampere of electricity (60 divided by 120 = .5 or 1/2). (Formula: Amperes = Watts divided by Volts

Volt (V) - A unit of measure of electrical pressure. A given electrical pressure (V) causes a given amount of electrical current (Amps) to flow through a load of given resistance. Voltage may be compared with water pressure in pounds per square inch in a water system. Common service voltages are 120 volts for lighting and small appliance circuits and 240 volts for heating, air conditioning, and large equipment circuits.

Watt (W) - A unit of measure of electrical power. When applied to electrical equipment, it is the rate that electrical energy is transformed into some other form of energy such as light. Watts may be compared to the work done by water in washing a car. (Formula: Volts x Amps = Watts)

Kilowatt (KW) - A unit of measurement used in computing electrical energy used. Kilowatts are determined by dividing the number of watts by 1000 (1 KW = 1000 W).

Kilowatt Hour (KWH) - A measure of electricity in terms of power in kilowatts and time in hours. A KWH is 1000 watts used for one hour.

Alternating Current (A.C.) - Electrical current that alternates or changes direction several times per second. The direction current moves depends on the direction the voltage forces it.

Cycle - The flow of electricity in one direction, the reverse flow of electricity in the other direction, and the start of the flow back in the other direction.

The cycles per second are regulated by the power supplier and are usually 60. Most electric clocks are built to operate on 60 cycles. More or less cycles would cause the clocks to gain or lose time. The present practice is to use the term Hertz (Hz) rather than cycles per second.

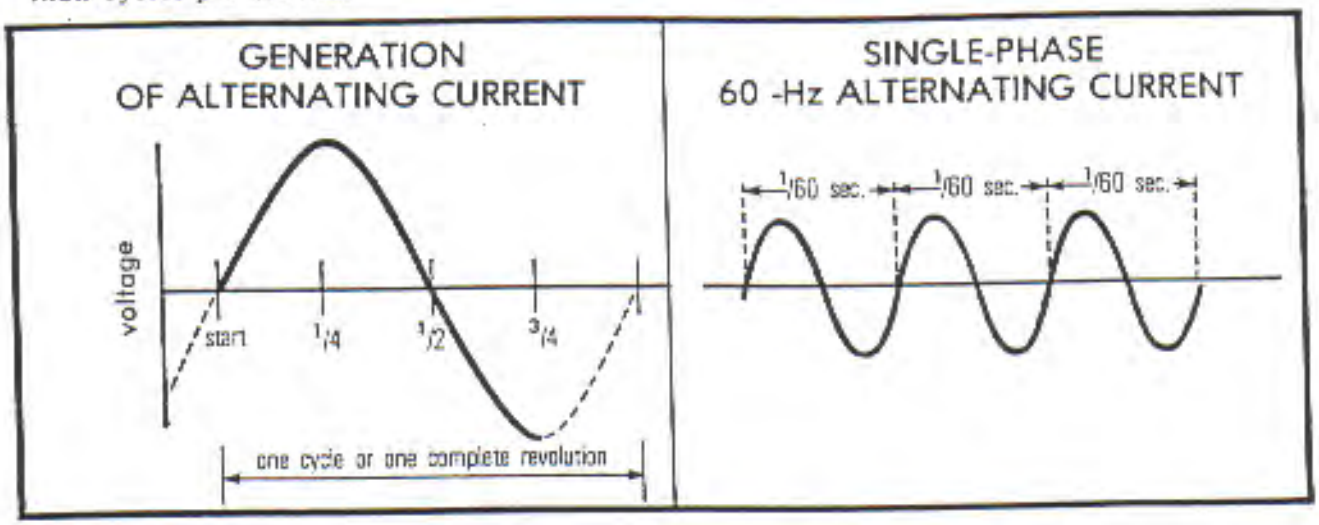

Direct Current (D.C.) - Electrical current flowing in one direction. Example: electrical circuit in automobiles and tractors.

Transformer - A device used to increase or decrease voltage.

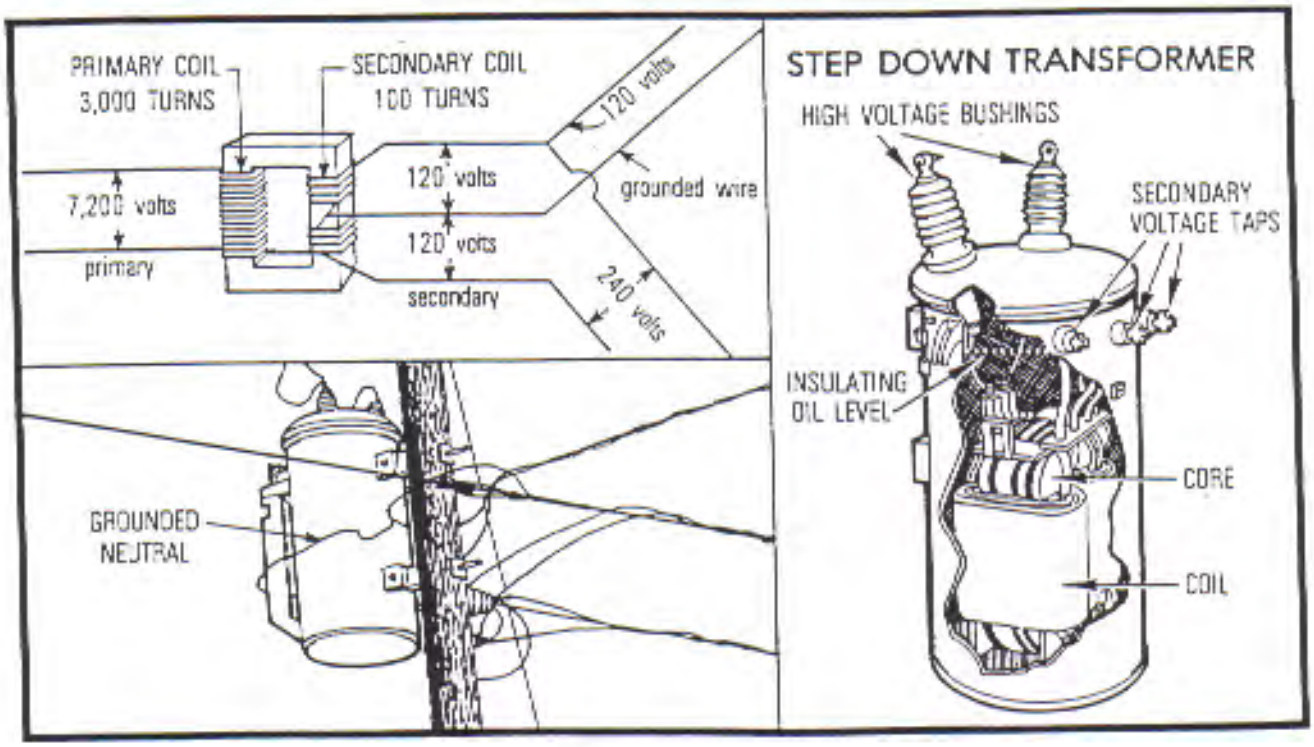

Single Phase - The most common type of electrical service or power available to consumers. One transformer is used between the distribution line and the meter. Usually three wires, two "hot" and one neutral, are installed to provide 120V and 240V single-phase service. Single-phase service may also be supplied with three-phase service.

Three-Phase - This type of service is designed especially for large electrical loads. It is a more expensive installation due to three wires and three transformers. The important advantage of three-phase power is that the total electrical load is divided among the three phases; consequently, the wire and transformers can be smaller. Other advantages exist in the design of three-phase motors.

Short Circuit - A direct connection (before current flows through an appliance) between two "hot" wires, between a "hot" and neutral wire, or between a "hot" wire and ground.

Voltage Drop - A reduction of current between the power supply and the load. Due to resistance, there will be a loss of voltage any time electricity flows through a conductor (wire). Factors that influence voltage drop are size of wire, length of wire, and the number of amps flowing. A drop in voltage may cause a loss of heat, light, or power output of a motor. It could cause motor burn-out unless the motor is properly protected (time-delay fuse).

Fuse - A device used to protect circuits from an overload of current.

Circuit Breaker - A device used to protect circuits from an overload of current. May be manually reset.

Time-Delay Fuse - A fuse with the ability to carry an overload of current for a short duration without disengaging the contacts or melting the fuse link.

Horsepower (hp) - A unit of mechanical power equal to 746 watts of electrical power (assuming 74.6% electric motor efficiency). One hp and above motors are rated at 1000 watts per hp; motors below one hp are rated at 1200 watts per hp.

Conductor - The wire used to carry electricity (copper or aluminum). Copper and aluminum should not be spliced together due to their incompatibility resulting in deterioration and oxidation.

Insulator - A material which will not conduct electricity and is usually made of glass, bakelite, porcelain, rubber, or thermo-plastic.

"Hot" Wire - A current-carrying conductor under electrical pressure and connected to a fuse or circuit breaker at the distribution panel. (Color Code: usually black or red)

Neutral Wire - A current-carrying conductor not under electrical pressure and connected to the neutral bar at the distribution panel. (Color Code: usually white)

Grounding - The connection of the neutral part of the electrical system to the earth to reduce the possibility of damage from lightning and the connection of electrical equipment housings to the earth to minimize the danger from electrical shock. (Color Code: can be green or bare wire)

Underwriters' Laboratory (U.L.) - A national organization which tests all types of wiring materials and electrical devices to insure that they meet minimum standards for safety and quality.

National Electric Code (N.E.C.) - Regulations approved by the National Board of Fire Underwriters primarily for safety in electrical wiring installations. All wiring should meet the requirements of the national as well as the local code.

4. Computing Electrical Energy Use and Cost

If an estimate of cost for electricity used is desired, the name plate data on appliances and equipment and an estimate of operating time may be used. The following formulas should be used for determining watts, amps, volts, watt-hours, kilowatt-hours, and cost.

WATTS = VOLTS X AMPERES

$$\text{AMPERES} = \frac{\text{WATTS}}{\text{VOLTS}}$$

$$\text{VOLTS} = \frac{\text{WATTS}}{\text{AMPERES}}$$

WATTS X HOURS OF OPERATION = WATT HOURS

$$\text{KILOWATT-HOURS} = \frac{\text{WATT-HOURS}}{1000}$$

COST = KWH X LOCAL RATE PER KWH

EXAMPLE COST PROBLEM:

LOCAL RATE PER KWH USED - 8 CENTS
NAME PLATE DATA - 120 VOLTS, 5 AMPS
MONTHLY HOURS OF OPERATION - 10

(1) (W = V X A) W = 120 X 5 W = 600

(2) (WATT-HOURS = W X HOURS) WATT-HOURS = 600 X 10 WATT-HOURS = 6000

(3) $\left(\text{KWH} = \frac{\text{WATT-HOURS}}{1000}\right)$ $\text{KWH} = \frac{6000}{1000}$ KWH = 6

(4) (COST = KWH X RATE) COST = 6 X 8 COST = 48 CENTS

5. Electrical Circuits

An electrical circuit is a completed path through which electricity flows. Insulated conductors (wires) provide the path for the flow of electricity. A water system and an electrical circuit are similar in many respects. Water flows through pipes and is measured in gallons per minute, and electricity flows through conductors and is measured in amperes. A simple circuit is diagrammed here:

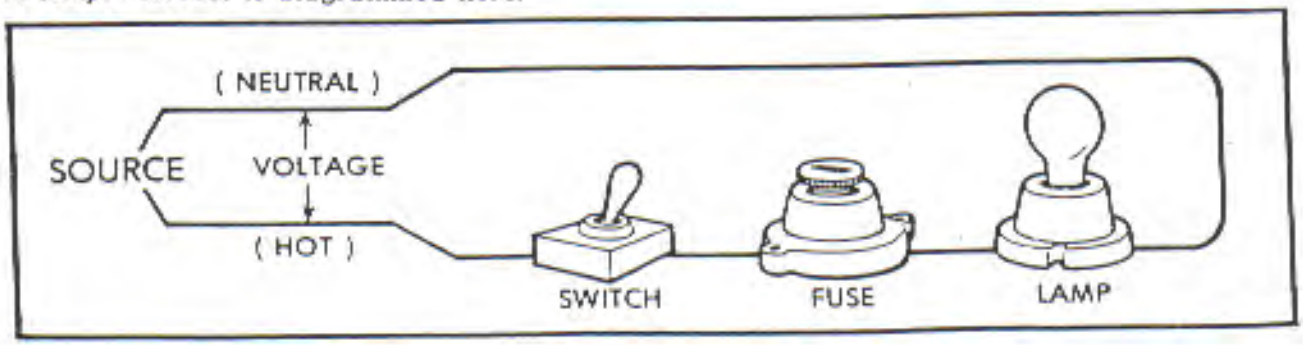

A circuit includes a "hot" wire (red or black) carrying current from the source through a switch, circuit protector (fuse or circuit breaker), and an appliance. The neutral wire (white) conducts the current from the appliance to the source (ground).

There are two methods for connecting devices in a circuit--series and parallel. In a series circuit all the current must flow through each device in the circuit. Removing or opening any one of the devices in the series circuit will stop the flow of current. In parallel circuits the load (lights or appliances) are connected between the two wires of the circuit providing an independent path for the flow of current, and removing a lamp has no effect on the other lamps in the circuit.

Switches, fuses, and circuit breakers are always connected in series. In most cases, except for some Christmas tree lights, appliances and lights are connected in parallel.

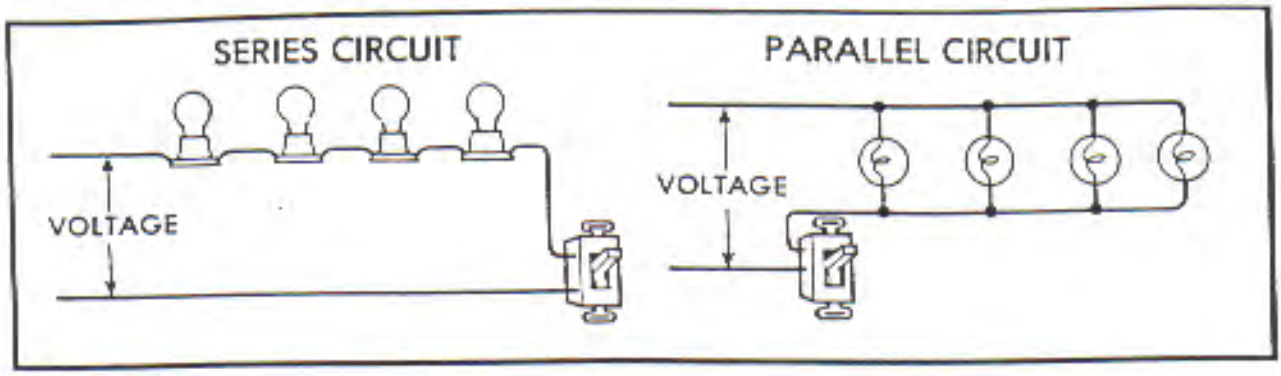

6. **120 Volt and 240 Volt Circuits**

The 120V circuit has one "hot" and one neutral wire with the switch and circuit protector in the hot line. The neutral wire from the appliance is connected to the neutral bar in the fuse or breaker box. For safety, the neutral wire should never be broken or interrupted with a switch or fuse.

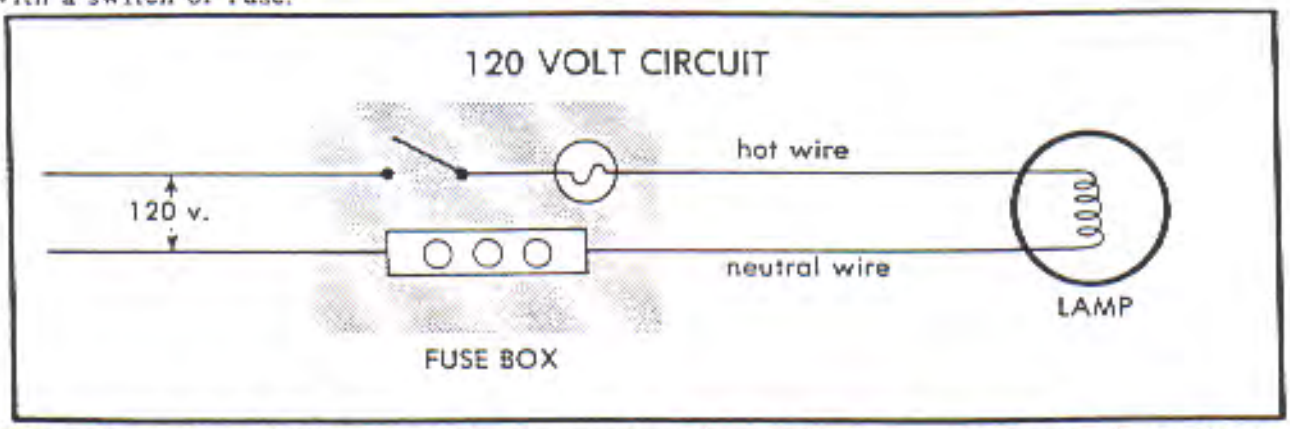

The voltage in a 120V circuit is measured with a voltmeter with one lead on the hot terminal and the other lead on the neutral bar. The number of amperes flowing may be measured with a clamp-on ammeter by encircling the hot or neutral wire with the jaws of the ammeter.

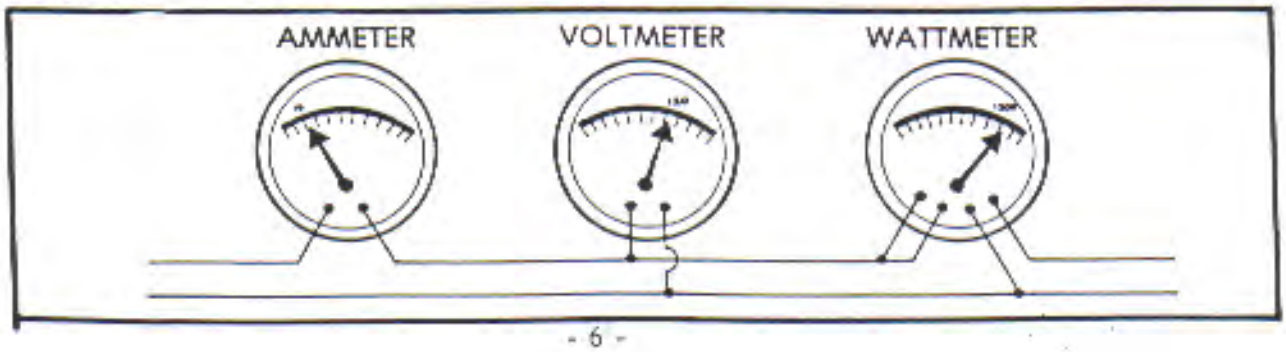

The 240V circuit has two hot wires and one safety-ground wire. Switches and fuses are installed in the hot lines. The two hot wires are necessary for the operation of 240V welders and motors. The safety-ground wire, connected to the metal frame of the equipment or motor and to the neutral bar, does not carry current unless a "short" develops in the motor or welder. If a short should occur, one of the circuit protectors will burn-out or open, thus opening the circuit.

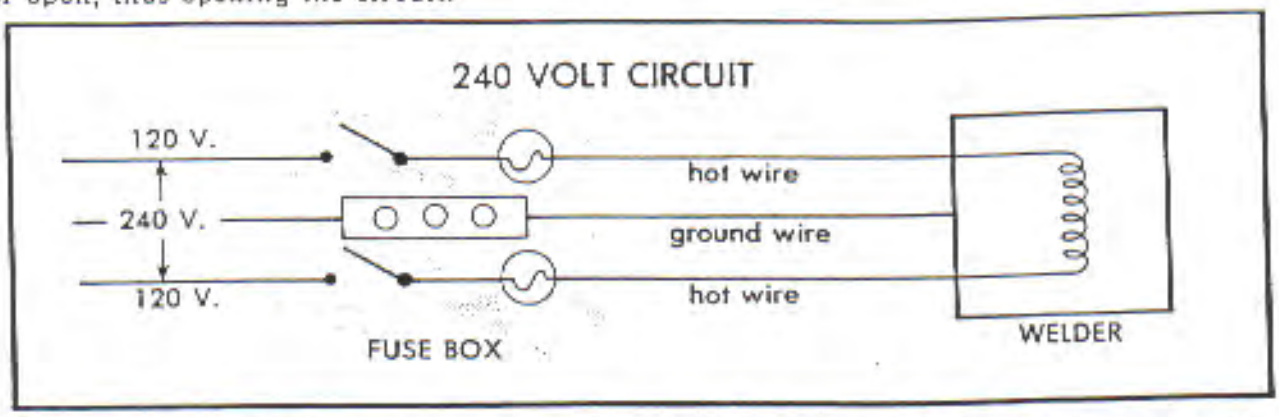

The voltage on a 240V circuit is measured by fastening a lead on the voltmeter to each of the hot wires. Voltage between either hot terminal and the neutral bar will be one-half of the voltage between the two hot wires. The number of amperes flowing can be measured by clamping an ammeter around either of the hot wires.

7. **Safety Grounding Electrical Equipment**

Refer back to the 240V circuit and note the ground wire from the metal frame to the neutral bar. The following illustration shows proper safety grounding when operating a drill in a 120V circuit. The safety-ground wire may be bare, but a three-wire romex is recommended. Safety-ground wire in three-wire romex is usually green in color. A current-carrying neutral wire should never be used for a safety-ground. Likewise, a safety-ground wire should never be used as a current-carrying hot or neutral wire.

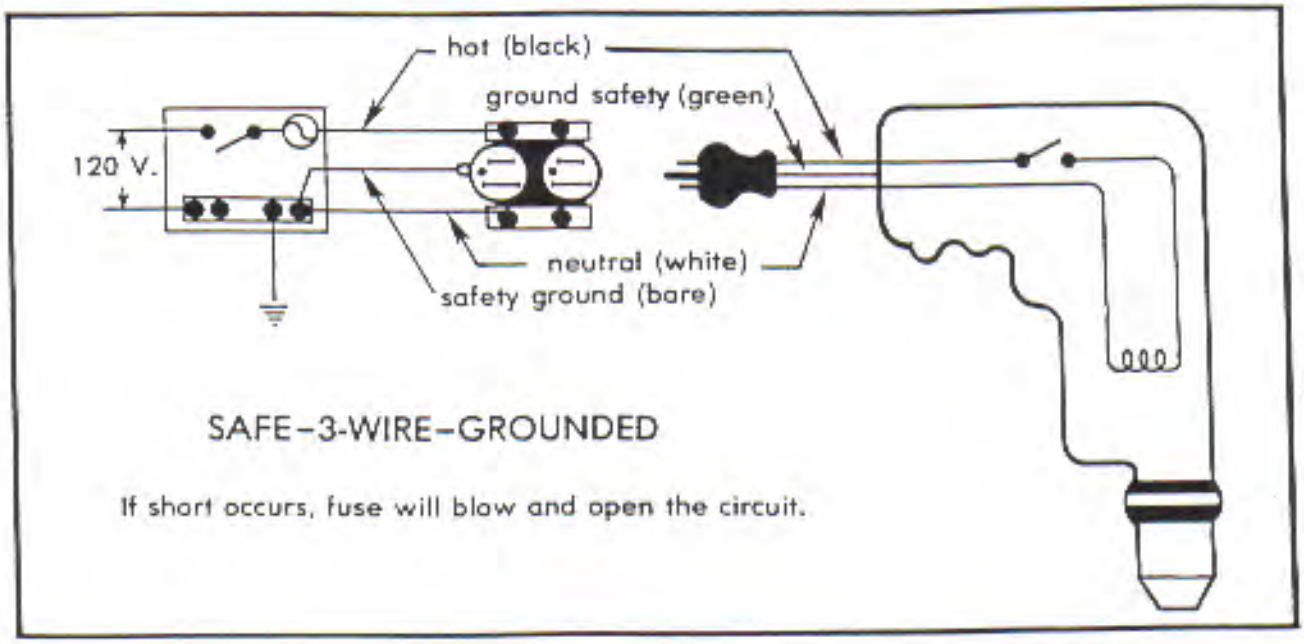

Using grounded receptacles and a safety-ground on all circuits will allow the safety-grounding of appliances when they are plugged into the outlet. An adapter must be used to properly ground appliances connected to receptacles not safety-grounded. If an adapter is used, the green pigtail wire must be connected to a known ground to give protection from electrical shock should a short occur.

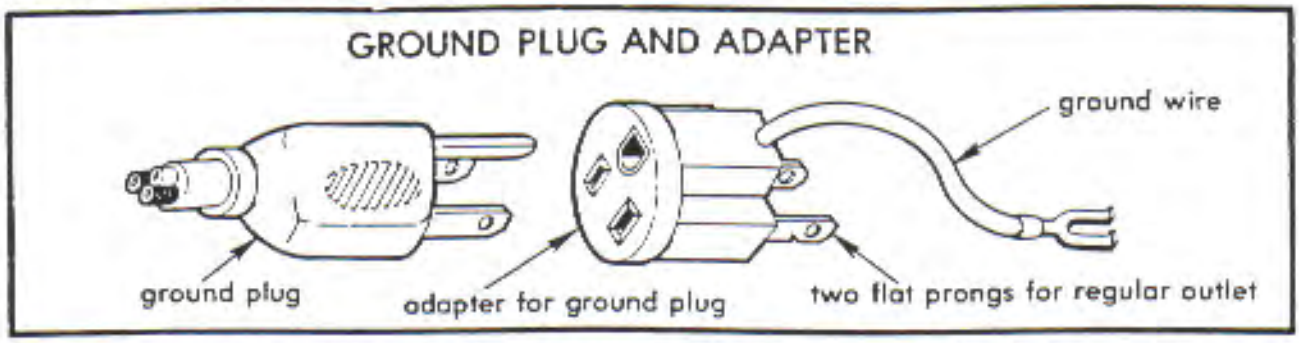

A test lamp can be used to check a circuit completed between a "hot" wire and a neutral wire. Use the test lamp to check appliances for shorts. With the appliance plugged into an outlet, touch the appliance frame with one lead of the test lamp while the other lead of the test lamp is grounded to a water or gas line. If the test light does not burn, reverse the appliance plug and check with the test lamp again. If the light burns, a short exists. (Hot wire is touching the frame of the appliance.) Unplug the appliance and repair or discard it.

8. **Electrical Circuit Protection**

Electrical circuits should be protected from an overload of amperes. Too many amperes flowing through an unprotected circuit will generate heat, which will deteriorate or melt the insulation and possibly cause a fire. The number of amperes that a given conductor can carry safely depends upon the kind and size of wire, type of insulation, length of run in feet, and type of installation. Charts are available in reference texts giving allowable current-carrying capabilities of various conductors.

The four types of circuit protection are common fuses, fusetrons (time-delay), fustats (two-part time-delay), and circuit breakers. Fuses are of two basic types, plug and cartridge.

Common fuses contain a link made from a low melting alloy which is designed to carry current up to the rating of the fuse. Current higher than the amperage rating causes the link to heat above its melting point. When the fuse "blows", the link melts and opens the circuit.

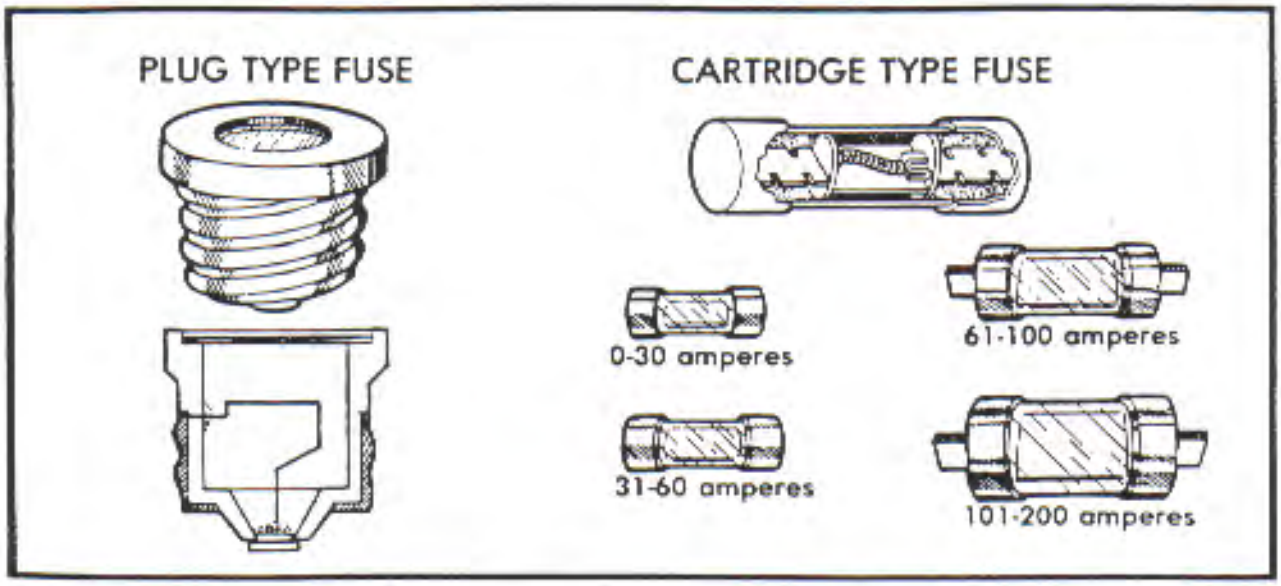

Fusetrons (time-delay fuses) are made to carry a temporary overload, such as the overload caused by the starting of an electric motor. The fuse, however, still provides protection for the circuit, and a short circuit will melt the fuse link. If a common fuse is used, the fuse link will melt every time an electric motor starts. The use of a larger ampere common fuse will prevent the "blow" resulting from the temporary overload, but will not provide protection for the motor or the circuit.

OPERATING PRINCIPLE OF DELAYED ACTION FUSE

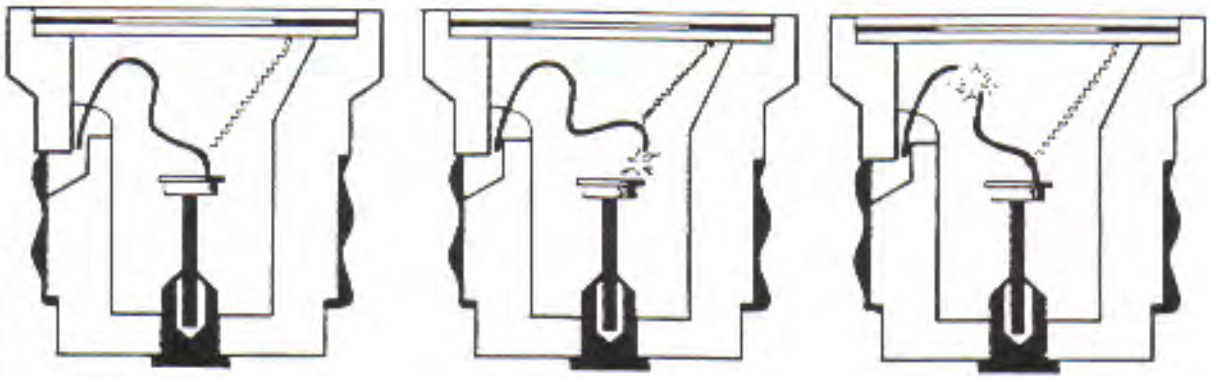

TIME DELAY CONTINUED OVERLOAD SHORT CIRCIUT

Fustats, nontamperable fuses of the time-delay type, have a different size base and require a special adapter that is screwed into the standard fuse socket. After the adapter is installed, it cannot be removed. For example, the installation of a 15-ampere adapter allows only the use of 15-ampere or smaller fuses.

FUSTATS

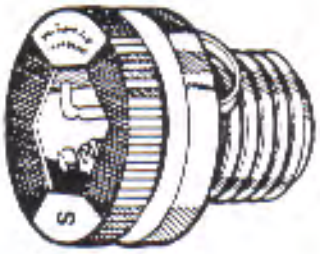

FUSE

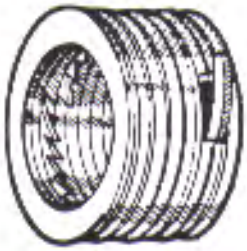

ADAPTER

Circuit breakers eliminate the replacement of fuses and are commonly used even though a circuit breaker box costs more than a fuse box. Circuit breakers are of two types, thermal and magnetic. The thermal breaker has two contacts held together by a bi-metal latch. An overload of current causes the bi-metal strip to become heated, the latch releases, and the points spring open. After the bi-metal strip cools; the switch is reset; and service is restored.

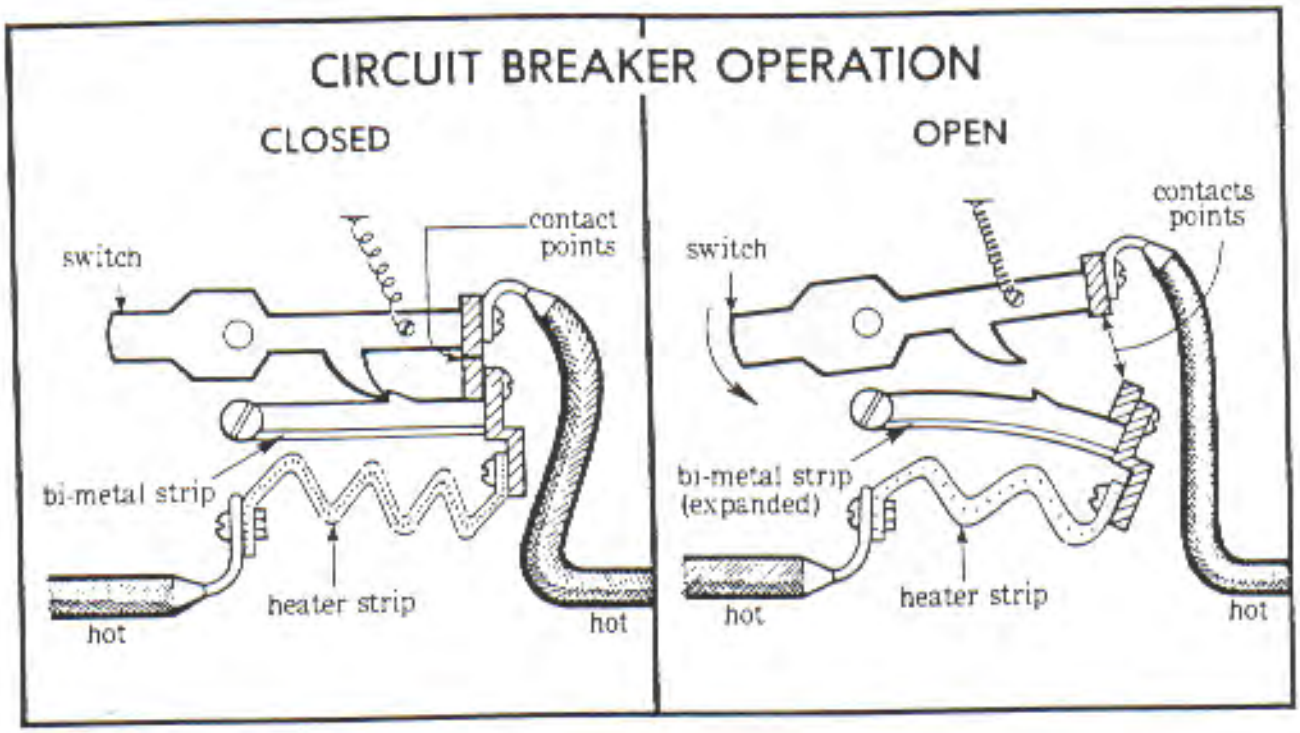

The magnetic breaker has contacts that are held together by a latch which is released by the action of an electromagnet. The amount of current flowing through the circuit will determine the size of the electromagnet. This type of breaker is reset by moving the toggle switch to the "on" position.

The following diagram shows the parts of a circuit breaker.

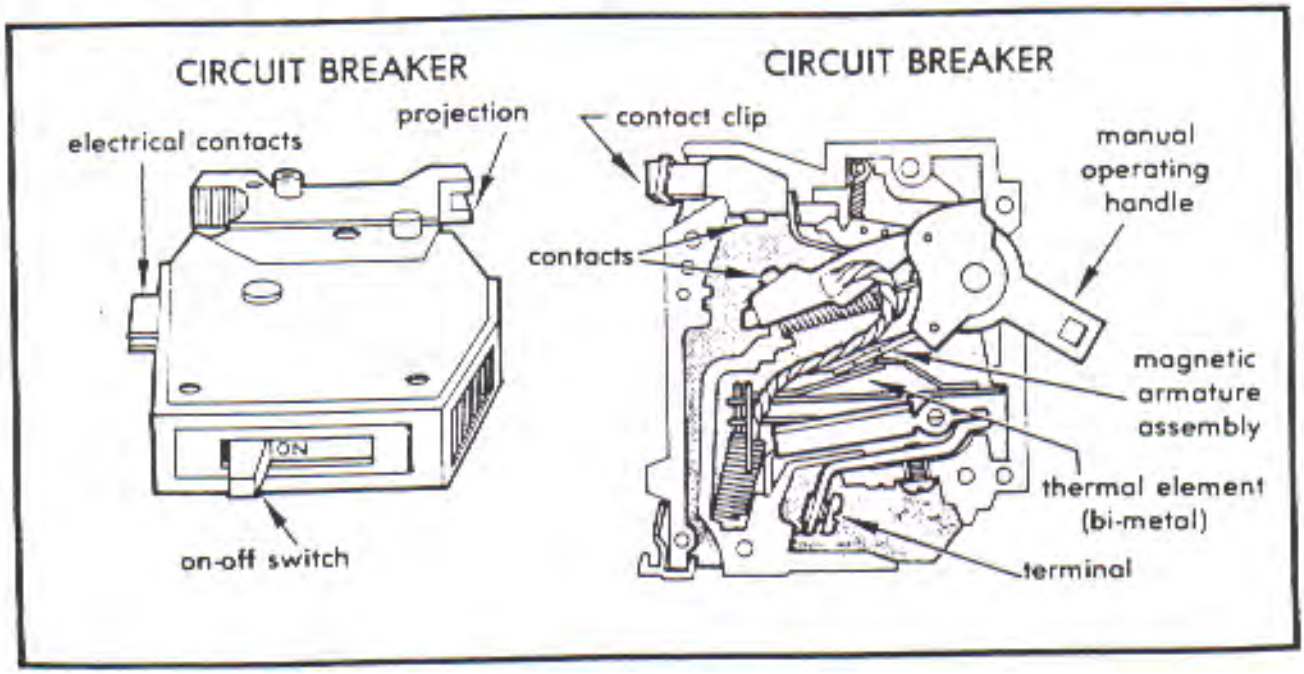

9. No Fault Grounding

Fuses and circuit breakers are safety devices which limit current (amperage) in a circuit. Their main function is to protect equipment and wiring from overload. Ground fault circuit interrupters (GFI) are designed to protect humans, equipment, and/or electrical systems from injury or damage if electricity flows in an unintended path (a short).

A GFI is a very sensitive device that functions by comparing the current moving in the "hot" wire with that in the neutral wire. If these two currents are not equal, a fault exists, and current is "leaking" out of the circuit. If the difference in current between the two wires is 5/1000 of an ampere or greater, the GFI will open the circuit, shutting off the power and eliminating any shock hazard.

The National Electrical Code requires GFI's for all 120V, single phase, 15 and 20 amp receptacles installed outdoors, in bathrooms, and in garages for residential buildings. A GFI is required at construction sites and some other applications. After correcting the circuit fault, the GFI may be reset for further use.

A variety of GFI equipment is made for 120 and 240 volt circuits.

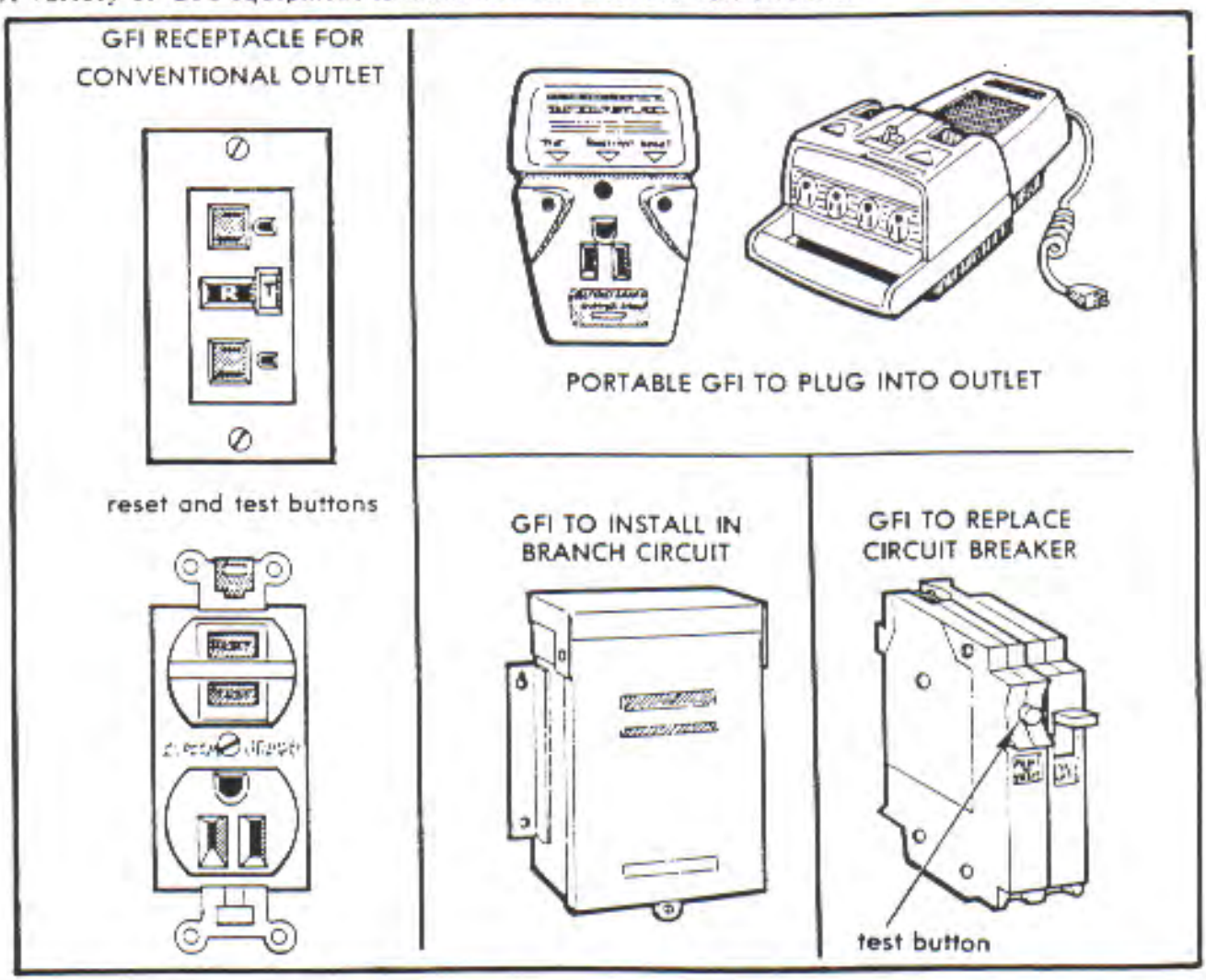

References:

Cooper, Elmer L., *Agricultural Mechanics: Fundamentals and Applications*, Delmar Publishers, Inc., Albany, New York.

Electrical Wiring - Residential, Utility Buildings, Service Areas, AAVIM, Athens, Georgia.

18. ADDITIONAL ELECTRICAL UNITS

Since one rarely encounters calculations in the emu system involving electric dipole moment p, polarization P, electric susceptibility η, and electric displacement D, we shall not define units for these quantities in the emu system.

A-3 Table of conversion factors

The mks electrical units belong to the rationalized mksa system. In this system, permittivity of empty space has the value

$$\epsilon_0 = \frac{1}{4\pi \times 8.98776 \times 10^9} \frac{\text{coulomb}^2}{\text{newton m}^2} \quad \left(\text{or } \frac{\text{farad}}{\text{meter}}\right)$$

and permeability of empty space has the value

$$\mu_0 = 4\pi \times 10^{-7} \frac{\text{weber}}{\text{amp meter}} \quad \left(\text{or } \frac{\text{henry}}{\text{meter}}\right)$$

Both esu and emu are unrationalized systems.*

See page 728 for instructions for use of the following table.

Quantity	Conversion Factor		
	Conversion Number	Unit of Numerator	Unit of Denominator
Angle, plane	1.745×10^{-2}	radian	degree
	57.30	degree	radian
	2.778×10^{-3}	revolution	degree
	2π	radian	revolution
	360	degree	revolution
Area, A	1×10^{-4}	meter^2	cm^2
	9.290×10^{-2}	meter^2	foot^2
	6.452×10^{-4}	meter^2	inch^2
Capacitance, C	1.113×10^{-12}	farad	statfarad (esu)
	1×10^9	farad	abfarad (emu)
	1×10^{-6}	farad	microfarad, μf
	1×10^{-12}	farad	micromicrofarad, $\mu\mu$f
Charge, electric (or quantity of electricity) Q, q	3.336×10^{-10}	coulomb	statcoulomb (esu)
	10	coulomb	abcoulomb (emu)

* For conversion of a formula in one system of units to the same formula in another system of units, see W. R. Smythe, *Static and Dynamic Electricity*, 2d ed., New York, McGraw-Hill Book Co., Inc., 1950, pp. 585–589.

Quantity	Conversion Factor		
	Conversion Number	Unit of Numerator	Unit of Denominator
Current, i, I	3.336×10^{-10}	amp	statamp (esu)
	10	amp	abamp (emu)
Density	1×10^{3}	kg/meter^3	g/cm^3
	16.02	kg/meter^3	pound/foot^3
	515.4	kg/meter^3	slug/foot^3
Distance (or length) l, L	1×10^{-2}	meter	cm
	2.540×10^{-2}	meter	inch
	0.3048	meter	foot
	1×10^{3}	meter	kilometer
	1609	meter	mile
Electric displacement (or induction), D	$1/(12\pi \times 10^{5})$	coulomb/meter^2	esu of displacement (no name assigned)
	$10^{5}/4\pi$	coulomb/meter^2	emu of displacement (no name assigned)
Electric field intensity, E	1×10^{2}	volt/meter or newton/coulomb	volt/cm
	2.998×10^{4}	volt/meter	dyne/statcoulomb (esu)
	2.998×10^{10}	volt/meter	dyne/abcoulomb (emu)
Energy (or work), W	1×10^{-7}	joule	erg
	3.6×10^{6}	joule	kwhr
	4.186	joule	calorie
	1.356	joule	ft lb
	1055	joule	Btu
Force (or weight), F	10^{-5}	newton	dyne
	0.1383	newton	poundal
	4.448	newton	pound (force)
	9.807×10^{-3}	newton	gram (force)
Inductance, L or M	1×10^{-9}	henry	abhenry (emu)
	8.987×10^{11}	henry	stathenry (esu)
	1×10^{-6}	henry	microhenry
	1×10^{-3}	henry	millihenry

Quantity	Conversion Factor		
	Conversion number	Unit of Numerator	Unit of Denominator
Magnetic field intensity, H	$10^3/4\pi$	amp turn/meter	oersted (emu)
	1×10^3	amp turn/meter	abamp turn/cm (emu)
	39.37	amp turn/meter	amp turn/inch
Magnetic flux, Φ	1×10^{-8}	weber	maxwell, or line (emu)
	1×10^{-5}	weber	kiloline (emu)
	2.998×10^2	weber	esu of Φ (no name assigned)
Magnetic flux density, B	1×10^{-4}	weber/meter^2	gauss, or line/cm^2 (emu)
	1.550×10^{-5}	weber/meter^2	kilolines/inch^2
	2.998×10^6	weber/meter^2	esu of B (no name assigned)
Magnetomotive force, mmf	10	amp turn	abamp turn (emu)
	$10/4\pi$	amp turn	gilbert (emu)
Mass	1×10^{-3}	kilogram	g
	14.59	kilogram	slug
	0.4536	kilogram	pound (mass)
	2.205	pound (mass)	kilogram
Pole strength, m	$4\pi \times 10^{-8}$	weber (mks Kennelly)†	unit pole (emu)
	0.1	amp meter (mks Sommerfeld)‡	unit pole (emu)
	$4\pi \times 10^{-7}$	weber (mks Kennelly)	amp meter (mks Sommerfeld)
Potential difference and emf, V, $\mathcal{E}$	299.8	volt	statvolt (esu)
	1×10^{-8}	volt	abvolt (emu)
Power, p, P	1×10^{-7}	watt	erg/sec
	745.7	watt	horsepower
	1.356	watt	footpound/sec
	4.186	watt	calorie/sec

Quantity	Conversion Factor		
	Conversion number	Unit of Numerator	Unit of Denominator
Resistance	8.987×10^{11}	ohm	statohm (esu)
	1×10^{-9}	ohm	abohm (emu)
Resistivity	1×10^{-2}	ohm meter	ohm cm
	1×10^{-11}	ohm meter	abohm cm (emu)
	8.987×10^{9}	ohm meter	statohm cm (esu)
Speed	0.3048	meter/sec	foot/sec
	0.4470	meter/sec	mile/hr
	0.2778	meter/sec	kilometer/hr
Volume	1×10^{-6}	meter^3	cm^3
	2.832×10^{-2}	meter^3	foot^3
	1.639×10^{-5}	meter^3	inch^3
	1×10^{-3}	meter^3	liter

† Not used in this text, see footnote 6, Par. 17–6.

‡ Used in this text.

INSTRUCTIONS FOR USE OF TABLE OF CONVERSION FACTORS. In making a conversion of a quantity from one system to another, be sure that the proper units are on the number to be converted (e.g., 1.52 radian, 6.15 statcoulomb, 5×10^7 maxwell). Next secure the appropriate conversion factor from the table. The second column gives the conversion number and the third and fourth columns give the units which belong to the conversion number; the third column is the unit of the numerator of the conversion number and the fourth column that of the denominator (e.g., the conversion factors 57.30 degree/radian, 3.336×10^{-10} coulomb/statcoulomb, 1×10^{-8} weber/maxwell). Then perform the operation (multiplication or division) with the conversion factor which will cancel the units which you wish to eliminate and retain the units which you wish to retain. For example, suppose you know that the magnetic flux density of a certain magnetic field is $B = 5.5 \times 10^3$ gausses and you wish to know the magnetic flux density of this same field expressed in weber/m². From the table, the conversion factor is

$$1 \times 10^{-4} \frac{\text{weber/m}^2}{\text{gauss}}$$

The unit to be canceled is the gauss and the unit to be retained is weber/m².

Don Smith. One of most impressive developers of free-energy devices is Don Smith who has produced many spectacular things, generally with major power output. These are a result of his in-depth knowledge and understanding of the way that the environment works. Don says that his understanding comes from the work of Nikola Tesla as recorded in Thomas C. Martin's book "The Inventions, Researches, and Writings of Nikola Tesla" ISBN 0-7873-0582-0 available from http://www.healthresearchbooks.com and various other book companies. Much of the content of the book, such as Tesla's lectures, can be downloaded free from http://www.free-energy-info.com.

Don states that he repeated each of the experiments found in the book and that gave him his understanding of what he prefers to describe as the 'ambient background energy' which is called the 'zero-point energy field' elsewhere in this eBook. Don remarks that he has now advanced further than Tesla in this field, partly because of the devices now available to him and which were not available when Tesla was alive.

Don stresses two key points. Firstly, a dipole can cause a disturbance in the magnetic component of the 'ambient background' and that imbalance allows you to collect large amounts of electrical power, using capacitors and inductors (coils). Secondly, you can pick up as many powerful electrical outputs as you want from that one magnetic disturbance, without depleting the magnetic disturbance in any way. This allows massively more power output than the small power needed to create the magnetic disturbance in the first place. This is what produces a COP>1 device and Don has created nearly fifty different devices based on that understanding.

Although they get removed quite frequently, there is one video which is definitely worth watching if it is still there. It is located at http://www.metacafe.com/watch/2820531/don_smith_free_energy/ and was recorded in 2006. It covers a good deal of what Don has done. In the video, reference is made to Don's website but you will find that it has been taken over by Big Oil who have filled it with innocuous similar-sounding things of no consequence, apparently intended to confuse newcomers. A website which I understand is run by Don's son is http://www.28an.com/altenergypro/index.htm and it has brief details of his prototypes and theory. You will find the only document of his which I could locate, presented as a downloadable .pdf document here http://www.free-energy-info.com/Smith.pdf and it contains the following patent on a most interesting device which appears to have no particular limit on the output power. This is a slightly re-worded copy of that patent.

Patent NL 02000035 A **20th May 2004** **Inventor: Donald Lee Smith**

TRANSFORMER GENERATOR MAGNETIC RESONANCE INTO ELECTRIC ENERGY

ABSTRACT

The present invention refers to an Electromagnetic Dipole Device and Method, where wasted radiated energy is transformed into useful energy. A Dipole as seen in Antenna Systems is adapted for use with capacitor plates in such a way that the Heaviside Current Component becomes a useful source of electrical energy.

DESCRIPTION

Technical Field:

This invention relates to loaded Dipole Antenna Systems and their Electromagnetic radiation. When used as a transformer with an appropriate energy collector system, it becomes a transformer/generator. The invention collects and converts energy which is radiated and wasted by conventional devices.

Background Art:

A search of the International Patent Database for closely related methods did not reveal any prior art with an interest in conserving radiated and wasted magnetic waves as useful energy.

DISCLOSURE OF THE INVENTION

The invention is a new and useful departure from transformer generator construction, such that radiated and wasted magnetic energy changes into useful electrical energy. Gauss meters show that much energy from conventional electromagnetic devices is radiated into the ambient background and wasted. In the case of conventional transformer generators, a radical change in the physical construction allows better access to the energy available. It is found that creating a dipole and inserting capacitor plates at right angles to the current flow, allows magnetic waves to change back into useful electrical (coulombs) energy. Magnetic waves passing through the capacitor plates do not degrade and the full impact of the available energy is accessed. One, or as many sets of capacitor plates as is desired, may be used. Each set makes an exact copy of the full force and effect of the energy present in the magnetic waves. The originating source is not depleted of degraded as is common in conventional transformers.

BRIEF DESCRIPTION OF THE DRAWINGS

The Dipole at right angles, allows the magnetic flux surrounding it to intercept the capacitor plate, or plates, at right angles. The electrons present are spun such that the electrical component of each electron is collected by the capacitor plates. Essential parts are the South and North component of an active Dipole. Examples presented here exist as fully functional prototypes and were engineer constructed and fully tested in use by the Inventor. In each of the three examples shown in the drawings, corresponding parts are used.

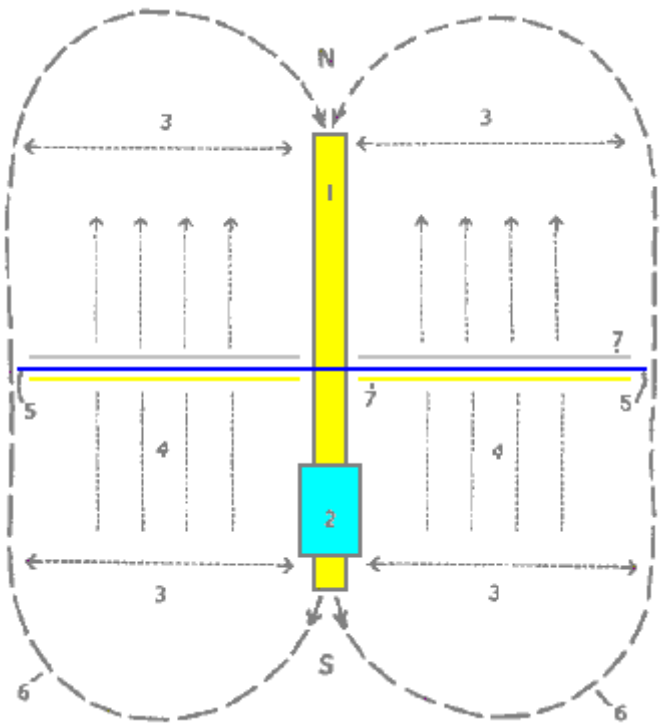

Fig.1 is a View of the Method, where **N** is the North and **S** is the South component of the Dipole.

Here, **1** marks the Dipole with its North and South components. **2** is a resonant high-voltage induction coil. **3** indicates the position of the electromagnetic wave emission from the Dipole. **4** indicates the position and flow direction of the corresponding Heaviside current component of the energy flow caused by the induction coil **2**. **5** is the dielectric separator for the capacitor plates **7**. **6** for the purposes of this drawing, indicates a virtual limit for the scope of the electromagnetic wave energy.

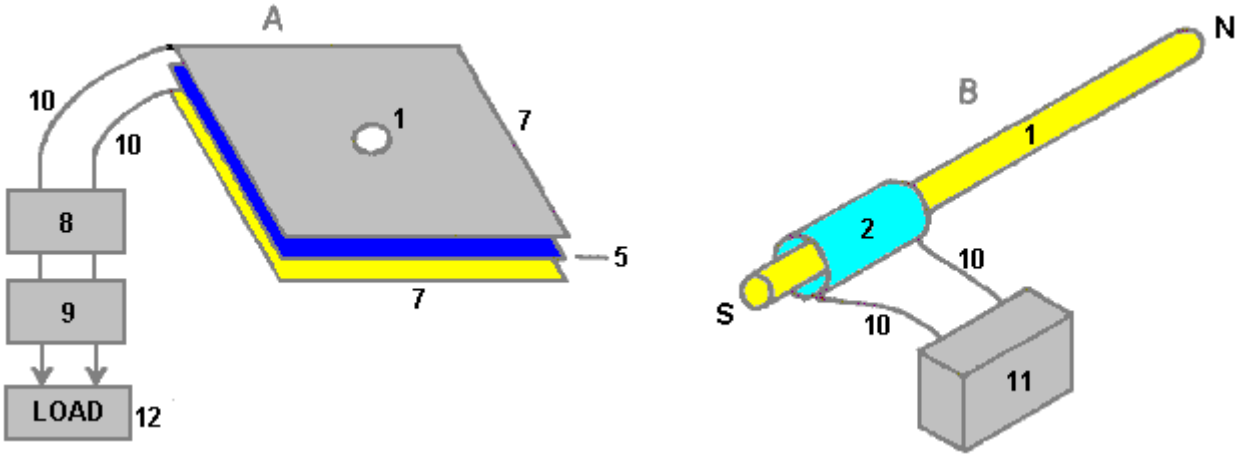

Fig.2 has two parts **A** and **B**.

In **Fig.2A 1** is the hole in the capacitor plates through which the Dipole is inserted and in **Fig.2B** it is the Dipole with its North and South poles shown. **2** is the resonant high-voltage induction coil surrounding part of the Dipole **1**. The dielectric separator **5**, is a thin sheet of plastic placed between the two capacitor plates **7**, the upper plate being made of aluminium and the lower plate made of copper. Unit **8** is a deep-cycle battery system powering a DC inverter **9** which produces 120 volts at 60 Hz (the US mains supply voltage and frequency, obviously, a 240 volt 50 Hz inverter could be used here just as easily) which is used to power whatever equipment is to be driven by the device. The reference number **10** just indicates connecting wires. Unit **11** is a high-voltage generating device such as a neon transformer with its oscillating power supply.

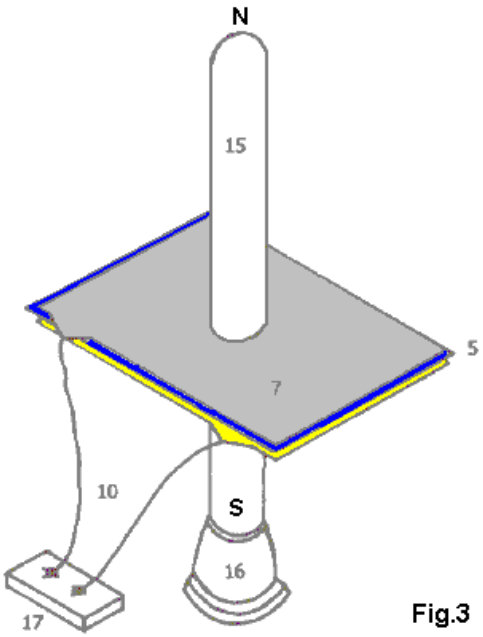

Fig.3

Fig.3 is a Proof Of Principal Device using a Plasma Tube as an active Dipole. In this drawing, **5** is the plastic sheet dielectric separator of the two plates **7** of the capacitor, the upper plate being aluminium and the lower plate copper. The connecting wires are marked **10** and the plasma tube is designated **15**. The plasma tube is four feet long (1.22 m) and six inches (100 mm) in diameter. The high-voltage energy source

for the active plasma dipole is marked **16** and there is a connector box **17** shown as that is a convenient method of connecting to the capacitor plates when running tests on the device.

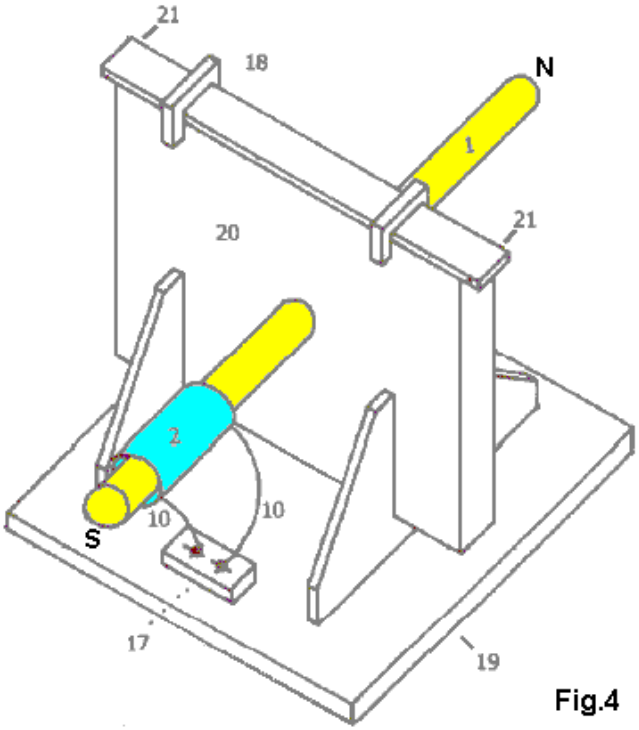

Fig.4

Fig.4 shows a Manufacturer's Prototype, constructed and fully tested. **1** is a metal Dipole rod and **2** the resonant high-voltage induction coil, connected through wires **10** to connector block **17** which facilitates the connection of it's high-voltage power supply. Clamps **18** hold the upper edge of the capacitor packet in place and **19** is the base plate with it's supporting brackets which hold the whole device in place. **20** is a housing which contains the capacitor plates and **21** is the point at which the power output from the capacitor plates is drawn off and fed to the DC inverter.

BEST METHOD OF CARRYING OUT THE INVENTION

The invention is applicable to any and all electrical energy requirements. The small size and it's high efficiency make it an attractive option, especially for remote areas, homes, office buildings, factories, shopping centres, public places, transportation, water systems, electric trains, boats, ships and 'all things great and small'. The construction materials are commonly available and only moderate skill levels are needed to make the device.

CLAIMS

1. Radiated magnetic flux from the Dipole, when intercepted by capacitor plates at right angles, changes into useful electrical energy.

2. A Device and Method for converting for use, normally wasted electromagnetic energy.

3. The Dipole of the Invention is any resonating substance such as Metal Rods, Coils and Plasma Tubes which have interacting Positive and Negative components.

4. The resulting Heaviside current component is changed to useful electrical energy.

****

This patent does not make it clear that the device needs to be tuned and that the tuning is related to its physical location. The tuning will be accomplished by applying a variable-frequency input signal to the neon transformer and adjusting that input frequency to give the maximum output.

Don Smith has produced some forty eight different devices, and because he understands that the real power in the universe is magnetic and not electric, these devices have performances which appear staggering to people trained to think that electrical power is the only source of power. One device which is commercially produced in Russia, is shown here:

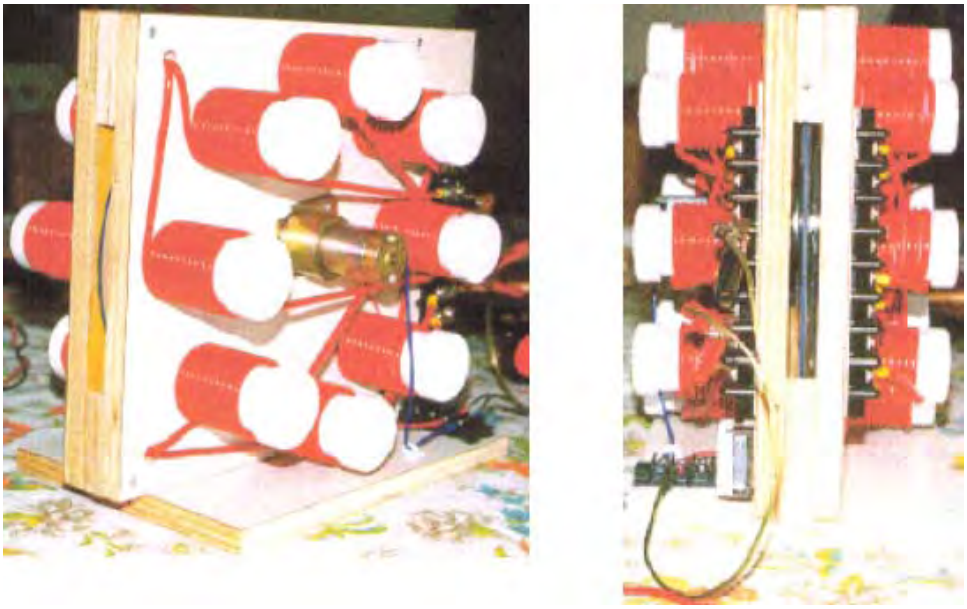

This is a small table-top device which looks like it is an experiment by a beginner, and something which would be wholly ineffective. Nothing could be further from the truth. Each of the eight coils pairs (one each side of the rotating disc) produces 1,000 volts at 50 amps (fifty kilowatts) of output power, giving a total power output of 400 kilowatts. It's overall size is 16" x 14.5" x 10" (400 x 370 x 255 mm). In spite of the extremely high power output, the general construction is very simple:

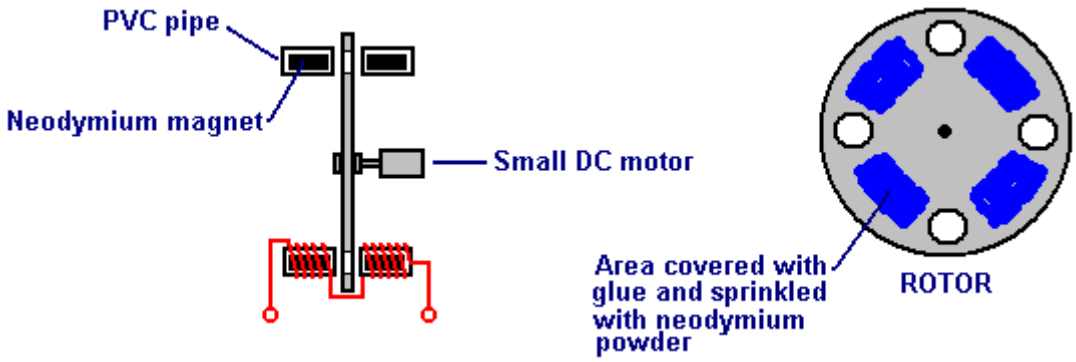

The device operates on a fluctuating magnetic field which is produced by a small low-power DC motor spinning a plastic disc. In the prototype shown above, the disc is an old vinyl record which has had holes cut in it. Between the holes is an area which was covered with glue and then sprinkled with powdered neodymium magnet material. It takes very little power to spin the disc, but it acts in a way which is very much like the Ecklin-Brown generator, repeatedly disrupting the magnetic field. The magnetic field is created by a neodymium magnet in each of the sixteen plastic pipes. It is important that the change in the magnetic flux between the matching magnets on each side of the disc is as large as possible. The ideal rotor material for this is "Terfenol-D" (tungsten zirconate) with slots cut in it but it is so expensive that materials like stainless steel are likely to be used instead.

For Don Smith, this is not an exceptional device. The one shown below is also physically quite small and yet it has an output of 160 kilowatts (8000 volts at 20 amps) from an input of 12 volts 1 amp (COP = 13,333):

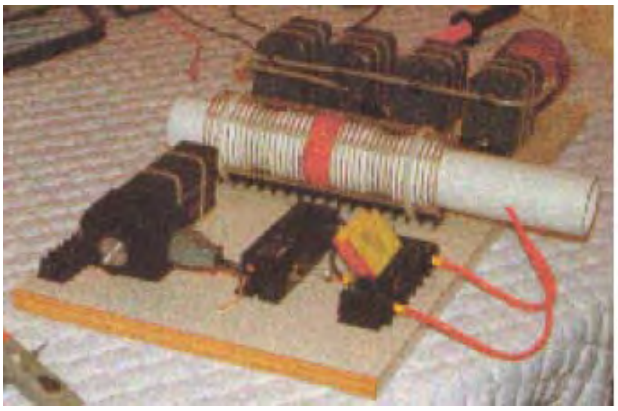

Again, this is a device which can be placed on top of a table and is not a complicated form of construction, having a very open and simplistic layout. However, some components are not mounted on this board. The twelve volt battery and connecting leads are not shown, nor is the ground connection, the step-down isolation transformer and the varistor used to protect the load from over-voltage by absorbing any random voltage spikes which might occur, but more of these things later on when a much more detailed description of this device is given.

Another of Don's devices is shown here:

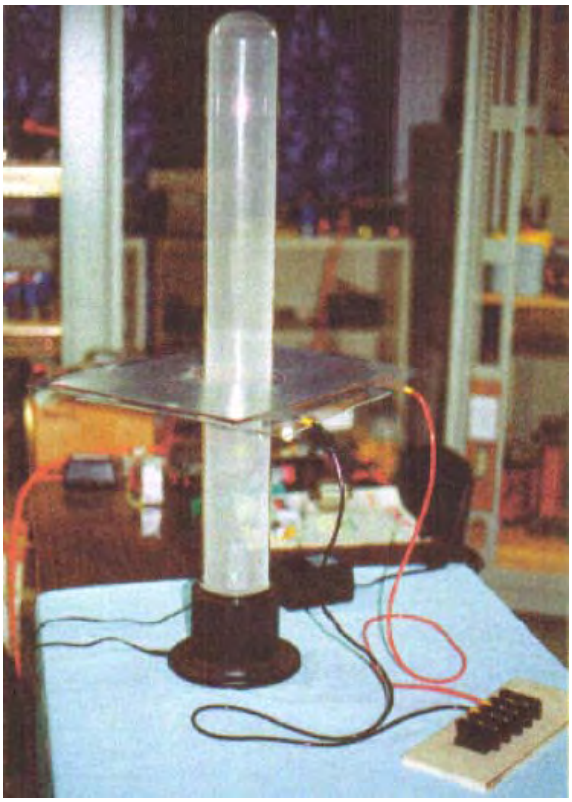

This is a larger device which uses a plasma tube four feet (1.22 m) long and 6 inches (100 mm) in diameter. The output is a massive 100 kilowatts. This is the design shown as one of the options in Don's patent.

Being an Electrical Engineer, none of Don's prototypes are in the "toy" category. If nothing else is taken from Don's work, we should realise that high power outputs can be had from very simple devices.

There is one other brief document "Resonate Electrical Power System" from Don Smith which says:

Potential Energy is everywhere at all times, becoming useful when converted into a more practical form. There is no energy shortage, only grey matter. This energy potential is observed indirectly through the manifestation of electromagnetic phenomenon, when intercepted and converted, becomes useful. In nonlinear systems, interaction of magnetic waves amplify (conjugate) energy, providing greater output than input. In simple form, in the piano where three strings are struck by the hammer, the centre one is impacted and resonance activates the side strings. Resonance between the three strings provides a sound level greater than the input energy. Sound is part of the electromagnetic spectrum and is subject to all that is applicable to it.

"Useful Energy" is defined as "that which is other than Ambient". "Electric Potential" relates to mass and it's acceleration. Therefore, the Earth's Mass and Speed through space, gives it an enormous electrical potential. Humans are like the bird sitting unaware on a high voltage line. in nature, turbulence upsets ambient and we see electrical displays. Tampering with ambient, allows humans to convert magnetic waves into useful electricity.

Putting this in focus, requires a look at the Earth in general. Each minute of each day (1,440 minutes), more than 4,000 displays of lightning occur. Each display yields more than 10,000,000 volts at more than 200,000 amperes in equivalent electromagnetic flux. This is more than 57,600,000,000,000 volts and 1,152,000,000,000 amperes of electromagnetic flux during each 24 hour period. This has been going on for more than 4 billion years. The USPTO insist that the Earth's electrical field is insignificant and useless, and that converting this energy violates the laws of nature. At the same time, they issue patents in which, electromagnetic flux coming in from the Sun is converted by solar cells into DC energy. Aeromagnetic flux (in gammas) Maps World-Wide, includes those provided by the US Department of Interior-Geological Survey, and these show clearly that there is present, a spread of 1,900 gamma above Ambient, from reading instruments flown 1,000 feet above the (surface) source. Coulomb's Law requires the squaring of the distance of the remote reading, multiplied by the recorded reading. Therefore, that reading of 1,900 gamma has a corrected value of 1,900 x 1,000 x 1,000 = 1,900,000,000 gamma.

There is a tendency to confuse "gamma ray" with "gamma". "Gamma" is ordinary, everyday magnetic flux, while "gamma ray" is high-impact energy and not flux. One gamma of magnetic flux is equal to that of 100 volts RMS. To see this, take a Plasma Globe emitting 40,000 volts. When properly used, a gamma meter placed nearby, will read 400 gammas. The 1,900,000,000 gamma just mentioned, is the magnetic ambient equivalent of 190,000,000 volts of electricity. This is on a "Solar Quiet" day. On "Solar Active" days it may exceed five times that amount. The Establishment's idea that the Earth's electrical field is insignificant, goes the way of their other great ideas.

There are two kinds of electricity: "potential" and "useful". All electricity is "potential" until it is converted. The resonant-fluxing of electrons, activates the electrical potential which is present everywhere. The Intensity/CPS of the resonant-frequency-flux rate, sets the available energy. This must then be converted into the required physical dimensions of the equipment being used. For example, energy arriving from the Sun is magnetic flux, which solar cells convert to DC electricity, which is then converted further to suit the equipment being powered by it. Only the magnetic flux moves from point "A" (the Sun) to point "B" (the Earth). All electrical power systems work in exactly the same way. Movement of Coils and Magnets at point "A" (the generator) fluxes electrons, which in turn, excite electrons at point "B" (your house). **None of the electrons at point "A" are ever transmitted to point "B"**. In both cases, the electrons remain forever intact and available for further fluxing. This is not allowed by Newtonian Physics (electrodynamics and the laws of conservation). Clearly, these laws are all screwed up and inadequate.

In modern physics, USPTO style, all of the above cannot exist because it opens a door to overunity. The good news is that the PTO has already issued hundreds of Patents related to Light Amplification, all of which are overunity. The Dynode used to adjust the self-powered shutter in your camera, receives magnetic flux from light which dislodges electrons from the cathode, reflecting electrons through the dynode bridge to the anode, resulting in billions of more electrons out than in. There are currently, 297 direct patents issued for this system, and thousands of peripheral patents, all of which support overunity. More than a thousand other Patents which have been issued, can be seen by the discerning eye to be overunity devices. What does this indicate about Intellectual Honesty?

Any coil system, when fluxed, causes electrons to spin and produce useful energy, once it is converted to the style required by its use. Now that we have described the method which is required, let us now see how this concerns us.

The entire System already exists and all that we need to do is to hook it up in a way which is useful to our required manner of use. Let us examine this backwards and start with a conventional output transformer. Consider one which has the required voltage and current handling characteristics and which acts as an isolation transformer. Only the magnetic flux passes from the input winding to the output winding. No electrons pass through from the input side to the output side. Therefore, we only need to flux the output side of the transformer to have an electrical output. Bad design by the establishment, allowing hysteresis of the metal plates, limits the load which can be driven. Up to this point, only potential is a consideration. Heat (which is energy loss) limits the output amperage. Correctly designed composite cores run cool, not hot.

A power correction factor system, being a capacitor bank, maintains an even flow of flux. These same capacitors, when used with a coil system (a transformer) become a frequency-timing system. Therefore, the inductance of the input side of the transformer, when combined with the capacitor bank, provides the required fluxing to produce the required electrical energy (cycles per second).

With the downstream system in place, all that is needed now is a potential system. Any flux system will be suitable. Any amplification over-unity output type is desirable. The input system is point "A" and the output system is point "B". Any input system where a lesser amount of electrons disturbs a greater amount of electrons - producing an output which is greater than the input - is desirable.

At this point, it is necessary to present updated information about electrons and the laws of physics. A large part of this, originates from me and so is likely to upset people who are rigidly set in the thought patterns of conventional science.

Non - Ionic Electrons

As a source of electrical energy, non-ionic electrons doublets exist in immense quantities throughout the universe. Their origin is from the emanation of Solar Plasma. When ambient electrons are disturbed by being spun or pushed apart, they yield both magnetic and electrical energy. The rate of disturbance (cycling) determines the energy level achieved. Practical methods of disturbing them include, moving coils past magnets or vice versa. A better way is the pulsing (resonant induction) with magnetic fields and waves near coils.

In coil systems, magnetic and amperage are one package. This suggests that electrons in their natural non-ionic state, exist as doublets. When pushed apart by agitation, one spins right (yielding Volts-potential electricity) and the other spins left (yielding Amperage-magnetic energy), one being more negative than the other. This further suggests that when they reunite, we have (Volts x Amps = Watts) useful electrical energy. Until now, this idea has been totally absent from the knowledge base. The previous definition of Amperage is therefore flawed.

Electron Related Energy

	Energy Available	Method of Storage	Common Unit	Units of Measure
Electrons	Electrical	Capacitor/Coulombs	Volts	Flux Units
	Spin / Gravity	Momentum	Torque	Ergs
	Magnetic	Coils/Amp. turns	Amperes	Flux Units Teslas, Gauss, Gammas, Oesteds
	Light	Laser	Lux ,	Photons/Gamma Rays
	Impact / resistance			
	Heat	Various	Fahrenheit/Celsius	Temp

Left hand spin of electrons results in Electrical Energy and right hand spin results in Magnetic Energy. Impacted electrons emit visible Light and heat.

Useful Circuits, Suggestions for Building an Operational Unit

1. Substitute a Plasma Globe such as Radio Shack's "Illumna-Storm" for the source-resonant induction system. It will have about 400 milligauss of magnetic induction. One milligauss is equal to 100 volts worth of magnetic induction.

2. Construct a coil using a 5-inch to 7-inch (125 to 180 mm) diameter piece of PVC for the coil former.

3. Get about 30 feet (10 m) of Jumbo-Speaker Cable and separate the two strands. This can be done by sticking a carpet knife into a piece of cardboard or wood, and then pulling the cable carefully past the blade to separate the two insulated cores from each other. (PJK Note: "Jumbo-Speaker Cable" is a vague term as that cable comes in many varieties, with anything from a few, to over 500 strands in each core. As Don points out that the output power increases with each turn of wire, it is distinctly possible that each of these strands acts the same as individual insulated turns which have been connected in parallel, so a 500-strand cable may well be far more effective than a cable with just a few strands).

4. Wind the coil with 10 to 15 turns of wire and leave about 3 feet (1 m) of cable spare at each end of the coil. Use a glue gun to hold the start and finish of the coil.

5. This will become the "L - 2" coil shown in the Circuits page.

6. When sitting on top of the Plasma Globe (like a crown) you have a first-class resonant air-core coil system.

7. Now, substitute two or more capacitors (rated at 5,000 volts or more) for the capacitor bank shown on the Circuits page. I use more than two 34 microfarad capacitors.

8. Finish out the circuit as shown. You are now in business !

9. Voltage - Amperage limiting resistors are required across the output side of the Load transformer. These are used to adjust the output level and the desired cycles per second.

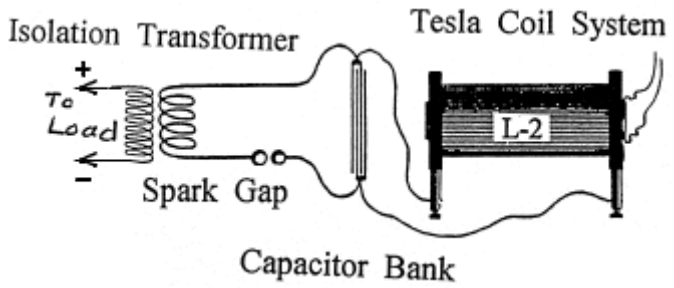

Useful Circuits from Nikola Tesla

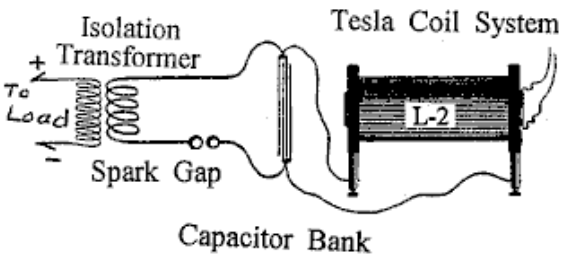

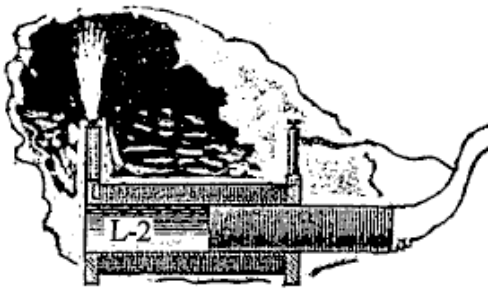

Tunable Coil System
Insertable Movable L-1

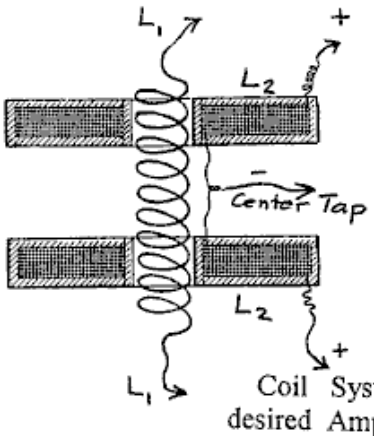

Coil System having desired Amperage Output

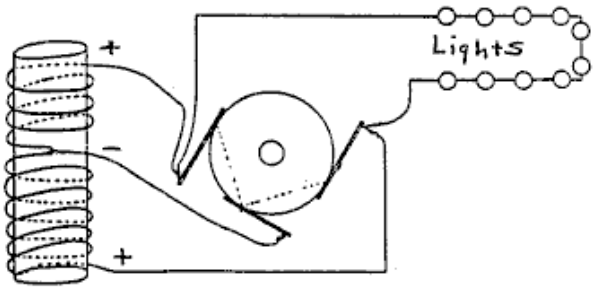

Armature (generator) taking place of the L - 1 yields desired Amperage

Don Smith's Suggestions: Get a copy of the "Handbook of Electronic Tables and Formulas", published by Sams, ISBN 0-672-22469-0, also an LCR meter is required. Chapter 1 in this book has important time constant (frequency) information and a set of reactance charts in nomograph style (*"nomograph": a graph, usually containing three parallel scales graduated for different variables so that when a straight line connects values of any two, the related value may be read directly from the third at the point intersected by the line*) which makes working, and approximating of the three variables (capacitance, inductance and resistance) much easier. If two of the variables are known, then the third one can be read from the nomograph.

For example, if the input side of the isolation transformer needs to operate at 60 Hz, that is 60 positive cycles and 60 negative cycles, being a total of 120 cycles. Read off the inductance in Henries using the LCR meter attached to the input side of the isolation transformer. Plot this value on the (nomographic) reactance chart. Plot the needed 120 Hz on the chart and connect these two points with a straight line. Where this line crosses the Farads line and the Ohms line, gives us two values. Choose one (resistor) and insert it between the two leads of the transformer input winding.

The Power Correction Factor Capacitor (or bank of more than one capacitor) now need adjusting. The following formula is helpful in finding this missing information. The capacitance is known, as is the desired potential to pulse the output transformer. One Farad of capacitance is one volt for one second (one Coulomb). Therefore, if we want to keep the bucket full with a certain amount, how many dippers full are needed? If the bucket needs 120 volts, then how many coulombs are required?

$$\frac{\text{Desired Voltage}}{\text{Capacitance in Microfarads}} = \text{Required frequency in Hz}$$

Now, go to the Reactance Chart mentioned above, and find the required resistor jumper to place between the poles of the Correction Factor Capacitor.

A earth grounding is desirable as a voltage-limiter and transient spike control. Two are necessary, one at the Power Factor Capacitor and one at the input side of the isolation transformer. Off-the-shelf surge arrestors / spark gaps and varistors having the desired voltage/potential and amperage control are commonly available. Siemens, Citel America and others, make a full range of surge arrestors, etc. Varistors look like coin-sized flat capacitors. Any of these voltage limiters are marked as "V - 1" in the following text.

It should be obvious that several separate closed circuits are present in the suggested configuration: The power input source, the high-voltage module, a power factor capacitor bank combined with the input side of the isolation transformer. Lastly, the output side of the isolation transformer and its load. None of the electrons active at the power source (battery) are passed through the system for use downstream. At any point, if the magnetic flux rate should happen to vary, then the number of active electrons also varies. Therefore, controlling the flux rate controls the electron (potential) activity. Electrons active at point "A" are not the same electrons active at point "B", or point "C", and so on. If the magnetic flux rate (frequency Hz) varies, then a different number of electrons will be disturbed. This does not violate any Natural Law and does produce more energy out than in should that be desirable.

A convenient high-voltage module is a 12 volt DC neon tube transformer. The Power Factor Correction Capacitors should be as many microfarads as possible as this allows a lower operating frequency. The 12-volt neon tube transformer oscillates at about 30,000 Hz. At the Power Correction Factor Capacitor bank we lower the frequency to match the input side of the isolation transformer.

Other convenient high-voltage sources are car ignition coils, television flyback transformers, laser printer modules, and various other devices. Always lower the frequency at the Power Factor Correction Capacitor and correct, if needed, at the input side of the isolation transformer. The isolation transformer comes alive when pulsed. Amperage becomes a part of the consideration only at the isolation transformer. Faulty design, resulting in hysteresis, creates heat which self-destructs the transformer if it is overloaded. Transformers which have a composite core instead of the more common cores made from many layers of thin sheets of soft iron, run cool and can tolerate much higher amperage.

RESONATE ELECTROMAGNETIC POWER SYSTEM

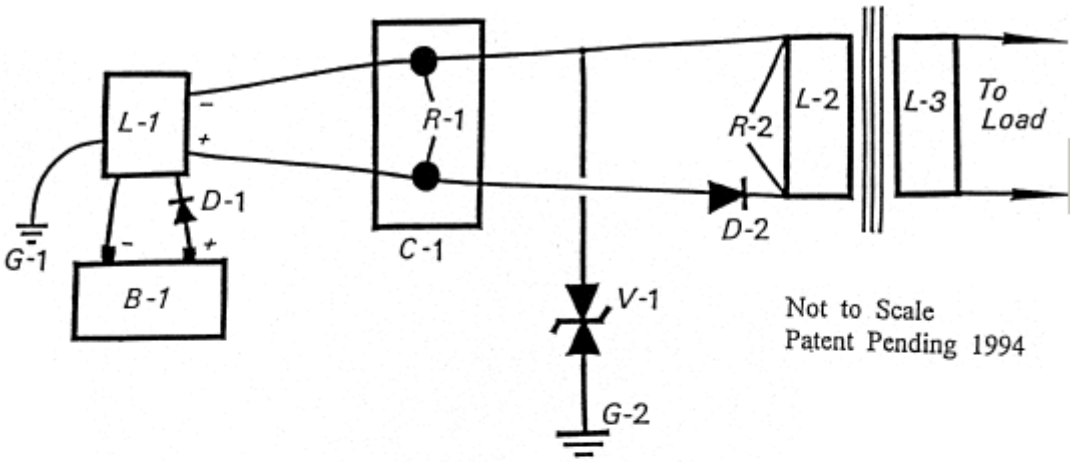

Power Source: B - 1 Gelcell, 12 Volt, 7 Amp Hour
D - 1 Kick back protection for L - 1
L - 1 Bertonee, NPS - 12D8, constant burn Neon Tube transformer, Bertonee, Boston, MS

Power Conditioner: C - 1, Capacitor or Capacitor Bank, 8,000 microfarads for 480 volts DC. R - 1, Resister used to set electron pump rate, frequency of the capacitor. Maintains the desired voltage level required to operate the system.

Voltage Control: V-1, Varistor, limits the voltage as required for the Output Transformer L -2. (480 V @ 60 Amps)

Output Transformer: Isolation Type, (L - 2 / L-3) with R - 2 (resistor) correcting the output frequency to 60 CPS, being 60 UP and 60 DN (120 total). (28.8 KVA)

Useful Timing Formulas:

T = frequency in cycles per second
C = capacitance in microfarads
L = Inductance in milliheneries
R = resistance in ohms

Therefore: $T = RC$ and $T = \frac{L}{R}$

The information shown above, relates to the small Suitcase Model demonstrated at the 1996 Tesla Convention, presented as Don Smiths' Workshop. This unit was a very primitive version and newer versions have atomic batteries and power output ranges of Gigawatts. The battery requirement is low level and is no more harmful than the radium on the dial of a clock. Commercial units of Boulder Dam size are currently being installed at several major locations throughout the world. For reasons of Don's personal security and contract obligations, the information which he has shared here, is incomplete.

Booker, H.G., " Energy in Electromagnetism ", Institute of Electrical Engineers, Peter Peregrinus, Ltd., 1982, I.S.B.N. 0-906048-59-1

Bleany and Bleany, " Electricity and Magnetism ", Oxford University Press, 1991, I.S.B.N. 0-19-851172-8

Chapman and Bartels, " Geomagnetism ", 3 vol., Oxford University Press, 1940

Hammond, P., " Energy Methods in Electromagnetism ", Oxford University Press, 1986, I.S.B.N. 0-19-859368-6

Matsushita and Campbell, " Physics of Geomagneic Phenomena ", several vols., National Center for Atmospheric Research, Boulder, Colorado, Academic press, 1967

Nashida, A., " Geomagnetic Diagnosis of the Magnetosphere ", University of Tokyo, Springer-Verlag, 1978, I.S.B.N. 0-387-08297-2

Rieger, Von Heinz., " Der Magnetisch Kreis ", Siemens A.G., Berlin and Munchen, Germany, I.S.B.N. 3-8009-4719-6

Rokityansky, I.I., " Geoelectrical investigation of the Earth's Crust and Mantel ", Institute of Geophysics, Kiev, U.S.S.R., Springer-Verlag, 1982, I.S.B.N. 3-540-10630-8

Vigoureux, P., " Units and Standards for Electromagnetics ", National Physical Laboratory, 1971, Springer-Verlag, I.S.B.N. 0-387-91077-8

Finnell, Woosley, " Solar Power Satellite Microwave Transmission and Receiver System. Energy Conversion Conference, Sept. 1981 pp 266-271

Glaser, " Satellite Solar Power Station " The Journal of Solar Energy and Technology, Vol. 12, No. 3., p. 353 .

Denmum et al, "A Microwave Power Transmission System for Space Satellite Power", Energy Conversion Conference Conference, Sept. 1977, pp 162-168

Nalos et al, "Microwave Power Beaming for long range energy transfer" "Proceedings of the 8 th European Microwave Conference" pp 573-578, 4 through 8 th. Sept., 1978

Angrist, S.W., " Direct Energy Conversion ", forth edition, Carnegie-Mellon University, Pub. Allyn and Bacon, Boston, London, Sidney and Toronto, ISBN 0-205-07758-7

Smith, D.L., " An Answer to Americas Energy Defict " , fifth edition, Pub. International Tesla Society, Colorado Springs, Co., 1996

Aspden, H. " The Law of Electrodynamics ", J. Franklin Inst., 287:179, 1969.

Sethian, J.D., " Anomalous Electron-Ion Energy Transfer ", Phys. Rev. Letters, vol. 40, No. 7, pp. 451-454 , 1978.

Westinghouse R. & D., "Electromagnetic Spectrum Chart"., Pub. The Exploratorium, San Francisco, CA 94123, Distributed by Edmond Scientific, Barrington, N.J. 06007 Order # 609-573-6250

I am most definitely not an expert in this area. However, it is probably worth mentioning some of the main points which Don Smith appears to be making. There are some very important points being made here, and grasping these may make a considerable difference to our ability to tap into the excess energy available in our local environment. There are four points worth mentioning:

1. Voltage
2. Frequency
3. Magnetic / Electric relationship
4. Resonance

1. Voltage. We tend to view things with an 'intuitive' view, generally based on fairly simple concepts. For example, we automatically think that it is more difficult to pick up a heavy object than to pick up a light one. How much more difficult? Well, if it is twice as heavy, it would probably be about twice as much effort to pick it up. This view has developed from our experience of things which we have done in the past, rather than on any mathematical calculation or formula.

Well, how about pulsing an electronic system with a voltage? How would the output power of a system be affected by increasing the voltage? Our initial 'off-the cuff' reaction might be that the power output might be increased a bit, but then hold on… we've just remembered that Watts = Volts x Amps, so if you double the voltage, then you would double the power in watts. So we might settle for the notion that if we doubled the voltage then we could double the output power. If we thought that, then we would be wrong.

Don Smith points out that as capacitors and coils store energy, if they are involved in the circuit, then the output power is proportional to the **square** of the voltage used. Double the voltage, and the output power is four times greater. Use three times the voltage and the output power is nine times greater. Use ten times the voltage and the output power is one hundred times greater !

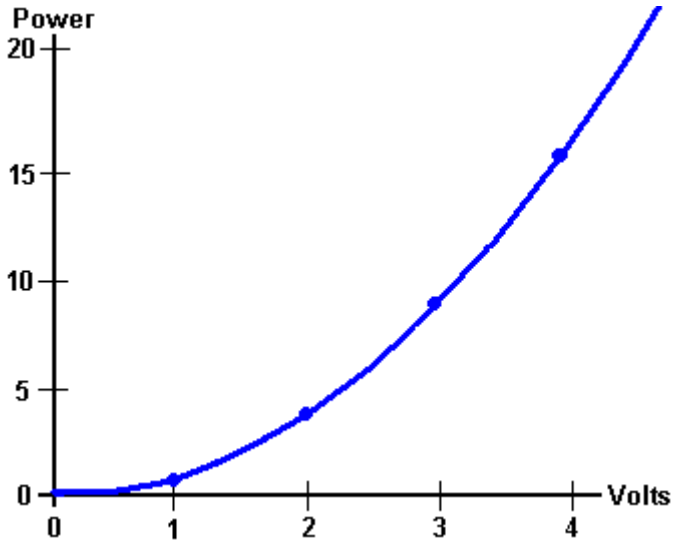

Don says that the energy stored, multiplied by the cycles per second, is the energy being pumped by the system. Capacitors and inductors (coils) temporarily store electrons, and their performance is given by:

Capacitor formula: $\mathbf{W = 0.5 \times C \times V^2 \times Hz}$ where:

W is the energy in Joules (Joules = Volts x Amps x seconds)
C is the capacitance in Farads
V is the voltage
Hz is the cycles per second

Inductor formula: $\mathbf{W = 0.5 \times L \times A^2 \times Hz}$ where:

W is the energy in Joules
L is the inductance in henrys
A is the current in amps
Hz is the frequency in cycles per second

You will notice that where inductors (coils) are involved, then the output power goes up with the square of the current. Double the voltage **and** double the current gives four times the power output due to the increased voltage and that increased output is increased by a further four times due to the increased current, giving sixteen times the output power.

2. Frequency. You will notice from the formulas above, that the output power is directly proportional to the frequency "Hz". The frequency is the number of cycles per second (or pulses per second) applied to the circuit. This is something which is not intuitive for most people. If you double the rate of pulsing, then you double the power output. When this sinks in, you suddenly see why Nikola Tesla tended to use millions of volts and millions of pulses per second.

However, Don Smith states that when a circuit is at it's point of resonance, resistance in the circuit drops to zero and the circuit becomes effectively, a superconductor. The energy for such a system which is in resonance is:

Resonant circuit: $\mathbf{W = 0.5 \times C \times V^2 \times (Hz)^2}$ where:

W is the energy in Joules
C is the capacitance in Farads
V is the voltage
Hz is the cycles per second

If this is correct, then raising the frequency in a resonating circuit has a massive effect on the power output of the device. The question then arises: why is the mains power in Europe just fifty cycles per second and in America just sixty cycles per second? If power goes up with frequency, then why not feed households at a million cycles per second? One major reason is that it is not easy to make electric motors which can be driven with power delivered at that frequency, so a more suitable frequency is chosen in order to suit the motors in vacuum cleaners, washing machines and other household equipment.

However, if we want to extract energy from the environment, then we should go for high voltage and high frequency. Then, when high power has been extracted, if we want a low frequency suited to electric motors, we can pulse the already captured power at that low frequency.

It might be speculated that if a device is being driven with sharp pulses which have a very sharply rising leading edge, that the effective frequency of the pulsing is actually determined by the speed of that rising edge, rather than the rate at which the pulses are actually generated. For example, if pulses are being generated at, say, 50 kHz but the pulses have a leading edge which would be suited to a 200 kHz pulse train, then the device might well see the signal as a 200 kHz signal with a 25% Mark/Space ratio, the very suddenness of the applied voltage having a magnetic shocking effect equivalent to a 200 kHz pulse train.

3. Magnetic / Electric relationship. Don states that the reason why our present power systems are so inefficient is because we concentrate on the electric component of electromagnetism. These systems are always COP<1 as electricity is the 'losses' of electromagnetic power. Instead, if you concentrate on the magnetic component, then there is no limit on the electric power which can be extracted from that magnetic component. Contrary to what you might expect, if you install a pick-up system which extracts electrical energy from the magnetic component, you can install any number of other identical pick-ups, each of which extract the same amount of electrical energy from the magnetic input, **without** loading the magnetic wave in any way. Unlimited electrical output for the 'cost' of creating a single magnetic effect.

The magnetic effect which we want to create is a ripple in the zero-point energy field, and ideally, we want to create that effect while using very little power. Creating a dipole with a battery which has a Plus and a Minus terminal or a magnet which has North and South poles, is an easy way to do create an electromagnetic imbalance in the local environment. Pulsing a coil is probably an even better way as the magnetic field reverses rapidly if it is an air-core coil, such as a Tesla Coil. Using a ferromagnetic core to the coil can create a problem as iron can't reverse it's magnetic alignment very rapidly, and ideally, you want pulsing which is at least a thousand times faster than iron can handle.

Don draws attention to the "Transmitter / Receiver" educational kit "Resonant Circuits #10-416" supplied by The Science Source, Maine. This kit demonstrates the generation of resonant energy and it's collection with a receiver circuit. However, if several receiver circuits are used, then the energy collected is increased several times without any increase in the transmitted energy. This is similar to a radio transmitter where hundreds of thousands of radio receivers can receive the transmitted signal without loading the transmitter in any way.

This immediately makes the Hubbard device spring to mind. Hubbard has a central "electromagnetic transmitter" surrounded by a ring of "receivers" closely coupled magnetically to the transmitter, each of which will receive a copy of the energy sent by the transmitter:

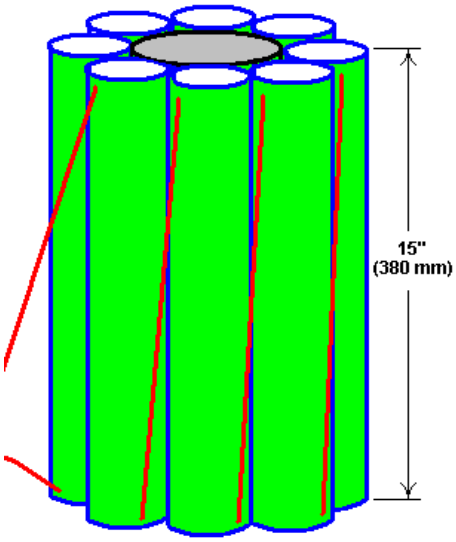

Don points to an even more clearly demonstrated occurrence of this effect in the Tesla Coil. In a typical Tesla Coil, the primary coil is much larger diameter than the inner secondary coil:

If, for example, 8,000 volts is applied to the primary coil which has four turns, then each turn would have 2,000 volts of potential. Each turn of the primary coil transfers electromagnetic flux to every single turn of the secondary winding, and the secondary coil has a very large number of turns. Massively more power is produced in the secondary coil than was used to energise the primary coil. A common mistake is to believe that a Tesla Coil can't produce serious amperage. If the primary coil is positioned in the middle of the secondary coil as shown, then the amperage generated will be as large as the voltage generated. A low power input to the primary coil can produce kilowatts of usable electrical power as described in chapter 5.

4. Resonance. An important factor in circuits aimed at tapping external energy is resonance. It can be hard to see where this comes in when it is an electronic circuit which is being considered. However, everything has it's own resonant frequency, whether it is a coil or any other electronic component. When components are connected together to form a circuit, the circuit has an overall resonant frequency. As a simple example, consider a swing:

If the swing is pushed before it reaches the highest point on the mother's side, then the push actually detracts from the swinging action. The time of one full swing is the resonant frequency of the swing, and that is determined by the length of the supporting ropes holding the seat and not the weight of the child nor the power with which the child is pushed. Provided that the timing is exactly right, a very small push can get a swing moving in a substantial arc. The key factor is, matching the pulses applied to the swing, to the resonant frequency of the swing. Get it right and a large movement is produced. Get it wrong, and the swing doesn't get going at all (at which point, critics would say "see, see …swings just don't work - this proves it !!").

Establishing the exact pulsing rate needed for a resonant circuit is not particularly easy, because the circuit contains coils (which have inductance, capacitance and resistance), capacitors (which have capacitance and a small amount of resistance) and resistors and wires, both of which have resistance and some capacitance.

These kinds of circuit are called "LRC" circuits because "L" is the symbol used for inductance, "R" is the symbol used for resistance and "C" is the symbol used for capacitance.

Don Smith provides instructions for winding and using the type of air-core coils needed for a Tesla Coil. He says:

1. Decide a frequency and bear in mind, the economy of the size of construction selected. The factors are:

(a) Use radio frequency (above 20 kHz).
(b) Use natural frequency, i.e. match the coil wire length to the frequency - coils have both capacitance and inductance.
(c) Make the wire length either one quarter, one half or the full wavelength.
(d) Calculate the wire length in feet as follows:
If using one quarter wavelength, then divide 247 by the frequency in MHz.
If using one half wavelength, then divide 494 by the frequency in MHz.
If using the full wavelength, then divide 998 by the frequency in MHz.
For wire lengths in metres:
If using one quarter wavelength, then divide 75.29 by the frequency in MHz.
If using one half wavelength, then divide 150.57 by the frequency in MHz.
If using the full wavelength, then divide 304.19 by the frequency in MHz.

2. Choose the number of turns to be used in the coil when winding it using the wire length just calculated. The number of turns will be governed by the diameter of the tube on which the coil is to be wound. Remember that the ratio of the number of turns in the "L - 1" and "L - 2" coils, controls the overall output voltage. For example, if the voltage applied the large outer coil "L - 1" is 2,400 volts and L - 1 has ten turns, then each turn of L - 1 will have 240 volts dropped across it. This 240 volts of magnetic induction transfers 240 volts of electricity to every turn of wire in the inner "L - 2" coil. If the diameter of L - 2 is small enough to have 100 turns, then the voltage produced will be 24,000 volts. If the diameter of the L - 2 former allows 500 turns, then the output voltage will be 120,000 volts.

3. Choose the length and diameter of the coils. The larger the diameter of the coil, the fewer turns can be made with the wire length and so the coil length will be less, and the output voltage will be lower.

4. For example, if 24.7 MHz is the desired output frequency, then the length of wire, in feet, would be 247 divided by 24.7 which is 10 feet of wire (3,048 mm). The coil may be wound on a standard size of PVC pipe or alternatively, purchased from a supplier - typically, an amateur radio supply store.

If the voltage on each turn of L - 1 is arranged to be 24 volts and the desired output voltage 640 volts, then there needs to be 640 / 24 = 26.66 turns on L - 2, wound with the 10 feet of wire already calculated.

Note: At this point, Don's calculations go adrift and he suggests winding 30 turns on a 2-inch former. If you do that, then it will take about 16 feet of wire and the resonant point at 10-feet will be at about 19 turns, giving an output voltage of 458 volts instead of the required 640 volts, unless the number of turns on L - 1 is reduced to give more than 24 volts per turn. However, the actual required diameter of the coil former (plus one diameter of the wire) is 10 * 12 / (26.67 * 3.14159) = 1.43 inches. You can make this size of former up quite easily if you want to stay with ten turns on the L - 1 coil.

5. Connect to the start of the coil. To determine the exact resonant point on the coil, a measurement is made. Off-the-shelf multimeters are not responsive to high-frequency signals so a cheap neon is used instead. Holding one wire of the neon in one hand and running the other neon wire along the outside of the L - 2 winding, the point of brightest light is located. Then the neon is moved along that turn to find the brightest point along that turn, and when it is located, a connection is made to the winding at that exact point. L - 2 is now a resonant winding. It is possible to increase the ("Q") effectiveness of the coil by spreading the turns out a bit instead of positioning them so that each turn touches both of the adjacent turns.

6. The input power has been suggested as 2,400 volts. This can be constructed from a Jacob's ladder arrangement or any step-up voltage system. An off-the-shelf module as used with lasers is another option.

7. Construction of the L - 1 input coil has been suggested as having 10 turns. The length of the wire in this coil is not critical. If a 2-inch diameter PVC pipe was used for the L - 2 coil, then the next larger size of PVC pipe can be used for the L - 1 coil former. Cut a 10-turn length of the pipe (probably a 3-inch

diameter pipe). The pipe length will depend on the diameter of the insulated wire used to make the winding. Use a good quality multimeter or a specialised LCR meter to measure the capacitance (in Farads) and the inductance (in henrys) of the L - 2 coil. Now, put a capacitor for matching L - 1 to L - 2 across the voltage input of L - 1, and a spark gap connected in parallel is required for the return voltage from L - 1. A trimmer capacitor for L - 1 is desirable.

8. The performance of L - 2 can be further enhanced by attaching an earth connection to the base of the coil. The maximum output voltage will be between the ends of coil L - 2 and lesser voltages can be taken off intermediate points along the coil if that is desirable.

Don provides quite an amount of information on one of his devices shown here:

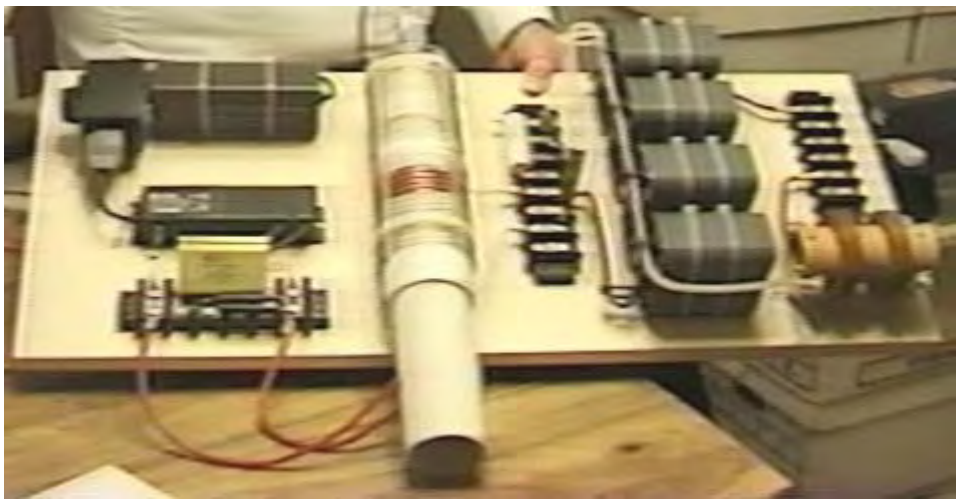

Without his description of the device, it would be difficult to understand it's construction and method of operation. As I understand it, the circuit of what is mounted on this board is as shown here:

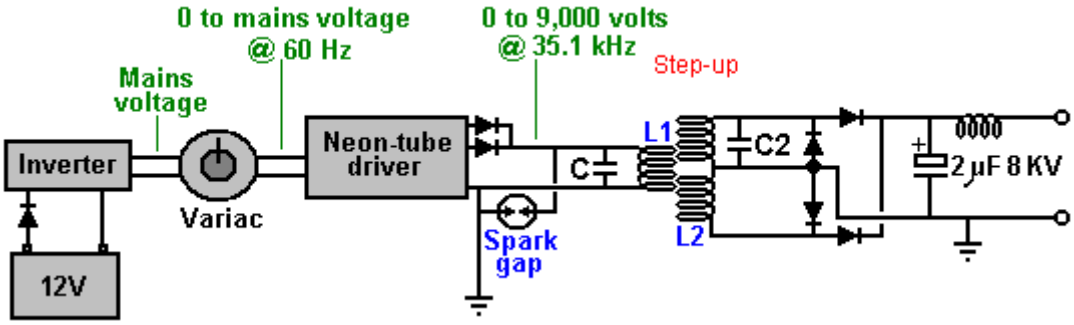

The electrical drive is from a 12-volt battery which is not seen in the photograph. Interestingly, Don remarks that if the length of the wires connecting the battery to the inverter are exactly one quarter of the wave length of the frequency of the oscillating magnetic field generated by the circuit, then the current induced in the battery wires will recharge the battery continuously, even if the battery is supplying power to the circuit at the same time.

The battery supplies a small current through a protecting diode, to a standard off-the-shelf "true sine-wave" inverter. An inverter is a device which produces mains-voltage Alternating Current from a DC battery. As Don wants adjustable voltage, he feeds the output from the inverter into a variable transformer called a "Variac". This produces an AC output voltage which is adjustable from zero volts up to the full mains voltage (or a little higher, though Don does not want, or use, a higher voltage). The Variac is there so that Don can feed a reduced AC voltage to the next component of his circuit which is a commercial Neon-tube driver. The use of a Variac makes it essential for the inverter to be a true sine-wave type as a Variac cannot adjust the voltage of a square wave which the cheaper inverters generate. As the power requirement of the inverter is so low, the inverter should not cost very much.

The neon-tube (or "gas-discharge" tube) driver circuit is a standard off-the-shelf device used to drive neon tube displays for commercial establishments. The one used by Don contains an oscillator and a step-up

transformer, which together produce an Alternating Current of 9,000 volts at a frequency of 35,100 Hz (sometimes written as 35.1 kHz). The term "Hz" stands for "cycles per second". The Variac is there so that Don can lower that 9,000 volts. He has found that he gets great power output at lower input voltages. The particular unit which Don is using here, has two separate outputs, so Don connects them together and uses a blocking diode in each line to prevent either of them affecting the other one. Not easily seen in the photograph, the high-voltage output line has a very small, encapsulated, spark gap connected between it and a ground connection. This is to trap any voltage spikes by discharging them and restricting the output voltage. The device is commonly used as a lightning strike protection device and in Don's circuit it lights continuously when the device is running. The component looks like this:

The output of the neon-tube driver circuit is used to drive the primary "L1" winding of a Tesla Coil style transformer. This looks ever so simple and straightforward, but there are some subtle details which need to have attention paid to them.

The operating frequency of 35.1 kHz is set and maintained by the neon-tube driver circuitry, and so we do not have to do any direct tuning ourselves. That frequency is imposed on the "L1" coil winding which induces exactly the same frequency on the "L2" secondary winding. However, we need to pay special attention is the ratio of the wire lengths of the two coil windings as we want these two winding to be tuned to **exactly** the same frequency.

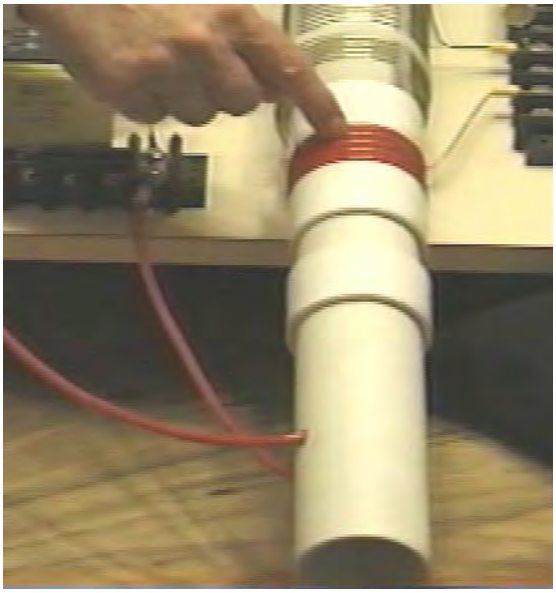

Don uses a plastic tube as the former for his "L1" primary coil winding. As you can see here, the wire is fed into the former, leaving sufficient clearance to allow the former to be slid all the way into the outer coil. The wire is fed up inside the pipe and out through another hole to allow the coil turns to be made on the outside of the pipe. There appear to be five turns, but Don does not always go for a complete number of turns, so it might be 4.3 turns or some other value. The key point here is that the length of wire in the "L1" coil turns is exactly one quarter of the length of wire in the "L2" coil turns.

The "L2" coil is a commercial 3-inch diameter unit from Barker & Williamson, constructed from uninsulated, solid, single-strand "tinned" copper wire. Don has taken this coil and unwound four turns at the centre of the coil in order to make a centre-tap. He then measured the exact length of wire in the remaining section and made the length of the "L1" coil turns to be exactly one quarter of that length. The wire used for the "L1" coil looks like Don's favourite "Jumbo Speaker Wire" which is a very flexible wire with a very large number of extremely fine uninsulated copper wires inside it.

You will notice that Don has placed a plastic collar on each side of the winding, matching the thickness of the wire, in order to create a secure sliding operation inside the outer "L2" coil, and the additional plastic collars positioned further along the pipe provide further support for the inner coil. This sliding action allows the primary coil "L1" to be positioned at any point along the length of the "L2" secondary coil, and that has a

marked tuning effect on the operation of the system. The outer "L2" coil does not have any kind of tube support but instead, the coil shape is maintained by the stiffness of the solid wire.

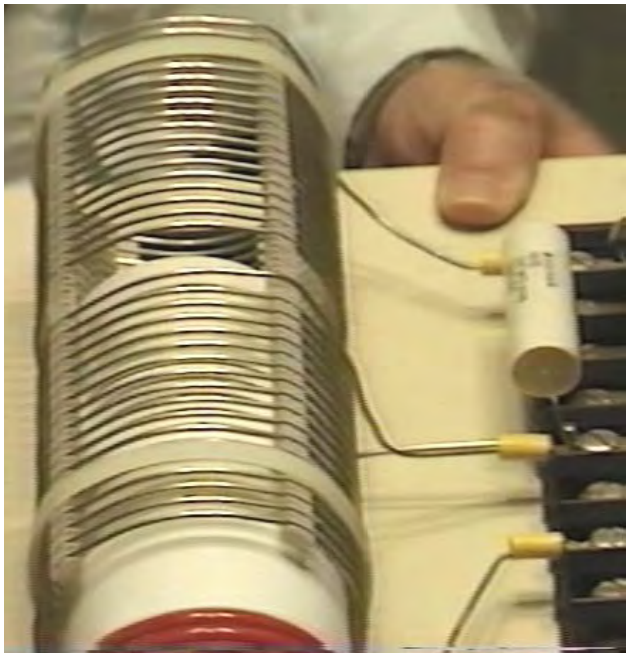

The "L2" coil has two separate sections, each of seventeen turns. One point to note is the turns are spaced apart using slotted strips to support the wires and maintain an accurate spacing between adjacent turns. While the spacing might be to avoid sparking because of the high voltage generated in this coil, it must be remembered that spacing coil turns apart like this alters the characteristics of the coil, changing it's main energy-storing capability from "inductive" to "capacitive" mode. Every coil has resistance, inductance and capacitance, but the form of the coil construction has a major effect on the ratio of these three characteristics. The coil assembly is held in position on the base board by two off-white plastic cable ties. The nearer half of the coil is effectively connected across the further half as shown in the circuit diagram above.

One point which Don stresses, is that the length of the wire in the "L1" coil and the length of wire in the "L2" coil, must be an exact even division or multiple of each other (in this case, the "L2" wire length in each half of the "L2" coil is exactly four times as long as the "L1" coil wire length). This is likely to cause the "L1" coil to have part of a turn, due to the different coil diameters. For example, if the length of the "L2" coil wire is 160 inches and "L1" is to be one quarter of that length, namely, 40 inches. Then, if the "L1" coil has an effective diameter of 2.25 inches, (allowing for the thickness of the wire when wound on a 2-inch diameter former), then the "L1" coil would have 5.65 (or 5 and 2/3) turns which causes the finishing turn of "L2" to be 240 degrees further around the coil former than the start of the first turn - that is, five full turns plus two thirds of the sixth turn.

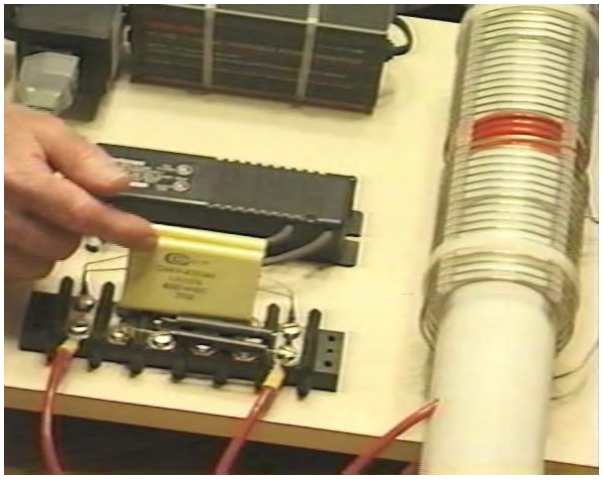

The L1 / L2 coil arrangement is a Tesla Coil. The positioning of the "L1" coil along the length of the "L2" coil, adjusts the voltage to current ratio produced by the coil. When the "L1" coil is near the middle of the "L2" coil, then the amplified voltage and amplified current are roughly the same. However, Don stresses that the "height" length of the coil (when standing vertically) controls the voltage produced while the coil "width" (the diameter of the turns) controls the current produced.

The exact wire length ratio of the turns in the "L1" and "L2" coils gives them an almost automatic synchronous tuning with each other, and the exact resonance between them can be achieved by the positioning of the "L1" coil along the length of the "L2" coil. While this is a perfectly good way of adjusting the circuit, in the 1994 build shown in the photograph, Don has opted to get the exact tuning by connecting a capacitor across "L1" as marked as "**C**" in the circuit diagram. Don found that the appropriate capacitor value for his particular coil build, was about 0.1 microfarad (100 nF) and so he connected two 47 nF high-voltage capacitors in parallel to get the value which he wanted. It must be remembered that the voltage across "L1" is very high, so if a capacitor is used in that position it will need a voltage rating of at least 9,000 volts. Don remarks that the actual capacitors seen in the photograph of this prototype are rated at fifteen thousand volts, and were custom made for him using a "self-healing" style of construction. As has already been remarked, this capacitor is an optional component.

Don also opted to connect a small capacitor across the "L2" coil, also for fine-tuning of the circuit, and that optional component is marked as "C2" in the circuit diagram and the value used by Don happened to be a single 47nF, 8,000 volt capacitor. As the two halves of the "L2" coil are effectively connected across each other, it is only necessary to have one fine-tuning capacitor for "L2":

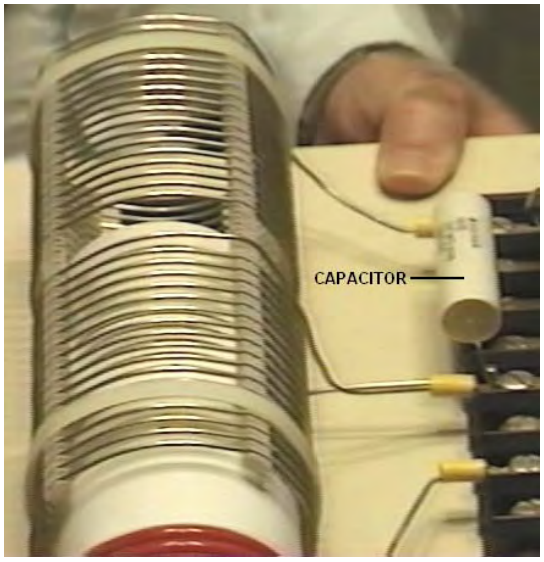

There are various ways of dealing with the output from the "L2" coil in order to get large amounts of conventional electrical power out of the device. The method shown here uses the four very large capacitors seen in the photograph. Each of these four capacitors are 8 microfarad capacity with a 2,000 volt rating. In spite of the fact that they appear to be wired in parallel, they are in fact, wired in series to make a single capacitor of 2 microfarad capacity with an 8,000 volt rating. Don remarks that he has to be very careful to keep the voltage to the neon-tube driver circuit turned down in order to avoid getting more than 8,000 volts on these output storage capacitors.

This capacitor bank is fed through a diode which is rated for both high voltage and high current, as Don states that the device produces 8,000 volts at 20 amps, in which case, this rectifying diode has to be able to handle that level of power, both at start-up when the capacitor bank is fully discharged and "L2" is producing 8,000 volts, and when the full load of 20 amps is being drawn. The actual diodes used by Don happen to be rated at 25 KV but that is a far greater rating than is actually needed.

In passing, it might be remarked that the average home user will not have an electrical requirement of anything remotely like as large as this, seeing that 10 kW is more than most people use on a continuous basis, while 8 KV at 20 A is a power of 160 kilowatts. As the neon-tube driver circuit can put out 9,000 volts

and since the L1 / L2 coil system is a step-up transformer, if the voltage fed to the capacitor bank is to be kept down to 8,000 volts, then the Variac must be used to reduce the voltage fed to the neon-tube driver circuit, in order to lower the voltage fed to the L1 / L2 coil pair, typically, to 3,000 volts.

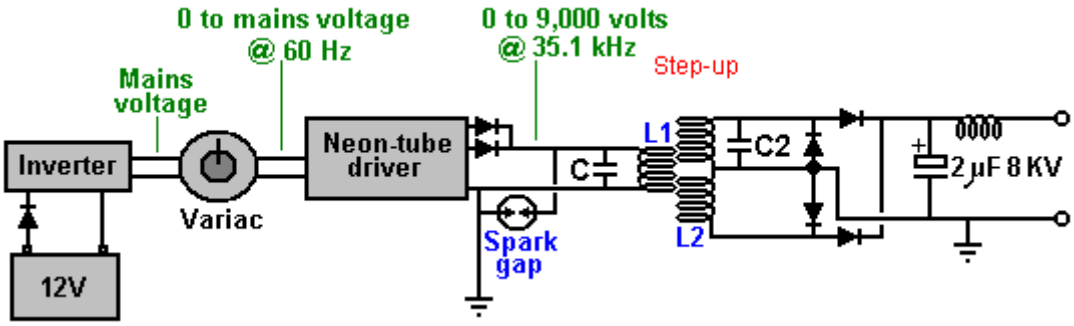

At this point, the storage capacitor bank behaves like an 8,000 volt battery which never runs down and which can supply 20 amps of current for as long as you want. The circuitry for producing a 220 volt 50 Hz AC output or a 110 volt 60 Hz AC output from the storage capacitors is just standard electronics. In passing, one option for charging the battery is to use the magnetic field caused by drawing mains-frequency current pulses through the output "choke" coil, shown here:

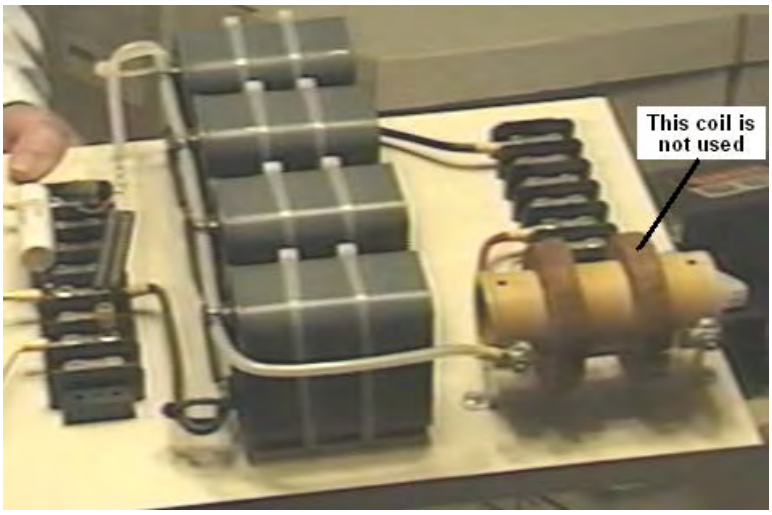

The output current flows through the left hand winding on the brown cylindrical former, and when the photograph was taken, the right-hand winding was no longer in use. Previously, it had been used to provide charging power to the battery by rectifying the electrical power in the coil, caused by the fluctuating magnetic field caused by the pulsing current flowing through the left hand winding, as shown here:

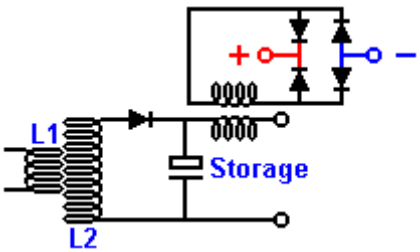

The DC output produced by the four diodes was then used to charge the driving battery, and the power level produced is substantially greater than the minor current drain from the battery. Consequently, it is a sensible precaution to pass this current to the battery via a circuit which prevents the battery voltage rising higher than it should. A simple voltage level sensor can be used to switch off the charging when the battery has reached its optimum level. Other batteries can also be charged if that is wanted. Simple circuitry of the type

shown in chapter 12 can be used for controlling and limiting the charging process. The components on Don's board are laid out like this:

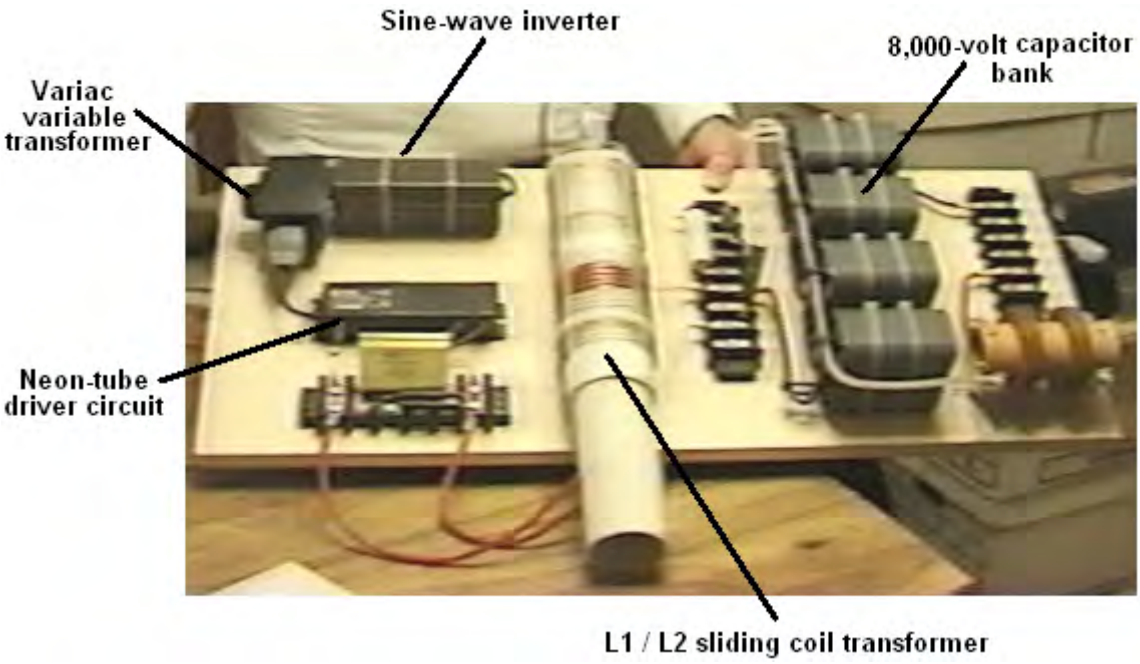

Don draws attention to the fact that the cables used to connect the output of "L2" to the output of the board, connecting the storage capacitors on the way, are very high-voltage rated cables with special multiple coverings to ensure that the cables will remain sound over an indefinite period. **Please bear in mind that the voltages here and their associated power levels are literally lethal and perfectly capable of killing anyone who handles the device carelessly when it is powered up. When a replication of this device is ready for routine use, it must be encased so that none of the high-voltage connections can be touched by anyone. This is not a suggestion, but it is a mandatory requirement, despite the fact that the components shown in the photographs are laid out in what would be a most dangerous fashion were the circuit to be powered up as it stands. Under no circumstances, construct and test this circuit unless you are already experienced in the use of high-voltage circuits or can be supervised by somebody who is experienced in this field. This is a "one hand in the pocket at all times" type of circuit and it needs to be treated with great care and respect at all times, so be sensible.**

The remainder of the circuit is not mounted on the board, possibly because there are various ways in which the required end result can be achieved. The one suggested here is perhaps the most simple solution:

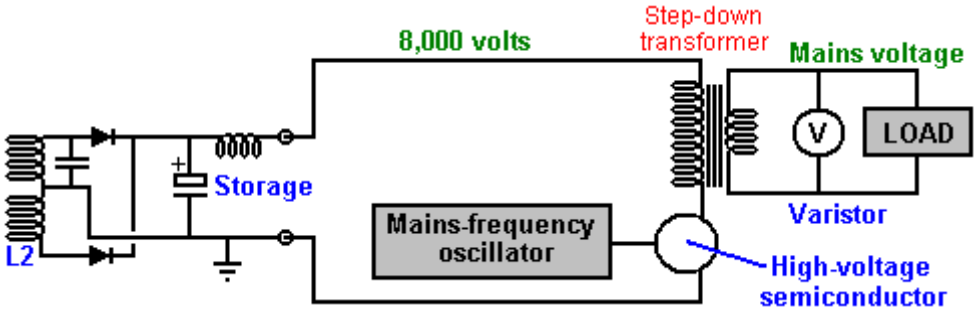

The voltage has to be dropped, so an iron-cored mains-frequency step-down transformer is used to do this. To get the frequency to the standard mains frequency for the country in which the device is to be used, an oscillator is used to generate that particular mains frequency. The oscillator output is used to drive a suitable high-voltage semiconductor device, be it an FET transistor, an IGBT device, or whatever. This device has to switch the working current at 8,000 volts, though admittedly, that will be a current which will be at least thirty six times lower than the final output current, due to the higher voltage on the primary winding of the

transformer. The available power will be limited by the current handling capabilities of this output transformer.

As the circuit is capable of picking up additional magnetic pulses, such as those generated by other equipment, nearby lightning strikes, etc. an electronic component called a "varistor" marked "V" in the diagram, is connected across the load. This device acts as a voltage spike suppressor as it short circuits any voltage above its design voltage, protecting the load from power surges.

Don also explains an even more simple version of the circuit as shown here:

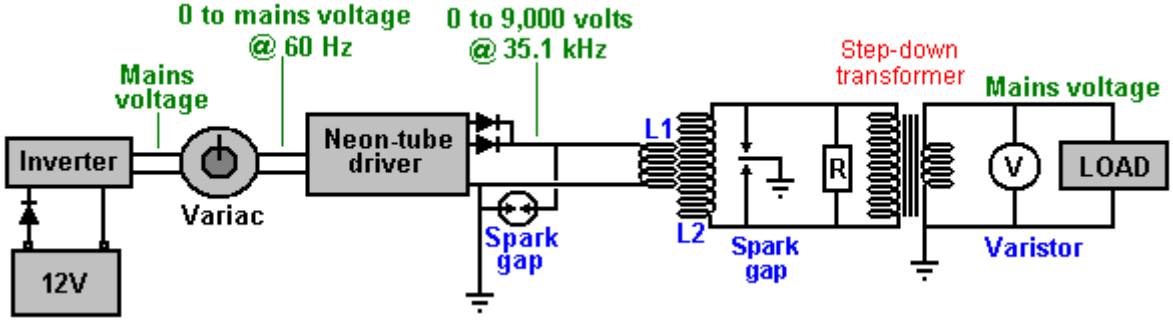

This simplified circuit avoids the need for expensive capacitors and the constraints of their voltage ratings, and the need for electronic control of the output frequency. The wire length in the turns of coil "L2" still needs to be exactly four times the wire length of the turns in coil "L1", but there is only one component which needs to be introduced, and that is the resistor "**R**" placed across the primary winding of the step-down isolation transformer. This transformer is a laminated iron-core type, suitable for the low mains frequency, but the output from "L2" is at much higher frequency. It is possible to pull the frequency down to suit the step-down transformer by connecting the correct value of resistor "R" across the output transformer (or a coil and resistor, or a coil and a capacitor). The value of resistor needed can be predicted from the American Radio Relay League graph (shown as Fig.44 in Don's .pdf document which can be downloaded free from the www.free-energy-info.com website). The correct value could also be found by experimentation. You will notice that an earthed dual spark gap has been placed across "L2" in order to make sure that the voltage levels always stay within the design range. Don remarks that he intends this particular device to be built by anyone who wants to, providing power for that person's needs and that some two hundred replications have already been built.

Don also explains an even more simple version which does not need a Variac, high voltage capacitors or high voltage diodes. Here, a DC output is accepted which means that high-frequency step-down transformer operation can be used. This calls for an air-core transformer which you would wind yourself from heavy duty wire. Mains loads would then be powered by using a standard off-the-shelf inverter. In this version, it is of course, necessary to make the "L1" turns wire length exactly one quarter of the "L2" turns wire length in order to make the two coils resonate together. The operating frequency of each of these coils is imposed on them by the output frequency of the neon-tube driver circuit. That frequency is maintained throughout the entire circuit until it is rectified by the four diodes feeding the low-voltage storage capacitor. The target output voltage will be either just over 12 volts or just over 24 volts, depending on the voltage rating of the inverter which is to be driven by the system. The circuit diagram is:

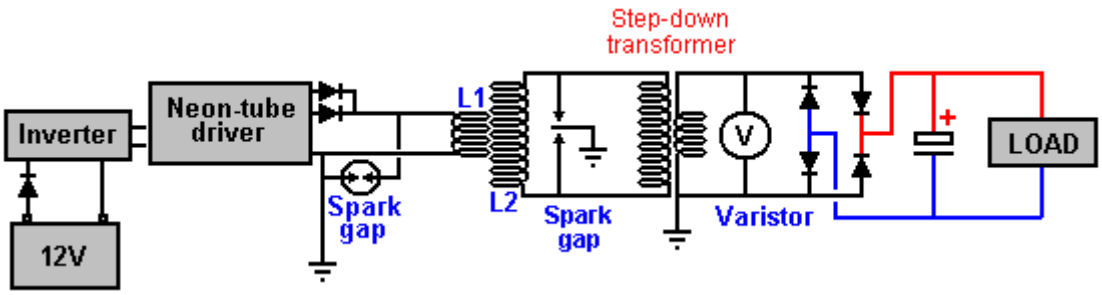

Another device of Don's is particularly attractive in that almost no construction is needed, all of the components being available commercially, and the output power being adaptable to any level which you

want. Don particularly likes this circuit because it demonstrates COP>1 so neatly and he remarks that the central transmitter Tesla Coil on its own is sufficient to power a household.

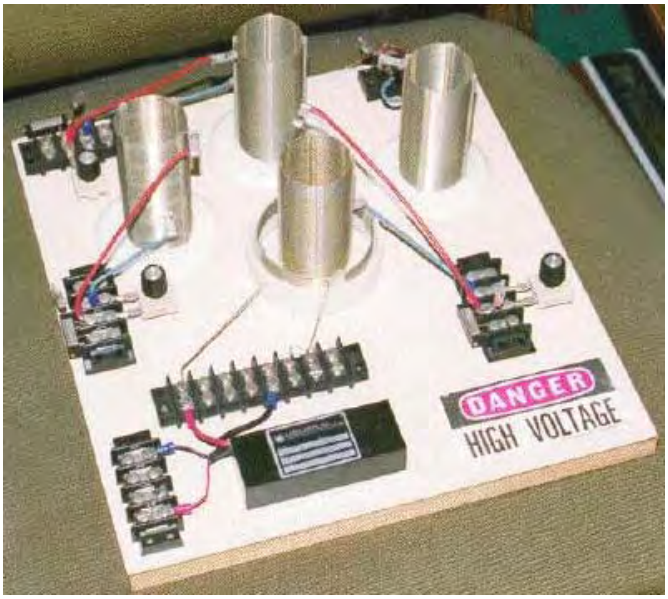

The coil in the centre of the board is a power transmitter made from a Tesla Coil constructed from two Barker & Williamson ready-made coils. Three more of the inner coil are also used as power receivers. The outer, larger diameter coil is a few turns taken from one of their standard coils and organised so that the coil wire length is one quarter of the coil wire length of the inner coil ("L2").

As before, a commercial neon-tube driver module is used to power the "L1" outer coil with high voltage and high frequency. It should be understood that as power is drawn from the local environment each time the power driving the transmitter coil "L1" cycles, that the power available is very much higher at higher frequencies. The power at mains frequency of less than 100 Hz is far, far less than the power available at 35,000 Hz, so if faced with the choice of buying a 25 kHz neon-tube driver module or a 35 kHz module, then the 35 kHz module is likely to give a much better output power at every voltage level.

The "L1" short outer coil is held in a raised position by the section of white plastic pipe in order to position it correctly relative to the smaller diameter "L2" secondary coil. Again, it appears to have five turns:

The secondary coils are constructed using Barker & Williamson's normal method of using slotted strips to hold the tinned, solid copper wire turns in place.

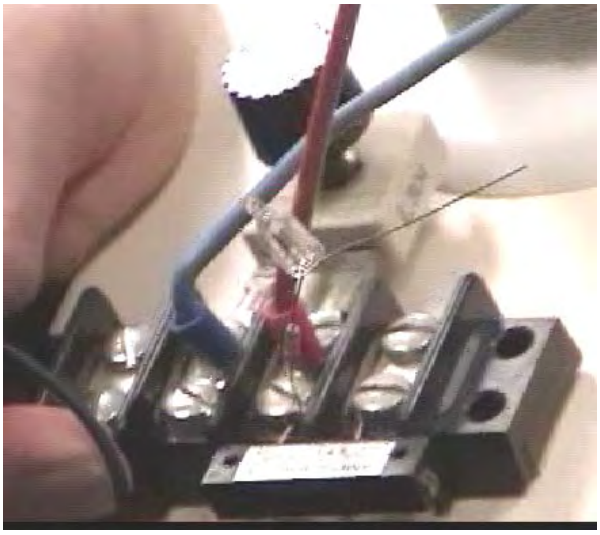

As there are very slight differences in the manufactured coils, each one is tuned to the exact transmitter frequency and a miniature neon is used to show when the tuning has been set correctly.

The key feature of this device is the fact that any number of receiver coils can be placed anywhere near the transmitter and each will receive a full electrical pick up from the local environment, without altering the

power needed to drive the Tesla Coil transmitter - more and more output without increasing the input power - unlimited COP values, all of which are over 1. The extra power is flowing in from the local environment where there is almost unlimited amounts of excess energy.

Each of the pick up coils act exactly the same as the "L2" secondary coil of the Tesla Coil transmitter, each picking up the same level of power. Just as with the actual "L2" coil, each will need an output circuit arrangement as described for the previous device. Presumably, the coils could be connected in parallel to increase the output amperage, as they are all resonating at the same frequency and in phase with each other. Alternatively, each could have its own separate output circuit with a step-down isolation transformer and frequency adjustment as before. If any output is to be a rectified DC output, then no frequency adjustment is needed, just rectifier diodes and a smoothing capacitor following the step-down transformer which will need to be an air core or ferrite core type due to the high frequency.

Two DVDs containing video recordings of Don Smith's lectures are available for purchase via the website link: https://secure.netsolhost.com/nuenergy.org/product_catalog.htm

Patrick Kelly
engpjk@yahoo.co.uk
http://www.free-energy-info.co.uk
http://www.free-energy-info.com

As works [devays] Of [tarielya] To [kapanadze].

To us [motivchik] to catch, and the symphony
we will write…
[E]. [Dog].

Moral aspect.

After the survey of the film of the demonstration “of the muff” Of [tarielya] [Kapanadze], i became likable and even roads this person as inventor and it is simple as men.
To us it is necessary it to worthily estimate and to place this inventor before one row with such values of [alternativshchikov] as Edwin Grey, John [Bedini], Hubbard, [V]. [Grebennikov] and others…
Therefore, from now on it: [Tariel], To [kapanadze], Georgian inventor; but not before which measure not “of [gruzyn]” and that other.

Social aspect.

Certainly, this muff pulls above itself whole chain of the problems, which are not absolutely necessary to us. Most important problem this that which “SOMEBODY” can think that this box before the state to replace at the point of power station and other energy sources, including hydrocarbons, thus down today's moment can damage to the exporters of entire this, including [sopostavshchikov] on the transport and the realization.
In reality this thus far not so, since all before the life changes gradually: spacecraft furrow the spaces of the universe, and cartage is used on the Earth, until now.
Nevertheless, we should take measures for its possible protection, namely entire information on this theme hold before the separate folder, it is better on the disk or to [fleshke] and to be at call in order in “the case of what” - immediate to throw down all this beside the open Internet.

[Motivchik] to catch…

I will try to completely exclude “water”.
Before the muff To [kapanadze], i.e., before the principle of the operation of this muff is [tsimis], the raisin, on which this all is built.
It relatively simple, but in order beside it “to enter” it is necessary to pass known concepts, but already without solonchak playa.

(54) Title: INDEPENDENT ENERGY DEVICE

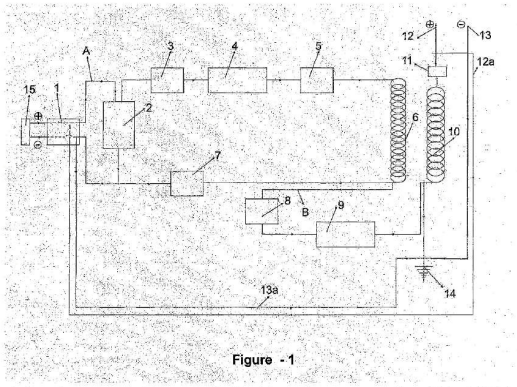

Figure - 1

(57) Abstract: The independent energy device improved with this invention, starts operation with the initial electric energy received from the initial energy supply (15) and afterwards generates energy consistently and is characterized to include power switch (1), capacitor (2), points (3), high frequency generator (4), first filter (5), first bobbin (6), first frequency adjuster (7), second filter (8), frequency stabilizer (adjuster) (9), second bobbin (10), second frequency adjuster (11), exit (phase) (positive) (12), positive self feeding cable (12a), exit (neutral) (13), negative self feeding cable (13a), neutral (grounding) (14), initial power supply (15).

Is above beyond the supplementary sheet depicted diagram from the patent Of [tarielya] To [kapanadze]. Only it does not a little correspond to green box, since it is its improvement.

Single-cycle resonance of medium.

Let us begin Azov.
Parallel circuit the LC.

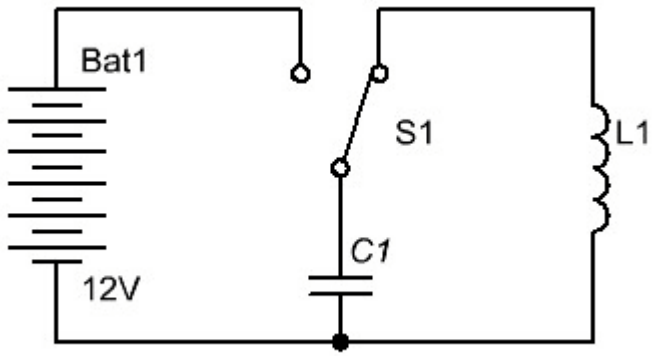

Charge of capacity. Discharge of capacity down the inductance. Strained by the inductance of environment - soft push, push, but not by impact impulse. Recovery of [napryaga] of medium, motion conversely, self-induction, the recharge of capacity, subsequently - resonant circuit.
Is established stable fluctuation, resonance frequency.
In consequence of which?
As a result of the pushing of medium down one side, and the recharge of capacity - as the consequence of the motion of medium conversely.

Hundred per-cent "single-cycle", "one-sided" the resonance bridge, when on it goes by system the company of soldiers and it strikes its surface, but in this case "does not pull back" this surface upward conversely, but also this it is sufficient so that the bridge would be pulled down.

But let us return to the outline LC.
I change capacitance value down that or other side. What will occur?

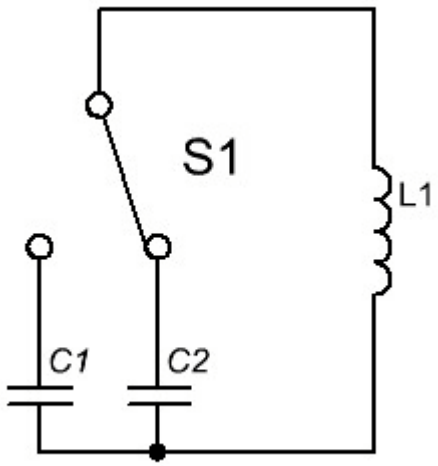

The phenomenon of resonance remains, only changes the frequency of resonance and the amplitude of fluctuation because of a change in the energy factor of outline.

But based on the position of medium - all [ostaetsya] against its places, it as before [elektromagnitouprugaya] and attempts to always " reset to zero" its gradient of [lokala] of [napryaga], elasticity.
The question arises on the course of events in me.
But there is whether very natural resonance of medium?
I.e., can we by our randomly outline fall on some unknown thus far to us the resonance of medium and because of this "rock OHO"?
I answer is not!
Since in entire time of the history of radio communication and any connected for the sake of this question outlines, someone compulsorily "would get in" before it, beside natural [em] resonance.
But there is one small reservation.
This is the volume of medium, limited as far as the walls of solid body, from which can be reflected [em] the wave. Here can arise the so-called volumetric resonance of medium, excited no longer only inductance, but also by the flow of [em] of emission.
But this is the question, which relates down the same platform [VSG] and we it thus far, we do not examine.

Double measure resonance of medium.

That I make further.
I remove the capacity of outline and instead of it connect the generator of sine down the inductance, it is desirable with small [KNI], (coefficient of nonlinear distortions), and I swing the same [lokal] of medium.

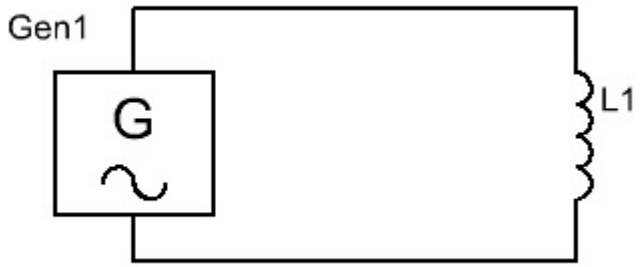

[Lokal] *- because it is formed by reduction in the power of [em] of the emission of inductance down the square of distance based on it.*
And, glory to god, otherwise we here [narezonirovali].

For the monitoring of the resonance of medium I stretch small inductance, inductance- sensor, down the basic inductance and connect down it [ostsil].

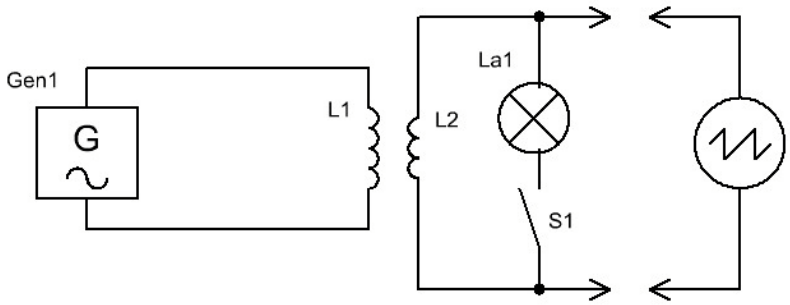

What is observed?
Is observed the same resonance of medium, only down much better, since generator, in contrast to the capacity, not only pushes medium "there", but also it " pulls" it conversely.

I observe the [ofigennuyu] power of the oscillating process of medium.
And in me here appears the desire to rock the small bit of this energy, and bit itself - OHO!, and to use it before "underdeveloped spheres of my patriarchal economy".
I connect lamp down this to inductance- sensor and see for this that it not sickly burns. But here I observe, that my generator began "to [dosasyvat]" from the rosette exactly that power, which was equal down the power of lamp.
Simultaneously "began to pull itself" the resonance of medium and I understand, that it was introduced beside [lokal] of the resonance of medium, about the well-aimed determination Of [n]. [Tesly], **friction clutch!**
And entire my [kombina] became commonplace, primitive transformer, and my "muff" was destroyed and disappeared.
And with melancholy of [osoznaetsya], that was disrupted the main thing is/are this it was disrupted the resonance of medium!!!
Muff from the resonance can be rocked only with the condition not for its disturbance!!!
As this to make??!!

[Motivchik] floated…

And here here to us down the aid comes [Yu]. Ivanov's [ritmodinamika].
Ivanov describes this moment.
When before the pool, which was remained still after union, before [lokale] of the system of the Ukraine was lowered in Hertz's portions commercial frequency, then was registered the powerful draining of energy there. ([Khokhlyatskiy] resonance. Name my).
To crests even they were put out down claim beyond this theme.
From entire variety Of [ritmodinamiki] for us is important precisely this moment!!!
It is interesting: he does know about this our [Kapanadze] or it did leave down this randomly?
And it is still interesting: did know about this sixteen-year boy Hubbard or he did also leave down this randomly?
Here to us and the answer: as to rock [khalyavku] without disrupting the resonance of medium, medium!, but not outline!

Second displaced resonance of [lokala] of medium.

Therefore, adhering to the analogy "displaced before the frequency resonance -[lokala] of crests", that rocks from the general large, "correct" resonance of power system concealed [khalyavku], we can be determined before the criteria of the second inductance and that frequency of resonance, created by it in order to rock the bit of energy from the organized resonance of [lokala] of the medium of the first inductance.

1. The volume of energy, pumped out by the second inductance must be by an order, if not more, it is less than that volume of energy, which is created for the sake of the first inductance.
2. Because of this, its, second inductance, magnetic field must be less than the magnetic field of the first inductance.
3. And already as a result of entire this overall sizes and inductance itself before Henry must be less than the first.
4. **The rolled away power by the second inductance - this is the consequence of a difference in the frequencies of the resonance oscillation between the first and second inductance!!!**

But can happen so that the frequency of the second inductance sharply it will change it will so that take entire energy of the resonance of [lokala]?
And as it [dolbanet]!!!…
Can.
Therefore before the patent specification [Tarielya] has such lines.

> *The first frequency regulator (7) stabilizes the obtained high frequency in accordance with the need and orders it,* ***causing no harm to parts against the output of chain.***

It is obvious that in it to this [dolbalo] and repeatedly…
Thus, summing up it is possible to say that the evacuation of energy of the resonance of medium is produced also as far as resonance, but the frequency of it a little, on Hertz, ten Hertz, it is different from the frequency of the general resonance, created for the sake of the first coil.
Chart technology methods are such and are such they must be the values of a difference in the frequencies for satisfaction of this condition - let us determine more lately.

Third resonance - resonance of charges.

After satisfying increasingly above-presented conditions and after connecting lamp down the second coil - everything returns down the circles its - we obtain such break the same commonplace trans-, and together with it, that if not the film Of [tarielya], then long ago would throw all efforts for this theme.

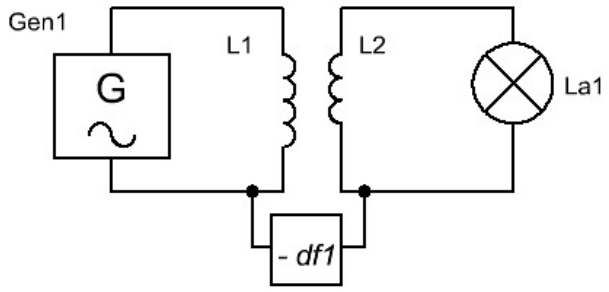

Therefore we think and we move further.
But who did say that, after hanging up lamp down the second inductance, we will not change and will not worsen the resonance condition of medium, created by the first coil? Even if this [katukha], the second, is displaced before the frequency of its resonance relative to the frequency of the resonance of the first inductance.
Clear pepper - let us worsen, still as will worsen, because the second resonance from “that sliding” became the same friction clutch! The same lamp on the indicative inductance, switch oned in parallel to the entrance of [ostsila], examined earlier!
But here what is to be done? How to remove this [dolbannyy] friction clutch?
But here also to be it is in no way necessary, since all this already thought over to us our fascinating participant in the forum - LAZJ!
What there is electric current?

> *I recall [voenku] before the institute.*
> *Instructor- Major shows in the diagram the passage of current on the chain: from plus of the power source, further lamp or another chain, then* ***housing, the housing of the power source.***

Current - this that? Only directed motion of charges, electrons on the chain?….
No, not only!
The clearest determination - which is by itself, give Horowitz and Hill, the authors of splendid best-seller - skill of circuit design.

Current - this is the speed of the displacement of electric charge at point!

Thus, gentlemen, before us the task: to light the tungsten filament of incandescent lamp.
How this we can make?

1. To apply a potential difference from the steady source of the current let us assume of storage battery.
2. To include in break, the same rosette.
3. But it is possible also differently: to place lamp beside the inductor of high-frequency chain and tungsten will be lit **without the application** to it, the filament, such as or **potential!**

On the thread current, in the known to us case: ***… housing, housing of the power source***, flow will not be!
In this case the charges, the same electrons, will high-frequency "be twitched", swinging crystal lattice of metal and so on…
It is good.
But if we to the contact of lamp, which is located before the inductor do solder installations and down it will connect the contact of the second lamp, which is no longer located before the inductor, but outside, then will catch fire its filament or not?
It can even be heated, but catch fire - no.
Why?
Because the efforts "of pulling" of the charges of the first lamp will not be sufficient in order "to pull" the charges of the limited volume of the second thread.
The same friction clutch of phenomenon operates.
But here if we connect **the second contact of the second lamp** down what or to volumetric [zhelezyake] (on LAZJ), and better let us ground how this makes [Tariel], then picture sharply will change!
Is large [khalyavnyy] volume of charges as our [planetochka] the Earth.
We already do not have need for "taking out" and "pressing" that limited volume of charges, which is found only before the volume of the thread of the second lamp, creating against its free end, in this case, [protivopotentsial], which reaches hundred volts, as this occurs on the thread of lamp, which is located before the high-frequency inductor.
But most main that, the aim is at the point of what, we can organize, when the unlimited quantity of charges is present, obtained based on the large volumetric body, **THE GALVANIC RESONANCE OF CHARGES!!!,** before tele- thick copper wire and furthermore of that jerked through through the primary and second inductance!
There is no motion of current, in those accepted before our [zashorennykh] concepts -!
But are only "pulling" of charges before tele- thick copper wires!
And load is connected down this green box taking into account these definitions, but not taking into account "housing, the housing of the power source".

Therefore, "pulling" of electrons before the tele- heavy-gauge wire, before the required order connected by the second end down a good grounding, can be produced with the connection to it of altogether only one end of the second inductance through the load!!!

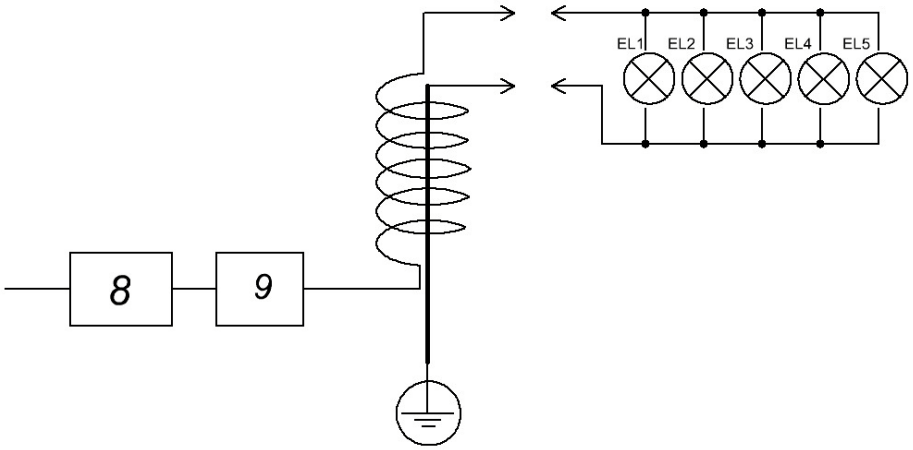

But most main that already there are no obstacles in the form of friction clutch whatever, for organizing already the third resonance - the resonance of charges.
Based on your permission, gentlemen, I will repeat again: current itself, in the known to us cases does not flow, but only “it twitches itself”. Therefore the output of green box - this is high-frequency output!
The most optimum form of load for this chain - this is resistive load, that by itself they are of incandescent lamps.
This fact entails completely new approach to the organizations **of the reactive load** in the form of electric motors and that other. But the charm of reactive load consists before the fact that before the same chain of connection it is possible to organize additional resonance, resonance, specific to the load of consumption!
We will not be distracted, but let us pose to itself the following question: and as to connect the already known and extended everywhere alternating-current motors of commercial frequency before 50 Hz?
For this [Kapanadze] provided usual amplitude modulator beside 50 Hertz, designated in the diagram patent by number 11.

So that we do have?

Were examined three conditions, three resonances of the systems, which must be performed in order “[khalyavku] to rock”.

1. High-voltage, high-frequency resonance of medium, organized by the first coil.
2. High-frequency, but outstanding before the frequency and the power from the resonance of the first coil, the relatively low-voltage resonance of the second coil.
3. The galvanic resonance of charges before the tele- thick copper wire, grounded by one end for the purpose of obtaining the unlimited quantity of charges for eliminating the phenomenon of the friction clutch of last resonance, since before this device everything is interconnected and this friction clutch, last resonance, it influences the passage of the resonance of primary coil.
4. Specific, different from the traditional method, method of the connection of load.

Is very interesting would be interesting to estimate the relationship of the power of the resonances of the first and second coil.

Taking into account that the fact that the green box has a discharger with the width of clearance beside **11,5 мм**, then the voltage of the breakdown of this space lies within the limits **of 2000 volts.**
Frequency of [vozbuda] of this discharger - **150 - 200 kHz.**
Second coil rocks the current of charges, by effort before **5 kW.**
This before the recomputation down the current: **5000[Vt]: 220[V] of =23[A]**, that also showed current tongs on the film.
It turns out that the relative transformation ratio of the coils
2000[v]: 220[V] = 10, approximately.
It leaves, that allegedly the thickness of the first outline is **10 times more,** that is to say, it composes **50[kVt].**
So whether this? Indeed we a matter have with the resonance.
Give let us visit based on the other side.
Power is proportional down the square of stress.
Before the first coil 2000 X 2000 **= 4 000 000.**
Before the second coil 220 X 220 **= 48 400**
Relation 4 000 000: 48 400 = 82, approximately **100 times.**
Came out already two orders. This already something.
I.e., before [lokale] of the resonance of the first coil it varies **by 500 kW** of power, and we pump out altogether only hundredth - **5[kVt].**
Before principle this is actual, against the level "of noise", so that "force did not note the loss of soldier" beside **5[kVt].**

Now before the frequencies.
If before "[khokhlyatskom] resonance" the frequency drift of power system composed **0,5 Hertz**, then this **1%** of 50[Gts].
1% from 200 000[Gts] this will be **2 kHz.**
It turns out that the frequency of the second coil can differ down the hundredth, i.e., in the limits **of 2[kGts].** The definite dependence of power and frequencies is examined. But this down the future.
Here this already is considerably better than "to catch" the displacement of the resonance of the second inductance before **Hertz** or even before **ten Hertz,** about whom I assumed earlier.

Conclusion.

The basic principles of approaches to this problem were expressed.
There are considerations, also, in the circuit design, but I did not intentionally examine them not in order randomly to not impose its point of view.
With exception, I lead the visual aid of that assertion To [kapanadze], that "the capacitor (2) serves after pump…" and are here clearly represented "points" as the contacts of transfer relay.

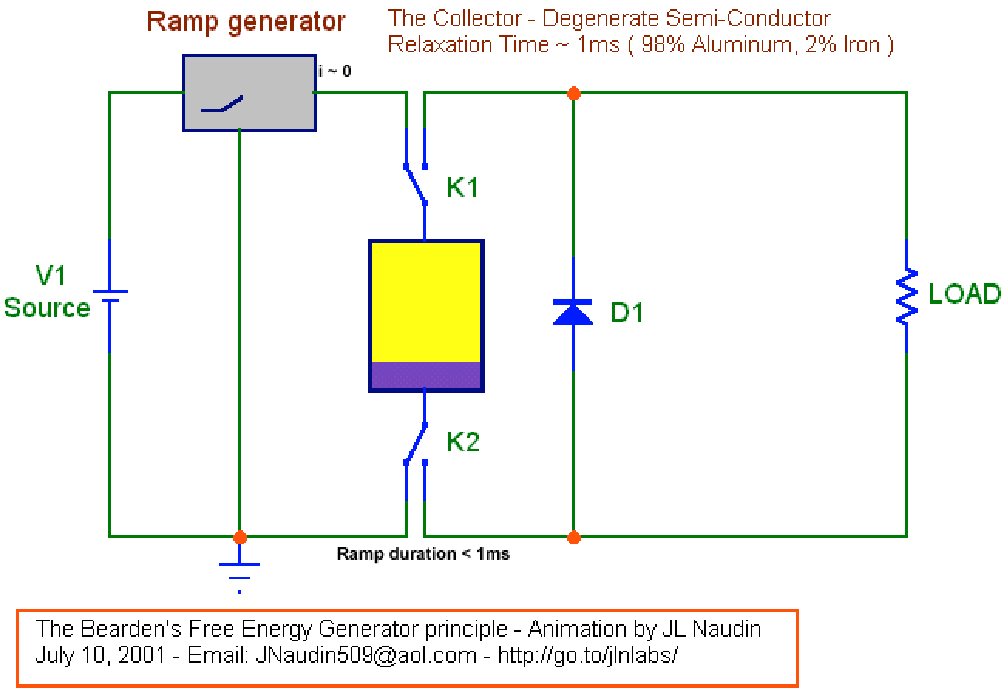

So that, your word, gentlemen!

Victor Grieg
March 2009.

P.S.
But before principle, gentlemen, here, however are strangely begun to operate time, and temporary passages of energy, for what I strictly here and got in.
But this already the theme of more serious conversation.

We reflect under the patent of Tariela Kapanadze.

The patent, as well as all other, is written by more legal language, rather than technical. As a matter of fact, it also is the legal document intended to put out to competitors and to constrain development of technology, other purpose in the given kind of the property I do not see. Of course we can say, that the inventor should be rewarded, but this reward often comes in such perverted form, that the inventor dies in poverty or walks from14 floors … Who need such a reward?

But in any case, under all this paper work the essence of the invention essence should be so the rights for the invention could be presented. Lets dig into the essence.

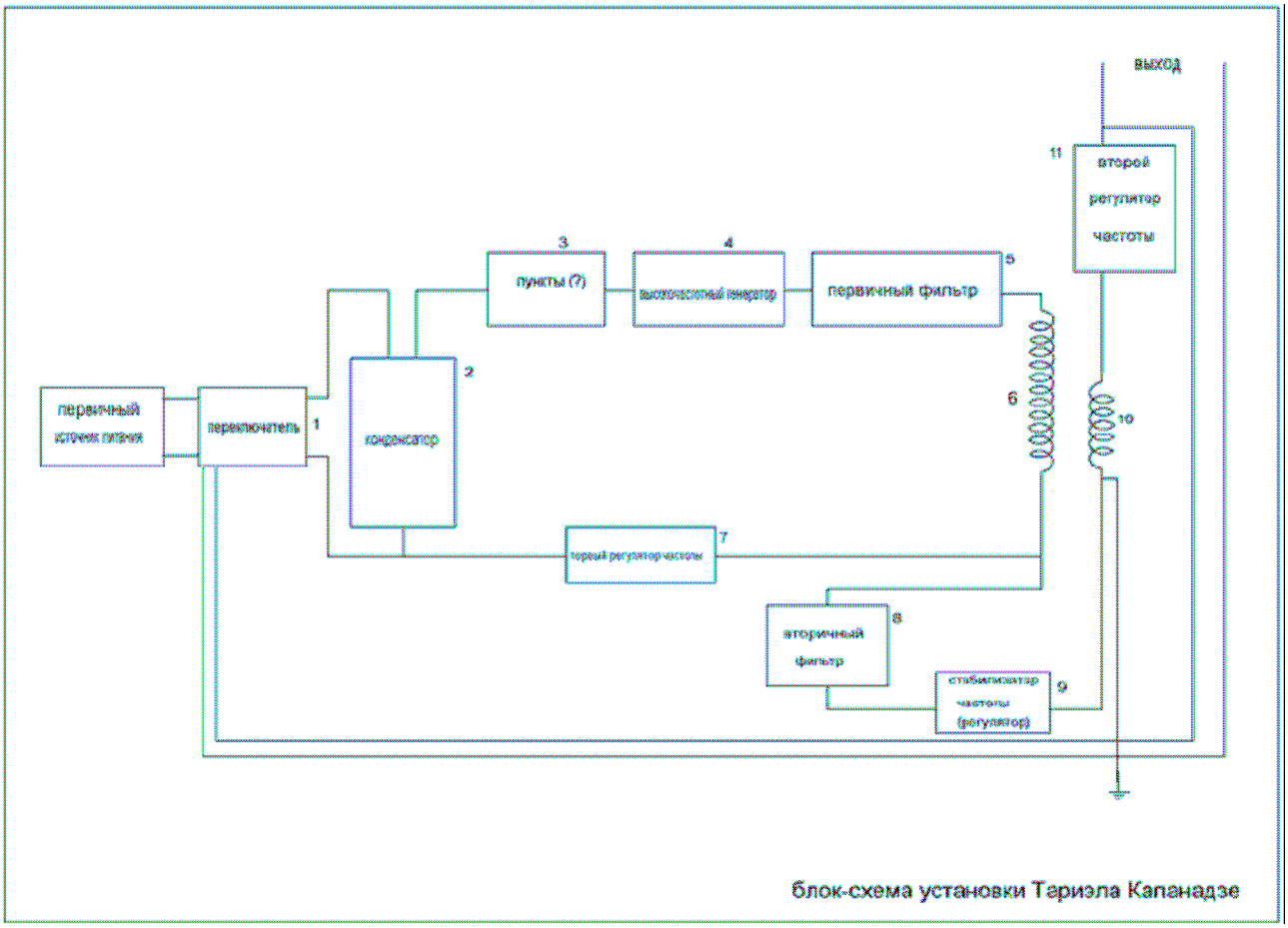

Drawing 1 represents the scheme of the existing invention. The parts connected with the invention are numbered and explained:

1- Power switch

2 - The Condenser

3- Points (as the engine distributor)

4- High-frequency generator

5- The First filter

6- Primary coil

7- Frequencies First a regulator

8- Second filter

9- Frequenciy Stabilizer (regulator)

10- Secondary coil

11- Second regulator of frequency

12- Exit (phase) (positive)

12a-positive cable

13- Exit (neutral)

13a - A negative cable

14- Neutral (grounding)

15- Initial power supplies

A- Cable of the first circuit

B- Cable of the second circuit

THE INDEPENDENT DEVICE OF ENERGY

The existing invention - the device self-sufficient (self-powering) and making the electric energy ready to use, started in work as the initial electric energy received from the accumulator or a similar energy source, transferring (transmitting) a magnetic field made in the first coil to the second coil through the stabilizer of frequency, after rhythmical stabilization of a magnetic field arising between coils; transforms independent energy - received by the second coil from air - to electric energy.

Here looks like everything is clear. There is only few questions:

1. How to transfer (transmit) a magnetic field from the first coil to the second, through the frequency stabilizer? What is the stabilizer of frequency?

2. Rhythmical stabilization of a magnetic field. How?

The existing invention receives external energy only in the first starting phase. This mentioned energy can be easily made from the small (little) accumulator or the battery or similar sources.

After 1-2 seconds after the device will be started, the switch on a device input(entrance) disconnects(switches-off) the external electric A power (from the accumulator or a similar energy source), making electric energy.

What occurs (happens) for us in these two seconds?

Very small part of this electrical made energy are used by the device to power itself, and its big part is liberated for usage. Until the device is switched off, or some internal problem has not occurred inside, the device makes energy permanently. There is no modern device similar to the existing invention, making energy permanently, and powering itself.

This is because for device operation it is required much less energy, than it turns out on an output(exit). Therefore, the device works as the valve, for the certain natural process existing and proceeding irrespective of the device.

The first circuit is developed to make an electricity, transferring (transmitting) the magnetic field made in the first coil from electrical energy, received from independent initial power supplies, to the second coil.

The first circuit consists of a time relay, the capacitor, points, the high-frequency generator, the first filter, the first coil, the first regulator of frequency (this circuit is shown by a line in a figure(picture)),

So, under the statement of the author, this circuit produces an electricity, transferring (transmitting) a magnetic field of the first coil to the second. The magnetic field here … well, how tell it more softly? It seems to me – bulshit. Probably, such terminology is applied not to stand out of the crowd. Say, all within the limits of the standard representation about an induction. Let’s take a look at this circuit separately.

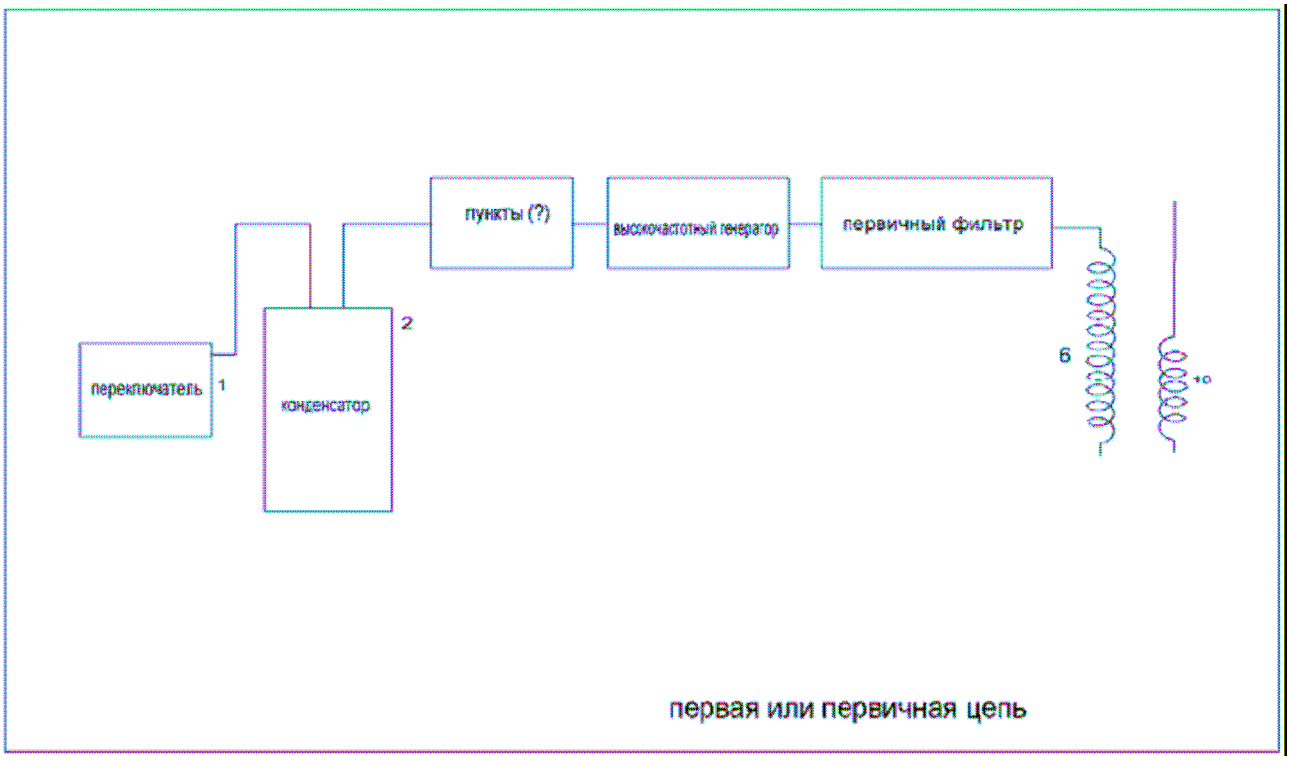

And let’s look what the Great Son of the Georgian People (in abbreviated - GSGP), is trying to tell us.

1. It is the switch with the timer, having for an object to disable external power supply at reaching the mode of self-powering. It is fulfilled quite straight forward, like the delay after which, the device is guaranteed can to support itself. For understanding of a principle this doesn’t play a bog role. Nothing new.

2. The capacitor. Well the capacitor in this part of a circuit for us asks to be called as демпферная (limiting??) capacity. Other role for the given part of the circuit I’m not able to find. However, the lines of connection divided in two, drop a doubt seed. But we will suppress it for a while.

3. Points. The remarkable name. No way to identify them. But in the summary to a figure, the author makes the stipulation *3- Points (as the engine distributor)* Georgian slang on Turkish manners. It is necessary to guess only that is hidden under this mysterious definition. The first thought which comes to mind according definition «as the distributor», it is the commutator. As "cylinders" for us there is only one the task of this commutator not to switch between, but to switch on/off, connect or disconnect. For example Grey «in this place» had a multivibrator. And the name "points", suggests that it is real it, and on an output(exit) for it - "dotted line". Let’s assume this is true.

4. The high-frequency generator. Here like habitual the term and especially it is not necessary to be soared. But however there are slippery places. Why "multivibrator" is shown separately? But if you the usual person, instead of GSGP on the simple stupid direct logic it turns out that this "Points" raise(excite) a with great dispatch certain outline of high frequency. Here though kill, but other understanding for me while is not present.

5. The primary filter. A problem has put GSGP. What it is filtered? High frequency which is produced in the high-frequency generator. What for?

And maybe this GSGP fools around? What is for us simplest filter for HF (high frequency)? Let's place capacitor for a while, just not to climb in to the higher (supreme) electronics(electronics engineering).

Through this condenser, of corresponding to a nominal becomes clear, that everything is put to the coil 6. It is starting to appear the circuit. However, it is not visible from where "aic" (??) comes. So now we have very common circuit, there is quite a lot of them. Well, let's draw it anyway to avoid future confusions. Thus the switch with the timer we will throw out so it wouldn't mess things up.

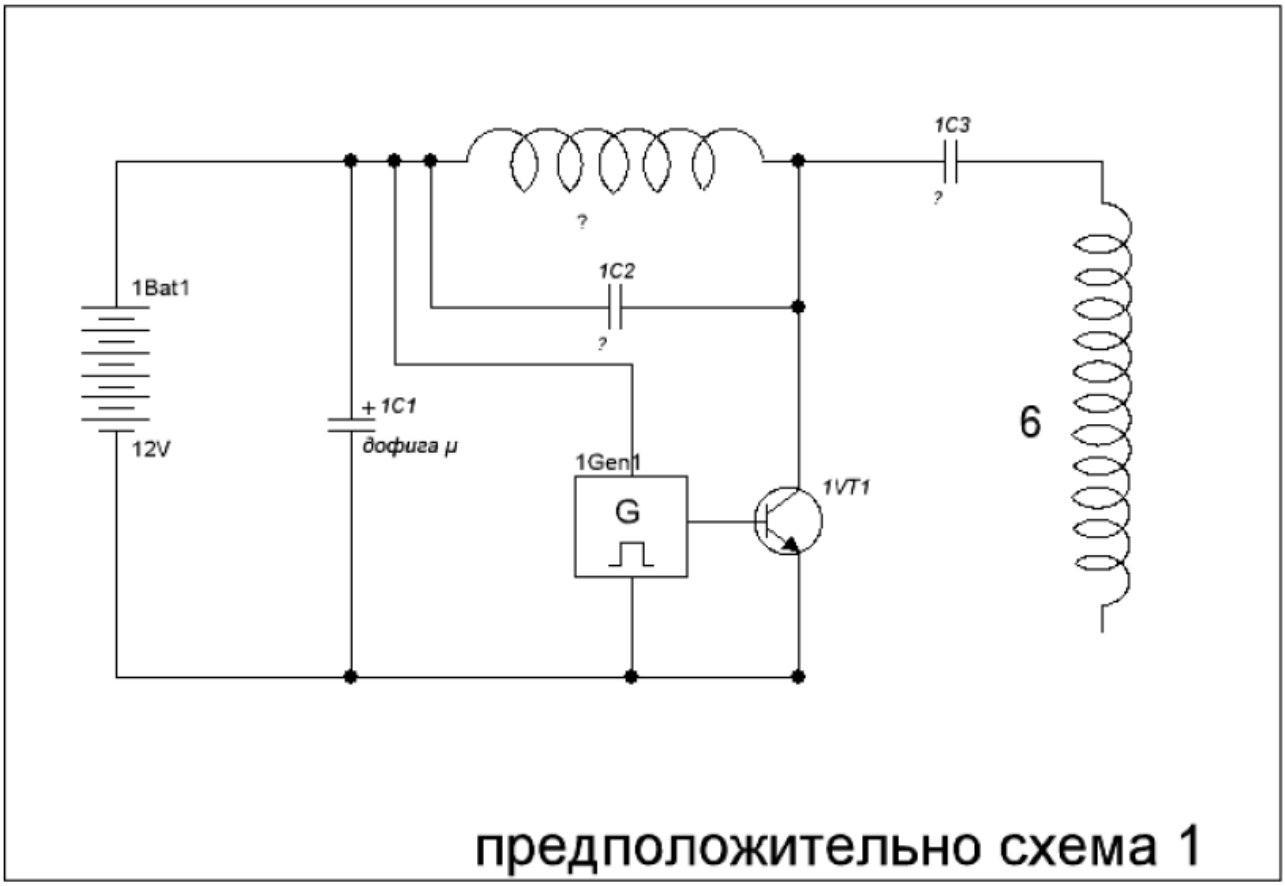

Well here is what we have for now. Let's go further.

We look a circuit two (or secondary?) …

And the second circuit, thanks to the strong magnetic field accepted from the first coil, creates a difference of magnetic fields between coils. The difference of a magnetic field arising between the second coil and the first coil is stabilized by means of the stabilizer of frequency within this circuit.

The second circuit consists of the second filter, the stabilizer of the frequency, the second coil, the second regulator of frequency.

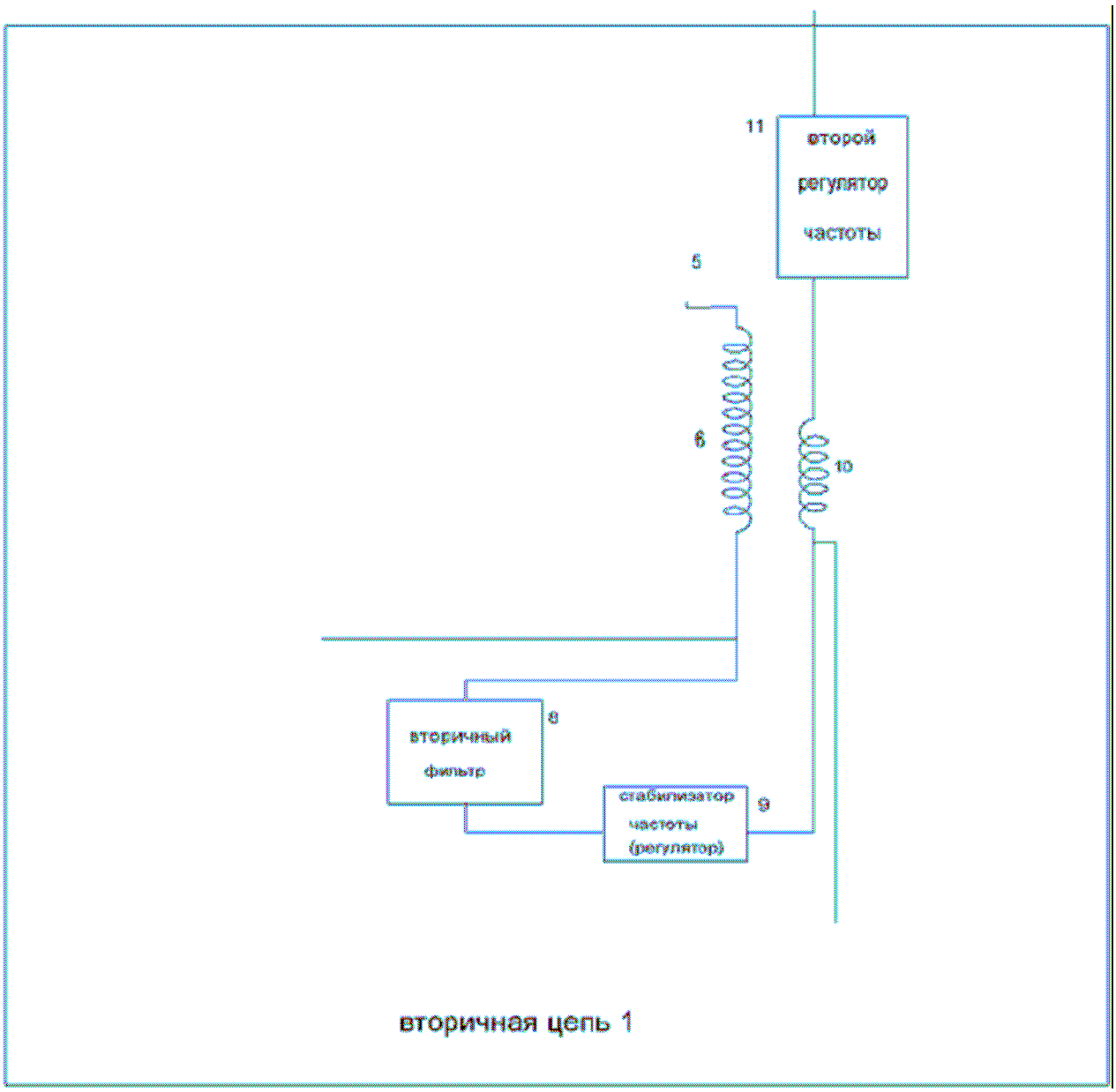

Well we will start from numbers.

8. The secondary filter. As we have made bold to substitute the primary filter condenser why us to hesitate to make it again? Let’s to it.

9. The stabilizer frequencies (regulator). Bu-bu-bu … It hard to tell what this device is represents by itself. But here something «sucks in the pit of the stomach» that it is that discharger, which We observed during demonstration, like creation by these smart hands. Let it be. (It not definitive opinion, I simply try to translate this the block the circuit(scheme) in simple one. There are possible error). But let’s leave it as discharger for a while.

10. The coil secondary. Here without questions.

11. The second regulator of frequency. Here to call it discharger will not be enough. But on other hand here still it is necessary to clarify what happens, that at such parameters of coils, we on an output(exit) receive industrial frequency. Therefore we will hand this device in air with the sign (?).

The stabilizer of a difference of a magnetic field by means of the frequency stabilizer, this circuit also will transform energy which moves independently to air to the second coil standing(costing) on reception(trick) of this electrical energy. This electrical energy generated by the second coil, regulates necessary frequency of an output(exit) (220 V - 50 Hz or 110 V - 60 Hz) by means of the second regulator of frequency standing(costing) on an output(exit) of the coil.

It seems that nevertheless it is necessary to recollect about a variant offered Zimney. It is probable that energy fluctuates in primary and secondary circuits with a difference on frequency in 50-60 Hz. And this is what frequencies support circuits are for. For two pendulums (mechanical ones) suspended on one wall come after a while to synchronism. Means it is necessary is artificial to support(maintain) mistuning.

The detected beat frequency guarantees to us absence of influence of an output(exit) on an input(entrance). It is the positive moment. Negative that it is not completely clear how to provide it. But I believe that joint efforts we should outdo it GSGP.

Let's try to finish principal circuit except for unclear moments.

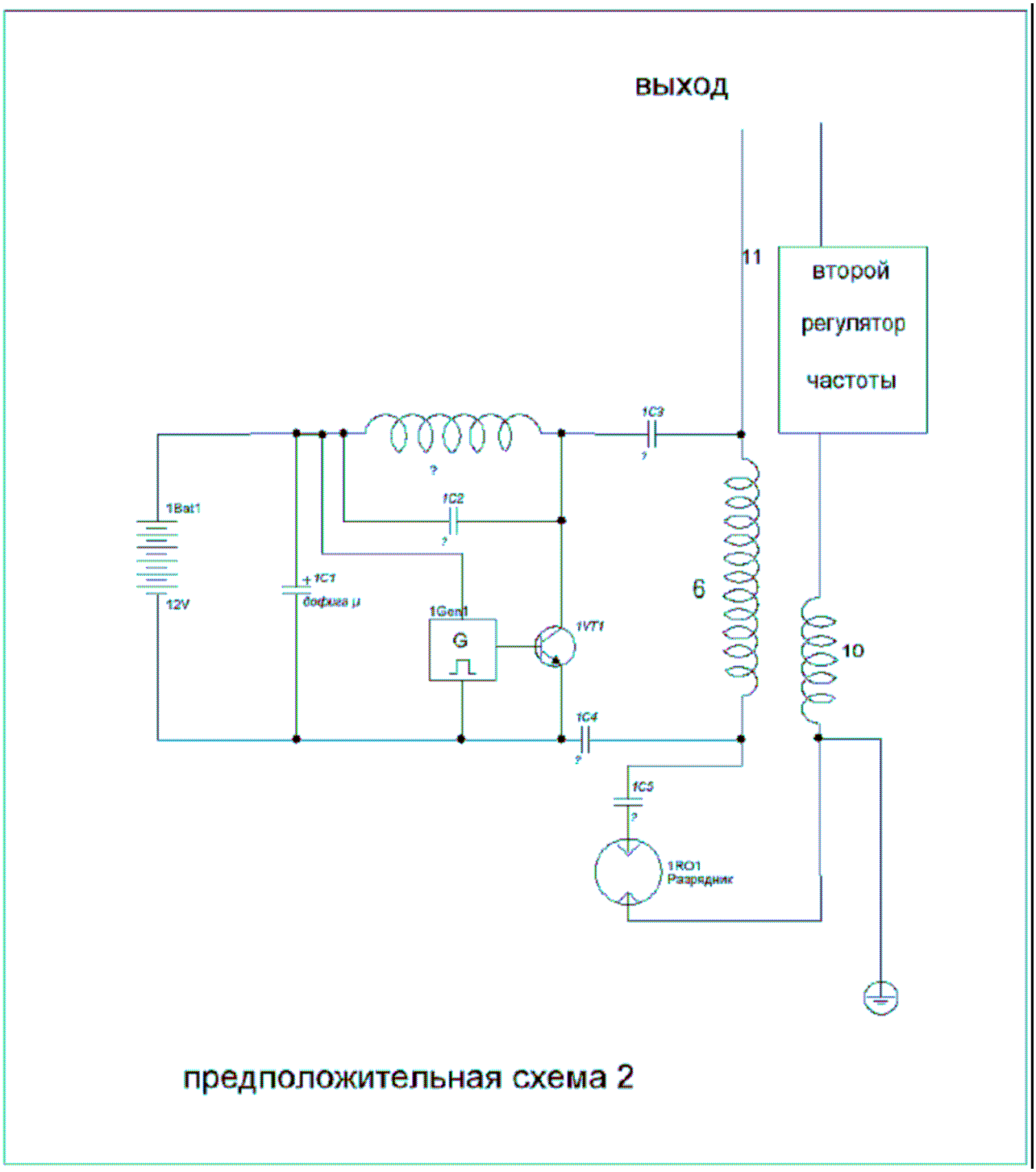

Here is what we've got.

This made electrical energy is transferred(transmitted) to the set load through output outputs. Through output cables the device feeds itself with the made electrical energy. The mentioned process is ended after 1-2 seconds after the device will be started. After that the switch of a time element standing(costing) on an input(entrance) of the device disables the accumulator. And the device makes energy independently.

The kind and optimistic ending. ☺

Tesla also designed a device for picking up energy from the air. As far as I am aware, it was never patented and I have never seen a specification of its output. Perhaps it was one of Tesla's failures but personally, I doubt that. It might make a very interesting experiment so see what level of output can be achieved using it. The construction is shown here:

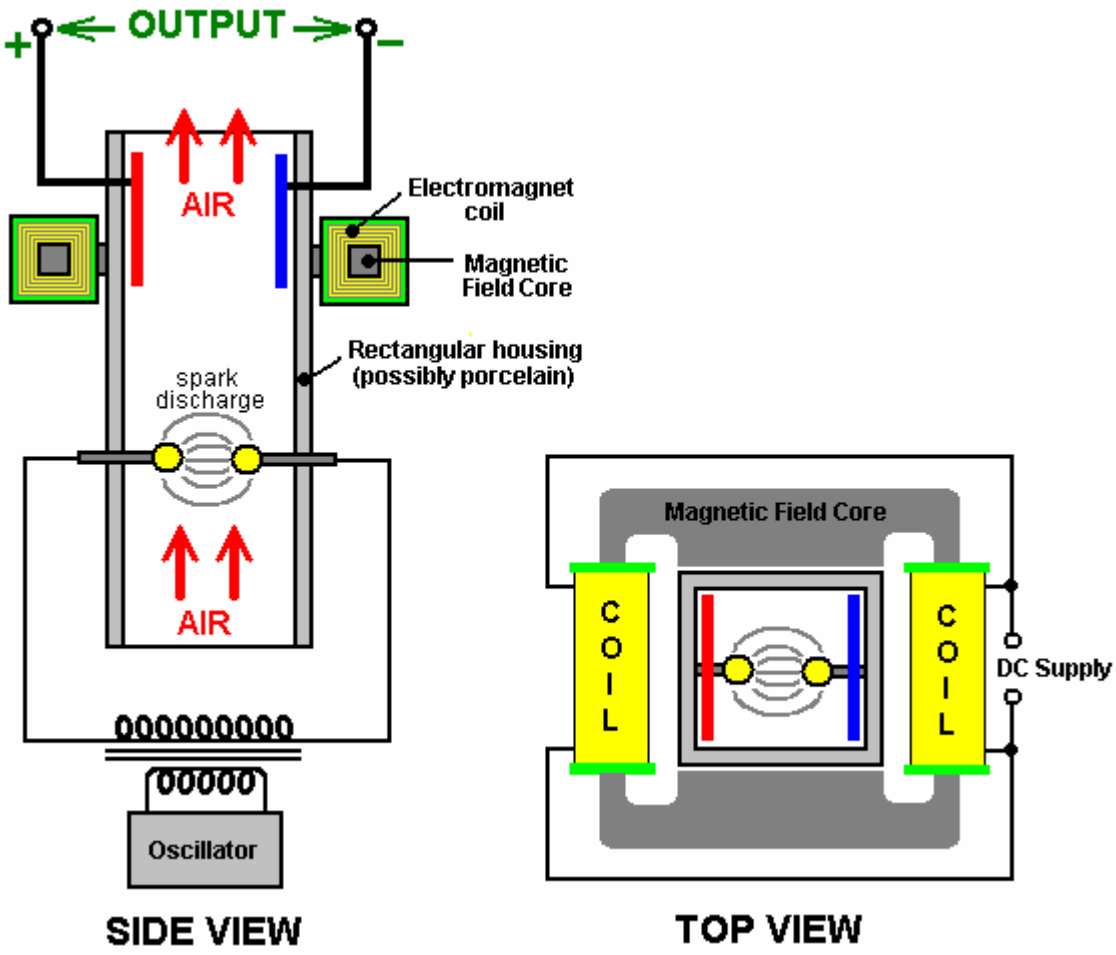

It is essentially, a rectangular cylinder which contains two spherical electrodes like a Wimshurst machine. The cylinder is positioned vertically, so that when the electrodes are powered up with high voltage to create spark discharges, the air inside the cylinder is heated which causes it to rise up the cylinder. The heated air is ionised, so a magnetic field generated by a surrounding electromagnet, causes the charged ions to move to opposite sides of the cylinder. Electrode plates positioned inside the cylinder, provide an electrical path for the excess positive and negative charges to flow together through the load - lighting, heating or motor circuits typically.

On the surface, this system would appear to be less than 100% efficient, in that the amount of power applied to the device to make it operate should be less that the amount of power drawn from it to drive useful loads. I am not sure that this is necessarily so. Firstly, the air already contains charged ions before this device starts to generate more. These naturally occurring ions gain in number when a thunderstorm is likely, even to the extent of giving many people a headache by their presence. These naturally occurring ions will be picked up by this device and without any input power needed to create them, they are capable of providing output power.

Also, the whole earth is immersed in the zero-point energy field. This is seething energy at the quantum level whose effects can be seen even at 'absolute zero'. This field is made of small random effects which makes it hard to obtain useful energy directly from it. The field needs to be structured before energy can be drawn from it. One way to do this is to align the field with an event which causes coherent waves of energy to radiate outwards as a 'radiant energy' wave - something like the ripples caused on the surface of a pond of still water

when a large stone is dropped vertically into the water. The ripple 'waves' move outwards from the 'event' until they reach the bank of the pond. If there was a generator attached to a float in the pond, it would be possible to pick up some energy from the ripples. The same can be done with 'radiant energy' waves if you can create them and know how to pick up energy from them.

Radiant energy waves can be formed by very short sharp uni-directional electrical pulses. Pulses less than one hundredth of a second are suitable for this. One way of creating pulses of that type is using a spark gap. In Tesla's device shown above, sparks are generated continuously. These sparks will generate radiant energy waves radiating out at right angles to the spark. Without a doubt, the vertical cylinder will have a mass of radiant energy shooting up it when it is being operated. This is in addition to the air ions which are being picked up. The only question is whether or not the electrode plate arrangement shown is capable of picking up any of this excess energy. Considering the metallic pickup device used by Edwin Gray to capture radiant energy as described below, it seems highly likely that some of that additional energy is, in fact, picked up and used to power the loads.

It should be noted that Tesla's device shown above, will generate UV radiation in the same way as any MIG or stick welder does, so care should be exercised to avoid looking at the arc or allowing the UV to shine on your skin, even if the skin is covered by clothing. You can get serious sunburn through thin clothing if it is subjected to strong UV radiation. Also, radio interference is likely to be generated by the arc, so screening should be provided during any tests. **WARNING**: Tesla accidentally discovered that electric spark discharges in air, ignite and burn atmospheric oxygen and nitrogen, producing 12,000,000 volt waves. The oxygen and nitrogen, both below atomic number 19 are thereby transmuted into alpha and beta charges (stripped helium nuclei with +2 charge each, and electrons with -1 charges each) by the powerful radiation produced, having a voltage potential of 12 Mev. This is almost three times the Mev level of gamma radiation emitted by radium, it may well be the reason why Tesla did not publicise the device shown above, and should you decide to experiment with it, please be aware of the potential hazard of this radiation.

A variation on the above device of Tesla's is given in the book "Physical Chemistry" by E. A. Moelwyn-Hughes, Pergamon Press, Oxford 1965, page 224. Rutherford and Geiger determined the fact that radium puts out alpha particles at the rate of 34,000,000,000 per second, each having two units of positive charge at 4.5 million electron-volts. This is a staggering amount of energy which ionises the air inside the housing and produces enough power to be capable of replacing the entire Four Corners power complex indefinitely.

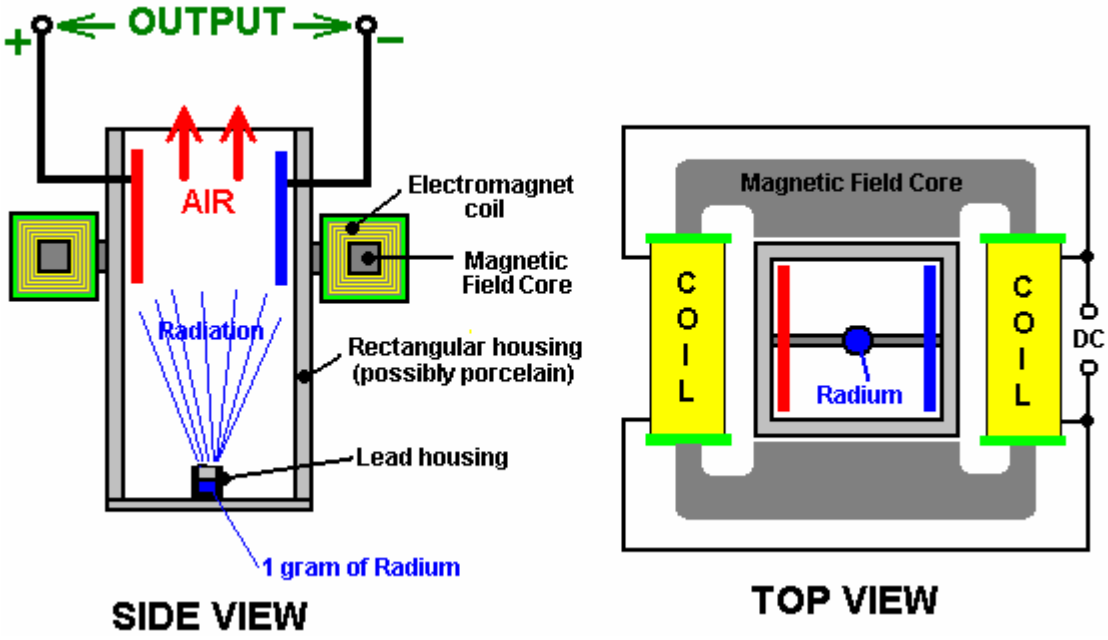

The variation of Tesla's device shown above, supports the lead container with its gram of radium on a strap across the bottom of the housing. The radiation ionises the air and the magnetic field separates the charges and directs them to opposite sides of the housing, to be collected and used via the electrode plates. There does not appear to be any reason why strong permanent magnets should not be used instead of the DC electromagnet shown.

Excerpt from the "Practical Guide to Free-Energy Devices" by Patrick Kelly, Part 8, pages 10 and 11. The full document is at www.web-space.tv/free-energy/index.html

Planetary Ion Concentration and Source Data

Almost all positive ("+") natural ions during fair weather come from radioactivity. About 40% of these natural air ions come from radioactive minerals in the ground. Each time a radioactive atom decays near the air, it typically ejects an energetic alpha particle, produces 50,000 - 500,000 air ion pairs as it travels a few cm through the air. Another 40% comes from radon in the air (which produces about 250,000 ion pairs for each radon atom), and 20% comes from cosmic rays (high-energy protons from distant supernovas). Indoors, ions "live" typically 30 seconds before touching a surface and shorting to ground. Outdoor ions usually "live" several minutes more. **Natural negative ions usually come from radioactivity and evaporating water.** Lightning, thunderstorms, and forest fires can contribute "+" and "-" ions, but these ions are not produced under everyday conditions.

Ions cannot be produced without an energy source. An “energy source” means, heat or flame, radioactivity, frictional rubbing, electricity, evaporation (which is a heat process), etc. Minerals that are not radioactive do not spontaneously emit ions. Normal fair-weather ion concentrations are 200 to 800 negative and 250 to 1500 positive ions per cubic centimeter. Indoor levels are usually lower. Several hours before a storm, +ion concentration will increase dramatically, sometimes exceeding 5000 ions per cubic centimeter (cm^3). During a storm, -ions increase to several thousand while +ions decrease, often to below 500.

Ions can also be produced by high-energy events, such as an open flame or a glowing hot object. Hot objects usually emit equal numbers of + and -ions. High DC voltage (over 1000 Volts), especially when connected to pointed metal edges or needles, will produce ions of the same polarity as the voltage source. This is the basis of electric ionizers. Evaporating water will produce - ions in the air and as a consequence leave +charges behind in the water that hasn't yet evaporated. If the excess +charges left behind are not conducted back to ground, the water will become + enough that -ion production will cease. For example, a fountain that has a motor that plugs into the wall will continuously produce -ions (until the water runs out) but a battery operated fountain will stop producing -ions after a few minutes if the fountain is well insulated from ground. The same is true of a battery-powered air ionizer. In general, for about every $3x10^{14}$ water molecules that evaporate, one water molecule carries an excess -charge.

Because a large concentration of +ions can attract -ions, high concentrations of + and -ions are often found together. Typically, a high concentration (1000 or more) of both may be found in one area outdoors while low concentration (300 or less) is found typically one city block away. A cloud of pure +ions (no -ions) with a concentration of 1000 ions/cm^3 would be very

unstable and would fall apart if its diameter were more than about 30m (100'). For this reason, high concentrations of exclusively + (or exclusively -) ions tend to be compact, and don't extend more than about 30m. The only exception is during storms, when strong atmospheric electric fields can maintain a high concentration of exclusively one ion polarity. Indoors, the concentration of ions can vary radically from place to place (even over a distance of less than a meter). This strong variation occurs because air mixing (circulation) is often poor or nonexistent indoors. For this reason, if for example a negative ionizer is used indoors, a fan is usually needed; otherwise, the ions may just stay within an invisible “cloud” that extends no more than 2m in front of the ionizer. **The resistivity of air (in ohm cm) is $6x10^{18}$ /N, where N is the number of ions/cc (whichever is lower of + or -). The "half-life" (in seconds) of charges on a charged object is approximately $T_{1/2} = 1.2x10^5$/N.**

The lifetime of "fast" ions (these are the most common type) is determined by how long they last before they collide with a solid (or dust) which usually neutralizes their charge. Indoors, electric fields are stronger than outdoors. Plastic surfaces charge to a typical potential of -1000 volts. This produces electric fields of 500-5000 volts per meter (V/m) near the plastic surface. The electric field repels negative ions (air molecules with an extra O- or OH-). The mobility of "fast" ions is about $1.2x10^{-4}$ m/s per V/m (meters/second per volt/meter of electric field). Therefore, in a typical electric field near charged plastic of 2000 V/m, fast -ions are repelled at a speed of 2000 x $1.2x10^{-4}$ = 0.24 m/s. Positive ions (air molecules with an extra H+ or positive ammonia molecule) are attracted to the plastic by the same field. Mobility of fast +ions is slightly lower (about $1x10^{-4}$ m/s per V/m) so they have a slightly slower speed. (**There are also "slow" ions, which literally travel slower** in a given electric field because they have a bigger volume [per amount of electric charge]. Typically these slow ions are much less common than fast ones. The Air Ion Counter detects both, and displays the total number of charges per cc in the air. However, the sensitivity to slow ions is about 50% low.) If +ions in the air touch negatively-charged plastic, the ions give up their +charge. This partially neutralizes the -charge on the plastic. Under typical conditions, 99% neutralization of the -charge on the plastic would occur in a few hours. However, dust blowing by will rub against the plastic and acquire a +charge. This dust carries the +charge away (ultimately to Earth ground). As a result, the plastic usually retains some negative charge. A good way to standardize (and lengthen) the lifetime of indoor ions is to put them in a large cardboard box. (Cardboard is actually somewhat conductive, so there is little electric field inside a box.) Average ion lifetime in a one cubic foot cardboard box is around 50 seconds, regardless of humidity, so if, for example, 4 pCi/L of radon is in the box, it will produce a continuous 1600 + ions/cm^3 in the box.

You can produce negative ions directly by rubbing cotton fabric (or your hair) against a plastic object, which will then briefly emit negative ions. You can use a plastic comb on your hair. If you then blow air past the comb, the air will have between 1000 and 10,000 -ions/cm^3 immediately next to the comb. The number

is lower in high humidity. Also, your breath contains about 20,000 to 50,000 -ions/cm^3 from the evaporating water, but you must be grounded to exhale a concentration this high. If you are insulated from ground, you will become more positively charged with each exhalation (by about five volts) because your breath is removing negative charge. Eventually, you will become sufficiently positive (after exhaling about 20 times), that the negative ions will immediately return to you. This is the same effect that occurs in building cooling systems that use an evaporating water tower. If not properly grounded, the water pump and vents will become very positive. (If the inside vents are isolated from the evaporating water via a heat exchanger, the vents may become very positive and produce a large number of +ions. This can be corrected simply by grounding the vent).

Indoors, near ground level or in the basement, most +ions come from radon gas, although solid elements such as thorium and uranium can also contribute if they are on the surface of the concrete or rock. The number of ions is directly proportional to radon concentration multiplied by average ion lifetime. (Strong electric fields indoors will reduce the ion lifetime.) Because it is unlikely that a high level of 1000 +ions/cm^3, (or 1.00 on the Air Ion Counter) can come from anything else other than radioactive decay, flame, smoke, or a hot electric heating element, it is probable that 1000 +ions/cm^3 in a basement signifies the presence of at least 4 pCi/L (picocuries per liter) of radon (2000 ions/cm^3 = 8 pCi/L, etc.) Four pCi/L is the maximum allowable amount in the U.S. If radon is the source of the ions, then the concentration of ions will be approximately equal throughout the basement. If, instead, it is +1000 near a water heater but only 100 +ions/cm^3 elsewhere, it is not radon, but instead it from a little exhaust from the water heater. A slightly higher concentration of +ions near cracks in the concrete foundation or near corners indicate the radon is coming in there. If the average +ion count is low (for example, less than 100), then there is essentially no radon present. It is not possible to "hide" the ions that radon produces. "No +ions" means "no radon".

Practical Guide to 'Free-Energy' Devices

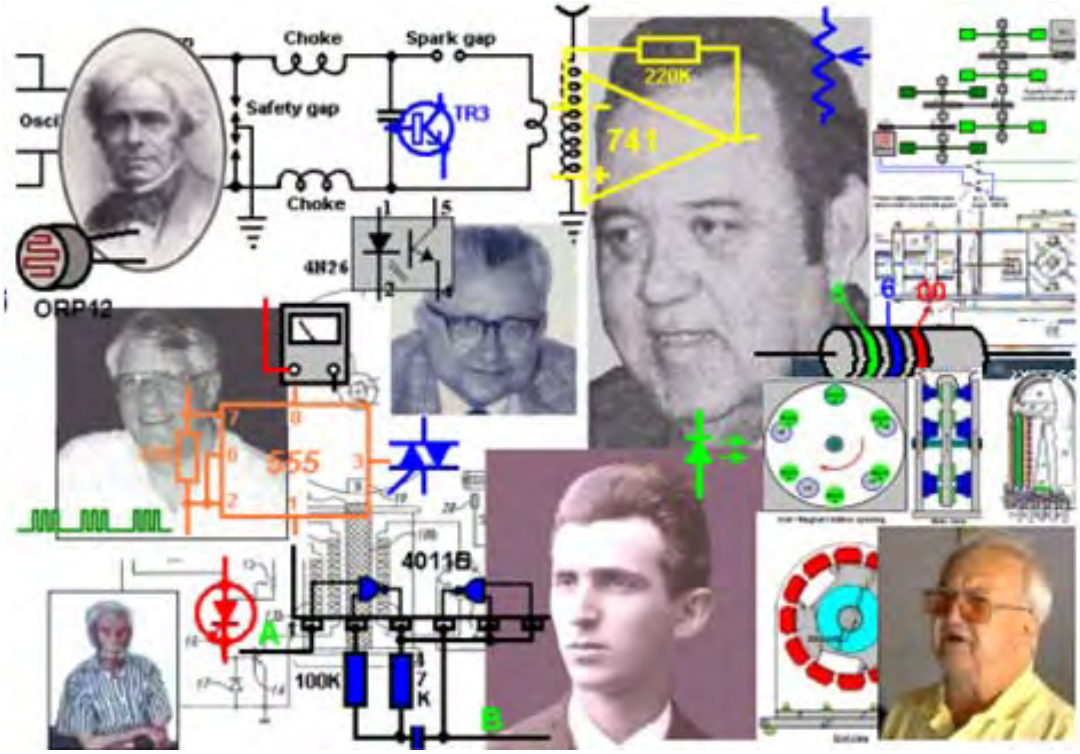

Author: Patrick J. Kelly

Version: 13.6 Release date: 5th January 2010

Preface

Here is a small amount of background information in order that you can understand the nature of this "***Practical Guide to Free-Energy Devices***".

I am just an ordinary person who became interested in "free-energy" as a result of a television programme entitled 'It Runs on Water' shown in the 1980s by a UK television company called 'Channel 4'. This programme has since been put on the internet and at this time can be seen at http://video.google.com/videosearch?q=It+Runs+On+Water#q=It%20Runs%20On%20Water&start=20. From my point of view, the content of this documentary seemed to be rather unsatisfactory as it suggested quite a number of very interesting things but gave no real hard and fast specifics for the viewer to follow up on to investigate the subject further. However, it had the enormous benefit of making me aware that there was such a thing as "free-energy".

My attempts to find out more were not very successful. I bought paper copies of several of Stan Meyer's hydroxy gas patents from the Patent Office in 1986 but while they were interesting, they did not provide much in the way of additional information. Searching on the internet at that time did not produce much more in the way of practical information. Things have changed dramatically since then and there has been an enormous increase in available information. But, even today, it is relatively difficult to find direct, useful and practical information on free-energy systems and techniques. Much of the information consists of chatty, lightweight articles describing people, events and inventions in vague, broad outline terms which are almost completely lacking in specifics.

These articles have the style of saying "There is a new invention called a 'bus' which is used to carry passengers from place to place. We saw one the other day, it was painted green and blue and looked most attractive. It is driven by Joe Bloggs who wears an engaging smile and a hand-knitted sweater. Joe says that even his children could drive a bus as it is so easy to do. Joe expects to retire in six months time as he is going to take up gold prospecting." While I'm sure that an article like that is interesting, the sort of description which I would want would be: "There is a new invention called a 'bus' which is used to carry passengers from place to place. We saw one the other day, and were very impressed as it has seats for some forty-five people. It has bodywork made of pressed aluminium, a wheel at each corner of its considerable 40' x 10' structure, a five litre diesel engine made by the Bosworth Engineering Company of Newtown, and has power-assisted steering, hydraulic brakes and ……".

There are also many articles, scientific papers and books which, quite frankly, I am not able to understand as the authors think mathematically and express themselves in equations (where they frequently do not define the terms which they use in their equations, making them effectively meaningless). I do not think in mathematical equations, so I do not share in this much higher level of thinking and analysis, though I do have some of these papers on my web site for the benefit of visitors who do have the ability to understand them easily.

After a long period of searching and investigating I was beginning to gather enough information to be fairly confident of what was being done, what had already been achieved, and some of the possible background reasons for the effects which were being observed. Early in 2005 I decided that as I had encountered so much difficulty and had to put in so much effort to find out the basics of "free-energy" that it could be helpful to others if I shared what I had found out. So I wrote the first edition of this presentation and created a simple web site to make it available to others. Of course, this body of information is not static – on the contrary, it is very fast-moving. Consequently, this information digest is updated and refined typically once or twice per week. The present form of presentation is the third style of layout which has been used as the volume of material has increased.

It should be stressed that this information is what I have discovered as part of my interest in the subject and is mainly a reporting on what is being said by other people. I have not built and proved every device described – to do that would take many lifetimes, so please understand that this is just an attempt to aid your own investigation. While it can be proved that some device works as described, through independent replication and verification, the reverse is not true. If someone were to build a device and fail to get it to work as described, then the most that can honestly be said is that an unsuccessful attempt was made to replicate

it. It does not, of course, show that the original device did not operate exactly as described, just that the (possibly inept) attempt at replication, was not successful. In some instances, you will see that I have expressed the opinion that the device is not viable, or, as in the case of the 'Nitro Cell' that I do think that it does work, but as many people have tried to build it and failed to get the results described, that it can't be recommended as an investigation project.

I do not suggest that this set of information covers every possible device, nor that my description is by any means the complete and definitive statement of everything to be known on the subject. The old saying applies here: "If you think you know all the answers, then you just haven't heard all the questions!" So, this material is just an introduction to the subject and not an encyclopaedia of every known device.

I should like to thank the very large number of people who have most kindly given me their permission to reproduce details of some of their work, providing photographs, checking what I have written, suggesting additions, etc. Also those kind people who have given me permission to reproduce their own works directly on my web sites or in my documents. There seems to be a common thread of concern among many people that shows as a desire to share this information freely rather than to try to make money from selling it, and I thank these people for their generosity.

Many people hold "conspiracy theory" views and believe that there is a concerted effort to suppress this information, and more especially, to prevent free-energy devices reaching the market. Personally, I think that the bulk of this opposition is just the normal reaction of vested commercial interests. If you were making a profit of literally millions per hour, would you welcome the introduction of a system which would eventually cut your income to zero? If not, then how much would you be willing to pay someone to make sure that the present system is never changed – a million? A billion? While this opposition is definitely there and people who stand to lose money and/or power through change will continue to oppose this knowledge, and to a much greater extent, the introduction of any commercial free-energy device, this is not something which I feel is immediately relevant to this presentation, and so almost the entire focus of the information is on devices – what they do, how they are made and how they may operate when they draw additional energy from the local environment.

Let me stress again, that this set of information is not by any means the final word on the subject, but just an introduction to the subject by a single person who makes no claims to knowing all the answers. Enjoy your research – I hope you are successful in every respect.

Patrick Kelly

April 2008

A Practical Guide to 'Free-Energy' Devices

Contents

Chapter 1: Magnet Power
Overview and Introduction ..... 1 - 1
The Shen He Wang permanent magnet motor-generator ..... 1 - 2
The Bedini permanent magnet motor ..... 1 - 9
The Ecklin-Brown generator ..... 1 - 27
The Phi-Transformer generator ..... 1 - 31
The Dave Squires variation of the Phi-Transformer ..... 1 - 31
The Garry Stanley motor arrangement ..... 1 - 33
The Howard Johnson magnet motor ..... 1 - 34
The 'Carousel' permanent magnet motor ..... 1 - 37
The Robert Tracy permanent magnet motor ..... 1 - 39
The Ben Teal electromagnet motor ..... 1 - 39
The Jines permanent magnet motor ..... 1 - 41
The Invention Intelligence permanent magnet motor ..... 1 - 42
The Stephen Kundel permanent magnet motor ..... 1 - 43
Charles Flynn's permanent magnet motor ..... 1 - 26
Steorn's Magnet Motor ..... 1 - 53
Asymmetrical Magnet Motor ..... 1 - 55
Magnetic lines of force from a standard bar magnet ..... 1 - 58
Dr Steele Braden's Magnet Motor ..... 1 - 59
David Cunningham's Magnet Motor ..... 1 - 62
Emil Hartman's Magnetic Track ..... 1 - 63
Howard Johnson's Magnetic Track ..... 1 - 64
James Roney's Shielded Stator Magnets ..... 1 - 65
Twin Shielded Rotor Idea ..... 1 - 68
Donald Kelly's Magnet Motor ..... 1 - 70
Mike Brady's Perendev Magnet Motor ..... 1 - 78

Chapter 2: Moving Pulsed Systems
The Adams Motor ..... 2 - 1
The Kromrey No-Drag Electrical Generator ..... 2 - 17
The Teruo Kawai Motor ..... 2 - 25
Self-Powered Water-jet 800 watt Generator ..... 2 - 27
The Muller Motor ..... 2 - 28
The RotoVerter ..... 2 - 33
Phil Wood's DC Motor RV Control System ..... 2 - 39
David Kousoulides' Power Recovery System ..... 2 - 41
Thyristor Test Equipment ..... 2 - 47
Phil Wood's Power Recovery System ..... 2 - 48
Lawrence Tseung's COP = 3.3 Unbalanced Rotor ..... 2 - 53
Alternator Design Details ..... 2 - 53

Chapter 3: Motionless Pulsed systems
Graham Gunderson's Solid-State Electric Generator ..... 3 - 1
Charles Flynn's devices ..... 3 - 9
Stephan W. Leben's device ..... 3 - 10
Floyd Sweet's VTA ..... 3 - 12
Dan Davidson's Acoustically-coupled Generator ..... 3 - 14
Pavel Imris' Optical Generator ..... 3 - 14
Michael Ognyanov's Self-powered Power Pack ..... 3 - 17
The Michael Meyer and Yves Mace Isotopic Generator ..... 3 - 18
The Colman / Seddon-Gilliespie Generator ..... 3 - 20
Hans Coler's "Stromerzeuger" ..... 3 - 21
Don Smith's Magnetic Resonance System ..... 3 - 22
Kwang-jeek Lee's Power Amplification System ..... 3 - 47
Tariel Kapanadze's Self-powered Device ..... 3 - 64

Chapter 4: Gravitational Pulsed Systems

Lawrence Tseung's Gravity Impact wheel ..... 4 - 1
The Chas Campbell System ..... 4 - 2
The Ted Ewert Cut Motor ..... 4 - 8
The Bedini Pulsed Flywheel ..... 4 - 9
The Water-jet Generator ..... 4 - 10
Gravitational Effects ..... 4 - 11
The Dale Simpson Gravity Wheel ..... 4 - 13
The Veljko Milkovic Pendulum / Lever system ..... 4 - 15
The Dale Simpson Hinged-Plate System ..... 4 - 16
The Murilo Luciano Gravity Chain ..... 4 - 18
Ivan Monk's Rotary Power Unit ..... 4 - 26

Chapter 5: Energy-Tapping Pulsed Systems

Frank Prentice's horizontal wire system ..... 5 - 1
Dave Lawton's Water Fuel Cell ..... 5 - 3
John Bedini's Battery Pulse-Charger ..... 5 - 4
The Tesla Switch ..... 5 - 5
Bob Boyce's Toroid ..... 5 - 36
Don Smith's device ..... 5 - 37
Steven Mark's TPU ..... 5 - 39
The Ed Gray Power Tube ..... 5 - 46
Tesla's Experiments ..... 5 - 51
The Alberto Molina-Martinez Generator ..... 5 - 58
The Hubbard Self-powered Generator ..... 5 - 58
The Joseph Cater Self-powered Generator ..... 5 - 61
Floyd Sweet's VTA ..... 5 - 69
Collapsing Field Technology Self-powered Generators ..... 5 - 71

Chapter 6: Battery-Charging Pulsed Systems

Bedini Pulsing ..... 6 - 1
Ron Pugh's Charger ..... 6 - 3
The Self-charging Variation ..... 6 - 16
The Re-wired Fan Charger ..... 6 - 18
The Automotive Relay Charger ..... 6 - 19
The Self-charging Motor ..... 6 - 21
The Ron Cole One-Battery Charger ..... 6 - 22
The Tesla Switch ..... 6 - 23

Chapter 7: Aerial Systems

Nikola Tesla's System ..... 7 - 1
Thomas Henry Moray's System ..... 7 - 9
Herman Plauston's System ..... 7 - 25
Roy Meyer's System ..... 7 - 27
Raymond Phillips' RF System ..... 7 - 28

Chapter 8: Fuel-less Engines

The Bob Neal Engine ..... 8 - 1
The Leroy Rogers Engine ..... 8 - 12
The Vortex Tube ..... 8 - 28
The Eber Van Valkinburg Engine ..... 8 - 29
The Clem Engine ..... 8 - 33
The Papp Engine ..... 8 - 51
The Robert Britt Engine ..... 8 - 91
The Michael Eskeli Turbine ..... 8 - 103
The Water-pump Generator ..... 8 - 122
The Cahill & Scott Generator ..... 8 - 123

Chapter 9: Passive Systems

Hans Coler device ..... 9 - 1
Thomas Trawoeger's pyramid ..... 9 – 3
Peter Grandics' pyramid ..... 9 - 20
The Joe Cell ..... 9 - 22
Co-axial Cable Electrets ..... 9 - 49

Chapter 10: Vehicle Systems

Booster design ..... 10 – 1
Bubbler design ..... 10 - 15
The Smack's booster ..... 10 - 17
The Hotsabi booster ..... 10 - 17
The Zach West booster ..... 10 - 18
The DuPlex booster ..... 10 - 18
The Bob Boyce DC electrolyser ..... 10 - 19
Dave Lawton's water-splitter ..... 10 - 20
Stan Meyer's water-splitter ..... 10 - 23
Dr Cramton's water-splitter ..... 10 - 39
Bob Boyce's water-splitter ..... 10 - 44
Resonant frequency control systems ..... 10 - 46
Water-injection systems ..... 10 - 47
Spark timing adjustments ..... 10 - 53
Waste spark ..... 10 - 55
Peter Lowrie’s hydroxy system ..... 10 - 60
Ted Ewert’s Vortex Tube ..... 10 - 61
Cam timing ..... 10 - 66
The FireStorm spark plug ..... 10 - 67
The Water Vapour Injection system ..... 10 - 68
Fuelsavers ..... 10 - 70
The Ram Implosion wing ..... 10 - 71
Vortex Fuel Reforming ..... 10 - 72
The Weird Nature of Water ..... 10 - 74

Chapter 11: Other devices

The Tesla Generators ..... 11 - 1
The Aspden Device ..... 11 - 3
Paulo & Alexandra Correa ..... 11 - 15
Professor Konstantin Meyl ..... 11 - 16
Tesla’s MHD unit ..... 11 - 16
The Unified Field Theory ..... 11 - 18
Tesla’s Dynamic Theory of Gravity ..... 11 - 20
John R. R. Searle ..... 11 - 22
The Gravity Wave Detector ..... 11 - 23
The Butch Lafonte Motor / Generator ..... 11 - 25
The Joseph Newman’s COP = 8 Device ..... 11 - 30
Daniel Cook’s Induction Coil ..... 11 - 41
Michael Eskeli’s Fuel-less Heater ..... 11 - 43
Karl Schappeller’s Free-energy Device ..... 11 - 54
Condensation-Induced Water Hammer ..... 11 - 65
William Hyde's COP = 10 Electrostatic Power Generator ..... 11 - 66

Chapter 12: Electronics tutorial

Voltage ..... 12 - 1
Resistance ..... 12 - 2
Semiconductors - Transistors ..... 12 - 10
Diodes ..... 12 - 15
Alternating Current ..... 12 - 17
Coils (Inductors) ..... 12 - 17
The Ben Teal Motor ..... 12 - 19
Transformers ..... 12 - 21
Rectification and Power Supplies ..... 12 - 22
Multivibrators ..... 12 - 26
The Bistable ..... 12 - 26
The Monostable ..... 12 - 27
The Astable ..... 12 - 28
Inverters ..... 12 - 29
Digital Logic and Truth Tables ..... 12 - 29
The NAND gate and Gating ..... 12 - 31
The Latch ..... 12 - 34

The NE555 Timer Chip ..... 12 - 38
The 741 Op-amp Chip ..... 12 - 42
The SCR ..... 12 - 46
The Triac ..... 12 - 47
The 4022 Divide-By-Eight Chip ..... 12 - 48
Capacitors ..... 12 - 49
Prototype Construction ..... 12 - 51
Test Equipment ..... 12 - 54
Power Supply Unit ..... 12 - 59
The Oscilloscope ..... 12 - 60
The Weird Stuff ..... 12 - 62

Chapter 13: Doubtful devices
Paul Baumann's "Thestakia" ..... 13 - 1
The Homopolar or "N-Machine" ..... 13 - 4
The "Romag" and "Mini-Romag" Generators ..... 13 - 6
Cold Fusion ..... 13 - 9
Moller's Atomic Hydrogen Generator ..... 13 - 9
Muammer Yaldiz's "Ocean Star" Electrical Generator ..... 13 - 11
Jesse McQueen ..... 13 - 17
The Nitro Cell ("D18") ..... 13 - 20
The HydroStar and HydroGen ..... 13 - 38
Hydrogen from Aluminium ..... 13 - 41
Francois Cornish ..... 13 - 42
Ultrasonic water-splitting ..... 13 - 43
The MEG ..... 13 - 43
Dave Lawton's assymetric MEG variation ..... 13 - 45
Valeri Ivanov's Motionless Generator ..... 13 - 46

Chapter 14: Renewable Energy devices
Heaters ..... 14 - 1
Sang Nam Kim's hydroxy heaters ..... 14 - 3
Eugene Frenette ..... 14 - 5
Eugene Perkins ..... 14 - 6
Disc Heater ..... 14 - 8
The Peter Davey Heater ..... 14 - 9
Home-build Wind Generator ..... 14 - 12
Frank Herbert's Wind Generator ..... 14 - 24
Mead and Holmes Power System ..... 14 - 26
Solar Ovens ..... 14 - 26
Solar Water Pasteurisation ..... 14 - 47
Drinking Water Systems ..... 14 – 52
Solar Water Stills ..... 14 – 54
Sonic Water Pumps ..... 14 – 56
The Ram Pump ..... 14 – 59
Wave Power ..... 14 – 61
Solar Icemaker ..... 14 – 64
Cooling Using Heat ..... 14 – 65
Solar Panels ..... 14 – 67

Chapter 15: The Time Remaining
Astronomical Events ..... 15 - 1
New World Order Financial Attack ..... 15 - 14
New World Order Biological Attack ..... 15 - 42
A Simple Home-Made Remedy ..... 15 - 45

Final comments
An attempted response to the frequently asked question "What should I choose to build?"

Appendix

US and UK Wire sizes and capacities ..... A -1
Frank Fecera's permanent magnet motor patent ..... A - 2
Howard Johnson's permanent magnet motor patent ..... A - 46
Harold Ewing's Carousel permanent magnet-generator patent ..... A - 56
The Pavel Imris minimal power lighting system patent ..... A - 74
The Colman/Seddon-Gillespie 70-year battery patent ..... A - 83
The Jon Sok An Lenz-less electrical generator patent ..... A - 87
The Molina Martinez self-powered electrical generator patent ..... A - 100
Michael Ognyanov's solid-state electrical generator patent ..... A - 113
Edwin Gray's electric motor patent ..... A - 119
Edwin Gray's electric power supply patent ..... A - 142
The Adams-Aspden electrical motor-generator patent ..... A - 148
William Barbat's self-powered electrical generator patent ..... A - 164
John Reardon's AC generator patent ..... A - 196
Geoffrey Spence's self-powered electrical generator patent ..... A - 213
Robert Alexander's COP = 2.93 electrical generator patent ..... A - 228
Shigeaki Hayasaka's electrical generator patent ..... A - 236
Larry Jamison's electrical generator patent application ..... A - 252
Teruo Kawai's COP>1 electric motor patent ..... A - 259
Joseph Newman's Energy Generator patent ..... A - 280
Philip Brody's very high output ceramic solar devices patent ..... A - 298
Charles Flynn's controlled magnetic devices patent ..... A - 338
The **M**otionless **E**lectromagnetic **G**enerator patent ..... A - 411
Dan Davidson's acoustic-magnetic electrical generator patent ..... A - 427
John Bedini's battery-charging patent ..... A - 434
John Bedini's motor-generator patent ..... A - 445
John Bedini's pulse-charging system patent ..... A - 456
Richard Weir and Carl Nelson's battery replacement patent ..... A - 470
Hermann Plauston's aerial power systems patent ..... A - 485
Roy Meyers' Electricity-producing device patent ..... A - 524
Paulo and Alexandra Correa's free-electricity patent ..... A - 532
Paulo and Alexandra Correa's energy conversion patent ..... A - 561
The Mead-Nachamkin ZPE to electricity conversion patent ..... A - 603
Stanley Meyer's Water Fuel patent 4,936,961 ..... A - 620
Stanley Meyer's hydrogen injection system for vehicles patent 4,389,981 ..... A - 627
Stanley Meyer's hydrogen gas burner patent 4,421,474 ..... A - 637
Stanley Meyer's hydrogen generation and enhancement patent 5,149,407 ..... A - 642
Stanley Meyer's water fuel generator patent CA 2,067,735 ..... A - 659
Stanley Meyer's WFC control circuitry patent WO 92/07861 ..... A - 670
Stephen Meyer's water-splitting patent application 2005/0246059 ..... A - 680
Henry Puharich's water-splitting patent 4,392,230 ..... A - 689
Shigeta Hasebe's spiral electrolyser patent ..... A - 719
Stephen Chambers' hydroxy generator patent (Xogen Power Inc.) ..... A - 725
Charles Garrett's water carburettor patent ..... A - 740
Archie Blue's electrolyser patent ..... A - 748
Ruggero Santilli's plasma arc electrolysis patent ..... A - 754
Chak Chang's low-voltage low-temperature plasma patent application ..... A - 764
Juan Aguero's water-engine patent application ..... A - 823
Stephen Horvath's water-powered car patent ..... A - 830
Christopher Eccles' water-splitting cell patent ..... A - 857
Spiro Spiros' COP>1 electrolyser patent ..... A - 864
Henry Paine's hydroxy gas conversion patent ..... A - 901
Boris Volfson's gravity drive patent ..... A - 904
Charles Pogue's first high-mpg carburettor patent ..... A - 919
Charles Pogue's second high-mpg carburettor patent ..... A - 927
Charles Pogue's third high-mpg carburettor patent ..... A - 932
Ivor Newberry's high-mpg carburettor patent ..... A - 940
Robert Shelton's high-mpg carburettor patent ..... A - 945
Harold Schwartz's high-mpg carburettor patent ..... A - 949
Oliver Tucker's high-mpg carburettor patent ..... A - 952
Thomas Ogle's high-mpg carburettor patent ..... A - 955
Stephen Kundel's permanent magnet motor ..... A - 968
Charles Flynn's permanent magnet motor ..... A - 992
Claude Mead and William Holmes' wind power storage system ..... A - 1021

Mark McKay's investigation into Edwin Gray's technology …… A - 1028
Web links to Scientific Papers ..... A - 1089
Web links to Videos ..... A - 1090

Alphabetical Index of Devices

AC generator patent, John Reardon ..... A - 196
Acoustic Electrical Generator, Dan Davidson ..... 3 - 18
Acoustic-magnetic electrical generator patent, Dan Davidson ..... A - 427
Acoustic water pumps: Bellocq, Dickinson and Benson ..... 14 - 56
Aerial power systems patent, Hermann Plauston ..... A - 485
Aerial system, Frank Prentice ..... 5 - 1
Aerial system, Hermann Plauston ..... 7 - 25
Aerial system, Nikola Tesla ..... 7 – 1
Aerial system, Raymond Phillips ..... 7 - 28
Aerial system, Roy Meyers ..... 7 - 27
Aerial system, Thomas Henry Moray ..... 7 - 9
Air Vortex Turbine, Ted Ewert ..... 10 - 61
Alternator design, Prof. Kevin Sullivan ..... 2 - 53
Aspden Effect, Harold Aspden ..... 5 - 51
Asymmetrical Magnet Motor ..... 1 - 55
Asymmetrical Motionless Generator, Dave Lawton ..... 13 - 45
Atomic Hydrogen generator, William Lyne ..... 13 - 9
Automotive Relay battery pulser, Imhotep ..... 6 - 21
Battery-charging patent, John Bedini ..... A - 434
Battery-pulser, John Bedini ..... 5 - 4
Battery-pulser, John Bedini ..... 6 - 1
Battery-pulser, Ron Pugh ..... 6 - 3
Battery replacement patent, Richard Weir and Carl Nelson ..... A - 470
Battery technology, Ronald Knight ..... 6 - 3
Bi-filar Coil, Nikola Tesla ..... 5 - 51
Boosters, Various ..... 10 - 1
Britt Engine ..... 8 - 91
Capacitor Battery Pulser, Ron Cole ..... 6 - 22
Caravan Power System, Claude Mead and William Holmes ..... 14 - 25
Car relay pulse charger, Imhotep ..... 6 - 19
Clem engine, Richard Clem ..... 8 - 22
Co-axial Cable Electrets ..... 9 - 49
Cold electricity capture, Dave Lawton ..... 5 - 10
Collapsing Field Technology ..... 5 - 71
Compressed-air engine, Bob Neal ..... 8 - 1
Compressed-air engine, Leroy Rogers ..... 8 - 12
Compressed-air tank, Scott Robertson ..... 8 - 10
Compressed-air/oil engine, Eber Van Valkenburg ..... 8 - 29
Controlled magnetic devices patent, Charles Flynn ..... A - 338
COP = 2.93 electrical generator patent, Robert Alexander ..... A - 228
COP>1 electric motor patent, Teruo Kawai ..... A - 259
COP>1 electrolyser patent, Spiro Spiros ..... A - 864
Davey water heater, Peter Davey ..... 14 - 21
Drinking Water Systems ..... 14 - 52
Electrets ..... 9 - 49
Electrical energy from air, Nikola Tesla ..... 11 - 1
Electrical free-energy generation, Harold Aspden ..... 11 - 3
Electrical generator, Alfred Hubbard ..... 5 - 58
Electrical generator, Arthur Cahill & John Scott ..... 8 - 123
Electrical generator, Joseph Cater ..... 5 - 61
Electrical generator, Alberto Molina-Martinez ..... 5 - 58
Electrical generator, Ecklin-Brown ..... 1 - 29
Electrical generator, Graham Gunderson ..... 3 - 1
Electrical generator patent application, Larry Jamison ..... A - 252
Electrical generator, Meyer-Mace ..... 3 - 20
Electrical generator, Raymond Kromrey ..... 2 - 17
Electrical generator, self-powered ..... 2 - 27
Electrical generator patent, Shigeaki Hayasaka ..... A - 236
Electrical generator coil, Stephen Mark ..... 5 - 39
Electrical motor-generator patent, Adams-Aspden ..... A - 148
Electrical power amplification system, Kwang-jeek Lee ..... 3 - 47
Electrical power pack, Michael Ognyanov ..... 3 - 17

Electricity-producing device patent, Roy Meyers ..... A - 524
Electric motor, Ben Teal ..... 1 - 39
Electric motor, Ben Teal ..... 4 - 5
Electric motor patent, Edwin Gray ..... A - 119
Electrical motor, Bill Muller, ... 2 - 28
Electrical motor, Edwin Gray ..... 5 - 46
Electric motor, Robert Adams ..... 2 - 1
Electric motor, Teruo Kawai ..... 2 - 25
Electric power supply patent, Edwin Gray ..... A - 142
Electrolyser, Bob Boyce ..... 5 - 36
Electrolyser, Bob Boyce ..... 10 - 19
Electrolyser, Bob Boyce ..... 10 - 45
Electrolyser, Peter Lowrie ..... 10 - 60
Electrolyser, Zach West ..... 10 - 18
Electrolyser patent, Archie Blue ..... A - 748
Electrostatic Power Generator, William Hyde ..... 11 - 66
Energy-conversion patent, Paulo and Alexandra Correa ..... A - 561
Energy Generator patent, Joseph Newman ..... A - 280
Fan Battery Pulser, Imhotep ..... 6 - 18
FireStorm spark plug, Robert Krupa ..... 10 - 67
Francois Cornish hydrogen generator ..... 13 - 40
Free-electricity patent, Paulo and Alexandra Correa ..... A - 532
Free-energy device, Karl Schappeller ..... 11 - 53
Fuelsavers ..... 10 - 70
GEET fuel re-former system, Paul Pantone ..... 10 - 72
Gravity-chain device, Murilo Luciano ..... 4 - 18
Gravity drive patent, Boris Volfson ..... A - 904
Gravity-tapping generator, Chas Campbell ..... 4 - 2
Gravity Wave Detector, Dave Lawton ..... 11 - 21
Gravity wheel, Dale Simpson ..... 4 - 13
Gravity wheel, Lawrence Tseung ..... 4 - 1
Heater, Fuel-less, Michael Eskeli ..... 11 - 42
Heaters ..... 14 - 1
High-mpg carburettor patent, Charles Pogue ..... A - 919
High-mpg carburettor patent, Charles Pogue ..... A - 927
High-mpg carburettor patent, Charles Pogue ..... A - 932
High-mpg carburettor patent, Harold Schwartz ..... A - 949
High-mpg carburettor patent, Ivor Newberry ..... A - 940
High-mpg carburettor patent, Oliver Tucker ..... A - 952
High-mpg carburettor patent, Robert Shelton ..... A - 945
High-mpg carburettor patent, Thomas Ogle ..... A - 955
Hinged-plate gravity device, Dale Simpson ..... 4 - 16
Homopolar generator, Michael Faraday ..... 13 - 4
Hotsabi booster, "Hotsabi" ..... 10 - 17
Hydraulic Ram Pump ..... 14 - 59
Hydrogen from Aluminium ..... 13 - 41
Hydrogen gas burner patent 4,421,474, Stanley Meyer ..... A - 637
Hydrogen generation and enhancement patent 5,149,407, Stanley Meyer ..... A - 642
Hydrogen injection system for vehicles patent 4,389,981, Stanley Meyer ..... A - 627
HydroStar and HydroGen devices ..... 13 - 38
Hydroxy gas conversion patent, Henry Paine ..... A - 901
Hydroxy generator patent, Stephen Chambers ..... A - 725
Hydroxy-burning heaters ..... 14 - 3
Induction Coil generator, Daniel Cook ..... 11 - 29
Inert-gas engine, Josef Papp ..... 8 - 23
Inert-gas engine, Robert Britt ..... 8 - 60
Inverter system, Jesse McQueen ..... 13 - 17
Joe Cell, Joe Nobel ..... 9 - 14
Joseph Newman Motor, Joseph Newman ..... 11 - 29
Lead-out energy, Lawrence Tseung ..... 4 - 1
Lenz-less electrical generator patent, Jon Sok An ..... A - 87
Long-life battery, Colman / Seddon-Gillespie ..... 3 - 20
Low-voltage low-temperature plasma patent application, Chak Chang ..... A - 764
Magnet motor-generator, permanent 5kW, Shen He Wang ..... 1 - 27
Magnet motor, Bedini ..... 1 - 27

Magnet motor, Carousel ..... 1 - 37
Magnet-generator patent, Carousel ..... A - 56
Magnet motor patent, Charles Flynn ..... 1 - 44
Magnet motor patent, David Cunningham ..... 1 - 62
Magnet motor patent, Frank Fecera ..... A – 2
Magnet motor, Garry Stanley ..... 1 - 33
Magnet motor, Howard Johnson ..... 1 - 34
Magnet motor patent, Howard Johnson ..... A - 46
Magnet motor, Invention Intelligence (India) ..... 1 - 42
Magnet motor, John Jines ..... 1 - 41
Magnet motor, Donald Kelly ..... 1 - 70
Magnet motor, Perendev (Mike Brady) ..... 1 - 78
Magnet motor, Robert Tracy ..... 1 - 39
Magnet motor, Steele Braden ..... 1 - 59
Magnet motor, Steorn ..... 1 - 53
Magnet motor, Stephen Kundel ..... 1 - 43
Magnet motor, Twin Rotor proposal ..... 1 - 68
Magnetic Conversion, Don Smith ..... 3 - 22
Magnetic Conversion, Don Smith ..... 5 - 37
Magnetic flux, Charles Flynn ..... 3 - 8
Magnetic track, Emil Hartman ..... 1 - 63
Magnetic track, Howard Johnson ..... 1 - 64
Magnetohydrodynamic drive, Nikola Tesla ..... 11 - 17
MEG, Tom Beardon et al. ..... 13 - 43
Motionless Generator of Valeri Ivanov ..... 13 - 46
Minimal power lighting system patent, Pavel Imris ..... A - 74
Motionless **E**lectromagnetic **G**enerator patent ..... A - 411
Motor-generator, Butch Lafonte ..... 11 - 23
Motor-generator patent, John Bedini ..... A - 445
Muller Motor, Bill Muller ..... 2 - 28
N-machine generator, Michael Faraday ..... 13 - 2
Neal Compressed-air Engine ..... 8 - 1
Nitro Cell ..... 13 - 20
Ocean-Star generator, Muammer Yaldiz ..... 13 - 11
Optical Amplifier, Pavel Imris ..... 3 - 14
Pancake Coil, Nikola Tesla ..... 5 - 51
Pendulum/lever device, Veljko Milkovic ..... 4 - 15
Phi Transformer, electrical generator ..... 1 - 31
Plasma arc electrolysis patent, Ruggero Santilli ..... A - 754
Power Recovery System - David Kousoulides ..... 2 - 41
Power Recovery System - Phil Wood ..... 2 - 48
Power System for Caravans, Mead and Holmes ..... 14 - 25
Power tube, Edwin Gray (Marvin Cole) ..... 5 - 46
Pulse-charging system patent, John Bedini ..... A - 456
Pulsed DC Motor, Ted Ewert ..... 4 - 6
Pulsed flywheel generator, Chas Campbell ..... 4 - 1
Pulsed flywheel generator, John Bedini ..... 4 - 8
Pulsed flywheel generator, Jim Watson ..... 4 - 7
Pulsed flywheel generator, Lawrence Tseung ..... 2 - 53
Pulsed generator, Joseph Newman ..... 4 - 8
Pyramid, James Brock ..... 9 - 15
Pyramid, Paulo and Alexandra Correa ..... 11 - 15
Pyramid, Peter Grandics ..... 9 - 19
Pyramid, Thomas Trawoeger ..... 9 - 3
Radium power generation, Nikola Tesla ..... 11 – 2
RF aerial to DC power, Raymond Phillips ..... 7 - 28
Ram Implosion Wing, Robert Patterson ..... 10 - 70
Ram Pump ..... 14 - 59
Refrigeration through heating, Albert Einstein ..... 14 - 65
Romag generator, Magnetic Energy ..... 13 - 6
Rotary Power Unit, Ivan Monk ..... 4 - 26
RotoVerter, Hector Torres, ... 2 - 33
RotoVerter, Phil Wood, ... 2 - 39
RotoVerter, Extra energy collection (DK), ... 2 - 41
RotoVerter, Extra energy collection (PW), ... 2 - 48

Searle Effect Device, John R. R. Searle ..... 11 - 21
Self-powered water-jet electrical generator ..... 2 - 27
Self-powered water-jet electrical generator ..... 8 - 122
Self-powered electrical generator patent, Geoffrey Spence ..... A - 213
Self-powered electrical generator patent, Molina Martinez ..... A - 100
Self-powered electrical generator patent, Tariel Kapaladze ..... 3 - 64
Self-powered electrical generator, TheGuru2You ..... 3 - 10
Self-powered electrical generator patent, William Barbat ..... A - 164
Seventy-year battery patent, Coleman/Seddon-Gillespie ..... A - 83
Shielded stator magnets, James Roney ..... 1 - 65
Smack's Booster, Eletrik ..... 10 - 17
Solar ovens, BYU ..... 14 - 23
Solar panels ..... 14 - 68
Solar Still Water-makers ..... 14 – 52
Solid-state electrical generator patent, Michael Oyganov ..... A - 113
Spiral electrolyser patent, Shigeta Hasebe ..... A - 719
Squires electrical generator design ..... 1 - 32
Stromerzeuger, Hans Coler ..... 3 - 21
Stromerzeuger, Hans Coler ..... 9 - 1
Tesla Coil, Nikola Tesla ..... 5 - 35
Tesla Coil, Correas ..... 11 - 15
Tesla Coil, Don Smith ..... 3 - 22
Tesla Switch, Nikola Tesla ..... 5 - 5
Tesla Switch, Nikola Tesla ..... 6 - 23
Testatika, Paul Baumann ..... 13 - 1
Thyristor Tester, circuit, ... 2 - 47
Toroidal Power Unit, Bob Boyce ..... 5 - 36
Toroidal Power Unit, Stephen Mark ..... 5 - 37
Turbine, Michael Eskeli ..... 8 - 103
Ultrasonic hydrogen generator ..... 13 - 43
Very high output ceramic solar devices patent, Philip Brody ..... A - 298
Vortex Fuel Reformers, ... 10 - 72
Vortex tube, ... 8 - 28
VTA, Floyd Sweet ..... 3 - 12
VTA, Floyd Sweet ..... 5 - 69
Waste spark handling ..... 10 - 55
Water carburettor patent, Charles Garrett ..... A - 740
Water-engine patent application, Juan Aguero..... A - 823
Water Fuel Cell, Dr Scott Cramton ..... 10 - 39
Water Fuel Cell, Dave Lawton ..... 5 - 3
Water Fuel Cell, Dave Lawton ..... 10 - 20
Water fuel generator patent CA 2,067,735, Stanley Meyer ..... A - 659
Water Fuel patent 4,936,961, Stanley Meyer ..... A - 620
Water-jet self-powered 800 watt generator ..... 2 - 27
Water-jet self-powered 800 watt generator ..... 8 - 122
Water-maker, Calice Courneya ..... 14 - 56
Water-maker, Elmer Grimes ..... 14 – 55
Water-makers ..... 14 – 52
Water Heater, Peter Davey ..... 14 - 9
Water Acoustic Pump, Toribio Bellocq ..... 14 - 56
Water Acoustic Pump, Richard Dickinson ..... 14 - 57
Water Acoustic Pump, Arthur Bentley ..... 14 - 58
Water-powered car patent, Stephen Horvath..... A - 830
Water-splitting cell patent, Christopher Eccles ..... A - 857
Water-splitting patent application 2005/0246059, Stephen Meyer ..... A - 680
Water-splitting patent 4,392,230, Henry Puharich ..... A - 689
Water vapour injection systems ..... 10 - 68
Water injection systems, Stan Meyer ..... 10 - 47
WFC control circuitry patent WO 92/07861, Stanley Meyer ..... A - 670
Wind Generator, Dan Bartmann and Dan Fink ..... 14 - 8
Wind Generator, Frank Herbert ..... 14 - 24
Wind Power Storage System, Claude Mead and William Holmes ..... A - 1021
Wire sizes and capacities ..... A -1
ZPE to electricity conversion patent, Mead-Nachamkin ..... A - 603

Alphabetical Index of People

Adams, Robert ..... 2 - 1
Adams, Robert ..... A - 148
Aguero, Juan ..... A - 823
Alexander, Robert ..... A - 228
An, Jon Sok ..... A - 87
Aspden, Harold ..... 5 - 43
Aspden, Harold ..... 11 - 3
Aspden, Harold ..... A - 148
Barbat, William ..... A - 164
Bartmann, Dan ..... 14 - 8
Baumann, Paul ..... 13 - 1
Beardon, Tom ..... 13 - 43
Bearden, Tom ..... A - 411
Bedini, John ..... 1 - 27
Bedini, John ..... 4 - 9
Bedini, John ..... 5 - 4
Bedini, John ..... 6 - 1
Bedini, John ..... A - 434
Bedini, John ..... A - 445
Bedini, John ..... A - 456
Bellocq, Toribio ..... 14 - 56
Bentley, Arthur ..... 14 - 58
Blue, Archie ..... A - 748
Boyce, Bob ..... 5 - 36
Boyce, Bob ..... 10 - 19
Boyce, Bob ..... 10 - 45
Braden, Steele ..... 1 - 59
Brady, Mike ..... 1 - 78
Brinkley, William ..... 13 - 41
Britt, Robert ..... 8 - 88
Brock, James ..... 9 - 16
Brody, Philip ..... A - 298
Cahill, Arthur ..... 8 - 123
Campbell, Chas ..... 4 - 2
Cater, Joseph ..... 5 - 61
Chambers, Stephen ..... A - 725
Chang, Chak ..... A - 764
Classen, Ronald ..... 2 - 28
Clem, Richard ..... 8 - 22
Coe, Graham ..... 9 - 14
Cole, Marvin ..... 5 - 46
Cole, Ron ..... 6 - 22
Coler, Hans ..... 3 - 21
Coler, Hans ..... 9 - 1
Colman, Harold ..... 3 - 20
Colman, Harold ..... A - 83
Cook, Daniel ..... 11 - 29
Cook, Nick ..... 5 - 53
Cornish, Francois ..... 13 - 42
Correa, Paulo and Alexandra ..... 11 - 15
Correa, Paulo and Alexandra ..... A - 561
Courneya, Calice ..... 14 - 56
Cramton, Dr Scott ..... 10 - 39
Cunningham, David ..... 1 - 62
Davey, Peter ..... 14 - 20
Davidson, Dan ..... 3 - 14
Davidson, Dan ..... A - 427
Davson, Cryil ..... 11 - 53
Dickinson, Richard ..... 14 - 57
Drbal, Karel ..... 9 - 7
Eccles, Christopher ..... A - 857
Ecklin, John W. ..... 1 - 29

Einstein, Albert ..... 14 - 65
Electrodyne Corporation ..... 5 – 5
Eskeli, Michael ..... 11 – 42
Eskeli, Michael ..... 8 – 103
Evert, Prof. Alfred ..... 8 - 23
EVGRAY, Yahoo forum. ..... 2 - 31
Ewert, Ted. ..... 6 - 6
Ewert, Ted. ..... 10 - 61
Ewing, Harold. ..... 1 - 34
Ewing, Harold ..... A - 56
Faraday, Michael ..... 5 - 46
Faraday, Michael ..... 13 - 4
Fecera, Frank ..... A- 2
Fink, Dan ..... 14 - 8
Flynn, Charles ..... 1 - 44
Flynn, Charles ..... 3 - 8
Flynn, Charles ..... A - 338
Flynn, Charles ..... A - 988
Garrett, Charles ..... A - 740
Grandics Peter ..... 9 - 20
Gray, Edwin ..... 5 - 46
Gray, Edwin ..... A - 119
Gray, Edwin ..... A - 142
Grimes Elmer ..... 14 - 55
Gunderson, Graham ..... 3 - 1
Hartman, Emil ..... 1 - 63
Hasebe, Shigeta ..... A - 719
Hayasaka, Shigeaki ..... A - 236
Hayes, James ..... 3 - 9
Heath, Brian ..... 6 - 19
Henry, Dr Joseph ..... 5 - 43
Herbert, Frank ..... 14 - 24
Hodowanec, Gregory ..... 11 - 22
Holdgate, Ed ..... 10 - 20
Holmes, William ..... 14 - 25
Holmes, William ..... A - 1021
Horvath, Stephen ..... A - 830
Hubbard, Alfred ..... 5 - 58
Hyde, William ..... 11 - 66
Hydrogen Garage ..... 10 - 13
Imhotep ..... 6 - 18
Imhotep ..... 6 - 19
Imris, Pavel ..... 3 - 14
Imris, Pavel..... A - 74
Invention Intelligence (India) ..... 1 - 42
Ivanov, Valeri ..... 13 - 46
Jamison, Larry ..... A - 252
Jines, John ..... 1 - 41
Johnson, Howard ..... 1 - 34
Johnson, Howard ..... 1 - 64
Johnson, Howard ..... A – 46
Kapaladze, Tariel ..... 3 - 64
Kawai, Teruo ..... 2 - 25
Kawai, Teruo ..... A - 259
Kelly, D. A. ..... 13 - 1
Kelly, D. A. ..... 1 - 70
Kenny, James ..... 13 - 43
Kim, Sang Nam ..... 14 - 3
King, Moray B. ..... 7 - 10
Knight, Ronald ..... 6 - 3
Kousoulides, David ..... 2 - 41
Kromrey, Raymond ..... 2 - 17
Krupa, Robert ..... 10 - 67
Kundel, Stephen ..... 1 - 43
Lafonte, Butch ..... 11 - 23

Lawton, Dave ..... 13 - 45
Lawton, Dave ..... 5 - 3
Lawton, Dave ..... 5 -10
Lawton, Dave ..... 10 - 20
Lawton, Dave ..... 11 - 21
Leben, Stephan W. ..... 3 - 10
Lee, Kwang-jeek ..... 3 - 47
Lisac, Bozidar ..... 5 - 26
Lowrie, Peter ..... 3 - 60
Lindemann, Peter ..... 5 - 47
Luciano, Murilo ..... 4 - 18
Lyne, William ..... 13 - 7
Mace, Yves ..... 3 - 18
Mark, Steven ..... 5 - 39
Martinez, Molina ..... A - 100
Marvin Cole ..... 5 - 46
Maynard, Roger ..... 10 – 68
Mazenauer, Hans ..... 8 - 35
McQueen, Jesse ..... 13 - 17
Mead, Claude ..... 14 - 25
Mead, Claude ..... A - 1021
Mead, Franklin ..... A - 603
Meyer, Michael ..... 3 - 18
Meyer, Stanley ..... 10 - 23
Meyer, Stanley ..... 10 - 47
Meyer, Stanley ..... A - 620
Meyer, Stanley ..... A - 627
Meyer, Stanley ..... A - 637
Meyer, Stanley ..... A - 642
Meyer, Stanley ..... A - 659
Meyer, Stanley ..... A - 670
Meyer, Stanley ..... A - 680
Meyers, Roy ..... 7 - 27
Meyers, Roy ..... A - 524
Milkovic, Veljko ..... 4 - 15
Molina-Martinez, Alberto ..... 5 - 58
Moller, Nikolas ..... 13 - 9
Monk, Ivan ..... 4 - 26
Moore, Kenneth ..... 13 - 46
Moore, Dr. Terry ..... 11 - 21
Moray, Thomas Henry ..... 5 - 43
Moray, Thomas Henry ..... 7 - 9
Muller, Bill ..... 2 - 28
Nachamkin, Jack ..... A - 603
Naudin, Jean-Louis ..... 13 - 4
Neal, Bob ..... 8 - 1
Nelson, Carl ..... A - 470
Newberry, Ivor ..... A - 940
Newman, Joseph ..... 4 - 10
Newman, Joseph ..... 11 - 29
Newman, Joseph ..... A - 280
Nobel, Joe ..... 9 - 14
Ogle, Thomas ..... A - 955
Ognyanov, Michael ..... 3 - 17
Ognyanov, Michael ..... A - 113
Paine, Henry ..... A - 901
Papp, Josef ..... 8 - 51
Patrick, Stephen ..... 3 - 9
Patterson, Robert ..... 10 - 71
Phillips, Raymond Snr. ..... 7 - 28
Plauston, Hermann ..... 7 - 25
Plauston, Hermann ..... A - 485
Pogue, Charles ..... A - 919
Pogue, Charles ..... A - 927
Pogue, Charles ..... A - 932

Prentice, Frank ..... 5 - 1
Pugh, Ron ..... 6 - 3
Puharich, Henry ..... A - 689
Reardon, John ..... A - 196
Robertson, Scott ..... 8 - 10
Rogers, Leroy ..... 8 - 12
Roney, James ..... 1 - 65
Rothman Technologies ..... 13 - 41
Santilli, Ruggero ..... A - 754
Schappeller, Karl ..... 11 - 53
Schwartz, Harold ..... A - 949
Scott, John ..... 8 - 123
Searle, John R. R. ..... 11 - 21
Seddon-Gillespie, Ronald ..... 3 - 20
Seddon-Gillespie, Ronald ..... A - 83
Shelton, Robert ..... A - 945
Simpson, Dale ..... 4 - 13
Simpson, Dale ..... 4 - 16
Smith, Donald Lee ..... 3 - 22
Smith, Donald Lee ..... 5 - 37
Spence, Geoffrey ..... A - 213
Spiros, Spiro ..... A - 864
Squires, Dave ..... 1 - 27
Stanley, Garry ..... 1 - 33
Steorn ..... 1 - 53
Stevens, Peter ..... 9 - 14
Sullivan, Prof. Kevin ..... 2 - 53
Sweet, Floyd ..... 3 - 12
Sweet, Floyd ..... 5 - 69
Szilard, Leo ..... 14 - 65
Teal, Ben ..... 1 - 39
Teal, Ben ..... 4 - 5
Tesla, Nikola ..... 5 - 5
Tesla, Nikola ..... 5 - 40
Tesla, Nikola ..... 5 - 51
Tesla, Nikola ..... 7 - 1
Tesla, Nikola ..... 11 - 1
Tesla, Nikola ..... 11 - 17
TheGuru2You ..... 3 - 10
Thomson, Elihu ..... 5 - 43
Torres, Hector ..... 2 - 33
Tracy, Robert ..... 1 - 39
Trawoeger, Thomas ..... 9 - 3
Tseung, Lawrence ..... 2 - 56
Tseung, Lawrence ..... 4 - 1
Tucker, Oliver ..... A - 952
Van Valkenburg, Eber ..... 8 - 29
Vassilatos, Gerry ..... 5 - 42
Volfson, Boris ..... A - 904
Wang, Shen He ..... 1 - 27
Watson, Jim ..... 4 - 9
Weir, Richard ..... A - 470
West, Zach ..... 10 - 18
Wood, Phil ..... 2 - 39
Wood, Phil ..... 2 - 48
Yaldiz, Muammer ..... 13 - 11
Zorzi, Kim ..... 8 - 1

A Practical Guide to 'Free-Energy' Devices

Overview

This document contains most of what I have learned about this subject after researching it for a number of years. I am not trying to sell you anything, nor am I trying to convince you of anything. When I started looking into this subject, there was very little useful information and any that was around was buried deep in incomprehensible patents and documents. My purpose here is to make it easier for you to locate and understand some of the relevant material now available. What you believe is up to yourself and none of my business. Let me stress that almost all of the devices discussed in the following pages, are devices which I have not personally built and tested. It would take several lifetimes to do that and it would not be in any way a practical option. Consequently, although I believe everything said is fully accurate and correct, you should treat everything as being "hearsay" or opinion.

Some time ago, it was commonly believed that the world was flat and rested on the backs of four elephants and that when earthquakes shook the ground, it was the elephants getting restless. If you want to believe that, you are fully at liberty to do so, however, you can count me out as I don't believe that.

The Wright brothers were told that it was impossible for aeroplanes to fly because they were heavier than air. That was a commonly believed view. The Wright brothers watched birds flying and since, without question, birds are considerably heavier than air, it was clear that the commonly held view was plain wrong. Working from that realisation, they developed aeroplanes which flew perfectly well.

The years passed, and the technology started by the Wright brothers and their careful scientific measurements and well-reasoned theory, advanced to become the "science" of aeronautics. This science was used extensively to design and build very successful aircraft and "aeronautics" gained the aura of being a "law".

Unfortunately, somebody applied aeronautic calculations to the flight of bumblebees and discovered that according to aeronautics, bumblebees couldn't possibly fly as their wings could not generate enough lift to get them off the ground. This was a problem, as it was perfectly possible to watch bees flying in a very competent manner. So, the "laws" of aeronautics said that bees can't fly, but bees actually **do** fly.

Does that mean that the laws of aeronautics were no use? Certainly not - those "laws" had been used for years and proved their worth by producing excellent aircraft. What it did show was that the "laws" of aeronautics did not yet cover every case and needed to be extended to cover the way that bees fly, which is through lift generated by turbulent airflow.

It is **very** important to realise that what are described as scientific "laws" are just the best working theories at the present time and it is virtually certain that those "laws" will have to be upgraded and extended as further scientific observations are made and further facts discovered. Let's hope those four elephants don't get restless before we have a chance to learn a bit more!

Introduction

It should be stressed at this point, that this material is intended to provide you with information and only that. If you should decide, on the basis of what you read here, to build some device or other, you do so solely and entirely at your own risk and on your own responsibility. For example, if you build something in a heavy box and then drop it on your toe, then that is completely your own responsibility (you should learn to be more careful) and nobody other than yourself is in any way liable for your injury, or any loss of income caused while your toe is recovering. Let me amplify that by stating that I do not warrant that any device or system described in this document works as described, or in any other way, nor do I claim that any of the following information is useful in any way or that any device described is useful in any way or for any purpose whatsoever. Also, let me stress that I am not encouraging you to actually construct any device described here, and the fact that very detailed construction details are provided, must not be interpreted as my encouraging you to physically construct any device described in this document. You are welcome to consider this a work of fiction if you choose to do so.

I apologise if this presentation seems very elementary, but the intention is to make each description as simple as possible so that everybody can understand it, including people whose native language is not English. If you are not familiar with the basic principles of electronics, then please read the simple step-by-step electronics tutorial in Chapter 12 which is intended to help complete beginners in the subject.

At this point in time - the early years of the twenty-first century - we have reached the point where we need to realise that some of the “laws” of science do not cover every case, and while they have been very useful in the past, they do need to be extended to cover some cases which have been left out until now.

For example, suppose a bank robber broke into a bank and stole all of the cash there. How much could he take? Answer: “every coin and every note”. The limit is the sum total of all cash in the building. This is what the “Law” of Conservation of Energy is all about. What it says is very simple – you can’t take out any more than there is there in the beginning. That seems pretty straightforward, doesn’t it?

As another example, consider a glass tumbler filled completely with water. Using common sense, tell me, how much water can be poured out of the glass? For the purposes of this illustration, please take it that temperature, pressure, gravity, etc. all remain constant for the duration of the experiment.

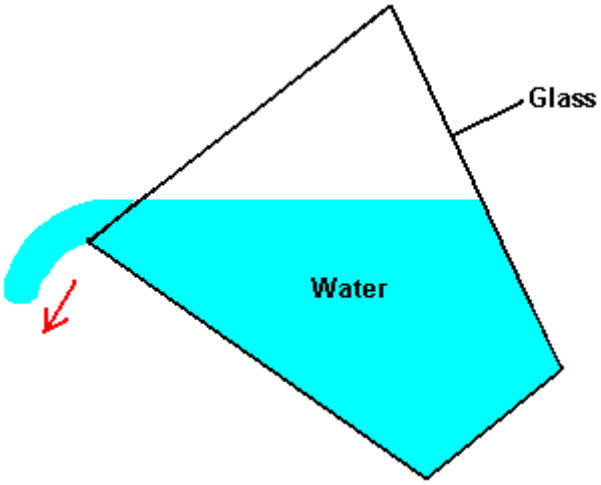

The answer is: “the exact volume contained inside the tumbler”. Agreed. This is what present day science says. To be strictly accurate, you will never be able to pour all of the water out as a small amount will remain, wetting the inside of the glass. Another way of putting this is to say that the “efficiency” of the pouring operation is not 100%. This is typical of life in general, where very few, if any, actions are 100% efficient.

So, are we agreed with current scientific thinking then – the maximum amount of water which can pour out of the tumbler is the total volume inside the tumbler? This seems simple and straightforward, doesn’t it? Science thinks so, and insists that this is the end of the story, and nothing else is possible. This arrangement is called a “closed system” as the only things being considered are the glass, the water and gravity.

Well, unfortunately for current scientific thinking, this is not the only possible situation and “closed systems” are almost unknown in the real world. Mostly, assumptions are made that the effects of anything else around will cancel out and add up to a net zero effect. This is a very convenient theory, but unfortunately it has no basis in reality.

Let’s fill our glass with water again and begin to pour it out again, but this time we position it underneath a source of flowing water:

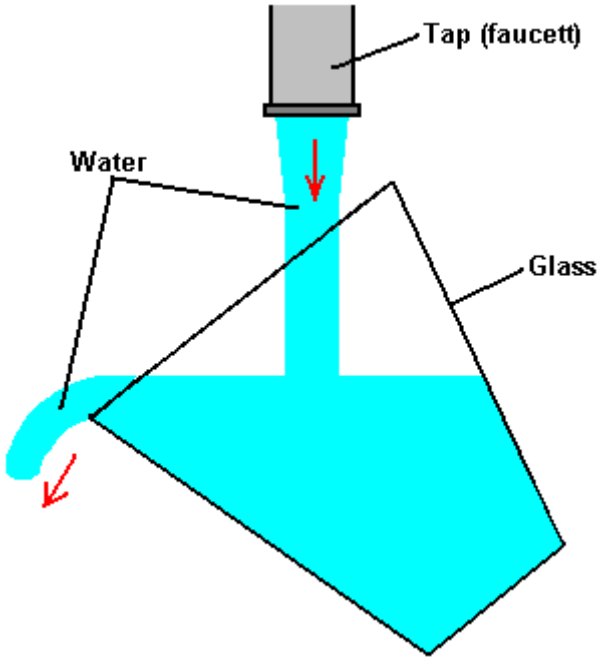

So, now, how much water can be poured out of the tumbler? Answer: “millions of times the volume of the tumbler”. But hang on a moment, haven’t we just said that the absolute limit of water poured from the tumbler has to be the volume inside the tumbler? Yes, that’s exactly what we said, and that is what current science teaching says. The bottom line here is that what current science says does in fact hold true for most of the time, but there are cases where the basic assumption of it being a “closed system” is just not true.

One popular misconception is that you can’t get more energy out of a system than you put into it. That is wrong, because the sentence was worded carefully. Let me say it again and this time, emphasise the key words: “**you** can’t get more energy out of a system than **you** put into it”. If that were true, then it would be impossible to sail a yacht all the way around the world without burning any fuel, and that has been done many times and none of the driving energy came from the crews. If it were true, then a grain mill driven by a waterwheel would not be able to produce flour as the miller certainly does not push the millstones around himself. If that were true, then nobody would build windmills, or construct solar panels, or tidal power stations.

What the statement should say is “more energy can’t be taken out of a system than is put into it” and that is a very different statement. When sailing a yacht, the wind provides the driving force which makes the trip possible. Notice that, it is the environment providing the power and not the sailors. The wind arrived without them having to do anything about it, and a lot less than 100% of the wind energy reaching the yacht actually becomes forward thrust, contributing to the voyage. A good deal of the energy arriving at the yacht ends up stretching the rigging, creating a wake, producing noise, pushing the helmsman, etc. etc. This idea of no more energy coming out of a system than goes into it, is called “The Law of Conservation of Energy” and it is perfectly right, in spite of the fact that it gets people confused.

“Free-Energy Devices” or “Zero-Point Energy Devices” are the names applied to systems which appear to produce a higher output power than their input power. There is a strong tendency for people to state that such a system is not possible since it contravenes the Law of Conservation of Energy. It doesn’t. If it did, and any such system was shown to work, then the “Law” would have to be modified to include the newly observed fact. No such change is necessary, it merely depends on your point of view.

For example, consider a crystal set radio receiver:

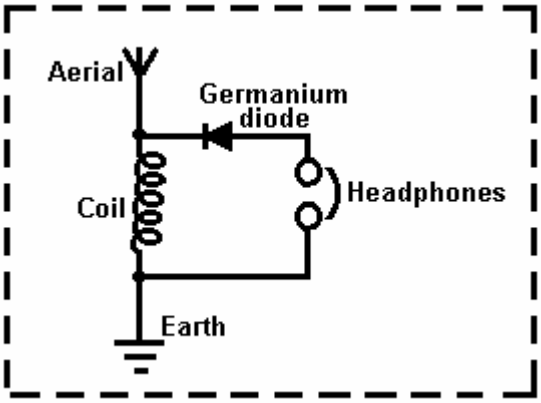

Looking at this in isolation, we appear to have a free-energy system which contradicts the Law of Conservation of Energy. It doesn't, of course, but if you do not view the whole picture, you see a device which has only passive components and yet which (when the coil is of the correct size) causes the headphones to generate vibrations which reproduce recognisable speech and music. This looks like a system which has no energy input and yet which produces an energy output. Considered in isolation, this would be a serious problem for the Law of Conservation of Energy, but when examined from a common sense point of view, it is no problem at all.

The whole picture is:

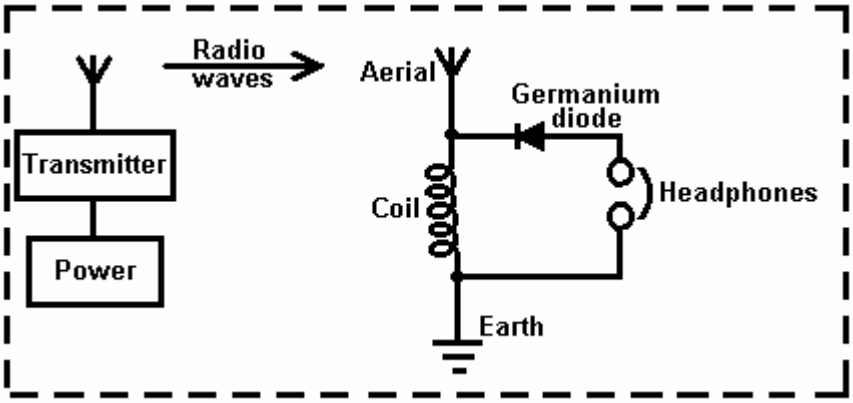

Power is supplied to a nearby transmitter which generates radio waves which in turn, induce a small voltage in the aerial of the crystal set, which in turn, powers the headphones. The power in the headphones is far, far less than the power taken to drive the transmitter. There is most definitely, no conflict with the Law of Conservation of Energy. However, there is a quantity called the "**C**oefficient **O**f **P**erformance" or "**COP**" for short. This is defined as the amount of power coming out of a system, divided by the amount of power that **the operator** has to put into that system to make it work. In the example above, while the **efficiency** of the crystal set radio is well below 100%, the **COP** is greater than 1. This is because the owner of the crystal radio set does not have to supply any power at all to make it work, and yet it outputs power in the form of sound. As the input power from the user, needed to make it work is zero, and the COP value is calculated by dividing the output power by this zero input power, the COP is actually infinity. **Efficiency** and **COP** are two different things. Efficiency can never exceed 100% and almost never gets anywhere near 100% due to the losses suffered by any practical system.

As another example, consider an electrical solar panel:

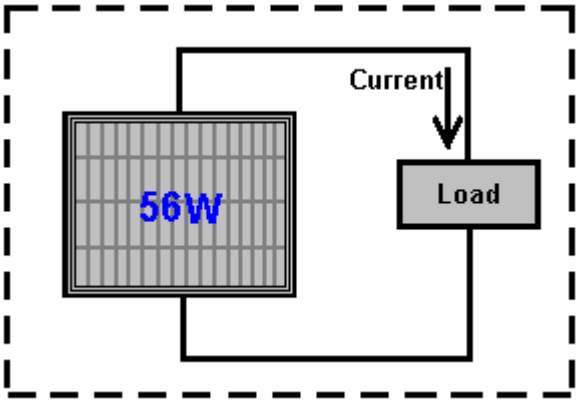

Again, viewed in isolation, this looks like (and actually **is**) a Free-Energy device if it is set up out of doors in daylight, as current is supplied to the load (radio, battery, fan, pump, or whatever) without the user providing any input power. Again, Power Out with no Power In. Try it in darkness and you find a different result because the whole picture is:

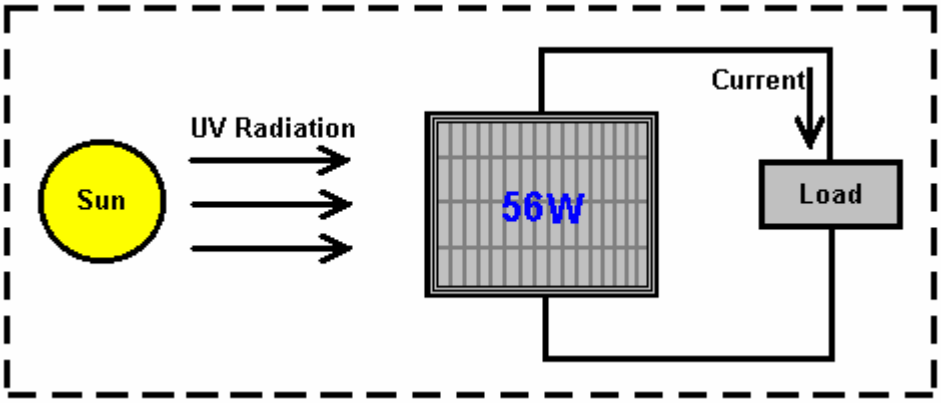

The energy which powers the solar panel comes from the sun.. Only some 17% of the energy reaching the solar panel is converted to electrical current. This is most definitely not a contravention of the Law of Conservation of Energy. This needs to be explained in greater detail. The Law of Conservation of Energy applies to closed systems, and only to closed systems. If there is energy coming in from the environment, then the Law of Conservation of Energy just does not apply, unless you take into account the energy entering the system from outside.

People sometimes speak of “over-unity” when talking about the efficiency of a system. From the point of efficiency, there is no such thing as “over-unity” as that would mean that more power was coming out of the system than the amount of power entering the system. Our trusty bank robber mentioned above would have to take out of the bank vault, more money than was actually in it, and that is a physical impossibility. There are always some losses in all practical systems, so the efficiency is always less than 100% of the power entering the system. In other words, the efficiency of any practical system is always under unity.

However, it is perfectly possible to have a system which has a greater power output than the power input which **we** have to put into it to make it work. Take the solar panel mentioned above. It has a terribly low efficiency of about 17%, **but**, we don’t have to supply it with any power to make it work. Consequently, when it is in sunlight, it’s Coefficient Of Performance (“COP”) is it’s output power (say, 50 watts) divided by the input power needed to make it work (zero watts) which is infinity. So, our humble, well-known solar panel has terrible efficiency of 17% but at the same time it has a COP of infinity.

It is now generally accepted that “Dark Matter” and “Dark Energy” form more than 80% of our universe. There is nothing sinister about the adjective “Dark” as in this context, it merely means that we cannot see it. There are many useful things which we utilise, which we can’t see, for example, radio waves, TV signals, magnetism, gravity, x-rays, etc. etc.

The fact of the matter is, that we are sitting in a vast field of energy which we can't see. This is the equivalent of the situation for the crystal set shown above, except that the energy field we are in is very, very much more powerful than the radio waves from a radio transmitter. The problem is, how to tap the energy which is freely available all around us, and get it to do useful work for us. It can definitely be done, but it is not easy to do.

Some people think that we will never be able to access this energy. Not very long ago, it was widely believed that nobody could ride a bicycle faster than 15 miles per hour because the wind pressure on the face of the rider would suffocate him. Today, many people cycle much faster than this without suffocating - why? - because the original negative opinion was wrong.

Not very long ago, it was thought that metal aircraft would never be able to fly because metal is so much heavier than air. Today, aircraft weighing hundreds of tons fly on a daily basis. Why? - because the original negative opinion was not correct.

It is probably worth while, at this point, to explain the basics of Zero-Point Energy. The experts in Quantum Mechanics refer to how the universe operates as "Quantum Foam". Every cubic centimetre of "empty" space is seething with energy, so much in fact, that if it were converted using Einstein's famous equation $E = mC^2$ (that is Energy = Mass x a very big number), then it would produce as much matter as can be seen by the most powerful telescope. There is actually nothing "empty" about space. So why can't we see anything there? Well, you can't actually see energy. All right then, why can't you measure the energy there? Well, two reasons actually, firstly, we have never managed to design an instrument which can measure this energy, and secondly, the energy is changing direction incredibly rapidly, billions and billions and billions of times each second.

There is so much energy there, that particles of matter just pop into existence and then pop back out again. Half of these particles have a positive charge and half of them have a negative charge, and as they are evenly spread out in three-dimensional space, the overall average voltage is zero. So, if the voltage is zero, what use is that as a source of energy? The answer to that is "none" if you leave it in it's natural state. However, it is possible to change the random nature of this energy and convert it into a source of unlimited, everlasting power which can be used for all of the things we use mains electricity for today - powering motors, lights, heaters, fans, pumps, ... you name it, the power is there for the taking.

So, how do you alter the natural state of the energy in our environment? Actually, quite easily. All that is needed is a positive charge and a negative charge, reasonably near each other. A battery will do the trick, as will a generator, as will an aerial and earth, as will an electrostatic device like a Wimshurst machine. When you generate a **Plus** and a **Minus**, the quantum foam is affected. Now, instead of entirely random plus and minus charged particles appearing everywhere, the **Plus** which you created gets surrounded by a sphere of minus charge particles popping into existence all around it. Also, the **Minus** which you created, gets surrounded by a spherical-shaped cloud of plus-charge particles popping into existence all around it. The technical term for this situation is "**broken symmetry**" which is just a fancy way of saying that the charge distribution of the quantum foam is no longer evenly distributed or "symmetrical". In passing, the fancy technical name for your **Plus** and **Minus** near each other, is a "**dipole**" which is just a techno-babble way of saying "two poles: a plus and a minus" - isn't jargon wonderful?

So, just to get it straight in your mind, when you make a battery, the chemical action inside the battery creates a Plus terminal and a Minus terminal. Those poles actually distort the universe around your battery, and causes vast streams of energy to radiate out in every direction from each pole of the battery. Why doesn't the battery run down? Because the energy is flowing from the environment and not from the battery. If you were taught basic physics or electrical theory, you will probably have been told that the battery used to power any circuit, supplies a stream of electrons which flows around the circuit. Sorry Chief - it just ain't like that at all. What really happens is that the battery forms a "dipole" which nudges the local environment into an unbalanced state which pours out energy in every direction, and some of that energy from the environment flows around the circuit attached to the battery. The energy does **not** come from the battery.

Well then, why does the battery run down, if no energy is being drawn from it to power the circuit? Ah, that is the really silly thing that we do. We create a closed-loop circuit (because that's what we have always done) where the current flows around the circuit, reaches the other battery terminal and immediately destroys the battery's "dipole". Everything stops dead in it's tracks. The environment becomes symmetrical again, the massive amount of readily available free-energy just disappears and you are back to where you started from. **But**, do not despair, our trusty battery immediately creates the Plus and Minus terminals again and the process starts all over again. This happens so rapidly that we don't see the breaks in the operation of the circuit and it is the continual recreation of the dipole which causes the battery to run down and lose it's power. Let me say it again, the battery does **not** supply the current that powers the circuit, it never has and it never will - the current flows into the circuit from the surrounding environment.

What we really need, is a method of pulling off the power flowing in from the environment, without continually destroying the dipole which pushes the environment into supplying the power. That is the tricky bit, but it has been done. If you can do that, then you tap into an unlimited stream of inexhaustible energy, with no need to provide any input energy to keep the flow of energy going. In passing, if you want to check out the details of all of this, Lee and Yang were awarded the Nobel Prize for Physics in 1957 for this theory which was proved by experiment in that same year. This book includes circuits and devices which manage to tap this energy successfully.

Today, many people have managed to tap this energy but no commercial device is readily available for home use, though it is quite likely that there will be in the next six months as some are going through mandatory government testing for safety and reliability ahead of production being approved. This situation has been a long time coming.

The reason for this is human rather than technical. More than 3,000 Americans have produced devices or ideas for devices but none have reached commercial production due to opposition from influential people who do not want such devices freely available. One technique is to classify a device as “essential to US National Security”. If that is done, then the developer is prevented from speaking to anyone about the device, even if he has a patent. He cannot produce or sell the device even though he invented it. Consequently, you will find many patents for perfectly workable devices if you were to put in the time and effort to locate them, though most of these patents never see the light of day, having been taken by the people issuing these bogus “National Security” classifications.

The purpose of this book is to present the facts about some of these devices and more importantly, where possible, explain the background details of why and how systems of that type function. As has been said before, it is not the aim of this book to convince you of anything, just to present you with some of the facts which are not that easy to find, so that you can make up your own mind on the subject.

The science taught in schools, colleges and universities at this time, is well out of date and in serious need of being brought up to date. This has not happened for some time now as people who make massive financial profits have made it their business to prevent any significant advance for many years now. However, the internet and free sharing of information through it, is making things very difficult for them. What is it that they don’t want you to know? Well, how about the fact that you don’t have to burn a fuel to get power? Shocking, isn’t it !! Does it sound a bit mad to you? Well, stick around and start doing some thinking.

Suppose you were to cover a boat with lots of solar panels which were used to charge a large bank of batteries inside the boat. And if those batteries were used to operate electric motors turning propellers which drive the boat along. If it is sunny weather, how far could you go? As far as the boat can travel while the sun is up and if the battery bank is large, probably most of the night as well. At sun-up on the next day, you can continue your journey. Oceans have been crossed doing this. How much fuel is burned to power the boat? None !! Absolutely none at all. And yet, it is a fixed idea that you have to burn a fuel to get power.

Yes, certainly, you can get power from the chemical reaction of burning a fuel - after all, we pour fuel into the tanks of vehicles “to make them go” and we burn oil in the central heating systems of buildings. But the big question is: “Do we have to?” and the answer is “No”. So why do we do it? Because there is no alternative at present. Why is there no alternative at present? Because the people making incredibly large financial profits from selling this fuel, have seen to it that no alternative is available. We have been the suckers in this con trick for decades now, and it is time for us to snap out of it. Let’s have a look at some of the basic facts:

Let me start by presenting some of the facts about electrolysis. The electrolysis of water is performed by passing an electric current through the water, causing it to break up into hydrogen gas and oxygen gas. This process was examined in minute detail by Michael Faraday who determined the most energy efficient possible conditions for electrolysis of water. Faraday determined the amount of electric current needed to break the water apart, and his findings are accepted as a scientific standard for the process. I can see no reason for doubting Faraday’s results.

We now bump into a problem which scientists are desperate to ignore or deny, as they have the mistaken idea that it contradicts the Law of Conservation of Energy – which, of course, it doesn’t. The problem is an electrolyser design by Bob Boyce of the USA which appears to have an efficiency twelve times greater than Faraday’s maximum possible gas production. This is a terrible heresy in the scientific arena and it gets the average “by the book” scientist very up-tight and flustered. There is no need for this worry. The Law of Conservation of Energy remains intact and Faraday’s results are not challenged. However, an explanation is called for.

To start with, let me show the arrangement for a standard electrolyser system:

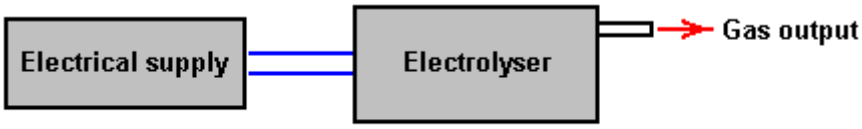

STANDARD ELECTROLYSER SYSTEM

Here, current is supplied to the electrolyser by the electrical supply. The current flow causes breakdown of the water contained in the electrolyser, resulting in the amount of gas predicted by Faraday (or less if the electrolyser is not well designed and accurately built).

Bob Boyce, who is an exceptionally intelligent, perceptive and able man, has developed a system which performs the electrolysis of water using power drawn from the environment. To a quick glance, Bob's design looks pretty much like a high-grade electrolyser (which it is) but it is a good deal more than that. The practical construction and operational details of Bob's design are shown in Chapter 10, but for here, let us just consider the operation of his system in very broad outline:

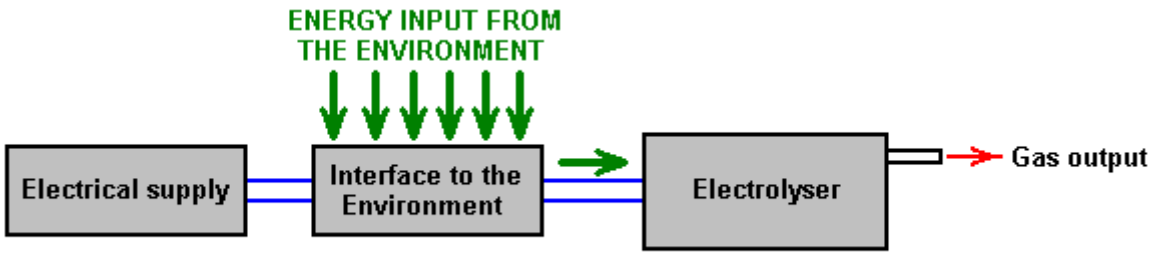

BOB BOYCE'S ELECTROLYSER SYSTEM

The very important distinction here is that the power flowing into the electrolyser and causing the water to break down and produce the gas output, is coming almost exclusively from the environment and **not** from the electrical supply. The main function of Bob's electrical supply is to power the device which draws energy in from the environment. Consequently, if you assume that the current supplied by the electrical supply is the whole of the power driving the electrolyser, then you have a real problem, because, when properly built and finely tuned, Bob's electrolyser produces up to 1,200% of Faraday's maximum efficiency production rate.

This is an illusion. Yes, the electrical input is exactly as measured. Yes, the gas output is exactly as measured. Yes, the gas output is twelve times the Faraday maximum. But Faraday's work and the Law of Conservation of Energy are not challenged in any way **because** the electrical current measured is used primarily to power the interface to the environment and nearly all of the energy used in the electrolysis process flows in from the local environment and is not measured. What we can reasonably deduce is that the energy inflow from the environment is probably about twelve times the amount of power drawn from the electrical supply.

At this point in time, we do not have any equipment which can measure this environmental energy. We are in the same position as people were with electrical current five hundred years ago – there was just no equipment around which could be used to make the measurement. That, of course, does not means that electrical current did not exist at that time, just that we had not developed any equipment capable of performing measurement of that current. Today, we know that this environmental energy exists because we can see the effects it causes such as running Bob's electrolyser, charging batteries, etc. but we can't measure it directly because it vibrates at right-angles to the direction that electrical current vibrates in. Electrical current is said to vibrate "transversely" while this zero-point energy vibrates "longitudinally", and so has no effect on instruments which respond transversely such as ammeters, voltmeters, etc.

Bob Boyce's 101-plate electrolyser produces anything up to 100 litres of gas per minute, and that rate of production is able to power internal combustion engines of low capacity. The vehicle alternator is perfectly capable of powering Bob's system, so the result is a vehicle which appears to run with water as the only fuel. This is not the case, nor is it correct to say that the engine is powered by the gas produced. Yes, it does utilise that gas when running, but the power running the vehicle is coming directly from the environment as an inexhaustible supply. In the same way, a steam engine does not run on water. Yes, it does utilise water in the process, but the power that runs a steam engine comes from burning the coal and not from the water.

The Basics of "Free-Energy":

This beginner's introduction presumes that you have never heard of free-energy before and would like an outline sketch of what it is all about, so let's begin at the beginning.

We tend to have the impression that people who lived a long time ago were not as clever as we are - after all, we have television, computers, mobile phones, games consoles, aeroplanes, …. But, and it is a big "but", the reason why they did not have those things is because science had not advanced far enough for those things to become possible. That did **not** mean that the people who lived before us were any less clever than we are.

For example, could you, personally, come up with an accurate calculation of the circumference of the Earth? This has to be without prior knowledge, no satellites, no astronomical information, no calculators, no computers and no experts to guide you. Eratosthenes did by observing the shadows in two wells some 800 kilometres apart. When was that? More than two thousand years ago.

You have probably heard of the geometry of Pythagoras who lived hundreds of years before Eratosthenes, and that geometry is still used in remote areas to lay out the foundations for new buildings. You have probably heard of Archimedes who worked out why things float. He lived more than two thousand years ago. So, how do those people stack up against you and me? Were they stupid people?

This is quite an important point because it demonstrates that the body of scientific information enables many things which were not thought possible in earlier times. This effect is not restricted to centuries ago. Take the year 1900. My father was a youngster then, so it is not all that long ago. It would be another three years before Orville and Wilbur Wright made their first 'heavier-than-air' flight, so there no aircraft around in 1900. There were no radio stations and most definitely, no television stations, nor would you have found a telephone inside a house. The only serious forms of information were books and periodicals or teaching establishments which relied on the knowledge of the teachers. There were no cars and the fastest form of transport for the average person was on a galloping horse.

Today, it is difficult to grasp what things were like not all that long ago, but come closer in time and look back just fifty years. Then, people researching in scientific fields had to design and build their own instruments before they ever got to experimenting in their chosen fields of knowledge. They were instrument makers, glass-blowers, metal workers, etc. as well as being scientific researchers. Nowadays there are measuring instruments of all kinds for sale ready-made. We have silicon semiconductors which they didn't have, integrated circuits, computers, etc. etc.

The important point here is the fact that advances in scientific theory have made possible many things which would have been considered quite ridiculous notions in my father's time. However, we need to stop thinking as if we already know everything there is to know and that nothing which we think of as "impossible !!" could ever happen. Let me try to illustrate this by remarking on just a few things which as recently as the year 1900 would have marked you out as a "lunatic crank", things which we take for granted today because, and only because, we are now familiar with the science behind each of these things.

Certainties in the year 1900

A metal aeroplane weighing 350 tons couldn't possibly fly - everyone knows that !!

You couldn't possibly watch someone who is a thousand miles away - talk sense !!

No ! Of course you can't speak to somebody who lives in a different country unless you visit them !

The fastest way to travel is on a galloping horse.

A machine could never beat a man at chess - be realistic !

Today, we know that these things are not just possible, but we take them for granted. We have a mobile phone in our pocket and could easily use it to talk to friends in other countries almost anywhere in the world. It would seem very strange if we could not do that any more.

We each have a television and can watch, say, a golf tournament taking place at the other side of the world. We watch in real time, seeing the result of each stroke almost as soon as the golfer does himself. Even suggesting that such a thing was possible might have got you burnt at the stake for witchcraft, not all that long ago, but not having television would seem a very strange situation for us today.

If we see a 350 ton metal Boeing 747 aircraft flying past, we would not think it to be strange in any way, let alone think it was "impossible". It is routine, casual travel at 500 mph, a speed which would have been considered to be a fantasy when my father was young. The fact that the aircraft is so heavy, is of no concern to us as we know that it will fly, and does so, routinely, every day of the year.

We take for granted, a computer which can do a million things in one second. Today, we have lost the understanding of how big "a million" is, and we know that most people are likely to lose a game of chess if they play against a computer, even a cheap chess computer.

What we need to understand is that our present scientific knowledge is far from being comprehensive and there is still a very large amount to be learned, and that things which the average person today would consider "impossible" are quite liable to be casually routine day-to-day devices in just a few years time. This is **not** because we are stupid but instead it is because our current science still has a long way to go.

The objective of this website (www.free-energy-info.com) is to explain some of the things which current science is not teaching at the present time. Ideally, we want a device which will power our homes and cars without the need to burn a fuel of any kind. Before you get the idea that this is some new and wild idea, please remember that windmills have been pumping water, milling grain, lifting heavy loads and generating electricity for a very long time now. Water wheels have been doing similar work for a very long time and both of these devices are fuel-less.

The energy which powers windmills and water wheels comes to us via our Sun which heats air and water, causing wind and rain, feeding power to our devices. The energy flows in from our local environment, costs us nothing and will keep on coming whether we make use of it or not.

Most of the pictures of wind generators and water wheels which you will see, show devices which would take a large amount of money to set up. The title of this eBook is "The Practical Guide to Free-Energy Devices" and the word "practical" is intended to indicate that most of the things spoken about are things which you, personally, have a reasonable chance of constructing for yourself if you decide to do so. However, while in chapter 14 there are instructions for building your own wind-powered electrical generator from scratch, pumping water uphill without using a fuel and utilising wave power at low cost, these things are subject to the weather. So, because of this, the main subject is the next generation of commercial devices, devices which do not need a fuel in order to function and power our homes and vehicles, devices which operate no matter what the weather is doing.

Perhaps I should remark at this point, that the commercial introduction of this new wave of hi-tech devices is being actively opposed by people who will lose a very large stream of revenue when it does eventually happen, as it most certainly will. For example, Shell BP which is a typical oil company, makes about US $3,000,000 profit per hour, every hour of every day of every year, and there are dozens of oil companies. The government makes even more than that out of the operation, with 85% of the sale price of oil in the UK being government tax. No matter what they say, (and they both do like to talk "green" in order to gain popularity), neither would ever for a single moment, consider allowing the introduction of fuel-less power devices, and they have the financial muscle to oppose this new technology at every possible level.

For example, some years ago MIT in the USA spent millions proving that on board fuel reformers for vehicles would give us all better fuel economy and cleaner air. They did long-term testing on buses and cars to provide proof. They teamed up with the very large auto-parts supplier Arvin Meritor to put these new devices in production vehicles. Then "One Equity Partners" bought out Arvin Meritor's division that did all the final work to get fuel reformers put into all new vehicles. They created a new company, EMCON Technologies, and that company dropped the fuel reformer from their product line, not because it did not work but because it did work. This is not "conspiracy theory" but a matter of public record.

Some years ago, Stanley Meyer, a talented man living in the USA, found a very energy-efficient way of breaking water into a mixture of hydrogen gas and oxygen gas. He pushed on further and found that a vehicle engine could be run on quite a small amount of this "hydroxy" gas if it was mixed with air, water droplets and some of the exhaust gas coming from the engine. He got funding to allow him to start manufacturing retro-fit kits which would allow any car to run on water alone and not use any fossil fuel at all. You can imagine how popular that would have been with the oil companies and the government. Just after getting his funding, Stan was eating a meal at a restaurant when he jumped up, said "I've been poisoned !", rushed out into the car park and died on the spot. If Stan was mistaken, and he died of 'natural causes', then it was remarkably convenient timing for the oil companies and the government, and his retro-fit kit was never manufactured.

Even though Stan left behind many patents on the subject, until recently nobody managed to replicate his very low-power electrolyser, then Dave Lawton in Wales achieved the feat and many people have since replicated it by following Dave's instructions. More difficult still is getting an engine to run on no fossil fuel as Stan did, but recently, three men in the UK achieved just that by getting a standard petrol-engined electrical generator to run with water as the only fuel.

Interestingly, this is not something which they want to pursue as they have other areas which are of much more interest to them. Consequently, they have no objections to sharing the practical information on what they did and the details are in chapter 10.

In very brief outline, they took a standard 5.5 kilowatt generator and delayed the spark timing by some eleven degrees, suppressed the 'waste' spark and fed the engine a mix of air, water droplets and just a small amount of hydroxy gas (measured at three litres per minute). They test-loaded the generator with four kilowatts of electrical

equipment to confirm that it worked well under load, and then moved on to larger engines. This is the general style of generator which they used:

And their arrangement for running it without petrol, is shown in outline here, the full details being in chapter 10, including how to make your own high-performance electrolyser:

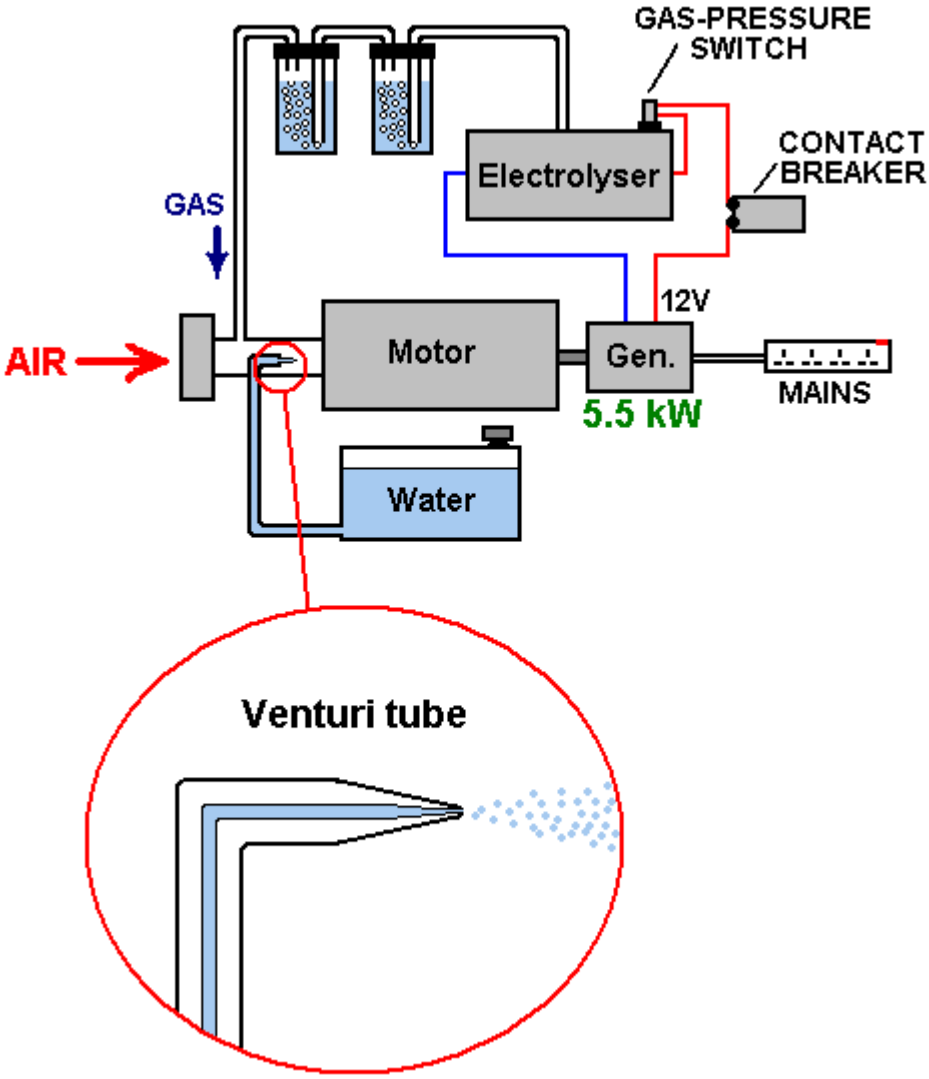

Conventional science says that it can prove mathematically that it is quite impossible to do this. However, the calculation is massively flawed in that is not based on what is actually happening and worse still, it makes initial assumptions which are just plain wrong. Even if we were not aware of these calculations, the fact that it has been done is quite enough to show that the current engineering theory is out of date and needs to be upgraded.

Now, let us consider a device built by John Bedini, a very talented man in the USA. He built a battery-powered motor with a flywheel on the shaft of the motor. This, of course, does not sound like startling stuff, but the crunch is that this motor ran in his workshop for more than three years, keeping it's battery fully charged during that time - now that **is** startling. The arrangement is like this:

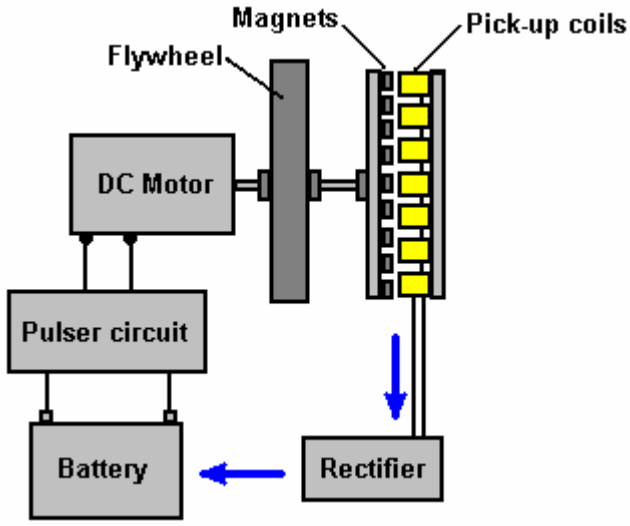

What makes this arrangement different from a standard set-up is that the battery powered motor is not connected directly to the battery but instead is fed with a rapid series of DC pulses. This has two effects. Firstly, that method of driving a motor is very efficient electrically speaking and secondly, when a flywheel is driven with a series of pulses, it picks up additional energy from the local environment.

One other unusual feature is the way that the motor shaft spins a disc with permanent magnets mounted on it. These sweep past a matching set of coils attached to a stationary board, forming an ordinary electrical generator and the resulting electrical power which is generated is converted to DC current and fed back to the driving battery, charging it and maintaining its voltage.

Standard theory says that a system like this has to be less than 100% efficient because the DC motor is less than 100% efficient (true) and the battery is well below the 100% efficient mark (true). Therefore, the conclusion is that the system cannot possibly work (false). What is not understood by conventional science is that the pulsed flywheel draws in additional energy from the local environment, showing that conventional science theory is inadequate and out of date and needs to be upgraded.

An American called Jim Watson built a much larger version of John's system, a version which was twenty feet (6 meters) long. Jim's version not only powered itself, but generated 12 kilowatts of excess electrical power. That extra 12 kilowatts of power must be a considerable embarrassment for conventional science and so they will either ignore it, or deny that it ever existed, in spite of the fact that it was demonstrated at a public seminar. This is what Jim's device looked like:

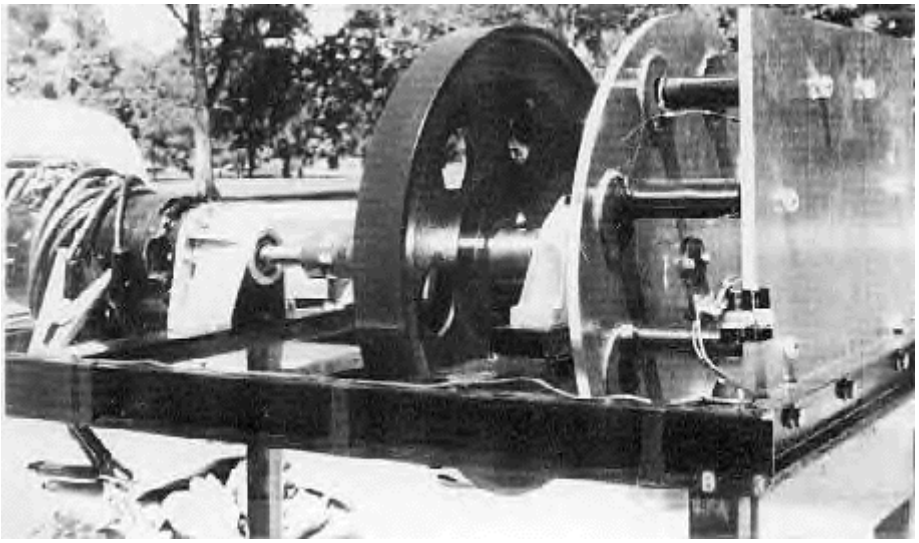

Working quite independently, an Australian called Chas Campbell, discovered the same effect. He found that if he used an AC motor plugged into the mains, that it was possible to get more work done that the amount it takes to drive the motor.

He used his motor to drive a series of shafts, one of which has a heavy flywheel mounted on it, like this:

The final shaft drives a standard electrical generator and Chas found that he could power electrical equipment from that generator, electrical mains equipment which required greater current that his mains-driven motor did.

Chas then took it one stage further and when the system was running at full speed, he switched his mains motor over from the wall socket to his own generator. The system continued to run, powering itself and driving other equipment as well.

Conventional science says that this is impossible, which just goes to show that conventional science is out of date and needs to be upgraded to cover system like this where excess energy is flowing in from the local environment. Here is a diagram of how Chas Campbell's system is set up:

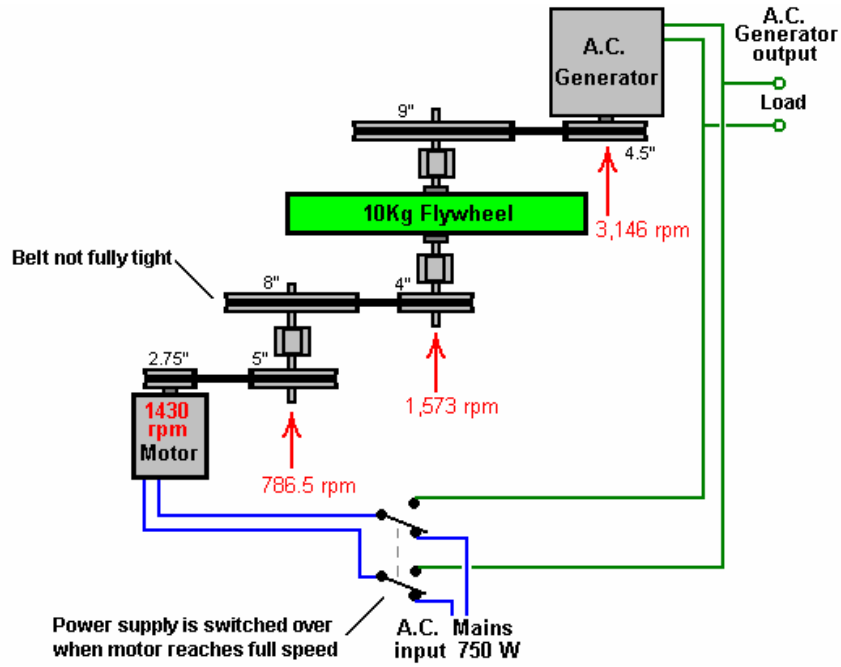

Another man has put a video on the web, showing a variation of this same principle. In his case, the flywheel is very light and has simple paddles attached around the rim of the wheel:

He then aims a powerful jet of water from a high-powered water pump, directly at the paddles, driving the wheel round with a rapid series of pulses. The shaft, on which the wheel is mounted, drives a standard electrical generator which lights an ordinary light bulb:

The really interesting part comes next, because he then unplugs the electrical supply to the water pump and switches it over to the generator which the wheel is driving. The result is that the pump powers itself and provides excess electricity which can be used to power other electrical equipment. The arrangement is like this:

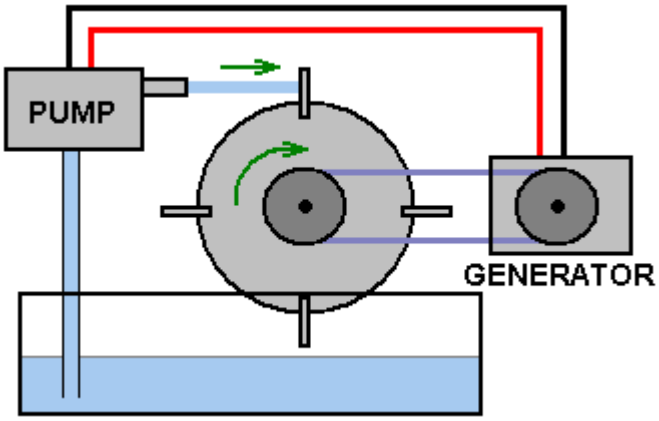

Once again, conventional science says that this is impossible, which in turn, demonstrates that conventional science is out of date and needs to be expanded to include these observed facts.

Permanent Magnets have continuous power. This should be obvious as one will support its own weight on the vertical face of a refrigerator, for years on end. Conventional science says that permanent magnets can't be used as a source of power. However, the reality is that conventional science just doesn't know the techniques necessary for extracting that power.

The New Zealander, **Robert Adams** produced a motor which appears to be, typically, 800% efficient. This, of course, is impossible according to conventional science. Robert was told that if he shared the information, he would be killed. He decided that at his age, being killed was not a major thing, so he went ahead and published all the details.

Motors driven by electrical pulses are always less than 100% efficient. The Adams motor looks like that sort of design but it is **not**. The motor power comes from the permanent magnets mounted on the rotor and not from an electrical pulse applied to the electromagnets attached to the stator. The magnets are attracted to the metal cores of the stationary electromagnets. This provides the driving power of the motor. The electromagnets are then powered just enough to overcome the backwards drag of the magnets when they have just passed by the cores of the electromagnets.

The system works like this:

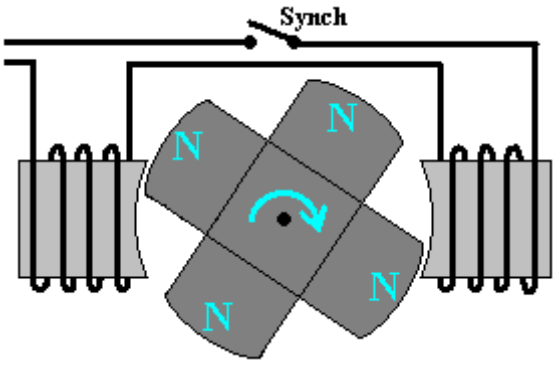

1. The magnets are attracted to the iron cores of the electromagnets, rotating the drive shaft and powering the motor.

2. The moving magnets generate electrical power in the windings of the electromagnets and this power is used to charge the driving battery.

3. When the permanent magnets reach the electromagnets, a small amount of electrical power is fed to the windings of the electromagnets in order to overcome any backward pull hindering the rotation of the drive shaft.

4. When that power supplied to the electromagnets is cut off, the Back EMF pulse is captured and used to charge the driving battery.

When operated in this way, the Adams Motor has a power output far in excess of the input power needed to make it run. The design confuses conventional science because conventional science refuses to accept the concept of energy flow into the motor, from the local environment. This is all the more strange, considering that windmills, water wheels, hydro-electric schemes, solar panels, wave-power systems, tidal power systems and geothermal energy systems are accepted and considered perfectly normal, in spite of the fact that they all operate on energy flowing in from the local environment. It is difficult to avoid the conclusion that vested interests are working hard to prevent conventional science accepting the fact that free-energy is all around us and there for the taking. Perhaps it is the case that they want us to go on paying for fuel to burn to "make" energy to power our homes and vehicles.

Another example of magnet power being used in the design of a powerful motor comes from **Charles Flynn**. He uses a similar method of electrical screening to prevent magnetic drag hindering the drive shaft rotation. Instead of using electromagnets, Charles uses permanent magnets on both the rotor and the stator, and a flat coil of wire to create the blocking fields:

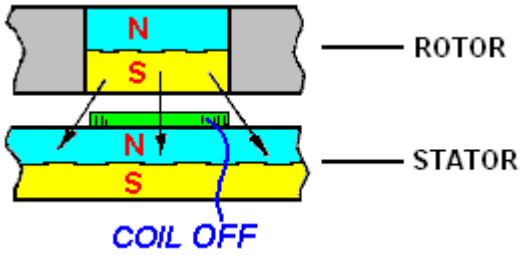

When the coil does not have current flowing through it, it does not produce a magnetic field and the South pole of the rotor magnet is attracted equally forwards and backwards by the North pole of the stator magnet. If there are two coils as shown below, and one is powered and the other is not powered, the backward pull is cancelled out and the forward pull causes the rotor to move forwards:

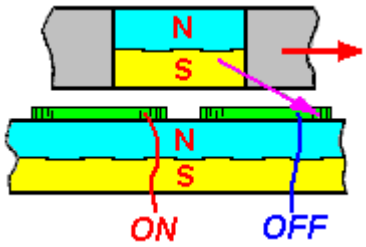

Conventional science takes a quick glance at this arrangement and proclaims that the motor efficiency has to be less than 100% because of the large electrical pulse needed to make the shaft turn. This just demonstrates a complete lack of understanding of how the motor operates. There is no "large electrical pulse" because the motor is **not** driven by electrical pulses, but instead it is driven by the attraction of many pairs of magnets, and only a very small electrical pulse is applied to cancel the backward drag as the magnets move past. To put this in context, the powerful prototype motor built by Charles ran at 20,000 rpm and the power for the coils was supplied by an ordinary 9-volt "dry-cell" battery quite incapable of supplying heavy currents.

The motor is easily made more powerful by using a stator magnet on both side of the rotor magnet, as shown here:

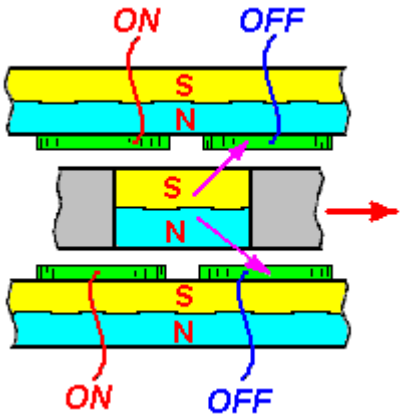

There is no real limit to the power of this motor as layer after layer of magnets can be mounted on a single drive shaft as shown here:

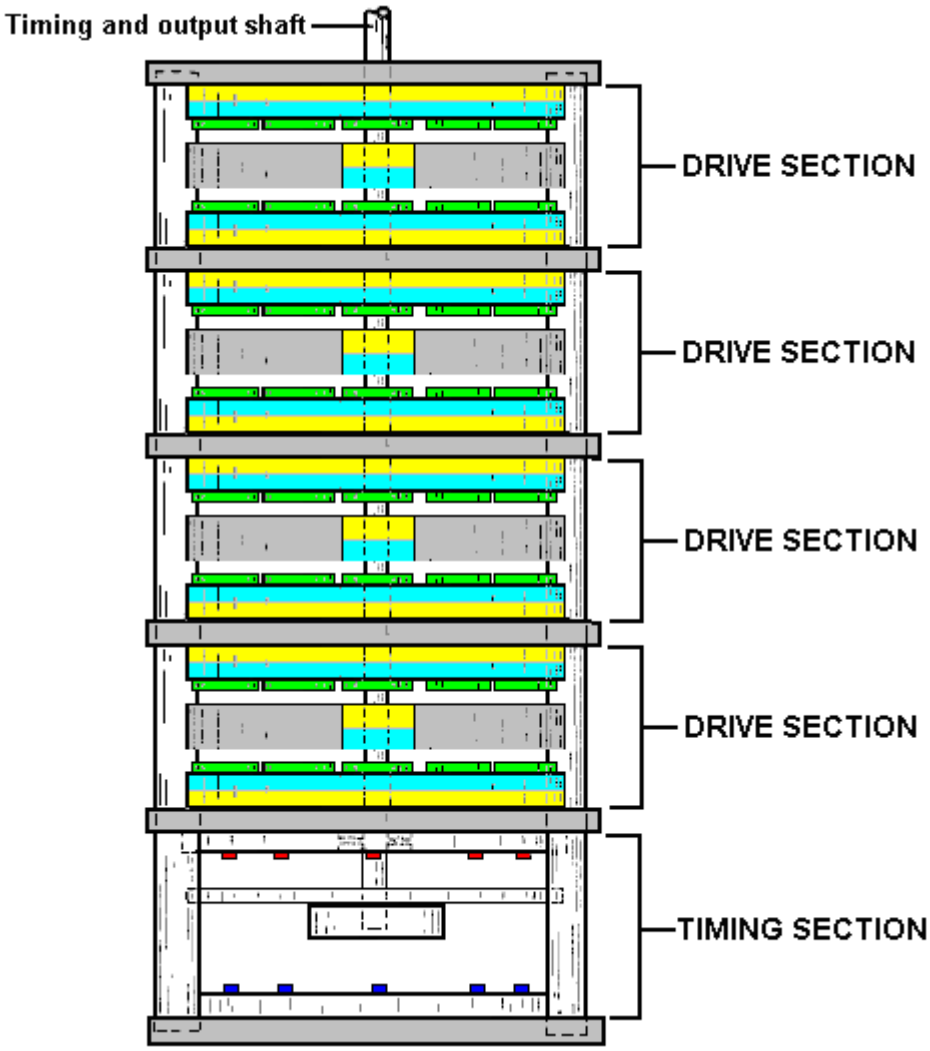

The electrical pulses to the screening coils can be synchronised by the light from Light-Emitting Diodes mounted in the timing section, shining through holes in a timing disc attached to the drive shaft of the motor. The light falling on light-dependant resistors on the other side of the disc, provide the switching for the coil-powering electricity.

An alternative method is to skip the timing section altogether and provide the synchronising pulses from an adjustable-frequency electronic pulsing circuit. To start the motor, very slow pulses are generated to get the drive shaft moving, and then the pulse rate is increased to speed the motor up. This has the advantage of providing speed control which can be useful for some applications.

Aerial systems. We are surrounded by so much energy that a simple aerial and earth connection can draw in very large amounts of electrical power from the local environment.

Thomas Henry Moray ran frequent public demonstrations during which he lit banks of light bulbs to show that useful amounts of energy could be drawn from the environment:

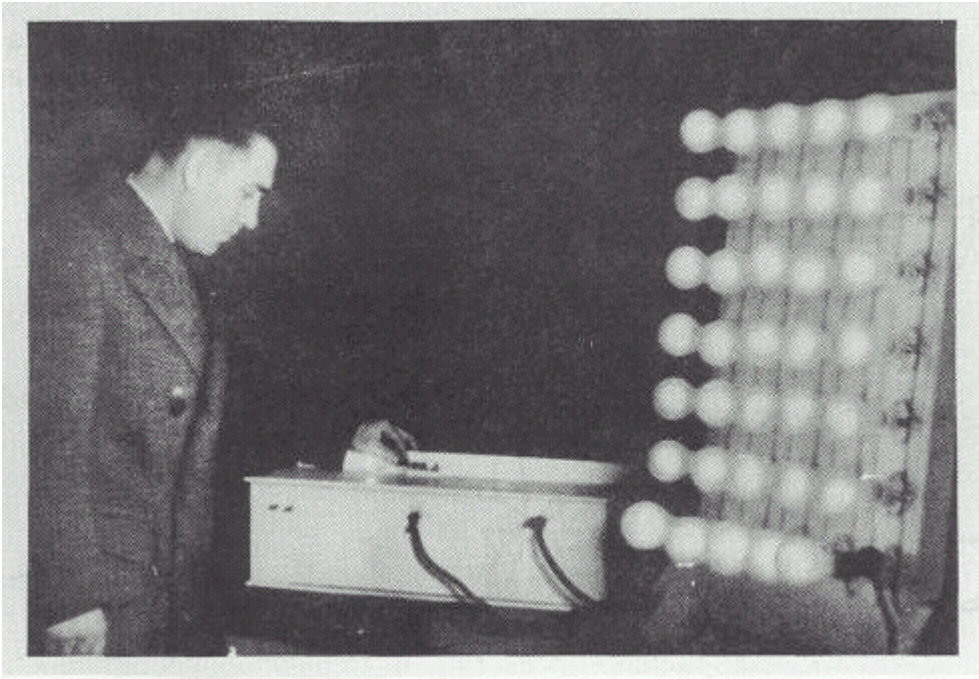

Moray's device could produce output powers up to fifty kilowatts and it had no moving parts, just a simple aerial and an earth. In spite of the frequent demonstrations, some people would not believe that this was not a hoax, so Moray invited them to choose a place and he would demonstrate the power available at any location they wanted.

They drove out into the countryside and picked a really isolated spot away from all power lines and the very few commercial radio stations in the area. They set up a very simple aerial estimated by one observer to be just fifty seven feet long and only seven or eight feet off the ground at its lowest point:

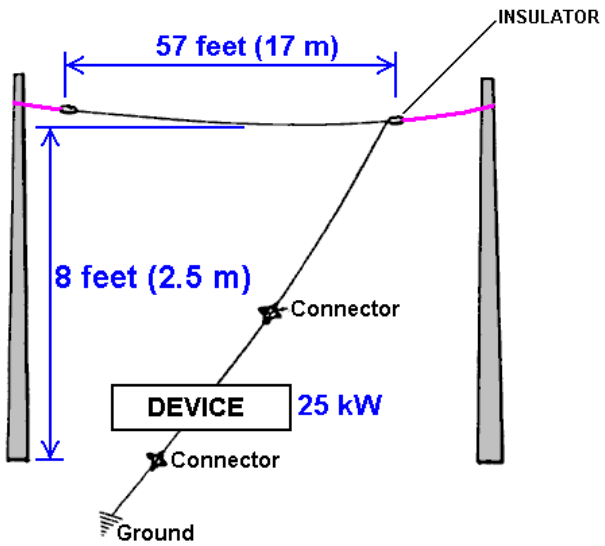

The earth connection was an eight-foot length of gas pipe which was hammered into the ground. The bank of lights being powered by Moray's device, grew brighter as the gas pipe was driven further and further into the ground, providing a better and better earth connection. Moray then demonstrated that when the aerial was disconnected, the lights went out. When the aerial was connected again, the lights were lit again. He then disconnected the earth wire and the lights went out and stayed out until the earth wire was connected again. The sceptics were completely convinced by the demonstration.

Moray's is one of several excellent and very successful devices which I can't tell you exactly how to replicate but the important point here is that a 57-foot aerial raised just 8-feet from the ground can provide kilowatts of electrical power at any location, if you know how to do it.

Moray's demonstrations were highly unpopular with some people and he was shot at in his car. He put bullet-proof glass in his car, so they came into his laboratory and shot at him there. They succeeded in intimidating him into stopping his demonstrations or publishing the exact details of how to replicate his aerial power system.

Lawrence Rayburn has recently developed an aerial system with one part raised thirty feet above the ground. He powers his farm with it and has measured more than 10 kilowatts being drawn from it.

Hermann Plauston has a patent which reads more like a tutorial on how to extract useful power from an aerial. He describes installations of his which produce 100 kilowatts of excess power as being "small" systems.

Frank Prentice has a patent on an aerial system where he drives a wire loop alongside a long length of wire mounted just seven or eight inches (200 mm) above the ground. His input power is 500 watts and the power drawn from the system is 3,000 watts, giving an excess of 2.5 kilowatts:

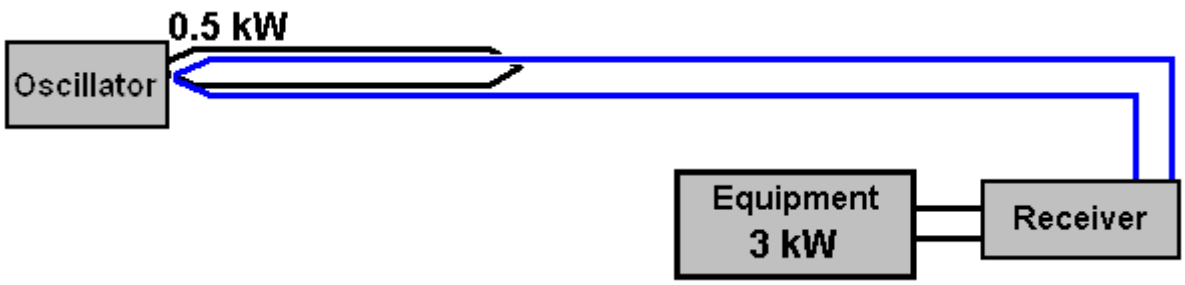

Nikola Tesla, probably the most famous person in the free-energy field, has a patent on an aerial system which uses a shiny metal plate with insulated faces as the main component of his aerial. As is common in this field, a high-quality capacitor is used to store the energy initially and then that power is pulsed through a step-down transformer which lowers the voltage and raises the current available, as shown here:

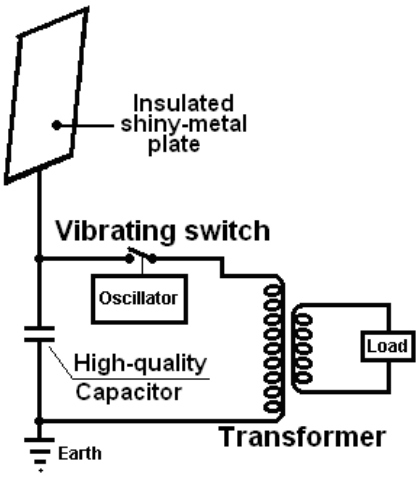

Tesla Coils. Instead of using an aerial, it is possible to use a Tesla Coil which produces very high currents **if** the primary winding is placed in the middle of the secondary winding and not at one end which is the usual configuration. Tesla directs the output on to a single metal plate and powers a load between the plate and the earth.

Don Smith demonstrates this in a video currently on YouTube. He uses a capacitor made from two metal plates with a sheet of plastic between them, instead of Tesla's insulated single plate. The load is powered between the capacitor and earth. The video shows Don using a 28-watt hand-held Tesla Coil and producing what looks like several kilowatts of power in the earth line.

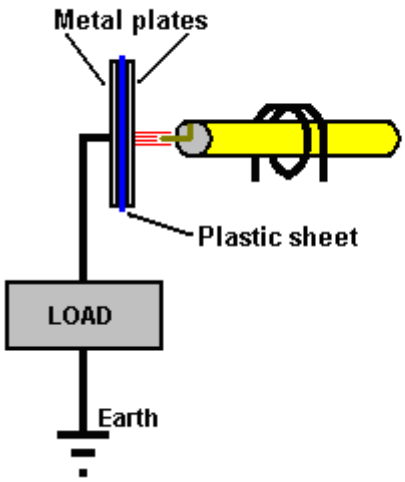

Don Smith

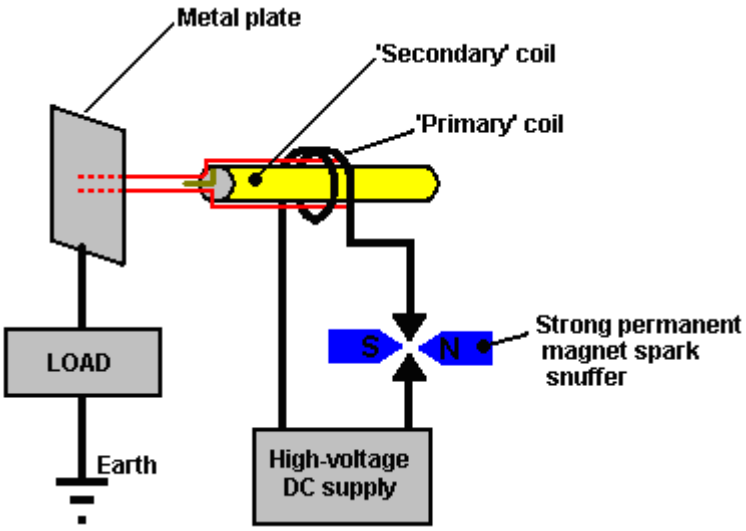

Nikola Tesla

Don points out that the output power is proportional to the **square** of the voltage and the **square** of the frequency: So if you double the frequency and double the voltage there will be 16 times the output power.

Tariel Kapanadze demonstrates this in a web video of his interview for Turkish TV. It shows him making an earth connection by burying an old car radiator, and then lighting a row of light bulbs from a Tesla Coil style fuel-less device. While the commentary is not in English, the video is very informative. You will notice that this is a substantial power output coming from a device built with a very basic style of construction where bare wires are twisted together to form an electrical connection.

When the starting battery is removed, the equipment is held in the air to show that it is self-contained and self-powered. This is another confirmation that free-energy is all around us and ready to be taken by anyone who knows how. Tariel is seen here lighting a row of five light bulbs hanging from a broom handle placed across the backs of two chairs - not exactly a high-tech, high-cost form of construction this!

This is a picture of his circuit housing, spark gap and output transformer:

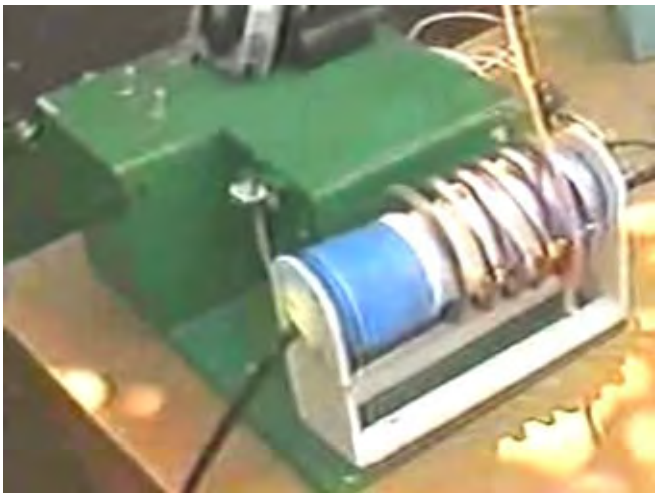

The **Colman / Seddon-Gillespie** 70-year battery. A quite different approach to getting fuel-less power was taken by Colman and Seddon-Gillespie who developed a tiny tube of harmless chemicals - copper, zinc and cadmium:

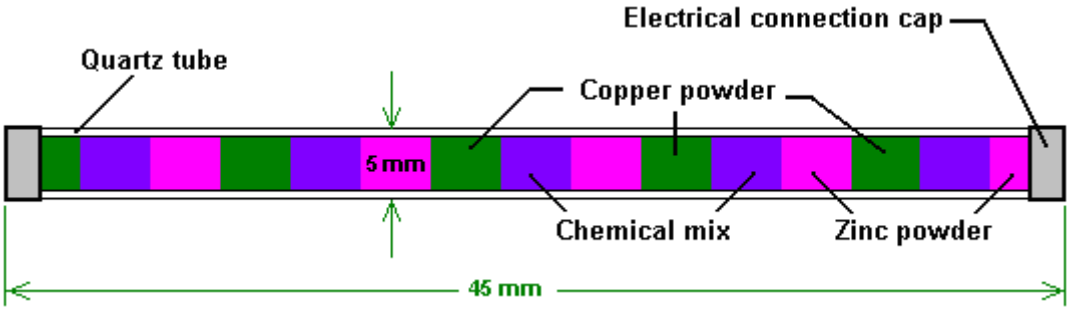

They found that if his tube was subjected to a few seconds of high-frequency electromagnetic radiation, then it became radioactive for about one hour. During that time, a kilowatt of electrical power could be drawn from this tiny tube. Near the end of the hour, another burst of electromagnetic waves keeps the tube radioactive and maintains the output current. Lead shielding is used to make this a safe device. They have a patent on this device. The expected working life of one of these tubes is estimated as being seventy years.

Electrolysis. Michael Faraday did a really excellent job of investigating how much energy was required to change water from it's liquid state into a mixture of hydrogen gas and oxygen gas. Conventional science has latched on to this information and refuses to believe that it is not the last possible word on electrolysis.

This is akin to saying that the fastest a man can propel himself over the ground is by running, and refusing to accept the fact that there might be a later invention of a bicycle which would allow a much faster human-powered speed over the ground.

This is maintained in spite of the fact that a patent has been awarded to **Shigeta Hasebe** for a different style of electrolysis, using magnets and spiral electrodes like this:

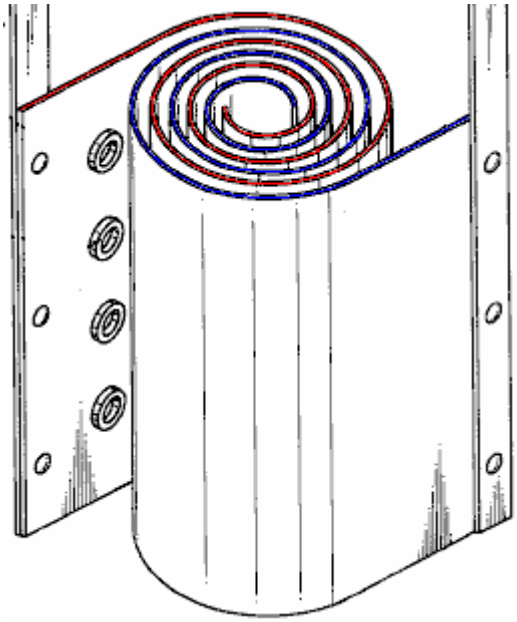

In his patent, Shigeta indicates his disappointment that his laboratory tests only showed an efficiency of ten times that of Faraday while his calculations showed that he could be getting twenty times the Faraday result. The different method, along with the use of powerful magnets at the top and bottom of his electrode pairs, bypassed the limits which Faraday had established.

Bob Boyce of the USA has produced a pulsed electrolysis system which has given measured outputs which are twelve times that of Faraday's established "maximum" efficiency. This makes a nonsense of calculations based on Faraday's results. Excellent as Faraday's results are, they are no longer the limiting factor in splitting water as technology has progress beyond the methods used by Faraday.

Stanley Meyer of the USA discovered a method of splitting water into it's gas form, using very little power. Stan's work has been replicated by Dave Lawton and many other people. For example, Dr Scott Cramton has produced the "hydroxy" gas mix produced by the electrolysis of water, at a rate of 6 litres per minute with a power input of just 36 watts (12 volts at 3 amps). This is dramatically better than Faraday thought was possible and it allows power production through recombining the hydroxy gas to give water again, as the power produced is well above the amount of power needed to split the water in the first place.

John Bedini of the USA has patented a system for the rapid charging of batteries with a pulsed waveform. Using banks of batteries tends to be very expensive, very space-consuming and replacement batteries are needed at frequent intervals, giving the user a disposal problem and additional cost. Batteries have the serious restriction that they get damaged and their life shortened if the rate of discharge is less than 20 hours. So a 100 Amp-Hour battery can only manage a 5 amp current (60 watts) if it is not to be damaged.

John Bedini's spike-generating system can charge several batteries at the same time. The snag is that you can't use the batteries to power equipment while they are being charged, so you need two sets of batteries. The system is easy to make and use, but it is quite difficult to get more genuine power out of the device than is needed to drive it. The best performance that I have come across is where there is eleven times more power output than the power input.

There are several variations on John's pulser. The most common is a bicycle wheel with ferrite permanent magnets attached to the rim:

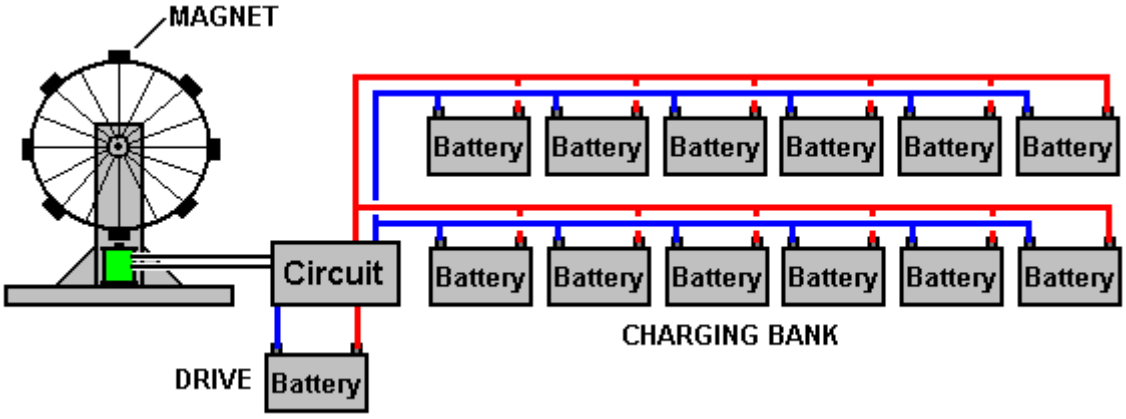

As the wheel spins, the approaching magnet generates a voltage in one winding of an electromagnet. This triggers a circuit which powers a second winding of the electromagnet. This pulse pushes the magnet away, keeping the wheel spinning. When the power to the coil is cut off, the resulting "Back EMF" voltage spike is fed to the batteries being charged. If the spike is sharp enough, it can cause an inflow of additional energy from the local environment. Interestingly, the rate at which the wheel rotates is directly proportional to the amount of charge in the batteries being charged. Here is a picture of **Ron Pugh**'s high-quality construction of a Bedini pulse charger:

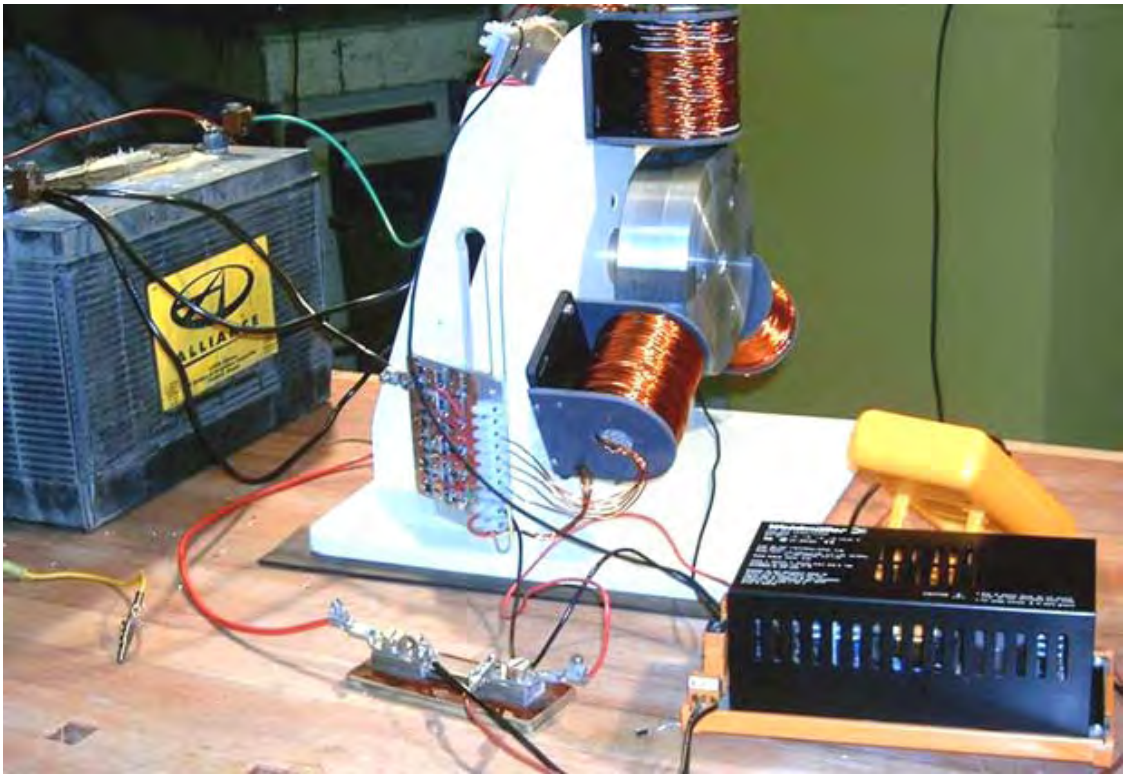

Conclusion:
The term "Free-Energy" generally means a method of drawing power from the local environment, without the need to burn a fuel. There are many different successful methods for doing this and these methods span many countries and many years.

The amount of power which can be collected can be very high and the few kilowatts needed to power a household is most definitely within the reach of most of the devices mentioned.

However, the key to drawing large amounts of electrical power from the local environment, or as Moray puts it "the sea of energy in which the Earth floats", is an ordinary, everyday commercial device, used to power the neon tubes used in advertising displays:

Not particularly expensive, nor difficult to buy, this device produces an AC waveform of thousands of volts at tens of thousands of cycles per second. Connected in the right way, it draws large amounts of power from the environment as described by Don Smith who is a very talented American man. A specially shaped step-up transformer called a Tesla Coil is used to boost the voltage even higher and that has a dramatic effect because the power drawn into the circuit from outside is proportional to the square of the voltage and the square of the frequency. So, if you double the voltage and double the frequency, the extra power is boosted by a factor of sixteen times.

The technique used looks mad if you don't understand what is happening, because you step up the voltage and frequency, and then you step them both down again, which looks like a waste of time, but, and it is a big "but", one simple device described in chapter 3 produces excess power of 160 kilowatts as well as powering itself.

****

In this brief introduction, not much detail has been given about the devices mentioned and only a small selection of devices have been covered. Much more detail is available in this and the other chapters of this eBook

The 'bottom line' is that energy can definitely be drawn from the local environment in sufficient quantities to supply all of our needs. For whatever reason, conventional science appears determined not to accept this basic fact and denies it at every opportunity. It seems likely that vested financial interests are the root cause of this refusal to accept the facts. The true scientific method is to upgrade scientific theory in the light of observed fact and new discoveries, but the true scientific method is not being followed at the present time.

Therefore, I invite you to examine the facts, read the information in this eBook and the additional information on the website http://www.free-energy-info.com and make up your own mind on the subject.

Chapter 1: Magnet Power

One thing which we are told, is that permanent magnets can't do any work. Oh yes, magnets can support themselves against the pull of gravity when they stick on your refrigerator, but, we are told, they can't do any work. Really?

What exactly is a permanent magnet? Well, if you take a piece of suitable material like 'soft' iron, put it inside a coil of wire and drive a strong electrical current through the coil, then that converts the iron into a permanent magnet. What length of time does the current need to be in the coil to make the magnet? Less than one hundredth of a second. How long can the resulting magnet support its own weight against gravity? Years and years. Does that not strike you as strange? See how long you can support your own body weight against gravity before you get tired. Years and years? No. Months, then? No. Days, even? No.

Well if you can't do it, how come the magnet can? Are you suggesting that a single pulse for a minute fraction of a second can pump enough energy into the piece of iron to power it for years? That doesn't seem very logical, does it? So, how does the magnet do it?

Well, the answer is that the magnet does not actually exert any power at all. In the same way that a solar panel does not put any effort into producing electricity, the power of a magnet flows from the environment and not from the magnet. The electrical pulse which creates the magnet, aligns the atoms inside the iron and creates a magnetic "dipole" which has the same effect that the electrical "dipole" of a battery does. It polarises the quantum environment surrounding it and causes great streams of energy flow around itself. One of the attributes of this energy flow is what we call "magnetism" and that allows the magnet to stick to the door of your refrigerator and defy gravity for years on end.

Unlike the battery, we do not put it in a position where it immediately destroys its own dipole, so as a result, energy flows around the magnet, pretty much indefinitely. We are told that permanent magnets can't be used to do useful work. That is not true.

This is a picture of a Chinese man, Shenhe Wang, who has designed and built an electrical generator of five kilowatt capacity. This generator is powered by permanent magnets and so uses no fuel to run. It has been demonstrated publicly, and two of these generators have successfully completed the Chinese government's mandatory six-month "Reliability and Safety" testing programme in April 2008. One large Chinese consortium has started buying up coal-fired electricity generating stations in China in order to refurbish them with pollution-free large versions of Wang's generator. Several companies are competing for the rights to manufacture home-power versions of less than 10 kW capacity but it appears most likely that this generator will not be allowed to be sold outside of China in spite of Shenhe's desire to give the design away free to all countries.

It is not easy to arrange permanent magnets in a pattern which can provide a continuous force in a single direction, as there tends to be a point where the forces of attraction and repulsion balance and produce a position in which the rotor settles down and sticks. There are various ways to avoid this happening. It is possible to modify the magnetic field by diverting it through a soft iron component. An example of this is John Bedini's simple design shown here:

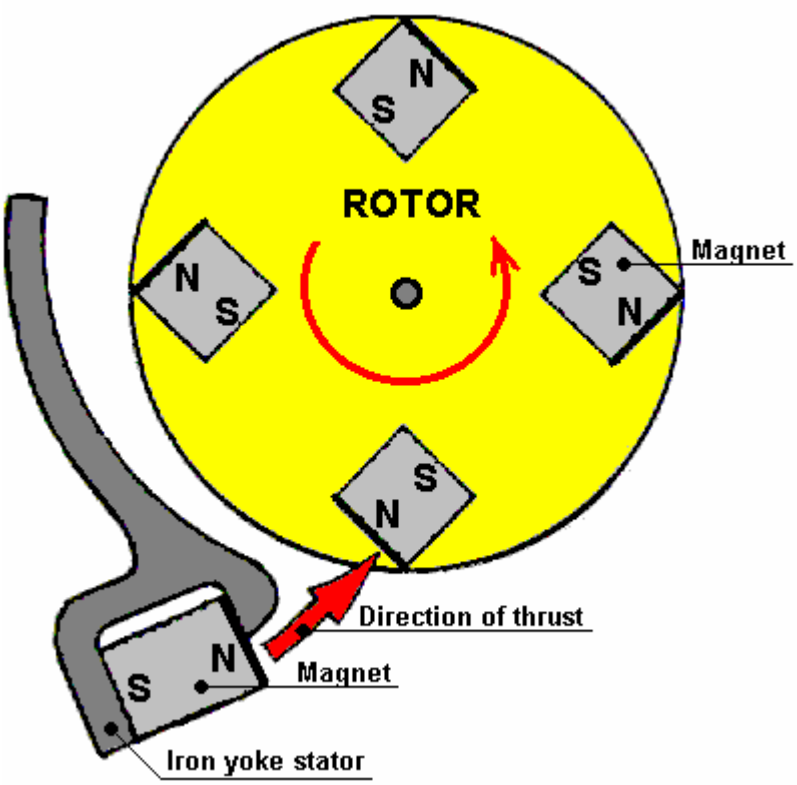

In John's design, the magnetic field of the stator magnet is altered by the iron yoke and this smothers the repulsion which would normally occur between the North pole of the stator magnet and the North pole of each rotor magnet as it gets close to the stator magnet. This arrangement allows the rotor magnets to receive a push as they pass by the stator magnet, producing a repeating thrust to keep the rotor rotating. To increase the power, there does not appear to be any reason why there should not be two stators as shown here:

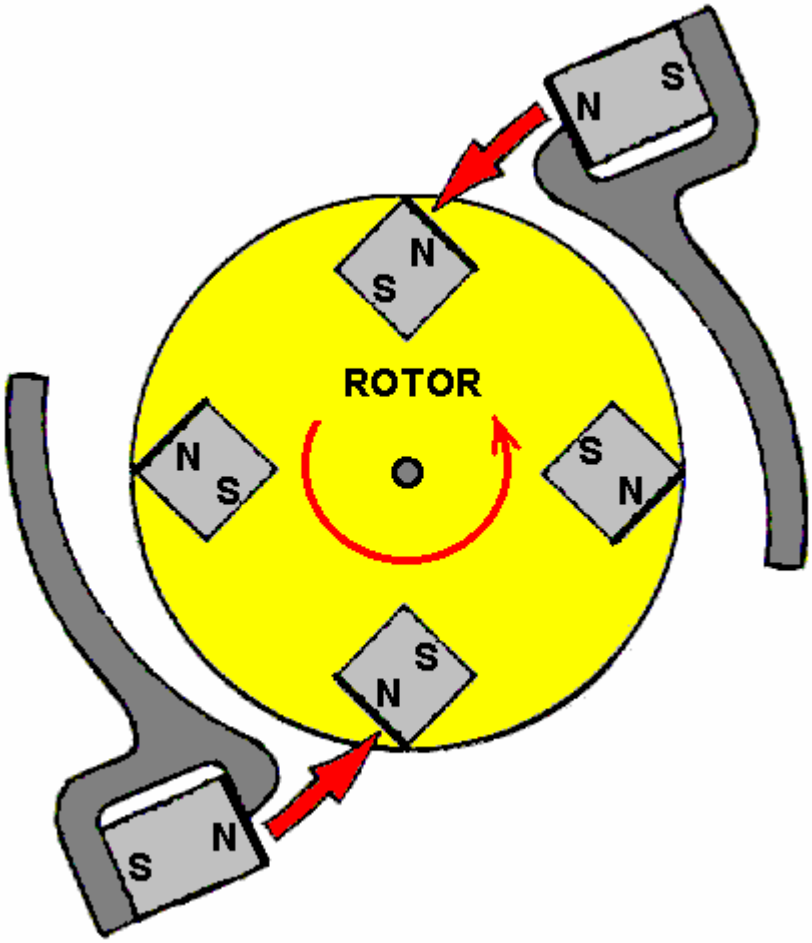

There does not appear to be any reason why several of these rotor/stator assemblies should not be attached to a single shaft to increase the power applied to the shaft and allow an increased level of useful work to be performed

by the device, but this style of magnet motor rotates only slowly and should be considered a "proof of concept" device rather than a serious drive motor.

There are many other designs of permanent magnet motor, but before showing some of them, it is probably worth discussing what useful work can be performed by the rotating shaft of a permanent magnet motor. With a home-built permanent magnet motor, where cheap components have been used and the quality of workmanship may not be all that great (though that is most definitely not the case with some home construction), the shaft power may not be very high. Generating electrical power is a common goal, and that can be achieved by causing permanent magnets to pass by coils of wire. The closer to the wire coils, the greater the power generated in those coils. Unfortunately, doing this creates magnetic drag and that drag increases with the amount of electrical current being drawn from the coils.

There are ways to reduce this drag on the shaft rotation. One way is to use an Ecklin-Brown style of electrical generator, where the shaft rotation does not move magnets past coils, but instead, moves a magnetic screen which alternatively blocks and restores a magnetic path through the generating coils. A commercially available material called “mu-metal” is particularly good as magnetic shield material and a piece shaped like a plus sign is used in the Ecklin-Brown generator.

John W. Ecklin was granted US Patent Number 3,879,622 on 29th March 1974. The patent is for a magnet/electric motor generator which produces an output greater than the input necessary to run it. There are two styles of operation. The main illustration for the first is:

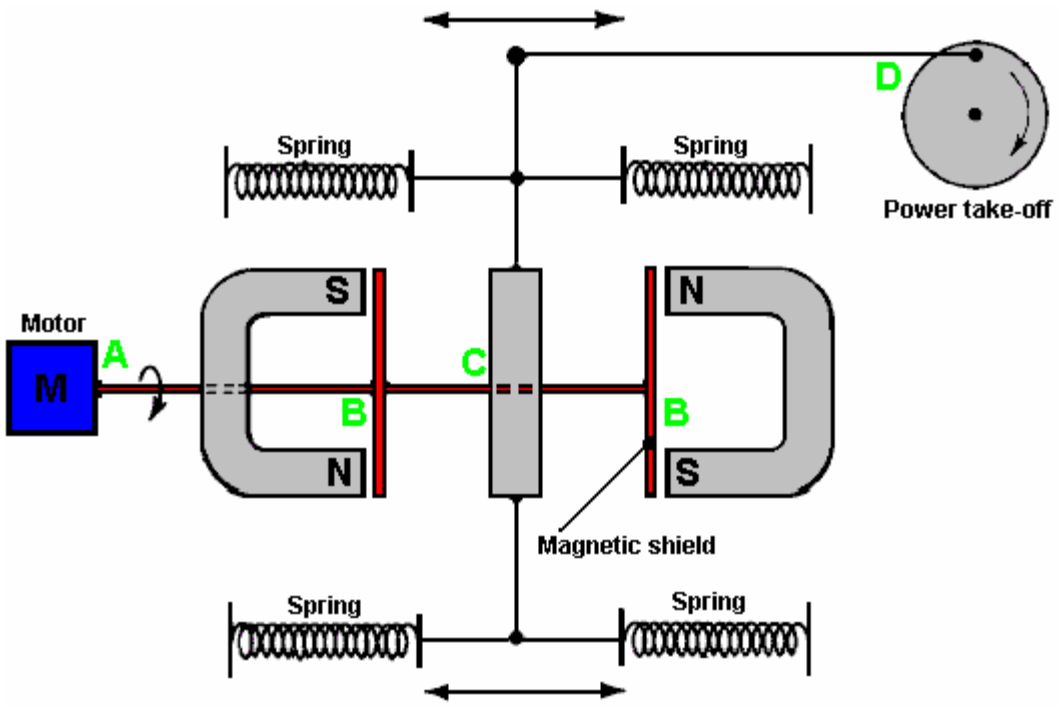

Here, the (clever) idea is to use a small low-power motor to rotate a magnetic shield to mask the pull of two magnets. This causes a fluctuating magnet field which is used to rotate a generator drive.

In the diagram above, the motor at point ‘A’ rotates the shaft and shielding strips at point ‘B”. These rectangular mu-metal strips form a very conductive path for the magnetic lines of force when they are lined up with the ends of the magnets and they effectively shut off the magnet pull in the area of point ‘C’. At point ‘C’, the spring-loaded traveller is pulled to the left when the right-hand magnet is shielded and the left hand magnet is not shielded. When the motor shaft rotates further, the traveller is pulled to the right when the left-hand magnet is shielded and the right hand magnet is not shielded. This oscillation is passed by mechanical linkage to point ‘D’ where it is used to rotate a shaft used to power a generator.

As the effort needed to rotate the magnetic shield is relatively low, it is claimed that the output exceeds the input and so can be used to power the motor which rotates the magnetic shield.

The second method for exploiting the idea is shown in the patent as:

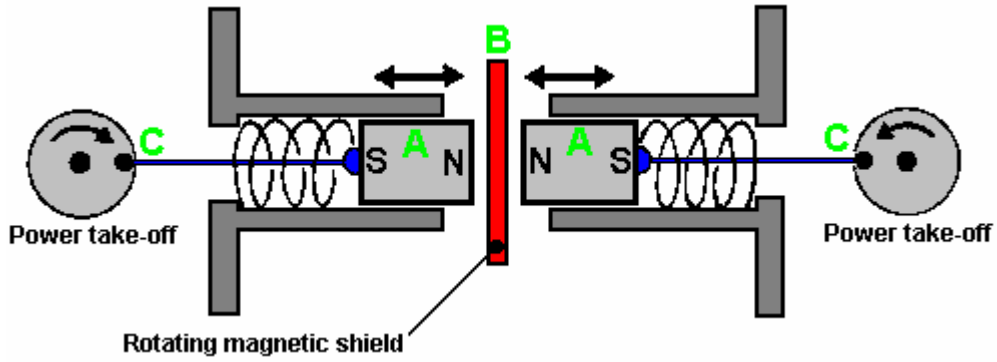

Here, the same shielding idea is utilised to produce a reciprocating movement which is then converted to two rotary motions to drive two generators. The pair of magnets 'A' are placed in a housing and pressed towards each other by two springs. When the springs are fully extended, they are just clear of the magnetic shield 'B'. When a small electric motor (not shown in the diagram) moves the magnetic shield out of the way, the two magnets are strongly repelled from each other as their North poles are close together. This compresses the springs and through the linkages at 'C' they turn two shafts to generate output power.

A modification of this idea is the **Ecklin-Brown Generator**. In this arrangement, the movable magnetic shielding arrangement provides a direct electrical output rather than a mechanical movement:

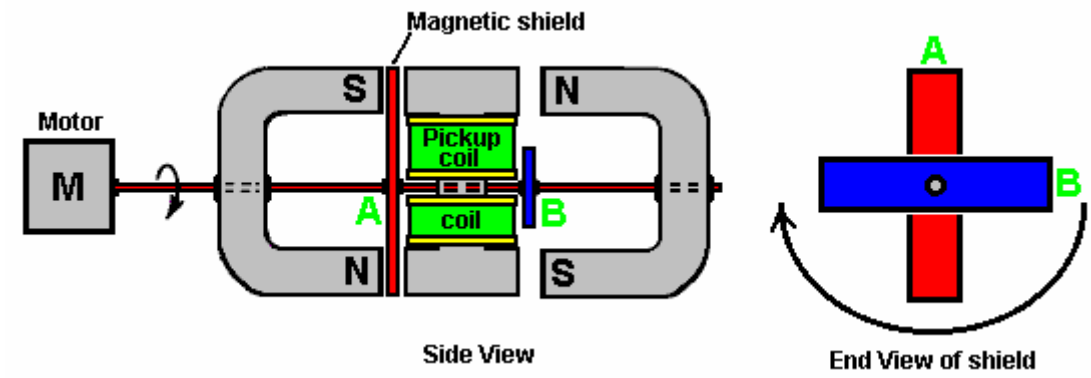

Here, the same motor and rotating magnetic shield arrangement is used, but the magnetic lines of force are blocked from flowing through a central I-piece. This I-piece is made of laminated iron slivers and has a pickup coil or coils wound around it.

The device operates as follows:

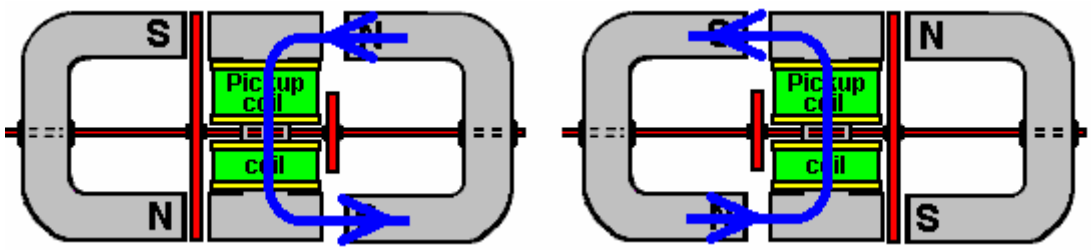

In the position shown on the left, the magnetic lines of force flow **downwards** through the pickup coils. When the motor shaft has rotated a further ninety degrees, the situation on the right occurs and there, the magnetic lines of force flow **upwards** through the pickup coils. This is shown by the blue arrows in the diagram. This reversal of magnetic flux takes place four times for every rotation of the motor shaft.

While the Ecklin-Brown design assumes that an electric motor is used to rotate the mu-metal shield, there does not seem to be any reason why the rotation should not be done with a permanent magnet motor.

Another effective power take-off system is that used by the “Phi Transformer” (“Phi” is pronounced “Fi”). In this design, the magnetic drag is reduced by containing the magnetic flux in a laminated iron ring or “toroid”. Again, the design expects an electric motor to be used to spin the rotor, but there does not seem to be any great reason why a permanent magnet motor should not be used instead.

Toroidal shapes are clearly important in many devices which pull in additional energy from the environment, even to the extent that Bob Boyce warns against the high-frequency sequential pulsing of coils wound on a toroid yoke, producing a rotating magnetic field as unpredictable surge events can generate some 10,000 amps of additional current which will burn out the circuit components and can very well trigger a radiant energy build up which can create a lightning strike. Bob himself has been hit by just such a lightning strike and he is lucky to have survived. Lesser systems such as the toroid transformer used in Bob’s electrolyser system are safe even though they generate a power gain. So the many toroidal system designs are definitely worth examining.

One of these is the “Phi-Transformer” which looks like a somewhat similar arrangement to the MEG described in Chapter 3. However, it operates in quite a different way:

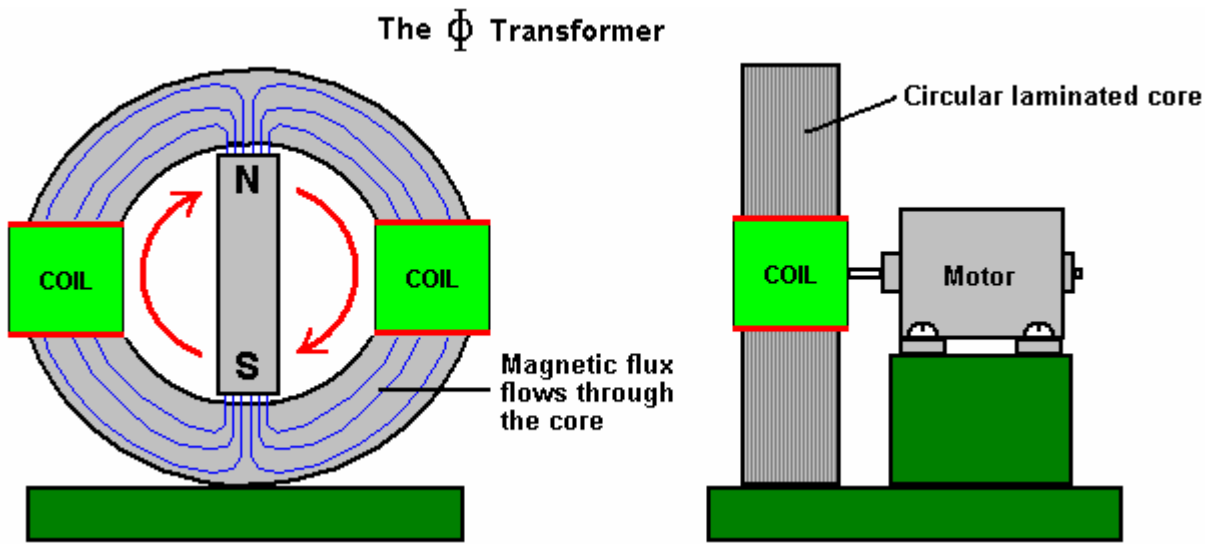

Here, lines of magnetic flux coming from a permanent magnet are channelled through a laminated yoke which is effectively a circular mains transformer core. The difference is in the fact that instead of electronically driving a coil to alter the flux coming from the permanent magnet, in this system the magnet is rotated by a small motor.

The performance of this device is impressive. The power required to rotate the magnet is not unduly affected by the current drawn from the coils. The flux is channelled through the laminated iron core and in tests an output of 1200 watts for an input of 140 watts has been achieved, and that is a COP of 8.5 which is very respectable, especially for such a simple device.

At http://jnaudin.free.fr/html/dsqromg2.htm a generator design by Dave Squires is shown, dated 1999. All attempts to contact Dave Squires have been unsuccessful, so it is not known if the information there is from tests on a device which has actually been built or if it is just a theoretical design, though it is likely that it was not built at that time. The design is almost identical to the Phi Transformer. A central core is produced by casting the shape shown below, using an amorphous iron powder / epoxy mix. However, as the operating frequency is low at only 50 Hz or 60 Hz, there does not seem to be any reason why normal transformer laminations should not be used, in which case six sets of shims shaped like this:

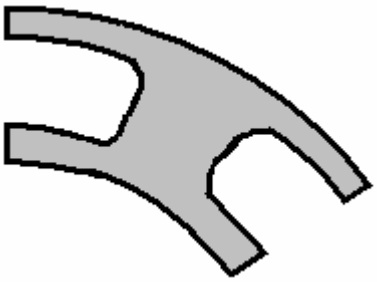

which would make the winding of the coils very much easier as standard bobbins could be slotted into place as the core yoke is being assembled.

However, the complete core is shaped like this with coils placed in the slots:

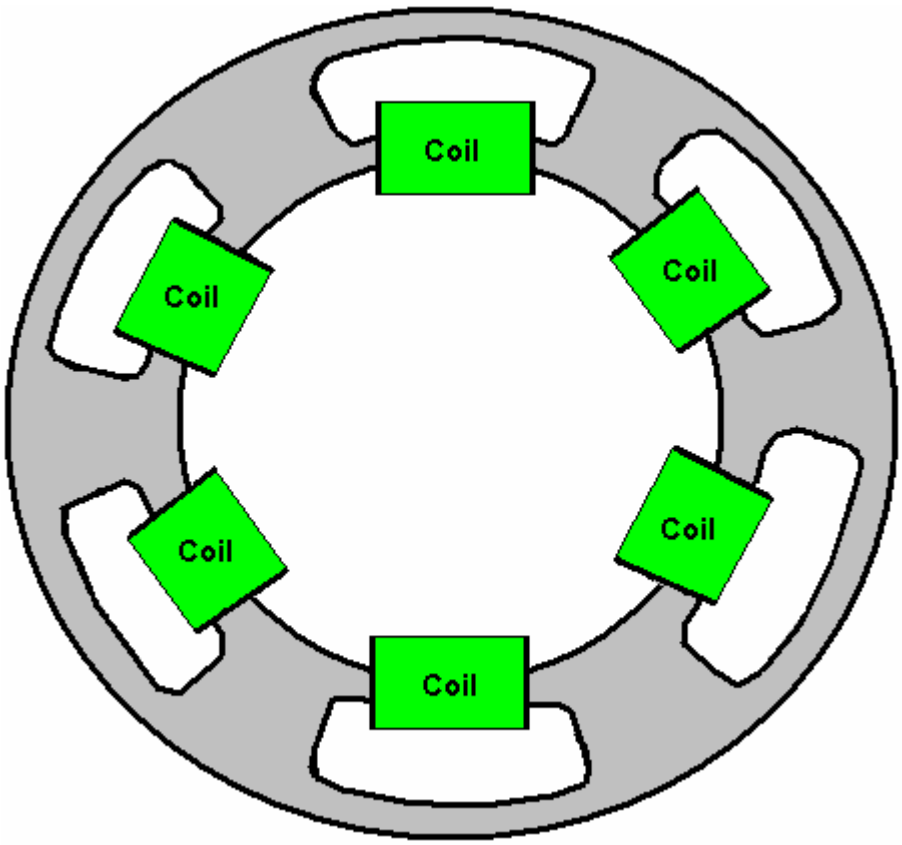

The thinking behind this arrangement is that the “back-EMF” magnetic flux which normally causes Lenz Law opposition to the free rotation of the magnets around the toroid, is diverted around behind the coil and turned so that instead of hindering the rotation, it actually assists it:

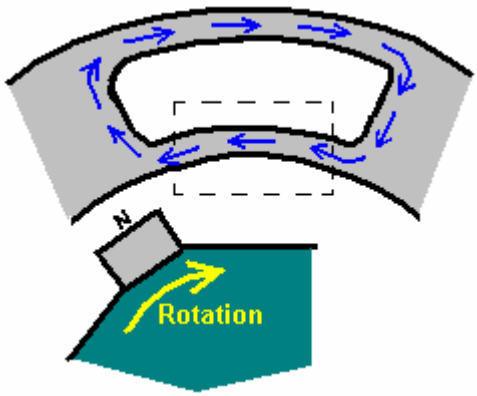

The speed of rotation is quoted as being 1,000 rpm for 50 Hz and 1,200 rpm for 60 Hz. The coil windings are suggested as being 180 turns of AWG 14 (16 SWG) for 120 volts AC, at a supposed current of 100 amps, which is seems unrealistic as the maximum current for that size of wire is quoted as being 5.9 amps. The magnets are 2 inches long, 1 inch deep neodymium set into a circular rotor of 12 inch diameter. There can, of course, be more than one rotor on a single shaft, and the number of turns would be doubled for 240 volts AC output.

The yoke on which the coils are wound is effectively a series of toroids, though admittedly, not exactly circular in shape. An alternative shape which might be considered would be as shown below where the section carrying the magnetic flux for any one coil is more isolated from the other toroids. It is not clear if making the section which passes through the coil, straight rather than curved, so I will leave that detail to people who are expert in magnetics.

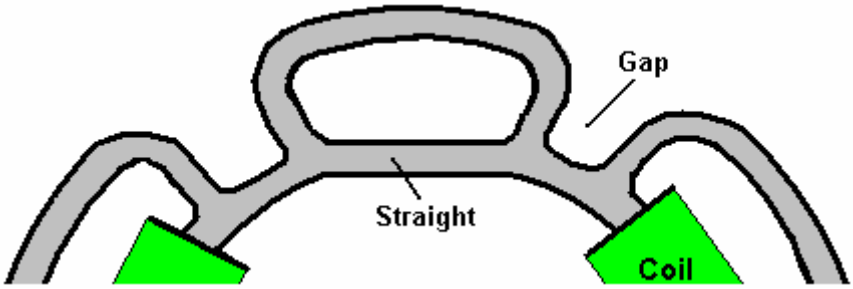

This design concept has been tested by one or two people and while magnetic drag was reduced, it did not reach zero. One arrangement suggested by Garry Stanley and verified by Stefan Hartman in October 2003 is:

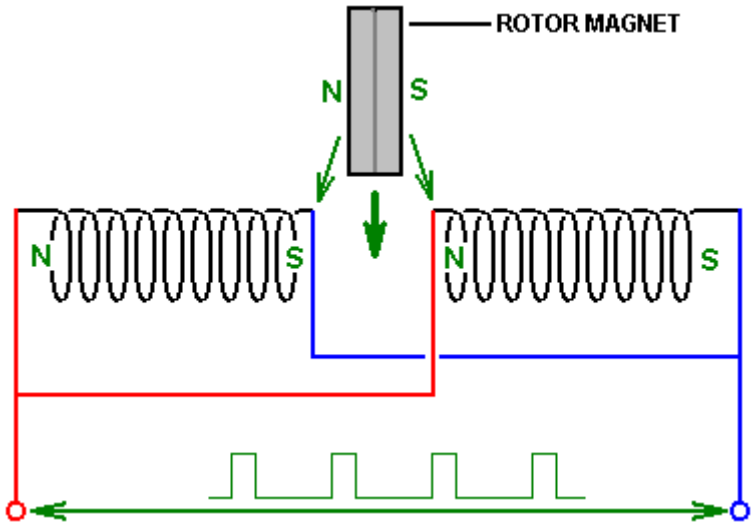

Here, two identical coils are wired in parallel and driven by a pulsed DC voltage. When they are powered up a strong attraction is created between these stationary coils and the permanent magnet fixed to a rotating disc positioned between the coils. This attraction causes the rotor to rotate, moving the magnet into the space between the coils. If nothing were changed, then the magnet would overshoot the centre of the coils and then experience a pull backwards towards the coils. To avoid this, the electrical power is cut as soon as the magnet passes the centre of the coils. This produces a large voltage of the opposite polarity in the coil and that has two beneficial effects. The first effect is that the poles of the coils are reversed and instead of dragging the magnet backwards, the coils actually push the magnet onwards. The second effect is that the voltage pulse can be directed through diodes to pass that “back EMF” power pulse back to charge a battery, regaining some of the electrical power used to drive the rotor.

While this looks like a new motor arrangement, it is actually a variation of the motor designed by the late Robert Adams of New Zealand and described in detail in Chapter 2:

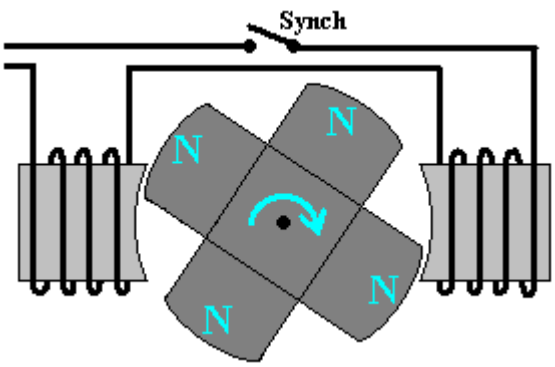

The only physical difference is that the coils are wired in series rather than in parallel, that is, in a daisy chain rather than wired directly across each other. The non-obvious difference is that the Adams motor is driven by the

power of the permanent magnets being attracted to the metal cores of the coils and the power applied to prevent the backwards drag when the rotor magnet has passed the centre of the coil.

The Raymond Kromrey electrical generator design claims a near-zero magnetic drag factor and it is described in detail in Chapter 2.

Howard Johnson. Returning to permanent magnet motors themselves, one of the top names in this field is Howard Johnson. Howard built, demonstrated and gained US patent 4,151,431 on 24th April 1979, from a highly sceptical patent office for, his design of a permanent magnet motor. He used powerful but very expensive Cobalt/Samarium magnets to increase the power output and demonstrated the motor principles for the Spring 1980 edition of *Science and Mechanics* magazine. His motor configuration is shown here:

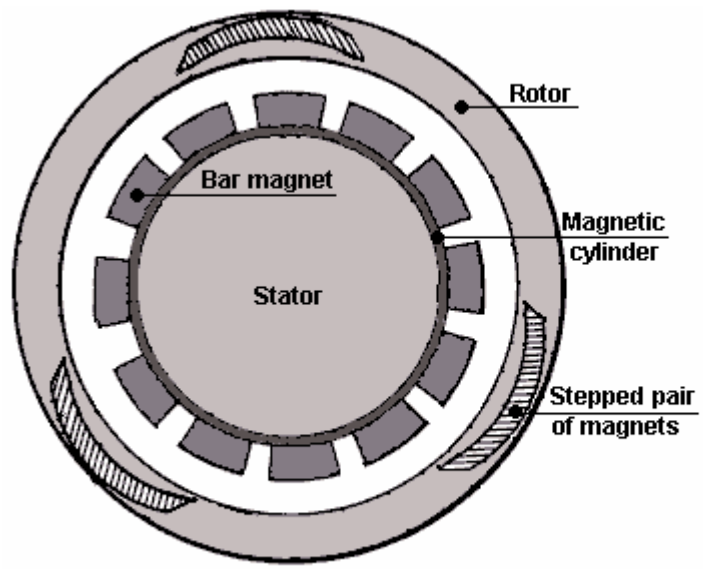

Note that the gaps between the magnets are not a constant width.

The point that he makes is that the magnetic flux of his motor is always unbalanced, thus producing a continuous rotational drive. The rotor magnets are joined in stepped pairs, connected by a non-magnetic yoke. The stator magnets are placed on a mu-metal apron cylinder. Mu-metal is very highly conductive to magnetic flux (and is expensive). The patent states that the armature magnet is 3.125” (79.4 mm) long and the stator magnets are 1” (25.4 mm) wide, 0.25” (6 mm) deep and 4” (100 mm) long. It also states that the rotor magnet pairs are **not** set at 120 degrees apart but are staggered slightly to smooth out the magnetic forces on the rotor. It also states that the air gap between the magnets of the rotor and the stator are a compromise in that the greater the gap, the smoother the running but the lower the power. So, a gap is chosen to give the greatest power at an acceptable level of vibration.
Howard considers permanent magnets to be room-temperature superconductors. Presumably, he sees magnetic material as having electron spin directions in random directions so that their net magnetic field is near zero until the electron spins are aligned by the magnetising process which then creates an overall net permanent magnetic field, maintained by the superconductive electrical flow.

The magnet arrangement is shown here, with the inter-magnet gaps assessed from the drawing in Howard’s patent:

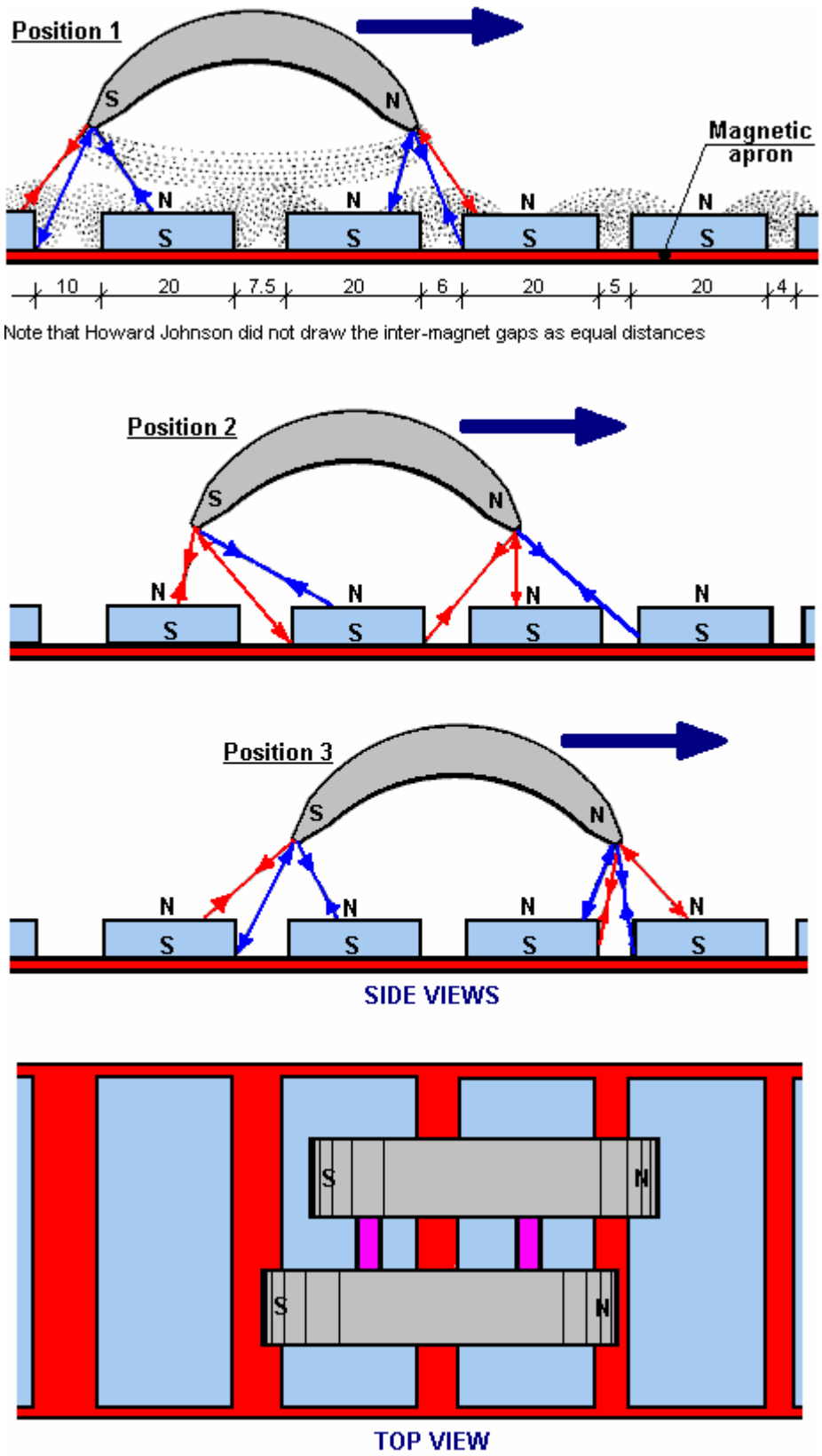

Howard made measurements of the magnetic field strengths and these are shown in the following table:

Measurements taken at the North and South poles of the armature magnet shows that there is a constant off-balance situation.

"Zero" Air Gap SOUTH POLE of Armature over:		1/8" Air Gap SOUTH POLE of Armature over:	
Spaces (Repulsion)	Stator Magnets (Attraction)	Spaces (Repulsion)	Stator Magnets (Attraction)
925	1650	950	1250
675	2220	550	1175
600	2200	650	1150
500	2175	650	1150
375	2325	800	1150
300	2275	600	1175
525	2150	750	1150
600	2275	700	1200
450	1800	800	1100
550	1700	850	1150
575	1825	650	975
400	2050	850	1250
475	2150	675	1350
6,950 Gauss	26,775 Gauss	9,475 Gauss	15,225 Gauss
33,725 Gauss (Total)		24,700 Gauss (Total)	
9,025 Gauss (Difference)			

"Zero" Air Gap SOUTH POLE of Armature over:		3/8" Air Gap SOUTH POLE of Armature over:	
Spaces (Repulsion)	Stator Magnets (Attraction)	Spaces (Repulsion)	Stator Magnets (Attraction)
750	1600	875	1100
700	1450	950	1450
850	1500	950	1400
1175	1600	925	1375
950	1400	925	1350
900	1400	950	1450
950	1575	925	1350
800	1350	925	1350
1050	1550	1000	1350
1000	950	925	1100
850	1700	875	1250
800	1900	775	1275
550	1400	600	1300
11,325 Gauss	19,375 Gauss	11,800 Gauss	17,100 Gauss
30,700 Gauss (Total)		28,700 Gauss (Total)	
2,000 Gauss (Difference)			

the magazine article can be seen at http://newebmasters.com/freeenergy/sm-pg48.html.

An artist's impression of the completed motor-generator set-up with a cut-away section is shown here:

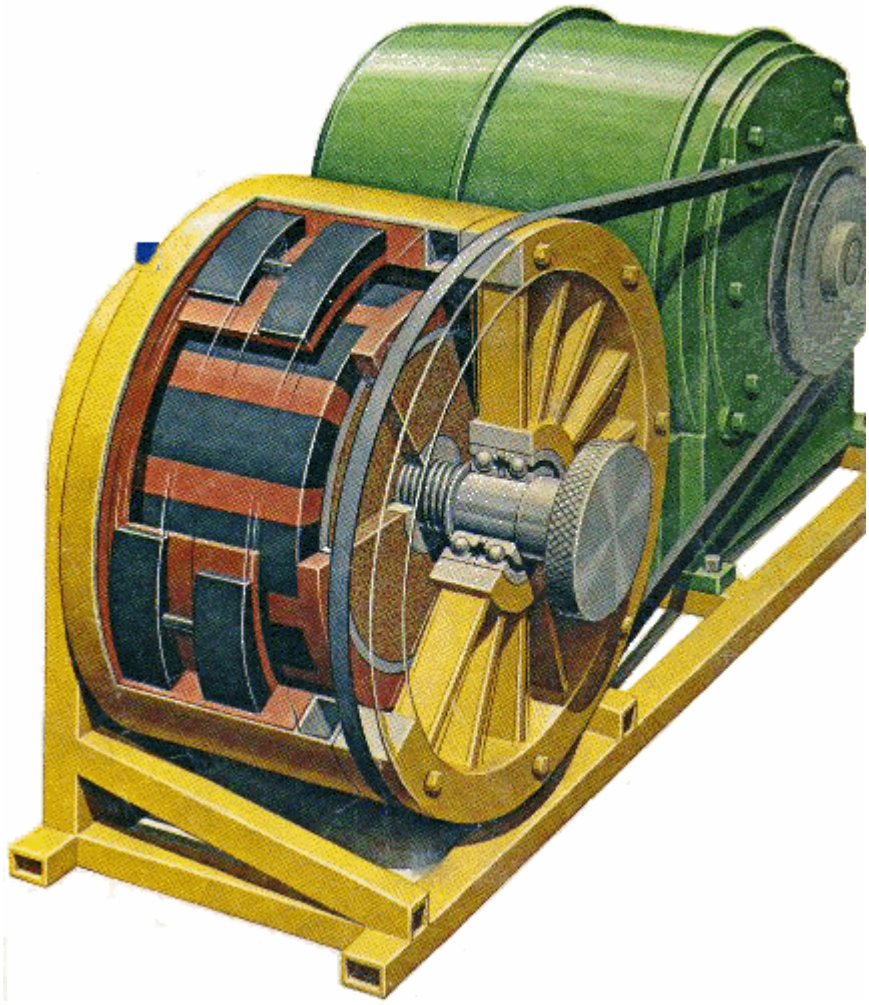

The Carousel Permanent Magnet Motor/Generator: US Patent 5,625,241 presents the specific details of a simple electrical generator powered by permanent magnets alone. This generator can also be used as a motor. The construction is not particularly complicated:

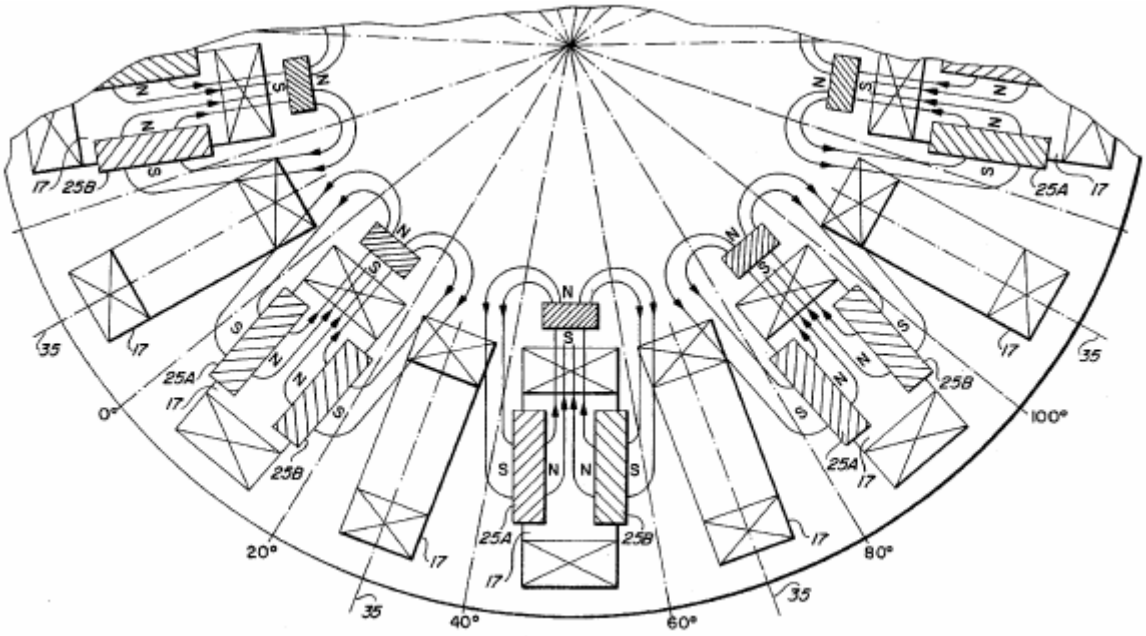

FIG. 6

It uses an arrangement where permanent magnets are associated with every second coil set around the rotor. Operation is self-powered and the magnet arrangement is clearly defined:

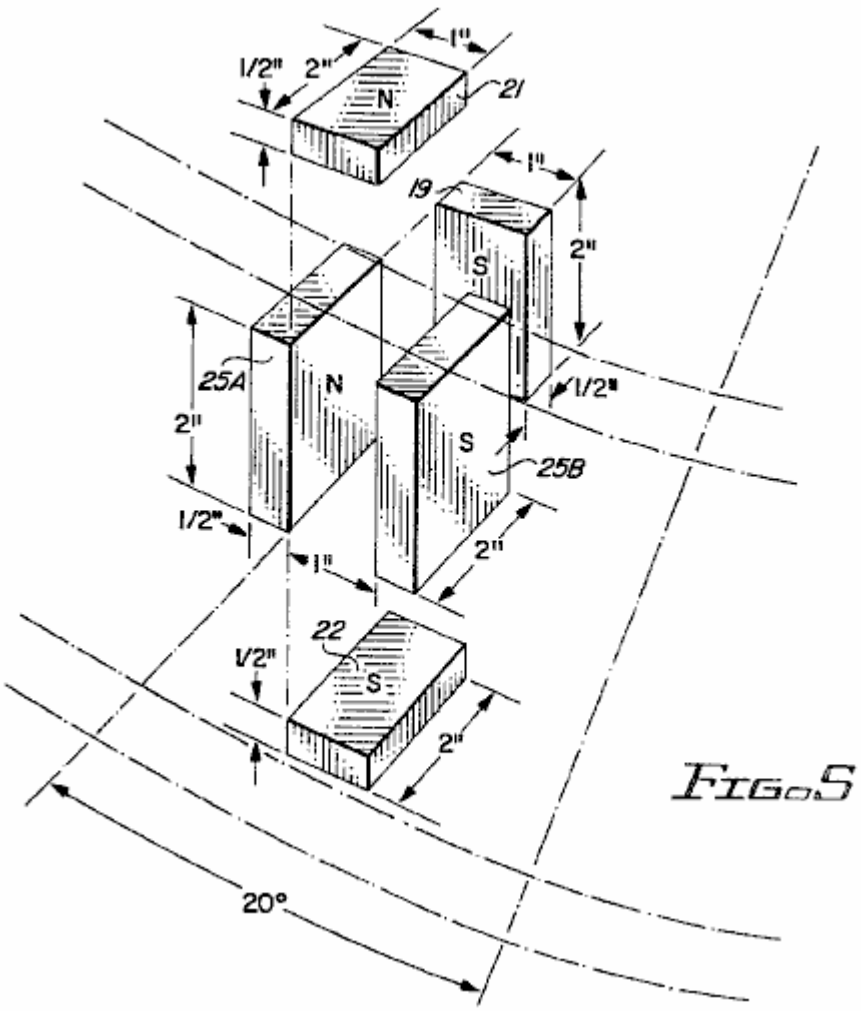

FIG. 5

As are the possible arrangements of the pick-up coils, both high-power, low voltage wiring:

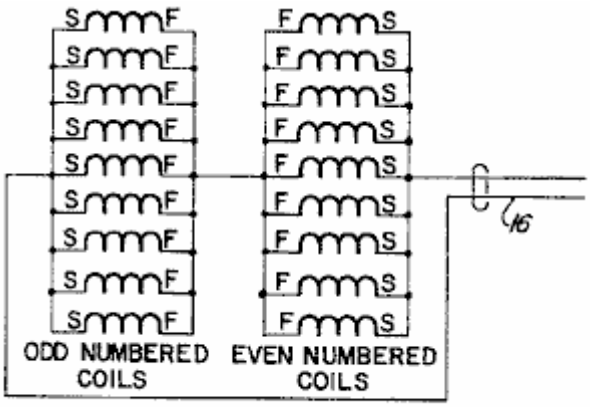

FIG. 8

And high voltage low power connections:

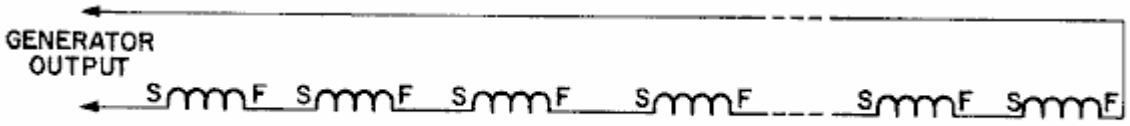

FIG. 9

And the physical arrangement of the device is not particularly complicated:

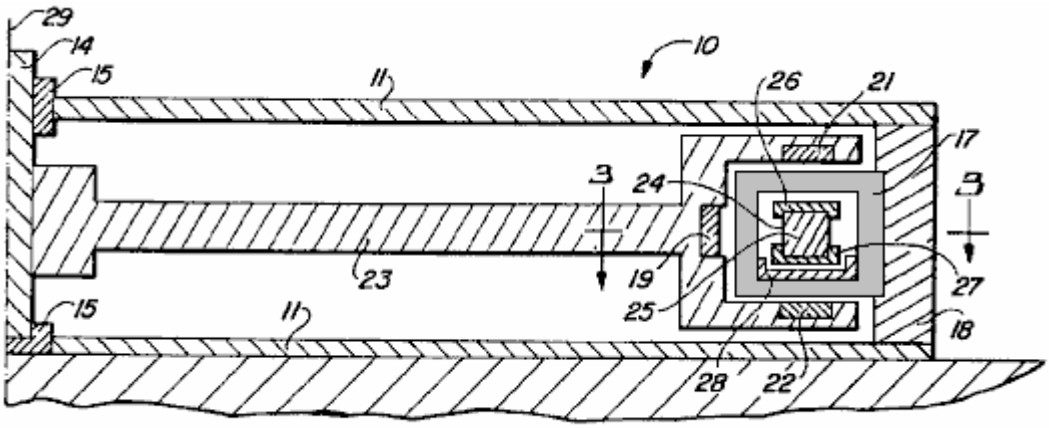

FIG. 2

This is a patent which is definitely worth reading and considering, especially since it is not a complicated presentation on the part of the authors, Harold Ewing, Russell Chapman and David Porter. This seemingly very effective generator appears to be overlooked at the present time.

It seems quite clear that permanent magnet motors are a wholly viable option for the home constructor and they are capable of substantial power outputs over long periods.

The Robert Tracy Magnet Motor. Some people have opted for permanent magnet motors where the field is shielded at the appropriate moment by a moving component of the motor. Robert Tracy was awarded US Patent Number 3,703,653 on 21st November 1972 for a "Reciprocating Motor with Motion Conversion Means". His device uses magnetic shields placed between pairs of permanent magnets at the appropriate point in the rotation of the motor shaft:

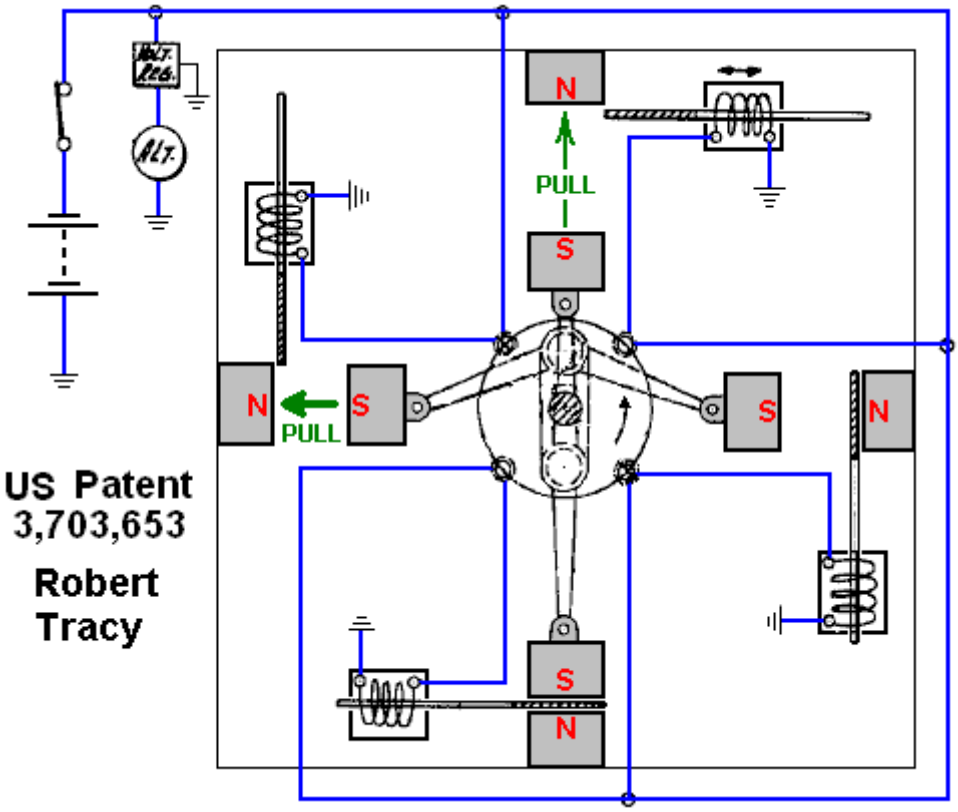

The Ben Teal Motor. Motors of this kind are capable of considerable power output. The very simple motor, originally built by Ben Teal using wood as the main construction material, was awarded US Patent Number

4,093,880 in June 1978. He found that, using his hands, he could not stop the motor shaft turning in spite of it being such a very simple motor design:

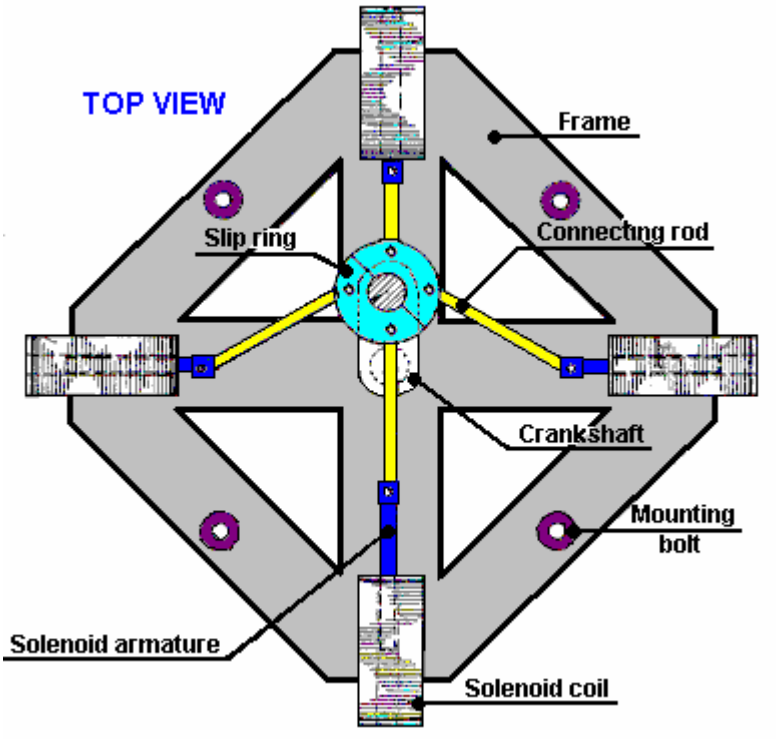

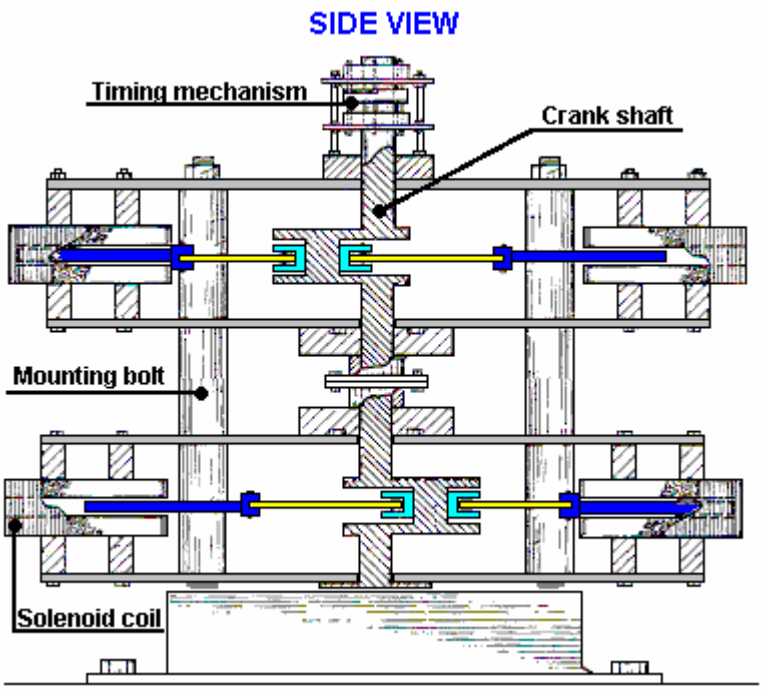

The motor operation is as simple as possible with just four switches made from springy metal, pushed by a cam on the rotor shaft. Each switch just powers it's electromagnet when it needs to pull and disconnects it when the pull is completed. The resulting motor is very powerful and very simple. Additional power can be had by just stacking one or more additional layers on top of each other. The above diagram shows two layers stacked on top of one another. Only one set of four switches and one cam is needed no matter how many layers are used, as the solenoids vertically above each other are wired together in parallel as they pull at the same time.

The power delivered by the Teal motor is an indication of the potential power of a permanent magnet motor which operates in a rather similar way by moving magnetic shields to get a reciprocating movement.

James E. Jines and James W. Jines were awarded US Patent 3,469,130 on 23rd September 1969 “Means for Shielding and Unshielding Permanent Magnets and Magnetic Motors Utilising the Same” and which is in the Appendix. This magnet motor design uses selective shielding of the drive magnets to produce a continuous force in one direction. It also has a mechanical arrangement to progressively adjust the shielding to adjust the power of the motor.

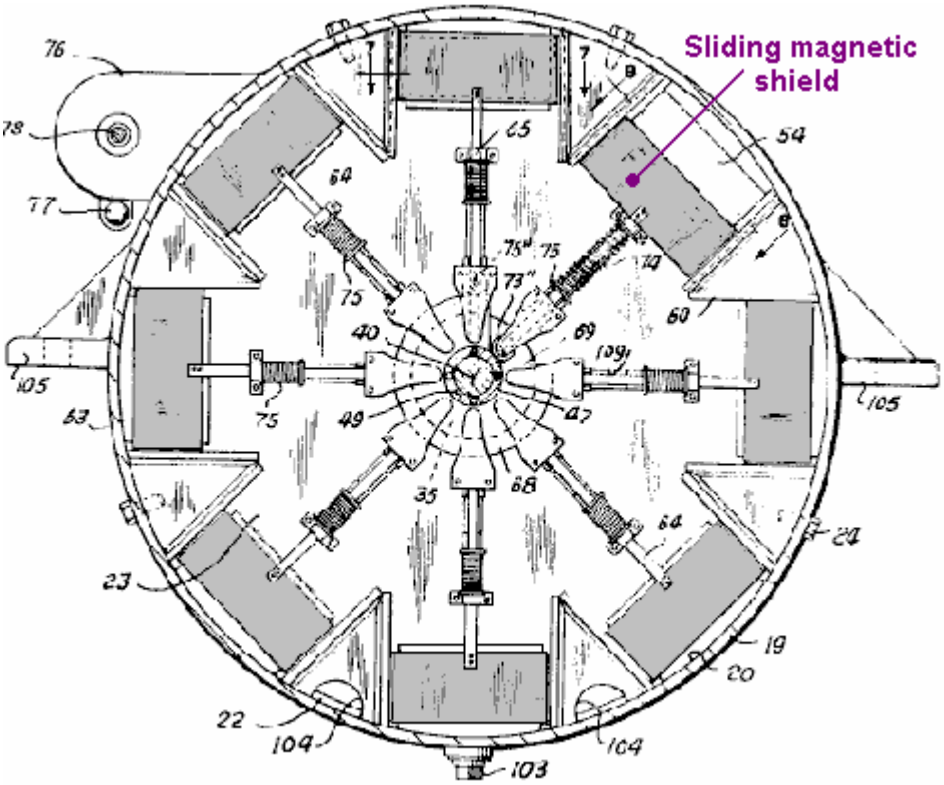

END VIEW

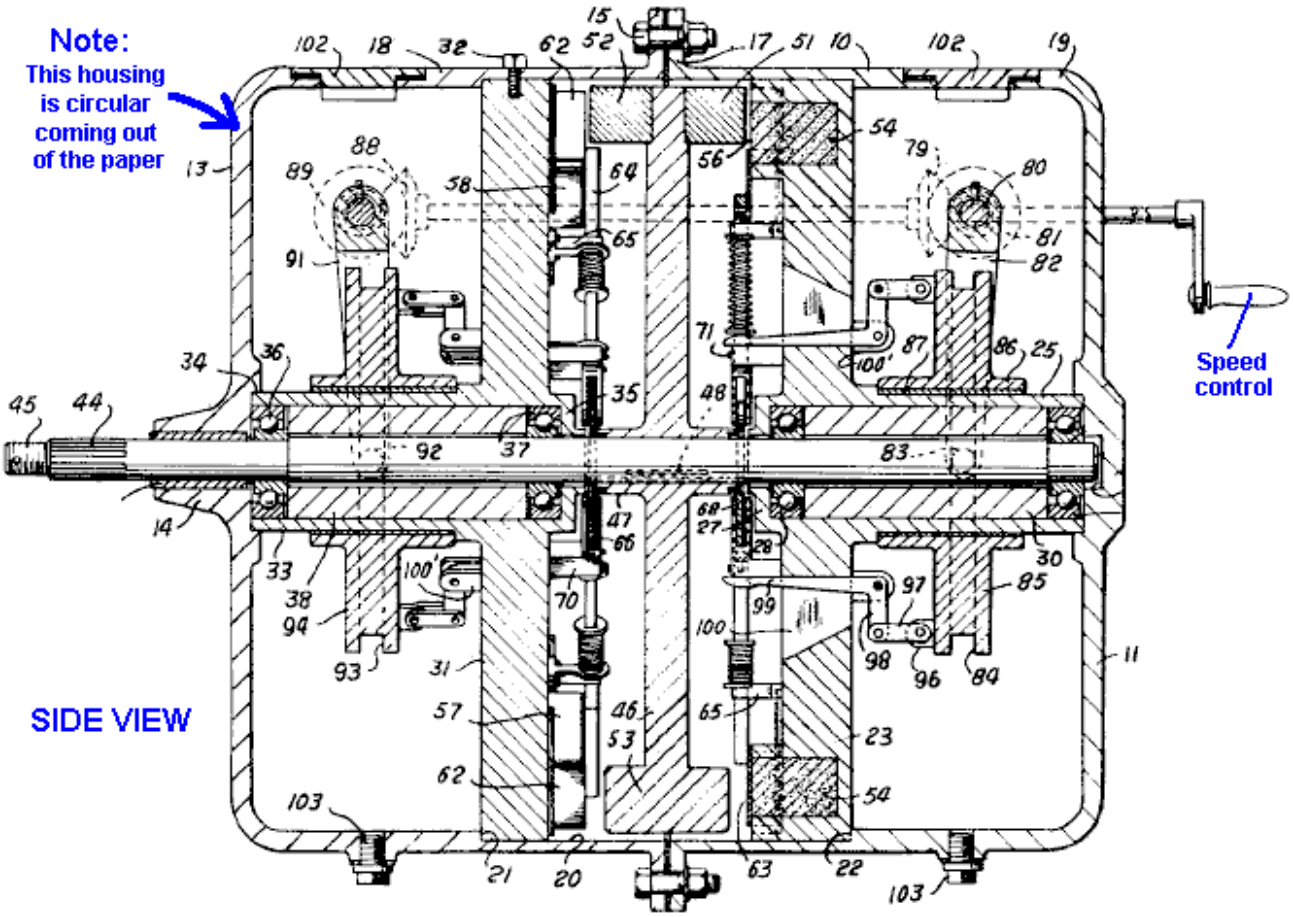

SIDE VIEW

This is a very interesting design of magnetic motor, especially since it does not call for any materials which are not readily available from many suppliers. It also has the advantage of not needing any form of exact adjustment or balancing of magnetic forces to make it operate.

Invention Intelligence (India). The following design for a permanent magnet motor was published in the April 1977 issue of 'Invention Intelligence' in India:

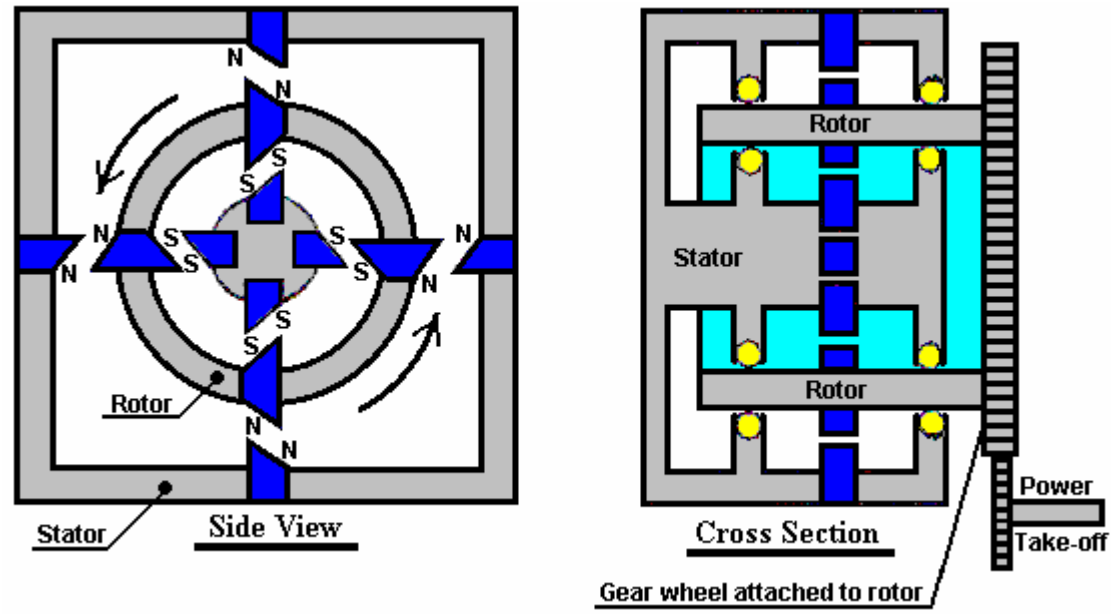

This design relies on the magnetic field of a magnet being distorted by having the pole faces angled at 45 degrees. In the diagram, the magnets are shown in blue and they are mounted in a non-magnetic stator and rotor material shown in grey. The rotor is mounted on two ball races shown in yellow. The theory is that the repulsing forces of the four North-North outer magnet pairs along with the repulsing forces of the four inner South-South magnet pairs should be continuously greater than the North-South attracting forces, thus giving continuous rotation.

It appears most likely that this design is just a theory and that a working model has never been constructed. However, it is possible that this system might work very well, so the information is presented here for interest and possible experimentation. It might be remarked that making the magnet face have a 45 degree angle may well not skew the magnetic field sufficiently to give a big enough imbalance to provide significant drive power. One way to increase the effect might be to use a mu-metal strip along the back of each magnet. Mu-metal is an expensive material which conducts magnetic lines of force in a phenomenal way and so soaks up any magnetism near it:

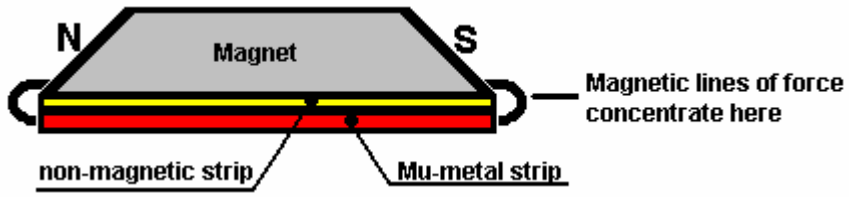

To recap: the underlying principle of the power of magnets is that each permanent magnet mentioned here, has two magnetic poles (one "North" and one "South" pole) and these poles being of opposite type and near each other, form a "dipole". This dipole unbalances the quantum environment around the magnet, causing continuous streams of energy to flow out in every direction from the magnet. These streams of energy are not what we see as lines of magnetic force, and to date, nobody has managed to design any piece of equipment which responds to that energy and which can be used to measure it. At this point in time, all we can do to estimate the energy flow is to divert it into a battery and then assess the battery charge by measuring the length of time that the battery can power a load from the energy which it received. This is a very crude method, but it does work.

Stephen Kundel's Magnet Motor. Stephen Kundel's motor design is shown in full detail in his patent which is shown on page A - 968 of the Appendix. It uses a simple oscillating motion to position the "stator" magnets so that they provide a continuous rotational force on the output shaft:

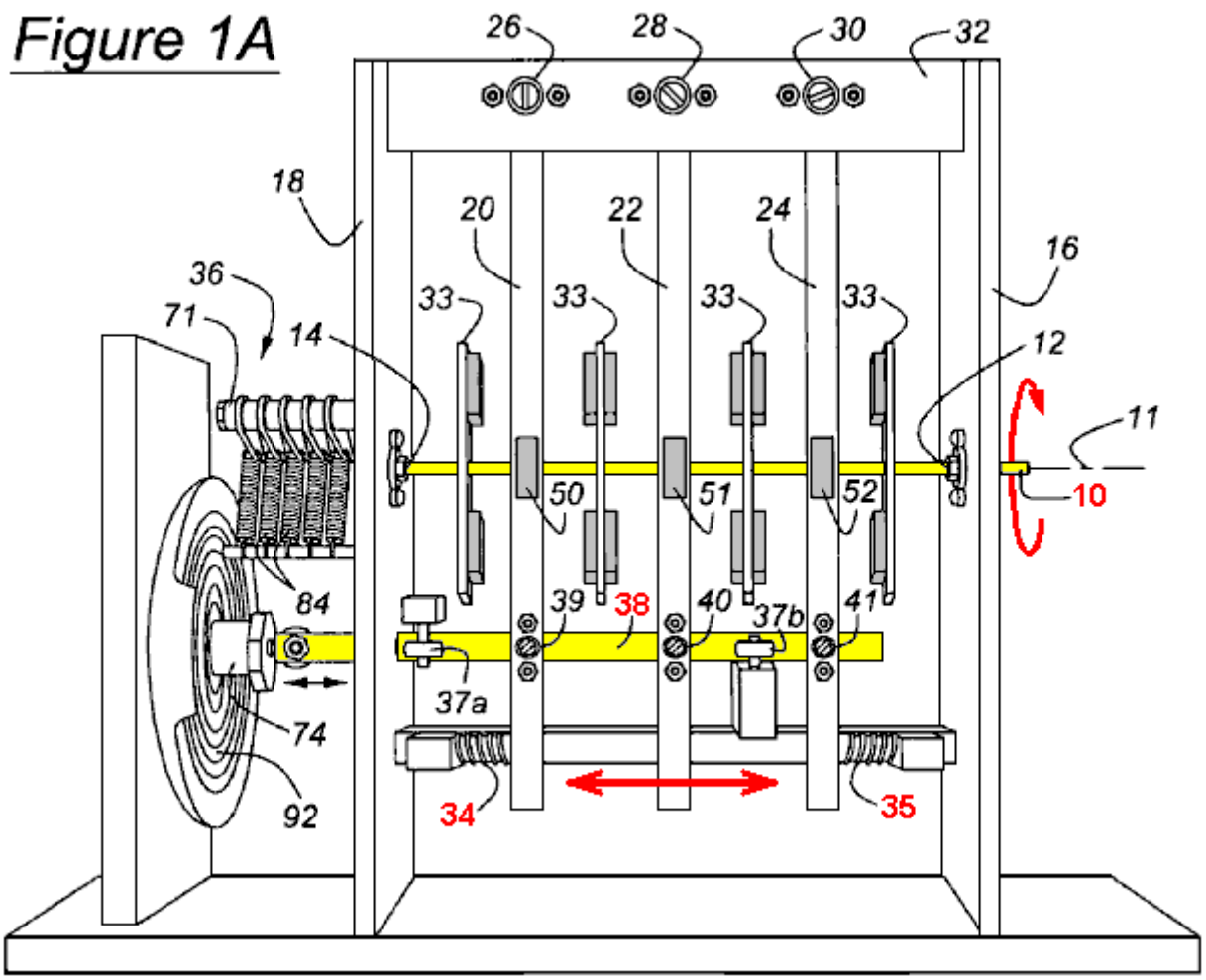

Here, the yellow arm marked **38**, rocks to the right and left, pushed by a solenoid coil **74**. There is no obvious reason why this rocking motion could not be achieved by a mechanical linkage connected to the rotating output shaft **10**. The three arms **20**, **22** and **24**, being pivoted at their upper points, are pushed into a central position by the springs **34** and **35**. The magnets **50**, **51** and **52**, are moved by these arms, causing a continuous rotation of the output drive shaft **10**. The movement of these magnets avoids the position where the magnets reach a point of equilibrium and lock into a single position.

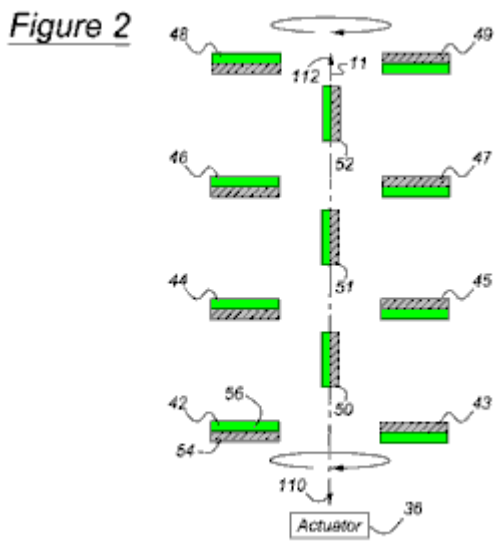

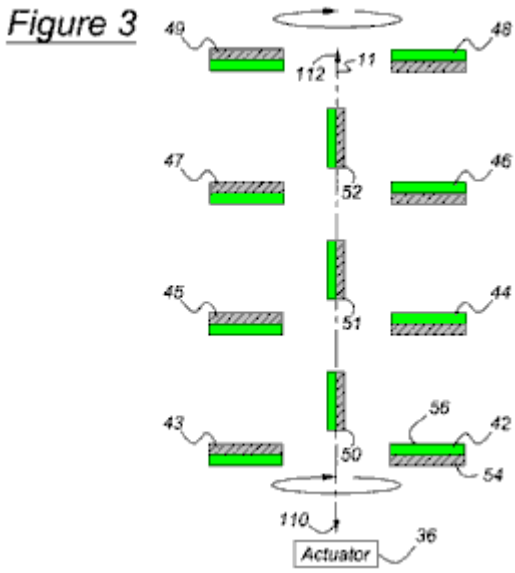

Figures 2 and 3 show the position of the magnets, with the Figure 3 position showing a point in the output shaft rotation which is 180 degrees (half a turn) further on than the position shown in Figure 2.

Some other, more powerful magnet arrangements which can be used with this design are shown in the full patent in the Appendix.

Charles "Joe" Flynn's Magnet Motor. Patent US 5,455,474 dated 3rd October 1995 gives details of this interesting design. It says: "This invention relates to a method of producing useful energy with magnets as the driving force and represents an important improvement over known constructions and it is one which is simpler to construct, can be made to be self starting, is easier to adjust, and is less likely to get out of adjustment. The present construction is also relatively easy to control, is relatively stable and produces an amazing amount of output energy considering the source of driving energy that is used. The present construction makes use of permanent magnets as the source of driving energy but shows a novel means of controlling the magnetic interaction or coupling between the magnet members and in a manner which is relatively rugged, produces a substantial amount of output energy and torque, and in a device capable of being used to generate substantial amounts of energy."

The patent describes more than one motor. The first one is like this when seen from the side:

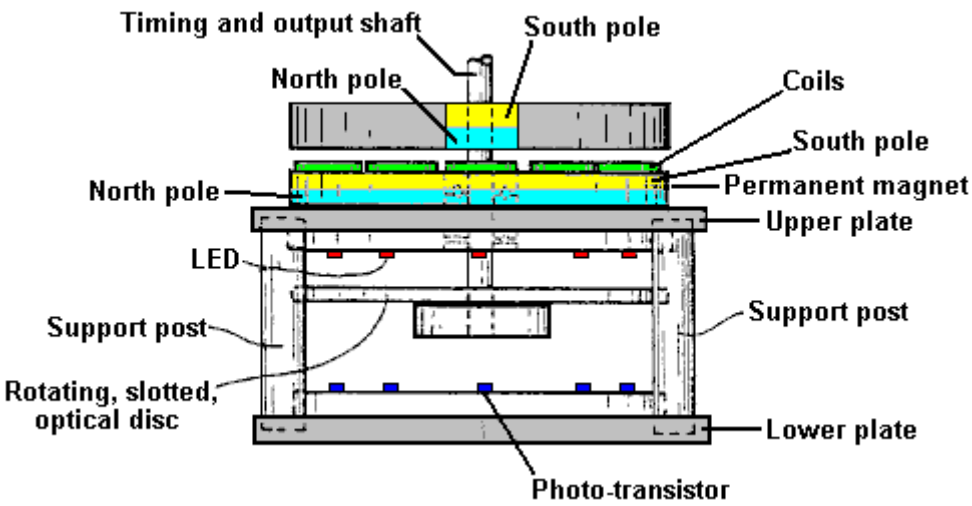

An exploded view, shows the different parts clearly:

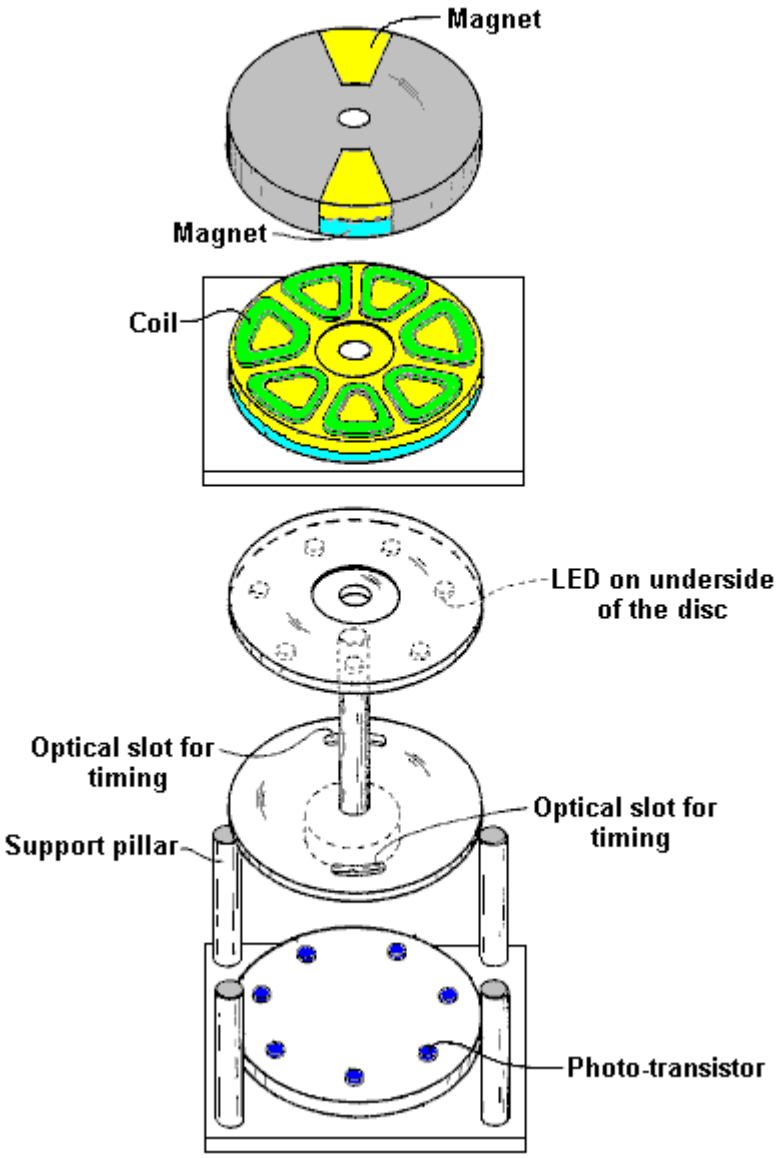

This construction is relatively simple and yet the operation is powerful. The power is provided by three magnets, shown shaded in blue and yellow. The lower magnet is in the form of a disc with the poles arranged on the large, circular, flat faces. This is the stator magnet which does not move. Positioned above it is a disc made of non-magnetic material (shaded in grey) and which has two magnets embedded in it. This disc is the rotor and is attached to the central vertical shaft.

Normally, the rotor would not rotate, but between the two discs there is a ring of seven coils which are used to modify the magnetic fields and produce powerful rotation. The powering up of these coils is very simple and it is arranged by shining a beam of Infra Red light from one of the Light-Emitting Diodes through a slot in an optical-timing disc attached to the rotating shaft. The LEDs and the photo-transistors are aligned with the centres of the seven coils. The position and width of the slot controls which photo-transistor gets switched on and for how long it remains powered up. This is a very neat and compact arrangement. The really interesting part of the design is how the coils modify the magnetic fields to produce the output power of the device. The orientation of the magnet poles can be swapped over, provided that this is done for all three magnets.

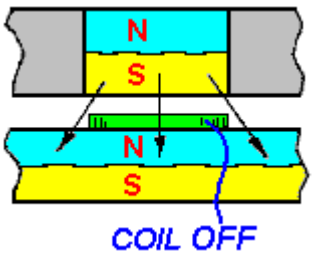

Shown here is the situation when one of the top magnets **54** has rotated to be above one of the coils **26** which is not yet powered up. The South pole of magnet **54** is attracted to the North pole which is the entire upper face of magnet **24** as shown by the three arrows. If a voltage is applied to coil **26**, then this magnetic coupling is disrupted and altered. If any torque is developed as a result of the coil being powered up, then it will be developed to either side of the coil **26**. If coil **26** is not powered up, then there will be full attraction between magnets **24** and **54** and no rotational force will be produced. You will notice that there are two rotating magnets (an even number) and seven coils (an odd number) so when one of the rotor magnets is above a coil, then the other isn't. This staggering of the two positions is essential for generating rotational torque.

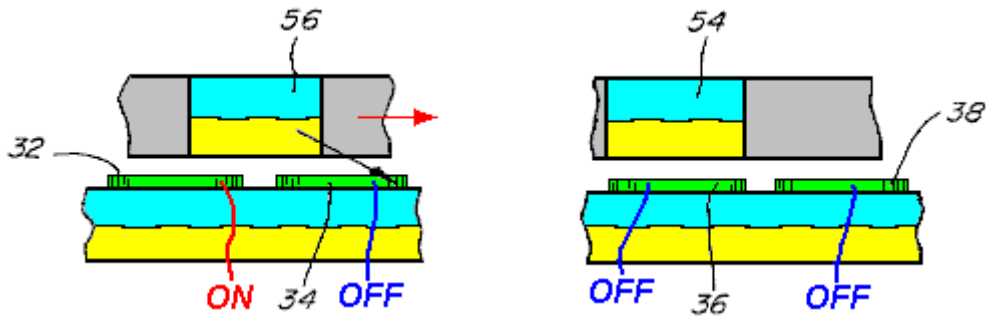

This diagram shows a piece from both sides of the rotor disc, to explain the operation of the coils. On the left, magnet **56** overlaps coil **32** and coil **34**. Coil **32** is powered up and this breaks the magnetic link on the left hand side of magnet **56**. But, coil **34** is not powered up, so the attraction between magnet **56** and the disc magnet under the coils remains. Even though this attraction is at a downward angle, it creates a push on the rotor, driving it towards the right as shown by the red arrow.

While this is happening, the situation around the other side of the rotor disc, is shown on the right. Here, magnet **54** is above coil **36** and that coil is not powered up, so there is no resulting drive in either direction. The adjacent coil **38** is also not powered up and so has no effect on the rotation. This method of operation is **very** close to that of the motor design of Robert Adams described in the next chapter. It is important to understand that this method of operation is nothing like that of the John Bedini pulsers where the rotation of a disc is caused by the electrical pulse applied to a coil. Instead, here, the coil acts as a magnetic shield, being provided with the minimum possible power to do its job. The coil is, in effect, a shield which has no moving parts, and so is a very clever mechanism for overcoming the tendency for the rotor magnets locking on to the stator magnets and preventing rotation.

At any moment, six of the seven coils are inactive, so in effect, just one coil is powered. This is not a major current drain. It is important to understand that the power of this motor is provided by the permanent magnets pulling towards each other. Each of the two magnets applies a horizontal pull on the rotor every seventh of a turn, that is, every 51.1 degrees in the rotation. As the coils are an uneven number, the rotor gets a magnetic pull every 25.5 degrees in the rotation, first from one rotor magnet and then from the other rotor magnet.

It follows then, that the power of the motor can be increased by adding more magnets. The first step in this search for additional power is to add a second disc magnet and coils on the other side of the rotor, so that there is a second pull on the magnet. This has the added advantage that it balances the downwards pull of the first disc magnet with an upward pull, giving an enhanced and balanced horizontal thrust as shown here:

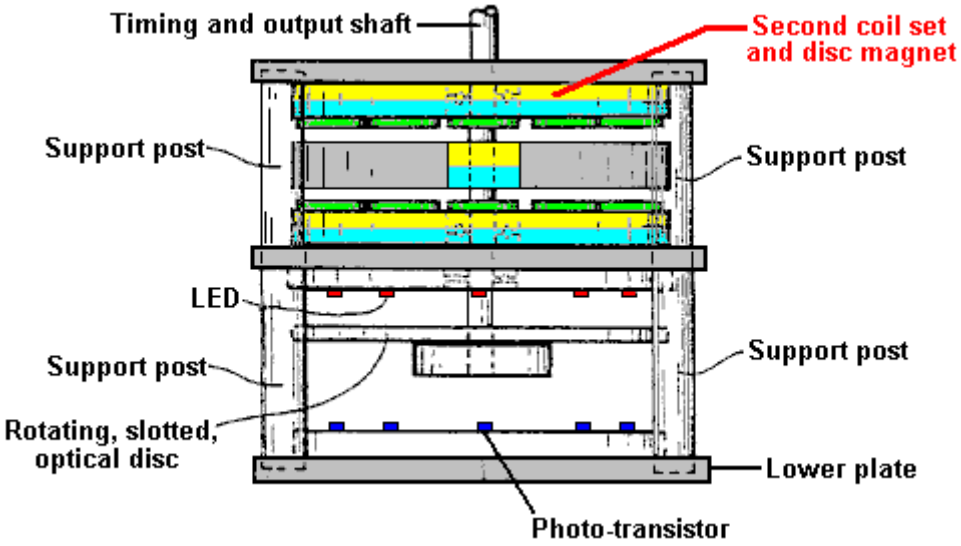

The coil switching with the additional layer of coils is shown here:

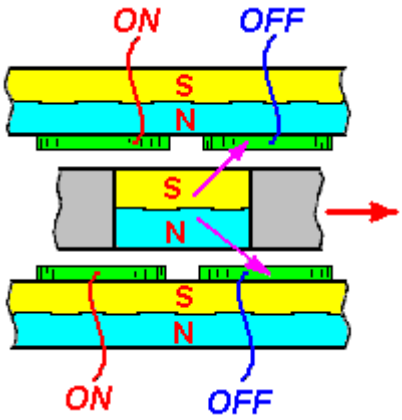

This produces a larger horizontal thrust. While this design goes for optimum performance, I suggest that a much more simple form of construction with a ring of standard circular neodymium magnets could be used instead of one large disc magnet, and ordinary circular coils placed on top of the circular magnets:

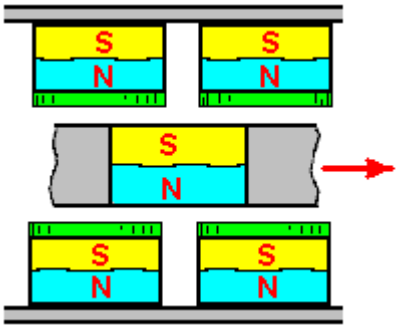

To increase the power of the output shaft further again, additional sets of magnets and coils can be added as shown here:

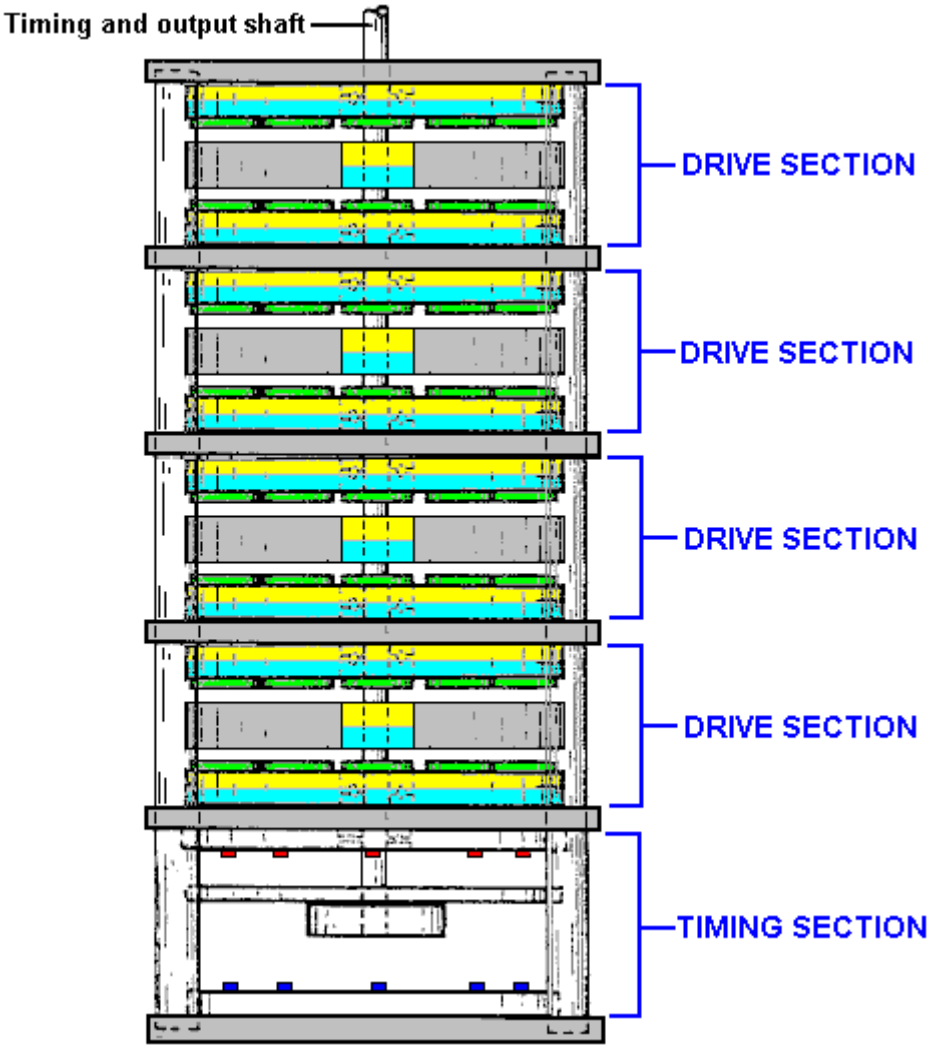

It should be remembered that the timing section shown above could be replaced by a NE555 timer circuit which generates a steady stream of On / Off pulses. When those pulses are fed to the coils, the motor rotates, slaving itself to the pulse rate. This gives an immediate speed control for the motor as well as avoiding the need for the precise positioning of the slotted disc which allows the LEDs to shine directly on to the phototransistors at the appropriate instant. If that approach is taken, then the timing section shown above would be omitted.

The circuitry that Charles specifies for powering the coils to block the magnetic fields of the permanent magnets uses N-channel MOSFETs and is very simple. Here is his circuit for driving one of the coils:

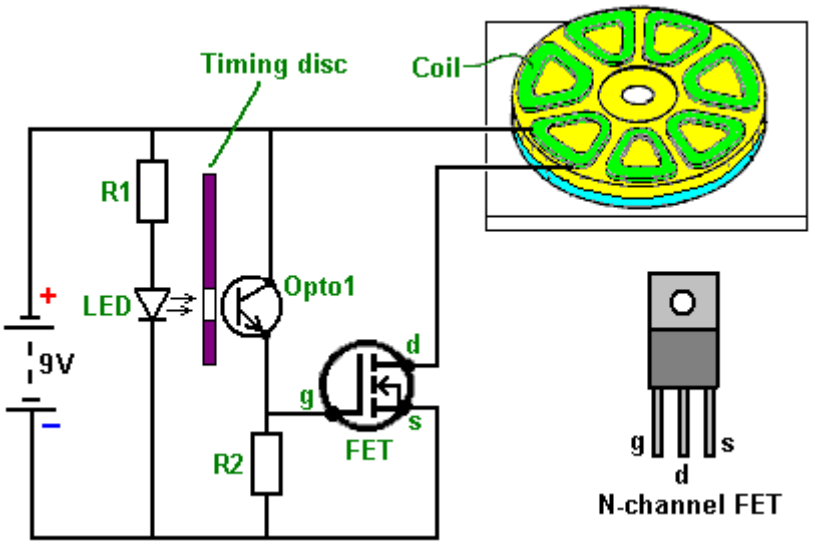

Just five components are used. The current through the coil is controlled by a transistor. In this case it is a Field-Effect Transistor usually called a "FET". The most common type of FET is used, namely an "N-channel" FET which is the rough equivalent to an NPN transistor as described in Chapter 12. A FET of this type is switched off when the voltage on it's "gate" (marked "g" in the diagram) is 2.5 volts or lower. It is switched on when the voltage on it's gate is 4.5 volts or more.

In this circuit we want the FET to switch on when the motor's timing disc is in the right position and be off at all other times. This is arranged by shining the light from a Light-Emitting Diode or "LED" through a hole in the timing disc which rotates with the shaft of the motor. When the hole is opposite the LED for the coil which is to be powered up, light shines through the hole and on to a light-sensitive device, Charles has opted to use a Light-Sensitive transistor, but a light-dependent resistor such as an ORP12 could be used instead. When the light shines on the "Opto1" device in the circuit diagram, it's resistance falls dramatically, raising the voltage on the gate of the FET and switching it on. When the timing disc hole moves past the LED, the light is cut off and the FET gate voltage drops down, switching the FET off. This arrangement causes the coil of the motor to be switched on and off at just the right time to give a powerful rotation of the motor shaft. In the circuit, the resistor "R1" is there to make sure that the current flowing through the LED is not excessive. The resistor "R2" has a low value compared to the resistance of "Opto1" when no light falls on it, and this holds the gate voltage of the FET down to a low value, making sure that the FET is completely off.

As you can see, this is basically a very simple circuit. However, as one of these circuits is used for each coil (or each pair of coils if there is an even number of coils in this slice of the motor), the circuit in the patent looks quite complicated. It is actually very simple. The resistor "R1" is used to limit the current flow through all of the LEDs used and not just one LED. You could, of course, use one resistor for each LED if you wanted to. The circuit for powering two coils (and not showing the timing disc) looks like this:

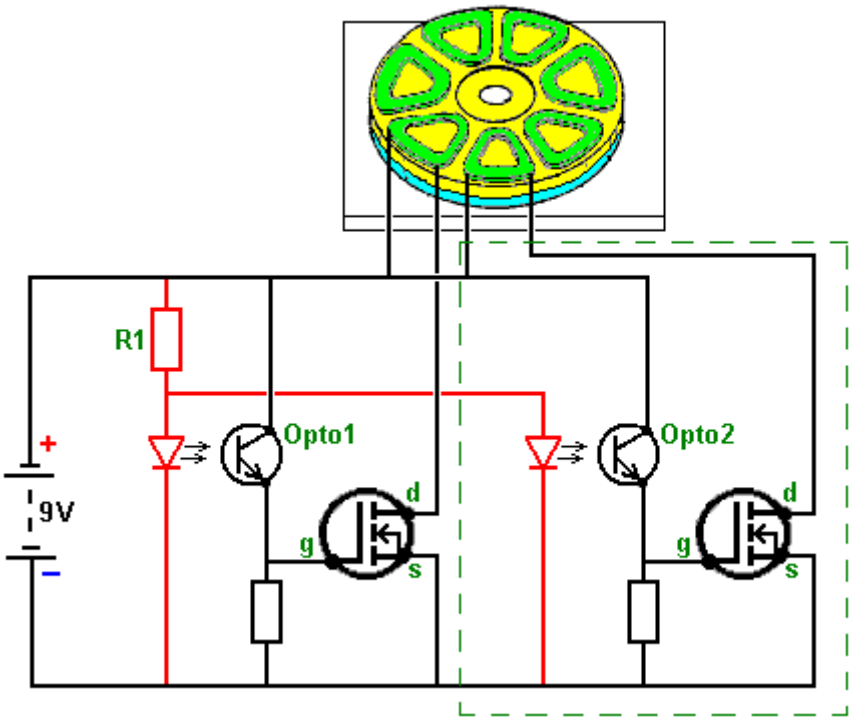

The section inside the green dashed line being the identical circuit for the second coil. This addition to the circuit is made for each coil, at which point, the motor is ready to run. If, as would be normal, several layers of magnets are being used, then the coils positioned above each other can be connected in a chain like this:

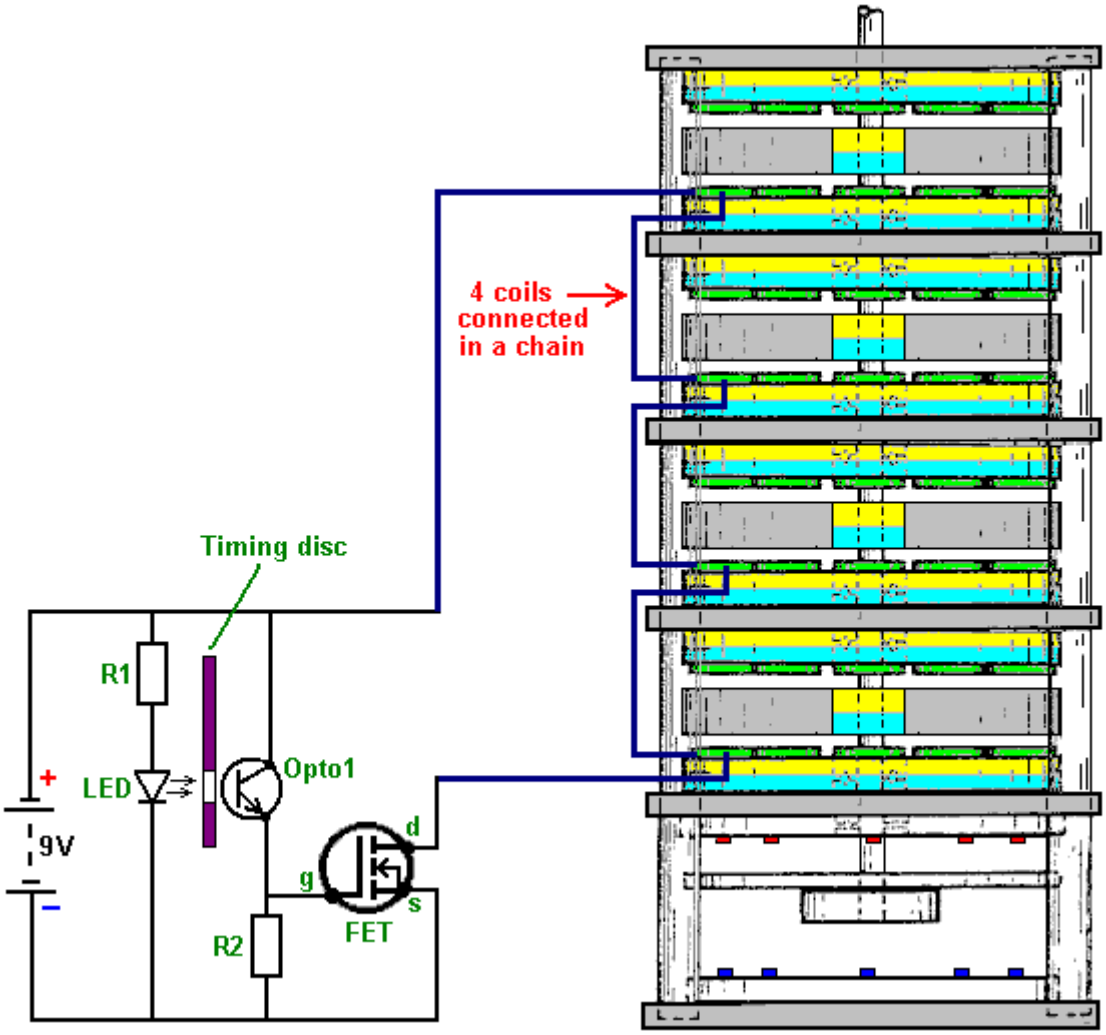

Connecting several coils "in series" (in a chain) like this, reduces the number of electronic components needed and it makes sure that the pulses to each of these coils is at exactly the same instant. The patent drawing shown above seems to indicate that there is a big gap between the LEDs and the optical devices. This is generally not the case as you would keep the gap between the LED and the light-dependent device as small as possible, mounting them so that they are just clear of the timing disc on each side of it.

In this patent, Charles Flynn remarks that this magnet motor can be used for almost any purpose where a motor or engine drive is required and where the amount of energy available or required to produce the driving force may vary little to nil. Charles has produced motors of this type which are capable of rotating at very high speed - 20,000 rpm and with substantial torque. Lesser speeds can also be produced, and the motor can be made to be self-starting. Because of the low power required to operate the device, Charles has been able to operate the motor using just a nine volt, off-the-shelf dry battery.

One application which seems most appropriate for this motor design is the Frenette heater shown in Chapter 14. Using this motor to drive the discs inside the heater drum would produce a heater which appears to be driven by just a nine-volt battery. However, while that is the appearance, the reality is that the power of this motor comes from the permanent magnets and **not** from the battery. The battery current is only used to prevent the backward pull of the magnets and it is **not** used to drive the motor.

While the use of a timing disc is a very satisfactory arrangement, it is also possible to use electronic circuitry instead of the mechanical timing disc, the opto devices and the LEDs. What is needed here is a device which produces a series of voltage pulses which can be used to drive the gate voltage of each FET from below 2.5 volts to over 4.5 volts. It looks as if the well-known 555 timer chip would be suited to this task and it would certainly run off the nine-volt battery. However, we have more than one set of coils which need to be run. For example, if we have say, four sets of coils to drive by powering up four different FET transistors one after the other, then we could use a "Divide-by-Eight" chip, like the 4022 chip. This chip can be set to divide by any number from two to eight. All that is needed to select the number to divide by, is one connection between two of the pins on the chip.

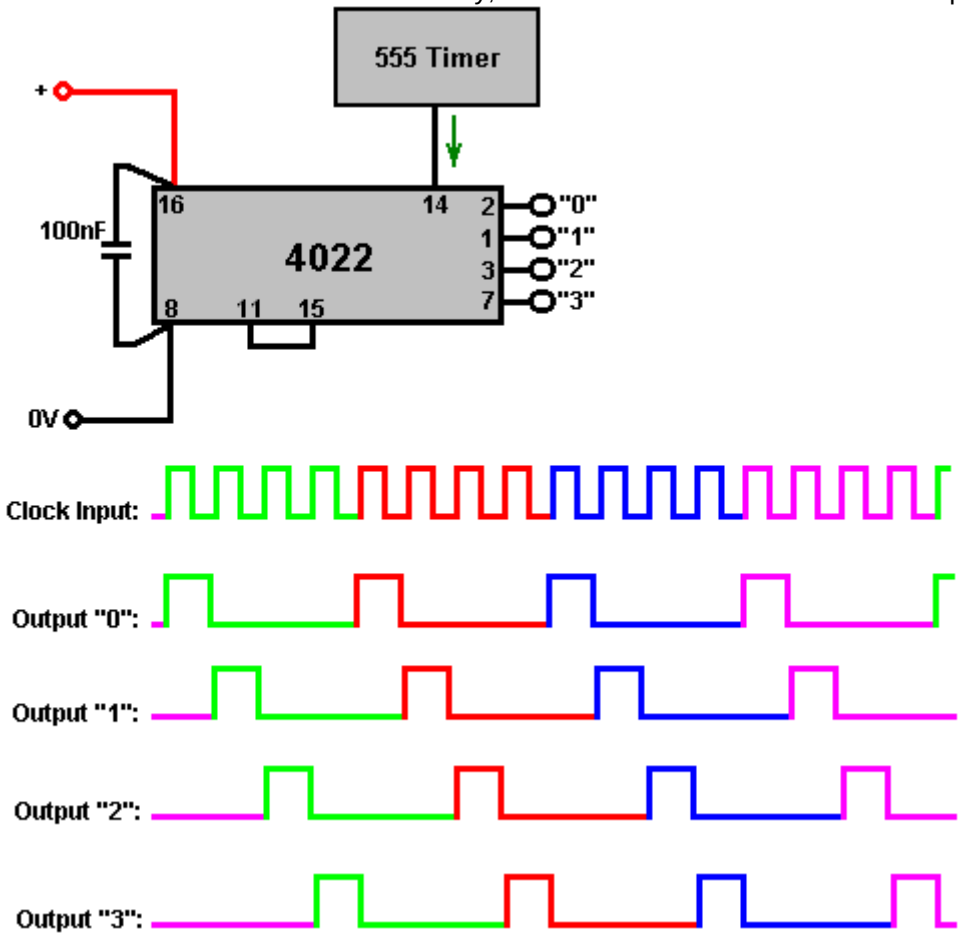

The output voltage on the pins marked "1", "2", "3" and "4" goes high one after the other as shown in the diagram above. So, each of these output pins would be connected to the FET gates in that order and the FETs would get switched on in that same order.

With the 4022 chip, the connections for the rate of division are as follows:

For ‘Divide by 7’ operation, connect pin 10 to pin 15
For ‘Divide by 6’ operation, connect pin 5 to pin 15
For ‘Divide by 5’ operation, connect pin 4 to pin 15
For ‘Divide by 4’ operation, connect pin 11 to pin 15
For ‘Divide by 3’ operation, connect pin 7 to pin 15
For ‘Divide by 2’ operation, connect pin 3 to pin 15

When using a circuit like this, the pulse rate from the 555 chip is set to a very low value like half a second, so that the motor shaft can get started. Once it gets moving, the pulse rate is gradually increased to speed the motor up. One advantage of this method is that it allows speed control, and if the motor was being used to power a Frenette heater, then the speed control would also act as a temperature control for the heater.

A possible 555 chip circuit might be:

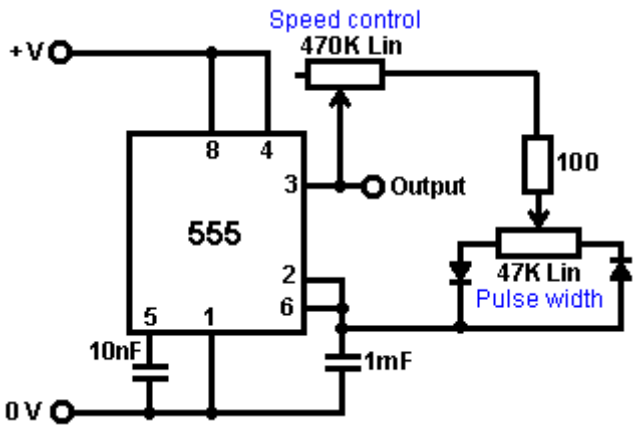

As this allows the speed to be controlled and when the required speed is reached, the pulse width can then be adjusted to give the minimum current draw to maintain that speed. There are, of course, many other suitable circuits which could be used instead of this one and Chapter 12 will fill you in on some of them as well as explaining how circuits work and how to build them.

If it so happens that it is difficult to find suitable circular magnets with the poles on opposing faces, then I suggest that it should be possible to use standard rectangular magnets throughout and rectangular coils as shown here:

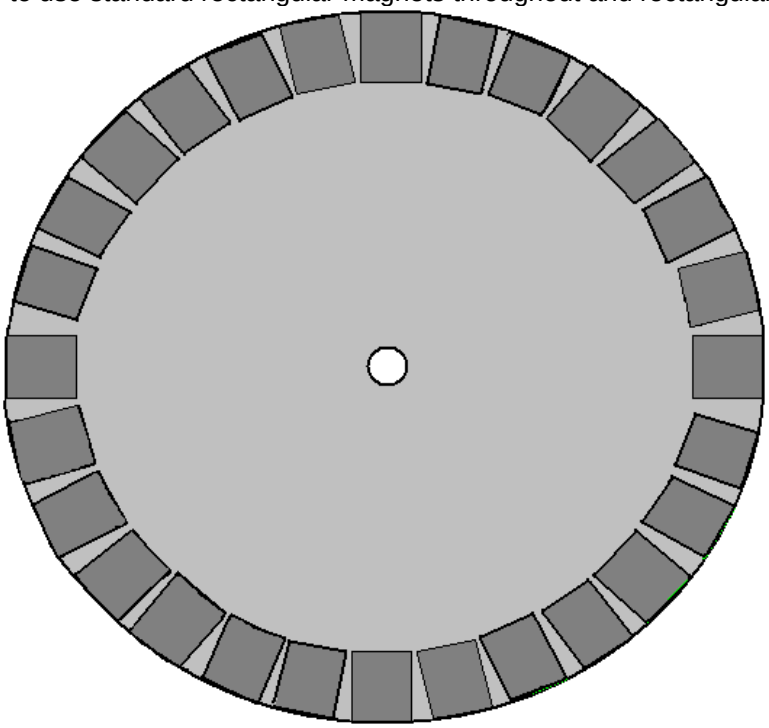

And while this arrangement is not as magnetically efficient as a circular magnet, it does have the convenience of having an even number of magnets, and so, an even number of coils. This means that only half as many driving transistors will be needed as the coils opposite each other, for instance, the coils above the magnets marked 1

and 5 can be connected in series. The same goes for the coils above magnets 2 and 6, 3 and 7 and 4 and 8. It is, of course, possible to use rectangular magnets instead of the two tapered magnets in each rotor disc.

The objective of each coil is to just, and only just, cancel out the magnetic field of the permanent magnet underneath it. The magnetic field produced by the coil depends on the current flowing in the coil, the number of turns in the coil and the area of the coil. The current flowing depends on the diameter of the wire and the voltage applied to it. It is probably necessary to mount just one magnet on the stator and experiment with the coil until your current drive and coil allow the rotor to spin freely. Whatever the coil result is, should be ok for all of the magnets even though they are likely to vary in strength a bit.

Steorn. The Irish company Steorn have produced a system which is almost identical to the Charles Flynn magnet motor just described. They call their device "Orbo" and its operation is pretty much the same. The advance made by Steorn is that they have devised a very clever magnetic masking system using ferrite toroids wound with a copper wire coil. This is a slick method of switching magnetic attraction on and off. When the coil carries a sufficient current it generates a circular magnetic field spiralling around the toroid and not going outside the toroid. This field does not have an attraction for outside magnets. It makes no difference if the direction of the current flow through the coil is reversed as the resulting magnetic field just spins around the toroid in the opposite direction and performs exactly the same magnetic blocking of the ferrite ring which forms the toroid. If no current flows, then the copper wire does not block off the influence of the ferrite ring and the permanent magnets on the rotor are strongly attracted to it, causing the rotor to spin.

On their web site www.steorn.com, Steorn illustrate their design like this:

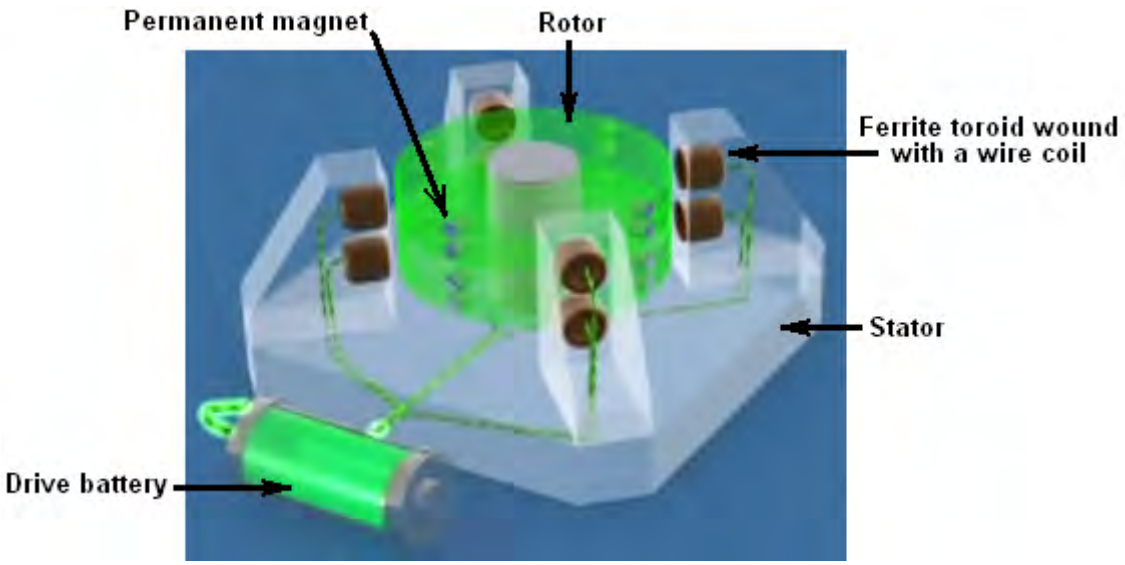

In this implementation, eight ferrite rings are mounted on the stator in four locations ninety degrees apart. These are wound with copper wire coils which can be powered by a battery, via a timing mechanism. The rotor has embedded in it, eight pairs of small permanent magnets, also spaced ninety degrees apart.

In exactly the same way as the Adams motor described in chapter 2, the current through the coils is set to the minimum level which allows the rotor to spin freely. The timing mechanism is then switched in and the motor and the rotor given a spin. The rotor magnets are strongly attracted to their corresponding ferrite rings mounted on the stator posts and this accelerates the rotor.

If no current is passed through the coils, then the rotor will oscillate backwards and forwards for a short time before coming to rest with the magnets as close to the ferrite rings as possible. To prevent this happening, the timing circuit senses when the magnets reach the ferrite rings, and passes that minimum current through the coils, trapping the rings inside a magnetic field which has no effect on the rotor magnets. The momentum of the rotor causes it to spin on past the stator rings to a position where the magnets are closer to the next rings than they are to the ones which they have just passed, at which point, the current is cut off and the magnetic attraction to the ferrite rings returns. This is identical to one mode of operation of the Adams motor.

The next step is also identical to that of the Adams motor, namely, to add on some pick-up coils to convert some of the rotating magnetic energy into electrical energy, either to recharge the driving battery or to power other equipment, or both.

Steorn's arrangement for doing this is to add an additional disc, containing permanent magnets, to the rotor and positioning wire coils opposite those magnets as is normal for a generator. Steorn choose to show the resulting energy charging up the battery again:

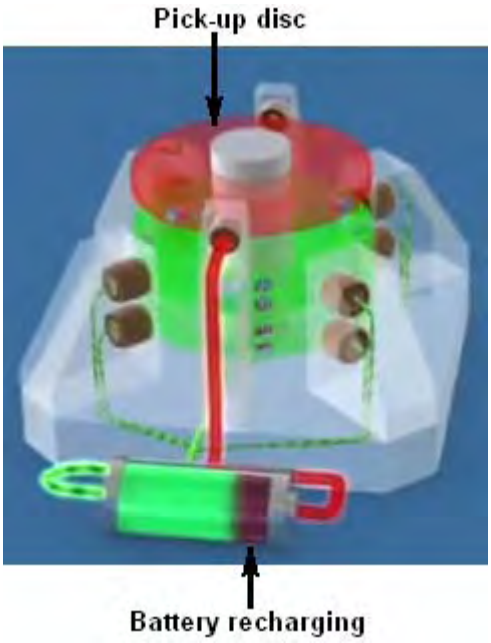

Video presentations on this style of motor/generator are at:
http://www.youtube.com/watch?v=AXamGLyRkt8&NR=1
http://www.youtube.com/watch?v=rg3rLqYMzN4&feature=related and
http://jnaudin.free.fr/steorn/indexen.htm

We tend to think of this style of magnet-powered motor as being low-power. This is probably because it is often the case that the demonstration proof-of-principle implementations shown are minor devices. These motors can be very powerful and the one shown here, designed and built by Mr Sung of China has an output power of 20 kilowatts or fifteen horsepower:

And another design which has a larger diameter and about 144 magnets has a reported output of 225 horsepower:

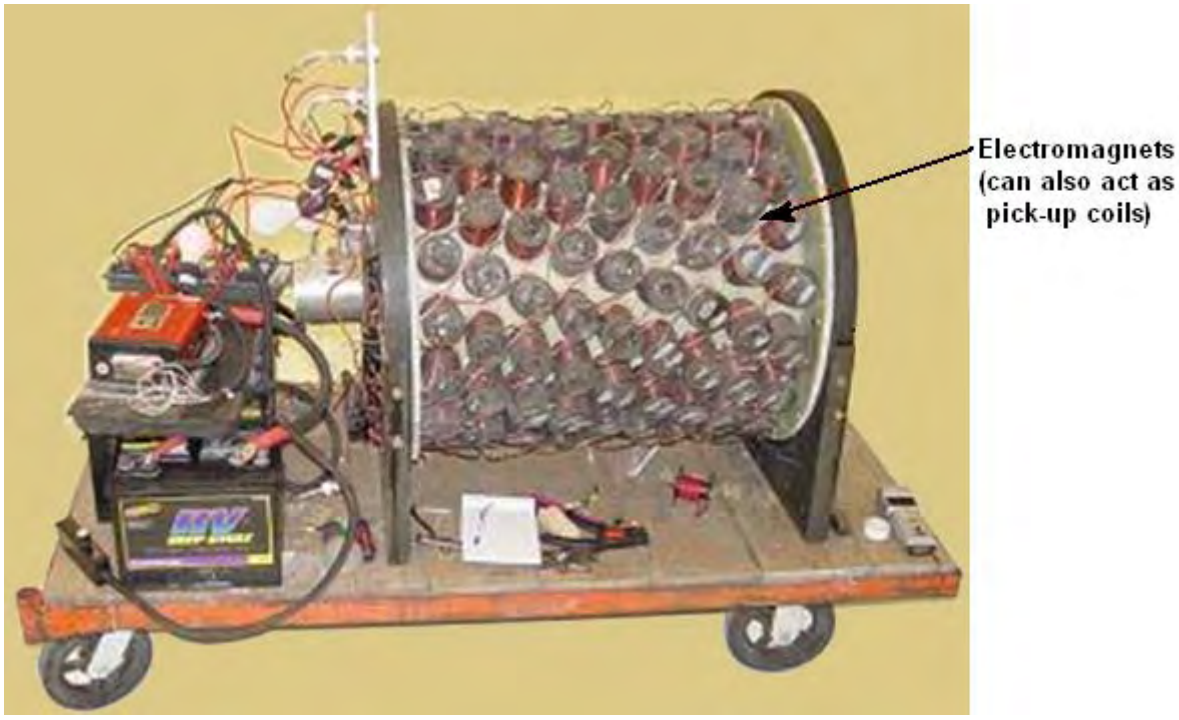

You will notice that each ring of magnets is positioned further around the rim of the cylinder providing powerful pulses from 64 magnets every 22.5 degrees of rotation, so it is little wonder that the motor has considerable shaft power. Some of the coils can be switched to collect power if the working conditions do not need the full shaft output power, charging the drive battery. The rotating inner cylinder has permanent magnets mounted on it.

Asymmetrical Magnet Motor. At the present time there is an interesting video on the internet, showing a magnet motor http://www.youtube.com/watch?v=7tdWkn1m-4w&feature=related. This motor is built on the "V" style of magnet placement which has two sets of permanent magnets spaced like this:

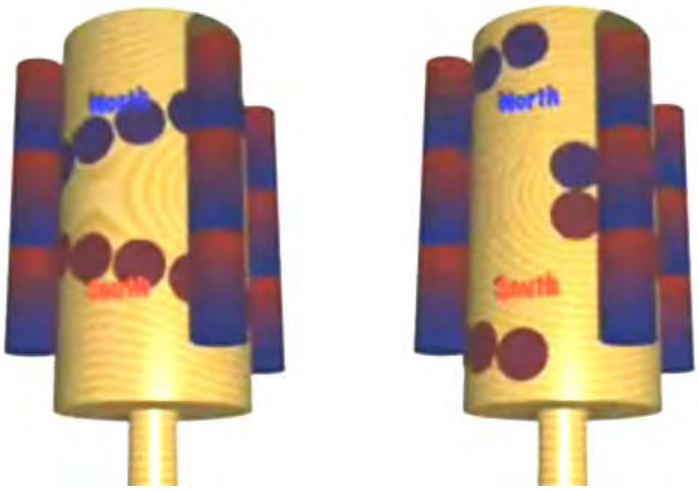

This style of magnet arrangement (North magnets shown in blue and South in red) has a locking point where the switch from wide spacing to narrow spacing occurs and this causes the rotation to stop there.

The implementation shown in this video has the V magnets spaced rather more widely apart as shown here:

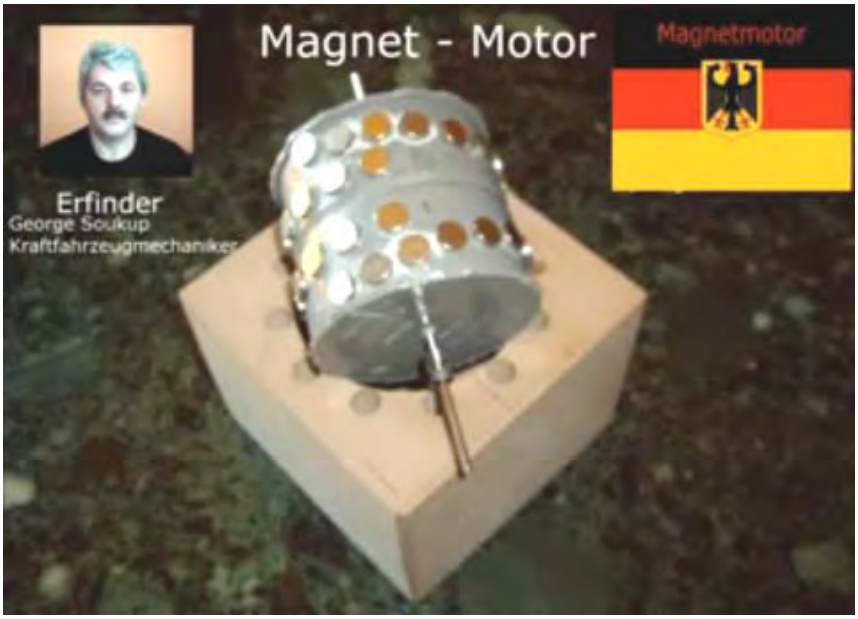

The taper is much less pronounced with an inner gap some four times greater than the gap to the outer ring. It also appears that the last inner magnet has a greater gap around the drum than the remaining ring of magnets.

The housing is very simple looking, with an evenly spaced ring of twelve holes to take long magnets with alternating North and South magnetised areas along their length:

The housing has considerable clearance for the drum and magnets. The rear shaft bearing is just set into the back of the housing:

The front has two sheets of acrylic, one to hold the insert magnets in place and one to provide the shaft's front bearing support:

As there is no commentary with the video it is a little difficult to pick up all of the details, but it seems that positioning stator magnets allows the motor to overcome the normal sticking point of the typical V-motor arrangement. The video shows various arrangements including the non-symmetrical grouping shown here where four or five consecutive magnets are used and the remaining slots left empty:

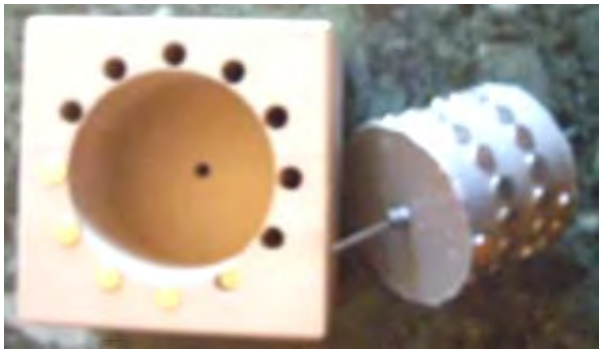

This looks like a design which might be worth investigating further as the implementation shown in the video appears to operate very well.

Lines of Magnetic Force. In passing, schools currently teach that the field surrounding a bar magnet is like this:

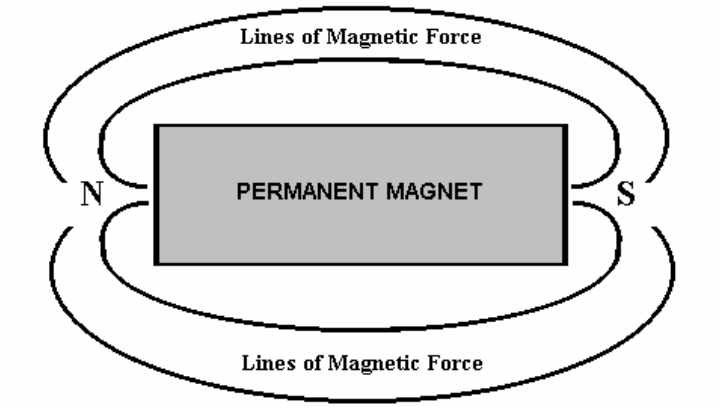

This is deduced by scattering iron filings on a sheet of paper held near the magnet. Unfortunately, that is not a correct deduction as the iron filings distort the magnetic field by their presence, each becoming a miniature magnet in its own right. More careful measurement shows that the field actually produced by a bar magnet is like this:

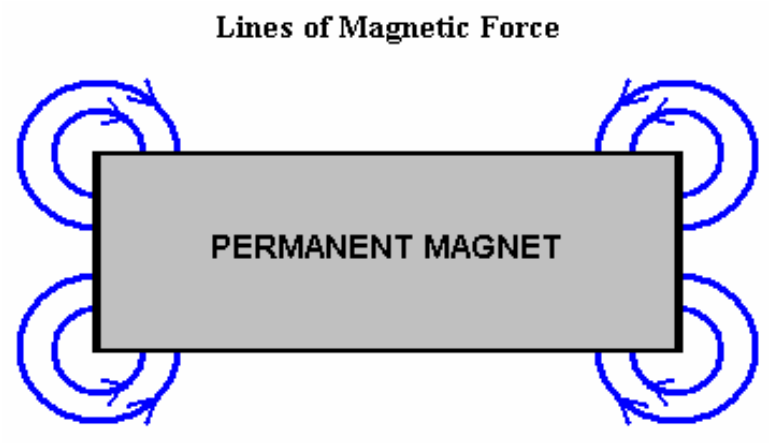

There are many lines of force, although the sketches shown above only show two. The important factor is that there is a circling field at each corner of a typical bar magnet.

It follows then that if a row of magnets is placed at a an angle, then there will be a resulting net field in a single direction. For example, if the magnets are rotated forty five degrees counter clockwise, then the result could be like this:

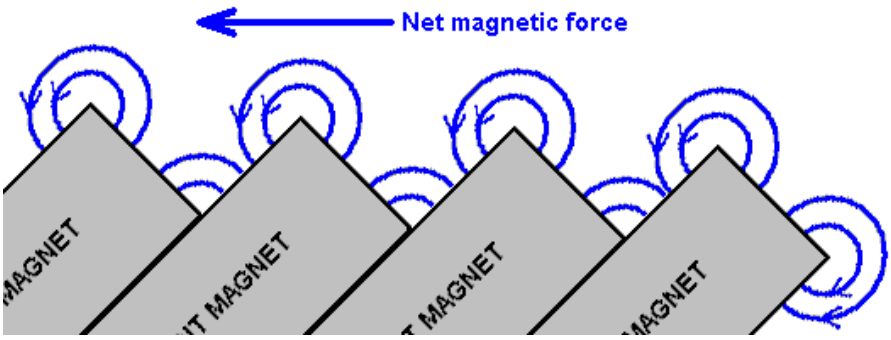

Here, the opposing corners of the magnets are lower down and so there should be a net magnetic force thrust path. I have not tested this myself, but the supposition seems reasonable. If it tests out to be correct, then placing the angled magnets in a ring rather than a straight line, should create a motor stator which has a continuous one-way net field in a circular path. Placing a similar ring of angled magnets around the circumference of a rotor disc, should therefore give a strong rotary movement of the rotor shaft - in other words, a very simple permanent magnet motor.

Steele Braden has experimented very extensively with this arrangement of magnets and it is his experience that each magnet in a set of this kind, affects the field of the following magnet. This effect is progressive and by the fifth magnet, the magnetic push is no longer near enough to the horizontal to be fully effective. This is overcome by putting a non-magnetic wooden spacer between sets of five magnets as shown here:

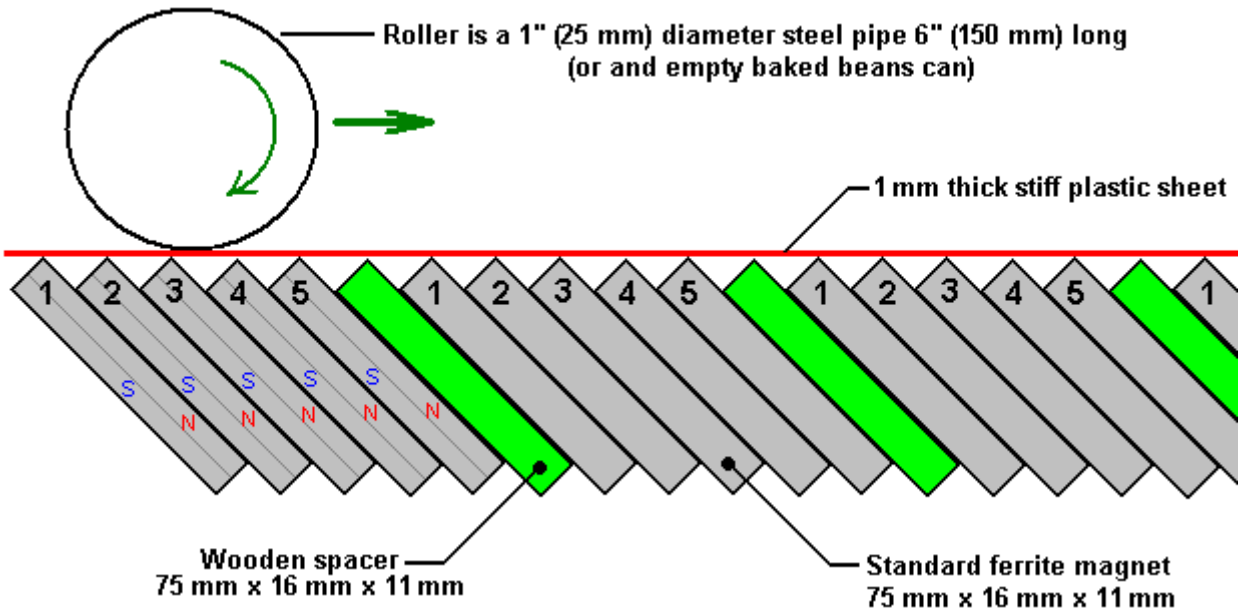

This gives transport of the rolling ferrous cylinder without any input power being required. There is no limit to the length of the magnetic strip along which the metal cylinder rolls but the cylinder weight of 325 grams is essential for the inertial effect in keeping the cylinder rolling. With just a ferrous roller, the effect is not powerful. The magnets used by Steele for the track are standard ferrite magnets 75 mm long. This length does not show in the side-view diagram above as it runs away into the distance as does the length of the metal cylinder. The cylinder needs to overlap at least three magnets and the rolling effect causes the cylinder to appear to have only one magnetic pole The magnets have a North pole on one face and a South pole on the opposing face and when they are stacked as shown, they are pulled together by the magnetic effect. Serious experimenters can contact Steele at stebra@xtra.co.nz for sharing of results or discussing observed effects.

Steele has also experimented with a magnetic roller constructed from twenty wedge-shaped magnets 48 mm long and stacked inside a stainless steel tube. This produces a high-performance roller but getting magnets which are wedge-shaped is not easy nor are they cheap. Here is a video of Steele's roller rolling along his magnetic track http://www.free-energy-info.com/Bradem.mov

The roller construction method is shown here:

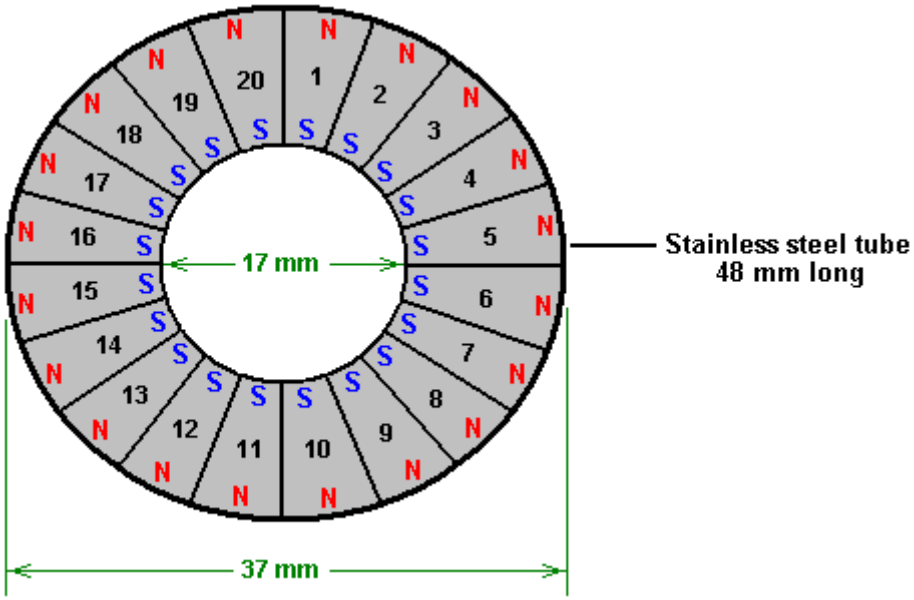

Permanent magnet motors have a Coefficient Of Performance ("COP") of infinity as they produce output power and the user does not have to provide any input power to make them operate. Remember, COP is defined as Output Power divided by the Input Power **which has to be provided by the user** to make the device operate. In the following chapter, we will be considering pulsed systems, where the user has to provide input pulses to make the device operate. This prevents these devices from having a COP of infinity and instead, we are looking for any device which has a COP greater than one. However, any device with COP>1 has the potential of becoming self-powered, and if that can be arranged, then the COP does in fact become infinity by definition, as the user no longer needs to supply any input power.

The examples of permanent magnet motors and motor-generators mentioned above, have generally been of the type where there is a stationary "stator" and a rotating "rotor". It should be understood that the arrangement of magnets on the "stator" do not necessarily have to be stationary. Some motor designs do not have a stator, but instead have two or more rotors. This allows the magnets which would have been on the stator to be in position to provide thrust to the output rotor, and then move out of the way so as not to retard the rotor movement. The Bowman magnet motor is one of this type, though admittedly, it uses one stator magnet to get it started and it has two subsidiary small rotors which carry the magnets which would normally be on a stator. A search on the web will provide the details of many permanent magnet motor designs.

The next step with Steele Braden's system is to arrange the magnetic track so that it forms a continuous circular path, and have more than one roller. It needs to be stressed that to date, this has not been successful and it is still a matter of research and development. To create a compact motor, tapered ceramic magnets have been used. This causes the magnets to fit together closely as shown here:

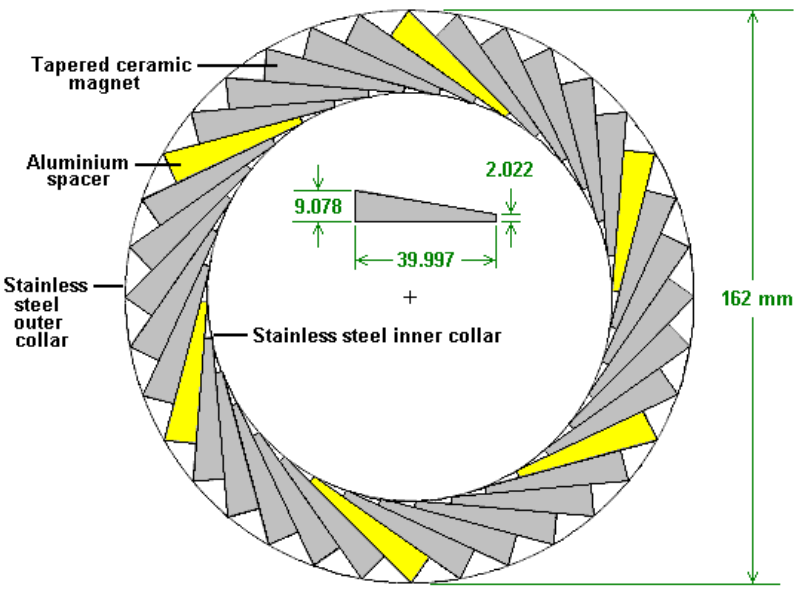

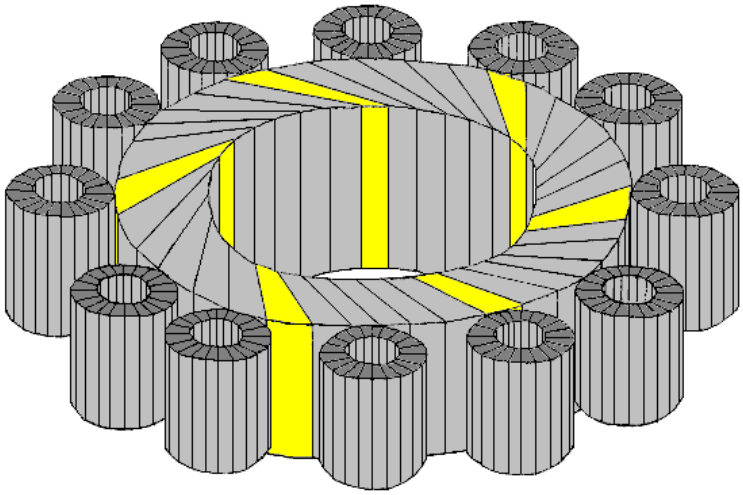

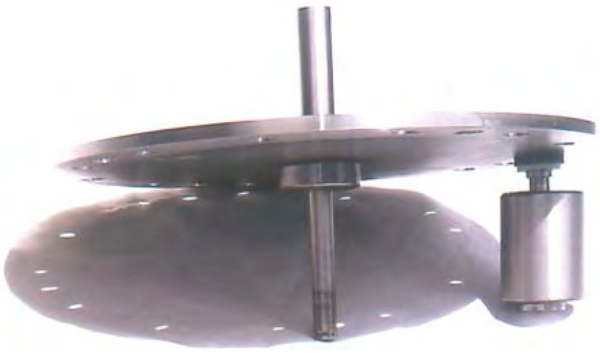

This arrangement uses twelve of the 37 mm diameter cylindrical rollers, each of which contains twenty tapered magnets as shown in the diagram above. The photograph above shows the rotor plate with one of the twelve rollers attached. The motor housing is as shown here:

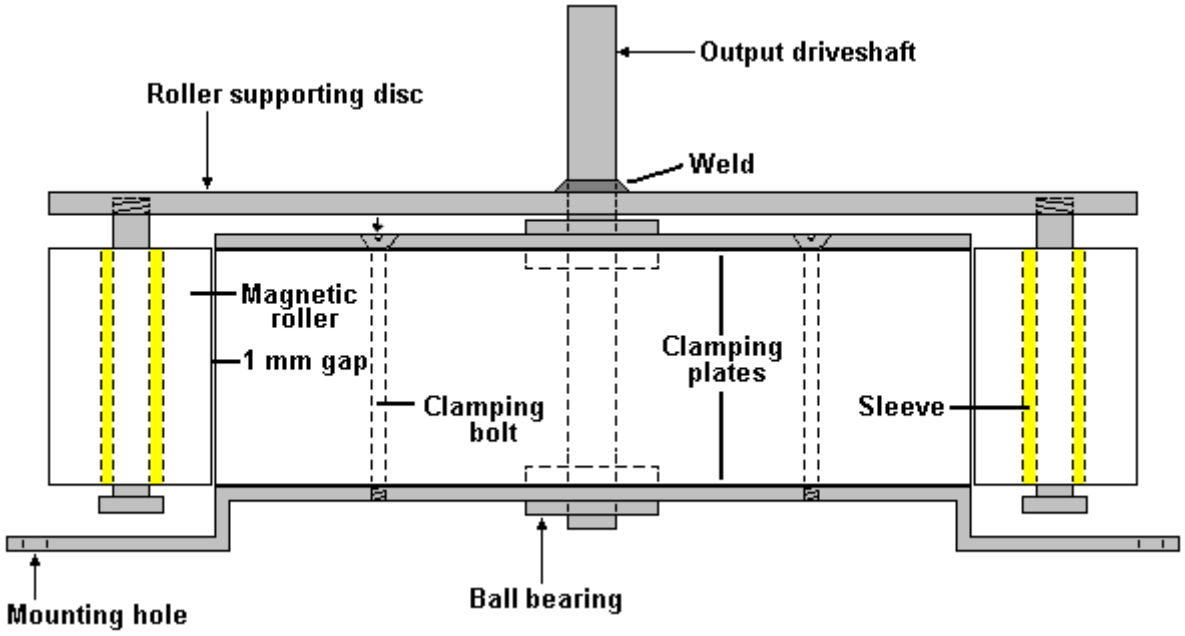

The motor is arranged so that the twelve magnetic rollers are bolted to a metal disc welded to the rotor shaft. The rollers run around the magnetic path driving the output shaft. The bolts holding the rollers in place are made to be a loose fit on a sleeve made of a material of a type which has a low rotational friction. At the start, the rollers roll in direct contact with the outer stainless steel sleeve, but as the rotation speed increases, the resulting outward pressure causes the rollers to press outwards on their bearings, creating the 1 mm gap shown in the diagram. In the version shown in the photograph above, the bolts holding the rollers in place are secured by nuts but a preferred arrangement is where the holes in the rotor disc are tapped to take the roller bolts directly.

David Cunningham A very similar looking design by David Cunningham was patented (US 4,443,776) which uses a ring of triangular magnets:

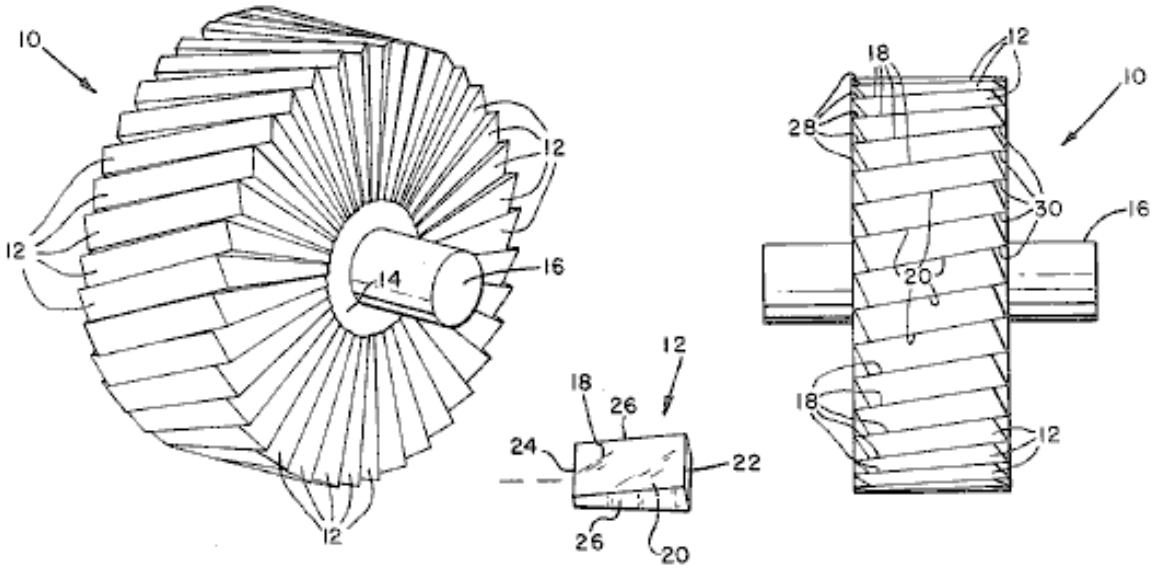

Emil Hartman and Howard Johnson. Both Emil Hartman and Howard Johnson have been granted US Patents on arrangements of permanent magnets which produce a directional push along a straight path. Emil, in July 1980 (Patent 4,215,330) and Howard in October 1989 (Patent 4,877,983) and in March 1995 (Patent 5,402,021). Each of these patents show very different methods of producing the magnetic push and each method has been proven by prototypes constructed by the inventors.

In brief outline, Emil Hartman's design drives a ferromagnetic sphere, such as a steel ball bearing, up a slope against gravity. The arrangement is like this:

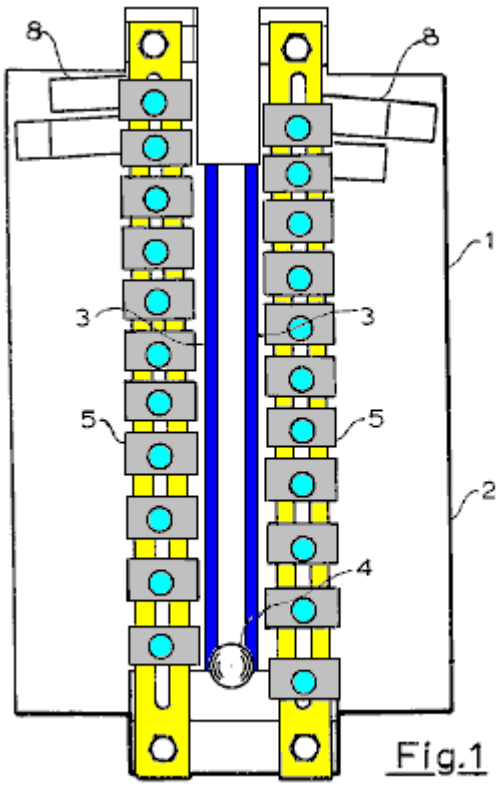

Fig.1

TOP VIEW

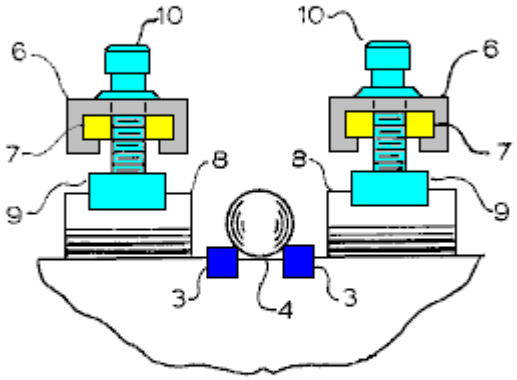

Fig.2

END VIEW

Here, the metal ball rolls along a path between two guiding strips shown in blue in the diagram above. The magnets which provide the pulling force on the ball are not seen in the top view as their clamping mechanism (marked **5** in **Fig.1** and **6** in **Fig.2**) hides them from view. They can be seen on the right in **Fig.2** where they are marked with the number **8**. Interestingly, this device is put forward as an automated conveyor or as a toy, but as the metal ball is raised into the air as well as being moved along the track, the device immediately lends itself to the feed for a gravity wheel constructed in the style of an overshot water-wheel. Also, horror or horrors, this looks like one of the hated "perpetual motion" devices which people who are steeped in conventional physics are too frightened to accept.

A key feature of this arrangement is the spacing and the orientation of the permanent magnets as shown here:

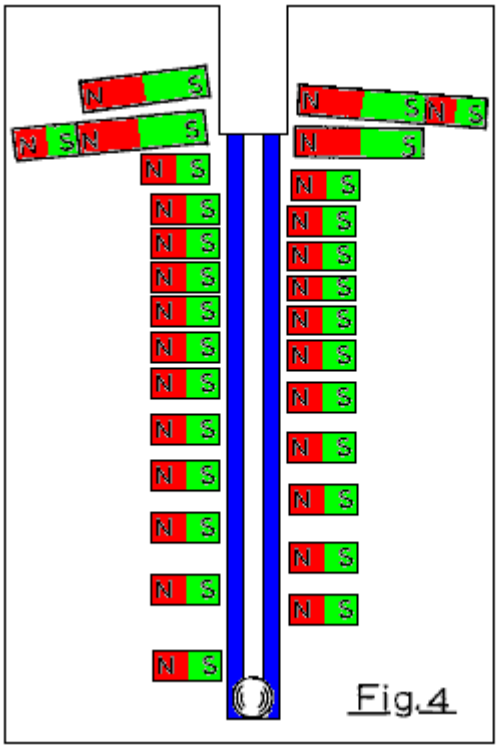

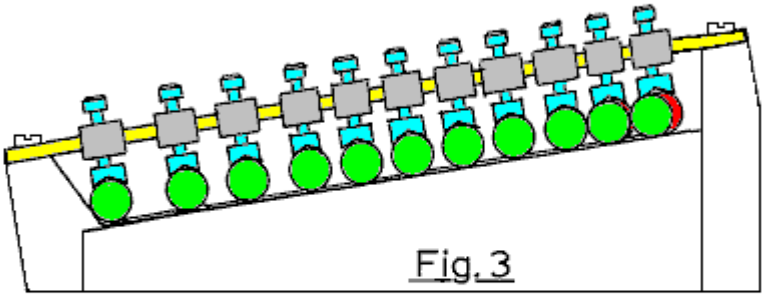

SIDE VIEW

Notice that the magnets are staggered with those on the right being opposite the gaps between those on the left. Emil opted to use circular bar-shaped magnets with the poles on the circular end faces. The clamping arrangement allows for very precise adjustment of the magnet positions and this will be used when finding the optimum performance. If you wish to examine the full patent, then it can be downloaded free from the website http://www.freepatentsonline.com

The more recent of Howard Johnson's linear-track magnetic patents (Patent US 5,402,021) shows a complicated arrangement of magnets. These look symmetrical to a quick glance, but this is not the case with the projecting 'spin accelerator' magnet assemblies being staggered, the poles being swapped on opposite sides and an unusual dividing group marked with a blue arrow in this diagram:

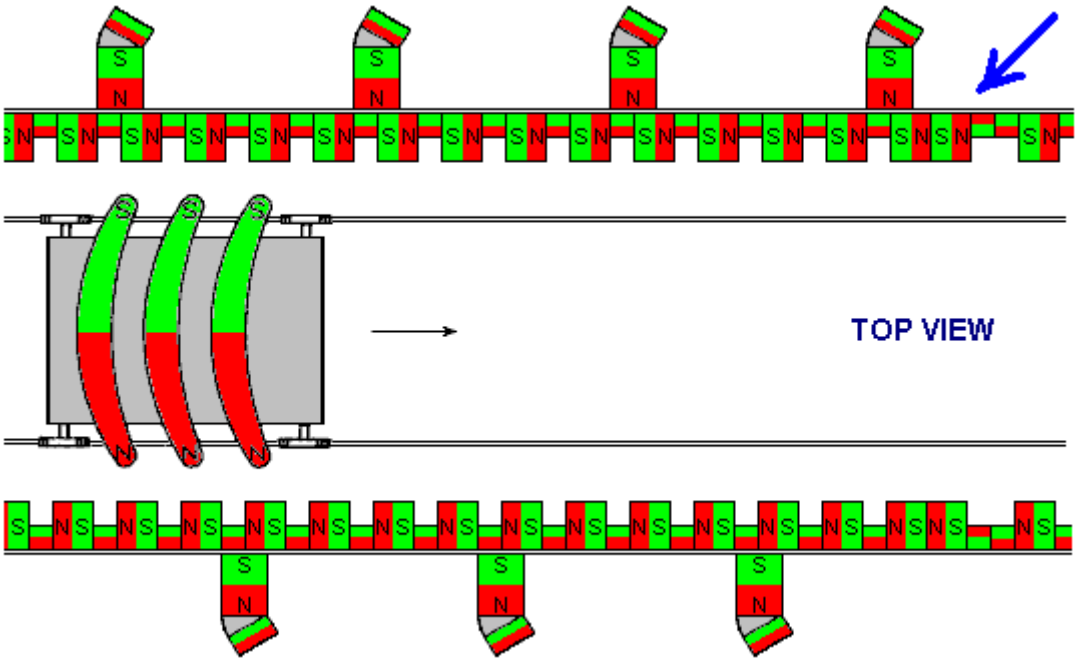

In the centre of the gap between these two sets of magnets, there is a track for a miniature rail vehicle to run along and that vehicle has curved "Alnico 8" magnets mounted on it, the spacing between those magnets being the same as the spacing of the main magnets and their pole directions match those of the short "gap" magnets. The gap between the tips of the curved magnets and the magnetic walls is 0.5" to 1.25" (12 mm to 32 mm) and the prototype vehicles were boosted down the track covering 2 feet (600 mm) in one second.

In the diagram above, all of the North magnetic poles are colour coded red and the South magnetic poles green and these colours are relied on where there is not enough room to mark the magnets clearly with the "N" or "S" letters. Howard remarks that having sets of permanent magnets positioned so closely together, actually strengthens the magnetic effect and so is helpful. The smaller magnets placed between the main magnets do not exceed half of the length of those main magnets and so there is an indentation gap between the main magnets and that gap extends at least half way down the length of the main magnets as shown above.

All of the inventors who produce a working linear track device such as these, have great difficulty in modifying the design to produce a continuous circular movement. It is not at all clear why the Howard Johnson design shown above should not have the magnetic walls curved into a large circle and the curved magnets mounted on a non-magnetic gantry arm or disc instead of a vehicle. However, as this has not been done, there is presumably some very good reason why a conversion to circular motion does not work.

James Roney has posted a number of video on his magnetic experiments. One of these is located at http://www.youtube.com/watch?v=H6bE9TzetSA&annotation_id=annotation_234168&feature=iv and shows his method of magnetic shielding which produces a permanent magnet which appears to have only one magnetic pole. This effectively overcomes the back-drag of a stator magnet when a rotor magnet passes by it. James demonstrates the construction which he is using at present, which has a neodymium magnet surrounded by several other materials. He says:

The outer shielding is “flashing material” which is commonly sold in hardware stores in the US.I have no idea of it’s exact composition. This simple demonstration, which I first posted on 21st January 2008, shows just how effective one-way shielding is in producing a net gain. Here, you see two specially shielded magnets being moved close together. When the two shielded faces are pushed together there is no magnetic effect but when they are reversed and the opposing two faces are pushed towards each other there is a sizeable magnetic push which moves the stationary magnet away. It is this thrust which is the making a fuel-less permanent magnet motor using any one of a number of different possible designs. My long-awaited video showing the method of magnetic shielding which I use.

However, shielding is just the half of it and the other half is the exact position of the stator and the angle of approach of the incoming magnets. At all times, only like poles are used as the primary pole, which means that the magnets approaching the stator will be two like poles which must be able to pass close by each other. This approach is what I call “the back door” to my stator, where one of the like poles has been heavily shielded. However, if you provide too much shielding on the stator magnet, then the rotor magnet will be attracted to the

heavy metal of that shielding and that would cause a braking effect, opposing the rotation of the rotor. To neutralise this effect we can allow some of the “like pole” to pass through the shielding. When the right amount of magnetism passes through the shielding it exactly balances the attraction of the rotor magnet to the metallic shielding of the stator magnet, allowing unhindered movement of the rotor as it passes the stator magnet.

As soon as the rotor magnet has passed “the back door” of the stator magnet, and moved into the unshielded area, the like poles of the stator magnet and the rotor magnet repel each other, giving the rotor a strong push in it’s direction of rotation. This, of course, is immediately repeated by the next rotor magnet, providing the rotational drive for the motor. The turning force is enormous, even on this small scale, and if scaled up, would have enough power to drive a car or power a home.

When you take this two-dimensional layout and turn it into a three-dimensional layout (by placing several rotors on the same shaft) you get a tremendous amount of thrust, capable of handling heavy loads and still keep working with the greatest of ease. Best of all, there is only one moving part and it is 99% friction free.

Having the stator long and thin, unlike typical bucket magnets which do not work in this case, this allows for a long 3-inch (75 mm) pass over the stator before the rotor magnet receives its strong push from the stator magnet, spinning the rotor and driving the next rotor magnet across the shielded part of the stator magnet, allowing the process to repeat indefinitely, producing a fuel-less permanent magnet motor.

Our thanks go to James for sharing his design information freely like this. He invites everybody to copy and repost his videos as the web hosting sites, such as YouTube, repeatedly take his videos down. Due to this repeated opposition to this information from James, it is quite possible that by the time you read this, the video pointed to by the above link will no longer be available at that address. The details from his videos are as follows:

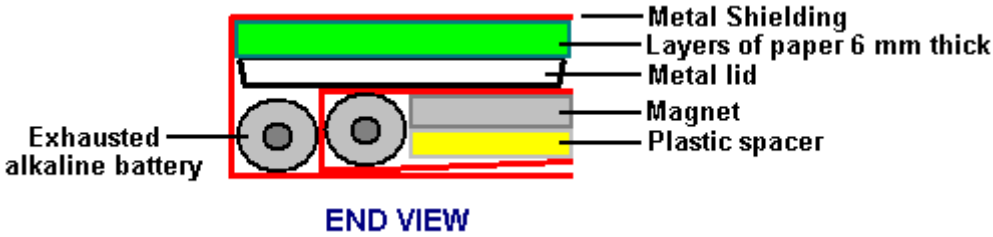

The magnet used is a Grade 52 strength neodymium magnet 2” x 1” x 1/4” (50 mm x 25 mm x 6 mm) and it is encased in five different types of material in order to give it modified magnetic characteristics. The completed set of materials is wrapped in the silver aluminium adhesive tape used for ductwork construction and so, looks like this:

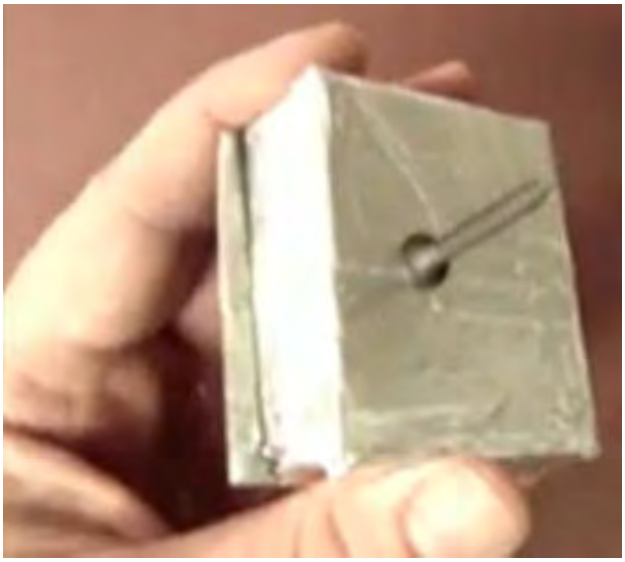

In this picture, a steel screw is shown held on one face by the residual magnetic field but that screw falls off the back face as there is not enough magnetism there to hold it in place.

Underneath the tape are two shells made from any thin magnetic metal material. James uses thin flashing metal as that is readily available and is easy to bend into shape. As the objective is to encase the magnet on three sides, the metal is cut and bent like this:

The resulting shape is not unlike a book. There are two of these metal casings, one inside the other. Each of these casings contains an alkaline battery inside it. James stresses that these batteries need to be fully discharged in case a short-circuit develops inside the casing.

The inner casing contains the magnet and the 1/4” (6 mm) plastic spacer supplied with the magnet, making an overall thickness of 1/2” (12 mm), placed up against the alkaline battery which has a 14 mm diameter, which means that the lower face of the inner casing is not quite parallel with the upper face. In the diagram, the metal casing is shown in red.

Outside that metal casing, there is a second alkaline battery and above it, there is a 2” (50 mm) diameter shallow metal cap from a container:

Between the metal cap and the upper metallic case there is a 1/4” (6 mm) layer of sheets of paper as shown here:

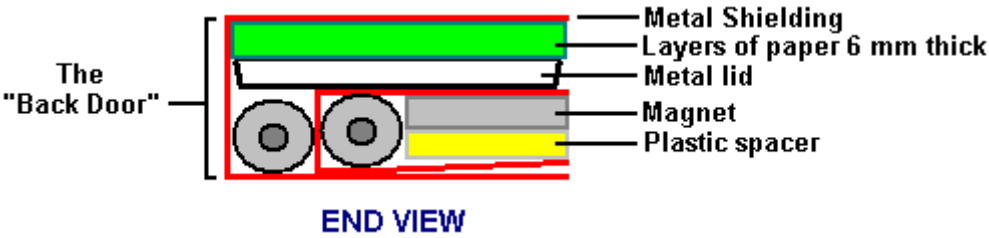

James stresses that the spacers made of plastic and paper can be made of almost any non-magnetic material **except** aluminium which has unusual magnetic properties. The shielded magnet can be used in two different ways, either in attraction or repulsion. The repulsion mode is slightly more powerful than the attraction mode, but some permanent magnet motors built using it have found that the magnets lost their magnetisation after some three months of continuous operation. Using the attraction method (where the rotor magnet pole is selected to be opposite to the stator magnetic pole) is nearly as powerful and never causes the magnets to get depleted. James demonstrates the attraction mode in one of his videos:

This view is looking vertically downwards on a horizontally mounted bicycle wheel which has six magnets attached to the rim. The first two magnets are Grade 52 neodymium 1" x 1" x 1/4" (25 mm x 25 mm x 6 mm) with plastic spacers glued to them. The following four magnets are the same but have a 1" diameter 1/4" thick circular neodymium magnet placed on top of them. This magnetic attraction setup is demonstrated to accelerate the wheel from a stationary position.

However, in my opinion, this video is not very satisfactory in that it is conceivable that the view is not vertical but horizontal and the rotation taking place due to the weight imbalance of the wheel, as the wheel is restrained immediately after it has stopped instead of allowing time to show that no reverse motion occurs. Also, no information is given as to why the six magnets are not identical, nor why the whole of the rim did not have magnets attached to it, demonstrating continuous rotation.

It might be remarked that a wheel of this type is probably a little light for a magnetic rotor as there is considerable advantage in having sufficient rotor weight to generate the momentum needed to carry the rotor past any magnetic sticking point. I can also be remarked that the wheel really needs to be balanced by having an equivalent set of six magnets on the opposite side of the wheel rim, and that placing additional shielded stator magnets at an odd number of positions around the wheel would give a steady powering of the rotor even with only two sets of six rim magnets on the rotor.

The Twin Rotor Suggestion. When you are considering shielding magnets using iron or steel, you need to remember that fridge magnets stick to refrigerators because the refrigerators are made of steel. This demonstrates the fact that there is an attraction between magnets and iron or steel. Consequently, if a magnet is shielded with steel so that it blocks the whole of the magnetic field of the magnet, a second magnet will be attracted to that metal shielding material. At http://www.youtube.com/watch?v=vUcWn1x3Tss there is, at the present time, a video by "magneticveil" where he proposes the use of this feature of simple shielding in the construction of a magnet motor.

He suggests using two rotors geared together. The rotors have magnets on them, but for the purposes of explanation, just one pair of magnets are shown here:

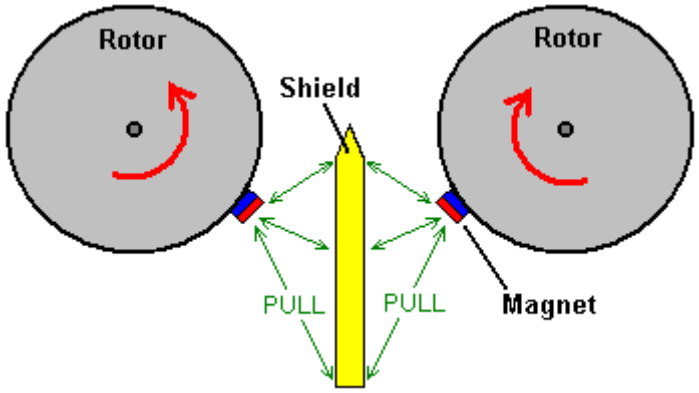

Each magnet is attracted to the metal shield material between the rotors. This causes the rotors to rotate in the direction shown by the red arrows. The magnets are drawn to the nearest point to the shield which they can reach as shown here:

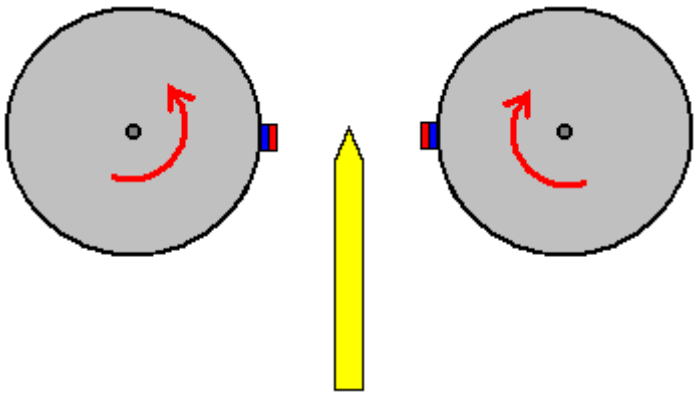

At this point you would expect the rotors to stop moving and lock into a stationary position. However, the interesting idea is to adjust the shape of the shield like this:

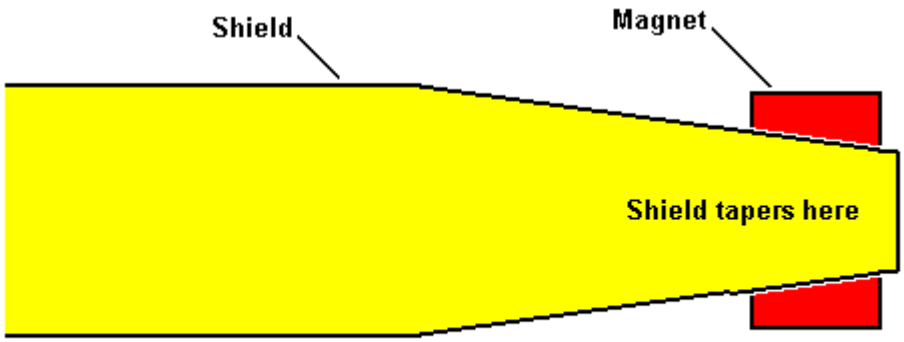

SIDE VIEW

At the end of the shield, its width is reduced and tapered so that the magnetic field from the magnet behind it exactly matches the attraction of the magnet on the near side of the shield. This has the effect of giving a completely neutral zone at the tip of the shield, with neither an attraction or a repulsion in that region. The degree of tapering depends on the strength of the magnets, the thickness and material of the shield and the spacing between the magnets and the shield, and it needs to be discovered by experiment.

This neutral zone stops there being a major pull between the magnets and the shield, and so momentum carries the rotors on past the end of the shield. This produces a situation like this:

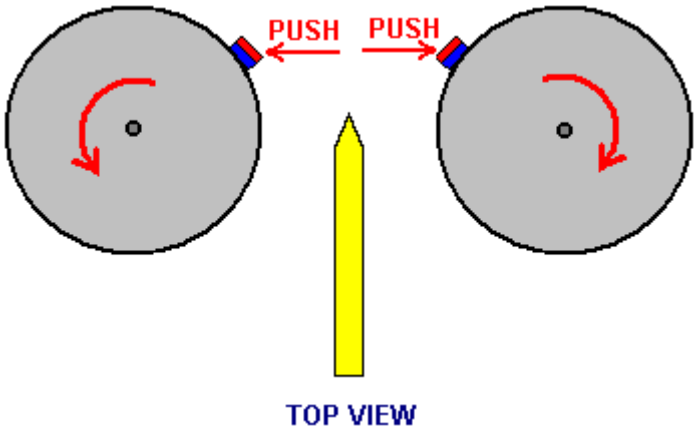

Here, the magnets have moved past the shield and are repelling each other strongly. They are beyond the axles of the rotors, so the repelling force produces a turning effect on each rotor. This is the situation with just one pair of magnets, but each rotor will have many magnets on it. This produces an additional turning effect. Consider just one other pair of magnets, in the same position as our first diagram:

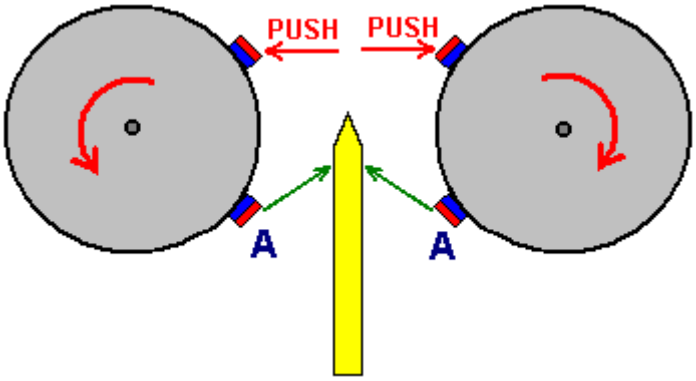

The pull between the magnets "A" and the shield, adds to the rotation caused by the push between the unshielded magnets. This arrangement of magnets and shield should allow continuous rotation of both rotors and the motor can be stopped by removing the shield.

It should be noted that this arrangement uses magnets in repulsion mode. That is, the outward-facing poles of the magnets on both rotors are the same. There have been reports of permanent magnet motors where the magnets were in repulsion mode, and while these motors ran well, it was found that after about three months, the magnets lost their magnetisation. If at all possible, magnets should be used in their attraction mode. This is not possible in the above twin-rotor arrangement, so if one is being constructed, it might be a good idea to arrange the physical construction in such a way that the rotor magnets can easily be removed. This allows remagnetisation of the magnets, or alternatively, their replacement if very cheap types are used.

Donald A. Kelly. In 1979, Mr Kelly was granted a patent on a permanent magnet motor design. He comments that apart from it being very difficult to generate sufficient power to mechanically move the stator magnets slightly to achieve continuous rotation, the resulting rate of revolutions is very low. For those reasons, he has opted to move the stator magnets slightly using small DC motors. His design is included here as it is a concept which is relatively easy to understand. The overall idea is not unlike that of Stephen Kundell who rocks the stator magnets with a solenoid, as shown earlier in this chapter. The objective here is to use a small electrical current to generate a powerful rotation far greater than would be possible from the electrical current itself, and so, produce what is in effect, a power multiplication through the use of permanent magnets. A slightly reworded copy of his patent is shown here:

Patent US 4,179,633 **18th December 1979** **Inventor: Donald A. Kelly**

MAGNETIC DISC DRIVE

ABSTRACT

This permanent magnet disc drive consists of two basic magnetic components, one large driven flat disc containing a uniform series of identical magnet segments, and a second magnetic driving means comprising multiple oscillating magnetic pairs of opposite identical magnet segments. The magnetic mechanism simulates the action of a clock escapement mechanism in that the oscillating magnet pairs uniformly oscillate between the disc magnet segments to induce continuous disc rotation. All of the multiple oscillating magnet pairs are oscillated by a motor, or motors, which provide an eccentric movement through a suitable gear reduction unit. The small DC motors are powered by multiple arrays of silicon solar photovoltaic cells at some convenient rooftop location.

US Patent References:

4,082,969	Magnetic torque converter	April, 1978	Kelly	310/103
4,100,441	Magnetic transmission	July, 1978	Landery	310/103

BACKGROUND OF THE INVENTION

At the present time the magnetic disc drive has reached the stage of development where the oscillating magnet pairs will rotate the magnetic segmented disc when the oscillations is done manually. The disc rotation is smooth and continuous when the manual oscillation is uniform and continuous, and the disc speed may be increased as the oscillation rate is increased.

Since the adequate functioning of the magnetic/mechanical-conversion concept has now been proven with a working prototype, a practical and economical self and/or external oscillation means for the oscillating magnetic pairs must now be developed. The magnetic disc drive was originally designed to be self-actuated by means of a multi-lobe cam and push rod arrangement, but this approach has not been proven successful to date.

A disadvantage for the self-actuated type of magnetic disc drive is that the disc is locked-in with a low, fixed speed output which is dependant on the natural magnetic field interaction between the involved interacting magnet segments.

A mid-diameter direct displacement multi-lobe cam was used for the first prototype, but this did not work because of the high rotational resistance imposed by the high cam lobe angles. A peripheral, direct displacement multi-lobe cam was also tried but this was not successful because of the moderate and sufficient cam lobe resistance to push rod displacement.

Other cam lobe configurations are being planned and developed to make sure that no possible trade-off to self-actuated mechanical oscillation is overlooked. Another possible approach to self-actuation for the magnetic disc drive is by the application of a twin level magnetic commutator which is directly connected to the disc drive shaft. The magnetic commutator segments alternately attract corresponding radial magnets on pull-rods which are pivoted on each of the oscillation plates of the magnetic pairs.

While auto-actuation of the magnetic disc units may be desirable for some self-contained power applications, the low, fixed speed output is not considered attractive and promising for a wide range of household power applications. Because of the inflexibility of speed output of the auto-actuated type of unit the, the development of a variable speed, externally oscillated type of disc unit is required to meet the growing demand for alternate and auxiliary power means for many applications.

The matching of a large magnetic disc drive and small solar powered DC electric motors is a nearly ideal arrangement since a single or series of small precision DC motors can be readily powered by modest arrays of silicon photovoltaic cells located at some convenient rooftop location. Small high-efficiency, ball bearing DC motors are available which, when connected to suitable gear reduction drives, can revolve a simple eccentric mechanism with sufficient power and variable speed, to cause oscillation of a series of four to six magnetic oscillating pairs of stator magnets.

This series of magnetic oscillating pairs will all be connected together with straight linkage to transmit the reciprocating motion from the driving oscillating shaft to the other oscillating shafts of the series. This is a more desirable multiple driving arrangement rather than separate small DC motors since synchronism is automatically assured, rather than more complex and less reliable electrical synchronization requirements. Because there is no locked-in synchronism for this type of external oscillation means, the multiple magnetic oscillation pairs must be of the minimum interference type, in that they must not become jammed into the disc magnet segments. Although the proper functioning of the magnetic disc unit requires that the oscillating magnet pairs must enter the disc's magnet segment interference circle, deflection means must be added to all of the oscillation plates to insure that the continuously revolving disc will readily by-pass all of the oscillating magnet pairs.

The large magnetic disc unit will consist of a basic non-magnetic circular disc, on which multiple high energy permanent magnet segments are equally spaced around the rim of the disc. The drive shaft of the disc rotates on precision ball-bearings and may be chosen to revolve in either a horizontal or a vertical plane. The disc is the driven component of the magnetic drive assembly, and it can be connected to the load or an electrical generator.

The multiple oscillating magnet pairs are the driving component of the disc drive unit and consist of flat, non-magnetic oscillation plates, on which identical high-energy permanent magnets are secured at each end of these oscillating plates. The magnet segments are placed with opposite poles exposed at the sides, relative to each other so that a north-south pole couple reacts on the disc's magnet segments. The driven disc's direction of rotation depends on the polarity of the disc's magnets in relation to the oscillating magnetic pairs.

The oscillating magnetic pairs will make a full back and forth oscillation between two adjacent local disc magnet segments so that an alternate "pull and push" effect is induced on the magnetic segmented disc. The basic synchronism between the disc's magnet segments and the multiple oscillating magnet pairs closely simulates the action of a watch or clock escapement mechanism in respect to the natural "cogging" action between the functioning components.

This general magnetic disc drive arrangement insures smooth and continuous rotation for the driven disc with an optimum of magnetic energy interchange between the oscillation stations and the magnetic disc because of near pole face to pole face exposure. It is now believed that this present type of magnetic disc drive is approaching a theoretical maximum of conversion performance possible, especially when compared with other types of magnetic/mechanical arrangements such as magnetic worm and worm discs, spur couples, mitre couples, and all types of inferior, linear magnetic devices.

The attractiveness of the basic magnetic disc and oscillating pairs is that a nearly ideal leverage factor is introduced in magnetic/mechanical conversion arrangements. Simply stated, considerably less energy is needed to oscillate the oscillating pairs than is produced from the near pole face to pole face magnetic interaction between the functioning magnetic components.

The alternating and uniform "pull and push" force imposed by the oscillating magnet pairs on the disc magnet segments produces no direct back or counter force reaction on the driving oscillating magnet segments which is the master key for a useful and practical magnetic/mechanical conversion drive. The back or counter-reacting force on the oscillating magnet pairs is taken directly by the fixed pivots of the oscillation plates, with a minimum of load penalty imposed on the drive of the oscillating magnet pairs.

All other types of rotary magnetic/mechanical conversion devices, with the possible exception of the worm and worm disc type, produce an undesirable back reaction force on the driving component and resulting ineffective performance. The magnetic worm and worm disc units have not proven to be sufficiently worthwhile for commercial applications because of the very high permanent magnetic energy necessary and due to the low speed output of these mechanisms.

When configuration comparisons are made of all types of possible magnetic/mechanical conversion devices it will be noted that the combination of a magnetic disc driven by multiple oscillating magnet pairs will stand out as a practical and useful permanent magnetic conversion arrangement. The incentive for the development of this magnetic disc drive was the direct outgrowth of overall disappointing performance of solar energy conversion efforts and the frustrations encountered with component costs, conversion efficiency and a lack of suitable energy storage means. While solar energy is being widely hailed for its future potential as a viable alternate energy source, relatively few engineers speak out about relatively poor overall cost/effectiveness due to days-on-end of overcast skies during the winter months when the energy is most needed, especially in northern latitudes.

Because of the less-than-adequate solar energy conversion outlook for the vast majority of American homeowners, other alternate, small scale, decentralised, energy sources must be explored and developed on a crash program basis. If this is not done within the next several decades we must accept the alternative of a greatly reduced standard of living because of the alarming rise in the rate of energy costs.

This magnetic disc drive represents a practical solution in applying permanent magnetism in the development and commercialism of a decentralised, silent, fuel-free, household-sized alternate power system. While the power output from an individual magnetic disc unit may be small, the power output is constant and does not generally depend on the intensity of an external energy source, as do present solar energy systems.

SUMMARY OF THE INVENTION

The magnetic disc drive unit is comprised of a large driving disc made of non-magnetic metal on which several permanent magnets are equally spaced around the rim. The disc drive shaft rotates on trunnion supported ball

bearings and may revolve in nearly any conventional position, and may be constructed with any practical large diameter.

The identical oscillating magnet pairs are the driving component of the disc drive and consist of flat, non-magnetic plates on which, pairs of identical permanent magnets are secured at both sides of the oscillation plates. These magnet pairs have opposite pole faces facing each other. The disc's direction of rotation is determined by the polarity of all the disc's magnets relative to the polarity of the oscillating magnet pairs.

The oscillating pair of magnets make a full back and forth oscillation while each rotor disc magnet passes by. This produces a pull on the disc magnet as it approaches the oscillator magnet and then when the oscillator moves that magnet away, a push force is applied to the magnet on the rotating disc by the second magnet of the oscillating pair of magnets. The synchronisation of the disc and the oscillating magnet pairs must be maintained for continuous and smooth rotation of the disc. This movement is similar to the action of a clock escapement-mechanism.

The method of moving the oscillating pairs of magnets is one or more solar-powered DC motors. These motors drive push rods which are in contact with ball bearings mounted on the oscillation plates. Since the eccentrics must move at relatively slow speeds, suitable gear reduction units must be used between the motors and the rocker arms.

In order to maintain proper synchronisation of all of the oscillating components, straight links are used to connect all of the driven oscillation shafts to the driving oscillation shaft. Four or five oscillation stations can be driven from one driver oscillation shaft so that a disc drive with a large number of oscillation stations will require several D.C. motors to drive all of the other oscillation shafts.

It is important that the multiple, identical oscillation plates and their magnet pairs be slightly shorter in width than the space between two adjacent disc magnet segments, so that an optimum pull and push force is induced on the local disc magnet segments. One side of the oscillating magnet couple "pulls" on the disc's permanent magnet and then the other oscillator magnet "pushes" the disc's permanent magnet onwards as it has been moved into place by the oscillation.

All of the oscillating magnet pairs oscillate on stationary rods, or shafts, and all of the eccentrics and DC motor drives remain fixed on a base plate. The other ends of the oscillating rods or shafts must be supported by some form of bracket to keep the oscillation plates parallel to the disc magnet segments. Each eccentric which moves a ball bearing attached to arms on the oscillation plates must make one full 360 degree revolution within the angular displacement arc between two adjacent rotor disc magnet segments. Two small pivot brackets are attached to the extreme, non-magnetic ends of the oscillation plates to allow these plates to oscillate freely with a minimum of friction.

The basic rotational relationship between the magnetic oscillating pairs, and the magnetic segmented disc, will have a bearing on the gear reduction ratio required for the gear drive unit coupled to the small DC motors. Fairly rapid oscillation is necessary to maintain a reasonably acceptable disc speed which will be required for most power applications. The size of the eccentrics which oscillate the oscillating magnet pairs will be determined by the full oscillating arc needed and the mechanical advantage required by the oscillation plate in order to cause the optimum rotation of the magnetic disc drive unit.

Proper magnetic disc drive functioning requires the pulling magnets of the oscillating magnet pairs to enter the disc's interference circle within the mutual magnetic field zone between the two local interacting magnets on the disc's rim. Since the disc will revolve continuously, the withdrawing phase of the "pulling" magnets brings the "pushing" magnets of the couple into the disc's interference circle within the mutual magnetic field zone, for effective interaction with the adjacent disc magnet segment.

All of the magnet segments on the oscillation plates which form the magnetic couples must be in line with the corresponding disc magnet segments in order to maintain an optimum interaction between them.

Because there is no natural, lock-in synchronism for this type of magnetic disc drive, the multiple magnetic oscillating magnet pairs must be of the minimum interference type, which consists of adding plastic deflectors to the oscillation plates to prevent the pulling magnets of the couple from jamming into the disc magnet segments. Since the oscillating magnet pairs must never jam into the disc and stop its rotation, the plastic deflectors will allow the oscillation plates and magnet pairs to be deflected away from all of the disc magnet segments.

The permanent magnets selected for both components of the disc drive must be uniformly identical and have the highest possible energy product or magnetic induction plus coercivity. Both of these magnetic properties will play a significant role in determining the true value of the magnetic disc drive unit. At the present time the rare-earth/cobalt permanent magnets offer the highest possible magnetic properties for this application, but their cost

is very high and currently not considered cost effective for the magnetic disc drive. Since costs will also play a major role in the competitive value of the disc drive, the magnets selected must show the highest possible cost/effectiveness ratio, along with long operating life.

Rectangular ceramic permanent magnets with large flat pole faces are preferred for the disc drive prototypes, and there is no theoretical limit to the size of both interacting components. A practical limit to the actual size of the components is imposed by weight and material cost restrictions plus available space, but nearly any practical number and size of uniformly identical magnets may be used to make up the magnetic disc drive.

It will be advantageous to build up each disc magnet station into clusters of up to about twelve to twenty four individual magnets which are arranged in lengths of four or five units and double or triple widths depending on the disc diameter. A large diameter disc unit is always desirable since the torque output for the disc unit depends on the tangential magnetic force produced by all of the oscillating magnet couple stations multiplied by the disc radius.

The large diameter disc speed will be relatively slow, in the 20 to 30 r.p.m. range, so that the disc output speed must be stepped up to a useful 750 to 1200 r.p.m. speed range, by a belt drive arrangement. The magnetic disc drive output is best adapted to run an electrical generator or alternator to produce electrical power for various household purposes.

An advantage to using silicon photovoltaic solar cells on an exposed rooftop location as a power source, is that they are capable of providing a partial E.M.F. under non-sunlight/overcast sky conditions. With full sunlight exposure the electrical energy produced will run the magnetic disc drive at its maximum possible speed, with reduced sunlight levels producing a corresponding proportionate reduction in the disc output speed.

A workable option exists for using a greater number of silicon photocells than would be normally necessary for full sunlight operation. The number of cells selected would be capable of running the magnetic disc drive at full speed under overcast sky conditions, with any excess full sunlight current bypassed to storage batteries. This option is a desirable arrangement since the disc will be assured of full electrical input power each day, with battery power available to make up the loss from any dark daytime sky conditions.

The principal object of the invention is to provide the highest torque output for the large driven disc from the lowest possible torque input for the multiple oscillating magnet pairs, as a useful power step-up means for electrical generating applications.

Another object of the invention is to provide a step-up power source which can be produced at competitive costs, requires no combustible fuel and is non-polluting while running silently and continuously.

It is a further object of the invention to provide a natural energy source which has an extremely long operating life, with a maximum of operating effectiveness, component resistance to degradation, with a minimum of parts replacement and maintenance.

The various features of the invention with its basic design geometry will be more apparent from the following description and drawings which illustrate the preferred embodiment. It should be understood that variations may be made in the specific components, without departing from the spirit and scope of the invention as described and illustrated.

Referring to the Drawings:

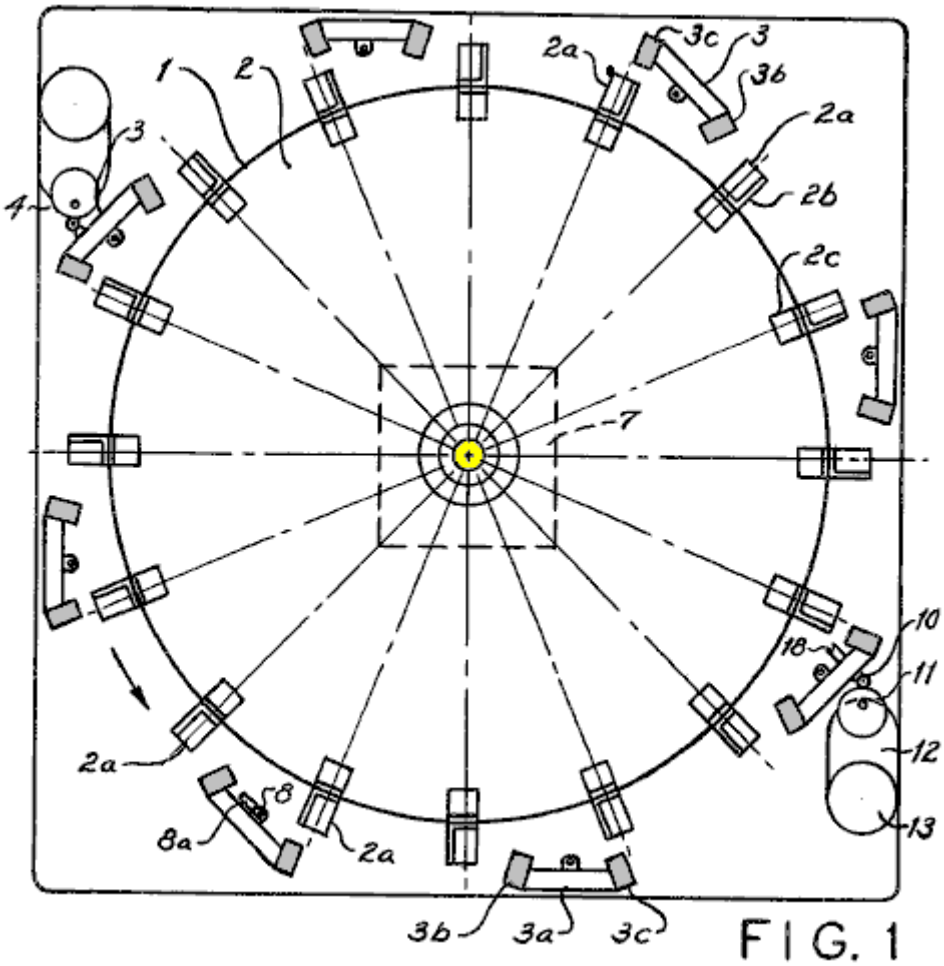

Fig.1 is a top, external view of the magnetic disc drive.

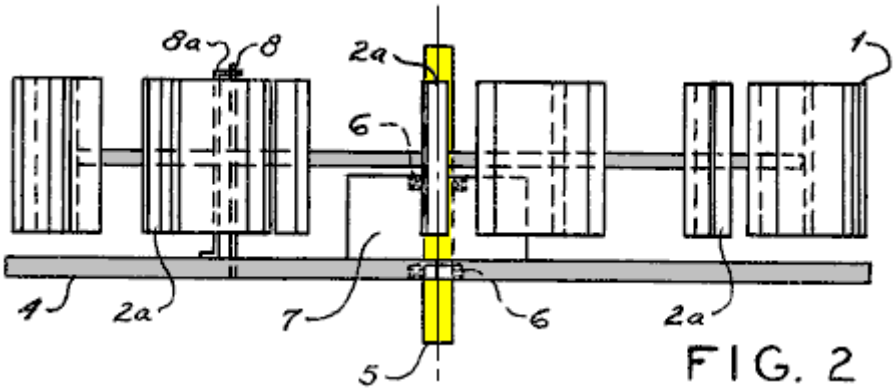

Fig.2 is an external side view of the magnetic disc drive.

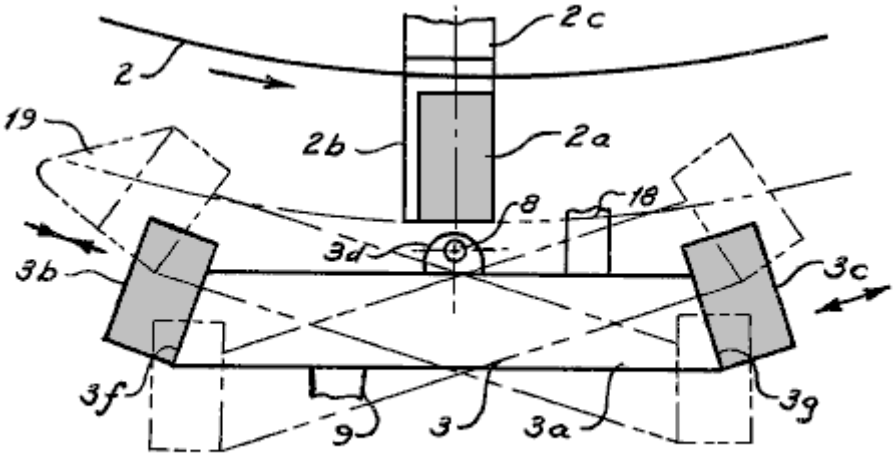

FIG. 3

Fig.3 is an enlarged top view of one oscillating magnet couple.

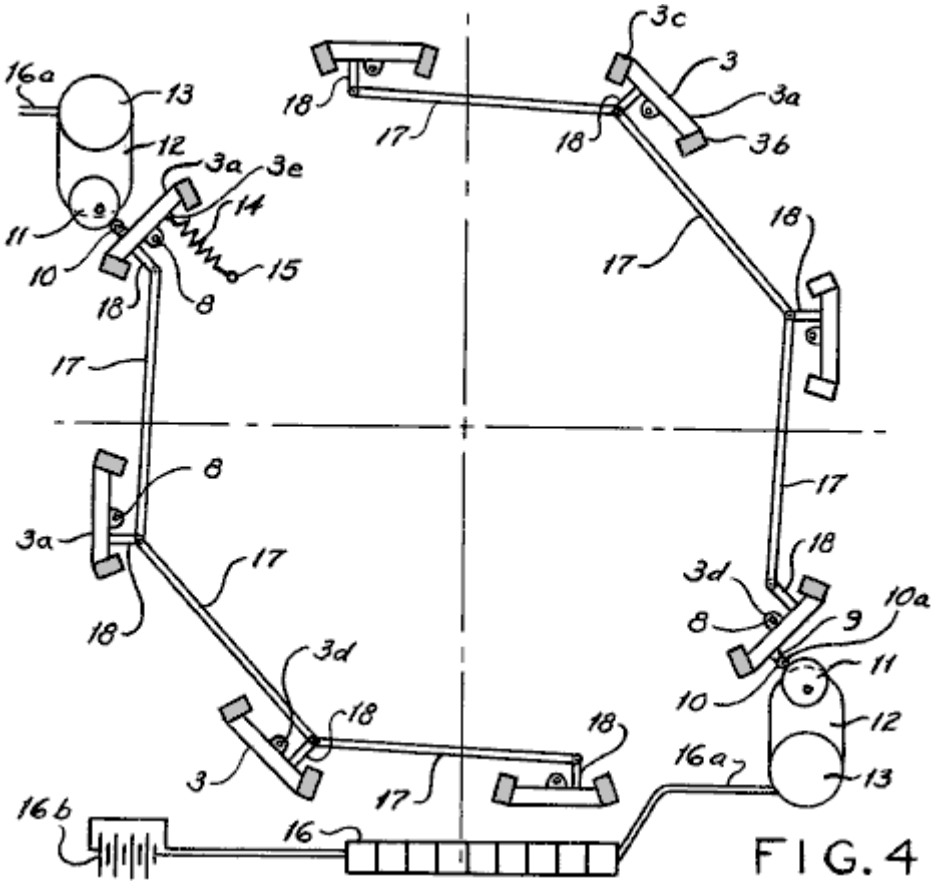

FIG. 4

Fig.4 is a top, break-away view of several oscillating magnet pairs connected together with linkage.

DESCRIPTION OF THE PREFERRED EMBODIMENT

The invention **1**, is comprised of two basic components: a large driven disc **2**, and multiple oscillating magnet pairs **3**, which are closely interrelated and mounted on a common base plate **4**.

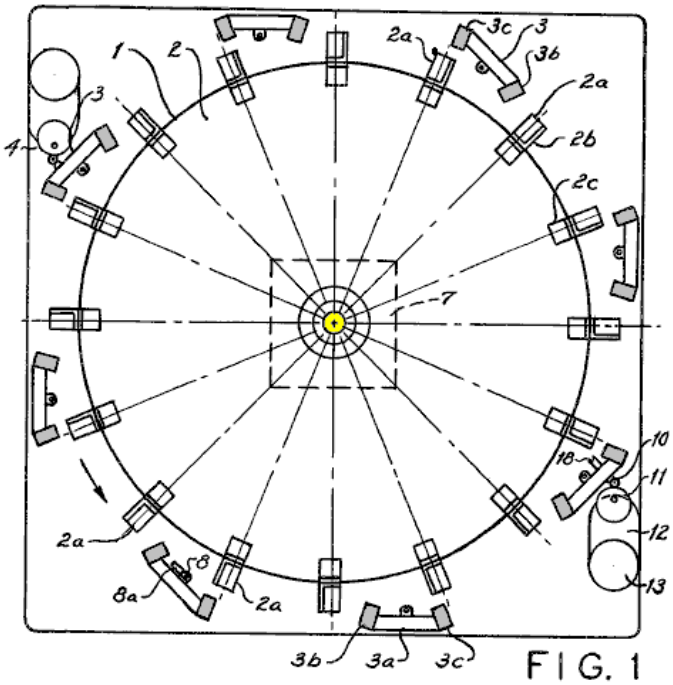

FIG. 1

Multiple, identical permanent magnets **2a**, are equally spaced around the periphery of the large driven disc **2**, by means of support angles **2b**, and angle brackets **2c**, which are secured to the disc **2**, with standard hardware.

A drive shaft **5**, is fastened to the disc **2**, by means of a hub **2d**, and supported by two ball bearings **6**. One of the ball bearings **6**, is fitted into a bore within the base plate **4**, while the other ball bearing **6**, is fitted into a box-base **7**, which is fastened to the base plate **4**, with standard hardware.

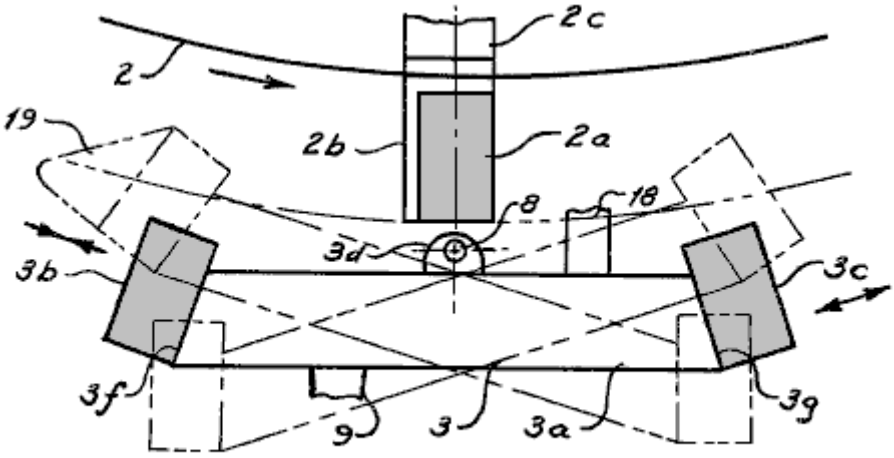

FIG. 3

The multiple oscillating magnet pairs **3**, are a flat, non-magnetic plate **3a**, with opposite pole magnet segments **3b** and **3c**, respectively, attached to the side of the flat oscillation plate **3a**. Two pivot brackets **3d**, are attached to the top and bottom of the flat plate **3a**, which pivot the oscillation plate **3a**, on the pivot rod **8**. One end of the pivot rod **8**, is fitted into the base plate **4**, and the opposite end is supported by an elongated Z-shaped bracket **8a**.

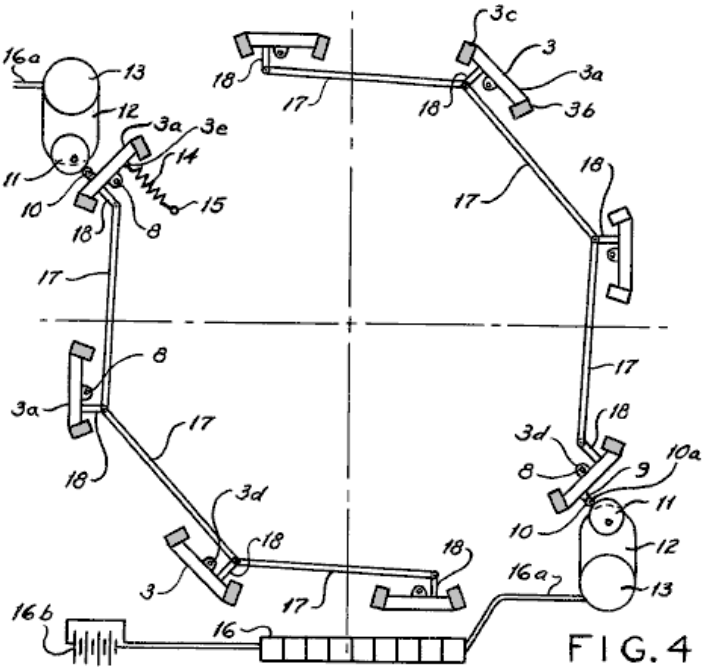

An arm **9**, is fastened to a flat face of the flat plate **3a**, which supports the pin **10a**, which carries the ball bearing **10**, as it rolls on the eccentric disc **11**. The off-centre disc **11**, is fastened to the slow speed shaft of the gear reduction unit **12**, which is driven by the small DC motor **13**. A return tension spring **14**, is connected to the oscillation plate **3a**, by eyelet **3e**. The opposite end of the return tension spring **14**, is retained by the post **15**, which is pressed into the base plate **4**. Motors **13**, are powered by multiple arrays of silicon photovoltaic solar cells **16**. Electrical leads **16a**, conduct solar converted electricity to the motors **13**, with any excess current stored in the batteries **16b**.

The motor driven oscillation stations become the master stations for this invention **1**, from which three to five slave oscillation stations are driven. The reciprocating motion is transmitted by straight links **17**, which are pinned to the link arms **18**, which in turn are secured to the flat plates **3a**.

All of the slave oscillation stations must be precisely adjusted to exactly the same angular position as the master driving oscillation station so that all stations are synchronised to allow proper functioning of the rotating disc **2**.

For very large discs **2**, with many disc magnets, several master oscillation stations, with a fixed number of slave oscillation stations will be required. All of the master oscillation driving-stations will have to be electrically synchronised to maintain overall synchronisation, with all of the eccentrics **11**, set at the same angle at start-up of the disc.

Either end of the drive shaft **5**, may be connected with a speed step-up belt drive arrangement, which is not shown here.

Plastic deflectors **19**, are added to either side of the oscillation plates **3a**, adjacent to the opposite magnets segments **3b**, and **3c**, their exact position depending on the direction of rotation of disc **2**. These act as an anti-jamming device for the magnets.

Magnetic field bias angles **3f** and **3g** (**Fig.3**), are required for the sides of plates **3a**, in order to assure an optimum "pull-push" sequence on the large drive disc **2**, as the magnetic oscillation pairs **3**, are actuated. The bias angle **3f**, is matched to the magnet segment **3b**, while bias angle **3g** is matched to magnet segment **3c**.

None of the load components which are external to the device, such as an electric generator or alternator, are shown as a part of this invention, since a variety of load devices and arrangements are possible for the magnetic disc drive.

Mike Brady's Perendev Magnet Motor. One of the most widely known permanent magnet motors is the "Perendev" motor. It is said that dozens of these motors have been made and sold as motor/generators with an output of not less than 100 kilowatts. As far as I am aware, this has not been confirmed, nor have there been independent tests made on the motor. An old, poor-quality video of a prototype of this motor can be seen at http://technorati.com/videos/youtube.com%2Fwatch%3Fv%3DJc9rbysrv24 and the somewhat simplified wording of the Patent Application is shown here:

Patent Application WO 2006/045333 A1 4th May 2006 Inventor Mike Brady

PERMANENT MAGNET MACHINE

ABSTRACT

The invention provides a magnetic repellent motor which comprises: a shaft (**26**) which can rotate around it's longitudinal axis, a first set (**16**) of magnets (**14**) arranged around the shaft (**26**) in a rotor (**10**) for rotation with the shaft, and a second set (**42**) of magnets (**40**) arranged in a stator (**32**) surrounding the rotor. The second set of magnets interacts with the first set of magnets, and the magnets of both sets are at least partially screened so as to concentrate their magnetic field strength in the direction of the gap between the rotor (**10**) and the stator (**32**).

BACKGROUND

This invention relates to a magnetic repellent motor, or drive mechanism. Such a mechanism may be useful for driving an electrical generator, a vehicle, a ship, an aircraft, or the like.

Conventional power sources rely on fossil fuels or secondary power sources such as nuclear power, or electricity derived by whatever means, for its source of driving power. All of these sources of power suffer from disadvantages such as being the cause of pollution, requiring transportation or transmission over long distances to the point of use, and being costly to purchase. Thus, there is a need for a power source which is substantially pollution-free in operation, requiring substantially no external power, and which is simple to maintain.

SUMMARY

This invention provides a magnetic repellent motor which comprises: a shaft which can rotate about its longitudinal axis, a first set of magnets which are arranged around the shaft and which rotate with the shaft, and a second set of magnets arranged in a stator surrounding the rotor, where the second set of magnets reacts with the first set of magnets, both sets being partially screen magnetically in order to direct their magnetic field into a gap between the two sets of magnets. Thus, the interaction of at least some of the magnets of the first and second sets urge the shaft to rotate.

The interaction may be the net force of like magnetic poles repelling each other thereby urging the magnets away from each other, however, since only the rotor magnets can be moved by this urging force, the shaft is urged to rotate into a position where the repelling force is less.

The rotor may be substantially disc-shaped and the first set of magnets may be located in a peripheral region of the rotor which rotates with the shaft. The stator may be in the form of a pair of arms aligned with the rotor. These stator arms can be moved relative to each other and away from the rotor, in order to allow the gap between the rotor and the stator to be set selectively. The gap may be set manually, for example, by a hand wheel, or automatically, for example by a system of weights which move centrifugally and so form a rotational speed control which acts automatically, i.e. the smaller the gap, the greater the repulsion forces between the magnets of the rotor and stator.

Both the rotor and the stator may have more than one set of magnets. The magnets may be placed in sockets which extend towards the circumference of the rotor. These sockets may be substantially cylindrical and arranged in a plane which is perpendicular to the longitudinal axis of the rotor shaft. These sockets may also be arranged at an acute angle relative to the tangent to the circumference of the rotor disc where the mouth of the cylindrical socket is located. Similarly, the stator magnet sockets may be angled relative to the inner circumference of the stator. These angles may be between 18 degrees and 40 degrees, but preferably between 30 degrees and 35 degrees.

These sockets may have a socket lining consisting at least partially of a magnetic screening material. The socket lining may line the entire extent of the sockets so that only the opening to the exterior remains unlined. In another embodiment of the invention, the magnetic screen lining may cover a substantial percentage of the whole of the socket lining, e.g. 50% of the socket lining.

The magnets may be Nd-Fe-B of dimensions which fit snugly inside the linings of the sockets. These magnets may be cylindrical in shape and have a 37 mm diameter, a 75 mm length and a magnetic strength of 360,000 gauss. The socket lining, magnetic shield and magnet may all have a hole through them to receive a securing pin, preferably positioned so that it is parallel to the longitudinal axis of the shaft.

The number of sockets in the rotor and the corresponding stator may differ so that there is not a one-to-one relationship between the sockets in the rotor and the sockets in the corresponding stator. Similarly, the number of

magnets in any additional rotor/stator sets may differ from the first rotor/stator sets in order that the two sets are out of register at any given time. Some sockets may be left empty in either the rotor or the corresponding stator, or both. The motor may have one or more rotor/stator pairs of this type arranged in a stack. It is preferable for the magnets of adjacent rotors to be out of register, i.e. staggered or offset relative to each other.

DESCRIPTION OF THE DRAWINGS

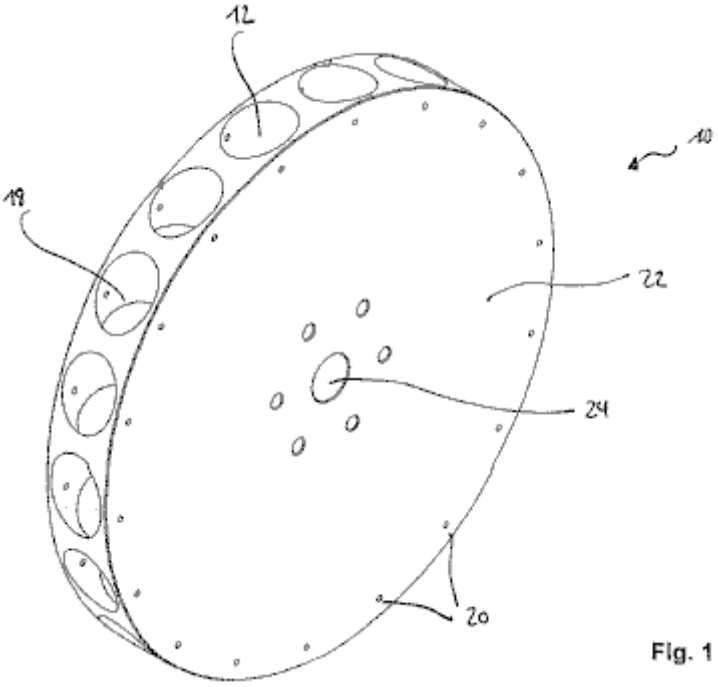

Fig. 1

Fig.1 is a perspective view which shows one rotor disc.

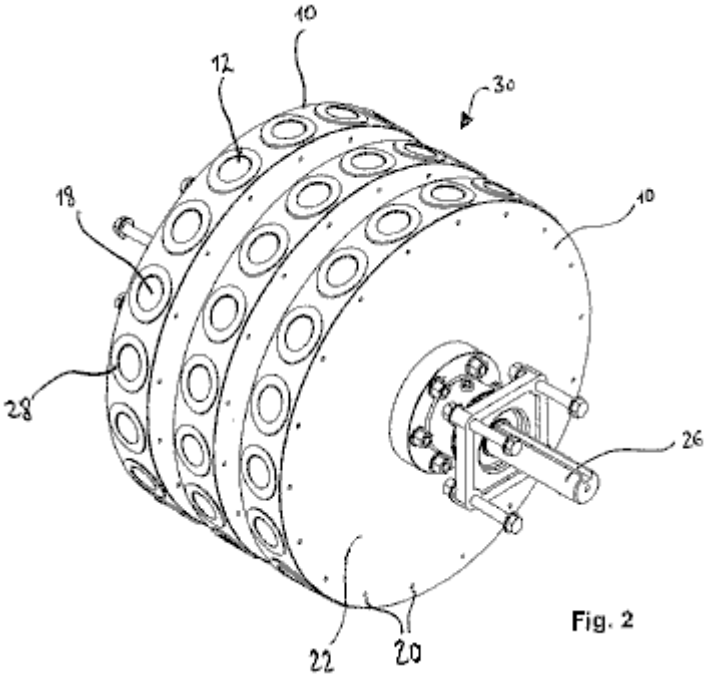

Fig. 2

Fig.2 is a perspective view showing a stack of the Fig.1 rotors in an assembled arrangement.

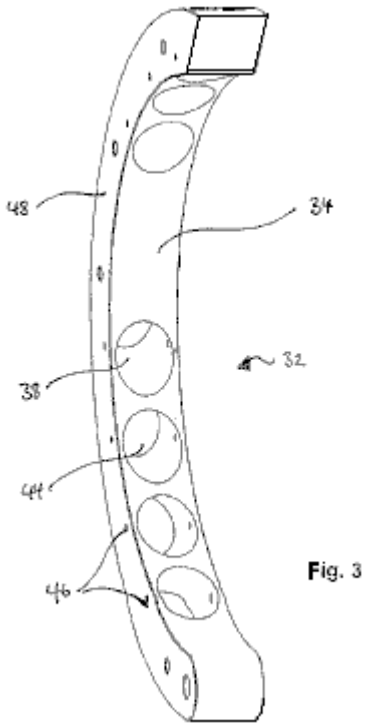

Fig. 3

Fig.3 is a perspective view showing a left arm of a stator.

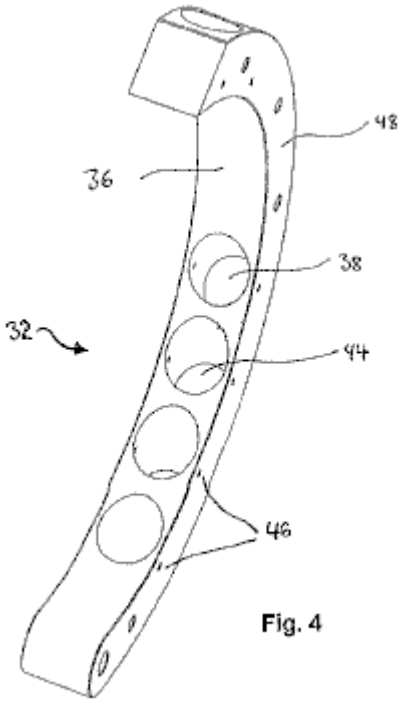

Fig. 4

Fig.4 is a perspective view showing a right arm of a stator

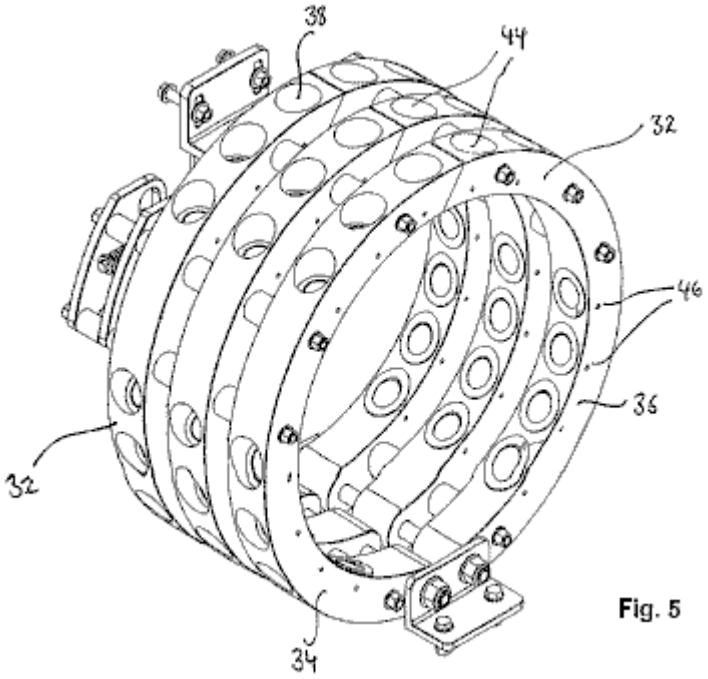

Fig. 5

Fig.5 is a perspective view showing a stack of the stators or Fig.3 and Fig.4 in an assembled arrangement.

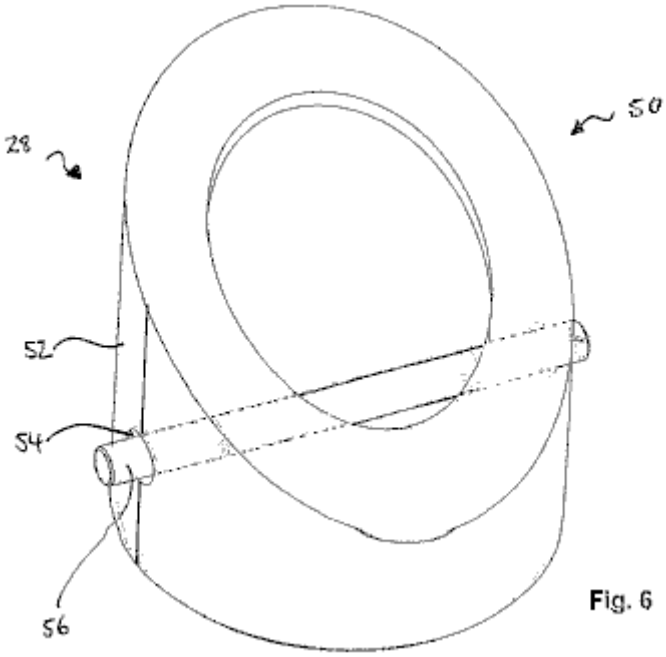

Fig. 6

Fig.6 is a perspective view showing a socket lining of a stator or a rotor.

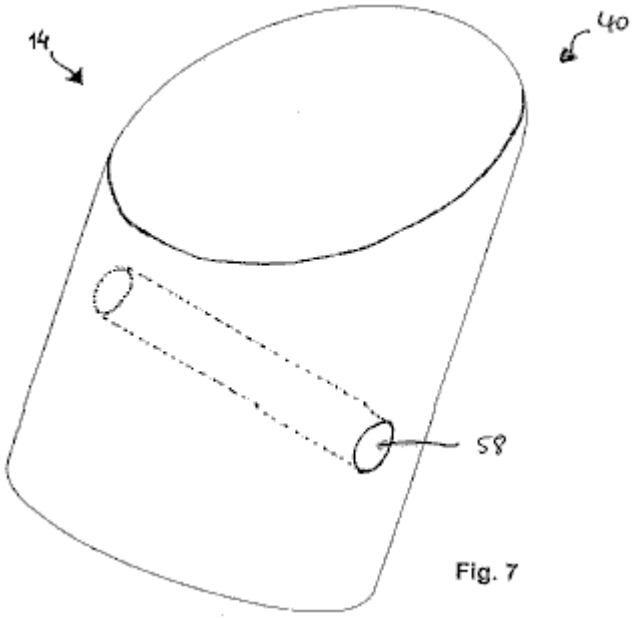

Fig. 7

Fig.7 is a perspective view showing one of the magnets.

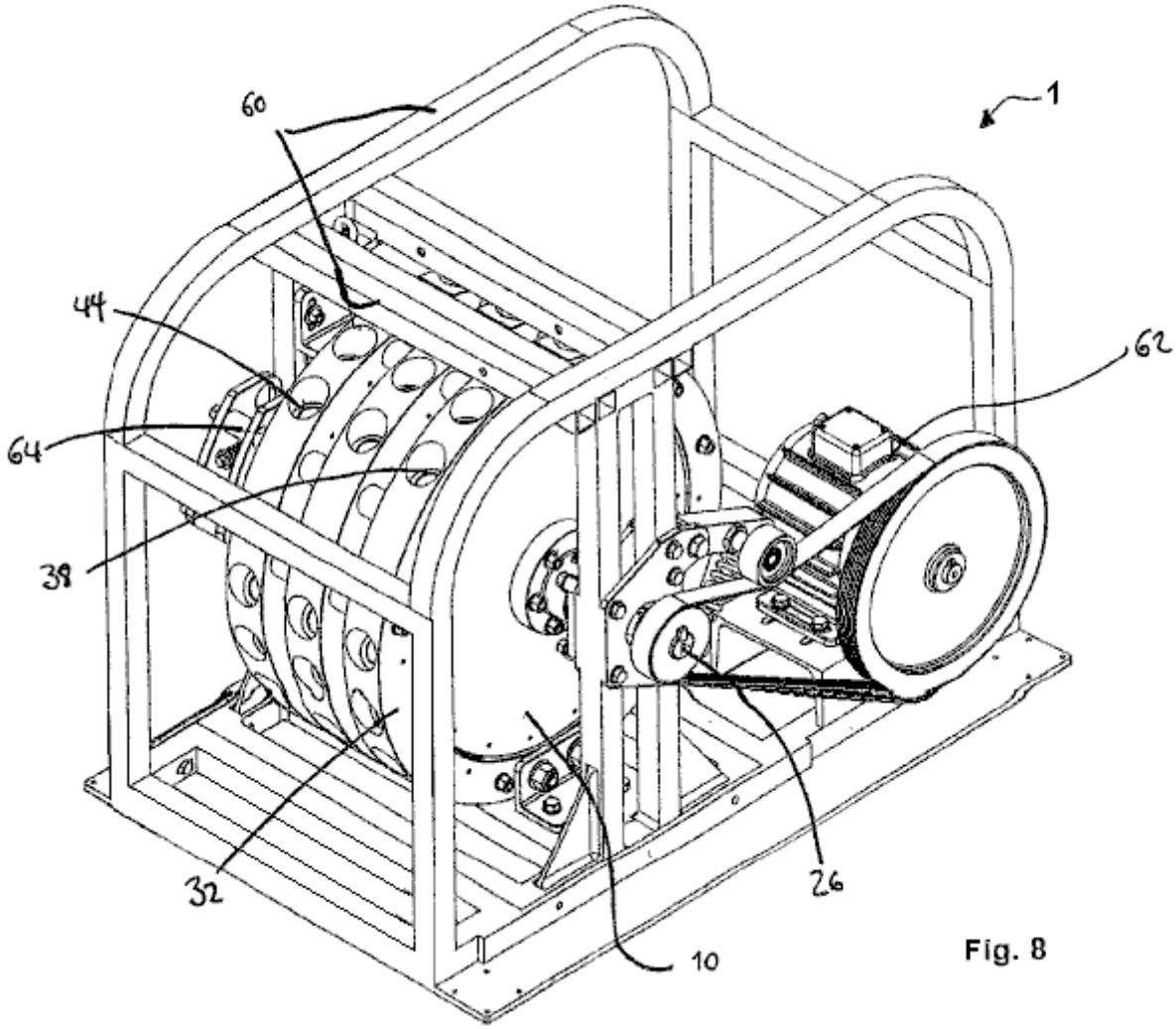

Fig. 8

Fig.8 is a perspective view showing one embodiment of the magnetic repellent motor coupled to an electrical generator.

DESCRIPTION OF PREFERRED EMBODIMENTS

Referring to **Fig.1**, a substantially disc-shaped rotor **10**, is made from a non-magnetic material. The rotor **10** has a plurality of magnet receiving zones **12**, provided in it for receiving magnets **28** (shown in later figures)

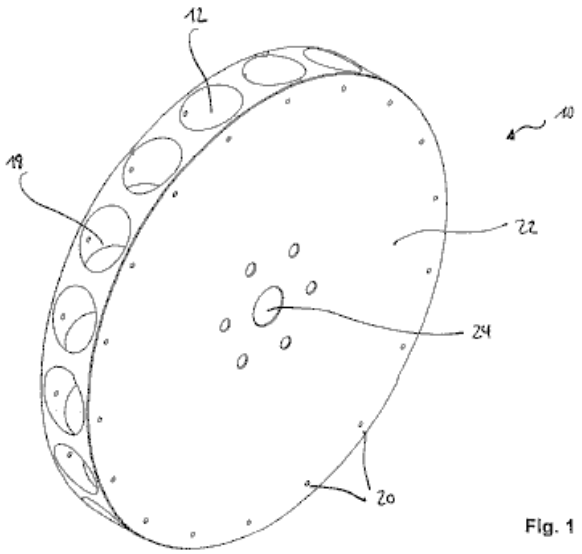

Fig. 1

of a first set **16** of magnets. The receiving zones **12** are in the form of circumferentially extending, spaced apart, and substantially cylindrical sockets **18** which are located in a plane which is perpendicular to the rotational axis **10** of the rotor and in a peripheral region of the disc.

In the region of the sockets **18**, the rotor **10** also has through holes **20** in it's side surfaces **22**, extending parallel to the rotational axis of the rotor. The rotor **10**, also has a centre hole **24**, to receive shaft **28** which is shown in later figures. The sockets **18**, are preferably angled at an acute angle relative to the tangent to the circumference of the rotor disc **10**, at the mouth opening of the sockets **18**. Ideally, this angle is between 18 and 40 degrees, and preferably between 30 and 35 degrees. In one particularly preferred embodiment, the angle is 34 degrees.

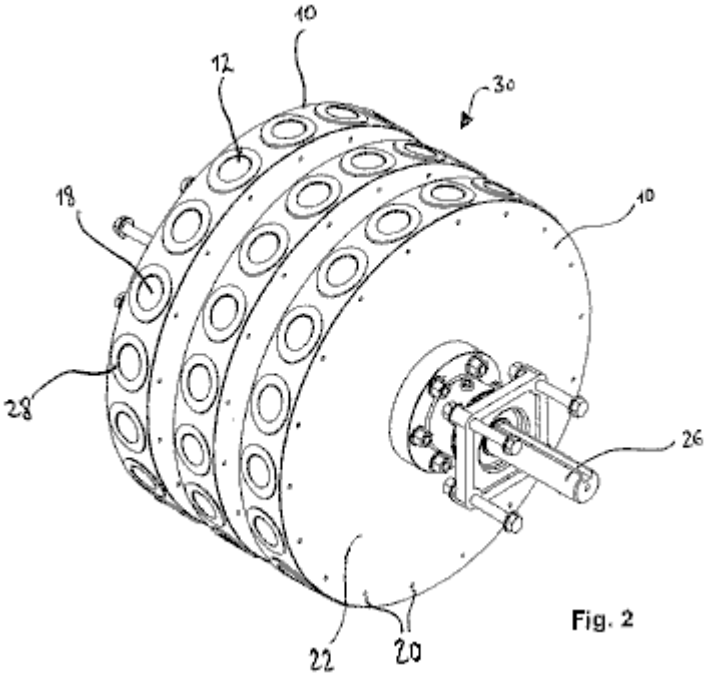

Fig. 2

As shown in **Fig.2**, the sockets **18**, receive (or incorporate) a socket lining **28** (shown in more detail in later figures) which is at least partially made of a magnetic screening material, whether metallic or non-metallic, for example, graphite. The socket lining **28**, covers the entire extent of the sockets **18**, so that only the opening to the exterior remains uncovered.

In the rotor assembly **30** of **Fig.2**, three rotors discs **10**, have been stacked in a row on the shaft **26**. The connection between the rotor discs **10** and shaft **26**, as well as between the rotor discs themselves, can be established via linking means which are widely known. In general, the motor may have any number of rotor discs **10**, and corresponding stators **32**, since the effect of using several rotor discs **10** in parallel, is cumulative. However, it may be useful for smooth operation of the motor **1**, to arrange the rotor discs **10** so that the magnets of adjacent rotor discs are staggered, or offset relative to each other.

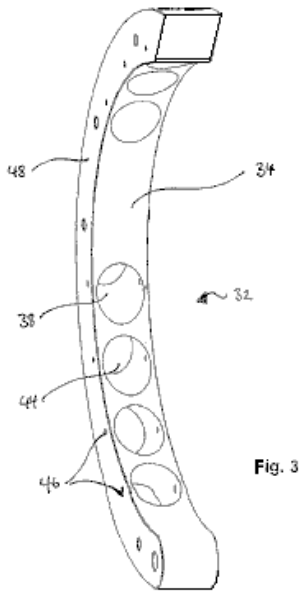

Fig. 3

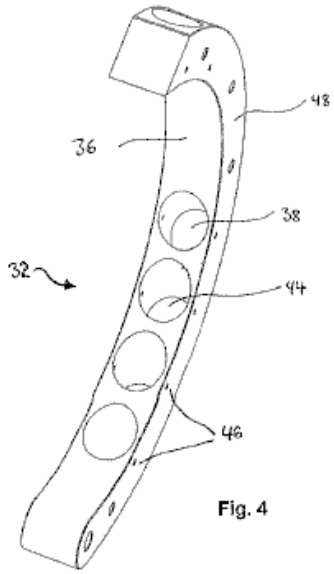

Fig. 4

Referring to **Fig.3** and **Fig.4**, a stator **32** is shown. This stator is made of a non-magnetic material. The left arm **34**, and the right arm **36**, combine to form the stator **32**. Each of the arms, **34** and **36**, has a substantially semi-circular shape and is sized so as to enclose the corresponding rotor disc **10** in the radial direction, while still leaving a gap between the stator **32** and the rotor disc **10**. The arms **34** and **36** of one stator **32**, can be moved relative to each other and their corresponding rotor disc **10**, so that the gap between the arms and the rotor disc can be set at different values.

The stator **32** has several magnet receiving zones **38**, ready to accept the magnets **40**, (which are shown in a later figure) of the magnet set **42**. These receiving zones are again in the form of circumferentially extending, substantially cylindrical sockets **44** which are positioned in a plane which is perpendicular to the longitudinal axis of shaft **26**. In the region of the sockets **44**, the stator **32** has through holes 46 arranged in it's side surfaces **48**, these holes extending parallel to the longitudinal axis of the shaft **26**.

These sockets **44** are again angled at an acute angle relative to a tangent to the inner circumference of the stator **32** at the mouth opening of the sockets **44**. This angle is preferably between 18 and 40 degrees and more preferably, between 30 and 35 degrees. The angle of the sockets **18** and **44**, and the relative positioning between them, has to be adjusted to allow for a good performance of the motor.

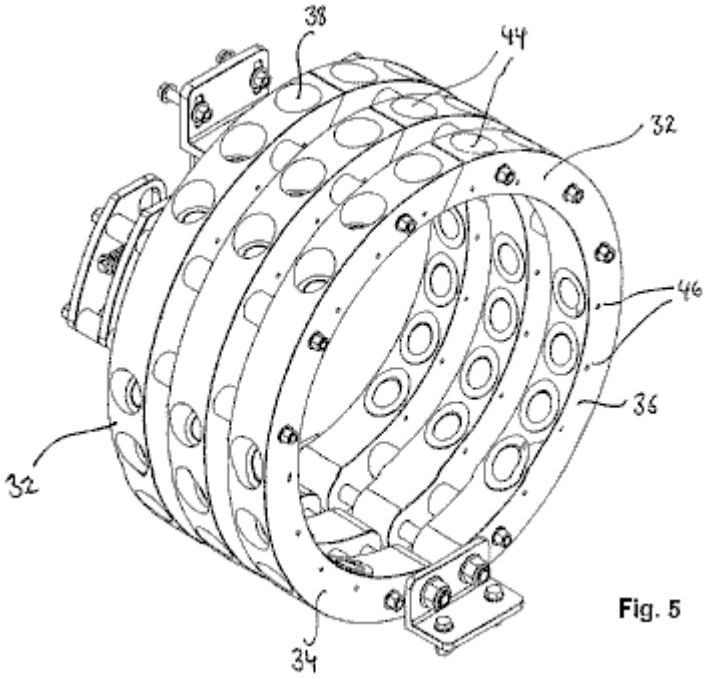

Fig. 5

Fig.5 shows a stator assembly consisting of three stators designed to fit the rotor assembly of **Fig.2**. As described with reference to the sockets **18** of **Fig.2**, the sockets **44** receive (or incorporate) a socket lining **50** (shown in more detail in later figures), which is at least partially made of a magnetic screening material. The socket lining **50**, covers the entire extent of the sockets **44** so that only the opening to the exterior remains uncovered.

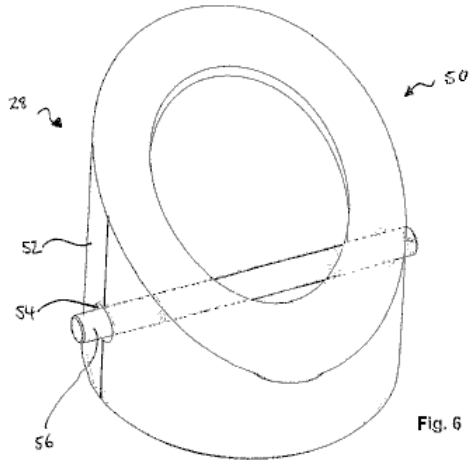

Fig. 6

Referring to **Fig.6**, a socket lining **28, 50** of the rotor disc **10**, or the stator **32**, is shown in more detail. The socket lining **28, 50** is formed to fit into the sockets **18, 44** and may be made completely of a material which has magnetic screening properties. In one preferred embodiment, the socket lining **28, 50** is made of diamagnetic graphite and is partially surrounded by an additional shield **52** of a material having strong magnetic screening properties, e.g. stainless steel. In the embodiment shown in **Fig.6**, the shield **52** surrounds about 50% of the socket lining surface.

Thus, by at least partially covering the sockets **18, 44** with a magnetic screening material, the magnetic field of the inserted magnets **14, 40** is, so to say, focussed axially with the socket **18, 44**, rather than dissipated about the magnets.

Further, holes **54** through the socket linings **28, 50** are provided and these correspond to the through-holes **20** and **46** in the rotor disc **10** and the stator **32**, respectively. Thus, a retaining pin **56** may be inserted after magnet **14, 40** has been put in socket **18, 44** to make a detachable fixing for magnet **14, 40** to the socket lining **28, 50** and the socket **18, 44** so as to prevent expulsion of the magnetic sources during operation.

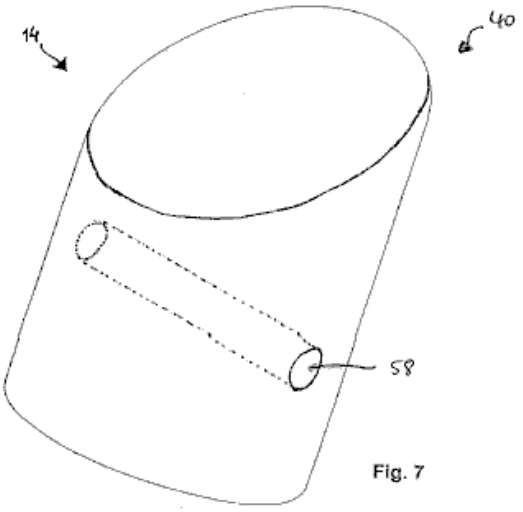

Fig. 7

Fig.7 shows a typical magnetic source **14,40** used in this motor design. The magnetic sources **18, 40** may be natural magnets, induced magnets or electromagnets. The magnetic source for example, is a Nd-fe-B magnet which has the necessary dimensions needed to fit neatly into socket **18, 44** and socket lining **28, 50**, respectively. In one preferred embodiment, the magnetic source **18, 44** is a substantially cylindrically shaped magnet with a diameter of 37 mm, a length of 75 mm and provides 360,000 gauss. However, the magnetic source **18, 44** may be shaped differently to cylindrical and may have different characteristics. In any case, the magnetic source **18, 44** must have a through-hole **58** to receive the retaining pin 56.

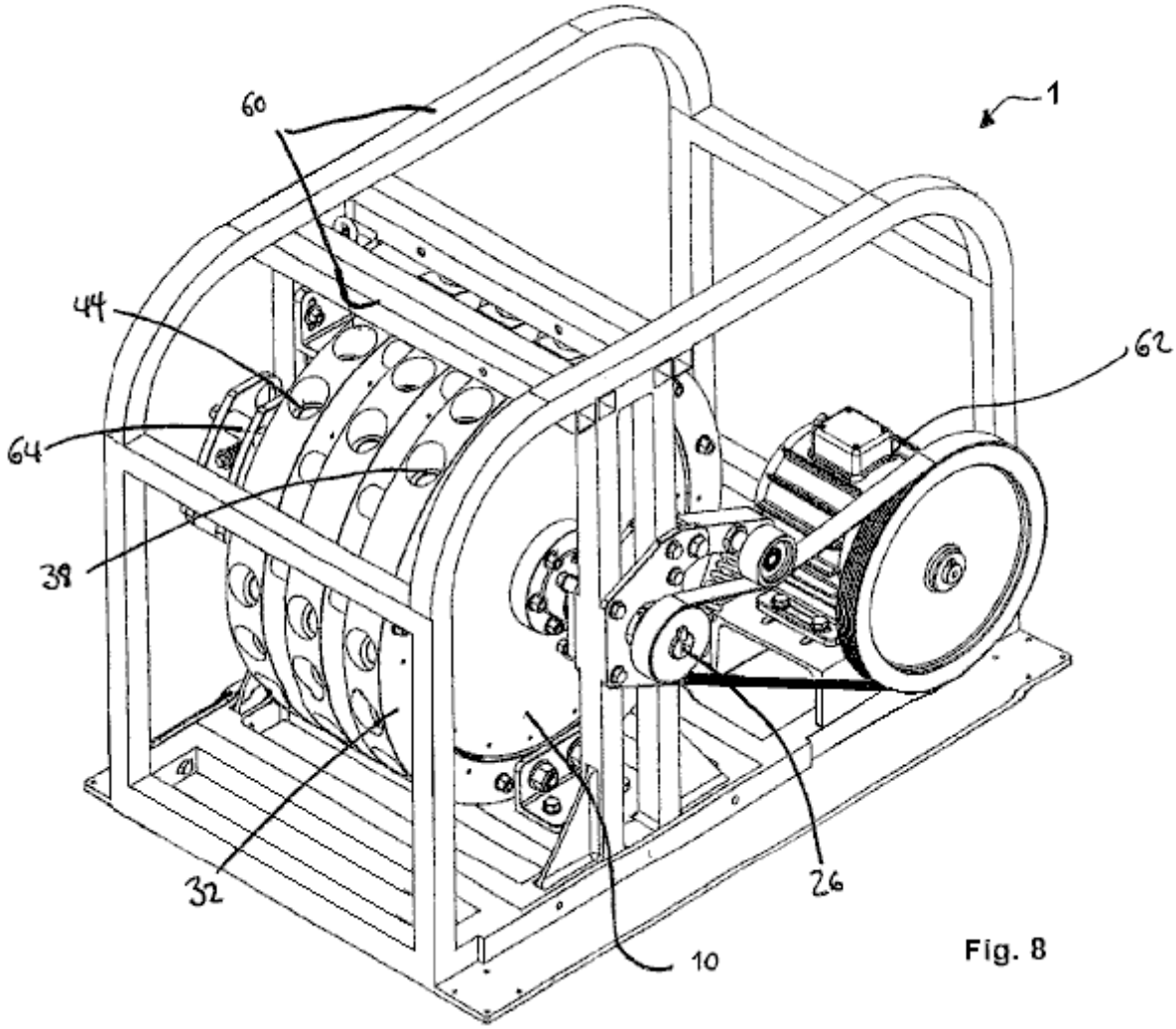

Fig. 8

The magnet motor shown in **Fig.8** is mounted on frame **60** and is coupled to an electrical generator **62**. In this specific embodiment, the motor has three rotor discs **10** of the type already described. These are mounted on a single rotating shaft **26** and are driven by three stators **32**, as already described, causing shaft **26** to rotate about it's longitudinal axis. Shaft **26** may be connected to a gearbox in order to gain a mechanical advantage. The stator arms can be moved by a stepper motor **64**.

The number of sockets in the rotor discs **10** and their corresponding stators **32** may differ so that there is not a one-to-one relationship between the sockets **18** in the rotor disc **10** and sockets **44** in the corresponding stator **32**. Similarly, the number of magnetic sources in the stator **32** and the rotor disc **10** may differ so that a proportion of the magnetic sources **14, 40** are out of register at any given time. Some sockets may be empty, i.e. without a magnetic source, in either the rotor disc **10** or the stator **32**, or both.

The sockets **18** of the rotor discs **10** can be staggered, i.e. offset relative to the sockets of adjacent rotors, or they can line up in register. Thus, the magnet motor may be time-tuned by the relative positioning of the magnetic sources **14** of adjacent rotor discs **10**.

Thus, the interaction of at least some of the magnetic sources **14, 40** of the first and second set **16, 42** urges the shaft **26** to rotate. Once the shaft begins to rotate, the plurality of simultaneous interactions causes shaft **26** to continue rotating.

As mentioned before, the motor can have any number rotor discs **10** and corresponding stator sets **32**. Although the precise adjustment of the motor elements is important, one may imagine other embodiments covered by this invention.

Patrick Kelly
engpjk@tiscali.co.uk
http://www.free-energy-devices.com

Chapter 5: Energy-Tapping Pulsed Systems

One very interesting feature of free-energy devices is that although various devices which appear to be completely different and have different apparent applications, the background operation is often the same. It is clear that a sharp positive going DC electric pulse interacts with the surrounding energy field, making large quantities of free-energy available for anyone who has the knowledge of how to gather and use that extra energy.

Let me stress again that "over-unity" is an impossibility. Over-unity suggests that more energy can be taken out of a system than the total energy which goes into the system. This is not possible as you can't have more than 100% of anything. However, there is another perfectly valid way of looking at the operation of any system, and that is to rate the output of the system relative to the amount of energy that the user has to put in to make it work. This is called the "Coefficient Of Performance" or "COP" for short. A COP = 1 is when all of the energy put in by the user is returned as useful output. A COP>1 is where more useful energy comes out of the device than the user has to put in. For example, a sailing boat in a good breeze transports people along without the need for the energy of movement to be supplied by the crew. The energy comes from the local environment and while the efficiency is low, the COP is greater than 1. What we are looking for here is not something to tap wind energy, wave energy, sunlight energy, river energy, thermal energy or whatever but instead we want something which can tap the invisible energy field which surrounds us all, namely the "zero-point energy" field.

For this, let us look at pulsing circuits used by a wide range of people in a number of apparently quite different devices. An electrical "pulse" is a sudden voltage rise and fall with very sharply rising and falling voltages. However, pulses are seldom generated as isolated events when working with practical devices, so it is probably better to think of a train of pulses, or a "waveform" with very sharp rising and falling edges. These can be called oscillators or signal generators and are so commonplace that we tend not to give them a second thought, but the really important factors for using an oscillator for zero-point energy pick-up is the quality of the signal. Ideally, what is needed can be a perfect square wave with no overshoot, and the voltage level never going below zero volts, or a complex waveform, also with very sharp attack and decay times. These waveforms are a good deal more difficult to generate than you might imagine.

Even in these days of sophisticated solid-state electronic devices, the best method of creating a really sharp voltage pulse is still considered to be a spark gap, especially one which has the spark chopped off suddenly by the use of a strong magnetic field at right angles to the spark gap. For an example of this style of operation, consider the following device.

Frank Prentice. Electrical Engineer Frank Wyatt Prentice of the USA invented what he described as an 'Electrical Power Accumulator' with an output power six times greater than the input power (COP = 6). He was granted US patent 253,765 on 18th September 1923 and which says:

> My invention relates to improvements in Electrical Power Accumulators, wherein the earth acting as rotor and the surrounding air as a stator, collects the energy thus generated by the earth rotating on its axis, utilises the same for power and other purposes.
>
> In the development of my Wireless Train Control System for railways, covered by my United States Letters Patent Number 843,550, I discovered that, with an antenna consisting of one wire of suitable diameter supported by insulating means three to six inches above the ground and extending one half mile, more or less in length, the said antennae being grounded at one end through a spark gap and energised at the other end by a high frequency generator of 500 Watts input power and having a secondary frequency of 500,000 Hz, would produce in the antenna an oscillatory frequency the same as that of the earth currents and thus electrical power from the surrounding media was accumulated along the length of the transmission antenna and with a closed oscillatory loop antenna 18 feet in length run parallel with the transmission antenna at a distance of approximately 20 feet it was possible to obtain by tuning the loop antennae, sufficient power to light to full power, a series bank of fifty 60 watt carbon lamps.
>
> Lowering or raising the frequency of 500,000 Hz resulted in diminishing the amount of power received on the 18 foot antenna. Similarly, raising the transmission antenna resulted in a proportionate decrease of power picked up on the receiving antenna and at 6 feet above the earth no power at all was obtainable without a change of potential and frequency.
>
> It is the objective of my generic invention to utilise the power generated by the earth as described here, and illustrated in the drawings. The two figures in the drawings illustrate simple and preferred forms of this invention, but I wish it understood that no limitation is necessarily made as to the exact and precise circuits,

shapes, positions, and structural details shown here, and that changes, alterations and modifications may be made when desired within the scope of my invention.

DESCRIPTION:

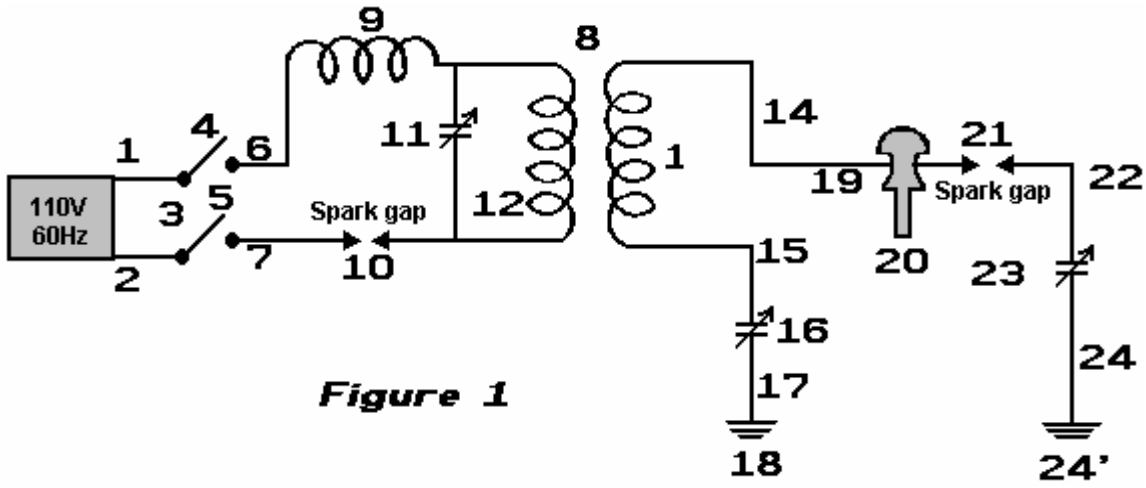

Figure 1

In **Fig.1**:

1 and **2** are alternating current feed wires supplying 110 volts 60 cycles to a high frequency generator.
3 is a switch with poles **4** and **5**.
6 and **7** are connections of high frequency transformer **8** for stepping up the frequency to 500 KHz and the voltage to say 100 KV.
9 is an inductance coil.
10 is a spark gap.
11 is a variable capacitor.
12 is the primary winding of transformer **8**.
13 is the secondary winding of transformer **8** which is connected through wire **15** via variable capacitor **16** and wire **17** to ground **18**.
14 is the wire from the other side of the secondary winding of transformer **8** connecting it to the main transmission antenna **19** which is supported by insulating means **20**.
21 is spark gap from transmission antenna **19** to ground through wire **22,** variable capacitor **23**, and wire **24** to ground **24'**.
Transmission antenna **19** may be of any desired length.

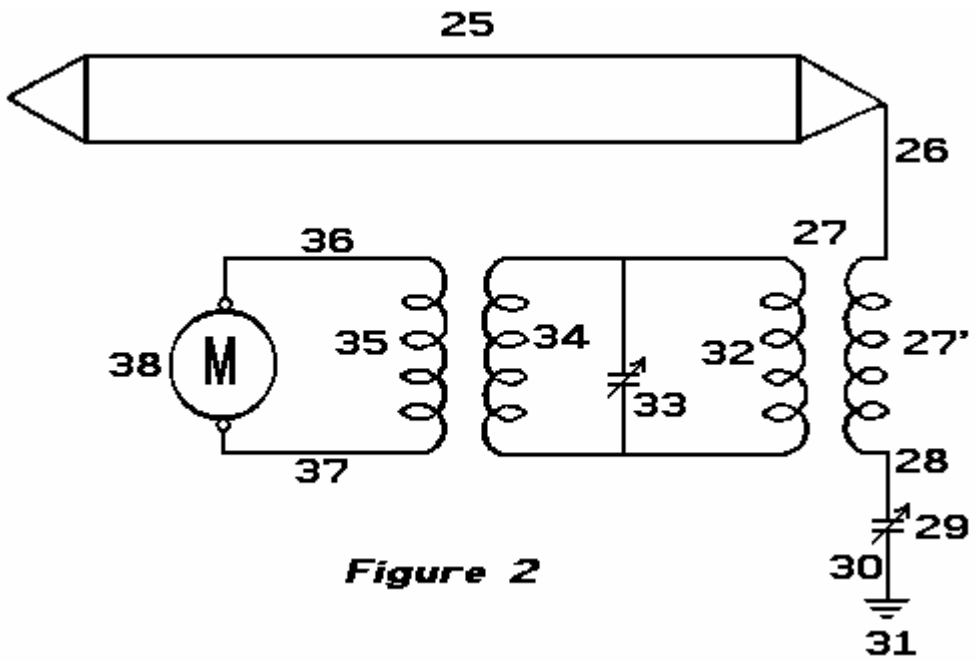

Figure 2

In **Fig.2**:

25 is a closed oscillating loop antenna of any desired length, which for greatest efficiency, is run parallel with transmission antenna **19** of **Fig.1**.
26 is the connecting lead between the antenna and step-down transformer **27** of which **27'** is the secondary.

28 is the lead connecting the secondary winding **27'** to ground **31** via variable capacitor **29** and lead **30**.
32 is the primary winding of transformer **27**.
33 is a variable capacitor.
34 and **35** are frequency transformer windings, supplying current through leads **36** and **37** to motor **38**, or any other power devices.

OPERATION OF THE INVENTION:

Close switch **3** to connect feed wires **1** and **2** to transformer leads **6** and **7.** Adjust spark-gap **10** and variable capacitor **11** so that a frequency of 500 KHz and 100 KV is delivered from secondary leads **14** and **15** of step-up transformer **8** of **Fig.1**. Next adjust spark-gap **21** of transmission antenna **14** so that all nodes and peaks are eliminated in the transmission of the 100 KV and 500 KHz frequency along antenna **14**. The surges which occur, pass over gap **21** through lead **22** to variable capacitor **23** and then on to ground **24'** via lead **24.**

The high frequency current of 500 KHz returns through the ground, to ground connection **18**, up lead **17** to the variable capacitor **16** and via lead **15** to the secondary winding **13** of transformer **8** of **Fig.1**. The alternating current produced by the 100 KV 500 KHz supply is the same frequency as the earth generated currents, and being in tune with them it picks up additional power from them. Being the same frequency as the output from transformer **8** along wires **14**, this produces a reservoir of high frequency current which can be drawn upon by a tuned circuit of the same 500 KHz frequency, as shown in **Fig.2**.

Antenna **25** is tuned to receive a frequency of 500 KHz which produces a current that passes to lead **26** through winding **27'** of transformer **27**, through wire **28**, variable capacitor **29** and wire **30** to ground connection **31**. The high frequency currents of 500 KHz pass through to winding **32** and by variable capacitor **33** and windings **34** and **35** of the frequency transformer **27** are stepped down to a voltage and frequency suitable to operate motor **38** via leads **36** and **37**. This makes available a current supply for any purpose whatsoever, such as the operation of aeroplanes, cars, railway trains, industrial plants, lighting, heating etc.

The return of current through the earth from transmission antenna **14** is preferable to a metallic return as a higher percentage of accumulation of earth currents is noticeable on receiving antennae of **Fig.2** than from a metallic return, caused by the capacitance of the grounded circuit. I also prefer under certain conditions to use a single antenna receiving wire in place of the closed loop shown in **Fig.2**. Under certain operation requirements I have found it expedient to have the transmission antenna elevated and carried on poles many feet above the earth and in that case a different voltage and frequency were found to be necessary to accumulate earth currents along the transmission antenna **14**.

This system of Frank's effectively applies very sharply pulsed DC pulses to a long length of wire supported in a horizontal position not far above the ground. The pulses are sharp due to both the spark gap on the primary side of the transformer, along with the spark-gap on the secondary (high voltage) side of the transformer. An input power of 500 watts gives a 3 kW power output from what appears to be an incredibly simple piece of equipment.

Dave Lawton. A solid-state semiconductor circuit which has proved successful in producing pulses like this is shown as part of Dave Lawton's replication of Stan Meyer's Water Fuel Cell. Here, an ordinary NE555 timer chip generates a square wave which feeds a carefully chosen **F**ield-**E**ffect **T**ransistor the BUZ350 which drives a water-splitter cell via a combined pair of choke coils at point "A" in the diagram below.

Stan Meyer used a toroidal ferrite ring when he was winding these choke coils while Dave Lawton uses two straight ferrite bars, bridged top and bottom with thick iron strips. Chokes wound on straight ferrite rods have been found to work very well also. The effects are the same in all cases, with the waveform applied to the pipe electrodes being converted into very sharp, very short, high-voltage spikes. These spikes unbalance the local quantum environment causing vast flows of energy, a tiny percentage of which happens to flow into the circuit as additional power. The cell runs cold, and at low input current, quite unlike an ordinary electrolysis cell where the temperature rises noticeably and the input current needed is much higher.

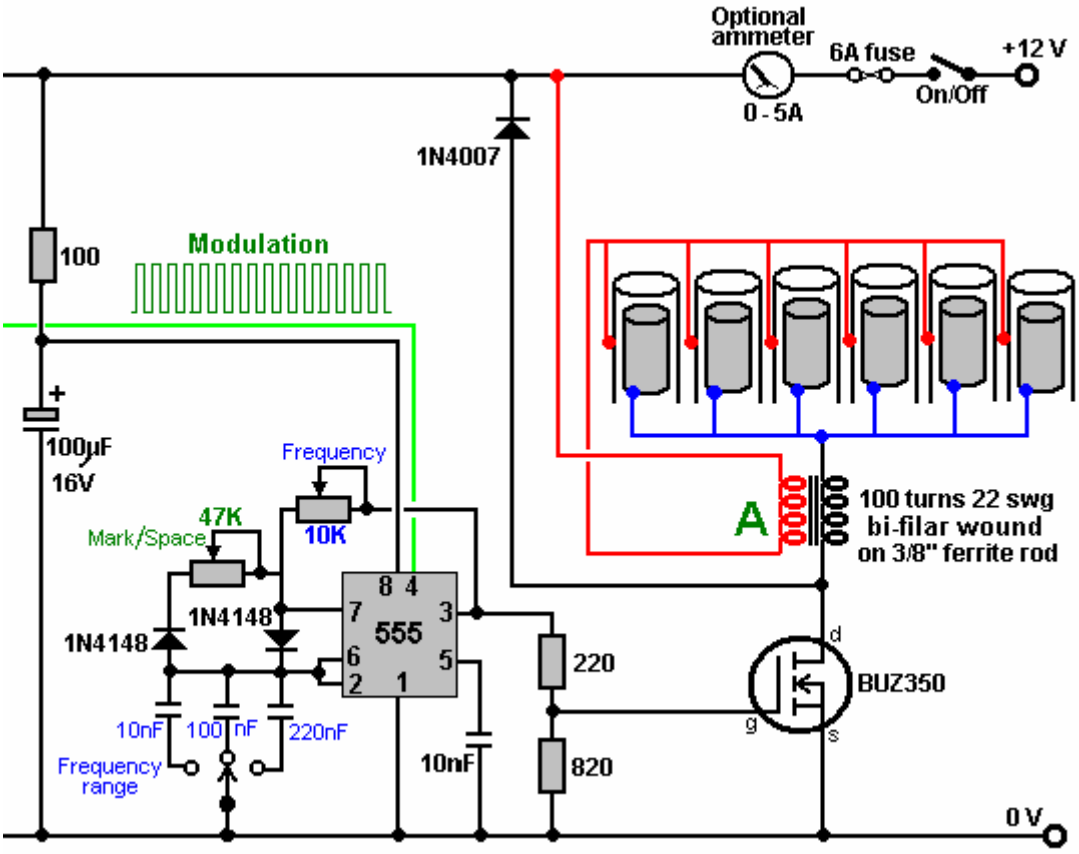

John Bedini uses this same pulsing of a bi-filar wound coil to produce the same very short, very sharp voltage spikes which unbalance the local energy field, causing major flows of additional energy. The figure shown here is from his US patent 6,545,444.

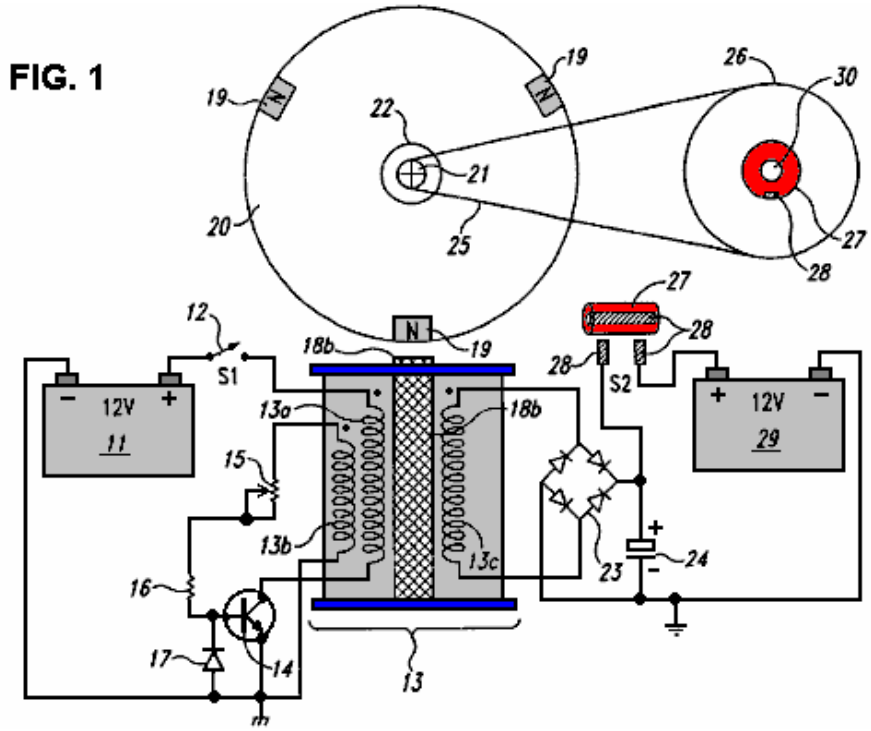

John has produced and generously shared, many designs, all of which are basically similar and all using a 1:1 ratio bi-filar wound transformer. This one uses a free-running rotor with permanent magnets embedded in it's rim, to trigger sharp induced currents in the windings of the coil unit marked "**13b**" which switches the transistor on, powering winding "**13a**" which powers the rotor on its way. The pick-up coil "**13c**" collects additional energy from the local environment, and in this particular circuit, feeds it into the capacitor. After a few turns of the rotor

(dictated by the gear-down ratio to the second rotor), the charge in the capacitor is fed into a second “on-charge” battery.

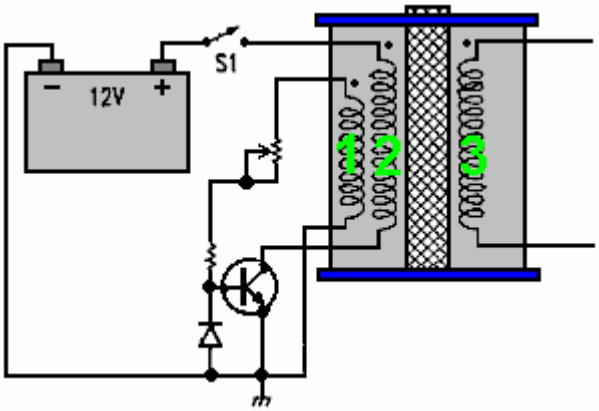

The rotor is desirable but not essential as the coils marked **1** and **2** can self-oscillate, and there can be any number of windings shown as **3** in the diagram. Winding **3** produces very short, sharp, high-voltage spikes, which is the essential part of the design. If those sharp pulses are fed to a lead-acid battery (instead of to a capacitor as shown above), then an unusual effect is created which triggers a link between the battery and the immediate environment, causing the environment to charge the battery. This is an amazing discovery and because the voltage pulses are high-voltage courtesy of the 1:1 choke coils, the battery bank being charged can have any number of batteries and can be stacked as a 24-volt bank even though the driving battery is only 12 volts. Even more interesting is the fact that charging can continue for more than half an hour after the pulsing circuit is switched off.

It can be tricky to get one of these circuits tuned properly to work at peak performance, but when they are, they can have performances of COP>10. The major snag is that the charging mechanism does not allow a load to be driven from the battery bank while it is being charged. This means that for any continuous use, there has to be two battery banks, one on charge and one being used. A further major problem is that battery banks are just not suitable for serious household use. A washing machine draws up to 2.2 kilowatts and a wash cycle might be an hour long (two hours long if a “whites” wash and a “coloureds” wash are done one after the other which is not uncommon). During the winter, heating needs to be run at the same time as the washing machine, which could well double the load.

It is recommended that batteries are not loaded much beyond their “C20” rate, that is, one twentieth of their Amp-Hour nominal rating. Say that 85 Amp-Hour deep-cycle leisure batteries are being used, then the recommended draw rate from them is 85 Amps divided by 20, which is 4.25 amps. Let’s push it and say we will risk drawing double that, and make it 8.5 amps. So, how many batteries would we need to supply our washing machine assuming that our inverter was 100% efficient? Well, 2,200 watts on a 12-volts system is 2,200 / 12 = 183 amps, so with each battery contributing 8.5 amps, we would need 183 / 8.5 = 22 large, heavy batteries. We would need twice that number if we were to treat them right, plus twice that again for household heating, say 110 batteries for an anyway realistic system. That sheer size of battery banks is not realistic for your average householder or person living in an apartment. Consequently, it appears that the Bedini pulse-charging systems are not practical for anything other than minor items of equipment.

However, the really important point here is the way that when these short pulses are applied to a lead-acid battery, a link is formed with the environment which causes large amounts of energy to flow into the circuit from outside. This is extra “free-energy”. Interestingly, it is highly likely that if the pulses generated by Dave Lawton’s water-splitter circuit shown above, were fed to a lead-acid battery, then the same battery-charging mechanism is likely to occur. Also, if a Bedini pulse-charging circuit were connected to a water-splitting cell like the Lawton cell, then it is highly probable that it would also drive that cell satisfactorily. Two apparently different applications, two apparently different circuits, but both producing sharp high-voltage pulses which draw extra free-energy from the immediate environment.

The Tesla Switch. It doesn’t stop there. Nikola Tesla introduced the world to Alternating Current (“AC”) but later on he moved from AC to very short, sharp pulses of Direct Current (“DC”). He found that by adjusting the frequency and duration of these high-voltage pulses, that he could produce a whole range of effects drawn from the environment - heating, cooling, lighting, etc. The important point to note is that the pulses were drawing energy directly from the immediate environment. Leaving aside the advanced equipment which Tesla was using during those experiments and moving to Tesla’s simple-looking 4-battery switch, we discover the same background operation of sharp voltage pulses drawing free-energy from the environment.

Consider the Electrodyne Corp. circuit (The Manual of Free-Energy Devices and Systems, 1986) tested by them for a period of three years:

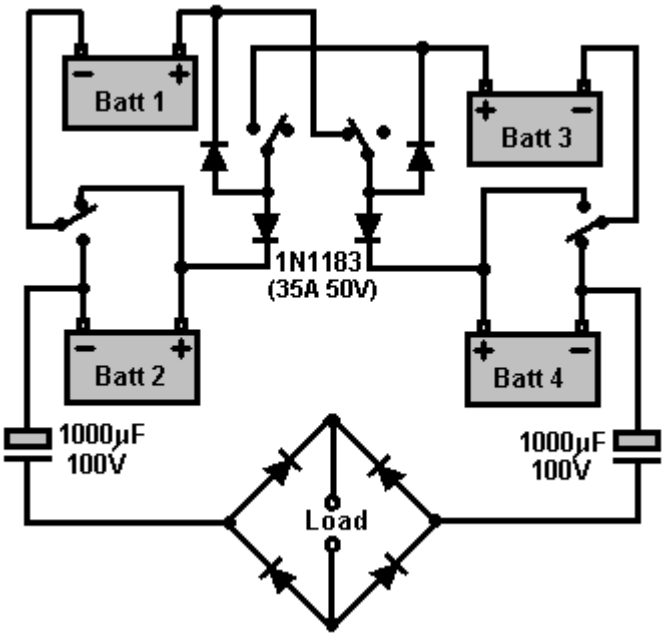

This simple-looking circuit needs to have an inductive load, preferably a motor, but that aside, consider the results of that very extended period of testing. If the switching rate and switching quality were of a sufficiently high standard, then the load could be powered indefinitely.

The batteries used were ordinary lead-acid batteries, and after the three years of tests, the batteries appeared to be in perfect condition. Their tests revealed a number of very interesting things. If the circuit was switched off and the batteries discharged to a low level, then when the circuit was switched on again, the batteries returned to full charge in under one minute. As no electrical charging circuit was connected to the system, the energy which charged those batteries had to be flowing into the batteries (and load) from outside the circuit. The similarity with the Bedini pulsed battery charger circuits immediately springs to mind, especially as no heating occurred in the batteries in spite of the massive charging rate. If the circuit was switched off and heavy current drawn from the batteries, then heat would be produced which is quite normal for battery discharging. The system operated lights, heaters, television sets, small motors and a 30-horsepower electric motor. If left undisturbed, with the circuit running, then each battery would charge up to nearly 36 volts with no apparent ill effects. Control circuitry was developed to prevent this over-charging.

Here we have spectacular battery charging and performance, quite outside the normal range associated with these ordinary lead-acid batteries. Are they being fed very short, very sharp pulses, like the previous two systems? It would look as if they were not, but one other very interesting piece of information coming from Electrodyne is that the circuit would not operate correctly if the switching rate was less than 100 Hz (that is 100 switchings in one second). The Electrodyne switching was done mechanically via three discs mounted on the shaft of a small motor. It is distinctly possible that the brushes pressing on those rotating discs experienced the equivalent of “switch bounce” which plagues mechanical switches used with electronic circuits. Instead of a single, clean change over from Off to On states, there is a series of very short makes and breaks of the circuit. If this happened with the Electrodyne mechanical switching, then the circuit would have experienced very short, sharp electrical pulses at the instant of switching. The fact that the switching speed had to reach one hundred per second before the effect started happening is certainly interesting, though not proof by any means.

One other detail reported by the Electrodyne testers, is that if the switching speed exceeded 800 times per second, that it was “dangerous” but unfortunately, they didn’t say why or how it was dangerous. It clearly was not a major problem with the batteries as they were reported to be in good shape after three years of testing, so definitely no exploding batteries there. It could well be as simple a thing that the voltage on each battery rose so high that it exceeded the voltage specifications of the circuit components, or the loads being powered, which is a distinct possibility. In my opinion, considering the way that the batteries responded, it would be perfectly reasonable to take it that short pulses were being generated by their mechanical system. If that is the case, then here is another system drawing fee-energy from the environment via sharp voltage pulses.

The Tesla Switch circuit has some very interesting features. Pupils in school are taught that if a bulb is connected across a battery, a current flows from the battery, through the bulb and back to the battery. This current causes

the bulb to light, and after a time, the battery runs down and is no longer able to light the bulb. This is completely correct.

However, this teaching gives the wrong impression. It implies that the "work" done in lighting the bulb, uses up the electricity coming from the battery and that the battery somehow has a store of electricity, something like the sand in an hourglass or egg-timer, which when it runs out will no longer be able to light the bulb. In passing, it can be remarked that not a single electron which flows at a power station actually comes out of your mains wall socket. The reality is that the power station electrons flow in one winding of your local step-down transformer and cause a fluctuating magnetic field there which causes some of the many free electrons in your locality to flow into another winding of the transformer and then on to your wall socket. If you were to cause those same magnetic fluctuations yourself, then you would receive the same level of electrical power without the power company being involved.

Interestingly, those same school teachers will show the correct picture of the circuit, drawing it like this:

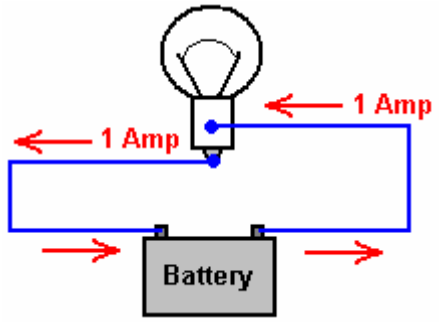

You will notice that the 1-amp current flowing out of the bulb is exactly the same as the 1-amp current flowing into the bulb. Exactly the same amount of current comes out of the bulb as the current which flows into the bulb. So, how much current is "used up" in doing the work of lighting the bulb? Answer: **None**. Energy is never destroyed, the most that can happen to it is that it gets converted from one form to another.

So why does the battery end up not being able to light the bulb any more? Well, that is a feature of the way that batteries operate. If the current flow is in one direction, then the battery gets charged up, and if it is in the other direction, then the battery gets discharged:

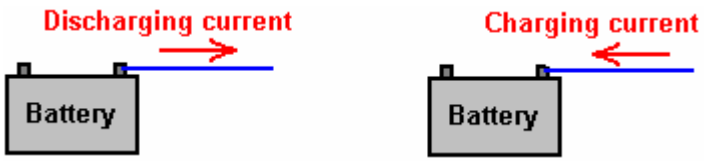

The battery getting run down, has nothing to do with the current flowing through the bulb, the battery would get run down if the bulb were left out of the circuit. The useful "work" of creating light by having the current flow through the bulb, does not "use up" any current, and more importantly, it does not "use up" any energy. Energy cannot be "used up" - it just gets transformed from one form to another. This is difficult to understand as we have been taught that we have to keep buying energy from the electricity supply companies to power our equipment. The false idea is that we buy the energy, and it then gets "used up" in the equipment, so we have to buy some more to keep the equipment going. We accept it because that's what we were taught. It isn't true.

The current flowing through the bulb can be arranged to be a charging current for another battery. It can both light the bulb and charge another battery without needing any extra current:

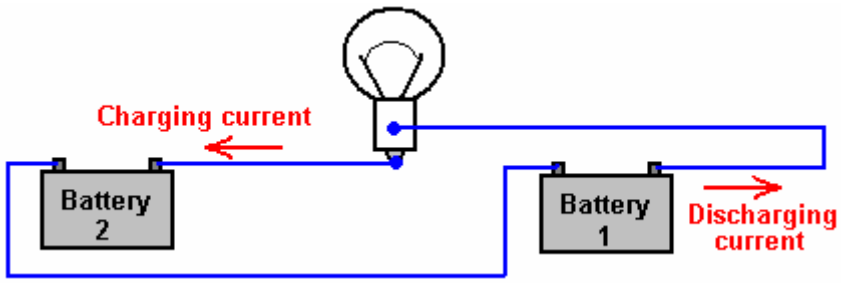

Here, the circuit is powered by battery 1 as before, but this time the current goes on to charge battery 2. Yes, battery 1 gets discharged just as before, but the plus side is that battery 2 is getting charged up all the time. The

final step is to swap the batteries over:

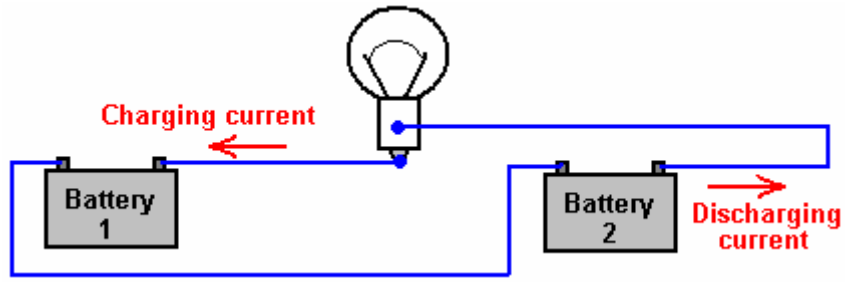

And now, the newly charged battery 2 lights the bulb and charges up battery 1 again. Seem impossible? Well it isn't. Nikola Tesla demonstrates this with his "4-battery switch" system where he chooses to use four identical batteries to implement this circuit:

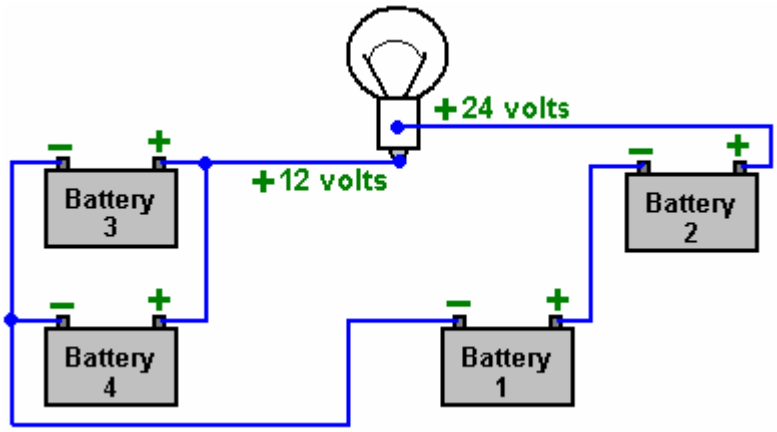

With 12-volt batteries as shown here, the bulb has the same 12 volts across it as it would have had with the single battery shown in the first diagram, as batteries 1 and 2 are wired "in series" to give 24 volts, while batteries 3 and 4 are wired "in parallel" to give 12 volts. The Tesla switch circuit swaps the batteries over with 1 and 2 taking the place of 3 and 4, hundreds of times per second. If you wire a simple manual change-over switch and use it to change the battery arrangement as shown above, tests show that the batteries can power the light for a longer time than if they were not switched over. The snag is that batteries are not 100% efficient and so you can only take about half of the charging current back out of the battery again. For a Tesla 4-battery switch to operate indefinitely, there has to be inflow of outside energy to offset the poor efficiency of a lead-acid battery. NiCad batteries are more efficient and so they are sometimes used in this circuit, where they can work well.

There is another important factor involved in battery-charging circuits to be used with normal lead-acid batteries and that is the characteristics of the materials involved. The charging process in this switching circuit is carried out by electrons flowing down the connecting wire and into the battery. The electrons flowing along the outer surface of the wire, move very rapidly indeed. The main current inside the battery is carried by the charged ions inside the lead plates inside the battery. These ions are hundreds of thousands of times heavier than the electrons. This doesn't matter at all once the ions get moving, but in the initial split second before the ions get going, the incoming electrons pile up like in a traffic jam tail-back. This pile-up of electrons pushes up the voltage on the terminal of the battery, well above the nominal battery voltage, and so the charging starts off with a high-voltage, high-current pulse into the battery.

This is not normally noticed when using a standard mains-powered battery charger, as switch-on only occurs once during the whole charging process. In the Tesla switch shown here, and in the Bedini circuits shown earlier, this is not the case. The circuit takes advantage of this difference in momentum between the electrons and the lead ions, and uses it repeatedly to great advantage. The technique is to use very short duration pulses all the time. If the pulses are short enough, the voltage and current drive into the receiving battery is far greater than a quick glance at the circuit would suggest. This is not magic, just common-sense characteristics of the materials being used in this circuit.

A person unfamiliar with these systems, seeing John Bedini's many advanced circuits for the first time, might get the impression that they are just crude, roughly-built circuits. Nothing could be further from the truth. John often uses mechanical switching because it gives very sharp switch-on and switch-off times. John is a complete master of this circuitry and knows exactly what he is doing

The Electrodyne Corporation tested the Tesla 4-battery circuit over a period of three years. They found that at the end of that period, the batteries did not show any unusual deterioration. The batteries used were ordinary lead-acid batteries. The system operated lights, heaters, television sets, small motors and a 30-horsepower electric motor. If the batteries were run down to a low level and then the circuit switch on with a load, the recharging of the batteries took place in under one minute. No heating was experienced during this rapid charging. Heat was only produced during discharge cycles. They used mechanical switching and stated that below 100 Hz there was not much advantage with the circuit and above 800 Hz it could be dangerous.

They didn't mention why they consider that higher rates of switching could be dangerous. If we consider what exactly is happening, perhaps we can work out why they said that. The charging situation is like this:

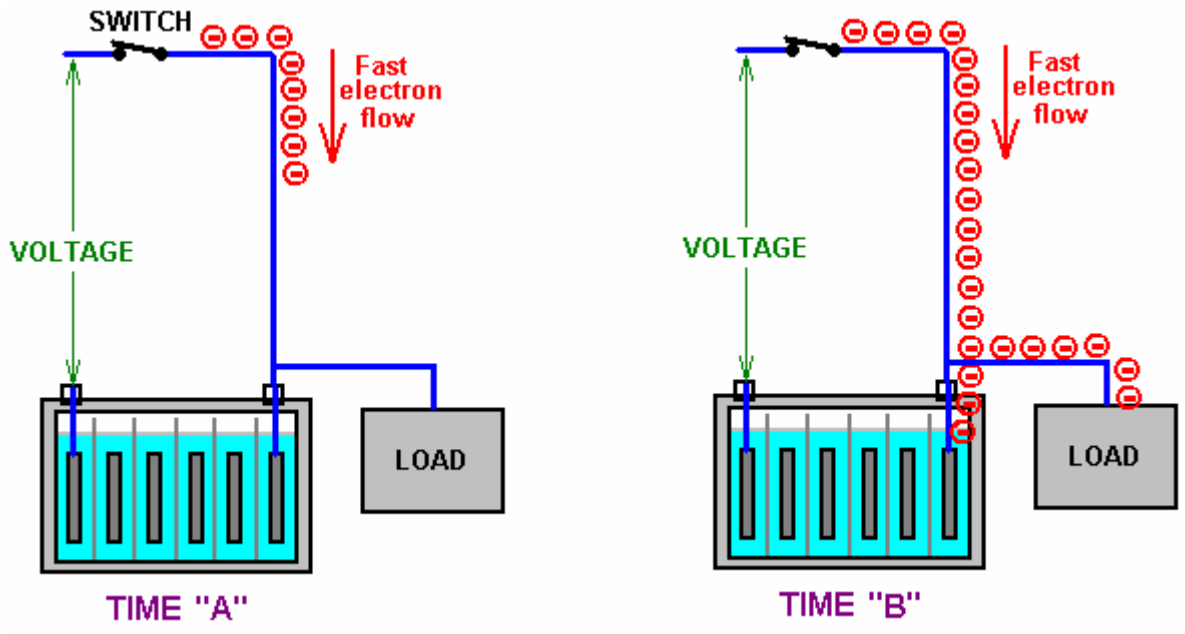

At Time "A" the switch closes, connecting a voltage source (battery, charged capacitor, or whatever) to a lead-acid battery. Electrons start flowing down the outside of the connecting wire. Being very light and having little obstruction, they move very fast indeed (the electrons inside the wire only move a few inches per hour as getting through the wire is difficult). All goes well until Time "B" when the leading electrons reach the lead plates inside the battery. Here, they have a problem, because the current flow through the plates is carried by lead ions. Lead ions are very good at carrying current, but it takes them a split second to get going due to their inertia. That split second is critical and it opens the door to free-energy. In that split second, the electrons pile up because they are still arriving down the wire at very high speed. So, at Time "C" they have built up into a large body of electrons.

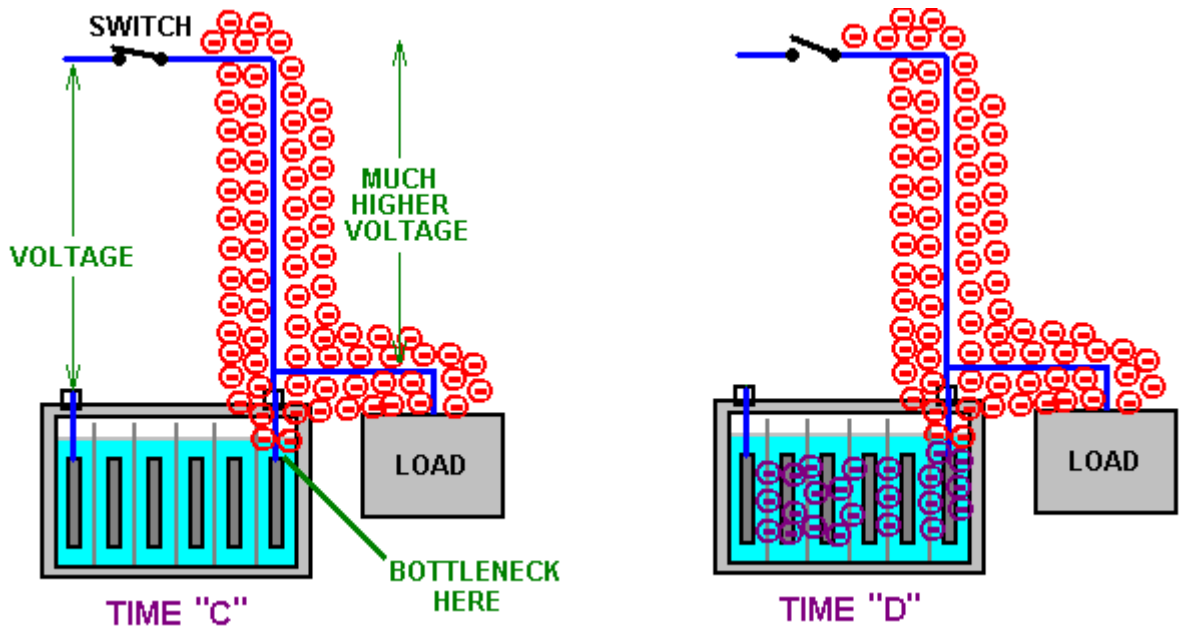

This large body of electrons has the same effect as if there had been a sudden connection to a much higher voltage source capable of supplying a much higher current. This situation only lasts for a very short time, but it has three very important effects. Firstly, at Time "D", it drives a much larger current into the battery than could reasonably expected from the original voltage source. Secondly, this high voltage pulse alters the Zero-Point Energy field in which the circuit is located, causing extra energy to flow into the circuit from the outside environment. This is a bit like sunshine generating current flow in an electric solar panel, but instead of visible sunshine, the energy flow is not visible to us and we have no instruments which react to this excess energy. Thirdly, the excess energy flows into the battery, charging it much more than would be expected, and at the same time, some of the excess energy flows into the load, powering it as well, and further, some of the flow goes back into the driving circuit, lowering its current draw.

Remember Dave Lawton's Water Fuel Cell? Well Dave also connects a bulb across the cell to extract additional energy:

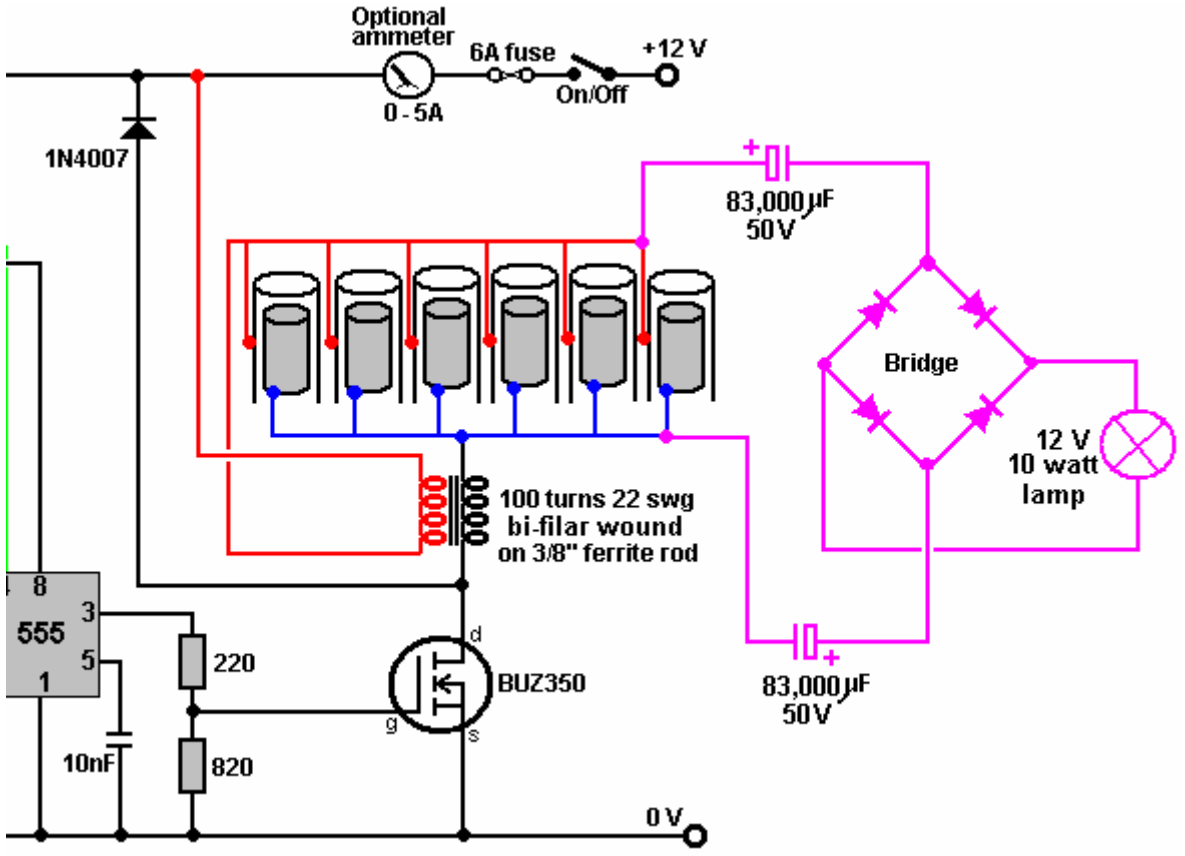

A really interesting feature of this extra power draw-off is that when Dave adjusts the frequency to the optimum value, the supply voltage remains unchanged but the input current drops noticeably and the brightness of the lamp increases markedly. Less input power at the same time as greater output power - the circuit hasn't changed, so from where is the extra power coming? One possibility is certainly that it is flowing in from the environment.

So, returning to our excess energy is collected from the environment and used to both charge the battery and at the same time, perform useful work. The old saying "you can't have your cake and eat it" just does not hold in this situation as that is exactly what happens. Instead of the battery being run down from powering the load, the load gets powered **and** the battery gets charged up at the same time. This is why, with this system, a discharged battery can be used to apparently run a motor. It works because the plates in the discharged battery are made of lead which forms a bottleneck for the electron flow, causing the environment to charge the battery and run the load at the same time. That is why you get what looks like the magical effect of a discharged battery appearing to power a load. In passing, the more discharged the battery, the faster it charges as the environment adjusts automatically to the situation and feeds greater power into a flat battery. The environment has unlimited power available for use. John Bedini who is expert in this field has had motors running continuously for three or more years with the battery never running down and the motor doing useful work all the time. Great battery? No, - great environment !!

Not necessarily exactly the same effect, but Joseph Newman's motor exhibits this same result, much to the discomfort of a conventionally taught scientist, who measured the motor at a minimum of 400% "efficiency" (really COP = 4) and probably nearer 800% when all the major factors were taken into account. One thing which really bothered him was that when powering the motor on almost completely discharged dry cell batteries, the voltage measured at the motor was some three times the voltage at the batteries. That is very upsetting for a scientist who is not aware of the zero-point energy field and considers most systems to be "closed" systems, when in fact, there are practically no "closed" systems in our universe. Surprise, surprise, the Newman motor operates on electrical pulses.

Anyway, returning to the Tesla 4-battery switch. For the vital build up of excess electrons to take place, the switch closure has to be very sudden and very effective. A thyristor or an SCR might be suitable for this, but the sharp switching of a PCP116 opto-isolator driving an IRF540 FET is impressive and a TC4420 FET-driver could substitute for the opto-isolator if preferred. It is likely that the Tesla 4-battery switch circuit switching in the 100 Hz to 800 Hz region operates in this way.

This drawing in of excess energy from the environment can be further enhanced by suddenly cutting off the electron flow from the original voltage source while the excess electron pile-up is still in place. This causes a sudden (very brief) further surge in the excess power, building up the voltage and current even further and increasing the battery charging and load-powering drive.

An even greater effect can be had if the next, short, sharp pulse is applied to the battery/load combination, just before the effect from the last pulse dies away. It may be that this is the situation which the Electrodyne Corporation people encountered when the pulse rate went over the 800 Hz rate. It may not be so much a case that the battery and load could not take the power, but more a case that the components which they were using were not rated high enough to carry that level of power. They do mention that if they went further, that they found that some of their circuit components started failing through not having high enough ratings (notice that the output capacitors are rated at 100 volts which is eight times the nominal battery voltage). This was hardly a problem, considering that they had 12-volt batteries operating happily at 36-volts if they wanted that. They ended up building circuitry to hold the voltages down to a convenient level.

To summarise the situation. The Tesla 4-battery switch appears to do the impossible through:

1. Catching the current coming out of the load and using it to charge another battery instead of wasting it.
2. Providing very short, sharp, and rapid switching pulses which exploit the momentum of the lead-ions current flow.
3. Pulling extra energy in from the local environment to both charge the batteries and power the load at the same time

This leaves aside the possibility of two further gains available through very precise timing of the switching pulses (mainly to make the power available more easily and cheaply handled). So, it should be borne in mind that the practical issues involved in getting this circuit operating effectively are primarily about very fast, clean and well-timed switching. Multi-strand, very large diameter, high-current rated wire will be helpful in getting the draw of excess energy into the circuit.

Here is the switching sequence for the Tesla 4-battery switch system:

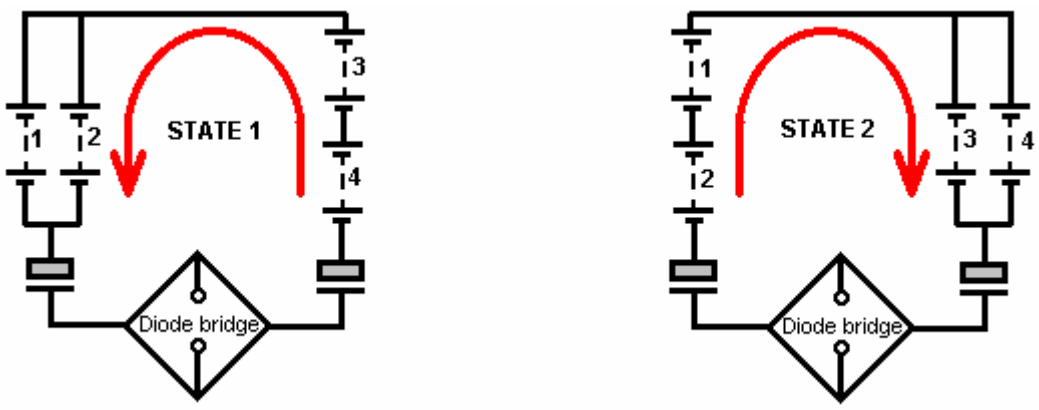

As you can see, this is essentially the same circuit with batteries 1 and 2 swapping over with batteries 3 and 4. But he has added in two capacitors and a diode bridge of four diodes to power the "load" which needs to be inductive for this circuit (transformer, motor, etc.). The circuit used by the Electrodyne Corp. testers was:

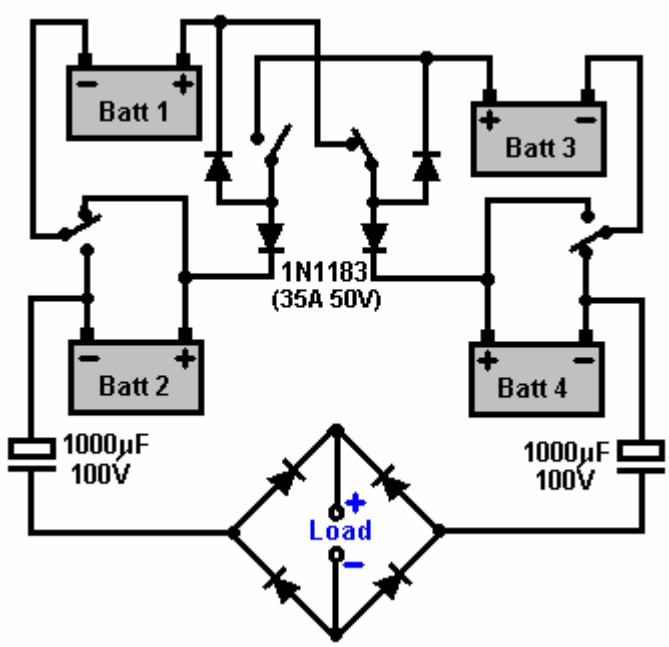

This circuit was reported to have excellent results using six On/Off switches on a motor-driven cam arrangement:

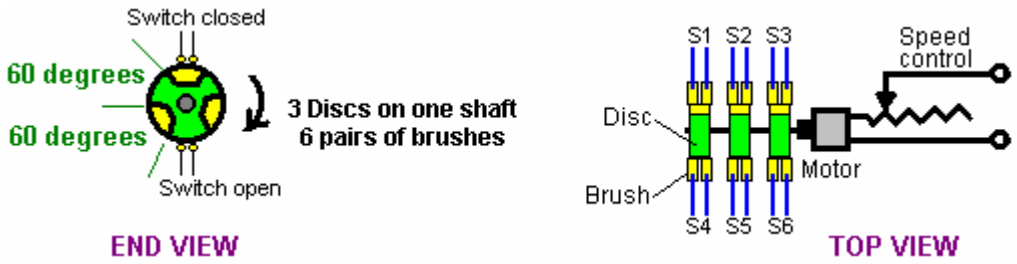

Here three discs are mounted on the shaft of a motor as shown here. These are insulated from each other and the conducting sectors are aligned, and so are the brushes. The arrangement gives a mechanical switching such that when the upper brushes are short-circuited together, the lower brushes are open-circuit. As there is a requirement for an inductive load for this circuit, the motor of a mechanical switching system could well form part of the load. Many people prefer solid-state switching to mechanical switching and so set out to design suitable

circuits. It needs to be borne in mind that a very precise 50% Mark/Space ratio is essential and that may not be so easy to arrange. The common idea of using mechanical relays is not very practical. Firstly, relays have trouble switching at the speeds suggested for this circuit. Secondly, with a contact life of say, two million and a switching speed of just 100 times per second, the relays would reach their projected lifespan after two weeks of operation, which is not a very practical option.

To get an exact 50% Mark/Space ratio, possibly the following style of circuit could be used with a multi-turn preset resistor in position “A”:

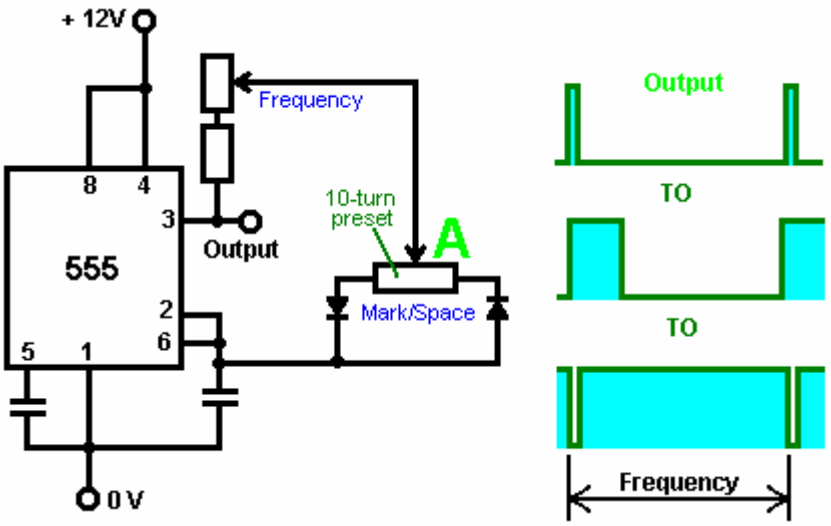

Here, the frequency is not noticeably affected by adjustment through a very wide range of Mark/Space settings. The output from Pin 3 needs to drive a very sharp switching combination such as a TC4420 FET driver connected to IRF540 FETs.

As the circuit diagram used by the Electrodyne Corp. people is a little difficult to follow, perhaps the following diagrams may help by showing the current flow during the two states:

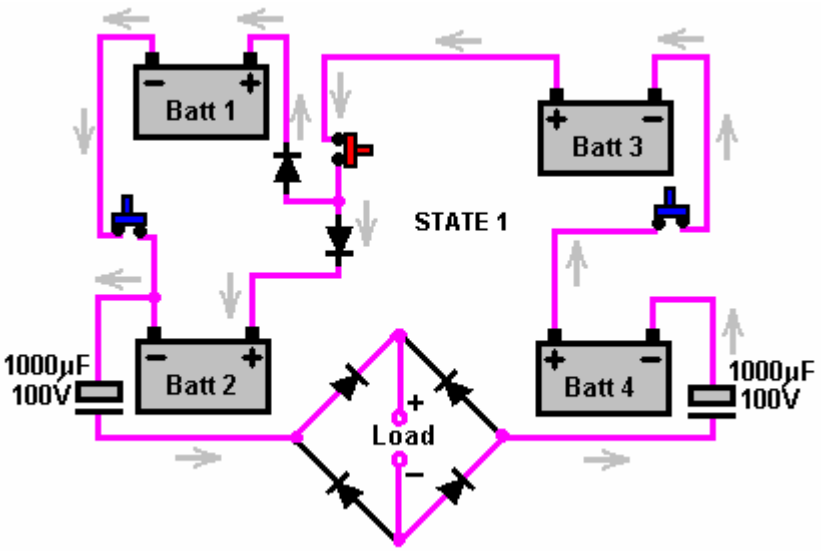

Here, batteries 1 and 2 are wired across each other while batteries 3 and 4 are wired in series (in a daisy-chain). This needs three On/Off switches and the two diodes are inserted so that the plus terminal of battery 1 is not permanently connected to the plus terminal of battery 2, because in State 2, that connection must not be made.

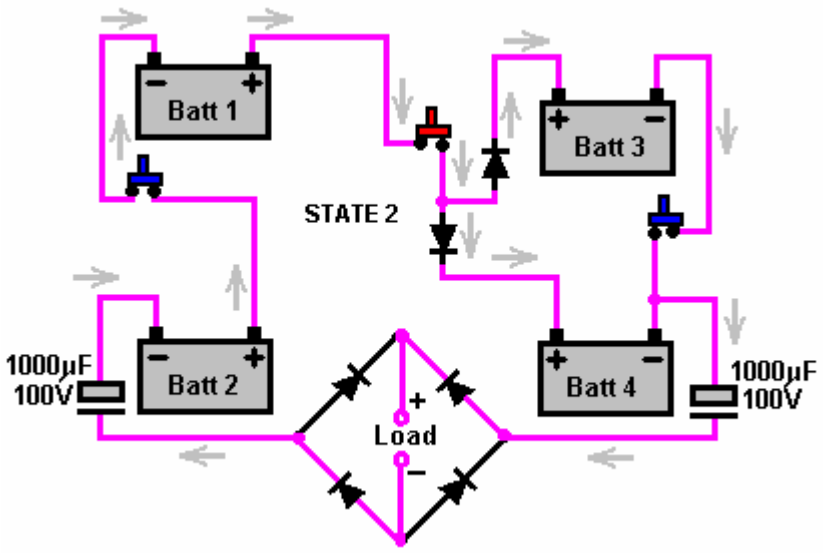

The State 2 wiring is almost identical, requiring another three On/Off switches and two diodes to avoid a permanent link between the plus terminals of batteries 3 and 4.

Here is a suggestion for doing that with PCP116 fast-operating opto-isolators:

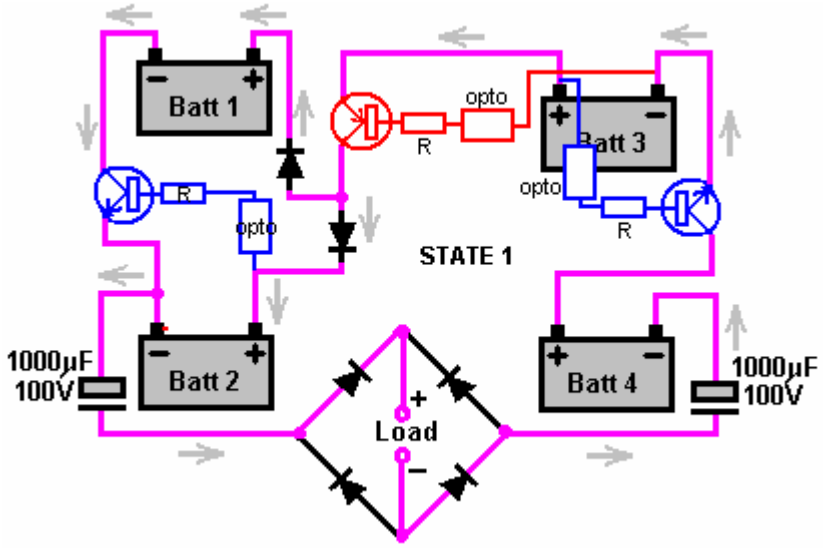

Each of the three mechanical switches are replaced with a transistor - one PNP type and two NPN type. These need to be able to handle 30 amps, so although not shown here, they will probably be Darlington pairs with the low gain of the high-power transistor being boosted by the additional gain of a driver transistor, perhaps something like a 2N3055 / 2N2222A combination. The transistor base current comes via a limiting resistor fed from an appropriate battery terminal a fixed 12 volts above it. The switching is controlled via an opto-isolator and the three opto isolators which switch together (shown above) are driven from one side of an astable multivibrator. The other three opto-isolators needed to perform the switching for State 2, will be Off during State 1, so they will be driven by the inverted version of the same oscillator waveform. This ensures that three will be On and three will be Off at the same time.

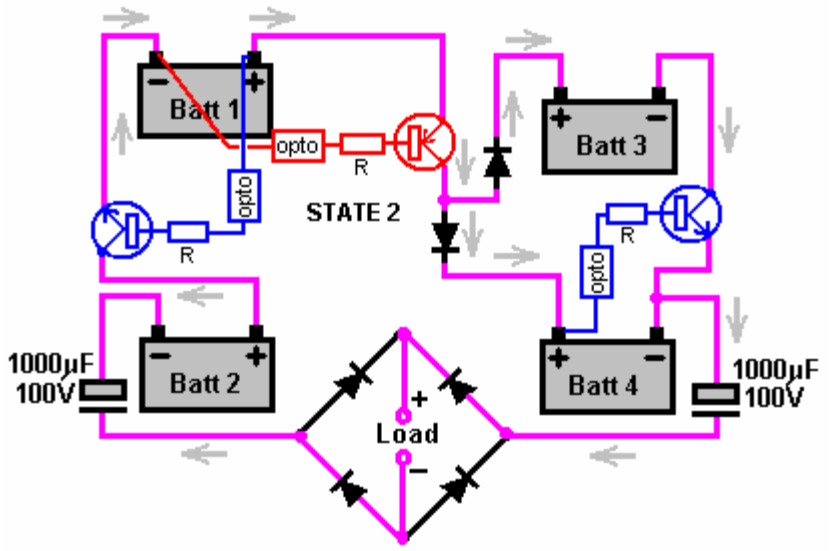

The suggested transistor switching for the State 2 situation is shown above. This is just an attempt to perform the switching with the most simple components available, and has been shown to work in practice.

The mechanical changeover switch can be replaced with transistors:

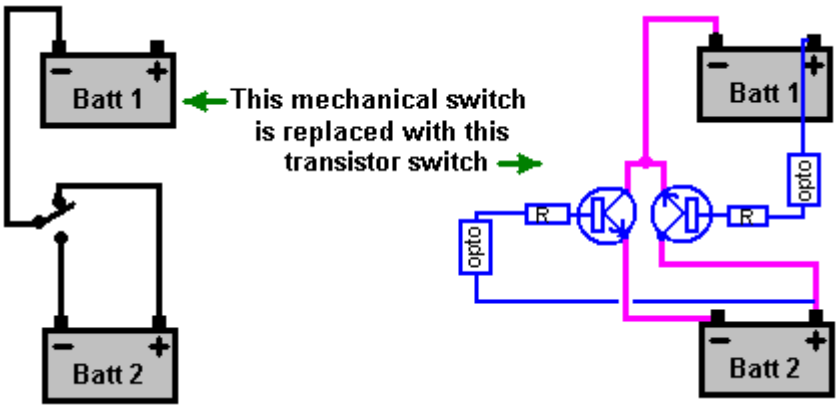

and

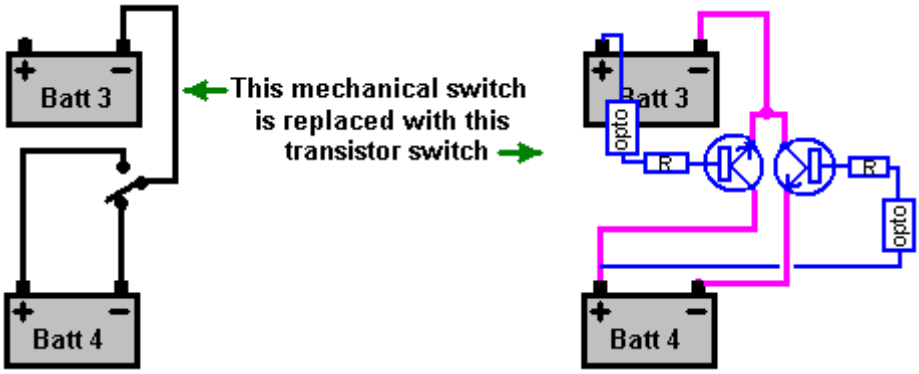

The Electrodyne Corp. experience indicates that it is likely that additional circuitry will be needed to cut off the extra power when the energy in the batteries rises to the point where it could endanger the equipment which it is powering or the components in the circuitry.

The electronics tutorial which forms part of this eBook shows the principles which can be used for the design and construction of this kind of circuitry. It might be sensible to have the control circuitry kick in at fourteen or fifteen volts and drop out again when the battery voltage drops back to 12.5 volts or so.

This switching circuit is said to be able to power its load indefinitely. It is also said that if one of the batteries is fully discharged, or nearly fully discharged, then putting it in any of the four positions returns it to full charge within one minute.

The connecting wires should be at least 30 Amp current carrying capacity and the individual diodes and the diode bridge are rated at 35 Amps 50 Volts. The circuit is intended for use with lead/acid batteries but it has been used successfully with rechargeable NiCad batteries. The circuit provides about 12 volts as the output, so mains equipment would be operated using a standard, commercial “inverter” which converts this low DC voltage to normal mains AC voltage capable of powering TV sets, DVD recorders, or whatever.

There have been various different versions of the Tesla 4-battery switch circuit. Some of these show additional diodes, making an absolutely symmetrical circuit where the current flow can continue even if the load is disconnected, as shown here:

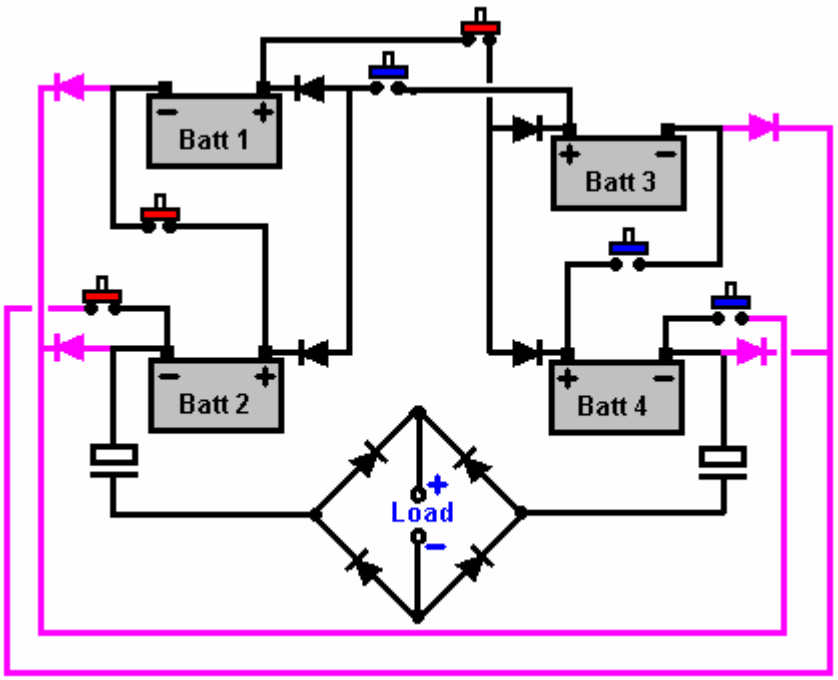

I have been asked to explain how the switching might be achieved. Usually there are many different way to achieve any wanted effect and switching circuits are no exception. What follows then is just a suggestion for one possible way of doing the switching and must **not** be thought of as **the** way in which the switching must be done.

The main objectives for the switching circuit are to have very fast switching and to have an exactly equal "On" period for the two switched states. As electronic components have manufacturing tolerances, it is not possible to have components with exactly the same values unless they are selected from a large stock of the same component. To deal with this situation, and avoid spending large amounts by buying high-specification components, we will aim for a manually adjusted circuit, where the switch "On" time can be adjusted to give exactly the right value:

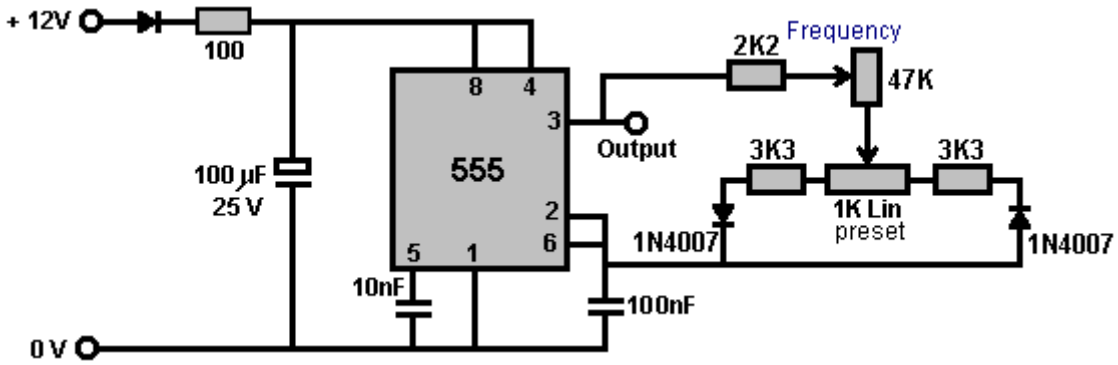

This circuit allows the Mark-Space ratio to be adjusted without altering the frequency, and the frequency can be

adjusted without affecting the Mark-Space setting in any way. In the Tesla Switch circuit, three switches need to be in their On position and the other three switches in their Off position, so we will arrange this by using the ordinary NE555 timer circuit shown above, with it's adjustable Mark-Space ratio (that is, variable On-to-Off ratio). We will use this circuit to drive six opto-isolators which will turn the six transistors On and Off in groups of three as required. To get the very high switching speed needed, PCP116 opto isolators should be used and although these are difficult to find, every effort should be made to get them as they enhance the switching speed.

One feature of the Tesla Switch is the fact that it should have an inductive load. In simple terms, that means that the load should be a motor or a transformer. The need for an inductive load may well be the back-EMF voltages which are developed when the current flowing through the load is cut off suddenly. So, let's start with the circuit shown below which has a transformer as the load. In this circuit, switches 1, 2 and 3 switch On and Off at the same time, and switches 4, 5 and 6 form the second group. If one group of three switches is On, then the second group of switches needs to be Off.

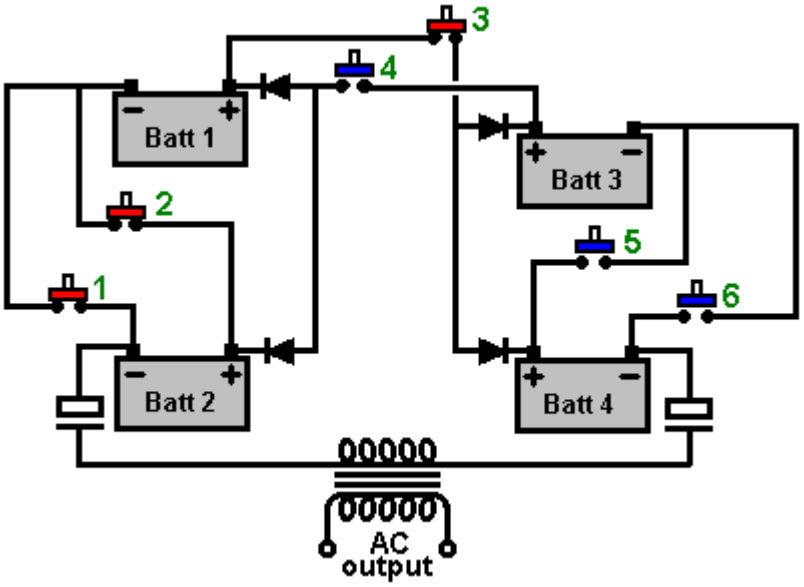

The following details show the preliminary stages of an implementation using 4N25 opto-isolators which are not nearly as satisfactory as PCP116 chips which switch typically 30 times faster. However, the circuit adaption is very minor in that it is only one board which needs to be altered. The circuitry choice was as follows:

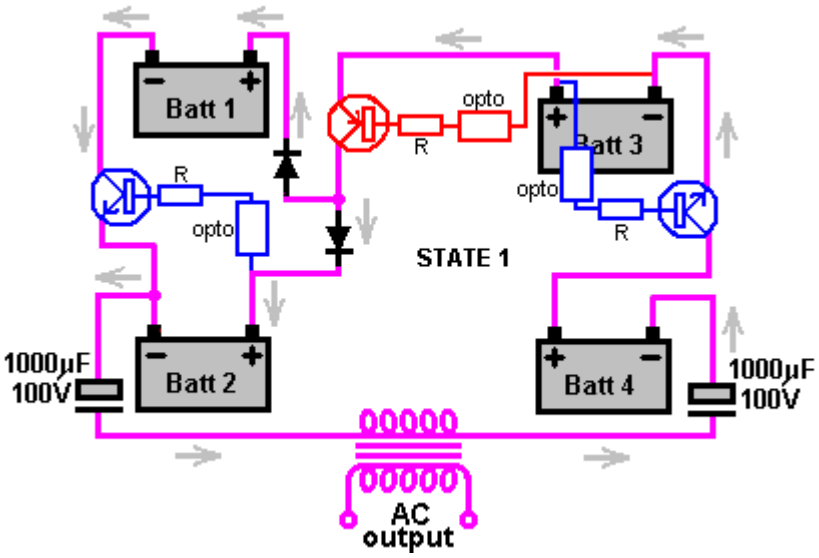

Here, each of the three mechanical switches are replaced with a transistor - two NPN type and one PNP type. As these were required to be able to handle 30 amps, the initial build used the Darlington pair devices MJ11016 for the NPNs and MJ11015 for the PNPs as these are rated at 30 amps and have a minimum gain of 1,000, allowing quite low switching currents for the control circuitry.

The switching is controlled via an opto-isolator and the three opto isolators which switch together as shown in the diagram above, are driven by the output of a 555 timer chip astable multivibrator (Chapter 12 explains all of this, so if you are not familiar with these things, then perhaps it would be a good idea to read through that chapter now). The other three opto-isolators needed to perform the switching for State 2, will be Off during State 1, so they will be driven by the inverted version of the same 555 signal. This ensures that three will be On and three will be Off at any time.

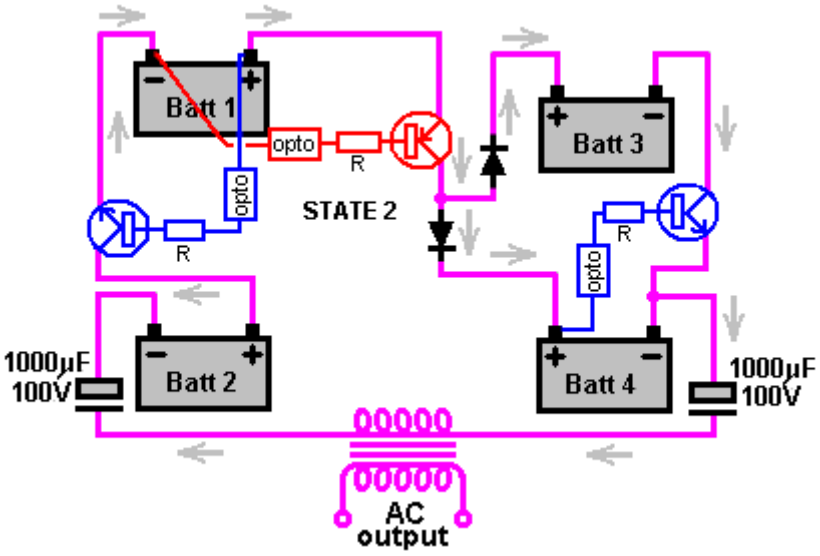

We need to get an inverted output from the timer circuit, that is, an output which goes high when the 555 timer chip goes low and which goes low when the 555 timer chip output goes high. There are various ways to do this, but the way shown here is the very simple method of using a transistor. If we were using mechanical switching, we would choose to use a switch which opens one set of contacts before closing the other set. We can arrange that by making the switch-on of the inverting transistor adjustable, like this:

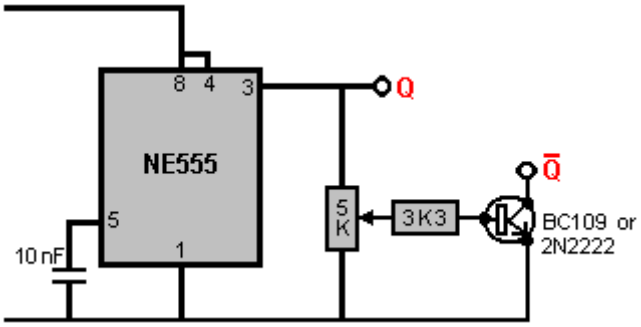

The 5K variable or preset resistor is placed across the output of the NE555 timer chip. This resistor will have either a very low voltage across it or a voltage nearly the same as the battery supply. Please remember that the 555 chip can't handle supply voltages over 15 volts and will burn out if you feed them anything more than that. The Tesla Switch circuit with 12 volts batteries should be ok as you don't want the batteries to exceed 14 volts anyway.

When the 5K variable resistor has a high voltage on it, every voltage from zero to that high voltage can be selected by moving the slider of the resistor along its track. At some point when the slider is gradually moved up from the minimum voltage point, the transistor will turn on. The 3.3K resistor limits the current if the slider is moved to the very highest voltage point. The output transistor can be a BC109 or a 2N2222 type as these are high-gain types easily capable of handling the tiny current needed to drive three opto-isolators.

The variable resistors come in a wide range of types. It is probably best to use a preset type as they are very easy to adjust and hold their settings very solidly. Also, when the correct setting is found, the component will be left on that position permanently. Some common types are:

where some can be adjusted from the top and others adjusted from the side. All of tghem can be mounted directly on the strip-board or printed circuit board used to construct the circuit.

The initial build can be done in simple stages. This is to ensure that the switch wiring is correct before the semiconductor switching is attempted. Although the circuit does not show it, it would be no harm to have a fuse on each battery as a battery holds a considerable store of electrical energy and is easily capable of starting a fire if there is an inadvertent short-circuit. The excessive current draw caused by a short-circuit is not visible, and the first you know of it with a battery-powered circuit is the burning smell and wisp of smoke. Even using a mains-powered power supply unit with voltage and current displays, it is still very easy indeed to miss a short-circuit as you tend not to be watching the current display when the problem occurs.

To make the assembly and subsequent adjustment simple, a standard strip of ordinary screw-connectors is used. For initial testing, a four-pole three-way wafer switch is used. The switch provides the two changeover switches and the single On switch and the single Off switch. It also has the advantage that the third switch position switches the entire circuit off. The initial test, uses a low-current load of two LEDs with limiting resistors wired in opposite directions. This shows the direction of current flow and confirms that the switching is working correctly. By omitting the capacitors and pulse switching, it allows leisurely checking of the wiring and operation:

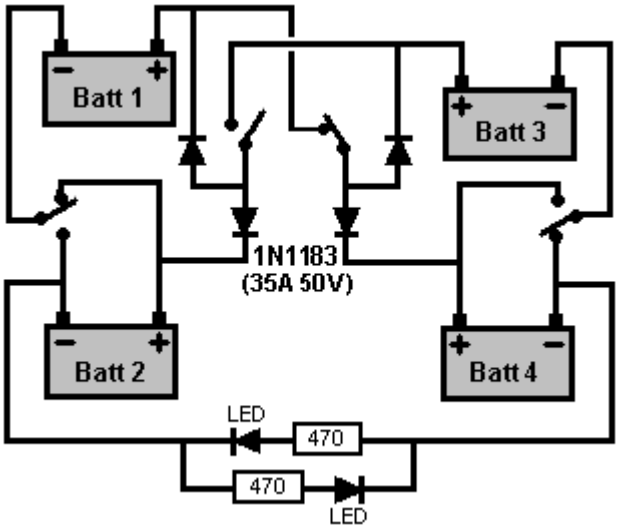

The physical layout with a mechanical rotary 4-pole 2-way switch could be:

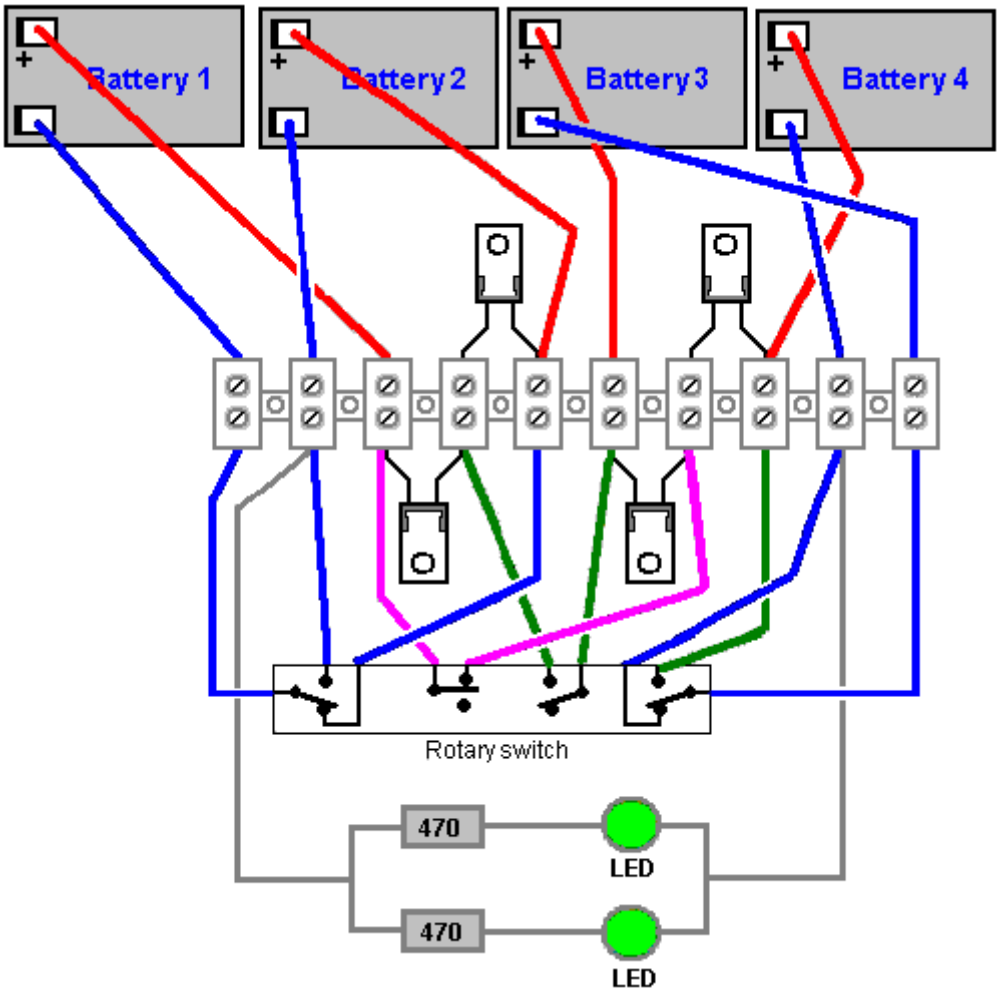

And the diodes used here happen to be high-speed, IXYS type DSEI 12-10A which were to hand and which are rated at 1,000 volts, 12 amps. While this does limit the initial current capacity, there is no reason why these cannot be doubled up or tripled up to allow a higher current. The batteries used initially in the test are very small 1.2 AHr types and so the allowable current draw from them is quite limited. If this circuit does not operate correctly straight off, it is quite likely that the diodes are the wrong way round. In this physical layout, the back of the diodes all face upwards.

This particular build looks like this:

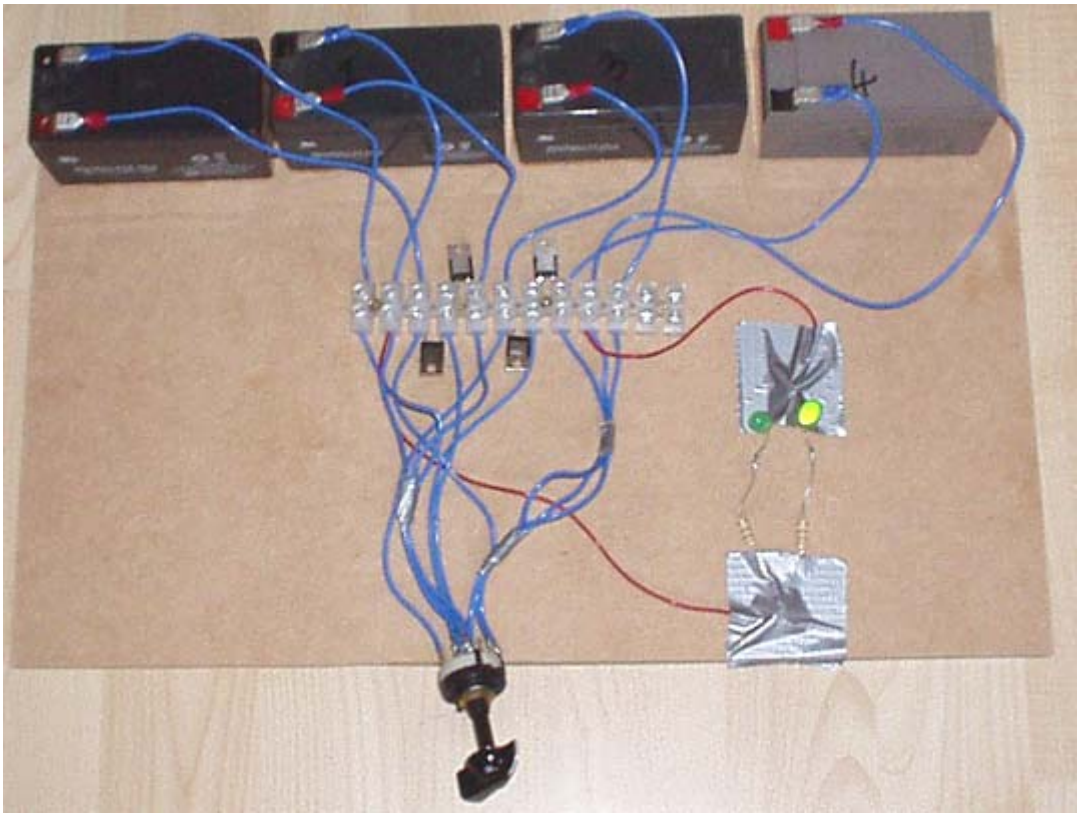

State 1 with the right-hand LED lit.

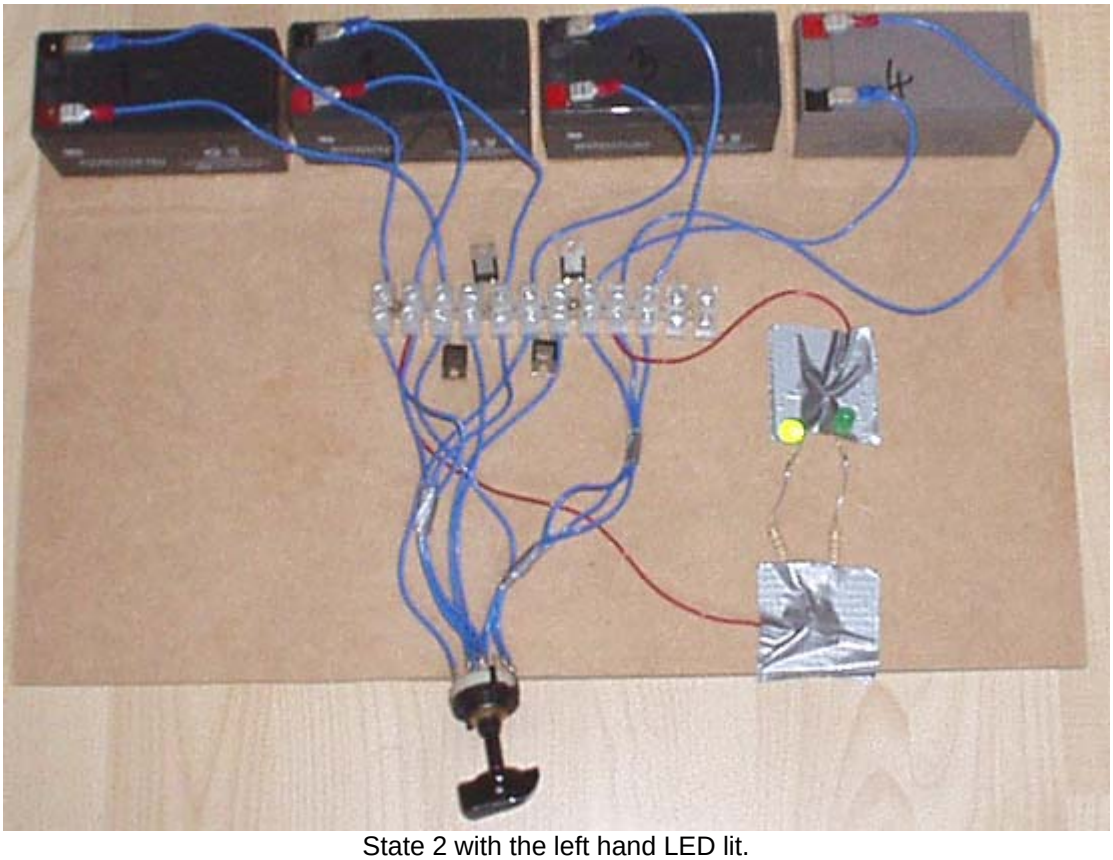

State 2 with the left hand LED lit.

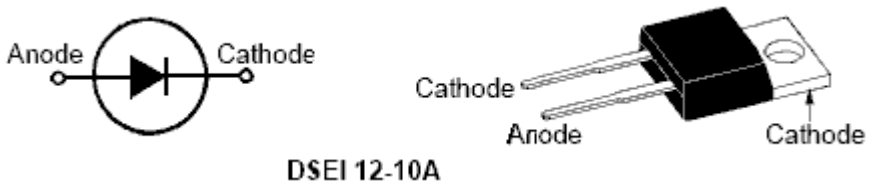

So far, this shows that the batteries, diodes and switch connections are correct. The next step is to change the switching for one of the states to transistor switching. This requires three transistors, three opto-isolators and three resistors. The transistors are housed in the large TO-3 package and so will mount on the base board. The small components can be mounted on a standard small piece of stripboard, 10 strips with 38 holes per strip:

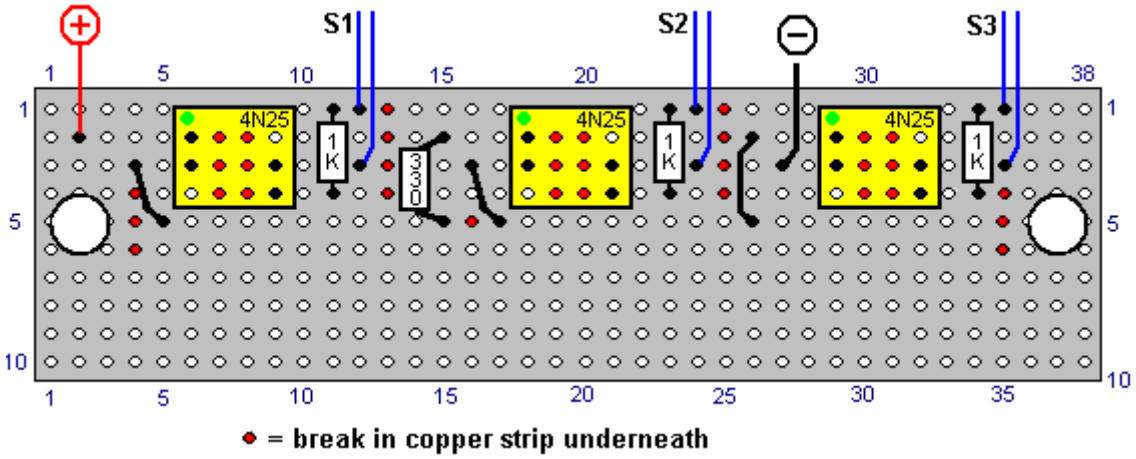

There should be a voltage drop of at least 10 volts (11.5 volts to 1.5 volts) across the resistor feeding the base of the transistors. If the transistor current is 10 amps and the gain 1,000, then 10 milliamps will be needed as the current into the base, so with a 10 volt drop the resistor should have a value of 1K. The current through the LED section of the opto-isolators is limited by a 330 ohm resistor, which can be positioned anywhere convenient in the chain as the same current passes through all of the LEDs inside the opto-isolators. The circuit diagram for each set of three opto-isolators could be:

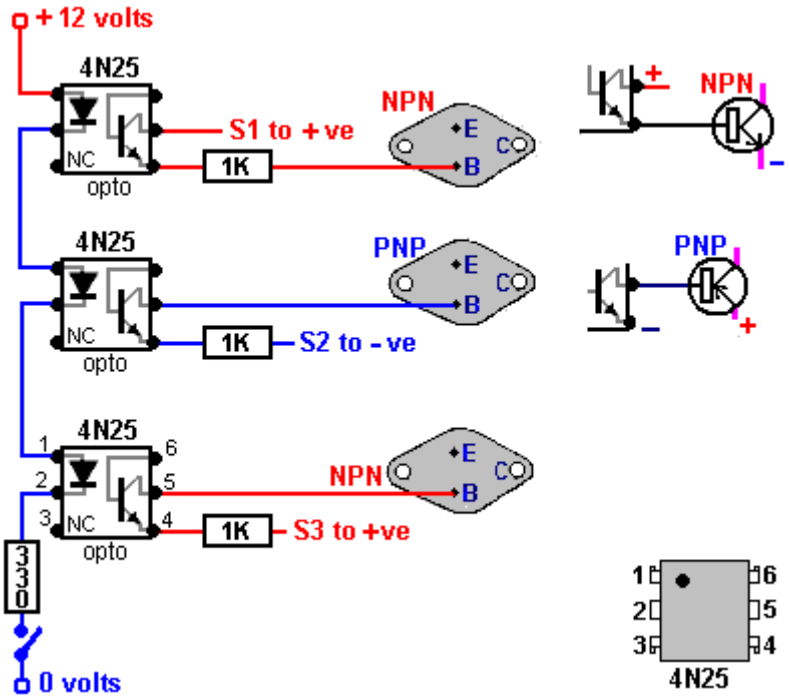

The first part of the circuit is now wired up to switch when the first chain of three opto-isolators is powered up to feed base current to the three power transistors. When this section is working correctly, then the board containing the first chain of three opto-isolators is extended to hold an identical additional chain of three opto-isolators as shown here:

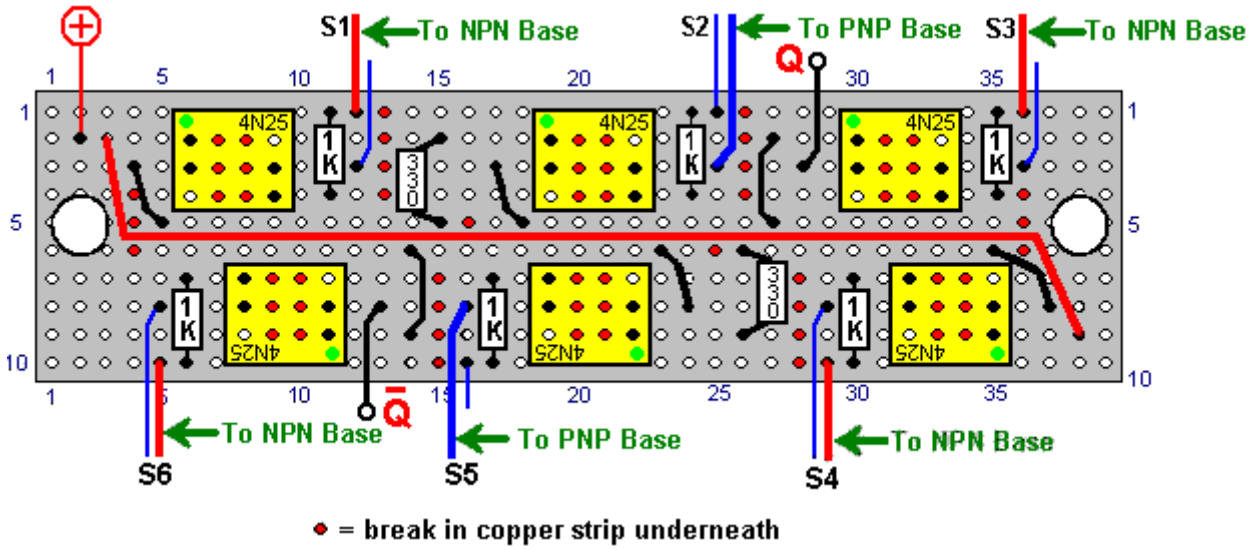

You will notice that for convenience, the physical layout is arranged so that the strip-board is just rotated through 180 degrees and the wiring diagram for the first three optos is used again for the second three.

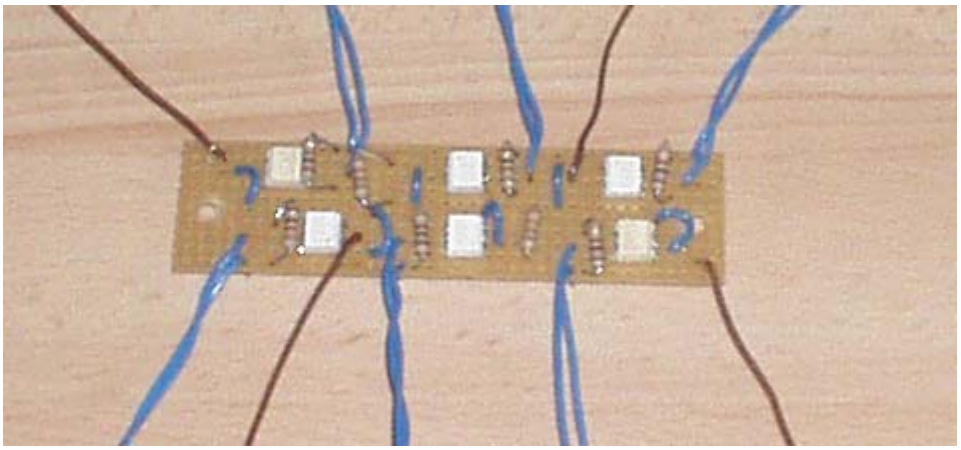

The underside of the board looks like this when turned over from left to right:

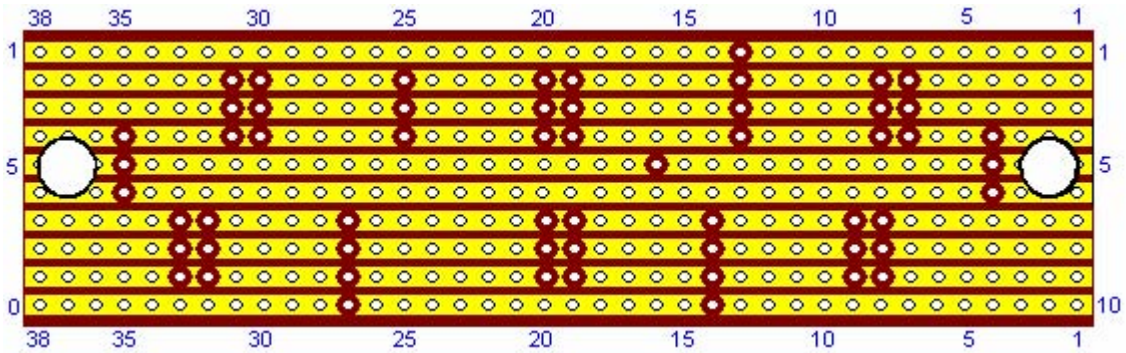

And with the power transistors wired in place and ready to receive the opto-isolator connections:

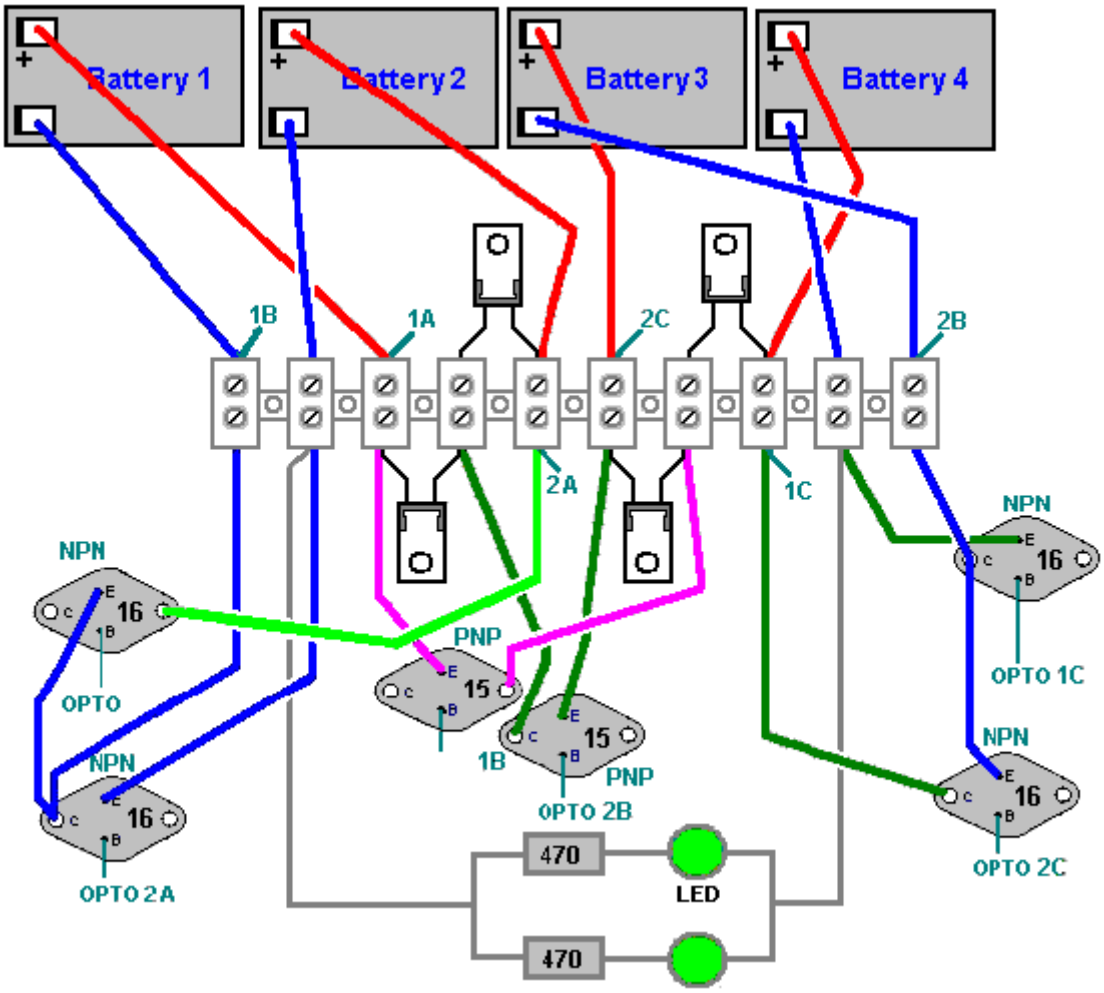

The two chains of opto-isolators now do the actual switching when they are powered up in turn. This spread-out simple layout makes testing and checking easy and no heat sinks are needed for low-current testing:

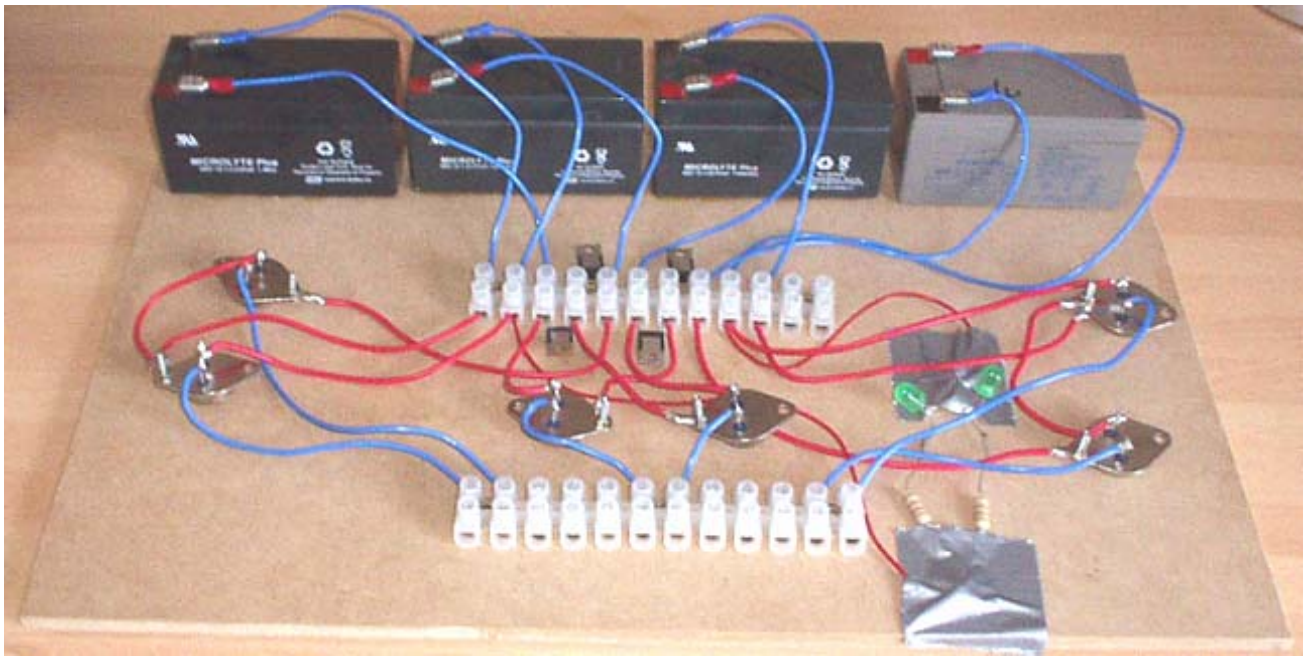

So with the opto-isolators wired in place, the switching is solid-state:

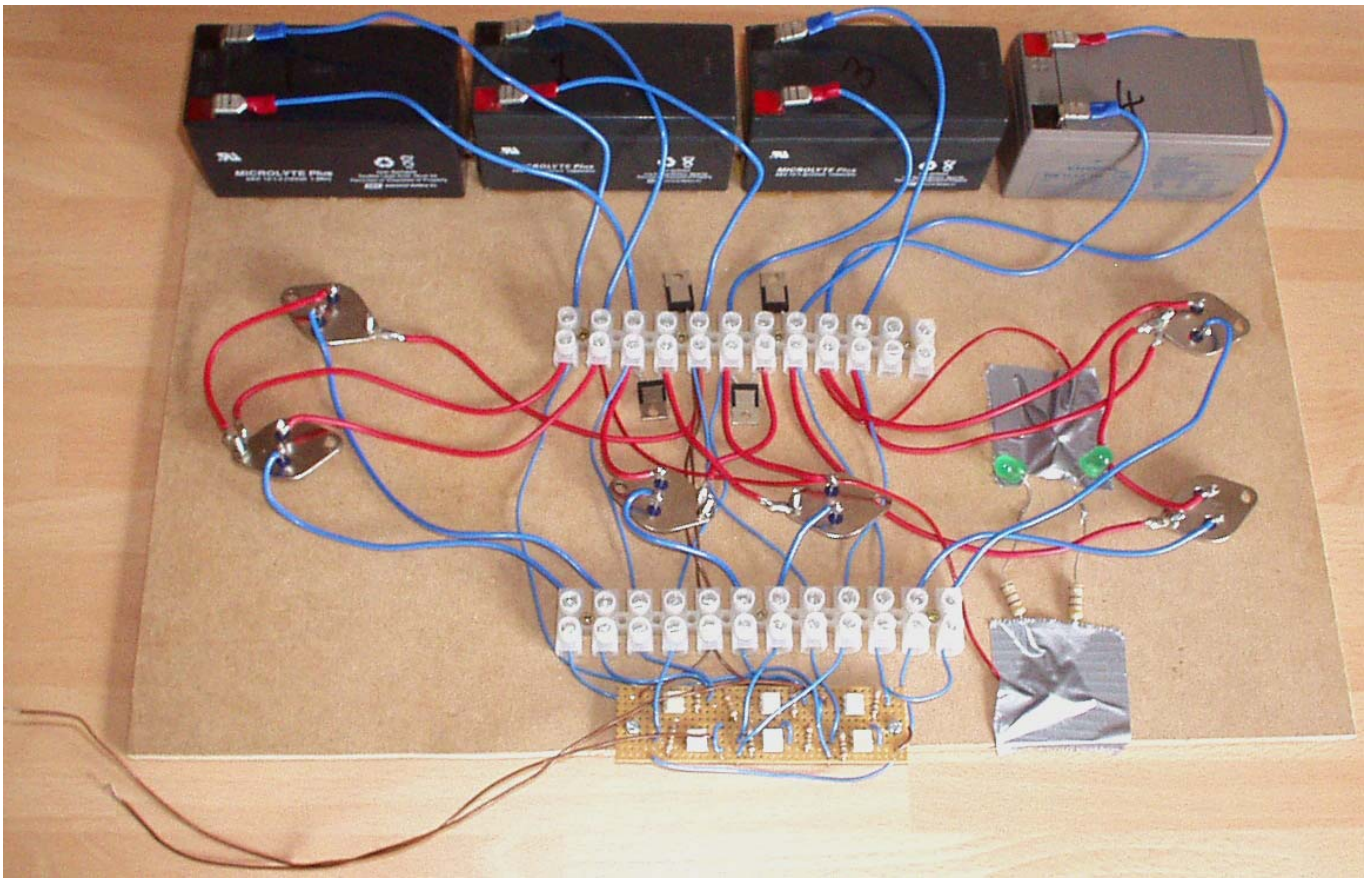

Here, when one of the brown wires, seen at the bottom left hand side of the picture, are touched to the minus terminal of battery 2, one LED lights up. Disconnecting the wire and touching with the minus terminal of battery 2 with the other wire, lights the other LED. Obviously, you **don't** connect both of the wires at the same time. It would be sensible to have a fuse on the positive lead coming from each of the batteries as this protects against accidental short-circuits and against the failure of any of the main power semiconductors.

In the picture above, most of the wires coming from the opto board appear to be connected via the lower terminal block. This is not the case as only the six leads coming from the base connections of the power transistors actually use the terminal block, while the other wires are just routed through the block as being the most direct way of reaching their connection points further in on the board.

It should be stressed that the opto-isolator connections are not random. These are not mechanical switches where it doesn't matter which way round the switch is connected. The optos are transistor junctions and the connections to the PNP transistors in the middle of the board are made the opposite way round to that for the NPN transistors. In other words, Pin 5 goes to the base of a PNP transistor so that it gets switched through to the negative side of the battery powering it, while Pin 4 goes to the base of an NPN as it needs to be connected to the positive side of the battery powering it:

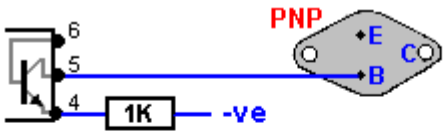

NOTICE THE DIFFERENT CONNECTIONS

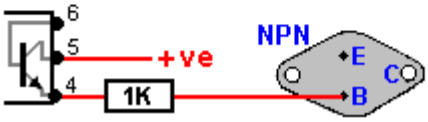

As well as paying attention to which wires go to the bases of the six transistors, it should be noted that if you wish, instead of having two wires running from the board to the positive supply for the board, that an alternative is to make the positive line connection for the second chain of opto-isolators physically on the board, as both chains are fed from the same voltage source, which for the moment, is battery 2.

When this stage is working correctly, the manual powering of the opto chains is replaced with a solid-state switching board to allow high-speed, reliable switching. There are various options for the design of this switching circuit. The initial design opts for simplicity and hopes that the opto-isolator switch-on and switch-off rates will be fast enough to make the overall circuit operate as desired, pulling excess energy from the local environment in spite of using 4N25 opto-isolators.

This may look a little strange with the collector of the output transistor not appearing to be connected to anything, but it connects to one of the chains of three opto-isolators with its built-in current-limiting series resistor. The normal Pin 3 output from the NE555 chip, connects directly to the other opto-isolator chain, so one will be switched off and the other one switched on at the same time. The timing resistor can be varied from 3.3K to 50.3K ohms and that combines with the 220nF capacitor to give switching in the required frequency range.

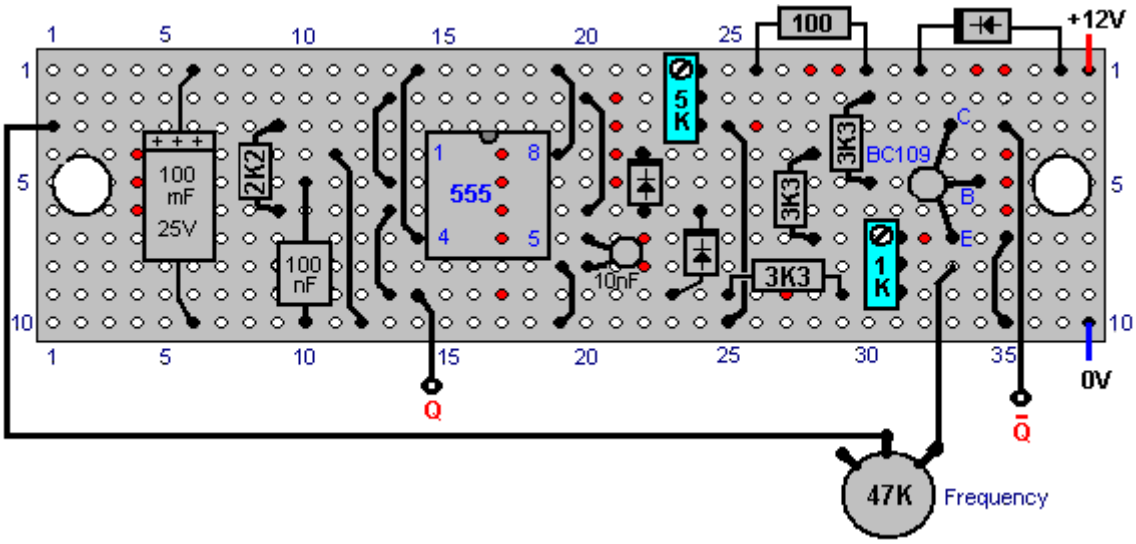

And the underside of the board when turned over from left to right, is:

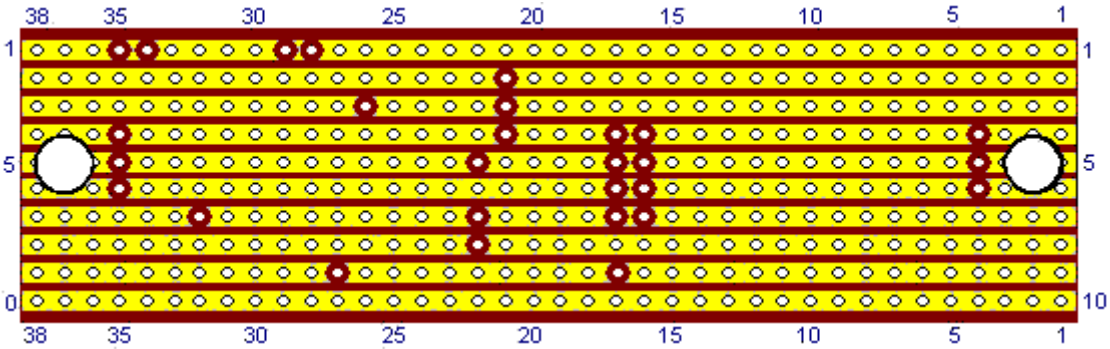

Tuning of the Mark-Space preset resistor is initially set to its centre position and if the batteries start to develop different voltages, then it is adjusted slightly and running continued, aiming for exactly the same voltage on each battery. The batteries should be the same age and the same AHr capacity.

Recently, a patent application has been lodged on what is effectively the Ron Cole one-battery switch and the Tesla Switch. I must admit to being highly doubtful about the notion of using capacitors as an energy source (unless the switching frequency is so high that the capacitors have insufficient time for their voltage to drop significantly), I am including the re-worded patent here. Some experimenters have reported overall battery energy

gains with switching speeds of 0.5 Hz or less, which means that in circuits of that type, mechanical switching should give a reasonable switch contact life. This patent has needed a fair degree of attention as the person writing it does not have a full grasp of English and confused the word "load" with the word "charge". Let me say again, that the following patent application is included here primarily for interest sake, rather than being the definitive way of making a circuit of this type.

Patent Application US20080030165 7th February 2008 Inventor: Bozidar Lisac

METHOD AND DEVICE FOR SUPPLYING A LOAD WITH ELECTRIC ENERGY RECOVERY

ABSTRACT

In the invention an electric current circulates from the battery **UB**, through the electric motor **M**, and the diode **D1** charges the capacitors **CA** and **CB**, connected in parallel, which, once charged, are connected in series, giving rise to a difference in voltage in relation to the battery, causing half the charge of the capacitors to be returned to the battery through the diode **D2**, whilst with a new parallel connection, the capacitors recharge, this charge being equal to that which had been previously transferred from the capacitors to the battery, so that by means of the cyclic connection of the capacitors in parallel and series the energy is transferred from the battery to the capacitors and from the capacitors to the battery, thus considerably extending the range of the battery and operation of the motor.

OBJECT OF THE INVENTION

This invention relates to a method and device enabling the electrical energy with which a charge is supplied to be recovered using a self-rechargeable electricity source in which, which by means of a circuit, the current circulating from an accumulator or battery through a load, e.g. a motor, is fully returned to the same, thereby considerably extending its range.

More specifically, two capacitors that are connected cyclically from parallel to serial and vice versa are charged through a motor during the connections in parallel, whilst in series connection, when its voltage doubles, they return the electricity, recharging the battery. This source represents a closed system which does not require an energy supply from the outside, except to compensate for the losses produced, the range of the battery being limited by the number of charges and discharges that the same technically permits.

BACKGROUND TO THE INVENTION

A load, such as an electric motor, is connected to a battery or accumulator with a certain charge, which will be progressively discharged by it, this discharge being directly proportional to the connection time and to the current circulating through the motor. It is therefore necessary to supply fresh energy from an external source to recharge it. Systems that enable the energy consumed by the load to be reused are not known in the state of the art.

DESCRIPTION OF THE INVENTION

A first aspect of the invention relates to a method for supplying a load with recovery of electrical energy, which comprises supplying a load with electrical energy deriving from the first electrical energy accumulator, and returning at least a proportion of that electrical energy after it passes through the load to the first accumulator for the purpose of recovering the energy supplied.

The electrical energy, after passing through the load, is recovered by second electrical energy accumulator, from where it is transferred to the first accumulator, giving rise to cyclic transfer of electrical energy between the first and second energy accumulators.

The recovery of energy from the second accumulator and transfer to the first accumulator may be achieved without passing the energy through the load. In another alternative implementation, the energy is recovered from the second accumulator and passed to the first accumulator through the load, in which case the polarity of the load is reversed during the recovery of energy through the load.

The transfer of energy is brought about by cyclically connecting two or more electrical energy accumulators between parallel and serial connections.

A second aspect of the invention relates to a device for supplying a load with recovery of electrical energy, which comprises a first electrical energy accumulator and a second electrical energy accumulator, where the load is connected between the first and second accumulators. The device may be provided in one embodiment with a

unidirectional connection device, for example, a diode which is connected in parallel to the load, causing circulation of the electrical energy recovered after passing through the load, and via which the electrical energy is returned to the first accumulator.

The first electrical energy accumulator may be a battery. The second electrical energy accumulator might be two or more capacitors with switching to cyclically connect them between parallel and serial connection configurations.

The invention constitutes a self-rechargeable source of electrical energy which enables the range of a battery to be considerably extended so that the current circulating from the same through a motor charges two capacitors connected in parallel, up to the voltage level of the battery, by means of contacts. These capacitors, once charged, are connected in series, producing double their voltage, and they then return the energy to the battery, thereby extending its range. Once the losses have been compensated for, the duration of the extended range depends on the charging and discharging properties of the capacitors.

The existence of the difference in voltage between the battery and the capacitors connected both in parallel and in series, and which give rise to the displacement of energy from the battery to the capacitors and vice versa, is used to supply the motor connected between the battery and the capacitors, comprising the self-rechargeable source of electrical energy.

When connected in parallel, the capacitors are charged through a motor and a diode, and when connected in series, they are charged through another diode, the voltage of the motor being half that of the battery. On the other hand, if the motor is connected between the battery and the serially-connected capacitors, the latter, which are charged in parallel through a diode and are discharged by means of the motor and the other diode, will supply the motor with a voltage equal to that of the battery, whilst a capacitor connected in series to the winding of the motor guarantees its operation without loss of power.

Instead of the two capacitors, two batteries connected in series and another two connected in parallel may be used, between which batteries a motor is connected, the current circulating in this case from the batteries connected in series through the motor to the batteries connected in parallel. The serially-connected batteries are then connected in parallel, by means of switching contacts, and the other two parallel-connected batteries are then connected in series, reversing the direction of the current, whilst the connections of the motor are inverted by means of the simultaneous switching of other contacts in order to maintain the polarity and direction of rotation of the motor.

In one possible embodiment of the invention, another two capacitors and a transformer with two primary windings, or a motor with two windings are added to the device previously described, each pair of capacitors cyclically switching from parallel to serial connection and vice versa so that during the parallel connection cycles, two of the capacitors are charged through one of the windings up to the voltage level of the battery at the same time that the other two capacitors are connected in series, double their voltage and are discharged by means of a second winding to the battery.

The reduced level of energy losses brought about mainly by the dissipation of heat and in the capacitors, as well as by the charge factor of the batteries, is compensated for from an external source, and because the sum of the current circulating through a winding of the motor or transformer charging two of the capacitors and the current simultaneously circulating from the other two capacitors through the second winding, recharging the battery, plus the current which is supplied from the external source, is equal to zero, because of the work carried out by the motor or the loads which are connected to the alternating voltage induced in the secondary of the transformer, no discharge of the battery takes place.

DESCRIPTION OF THE DRAWINGS

In order to supplement the description now being given, and with the aim of contributing to a better understanding of the characteristics of the invention, according to a preferred practical embodiment, a set of drawings is attached as an integral part of this description, in which, for informative and non-restrictive purposes, the following is shown:

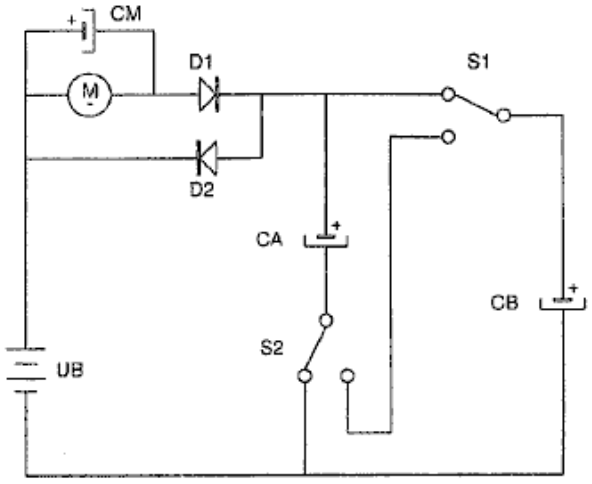

FIG.1

Fig.1 shows a practical circuit in which, by means of switching, two capacitors connected in parallel are charged from a battery through a motor and a diode, and after the contacts are switched, they are connected in series, thereby discharging the battery through another diode.

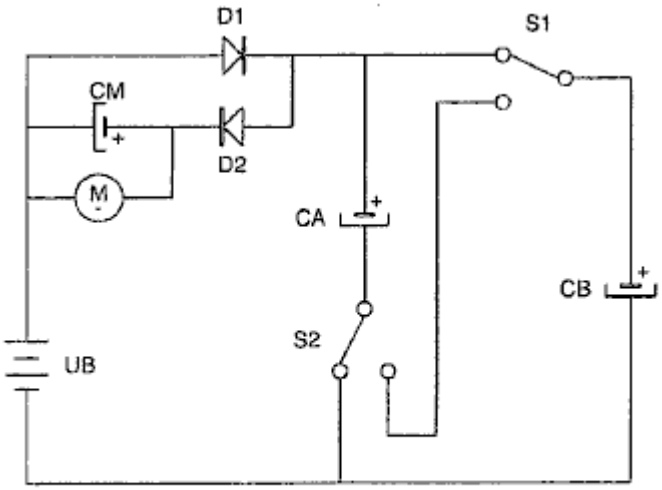

FIG.2

Fig.2 shows a practical circuit in which, through switching, the two capacitors are connected in parallel and are charged from a battery through a diode, and after the switching of the contacts they are connected in series, thereby charging the battery through the motor and the other diode.

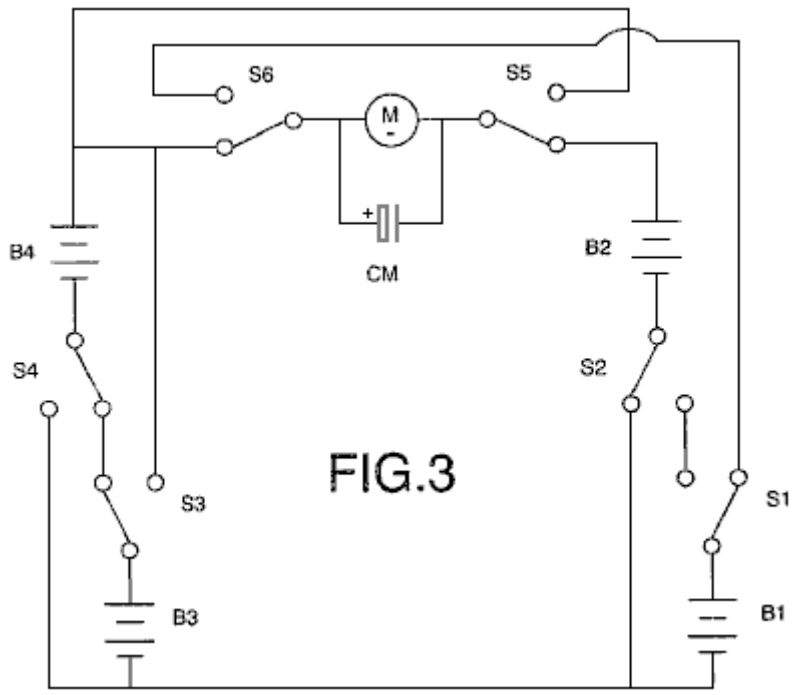

FIG.3

Fig.3 shows the connection of the two batteries in series, connected through a motor to another two batteries connected in parallel, and which, by means of contacts, switch alternatively, this giving rise to effects similar to those described in relation to the use of the capacitors.

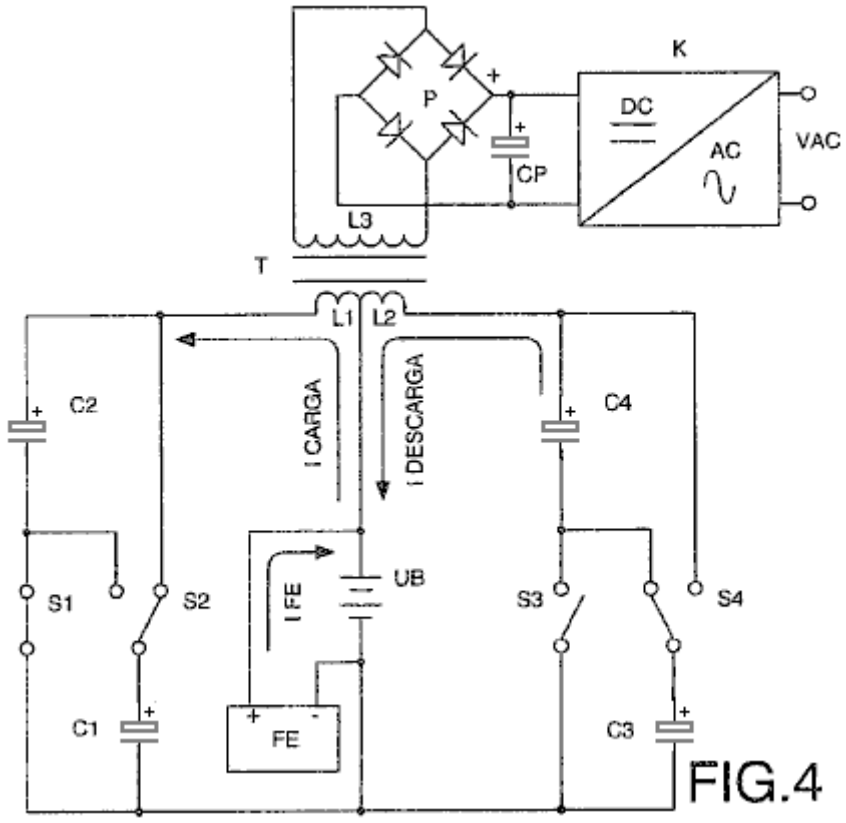

FIG.4

Fig.4 shows the electrical diagram corresponding to the connection between the battery and the two pairs of capacitors of a transformer with two primary and one secondary winding, in which an alternating voltage is induced which is rectified, filtered and converted to a sinusoidal voltage.

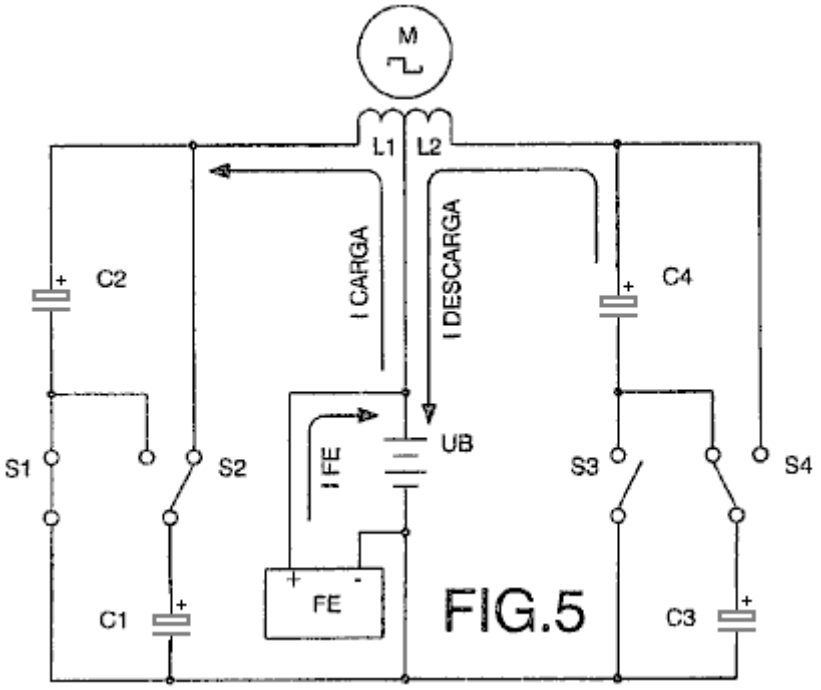

Fig.5 shows the electrical diagram of an alternating current motor with two windings connected between the battery and two pairs of capacitors.

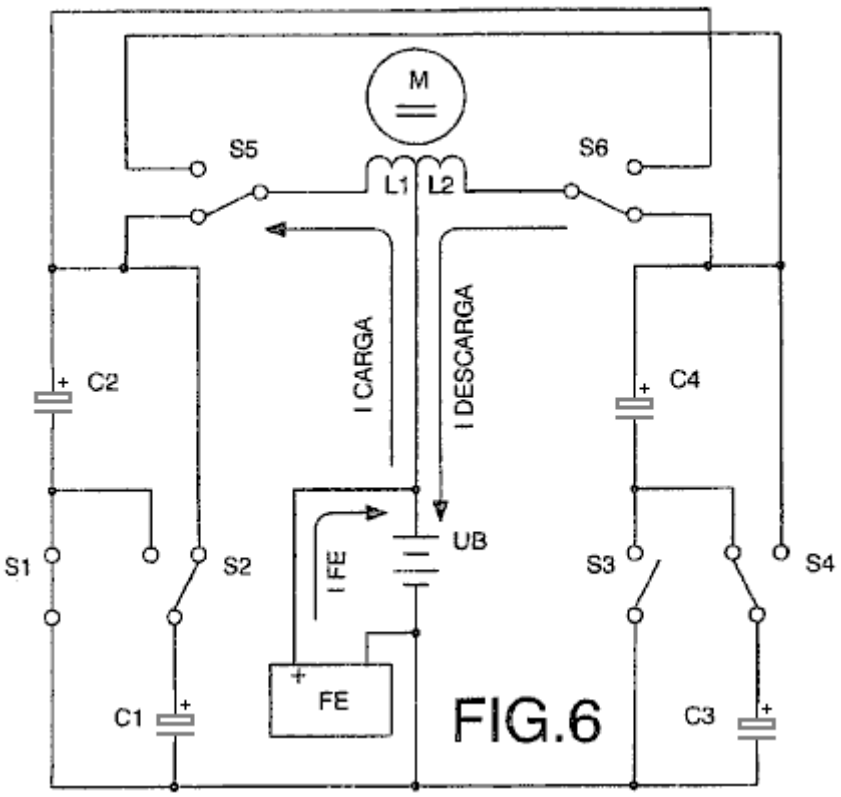

Fig.6 shows the electrical diagram of a direct current motor with two windings connected between the battery and two pairs of capacitors, in which two switch contacts ensure their correct polarisation and direction of rotation.

PREFERRED EMBODIMENT OF THE INVENTION

In a preferred embodiment shown in **Fig.1**, the load consists of a direct current motor **M**, the battery **UB**, and the second accumulator which consists of a pair of capacitors **CA** and **CB**. The capacitors **CA** and **CB** are connected to each other in parallel by means of two switches **S1** and **S2**. These capacitors are charged through the motor **M**

and diode **D1** to a voltage level equal to that of the battery **UB**, the charge being Q = (CA+CB)UB, and while these capacitors are being charged, the motor **M** is rotating.

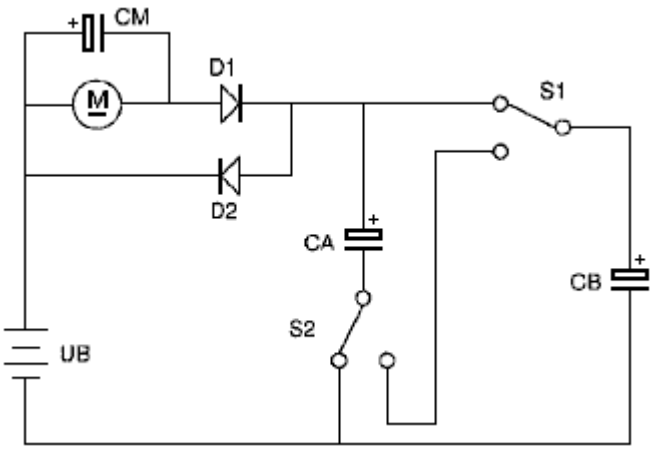

When both capacitors are fully charged, they are connected in series by the switch contacts **S1** and **S2**. This produces a voltage which is twice the value of the voltage of the battery **UB**, resulting in the charge which is given by Q = 2 x UB x (CA+CB) / 2 which is Q = (CA+CB)UB, which shows that once charged, the charge Q of both capacitors is identical both in parallel and in series.

Diodes **D1** and **D2** ensure that current flow through the motor **M** is only ever in one direction. Immediately after capacitors **CA** and **CB** are connected in series, they return half of their charge through diode **D2**. Switches **S1** and **S2** then connect the capacitors **CA** and **CB** in parallel. In this arrangement, they start off with half of the battery voltage. They charge immediately, regaining the battery voltage through the motor **M** and the diode **D1**.

By means of repeated cyclic switching of the capacitors **CA** and **CB** from parallel to serial connection mode, the current circulating from the battery **UB** through the motor **M** to the capacitors, and from these to the battery, recharging it and extending its range, constitutes a self-rechargeable source of electrical energy.

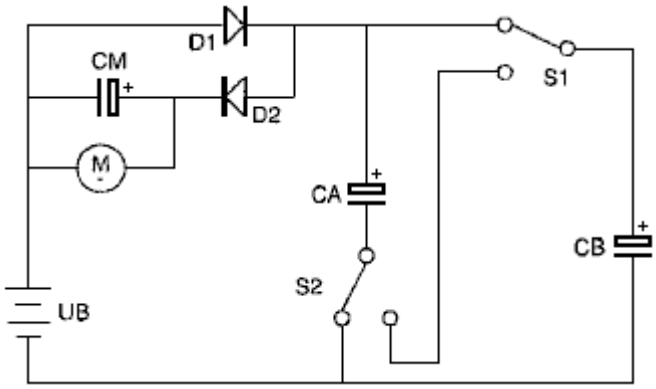

In a second practical embodiment shown in **Fig.2**, the motor **M** is connected between the battery **UB** and the capacitors **CA** and **CB** by means of the diode **D2**. The capacitors are charged directly through the diode **D1** and are discharged through the motor **M** and the diode **D2**, the values of the charges on the capacitors **CA** and **CB** previously described in the example shown in **Fig.1** remain unchanged, the difference in this circuit is that the voltage applied to the motor **M** is the full battery voltage in this case.

The charging rate of the capacitors **CA** and **CB** is determined by the intensity of the current flowing through the motor **M**, to which is connected in parallel, the capacitor **CM** which guarantees that the operation of the motor is maintained at maximum power. It is possible to substitute a battery, preferably a rapid charge battery, for capacitor **CM**.

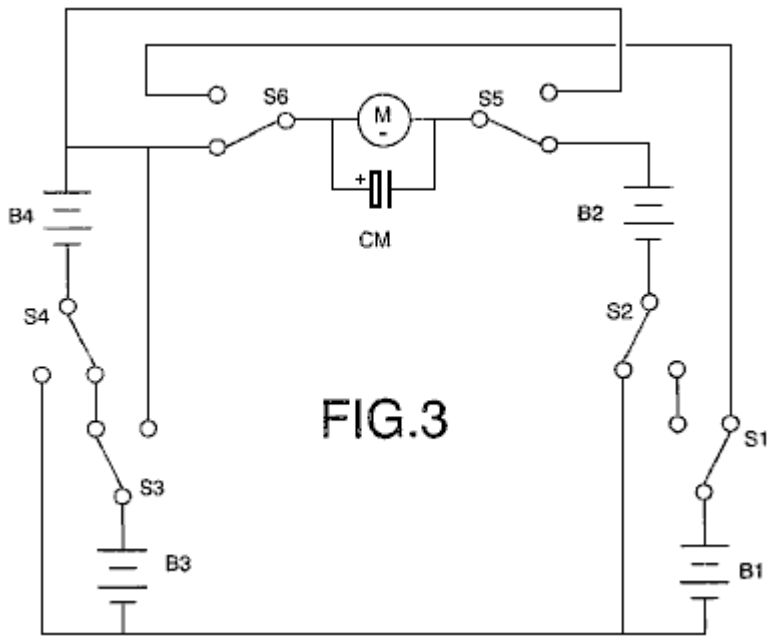

FIG.3

In another embodiment shown in **Fig.3**, the first and second accumulators consist of pairs of batteries **B1**, **B2** and **B3**, **B4**. Therefore, in this embodiment, two pairs of batteries are used instead of the capacitors **CA** and **CB**. Batteries **B1** and **B2** are connected to the switches **S1** and **S2**, and the pair of batteries **B3** and **B4** are connected to the switches **S3** and **S4**. The switches **S1** to **S4**, connect the pairs of batteries with which they are associated, into series or parallel configurations, depending on the position of the switches.

While the batteries **B1** and **B2** are connected in parallel, the other two batteries **B3** and **B4** are connected in series, and the motor **M** rotates as a result of the difference in voltage between the batteries, as it is connected between both pairs of batteries. At the same time, the current circulating through the motor from the serial connected batteries recharges the two parallel-connected batteries. The switches **S1** to **S4**, which connect the batteries **B1** and **B2** in series and the batteries **B3** and **B4** in parallel then switch, thus reversing the direction of the current flow, and at the same time, the switches **S5** and **S6** change positions in order to maintain the correct polarity for the motor and its direction of rotation.

The two capacitors and the batteries may be switched by means of any mechanical, electromechanical, electrical, electronic or other element that meets the conditions described with the purpose of obtaining a self-rechargeable electrical energy source. These switching operations may be controlled by any known method, for example, a programmable electronic circuit.

In the preferred embodiments previously described, the load consists of a direct current motor, but as an expert in the field may understand, the load may also consist of any type of resistive (?) and/or inductive load.

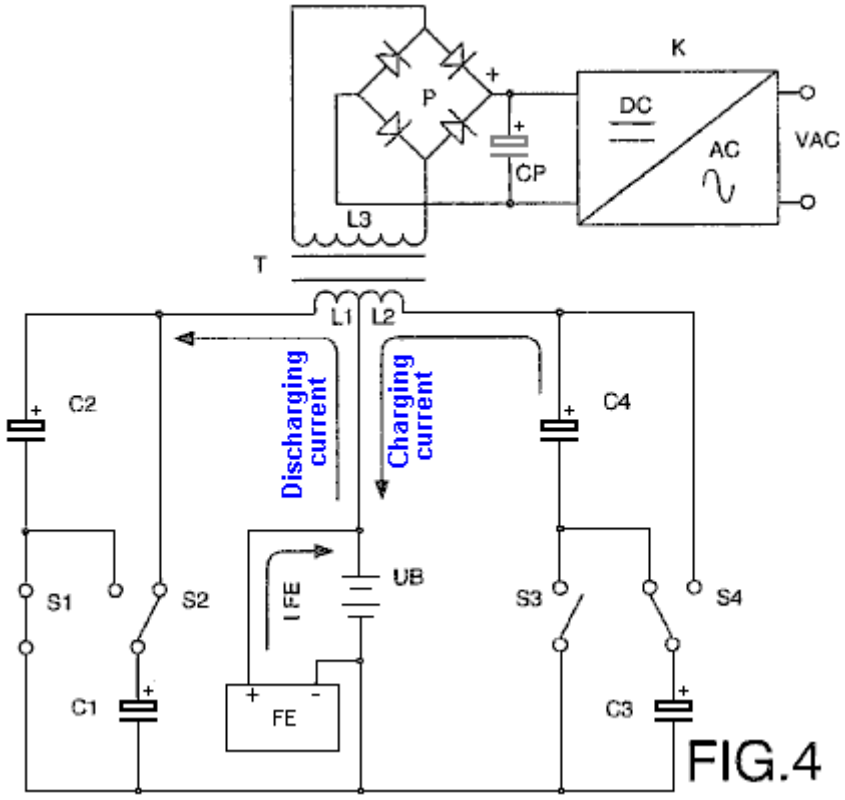

FIG.4

Another preferred embodiment is shown in **Fig.4**, where a transformer **T** with two primary windings **L1** and **L2** is connected between the battery **UB** and the two pairs of capacitors **C1** and **C2**, plus **C3** and **C4**, causing the two capacitors **C1** and **C2** to switch their connections from parallel to serial and back again by means of the contacts **S1** and **S2**, and causing the capacitors **C3** and **C4** to switch by means of contacts **S3** and **S4**, so that during the cycles of connection of the capacitors **C1** and **C2** in parallel, the latter are charged via the winding **L1** up to the voltage level of the battery, whilst at the same time the capacitors **C3** and **C4** are connected in series and provide double their voltage, the battery being discharged by means of the winding **L2**, in which case the charging and discharging currents to circulate in the same direction. On the other hand, during the cycles of connection in parallel of the capacitors **C3** and **C4**, which are charged through the winding **L2** up to the battery voltage level, the capacitors **C1** and **C2** are connected in series to provide double their voltage and are discharged into the battery through the winding **L1**. The direction of the charging and discharging current therefore changes, thus inducing in the secondary winding **L3** an alternating voltage whose frequency depends on the speed of switching of the contacts mentioned, and after being rectified by means of the bridge of diodes **P** and filtered by the capacitor **CP**, the resultant DC voltage is converted to a sinusoidal voltage by means of a circuit **K**.

The connection in parallel of one pair of capacitors and the connection in series of the other pair take place at the same time. Therefore the sum of the current circulating from the battery through one of the windings, charging two of the capacitors, and the current circulating from the other two capacitors through the other winding to the battery, is approximately zero.

From an external energy source **FE** the minimum energy losses caused essentially by dissipation of heat and in the capacitors, as well as by the charging factor of the battery, are compensated for, with the result that the sum of the current circulating from this source external to the battery and the charging and discharging currents of the capacitors is equal to zero. Therefore the battery is not discharged and its range does not depend on the work developed by the motors or the loads connected to the secondary winding **L3** of the transformer **T**, since the greater the power of the loads, the higher the intensity of the charging and discharging currents of the capacitors.

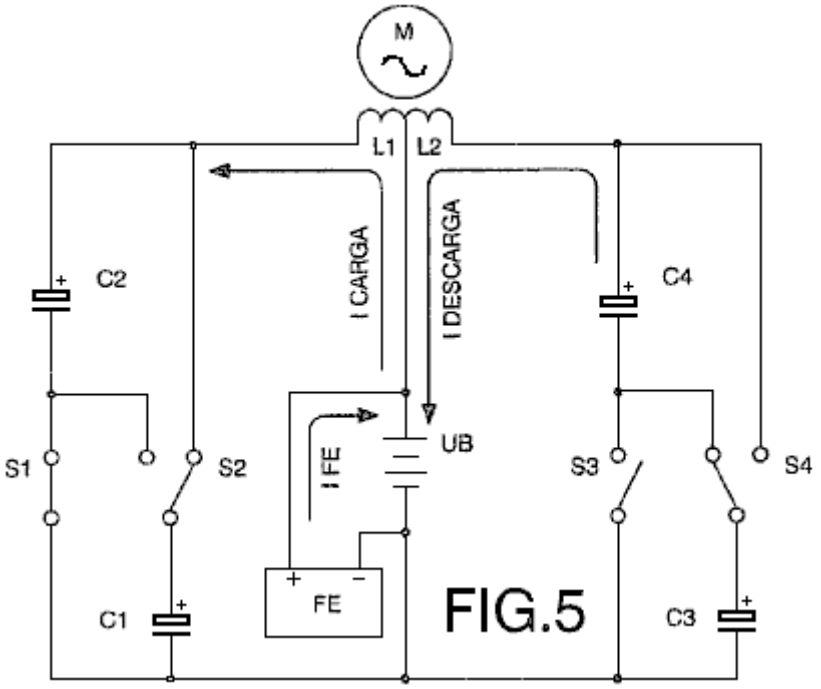

Fig.5 shows another embodiment in which an alternating current motor **M** is connected to two windings **L1** and **L2** so that during the connections in parallel of the capacitors **C1** and **C2**, the latter are charged by means of the winding **L1** at the same time that the capacitors **C3** and **C4**, connected in series, are discharged by means of the winding **L2** to the battery **UB**, the charging and discharging current circulating through the windings in the same direction. The capacitors **C1** and **C2** are then connected in series and the capacitors **C3** and **C4** are connected in parallel. The direction of the charging and discharging current of the capacitors is therefore reversed, thus producing at terminals of the motor an alternating voltage with a frequency that depends on the speed of switching of the contacts. The energy losses caused are compensated for from an external source **FE**, the sum of the current circulating from this source to the battery and the currents circulating through the two windings during charging and discharging of the capacitors being equal to zero. The battery is therefore not discharged as a result of the work developed by the motor.

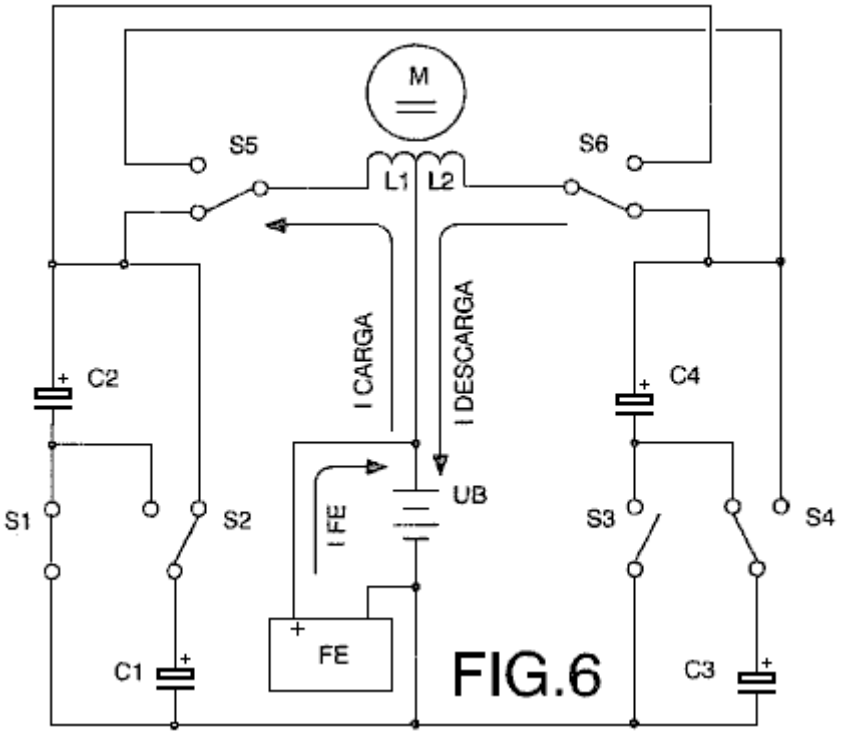

Fig.6 shows the connection of a direct current motor **M** to two windings **L1** and **L2** between the battery **UB** and the two pairs of capacitors **C1** and **C2** plus **C3** and **C4**, so that during the connections in parallel two of the capacitors are charged by means of the winding **L1**, and during the simultaneous connections in series, the other two capacitors are charged by means of the winding **L2** to the battery. Coinciding with the switching of the

contacts **S1**, **S2**, **S3** and **S4**, which connect to each pair of capacitors from parallel to serial and vice versa, the contacts **S5** and **S6** switch, polarising the windings of the motor so that the charging and discharging currents of the capacitors circulate in the same direction, producing a direct voltage. The sum of the current supplied from the external source **FE** and the charging and discharging currents of the capacitors is equal to zero, and thus there is no battery discharge.

Bob Boyce's Toroid. Consider also, Bob Boyce's very effective electrolyser system, which achieves twelve times the efficiency that Faraday considered to be the maximum possible. Faraday was no fool and he performed very high-quality tests and experiments an a methodical way, making solid observations and drawing conclusions which were respected by his colleagues. Yet here we have Bob Boyce outperforming Faraday by a factor of twelve times. Was Faraday wrong? Probably not. Is Bob wrong? Definitely not. How come then that they appear to disagree?

Well, the Boyce system pulls in additional energy from the immediate environment by applying very high quality voltage pulsing to a toroidal transformer wound with three very accurately positioned primaries and one very accurately wound secondary (the http://www.free-energy-info.com/D9.pdf document provides full details of this). It also develops an oscillating magnetic field by using a hundred parallel, closely spaced steel plates. These magnetic oscillations enhance the process and place it outside the DC electrolysis which Faraday was examining. In passing, Shigeta Hasebe appears to get ten times the Faraday maximum on DC alone, but that is not the case as Shigeta uses strong permanent magnets to provide an additional energy input, so it is no longer strictly DC electrolysis as performed by Faraday.

The Boyce arrangement is like this:

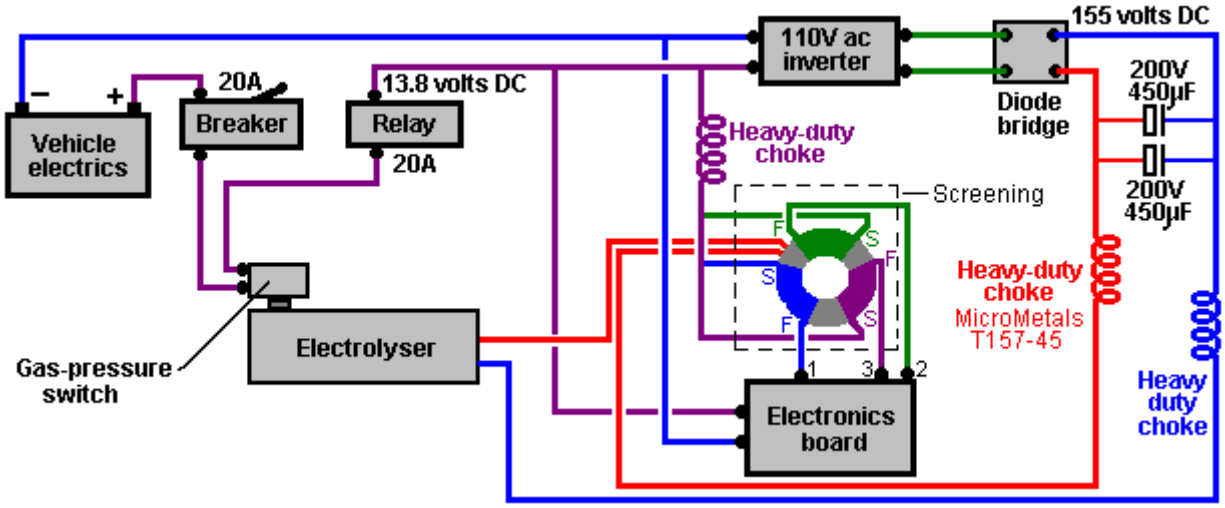

The output waveform from Bob Boyce's triple-oscillator board is sharpened up by the use of carefully chosen opto-isolators, and that output would almost certainly drive Dave Lawton's Meyer replication Water Fuel Cell. It would also be interesting to see if it has the same effect on battery recharging as the John Bedini pulse-charging circuits, as it is distinctly possible that it has. You will notice that Bob defeats the Faraday maximum output by careful construction of the electrolyser, plus one apparently simple electronics board and one apparently simple transformer. Again, these components call for specific materials and very careful, high-quality construction as is common for most successful free-energy devices.

Serious warning needs to be given here. The combination of sharp pulsing and accurately wound toroid core composed of an iron powder matrix, draws in so much extra power from the environment that it is essential that it is only used with the electrolyser cell which is capable of soaking up excess energy surges. The extra energy drawn in is not always constant and surges can occur which can generate currents of 10,000 amps. It should be understood that this electrical current which we can measure is only the "losses" part of the real power surge which is in a form which we can't measure as we have no instruments which can measure it directly. Consequently, the actual environmental power surge is far, far in excess of this 10,000 amps. It is very important then, that the electronics board and toroidal transformer are NOT connected to other equipment "to see what will happen". Even more important is not to arrange a pulsed, rotating magnetic field in the toroid by sequential pulsing of coils spaced around the toroid. These arrangements can generate power surges so great that the

excess power not soaked up by the circuit (especially after it's instantaneous burn-out) is liable to form the ground-leader of a lightning strike. Bob experimented with this and was hit by a direct lightning strike. He was very lucky to survive being hit and he now works in a workshop which has metal walls and roof, and lightning grounding at each corner of the building, plus a separate ground for the equipment inside the building. A device like this is not a toy, and it demonstrates the incredible level of free-energy which can be tapped by quite simple devices **if** you know what you are doing.

Please note, that if you do not have an electrolyser attached to the toroid to soak up any surges and voltage spikes, then you need to connect a spark gap across the secondary winding and a varistor (spike protector) across the equipment which you are powering from the toroid.

Don Smith. Don Smith is a very talented American who has understood all of Tesla's work and has produced literally dozens of practical devices based on his understanding. You will find more specific details in chapter 3, but in broad outline, a twelve-volt battery can be used to generate the pulsing magnetic field needed to nudge the local environment into providing massive amounts of electrical energy. The device described in detail in chapter 3, has an output of around 160 kilowatts, which is far, far more than any individual would need. In other words, it is a device which could easily power your home, and considering that an electric car needs about 65 kilowatts, one could easily power a vehicle, making it into a fuel-less mode of transport. This is not magic, just standard electrical theory being applied correctly for a change.

The key component in many of Don's devices is the humble, commercial power supply used to drive neon sign displays. This module produces some 9,000 volts at a frequency of 35,100 Hz (cycles per second). As Don points out, when you double the pulsing frequency and double the pulsing voltage, the available power goes up by a factor of sixteen times, because the effect of both of these things is squared. You will recall that Bob Boyce is pulsing his toroid very sharply at 42,000 Hz and that high frequency has a major effect on the power produced in his system.

Don then boosts his working voltage further with a step-up transformer called a Tesla Coil. This brings us into an area of massive power. People have the very mistaken idea that a Tesla Coil can only produce voltage and not current. The reality is that if the primary coil is positioned in the centre of the secondary coil, then the voltage and current produced will be roughly the same, and that is a very, very high level of power. One device of Don's looks like this:

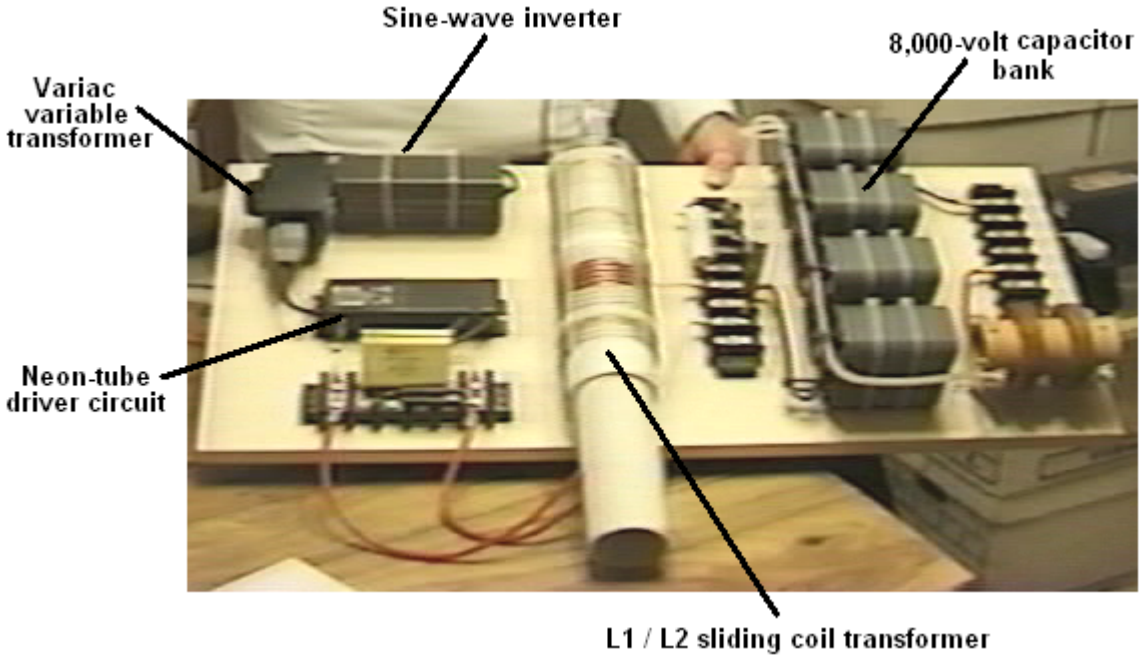

This prototype is actually more complicated than it needs to be. It uses three very high-voltage capacitors which are not necessary if you opt for a slightly different method of construction. However, in this version, the twelve-volt battery (which is not shown), powers a true sine-wave inverter in order to provide the mains voltage and frequency needed by the neon-tube driver circuit. The voltage limitations of the capacitors, in particular, the 8,000-volt output storage capacitors, make the 9,000 volt output of the neon-tube driver too much for safe usage. To deal with this, Don uses a Variac-style variable transformer to lower the voltage supplied to the neon-tube driver circuit, and this lets him limit the output voltage to the 8,000 volts of the output storage capacitors.

A key detail is that the wire length in the turns of the short primary winding of the Tesla Coil is exactly one quarter of the wire length of the turns in the long secondary winding. This makes the coils resonate which is a vital factor in the operation. The final, exact tuning, can be done by sliding the primary coil to a slightly different position. In this prototype, Don chose to do the final fine tuning by attaching a small capacitor across each of the windings. This is not necessary.

In the prototype shown above, Don then uses four diodes to rectify the output to DC to feed the storage capacitors. This results in an 8,000 volt supply which can provide 20 amps of current. That is an output power of 160 kilowatts, and is limited by the output capacitor voltage rating.

Don points out that it is not necessary to do it that way and instead, a step-down transformer can be used to lower the output voltage and boost the available current. If this is done, then the voltage limitations disappear (provided that you are using very high-voltage cables) and so no Variac is needed and no high-voltage capacitors are needed either.

There are two options. Either you can aim for a mains-voltage, mains-frequency, AC output, or you can produce a DC output and use an off-the-shelf inverter to run any mains equipment powered by the device. With the first option, Don connects a single resistor across the primary of the step-down transformer and that drags the frequency down to the wanted level, provided that the resistor has the right value:

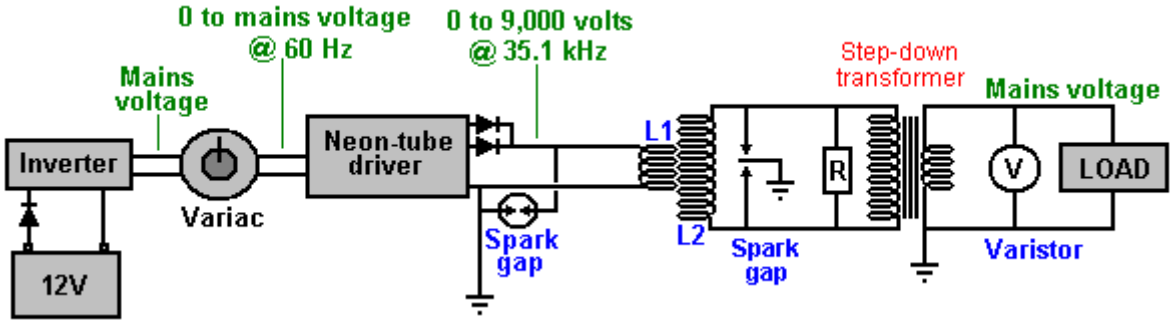

The alternative method which aims for a DC output does not need to alter the frequency:

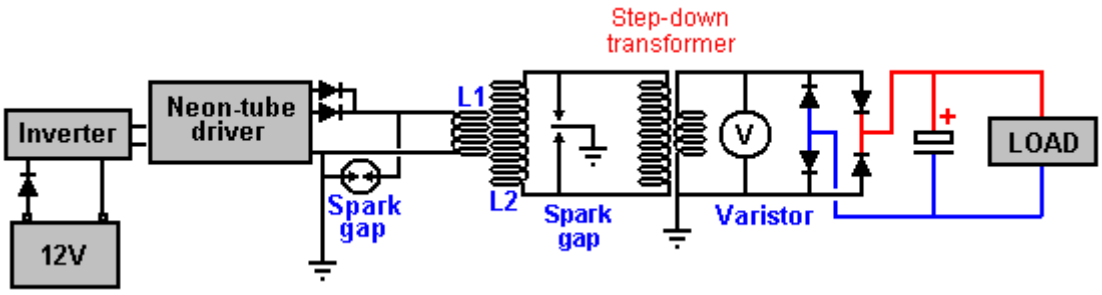

In both of these cases, the twelve volt driving battery can be charged continuously by part of the output power, and there are various ways of doing that. However, care needs to be taken that the battery is not overcharged as the input power is very low.

You will notice the similarity between Bob Boyce's toroid system and Don Smith's Tesla Coil system. In each case, a very carefully wound circular winding is pulsed at high frequency, and in each case, substantial amounts of excess electrical power becomes available, flowing in from the surrounding environment, courtesy of the pulsating magnetic field.

Tariel Kapanadze produced a similar style of device which is self-powered and produces a mains electricity output. He has demonstrated this for a TV documentary:

and any details available are in chapter 3.

Steven Mark's Toroidal Power Unit. Fairly recently, Steven Mark placed a video of a self-powered, circular coil device on YouTube. This device was demonstrated powering both itself and a 100 watt light bulb. If the video is still in place, then you can see it at
http://video.google.com/videoplay?docid=333661567309752927

It has been said that Steven has sold the rights to his design and the building details have not been disclosed publicly. A number of attempts to replicate Steven's device are being made at the present time, one of the best know is at the http://www.overunity.com/index.php/topic,2535.0.html forum where interesting tests have been run on a variety of alternative constructions, mainly based on coils placed around a central Mobius loop. A Mobius loop is an arrangement where a wire loop has no starting point or ending point. The following diagram attempts to show how this is done, using a small inner loop inside a larger outer loop. In actual practice, the two loops are almost identical in size:

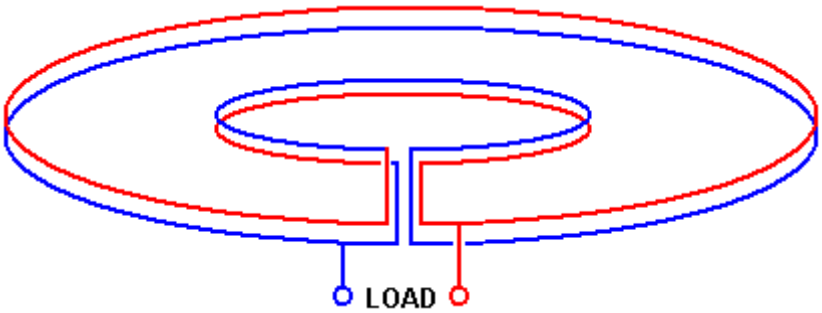

At the time of writing, although development work is continuing, nobody has replicated Steven's TPU. The forum strategy is to place three coils around the Mobius loop and experiment with powering those coils with different forms of pulsed signals at different frequencies. The arrangement is like this:

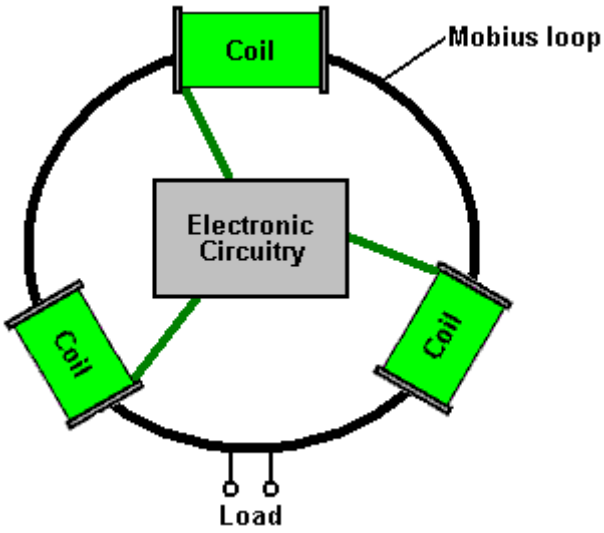

This is getting very close to Bob Boyce's toroidal transformer system which picks up substantial amounts of excess power from the environment. Instead of using a Mobius loop, Bob uses a powdered-iron toroidal core, wrapped with the secondary winding around the whole of it's length:

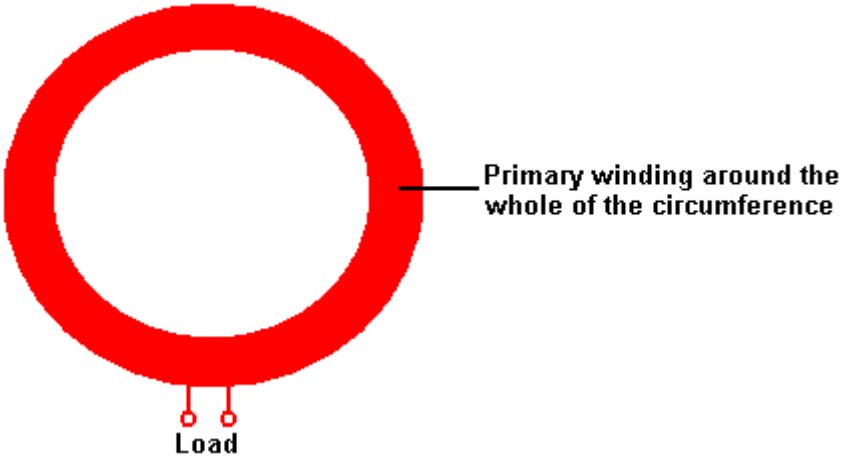

Then, on top of the secondary winding, three equally-spaced primary windings are wound on top of the secondary, and driven by electronics which is positioned inside the toroid as that is the place least affected by the magnetic fields produced by the system:

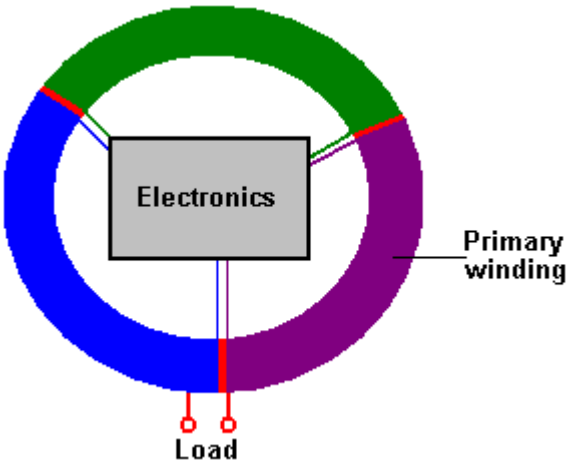

Let me stress again, that a toroidal core like these ones is potentially very dangerous, especially when pulsed with a high-frequency rotating magnetic field. An arrangement like that taps into the zero-point energy field which has

unlimited power and power surges are liable to occur. Bob Boyce states that it is perfectly possible to get power surges of 10,000 amps which will not only burn out the equipment, but can also trigger a lightning strike directly at the equipment, and you, standing beside it. Bob was hit by a strike of this nature and you should remember that Nikola Tesla burnt out a whole power station when the input from the zero-point energy field exceeded the station's capacity by a major factor. These things are not toys, and the power which is being tapped, is literally unlimited.

Recently, Sterling Allan interviewed Jack Durban – see some of the details at Sterling's web site: http://peswiki.com/index.php/Article:Jack_Durban's_experience_with_Steve_Marks_Toroid_Generator and Jack made several statements about the Steven Mark device. You need to make up your own mind about how reliable the information coming from Jack actually is. Jack states that he has a "photographic memory" and yet he is unable to remember the number of an important patent which he had recently discussed with Sterling and unable to remember important details shown in his high-resolution video of Steven's device operating. I know of no way of reconciling those statements, and that raises concerns for me personally. Jack also makes wholly unsupported and unnecessary allegations about the character and abilities of Steven which raises further doubts about the reasons for, and accuracy of the statements made. However, it seems necessary to note these statements, some of which are as follows:

According to Jack, the device was not invented by Steven and he suspects it was based on Tesla's patent No. 381,970 "System of Electrical Distribution" :

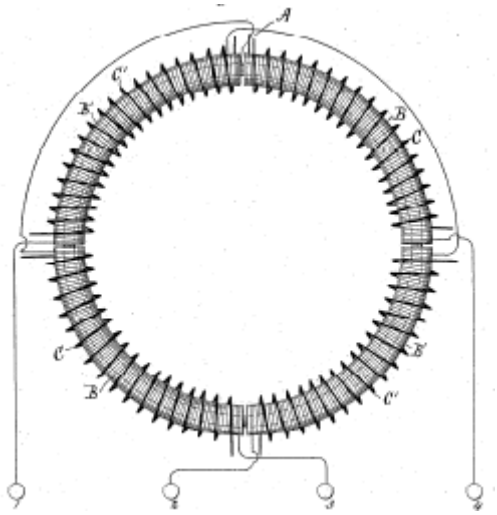

Jack also says that no patent was ever filed on Steven's device and so long has now elapsed since public disclosure of the device, that it can no longer be patented. All the components were bought from Radio Shack, the shape is supposedly not important and was just made as a toroid because it was easy to wind that shape. He also says that it, and all replication attempts, get warm after a couple of minutes of use, but nineteen to twenty minutes into the operation, exponential thermal runaway takes place, causing the device to shut down completely. He also says that the device vibrated when in use although it contained no moving parts and there was no electronic circuitry used. Please remember that I am unsure of the reliability of these additional comments.

Here is the Tesla patent mentioned, and which is being examined in detail on Stefan Hartmann's overunity.com forum mentioned above:

US PATENT 381,970 SYSTEM OF ELECTRICAL DISTRIBUTION May 1, 1888

To all whom it may concern:

Be it known that I, NIKOLA TESLA, from Smiljan Lika, border country of Austria-Hungary, now residing at New York, in the county and State of New York, have invented new and useful Improvements in Systems of Electrical Distribution, of which the following is a specification, reference being had to the drawings accompanying and forming a part of the same.

This invention relates to those systems of electrical distribution in which a current from a single source of supply in a main or transmitting circuit is caused to induce by means of suitable induction apparatus, a current or currents in an independent working circuit or circuits.

The main objects of the invention are the same as have heretofore been obtained by the use of these systems, that is, to divide the current from a single source, whereby a number of lamps, motors, or other translating devices, may be independently controlled and operated by the same source of current, and in some cases, to reduce a current of high potential in the main circuit to one of greater quantity and lower potential in the

independent consumption or working circuit or circuits.

The general character of the devices employed in these systems is now well understood. An alternating-current magneto-machine is used as the source of supply. The current developed thereby is conducted through a transmission circuit to one or more distant points at which the transformers are located. These consist of induction-machines of various kinds. In some cases, ordinary forms of induction-coil have been used with coil in the transmitting-circuit and the other in a local, or consumption circuit, the coils being differently proportioned according to the work to be done in the consumption-circuit – that is to say, if the work requires a current of higher potential than that in the transmission-circuit, the secondary or induced coil is of greater length and resistance than the primary, while, on the other hand, if a quantity current of lower potential is wanted, the longer coil is made the primary.

In lieu of these devices, various forms of electro-dynamic induction-machines, including the combined motors and generators, have been devised. For instance, a motor is constructed in accordance with well-understood principles, and on the same armature are wound induced coils which constitute a generator. The motor-coils are generally of fine wire and the generator-coils of coarser wire, so as to produce a current of greater quantity and lower potential than the line-current, which is of relatively high potential, to avoid loss in long transmission. A similar arrangement is to wind coils corresponding to those described in a ring or similar core and by means of a commutator of suitable kind to direct the current through the inducing-coils successively, so as to maintain a movement of the poles of the core and of the lines of force which set up the currents in the induced coils.

Without enumerating the objections to these systems in detail, it will suffice to say that the theory or the principle of the action or operation of these devices has apparently been so little understood that their proper construction and use have, up to the present time, been attended with various difficulties and great expense. The transformers are very liable to be injured and burned out, and the means resorted to for curing this and other defects have almost invariably been at the expense of efficiency.

The form of converter or transformer which I have devised, appears to be largely free from the defects and objections to which I have alluded. While I do not herein advance any theory as to its mode of operation, I would state that, insofar as the principle of construction is concerned, it is analogous to those transformers which I have above described as electro-dynamic induction-machines, except that it involves no moving parts whatever, and is hence not liable to wear or other derangement, and requires no more attention than the other and more common induction machines.

In carrying out my invention, I provide a series of inducing-coils and corresponding induced-coils, which by preference, I wind upon a core closed upon itself – such as an annulus or ring subdivided in the usual manner. The two sets of cols are wound side by side or superposed or otherwise placed in well-known ways to bring them into the most effective relations to one another and to the core.

The inducing or primary coils wound on the core, are divided into pairs or sets by the proper electrical connections, so that while the coils of one pair or set to co-operate in fixing the magnetic poles of the core at two given diametrically-opposite points, the cols of the other pair or set – assuming, for sake of illustration, that there are only two – tend to fix the poles ninety degrees from such points. With this induction device I use an alternating-current generator with cols or sets of coils to correspond with those of the converter, and by means of suitable conductors, I connect up in independent circuits the corresponding coils of the generator and converter.

It results from this that the different electrical phases in the generator are attended by corresponding magnetic changes in the converter; or, in other words, that as the generator-coils revolve the points of greatest magnetic intensity in the converter will be progressively shifted or whirled around. This principle I have applied under variously-modified conditions to the operation of electro-magnetic motors, and in previous applications, notably in those having Serial Nos. 252,132 and 256,561, I have described in detail the manner of constructing and using such motors. In the present application, my object is to describe the best and most convenient manner of which I am at present aware of carrying out the invention as applied to a system of electrical distribution; but one skilled in the art will readily understand from the description by the modifications proposed in said applications, wherein the form of both the generator and converter in the present case can be modified.

In illustration therefore of the details of construction which my present invention involves, I now refer to the accompanying drawings.

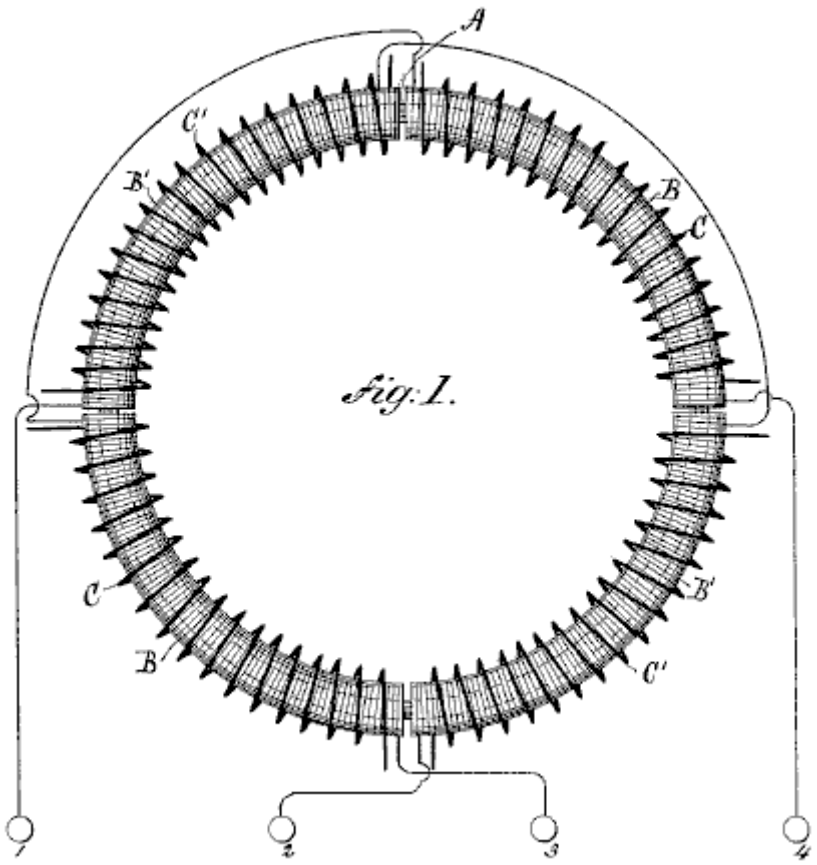

Fig.1 is a diagrammatic illustration of the converter and the electrical its connections.

Fig.2 is a horizontal central cross-section of **Fig.1**

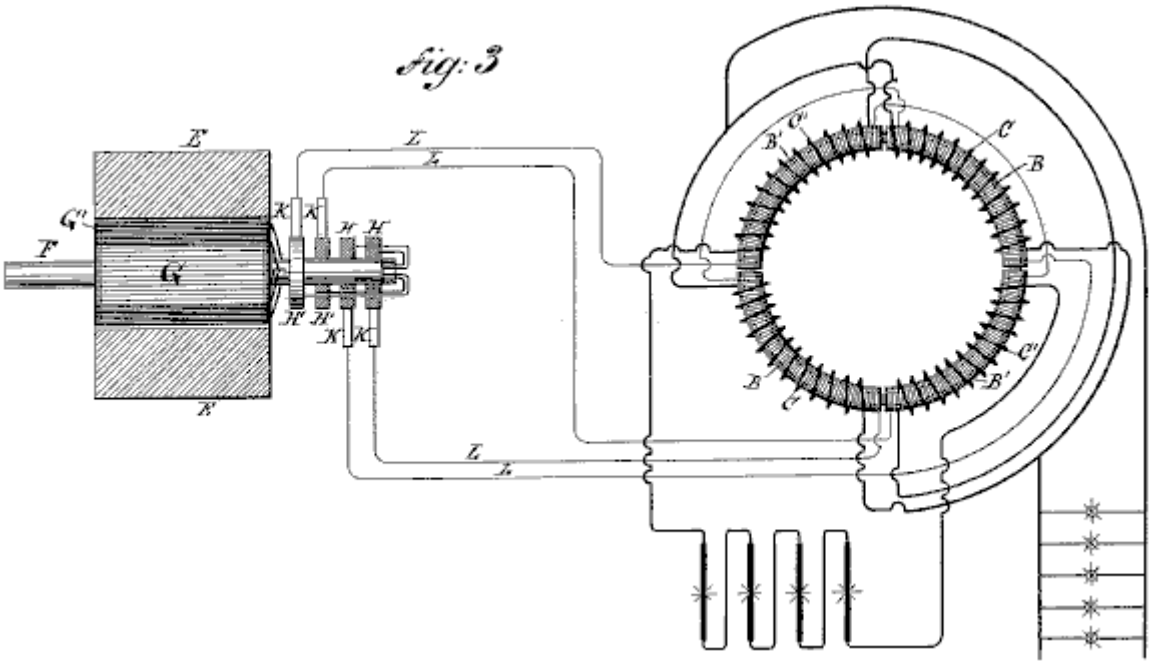

Fig.3 is a diagram of the circuits of the entire system, the generator being shown in section.

I use a core, **A**, which is closed upon itself – that is to say, of an annular cylindrical or equivalent form – and as the efficiency of the apparatus is largely increased by the subdivision of this core, I make it of thin strips, plates or wires of soft iron, electrically insulated as far as is practicable. On this core, using any well-known method, I wind, say, four coils, **B B B' B'**, which I use as primary coils, and for which I use long lengths of comparatively fine wire. Over these coils I then wind shorter coils of coarser wire, **C C C' C'**, to constitute the induced or secondary coils. The construction of this or any equivalent form of converter may be carried further, as pointed out above, by enclosing these coils with iron – as, for example, by winding a layer or layers of insulated wire over the coils.

The device is provided with suitable binding-posts, to which the ends of the coils are led. The diametrically-opposite coils **B B** and **B' B'** are each connected in series and terminated on the binding-posts **1**, **2**, **3** and **4**. The induced coils are connected together in any desired manner. For example, as shown in **Fig.3**, **C C** may be connected in multiple arc when a quantity current is desired – as for running a group of incandescent lamps, **D** – while **C' C'** may be independently connected in series in a circuit including arc lamps or the like. The generator in this system will be adapted to the converter in the manner illustrated. For example, in the present case, I use a pair of ordinary permanent or electro magnets, **E E**, between which is mounted a cylindrical armature on a shaft, **F**, and wound with two coils **G** and **G'**. The terminals of these coils are connected, respectively, to four insulated contact or collecting rings, **H H H' H'**, and the four line circuit-wires **L** connect the brushes **K**, bearing on these rings, to the converter in the order shown.

Noting the results of this combination, it will be observed that at a given point of time, the coil **G** is in its neutral position and is generating little or no current, while the other coil, **G'**, is in a position where it exerts its maximum effect. Assuming coil **G** to be connected in circuit with coils **B B** of the converter, and coil **G'** with coils **B' B'**, it is evident that the poles of the ring **A** will be determined by coils **B' B'** alone; but as the armature of the generator revolves, coil **G** develops more current and coil **G'** less, until **G** reaches its maximum and **G'** its neutral position. The obvious result will be to shift the poles of the ring **A** through one quarter of its periphery. The movement of the coils through the next quarter of a turn, during which coil **G'** enters a field of opposite polarity and generates a current of opposite direction and increasing strength, while coil **G**, in passing from its maximum to its neutral position, generates a current of decreasing strength and same direction as before, causes a further shifting of the poles through the second quarter of the ring. The second half-revolution will obviously be a repetition of the same action. By the shifting of the poles of the ring **A**, a powerful dynamic inductive effect on the coils **C C'** is produced.

Besides the currents generated in the secondary coils by dynamo-magnetic induction, other currents will be set up in the same coils in consequence of any variations in the poles of the ring **A**. This should be avoided by maintaining the intensity of the poles constant, to accomplish which, care should be taken in designing and proportioning the generator and in distributing the coils in the ring **A** and balancing their effects. When this is done, the currents are produced by dynamo-magnetic induction only, the same result being obtained as though the poles were shifted by a communicator with an infinite number of segments.

The modifications which are applicable to other forms of converter are in many respects applicable to this. I refer more particularly to the form of the core, the relative lengths and resistances of the primary and secondary coils,

and the arrangements for running or operating them.

The new method of electrical conversion which this system involves, I have made the subject of another application, and I do not claim it here. Without limiting myself therefore to any specific form, what I claim is –

1. The combination, with a core closed upon itself with inducing or primary coils wound on it and connected up in independent pairs or sets, and induced or secondary coils wound upon or near the primary coils, of a generator of alternating currents and independent connections to the primary coils, whereby by the operation of the generator a progressive shifting of the poles of the core is effected, as set forth.
2. The combination, with an annular or similar magnetic core and primary and secondary coils wound on it, of an alternating-current generator having induced or armature coils corresponding to the primary coils with the corresponding coils of the generator, as herein set forth.
3. The combination, with independent electric transmission-circuits, of transformers consisting of annular or similar cores wound with primary and secondary coils, the opposite primary coils of each transformer being connected to one of the transmission-circuits, and alternating current generator with independent induced or armature coils connected with the transmission-circuits, whereby alternating currents may be directed through the primary coils of the transformers in the order and manner herein described.

An interesting suggestion for a Steven Mark replication, comes from "tao" of the web-based forum located at http://www.overunity.com/index.php/topic,2702.0.html and reproduced here with his kind permission. Here, the central core is a coil of wire. Bob Boyce has found that it is essential to use specialist wire for the windings of his toroidal transformer. The only viable material is solid-core copper wire which has a coating of silver and an outer covering of teflon. This is particularly interesting as that matches exactly, the materials used by Ed Gray inside his power tubes, where solid copper rods have their operational tips coated with silver. Silver is clearly a strategic material in this operation (as is carbon, which Ed also used inside his power tubes). Consequently, I would suggest that solid-core, silver-plated, teflon-covered wire would be a realistic choice for the central ring of tao's projected design:

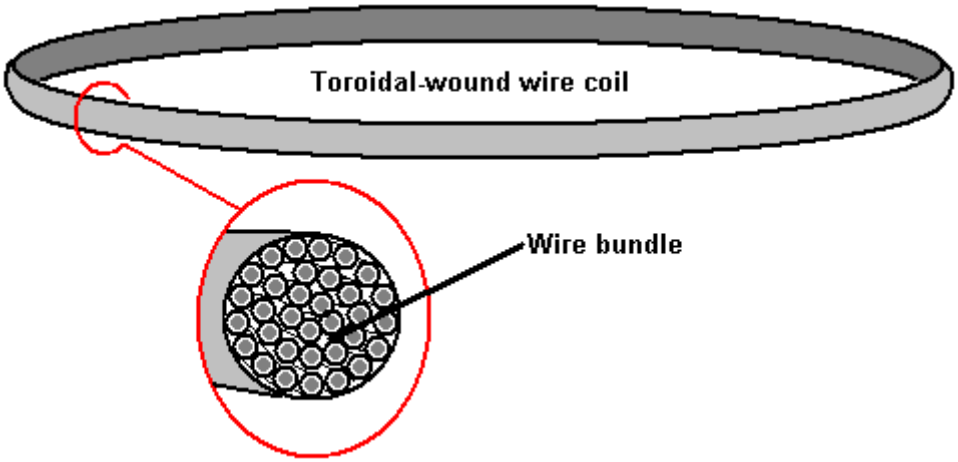

On top of the toroidal wind of wire, the bundle is wrapped in slightly overlapping pulsing coils. The theory of operation is that one coil is pulsed. This creates a strong magnetic field which causes the movement of environmental energy along the section of the toroid coil which is inside the pulse coil.

This energy flow can be thought of as being electrons flowing through the wire of the toroid. While electrons do actually flow through copper wire, the rate of flow is millions of times slower than the flow along the surface of the wire. However, strictly speaking, we are really looking for zero-point energy to flow "in" the toroidal coil. Here again, we are not being entirely accurate as that energy does not flow in or on the wire at all, but instead, it flows along the magnetic field formed around the wire. As current in the toroidal coil intensifies, the magnetic field along its length increases, further directing the flow of "cold" electricity which we want. The zero-point field energy flow is created by the imbalance of the local energy field by the magnetic "dipole" created by the current flowing through the pulse coil.

This is exactly the same situation as arises when a battery "dipole" unbalances the local field, creating broken symmetry and causing massive energy flows to radiate out from each pole of the dipole. A minute fraction of this

massive energy flow happens to ride along the magnetic field around the toroidal wire coil, which is exactly what we want.

However, the strategy is to have minimum current flow in the pulsing coils, so the idea is to cut off the voltage applied to the pulse coil before actual current has an opportunity to flow. In theory, we should get the drive which we want, without any current flowing at all - drive from just voltage potential alone. From an electronics point of view, this is a very tall order indeed, especially since there must be no reverse voltage at the time of switch off. Nikola Tesla used a spark gap for pulses of that duration, but operating a spark gap is a very long way from a current-less drive pulse.

Anyway, tao's idea is to have three, six, nine or twelve pulse coils around the circumference of the toroidal coil. These coils should overlap slightly at each end. For the purpose of this explanation, just three coils are shown here:

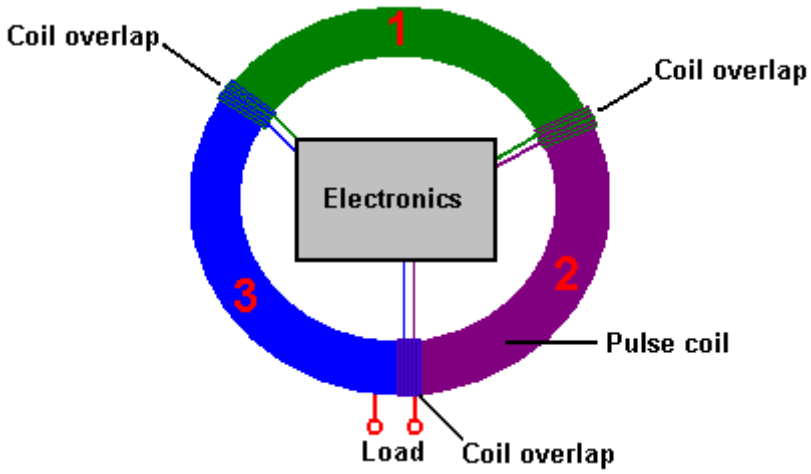

If pulse coil 1 is powered up, it causes an energy flow in a clockwise direction, through the pulse coil and therefore, along that section of the toroidal coil. This is a pulse of **very** short duration. The energy flow will be at 186,000 miles per second or about 300,000,000 metres per second. If the circumference length of the toroidal coil is one metre, then the energy flow through that third of the circumference will be completed in just under one nanosecond.

The idea is then to cut off the drive to pulse coil 1 and power pulse coil 2 in order to continue the drive for the energy which has just flowed through pulse coil 1. Then, after one more nanosecond, pulse coil 2 is powered down and pulse coil 3 is pulsed. This is to produce a continuously rotating magnetic field around the circumference of the toroidal coil.

This is a nice theory, but there is no obvious way of implementing it in practice. Even providing a separate circuit for each pulse coil, each circuit would need to generate a 1 nanosecond pulse every 3 nanoseconds. That will not be done with a mechanical switching system, and no solid-state solution springs to mind. The waveform needs to have very sharply rising and falling edges and a frequency of some 900 MHz, which is not an easy circuit to produce.

The Ed Gray Power System. The power tube presented to the public by Edwin Gray snr. operates by generating a series of very short, very sharp pulses using a spark gap. This device is reputed to have a power output which is one hundred times that of the power input. Ed Gray and his electric pulse motor are very famous, but as far as I am aware, nobody has successfully replicated this claimed performance. Further, an in-depth examination of the background details by Mr Mark McKay have turned up a number of facts which present a very different picture, and while it is perfectly correct to say that spark-gap pulses generate a good waveform for shocking the local zero-point energy field into the sort of imbalance which can provide a massive power inflow into a device or circuit, we need to be careful to get the full facts in this case.

First, let us put the whole thing in its proper perspective. In May 1973, Cal-Tech in the US performed an independent assessment of an engine provided to them by Edwin Gray. They measured the input and the output and certified that the output power was 275 greater than the input power. This demonstrates clearly that excess power can be drawn into an engine and provide a performance which can power both the engine as well as doing additional useful work.

Having said that, it needs to be made clear that Edwin Gray did not build that small motor, did not understand how it worked, nor did he ever disclose the design in any of the patents which he obtained afterwards. We need to follow the sequence of events and notice when each thing happened. The history is as follows:

In 1957, a Russian immigrant to the USA, one Alexei Poppoff, showed Edwin Gray a circuit which he said that he had been shown by Nikola Tesla. Edwin Gray did not understand the circuit and had no idea how to create anything useful based on it. He then joined up with his next-door neighbour Marvin Cole, who held a Masters degree in Mechanical Engineering and who, unlike Gray, was able to understand the circuitry.

In 1958, Ed Gray (shown above) left the Los Angles area in a hurry.

From 1958 to 1967 Marvin Cole, working alone, designed and built ever more powerful prototype engines, and it was a small one of these which was tested by Cal-Tech. In this period, Marvin also developed ever more powerful power supplies, which are the really important item in all of this.

In 1967, Ed Gray rejoins Marvin Cole and together from 1967 to 1972 they solicited venture capital and promoted the technology.

Early in 1972, Marvin Cole disappeared and never saw Gray again. It is not clear if he was intimidated, died, or just did not want to be involved in all the publicity and effort needed to turn the prototype engines into a commercial product. No matter what the reason, the result was that Edwin Gray was suddenly disconnected from the brains behind the project, and that left him in a very difficult position. He didn't want to let go of the dream of becoming rich through this spectacular development, and so he tried to continue the development on his own.

As already mentioned, in May of the following year (1973), Gray had a small Marvin Cole motor independently third-party tested at the famous Cal-Tech laboratory in Los Angles, where a measured input of just 27 watts produced a measured output of 10 horsepower (7460 watts). The objective was to provide solid evidence of a new technology which was capable of changing the world and so would attract investors. To further boost his image and convince potential investors, in that same year of 1973, Edwin staged demonstrations which jumped electromagnets up into the air, showing the strength of the power which drove the Marvin Cole engines.

It is very important to understand that all of Edwin Gray's patents were applied for after the departure of Marvin Cole. These do not disclose the technology tested by Cal-Tech and it must be understood that Edwin was very much afraid of revealing anything important in any of the patents in case some other person would understand the things which were a mystery to him and snatch away the prize of commercial success. So, please be aware that the patents where applied for solely to encourage investors and most definitely not to show any significant details.

Edwin then assembled a small team of people to attempt to understand and advance the work of Marvin Cole. However, the subsequent changes to the Cole implementations did not result in genuine, reliable working motors due to Gray's lack of understanding of the underlying energy-tapping methods used by Cole.

The Power Tube shown in Gray's patents has never been shown to provide the COP=100 energy performance which is sometimes mentioned, nor did it form part of Marvin Cole's system. In 1976, Edwin Gray shows three of these Power Tubes driving one (failed version) motor. This technique is in direct conflict with Marvin Cole's successful technique which had 24 separate power supplies driving the motor. Please understand that the power-gathering mechanism of the Cole system is the key feature of all of the successful systems. Unfortunately, as far as I am aware, that technology has never been disclosed.

Just to clarify the differences, let me briefly outline my understanding of what Edwin Gray put forward as the power-gathering system of the motors which he attempted to develop after he parted company with Marvin Cole. Edwin shows three Power Tubes connected to the engine like this:

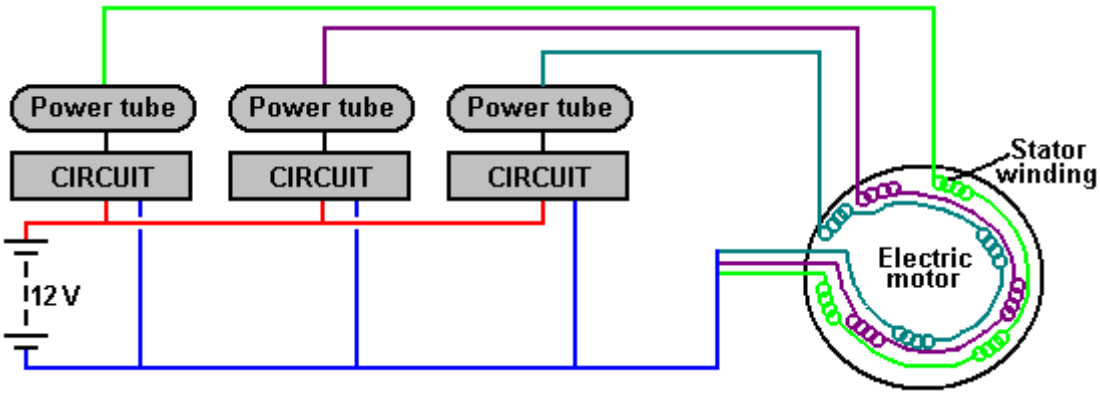

Here, three separate sets of electromagnets inside the motor are pulsed in sequence by three separate identical circuits, each driving the electromagnets via a power Tube. Marvin Cole's system used twenty-four separate power-gathering circuits which drove twenty-four separate electromagnets inside the motor (Power Tubes were not used).

You may wish to try Edwin's Power Tube for yourself, so let me explain the basic details as I understand them. The overall circuit is like this:

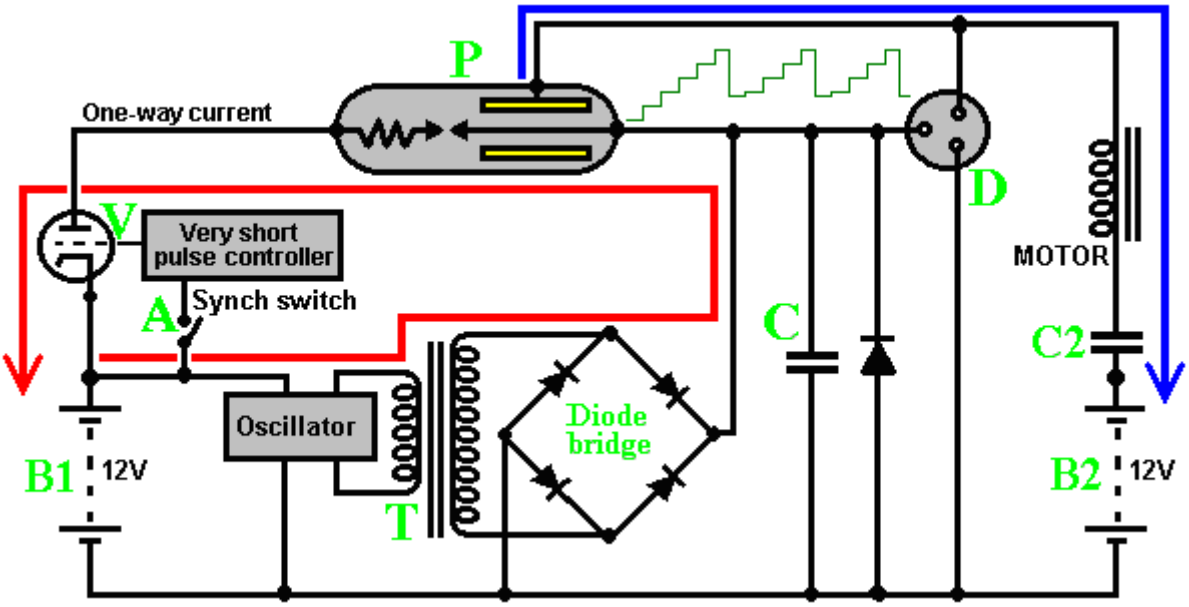

You will notice that the power driving the load does **not** come from the battery as the battery circuit produces the spark inside the Power Tube and nothing else. The motor's electromagnet winding is driven by power picked up by the copper shells around a half inch (12 mm) diameter, copper rod, spark-gap electrode which has silver coated tips. The circuit supposedly operates as follows:

The driving 12V battery "**B1**", continuously powers an oscillator which uses transformer "**T**" to step the voltage up to a high level. This high voltage is full-wave rectified by a bridge of high-voltage diodes, and the resulting DC voltage is fed to capacitor "**C**". If any malfunction causes this DC voltage to get too high for safety, the discharge contacts "**D**" cause the voltage to discharge via a spark to the earth connection. Under normal circumstances, the high voltage on "**C**" creates a spark in the power tube "**P**" when it's circuit is completed by the closing of switch "**A**", which is used to synchronise the power pulse to the rotation position of the electric motor's shaft. The switch drives a monostable circuit which delivers a very short enabling pulse to "**V**" the "one-way current switch" which is a powerful electronic triode valve. These days, it is very difficult to get a valve of that type and the best source is probably the power output valve from a World War Two radio transmitter.

The power tube "**P**" has a resistor shown in it. This was actually a block of carbon, and as such, will have had minimal electrical resistance. However, several different devices which appear to have COP>1 power outputs

use a spark gap associated with a carbon electrode, so there may well be a second effect coming into play here. A key factor in this circuit is the fact that the power which drives the motor does not come from this electrical circuit at all, but from the apparently disconnected cylinders inside power tube "**P**". This power is "cold" electricity, flowing into the circuit from the local environment. Remember that Floyd Sweet in his first measured test had an 500 watt electrical output from a power input of just 0.31 of a milliwatt.

In this circuit, the "**MOTOR**" represents just one of the coil windings inside the electric motor and instead of the power flowing through the motor being fed to ground as normal, it is fed to the +12 volts of battery "**B2**". The objective was to charge battery "**B2**", the charging current being limited by capacitor "**C2**", the idea being that "**B1**" and "**B2**" could be swapped over when "**B1**" became discharged. This arrangement was soon discontinued and battery "**B2**" was charged from a standard car alternator driven by the engine in an entirely conventional manner.

A rapid and abrupt electrical discharge is produced by generating a spark, and power pick-up is achieved by two copper cylinders surrounding the conductor which carries the spark current. There is more than one way of doing this. In the following diagram, the spark gap is shown exposed to make it easier to see, but in practice, the perforated copper shells extend to cover the spark gap:

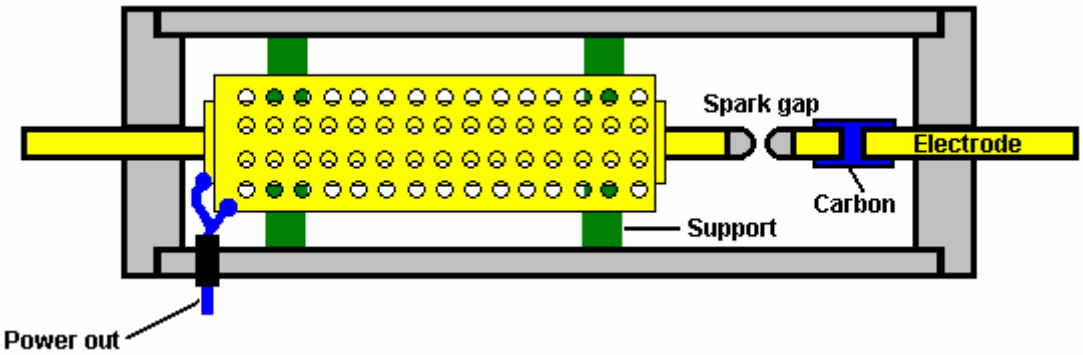

A full and detailed description of how it is believed that "Ed Gray's" system works is given in Peter Lindemann's book "The Free Energy Secrets of Cold Electricity" which is available via the website http://www.free-energy.ws/products.html.

Tesla used this spark gap method with spark quenching provided by a strong magnetic field at right angles to the spark, in order to get really high-quality DC pulses with durations of one microsecond or less. Pulse trains of individual pulses with very short durations produce heat, spontaneous lighting, cooling, etc. depending on the frequency of the pulsing. The power tube is placed around a heavy-duty copper conductor which is pulsed, unbalancing the zero-point energy field and a tiny part of the resulting energy flow as the field moves back into equilibrium again, is captured by the surrounding perforated copper shells.

While the switching valve in the electronics circuit looks like a very difficult component to come by, the possibility of constructing one yourself should be considered. Essentially, a thermionic valve is a simple device. A heated filament at one end of the tube emits electrons. A high voltage along the length of the tube provides an electrical urge for those electrons to flow along the tube. A metal grid between the heated filament and the electrode at the far end of the tube can be used to prevent that current flow by connecting an opposing voltage to that grid. It is that grid voltage which is turned off very briefly to provide the current pulse to one set of motor windings. A seeming obstacle is producing the glass envelope for the valve, but there is actually no need for the valve to have a glass container and a wide range of other materials can be used. Another obstacle is creating a vacuum inside the valve housing, but it has been stated that the main reason why these valves have a vacuum inside them was mainly commercial, namely, an attempt to encourage people not to make their own. It is said that there is no reason why a thermionic valve should not have air inside it – the current flow is not a spark. I have no idea how accurate, or inaccurate, this information on valve construction is, but I strongly suspect that it is correct.

Marvin Cole's power system produced "cold electricity" which could power lights and other devices. It was frequently demonstrated that the output was not conventional electricity and powered light bulbs which were placed under water and at the same time, it was quite safe for a hand to be put into that same water along with the lit bulb. The glass of the conventional bulbs used in these demonstrations would have shattered when placed under water if they had been powered by conventional "hot electricity" as the sudden change in temperature would have broken the glass. Powered as they were by "cold electricity", they ran cool and so there was no stress on the glass when submerged in water.

The construction of the pick-up tube is not particularly difficult. It is comprised of a teflon (plastic) cylinder of about 80 mm diameter with teflon plates at each end, grooved to hold the pick-up cylinders in place. A pair of 12 mm diameter copper rods are positioned down the centre of the cylinder and provided with a means to adjust the gap

between them where they meet. The rod ends form the spark gap and these ends are plated with silver. One rod has a graphite block inserted in it, using a push-fit connection into slots cut in the bar. This carbon insert is supposedly a resistor, but in fact it is an important part of the excess energy generation system. In some successful constructions of the tube an 8-inch long, half-inch diameter carbon rod with a silver tip, is used for one of the electrodes.

The two or three cylinder shells which pick up the Radiant Energy, are constructed from copper sheet. The gap between the outside of one cylinder and the inside of the surrounding cylinder is about 6 mm. These cylinders are more effective if they have a matrix of holes drilled in them. They are connected together electrically and the connection is led out through the teflon casing to feed the load circuit. The cylinder contains air rather than a vacuum or an inert gas. The copper cylinders are held in place by push-fit supports, one set positioned between the outside of the smaller cylinder and the inside of the larger cylinder. The second set are placed between the outside of the larger cylinder and the inside of the housing tube:

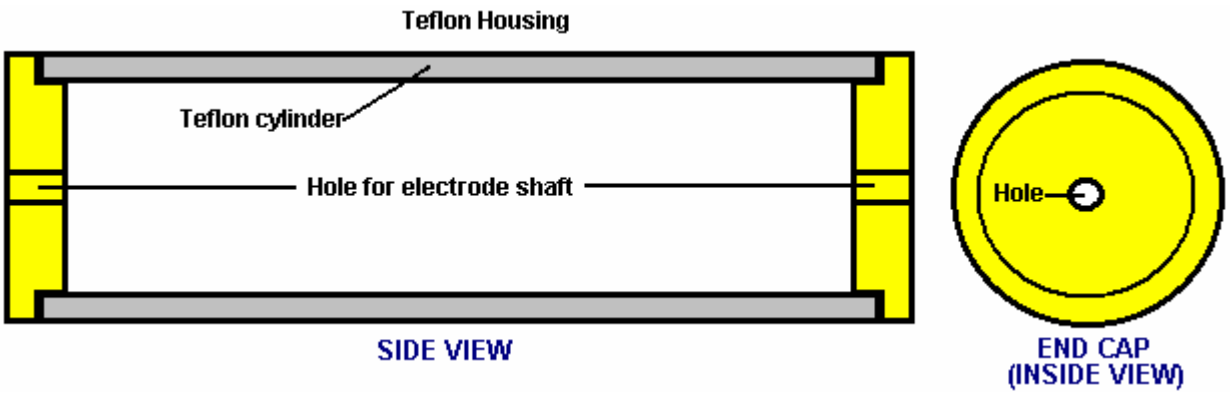

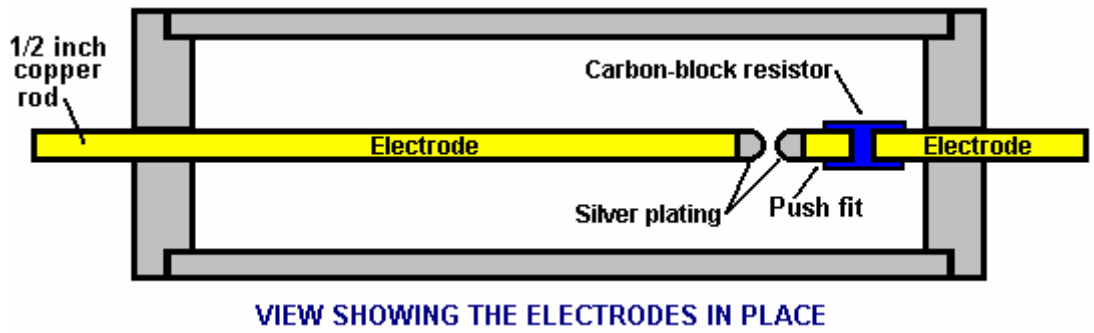

The power tube is constructed this way because the Radiant Energy wave generated by the sharp pulse of current through the electrodes, radiates out at right angles to the electrodes.

Peter Lindemann points out that Ed Gray's power conversion tube circuit is effectively a copy of Nikola Tesla's circuit for doing the same thing:

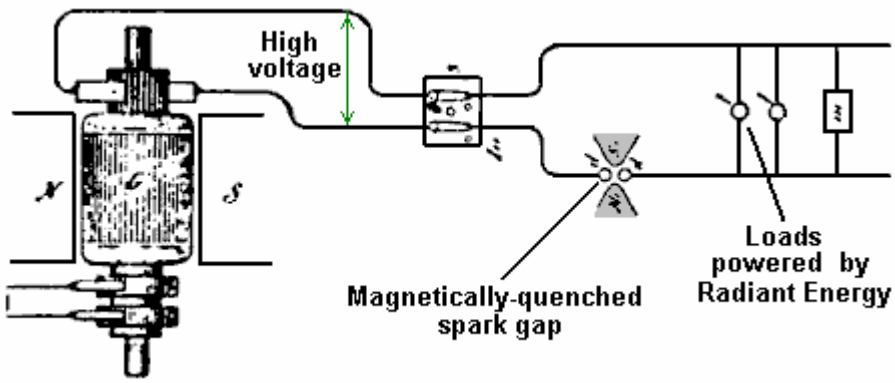

This was disclosed by Tesla in his 'Philadelphia and St Louis' lecture in 1893 and shows how loads can be powered when a high voltage source is pulsed by a magnetically-quenched sparks - this creates DC pulses of **very** short duration.

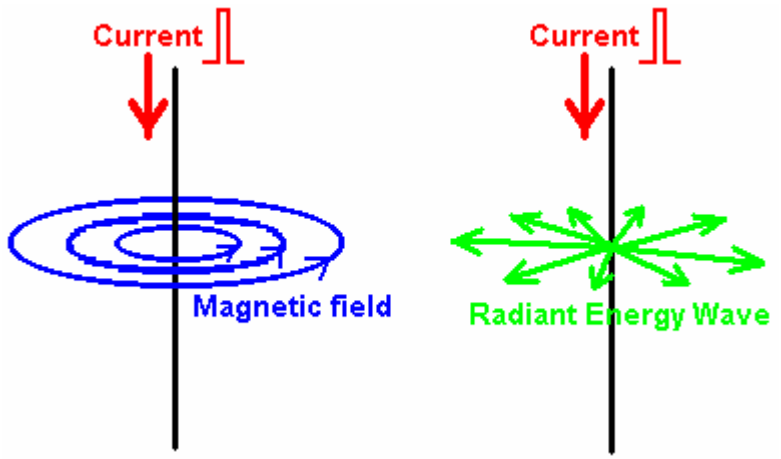

The diagram above, illustrates the difference between the Magnetic field generated around a conductor fed with a pulse of Direct Current and the Radiant Energy waves created by that pulse. If a sharp current pulse is driven down a vertical wire, it causes two different types of field. The first field is magnetic, where the lines of magnetic force rotate around the wire. These lines are horizontal, and rotate clockwise when viewed from above. The magnetic field remains as long as the current flows down the wire.

The second field is the Radiant Energy wave. This wave will only occur if the current pulse is in one direction, i.e. it will not occur if the wire is fed with alternating current. The wave radiates out horizontally from the vertical wire in every direction in the form of a shock wave. It is a one-off event and does not repeat if the current in the wire is maintained. The Radiant Energy briefly unbalances the zero-point energy field and that causes an energy flow as the field moves back into equilibrium again.

The Radiant energy wave is not restricted to a single plane as shown in the diagram above, which is intended to indicate the difference between the electromagnetic field circling around the wire, and the Radiant Energy field which radiates away from the wire. Both of these fields occur at all points along the full length of the wire as shown here:

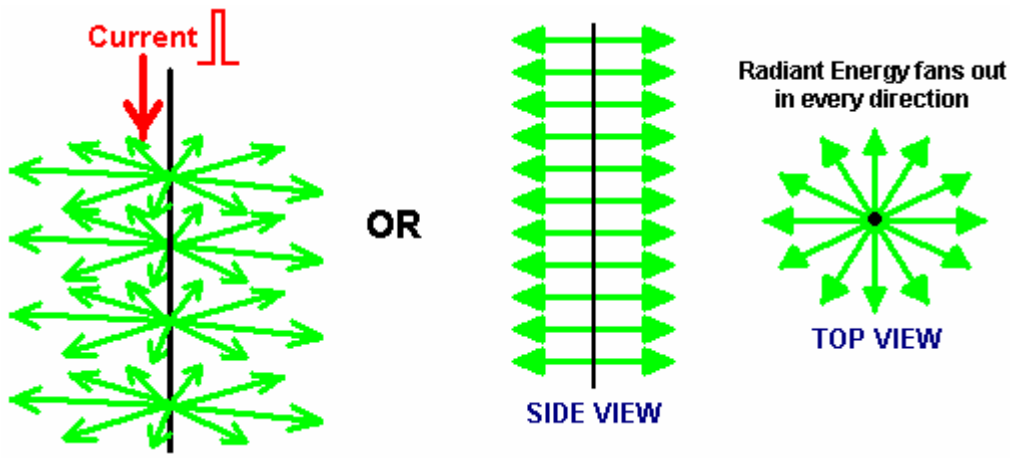

Radiant Energy, when converted to electrical power, produces a different kind of electrical power to that produced by batteries and by the mains supply. Power a motor with conventional electricity and it gets hot under load. Power the same motor by Radiant Energy electricity and under load the motor gets cold. Really overload it by stalling it and the motor housing is likely to be covered with frost. That is why this form of electricity is referred to as “cold” electricity.

In his book “Cold War Secrets - HAARP and Beyond”, Gerry Vassilatos quotes research work done in this area by Tesla and others:

Tesla’s Experiments: In 1889 Tesla began experimenting with capacitors charged to high voltages and discharged in very short time intervals. These very short pulses produced very sharp shockwaves which he felt

across the front of his whole body. He was aware that closing a switch on a high-voltage dynamo often produced a stinging shock. This was believed to be static electricity and it occurred only at switch-on and only for a few milliseconds. However, in those few milliseconds, bluish needles of energy stand out from the electrical cables and they leak to ground, often through the bodies of any people standing nearby, causing immediate death if the installation is large. While the generators of that time were rated at some thousands of volts, these discharges were millions of volts in intensity. The generator problem was eliminated by the used of highly insulated switches which were provided with a very large ground connection.

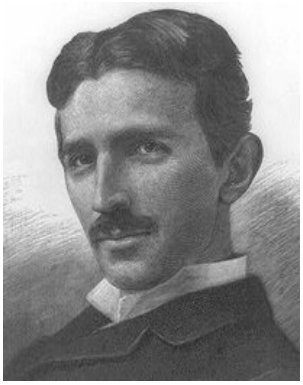

Tesla was intrigued by this phenomenon which appeared to match the effect of his capacitor discharges. He calculated that the voltages produced were hundreds of times greater than could be supplied by the capacitor or generator. It was clear that the power supplied was being amplified or augmented in some way, but the question was, from where was the extra energy coming?

Tesla continued to investigate through experiments, taking precautions against the high voltages being produced. He was soon able to produce these shockwaves whenever he wanted to. The shockwaves produced a stinging sensation no matter where he stood in his laboratory, and hands and face were particularly sensitive to the wave. These waves radiated out and penetrated metal, glass and every other kind of material. This was clearly not an electromagnetic wave, so he called the new wave 'Radiant Electricity'.

Tesla searched the literature to find references to this radiant energy but he could not find much. In 1842, Dr. Joseph Henry had observed that steel needles were magnetised by a Leyden Jar spark discharge located on a different floor of the building. The magnetising wave had passed through brick walls, oak doors, heavy stone and iron flooring and tin ceilings to reach the needles located in a vault in the cellar.

In 1872, Elihu Thomson took a large Ruhmkorrf Spark Coil, attached one pole of the coil to a cold-water pipe and the other pole to a metal table top. This resulted in a series of massive sparks which electrified the metal door knob of the room and produced the stinging shockwaves which Tesla was investigating. He found that any insulated metal object anywhere in the building would produce long continuous white sparks discharging to ground. This discovery was written up briefly in the Scientific American journal later that year.

Tesla concluded that all of the phenomena which he had observed, implied the presence of "a medium of gaseous structure, that is, one consisting of independent carriers capable of free motion - besides the air, another medium is present". This invisible medium is capable of carrying waves of energy through all substances, which suggests that, if physical, its basic structure is much smaller than the atoms which make up commonplace materials, allowing the stream of matter to pass freely through all solids. It appears that all of space is filled with this matter.

Thomas Henry Moray demonstrated this energy flow passing through glass and lighting standard electric light bulbs. Harold Aspden performed an experiment known as the "Aspden Effect" which also indicates the presence of this medium. Harold made this discovery when running tests not related to this subject. He started an electric motor which had a rotor mass of 800 grams and recorded the fact that it took an energy input of 300 joules to bring it up to its running speed of 3,250 revolutions per minute when it was driving no load.

The rotor having a mass of 800 grams and spinning at that speed, its kinetic energy together with that of the drive motor is no more than 15 joules, contrasting with the excessive energy of 300 joules needed to get it rotating at that speed. If the motor is left running for five minutes or more, and then switched off, it comes to rest after a few seconds. But, the motor can then be started again (in the same or opposite direction) and brought up to speed with only 30 joules **provided** that the time lapse between stopping and restarting is no more than a minute or so. If there is a delay of several minutes, then an energy input of 300 joules is needed to get the rotor spinning again.

This is not a transient heating phenomenon. At all times the bearing housings feel cool and any heating in the drive motor would imply an increase of resistance and a build-up of power to a higher steady state condition. The experimental evidence is that there is something unseen, which is put into motion by the machine rotor. That "something" has an effective mass density 20 times that of the rotor, but it is something that can move independently and take several minutes to decay, while the motor comes to rest in a few seconds.

Two machines of different rotor size and composition reveal the phenomenon and tests indicate variations with time of day and compass orientation of the spin axis. One machine, the one incorporating weaker magnets, showed evidence of gaining strength magnetically during the tests which were repeated over a period of several days.

This clearly shows that there is an unseen medium which interacts with everyday objects and actions, and confirms Tesla's discovery. Tesla continued to experiment and determined that a very short uni-directional pulse is necessary to generate the radiant energy wave. In other words, an alternating voltage does not create the effect, it has to be a DC pulse. The shorter the pulse time and the higher the voltage, the greater the energy wave. He found that using a capacitor and an arc discharge mechanism with a very powerful permanent magnet placed at right angles to the spark, improved the performance of his equipment by a major factor.

Additional experiments showed that the effects were altered by adjusting the duration of the electrical pulse. In each instance, the power of the radiated energy appeared to be constant irrespective of the distance from his apparatus. The energy was in the form of individual longitudinal waves. Objects placed near the equipment became powerfully electrified, retaining their charge for many minutes after the equipment was switched off.

Tesla was using a charging dynamo as a power source and he found that if he moved his magnetic discharger to one side of the dynamo, the radiant wave was positive. If he moved the magnetic discharger towards the other side of the dynamo, the radiant wave became negative in sign. This was clearly a new electrical force which travelled as light-like rays, showing them to be different in nature to the electromagnetic waves of Maxwell.

Investigating the effects of adjusting the duration of the pulses, Tesla found that a pulse train which had individual pulses with durations exceeding 100 microseconds, produced pain and mechanical pressures. At this duration, objects in the field visibly vibrated and were even pushed along by the field. Thin wires subjected to sudden bursts of the radiant field, exploded into vapour. When the pulse duration was reduced to 100 microseconds or below, the painful effect was no longer felt and the waves are harmless.

With a pulse duration of 1 microsecond, strong physiological heat was felt. With even shorter pulse durations, spontaneous illuminations capable of filling rooms with white light, were produced. Even shorter pulses produced cool room penetrating breezes with an accompanying uplift in mood and awareness. These effects have been verified by Eric Dollard who has written about them in some detail.

In 1890, Tesla discovered that if he placed a two-foot long single-turn deep copper helix coil near his magnetic disrupter, the thin-walled coil developed a sheath of white sparks with long silvery white streamers rising from the top of the coil. These discharges appeared to have much higher voltages than the generating circuit. This effect was greatly increased if the coil was placed inside the disrupter wire circle. The discharge seemed to hug the surface of the coil with a strange affinity, and rode up its surface to the open end. The shockwave flowed over the coil at right angles to the windings and produced very long discharges from the top of the coil. With the disrupter charge jumping one inch in its magnetic housing, the coil streamers were more than two feet in length. This effect was generated at the moment when the magnetic field quenched the spark and it was wholly unknown at that time.

This train of very short uni-directional pulses causes a very strange field to expand outwards. This field resembles a stuttering electrostatic field but has a far more powerful effect than would be expected from an electrostatic charge. Tesla was unable to account for the enormous voltage multiplication of his apparatus using any of the electrical formula of his day. He therefore presumed that the effect was entirely due to radiant transformation rules which would have to be determined through experimental measurements. This he proceeded to do.

Tesla had discovered a new induction law where radiant shockwaves actually auto-intensified when encountering segmented objects. The segmentation was the key to releasing the action. Radiant shockwaves encountered a helix and "flashed over" the outer skin, from end to end. This shockwave did not pass through the windings of the coil but treated the surface of the coil as a transmission path. Measurements showed that the voltage increase along the surface of the coil was exactly proportional to the length travelled along the coil, with the voltage increase reaching values of 10,000 volts per inch of coil. The 10,000 volts which he was feeding to his 24 inch coil were being magnified to 240,000 volts at the end of his coil. This was unheard of for simple equipment like that. Tesla also discovered that the voltage increase was mathematically linked to the resistance of the coil winding, with higher resistance windings producing higher voltages.

Tesla then began to refer to his disrupter loop as his special “primary” and to the long helical coil as his special “secondary” but he never intended anyone to equate these terms to those referring to electromagnetic transformers which operate in a completely different way.

There was an attribute which baffled Tesla for a time. His measurements showed that there was no current flowing in the long copper ‘secondary’ coil. Voltage was rising with every inch of the coil, but there was no current flow in the coil itself. Tesla started to refer to his measured results as his “electrostatic induction laws”. He found that each coil had its own optimum pulse duration and that the circuit driving it needed to be ‘tuned’ to the coil by adjusting the length of the pulses to give the best performance.

Tesla then noticed that the results given by his experiments paralleled the equations for dynamic gas movements, so he began wondering if the white flame discharges might not be a gaseous manifestation of electrostatic force. He found that when a metal point was connected to the upper terminal of the ‘secondary’ coil, the streamers were directed very much like water flowing through a pipe. When the stream was directed at distant metal plates, it produced electronic charges which could be measured as current at the receiving site but in transit, no current existed. The current only appeared when the stream was intercepted. Eric Dollard has stated that this intercepted current can reach several hundred or even thousands of amps.

Tesla made another remarkable discovery. He connected a very heavy U-shaped copper bar directly across the primary of his disrupter, forming a dead short-circuit. He then connected several ordinary incandescent filament bulbs between the legs of the U-shaped bar. When the equipment was powered up, the lamps lit with a brilliant cold white light. This is quite impossible with conventional electricity, and it shows clearly that what Tesla was dealing with was something new. This new energy is sometimes called “cold electricity” and Edwin Gray snr. demonstrated how different it is by lighting incandescent-filament bulbs directly from his power tube, submerging them in water and putting his hand in the water. Cold electricity is generally considered to be harmless to humans. Ed Gray’s power tube operates by generating radiant electricity waves by using a spark gap, and collecting the energy using three encasing copper cylinders surrounding the spark gap. The cylinders are drilled with many holes as that enhances the pick-up and the load is driven directly from the current in the cylinders. When lighting bulbs, Ed used an air-cored transformer made of just a few turns of very heavy wire. I, personally, am aware of two people who have independently reproduced Ed’s power tube.

Tesla viewed the streamers coming off his coils as being wasted energy so he tried to suppress them. He tried a conical coil but found that this accentuated the problem. He then tried placing a copper sphere at the top of his coil. This stopped the streamers but electrons were dislodged from the copper sphere, creating really dangerous conditions. This implied that metals generate electron flows when struck by the coil streamers (as had been seen when the streamers had been aimed at remote metal plates and current was generated as a result).

Tesla designed, built and used large globe lamps which required only a single external plate for receiving the radiant energy. No matter how far away these lamps were from the radiant source, they became brilliantly lit, almost to the level of an arc lamp and far, far brighter than any of the conventional Edison filament lamps. By adjusting the voltage and the pulse duration of his apparatus, Tesla could also heat or cool a room.

Tesla’s experiments suggest that a method of extracting free-energy is to use a Tesla coil which has a metal spike instead of the more common metal sphere at the end of the ‘secondary’ coil. If the Tesla coil is fed with sufficiently short uni-directional pulses and the ‘secondary’ coil pointed at a metal plate, then it should be possible to draw off serious levels of power from the metal plate, just as Tesla discovered. This has been confirmed by Don Smith who uses two metal plates separated by a layer of plastic dielectric, forming a capacitor. He states that a well designed Tesla coil is capable of producing currents as high as the voltages and he demonstrates a hand-held 28 watt Tesla Coil played on the first plate producing a substantial continuous spark discharge between the second plate and ground. I estimate that the spark produced would have to be thousands of volts at a significant current, which puts it in the kilowatt range, like most of Don's other devices. Video: http://www.metacafe.com/watch/2820531/don_smith_free_energy/ Don's patent is in Chapter 3 and his .pdf document here: http://www.free-energy-info.com/Smith.pdf in which he explains many of his high-power designs.

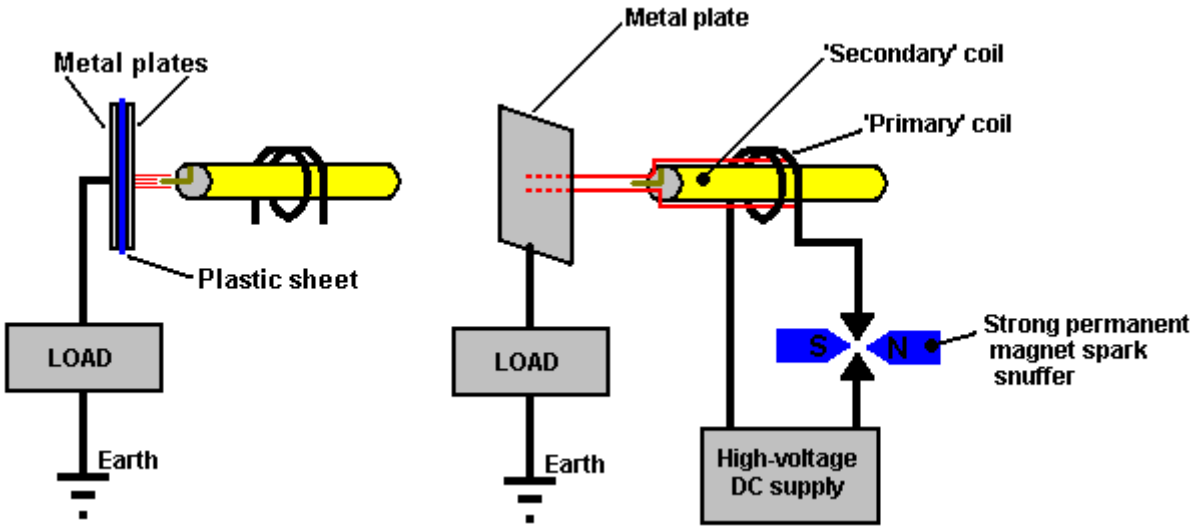

Don also points out that the positioning of the primary coil relative to the secondary coil of a Tesla Coil determines the amount of current which can be provided. Contrary to most opinion, it is possible to have Tesla Coil current as high as the voltage. Don always stresses that you have the option of picking the electrical component (as conventional science has done) which leads to "heat death" while the alternative option of selecting the magnetic component makes "the world your oyster". With a magnetic ripple imposed on the zero-point energy field, which Don prefers to call the 'ambient background energy', you can make as many electric conversions as you wish, without depleting the magnetic event in any way. In other words, you can draw off serious amounts of current from capacitor plates positioned at right angles to the magnetic flow, and every additional pair of plates gives you an additional source of major current without any need to increase the magnetic disturbance in any way. With his single metal plate, Tesla mentioned currents of a thousand amps being available. Please remember that a Tesla Coil produces seriously high voltages and is **not** a toy. Great care is needed around a Tesla Coil so, when it is running, keep well away from it.

Don also states that the collection and transfer of energy requires temporary storage which occurs as the capacitors and coils of a resonant circuit are cycled on and off. The frequency at which the capacitors and coils are pumped, determines the amount of electrical energy that moves onwards. The amount of Energy transferred relates directly to the density of lines of magnetic flux present. The Kinetic Energy formula is helpful in establishing the amount of energy present. This formula points to mass multiplied by the square of the velocity. In the case of electrical energy, intensity of voltage and amperes multiplied by cycles per second, replace velocity. Note that the "acceleration" of the Voltage and the Amperage, increases in a non-linear fashion as the Law of Squares applies, with each unit of increase causing a squaring of the flux lines present. In resonant air-core coil energy transfer, the increase in flux lines present disturbs more electrons than previously and this results in greater output energy than input energy being present and available.

Energy stored, multiplied by the cycles per second, is the energy being pumped by the system. Capacitors and inductors (coils) temporarily store electrons.

Capacitor formula: $W = 0.5 \times C \times V^2 \times Hz$ where:

W is the energy in Joules (Joules = Volts x Amps x seconds)
C is the capacitance in Farads
V is the voltage
Hz is the cycles per second

Inductor formula: $W = 0.5 \times L \times A^2 \times Hz$ where:

W is the energy in Joules
L is the inductance in Henrys
A is the current in amps
Hz is the frequency in cycles per second

Both one Henry and one Farad equal one volt. The higher the frequency, including the squaring of the flux lines, causes a large increase in the amount of energy being produced. This, combined with the use of a resonant

energy induction system (all electrons moving in the same direction at the same time), make the move into COP>1 practical.

The damping process of conventional electrical power generation, has all of the available electrons bouncing randomly, mostly cancelling out each other, and so the useful energy available is only a very small percentage of the energy which is present. In a resonant induction system, a very high percentage of the energy present is useful. When resonating, (ohms-impedance-Z) becomes zero and all of the energy present becomes available, undegraded. Ohms is load or wasted energy and amperes is the rate of that wasting.

Now, apply this information to an air-core coil resonant transformer energy system. L-1 and L-2 coils are now present. L-1 has fewer turns and is several times the diameter of L-2. Input from a 12-volt 'gelcel' high-voltage laser module, produces 8,000 volts with low (wasted energy) amperage into 4 turns of coil L-1. Each turn of L-1 then acquires 2,000 volts of resonant potential. Each turn of L-2 is then exposed to an electric flux of 2,000 volts. Each turn at the bottom end of L-2 acquires 2,000 volts. The flux lines are squared and are additive as the voltage and amperage progress towards the top end of L-2's many turns.

A huge number of flux lines which were not previously present, occur at the top end of L-2. These flux lines excite the electrons nearby in it's earth and air and groundings. This high level of excitement above the ambient, causes a large number of electrons to become available, electrons which previously, were not part of the energy present. At this point, large amounts of excess energy is present. This COP>1 device produces energy at radio frequencies in the megahertz range and this allows it to be small in size and yet produce large amounts of energy. A megawatt sized unit will sit comfortably on a breakfast table. The energy is changed to direct current, and then, to the desired working frequency.

The energy powering these devices is drawn from the surrounding energy field and is not conventional electricity and it does not flow through the wire of the ‘secondary’ coil, but instead, it runs along the outside of the coil and through space to strike the surface of the metal plate, where it generates conventional electric current. Thomas Henry Moray demonstrated that this energy flowing along the outside of the wire can pass through glass without being affected in any way.

In his 1995 paper Don Smith presents the following diagram:

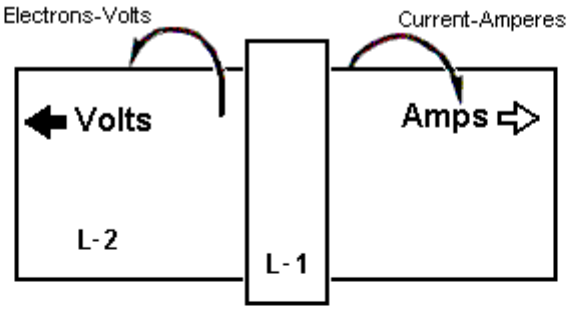

Volts dominate if the L-1 coil is far right
Volts and Amps are about equal if L-1 is central

This end has greater Voltage
Distributive Capacitance at maximum
Capacitance-Coulombs-Voltage

Voltage has electrons spinning
to the left

This end has greater Amperage
Distributive Inducatnce at Maximum
Induction-Henrys-Amperage

Amperage has electrons spinning
to the right

Volts represent the more negative and Amperes the less negative. Therefore, the electrical charge of more negative must seek the less negative to regain ambient.

While Tesla’s experiment used a metal plate, he patented (US 512,340) a coil type which he said is very effective in picking up this radiant energy. This "pancake" coil type goes by the rather impressive name of “bi-filar serial-connected coil”, which, despite it's impressive name is not difficult to wind using two separate strands of wire as shown here:

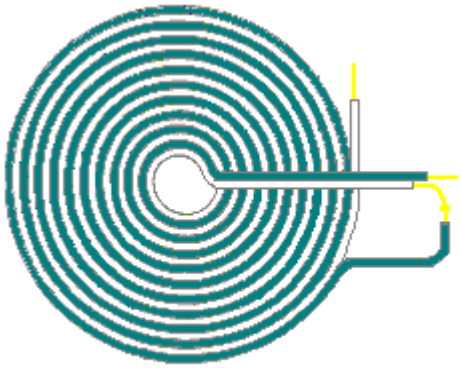

Flat 'pancake' coil winding
method patented by Nikola Tesla

If a strong magnetic field is positioned across the spark gap as shown above, it sharpens the cut-off of the spark and enhances the uni-directional character of the pulse of current. It should be remembered that if a very short sharp pulse of uni-directional current such as is produced by a spark jumping across a spark gap as in the arrangement shown above, occurs in a conductor, then a strong wave of radiant energy radiates out in a plane at right angles to the pulse of current.

This radiant energy wave is quite different from the electromagnetic field generated around the wire carrying the pulse of current. In the Tesla coil arrangement shown above, it should be possible to gather additional free energy through one or more co-axial (like layers of an onion) cylindrical coils around the spark gap leads. These coils will be better if they are would as bi-filar serially-connected coils, which just means that the wire used to wind them is doubled over from its mid point before the coil is wound. The reason for this arrangement is that the magnetic field component of the coils is (nearly) zero as the current flowing through the wire is flowing in opposite directions in alternate turns, and so the magnetic fields produced should cancel out:

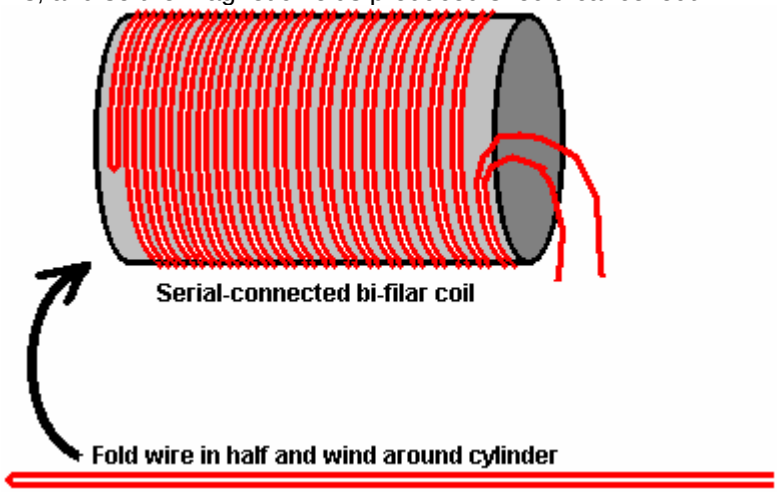

Tesla was granted US Patent 685, 957 “Apparatus for the Utilisation of Radiant Energy” in which he shows various ways of handling the energy collected by the metal plate. It is likely that the pick-up techniques shown in the patent of Hermann Plauston, which is in the Appendix, would also work very effectively with this collected energy. Old patents sometimes mention a “condenser” which is the original term for what is nowadays called a “capacitor”.

After careful consideration and many experiments, Tesla concluded that the radiant rays which he was utilising, radiated out so rapidly that electrons were unable to keep up with them. The rays were being carried via a medium consisting of extremely mobile, almost mass-less particles, very much smaller than electrons and which, because of their size and speed, could pass easily through most materials. In spite of their small size, their extreme speed caused them to have considerable momentum. A fact which is **very** difficult to come to terms with is that these rays seem to propagate outwards instantly, with no time delay at all, as if transmitted through matter which is wholly incompressible. It is sometimes called “Radiant Energy” or “RE” for short and appears to have no net charge in conventional terms. This is a unique feature of the universe, with unique characteristics, which if utilised, provides a whole host of new applications and capabilities.

Tesla considered that this newly discovered field acted like a fluid. A hundred and fifteen years later, the cover story of the December 2005 edition of the 'Scientific American' journal states that experimental models hint that space-time could be a kind of fluid. It has taken a long time for modern science to start catching up with Tesla. In actual fact, it was Michael Faraday (1781 - 1867) who came up with the idea in the first place.

The Alberto Molina-Martinez Generator. US patent application US 20020125774 of 6th March 2002, shows a self-powered electrical generator. Like that used by Bob Boyce, this is a toroidal (ring-shaped) frame with several windings on it, as shown in the diagram below. Once it has been powered up with AC mains frequency voltage, it produces so much power that it can supply it's own input power requirement as well as powering other loads such as light bulbs. This patent application is shown in full in the Appendix.

It is said that the Toroid device built by Stephen Mark and shown in web videos, is a replication of this generator design. The forum at present at http://www.overunity.com/index.php/topic,2535.0.html is dedicated to replicating Stephen Mark's device and considerable progress has been made. This group is operating on the basis that instead of a metallic toroid core as shown here, that a Mobius-loop toroidal wire core is used. At this point in time, their efforts have not yet produced a circuit which exhibits a COP>1 performance

You will notice that very many different devices, aimed at doing different things, all operate by generating very sharp DC pulses

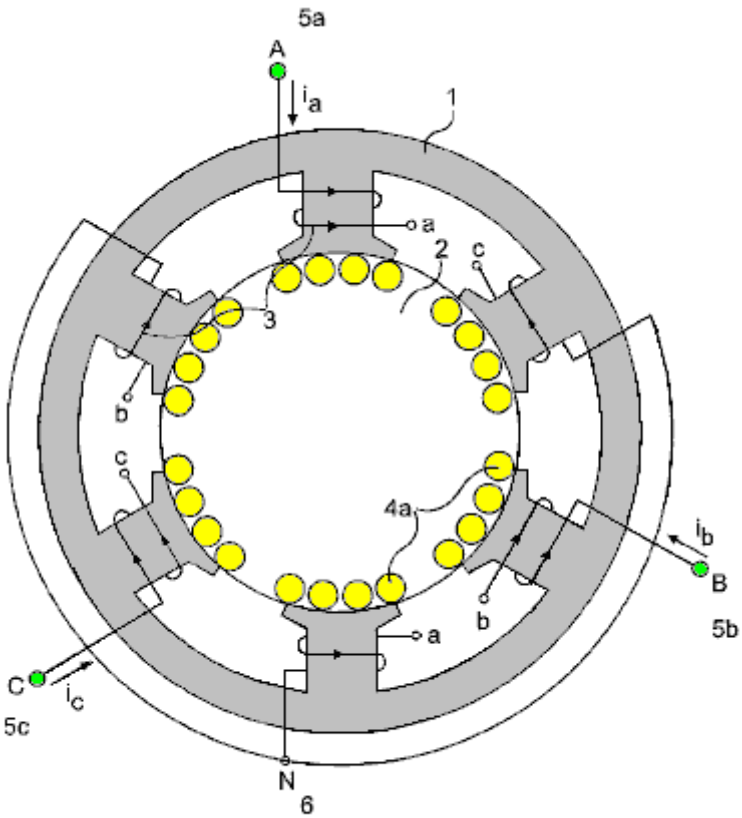

So, a wide range of different devices have the same background technique for making them work. Meyer used the pulsing for water-splitting in a hydroxy gas cell. Bedini uses the pulsing to charge batteries with cold electricity. Tesla used the pulsing to charge batteries, provide heating, cooling and lighting. Boyce uses pulsing to obtain electrolysis at 1,200% of Faraday's stated maximum rate of electrolysis. Gray used the pulsing to capture cold electricity to drive a powerful electric motor. Many different applications all based on using very short, very sharp, high-voltage pulses.

Alfred Hubbard. In 1920 Alfred Hubbard demonstrated his 'Atmospheric Power Generator' which was said to have an output power of some three times greater than the input power. It is difficult to determine the exact details of its construction, but the best information to hand suggests the following:

It consisted of one tall central iron-cored 'primary' coil 15 inches high. The core was made from 16 iron rods and the winding made of 43 turns of cable. The cable had 7 cores each of 0.09" diameter, forming a bundle 0.204" in diameter inside the insulation which had an outside diameter of 0.34" which is American Wire Gauge Size 4 wire.

Placed around the central coil were 8 'secondary' coils wound on low-carbon steel fence pipe of 2" inner diameter and approximately 2.25" outer diameter (57 mm), 15 inches high. The windings were also 43 turns of AWG No 4 wire and the coils were wired with the bottom of each coil connected to the top of the adjacent coil, i.e. the secondary coils were wired in series. The secondary coils touch each other tangentially and they also touch the central primary winding tangentially.

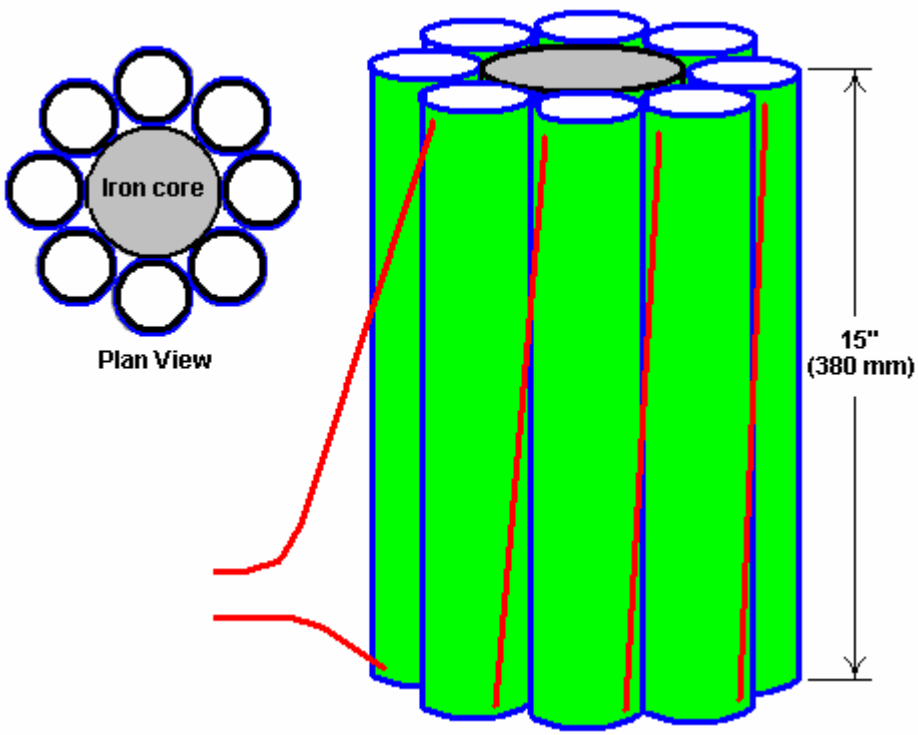

The generator was initially demonstrated powering an 18-foot boat with a 35 horsepower electric motor, around Portage Bay on Lake Union, Seattle at eight to ten knots, starting from the Seattle Yacht Club wharf. It appears that the wires should have been larger diameter as they started to overheat quite quickly. Dozens of people witnessed this demonstration and it was reported in the local Seattle press. Alfred is reported to have referred to the secondary windings as "electromagnets" each having both primary and secondary windings of copper wire. Details of the device are presented in Joseph Cater's book "Awesome Force" which attempts to explain the theory of its operation.

The circuit looks deceptively simple, with the DC input being converted to a rapid train of very short duration pulses, stepped up in voltage and fed to the primary winding. The output is passed through a step-down transformer and was said to be 280 Amps at 125 Volts:

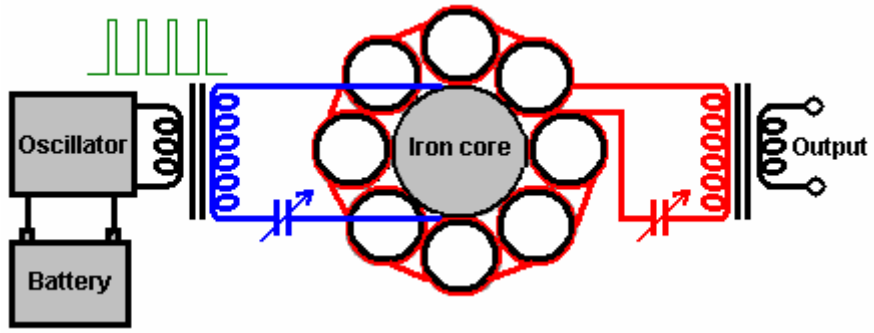

The variable capacitors shown are used to tune the input and output circuits to their resonant frequencies. There appears to be similarities between this circuit and the circuitry used by Edwin Gray when he was using his power tube to drive mains light bulbs and other standard electrical equipment. Edwin used air-cored transformer windings of very heavy-duty wire, to drive the loads and while Alfred does have steel formers for the secondary coils, they are mainly air-core, unlike his primary coil. Edwin and Nikola Tesla were tapping the same source of power, and since Alfred Hubbard worked with Tesla for a short period, it seems likely that his transformer is based on the same techniques that Tesla used so successfully.

It may well be that Alfred's circuitry was actually constructed more like Tesla's circuitry for his unique coils. It might have been like this:

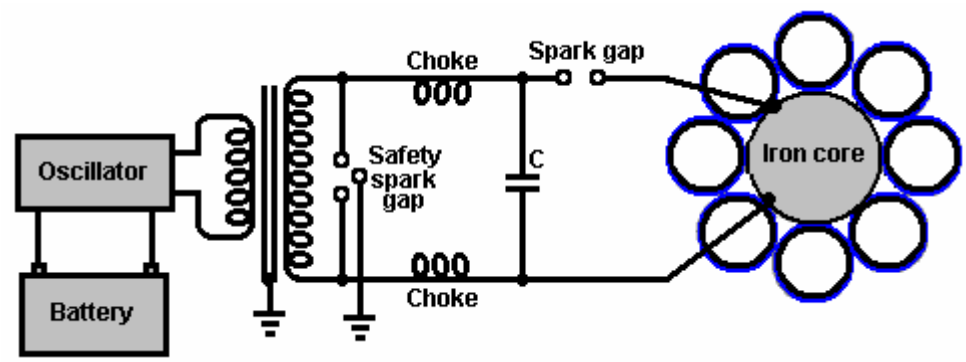

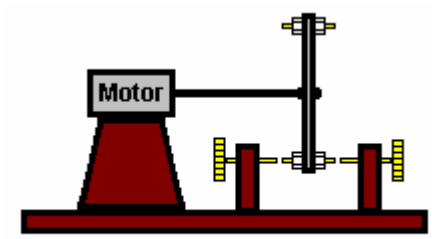

Motorised spark gap

Alfred's association with Tesla raises some interesting points. Firstly, Tesla was aware that to generate Radiant Energy waves of the type that Edwin Gray trapped so successfully, ideally, uni-directional pulses of very short duration (1 millisecond or less) were needed. The best way to generate these is using a spark, so it is distinctly possible that Alfred's oscillator contained a spark generator. Secondly, Tesla was aware that a serially-connected bi-filar wound coil is a very effective device for collecting Radiant Energy. Might it be possible that the information on how the secondary coils were wound and connected is not quite correct, and that while the coils were connected in series, they were bifilar-wound?

In fact, it seems much more likely that there were separate inner bi-filar windings connected in series while the outer bi-filar windings were also connected in series, especially since, it was reported that the device had four wires coming out of it. This strongly suggests that the bi-filar series-connected 'secondary' windings were connected internally to form the final circuit and that the four wires were one pair for the primary winding and one pair for the serially-connected pickup set of sixteen windings:

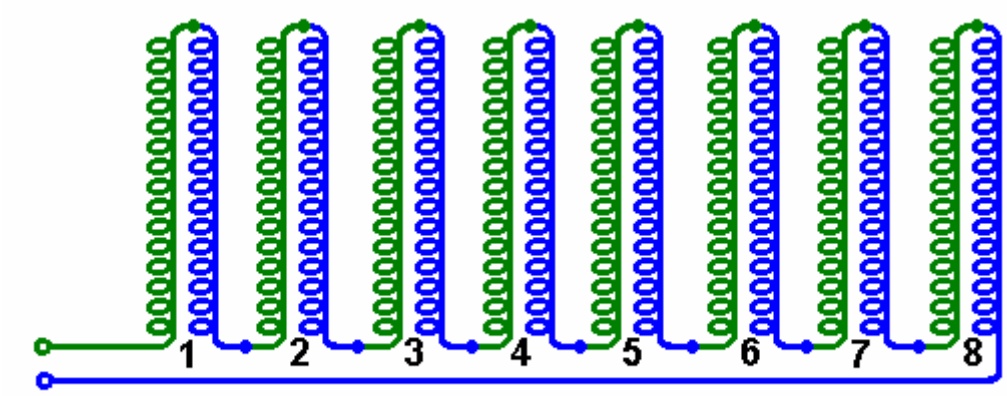

Possible series-connected bi-filar connection method for Hubbard's "secondary" coils

The device was examined and tested fully by Father William Smith, professor of physics at Seattle College. He was quoted as saying “I unhesitatingly say that Hubbard’s invention is destined to take the place of existing power generators”. While this indicates that Professor Smith’s examination and tests showed that the device worked extremely well, he clearly was not aware of the marketplace opposition to any commercial form of free-energy device.

It has been suggested that the core of the device was packed with radio-active material (probably radium) and that an outer steel cylinder was placed around the device to absorb excess radiation. If that was so, the amount of material would have been very minor, and used only to ionise the air around the coils to improve the energy pick up. Any radio-active material used would have been similar to the ‘luminous’ paint which used to be applied to the hands of alarm clocks, and consequently, fairly harmless.

What appears to be an implementation of the Hubbard coil system, or perhaps a very closely related device is Joseph H. Cater’s self-sustaining electrical generator. As usual, information on it is limited and not particularly clear, so the following is just my attempt to piece together some information from different sources. Much of this information comes from a document which has Geoff Egel’s name on it and although it seems likely that Geoff is quoting some other source, my thanks goes to him for sharing what we have here. The diagrams give the names of various minor websites none of which exist any longer and so these have been removed as they have no useful purpose any longer. Here is an original diagram from this information:

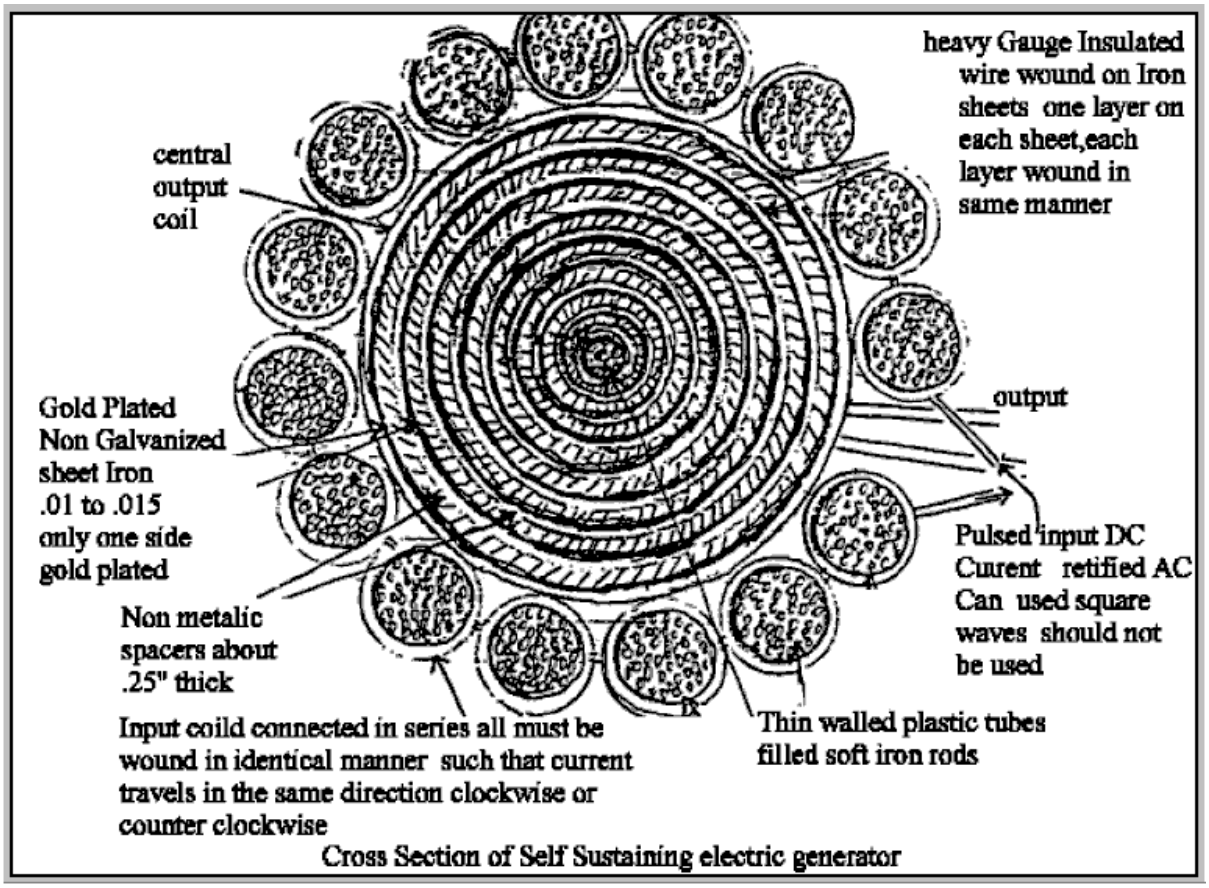

As it seems to me that there are many conflicting details in this information, I am presenting it here in pretty much the same form in which it reached me:

Mr. Cater claims that a group in California built this device which, it is claimed, performed very well, but he does not claim that he has personally seen or tested such a device. This design is published for researchers and experimenters in order that a working prototype may be developed. Mr. Cater says "I would be willing to give big odds that if my instructions are carried out to the letter, then sensational results will be obtained. It should easily outperform any other generator that has ever been built including the Moray and the Hubbard devices. It could easily be mass-produced.

Some years ago I got word from someone in Germany who built a similar configuration (a very poor replica of this one, where the output coil consisted of only windings on a solid iron bar which in turn was surrounded by smaller coils on smaller bars which constituted the input. Even this was quite successful as the output was three times the input. I do not know what happened to the builder but such a crude device as this could give the world free energy. The output of a small unit could be used as the input for a larger one and so on."

Please bear in mind that these plans are not meant to be explicit in every fine detail, but are provided as the best guide that the author can make with the available data. Therefore you will need to use some of your own ingenuity and design skills in the construction of this rather unusual coil configuration.

The Primary Coil Input-driver: Suggestions for the Bench-test Prototype

I would suggest the construction of an input power supply which can vary Frequency, Voltage and Current. A frequency range of 50 Hz to 1,000 Hz would be a good starting point. The higher the frequency of the input current (the amperage and voltage being held constant) the greater the induced output E.M.F. as it is directly proportional to the frequency (the rate of change of the magnetic flux). A frequency of 50 or 60 Hz would be more convenient to experiment with as these frequencies are standard power mains frequencies, however a frequency of 360 Hz or higher is recommended.

Mr. Cater suggests that for experimental purposes in determining the input needed to get the desired output, that rectified 12 volt AC is used. Sinusoidal waves should be used and not square waves. Because of its tremendous potential, care should be taken to limit the amount of input current. One should start with a low frequency (50 or 60 Hz) and low amperage, then gradually increasing the current until the desired input / output is obtained.

Such caution was not followed with a previous model built by a group in California and it resulted in the disintegration of the output coil. The iron sheets in this model were not plated and did not have the caps fitted. Nevertheless, it was still an effective orgone accumulator. The gold plating of the iron sheets and the addition of the CAPS enables it to operate with a much lower input current and lower frequency.

The Primary Coils

If the outer body of your secondary coil is eight inches in diameter, then you won't fit the recommended seventeen primary coils around its perimeter. If your primary coils are one and a half inches in diameter then these will fit nicely around the perimeter of an 8-inch diameter secondary coil. However, it is preferable to have larger primary coils as mentioned in Mr Cater's opening comments, so it may be advisable to stick to the recommended 2-inch diameter size for the primary coils, but settle for one less and use only 16 primary coils.

Experimentation will decide which is the best way to go. For the purposes of this article I will refer to 2-inch diameter coils.

Cut medium gauge soft iron rods (oxy-welding rods will do) to 13-inch lengths. Be sure to de-burr the cut rods so that a compact fit is achieved.

Next, wind each coil separately with one terminal at each end (no gap 'G' is required for the primary coils). Then the primary coils are physically mounted around the large secondary coil - refer to Diagram 1.

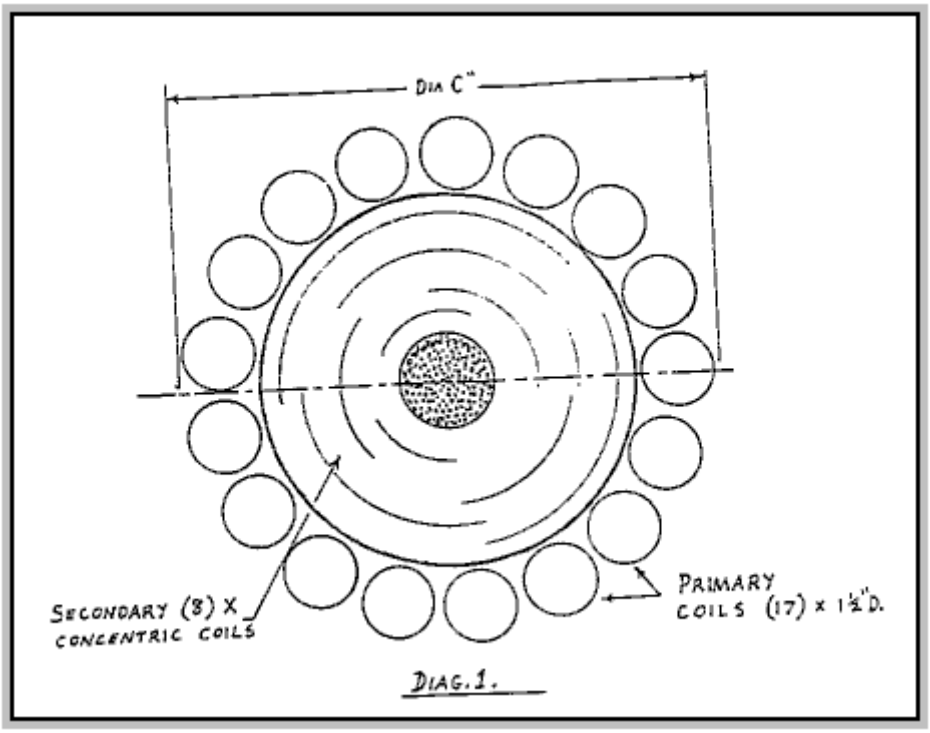

DIAG. 1.

The primary coils are then interconnected with suitable leads of the same gauge as the coil wire to form a series coil configuration. Refer to Diagram 2.

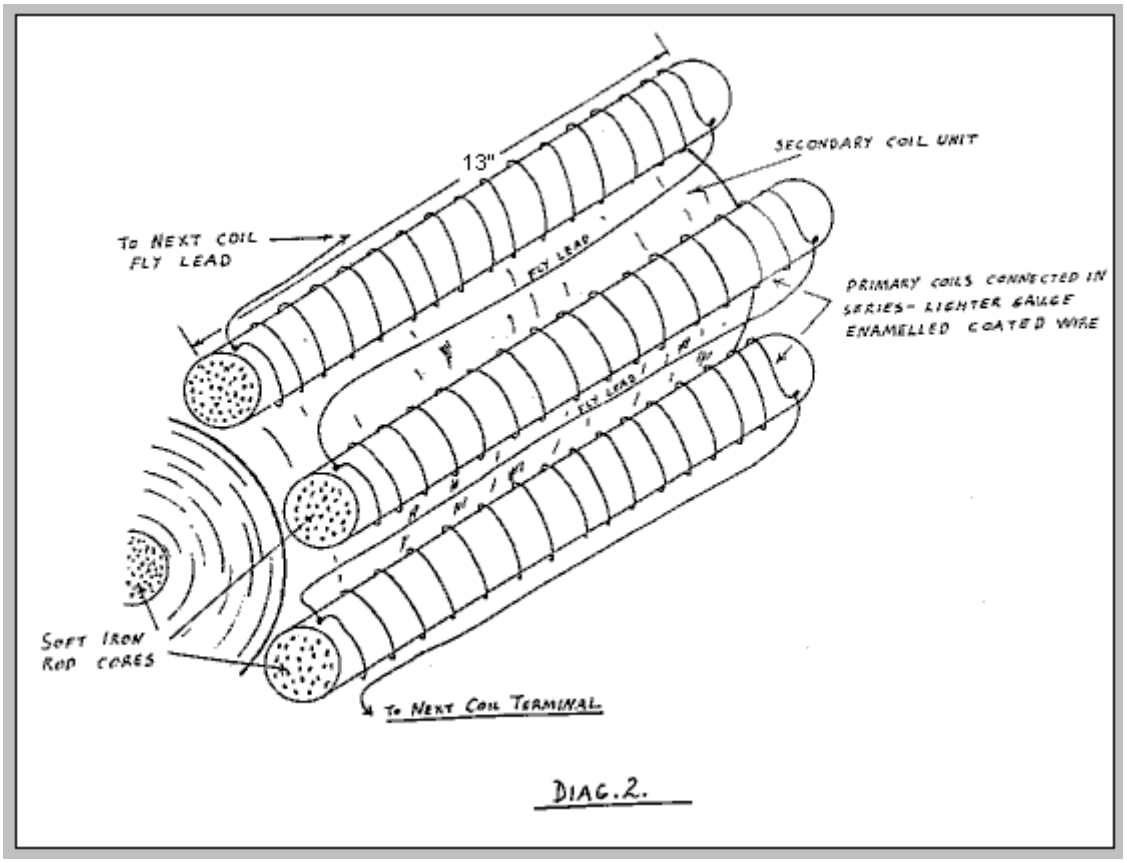

All coils must be wound in an identical manner so that the current in each one travels in a clockwise or counter clockwise direction. It is essential that the current flows in the same direction.

The Secondary Coil: Construction Notes

The secondary coil consists of a number of concentric cylinders and coils of three varying types repeated in a special sequence as detailed here.

1. You begin with the soft iron core in the same way as the primary iron cores were constructed. Use two inch diameter (2" OD) thin-walled PVC tubing cut to thirteen inches (13") in length, and packed with soft iron rods (oxyacetylene welding rods will do).

2. Around the central PVC tubing wrap the gold-plated iron sheeting so that the gold is facing outwards. The iron sheeting needs to be in the range 0.010" to 0.015" in thickness. The iron sheeting should be as thin as possible as you want to get the most powerful fluctuating magnetic field possible, induced as close to the wire as can be physically and electrically achieved.

This is the reason for the oil-soaked iron powder. The purpose of the oil is, of course, to make the iron powder physically manageable. The thinner the iron sheeting the more completely magnetised it will be. The gold plating is only the frosting on the cake so to speak. It certainly does not need to be very thick and no, you don't have to pay thousands of dollars for gold plating. A simple chemical process is used. Ask your local electro-plater for a lead in the right direction. As to the suppliers of the iron sheeting, you certainly wont find it down at your local hardware store as it is a rather a specialised item. Try transformer manufacturers or electric motor and generator suppliers.

You will need eight (8) concentric iron cylinders. Each one will be thirteen inches (13") wide with varying lengths depending on the circumference of each concentric layer. Allow a quarter inch over the circumference length to give a small overlap. You will need to devise a method for keeping the iron sheeting in position ready for the next stage of construction. Several spots of super glue should do the job nicely.

3. Now that you have wrapped your first iron layer around the central PVC tube containing the soft iron core, you are now ready to wind your first secondary coil. Use a heavy gauge enamel coated wire somewhere near the gauge of house wiring. If this is not available, then insulated single core wire will do. As with all the coils that

are to be wound, whether primary or secondary, only one layer of wire is wound. When you are winding the secondary coil leave a small space between each turn. Refer to Diagram 3.

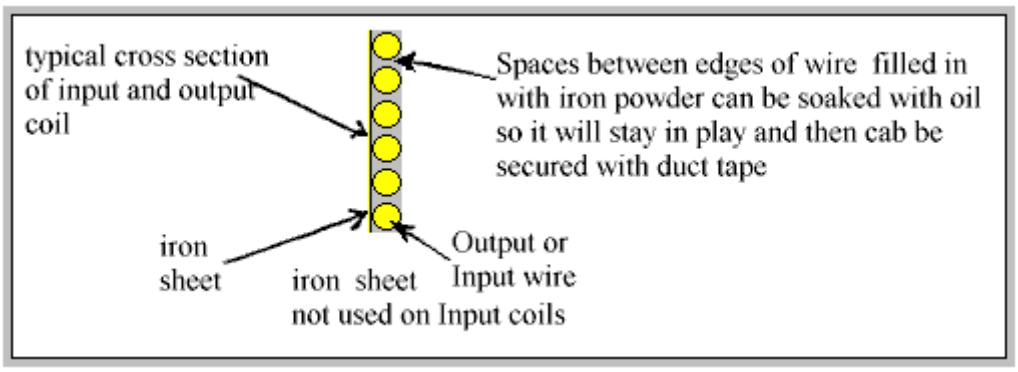

The gap 'G' reduces the inertia of flowing electrons as well as providing room for the oil-soaked iron powder which is to be packed between each winding. Perhaps 1 mm to 1.5 mm would be a sufficient gap between adjacent turns of the winding. However, before packing each coil with the iron powder, it would be advisable to lacquer the coil winding to seal it in position on the iron sheeting. This also provides extra insulative protection. The purpose of the non-metallic concentric spacers within the secondary coil serves two purposes:

a. To minimise the cancellation effects.

b. To produce an Orgone accumulator effect.

The material used could be heavy-duty PVC tubing with quarter-inch thick walls or quarter-inch thick sheeting, possibly heat treated, wrapped around the coils. You may be lucky for one or two of the concentric rings required, and have a piece of PVC tubing which is just the right diameter. For the remaining diameters you could reduce the circumference of a larger piece of tubing, thus converting it to the desired diameter. Be sure that the butt joint is perfect or that any gaps in the join are filled in with a suitable plastic filler. Some innovation and ingenuity may be required for this part of the construction. The general strategy for building this multi-layered secondary coil is to build it by winding each coil on separate concentric cylinders consisting of the gold-plated iron sheeting wrapped around the non-metallic spacer. The inner diameter of one cylinder will be the outer diameter of another. They are then joined together one inside the other. Fly wires are then used to interconnect the ends of each coil. For initial experiments this may be done in several ways, two of which are recommended by Mr. Cater:

1. Each concentric coil may be connected in series so that the current will flow in the same direction, either clockwise or counter clock wise as if it is one continuous coil.

or

2. Each adjacent pair of coils is wired so that the current flows in the opposite direction to the adjacent pair of coils. In other words, the first two adjacent coils are connected in the clockwise direction, and then the next pair of adjacent coils is connected counter clock wise. The third pair will be clockwise and the fourth pair counter clockwise. Changing the wiring configuration can be achieved quite simply by rearranging the external fly leads which are used to interconnect each of the secondary coils.

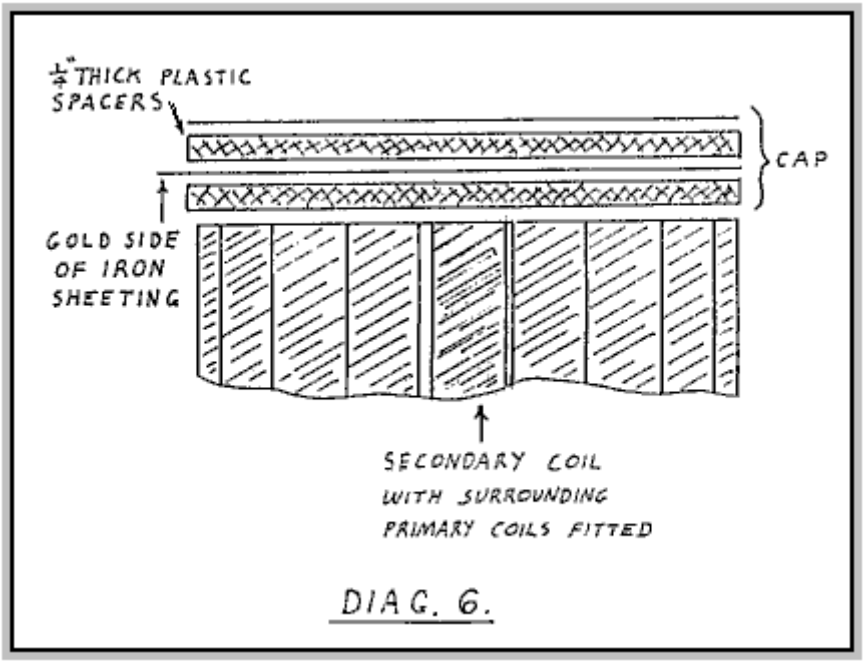

The leads should take the shortest path around the outer face of the secondary coil and of course they should be of the same gauge as the actual coil winding itself. Refer to Diagram 4

The Side Caps

Now that you have completed the secondary coil and wound the primary coils, the next step is to cut the caps to their correct size so that their diameter will be big enough to cover in the entire primary and secondary coil assembly. Refer to Diagram 1 above where the required dimension is marked as "Dia. C"

1. Cut eight pieces of quarter-inch thick plastic sheeting to the diameter "Dia. C" dimension, 4 per cap, so 8 in total.
2. Cut eight pieces of gold-plated iron sheeting in the same manner.
3. Glue together the plastic and iron sheeting as illustrated in the expanded drawing Diagram 6.

Devise a method to attach the caps to the sides of the unit and a means of positioning the outer primary coils so that they are all held in their correct positions. Bear in mind that powerful magnetic forces will be present and that the unit itself will be quite heavy, so a strong form construction is needed. One suggestion is to use dowels to hold the caps in position and use suitably shaped plastic spacers to position and hold the primary coils in place. Once the caps have been fitted, the generator becomes a highly potent orgone accumulator.

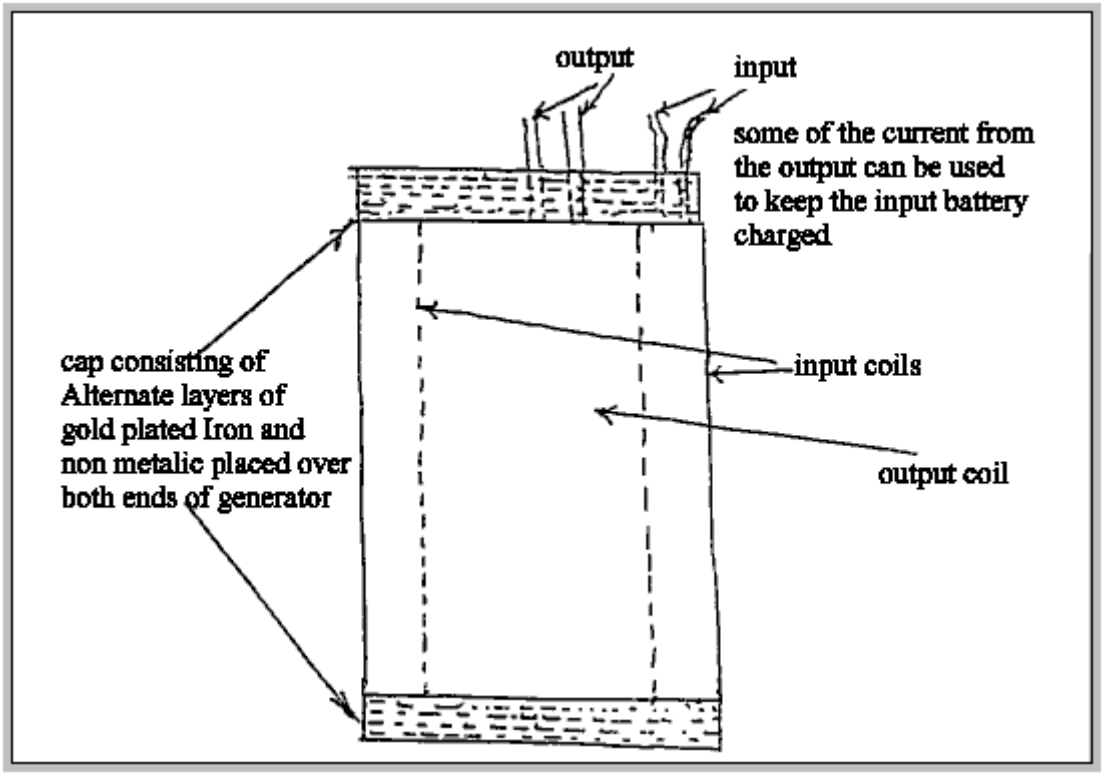

Gold-plated iron is many, many times more effective than any other metallic material. The accumulator effect greatly increases the effectiveness of the generator.

Testing

Now that you have actually completed all the construction work, you now need a suitable input driver unit which should have been thoroughly tested and ready for driving the unit. Let's be optimistic and hook up a good size load for the secondary, a couple of radiator bars (electric heaters) should do to begin with. Across the output terminals you can connect all the usual test gear.

Summary

The construction of the secondary coils may be carried out by completing the following steps:

1. Fill a thin-walled PVC tube of 2-inch diameter and 13-inches long, with soft iron rods.
2. Wrap the PVC tubing with the iron sheeting cut to 13" size with a 1/4" overlap along the tube, flush with the ends. Ensure that the **gold side** is facing outwards.
3. Wind the single-layer heavy-gauge coil with a suitable spacing between each turn of the winding and attach suitable terminals at each end of the wire.
4. Coat the coil winding with lacquer, sealing it in position.
5. Pack between each turn of the coil windings with oil-impregnated iron powder.
6. Wrap the coil and iron powder with ducting tape.
7. Fit the quarter-inch thick non-conductive spacer as described above.
8. Repeat step 2 to step 7, eight times and finish off by fitting an outer casing of the quarter-inch thick non-conducting material.

This Article first saw the light of day several years ago and it is believed, was first published in the Australian Free-Energy Newsletter called "Tuning In".

Another source comments on the Cater device as follows:

A self-sustaining electric generator was demonstrated at Seattle, Washington in 1919 by an inventor named Hubbard. His invention was supposedly 14 inches long and 11 inches in diameter. It powered a 35 horsepower electric motor which pushed a boat continuously around the bay for several hours. This demonstration was

witnessed by thousands. During the time of his demonstrations, Hubbard made a sketch of one of his smaller generators used to power ordinary electrical appliances shown in Fig. 28:

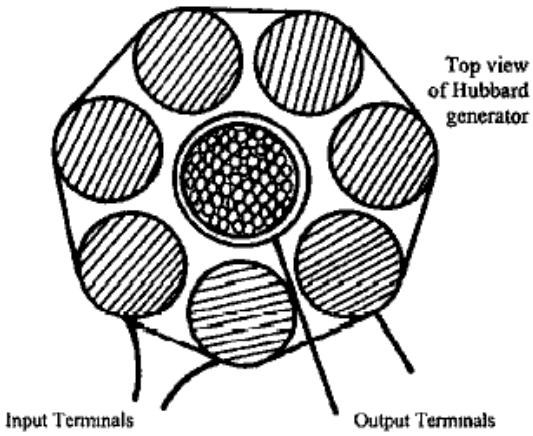

Fig. 28

It was approximately six inches long and about five inches in diameter. It consisted of eight coils in series, wound on iron cores which in turn surrounded a slightly larger central coil. The central coil was wound on a hollow tube which contained many small rods of soft iron. Four terminals extended from the unit, two connecting to the outer coils which received the input current, while the other two came from the central coil.

It is highly significant that both wires used in the generator appeared to be of heavy gauge like those used in power lines with the same kind of insulation. Each coil had only one layer of this wire which means that only a moderate number of turns were used in the entire generator. It is known that the generator produced a fluctuating current of an undisclosed frequency and had no moving parts.

The basic principle on which the generator operated is apparent. A small current passed through a coil with a moderate number of turns per unit length will magnetise an iron core to a surprising degree. This principle is utilised to great advantage in electromagnets. What apparently hasn't been realised is that during the brief interval in which the current builds up after it is turned on, an induced EMF (voltage) is produced in the coil by the changing magnetic flux, which is in the same direction as the current. This induced EMF is the result of the magnetic field produced by the magnetisation of the iron core. If this induced EMF were in the opposite direction to the current, then a sizeable current could never be produced in the coil as the EMF opposing the current would automatically cancel it before it could increase.

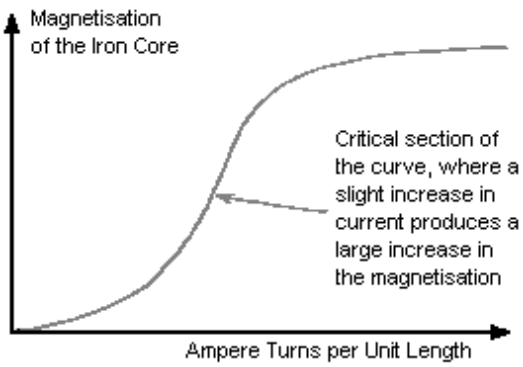

Fig. 29

Fig. 29 shows a graph of the magnetisation of an iron core plotted against ampere turns per unit length. The term "ampere turns" is the number of turns of the coil per unit length multiplied by the number of amps of current flowing through the coil. For example, a current of 1 amp flowing through a coil of 100 turns will produce the same effect as 2 amps flowing through a coil of the same length which has only 50 turns.

There is a section on the curve where a slight increase in ampere turns will produce a tremendous in magnetisation of the iron core. The cause of this phenomenon should be analysed. It seems strange that just a

few ampere-turns can produce extensive and significant magnetisation of the iron core. Yet, the observable magnetic field produced by the current without the magnetic core is tiny by comparison. A similar field produced by a permanent magnet, would be unable to induce a noticeable magnetisation of the iron. This is something which conventional science has found convenient to ignore.

If an alternating current is passed through an electromagnet and the ampere-turns exceed a critical point, a chain reaction takes place in the coil, producing a tremendous increase of current in the coil. This is responsible for transformers which occasionally burn out during current surges. In some cases the sudden increase in current is sufficient to push the ampere-turns value into this critical range. The chain reaction results from an increase in the magnetisation of the iron which produces an increase in the current, which then produces an additional large increase in magnetisation, and so on until the iron reaches its maximum degree of magnetisation.

This process occurs during the first half of the AC cycle. The EMF is flowing in the direction opposite to that of the current after it reaches its maximum value and the second part of the cycle begins. This EMF, which is the same magnitude as that which brought the current to its maximum value during the first part of the cycle, now acts as a brake and stops the current. The applied alternating EMF then starts the current in the opposite direction and the identical process occurs again with the current flowing in the opposite direction.

Normal working transformers have ampere-turns which are well below this critical point. The additional EMF induced in the coils by the magnetisation of the iron offsets the natural inductive impedance of the coils. This is why transformers have such a high degree of efficiency. If any material other than iron or special steel were used for the core, the efficiency would drop significantly.

A normal square-wave pulsed current cannot be used in such a device due to the very short time of the rise and fall of the applied voltage, so a sine wave power supply is needed to produce this effect. Since the induced EMF in a coil is directly proportional to the rate of change of magnetic flux, it follows that the higher the frequency of this sine wave supply, the better.

There is possibly another factor which could contribute to the success of the Hubbard device. At that time, the only insulated wire available had thick and heavy insulation. This means that adjacent turns of wire in the coil were separated by a distance equal to twice the thickness of the insulation. Consequently, the gap resulted in a cancellation of magnetic effects produced by electrons flowing in the wire. Since inertia is dependent on the ability to generate a magnetic field, the inertial properties of the electrons would be almost nullified.

There is an optimum distance between the wires which would produce the maximum effect. It seems likely that the thick insulation on Hubbard's wire produced this optimum distance. Most of the resultant magnetic field was that which encircled both wires and that would be the weaker part of the field. This means that a relatively low EMF could accelerate a larger number of electrons to a high velocity during a very short period of time. As the electrons leave the coil, inertia returns. This would result in a backup of a high concentration of electrons in the coil. Since electrostatic repulsion is not affected, electrons would be ejected from the coil at a high velocity despite their increased inertia. This would produce an output of both high voltage and high amperage.

Floyd Sweet's VTA. Another device in this category of pulsed devices which tap external energy was produced by Floyd ("Sparky") Sweet. The device was called "Vacuum Triode Amplifier" or "VTA" by Tom Bearden. There is very little practical information available on this device, though there is a video of it in operation on the web, with an input power of just 0.31 milliwatt and a continuous power output of more than 500 watts (112 volts AC at 60 Hz) which is a COP of more than 1,612,000 which is spectacularly impressive.

The device was capable of producing more than 1 kW of output power at 120 Volts, 60 Hz and can be connected so as to be self-powered. The output is energy which resembles electricity in that it powers motors, lamps, etc. but as the power increases through any load there is a temperature drop instead of the expected temperature rise, which is why it is called "cold" electricity.

When it became known that he had produced the device he became the target of serious threats, some of which were delivered face-to-face in broad daylight. It is quite possible that the concern was due to the device tapping

zero-point energy, which when done at high currents opens a whole new can of worms. One of the observed characteristics of the device was that when the current was increased, the measured weight of the apparatus reduced by about a pound. While this is hardly new, it suggests that space/time was being warped. The German scientists at the end of WWII had been experimenting with this (and killing off the unfortunate people who were used to test the system) - if you have considerable perseverance, you can read up on this in Nick Cook's inexpensive book "The Hunt for Zero-Point" ISBN 0099414988.

Floyd found that the weight of his device reduced in proportion to the amount of energy being produced. But he found that if the load was increased enough, a point was suddenly reached where a loud sound like a whirlwind was produced, although there was no movement of the air. The sound was heard by his wife Rose who was in another room of their apartment and by others outside the apartment. Floyd did not increase the load further (which is just as well as he would probably have received a fatal dose of radiation if he had) and did not repeat the test. In my opinion, this is a potentially dangerous device. It should be noted that a highly lethal 20,000 Volts is used to 'condition' the magnets and the principles of operation are not understood at this time. Also, there is insufficient information to hand to provide realistic advice on practical construction details.

On one occasion, Floyd accidentally short-circuited the output wires. There was a bright flash and the wires became covered with frost. It was noted that when the output load was over 1 kW, the magnets and coils powering the device became colder, reaching a temperature of 20 degrees Fahrenheit below room temperature. On one occasion, Floyd received a shock from the apparatus with the current flowing between the thumb and the small finger of one hand. The result was an injury akin to frostbite, causing him considerable pain for at least two weeks.

Observed characteristics of the device include:

1. The output voltage does not change when the output power is increased from 100W to 1 kW.
2. The device needs a continuous load of at least 25W.
3. The output falls in the early hours of the morning but recovers later on without any intervention.
4. A local earthquake can stop the device operating.
5. The device can be started in self-powered mode by briefly applying 9 Volts to the drive coils.
6. The device can be stopped by momentary interruption of the power to the power coils.
7. Conventional instruments operate normally up to an output of 1 kW but stop working above that output level, with their readings showing zero or some other spurious reading.

It appears that Floyd's device was comprised of one or two large ferrite permanent magnets (grade 8, size 150 mm x 100 mm x 25 mm) with coils wound in three planes mutually at right angles to each other (i.e. in the x, y and z axes). The magnetisation of the ferrite magnets is modified by suddenly applying 20,000 Volts from a bank of capacitors (510 Joules) or more to plates on each side of it while simultaneously driving a 1 Amp 60 Hz (or 50 Hz) alternating current through the energising coil. The alternating current should be at the frequency required for the output. The voltage pulse to the plates should be applied at the instant when the 'A' coil voltage reaches a peak. This needs to be initiated electronically.

It is said that the powering of the plates causes the magnetic material to resonate for a period of about fifteen minutes, and that the applied voltage in the energising coil modifies the positioning of the newly formed poles of the magnet so that it will in future, resonate at that frequency and voltage. It is important that the voltage applied to the energising coil in this 'conditioning' process be a perfect sinewave. Shock, or outside influence can destroy the 'conditioning' but it can be reinstated by repeating the conditioning process. It should be noted that the conditioning process may not be successful at the first attempt but repeating the process on the same magnet is usually successful. Once conditioning is completed, the capacitors are no longer needed. The device then only needs a few milliwatts of 60 Hz applied to the input coil to give up to 1.5 kW at 60 Hz at the output coil. The output coil can then supply the input coil indefinitely.

The conditioning process modifies the magnetisation of the ferrite slab. Before the process the North pole is on one face of the magnet and the South pole on the opposite face. After conditioning, the South pole does not stop at the mid point but extends to the outer edges of the North pole face, extending inwards from the edge by about 6 mm. Also, there is a magnetic 'bubble' created in the middle of the North pole face and the position of this 'bubble' moves when another magnet is brought near it.

The conditioned slab has three coil windings:

1. The '**A**' coil is wound first around the outer perimeter, each turn being 150 + 100 + 150 + 100 = 500 mm long (plus a small amount caused by the thickness of the coil former material). It has about 600 turns of 28 AWG (0.3 mm) wire.

2. The '**B**' coil is wound across the 100 mm faces, so one turn is about 100 + 25 + 100 + 25 = 250 mm (plus a small amount for the former thickness and clearing coil 'A'). It has between 200 and 500 turns of 20 AWG (1 mm) wire.

3. The '**C**' coil is wound along the 150 mm face, so one turn is 150 + 25 + 150 + 25 = 350 mm (plus the former thickness, plus clearance for coil 'A' and coil 'B'). It has between 200 and 500 turns of 20 AWG (1 mm) wire and should match the resistance of coil 'B' as closely as possible.

Coil '**A**' is the input coil. Coil '**B**' is the output coil. Coil '**C**' is used for the conditioning and for the production of gravitational effects.

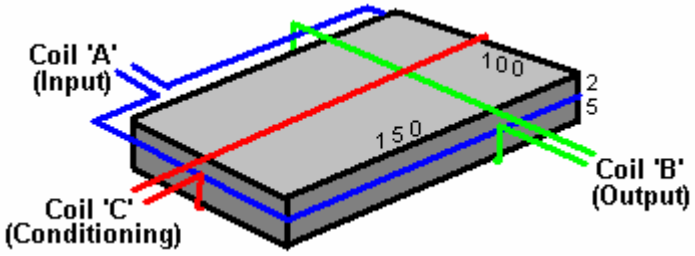

At time of writing, information and photographs of the original device can be found on the website: http://www.intalek.com/Index/Projects/Research/Construction%20of%20the%20Floyd%20Sweet's%20VTA%20by%20Michael%20Watson.htm where a paper by Michael Watson gives much practical information. For example, he states that an experimental set up which he made, had:
The '**A**' coil with a resistance of 70 ohms and an inductance of 63 mH,
The '**B**' coil, wound with 23 AWG wire with a resistance of 4.95 ohms and an inductance of 1.735 mH, and
The '**C**' coil, also wound with 23 AWG wire, with a resistance of 5.05 ohms and an inductance of 1.78 mH.

The **Collapsing Field Technology**.
At the website http://community-2.webtv.net/hotmail.com/prime137/ConvertingOffShelf/ the following, very interesting presentation is made:

CFT- (Collapsing Field Technology) - Updated 2008

In electrical systems, the term "back emf" actually refers to the equal and opposite force field accompanying the "forward emf", in any "symmetrical" electrical system. In magnetic systems, the corresponding term is "forward and back magnetic motive force", rather than "forward and back electric motive force".

All rotating motors actually turn themselves from the broken symmetry which is created inside them. The present day engineers have been taught that they must pay to put extra energy into the system, just to break its symmetry. That of course is totally false. Otherwise, a rotating electron (with its continual spin) would not spin.

In a normal motor, we are taught to put in a coil (say, there in the back mmf region) and then we pay to put in a sudden surge of electromagnetic energy into that coil, so that it momentarily overrides (cancels) the back mmf force. In short, we momentarily make the system asymmetrical, so that its net back mmf is less than its forward mmf.

That means that now the motor retains at least some of its excess acceleration and excess angular momentum added to the flywheel and shaft in its previous acceleration (forward mmf) zone, but we are "paying" (the electric power grid) to have this occur.

Anyway, once that broken symmetry between forward and back mmfs is there, with the back mmf deliberately reduced so that it is less than the forward mmf, the motor will self-rotate because of its own system asymmetry.

For more than one hundred years this effect has been viewed as a problem to be designed out of electrical systems, perhaps because of greed. No one had seriously considered it as a source of abundant free energy. Everyone knew it was there, but no one recognised it's potential.

Standard electrical generator systems can be modified inexpensively to the Over-Unity / Asymmetrical design concept by the addition of a second set of commutator brushes and/or the addition of a second slip ring assembly. Present day electrical generators can be converted to Over-Unity output, as asymmetrical rotation can be

achieved in just a few hours of adaptation work.

The additional commutator and slip ring collect, or scavenge, the collapsing electromagnetic fields (C.E.M.F.) of both the armatures and field coils of standard electrical generator sets. Present day electrical generator design throws away the tremendous amount of electrical energy stored in these collapsing fields. You pay for it, so why not get the benefit from it?

Everyone who makes use of electrical circuits has always considered the collapsing field effect to be a nuisance because, when using a mechanical relay coil in an electronic circuit, it would cause a current to be pumped back into the circuit, creating havoc. One solution to the problem of C.E.M.F. was to install a diode across the coil leads so that when the power was removed, the C.E.M.F. caused a current flow which passed through the diode and which was dissipated as heat in the coil itself, rather than in the circuit.

So, to effect this modification, on the armature / exciter element just install a second set of brushes or slip rings, the exact amount behind the driver units which is needed to collect the C.E.M.F. of the armature field collapse, and take it out of the system to be used as an additional generated electrical supply.

The additional new C.E.M.F. outputs can easily be phased to the original output system load wiring. These modifications more than double the generator's output power for just a small modification cost / time, and no increase in operating costs.

This general design modification allows almost any currently manufactured electrical generator to be an over-unity design, and with some additional external modifications a self-powered over-unity configuration can be obtained on most commercial electric generators by any competent electrical engineer. Why pay for fuel / power that you have available in your generator system already?

Again, just collect the C.E.M.F. of the armature and field coil's collapses for far-over unity operation of these devices, and with external circuit additions, stand-alone, fuel-less electrical power is available to everyone, in the form of an off-the-shelf, self-sustaining, asymmetrical, electrical generator.

The same modifications can be made in most manufactured motors as they can easily be converted into generators. Just scavenge the collapses of the armature and field coil, control it with an external circuit, and you have a stand-alone over-unity electrical generator.

There is a stationary "motionless electromagnetic generator" design, based on the Alexander patent that has been built experimentally. No far out zero-point vacuum explanations are needed to explain its operation. The best form of any such generator would have no moving parts. Looking at any common transformer, and considering how it works, supplies the answer. In any kind of transformer, electricity is transferred between the two coils by the magnetic field. When a coil is initially powered up or switched off, that coil creates a magnetic field which causes a rush of electricity, usually called a 'voltage spike'. In conventional electronics, this voltage spike is suppressed to protect the other circuit components from damage. In collapsing field technology (CFT), that voltage spike is harnessed, rather than being suppressed.

If I take a DC signal generator power supply, and connect it to the primary of the transformer, I can make a generator of sorts. I'll turn on the DC signal in the primary coil windings for just an instant, and then turn it off. In the secondary there is a flux linkage which mirrors the primary signal and this is some 90% of the input power. But we can recover this field collapse in the secondary' and gain an additional 90% of the input power. Thus, any transformer secondary can produce a total output power which is about 180% of the input power in this mode, with a DC input signal which is a gradually applied quarter-sine or saw tooth wave shape.

But wait, we are throwing recoverable power away when the primary coil winding's field collapses. By applying the DC power input signal and then, when the input power is cut off, switch the primary winding's field collapse to the output also, the primary field collapse contributes at least another 90% to the output, for a grand total output power of about 270% of the input power, with this design.

The DC power signal must only power the primary winding up and then let disconnect at the peak voltage. This allows the primary winding to be switched to the output to recover the power in its field collapse, which is in synchronisation with the field collapse in the secondary winding.

Simple electronic switching can accomplish all of these functions, at little power usage and low cost. Therefore, the gain of a transformer over-unity generator would probably be about 250% output power to input power, and no mechanical movement is needed. Many old motors and generators could be adapted to this transformer design.

The armature must be held so that it is permanently stationary and the air gap between armature and field coils filled with iron filings. The air gap iron filings, or iron powder filling is to make the best use of the primary's (armature) full magnetic flux power. This produces the best transformer action and the highest power gain possible with this conversion design.

Cooling, through holes, can be left in the air gap if necessary in these units. The external switching electronic circuitry is the same as for the standard transformer design, described above. All we have done is to turn the motor / generator into a reasonable transformer.

What is happening in this design is that for one "up" drive voltage pulse (power signal) in the primary coil, we get the "up" (field build) in the secondary coil and the "downs" (field collapses) of both the secondary and primary coils, as output power. Think of the primary coils as coupled "springs" and it will all be clear.

This transformer / generator design has been the nature of electromagnetic coils all the time - we just never saw it. If the unit is actuated 60 times a second, allowing for the counter-electromotive force field collapses, it makes a standard household 60 Hz electrical power generator.

This design concept is the natural last step after recovery of secondary collapses was introduced in generator designs. The same gain principle and results could then be achieved in capacitor systems. The charge (up) cycle from the secondary plate and the two discharge cycles from both the secondary and primary plates would be the output power. The basic external switching electronics is generally the same as in the transformer designs.

These designs are in the basic nature of energy storage / transfer elements - one input power pulse produces one input transfer plus two storage collapses or discharges as output power, which is a gain of about 300%.

Rosemary Ainslie. Rosemary Ainslie has produced a pulsed heater system which has been measured at a performance of COP = 17. This is a recent design and as far as I am aware, has not yet been replicated by other people. Panacea-bocaf.org are working with Rosemary's original developers to produce an independent implementation of the heater. At this point in time, the heater has been built to a prototype testing scale for laboratory examination and measurement and not been produced in the kilowatt range, which, hopefully, will come at a later date.

Panacea have produced a 250-page document describing the research, the testing, the theory, etc. and that can be downloaded free using this link:
http://www.panaceauniversity.org/Rosemary%20Ainslie%20COP17%20Heater%20Technology.pdf

As that document contains the details which scientists need to see for serious testing and development, it may be a little technical for some people, so Panacea have produced a simplified version aimed at the average home-build investigator and that can be downloaded free using this link:
http://www.panaceauniversity.org/Ainslie_heater_circuit_by_Patrick_Kelly.pdf

In very broad outline, the circuit produces the same very short, very sharp voltage pulses that are the basis for so many "free-energy" devices. The circuit used looks very simple but in spite of that, the way that it operates is not at all simple. The circuit is shown below and to a quick glance, it looks like a standard 555 timer chip circuit, used in many existing applications. However, if the circuit is operated as a 555 pulsing circuit, then the output is not COP>1.

Looking more closely, we notice that the link between the output of the 555 chip on pin 3 and the input gate pin of the Field-Effect Transistor, is unusual as it is not the usual voltage divider between pin 3 and the 0-volts ground line. Instead, the gate is directly coupled to the 555 chip output by a single, low-resistance preset resistor.

Normally, an NE555 chip struggles to reach 50,000 cycles per second and a large number of 555 chips on the market can't even operate at even that frequency. To get Rosemary's circuit into it's COP>1 operation, the resistor marked "GATE" is adjusted very slowly to find the point at which the circuit becomes unstable, over-rides the normal operation of the 555 chip and starts oscillating at the resonant frequency of the overall circuit, forcing the 555 chip to become a feedback component. The circuit then produces the sharp, short voltages spikes at more than ten times the operating speed of the 555 chip and pulsing the 10-ohm heating element marked "LOAD" at about 500,000 pulses per second.

That rate of operation is clearly well outside the possible performance of an NE555 chip, besides which, the timing elements of the chip should be producing a much lower frequency, as indeed it does before the "GATE" resistor

adjustment causes the circuit to break out of its normal design-mode operation and start the high-speed spike generating, resonant performance. The circuit used is shown here:

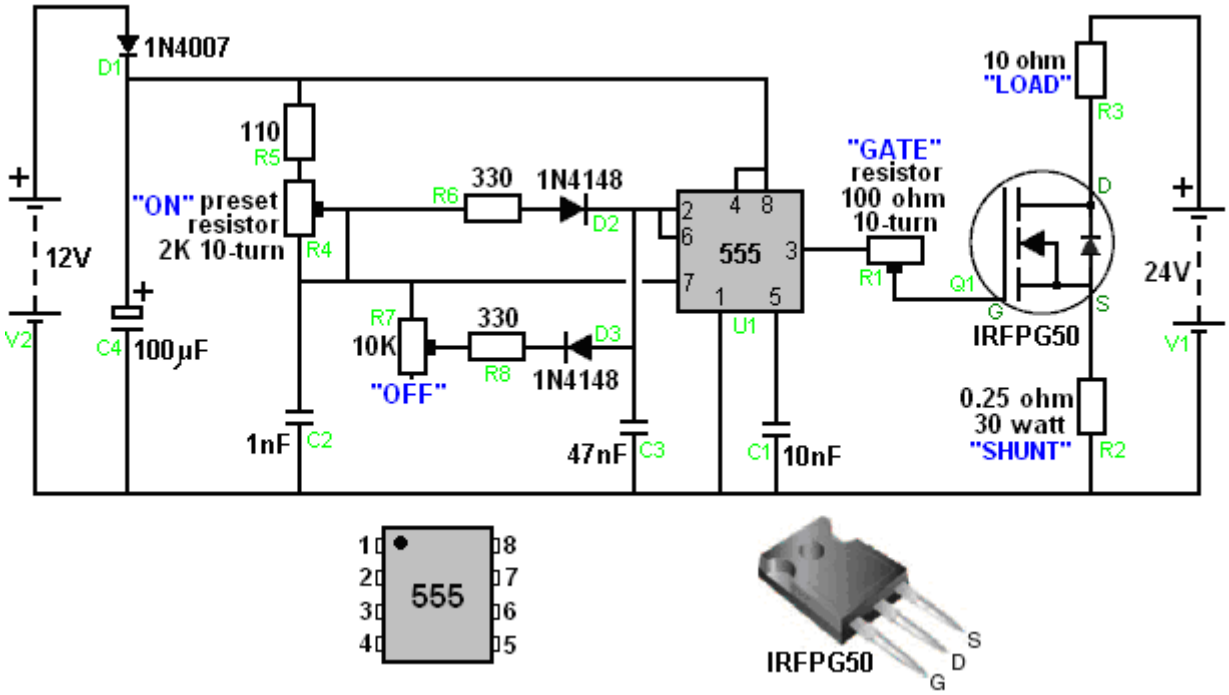

As Panacea-bocaf are working to test and develop this circuit further, it would be a good idea to download their free documentation on the design and keep an eye on their progress in this field. The two documents give very considerable detail on the work which has already been done, and of course, you can yourself experiment with this circuit and see what results and adjustments you can discover yourself.

Patrick Kelly
engpjk@yahoo.co.uk
http://www.free-energy-info.co.uk
http://www.free-energy-devices.com

N° 1098 A.D. 1913

Date of Application, 14th Jan., 1913—Accepted, 14th Jan., 1914

COMPLETE SPECIFICATION.

Improvements in and relating to Apparatus for Producing Electricity.

I, ROY JEROME MEYERS, of Hotel Altamont, Baltimore, in the State of Maryland, United States of America, Electrician, do hereby declare the nature of this invention and in what manner the same is to be performed, to be particularly described and ascertained in and by the following statement:—

This invention relates to improvements in apparatus for the production of electrical currents, and the primary object in view is the production of a commercially serviceable electrical current without the employment of mechanical or chemical action. To this end the invention comprises means for producing what I believe to be dynamic electricity from the earth and its ambient elements.

I am, of course, aware that it has been proposed to obtain static charges from upper strata of the atmosphere, but such charges are recognized as of widely variant potential and have thus far proved of no practical commercial value, and the present invention is distinguished from all such apparatus as has heretofore been employed for attracting static charges by the fact that this improved apparatus is not designed or employed to produce or generate irregular, fluctuating or other electrical charges which lack constancy, but on the other hand I have by actual test been able to produce from a very small apparatus at comparatively low elevation, say about fifty or sixty feet above the earth's surface, a substantially constant current at a commercially usable voltage and amperage. This current I ascertained by repeated tests is capable of being readily increased by additions of the unit elements in the apparatus hereinafter set forth, and I am convinced from the constancy of the current obtained and its comparatively low potential that the current is dynamic and not static, although, of course, it is not impossible that certain static discharges occur and, in fact, I have found occasion to provide against the damage which might result from such discharge by the provision of lightning arresters and cut-out apparatus which assist in rendering the obtained current stable by eliminating sudden fluctuations which sometimes occur during conditions of high humidity from what I consider static discharges. The nature of my invention is obviously such that I have been unable to establish authoritatively all of the principles involved, and some of the theories herein expressed may possibly prove erroneous, but I do know and am able to demonstrate that the apparatus which I have discovered does produce, generate, or otherwise acquire a difference of potential representing a current value which is commercially serviceable and may be delivered at the voltage and amperage above stated, or varied therefrom at the will of the operator according to the uses to which the current is to be subjected.

The invention comprises generically means for producing electrical currents of serviceable potential substantially without the employment of mechanical or chemical action, and in this connection I have been able to observe no chemical action whatever on the parts utilized although deterioration may possibly occur in some of the parts, but so far as I am able to determine such deterioration does not add to the current supply but is merely incidental to the effect of climatic action.

The invention more specifically comprises the employment of a magnet or

[*Price 8d.*]

BIRMINGHAM REFERENCE LIBRARY PUBLIC LIBRARIES

magnets and a co-operating element, such as zinc disposed adjacent to the magnet or magnets and connected in such manner and arranged relative to the earth so as to produce current, my observation being that current is produced only when such magnets have their poles facing substantially to the north and south and the zincs are disposed substantially along the magnets.

The invention also comprehends other details of construction, combinations and arrangements of parts as will hereinafter be fully set forth and claimed.

In the accompanying drawings:

Figure 1 is a top plan view of an apparatus embodying the features of the present invention, the arrow accompanying the figure indicating substantially the geographical north, parts of the figure being diagrammatic for condensing the showing.

Figure 2 is a view in side elevation of the parts seen in plan in Figure 1.

Figure 3 is a vertical section taken on the plane indicated by the line 3—3 of Figure 2 and looking in the direction indicated by the arrow.

Figure 4 is a detail view partly in elevation and partly in section showing the detail connections of the converter and intensifier.

Figure 5 is a transverse section taken on the planes indicated by line 5—5 of Figure 4 and looking downwardly.

Figure 6 is an enlarged detail fragmentary section illustrating the parts at the juncture of the conductors and one of the intensifiers.

Figure 7 is an enlarged detail view partly in elevation and partly in section of one of the automatic cut-outs and

Figure 8 is a diagrammatic view of one of the simplest forms of embodiments of the invention.

Referring to the drawing by numerals, 1, 1 indicates magnets connected by a magnetic substance 2, preferably an iron wire. The magnets 1 are arranged in pairs, one pair being spaced beneath the other, and interposed between the magnets are zinc plates 3, 3 connected by an iron wire conductor 4. Suitable insulating supports 5 are arranged for sustaining the respective magnets 1 and plates 3, 3. Each plate 3 is preferably bent substantially into V form, as clearly seen in Figure 1, and the V of one of the plates opens or faces toward the north and the V of the other plate to the south. I have determined by experimentation that it is essential that the plates 3 be disposed substantially north and south with their flat faces approximately parallel to the adjacent faces of the co-operating magnets, although by experience I have not discovered any material difference in the current obtained when the plates are disposed slightly to one side of north and south, as for instance when disposed in the line of the magnetic polarity of the earth. The same is true with respect to the magnets 1, the said magnets being disposed substantially north and south for operative purposes, although I find that it is immaterial whether the north pole of one of the magnets is disposed to the north and the south pole to the south, or *vice versa*, and it is my conviction from experience that it is essential to have the magnets of each pair connected by magnetic material so that the magnets substantially become one with a pole exposed to the north and a pole exposed to the south. In Figure 1, I have indicated in full lines by the letters S and N the respective polarities of the magnets 1, and have indicated in dotted lines the other poles of those magnets when the connection 2 is severed. I have found that the magnets and zinc plates operate to produce, whether by collection or generation I am not certain, electrical currents when disposed substantially north and south, but when disposed substantially east and west no such currents are produced. I also find that the question of elevation is by no means vital, but it is true that more efficient results are obtained by placing the zincs and magnets on elevated supports. I furthermore find from tests that it is possible to obtain currents from the apparatus with the zincs and magnets disposed in a building or otherwise enclosed, although more efficient results are obtained by having the said elements arranged in the open.

While in Figures 1, 2 and 3, I have shown the magnets and the zinc plates as superimposed, it will be apparent, as hereinafter fully set forth, that these elements may be juxtaposed in horizontal planes, and substantially the same results will be secured. Furthermore, the magnets 1 with the interposed zincs 3, as shown in Figures 1, 2 and 3 merely represent a unit which may be repeated either horizontally or vertically for increasing the current supply, and when the unit is repeated the zinc plates are arranged alternating with the magnets throughout the entire series as hereinafter indicated.

A conductor 6 is connected in multiple with the conductors 2 and a conductor 7 is connected with conductor 4, the conductor 6 extending to one terminal of a rectifier which I have indicated by the general reference character 8, and the conductor 7 extending to the other terminal of said rectifier. The rectifier as seen in diagram in Figure 1 may assume any of several well known embodiments of the electrical valve type and may consist of four assymmetric cells or Cooper-Hewitt mercury vapor lamps connected as indicated in Figure 1 for permitting communication of the positive impulses from conductor 7 only to the line conductor 9 and the negative impulses from the conductor 7 only to the line conductor 10, and permitting the positive impulses from the conductor 6 only to the line conductor 9 and the negative impulses from conductor 6 only to the line conductor 10. The current from this rectifier may be delivered through the conductors 9 and 10 to any suitable source for consumption.

While the said rectifier 8 may consist of any of the known types, as above outlined, it preferably consists of a specially constructed rectifier which also has the capacity of intensifying the current and comprises specifically the elements shown in detail in Figures 4, 5 and 6 wherein I have disclosed the detail wiring of the rectifier when composed of four of the rectifying and intensifying elements instead of assymmetric cells or simple mercury vapor valves. As each of these structures is an exact embodiment of all the others, one only will be described, and the description will apply to all. The rectifying element of each construction consists of a mercury tube 11 which is preferably formed of copper but may be formed of glass or other suitable material, and comprises a cylinder having its end portions tapered and each terminating in an insulating plug or stopper 12. Through the upper stopper 12 is extended the electrode 13 which extends well into the tube and preferably substantially one-half the length thereof to a point adjacent the inner end of an opposing electrode 14 which latter electrode extends thence downwardly through the insulation 12 at the lower end of the tube. The tube 11 is supplied with mercury and is adapted to operate on the principle of the mercury vapor lamp, serving to rectify current by checking back impulses of one sign and permitting passage of impulses of the other. To avoid the necessity for utilizing a starter, as is common with the lamp type of electrical valve, the supply of mercury within the tube may be sufficient to contact with the lower end of the electrode 13 when current is not being supplied, so that as soon as current is passed from one electrode to the other sufficiently for volatilizing that portion of the mercury immediately adjacent the lower end of electrode 13, the structure begins its operation as a rectifier. The tube 11 is surrounded by a tube 15 which is preferably spaced from tube 11 sufficiently for allowing atmospheric or other cooling circulation to pass the tube 11. In some instances, it may be desirable to cool the tube 11 by a surrounding body of liquid, as hereinafter indicated. The tube 15 may be of insulating material but I find efficient results attained by the employment of a steel tube, and fixed to the ends of the tube are insulating disks 16, 16 forming a spool on which are wound twin wires 6^1 and 7^1, the wire 6^1 being connected at the inner helix of the coil with the outer end of the electrode 14, the lower portion of said electrode being extended to one side of the tube 11 and passed through an insulating sleeve 17 extending through the tube 15, and at its outer end merging into the adjacent end of the wire 6^1. The wire 7^1 extends directly from the outer portion of the spool through the

several helices to a point adjacent the juncture of the electrode 14 with wire 6^1 and thence extends in mechanical parallelism with the wire throughout the coil, the wire 6^1 ending in a terminal 18 and the wire 7^1 ending in a terminal 19. For the sake of convenience of description and of tracing the circuits, each of the apparatus just above described and herein known as an intensifier and rectifier will be mentioned as A, B, C and D, respectively. Conductor 6 is formed with branches 20 and 21 and conductor 7 is formed with similar branches 22 and 23. Branch 20 from conductor 6 connects with conductor 7^1 of intensifier B and branch 21 of conductor 6 connects with the conductor 7^1 of intensifier C, while branch 22 of conductor 7 connects with conductor 7^1 of intensifier A and branch 23 of conductor 7 connects with conductor 7^1 of intensifier D. A conductor 27 is connected with terminal 19 of intensifier A and extends to and is connected with terminal 18 of intensifier C, and a conductor 28 is connected with the terminal 19 of intensifier C and extends to and is connected with electrode 13 of intensifier A. A conductor 29 extends from the terminal 19 of intensifier B to the terminal 18 of intensifier D and a conductor 30 extends from the terminal 19 of intensifier D to electrode 13 of intensifier B. Each electrode 13 is supported on a spider 13^1 resting on the upper disk 16 of the respective intensifier. Conductors 31 and 32 are connected with the terminals 18 of intensifiers A and B and are united to form the positive line wire 9 which co-operates with the negative line wire 10 and extends to any suitable point of consumption. The line wire 10 is provided with branches 35 and 36 extending to the electrodes 13 of intensifiers C and D for completing the negative side of the circuit.

Thus it will be seen that alternating currents produced in the wires 6 and 7 will be rectified and delivered in the form of a direct current through the line wires 9 and 10, and I find by experiment that the wires 6 and 7 should be of iron, preferably soft, and may of course be insulated, the other wiring not specified as iron being of copper or other suitable material.

In carrying out the operation as stated, the circuits may be traced as follows: A positive impulse starting at the zincs 3 is directed along conductor 7 to branch 23 to conductor 7^1 and the winding of intensifier D to terminal 19 through conductor 30 to electrode 13 of the rectifier of intensifier B through said rectifier to the conductor 6^1, through the winding thereof to the contact 18, conductor 32 and to the line wire 9. The next or negative impulse directed along conductor 7 cannot find its way along branch 23 and the circuit just above traced because it cannot pass across the rectifier of intensifier B but instead the negative impulse passes along conductor 22 to conductor 7 of intensifier A and the winding thereof to the contact 19 to conductor 27 to contact 18 of intensifier C, to the winding of the wire 6^1 thereof to the electrode 14 through the rectifier to the electrode 13 and conductor 36 to the line wire 10. A positive impulse delivered to wire 6 passes along the said wire to the branch 21 to the conductor 7^1 of intensifier C and the winding thereof to the contact 19, conductor 28, electrode 13 of the rectifier of intensifier A, electrode 14 thereof and conductor 6^1 to contact 18 and wire 31 to line wire 9. Obviously the positive impulse cannot pass along the wire 20 because of its inverse approach to the rectifier of intensifier B. The next impulse or negative impulse delivered to conductor 6 cannot pass along conductor 21 because of its connection with electrode 13 of the rectifier of intensifier A, but instead passes along conductor 20 to the wire 7^1 and its winding forming part of intensifier B to the contact 19 and conductor 29 to contact 18 and the winding of wire 6^1 of intensifier D to the electrode 14 and through the rectifier to the electrode 13 and conductor 35 to line wire 10. Thus the current is rectified and all positive impulses directed along one line and all negative impulses along the other line so that the potential difference between the two lines will be maximum for the given current of the alternating circuit. It is, of course, apparent that a less number of intensifiers with their accompanying rectifier elements may be

employed with a sacrifice of the impulses which are checked back from a lack of ability to pass the respective rectifier elements, and in fact I have secured efficient results by the use of a single intensifier with its rectifier elements, as hereinafter set forth.

Grounding conductors 37 and 38 are connected respectively with the conductors 6 and 7 and are provided with the ordinary lightning arresters 39 and 40 respectively for protecting the circuit against high tension static charges.

Conductors 41 and 42 are connected respectively with the conductors 6 and 7 and each connects with an automatic cut-out 43 which is grounded as at 44. Each of said automatic cut-outs is exactly like the other and one of the same is shown in detail in Figure 7 and comprises the inductive resistance 45 provided with an insulated binding post 46 with which the respective conductor 6 or 7 is connected, said post also supporting a spring 48 which sustains an armature 49 adjacent the core of the resistance 45. The helix of resistance 45 is connected preferably through the spring to the binding post at one end and at the other end is grounded on the core of the resistance, the said core being grounded by ground conductor 44 which extends to the metallic plate 52 imbedded in moist carbon or other inductive material 53 buried in the earth. Each of the conductors 41, 42 and 44 is of iron, and in this connection I wish it understood that where I state the specific substance I am able to verify the accuracy of the statement by the results of tests which I have made, but of course I wish to include along with such substance all equivalents, as for instance, where iron is mentioned its by-products, such as steel, and its equivalents such as nickel and other magnetic substances are intended to be comprehended. The cut-out apparatus seen in detail in Figure 7 is employed particularly for insuring against high tension currents it being obvious from the structure shown that when potential rises beyond the limit established by the tension of the spring sustaining the armature 49, the armature will be moved to a position contacting with the core of the cut-out device and thereby directly close the ground connection for line wire 41 with conductor 44, eliminating the resistance of winding 45 and allowing the high tension current to be discharged to the ground. Immediately upon such discharge the winding 45 losing its current will allow the core to become demagnetized and release the armature 49 whereby the ground connection is substantially broken leaving only the connection through the winding 45 the resistance of which is sufficient for insuring against loss of low tension current.

In Figure 8 I have illustrated an apparatus which though apparently primitive in construction and arrangement comprehends the first successful embodiment which I produced in the course of the discovery of the present invention, and it will be observed that the essential features of the invention are therein disclosed. The structure delineated in said figure consists of horse shoe magnets 54, 54, one facing north and the other south, that is, each opening in the respective directions indicated and the two being connected by an iron wire 55 which is uninsulated and wrapped about the respective magnets at or adjacent the neutral zone thereof, and the wire 55 is preferably soldered to the respective magnets each end portion of the wire 55 being extended from the respective magnet to and connected with, as by being soldered to, a zinc plate 56, there being a plate 56 for each magnet and each plate being arranged longitudinally substantially parallel with the legs of the magnet and with the faces of the plate exposed toward the respective legs of the magnet, the plate being thus arranged endwise toward the north and south. An iron wire 57 connects the plates 56, the ends of the wire being preferably connected adjacent the outer ends of the plates but from experiment I find that the wire may be connected at practically any point to the plate. Lead wires 58 and 59 are connected respectively with the wires 55 and 57 and supply an alternating current ordinarily at a comparatively low tension, and to control such current the wires 58 and 59 may be extended to a rectifier or combined rectifier and intensifier, as above set forth.

The tests which I have found successful with the apparatus seen in Figure 8 were carried out by the employment first of horse shoe magnets approximately four inches in length, the bar comprising the horse shoe being about one inch square, the zincs being dimensioned proportionately and from this apparatus with the employment of a single intensifier and rectifier, as above stated, I was able to obtain a constant current of 8 volts.

It should be obvious that the magnets forming one of the electrodes of this apparatus may be permanent or may be electro-magnets, or a combination of the two.

While the magnets mentioned throughout the above may be formed of any magnetic substance, I find the best results obtained by the employment of the nickel chrome steel.

While the successful operation of the various devices which I have constructed embodying the present invention have not enabled me to arrive definitely and positively at fixed conclusions relative to the principles and theories of operation and the source from which current is supplied, I wish it to be understood that I consider myself as the first inventor of an apparatus of the general type hereinbefore described capable of producing commercially serviceable electricity, for which reason my claims hereinafter appended contemplate that I may utilize a wide range of equivalents so far as concerns details of construction suggested as preferably employed.

The current which I am able to obtain is dynamic in the sense that it is not static and its production is accomplished without chemical or mechanical action either incident to the actual chemical or mechanical motion or incident to changing calorific conditions so that the elimination of necessity for the use of chemical or mechanical action is to be considered as including the elimination of the necessity for the use of heat or varying degrees thereof.

Having now particularly described and ascertained the nature of my said invention, and in what manner the same is to be performed, I declare that what I claim is:—

1. Means for producing dynamic electricity without mechanical or chemical action.

2. Electricity producing means as claimed in Claim 1, characterized in that said means is capable of producing low tension current.

3. Electricity producing means as claimed in Claim 1, characterized in that said means comprises a magnet, and means co-operating with the latter.

4. Means as set forth in Claim 3, characterized in that the parts are stationary.

5. Means as claimed in Claim 3, characterized in that the magnet is disposed substantially north and south.

6. Means as claimed in Claims 1, 3 and 5, wherein the means coacting with the magnet is a metal and said parts are disposed substantially north and south.

7. Means as claimed in Claims 1, 3 and 6, in which the metal is zinc, and combined with conductors connected with the co-operating parts to deliver current therefrom.

8. Means as set forth in Claim 1, characterized in that said means comprises spaced magnets with an adjacent co-operating zinc, and an iron wire connecting the magnets, and means to deliver electrical current from said parts.

9. Means as set forth in Claim 8, characterized in that the current delivery means comprises an intensifier and rectifier.

10. Means as set forth in Claim 8, characterized in that the current delivery means comprises wires connected with the magnets and zinc, an electrical valve connected with one of said wires, and independent helices surrounding said valve, one of said helices being connected with the terminal of the valve at the opposite side from the contact of said wire and the other of said helices being connected with the other wire, the electrical valve comprising a mercury vapor rectifier.

11. The process of producing electricity comprising exposing a magnet and

co-operating means disposed substantially north and south and taking off current therefrom.

12. The process of producing electricity comprising disposing stationary elements in co-operative relation in respect to each other and with respect to the earth for giving off relatively low tension electrical current, substantially without chemical action.

13. Electricity producing means constructed and operating substantially as described with reference to the accompanying drawings.

Dated this 13th day of January, 1913.

W. P. THOMPSON & Co.,
6, Lord Street, Liverpool, and at
Bradford & London,
Agents for the Applicant.

Reference has been directed, in pursuance of Section 7, Sub-section 4, of the Patents and Designs Act, 1907, to Specifications No. 16,709 of 1887, No. 14,033 of 1899, No. 15,412 of 1906, and No. 5457 of 1911.

Redhill: Printed for His Majesty's Stationery Office, by Love & Malcomson, Ltd.—1914.

A.D. 1913. JAN. 14. Nº 1098.
MEYERS' COMPLETE SPECIFICATION.

(2 SHEETS)
SHEET 1.

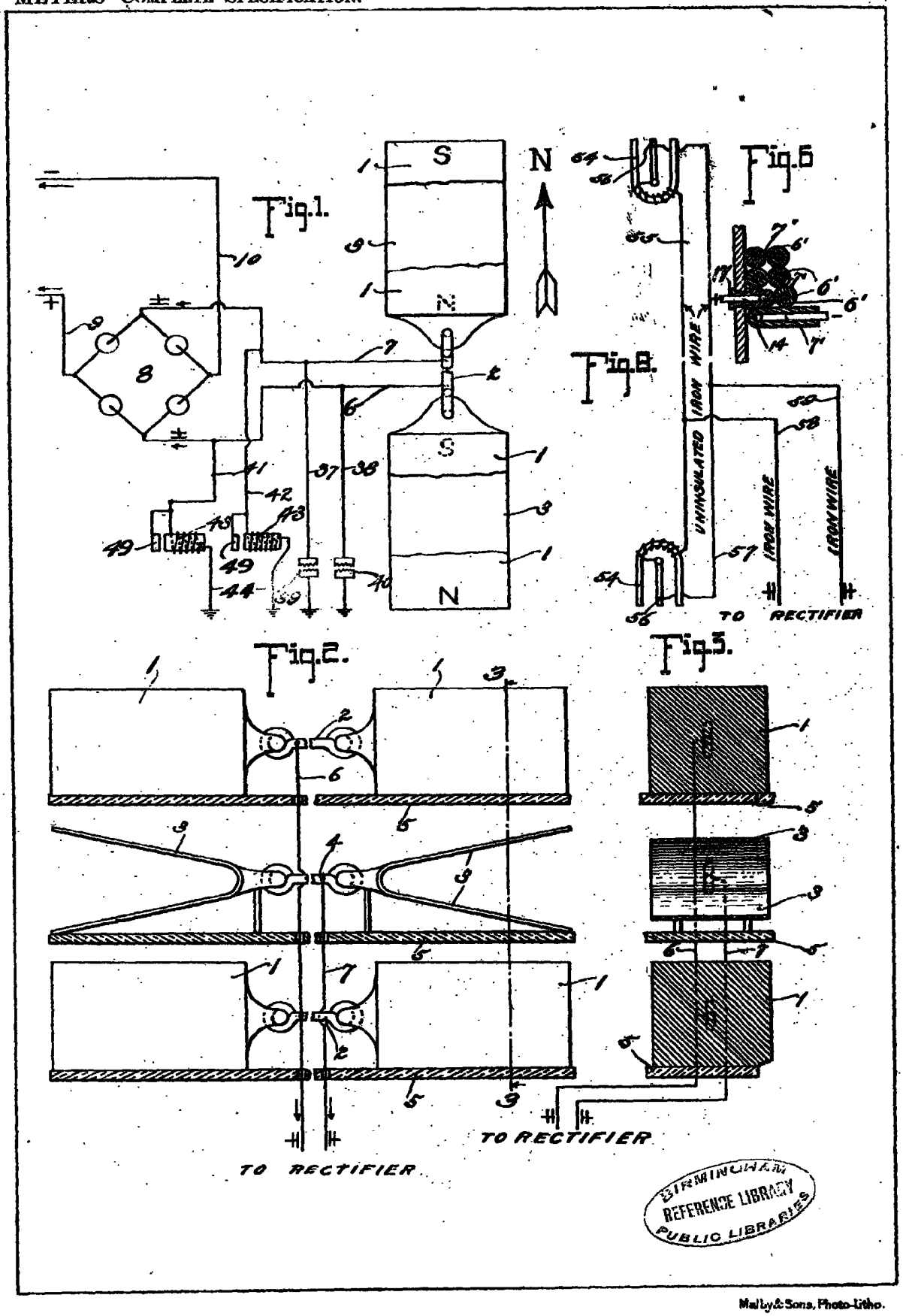

BIRMINGHAM REFERENCE LIBRARY PUBLIC LIBRARIES

[This Drawing is a reproduction of the Original on a reduced scale.]

Malby & Sons, Photo-Litho.

[This Drawing is a full-size reproduction of the Original.]

Fig. 7.

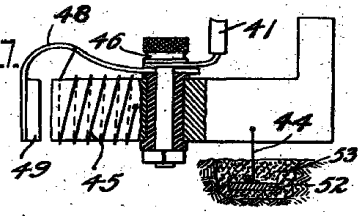

Fig. 4.

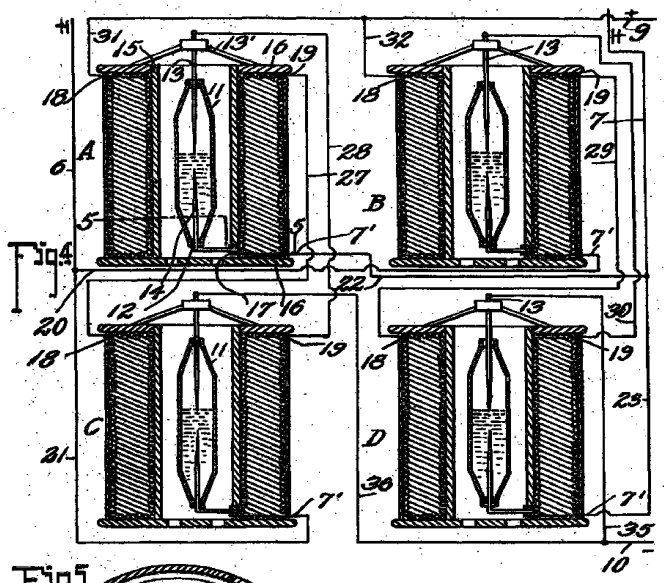

Fig. 5.

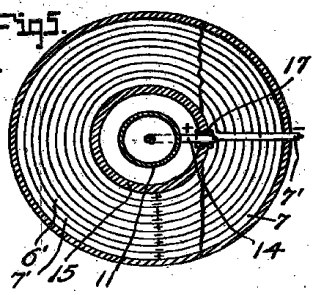

REFERENCE LIBRARY
PUBLIC LIBRARIES

Malby & Sons, Photo-Litho.

[This Drawing is a full-size reproduction of the Original.]

Fig. 7.

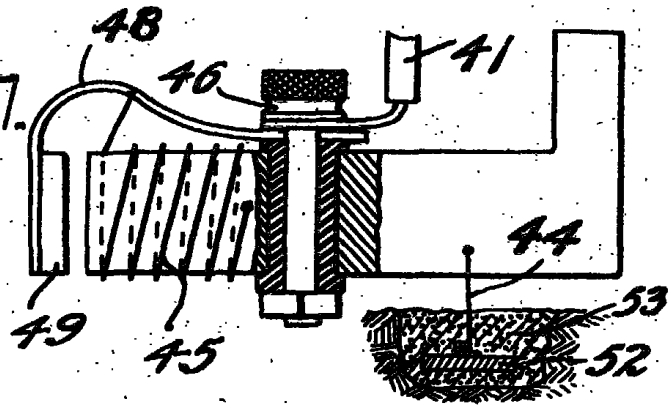

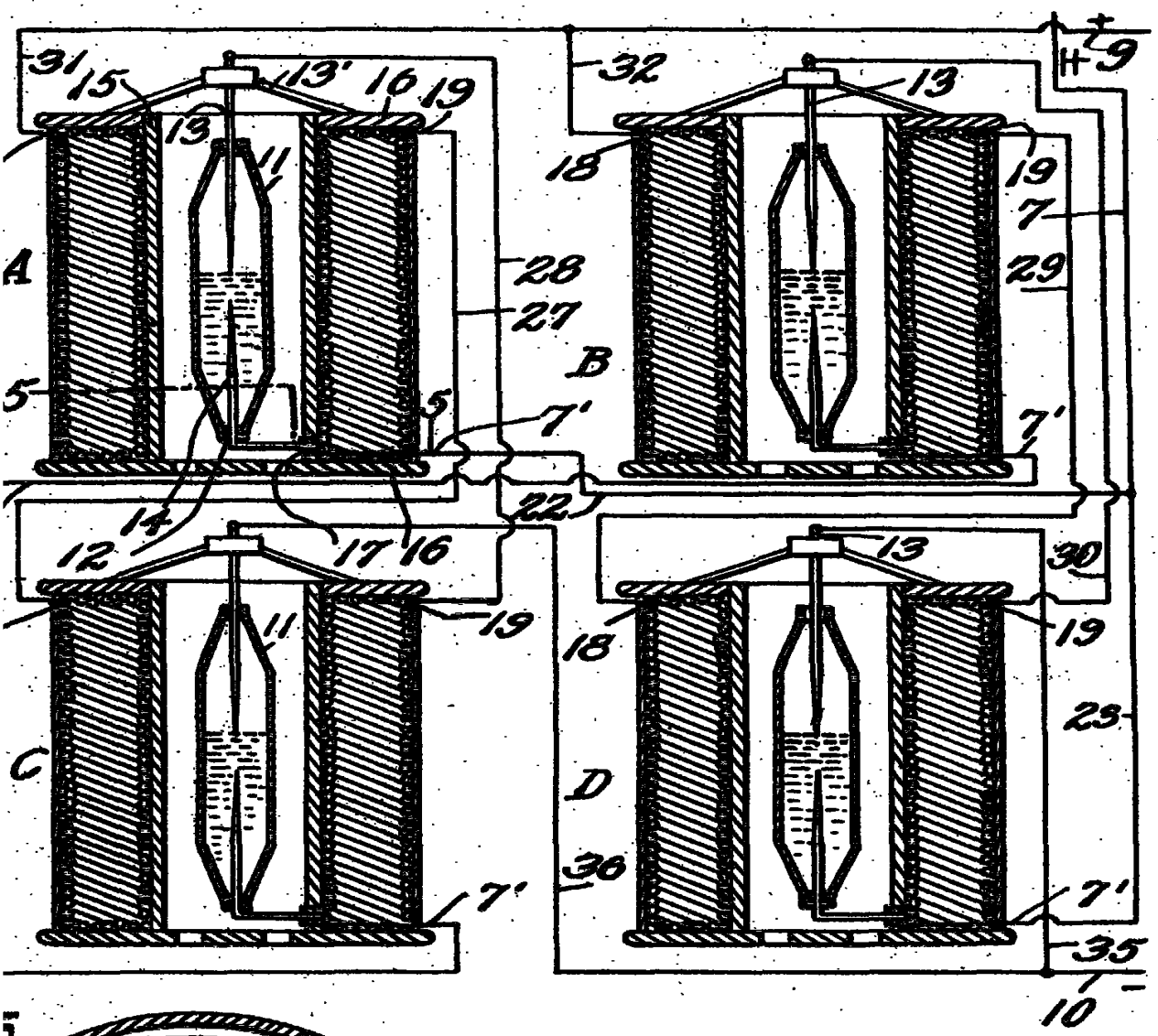

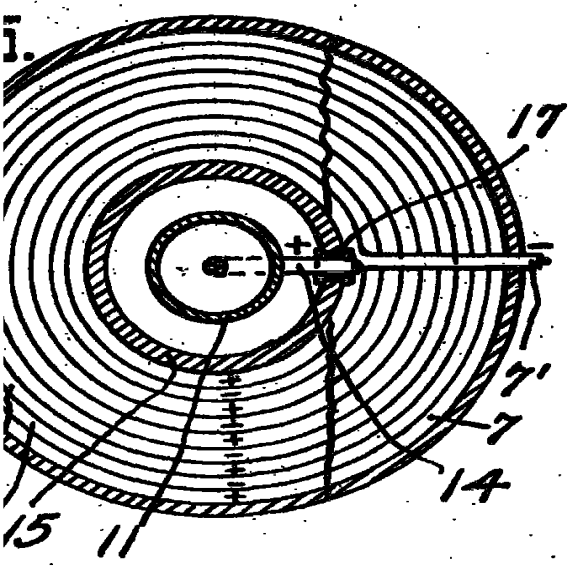

BIRMINGHAM
REFERENCE LIBRARY
PUBLIC LIBRARIES

Malby & Sons, Photo-Litho.

The Basics of "Free-Energy":

This beginner's introduction presumes that you have never heard of free-energy before and would like an outline sketch of what it is all about, so let's begin at the beginning.

We tend to have the impression that people who lived a long time ago were not as clever as we are - after all, we have television, computers, mobile phones, games consoles, aeroplanes, …. But, and it is a big "but", the reason why they did not have those things is because science had not advanced far enough for those things to become possible. That did **not** mean that the people who lived before us were any less clever than we are.

For example, could you, personally, come up with an accurate calculation of the circumference of the Earth? This has to be without prior knowledge, no satellites, no astronomical information, no calculators, no computers and no experts to guide you. Eratosthenes did by observing the shadows in two wells some 800 kilometres apart. When was that? More than two thousand years ago.

You have probably heard of the geometry of Pythagoras who hundreds of years before Eratosthenes, and that geometry is still used in remote areas to lay out the foundations for new buildings. You have probably heard of Archimedes who worked out why things float. He lived more than two thousand years ago. So, how do those people stack up against you and me? Were they stupid people?

This is quite an important point because it demonstrates that the body of scientific information enables many things which were not thought possible in earlier times. This effect is not restricted to centauries ago. Take the year 1900. My father was a youngster then, so it is not all that long ago. It would be another three years before Orville and Wilbur Wright made their first 'heavier-than-air' flight, so there no aircraft around in 1900. There were no radio stations and most definitely, no television stations, nor would you have found a telephone inside a house. The only serious forms of information were books and periodicals or teaching establishments which rely on the knowledge of the teachers. There were no cars and the fastest form of transport for the average person was on a galloping horse.

Today, it is difficult to grasp what things were like not all that long ago, but come closer in time and look back just fifty years. Then, people researching in scientific fields had to design and build their own instruments before they ever got to experimenting in their chosen fields of knowledge. They were instrument makers, glass-blowers, metal workers, etc. as well as being scientific researchers. Nowadays there are measuring instruments of all kinds for sale ready-made. We have silicon semiconductors which they didn't have, integrated circuits, computers, etc. etc.

The important point here is the fact that advances in scientific theory have made possible many things which would have been considered quite ridiculous notions in my father's time. However, we need to stop thinking as if we already know everything there is to know and that nothing which we think of as "impossible !!" could ever happen. Let me try to illustrate this by remarking on just a few things which as recently as the year 1900 would have marked you out as a "lunatic crank", things which we take for granted today because, and only because, we are now familiar with the science behind each of these things.

Certainties in the year 1900

A metal aeroplane weighing 350 tons couldn't possibly fly - everyone knows that !!

You couldn't possibly watch someone who is a thousand miles away - talk sense !!

No ! Of course you can't speak to somebody who lives in a different country unless you visit them !

The fastest way to travel is on a galloping horse.

A machine could never beat a man at chess - be realistic !

Today, we know that these things are not just possible, but we take them for granted. We have a mobile phone in our pocket and could easily use it to talk to friends in other countries almost anywhere in the world. It would seem very strange if we could not do that any more.

We each have a television and can watch, say, a golf tournament taking place at the other side of the world. We watch in real time, seeing the result of each stroke almost as soon as the golfer does himself. Even suggesting that such a thing was possible might have got you burnt at the stake for witchcraft, not all that long ago, but not having television would seem a very strange situation for us today.

If we see a 350 ton metal Boeing 747 aircraft flying past, we would not think it to be strange in any way, let alone think it was "impossible". It is routine, casual travel at 500 mph, a speed which would have been considered to be a fantasy when my father was young. The fact that the aircraft is so heavy, is of no concern to us as we know that it will fly, and does so, routinely, every day of the year.

We take for granted, a computer which can do a million things in one second. Today, we have lost the understanding of how big "a million" is, and we know that most people are likely to lose a game of chess if they play against a computer, even a cheap chess computer.

What we need to understand is that our present scientific knowledge is far from being comprehensive and there is still a very large amount to be learned, and that things which the average person today would consider "impossible" are quite liable to be casually routine day-to-day devices in just a few years time. This is **not** because we are stupid but instead it is because our current science still has a long way to go.

The objective of this website (www.free-energy-info.com) is to explain some of the things which current science is not teaching at the present time. Ideally, we want a device which will power our homes and cars without the need to burn a fuel of any kind. Before you get the idea that this is some new and wild idea, please remember that windmills have been pumping water, milling grain, lifting heavy loads and generating electricity for a very long time now. Water wheels have been doing similar work for a very long time and both of these devices are fuel-less.

The energy which powers windmills and water wheels comes to us via our Sun which heats air and water, causing wind and rain, feeding power to our devices. The energy flows in from our local environment, costs us nothing and will keep on coming whether we make use of it or not.

Most of the pictures of wind generators and water wheels which you will see, show devices which would take a large amount of money to set up. The title of the main eBook on this website is "The Practical Guide to Free-Energy Devices" and the word "practical" is intended to indicate that most of the things spoken about are things which you, personally, have a reasonable chance of constructing for yourself if you decide to do so. However, while in chapter 14 there are instructions for building your own wind-powered electrical generator from scratch, pumping water uphill without using a fuel and utilising wave power at low cost, these things are subject to the weather. So, because of this, the main subject is the next generation of commercial devices, devices which do not need a fuel in order to function and power our homes and vehicles, devices which operate no matter what the weather is doing.

Perhaps I should remark at this point, that the introduction of this new wave of hi-tech devices is being actively opposed by people who will lose a very large stream of revenue when it does eventually happen, as it most certainly will. For example, Shell BP which is a typical oil company, makes about US $3,000,000 profit per hour, every hour of every day of every year, and there are dozens of oil companies. The government makes even more than that out of the operation, with 85% of the sale price of oil being government tax. No matter what they say, (and they both do like to talk "green" in order to gain popularity), neither would ever for a single moment, consider allowing the introduction of fuel-less power devices, and they have the finance to oppose the new technology at every level.

For example, some years ago MIT in the USA spent millions proving that on board fuel reformers would give us all better fuel economy and cleaner air. They did long-term testing on buses and cars to provide proof. They teamed up with the very large auto-parts supplier Arvin Meritor to put these new devices in production vehicles. Then "One Equity Partners" bought out Arvin Meritor's division that did all the final work to get fuel reformers put into all new vehicles. They created a new company, EMCON Technologies, and that company dropped the fuel reformer from their product line, not because it did not work but because it did work. This is not "conspiracy theory" but a matter of public record.

Some years ago, Stanley Meyer, a talented man living in the USA, found a very energy-efficient way of breaking water into a mixture of hydrogen gas and oxygen gas. He pushed on further and found that a vehicle engine could be run on quite a small amount of this "hydroxy" gas if it was mixed with air, water droplets and some of the exhaust gas coming from the engine. He got funding to allow him to start manufacturing retro-fit kits which would allow any car to run on water alone and not use fossil fuel at all. You can imagine how popular that would have been with the oil companies and the government. Just after getting his funding, Stan was eating a meal at a restaurant when he jumped up, said "I've been poisoned !", rushed out into the car park and died on the spot. If Stan was mistaken, and he died of 'natural causes', then it was remarkably convenient timing for the oil companies and the government, and his retro-fit kit was never manufacture red.

Even though Stan left behind many patents on the subject, until recently nobody managed to replicate his very low-power electrolyser, when Dave Lawton achieved it feat and many people have since managed it by following Dave's instructions. More difficult still is getting an engine to run on no fossil fuel as Stan did, but recently, three men in the UK achieved just that by getting a standard petrol-engined electrical generator to run with water as the only fuel.

Interestingly, this is not something which they want to pursue as they have other areas which are of much more interest to them. Consequently, they have no objections to sharing the practical information on what they did and the details are in chapter 10 of the eBook.

In very brief outline, they took a standard 5.5 kilowatt generator and delayed the spark timing by some eleven degrees, avoided the 'waste' spark and fed the engine a mix of air, water droplets and just a small amount (measured at three litres per minute) of hydroxy gas. They test-loaded the generator with four kilowatts of

electrical equipment to confirm that it worked well under load, and then moved on to larger engines. This is the sort of generator:

And the general arrangement for running it without petrol is shown in outline here, the full details being in chapter 10 of the eBook, including how to make your own high-performance electrolyser:

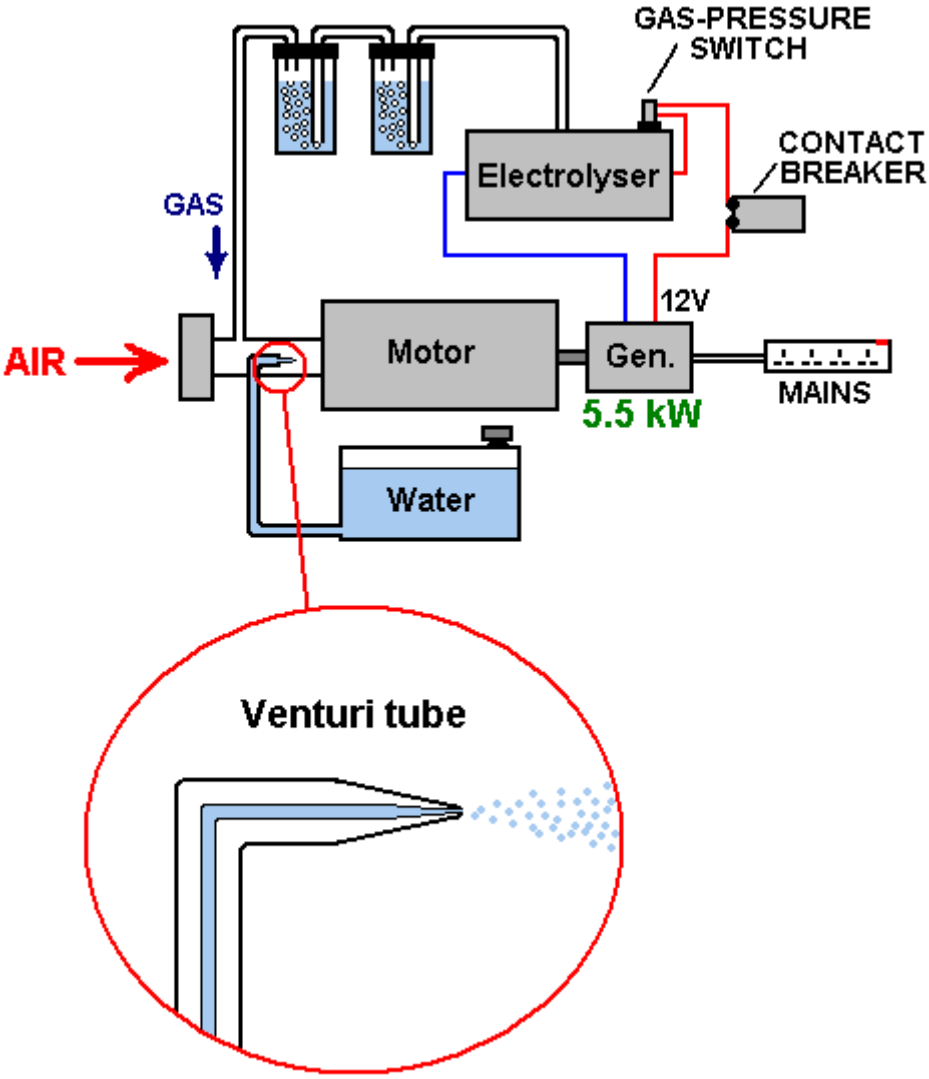

Conventional science says that it can prove mathematically that it is quite impossible to do this. However, the calculation is massively flawed in that is not based on what is actually happening and worse still, it makes initial assumptions which are just plain wrong. Even if we were not aware of these calculations, the fact that it has been done is quite enough to show that the current engineering theory is out of date and needs to be upgraded.

Now, let us consider a device built by John Bedini, a very talented man in the USA. He built a battery-powered motor with a flywheel on the shaft of the motor. This, of course, does not sound like startling stuff, but the crunch is that this motor ran in his workshop for more than three years, keeping it's battery fully charged during that time - now that **is** startling. The arrangement is like this:

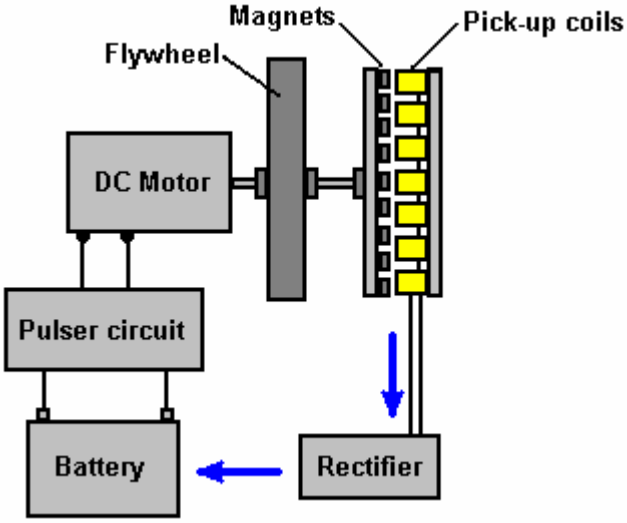

What makes this arrangement different from a standard set-up is that the battery powered motor is not connected directly to the battery but instead is fed with a rapid series of DC pulses. This has two effects. Firstly, that method of driving a motor is very efficient electrically speaking and secondly, when a flywheel is driven with a series of pulses, it picks up additional energy from the local environment.

One other unusual feature is the way that the motor shaft spins a disc with permanent magnets mounted on it. These sweep past a matching set of coils attached to a stationary board, forming an ordinary electrical generator and the resulting electrical power which is generated is converted to DC current and fed back to the driving battery, charging it and maintaining its voltage.

Standard theory says that a system like this has to be less than 100% efficient because the DC motor is less than 100% efficient (true) and the battery is well below the 100% efficient mark (true). Therefore, the conclusion is that the system cannot possibly work (false). What is not understood by conventional science is that the pulsed flywheel draws in additional energy from the local environment, showing that conventional science theory is inadequate and out of date and needs to be upgraded.

An American called Jim Watson built a much larger version of John's system, a version which was twenty feet (6 meters) long. Jim's version not only powered itself, but generated 12 kilowatts of excess electrical power. That extra 12 kilowatts of power must be a considerable embarrassment for conventional science and so they will either ignore it, or deny that it ever existed, in spite of the fact that it was demonstrated at a public seminar. This is what Jim's device looked like:

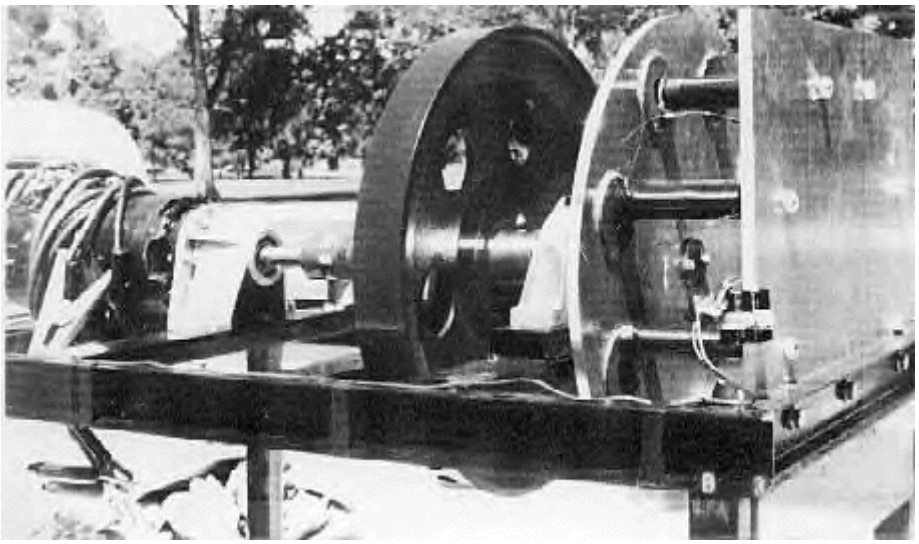

Working quite independently, an Australian called Chas Campbell, discovered the same effect. He found that if he used an AC motor plugged into the mains, that it was possible to get more work done that the amount it takes to drive the motor.

He used his motor to drive a series of shafts, one of which has a heavy flywheel mounted on it, like this:

The final shaft drives a standard electrical generator and Chas found that he could power electrical equipment from that generator, electrical mains equipment which required greater current that his mains-driven motor did.

Chas then took it one stage further and when the system was running at full speed, he switched his mains motor over from the wall socket to his own generator. The system continued to run, powering itself and driving other equipment as well.

Conventional science says that this is impossible, which just goes to show that conventional science is out of date and needs to be upgraded to cover system like this where excess energy is flowing in from the local environment. Here is a diagram of how Chas Campbell's system is set up:

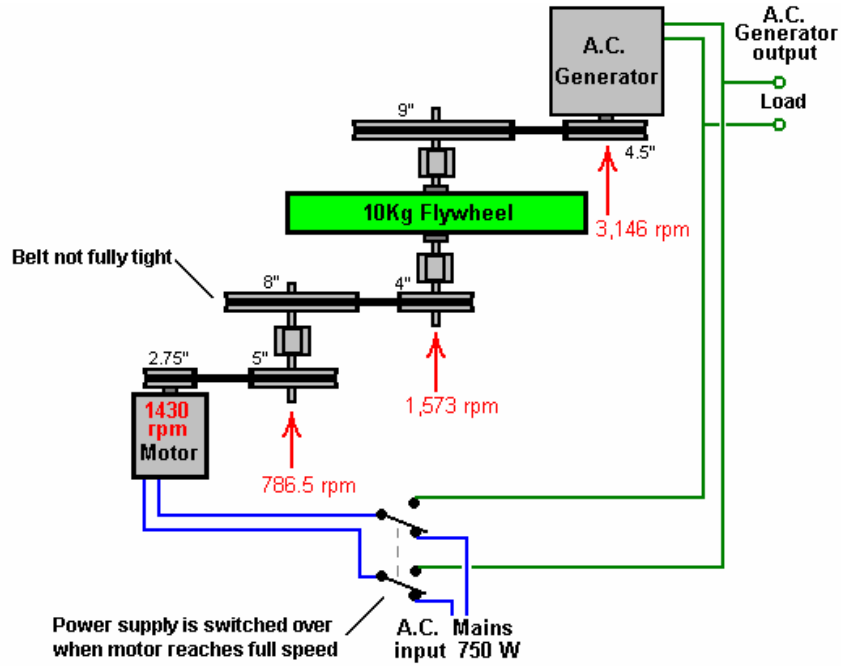

Another man has put a video on the web, showing a variation of this same principle. In his case, the flywheel is very light and has simple paddles attached around the rim of the wheel:

He then aims a powerful jet of water from a high-powered water pump, directly at the paddles, driving the wheel round with a rapid series of pulses. The shaft, on which the wheel is mounted, drives a standard electrical generator which lights an ordinary light bulb:

The really interesting part comes next, because he then unplugs the electrical supply to the water pump and switches it over to the generator which the wheel is driving. The result is that the pump powers itself and provides excess electricity which can be used to power other electrical equipment. The arrangement is like this:

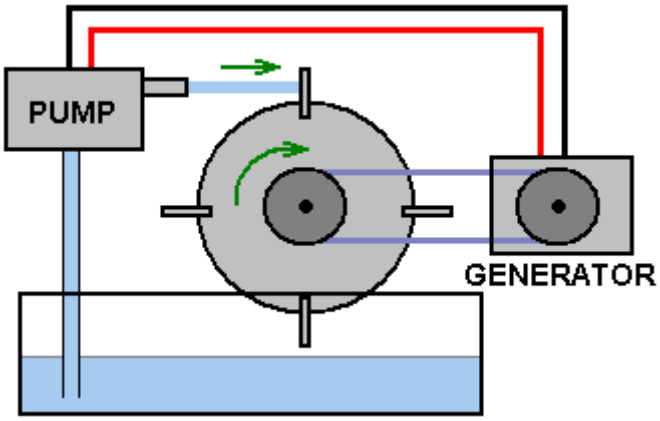

Once again, conventional science says that this is impossible, which in turn, demonstrates that conventional science is out of date and needs to be expanded to include these observed facts.

Permanent Magnets have continuous power. This should be obvious as one will support its own weight on the vertical face of a refrigerator, for years on end. Conventional science says that permanent magnets can't be used as a source of power. However, the reality is that conventional science just doesn't know the techniques necessary for extracting that power.

The New Zealander, **Robert Adams** produced a motor which appears to be, typically, 800% efficient. This, of course, is impossible according to conventional science. Robert was told that if he shared the information, he would be killed. He decided that at his age, being killed was not a major thing, so he went ahead and published all the details.

Motors driven by electrical pulses are always less than 100% efficient. The Adams motor looks like that sort of design but it is **not**. The motor power comes from the permanent magnets mounted on the rotor and not from an electrical pulse applied to the electromagnets attached to the stator. The magnets are attracted to the metal cores of the stationary electromagnets. This provides the driving power of the motor. The electromagnets are powered just enough to overcome the backwards drag of the magnets when they have just passed by the cores of the electromagnets.

The system works like this:

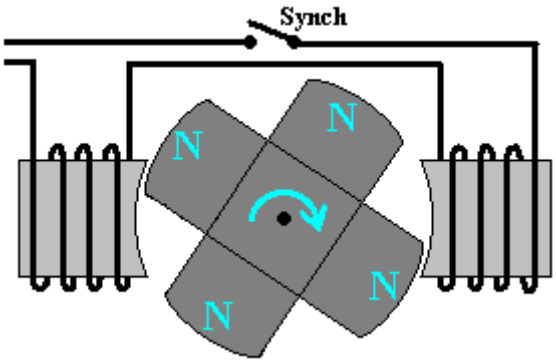

1. The magnets are attracted to the iron cores of the electromagnets, rotating the drive shaft and powering the motor.

2. The moving magnets generate electrical power in the windings of the electromagnets and this power is used to charge the driving battery.

3. When the permanent magnets reach the electromagnets, a small amount of electrical power is fed to the windings of the electromagnets in order to overcome any backward pull hindering the rotation of the drive shaft.

4. When that power supplied to the electromagnets is cut off, the Back EMF pulse is captured and used to charge the driving battery.

When operated in this way, the Adams Motor has a power output far in excess of the input power needed to make it run. The design confuses conventional science because conventional science refuses to accept the concept of energy flow into the motor, from the local environment. This is all the more strange, considering that windmills, water wheels, hydro-electric schemes, solar panels, wave-power systems, tidal power systems and geothermal energy systems are accepted and considered perfectly normal, in spite of the fact that they all operate on energy flowing in from the local environment. It is difficult to avoid the conclusion that vested interests are working hard to prevent conventional science accepting the fact that free-energy is all around us and there for the taking. Perhaps it is the case that they want us to go on paying for fuel to burn to "make" energy to power our homes and vehicles.

Another example of magnet power being used in the design of a powerful motor comes from **Charles Flynn**. He uses a similar method of electrical screening to prevent magnetic drag hindering the drive shaft rotation. Instead of using electromagnets, Charles uses permanent magnets on both the rotor and the stator, and a flat coil of wire to create the blocking fields:

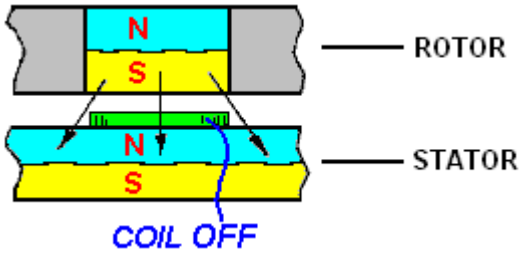

When the coil does not have current flowing through it, it does not produce a magnetic field and the South pole of the rotor magnet is attracted equally forwards and backwards by the North pole of the stator magnet. If there are two coils as shown below, and one is powered and the other is not powered, the backward pull is cancelled out and the forward pull causes the rotor to move forwards:

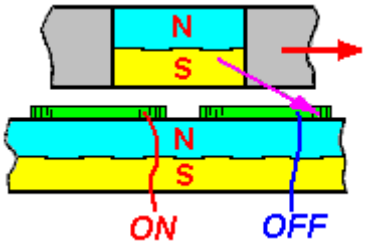

Conventional science takes a quick glance at this arrangement and proclaims that the motor efficiency has to be less than 100% because of the large electrical pulse needed to make the shaft turn. This just demonstrates a complete lack of understanding of how the motor operates. There is no "large electrical pulse" because the motor is **not** driven by electrical pulses, but instead it is driven by the attraction of many pairs of magnets, and only a very small electrical pulse is applied to cancel the backward drag as the magnets move past. To put this in context, the powerful prototype motor built by Charles ran at 20,000 rpm and the power for the coils was supplied by an ordinary 9-volt "dry-cell" battery quite incapable of supplying heavy currents.

The motor is easily made more powerful by using a stator magnet on both side of the rotor magnet, as shown here:

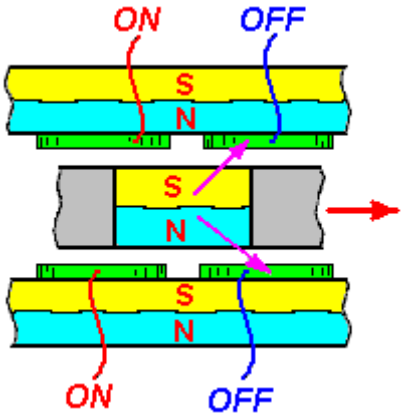

There is no real limit to the power of this motor as layer after layer of magnets can be mounted on a single drive shaft as shown here:

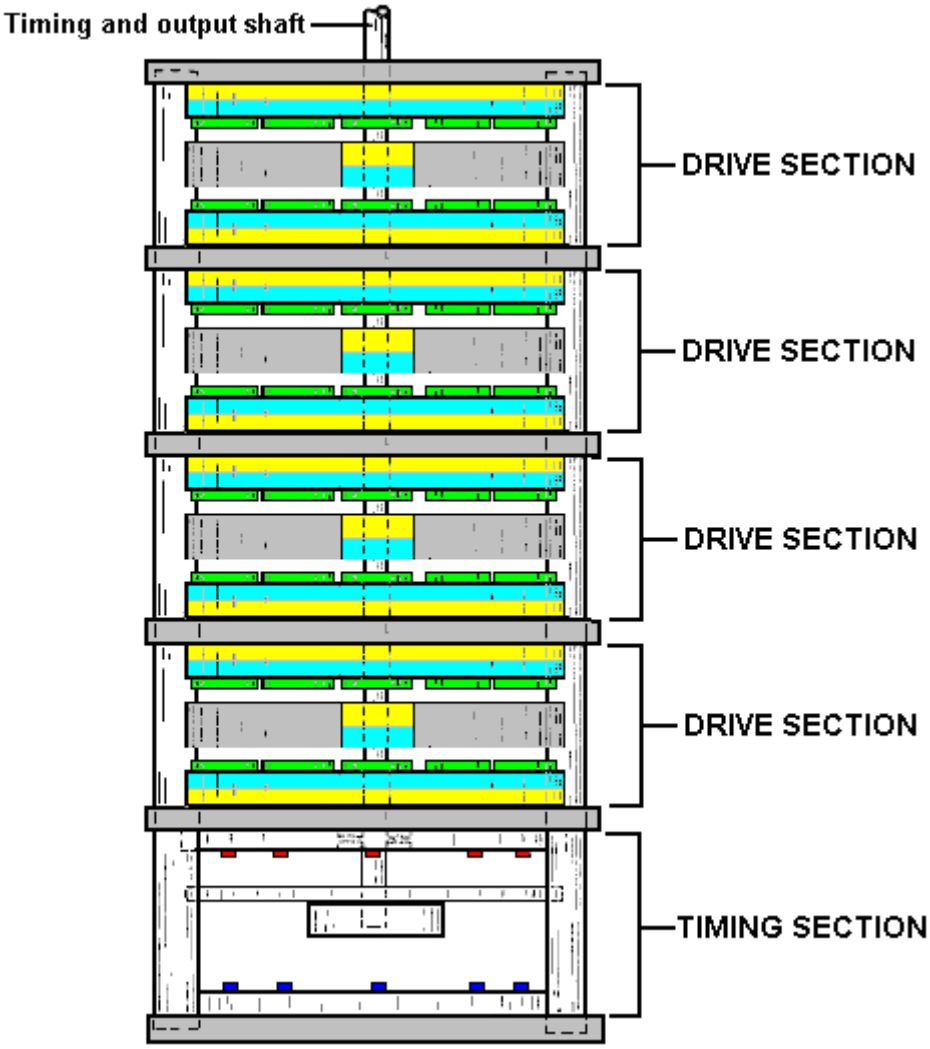

The electrical pulses to the screening coils can be synchronised by the light from Light-Emitting Diodes mounted in the timing section, shining through holes in a timing disc attached to the drive shaft of the motor. The light falling on light-defendant resistors on the other side of the disc, provide the switching for the coil-powering electricity.

An alternative method is to skip the timing section altogether and provide the synchronising pulses from an adjustable-frequency electronic pulsing circuit. To start the motor, very slow pulses are generated to get the drive shaft moving, and then the pulse rate is increased to speed the motor up. This has the advantage of providing speed control which can be useful for some applications.

Aerial systems. We are surrounded by so much energy that a simple aerial and earth connection can draw in very large amounts of electrical power from the local environment.

Thomas Henry Moray ran frequent public demonstrations during which he lit banks of light bulbs to show that useful amounts of energy could be drawn from the environment:

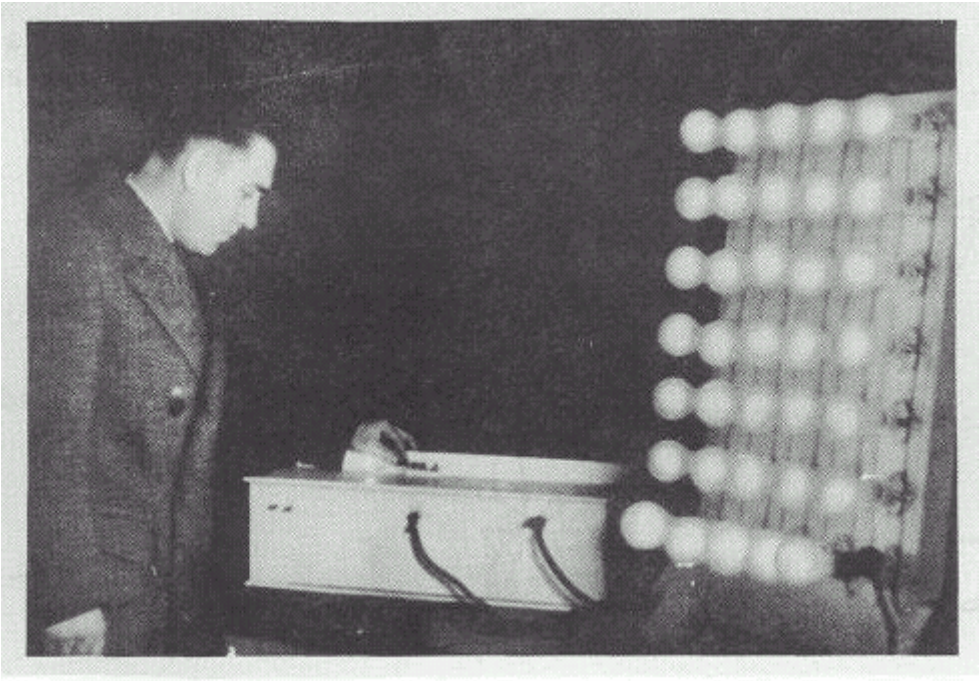

Moray's device could produce output powers up to fifty kilowatts and it had no moving parts, just a simple aerial and an earth. In spite of the frequent demonstrations, some people would not believe that this was not a hoax, so Moray invited them to choose a place and he would demonstrate the power available at any location they wanted.

They drove out into the countryside and picked a really isolated spot away from all power lines and the very few commercial radio stations in the area. They set up a very simple aerial estimated by one observer to be just fifty seven feet long and only seven or eight feet off the ground at its lowest point:

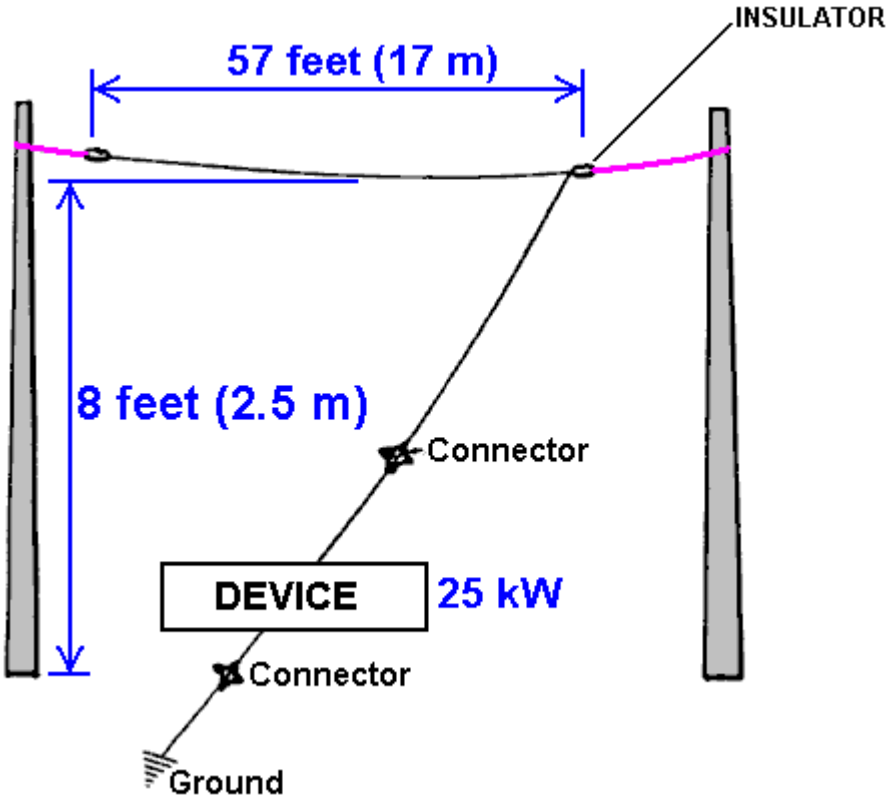

The earth connection was an eight-foot length of gas pipe which was hammered into the ground. The bank of lights being powered by Moray's device, grew brighter as the gas pipe was driven further and further into the ground, providing a better and better earth connection. Moray then demonstrated that when the aerial was disconnected, the lights went out. When the aerial was connected again, the lights were lit again. He then disconnected the earth wire and the lights went out and stayed out until the earth wire was connected again. The sceptics were completely convinced by the demonstration.

Moray's is one of several excellent and very successful devices which I can't tell you exactly how to replicate but the important point here is that a 57-foot aerial raised just 8-feet from the ground can provide kilowatts of electrical power at any location, if you know how to do it.

Moray's demonstrations were highly unpopular with some people and he was shot at in his car. He put bullet-proof glass in his car, so they came into his laboratory and shot at him there. They succeeded in intimidating him into stopping his demonstrations or publishing the exact details of how to replicate his aerial power system.

Lawrence Rayburn of Canada has recently developed an aerial system with one part raised thirty feet above the ground. He powers his farm with it and has measured more than 10 kilowatts being drawn from it.

Hermann Plauston has a patent which reads more like a tutorial on how to extract useful power from an aerial. He describes installations of his which produce 100 kilowatts of excess power as being "small" systems.

Frank Prentice has a patent on an aerial system where he drives a wire loop alongside a long length of wire mounted just seven or eight inches (200 mm) above the ground. His input power is 500 watts and the power drawn from the system is 3,000 watts, giving an excess of 2.5 kilowatts:

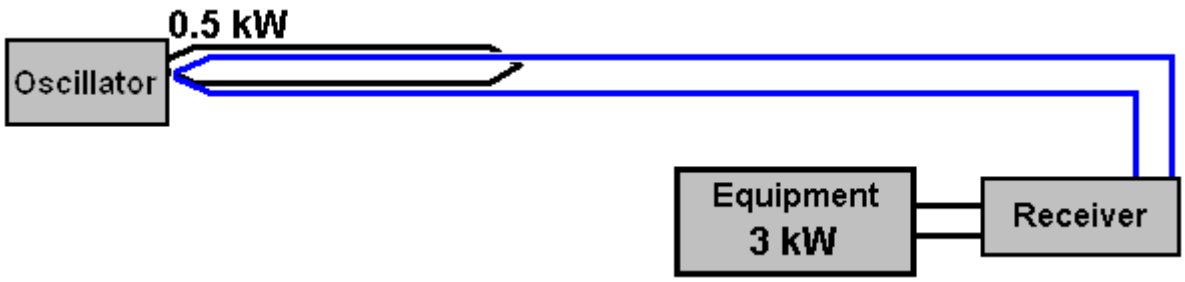

Nikola Tesla, probably the most famous person in the free-energy field, has a patent on an aerial system which uses a shiny metal plate with insulated faces as the main component of his aerial. As is common in this field, a high-quality capacitor is used to store the energy initially and then that power is pulsed through a step-down transformer which lowers the voltage and raises the current available, as shown here:

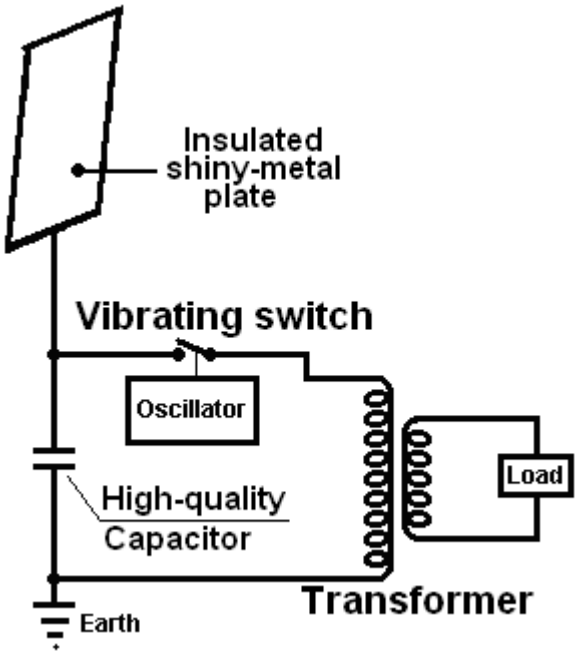

Tesla Coils. Instead of using an aerial, it is possible to use a Tesla Coil which produces very high currents **if** the primary winding is placed in the middle of the secondary winding and not at one end which is the usual configuration. Tesla directs the output on to a single metal plate and powers a load between the plate and the earth.

Don Smith demonstrates this in a video currently on YouTube. He uses a capacitor made from two metal plates with a sheet of plastic between them, instead of Tesla's insulated single plate. The load is powered between the capacitor and earth. The video shows Don using a 28-watt hand-held Tesla Coil and producing what looks like several kilowatts of power in the earth line.

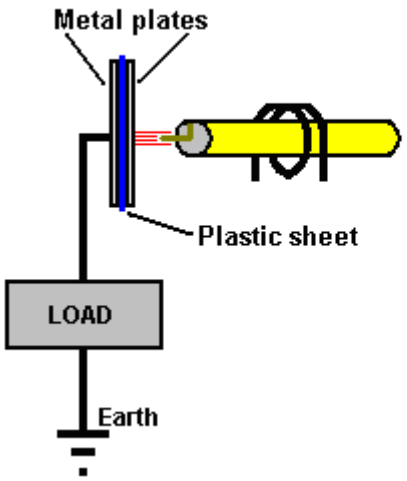

Don Smith

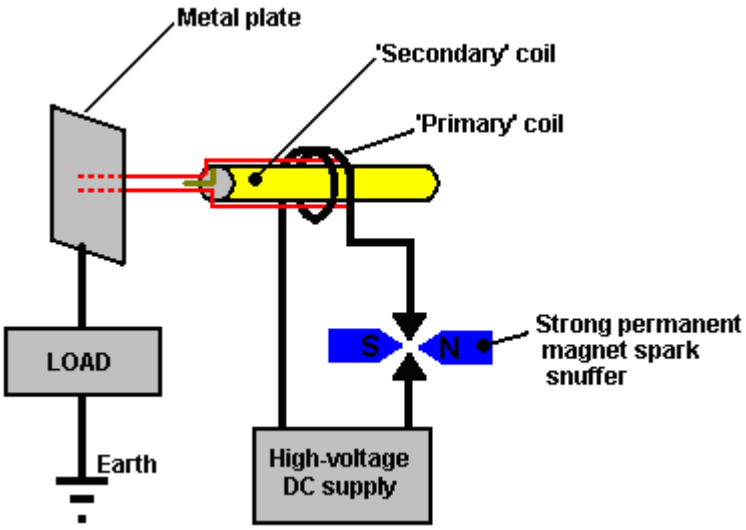

Nikola Tesla

Don points out that the output power is proportional to the **square** of the voltage and the **square** of the frequency: So if you double the frequency and double the voltage there will be 16 times the output power.

Tariel Kapanadze demonstrates this in a web video of his interview for Turkish TV. It shows him making an earth connection by burying an old car radiator, and then lighting a row of light bulbs from a Tesla Coil style fuel-less device. While the commentary is not in English, the video is very informative. You will notice that this is a substantial power output coming from a device built with a very basic style of construction where bare wires are twisted together to form an electrical connection.

When the starting battery is removed, the equipment is held in the air to show that it is self-contained and self-powered. This is another confirmation that free-energy is all around us and ready to be taken by anyone who knows how. Tariel is seen here lighting a row of five light bulbs hanging from a broom handle placed across the backs of two chairs - not exactly a high-tech, high-cost form of construction this!

This is a picture of his circuit housing, spark gap and output transformer:

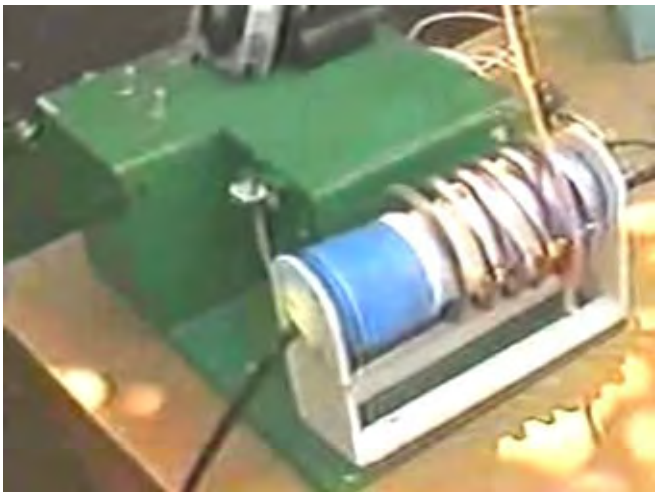

The **Colman / Seddon-Gillespie** 70-year battery. A quite different approach to getting fuel-less power was taken by Colman and Seddon-Gillespie who developed a tiny tube of harmless chemicals - copper, zinc and cadmium:

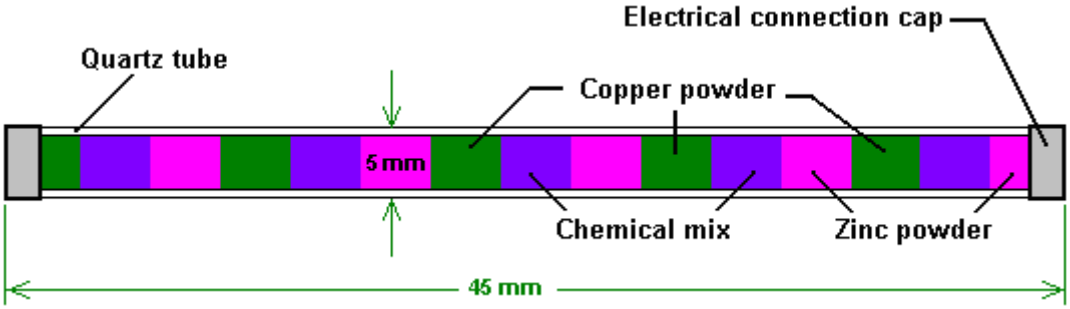

They found that if his tube was subjected to a few seconds of high-frequency electromagnetic radiation, then it became radioactive for about one hour. During that time, a kilowatt of electrical power could be drawn from this tiny tube. Near the end of the hour, another burst of electromagnetic waves keeps the tube radioactive and maintains the output current. Lead shielding is used to make this a safe device. They have a patent on this device. The expected working life of one of these tubes is estimated as being seventy years.

Electrolysis. Michael Faraday did a really excellent job of investigating how much energy was required to change water from it's liquid state into a mixture of hydrogen gas and oxygen gas. Conventional science has latched on to this information and refuses to believe that it is not the last possible word on electrolysis.

This is akin to saying that the fastest a man can propel himself over the ground is by running, and refusing to accept the fact that there might be a later invention of a bicycle which would allow a much faster human-powered speed over the ground.

This is maintained in spite of the fact that a patent has been awarded to **Shigeta Hasebe** for a different style of electrolysis, using magnets and spiral electrodes like this:

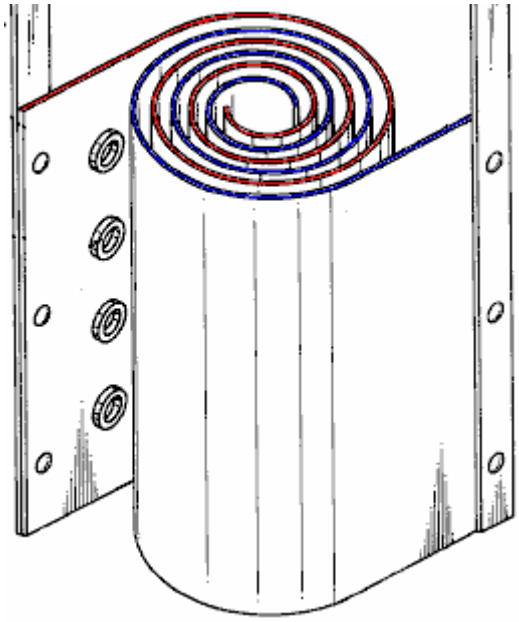

In his patent, Shigeta indicates his disappointment that his laboratory tests only showed an efficiency of ten times that of Faraday while his calculations showed that he could be getting twenty times the Faraday result. The different method, along with the use of powerful magnets at the top and bottom of his electrode pairs, bypassed the limits which Faraday had established.

Bob Boyce of the USA has produced a pulsed electrolysis system which has given measured outputs which are twelve times that of Faraday's established "maximum" efficiency. This makes a nonsense of calculations based on Faraday's results. Excellent as Faraday's results are, they are no longer the limiting factor in splitting water as technology has progress beyond the methods used by Faraday.

Stanley Meyer of the USA discovered a method of splitting water into it's gas form, using very little power. Stan's work has been replicated by Dave Lawton and many other people. For example, Dr Scott Cramton has produced the "hydroxy" gas mix produced by the electrolysis of water, at a rate of 6 litres per minute with a power input of just 36 watts (12 volts at 3 amps). This is dramatically better than Faraday thought was possible and it allows power production through recombining the hydroxy gas to give water again, as the power produced is well above the amount of power needed to split the water in the first place.

John Bedini of the USA has patented a system for the rapid charging of batteries with a pulsed waveform. Using banks of batteries tends to be very expensive, very space-consuming and replacement batteries are needed at frequent intervals, giving the user a disposal problem and additional cost. Batteries have the serious restriction that they get damaged and their life shortened if the rate of discharge is less than 20 hours. So a 100 Amp-Hour battery can only manage a 5 amp current (60 watts) if it is not to be damaged.

John Bedini's spike-generating system can charge several batteries at the same time. The snag is that you can't use the batteries to power equipment while they are being charged, so you need two sets of batteries. The system is easy to make and use, but it is quite difficult to get more genuine power out of the device than is needed to drive it. The best performance that I have come across is where there is eleven times more power output than the power input.

There are several variations on John's pulser. The most common is a bicycle wheel with ferrite permanent magnets attached to the rim:

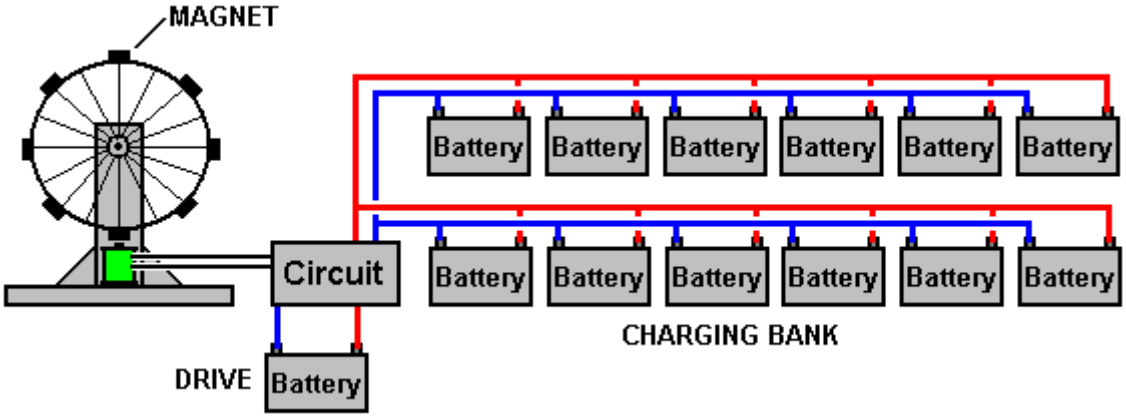

As the wheel spins, the approaching magnet generates a voltage in one winding of an electromagnet. This triggers a circuit which powers a second winding of the electromagnet. This pulse pushes the magnet away, keeping the wheel spinning. When the power to the coil is cut off, the resulting "Back EMF" voltage spike is fed to the batteries being charged. If the spike is sharp enough, it can cause an inflow of additional energy from the local environment. Interestingly, the rate at which the wheel rotates is directly proportional to the amount of charge in the batteries being charged. Here is a picture of **Ron Pugh**'s high-quality construction of a Bedini pulse charger:

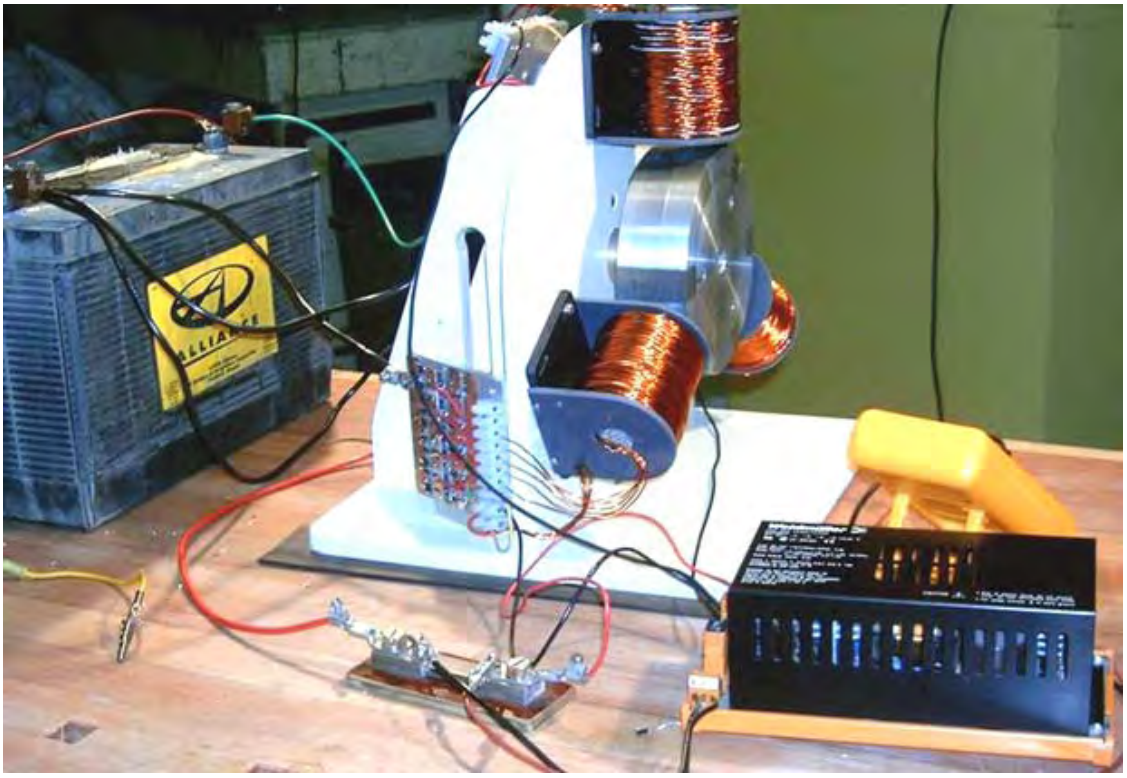

Conclusion:
The term "Free-Energy" generally means a method of drawing power from the local environment, without the need to burn a fuel. There are many different successful methods for doing this and these methods span many countries and many years.

The amount of power which can be collected can be very high and the few kilowatts needed to power a household is most definitely within the reach of most of the devices mentioned.

However, the key to drawing large amounts of electrical power from the local environment, or as Moray puts it "the sea of energy in which the Earth floats", is an ordinary, everyday commercial device, used to power the neon tubes used in advertising displays:

Not particularly expensive, nor difficult to buy, this device produces an AC waveform of thousands of volts at tens of thousands of cycles per second. Connected in the right way, it draws large amounts of power from the environment as described by Don Smith who is a very talented American man. A specially shaped step-up transformer called a Tesla Coil is used to boost the voltage even higher and that has a dramatic effect because the power drawn into the circuit from outside is proportional to the square of the voltage and the square of the frequency. So, if you double the voltage and double the frequency, the extra power is boosted by a factor of sixteen times.

The technique used looks mad if you don't understand what is happening, because you step up the voltage and frequency, and then you step them both down again, which looks like a waste of time, but, and it is a big "but", one simple device described in chapter 3 produces excess power of 160 kilowatts as well as powering itself.

****

In this brief introduction, not much detail has been given about the devices mentioned and only a small selection of devices have been covered. Much more detail is available in the eBook "The Practical Guide to Free-Energy Devices" which is a free download from, for example, the website at http://www.free-energy-info.com or the website at http://www.free-energy-devices.com.

The 'bottom line' is that energy can definitely be drawn from the local environment in sufficient quantities to supply all of our needs. For whatever reason, conventional science appears determined not to accept this basic fact and denies it at every opportunity. It seems likely that vested financial interests are the root cause of this refusal to accept the facts. The true scientific method is to upgrade scientific theory in the light of observed fact and new discoveries, but the true scientific method is not being followed at the present time.

Therefore, I invite you to examine the facts and read the information on one of the websites shown above, and make up your own mind on the subject.

Patrick J. Kelly
engpjk@yahoo.co.uk
www.free-energy-info.co.uk

THE SEA OF ENERGY IN WHICH THE EARTH FLOATS

For Beyond the Light Rays Lies the
Secret of the Universe

The Evolution of Energy and Matter
Originally compiled for the Layman in 1926 from
excerpts of the Writings first presented in 1914

by
T. HENRY MORAY
2505 South 4th East St.
Salt Lake City, Utah, U.S.A.
Revised and Printed in 1960

In the study of these pages one should consider that both matter and radiations have particle properties as well as wave properties. The particle properties are evident when recognized as highly localized events of very short duration with specific values of electric charge, energy and mass. The wave properties can be proven in different ways which have been proven and taught for so many years.

SCIENTIFIC RESEARCH IS OUR BUSINESS.
SCIENTIFIC DISCOVERY OUR CORNERSTONE

First printed in 1931
Copyrighted 1945 and 1956 *by*
T. HENRY MORAY

All Rights Reserved

4th Edition

Printed in the U.S.A.

1960

Copyrighted

–

INTRODUCTION

RADIANT ENERGY — the term Moray has used to describe that source of energy coming from the Cosmos to the earth and radiating from the earth back from whence it came. This is the energy the Moray device captures and could be described as those particles of energy pervading all space. In the evolution of energy and the evolution of matter these particles of matter and energy (one and the same thing) manifest under certain conditions as pure energy and under others as pure matter. Radiant Energy from the Cosmos, like radiant particles of matter, being composed of an infinitesimal quantity whose behaviors are described by mathematical equations similar to those used for describing electrical waves, keeping in mind to differentiate between wave length and frequence. Radiant- Energy being particles of energy, just as light is wave lengths and particles is comparable to the electron and magnetron; a ring of negative electricity traveling in a vortex with the speed of light. Streams of energy quanta, each quantum having energy and momentum where the electron revolves around the proton at a distance equal to the electron radius.

To Summarize — Radiant Energy as herein used is that energy existing in the lumineferous medium of the Universe, kinetic and exercised in wave transmission and rendered sensible by conversion of its energy into a detectable frequency. The phenomenon of the transducer combined with fission. IN THE FINAL ANALYSIS RADIANT ENERGY IS A MEANS OF USING THE ENERGY RELEASED BY THE FISSIONABLE REACTIONS TAKING PLACE IN THE STELLAR CRUCIBLES OF THE UNIVERSE.

CONTENTS

Page
A NEW ERA IN ENERGY 4
REACTIONS BY MEANS OF ELECTRONIC EXCITATION 12
THE DISSOCIATION OF MATTER.....26
CAPTURE OF ENERGY BY RESONANCE 31
HISTORY OF RADIANT ENERGY 37
TO SUMMARIZE.....60

–

WHAT IS NEEDED TO BE DONE TO COMMERCIALIZE THIS DISCOVERY

By following the procedure of "Syntheses" by first recognizing the Natural Law, to study the principle and then to allow the true apprehension of the principle to determine the Mechanism through and by which this power may be brought into practical use has been the method of Dr. Moray. Ninety percent of the project is completed. The remaining ten percent does not present any more difficulties than the standardization of a few highly specialized and intricate tubes and measuring devices, coupled with further routine research engineering in mechanical construction or prototypes of the unites for economy, efficiency and lasting qualities when produced commercially.

CHAPTER ONE

A NEW ERA IN ENERGY

Power from the Cosmos and the Earth

Dr. Nickola Tesla said over sixty years ago, "Ere many generations pass our machinery will be driven by power obtainable at any point in the universe. Is this energy static or kinetic? If static, our hopes are in vain; if kinetic, and this we know it is for certain, then it is a mere question of time when men will succeed in attaching their machinery to the very wheelwork of nature. "Nickola Tesla was not referring to so-called "atomic energy" or nuclear energy but to the energy which is continually bombarding the earth from outer space. Call it cosmic or what one will.

Enough energy is coming to the Earth to light one million, one hundred ninety-three thousand, six hundred, one hundred-watt lamps for every human being on the earth today. No fuel of any kind will be taken as a dead load for the energy can be "picked-up" direct by great ocean liners, railroads, airplanes, automobiles or any form of transportation, to say nothing of the heat, light and power available for use in all kinds of buildings; to pump water on the desert lands with equipment of only a fraction of the weight of any steam plant or any kind of engine in use today and at a fraction of the cost. A wild dream? A proven, practical reality as hundreds of people know who have witnessed the MORAY Radiant Energy equipment. Powered from the cosmos!

The total energies involved in "cosmic" radiations are individually and collectively very large. The methods or processes of their generation involve a basic relation to the total structure of the action of the universe. Physicists today believe that cosmic radiation consist primarily of protons and, some heavier nuclei. At times they pack a maximum allop of around 100 quadrillion electron volts. Coming continuously, with slight variations in time, their radiation have a uniform directional isotropy. The earth is therefore surrounded in an atmosphere of radiations with the cosmic rays coming continually to the earth from all directions. There may be a slight deflection of the weaker rays by the earth's magnetic field. There is every indication that our sun is not the source of any appreciable amount of these radiations. The origin, therefore, is from the universe as a whole. The total energy of cosmic radiation is more than the entire luminous output of all the stars and nebulae of the universe combined. Unlimited power is being delivered to everyone's doorstep.

The Moray radiant energy discoveries give the greatest amount of energy per pound of equipment of any system known to man. Electric power through an electric motor or an electric jet far exceed any form of engine in the delivery of power as there is no dead center, or lost motion, in an electric motor nor loss of push in an electric jet. A much higher starting torque is had than in any type of combustion engine.

Cosmic power is the most practical form of "energy harnessing" yet put to use by man whereby it is possible to utilize the vast source of energy of the universe without a prime mover at any point on the land, in the air, on the water or under the water, using the energy which exists in the universe and transforming it into useful purposes. An electrical generator is, in the true sense, not a generator, as it does not create electrical energy. Electricity is not made by the generator, it is merely pumped. From that standpoint, an electric generator might be referred to as an electric pump and the Moray radiant energy device as a high-speed electron oscillating device.

To account for the propagation of heat and light — that is, of radiant energy — man has postulated the existence of a medium filling all space. But the transference of the energy of radiant heat and light is not the only evidence in favor of the existence of such a medium. Electric, magnetic, and electro-magnetic phenomena (and gravitation itself) point in the same direction.

It is a matter of common observation that attractions and repulsions take place between electrified bodies, magnets, and circuits conveying electric currents. Large masses may be set in motion in this manner and acquire kinetic energy. If an electric current be started in any circuit, corresponding *induced* currents spring up in all very close neighboring conductors; yet, there is no visible connection between the circuit and the conductors. To originate a current in any conductor requires the expenditure of energy. How then is the energy propagated from the circuit to the conductors? If we believe in the continuity of the propagation of energy — that is, if we believe that when it disappears at one place and reappears at another, it must have passed through the intervening space, and therefore have existed there somehow in the meantime — we are forced to postulate a vehicle for its conveyance from place to place.

When a body is electrified, what we must first observe is that a certain amount of energy has been spent; work has been done, and the result is the electrified state of the body. The process of electrifying a conductor is therefore the storing of energy in some way in, or around the conductor, in some medium. The work is spent in altering the state of the medium, and when the body is discharged the medium returns to its original state, and the store of energy is evolved. Similarly a supply of energy is required to maintain an electric current, and the

phenomena arising from the current are manifestations of the presence of this energy in the medium around the circuit. Formerly an electrified body was supposed to have something called electricity residing upon. it which caused the electrical phenomena, and an electric current was regarded as a flow of electricity traveling along the wire, while the energy which appeared at any part of the circuit (if considered at all) was supposed to have been conveyed along the wire by the current. The existence of induction, however, and electromagnetic actions between bodies situated at a distance from each other, lead us to look upon the medium around the conductors as playing a very important part in the development of the phenomena. It is, in fact, the storehouse of the energy.

Upon this basis Maxwell founded his theory of electricity and magnetism, and determined the distribution of the energy in the various parts of the field in terms of the electric and magnetic forces. The medium around an electrified body is charged with energy, and the electrical phenomena are manifestations of this energy, and not of an imaginary electric fluid distributed over the conductor. When we speak of the charge of an electrified conductor we refer to the charge of energy in the medium around it, and when we talk of the electric flow or current in the circuit we refer to the only flow we know of, viz. the flow of energy through the electric field into the wire.

The work spent in producing the electrification of a conductor is spent on the medium and stored there, probably as energy of motion. To denote this we shall say that the medium around the conductor is polarized, this word being employed to denote that its state or some of its properties have been altered in some manner by the work done on it — that is, by the energy stored in it. In the case of a conductor possessing what is termed a positive charge, the medium around it is polarized in a certain manner and to a certain extent depending on the intensity of the charge. If the charge be negative the polarization is in the opposite sense, the two being related, perhaps, like right-handed and left-handed twists or rotations.

Now consider the case of a a body charged alternately, positively and negatively, in rapid succession. The positive charge means a positive polarization of the medium, which begins at the conductor and travels out through space. When the body is discharged the medium is once more set free and resumes its former conditions. The negative charge now entails a modification of the medium or polarization in the opposite sense. The result of alternate charges of opposite sign is that the medium at any point becomes polarized alternately in opposite directions, while waves of opposite polarizations are propagated through space, each carrying energy derived from the source or agent supplying the electrification. Here, then, we have a periodic disturbance of some kind occuring at each point, accompanied by waves of energy traveling outwards from the conductor.

The phenomena of interference lead to the conclusion that light is the result of a periodic disturbance, or vibration, of the medium, but as to the nature of the vibration — that is, as to the exact nature of the periodic change — or what it is that changes we possess no knowledge. We know that alternating electric charges are accompanied by corresponding changes of state, or vibrations, of the medium, and if the charge be varied periodically and with sufficient rapidity, we have a vibration at each point analogous to, and perhaps identical with, that which occurs in the propagation of light; a combination of wave and particle properties.

This, then, is the electromagnetic theory of the luminous vibration. In the older or elastic-solid theory, the light vibrations were supposed to be actual oscillations of the elements or molecules of the medium, about their positions of rest, such as takes place when waves of transverse disturbance are propagated through an elastic solid. Such a limitation is, however, unwarranted to some extent although we cannot afford to entirely disregard the particle theory of light. A combination of the theories have merit. We know that the change, disturbance, vibration, polarization, or whatever we wish to term it, is periodic and transverse to the direction of propagation. The electromagnetic theory teaches us nothing further as to its nature, but rather asserts that whatever the change may be, it is the same in kind as that which occurs in the medium when the charge of an electrified body is altered or reversed. It reduces light and heat waves to the same category as waves of electric polarization; the only quality of the latter required to constitute the former is sufficient rapidity of alternation. These speculations were given the strongest confirmation by important experiments of Professor Hertz many years ago.

When a resilient substance is subjected to strain and then set free, one of two things may happen. The substance may slowly recover from the strain and gradually attain its natural state, or the elastic recoil may carry it past its position of equilibrium, and cause it to execute a series of oscillations. Something of the same sort may also occur when an electrified capacitor is discharged. In ordinary language there may be a continuous flow of electricity in one direction till the discharge is completed, or an oscillating discharge may occur — that is, the first flow may be succeeded by a back-rush, as if the first discharge had overrun itself and something like recoil had set in. The capacitor thus becomes more or less charged again in the opposite sense, and a second discharge occurs, accompanied by a second back-rush, the oscillation going on till all the energy is either radiated or used up in heating the conductors or performing other work.

As stated above, when capacitors are charged with this radiant energy and then discharged through a' circuit of proper impedence, reactance and inductance syncronizing the oscillations of the device with those of the Universe, we set up electrical inertia. That is, in the reversal of the current, the condensers are charged and

discharged and recharged slowly until the energy originally stored in them is radiated in kinetic energy through the device, which is kept alive indefinitely by the oscillations of the Universe through establishing resonance.

Considering oscillations, mechanical and electrical and or mathematical, we find that electrical resistance is the same as mechanical friction and current comparable to mechanical velocity. Inertia and inductance then may be considered analagous terms. In mechanics the greater the inertia of a body, the longer it will keep in motion. In the RE circuit, the greater the electrical inductance the longer the current continues to flow once it is established by a syncronized cosmic surge.

Expressed mathematically, the equations are the same for electrical or mechanical phenomena. That is $R < \sqrt{\frac{4L}{C}}$ where R is the resistance in ohms L is the inductance in henries and C the capacity in farads an oscillatory discharge will occur and with a very powerful inductance inertia will assert itself. For low values of R the frequency of the oscillations can be shown by $f = \frac{1}{2\pi\sqrt{LC}}$. The rapidity of the oscillations i.e. frequencies are governed by the quantity of the capacity and the inductance.

In the vibrations of the forces of the Universe we find the key to the sources of all energy. The real key in securing the energy needed in modern industry is the utilization of the energy resources of the Universe without being limited to mechanical prime movers. The answer may lie in the balancing of an energy generator that will oscillate because of the oscillations of the Universe. Some claim it will be found by a collapsing of the earth's magnetic field. Others seek it in the creation of an electron drag. Dr. Gunn, who was a civilian scientist for the U.S. Navy, stated years ago that the earth is a huge generator, generating over 200 millions amperes of electric current continuously.

The aurora borealis is considered to be very definitely an electrical phenomenon produced by the passage of electric charges through the rarified gases of the higher atmosphere.

The conversion of matter to energy in the stars is now generally accepted as demonstrated, and reasoning from what occurs in radioactive disintegration, during which energy waves are radiated, we may conclude that energy waves of very high frequency are sent out from the stars, one of which is our sun. Now the conversion of energy into matter will equally have to be accepted.

It is well known that air conducts electricity away from charged objects. This being true how does the earth, a charged object exposed as it is to the surrounding atmosphere, maintain its charge? Dr. Gunn and others have proven the earth has this charge. Physicists have shown that the earth has a negative charge which amounts to 400,000 columbs, yet six feet above the ground the air is charged with more than 200 volts positive in respect to the ground. Therefore, if the air conducts electricity the earth's charge must be constantly passing into the atmosphere. It has been calculated that the earth has a continuous discharge into the atmosphere of 1800 amperes. At this rate the earth would lose 90% of its charge into the air in an hour, yet the earth's charge does not diminish but persists and has done so since the earliest of geological time. Where does the earth's source of energy come from? It has been found that the higher the altitude from the earth, ionization, which could be the media for the flow of energy, increases instead of decreasing. Many names have been given to the sources of energy which we may feel are different sources of energy. We carry on a great deal of research on cosmic ray — the universal electromagnetic field, earth's magnetic field and the energy being received on the earth from the sun's rays. Could it be all energy is from one source — vibrations? Since the source of energy is the universe, the generation of energy by rotary action and by all prime movers is an effect and not a cause. Would it be going too far to suggest that there is no such thing as heat, light, sound or even electricity; but all things are merely effects manifesting themselves in various forms because of the effect of vibrations on various media? Oscillatory energy action, be it in a leyden jar or another capacitor, man-made or in what we may call natural capacitors, all act the same. The oscillations will continue until they have reached their cycle of height and then there will be a back-rush returning to where the oscillations originated. Every oscillation, whether large or small, is completed during the same interval of time. The beat note of time, the heart beats of life, the oscillations of the universe all prove the same great fact that oscillations are governed by the same cycle of time, completed during the same interval of time. Waves of energy have a regular beat note, coming and going as the waves of the sea, but in a very definite mathematical order, coming to the earth from every direction with a definite rhythm that might be referred to as the Father of Time, the Sire of Gravitation.

We repeat, "Energy has a definite elastic or resilient rigidity and density, which is subject to displacement and strain." When a strain is removed, the medium will spring back to its old position and beyond, surging back and forth as the waves of the sea, and will continue to oscillate until the original pressure is used up. If the internal impedance is too great, there will be no oscillations, but it will merely slide back in a dead beat to its unrestrained state. Cutting down the resistance to the minimum and by synchronous or resilient ionic actions of the device with the ionic actions of the universe, recovery will be quicker and quicker until inertia will assert itself and lengthen out the time of final recovery by carrying the recoil beyond the natural oscillation and thus

prolonging the vibrations by oscillations. When the recovery is distinctly oscillatory and harmonics set in, the oscillations will continue because of the oscillations of the universe. These oscillations will be surgings with a definite beat note of the evolution of matter and the evolution of energy.

"In the far-off stellar crucibles of the universc we see the same laws being obeyed as in our laboratories. As we trace down to the almost infinitesimal constituents of the extremely minute atom, we find apparently matter does not exist at all, as the realistic substance which we have supposed it to be. There at its very foundation it seems to consist of energy charges which probably stimulate the motions of celestial bodies. It is becoming more and more certain that the apparent complexity of nature is due to our lack of knowledge, as the picture unfolds it promises a marvelous simplicity. Energy is emitted at various wave lengths, or frequencies which must be taken into account in laws of radiation… Now the physicist uses quanta as commonly as he does electron and atoms and molecules. Bodies are built of molecules, the molecules of atoms, and the atoms of electrons, ions, protons and high energy photons. Here we see the atomistic principle applied to "material" (matter) and then to electricity (What shall we call it?) Finally, a physical process — the radiation emitted by the electrons — is divided into quanta. With such pictures of the universe being constructed we may cease to be surprised at anything, and our interest and admiration will grow. Will we ever get to the final foundation?

"One of the most marvelous relationships that has ever been revealed in the entire science of physics is that between light and electricity. Knowing what we do at the present time in regard to the structure of atoms, this relationship is not quite so surprising. However, considering the total absence of this knowledge about a half century ago, pertaining to the existence of electronics in atoms of matter, the sudden revelation that light (and radiation in general) are vibratory phenomena was very startling and revolutionary." Even today persons unfamiliar with fundamental physics find it difficult to believe that energy traveling from yonder star to the earth is electromagnetic of many wave lengths of frequencies, with different effects depending on the media, being acted upon.

"Radiant here means proceeding from a center in straight lines in every direction. Energy is internal and inherent. "Energy" is defined as a condition of matter in virtue of which any definite portions may effect changes in any other definite portion. This was written in 1892, and discoveries since confirm it. Energy then, is a state of matter, or, rather, the result of a particular state or condition in which matter may be when any observed phase of energy appears."

It is recognized that in addition to possessing kinetic energy, the atom is capable of absorbing energy internally. This internal energy would seem to be associated with the configuration of the particles of which the atom is composed. While under ordinary conditions an atom is in what is known as the normal state, or the state in which we find matter apparently neither giving off, nor absorbing energy. However, the internal energy of the atom can be altered. When the internal energy of the atom exceeds that of its normal state it is said to be excited. Excitations may be caused in several ways, among which is the collision of the atom with rapidly moving positive or negative particles, or as in the breaking of lines of force in the modern electromagnetic generator, which is nothing more than an electric pump, for the electric generator does not create the electrical energy any more than the water pump creates water. Kinetic energy is given up when excitation causes rapidly moving particles to give up some or all of their kinetic energy to the atom during collisions. This is taking place in the Universe all the time. The electric motor and generator would never have been discovered except a dielectric (insulation) had been discovered. Discover a dielectric (a valve) for the energy of the Universe and a means of making a device oscillate with the oscillating energy of the Universe and one has the answer to harnessing the energy of the Universe. A limiting case of excitation is ionization, in which energy is absorbed by the atom sufficiently to allow a loosely bound electron to leave the atom against the electrostatic forces which tends to hold it within the atom. An atom which has given up one or more electrons is said to be ionized. It is possible that ionization, or in other words excitation, may take place in successive steps through absorption of quanta energy, or that is, through the evolution of matter and evolution of forces. The return of an ionized atom to a state of lower energy is associated with electromagnetic radiation. So also from the process of ionization which may result from a number of causes, and the one we are interested in is through cosmic radiation, electric energy becoming associated with the oscillation or vibration of the universe. The higher the frequency, the greater the ionization or excitation. All energy appertains either to matter or excitation of energy and continually passes from one to the other, or in other words, continually possessing kinetic energy. There, at its very foundation, matter consists of an energy charge which governs the very motion of the planets and suns.

Matter is susceptible to motion, and stress. All atoms appertain either to matter or energy and continually pass from one to the other, thus producing kinetic energy. There at its very foundation matter consists of energy charges which govern the very motion of celestial bodies…

To introduce a new way of using an old source of energy, be it called the collapsing of earth's magnetism or any hypothesis of a source of energy can only be justified by the necessity of explaining the insistent fact that a battery of vibratory units can be made to produce 50 KW of energy per unit of 60 pounds. Therefore, some hypothesis of theory must be found to attempt an explanation of the discovery of a device whereby energy can

be obtained by oscillatory means in harmony with the vibrations (oscillations) of the Universe. On the other hand the hypothesis may be taken that the oscillations are out of harmony with the harmonies of the Universe cutting lines of force of energy oscillations by oscillations. The viewpoint on the harmonics of the Universe depending on what yardstick is used in the valuation of the hypothesis used to explain the results. It all sums down to the fundamentals of electromagnetism or whatever name one has chosen to apply to the original source of energy which in the final analysis must be accepted as vibration or oscillation. The focus of our attention in any field of energy has the same dimensions as has the foci of attention in all the higher fields of vibratory energy. It also must be conceded that all energy is vibratory in its final analysis and therefore exists throughout all the Universe. It might be well not to throw this theory out of the window as some former theories have gone and later had to be brought back through the door because they refused to die but were kept alive by the fact that they may have best explained the reason why a modality which existed did perform as claimed.

No one can say that in all space, including that of the Earth's atmosphere, all matter is not being bombarded by high speed particles. Therefore is it too far wrong to say that throughout space there is energy and this energy is kinetic in nature and can be harnessed and used by man by oscillatory means without a mechanical prime mover? Not alone on the earth but in all the Universe.

It has been proven that this oscillatory energy will drive special constructed electric motors at a speed heretofore never dreamed possihle. Tesla had a glimpse of the idea in his one wire motor. Also by this means of oscilliatory action the clockwise vortex of the pull of gravity in the Northern Hemisphere can be made to rotate counter-clockwise and the counterclockwise pull of gravity in the Southern Hemisphere can be made to rotate clockwise.This is a complete reversal of the vortex of the earth's magnetic pull, or call it what you will.

Watson Davis, director of Science Service, Washington, D.C. in his book "The Advance of Science," 1934 writes "Cosmic Rays bombard the earth from outer space every second of the day and night. They penetrate everything including our own bodies. They carry the mightiest packet of energy yet known to science. They give rise to burst of material particles. —"

"Of all radiant energy rushing about the universe, the Cosmic Rays are thought to be by far the most important. Science deduces with astronomical accuracy that the universe's total radiant energy in the form of cosmic rays is from 30 to 300 times greater than that existing in heat, light, and all other forms combined. Of the imports of energy received by the earth, the cosmic rays equal approximately one-half of the total energy coming in from the stars, excepting the sun."

The important purpose for the quotations which have been given is to arouse attention to the fact that there are tremendous energies coming to the earth from outer space. These energies are only different manifestations of the energies we see in operation all around us. In many cases we are not even consciously aware of their existence. As Mr. Davis states, "They penetrate everything including our own bodies. "Everyone of us is actually alive by virtue of these energies. Every part and particle of the Universe is alive with them. The generators that now furnish our electric power do not create or originate any power or electricity; they merely direct "pump" the existing energy or electricity. In other words, so far as this is now concerned, electricity has always existed.

Vibrational waves of frequencies above the normal range of human ear perceptions are catalogued as ultrasonics. These are waves of frequencies of over 20 k.c. up to 500 m.c. Vibrations above and below these ranges act essentially the same.

Motion is manifest in everything in the universe. In other words, as in a musical note of a high or low C the vibrational rate, the frequency, is different but all "C" notes are essentially the same, differing only in harmonic and range frequency. This is the foundation upon which much of Moray's investigation of vibration is based. All matter possesses a natural rate of vibration. Moray's research in ultrasonics did not end at 500 m. c. but he took the harmonic of certain frequencies and utilized them for various results from breaking objects by vibrations to bringing down birds out of the air, from throwing the natural vibratory rate of living cells out of balance to the shearing off of animal, mineral and vegetable matter. Sometime it has required several frequencies to be transmitted over a media at the same time. Any material that has elasticity can propagate this type of ultrasonics research. The propagation takes the form of a displacement of oscillations.

The universe is singing and this symphony or frequency is what keeps every part of the universe and every atom in its proper orbit. We can see this in studies beyond the microscope or beyond the telescope, either instrument telling us the same story. Science agrees that all form of matter is vibrating at its particular rate of frequency and so it is with the various forms of energy, heat, light, magnetism and electricity, these are but forms of vibratory motion connected with and emanating from the same source, the great generator of the universe; or, in other words, all matter, energy or force in the evolution of matter and the evolution of forces manifests a rate and degree of vibration entirely of its own. Matter, vibrating at a certain rate of its individual character, may be transmitted into other substances by lowering or raising its rate of frequency. If the frequency is raised high enough its molecules will separate and the atoms are freed. Raise the vibration of the atoms still higher and higher and they will resolve themselves into the original elements of which all matter is constituted.

Matter then becomes a form of energy. Frequencies may be developed which will balance the pull of gravity to a certain degree of neutralization of the forces of gravity. One then goes beyond those of gravitation. The understanding then of the principle of vibration or frequency is to grasp the secret of energy, i. e. vibrations, in which lies the secret of all things.

The Salt of the earth is energy and the evolution of matter and the evolution of forces in the processes of the creation of all things. By the proper uses of these natural laws of energy and matter, matter is turned into energy and energy into matter.

In the Gamma Rays we find potentials which are equivalent to as much as 2,000,000 volts, yet their wave lengths are not the shortest known to the physicists. In octaves still higher lie rays which are known as Cosmic Rays. Who can draw a definite line and say how much higher other octaves exist than those known as the Cosmic Rays- Our starting point from the discovery of these different rays — vibrations — was electrical conductivity of the air. It has been discovered that conductivity is just as strong by night as by day, so that radiations emitted by the sun can scarcely be the cause of this energy. May we not, then, accept the theory that the sun, in and of itself, has no energy, but is merely a rebroadcaster of the greater generator — the sonic of the universe itself; that these two, then — matter and energy — are possibly one? Is the sum total of all that has been found out during the centuries of constant research to be judged by the small portion of the universe which is visible to man, who is only armed with his telescopes, or with the most powerful miscroscopes and spectroscopes ever made by man?

All space is saturated with vibrations, energies which are doubtless what we may call electrical in their ultimate character or very closely allied to electrical action. The relation of matter to energy and energy to matter then becomes the potential of the universe, one continuous series of oscillations, oscillating to and fro like a great pendulum across the universe. One might ask, "How can one get a steady source of energy from such surges?" Could not a steady flow of water be obtained from the waves of the sea?

In reference to electrons, neutrons, protons, photons, and ions, etc., it is our theory in using these terms that they are the energy of the universe, which have become disassociated here and there, and these innumerable infinitesimal particles constitute (by forces they exert and the disturbances they originate) the substratum of what our senses terms as matter, and by nature splitting matter the energy of the universe is born and matter "reborn."

Matter is susceptible to motion. The media is susceptible to stress. All atoms appertain either to matter or energy, and continually pass from one to the other, thus introducing kinetic energy. There at its very foundation matter consists of electrical charges which govern the very motion of celestial bodies — including radioactive radiations of energy and matter. The evolution of matter and the evolution of energy.

There are ample writings and scientific books written by experts which acknowledge that there is unlimited energy in the universe, but to say one is able to tap this supply is another matter. If I tell you there is water, good cold water, in a glass on your table, but you cannot drink it for a million years, what would you think? You know how to get the water out of a glass. Well, it is as easy to tap this energy now out in space as it will be in a million years from now. If it can be done then, it can be done now.

We speak of generating electricity: To be exact, we only transfer it from one place to another (pump it, if you please). We cannot generate it because we can neither destroy or create it. After we have used it to light our homes or do other work, it is like water over the wheel — no less water, only the lowering of potential. The electricity has "sunk back" from whence it came, ready and waiting for nature or man to raise its potential, when it again is ready to do man's bidding, or in other words in the evolution of energy it "sinks back" to its source. It is naturally very slowly but steadily being liberated from the universe only to return again.

Elements maintain an equilibrium by oscillations, rotations, attractions and repulsions, but this does not interfere with a transformation of equilibrium, which when the transformations of equilibrium are rapid enough become heat, light and electricity, i.e., matter is turning into energy and energy into matter.

There can be no "production" of current electricity, there will be no kinetic energy if there is no disturbance of equilibrium, that is to say change of potential of energy level. When one thinks of the oxygen and nitrogen molecules of the air all about us moving with the speed of bullets and striking us and everything with this speed, one can form some idea of the agitation taking place in the universe. The oscillations of the universe are part of this agitation.

The oscillations of these electrons, ions, photons, protons, etc. out in space are emitting electromagnetic waves of many wavelengths and frequency. In the Moray device it is so constructed that the frequency is very much lower on the secondary side than on the primary side and almost complete resonance established.

All radiant energy is now believed to possess mass or something equivalent to it. Mass and radiant energy are even considered to be interchangeable.

We are convinced the energies from the Universe are active radiations produced in "nature's cyclotrons" (nature's reactors) by the evolution of matter into energy and energy into matter.

"Scientific American" (1930) — "The earth itself is a huge electric dynamo generating enough current to supply light, heat, and other electrical needs to the 10 largest cities in the U.S. for at least a million years."

Researches on thermal reactions inside the earth, conducted by Dr. Ross Gunn, indicate that the earth is a great generator.

"Nature of the World and of Man" (Printed by the Univ. of Chicago Press, 1925) "The amount of light and heat (radiant energy) received by the earth from the sun is enormous. On the square yard exposed perpendicularly to the sun's rays radiant energy is received at the rate of one and one-half horsepower. The average rate for the earth through the periods of darkness as well as of light is three-eights of a horsepower per square yard. This means that 300 horsepower are received on a building 50x150 feet in dimensions. Our planet is receiving energy at the rate of 160,000 horsepower per inhabitant of the earth at the present time.

"The earth receives but an insignificant fraction of the energy the sun radiates: only about one-two-billionth." "The Advance of Science," by Watson Davis, Director, Science Service, Washington, 1934.

Cosmic Rays bombard the earth from outer space every second of the day and night. They penetrate everything including our own bodies. They carry the mightiest packet of energy yet known to science. They give rise to bursts of material particles.

Hundred Billion Volt Wallops.

Preliminary analysis of Explorer VI data just published shows the belts shrunken in size and in intensity — at least this was the state of affairs during August and September of last year.

Another surprise come in the discovery of a third belt lying between the outer and inner belts found by Van Allen. Perhaps this new belt should be called the Arnoldy, Hoffman, and Winckler belt in honor of the three University of Minnesota cosmic ray scientists responsible for its discovery.

The three physicists from the Land of Lakes masterminded the construction of the radiation detection equipment which formed part of the payload of Explorer VI and analyzed the data it accumulated.

The new shape in radiation belts found by the Minnesotans confirmed a growing suspicion that the belts are not the stable pair of doughnuts once visualized, but a shimmering set of tenuous rings which may change markedly from day to day.

Radiation levels measured by Pioneer III, Pioneer IV, the Russian Mechta, and Explorer VI have shown significant variations.

Fortuitously, Explorer VI was in orbit and busily taking radiation measurements during a strong magnetic storm created by unusual activity on the face of the sun.

As a result, the step-by-step reaction of the belts to such a storm and a rather complete history of their return to normaley was obtained for the first time.

The orbit of Explorer VI was ideal in several respects for the probing of the intensity and extent of the Van Allen belts.

Its orbit was highly elliptical, extending from about 4,100 miles from the earth's center at its near point to some 30,000 miles at its far point.

Moreover, the inclination of the orbit was such that the rocket passed from rather high northern magnetic latitudes to high southern magnetic latitudes.

Because of these two orbital characteristics, a large portion of the region of the belts was scanned in several days time.

That portion of the new data which has been processed to date indicates that the maximum normal radiation dosages in the belts during the period of Aug. 7 to Oct. 6 of last year was down significantly compared to that found earlier with payloads aboard Pioneers III and IV, and the Soviet Mechta.

On the night of Aug. 16-17, a strong geomagnetic storm occurred which- brought a new surprise. During the first 24 hours of the storm, about two-thirds of the radiation in the outer zone was "dumped" on the earth.

Available evidence suggests that the lost radiation consisted largely of low energy electrons.

The outer belt soon recovered, in fact over-recovered, and near the end of the storm, on Aug. 18, the outer belt was found to contain about five times the total radiation found there before the storm.

This abnormally high radiation "fever" persisted for 10 days and was followed by a slow return to normal.

As yet, a satisfactory explanation of the "dumping" process in the radiation of the outer belt has not been found.

Tracing the probable dumping paths of this radiation to earth, the Minnesota scientists found that it should show up near the surface of the earth between magnetic latitudes of 52 and 62 degrees, with a peak appearance at 57 or 58 degrees.

On the very night of the magnetic storm, the counters aboard Explorer VI revealed the disappearance of radiation from the outer belt, Dr. Winckler observed an aurora over Minneapolis, at a magnetic latitude of 57 degrees.

The tie-in was inescapable. The observed aurora must have been caused by the jumped electrons from the outer belt.

Such electrons would produce more than the visible evidence of an aurora. 1-hey would produce X-rays. Previous observations by balloon had already indicated that such X-rays were often present at relatively low latitudes during times that visible auroras lay far to the north.

The Minnesota data thus gives support to the idea that under certain conditions at least, an aurora may consist of two parts, a visible aurora most likely appearing near the usual auroral zone, and an X-ray aurora, invisible perhaps to the naked eye, lying to the south.

The National Aeronautics and Space Administration picked up the tab for this work, and most likely will do so in the future as the Van Aliens, Arnoldys, Hoffmans, Wincklers and others bring new light to bear on the remaining mysteries of the earth-circling radiation belts. Salt Lake Tribune, June 19, 1960.

SPACE FILMS DISCLOSE FAR GREATER RADIATION

BEDFORD, MASS. (UPI) — Film packs exposed at altitudes up to 700 miles in an Atlas nose cone showed far greater radiation than previously discovered, according to the air research and development command.

"Particle tracks indicate that radiation in the (Van Allen) belts discovered by the Explorer satellites far outshadow the flux of primary cosmic radiation as measured by means of skyhook balloons at 20-mile altitudes," the report said.

"Counts in the Atlas-flown emulsions show that for every comic ray that penetrated the block, some 44,000 protons of the Van Allen belt were recorded.

"The accompanying photomicrograph of a section of the emulsion smaller than the head of a common pin shows a track produced by a heavy cosmic ray primary immersed in a sea of protons carrying kinetic energies in excess of four billion electron volts and thus capable of penetrating the Atlas nose cone.

"The more energetic of the trapped particles produced `stars' or nuclear explosions inside the emulsion (film) 500 times more frequently than observed on earlier Aerobee rockets which reached only 100 miles, below the intense trapped radiation of the Van Allen belt." March 17, 1960, Deseret News

No other radiations "pack such a wallop" as Cosmic Rays. Compared with other energies here on earth, they rate thousands and millions of times as powerful. Cosmic Rays energies seem to lie between 100 million and more than 100 billion volts. It is not possible to be any too definite and positive, because estimates necessarily change with additional experiments and knowledge. Comprehension becomes difficult when energies reach billions of volts. The highest electrical presssure on high-tension power lines is 250,000 volts. The peak of artificial electricity production for experimental purposes is 20 million volts. Lightning is rated at about 1 billion volts.

Dr. Anderson's cloud chamber at California Institute of Technology in which the positron was discovered has furnished much information about cosmic ray energies. He found that some positrons are born of cosmic rays smashing into matter. The cosmic-ray energies deduced from the tracks left in the Anderson cloud chamber range from 100 volts to 3 billion volts. The Lemaitre-Vallarts theory together with Dr. Johnson's asymmetry measurements, give definite values for the energy of half of the cosmic radiation, and shows it continuously disturbed between 5 billion and 50 billion volts.

The figure of 100 billion volts is a result of Dr. W. Kolhorster's measurement of penetrating radiated in the depths of the Strassfurt salt mines. He found that the minimum energy of these rays had a penetration which was greater than ever before demonstrated. Dr. Axel Corlin of Sweden's Lund Observatory found radiation that still had energy after passing through somewhat greater depths and, therefore, the voltage figures can be made even higher. And energies of 100 billion volts or more are indicated by the great bursts set off by cosmic ray collisions, called the stosse, which have been observed particularly in Germany. The Moray RE devices have worked equally well in deep mines under water or high in the mountains and in an airplane.

It is about 100 years since science began to consider light, heat, magnetism, galvanism and electricity as natural forces. In the early part of the 19th Century school books termed these things imponderable substances. The corpuscle theory of light was taught and the sun was supposed to contain a never failing supply of these corpuscles. After the corpuscular theory had about faded man turned to the wave theory, but even the wave theory was based on a crude concept of a movement of the ultimate principles or atoms of matter. The electronic theory superceded the old theory and while the electron theory surpasses all former theories, could it be, as greater light leads us on, the electron theory will be found to lack "absolute" knowledge, and the Einstein Theory stand some revision, amendments, or even undoing?

CHAPTER TWO

REACTIONS BY MEANS OF ELECTRONIC EXCITATION

As I stated in 1914 in connection with the action of Moray RE tube values.

If two molecules were beyond each other's Molecular range and if the neighboring surfaces could, by any means as by the supply of electricity from without, be oppositely electrified, the forces of cohesion would be intensified momentarily by something akin to chemical affinity and cohesion would set in over Ultra-molecular distances. The opposite charges cannot be maintained electrostatically between two neighboring metallic surfaces, but they can be momentarily imparted by a sudden jerk of disruptive discharge or receive electric impulses, these are the things which are effective in promoting chemical cohesion. It is not to be supposed that the electrons in a polarized atom need to be disturbed in any great amount in order to produce chemical cohesion, polarization converts ordinary molecular force in cohesion into incipient but real chemical affinity.

It has long been known that electrical forces between charges are of the inverse square law type. The interactions of two moving charged particles free in space can be easily computed by our analogy to our well-known astronomical problems with due regard to the signs. Coulomb's Law states, "The forces exerted upon each other by two small charged bodies varies directly as the product of the charges and inversely as the square of the distance between their centers." The force also depends on the kind of medium in which the charged bodies are placed $f = \frac{Q^1 Q^2}{4\pi p r^2}$ Where p is the permeability of the medium. As an illustration of the force given by the Coulombs Law, if we have two small bodies each charged with one coulomb of electricity and these are placed in a vacuum with a distance of one meter between centers the force of repulsion will be 8.9 x 10^9 neutons or 2.25 x 10^9 lbs.

It is obvious that chemical molecules can be made to obey Coulomb's Law and may be subjected to the interactions of the electrical forces, the impact, or inter-molecular pressure, between the reacting molecules must be very large.

We know from proven experimental facts that at 10^{-2} cm. and even down to 10^{-5} cm. apart, gaseous ions at atmospheric pressure exert very feeble forces on each other. As the ions are being knocked around randomly by molecular impacts, Brownian movement whose impact forces are larger than the attractive forces. Only until they are within molecular distances to each other is the coulombic potential energy equal to or exceeding the average of translation.

$$\frac{ge^2}{4\pi p r_o} \text{ equal to or greater than } \tfrac{3}{2} Kt$$

r_o is the molecular distance

Inside this molecular distance the ions are actively drawn together; outside this sphere of radius r_o has an electric field given by the equation:

$$X = \frac{e}{r^2}$$

at 10^{-8} cm. X is 10^8 volts/cm., even at 10^{-6} cm. it is 10^4 volts cm. It is apparent that the coulombic force within such molecular distances between oppositely charged ions must be very great. The effect is analogous to the entrapping of comets when they pass near a planet, thereby rendering them permanent members of the solar system. Since the stoppage of comet like ions in an encounter with oppositely charged ions occurs well within the limits of atomic magnitude, 10^{-8} cm., so that the acceleration will be of the order of $U^2/2t=10^{26}$ egs., and the force needed to drop even a single electron will be 1/10 dyne. The power to stop and neutralize such electrons flying with 1/30 of the speed of light inside a molecular thickness can be estimated.

$$\frac{\text{energy}}{\text{time}} = \tfrac{1}{2}\text{mu}^2 \quad \frac{\text{u}}{2\text{t}} = 10^{27}(10^9)^3 10^8 = 10^8 \text{erg/sec}$$

Reaction of excited atoms or molecules is of importance only under conditions of high electric densities, in view of the short time intervals involved,' that is 10^{-8} sec. Some atoms can, however have electrons in metastic state of excitation lasting some 10^{-4} sec. However, at lower electron densities second impacts can change the phenomena, and such atoms in impact with neutral atoms or molecules of an appropriate sort can lose energy by inelastic impacts causing excitation, ionization or dissociation of the molecules.

In any collison between a charged particle and a neutral molecule ionization takes place because of the electric force exerted on the planetary electrons in the molecules.

The Bohr Theory of spectral lines indicates that an electron should be able to lose energy to an electron in an atom or molecule as soon as it possesses an energy equal to $hv=1/2\ mv^2$; v is the frequency of the energy radiated, h is the Planck constant therefore we have $h=6.62 \times 10^{-72}$ erg/sec, V=frequency, m=mass. When the disturbed electron returns from its orbit or state, it was suspected that the first inelastic impact at increasing energies should correspond to these excitations losses, leading to light emission, and not to ionization, the ionization potential being higher. It was found in complete conformity with Bohr's theory, the first inelastic impacts of electrons with atoms or molecules at lower energies, in general gives rise to the emission of light of the first line of a series of these atoms and that as the electrons' energies increase, the separate higher lines of appropriate frequency appear as the energy reaches a proper value.

At an appropriate energy of the impacting electron, the atomic or molecular electrons are completely removed from the atoms or molecules leaving behind the positively ionized atomic ions or molecular ions.

When an electron possesses more than an ionizing amount of energy, any superfluous energy which it has after causing ionization is distributed between itself and some electrons removed from the atoms or molecules.

A single electron of appropriately high energy can liberate as many as 4 to 5 electrons at once from an atom as in the outer electrons of mercury. The work on dissociation and the mechanism of ionization in certain gases such as the rare gases, nitrogen and hydrogen, has shown the possibility of the simultaneous excitation and ionization of the same atom by a single electron impact of appropriate energy.

It is found with few exceptions that the larger the diameter of the atoms and the larger the number of external electrons the smaller the excitation and ionization potential will be.

The probability of resonance and ionization is greatest at the precise ionization or resonance potential and falls off exponentially from that value on only to rise again as the next potential is reached. In any case it can be definitely stated that the probability of ionization and excitation calculated on the basis of the electron free path in a given gas the number ions formed are a maximum at the ionization or excitation potential; thereafter, they drop rapidly to lower values as the electron velocity increases.

We experimentally found the number of ionizing collisions per meter made by an electron, is approximately proportional to the excess of energy of the electron above the ionizing energy

$$n=C\ (E-E_1)$$

E is the actual energy of the electrons
E_1 is the ionization potential of the gas
C is a constant

The energy an electron must have before it can produce an appreciable amount of ionization is always considerably larger than the ionization potential. The ionization potential determines only the energy at which ionization by collision starts. The greatest amount of ionization occurs when the electron has an energy 5 to 10 times that given by the ionizing potential.

The minimum value of the potential at which definitely inelastic impacts of electrons with atoms or molecules set in and where the electrons lose all, or a large fraction of their energy at a single impact, is called the critical potential. It was first observed that the conductivity of gas was increased at the critical potential, or first ionization potential, that is, when an electron acquired an energy of equivalent volt V_o, characteristic of a given gas, it was able on impact, to remove an electron from an atom which has an ionization potential of V_o. This is expressed in electron volts.

The second ionization potential corresponds to the work required to remove a second electron from the atom or molecule, when the atom or molecule has already been ionized.

Unless ionization occurs, atoms and molecules can absorb only discreet amounts of energy, this energy has the effect of moving the most loosely held orbital electron or electrons in an atom to some larger orbit. Thus at normal temperature 80.°F, the average kinetic energy of the gas molecules corresponds to less that 0.04e.v., that is, the fraction of the total number of molecules which has energies greater than that necessary for ionization of the gas is extremely small.

Because the mass of the electron is so very small the energy it loses in an elastic collision is only a small fraction of its total kinetic energy. The fraction f is given by the following equations:

$$f = 2.66\frac{mM}{(m-M)^2}\frac{(1\quad WM)}{Wm}$$

WM average mass of the molecules
Wm average mass of the electrons

f is approximately equal to m/M even when the average energy of the electrons is only 20% or 30% larger than the average energy of the molecules. Thus with a comparatively small electric field, if the electrons can make a sufficient number of collisions the average energy of the electron can become many times that of the molecules.

If the electric intensity were only 100 volts/ampere the average energy of the electrons in oxygen would be about 4.5 e. v. at 1 mm. Hg. This corresponds to a temperature of 35,000°k. Under conditions such as these the

actual kinetic energy of a fairly large fraction of the electrons would thus be larger than the ionization energy of the molecules and ionization could occur owing to the collisions of the electrons with neutral molecules.

The forces acting between an electron and a molecule vary much more than the inverse square law coulomb. This is represented by the following equation:

$$f = \frac{(D-1) \quad O^2}{2 * 3{,}1416\ N\pi 5}$$

this assumes spherical elastic molecules and ions, these attract each other at a distance r with a force f. Thus an electron can approach very closely to a neutral molecule before experiencing any force due to the neuclei and the orbital electrons. If then, the electron has made a series of collisons and its energy or velocity is sufficiently low it can attach itself easily to the neutral molecule to form a negative ion. However, at too low pressures, the electron mean free path is increased and collisions are few thus insufficient to bring about the formation of negative molecular ions.

Electrons of low velocity approaching an ionized atom or atomic ion or molecular ion, must be able to interchange velocities so that while one electron neutralizes the ionized atom, the other electron escapes with the total energy resulting from the process. Another example would be a free slow-moving electron approaching an excited atom, the energy of excitation is given to the slow electron while the excited electron returns to its normal orbit without radiation or to some intermediate orbit with radiation of lower frequency. A classical example for illustration is the irradiation of mercury vapor by the line 2537 Au; the mercury vapor becomes activated, is then in a metastable state; if these atoms collide with Thallium atoms while in this state, a thallium-electron would be raised to a higher level so that it emits the green thallium line. The difference bewteen the energy of the 2537 Au line and the low-energy thallium line is converted into kinetic energy of the separating mercury and thallium atoms after impact. If the activated mercury atom strikes hydrogen molecules in the excited state the energy is converted into the work a dissociation of these molecules into atoms or molecular hydrogen fragments. If the excited mercury atom collides with an atom of lower ionizing energy, this may remove an electron from the neutral atom ionizing it, and itself returns to the normal state.

Methods of electronic excitation

A. Processes in the gas itself;
1. Rapidly moving electrons and beta particles from radioactive changes.
2. Rapidly moving positive charges, protons and alpha particles.
3. Rapidly moving positive ions in high electrostatic fields
4. Photo electric ionization by ultraviolet light, X-Ray and other rays beyond the light rays as coming from the Cosmos.
5. Through chemical reactions in the gas, e. g. e. oxidation of NO — NO_2 P — P_2O_3, P_2O_5, etc.
6. Possibly ionization and excitation of the gas may be caused by temperature alone without action of the walls, or by impact of rapidly moving neutral atoms or molecules from other sources, for example neutralized alpha rays,

B. Processes due to solid or liquid surfaces in contact with the gas.
1. Bombardment of metal by fast electrons, alpha particles, positive ions or recoil atoms giving secondary atoms.
2. Action of metasable atoms on solid surfaces giving secondary atoms.
3. Action of gamma rays, X-rays and light on solid or liquid surfaces giving electrons photoelectric effect.
4. Incandescent metals in general emitting large numbers of electrons called thermo-ionic emissions.
5. Incandescent surfaces having salts, phosphates, oxides, chlorides, or complex metal salts of mixed composition, at lower temperatures give positive ions such as sodium ions, postassium ions, barium ions, etc.
6. Chemical reactions at surfaces, oxidation of moist phosphorus, potassium, sodium, give ions of both signs, but more negative ions.
7. The atomizing of liquids into minute droplets by high velocity air currents tangential to the surface causes the smallest droplets to become negatively charged. If water is used which contains ions the larger droplets have ions in them and are predominately positive. The source of conductivity of the gas is the source of the charges on rain clouds and thunderstorms.
8. Frictional effects between solid particles suspended in gases, as typified by electron in sand storms.

9. Ionization of a gas can occur when the average energy of the molecules becomes so great that the energy transferred in a collision bebetween two neutral molecules is sufficient to ionize one of them.
10. The collision of free electrons with neutral atoms or molecules. Ionization by collision between molecules and electrons in thermal ionization may involve several processes:
    a. The electrons may ionize directly in colliding with a neutral molecule.
    b. The electron may excite a molecule acid subsequent electron may ionize it.
    c. An electron might excite a neutral atom which subsequently in returning to its normal state would give off radiation and cause photo-ionization either in the gas or at the walls of the discharge.
11. The electric field is then one of the most important ionization agents.

An ion moving under the influences of the forces of the electric field is given by the following equations:

F — XAned

legend F — force; X — field strength; A — base area volums; n — ions/cc; e — charge; d — length parallel to field

This force acts on each ion between its 10^9 collisions/sec. with molecules to give it momentum in the field direction. At each of the 10^9 impacts some of this momentum is yielded to the neutral molecules with which the ion collides. As a result the molecules are set into a motion along X.

When a molecule captures a charge to become a molecular ion it moves in the electric field according to the following equation:

K — e/6 x 3.1416 - a (1-AL/a)

legend e — charge; coefficient of viscosity; a — radius of particles; A — constant, (.874); L — Mean free path.

The distance a molecule moves between impacts is called a free path, the mean free path is dependent on the velocities of the ions.

Now an ion that has fallen through a potential difference of one volt will have a kinetic energy of 1.6 x 10^{19} joule. That is,

q E —1x1.6 x 10^{19} — 1..6 x 10^{19} joule

According to the equation: q E — $^1/_2mv^2$ we find that the velocity of the particle after falling through a difference of potential of E volts is entirely independent of the length of the path the particle has traversed and also entirely independent of the form or shape of the electric field. The electric field intensity may be distorted in any way we please. That is, it may be at a high at one point, low at another, but still if the total difference in potential is E volts, the velocity of the particle will be:

$$V = \sqrt{2q / m(E)}$$

E. g. an electron with the kinetic energy of one electron has a velocity of: V — 5.93 x 10^5 meters/sec.

A hydrogen ion having a kinetic energy of one electron volt would have a velocity of 9.85 x 10^3 meters/sec. Or nearly 6.1 miles per second. Hence the mobility of charged particles, positively charged molecular ions and negatively charged molecular ions or atomic ions in the electric field may be controlled by simply controlling the difference of potential through which the particles are falling. Further, since the molecules are to react with one another the rate of reaction and the intensity of said reaction may be controlled at will.

A specific case in which the electric field performs the double function of molecular excitation and the creation of inter-molecular and atomic ions is being given by the system used by the inventor.

It is a system utilizing the principles of the wire corona with concentric cylinder at different pressures. The system is modified in conformity to the concept that chemical reactions must take place when the oppositely charged molecular ions from an appropriate activated catalyst are accelerated against one another in the wire corona, it consists of a cylinder made of a suitable catalyst from which positive atomic ions are emitted. The reactants (gases) streaming through the chamber parallel to the length of the wire attain the polarity of the negative molecular ions by the high electric field close to the wire. As these negative molecular ions are accelerated at the right angles to the wire in the direction of the electric field toward the positively charged catalyst cyclinder, they are met by an avalanche of on rushing atomic ions from the catalyst. A certain amount of reaction takes place in that instant. (10^{-8} sec.) However, some of the negative molecular ions outside the mean free path of the positive atomic ions are free to rush headlong toward the positive cylindrical field where they are neutralized, and instantly given a positive charge by the avalanche of outrushing positive ions. These

positive molecular ions are accelerated back into the field and collide against the negative molecular ions coming from the direction of the negative electrode corona. This melee continues until the reaction has come to a point when the individual participants are either all gone or the mixture is outside of the electric field; backrush oscillations.

The Moray apparatus combined with other equipment, consists of a combination of specially constructed tubes which we will refer to as valves, "pressure transmitters," interceptors and oscillators. The valves are not rectifiers in the sense that they operate as radio valves in changing A.C. or H.F. to D.C. They have an actual valve action in stopping the "flow" of energy which may be thought of as oscillatory action similar to the waves of the sea, without rectification, from returning to the outer circuit, much as a retaining wall could stop the waves of the sea from returning. The other modalities and "tubes" of the device are equally unique in their performance. Although no new laws of energy are being advanced or claimed as having been discovered, the application in the method of utilization of the energy throughout space is unique in that "Generation" is accomplished by oscillatory utilization rather than by the conventional prime owner. These detector tubes have a synchronized pull with the specially developed oscillators of high faradic capacity and provide a means through which oscillating energy may pass to specially constructed valve oscillators whose relation to the first stage valve is such as to permit oscillations to come in from but not to return to the outer circuit with an automatic variable relation to the oscillations from the universe, and capable of setting up within their circuits initial oscillations which coincide with the oscillations of the universe.

Special provision is provided to stop R. E. tubes from becoming blocked in their disipation of the charges created by the oscillations that continually accumulate based on the oscillatory capacity back rush effect common to capacitors and herein applied in vacuum tubes. This action of these devices has the effect of enlarging and prolonging the time of charge and discharge of the capacitors and the capacity energy in the circuit to an appreciable interval in perfect harmony with the natural energy wave through the intercepter's valves and oscillators in the circuit which set up in the circuit electrical pulsations corresponding to the energy waves captured by the interpreter and again kept from returning to the second outer circuit by "multi-walled" valves. The final tubes act as energy pressure transmitters with a means to prevent "shunting" condensation by a special form of "getter." This stops condensation accumulating at the base of the tubes which would block their ionic action.

One must "split" the energy discharge band into lines of variation, call this what you will, lines of energy or line of light beyond the "light rays." The oscillations, therefore, do not become simple oscillations but through the action of the Universe set up an energy flow — which might be referred to as the assertion of inertia. When inertia sets in the action will continue because of the oscillations of the Cosmos, otherwise one would have a complete dissipation of energy and no oscillations. The oscillations will vibrate during the same period of time regardless of the potential, but the rate of vibration of the device depends on the "capacity" of its modalities, i.e., condensers, etc.

Let us go from the known to the unknown. We have referred to a form of ionic action in place of the common electronic liberation accomplished in radio tubes. It is an accepted fact when various substances are bombarded with alpha particles they are found to give off electrons. This is the principle involved in various vacuum tubes. Thomson gave a similar action of liberation the name of Delta Rays. These Delta Rays or electrons are thought by some to originate in a type of ionization which might be referred to as "thermions," give off when the alpha particles strike the bombarded substance. Is it, therefore, possible some "particle" from the Cosmos, with greater penetrating power than Alpha particles, would penetrate quartz or various substances and set up a decided ionic action? One maybe could learn much from a glorified "monochromator."

Just as sodium, postassium, caesium, rubidium, barium, strontium, react to visible light, or let us say wavelengths, within a certain range, might not certain other substances or substance react to oscillations from the Cosmos or artificially produced radiations?

The universe is analogous to a radio transmitting station. It is continually emitting energy, only of a greater range of wavelength. Wavelengths and frequencies are truly the answer to all vibrant worlds of living things. The stellar laboratories providing environments as yet unproducible by man or perhaps only unrecognized. The terms cosmic energy, radiant energy (as used by Dr. Moray) can be thought of as synonymous terms of frequencies of unknown and undefined limits. In fact, limits of arbitrarily named ranges of the spectrum, which the spectrum has not defined so that the terms should be recognized as meaning a locality in the wavelength scale without being definitely "fenced." Energy must be absorbed to be utilized. Absorption converts energy into heat, chemical energy, mechanical energy, electrical energy and perhaps into forms unknown at the present time. "Vibrant with life" is more than a poetical phrase.

In its simplest form an ion consists of a molecule of air that has either one or more or one less than the quota of electrons for the electrically neutral molecule. The former is a negatively charged, the latter a positively charged ion. Positive ions are attracted toward negatively charged bodies while negative ions drift away from them. This process goes on and the medium loses its electrical charge at a rate that is porportional to the

abundance of ions, to the velocity at which the ions move towards the attracting medium. The velocity is less or greater if the ion is not the simple type but consists of a variable aggregate of molecules. Much could be written on this. but the above should suffice for the present purpose. Let us go on from, not stop at, the Ultra violet Light Theory of Aurorea.

In some electronic tubes the electrons are not emitted directly from the filament but from an indirect Cathode which does not enter into the direct electrical function of the tube. Does this teach us anything toward an indirect generation of ions and ionic action? Could the opposite deflection of alpha and beta rays and the . undeflected course of the gamma rays teach us anything about cosmic energy or radiant energy valves and oscillators?

The more perfect the ionic action the greater the velocity. The greater the mean free path and the greater the collecting voltage the greater the ionic gain of energy will be between collisions and the greater the amount of kinetic energy will be conserved. The collision will be "perfectly resilient."

The little we know about "space" and what it contains or may contain is so limited that we are forced to acknowledge anything is possible beyond our experiences. The actual material of space consisting of the matter of celestial bodies is a very small part of the whole. There may be many all pervading energies or matter that are more important than those we have detected. The very fact of our inability heretofore to detect them may make them all the more important in the cycles of our life and the things we know.

There is a multiplicity of phenomena which occurs at the same time in gas conduction, the known laws are largely empirical and approximate. Ohm's law is valid in only a few limited cases, conductivity changes markedly with the variety of gas and the gas pressure. In the detector and intercepter circuits it becomes more important to maintain oscillatory action than frequency stability.

The relationship and combination of natural vibration and forced vibration is particularly important. It must be remembered that a point of resonance will be reached at some frequency and the charge will reach a magnitude depending on the impressed force which, in the case of the universe, is immense — the effect of resonance, pure resonance.

Science claims complete resonance is not producible. Science also, at one time, said it was impossible to transmit the human voice over a copper wire. That is and will always be a fact, but the same results are obtained. Science also said it was impossible for a heavier than air device to "fly."

Resonance has been obtained where a return wire in an electric circuit is not necessary. Pure resonance offers many dangers to the inexperienced investigator. The walls of Jericho are an example of pure mechanical resonance. Marching feet, running dogs and some harmonics come within the danger zone for bridges and the other mechanical structures, as also the breaking of a water glass. Every substance has a natural mechanical vibratory resonance and a point of dissociation. This is also true in electrical or energy resonance.

The theory is that in perfect resonance the oscillations will become more and more vigorous until the vibration or oscillation will go on forever if properly "fed" or to the dissociation of the matter. However, while this will be true in theory, it is only partly true. In fact, if one can obtain resonance with the "great generator" of the universe with its multiplicity of vibrations corresponding to the natural vibration and pure resonance of the different substances — each substance has a different pure sonic, pure vibration, pure resonance, buildings may be made to fall, glass to break, matter to explode, but only such things as come within the exact vibratory ranges of that resonance will be affected. The vibratory rate and the resonance of water is not exactly the same as that of oil. Find the proper mechanical or energy resonance of certain "kinds" of matter and the constructive results will far outweigh the destructive. Gasoline and fire each have their place which must be honored and feared as also appreciated. Man can destroy himself now, so where will a pure controlled resonance make too great a difference? There are enough things which, in the hands of babes, ignorance or knaves can snuff out nearly everything now; so, where need pure resonance be feared? The writer has, as Tesla did, come very close to pure resonance with certain substances. Being in resonance to one substance as compared to another is not being in resonance to all substances.

Put together in pure energy resonance certain electrical responding modalities which synchronize with the resonance of certain vibrations of the universe and what have you? Usable energy from the universe. This energy may come to the planets as oscillations similar to the oscillations and the tides of the sea. The R. E. tubes received this energy in surges, which may last only. a few micro-seconds but the pressure and the current in those surges are so large that sufficient energy is delivered to the equipment in resonance as to be un???ed and usable in multiples of flashes and a magnitude which will compete with the light of day. Remember resonance and pressure can do a lot of amplifying of energy. Also remember the vibrations going out from the sources in the universe must also return to their sources. Nothing is lost only a lowering of potential like water over the wheel.

The R. E. tubes present no new laws of physics. It may be a case of advancing further in the law and thereby obtaining results not at first deemed possible. This is the history of science. R. E. tubes possess greater ability to obtain "saturation" and thus charge the accompanying capacitors or condensers at a more steady rate which, when a certain voltage is reached, ionization occurs in the gases of the discharged tube and causes the

condensers of the valve circuit to discharge into other condensers of the oscillators and the other modalities of the circuit.

When ionization in the preceding tubes is no longer possible because of the reduced voltage, the process starts all over again. The first valve passes vibration of energy into an oscillatory circuit, ionization sets in, a discharge occurs and energy passes through another valve into other oscillators. The process is repeated from the first stage on to the second on to the third and so on, much like a bucket bridge. That is why I asked years ago, "cannot a steady flow of water be obtained from the waves of the sea or energy from the vibrations of the Cosmos?"

Many phenomena, especially those occurring in certain frequencies, are still unexplained and there are numerous places where the classic theory and observed facts do not agree.

When a vibration of any kind strikes a boundary between two media of different vibratory impedances at an angle of less than 90 degrees, a transformation of the vibratory rate may be changed into another vibratory rate. The R. E. Device, therefore will continue to capture energy by resonance, or call it what you will, as long as the "keep alive" vibration of the Cosmos continues to oscillate the various stages of valves and oscillators in the circuit. Simple is it not? Just a case of the trapping of energy which is everywhere present in the primary circuit and causing it to oscillate through the secondary circuits t rough a blocked circuit of no return.

Our experiments have proved that there is an energy which exists in the universe which, by proper development of equipment can be made available for commercial use.

One may say all "energy" comes from the sun. Can one prove the sun is the foundation of all "energy?" Or is the sun a retransmitter of energy? That light is an electrical phenomena has been amply proved. The atoms in those distant stellar crucibles have moving electrons which are emitting electromagnetic waves of many lengths and and many frequencies, which can be tuned to certain ranges of wavelengths. Our eyes and other senses respond to some of these frequencies but there are many beyond those which we loosely term light. The photographic plate records some of these and also invisible radiations of shorter wavelengths or higher frequencies known as ultra violet radiations. There are radiations measured by their heating effect of longer wavelengths or lower frequencies which we call infrared radiations. There are electromagnetic radiations of shorter wavelengths. These are generally known as "Roentgen Rays." There are rays of still shorter wavelengths; these are of unlimited power. These are born and put into locomotion from the very "Source or Foundation of Energy." What is a man to do with such a picture of the universe other than let our interest and admiration grow? But will we ever get to the final foundation? Anything is possible beyond our experiences. And as Tennyson said

"One God, one law, one element
And one far-off divine event
To which the whole creation moves"

Electricity is vibrations. Substance is a vibrating medium. All substances are really combinations of one primordial substance i.e. vibrations. Electrons in motion go to constitute an electric current. What electricity is to matter, so is electric force to common mechanical force, and electrical inertia to mechanical inertia. By inertia, we mean the ratio of force to acceleration.

Here on earth we have many "receiving stations" which are tuned to certain ranges of wavelengths.

Energy was defined in 1892 as a condition of matter, in virtue of which, any definite portion may effect changes in any other of definite portion. Later discoveries have since confirmed this. Energy then, is a state of matter, or rather, the result of a particular state or condition in which matter may be, when any observed phase of energy appears.

Cosmic rays, cosmic vibrations and matter may appear to consist of two entirely different things, but the fact is, these two subjects are actually joined together. Those highly penetrating rays which we call cosmic rays, originate somewhere in the remote spaces of the universe and continually bombard our earth with continuous vigor day and night, year after year.

We must not think of cosmic rays, infra ray and ultra-violet, X-ray, gamma or any ray, or particle as simple in character. None of them in any sense of the word consist of a simple frequency of ray. Ultraviolet rays, X-ray, gamma rays, cosmic rays and so on all consist of various wavelengths or frequencies. That is all ultraviolet rays are not of the same frequency, all X-rays are not of the same frequency any more than all radio waves (hertzian waves) are the same frequency. All are exceedingly complex in their make-up. This complexity is what has given them such an important place in the study of the physical sciences.

The great study of matter and cosmic rays so closely tied together, will open up greater and greater fields of science for the practical good of the human race.

Experiments have also satisfied us that gravity is akin to, if not an "electrical" oscillation, so well balanced that we might, for the lack of a better name, almost call it a "Wattless energy" until some force is exerted to oppose its potential and then gravity opposes such force. This means gravity can be controlled and unlimited advancement made in air navigation.

Facts prove that matter is capable of dissociation fitted to lead it into forms in which it loses all its material qualities. Among the most important Dr. Le Bon noted the emission by all bodies of particles endowed with immense speed, capable of making the air a conductor of electricity, of passing through obstacles, and of being thrown out of their course by a magnetic field. None of the forces then known were able to produce such effects, particularly the emission of particles with a speed almost or equaling that of light; it was evident that science then found itself in the presence of absolutely unknown facts. Several theories were put forth in explanation of them. One only — that the dissociation of atoms, which Dr. Le Bon advanced at the commencement of these researches — has resisted all criticism and on this account is now almost universally adopted.

It is now nearly seventy years since Dr. Le Bon proved by experiment that the phenomena observed in substances termed radioactive — such as uranium — could be observed in all substances in nature, and could only be explained by the dissociation of their atoms.

The action of light on any substance, a lighted lamp, chemical reactions of very different kinds, an electric discharge, etc., cause these effluxes to appear. Substances termed radio-active such as uranium or radium, simply present in a high degree a phenomena which all matter possesses to some extent. When Dr. Le Bon formulated for the first time this generalization, though it was supported by very precise experiments, it attracted hardly any attention. In the whole world one physicist, the learned Prof. De Heen, alone grasped its import and adopted it after having verified its perfect correctness. But the experiments being too convincing to permit of long challenge, the doctrine of the universal dissociation of matter at last triumphed. The atmosphere was then cleared, and physicists no longer denied that this dissocation of matter — this radioactivity as it is now called — is a universal phenomenon widely spread thoughout the universe; and, as Prof. J. J. Thomson demonstrated, exists in most substances — water, sand, granite, clay, bricks, etc.

What becomes of matter when it dissociates? Can it be supposed that when atoms dissaggregate they only divide into smaller parts and thus form a simple "dust of atoms"? We shall see that nothing of the sort takes place, and that matter which dissociates dematerializes itself by passing through successive phases which gradually deprive it of its material qualities until it finally returns to the rate of vibrations whence it seems to have issued as energy.

When the fact is once recognized that atoms can dissociate and reappear as energy and then from energy back to matter then the question arises as to whence they obtain the immense quantity of energy necessary to launch into space, particles with a speed of a same order as light or *greater.*

The explanation in reality is simple enough, since it is verified that far from being an inert thing only capable of giving up the energy artificially supplied to it, matter is an enormous reservoir of energy, intra cosmic energy.

Such a doctrine years ago assailed too many then accepted fundamental scientific principles to be at once admitted. Accustomed to regard the rights, the rigid principles of thermodynamics as absolute truths, and persuaded that an isolated material system could possess no other energy than supplied from without, a majority of physicists long persisted in seeking outside of it the sources of the energy manifested during the dissociation, not disintegration of matter. Gradually we are coming to see the facts.

The reality of this form. of energy is proven by experimental facts. Cosmic energy is the most powerful of known forces, and is the origin of most others including intra atomic energy.

Matter, formerly regarded as inert and only able to give back the energy originally supplied to it, is, on the other hand, a colossal reservoir of energy intra-atomic and intra-cosmic energy which can be expended without borrowing anything from without.

It is from the intra-sonic energy manifested during the dissociation of matter that most of the forces in the universe are derived, notably electricity and solar heat.

Force and matter are two different forms of one and the same thing. Matter represents a stable form of intra-atomic energy; heat, light, electricity, etc., represent instable forms of it (cosmic energy).

In the dissociation of atoms, the stable form of energy termed matter is simply changed into those unstable forms known by the names of electricity, light, heat, etc.

For the examination of these several propositions let us, as a basis of presentation, take them as proved and seek at once the changes they bring about in a general conception of the mechanism of the universe.

The problem of the nature of matter and of force is one of those which has most exercised the sagacity of scientists. Its complete solution has escaped us because it really implies the knowledge, still inaccessible, of the first cause of things. Scientific theories heretofore set forth have not allowed us to completely solve this great question. They lead, however, to a conception of matter and energy far different from that in use at the present day, cosmic energy.

We can arrive at the conclusion that matter is an immense reservoir of energy solely constituted by a system of vibrating atoms maintained in equilibrium by the rotations, attractions and repulsions of matter's component parts. From this equilibrium result the material properties of bodies such as weight, form, and apparent permanence. Matter also represents movement, but the movements of its component elements are confined within a very restricted space. This conception leads us to view matter as a variety of energy. To the known

forms of energy — heat, light — there must be added another — energy from the cosmos which embraces but surpasses intra-atomic energy. This energy is characterized by its collossal greatness and its unlimited accumulation with everything in the universe.

It follows from the preceding statements that by dissociation of matter one is simply giving to the variety of energy which fills all space in a different form — such as, for example, what we call electricity or light but in reality are radiations or forms of vibrations, their proper status.

We will endeavour to give an account of the forms under which this energy of the universe may be condensed within the atom, and the cosmos, but the existence of the fact itself has a far greater importance than the theories it gives rise to of simple atomic energy. Without pretending to give the definition so vainly sought for of energy, we will content ourselves with stating that all phenomenality is nothing but a transformation of equilibrium. When the transformations of equilibrium are rapid, we call them electricity, heat, light, all forms of vibration. When the changes of equilibrium are slower, we give them the name of matter. To go beyond this we must wander into the region of hypothesis and admit that the elements of which the aggregate is represented by forces in equilibrium, are constituted by vortices formed in the midst of the universe. These vortices posses an individuality, supposed by some to be ephemeral but which the evolution of matter and of energy prove to be eternal. The individuality disappears, and the vortex dissolves as soon as the forces which maintain their existence cease to act but others form elsewhere, i.e. eternal creation, eternal evolution, eternal energy and matter.

The equilibriums of these elements of which the aggregate constitutes an atom, may be compared to those which keep the planets in their orbits. So soon as they are disturbed considerable energies manifest themselves, as they would were the earth or any other planet stayed in its course.

Such disturbances in planetary systems may be realized, either without apparent reason, as in very radioactive bodies when, for diverse reasons, they reached a certain degree of instability, or artificially — as in ordinary bodies when brought under the influence of various excitants — heat, light, or other forms of vibration.

These excitants act in such cases like the detonator of an explosive — that is to say, by freeing quantities of energy greatly in excess of the very slight cause which has determined their liberation. And as the energy condensed in the universe is immense in quantity, it results from this that to an extremely slight loss in matter there corresponds the creation of an enormous quantity of energy.

From this standpoint we may say of the various forms of energy such as heat, electricity, light (all vibrations), represent the last stages of matter before it returns into the cosmos from whence it came.

IF, extending these ideas, we wish to apply them to the differences presented by the various simple bodies studied, we should say that one simple body only differs from another in rate of vibration. If we could deprive any element of a sufficient quantity of the energy it contains, we should succeed in completely transforming it.

As to the necessarily hypothetical origin of the energies condensed within the atom, we will seek for it in a phenomenon analogous to that invoked by astronomers to explain the formation of the sun, and of the energies it stores up. To their minds this formation is the necessary consequence of the condensation of the primitive nebula. If this theory be valid for the solar system, an analogous explanation is equally so for all matter.

Such a theory clears away the classical duality of matter and energy. These are two identical things under different aspects. There is no separation between matter and energy, since matter is simply a stable form of energy and nothing else and continually changes from one to the other in the cosmos.

We can only understand things by fitting them into the common frame of our thoughts. The essence of energy being unknown, we are compelled to materialize it in order to enable us to reason about it. We thus arrive — but only for the purposes of demonstration — at the following definitions: Energy and matter represent entities of the same order. The various forms of energy — electricity, heat, light — are manifestations of matter in action. They only differ in the nature and the stability of the equilibrium formed in the heart of the cosmos. It is through these manifestations that the universe is known to us.

The illustrious Faraday endeavored to clear away the duality existing between matter and energy. Others made the same attempt, by pointing out that matter was only brought home to us by the intermediary of forces acting on our senses. But all arguments of this order were considered as having a purely metaphysical bearing. It was objected to in Faraday's time that it had not been possible to transform matter into energy, and that this matter was necessary to animate the former. Scientific principles, considered assured, taught that nature as a kind of inert reservoir could create the liquid it holds. Everything seemed then to point out that nature and energy were irreducible things as independent one of the other as weight is of color. It was therefore not without reason that they were taken as belonging to different worlds.

The transformation of matter into energy having been demonstrated, it follows that energy may be transformed into matter.

The facts summed up in the preceding pages show that matter in a set form is not eternal but as a rate of vibration or energy is eternal, that it constitutes an enormous reservoir of vibrations, and that it disappears by

transforming itself into other forms of energy or matter before returning to its source, being in reality just another cycle in the process of creation.

It can therefore be said that if matter cannot be created, it cannot be destroyed but returning to its source begins a cycle again. The elements of a substance which is burned or sought to be annihilated by any other means are transformed and are but a change of vibration. They may lose every quality of matter, including the most fundamental of them all — weight — but that only shows gravity lost its power over such elements because of a change in vibration. The theoretical importance of these principles is considerable but self-evident.

It is easy to deprive matter of all its attributes, save one. Solidity, shape, color, chemical properties may disappear but there remains a rate of vibration. The very hardest body can be transformed into an invisible vapor. But, in spite of every one of these changes, the mass of the body, as measured by its weight, remains invariable, and by changing or restoring rates of vibrations can be made to reappear; this constituted the one fixed point in the mobile ocean of phenomena, vibration. It enables the chemist, as well as the physicist, to follow matter through its perpetual transformations, and this is why matter remains something mobile and eternal.

The importance of permanence and, therefore, the indestructibility of vibration which one recognizes throughout the changes in matter, being the only characteristic by which this great unknown conception can be grasped, necessarily became preponderant.

These fundamental dogmas, the bases of modern science, the researches detailed in this work tend to destroy. If the principle of the conservation of energy — which is simply a bold generalization of experiments made in very simple cases — likewise succumbs to the blows which are already attacking it, the conclusion must be arrived at that nothing in the world is eternal in a set form but subject to changes of rate of vibration. The great divinities of science could also be condemned to submit to that invariable cycle which rules all things.

On the ruins of former doctrines and after centuries of persistent efforts, there sprang up two sovereign powers which seemed eternal — matter as the fundamental woof of things and energy to animate it, the two being one on different rates of -vibration. With the equations connecting them, modern science thought it could explain all phenomena. In its learned formulas all the secrets of the universe were enclosed. The divinities of old time were replaced by ingenious systems of differential equations.

Discovery is rarely spontaneous; it only appears so because the difficulties and the hesitations which most often surround its inception are generally unnoticed.

The public troubles itself very little with the way in which inventions are made, but psychologists should certainly be interested in certain sides of the problems of inventions. In fact, they will find therein valuable documents on the birth of beliefs, on the part played, even in laboratories, by suggestions and illusions, and finally on the preponderant influence of prestige considered as a principal element of demonstration which much of the time surplant facts.

The generality of the phenomenon of the dissociation of matter would have been noticed much sooner if a number of known facts had been closely examined, but this was not done. So also is this true of the law of oscillations by vibrations of the universe. These facts were spread over very different chapters of physics. For example, the loss of an electric charge occasioned by ultraviolet light has long been known, but not one little thought connecting the fact with a cathode ray. More than 75 years ago Niepe de Saint-Victor saw that, in the dark, salts of uranium caused photographic impressions for several months; but as this phenomenon did not seem to be connected with any known fact, it was put to one side as the oscillations of the cosmos are now. For hundreds of years the gases of the oscillations or vibrations of the universe have gone unappreciated. The common link which connects them appeared clearly when we established that the dissociation of matter and the forms of energy which result from it are to be ranked among the most widely spread natural phenomena. Flames had been observed to discharge electrified bodies without any one determining the exact cause of this phenomenon/. The loss of electric charges through the influence of light had been known for many years but it was regarded as a fact peculiar to a few metals with no suspicion of how general and important this law was.

All this phenomena and many others, such as electricity and solar heat — are very dissimilar in appearance, but are the consequences of the same fact — namely, the dissociation of matter.

The discovery of the dissociation of matter by radiation has allowed us to penetrate into an unknown world ruled by new forces, where matter losing its properties as we had known it, becomes a form which passes without difficulty through obstacles, and possesses a whole series of unforseen properties, the farreaching effect of which we have yet a great deal to learn about.

With the discovery of the universal dissociation of matter is linked to that of intra-atomic energy and energy of the cosmos by which science has succeded in explaining some radioactive phenomena.

The origin of intra-atomic energy is not difficult to elucidate, if one supposes, as do the astronomers, that the condensation of our nebula suffices by itself to explain the constitution of our solar system. It is conceivable that an analogous condensation of the cosmos may have begotten the energies contained in the atom. The latter may

be roughly compared to a sphere in which a non-liquefiable gas was compressed to the degree of thousands of atmospheres at the beginning of the world.

The reason this force (the most widespread and the mightiest of all those of nature) has remained unrecognized so long is in the first place because man lacked the reagents necessary for the proof of its existence and then, because the theory and atomic edifice erected by science were so stable, so solidly fixed in our minds that its dissociation and connection with the cosmos remained extremely slight. Had it been otherwise the world would long ago have utilized cosmic energy*

But how is it that a demonstration so simple as that of the existence of cosmic radiant energy has not been made since the discovery of radioactivity, and especially since the demonstration of the generality of this phenomenon? This can only be explained by bearing in mind that it was contrary to all accepted principles to recognize that matter or the energy of the universe could by itself produce energy. Scientif is dogmas inspire the same superstitious fear as did the gods of old, though they have at times permitted all their liability to be broken.

The fact of the existence of a considerable condensation of energy within the atoms of the universe only seemed at first to annoy us because it was outside the range of things formerly taught us by experience; it should however be remarked that, even leaving on one side the facts revealed by radioactivity, analogous concentrations are daily observable. Is it not strikingly evident, in fact that electricity must exist at an enormous degree of accumulation in all substances of the universe since it is found by the electrolysis of water that one gramme of hydrogen possesses an electcric charge of 96,000 coulombs? One gets an idea of the degree of condensation at which electricity existed before its liberation in all the universe. Elementary treatises have long since pointed out that barely a twentieth part of the above quantity would suffice to charge a globe the size of the earth to a potential of many thousands of volts. The best static machines of our laboratories hardly give forth. 1/10,000 of a coulomb per second.

They would have, consequently, to work unceasingly for a little over 30 years to give the quantity of electricity contained within the atoms of one gramme of hydrogen.

As electricity exists in a state of considerable concentration in all matter, it is evident that the atoms of the universe should have been regarded many years ago as a veritable capacitor of energy. One should have recognized the quantity of this energy must be enormous; it was only necessary to appreciate the magnitude of the attractions and repulsions which are produced by electric charges before us. It is curious to note that several physicists years ago have touched the fringe of this question without perceiving its consequences. For example, Cornu pointed out that if it were possible to concentrate a charge of another sphere also having a charge of one couloumb, the force created by this repulsion would equal 918 dynes, or about 9 billions of kilogrammes.

What about the stars and plants of the universe? We know that by the dissociation of water we can obtain from one gramme of hydrogen an electric charge of 96,000 coulombs. This energy would be enough (and this is exactly the hypothesis enunciated by J. J. Thomson) to dispose the electric particles at suitable distances within the universe to obtain through their attractions, repulsions, and rotations, extremely powerful energies in an extremely small space. The difficulty was not, therefore, in conceiving that a great deal of energy could remain within any atom, not just a radioactive one, but that nature was supplying us from the universe usable energy if we but reached out to harness it. It is surprising that a notion so evident was not recognized long ago.

Calculation of radioactive energy has been made within those limits of speed at which experiments show that the inertia of matter does not greatly vary.

Science formerly established a complete separation between matter and energy. The classic ideas on this decision will be shown in the following passage of a work by Prof. Janet:

"The world we live in was thought, in reality, a double world; or, rather it was composed of two distinct worlds — one the world of matter, the other the world of energy. Copper, iron, and coal are forms of matter, mechanical labor and heart are forms of energy. These two worlds are each ruled by one and the same law. Matter can neither be created nor destroyed. Energy can neither be created nor destroyed, therefore we can rightly observe that as energy and matter are one in different stages we have but one world in the evolution of matter and energy.

"Matter and energy can assume various forms without matter transforming itself into energy or energy into matter — We can no more conceive energy without matter than we can conceive matter without energy."

It is utterly impossible," Lord Kelvin wrote, "that the heat produced can proceed from the stored energy of radium. It therefore seems to me absolutely certain that if the emission of heat continues at the same rate, this heat must be supplied from outside."

Lord Kelvin fell back on the commonplace hypothesis formed at the outset on the origin of the energy of radioactive bodies, which were attributable, as it was then believed, to some mysterious forces from the ambient medium. This supposition had no experimental support. It was simply the theoretical consequence of the idea

* Let us here remind the reader this theory was first given to the world by Moray as early as 1914 and 1926 first published in printed book form in 1931.

that matter being entirely unable to create energy, could only give back what had been supplied to it. The fundamental principles of thermodynamics which Lord Kelvin had helped so much to found, tell us, in fact, that a material system isolated from all external action cannot spontaneously generate energy. Experiment is superior to principles, and when once it has spoken, those scientific laws which appeared to be the most stable are condemned to rejoin in oblivion, the used-up,wornout dogmas and doctrines of the past.

It would be desirable, even in this so-called atomic and space age, to have the theory which explain the facts, and to enable science to know whether the energy is borrowed from the atom itself or from external sources from the universe.

Many physicists, like Lord Kelvin, held to the end to the old principles; that is why the phenomena of radioactivity, especially the spontaneous emission of particles animated with great speed and the rise in temperature during radioactivity, seem to them utterly unexplicable, and constitute a scientific engima, as M. Mascart said. The enigma, however, is very simple with the proper explanation. Today there is an enigma on the use of cosmic power for commercial purposes.

One can hope, however, that ideas so opposed to classical dogmas as oscillatory cosmic energy and the transforming of matter into energy and energy into matter will soon be widely acknowledged.

The fact is that the scientific ideas which rule the minds of men at various epochs have all the solidity of religious dogmas. Very slow to be established, they are very slow likewise to disappear. New scientific truths, although they have experience and reason as a basis, are only propagated by prestige, that is, when they are enunciated by those whose official position gives them prestige in the eyes of the scientific world. Truths of such great importance as Ohm's law which governs the whole of electricity, and the law of the conservation of energy which governs all physics, were received, on their first appearance with indifference or contempt and remained without effect until the day when they were enunciated anew by individuals endowed with influence. Now we limit the conservation of energy without fully understanding what truths it embraces.

It is only by studying the history of sciences that one succeeds in understanding the genesis of beliefs and the laws governing their diffusion. We have just mentioned two discoveries which were among the most important of the 19th Century, and which are summarized in the laws, of which one can say that they ought to have appealed to all minds by their marvelous simplicity and their imposing grandeur. Now tradition fences them in where we fail to see their magnitude. Not only did they strike no one, but the most eminent scientists of that time did not concern themselves about them except to try and cover them with ridicule. Are we different today?

That the simple enunciation of such doctrines should have appealed to so few shows with what difficulty a new idea is accepted when it does not fit in with former dogmas. Prestige, we repeat, and to a very slight entent, experience are alone the ordinary foundation of our convictions — scientific and otherwise. Even the most convincing experiments have never consituted an immediately demonstrable foundation when they clashed with long established accepted ideas that we hate to discard even when the old dogmas have been proven wrong. Galileo learned this when, having brought together all the philosphers of the celebrated University of Pisa, he thought to prove to them by experiment that, on the contrary to the then accepted ideas, bodies of different weights fell with the same velocity. Galileo's demonstration was assuredly very conclusive, since by letting a small leaden ball and a cannon shot of the same metal fall at the same moment from the top of a tower, he showed that both bodies reached the ground together. The professors contented themselves with appealing to the authority of Aristotle and would not change or modify their opinions. For years it has been the same with R. E. demonstrations especially by those who never saw the device.

Galileo lived a long time ago, but the degree of receptivity of minds for new things has not sensibly increased.

When Ohm discovered the law which immortalized his name and, on which the whole science o f electrical measurement rests he published it in a book filled with experiments so simple and so conclusive that they might have been understood by any child in an elementary school. Not only did he fail to convince anyone, but the most influential' scholars of his time treated him in such a way that he lost the berth he occupied, as a college professor, and, to avoid dying of starvation, was only too glad to take a situation in a college at 1,200 francs per annum, where he remained for 6 years. Justice was only rendered to hire at the close of his life. Robert Mayer, less fortunate, did not even obtain this belated satisfaction. When he discovered the most important of modern scientific laws, that of all the examples of the conservation o f energy the vibrations of the universe is *the greatest example, he had great difficulty in finding a publisher who would consent to publish his findings; no scholar bestowed the least attention upon it, no more in fact than on his subsequent publications, among which was the one on the mechanical equivalent of heat, published in 1850. After attempting suicide, Mayer went out of his mind, and remained for a long time unknown, to such a degree that when Helmholtz re-made the same discovery, he was not aware o f the work o f Mayer. Helmholt himself did not meet with any greater encouragement to begin with and the most important of the scientific journals of that day, the Annals de Poggendorff , declined to insert his celebrated memoir, "The Conservation of Energy," regarding it as a fanciful speculation unworthy of the attention of serious readers.*

Although matter was formerly considered inert, and only capable of preserving and restoring the energy which had first been given to it, it was necessarily established that there existed within it forces sometimes in considerable amounts, such as cohesion, which forces were independent of all external agents. Other forces, such as radiant heat and electricity, which also issued from matter, might be considered simple restitutions of an energy borrowed from the cosmos.

If the cohesion which makes a rigid block out of the dust of atoms of which bodies are formed, or if that affinity which draws apart or dashes certain elements one upon the other and creates chemical combinations, or if the osmotic attractions are repulsions which hold in dependency the most important phenomena of life, are visibly forces inherent to matter itself, then it was, with the old ideas, impossible to determine the source of this energy. The origin of these forces ceases to be mysterious when it is known that the cosmos is a colossal reservoir of energy that fills all space. Observation has long ago shown that any form of energy lends itself to a large number of transformations, and we can conceive how energy from the cosmos may be the source of all molecular forces — cohesion, affinity, etc. — of matter. We are far from being acquainted with their character, but at least we see the source from which they spring, the universe where matter is "born" from energy.

Outside the forces plainly inherent to matter that we have considered, there are two — electricity and solar heat — the origin of which has always remained unknown, and for which we can find an explanation in the theory of intra-atomic energy and inter-cosmic energy, the cradle of the intra-atomic energy.

When we approach in detail the study of the facts on which their theories are based, we find that electricity is one of the most constant manifestations of the dissociation of matter. Matter being nothing else than cosmic energy itself, it may be said that to dissociate matter is simply to liberate a little intra-atomic energy throughout the universe and to oblige it to take another form. Electricity is precisely one of these forms.

Throughout the years the role of electricity has constantly grown in importance. It is at the base of all chemical reactions; it is a universal force, and one must connect all other forms with it. That a force with the manifestation importance and universality of electricity should have remained unknown for thousands of years constitutes one of the most striking examples of apathy in the history of science, and is one of those facts we must always bear in mind to understand how we may be surrounded with every powerful force without fully realizing their existence. Power from the cosmos radiant energy is another similar example.

For centuries all that was known about electricity could be reduced to this, that, certain resinous substances when rubbed attract light bodies. Could not other bodies enjoy the same property? By extending the friction to larger surfaces might not more intense effects be produced? This was the one question of inquiring. However, ages passed before a mind arose penetrating enough to ask itself, "The where and why-for," — one inquisitive enough to verify by experiment whether a body with a large surface when rubbed would not exercise an action superior in energy to that produced by a small fragment of the same body. From this verification which now seems simple, but which took centuries to accomplish, we saw emerge the frictional electric machine and the phenomena it produces. Why not now let it emerge from the oscillations of the universe arid put into the hands of man a power which he one time thought the gods alone possessed the secret to.

Electricity was then only produced very laboriously and was considered a very exceptional phenomenon. Now we find it everywhere and know that the simple contact of two heterogeneous bodies suffice to generate it. The difficulty now is not how to produce electricity, but how not to give birth to it during the production of any phenomenon whatever. The falling of a drop of water, the heating of a gasous mass by the sun, the raising of the temperature of twisted wires, the burning of a match, and any action capable of modifying the nature of a body, are all generators of electricity.

If all chemical reactions are electrical reactions, as is now proven to be the case, if the sun cannot change the temperature of a body without disengaging electricity, if a drop of water cannot fall without its manifestation, it is evident that electricity's role in all forms of life must be preponderant. This, in fact, is what the world is beginning to admit. Not a single change takes place in the cells of the body, no vital reaction is effected in the tissues without the intervention of electricity. M. Berthelot showed the important roles of the elecric tensions to which plants are constantly subjected. The variations in the electric potential of the atmosphere is enormous, since they may oscillate between 600 and 800 volts in fine weather, and rise to 15,000 volts at the least fall of rain. This potential increases at the rate of from 20 to 30 volts per metre in height in clear to from 400 to 500 volts in rainy weather for the same elevation. "These figures," Berthelot said, "give an idea of the potential which exists either between the upper point of a rod of which the other extremity is earthed, or between the top of a plant or a tree, and the layer of air in which that point or that top is bathed. M. Berthelot also proved that the effluves generated by these differences of tension can provoke numerous chemical reactions-the fixation of nitrogen on hydrates of carbon, the dissociation of carbonic acid into carbonic oxide and oxygen, etc. Why go back to these scientists of yesteryear? Only to show that much we are doing today does not originate with the Atomic Age! There were thinkers before our day. After having established the phenomenon of the general dissociation of matter, let us ask ourselves if the universal electricity, the origin of which remained unexplained, was not precisely the consequence of the universal displacement of matter. Experiments fully verified this

hypothesis, and they proved that electricity is one of the most important forms of intra-atomic energy liberated by the displacement of matter. The various methods employed to obtain electricity, notably friction, only hasten the dissociation of matter. Now let us turn to vibratory oscillations of the universe.

CHAPTER THREE

THE DISSOCIATION OF MATTER

As we study the dissociation of matter, so will the importance of this phenomenum proportionately increase. After recognizing that, electricity may be considered one of the manifestations of the vibration of matter.

To maintain that stars such as the sun can keep up their own temperature by the heat resulting from the dissociation of their component atoms, seems much like saying that a heated body is capable of maintaining its temperature without any contribution from outside.

Atomic reactions cool, simply because the rise in temperature produced during the dissociation of its atoms producing the incandescence is far too slight to compensate for its loss of heat by radiation. The substances which, like radium, most rapidly dissociate, can hardly maintain their temperature at more than 3° to 4° C. above that of the ambient medium. Suppose, however, that the dissociation of any substance whatever were only one thousand times more rapid than that of radium, then the quantity of energy emitted ould more than suffice to keep it in a state of incandescence.

The whole question therefore is whether, at the origin of things, that is to say at the epoch when atoms were formed by condensations, did they not possess such a quantity of energy or rate of vibration that they have been able ever since to maintain the stars in a state of vibration, thanks to their slow dissociation. This supposition is supported by various experiments. J. J. Thomson arrived at the conclusion that the energy now concentrated within the atoms is but an insignificant portion of that which they formerly contained and lost by radiation. Independently and at an earlier date, Prof. Filippo R'e arrived at the same conclusion. If, therefore atoms formerly contained a quantity of energy far exceeding the still formidable amount they now possess, they may, by dissociation, have expended during long accumulations of ages a part of the gigantic reserves of forces piled up within them at their source in the universe. They may have been able, and consequently may still be able, to maintain a very high rate of vibration, i.e., stars, like the sun and the heavenly bodies. In the course of time, however, the store of intra-atomic, energy within the atoms of certain stars may at length be reduced, and their dissociation and rate of vibration become slower and slower. Finally, they have acquired an increasing stability, have dissociated very slowly, and have become such as one observes them today in the shape of cooled stars like the earth and other planets.

If the theories thus formulated are correct, and this the experiments of the Moray Radiant Energy discoveries so indicate, then intra-atomic energy manifested during the dematerialization of matter constitutes the fundamental element from which most other forces are derived. So it is not only electricity which is one of its manifestations, but also solar vibrations, the primary source of life and of the majority of the forces at our disposal. This study, which reveals to us matter in a totally new aspect, permits us to throw unforeseen light on the higher mechanics of the universe.

The interest now being shown in spontaneously radioactive substances consists in their emitting in considerable quantity,, elements which other bodies only produce in much smaller quantity. By thus enlarging on this general phenomenon, we encourage it's study in more detail, as also the rate of vibration in all things.

Rutherford, who studied radioactive substances with great success and, with Curie, discovered facts concerning rays from them, led to the designation of the radiations as Alpha Beta Gamma. The Alpha radiations are composed of positive ions, the Beta radiations of electrons identical with those constituting the cathode rays, while the Gamma radiations are similar to the X-rays. Did these pioneers build better than they realized in showing the way?

Alpha particles are formed of positive ions. They are deviated by an intense magnetic field, but in the opposite direction to the Beta rays or particles. The radius of curvature of their deviation is 1000 times greater than that of the Beta particles. They form 99% of the total radioactivity of radium. They render air a conductor of electricity. Their action on a photographic plate is much less than that of the Beta rays, and their force of penetration very slight, since they are stopped by a sheet of paper. This weak power of penetration enables them to be easily differentiated from the other radiations to which paper is no obstacle. Of all the emission of radioactive bodies, it is the Alpha particles especially which make the air a conductor of electricity, and it is the Beta particles or rays which produce photographic impressions. When a radioactive body is enclosed in a glass tube nearly all the Alpha particles are stopped by the glass walls but inside those glass walls great things take place because of their electrical conducting ability.

It is supposed, from various calculations, that the Alpha particles must have a mass equal or superior to that of the hydrogen atom and a like charge. Their speed, as calculated from the extent of their deviation by a magnetic field of given intensity, is one-tenth that of light. For uranium and thorium, it is for one gramme, 70,000 per second, and for radium a hundred thousand millions. This emission may last without interruption for more than 100 years.

The emission of alpha particles, positive ions, is, together with the production of the emanation, the fundamental phenomenon of radioactivity. The emission of beta particles and that of the gamma rays, which together form hardly 1 % of the total emission, should represent a further stage in the dissociation of radioactive atoms. How puny are these compared to the total energy in the cosmos but how close the relationship.

On striking phosphorescent bodies the alpha particles render them luminous. It is this property which is the basis for the operation of the spinthariscope, an instrument which renders visible the permanent dissociation of matter. It consists of a screen of sulphide of zinc, above which is placed a small metal rod, the end of which has been dipped in a solution of chloride of radium. On examining the screen through a magnifying glass, there can be seen spurting out without cessation. a shower of small sparks produced by the impact of the alpha particles and the emission may last for centuries. This shows the extreme smallness of the particles coming from the disaggregation of atoms. This emission is visible because each particle is made apparent through the enormous degree of lateral perturbation produced by its shock on the sensitive surface, in the same way that raindrops falling into the water produce ripples which exceed their diameter. One may, by using certain varieties of phosphorescent sulphide, succeed in making screens showing the phenomena of dissociation, not only with salts of radium, but also with other substances. Herein is the door to greater discoveries.

The high speed of the alpha particles seems very difficult to explain. This speed is intelligible enough in the case of the beta rays, which, being composed of atoms of pure electricity, and having a very small inertia can acquire a very high speed under the influence of limited forces; but the Alpha particles whose dimensions would appear to be identical with that of the hydrogen atom, a velocity of 30,000 kilometres per second seems to be more difficult to explain. It could prove profitable if these experiments of Rutherford and his co-workers were taken up again.

These velocities may not be produced instantaneously; they are only comprehensible on the hypothesis that the particles of atoms can be compared to small planetary systems animated with enormous velocities. They would preserve their speed on leaving their orbits as does a stone launched from a sling. The invisible speed of rotation of the elements of matter would therefore be simply transformed into a speed of projection perceptible only by proper instruments.

Beta rays are considered to be composed of electrons identical with those of the cathode rays. They are formed of negative electric atoms freed from all matter. Their mass is similar to that of the cathode particles, the thousandth part of that of the hydrogen atom. Their velocity varies between 33% & 96% of that of light.

They immediately render luminous by impact bodies capable of phosphorescence, even when separated from them by aluminum foil. The phosphorescence is very bright in platinocyanide of barium and some kinds of diamonds which are rather rare, but are capable of phosphorescence.

In addition to alpha and beta particles, the first charged with positive, and the second with negative electricity, radioactive bodies emit an extremely slight proportion (less than 1%) of gamma rays which are entirely analogous, as to their properties, to X-rays, but possessing a higher power of penetration, since they can penetrate several centimeters of steel. This property enables them to be easily distinguished from alpha and beta rays, which are stopped by a lead plate a few millimeters thick[*]

One of the singular properties of alpha-beta-gamma emissions is that none of them can touch a gaseous or solid body without immediately causing, no doubt through the disturbance produced by their enormous velocity, a dissociation resulting in the production of secondary rays, which are similar in their properties to the primary rays, but less intense. These secondary radiations also impress photographic plates, render the air a conductor of electricity, and are deviated by a magnetic field. They are able to produce by their impact tertiary rays having the same properties. It is the secondary rays produced by the gamma rays which are the most active. A photographic impression through a metallic plate is sometimes intensified by the interposition of that plate, because the action of the secondary rays then superimposed on the primary rays. Herein may lie a prototype of the action of the universe.

Emanations can be cheaply drawn from any highly radioactive body either by dissolving in liquid placed in a receiver communicating with a closed tube and subjecting the radioactive substance to certain ray bombardment or by bringing them to a red heat in a similar apparatus and bombarding them with rays. The emanation drawn into the tube renders it phosphorescent. It can be condensed in liquid air. This condensation is revealed by the localization of the phosphorescence.

At ordinary temperature radioactive bodies in a solid state emit the emanation, but only a hundredth part of the quantity omitted in a state of solution and under bombardment of certain rays. By introducing sulphide of zinc into a bulb containing a solution of chloride of radium, the disengagement of the emanation renders the sulphide phosphorescent. Radium, when heated, loses the greater part of its activity because of the quantity of emanation it gives off, but it regains it again in about 20 days. The same loss occurs when a solution of this salt is heated to boiling.

[*] Written by Moray in Europe in 1914 when these penetration values were valid.

When solid chloride of radium has been brought to a red heat, or a solution of it has been boiled for some time, or better still, subjected to special ray bombardment, it still preserves a quarter of its primary activity, but this latter is then solely due to the alpha particles as can be noted by the weak penetrating power of the rays emitted, when can no longer pass through a sheet of paper. It is only after a certain lapse of time that the appearance of the beta rays, capable of passing through metals, again takes place. The activity of the emanation is lost rather quickly. The rapidity of this loss varies according to the substance. That of actinium is destroyed in a few seconds, that of thorium in a few minutes, that of radium only at the end of three weeks, but is reduced to one-half in 4 days.

Radium and thorium produce different energy levels of emanations, that is, of dissociations which begin with the emission of the emanations. Five or six have been counted. The first engenders the second, and so on. They, no doubt, represent successive stages in the evolution of matter.

To these emanations are due three-fourths of the heat continually produced by radium, which maintains its temperature of 3° or 4°c. above its surroundings. If radium be deprived of its emanation by heating, it gives out about a quarter of the heat it emitted before heating. Almost all of the rise in temperature is due to the alpha particles. If some emanation of radium is left for several days in a tube, one can observe the spectral lines of helium which were not there before.

Before drawing too many conclusions from this transformation, it must be f irst remarked that helium is a gas which accompanies all radioactive minerals. It was from these bodies that it was first obtained. This gas enters into no chemical combination, it will not liquify and can be kept for indefinite time in the tube in which it is enclosed, a catechist of interesting effect.

This derivative from radium is a special helium since it appears to possess the property of spontaneously vanishing. Its only resemblance to ordinary helium seems to consist of the momentary presence of some spectral rays.

The emanation disintegration products of the radioactive bodies represents one of the intermediate substances. It is partly material, since eit can be condensed and dissolved in certain acids and recovered by evaporation. But it is only incomplete material, since it ends by entirely disappearing and transforming itself into electric particles and secondary particles. This transformation, which takes place even in a sealed glass tube, has been proved by experimentation.

Matter and energy! Where can one draw the line? The part played by various radiating substances in the phenomena of energy and life is a very predominant one. Most often it is the indirect reactions which reveal their existence in the phenomena of life and allow them to be isolated. All we know of them in their physiological reactions is that they lose their properties if deprived of the infinitely small quantities of mineral matter which they contain under a form that we suppose to be in the ionic state.

Why go into these reactions? Because they may to a degree help us to understand natural phenomena of the cosmos and of life because there is a parallel of phenomena.

Among the substances of which one might strictly say act only by their presence is found the vapor of water, which in extremely small amounts play an important part in various reactions. Perfectly dry acetylene is without action on hydride of potassium, but in presence of a trace of humidity the two bodies react one on the other with such violence that the mixture becomes incandescent. Well-dried carbonic acid is also without action on hydride of potassium, but in presence of a slight quantity of steam it produces a formate. It is the same with many other bodies — ammonia gas and hydrochloric gas, for example, which ordinarily combine with the emission of thick white fumes, but do not do so after having been carefully dried. It will be remembered that by adding to dried salts of quinine traces of water vapor they become phosphorescent and radioactive.

Although catalytic actions were known many years ago it was only in later years that they proved to play a preponderant part in the chemistry of living beings. It is admitted that the disastases and various ferments whose role is so important act only by their presence.

On closely examining the role of bodies acting by their mere presence, we note that they behave as if energy were transported from the catalyzing body to that catalyzed. This fact can hardly be explained unless by acknowledging the catalyzing body is undergoing the commencement of atomic dissociation. We know that, by reason of the enormous velocity possessed by particles of matter during its dissociation, considerable quantities of energy can be produced by the dissociation of a quantity of matter so small as to elude all attempts to measure it. The catalyzing substances could therefore be simply liberators of energy in matter on the earth and in all the universe. As in the atomic pile the fission material is worn out so also platinum black and the colloid metals are eventually worn out — that is to say, by use they lose a great part of their catalyzing action. The theory involved indicates all matter and energy simply represent a state of equilibrium between the internal elements of which it is formed and the external elements acting upon it. If this connection is not plainly apparent in some bodies, it is because they are so constituted that their equilibrium maintains themselves without perceptible changes within the limits of fairly large variations of the medium. Water can remain liquid in variations of temperature ranging

from 0° to 100°C., and most metals do not appear to change their state within still wider limits of heat or of rates of vibration. However, these facts do not answer all the questions.

Succession of changes will be accompanied by the liberation of a certain quantity of the intra-atomic energy contained in matter. This is going on all the time in the cosmos to such an extent man with his man-made devices can never hope to compete. So why not use "nature's gift" of cosmic reactions? The actions by mere presence which are of such importance in the phenomena of life, may perhaps find an explanation in this theory. It was such studies on phosphorescence which led men to this hypothesis. It will be recollected that pure substances, various sulphides, phosphates of lime, etc., are never phosphorescent normally, and only become so when brought to a red heat for a length of time with traces of other various bodies — such as bismuth, maganese, etc. On the other hand, this elevation of temperature always provokes a dissociation of matter. It is therefore reasonable to suppose that the elements proceeding from this dissociation have an active part in the compounds then formed, which gives to such bodies the capacity of phosphorescence and sometimes other properties.

The combinations so obtained have precisely the characteristics pointed out above as belonging to extreme mobility, that is to say, of disintegrating and then regenerating themselves very rapidly. A ray of blue light falling on a screen of sulphide of zinc, illuminates it in the tenth of a second, and a ray of red light falling on the same screen, disintegrates the phosphorescence in the same space of time, that is it brings the screen back to its original state. These two contrary operations, necessarily implying two converse reactions which may be indefinitely repeated.

These facts prove that by reason of the enormous quantity of intra-atomic energy contained in matter, a loss substance too small to be detected by an analytical balance may be accompanied by a very greater liberation of energy. We have no need to do this artificially because it is being done for us in the cosmos.

It is possible even without the action of heat to verify in ordinary bodies the existence of a constant emanation from the dissociated matter, though this emanation normally is extremely small in quantity. This all proves that the evolution of creation is going on continually.

To cause it to be apparent, it is necessary to compel it to accumulate in a restricted space. In order to demonstrate this, fold a sheet of metal so as to transform it into a small cylinder similar to the one which encloses the ball of a condensing electroscope. The lower opening is then closed and it is left for 8 days in darkness, and then, still keeping it in darkness so as to avoid any possible influence from light place the cylinder on the insulating disc of the electroscope or special ray counter instruments to examine its radioactivity. It will be found, after having charged the whole system, that a definite discharge per minute is obtained. As the metal rapidly loses that which it has accumulated, the discharge soon ceases. Many bodies other than metals such as box-wood cylinder will produce the same effect, also certain gas-filled tubes.

The metal, after ceasing to act on the electroscope or counter still has not exhausted its provision of radioactivity. It has simply parted with the quantity it can emit at the particular temperature at which the operation was effected. As with phosphorescent bodies or radioactive matter, it only has to be slightly heated to cause it to again yield a more considerable emission of active effluves. The only difference between all matter is in the rate of vibration or wavelength, the difference resulting in transmutation; changing and restoring. A matter of changing from one rate of vibration to another, evolution in its true sense, evolution from one rate of vibration to another or transmutation, energy changing into matter and matter into energy as we wrote back in 1925.

Cosmic rays are constantly creating radioactive carbon and the fusion of small atoms together to make larger ones gives off more energy than so-called "splitting" of the larger uranium or plutonium atoms, the uranium energy release ratio being only 1 to 1000-that is only 1/1000 of the heavy atoms changed in the uranium "atom splitting" process.

"Nuclear fission" action is not confined to highly radioactive substances. "Atom splitting" is taking place naturally on this earth, in the universe, and on other planets and suns, and there is absolutely no need of the unnecessary hysteria that has swept the world over "atom splitting" as it has been going on naturally from the very beginning of time. Energy and matter cannot be considered strangers nor as a science just being introduced to the world. When the evolution of matter acid the evolution of forces is considered nothing new is being advanced: When we consider radium giving off 3 distinct forms of energy — alpha, beta, gamma — we cannot help but see a relationship between electricity & matter. Alpha ray? Alpha particle (matter) Beta Ray (the electron, but still matter).

Radium also emits an emanation which has the characteristic properties of matter (radon gas nuclei of helium, ionized helium, another gas generated by alpha rays) from radium which can be condensed into a liquid. Its volume varies inversely with its pressure (Boyles law) . Thorium gives off 3 solid substances — mesothorium, radio thorium, and thorium X.

Now, if we turn to vegetable matter, we find energy is also being given off similar as in the case of radium, thorium and other radioactive matter. This time, however, we find direct electrical energy being given off.

Various vegetables and fruits will do for the experiment. A "volta pile" can be made of potatoes, grain, apples, onions, etc. Let us consider the apple. In a "volta pile" made of 25 apples (50 halves) one can obtain enough e.m.f. to light a flashlight globe. It will also be found that the living animal cell like the vegetable cell is giving off energy and consuming oxygen and giving off carbon dioxoide and an electrical potential.

We-find in vegetable, mineral and animal matter the same relationship 'and dependence on oxidation and electrical energy — oxidation in stellar space, evolving energy into matter and matter into energy. Here we see energy and matter and matter and energy vibrating together.

Regarding the force of energy from the cosmos, noted experts in photography have found the light produced from this source of energy is much whiter than that obtained from ordinary electrical energy. Also, this light burns into the film when photographed due to the great intensity and pure white light produced, yet the light is easy on even weak eyes.

It was also noted that detail from these films could only be obtained by holding back dense areas to about 10 times that of normal exposure even when non-halation film and super flash bulbs were used., but the pictures are sharper. Let us again state, "An electrical generator is in the true sense not a generator. It creates nothing. Electricity is not made by the generator, it is merely captured or pumped. From that standpoint an electric generator is an electric pump, and a radiant energy or cosmic energy device, a high-speed oscillating energy resonator.

Let me be permitted to say again, if we reverse our imagination on what the telescope has taught us of the stellar universe, we will find that beyond the microscope we have the particles of which everything about us consists, obeying every law that is found everywhere from stellar space to atomic space. We find bodies in motion and *when we think o f how small the proton and electron are, and yet obeying the same laws o f the universe, we may see the economical wastefulness of science tryin to crack the atom, when nature, or call it what you will,* is *accomplishing the sane thing for us in stellar and inter-stellar spaces. Why do something nature is already doing for us?…* Let's use what nature offers as I first suggested many years ago. From this conception, we might see that Democritus came close to a great scientific truth in his bold statement, when he declared that all physical phenomena reduced itself to one single item-motion — or as we might repeat, "vibration," "the sonic of the universe." Let me repeat, "Do not forget the atom is but a counterpart of the universe itself, and that light and other radiations exert a mechanical pressure upon every object they strike, and that all these radiations are essentially electrical in their character. There is a breaking down and a building up of the atom continuously, and it is this evolution which is producing, eternally, unlimited power."

May it not yet be shown that the dissipated energy which results from so much transformation of matter which has heretofore been unavailable — or should we say, unused by us where it has only appeared to be unavailable should now become available to us, an unlimited source of power through the Moray discoveries of application of these forces? And that matter and energy are possibly one is the sum total of all that has been found during the centuries of constant research. Are matter and energy to be judged by that small portion of the universe which is visible to man, who is only armed with his limited yet most powerful telescope, or with his most powerful microscopes?

As I have said before, I repeat again, "All space is saturated with energies which are vibratory in their ultimated analysis and very closely allied to electrical action. The relation of matter to energy and energy to matter then becomes the potential of the universe, one continuous series of oscillations, oscillating to and fro like a great pendulum across the universe. A steady flow of energy can be had from the surges of the universe just as a steady flow of water may be obtained from the surgings of the sea."

Electrons are spontaneously being emitted from the nuclei found in nature and every new discovery on the subject bears out the claim that all "space" is filled with_energy millions of amperes at very high voltages. Let "A" equal the atomic mass and "N" the nuclear mass. Let "Ze" represent atomic nuclear charge, "Ma" mass and a mass number "A". We then have the energy found in nature from a given substance to be:

$$\text{Energy}=Mn\ (Z^{a}) — Mn\ (Z+1)^{a} — me(e)$$

$$\text{Energy} — Ma(Z^{a}) — Zm\ (e) — Ma\ (Z_{1})\ A\ (Z_{-1})\ m(e) — M(e)$$

$$\text{Energy} — Mz\ (Z^{a}) — Ma\ (Z_{+1})A$$

This is based on the disintegration of radioactive material, natural or artificial; but, the same action is taking place in the "sonic" (vibrations) of the universe with all matter and energy.

As long as the universe has existed charged particles now called cosmic rays" have been bombarding every planet or object in the universe, including all living bodies, at tie rate of twenty tunes per second and with a force great enough to penetrate deep into the rocks of the earth.

Cosmic rays have been called "the death cry of the universe" or "by-products of the destruction of matter in the cosmos." In the process of the evolution of matter and evolution of forces there is no "death cry," only the "song of creation." There is no destruction of matter or energy, only the cycle of matter and energy. The creation is going on continually. You subtract in one place only to add in another.

CAPTURE OF ENERGY BY RESONANCE

With the Radiations of the Universe

Oscillating Discharge — When any elastic substance is subjected to strain and then set free, one of two things may happen. The substance may slowly recover from the strain and gradually attain its natural state, or the elastic recoil may carry it past its position of equilibrium, and cause it to execute a series of oscillations; something of the same sort may also occur when an electrified condenser is discharged. In ordinary language there may be a continuous flow of electricity in one direction till the discharge is completed, or an oscillating discharge may occur-that is, the first flow may be succeeded by a back-rush, as if the first discharge had overrun itself and something like recoil had set in. The condenser thus becomes more or less charged again in the opposite sense, and a second discharge occurs, accompanied by a second back-rush, the oscillation going on till all the energy is either radiated or used up in heating the conductors. However in the case of RE the oscillations go on forever because of the actions of the universe. It is known that high frequency currents may be classified as to their oscillating characteristics, i.e. damped or undamped. The energy from the Universe being of both types, depending on conditions beyond the scope of this writing, we have a back rush effect as explained before in the RE device.

The purpose of the capacitors in the RE circuit is to act in their capacity of stored energy discharged. If the resistance is low, an oscillatory discharge takes place: The discharge and recharge on the opposite plates continues in the ordinary sense until the energy which was originally stored is dissipated. In the case of the RE device a different effect is established because the oscillations from the Universe, trapped by the RE valve, continue to enter the circuit as waves of the sea beat upon the shore. Wit negligible resistance in the device, no energy is lost in heat and the oscillations continue.

With the explanations given, is the obtaining of energy from the energy oscillations of the Universe any less understandable than the obtaining of energy from a mechanical prime mover? To use mathematical language: exact conditions exist in both cases be they mechanical or electrical systems. The electrical prime mover, the so-called electric generator or the Moray energy oscillator all have the same scientific facts. In a mechanical system, the greater the inertia the greater the tendency of the body to keep in motion once it is set in motion. In an electrical circuit, the greater the inductance with resistance cut to a minimum, the greater the tendency of the electrical energy (current) to continue to flow once it is started.

From the above it then becomes clear that if $R < \sqrt{\frac{4L}{C}}$ where R is the resistance in ohms L is the inductance in henries, and C the capacity in farads, oscillating discharges take place. For low resistance value i.e. R, the frequency of the oscillations may be expressed $f = \frac{1}{2\pi\sqrt{LC}}$

Let Q be the charge of the capacitor at any instant, C its capacity, R the resistance of the circuit, and L its coefficient of self-induction. Then if I be the intensity of the current and E the electromotive force, we have the equation

$$E - IR = \frac{d}{dt}(LI) = L\frac{dI}{dt}.$$

In this case $E = \frac{Q}{C}$, and $I = -\frac{dQ}{dt}$. Therefore

$$L\frac{d^2Q}{dt^2} + R\frac{dQ}{dt} + \frac{Q}{C} = 0.$$

The solution of this equation is

$$Q = Ae^{\mu t} + Be^{\mu' t}$$

where μ and μ' are the roots of the equation

$$\mu^2 + \frac{R}{L}\mu + \frac{I}{CL} = 0,$$

or

$$\mu = -\frac{R}{2L} \pm \sqrt{\frac{R^2}{4L^2} - \frac{1}{CL}}.$$

Writing

$$\alpha = \sqrt{\frac{R^2}{4L^2} - \frac{1}{CL}},$$

we have

$$\mu = -\frac{R}{2L} + \alpha, \qquad \mu' = -\frac{R}{2L} - \alpha,$$

and

$$Q = e^{-\frac{Rt}{2L}}(Ae^{\mu t} + Be^{-\mu t})$$

where A and B are constants determined by the initial conditions, viz. that initially we have $Q=Q_0$, and I=0, which give

$$+B = Q_0, \text{ and } A\mu + B\mu' = 0,$$

or

$$A = Q_0\left(\tfrac{1}{2} + \frac{R}{4L\alpha}\right), \text{ and } B = Q_0\left(\tfrac{1}{2} - \frac{R}{4L\alpha}\right).$$

Hence at any time we have

$$Q = Q_0 e^{-\frac{Rt}{2L}}\left\{\left(\tfrac{1}{2} + \frac{R}{4L\alpha}\right)e^{\mu t} + \left(\tfrac{1}{2} - \frac{R}{4L\alpha}\right)e^{-\mu t}\right\}.$$

Consequently the current at any instant is

$$I = -\frac{dQ}{dt} = \frac{Q_0}{2CL\alpha}e^{-\frac{Rt}{2L}}\left(e^{\mu t} - e^{-\mu t}\right).$$

Hence if a be real — that is, if we have $R^2 > 4L/C$ -the quantity Q will gradually diminish to zero as the time increases.

If, however, we have $R^2<4L/C$, then α will be imaginary, and writing

$$\alpha' = \alpha\sqrt{-1} = \sqrt{\frac{1}{CL} - \frac{R^2}{4L^2}}.$$

the above formulae become at once

$$Q = Q_0 e^{-\frac{Rt}{2L}}\left(\cos\alpha' t + \frac{R}{2L\alpha'}\sin\alpha' t\right),$$

and

$$I = \frac{Q_0}{CL\alpha'}e^{-\frac{Rt}{2L}}\sin\alpha' t.$$

In this case the current starts from zero and rises to a maximum; it then falls to zero and becomes reversed, after which it passes through a series of oscillations. The discharge therefore does not take place in a single flow from one capacitor to the other, *but a back-rush sets in, and a* series of currents, or oscillations, occur alternately in opposite directions.

The current attains its maximum intensity when

$$\tan\alpha' t = 2L\alpha'/R \qquad \text{(maximum current).}$$

The zero value of the current is reached when

$$\alpha' t = n\pi \qquad \text{(zero current),}$$

and consequently the charge at the same time is at its maximum, for we have *I=-dQ/dt.* Thus the charge oscillates backwards and forwards, attaining positive and negative maxima after the lapse of equal intervals π/α',the time of a complete oscillation being

$$T = \frac{2\pi}{\sqrt{\frac{1}{CL} - \frac{R^2}{4L^2}}}.$$

If the resistance be small compared with the reciprocal of the capacity we may use the approximate formula

$$T = 2\pi\sqrt{LC}$$

The successive maximum charges occur when I=0, or $\alpha' t = n\pi$; they are therefore

$$Q_0, \quad Q_1 = -Q_0 e^{-\frac{\pi R}{2L\alpha'}} \quad Q_2 = -Q_0 e^{-\frac{2\pi R}{2L\alpha'}} \quad Q_3 = -Q_0 e^{-\frac{3\pi R}{2L\alpha'}}$$

The quantities therefore diminish in geometrical progression, and the energy of the charge diminishes correspondingly on each oscillation, being lost in heating the circuit.

Whether the discharge is continuous or oscillatory therefore depends on whether 4L is less or greater than CR^2, and an oscillatory discharge may be obtained either by increasing L or sufficiently diminishing C and R.

These predictions on analysis have been confirmed, as Thomson suggested, by examining the spark, during discharge, by means of a revolving mirror. In Feddersen's experiments the image of the spark in a revolving mirror was viewed through. a telescope. When the resistance of the circuit was high the spark was merely drawn out in width — that is, at right angles to its length; but when the resistance was sufficiently reduced, so that the oscillating discharge might occur, the band was reduced to a broken image consisting of a series of strips, each strip corresponding to a discharge. As stated we have discovered the oscillation of the Universe corresponds to oscillation of electric capacitors depending on the frequency of the energy involved going on into infinity. The arithmetic progression becoming geometrical.

The drawings, circuits and theory have been pronounced by leading men of science as scientifically mathematically, electrically, sound and correct.

It is generally accepted now by science, and Moray's device proves, there is energy coming from the Cosmos and that the earth is surrounded by such a field of energy; That the earth floats in a sea of energy.*

EARTH FLOATS IN ELECTRICAL SEA

By Alton L. Blakeslee-Associated Press Science Writer*

BOULDER, COLO., Oct. 12 (AP) — High overhead floats a fantastic *electrical sea.*

It girdles the earth, reaches at least 150 miles deep. It writhes with storms and savage winds. Powerful electro-jet currents course through it.

It is. pulled by tides, pocked by peculiar clouds, bombarded by cosmic rays.

Created by the sun's cruelest rays, this sea is the ionosphere a *vast belt of electrons* and electrified atoms or ions. It begins 60 miles up, goes at *least* 200 *miles high.*

In sparsest form it apparently *reaches* thousands *of miles* into *desolate space.*

It's a shield between you and a deadly sun.

Were it not there, absorbing the sun X-rays and most power ultraviolet light, life on earth would perish.

Were it not there, you might never hear a radio. Short wave radio communication depends upon bouncing or reflecting radio waves back to earth from this electrical sea.

Strange quirks in the ionospheres sometimes perform magic. Miami police calls are heard in California.

Or a picture from a TV station hundreds of miles away suddenly appears on the screen.

Exploring this sea is a major activity of the International Geophysical Year, a co-operative 64-nation effort to learn more about our earth, sun and space.

Fingers of radio itself are a prime method of ionosphere exploring. Literally thousands of times a day over the world special radio beams are darting up and bouncing back to measure heights, intensities and other changing peculiarities of the ionosphere.

When the full story is pieced together, scientists hope to answer some puzzles of the high atmosphere and *find new or improved ways of putting the ionosphere to human service.*

THE RADIO fingers and other techniques already have disclosed much of the story, explains Robert W. Knecht, a project leader in sun-earth relationships at the National Bureau of Standards Boulder laboratories.

In reality the ionosphere is our outer atmosphere of ultra-thin air. X-rays and ultraviolet light from the sun rip into molecules of oxygen and nitrogen, tearing out their electrons, electrifying billions-times — billions of atoms.

Usually the ionosphere has distinct layers.

About 60 miles high is the E layer, then the denser, F-1 region at about 120 miles, the F-2 layer at 200 miles.

The E LAYER reflects low-frequency or long radio waves. Higher frequencies or shorter waves penetrate through it, bounce back from higher layers. Sufficiently *high frequencies barrel right on through into space.* Usually this is what happens with TV signals.

During IGY, nearly 200 special radio-sounding stations from pole to pole are intently exploring the ionosphere. Each shoots up pulses of radio waves, sweeping through a quick range from long to short waves in 15 seconds, then timing and recording the echoes from different layers.

A few will make continuous recordings of the seething electrical sea.

For the ionosphere, far from being a static shell, changes, minute by minute, hour by hour, season by season. It is a sensitive link between events on the sun and earth, Knecht points out.

Great flares or explosions on the sun sometimes create a much enhanced D layer about 40 to 50 miles up. This absorbs rather than reflects radio waves, producing radio blackouts and interference. Other sun flares have no effect, for reasons not yet understood.

NOTED PHYSICIST ANNOUNCES NEW ENERGY SOURCE

Nickola Tesla, the renowned physicist and inventor who developed the great AC motor, the fundamental principle of radio, and the practical transmission of alternating power foretold the discovery, many years ago of a hitherto unknown source of unlimited energy, "so practical that the machinery to harness it will last 500 years, and so basic that it will undo existing theories.

"They called me crazy, in 1896 said Dr. Tesla, when I announced the discovery of cosmic rays,: Dr. Telsa said, "Again and again they jeered when I discovered something new and then years later saw that I was right. Now I suppose it will be the same old story when I say I have discovered a hitherto unknown source of energy, unlimited energy, that can be harnessed.

"The initial cost will be relatively big. After that hardly anything and unlimited power for the asking."

Dr. Tesla has given the world the arc lighting system, the Tesla coil and rotating field principle for alternate current and innumerable other electrical devices.

Dr. Tesla did not live to reduce to practical application the discovery he referred to above.

This energy, or as Moray explains it— these oscillations of Energy are picked up by the Moray device and the oscillator tubes of the device itself. As stated, these surgings or oscillations of Energy coming and returning to the Universe are picked up by the Moray Device because the Moray Device is tuned to oscillate in harmony with the oscillations of the universe just as musical instruments can be made to oscillate together. Every oscillation, whether large or small, is completed during the same interval of time. The beat note of time, the heart beats of life, the oscillations of the Universe all prove the same great fact that oscillations are all governed by the same cycle of time, or, as stated above, completed during the same interval of time, and as Moray stated years ago, these waves of energy have a regular beat note of time, coming and going as the waves of the sea, but in a very definite mathematical order of time, coming to the earth from every direction, stronger in the day time than at night, but always coming with regular beat note that might be referred to as the Father of time, the Sire of Gravitation.

Below will be found excerpts from some Scientific books.

"ASTRONOMY," by Robert H. Barker, Ph.D. Professor of Astronomy, University of Illinois, page 303:

"Another problem relates to the apparent lavish expenditure of this radiation. Of all the energy that pours forth from the sun, less than one part in 200 million is intercepted by the planets and their satellites. The remainder spreads through interstellar space with little chance, so far as we know, of being recovered. The suggestion that the sun shines only in the directions of material that can intercept it makes an appeal from the point of view of economy, but appears to have little else to recommend it. It would seem that nature is squandering its resources of energy so prodigally that it must end in bankruptcy; but doubtless we have at present an imperfect account of the situation."

Quoting from "Foundations of the Universe" by Luckiesh of General Electric, pages 41-43:

"The great success of the atomistic principles as it is involved in the kinetic theory of matter was one of the wonders of the modern scientific age. It is to be expected that there will be found other applications equally fascinating and promising. It is now being pressed further into the service of explaining the structure of matter…"

"When Maxwell (1873) propounded the electromagnetic theory of light (radiation), his achievement was epochal. The exact manner in which the radiant energy traversed space was not known, and the next epochal event was the founding by Planck (1900) of the quantum theory. Here we have the atomistic principle applied to energy instead of being confined to the material of the universe as it had been. In other words, in the quantum theory we have the atomistic idea applied to physical processes. We now have the atom of matter, the atom (electron) of electricity, and the atom (quantum) of action (a product of energy and time). Planck assumed the emission of radiation (from the sun, a lamp filament, etc.) to occur discontinuously. He conceived elements of energy of equal magnitude analogous to the equality of electrons, or atoms of a given element. Radiation or radiant energy is emitted of various wave lengths or frequencies which must be taken into account in laws of radiation *** now the physicist uses quanta as commonly as he does electrons and atoms and molecules. Bodies are built of molecules, the molecules of atoms, and the atoms of electrons (and protons) etc. Here we see the atomistic principle applied to "material" (matter) and then to electricity. Finally, a physical process — the radiation omitted by the electrons — is divided into quanta. With such pictures of the Universe being considered we may cease to be surprised at anything, but our interest and admiration will grow. Will we ever get to the final foundation?"

Matter and energy, are possibly one, is the sum total of all that has been found during three centuries of incessant research in all that portion of the Universe visible in a forty-inch telescope armed with the most powerful spectroscope ever made.

It is the experience of the writer that all space is saturated with inconceivably minute corpuscles of energy. Reference is made to the discoveries of Professor J. J. Thomson. These are doubtless either electricity in its ultimate refinement, or very closely allied to it, or its immediate carries… The earth and sun, all suns and dark bodies in space, all granular matter move through the primodial cosmical mass of electrical energy as would a

wire screen through water. The wide spaces in diamond, glass, steel, flint or any thing else allow these 'Bodies smaller than atoms,' as Thomson calls them, to pass through."

From the definition of energy it is the potential of the Universe. When matter is in a phase allowing it to be active, it effects other quantities of matter at a disance. The method of transfer is known to be by means of wave and corpuscular motion. Each impulse moves from the omitting to the receiving mass on a rigorously straight line. One continuous set of oscillations in this right line is called a ray. Each negative or "Thomsonian corpuscle" makes a double vibration to and from like a pendulum straight across the direction of the ray — i.e., at right angles to it, the corpuscles move over and return to the original position had before the excursion. Since the corpuscles are negative and can be drawn out of their original straight path by the action of magnetism, the entire wave motion of the Universe is electro-magnetic. This is what Maxwell theorized many years ago. Thomson proved the theory a fact.

"After one corpuscle makes an oscillation across the direction of the ray and return the next does likewise, and the next, and so on. After the first corpuscle makes the swing, another distant from it 186,000 miles in the same straight line will also make a vibration at the end of the first second of time."

"ATOMS AND RAYS," by Sir Oliver Lodge, Fellow of the Royal Society of Science and holder of five or six Doctors degrees from colleges, with honors from a score or more and who held offices of President in a dozen or more Scientific Societies, printed in 1924:

The term 'light,' strictly speaking, means that kind of etherial radiation which is able to affect the eye. But it is common knowledge that there are many other varieties of radiation besides these to which the eye is sensitive. It is not clearly known why the eye is sentitive to some kinds of etherial radiation, and not to other kinds. That, no doubt, can be ascertained; it is a question for physicists and physiologists in collaboration. But the eyes of animals and insects as well as of man, all appear to be sensitive to a limited range of etherial radiation, which is therefore called light. Other kinds of radiation can affect a photographic plate; other kinds, again, can stimulate the chemical actions going on in the leaves of plants, and thereby supply the energy needed for vegetable growth. Another kind — a rather deeper harmonic as it were — supplies everything on earth with warmth, and by evaporating water contributes to most of the phenomena of weather. Other kinds, again, are omitted when individual electrons traveling at a high speed in a vacuum, encounter the obstruction of a target; this kind of invisible radiations being called X-rays. And, at the opposite end of tile scale, another kind of radiation is emitted and is known as the Hertzian waves employed in radio.

In speaking of these kinds of radiation as different, we are not speaking quite accurately. They differ only as treble notes differ from bass notes; they differ in rapidity or rate, of vibration, wave-length or frequency. They do not differ in any other essential particular. Through the whole range — from the telegraphic waves, which may be- a mile long, to X-rays, of which the wave-length is actually smaller than atoms, and only expressible in billionths of an inch — they all travel we assume at precisely the same speed. They are all of the same electromagnetic character; they are all subject to the same laws of interference, of reflection, refraction, and polarization, which have long been studied in the department of physics known as optics.

T. Henry Moray would qualify the above statement by saying there are speeds greater than 186,000 miles per second.

"Whatever an electric charge is, or is not, it is certainly a focus of energy. And if we could imagine an vortex, containing the known mass of the electron and circulating with the velocity of light, its energy would be equal to that of the electric field in the space surrounding the electron. This coincidence, if it be a coincidence, can hardly fail to have some meaning. And there are those who are beginning to think that the whole material universe is built up of energy in various states of self contained or intrinsic motion; by which adjectives it is intended to discriminate between rotatory motion, like that of a top or a whirlpool, and ordinary locomotion, are shifting from place to place.

"Those who hold this view of the universe are strengthened in their position by the statements of Einstein on energy in general. It is well known that all the ordinary energy we are acquainted with, such as tile motion of railway trains, cricket halls, and such like, is merely relative — relative to the earth, or to some other piece of matter. There is nothing absolute about it. But Einstein gives an expression for what one might be inclined to call absolute energy, in which the only relevant velocity is the velocity of the Cosmos. And all the phenomena we observe in nature, at any rate in inorganic nature — omitting the phenomena of Life and Mind for the present, as lying outside our physical ken — may be regarded as due to, and as demonstrating, slight modifications of the portion affected by this great velocity, in form which enables it to appeal to our animal-derived senses. For the spinning motion itself is impalpable and beyond the ken of our instruments, until it partially exhibits itself as transmitted waves in the form of radiation."

"All the energy that we experience can be resolved into vibrations or tremors. But all electric and magnetic phenomena, and therefore, all chemical activity, are likewise known to be modes of manifestation of vibrating space, the complete manner and meaning of which have still to be worked out."

"So the question arises, What i's Matter? Is that too a manifestation of some peculiar properties in the medium? We know now that matter is built up of protons, neutrons, electrons, etc. But when we come to analyse these into their fundamentals, we find far more than a hint that they are but special modifications in the all-pervading energy, and are essentially resolvable into kinetic energy of a specific kind. Hence we are beginning to think that all matter itself is a form of energy."

"Energy is tile chief thing in the physical universe that directly appeals to us. We apprehend it under a great variety of forms. And it is becoming probable that what we call matter is one of these forms. Most of the forms of energy that we know are convertible one into another. The energy of motion turns into heat; so does the energy of electric currents, unless it is converted into the energy of chemical separation or electric charge. Conversion from one form to another, without loss, is the sign-manual of energy. And the proof that matter is a form of energy will not be clinched until it can be demonstrated that matter tot) is convertible into other forms of energy."

Many attempts have been made to harness the forces of nature directly to produce usable power. Other types of energy besides sunlight are constantly bombarding the earth with waves arid particles, or surrounding it ill much the same manner as its atmosphere or the very space in which it exists. Among these are the gravitational and magnetic fields and the cosmic rays.

The features of cosmic radiation would enable R E transformers using cosmic radiations as a primary source to operate with relative independence as to position or season. It is also evident that such a device would show possibilities of efficient operation in moving vehicles within the earths atmosphere and ill space at continuous high power levels.

Such an energy transformer or converter leas been built. It has been operated at full load continuously with no expenditure of fuels of any type without a mechanical prime mover, kept alive by the oscillations of the energies from the cosmos; An energy converter, or transformer, which would be capable of converting the high frequency, high level energy of the cosmic radiations into current of usable frequency and voltage.

Basically the theory of operation is as follows. Oscillations are started in the first stage or circuit of the device by exciting it with an external energy source. The circuit is "tuned" until the oscillations are sustained by harmonic coupling to the cosmic wave frequencies. The reinforcing action of the harmonic coupling increases the amplitude of the oscillations until the peak pulses "spill" over into the next stage through a special detector or valve which prevents the return or feed-back of energy from succeeding circuits. These "pulses" drive this stage which oscillates at a lower frequency and is again reinforced by harmonic coupling with the ever present cosmic waves. The second stage drives a third stage and additional stages are coupled until a suitable power level at a usable frequency and voltage is obtained by means of special transformers. (See* schemetic drawing of R E device).

Once the machine is in operation and delivering power it does not require any continuance of the excitation forces. necessary to start it. The oscillations are sustained as long as it remains properly tuned and the external circuit is completed through a suitable load.

The special tubes which appear to be the key to the success of this device are Ionic cold cathode tubes which require no external power sources.

Practically speaking, the present method of securing energy with primemovers has been used too long. We have used it so long, that we have let ourselves believe that there is no other way to secure it. Present methods are expensive and cumbersome. Think of the power sites, and steam plants, the transmission lines, the transformers, and many other kinds of equipment that are now required to supply our electricity. The present system is unreasonably expensive. When we begin to realize the tremendous energies, electrical energies, that surround us, we should actually he ashamed that we have been so dilatory in our efforts to improve upon this crude, cumbersome, and expensive method of furnishing heat, light and power.

Books could be filled with accounts of the struggles for existence of a new idea or a new way of doing things. You need only read the story of the development of the telephone, and the railroad, the airplane, automobile, and so on, and you will begin to appreciate the cost in sacrifice, money and unselfishness to promote a new and revolutionary movement, irrespective of the vast good it accomplishes when established for the use of humanity. (See Ralph Parleys "Pockets of Paradise").

CHAPTER FIVE

HISTORY OF RADIANT ENERGY

Experimentation and Development

The thought has occured that the reader would find a brief history of Dr. Moray and his work a valuable background. With this in mind, the editors of this chapter leave gone through a great deal of correspondence and many of the papers of Dr. Moray. The material would fill many volumes but of necessity had to be condenced to what was felt to most clearly demonstrate the purpose in mind and give the reader the most comprehensive approach to the work.

The story of Henry Moray is the story of a man working alone, whose discoveries and theories have been years ahead of his time. His many pamphlets and writings have advanced ideas with which science is coming more and more into agreement. Isis active mind has delved into many fields of science and always come up with many new and startling discoveries.

Henry Moray was born August 28, 1899 in Salt Lake City, a son of James C. and Petronella (Larson) Moray. His father was a well known mining enigneer and an active pioneer in the early mining activities in Western America. He was educated in the public schools in Salt Lake City. As a young boy, he could hardly wait for school to close afternoons so he could run to the public library to read books about electricity. Such men as Michael Faraday and Nickola Tesla were his heroes. As early as 1905 he was experimenting with then so-called wireless and other electrical devices.

In 1907 lie started experimenting with alternating currents of High Potential and High Frequency and with rays beyond the light rays. His main interest leas always been with high frequency phenomena. lie attended the L.D.S. Business College, the L.D.S. University, and a course in electrical engineering from Pennsylvania. In 1912 lie went to Europe and while there over a period of years did advance study in electrical engineering.

Through the years lie has kept abreast of the latest developments in science through diversified and extensive reading and has built up a personal scientific library of very extensive proportions.

On November 28, 1917, he married Ella Ryser. They had five children: Henry Junior, Ella Evelyn, Sylvia, John Eugene, and Richard Ryser.

Prior to 1921 when he decided to devote all of his time to private research, he was an electrical engineer and designer for the Utah Power and Light Co., Phoenix Construction Co., assistant chief electrical engineer Aarastad Construction Co., and assistant division electrical engineer for the Mountain States Telephone and Telegraph Co. He also worked as a civil engineer for the Denver and Rio Grande Railroad. During this time lie designed the electrical layouts for important power plants and for some of the largest buildings of that time in the west. He was a certified member of the A.A.E. (American Association of Engineers), and a past secretary of the Independent Electric Co.

Time and space do not allow a full discussion of the various Moray devices as the primary purpose of this paper is a presentation on RE. A very complete and detailed record of letters, articles, pamphlets, etc., are on file in the records of The House of Moray in Salt Lake City, Utah.

Dr. Moray and radiant energy are so closely related that one cannot be separated from the other. It is not the purpose of this history to give a complete picture of Radiant Energy but a discussion is necessary as it seems that all of the other work which Moray has done is received on the basis of how the party or parties involved feel about Radiant Energy. During the past years, Dr. Moray has turned to many other fields of endeavor, continuing to build on Radiant Energy as finances from other works would allow. Since 1926 this work on Radiant Energy has been paralleled among other things by an intensive study of radiations and radio active substances.

Through the years Dr. Moray's chief wish has been to be free of bothering business details so that lie could concentrate on research. Yet every time lie has turned business details over to someone else, chaos has resulted. One of the chief needs has been to find someone who combined the unusual talents of a good business manager with a knowledge of science, who was dedicated, trustworthy, unselfish, and tough enough to withstand the rough road which had to be traveled. The qualities of trustworthiness and toughness seem to have been lacking the most often. It has been lard to find administrators with the special skills needed.

Progress through all of history has been slowed and sometimes thwarted by selfish interests. But inspite of all obstacles, the world slowly crawls forward.

James DuPont in a speech before a group of Kiwanis and Chamber of Commerce representatives asked how many businesses would be in existence today if it were not for inventing acid scientific research. This work requires something which no money call buy and which no educational training call supply acid without which no research or inventing business can thrive — the power of creative imagination. Tile pioneering today is oil the frontier of scientific research. It is no place for the faint of heart.

Independent research in the United States today travels a rough road. The problems lie in two directions. 1. Financial: It is very difficult for all individual or small group of individuals to collect sufficient funds for equipment which is very specialized and very expensive and to be able to pay competent help. 2. Business management: Few research workers have the time for involved business acid financial details oil top of the full schedule necessary for scientific advancement.

People, like objects, seem to lie governed by the laws of inertia. Anything which tends to change the existing status quo is viewed with alarm; particularly if they cannot understand or explain the new in view of present knowledge. Through the years continual experimentation and refinement leas gone forward, but always in tile long run tile work leas fallen back onto one man and his resources.

At the onset Radiant Energy received much attention, but it got off to a bad start because of the desire for personal advancement acid power by groups of promoters.

Many leave asked what is this thing Moray has called Radiant Energy which has caused so much discussion over so many years? In lay terms it is the harnessing of the power of the universe to man's need for electrical energy here oil carth. Many attempts have been made to harness the forces of nature directly to produce usable power.

As early as 1904 Nickola Tesla on experimenting with A.C. currents of High Potential and High Frequency said "There is a vast quantity of available energy in space and it will not be long until men will attach their machines to the wheelwork of nature.

Radiant Energy was first presented years before the world was ready to accept it in principal or to understand its magnitude. History has again shown the unwillingness of men to accept and adapt to drastic change or new ideas. Dr. Moray realized the magnitude of his discovery and has felt the burden of responsibility for what could well be the future of mankind. lie has had a sincere desire to place his knowledge where it would do the most good for all and not into the hands of a few who were selfish for power and wealth. In this undertaking he has been thwarted on all sides, even from quarters where there was no knowledge of or connection with the work.

Because of conflicting interests, some people would like to sit back or deliberately interfere with the development of Radiant Energy until Dr. Moray makes a slip and the invention becomes public use. The many offers for Radiant Energy have to be carefully considered for intent and chances for successful presentation. Some interests have even tried to tie the invention up and prevent future development. As has been said before, time and space do not allow a lengthy review of the happenings through the years, but a few high lights may be of interest.

On July 24, 1925, while conferring with Senator Reed Smoot at the senators invitation in his offices in the Hotel Utah in Salt Lake City, Dr. Moray offered his Radiant Energy discovery to the United States Government gratis. The senator thanked Dr. Moray for his offer but stated that the U. S. government would decline such an offer on the grounds that the government was not running in competition with public utilities.

In the early years of its development during many, many tests the Radiant Energy device was minutely examined. Many people saw this device with no other purpose in mind than to prove it a fraud. None was ever able to find any evidence of fraud and admitted that it was beyond their comprehension.

During this time there seem to have been four main points of dispute, all of which were thoroughly dealt with. These objections were: 1. The power was obtained from a hidden wire connected with the electric light circuit. 2. The power came from batteries. 3. The power came from induction. 4. There existed no such energy in the universe so that it couldn't be as represented.

Let us look at each of these objections in view of the records of people who saw these demonstrations. Only a few of the more comprehensive descriptions can be examined here.

The question of batteries is most conveniently dealt with at the same time as the idea of a hidden wire connected to the electric light circuit.

On March 16,1929 Mr. T. J. Yates, E.E., and M.E., a graduate of Cornell University with a great deal of experience in the electrical field, wrote a complete and detailed description of the apparatus and experiments which he saw of the Moray Radiant Energy device. He made and related several basic electrical tests which proved that the source of power present was not from an ordinary light circuit or from batteries. He made tests which would have produced a short circuit if the circuit had been connected to the electric power source. None was produced. He checked the main switch, and examined the table which held the device for hidden wires. He opened the main control switch on the lights in the building with no visible effect upon the Radiant Energy circuit. He tested the terminals for a battery type discharge and found that the tests indicated a condensor type discharge. He tested and made sure that energy was passing through the apparatus. He emptied the boxes which contained the apparatus -and found no batteries nor any place big enough to hold them. He also made the observation that the lights even though standard globes burned a different color, brighter and whiter, than those on the regular light circuit. In conclusion he said, "One is therefore forced to conclude that the electrical energy was received from some other source and difficult as it is to understand, with our present knowledge of electrical

generation, no other conclusion can be drawn from the demonstration as above described than that the energy was received by and through the apparatus as claimed by Dr. Moray." (See Footnote)

TO WHOM IT MAY CONCERN:

This is to certify that on the evening of March 16, 1929, in connection with Dr. H. H. —— of —— City, I witnessed a demononstration at the home of T. H. Moray, 2184 South 5th East Street, Salt Lake, City, Utah.

Dr. Moray claims to have devised and invented an apparatus that will produce electrical energy without the use of prime mover, and this is the apparatus demonstrated on the occasion above referred to.

The subjects of this article will be treated in the following order:

1. Description of Apparatus
2. Demonstration
3. Objections that I have heard
4. Tests
5. Conclusions

1. Tile apparatus consists of an antenna, a lead-in and a ground wire. These are connected to the terminals of a switch. Two wooden boxes were placed on a table. In one of these boxes was a high-frequency transformer and in the other box were two sets of condensers, 10 large condensers in one set and 10 small condensers in the other set; two composition cylinders, each about 1 1/2 inches diameter and four inches long; each of these weighed about three or four ounces; and another box approximately hemispherical in shape about 2 inches in diameter and weighing about 2 ounces; and a coil of wire. These piece. of apparatus were connected by a number of wires by which lite hook-up was connected.

Two of these wires were led out to the switch. One was attached to the blade of the switch and the other to the jaws of the switch so that when the switch was open the antenna, lead-in apparatus in the boxes, and ground wire, were all in series.

Two other wires Ieading out of the box were connected to six 100 watt lamps connected in multiple during part of the demonstration, and to a flat iron during part of the demonstration.

2. Demonstration.

During the demonstration the apparatus was connected in series as above described, except that a small switch connected in series with tile coil was left open.

Dr. Moray stroked the coil with a small magnet for three or four minutes: he then closed the small switch and the lamps were lighted and remained bright as long as the circuit was left closed, which was about 60 minutes. He then connected an electric flat iron. In a short time tile iron was hot. When the ground wire was disconnected and when the lead-in was disconnected the light went out.

3. Objections that I have heard.

1. That the power is obtained by a hidden wire from the electric lighting circuit.
2. That tile power is obtained from batteries.

4. Tests.

Before and after the demonstration I closed the big switch which connects the antenna and ground. If the antenna or lead-in were connected to the lighting circuit this would have produced a short circuit. I further tested by closing and opening the switch several times to see if any sparks appeared, but there were no sparks. I placed my wet finger between the blade and the jaws of the switch and could not feel any electricity. I touched my hand to both sides of the switch and the wall to check for ground but could not feel anything. We turned the table over and examined it carefully for hidden wires but found none. With the apparatus all connected the same as when operating the lights, the contacts with the switch were moved but produced no arcing. This indicates that the circuit was dead.

While the demonstration was being conducted and the lamps were receiving their energy through the apparatus the main switch that control the lights in the house was opened. All lights on the house circuit went out but the lights on the aerial circuit was not altered — were neither brighter nor dimmer at that time. *Thus the lights could NOT have received their power from that source.*

The condensers were THOROUGHLY tested. The terminals were shorted, the positive to the negative. If they had been batteries they would have showed a spark, but no sign of spark appeared. They were then tested by connecting them to the electric terminals. After thus being charged the large condenser gave a vigorous discharge, showing a brilliant strong arc and a loud snappy sound showing a sudden discharge as condensers are supposed to do and batteries never do.

The small condensers were less vigorous in discharging but the some snappy discharge indicated a condenser and not a battery discharge. These tests proved positively that condensers and not batteries were in the cases supposed by some to contain batteries. The boxes were completly emptied thus leaving no possible place for batteries to be stored.

During the time that the lights were burning the connections with the big switch were moved along the switch and vigorous arcing occurred, thus proving that electrical energy was passing through this apparatus.

5. Conclusions.

The electric lamps received energy from some source and during the demonstration, which lasted for about an hour, the lights were brilliant at all times; just as bright at the last as the first of the demonstration.

The lights on demonstration were a different color and seemed brighter than those on the house circuit.

The electric energy that lighted the lamps and heated the flat iron was not received from batteries in the boxes.

The electric energy that lighted the lamps and heated the flat iron was not received from the house circuit.

One is therefore forced to the conclusion that the electric energy was received from some other source and difficult as it is to understand, with our present knowledge of electrical generation, no other conclusion can be drawn from the demonstration as above described than that the energy was received by and through the apparatus ac claimed by Dr. Moray.

T. J. YATES

Mr. Yates has an M.A. in Electrical Engineering, Columbia University.

On December 13, 1930 Mr. Yates saw another test which he again described in detail. he noted a slight change in the apparatus which made a great improvement in the performance. He again described a careful examination of the system for any other source of electricity. He states that he inspected everything and that not an inch of space was overlooked. We will now quote directly from the letter.

"A crystal radio set was cut in on the lead-in wire from the antenna on one side and to the ground wire on the other side and perfect reception was had. If there had been power from other sources on the antenna or lead-in, by connecting the radio set to the ground wire, reception would not have been possible but a loud, humming

sound would be produced. This was demonstrated by connecting the radio set to the house lighting system. When the system was working, the lights were burning bright. The terminal attached to the antenna was disconnected. A vigorous arcing occured and the sparks jumped over an air gap as much as six inches. This would indicate that the power was high voltage and the nature of the sparks indicated a high frequency.

I do not understand the principle by which Dr. Moray produces the electric energy. The condensers and the coils of wire are common. The two cylinders called "oscillators" and the small conical shell called the "detector" are the only things not commonly known, but the system works. It produces electric power in abaundance and does all that Dr. Moray claims for it.

I do not own any stock or interest in the company that is promoting this enterprise and my only purpose in issuing this statement is in the interest of the advancement of science. I consider this development a great advance in the science of producing electrical energy.

Very truly yours
(Signed) Thomas J. Yates

This letter was subscribed and sworn to before a Notary Public on the 18th day of Decemher, 1930.

In later R E. devices a HF brush discharged of 18 inches in length was sustained and 50 KW of energy obtained.

Another distinguished feature of the Radiant Energy device is the characteristic whiteness of the light globes. Regular light globes purchased on the open market were used in all of the demonstrations, yet the light produced was quite different than that in an ordinary electric circuit.

On Jan. 5, 1938 Mr. Chester Clawson wrote the following. "For many years I was a producer of independent motion pictures and in this work necessarily used high-powered open-arc lamps. Through my exposure to these powerful lights my optic nerves were affected by the ultra-violet rays and ordinary light has always caused me considerable discomfort so naturally I was particularly impressed with the fact that in looking at your board of some thirty-five hundred-watt lamps, all burning at the same time, the light was very much less troublesome to my eyes.

Photographers have also noticed the different quality of the light produced with this device. In June of 1937 Mr. Keen Polk, a photographer whose experience covers thirty years during which he had been a newspaper photographer; official photographer of the United States over seas; and head photographer for the U. S. government in Washington, D.C. wrote "I began taking photographs of the Moray Energy machine, while it was being operated, some six years ago. The purity of the light has always greatly impressed me. The light appears to be much whiter than the light in bulbs lit with the ordinary electric current. To my eyes, it appears that there is less of the ultra-violet and red rays, than are contained in the regular light.

In all of the demonstrations that I have photographed, Moray has used the standard market electric light globes. The light produced by this machine is superior to any of the special lights used in my photographic work. On June 25. 1937 I photographed seven. negatives and discovered that dais light is rather difficult to properly photograph on account of its extreme brightness.

On July 6, 1938 Mr. W. Earl Lyman of the: Utah Photo Material Co. wrote toy Dr. Moray: During the latter part of May 1938, I photographed your Radiant Energy Machine May was very much impressed with same.

In my opinion the bank of lights photographed were much brighter than the Mazda Lights of similar work I leave had to do.

I used a non halation film acid was sure I could offset the light with a large #3 Super Flash Bulb, but your light burned into the film much deeper than I expected.

The pure white light you get should be a great help in photography."

Processing the negatives taken of the lights of the Radiant Energy device has also presented some unusual problems not ordinarily found in pictures of this type as is illustrated in the following three letters to Dr. Moray:

"Dear Sir:

We wish to thank you for the recent business you have given us, and hope we may have the pleasure of serving you again.

"For your information we wish to state that in all cases where negatives included any of your lights we found them to be of greater intensity than ordinary illumination. They seem to burn into the negative to such a degree that we found it necessary to cut special masks to hold back the immediate area of illumination in order to obtain any outline of the globes whatever. We found the average negative required about ten times the normal exposure in the areas where lights were used. This is especially interesting as in photographing ordinary lights when shining directly into the lens of the camera the light outline can be plainly seen even though the negative is dense at point of illumination and in the case of your lights the only detail possible to obtain lead to be brought out through holding back the dense area as mentioned above."

Very truly yours,

The Sun Photo Service
Signed D. R. Silvers

In a later letter Mr. Silvers again writes: "In regards to your inquiry on the change of light values or negatives changing their properties of value during a period of years, we state that, to the best of our knowledge any changes would have to be uniform in over all negative value and the ultimate results in printing would remain the same.

At the time we printed your latest group of negatives, we understood the photographer used a No. 3 flash bulb which under ordinary circumstances would offset any area of intense light or bank of lights other than the source of the No. 3 flash bulb.

We found that is not the condition in this case. This source of light seemed to burn into the negative to such an extent that we lead to shade out the light in order to obtain a background which the No. 3 flash bulb should leave illuminated.

To summarize, we found that in order to obtain a balance print quality, we had to mask out or eliminate this source of light in order to obtain any detail in the balance of the picture."

"In March of 1957 Mr. L. E. Remington, manager of the Shutter Bug in Salt Lake City wrote to Dr. Moray: In our Photo finishing plant we have recently made photographic prints from negatives supplied by you. Included in all of these negatives were banks of lights.

Needless to say, producing satisfactory prints from these negatives was extremely difficult, due mainly to the fact that the intensity range on the negative was far beyond the limitations of the photographic papers. On some of the negatives the range was so extreme that even with intense "burning in" we were unable to produce a print that satisfactorily covered all areas of the negative.

We noted several interesting characteristics in the negatives of these lights in contrast to normal incandescent or fluorescent lights. The intensity of these lights appeared greater than normally produced. They also, in some cases, produced a circular halo effect that has not been encountered previously. The most interesting observation was that, in spite of the intense density of the negative image of these lights, there was no complete "blocking up" such as would normally be found with other lamps."

As has been noted, electric light globes (standard articles bought on the open market) behave differently when used with the Moray Radiant Energy device then when used with regular current. The globes become exceedingly hot in one spot about the size of a dime, due to the fact that the gas in the globes becomes incandescent under the influence of the very high frequency current and because of the incandescent gas, the luminosity is much higher and whiter than with ordinary current.

Before we leave the question of outside power sources, let us consider one more letter written Dec. 22, 1958.

"To Whom It May Concern:

In the spring of 1938, 1 was invited by tile Securities Commissioner of the State of Utah to acompany Mr. Gull to the Laboratory of Dr. Henry Moray and inspect the Moray Radiant Energy equipment. My father, Mr. J. C. Jensen, an engineer, was also present. He has seen many tests made of the Moray equipment. This invitation was given me because I am an engineer and battery expert.

After seeing the Moray equipment light 30 one-hundred-fifty watt standard light globes, heat a 1000 watt soldering iron and operate a special high frequency motor for some time over an hour, I placed my measuring instruments on the antenna and ground connection. They were electrically dead. They were checked in detail for hidden wires, there were none. The box in which the equipment was housed was opened by commissioner Gull and myself. Every part of the equipment was taken out of the box, weighed and tested. Tests were made with sensitive volt and amp meters to determine if the box could contain batteries or if any of the equipment had any sort of battery action in them. They did not.

There were no hidden wires and nothing from which any battery current or any other power could have been obtained other than as claimed by the inventor.

The commissioner then requested permission to bore holes in the box in which the equipment lead been housed in order to satisfy himself that everything had been taken out and there were no hidden compartments. This was done to the complete satisfaction of all present.

I have been asked for my comments concerning tests and demonstrations of Dr. Moray"s Radiant Energy equipment, and the above is a review of the test and demonstration which I witnessed. I endorse this equipment as represented by Dr. Moray."

Signed A. B. Jensen,
Salt Lake City, Utah

A letter dated Sept. 26, 1928 written by Air. E. G. Jensen, relates that on Sept. 25, 1928 in Dr. Moray's Laboratory, a demonstration was given for the benefit of Dr. Harvey Fletcher in which three one-hundred-watt lights were lit and also a 575 watt flat iron was heated. After the demonstration, the apparatus was dismantled

for Dr. Fletcher's inspection and the various circuits and hook-ups were explained. Dr. Fletcher remarked, "It was a wonderful demonstration."

A feature of the demonstration was the breaking of the antenna circuit which caused a brush discharge spark of about nine inches to occur. Dr. Fletcher stated that the current was evidently high frequency. On the Thursday preceeding this demonstration, Dr. Fletcher spent several hours with Dr. Moray who explained the various circuits to him in detail. This conference was attested to in a letter dated Sept. 27, 1928 and signed by Robert L. Judd. At this time Mr. Judd relates that Dr. Fletcher had to return to the Bell Telephone Laboratories in New York and would be unable to make further investigations, but felt that he could accept any findings of Dr. Carl Eyring. He also suggested that one weekness of the device night be the inability to function over a long period of time and suggested an endurance test.

On Oct. 10, 1928 Mr. Robert L. Judd wrote a letter to Dr. Fletcher at the Bell Telephone Laboratories in New York. In this letter Mr. Judd recounts the details of an endurance test arranged with Mr. E. G. Jensen, Dr. M. O. Hayes, and himself. They set up the machine in a heavy tin covered trunk with a small hole in the top and another in one end through which the globes attached to the machine could be observed. After making some tests, the trunk was closed and locked and the key delivered to Dr. Hayes. The trunk was then sealed in three different places with the standard freight car seals. The details of each day were recounted, the principals involved visiting the laboratory many times to check the device. After a week the trunk was opened and the device carefully tested.

Mr. R. F. Haffenreffer, Jr.
Fall River, Massachusetts
Dear Mr Haffenreffer:

It has been some little time since I have had anything worth while to tell you about our electrical mechanism. We have though just finished a most interesting demonstration that I am sure you will be pleased to hear about.

You will remember that I told you of our unsuccessful attempt to have an examination of the mechanism made by Dr. Fletcher of the Western Electric Co. of New York, when he was here a year ago, and of our inability to make much headway since that time. I think I have told you that Dr. Fletcher is a very close friend of mine whom I met when we were both attending the University of Chicago. At that time he was working to get his doctors degree in physics and was assistant to Dr. Milican, and helped very materially in the demonstration and establishment of the ionic and electronic theory of matter. A few years after his graduation lie was called into the staff of the Western Electric CO. at New York, where lie has remained up to the present time. He has done some very remarkable work and for more than a year past has had direct charge of the television. A couple of weeks ago I learned that he was paying us another visit and accordingly took up with Mr. Moray the proposition of his spending some time on our mechanism while here. I know by reason of your knowledge of inventors, that you will fully appreciate the difficulties encountered in getting Moray to give Dr. Fletcher a chance to study and investigate his instrument. However, he did give his consent, and on Thursday a week ago Mr. Moray and *Dr. Fletcher spent the afternoon in a detail study of the drawings demonstrating the circuits involved and the theory upon which the mechanism is based. This was as requested by Dr. Fletcher.* On Tuesday last, Dr. Fletcher, myself and Mr. Jensen, another interested party went down to Morray's home. *Dr. Fletcher was afforded the opportunity of studying the antenna, the ground and their respective connection with the machine.* Moray then demonstrated that there was no life in any part of the machine, and explained to the Doctor what he was about to do. He then began his tuning in as you have seen him and in six minutes from the time of his commencement had sufficient power to light three one hundred watt lamps. Dr. Fletcher in observing the lamps stated that they were burning far above normal and that if they were to continue at that degree of radiancy they would soon burn out. While observing the lights various tests were made such as disconnecting the antenna and the ground. The lights were then screwed out quickly and a five hundred seventy five watt flat iron attached. This was heated to the "sizzling" point in about five minutes. After making such observations as were necessary to this test, the wire was disconnected and the lights again put on. After the lights had been burning for some little time, for some reason then unknown, they flickered a few minutes and then went out. The lights on the regular circuit in the house still going on. The globes were tested and found to be all right. *A later examination of the parts of the machine showed that one part of the detector, that piece of mechanism which is not yet "fool" proof, had slipped down out of place and in effect had disconnected that particular circuit. This happening pleased Dr. Fletcher and was considered by him a valuable part of the experiment. After the lights had gone out the mechanism was dismantled part by part and the Doctor given a chance to see that the mechanism was one intrical whole and no other connection than with the antenna and the ground.*

His conclusion was without further time or equipment with which to study the circuits, and the extent of them going through different parts of the machine, that the energy secured by the machine was what Mr. Moray contended for it or that Moray secured from his antenna and ground a force which set up in his tubes, the makeup of which were explained to the Doctor, some form of battery action which resulted in the electric current generated. He stated that if it were the latter however, the phenomenon was quit as remarkable as contended for by Moray, because in accomplishing what they did the tubes were far more powerful than anything known to science today.

His observation as to the possible weakness of the thing is it was some battery reaction in the tubes which were commenced and kept alive. by some form of energy from the atmosphere, was that the tubes would soon burn out and that it would be necessary to do further work with the tubes to give them long life. I told him that the tubes built two years ago last June had done services up to the last month when Moray, through their leaking on account of what he says is his crude way of making them, had had to make new ones. His answer to that was that if it is battery action the titles might be used for some time then left idle that they would rebuild themselves and thus go on serving as the tubes mentioned had clone. He told its that an experiment that would be very helpful in determining what the energy was or the efficiency of the tubes would be to run the machine just as long as it would go, then determine what pact quit first and if it were the tubes make observation as to what happened. I didn't know just what Moray's response to that suggestion would be, but yesterday he dropped in to say that he was very anxious to make the test as soon as possible, and asked that I assist him in figuring out the proper personnel of a committee, seal the machine tip in some way after it was lighted, and then make frequent observations as to its continued operation for the full period of time it would run. I expect to work out such arrangements as soon as possible.

From this demonstration it is established, I should say absolutely, that what we have is something entirely new and very wonderful and that there is no possibility for doubt on any phase of this proposition. Dr. Fletcher left for New York by automobile yesterday morning. He told me that following the time that he had to sit down' and think out this matter a little, he would write us and try and make some suggestions for further development.

With kindest regards, I am
Yours respectively,

_____

Original was signed .-by R. L. Judd,
Kearns Building, Salt Lake City, Utah

One outstanding example of how a discovery can be appropriated by others is in the "Moray Valve." During ,June of 1925, Moray's experimentation. in searching for a more stable detector for his Radiant Energy Device, blended certain substances which he had brought from Sweden in 1914 and had used in his Radiant Energy Device as a valve.

Moray failed in his search at that time, as far as getting a substance for the Radiant Energy detector, but discovered that by making "pellets" of a mixture of the Moray Lead, which withstands heat up to over 1800°F, and using pure germanium mixed with bismuth, iron sulphate triboluminescent zinc, and certain other impurities including the Moray fission Material, he obtained a substance that had wonderful properties as a detector or valve for radio signals. he made a specially constructed radio speaker, altho standard speakers also responded. With this germanium combination alloy used as a detector, it was found that radios would operate without batteries or tubes or any other source of power than that obtained from the radio transmitting station. His germanium valve, with a special radio circuit which he devised and a Special Moray constructed loud speaker, brought in radio signals which were loud and clear; the radio programs could be heard all over the building. Dr. Moray disclosed this fact to Atty. R. L. Judd and Atty. A. H. Nebeker witnessed Mr. Judd's signature on the 12th day of October 1925, describing how the valve was made to Attorney

Judd and showing them a drawing of the same which they signed in evidence. This valve and more data was also explained to Dr. Carl Eyring in the presence of Atty. R L. Judd, also in 1925. This valve was fully explained to Dr. Murray 0. Hayes in 1926 and at later dates. In October 1928 this Moray valve was explained in detail to Dr. Harvey Fletcher of the Bell Laboratories in the presence of Atty. R. L. Judd who wrote a detailed account of this disclosure. In July 1931, an application for patent was filed in this germanium valve as a detector and oscillator under serial #550622. "This valve and radio were explained and demonstrated to hundreds of people as late as June of 1938. Some of these gentlemen were — C. F. Clauson, J. C. Jensen, H. D. Snyder, Clive Gardner, W. Lewis Gardner, and many others who attested to these facts and signed documents.

In a letter to Mr. W. H. Lovesey describing this valve in action Dr. M. O. Hayes stated, "He connected his detector to a crystal set for receiving radio, in place of the crystal, and obtained better reception than with the Erla crystal, though the. antenna was merely one of the bell type, in my home. He also took a lump of lead treated according to the process he has discovered and used it in place of the crystal, and got wonderful reception on a radio — loud enough in fact to operate an old fashioned horn speaker of the type put out by RCA about 1923."

From 1930 to 1938 Dr. Moray made tests at various times with scores of people present of his special radio. This radio, on several occasions received broadcasts from Little America, from Admiral Byrd and his party from the Antarctic. These broadcasts came in loud and clear on occasions when regular radio broadcasting stations reported that interference was so severe they could not receive Admiral Byrd's broadcasts because of weather conditions.

This special RE radio with a Germanium alloy valve was also demonstrated to Felix Frazer of the R E. A. and be experimented with it during the months of March, April, and May of 1939.

As has been the case many times, the original discoverer of some great invention does not get the credit for having first made the discovery. This fact has been repeated in the case of the device now known *as the transitor*. This was first used by Dr. Moray in June of 1925 under the name of "Moray Valve" in many radios constructed and operated for many years. This is strongly documented in many references contained in the early records of the work of Dr. Moray by many witnesses.

(See Footnote also cut on patent papers)

EDITOR'S NOTE

Compiled from excerpts for the history of the T. Henry Moray research work on what he designated, at the time of it's discovery; as the Moray Valve. Details have later shown this valve to be the same as the discovery now known as the Transistor.

It was June 24, 1925, that T. Henry Moray discovered that by alloying Germanium with various substances he was able to make a valve for a radio receiver capable of reception of radio signals of considerable stregth without the use of tubes, batteries or any conventional source of power. This germanium alloyed material he also used successfully in the amplification of radio signals for radios he constructed and used in his home and the home of his sister's family, with reception loud enough to be heard throughout the house. He devised a specially constructed loud speaker which worked better than the then standard permanent magnet type commercial speaker.

A schematic drawing of this radio hookup and the place where the germanium "compound" valve was used was shown to and described to Atty. Robt. L. Judd in the presence of Atty. A. H. Nebeker and this drawing was duly verified on the 12th day of October, 1925. The same drawing was later signed by C. Fred Schade, May 22, 1931, and by Dr. Murray O. Hayes, L. A. Thomsen, R. J. Chapman, D. L. Farnsworth and D. Thomsen, March 21, 1931. On the same day of March, 1931, the above six gentlemen were permitted to examine a set of six drawings showing uses of the compound germanium valve and the description of the materials used with the germanium and the method of forming this compound into pellets and why germanium works best when these "impurities" are introduced in the pellet.

On November 14, 1927, the germanium alloy material with another radio hookup was submitted and sworn to before R. Howard Allington, a notary of Salt Lake.

On September 17, 1928, Atty. Judd who had signed a drawing that he had had explained to him, the. Moray germanium valve, on the 12th day of October, 1925, wrote a letter in which he stated among other things, the following "Dr. Fletcher spent the afternoon in a detail study of the drawings (plural) demonstrating the circuits involved and the theory upon which the mechanism is based. *This was as requested by Dr. Fletcher*."

Application dated July 13, 1931.

This valve is indicated in the circuit shown on figures 1, 2 and 3 and will now be described in detail. The valve may consist of a metal case 135 to which pieces 136 of bismuth may be attached, the attachment being effected by fuzing a portion of the surface of the bismuth and applying it to the case. A piece of iron sulphide may be attached to the bismuth by fuzing, the said iron sulphide, however, being insulated from the case 135 at the point 138. It is also advisable to use, at the points 138 between 136, 137 and 139, portions of germanium which has some very unique properties in the functioning of the valve when used as a booster or amplifier. At 139, in the form of a rounded stone, is a small mineral body containing ..... (material blanked out in this paper for security reasons but can say it describes the Moray fission material) triboluminescent zinc and germanium compressed into a hard, rounded stone. This rounded stone is delicately supported between the pieces of iron sulphide 137 and the upper piece of bisimuth 136. The stone 139 has remarkable amplifying

and rectifying properties, is also remarkable for the maintainance of a higher temperature than exists in its surroundings, as well as for its radiation of alpha, beta and gamma rays which produce an ionic reaction. It is by reason of this later property that this stone readily ionizes gases. It will be understood, therefore, that this stone may well serve as a valve which allows energy waves to pass in only one direction at a time, that is to say, from the antenna capacitor into the various circuits or from the circuits into the antenna capacitor without necessarily changing from H.F. or A.C. to D.C.

Extending through the case 135 but insulated therefrom, is a metallic pin 140, this pin being connected to the antenna lead-in and carrying a piece of molybdenite (molybdenum sulphide or a molybdenum metal combination of Moray mixture of the germanium alloy). This later contacts the stone 139. A wire 142 connects the case of 135 with the various hookups hereinbefore mentioned. An arm 143 extends through the case 135 and furnishes a support for the wire 142 while at the same time it is provided with an upturned portion having a nut 144 threaded thereon for the purpose of securing a tight covered sealed plate over the otherwise open mouth of case 135. This, with variations and hookup shown in figure 10, as used for the rectification and amplification of radio or other high frequency signals without the application of any outside current other than the incoming radio or Cosmic signal and small pencil sized dry cell batteries. Certain hookups require no battery cells whatsoever.

*See photostat patent application #550611.

The following is a copy of one of the signed papers on the Moray germanium valve which anticipates the transistor. This tracing cloth document was signed as having been read and signed by the following on December 16, 1937: K. K. Steffensen, Johanna Solmon. Christ T. Clawsen, J. C. Jensen, H. G. Snyder, W. Louis Gardner, Clive D. Gardner, which reads as follows:

"This and more data was originally explained to Dr. Carl Eyring of the B.Y.U. with Atty. R. L. Judd present in my home (Morays) in 1925. It was later shown to Dr. Harvey Fletcher of Bell Laboratories in the Fall of 1928. Later to Dr. Murray O. Hayes and later this was incorporated in the RE patent application of July 13, 1931, serial number 550,611 (dates furnished on request). The Moray valve and circuits involved shown on the drawwing 1, 2 and 3 were there described in more detail. The valve used a metal envelope shown at #135 to which bismuth was attached at 136 by fuzing. Iron sulphide was, or, one might say, may be added to the bismuth by fuzing. The sulphide being insulated (from case 135 at point 138, portions of germanium were used at point 138 between 136, 137 and 139. It has been found that germanium prepared by the Moray mixture, which was explained to Dr. Hayes, Messrs. Chapman, Thomson and others enough to establish dates in March, was the same as had been explained to Dr. Fletcher in 1928 in complete detail. All had been sworn not to describe what they saw, only to establish dates of data signed. Dr. Fletcher, according to Air. Judd's wool to me, had, in the presence of Judd, been placed under oath at Moray's request that he, Dr. Fletcher, would keep sacred what I (Moray) was about to disclose to him. I often refer to a detector tube as a valve, hence this Moray valve. The "rounded stones" shown in the drawing are small Pellets containing ..... (left blank on this copy but not on the tracing for security reasons) and germanium compressed into hard round pellets. Germanium may be mixed with other materials explained to Dr. Fletcher, Dr. Hayes and others. These pellets are supported, as shown in other drawings.

These combinations of materials are used in the various radio hookup-, which receive radio signals in good strength without conventional power supply. This Moray valve radio has been in operation at a home at 2505 So. 5th East. St. as also at 2484. So. 5th Fast St. as experimental research for several years (1928-1937). No ABC batteries or power source used. This was the radio valve used in the RE powered radio which scores of people heard, especially in bringing in Admiral Byrd from Little America (in the Anarctic). Molybdenum (molybdenum, sulphide or molybdenum metal germanium combination), wording changed somewhat to suit Dr. Hayes' wording as he wrote the patent application.

Impure germanium and Moray germanium compound mixture has some very unique properties in functioning in the Moray valve. Also used valves as boosters or amplifiers when several valves were connected in the circuit together as has been shown. (Part left out for security reasons) *See circuit diagram. For more complete information see other disclosures made after putting named parties under promise to tell no one. They were told all I was doing to establish date of conception of discovery and to maintain as much protection as I could by establishing these dates. The tracing is signed T. Henry Moray and then signed by the gentlemen named above, some on the 15th day of December 1937, some on the 16th day of December 1937, as shown on the linen tracing cloth drawing.

The Moray files' signed drawings, records and documents. together with scores of witnesses who heard the Moray radio operated by the Moray germanium valve, all prove that Moray discovered and experimentally operated the device now known as the transistor some twenty years prior to the time the Bell Laboratories did so. The records show this discovery was disclosed as early as 1925 to Dr. Eyring who was later with the Bell Laboratories and a cousin of Dr. Fletcher. Also that in 1928 it was shown to Dr. Harvey Fletcher who was the head of the division of the Bell Laboratories which came out with the transitor.

It is the opinion of the editors that it is certainly strange that two employees of Bell Laboratories came out with a germanium mixture that protyped the Moray valve. We doubt that the Bell Laboratories know the full story of this discovery as they being an honorable company would never have been a party to such an unethical action.

(Footnote Wood & Webber, Inc.)

Képaláírások:

- Photostate patent application #550611
- The Moray pocket radio 1 1/2 times actual size used Moray Germanium mixture. Moray valve now called Transistor
- Moray Valve Circuits
- Official U. S. Government picture taken by Dr. Frazer in April 1939 of the Moray radio using the special Germanium mixture valve. With special loud speaker by Moray that will work with Moray Valve. First discovered in 1925.

Wood and Weber

REPORT on MORAY IIADIANT ENERGY DEVICE

On April 7th and 8th, 1933, the writer in company with Dr. C. R. Bonzel and Mr. J. J. Jurgensen of Greeley, Colorado, visited Dr. T. H. Moray, at his laboratory, 2484 South Fifth Street East, Salt Lake City, Utah, and thoroughly discussed with him the device which was the particular object of this investigation, and other devices and products, of which Dr. Moray is the inventor.

We also talked with others in Salt Lake, who are or have been connected with Moray in the development of these inventions. We first met and talked with Mr. W. H. Lovesay, Purchasing Agent of the Utah Refining Co., of Salt Lake City, who been been closely associated with Dr. Moray in the development of this work, and who knows him intimately.

This is marked as it contains details of construction not deemed wise to publish.

I was impressed with the apparent honesty of Mr. Lovesay's opinion of the invention, and that he was wholly convinced of the integrity and honesty of Dr. Moray. At this conference Mr. Bringhurst, a business man of Salt Lake, was also present. he is secretarytreasurer of the Moray Products Co.

Mr. Lovesay described to us numerous demonstrations he had witnessed of the Radiant Ray apparatus, as well as other inventions and devices developed by Moray; and although he made no claim as understanding them, there was no question in his mind as to the honesty of purpose, integrity and ability of Dr. Moray. Some two hours were spent in going over various matters connected with the project, with Mr. Lovesay, who took the time out of a busy day at his own affairs to give its all possible help in our investigation. The balance of the first day and a part of the second was spent with Moray at the laboratory and in visiting others connected with the project.

I found that Dr. Moray was extremely open and frank in every way, and gave us every possible opportunity to investigate what we came for. He is, in my opinion, a man of marked ability in the line of research and invention, but needs assistance in developing it into it commercial business venture. I found no evidence of lack of integrity and honesty. He has evidently worked for many years in the investigations, and of course is thoroughly imbued with the nature and possibilities of the particular invention. The investigation convinced me that he has discovered something about the nature of energy which has not been known before, and which is not even now understood by anyone.

Certain theories have been advanced by him, and other scientists, to explain the phenomenon, but all that can be said about it is that certain results have been obtained that indicate unlimited possibilities for development along these lines, in the way of production of energy for all light, heat and power purposes.

I am thoroughly convinced that the device is not a hoax, or a fake, and that the results are not the results of induction from established power sources or batteries; but I do not pretend to understand the real nature of the source. This is something, that in my opinion, can only be determined by future research.

The device is not especially complicated, nor is it

This is masked as it contains details of construction deemed unwise to publish.

I talked with a number of reputable people who witnessed numerous demonstrations, and examined signed and sworn-to letters, describing the demonstrations. From all of this, and from the conferences with Moray, I am fully convinced that there is no hoax or fraud about the device. The commercial development at this time apparently hinges upon the construction of a vacuum tube especially invented for this purpose, which will eliminate

Masked, not for public information as it contains construction information

a tube, an which application has been made for a patent. He thinks it wise not to divulge the details until applications can be made for patents in foreign countries, and until sufficient capital is available to establish laboratory facilities, when the tubes can be perfected.

My conclusions are as follows:

1 — It is not a hoax or fraud in any sense.

2 — Dr. Moray has discovered a new principle in electrical energy that has not heretofore been known.

3 — That the nature of the energy is not fully known, but that Moray's theory of the world being surrounded by a sea of oscillating energy is as satisfactory as any.

4 — That energy that can be utilized for light, heat and power has and can be produced from the surrounding space by devices which Moray has developed, but which need perfecting.

5 — It would seem that any amount can be developed. That in effect we are surrounded by an unlimited reservoir of energy that can and some day will be utilized.

6 — That to demonstrate the commercial feasibility of the project, equipment and funds must be made available, under competent business administration.

7 — The results obtained so far indicate that such research undertaken in the proper spirit and under proper conditions, will result in the development of an unlimited source of energy that will revolutionize our whole industrial and economic life.

In addition to the radiant energy discoveries, Moray has developed other devices and products that should have widespread commercial value, if properly exploited. Among them is a simple radio device using neither tubes or battery, that can be manufactured inexpensively and widely marketed. Whether it is patentable or not remains to be seen, as no application has been made, but even with a very limited patent protection should have widespread commercial value.

I feel that if Moray is given the proper opportunity, under competent and sympathetic management, he will produce revolutionary results in many lines of research.

Respectfully submitted,
FRANKLIN P. 'HOOD
For Wood & Weber, Inc.

April 12, 1933

Képaláírás:

Official U. S. Government picture taken by Dr. Frazer in April 1939 of the Moray radio using the special Germanium mix. ture valve. With special loud speaker by Moray that will work with Moray Valve. First discovered in 1925.

Rossz minõségû fotókópia szövege:

MORAY SCIENTIFIC LABORATORIES
Dr. T. H. Moray
2484 South 5th East Street.
SALT LAKE CITY, UTAH

September 15, 1931.

To the Commissioner of Patents
Department of Commerce
United States Patent Office
Washington, D.C.

Dear Sir:

I, Thomas Henry Moray, a citisen of the United States, and President of the Moray Products Company, to whom the following patent was assigned:

#550,611 Radiant Energy Device Filed tiny 13, 1931

hereby revoke the power of attorney given to ?név1?, ?név2, Karkan & Sutton, Attorneys, 700 - 10th Street, Washington, D. C., and until further advice, it is the desire that all communications and correspondence in connection with this patent shall be directed to the Moray Products Company at 2482 South 5th East Street, Salt take City, Utah.

Respectfully,
MORAY PRODUCT COMPANY

Accepted
SEP 17 1932

In a letter sworn to before a notary public on Oct. 29, 1928 and written Oct. 10, 1928, Dr. Murray O. Hayes states:

To Whom It May Concern:

Below is a report of my observation of the Moray cosmic energy device.

The aerial used is about two hundred feet long and is about eighty feet above the ground, the wire is a copper cable approximately a fourth inch in diameter, and well insulated. The ground is the water pipe in tile basement of Dr. Moray's home.

The device was assembled in a trunk through the sides of which were holes for the connections to ground and to the antenna and for observation; the said holes were about one-half inch in diameter. There were two boxes about tell by twenty by four inches, one on top of the other; both were closed and the covers fastened with screws. On the upper box was lying an insulated panel about an inch thick by fifteen inches long and three inches wide; it is of slate or hard rubber or some material of similar appearance. On this were two binding posts that were connectible by means of a small switch; also mounted on this panel is a body about two and one-half inches square, wrapped in friction tape, front which protrude two poles about one-fourth inch in diameter, apparently of soft iron. A double receptacle for light globes was connected in the circuit, in one of which was a twenty watt globe, and in the other a hundred watt globe.

E. G. Jensen, R. L. Judd, and I were present and examined tile trunk to see if there were any connections other than the antenna and the ground, but found none. The small switch above mentioned was thrown several times, but without result; the connections to ground antenna were also removed, also without result.

Dr. Moray then took a magnet, which was a very broad, short limped U, and began to stroke one hole of it in the polls in the taped body; M. Jensen placed his fingers on the binding posts several times, and at last received a rather vigorous shock; Dr. Moray then threw the switch and the globes lighted. When the switch was opened the lights went off and came on again when the switch was closed. Removing either the ground or the antenna connection caused the lights to go out, but they came on again as soon as the connection was re-established. The time of excitation was ten minutes, and the lights came on at 7:59 a.m., October first.

The trunk was then closed and sealed with railroad car seals, and the numbers on the seals were recorded by Mr. Jensen. Each morning and night up to the morning of Oct. 4, I inspected the seals and observed that the lights were burning. About 10:30 on this date the detector was jarred out of adjustment by the felling of a heavy tree next to the house.

The evening of the same day Mr. Moray removed the detector in the presence of Mr. Jensen and me and in twenty minutes had it readjusted and reassembled ready to start. As soon as Mr. Judd arrived the stroking began and the lights came on in about ten minutes. The trunk was again sealed as before.

The device continued in operation until the morning of Oct. 8, and the trunk was opened in the presence of the three witnesses above mentioned after a run of eighty-four hours. The hundred watt lamp was removed and a standard 575 Hotpoint electric iron was plugged into its place; the iron was heated as quickly as though on the

usual house circuit. During this test a sixty watt globe was put in the place of the twenty, so that the total wattage was 635.

The antenna and ground connections were then removed until no current was delivered when the switch was closed, and five 100 watt globes were substituted for the iron, making a total power output of 560 watts. The lamps appeared to be as bright as when on the house circuit. It required four minutes of excitation to get it in operation again.

After again being disconnected until it ceased to operate it required but one minute of excitation to bring in the current.

While the test was in progress every test that could be thought of was applied to make sure that there were no hidden connections to the house circuit or to a battery; the house lights were turned on and then all main switches pulled, which turned off the house lights but did not in the least affect those in the test. After the run had terminated the trunk and table were examined for wires, but none were found except those to the antenna and to the ground.

As a further proof that the conversion of the energy was due to the mechanism in the box, Dr. Moray hit the table on which the trunk was standing, a moderate blow with a hammer whereupon the light flickered and went off, due to the detector being shaken out of adjustment.

It is to be noted that after a total run of 158 hours the device supplied 635 watts; inasmuch as a horsepower is but 74.6 watts this equals 0.878 of a horsepower or slightly more than 7/8 horsepower. This alone is sufficient to dispose of any suggestion of a battery.

In witness to the above I hereunto sign my name"

Signed, Murray O. Hayes
Duly verified and notarized.

During the early morning hours of September 3, 1926, Dr. Moray first successfully operated his sound detector device. After months of work in his laboratory, he was able to "pick up" conversation and music from thousands of feet away from his laboratory without instrument or wire connections to the point from which the conversations originated. Several days later the public was invited to listen to conversations originating in houses and from streets which were a considerable distance from the instrument in the laboratory.

In October 1929 a scientist from Russia, a Dr. A. A. Yakalov come to the Moray laboratory and witnessed tests of the Moray Radiant Energy equipment as well as listening to conversation brought in by the Moray Sound Pickup Device which was going on some five miles from the Moray laboratory i.e. in the Denver and Rio Grand R. R. Station, Salt Lake City.

By 1936 the Sound Detector Device had been improved to where it would operate radio loud speakers. Up until this time only radio head phones had been used. The signals were brought in loud and clear. A test of this equipment was given to a General Shinkle of the War Department and an accompanying Captain of the U. S. Army in December of 1936. These army gentlemen, with about eight civilians witnessed these experiments. The general said he was very much impressed and asked how the Sound Pickup Equipment might be obtained for the U. S. government. Dr. Moray told the general he would give it to the government free of charge, the only requirement being that the government give the device the Moray name. The general said he would report to his superiors. It was later reported to Dr. Moray and others by a U. S. Congressman that an official report had been filed in Washington, but that the government had not accepted the offer. This report was made by U. S. Representative Congressman Thomas Amlie.

Now for the question of induction.

As was suggested by Dr. Harvey Fletcher, Dr. Carl Eyring, who was head of the department of physics of Brigham Young University, saw a demonstration of the Moray device. In a statement dated Sept. 7, 1929 Robert L. Judd relates that a demonstration was given to Dr. Eyring in October of 1925. We quote:

Dr. Eyring was permitted to risk any questions he wished and after spending over an hour with the device in operation, he said that he could not find any fault wills what he saw; that the current was not obtained from batteries or hidden wires so that his oily conclusion was "induction," but that such induction was wonderful and unheard of before over such distance."

Dr. Eyring said that if the device would operate five miles from all power lines, he would be satisfied that it was not induction.

A demonstration was given in Emigration Canyon, there being no power lines in the canyon at that time, in the presence of Mr. Judd, Mr. O. W. Adams, and a Mr. Nebacker of the Judd law firm. A site was arbitrarily selected by Messers Adams, Judd and Nebacker. Mr. Adams and Mr. Nebacker erected the ground and antenna. A single one-hundred watt lamp was lit for a period of one hour.

Some days later Dr. Eyring, who had not been present at this demonstration, met these men at Dr. Moray's laboratory. We quote from Mr. Judd's account of that meeting. "We spent the morning going over all the theory and hook-ups and examined the device and the Dr. asked questions continually. He made several drawings and sketches. Dr. Eyring congratulated Dr. Moray on what he termed as a wonderful work and said that what he had seen and heard was electrically, mathematically and scientifically sound and corrected.

A statement dated December 1929 quoted below was written by Dr. Eyring in leis own handwriting.

"This discovery with its processes, mechanisms, and devices deals with and enables man to use the so called cosmic energy, acts energy radiated from the universe to operate any of the mechanical. electrical, magnetic, or optical devices for the utilization of energy or power.

"Cosmic energy as the term is here used, is energy which exists in the space surrounding the earth and which lave or may have, its source in the natural processes and movements of the earth, in the earth itself, and includes its atmosphere and component parts or elements on celestial bodies. These cosmic rays are continually bombarding the earth.*

To further disprove the induction theory concerning the Moray device, let us consider another test.

On October 29, 1926 Dr. Moray, Atty. R. L. Judd, and Mr. E. G. Jensen loaded the equipment into Mr. Jensen's car and drove up Daniels Canyon into the Strawberry Valley. Mr. Jensen gives a very detailed description of the weather, the location, how the apparatus was set up and the subsequent successful demonstration. The speedometer of the car verified that they were fifty-two miles from the closest power line when the test was made.

In July of 1950 Mr. E. G. Jensen verified all of the statements made in his letter of 1926 concerning the Strawberry test and another letter dated October 1928 telling of the before mentioned endurance test.

Now let us consider the fourth objection made in 1925 to 1945 to the Radiant Energy device on the basis that there is no such source of power. The discoveries of recent years make this claim look increasingly out of line. However it might be interesting to examine a letter written by Dr. Moray and witnessed as correct by a prominent Salt Lake attorney who was present during the conversation referred to and from which we quote in part.

The engineer who came here was a Mr. Pearson employed by a Mr. McKee, a high official in the north-west for the Electric Bond and Share of New York. Mr. Davis said Mr. Pearson did not believe in the Radiant Energy Device, not because of any fault he could point out of any evidence of anything being wrong or evidence of fake, but on the grounds that he did not believe there was such an energy to be had. That the device acted contrary to all known electrical laws on the incoming or primary side; but worked standard electrical devices on the output on the secondary side. He proved no standard meter would give a true reading of the incoming current; that a milli-volt meter gave a lesser voltage reading than the reading on the five volt scale or in other words the greater reading was had on the meter requiring 5000 times as much voltage to operate it. He made tests with batteries and other methods to check the meter and proved it to be in perfect operation and correct when used with other currents. Mr. Pearson tested the tubes and said they were OK and that he was satisfied they were all Moray claimed them to be and perhaps even greater worth and value than Moray might realize. In spite of this acknowledgment about the tubes and his OK of them he would not accept the Radiant Energy Device, although the tubes are the heart of the Radiant Energy Device, and Moray pointed out to Mr. Davis, the real invention is in the tubes.

Moray was very much pleased with everything, all and all, and as Moray told Mr. Davis, Mr. Pearson really OK'd the whole thing. Being of the frame of mind that there is no natural source of electrical wave energy to which Moray could tune his device, he would not accept the Radiant Energy Device as lighting the lights, but he accepted the tubes as they operated on this same Radiant Energy. They operated the radio and produced music which he acknowledged the best he had ever heard, the purest and best radio music ever produced. Being so prejudiced against there being such a source of current, it would be impossible for him to accept the device or the demonstration, or with an open mind understand what he was seeing. Yet in that opposed frame of mind he had to acknowledge that the current on the primary side acted as an outlaw current doing things which, from the standpoint of known laws are unreasonable and contrary to electrical law. This he should have reasoned, proved the results he saw were not and could not be obtained from any known source of electrical current or it would have obeyed these laws. His objection that on the primary side it was an outlaw current while on the secondary side it was able to operate known electrical devices, is very satisfactory because this only goes to show that it can be controlled when the proper methods are used.

Saying that the tubes are of great value and OK is the same thing as acknowledgment that the Radiant Energy Device is OK because as Moray said, the tubes are the heart of the Radiant Energy Device.

In 1931, Dr. M. O. Hayes wrote about a Dr. Gunn, a civilian scientist of the Naval Research laboratory who had proved that the earth is generating 200,000,000 amperes of electrical current.

There are hundreds of letters on record of experimental tests made by the Radiant Energy Device written by those who witnessed these tests. These were made for the purpose of establishing the scientific soundess of the theory upon which the device operated. The purpose being to enable the inventor to progress toward the perfecting of his invention by testing the workability and soundness of his various ideas, changes, and additions made to the component parts of the invention.

---

* It will be noted that Dr. Eyring attributes the energy to induction or to Cosmic Rays. Dr. Fletcher to battery action kept alive by energy from the universe and yet Dr. Fletcher pronounced the current high frequency. Please note, battery action is always direct current and never high frequency current so it could not be battery action.

A partial record of these letters was compiled front the original documents by a U. S. government investigator Dr. Felix Frazer and the original was signed by him.

Before we leave the account of demonstration, let us consider just a few more letters concerning them.

On January 10, 1938 Mr. George R. Pyper wrote a letter from which we quote in part:

"To Whom It May Concerti:

I have worked in electricity all my life, was with the Utah Power and Light Company for thirteen years and worked in all departments including sub-stations. I have been with the Kearns Corporation over seventeen years; and leave charge of all the electrical work for the Tribune and Telegram Publishing Company and in the Kearns and Tribune Buildings.

On December 23, 1937, I witnessed a demonstration at Dr. Moray's home at 2484, So. Fifth East of his electrical marvel box. He let me see inside this box and there was a transformer H. F., some of his cold tubes, and some condensers. Dr. Moray connected this box to an aerial and ground wire and lighted about thirty small 120-volt lamps. He then disconnected the ground wire from the outside and two of us held a counter poise antenna attached to glass insulators in the room and when he connected the box to this counter poise antenna I saw the same results.

During this demonstration and while the lamp and appliances were on I shorted the aerial and ground wires. There was no spark, it just turned off the power from the box. I then took hold of both these wires. There was no feeling and they were both cold."

Mr. Pyper continues with a further description of the demonstration and then concludes.

"I am satisfied myself from my experience in electricity that there was no fake of any kind or concealed batteries. Everything was in the open so I could see every operation."

Let us now consider a portion of a letter written in October of 1930 by Mr. W. H. Welling, then Secretary of State of the State of Utah. Mr. Welling described the device and the demonstration and told how he and Mr. Gaxiola, the Mexican Consul tuned in the system as the inventor had done, closed the switch and brought in the full volume of lights. He continues, "In order to make sure that the lights connected with the house circuit were entirely separate from the lights produced through the Radiant Energy machine, repeated test were made of disconnecting the entire house circuit in which event the house meter did not register at all. An electric iron was then connected with the house circuit which of course produced the ordinary reaction in the house meter. After the demonstration had been completed, the inventor raised the two boxes from the work bench on which they were located, showing that there was absolutely no connection by wires from below or from any place, save to the aerial and the ground wire.

At the conclusion of the demonstration, Moray dropped a stone weighing two or three pounds about two feet onto the work bench. The jar caused the lights to flicker a moment and go out. This simple demonstration itself seemed to show conclusively that the power derived was dependent wholly upon the machine and in no way upon the house circuit.

In a report of the Moray Radiant Energy Device, dated April of 1933, Mr. Franklin P. Wood of Wood and Weber, Inc. Engineers later of the U. S. government wrote in part:

"The balance of the first day and a part of the second was spent with Moray at the laboratory and in visiting others connected with the project.

I found that Dr. Moray was extremely open and frank in every way, and gave us every possible opportunity to investigate what we came for. He is, in my opinion, a man of marked ability in the line of research and invention, but needs assistance in developing it into a commercial business venture. I found no evidence of lack of integrity and honesty. He has evidently worked for many years in the investigation, and of course is thoroughly imbued with the nature and possibilities of the particular invention. The investigation convinced me that he has discovered something about the nature of energy which has not been known before, and which is not even now understood by anyone.

Certain theories have been advanced by him, and other scientists, to explain the phenomenon, but all that can be said about it is that certain results have been obtained that indicate unlimited possibilities for development along these lines, in the way of production of energy for all light, heat, and power purposes.

I am thoroughly convinced that the device is not a hoax, or a fake, and that the results are not the results of induction from established power sources or batteries; but I do not pretend to understand the real nature of the source. This is something that in my opinion, can only be determined by future research."

Now let us consider a letter written by Dr. Murray O. Hayes to Mr. W. H. Lovesy on October 24, 1929:

"Dear Mr. Lovesy

Pursuant to my promise to you at our recent discussion, I am writing to make of record the extent of my acquaintance with the construction and operating principles of the Moray device for utilizing cosmic energy.

You are already aware that I have seen many demonstrations of what this mechanism will do, and that I have seen the parts of which it is built. Recently Mr. Moray has shown to me the wiring diagram of the assembly, and I am free to say that I can find no inconsistancies in it, nor anything which does not appear to be logical and sound. While the hook-up appears to be very complicated, when looking at the machine, it is in reality very simple in essence, and based on recognized laws of electricity, when all is explained. There are many features which appear to be incidental, but they are in reality of basic importance.

He has also shown to me and explained the detector which be uses. In this he has applied a fundamental principle of electric circuits which, I believe, would not be noticed unless pointed out by him. This element of his device also, as above mentioned in respect to the circuits, has numerous features which appear incidental but are the heart of the matter and of first importance.

I was recently present when an electrical engineer representing a foreign government was given a demonstration of the energy machine. He at first said that amplification of radio waves accounted for what he saw, although it would be a real achievement to amplify such waves sufficiently to light six one hundred watt lights at one time, and also to heat a flat iron of the standard five hundred seventy five watt type; when he had seen the inside of the device he admitted that it could not have been what he had supposed. He remarked many times "It is very interesting."

This machine has been operated in my presence so many times, under so many different conditions of weather and of season that I am positively convinced that it is what its inventor claims it to be, and that its commercial adapation is feasible. I believe that Mr. Moray has explained all to me without reservation, and I am sure that this is a revolutionary and epoch making invention."

Sincerely yours,
Murray O. Hayes

On an attached sheet dated Oct. 25, 1929 to Mr. Lovesy, Dr. Hayes lists his education record and qualifications as follows: "A. B. with major in physics under Dr. Harvey Fletcher; M. S. including graduate courses in physics and mathematics; Ph.D. in geology. Five years in examining corps, U. S. Patent office. Acting head of department of physics, Brigham Young University, 1922-23, vice Carl F. Eyring, was finishing work for doctorate. To take bar examination soon.

It is very interesting to go through these original letters and records of demonstrations and read the detailed accounts of how thoroughly Moray's Radiant Energy device was demonstrated, examined, and actually taken apart. It is even more interesting to read recent letters by men who saw these early demonstrations. Some of them stand steadfastly by their original statements, recounting with surprising accuracy what they saw. It is very puzzling to read letters from others who saw so much but have had no direct contact for many years. "I have no way of deciding whether or not the invention is genuine, simply because he (Moray) refuses to let anyone see it or build one like it," is the way one observer put it. Others follow along this same line of thought. What could they possibly say if confronted by their two letters written thirty to thirty five years apart. Have they forgotten how much they saw, or has their memory been tricked by steady outside pressures?

The Moray energy equipment has been thoroughly investigated and tested. It has been experimented with under all kinds of physical and weather conditions. It has been tested many miles from all power lines before capable and disinterested electrical men and distinguished scientists from all parts of the world who could find no answer other than that advanced by the discoverer.

The discovery of the natural principles and laws through which energy has been captured and made part of the great discovery has been brought about by years of intensive work with this one please of energy in mind.

It should be just as easy to, accept the fact that a receiving set or electrical device has been constructed for the purpose of receiving the energy, waves from the universe as it is to accept a radio receiving set that receives "audio waves" transformed from electrical impulses as the radio does. One transposes electrical waves to mechanical while the other transposes energy waves into light, heat and power. The facts involved are the same in both the radio receiving set and this device. The radio receiving set receives man transmitted energy waves out of the air and transposes them into "audio waves," the Radiant Energy Device receives oscillations from the universe and transposes them into electrical energy. As in the reception the circuit radio waves, so in the case of the Moray device; the circuit is a tuned arrange ment to respond to the particular wave frequency "oscillations" which it is desired to intercept. A "valve" used to prevent the return of the energy to the outer circuit and force it to go trough the, power application circuit is a part of the invention.

The discovery reached the point where continued experimental demonstration produced no valued results as to proof of the device and each new experiment was becoming a rehashing of well documented facts. Dr. Moray has exhausted all suggested tests, all are on record and all are conclusive. Dr. Moray made so many experimental demonstrations and so many disclosures during the early years of Radiant Encrgy that he found he was putting his discovery into a position of jeopardy under the patent situation and the U. S. patent law of public use, Section 4886. This situation has lead to the present strict attitude Dr. Moray has had to take on demonstration of

the Radiant Energy Device. He must be very careful in the perfection of the Radiant Energy discoveries not to invoke public use. He will not jeopardize those who are interested in Radiant Energy by giving demonstrations which would cause them and him to loose their ownership.

Sometimes it is very difficult for an inventor to secure patent protection, particularly if the discovery is controversial in any respect which Radiant Energy is. Most people think that getting a patent is a straight forward thing but the red tape connected with such a procedure in a new and basic discovery is almost unbelieveable to one not familiar with the process. A patent application can drag on to the point where it is very difficult to finance and an inventor has to put a great deal of trust and responsibility upon the patent attorney handling the case. The complete mis-handling of the original patent application during the days of the Moray Products Company has taken years to straighten out.

To add upon all of the other difficulties involved, the patent office contested many of the points of the Radiant Energy application even though Dr. Murray O. Hayes wrote to Dr. Moray on August 7, 1937 from Washington, D.C. that he had examined every patent issued on devices for the reception of radiant energy. Most were obviously dissimilar and not a one shows even the remotest resemblance to the Radiant Energy machine. He also reported there were no patents like the oscillator tubes. Here are but two of the objections of the patent office. "Claims rejected as being drawn to an apparently inoperative device. It is thought it will not produce a sensible current because the cathodes are not heated to a point where they will emit an appreciable number of electrons" (such an objection is now obsolete.) And still another: "No natural source of electricity wave energy is known to the examiner and proof of the existence of such is requested." (This statement too is now obsolete.)

Another problem was brought to light in a letter from a Mr. John Y. Smith to Dr. Murray Hayes. We quote: "One of the parties interested formerly held a confidential position with the General Electric Co. and later with the Westinghouse Company. He nearly took my breath (Mr. Smith's) when I told him regarding Moray's fears that the proposition might be stolen from the patent office. He said it will just as sure as you sent it there. That the U. S. patent office is "honey combed" with employes of the General Electric, General Motors, and other large companies. *That he had helped* steal valuable data from the patent office at the request of the above companies. He said you were crazy if you sent a description of the device to Washington before you had plenty of money to follow through and influence enough to prevent a theft. So I confess after hearing him that I was in error scoffing at the fears of Moray."

In a court test, whether the use of an invention is "public use" which will act as a bar to securing a valid patent, or whether a particular use of the invention is merely an "experimental use" is a question of fact to be determined in each case by each individual judge. It is difficult to draw a sharp line between public and experimental uses. No one can venture a guess as to the attitude the courts will take on the question of public use. Dr. Moray will not throw Radiant Energy on the mercy of the courts. Ford Harris Jr. of the Los Angeles firm of Harris, Keith, Foster, and Harris cites a present trend toward stricter and narrower interpretation of patent laws. It seems reasonably certain that they will not become any more liberal in interpretation during the next few years.

It would be impossible to review in a paper such as this, all of the legal aspects and fine points which determine public usage of an invention. Instead let us consider just two opinions. Patent attorney Alwine of Washington, D.C. wrote: "Up to the time, and prior to the time you actually have on file all U. S. and foreign patent applications which it is desired to file, and sufficient technical data to complete patent applications to obtain full coverage, any demonstrations which are not experimental could endanger and cause you to lose all your patent rights to your invention — see Sec. 4886 U. S. patent law."

In 1939 when Dr. Moray was connected with the R. E. A., the Attorney General of the U. S. fully supported his views on demonstrations and the patent law. Dr. Moray must take a firm stand for the protection of future investors. There can be no more demonstrations until Radiant Energy is in the patent office with an allowable application.

Some scientific men have vigorously protested that Dr. Moray should make full disclosures of the principles connected with Radiant Energy to scientific men, publish full disclosures, and allow others to build full working models. Ordinarily in the case of new scientific theories this is the procedure. In these cases the theory often came years before the development of a practical application. But here we have a unique situation. We have an application developed along with the theory. We have an application which must be kept under responsible control. In the words of Franklin P. Wood, a United States R. E. A. Engineer, "If it is all he (Moray) thinks it is, (it) will more profoundly affect the human race than any other discovery in previous history."

Two of the more sensational efforts to put Radiant Energy before the public have been with a company known as the Moray Products Co., which was formed in 1931, and an association with the Rural Electrification Administration 1939-1941.

In 1931 the Moray Products Company was formed in Nevada as a stock company to finance the development of the Moray inventions. D. V. Farnsworth was President, C. Fred Schade was Vice-president, and Murray O. Hayes was Secretary treasurer. These men willfully and fraudulently deceived the court in stating their position

and power in the company. Dr. Moray gave these men his trust and confidence, particularly Dr. Murray O. Hayes. As had been seen in a previous letter, Dr. Hayes admitted that he had Moray's confidence and full disclosures. It was not long after the company was formed that Dr. Moray discovered that it was being used to further the dubious purposes of Messrs. Schade, Farnsworth, and Hayes. In 1932 Moray instigated court action and tried to save the company. In the words of Mr. John Belford, a Nevada attorney connected with the case, "The whole thing was an example of shiltiness and bad faith on the part of officials of the company."

There have been men who worked their way into Moray's confidence. Mr. Murray Hayes was one of these who defrauded Moray by missuse of a company's finances which had been organized to forward Moray's invention. The Public Auditor's report, in our files, on these dealings, states in part: "With regard to the item of $2,056.00, Murray O. Hayes took check #17 for $56.00, check #30 for $100.00 and =1,900.00 cash. There is on file a statement signed by Mr. Hayes listing expenditures of $1,867,80 but no supporting invoices to cover the expenditures. There is a minute order setting aside $2000.00 for patent expenses." The record shows all that can be accounted for in patent expenditures is $110.80. Should I go into detail this picture would become even worse. Remember, Moray is the one who brought these matters to Court action in an effort to save the company.

Auditor's report further states "Of the total expenditures on company account of cash and checks amounting to $7,521.20, we could definitely support by cancelled check $3,272.50. For the $3000.00 check issued Aug. 21, 1931, there is no statement on file as to how this money was spent." We could go on and on, but Moray at last could take it no longer and he took the matter to court. Murray O. Hayes and others were removed by Court Action but the company had had it's funds depleted. However, Moray worked for five years for nothing trying to save the company but the damage done was too great. The Judgment and Decree read: "It is hereby Ordered, Adjudged and Decreed That D. V. Farnsworth, C. Fred Schade and Murray O. Hayes be and they are hereby removed as directors," etc. And further "It is further ordered, adjudged and decreed That petitioner shall have and recover his cost of suit." Moray did not get one this, these men had depleted the treasury. Remember the date of this Court order, June 11, 1932.

"Dear Sir:

This will acknowledge receipt of your letter of June 9th, and also your letter of June 28th which Judge Brown answered. I have just gotten back from Chicago and went over to see Rowsen today.

As stated to you in my letter of June 9th, Rowsen informed me that a meeting of the directors had been held and that the number of directors had been increased to seven. Since this was done while these men were directors, I saw no way of attacking its validity. However, he today informed me that what he said was that they had been considering increasing the board. This is not at all my understanding of our conversation, and if the facts are as he states them I can see no reason why I should have agreed with him to permit them representation on the new board. As Judge Brown wrote you, E. H. Hursh has been appointed a director.

In view of our understanding, it appears to me that the only thing Rowsen can decently do is to resign, but this he refuses to do. He asked me to delay any action until he could take up the matter with Farnsworth, Schade and Hayes, two of whom are in the east. I informed him that I intended to institute proceedings immediately, and if he could arrange matters in the meantime all well and good. I am exceedingly chagrined that matters have taken the course which they have, and am determined to force the matter to as speedy a conclusion as possible.

I am preparing and will file a motion to modify the decree hereinbefore entered, removing Hursh and substituting one of Morays nomineers. The motion will be based on the ground of fraud and deceit, reciting the fact that Farnsworth, Schade, Hayes and Hursh at all times knew that there were four directors instead of three, and wilfully and fraudulently deceived the court. It is my personal opinion that Judge Curler will not look kindly upon these men playing ducks and drakes with his court.

I was sorry not to see you in Salt Lake, but was in a hurry both going and coming.

With kind personal regards, I remain"

Very truly your,
(Signed) John S. Belford

Some years age Moray saw and handled one such incomplete set of unissued patent application papers in the hands of Lionel Cornwell which were let out to these who had no right to have such papers by the above mentioned Farnsworth and Hayes. This was a breach of the ethical code all patent attorneys observe. (Dr. Hayes was the patent attorney). Details, however, were missing in these papers by art oversight no doubt, for as Dr. Hayes, before he made patent application, one time wrote "He, (Moray) has also shown to me and explained the detector which he uses. In this he has applied a fundamental principle of electricity which I believe would not be noticed unless pointed out by him. This element of his device, also as above mentioned in respect to the circuits, has numerous features which appear incidental but are the heart of the matter and of first importance."

So the fact these papers got out of the application Dr. Hayes had prepared, did not do R. E. too much harm but the intent to harm is evident by such actions.

Now keeping the date June 11, 1932 still in mind, after these men were removed by Court order, we read from a sworn statement made by Air. Farnsworth and Dr. Hayes before the United States Patent Office:

"Wherefore your Petitioner (Murray O. Hayes and D. V. Farnsworth (signing this statement under oath) prays that the said Moray be excluded from access to said application; that he be given no information concerning it and that no action taken in respect thereto by said T. H. Moray be recognized or sanctioned by the patent office." This sworn statement made to the U. S. Patent Office, is slated "18th day of July, 1932." Made under oath it is signed in behalf of the Moray Product Co. by D. V. Farnsworth as its president and Murray O. Hayes as its secretary. Remember they were removed by Court Order dated June 11, 1932 and so recorded. Is this not perjury when they had been removed by Court Order .June 11, 1932? Naturally when the, patent office learned the facts, this wrong was righted and Moray had his rights restored.

Again we read from a letter written by Murray O. Hayes under date of March 21, 1932, from Washington, D.C., The Patent situation on the Moray inventions is very good." "' Do not tell Moray what I have. told you, as we are trying to get hint to do certain things but he probably will not if he learns that things are going well here."

Reading again from a letter dated July 15, 1931, signed by Dr. Murray O. Hayes "There is a man working where I do (U. S. Navy Patent Division) who says he makes more from his private patent practice than his salary (from the Navy.) "He does it through an associate, but we intend to have an associate anyhow, so that is OK by us ..... I will be right on the job looking after our stuff." Another quote from a Hayes letter "I spent most of a day searching on the radiant energy device and the oscillation tubes but did not find anything even remotely resembling either one." "Keep me posted on developments there and I will do the same from this end for you."'

Murray O. Hayes testified on the witness stand in Reno, Nevada, that he and those associated with him had endeavored to put together a machine described by the patent papers and had failed. A public auditor's report showed a clear misuse of company finances. There were discrepancies on money set aside for certain purposes and the amount used. The expenditures were listed but not supporting invoices to cover them. For a $3,000.00 check issued Aug. 21, 1931, there was no statement on file as to how the money was spent. The story gets worse with the telling — meetings of stockholders were not called as in accord with Nevada law, and stock certificates were not properly issued.

On June 11, 1932 Schade, Farnsworth, and Hayes were removed as directors of the company by court order. It was further decreed that Dr. Moray should recover his cost of suit, but the treasury was depleted.

EDITOR'S FOOTNOTE —

It is a source of amazement to the editors of this article that the principles of the Moray Products Co. were allowed to walk away. The three (Farnsworth, Schade, and Hayes) with their partner in what they were doing, Mr. Harsh seemed to he on the outside of the Law. Yet as far as we can tell none were ever charged by either the courts or stockholders of the company. On top of this Hayes was allowed to practice patent law after it was proven in court that he had used the confidences of Dr. Moray and given this information to others. It was also ignored that these three gentlemen purged themself in the U. S. patent office and Hayes was still allowed to practice patent law.

When one knows Dr. Moray as I know him you can understand why. even if it is not good business on today's standards; he wishes no one evil and after going in debt to save the Moray Product Co. he himself would not sign the charges. The cost of the fight was borne by him alone and he was sick of the sound of it by the time it was done.

The fact that Moray was not responsible is a matter of all records, still he tried for another five years to save the company, but the damage was too great.

In July of 1932, more than a month after having been removed from office by court order, D. V. Farnsworth and Dr. Murray O. Hayes, in a sworn affidavit to the U. S. patent office as the legal officers of the Moray Products Company, tried to have Moray excluded from all records pertaining to his own invention. The patent office reversed this exclusion when legal proof was furnished as to the true situation.

Fortunately Dr. Hayes must have missed some of these details which had been pointed out to him, as he and his associates failed in their purpose to reproduce Radiant Energy.

Here were men who deliberately misrepresented their true purpose until they thought they could take over completely. No wonder Dr. Moray is cautious about letting himself and Radiant Energy be put in a position of jeopardy again.

When all legal action turned against these men, their attacks against Dr. Moray became of a personal nature. Perhaps we are not as far from the jungle as we would like to think.

Now let us consider the Rural Electrification Administration and its dealings with Dr. Moray. At the invitation of the government, in the summer of 1938, Dr. Moray made a trip to Washington, D.C. Another trip was made early in the year of 1939. We quote from a letter written by Dr. Moray to Mr. John M. Carmody, then administrator for the R. E. A. in Washington, dated March 17, 1939. Dear Mr. Carmody: "I wish to express my deep appreciation of the many courtesies shown to me by you and members of your staff during my recent trip to Washington.

I have now reported to my western associates, and have consulted with them concerning the proposal set forth in your letter dated Februry 25, as clarified by your letter dated March 3.

They are all extremely gratified by the interest which you have shown, and by the manifestation of your desire to help in the great work of preparing radiant energy for actual distribution to the people.

Nevertheless, as they analyze your proposal, it appears to accomplish little more than this: It gives me a few months work in merely repeating what I have already done before, and it gives me the opportunity to submit my radiant energy device to an exhaustive test by your staff but not the funds to do so, and it gives me the assistance of your recommendation to the Department of Justice that all necessary patents be issued.

My associates are fearful that your recommendation in regard to the patent would still leave much work to be done, and much money to be spent, which we do not have before the patent situation is in proper order. Also, they are not yet fully satisfied that the contemplated demonstration would not constitute a "public use," and that your whole proposal would not constitute a "sale" within the meaning of the present law. They are not yet prepared to take the step of abandoning our rights to patent protection, and the situation is sufficienly complex that they hesitate to bind ourselves to make a "public use" or "sale" within the immediate future.

In other words, although they greatly appreciate the helpful spirit shown by your proposal, they are fearful that it still leaves the great bulk of our problems unsolved, and that our acceptance of the proposal at this time might seriously embarrass some course of action which would give promise of putting us much further along the way."

However, after many more assurances of good faith and assistance in technical advice and help from the justice department in securing proper patent coverage, Dr. Moray decided to go along with the R. E. A. in the hope that here was a big enough source to help give radiant energy to the world in a safe and proper manner. The agreement with the R. E. A. was along the lines that they would furnish legal help in securing a proper

patent and technical help in the form of advisors and the loan of scientific instruments, these instruments to be returned to the government if the agreement should come to an end. Dr. Moray was put on the payroll of the R. E. A. as a consulting engineer at $25.00 per diem. In return Dr. Moray was to make all possible efforts to bring radiant energy to a commercial level. Other financial backing was also promised by those who contacted the R. E. A. This never materialized.

Dr. Moray built a new twenty room laboratory with a loan from private parties who interested the R. E. A. which was all repaid with interest. Subsequently many of the bills incurred in the building of the laboratory were unpaid and it fell upon Dr. Moray to meet them. As stated after the agreement with R. E. A. came to an end because certain parties among them insisted Moray turn matters over to include Russia, Dr. Moray paid for the laboratory out of his own resources. It took until 1949 for Moray to rid himself of the debt that this episode cost him. Not one red cent of R. E. A. money went into building the Moray Laboratory.

It is not even suggested that Moray's differences of political views extended to all the R. E. A. officials in Washington as a whole or to. the administrators. however, it was not long before Dr. Moray began to have doubts about some of his government associates. We quote from an account given by Dr. Moray. As early as February 1939 "I began to fear, from personal contact, that Washington had more radicals in it than I had the slightest idea of and it worried me. I expressed my fears to some of my associates in Salt Lake City upon my return from Washington in February 1939 and later so informed a Dr. Frazer whom the R. E. A. had called in as a scientific expert to consult with me on my work and as my body guard.

In answer to my letter expressing my fears that I lead gotten Radiant Energy mixed tip with liberals and radicals which I could not go along with, Dr. Frazer wrote me on March 27, 1939, "The only thing J. M. should not say or write is anything in connection with a threat. When he does that he is very wrong and should be told so, and in fact I have told him so upon many occasions. I realize that so-called "radicals" are feared out west, but the term is not feared here in the east except by a few reactionaries." So it was I seemed to be surrounded with radicals, liberals and what have you and their talks of "their daring plans" and "this man is one of us and that man is not."

Again we quote from Dr. Moray's notes. "Dr. Frazer came to Salt Lake City and began investigatitig Moray and Radiant Energy. The following copied from my notes made in April and May 1939: In April, 1939, a department of the United States Government on its own initiative, sent a gentleman to Salt Lake City who had been introduced to me as Dr. Frazer. I was told he was an electricl expert. This gentleman was in the Moray Laboratory for about a total of two months spending many hours each day making tests and taking pictures of the Moray Radiant Energy discoveries, especially the Radiant Energy powered radio, using the Moray germanium fission valve and gathering information for written reports to his superiors in Washington, D.C. After about two weeks he said it was necessary he go to Los Angeles, Calif. and it was their desire that I also go to California."

In California further conferences were held; Moray returned to Utah in about a week and Dr. Frazer came back in May of 1939 when he again continued tests and experiments. After weeks of these tests he said "I have tested and tested until I am fully satisfied and feel there are no tests left to make (he was also getting advice and suggestions as to tests from two scientists at Columbia University in New York). He also stated as long as I lave the device I will want to run tests, so I wish you would destroy the damn thing so I cannot ask for more tests."

"Dr. Frazer returned to California and I was again requested to follow him. All these trips were paid for by the U. S. government. While in California I mentioned the "Jensen" test where the R. E. current had been passed through a sheet of 1/4" plate glass and the device operated with no hinderance to the flow of current even when passed through the plate glass.

Dr. Frazer said if he could use the "glass" test that would be all anyone in the government could ever ask for. It was arranged that he make the glass test. The only requirement I made was that the government should furnish the glass for these tests so it could not be said I had "doctored" the glass. Twelve sheets of window glass were used and the current passed through this glass and the device operated as if the glass had not been in series in the circuit. Dr. Frazer said "that is enough, we will never ask for another test." He gave me several copies of pictures he had taken of the Radiant Energy Device used to power the R. E. radio. Dr. Frazer grabbed a hammer and smashed the R. E. device, before I could stop him saying "Now I cannot ask for any more tests."

At one time, just before Dr. Frazer left Salt Lake to go to Los Angeles, after swearing him to secrecy I showed my confidence in him by disclosing details of three of the Radiant Energy tubes to such an extent I permitted him to make detailed drawings of these tubes for patent purposes. As I wrote then "I think that speaks for itself as I have only permitted one other scientific man to ever get that far into details of the construction during my entire work with this research."

In April of 1940 Dr. Moray wrote: "One former high government official in writing me, trying to convert us to doing what Felix, Woods, and others from the REA wanted us to do — disregard all patent protection and patent laws, said "Two years ago I made the statement that Democracy had probably less than five years to run

in Europe and that the process of disintegration there was probably not more than five years further advanced than here."

In other words America would, in five years or so, be controlled by their so called "liberals" (to me communists) : therefore I should have no hope of my, work succeeding except with them. I need put no confidence in the protection of the laws of the country as they have been.

I was told I lead better do as I was told so I could stay in the government employ because in a little while everyone would be working for the government.

They also brought representatives from Russia to talk with me and turned certain papers I had loaned the REA over to these men.

I later wrote: "I wish I could have someone come here from our government who believes in the strength of our laws, who believes that the government that Washington and Lincoln stood for is not going to perish front the earth; someone who believes in the continued strength and protection of our United States laws, including the patent laws, and with faith in the preservation of the principles of the spirit of '76; someone who will not have a pet hobby of, to quote, "Our daring plan" and who does not live for "the expected change in our national structure."

On Tuesday morning, December 2, 1941, on page 2 of tile Salt Lake Tribune, one play read comments made by Rep. Thomas D. Whiter on the REA that made me feel I had made no mistakes with tile REA. Washington Dec. 1. (AP) Representative Thomas D. Winter (R) Kansas, Monday demanded an investigation of tile rural electrification administration, which he asserted was "obstructing national defense as surely as a paid saboteur."

"The true friends of farce electrification," he said in the house, "may as well face that fact, may as well realize, that this federal agency has fallen into the hands of a gang of communists, fellow travelers and political second story workers who do not hesitate to sabotage the national defense program in the interests of preservation of their political theories and perpetuation of their payroll."

Again we quote Dr. Moray. "I was constantly being sent to California by the REA for many reasons including the investigation of spiritual seances, the REA paying for these trips. With all there was to do, including recovering from a serious bullet wound, (Dr. Moray was shot while in his laboratory on March 2, 1940) and with all their trying to convert me to being "one of them," together with the building of a new 20 room laboratory (paid for by Moray not the REA), there was little time in these short months to accomplish what one would like to accomplish in the work with R. E. Then too, how far would any scientific research of this magnitude be getting on $25.00 per day plus the loan of a few scientific instruments."

After Moray was shot, things went from bad to worse. Dr. Moray would not be threatened into giving Radiant Energy to men whose motives he had every reason to question.

The association was ended in February of 1941 when the scientific equipment loaned to Dr. Moray was returned to the government.

On October 16, 1956 Dr. Robert Craig, a former deputy administrator for the REA, who did not follow those referred to by Rep. Winter and left the REA, wrote that the development of Radiant Energy has been a slow, laborious task, one of the greatest difficulties being that Moray has stood all alone. People who should have been interested were more concerned with immediate returns than with the important long range returns. Naturally during such a long period, many questions arise as to protection rights, interests, etc.

Again on Nov. 14th, 1959 Dr. Craig wrote, and we quote, "Permit me to say that I have known Dr. Moray now for about 20 years and have observed him single-handedly trying to get acceptance of some of his ideas and discoveries, particularly in the area of "radiant energy." Many of the now-accepted areas in atomic and nuclear physics were outlined by Dr. Moray as early as the middle 30's.

At one time or another I have endeavored to help him by bringing his work to the attention of people in the government without any great success. *Of course, no longer do they dispute the basis of his work.* However, to bring pure research to successful commercial application involves time and money, particularly the latter. While we can spend millions for missiles that are abortive and no one seems to mind, a few hundred thousand dollars available to this man would obviate, I believe, much of the need for missiles. Of course, this is my own idea in the matter but I do believe a helping hand now to Dr. Moray could do more towards solving world tension than the mere building of bigger and bigger armaments to protect us from the "have-nots."

"I can assure you from my personal knowledge of Dr. Moray that here is a unique mind and an ability which would be worthwhile developing."

There are hundreds of letters of record of experimental tests made of the Radiant Energy device written by those who witnessed these tests. These were made for the sole purpose to establish the scientific soundness of the theory upon which the device operates. The purpose being to enable the inventor to progress towards the perfecting of his invention by testing the workability and soundness of his various ideas, changes and additions made to the component parts of the invention.

In the following pages are a few of these letters taken at random and not edited along with a few photographs of the experiments.

Washington, D.C.
October 16, 1956

Dear Sir:

In reference to your letter of October 12 regarding Dr. Henry T. Moray of Salt Lake City, Utah, I would like to say that I have known Dr. Moray now for about sixteen years. During that time he has spent his own money upon research in the development of radiant energy and various other high frequency projects.

One of the difficulties that Dr. Moray has faced that I know of to my own knowledge is inadequate financing to bring to complete fruition some of his discoveries. Unfortunately, people who should be interested have seemed to be more concerned with the returns they would immediately get than the development of discoveries which would be of immense benefit to all concerned and upon their logical development repay many times over the investment needed to bring these discoveries from the laboratory stage to commercial application.

Because of the difficulties of the past in finding wholehearted contribution. Dr. Moray has stood all alone, earning from other researches and from laboratory job work sufficient funds to provide for his needs and advance the major program of his interest. Naturally this is a slow and laborious task and of course many questions arise during this period as to protection of rights, interests, etc. I know this, that generous support without strings attached which would be prohibitive would have the result of real achievement in the field of high frequency.

Sincerely yours,
ROBERT B. CRAIG

TO WHOM IT MAY CONCERN:

On March 16, 1929, I witnessed a demonstration of the apparatus invented by Dr. T. H. Moray by which he produces electrical energy. A report of that visit has already -been made.

On December 13, 1930, I witnessed a second demonstration of the same set; only slight changes in the apparatus were noted although a great improvement was made in the performance. The condensers, coils and other parts noted at the previous test were now in one small box about 10"x10"x30". To start the set operating instead of stroking with the magnet, as formerly, now, two discs — one hard rubber, the other of iron — were rubbed together and produced an electric charge. The electric charge, on being discharged onto the act started the set operating and once it is operating, it will continue to charge itself.

The lamp rack which formerly held 6 100-watt lamps is now displaced by a larger rack which holds 32 50-watt lamps, 3 100-watt lamps and a receptacle to receive an extension plug and cord. On the other end of this cord was a 575-watt electric iron. During this test. all of the electric lamps were lighted at one time and were more brilliant than other lights in the room which were supplied from the house circuit. When the lights were oil bright — the electric iron was plugged in. There was no noticeable blinking or sudden diminuation of lights as is usual in house lighting systems when an electric iron was on. The lights were as bright is before the iron was cut in. The iron heated quite rapidly slid in about 2 1/2 minutestes was hot enough to be used for ironing.

I made a thorough and careful examination of the entire system to see if it were possible for the electricity to have been introduced on the system from some other source. Every part of the system was inspected — the antenna, the lead-in wire, the switch; the switch was removed and examined; the leads from the switch to the box containing the condensers and coils; the box itself was lifted and examined; the lead-, from the box to the, lamp rack; the lamp rack was lifted and examined and the ground wire from the switch to the water pipe on which it was grounded; not an inch of space was overlooked where it would be possible. to introduce any metal that would carry the power and I am prepared to say that no such connection existed from which power could be had from any other system.

A crystal radio set was cut in on the lead-in wire from the antenna on one side and to the ground wire on the other side and perfect reception was had. If there had been power from other sources on the antenna or lead-in, by connecting the radio set to the ground wire, reception would not have been possible but a loud. humming sound would be produced. This was demonstrated by connecting the radio set to the house lighting system. When the system was working, the lights were burning bright. The terminal attached to the antenna was disconnected. A vigorous arcing ocurred and the sparks jumped over all air gap as much as six inches. This would indicate that the power was high voltage and the nature of the sparks indicated a high frequency.

I do not understand the principle by which Dr. Moray produces the electric energy. The condensers and the coils of wire are common. The two cylinders called "oscillators" and the small conical shell called the "detector" are the only filings not commonly known, but the system works. It produces electric power in abundance and does all that Dr. Moray claims for it.

I do not own any stock or interest in the company that is promoting this enterprice and my only purpose in issuing this statement is in the interest of the advancement of science. I consider this development a great advance in the science of producing electrical energy.

Very truly yours,

In witness to the above I hereunto sign my name.

THOMAS J. YATES, E.E., ME.

STATE OF UTAH
COUNTY OF SALT LAKE

Thos. J. Yates, being first duly sworn, deposes and says: That he has read the foregoing statement and acknowledges that he wrote and signed the same as above set up.

(Seal)

THOMAS J. YATES
Subscribed and sworn to before me this 18th day of December 1930 R. J. Chipman.
Notary Public — residing at Salt Lake City, Utah.

My commission expires May 7, 1934.

Washington, D.C.
November 14, 1958

Dear Mr. Anderson:

Your letter with reference to Dr. T. Henry Moray came during my absence from the city so I have been delayed in answering it.

Permit me to say that I have known Dr. Moray now for about 20 years and have observed him single-handedly trying to get acceptance of some of his ideas and discoveries, particularly in the area of "radiant energy." Many of the now-accepted areas in atomic and nuclear physics were outlined by Dr. Moray as early as the middle 30's.

At one time or another I have endeavored to help him by bringing his work to the attention of people in the Government but without any great success. *Of course, no longer do they dispute the* basis *of his work. H*owever, to bring pure research to successful commercial application involves time and money, particularly the latter. While we can spend millions for missiles that are abortive and no one seems to mind, a few hundred thousand dollars available to this man would obviate, I believe, much of the need for missiles. Of course, this is my own idea in the matter but I do believe a helping hand now to Dr. Moray could do more towards solving world tension than the mere building of bigger and bigger armaments to protect us from the "have-nots."

I can assure you from my personal knowledge of Dr. Moray that here is a unique mind and an ability which would be worthwhile developing.

Sincerely,
ROBERT B. CRAIG;

Dr. Craig was formerly a high U. S. Gov. Official, is Vice President of a large International Company and other companies.

(C o p y)

THE STATE OF UTAH
OFFICE OF THE SECRETARY OF STATE
SALT LAKE CITY,
October 8, 1930

M. H. WELLING
Secretary of State
GEO. A. SEAMAN
Deputy

TO WHOM IT MAY CONCERN:

I witnessed a demonstration of the Moray Radiant Energy machine, October 5, 1930. There were present Mr. Gaxiola, Mexican Consul General to the United States, J. R. Murdock, Mr. Buehner, Dr. M. O. Hayes, besides Dr. Moray and C. F. Schade and D. V. Farnsworth.

The essential parts of the machine were contained in two boxes, one directly on top of the other, each box about 14" wide and 4" by 24" long. On the top of the upper box was an electric switch on an insulating base. There was also attached to the upper box two soft iron poles wound with wire which in turn was covered with ordinary friction tape. Ten standard electric light globes, each of 100 watts, were connected to the interior of these boxes. A heavy copper wire led from one of the boxes to an outside aerial, a second similar wire connected the boxes with a water pipe going into the ground. Several members of the party took hold of both wires at the same time which showed there was no current in them before the demonstration began. Dr. Moray also put the terminals of the connections which led into the boxes in his mouth to prove that there was no current in the boxes.

After having . connected these terminals with the outside aerial and with the ground wire, Moray then took a small magnet and stroked the soft iron pole pieces above mentioned, the windings of which were connected to the interior of the boxes. He explained that the stroking was necessary to set the device into an "electrical oscillation," and that when it was "oscillating" in tune with what he called "radiant energy" it would continue so to do and bring in this energy in a usable form when the switch was closed. After this stroking had continued for a few seconds less than five minutes, Moray closed the switch and the lights came on very brilliant. The lights gave off very much more heat than the ordinary electric lights of similar voltage attached to the house circuits which with the added brilliance clearly: indicated that more than the usual voltage was going through these 100-watt lamps. This was clearly shown in another manner when the inventor took out one light and attached to this socket an ordinary Hotpoint electric flatiron of 575 watt capacity. There was no dimming of the nine remaining lights. The iron was heated with great rapidity and when in operation with the lights added was drawing from this machine 1475 watts of electrical energy. I am told that this is practically two horse power. After watching the demonstration for some thirty minutes, Moray disconnected the lead-in wire. The lights of course immediately went out and when connected they did not immediately return. Later on, both myself and Air. Gaxiola, the Mexican Consul tuned in the system as the inventor had done, closed the switch and brought in the full volume of lights.

In order to make sure that the lights connected with the house circuit were entirely separate from the lights produced through the radiant energy machine, repeated tests were made of disconnecting the house circuit in which event the house meter did not register at all. The iron was then connected with the house circuit which of course produced the ordinary reaction in the house meter. After the demonstration had been completed, the inventor raised the two boxes from the work bench on which they were located, showing that there was absolutely no connection by wires from below or from any place, save to the aerial and the ground wire.

At the conclusion of the demonstration, Moray dropped a stone weighing two or three pounds about two feet onto the work bench. The jar caused the light to flicker a moment and go out. Moray explained to us: "This was because the detector is not perfect, and one part slips when so heavily jarred, but this is all that remains to be done to make the device a practical commercial product. This simple demonstration itself seemed to show conclusively that the power derived was dependent wholly upon the machine and in no way upon the house circuit.

Before witnessing the demonstration I had read affidavits certifying to similar tests made in Emigration Canyon seven miles from a power line, and in Strawberry Valley, 26 miles from any power line, when the machine operated with the same degree of success that it did in Mr. Moray's laboratory.

The inventor explained that this astonishing exhibition when understood was a matter of ordinary physics and predicted that there could be developed from the energy all about us power and light and heat sufficient to take care of many times the present known needs of man.

Respectfully
M. H. WELLING

LETTER FROM DR. POLLY

Baltimore, Md.
November 8, 1936

TO WHOM IT MAY CONCERN:

On the occasion of a recent visit to Salt Lake City (Sept. 1936) I arranged, because of my own interest in various reports I had heard, to visit with Mr. T. H. Moray and discuss with him some of his experiments.

I was happy to find his laboratory well equipped with a number of costly electrical measuring instruments, and soon became convinced that he understood their uses.

His radiant energy device, as he calls it, seems to involve no mysterious circuit, altho the electrical valve upon which it depends is novel. The apparatus does not depend on any battery or other source of electricity than the antenna. In other words the power obtained is not derived thru the medium of a secondary power source — no feeble current is built up as in a radio set by vacuum tube amplifiers. However, no violation of the laws of thermodynamics is implied.

I saw no evidence that he was perpetrating a hoax and I gladly write this in appreciation for the time he spent with me.

O. L. POLLY

Dr. Polly receved his degree PhD. in Physics from Baltimore, Md.

Kansas City. Mo.
Dec. 21, 1931 (3231 Broadway)

Mr. T. H. Moray
2481 Smith Fifth East
Salt Lake City, Utah.

Dear Sir:

l have received many days ago your pamphlets related to your wonderful invention which I personally inspectedd in your home last year in the company of Hon. Milton H. Welling, Secretary of State• there.

I am still interested in the future of this invention and its industrialization, arid would like to know if you will

Blanked out, contains personal data.

Yours very sincerely,

C. W. GAXIOLA

Mexican Consul General of the United States

Since the R. E. A. episode, Dr. Moray has turned his energies to discoveries in many other fields in order to obtain funds but always with the purpose of pushing R. E. to the fullest extent of his resources and time.

4 oldal kimaradt

ATTACHED RESUME

Reference is made to the following publications:

1. — Whose Who in Engineering, years 1923-1924-25
2. — History of Utah, Published in 1932 by The American Historical Society, Inc., Chicago and New York
3. — Famous Utahns
4. — Utah's Distinguished Personalities

In 1905 began experiments with then so-called wireless and other electrical devices

1907 to the present time have experimented with alternating currents of High Potential and High Frequency and with rays beyond the light rays.

1922 discontinued commercial electrical engineering and turned wholly to scientific research.

1926 research was started with radiations from radioactive substances especially with high grade colnotite from southeastern Utah and Colorado, branching into the study of artificial radio activity and the artificial transformation of the nuclei of a number of elements and fission reactions. Research in the study of rays from 1.000 Angstroms to those of 10-5 Angstrom Units and beyond has been going on since 1939. This research has extended into the disintegration of the nuclei using our own special constructed tubes to cause bombardment by swift moving alpha particles and neutron bombardments to accomplish artificial transformations as stated above.

In this research we have found and AEC assay reports show "The sample appears to be fused uranium dioxide." The samples assayed as high as 85 per cent U^3O^8 equivalent. One material, the report stated, might be an artificial product.

This is a breeding or ageing process ill which none of the waste material is removed.

CHAPTER SIX

TO SUMMARIZE

QUESTION: Is there any question about the PRACTICAL features resulting from further research and development, and about the FINAL OUTCOME of the Project?

HOW do we KNOW and HOW can we be CONVINCED that further development will ACTUALLY PRODUCE the conditions, as well as the PRACTICAL and sufficiently ECONOMICAL "Radiant - Energy" Units, devices and methods, leading to COMMERCIAL application of "RADIANT ENERGY?"

Is it a matter of SPECULATION or has Research and Development during the last 35 years, produced SUFFICIENTLY SOUND mid REALISTIC FOUNDATIONS which would ACTUALLY GUARANTEE the SUCCESSFUL OUTCOME?

ANSWER: The "FIRST STAGE" in almost any undertaking of consequence is in "BELIEVING" that a certain thing can be accomplished. All major and minor developments in all phases of progress, throughout the ages, have proven this fundamental truth. CREATIVE IMAGINATION, combined with the power of "BELIEVING," were responsible for even the most primitive discoveries and applications of common-place "FREE-TRANSFER" of energy such as, the action of the wheel, the lever and fulcrum, and the pulley.

Advancing tediously and gradually, always following the NATURAL TENDENCY of EVOLUTIONARY PROCESSES, which no-one and no power can retard, hinder or hamper with impunity, a few bold pioneers devised means and methods of utilizing the NATURAL POWER inherent in wood, coal and oil, to be followed by the process of harnessing electricity in its crudest form.

The application of "ALTERNATING CURRENT" which was widely opposed for wider and more economical use, succeeded the limited nature of "DIRECT CURRENT." The telephone was held back 60 years and radio 157 years after their discovery. With Radiant Energy we are continuing to advance, no matter what hinderance. We are gradually approaching the seemingly "LAST FRONTIER" in the recognition and application of an UNLIMITED UNIVERSAL POWER, termed, for lack of a better description.

RADIANT ENERGY:

"Nikola Tesla," the electrical wizard and discoverer of "Alternating-Current," said in 1904 (and reiterated the assertion in 1933 on his 77th birthday)

"Ere many generations pass, our machinery will be driven by *power obtainable at any point in the Uni*verse. Is this energy static or *KINETIC?* If static, our hopes are in vain; if KINETIC, and this we *KNOW FOR CERTAIN*, then it is a mere question of time when *man will succeed in attaching his machinery to the very WHEEL-WORK of NATURE."*

Incidentally, Nikola Tesla was NOT referring to socalled "Atomic-Energy" or nuclear energy, but to the energy which is continually bombarding the earth from outer space.

SERIOUS, SANE and SYSTEMATIC Research, Development and EXPERIMENTATION, coupled with a high degree of perseverance, and willingness to make almost super-human sacrifices, will sooner or later lead to *"DEFINITE KNOWLEDGE"* and CONCRETE DEMONSTRATION of UNIVERSAL PRINCIPLES or POWERS involved, and the realistic application of them.

Thus, having arrived at the second stage, we do not have to "BELIEVE" anything with regards to essential issues at hand. We either "KNOW" or "DON'T KNOW." Knowing what we do, we say so and PROVE IT. *Not* knowing it, we say so too, and explain WHY we don't know. This is a matter of great consequence to us and to all those who concern themselves with such vital developments of world-wide significance.

We have been forced to give up the idea of "WISHFUL THINKING" a long time ago. Consequently, we are proceeding with the greatest degree of CERTAINTY and here is HOW and WHY:

In 1914 T. Henry Moray said, and it has since been reiterated several times in his copyrighted articles, "It is the belief of the writer that all space is saturated with energies which are doubtless electrical in their ultimate energies or very closely allied to electrical action. The relation of matter to energy and energy to matter then becomes the potential of the universe, one continuous series of oscillations, oscillating to and fro like a great pendulum across the universe." See *Scientific American*, May 1958 page 44, Feb. 1960, page 53, June 1960, page 64.

WHAT ARE THE REQUIREMENTS for further De*velopment* and *Research:*

(a) Parts: *POWER TUBES, VALVES, OSCILLATORS*, etc.

(b) Means and Methods *(c) MEASURING INSTRUMENTS* and *METERS* so that a *PROTOTIPE* for COMMERCIAL production can be produced? To bring it from a supersensitive laboratory instrument to a rugged commercial apparatus. There is ONLY ONE DOMINATING REQUIREMENT LEFT TO

ACCOMPLISH before "RADIANT ENERGY" UNITS are ready for COMMERCIAL PRODUCTION, viz., the *STANDARDIZATION* of the *POWER TUBES* and / or *VALVES* as well as OSCILLATORS in order to get POSITIVE, UNIFORM RESULTS from every tube made. This essential scientific development and engineering call only be accomplished with the use and application of SPECIALLY DESIGNED and CONSTRUCTED *MEASURING INSTRUMENTS* and *TUBE-TESTING* Equipment which is built and calibrated for use with the Energy from the Universe, just as in the measurement and utilization of DIRECT and ALTERNATING current circuits.

"RADIANT ENERGY" is of a nature that Instruments available for measuring present-day electric energies are of no value when used in testing RADIANT ENERGY VALVES, OSCILLATORS and other Modalities which are part of Radiant Energy Devices and Equipment.

It might be said that the major part of this please of research and development for the construction of "Radiant Energy" Units constitutes Engineering Techniques.

STANDARDIZATION of *POWER TUBES* and / or *VALVES* and *OSCILLATORS:*

It is absolutely essential to standardize the POWER TUBES in order to obtain UNIFIED RESULTS from every tube. At present, when 100 tubes were constructed in the laboratory, only perhaps ten or twenty of then, would meet requirements. The others failed to measure tip to the necessary standard. Sometimes only a few operated as required by the CRITICAL Balance and combined SYNCHRONOUS Resonance action called four to accelerate with the magnetic: fields in the Universe. As a comparison with Radio Tubes, RADIANT ENERGY POWER TUBES must function as VALVES, and some as OSCILLATORS, and so on. Each tube most be in a certain position in the circuit, for they will not operate in any other position in the circuit. They also have to synchronize and balance perfectly one with the other, in their relation with each other.

COST (approximate) of *RADIANT ENERGY POWER TUBES*

A "Radiant Energy" Unit calls for a set of 29 Power Tubes, the cost of which, at this developing stage, is approximately $500.00 for each tube. Standardization of function, type, nature and manufacturing methods of such Power Tubes will soon lead to a very economical cost in actual production, making it possible to be within the total cost of the finished Unit for Commercial use.

STANDARDIZED MEASURING INSTRUMENTS and *METERS*

Highly specialized Measuring Instruments and Meters, allowing TRUE READINGS of the Radiant Energy Power Tube's characteristics, are not available in Industry or Commerce at the present time. While special types of such Instruments have been designed and constructed by T. Henry Moray and Assistants, these have not been entirely satisfactory, not giving ABSOLUTE readings under the frequency and other energy characteristics. The further development of the Instruments by the Inventor and Assistants and noted Instrument Designers, is part of the project, prior to construction of the commercial prototype of the "Radiant Energy" Unit.

COST (approximate) of further *Development* and *Construction o f MEASURING INSTRUMENTS* and *Meters:*

Estimates received from leading Instrument Designers, working in conjunction with the inventor and his Assistants, would place the initial cost of further development and construction of the first instrument as quoted some 20 years ago at about $750,000.00. Further production from such prototypes would reduce the cost to be in line with other standard Measuring Instruments and Meters, used for similar purposes.

TIME FACTOR:

While it is almost impossible to determine the exact time required for the completion of those last phases of Development of Power Tubes, Valves and Measuring lnstruments, leading to final preparation for commercial production of the Radiant Energy Units, it has conservatively been estimated for 24 months, or possibly less, after this final project is accomplished.

It is certain, however, that the combined efforts of the Scientists and Engineers taking advantage of Talent, Facilities and past Experience, their aim will be achieved in the shortest possible time, provided monetary means and ways are provided without interruption and interference as it is estimated R.E. development is 90% completed.

ESTIMATED TOTAL COST for *COMPLETION OF FINAL PHASES of "RADIANT ENERGY" PROJECT:*
covering:

(a). Development and Research for STANDARDIZATION of POWER-TUBES, VALVES, OSCILLATORS and other Modalities, as well as MEASURING INSTRUMENTS and METERS;

(b) Other essential and incidental Scientific and Engineering work and activities:

(c) Equipment and other facilities;
(d) Overhead

all leading to the final construction of a COMMERCIAL PROTOTYPE, from which Engineering Plans may he developed for ACTUAL MANUFACTURE of this and similar "RADIANT ENERGY" Units — and also development and methods for application of this Universal Power for other Machinery, Equipment and Appliances. $5,380,000 *(Five-Million, Three Hundred and Eighty Thousand Dollars)*

To summarize what has been accomplished Energy has been received by and through this apparatus. An 18 inch high frequency brush discharge was sustained and energy up to 50,000 Watts obtained from one unit. Another distinguishing feature is the whiteness of the lights as determined by the expert photographers. The characteristics of the current obtained determined by those who have witnessed expermental tests prove a new source of energy. All the facts establish something entirely new has been discovered. There is no possibility for doubt on any phase of this method of obtaining energy from the Cosmos.

The above shows that so much of this development bas beets accomplished, that so much is being offered for so little, as compared to other energy projects now under development.

REFERENCES

Applied Nuclear Physics by Pollard and Davidson — page 70
Astronomy by Dr. Robert Baker — page 303
In the release of energy, where is the seal of energy, whence it came
Evolution of Matter by Dr. Gustave LeBon
*Evolution of Forces b*y Dr. Gustave LeBon
Experiments with. A. C. Currents of High Potential and High Frequency Experiments by Dr. Nikola Tesla — 1904
Radiant Energy by Dr. Edgar L. Larkin — page 17
Sky and Telescope — July 1956, August 1956, March 1959, pages 241-243
Element formation in the Stars is also energy transformation in the Stars
Scientific American May 1958 — page 44
Scientific American, February 1960 — page 53
Scientific American, June 1960 — page 64
The Nature of the World and of Man — University of Chicago Press — pages 16, 17 — 136, 137 and other pages
Foundations of the Universe by Dr. M. Luckiesh — pages 5, 14, 43

© Verzió: 0.99 (2002-06-29)

© **Minden jog fenntartva az elektronikus verzióval kapcsolatban!**
Szerkeszti: Varsányi Péter (Pepe) E-mail: varsanyi@axelero.hu

Külön köszönet Tax Istvánnak <tixi58@yahoo.com> az OCR munkáért!

Roto-Verter energy saving applications

Index

Background……
Introduction …….
Technical explanation of operation in RV mode …….
Overview of instant energy saving applications……..
Guidelines to run motors in RV mode……
RV test of energy efficiency vs. energy waste……
Recommended RV applications…….....
RV's reverse dynameter applications……..
Lubrication testing and baring testing for energy saving standards……
RV Sugar Cain mill……
RV Impeller design…….
Theory examples of a RV power plant…….
Declination plant with RV run Tesla pumps…….
Norms big motor RV tests ……
RV working in real devices…….
Simple RV battery charging……
Clarification of engineering principles…….....
Weight issue…….
Essence of the RV running minimal current on idle……....
Tests for Basic hard postulates……
Accurate debunking via test equipment by earl……
Recommended testing equipment for RV energy savings Tests……..
Phils DC to AC start with the BCSRC RV…….
The 3 Phase finally unlocked by Phillip Wood …….
Anomaly readings from coupling the RV based on Hectors teachings……
Recommended RV motor parameters……

RV motor -generator, and RV Drill

Efficiency-a : efficient operation b (1) : effective operation as measured by a comparison of production with cost (**as in energy, time, and money**) (2) : **the ratio of the useful energy delivered by a dynamic system to the energy supplied to it.**

This document will present lab tested results which verify the capacity the Roto Verter effect has for energy saving applications**. No where in the world TODAY are there better efficient energy savings methods in electric .8 - 1.25+ HP motors in comparison to the RV**.

Google videos explaining and showing the concept can be down loaded from these links:

Link – RV energy saving demonstration
Link-RV Frequency driven test

The authors, engineers and inventor are **not for profit**. For the experimenter wishing to replicate the RV please consult the RE-OU PDF file and or RV laymen's theory available from the **file sections** in these yahoo energy groups on the web.

EVGRAY@yahoogroups.com
RVreplication@yahoogroups.com

Quote- *In engineering OU (Over unity) the fundertmentals must be enabled by an energy saving medium. What matters is quantification and method, the RV is primary an R&D tool which aims to educate the simple fact that the first energy you save is the one you don't waste. If you save it then you can transform it, and it is only in these conditions that it is logically permissible to assume OU can come into play, fundamentally OU must start from energy saving applications***.- Hector inventor of the Roto-Verter**

Note: all enquiries and R and D questions are to be addressed formally by Hector on the EVGRAY and RVreplication yahoo energy groups, if he can not be reached contact Ashtweth and He will do to the best of his ability to aid:

ashtweth@gmail.com

Some background on Hector the inventor of the RV and TV (Trans-verter).Out of ANY R&D Investigator or inventor apart from Tesla, Hector is the first to TEACH how to operate a device from Standard Off shelve parts from a basic set of instructions.

Hector is also the FIRST one to directly relate RADIANT ENERGY with RF (radio frequency) in the operation of the RV alternator, and teaches a way to produce this radiant energy the same as EV gray did in an LRC circuit under resonance. Please consult the RE-OU compilation mentioned for more detail on this.

Hector has stated that he is willing to cooperate with University and Industry but will not be manipulated to let them Headhunt and shrink & dry brains hi and dry. Hector like Doug Konzen of the EVGRAY internet yahoo energy discussion groups are **open sourced** and discloses DIY R and D FREE for public knowledge.

Background

RV has been originally released open sourced from Hector Perez Torres R&D on alternate Energy Replicated by EVGRAY and RVeplication yahoo energy Group Members.

The dates the RV was first disclosed along with the improvements span from as early as 1969-1980-1984-1999 to currently 2007. There are currently hundreds of engineers who have done replications and who deserve to be included as part of the history. Their theories, findings and personal contributions to the RV have enabled the progress to continue.

Please consult the RV Peswiki page and yahoo groups mentioned for further credits.

The engineers mentioned along with the not for Profit organisation Panacea-bocaf wish to state that **the ever growing public input to the technology has enabled development of critically needed energy saving applications**. You will find a detailed list and construction details of these energy saving applications in this compilation.

The RV roto Verter method is Statutory **Public copyright** (Other Rights Apply) under a local and international. (Publication) Scientific discovery, the Roto conversion effect is covered by the publication statutory copyrights for 75 years. Further more upon the publication of the RV, up to 20,000 patents had Expired which may be technically paralleled or resemble the RV in any way.

These include add a phase patents. In fact CAREY, Otto smith, and latest MEG & Bedini patents fall within material published under the RV's related resonance & radiant energy issues. It should further be noted that when comparing Otto smith's patent to the method and operation of the RV, Otto smith works on a LOW impedance method as a VARIANT of magnetically current controlled add a phase concepts, and NOT the same as in operation of the RV. The RV is configured for freq matched HI impedance power on demand (energy saving) mode. Smiths patent also describes a freewheeling effect with a mistaken explanation.

In the RV the Speed is a fixed synchronous or reverse induction function, and incrementally accelerated, not "free wheeling". Smith's device can be evaluated here.

The TV (a concept called the trans-verter also designed by Hector) & RV are a METHOD and discovery and are covered by the PUBLICATION statutory copyrights for 75 years. A public warning is therefore expressed to any corporate or spurious group (same thing) intending on using ANY of the public's knowledge disclosed in the RV, TV or Doug Konzen disclosures from the EVGRAY yahoo internet group to subjugate others for money, when you LOOSE you run with expenses plus damages. Hector has done 5 years of PATENT R&D so it's advised that you **sell your house now**.

Further to those attempting to Hijack public open source disclosures and make it "proprietary". The impedance and tuning & recovery disclosed in RV mode, including the theories and definition of over unity comprising Pulse length and intensity to saturate a core to Extract OU CEMF is public knowledge and pre dates the current patent imitations. This can even be traced to Time Pulsed 3 phase Inverter and pulsing circuits have been public since 1960. The RV is public knowledge and pre dates since the 80's.

The RV's method as the RV's diode plug recovery circuit and all its related work are covered by copyright and statutory copyright as published R&D free domain research.
Weapon is PUBLICATION -Hector

Quote: *After the basics are applied using the method of the RV we can go into higher level, using the RV as an ENERGY saver can't be denied, it's very hard to suppress as it can be constructed from OFF the shelve parts. The RV energy saver can also enable potential for an OU generator. After applying the fundamentals of the energy saving RV method and operation, by default looping and OU will be made by anyone, mean time the education of the RV has to GO first as Energy saver.*

You can't have Over Unity in a system of WASTE, you need first to MANAGE power by minimal losses, managing power by the RV's HI efficiency will permit you to manage and transform an energy system towards OVER UNITY.. – Hector, edited by Ashtweth

Introduction

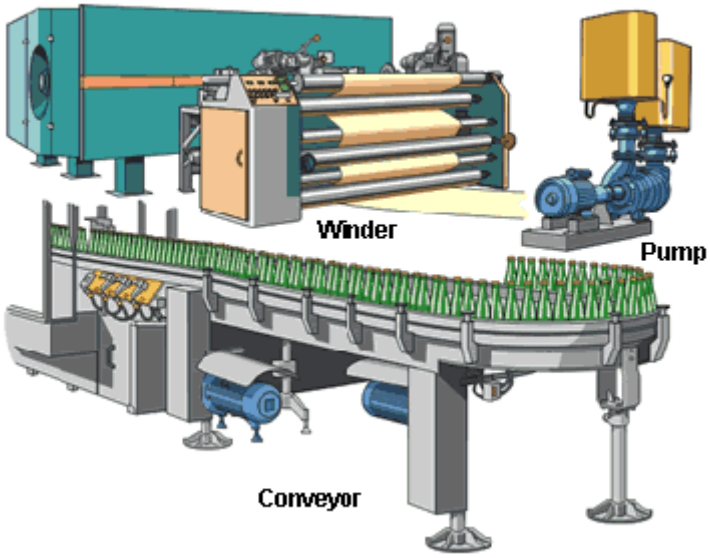

A motor is a device which uses electrical energy to produce motion. One phase and three phase motors are used in many residential and industrial commercial utility applications, **examples can be found in pumps or fans, winders, conveyers, mixers, lathes, drills, saws, pumps and grain grinders**.

Most induction motors are wired operate with both starts and run capacitors for add a phase or power factor correction. A typical example is this 1HP electric motor which is usually applied in the role of a PUMP, GENERATOR, LATHE, SAW or AIR COMPRESSOR.

ALUMINIUM FRAME ASYNCHRONOUS -INDUCTION MOTOR

The separate run and start capacitors are housed in the box on the top of the motor. The specifications of this motor are: 240 volt \ 4.78 amp \ 1400 RPM \ 1HP - 0.75kw \ 750WATT \ 13kg.

Here is another example of induction motors with start and run capacitors used in a SAW, DRILL and BRICK CUTTER role.

Brick cutter

BAND SAW, the run and start capacitors are housed left on the side of the motor.

DRILL PRESS, with run and start caps attached left and right side of the motor.

Running induction motors with start and run capacitors in these off the shelf items are chosen particularly for a power management role**.** However **what designers for industry intermittent use applications fail to see, is that by using start/run capacitors in bigger inductive windings (higher rated motors) tuned by a capacitor value to the specific load requirement; will result in a higher efficiency.**

This will also permit complete power savings in the idle states (Example of an idle state is in the drill press or a saw).

The Data presented in this compilation is relative to NEMA, politicians and university faculties who teach power management.

NEMA / IEC

The National Electrical Manufacturers Association, NEMA, sets standards for a wide range of electrical products, including motors. NEMA is primarily associated with motors used in North America. The standards represent general industry practices, and can be found in NEMA Standard Publication No. MG 1. Some large AC motors may not fall under NEMA standards, and are built to meet the requirements of a specific application. These are referred to as "above NEMA" motors.

The International Electrotechnical Commission (IEC) produces a group of recommended electrical practices developed by committees from participating IEC countries. These standards differ from NEMA standards, and they are associated with motors used in many countries, including North America. Motors which meet or exceed these standards are called IEC motors.

The RV can also upgrade the Australian standard AS1359 in motors for higher efficiency. Independent labs tests confirm that greater energy savings are available from using RV mode in these ranges:

-60 hertz / 3 phase / 3 -7 HP motors give a higher eff .5 to 1.8 HP in RV mode.
-50 hertz / 5-10 HP / 3 phase motors give a higher eff .8 - 1.13 in RV mode.

This data is premise to mandate laws for no further energy wastage in variable load applications.

RV Drill, lathes, punchers, rotary presses, planners, saws, cutters, air compressors, vacuums & others can be optimized to lowest more effective power usage.

Manufacture and industrial use are the turf where RV can excel in power savings. The First free energy the world gets is the one that does not go to waste. In solar it means using much less power cells more effectively ,for this means cost effective usage in 3rd world nations, water well pumps, grain grinders , & general machine use applications. Free solar energy for poorer nations can compete with greater economic Power more effectively used.

Running motors in RV mode is a superior energy saving incentive that's not currently utilized in mainstream industry applications or taught at the faculty level. The public must also help to enforce this energy saving standard to help save them money and their planet. Currently petitions to support the inventor and the 'no energy wastage standards' can be signed at Link

Technical explanation of operation in RV mode

Running three phase motors in RV mode is a method to operate a motor at HI impedances to its input. In RV mode the three phase motor is wired to operate on ¼ of the rated voltage from single phase power and uses the addition of start and run capacitors to generate the third phase. After the motor acquires rotation the start

capacitor is switched off, the run capacitors value is then tuned to the lowest draw to match the load requirements.

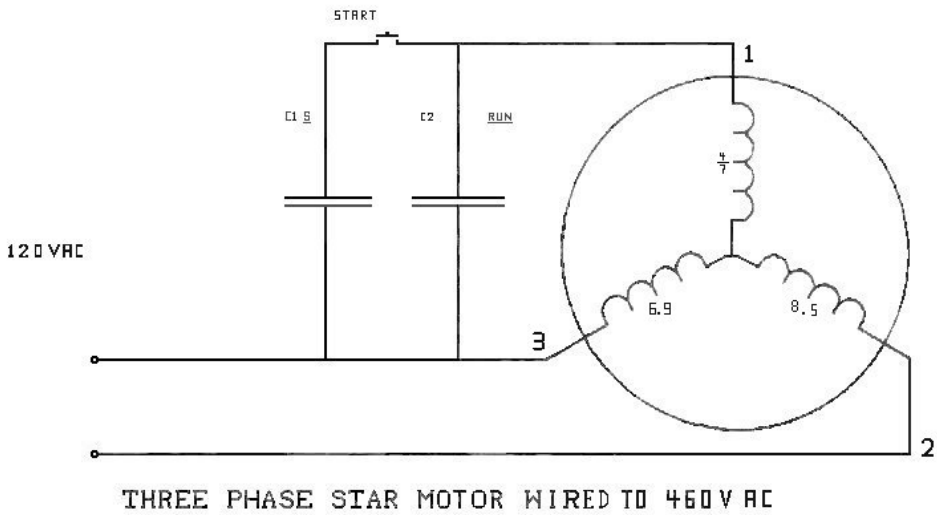

60 hertz RV schematic

In the prime mover the windings are connected in series (to 480V mode), but driving the motor only from 110V grid (operating at ¼ of the voltage) this series-connection further helps to reduce input current. **The HI impedance and 3rd phase generation create a transformer alike operation were 1/10 power usage can be attained at no load.**

Running 3 PH motors from 1PH power via start and run capacitors is nothing new, however **RV-mode is not like the common "add-a-phase" setup**, but more related to **impedance matching** by tuning the voltage, frequency and pulse-width in advanced configurations. The RV principle is based on "matching the source to the needs of the load" [as referenced by Nicola Tesla] by tunning capacitors values to the load requirements.

Resonance within the RV prime mover is responsible for the high impedance of the motor, seen from the grid/source. Under load inner resonance becomes broad banded, but is still there! The more it goes broadband, the more RV inner voltage drops (seen from the grid), and this results in higher input currents. This is what makes RV prime mover to a Power-On-Demand-Motor.

This results in a yet unrecognised **superior power management with many other advantages.** When the motor is unloaded, the RV functions the same as a true transformer does. The primary winding (stator) is connected to the power source and the shorted secondary (rotor) carries the induced secondary current. Torque is produced by the action of the rotor (secondary) currents on the rotary repulsion from the off phase 3 ph fields and capacitor vectored virtual 3rd phase.

Rotors typically consist of a laminated, cylindrical iron core with slots for receiving the conductors. The most common type of rotor has cast-aluminium conductors and short-circuiting end rings. This "squirrel cage" rotates when the moving magnetic field induces a current in the shorted conductors. The speed at which the magnetic field rotates is the synchronous speed of the motor and is determined by the number of poles in the stator and the frequency of the power supply: ns = 120f/p, where ns = synchronous speed, f = frequency and p = the number of poles.

When running, the rotor always rotates slower than the magnetic field. The rotor speed is just slow enough to cause the proper amount of rotor current to flow, so that the resulting torque is sufficient to overcome windage and friction losses, and drive the load. The speed difference between the rotor and magnetic field is called the slip and is normally referred to as a percentage of synchronous speed: s = 100 (ns - na)/ns, where s = slip, ns = synchronous speed, and na = actual speed.

An electrical transformer uses minimal energy in its primary winding when unloaded. The RV functions the same by using minimal energy at its input when its MECHANICAL (shaft) output is unloaded.

As RV starts, it is resonant; as it attains rotation its impedance becomes receding (running away from source); as you load it tends to go back to semi resonant state, where the extra phase takes the power factor lag **as a leading angle in the extra phase**, balancing the input to a PF ‘unity’. As such the power is more efficiently used than in standard all the time energy wasting motor.

This RV LOW waste design has a capacity of 94+% efficiency on LOW power motors, and 90% energy savings on basic idling used in tools and intermittent or variable loads.

The rotor in the RV becomes a reverse induction VARIABLE element that determines the IMPEDANCE relative to the input frequency and amplitude. So here we take MECHANICAL LOAD as a variable, reflecting a CHANGE in impedance rather than a PURE resistance to energy flow. In doing so, **we reduce the thermal loss and increase power gain efficiency within the system.**

That means the ROTATING element of squirrel cage rides the AC wave, becoming synchronous to it, resulting in a very broadband impedance match to line, reducing losses as if it were a TRUE induction transformer; the energy transformation results in a rotary mechanical movement which reflects minimal loss to the source.

The Roto Verter stator windings are wired in Y configuration and are having 3 terminals. We are feeding 2 of these directly with some sinusoidal voltage, which creates some current in 2 of the stator coils (they are connected in series in case of Y-connection). This current in these coils will lag the applied voltage by 90 degrees due to the inductive nature of these windings. The third terminal is fed through a capacitor.

This compensates the lagging of current (current which is going through a capacitor will be leading the applied voltage for 90 degrees) in the third stator coil. Hence then

there will a rotating magnetic field created in the stator windings, which will induce the current in initially static squirrel cage rotor windings.

The squirrel cage can actually be considered as a transformer secondary winding, which is in "shorted" state when the rotor is just starting its rotation. And what happens when you short a transformer? Its primary virtual inductance (and thus the total impedance) decreases very much and lot of current will be needed from the power source. Point is that to maintain this rotating magnetic field in the stator when the rotor is just accelerating, we have to supply a lot of current to ALL of the stator windings.

That's why we need much bigger capacity for the start cap - Xc=1/(2*PI*f*C) - we are having constant frequency and in order to pass more current to the third coil also we need to decrease the reactive resistance of the capacitor, thus we need to increase the capacitor's value. So we will use the start cap that is able to pass almost similar amount of current to the third stator coil also.

When the rotor comes up to speed, the rotating magnetic field of the stator will cut less and less. The squirrel-cage windings and the virtual transformer shorting effect decreases and thus the needed current from the power source also decreases. Now when we still have the big start cap in place, then it's Xc (reactive capacitance) will be so small when compared with the third stator winding's XL (reactive inductance XL=2*PI*f*L), that the total current in the third winding will be mostly determined by this XL value and thus the current in first two stator coils and third stator coil will be almost in the same phase, thus killing the rotating magnetic field that should be produced by the stator for normal operation for this kind of motor.

Now we need to disconnect the start cap and keep only the much smaller run cap, which will restore the properly rotating field in the stator (the cap creates the needed phase shift for current in the third winding). This advice is valid only for the prime mover in UNLOADED CASE (for the case when we do not need to run big loads with it). The values of the capacitors and components are specific to the motor size used.

The starting cap in the 60 hertz example is 100 to 200uF, the running cap is from 7 to 40uF (370V oil caps). Starting cap is to give a boost from 0. Big motors require it to acquire torque to move the rotor mass plus alternator mass to rotational RV effect speed. The run capacitor is chosen as to maintain best 120 degree rotation within the 3PH windings under the intended target load.

This is the most efficient Power On demand process; Normal electric motor engineering design has an inferior inefficient power management process. The RV solves this design flaw and also makes **solar cogeneration** of motor applications possible where previously it would have been impractical.

The benefit of running motors in RV mode will result in superior energy savings when used in the role of industrial machinery, intermittently in rotary punch applications.

All applications which employ **a lathe, a drill a grinder a rotary saw, a reciprocating pump, and also vacuum pumps run in RV mode can save energy**, **but this is only the beginning**.

In the beginning the horse power of the motor in RV mode is re rated in the following ranges:

In 60 hertz 3 phase motors from 3 -7 HP motors will give .5 to 1.8 HP in RV mode
In 50 hertz 5-10 horse power 3 phase motors will give about .8 - 1.13 in RV mode.

The RV's higher efficient re rated horse power is not a fixed value; the motor becomes more efficient in the loaded and unloaded states. Running a motor in RV mode can still reach the HP rating of the motor via boasting the voltage or frequency. This will give the process higher torque and still preserve the efficiency ratio. Examples of how to do this can be found in this compilations example of using frequency drives with the RV.

It is possible to run 1 PH motors in RV mode however in single phase configuration it requires 200mF 370 VAC caps (as an average to go into resonance) at 12 Ohms impedance, but will have a low Q which varies a lot, and needs further lab experimentation. A single phase demands more to run in RV mode as is lower impedance than a normal 3PH motor.

You can wire one phase motors to 460 VAC and can run them in RV mode vectoring the START phase at the proper angle (45deg). It will however be a bit less effective than a 90DEG 3PH force vector but it will be effective, all 1 PH motors can be run RV mode this way.

Other Research and development idea includes using them as an RV Type reverse induction alternators. 230 VAC one phase motors can self excite with cap to self resonance. Values range in 40 to 100mF 370 VAC oil caps.

The principle for the single phase is of course the same - one winding is connected directly to mains and the second through the caps. The caps make sure that there will be ca 90-degree phase shift between the original input voltage and second winding voltage. The 90-degree windings will create a revolving magnetic field, which will start to drag the squirrel-cage rotor along.

For a Single phase RV 28VAC, use a 120VAC to 28VAC trafo (transformer) it will work de-rated, use the same cap value. With 230VAC motors use 48-52VAC. As it generates power factor correction to line across transformer that will have an interesting effect Single phase is not as effective as 3 Phase but it still works as "tuned wideband dipole.

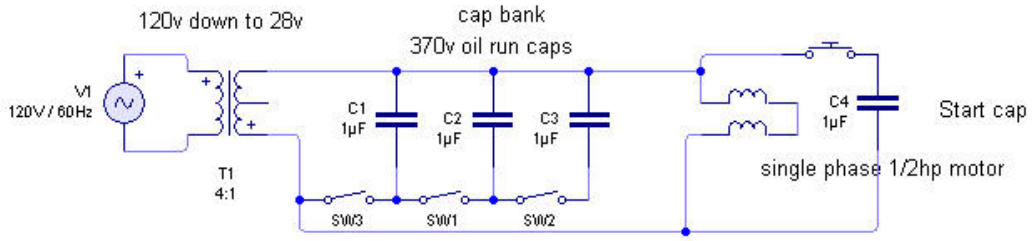

Credits to Jason

For single phase power savings you can do easily just run about 60 uf (for 1/3hp motor), uf will have to be adjusted for best results, use a cap bank then after you find out what value works for your set up (drill press etc.) you can pick up a single cap (or two). Use 370v oil run caps.

Place caps parallel to line in close to motor. Most small motors have a centrifugal start cap (or winding) and I have found no need to mess with them. This works well with my drill press and other small load motors. I could not find a big savings on my air compressor but I did have the caps at the end of the plug and have not tried it close to the motor which seems to be desirable. A drop from 6-7amps to 2-3 amps is normal.

Use a 4 to 1 trafo, 120vac in and 30vac out. Use a cap bank of 370v oil RUN caps. Put caps after trafo parallel to line and adjust to lowest current draw.

```
-------------                 --------     ---     ----------
Line in        [transformer]              Cap     cap          Motor
-------------                 --------     ---     ----------
```

Most small motors I [Jason] have found have a start winding or capacitor that turns itself off after it is up to speed (centrifugal switch).You know for sure you have RV effect when you have a higher circulating voltage Amperage between the cap bank and motor then you have watts from a battery to inverter. Also, a magnet vibrates violently 4” away from motor housing. A single phase can work as alternator as well.

Over view of the RV’s energy saving applications.

In RV solar co-generation applications the difference compared to normal motors used in an identical role from inverters is estimated to be 10 solar cells less you need to run your Solar shop lathe, drill, grinder, rotary saw, reciprocating pump, and or vacuum pump.

Example: Using a 60 hertz 3PH motor wired to run in RV mode unloaded will result in a draw of approx 40W from 3.5 amperes max, with a 90% eff inverter. A normal 1 HP motor unloaded normally draws up to 800W IN THE SAME ROLE, which would run down a battery by using a constant 77.9 AMPERES at 12.7 VDC.

A Normal 1 HP conventional motor uses a CONSTANT 800W to run with no load, when loaded can be up to 88% efficient. **Using the same application from a motor configured to run in RV mode will uses as little as 40-50W idling with no load and is at 94%+ eff when tuned to the load requirements.**

A 5 HP Baldors motor modified to run in RV mode to give
.8- 1.13 HP for energy saving applications.

The above 5HP Baldors motor specifications are: 1450 RPM /50 hertz /4kW / (line power) is at 88% eff at 746W/HP (conventional) = 4.7 HP (at the shaft). In RV mode this motor can deliver about .8 - 1.13 HP and can reach a 94%+ efficiency.

This motor was tested with no load and compared to this typical one phase 240 volt \ 4.78 amp \ 1400 RPM \ 1HP -0.75kw \ 750WATT \ motor.

The RV idled on .7 amps AC at 240 volts = 168 watts and is estimated to be 94%+ efficient when loaded at 1HP

The non RV idles on 1.84 amps at 240 volts and when loaded is 4.78 amps at 240 volt s=1147 watts.

By a typical estimation of 60 hertz RV lab figures we can conclude:

A 1 HP RV uses 40W< idling and 794 W when loaded (1HP) **94% eff constant**
A 1 HP (non RV) uses 888W>idling and 940W loaded (1HP) **79% eff constant**
Equalling- 848W wastage for normal motors compared to operating 3PH motors in RV mode.

As you can conceive, this gives premise for running motors in RV mode and demonstrates the fact that basic induction motor design can be enhanced using Hi impedance and capacitor phase generation vectoring (resonance).

Running motors in RV mode particularly solves problems which lie in solar run mechanical energy conversions. The RV creates power loss reduction which allows the battery to charge. This completely permits the operation of other wise wasteful power implements with cogeneration of the solar industry. No other method is possible to make low power asynchronous solar cogeneration possible and practical

In Solar energy applications you can tune the RV motor to operate as a power on demand device, the RV will use from 12-50W and enable the motor to deliver up to 1.8 HP with an effective efficiency of + 94%. This figure is estimated to have a 90% minimal energy savings capacity on the motors idling time, and can operate machine tools, lawn mowers, Pumps ,saws , log splitters , drills, lathe (Solar Home workshop). **This currently is Impossible with “standard” electric motor setups.**

Guidelines to run motors in RV mode

The configuration varies from motor to motor that will be used. Here are some general guidelines:

1) the RV power output is about 1/4 to 1/5 of the rated one on the motor plate. So check what power you need (in kW or HP) and then take a 3PH motor 4-5 times 'stronger'.(people will now say that they are fooled because you need a 5x bigger motor. The fact is in RV mode, the motor is much more efficient versus standard use, and also at idle consumes very little -energy savings!)

2) If you want to run it straight from the mains, then you need to select a motor with a voltage rating of about 2x that per winding (or 4x in WYE connected). Example: if you have 110V 60Hz mains, take a 230/460V dual winding 60Hz motor; connect windings in series and in WYE. (460/4 = 115 = is close to mains) Example2: if you have 230V 50Hz mains, take a 400/690V 50Hz motor, and connect in WYE (800/4 = 200 = fairly close to mains - better is 220V) Alternatively, if you feed the motor from an inverter, then modify the inverter to set the correct voltage output for your RV motor (is relatively easy to do within a certain range).

3) In terms of speed, check the desired speed of your tool. If you can find a motor that is close to that speed, use that one.

The standard motor speeds are:
for 50Hz: 3000, 1500, 1000, 750 rpm (=2-4-6-8 poles)
for 60Hz: 3600, 1800, 1200, 900 rpm
(in fact about 3-5% less than that because of slip)

The speeds of 3000/36000 and 1500/1800 are most common. If you do not have a good match, you can use a reduction gear or pulley (but those have energy loss), you can also modify your inverter to alter the frequency, then no pulleys or gears are needed. For more information on the RV's frequency adjustable method please consult the index.

For the 60 hertz RV, it is optimal 1:4, i.e 120:480, 230:920 (grid 230VAC and motor wired to 920VAC). The latter requires rewinding the motor, but the positive side is that you need lower run capacitors as the inductance is much higher.

Note it is possible to build an advanced binary capacitor that is switched by CPU that senses the input current and auto-adjust capacitors for full Range load.

Running motors from 230VAC wired to 400VAC is also quite practical in terms of energy savings, something interesting happens when you decrease the input voltage, while maintaining the torque and optimal run capacitor. The Amperage remains roughly the same (all depending on circumstances), and you wonder where the energy was lost in higher voltage drive mode.

It is assumed the PF=1 on both HV (230VAC) and LV (120VAC), so we may have a 50W difference (this report was based on a real life example). Where did the energy go - heat? No, the current was only 0.5A that does not explain heat losses. The possible explanation is that energy has gained in high impedance mode (120VAC). You may use two 400VAC+ rated motors in series (WYE) on the same rotor and drive them from 230VAC to have 1:4 proportion.

Or increase the freq 2x ->100hz to have RV mode. When motor is wired to 460VAC (50hz), by increasing the freq 2x, it is virtually wired to 920VAC (100hz). So you need a 230VAC freq tuneable inverter. That is the whole idea to have the voltage and freq increased proportionally to have very powerful RV's. You can use low RPM motors (980RPM) and rotate those at 1960RPM

120VAC motors can run in RV mode with 28VAC. It just requires x4 to x6 capacitance using oil run caps. Start caps can be lytic (to lower price cost). That means in 24 VOLT DC battery systems you can run a 120VAC motor DIRECTLY FROM THE BATTERY DRIVING IT with a IGTBs BIASED H network and thus lowering the cost of an integrated inverter system. The motor can also be run directly from DC as DC becoming a brushless RV motor direct motor driver.
Andrew,

You must be aware that an electric motor will draw up to 7 times the motor's full load current on start up, even though this may be only for a fraction of a second. Your

inverter must be able to handle this inrush current. A modified sine wave 3000 watt inverter will handle up to 8000W (Peak) inrush current which is approx 32 amps. Divide 32 amps by 7 (the amount an electric motor will need for start up) = 4.57 amps. This tells us that the inverter will start an electric motor which has 4.5 amps full load current or less - if you exceed this the inverter may start larger motors if they are unloaded but we cannot be guaranteed t do so.

RV test of energy efficiency vs. energy waste

To allow a proper measurement accuracy and calculation of real power distribution, the motor used in the tests against the RV was power factor corrected with capacitors to match the PF of the RV. This logical for many reasons, as power companies want better power factor in energy operation as industrial people will recognize. Power factor explains the true power and apparent power being consumed.

Power Factor Correction Makes Every Watt Count!

For some reason, a lot of engineers and technicians seem to have a problem with understanding power factor correction. However, not understanding what a power factor is and how to correct it can lead to overcharges on your electric bill. An incorrect power factor is like driving a poorly tuned vehicle... the car moves, but you pay for a lot of extra gas! As your local utility distributes electricity over the grid, line losses occur, in other words, the voltage lags the current and the actual power available is not as great as electrical meters based on wattage claim.

Early efforts to correct this phase difference were centred on the fuse box. However, as power factor correction became popular with major companies, the utilities changed their meters from watt measurements to read the current consumption thus causing an actual increase in utility bills where the power factor was corrected at the fuse box.

This has forced power correction efforts to be decentralized and to be performed on individual motors. You must properly read a KVAR meter to measure how much your voltage is lagging your current. Baldors motors mention this very task of power factor correction in motors. Here is a direct exert from their energy efficiency document

■ **Misconception 2: "A more efficient motor also has higher power factor."** Many motor design modifications may be made to increase efficiency. Some of them will also increase the power factor, whereas others (such as a larger air gap) will decrease it. Comparing "energy efficient" machines with their less efficient predecessors shows that some do have higher power factor, some have lower power factor, and some exhibit no change. If power factor improvement is ever needed, an easy way to get it is with capacitors on the motor circuit—an economical corrective measure that isn't available to improve efficiency.

In Power Factor Correction the apparent power in an AC circuit has been described as the power the source "sees". As far as the source is concerned the apparent power is

the power that must be provided to the circuit. You also know that the true power is the power actually used in the circuit.

The difference between apparent power and true power is wasted because, in reality, only true power is consumed. The ideal situation would be for apparent power and true power to be equal. If this were the case the power factor would be 1 (unity) or 100 percent.

There are 3 ways in which this condition can exist:

(1) If the circuit is purely resistive or
(2) If the circuit "appears" purely resistive to the source.
(3) The X and L cancel each other out

To make the circuit appear purely resistive there must be no reactance. So the current will not lag the voltage. Power factor correcting motors will optimise the measuring performance and show where the real power is being used or wasted. Also to present the benefits involved in power factor correction of motors the tests will involve a kilowatt-hour meter and a power factor meter to show the energy saving figures.

A motor with .1 power factor can only do 10% of the load of a PF1 motor. The PF .1 motor will not function if it tries to drive the same load as a fully-loaded PF of 1 motor.

The justification for this can been seen in the meter readings of the power factor corrected motor tests verses the RV. After a sample motor rated at 2HP was power factor corrected so that it was close to the power factor of the RV motor. The difference on the meters showed The RV costs $12.00 per month with the load, where the non-RV motor costs $55.00 per month with the same load.

With the power factor correction the non-RV motor, takes $26 per month to run. Without the PF correction, the non-RV motor won't even drive the load correctly and still costs $20 per month to run. These poor power factor issues need to be addressed; and is where normal motors waste energy as opposed to where the RV saves it.

These Test results were confirmed by an open sourced engineer Matt whilst evaluating the Roto Verter comparing a 1.8 HP RV motor against a 2HP non RV motor (PF corrected)

To PF correct the motor different size caps were attached across the incoming power. The caps are attached with one lead to the common and one lead to the hot wire. The motor ended up with a 115MF cap. Then the experimenter checked PF was with a PF meter Link

To test your RV motor with equal watt HRS meters used in the utility line. Measure the device under load test only. RUN the 2 idling under the meter reading and read the effects on the line from a CONSTANT source.

The power FACTOR itself can become trap if the power factor is negatively affecting In INPUT; this effect will increases the current logarithmically, then there is a loss

increase. But in the RV such a loss does not represents the LINE loss and the 3rd phase reading exceeds the input any way you put it.

Phasing at 120Deg creates a PF of 1 in the source; the ABC phases are higher efficiency in average to input, whatever the Meters say go by the Scope reading and the BOOK formulas to define this truth. In fact the RV's application in power saving is FACTUAL in a DC sourced battery and inverter shunt set up. Verification of this can be done by going full solar and making the utilities obsolete.

In the input of a one phase RV the power factor is irrelevant in 3 a phase relation by being relative to each 3 phase's interrelation, the angle of rotation is what matters and PF does not define that. But the CURRENT & voltage Phase does. This is in the same context of the book laws as in an LRC current where the PHASE is the constant VOLTAGE Phase and is the one that's shifting in components.

This is interesting and is the same as viewed from an RF antenna perspective. The components represent Voltage and Current nodes where the 0 points are present within these standing wave NODES.

The RV creates a BROADBANDED semi resonant condition at idling so it has a LEADING VAR relation to line input and a semi NUL vectoring of PF RF signal in SERIES LC identical motor where acting as an ALTERNATOR of the 3rd phase.

To avoid complications it is advised to design full solar applications for proof of principles comprising A DC battery with identical inverter fixtures with the exchangeable loads. (Eliminate voltage phase AC in accuracies)

They must be identical applications & loads, the purpose is to confirm and demonstrate the RV is SUPERIOUR POWER MANAGEMENT. Further that the RV is justification to creating new standards (which needs to be mandated by law) in electric motor design for GREENER higher efficiency.

The RV solar battery and inverter method guide lines are:

Equal rated batteries are obtained and connected with a hydrometer and tested to equal, and then match the two inverters RESISTIVE and Inductive reference loads, test and certify to equal. Tune the RV (via run capacitors values) to an equal mechanical load and see what motor wins.

This will confirm the Basics hard postulates of the RV which show how the idling power savings saves the battery power needed to allow PRACTICAL solar cogeneration of electric motors.

This Data is applicable to:

Industrial applications

With the relevance of using the RV to operate intermittent use applications more efficient in industry.

Solar "off-the-grid" systems

With the relevance of being able to operate solar machine shops where previously it would have been impractical.

NEMA and universities

With the relevance to the test data which qualifies to upgrade the required energy efficiency standards of .8 to 1.8 HP electric motor applications. This Data is also relative to NEMA, politicians and university faculties which teach power management.

The consumer

With the relevance to a logical environmental responsibility, the money it will save them from the performance of the RV's energy savings. The collaboration of the open sourced engineers working on the RV technology also provides opportunity for social reform. The RV being disclosed open sourced aids the public by serving their needs in a non regulated non profit environmental role.

The public consolidating with open sourced engineers to produce open sourced energy technology into their daily applications is reform the public needs to quell spurious non environmental money subjugating energy technology from their lives and keep it obsolete permanently.

Public grants for a non profit division to contract the already available open sourced engineers in a research and development centre can bring this genre of technology into public service. The non profit organisation panacea-bocaf has to begun essential organisation to consolidate this into reality and produce open sourced free energy in a granted centre for the public. By consumers using the RV It means end to global warming energy crisis with energy savings and efficiency boasting from:

Power on Demand
Power factor correction
Power management

This justification for running motors in RV mode is needed to be understood/ SOLD with the public's motivation to apply the Roto Veter technology. The Energy saving readings demonstrates that there is need to address the WASTE issue, politically and scientifically**. THE RV'S ENERGY SAVING FIGURES IS PREMISE for the public to lobby for energy efficiency standards to match the RV's power management and Demand NO FURTHER ENERGY WASTAGE**. You can sign petitions for no energy wastage to address this at Link

Recommended RV applications

With solar cogeneration the power efficiency of RV is unable to be ignored. The RV **will** provide the most efficient power on demand out put for the least amount of solar panels needed.

It is recommended that the RV run a Lathe, a milling machine, an industrial bench drill or any other load variable machine in these ranges:

In 60 hertz 3 phase motors from 3 -7 HP motors will give .5 to 1.8 HP in RV mode
In 50 hertz 5-10 horse power 3 phase motors can be used, and will give about .8 - 1.13 in RV mode.

Use a Grain grinder and a step-down pulley for HI HP output into grinding grain as a BASIC use for SOLAR (true free energy) off the grid small farms and communities. Also A well pump, a circular saw, a drill bench, to compare with a normal motor for solar use run with Solar cells, regulator, battery and an inverter.

In the application of a **POWER DRILL, A SAW or a LATHE** run with a 12V car battery connected with a 120W Solar cell, it means affording a situation to allow Battery charging whilst the unit is idling. **In a NORMAL motor it would use up to 90% more energy using a 3000W Inverter and drain your battery in minutes.**

Using a SOLAR Drill powered by a 120 WATT solar powered RV motor, the unit can run all day and permits drilling holes at a superior 94+% efficient power management and power on demand operation. The same concept can be applied to AC line power tools. It is recommended that 60 hertz is used, how ever you can use a 50 hertz RV for a drill but will need a higher (24 volt recommended) inverter.

50 hertz RV Drill and 120 watt solar panel pictured right

The above RV drill idled at 120 watts, and was compared to the following ¾ horse power drill rated to 5+ amps under full load.

Upon idle the above ¾ horse power motor drew 2.21 ACA.

2.21 AVCA draw consumption idling

Below is the RV drill using the same load:

RV drill drilling the same load

The RV drill idled on .5 ACA, and under the same load ranged from .6 ACA to .7 ACA!

Also a demo can be given in 60CPS using 120VAC and put into justify the issue of needing a new engineering notion of UNIVERSAL devices which are tailored to work from 47 to 450CPS. This is another engineering step toward power savings and equipment weight reduction in a near future using the amplitude, frequency and pulse length management (frequency drives).

IF we compare the figures the nations using 60CPS they waste 20% more energy than those using 50CPS and they do it 20% faster If the 50CPS nations go to 60CPS in RV modes they will save 80% over the ones using 60cps in normal ways, (you can drill holes 20% faster!).

Lets say you choose 5HP 1725 RPM, use a modified frequency drive to get it to say 6,000RPM (tolerable to motor)in RV amplitude-pulse length adjusted 3PH modes.

You will then get approximate 7HP at down gearing to your planner, if adjusted to the lowest friction it will work on power on demand mode real nice.

Using a normal RV and in 50CPS is marginal, and will not be as effective as 60CPS or in use with a Frequency drive but still will save quite a bunch in electric power. A 7.5 to 10 HP (marginal may do) and finding the best tool harmonics speed to best cut the wood type you use will be needed .

60 hertz free wheeling RV

The above 7.5 HP 60 hertz motor was run in RV mode to give 1.8 horses power for power on demand applications. The motor run was run from an inverter and returned an idle draw of 5.5 DCA at 12VDC which equals 66 watts.

Inverter running the RV

In the machine tool trade there is a speed where tools and materials are worked in the best efficient way, having a frequency drive can give you the advantage to tune the tool to the best performance in a given wood density with the cutting tool best performance to cut it with the best finish possible. That is adapting a capability of NCC to tools using power management optimization.

Manufacture and industrial use are the turf where the RV can excel in power savings using **RV Drill, lathes, punchers, rotary presses, planners , saws , cutters ,air compressors, vacuums & others optimized to lowest more effective power usage.**

The First free energy the world gets is the one that does not go to waste. In solar it means using much less power cells more effectively ,for this means cost effective usage in 3rd world nations, water well pumps, grain grinders , & general machine use

applications. Free solar energy = poorer nations can compete with greater economic Power more effectively used.

Here are harbour freight examples which are a perfect substitution and recommended by Hector to demonstrate the RV's power on demand energy savings. Check at the end of this compilation for the guide for choosing the right rating RV motor. It is important to select the right application to suit the horse power range and allow the proper efficiency.

Three speeds to cut everything from brass and aluminium to rugged alloy and tool steels! In horizontal position, use the gravity feed adjustment to increase or decrease cutting pressure. 6-3/4" x 6-3/4" table for use in vertical position. Blade and heavy duty stand included.

Cutting Capacity: 4" x 6" (rectangle), 4" (round)
Blade size: 1/2" x .025" x 64-1/2"
Blade speeds: 80, 120, 200 FPM
Bed width: 7-1/2"
Vise: 7-3/4" x 6-1/4"
Overall length: 37"
Height: 38" (horizontal); 54"

- (vertical)

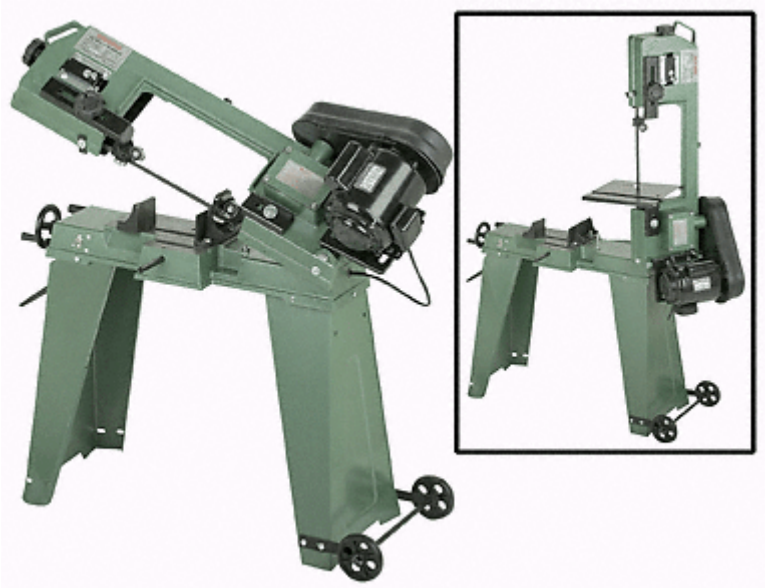

Source http://www.harborfreight.com/

Replace the motor pictured above with a motor running in RV mode.

12 SPEED FLOOR PRODUCTION DRILL PRESS

1-1/2 HP Motor

This professional-quality tool features rack-and-pinion table movement, heavy duty all ball bearing motor and an independently wired work lamp. Includes oiler.

Cast iron table rotates 360° and tilts left to right up to 45°
Motor: 1-1/2 HP; 1720 RPM; 120 volt; single phase
Precision 5mm to 20mm (.197" to .787")
capacity JT3 ball bearing geared key chuck
MT3 spindle taper
20" swing
Spindle stroke: 4"
Table size: 16-3/4" x 18-11/16"
Column diameter: 3-5/8"
Spindle speeds: 150-4200
Source http://www.harborfreight.com/

Whatever has a removable motor that you can replace the NORMAL one with the RV one.

Example of a modified Floor Drill press with an RV motor

Other Examples with solar cogeneration or with line AC grid input. USE the RV to optimize a water pump impeller design by Ceramic low friction seals. This can be experimented in hydroponic FARMING in a role of SOLAR POWERED water recirculation.

A belt woodcutting saw with an installed **pulley** to your RV tuned by the run capacitor to the lowest draw will be more efficient than the normal motor. This is the type of availability of PRACTICAL DO NOW RV applications. **With a band saw it is not logical to draw 800W instead of only using 50W running in RV mode and 500 to 700 W on demand (Cutting big piece of wood).** This application can be made even simpler with a current start switch to start RV automatically. The rest of Band saw is left as is.

Example of using a bench drill powered by the RV

Try using the same drill bit size and drill 200 holes on a wood plank or metal piece, then compare the watt HRS used. This can be done with a 3PH motor wired to run in RV mode. The concept is to fit the motor and belt pulley.

Guidelines for this are stated in the next section. The belt and pulley system can ALSO be improved on using low friction segmented flexible belts, all energy losses can be quantified and mitigated as the RV can function with REVERSE DYNAMOMETER CAPABILITY. (See index for explanation).

Two separate bench drills are obtained; drill no 1 is to be a single PH (phase) 1 HP (horse power) rated motor; the other is to have an RV modified motor. The RV modified motors can range from:

A 3PH 60CPS 3 to 7.5 HP230/460VAC motor, in this example apply the RV motor in a 1 to 1.8 HP role. In a 50 hertz or 50 CPS RV motor, a 5 to 10 HP or a 4KW (5+HP) RV will afford approx .8 - 1.13 HP out put.

Tune the RV to match the other motors 1HP max load, then measure the two readings by a cumulative Watt hour meter. After a day of drilling by the same load, compare and evaluate the 2 readings Compare by the classic A vs. B comparison.

A 60CPS 120V bench drill 1 HP RV drill will draw 37W continuously and when loaded is estimated to draw 453W.

A normal 1 HP non RV drill will draw around 890W continuous, and when loaded around 1023W.

As engineer what is your choice for a 1,000 drills 1,000 employee drill production line.

Normal drill = 890,000 watt hours
RV drill =37,000 watt hours

It's 24 times the money expense to run in non RV mode and in full duty is still. 50% less power usage in worst case (all drills making a hole at same time with.)

Tips: Try to find any old belt driven machine you can, something that looks easy to line up another motor and have clearance for an oversized belt. Or get a custom Drill made up, it will be the most efficient drill in the world.

On the RV modified drill motor, use low friction belts (test timing belts for best RV performance) what matters is that they have to have the same RPM to be compared on performance , a 3600 RPM RV will move tons at 360 RPM wood drill with an efficient low loss down gearing.

The lowest-loss you can do with belts is to use rubber toothed timing belts. Regular V-belts have to have too much tension just to get the belts to grip the pulleys and the teeth in rubber toothed belts means you don't need so much belt tension that way.

Timing belts are low friction:

Timing belts from cars are also standard and are used in industrial servomotor applications (less friction than V belts) also the grooved V belts can run better.

For an automatic tuning of the RV drill load, later we can switch to an automatic computer controlled load sensor which can also utilize the RV's hidden OU component and operation. This method is the specific LOAD tuned Amplitude, frequency & pulse length. This is where Hector details the RV's relation to OU and ZPE.

ANY motor can be run this way using adaptive electronics and reach the FULL HP range of the rated motor in RV mode (preforming the HP more efficiently) using

Amplitude control Voltage from 120VAC to 460VAC (Frequency adjusting or boasting the voltage).

In the RV drill tests the GEARS for the optimal performance at the drill head against the normal drill, this gives the POWER to optimize & is professional RV use in R&D to quantify and improve power performance in the field. Machines can be optimized for their particular task, be it Punching or drilling a Hole, pumping liquid, moving objects or any quantifiable energy usage.

Guide lines for drill modifications

If you are going to test: A 3PH 1HP motor versus 3PH 3HP+ motor in RV mode. Test setup is a drill bench where the motor can be changed without problems.

== 3PH tests ==

To demonstrate that normal motor may draw idle say 1.5A constantly (1.5A x 400VAC x 1.732 = 1039.2 VA x PF) with PF=?, thus we pay still for 1.5A normally unless we use special kVAR packet.

The RV draws maybe below 50W. Motors must be the same RPM of course and RV must not have the FAN as it is not required - no heating problems.

1HP motor connected to 3PH we can use power factor correction (PFC) capacitors in WYE, say 10uF (just guessing), in the range from 5uF to 30uF and at the same time measuring how the amps go down. I know those amps will go down, when we optimize the PF near 1. Not good to go exactly 1 when doing PFC due to resonance as per book.

When we have reduced the current consumption for normal 1HP motor, we can calculate its real power consumption in watts (now we know PF is near 1).

== 1PH tests ==

We can also test 1HP motor, being wound to 230VAC nominal and running it also at 230VAC with some 16-20uF cap as usually those single phase bench drill's are designed. This is also add-phase, but it is not RV mode, because of the wrong voltage level (too high and saturating). As those bench drills do some work even when unloaded due to belt friction, FAN is required. **And compare it to RV motor**.

RV Drill press with binary switched Capacitor bank above

The above 50 hertz RV motor used in this drill press from the 240 volt line input idled on about .5ACA at 240 volts to equal 120 watts.

This RV method is an unstoppable means to make possible solar powered RVs which could also grind grain in remote villages, pump water in Africa, drive electric boats cars & planes without polluting water land or air, making Paradise on earth.

Tips-Lets say you have 50 Hz 460VAC and 60 Hz 460VAC same HP motors? What is The difference?

60 Hz motor has 20% more wire length. Induction is higher 44% (1.2x1.2).Running 60 Hz motor (ordinary way) from 50hz 3PH grid, it will take more idle and running current.20% more or less wire, however, is not an obstacle for the RV mode I think.

What I strongly suggest is that 60 Hz is better than 50 Hz in RV mode, since the resonance Q is better. For both prime mover and alternator.60hz alternator - self induction with capacitors will start much better.

If you use 60hz or freq drive 60-100hz, it would be good for RV. Also note, if you increase freq 2x, increase the voltage 2x as well, retain the proportion, so RV mode goes on and the eff and power improves.

Simple RV mode controls with frequency drives can be modified to use frequency control, amplitude control & pulse length control for even higher efficiency. Freq drives.

Adding a DC amplitude level charge control and optical isolated IGBT gate within a range of say 50 to 480 VDC at the motor drive stage with minimal cost is an effective parameter and a specific range to improve applications.
Computer Defined Parameter Universal AC motor drives.

The RV effect can be PULSE tailored within REACTIVE component itself being the source the capacitive element defined by varactor theory as a predetermined voltage (amplitude) and pulse length (time current raise vector) (.triggered pulse)

Hector describes running a 1MEGAWATT RV motor using SCR, IGBT & transistor frequency drives.(You use the power needed at demand ...) WE ran I megawatt motor with RV system input of 3KW, tested full force 480VDC battery bank at 4000amperes surge.

For the following example this 2 in one shop equipment module employs a lathe and drill which is powered by a 1HP motor, this all in one shop tool can be improved to not only operate as a solar work shop where previously it would be economically impractical, but can save energy and money in the line AC grid when power managed by the RV.

2 in one drill and lathe

RV grinder

Credits got to Ron for this. Referring to this pic:

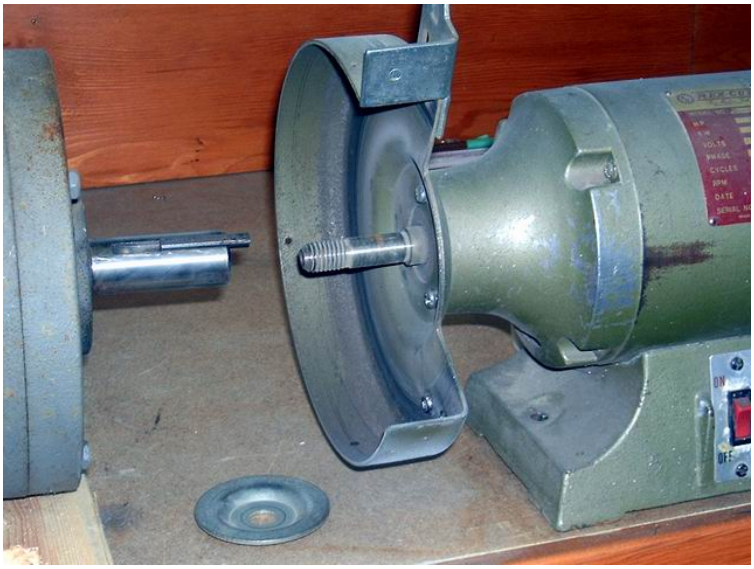

The gizmo on the right is a standard 8 inch bench grinder.
Left is the RV motor.

Note the small size of the spindle that sticks out and thread for the nut to hold the wheel on. Also note the small step at the motor end where the collar (laying on the bench) fits up against. Now if you look at the 3 hp shaft, on the left, you can see it has none of these features as it's to big and too short (**that's what all the girls say to uncle Ronney**.)

So that's all the drawing presented, it's a sleeve that slips over the motor shaft and has a spindle that sticks out on which to mount the grinding wheel.

Imagine this hub slipped over the motor shaft. but having a shaft welded on, sticking out with a thread cut on it for the nut, two side collars to hold the grinding wheel, the nut tightened up, this would be a visual perspective of an RV grinder.

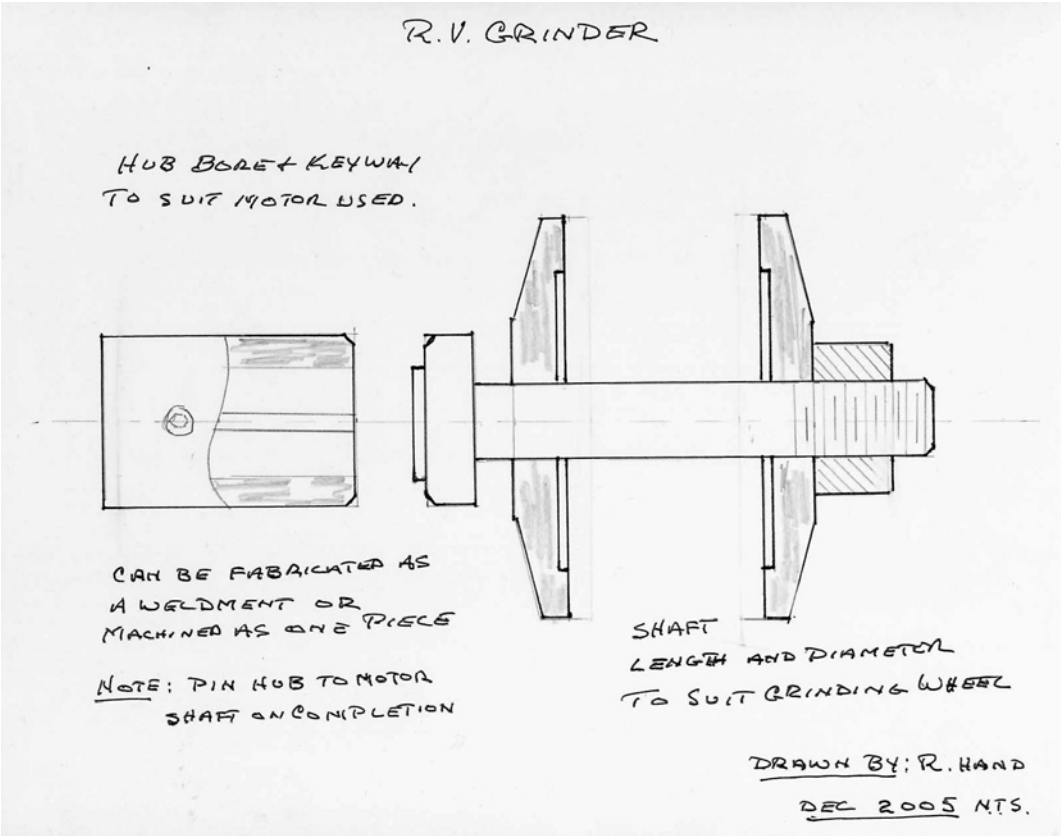

A Bench grinder 60 hertz 3PH 460VAC motor can also be made to run more efficient in RV mode.

To be further made simple the speed and torque must match the ones required for original operation or better, **a pulley down stepped 3450 RPM RV will definitely outperform any stock 1725 1/4 to .5 HP motor**.

A Basic example-1 HP RV is can be made from a 60 hertz 5 or 7.5 HP 3PH motor, the then max load is to be calculated and the RUN capacitor can be set in a mid adjustment range (broad banded), even though the run cap wont be optimally tuned to the specific loaded condition, the RV will outperform the normal motor!!!

Baldor's motor's can also wind up 120,240,380,460 & up to 920VAC 3PH Motors which can be RV modified anywhere from 100-120 200 240 VAC 47 -60cps with only needing to be using capacitors and centrifugal start switch

RV current relay

This is an example of a tuneable current relay put it inside a box.

Can be used to start RV automatically - (RV lathe,). Similar to Circuit: using 5 turns as primary and 12V output as the secondary on toroid transformer.

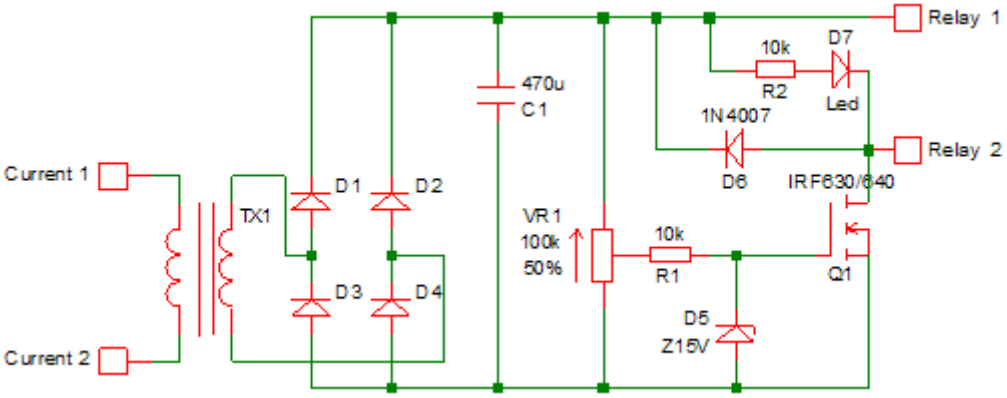

Further examples can extend to a coffee bean grinder; a grain mill is to grind grain into flower (dust) and can run with RV with SOLAR energy. This means a lot of savings using power milling not spinning with a load, same as a bench drill lathe, band saw, fence post drill, and a lawnmower. The ultimate application and capacity the RV has to save energy lies in the construction of a superior solar shop module.

Centrifugal switches

The following is an article written in machine design on the topic of centrifugal switches. The information for the article was provided by the Torq Corp. www.torq.com Design: Link

Their centrifugals would work with the RV. All RVs can be started using these switches for EMP proof simple non computer driven Spartan made RVs.

You don't need a computer to drive a home drill fed from a hydro run generator power. Switch has to be specified if for 50 or 60 cycles & motor speed and cut off threshold.

The shaft measure & fit options also need to be considered, Hector prefers the ring type governor with hex screws not the hammer in type for in shaft installation.

The switch can be fitted to fan cover in most motors using plastic spacers and drilling a few small holes, the governor if hole oversized can be adapted using PVC pipe spacers lathe turned to fit governor hole size and shaft size ... (pressure tight fit).

on big motors a hole can be drilled & tapped in shaft centre and governor fitted with a governor centring spacer screwed in with a machine screw 1/4 24 or 3/8 24

For home made phase converters these switches are priceless! As they substitute all this cumbersome relays Otto smith & others use in their already obsolete patents. For hi loads switch can handle a HI power relay or solid state SCR ac module driver.

RV water pumps

RV water pumps will certainly be the most efficient drive motor,. This will need custom adaptation of the pump onto the RV motor in most cases but is worth the effort in savings.

A typical induction motor attached to a pump

So far the off the shelf possibilities which have been researched (more may be out there) point to Teel water pumps, and **Davey** water pumps.

In these pumps an RV conversion MAY be possible via direct coupling to the RV motor. The 3phase motor already coupled to the Teel and Davey water pumps May be just need to be rewired on the motor side to run in RV state.

Davey water pump

Other R and D can be done by matching the HP rating to the liquid head and pressure needed for the task and then compare with normal pump. Also work on RV quantifiable implosion cavitation can be tested towards self running water pumps - motor -asynchronous generation devices. It permits cavitation & hydrodynamic energy conversion R&D.

Jet water pump which also could be RV'd

RV as a Reverse dynamometer

When applied in the application of an airplane propeller design, the RV can be installed with a prop pulling motor set up for a rail pulling weight measuring device.

First you must hunt for the strongest pull and lowest drag electric power usage. Examples are in the Tesla pumps design. You must test the drag and pressure then optimize for the highest flow highest pressure - lowest power usage from the RV.

Other applications are in Low Lenz law generator design, hunt for the highest output lowest input. Other uses are, testing Lubricants, transmission energy loss, and monitoring the drag increase in mechanical systems with current limit alarm.

REVERSE DYNAMOMETER CAPABILITY= the ability to test how much power a rotating piece of machinery is actually USING.

A Dynamometer is used to measure how much mechanical energy is being produced (transformed, actually) at the rotating shaft of a motor. Using logic and the context of Hectors posts, a Reverse dynamometer measures how much rotating mechanical energy is required to make something spin.

Since the RV only has the losses from its bearings, an increased load will be reflected by a linear increase in the amps driving the RV. A normal AC motor changes power factor and efficiency depending on the load put on it so it is virtually useless for evaluating the power usage or efficiency of the driven object.

One method is to take a low friction bearing and normal drag grease and compare it being spun by the RV & take readings ,a new set of TESTING standards can be made for bearing replacement and lubrication, resulting in **PERFORMANCE and ENERGY savings in Shop Home or industry use.** The RV can be applied as A NEW R&D tool and POWER SAVING device.

This energy saving RV method may be verified also by using a Foot pound pony braking Torque measurement, using liquid drag clutch (that is a simple way) a rod exerts weight on measurement device, Torque measured in foot pounds

RV Lubrication and baring testing for energy saving

The RV is also a practical base for in energy saving and power management from optimizing the motors ball bearing performance, and to quantify pulley BELT friction losses, a generator design flaw (as permanent magnet alternators are).

One of best grease awakeners is transmission fluid. This needs to be applied to RV motor bearings as with time & storage the normal motors grease goes to sleep (turning to WAX) and literally becomes a "DRAG" in all sense. One solution is in the method of washing the bearings in transmission fluid and then reviving and re greasing them with a low friction lube. That is part of the R&D to eliminate DRAG losses using the RV as a reverse dynamometer (Machine design) related to a power loss management.

Sugar cane mill

A 60 hertz 7.5 HP motor running in RV mode using up to 1HP in a power on demand sugar cane mill application will use only 40Watts idling. From a solar panel & 2000W inverter the system this system can operate all day idling by merely using a 120W solar cell to maintain the self sustaining battery charging. Upon loading the draw will

be 600W, and then will revert back to 40W. This is estimated to be around 200% energy saving by a normal comparison to a standard system containing the 1HP motor.

A normal 1HP motor uses 890W constant power drawing. And could not run more than 2 Hrs without the battery running down, by the standard system, it would require **up to ten times the solar cells power to run it.** Plus further complications exist with the Starting as it draws 30 amperes on a weaken battery which results to an inverter failure collapse.

Impeller design

The following is instruction on how to use the RV in an impeller design (Fan blades) for power saving applications. Starting from 0 based on your motor speed by an example of 1725 RPM; design a primary 0 pitch (0 angle variable pitch blades). Step one is to determine the resulting friction at a this 0 pitch and then lower it to the lowest watt usage reflected in the fan blade design, then determine the lowest drag of the fan blade.

The next step is to find the blade design needed to create the individual choice of required thrust or flow parameters you want. Your virtual perfect 0 reference is the spinning disc and creates an air flow principle (reference is Tesla turbine), as it spins, the resulting drag will reflect in power input.

The RV as first usage must be applied to quantify its own losses, FIRST determine the RV lubricant bearing drag, change the grease or bearings to low friction ones , the RV internal friction ,fin and blades can be shaven to an optimal efficiency. When the flat internal fans are removed as such you must note the energy LOSS issues and quantify them (Use RV as lab tool to OPTIMIZE its own design).

Then optimize the FAN design on your intended power saving project, and ask yourself what parameters you need to optimize as to make best use in your application (as proper Fan blade design) **which are grossly overlooked in modern engineering practice**. **The RV can be utilized as a tool which permits you to quantify losses in those areas.** At same time by using minimal power to do it. Just refine your methods and apply variable options for improved fan design & applications. Variable pitch fans save more energy than fixed pitch ones, having them designed for lower drag and maximal air flow with minimal thrust and drag component.

For aircraft design this can be reversed towards a minimal drag and minimal flow for a maximal linear push force horizontal (Lift) force transferred to shaft as thrust. The same applies to watercraft props and water pump design, reversed for flow in pumps. "0" thrust. Construction of a redesign impeller for a Tesla type turbine, (hi pressure) it is also possible when calculating overall head pressure to optimize a vapour cavitation energy boost from water hydrates.

For Reference of Viktor Schauberger type turbine designs-Link

Open sourced engineers really need resources to do TURBINE R&D with The RV prime mover, seal optimization, drag reducing impeller redesign for Tesla or vortex cavitation modes. You can support their research at http://www.panacea-bocaf.org

The VIKTOR SCHAUBERGER Implosion turbine concept is also possible in a cogeneration role having the RV Start such a turbine and then switch to generator mode in a cheap Cost effective way. More related vortex technology cogenerations with the RV are described later in this compilation.

Theory Example of an RV power plant

A power plant bearing generator is obtained at a range of 10KW. Specs are 120/230/460 VAC 60CPS by a ring exited rotor (brush) bashler regulator of a /// 1600RPM 4 pole alternator. The regulator is substituted by manual or current regulated adjust EM excitation power.

The System is then wired to 460 VAC, the RV then starts it towards a synchronous speed, once it is in a synchronous state it is then connected to the line where the excitation voltage and current magnetizes the rotor and thus creates the RV power factor correction synchronous dynamotor result. If this is connected to your house it reduces the power factor loss to 0 with an adaptive sensing and adjusting.
That is 40% energy savings Average.

If you Use a PM (permanent magnet) rotor this FEEDS EMA (electromagnetic amplification) power into your to home. Instructions are so far to use via series variac to regulate the KVARS or use a magnetic current regulated amplifier to control the PM KVAR output .In places far away from a grid power source this can save 60% on your power bills by correcting the PF line loss. **These are Solutions that can be implemented NOW using off shelve stuff**.

For 5 HP RV you need to go PM RV and use a generator set wired to 460VAC and rotor exited with a current magnetic amplifier. Hector has stated that he used a LIMA 1MEGAWATT generator long ago, which used 3KW idling and 300w with hydrogen core cooling & spiral cooling fans. As this design was synchronized to the line it (PF) corrected the utility power factor becoming rotary condenser and reducing building power usage 46%. It is also theorised that by using solar or hydro power units the system is estimated to be able to co generate with a 130% efficiency.

Reference

Reference

Via this design super Efficient Electric turbines are possible. For cars the electric turbine RV is best as a 24,000 RPM 5 HP motor can put out 60 HP. The RV motor housing can be made ultra light weight and at increase in speed their HP increases with size being same. A current model of a 3PH 7.5hp motor can as a sample with a modified rotor to with stand 38,000 RPM will give 80 Horsepower.

Declination plant with RV run Tesla pumps

Energy saving components included in this hypothetical analogy:

1) Running the current motors in RV (rotor verter) mode for higher efficiency and no energy waste

2) Utilization of the Tesla pump design allowing the most efficiency of the medium and to save energy U.S. patent #1,061,142

3) Inclusion of patent number NO: 2005904642 by Phil wood describing a desalination system to covert to solar renewable propagation and higher efficiency

4) An example of this RV system for use in Fijian resorts to illustrate an energy saving capacity.

On Fijian island resorts, they have old in-efficient water treatment and water pumping systems in place. Also there is an absence of solar cogeneration and other geothermal systems which is able to save them money and energy.

These in efficient systems are in place as a result of an economic preference. The following will the example the use of a **Tesla pump which by proven patented function will half there energy consumption from what they have now**. Tesla pumps will pump very hard with much less energy compared too and off the shelf pump.

TESLA PUMP

Background-On October 21st, 1909, Nikola Tesla (an inventor of many ingenious items) filed a patent for a pump which uses smooth rotating disks inside a volute casing. Tesla's novel method of "fluid propulsion" was based on two basic principals of physics: "adhesion and viscosity".

In the patent (which he received May 6th, 1913) Tesla began by pointing out the benefits of a smooth transition of energy:

"In the practical application of mechanical power based on the use of fluid as the vehicle of energy, it has been demonstrated that, **in order to attain the highest economy, the changes in velocity and direction of movement of the fluid should be as gradual as possible."** His device accomplishes this by harnessing the "internal forces opposing molecular separation" and "the shock of the fluid against the asperities of the solid substance". (Asperities are surface deformities, which even the smoothest disk will have.)

Pictured above is the Current three phase 5 hp motor pump used on Matamanoa island resort located in Fiji.

Running the resorts electric motors in RV mode in any 1-2hp role will operate doing the same function but on a quarter of its rated energy draw. An advantage of running this RV system on Fijian island resorts is that normally a 1-2 horse power motor or any electric motor would require 10 times the solar panels to recharge the batteries, where in RV mode it will only require ONE.

RV motor courtesy of Dan

Above top left is the capacitor bank, and the 3PH motor running of grid power from a variac wired and tuned to run in RV mode.

EFF figures are

1.b. Variac

- 2kW
- input 230V - output 0-260V

1.c. Measuring equipment

- DMM Victor VC9808
- DMM Metex M-3800
- Scope Tektronix 2215

1.d. Capacitor bank

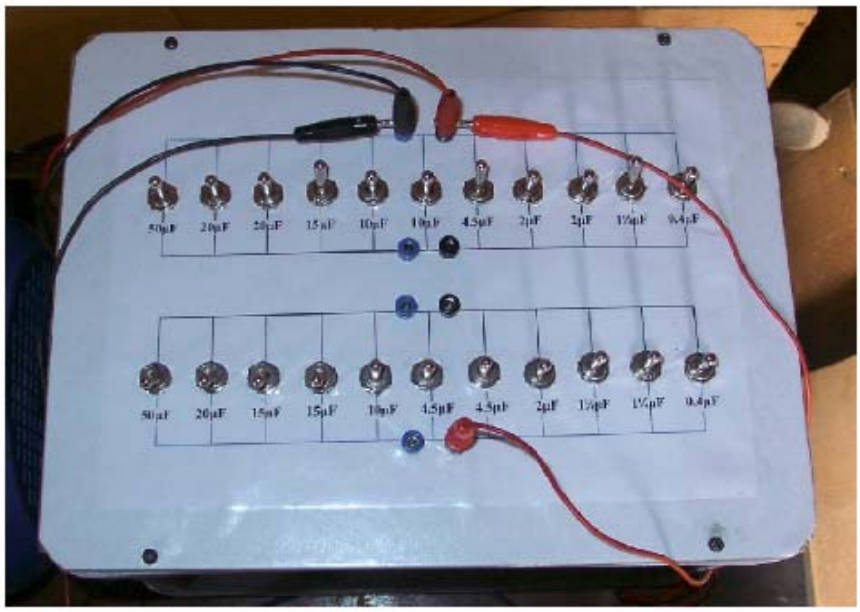

- Consists of 22 capacitor – all running oil caps – minimal 400VAC
- All switches are dual-pole ON-OFF-ON
- Wiring configuration as such that **2 dual banks can be used**

2. Running Primemover unloaded

- Motor wired for 400V in WYE
- Input connected to L1 & L2
- Caps connected to L2 & L3
- Start capacitor: 100uF (see bank 50 + 20 + 15 + 15 uF)
- Run capacitors: 20.75 uF (see bank 15 + 4.5 + 1¼ uF)
- Start current about 6A
- Input power measurements – iddle running – no fan:
  U = 80.1 VAC
  I = 0.25 A
  P = 20.03W consumed power - PF=1

- With fan, the motor current is 0.66A;

SOLAR/RV SALT DESALINATION PLANT

All Fijian Resorts are armed with an abundant resource for Solar systems. However when this report was compiled in 2005, it showed that ALL Fijian resorts are with out the awareness of the RV energy savings and available efficient solar water desalination systems. The current patent addresses these issues along with methods which Fijian resorts can multiply the evaporation process involving the use of mirrors, and other implosion techniques.

The patent salt desalination process will remove all salts and chemicals in seconds with NO filters.

The water cooker pictured above works by a invention that super heats a disk too very high temperature, then because of the centrifugal force and other means, instantly evaporates the water but spins out the salts and other unwanted impurities.

The steam is vacuumed gently upwards where it is condensed. Instead of boiling the water to remove contaminates as normally is employed in a conventional process, this unit has a secret ultra high efficient heating method where the water is injected carefully then there is instant evaporation. The air is regulated through a chamber.

Pat NO: 2005904642 cover this and other principles of the apparatus.

This system for the water unit is designed to generate 200deg C and water is injected where we get instant steam and salt separation. This unit consumes 400watts and showed by tests to get through 1.5 litters of water per minute. Please note there are no filters too clean and no waist of water as this is pure instant steam.

Also when ever we have something like this that generates heat, we have something that can generate cold which could be applied to refrigeration as a bonus by product of operation, perfect for the resorts function.

Below is a drawn diagram of a simple yet highly efficient concept where sea water can easily be purified. Periodic flushing would only be required once slat build up is too high. The desalination component is in the picture just for an emergency backup if water demands get high.

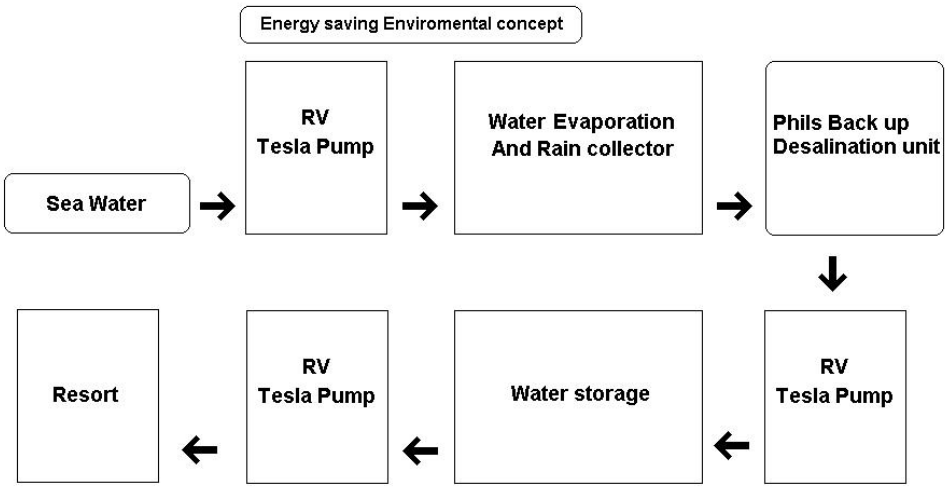

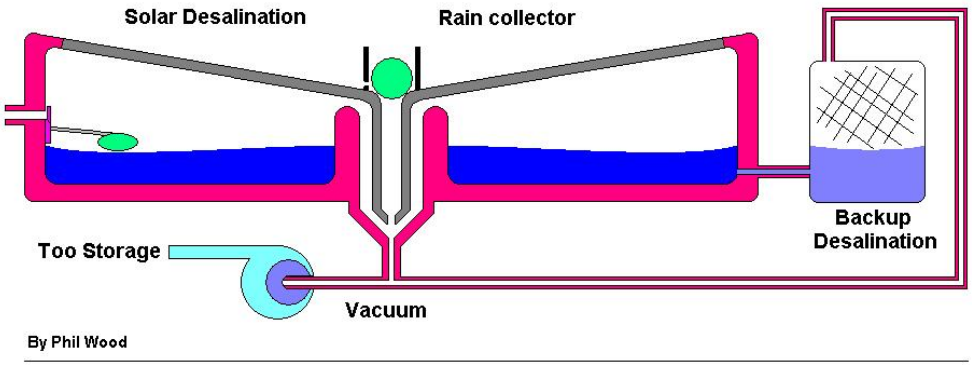

Norm's big motor RV tests

Quote -Norman Wootan

I have a 30 HP Magnetek, Century E Plus Motor, 1760 RPM, 460 V. 35 A. running on 1.2 A @ 125 VAC input. I disassembled the motor and washed the grease out of the bearings and machined off the large aluminium cooling internal fan. Now the motor will free spool for a long time when power is turned off, with very little rolling friction.

Congratulations, Norman Wootan on your MOUSTER RV setup the standard book rules state you did the impossible. This will lead to rethink the ways motors are engineered, but are up to the group and all others to force this KNOWLEDGE into The media and petrol mafia cartel faces. One megawatt motors running with 10 amps! -Hector

RV working in real devices

Doug Conzen has been the first to benefit by applying the RV energy saving principle into real life applications, which saved him energy and money. **Doug likes to cut grass** ☺ and did so with this adaptation of a home depot lawn mower. This test clearly demonstrates the significant energy saving involved with the RV's capacity of power on demand, and how the use of this technology in intermittent roles works in making the energy consumption drop.

Quote: *Today I cut some grass with the RV lawnmower - it cut through it great, and it was wet and high grass too.* ***The amps went DOWN when cutting grass - started out at 1.4Aac and dropped to 1.2A while cutting****. These Electric lawn mowers you can buy in stores like home depot and draw 15Amps so that is pretty good doing it RV instead at around 1.2A.****One thing I did is made my own aluminium-blade in it, this saves lots of watts as compared to the original heavy thick steel one.***

1.2 A is 12.5 times less energy than the 15 amp HD ones

I Just spent around 3 hrs mowing a couple lawns with the red RV mower it bogged down in thick grass and I had to restart it a few times, but so does the gas mower too in same place. Anyways I used 19uf run cap, and 5uf more for start cap, for a time in the thick grass, I hooked up the start cap all the time and then the motor got hot a bit but not too hot. It would be nice to have a switch for easy adjusting of the cap-uf size, as at pure-idle mode, I could drop that run cap down to 10uf or even lower, but then when you hit the grass with it, there isn't enough power to cut it without bogging down **so you need a "load" cap as well as an "idle" and "start" cap too is what I would say for next lawn mowing job.**

Also I ran the mower on a single half-charged up 7ah/12V battery not a Coleman 400W invertor and then the invertor running the RV lawn mower. The speed and power seemed the same as when running direct 120VAC house power (with long cord) but the battery drained down pretty fast - I didn't look at the current-draw (didn't have meter that big) but assume it is around 12A X 12VDC as its 144W watts on 120VAC.

This lawn mower is a good demonstrator for sure - its very easy actually to do the conversion, my motor is only 1/2hp too, lots of them on e-bay for super cheap I would go up to 1hp rated AC motor next lawnmower project however.

One thing I did is made my own aluminium-blade in it, this saves lots of watts as compared to the original heavy thick steel one - you don't need all that blade to cut grass. In conclusion I'm using only 1.2A ac compare to "conventional mower" using 15 isn't a direct-comparison, since I changed the blade too maybe if the conventional electric lawnmower had a lightweight blade, it would then only draw 8 or 9 amps I would guess. –end quote

Dougs converted lawn mower to run in RV modes with motor attached on top.

In a simple lawn mower application the normal motors draw is mathematically calculated to be at 33 amps, as opposed to 7.3 amps operating in RV mode. The RV motor draws power only as its cuts grass at 3450 RPM at a constant speed, and is still more efficient than a normal motor at that speed.

Simple RV battery charging

This is a very simple RV battery-charging circuit that anyone can try out on their RV Prime mover - now a switch fills a cap once per revolution, then other switch dumps this cap into battery to charge - tried this out already and it works good – for example within an hour 7ah 12V battery being charged had climbed to 12.71Vdc from 12.57Vdc...input draw to RV still surges every 6 seconds as the "mechanically timed" cap switches mounted to shaft "buzzsaw" through the motor's sine wave - .23A input to motor at idle - input amps to 7.5hp Baldor while charging now stretch/cycle from .18 to .40amps

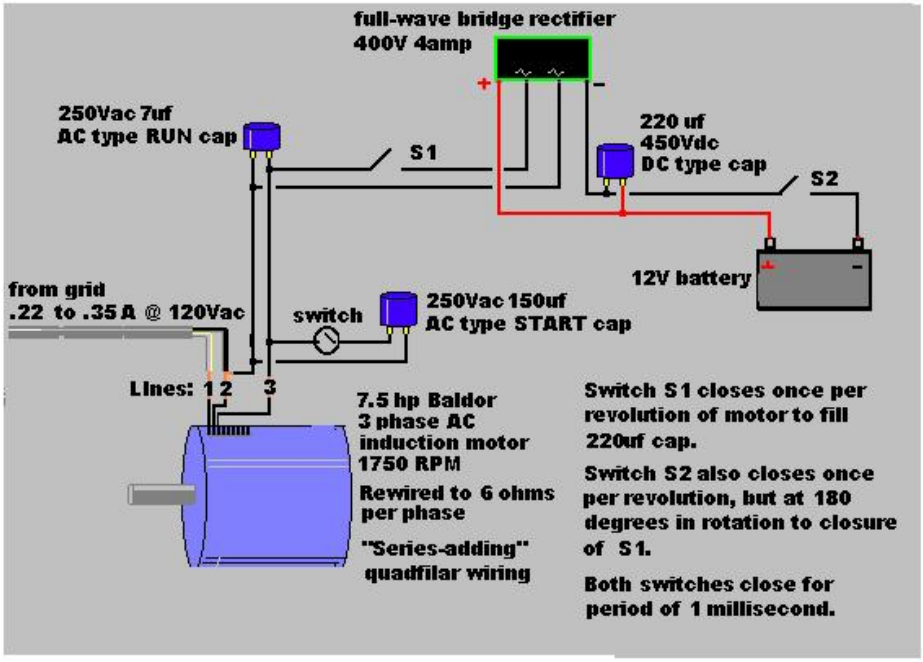

The disc on shaft with offset-rollers that hit brushes which work as the cap switches:

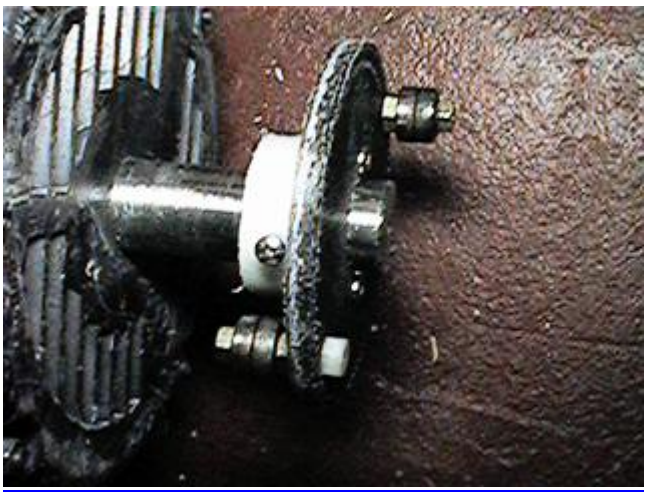

Two pairs of brushes that hit the rollers (one pair fills 220uf cap, other pair dumps cap into battery to charge)

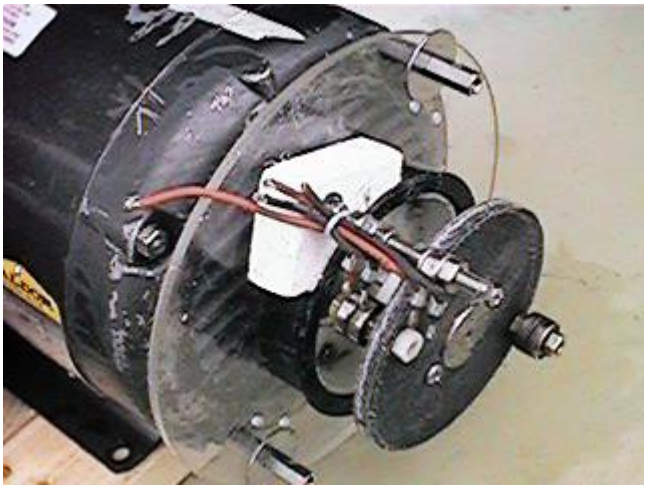

Phil's battery Charging circuit

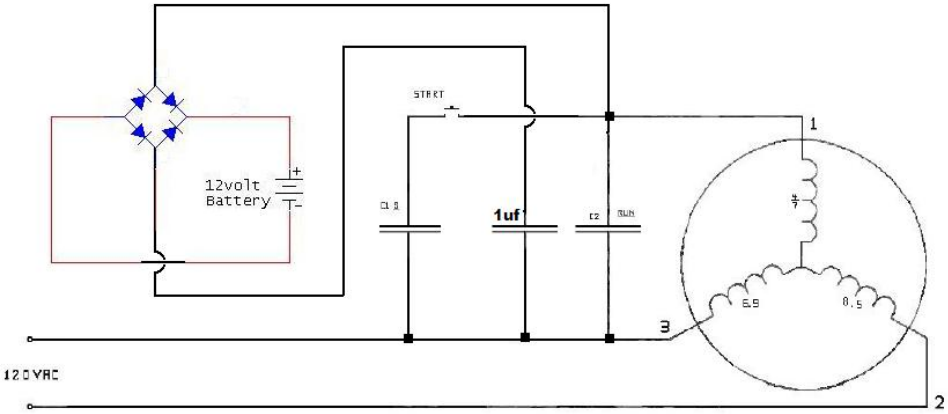

Notes- charging a battery directly from the RV is easy. **CAUTION- do not connect this circuit back to the same battery that is powering using an off the shelf inverter as it will blow up**. Phil has made a custom inverter which is profiled in the Advanced RV research and development compilation. This inverter can be run with this circuit as it has high isolation, and was designed for closed loop circuits.

This will swing the wattage way down running the inverter and you might just get lucky with a negative reading. Another Advanced battery charging circuit from Phil and David Kou (both open sourced RV engineers) can be found in the Advanced RV research and development compilation.

Link to the advanced compilation

RV principle applied to an Air conditioner

This is a demonstration of the very basic Roto Verter principles (power factor correction) on an old style single phase air conditioner.

Tunning binary cap bank connected to the air con and mains

We saved approximately 1 amp of input current from the mains power (240 volt 50 Hz) using 63uF of capacitance connected in parallel with the air conditioner to correct the inductive loads. An air conditioner uses two electric motors to operate - one for the fan, the other as a pump to circulate refrigerant gases to transfer heat.

Air con used

Google Video link

Note well when watching the video!

If you calculate for example for 64uF cap, then it's apparent resistance Xc=1/(2*PI*50*0.000064)= ca 497 Ohm (j designates the +90deg phase shift) and through caps will flow ca 0.443A.

OK, this is not very dangerous yet (I initially thought the current will be more with such value of a cap) and this amount seems to compensate the lagging current (-90 deg current, actually not quite, as there is no pure inductivity in motor) of the conditioner motor so that the overall amperage consumption from grid decreases (power factor correction).

To avoid bigger bangs and death of course such box has to be properly isolated, also the switches need to be of high quality and switch knobs dials very well isolated. The switches should be able to withstand quite high peak currents and voltages (possible inductive kicks of several hundred volts or even thousands volts).

The caps inside the box should have proper 1-10Mohm bleed resistors to bleed off the residual voltage in disconnected state. This avoids the situation when at switch turn-on the cap voltage from previous disconnects is say -300V and you turn it on at the exact moment when the grids voltage is +300V =>> this results then a very big inrush current to the cap and possibly the melting of poor switch contacts or weak wires.

Clarification of the RV's engineering principles.

Related to the De –rated horse power issue:

Question-If you run a high voltage motor with a very low voltage you will cut the current usage considerably down. Yes and by proper power factor you can tune this for better efficiency once more. But the bottom line here is: What is the power factor and what is the motor when loaded, able to deliver?

Answer: The power factor in (semi)resonance looking from the side of line is 1.0. The Motor is able to deliver lets say .8-1.13 HP by 5HP motor at its nominal RPM without falling off the RV mode. This is a trap in thinking here where 95% scientists fall here. Which is Why to use such a motor that can only gives a part of the HP power, there is no torque, and therefore there isn't any use.

The answer is: efficiency will increase and in some motors over 100% (no spark gaps, no switching, no high voltage, no high freq). It is because you run a motor in high impedance mode that allows this thing to happen.
How to make it more powerful at the same or higher eff% is to design high RPM motor (car/boat/airplane), increase the voltage 4x and RPM 4x. You are still running it in RV mode!

A 5HP motor at RV mode at 60cps 1800RPM will give out 1.13HP. When you increase the speed 5x = 9000RPM you increase the voltage from 120V to 600V also 5x, **you'll get >6HP out of it**. RV mode is preserved as well as the **HIGHER EFFICIENCY**.

When operated with a custom designed inverter with a frequency lock and frequency adjust, one can increase the HP torque by increasing the AC frequency and still running in RV, mode making the motor reach its rated HP but with more efficiency.

As the frequency increases if USING a single phase POWER source the capacitance needed is LOWER the HP output is higher and eff% goes up.

A point of adjust is FOUND were consumption DROPS to ZERO and CURRENT reverses flow (OU)...This happens as frequency matches the optimal OU impedance region (52 to 520 Ohms) of a given broadband range of. 72 to 450 CPS

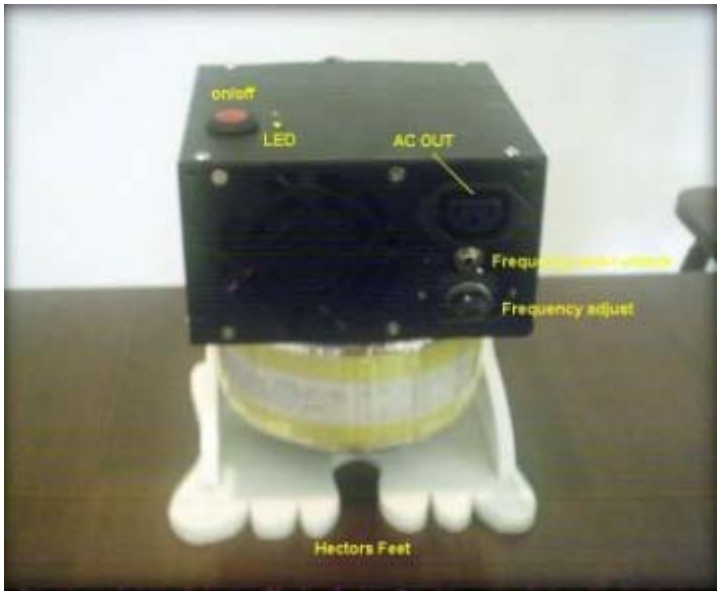

Frequency adjustable inverter built by Phil Wood.

The engineering protocol involves a Pulse length control, when adjusting from 0 to the MAX frequency length pulse, the operation is determined by the sine wave or square DC wave length in time (modified sine wave) & sine wave or any wave slope angle saw tooth, incremental logarithmic, stepped pulsed, quadrature modulated or phase modulated or any compound modulation or amplitude form, power or RF current & voltage phased angles (power factor).

A frequency adjustable inverter Power supply has variable parameters (amplitude control). When this concept is applied in RV mode the Voltage regulates the impedance as if it were VARACTOR tuned LC. This also regulates the HP output and energy saving Impedance states. The frequency control regulates the speed, and thus horsepower output, this is in combination with amplitude.

ANY frequency drive can be MODIFIED to do this; especially the 480ACV rated ones by adding voltage and amplitude control. The frequency drive needs to be constructed to regulate its final drive voltage from 100 to 480VDC. This can be switched by the 3 PH transistor or IGTBs 3x3 network. The drive can regulate motors into a full range of parameters; this has been given open sourced in RV disclosure with the advantage of having FULL rated horsepower at demand.

Any modified sine wave inverter can be modified to operate in amplitude, frequency and pulse length control. The opto isolated drives are the best, 12.7VDC operated electronics and also opto isolated & computer driven are as an Extra option.

Any number of inverters can be arranged to create an improved multiphase array, where also the computer can be used drivers by using opto isolated stages.

One EFF example:3 10KW inverters can drive 30KW 3 phase system with same source and using computer driven 3PH trigger, pulse & amplitude generation. More speed = more power which is gown geared to less speed. It is recommended to test a

1/2 HP and 1 HP drill motor against a normal & frequency regulated Over-rev'd RV Motor. Range parameters are Hi frequency Hi HP in 450 CPS RV 3 HP motor will give an equivalent output of a 30HP 50cps one.

A common commercial inverter has 2 stages:

1) A DC-DC converter to go from 12V (or 24V) to 145VDC (or 280VDC in other regions)

2) A DV-AC inverter to invert the HV-DC into the required AC

Both stages are controlled by separate logic. If you are lucky it's non-CPU based, so easier to hack.

So Hector is saying to rectify the grid AC and feed into the HV-DC bus via Diodes .Then the second stage of the inverter can convert this back to AC. If you can hack the inverter, then you could 'play' with the frequency, Pulse-width. The inverter need 12V source for the control logic, so a PC power supply can be used as an example.

This is of course one way of working. There are other ways as well, depending on the power requirements you have. The power limitation of an inverter is typically in the first stage. If you need high power (for Gene's setup) then the way H explained is only using the second stage, which usually can go high power.

In the case of a higher frequency transformer voltage, this goes up and the current goes down compensating within a given range same power level. You can use down stepped frequency drives in full RV mode. This is explained above in the theories of voltage (amplitude) , frequency & pulse length.

All inverters used for the RV should have an idle draw in specification. If it is below 0.4A, it is OK. Note that, 12V nominal solar panels can go up to 21-22V and most this inverters are dedicated up to 15V. This means, it requires the solar chargers (10-22V->13V) in between. Ravio and Phil have modified that so those can't be killed up to 36V, so we do not require those chargers.

Inverter- Other places were to buy the whooper, Inverter.

Other modifications can be made manufacturer specs options are (you can order it made to) Input 12,24,48 VDC, Output 60cps 100 -110-120-208-220VAC

If using a standard frequency drive we need 1 phase for the RV.

RV mode:
* 50hz @110V
* 100hz @220V

So we need a freq drive to output 220V, 100 Hz. In a sense - we can use a freq/PWM tuneable inverter for this, but the problem might be the transformer. Lets way you have 12V:300V transformer and using PW=0.75% we get V=300*75% ca 220V. This will be OK for 50hz. But when we increase the freq to 100hz, the transformer's reactance will resist a little bit that will result in slightly lower power output.

What freq drives do is they create first say 320VDC into capacitors with high freq and then the second stage inverter makes this DC to AC (pulse, modified sine wave or sine wave). This way - there is no transformer in the output and any freq can be generated.

Good to use the 220-240V output **SINGLE PHASE freq drive**, as it matches to 100hz RV mode and is more powerful. We do not use that freq drive in standard 3PH mode. We use RV mode and it must be single phase.

3HP motors take very little current when in RV mode and when they are used as bench drills. Quite simple freq drive can do. You can drive 1500RPM motor to 3000RPM. Starting requires more current. When it runs at high frequency the run capacitance requirement is much lower.

One company which manufactures a 1phase in and 1 phase out is called bardac.

Optidrive 1

SINGLE PHASE AC MOTOR SPEED CONTROL UP TO 1.5 HP FOR VARIABLE TORQUE FAN & CENTRIFUGAL PUMP APPLICATIONS.

Single Phase AC Induction Motor types:
Permanent Split Capacitor (PSC)
Shaded-Pole
Supply Options:
110-120V single phase
220-230V single phase

Rugged compact packaging
Optiwand & Optistore configuration and parameter storage
Silent running with 32KHz switching
Output frequency up to 1000Hz
Bipolar 12 bit analogue input
Overload rating 150% for 60 seconds
DC injection braking
Easy installation and fast start up
Isolated control circuits
Programmable i/o
Hours run log 50°C ambient
Power loss ride through
Integral RFI filter option

Heres the link to the bardac one: Link Seems like that should work, it goes up to 1000 Hz..

Or alternatively you can just make a cheap one using a DPDT relay and a centre tap 12V to 120V trafo along with a 555 to drive the relay. It is expected that the transformer to saturate if the frequency goes to high but there might be some 400Hz centre. Hector also states you can USE 3PH ones with step down 3ph transformers to get the HI impedance and use the triple flux capacitors or NO capacitors at all (pure reactive CEMP capture).

If 3PH is cheaper go 3PH remember a 3PH drive can be used to drive 3 RV motors on one phase each generating 9 capacitor virtual phases combined.

Link, Single phase input 3 Phase output ones here ! (Choose!) & hack one to OU!
Link amplitude, frequency & pulse length controlled computer programmable.

Have one for 50CPS 220 VAC input and 0 to 1kC output. 3 phase drives ALREADY contain the recovery diodes within the transistor IGBTs structure & some are already optically gate isolated so little mod in frequency amplitude & pulse length and in its "modified sine wave 3PH signal and you have off shelve OU.

IF an inverter drive is 220 you can use 1 PH transformer to step up to 220 and use step down 3 PH one on the 220 INVERTER DRIVE output and lower it to 120 VAC.

Also A 460VAC DRIVE CAN BE USED AND THE output transformer can be universal multi winding tap to use 480,360,240,120 VAC and capacitor Resonators to boost OU production (Ferro resonators). Also You can MOV "VARISTORS" arresters to kill the surge

Fact a one phase Inverter has 4 transistors and is driven in opposed pairs ,the parameters to control are. Frequency CPS (cycles per second) Pulse length the length each transistor is on and Is calculated as from 0 to.75 the time interval of a half cycle per second. Amplitude (the voltage in the ac section of the inverter....)

This can be regulated adding amplitude modulation or VOLTAGE regulation from o to 460VAC. I have the module in storage from 0 to 800VDC at 8 amps as add on

opto isolated bridge driver regulator system (3PH)

3PH systems use 6 transistors array driven 3 at a time in specific intervals all that can be pulse length driven as one phase inverters are.

Any normal inverter can be HACKED the driver circuit and control pulse length this can be done by r programming the chip software or using multi vibrator circuit Substitution, frequency is easy 555timer or 556 (Dual 555 timer) to include a pulse length adjusts.

You can make any inverter OU if you hack the first stage into "flyback" mode and make it squeal like a pig. (Refer the advanced RV research and development compilation located on http:///ww.panacea-bocaf.org for further instructions.)

Websites to source Frequency drives:

Link

Link

Link

Link

Theory

There is a "virtual rotary capacitor" in 3PH frequency driven motors (triple flux one)

Reference

Also by Hector, most frequency drives have already internal recovery diodes if CEMFP falls within a BLANK segment it returns to POWER capacitor dealing with PULSES It is just an "answer awaiting rediscovery" how many times I mentioned the harmonics.

Redirected non reflective to a load they become pure OU power on BEMF recovery designed inverter reflated power. What will those harmonics will do reflected back into a pure resonant LC...????? Contemplate the LC in series initiated by RV alternator to Circuit.

Those experimenting with 50 hertz inverters for RV operation they will start electric motors - but you must be aware that an electric motor will draw up to 7 times the motor's full load current on start up, even though this may be only for a fraction of a second. Your inverter must be able to handle this inrush current. The Inverter must be a modified sine wave inverter & handle up to 8000W (Peak) inrush current which is approx 32 amps. Divide 32 amps by 7 (the amount an electric motor will need for start-up) = 4.57 amps. This tells us that the inverter will start an electric motor which has 4.5 amps full load current or less - if you exceed this the inverter may start larger motors if they are unloaded it cannot guaranteed it will start it

Video Link- Frequency driven RV test

An example in efficiency Tested by Doug konehedx

A normal 5HP AC motor: draws 3800watts input at idle or under load (under load maybe more maybe less depending on motor design) The RV 5HP motor: draws 36watts input at idle. Under load watts goes up until slip range, then motor stops. (Non-RV 5HP AC motor gets hot and melts windings when slip range is exceeded).

NOTE: a PM (permanent magnet) RV rotor eliminates the slips loss. This aimed to be demonstrated more in further RV R and D research, please consult the compilations mentioned at the start for more detail.

An RV 5HP motor is estimated to be de-rated to a HP rating of about 2HP, that's 1498 watts normally. The RV motor probably achieves this at around 250watts (2 amp input) **6 times more efficient**, as a basic estimate.

One point that many people miss: When you take a 480V motor and run it on 120V, you will not have the full rated horsepower – the objective is to get very efficient conversion energy from electrical to rotary mechanical.

A 5HP 3-phase motor run on 120V will be lucky to put out 1HP BUT it will do that with very little loss. (The only way to get more hp out would be to drive the motor at a higher speed -- something Hector calls an electric turbine.) Very low idle current (the amount of power it takes without a load) and tuneable for specific loads. Hector calls it a reverse dynamometer. This means that the input current is fairly linear to the power output between idle and stall.

Weight issue

At this early stage of R and D it is recommended that Lighter aluminium motor casing are to be constructed for further elimination of power to weight ratios for applications of higher efficient motors. Also a 746 HP electric motor designed for aircraft use weighting under 100 pounds is possible by design. Hector states that with a design is very simple, and can eliminate 90% of current electric motor weight with no sacrifice in performance. Currently the heavy motors are only used as RV hosts to demonstrate the proof of principle.

Hector has stated that **if you look at a rotor 95% of its weight is useless as only the surface plays part as linear motor**. The lines do not really cross the squirrel cage inward carbon fibre composite or titanium Magnesium alloy shaft. Aluminium sodium wire alloy shaft coated and countered stator core integrated in magnalloy or composite casing for a car a motor can be designed to weight 20 pounds and deliver 250 HP in electric turbine mode (Easy having the resources.)

Essence of the RV running minimal current on idle

The essence of RV is not actually running on minimal current if idle. The essence is to have 2 motors connected, one as motor and the other as generator. A load will be connected to generator (having it's dual windings in parallel, thus low Q, motor part has it's dual windings in series => high Q, (big inductivity) and only then the motor part's run cap is **TUNED to MINIMAL MOTOR CURRENT WITH DESIRED LOAD.**

Now we have a High Q narrowband motor part driving low Q wideband alternator part with desired load. Motor part will be tuned to resonance and this resonance will contribute a lot of mechanical power to the alternator part while consuming minimal power from the power supply. The motor part should have U voltage driving 4*U rated windings, this gives some headroom for resonant rise and resonant amplification effects without the irons saturating.

If run without load with the same run cap, the motor part will not have minimum current because Crun for loaded case is bigger than Crun for idle case. So in idle mode the RV primary's input current will be actually capacitive instead of inductive as with normal motors. **But when loaded, the sweet point is attained where the PF=1 and resonant current amplification occurs and motor torque will be much bigger than normally expected with this low input voltage.**

Doctorated certified Bullshit

There is dis-info made into a "scientific Dogma. A DOCTOR in power engineering told Hector once that he needed 240AC volts as to have 2 phases to generate the 3rd. Point to point non grounded 240VAC is single phase 2 wire power .120VAC is same (1 phase power) and can be verified with a scope.

Test for Basic hard postulates

Any university power engineering R and D faculty may test the publicly available plans and instructions to gain advanced knowledge in power engineering via the Roto conversion effect.

Goals: University test –evaluation of the rotor conversion effect - driving (3-7HP) motors at 1/4 nominal voltage optimizing vectoring capacitance to the load, measuring power factors, rotation, input VxA, rotating VxA and PF, torque, eff%, magnet fields during semi-resonance.

For energy savings of 90% involving

Application in solar cogeneration/ grid power using RV mode to run a Lathe, a milling machine, an industrial bench drill or any other load variable machine which it can run easily up to one HP from the grid or solar power including a BELT woodcutting saw with an installed pulley to the RV prime mover.

To confirm the BASIC HARD postulates of:

Postulate one: Normal motors waste 90% of their power with no load, RV saves 90% of this otherwise lost energy as a power on demand electrical transformer alike operation showing motors can be operated in resonance at a minimal Power draw, and supply power on demand Using Higher Impedance being 90% power savins idling 94% eff on loading at re rated HP.

-measurement of 5 to 7.7 HP 3PH motors run in RV mode re-rated to 1 to 1.8 HP tuned at 749W per hp 97% eff as an approximate estimate tested by a method to measure foot pound torsion to HP to Watts conversion using a LAB volt Foot Pound torque meter or equivalent. To show and prove that under certain conditions of load & tuning conditions RV is OU (over unity).

Point: To show motors can be operated as transformers at a minimal Power draw, and supply power on demand Using Higher Impedance. 90% power savins idling 94% eff on loading at re rated HP.

Accurate debunking via test equipment

A ***start*** for basic research. By earl.

1) Measure the inductance of the winding to be resonated.

2) Couple the motor to a "rotary table" as the machinists call it. Rotate the motor in precise increments and note variations in inductance, including minimum and maximum.

3) Build a two-terminal oscillator with two transistors, a diode, couple of R's and C's. Cheap, easy, and simple. Below is a schematic.

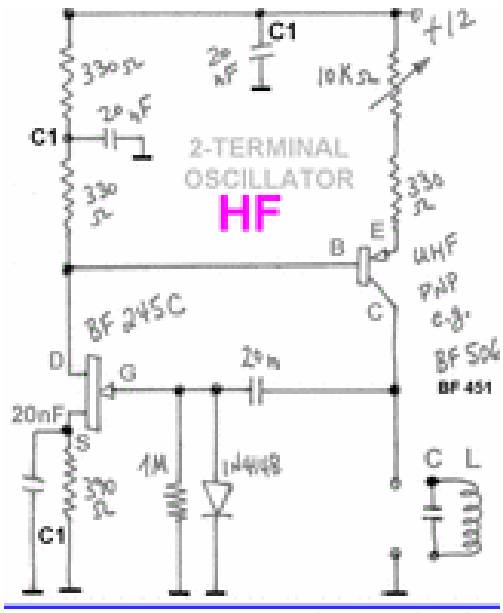

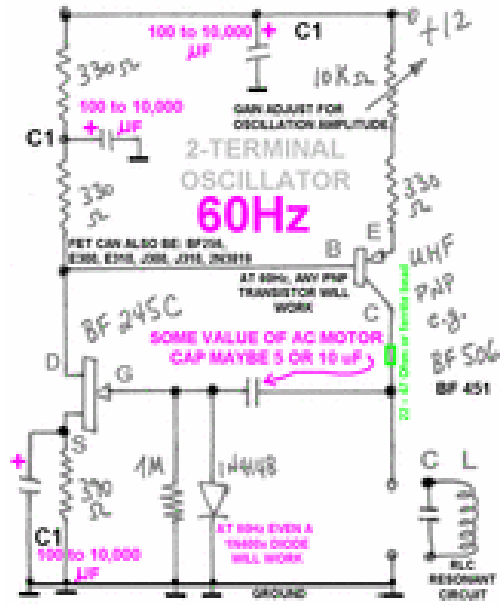

4) Connect the resonating capacitor to the motor coil, which in turn are connected to the oscillator.

5) Beg, borrow, or buy a frequency counter with "period measurement". It must be able to measure period because at 50/60 Hz the frequency is so low, normal frequency counter operation would take too long and be imprecise.

6) While turning the motor on a rotary table, protocol the rotor angle versus oscillation frequency.

This is the crux of the matter. You will see if you are anywhere near 50 or 60Hz and you will see how much the resonant frequency varies from the nominal AC line frequency over 360 degrees.

I would also monitor the waveform with an oscilloscope.

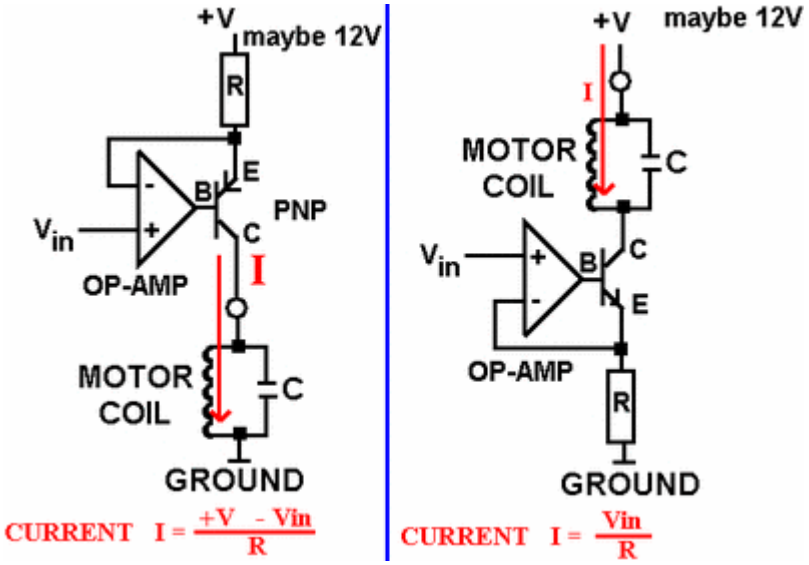

elektor infocarte 51 | **composants discrets 11** | **caractéristiques des transistors J-FET à canal N**

Type	$V_{DS\,max}$ en V	$V_{GS\,max}$ en V	P_{max} en mW	Courant de repos de grille en nA	$V_{GS\,(OFF)}$ en V	Courant de saturation de drain en mA	Fréquence limite en MHz	CASE Boîtier
BF 245A	± 30	−30	300	5	−0,4 . . . −2,2	2,0 . . . 6,5	700	I
BF 245B	± 30	−30	300	5	−1,6 . . . −3,8	6,0 . . . 15	700	I
BF 245C	± 30	−30	300	5	−3,2 . . . −7,5	12 . . . 25	700	I
BF 246A	± 25	−25	250	5	−1,5 . . . −4,0	30 . . . 80	450	II
BF 246B	± 25	−25	250	5	−3,0 . . . −7,0	60 . . . 140	450	II
BF 246C	± 25	−25	250	5	−5,5 . . . −12	110 . . . 250	450	II
BF 256A	± 30	−30	300	5	−0,5 . . . −7,5	3,0 . . . 7,0	1000	I
BF 256B	± 30	−30	300	5		6,0 . . . 13	1000	I
BF 256C	± 30	−30	300	5		11 . . . 18	1000	I
E 300	–	−25	350	0,5	−1,0 . . . −6,0	6,0 . . . 30	700	III
E 310	–	−25	350	1	−2,0 . . . −6,5	24 . . . 60	700	III
J 300	–	−25	360	0,5	−1,5 . . . −7,0	4,0 . . . 45	450	IV
J 310	–	−25	360	1	−2,0 . . . −6,5	24 . . . 60	700	IV
2N3819	± 25	−25	200	2	−0,5 . . . −8,0	2,0 . . . 20	–	II

V_{DS} = tension continue Drain-Source
V_{GS} = tension continue Grille-Source
$V_{GS\,(OFF)}$ = tension de blocage Grille-Source

Two further considerations provided by Phil Wood

First: and which is fool proof is run time. This is when you run a motor in RV mode compared to the same motor and batteries run through a conventional 3phase inverter.
Second: is using computer software and monitor all resistance blocks at the, in and out, where an average recording is calculated over a period of time.

Phil states - I learnt something very important whilst going through professional 3rd party testing and that is, you can not fool or discredit run time with too 2 machines doing identical work with one having your concept and the other not. Then the motor and the batteries must be alternated and the same tests run again and again to eliminate any errors.

There is so much to learn (R and D is needed) and understand, as when hitting true resonance and operating within its realms, effects will not be what you expect. This is what I personally have witnessed thousands of times where the original energy consumption may appear the same, but where the load is doubling its energy output. Other effects are temperature changes as energy is compressed and released.

Recommended testing equipment for RV energy savings Tests

Two options will be recommended the most thorough recommended test is to use a prony brake to test the shaft power to watts used. The other option to test this same goal is to measure Volts AC with a true RMS volt meter preferred, an AC ammeter, and a wattmeter. Now compare the power reading on the watt meter and what is calculated after multiplying volts and amps. There is a calculation for those figures and you can find the power factor from those figures.

For mechanical power you need a dyno and an optical tachometer with a small piece of reflective tape on the output shaft.

Prony brake testing

Construction tips: A 1m tuneable proney break dynamometer where one side can be put onto the electronic scale can be constructed shaped like the following.

-------O

You can do also a balanced version:
-------O-------

By Reading the scale, and freq you can calculate the mechanical energy output. With this you can calculate the I/O. To make a screw tuneable prony break (perhaps 1m long) to measure the mechanical power output on various loads. You can use car breaks if you want. The centre or middle is attached to the motor sides are equal, one side steps on the electronic scale. Power out = some magic fm (RPM, force/mass on scale, distance from centre to scale) this is the solid proof of OU.

Taken from Sample:Link

MEASURING THE SHAFT POWER OF THE MOTOR

For small motors, this is best done with a tool called a "Prony Brake", which is named after a fellow called Prony who invented this.

It is simple; a one foot long bar (from center of shaft to tip of bar) is clamped around the motor shaft, the tension of the clamp gives it an adjustable resistance to test different RPMs and loads.

The formula to measure horsepower is this:
Foot-pounds X RPM / 5250 = Horsepower X 746 = WATTS

To calculate foot-pounds with the prony brake test, first let the bar rest on the scale, and measure what this weight is. Subtract this weight of the bar itself from the total weight shown when testing the motor while it runs.

Prony brake:

Resting on scale and around shaft:

Close up of clamp:

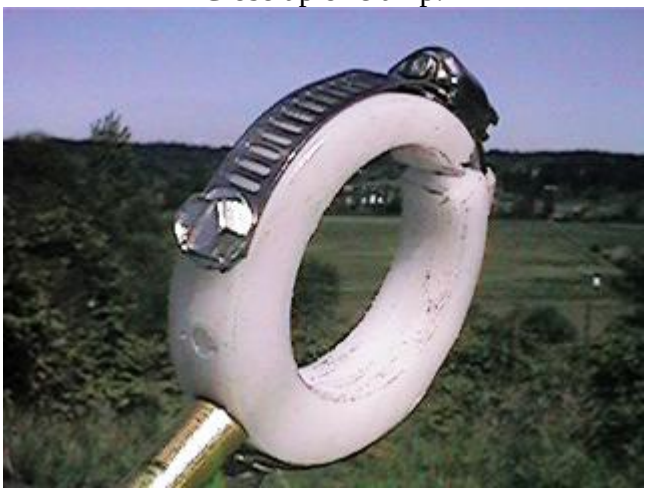

Tensioner screw on clamp:

Clamped around shaft-disc:

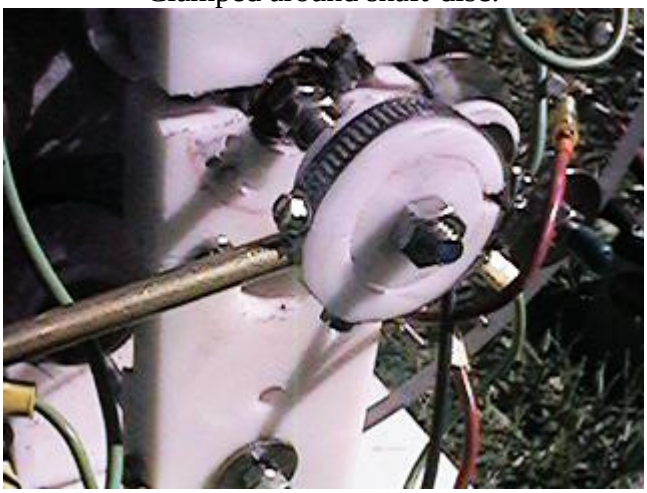

Make it as light as possible - you don’t need Teflon as the wrap around part; you could make it of aluminium or brass. All you need is a drill press and bit the diameter of your motor shaft. When you do your Prony brake tests, rest the arm on the scale with. The motor not running and the brake very loose on the shaft then see how much it weighs, then subtract this weight from what the brake pushes the scale when you do the testing with the motor running.

Hector says to make double-armed brake (two one foot arms at 180 degrees) , and have the other arm's purpose to be a perfect balance so that the arm resting on the scale will read O grams...this way you don’t need to subtract the weight of the scale itself, and the reading should be more accurate since there would be less drag on the shaft too. I haven’t made one like this yet, but it seems to be a better design.

When you test, the RPMS measurement must be very exact, (use scope) as well as the grams or ounces that you read on the scale. when you insert the numbers in the formula, if you miss getting it right by just a bit, it will tweak the formula into an unbelievable way over OU or unbelievable way under OU so do a lot of repeat-tests, so that you can do it anytime in a flash and the readings are always going to be predictable.

A lube on the shaft too will help keep the RPMS steady (hemp oil?) Also its an AC motor surfing on a AC sine wave, so don’t over-brake it into heat build up and huge draw (what a debunker-lab would do like t) you'll find a certain RPM and shaft-loading that will be the best. I prony braked one of my kone-head motors way back in 99 at a FCC lab and what really made it better than normal motors is the lack of heat build up under heavy shaft loading, the draw was about 3 times less with same load on shaft.

Thus the opinion by many engineers experienced in ALT energy is the best way and most accurate to compare shaft power in motors is a PRONY BRAKE which is just a 1 foot arm on your shaft, with one end of arm resting on a scale measuring grams or ounces, and the other end is wrapped around the motor shaft, with this end "split" so that a screw can go through it so that it can be tightened or loosened for different amounts of tension on the arm (tighter will make more pressure on scale, looser will make for less pressure on scale)

Then calculate WATTS by knowing the RPMS (use scope) while pressure on scale is being measured, and knowing that you have a one foot long arm foot-pounds pressure is easy to see, then stick it all into the basic horsepower formula.

Doug kone head has been using Prony Brakes for 7 years on motors – the idea has also been endorsed by JL Naudin who acquired it from patent that Mr Prony made long ago...it works great.

Prony Formula by Raivo.

Here is the prony break formula I used once (in metric):
P = E / t = m * 9.8 * 2 * PI() * R * (RPM / 60)
Simplified: P = 1.026223 * m * R * RPM
Oversimplified: P = m * R * RPM

m - scale reading
R - distance from shaft to scale
RPM - rotations per minute

Output is in watts.

Another Simple way is to use DC car generator (not an alternator) older cars like a 67 fiat as example used generators, nowadays they are all alternators. Simply run one motor with the generator, then the other with same generator and see how much power you make in comparisons.

PROBLEMS anticipated with this: When doing true power tests, you need that capacitor, and the resistor, and your audience needs to UNDERSTAND how to measure true power (WATTS)...most people (actually maybe 1 out of 5 maybe) know that watts is volts X amps, and WATTS is true power, BUT the thing is, most people DONT UNDERSTAND that you need a resistive load (A RESISTOR) to check

power (WATTS) output from coils (what a generator has in it making that power) and also it should be rectified to DC too, to avoid meter errors and other problems....in fact I would say that if you put a thousand people who took science and electronics classes in high school in a room I would guess maybe 12 of those people understand how to check REAL POWER with a resistive load across your cap.

So to me this is your biggest hurdle to overcome when you do your demos - basically your audience will not know what you are talking about and you must teach them how to test power – make sure they understand you and don’t think you are making it up..

Another solution is to use a PMI DC servo motors as your load on the shaft if you can’t get a car generator or use both.

Update:

1. PRONY BRAKE
Attach to RV aluminium, ca 8mm thick 'flywheel'.

Make a 'scale type' brake:
====O=.=O====
. - centre
O - neo magnets

Attach one end to electronic scale.

When you push it near the rotating flywheel, magnets will cause drag and aluminium will heat up. There are no things that get 'used'. Power is adjusted by the gap between scale and flywheel.

2. use the same RV + flywheel setup

Other RV, alternator you have the flywheel with magnets. Now, you can have prime mover running and shift the alternator nearer and nearer to prime mover. This way you control the slip and RPM, so you can optimize the resonance and do light bulb standing wave test. Generator tests, at different RPM's and loads, etc

Hector the inventor will agree to use a car battery, and then put an ammeter on it feeding an invertor, then run the rotovertor or other motor with the invertor, and then run both types of motors and then compare how much they consume while using the drill press. A drill press is good because the IDLE power saving advantage can be shown.

A valanced arm one feet length from shaft centre taped as to force valance or weight transducer as to read foot pounds of torque . A system to adjust arm friction to rotating shaft.

Formula:

To get from pound-feet of torque to horsepower, you need to go through a few conversions. The number 5,252 is the result of lumping several different conversion factors together into one number.

First, 1 horsepower is defined as 550 foot-pounds per second (read How Horsepower Works to find out how they got that number). The units of torque are pound-feet. So to get from torque to horsepower, you need the "per second" term. You get that by multiplying the torque by the engine speed.

But engine speed is normally referred to in revolutions per minute (RPM). Since we want a "per second," we need to convert RPMs to "something per second." The seconds are easy -- we just divide by 60 to get from minutes to seconds. Now what we need is a dimensionless unit for revolutions: a radian. A radian is actually a ratio of the length of an arc divided by the length of a radius, so the units of length cancel out and you're left with a dimensionless measure.

You can think of a revolution as a measurement of an angle. One revolution is 360 degrees of a circle. Since the circumference of a circle is (2 x pi x radius), there are 2-pi radians in a revolution. To convert revolutions per minute to radians per second, you multiply RPM by (2-pi/60), which equals 0.10472 radians per second. This gives us the "per second" we need to calculate horsepower.

Let's put this all together. We need to get to horsepower, which is 550 foot-pounds per second, using torque (pound-feet) and engine speed (RPM). If we divide the 550 foot-pounds by the 0.10472 radians per second (engine speed), we get 550/0.10472, which equals 5,252.

So if you multiply torque (in pound-feet) by engine speed (in RPM) and divide the product by 5,252, RPM is converted to "radians per second" and you can get from torque to horsepower -- from "pound-feet" to "foot-pounds per second."

The prony-brake rod centre must be pointing to shaft centre. Foot pound is measured from shaft CENTER 1 foot to weight transfer point at centre also of relative rod end ...(One foot). Use 2 rods to valance tool in centre, use adapter ring else you will have keyway eating your brake away as a router bit. If tool is perfectly valanced you don’t have to centre weight correction into the equation

How do you convert engine torque to horsepower?

Have you ever looked at the specs of an engine in a magazine and seen something like "this engine makes 300 pound-feet of torque at 4,000 RPM," and wondered how much power that was? How much horsepower are we talking about here? You can calculate how many foot-pounds of horsepower this engine produces using a common equation:

(Torque x Engine speed) / 5,252 = Horsepower
The engine that makes 300 pound-feet of torque at 4,000 RPM produces [(300 x 4,000) / 5,252] 228 horsepower at 4,000 RPM. But where does the number 5,252 come from?

To get from pound-feet of torque to horsepower, you need to go through a few conversions. The number 5,252 is the result of lumping several different conversion factors together into one number.

First, 1 horsepower is defined as 550 foot-pounds per second (read How Horsepower Works to find out how they got that number). The units of torque are pound-feet. So to get from torque to horsepower, you need the "per second" term. You get that by multiplying the torque by the engine speed.

But engine speed is normally referred to in revolutions per minute (RPM). Since we want a "per second," we need to convert RPMs to "something per second." The seconds are easy -- we just divide by 60 to get from minutes to seconds. Now what we need is a dimensionless unit for revolutions: a radian. A radian is actually a ratio of the length of an arc divided by the length of a radius, so the units of length cancel out and you're left with a dimensionless measure.

You can think of a revolution as a measurement of an angle. One revolution is 360 degrees of a circle. Since the circumference of a circle is (2 x pi x radius), there are 2-pi radians in a revolution. To convert revolutions per minute to radians per second, you multiply RPM by (2-pi/60), which equals 0.10472 radians per second. This gives us the "per second" we need to calculate horsepower.

Let's put this all together. We need to get to horsepower, which is 550 foot-pounds per second, using torque (pound-feet) and engine speed (RPM). If we divide the 550 foot-pounds by the 0.10472 radians per second (engine speed), we get 550/0.10472, which equals 5,252.

So if you multiply torque (in pound-feet) by engine speed (in RPM) and divide the product by 5,252, RPM is converted to "radians per second" and you can get from torque to horsepower -- from "pound-feet" to "foot-pounds per second."

Torque (FP) x Engine speed (RPM)) / 5,252 = Horsepower

The engine that makes 300 pound-feet of torque at 4,000 RPM produces [(300 x 4,000) / 5,252] 228 horsepower at 4,000 RPM. But where does the number 5,252 come from?

To get from pound-feet of torque to horsepower, you need to go through a few conversions. The number 5,252 is the result of lumping several different conversion factors together into one number.

First, 1 horsepower is defined as 550 foot-pounds per second (read How Horsepower Works to find out how they got that number). The units of torque are pound-feet. So to get from torque to horsepower, you need the "per second" term. You get that by multiplying the torque by the engine speed.

But engine speed is normally referred to in revolutions per minute (RPM). Since we want a "per second," we need to convert RPMs to "something per second." The seconds are easy -- we just divide by 60 to get from minutes to seconds. Now what we need is a dimensionless unit for revolutions: a radian. A radian is actually a ratio of the length of an arc divided by the length of a radius, so the units of length cancel out and you're left with a dimensionless measure.

You can think of a revolution as a measurement of an angle. One revolution is 360 degrees of a circle. Since the circumference of a circle is (2 x pi x radius), there are 2-pi radians in a revolution. To convert revolutions per minute to radians per second, you multiply RPM by (2-pi/60), which equals 0.10472 radians per second. This gives us the "per second" we need to calculate horsepower.

Let's put this all together. We need to get to horsepower, which is 550 foot-pounds per second, using torque (pound-feet) and engine speed (RPM). If we divide the 550 foot-pounds by the 0.10472 radians per second (engine speed), we get 550/0.10472, which equals 5,252.

So if you multiply torque (in pound-feet) by engine speed (in RPM) and divide the product by 5,252, RPM is converted to "radians per second" and you can get from torque to horsepower -- from "pound-feet" to "foot-pounds per second.

Phils DC to AC start with the BCSRC RV

The following picture is of running a 3phase with a 12volt DC motor coupled. This gives immediate start up with no starting caps required, and when the 3phase is heavily loaded the slip causes the DC motor too work harder pulling the 3phase back up to speed. After running many tests with this, the results show it is highly efficient with "power on demand” characteristics.

Both motors run cold, note a chain drive is too noisy, the advice is to go belt driven. If you run the 3phase in RV with the following BCSRC circuit you won't be disappointed.

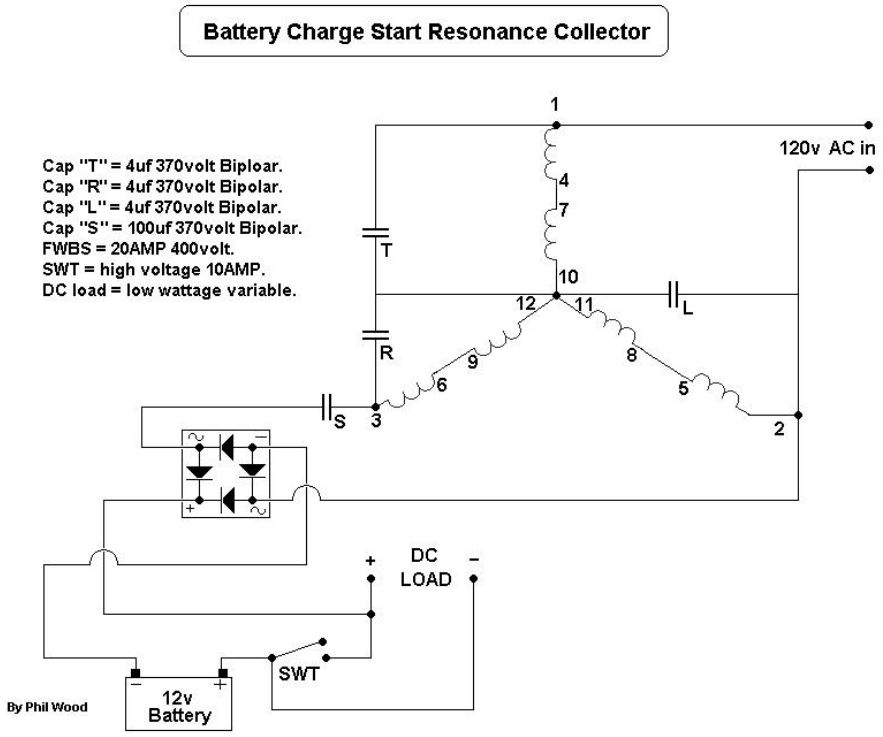

The circuit operation consists of the above mentioned components where the main driving coils In a 3phase motor are also tuned into a resonance condition.

This is achieved by connecting between 2uf and 4uf capacitors across each coil winding. The Starting capacitor "S" is engaged by closing the switch thus placing the battery in the circuit as too receive a fast charge from the starting current, but provide the necessary resistance too allow cap "S" too operate correctly.
Once the motor starts the switch must be immediately opened where a high resistive load is now operating in the loop.

With the battery also staying in the loop the resistive load is now in control of adjusting the phase angle of the resonance windings in the motor.
Any resistive load places a gentle charge on the battery at all times
The battery MUST NOT be running an inverter that is also connected to the motor unless it utilizes a step up transformer too provide an isolation from its main source.

This circuit has been operated on a 5Hsp 3phase Baldors motor where the energy input is 26.4 watts whilst running on 240volts 50HTZ.
Further improvements are now expected with changes in capacitance values and by resistive load adjustments on the output.

Copy and enlarge for further detail. The instructions are to try 20UF caps on all phases for the 120volts 60 hertz motors. Note you may need to do some digging to find the centre Y in some motors.

Australian motors are already setup for this configuration without hacking into the motor. All you do is connect the links as per this diagram.

Ausi 3phase wiring for Y connection.

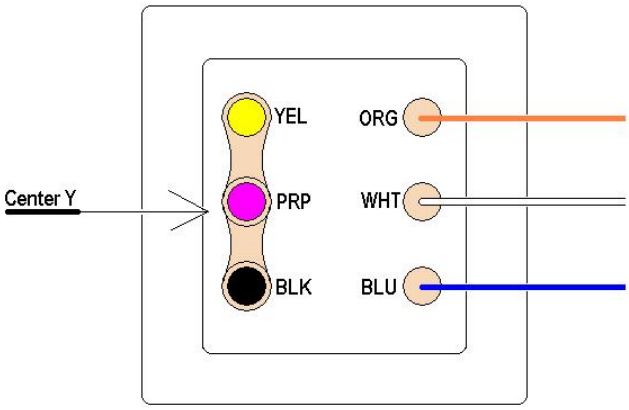

Colour/Number codes are:

1), Blue
2), white
3), orange
4), yellow
5), black
6), purple

The following will mean you never will need a start cap as the DC motor automatically spools up the PM. When you load down the PM the DC motor automatically pulls it back up to speed. I have mine running like this, and even though it is belt coupled it doesn't matter as it is a one too one ratio Anyways.

Now before anyone freaks out, the DC motor does not see 120volts but only the voltage it is rated for. Without getting complicated it is all just a resistance thing with the differential between the DC and AC motor. You will also notice that the current draw is much less than normal RV mode and there is much more torque.

Now mate, if you want too also use the PMI as a generator, it is so damn easy.
All you do is connect your next load, and lets say it is light bulbs across the DC motor. Why only 2 people would listen to me and try this I have no idea. But you will see how a tiny inverter will now start the PM and the current will fall way lower than before, and you can generate excess power from the DC motor with out any complications

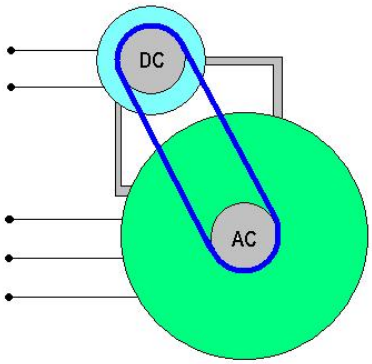

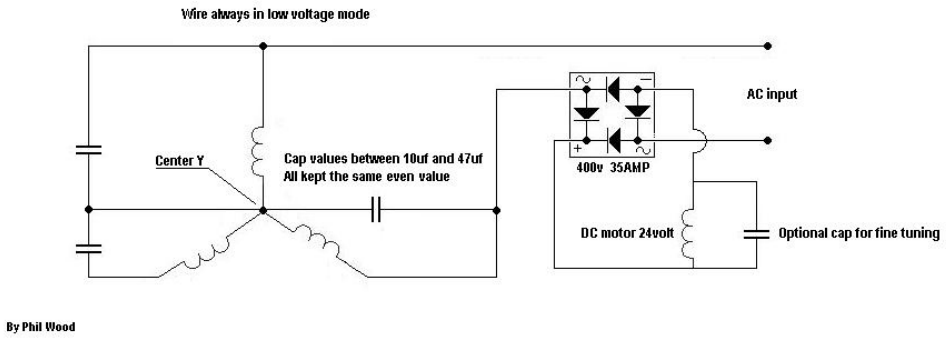

The following diagram is the DC motor working in conjunction with the AC motor for sure. Ideally it would be a better commercial product if the 3phase motors had an in-built DC type motor within the unit its self. This does not need too have any commutator and could all be a solid state operation.

Anyway, I [Phil] have run 2 X 3phase motors myself using the DC motor attachment and they operate perfectly. I have used a 12volt golf buggy cart motor and also a 36volt DC motor that I believe could have been off an electric scooter.

To give you an idea of the types of resistance's of a DC motor that can be used with the RV, the 12volt motor is 0.9ohms. The 36volt motor is 2.8ohms.

Because I have spent many years inventing circuitry for DC motors improving there efficiency I have also learnt ways too change there torque and temperature operation. Virtually all DC motors can be adjusted so they run cooler, and this we do by loosening the bolts that run through the motor and retard the case that supports the permanent magnets.

So if the shaft is too run in a clockwise direction, we slacken the through bolts and turn the magnet casing anti-clockwise a couple degrees or at least until it cant turn any further. Normally this is where the long through bolts that are in the elongated slot

between the magnets pull up against one side of the magnets .Once this is done, the DC motor has now got much more torque and will operate far cooler than ever before. It does slow the RPM down somewhat running on its own, but has no effect with the operation of the RV, as a natural balance takes place with RPM and voltage where both the RV and DC motor automatically stay in tune.

It may be wise too put a conventional scientific explanation why the 2 motors run together in harmony, and why the current usage now drops down further in this operation, as I have a complete different understanding of energy that seems too confuse people further. LOL.

Now close looping with the DC output too an inverter is a big NO NO. But there is a YES. First of all I will explain as best as I can why. Electrons have a form of memory where they do not like to be sent back to the original source. To close loop with the DC motor in this instance back into the inverter will blow the inverter out immediately. There are a number of ways too get around this, where we can either use an isolation transformer on the RV, or send the energy back into a different source, so there is no reference.

Another thing I can assure you of from my experience is that you can also get runaway in this closed loop sequence. This is where the returning energy lifts the battery voltage by 2 or 3 volts which in turn lifts the output of the inverter by many more volts which in turn now lifts the returning energy by many more volts until where the battery is unable too hold a steady voltage being over charged.
This is where something will blow.

Anyway the solution is how I managed to get 3rd party reports showing that the BECS circuit was a minimum of cop1.6 too a maximum of cop1.9.
This is where we use 2 batteries where they alternate, so one is running the load while the generated output is charging the other battery.After a short period of time we then switch in the charged battery to work, and switch in the other battery too now be charged.

So with a simple relay circuit, the DC motor can be charging a second battery for some time, then this battery can latter be switched in too now run the inverter.
Ok, so how do we regulate the charging of a battery where the voltage could be anything far higher than 14volts. This is as per the circuit I have attached where in series too the charging battery we connect a light bulb of what ever wattage we wish too use for charging. A standard voltage regulator wastes the excess voltage as heat, so the next best thing is too dump the excess voltage in the form of heat which also is producing light.

When switching between batteries in this manor, it is essential too have a capacitor of a large value connected too the input power of the inverter. This is because there is a momentary delay as the relays switch,,, and the inverter requires a steady voltage.

Anyways, I hope this explains a few things so people can understand any safety issues and prevent damaging equipment like an inverter. I have also added the relay circuit and am hoping there is no mistakes.

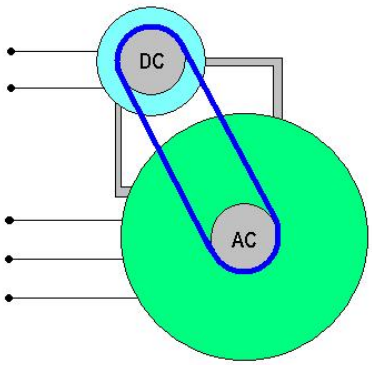

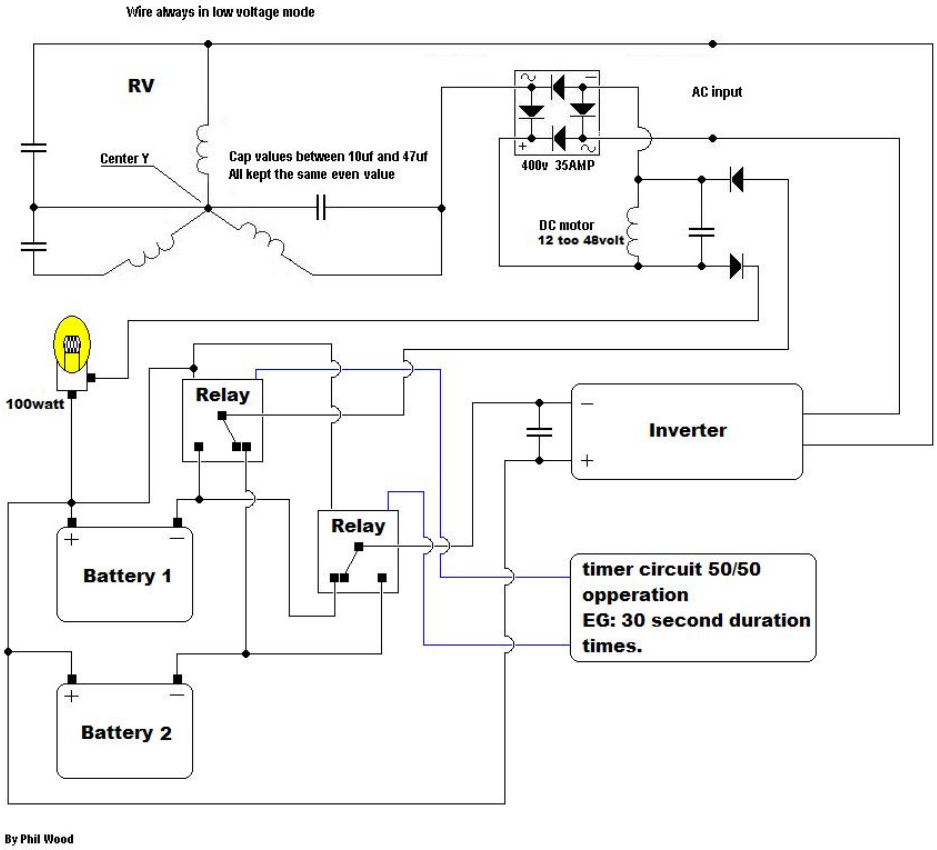

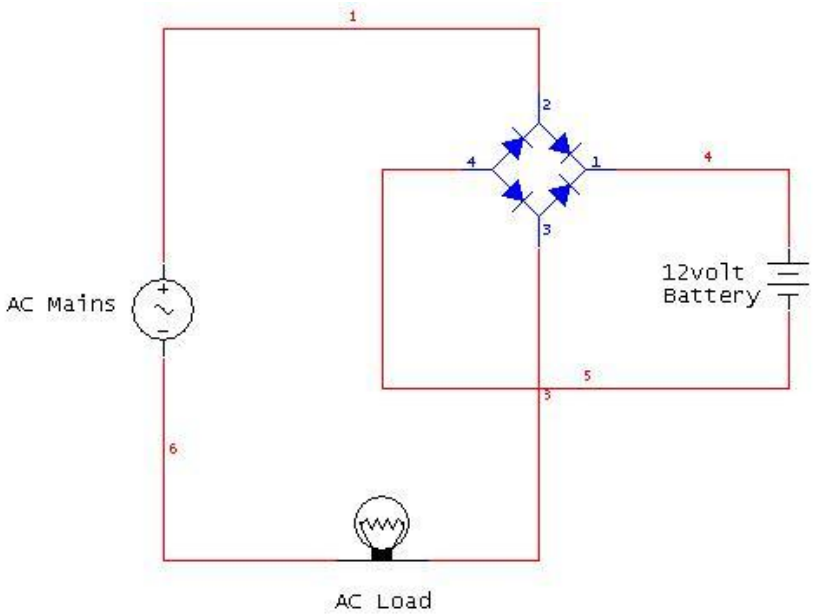

Warning.
Make sure all power is off before conecting or dis-conecting the battery

Phils RV DC with AC set up

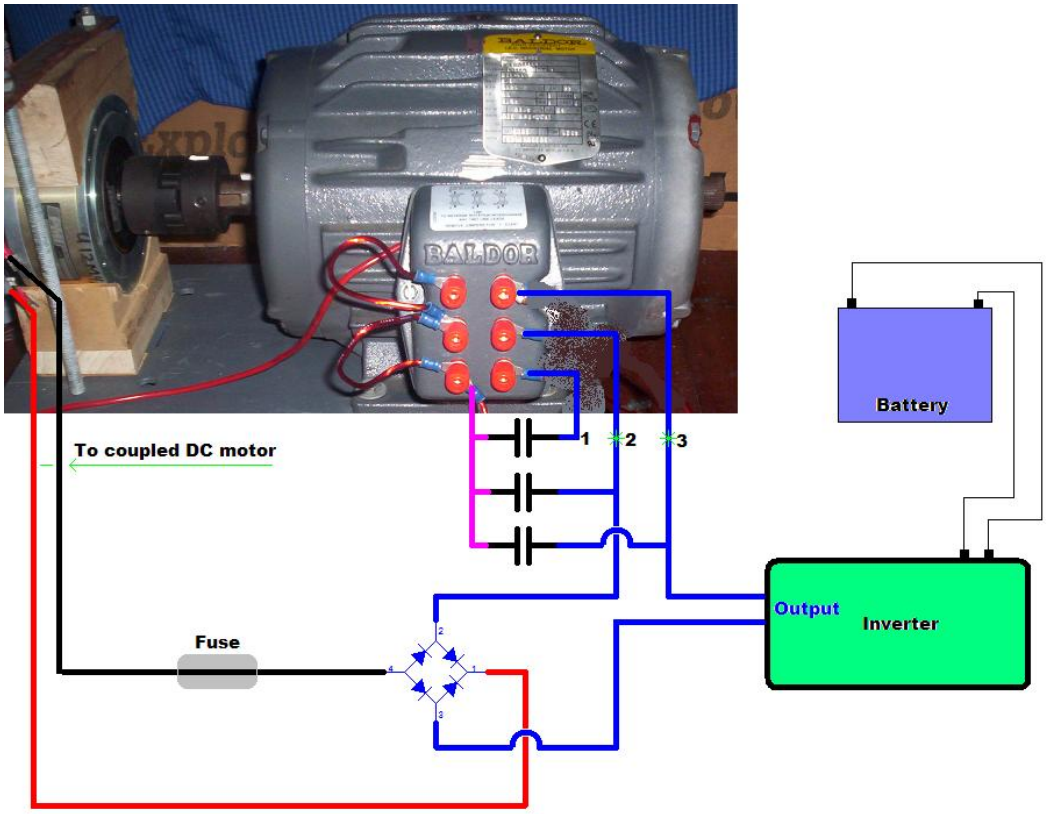

Another DC humping AC schematic

The 3 Phase finally unlocked by Phillip wood

To simplify the 3phase operation, I [Phil] will work with one small part of the rotor and break the phase relationships into square pulsed segments so you can see how simple it really is.

The rotor consists of 2 dissimilar metals being Ferris and non-Ferris.
When a magnetic field is activated over or near Copper or Aluminium it repels this metal pushing it away. Especially with Aluminium as it has a high stored mass of energy that was used too manufacture the product. This means that lets stay with Aluminium; it is already saturated with energy and can not accept anymore charge. Also this is why these metals are used as conductors as the electrons travel around the metal and are not absorbed.

With alternating dissimilar metals surrounding the rotor diameter, and when a magnetic field is activated we have 2 forces that exist. First we have a push against the Aluminium or copper strip and a pull towards the iron strip.

The iron has a permeability enough too hold for the next polarity phase where the next magnetic field activated, not only forces against the Aluminium but pulls harder too the opposite polarity of the Iron magnetic field, until it becomes the same polarity as the magnetic field being activated. This is why a particular amount of slip is important too allowing enough time too cause saturation in the Iron of the coil polarity.

The next simplicity is the use of dissimilar metals known as the Peltier Effect and the Seebeck Effect, whereby at the junction of them touching we have a temperature of hot on one side and cold on the other side. This is generated from the magnetic field working against the Aluminium (wrongly known as Eddy currents) but where if there is a temperature differential this generates a current. With this high current in place being generated, it amplifies the magnetic field within the Iron.

Overall it is obvious why the 3phase motor becomes more efficient when approximately 2/3 loaded, as the effects within the rotor are increased due too a longer time interaction from the working magnetic field windings.
This is a simple diagram of how the Iron becomes charged with the coil polarity and enhances the next phase operation.

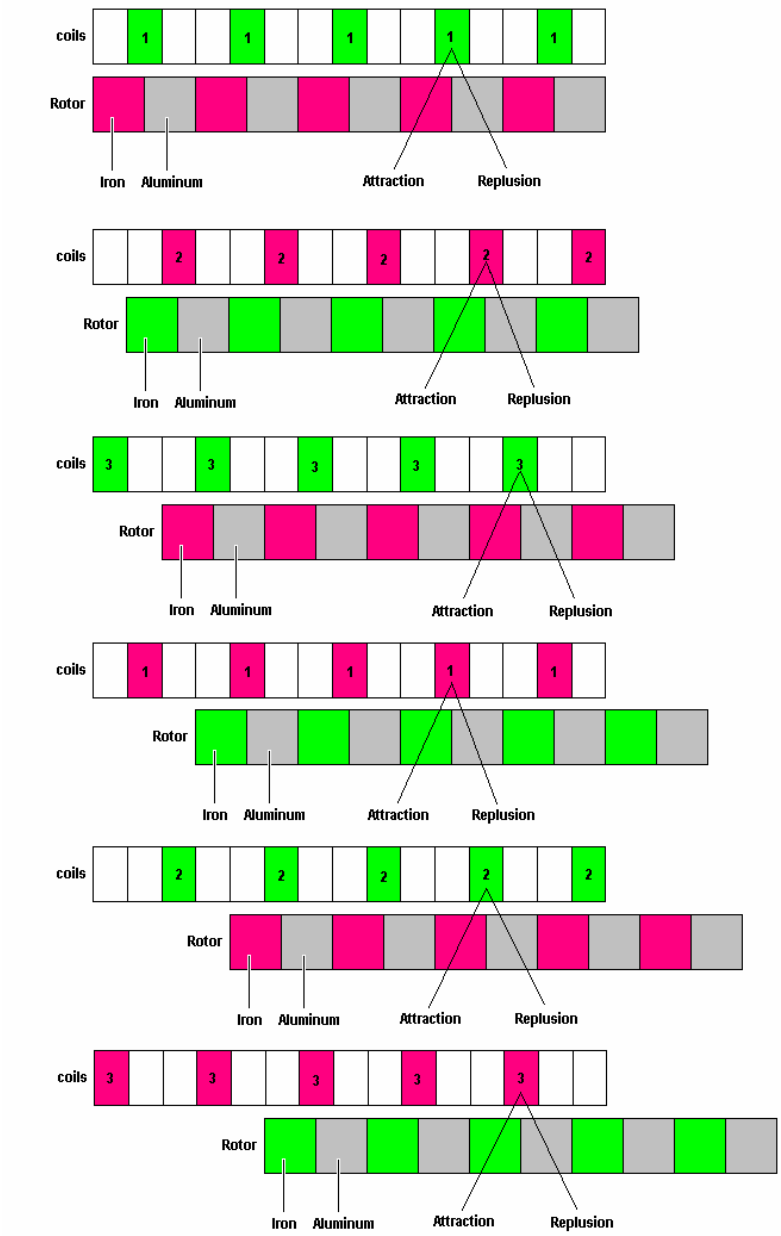

With all this stated I realized the motors can be powered with DC pulsing and hence tested a few circuits too prove the operation can be performed on a simple scale, of driving all 3 phases just of one voltage polarity.

The next thing that became obvious is that just like my Baldors motor it becomes 89.1% efficient when 75% loaded. Taking into consideration the power factor and the overall true wattage usage being paid for, it can be seen that a generator coupled too the motor that has an efficiency near the same as the motor used, will develop an efficiency exceeding COP1.

This means it is a motor generator doing real work generating real power as is, being off the shelf with no modification regarding resonance circuits.

However if the concept is too be used with a standard off the shelf inverter, the reflected power from the motor can cause much damage too these devices. But utilizing an inverter with step up transformers and H bridge drive circuits, all reflected power will naturally be directed too the battery source.End

Anomaly readings from the RV based on Hectors teachings

OU -RV coupled to a PMI disk PM, DC motor
From Norman Wotan (Mon, 25 Feb 2002 – on Keelynet-rotoverter)

Quote: I built Hectors phase Roto Verter with the following results: Motor is 3HP, 3 Phase, 60HZ, 1725 RPM, wired for operation on 480V. Motor free running, tuned to minimum current draw from 120V line input required 20mfd 370V oil filled cap resulting with a current draw of .66 amps @ 120VAC input. Motor loaded with belt drive step-up 6:1 ratio to drive a PMI disk PM, DC motor acting as a generator.

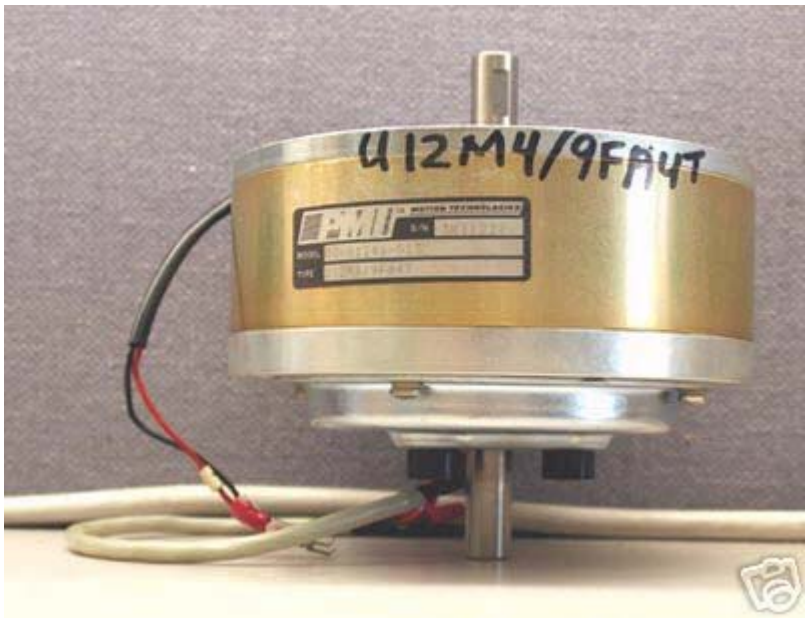

PMI Kollmorgen U12M4/9AF4T ServoDisc DC Motor
Part Number: 00-01246-013
Serial Number: 3K11227 or 3K11228

Manufacturers Lead Time: 10 to 12 weeks
Retail Price: $1,708.00
Features:
38.3 to 402.5 oz-in. continuous torque
Motor lengths less than 2”
4.37” to 7.37” OD Round Frame
U-Series ServoDisc™ DC motors employ the unique Kollmorgen/PMI flat disc armature. The ironless, low inertia armature delivers high acceleration and zero cogging in an exceptionally compact package.
Extremely good speed control with zero cogging and low RFI
Long Brush Life
Flat ServoDisc™ motors are ideal for many applications:
Save space and weight in applications requiring a low profile motor
Large torsional stiffness for precision control of speed and acceleration
Specifications:
Peak Torque: 1316 oz-in, 929 N-cm
Rated Speed: 3000
Rated Continuous Torque @ 25° Celsius: 128 oz-in, 91 N-cm
Rated Continuous Torque @ 40° Celsius: 114 oz-in, 81 N-cm
Rated Power Output: 284
Maximum Recommended Speed: 6000
Continuous Stall Torque: 122 oz-in, 86 N-cm
Cogging Torque: 0 oz-in
Rated Terminal Voltage: 43.4 Volts
Rated Continuous Current: 8.8 Amps
Peak Current: 85 Amps
Continuous Stall Current: 8.1 Amps
Terminal Resistance ±10%: 0.750 Ohms
Armature Resistance ±10%: 0.610 Ohms
Back EMF Constant ±10%: 11.55 V/KRPM
Torque Constant ±10%: 15.63 oz-in Amp, 11.04 N-cm Amp
Viscous Damping Constant: 1.8 oz-in/KRPM, 1.3 N-cm/KRPM
Armature Inductance: <100
Temperature Coefficient of KE: -0.02%/° Celsius Rise
Number of Cummutator Bars: 141
Moment of Inertia: 0.0190 oz-in-sec², 1.34 kg-m²
Static Friction Torque: 5.5 oz-in, 3.9 N-cm
Weight: 10 lbs.
Diameter: 5.50” in, 139.7 mm
Length: 2.10” in, 53.3 mm
Peak Acceleration: 69.2 kRad/s²
Mechanical Time Constant: 6.68 ms
Electrical Time Constant: <0.16 ms
Continuous Power Rate: 6.1 kW/sec
Thermal Resistance at Rated Speed: 1.27° Celsius/Watt
Thermal Resistance at Stall: 1.90° Celsius/Watt
Forced Air Thermal Resistance – with 2.0 lbs/min Forced Air: 0.23° Celsius/Watt
Type 9FA4T Low Cost Analog Tachometer Characteristics: < /B>
Output Voltage: 2.50 V/KRPM

Ripple Voltage Max (P-P) (1): 5.0% @ 1000 RPM, 5.0% @ 500 RPM, 5.0% @ 100 RPM
Linearity of Output Voltage (Rated at 3600 RPM): .06%
Bi-directional Tol (diff. in output V/KRPM): 3.0%
Output Impedance (Resistive): 1.18 Ohms
Temperature Coefficient Output Voltage: -.19%/° Celsius Rise
Load Resistance (Recommended Min.): 1180 Ohms
Tachometer Inertia: .0024
Number of Cummutator Bars: 117

(generator unloaded) required 30 mfd, 370V oil filled cap with a resulting current draw of .50 amps @ 120VAC input. Now I loaded the DC generator with 160-watt incandescent lamp load. Since I have two independent systems here, one being driven with 120VAC line input and the other system a belt driven DC generator being loaded with pure resistive load. Here are the numbers: Motor was retuned for minimum current draw which required 45 mfd, 370V oil filled cap with a resulting current draw of .15 amps @ 120VAC input. The independent generator put out .75 amps @ 74 VDC into a resistive load. The only thing that needs to be looked at on the input side of the equation is the power factor of the AC input.

I need to look at the current/ voltage phase relationship. I'm satisfied with the figures that I calculate which shows roughly 18 watts AC input with a DC output of 55.5 watts. What I find most interesting is the fact that the more load you put on the 3-phase motor the lower the input current draw and the motor gets colder.

The belt driven DC generator gets quite hot after about 30 minutes of running time. Go figure it out. I believe there is a lot to be learned about revolving magnetic fields in 3 phase motors and tuning the output via capacitors. This experiment is so easy to do everyone should seriously look at this phenomenon. My next step is to document PF on input and improve the DC side of the circuit to provide more loading.

Be careful with loading of the prime mover. Make your belt coupling variable as to loading for you cannot load prime mover below its design slip speed. After loading to design slip speed you must adjust capacitance to new lowest current draw. Run capacitance will change after loading. –End quote.

If trying let your belt system slip and ride in the slip speed of the motor. "Adjusting the slip with slack” and adjusting the pulleys with the slack as to fine its Sweet spot".

Theory examination by Hector

In the RV the frequency applied directly determines the speed, frequency synchronous speed minus % slip = load speed. The speed also is critical to find the OU potential in a GENERATOR, speed & load = (critical) adjust.

OU in generators is manifested at a given speed with a specific LOAD where it is maximal in gain and performance and whereby it requires its lowest mechanical input to give its highest electrical one.

Go back to tuning and get the best speed, best load for best performance. Also use different pulleys to get best speed for that particular generator, IMPORTANT don’t get fixed on one parameter One is RV the other is the generator.

Asynchronous PM generator will put power into the system as power factor correction from the over unity magnetic amplification. Extract: lower intensity attractor field is charged by the approaching higher intensity magnetic field one.

Lab test: a lab test indicates rotor lowers temperature at this state, indicating thermal energy transfer from electron spin to field induction one. (True magnetic amplification transformation) justified by book rules and thermodynamic law.

Synchronous speed is the absolute upper limit of motor speed. If the rotor turns exactly as fast as the rotating magnetic field, then no lines of force are cut by the rotor conductors, and torque is zero.

ZERO (ZERO point energy) (Note here that when on 0 torque we have 0 power on a theoretical 0 current) being self induction, and NEGATIVE in relation to the rotary field. The VOLTAGE vector becomes a NEGATIVE resistance to the line power and contributes power to such source (seen as POWER factor correction on LOW impedance but as OU in matched hi impedance circuits.)

When running, the rotor always rotates slower than the magnetic field. The rotor speed is just slow enough to cause the proper amount of rotor current to flow, so that the resulting torque is sufficient to overcome windage and friction losses, and drive the load. The speed difference between the rotor and magnetic field, called slip, is normally referred to as a percentage of synchronous speed: s = 100 (ns - na)/ns, where s = slip, ns = synchronous speed, and na = actual speed.

Dan’s tests

Basic tests with loading one phase of the alternator with caps. I've 2x 5.5HP motors 3000rpm (50Hz) connected 1:1.

This is a picture of the setup:

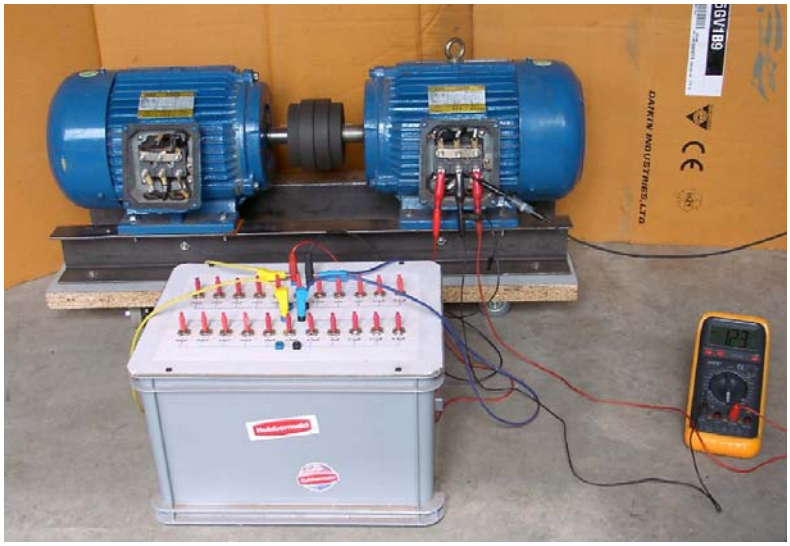

Here is a scope shot of the voltage and current in the PM (unloaded)
The ‘clean’ sine is the voltage. The ‘dirty’ sine is the current.

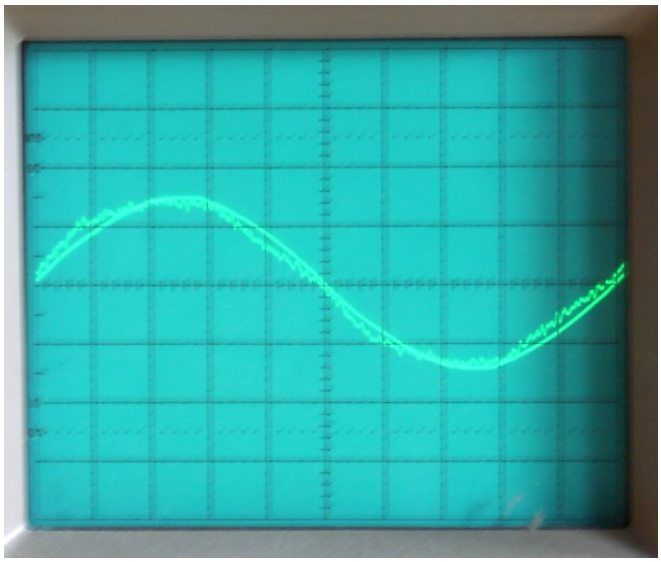

I did some basic tests with loading one phase of the alternator with caps. I've 2x 5.5HP motors 3000rpm (50Hz) connected 1:1.

The PM is wired in Y, with 120V input voltage (through variac as grid in 230V in EU).

The Alt is also wired in Y, so I have as possible connections L1, L2 and L3.

On the Alt, the caps are connected to L1 & L2.
- Voltmeter is connected over L1 & L2
- Current clamp meter in line to L1

- scope Ch1: voltage on L1
- scope Ch2: current probe in line to L1

I did measurements with several cap values:
1) 290V 2.5A 725VA 30 uF
2) 380V 3.8A 1444VA 35 uF
3) 435V 5.5A 2393VA 45 uF
4) 444V 6.3A 2797VA 50 uF

For the 1st and 4th, I made a small video of the scope measurements.
The current sine wave is more or less static. For the voltage sine, notice a changing phase shift from 70° to 160° (leading to the current), as well as an amplitude fluctuation. This is at about 0.6 Hz.

4th: Here also the current sine wave is more or less static. For the voltage sine, again a changing phase shift from 80° to 120° (less than video 1), as well as an amplitude fluctuation although less pronounced than the first test. This is about 3.6 Hz. Because of the higher load, the generated frequency has gone down to approx 46 Hz (likely 4% slip in PM and 4% slip in alternator…).

Doug Konzen's prony Break testing

For the third time I tested the 7.5hp Baldor motor with the series adding wiring which gives 5.9 ohms resistance to each phase. This time I tore the motor all the way down first, photographed the internal wiring and labels, and also oiled the bearings just a bit with some "Kroil" brand hi-tech lubricant.

The phases are wired in Y fashion - and the motor is run in Hector's roto vertor-mode with a 7UF run cap across lines 2 and 3. At 1650rpm no-load idle, the motor draws .3Aac @ 120Vac with the 7UF cap.

Any amount of force from the prony brake that exceeds approx 80 ounces on the scale with the corresponding amps input of approx 2.3Aac will bring the motor to a stop.

In this testing, and the previous too, it has been found that this particular RV'd 3ph 7.5hp Baldor AC motor only likes just a couple narrow "notches" of speed and torque being squeezed from the shaft by the foot-long Teflon-collar prony brake.

And as before in the two earlier test-runs done this week, it was possible to keep a consistent force of 54 ounces (3.375LBFT) on the scale, which corresponds to a simultaneous reading of 1 Aac @ 120Vac input to the motor showing on the meters.

And also a force of 43 ounces (2.687LBFT) and the simultaneous .8 Aac @ 120Vac input to motor on the meters was another narrow notch-of-power from the shaft to extract.

So again, it is almost a full HP (746watts) of shaft-power from under 120 watts electrical input, and still haven't tried out more UF values to the run-cap in order to fine-tune it to the load.

RESULTS:

1/20/2007

120VAc grid-power input
7.5HP Baldor motor
.81 power-factor rated showing on label (stock rating)
88% efficiency rating on label (stock rating)
7UF run-cap used in both tests

Test #1:
.8Aac X 120Vac = 96watts input
2.687 LBFT X 1550rpm / 5250 = .793HP X 746 = 591 watts output

Test #2:
1Aac X 120Vac = 120watts input
3.375 LBFT X 1500rpm /5250 = .96HP X 746 = 716watts output

Recommended RV motor parameters

Whatever your motor voltage is, you need to apply 1/4 of that to the prime mover. So if you have a 230/400VAC 50Hz 3000rpm motor, this means technically it's a motor to connect in delta to 230V grid and in Y to 400V grid.

In fact each coil in the motor is rated for 230V, so if you connect the motor in Y, 2 of the coils are in series, so can handle 460V. That is the real technical voltage of the motor in Y. Of that you take 1/4, so feed about 115V to that motor (through variac or transformer).So with 50Hz 5HP motors commercial motors, this means about 4KW.

Here is an example with standard efficiency (85%): MM3613-56
to be found at Link
(the motors I use, have standard eff.)

Here is an example with high efficiency (89%): EMM3663-55
to be found at Link
I guess these are more expensive, but run better off of inverters

In both cases I took a 3000rpm motor (in practice 2900 rpm). You could also take a 4-pole motor (so 1450rpm) for your alternator. If you connect this in 1:1 to your prime mover, it will run at 2900rpm, and as such generating the double voltage and frequency. Below is an extraction for the 4 and 5.5KW 50 hertz versions, which is the best range. Type numbers in bold at the Link site to bring up more specifications.

4KW 2900 RPM **EMM3663-55**
4KW 1450 RPM **EMM3665-58**
4KW 960 RPM **EMM3768-55**
5.5KW 2900 RPM **EMM3769-55**
5.5KW 1450 RPM **EMM3770-55**

For 50 hertz it is suggested that you take the 4KW version (=5.5 HP)
This should give you up to .8 - 1.13 HP in RV mode. Web address is Link

To summarise:

EMM3663-55 4KW-50Hz - rated 415V in Delta
- so each winding is rated 415V
- if you run this as PM in delta, you need to feed it with about 100-115V
- if you run this as PM in Y, you need to feed it with about 205-230V
- as Alternator: wire in delta

Comparing the following 2 motors:

A) EMM3663-55

* It is delta-Y 6-lead, 4KW (5.5HP), 230/414V, 50Hz, 89% eff.
* is a very common motor around the 50Hz world (in EU, AU, etc...)
(I remember that the '55' suffix means it's an Aussi motor...)
* as PM-RV, wire in Y (=414V) (BUT in RV-mode each phase sees 2 coils in series, and as each coil is rated 230V, the RV-mode 'sees' 460V),
and feed with 1/4 of that which is about 110-115V 50Hz * as Alt, wire in delta

B) M3613T-50
* Is a dual coil motor 12-lead, 5HP, 220/380/440V, 50Hz, 85% eff.
* is not a common motor in the 50Hz world (EU, AU)
* can be wired in many ways

(Link): 1- dual-Delta (means coils in parallel and in delta); so is wired for 220V, and feed with 55V NOT recommended for RV - too low V, too high current, too big caps needed 2- dual-Wye (means coils in parallel and in Wye); so is wired for 380V (in RV-mode is seen as 440V as coils are in series because of Wye)

Feed with 110V 50Hz - so good for use where grid is 110V or with +-110V inverter
3- single-Delta (means coils in series and in Delta); so is wired for 440V feed with 110V (see above) - between these 2 configs (2 & 3), best is dual-Wye 4- single-Wye (means coils in series and in Wye); so is wired for 760V (this mode in Unsupported by Baldor, but again they don't know RV mode)

RV-mode sees this as 880V; so feed with 220-230V 50Hz - so good for use where grid is around 230V or with +-230V inverter

In summary:

- Motor A is common to be found as surplus, and is an excellent choice for RV DEMO, where you can say to use a standard Wye/Delta motor (so does not have to be Baldor at all). This is the reason why I recommended this;
Drawback is that this motor is less flexible in wiring options, and can only be fed with around 110V in RV-mode. So you need such a grid V, or inverter or transformer.

-Motor B is very UNCOMMON in the 50Hz world, so is difficult to find (cost?). Technically it is a better RV motor, as you can wire so to connect straight to a +-230/240V grid. If you want reliable input power measure, then you need to connect anyway to an inverter and measure the power from the battery.

H's recommendation for motor B is also very right, but thinks about it being 'uncommon' if advertising the concept to the general public.

RV 60 Hertz range. Best motor performance tested so far is 230/460 VAC 7.5HP 3450- or 1725 RPM 3PH motors 184 TCH frame (with removable external fan
Specifications: baldors motor EM3770T

Catalogue Number: EM3770T
Specification Number: 07H002X790
Horsepower: 7 1/2
Voltage: 230/460
Hertz: 60
Phase: 3
Full Load Amps: 19/9.5
Usable at 208 Volts: N/A
RPM: 1770
Frame Size: 213T
Service Factor: 1.15
Rating: 40C AMB-CONT
Locked Rotor Code: J
NEMA Design Code: A
Insulation Class: F
Full Load Efficiency: 91.7
Power Factor: 81
Enclosure: TEFC

Baldor Type: 0735M
DE Bearing: 6307
ODE Bearing: 6206
Electrical Specification Number: 07WGX790
Mechanical Specification Number: 07H002
Base: RG
Mounting: F1

Bottom line is you need DOUBLE COIL motors - this means, that the motor should have 9 or 12 wire terminals and two identical motors. That's why Hector has stated that it should be 230/460V model - when the dual coils are connected in series, then it is 460V (good for RV prime mover), when in parallel, then it is a 230V motor with twice the amps capacity (excellent for RV alternator operation).

Such double coil motors might be a bit hard to find in Europe or in Australia. It is advisable to stick to the modelled guide and to order those US 230/460 motors.

The above is the motor that Hector recommended (it's a 1770RPM motor which is a bit more peaceful to operate - less vibration, especially when the coupling between motors is not very good)

Current recommendations from EVGRAY on RV motors to use: NA: - DUAL winding motors 230/460VAC 60Hz; 3 to 7.5HP - prime mover 3600rpm, wired for highest voltage (460V 'Y') and apply single-phase 110V

- Alternator 3600rpm or lower, wired for lowest voltage (230V) EU: - WYE/Delta motors 230/400VAC 50Hz; 5 to 10 HP

- Prime mover 3000rpm, wired for highest voltage ('Y') and apply single-phase 100-120VAC (through variac or transformer) - alternator 3000rpm or lower, wired for lowest voltage (in DELTA)

In any case the lowest HP is 5HP for 50Hz, as you need to have the same efficiency. (with 60Hz, you can go down to 3HP).So a 4KW 50nhertz motor will do.

Recently an engineer re wired the RV and describes: I did it with stock parallel quadfialr motor winds in a 7.5hp Baldor AC motor. Rv'd it plus putting all the winds in series instead of parallel makes for 6 ohms compared to stock ohms of .4 ohms which means super low amps draw. I got this motor to go OU in prony-brake HP tests (120watts making 1hp from the shaft alone)...this happens when the winds are "series adding.

Wire up the motor to its highest-voltage circuit possible (it should be made for a 460V input) and this gives you high impedance so you will draw as little current as possible, then hook up to your grid like in drawing and see it go. In one of my RVs, I actually went inside the motor and found the motor winds were 4 wires in parallel, instead of one thick wire - so I resoldered the wires to be all in SERIES and really brought the impedance up, from .5ohms "stock" (parallel) to a big 6 ohms with the wires in SERIES...this is the motor that produces 1hp on 120watts. (7.5hp Baldor) Light bulbs can be stuck onto your input as easy way to bring volts down if you want - also you

might want to get a 120V 60hz invertor form a autopaths store and run it on battery feeding the invertor which is really easy then you can chuck the battery and run it on single solar panel to impress your friends. Try and get rid of your cooling fan in the motor, this sucks up watts and is not needed since these RVs run cool and cold. Also run it before you clean bearings, and after you spray them out with carburettor cleaner super-clean - then note difference clean bearings makes in watts-draw....this makes a huge difference when you run with clean bearings. Just use small amount of hi-tech lube in bearings after they are clean.

For Additional Technical explanations of the RV alternator and more please consult Dans E-book RE-OU available at the EVGRAY yahoo energy group or the RVreplication yahoo group in the files section.

SYNTHETIC TELEPATHY
AND
THE EARLY MIND WARS

Richard Alan Miller, c2001

[Presented at the Consciousness Technologies Conference, July 19-21, 2001, on ***Saturday, July 20th, 2001, in Sisters, OR***

Introduction:

I first became aware of Allan Frey's work at Willow Grove in 1972, just after completing "*The Holographic Concept of Reality*." I was working with Dr. Carl Scheicher (MRU) at the time, and was asked about the significance of this work. Realizing its possible use in mind control, my first reaction was to go on "red alert."

Full significance was not yet understood at this time. Basically, Frey had discovered another sensory motor input in the higher blue-band frequencies of 0.3-3.0 GHz. - at very low amplitudes of power. It was "as if" we had another type of "vision," but did not know how to "see" what was being received. It constituted the next generation of subliminal communications.

My work at the time was involved with an AI database for paranormal references (Project Parafile). A second paper was also presented at the Omniversal Symposium, California State College at Sonoma, (September 29, 1973). This was titled "Embryonic Holography," and was an application of the "*Holographic Concept of Reality*" model. It dealt with biogenesis and neurological regeneration, and included speculation on the origins of cancer, faith healing, psychic surgery and more technical aspects of mind-body energetics.

One week after the delivery of that paper, four men came into my place of business, two in suits and two in full Army dress. The two suits held me under close arrest, while the two Army personnel went through my files, pulling anything related to "*Embryonic Holography*." The paper was rewritten from old notes and memory, but it was not the same.

What got this paper classified "top secret" for almost 20 years was that it was critical for the use of Allan Frey's study, and its possible application to mind control. I never was able to draw what was so important in that initial paper until I began researching this paper, more than 24 years later. I will discuss those aspects further into this document.

In 1961, Allen Frey, a freelance biophysicist and engineering psychologist, reported that humans could hear microwaves. Most United States scientists dismissed this discovery as the result of outside noise.

James C. Linn offered a more technical description of the experiment.

> *"Frey found that human subjects exposed to 1310 MHz and 2982 MHz microwaves at average power densities of 0.4 to 2 mW/cm2 perceived auditory sensations described as buzzing or knocking sounds. The sensation occurred instantaneously at average incident power densities well below that necessary for known biological damage and appeared to originate from within or near the back of the head."*

Pulsed Microwave Technology

Pulsed microwave voice-to-skull (or other-sound-to-skull) transmission was discovered during World War II by radar technicians who found they could hear the buzz of the train of pulses being transmitted by radar equipment they were working on. This phenomenon has been studied extensively by Dr. Allan Frey, (Willow Grove, 1965) whose work has been published in a number of reference books.

What Dr. Frey found was that single pulses of microwave could be heard by some people as "pops" or "clicks", while a train of uniform pulses could be heard as a buzz, without benefit of any type of receiver.

Dr. Frey also found that a wide range of frequencies, as low as 125 MHz (well below microwave) worked for some combination of pulse power and pulse width. Detailed unclassified studies mapped out those frequencies and pulse characteristics which are optimum for generation of "microwave hearing".

Very significantly, when discussing electronic mind control, is the fact that the peak pulse power required is modest - something like 0.3 watts per square centimeter of skull surface, and that this power level is only applied or needed for a very small percentage of each pulse's cycle time. 0.3-watts/sq cm is about what you get under a 250-watt heat lamp at a distance of one meter. It is not a lot of power.

When you take into account that the pulse train is off (no signal) for most of each cycle, the average power is so low as to be nearly undetectable. This is the concept of "spike" waves used in radar and other military forms of communication.

Frequencies that act as voice-to-skull carriers are not single frequencies, as, for example TV or cell phone channels. Each sensitive frequency is actually a range or "band" of frequencies. A technology used to reduce both interference and detection is called "spread spectrum". Spread spectrum signals usually have the carrier frequency "hop" around within a specified band.

Unless a receiver "knows" this hop schedule in advance, like other forms of encryption there is virtually no chance of receiving or detecting a coherent readable signal. Spectrum analyzers, used for detection, are receivers with a screen. A spread spectrum signal received on a spectrum analyzer appears as just more "static" or noise.

The actual method of the first successful unclassified voice to skull experiment was in 1974, by Dr. Joseph C. Sharp and Mark Grove, then at the Walter Reed Army Institute of Research. A Frey-type audible pulse was transmitted every time the voice waveform passed down through the zero axes, a technique easily duplicated by ham radio operators who build their own equipment.

The sensation is reported as a buzzing, clicking, or hissing which seems to originate within or just behind the head. The phenomenon occurs with carrier densities as low as microwatts per square centimeter with carrier frequencies from 0.3-3.0 GHz. By proper choice of pulse characteristics, intelligent speech may be created.

Dr. James Lin of Wayne State University has written a book entitled: Microwave Auditory Effects and Applications. It explores the possible mechanisms for the phenomenon, and discusses possibilities for the deaf, as persons with certain types of hearing loss can still hear pulsed microwaves (as tones or clicks and buzzes, if words aren't modulated on). Lin mentions the Sharp and Grove experiment and comments: "The capability of communicating directly with humans by pulsed microwaves is obviously not limited to the field of therapeutic medicine."

"Synthetic Telepathy"

In 1975, researcher A. W. Guy stated that "one of the most widely observed and accepted biologic effects of low average power electromagnetic energy is the auditory sensation evoked in man when exposed to pulsed microwaves."

He concluded that at frequencies where the auditory effect can be easily detected, microwaves penetrate deep into the tissues of the head, causing rapid thermal expansion (at the microscopic level only) that produces strains in the brain tissue.

An acoustic stress wave is then conducted through the skull to the cochlea, and from there, it proceeds in the same manner as in conventional hearing. It is obvious that receiver-less radio has not been adequately publicized or explained because of national security concerns.

Today, the ability to remotely transmit microwave voices inside a target's head is known inside the Pentagon as "Synthetic Telepathy." According to Dr. Robert Becker, "Synthetic Telepathy has applications in covert operations designed to drive a target crazy with voices or deliver undetected instructions to a programmed assassin."

This technology may have contributed to the deaths of 25 defense scientists variously employed by Marconi Underwater and Defense Systems, Easems and GEC. Most of the scientists worked on highly sensitive electronic warfare programs for NATO, including the Strategic Defense Initiative. It is claimed that directed energy weapons might have been used to literally drive these men to suicide and 291accidents.

Biological Amplification

Using Microwave Band Frequencies

The next major development in ELF weaponry was the concept of a biological amplification of these signals at the cell level to perpetuate and set up resonance for more sophisticated information transfer. This was the beginning of using more than one technology in a stack to do something "more." While this was implied, it was never developed in "The Holographic Concept of Reality."

Electromagnetic fields or relatively weak power levels can affect intercellular communication. Bio-amplification is apparently why radio signals of very low average power (mw) can produce audio effects, and is difficult to detect. [*Electromagnetic Interaction with Biological Systems*, ed. Dr. James C. Lin, Univ. of Illinois, 1989, Plenum Press, NY]

Imposed weak low frequency fields (and radio frequency fields) that are many orders of magnitude weaker in the pericellular fluid (fluid between adjacent cells) than the membrane potential gradient (voltage across the membrane) can modulate the action of hormones, antibody neurotransmitters and cancer-promoting molecules at their cell surface receptor sites.

These ELF sensitivities appear to involve nonequilibrium and highly cooperative processes that mediate a major amplification of initial weak triggers associated with the binding of these molecules (specific cell surface receptor sites). Membrane amplification is inherent in this trans-membrane signaling sequence.

Initial stimuli associated with weak perpendicular EM fields and with binding of stimulating molecules at their membrane receptor sites elicit a highly cooperative modification of Ca++ binding to glycoproteins along the membrane.

A longitudinal spread is consistent with the direction of extracellular current flow associated with physiological activity and imposed EM fields. This cooperative modification of surface Ca++ binding is an amplifying stage. By imposing RF fields, there is a far greater increase in Ca++ efflux than is accounted for in the events of receptor-ligand binding. from imposing RF fields.

Enzymes are protein molecules that function as catalysts, initiating and enhancing chemical reactions that would not otherwise occur at tissue temperatures. This ability resides in the pattern of electrical charges on the molecular surface.

Activation of these enzymes and the reactions in which they participate involve energies millions of times greater than in the cell surface, triggering events initiated by the EM fields, emphasizing the membrane amplification inherent in this trans-membrane signaling sequence.

Frey and Messenger confirmed that a microwave pulse with a slow rise time was ineffectual in producing an auditory response. Only if the rise time is short, resulting in effect in a square wave with respect to the leading edge of the envelope of radiated radio-frequency energy, does the auditory response occur. This is why we don't "hear" ordinary radio and TV signals.

The significance of "*Embryonic Holography*" now becomes more understandable. For example, the specific frequency bands (0.3-3.0 Hz) are so flat as to appear almost 2-dimensional to most biological processes on a semi-quantum mechanical level. This means that these frequencies can be seen as "scalar" in their possible interaction with specific brain processes.

What these frequencies really are, however, are actual holograms of specific thoughts. They have a third component of detail (much like the patented P300 wave). This means that a hybrid form of brain fingerprinting is now possible. And, once these "images" are stored (usually in a very sophisticated super-cooled computer), similar responses can be fed back to the person, inducing virtually any state desired (via entrainment protocols).

Silent Sound Technology - "S-quad"

Silent (converted-to-voice FM) hypnosis can be transmitted using a voice frequency modulator to generate the "voice." It is a steady tone, near the high end of hearing range (15,000 Hz), plus a hypnotist's voice, varying from 300 - 4,000 Hz. These two signals are frequency modulated. The output now appears as a steady tone, like tinnitus, but with hypnosis embedded. The FM-voice controls the timing of the transmitter's pulse.

Each vertical line is one short pulse of microwave signal at a frequency to which the human brain is sensitive. Timing of each microwave pulse is controlled by each down-slope crossing of the voice wave (Sharp's method, 1974). Then the brain converts the train of microwave pulses back to inaudible voice. There is no ***conscious defense*** possible against this form of hypnosis.

Ordinary radio and TV signals use a smooth waveform called a 'sine' wave. This wave signal cannot normally penetrate the voltage gradient across the nerve cell walls. Radar signals consist of very short and powerful pulses of sine wave type signals, and can penetrate the steep voltage gradient across these nerve cell walls (Allan H. Frey, Cornell University, 1962).

Differences in osmosis of ions (dissolved salt components) cause a small voltage difference across cell walls. When a small voltage appears across a very tiny distance, the change in voltage is called very 'steep.' It is this steep gradient that keeps normal radio signals from throwing us into convulsions.

The mind-altering mechanism is based on a subliminal carrier technology: the Silent Sound Spread Spectrum (SSSS), sometimes called "S-quad" or "Squad". It was developed by Dr Oliver Lowery of Norcross, Georgia, and is described in US Patent #5,159,703, "Silent Subliminal Presentation System", dated October 27, 1992. The abstract for the patent reads:

> *"A silent communications system in which nonaural carriers, in the very low or very high audio-frequency range or in the adjacent ultrasonic frequency spectrum are amplitude- or frequency-modulated with the desired intelligence and propagated acoustically or vibrationally, for inducement into the brain, typically through the use of loudspeakers, earphones, or piezoelectric transducers. The*

> *modulated carriers may be transmitted directly in real time or may be conveniently recorded and stored on mechanical, magnetic, or optical media for delayed or repeated transmission to the listener."*

According to literature by Silent Sounds, Inc., it is now possible, using supercomputers, to analyze human emotional EEG patterns and replicate them, then store these "emotion signature clusters" on another computer and, at will, "silently induce and change the emotional state in a human being".

Edward Tilton, President of Silent Sounds, Inc., says this about S-quad in a letter dated December 13, 1996:

> *"All schematics, however, have been classified by the US Government and we are not allowed to reveal the exact details... ... we make tapes and CDs for the German Government, even the former Soviet Union countries! All with the permission of the US State Department, of course... The system was used throughout Operation Desert Storm (Iraq) quite successfully."*

"Induced Alpha to Theta Biofeedback Cluster Movement" is an output from "the world's most versatile and most sensitive electroencephalograph (EEG) machine". This device has a gain capability of 200,000, as compared to most other EEG machines (with gain capability of 50,000). It is software-driven by the "fastest of computers" using a noise nulling technology similar to that used by nuclear submarines for detecting small objects underwater at extreme range.

The purpose of all this high technology is to plot and display a moving cluster of periodic brainwave signals. The illustration shows an EEG display from a single individual, taken of left and right hemispheres simultaneously. This technology is very similar to that used to generate P300 waves.

Cloning the Emotions

By using these computer-enhanced EEGs, scientists can identify and isolate the brain's low-amplitude "emotion signature clusters," synthesize them and store them on another computer. In other words, by studying the subtle characteristic brainwave patterns that occur when a subject experiences a particular emotion, scientists have been able to identify the concomitant brainwave pattern and can now duplicate it.

> *"These clusters are then placed on the Silent Sound[TM] carrier frequencies and will silently trigger the occurrence of the same basic emotion in another human being!"*

Regarding system delivery and applications, there is a lot more involved here than a simple subliminal sound system. There are numerous patented technologies that can be piggybacked individually or collectively onto a carrier frequency to elicit all kinds of effects.

There appear to be two methods of delivery with the system. One is direct microwave induction into the brain of the subject, limited to short-range operations. The other, as described above, utilizes ordinary radio and television carrier frequencies.

Far from necessarily being used as a weapon against a person, the system does have limitless positive applications. However, the fact that the sounds are subliminal makes them virtually undetectable and possibly dangerous to the general public.

In more conventional use, the Silent Sounds Subliminal System might utilize voice commands, e.g., as an adjunct to security systems. Beneath the musical broadcast that you hear in stores and shopping malls may be a hidden message that exhorts against shoplifting. And while voice commands alone are powerful, when the subliminal presentation system carries cloned emotional signatures, the result is overwhelming.

Free-market uses for this technology are the common self-help tapes, positive affirmation, relaxation and meditation tapes, as well as methods to increase learning capabilities. But there is strong evidence that this technology is being developed toward global mind control.

The secrecy involved in the development of the electromagnetic mind-altering technology reflects the tremendous power that is inherent in it. *To put it bluntly, whoever controls this technology can control the minds of men - all men.*

There is evidence that the U.S. Government has plans to extend the range of this technology to envelop all peoples, all countries. This can be accomplished, and is being accomplished, by utilizing the nearly completed HAARP project for overseas areas and the GWEN network now in place in the U.S. The U.S. Government denies all this.

Dr Michael Persinger is a Professor of Psychology and Neuroscience at Laurentian University, Ontario, Canada. His work and findings indicate that strong electromagnetic fields can and will affect a person's brain.

> *"Temporal lobe stimulation can evoke the feeling of a presence, disorientation, and perceptual irregularities. It can activate images stored in the subject's memory, including nightmares and monsters that are normally suppressed."*

Mind Reading Devices

Alan Yu, a former lieutenant colonel in the Taiwan National Defense Department, says that the United States has not only developed an operational mind control machine, but has also distributed models for use by allied countries. Yu states that such machines pose a great threat to human rights and the American way of life. He calls the device the "Mind Reading Machine" (Mind Machine).

Yu writes that there are two sources of information detailing the existence of the Mind Reading Machine. The first evidence: In the 1970s, The South China Morning Post reported that the

University of Maryland had invented a Thought Reading Machine. The original purpose of this invention was to help authorities investigate severe car accidents. It was to be used on people who were severely injured to get their accounts of how the accidents occurred.

In the spring of 1984, Yu was a lieutenant colonel serving in the National Defense Department of Taiwan. At that time, Yu read a classified document from the department that he serviced under. The document said the Military Police Department of Taiwan had purchased several of the Mind Reading Machines from the United States (In Taiwan, it was called Psychological Language Machine).

The document was a request to the United States for parts to repair several malfunctioning machines. The machine allegedly uses microwaves to deliver spoken messages directly to the human brain, as well as using radio waves to hypnotize people or change their thoughts. Yu reports that before he left, this machine had become the most effective weapon for the security departments of Taiwan.

In 1993, Defense News announced that the Russian government was discussing with American counterparts the transfer of technical information and equipment known as "Acoustic Psycho-correction." The Russians claimed that this device involves the transmission of specific commands via static or white noise bands into the human subconscious without upsetting other intellectual functions.

Demonstrations of this equipment have shown encouraging results after exposure of less than one minute and have produced the ability to alter behavior on unwilling subjects. A US Department of Defense medical engineer claimed in 1989 that the U.S. and Israel had regularly used microwaves to condition and control the minds of Palestinians.

Unclassified ELF-Type Weapons

Remote physical manipulation: Not covered in this document. At time of writing, that technology appears to be classified.

Transmission methods for neuro-effective signals: This includes pulsed microwave (i.e., like radar signals) and ultrasound and voice-FM (transmitted through the air). Also known as "Synthetic Telepathy."

While transmission of speech, dating from the early 1970s, was the first use of pulsed microwave, neuro-effective signals can now cause many other nerve groups to become remotely actuated. That specific technology is classified.

Pavlovian hypnotic triggers: A [Pavlovian] hypnotic trigger is a phrase or any sensory cue that the subject is programmed to involuntarily act in a certain way. MKULTRA survivors can still be triggered from programming done decades ago.

One of the main goals of the institutional/drug/child abuse phases of the CIA MKULTRA atrocities (1950's through 1970's) was to implant triggers using a "twilight state" (half-conscious) medication and tape-recorded hypnosis. The ultimate goal was to have the acting out of Pavlovian triggers erased from the victim's memory.

These triggers are now planted using either of the above two transmission methods, but with the words moved up just above (or near the top of) the audible frequency range. The result is that hypnotic triggers are planted without the subject being aware. This technology was used in the Gulf War as "Silent Sound."

Through-wall surveillance methods: This includes top end of microwave (near infrared), and the so-called "millimeter wave" scanning. This method uses the very top end of the microwave radio signal spectrum just below infrared. To view small objects or people clearly, the highest frequency that will penetrate non-conductive or poorly-conductive walls is used.

Millimeter wave scanning radar can be used in two modes: The first is passive (no radiated signal) and uses background radiation already in the area to be scanned. It is totally undetectable. The active system uses a (low power millimeter wave) "flashlight" attached to the scanner.

Thought reading: Thought reading can be classed as a form of "through wall surveillance" technology. In the unclassified and commercial realms, it is called thru-skull microwave reading, and magnetic skull-proximity reading.

Brain entrainment: This involves moods and sleep states, the reverse of biofeedback. The low frequency electrical brain rhythms are characteristics of various moods and states of sleep. Not only can they now be read out using biofeedback equipment or EEG machines, but also radio, sound, contact electrodes, or flashing lights. These moods and sleep states can be generated or at least encouraged using brain entrainment devices.

Brain entrainment signals cannot carry voice, which is a much higher frequency range. Brain entrainment can, however, be used to "set up" a target to make him/her more susceptible to hypnosis.

Implantation: (no longer required)

Specific ELF Weapons

Ultrasound and Voice-FM: Main advantage in mind control work is that it can carry verbal hypnosis, more potent than simple biorhythm entrainment. An example is Chicago's Airport Terminal connection tunnels and their "Keep Walking."

Steady tone, near the high end of hearing range (15,000 Hz). Hypnotist's voice, varying from 300 to 4,000 Hz, fed into a frequency modulator, where the voice controls the frequency. Output

is now a steady tone, sounding like tinnitus, but with hypnosis embedded. While the brain can hear and understand, the ear only hears a "tone" or a "rush."

Acoustic Heterodyne
American Technologies Corp.
13114 Evening Creek Drive. S.
San Diego, CA 92128

Through-Wall Radar: Millimeter wave through clothing, through-luggage is currently in use at airports. Millimeter wave scanners can be purchased from:

Millivision Corp.
Northampton, MA

Thought Readings: Thought reading is an enhanced version of computer speech recognition, with EEG waves being substituted for sound waves. The easiest "thought" reading is actually remote picking up of the electro-magnetic activity of the speech-control muscles.

When we say words to ourselves, silently, or, read a book, we can actually feel the slight sensations of those words in our vocal muscles - all that is absent is the passage of air. Coordinated speech signals are relatively strong and relatively consistent.

We are "fed" hypnotic signals to force consistent "neutral" content (but of different character than prior to becoming test subjects) in dreams. These forced, neutral content ("bland" content) dreams occur every single night and may represent the experimenters' efforts to have our experiences portray themselves in such dreams, in effect, mining our experiences.

confirms the ability of current unclassified technology to actually see what a living animal sees, electronically. It is therefore extremely likely that these forced dreams can be displayed on the experimenters' screens in an adjacent apartment or adjacent house, (which are made obvious to the involuntary experimentee).

Implants: Implants can either receive instructions via radio signals, passing them to the brain. Or, can be interrogated via external radio signals to read brain activity at a distance. Since implants for beneficial purposes are actively being promoted by NIH, it is obvious they will not disappear any time soon.

Thermal Gun, Seizure Gun, and Magnetophosphene Gun: Evokes a visual response and is thought to be centered in the retina (as seen in the movies Goldeneye, Broken Arrow, Escape From LA, and Eraser). The popular video "Waco: The Big Lie Continues" shows video footage of three EM weapons being used during the confrontation.

Silent Subliminals
ALTERED STATES LTD
P.O.Box 68-344, Newton,

Auckland, New Zealand.
Ph: +64-9-815-5095 or +64-9-815-5059
Fax: +64-9-815-5067

From their brochure:

"Only your mind can hear. Your ears hear nothing but your mind hears and accepts the powerful suggestions.

You can safely play these tapes anywhere - in a car, while watching TV or listening to your favorite music, while working or even as silent sleep programming.

Warning: *Everyone within listening range of the tape will be programmed by the suggestions. To assure yourself that strong suggestions are recorded on the tape, take it to any Radio Shack store, play it on their stereo and read the output with a Radio Shack Sound Level Meter (Item 33-2050)*

How To Use The Tapes: *Increase the volume until it is just below any tape noise. If your stereo deck has treble and bass controls, you can boost the subliminal output by increasing the treble and decreasing the bass. The player then emits a strong but inaudible frequency - modulated 60 - 90 decibel signal that is received and demodulated by the human ear.*

Technical Information *The Suggestions are delivered on a carrier frequency of 14,800 cps, via a low-distortion sine wave signal. This frequency is slightly above the audible hearing range but the frequency-modulated (FM) signal is still strongly impinging upon the diaphragm of the ear. The listener can expect his subconscious mind to accept the suggestions with repeated listening.*

How To Use The Tapes*: Increase the volume until it is just below any tape noise. If your stereo deck has treble and bass controls, you can boost the subliminal output by increasing the treble and decreasing the bass. The player then emits a STRONG BUT INAUDIBLE frequency-modulated 60 to 90 decibel signal that is received and demodulated by the human ear.*

The Silent Subliminals is a new brain/mind technology developed by an aerospace engineer. This new technique has been licensed to Valley of the Sun Audio/Video for this incredible new tape series. Patent pending. Note: Because the frequency is beyond normal recording range, the tape cannot be duplicated:

Examples of Suggestions:
- *"Every day you become thinner and thinner"*
- *"You now lose weight and full fill your goals"*

- *"You attain your weight goals and the body you desire"*
- *"You have the power and ability to attain the perfect weight and body you desire"*
- *"You have the self-discipline to lose all the weight you want"*
- *"You live a healthy lifestyle and eat a proper diet"*
- *"You now quit smoking because it serves you"*
- *"You lose all desire to smoke"*
- *"You accept that you now quit smoking"*
- *"You are a non-smoker"*
- *"Quit smoking. Quit smoking. Quit smoking"*
- *"You have the willpower to do anything you want to do"*
- *"You have great self- discipline and you use it to quit smoking"*
- *"Cigarettes disgust you"*
- *"You are very sure of yourself"*
- *"You accept that you have great inner courage"*
- *"You are self-reliant and self-confident"*
- *"You are full of independence and determination"*
- *"You have great inner courage"*
- *"Every day in every way, you become more and more self-confident"*
- *"You feel good about yourself"*
- *"You project a very positive self-image"*
- *"You are relaxed and at ease"*
- *"You detach from worldly pressures and experience an inner calm"*
- *"Negativity flows through you without affecting you"*
- *"You accept other people as they are"*
- *"You peacefully accept the things you cannot change, and change the things you can"*
- *"You are at peace with yourself, the world and everyone in it"*
- *"Your mind is like calm water*
- *"You direct your time and energy to manifest your desires"*
- *"You have the self-discipline to accomplish your personal and professional goals"*
- *"Every day, you increase your self-discipline"*
- *"You do what you need to do and stop doing what doesn't work"*
- *"You freely choose to do what you need to do"*
- *"You are assertive and feel good about yourself*
- *"You now focus your energy upon attaining success"*
- *"You know exactly what you want and you go for it"*
- *"You can accomplish whatever you set out to do"*
- *"Be ultra-successful. Be ultra-successful and become wealthy"*
- *"Every day in every way, you become more successful"*
- *"Your creative thinking opens the door to monetaryabundance"*
- *"You easily achieve and maintain a penile erection"*
- *"Your body performs perfectly during sex without thinking about it"*

- *"A hard, firm erection is your natural response to sexual stimulation "*
- *"You can make love for a long before you ejaculate"*
- *"Every day you feel better about your sexual prowess and your ability to achieve and maintain a hard, firm erection"*

"Acoustic Spotlight (Can Target One person in Crowd)"

Posted by F. Joseph Pompeii, MIT Media Lab

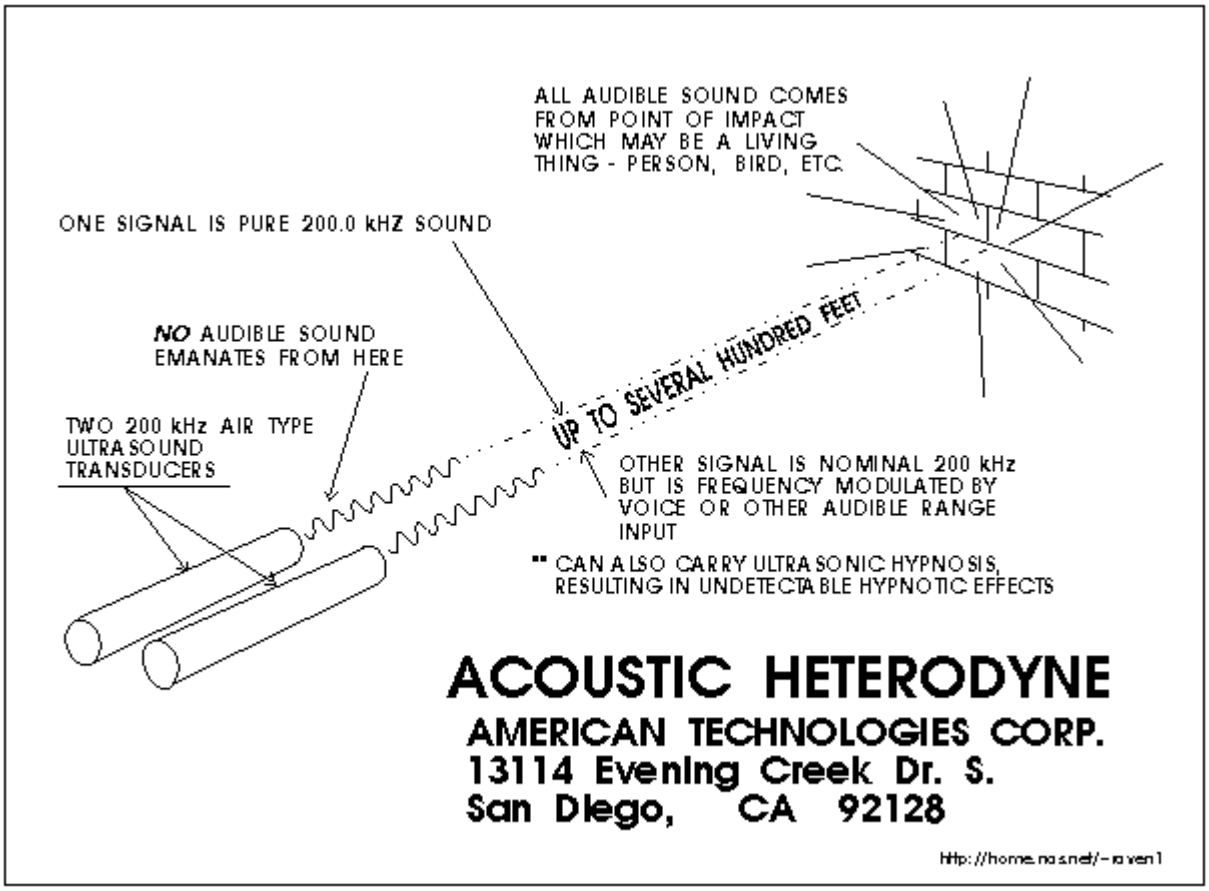

Usage: The Audio Spotlight can be used in two major ways: As directed audio, sound is directed at a specific listener or area, to provide a private or area specific listening space. As projected audio, sound is projected against a distant object, creating an audio image. This audio image is literally a projected loudspeaker - sound appears to come directly from the projection, just like light.

The Audio Spotlight consists of a thin, circular transducer array and a specially designed signal processor and amplifier. The transducer is about half an inch thick, nonmagnetic, and lightweight. The signal processor and amplifier are

integrated into a unit about the same size as a traditional audio amplifier, and have similar power requirements.

Technology: Because it is impossible to generate extremely narrow beams of audible sound without extremely large loudspeaker arrays, we instead generate the sound indirectly, using the nonlinearity of the air to convert a narrow beam of ultrasound into a highly directive, audible beam of sound.

The device transmits a narrow beam of ultrasound (blue), which, due to the inherent nonlinearity of the air itself, distorts (changes shape) very slightly as it travels. This distortion creates, along with new ultrasonic frequencies, audible artifacts (green) that can be mathematically predicted, and therefore controlled.

By constructing the proper ultrasonic beam, this nonlinearity can be used to create, within the beam itself, an audible sound beam containing any sound desired. This is presently done in real-time using low cost circuitry, a specially designed amplifier, and transducers developed at MIT specifically for this project.

Hyperdirectivity: The directivity, or narrowness, of an acoustic wave generated by a circular transducer is proportional to the ratio of the diameter of the transducer to the wavelength of the sound. So a transducer much larger than the wavelength of the sound creates a very narrow beam.

Audible sound contains wavelengths reaching lengths of several feet, so a reasonably sized loudspeaker will always produce a very wide, non-directional source at lower frequencies. The Audio Spotlight, in contrast, outputs short, millimeter sized ultrasonic waves, which form a very narrow beam even in a small transducer, which in turn generates audible sound.

The nature of the nonlinear transformation also essentially eliminates side lobes in the resulting beam, and maintains relatively uniform directivity across the entire audible frequency range.

The figure above (from American Technologies Corp.) compares the directivity of the Audio Spotlight (yellow) to that of an ordinary loudspeaker (purple) at 400 Hz. Note that the directivity of the Audio Spotlight is only three degrees, compared to the essentially omni directional directivity of the loudspeaker.

In order to obtain such narrow directivity from a traditional loudspeaker system, one would need a loudspeaker array fifty meters across! A loudspeaker is like a light bulb, but the Audio Spotlight is like a laser.

History: The use of nonlinear interaction of high frequency sound to generate directive low frequency sound sources has been a well-researched subject in the field of underwater acoustics since the early 1960's. Often

misattributed to so-called "Tartini Tones," the effect is more accurately described as a parametric array, a term introduced by Westervelt.

In the past several decades, many underwater sonar researchers have used the effect to generate directive low frequency sonar beams, detect underwater sound (parametric receiving array), and extend the bandwidth of underwater transducers.

The first published demonstration of an airborne parametric array was in 1975 by Bennett and Blackstock. Rather than using inaudible ultrasound, they instead used very intense, high frequency audible sound to produce simple difference tones. While their goal was not a practical audio reproduction device, they nonetheless effectively demonstrated that the parametric array would work in air in addition to underwater.

Life Assessment Detector System (LADS) The Life Assessment Detector System (LADS), a microwave Doppler movement measuring device, can detect human body surface motion, including heartbeat and respiration, at ranges up to 135 feet (41.15 meters).

The primary function of the LADS is to provide a reliable method by which medical and emergency personnel can locate personnel buried in building collapses or injured on the military battlefield. LADS can detect such signs of life as movement, heartbeat, or respiration.

Originally designed to detect heartbeat and respiration of military personnel wearing chemical-biological warfare protective overgarments, the LADS has been restructured, greatly increasing its operational range and providing a means for eliminating "nuisance alarms" which could mimic human life signs, such as fans, wind drafts, or swaying trees.

This is accomplished through neural network technology, which "trains" the system to recognize human motion and heartbeat/respiration functions. If these functions are not detected, the reasonable assumption is that there are no survivors. Operating under such an assumption, the rescue team can now proceed without fear of further loss of life, i.e., rescue and medical personnel and equipment can be deployed more effectively and efficiently.

The LADS consists of a sensor module, a neural network module, and a control/monitor module. The sensor module is an x-band (10 GHz) microwave transceiver with a nominal output power of 15 milliwatts, operating in the continuous wave (CW) mode. The neural network module device can store many complex patterns such as visual waveforms and speech templates, and can easily compare input patterns to previously "trained" or stored patterns.

The control/monitor module provides the LADS' instrument controls, such as on-off switches, circuit breakers, and battery condition, as well as motion, heartbeat waveform, pulse strength, and pulse rate displays.

LADS provides life assessment capabilities for people who are:

Trapped in building rubble;

Battlefield casualties in a chemical/biological warfare environment;
Victims of airline, train, or automobile crashes;
Trapped in an avalanche or mudslide;
Trapped on a mountain ledge;
Trapped under a collapsed tent structure; or
Hostages being held in a nonmetallic room.

For more information about the LADS, send E-mail to: info@vsecorp.com

Radar Flashlight: The National Institute of Justice (NIJ), through the Joint (Justice-Defense) Program Steering Group (JPSG), is sponsoring Georgia Tech Research Institute (GTRI) in developing inexpensive, handheld, low-power radar that will enable law officers to detect individuals through interior building walls. It works by sensing the motion of an individual's chest when they breathe.

GTRI is currently designing and refining the first prototype unit. A laboratory test area has been constructed consisting of a section of home siding and drywall, a wooden front door, and a section of brick and mortar.

It also demonstrated the ability to detect an individual through the laboratory's cinder block walls. GTRI is working to combine the two parts of this device into a single unit. NIJ plans on demonstrating the Radar Flashlight with law enforcement agencies through its National Law Enforcement and Corrections Technology Center (NLECTC) (Southeast Regional Center) before the end of 1999.

Dr. Pete Nacci Project Manager
(703) 351-8821

Millivision Radar Millimeter-Wave Camera picks up both metallic and plastic concealed handguns. Between microwave and infrared lies the millimeter wave band. This little-heralded portion of the electromagnetic spectrum turns out to be perfect for "remote frisking." Millitech Corp. has designed a camera to accomplish just that.

The idea calls for measuring the time delay and intensity of millimeter wave energy that radiates naturally. At millimeter wavelengths, people are good emitters, while metals are very poor. Dielectric objects, such as plastics, ceramics and powdered drugs, are somewhere in between. *Clothing and building materials, such as wallboard, are virtually transparent.*

Ground (or Home/Apt. Wall) Penetrating Radar: Patriot Scientific Corporation has developed radar technologies with a wide range of possible applications.

A pulse generator is used to drive the transmit antenna. The pulse is a positive spike going up to 100V then falling back to ground in one and a half nanoseconds corresponding to a pulse transmit frequency of 750 MHz.

The return signal is read by the receive antenna. At this point some simple analog processing is done and the signal is digitized at a resolution of 6 GHz, and sent to a PC. The PC correlates the data into a conventional waveform, does some processing, and then transmits the data over an Ethernet cable to a Pentium workstation (not shown).

The Pentium workstation is used to apply different digital filters, combine waveforms, and display the results. This system can be used to demonstrate detection of small targets buried in sand, people behind walls, and other targets.

Patriot has used its antenna system to demonstrate detection of objects as small as a coke buried in sand, through a wall. Even small targets disturb the wavefront of the pulse, producing reflections and modifying the field in measurable ways.

The key to Patriot's Radar system is its ability to transmit and receive pulses barely longer then single cycles at the transmit frequency. The first waveform shown here is a pulse generated by an earlier Patriot Design, based on "off the shelf" antenna technology. The waveform on the bottom was produced and received by Patriot's current Design.

The current Patriot antenna system produces a pulse at the desired frequency with little leading or trailing noise. The Patriot antenna system provides many advantages over pulse-based systems.

Patriot originally developed the impulse radar system to allow time domain processing in Patriot's GPR systems. Because the impulse is extremely short (3 nanoseconds), the time to return can be used to gauge the distance traveled by the pulse.

Furthermore, the transmitter and receiver antennas are very directional, eliminating much of the multipath components of the return signal. The short pulses combined with the directional transmit and receive to provide us with a number of important advantages:

Very low average power during transmission
Low interference from other transmitters
Transmission invisible to conventional receivers
High bandwidth digital data transmission possible
Difficult detection by other impulse receivers

Interference with other sources and receivers is further reduced by using directional antennas. The antenna design shown is highly directional.

When penetrating the ground, we wish to eliminate as much of the multipath signal as possible. The directional antennas reduce the multipath signals detected to those that are relatively inline with the wave path, and eliminate much of the multipath signal that returns at odd angles.

Impulse radar uses low power inherently because the transmissions occur in pulses separated by periods of no transmission. The power of the pulses is offset by the dead time between the pulses. The average output of the current system is about 300 microwatts. The low average power of an impulse system effectively hides the transmissions from conventional receivers.

Interference can be further reduced in an impulse system by using random interval spacing. As long as the transmit and receive antennas are in sync, the period between pulses can be varied to prevent aliening with other continuous- or pulse-transmission systems that might be operating in the same locale.

Furthermore, if an impulse system is being used to transmit data, varying the intervals between pulses prevents other impulse systems from locking onto the signal. Patriot Scientifics' current GPR system does not use random interval spacing.

Patriot Scientific Corporation

Commercial Thought Reading Devices: The Cyberlink Mind Mouse is a revolutionary hands-free computer controller which allows you to move and click a mouse cursor, play video games, create music, and control external devices, all without using your hands.

A headband with three sensors detects electrical signals on the forehead resulting from subtle facial muscle, eye, and brain activity. This headband connects to an interface box that amplifies and digitizes the forehead signals and sends them to your computer.

The Cyberlink software decodes the forehead signals into ten Brain Fingers for continuous cursor control. It also decodes eye motion and facial gestures into mouse button clicks, keystrokes, and cursor resolution control. With a little practice, most or all of these commands can be mastered to operate virtually all computer functions.

By learning to change the energy levels of your Brain Fingers, you will be able to do just about anything on a computer, except turn it on! The Cyberlink Mind Mouse supports hands-free mouse, keyboard and joystick cursor control, switch closure, video game control, and music and art synthesis.

The Cyberlink Mind Mouse features a Windows 95 Mouse Driver for hands-free control of third party software like games, business software, Internet browsers, and a range of assistive technologies, such as the X-10 Home Controller and special needs word-processing and communication software, including WiVik2, Words Plus, and Clicker Plus.

The Cyberlink Mind Mouse is priced at $1495.00 (U.S.$) plus shipping. Free upgrades are included for one year.

Hearing For the Deaf: It was during these [Frey] studies that a profoundly important discovery was made: Deaf subjects often had the ability to *hear* radio frequency sound. The clinical criterion was that, if a given person could hear audio above 5 kHz [higher range of a piano] by bone or air conduction, then radio frequency sound could be heard as well.

This and related work has resulted in the manufacture of radio frequency type hearing aids for the deaf, one of which is made by Listening, Inc., of Arlington, Mass., and is known as the Neurophone Model GPF-1. It operates at 100 kHz (about five times the normal maximum hearing frequency) and employs crystal control.

These observations tie in with the fact that some individuals can detect radio programs through fillings in their teeth. This phenomenon was technically *verified* by interposing shields between respective people who exhibited this effect and the modulated radio frequency sources.

When the lower half of the head was *covered*, including the maxillary dental area, the radio frequency sound was perceived. The sound *ceased* on covering the *top* half of the head. While the mechanism responsible for this phenomenon is only imperfectly understood, *it can be assumed to be the result of DIRECT cortical stimulation.*

In other words, even when the sound seems to be coming from the teeth, it is actually being directly received and interpreted in the brain, not the teeth.

Some Important Historical Developments:

Brain-Wave Detection: Some 40-odd years ago, university professor F. Cazzamalli started publishing papers on the subject of brain-wave detection [using radio signals] and implied that he had detected radiations from the mind.

He placed his subjects in a shielded room (or Faraday cage), emanated VHF radio waves through their heads, and claimed to have recorded "beat frequencies" obtained with an untuned receiver consisting of a galena crystal or diode tube, a fixed capacitor, an antenna, and a sensitive light beam galvanometer. A "galvanometer" is a voltmeter; light beam types show up in physics labs and are one of the most sensitive types of voltmeter.

The trouble is that Cazzamalli never mentioned transmitter power in his somewhat unprofessional papers. His oscillograms meant to show variations of the "beat" when his subjects were emotionally aroused or engaged in creative tasks when they were in the Faraday cage. "Beat" as used by Cazzamalli refers to EEG-frequency, i.e., ELF, traces.

Later he told an astounded world that his subjects would hallucinate when under the influence of his "oscillatori telegrafica," its frequency being around 300 MHz at the time. Aviation radios are in this range.

Tom Jaski, a noted science writer and engineer duplicated some of Cazzamalli's work with a modern low-power oscillator that was swept from 300 MHz to 600 MHz. Cell phones start at over 900 MHz.

His subjects could not see the dial. They were told to sound off as soon as they felt something unusual. At a certain frequency range - varying between 380 MHz and 500 MHz - the subjects repeatedly indicated points with exact accuracy in as many as 14 out of 15 trials. At these "individual" frequencies, the same subjects announced having experienced pulsing sensations in the brain, ringing in the ears, and an odd desire to *bite* the experimenters.

The oscillator's output power was only a few *milli*watts, while the oscillator itself was located several feet away from the subjects. Any experimenters out there want to try this? Milliwatts are quite safe for short-term experiments. Kids' walkie-talkies are 50 to 100 milliwatts, for example.

LIDA Machine: 1960 Soviet device that bombards brains with low-frequency radio waves. Now with Dr. Ross Adey, Chief of Research, Veterans Hospital, Loma Linda, CA.

Low frequency square wave modulation of a radio frequency field. It was developed by L. Rabichev and his colleagues in Soviet Armenia, for "the treatment of neuropsychic and somatic disorders, such as neuroses, psychoses, insomnia, hypertension, stammering, bronchial asthma, and asthenic and reactive disturbances." (U.S. Patent # 3,773,049)

The radio frequency field has a nominal carrier frequency of 40 MHz and a maximum output of approximately 40 watts. The E-field is applied to the patient on the side of neck through two disc electrodes approximately 10 cm in diameter. The electrodes are located at a distance of 2 to 4 cm from the skin.

The radio signal appears to be the primary cause of the sleep/trance effect. Optimal repetition frequencies are said to lie in the range from 40 to 80 pulses per minute.

Voice to Skull, 1974: The demonstration of sonic transduction of microwave energy by materials lacking in water LESSENS the likelihood that a thermo hydraulic principle is operating in human perception of the energy. Nonetheless, some form of thermo acoustic transduction probably underlies perception. If so, it is clear that simple heating is NOT a sufficient basis for the Frey effect; the requirement for pulsing of radiations appears to implicate a thermodynamic principle.

Frey and Messenger (1973) and Guy, Chou, Lin, and Christensen (1975) confirmed that a microwave pulse with a slow rise time is ineffective in producing an auditory response; only if the rise time is SHORT, resulting in effect in a square wave with respect to the leading edge of the envelope of radiated radio-frequency energy, does the auditory response occur.

Thus the rate of change (the first derivative) of the waveform of the pulse is a CRITICAL factor in perception. Given a thermodynamic interpretation, it would follow that information can be encoded in the energy and "communicated" to the "listener".

Communication has in fact been demonstrated. A. Guy, a skilled telegrapher, arranged for his father, a retired railroad telegrapher, to operate a key, each closure and opening of which resulted in a pulse of microwave energy. By directing the radiations at his own head, complex messages via the Continental Morse Code were readily received by Guy.

Sharp and Grove found that appropriate modulation of microwave energy can result in "wireless" and "receiverless" communication of SPEECH. They recorded by voice on tape each of the single-syllable words for digits between 1 and 10. The electrical sine-wave analogs of each word were then processed so that each time a sine wave crossed ZERO REFERENCE IN THE NEGATIVE DIRECTION, a brief pulse of microwave energy was triggered.

This is, in effect, is a form of what is called pulse-RATE modulation. By radiating themselves with these "voice modulated" microwaves, Sharp and Grove were READILY able to hear, identify, and distinguish among the 9 words. Persons with artificial larynxes not unlike those emitted the sounds heard.

Communication of more complex words and of sentences was not attempted because the averaged densities of energy required to transmit longer messages would approach the current 10 milliwatts per square centimeter limit of safe exposure.

The capability of communicating directly with a human being by "receiverless radio" has obvious potentialities both within and without the clinic. But the hotly debated and unresolved question of how much microwave radiation to which a human being can safely be exposed will probably forestall applications within the near future.

EC-130E Commando Solo: Primary function is "Psychological operations broadcasts." Air Force Mission statement: Commando Solo conducts psychological operations and civil affairs broadcasts missions in the standard AM, FM, HF, TV and military communications bands.

It was called EC-121, known at the time as the Coronet Solo, and was used in Operation Urgent Fury. Volant Solo was during Operation Just Cause.

The Commando Solo aircraft and earlier generations of this design have participated in the following missions:

Operation *Urgent Fury* (Grenada, October-November 1983, January-June 1985)
Operation *Just Cause* (Panama, late December 1989)
Operation *Desert Shield* (Kuwait, Iraq, from August 1990)
Operation *Desert Storm* (Saudi Arabia, Turkey, Iraq, 1991)
Operation *Uphold Democracy* (Haiti, 1994-1995)
Operation *Joint Guard* (Part of a U.N. operation in Bosnia-Herzegovina, 1995)
Operation *Desert Thunder* (part of a U.N. operation in Iraq)
Operation *Desert Fox* (Iraq, 2 to 3 days in December 1998)

HAARP:

HAARP (High Frequency Active Auroral Research Project), by virtue of its far-reaching impact on the environment to be a global concern and calls for its legal, ecological and ethical implications to be examined by an international independent body before any further research and testing, regrets the repeated refusal of the United States Administration send anyone in person to give evidence to the public hearing or any subsequent meeting to be held by its competent committee into the environmental and public risks connected with the HAARP programmed currently being funded in Alaska...

One of HAARP's potential uses is a communications system. The military officially acknowledges two communications-related applications:

(1) to replace the existing Extremely Low Frequency (ELF) submarine communications system now operating in Michigan and Wisconsin;

(2) to provide a way to wipe out communications over an extremely large area, while keeping the military's own communications system working.

As we have seen, the mind-control subliminal messages are carried on radio-frequency broadcasts. The HAARP facility could be used to broadcast global mind-control messages, or such messages could simply be inserted into existing systems.

Dr. Igor Smirnov, of the Institute of Psycho-correction in Moscow, says in regard to this technology: "It is easily conceivable that some Russian 'Satan', or let's say Iranian [or any other 'Satan'], as long as he owns the appropriate means and finances, can inject himself [intrude] into every conceivable computer network, into every conceivable radio or television broadcast, with relative technological ease, even without disconnecting cables.

Recent Media on HAARP

HAARP TRANSMITTER NOW RUNNING AT FULL POWER!!
Can be Easily Heard Around the World on Short-wave Radio.
Has Space War Begun?
-BJNews by Marshall Smith

"As of this morning, Saturday Feb 17, 2001, HAARP began doing testing with greatly increased FULL power. The transmitter can now be heard all day long on 3.39 MHz. Very early this morning about 3 AM, HAARP could be heard at its "old" normal signal strength. About 4 AM the signal changed in both its pulse timing and inter-pulse spacing. At 4:30 AM the signal strength suddenly increased tremendously.

"Unlike previous mornings, there was no regular F-layer daytime fade out when the sun rose here in California about 6:45 AM. I continued to monitor during the daylight. I have never heard the HAARP signal during the daytime before. The

sun now rises in Gakona Alaska about 10 AM PST. The received signal again increased from about S5 to S9 at 10:05 AM. With sunlight at both the transmitter and receiver there is no F-layer skip to bend the powerful signal around the planet. This means this is an extremely powerful direct ground wave signal. And I'm only receiving the leakage off the side lobes of the antenna array.

"The full HAARP design power is supposed to be about 350 Megawatts. But that is only the published spec, not necessarily what is done in practice (as in those CB'rs running illegal 1KWatt linear amplifiers). There is a planned Air Force "Star Wars" test with two vehicles, one from California and the other in the south Pacific, similar to last summer's failed test. The tentative published launch is set for late March or April. I will monitor HAARP to confirm it is running full power during the launch, as it was last summer.

"Last summer's "failure" is exactly what a HAARP device is supposed to do; destroy the electronic controls of a vehicle so the second stage cannot separate from the booster. A very cheap, simple way to knock down missiles launched from anywhere on the planet. It also can destroy military satellites in low orbit. Maybe that's why the Russians and Chinese have been complaining in the last several weeks about Bush's intention to "build" the star wars system. Maybe they've been losing some of their "secret hardware." But of course, they won't say that in public.

"Its now 11 AM PST, on Saturday the 17th, and the signal is blasting in with the powerful pre-pulse tone around S+20 and the main signal about S9. The signal varies 3 to 6 db over a series of several pulses. Since this is not due to F-layer skip fading, I must assume they are slewing the beam of the antenna in various directions, and thus changing the amount of the side lobes in this direction. This must be a test of a simulated space warfare game with multiple targets. Rapid slewing of the antenna in just a matter of a minute or two is not useful for submarine communication, nor for their stated purpose of doing "ionospheric research."

"To show the HAARP signal is abnormally large, at this time, the 80-meter band is silent and WWV at 5 MHz cannot be heard, as would be expected during the daytime. WWV at 10 MHz is barely heard but does not even register on the S meter. Tuning back to 3.39 MHz, the S meter jumps off the top of the scale. Even the extremely powerful Russian "woodpecker" transmitters during the cold war never did that, and they were aimed along the ground not out into space. I have no way to estimate how many Gigawatts that represents.

"It may be only coincidence but just several days ago, Russia announced it would be conducting a massive space war game, including the launch of numerous missiles, from both ground sites and submarines. Of course this is only a coincidence. You Think. For more information about HAARP, how the transmitter works and to hear what the transmitter sounds like, go back to the Brother

Jonathan Gazette front page article about the HAARP facility and how it is used in space warfare.

"I should point out in 1983 a number of Air Force ER-135 electronic warfare planes were shot down in the Sea of Japan. They were apparently making a covert entry into soviet airspace to test the latest Russian technology. What the Air Force did not know then was the Soviets had developed a stealth fighter so the 135's never saw the Russians coming and all 5 of the US e-warfare planes were shot down. To cover this "covert" event, the US shot down a 747, a plane similar to the 135's (or modified Boeing 707's whose parts are very similar to a 747) so if plane parts are found in the Sea of Japan they are claimed to be the 747. The 747 may, in fact, have played a part in the covert event. This is the supposed "Russian" shoot down of Korean Airlines Flight 007, on Sept 1, 1983. I remember the event well, since it is my son's b-day.

"The proof of a covert event with stealth Russian fighters shooting down 5 Air Force ER- 135's is documented in R.W. Johnson's book, SHOOTDOWN, published in 1986. The most convincing evidence is the strange fact that 27 US active duty electronic warfare officers somehow end up on the passenger list among the dead on the civilian KAL Flight 007 going to Korea. I only point this out to show how high tech secret warfare between Russia and the US may result in deaths and the destruction of hardware, and yet is never reported to the public.

"The US did not announce and demonstrate deployment of its own stealth fighters until the Gulf War in '90-91, seven years later. In 1991, three events occurred, (1) the US demonstrates stealth fighter-bombers which can travel anywhere in the world without detection, (2) the announcement of the construction of HAARP which would neutralize all soviet missiles coming over the pole, and (3) the collapse of the Soviet Union. To see these as unrelated events is to miss the point of history.

"At the present time, both the Russian's and Chinese have demonstrated their ability and inclination to engage in warfare, especially space warfare. It would thus seem clear the "coincidence" of the massive Russian war games and the sudden increase in the output of HAARP in a warfare mode, would indicate that on this Presidents Day Weekend 2001, warfare is actually occurring, not just games. Just as in 1985, when planes were destroyed and US airmen died, the story was completely covered up, but it nonetheless had great implications on the relations between the governments of the world.

"There are, of course, no airmen on the Russian missiles, nor the Chinese and Russian satellites in orbit. This is the new hi-tech robotic remote control warfare of outer space. But, the "war games" are real, nonetheless. The massive increase in the output of HAARP, under the control of the Air Force's Space Vehicles Command which operates HAARP and has the mission of engaging in space warfare, would indicate of a lot of expensive space hardware is now biting the

dust. The Russians will claim their exercise was a "success." The Chinese who have just lost their "eyes in orbit" will say nothing. And the US will claim, as usual, "What, who me? HAARP hasn't been in operation since October '99." But you can listen for yourself on any short-wave receiver by tuning to 3.390 MHz. Good Listening."

Some Concluding Remarks

The discovery of "Synthetic Telepathy," as an EM way to communicate information directly onto the brain has changed everything. And, with related discoveries on membrane responses to specific frequency bands, and their amplification, has led to some very serious questions. Where are these technologies really leading man?

Certainly not toward a better way of living…. We see little application in their uses in medicine. In fact, most aspects have remained classified, and are still being used (historically) for military applications and uses. When you consider our ability to clone emotions, and the possible uses of HAARP, there is NO QUESTION on the possibility of its use for the complete mind control of humanity.

We can do it now. We have the theory. We have the technology. Why would it not be done? And then, by whom? Dr. Robert O. Becker, twice-nominated for the Noble prize for his health work in bio-electromagnetism, was more explicit in his concern over illicit government activity. He wrote of "obvious application in covert operations designed to drive a target crazy with voices."

What is frightening is that words, transmitted via low-density microwaves or radio frequencies, or by other covert methods, might be used to create influence. For instance, according to a 1984 U.S. House of Representatives report, a large number of stores throughout the country use high frequency transmitted words (above the range of human hearing) to discourage shoplifting. Stealing is reduced by as much as 80 percent in some cases.

Given the low power levels required for some of these psycho-physical effects, and the ability to concentrate certain frequencies of electromagnetic radiation into tight beams, it is worth considering the possibility that low-orbiting satellites could transmit such signals directly to a chosen person. Such a capability would have obvious strategic value.

What if some group or organization wanted to conduct terrorist activities that would strike right into the heart of their intended victims? What better way than to create killers from the most ordinary of citizens? Worse yet would be to cause children to unexpectedly lash out and murder those around them.

It is apparent that the technology exists to elicit such behavior using waves of electromagnetic energy sent directly into the brain.

"ELF" frequencies, as we know now, are not the most invasive weapons-capable frequencies. Doses of ELF can act as either sedatives or stimulants, entraining the target's EEG as with the Russian LIDA machine. Weapons that can transmit hypnotic commands silently and untraceably, over distance and through walls, can cause a far wider spectrum of effects.

In other words, don't assume that "ELF" is the only form of electromagnetic signal which can do damage. And, if you might wonder what that "buzzing" sound you sense behind you ear might be? It is HAARP. You can actually hear it when they have it "on."

The obvious next important discussion should be around the changing Shuman Resonance, and its affects and importance to biological functions and activities. There is no question that the Shuman Resonance is changing toward the higher frequencies associated with our "conscious states" of mind… Why is that?

BOOKS
ON
MIND CONTROL

Adey, W. Ross, and Lawrence, Albert F. (eds.): *Nonlinear Electrodynamics in Biological Systems*, Plenum Publishing Corp., NY, 1984.

Alexander, John B., Groller, Richard, and Morris, Janet: *The Warrior's Edge: Front-line Strategies for Victory on the Corporate Battlefield*, 1990.

Anderson, Larry E. (ed.): *Interaction of Biological Systems with Static and ELF Electric and Magnetic Fields*, Dept. of Energy, Washington, DC, 1984.

Aquino, Michael A. (Major), and Valley, Paul E. (Col.): *Mindwar: From Psyops to Mindwar: The Psychology of Victory*.

Bamford, James, and Madsen,: *The Puzzle Palace: Inside the National Security Agency, America's Most Secret Intelligence Organization*, Penguin Books, NY, 1982.

Baranska, S., and Czerski, P.: *Biological Effects of Microwaves*, Dowden, Hutchinson, and Ross, Inc., Stroudsburg, PA, 1976.

Barnothy, M. F.: *Biological Effects of Magnetic Fields*, Plenum Publishing Corp., NY, Vol. I: 1964, Vol. II, 1969.

Basar, E., Flohr, H., Haken, H., and Mandell, A. (eds.): *Synergetics of the Brain*, Springer-Verlag, Berlin, 1983.

Bearden, Thomas E. (Lt. Col.): *An Approach to Understanding Psychotronics*, (AD-A027866), Defense Documentation Center, Washington, DC, 1976.

Bearden, Thomas E. (Lt. Col.): *Excalibur Briefing*, Strawberry Hill Press/Walnut Hill Books, San Francisco, 1980.

Bearden, Thomas E. (Lt. Col.): *Gravitobiology*, 1991.

Bearden, Thomas E. (Lt. Col.): *The New Tesla Electromagnetics and the Secrets of Electrical Free Energy*, Tesla Book Co., Millbrae, CA, 1983.

Bearden, Thomas E. (Lt. Col.): *Solutions to Tesla's Secrets and the Soviet Tesla Weapons*, Tesla Book Co., Millbrae, CA, 1983.

Becker, Robert O., and Selden, Gary: *The Body Electric: Electromagnetism and the Foundation of Life*, William Morrow & Co., Inc., NY, 1985.

Becker, Robert O.: *Cross Currents: The Perils of Electropolution, The Promise of Electromedicine*, Jeremy P. Tarcher, NY, 1990.

Becker, Robert O., and Marino, Andrew A.: *Electromagnetism and Life*, SUNY Press, Albany, NY, 1982.

Becker, Robert O. (ed.): *Mechanism of Growth Control*, C. C. Thomas Press, Springfield, IL 1982.

Begich, Nick, and Manning, Jeane: *Angels Don't Play This HAARP: Advances in Tesla Technology*, Earthpulse Press, Anchorage, AK, 1995. (ISBN: 0-96488-12-0).

Begich, Nick: *Towards a New Alchemy: The Millennium Science*.

Beir, V.: *Health Effects of Exposure to Low Levels of Ionizing Radiation*, 1990.

Beischer, D. E., et al.: *Exposure of Man to Magnetic Fields Alternating at Extremely Low Frequency*, (AD-7701400, NAMRL 1180) Naval Aerospace Naval Research Laboratory, Pensacola, FL, 1973.

Bennett, William R.: *Health and Low-Frequency Electromagnetic Fields*, Yale University Press, New Haven, CT, 1994.

Biderman, A. D., and Zimmer, H. (eds.): *The Manipulation of Human Behavior*, John Wiley & Sons, 1961.

Blank, Martin: *Electromagnetic Field Biointeractions and Mechanics*, Advances in Chemistry Series No. 250. American Chemical Society, 1155 Sixteenth St., NW, Washington, DC 20036, 1995 (ISBN: 0-8412-3135-4).

Bowart, Walter: *Operation Mind Control*, Dell, NY, 1978.

Bowart, Walter H.: *Operation Mind Control: How the Cryptocracy will Psychocivilize You*, St. Martin's Press, NY, 1994.

Braid, James: *Electro-biological Phenomena Considered Physiologically and Psychologically*, Sutherland & Knox, Edinburgh, 1851 (yes, 1851).

Brodeur, Paul: *Currents of Death: Power Lines, Computer Terminals, and the Attempt to Cover Up Their Threat to Your Health*, Simon & Schuster, NY, 1989.

Brodeur, Paul: *Secrets: A Writer in the Cold War*, Faber & Faber, Boston, 1997 (ISBN: 0-571-19907-0).

Brodeur, Paul: *The Zapping of America: Microwaves, Their Deadly Risk, and the Cover-up*, W. W. Norton & Co., NY, 1977.

Buderi, : *The Invention that Changed the World*.

Burch, N., and Altschuler, H. L. (eds.): *Behavior and Brain Electrical Activity*, Plenum Publishing Corp., NY, 1976.

Burdick, Dorothy: *Such Things are Known*, Vantage Press, Inc., 1982 (nonfiction, out-of-print).

Burner, Alvin M.: *Biological Effects of Microwaves: Future Research Directions*, San Francisco Press, Inc., San Francisco, CA, 1968.

Burr, H.S.: *Blueprint for Immortality: The Electric Patterns of Life*, Neville Spearman, London, 1972.

Bylinsky, Gene: *Mood Control*, Charles Schribner's Sons, NY, 1968.

Callahan, Philip S., (Ph.D.): *Exploring the Spectrum and Paramagnetism*, 19__.

Callahan, Philip S.: *The Paramagnetic ELF Forces*, 19__.

Calder, Nigel: *The Mind of Man*.

Cannon, Martin: *Mind Control in America*.

Cannon, Martin: *The Controllers: A New Hypothesis of Alien Abduction*, Prevailing Winds, Santa Barbara, CA, 1989.

Capron, Alexander, M.: *Human Experimentation*, University Publications of America, Bethesda, MD, 1986.

Chavkin, Samuel: *The Mind Stealers: Psychosurgery and Mind Control*, Houghton Mifflin Co., Boston, 1978.

Chiabrera, A., Nicolini, C., and Schwan, H. P. (eds.): *Interactions Between Electromagnetic Fields and Cells*, NATO Scientific Affairs Division, ASI Series 97A, Plenum Publications Corp., NY and London, 1985.

Chokroverty, Sudhansu: *Magnetic Stimulation in Clinical Neurophysiology*.

Chorover, Stephen L.: *From Genesis to Genocide: The Meaning of Human Nature and the Power of Behavior Control*, MIT Press, Cambridge, MA, 1979.

Clark, Hulda: *The Cure for All Disease*.

Clarke, Arthur C.: *July 20, 2019*.

Cleary, Stephen, F. (ed.): *Biological Effects and Health Implications of Microwave Radiation*, US Dept. HEW, BRH/DBE 70-2, Washington, DC, (June) 1979 (From the Richmond Symposium, Richmond, VA , Sept. 17-19, 1979).

Cole, K. C.: *Sympathetic Vibrations*.

Collins, Larry: *The Maze: A Novel*, Simon & Schuster, Inc., NY, 1989 (fiction).

Colorado Springs Notes, (Nikola Tesla's experiments).

Condon, Richard: *The Manchurian Candidate*, (fiction).

Constantine, Alex: *Psychic Dictatorship in the USA*, Feral House, Portland, OR, 1995 (ISBN: 0-922915-28-8: 221 pages).

Constantine, Alex: *Virtual Government: CIA Mind Control Operations in America*, Feral House, Venice, CA, 1997.

Copeland, Miles: *Without Cloak and Dagger: The Truth About the New Espionage*, Simon & Schuster, NY, 1974.

Corning, W.C., and Balaban, M.: *The Mind: Biological Approaches to its Function*, 1968.

Corson, William: *The Armies of Ignorance*, Dial Press, NY, 1977.

Czerski, P., Shore, M. L., et al. (eds.): *Biological Effects and Health Hazards of Microwave Radiation*, Polish Medical Pub., Warsaw, POLAND, 1974.

Davis, Albert Roy: *The Anatomy of Biomagnetism*, Vantage Press, NY, 1982 (ISBN: 533-05046-4: 107 pages).

Davis, Albert Roy, and Rawls, Walter C., Jr.: *The Magnetic Blueprint of Life*, Exposition Press, Hicksville, NY, 1979 (ISBN: 0-682-49215-9: 150 pages) - (good bibliography at end).

Davis, Albert Roy, and Rawls, Walter C., Jr.: *The Magnetic Effect*, Exposition Press, Hicksville, NY, 1975.

Davis, Albert Roy, and Rawls, Walter C., Jr.: *Magnetism and Its Effects on the Living System*, Exposition Press, Hicksville, NY, 1974.

Dean, (Lt. Col.) David J. (ed.): *Low-Intensity Conflict and Modern Technology*, Air University Press, Maxwell Air Force Base, AL, (June) 1986.

DeFelice, L.: *Introduction to Membrane Noise*, Plenum Publishing Corp., NY, 1981.

De la Warr, G.W., and Baker, D.: *Biomagnetism*, de la Warr Laboratories, Ltd., Oxford, 1978.

Delgado, Jose M. R.: *Physical Control of the Mind: Toward a Psychocivilized Society*, Harper & Row, NY, 1969.

DeVolpi, A., et al.: *Born Secret: The H-H-HhhhHHHH-Bomb, the Progressive Case and National Security*, Pergamon Press, 1981.

Dumansky, Y., Serdyuk, A. M., and Los, I. P.: *The Effect of Radiofrequency Electromagnetic Fields on Humans*, Kiev.

Ebon, Martin: *Psychic Warfare: Threat or Illusion?*, McGraw Hill, NY, 1983.

Eccles, J. C.: *The Neurophysiological Basis of Mind*, Oxford University Press, NY, 1953.

Eden, Jerome: *Animal Magnetism and the Life Energy*, Exposition Press, Hickville, NY, 1967.

Edelman, G. M.: *The Remembered Present: A Biological Theory of Consciousness*, Basic Books, NY, 1989.

Erne, Sergio N., Hahbohm, H.D., and Lubbig, H.: *Biomagnetism*, Walter De Gruyter & Co., Berlin & NY, 1981 (558 pages).

Eyges, Leonard: *The Classical Electromagnetic Field*, Addison-Wesley Publishing Co., Reading, MA, 1972 (413 pages).

Ferguson, Marilyn: *The Brain Revolution: The Frontiers of Mind Research*, Taplinger Publishing Co., NY, 1973.

Flanagan, G. Patrick: *The Neurophone*, Pyramid Power, 8th ed., DeVorss & Co., Marina del Rey, CA, 1980.

Franceschetti, Giorgio, Gandhi, and Grandolpho, M. (eds.): *Electromagnetic Biointeraction*, 1988.

Frohlich, H. (ed.): *Biological Coherence and Response to External Stimuli*, Springer-Verlag, Heidelberg and Berlin, 1988.

Gaylin, Willard M., Meister, Joel S., and Neville, Robert C. (eds.): *Operating on the Mind*, Basic Books, 1975.

Galton, Lawrence: *MedTech*.

Gillmor, Don: *I Swear by Apollo: Dr. Ewen Cameron, the CIA, and the Canadian Mind-Control Experiments*, Eden Press, Montreal, 1986.

Glaser, Zorach R., and Moore Julia L.: *Cumulative Index to the Bibliography of Reported Biological_Effects and Clinical Symptoms Attributed to Microwave and Radio-Frequency Radiation Exposure*, Julie Moore and Associates, Riverside, CA, 1982.

Gordon, Thomas: *Journey into Madness: The True Story of Secret CIA Mind Control and Medical Abuse*, Bantam Books, NY, 1989.

Grandolfo, M., Michealson, S. M., and Rindl, A. (eds.): *Biological Effects and Dosimetry of Nonionizing Radiation*, Plenum Publishing Corp., NY, 1983.

Green, Elmer and Alyce: *Beyond Biofeedback*, 1977.

Greenslade, Shirley: *Mind Control*, Agape Word, 1994 (ISBN: 1-886799-05-9).

Guzman, Emilio: *Mind Control*, Institute of Psychology, Inc., 1996 (ISBN: 0-913343-25-0).

Halacy, D. S., Jr.: *Cyborg*, 1965.

Hassan, Steven: *Combatting Cult Mind Control*.

Hazzard, D. G. (ed.): *Biological Effects and Measurements of Radio Frequency/Microwaves*, Bureau of Radiological Health, HEW Pub. 77-8026, Rockville, MD, 1977.

Heller, John H.: *Of Mice, Men, and Molecules*, 1963.

Hemming, Leland H.: *Architectural Electromagnetic Shielding Handbook: A Design and Specification Guide*, IEEE (Institute of Electrical and Electronics Engineers) Press, NY, 1992.

Hoffman, Michael A.: *Secret Societies and Psychological Warfare*, Coetur d'Alene, ID, 1989 (127 pages).

Hooper, Judith: *The Three Pound Universe*.

Hutchings, Edward, Jr.: *Frontiers in Science*, 1958.

Hutchison, Michael: *Mega Brain: New Tools and Techniques for Brain Growth and Mind Expansion*, Ballantine Books, NY, 1986 (ISBN: 0-345-41032-7: 380 pages).

Hutchison, Michael: *Mega Brain Power*, (ISBN: 1-56282-770-7: 480 pages).

Illinger, K. H. (ed.): *Biological Effects of Nonionizing Radiation*, American Chemical Society Symposium Series No. 157, Washington, DC, 1981.

Jacobson, Steven: *Mind Control in the United States*, Critique Publishers, Santa Rosa, CA, 1985.

John, E. R.: *Machinery of the Mind*, Birkhauser, Boston, MA, 1990.

John, R.G., and Dunne, B. J.: *Margins of Reality: The Role of Consciousness in the Physical World*, Harcourt, Brace, & Jovanovich, NY, 1987.

Johnson, C. C., and Shore, M. L. (eds.): *Biological Effects of Electromagnetic Waves*, Bureau of Radiological Health, HEW Pub. 77-8010, Rockville, MD, 1976.

Johnson, George: *In the Palaces of Memory*.

Kahn, Herman, and Weiner, Anthony: *The Year 2000: A Framework for Speculation on the Next Thirty-three Years*, MacMillian Co., NY, 1967.

Keith, Jim: *Mind Control/World Control: The Encyclopedia of Mind Control*, Adventures Unlimited Press, Illinois, 1998 (ISBN: 0-932813-45-3).

Key, Wilson Bryan: *The Age of Manipulation: The Con in Confidence; The Sin in Sincere*, Henry Holt & Co., NY, 1989.

Kholodov, Y.A.: *Effects of Electromagnetic...*

Kollberg, E. (ed.): *Microwave and Millimeter Wave Mixers*, Institute Electrical, 1984 (ISBN: 0-87942-179-7).

Kong, Jin A., et al.: *Theory of Microwave Remote Sensing*, (2nd ed.), John Wiley & Sons, NY, 1985.

Lakhovsky, Georges: *The Secret of Life: Cosmic Rays and Radiations of Living Beings*, Health Research, Mokelumme Hill, CA, 1970 (Translated from Russian by Mark Clement: 212 pages).

Lakhovsky, Georges: *The Secret of Life: Electricity, Radiation, and Your Body*, Liberty Lobby, Washington, DC, 1994.

Lausch, Erwin: *Manipulation*, Aiden Ellis, 1974.

Lawrence, Lincoln (pseudonym): *Were We Controlled?* University Books, New Hyde Park, NY, 1967.

Lawrence, Lincoln (pseudonym), with an introduction by Kenn Thomas: *Mind Control, Oswald & JFK: Were We Controlled?* Adventures Unlimited Press, Kempton, IL, 1997 (ISBN: 0-932813-46-1).

Lee, Martin, and Shlain, B.: *Acid Dreams: The CIA, LSD, and the Sixties Rebellion*, Grover Press, NY, 1986.

Lee, Martin: *The Beast Reawakens*.

Leonard, George: *The Silent Pulse*, Bantam Books, NY, 1981.

Levitt, B. Blake: *Electromagnetic Fields*, (432 pages).

Lin, James C. (See Michaelson, Sol M., and): *Biological Effects and Health Implications of RF Radiation.*

Lin, James C.: *Electromagnetic Interaction with Biological Systems*, Plenum Publishing Corp., NY, 1989.

Lin, James C.: *Microwave Auditory Effects and Applications*, 1978 (221 pages).

Lipsky, Stephen: *Microwave Passive Direction Finding*,

Llaurado, J. G., Sances, A., and Battocletti, J.H.: *Biologic and Clinical Effects of Low-Frequency Magnetic and Electric Fields*, Charles C. Thomas, Springfield, IL, 19??. (>1988).

London, Perry: *Behavior Control*, (269 pages).

Mackay, Stuart: *Biomedical Telemetry*.

Marha, Karel, Musil, Jan, and Tuha, Hana: *Electromagnetic Fields and the Life Environment*, San Francisco Press, San Francisco, CA, 1971.

Marino, Andrew A. (ed.): *Modern Bioelectricity*, Marcel Dekker, NY, 1988.

Marks, John D.: *Search for the Manchurian Candidate: The CIA and Mind Control*, Times Books, NY, 1979 (nonfiction).

Maxwell, J. C.: *A Treatise on Electricity and Magnetism*, Vols. I & II, Dover Publications, NY, 1954.

McRae, Ronald M.: *Mind Wars: The True Story of Government Research into the Military Potential of Psychic Weapons*, St. Martin's Press, NY, 1984 (ISBN: 0-312-65231-3).

Michaelson, Sol M., and Lin, James C.: *Biological Effects and Health Implications of RF Radiation.*

Mills, James: *The Power*, Warner Books, Inc., NY, 1990 (fiction).

Mind Control, Hidden Manipulation and Subliminal Learning, Gordon Press, NY, 1991.

Moell, Joseph D.: *Transmitter Hunting: Radio Direction Finding Simplified*.

Morris, Janet: *Medusa*.

Newman, Joseph: *Energy is Electromagnetic*.

Nicolini, C.: *Chromatin Structure and Function*, Plenum Press, NY, 1979.

Norden, B., and Ramel, C. (eds.): *Interaction Mechanisms of Low-Level Electromagnetic Fields in Living Systems*, Royal Swedish Academy of Sciences, Oxford University Press, Inc., NY, 1989.

O'Connor, Mary Ellen, and Lovely, Richard, H. (eds.): *Electromagnetic Fields and Neurobehavioral Function*, Alan R. Liss, Inc., NY, 1988.

O'Neill, John J.: *Prodigal Genius: The Life of Nikola Tesla*, Ives Washburn, Inc., NY, 1944 (326 pages).

Orwell, George: *1984*, Harcourt, Brace,& Jovanovich, NY, 1949 (268 pages).

Osepchuk, John M. (ed.): *Biological Effects of Electromagnetic Radiation*, John Wiley & Sons, Inc., NY, 1983 (IEEE Order No. PC01594: 593 pages).

Ostrander, Sheila, and Schroeder, Lynn: *Super Memory: The Revolution*, 1991.

Persinger, Michael A. (ed.): *ELF and VLF Electromagnetic Field Effects*, Plenum Publishing Corp., NY, 1974.

Pines, Maya: *The Brain Changers: Scientists and the New Mind Control*, Harcourt, Brace, Javonovich, Inc., 1973.

Polk, C., and Postow, E. (eds.): CRC (Chemical Rubber Co.) *Handbook of Biological Effects of Electromagnetic Fields*, Chemical Rubber Co. Press, Boca Raton, FL, 1986.

Popp, Fritz-Albert (ed.): *Electromagnetic Bioinformation*, Urban & Schwartzenberg, Baltimore, MD, 1979.

Presman, A. S.: *Electromagnetic Fields and Life*, Plenum Publishing Corp., NY and London, 1970. Translated from Russian by F.L. Sinclair; Edited by Frank A. Brown (336 pages).

Pribram, Karl H.: *Brain and Perception: Holonomy and Structure in Figural Processing*, Lawrence Erlbaum Associates, Hillsdale, NJ, 1993.

Pribram, Karl H. (ed.): *Rethinking Neural Networks: Quantum Fields and Biological Data*, Lawrence Erlbaum Associates, Mahwah (Hillsdale), NJ, 1993.

Puharic, Andrija: *Beyond Telepathy*, Anchor Books, Garden City, NY, 1973.

Puthoff, Harold E., and Targ, Russell: *Mind Reach: Scientists Look at Psychic Ability*, Delta, NY, 1978.

Puthoff, Harold E., and Targ, Russell (eds.): *Mind at Large: Institute of Electrical and Electronic Engineers Symposia on the Nature of Extrasensory Percection*, Praeger, NY, 1979.

Raden, Dean: *The Unconscious Universe*, 19__.

Radiofrequency Radiation Dosimetry Handbook, USAF School of Aerospace Medicine, Brooks AFB, TX, October 1986.

Ranelagh, John: *The Agency*, 1986 (ISBN: 0-671-44318-6).

Rappoport, Jon: *US Mind Control Experiments on Children*, Los Angeles, 1995 (bound xerox: 136 pages).

Rauscher, Elizabeth A.: *Electromagnetic Phenomena in Complex Geometries and Nonlinear Phenomena, Non-hertzian Waves, and Magnetic Monopoles*, Tesla Book Co., Millbrae, CA, 1983.

Regan, David: *Evoked Potentials*.

Remote Mind Control Technology.

Renati, Charles, and hudson, Michael: *The Silent Intruder*, Houghton Mifflin, Boston, 1982 (208 pages).

Restak, Richard M.: *The Brain: The Last Frontier*, Doubleday Direct, Garden City, NY, 1979 (page 258).

Restak, Richard M.: *The Mind*, Bantam Books, NY, 1988.

Ricketts, L. W., Bridges, J. E., and Miletts, J.: *EMP Radiation and Protective Techniques*, John Wiley & Sons, NY, 1976.

Riesen, W., et al.: *A Pilot Study of the Interaction of Extremely Low Frequency Electromagnetic Fields with Brain Organelles*, IIT Research Institute (AD-748119), Chicago, IL, 1971.

Roper Organization, The: *Unusual Personal Experiences: An Analysis of the Data from Three National Surveys*, Bigelow Holding Corp., Las Vegas, NY, 1991 (John Mack and Budd Hopkins).

Rossman, Michael: *New Age Blues: On the Politics of Consciousness*, E.P. Dutton, NY, 1979 (chapter on mind control technology)/

Rucker, Rudy: *Mind Tools*.

Russell, Richard: *The Man Who Knew Too Much*.

Russell-Manning, Elizabeth (Betsy): *Mass Mind Control of the American People*, (self-published) San Francisco, CA, 1992.

Russell-Manning, Elizabeth (Betsy): *The Microwave Deception*, Greensward Press, 1989 (ISBN: 0-930165-13-6).

Russell-Manning, Elizabeth (Betsy): *Mind Control in a Free Society*, 1989.

Russell-Manning, Elizabeth (Betsy), and Welsh, Cheryl: *Whistleblowers*, 1996 (bound xerox available from Flatland Books: 276 pages) or *Whistleblowers: Nonlethal Weapons*, Greenswald, Press, San Francisco, CA, 1996 (315 pages).

Sargent, William: *Battle for the Mind: A Physiology of Conversion and Brainwashing*, Greenwood Press, Westport, CT, 1957.

Schaffranke, Rolf: *Proofs of Free Energy Devices and Supporting Data*, Tesla Book Co., Millbrae, CA, 1983.

Scheflin, Alan W., and Opton, Edward M., Jr.: *Mind Manipulators: A Nonfiction Account*, Paddington Press, London, 1978.

Schmitt, F. O., and Schneider, D. M.: *Functional Linkage in Biomolecular Systems*, Raven Press, NY, 1975.

Schnitzgebel, Robert L., and Schnitzgebel, Ralph K.: *Psychotechnology: Electronic Control of the Mind and Behavior*, Holt, Rhinehart & Winston, NY, 1973.

Schrag, Peter: *Mind Control*, Pantheon Books, NY, 1978.

Schwarz, Jack: *Human Energy Systems*, E.P. Dutton, NY, 1980 (175 pages).

Sheffield, Charles, et al. (eds.): *The World of 2044: Technological Development and the Future of Society*, Paragon House, 1994.

Shepherd, G. M.: *The Synaptic Organization of the Brain*, Oxford University Press, NY, 1974.

Sheppard, Asher R., and Eisenbud, Merril: *Biological Effects of Electric and Magnetic Fields of Extremely Low Frequency*, New York University Press, NY, 1977 (229 pages).

Shukman, David: *Tomorrow's War: The Threat of High-Technology Weapons*, Harcourt Brace & Co., 1996 (Formerly: *The Sorcerer's Challenge*, Hodden & Stoughton, London, 1995).

Siegel, Ronald K., and West, Louis Joyolon* (eds.): *Hallucinations: Behavior, Experience, and Theory*, Wiley, NY, 1975 (*member: "Old Crows Association").

Siegel, Ronald K.: *Whispers: The Voices of Paranoia*, Crown Publishers, Inc., NY, 1994.

Smith, Cyril W., and Best, Simon: *Electromagnetic Man: Health and Hazard in the Electrical Environment*, St. Martin's Press, Inc., NY, 1989.

Soyke, Fred, and Edmonds, Alan: *The Ion Effect*, E.P. Dutton, NY, 1977.

Steneck, Nicholas H.: *The Microwave Debate*, MIT Press, Cambridge, MA, 1984.

Stine, G. Harry: *The Silicon Gods*, Bantam Books, NY.

Sweeney, H. Michael: *Alice in Americaland*.

Taylor, Brice: *Starshine: One Woman's Valiant Escape from Mind Control*, (MK-ultra victim). $18.95 (includes s/h) from:

Brice Taylor Trust
P.O. Box 655
Landrum, SC 29356

[Brice Taylor also offers her recovery book, *Revivification;* "a gentle, alternative, memory retrieval process for trauma survivors." $7.50 (includes s/h)]

[For more on Brice Taylor see her .]

Theury, Jacques: *Microwaves: Industrial, Scientific, and Medical Applications*, (670 pages).

Thomas, Gordon: *Enslaved*, Pharos Books, NY, 1981.

Thomas, Gordon: *Journey into Madness: The True Story of Secret CIA Mind Control and Medical Abuse*, Bantam Books, NY, 1989 (388 pages).

The Transformation of America, (by George Leonard?).

Tubiana, Morris, et al.: *Radiobiology*.

Turner, William: *Hoover's FBI*.

Valenstein, Elliot S.: *Brain Control: A Critical Examination of Brain Stimulation and Psychosurgery*.

John Wiley & Sons, NY, 1973.

Valerian, Valdamar: *Matrix* 3, "The Psycho-Social, Chemical, Biological, and Electric Manipulation of Human Consciousness", 1994? (bound xerox: 730 pages).

Valerian, Valdamar: *Matrix* III, Vol. 2, "The Psycho-Social, Chemical, Biological, and Magnetic Manipulation of Human Consciousness" 1995 (bound xerox: 707 pages).

Vankin, Jonathan: *Conspiracies: Cover-ups and Crimes*, Dell, NY, 1990.

Vankin, Jonathan: *Conspiracies, Crimes, and Cover-ups: Political Manipulation and Mind Control in America*, Paragon House, NY, 1991.

Wallia, C. S.: *Towards Century 21*.

War in the Age of Intelligent Machines.

Warden, Patrick, A.: *Mind Control and Mental Telepathy*, Samizdat, Los Angeles, August 1, 1993.

Warshovsky, Fred: *The Control of Life*.

Watson, Peter: *War on the Mind: Military Uses and Abuses of Psychology*, Basic Books, Inc., NY, 1978.

Weinstein, Harvey M.: *Psychiatry and the CIA: Victims of Mind Control*, American Psychiatric Press, Washington, DC, 1990.

Whalen, John: *50 Top Conspiracies of All Time*.

White, John (ed.): *Psychic Warfare: Fact or Fiction?*, Aquarian, 1988 (book?).

Williams: *Electromagnetic Brain Blaster*.

Williamson, Samuel J. (ed.): *Biomagnetism*, Plenum Publishing Corp., NY, 1983.

Winn, Denise: *The Manipulated Mind*, The Octagon Press, NY, 1983.

Wolf, Alfred A.: *The Body Quantum*.

Yu, Alan: *Millimeter Waves and Mind Control*.

ARTICLES
ON
MIND CONROL

Aftergood, Steven: Secrecy and Government Bulletin, Issue 28, Nov. 1993.

Aftergood, Steven: "The Soft-Kill Fallacy," Bulletin of the Atomic Scientists, pp. 40-45, September/October 1994.

Alexander, John B.: "The new mental battlefield: Beam me up Spock," Military Review (A U.S. Army Journal) pp. 47-54, December 1980.

The Associated Press: "Mind-altering microwaves: Soviets studying invisible ray," Los Angeles Herald Examiner, Sec. A, p. 22, November 1976. *

Bacon, S.: "Now they're probing the hidden depths of your mind," Popular Mechanics, Vol. 136: pp. 62-65, August 1971.

Barry, John, and Morganthau, Thomas: "Science of war: Non-lethal weapons," Newsweek, pp. 24-26, 7 February 1994.

Bartch, Paul: "Neurotransmission.," Resonance, No. 17: pp. 8-10, July 1990.

Bearden, Thomas: "An approach to understanding psychotronics," DDC (AD-A027866) June 1976.

Beardsley, Tim: "Making waves," Scientific American, Vol. 268 No. 2): p. 32, February 1993.

Beck, Robert C.: "ELF: Extremely low frequency fields: They affect us all in ways we may never consciously realize!" Nexus, Vol. 2 (No. 6): pp. 11-15 & 66-67, January/February 1992.

Beck, Robert C.: "Extreme low frequency (ELF) magnetic fields and EEG entrainment: A psychotronic warfare possibility?" Association for Humanistic Psychology Newsletter, April 1978 or Biomedical Research Associates, Los Angeles, CA, 1978.

Besly, Kim: "Electromagnetic pollution: A little known health hazard. A new means of control," Preliminary Report, Greenham Common Woman's Peace Camp, Inland House, Southbourne, Emsworth, Hants, England , 1993.

"Biomedical Aspects of Nonionizing Radiation, Naval Weapons Laboratory (NWL) Dahlgren, VA, Symposium, 10 July 1973.

Blackmon, Janet: "Woman fears government zapping," Sun Journal, New Bern, NC, 28 September 1992. (Mildred Cooper)

Boyce, Nell: "Bioterrorism Special Report: Nowhere to Hide," New Scientist Vol. : pp ., March 21, 1998.

Brodeur, Paul: "A reporter at large: Microwaves -I and -II," New Yorker, 13, 27 December 1976.

Budiansky, Stephen, and Good, Erica, E.: "Orlikow v. US," US News & World Report (Investigative Report) Vol. (No.): p. 34, 24 January 1994.

Burrell, Garland E., Jr.: "Mental privacy: An international safeguard to governmental intrusion into the mental processes," California Western International Law Journal, Vol. 6: pp, 110+, 1975.

Butler, Declan: "Advances in neuroscience may threaten human rights," Nature, Vol. 391 (Issue): p. 319, January 1998. *

Butterfield, Fox: "$2.15 million for hidden weapon research," The New York Times, Seattle Post Intelligencer, Sec. A-3, Friday, 10 March 1995.

Byrne, Harlan S.: "California microwaves," Barrons, Vol. 72 (No. 13): pp. 48-49, 30 March 1992.

Cannon, Martin: "Mind control and the American Government," Lobster, No. 23, 1993.

Caylor, Ron: "Government working on machine that can read your mind," The National Enquirer, June 22, 1976. (article created sensation)

Chernishev, I.: "Can rulers make 'zombies' and control the world?" Orienteer, pp. 58-62, February 1997.

Collins, Larry: "Mind Control," Playboy, January 1990.

Coupland, Robin M.: "Non-lethal weapons: Precipitating a new arms race? Medicine must guard against its knowledge being used for weapon development," British Medical Journal, Vol. 315: p. 72, 12 July 1997.

Crary, David: "Soldiers recount most memorable Iraqi surrenders," Associated Press The Daily Commercial, March 1, 1991.

DeBoskey, Bruce H.: "Nonionizing radiation: Hidden hazards," Trial Magazine, Vol. 26, (No. 8): pp. 32-36, August 1990.

De Caro, Chuck: "Washington: The zap gap: The Soviets may be ahead of us in the development of radio-frequency weapons," Atlantic Monthly, pp. 24-28, March 1987. *

DeLeno, Steven: "Electronic Concentration Camp."

"Disabling people and electronics," Microwave News, January/February 1996. *

DoD, Intel agencies look at Russian mind control technology claims," Defense Electronics, July 1993.

Dodgen, Larry: Non-lethal weapons," U.S. News & World Report, Vol. (No.): p. 5, August 4, 1997.

Dornheim, M.A.: "U.S.A.F. studying brainwaves to increase crew performances," Aviation Week and Space Technology, Vol. 20: pp. 18+, February 1986.

Doswald-Beck, Louise and Cauderay, Gerald C.: "The development of new antipersonnel weapons," International Review of the Red Cross, Vol. 279 , 1 November 1990.

Edwards, D.D.: "Cells haywire in electromagnetic field?" Science News, Vol. 133: pp. 216, 2 April 1988 (work of W.R. Adey).

Edwards, D. D.: "ELF: The current controversy," Science News, Vol. 131: pp. 107-109, 14 February 1987.

"Electromagnetic fields: New-wave coverage issues," Best's Review, 1991.

Elliott, Dorinda, and Barry, John: "A subliminal Dr. Strangelove. Mind: Using the power of hidden suggestions, this Russian Scientist (Igor Smirnov) tries to rewire the brain," Newsweek, p. 57, 22 August 1994.

"Emerging threat..."

"Expert meeting on certain weapon systems and on implementation mechanisms in international law," Report of the International Committee of the Red Cross, Geneva, Switzerland, May 30 - June 1, 1994 (issued July 1994).

"Final Report on Biotechnology Research Requirements for Aeronautical Systems through the Year 2000," Vols. I and II, Southwest Research Institute, San Antonio, TX, 1982.

"From Russia with love.At Los Alamos?" Intelligence Report: Parade Special Supplement, 1993?

"German workshop on mechanisms of EMF interactions," Microwave News, November/December 1991.

Glenn, J.C.: "Conscious technology: The co-evolution of mind and machine," Futurist, September/October 1989.

Herron, Robert (Maj.): "Electronic Warfare: New priority for next generation fighters," Aerospace America, p. 64, 1984.

Hough, Warren: "High tech civilian control studied: Secret Pentagon - DOJ Memo of Understanding, `Nonlethal' weapons under development are being added to the government arsenal in its war against its own citizens," The Spotlight, p. , July 31, 1995. *

Hutchison, Michael: MegaBrain Report: The Psycho-technology Newsletter

Keeler, Anna: "Remote mind control technology," Full Disclosure, Vol. 15: pp. 1-14, 1989; Also published in Mike Coyle's MindNet Journal, Vol. 1 (No. 23a: Part I & No. 23b: Part II); and in Resonance, No. 23: Part I: pp. 3-14, February 1993 & No. 24: Part II: pp. 3-16, May 1992. *

Kelly, Jack A. and Conway, Joseph: "Non-lethal weapons: Emerging requirements for security strategy," Institute for Foreign Policy Analysis, May 1996.

Kempster, Norman: "Sci-fi comes true: Mind reading machine tells secrets of the brain," Los Angeles Times, March 20, 1976. *

Krawczyk, Glenn: Nexus, Vol. 2 (No. 22); pp., October/November 1994.

Krawczyk, Glenn: "Big brother's recipe for 'Revolution in Military Affairs'", Nexus, pp. 31-36, June/July 1995. *

Lopez, Ramon: "Special operations survive Pentagon budget constraints," International Defense Review, Vol. 26 (No. 3): p. 247, 12 December 1994.

MacGregor, R.J.: "A brief survey of literature relating to low-intensity microwaves on nervous function," RAND Report, R-4397, June 1970.

MacGregor, R.J.: "A direct mechanism for the direct influence of microwave radiation on neuroelectric function," RAND Report R-4397, June 1970 - ("The electrical component of microwave radiation induces transmember potentials in nerve cells and thereby disturbs nervous function and behavior.").

MacKenzie, Debora: Bioterrorism Special Report: Bioarmageddon," New Scientist, Vol. September 19, 1998.

Maddox, J., et al.: "", Nature, Vol. 334 (No.): 287-, 1988.

Mann, Paul: "Mass weapons threat deepens worldwide," Aviation Week & Space Technology, Vo.. 144 (No. 25): p. 58, 17 June 1996.

Manning, Jeane: "Electronic telepathy devise" (unnamed source, from Angels Don't Play This HAARP)

Martin, Harry V., and Caul, David: "Mind control," (A 13-part series) The Napa Sentinel, Napa, CA 1995.

Matthews, Owen: Report: "Soviets used top secret 'psychotronic' weapons," Moscow Times, Sec. 750, 11 July 1995.

McAuliffe, Kathleen: "The mind fields," Omni Magazine, pp. 258-267, February 1985.

McKinney, Julianne: "Microwave harassment and mind control experimentation," Unclassified, Vol. IV (No. 3) Parts I & II: 20 pgs., June/July 1992. *

Merritt, J. H., et al.: "Some biological effects of microwave energy directed at the head," (Unpublished and unclassified abstract circulated to conference participants. Conference was sponsored by the DoD Electromagnetic Compatibility Analysis Center) 19??. (See Steneck, Nicholas: The Microwave Debate, p.)

Metz, Steven, and Keivit, James: "The revolution in military affairs and conflict short of war," Strategic Studies Institute (SSI), U.S. Army War College, U.S. Government Printing Office (No. 1994-504-111/00089) July 25, 1994 (references to mind manipulation).

Michrowski, Andrew: "Covert ELF warfare," Specula (formerly published as The Journal of the American Association of Metascience) p. 27, January/March 1980.

"Microwave measurements," Aviation Week and Space Technology, Vol. 144 (no. 18): p. 73, 29 April 1996.

Microwave News, May/June 1988.

"Military on non-lethal weapons: A very attractive option," Microwave News, November/December 1993.

"The Mind Control Papers," Freedom News Journal, 1980 (ISBN: 0-915509-35-3)?

"Mind-reading computer," Futurist, p. 49, May/June 1992.

Mintz, John: "The secret's out: Covert E-Systems, Inc. covets commercial sales," The Washington Post, p. A-1, A-10, 24 October 1994.

Mizrach, Steve: "Electromagnetic effects on human behavior," MindNet Journal, Vol. 1 (No. 82) July 1996. *

Mollick, Ethan: "A gentler war: The debate over non-lethal weapons," Harvard International Review, Vol. 18 (No. 4): p.46, Fall 1996.

Morrison, David C.: "Sites unseen: A sketch of the Pentagon's secret 'black' bases used for stealth aircraft, special operations, and electronic eavesdropping programs emerges from a National Journal study," National Journal (Defense Report) pp. 1468-1472, June 4, 1988. *

Opall, Barbara: "U.S. experts: Focus arms control goals," Defense News, p. 6, 24-30 November 1997. Opall, Barbara: "U.S. explores mind control technology," Defense News, pp. 4, 29, January 11-17, 1993. *

Opall, Barbara: "U.S, Russia hope to safeguard mind-control techniques," Defense News, p. 4, 11-17 January 1993.

Page, J.: "Tuning in on brainwaves," Science, Vol. 5: pp. 88+, October 1984.

Pasternak, Douglas: "Wonder weapons: The Pentagon's quest for nonlethal arms is amazing. But is it smart?" US News & World Report (Special Report), Vol. 123 (No. 1): pp. 38-46, July 7, 1997. *

Pengelley, Rupert: "Wanted: A watch on non-lethal weapons," International Defense Review, Vol. 24 (No. 4): p. 1, 1 April 1994.

"Perry plans to launch nonlethal warfare", Defense News, September 19-25, 1994.

Persinger, Michael A.: "On the possibility of directly accessing every human brain by electromagnetic induction of fundamental algorithms," MindNet Journal, Vol. 1 (No. 65) June 1995.

Pool, Robert: "Electromagnetic fields: The biological evidence," Science, Vol. 249: pp. 1378-1381, 21 September 1990.

Posner, Michael I.: "Seeing the mind," Science, Vol. 262: pp. 673-674, 29 October 1993.

Possony, Stefan: "Scientific advances hold dramatic prospects for phy-strat," Defense and Foreign Affairs, Vol. 34, July 1983.

Ray, J.: "The body magnetic," Buzzworm, Vol. 4: p. 22, September/October 1992.

Ricks, Thomas E.: "Nonlethal arms: New class of weapons could incapacitate foe yet limit casualties," The Wall Street Journal, pp. A1 & A4, January 4, 1993. *

Rosenberg, Barbara Hatch: "Non-lethal weapons may violate treaties," The Bulletin of the Atomic Scientists, pp. 44 - 45, September - October 1994. (Note: Rosenberg gives the full name of this treaty as "Convention on prohibition or Restriction of the Use of Certain Conventional Weapons which may be deemed to be Excessively Injurious or to have Indiscriminate Effects.")

Schmitt, Eric: "Zany new weapons for U.S. team in Somalia," International Herald Tribune, 16 February 1995.

Schmitz, Tom: "California's Livermore weighs plan to use Russian technology," The Journal of Commerce, April 8, 1993. *

Selden, Gary: "Machines that read minds," Science Digest, Octorber 1981.

Sharp, Joseph C. et al.: "Generation of acoustic signals by pulsed microwave energy," IEEE Transactions on Microwave Theory and Techniques, May 1974.

Shorto, Russell: "Armageddon: Killing them softly," Gentlemen's Quarterly, March 1995. * "Still under wraps" Aviation Week and Space Technology, pp. 35+, June 7, 1993.

Sweetman, Sherri: Report on the Attorney General's Conference on Less than Lethal Weapons, U.S. Dept. of Justice, National Institute of Justice, March 1987.

Thomas Timothy: "The mind has no firewall," Parameters: U.S. Army War College Quarterly, Vol. 28 (No. 1): pp. 84-92, Spring 1998. *

Tigner, Brooks: "NATO panel to consider non-lethal weapon guidelines," Defense News, p. 14, 29 September 1997.

Tigner, Brooks: "Europeans protest U.S. ionospheric research," Defense News, p. 3, 16-22 February 1998.

Tyler: IN: Dean, David J. (ed.): Low-intensity Conflict and Modern Technology, Air University Press, USAF, Center for Aerospace Doctrine, Research, and Education, Maxwell AFB, AL, June 1986. *

"U.S. Nullifies Nuremberg Law," Earth Island Journal, p. 18, Winter 1996-97. *

Victorian, Armen: "The military use of electromagnetic, microwave, and mind control technology," Lobster, No. 34: pp 2-7, Winter 1998; Also published in Resonance, No., April 1998.

Victorian, Armen: "Mind reading computer," Time Magazine, 1 July 1974.

Victorian, Armen: "Neural manipulation by remote radar," Resonance, No. 30: pp. 25-28, March 1996; Also published in Lobster No. 30. *

Victorian, Armen: "Psychic warfare and nonlethal weapons."

Walker, Martin: "Dark dreamer of Star Wars," 5 May 1995.

Wall, Judy: "Electromagnetic weapons," Resonance, No. 29: pp 27-33, May 1995. *

Wall, Judy: "Military use of mind control weapons," Nexus, pp. 11 - 16, October - November 1998. (Unedited version originally published in Resonance, No. 33, April 1998. *

Wall, Judy: "Synthetic telemetry," Resonance No. 29: pp. 17 - 26, May 1995. *

Weiner, Malcolm H., Chairman: "Non-lethal technologies: Military options and implications", Report of an independent task force sponsored by the Council on Foreign Relations released June 22, 1995.

Wright, Steve: "An appraisal of technologies for political control," European Parliament Scientific and Technological Options Assessment (STOA) Luxembourg, European Parliament, 6 January 1998.

IMPORTANT

TECHNICAL REFERENCES

Photo and description of the Korean War LIDA machine, a radio frequency brain entrainment device.

~~"Human Auditory System Res~~ponse To Modulated Electromagnetic Energy," Allan H. Frey, General Electric, Advanced Electronics Center, Cornell University, Ithaca, New York.

NASA technical report abstract stating that speech-to-skull is feasible.

DOD/EPA small business initiative (SBIR) project to study the unclassified use of voice-to-skull technology for military uses.

Excerpts, Proceedings of Joint Symposium on Interactions of Electromagnetic Waves with Biological Systems, 22nd General Assembly of the International Union of Radio Science, August 25 - September 2, 1987, Tel Aviv, Israel.

Excerpt, Dr. Don R. Justesen, neuropsychological researcher, describes Dr. Joseph C. Sharp's successful transmission of "words" via a pulse-rate- modulated microwave transmitter of the Frey type.

~~FOIA article circulated among U.S~~. agencies describing the Russian TV program "Man and Law", which gives a glimpse into the Russian mind control efforts. (Dr. Igor Smirnov, a major player, was used as a consultant to the FBI at the Waco Branch Davidian standoff.)

SBIR (small business initiative contract) which clearly shows intent to use ultrasound as an anti-~~personnel weapon, including on~~e-man portability and with power to kill.

A page originally from the MIT Media Lab's acoustic engineer, Joseph Pompeii. Describes a similar technique under commercial and military development (American Technologies Corp., San Diego) under the trade name "Hypersonic Sound". Shows that sound can be focused to the ~~extent of targeting just one person in a~~ crowd, acoustically, using ultrasound.

APPENDIX A

Electromagnetic Weapons Timeline:

Electromagnetic (EM) weapons are of recent invention. They utilize the various frequencies of the electromagnetic spectrum to disable or kill the target. Psychotronic weapons are those EM weapons that interact with the nervous system of the target. These weapons usually operate in the very low (100 to 1,000 Hz) or extremely low (greater than zero but less than 100 Hz) frequency ranges.

1934 "A method for Remote Control of Electrical Stimulation of the Nervous System", a monograph by Drs. E. L. Chaffee and R. U. Light.

1934 Experiments in Distant Influence, book by Soviet Professor Leonid L. Vasiliev
Vasiliev also wrote an article, "Critical Evaluation of the Hypogenic Method" concerning the work of Dr. I. F. Tomashevsky on experiments in remote control of the brain.

1945 After World War II, the Allies discovered the Japanese had been developing a "death ray" utilizing very short radio waves focused into a high power beam. Tests were done on animals.

1950 The French conducted research on infrasonic weapons. (From "The Road From Armageddon", by Peter Lewis, Resonance #13, pp 9-14).

1953 John C. Lilly, when asked by the director of the National Institute of Mental Health (NIMH) to brief the Central Intelligence Agency (CIA), Federal Bureau of Investigation (FBI), National Security Agency (NSA), and the various military intelligence services on his work using electrodes to stimulate directly the pleasure and pain centers in the brain, refused.

1958, 1962 The U.S. conducts high-altitude Electromagnetic Pulse (EMP) bomb tests over the Pacific. (From "The Road From Armageddon" by Peter Lewis.)

1960 Headlines read "Khrushchev Says Soviets Will Cut Forces a Third; Sees 'Fantastic Weapon' ". (From article of same title, by Max Frankel, New York Times, Jan. 15, 1960, p1 as cited in "Tesla's Electro-magnetics and Its Soviet Weaponization", paper by T. E. Bearden.)

1965 A "Death Ray" weapon was developed by McFarlane Corporation, described as a modulated electron gun X-ray nuclear booster, could be adapted to communications, remote control and guidance systems, EM radiation telemetry and death ray.

Reported hearings before the House Subcommittee on Department of Defense Appropriations, chaired by Rep. George Mahon (Dem. - Texas). From "Hearing Voices" by Alex Constantine, Hustler, January 1994, pp 102-104, 113, 120, 134. Research by Harlan Girard.

1965 Project Pandora was undertaken in which chimpanzees were exposed to microwave radiation. The man who was in charge of this project said, 'the potential for exerting a degree of control on human behavior by low level microwave radiation seems to exist' and he urged that the effects of microwaves be studied for 'possible weapons applications' - (From "Electromagnetic Pollution: A Little Known Health Hazard. A new means of control?" by Kim Besley, Great Britain, p14. Research from Woody Blue).

1968 Dr. Gordon J. F. MacDonald, science advisor to President Lyndon Johnson, wrote, "Perturbation of the environment can produce changes in behavioral patterns." He was referring to low frequency EM waves in the ionosphere affecting human brain wave patterns. (From his book, Unless Peace Comes, a Scientific Forecast of New Weapons, cited in "New World Order ELF Psychotronic Tyranny", a paper by C. B. Baker.)

1970 Zbigniew Brzezinski, President Jimmy Carter's National Security Director, said in his book, Between Two Ages, weather control was a new weapon that would be the key element of strategy. "Technology will make available to leaders of major nations a variety of techniques for conducting secret warfare..." He also wrote "Accurately timed, artificially excited electronic strokes could lead to a pattern of oscillations that produce relatively high power levels over certain regions of the Earth ... one could develop a system that would seriously impair the brain performance of a very large population in selected regions over an extended period."(Cited in Baker's "ELF Psychotronic Tyranny" paper.)

1972 The Taser, first electrical shock device developed for use by law enforcement, delivers barbed, dart shaped electrodes to a subject's body, and 50,000 volt pulses at two millionths of an amp over 12-14 seconds time. (From "Report on the Attorney General's Conference on Less Than Lethal Weapons", by Sherry Sweetman, 1987, p4, which cites "Non-Lethal Weapons for Law Enforcement: Research Needs and Priorities. A Report to the National Science Foundation by the Security Planning Corporation, 1972. Research by Harlan Girard.)

1972 "A U.S. Department of Defense document said that the Army has tested a microwave weapon. It was an extremely powerful 'electronic flamethrower'." (From "Electromagnetic Pollution.")

1972 "A study published by the U.S. Army Mobility Equipment Research and Development Center, titled 'Analysis of Microwaves for Barrier Warfare' examines the plausibility of using radio frequency energy in barrier counter-barrier warfare ... The report concludes that:

(a) it is possible to field a truck-portable microwave barrier system that will completely immobilize personnel in the open with present day technology;
(b) there is a strong potential for a microwave system that would be capable of delaying or immobilizing personnel in vehicles;
(c) with present technology, no method could be identified for a microwave system to destroy the type of armored material common to tanks."

(From "Electromagnetic Pollution" by Kim Besly, p15, quoting The Zapping of America by Paul Brodeur.) The report further documents the ability to create third-degree burns on human skin using 3 GHz at 20-watts/square centimeter in two seconds.

1972 Dr. Gordon J. F. MacDonald testified before the House Subcommittee on Oceans and International Environment, concerning low frequency research: "The basic notion there was to create between the electrically charged ionosphere in the higher part of the atmosphere and conducting layers of the surface of the Earth this neutral cavity, to create waves, electrical waves that would be tuned to the brainwaves ... about ten cycles per second ... you can produce changes in behavioral patterns or in responses." (From Baker's "ELF Psychotronic Tyranny" paper.)

1973 Sharp and Grove transmit audible words via microwaves.

1975 - 1977 "Unpublished analyses of microwave bioeffects literature were disseminated to the U.S. Congress and to other officials arguing the case for remote control of human behavior by radar." (From the Journal of Microwave Power, 12(4), 1977, p320. Research by Harlan Girard.)

1978 Hungarians presented a state-of-the-art paper on infrasonic weapons to the United Nations, "Working Paper on Infrasound Weapons", United Nations CD/575, 14 August 1978. (From "The Road From Armageddon" by Peter Lewis.)

1981 - 1982 "Between 1981 and September 1982, the Navy commissioned me to investigate the potential of developing electromagnetic devices that could be used as non-lethal weapons by the Marine Corp for the purpose of 'riot control', hostage removal, clandestine operations, and so on." Eldon Byrd, Naval Surface Weapons Center, Silver Spring MD. (From "Electromagnetic Pollution" by Kim Besly, p12.)

1982 Electromagnetic weapons for law enforcement use in Great Britain: Charles Bovill of the now defunct British firm, Allen International, developed a 10-30 Hz strobe light that can produce seizures, giddiness, nausea, and fainting. Addition of sound pulses in the 4.0 - 7.5 Hz range increases effectiveness, as utilized in the Valkyrie, a "frequency" weapon advertised in British Defense Equipment Catalogue until 1983.

The squawk box or sound curdles uses two loudspeakers of 350-watt output to emit two slightly different frequencies that combine in the ear to produce a shrill shrieking noise. The U.S. National Science Foundation report says there is "severe risk of permanent impairment of hearing." (From "Electropollution" by Kim Besley, citing the Manchester City Council Police Monitoring Unit document.)

1982 Air Force review of biotechnology: "Currently available data allow the projection that specially generated radio frequency radiation (RFR) fields may pose powerful and revolutionary antipersonnel military threats. Electroshock therapy indicates the ability of induced electric current to completely interrupt mental functioning for short periods of time, to obtain cognition for longer periods and to restructure emotional response over prolonged intervals.

"... impressed electromagnetic fields can be disruptive to purposeful behavior and may be capable of directing and/or interrogating such behavior. Further, the passage of approximately 100 milliamperes through the myocardium can lead to cardiac standstill and death, again pointing to a speed-of-light weapons effect.

"A rapidly scanning RFR system could provide an effective stun or kill capability over a large area."
(From Final Report on Biotechnology Research Requirements for Aeronautical Systems Through the Year 2000. AFOSR-TR-82-0643, vol 1,and vol 2, 30 July 1982.)

1986 "The Electromagnetic Spectrum in Low-Intensity Conflict" by Captain Paul Tyler, MC, USN quotes the above passage and further elaborates on the theme. (Published in Low Intensity Conflict and Modern Technology Lt. Col. David J. Dean, USAF, ed., Air University Press, Maxwell AFB, AL.Research by Harlan Girard.)

1983 Nikolai Khokhlov, a Soviet KGB agent who defected to the West in 1976, interviews recently arrived scientists and reports: "The Soviet mind- control program is run by the KGB with unlimited funds." (From The Spectator, February 5, 1983, reported in "New World Order Psychotronic Tyranny" by C. B. Baker.)

1984 "USSR: New Beam Energy Possible?" possibly associated with early Soviet weather engineering efforts over the U.S. (From "Tesla's Electromagnetics and Its Soviet Weaponization" by T. E. Bearden.)

1985 Women in the peace camps at Greenham Common began showing various medical symptoms believed to be caused by EM surveillance weapons beamed at them. (See "Zapping: The New Weapon of the Patriarchy", Resonance #13, pp 22-24. Research by Woody Blue.)

1986 Attorney General's Conference on Less Than Lethal Weapons reviews current weapons available. They include the Taser, the Nova XR-5000 Stun Gun (can interrupt a pacemaker); the Talon, a glove with an electrical pulse generator; and the Source, a flashlight with electrodes at the base.

Photonic driving strobe lights tested by one conference delegate on 100 subjects, produced discomfort. Closed eyelids to not block the effect. Evidence that ELF produces nausea and disorientation. Suggestion to develop fast acting electro sleep inducing EM weapon.

Discusses problem of testing weapons on animals and human "volunteers". (From "Report on the Attorney General's Conference on Less Than Lethal Weapons", by Sherry Sweetman, March 1987, prepared for the National Institute of Justice. Research by Harlan Girard.)

1988 The Pentagon is ordered by courts to cease EMP tests at several locations due to a lawsuit filed by an environmental group. (From The Washington Post, May 15, 1988, see "U.S. and Soviets Develop Death Ray", Resonance 11, p10. Research by Remy Chevalier.)

1992 December. "The U.S. Army's Armament Research, Development and Engineering Center is conducting a one-year study of ACOUSTIC BEAM TECHNOLOGY ... the command awarded the one year study to Scientific Applications and Research Associates of Huntington Beach CA. Related research is conducted at the Moscow based Andreev Institute." (From "U.S. Explores Russian Mind Control Technology", by Barbara Opal, Defense News, January 11-17, 1993. Research by Harlan Girard and others.)

1993 The Russian government is offering to share with the United States in a bilateral Center for Psychotechnologies the Soviet mind-control technology developed during the 1970s. The work was funded by the Department of Psycho-Correction at the Moscow Medical Academy.

"Acoustic psycho-correction involves the transmission of specific commands via static or white noise bands into the human subconscious..." The Russian experts, among them former KGB General George Kotov, present in a paper a list of software and hardware available for $80,000. (From Opal article, "U.S. Explores Russian Mind Control Technology".)

1993 February 28, beginning of 51 day siege on the Branch Davidians at Waco Texas, which ended in the death of more than 80 people.

Until this incident, the electromagnetic weapons had kept a very low profile. But in the documentary video, "Waco: The Big Lie Continues", footage from the British Broadcasting (BBC) shows at least three EM weapons used by U.S. government agents. First, the noise generators used against the Davidians. Second, a powerful strobe light, shown during a nighttime sequence.

And the third was the Russian psychoacoustics weapon, considered, but agents deny use of this weapon against the Waco people. FBI agents met with Dr. Igor Smirnov in Arlington VA to discuss the possibility of using the weapon against the Davidians. (From "A Subliminal Dr. Strangelove", by Dorinda Elliot and John Barry, Newsweek, August 22, 1994)

APPENDIX B

Most Common Known ELF Effects: Here is a list of most of the common effects. It is intended to show how the various induced stress effects are broken down. Indent levels are used to show categories and sub-categories:

Invasive At-a-Distance Body Effects (including mind):

Sleep deprivation and fatigue:

Silent but instantaneous application of "electronic caffeine" signal, forces awake and keeps awake

Loud noise from neighbors, usually synchronized to attempts to fall asleep

Precision-to-the-second "allowed sleep" and "forced awakening"; far too precise and repeated to be natural

Daytime "fatigue attacks", can force the victim to sleep and/or weaken the muscles to the point of collapse

Audible Voice to Skull (V2S):

Delivered by apparent at a distance radio signal

Made to appear as emanating from thin air

Voices or sound effects only the victim can hear

Inaudible Voice to Skull (Silent Sound):

Delivered by apparent at a distance radio signal; manifested by sudden urges to do something/go somewhere you would not otherwise want to; silent (ultrasonic) hypnosis presumed

Programming hypnotic "triggers" - i.e., specific phrases or other cues which cause specific involuntary actions

Violent muscle triggering (flailing of limbs):

Leg or arm jerks to violently force awake and keep awake

Whole body jerks, as if body had been hit by large jolt of electricity

Violent shaking of body; seemingly as if on a vibrating surface but where surface is in reality not vibrating

Precision manipulation of body parts (slow, specific purpose):

Manipulation of hands, forced to synchronize with closed-eyes but FULLY AWAKE vision of previous day; very powerful and coercive, not a dream

Slow bending almost 90 degrees BACKWARDS of one toe at a time or one finger at a time

Direct at-a-distance control of breathing and vocal cords; including involuntary speech iv. Spot blanking of memory, long and short term

Reading said-silently-to-self thoughts:

Engineered skits where your thoughts are spoken to you by strangers on street or

Real time reading sub vocalized words, as while the victim reads a book, and BROADCASTING those words to nearby people who form an amazed audience around the victim

Direct application of pain to body parts:

Hot-needles-deep-in-flesh sensation

Electric shocks (no wires whatsoever applied)

Powerful and unquenchable itching, often applied precisely when victim attempts to do something to expose this "work"

"Artificial fever", sudden, no illness present v. sudden racing heartbeat, relaxed situation

Surveillance and tracking:

Thru-wall radar and rapping under your feet as you move about your apartment, on ceiling of apartment below

Thru-wall radar used to monitor starting and stopping of your urination - water below turned on and off in sync with your urine stream

Loud, raucous artificial bird calls everywhere the victim goes, even into the wilderness

Invasive Physical Effects at a Distance (non-body):

Stoppage of power to appliances (temporary, breaker ON)

Manipulation of appliance settings

Temporary failures that "fix themselves"

Flinging of objects, including non-metallic

Precision manipulation of switches and controls

Forced, obviously premature failure of appliance or parts

External Stress-Generating "Skits":

Participation of strangers, neighbors, and in some cases close friends and family members in harassment:

Rudeness for no cause

Tradesmen always have "problems", block your car, etc.

Purchases delayed, spoiled, or lost at a high rate

Unusually loud music, noise, far beyond normal

Break-ins/sabotage at home:

Shredding of clothing

Destruction of furniture

Petty theft

Engineered failures of utilities

Sabotage at work:

Repetitive damage to furniture

Deletion/corruption of computer files

Planting viruses which could not have come from your computer usage pattern

Delivered goods delayed, spoiled, or lost at a high rate

Spreading of rumors, sabotage to your working reputation

Direct sabotage and theft of completed work; tradesmen often involved and showing obvious pleasure

In summary, the effects include:

To the Brain:

Forced memory blanking and induced erroneous actions
Induced changes to hearing. Both apparent direction and volume, and sometimes even content
Reading and broadcasting thoughts. "How can that lady talk with her mouth closed?"
Vivid controlled dreams.
Forced waking visions: some synched with forced body motion
Microwave hearing
Sleep prevention each nigh, at exactly the same time (for weeks)

To the FaceL

Sudden violent itching inside eyelids
Forced manipulation of airways, including externally controlled forced speech
"Transparent eyelids"
Artificial tinnitus (ringing in ears)
Forced movement of jaw and clacking of teeth

To the Body:

Wilding racing heart without cause
Remotely induced violent no-rash itching
Forced nudging of arm during delicate or messy work causing injury or spills
Forced "muscle quaking" on large muscles on the back or other unexplainable vibrations
Cases of repeated fresh watch batteries dying
Forced precision manipulation of hands. Sometimes synched to the forced waking visions.
Special attention to genital area: itching, forced orgasm, intense pain, "hot needles"
Intense general pain in the legs, like stings.

[Remind you, that these are the unclassified effects only.]

RICHARD ALAN MILLER

Lectures, Writing, & Research

Author & researcher Richard Alan Miller reveals a wealth and depth of knowledge and experience in three major fields; Alternative Agriculture, New Age Physics, and Metaphysics. Before many leading edge concepts became trendy topics, Miller was (and is) in the international front lines of research, experimentation and documentation.

His focus on botanicals made him the leading world authority on herb farming, processing and marketing. With numerous books, bi-lines and websites (www.nwbotanicals.org), Miller's visionary work with Alternative Agriculture continues to be 20 years ahead including concepts such as sustainability, intercropping, and Forest Farming.

Taking a step behind the scenes of "black ops" research is for most of us limited to speculations. Miller began working in that "X-Files" world in the 60s and has amazing experiences and conclusions to share. An original team-member, "man-in-black," Miller's research in the field of Parapsychology & Paraphysics began as a graduate physicist working 10 years with Army Intel/Pentagon.

During this period numerous foundational papers, including "A Holographic Concept of Reality" and "Embryonic Holography" were written. Richard Alan Miller's most recent work, "Synthetic Telepathy and the Early Mind Wars" discusses how some of his earlier work contributed to new "mind altering" technologies and their current applications.

His most recent works at Nexus Conferences in Brisbane, 2004 and Amsterdam, 2005 was titled “The Non-Local Mind In A Holographic Universe.” He also has semi-technical papers to be presented in Anaheim at The World Nutra Conference in October, 2005. Title: “Lab-Grown *Cordyceps sinsensis* Hybrid: A Nano-Processed Medicinal Mushroom that Really Delivers.”

Offering fresh perspectives on Metaphysical traditions his books, papers & articles integrate his scientific research with time-honored metaphysical concepts, leading to such works as The Modern Alchemist; A Guide to Personal Transformation and The Diamond Body, a Synergetic Approach to Mysticism.

He brings a similar integration to The Magical & Ritual Use of Herbs and The Magical & Ritual use of Aphrodisiacs. Miller is listed in Who's Who in the World, America, and the West.

Richard Alan Miller
Northwest Botanicals, Inc.
(541) 476-5588
(541) 476-1823 (fax)

US 20150091891A1

(19) United States

(12) Patent Application Publication

Raheman et al.

(10) Pub. No.: US 2015/0091891 A1

(43) Pub. Date: Apr. 2, 2015

(54) **SYSTEM AND METHOD FOR NON-HOLOGRAPHIC TELEPORTATION**

(71) Applicants: **Fazal Raheman**, Dubai (AE); **Ali Fazal Raheman**, Dubai (AE)

(72) Inventors: **Fazal Raheman**, Dubai (AE); **Ali Fazal Raheman**, Dubai (AE)

(73) Assignee: **DUMEDIA, INC.**, Newark, DE (US)

(21) Appl. No.: **14/040,729**

(22) Filed: **Sep. 30, 2013**

Publication Classification

(51) **Int. Cl.**
G06T 15/00 (2006.01)

(52) **U.S. Cl.**
CPC ***G06T 15/00*** (2013.01)
USPC **345/419**

(57) **ABSTRACT**

The present invention discloses a system and method for non-holographic virtual teleportation of one or more remote objects to a designated three-dimensional space around a user in realtime. This is achieved by using a plurality of participating teleportation terminals, located at geographically diverse locations, that capture the RGB and depth data of their respective environments, extract RGB images of target objects from their corresponding environment, and transmit the alpha channeled object images via Internet for integration into a single composite scene in which layers of computer graphics are added in the foreground and in the background. The invention thus creates a virtual 3D space around a user in which almost anything imaginable can be virtually teleported for user interaction. This invention has application in intuitive computing, perceptual computing, entertainment, gaming, virtual meetings, conferencing, gesture based interfaces, advertising, ecommerce, social networking, virtual training, education, so on and so forth.

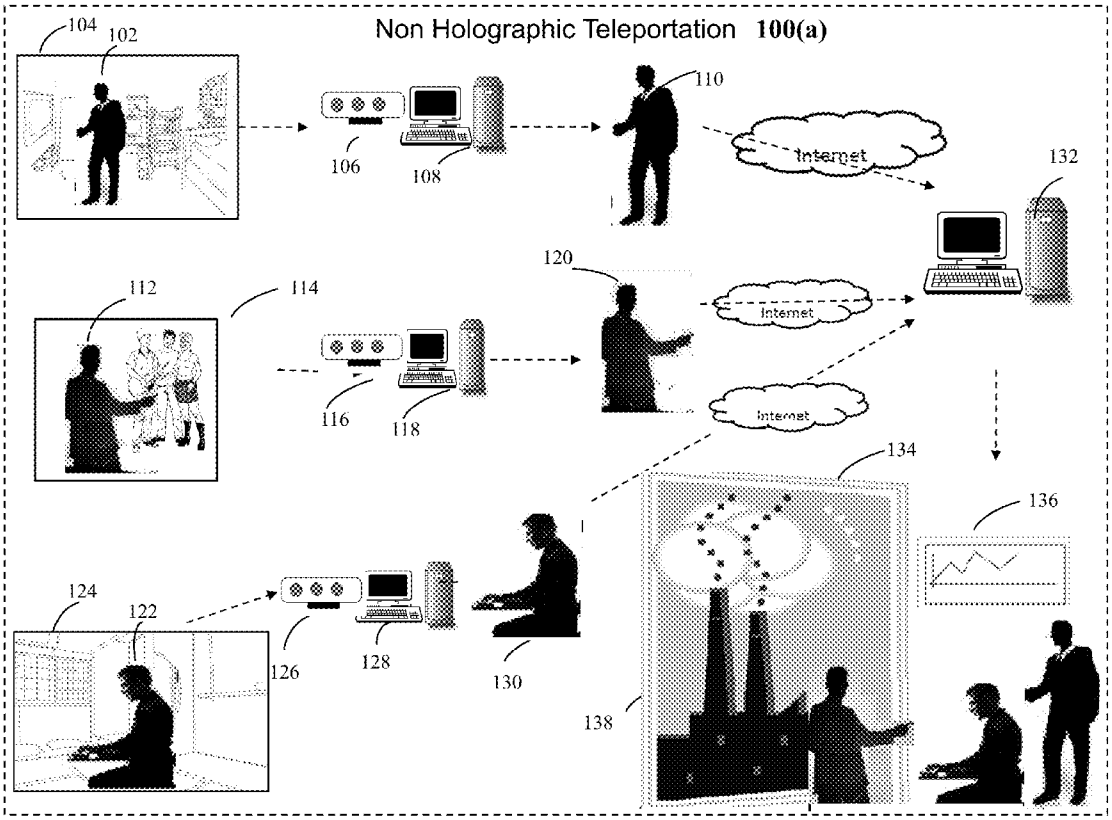

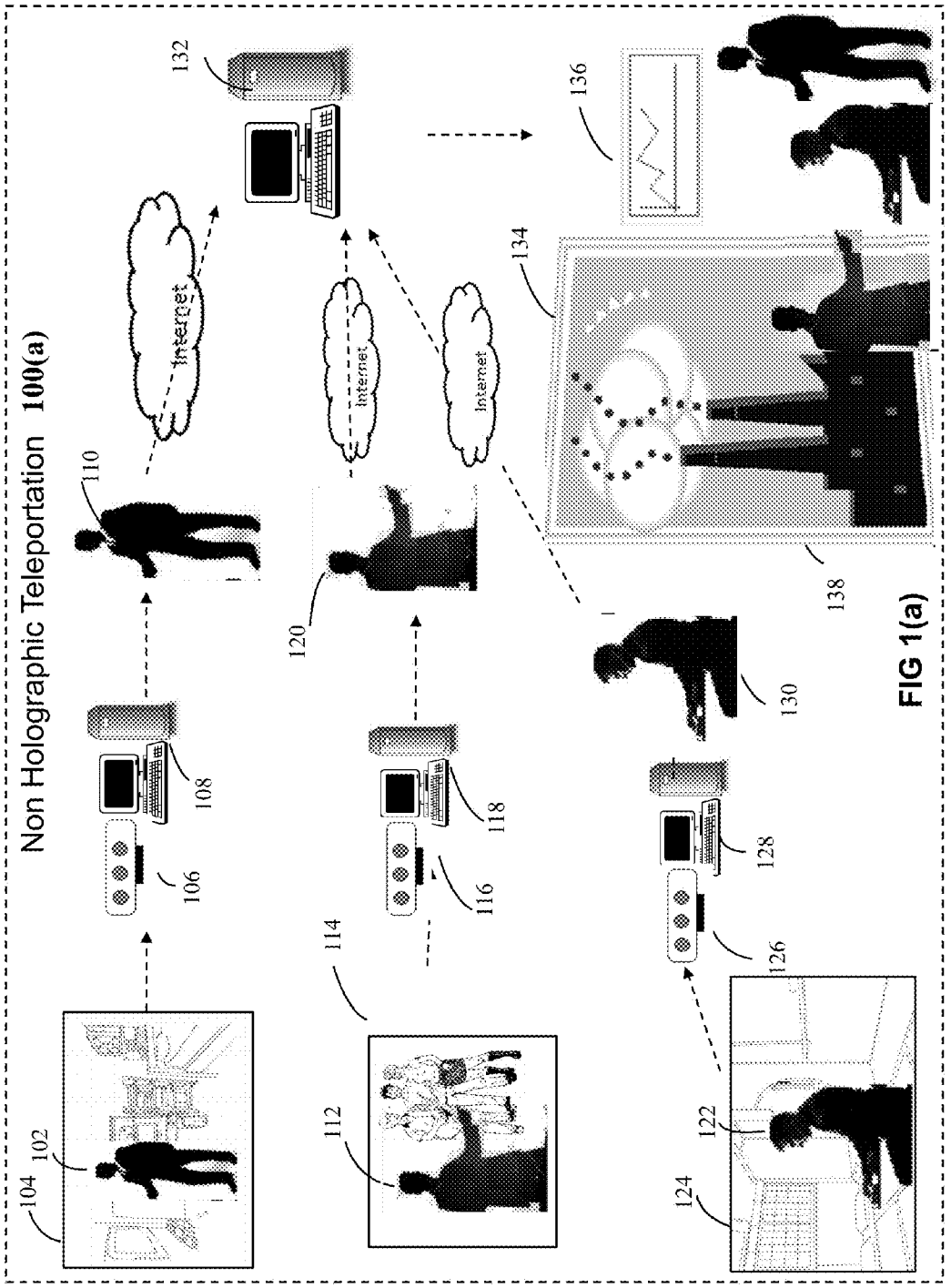
Non Holographic Teleportation 100(a)
Internet
Internet
Internet
102
104
106
108
110
112
114
116
118
120
122
124
126
128
130
132
134
136
138

FIG 1(a)

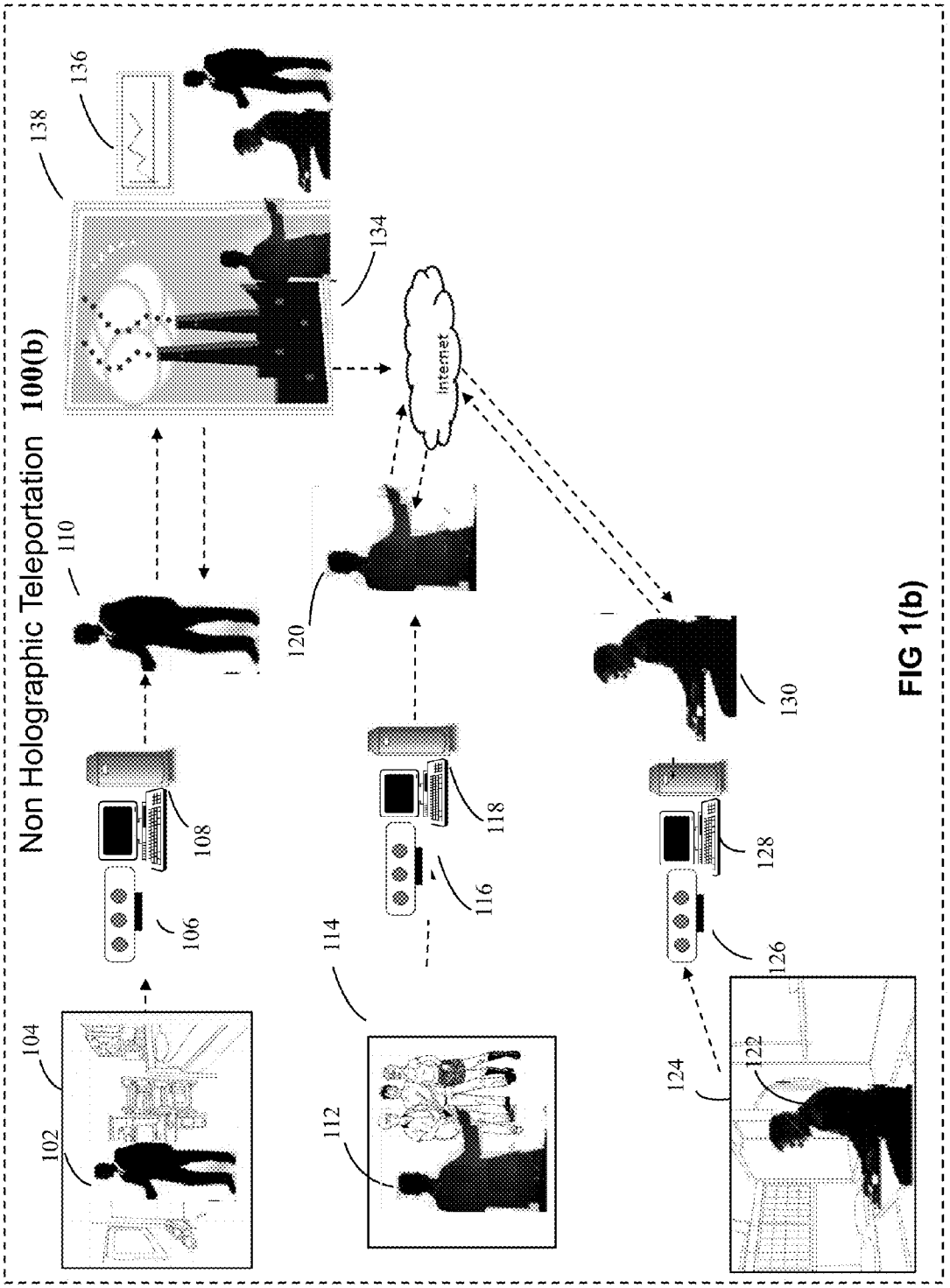
Non Holographic Teleportation 100(b)
Internet
102
104
106
108
110
112
114
116
118
120
122
124
126
128
130
134
136
138

FIG 1(b)

FIG 1(c)

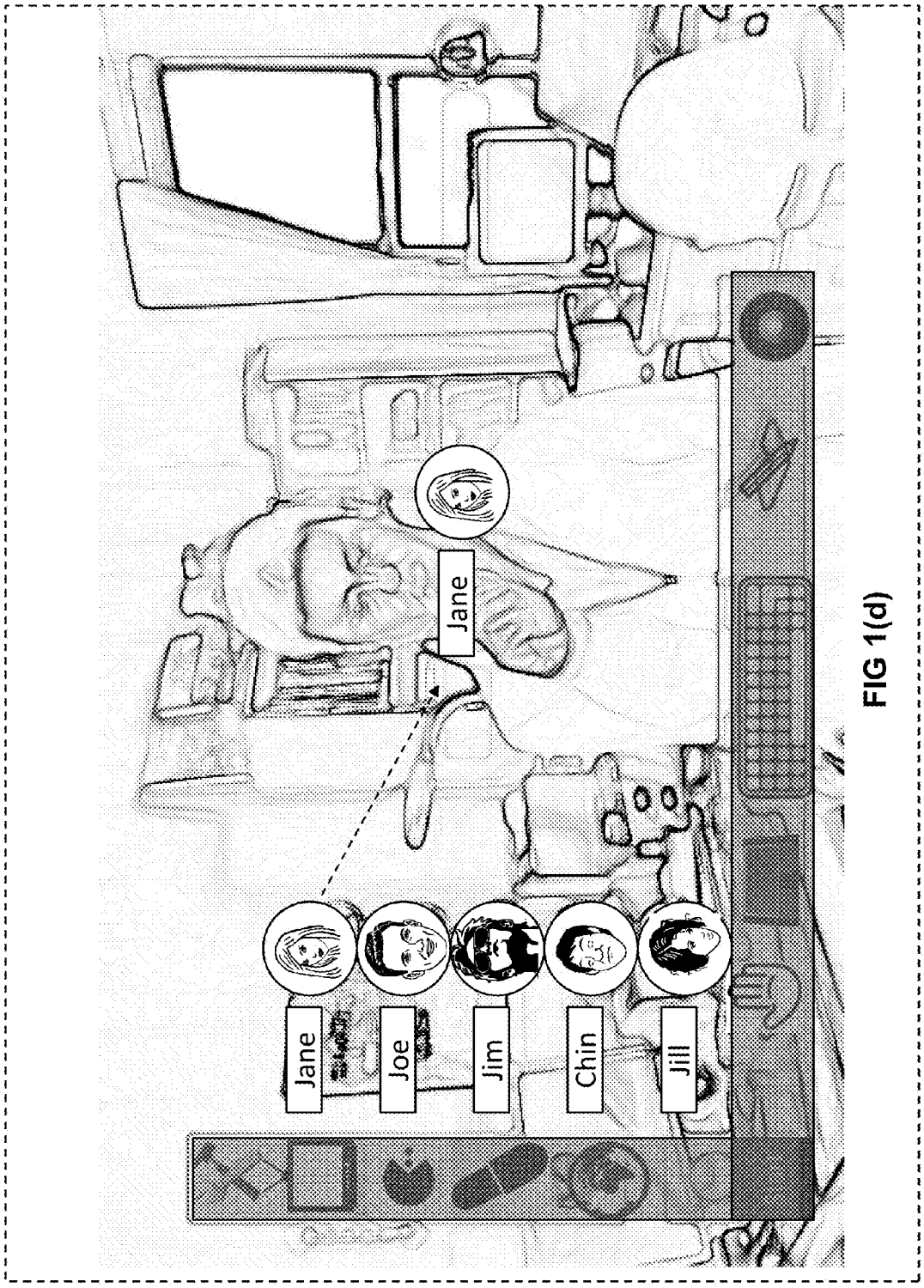

FIG 1(d)

FIG 1(e)

FIG 1(f)

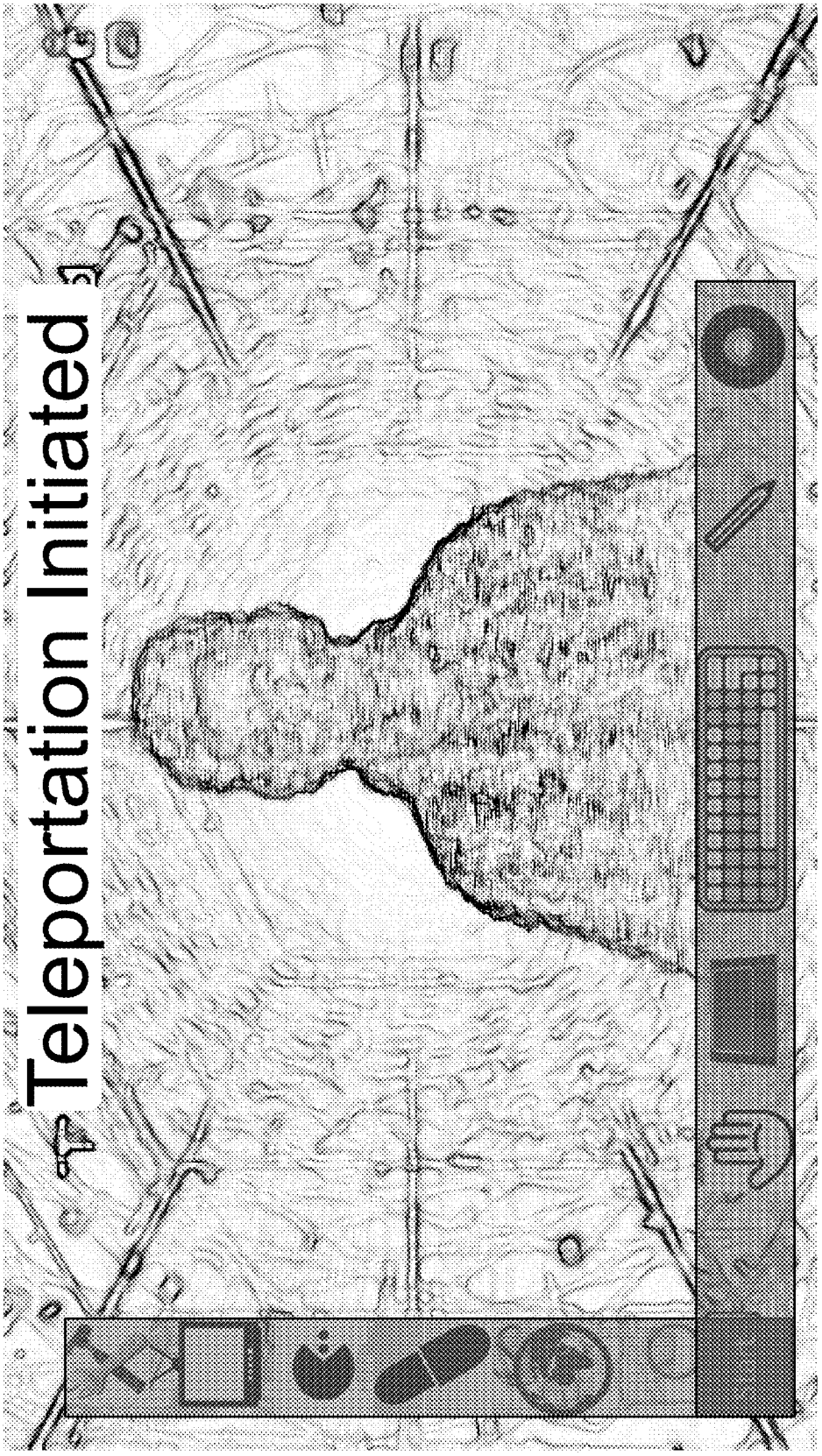

FIG 1(g)

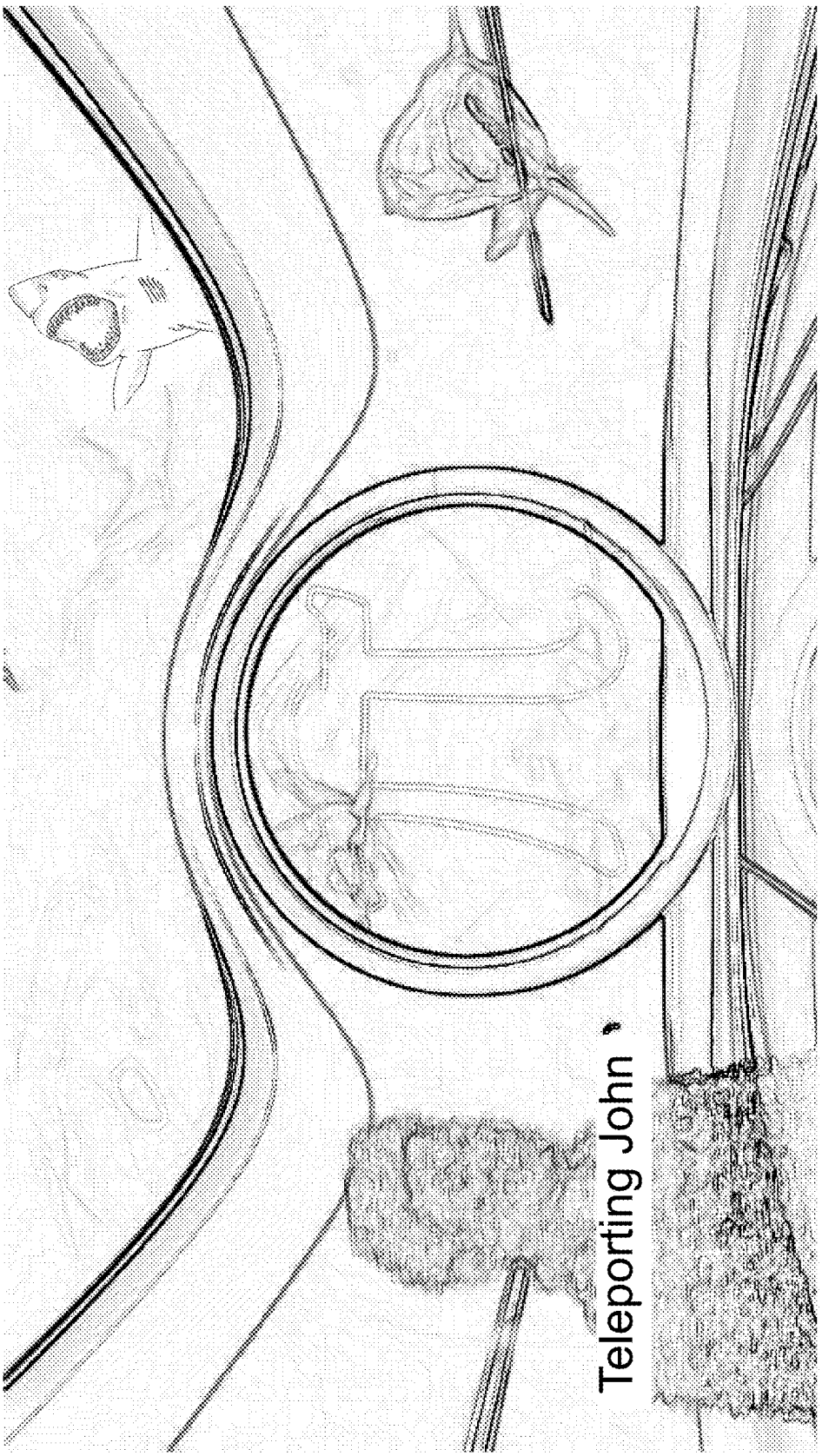

FIG 1(h)

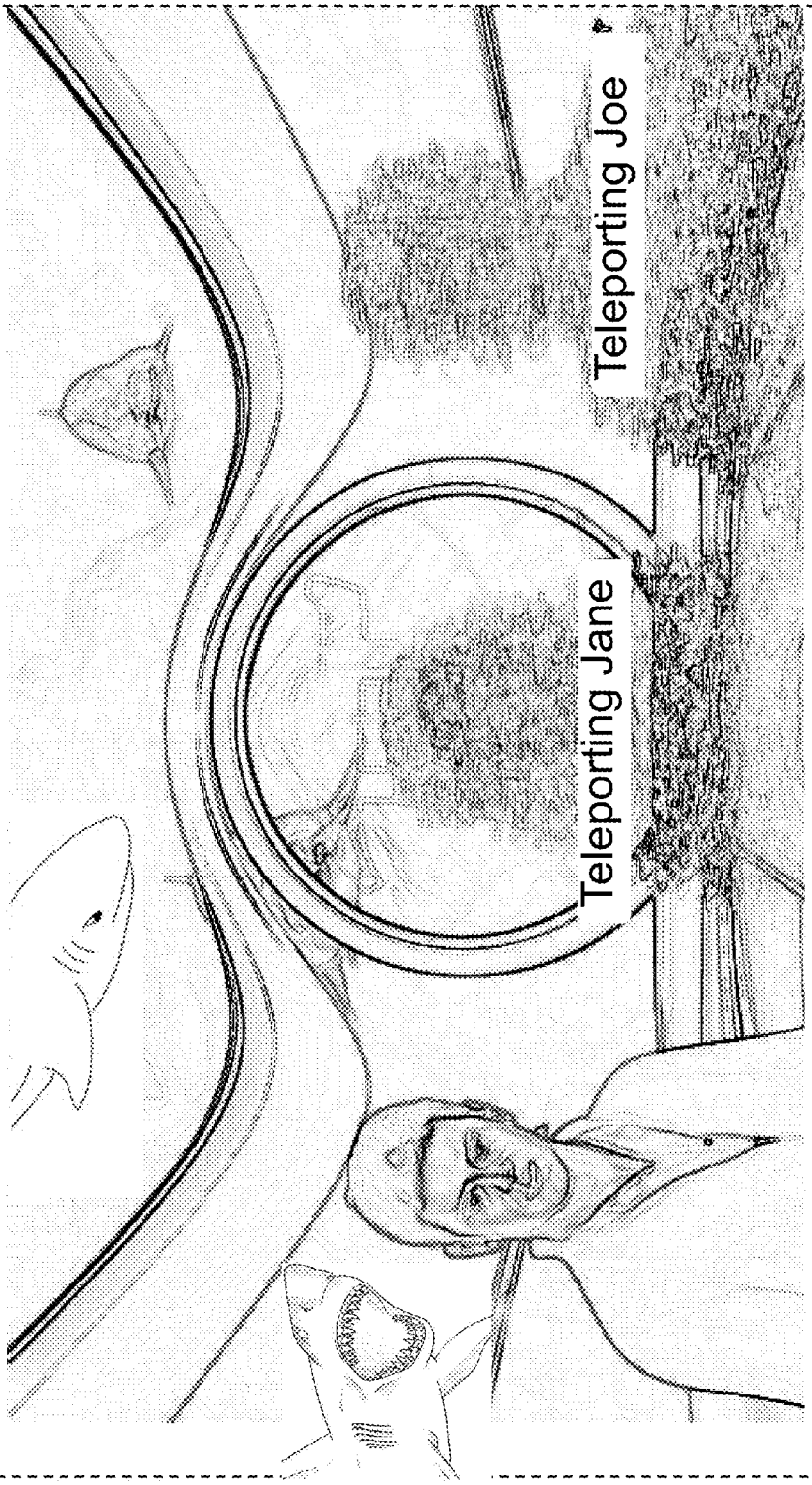

FIG 1(i)

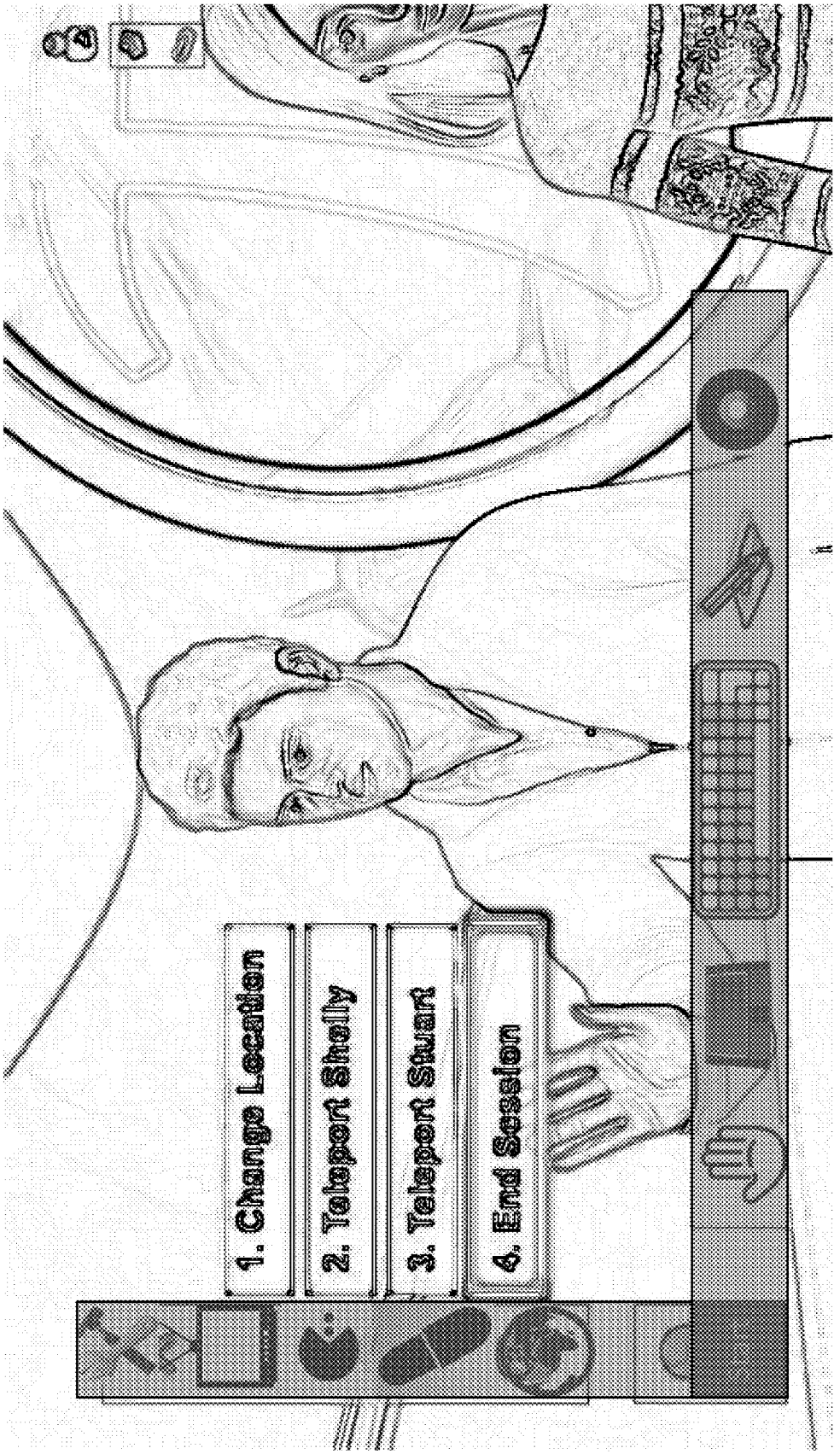
1. Change Location
2. Teleport Shelly
3. Teleport Stuart
4. End Session

FIG 1(j)

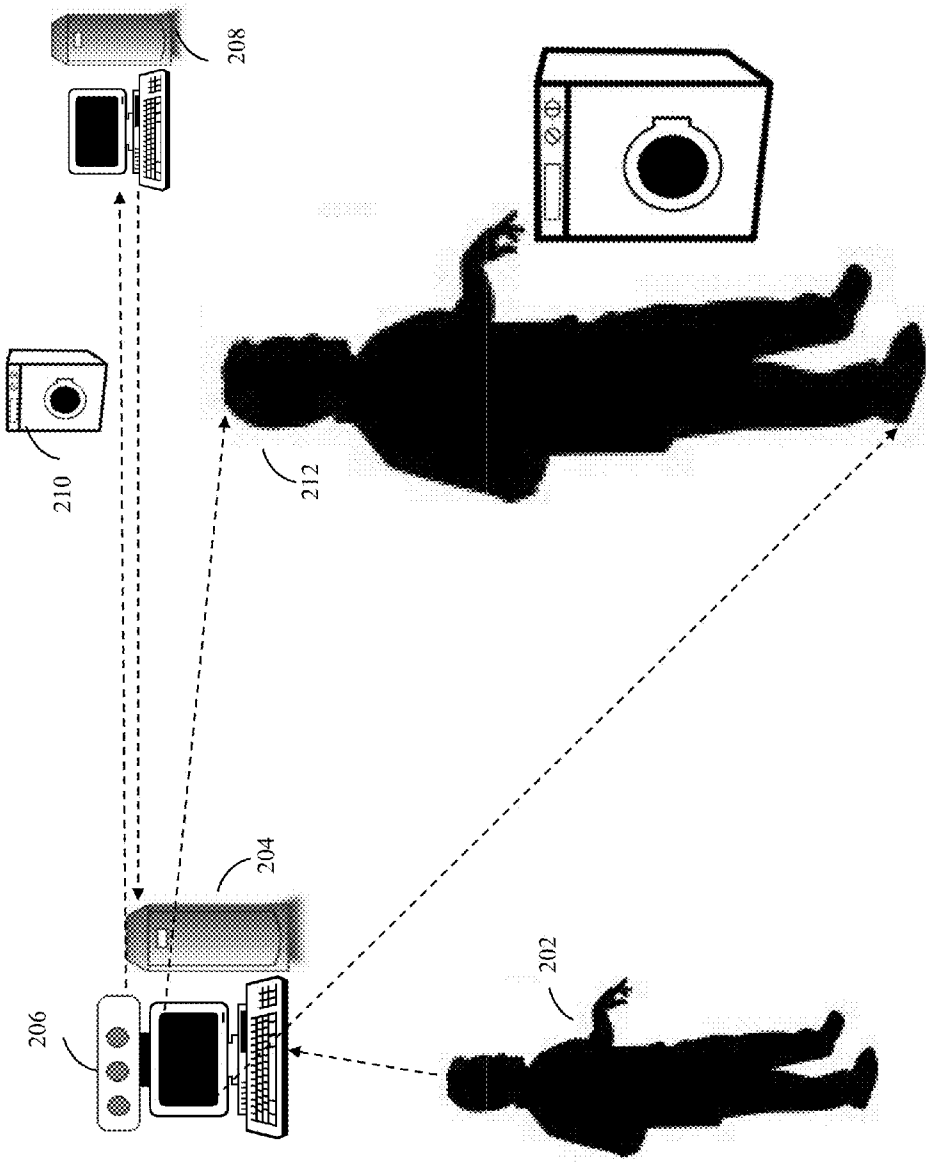

FIG 2

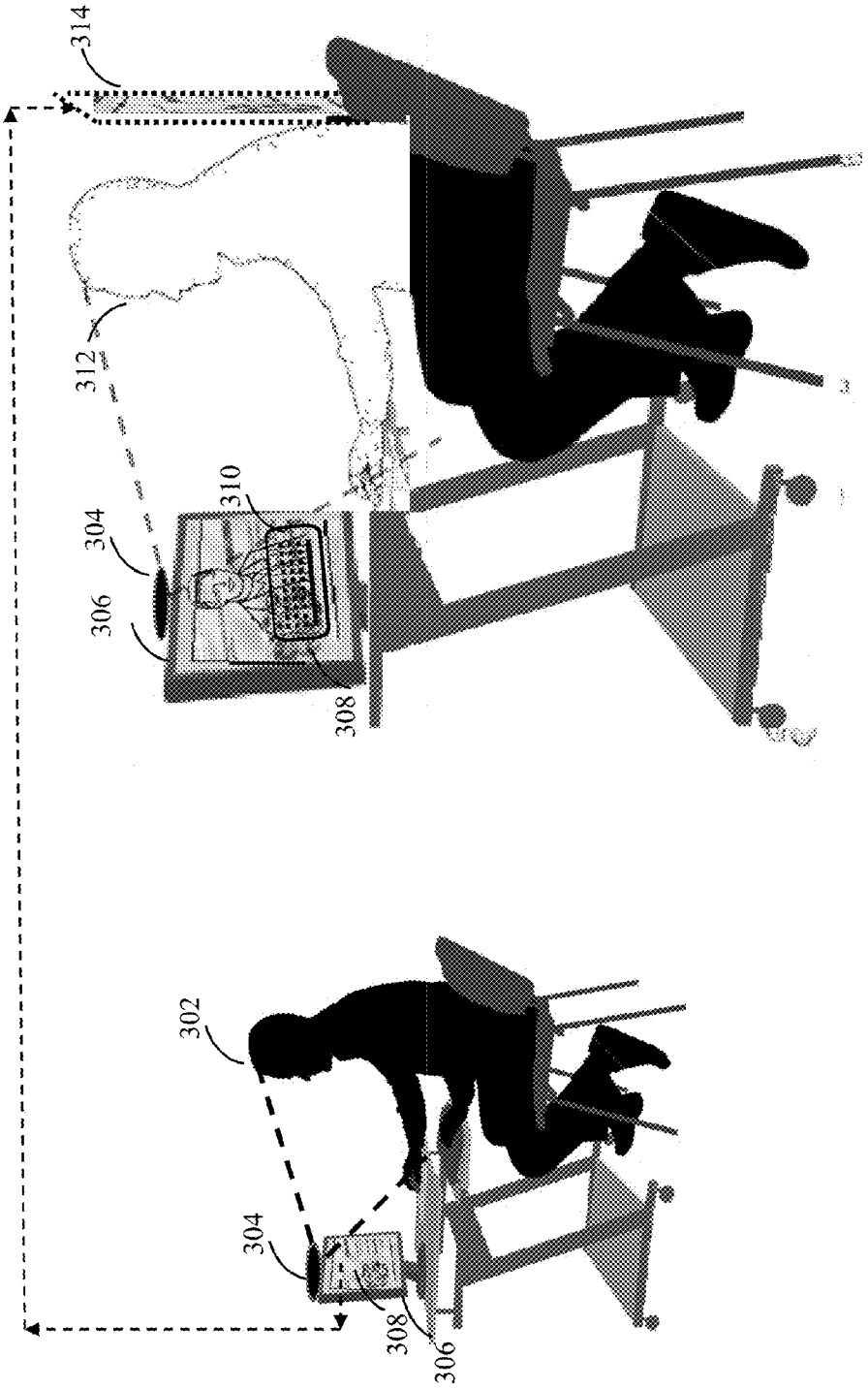

FIG 3

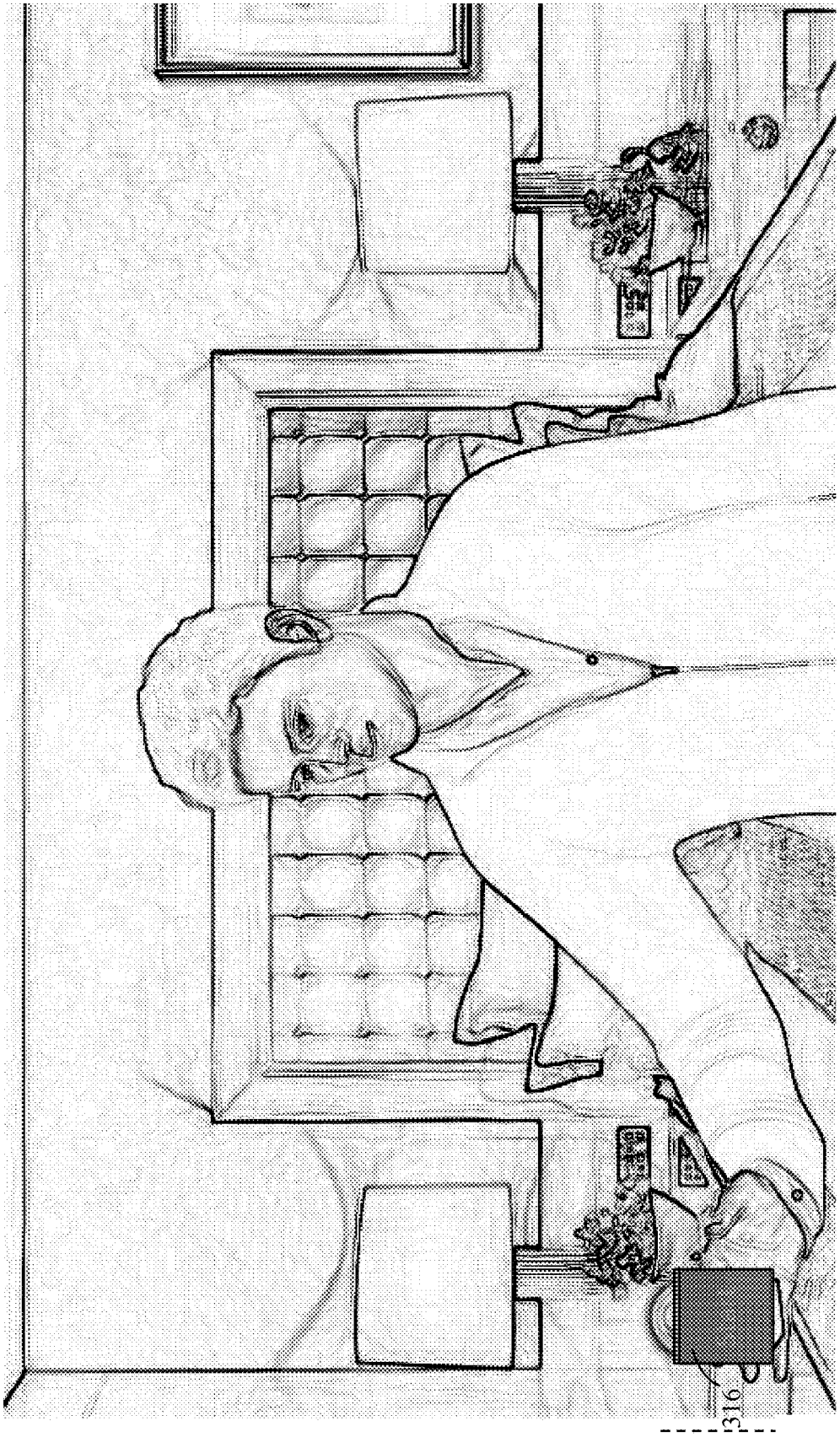

FIG 3(a)

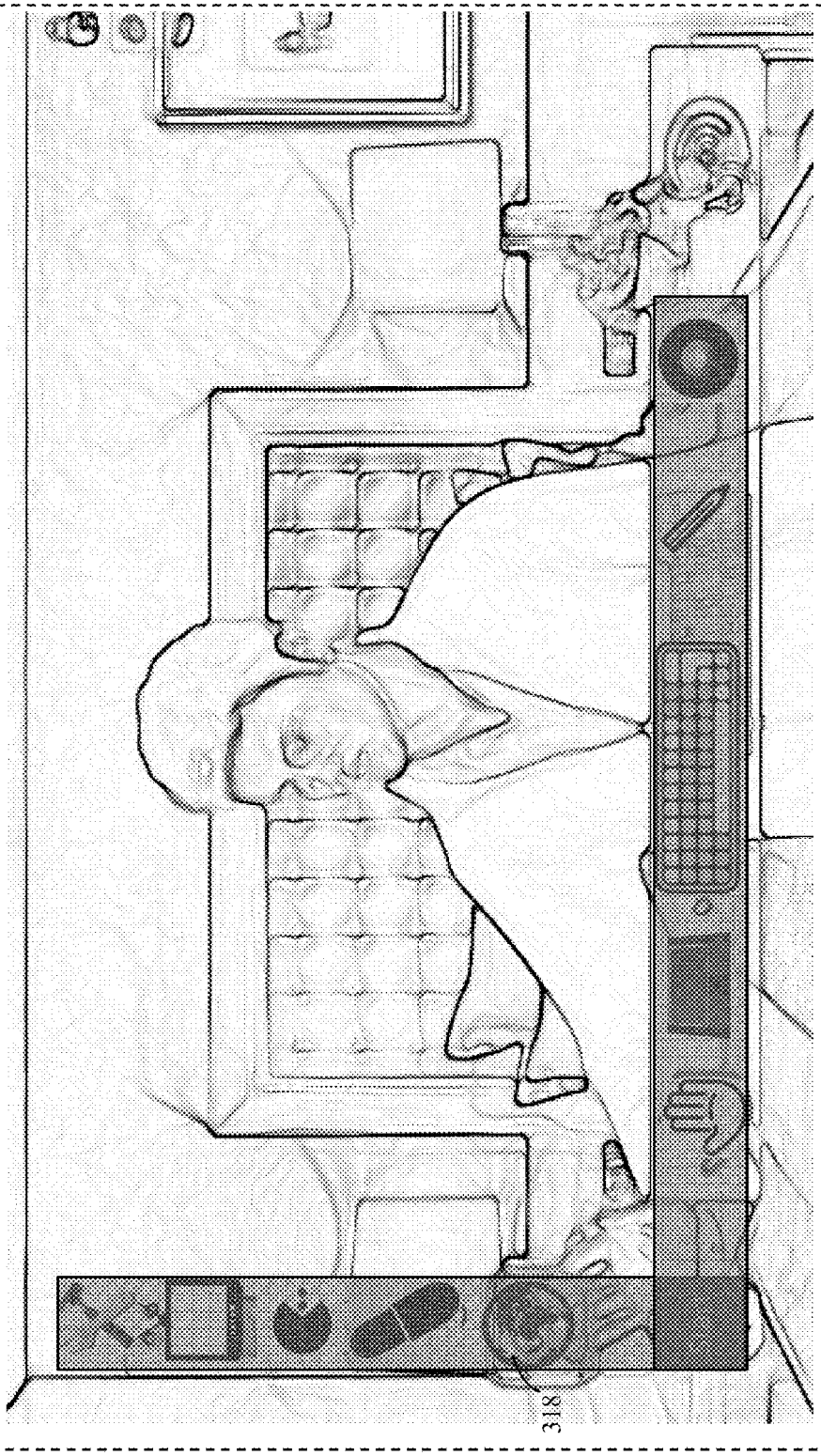

FIG 3(b)

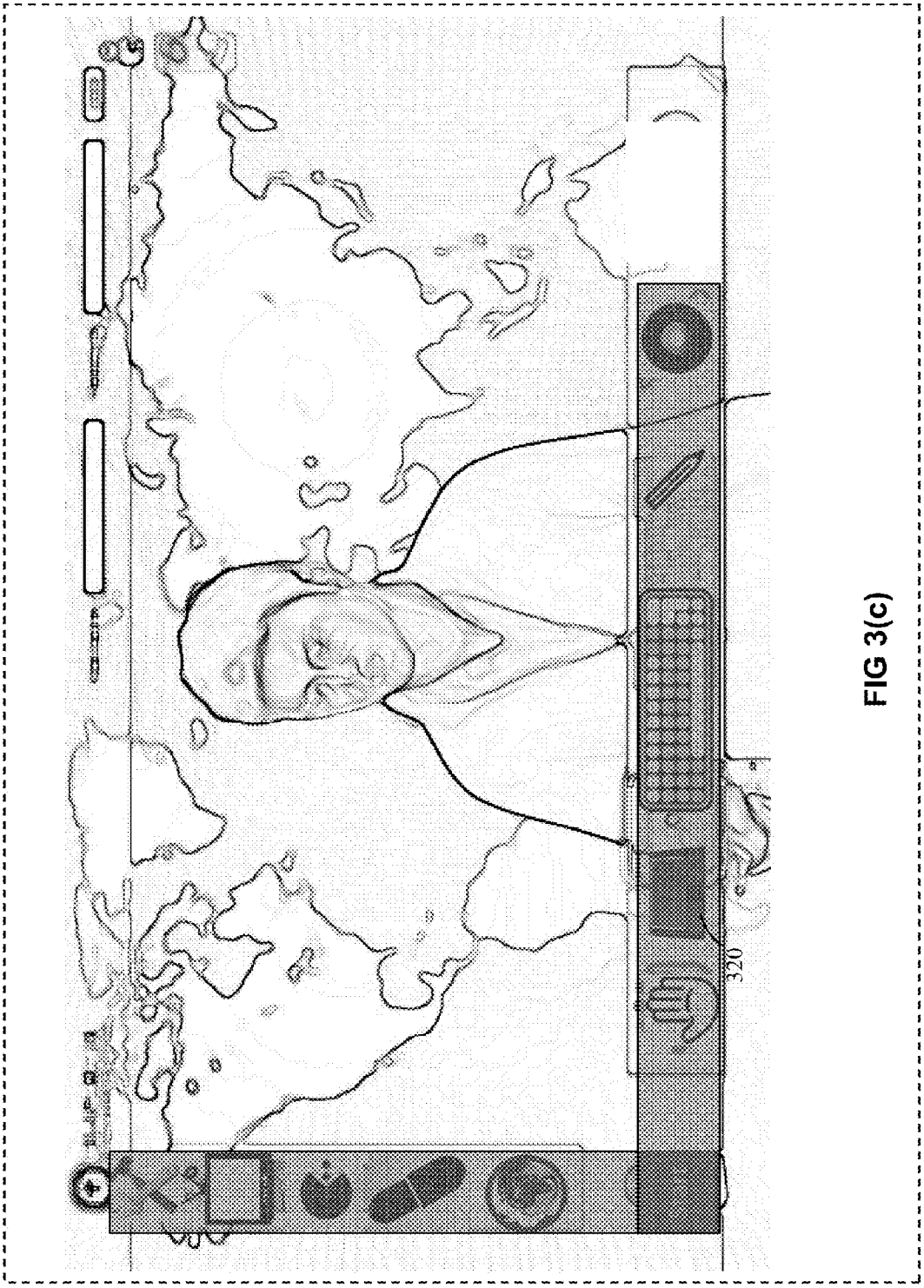

FIG 3(c)

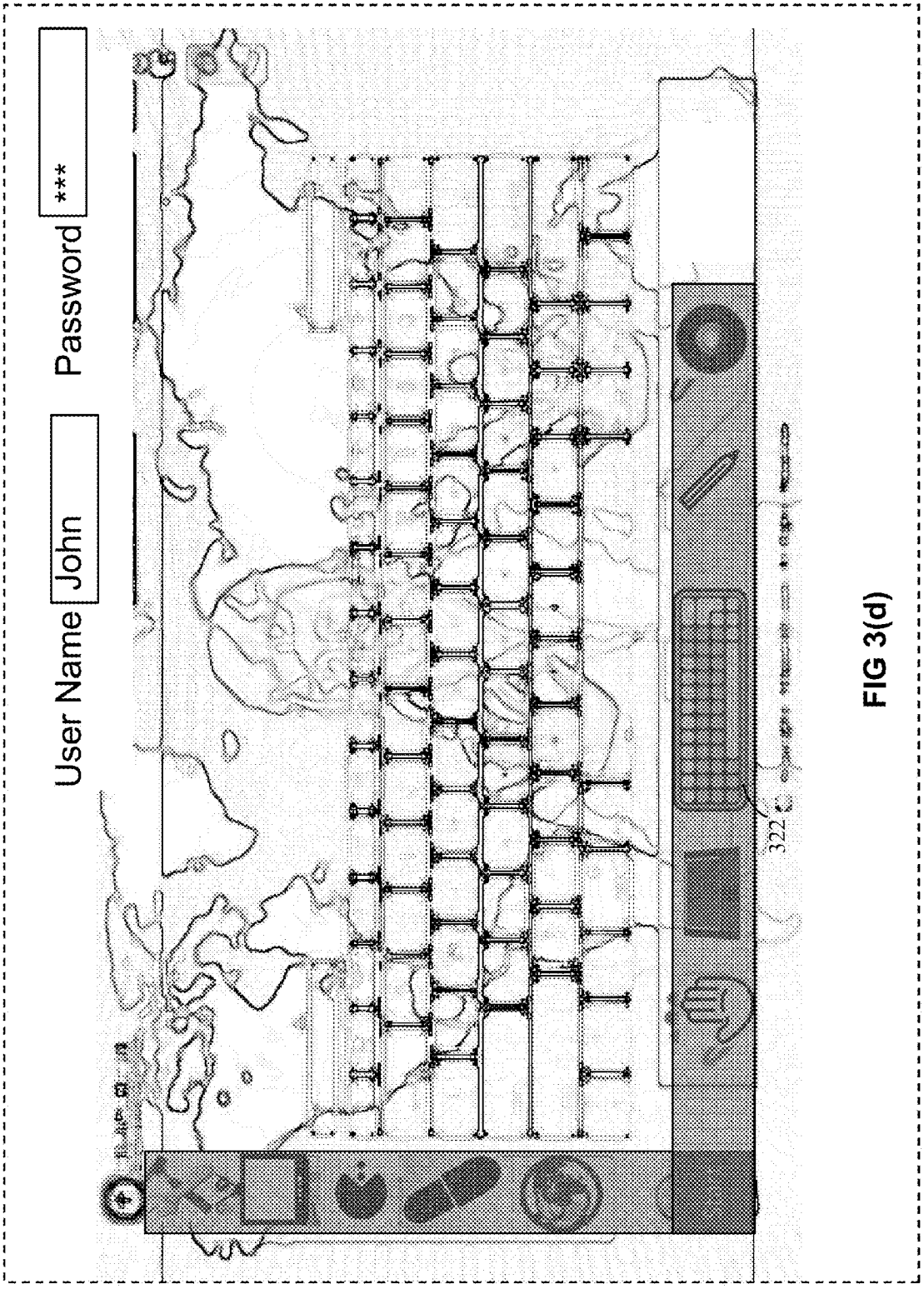

FIG 3(d)

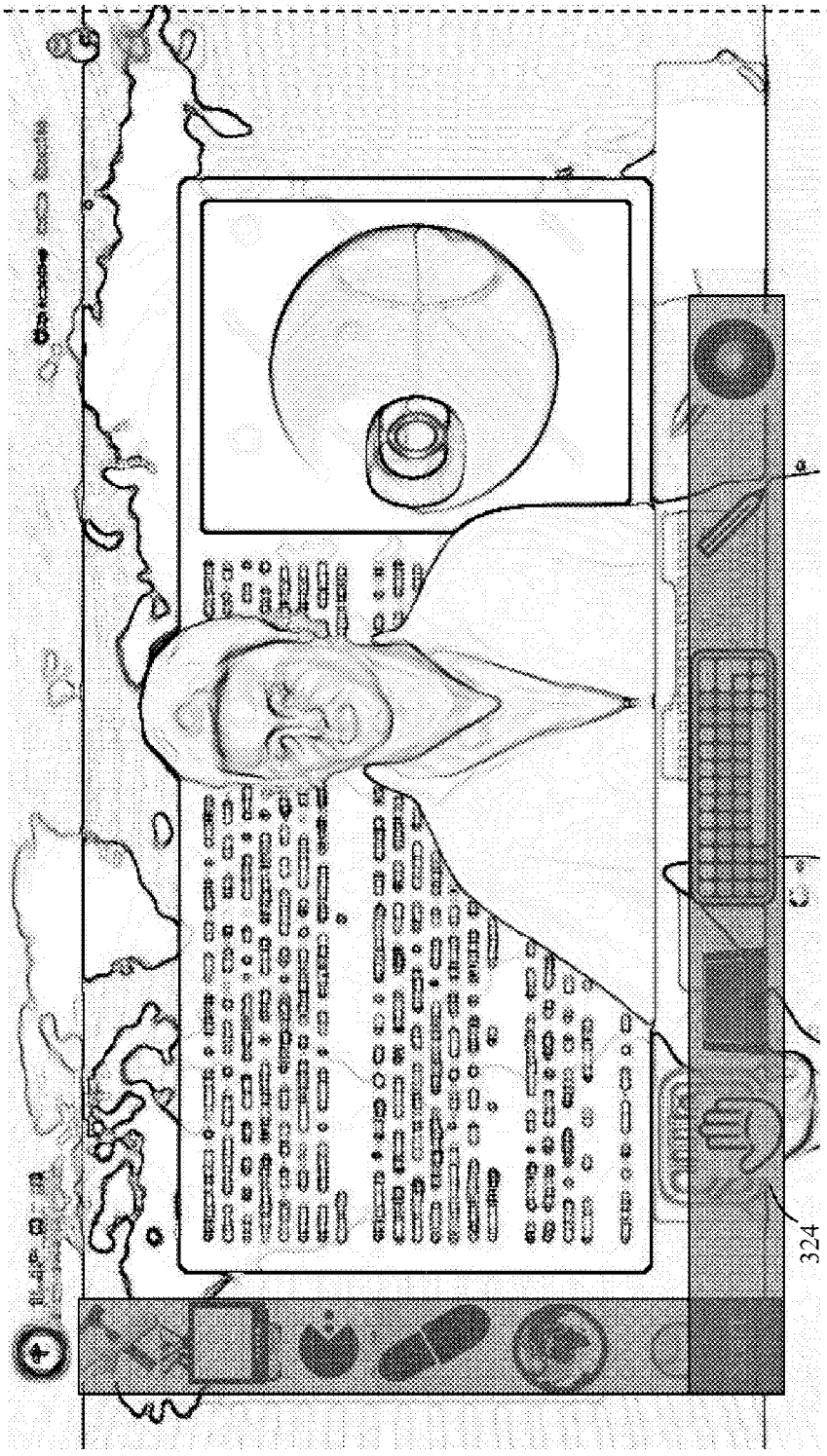

FIG 3(e)

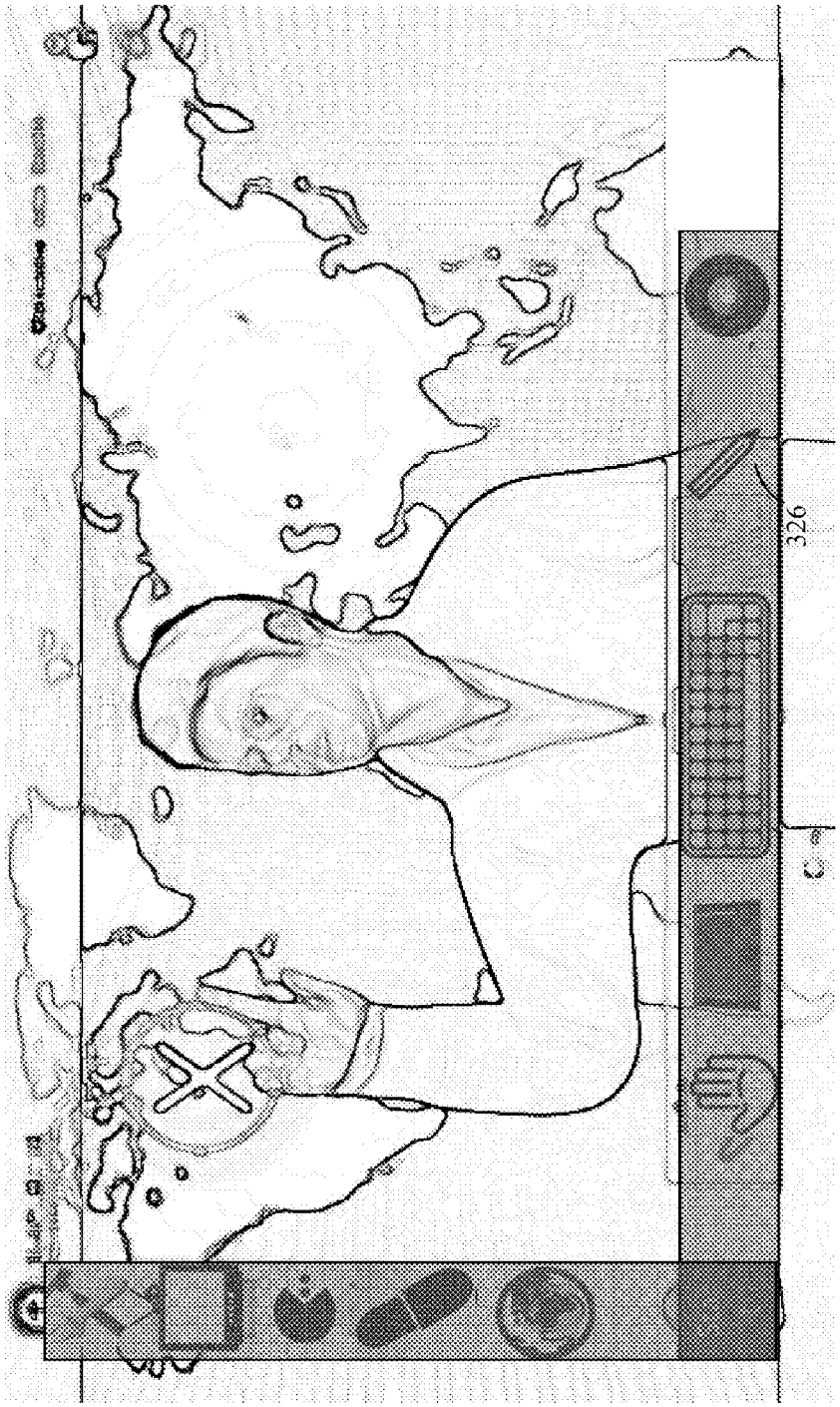

FIG 3(f)

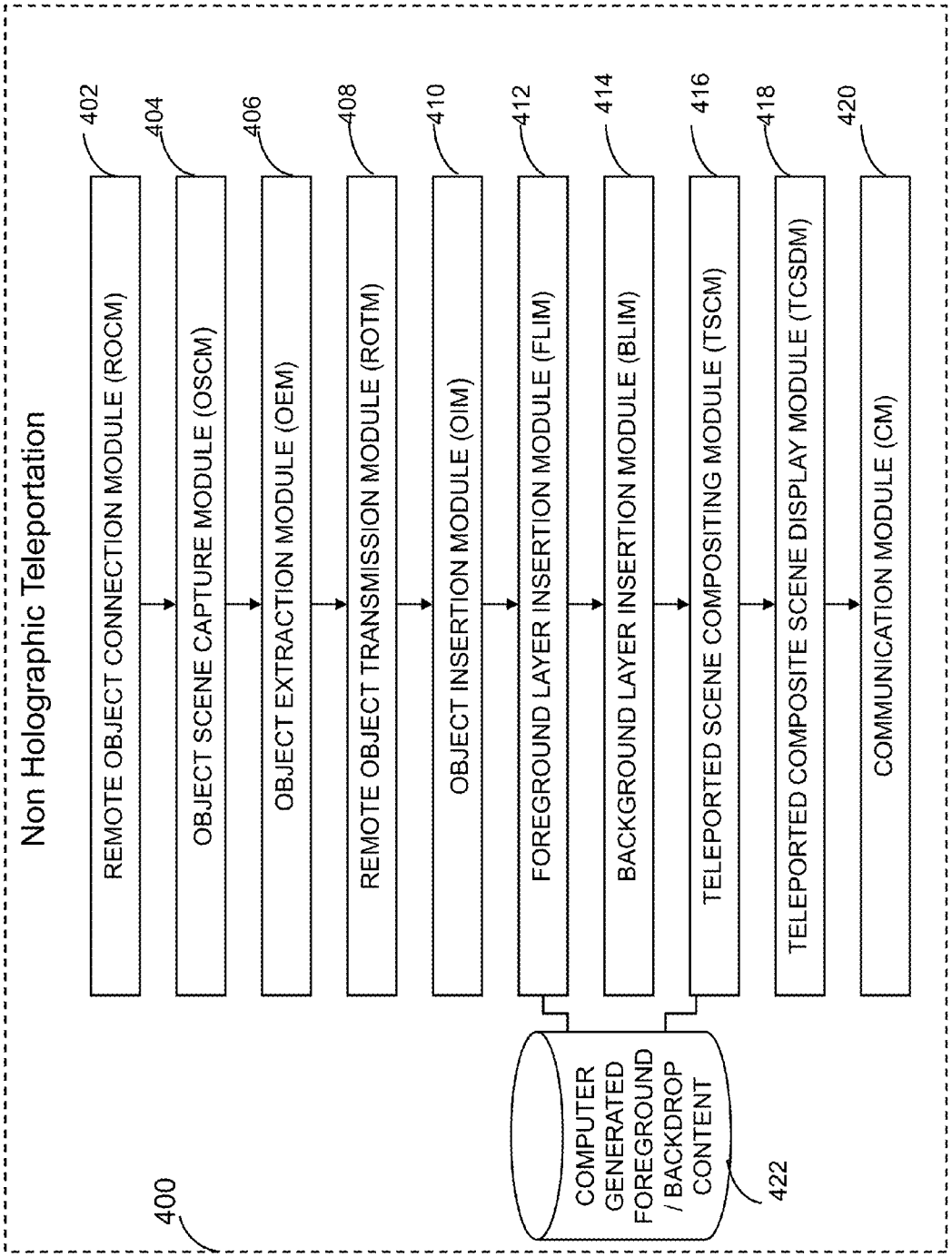
Non Holographic Teleportation
REMOTE OBJECT CONNECTION MODULE (ROCM)
402
OBJECT SCENE CAPTURE MODULE (OSCM)
404
OBJECT EXTRACTION MODULE (OEM)
406
REMOTE OBJECT TRANSMISSION MODULE (ROTM)
408
OBJECT INSERTION MODULE (OIM)
410
FOREGROUND LAYER INSERTION MODULE (FLIM)
412
BACKGROUND LAYER INSERTION MODULE (BLIM)
414
TELEPORTED SCENE COMPOSITING MODULE (TSCM)
416
TELEPORTED COMPOSITE SCENE DISPLAY MODULE (TCSDM)
418
COMMUNICATION MODULE (CM)
420
COMPUTER GENERATED FOREGROUND / BACKDROP CONTENT
422
400

FIG. 4

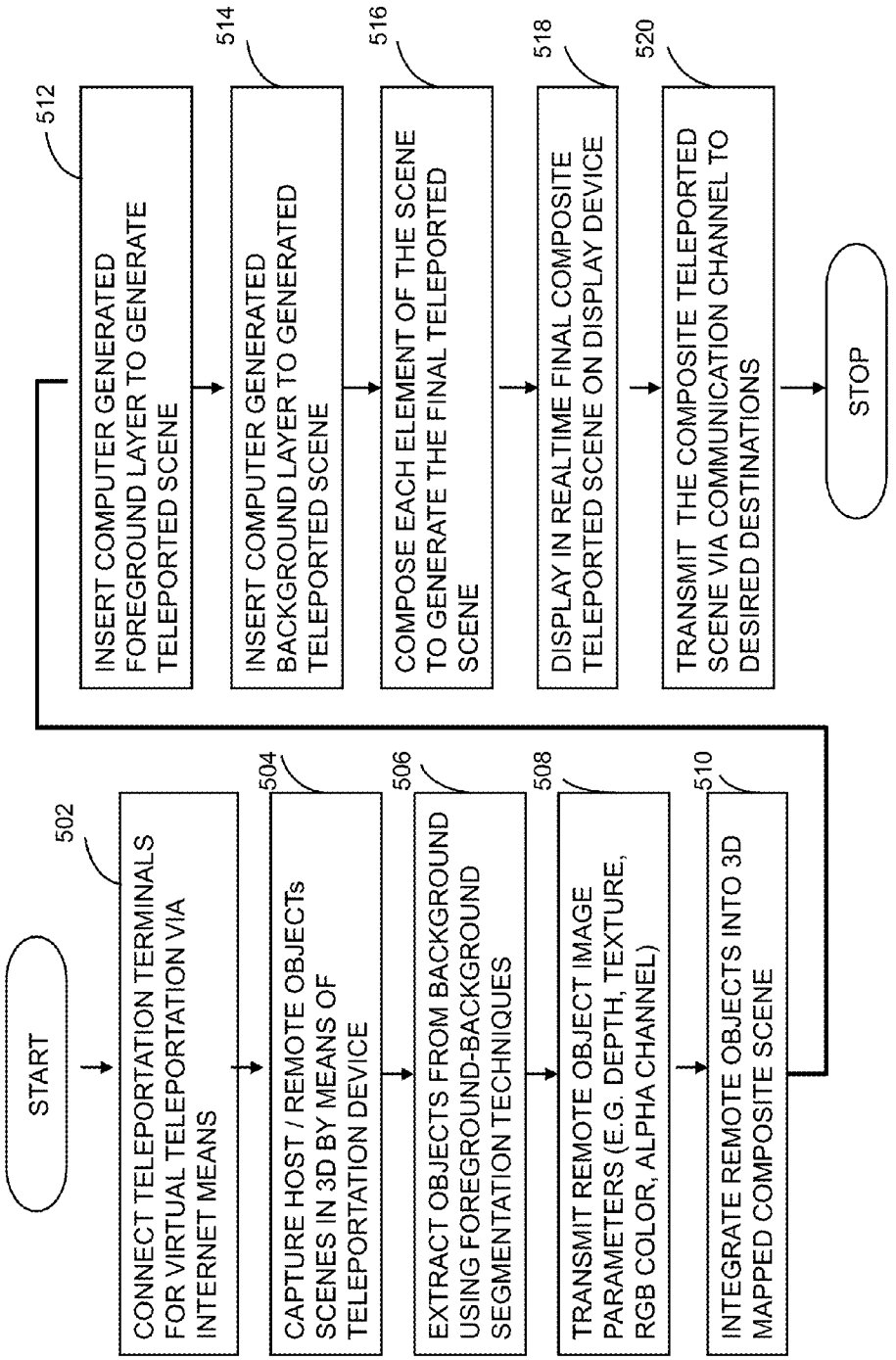
START
502
CONNECT TELEPORTATION TERMINALS FOR VIRTUAL TELEPORTATION VIA INTERNET MEANS
504
CAPTURE HOST / REMOTE OBJECTs SCENES IN 3D BY MEANS OF TELEPORTATION DEVICE
506
EXTRACT OBJECTS FROM BACKGROUND USING FOREGROUND-BACKGROUND SEGMENTATION TECHNIQUES
508
TRANSMIT REMOTE OBJECT IMAGE PARAMETERS (E.G. DEPTH, TEXTURE, RGB COLOR, ALPHA CHANNEL)
510
INTEGRATE REMOTE OBJECTS INTO 3D MAPPED COMPOSITE SCENE
512
INSERT COMPUTER GENERATED FOREGROUND LAYER TO GENERATE TELEPORTED SCENE
514
INSERT COMPUTER GENERATED BACKGROUND LAYER TO GENERATED TELEPORTED SCENE
516
COMPOSE EACH ELEMENT OF THE SCENE TO GENERATE THE FINAL TELEPORTED SCENE
518
DISPLAY IN REALTIME FINAL COMPOSITE TELEPORTED SCENE ON DISPLAY DEVICE
520
TRANSMIT THE COMPOSITE TELEPORTED SCENE VIA COMMUNICATION CHANNEL TO DESIRED DESTINATIONS
STOP

FIG. 5

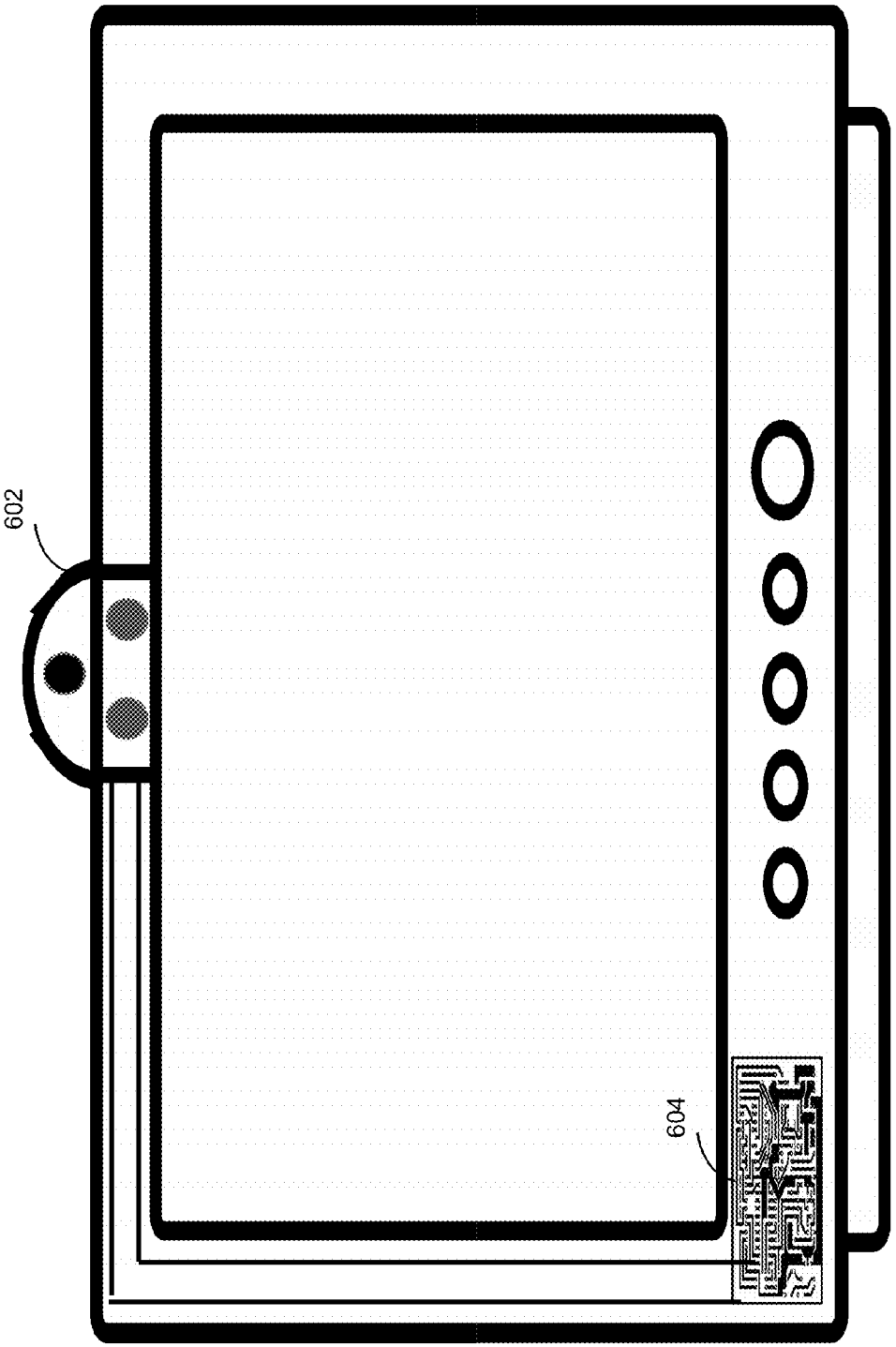

FIG. 6

SYSTEM AND METHOD FOR NON-HOLOGRAPHIC TELEPORTATION

STATEMENT REGARDING FEDERALLY SPONSORED RESEARCH OR DEVELOPMENT

[0001] Not Applicable

REFERENCE TO A MICROFICHE APPENDIX

[0002] Not Applicable

TECHNICAL FIELD OF INVENTION

[0003] The present invention generally relates to the field of virtually teleporting in real time, from diverse geographical locations, one or more remote objects, subjects, themes, events, environments, computer graphics, interfaces, seamlessly into user's three-dimensional (3D) space to create an interactive immersive experience. Specifically the invention pertains to creation of a 3D virtual space around a computer user in which almost anything imaginable can be virtually teleported for user interaction. More particularly the invention pertains to a non-holographic real time technique that extracts from their corresponding backdrops, images and depth information of one or more remote objects located at remote teleportation terminals, transmits said images with alpha channel to a host teleportation terminal, extracts host object and composes a composite scene of all participating objects by inserting pre-selected background and foreground computer graphics. More importantly the invention creates a new versatile genre of non-holographic virtual teleportation that has a broad scope applicability in applications such as intuitive computing, perceptual computing, entertainment, gaming, virtual meetings, conferencing, gesture based interfaces, advertising, ecommerce, social networking, virtual training, education, so on and so forth.

BACKGROUND

[0004] In a pending application (U.S. application Ser. No. 13/864,019) the present inventors disclosed a multilayered augmented reality technique that deployed a virtual chroma keying approach that eliminated the requirement of bulky and cumbersome physical chroma screens by making use of digitally generated virtual chroma mask. That approach reduced the size of hard chroma screen background and increased the portability of an Augmented Reality Kiosk. But it did not completely eliminate the need of a reduced size chroma screen. Furthermore, although it added multiple layers of foreground and background computer graphics to the user's 3D space, it did not extract, transmit and insert into the scene objects from remote locations. Adding 2D or 3D foreground and background segmentation techniques for background removal not only completely eliminates the need for hard chroma screen, but creates a virtual 3D space around a user in which almost anything can be teleported from any remote location for user interaction. 3D depth sensing is known in prior art to enable separation of a subject from background within a camera view without any chroma screen, and at the same time capture user movements for interacting with the system. It also opens an entire new way to teleport remote objects between remote geographical locations in real time.

[0005] Traditionally, holography has been used for virtual teleportation of human subjects. Ideally, teleportation is defined as transfer of matter from one point to another without traversing the physical space between them. As much as it may be a very cool concept in the popular ScFi culture, for the real world inventors, it is not a matter of actually moving matter, but one of transporting information. In other words, teleportation of a physical being will always be virtual and never real.

[0006] In prior art holography is the closest one can get to demonstrate virtual teleportation. However, holography based techniques are unsuitable for adaptation by the masses owing to high cost and time required for creating an extensive set up that requires a 3D laser infrastructure. Therefore, in this disclosure, a system and method for achieving virtual teleportation of one or more remote objects based on non-holographic technique is described. Such a system does not require expensive 3D laser holography infrastructure set up, can be used with any Internet connected computing device, can be installed in minutes, can teleport multiple objects simultaneously in High Definition (HD) resolutions to any real or fictionally created location.

[0007] Another need addressed by the present invention relates to perceptual computing, which is of great importance in entertainment, education, productivity, immersive gaming, social networking and most importantly in futuristic contactless or touch-less virtual interfaces. Currently known gesture based algorithms are unable to provide a fine degree of control needed in operating systems such as a computing device wherein data input with the precision of a keyboard, mouse or touchpad is required. They are limited to executing basic commands such as those of starting or stopping an application, or triggering an event. The present invention also addresses this need and finds utility in various applications such as video and computer gaming, entertainment, conferencing, interactive and perceptive computing to create an enriched user experience.

PRIOR ART

[0008] Chou et al., in U.S. Pat. No. 8,375,085 disclose a system and method of enhanced collaboration through teleportation, wherein several remote users collaborate in a virtual environment. Dawson et al., in U.S. Pat. No. 8,392,839 disclose a system and method for using partial teleportation or relocation in virtual worlds by using a facility such as a virtual kiosk at which one can view previously rendered images of portions of one or more teleportation destinations. When full teleportation is initiated, the processing intensive rendering is supplemented from image data representing the portion or the teleportation destination, thus hiding rendering delays and simulating seamless, instantaneous response to the full teleportation operation.

[0009] Shin et al., in PCT application no. WO 2001011511 disclose an electronic commerce system and method over three-dimensional virtual reality space, wherein an interactive electronic commerce system using intelligent virtual objects in a three-dimensional virtual reality space over a communication network such as the Internet, is provided. Altberg et al., in PCT application no. WO 2008130842 describe methods and systems to connect people via virtual reality for real time communications with respect to a commercial advertisement. Kikinis et al., in PCT application no. WO 2012054231 disclose a system and method for 3D projection and enhancements for interactivity wherein the system projects a user-viewable, computer-generated or -fed image, wherein a head-mounted projector is used to project an image onto a retro-reflective surface, so only the viewer can see the image.

[0010] The above patent disclosures emphasize the need of a cost effective and easy to set up system for achieving virtual teleportation of a plurality of remote objects for enhancing user experience in perceptual computing, entertainment, social networking, gaming, virtual interfaces, education, conferencing applications, or such applications. However, none of the systems and methods described in the prior art disclosures use a non-holographic technique to create a teleportation experience in a customized environment.

BRIEF SUMMARY OF THE INVENTION

[0011] The present invention addresses the foregoing need for an easy to install, cost effective virtual teleportation method and system thereof. It discloses a non-holographic method of virtually teleporting any object from a three dimensional space of a remote location, into a customized environment wherein one or more background layers or background layers of computer graphics may be inserted to render a seamless 3D environment in which all the teleported objects can interact. The system does not employ any laser holography means for recording or replaying image or scene. Furthermore, it also does not deploy any physical chroma screens or chroma keying techniques for background removal, thereby making it an effective and accessible system for the masses.

[0012] The present invention is directed to hardware, systems, methods, programs, computer products, computer readable media, interfaces and modules for controlling one or more operating parameters of one or more teleporting devices coupled to one or more computing devices with internet connectivity in different geographic locations for generating a composite scene comprising of a plurality of remote objects against a single customized 3D environment in real time. Accordingly, there is a need for such non-holographic virtual teleportation system and method as summarized herein in some detail.

[0013] It is an object of the present invention to provide a virtual teleportation platform wherein interactive video conferencing between several remote objects (participants) is possible, thereby eliminating the need for expensive travel. Other objects of the invention include providing a virtual teleportation system wherein depth, shape and gesture related interactive features are provided to create a realistic and believable 3D environment set up.

[0014] A further object of the present invention is to designate a virtual three-dimensional space around a host object at a host teleportation terminal, comprising of one or more human subjects, and to selectively teleport, i.e. virtually transmit images of one or more of remote objects located at different remote teleportation terminals at diverse geographical locations, to the virtual three dimensional space of the host object at the host teleportation terminal.

[0015] It is therefore an object of the present invention to provide a new method of virtually teleporting one or more remote objects to a predetermined, customized scene or environment without employing holographic techniques. This object is achieved by, firstly, extracting in real time one or more images of remote object(s) from the camera scene by deploying known foreground and background segmentation techniques, such as 2D pixel recognition and differentiation, or by 3D depth mapping and differentiation; secondly, transmitting and inserting one or more extracted objects into a single teleported host scene; thirdly, inserting layers of computer graphics as background and foreground layers, fourthly, compositing the final teleported scene with the objects and computer graphic layers properly aligned to generate a seamless virtual 3D environment in which each of the teleported objects can interacts.

[0016] It is further object of the present invention to provide a system that can be readily and easily used without the need for a sophisticated 3D laser infrastructure set up, and without any specialized knowledge of using 3D recording and replaying paraphernalia. In different embodiments of the present invention, the foreground/background segmentation is achieved by known techniques such as 2D pixel recognition and differentiation, or 3D depth measurement achieved by either dual camera triangulation, or multiple camera array that uses micro or nano lenses, or by means of Time-of-Flight (ToF) sensors, or by means of structured light based sensing methods.

[0017] Yet another object of the present invention is to provide a multi-layered perceptual computing interface (MLPCI) that virtually teleports all interactive tools such as keyboard, mouse, pen, page scroller, onscreen navigation links, icons, etc., into user's 3D space, wherein the user can perform sophisticated data input gesture-based interactions without using any proximity hardware like controller, gloves or near field sensor. It is further object of the present invention to enable execution of complex commands such as typing text, otherwise impossible by any gesture recognition system of prior art. It is therefore an object of the invention to enable MLPCI by replacing the background layer with the live screen view of the application that user is interfacing with. It is also further object of the invention to insert the graphic elements of virtual interactive tools as one or more translucent foreground layers and make the user transparent/translucent so that the virtual translucent interface apparently appears to float in the 3D space between the user and the display screen. It is therefore an object to allow user's transparent silhouette guide the user to move his hands and fingers in air for executing any command of desire via the virtual interface with ease.

[0018] It is thus an eventual object of the instant invention to create a virtual 3D space around a user and teleport almost anything imaginable within that space, such as friends, family, date, colleagues, store merchandise, venues, events, services, environments, user interfaces and even dreams, for the purpose of intuitive computing, perceptual computing, entertainment, gesture based interfaces, gaming, advertising, ecommerce, social networking, virtual training, education, so on and so forth.

[0019] Accordingly, a teleporting device is configured in different embodiments to include singly or in combination, one or more digital RGB cameras, 3D depth sensing (time of flight) ToF camera, 3D depth sensing camera based on structured light imaging, or dual camera depth sensor, or multiple camera array, that can be coupled to an internet enabled computing device.

[0020] These advantages in addition to other objects and advantages of the invention will be set forth in the description which follows, and in part will be obvious from the description, or may be learned by the practice of the invention. The objects and advantages of the invention may be realized and obtained by means of software, algorithms, hardware devices, remote servers and combinations thereof particularly pointed out in the appended claims.

[0021] The foregoing discussion summarizes some of the more pertinent objects of the present invention. These objects

should be construed to be merely illustrative of some of the more prominent features and applications of the invention. Applying or modifying the disclosed invention in a different manner can attain many other beneficial results as will be described. Accordingly, referring to the following drawings may have a complete understanding of the invention. Description of several preferred embodiments is as follows.

BRIEF DESCRIPTION OF THE SEVERAL VIEWS OF THE DRAWINGS

[0022] The above-mentioned and other features and advantages of this present disclosure, and the manner of attaining them, will become more apparent, and the present disclosure will be better understood by reference to the following description of embodiments of the present disclosure taken in conjunction with the accompanying drawings, as illustrated herein:

[0023] FIG. **1**(*a*): A representative diagram illustrating an embodiment of a system facilitating virtual teleporting of three remote objects in real time using a client-server network architecture.

[0024] FIG. **1**(*b*): A representative diagram illustrating an embodiment of a system facilitating virtual teleporting of three remote objects in real time using a Peer-to-Peer architecture.

[0025] FIG. **1**(*c*): A representative diagram illustrating an embodiment wherein a user initiates teleportation session by activating Teleportation Icon **140** on a virtual interface by means of hand gesture.

[0026] FIG. **1**(*d*): A representative diagram illustrating an embodiment wherein an invitation to teleport is sent to selected participants from contact list.

[0027] FIG. **1**(*e*): A representative diagram illustrating an embodiment wherein the invited participants accept the invite to teleport.

[0028] FIG. **1**(*f*): A representative diagram illustrating an embodiment wherein the initiator of the teleportation session selects the location to teleport participants (such as under water expedition).

[0029] FIG. **1**(*g*): A representative diagram illustrating an embodiment wherein the teleportation process commences.

[0030] FIG. **1**(*h*): A representative diagram illustrating an embodiment wherein the initiator is being teleported to the desired virtual location.

[0031] FIG. **1**(*i*): A representative diagram illustrating an embodiment wherein the invitees to the teleportation session join the initiator of the teleportation session at the selected virtual location.

[0032] FIG. **1**(*j*): A representative diagram illustrating an embodiment wherein the session initiator ends the teleportation session by activating "End Session" option on a virtual interface by means of hand gesture.

[0033] FIG. **2**: A representative diagram illustrating an alternate embodiment of a system facilitating virtual teleporting for an e-commerce application.

[0034] FIG. **3**: A representative diagram illustrating a multi-layered perceptual computing interface (MLPCI) embodiment for creating a virtual interface.

[0035] FIG. **3**(*a*): Illustrative screenshot of a virtual interface embodiment of the present invention wherein the user gestures the START icon **316** for launching the application.

[0036] FIG. **3**(*b*): Illustrative screenshot of a virtual interface embodiment wherein the user launches the target application **318** (Internet Browser) by hand gesture.

[0037] FIG. **3**(*c*): Illustrative screenshot of a virtual interface embodiment wherein the user activates the cursor by launching the virtual touchpad **320** to move the cursor on the target application page.

[0038] FIG. **3**(*d*): Illustrative screenshot of a virtual interface embodiment wherein the user launches and uses the virtual keyboard **322**.

[0039] FIG. **3**(*e*): Illustrative screenshot of a virtual interface embodiment wherein the user launches and uses the virtual page scrolling function **324**.

[0040] FIG. **3**(*f*): Illustrative screenshot of a virtual interface embodiment wherein the user uses gesture controlled drawing tool function **326** to draw and to close the application.

[0041] FIG. **4**: An exemplary block diagram illustrating the operating modules of a virtual teleporting system.

[0042] FIG. **5**: An illustration of the process flow steps deployed in an embodiment of the present invention.

[0043] FIG. **6**: A representative diagram illustrating integration of different modules of the embodiment within a television set or a display monitor.

DETAILED DESCRIPTION OF THE INVENTION

[0044] It is to be understood that the present disclosure is not limited in its application to the details of construction and the arrangement of components set forth in the following description or illustrated in the drawings. The present disclosure is capable of other embodiments and of being practiced or of being carried out in various ways. Also, it is to be understood that the phraseology and terminology used herein is for the purpose of description and should not be regarded as limiting. Exemplary embodiments of the present invention are directed towards a system and a method for facilitating non-holographic virtual teleporting in real time directed at one or more remote objects.

[0045] It is advantageous to define several terms, phrases and acronyms before describing the invention in detail. It should be appreciated that the following terms are used throughout this application. Where the definition of term departs from the commonly used meaning of the term, applicant intends to utilize the definitions provided below, unless specifically indicated. For the purpose of describing the instant invention following definitions of the technical terms are stipulated:

[0046] 1. 2D foreground segmentation: Two dimensional image segmentation techniques for distinguishing a background from a foreground, such as those based on pixel recognition and differentiation. The 2D pixel differentiation technique requires a training session so that the system first reads and learns the pixel pattern in a given scene and uses it as a reference to extract target object from the background.

[0047] 2. 3D background segmentation: Three dimensional image segmentation techniques such as those based on depth measurement techniques by dual camera triangulation algorithm, multiple camera array, Time-of-Flight 3D mapping, or structured light based 3D imaging processes.

[0048] 3. Teleporting device/Teleporting terminal: A computer device or a combination of devices coupled to an internet enabled computing device comprising of at least one RGB (Red, Green, Blue) sensor, which is a high definition camera with HD resolution of 720P (1280×720 pixels) or Full HD resolution of 1080P (1920×1080 pixels) that captures the live object images at each of the teleporting terminal; at least one audio sensor, and at least one depth sensor, which is based on

generating 3D maps of the objects at each of the teleportation terminal using one of the following approaches: a) Time-of-Flight based depth sensing, b) Structured Light based 3D sensing, c) using Dual Camera based triangulation algorithm, or d) by means of Multiple Camera Array method. The complete assemblage of Internet-connected teleportation enabling hardware and software at a specific geo-location is referred as teleporting terminal. A teleporting terminal that deploys two-dimensional segmentation may not need the depth sensor.

[0049] 4. Time-of-Flight Depth Sensor: A time-of-flight sensor or camera (ToF camera) is a range imaging camera system that resolves the depth of an object by measuring the time-of-flight of a light signal between the camera and the subject for each point of the image distance based on the known speed of light.

[0050] 5. Structured Light Depth Sensor: Another type of depth sensor that is used for measuring the three-dimensional shape of an object using projected light patterns and a camera system.

[0051] 6. Dual Camera Depth Sensor: Depth of a three-dimensional object can also be measured by using two RGB cameras for capturing image data points on the object from two different perspectives, and then using triangulation algorithm to analyze all the data points for creating a 3D map of the object.

[0052] 7. Multiple Camera Array: Using an array of multiple cameras to record a scene is a more recent technique that is used to generate pixel specific data from multiple perspectives. In this system each pixel carries depth information in addition to the normal RGB data. Such pixel-specific information can be deployed in many different ways, one of which being creating a depth map of the image. An array may comprise of either multiple micro cameras with their own imaging sensors, or a collection of miniaturized micro or nano lenses focusing light from different perspectives on a single processor chip collectively analyzing the entire image information from all perspectives to measure the depth of each pixel from each perspective.

[0053] 8. Remote object/s & Remote terminal/s: One or more human subjects, living beings, physical objects or articles located in a designated three dimensional space in a single or multiple geographical locations who are to be virtually teleported to a different location. The complete assemblage of teleportation enabling hardware and software infrastructure at such a remote location is referred as remote terminal.

[0054] 9. Host Object/s: One or more human subject, living being located in a designated three-dimensional space in a geographical location, who initiate a teleportation session with one or more remote teleportation terminals, and who are to be virtually teleported to a pre-defined virtual location. The complete assemblage of teleportation enabling hardware and software at such a host location is referred as host terminal.

[0055] 10. Camera view background: The local background environment surrounding each of one or more remote object(s) or host object(s) from which the corresponding object(s) have to be extracted and transmitted with alpha channel (transparency) to the host terminal, so that various teleported or computer generated graphic elements can be integrated into a composite teleported scene.

[0056] 11. Teleported scene background layer: The background layer comprising of one or more preselected computer generated graphic content, retrieved from a repository, for insertion into the integrated, composite teleported scene.

[0057] 12. Teleported scene foreground layer: The foreground layer comprising of one or more preselected computer generated graphic content, retrieved from a repository, for insertion into the integrated, composite teleported scene.

[0058] 13. Elements of a teleported scene: The remote object(s), host object(s), computer generated background graphics layer(s), computer generated foreground graphics layer(s), and alpha and audio channel associated with each of them constitute the elements of the teleported scene.

[0059] 14. Remote Object Connection Module (ROCM): A set of computer programs that is used to logically connect one or more remote objects in real time via internet means that include but are not limited to a telecommunication link, or a wired or wireless local area network (LAN), or a wide area network (WAN), or a virtual private network (VPN) or intranet through wired or wireless telecommunication protocol, or TCP/IP protocol, or GPRS protocol or WiFi protocol or Bluetooth or radiofrequency protocol or a telecommunication protocol.

[0060] 15. Object Scene Capture Module (OSCM): A set of computer programs that receive, as input from RGB sensor, the image of object scene in real time from the teleporting device

[0061] 16. Object Extraction Module (OEM): A set of computer programs that rely on 2D or 3D background and foreground segmentation techniques to extract in real time scene objects from their backgrounds.

[0062] 17. Remote Object Transmission Module (ROTM): A set of computer programs that transmit in real time, to a host object terminal, the extracted image of a remote object along with associated parameters, those include but not limited to depth, texture, color, alpha channel and audio channel.

[0063] 18. Object Insertion Module (OIM): A set of computer programs that integrates, places and composes one or more remote teleported objects within alpha channeled areas of extracted host object image scene.

[0064] 19. Foreground Layer Insertion Module (FLIM): A set of computer programs that inserts in real time a predefined foreground layer of computer graphics to the composition of teleported scene.

[0065] 20. Background Layer Insertion Module (BLIM): A set of computer programs that inserts in real time a predefined background layer of computer graphics to the composition of teleported scene.

[0066] 21. Teleported Scene Compositing Module (TSCM): A set of computer programs that integrates and fine tunes in real time the composition of all the elements of the teleported scene, such as host and remote objects, background and foreground layers of computer graphics, alpha channel and audio channel to produce a live composition of teleported environment.

[0067] 22. Teleported Composite Scene Display Module (TCSDM): A set of computer programs that display in real time the integrated, composite teleported scene on display devices of each of the participating teleportation terminals.

[0068] 23. Communication Module (CM): A set of computer programs which delivers the integrated, composite teleported scene in real time to a preselected destination using either wired or wireless telecommunication protocol, or TCP/IP protocol, or WiFi protocol or Bluetooth, or a radiofrequency protocol.

[0069] 24. Central Processing Unit (CPU): A computing system that analyzes and executes the operations of ROOM, OSCM, OEM, ROTM, OIM, FLIM, BLIM, TSBLIM, TCSM, TCSDM.

[0070] The present invention is now described with reference to the drawings. An overview of a system in a preferred embodiment facilitating virtual teleportation of three remote objects in a teleportation session to a new real or virtual location using non-holographic technique is now discussed in conjunction with FIGS. **1**(*a*) and **1**(*b*). FIG. **1**(*a*) illustrates the technical implementation of virtual teleportation in client server network architecture, while FIG. **1**(*b*) illustrates implementation in a peer-to-peer network. The system **100** includes a plurality of objects **104**, **112** and **124** located at plurality of teleportation terminals who are to be teleported. The host object **102** at host terminal initiates the teleportation session. Host object is present in a backdrop comprising of host background elements **104**. The host scene is captured by the RGB sensor (camera) of a teleporting device **106** coupled to a computing device **108**. After removal of background elements **102**, **110** is the extracted alpha channeled RGB image with audio of the host object **104**. The extracted image data **110** is transmitted from the host terminal via Internet through wired or wireless means to a real time teleportation server **132**. In a peer-to-peer network the teleportation server **132** is not required FIG. **1**(*b*) since the elements of the scene at the host and each of the participating terminals are transmitted directly between them in real time.

[0071] A remote object **112** at a remote teleportation terminal is present in a remote background **114**. The remote scene at the remote terminal is captured by teleporting device **116** coupled to a computing device **118**. **120** denotes the alpha channeled extracted image with embedded audio of remote object **112**, which is transmitted via internet through wired or wireless means. Another remote object **122**, at another remote teleportation terminal, is present along with remote background element **124**. The remote scene at this remote terminal is captured by teleporting device **126** coupled to a computing device **128**. **130** denotes the extracted image data of remote object **124**, which is transmitted along with its corresponding alpha channeled background via internet through wired or wireless means. In a client-server network architecture FIG. **1**(*a*), the teleportation server **132** inserts and manipulates each of the transmitted alpha-channeled object image data **110**, **120** and **130** into the alpha channeled background areas of the host environment, so that each object image is overlaid distinct from each other on its pre-defined location in the teleported scene or environment. The environment that includes all the teleported objects participating in the teleportation session is then enhanced by inserting one or more background layers **134**, and one or more foreground layers **136** into a composite teleported scene **138**. Such background and foreground layers are retrieved from a database of computer generated graphic content. The final integrated composite teleported scene or environment **138** is then displayed on a display panel at each of the participating terminals. Such display is either a plasma display panel, or an LCD (liquid crystal display) panel, or an LED (light emitting diode), or an OLED (organic light emitting diode) display panel, or a video projector, or a see-through display screen, or a television set.

[0072] As illustrated in FIG. **1**(*b*), in a peer-to-peer network, all the data processing steps are distributed and shared between the participating teleportation terminals, and the composite teleported scene **138** is generated at the client terminal itself and shared with each of the participating terminals seamlessly.

[0073] Each of the teleportation terminals is equipped with means to initiate, modify, pause or record a teleportation session, to invite, add or delete participants in a teleportation session. The participants of a teleportation session can also chose environment or virtual location (as defined by the foreground and background layers) they want to be teleported in. A practical implementation of the present invention can be a virtual conference taking place between participating teleportation terminals in a virtual environment created by the computer generated elements of the teleported scene simulating either a real world environment or a fictional environment. The integrated composite teleported scene of a teleportation session can be either recorded locally at one or more teleportation terminals, or broadcast live and made instantly available to one or more preselected remote destinations via an Internet, or a television satellite link, or a telecommunication link, or a wired or wireless local area network (LAN), or a wide area network (WAN), or a virtual private network (VPN) or intranet.

[0074] For connecting the participating teleportation terminals with each other the system uses any one of the communication protocols known to prior art such as TCP/IP protocol, GPRS protocol, WiFi protocol, a telecommunication link, a wired network, a wireless network, a virtual private network, intranet, wireless telecommunication protocol, Bluetooth, or a radiofrequency protocol.

[0075] In a variant of this embodiment one or more participating teleportation terminals deploy chroma-keying techniques for background removal. In yet another variant of the embodiment the host teleportation terminal does not deploy background removal. In another variant of this embodiment, the teleportation device coupled to its Internet enabled computing device is integrated within an LCD panel, an LED, an OLED display panel, a video projector, or a see-through display screen, or a television set. In yet another variant, the teleportation terminal is handheld communication device, or a head-mounted teleportation apparatus.

[0076] Having disclosed the technical aspects of a preferred embodiment is some detail, it is pertinent to walk through the practical implementation of the instant invention. FIG. **1**(*c*) through FIG. **1**(*j*) illustrate various steps from initiating a teleportation session to ending the session. While a convention keyboard/mouse can be used for executing all the teleportation related commands, all the commands can also be executed via gestures using the virtual interface of the invention as depicted herein. The teleportation session is initiated by activating the Teleportation Icon **140** on a virtual interface by means of hand gesture. The invitation to teleport is sent to selected participants from contact list FIG. **1**(*d*). The invited participants accept the invite FIG. **1**(*e*). The initiator of the teleportation session selects the location (such as under water expedition) session FIG. **1**(*f*), which is followed with teleportation of the participants FIG. **1**(*g*), FIG. **1**(*h*), FIG. **1**(*i*) to an underwater ship. Finally, at the conclusion of the teleportation session, the session initiator ends the session FIG. **1**(*j*).

[0077] Referring now to FIG. **2**, which illustrates another embodiment of the system facilitating virtual teleporting for an e-commerce application, in which a user is teleported into a 3D environment of a virtual store or showroom, a virtual shopping mall, or, a merchandise service center, and interacts

with merchandises therein. In a variant of this embodiment, one or more merchandises are teleported into user's 3D environment for product demonstration, pre-purchase preview of goods, technical support, troubleshooting and service of pre-owned goods. **202** denotes a human subject or a user at a teleportation terminal **204**.

[0078] The image parameters, audio and video data of **202** are captured via teleporting device **206** and transmitted to teleportation server **208** that hosts a database containing specifications, images, computer graphics and 3D models of merchandise, such as a given model of a washing machine **210**. Upon initiation of a teleportation session by the user, the teleportation server **208** retrieves the computer-generated graphics pertaining to the washing machine **210** and transmits the merchandise data to the teleportation terminal **204**, where it is inserted in the teleported scene **212** in user's 3D space as a foreground layer appearing in front of the user. Such an embodiment can be used for applications wherein several customers can be serviced remotely and conveniently for sales, marketing or troubleshooting of a product and thereby eliminating the need for a personal visit. Similar embodiments can be used in applications such as teaching and providing education to students remotely.

[0079] In another variant of ecommerce teleportation embodiment, instead of teleporting the merchandise object into user's 3D space, the user is teleported to a 3D environment of a virtual shopping mall or a store. Briefly, in the manner described in the first preferred embodiment as illustrated in FIG. **1**, the user image captured at the user's teleportation terminal is extracted from the user environment and transmitted to the teleportation server where it is inserted into a teleported scene that includes foreground and background layers of computer graphics that create a real time in-store or in-mall shopping experience for the user.

[0080] The teachings of the instant invention is not limited to virtual teleportation of objects such as human subjects or material objects into a user's 3D space, but data entry means, navigation controls, or icons can also be teleported into user's 3D space between the user and the computer display, serving as voice or gesture responsive virtual interface. Such means of gesture or voice responsive computer-generated elements of virtual interface are retrieved from the application database and inserted as one or more foreground layers of the composite scene. These computer-generated graphic elements of virtual interface include:

[0081] a) virtual keyboard, virtual mouse, virtual touchpad, virtual pen of varying transparency to make other elements of the composite teleported scene behind the foreground layer visible to enable data input,

[0082] b) virtual menu for accessing different teleportation functions as well as navigating to other co-existing and unrelated client applications that include but not limited to, mail client, Internet browser, social networking applications, gaming applications, productivity applications,

[0083] c) virtual icons for displaying application links and alerts in real time.

[0084] As illustrated in FIG. **3**, such a system of a virtual interface application comprise of a computer (teleportation terminal) operated by a user **302** whose image along with his 3D space data is captured by a teleporting device (depth sensor plus RGB camera) **304** coupled to user's computer **306**. The computer screen displays the interface of the target application **308** the user is working on. Such target application has fields in which the user is required to enter personal information by typing text. Implementing the features of the instant invention the user can perform all actions without using any data input hardware. This is achieved by means of first generating a 3D map of user's 3D space by means of data captured by the teleporting device **304** that is used for tracking user's hand movements. Computer-generated graphic elements of virtual interface from the application database are then retrieved and inserted as a foreground layer in user's 3D space. Such elements of virtual interface are rendered translucent so that the target application on the display screen is operationally visible to the user. Virtual keyboard **310** is an example of the elements of virtual interface. An association of each key on the virtual keyboard is established with the 3D map of user's 3D space, so that when user moves his finger in air to overlap on a specific key on the virtual keyboard the system matches the location of the specific key with the location of user's finger. To make both, the target application and virtual keyboard, clearly visible on screen, the user's image is rendered translucent **312**. The screen view of the target application can be either rendered visible through the transparent foreground layer or captured in real time and screen capture inserted as background layer **314** of the user's camera view. The ultimate effect of this composition of the translucent foreground layer, the translucent user image and the target application's screen image in the background of the composition is that the target application, the virtual keyboard and user's fingers are all clearly visible to the user, and gives him an impression like the virtual keyboard is floating in air in between him and the target application interface displayed on the computer screen.

[0085] FIG. **3**(*a*) through **3**(*f*) further illustrate practical implementation of the instant embodiment wherein the user begins the method by launching the virtual interface application's START icon **316** by hand gesture, and then launching the target application **318** (Internet Browser) by hand gesture FIGS. **3**(*a*) and **3**(*b*). The user then activates the cursor by launching the virtual touchpad **320** to move the cursor to the data entry field on the target application page FIG. **3**(*c*). To type the information in the data entry field FIG. **3**(*d*) the user launches and uses the virtual keyboard **322**. To move and scroll the page FIG. **3**(*e*) the user can also launch the virtual page scrolling function **324**. The user can also use the drawing tool function **326** to close the application FIG. **3**(*f*).

[0086] Such an embodiment as illustrated in FIGS. **3** and **3**(*a*)-**3**(*f*) enables the user to perform highly sophisticated operations remotely using hand movements and without touching any data input hardware or using any wearable or gesture recognition proximity hardware. Combining the disclosed virtual interface with voice-activated commands can impart unprecedented versatility to the instant invention. Such virtual interface embodiment can have widespread application as a visual and voice interface in gaming and entertainment facilitating sophisticated gesture based interaction and navigation. In a variant of virtual teleportation of virtual interface tools in user's virtual 3D space, the interface does not require any START or HOME button, but can just trigger the application links and navigation and other tools by just moving his hand to the edge of the display screen. Each of the four edges of the display screen can be assigned to specific group of virtual interface tools.

[0087] Referring now to FIG. **4**, the drawing illustrates an exemplary block diagram depicting the operating modules of the system **400** for facilitating virtual teleporting of remote objects into user's 3D space using a non-holographic tech-

nique. The operating modules referred to hereunder may be present on a single or plurality of computing devices present at a single teleportation terminal location, or at plurality of teleportation terminals, or at remote teleportation servers.

[0088] System **400** comprises of Object Connection Module (OCM) **402**, Object Scene Capture Module (OSCM) **404**, Object Extraction Module (OEM) **406**, Remote Object Transmission Module (ROTM) **408**, Object Insertion Module (OIM) **410**, Foreground Layer Insertion Module (FLIM) **412**, Background Layer Insertion Module (BLIM) **414**, Teleported Composite Scene Integration Module (TCSIM) **416**, Teleported Composite Scene Display Module (TCSDM) **418**, Communication Module (CM) **420**, Computer Generated Foreground/Backdrop content database **422**. These modules may be hosted on a local or remote server or distributed at multiple remote locations. Component **422** provides a means for storage of computer-generated foreground and background content including data in audio, video, animation, 3D image, map or text format. **424** serves as a repository of preselected computer-generated foreground and background content.

[0089] Component **402** is responsible for connecting one or more teleportation terminals with each other and to a common teleportation server. This connection may be achieved by wired or wireless means via an Internet or a telecommunication link, or a wired or wireless local area network (LAN), or a wide area network (WAN), or a virtual private network (VPN) or intranet. Component **404** is responsible for capturing the object scene comprising of a object along with object background by means of a teleporting device capable of sensing image attributes and depth parameters. Instances of teleporting devices include time-of-flight sensor based camera, structured light sensor based camera, dual camera depth sensor based camera, multiple camera array and digital image capturing devices capable of 2D pixel differentiation. Component **406** is responsible for distinguishing and separating the object from its immediate background using foreground/background segmentation techniques. Component **408** is responsible for transmitting selectively or completely, the extracted object image along with other image attributes such as RGB color, texture, audio, alpha channel from one teleportation terminal to the other or to the teleportation server. Component **410** combines the plurality of remote object images received from multiple remote locations for insertion into an integrated composite scene rendering individual remote images as part of the composite scene by manipulating them in terms of their image attributes. Component **412** is responsible for insertion of a layer of preselected computer graphics as a foreground layer while component **414** is responsible for insertion of a layer of preselected computer graphics as a background layer in the teleported integrated composite scene. Component **416** integrates said foreground layer, said background layer and remote object images in relation to each other for rendering a seamless customized view of a teleported scene. Component **418** is responsible for displaying the teleported integrated composite view in a display device such as a plasma display panel, an LCD (liquid crystal display) panel, an LED (light emitting diode), an OLED (organic light emitting diode) display panel or a video projector. Component **420** is responsible for transmitting and communicating the teleported integrated composite view to preselected destinations including, a handheld communication device, an email account, downloadable URL link of a remote server, so on and so forth. In different embodiments of present invention, the teleported integrated composite view is transmitted through wired or wireless telecommunication protocol, or TCP/IP protocol, or GPRS protocol or WiFi protocol or Bluetooth or radiofrequency protocol or IMAP, SMTP or a telecommunication protocol.

[0090] FIG. **5** depicts an exemplar methodology illustrating the steps followed in one aspect of the invention. It is to be understood and appreciated that the present invention is not limited by order of steps and that some of the steps may occur in different order and/or concurrently with other steps from that illustrated here. At step **502**, one or more objects, located at geographically diverse teleportation terminals, which are required to be virtually teleported are connected via Internet means in real time. At step **504**, the object scene at each of the participating terminals is captured in RGB along with its depth data by means of a teleporting device. At step **506**, the remote object image is extracted from the remote background using one or more of foreground-background segmentation techniques. At step **508**, image parameters of captured object at each of the participating teleportation terminals, such as color, texture, audio, alpha channel are transmitted either to a teleportation server when client-server network architecture is deployed, or directly to participating peers if peer-to-peer network architecture is deployed. At step **510**, the transmitted object images are inserted and appropriately placed in relation to each other into a single composite scene. At step **512**, a layer of computer-generated graphics that can act as virtual foreground layer is accessed from a database and inserted in the teleported scene. At step **514**, a layer of computer-generated graphics that can act as virtual background layer is accessed from a database and inserted in the teleported scene. At step **516**, each element of the teleported scene, i.e. each of the extracted remote objects, the extracted host object, the foreground and background layers of computer generated graphics, alpha channels, along with their corresponding audio channels are composed into a final composite teleported scene. At step **518**, the integrated composite teleported scene is displayed in real time on a device such as a plasma display panel, an LCD (liquid crystal display) panel, an LED (light emitting diode), an OLED (organic light emitting diode) display panel or by a video projector. The displayed integrated teleported content including the composite background scene and remote objects is transmitted to one or more preselected destinations such as, a handheld communication device, an email account, downloadable URL link of a remote server, so on and so forth through wired or wireless telecommunication protocol, or TCP/IP protocol, or GPRS protocol or WiFi protocol or Bluetooth or radiofrequency protocol or a telecommunication protocol.

[0091] FIG. **6** illustrates another embodiment of the present invention in which the teleporting device **602** along with its computing hardware **604** and all the different modules are integrated within a television set or a display monitor so that such television set or display monitor itself functions as a fully functional teleportation terminal. Alternatively, this embodiment can also be practiced by compiling all the components (except the display device) of the teleportation system into a kit that can be provided as a teleportation accessory to a television set or a display panel.

[0092] In an embodiment of the present invention, the computer-generated graphics layers that may be used as foreground/background layers in the integrated teleported scene constitute a video gaming environment comprising of one or more virtual game characters or elements that the remote

object(s) interact(s) with immersively, whether using hand or body gestures, or voice activated commands, or by using handheld game controller device.

[0093] In yet another embodiment of the present invention, only a part of the remote objects are teleported to the remote destination. This is achieved by manipulating the image of the remote object such that it appears partly transparent. Optionally, some of the remote objects may be rendered totally transparent, while some may be rendered translucent and some may be rendered as such while transmitting the image attributes such as color, texture, alpha channel, and audio channel. This embodiment can be used for providing a sophisticated gesture based computing interface.

[0094] In one embodiment of the present invention one or more teleportation terminals deploy chroma-keying techniques for background removal and object extraction. This is particularly important in showcasing a product or service such as an automobile, or a direct sales session for a fast moving consumer product to a large audience physically present in a high footfall public place such as shopping malls. In such an embodiment host teleportation terminal (public place) does not deploy any background removal or object extraction, while the remote terminal may either deploy chroma-key based or depth-based background removal. In another embodiment of the present invention, the plurality of remote objects may be the participants of a virtual conference, workshop, virtual training, etc., wherein the remote object image captured at remote teleporting terminal along with associated audio and video data is transmitted into the teleported scene at host terminal.

[0095] In a yet another embodiment of the present invention a useful, confidential and private means of one-on-one interaction is provided for communicating with strangers, such as encountered in social and dating networks. In this embodiment the user is teleported anonymously into a secure and private 3D environment of another unknown user without sharing any of their personal identification for the purpose of socializing or going on a blind date with a stranger. In still another embodiment the computer programs of one or more modules run remotely from a server via an active server webpage, or operate as a browser plugin, or run from an external drive of a computer.

[0096] Although the present invention has been particularly shown and described with reference to exemplary embodiments thereof, it will be understood by those of ordinary skill in the art that various changes in form and details may be made therein without departing from the spirit and scope of the present invention as defined by the appended claims. Therefore, the present embodiments are to be considered as illustrative and not restrictive and the invention is not to be limited to the written description.

The invention claimed is:

1. A computer-implemented method of virtually teleporting non-holographically, in real time, a plurality of objects or users located at diverse geographical locations, into a customized, seamless 3D environment, using a plurality of teleportation terminals, wherein the method comprises of the steps of:

a) a host teleportation terminal initiating connection via Internet means to one or more remote teleportation terminals participating in a teleportation session;

b) capturing each remote scene at plurality of participating terminals comprising of at least one remote object in a remote background and at least one host object in host background, by means of RGB sensor of a teleporting device coupled to an internet enabled computing device;

c) extracting each of the plurality of RGB device-captured object images from their corresponding remote backgrounds by means of a plurality of teleporting devices, coupled to their corresponding internet enabled computing devices;

d) transmitting each of the extracted RGB-captured remote object images along with their corresponding alpha channeled background for compositing the final teleportation scene or environment;

e) inserting each of the transmitted alpha-channeled object images into the alpha channeled background areas of the host environment;

f) inserting one or more background layers of retrieved computer-generated content to produce an integrated composite teleported scene or environment that includes all the objects participating in the teleportation session;

g) inserting one or more foreground layer of retrieved computer-generated content in the integrated composite teleported scene or environment;

h) compositing the final teleported scene by manipulating each element of the scene, so that each of the plurality of object images is overlaid distinct from each other on its pre-defined location in reference to the foreground and background layers in the teleported scene or environment;

i) displaying in real time the final integrated composite teleported scene or environment on a display panel at each of the participating terminals.

2. A method of claim **1**, wherein the step (c) of extraction of object images from their corresponding backgrounds are achieved by 2D foreground segmentation technique comprising of 2D pixel recognition and differentiation.

3. A method of claim **1**, wherein the step (c) of extraction of object images from their corresponding backgrounds is achieved by depth differentiation using any one, or combination thereof, of the following 3D background segmentation techniques:

a) Time-of-Flight imaging,

b) Structured light imaging,

c) Dual camera triangulation,

d) Multiple camera array of micro or nano cameras or lenses.

4. A method of claim **1**, wherein data processing for one or more of the steps from a) through h) are:

a) shared equally by each of the participating terminals in a peer-to-peer network,

b) are implemented at a remote teleportation server in a client-server network.

5. A method of claim **1**, wherein the teleporting device is a combination of devices that are coupled to an internet enabled computing device and comprise of:

a) at least one RGB sensor, which is a high definition camera with resolutions not less than 720P that captures the live object images at each of the teleportation terminal;

b) at least one audio sensor; and,

c) at least one depth sensor, which is based on generating 3D maps of the objects at each of the teleportation terminal using one of the following algorithms:

i) dual camera triangulation,

ii) multiple camera array,

iii) Time-of-Flight,
iv) structured light.

6. A method of claim **1**, wherein the integrated composite teleported scene is either recorded locally at one or more teleportation terminals, or broadcast live and made instantly available to one or more preselected remote destinations via an Internet connection, or a television satellite link, or a telecommunication link, or a wired or wireless local area network (LAN), or a wide area network (WAN), or a virtual private network (VPN), or Intranet.

7. A method of claim **1**, wherein the plurality of remote teleportation terminals are connected by means selected from a group comprising of internet protocol, a telecommunication link, a wired network, a wireless network, a virtual private network, intranet, wireless telecommunication protocol, TCP/IP protocol, GPRS protocol, WiFi protocol, Bluetooth, or a radiofrequency protocol.

8. A method of claim **1**, wherein the foreground layer and the background layer of the integrated composite teleported scene constitute a 3D video gaming environment comprising of virtual game characters and elements that interact with one or more users immersively by means of voice, hand, body gestures or combination thereof.

9. A method of claim **1**, wherein the plurality of remote and host objects are participants of a virtual conference that takes place in a virtual environment created by the computer generated elements of the teleported scene simulating either a real world environment, or a fictional environment.

10. A method of claim **1**, wherein, either,

a) a user is teleported into a 3D environment of a virtual store or showroom, a virtual shopping mall, or, a merchandise service center, and interacts with merchandises therein, or,
b) merchandises are teleported into user's 3D environment for product demonstration, pre-purchase preview of goods, technical support, troubleshooting and service of pre-owned goods.

11. A method of claim **1**, wherein a user is teleported anonymously into a secure and private 3D environment of another unknown user without sharing any of their personal identification for the purpose of socializing or going on a blind date with a stranger.

12. A method of claim **1**, wherein one or more elements of the teleported scene are rendered transparent or translucent for providing pre-defined level of visibility to hidden or masked elements.

13. A method of claim **1**, wherein at least one background or foreground layer is replaced by a live screen capture of the desktop that a user is interacting with, and, one or more transparent or translucent foreground layers comprising of computer graphics that operate as virtual computing interface, displaying voice or gesture responsive data entry means, navigation controls or icons that include but not limited to:

a) virtual keyboard, virtual mouse, virtual touchpad, virtual pen of varying transparency to make other elements of the composite teleported scene behind the foreground layer visible to enable data input;
b) virtual menu for accessing different teleportation functions as well as navigating to other co-existing and unrelated client applications that include but not limited to, mail client, Internet browser, social networking applications, gaming applications, productivity applications;
c) virtual icons for displaying application links and alerts in real time.

14. A method of claim **1**, wherein the display is a plasma display panel, an LCD (liquid crystal display) panel, an LED (light emitting diode), an OLED (organic light emitting diode) display panel, a video projector, or a see-through display screen, or a television set.

15. A method of claim **1**, wherein the teleportation device coupled to its Internet enabled computing device is integrated within an LCD panel, an LED, an OLED display panel, a video projector, or a see-through display screen, or a television set.

16. A method of claim **1**, wherein the teleportation terminal is handheld communication device, or a head-mounted teleportation apparatus.

17. A method of claim **1**, wherein one or more participating teleportation terminals deploy chroma-keying techniques for background removal.

18. A method of claim **1**, wherein the host teleportation terminal does not deploy background removal.

19. A system of virtually teleporting a plurality of remote objects from plurality of remote teleportation terminals in real time into a customized, seamless 3D environment of a host object's host teleportation terminal, by means of a plurality of teleporting devices coupled to a plurality of internet enabled computing devices, comprising of:

a) Remote Object Connection Module (ROOM) which is a set of computer programs that is used to logically connect one or more remote objects via internet means;
b) Object Scene Capture Module (OSCM), which is a set of computer programs that receive, as input from RGB sensor, the image of object scene in real time from the teleporting device;
c) Object Extraction Module (OEM) which is a set of computer programs that deploy either 2D pixel recognition and differentiation techniques for foreground segmentation, or, 3D depth sensors for foreground-background segmentation to extract object with alpha channel from background of the captured object scene in real time;
d) Remote Object Transmission Module (ROTM) which is a set of computer programs that transmit in real time, to a host object terminal, the extracted image of a remote object along with associated parameters, that include but not limited to depth, texture, color, alpha channel;
e) Object Insertion Module (OIM) which is a set of computer programs that integrates, places and composes in real time one or more remote teleported objects within alpha channeled areas of extracted host object image scene;
f) Background Layer Insertion Module (BLIM), which is a set of computer programs that inserts a pre-defined background layer of computer graphics to the composition of teleported scene in real time;
g) Foreground Layer Insertion Module (FLIM), which is a set of computer programs that inserts a pre-defined foreground layer of computer graphics to the composition of teleported scene in real time;
h) Teleported Scene Compositing Module (TSCM), which is a set of computer programs that integrates and fine tunes in real time the composition of host and remote objects with background and foreground layers of computer graphics to produce a live composition of teleported environment;
i) Teleported Composite Scene Display Module (TCSDM) which is a set of computer programs that display in real

time the integrated, composite teleported scene on display devices of each of the participating teleportation terminals;

j) Central Processing Unit (CPU), which analyzes and executes the operations of ROCM, OSCM, OEM, ROTM, OIM, FLIM, BLIM, TSBLIM, TCSM, TCSDM.

20. A method of claim **19**, wherein the integrated composite teleported scene is either recorded locally at one or more teleportation terminals, or broadcast live and made instantly available to one or more preselected remote destinations via an Internet connection, or a television satellite or a telecommunication link, or a wired or wireless local area network (LAN), or a wide area network (WAN), or a virtual private network (VPN) or intranet.

21. A method of claim **19**, wherein the plurality of remote objects are connected by means selected from a group comprising of internet protocol, a telecommunication link, a wired network, a wireless network, a virtual private network, intranet, wireless telecommunication protocol, TCP/IP protocol, GPRS protocol, WiFi protocol, Bluetooth, radiofrequency protocol, a telecommunication protocol.

22. A method of claim **19**, wherein the foreground layer and the background layer of the integrated composite teleported scene constitute a 3D video gaming environment comprising of virtual game characters and elements that interact with one or more users immersively by means of voice, hand, or body gestures.

23. A method of claim **19**, wherein the plurality of remote and host objects are participants of a virtual conference that takes place in a virtual environment created by the computer generated elements of the teleported scene simulating either a real world environment or a fictional environment.

24. A method of claim **19**, wherein, either,

a) a user is teleported into a 3D environment of a virtual store or showroom, a virtual shopping mall, or, a merchandise service center, and interacts with merchandises therein; or,

b) merchandises are teleported into one or more users' 3D environment for product demonstration, pre-purchase preview of goods, technical support, troubleshooting and service of pre-owned goods.

25. A method of claim **19**, wherein a user is teleported anonymously into a secure and private 3D environment of another unknown user without sharing any of their personal identification for the purpose of socializing or going on a blind date with a stranger.

26. A system of claim **19**, wherein one or more foreground layers comprise of computer graphics that operate as virtual computing interface displaying voice or gesture responsive data entry means and navigation controls or icons that include but not limited to:

a) virtual keyboard, virtual mouse, virtual touchpad, virtual pen of varying transparency to make other elements of the composite teleported scene behind the foreground layer visible to enable data input;

b) virtual menu for accessing different teleportation functions as well as navigating to other co-existing and unrelated client applications that include but not limited to, mail client, Internet browser, social networking applications, gaming applications, productivity applications;

c) virtual icons for displaying alerts in real time.

27. A system of claim **19**, wherein the computer programs of one or more modules run remotely from a server via an active server webpage, or operate as a browser plugin, or run from an external drive of a computer.

28. A system of claim **19**, wherein a Communication Module (CM) which is a set of computer programs that stream live the integrated, composite teleported scene to one or more preselected remote destinations.

29. A system of claim **19**, wherein one or more teleportation terminals deploy chroma keying techniques for background removal.

30. A method of claim **19**, wherein the host teleportation terminal does not deploy background removal.

31. A system of claim **19**, wherein modules (a) through (h) and module (j) are compiled as a kit that can be incorporated into a television set or a display panel.

* * * * *

Teleportation Through Communications

A. MICHAEL NOLL, MEMBER, IEEE

Abstract—A stereoscopic, stereophonic, user-controllable communications system is described. This system might allow the user to feel physically present at some remote location and thus might be considered to be an approximation through communications to teleportation. While admittedly somewhat futuristic, such a teleportation-through-communications system might be realistic in the bandwidth-rich future.

Manuscript received January 22, 1976; revised June 1, 1976.
The author is with Bell Telephone Laboratories, Murray Hill, NJ 70974.

Copyright © 1976 by The Institute of Electrical and Electronics Engineers, Inc.
Printed in U.S.A. Annals No. 611SM006

In the interim, the system might be useful for experimental explorations of the feeling of physical presence in interpersonal communications.

I. Introduction

A. Communications—A Substitute for Travel

The physical transportation of people seems to be a significant contributor to the cause of many of the crises in such areas as energy and urban congestion presently afflicting the United States. The use of communications as a replacement for the physical transportation of people might help to solve such transportation-related crises.

To a considerable extent, the conventional telephone probably already substitutes for much travel, although the increased interpersonal interaction resulting from the telephone has possibly increased travel to some extent also. It is possible that a richer communications system using not only audio communications but also video communications might allow communications to substitute for even more travel situations. On the other hand, the telephone and its audio-only relatives might already have substituted for those situations in which a communications substitute were possible. These are interesting and significant issues worthy of further future research.

B. Video Teleconferencing

Communications systems have already been designed to enable two groups of people to hold a conference between two physically separate locations through the use of interactive video communications. A British system called Confravision, a system at use at Bell Laboratories between Murray Hill and Holmdel, NJ, and the intercity PICTUREPHONE ® Meeting Service presently being offered by the American Telephone and Telegraph Company are somewhat similar in that these three systems use many television cameras and monitors with automatic voice-controlled video switching so that the person speaking can be seen by all at the remote location [1]–[3].

C. Factors Affecting Teleconferencing Usage

A number of other teleconferencing systems also exist, some using sophisticated video technology and others using simple audio-only technology [4]. Some of these systems experience good usage while others do not. The factors affecting usage might be related to the off-premises nature of some of these systems, the nature of the meetings, the relationship between the participants, the economic tradeoff against travel, or some aspect of the teleconferencing technology itself. This paper addresses the technology factor by suggesting an "ultimate" communications system that would be applicable to teleconferencing.

D. Physical Presence

When using the telephone or some visual communications device, the user usually does not feel physically present at the remote location. However, when one person visits another person, they are each able to sense physical presence through various acoustic and visual stimuli. Quite possibly, people travel to visit and meet with other people because of some human need to sense this physical presence.

The nature of the sensation of physical presence needs definition and exploration so that its importance in face-to-face communications can be ascertained. Whether "physical presence" can be "felt" remotely through the use of communications technology needs to be determined along with the technological requirements for transmitting such "physical presence," if indeed it can be transmitted.

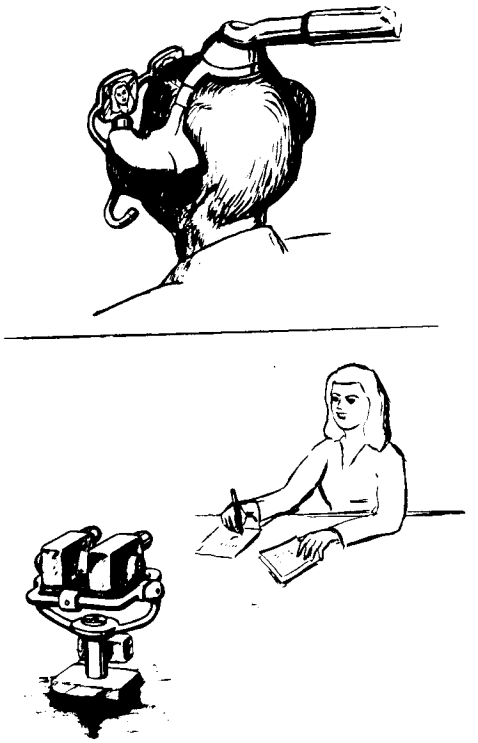

Fig. 1. Pictorial depiction of teleportation-through-communications system showing head-piece worn by the user and equipment located at the remote location.

E. Teleportation Through Communications

The acoustic and visual stimuli that a person senses when visiting another person should probably be retained as closely as possible in any communications system intended to convey a feeling of physical presence. Thus both stereophonic audio and stereoscopic video would seem to be required for a communications system intended to "convey" a person from one location to another. Also required would be an ability for the users to determine themselves where the remote equipment looks and listens.

The features of stereophonic audio, stereoscopic video, and user control are essential ingredients in the communications system proposed in this paper to allow a person to feel physically present at a remote meeting with one or more other people. This system, through communications, would approximate teleportation!

II. A Teleportation-Through-Communications System

A. System Description

The teleportation-through-communications system proposed in this paper consists of equipment used by the user and equipment located at the remote location. As is depicted in Fig. 1, the user wears a stereophonic headset that is equipped with a boom microphone. Attached to the headset is a spectacle-like device that presents a separate image to each eye. Suitable optics are used so that the images seem to be located about 6 m from the user.

The images presented to the user come from the faces of two cathode ray tubes. Small cathode ray tubes might be located on each side of the headphone-spectacle device, or alternatively, fiber optics might be used to transmit the images to the spectacle device.

The headphone band is attached to a gimbal device that senses any movement of the user's head. Alternatively, coils

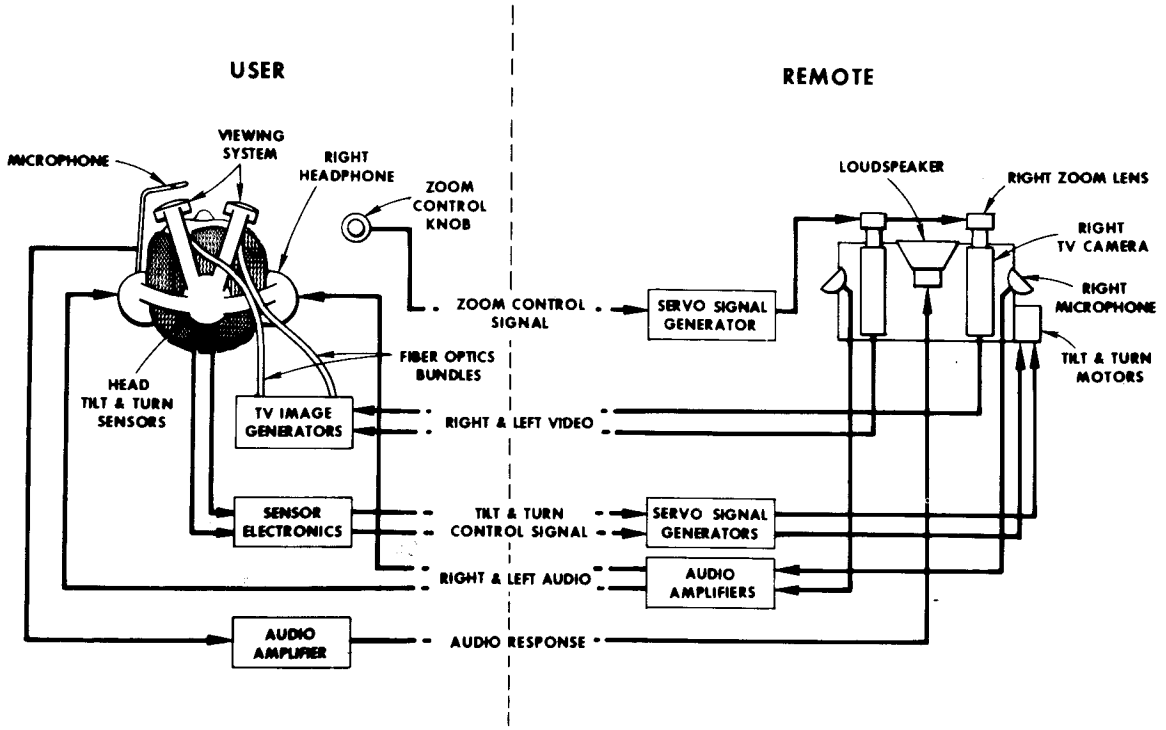

Fig. 2. Signal paths required for teleportation-through-communications system.

or some form of radio transmission might be used to sense movement of the user's head.

The remote system consists of two small television cameras that are positioned about 6 cm apart to correspond to the distance between the two eyes of a person. Two microphones are mounted with the cameras to approximate the distance between two human ears. All this equipment, including a small loudspeaker, is mounted on a platform that can be automatically turned and tilted by an appropriate mechanism.

The images picked up by the two television cameras are transmitted to the two television cathode ray tubes which then present the two images separately to each eye of the user as shown in Fig. 2. The acoustic signals picked up by the two microphones are transmitted to the two separate earphones which present a separate acoustic signal to each ear of the user. The physical position of the user's head is sensed by the gimbal mechanism, and this position information is transmitted to motors which control the position of the platform to correspond to the position of the user's head. Any speech spoken by the user is picked up by the boom microphone and is transmitted to the loudspeaker located on the platform.

With this system, the user is able to turn his head and see stereoscopically and hear stereophonically what is happening at the remote location. Any speech spoken by the user will be heard by those present at the remote location, and any conversation that occurs at the remote location will be heard stereophonically by the user.

B. Technological Options

Stereoscopic information is conveyed by the horizontal shifts of images relative to their backgrounds. Hence, the two images picked up by the two cameras would be quite similar. Thus differential coding of one image relative to the other would seem appropriate in order to reduce the bandwidth required to transmit the left and right visual information.

Rather than physically moving the cameras, mirrors might be used in front of the lenses to change the viewing direction. Electronic steering of a microphone array might be used rather than physical movement of two microphones.

Zoom lenses might be added to the two cameras so that the user could zoom in on some picture or scene of interest. In this way, the user could substitute for the usual ability of moving closer to see something of particular interest.

The bandwidth required to transmit two video signals might be reduced by using a device to track the movement of the user's eyes [5]. Since the human visual system sees high resolution only within a very small field, the resolution of the television image outside this field could be greatly reduced and the user would not know that any degradation had occurred.

A stereophonic headset for which the sound images are not localized within the listener's head but are localized externally has recently been demonstrated [6]. This has been accomplished by the use of microphones which closely approximate the acoustic properties of the human ear and head and by the use of earphones which are tightly coupled to the listener's ears with proper acoustic impedance matching. The use of this stereophonic system in the teleportation-through-communications system would probably enhance significantly the realism of the feeling of acoustic presence at the remote location.

The stereoscopic television should probably be in color to enhance the feeling of realism and presence. At the present, however, color television cameras are quite large and bulky, and hence two cameras could probably not be mounted easily on the remote platform. One possible solution would be the use of flexible fiber-optics bundles to carry two images from the platform to the stationary color cameras. Alternatively, recent research has demonstrated the feasibility of solid-state charge-coupled color cameras that are lightweight and small sized [7].

C. User Surrogate

The remote system would in effect be a surrogate for the user. For example, if someone at the remote location spoke the user's name, then the user would stereophonically locate the direction of the speaker and would turn his head in that direction. This

action would be sensed by the gimbal mechanism which would then cause the platform to turn in the same direction, and the user would be able to see the person who spoke his name. The people at the remote location would see the platform turn and would therefore know that the user was looking at them. The directional characteristics of the loudspeaker mounted on the platform would also serve as a clue to the remote people as to the direction in which the user was speaking. As they became accustomed to the remote device and its responses, people at the remote location would probably come to accept the device as a surrogate for the user. However, the people at the remote location would be somewhat at a disadvantage since they would be unable to see the facial expressions of the user.

The platform device might be equipped with a handle so that it could be transported easily to any room or other location where the user wished to be "present" for some conference or meeting. The "surrogate" might be placed on a table, chair, or other suitable resting place. The headphone device worn by the user would also be portable.

Thus both the platform device and the headphone device could be used at different times by different people to "attend" different meetings at different locations. Neither the user nor the people at the remote location would have to go to a special site—the user's office and a regular conference room would be sufficient. The only requirement would be a broadband transmission facility between the user's office and the remote location.

III. Discussion

A. Market Prospects

The teleportation-through-communications system described in this paper probably is not a marketable product in the near future. The hardware is quite elaborate and would undoubtedly be quite expensive. The user must wear a cumbersome headphone-spectacle device. Also, a large amount of bandwidth is needed for transmitting two television images.

B. Technical Feasibility

The teleportation-through-communications system described in this paper is admittedly quite futuristic. However, such a system is definitely within the capabilities of present technology, although widespread commercial exploitation is not reasonable for the present.

The Bell Helicopter Company has constructed a user-controlled stereoscopic device for use by helicopter pilots [8], [9]. A photograph of the helmet-spectacle device worn by the pilot is shown in Fig. 3. Two servo-controlled television cameras are mounted on struts with a wide physical separation to create an exaggerated sensation of depth. The head-mounted stereoscopic display was later adapted for use in computer graphics research at the University of Utah [10].

C. Research Tool

For the present, a teleportation-through-communications system would be an interesting demonstration of communications technology that some day in the future might form the basis for a communications service. A teleportation-through-communications system would be a useful vehicle for studying and understanding the importance and role of such factors as stereophonic sound, stereoscopic vision, and user control in face-to-face interpersonal communications. Evaluations of the effects of acoustic and visual distortions on interpersonal communications might also be studied using the system. Thus, for the present, a teleportation-through-communications system would be primarily a research tool and technology demonstration.

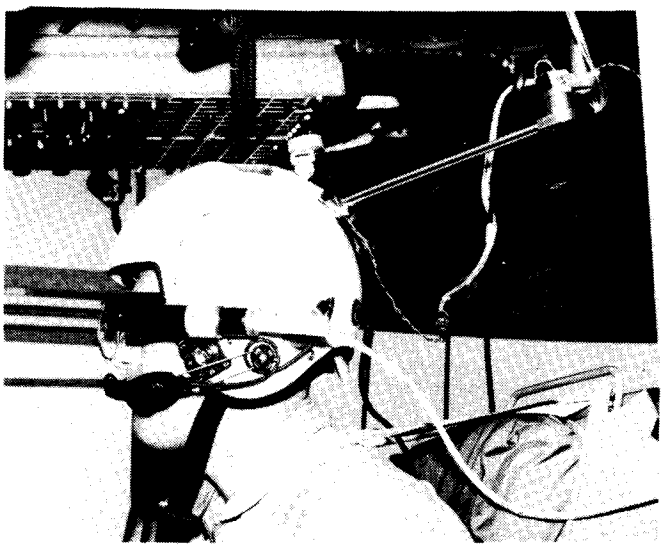

Fig. 3 Stereoscopic head-mounted display used by helicopter pilots. Miniature CRT's are mounted on the sides of the pilot's helmet. The display optics, consisting of a spherical-mirror reflector and a pellicle beam-splitter, present a collimated image to the user. (Photograph courtesy of H. W. Upton, Bell Helicopter Company.)

References

[1] Confravision (promotional brochure), Telecommunications Department, British Post Office, London.

[2] D. Mitchell, "Better video conferences," *Bell Labs. Record*, vol. 48, no. 1, pp. 19–22, Jan. 1970.

[3] C. A. Bentz, J. J. Horzepa, and C. D. Stubbs, "The Bell system video conferencing system," *Proc. of the 1975 IEEE International Conf. on Cybernetics and Society*, pp. 126–128, Sept. 1975.

[4] R. W. Hough, "Teleconferencing systems: A state of the art survey and preliminary analysis," Stanford Research Institute, Menlo Park, California, in preparation.

[5] T. N. Cornsweet and H. D. Crane, "Accurate two-dimensional eye tracker using first and fourth purkange images," *Journal of the Optical Society of America*, vol. 63, no. 8, pp. 921–928, August 1973.

[6] R.L. Wallace, Jr., Bell Labs., private communication.

[7] C. H. Sequin and M. F. Tompsett, *Charge Transfer Devices*. New York: Academic Press, 1975, pp. 169–171.

[8] H. W. Upton, "Head-mounted displays in helicopter operations," USAECOM-AAA-ION Technical Symposium on Navigation and Positioning, Fort Monmouth, NJ., Sept. 1969.

[9] D. D. Strother and H. W. Upton, "Head-mounted display/control system in V/STOL operations," The 27th Annual National V/STOL Forum, American Helicopter Society, Washington, D.C., Preprint No. 532, May 1971.

[10] I. E. Sutherland, "A head-mounted three dimensional display," *AFIPS Conference Proceedings*, vol. 33, pp. 757–764, 1968.

[11] A. M. Noll, "Man-machine tactile communication," *SID Journal*, vol. 1, no. 2, pp. 5–11, July/August 1972.

Holoportation: Virtual 3D Teleportation in Real-time

Sergio Orts-Escolano Christoph Rhemann* Sean Fanello* Wayne Chang* Adarsh Kowdle* Yury Degtyarev*
David Kim* Philip Davidson* Sameh Khamis* Mingsong Dou* Vladimir Tankovich* Charles Loop*
Qin Cai* Philip Chou* Sarah Mennicken Julien Valentin Vivek Pradeep Shenlong Wang
Sing Bing Kang Pushmeet Kohli Yuliya Lutchyn Cem Keskin Shahram Izadi*†
Microsoft Research

Figure 1. Holoportation is a new immersive telepresence system that combines the ability to capture high quality 3D models of people, objects and environments in real-time, with the ability to transmit these and allow remote participants wearing virtual or augmented reality displays to see, hear and interact almost as if they were co-present.

ABSTRACT
We present an end-to-end system for augmented and virtual reality telepresence, called Holoportation. Our system demonstrates high-quality, real-time 3D reconstructions of an entire space, including people, furniture and objects, using a set of new depth cameras. These 3D models can also be transmitted in real-time to remote users. This allows users wearing virtual or augmented reality displays to see, hear and interact with remote participants in 3D, almost as if they were present in the same physical space. From an audio-visual perspective, communicating and interacting with remote users edges closer to face-to-face communication. This paper describes the Holoportation technical system in full, its key interactive capabilities, the application scenarios it enables, and an initial qualitative study of using this new communication medium.

Author Keywords
Depth Cameras; 3D capture; Telepresence; Non-rigid reconstruction; Real-time; Mixed Reality; GPU

ACM Classification Keywords
I.4.5 Image Processing and Computer Vision: Reconstruction; I.3.7 Computer Graphics: Three-Dimensional Graphics and Realism,

* Authors contributed equally to this work
† Corresponding author: shahrami@microsoft.com

Permission to make digital or hard copies of all or part of this work for personal or classroom use is granted without fee provided that copies are not made or distributed for profit or commercial advantage and that copies bear this notice and the full citation on the first page. Copyrights for components of this work owned by others than the author(s) must be honored. Abstracting with credit is permitted. To copy otherwise, or republish, to post on servers or to redistribute to lists, requires prior specific permission and/or a fee. Request permissions from Permissions@acm.org.
UIST 2016, October 16-19, 2016, Tokyo, Japan.
Copyright is held by the owner/author(s). Publication rights licensed to ACM.
ACM 978-1-4503-4189-9/16/10..$15.00.
DOI: http://dx.doi.org/10.1145/2984511.2984517

INTRODUCTION
Despite huge innovations in the telecommunication industry over the past decades, from the rise of mobile phones to the emergence of video conferencing, these technologies are far from delivering an experience close to *physical co-presence*. For example, despite a myriad of telecommunication technologies, we spend over a trillion dollars per year globally on business travel, with over 482 million flights per year in the US alone[1]. This does not count the cost on the environment. Indeed telepresence has been cited as key in battling carbon emissions in the future[2].

However, despite the promise of telepresence, clearly we are still spending a great deal of time, money, and CO_2 getting on planes to meet face-to-face. Somehow much of the subtleties of face-to-face co-located communication — eye contact, body language, physical presence — are still lost in even high-end audio and video conferencing. There is still a clear gap between even the highest fidelity telecommunication tools and physically being *there*.

In this paper, we describe Holoportation, a step towards addressing these issues of telepresence. Holoportation is a new immersive communication system that leverages consumer augmented reality (AR) and virtual reality (VR) display technologies, and combines these with a state-of-the-art, real-time 3D capture system. This system is capable of capturing in full 360° the people, objects and motions within a room, using a set of custom depth cameras. This 3D content is captured and transmitted to remote participants in real-time.

Any person or object entering the instrumented room will be captured in full 3D, and *virtually teleported* into the remote participants space. Each participant can now see and hear these remote users within their physical space when they wear

[1] `http://www.forbes.com/sites/kenrapoza/2013/08/06/business-travel-market-to-surpass-1-trillion-this-year/`

[2] `http://www.scientificamerican.com/article/can-videoconferencing-replace-travel/`

their AR or VR headsets. From an audio-visual perspective, this gives users an impression that they are co-present in the same physical space as the remote participants.

Our main contribution is a new end-to-end immersive system for high-quality, real-time capture, transmission and rendering of people, spaces, and objects in full 3D. Apart from the system as a whole, another set of technical contributions are:

- A new active stereo depth camera technology for real-time high-quality capture.
- A novel two GPU pipeline for higher speed temporally consistent reconstruction.
- A real-time texturing pipeline that creates consistent colored reconstructions.
- Low latency pipeline for high quality remote rendering.
- Spatial audio that captures user position and orientation.
- A prototype for headset removal using wearable cameras.

Furthermore, this paper also contributes key interactive capabilities, new application scenarios, and an initial qualitative study of using this new communication medium.

RELATED WORK

There has been a huge amount of work on immersive 3D telepresence systems (see literature reviews in [16, 4, 32]). Given the many challenges around real-time capture, transmission and display, many systems have focused on one specific aspect. Others have constrained the scenarios, for example limiting user motion, focusing on upper body reconstructions, or trading quality for real-time performance.

Early seminal work on telepresence focused on capturing dynamic scenes using an array of cameras [17, 27]. Given both the hardware and computational limitations of these early systems, only low resolution 3D models could be captured and transmitted to remote viewers. Since this early work, we have seen improvements in the real-time capture of 3D models using multiple cameras [57, 55, 31]. Whilst results are impressive, given the real-time constraint and hardware limits of the time, the 3D models are still far from high quality. [48, 36] demonstrate compelling real-time multi-view capture, but focus on visual hull-based reconstruction —only modeling silhouette boundaries. With the advent of Kinect and other consumer depth cameras, other real-time room-scale capture systems emerged [39, 43, 25, 47]. However, these systems again lacked visual quality due to lack of temporal consistency of captured 3D models, sensor noise, interference, and lack of camera synchronization. Conversely, high quality offline reconstruction of human models has been demonstrated using both consumer, e.g. [13], and custom depth cameras, e.g. [11]. Our aim with Holoportation is to achieve a level of visual 3D quality that steps closer to these offline systems. By doing so, we aim to achieve a level of presence that has yet to be achieved in previous real-time systems.

Beyond high quality real-time capture, another key differentiator of our work is our ability to support true motion within the scene. This is broken down into two parts – remote and local motion. Many telepresence systems limit the local user to a constrained seating/viewing position, including the seminal TELEPORT system [19], and more recent systems [47, 10, 38, 5, 62], as part of the constraint of the capture setup. Others constrain the motion of the remote participant, typically as a by-product of the display technology used whether it is a situated stereo display [10] or a more exotic display technology. Despite this, very compelling telepresence scenarios have emerged using situated autostereo [42, 45], cylindrical [28], volumetric [24], lightfield [1] or even true holographic [7] displays. However, we feel that free-form motion within the scene is an important factor in creating a more faithful reconstruction of actual co-located presence. This importance of mobility has been studied greatly in the context of co-located collaboration [37], and has motivated certain tele-robotics systems such as [26, 33], and products such as the Beam-PRO. However, these lack human embodiment, are costly and only support a limited range of motion.

There have been more recent examples of telepresence systems that allow fluid user motion within the space, such as blue-c [21] or [4]. However, these systems use stereoscopic projection which ultimately limits the ability for remote and local users to actually inhabit the exact same space. Instead interaction occurs through a 'window' from one space into the other. To resolve this issue, we utilize full volumetric 3D capture of a space, which is overlaid with the remote environment, and leverage off-the-shelf augmented and virtual reality displays for rendering, which allow spaces to be shared and co-habited. [40] demonstrate the closest system to ours from the perspective of utilizing multiple depth cameras and optical see-through displays. Whilst extremely compelling, particularly given the lack of high quality, off-the-shelf, optical see-through displays at the time, the reconstructions do lack visual quality due to the use of off-the-shelf depth cameras. End-to-end rendering latency is also high, and the remote user is limited to remaining seated during collaboration.

Another important factor in co-located collaboration is the use of physical props [37]. However, many capture systems are limited to or have a strong prior on human bodies [9], and cannot be extended easily to reconstruct other objects. Further, even with extremely rich offline shape and pose models [9], reconstructions can suffer from the effect of "uncanny valley" [44]; and clothing or hair can prove problematic [9]. Therefore another requirement of our work is to support arbitrary objects including people, furniture, props, animals, and to create faithful reconstructions that attempt to avoid the uncanny valley.

SYSTEM OVERVIEW

In our work, we demonstrate the first end-to-end, real-time, immersive 3D teleconferencing system that allows both local and remote users to move freely within an entire space, and interact with each other and with objects. Our system shows unprecedented quality for real-time capture, allows for low end-to-end communication latency, and further mitigates remote rendering latency to avoid discomfort.

To build Holoportation we designed a new pipeline as shown

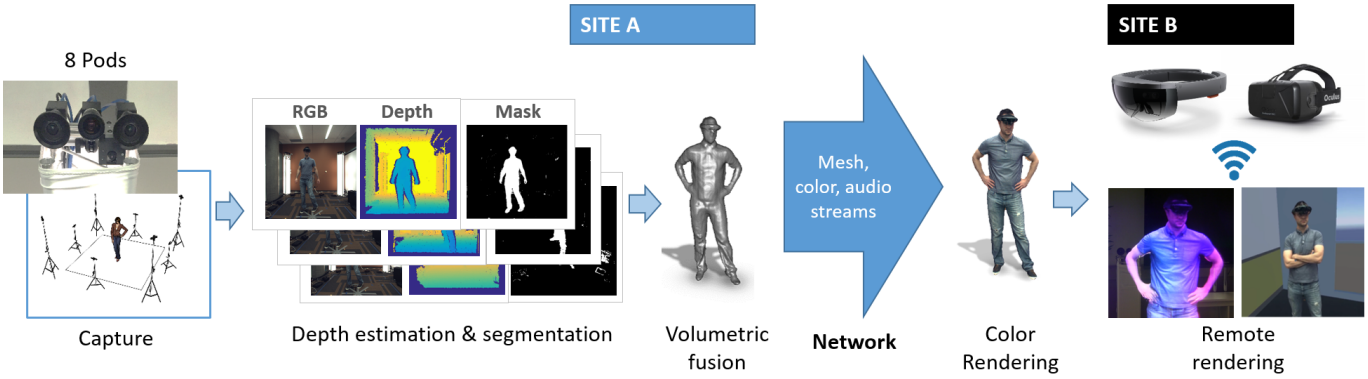

Figure 2. Overview of the Holoportation pipeline. Our capture units compute RGBD streams plus a segmentation mask. The data is then fused into a volume and transmitted to the other site. Dedicated rendering PCs perform the projective texturing and stream the live data to AR and VR displays.

in Fig. 2. We describe this pipeline in full in the next sections, beginning with the physical setup, our algorithm for high quality depth computation and segmentation, realistic temporal geometry reconstruction, color texturing, image compression and network, and remote rendering.

Physical Setup and Capture Pods

For full 360° capture of the scene, we employ $N = 8$ camera *pods* placed on the periphery of the room, pointing inwards to capture a unique viewpoint of the subject/scene. Each pod (Fig. 3, middle) consists of 2 Near Infra-Red cameras (NIR) and a color camera mounted on top of an optical bench to ensure its rigidity. Additionally a diffractive optical element (DOE) and laser is used to produce a pseudo-random pattern (for our system we use the same design as the Kinect V1). We also mount NIR filters on top of each NIR camera to filter out the visible light spectrum. Each trinocular pod generates a color-aligned RGB and depth stream using a state-of-the-art stereo matching technique described below. Current baseline used in the active stereo cameras is 15 centimeters, giving an average error of 3 millimeters at 1 meter distance and 6 millimeters at 1.5 meter distance.

In total, our camera rig uses 24 4MP resolution Grasshopper PointGrey cameras. All the pods are synchronized using an external trigger running at 30fps. Fig. 3, right, shows an example of images acquired using one of the camera pods.

The first step of this module is to generate depth streams, which require full intrinsics and extrinsics calibration. In this work we use [63] for computing the camera parameters. Another standard calibration step ensures homogeneous and consistent color information among the RGB cameras. We perform individual white balancing using a color calibration chart. Once colors have been individually tuned, we use one RGB camera as a reference and warp the other cameras to this reference using a linear mapping. This makes the signal consistent across all the RGB cameras. This process is performed offline and then linear mapping across cameras is applied at runtime.

Depth Estimation

Computing 3D geometry information of the scene from multiple view points is the key building block of our system. In our case, the two key constraints are estimating consistent depth information from multiple viewpoints, and doing so in *real-time*.

Depth estimation is a well studied problem where a number of diverse and effective solutions have been proposed. We considered popular depth estimation techniques such as structured light, time-of-flight and depth from stereo for this task.

Structured light approaches allow for very fast and precise depth estimation [59, 49, 6, 3, 15]. However, in our setup of multi-view capture structured light-based depth estimation suffers from interference across devices. Another alternative strategy is time-of-flight based depth estimation [22], which has grown to be very popular, however, multi-path issues make this technology unusable in our application. Depth from RGB stereo is another possible solution that has seen several advances in real-time depth estimation [51, 61, 56, 52]. Passive stereo uses a pair of rectified images and estimates depth by matching every patch of pixels in one image with the other image. Common matching functions include sum of absolute differences (SAD), sum of squared differences (SSD), and normalized cross-correlation (NCC). This is a well understood approach to estimating depth and has been demonstrated to provide very accurate depth estimates [8]. However, the main issue with this approach is the inability to estimate depth in case of texture-less surfaces.

Motivated by these observations, we circumvent all these problems by using active stereo for depth estimation. In an active stereo setup, each camera rig is composed of two NIR cameras plus one or more random IR dot pattern projector (composed of laser plus DOE). Each serves as a texture in the scene to help estimate depth even in case of texture-less surfaces. Since we have multiple IR projectors illuminating the scene we are guaranteed to have textured patches to match and estimate depth.

Additionally, and as importantly, we do not need to know the pattern that is being projected (unlike standard structured light systems such as Kinect V1). Instead, each projector simply adds more texture to the scene to aid depth estimation. This circumvents the issues of interference which commonly occur when two structured light cameras overlap. Here, overlapping projectors actually result in more texture for our matching algorithm to disambiguate patches across cameras,

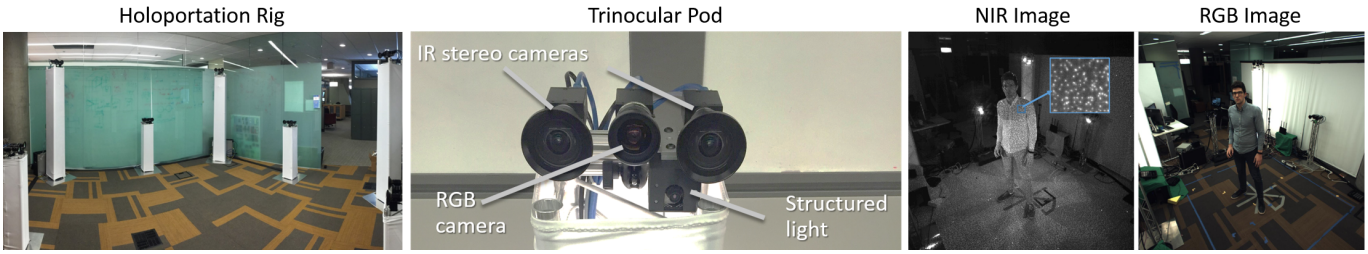

Figure 3. Left: Holoportation rig. Middle: Trinocular Pod: Right: NIR and RGB images acquired from a pod.

so the net result is an improvement rather than degradation in depth quality.

With the type of depth estimation technique narrowed down to active stereo, our next constraint is real-time depth estimation. There are several approaches that have been proposed for depth estimation [53]. We base our work on PatchMatch stereo [8], which has been shown to achieve high quality dense depth maps with a runtime independent of the number of depth values under consideration. PatchMatch stereo alternates between random depth generation and propagation of depth based on the algorithm by [2], and has recently been extended to real-time performance by assuming fronto parallel windows and reducing the number of iterations of depth propagation [65]. In this work, we develop a real-time CUDA implementation of PatchMatch stereo that performs depth estimation at as high as 50fps on a high-end GPU such as an NVIDIA Titan X in our case. Details of the GPU implementation are provided later in the paper. Examples of depthmaps are shown in Fig. 4.

Foreground Segmentation

The depth estimation algorithm is followed by a segmentation step, which provides 2D silhouettes of the regions of interest. These silhouettes play a crucial role – not only do they help in achieving temporally consistent 3D reconstructions [14] but they also allow for compressing the data sent over the network. We do not use green screen setups as in [11], to ensure that the system can be used in natural environments that appear in realistic scenarios.

The input of the segmentation module consists of the current RGB image I_t, and depth image D_t. The systems also maintains background appearance models for the scene from the perspective of each camera pod in a manner similar to [29]. These background models are based on depth and RGB appearance of the empty scene (where the objects of interest are absent). They are represented by an RGB and depth image pair for each camera pod $\{I_{bg}, D_{bg}\}$, which are estimated by averaging over multiple frames to make the system robust against noise (e.g. depth holes, light conditions etc.).

We model the foreground/background segmentation labeling problem using a fully-connected Conditional Random Field (CRF) [30] whose energy function is defined as:

$$E(\mathbf{p}) = \sum_i \psi_u(p_i) + \sum_i \sum_{j \neq i} \psi_p(p_i, p_j) \qquad (1)$$

where $\mathbf{p}$ are all the pixels in the image. The pairwise terms $\psi_p(p_i, p_j)$ are Gaussian edge potentials defined on image gradients in the RGB space, as used in [30]. The unary potential is defined as the sum of RGB $\psi_{rgb}(p_i)$ and depth $\psi_{depth}(p_i)$ based terms: $\psi_u(p_i) = \psi_{rgb}(p_i) + \psi_{depth}(p_i)$. The RGB term is defined as

$$\psi_{rgb}(p_i) = |H_{bg}(p_i) - H_t(p_i)| + |S_{bg}(p_i) - S_t(p_i)|, \quad (2)$$

where H and S are the HSV components of the color images. Empirically we found that the HSV color space leads to better results which are robust to illumination changes. The depth based unary term is a logistic function of the form of $\psi_{depth}(p_i) = 1 - 1/(1 + \exp(-(D_t(p_i) - D_{bg}(p_i))/\sigma))$, where σ controls the scale of the resolution and is fixed to $\sigma = 5$cm.

Obtaining the Maximum a Posterior (MAP) solution under the model defined in Eq. 1 is computationally expensive. To achieve real-time performance, we use the efficient algorithm for performing mean field inference that was proposed in [58], which we implemented efficiently on the GPU. In Fig. 4 we depict some results obtained using the proposed segmentation algorithm.

Temporally Consistent 3D Reconstruction

Given the $N = 8$ depth maps generated as described previously, we want to generate a 3D model of the region of interest. There are mainly 3 different strategies to achieve this. The simplest approach consists of visualizing the 3D model in the form of point clouds, however this will lead to multiple problems such as temporal flickering, holes and flying pixels (see Fig. 5).

A better strategy consists of fusing the data from all the cameras [23]. The fused depth maps generate a mesh per frame, with a reduced noise level and flying pixels compared to a simple point cloud visualization. However the main drawback of this solution is the absence of any temporal consistency: due to noise and holes in the depth maps, meshes generated at each frame could suffer from flickering effects, especially in difficult regions such as hair. This would lead to 3D models with high variation over time, making the overall experience less pleasant.

Motivated by these findings, we employ a state of the art method for generating temporally consistent 3D models in real-time [14]. This method tracks the mesh and fuses the data across cameras and frames. We summarize here the key steps, for additional details see [14].

In order to fuse the data temporally, we have to estimate the nonrigid motion field between frames. Following [14], we parameterize the nonrigid deformation using the embedded deformation (ED) model of [54]. We sample a set of K "ED

Figure 4. Top: RGB stream. Bottom: depth stream. Images are masked with the segmentation output.

Figure 5. Temporal consistency pipeline. Top: Point cloud visualization, notice flying pixels and holes. Bottom: temporally reconstructed meshes.

nodes" uniformly, at locations $\{\mathbf{g}_k\}_{k=1}^{K} \subseteq \mathbb{R}^3$ throughout the mesh $\mathcal{V}$. The local deformation around an ED node $\mathbf{g}_k$ is defined via an affine transformation $A_k \in \mathbb{R}^{3\times3}$ and a translation $\mathbf{t}_k \in \mathbb{R}^3$. In addition, a global rotation $R \in SO(3)$ and translation $T \in \mathbb{R}^3$ are added. The full parameters to estimate the nonrigid motion field are $G = \{R, T\} \cup \{A_k, \mathbf{t}_k\}_{k=1}^{K}$. The energy function we minimize is:

$$E(G) = \lambda_{data} E_{data}(G) + \lambda_{hull} E_{hull}(G) + \lambda_{corr} E_{corr}(G) + \lambda_{rot} E_{rot}(G) + \lambda_{reg} E_{reg}(G), \quad (3)$$

which is the weighted sum of multiple terms that take into account the data fidelity, visual hull constraints, sparse correspondences, a global rotation and a smoothness regularizer. All the details regarding these terms, including the implementation for solving this nonlinear problem, are in [14].

Once we retrieve the deformation model between two frames, we fuse the data of the tracked nonrigid parts and we reset the volume to the current observed 3D data for those regions where the tracking fails.

Color Texturing

After fusing depth data, we extract a polygonal 3D model from its implicit volumetric representation (TSDF) with marching cubes, and then texture this model using the 8 input RGB images (Fig. 6). A naive texturing approach would compute the color of each pixel by blending the RGB images

Figure 6. Projective Texturing: segmented-out RGB images and reconstructed color.

according to its surface normal $\hat{\mathbf{n}}$ and the camera viewpoint direction $\hat{\mathbf{v}}_i$. In this approach, the color weights are computed as $w_i = vis \cdot max(0, \hat{\mathbf{n}} \cdot \hat{\mathbf{v}}_i)^{\alpha}$, favoring frontal views with factor α and vis is a visibility test. These weights are non-zero if the textured point is visible in a particular view (i.e., not occluded by another portion of the model). The visibility test is needed to avoid back-projection and is done by rasterizing the model from each view, producing *rasterized depth maps* (to distinguish from *input depth maps*), and using those for depth comparison. Given imperfect geometry, this may result in so-called "ghosting" artifacts (Fig. 7a), when missing parts of geometry might cause wrongly projected color to the surfaces behind it. Many existing approaches use global optimization to stitch [18] or blend [64, 46] the incoming color maps to tackle this problem. However, these implementations are not real-time and in some cases use more RGB images.

Instead we assume that the surface reconstruction error is bounded by some value e. First, we extend the visibility test with an additional depth discontinuity test. At each textured point on a surface, for each input view we search for depth discontinuity in its projected 2D neighborhood in a rasterized depth map with radius determined by e. If such a discontinuity is found, we avoid using this view in a normal-weighted blending (the associated weight is 0). This causes dilation of edges in the rasterized depth map for each view (Fig. 7bc). This can eliminate most ghosting artifacts, however it can classify more points as unobserved. In this case, we use regular visibility tests and a majority voting scheme for colors:

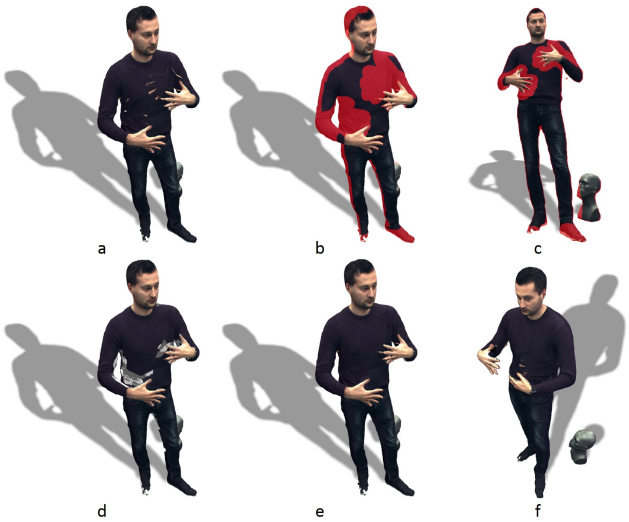

Figure 7. (a) Ghosting artifacts, (b) Dilated depth discontinuities, (c) Dilated depth discontinuities from pod camera view, (d) Number of agreeing color (white = 4), (e) Proposed algorithm, (f) Voting failure case.

for a given point, to classify each view as trusted, the color candidates for this view must agree with a number of colors (Fig. 7d) from other views that can see this point, and this number of agreeing views should be maximum. The agreement threshold is multi-level: we start from as small value and increase the threshold if no previous views agreed. This leads to a more accurate classification of trusted views as it helps to avoid false-positives near color discontinuities. Finally, if none of the views agree, we pick the view with the minimal RGB variance for a projected 2D patch in the input RGB image, since larger color discontinuity for a patch is more likely to correspond to a depth discontinuity of a perfectly reconstructed surface, and thus that patch should not be used.

While this approach works in real time and eliminates most of the artifacts (Fig. 7e), there are some failure cases when two ghosting color candidates can outvote one true color (Fig. 7f). This is a limitation of the algorithm, and a trade-off between quality and performance, but we empirically derived that this occurs only in highly occluded regions and does not reduce the fidelity of the color reconstruction in the region of interest, like faces. We also demonstrate that the algorithm can handle complex, multi-user scenarios with many objects (Fig. 8) using only 8 RGB cameras.

Spatial Audio

Audio is the foundational medium of human communication. Without proper audio, visual communication, however immersive, is usually ineffective. To enhance the sense of immersion, auditory and visual cues must match. If a user sees a person to the left, the user should also hear that person to the left. Audio emanating from a spatial source outside the user's field of view also helps to establish a sense of immersion, and can help to compensate for the limited field of view in some HMDs.

In Holoportation we synthesize each remote audio source, namely the audio captured from a remote user, as coming from the position and orientation of the remote user in the local user's space. This ensures that the audio and visual cues are matched. Even without visual cues, users can use the spatial audio cues to locate each other. For example, in Holoportation, it is possible for the first time for users to play the game "Marco Polo" while all players are geographically distributed. To the best of our knowledge, Holoportation is the first example of auditory augmented or virtual reality to enable communication with such freedom of movement.

In our system, each user is captured with a monaural microphone. Audio samples are chunked into 20ms frames, and audio frames are interleaved with the user's current head pose information in the user's local room coordinate system (specifically, x, y, z, yaw, pitch, and roll). The user's audio frame and the head pose information associated with that frame are transmitted to all remote users through multiple unicast connections, although multicast connections would also make sense where available.

Upon receiving an audio frame and its associated head pose information from a remote user, the local user's system transforms the head pose information from the remote user's room coordinate system to the local user's room coordinate system, and then spatializes the audio source at the proper location and orientation. Spatialization is accomplished by filtering the audio signal using a head related transfer function (HRTF).

HRTF is a mapping from each ear, each audio frequency, and each spatial location of the source relative to the ear, into a complex number representing the magnitude and phase of the attenuation of the audio frequency as the signal travels from the source location to the ear. Thus, sources far away will be attenuated more than sources that are close. Sources towards the left will be attenuated less (and delayed less) to the left ear than to the right ear, reproducing a sense of directionality in azimuth as well as distance. Sources above the horizontal head plane will attenuate frequencies differently, giving a sense of elevation. Details may be found in [20].

We also modify the amplitude of a source by its orientation relative to the listener, assuming a cardioid radiation pattern. Thus a remote user facing away from the local user will sound relatively muffled compared to a remote user facing toward the local user. To implement audio spatialization, we rely on the HRTF audio processing object in the XAUDIO2 framework in Windows 10.

Compression and Transmission

The previous steps generate an enormous amount of data per frame. Compression is therefore critical for transmitting that data over the wide area network to a remote location for rendering. Recent work in mesh compression [11] as well as point cloud compression [12] suggest that bit rates on the order of low tens of megabits per second per transmitted person, depending on resolution, are possible, although *real-time* compression at the lowest bit rates is still challenging.

For our current work, we wanted the rendering to be real time, and also of the highest quality. Hence we perform only a very lightweight real time compression and straightforward wire

Figure 8. Examples of texturing multiple users and objects.

format over TCP, which is enough to support 5-6 viewing clients between capture locations over a single 10 Gbps link in our point to point teleconferencing scenarios. For this purpose it suffices to transmit a standard triangle mesh with additional color information from the various camera viewpoints. To reduce the raw size of our data for real-time transmission, we perform several transformations on per-frame results from the capture and fusion stages, as we now describe.

Mesh Geometry

As described previously, we use a marching cubes polygonalization of the volumetric data generated in the fusion stage as our rendered mesh. The GPU implementation of marching cubes uses 5 millimeters voxels. We perform vertex deduplication and reduce position and normal data to 16 bit floats on the GPU before transfer to host memory for serialization. During conversion to our wire format, we use LZ4 compression on index data to further reduce frame size. For our current capture resolution this results in a per-frame transmission requirement of approximately 2MB per frame for mesh geometry (60K vertices, 40K triangles). Note that for proper compositing of remote content in AR scenarios, the reconstruction of local geometry must still be available to support occlusion testing.

Color Imagery

For color rendering, the projective texturing described above is used for both local and remote rendering, which requires that we transfer relevant color imagery from all eight color cameras. As we only need to transmit those sections of the image that contribute to the reconstructed foreground objects, we leverage the foreground segmentation calculated in earlier stages to set non-foreground regions to a constant background color value prior to transmission. With this in place, the LZ4 compression of the color imagery (8 4MP Bayer images) reduces the average per-frame storage requirements from 32MB to 3MB per frame. Calibration parameters for projective mapping from camera to model space may be transferred per frame, or only as needed.

Audio Transmission

For users wearing an AR or VR headset, the associated microphone audio and user pose streams are captured and transmitted to all remote participants to generate spatial audio sources

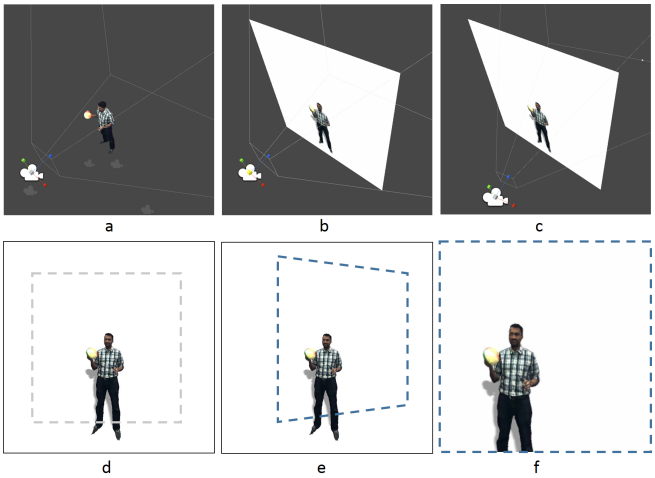

Figure 9. Render Offloading: (a) Rendering with predicted pose on PC, (b) Rendered image encoding, (c) Rendering with actual pose on HMD, (d) Predicted view on PC, and its over-rendering with enlarged FOV, (e) Pixels in decoded video stream, used during reprojection, (f) Reprojected actual view.

correlated to their rendered location, as described in the Audio subsection above. Each captured audio stream is monaural, sampled at 11 KHz, and represented as 16-bit PCM, resulting in a transmitted stream of 11000*16 = 176 Kbps, plus 9.6 Kbps for the pose information. At the receiving side, the audio is buffered for playback. Network jitter can cause the buffer to shrink when packets are not being delivered on time, and then to grow again when they are delivered in a burst. If the buffer underflows (becomes empty), zero samples are inserted. There is no buffer overflow, but the audio playback rate is set to 11025 samples per second, to provide a slight downward force on the playback buffer size. This keeps the playback buffer in check even if the receiving clock is somewhat slower than the sending clock. The audio+pose data is transmitted independently and bi-directionally between all pairs of remote participants. The audio communication system is peer-to-peer, directly between headsets, and is completely independent of the visual communication system. We do not provide AV sync, and find that the audio and visual reproductions are sufficiently synchronized; any difference in delay between audio and visual systems is not noticeable.

Bandwidth and Network Topology

For low-latency scenarios, these approaches reduce the average per-frame transmission size to a 1-2 Gbps transfer rate for an average capture stream at 30fps, while adding only a small overhead ($<$10ms) for compression. Compressed frames of mesh and color data are transmitted between capture stations via TCP to each active rendering client. For 'Living Memories' scenarios, described later in the applications section, these packets may be intercepted, stored, and replayed by an intermediary recording server. Large one-to-many broadcast scenarios, such as music or sports performance, requires further compression and multicast infrastructures.

Render Offloading and Latency Compensation

For untethered VR or AR HMDs, like HoloLens, the cost of rendering a detailed, high quality 3D model from the user's

perspective natively on the device can be considerable. It also increases motion-to-photon latency, which worsens the user experience. We mitigate this by offloading the rendering costs to a dedicated desktop PC on the receiving side, i.e., perform remote rendering, similar to [41, 34]. This allows us to maintain consistent framerate, to reduce perceived latency, and to conserve battery life on the device, while also enabling high-end rendering capabilities, which are not always available on mobile GPUs.

Offloading is done as follows: the rendering PC is connected to an untethered HMD via WiFi, and constantly receives user's 6DoF (six degree of freedom) *pose* from the HMD. It predicts a headset pose at render time and performs scene rendering with that pose for each eye (Fig. 9a), encodes them to a video stream (Fig. 9b), and transmits the stream and poses to the HMD. There, the video stream is decoded and displayed for each eye as a textured quad, positioned based on predicted rendered pose (Fig. 9c), and then reprojected to the latest user pose (Fig. 9f) [60].

To compensate for pose mispredictions and PC-to-HMD latency, we perform speculative rendering on the desktop side, based on the likelihood of the user pose. The orientation misprediction can be compensated by rendering into a larger FoV (field of view) (Fig. 9d), centered around the predicted user direction. The HMD renders the textured quad with actual display FoV, thus allowing some small misprediction in rotation (Fig. 9e). To handle positional misprediction, we could perform view interpolation techniques as in [34]. However, it would require streaming the scene depth buffer and its reprojection, which would increase the bandwidth and HMD-side rendering costs. Since the number of objects are small and they are localized in the capture cube, we approximate the scene depth complexity with geometry of the same (textured) quad and dynamically adjust its distance to the user, based on the point of interest.

IMPLEMENTATION

We use multiple GPUs across multiple machines to achieve real-time performance. At each capture site, 4 PCs compute depth and foreground segmentation (each PC handles two capture pods). Each PC is an Intel Core i7 3.4 Ghz CPU, 16 GB of RAM and it uses two NVIDIA Titan X GPUs. The resulting depth maps and segmented color images are then transmitted to a dedicated dual-GPU fusion machine over point-to-point 10Gbps connections. The dual-GPU unit is an Intel Core i7 3.4GHz CPU, 16GB of RAM, with two NVIDIA Titan X GPUs.

Depth Estimation: GPU Implementation

The depth estimation algorithm we use in this work comprises of three main stages: initialization, propagation, and filtering. Most of these stages are highly parallelizable and its computation is pixel independent (initialization). Therefore, a huge benefit in terms of compute can be obtained by implementing this directly on the GPU. Porting PatchMatch stereo [8] to the GPU required a modification of the propagation stage in comparison with the original CPU implementation. The original propagation stage is inherently iterative and is performed in row order starting at the top-left pixel to the end of the image and in the reverse order, iterating twice over the image. Our GPU implementation modifies this step in order to take advantage of the massive parallelism of current GPUs. The image is subdivided into neighborhoods of regular size and the propagation happens locally on each of these neighborhoods. With this optimization, whole rows and columns can be processed independently on separate threads in the GPU. In this case, the algorithm iterates through four propagation directions in the local neighborhood: from left to right, top to bottom, right to left, and bottom to top.

Finally, the filtering stage handles the removal of isolated regions that do not represent correct disparity values. For this stage, we implemented a Connected Components labeling algorithm on the GPU, so regions below a certain size are removed. This step is followed by an efficient GPU-based median algorithm to remove noisy disparity values while preserving edges.

Temporal Reconstruction: Dual-GPU Implementation

The implementation of [14] is the most computationally expensive part of the system. Although with [14] we can reconstruct multiple people in real time, room-sized dynamic scene reconstructions require additional compute power. Therefore, we had to revisit the algorithm proposed in [14] and implement a novel dual-GPU scheme. We pipeline [14] into two parts, where each part lives on a dedicated GPU. The first GPU estimates a low resolution frame-to-frame motion field; the second GPU refines the motion field and performs the volumetric data fusion. The coarse frame-to-frame motion field is computed from the raw data (depth and RGB). The second GPU uses the frame-to-frame motion to initialize the model-to-frame motion estimation, which is then used to fuse the data volumetrically. Frame-to-frame motion estimation does not require the feedback from the second GPU, so two GPUs can run in parallel. For this part we use a coarser deformation graph (i.e. we sample an ED node every 8 cm) and run 8 Levenberg-Marquardt (LM) solver iterations, with coarser voxel resolution and only 2 iterations are used for model-to-frame motion estimation.

Throughput-oriented Architecture

We avoid stalls between CPU and GPU in each part of our pipeline by using pinned (non-pageable) memory for CPU-GPU DMA data transfers, organized as ring buffers; overlapping data upload, download, and compute; and using sync-free kernel launches, maintaining relevant subproblem sizes on the GPU, having only its max-bounds estimations on the CPU. We found that overhead of using max-bounds is lower than with CUDA Dynamic Parallelism for nested kernel launches. Ring buffers introduce only processing latency into the system and maintain the throughput we want to preserve.

Computational Time

Image acquisition happens in a separate thread overlapping the computing of the previous frame with the acquisition of

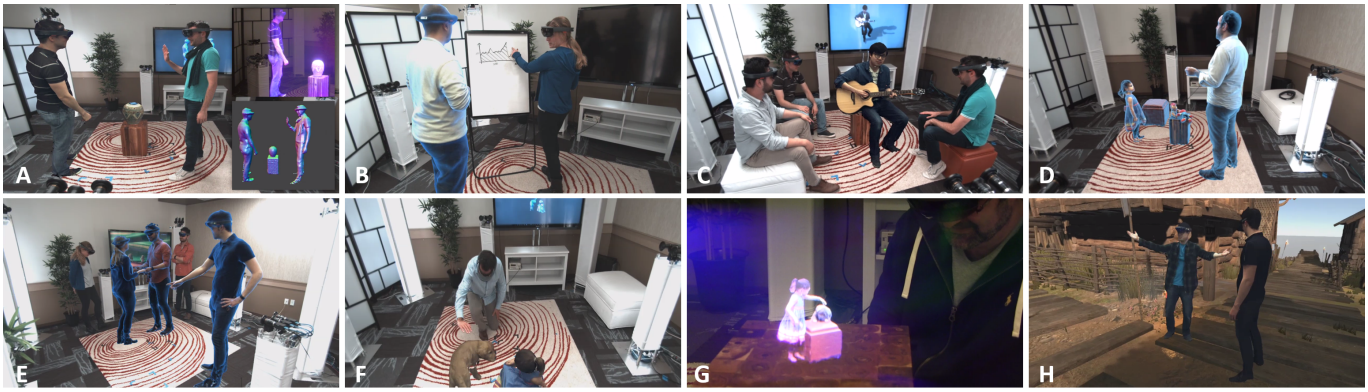

Figure 10. Applications. A) One-to-one communication. B) Business meeting. C) Live concert broadcasting. D) Living memory. E) Out-of-body dancing instructions. F) Family gathering. G) Miniature view. H) Social VR/AR.

the next one and introducing 1 frame latency. The average time for image acquisition is 4ms.

Each machine on the capture side generates two depth maps and two segmentation masks in parallel. The total time is 21ms and 4ms for the stereo matching and segmentation, respectively. In total each machine uses no more than 25ms to generate the input for the multiview non-rigid 3D reconstruction pipeline. Segmented RGBD frames are generated in parallel to the nonrigid pipeline, but do also introduce 1 frame of latency.

A master PC, aggregates and synchronizes all the depth maps and segmentation masks. Once the RGBD inputs are available, the average processing time (second GPU) to fuse all the depth maps is 29ms (i.e., 34fps) with 5ms for preprocessing (18% of the whole fusion pipeline), 14ms (47%) for the nonrigid registration (2 LM iterations, with 10 PCG iterations), and 10ms (35%) for the fusion stage. The visualization for a single eye takes 6ms on desktop GPU, and thus enables to display graphics at native refresh rate of 60Hz for HoloLens and 75Hz for Oculus Rift DK2.

APPLICATIONS

As shown in the supplementary video and Fig. 10, we envision many applications for Holoportation. These fall into two broad categories. First, are one-to-one applications: these are scenarios where two remote capture rigs establish a direct connection so that the virtual and physical spaces of each rig are in one-to-one correspondence. Once segmentation is performed any new object in one space will appear in the other and vice versa. As shown in the video, this allows remote participants to be correctly occluded by the objects in the local space. Because our system is agnostic to *what* is actually captured, objects, props, and even furniture can be captured.

One to one calls are analogous to a telephone or video chat between two parties. However, with the ability to move around the space, and benefit from many physical cues. The second category consists of one-to-many applications: this is where a single capture rig is broadcasting a live stream of data to many receivers. In this case the physical space within the capture rig corresponds to the many virtual spaces of the remote viewers. This is analogous to the broadcast television model, where a single image is displayed on countless screens.

One-to-one

One-to-one applications are communication and collaboration scenarios. This could be as simple as a remote conversation. The distinguishing characteristic that Holoportation brings is a sense of physical presence through cues such as movement in space, gestures, and body language.

Specific one-to-one applications we foresee include:

- Family gatherings, where a remote participant could visit with loved ones or join a birthday celebration.
- Personal instruction, where a remote teacher could provide immediate feedback on dance moves, or yoga poses.
- Doctor patient, where a remote doctor could examine and interact with a patient to provide a diagnosis.
- Design meetings, where remote parties could share and interact with physical or virtual objects.

One-to-many

A unique characteristic of Holoportation for one-to-many scenarios is *live* streaming. Other technologies can broadcast pre-processed content, as in Collet et al [11]. We believe that live streaming provides a much more powerful sense of engagement and shared experience. Imagine a concert viewable from any seat in the house, or even from on stage. Similarly, live sporting events could be watched, or re-watched, from any point. When humans land on Mars, imagine waiting on the surface to greet the astronaut as she steps foot on the planet.

In both one-to-one or one-to many scenarios, Holoportation content can be recorded for replay from any viewpoint, and any scale. Room-sized events can be scaled to fit on a coffee table for comfortable viewing. Content can be paused, rewound, fast forwarded, to view any event of interest, from any point of view.

Beyond Augmented Reality: A Body in VR

Finally, we point out that Holoportation can also be used in a single or multi player immersive VR experiences, where one's own body is captured by the Holoportation system and inserted into the VR world in real-time. This provides a virtual body that moves and appears like ones own physical body, providing a sense of presence.

As shown in the supplementary video, these experiences capture many new possibilities for 'social' AR and VR applications in the future.

USER STUDY

Having solved many of the technical challenges for real-time high quality immersive telepresence experiences, we wanted to test our prototype in a preliminary user study. We aimed to unveil opportunities and challenges for interaction design, explore technological requirements, and better understand the tradeoffs of AR and VR for this type of communication.

Procedure and Tasks

We recruited a total of 10 participants (3 females; age 22 to 56) from a pool of partners and research lab members not involved with this project. In each study session, two participants were placed in different rooms and asked to perform two tasks (social interaction and physical object manipulation) using each of the target technologies, AR and VR. We counterbalanced the order of technology conditions as well as the order of the tasks using the Latin square design. The whole procedure took approximately 30 minutes. For the duration of the study, two researchers observed and recorded participants' behavior, including their interaction patterns, body language, and strategies for collaboration in the shared space. After the study, researchers also conducted semi-structured interviews to obtain additional insight about the most salient elements of the users' experience, challenges, and potential usage scenarios.

Social Interaction Task: Tell-a-lie

To observe how people use Holoportation for verbal communication, we used a tell-a-lie task [66]. All participants were asked to state three pieces of information about themselves, with one of the statements being false. The goal of the partner was to identify the false fact by asking any five questions. Both deception and deception detection are social behaviors that encourage people to pay attention to and accurately interpret verbal and non-verbal communication. Thus, it presents a very conservative testing scenario for our technology.

Physical Interaction Task: Building Blocks

To explore the use of technology for physical interaction in the shared workspace, we also designed an object manipulation task. Participants were asked to collaborate in AR and VR to arrange six 3D objects (blocks, cylinders, etc.) in a given configuration (Fig. 11). Each participant had only three physical objects in front of him on a stool, and could see the blocks of the other person virtually. During each task, only one of the participants had a picture of the target layout, and had to instruct the partner.

Study Results and Discussion

Prior to analysis, researchers compared observation notes and partial transcripts of interviews for congruency. Further qualitative analysis revealed insights that fall into 5 categories.

Adapting to Mixed-reality Setups

Participants experienced feelings of spatial and social co-presence with their remote partners, which made their interaction more seamless. P4: *"It's way better than phone calls.*

Figure 11. User study setting: Two participants performing the building blocks task in an AR condition (left) and a VR condition (right).

[...] Because you feel like you're really interacting with the person. It's also better than a video chat, because I feel like we can interact in the same physical space and that we are modifying the same reality."

The spatial and auditory cues gave an undeniable sense of co-location; so much so that many users even reported a strong sense of *interpersonal space* awareness. For example, most participants showed non-verbal indicators/body language typical to face-to-face conversations in real life (e.g. adopting the "closed" posture when lying in the social task; automatically using gestures to point or leaning towards each other in the building task). P6: *"It made me conscious of [my own image]. It was kind of realistic in that sense, because whenever we are talking to someone around the table we are conscious of not wanting to slouch in front of the other person [and] about how we look to the other person."*

Participants also quickly adapted and developed strategies for collaborating in the mixed-reality setup. For example, several participants independently came up with the idea to remove their own blocks to let their partner arrange their shapes first, to avoid confusing the real and virtual objects. While participants often started by verbally instructing and simple pointing, they quickly figured out that it is easier and more natural for them to use gestures or even their own objects or hands to show the intended position and orientation. P2: *"When I started I was kind of pointing at the shape, then I was just doing the same with my shape and then just say 'Ok, do that. Because then she could visually see, I could almost leave my shapes and wait until she put her shapes exactly in the same location and then remove mine."*

Natural Interaction for Physical and Collaborative tasks

The shared spatial frame of reference, being more natural than spatial references in a video conversation, was mentioned as a main advantage of Holoportation. For example, P9 found that *"[the best thing was] being able to interact remotely and work together in a shared space. In video, in Skype, even just showing something is still a problem: you need to align [the object] with the camera, then 'Can you see it?', then 'Can you turn it?' Here it's easy."*

The perception of being in the same physical space also allows people to interact simply more naturally, even for full body interaction, as nicely described by P4: *"I'm a dancer [...] and we had times when we tried to have Skype rehearsals. It's really hard, because you're in separate rooms completely. There's no interaction, they might be flipped, they might not. Instead with this, it's like I could look and say 'ok, this is his right' so I'm going to tell him move it to the right or towards me."*

Influence of Viewer Technology

To probe for the potential uses of Holoportation, we used two viewer technologies with different qualities and drawbacks. Characteristics of the technology (e.g. FoV, latency, image transparency, and others) highly influenced participants' experiences, and, specifically, their feelings of social and spatial co-presence. To some participants, AR felt more realistic/natural because it integrated a new image with their own physical space. In the AR condition, they felt that their partner was "here", coming to their space as described by P7 *"In the AR it felt like somebody was transported to the room where I was, there were times I was forgetting they were in a different room."* The VR condition gave participants the impression of being in the partner's space, or another space altogether. P6: *"[With VR] I felt like I was in a totally different place and it wasn't all connected to my actual surroundings."*

Another interesting finding in the VR condition was the confusion caused by seeing a replica of both local and remote participants and objects. There were many instances where users failed to determine if the block they were about to touch was real or not, passing their hands directly through the virtual object. Obviously, rendering effects could help in this disambiguation, although if these are subtle then they may still cause confusions.

Related to AR and VR conditions was also the effects of latency. In VR the user's body suffered from latency due to our pipeline. Participants could tolerate the latency in terms of interacting and picking up objects, but a few users suffered from discomfort during the VR condition, which was not perceived in the AR condition. Despite this we were surprised how well participants performed in VR and how they commented on enjoying the greater sense of presence due to seeing their own bodies.

Freedom to Choose a Point of View

One of the big benefits mentioned, was that the technology allows the viewer to assume the view they wanted, and move freely without constraints. This makes it very suitable for exploring objects or environments, or to explain complicated tasks that benefit from spatial instructions. P10 commented: *"I do a lot of design reviews or things like that where you actually want to show somebody something and then explain in detail and it's a lot easier if you could both see the same things. So if you have a physical object and you want to show somebody the physical object and point to it, it just makes it a lot easier."* However, this freedom of choice might be less suitable in case of a "directors narrative" in which the presenter wants to control the content and the view on it.

Requirements for Visual Quality

While a quantitative analysis of small sample sizes needs careful interpretation, we found that most participants (70%) tended to agree or strongly agree that they perceived the conversation partner to look like a real person. However, some feedback about visual quality was less positive; e.g., occasional flicker that occurred when people were at the edge of the reconstruction volume was perceived to be off-putting.

Eye Contact through the Visor

One key factor that was raised during the study was the presence of the headset in both AR and VR conditions, which clearly impacted the ability to make direct eye contact. Whilst we perceived many aspects of physical co-located interaction, users did mention this as a clear limitation.

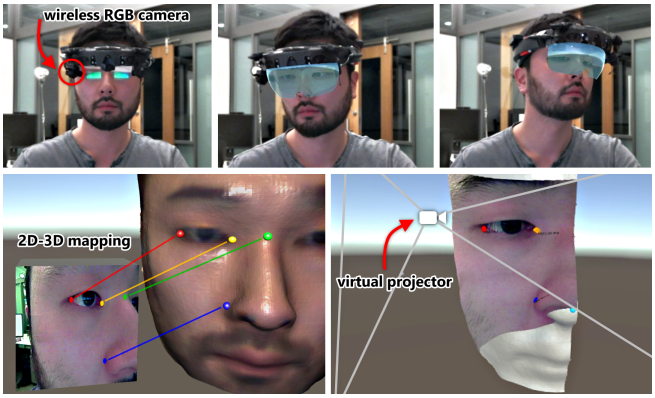

Figure 12. Visor Removal. The left image in the top row shows the placement of the inward looking cameras on the HMD while those on the center and right show the projections. The bottom row shows the facial landmarks localized by our pipeline to enable the projective texturing.

To overcome this problem, we have begun to investigate a proof-of-concept prototype for augmenting existing see-through displays with headset removal. We utilize tiny wireless video cameras, one for each eye region that is mounted on the outer rim of the display (see Fig. 12). We then project the texture associated with the occluded eye-region to a 3D reconstruction of the user's face.

To perform the projective texturing, we need to not only estimate the intrinsics calibration of the camera, but also the extrinsic parameters, which in this instance corresponds to the 3D position of the camera with respect to the face of the user. Given the 3D position of facial keypoints (e.g. eye corners, wings of the nose) in an image, it is possible to estimate the extrinsics of the camera by leveraging the 2D-3D position of these landmarks using optimization methods like [35]. We use a discriminately trained cascaded Random Forest to generate series of predictions of the most likely position of facial keypoints in a manner similar to [50]. To provide predictions that are spatially smooth over time, we perform a mean-shift filtering of the predictions made by Random Forest.

The method we just described requires the 3D location of keypoints to estimate the camera extrinsics. We extract this information from a high fidelity reconstruction of the user's face obtained by aggregating frames using KinectFusion [23]. This process requires human intervention, but only takes a few seconds to complete. Note that once we have the 3D model, we render views (from known camera poses) and pass these to our Random Forest to estimate the 2D location of the facial keypoints. Knowing the camera poses used to render, we can ray-cast and estimate where the keypoints lie on the user's 3D face model. We also perform color correction to make sure that the texture coming from both cameras look

compatible. At this stage, we have all the components to perform real-time projective texture mapping of eye camera images onto 3D face geometry and to perform geometric mesh blending of the eye region and the live mesh. Our preliminary results are shown in Fig. 12 and more results are presented in the attached video.

LIMITATIONS

While we presented the first high quality 360° immersive 3D telepresence system, our work does have many limitations. The amount of high-end hardware required to run the system is very high, with pairs of depth cameras requiring a GPU-powered PC, and a seperate GPU-based PC for temporal reconstruction, meshing and transmission. Currently, a 10 Gigabit Ethernet connection is used to communicate between rooms, allowing low latency communication between the users, which limits many Internet scenarios. More efficient compressions schemes need to be developed to address this requirement and compress geometry and color data for lower bandwidth connections. Moreover, during the texturing process we still observed color artifacts caused by extreme occlusions in the scene. More effective algorithms that take further advantage of the non-rigid tracking could further reduce the artifacts and the number of color cameras that are required. Regarding the 3D non-rigid reconstruction, we note that for many fine-grained interaction tasks, the 3D reconstruction of smaller geometry such as fingers produced artifacts, such as missing or merged surfaces. Finally, we note that developing algorithms for making direct eye contact through headset removal is challenging, and as yet we are not fully over the uncanny valley.

CONCLUSION

We have presented Holoportation: an end-to-end system for high-quality real-time capture, transmission and rendering of people, spaces, and objects in full 3D. We combine a new capture technology with mixed reality displays to allow users to see, hear and interact in 3D with remote colleagues. From an audio-visual perspective, this creates an experience akin to physical presence. We have demonstrated many different interactive scenarios, from one-to-one communication and one-to-many broadcast scenarios, both for live/real-time interaction, to the ability to record and playback 'living memories'. We hope that practitioners and researchers will begin to expand the technology and application space further, leveraging new possibilities enabled by this type of live 3D capture.

REFERENCES

1. Balogh, T., and Kovács, P. T. Real-time 3d light field transmission. In *SPIE Photonics Europe*, International Society for Optics and Photonics (2010), 772406–772406.
2. Barnes, C., Shechtman, E., Finkelstein, A., and Goldman, D. PatchMatch: A randomized correspondence algorithm for structural image editing. *ACM SIGGRAPH and Transaction On Graphics* (2009).
3. Batlle, J., Mouaddib, E., and Salvi, J. Recent progress in coded structured light as a technique to solve the correspondence problem: a survey. *Pattern recognition 31*, 7 (1998), 963–982.
4. Beck, S., Kunert, A., Kulik, A., and Froehlich, B. Immersive group-to-group telepresence. *Visualization and Computer Graphics, IEEE Transactions on 19*, 4 (2013), 616–625.
5. Benko, H., Jota, R., and Wilson, A. Miragetable: freehand interaction on a projected augmented reality tabletop. In *Proceedings of the SIGCHI conference on human factors in computing systems*, ACM (2012), 199–208.
6. Besl, P. J. Active, optical range imaging sensors. *Machine vision and applications 1*, 2 (1988), 127–152.
7. Blanche, P.-A., Bablumian, A., Voorakaranam, R., Christenson, C., Lin, W., Gu, T., Flores, D., Wang, P., Hsieh, W.-Y., Kathaperumal, M., et al. Holographic three-dimensional telepresence using large-area photorefractive polymer. *Nature 468*, 7320 (2010), 80–83.
8. Bleyer, M., Rhemann, C., and Rother, C. PatchMatch Stereo - Stereo Matching with Slanted Support Windows. In *BMVC* (2011).
9. Bogo, F., Black, M. J., Loper, M., and Romero, J. Detailed full-body reconstructions of moving people from monocular rgb-d sequences. In *Proceedings of the IEEE International Conference on Computer Vision* (2015), 2300–2308.
10. Chen, W.-C., Towles, H., Nyland, L., Welch, G., and Fuchs, H. Toward a compelling sensation of telepresence: Demonstrating a portal to a distant (static) office. In *Proceedings of the conference on Visualization'00*, IEEE Computer Society Press (2000), 327–333.
11. Collet, A., Chuang, M., Sweeney, P., Gillett, D., Evseev, D., Calabrese, D., Hoppe, H., Kirk, A., and Sullivan, S. High-quality streamable free-viewpoint video. *ACM TOG 34*, 4 (2015), 69.
12. de Queiroz, R., and Chou, P. A. Compression of 3d point clouds using a region-adaptive hierarchical transform. *Transactions on Image Processing* (2016). To appear.
13. Dou, M., and Fuchs, H. Temporally enhanced 3d capture of room-sized dynamic scenes with commodity depth cameras. In *Virtual Reality (VR), 2014 iEEE*, IEEE (2014), 39–44.
14. Dou, M., Khamis, S., Degtyarev, Y., Davidson, P., Fanello, S. R., Kowdle, A., Escolano, S. O., Rhemann, C., Kim, D., Taylor, J., Kohli, P., Tankovich, V., and Izadi, S. Fusion4d: Real-time performance capture of challenging scenes. *ACM Trans. Graph. 35*, 4 (July 2016), 114:1–114:13.
15. Fanello, S., Rhemann, C., Tankovich, V., Kowdle, A., Orts Escolano, S., Kim, D., and Izadi, S. Hyperdepth: Learning depth from structured light without matching. In *The IEEE Conference on Computer Vision and Pattern Recognition (CVPR)* (June 2016).

16. Fuchs, H., Bazin, J.-C., et al. Immersive 3d telepresence. *Computer*, 7 (2014), 46–52.

17. Fuchs, H., Bishop, G., Arthur, K., McMillan, L., Bajcsy, R., Lee, S., Farid, H., and Kanade, T. Virtual space teleconferencing using a sea of cameras. In *Proc. First International Conference on Medical Robotics and Computer Assisted Surgery*, vol. 26 (1994).

18. Gal, R., Wexler, Y., Ofek, E., Hoppe, H., and Cohen-Or, D. Seamless montage for texturing models. In *Computer Graphics Forum*, vol. 29, Wiley Online Library (2010), 479–486.

19. Gibbs, S. J., Arapis, C., and Breiteneder, C. J. Teleport–towards immersive copresence. *Multimedia Systems 7*, 3 (1999), 214–221.

20. Gilkey, R. H., and Anderson, T. R., Eds. *Binaural and Spatial Hearing in Real and Virtual Environments*. Psychology Press, 2009.

21. Gross, M., Würmlin, S., Naef, M., Lamboray, E., Spagno, C., Kunz, A., Koller-Meier, E., Svoboda, T., Van Gool, L., Lang, S., et al. blue-c: a spatially immersive display and 3d video portal for telepresence. In *ACM Transactions on Graphics (TOG)*, vol. 22, ACM (2003), 819–827.

22. Hansard, M., Lee, S., Choi, O., and Horaud, R. P. *Time-of-flight cameras: principles, methods and applications*. Springer Science & Business Media, 2012.

23. Izadi, S., Kim, D., Hilliges, O., Molyneaux, D., Newcombe, R. A., Kohli, P., Shotton, J., Hodges, S., Freeman, D., Davison, A. J., and Fitzgibbon, A. W. Kinectfusion: real-time 3d reconstruction and interaction using a moving depth camera. In *UIST 2011, Santa Barbara, CA, USA, October 16-19, 2011* (2011), 559–568.

24. Jones, A., Lang, M., Fyffe, G., Yu, X., Busch, J., McDowall, I., Bolas, M., and Debevec, P. Achieving eye contact in a one-to-many 3d video teleconferencing system. *ACM Transactions on Graphics (TOG) 28*, 3 (2009), 64.

25. Jones, B., Sodhi, R., Murdock, M., Mehra, R., Benko, H., Wilson, A., Ofek, E., MacIntyre, B., Raghuvanshi, N., and Shapira, L. Roomalive: Magical experiences enabled by scalable, adaptive projector-camera units. In *Proceedings of the 27th annual ACM symposium on User interface software and technology*, ACM (2014), 637–644.

26. Jouppi, N. P. First steps towards mutually-immersive mobile telepresence. In *Proceedings of the 2002 ACM conference on Computer supported cooperative work*, ACM (2002), 354–363.

27. Kanade, T., Rander, P., and Narayanan, P. Virtualized reality: Constructing virtual worlds from real scenes. *IEEE multimedia*, 1 (1997), 34–47.

28. Kim, K., Bolton, J., Girouard, A., Cooperstock, J., and Vertegaal, R. Telehuman: effects of 3d perspective on gaze and pose estimation with a life-size cylindrical telepresence pod. In *Proceedings of the SIGCHI Conference on Human Factors in Computing Systems*, ACM (2012), 2531–2540.

29. Kohli, P., Rihan, J., Bray, M., and Torr, P. H. S. Simultaneous segmentation and pose estimation of humans using dynamic graph cuts. *IJCV 79*, 3 (2008), 285–298.

30. Krähenbühl, P., and Koltun, V. Efficient inference in fully connected crfs with gaussian edge potentials. In *Advances in Neural Information Processing Systems: 25th Annual Conference on Neural Information Processing Systems 2011. Granada, Spain.* (2011), 109–117.

31. Kurillo, G., Bajcsy, R., Nahrsted, K., and Kreylos, O. Immersive 3d environment for remote collaboration and training of physical activities. In *Virtual Reality Conference, 2008. VR'08. IEEE*, IEEE (2008), 269–270.

32. Kuster, C., Ranieri, N., Agustina, Zimmer, H., Bazin, J. C., Sun, C., Popa, T., and Gross, M. Towards next generation 3d teleconferencing systems. 1–4.

33. Kuster, C., Ranieri, N., Zimmer, H., Bazin, J., Sun, C., Popa, T., Gross, M., et al. Towards next generation 3d teleconferencing systems. In *3DTV-Conference: The True Vision-Capture, Transmission and Display of 3D Video (3DTV-CON), 2012*, IEEE (2012), 1–4.

34. Lee, K., Chu, D., Cuervo, E., Kopf, J., Degtyarev, Y., Grizan, S., Wolman, A., and Flinn, J. Outatime: Using speculation to enable low-latency continuous interaction for mobile cloud gaming. In *Proceedings of the 13th Annual International Conference on Mobile Systems, Applications, and Services*, ACM (2015), 151–165.

35. Lepetit, V., Moreno-Noguer, F., and Fua, P. Epnp: An accurate o(n) solution to the pnp problem. *Int. J. Comput. Vision 81*, 2 (Feb. 2009).

36. Loop, C., Zhang, C., and Zhang, Z. Real-time high-resolution sparse voxelization with application to image-based modeling. In *Proceedings of the 5th High-Performance Graphics Conference*, ACM (2013), 73–79.

37. Luff, P., and Heath, C. Mobility in collaboration. In *Proceedings of the 1998 ACM conference on Computer supported cooperative work*, ACM (1998), 305–314.

38. Maimone, A., and Fuchs, H. Encumbrance-free telepresence system with real-time 3d capture and display using commodity depth cameras. In *Mixed and Augmented Reality (ISMAR), 2011 10th IEEE International Symposium on*, IEEE (2011), 137–146.

39. Maimone, A., and Fuchs, H. Real-time volumetric 3d capture of room-sized scenes for telepresence. In *3DTV-Conference: The True Vision-Capture, Transmission and Display of 3D Video (3DTV-CON), 2012*, IEEE (2012), 1–4.

40. Maimone, A., Yang, X., Dierk, N., State, A., Dou, M., and Fuchs, H. General-purpose telepresence with head-worn optical see-through displays and projector-based lighting. In *Virtual Reality (VR), 2013 IEEE*, IEEE (2013), 23–26.

41. Mark, W. R., McMillan, L., and Bishop, G. Post-rendering 3d warping. In *Proceedings of the 1997 symposium on Interactive 3D graphics*, ACM (1997), 7–ff.

42. Matusik, W., and Pfister, H. 3d tv: a scalable system for real-time acquisition, transmission, and autostereoscopic display of dynamic scenes. In *ACM Transactions on Graphics (TOG)*, vol. 23, ACM (2004), 814–824.

43. Molyneaux, D., Izadi, S., Kim, D., Hilliges, O., Hodges, S., Cao, X., Butler, A., and Gellersen, H. Interactive environment-aware handheld projectors for pervasive computing spaces. In *Pervasive Computing*. Springer, 2012, 197–215.

44. Mori, M., MacDorman, K. F., and Kageki, N. The uncanny valley [from the field]. *Robotics & Automation Magazine, IEEE 19*, 2 (2012), 98–100.

45. Nagano, K., Jones, A., Liu, J., Busch, J., Yu, X., Bolas, M., and Debevec, P. An autostereoscopic projector array optimized for 3d facial display. In *ACM SIGGRAPH 2013 Emerging Technologies*, ACM (2013), 3.

46. Narayan, K. S., and Abbeel, P. Optimized color models for high-quality 3d scanning. In *Intelligent Robots and Systems (IROS), 2015 IEEE/RSJ International Conference on*, IEEE (2015), 2503–2510.

47. Pejsa, T., Kantor, J., Benko, H., Ofek, E., and Wilson, A. D. Room2room: Enabling life-size telepresence in a projected augmented reality environment. In *CSCW 2016, San Francisco, CA, USA, February 27 - March 2, 2016*, D. Gergle, M. R. Morris, P. Bjrn, and J. A. Konstan, Eds., ACM (2016), 1714–1723.

48. Petit, B., Lesage, J.-D., Menier, C., Allard, J., Franco, J.-S., Raffin, B., Boyer, E., and Faure, F. Multicamera real-time 3d modeling for telepresence and remote collaboration. *International Journal of Digital Multimedia Broadcasting 2010* (2009).

49. Posdamer, J., and Altschuler, M. Surface measurement by space-encoded projected beam systems. *Computer graphics and image processing 18*, 1 (1982), 1–17.

50. Ren, S., Cao, X., Wei, Y., and Sun, J. Face alignment at 3000 fps via regressing local binary features. In *Proceedings of the IEEE Conference on Computer Vision and Pattern Recognition* (2014), 1685–1692.

51. Rhemann, C., Hosni, A., Bleyer, M., Rother, C., and Gelautz, M. Fast cost-volume filtering for visual correspondence and beyond. In *CVPR* (2011).

52. S. Kosov, T. T., and Seidel, H.-P. Accurate real-time disparity estimation with variational methods. In *ISVC* (2009).

53. Scharstein, D., and Szeliski, R. A taxonomy and evaluation of dense two-frame stereo correspondence algorithms. *Int. J. Comput. Vision 47*, 1-3 (Apr. 2002), 7–42.

54. Sumner, R. W., Schmid, J., and Pauly, M. Embedded deformation for shape manipulation. *ACM TOG 26*, 3 (2007), 80.

55. Tanikawa, T., Suzuki, Y., Hirota, K., and Hirose, M. Real world video avatar: real-time and real-size transmission and presentation of human figure. In *Proceedings of the 2005 international conference on Augmented tele-existence*, ACM (2005), 112–118.

56. Tombari, F., Mattoccia, S., Stefano, L. D., and Addimanda, E. Near real-time stereo based on effective cost aggregation. In *ICPR* (2008).

57. Towles, H., Chen, W.-C., Yang, R., Kum, S.-U., Kelshikar, H. F. N., Mulligan, J., Daniilidis, K., Fuchs, H., Hill, C. C., Mulligan, N. K. J., et al. 3d tele-collaboration over internet2. In *In: International Workshop on Immersive Telepresence, Juan Les Pins*, Citeseer (2002).

58. Vineet, V., Warrell, J., and Torr, P. H. S. Filter-based mean-field inference for random fields with higher-order terms and product label-spaces. In *ECCV 2012 - 12th European Conference on Computer Vision*, vol. 7576, Springer (2012), 31–44.

59. Will, P. M., and Pennington, K. S. Grid coding: A preprocessing technique for robot and machine vision. *Artificial Intelligence 2*, 3 (1972), 319–329.

60. Williams, O., Barham, P., Isard, M., Wong, T., Woo, K., Klein, G., Service, D., Michail, A., Pearson, A., Shetter, M., et al. Late stage reprojection, Jan. 29 2015. US Patent App. 13/951,351.

61. Yang, Q., Wang, L., Yang, R., Wang, S., Liao, M., and Nistr, D. Real-time global stereo matching using hierarchical belief propagation. In *BMVC* (2006).

62. Zhang, C., Cai, Q., Chou, P. A., Zhang, Z., and Martin-Brualla, R. Viewport: A distributed, immersive teleconferencing system with infrared dot pattern. *IEEE Multimedia 20*, 1 (2013), 17–27.

63. Zhang, Z. A flexible new technique for camera calibration. *IEEE Trans. Pattern Anal. Mach. Intell. 22*, 11 (Nov. 2000), 1330–1334.

64. Zhou, Q.-Y., and Koltun, V. Color map optimization for 3d reconstruction with consumer depth cameras. *ACM Transactions on Graphics (TOG) 33*, 4 (2014), 155.

65. Zollhöfer, M., Nießner, M., Izadi, S., Rhemann, C., Zach, C., Fisher, M., Wu, C., Fitzgibbon, A., Loop, C., Theobalt, C., and Stamminger, M. Real-time non-rigid reconstruction using an rgb-d camera. *ACM Transactions on Graphics (TOG) 33*, 4 (2014).

66. Zuckerman, M., DePaulo, B. M., and Rosenthal, R. Verbal and nonverbal communication of deception. *Advances in experimental social psychology 14*, 1 (1981), 59.

On the quantum "self-teleportation" probability of a human body

Massimiliano Sassoli de Bianchi
*Center Leo Apostel for Interdisciplinary Studies, Brussels Free University, Brussels, Belgium**
(Dated: December 25, 2017)

The probability of quantum relocation of a human body, at a given distance, is estimated using two different methods, giving comparable results. Not only the obtained values for the probabilities are inconceivably small, but assumptions of a sci-fi nature are also necessary to ensure that they are not identical to zero. The notions of 'non-spatiality' and 'superselection rule' are also briefly discussed.

arXiv:1712.08465v1 [physics.pop-ph] 22 Dec 2017

I. INTRODUCTION

Recently a science fiction writer asked me the following question:

What is the probability for an individual to suddenly vanish from one place and, one second after, reappear in another predetermined place, tens of kilometers away, according to the laws of quantum physics?

He also told me that a famous physicist (he had forgotten the name) used to pose such question to his students, so that it necessarily had to be a simple textbook problem. His interest in this question was that the protagonist of his story had to take advantage of this probability, no matter how infinitesimal (he was equipped with a futurist amplifier of probabilities), to "transfer" all of a sudden his body to a considerable spatial distance.

Inspired by his curious quiz, which only apparently is a textbook one, I will try in this article to offer a few elements of clarification about some important concepts of quantum physics, in particular the concept of *non-spatiality*, which I will illustrate by means of a simple metaphor. I will also provide two different estimates of the teleportation probability in question, on the basis of a number of simplifying assumptions, some of which will necessarily be of a sci-fi nature. Despite these assumptions, the values I will obtain are so small that they are almost impossible to conceive.

Not to create any misunderstanding, let me assert very clearly, from the beginning, that the probability that in *normal conditions* an individual would disappear from one place and be teleported to another place is, according to the today known laws of quantum physics (and the author's personal understanding of them), exactly *equal to zero*! In fact, as I will explain, and until evidence to the contrary, ordinary macroscopic bodies (such as our human bodies), in standard environmental conditions (for instance of temperature and pressure), do not obey the quantum laws. But before proceeding in my discussion, I have to face a little problem of terminology.

The term "teleportation" is used in quantum physics to denote a very specific class of phenomena that have nothing to do with the nature of the question addressed to me by the science fiction writer [1]. These phenomena describe the possibility of carrying information from one place to another, in ways that allow the construction of an exact duplicate of a given physical entity. This construction can be obtained only on the condition that the system of origin (i.e., the system that is to be duplicated) is altered, if not destroyed, in the process, since a well-known theorem, called the *no-cloning theorem*, forbids to create a perfect clone of a quantum entity [2, 3].

Apart from this difficulty, the quantum teleportation, understood in the usual sense mentioned above, requires the preparation of special pairs of non-separated (entangled) systems that have to connect the two spatial regions between which the teleportation is to be produced, which for this reason is also called *entanglement-assisted teleportation*. In other words, this form of quantum teleportation requires the presence of technological apparatuses tailored to the specificities of the entities to be teleported, and the execution of a series of operations that wil produce their destruction and reconstitution in the place of destination. This is not a spontaneous process, associated with probabilities, but a determinative process, which requires a specific technology to be implemented.

Let me add that in the quantum teleportation only the information about the entity is transported, so as to allow its reconstruction, while nothing material is actually moved (except the carriers of information along an ordinary communication channel); and even though experiments of entanglement-assisted teleportation have already been successfully carried out (the current record is a teleportation over a distance of 143 km, between the Canary Islands of La Palma and Tenerife [4]), these remain so far limited to individual microscopic entities and finite-dimensional physical observables, such as the polarization of a photon, or the spin of an electron.

*Electronic address: msassoli@vub.ac.be

Having said that, and in order to avoid misunderstandings, I will use in the following the term "quantum self-teleportation," or more simply *self-teleportation*, to designate a hypothetical process of spatial relocation of a physical entity, to distinguish it from the aforementioned quantum teleportation assisted by entanglement. As previously emphasized, self-teleportation does not seem to be possible for macroscopic bodies, in standard conditions, as they only obey the laws of classical physics. Therefore, some additional sci-fi-like assumptions will be needed to explore this possibility and provide an estimate of the probability of such event, for a macroscopic entity like the body of a human being.

II. NON-SPATIALITY

I will start by explaining a little better why a macroscopic body cannot behave like a microscopic entity. It is important to observe that macroscopic bodies, such as human bodies, or whatever ordinary objects, like rocks, grains of sand, etc., are *spatial entities*. This means that they evolve while remaining within the so-called 3-dimensional Euclidean space. To clarify what I mean by this, I will use a simple metaphor.

Imagine a swimmer in a pool. The pool's water corresponds to the 3-dimensional physical space, and the swimmer in it represents a macroscopic entity. If she wants to move from one point to another of the pool, that is, from one point in space to another point in space, she can only do so by swimming, and of course, due to the viscosity of water, the speed of her movement will be limited: she will not be able to exceed a determined maximum speed, which we can assume to be, say, of 2 m/s. Thus, if we assume that the swimmer is located near the trampoline, and she wants to reach a point located at the center of the pool, say 10 m away, this will take her 5 s, if she can travel at the maximum possible speed.

Imagine now a child on the trampoline. In this metaphor the child is a microscopic entity, located outside of the pool's water, that is, outside the ordinary 3-dimensional physical space. Indeed, microscopic entities, when not organized into macroscopic aggregates, or when not interacting with macroscopic entities, are typically non-spatial entities [5–11], not belonging to the water of the pool. The child, as a non-spatial entity, "moves" through another "space," which in a sense is adherent to our physical space, and which in our metaphor is represented by the layer of air above the pool; and since the viscosity of air is lower than that of water, he will be able to do so with greater effective speed than the swimmer.

Suppose that the limit speed in the air, for the child, is of 10 m/s, and that he is actually running at that speed on the trampoline, while in the process of diving. He will then be able to pass from the region of the trampoline to the region of the center of the pool in about 1 s, which is something the swimmer is obviously unable to do. The interesting thing is that from the perspective of the swimmer, it is as if the diving child would appear out of nowhere in the middle of the pool, because he was not moving through the water, as the swimmer is forced to do, but through the air, which corresponds to a different layer of reality, of a non-ordinary kind, that we cannot directly perceive using our ordinary perceptual tools.

I hope it is clear to everyone that a swimmer who is immersed in the water of the pool will never be able to move from one point to another as a diver (who is outside of it) can do. Similarly, a macroscopic body (the swimmer in our metaphor), being forced to move while remaining in the 3-dimensional physical space, will never be able to mimic the behavior of a microscopic entity, which instead is almost always outside of it (unless of course we would find a way to bring it out from that water, which is the sci-fi hypothesis we will have later on to consider).

There are several ways to infer the mysterious non-spatiality of the microscopic entities. The simplest is to take seriously the uncertainty principle of Heisenberg. In fact, according to it, it is not possible to simultaneously determine both the position and momentum of a microscopic entity. Therefore, it is not possible to solve the equations of motion (which require as an input both quantities), and as a consequence it is not possible to determine the spatial trajectory of the entity in question. This impossibility does not arise from the fact that we would lack some crucial information about the state of the entity (as the *no-go theorems* about hidden-variable theories illustrate [12–17]), which if we would possess would allow us to determine its trajectory: it is an impossibility of a fundamental, irreducible nature, which forces us to acknowledge that such trajectory in space does not exist, and since it does not exists, we must also abandon the idea that a microscopic entity would be always present in the 3-dimensional space.

In the words of the previous metaphor, a microscopic entity is essentially a diver, not a swimmer, and if you look for a diver you will find him almost always on the trampoline, or in the air, and not in the water. On the other hand, the human body, which is a macroscopic entity, is a genuine spatial entity, that is, a swimmer, not a diver, who cannot disappear from space as if by magic, only to reappear in another region of the same; certainly not in normal conditions, and according to the known laws of physics.

Le me add a further terminological clarification. In the scientific literature the term *non-spatiality* is much less used than that of *non-locality*. However, both terms express the same idea. In fact, all that is stably present in our three-dimensional space is necessarily local, that is, locally present in it, in *actual* and not in *potential* terms (also an

extended object, like a cloud, is a local object, as it possesses local actual properties). Therefore, what is not present in a local sense is in fact not present at all (which doesn't mean it doesn't exist), and consequently the concepts of non-locality and non-spatiality are intimately related.

Now, as I tried to illustrate with the metaphor of the pool, reality is layered, and one of these layers is that in which the microscopic entities live: it is a layer that could be called *prespatial* (and which in a sense is also *pretemporal*). In adherence to this prespatial layer (represented in the metaphor as the layer of air above the pool), lies our ordinary spatial layer (the water in the pool), inside which macroscopic entities usually evolve, like the objects of our daily lives, and our human bodies.

Of course, the pool metaphor is only to be understood as a very crude allegorical simplification. The non-spatial or prespatial layer is a non-ordinary reality whose dimensionality is much higher than the three dimensions of our ordinary space, or the four dimensions of spacetime, and in general it could even be considered to be infinite-dimensional (as infinite-dimensional is in general the Hilbert state-space of a quantum entity). This cannot be represented in the too simple pool metaphor, in which the dimensionality of the air region above the pool, and of the water region inside the pool, is the same. Also, the region of contact between the spatial and prespatial layers is much more articulate and intricate than what the metaphor suggests, and certainly the non-spatial (or pre-spatial) entities cannot be represented as simple corpuscular entities.

III. WAVE-PACKET SPREADING

The problem that we need first to consider is the evolution of the *probability of presence* (in space) of a microscopic entity, such as a single atom, when it evolves freely, i.e., when no external forces or other entities (microscopic or macroscopic) interact with it (apart the measuring system). The term "probability of presence" should be understood in the sense of the probability with which the microscopic entity in question lends itself to the creation of a spatial localization, in a given region of space R, at a given time t, through its interaction with a measuring apparatus [6, 8]. In quantum theory, this probability is given by the squared modulus $|\psi_t(\mathbf{x})|^2$ of the wave function (or wave packet) $\psi_t(\mathbf{x})$ (describing the state of the entity in question, at time t), integrated over the spatial region R, that is:

$$\mathcal{P}_t(R) = \int_R d\mathbf{x}\, |\psi_t(\mathbf{x})|^2. \tag{1}$$

What I am now going to do is to estimate the width of such wave packet in the simplest case of a hydrogen atom, which is the first and simplest element of the famous Mendeleev's periodic table.

To determine the wave function of a hydrogen atom, it is useful to express the problem in the so-called variables of the *center of mass* and *relative movement*. In doing so, I will neglect for simplicity the description of the spins of the electron and proton. Without going into the details of this procedure, which can be found in any textbook of quantum mechanics, we can observe that due to this change of variables it is possible to transform the problem of two interacting bodies (electron + proton) into an effective, simpler problem, of two bodies that evolve independently of each other, and whose equations can therefore be solved separately.

The first body corresponds to the evolution of the center of mass of the system, and is equivalent to the evolution of a free entity (an entity evolving in the absence of any interaction) of total mass $M = M_e + M_p$, where M_e and M_p are the masses of the electron and proton, respectively. The second body corresponds instead to the evolution of a entity of (reduced) mass $\mu = M_e M_p/M$, which moves in the presence of a Coulombian central force field.

The solutions of the Schrödinger equation associated with the first problem are the so-called plane waves, which cover a continuum of possible energies, from zero to infinity (we speak in this case of a continuous spectrum). The solutions of the problem with the central force field are instead associated with discrete energy values, given by the well-known formula: $E_n = -E_I/n^2$, where $n = 1, 2, \ldots$, and $E_I \approx 13.6\, eV \approx 22 \times 10^{-19}$ J is the ionization energy of the hydrogen atom. One speaks in this case of a discrete spectrum, corresponding to the known (emission and absorption) spectral lines, observed experimentally.

Now, as regards the possibility of acquiring different positions in space, what really matters is the movement of the center of mass of the hydrogen atom, which, as previously mentioned, evolves according to free evolution. What we are interested in is to calculate the spatial spreading of the wave packet associated with the center of mass variable, since such spreading will provide us a good estimate of the probability of observing the hydrogen atom at a certain distance from the place where it was initially observed, say at time $t = 0$ s.

The spatial spreading of the wave packet at time t can be estimated by calculating the so-called *standard deviation* ΔQ_t of the position observable $\mathbf{Q}$ (associated with the center of mass), which by definition is given by the square root: $\Delta Q_t = \sqrt{\langle \mathbf{Q}^2 \rangle_t - \langle \mathbf{Q} \rangle_t^2}$, where $\langle \cdots \rangle_t$ denotes the quantum average relative to the state of the center of mass entity. Using *Ehrenfest theorem*, with which one can calculate the average values of quantum observables, one can

show (following a little long but not difficult calculation) that by judiciously choosing the origin of the time axis the spreading ΔQ_t of the center of mass wave packet, at time t, is given by:

$$\Delta Q_t = \sqrt{\frac{\Delta P_0^2}{M^2}\, t^2 + \Delta Q_0^2}, \tag{2}$$

where ΔQ_0 is the spatial spreading at time $t = 0$, and ΔP_0 the spreading with respect to the momentum observable $\mathbf{P}$, at time $t = 0$.

For the initial width ΔQ_0 of the packet, we can choose the typical value of the *Bohr radius* (which in the semi-classical model of the Danish physicist corresponds to the radius of the innermost electron), i.e., about 5.3×10^{-11} m (0.53 angstroms). For the value of ΔP_0, we can instead consider a dispersion which is compatible with the energy of the ground state of the hydrogen atom, i.e., such that $\frac{\Delta P_0^2}{2M} \approx E_I$. Considering that the total mass is: $M \approx M_p \approx 1.67 \times 10^{-27}$ kg, we have $\Delta P_0 \approx 8.6 \times 10^{-23}$ Js/m, which is compatible with Heisenberg's principle, as is clear that: $\Delta Q_0 \Delta P_0 \approx 45.6 \times 10^{-34}$ Js $\approx 43\,\hbar > \hbar/2$ ($\hbar \approx 1.05 \times 10^{-34}$ Js).

Inserting the above values in (2), and observing that the second term in the square root is negligible compared to the first, we thus obtain $\Delta Q_t \approx 5.1 \times 10^4\, t$ m/s, that is:

$$t \approx 0.2 \times 10^4\ \Delta Q_t \text{ s/m}. \tag{3}$$

This last expression tells us the time we roughly need to wait for the center of mass of the wave packet of the hydrogen atom to reach the spatial spreading ΔQ_t. Let us consider some specific values. To obtain a spreading of 5 km, that is, of 5×10^3 m, we have to wait about 10^{-1} s, i.e., a tenth of a second. In 1 s, instead, the packet will have reached a width of about 50 km, while in 10 s its approximate width will be of 500 km, and so forth. In other words, the *effective speed* with which the radial dimension of the center of mass wave packet grows, is approximately 50 km/s, that is 180,000 km/h, which is a speed of all respect, and corresponds, in our previous metaphor, to the maximum speed of the diver (from our ordinary spatial perspective this is however only a *potential* speed, and certainly not an *actual* speed, as it is not associated with a body moving through our ordinary space).

IV. DISASSEMBLING THE BODY

Summarizing, for a hydrogen atom we have determined the approximate behavior of that part of the wave function which describes the potential spatial localization of its center of mass. In doing so, we have ignored for simplicity the relative motion between the proton of the nucleus and the orbital electron, as well as their spins. More precisely, we have calculated how the width of the center of mass wave function varies over time in (configuration) space, due to the so-called phenomenon of the *spreading of the wave function*, which can be understood as being a consequence of Heisenberg's uncertainty principle.

What is important to understand is that the domain in which the wave function is sensibly different from zero corresponds to the spatial region within which the atom in question has a chance of being detected. So, if the hydrogen atom, at time $t = 0$, was localized in a sphere whose radius is approximately equal to the Bohr radius, i.e., $r_0 = 5.3 \times 10^{-11}$ m (that is, its probability of presence in that sphere, at time $t = 0$ s, is equal to 1), what we have determined is that after for example 1 s, that localization radius will have approximately grown to about 50 km $= 5 \times 10^4$ m.

What we are interested in is to estimate the probability with which we can detect the atom not in any location of this macro-sphere of 50 km of radius, but in a predetermined sub-region of it. Indeed, if we later want to extrapolate our reasoning to an entire macroscopic structure, it is necessary that every atom forming the structure will re-locate in a very specific place in relation to all the other atoms of the structure, so as to reconstitute it in every detail. So, let us suppose that this sub-region corresponds to a micro-sphere whose radius is equal to the Bohr radius r_0.

To estimate the above probability I will make an additional simplifying assumption. The wave function being not a constant function, the probability of presence will vary according to the location of the micro-sphere within the macro-sphere. However, since we are only interested in estimating a rough order of magnitude, we can assume that the wave function is a step-function, only taking two values: a constant non-zero value inside the macro-sphere, and a zero value outside of it.

With this simplification, we have everything we need to complete our estimation. For this, we have to remember that to calculate a probability of presence we have to integrate the squared module of the wave function over the region of interest. Considering the step-function hypothesis, this means that the probability that we seek will be proportional to the relative volume of the micro-sphere compared to the volume of the macro-sphere.

More exactly, given that the volume of a sphere is proportional to its radius to the cube, we obtain for the probability $\mathcal{P}$ that the hydrogen atom in question will be detected, after 1 s, in a predetermined micro-sphere of radius r_0, within

the macro-sphere of radius $r = 50$ km, the following order of magnitude:

$$\mathcal{P} \approx \frac{r_0^3}{r^3} \approx \left(\frac{5.3 \times 10^{-11}\,\mathrm{m}}{5 \times 10^4\,\mathrm{m}}\right)^3 \approx 10^{-45}. \tag{4}$$

This is undoubtedly a very small number, with 45 zeros after the decimal point! And of course, we can easily do the same calculation for larger macro-spheres, i.e., waiting more time than just a second. For example, if we wait 10 s, the radius of the macro-sphere will increase by a further factor of 10 (from 50 km to 500 km), and consequently the estimated value of the probability $\mathcal{P}$ will decrease from 10^{-45} to 10^{-48}, i.e., by a factor of a thousand, and so on.

Now that we have obtained an estimate of the probability of quantum self-teleportation of a hydrogen atom from an initial micro-sphere to a given final micro-sphere, we must consider the case of an entire macroscopic body, like that of a human being of planet Earth, which we can assume to have a mass of 100 kg. Here of course we have to face the already mentioned problem that a macroscopic body has the property of spatiality, and therefore cannot be conveniently described by a wave function (more will be said about this in the next section). But suppose that for some reasons, unknown to us, all the interatomic bonds suddenly cease to exist, so that in an instant all the atoms that form the human body in question become separate and independent from each other, bringing them back to the prespatial layer of our physical reality.

On the basis of this sci-fi hypothesis, each individual atom of the body structure can be conveniently described by the laws of quantum mechanics, and we can apply the previous calculation to each one of them. In fact, this is not really true, as is clear that all these atoms will constantly be bombarded by the countless entities present in the environment, in particular the thermal photons, so that we also need to assume that the sci-fi process of disassembly of the human body is able to induce a perfect isolation of the different atomic constituents from all the other entities (micro and macro) present in the environment.

To keep the discussion as simple as possible, we further assume that the body structure is constituted solely by hydrogen atoms, and since the mass of a hydrogen atom is about 1.67×10^{-27} kg, a human of 100 kg, if constituted only by hydrogen atoms, would contain approximately a number N of them given by:

$$N \approx \frac{100\,\mathrm{kg}}{1.67 \times 10^{-27}\,\mathrm{kg}} \approx 4.2 \times 10^{28}. \tag{5}$$

Each of these atoms will have to individually re-locate in a specific region of space, to reconstitute the entire body structure, with no errors. Therefore, the (estimated) probability $\mathcal{P}_{\mathrm{body}}$ of self-teleportation of the overall body structure will be given by the product of the self-teleportation probabilities $\mathcal{P}$ of every single atom contained in that structure. If the body would be formed only by two atoms, that is, $N = 2$, the probability would be $\mathcal{P}_{\mathrm{body}} \approx \mathcal{P}^2 \approx 10^{-45\times 2} = 10^{-90}$. With three atoms, the probability would become: $\mathcal{P}_{\mathrm{body}} \approx \mathcal{P}^3 \approx 10^{-45\times 3} = 10^{-135}$. Therefore, with $N = 10^{28}$ atoms, we obtain:

$$\mathcal{P}_{\mathrm{body}} \approx \mathcal{P}^{10^{28}} \approx 10^{-4.5\times 10^{29}}. \tag{6}$$

Let us reflect for a moment on the amazing infinitesimality of this number. To write it in decimal, non-scientific notation, we must use more than 10^{29} zeros, i.e., more than one hundred billion billion billion zeros! If we write with a printer on paper ten zeros per second, to write the entire number will take us more than 10^{28} seconds, that is, more than 10^{21} years, which is about a hundred thousand billion times the assumed age of the known universe (according to today cosmological theories)! In other terms, the value we have obtained for $\mathcal{P}_{\mathrm{body}}$, although not strictly equal to zero, is nevertheless so small that we have no point of comparison to be able to understand it. Yet, we have probably overestimated it.

In fact, we have assumed that for a reason unknown to us all the atoms of the human body will suddenly disassemble and become non-spatial entities, so allowing their individual wave packets to spread. But we have also neglected the problem of the relative motion between the different atomic constituents, equating the individual atoms to free elementary-like particles. Furthermore, we have neglected the spin variables of the different atomic constituents. Also, we have assumed that the environment in which the different atomic components evolve, once disassembled, corresponds to an effective absolute vacuum, otherwise the associated wave-packets cannot be considered to evolve freely, and that each atom is able to evolve without interacting with all the others, before regaining a specific spatial location. In addition to that, we have hypothesized that when the various atoms reappear in the relative positions they occupied before being disassembled, the entire macroscopic structure will be able to reconstitute, without any particular inconvenience. Taking into account all these assumptions would of course further reduce the value of $\mathcal{P}_{\mathrm{body}}$, by a factor which is very difficult, if not impossible, to evaluate.

But that's not all. There is another "sci-fi miracle," which is implicit in our reasoning, perhaps even more amazing than that of the disassembly of the initial structure (which is possible to relax; see the next section). This second

miracle has to do with the different hydrogen atoms being simultaneously "drawn" back into space. Let me explain. An elementary entity, such as a proton, an electron, or an entire hydrogen atom, spends most of its time in a non-spatial (non-local) condition, unless it is incorporated into a macroscopic structure. Now, although there is no consensus on this among physicists, many agree that a microscopic entity is unable to acquire a precise spatial localization spontaneously, as this can only be done by interacting with a macroscopic material structure, like for instance that forming a measurement apparatus.

Experimental physicists are undoubtedly able to build detection apparatuses allowing microscopic entities to temporarily acquire a spatial localization, in specific places, and even though these apparatuses could in principle localize in space a certain number of microscopic entities at a time, as far as I know a device which can localize an entire macroscopic structure doesn't exist, and perhaps is not even conceivable. The possibility remains, of course, that the process of spatial localization could occur even in the absence of macroscopic structures playing the role of detection devices, as is suggested in some interpretations of quantum theory, like the so-called objective collapse theories [18], the transactional interpretation of quantum physics [19], and others, the discussion of which, however, would go beyond the scope of the present article.

Among the factors that we have not taken into account in the estimation of $\mathcal{P}_{\text{body}}$, there are of course also those that could slightly increase the value of the probability. For example, we have implicitly assumed that all the atomic components have to re-localize at exactly the same instant. However, nothing prevents us from admitting a small time-delay in the localization process of the individual atoms, which, if sufficiently small, may not affect the correct re-assembly of the entire body macrostructure. But it is unlikely that considerations of this kind would be able to significantly change the infinitesimality of $\mathcal{P}_{\text{body}}$.

V. COOLING DOWN THE BODY

At this point some readers may rightly object that we don't really needed our "disassembling sci-fi hypothesis," as what generally makes a macroscopic object like our human body behave classically, i.e., spatially and locally, is just the fact that it is immersed in a thermal environment, i.e., that it is constantly subjected to the random collisions of countless microscopic entities, in particular photons, and that the overall effect of these innumerable interactions is that of producing its continuous "collapse into space," which would be essentially the reason why it would behave differently from a "pure" quantum entity, like an electron. To use once more our metaphor, this bombardment is what would force the body to remain inside the water of the pool, preventing its owner from becoming a diver.

So, one could object that, to allow the body to quit the "spatial pool," and temporarily become a non-spatial entity, it would be sufficient to shield it from the external thermal environment, so that there would be no need for having it first disassembled into smaller atomic fragments and then recombined, which is the operation that apparently produced the inconceivable infinitesimality of the self-teleportation probability, as each of the 10^{28} fragments needed to relocalize in a predetermined place, within a sphere of 50 km of radius.

This is a pertinent objection that I'm now going to explore. This objection, by the way, could appear to be in contradiction with what I have just stated above, at the end of the last section, regarding the lack of an apparatus that could objectify (spatialize) a whole macroscopic structure. If our standard terrestrial environment is able to keep a macroscopic body into space, then wouldn't be that same environment the measuring apparatus that is able to achieve the required goal of producing the collapse – the objectification – of an entire macroscopic object?

If this is true, then it would be sufficient to isolate an ordinary object to obtain its automatic de-localization (i.e., its de-spatialization). However, we cannot expect this to work, as the object is also in contact with another environment: its own *internal* one. If the body is sufficiently large, as is certainly the case of a human body (but also of a speck of dust, and of much smaller entities), then the mutual interactions of its constituents can also have an influence in determining its overall classical (spatial) versus quantum (non-spatial) behavior.

The reason for this is easy to explain. In the case of the hydrogen atom, we were able to separate the wave function relative to the center of mass from that associated with the relative motion. In this way, the center of mass was described by a free evolving wave function. With a macroscopic body, we may want to do the same, i.e., to separate the wave function describing the center of mass from the contribution coming from the different movements of all its constituents, relative to that center and to each others. Here we can consider the ensemble of these constituents as an entity playing the role of a measuring apparatus with respect to the "center of mass entity," so that the latter would be constantly subjected to a measurement process, thus producing its classical behavior.

Therefore, to describe the center of mass by means of a free evolving wave function, the evolution of the body's center of mass needs to decouple from that of its internal degrees of freedom, and this can reasonably be done only if the body is cooled down to extremely low temperatures. How low? Well, we can say, remaining here necessarily vague, low enough to avoid any exchange of energy between the center of mass degree of freedom and the degrees of freedom associated with the internal relative movements [20].

In the previous section we have assumed that by some sci-fi action the body was all of a sudden disassembled (and each constituent isolated from one another, and the environment). This was an assumption of simplicity, as in this way we were able to use the well-known factorization of the wave-function of a two-body system, which of course is much harder to obtain in general for a macroscopic body. We can however replace the "disassembling sci-fi hypothesis" with the requirement that not only the body in question will have to evolve in a perfect vacuum (no thermal bombardment), but also that it will be cooled down instantaneously to temperatures almost equal to the absolute zero.

In other terms, we now replace the "disassembling sci-fi hypothesis" by a "freezing sci-fi hypothesis." The advantage is that cooling down a body seems an operation less impossible to achieve than disassembling it into its atomic fragments, without destroying them, but also, and more importantly for our idealized discussion, the entire structure of the body will be preserved in this way, which hopefully will increase the value of the self-teleportation probability. Of course, also in this case we will have to assume that the body is additionally isolated from the environmental thermal bombardment.

So, let us assume, as we did before, that the mass of the body is 10^2 kg. By assumption, since the internal and external environments have now been made totally silent, and cannot anymore play the role of generalized detector instruments with respect to the wave function of the body's center of mass, we can consider that the latter is described by a free evolving wave packet. To further simplify the discussion, we assume that at time $t = 0$, the wave packet is approximately Gaussian (this is a reasonable assumption, considering that the probability density of any non-Gaussian wave packet becomes approximately Gaussian as it spreads [22]), which means that the inequality in Heisenberg's uncertainty principle is approximately an equality: $\Delta Q_0 \Delta P_0 \approx \frac{\hbar}{2}$.

As we did with the hydrogen atom, we take the standard deviation of the center of mass position observable ΔQ_0 to be equal to the Bohr radius. Therefore:

$$\Delta P_0 \approx \frac{\hbar}{2\Delta Q_0} \approx \frac{1.05 \times 10^{-34}\,\mathrm{J\,s}}{2 \times 5.3 \times 10^{-11}\,\mathrm{m}} \approx 10^{-24}\,\mathrm{kg\,m\,s^{-1}}. \tag{7}$$

Inserting this value into (2), we find that the spreading ΔQ_t of the center of mass wave packet at time t is given by:

$$\Delta Q_t \approx \sqrt{(10^{-52}\,\mathrm{m^2\,s^{-2}})\,t^2 + 3 \times 10^{-21}\,\mathrm{m^2}}. \tag{8}$$

Now, the original question of the sci-fi writer was to have the body disappearing from one place and reappearing tens of kilometers away. Considering, as we did before, a distance of 50 km, we have to set $\Delta Q_t = 50$ km $= 5 \times 10^4$ m in the above equation. If we do so and solve for t, we find the value $t \approx 5 \times 10^{30}$ s. Considering that 1 year corresponds to 3.154×10^7 s, we obtain that the center of mass wave packet of the macroscopic body will reach a width of 50 km after approx. 1.6×10^{23} years, which is approximately ten million billion times the assumed age of the known universe!

Here we see an important difference between the wave packet spreading of a hydrogen atom, who was extremely fast, and the wave packet spreading of a macroscopic body, which is inconceivably slow. But to answer the question of the sci-fi writer, we certainly cannot wait so long, because he explicitly asked the self-teleportation to happen in a matter of seconds. Also, even in case we would accept to wait for so long, we may have a problem with the "expiration date" of our universe! And anyhow, without having to freeze the body and the environment, using any classical means of transport through space (the "swimming modality") would be in this case much more effective to travel the distance of 50 km.

On the other hand, we can also say that, although the width of the wave packet almost doesn't increase as time passes by, even if we perfectly confine the position of center of mass in a given small region of space, at time $t = 0$ s, a fraction of a second after its wave function will have acquired an infinite tail. The value of this tail will be infinitesimally small, but nevertheless different from zero. So, let us estimate this value, at a distance of 50 km, after exactly one second of free evolution.

The body's center of mass wave packet can be written as the product of three identical Gaussian factors: $|\psi_t(\mathbf{x})|^2 = |\psi_t(x_1)|^2 |\psi_t(x_2)|^2 |\psi_t(x_3)|^2$, where:

$$|\psi_t(x_i)|^2 = \sqrt{\frac{2}{\pi a^2}} \frac{1}{\sqrt{1 + \frac{4\hbar^2 t^2}{M^2 a^4}}} \exp\left[-\frac{2a^2 \left(x_i - \frac{\hbar k_i}{M} t\right)^2}{a^4 + \frac{4\hbar^2 t^2}{M^2}} \right], \quad i = 1, 2, 3. \tag{9}$$

To evaluate $|\psi_t(\mathbf{x})|^2$, at time $t = 1$ s, we can set $k_1 = k_2 = k_3 = 0$ (the body is at rest at time $t = 0$ s), $x_2 = x_3 = 0$ m, $x_1 \approx 5 \times 10^4$ m, $M = 10^2$ kg, and $a = 2r_0 \approx 10^{-10}$ m. This implies that $|\psi_1(x_2)|^2 = |\psi_1(x_3)|^2 \approx 10^{10}$, and $|\psi_1(x)|^2 \approx 10^{10} \times e^{-5 \times 10^{29}}$. Multiplying the probability density $|\psi_t(\mathbf{x})|^2$ by the volume of the micro-sphere of Bohr radius in which we want the center of mass to relocate, at time $t = 1$ s, we thus obtain that:

$$\mathcal{P}_{\mathrm{body}} \approx e^{-5 \times 10^{29}} \approx 10^{-2.2 \times 10^{29}}. \tag{10}$$

Comparing (10) with (6), we observe that have obtained a self-teleportation probability of the same order of magnitude. This means that, quite surprisingly, even if we avoid the sci-fi procedure of disassembling the macroscopic body, which as we have seen was responsible for the inconceivable infinitesimality of the obtained probability, and replace it with a procedure of total internal freezing, thus preserving the structural integrity of the body, a similar inconceivably infinitesimal self-teleportation probability is obtained, this time because of the extreme slowness of the spreading of the macroscopic wave function and the extreme infinitesimality of its long-distance tails.

VI. SUPERSELECTION RULES

Considering my above pessimistic analysis, I'll leave it to the science fiction writer the task of finding a convincing sci-fi solution, not violating too many physical laws at the same time, allowing the hero of his story to teleport himself and accomplish his mission, whatever it is. As for me, let me offer a final thought.

According to quantum theory, and the phenomenon of the spreading of the wave packet, a hydrogen atom, if left to evolve freely, will quickly acquire a truly gigantic size, apparently in contradiction with what is usually observed. Also, when considering the spectrum of energies of a hydrogen atom, in addition to the discrete energy values, associated with the relative electron-proton movement, we also have to consider the continuous energy values associated with the translational degrees of freedom of the center of mass. The spectrum of the total energy of the atom is thus given by the sum of these two energy spectra. But the sum of a discrete spectrum and a continuous spectrum produces a continuous spectrum, apparently in contradiction with the spectral lines experimentally observed.

In short, without further precautions, the application of the Schrödinger equation to the problem of the hydrogen atom does not allow to obtain results in agreement with the experimental observation, that is, in agreement with the fact that atoms do not usually possess macroscopic sizes, nor spectra of a continuous nature. To solve this problem, one can make use of the notion of *superselection rules* [21]. Rules of this kind restrict the physically realizable states, and when associated with a given observable, they prevent considering states that would be a superposition of states associated with different values of this observable, as these superpositions would be in disagreement with the experimental data. In other terms, the existence of superselection rules indicates that the structure of the state space is not strictly Hilbertian (as linearity would not apply for all states), but more general.

An example of superselection rule is that associated with the observable determining whether the infamous Schrödinger's cat is alive or dead. If ψ_A is the wavefunction describing the alive cat, and ψ_D the wave function describing the dead cat, then, as far as we know, the wave function $\psi = \psi_A + \psi_D$ obtained by superposing these two wave functions does not describe a physically realizable state. This means that there is a superselection rule on the "life observable" of the cat, which forbids the superposition of wave functions characterized by different values of this observable.

In the case of the hydrogen atom, if we want to obtain values for its energy spectrum in agreement with the experimental data, it is necessary to consider the position and momentum of its center of mass as variables of a classical kind, associated with superselection rules, and same thing if we want to correctly describe its observed non-macroscopic size. Of course, the reasons for this inhibition of quantum superpositions and the associated classical behavior of certain observables can be multiple, and will generally depend on the specificities of the environment in which the entity in question is immersed. So, determining what are the classical observables and what the quantum ones, in a given context, is a problem not necessarily easy to solve, and there is no unique recipe for this: in some contexts, certain observables will behave classically, while in other contexts they will behave quantum mechanically, and still in others their behavior will be semiclassical, or semiquantum, that is, in between these two regimes.

But then, if the center of mass of the hydrogen atom is the expression of a superselection rule, goodbye self-teleportation! On the other hand, if we consider it as quantum observable, goodbye agreement with many experimental data. But as I said, to determine the classical or quantum nature of an observable it is necessary to take into account the specificities of the experimental context. When an atom is incorporated into a macroscopic material structure, or undergoes continuous interactions with countless microscopic entities and force fields present in the environment, it usually undergoes a process of de-synchronization of its wave function, able to transform certain quantum observables into classical ones. That's why, in the beginning of this article, I have argued that, strictly speaking, quantum self-teleportation would be impossible. More precisely, it is impossible ($\mathcal{P}_{\text{body}} = 0$) if we consider the standard environment in which we humans evolve, which makes our bodies, and the objects with which we interact in our everyday life, classical entities.

What I'm here suggesting is that the classical or quantum nature of a physical entity is not an intrinsic feature of the same, but a contextual one: in some contexts certain entities will behave as quantum entities (when subjected to certain observational processes), and in other contexts they will behave, instead, classically. These considerations open to an important reflection, which can be summarized in the following question:

Is the physical reality fundamentally quantum?

The majority of physicists seem to believe so, that is, to think that quantum theory would be more fundamental than classical theory, and that a classical behavior would always emerge from a quantum substrate, when certain circumstances are met. However, a different view is also possible. For instance, one can consider that our physical reality is neither classical nor quantum, but genuinely hybrid, that is, a complex combination of these two aspects.

In other words, the physical entities forming our reality would generally be quantum-like, i.e., they would be entities potentially manifesting both aspects, the classical and the quantum aspects, depending on their state and the nature of the experimental questions we address to them. According to this view, supported by some very general (operational) approaches to the foundations of physical theories, especially that of the so-called Geneva-Brussels School of Quantum Mechanics (nowadays mainly active in Belgium, at the Center Leo Apostel, led by the Belgian physicist Diederik Aerts), the classical regime and the quantum regime would correspond to very specific limit cases of more general situations [5, 6, 9, 23].

More precisely, the classical regime would be associated with experimental situations where all fluctuations can be controlled, so that all observational processes are predictable in advance. On the other hand, the quantum regime would be associated with experimental contexts in which the fluctuations are maximal (and uniform), so producing a situation of maximum lack of knowledge. In between these two regimes, intermediate, hybrid regimes can also exist, neither purely classical nor strictly quantum, that physicists have just begun to investigate and that seem to provide a more general and realistic model for the description of the countless physical entities in interaction with their multiple environments.

---

[1] C. H. Bennett et al., "Teleporting an Unknown Quantum State via Dual Classical and Einstein-Podolsky-Rosen Channels," Phys. Rev. Lett., 70, 1895–1899 (1993).

[2] W. Wootters and W. Zurek, "A Single Quantum Cannot be Cloned," Nature 299: 802–803 (1982).

[3] D. Dieks, "Communication by EPR devices," Physics Letters A 92(6): 271–272 (1982).

[4] X. Ma, T. Herbst, T. Scheidl, D. Wang, S. Kropatschek, W. Naylor, B. Wittmann, A. Mech, J. Kofler, E. Anisimova, V. Makarov, T. Jennewein, R. Ursin and A. Zeilinger, "Quantum teleportation over 143 kilometres using active feed-forward, Nature 489, 269–273 (2012).

[5] D. Aerts, "The entity and modern physics: the creation discovery view of reality," In: *Interpreting Bodies: Classical and Quantum Objects in Modern Physics*, edited by Elena Castellani (pp. 223–257). Princeton Unversity Press, Princeton (1998).

[6] D. Aerts, "The Stuff the World is Made of: Physics and Reality," In: *The White Book of 'Einstein Meets Magritte'*, edited by Diederik Aerts, Jan Broekaert and Ernest Mathijs (pp. 129–183). Kluwer Academic Publishers, Dordrecht (1999).

[7] M. Sassoli de Bianchi, "Ephemeral Properties and the Illusion of Microscopic Particles," Foundations of Science 16, 393–409 (2011).

[8] M. Sassoli de Bianchi, "From Permanence to Total Availability: A Quantum Conceptual Upgrade," Foundations of Science 17, 223–244 (2012).

[9] M. Sassoli de Bianchi, "The δ-Quantum Machine, the k-Model, and the Non-ordinary Spatiality of Quantum Entities," Foundations of Science 18, 11–41 (2013).

[10] D. Aerts and M. Sassoli de Bianchi, "The extended Bloch representation of quantum mechanics and the hidden-measurement solution to the measurement problem," Annals of Physics 351, 975–1025 (2014).

[11] M. Sassoli de Bianchi, "God May Not Play Dice, But Human Observers Surely Do," Foundations of Science 20, 77–105 (2015).

[12] J. Von Neumann, "Grundlehren," Math. Wiss. XXXVIII (1932).

[13] J. S. Bell, "On the Problem of Hidden Variables in Quantum Mechanics," Rev. Mod. Phys. 38, 447–452 (1966).

[14] A. M. Gleason, "Measures on the closed subspaces of a Hilbert space," J. Math. Mech. 6, 885–893 (1957).

[15] J. M. Jauch and C. Piron, "Can hidden variables be excluded in quantum mechanics?," Helv. Phys. Acta 36, 827–837 (1963).

[16] S. Kochen and E. P. Specker, "The problem of hidden variables in quantum mechanics," J. Math. Mech. 17, 59–87 (1967).

[17] S. P. Gudder, "On Hidden-Variable Theories," J. Math. Phys 11, 431–436 (1970).

[18] G. C. Ghirardi, "Collapse Theories," The Stanford Encyclopedia of Philosophy (Winter 2011 Edition), Edward N. Zalta (ed.), URL = ¡http://plato.stanford.edu/archives/win2011/entries/qm-collapse/¿.

[19] R. E. Kastner, *The Transactional Interpretation of Quantum Mechanics*, Cambridge University Press, Cambridge (2013).

[20] C. P. Sun, X. F. Liu, D. L. Zhou and S. X. Yu, "Localization of a macroscopic object induced by the factorization of internal adiabatic motion," Eur. Phys. J. D 17, 85–92 (2001).

[21] R. F. Streater and A. S. Wightman, *PCT, spin and statistics, and all that*, W. A. Benjamin, Inc., New York (1964).

[22] K. Mita, "Dispersion of non-Gaussian free particle wave packets," Am. J. Phys. 75, 950–952 (2007).

[23] D. Aerts, "Quantum Theory and Human Perception of the Macro-World," Front. Psychol. 5, article 554 (2014).

Neuroscience: Teleporting Mind into Body and Space

Amir-Homayoun Javadi and Hugo J. Spiers*
Institute of Behavioural Neuroscience, Department of Experimental Psychology, Division of Psychology and Language Sciences, University College London, 26 Bedford Way, London, WC1H 0AP, UK
*Correspondence: h.spiers@ucl.ac.uk
http://dx.doi.org/10.1016/j.cub.2015.04.010

Brain imaging and a novel 'body-swop' illusion reveals distinct parietal-premotor and parietal-hippocampal networks involved in constructing a sense of body-ownership and self-location, with the posterior cingulate mediating between them.

Being able to instantly teleport to another place is a theme repeatedly explored in science fiction. The idea that, because of advanced technology, we could escape physical laws and instantaneously travel to far off places is a seductive idea both for the lazy and the adventurous. As with many ideas in science fiction, the idea of teleporting raises deep questions about what it means to be located in the world or to inhabit a body. Reports of neurological patients with out-of-body experiences show that it is possible to lose the sense of being located inside one's body [1]. Such cases are rare, making it difficult to determine from such patients the specific brain regions that underlie our sense of who we are and where we are. Using functional magnetic resonance imaging (fMRI), virtual reality and experimentally induced illusions it has been possible to gain some traction on the neural substrates of self-location and body-ownership. Research in this area has fallen into two distinct camps, those who have focused on using virtual reality to explore how the brain represents self-location and orientation (for example, [2–7]), and others who have exploited illusions to study body-ownership (for example, [8–11]). Now, as they report in this issue of *Current Biology*, Guterstam *et al.* [12] have taken the novel approach of combining these methods to determine which brain areas support both the sense of body-ownership and the sense of self-location, and the brain regions that mediate between them.

Body Illusions and Virtual Worlds

The most well-known body-ownership illusion is the 'rubber hand illusion' [13,14]. In this experimentally induced illusion, tactile stimuli are delivered to a person's visually obscured hand while that person observes the synchronous tactile stimulation of a viewed rubber hand, which leads to them believing that the rubber hand is their own hand. By introducing a time lag between the visually perceived and physically sensed tactile stimulation (asynchronous stimulation) the perceived illusory ownership of the rubber hand diminishes over time. A similar paradigm has been used with the addition of virtual reality techniques to induce the subjective feeling of whole-body ownership [15]. In this method participants observe an avatar through virtual reality goggles; using synchronous or asynchronous visual-tactile input, perception of whole-body ownership can be modulated in the person wearing the goggles. It has been shown that premotor-parietal regions play a key role in this sense of body ownership [14,16,17].

In addition to the sense that our body is ours, we also keep track of where we are in the world, our sense of self-location. Recording single units in the hippocampus, parahippocampal and parietal regions of rodents has provided detailed evidence for a network of spatial cells that code self-location and orientation [18,19]. Studying humans, researchers have combined fMRI with the use of virtual reality or real-world stimuli to decode location [2,4,5] and orientation in the world [3,4,7]. Such studies have shown that similar brain regions in humans and rodents code self-location and orientation.

Combining Body-swop and Location-swop Illusions

To determine which brain regions mediate the interactions between body-ownership and self-location, Guterstam *et al.* [12] took a new approach. They scanned subjects with fMRI while the subjects' perception of self-location, head direction, and body ownership was manipulated using a multisensory out-of-body illusion. Subjects wore virtual reality goggles, through which they were given video feed from three cameras (one at a time) located in the room in which they were being scanned (Figure 1). From each viewpoint, subjects could see a torso and legs of a manikin stretching into the space ahead them, consistent with the orientation of their own torso and legs in the MRI scanner. They could not see their own torso and legs because of the virtual reality goggles they were wearing.

Switching between the video feed from each of the cameras effectively allowed Guterstam *et al*. [12] to 'teleport' subjects to different locations and orientations in the room. For half of the experimental trials, an out-of-body illusion was created by an experimenter applying touches to the subject's torso synchronously with footage of an experimenter touching the torso of the manikin viewed in the video feed. On the other half of trials, touches were given asynchronously, breaking the illusion. Guterstam *et al.* [12] provide evidence from a number of tests to indicate this illusion was successful, which included subjects' own self-report of the experience.

Consistent with prior studies [14,16,17], Guterstam *et al.* [12] found

 ©2015 Elsevier Ltd All rights reserved

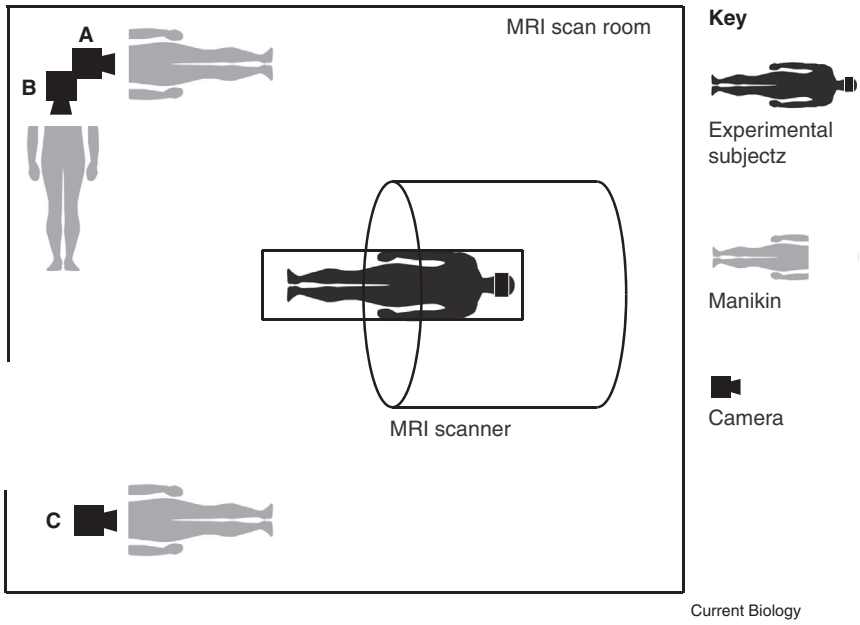

Figure 1. The multiple body-swop illusion.
The experimental subject is shown lying in the MRI scanner wearing virtual reality goggles that could receive video feed from each of the three cameras positioned across the room (positions A–C). Each of the three cameras had a manikin placed lying oriented supine, feet ahead of the camera. To induce the body-swop illusion the experimenter touched the participant's torso with a ball on a stick synchronously with footage of touches to the manikin's torso viewed through the virtual reality goggles. Videos from each camera were separately pre-recorded, such that the camera at C and its manikin were not present in the footage from camera view B. By analysing MRI data recorded during viewing the feed from cameras A and C, with and without the illusion, it was possible to determine which brain areas could decode spatial location. Similarly, comparing MRI data recorded during viewing footage from cameras A and B, with and without the illusion, made it possible to determine which brain areas could decode the facing orientation in the room.

that premotor-parietal activity reflected the extent to which subjects felt that the body viewed through the camera belonged to them. Also in agreement with some past research [2–5,7], activity in hippocampal, posterior cingulate, retrosplenial cortex, and intraparietal sulcus could be used to decode self-location. Parietal regions, including the precuneus and retrosplenial cortex contained information about the heading direction. In the new approach, Guterstam *et al.* [12] were able to show these brain regions could distinguish the different camera views significantly better in the synchronous than the asynchronous trials, and that activity in several regions was correlated with subject's ratings of their subjective feeling of being present in the location viewed through the camera. Thus, rather than simply showing that a network of brain regions can distinguish between locations (for example, [2,4,5]), the new results reveal that this network of brain regions is specifically more accurate at decoding self-location when subjects felt they were present in the locations viewed.

A New Role for the Posterior Cingulate Cortex

Guterstam *et al.* [12] also present an exciting new discovery. They found patterns of activity in the posterior cingulate cortex became more correlated with the activity in brain areas involved in both the feeling of body-ownership (parietal regions) and the feeling of self-location (hippocampus) as the subjects experienced the body-swop illusion. The authors argue that this points to an important role for the posterior cingulate in helping integrate our sense of body-ownership with our sense of self-location. The posterior cingulate has been linked to a variety of functions such as attention, memory, decision-making and spatial navigation [12]. It is also a core region in the 'default-mode-network' [20] — a network of brain areas that increases activity when subjects are not engaged in a specific task [20]. Because feeling present in your body, in a particular location, may vary with a variety of task and non-task demands, it seems plausible that the observation made by Guterstam *et al.* [12] may go some way towards explaining why a diverse range of potential roles has been ascribed to the posterior cingulate.

The approach taken by Guterstam *et al.* [12] opens up a number of new research possibilities. For example, the method could be extended to the use of moving camera views, allowing new insights to be made into how brain regions support spatial updating and navigation (for example, see [6]). More generally, extending the body-swop illusion to moving views may allow us to feel present on distant planets, as we 'remotely' go to where no one has gone before, experiencing body-ownership of a body sitting in a vehicle located far far away.

REFERENCES

1. Vallar, G., and Ronchi, R. (2009). Somatoparaphrenia: a body delusion. A review of the neuropsychological literature. Exp. Brain Res. *192*, 533–551.
2. Hassabis, D., Chu, C., Rees, G., Weiskopf, N., Molyneux, P.D., and Maguire, E.A. (2009). Decoding neuronal ensembles in the human hippocampus. Curr. Biol. *19*, 546–554.
3. Schindler, A., and Bartels, A. (2013). Parietal cortex codes for egocentric space beyond the field of view. Curr. Biol. *23*, 177–182.
4. Vass, L.K., and Epstein, R.A. (2013). Abstract representations of location and facing direction in the human brain. J. Neurosci. *33*, 6133–6142.
5. Marchette, S.A., Vass, L.K., Ryan, J., and Epstein, R.A. (2014). Anchoring the neural compass: coding of local spatial reference frames in human medial parietal lobe. Nat. Neurosci. *17*, 1598–1606.
6. Howard, L.R., Javadi, A.H., Yu, Y., Mill, R.D., Morrison, L.C., Knight, R., Loftus, M.M., Staskute, L., and Spiers, H.J. (2014). The hippocampus and entorhinal cortex encode the path and Euclidean distances to goals during navigation. Curr. Biol. *24*, 1331–1340.
7. Chadwick, M.J., Jolly, A.E., Amos, D.P., Hassabis, D., and Spiers, H.J. (2015). A goal direction signal in the human entorhinal/subicular region. Curr. Biol. *25*, 87–92.

 ©2015 Elsevier Ltd All rights reserved

8. Graziano, M.S., and Botvinick, M.M. (2002). How the brain represents the body: insights from neurophysiology and psychology. In Common Mechanisms in Perception and Action: Attention and Performance XIX, W. Prinz, and B. Hommel, eds. (Oxford: Oxford University Press), pp. 136–157.

9. Blanke, O., and Metzinger, T. (2009). Full-body illusions and minimal phenomenal selfhood. Trends Cogn. Sci. *13*, 7–13.

10. Serino, A., Alsmith, A., Costantini, M., Mandrigin, A., Tajadura-Jimenez, A., and Lopez, C. (2013). Bodily ownership and self-location: components of bodily self-consciousness. Conscious. Cogni. *22*, 1239–1252.

11. Tsakiris, M. (2010). My body in the brain: a neurocognitive model of body-ownership. Neuropsychologia *48*, 703–712.

12. Guterstam, A., Björnsdotter, M., Gentile, G., and Ehrsson, H.H. (2015). Posterior cingulate cortex integrates the senses of self-location and body ownership. Curr. Biol. *25*, 1416–1425.

13. Botvinick, M., and Cohen, J. (1998). Rubber hands 'feel' touch that eyes see. Nature *391*, 756–756.

14. Ehrsson, H.H., Spence, C., and Passingham, R.E. (2004). That's my hand! Activity in premotor cortex reflects feeling of ownership of a limb. Science *305*, 875–877.

15. Lenggenhager, B., Tadi, T., Metzinger, T., and Blanke, O. (2007). Video ergo sum: manipulating bodily self-consciousness. Science *317*, 1096–1099.

16. Ionta, S., Heydrich, L., Lenggenhager, B., Mouthon, M., Fornari, E., Chapuis, D., Gassert, R., and Blanke, O. (2011). Multisensory mechanisms in temporo-parietal cortex support self-location and first-person perspective. Neuron *70*, 363–374.

17. Petkova, V.I., Björnsdotter, M., Gentile, G., Jonsson, T., Li, T.Q., and Ehrsson, H.H. (2011). From part-to whole-body ownership in the multisensory brain. Curr. Biol. *21*, 1118–1122.

18. O'Keefe, J., and Nadel, L. (1978). The Hippocampus as a Cognitive Map. (Oxford: Clarendon Press.)

19. Moser, E.I., Kropff, E., and Moser, M.B. (2008). Place cells, grid cells, and the brain's spatial representation system. Annu. Rev. Neurosci. *31*, 69–89.

20. Fransson, P., and Marrelec, G. (2008). The precuneus/posterior cingulate cortex plays a pivotal role in the default mode network: Evidence from a partial correlation network analysis. Neuroimage *42*, 1178–1184.

Actin-Filament Disassembly: It Takes Two to Shrink Them Fast

Moritz Winterhoff and Jan Faix*
Institute for Biophysical Chemistry, Hannover Medical School, Carl-Neuberg Str. 1, 30625 Hannover, Germany
*Correspondence: faix.jan@mh-hannover.de
http://dx.doi.org/10.1016/j.cub.2015.04.050

Actin-filament disassembly is indispensable for replenishing the pool of polymerizable actin and allows continuous dynamic remodelling of the actin cytoskeleton. A new study now reveals that ADF/cofilin preferentially dismantles branched networks and provides new insights into the collaborative work of ADF/cofilin and Aip1 on filament disassembly at the molecular level.

The highly dynamic and tightly regulated remodelling of the actin cytoskeleton is an essential requirement for many cellular processes, including endocytosis, cytokinesis and cell migration. These processes are accompanied by a constant turnover of actin structures to provide the cells with the required plasticity to quickly alter specific actin architectures in response to signalling cues and, additionally, to replenish the pool of assembly-competent, ATP-bound actin monomers to fuel new assembly reactions [1]. A paper in this issue of *Current Biology* now adds to our understanding of the molecular mechanisms behind actin-filament disassembly mediated by the combined action of the actin-binding proteins ADF/cofilin and Aip1 [2].

Key players known to accelerate filament disassembly are a family of small and ubiquitous proteins collectively called actin depolymerization factor (ADF)/cofilin [3]. Vertebrate cells express three different ADF/cofilins (ADF, cofilin 1 and cofilin 2), whereas yeast expresses a single ADF/cofilin isoform. ADF/cofilin binds in a cooperative manner preferentially to aged ADP–F-actin and mediates severing by altering the mechanical properties of the filament [4,5]. Structural and biochemical analyses revealed that cofilin binding changes the subunit tilt and increases the helical twist of the filament [4], thereby weakening lateral contacts between actin monomers [6] and decreasing the persistence length of the filament [7]. Severing occurs preferentially at boundaries between bare and ADF/cofilin-decorated filament segments, thereby controlling the overall filament length, depending on ADF/cofilin-binding density [8]. ADF/cofilin remains bound to dissociated ADP–actin monomers and inhibits nucleotide exchange (ATP for ADP) on monomeric actin [9]. Thus, profilin and other accessory proteins, such as Srv2/cyclase-associated protein (CAP), are required to efficiently recycle ADF/cofilin-bound ADP–actin monomers back into an assembly-competent, ATP-bound state [10,11].

 ©2015 Elsevier Ltd All rights reserved

DTIC Copy

AFRL-PR-ED-TR-2003-0034 AFRL-PR-ED-TR-2003-0034

Teleportation Physics Study

Eric W. Davis
Warp Drive Metrics
4849 San Rafael Ave.
Las Vegas, NV 89120

August 2004

Special Report

APPROVED FOR PUBLIC RELEASE; DISTRIBUTION UNLIMITED.

AIR FORCE RESEARCH LABORATORY
AIR FORCE MATERIEL COMMAND
EDWARDS AIR FORCE BASE CA 93524-7048

REPORT DOCUMENTATION PAGE

Form Approved
OMB No. 0704-0188

Public reporting burden for this collection of information is estimated to average 1 hour per response, including the time for reviewing instructions, searching existing data sources, gathering and maintaining the data needed, and completing and reviewing this collection of information. Send comments regarding this burden estimate or any other aspect of this collection of information, including suggestions for reducing this burden to Department of Defense, Washington Headquarters Services, Directorate for Information Operations and Reports (0704-0188), 1215 Jefferson Davis Highway, Suite 1204, Arlington, VA 22202-4302. Respondents should be aware that notwithstanding any other provision of law, no person shall be subject to any penalty for failing to comply with a collection of information if it does not display a currently valid OMB control number. **PLEASE DO NOT RETURN YOUR FORM TO THE ABOVE ADDRESS.**

1. REPORT DATE *(DD-MM-YYYY)* 25-11-2003	**2. REPORT TYPE** Special	**3. DATES COVERED** *(From - To)* 30 Jan 2001 – 28 Jul 2003
4. TITLE AND SUBTITLE **Teleportation Physics Study**		**5a. CONTRACT NUMBER** F04611-99-C-0025 **5b. GRANT NUMBER** **5c. PROGRAM ELEMENT NUMBER** 62500F
6. AUTHOR(S) Eric W. Davis		**5d. PROJECT NUMBER** 4847 **5e. TASK NUMBER** 0159 **5f. WORK UNIT NUMBER** 549907
7. PERFORMING ORGANIZATION NAME(S) AND ADDRESS(ES) Warp Drive Metrics 4849 San Rafael Ave. Las Vegas, NV 89120		**8. PERFORMING ORGANIZATION REPORT NO.**
9. SPONSORING / MONITORING AGENCY NAME(S) AND ADDRESS(ES) Air Force Research Laboratory (AFMC) AFRL/PRSP 10 E. Saturn Blvd. Edwards AFB CA 93524-7680		**10. SPONSOR/MONITOR'S ACRONYM(S)** **11. SPONSOR/MONITOR'S REPORT NUMBER(S)** **AFRL-PR-ED-TR-2003-0034**

12. DISTRIBUTION / AVAILABILITY STATEMENT

Approved for public release; distribution unlimited.

13. SUPPLEMENTARY NOTES

14. ABSTRACT

This study was tasked with the purpose of collecting information describing the teleportation of material objects, providing a description of teleportation as it occurs in physics, its theoretical and experimental status, and a projection of potential applications. The study also consisted of a search for teleportation phenomena occurring naturally or under laboratory conditions that can be assembled into a model describing the conditions required to accomplish the transfer of objects. This included a review and documentation of quantum teleportation, its theoretical basis, technological development, and its potential applications. The characteristics of teleportation were defined and physical theories were evaluated in terms of their ability to completely describe the phenomena. Contemporary physics, as well as theories that presently challenge the current physics paradigm were investigated. The author identified and proposed two unique physics models for teleportation that are based on the manipulation of either the general relativistic spacetime metric or the spacetime vacuum electromagnetic (zero-point fluctuations) parameters. Naturally occurring anomalous teleportation phenomena that were previously studied by the United States and foreign governments were also documented in the study and are reviewed in the report. The author proposes an additional model for teleportation that is based on a combination of the experimental results from the previous government studies and advanced physics concepts. Numerous recommendations outlining proposals for further theoretical and experimental studies are given in the report. The report also includes an extensive teleportation bibliography.

15. SUBJECT TERMS

teleportation; physics, quantum teleportation; teleportation phenomena; anomalous teleportation; teleportation theories; teleportation experiments; teleportation bibliography

16. SECURITY CLASSIFICATION OF:			**17. LIMITATION OF ABSTRACT**	**18. NUMBER OF PAGES**	**19a. NAME OF RESPONSIBLE PERSON**
					Franklin B. Mead, Jr.
a. REPORT	**b. ABSTRACT**	**c. THIS PAGE**	A	88	**19b. TELEPHONE NO** *(include area code)*
Unclassified	**Unclassified**	**Unclassified**			(661) 275-5929

Standard Form 298
(Rev. 8-98)
Prescribed by ANSI Std. 239.18

NOTICE

USING GOVERNMENT DRAWINGS, SPECIFICATIONS, OR OTHER DATA INCLUDED IN THIS DOCUMENT FOR ANY PURPOSE OTHER THAN GOVERNMENT PROCUREMENT DOES NOT IN ANY WAY OBLIGATE THE US GOVERNMENT. THE FACT THAT THE GOVERNMENT FORMULATED OR SUPPLIED THE DRAWINGS, SPECIFICATIONS, OR OTHER DATA DOES NOT LICENSE THE HOLDER OR ANY OTHER PERSON OR CORPORATION; OR CONVEY ANY RIGHTS OR PERMISSION TO MANUFACTURE, USE, OR SELL ANY PATENTED INVENTION THAT MAY RELATE TO THEM.

FOREWORD

This Special Technical Report presents the results of a subcontracted study performed by Warp Drive Metrics, Las Vegas, NV, under Contract No. F04611-99-C-0025, for the Air Force Research Laboratory (AFRL)/Space and Missile Propulsion Division, Propellant Branch (PRSP), Edwards AFB, CA. The Project Manager for AFRL/PRSP was Dr. Franklin B. Mead, Jr.

This report has been reviewed and is approved for release and distribution in accordance with the distribution statement on the cover and on the SF Form 298. This report is published in the interest of scientific and technical information exchange and does not constitute approval or disapproval of its ideas or findings.

//Signed//

FRANKLIN B. MEAD, JR.
Project Manager

//Signed//

RONALD E. CHANNELL
Chief, Propellants Branch

//Signed//

PHILIP A. KESSEL
Technical Advisor, Space and Missile
Propulsion Division

//Signed//

RANNEY G. ADAMS III
Public Affairs Director

AFRL-ERS-PAS-04-155

This Page Intentionally Left Blank

Table of Contents

Section **Page**
1.0 INTRODUCTION……1
1.1 Introduction……1
1.2 The Definitions of Teleportation……1
2.0 vm -TELEPORTATION……3
2.1 Engineering the Spacetime Metric……3
2.1.1 Wormhole Thin Shell Formalism……3
2.1.2 "Exotic" Matter-Energy Requirements……11
2.2 Engineering the Vacuum……11
2.2.1 The Polarizable-Vacuum Representation of General Relativity……20
2.3 Conclusion and Recommendations……26
3.0 q-TELEPORTATION……30
3.1 Teleportation Scenario……30
3.2 Quantum Teleportation……32
3.2.1 Description of the q-Teleportation Process……34
3.2.2 Decoherence Fundamentally Limits q-Teleportation……38
3.2.3 Recent Developments in Entanglement and q-Teleportation Physics……38
3.3 Conclusion and Recommendations……46
4.0 e-TELEPORTATION……50
4.1 Extra Space Dimensions and Parallel Universes/Spaces……50
4.2 Vacuum Hole Teleportation……52
4.3 Conclusion and Recommendations……53
5.0 p-TELEPORTATION……55
5.1 PK Phenomenon……55
5.1.1 Hypothesis Based on Mathematical Geometry……60
5.2 Conclusion and Recommendations……61
6.0 REFERENCES……63
APPENDIX A – A Few Words About Negative Energy……73
A.1 A General Relativistic Definition of Negative or Exotic Energy……73
A.2 Squeezed Quantum States and Negative Energy……73
APPENDIX B – THεμ Methodology……75

Approved for public release; distribution unlimited.

List of Figures

Figure **Page**

Figure 1. Diagram of a Simultaneous View of Two Remote Compact Regions (Ω_1 and Ω_2) of Minkowski Space Used to Create the Wormhole Throat $\partial\Omega$, Where Time is Suppressed in This Representation……..……..……5

Figure 2. The Same Diagram as in Figure 1 Except as Viewed by an Observer Sitting in Region Ω_1 Who Looks Through the Wormhole Throat $\partial\Omega$ and Sees Remote Region Ω_2 (Dotted Area Inside the Circle) on the Other Side……. 6

Figure 3. A Thin Shell of (Localized) Matter-Energy, or Rather the Two-Dimensional Spacelike Hypersurface $\partial\Omega$ (via (2.3)), Possessing the Two Principal Radii of Curvature ρ_1 and ρ_2……..8

Figure 4. A Schematic of Vacuum Quantum Field Fluctuations (a.k.a. Vacuum Zero Point Field Fluctuations) Involved in the "Light-by-Light" Scattering Process That Affects the Speed of Light……13

Figure 5. A Schematic of the Casimir Effect Cavity/Waveguide……...15

Figure 6. Classical Facsimile Transmission (Modified IBM Press Image)……35

Figure 7. Quantum Teleportation (Modified IBM Press Image)……36

Figure 8. Quantum Teleportation (From www.aip.org).....43

Approved for public release; distribution unlimited.

List of Tables

Table **Page**

Table 1. Metric Effects in the PV-GR Model When K > 1 (Compared With Reference Frames at Asymptotic Infinity Where K = 1)……...…21

Table 2. Metric Effects in the PV-GR Model When K < 1 (Compared With Reference Frames at Asymptotic Infinity Where K = 1)……...22

Table 3. Substantial Gravitational Squeezing Occurs When $\lambda \geq 8\pi r_s$ (For Electromagnetic ZPF).....28

Approved for public release; distribution unlimited.

Glossary

AEC	Average Energy Condition
AFRL	Air Force Research Laboratory
AU	Astronomical Unit
BBO	Beta (β)-Barium Borate
CGS	Centimeter-Gram-Second
CIA	Central Intelligence Agency
DARPA	Defense Advanced Research Projects Agency
DEC	Dominant Energy Condition
DIA	Defense Intelligence Agency
DNA	Deoxyribo Nucleic Acid
DoD	Department of Defense
EPR	Einstein, Podolsky and Rosen
ESP	Extrasensory Perception
eV	Electron Volt
FRW	Friedmann-Robertson-Walker
FTL	Faster-Than-Light
IBM	International Business Machines
INSCOM	Intelligence and Security Command
IR	Infrared
MeV	Mega-Electron Volt
MKS	Meter-Kilogram-Second
NEC	Null Energy Condition
NLP	Neuro-Linguistic Programming
NMR	Nuclear Magnetic Resonance
NSA	National Security Agency
PK	Psychokinesis
PPN	Parameterized Post-Newtonian
PRC	Peoples Republic of China
PV-GR	Polarizable-Vacuum Representation of General Relativity
QED	Quantum Electrodynamics
QISP	Quantum Information Science Program
R&D	Research and Development
SAIC	Science Applications International Corporation
SEC	Strong Energy Condition
SRI	Stanford Research Institute
USSR	Union of Soviet Socialist Republics
UV	Ultraviolet
WEC	Weak Energy Condition
ZPE	Zero-Point Energy
ZPF	Zero-Point Fluctuations

Approved for public release; distribution unlimited.

Acknowledgements

This study would not have been possible without the very generous support of Dr. Frank Mead, Senior Scientist at the Advanced Concepts Office of the U.S. Air Force Research Laboratory (AFRL) Propulsion Directorate at Edwards AFB, CA. Dr. Mead's collegial collaboration, ready assistance, and constant encouragement were invaluable to me. Dr. Mead's professionalism and excellent rapport with "out-of-the-box" thinkers excites and motivates serious exploration into advanced concepts that push the envelope of knowledge and discovery. The author owes a very large debt of gratitude and appreciation to both Dr. David Campbell, Program Manager, ERC, Inc. at AFRL, Edwards AFB, CA, and the ERC, Inc. staff, for supporting the project contract and for making all the paperwork fuss totally painless. Dr. Campbell and his staff provided timely assistance when the author needed it, which helped make this contract project run smoothly.

There are two colleagues who provided important contributions to this study that I wish to acknowledge. First, I would like to express my sincere thanks and deepest appreciation to my first longtime mentor and role model, the late Dr. Robert L. Forward. Bob Forward was the first to influence my interests in interstellar flight and advanced breakthrough physics concepts (i.e., "Future Magic") when I first met him at an AIAA Joint Propulsion Conference in Las Vegas while I was in high school (ca. 1978). The direction I took in life from that point forward followed the trail of exploration and discovery that was blazed by Bob. I will miss him, but I will never forget him. Second, I would like to express my sincere thanks and appreciation to my longtime friend, colleague and present mentor, Dr. Hal Puthoff, Institute for Advanced Studies-Austin, for our many discussions on applying his Polarizable Vacuum-General Relativity model to a quasi-classical teleportation concept. Hal taught me to expand my mind, and he encourages me to think outside the box. He also gave me a great deal of valuable insight and personal knowledge about the Remote Viewing Program. Last, I would like to offer my debt of gratitude and thanks to my business manager (and spouse), Lindsay K. Davis, for all the hard work she does to make the business end of Warp Drive Metrics run smoothly.

Eric W. Davis, Ph.D., FBIS
Warp Drive Metrics
Las Vegas, NV

Approved for public release; distribution unlimited.

Preface

The Teleportation Physics Study is divided into four phases. Phase I is a review and documentation of quantum teleportation, its theoretical basis, technological development, and its potential application. Phase II developed a textbook description of teleportation as it occurs in classical physics, explored its theoretical and experimental status, and projected its potential applications. Phase III consisted of a search for teleportation phenomena occurring naturally or under laboratory conditions that can be assembled into a model describing the conditions required to accomplish the disembodied conveyance of objects. The characteristics of teleportation were defined, and physical theories were evaluated in terms of their ability to completely describe the phenomenon. Presently accepted physics theories, as well as theories that challenge the current physics paradigm were investigated for completeness. The theories that provide the best chance of explaining teleportation were selected, and experiments with a high chance of accomplishing teleportation were identified. Phase IV is the final report.

The report contains five chapters. Chapter 1 is an overview of the textbook descriptions for the various teleportation phenomena that are found in nature, in theoretical physics concepts, and in experimental laboratory work. Chapter 2 proposes two quasi-classical physics concepts for teleportation: the first is based on engineering the spacetime metric to induce a traversable wormhole; the second is based on the polarizable-vacuum-general relativity approach that treats spacetime metric changes in terms of equivalent changes in the vacuum permittivity and permeability constants. These concepts are theoretically developed and presented. Promising laboratory experiments were identified and recommended for further research. Chapter 3 presents the current state-of-art of quantum teleportation physics, its theoretical basis, technological development, and its applications. Key theoretical, experimental, and applications breakthroughs were identified, and a series of theoretical and experimental research programs are proposed to solve technical problems and advance quantum teleportation physics. Chapter 4 gives an overview of alternative teleportation concepts that challenge the present physics paradigm. These concepts are based on the existence of parallel universes/spaces and/or extra space dimensions. The theoretical and experimental work that has been done to develop these concepts is reviewed, and a recommendation for further research is made. Last, Chapter 5 gives an in-depth overview of unusual teleportation phenomena that occur naturally and under laboratory conditions. The teleportation phenomenon discussed in the chapter is based on psychokinesis (PK), which is a category of psychotronics. The U.S. military-intelligence literature is reviewed, which relates the historical scientific research performed on PK-teleportation in the U.S., China and the former Soviet Union. The material discussed in the chapter largely challenges the current physics paradigm; however, extensive controlled and repeatable laboratory data exists to suggest that PK-teleportation is quite real and that it is controllable. The report ends with a combined list of references.

Approved for public release; distribution unlimited.

1.0 INTRODUCTION

1.1 Introduction

The concept of teleportation was originally developed during the Golden Age of 20th century science fiction literature by writers in need of a form of instantaneous disembodied transportation technology to support the plots of their stories. Teleportation has appeared in such SciFi literature classics as Algis Budry's *Rogue Moon* (Gold Medal Books, 1960), A. E. van Vogt's *World of Null-A* (Astounding Science Fiction, August 1945), and George Langelaan's *The Fly* (Playboy Magazine, June 1957). The Playboy Magazine short story led to a cottage industry of popular films decrying the horrors of scientific technology that exceeded mankind's wisdom: *The Fly* (1958), *Return of the Fly* (1959), *Curse of the Fly* (1965), *The Fly* (a 1986 remake), and *The Fly II* (1989). The teleportation concept has also appeared in episodes of popular television SciFi anthology series such as *The Twilight Zone* and *The Outer Limits*. But the most widely recognized pop-culture awareness of the teleportation concept began with the numerous *Star Trek* television and theatrical movie series of the past 39 years (beginning in 1964 with the first TV series pilot episode, *The Cage*), which are now an international entertainment and product franchise that was originally spawned by the late genius television writer-producer Gene Roddenberry. Because of *Star Trek* everyone in the world is familiar with the "transporter" device, which is used to teleport personnel and material from starship to starship or from ship to planet and vice versa at the speed of light. People or inanimate objects would be positioned on the transporter pad and become completely disintegrated by a beam with their atoms being patterned in a computer buffer and later converted into a beam that is directed toward the destination, and then reintegrated back into their original form (all without error!). "*Beam me up, Scotty*" is a familiar automobile bumper sticker or cry of exasperation that were popularly adopted from the series.

However, the late Dr. Robert L. Forward (2001) stated that modern hard-core SciFi literature, with the exception of the ongoing *Star Trek* franchise, has abandoned using the teleportation concept because writers believe that it has more to do with the realms of parapsychology/paranormal (a.k.a. psychic) and imaginative fantasy than with any realm of science. Beginning in the 1980s developments in quantum theory and general relativity physics have succeeded in pushing the envelope in exploring the reality of teleportation. A crescendo of scientific and popular literature appearing in the 1990s and as recently as 2003 has raised public awareness of the new technological possibilities offered by teleportation. As for the psychic aspect of teleportation, it became known to Dr. Forward and myself, along with several colleagues both inside and outside of government, that anomalous teleportation has been scientifically investigated and separately documented by the Department of Defense.

It has been recognized that extending the present research in quantum teleportation and developing alternative forms of teleportation physics would have a high payoff impact on communications and transportation technologies in the civilian and military sectors. It is the purpose of this study to explore the physics of teleportation and delineate its characteristics and performances, and to make recommendations for further studies in support of Air Force Advanced Concepts programs.

1.2 The Definitions of Teleportation

Before proceeding, it is necessary to give a definition for each of the teleportation concepts I have identified during the course of this study:

Approved for public release; distribution unlimited.

- *Teleportation* – SciFi: the disembodied transport of persons or inanimate objects across space by advanced (futuristic) technological means (adapted from Vaidman, 2001). We will call this *sf-Teleportation*, which will not be considered further in this study.

- *Teleportation* – psychic: the conveyance of persons or inanimate objects by psychic means. We will call this *p-Teleportation*.

- *Teleportation* – engineering the vacuum or spacetime metric: the conveyance of persons or inanimate objects across space by altering the properties of the spacetime vacuum, or by altering the spacetime metric (geometry). We will call this *vm-Teleportation*.

- *Teleportation* – quantum entanglement: the disembodied transport of the quantum state of a system and its correlations across space to another system, where *system* refers to any single or collective particles of matter or energy such as baryons (protons, neutrons, etc.), leptons (electrons, etc.), photons, atoms, ions, etc. We will call this *q-Teleportation*.

- *Teleportation* – exotic: the conveyance of persons or inanimate objects by transport through extra space dimensions or parallel universes. We will call this *e-Teleportation*.

We will examine each of these in detail in the following chapters and determine whether any of the above teleportation concepts encompass the instantaneous and or disembodied conveyance of objects through space.

Approved for public release; distribution unlimited.

2.0 vm-TELEPORTATION

2.1 Engineering the Spacetime Metric

A comprehensive literature search for vm-Teleportation within the genre of spacetime metric engineering yielded no results. No one in the general relativity community has thought to apply the Einstein field equation to determine whether there are solutions compatible with the concept of teleportation. Therefore, I will offer two solutions that I believe will satisfy the definition of vm-Teleportation. The first solution can be found from the class of traversable wormholes giving rise to what I call a true "stargate." A stargate is essentially a wormhole with a flat-face shape for the throat as opposed to the spherical-shaped throat of the Morris and Thorne (1988) traversable wormhole, which was derived from a spherically symmetric Lorentzian spacetime metric that prescribes the wormhole geometry (see also, Visser, 1995 for a complete review of traversable Lorentzian wormholes):

$$ds^2 = -e^{2\phi(r)}c^2dt^2 + [1-b(r)/r]^{-1}dr^2 + r^2d\Omega^2 \qquad (2.1),$$

where by inspection we can write the traversable wormhole metric tensor in the form

$$g_{\alpha\beta} = \begin{pmatrix} -e^{2\phi(r)} & 0 & 0 & 0 \\ 0 & [1-b(r)/r]^{-1} & 0 & 0 \\ 0 & 0 & r^2 & 0 \\ 0 & 0 & 0 & r^2\sin^2\theta \end{pmatrix} \qquad (2.2)$$

using standard spherical coordinates, where c is the speed of light, $\alpha,\beta \equiv (0 = t,\ 1 = r,\ 2 = \theta,\ 3 = \varphi)$ are the time and space coordinate indices ($-\infty < t < \infty$; r: $2\pi r$ = circumference; $0 \le \theta \le \pi$; $0 \le \varphi \le 2\pi$), $d\Omega^2 = d\theta^2 + sin^2\theta d\varphi^2$, $\phi(r)$ is the freely specifiable redshift function that defines the proper time lapse through the wormhole throat, and $b(r)$ is the freely specifiable shape function that defines the wormhole throat's spatial (hypersurface) geometry. Such spacetimes are asymptotically flat. The Einstein field equation requires that a localized source of matter-energy be specified in order to determine the geometry that the source induces on the local spacetime. We can also work the Einstein equation backwards by specifying the local geometry in advance and then calculate the matter-energy source required to induce the desired geometry. The Einstein field equation thus relates the spacetime geometry terms comprised of the components of the metric tensor and their derivatives (a.k.a. the Einstein tensor) to the local matter-energy source terms comprised of the energy and stress-tension densities (a.k.a. the stress-energy tensor). The flat-face wormhole or stargate is derived in the following section.

2.1.1 Wormhole Thin Shell Formalism

The flat-face traversable wormhole solution is derived from the thin shell (a.k.a. junction condition or surface layer) formalism of the Einstein equations (Visser, 1989; see also, Misner, Thorne and Wheeler, 1973). We adapt Visser's (1989) development in the following discussion. The procedure is to take two copies of flat Minkowski space and remove from each identical regions of the form $\Omega \times \Re$, where Ω is a three-dimensional compact spacelike hypersurface and $\Re$ is a timelike straight line (time axis). Then identify these two incomplete spacetimes along the timelike boundaries $\partial\Omega \times \Re$. The resulting spacetime

is geodesically complete and possesses two asymptotically flat regions connected by a wormhole. The throat of the wormhole is just the junction $\partial\Omega$ (a two-dimensional space-like hypersurface) at which the two original Minkowski spaces are identified (see Figures 1 and 2).

Approved for public release; distribution unlimited.

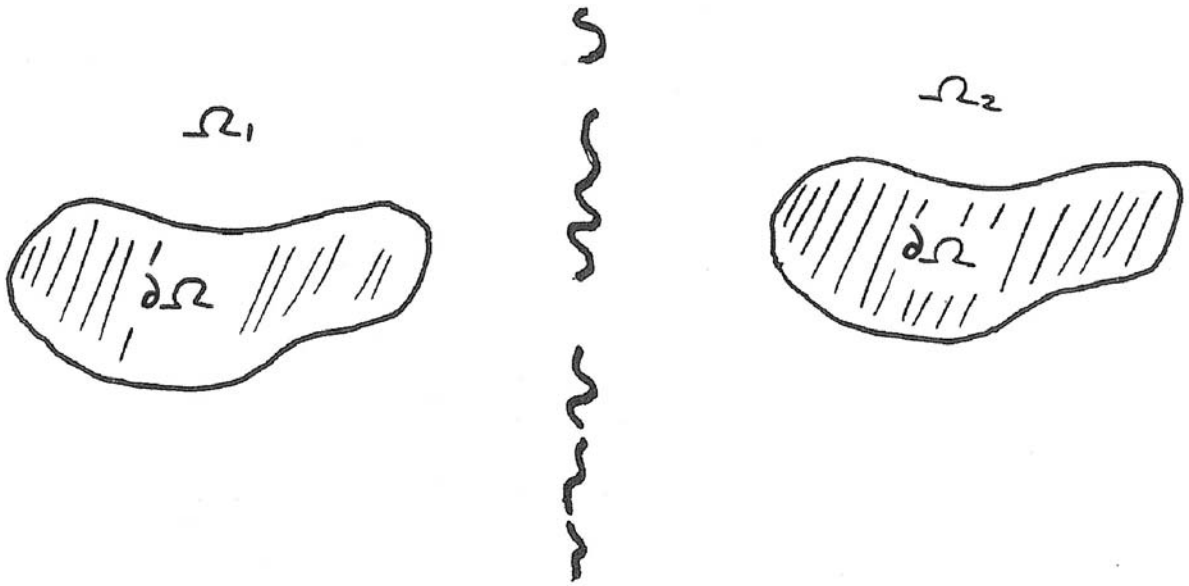

Figure 1. Diagram of a Simultaneous View of Two Remote Compact Regions (Ω_1 and Ω_2) of Minkowski Space Used to Create the Wormhole Throat $\partial\Omega$, Where Time is Suppressed in This Representation (adapted from Bennett et al., 1995)

Approved for public release; distribution unlimited.

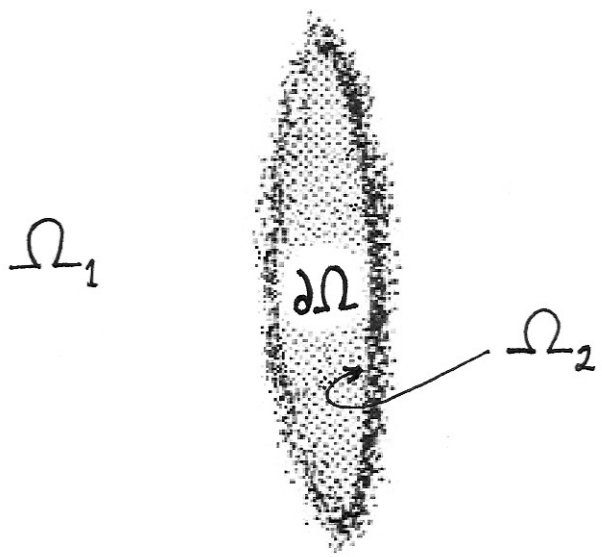

Figure 2. The Same Diagram as in Figure 1 Except as Viewed by an Observer Sitting in Region Ω_1 Who Looks Through the Wormhole Throat $\partial\Omega$ and Sees Remote Region Ω_2 (Dotted Area Inside the Circle) on the Other Side

Approved for public release; distribution unlimited.

The resulting spacetime is everywhere Riemann-flat except possibly at the throat. Also, the stress-energy tensor in this spacetime is concentrated at the throat with a δ-function singularity there. This is a consequence of the fact that the spacetime metric at the throat is continuous but not differentiable, while the connection is discontinuous; thus causing the Riemann curvature to possess a δ-function singularity (causing undesirable gravitational tidal forces) there. The magnitude of this δ-function singularity can be calculated in terms of the second fundamental form on both sides of the throat, which we presume to be generated by a localized thin shell of matter-energy. The second fundamental form represents the extrinsic curvature of the $\partial\Omega$ hypersurface (i.e., the wormhole throat), telling how it is curved with respect to the enveloping four-dimensional spacetime. The form of the geometry is simple, so the second fundamental form at the throat is calculated to be (McConnell, 1957):

$$\begin{aligned} K^{i}{}_{j}{}^{\pm} &= \pm\begin{pmatrix} \kappa_0 & 0 & 0 \\ 0 & \kappa_1 & 0 \\ 0 & 0 & \kappa_2 \end{pmatrix} \\ &= \pm\begin{pmatrix} 0 & 0 & 0 \\ 0 & 1/\rho_1 & 0 \\ 0 & 0 & 1/\rho_2 \end{pmatrix} \end{aligned} \qquad (2.3),$$

where $i,j = 0,1,2$ and $K^{i\pm}_{j}$ is the second fundamental form. The full 4×4 matrix $K^{\alpha}{}_{\beta}$ has been reduced to 3×3 form, as above, for computational convenience because the thin shell (or hypersurface) is essentially a two-surface embedded in three-space. The overall ± sign in equation (2.3) comes from the fact that a unit normal points outward from one side of the surface and points inward on the other side. We hereafter drop the ± sign for the sake of brevity in notation. The quantities κ_0, κ_1, and κ_2 measure the extrinsic curvature of the thin shell of local matter-energy (i.e., the stuff that induces the wormhole throat geometry). Since the wormhole throat is a space-like hypersurface, we can exclude time-like hypersurfaces and their components in the calculations. Therefore we set $\kappa_0 = 0$ in equation (2.3) because it is the time-like extrinsic curvature for the time-like hypersurface of the thin shell of matter-energy. As seen in equation (2.3) κ_1 and κ_2 are simply related to the two principal radii of curvature ρ_1 and ρ_2 (defined to be the eigenvalues of K^{i}_{j}) of the two-dimensional spacelike hypersurface $\partial\Omega$ (see Figure 3). It should be noted that a convex surface has positive radii of curvature, while a concave surface has negative radii of curvature.

Approved for public release; distribution unlimited.

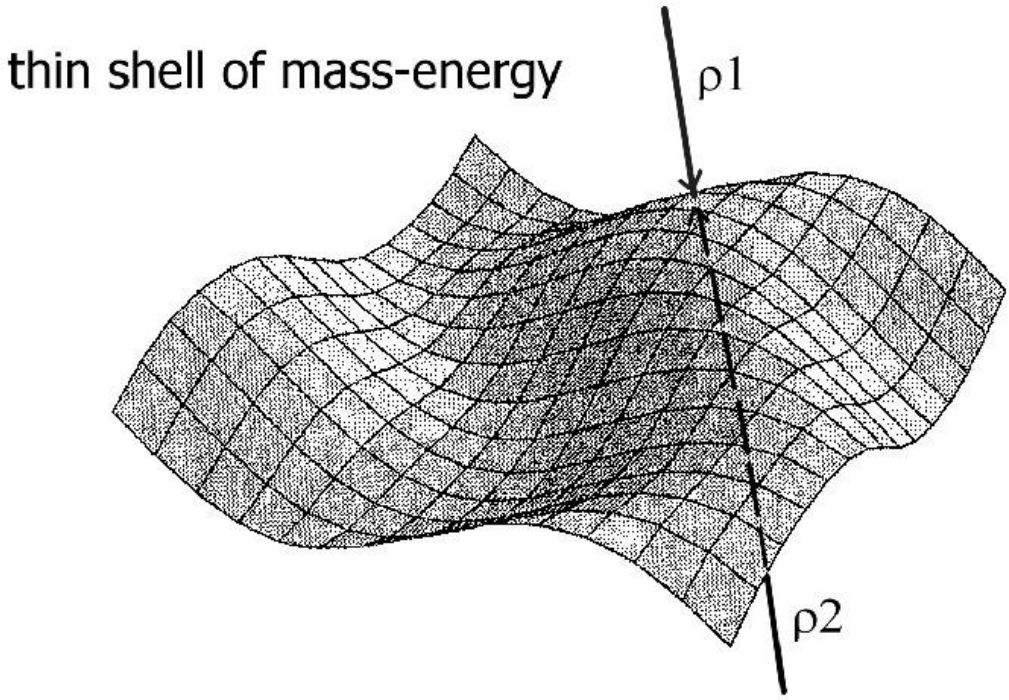

Figure 3. A Thin Shell of (Localized) Matter-Energy, or Rather the Two-Dimensional Spacelike Hypersurface $\partial\Omega$ (via (2.3)), Possessing the Two Principal Radii of Curvature ρ_1 and ρ_2

Approved for public release; distribution unlimited.

It is a standard result of the thin shell or junction condition formalism that the Einstein field equation may be cast in terms of the surface stress-energy tensor S^i_j of the thin matter-energy shell localized in $\partial\Omega$ (note: we are exploiting the symmetry of the wormhole with respect to interchange of the two flat regions Ω_1 and Ω_2):

$$S^i{}_j = -\frac{c^4}{4\pi G}\left(K^i{}_j - \delta^i{}_j K^k{}_k\right) \quad (2.4),$$

where G is Newton's gravitational constant and δ^i_j is the (three-dimensional) unit matrix. K^k_k is the trace of equation (2.3):

$$\begin{aligned} K^k{}_k &= Tr\, K^i{}_j \\ &= \frac{1}{\rho_1} + \frac{1}{\rho_2} \end{aligned} \qquad (2.5)$$

and

$$\delta^i{}_j K^k{}_k = \begin{pmatrix} \frac{1}{\rho_1} + \frac{1}{\rho_2} & 0 & 0 \\ 0 & \frac{1}{\rho_1} + \frac{1}{\rho_2} & 0 \\ 0 & 0 & \frac{1}{\rho_1} + \frac{1}{\rho_2} \end{pmatrix} \qquad (2.6).$$

Substituting (2.3) and (2.6) into (2.4) gives (after simplification):

$$S^i{}_j = \frac{c^4}{4\pi G}\begin{pmatrix} \frac{1}{\rho_1} + \frac{1}{\rho_2} & 0 & 0 \\ 0 & 1/\rho_2 & 0 \\ 0 & 0 & 1/\rho_1 \end{pmatrix} \qquad (2.7).$$

The thin matter-energy shell's surface stress-energy tensor may be interpreted in terms of the surface energy density σ and principal surface tensions ϑ_1 and ϑ_2:

$$S^i{}_j = \begin{pmatrix} -\sigma & 0 & 0 \\ 0 & -\vartheta_1 & 0 \\ 0 & 0 & -\vartheta_2 \end{pmatrix} \qquad (2.8).$$

Thus we arrive at the Einstein field equation by equating (2.8) and (2.7) and multiplying both sides by –1:

Approved for public release; distribution unlimited.

$$\begin{pmatrix} \sigma & 0 & 0 \\ 0 & \vartheta_1 & 0 \\ 0 & 0 & \vartheta_2 \end{pmatrix} = -\frac{c^4}{4\pi G}\begin{pmatrix} \frac{1}{\rho_1}+\frac{1}{\rho_2} & 0 & 0 \\ 0 & 1/\rho_2 & 0 \\ 0 & 0 & 1/\rho_1 \end{pmatrix} \qquad (2.9),$$

which gives the final result

$$\sigma = -\frac{c^4}{4\pi G}\left(\frac{1}{\rho_1}+\frac{1}{\rho_2}\right) \qquad (2.10a)$$

$$\vartheta_1 = -\frac{c^4}{4\pi G}\frac{1}{\rho_2} \qquad (2.10b)$$

$$\vartheta_2 = -\frac{c^4}{4\pi G}\frac{1}{\rho_1} \qquad (2.10c).$$

These are the Einstein equations. Equations (2.10a-c) imply that (for $\partial\Omega$ convex) we are dealing with ***negative*** surface energy density and ***negative*** surface tensions. This result is in fact the primary matter-energy requirement for traversable wormholes, as was proved by Morris and Thorne (1988), and later by Visser (1995), within the paradigm of classical Einstein general relativity. The negative surface tension (= *positive outward pressure*, a.k.a. gravitational repulsion or antigravity) is needed to keep the throat open and stable against collapse. The reader should **not** be alarmed at this result. Negative energies and negative stress-tensions are an acceptable result both mathematically and physically, and they manifest gravitational repulsion (antigravity!) in and around the wormhole throat. One only needs to understand what it means for stress-energy to be negative within the proper context. In general relativity the term "*exotic*" is used in place of "*negative*." The effects of negative energy have been produced in the laboratory (the Casimir Effect is one example). In short, negative energy arises from Heisenberg's quantum uncertainty principle, which requires that the energy density of any electromagnetic, magnetic, electric or other fields must fluctuate randomly. Even in a vacuum, where the average energy density is zero, the energy density fluctuates. This means that the quantum vacuum can never remain truly empty in the classical sense of the term. The quantum picture of the vacuum is that of a turbulent plenum of virtual (i.e., energy non-conserving) particle pairs that spontaneously pop in and out of existence. The notion of "zero energy" in quantum theory corresponds to the vacuum being filled with such fluctuations going on. This issue is further elaborated on and clarified in greater detail in Appendix A. We will also revisit this in Section 2.2. Finally, it should be noted that for the analysis in this section we assumed an ultrastatic wormhole [i.e., $g_{00} \equiv 1 \Rightarrow \phi(r) = 0$ in equation (2.1)] with the "exotic" matter-energy confined to a thin layer, and we dispensed with the assumption of spherical symmetry.

We can now build a wormhole-stargate and affect *vm-Teleportation* such that a traveler stepping into the throat encounters **no** exotic matter-energy there. This will require that our wormhole be flat shaped. To make the wormhole flat requires that we choose the throat $\partial\Omega$ to have at least one flat face (picture the thin shell in Figure 3 becoming a flat shell). On that face the two principal radii of curvature become $\rho_1 = \rho_2 = \infty$ as required by standard geometry. Substituting this into equations (2.10a-c) gives

$$\sigma = \vartheta_1 = \vartheta_2 = 0 \qquad (2.11),$$

which is a remarkable result. A further consequence of this is that now $K^i_j = 0$, thus making the Riemann curvature and stress-energy tensors (Riemann: $R^\alpha{}_\beta \sim K^\alpha{}_\beta$; stress-energy: $T^\alpha{}_\beta \sim K^\alpha{}_\beta$) at the throat become zero such that the associated δ-function singularities disappear there. This means that a traveler encountering and going through such a wormhole will feel no tidal gravitational forces and see no exotic matter-energy (that threads the throat). A traveler stepping through the throat will simply be <u>*teleported*</u> into the other remote spacetime region or another universe (note: the Einstein equation does not fix the spacetime topology, so it is possible that wormholes are inter-universe as well as intra-universe tunnels). We construct such a *teleportation* stargate by generating a thin shell or surface layer of "exotic" matter-energy much like a thin film of soap stretched across a loop of wire.

2.1.2 "Exotic" Matter-Energy Requirements

Now we have to estimate the amount of negative (or exotic) mass-energy that will be needed to generate and hold open a *vm-Teleportation* wormhole. A simple formula originally due to Visser (1995) for short-throat wormholes using the thin shell formalism gives:

$$\begin{aligned} M_{wh} &= -\frac{r_{throat}c^2}{G} \\ &= -(1.3469\,x10^{27}\,kg)\frac{r_{throat}}{1\,meter} \qquad (2.12), \\ &= -(0.709\,M_{Jupiter})\frac{r_{throat}}{1\,meter} \end{aligned}$$

where M_{wh} is the mass required to build the wormhole, r_{throat} is a suitable measure of the linear dimension (radius) of the throat, and $M_{Jupiter}$ is the mass of the planet Jupiter (1.90×10^{27} kg). Equation (2.12) demonstrates that a mass of $-0.709\ M_{Jupiter}$ (or -1.3469×10^{27} kg) will be required to build a wormhole 1 meter in size. As the wormhole size increases the mass requirement grows negative-large, and vice versa as the wormhole size decreases. After being alarmed by the magnitude of this, one should note that M_{wh} is **<u>not</u>** the total mass of the wormhole as seen by observers at remote distances. The non-linearity of the Einstein field equations dictates that the total mass is zero (actually, the total net mass being positive, negative or zero in the Newtonian approximation depending on the details of the negative energy configuration constituting the wormhole system). And finally, Visser et al. (2003) have demonstrated the existence of spacetime geometries containing traversable wormholes that are supported by ***<u>arbitrarily small quantities</u>*** of exotic matter-energy, and they proved that this was a general result. In Section 2.3 we will discuss how or whether we can create such a wormhole in the laboratory.

2.2 Engineering the Vacuum

Engineering the spacetime vacuum provides a second solution that also satisfies the definition of vm-Teleportation. The concept of "*engineering the vacuum*" was first introduced to the physics community by Lee (1988). Lee stated:

"*The experimental method to alter the properties of the vacuum may be called vacuum engineering…If indeed we are able to alter the vacuum, then we may encounter some new phenomena, totally unexpected*."

This new concept is based on the now-accepted fact that the vacuum is characterized by physical parameters and structure that constitutes an energetic medium which pervades the entire extent of the

universe. We note here the two most important defining properties of the vacuum in this regard (Puthoff et al., 2002):

- Within the context of quantum field theory the vacuum is the seat of all energetic particle and field fluctuations.

- Within the context of general relativity theory the vacuum is the seat of a spacetime structure (or metric) that encodes the distribution of matter and energy.

We begin our look into this concept by examining the propagation of light through space. We know from quantum field theory that light propagating through space interacts with the vacuum quantum fields (a.k.a. vacuum quantum field fluctuations). The observable properties of light, including the speed of light, are determined by these interactions. Vacuum quantum interactions with light lead to an effect on the speed of light that is due to the absorption of photons (by the vacuum) to form virtual electron-positron pairs followed by the quick re-emission (from the vacuum) of the photon (see Figure 4). The virtual particle pairs are very short lived because of the large mismatch between the energy of a photon and the rest mass-energy of the particle pair. A key point is that this process makes a contribution to the observed vacuum permittivity ε_0 (and permeability μ_0) constant and, therefore, to the speed of light c [$c = (\varepsilon_0\mu_0)^{-1/2}$].

Approved for public release; distribution unlimited.

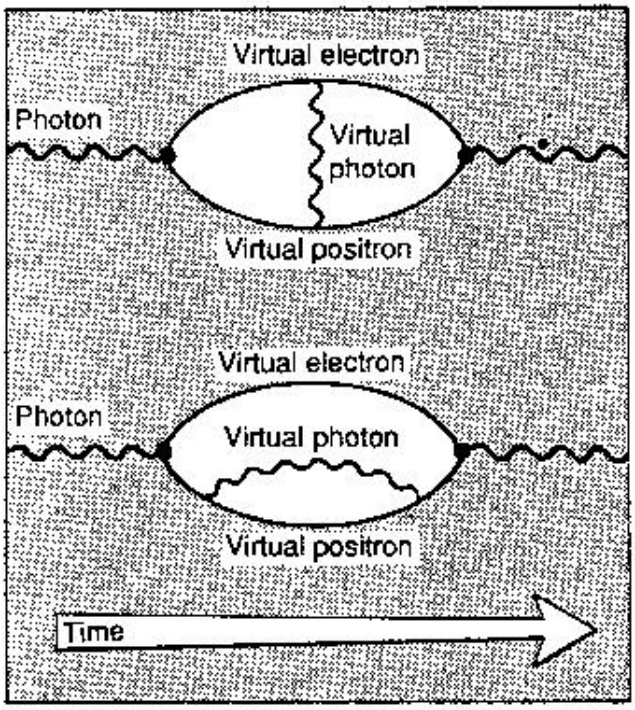

Photons can change into a variety of short-lived, or "virtual", particles as they fly through the vacuum. The processes above, represented by Feynman diagrams, are "two-loop"' processes. They affect light's speed

Figure 4. A Schematic of Vacuum Quantum Field Fluctuations (a.k.a. Vacuum Zero Point Field Fluctuations) Involved in the "Light-by-Light" Scattering Process That Affects the Speed of Light (from Chown, 1990)

Approved for public release; distribution unlimited.

The role of virtual particle pairs in determining the ε_0 (μ_0) of the vacuum is analogous to that of atoms/molecules in determining the relative permittivity ε (and μ) of a dielectric material. We know that the absorption/re-emission of photons by atoms/molecules in a transparent medium (note: there are no strongly absorbing resonances, so the atoms/molecules remain in their excited states for a very short time before re-emitting photons) is responsible for the refractive index of the medium, which results in the reduction of the speed of light for photons propagating through the medium. This absorption/re-emission process is also known in physics as a scattering process. We know from experiment that a change in the medium leads to a change in ε (μ), thus resulting in a change of the refractive index. The key point arising from this analogy is that a modification of the vacuum produces a change in ε_0 (μ_0) resulting in a subsequent change in c, and hence, a corresponding change in the vacuum refraction index.

Scharnhorst (1990) and Latorre et al. (1995) have since proved that the suppression of light scattering by virtual particle pairs (a.k.a. coherent light-by-light scattering) in the vacuum causes an ***increase*** in the speed of light accompanied by a decrease in the vacuum refraction index. This very unique effect is accomplished in a Casimir Effect capacitor cavity (or waveguide) whereby the vacuum quantum field fluctuations (a.k.a. zero-point fluctuations or ZPF) inside have been modified (becoming anisotropic and non-translational invariant) to satisfy the electromagnetic boundary conditions imposed by the presence of the capacitor plates (or waveguide walls). The principal result of this modification is the removal of the electromagnetic zero-point energy (ZPE) due to the suppression of vacuum ZPE modes with wavelengths longer than the cavity/waveguide cutoff ($\lambda_0 = 2d$, where d = plate separation; see Figure 5). This removal of free space vacuum ZPE modes suppresses the scattering of light by virtual particle pairs, thus producing the speed of light increase (and corresponding decrease in the vacuum refraction index). We know from standard optical physics and quantum electrodynamics (QED) that the optical phase and group velocities can exceed c under certain physical conditions, but dispersion always ensures that the signal velocity is $\leq c$. But recent QED calculations (see, Scharnhorst, 1990 and Latorre et al., 1995) have proved that in the Casimir Effect system, the dispersive effects are *much weaker* still than those associated with the increase in c so that the phase, group and signal velocities will therefore *all increase* by the same amount. Note that, in general, no dispersion shows up in all of the modified vacuum effects examined by investigators.

Approved for public release; distribution unlimited.

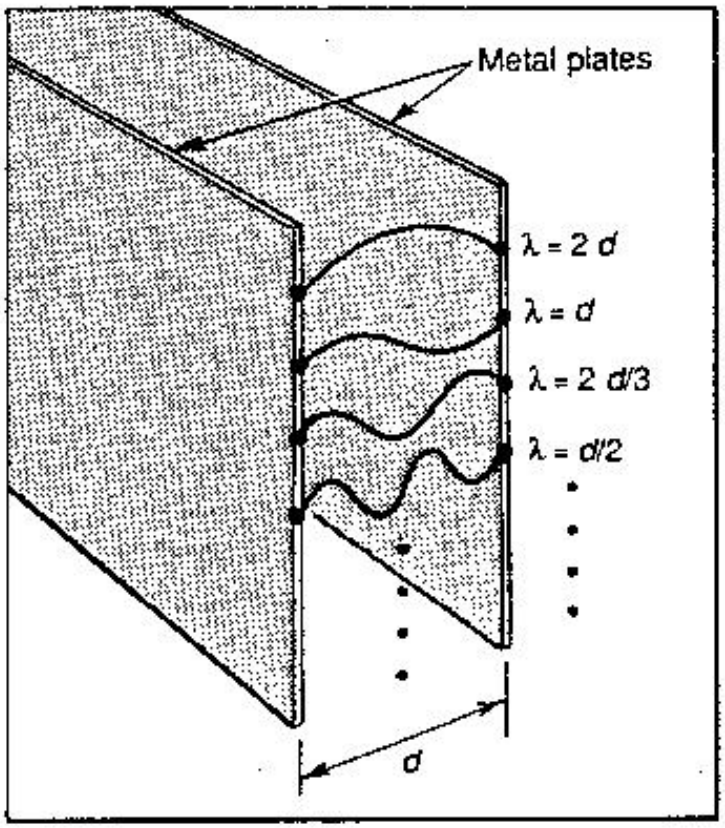

Casimir effect: the vacuum is full of virtual photons, but photons with wavelengths (λ), more than twice the separation of the plates, are excluded from the space between them. The imbalance pushes the plates together

Figure 5. A Schematic of the Casimir Effect Cavity/Waveguide (from Chown, 1990)

Approved for public release; distribution unlimited.

Examples demonstrating the increase in light speed (decrease in vacuum refraction index) via the Casimir Effect vacuum and other modified vacuum effects, as well as those effects producing a decrease in light speed (increase in vacuum refraction index), are described as follows. The vacuum modification effect on the speed of light described in the previous paragraph is (Scharnhorst, 1990):

$$\begin{aligned}\frac{c_\perp^{\ *}}{c_0} &= \left(1+\frac{11}{2^6\bullet(45)^2}\frac{e^4}{(m_e a)^4}\right) \qquad (\hbar = c_0 = \varepsilon_0 = \mu_0 = 1) \\ &= \left(1+\frac{11\pi^2}{8100}\alpha^2\frac{1}{(m_e a)^4}\right) > 1\end{aligned} \qquad (2.13),$$

where $c_\perp^{\ *}$ is the (modified) speed of light propagation perpendicular to the Casimir Effect capacitor plates, c_0 is the speed of light in free space (3×10^8 m/s in MKS units), m_e is the electron mass, α is the fine structure constant ($\approx 1/137$), e is the electron charge ($e^2 = 4\pi\alpha$ in quantum field theory natural units), a is the plate separation, $\hbar$ is Planck's reduced constant, and ε_0 is the vacuum permittivity constant. The condition $\hbar = c_0 = \varepsilon_0 = \mu_0 = 1$ stresses that (2.13), and all the equations that follow, are in quantum field theory natural units. The speed of light and vacuum refraction index measured parallel to the plates is unchanged from their free space values ($c_\parallel = c_0$, $n_\parallel = n_0 = 1$). The modified vacuum refraction index measured perpendicular to the plates is (Scharnhorst, 1990):

$$n_\perp = \left(1-\frac{11}{2^6\bullet(45)^2}\frac{e^4}{(m_e a)^4}\right) < 1 \qquad (\hbar = c_0 = \varepsilon_0 = \mu_0 = 1) \qquad (2.14).$$

Equations (2.13) and (2.14) show that in general $n_\perp < 1$ and $c_\perp^{\ *} > c_0$. But $c_\perp^{\ *} \to c_0$ and $n_\perp \to 1$ when $a \to \infty$ as expected, since we are now allowing all of the vacuum ZPE modes to re-enter the Casimir cavity in this case.

We now survey the additional examples of modified vacuums which increase/decrease light speed (from Latorre et al., 1995):

- For light (photons) propagating in a Friedmann-Robertson-Walker (FRW) vacuum (i.e., a homogeneous and isotropic Robertson-Walker gravitational background with Friedmann cosmology):

$$\frac{c^*}{c_0} = \left(1+\frac{11}{45}\alpha G\frac{\rho_r + p}{m_e^{\ 2}}\right) > 1 \qquad (\hbar = c_0 = \varepsilon_0 = \mu_0 = 1) \qquad (2.15),$$

where c^* is the modified vacuum speed of light, G is Newton's constant, ρ_r is the energy density and p is the pressure of a radiation-dominated universe ($p = \rho_r/3$). Here the speed of light is increased.

- For light (photons) propagating in a homogeneous and isotropic thermal vacuum:

$$\frac{c^*}{c_0} = \left(1-\frac{44\pi^2}{2025}\alpha^2\frac{T^4}{m_e^{\ 4}}\right) < 1 \qquad (\hbar = c_0 = \varepsilon_0 = \mu_0 = k_B = 1) \qquad (2.16),$$

where T is the temperature of the vacuum and k_B is the Boltzmann constant. Here the speed of light is decreased.

- For light (photons) propagating in an anisotropic vacuum given by an external constant uniform magnetic field $\boldsymbol{B}$:

$$\frac{c_{\parallel}^{*}}{c_0} = \left(1 - \frac{8}{45}\alpha^2 \frac{\mathbf{B}^2}{m_e^{\,4}} \sin^2\theta\right) < 1 \qquad (\hbar = c_0 = \varepsilon_0 = \mu_0 = 1)$$
$$\frac{c_{\perp}^{*}}{c_0} = \left(1 - \frac{14}{45}\alpha^2 \frac{\mathbf{B}^2}{m_e^{\,4}} \sin^2\theta\right) < 1 \qquad (2.17),$$

where the speed of light is decreased in this vacuum for polarizations coplanar (||) with and perpendicular (⊥) to the plane defined by $\boldsymbol{B}$ and the direction of propagation, and θ is the angle between $\boldsymbol{B}$ and the direction of propagation. Latorre et al. (1995) calculated the polarization-average of (2.17) to give the averaged (modified) speed of light in the B-field:

$$\frac{c^*}{c_0} = \left(1 - \frac{22}{135}\alpha^2 \frac{\mathbf{B}^2}{m_e^{\,4}}\right) < 1 \qquad (\hbar = c_0 = \varepsilon_0 = \mu_0 = 1) \quad (2.18).$$

- For light (photons) propagating in an anisotropic vacuum given by an external constant uniform electric field $\boldsymbol{E}$, the polarization-averaged modified speed of light is:

$$\frac{c^*}{c_0} = \left(1 - \frac{22}{135}\alpha^2 \frac{\mathbf{E}^2}{m_e^{\,4}}\right) < 1 \qquad (\hbar = c_0 = \varepsilon_0 = \mu_0 = 1) \qquad (2.19).$$

Here the speed of light is decreased.

Equations (2.16) – (2.19) are the result of vacuum modifications that populate the vacuum with virtual or real particles that induce coherent (light-by-light) scattering, which reduces the speed of massless particles. By examining the form of equations (2.13) and (2.15) – (2.19) Latorre et al. (1995) discovered that the low energy modification of the speed of light is proportional to the ratio of the modified vacuum energy density (as compared to the standard vacuum energy density, $\rho_{vac} = 0$) over m_e^4, with a universal numerical coefficient and the corresponding coupling constants. And a general rule became apparent from their analysis that is applicable to modified vacua for massive and massless quantum field theories, for low energy:

$c^* > c_0$ (vacuum refraction index < 1) when the modified vacuum has a lower energy density
$c^* < c_0$ (vacuum refraction index > 1) when the modified vacuum has a higher energy density
$c^* = c_0$ (vacuum refraction index = 1) when the vacuum is free (or un-modified) with $\rho_{vac} = 0$

The first two rules explain the sign of the change of the speed of light. From this rule and the mathematical commonality between the form of (2.13) and (2.15) – (2.19) Latorre et al. (1995) found a single unifying expression to replace these equations:

$$\frac{c^*}{c_0} = 1 - \frac{44}{135}\alpha^2 \frac{\rho}{m_e^{\,4}} \qquad (\hbar = c_0 = \varepsilon_0 = \mu_0 = 1) \qquad (2.20),$$

where ρ is the energy density of the modified vacua under consideration such that $\rho \to \rho_E \sim \boldsymbol{E}^2$ for the electric field vacuum, $\rho \to \rho_B \sim \boldsymbol{B}^2$ for the magnetic field vacuum, and $\rho \to \rho_T \sim \pi^2 T^4$ for the thermal vacuum. If the vacuum is a FRW gravitational vacuum, then one has to substitute one factor of α in (2.20) by $-m_e^2 G$ and $\rho \to \rho_r$. Equation (2.13) for the Casimir Effect vacuum studied earlier is recovered when $\rho \to \rho_{Casimir} = -(\pi^2/240)a^{-4}$.

Let us recast (2.20) into a more useful form. We subtract one from both sides of (2.20), do some algebra, and thus define the ratio of the change in the speed of light Δc in a modified vacuum to the speed of light in free space c_0:

$$\frac{c^*}{c_0} - 1 = \frac{c^* - c_0}{c_0} \equiv \frac{\Delta c}{c_0}$$

$$\frac{\Delta c}{c_0} = -\frac{44}{135}\alpha^2 \frac{\rho}{m_e^{\,4}} \qquad (\hbar = c_0 = \varepsilon_0 = \mu_0 = 1) \quad (2.21).$$

Equations (2.20) and (2.21) are in quantum field theory natural units, which is completely undesirable for estimating physically measurable values of $\Delta c/c_0$. We thus transform or "unwrap" (2.20) and (2.21) back into MKS or CGS units by making the following substitutions (Puthoff, 2003)

$$\rho \text{ (natural units)} \to \frac{\rho}{\hbar c} \text{ (MKS or CGS units)}$$

$$m_e \text{ (natural units)} \to \frac{m_e c}{\hbar} \text{ (MKS or CGS units)},$$

and after some algebra and rearranging we arrive at the final result:

$$\frac{c^*}{c_0} = 1 - \frac{44}{135}\alpha^2 \frac{\rho}{m_e c_0^{\,2}} \left(\frac{\hbar}{m_e c_0} \right)^3 \qquad (2.22)$$

and

$$\frac{\Delta c}{c_0} = -\frac{44}{135}\alpha^2 \frac{\rho}{m_e c_0^{\,2}} \left(\frac{\hbar}{m_e c_0} \right)^3 \qquad (2.23),$$

where all quantities are now in MKS or CGS units. We chose the former units so that $c_0 = 3\times10^8$ m/s, $\hbar = 1.055\times10^{-34}$ J-s, $m_e = 9.11\times10^{-31}$ kg, and $\alpha = 1/137$. Note that the ratio of the modified vacuum energy density to the electron rest-mass energy has the dimension of (*volume*)$^{-1}$ while the quantity in the bracket is the cubed Compton wavelength of the electron having the dimension of (*volume*), and the product of these is dimensionless.

An excellent example for estimating the magnitude of the change in the speed of light (in a modified vacuum) is the Casimir Effect vacuum, since Casimir Effect experiments are common and widespread such that this would be ideal to experimentally test (2.23). We substitute the Casimir vacuum energy density $\rho_{Casimir} = -(\pi^2 \hbar c_0/240)a^{-4}$ (in MKS units) into (2.23), do the algebra, insert the MKS values for the physical constants, and make further simplifications to get:

$$\frac{\Delta c}{c_0} = -\frac{44}{135}\alpha^2\left(-\frac{\pi^2}{240}\frac{\hbar c_0}{a^4}\right)\frac{1}{m_e c_0{}^2}\left(\frac{\hbar}{m_e c_0}\right)^3$$
$$= \frac{11}{8100}\alpha^2\pi^2\left(\frac{\hbar}{m_e c_0 a}\right)^4 \qquad (2.24),$$
$$\approx \left(1.59\times 10^{-56}\right)a^{-4}$$

where a (the plate separation) is in meters. Another useful equation is:

$$c^* = \left(1+\frac{\Delta c}{c_0}\right)c_0 \qquad (2.25),$$

where we make the substitution $c^* \rightarrow c_\perp{}^*$ for the present case. H. E. Puthoff and the author (Puthoff, 2003) compared the third line in (2.24) with equation (26) in Scharnhorst (1990) and discovered that the result cited there is in error, because the numerical coefficient is four orders of magnitude too small (Scharnhorst originally pointed out this error to Forward, 1996).

We now set $a = 10^{-6}$ m (1 μm) and we get $\Delta c/c_0 \approx 10^{-32}$ and $c_\perp{}^* \approx c_0$, which is a horrifically small 1 part in 10^{32} change that we cannot hope to measure at present. But for $a = 10^{-10}$ m (1 Å) we get $\Delta c/c_0 \approx 10^{-16}$ and $c_\perp{}^* \approx c_0$, which is a 1 part in 10^{16} change that could be measurable at present or in the very near future using high precision laser technology. Last, for $a = 1.1229\times 10^{-14}$ m (11.229 fm or ≈ 11 times the nuclear diameter; 1 fm = 10^{-15} m) we find that $\Delta c/c_0 \approx 1$ and $c_\perp{}^* \approx 2c_0$. We are not able to do technical work at nuclear distances at this time; however, that could change as ultrahigh precision measurement technology continues to evolve. The threshold for the onset of significant changes in light speed occurs when $a < 10^{-12}$ m. This result is generally true for the other modified vacua surveyed in (2.15) – (2.19), since accessible (everyday) values for electric and magnetic field strengths, thermal temperatures and radiation densities are not large enough to overcome the size of the electron mass to create a measurable effect. However, there is a class of ultrahigh intensity tabletop lasers that have achieved such extreme electric and magnetic field strengths and temperatures that it may now be possible to consider using them to explore vacuum modification effects in the lab. We will return to this theme in a later section.

•**Key Point**: As disappointing as the Casimir Effect vacuum (and other modified vacua) results are, it should be strongly pointed out that special relativity theory says that if in one inertial reference frame an object travels only one part in 10^{16} (or even one part in 10^{32}) times faster than c_0, then one can find another reference frame where departure and arrival times of the object are simultaneous, and thus the velocity is ***infinite***. This is what motivates us to look at a teleportation mechanism based on engineering of the vacuum.

•**Technical Notes**:

- Equation (2.15) is interpreted as an increase in the speed of light due to a decrease in the number of vacuum ZPE modes. However, this effect is totally unrelated to light-by-light scattering in the vacuum because the gravitational background "squeezes" (as in squeezed quantum optics states; see Davis, 1999a) the ZPE modes, therefore reducing the vacuum energy density. We further note that the coefficient of 11 is the same for the gravitational vacuum as for the other modified vacua examples based on QED. This factor also appears in the coefficient of the Euler-Poincare characteristic spin-½ contribution to the gravitational trace anomaly (Birrell and Davies, 1982). It is beyond the scope of this study to consider the deep connections between quantum field theory and gravitation.

- We have excluded from our survey the Latorre et al. (1995) results pertaining to all other (high or low energy) modifications of the speed of massless particles. That is because the other examples invoked different QED theories possessing massless ($m_e = 0$), massive and intrinsic mass scales that introduced complex correction terms (beyond the leading low energy terms surveyed above) which are mass-related or running mass-related, and they introduced no new speed modification effects (beyond the low energy electron-positron virtual pair contributions); or no genuine speed modification was possible (especially for the massless Quantum Chromodynamic sector involving pseudo-Goldstone particles).

- There is ongoing (very noisy) controversy within the physics community over the effects of $c^* > c_0$ on causality. As this topic is beyond the scope of this study, I will make three points in this regard: 1) There are no grounds for microcausality violations in accordance with Drummond and Hathrell (1980). 2) A new definition of causality is in order for FTL (faster-than-light) phenomena. 3) Investigators have found that time machines (a.k.a. closed timelike curves) do not affect Gauss's theorem, and thus do not affect the derivation of global conservation laws from differential ones (Friedman et al., 1990). The standard conservation laws remain globally valid while retaining a natural quasi-local interpretation for spacetimes possessing time machines (for example, asymptotically flat wormhole spacetimes). Thorne (1993) states that it may turn out that causality is violated at the macroscopic scale. Even if causality is obeyed macroscopically, then quantum gravity might offer finite probability amplitudes for microscopic spacetime histories possessing time machines. Li and Gott (1998) found a self-consistent vacuum for quantum fields in Misner space (a simple flat space with closed timelike curves), for which the renormalized stress-energy tensor is regular (in fact zero) everywhere. This implies that closed timelike curves could exist at least at the level of semi-classical quantum gravity theory. Therefore, FTL causality paradoxes are just a reflection of our ignorance or inadequate comprehension of the physics of chronology and causality.

In this section we have shown how "vacuum engineering" can modify the speed of light, and how this can, in principle, lead to vm-Teleportation. The vacuum modification concepts summarized above lead us to a formal theory that implements the concept of vacuum engineering within a framework that parallels general relativity theory. This theory is called the Polarizable-Vacuum Representation of General Relativity. In the next section we will introduce and summarize this theory.

2.2.1 The Polarizable-Vacuum Representation of General Relativity

The polarizable-vacuum representation of general relativity (a.k.a. PV-GR) treats the vacuum as a polarizable medium of variable refractive index (Puthoff, 1999a, 2002a, b; Puthoff et al., 2002) exemplifying the concept of the vacuum modification (or vacuum engineering) effects surveyed and discussed in the previous section. The PV-GR approach treats spacetime metric changes in terms of equivalent changes in the vacuum permittivity and permeability constants (ε_0 and μ_0), essentially along the lines of the "*TH*εμ" methodology (see Appendix B for a brief description of this) used in comparative studies of alternative metric theories of gravity (Lightman and Lee, 1973; Will, 1974, 1989, 1993; Haugan and Will, 1977). Such an approach, relying as it does on parameters familiar to engineers, can be considered a "metric engineering" approach. Maxwell's equations in curved space are treated in the isomorphism of a polarizable medium of variable refractive index in flat space (Volkov et al., 1971); the bending of a light ray near a massive body is modeled as due to an induced spatial variation in the refractive index of the vacuum near the body; the reduction in the velocity of light in a gravitational potential is represented by an effective increase in the refractive index of the vacuum, and so forth. This optical-engineering approach has been shown to be quite general (de Felice, 1971; Evans et al., 1996a, b).

As recently elaborated by Puthoff (1999a, 2002a, b; Puthoff et al., 2002) the PV-GR approach, which was first introduced by Wilson (1921) and then developed by Dicke (1957, 1961), can be carried out in a self-consistent way so as to reproduce to appropriate order both the equations of general relativity and the match to the standard astrophysics weak-field experimental (PPN parameters and other) tests of those equations while posing testable modifications for strong-field conditions. It is in application that the PV-GR approach demonstrates its intuitive appeal and provides additional insight into what is meant by a curved spacetime metric.

Specifically, the PV-GR approach treats such measures as the speed of light, the length of rulers (atomic bond lengths), the frequency of clocks, particle masses, and so forth, in terms of a variable vacuum dielectric constant K in which the vacuum permittivity ε_0 transforms as $\varepsilon_0 \rightarrow K\varepsilon_0$ and the vacuum permeability transforms as $\mu_0 \rightarrow K\mu_0$ (see also, Rucker, 1977). In a planetary or solar gravitational potential $K = exp(2GM/rc_0^2) > 1$ (M is a local mass distribution, r is the radial distance from the center of M) while $K = 1$ in "empty" or free asymptotic space (Puthoff, 1999a, 2002a, b; Puthoff et al., 2002). In the former case, the speed of light is reduced, light emitted from an atom is redshifted as compared with a remote static atom (where $K = 1$), clocks run slower, objects/rulers shrink, etc. See Table 1.

Table 1. Metric Effects in the PV-GR Model When $K > 1$ (Compared With Reference Frames at Asymptotic Infinity Where $K = 1$; adapted from Puthoff et al., 2002**)**

Variable	**Determining Equation** (subscript 0 is asymptotic value where $K = 1$)	$K > 1$ *(typical mass distribution, M)*
modified speed of light $c^*(K)$	$c^* = c_0/K$	speed of light $< c_0$
Modified mass $m(K)$	$m = m_0K^{3/2}$	effective mass increases
modified frequency $\omega(K)$	$\omega = \omega_0K^{-1/2}$	redshift toward lower frequencies
modified time interval $\Delta t(K)$	$\Delta t = \Delta t_0K^{1/2}$	clocks run slower
modified energy $E(K)$	$E = E_0K^{-1/2}$	lower energy states
Modified length $L(K)$	$L = L_0K^{-1/2}$	objects/rulers shrink
dielectric-vacuum "gravitational" forces $F(K)$	$F(K) \propto \nabla K$	attractive gravitational force

When $K = 1$ we have the condition that $c^* = c_0$ (vacuum refraction index = 1), because the vacuum is free (or un-modified, and $\rho_{vac} = 0$) in this case. When $K > 1$, as occurs in a region of space possessing a gravitational potential, then we have the condition that $c^* < c_0$ (vacuum refraction index > 1), because the modified vacuum has a higher energy density in the presence of the local mass distribution that generates the local gravitational field. This fact allows us to make a direct correspondence between the speed of light modification physics discussion in Section 2.2 and the underlying basis for the physics of the PV-GR model. Under certain conditions the spacetime metric can in principle be modified to reduce the value of K to below unity, thus allowing for faster-than-light (FTL) motion to be physically realized. In this case, the local speed of light (as measured by remote static observers) is increased, light emitted from an atom is blueshifted as compared with a remote static atom, objects/rulers expand, clocks run faster, etc. See Table 2. We therefore have the condition that $c^* > c_0$ (vacuum refraction index < 1) because the modified vacuum has a lower energy density. In fact, Puthoff (1999a, 2002a) has analyzed certain special

black hole metrics and found $K < 1$ from the model. We will return to this theme later. In what follows we briefly review and summarize the key points and equations from the development of the PV-GR model, and we refer the reader to Puthoff (1999a, 2002a, b) for more extensive discussion and derivations.

Table 2. Metric Effects in the PV-GR Model When $K < 1$ (Compared With Reference Frames at Asymptotic Infinity Where $K = 1$; adapted from Puthoff et al., 2002**)**

Variable	**Determining Equation** (subscript 0 is asymptotic value where $K = 1$)	$K < 1$ *(typical mass distribution, M)*
modified speed of light $c^*(K)$	$c^* = c_0/K$	speed of light > c_0
modified mass $m(K)$	$m = m_0 K^{3/2}$	effective mass decreases
modified frequency $\omega(K)$	$\omega = \omega_0 K^{-1/2}$	blueshift toward higher frequencies
modified time interval $\Delta t(K)$	$\Delta t = \Delta t_0 K^{1/2}$	clocks run faster
modified energy $E(K)$	$E = E_0 K^{-1/2}$	higher energy states
modified length $L(K)$	$L = L_0 K^{-1/2}$	objects/rulers expand
dielectric-vacuum "gravitational" forces $F(K)$	$F(K) \propto \nabla K$	repulsive gravitational force

We begin by recalling that in flat space electrodynamics, the electric flux vector ***D*** in a linear, homogeneous medium can be written

$$\begin{aligned} \mathbf{D} &= \varepsilon \mathbf{E} \\ &= \varepsilon_0 \mathbf{E} + \mathbf{P} \\ &= \varepsilon_0 \mathbf{E} + \alpha_V \mathbf{E} \end{aligned} \qquad (2.26),$$

where ε is the permittivity of the medium, the polarization ***P*** corresponds to the induced dipole moment per unit volume in the medium whose polarizability per unit volume is α_V, and ***E*** is the electric field. The identical form of the last two terms naturally leads to the interpretation of ε_0 as the polarizability per unit volume of the vacuum. The quantum picture of the vacuum, where it has been shown that the vacuum acts as a polarizable medium by virtue of induced dipole moments resulting from the excitation of virtual electron-positron particle pairs (Heitler, 1954), completely justifies the interpretation that the vacuum is a medium. Note that there are other virtual particle pairs in the vacuum that also contribute to this picture; however, it is the electron-positron pairs that dominate the others, as shown in Section 2.2. The basic postulate of the PV-GR model for curved space conditions is that the polarizability of the vacuum in the vicinity of localized mass-energy distributions differs from its asymptotic free space value by virtue of vacuum polarization effects induced by the presence of the local mass-energy. Thus the postulate for the vacuum itself is

$$\begin{aligned} \mathbf{D} &= \varepsilon \mathbf{E} \\ &\equiv K \varepsilon_0 \mathbf{E} \end{aligned} \qquad (2.27),$$

where K (a function of position) is the modified dielectric constant of the vacuum due to the induced vacuum polarizability changes under consideration. Equation (2.27) defines the transformation $\varepsilon = K\varepsilon_0$.

Table 1 shows the various quantitative effects a polarizable vacuum (in the presence of positive mass-energy distributions) has on the various measurement processes important to general relativity. The effects demonstrated in the middle and right columns demonstrate the basis of the polarizable vacuum approach to general relativity. Table 2 shows what effects are manifested when negative mass-energy distributions induce vacuum polarizability changes that lead to FTL phenomenon. Experimental observations impose constraints on the model causing key physical constants to remain constant even with variable polarizability present in the local space. Puthoff (1999a, 2002a, b) has shown that the fine structure constant is constrained by observational data to remain constant within a variable polarizable vacuum, and this constraint actually defines the transformation $\mu = K\mu_0$. The elementary particle charge e is also taken to be constant in a variable polarizable vacuum because of charge conservation. And $\hbar$ remains a constant by conservation of angular momentum for circularly polarized photons propagating through the (variable polarizability) vacuum. The remaining constant of nature is the speed of light, and although the tables showed how this was modified in variable polarizability vacuums, it is interesting to see how this modification comes about. In a modified (variable polarizability) vacuum the speed of light is defined, as it is in standard electrodynamics, in terms of the permittivity and permeability by:

$$\begin{aligned} c^* &\equiv (\varepsilon\mu)^{-1/2} \\ &= (K\varepsilon_0 \bullet K\mu_0)^{-1/2} \\ &= (K^2\varepsilon_0\mu_0)^{-1/2} \qquad (2.28), \\ &= \frac{1}{K}(\varepsilon_0\mu_0)^{-1/2} \\ &= \frac{c_0}{K} \end{aligned}$$

where the permittivity/permeability transformations and the free space (un-modified vacuum) definition for c_0 were inserted. Note that (2.28) can be re-written as $c^*/c_0 = 1/K$, and this is to be compared with (2.22). Thus we see from (2.28), and by comparison with (2.22), that K plays the role of a variable refractive index under conditions in which the vacuum polarizability is assumed to change in response to general relativistic-type influences. One further note of interest is that the permittivity/permeability transformations also maintains constant the ratio

$$\sqrt{\frac{\mu}{\varepsilon}} = \sqrt{\frac{\mu_0}{\varepsilon_0}},$$

which is the impedance of free space. This constant ratio is required to keep electric-to-magnetic energy ratios constant during adiabatic movement of atoms from one position in space to another of differing vacuum polarizability (Dicke, 1957, 1961). And this constant ratio is also a necessary condition in the $TH\varepsilon\mu$ formalism for an electromagnetic test particle to fall in a gravitational field with a composition-independent acceleration (Lightman and Lee, 1973; Will, 1974, 1989, 1993; Haugan and Will, 1977).

Now we make the "crossover connection" to the standard spacetime metric tensor concept that characterizes conventional general relativity theory, as originally shown by Puthoff (1999a, 2002a, b). In flat (un-modified or free) space the standard four-dimensional infinitesimal spacetime interval ds^2 is given (in Cartesian coordinates with subscript 0) by

$$ds^2 = -c_0{}^2 dt_0{}^2 + \sum_{i=1}^{3} dx_{i0}{}^2 \qquad (2.29),$$

where $i \equiv (1 = x,\ 2 = y,\ 3 = z)$. This metric means that measuring rods and clocks are non-varying wherever one goes in spacetime to make measurements. However, this has been shown to be incorrect in general relativity theory, so the length and time transformations (between proper and coordinate values) given in the tables (middle columns) indicate that measuring rods and clocks do vary when placed in regions where $K \neq 1$. Therefore, we replace the time and space differentials in (2.29) with the length and time transformations in the tables into (2.29), and derive the general relativistic spacetime interval

$$ds^2 = -\frac{1}{K} c_0{}^2 dt^2 + K\left(\sum_{i=1}^{3} dx_i{}^2\right) \qquad (2.30).$$

Note that observers within a $K \neq 1$ region will always measure the speed of light to be c_0. Equation (2.30) defines an isotropic coordinate system, which is a common and useful way to represent spacetime metrics in general relativity studies. By inspection the metric tensor is written

$$g_{\alpha\beta} = \begin{pmatrix} -1/K & 0 & 0 & 0 \\ 0 & K & 0 & 0 \\ 0 & 0 & K & 0 \\ 0 & 0 & 0 & K \end{pmatrix} \qquad (2.31).$$

The Lagrangian density for matter-field interactions in a vacuum of variable K is given by Puthoff (1999a, 2002a, b) as

$$\begin{aligned} L_d = &-\left[\frac{m_0 c_0{}^2}{\sqrt{K}}\sqrt{1-\left(\frac{v}{c_0/K}\right)^2} + q\Phi - qA_i v^i\right]\delta^3(\mathbf{r}-\mathbf{r}_0) \\ &-\frac{1}{2}\left(\frac{\mathbf{B}^2}{K\mu_0} - K\varepsilon_0\mathbf{E}^2\right) - \frac{c_0{}^4}{32\pi G}\frac{1}{K^2}\left[(\nabla K)^2 - \frac{1}{(c_0/K)^2}\left(\frac{\partial K}{\partial t}\right)^2\right] \end{aligned} \qquad (2.32),$$

where the first term is the Lagrangian density for a free particle of mass m_0, charge q and 3-vector velocity $\boldsymbol{v}$ ($v = |\boldsymbol{v}|$, 3-vector components are labeled by i) interacting with electromagnetic fields via the electromagnetic field 4-vector potential $\boldsymbol{A}_\mu = (\Phi, A_i)$ (note that $\delta^3(\mathbf{r} - \mathbf{r}_0)$ is the delta function that locates the point particle at position $\mathbf{r} = \mathbf{r}_0$); the second term is the Lagrangian density for the electromagnetic fields themselves, and the last term is the Lagrangian density for K (treated here as a scalar variable). This last term emulates the Lagrangian density for the gravitational field. Equation (2.32) does not include any quantum gauge field interaction terms because it is beyond the scope of the present incarnation of the PV-GR approach to include them. We can obtain the equations of particle motion in a variable dielectric vacuum by performing the standard variations of the Lagrangian density $\delta(\int L_d\, dx\, dy\, dz\, dt)$ with respect to the particle variables. However, we are more interested in obtaining the "master equation" for K by varying the Lagrangian density with respect to K, and Puthoff (1999a, 2002a, b) gives the result:

$$\nabla^2\sqrt{K}-\frac{1}{\left(c_0/K\right)^2}\frac{\partial^2\sqrt{K}}{\partial t^2}$$

$$=-\frac{8\pi G}{c_0^{\,4}}\sqrt{K}\left\{\frac{\left(m_0c_0^{\,2}/\sqrt{K}\right)}{\sqrt{1-\left(\frac{v}{c_0/K}\right)^2}}\frac{1}{2}\left[1+\left(\frac{v}{c_0/K}\right)^2\right]\delta^3(\mathbf{r}-\mathbf{r}_0)\right. \qquad (2.33).$$

$$\left.+\frac{1}{2}\left(\frac{\mathbf{B}^2}{K\mu_0}+K\varepsilon_0\mathbf{E}^2\right)-\frac{c_0^{\,4}}{32\pi G}\frac{1}{K^2}\left[(\nabla K)^2+\frac{1}{\left(c_0/K\right)^2}\left(\frac{\partial K}{\partial t}\right)^2\right]\right\}$$

This equation describes the generation of general relativistic vacuum polarization effects due to the presence of matter and fields. By inspecting the right-hand side of the equation, we observe that changes in K are driven by the mass density (1st term), electromagnetic energy density (2nd term), and the vacuum polarization energy density itself (3rd term). In fact, the 3rd term emulates the gravitational field self-energy density. Note that the 2nd and 3rd terms in (2.33) appear with opposite signs with the result that electromagnetic field effects can counteract the gravitational field effects. Puthoff found that (2.33) gives the solution $K = exp(2GM/rc_0^2)$ in the vicinity of a static spherically symmetric (uncharged) mass M (in the low velocity limit $v << c_0$, $\partial K/\partial t = 0$, $\boldsymbol{E} = \boldsymbol{B} = 0$, $q = 0$), which reproduces to appropriate order the standard general relativistic Schwarzschild spacetime metric for the weak gravitational field conditions prevailing in the solar system. This solution guarantees that $K > 1$ near mass concentrations.

Of major importance to the present study are solutions giving $K < 1$ so that teleportation can be realized. Puthoff has found one such solution by studying the case of a static spherically symmetric mass M with charge Q familiar from the study of the Reissner-Nordstrφm spacetime metric. In this case Puthoff found the result

$$K=\left[\cos\left(\frac{\sqrt{b^2-a^2}}{r}\right)+\frac{a}{\sqrt{b^2-a^2}}\sin\left(\frac{\sqrt{b^2-a^2}}{r}\right)\right]^2 \qquad \left(b^2>a^2\right) \qquad (2.34),$$

where $a^2 = (GM/c_0^2)^2$, $b^2 = Q^2G/4\pi\varepsilon_0c_0^4$, and r is the radial distance from the center of M. And in this case (2.34) gives $K < 1$, which shows that FTL solutions are available in the PV-GR approach (as they are also in the Einstein theory). (For $a^2 > b^2$ the solution is hyperbolic-trigonometric and describes the standard Reissner-Nordstrφm metric where $K > 1$.)

Generally speaking, in Einstein general relativity the Reissner-Nordstrφm metric can be manipulated along with two shells of electrically charged matter to form a traversable wormhole (Schein and Aichelburg, 1996). But there are two drawbacks to this. The first is that the scheme involves dealing with the collapsed state of the stellar matter that generates the metric (a.k.a. Reissner-Nordstrφm black hole) along with the unpleasant side effects that are encountered, such as the crushing singularities and multiple (unstable) event horizons. Second, the traversable wormhole is an eternal time machine connecting remote regions of the same universe together. Now there are no black hole solutions found in the PV-GR model because in that approach stellar matter collapses smoothly to an ultra-dense state and without the creation of singularities and event horizons (Puthoff, 1999b).

In either case, the Reissner-Nordstrφm metric does not offer a viable mechanism for vm-Teleportation. We are more interested in examining other PV-GR cases (where $K < 1$ or even $K << 1$)

that emulate the effects of traversable wormhole metrics that do obey the vm-Teleportation definition, such as the example presented in Section 2.1. Equation (2.33) suggests that we search for a vacuum engineering concept that exploits electromagnetic fields to alter the vacuum dielectric constant K to induce the desired vm-Teleportation effect in the modified vacuum. (However, we can insert other source terms that will lead to the desired result.) We envision this particular teleportation concept to resemble Figure 2. [Note: Before this report went to press H. E. Puthoff, C. Maccone and the author discovered a number of $K < 1$ solutions to equation (2.33) that uniquely meet the definition of vm-Teleportation and FTL motion. We discovered that the generic energy density required to generate $K < 1$ solutions must be negative, and that the total energy density of the system as seen by remote observes is approximately zero. This unique result compares very well with the traversable wormhole mass-energy density requirements discussed in Section 2.1.2. This discovery will be the subject of a forthcoming paper.]

2.3 Conclusion and Recommendations

The concept we envision for vm-Teleportation is that animate or inanimate objects would be placed inside an environmentally enclosed vessel that would simply be moved into the teleportation device. The "teleporter" would be activated, and the vessel would almost immediately disappear and then reappear at the remote destination as if it were briefly moving through a portal or "stargate." The teleportation device might be required to operate in the vacuum of space outside of the Earth's atmosphere. We have shown two practically equivalent ways to implement vm-Teleportation. There is the manipulation of spacetime geometry via exploiting negative (i.e., quantum vacuum zero point) energy as shown by Einstein's general relativity theory, and there is the modification of the vacuum dielectric constant as shown by the PV-GR model. Both have a great deal of theoretical foundation to begin exploring experimentally. The PV-GR model needs additional theoretical work for the present application, but it is now mature enough for experimental exploration.

There already is extensive theoretical, and more importantly, experimental research proving that the vacuum can be engineered (or physically modified) so that the vacuum ZPE can be exploited (via the Casimir Effect, for example) to extract electrical energy or actuate microelectromechanical devices (see for example, Ambjφrn and Wolfram, 1983; Forward, 1984, 1996, 1998; Puthoff, 1990, 1993; Cole and Puthoff, 1993; Milonni, 1994; Mead and Nachamkin, 1996; Lamoreaux, 1997; Chan et al., 2001, and the references cited therein). But most of this research involves very low energy density regimes, which are much too low for our purposes. The Mead and Nachamkin (1996) device is actually designed to extract electrical energy from the higher frequency/higher energy density ZPE modes. However, new ultrahigh-intensity lasers became available in the 1990s that have achieved extreme physical conditions in the lab that are comparable to the extreme astrophysical conditions expected to be found in stellar cores and on black hole event horizons (Perry, 1996; Mourou et al., 1998; Perry, 2000). The power intensity of these lasers has reached the point to where they actually probe QED vacuum physics and general relativistic physics, and they have even modified the vacuum itself. The lasers were originally called petaWatt lasers (operating range of $10^{14} - 10^{18}$ Watts/cm^2 at femtosecond pulses), but they have now reached power intensity levels in the $10^{25} - 10^{30}$ Watts/cm^2 range. The lasers were made possible by a novel breakthrough called "chirped pulse amplification" whereby the initial low energy/low power intensity laser beam is stretched, amplified and then compressed without experiencing any beam distortions or amplifier damage. This laser system was initially designed as a large-optics beam-line power booster for the NOVA laser fusion experiment at Lawrence Livermore National Laboratory. But researchers found a way to shrink the optics down to tabletop scale, and one can now own and operate a tabletop ultrahigh-intensity laser for ≈ $500,000. The dimensions of the optical bench used by the University of California-San Diego is ≈ 5 m × 12 m (or ≈ 60 m^2; see Mourou et al., 1998). In tabletop lab experiments ultrahigh-intensity lasers have generated >> gigagauss magnetic fields, ≥ 10^{16} Volt/cm electric field strengths, >> terabar light pressures and >> 10^{22} m/sec^2 subatomic particle accelerations. These ultrahigh-intensity

tabletop lasers are thus the ideal instrument with which to explore the fundamental physics underlying the two possible concepts for vm-Teleportation.

There are several ideas on how to generate negative energy in the lab that could potentially be extracted and concentrated in the proper fashion to induce the traversable flat-face wormhole outlined in Section 2.1.1 or induce the $K < 1$ condition (in the PV-GR model) outlined in Section 2.2.1. The schemes for generating negative energy are:

- Casimir Effect (described in Section 2.2): This is the easiest and most well known way to generate negative energy in the lab. The energy density $\rho_{\text{Casimir}} = -(\pi^2\hbar c_0/240)a^{-4}$ within a Casimir capacitor cavity is negative and manifests itself by producing a force of attraction between the capacitor plates. This has been measured in the lab (see above references). Forward (1998) proposes a mechanism for the endless extraction of energy from the vacuum in a Casimir cavity by cyclic manipulation of the cavity dimensions.

- Moving Mirror: Negative quantum vacuum energy can be created by a single moving reflecting surface (a moving mirror). If a mirror moves with increasing acceleration, then a flux of negative energy emanates from its surface and flows out into the space ahead of the mirror (Birrell and Davies, 1982). However, this effect is known to be exceedingly small, and it is not the most effective way to generate negative energy.

- Optically Squeezed Laser Light: Negative quantum vacuum energy can also be generated by an array of ultrahigh intensity lasers with an ultrafast rotating mirror system. In this scheme a laser beam is passed through an optical cavity resonator made of lithium niobate crystal that is shaped like a cylinder with rounded silvered ends to reflect light. The resonator will act to produce a secondary lower frequency light beam in which the pattern of photons is rearranged into pairs. This is the quantum optical "squeezing" of light effect. (See Section A.2 in Appendix A for a complete definition and description of squeezed quantum states.) Therefore, the squeezed light beam emerging from the resonator will contain pulses of negative energy interspersed with pulses of positive energy. Another way to squeeze light would be to manufacture extremely reliable light pulses containing precisely one, two, three, etc. photons apiece and combine them together to create squeezed states to order. Superimposing many such states could theoretically produce bursts of intense negative energy. For the laser beam resonator example we find that both negative and positive energy pulses are of $\approx 10^{-15}$ second duration. We could arrange a set of rapidly rotating mirrors to separate the positive and negative energy pulses from each other. The light beam is to strike each mirror surface at a very shallow angle while the rotation ensures that the negative energy pulses are reflected at a slightly different angle from the positive energy pulses. A small spatial separation of the two different energy pulses will occur at some distance from the rotating mirror. Another system of mirrors will be needed to redirect the negative energy pulses to an isolated location and concentrate them there.

- Gravitationally Squeezed Vacuum Energy: A natural source of negative quantum vacuum energy comes from the effect that gravitational fields (of astronomical bodies) in space have upon the surrounding vacuum. For example, the gravitational field of the Earth produces a zone of negative energy around it by dragging some of the virtual particle pairs (a.k.a. virtual photons or vacuum ZPF) downward. This concept was initially developed in the 1970s as a byproduct of studies on quantum field theory in curved space (Birrell and Davies, 1982). However, Hochberg and Kephart (1991) derived an important application of this concept to the problem of creating and stabilizing traversable wormholes, and their work was corrected and extended by Davis (1999a). They proved that one can utilize the negative vacuum energy densities, which arise from *distortion of the electromagnetic zero point fluctuations* due to the interaction with a prescribed gravitational background, for providing a violation of the energy conditions (see

Section A.1 in Appendix A). Hochberg and Kephart (1991) showed that the squeezed quantum states of quantum optics provide a natural form of matter having negative energy density. And since the vacuum is defined to have vanishing energy density, anything possessing less energy density than the vacuum must have a negative energy density. The analysis, via quantum optics, shows that gravitation itself provides the mechanism for generating the squeezed vacuum states needed to support stable traversable wormholes. The production of negative energy densities via a squeezed vacuum is a necessary and unavoidable consequence of the interaction or coupling between ordinary matter and gravity, and this defines what is meant by gravitationally squeezed vacuum states. The magnitude of the gravitational squeezing of the vacuum can be estimated from the squeezing condition, which simply states that substantial gravitational squeezing of the vacuum occurs for those quantum electromagnetic field modes with *wavelength* (λ in meters) > *Schwarzschild radius* (r_S in meters) of the mass in question (whose gravitational field is squeezing the vacuum). The Schwarzschild radius is the critical radius, according to general relativity theory, at which a spherically symmetric massive body becomes a black hole; i.e., at which light is unable to escape from the body's surface. We can actually choose any radial distance from the mass in question to perform this analysis, but using the Schwarzschild radius makes equations simpler in form. The general result of the gravitational squeezing effect is that as the gravitational field strength increases the negative energy zone (surrounding the mass) also increases in strength. Table 3 shows when gravitational squeezing becomes important for example masses. The table shows that in the case of the Earth, Jupiter and the Sun, this squeeze effect is extremely feeble because only ZPF mode wavelengths above 0.2 m – 78 km are affected. For a solar mass black hole (radius of 2.95 km), the effect is still feeble because only ZPF mode wavelengths above 78 km are affected. But note from the table that quantum black holes with Planck mass will have enormously strong negative energy surrounding them because all ZPF mode wavelengths above 8.50×10^{-34} meter will be squeezed; in other words, all wavelengths of interest for vacuum fluctuations. Black holes with proton mass will have the strongest negative energy zone in comparison because the squeezing effect includes all ZPF mode wavelengths above 6.50×10^{-53} meter. Furthermore, a black hole smaller than a nuclear diameter ($\approx 10^{-16}$ m) and containing the mass of a mountain ($\approx 10^{11}$ kg) would possess a fairly strong negative energy zone because all ZPF mode wavelengths above 10^{-15} meter will be squeezed.

Table 3. Substantial Gravitational Squeezing Occurs When $\lambda \geq 8\pi r_S$ (For Electromagnetic ZPF; adapted from Davis, 1999a**)**

Mass of body	Schwarzschild radius of body, r_S	ZPF mode wavelength, λ
Sun = 2.0×10^{30} kg	2.95 km	$\geq$ 78 km
Jupiter = 1.9×10^{27} kg	2.82 m	$\geq$ 74 m
Earth = 5.976×10^{24} kg	8.87×10^{-3} m	$\geq$ 0.23 m
Typical mountain $\approx 10^{11}$ kg	$\approx 10^{-16}$ m	$\geq 10^{-15}$ m
Planck mass = 2.18×10^{-8} kg	3.23×10^{-35} m	$\geq 8.50 \times 10^{-34}$ m
Proton = 1.673×10^{-27} kg	2.48×10^{-54} m	$\geq 6.50 \times 10^{-53}$ m

•**<u>Recommendations</u>**:

- <u>Theoretical Program 1</u>: A one to two year theoretical study (cost ≈ $80,000) should be initiated to explore the recently discovered $K < 1$ (FTL) solutions to equation (2.33) in order to define,

characterize and model the negative energy density source(s) that induce the FTL vacuum modification. The study should also identify potential lab experiments designed to test theoretical predictions.

- Theoretical Program 2: A one to two year study (cost ≈ $80,000) should be initiated to conduct a detailed review of the negative energy generation schemes summarized above to define their characteristics, performances and requirements. The study should develop technical parameters for each of the schemes in order to identify potential lab experiments.

- Experimental Program 1: An experimental study should be conducted to test Forward's (1998) Casimir energy extraction proposal. An experiment definition study will be required to estimate the experimental method, procedure, equipment needs and costs.

- Experimental Program 2: An experimental study using ultrahigh-intensity lasers should be conducted to test the Optically Squeezed Laser Light proposal. An experiment definition study will be required to estimate the experimental method, procedure, equipment needs and costs.

- Experimental Program 3: An experimental study using ultrahigh-intensity lasers should be conducted to probe QED vacuum physics and vacuum modification as well as test elements of the PV-GR model. A starting point for this program would be to use such lasers to perform the Ding and Kaplan (1989, 1992, 2000; see also, Forward, 1996) experiment. This is an important fundamental physics experiment to do, because it can distinguish between the rival quantum vacuum electromagnetic ZPE fluctuation and fluctuating charged particle source field theory models, which would settle the acrimonious debate over whether the vacuum really fluctuates or not. R. L. Forward (1999) told the author that a Nobel Prize rides on performing this experiment and settling the issue once and for all. The Ding and Kaplan proposal is already designed to probe QED vacuum physics and vacuum modification. [The essence of the Ding and Kaplan proposal is to demonstrate that a form of photon-photon scattering predicted by QED gives rise to 2nd-harmonic generation of intense laser radiation in a DC magnetic field due to the broken symmetry of interaction (in the Feynman "box" diagram approximation). This effect is possible only when the field system (optical wave + DC field) is inhomogeneous, in particular when a Gaussian laser beam propagates in either a homogeneous or inhomogeneous DC magnetic field. In other words, a vacuum region is filled with a DC magnetic field that polarizes the virtual particle pairs (a.k.a. virtual photons) in the vacuum. This polarized vacuum then scatters incident ultrahigh-intensity laser photons of frequency ν (energy E), thereby generating outgoing photons of frequency 2ν (energy $2E$).] An experiment definition study will be required to estimate the experimental method, procedure, equipment needs and costs.

- Experimental Program 4: An experimental study using ultrahigh-intensity lasers should be conducted to establish the extreme physical conditions necessary to test the strong-field limit of general relativity with an emphasis on generating spacetime curvature and negative energy in order to induce a putative micro-wormhole. (Experimental Programs 3 and 4 could be done together to determine whether Puthoff's PV-GR theory or Einstein's general relativity theory is the correct model for nature.) A Nobel Prize is in the offing if this question were to be addressed and settled. An experiment definition study will be required to estimate the experimental method, procedure, equipment needs and costs.

Approved for public release; distribution unlimited.

3.0 q-TELEPORTATION

3.1 Teleportation Scenario

Future space explorers and their equipment will need to easily and quickly travel from an orbiting spacecraft to the surface of some remote planet in order to get their work done, or military personnel in the United States need to easily and quickly travel from their military base to another remote location on Earth in order to participate in a military operation, or space colonists will need quick transport to get from Earth to their new home planet. Instead of using conventional transportation to expedite travel the space explorer, military personnel or space colonist and/or their equipment go into the "Teleporter" (a.k.a. "Transporter" in Star Trek lingo) and are "beamed down" or "beamed over" to their destinations at light speed. The mechanism for this teleportation process is hypothetically envisioned to be the following:

1. Animate/inanimate objects placed inside the teleporter are scanned by a computer-generated and -controlled beam.

2. The scan beam encodes the entire quantum information contained within the animate/inanimate object(s) into organized bits of information, thus forming a digital pattern of the object(s).

3. The scan beam then dematerializes the object(s) and stores its pattern in a pattern buffer, thus transforming the atomic constituents of the dematerialized object(s) into a matter stream. Alternative 1: The dematerialization process converts the atoms into a beam of pure energy. Alternative 2: The scan beam does not dematerialize the object(s).

4. The teleporter then transmits the matter/pure energy stream and quantum information signal in the form of an annular confinement beam to its destination. Alternative: Only the quantum information signal is transmitted.

5. At the receiving teleporter the matter/pure energy stream is sent into a pattern buffer whereby it is recombined with its quantum information, and the object(s) is rematerialized back into its original form. Alternative 1: The receiving teleporter recombines the transmitted quantum information with atoms stored inside a reservoir to form a copy of the original. Alternative 2: The quantum information is reorganized in such a way as to display the object on some three-dimensional (holographic) visual display system.

Problem: This generic scenario is modeled after teleportation schemes found in SciFi. There are a lot of important little details that were left out of the teleportation process because we simply do not know what they are. This technology does not yet exist. And we are left with the question of which one of the alternative processes identified in items 3 – 5 one wants to choose from. The above scenario is only an outline, and it is by no means complete since it merely serves to show what speculation exists on the subject. The above scenario describes a speculative form of what we call *q-Teleportation*.

There are questions to be addressed in the above scenario. Does the teleporter transmit the atoms and the quantum bit information signal that comprises the animate/inanimate object or just the quantum bit information signal? There are $\approx 10^{28}$ atoms of matter combined together in a complex pattern to form a human being. How does one transmit this much information and how do we disassemble that many atoms? Computer information gurus would insist that it is not the atoms that matter but only the bits of

Approved for public release; distribution unlimited.

information representing them when considering the transmission of large "bodies" of information. But are humans simply the sum of all the atoms (and the related excited atom quantum states) that comprise them? We could possibly learn to reconstitute a beam of atoms into a chemically accurate human being. However, would this also include the reconstruction of a person's consciousness (personality, memories, hopes, dreams, etc.) and soul or spirit? This question is beyond the scope of this study to address, but it is nevertheless one of the most important concepts awaiting a complete scientific understanding.

For the teleporter to process and transmit the quantum bit information signal that encodes the animate/inanimate object's pattern will require stupendous digital computer power. For each atom comprising the object we must encode its location in space (three position coordinates), its linear and angular momentum (three vector components for each quantity), and its internal quantum state (electron orbital-energy levels and their excitation/de-excitation and ionization states, binding to other atoms to form molecules, molecular vibrational/rotational states, bound nuclei states, spin states for electrons and nuclei, etc.), etc. If we assume that we can digitally encode all of this information for a single atom with a minimum of one kilobyte (1 byte = 8 bits, 1 bit ≡ 0 or 1) of data, then we will require a minimum of 10^{28} kilobytes to encode and store an entire human being (in three-dimensions). To digitally store and access this much information at present (and for the foreseeable future) is nontrivial. It will take more than 2,400 times the present age of the universe (≈ 13 billion years) to access this amount of data using commercially available computers (operating at ≈ 10 gigabyte/sec). Top-of-the-line supercomputers will not reduce this time significantly. The computer technology needed to handle such a large data storage requirement simply does not exist. The largest commercially available computers can store ≈ 40 gigabytes on a single hard drive. We will need ≈ 10^{20} of these hard drives to store the encoded information of just one human being. Also, wire and coaxial/fiber optic cables do not have the physical capacity to transmit this amount of data between devices. These numbers will not be significantly different for macroscopic inanimate objects. The information processing and transfer technology required for the teleportation system may become possible in 200 – 300 years if improvements in computer storage and speed maintains a factor of 10 – 100 increase for every decade. There is speculation that emergent molecular, bio-molecular (DNA-based systems) and quantum computer technology may achieve the performances required for a teleportation system. In the former case molecular dynamics mimics computer logic processes and the ≈ 10^{25} particles in a macroscopic sample will all act simultaneously, making for far greater digital information processing and transfer speeds. Researchers have given no formal performance estimates for this emergent technology. In the latter case quantum computing would take advantage of entangled quantum states of subatomic matter or photons, whereby digital logic processes would occur at light speed. This technology is in its infancy, and there has been no clear direction on what performance levels will be possible in the future. This topic will be discussed further in Section 3.2.3.

In the above teleportation scenario we might consider dematerializing animate/inanimate objects into a matter stream consisting of only the object's constituent atoms or atomic subcomponents (protons, neutrons and electrons) and transmitting them at the speed of light (or close to it). To push atoms or subatomic particles to near the speed of light will require imparting to them an energy comparable to their rest-mass energy, which will be at a minimum of one order of magnitude larger than the amount of energy required to break protons up into free quarks. The energy required to completely dematerialize (or dissolve) matter into its basic quantum constituents or into pure energy is alone stupendous. At first one will have to impart to every molecule within the object an energy that is equivalent to the binding energy between atoms (atomic binding energy ~ chemical energy ~ *several* eV) in order to break apart the molecules comprising the object's macro-structure. After this an energy equivalent to nuclear binding energies (≈ *several* × 10^6 times atomic binding energy, or ≈ *several* MeV) must be imparted to every free atomic nucleus inside the object in order to break apart the protons and neutrons residing within each nucleus. And last, an energy equivalent to the binding energy that holds together the three quarks residing within each proton and neutron must be imparted to each of the free protons and neutrons within the object. According to the Standard Model and experimental data, the quark binding energy is

practically infinite. But all is not lost, because the Standard Model also predicts that if we could heat up the nuclei to ≈ 10^{13} °C (≈ 10^6 times hotter than the core temperature of the Sun, or ≈ 10^3 MeV), then the quarks inside would suddenly lose their binding energies and become massless (along with other elementary matter). This heat is also equivalent to the rest-mass energy of protons and neutrons. Therefore, to heat up and dematerialize one human being would require the annihilation of the rest mass-energy of all 10^{28} protons-neutrons or the energy equivalent of 330 1-megaton thermonuclear bombs. Compare this stupendous explosive energy with the explosive yield of the largest thermonuclear bomb ever detonated on Earth, which was a 50-megaton bomb that was built by Andrei Sakharov in the USSR and detonated on October 30, 1961; it was called "Tzar Bomba." Its first incarnation (ca. early October 1961) comprised a uranium fusion tamper, which gave an estimated explosive yield of ≈ 100 megatons. But the weapon was too heavy (27 metric tons) for a bomber to carry, so the tamper was replaced by one made of lead, which reduced both the weight and the yield. In the end we see that it is not a trivial problem to simply heat up and dematerialize any human or inanimate objects. The technology to do so does not exist unless we invoke new physics to get around the energy requirement.

Finally, we must consider the resolution and aperture of the optics required to scan and transmit the animate/inanimate object's matter (or energy) stream. The Heisenberg quantum uncertainty principle fundamentally constrains the measurement resolution of conjugate observable quantities, such as position and momentum or energy and time. The measurement of any combination of (conjugate) observables with arbitrarily high precision is not possible, because a high precision measurement of one observable leads to imprecise knowledge of the value of the conjugate observable. The quantum uncertainty principle makes it impossible to measure the exact, total quantum state of any object with certainty. The scan resolution of a teleportation system is defined by the wavelength of light used to illuminate the object's atomic/subatomic constituents and record their configurations. To resolve matter at atomic/subatomic distance scales requires that the energy of the scanner light (photons) be extremely large (according to the uncertainty principle); and during the scan this large light energy will be conveyed to the constituents, causing them to drastically change their speed and direction of motion. This means that it is physically impossible to resolve an object's atomic/subatomic particle components and their configurations with the precision necessary to accurately encode and later recreate the object being teleported. To resolve atomic/subatomic particles requires wavelengths smaller than the size of these constituents, which will typically be 1 Å – 1 fm. Such wavelengths are in the gamma ray part of the spectrum, and this becomes a major technical problem for us because at present there is no gamma ray electro-optics with which to work with. Now consider the example of teleporting an object from the surface of a planet back to its spacecraft in orbit some *several* × 10^2 – 10^3 km away. The optical aperture required to illuminate and scan an object with ≈ 1 Å – 1 fm resolution from orbit will be >> *several* × 10^2 – 10^3 km. If we are to consider teleporting an object from planet to planet or from star to star then the aperture required will be >> *several* × 10^8 – 10^{13} km. These technical problems are truly insurmountable unless totally new physics becomes available.

3.2 Quantum Teleportation

It turns out that there does in fact exist a form of teleportation that occurs in nature despite the numerous technical roadblocks described in the previous section. It is called *quantum teleportation*, which is based on the well-known concept of quantum entanglement. Erwin Schrödinger coined the word "entanglement" in 1935 in a three-part paper (Schrödinger, 1935a, b, c, 1980). These papers were prompted by the Einstein, Podolsky and Rosen (1935; denoted hereafter as EPR) paper that raised fundamental questions about quantum mechanics, whereby Einstein had loudly complained that quantum mechanics allowed physical processes resembling "spooky action at a distance" to occur. EPR recognized that quantum theory allows certain correlations to exist between two physically distant parts of a quantum system. Such correlations make it possible to predict the result of a measurement on one part of a system by looking at the distant part. On this basis, EPR argued that the distant predicted quantity

Approved for public release; distribution unlimited.

should have a definite value even before being measured, if quantum theory is complete and respects locality (a.k.a. causality). EPR concluded that, from a classical perspective, quantum theory must be incomplete because it disallows such definite values prior to measurement. Schrödinger's perspective on this argument gives the modern view of quantum mechanics, which is to say that the wavefunction (a.k.a. quantum state vector) provides all the information there is about a quantum system. In regards to the nature of entangled quantum states, Schrödinger (1935a, b, c, 1980) stated that, "The whole is in a definite state, the parts taken individually are not." This statement defines the essence of pure-state entanglement. Schrödinger went on to give a description of quantum entanglement by introducing his famous cat experiment.

To better understand the concept of quantum entanglement/teleportation we will focus on the quantum wavefunction (a.k.a. quantum state function). Any quantum system such as a particle that possesses a position in space, energy, angular and linear momentum, and spin is completely described by a wavefunction. This is usually symbolized in a variety of ways, and we choose to represent a generic wavefunction using the traditional "bra-ket" notation of quantum mechanics: $|\varphi\rangle$. Anything that we want to know about the particle is mathematically encoded within $|\varphi\rangle$. As we discussed in the previous section the wavefunction can never be completely known because there is no measurement that can determine it completely. The only exception to this is in the special case that the wavefunction has been prepared in some particular state or some member of a known basis group of states in advance. By measuring one of the properties of a quantum system, we can get a glimpse of the overall quantum state that is encoded within $|\varphi\rangle$. According to the quantum uncertainty principle the act of doing such a measurement will destroy any ability to subsequently determine the other properties of the quantum system. So the act of measuring a particle actually destroys some of the information about its pristine state. This makes it impossible to copy particles and reproduce them elsewhere via quantum teleportation. However, it turns out that one can recreate an unmeasured quantum state in another particle as long as one is prepared to sacrifice the original particle. The trick is to exploit the EPR process to circumvent the quantum uncertainty principle.

As discussed previously, EPR discovered that a pair of spatially separated quantum sub-systems that are parts of an overall quantum system can be "entangled" in a non-local (i.e., non-causal) way. When two particles come into contact with one another, they can become "entangled." In an entangled state, both particles remain part of the same quantum system so that whatever you do to one of them affects the other one in a predictable fashion. More precisely, a measurement on one of the entangled sub-systems puts it into a particular quantum state, while instantaneously putting the sub-system with which it is entangled into a corresponding quantum state, while the two sub-systems are separated by arbitrarily large distances in spacetime (even backwards in time!). A simple example of this phenomenon is to prepare a pair of photons in the same quantum state such that they are entangled, and then allow them to fly apart to remote locations without any form of communication occurring between them along their journey. Measuring the polarization of one of the pair of entangled photons induces the other photon, which may be light-years away, into the same state of polarization as that which was measured for its entangled twin. The basic operation of quantum teleportation can be described as determining the total quantum state of some large quantum system, transmitting this state information from one place to another, and making a perfect reconstruction of the system at the new location. In principle, entangled particles can serve as "transporters" of sorts. By introducing a third "message" particle to one of the entangled particles, one could transfer its properties to the other one, without ever measuring those properties.

Historically, quantum entanglement was never reconciled with the quantum uncertainty principle and the requirement of locality (or causality) in observed physical phenomena, thus it became a paradox in quantum theory. A three-decade debate began following the appearance of the EPR paper over whether quantum entanglement (a.k.a. "spooky action at a distance") was a real quantum phenomenon or not, and this debate came to be called the "EPR dilemma." Einstein's only solution to the dilemma was to suggest that quantum mechanics was incomplete and needed a reformulation to incorporate local hidden-variables that can account for observed physical phenomena without violating causality. Bell (1964) later solved the EPR dilemma by deriving correlation inequalities that can be violated in quantum mechanics but have

Approved for public release; distribution unlimited.

to be satisfied within every model that is local and complete. Such models are called "local hidden-variable models." Bell showed that a pair of entangled particles, which were once in contact but later moved too far apart to interact directly (i.e., causally), can exhibit individually random behavior that is too strongly correlated to be explained by classical statistics. Bell's inequalities make it possible to test whether local hidden-variable models can account for observed physical phenomena in lab experiments. Groundbreaking experimental work by Aspect et al. (1982a, b) along with further theoretical and experimental work done by others (Freedman and Clauser, 1972; Aspect, 1983; Aspect and Grangier, 1985; Hong and Mandel, 1985; Bennett and Wiesner, 1992; Tittel et al., 1998a, b; Tittel and Weihs, 2001) demonstrated violations of the Bell inequalities, which therefore invalidated the local hidden-variable models. The key result of recent theoretical and experimental work is that an observed violation of a Bell inequality demonstrates the presence of entanglement in a quantum system.

3.2.1 Description of the q-Teleportation Process

The experimental work of Bennett et al. (1993) followed by the theoretical and experimental work of others (Vaidman, 1994; Kwiat et al., 1995; Braunstein, 1996; Braunstein and Kimble, 1998; Pan et al., 1998; Stenholm and Bardroff, 1998; Zubairy, 1998; Vaidman and Yoran, 1999; Kwiat et al., 1999) made the breakthrough that was necessary to demonstrate the principle of quantum teleportation in practice. It was a remarkable technical breakthrough that settled, once and for all, the nagging question of whether quantum entanglement could be used to implement a teleportation process to transfer information between remotely distant quantum systems non-causally (i.e., at FTL speed). It is easy to describe how quantum teleportation works in greater detail. Figure 6 compares conventional facsimile transmission with the quantum teleportation process seen in Figure 7. In a conventional facsimile transmission the original document is scanned, extracting partial information about it, but it remains more or less intact after the scanning process. The scanned information is then sent to the receiving station, where it is imprinted on new paper to produce an approximate copy of the original. In quantum teleportation (Figure 7) one scans out part of the information from object A (the original), which one wants to teleport, while causing the remaining, unscanned, part of the information in A to pass, via EPR entanglement, into another object C which has never been in contact with A. Two objects B and C are prepared and brought into contact (i.e., entangled), and then separated. Object B is taken to the sending station, while object C is taken to the receiving station. At the sending station object B is scanned together with the original object A, yielding some information and totally disrupting the states of A and B. This scanned information is sent to the receiving station, where it is used to select one of several treatments to be applied to object C, thereby putting C into an exact replica of the former state of A. Object A itself is no longer in its original initial state, having been completely disrupted by the scanning process. The process just described is teleportation and not replication, and one should not confuse the two. There is a subtle, unscannable kind of information that, unlike ordinary information or material, can be delivered via EPR correlations/entanglement, such that it cannot by itself deliver a meaningful and controllable message. But quantum teleportation delivers exactly that part of the information in an object that is too delicate to be scanned out and delivered by conventional methods.

Approved for public release; distribution unlimited.

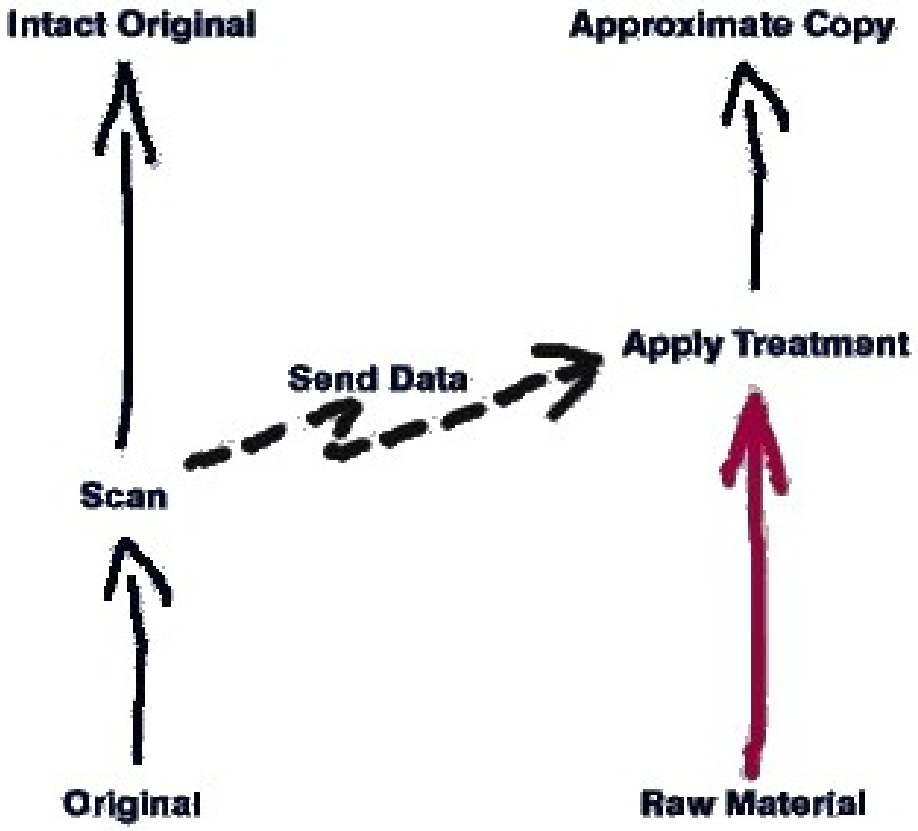

Figure 6. Classical Facsimile Transmission (Modified IBM Press Image)

Approved for public release; distribution unlimited.

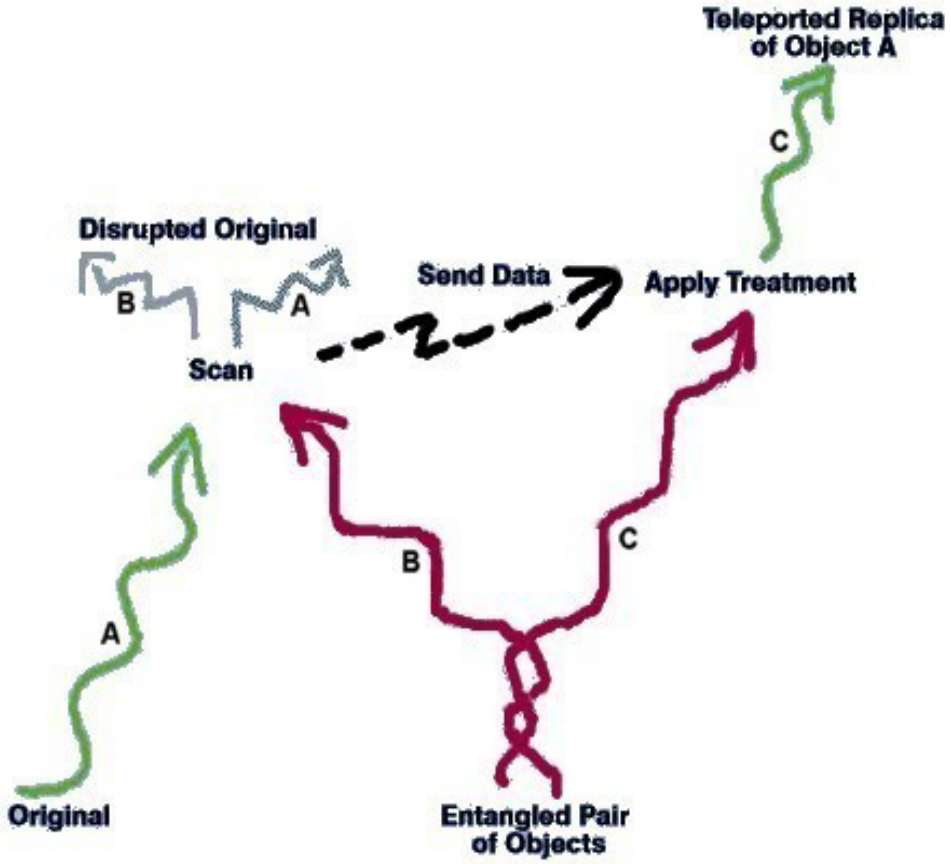

Figure 7. Quantum Teleportation (Modified IBM Press Image)

Approved for public release; distribution unlimited.

We now go one more final step to give a simplified outline of the actual teleportation process according to Bennett et al. (1993). They propose a multistep procedure by which any quantum state $|\chi\rangle$ of a particle or a photon (that correspond to an N-state system) is to be teleported from one location to another. For example, $|\chi\rangle$ might be a two-level system that could refer to the polarization of a single photon, the nuclear magnetic spin of a hydrogen atom, or the electronic excitation of an effective two-level atom. The following scenario outlines the q-Teleportation process in a very simplified way:

1. Prepare a pair of quantum subsystems $|\varphi\rangle$ and $|\psi\rangle$ in an EPR entangled state so that they are linked together. $|\varphi\rangle$ and $|\psi\rangle$ are maximally entangled and together constitute a definite pure state superposition even though each of them is maximally undetermined or mixed when considered separately.

2. Transport $|\varphi\rangle$ to the location of the teleportation transmitter and transport $|\psi\rangle$ to the location of the teleportation receiver. (In the technical literature the transmitter is called "Alice" and the receiver is called "Bob.") The transmitter and receiver can be many light years apart in space. Note that the two subsystems are non-causally correlated via entanglement, but they contain no information about $|\chi\rangle$ at this point. The two subsystems represent an open quantum channel that is ready to transmit information.

3. Now Alice brings the teleported state $|\chi\rangle$ into contact with the entangled state $|\varphi\rangle$ and performs a quantum measurement on the combined system $|\chi\rangle|\varphi\rangle$. Bob and Alice have previously agreed upon the details of the quantum measurement.

4. Using a conventional classical communication channel, Alice transmits to Bob a complete description of the outcome of the quantum measurement she performed on $|\chi\rangle|\varphi\rangle$.

5. Bob then subjects $|\psi\rangle$ to a set of linear transformations (i.e., suitable unitary rotations) that are dictated by the outcome of Alice's quantum measurement. The quantum subsystem Bob originally first received is no longer in state $|\psi\rangle$ after the linear transformations because it is now in a state identical to the original state $|\chi\rangle$. Therefore, $|\chi\rangle$ has in effect been teleported from Alice to Bob.

Bennett et al. (1993) showed in their experimental work that this scheme requires both a conventional communication channel and a non-causal EPR channel to send the state $|\chi\rangle$ from one location to another. In addition to this, a considerable pre-arrangement of entangled states and quantum measurement procedures is required to make the process work. Bennett et al. (1993) analyzed the information flow implicit in the process and showed that Alice's measurement does not provide any information about the quantum state $|\chi\rangle$. All of the quantum state information is passed by the EPR link between the entangled particle states $|\varphi\rangle$ and $|\psi\rangle$. We can think of the measurement results as providing the "code key" that permits the EPR information to be decoded properly at Bob's end. And because the measurement information must travel on a conventional communications channel, the decoding cannot take place until the code key arrives, insuring that no FTL teleportation is possible.

The q-Teleportation scheme teleports the state of a quantum system without having to completely measure its initial state. The outcome of the process is that the initial quantum state $|\chi\rangle$ is destroyed at Alice's location and recreated at Bob's location. It is very important for the reader to understand that it is the *quantum states* of the particles/photons that are destroyed and recreated in the teleportation process, and not the particles/photons themselves. The quantum state or wavefunction contains the information on the state of a particle, but is not a directly observable physical quantity like mass-energy. The quantum information contained within a state is available in the form of probabilities or expectation values.

Approved for public release; distribution unlimited.

Therefore, q-Teleportation *cannot* teleport animate or inanimate matter (or energy) in its physical entirety. However, some experts argue that because a particle's or a photon's quantum state is its defining characteristic, teleporting its quantum state is completely *equivalent* to teleporting the particle/photon even though the original particle's/photon's quantum state (and defining characteristic) was completely destroyed in the process (more on this in Section 3.3). Therefore, no quantum cloning is possible and we are left with a (near-perfect) copy of the now-destroyed original after teleportation (Wootters and Zurek, 1982; Barnum et al., 1996). And finally, classical information itself *cannot* be teleported faster than the speed of light via the non-causal EPR channel; however, quantum information can (more on this in Section 3.2.3).

3.2.2 Decoherence Fundamentally Limits q-Teleportation

Finally, the reader must understand that the q-Teleportation scenario described in the previous section was simplified because we unrealistically assumed that Alice and Bob shared an EPR entangled pair that was free of noise or decoherence. Decoherence is the process, whereby an object's quantum states degrade when information leaks to or from the environment (i.e., environmental noise) through stray interactions with the object. In reality, Alice and Bob have quantum systems that interact directly or through another mediating quantum system like two ions in an ion trap that interact through phonon modes of the trap, or Rydberg atoms in a laser cavity that interact via photons (Sackett, 2001; Raimond et al., 2001). Decoherence degrades the fidelity of the quantum link (i.e., the set of pure EPR entangled pairs) between two quantum systems, thus introducing a certain level of error in the exchange of quantum information between the systems.

In a real-world example of an application of q-Teleportation to quantum computation (discussed in the next section), we can devise an array of interconnected ion traps with each trap holding a small number of ions that are coupled by ions that are moved between the traps or by traveling photons (Wineland et al., 2002). The quantum link (or EPR interaction) between a pair of systems is subject to noise or decoherence through photon loss or heating of the phonons. At present, decoherence imposes a fundamental limit on our ability to perform quantum information processing. Research is continuing on whether decoherence can be reduced, circumvented, or otherwise be (partially or totally) eliminated. Dür and Briegel (2003) have taken the first step towards this goal at rudimentary level by showing that fault-tolerant quantum computation can be achieved in the presence of very high noise levels occurring in the interaction link between small quantum systems, if one assumes that local quantum processing on each end is nearly error free. They showed that the interaction link can have an error rate of two-thirds.

3.2.3 Recent Developments in Entanglement and q-Teleportation Physics

Quantum teleportation physics is still in its infancy. Both theoretical and experimental developments are advancing in many different directions, but are far from maturity at this point in time because the field is still evolving at present. Technical applications of entanglement and q-Teleportation are just becoming conceptualized for the first time, while a small number of basic physics breakthroughs and their related applications are in experimental progress at present. The research community is still in the process of discovering the full nature of entanglement and q-Teleportation, its rules, and what roadblocks nature has in store for its applications and further progression. The literature cited in this study is by no means complete, and only represents a subset of the entire field, because the research is still evolving.

An important application of quantum entanglement and q-Teleportation was the discovery made by Shor (1994, 1997) that computation with quantum states instead of classical bits can result in large savings in computation time. For example, the best algorithms take exponentially more resources to factor ever-larger numbers on a classical computer. A 500-digit number needs 10^8 times as many computational steps to factor as a 250-digit number. The latter classically requires $\approx 5\times10^{24}$ computational steps, or about 150,000 years computing time at terahertz speed, to factor. Shor found a polynomial-time quantum algorithm that solves the problem of finding prime factors of a large integer.

He showed that his algorithm rises only polynomially so that a 500-digit number takes only eight times as many computational steps to factor as a 250-digit number. And by using the quantum factoring algorithm, a 250-digit number requires only $\approx 5\times10^{10}$ steps or < 1 second to factor at terahertz speed, so that a 500-digit number will take ≤ 1 second to factor. No classical polynomial-time algorithm for this problem exists at present. This breakthrough generated a cottage industry of research into quantum computing and quantum information theory.

IBM (2001) constructed a prototype quantum computer that uses the nuclear spins of seven atoms that are part of a large molecule with the iron-based chemical composition $H_5C_{11}O_2F_5Fe$. The computer uses entangled nuclear spins for storage and has a capacity of seven qubits (qubits are defined in the bulleted list in the next two paragraphs below). All of the Fluorine atoms in the large molecule are Fluorine isotope 19 and two of the Carbon atoms are Carbon isotope 13. All the other non-hydrogen atoms have even isotope numbers and no nuclear spins. The objective of the prototype quantum computer was to factor the number 15 into its two prime factors 3 and 5 by using Shor's quantum factoring algorithm. The quantum computation required that a sample of $\approx 10^{18}$ of the large molecules be placed in a magnetic field and manipulated by nuclear magnetic resonance (NMR) techniques. This mechanism allows the spins to function as qubits, whereby Schor's algorithm can be performed via manipulation of the NMR fields. NMR was used to implement quantum computing in this prototype, because the nuclear spins are well isolated from decoherence as a result of the very long decoherence time (the time after which quantum coherence is lost due to environmental noise) in the system.

To factor larger numbers will require a system that uses more than seven qubits. It is estimated that a quantum computer using ≈ 36 qubits could very quickly perform computations that would require a conventional computer ≈ 13 billion years to perform. And such a computer could solve one of the technical problems of human teleportation discussed in Section 3.1. However, a scale-up in the number of qubits is difficult because the IBM prototype has reached the technology limit of NMR quantum computing. The prototype's operation requires that all of the qubits must be in the same molecule. And molecules with more than seven spins that can be used as qubits are not feasible at present. However, there are alternative technologies for quantum computing that show promise for scaling up the number of qubits. The technologies of nuclear spin orientation of single atom impurities in semiconductors, electron spin orientation in quantum dots, and the manipulation of magnetic flux quanta in superconductors all show promise of providing a basis for scalable quantum computers. Finally, the primary technical problem in quantum computing at the present time is decoherence, and this must be eliminated or otherwise mitigated before new quantum technology can become competitive with conventional computer technology.

A byproduct of the recent quantum computing and information research is that a modern theory of entanglement has emerged. Researchers now treat entanglement as a quantifiable physical resource that enables quantum information processing and computation. Entanglement is no longer treated as a paradox of quantum theory. It has been recently discovered that (Nielsen and Chuang, 2000; Nielsen, 2003; Terhal et al., 2003):

- various kinds of pure and mixed entangled states may be prepared in addition to the simple pure-state superpositions that was described in the previous section

- the members of an entangled group of objects do not have their own individual quantum states, only the group as a whole has a well-defined state (i.e., "the whole is greater than the sum of its parts")

- entangled objects behave as if they were physically connected together no matter how far apart they actually are, distance does not attenuate entanglement in the slightest – it has been demonstrated that information can be teleported over 40 km using existing technology (H. Everitt, Army Research Office, 2000)

Approved for public release; distribution unlimited.

- if something is entangled with other objects, then a measurement of it simultaneously provides information about its partners

- some quantum systems can have a little entanglement while others will have a lot

- the more entanglement available, the better suited a system is to quantum information processing

- decoherence degrades the fidelity of the quantum link (i.e., the set of pure EPR entangled pairs) between two quantum systems, thus introducing a certain level of error in the exchange of quantum information between the systems; thus limiting our ability to perform quantum information processing (see more on this issue in the next paragraph below)

- mixed entangled states may be measured, distilled, concentrated, diluted, and manipulated

- the basic resource of classical information is the bit (i.e., the two values 0 and 1), while quantum information comes in quantum bits (i.e., qubits) that are described by their quantum state; qubits can exist in superpositions that simultaneously involve 0 and 1, thus giving them an infinite range of values; groups of qubits can be entangled; qubits must be insulated against decoherence, so that the coherent state of the quantum system in a quantum computer is preserved for a time that is long enough to set up a calculation, perform it, and read out the results

- quantum computers processing qubits or entangled qubits can outperform classical computers; functional requirements of quantum computers:

    - ❖ they must have the ability to initialize any qubit in a specified state, and to measure the state of a specific qubit
    - ❖ they must have universal quantum gates, which are logical elements capable of arranging any desired logical relationship between the states of qubits
    - ❖ they must also have a processor capable of interlinking quantum gates to establish rules and boundary conditions for their inter-relationships – in a quantum computation, the arrangement of quantum gates connects the qubits in a logical pattern, according to a program or algorithm, and after an interval the qubits assigned to the result are read out

- quantum error correction codes exist, whereby qubits are passed through a circuit (the quantum analogue of logic gates) that will successfully fix an error in any one of the qubits without actually reading what all the individual qubit states are; no qubit cloning is required

- a completely secure quantum key can be generated and distributed (for communication and decoding of encrypted messages) using entangled photons has been demonstrated (Tittel et al., 2000; Jennewein et al., 2000; Naik et al., 2000); any eavesdropper's attempt to intercept the quantum key will alter the contents in a detectable way, enabling users to discard the compromised parts of the data

- in an experiment which verified that EPR entanglement obeys Special Relativity (Seife, 2000; Scarani et al., 2000; Gisin et al., 2000; Zbinden et al., 2000a, b), and involving a photon detector moving at relativistic speeds (for example, Bob moves away from Alice at close to the speed of light), investigators determined that quantum information via EPR photon pair entanglement must travel > 10^7 times light speed (the photon detectors were 10.6 km apart)

Approved for public release; distribution unlimited.

- investigators are still developing quantitative laws of entanglement to provide a set of principles for understanding the behavior of entanglement and how it is used to do information processing

- investigators are working to develop an understanding of the general principles that govern complex quantum systems such as quantum computers

Other developments are equally as interesting or compelling. For example, the quantum state of the object we wish to teleport does not have to describe single microscopic systems like photons, ions, atoms or electrons. Quantum states can describe large collections of atoms like chemical compounds, humans, planets, stars, and galaxies. Hartle and Hawking (1983) even derived the quantum wavefunction of the Universe in closed form, although, it was extremely simplified and excluded the presence of quantum matter-energy. So it has become possible to consider teleporting large quantum systems. We summarize the more recent spectacular developments in the following:

- Generation of entanglement and teleportation by Parametric Down-Conversion (Bouwmeester et al., 1997; Zeilinger, 2003): EPR entangled photon pairs are created when a laser beam passes through a nonlinear β-barium borate or BBO crystal. Inside the crystal (BBO, for example) an ultraviolet photon (λ = 490 nm) may spontaneously split into two lower energy infrared photons (λ = 780 nm), which is called parametric down-conversion. The two "down-conversion" photons emerge as independent beams with orthogonal polarizations (horizontal or vertical). (The orthogonal polarization states represent a classic example of the discrete quantum state variables that can be teleported. Other examples of discrete quantum variables that have been teleported using other schemes include the nuclear magnetic spin of a hydrogen atom, electronic excitations of an effective two-level atom, elementary particle spins, etc.) In the two beams along the intersections of their emission cones, we observe a polarization-entangled two-photon state. For the experimental realization of quantum teleportation, it is necessary to use pulsed down-conversion. Only if the pulse width of the UV light, and thus the time of generating photon pairs is shorter than the coherence time of the down-converted photons, then interferometric Bell-state analysis can be performed. In this type of experiment, the pulses from a mode-locked Ti:Saphire laser have been frequency doubled to give pulses of ≈ 200 fs duration (1 fs = 10^{-15} second). The interfering light is observed after passage through IR filters of 4 nm bandwidth giving a coherence time of ≈ 520 fs. After retroflection during its second passage through the crystal, the UV pulse creates another pair of photons. One of these will be the teleported photon, which can be prepared to have any polarization. Beam splitters and photon detectors are used to perform the Bell-state analysis during the standard teleportation process that ensues. See Figure 8 for a schematic showing the layout of a standard parametric down-conversion entanglement-teleportation experiment.

- Teleportation of squeezed states of light and continuous quantum state variables (Furusawa et al., 1998; Sørensen, 1998; Braunstein and Kimble, 1998; Opatrný et al., 2000; Braunstein et al., 2001; Zhang et al., 2002; Bowen et al., 2002; Bowen et al., 2003; Zeilinger, 2003): Squeezed light (see Section A.2 in Appendix A) is used to generate the EPR entangled beams, which are sent to Alice and Bob. A third beam, the input, is a coherent state of unknown complex amplitude. This state is teleported to Bob with a high fidelity only achievable via the use of quantum entanglement. Entangled EPR beams are generated by combining two beams of squeezed light at a 50/50 beam splitter. EPR beam 1 propagates to Alice's sending station, where it is combined at a 50/50 beam splitter with the unknown input state, in this case a coherent state of unknown complex amplitude. Alice uses two sets of balanced homodyne detectors to make a Bell-state measurement on the amplitudes of the combined state. Because of the entanglement between the EPR beams, Alice's detection collapses Bob's field (EPR beam 2) into a state

Approved for public release; distribution unlimited.

conditioned on Alice's measurement outcome. After receiving the classical result from Alice, Bob is able to construct the teleported state via a simple phase-space displacement of the EPR field 2. Quantum teleportation in this scheme is theoretically perfect, yielding an output state which equals the input with a fidelity $F = 1$. In practice, fidelities less than one are realized due to imperfections in the EPR pair, Alice's Bell measurement, and Bob's unitary transformation. By contrast, a sender and receiver who share only a classical communication channel cannot hope to transfer an arbitrary quantum state with a fidelity of one. For coherent states, the classical teleportation limit is $F = 0.5$, while for light polarization states it is $F = 0.67$. The quantum nature of the teleportation achieved in this case is demonstrated by the experimentally determined fidelity of $F = 0.58$, greater than the classical limit of 0.5 for coherent states. The fidelity is an average over all input states and so measures the ability to transfer an arbitrary, unknown superposition from Alice to Bob. This technique achieves the teleportation of continuous quantum state variables, as opposed to the discrete quantum state variables used in the Bennett et al. (1993) teleportation protocol and its variants. The teleportation of a squeezed state of light from one beam of light to another demonstrates the teleportation of a continuous feature (of light) that comes from the superpositions of an infinite number of basic states of the electromagnetic field, such as those found in squeezed states. This line of research also involves the experimental demonstration of the mapping of quantum states from photonic to atomic media via entanglement and teleportation. Hald et al. (1999) reported on the experimental observation of a spin-squeezed macroscopic ensemble of 10^7 cold atoms, whereby the ensemble is generated via quantum state entanglement/teleportation from non-classical light to atoms.

Approved for public release; distribution unlimited.

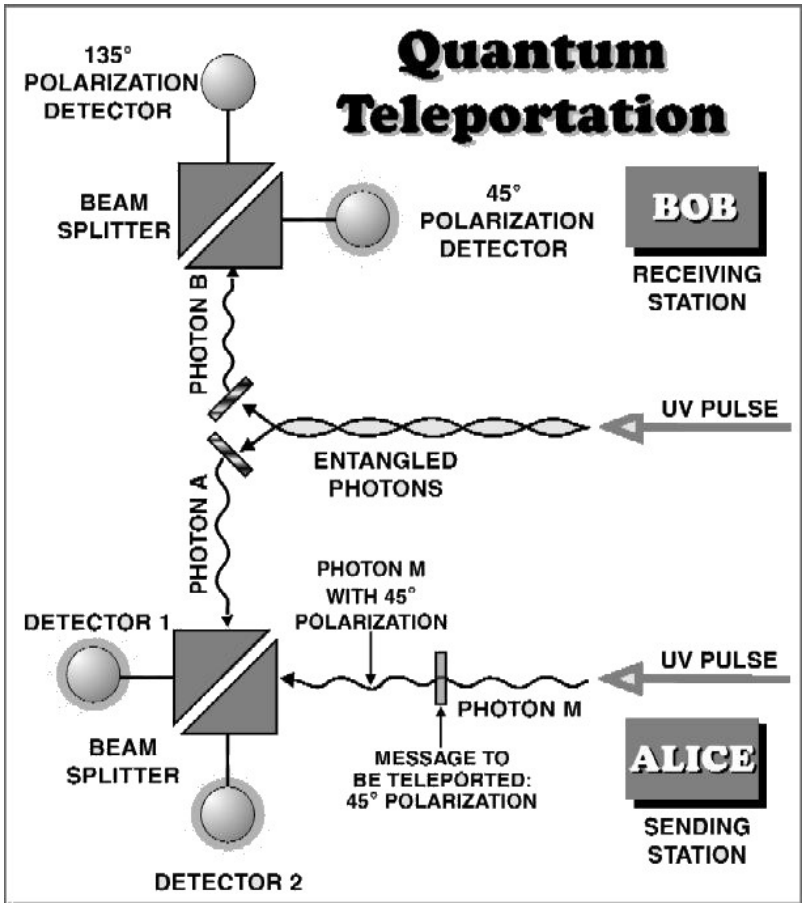

Figure 8. Quantum Teleportation (From www.aip.org)

At the sending station of the quantum teleporter, Alice encodes a "messenger" photon (M) with a specific state: 45 degrees polarization. This travels towards a beam splitter. Meanwhile, two additional entangled photons (A and B) are created. The polarization of each photon is in a fuzzy, undetermined state, yet the two photons have a precisely defined interrelationship. Specifically, they must have complementary polarizations. For example, if photon A is later measured to have horizontal (0 degrees) polarization, then the other photon must collapse into the complementary state of vertical (90 degrees) polarization. Entangled photon A arrives at the beam splitter at the same time as the message photon M. The beam splitter causes each photon to either continue toward detector 1 or change course and travel to detector 2. In 25% of all cases, in which the two photons go off into different detectors, Alice does not know which photon went to which detector. This inability for Alice to distinguish between the two photons causes quantum weirdness to kick in. Just by the very fact that the two photons are now indistinguishable, the M photon loses its original identity and becomes entangled with A. The polarization value for each photon is now indeterminate, but since they travel toward different detectors Alice knows that the two photons must have complementary polarizations. Since message photon M must have complementary polarization to photon A, then the other entangled photon (B) must now attain the same polarization value as M. Therefore, teleportation is successful. Indeed, Bob sees that the polarization value of photon B is 45 degrees: the initial value of the message photon.

Approved for public release; distribution unlimited.

- Entanglement of Atoms (Hagley et al., 1997; Sackett et al., 2000): EPR entanglement at the level of atoms has been experimentally demonstrated using rubidium atoms prepared in circular Rydberg states (i.e., the outer electrons of the atom have been excited to very high energy states and are far from the nucleus in circular orbits). The experimental apparatus produces two entangled atoms, one atom in a ground state and the other atom in an excited state, physically separated so that the entanglement is non-local. And when a measurement is made on one atom, let us say the atom in a ground state, then the other atom instantaneously presents itself in the excited state – the result of the second atom wave function collapse, thus determined by the result of the first atom wave function collapse. This work is now evolving towards the demonstration of entanglement for molecules and larger entities followed by teleportation of their states. Bose and Home (2002) have improved on this concept by proposing a single, simple generic method by which any atoms, ions and macroscopic objects can be entangled and teleported.

- Teleportation of an Atomic State via Cavity Decay (Bose et al., 1999; Sackett et al., 2000): It has been shown how the state of an atom trapped in a cavity can be teleported to a second atom trapped in a distant cavity simply by detecting photon decays from the cavities.

- Biological Quantum Teleportation (Mavromatos et al., 2002): There are several obstacles to teleporting large complicated objects, especially biological entities. Decoherence is the primary obstacle. That is because observable quantum effects in biological matter is thought to be strongly suppressed due to the macroscopic nature of most biological entities and the fact that such systems live at near room temperature, and there is always contact between biological entities and the environment (the source of decoherence). These conditions result in very fast collapse of pertinent quantum wavefunctions to one of the allowed classical states of the biological entity. Mavromatos et al. (2002) propose a daring model that predicts dissipationless energy transfer along shielded macromolecules at near room temperatures as well as quantum teleportation of states across microtubules and perhaps neurons. It is proposed that under certain circumstances it is in principle possible to obtain the necessary isolation against environmental decoherence, so that meso/macroscopic quantum coherence, and entanglement extending over scales that are larger than the atomic scale, may be achieved and maintained for times comparable to the characteristic times for biological and cellular processes. Microtubules are comprised of tubulin that is a common polar protein found in the cytoskeleton of eukariotic cells, which is especially enriched in brain tissue. The model treats microtubules as quantum mechanically isolated high-Q QED cavities, exhibiting properties analogous to those of electromagnetic cavities routinely used in quantum optics. The model builds a microtubule network that achieves quantum teleportation of coherent quantum states, leading to decoherence-resistant bulk quantum information processing and computing within the biological matter. It is speculated that the model can explain how consciousness works, and how the brain processes and computes information.

- Teleportation of a laser beam with embedded radio signal (Bowen et al., 2003): The teleportation of a laser beam from one part of a lab to another has been demonstrated. Investigators embedded a radio signal into a laser beam, then disintegrated the beam and reassembled it a meter away, virtually instantaneously. The laser beam was destroyed in the teleportation process, but the radio signal survived. The laser light at one end of an optical communications system was disassembled and its replica was recreated elsewhere in the lab. Even though the laser beam did not survive teleportation, its encoded message did. This system could be used to transport secure data, such that it could become possible to construct a perfect cryptography system. When two

Approved for public release; distribution unlimited.

parties want to communicate with one another, one can enable the secrecy of the communication to be absolutely perfect.

- Entanglement and Teleportation of a Macroscopic Ensemble of Atoms (Julsgaard et al., 2001): Expanding upon the earlier work of Hald et al. (1999) and Sackett et al. (2000), investigators experimentally demonstrated the entanglement of two macroscopic objects, each consisting of a cesium gas sample containing $\approx 10^{12}$ atoms. Entanglement is generated via interaction of the samples with a pulse of light, which performs a non-local Bell measurement on the collective spins of the samples. The entangled spin-state can be maintained for 0.5 milliseconds. The teleportation of macro-ensemble atom quantum states is expected to follow this experiment. This work is evolving towards the experimental demonstration of the Bose and Home (2002) proposal, which proved that there is a single generic process that can entangle and teleport any atoms, ions and macroscopic objects.

- Entanglement/teleportation of internal state and external motion information of atoms (Opatrný and Kurizki, 2001): Investigators propose an experiment for transmitting an atom's full information, including its "external" states, such as its energy of motion. This procedure replicates the quantum features of the external motion of a particle. For example, if particle-to-be-teleported C yielded a diffraction pattern after passing through two slits, then the same pattern would be produced by particle B, which receives the teleported information. The researchers propose the following idea: Dissociate a very cold molecule with a laser pulse into two atoms (called A and B). Then manipulate the two atoms so that they become entangled: each one is in a fuzzy state individually, but has a precisely defined relationship with its partner. Then let one of the entangled particles (such as A) collide with particle C, whose unknown state should be teleported. After their collision, the momentum values of the collision partners A and C are measured. With that information, the researchers know how to "kick" and deflect atom B, so that the motion of B precisely emulates that of particle C. The investigators say that state-of-the-art equipment for studying atomic collisions and quantum effects makes this experiment difficult, but feasible, to do. If this proposal proves to be correct, then the implication is that it will become possible to experimentally expand this concept to the teleportation of a large ensemble of atoms, such that the entire physical motion and quantum states of the ensemble can be teleported. This could lead to the future development of a teleportation process similar to what was discussed in Section 3.1.

- Laser-like Amplification of Entangled Particles and Entangled-Photon Lasers (Lamas-Linares et al., 2001): Entangled particles are notoriously difficult to create in bulk. To create entangled photons, for example, researchers use the parametric down-conversion technique to send laser light through a barium borate crystal. Passing through the crystal, a photon sometimes splits into two entangled photons (each with half the energy of the initial photon). However, this only occurs for one in every ten billion incoming photons. To increase the yield, researchers added a step: they put mirrors beyond the crystal so that the laser pulse and entangled pair could reflect, and have the chance to interact. The entangled pair and reflected laser pulse interfere constructively to generate fourfold more two-photon pairs or interfere destructively to create zero pairs. Following these steps, the researchers increased production of two-photon entangled pairs, and also of more rare states such as four-photon entangled quartets. This achievement could represent a step towards an entangled-photon laser, which would repeatedly amplify entangled particles to create greater yields than previously possible, and also towards the creation of new and more complex kinds of entangled states.

This list is by no means complete as new developments in this field continue to arise.

Approved for public release; distribution unlimited.

3.3 Conclusion and Recommendations

Given the incredible advancements that have been made in the entanglement and teleportation of macroscopic objects the size of 10^{12} atoms, we are still very far away from being able to entangle and teleport human beings (and even simpler biological entities such as cells, etc.) and bulk inanimate objects (tools, technical equipment, pencils and pens, weapons platforms, communications devices, personal hygiene supplies, etc.). There still remain four essential problems:

- One needs an entangled pair of such bulk objects.
- The bulk objects to be entangled and teleported must be in a pure quantum state (as in a Bose-Einstein condensate, for example). And pure quantum states are very fragile.
- The bulk objects to be entangled and teleported must be extremely isolated from the environment to prevent the onset of decoherence.
- The Bell-state measurement of animate or inanimate objects during entanglement/teleportation will require extracting an amount of information (in bits) that equals or exceeds the number of atoms contained within the object. This infers that the computer storage and processing requirements to entangle and teleport a complete bulk object will be astronomically huge (recall the discussion in Section 3.1).

It is difficult to imagine how we can achieve an extreme level of environmental isolation for an object, let alone a living being that breathes air and radiates heat. Experiments with atoms and larger objects must be done in a high vacuum to avoid collisions with molecules. Thermal radiation from the walls of a teleportation apparatus would easily disturb a tiny amount of matter. At present, decoherence imposes a fundamental limit on quantum entanglement and teleportation. Decoherence is the primary reason why we do not routinely see any quantum effects in our everyday world. Research is continuing on whether decoherence can be reduced, circumvented, or otherwise be eliminated. And some minor progress has been made in that direction.

In q-Teleportation it is the *quantum states* of the objects that are destroyed and recreated, and not the objects themselves. Therefore, q-Teleportation *cannot* teleport animate or inanimate matter (or energy) in its physical entirety. However, some experts argue that because an object's quantum state is its defining characteristic, teleporting its quantum state is completely *equivalent* to teleporting the object, even though the original object's quantum state (and defining characteristic) was completely destroyed in the process. This goes to the heart of what is meant by identity. When an object has all the right properties and features, it will be the same object that one observes whether it was observed now or 24 hours ago. Quantum physics reinforces the point that objects of the same type in the same quantum state are indistinguishable from each other. One should, according to this quantum principle, be able to swap all the atoms in a particular object with the same atoms from a mound of raw materials, and reproduce the original object's quantum states exactly with the end result that the new object is identical to the original. Last, we do not know how to put a human being into a pure quantum state or what doing so would mean for biological functioning (including brain function), but we do know how to put $\leq 10^{12}$ gas atoms/ions and a beam of photons into a pure state in practice. Further research will be required to ascertain whether microbiological and higher-level biological systems, in addition to bulk inanimate matter, can be put into pure quantum states and entangled/teleported.

To perform a Bell-state measurement on (bulk) animate or inanimate objects, during the entanglement/teleportation process, to extract and encode its information will require extracting an amount of information (in bits) that equals or exceeds the number of atoms contained within the object. An object containing a few grams of matter will require the extraction of $> 10^{28}$ bits of data. A simple virus of $\approx 10^{7}$ atoms would require the extraction of $\geq 10^{8}$ bits of information during the

entanglement/teleportation process, whereas the extraction of a minimum of 10^{28} kilobytes will be required to encode and store an entire human being. This is beyond the capability of present digital electronic computer technology to store and process. It is difficult to see how far computer technology will advance towards meeting this requirement.

It is difficult to fathom what will be in store for the teleportation of human beings given some possible future technology. What about the effects of the q-Teleportation process on the human consciousness, memories and dreams, and the spirit or soul? We know from quantum physics that "the whole is greater than the sum of its parts." So what happens to the fundamental characteristics of a human being when he/she steps into the teleporter-transmitter, where their quantum states (i.e., their complete identity) are destroyed during the quantum entanglement/teleportation process, and then their copy is created at the teleporter-receiver an instant later? What will things be like during the entanglement process? Will a teleported individual's consciousness, memories and dreams, and spirit/soul be successfully and accurately teleported or not? This is a major ethical and technical question that will have to be addressed by future research.

•**Recommendations**:

- Broad-spectrum Quantum Computing Technology Development Program: At present, the Quantum Information Science Program (QISP) is coordinated by the U.S. Army Research Office with funding and support from the Army, the National Security Agency, DARPA, and the Office of the Deputy Director of Defense for Research and Engineering. The Naval Research Lab and the CIA are both involved in their own programs. The CIA vets new commercial development of computer technology and computer information processing via its In-Q-Tel company (reference 44). This includes R&D on quantum entanglement and teleportation for computer, information processing and secure communications. QISP was funded for $19 million in 1999. The program involves 34 projects by researchers at 21 universities, three government laboratories and two corporate laboratories. QISP goals include building a quantum computer, developing quantum information processing, and further advances in quantum teleportation. The AFRL should join QISP and provide partnership funding on the order of $1 million per year. An alternative to this would be for AFRL to collaborate with In-Q-Tel and participate in its technology R&D venture capital programs. This R&D investment would allow the Air Force to acquire very advanced quantum physics and related technological applications that can support its mission. The R&D investment benefits would include the development and implementation of quantum computing/information processing and secured quantum communications technology, which can significantly enhance the performance and security of Air Force computing and communication systems infrastructure, and aerospace weapons systems.

- Quantum Cryptography: A dedicated research program should be implemented to develop a mature quantum cryptography technology. Theoretical and experimental work is in progress among a small number of select groups (QISP, In-Q-Tel, universities, etc.), but this field is not advancing fast enough for practical applications to become available to meet increasing adversarial threats against secured military and intelligence communications. The goal of proposed quantum cryptography research is to bring the theoretical and experimental foundation of quantum cryptography and secure quantum information processing to maturity, and to fully develop and implement quantum entanglement/teleportation-based cryptography technology. Recent experimental work has demonstrated that a completely secure quantum key can be generated and distributed for the communication and decoding of encrypted messages using entangled photons. Any eavesdropper's attempt to intercept the quantum key will alter the contents in a detectable way, enabling users to discard the compromised parts of the data. There is much more work that needs to be done in this area. I recommend that the AFRL implement a

Approved for public release; distribution unlimited.

$1 million/year program for five years in order to advance the state-of-art in quantum cryptography technology.

- Quantum Decoherence: Decoherence is the primary reason why we do not routinely see any quantum effects in our everyday world. And it imposes a fundamental limit on quantum entanglement and teleportation via the interaction between entangled/teleported quantum systems and their local environment. In order to advance quantum entanglement/teleportation physics and develop applied technologies, it is necessary that a research program be implemented by the AFRL to explore whether decoherence can be significantly reduced, circumvented, or otherwise be eliminated. An insufficient number of small university groups have slowly made minor progress in this direction. I recommend that a $500,000 - 750,000 per year R&D program be conducted for five years to overcome this technical challenge.

- Pure Quantum States: In order to entangle and teleport quantum particles and bulk objects, they both must be prepared in a pure quantum state. And pure quantum states are very fragile to decoherence. A technical challenge for entanglement/teleportation physics is whether the requirement for pure quantum states can be relaxed and how much decoherence will play a role in this situation, what technical challenges will arise when increasing the size of entangled/teleported matter to larger macroscopic scale ($>> 10^{12}$ atoms), and whether matter of mixed composition (such as a gas or Bose-Einstein condensate of mixed atomic elements) can be entangled/teleported in both pure and mixed quantum states. I recommend that a $250,000 – 500,000 per year research program be conducted for five years to study this problem.

- Entangling Bulk Matter and Bell-State Measurement to Extract Information: Recent experiments demonstrated the entanglement of two macroscopic objects, each consisting of a cesium gas sample containing $\approx 10^{12}$ atoms. Entanglement was generated via interaction of the samples with a pulse of light, which performs a non-local Bell measurement on the collective spins of the samples. In order to push the envelope on this development and take it to higher practical levels, it will be necessary to ascertain the limit on the size and composition of bulk matter entanglement (given the decoherence and pure-state constraints); and to determine what other quantum states can be used for entanglement, what other Bell-state measurement techniques can be used, and whether multiple quantum states can be entangled. The chief technical challenge is the computer technology that will be required to facilitate the huge amount of data that must be extracted, processed and stored from bulk matter quantum states during the Bell-state measurement process. I recommend that a $500,000 – 1 million per year research program be implemented for five years in order to explore these questions and ascertain what solutions may be technically available, and to develop such solutions.

- Biological Quantum Teleportation: The Mavromatos et al. (2002) theoretical model for biological entanglement and teleportation is a remarkable concept that could result in the development of a workable physics theory of consciousness. The model has potential applications to advanced quantum computing/information processing physics and the physics of psi phenomena (see Chapter 5). A research program should be implemented to continue the Mavromatos et al. (2002) work and bring their model to theoretical maturity. It is recommended that this program be funded at $500,000 – 800,000 per year for five years. A parallel or follow-up program should be implemented to experimentally test this model and ascertain any useful technological applications. One application that should be explored in the proposed research program is advanced, ultra-fast, ultra-high-capacity quantum computing and information processing using natural and/or artificial biological systems. The parallel or follow-up experimental research program should be funded at $800,000 – 1.5 million per year for five years.

Approved for public release; distribution unlimited.

- FTL Communication: Experiments verifying that EPR entanglement obeys Special Relativity (Seife, 2000; Scarani et al., 2000; Gisin et al., 2000; Zbinden et al., 2000a, b) determined that quantum information via EPR photon pair entanglement must travel > 10^7 times light speed. Can this mechanism be exploited to achieve FTL communication? If so, then the potential military and commercial applications will be revolutionary, and the science and industry of communications will be forever transformed. A comprehensive theoretical and experimental research program should be implemented to answer this question. It is recommended that this program be funded at $700,000 – 1 million per year for five years. A modest experiment definition study should be funded at $80,000 for one year to delineate the most promising experimental approaches to be used for the larger research program. [There is much controversy and debate over FTL (a.k.a. superluminal) signals/communication, and the reader should see the selected superluminal references in the Teleportation References section of this study.]

- New Entanglement/Teleportation Breakthroughs: The most exciting developments in quantum teleportation physics has included the teleportation of a laser beam with an embedded radio signal, the teleportation of squeezed states of light (and hence, continuous quantum state variables), the teleportation of photon states to atoms/ions (from light to matter!), the entanglement of two similar/dissimilar quantum particles that are created by two (independently) different particle sources, the laser-like amplification of entangled particle/photon pairs, parametric down-conversion entanglement and teleportation (of discrete quantum state variables), quantum cryptography with unbreakable keys, the teleportation of quantum information at speeds > 10^7 times light speed, the entanglement and teleportation of macroscopic (10^{12} atoms) matter quantum states, etc. There is also the yet-untested proposal to entangle/teleport the external physical motion and internal quantum state information of atoms. This shows that quantum physics sets no apparent limit on what it is that can be teleported/entangled and how it is to be teleported/entangled, or where it is to be teleported/entangled. At present teleportation technology requires fiber optic and coaxial cables to teleport quantum state information from one location to another. Can we avoid the use of cables and teleport through free space? [Note: Before this report went to press, Aspelmeyer et al. (2003) reported their outdoor experiment that demonstrated the distribution of quantum entanglement (of laser photons) via optical free-space links to independent receivers separated by 600 m across the Danube River (during inclement nighttime weather), with no line of sight between them. This experiment is revolutionary and begins the step toward conducting satellite-based distributed quantum entanglement.] We have not discovered all the possibilities that nature has in store for us. The present breakthrough discoveries will likely introduce novel military and intelligence technology applications in the near and far future. But further R&D must be conducted in order to discover new applications for these recent breakthroughs, to make additional breakthroughs and discoveries, and to advance the state-of-art in quantum teleportation physics to meet future challenges to the Air Force mission. I recommend that a two-track R&D program be implemented over five years. The first track should be funded at $250,000 – 750,000 per year for the purpose of developing new entanglement/teleportation breakthroughs in quantum teleportation physics. The second track should be funded at $750,000 – 1.5 million per year for the purpose of developing applications for any new breakthroughs with the proviso that such applications benefit the Air Force mission and have commercial dual-use capability to leverage advance technology in the private sector.

Approved for public release; distribution unlimited.

4.0 e-TELEPORTATION

4.1 Extra Space Dimensions and Parallel Universes/Spaces

A literature search for proposed e-Teleportation concepts based on the conveyance of objects through extra space dimensions and/or parallel universes/spaces has yielded only one result (see Section 4.2). The present state-of-art in research on parallel universes/spaces and extra space dimensions has been strictly limited to the work on developing a grand unified quantum field theory and a quantum theory of gravity, whereby the former necessarily includes the latter. Quantum gravity/unified field theory research has been evolving since the 1920s when Kaluza and Klein published the first papers to describe a model for the unification of gravity with electrodynamics. Many of the more prominent theories today invoke extra spatial dimensions, the existence of parallel universes/spaces, or both in order to quantise gravity and/or to unify gravity with the other forces of nature. It is beyond the scope of this study to provide an in-depth review of all of the research that has been done in this area, so we list below a select few of the historically prominent models that have largely gained a secure foothold in present-day research:

- Kaluza-Klein Electromagnetic-Gravity Unification Theory/Modern Kaluza-Klein Gravity Theories (Kaluza, 1921; Klein, 1926; de Sabbata and Schmutzer, 1983; Lee, 1984; Appelquist et al., 1987; Kaku, 1993, 1994; Overduin and Wesson, 1998): It was originally suggested that Maxwellian electrodynamics and Einstein gravitation could be unified in a theory of five-dimensional Riemannian geometry, where the gravitational and electromagnetic potentials together would determine the structure of spacetime. The fifth space dimension is curled up into a ball of space with a radius slightly larger than 10^{-35} m, and it was originally regarded as having no physical significance because it was simply a mathematical tool used to catalyze unification. At present, the generic name of Kaluza-Klein stands for a wide variety of approaches to quantising and unifying gravitation with other quantum fields using any number of dimensions greater than four.

- Superstring Theories (Green, 1985; Kaku, 1988, 1993, 1994): These theories come in a wide variety of interrelated concepts, and they are a highly evolved form of Kaluza-Klein theories. They are based on the dynamics of string-like fundamental quanta, whereby the observed fundamental particles are manifested by the vibrational ground or excitation states of a quantum string (open or closed loop). The superstrings are $\approx 10^{-35}$ m (i.e., the Planck length) in size. There are different versions of these theories that require ten, eleven or twenty-six extra space dimensions to unify and quantise gravity, whereby the extra dimensions are curled up (i.e., compactified) into balls of space with a radius $< 10^{-35}$ m. These theories later evolved into versions that are now called F- and M-theory. The mathematics behind this class of theories is very ugly, and it is difficult for even the best superstring theorists to make simple or sophisticated calculations and predictions. And so far, this class of quantum gravity theories has escaped experimental verification.

- D-Brane and 3-Brane Theories/Parallel Spaces (Rubakov and Shaposhnikov, 1983a, b; Polchinski, 1995; Antoniadis et al., 1998; Randall and Sundrum, 1999a, b; Weiss, 2000; Pease, 2001; Arkani-Hamed et al., 1998, 2000, 2002): D-brane theory is a recent incarnation of the original superstring theories in which open strings, corresponding to the fundamental particles of the standard model (quarks, leptons, gauge bosons), have their free ends stuck on a (hypersurface)

membrane called a D-brane (D = Dirichlet boundary conditions). But the graviton, which corresponds to a closed loop of string, can propagate in all the dimensions. It provides both unification and quantization of gravity by assuming that there are n new spatial dimensions in addition to the three infinite spatial dimensions we know about. And the extra space dimensions are $\approx 10^{-35}$ m in extent. A very recent alternative version of this model is called "3-brane" theory. In this theory, each of the n extra space dimensions is of finite extent $R \approx 2\times10^{(32/n)-17}$ centimeters. The space spanned by the new dimensions is called "the bulk." In this theory, the particles of the standard model live within our familiar realm of three spatial dimensions, which forms a three-dimensional (hypersurface) membrane or "3-brane" within the bulk. The propagation of electroweak and strong nuclear forces is then confined to our 3-brane. However, at distances (r) less than R, gravity (via gravitons) propagates in the full $(3 + n)$-dimensional space, whereby its strength falls as $r^{-(2+n)}$ with increasing separation r. When $r > R$, the gravitational force reverts to its normal Newtonian r^{-2} falloff because there is no longer any extra-dimensional space for it to spread into. If $n = 1$, then the size of the extra-dimension would have to be $R \approx 2\times10^{15}$ cm (or 2×10^{10} km = 133.3 AU; 1 AU = 1.5×10^{8} km is the mean Earth-Sun distance) in order to account for the weakness of gravity, but an extra space dimension this large would have already made itself obvious in the observed dynamics of the solar system. For this reason, investigators have discounted the possibility that $n = 1$. If $n = 2$, then the size of both extra space dimensions would have to be $R \approx 0.2$ cm (or 2 mm). In any case, inconspicuous neighboring 3-branes may be separated from the 3-brane we live on by only a fraction of a millimeter, or even much smaller distances, across the higher-dimensional bulk. Such neighboring 3-branes may be distant folds of our own 3-brane, with the same physics, but able to influence us across shortcuts through the bulk. Or they may be completely separate 3-branes possessing their own fundamental laws and parameters of nature that are completely different from our own. Several tabletop Cavendish-type experiments are now looking for sub-millimeter deviations from Newtonian gravitation as a first step towards verifying 3-brane theory, and other experiments are now being planned or are already underway (Pease, 2001). At present the preliminary experimental results have been negative for the existence of extra space dimensions, and the experimental data suggests that two extra space dimensions are now constrained to length scales << 0.2 – 0.3 millimeters while seven extra space dimensions can be no larger than 2 femtometers (Pease, 2001).

- Parallel Universes/Parallel Spaces (Everett, 1957; Wheeler, 1957, 1962; DeWitt, 1970; DeWitt and Graham, 1973; Jammer, 1974; Davies, 1980; Wolf, 1988; Kaku, 1994; Visser, 1995 and Section 2.1): There are only two other research tracts that are concerned with parallel universes besides 3-brane theory. The first tract is the traversable wormhole research that was discussed in Section 2.1. Traversable wormholes can connect many different universes in the "multiverse" (i.e., a conglomeration of many universes), and these are called inter-universe wormholes. However, traversable wormhole physics (a.k.a. Einstein's General Relativity Theory) does not provide a physical prescription for the existence and nature (i.e., fundamental parameters and physical laws) of other putative universes. The difference between inter-universe and intra-universe (i.e., two distant regions of one universe are connected with each other) wormholes arises only at the level of global geometry and global topology. Local physics near the throat of a traversable wormhole is insensitive to issues of intra-universal or inter-universal travel. An observer in the vicinity of the throat, while making local measurements, would not be able to tell whether he was traveling to another universe or to a remote part of our own universe. And one cannot rely on the topological (as opposed to geometrical) information to determine which is the case, because topological information is not enough to uniquely characterize an inter-universe connection. And General Relativity Theory does not fix the topology of spacetime, so we cannot ascertain the existence of other universes. [Note: Traversable wormholes are also geometrically possible for higher dimensional spaces.] The second tract is the "Many Worlds" interpretation of

quantum theory. This version of quantum theory requires the simultaneous existence of an infinite number of equally real worlds, all of which are more-or-less causally disjoint, in order to interpret consistently the relationship between observed phenomena and observers. The theory was proposed in an attempt to overcome a number of deep paradoxes inherent in the interpretation of the theory of measurement and quantum theory. The Many Worlds theory argues that quantum theory requires the existence of a "superspace" of worlds spanning the range of all possible quantum observations (or quantum measurements). Through our acts of measurement we are imagined to trace a path through the mesh of possible outcomes. All the "worlds" are causally disjoint, and the uncertainty of quantum observation can be interpreted as an artifact of our access to such a limited portion of the superspace of possible worlds. The evolution in the superspace as a whole is entirely deterministic.

At present, none of the theoretical concepts outlined above have been brought to a level of technical maturity, where it becomes meaningful to ascertain whether any form of e-Teleportation is theoretically possible between extra space dimensions and different or parallel universes/spaces. However, as mentioned in the item on parallel universes/parallel spaces, there is the exception that traversable wormholes (three- and higher-dimensional) provide a solid physics principle for the implementation of teleportation between parallel universes/spaces. And traversable wormholes can be devised to connect 3-branes together. See Section 2.1 for the discussion on teleportation via traversable wormholes. Also, Kaluza-Klein theories, superstring theories and D-brane theory all have the common feature that their extra space dimensions are $\leq 10^{-35}$ m in extent, which makes it impossible for any useful form of macroscopic-level teleportation to occur between space dimensions. Last, it is not yet possible to do theoretical calculations or even experimentally verify most of these theories. Three-brane theory is the best parallel space theory there is, with the possibility that macroscopic-level teleportation is possible between space dimensions (only if the extra space dimension(s) has length scale(s) >> millimeters). But this theory is still in the stage of maturing theoretically and achieving experimental verification (or falsification). Therefore, we can go no further in this section.

4.2 Vacuum Hole Teleportation

An unusual teleportation concept has been proposed by Leshan (1999, 2002), which describes the teleportation of objects throughout our universe by using the geometrical properties of spacetime. The proposal posits that there is a "zero-space" that exists outside the boundary of our universe, whereby this zero-space is a "point form" space, where the distance between any two points is always equal to zero. Leshan also calls this space a "hole." Further requirements and assumptions of the model are:

- time does not exist as a property in zero-space
- the cosmological principle (i.e., there are no privileged frames relative to another place or point in the universe) requires that the boundary or border of the universe must pass through every point of space
- virtual holes (or zero-space) in spacetime must exist at every point of the universe, which are also called "vacuum holes"
- vacuum holes exist as virtual particles

The last item is interesting because it implicitly says that vacuum holes (a.k.a. zero-space) must also be virtual particles, and in Section 2.2 we showed that virtual particles are a representation of the vacuum ZPF. Therefore, this infers that vacuum holes can be considered to be vacuum zero-point fluctuations in

Approved for public release; distribution unlimited.

Leshan's model. Thus, a teleportation mechanism can arise in this model because distances between zero-space and any other point in the universe are zero, so that the vacuum holes can potentially exist at every point in the universe simultaneously. Therefore, if an object is sent "out of the universe" and into a vacuum hole (a.k.a. zero-space), then the object can appear at random at any spacetime point in the universe.

The mechanism for teleportation in this model is:

- to send an object outside of the universe by creating a closed surface (i.e., "hole sphere"), which consists of vacuum holes, around the object;
- while inside the hole sphere, the object then ceases to exist because objects cannot really exist outside of the universe;
- however, the object simultaneously exists at any other remote location in the universe (via the cosmological principle) at the instant it became enclosed by the hole sphere;
- therefore, it has been teleported to some remote location in the universe

Leshan points out that the teleportation device must curve spacetime so that the starting and destination points in the universe coincide, and the curved geometry must be similar to that of a black hole for an instant, so that a channel between the two points can be formed. (This sounds suspiciously like creating a traversable wormhole via an Einstein-Rosen bridge, which can be made traversable by perturbing the Schwarzschild spacetime metric an infinitesimal amount.) There is no space to traverse, so therefore there will be no passage of time during teleportation. The only expenditure of energy in this teleportation scheme is the energy that will be needed to curve spacetime.

This teleportation concept is very convoluted. Leshan does not offer any further explanations that are useful nor does he offer any precise technical description for the vacuum holes, and how they are to be produced and manipulated. There is also no mathematical physics derivation published by Leshan to support this concept. I am totally unable to evaluate this concept in the absence of a rigorous theoretical framework. This concept is too sketchy and full of technical "holes" to seriously consider it any further for this study. The reader should note that it has already been demonstrated that traversable wormholes are the best physical principle available to implement teleportation between universes and extra space dimensions.

4.3 Conclusion and Recommendations

At present, none of the theoretical concepts explored in this chapter have been brought to a level of technical maturity, where it becomes meaningful to ascertain whether any form of e-Teleportation is theoretically possible between extra space dimensions and different or parallel universes/spaces. However, there is the exception that traversable wormholes (three- and higher-dimensional) provide a solid physics principle for the implementation of teleportation between parallel universes/spaces. And traversable wormholes can be devised to connect 3-branes together. Kaluza-Klein, superstring and D-brane theories do not allow for any useful form of macroscopic-level teleportation to occur between space dimensions, because these theories require that the extra space dimensions be $\leq 10^{-35}$ m in extent. Last, it is not yet possible to do theoretical calculations to make predictions or even to experimentally verify most of these theories. Three-brane theory is the best parallel space theory there is with the possibility that macroscopic-level teleportation is possible between space dimensions. But this theory is still in the stage of maturing theoretically and getting experimental verification.

Approved for public release; distribution unlimited.

•**Recommendations**:

- The recommendations outlined in Section 2.3 are relevant to the investigation of the possibility for e-Teleportation.

Approved for public release; distribution unlimited.

5.0 p-TELEPORTATION

5.1 PK Phenomenon

P-Teleportation is a form of psychokinesis (or PK) similar to telekinesis but generally used to designate the movement of objects (called apports) through other physical objects or over great distances. Telekinesis is a form of PK, which describes the movement of stationary objects without the use of any known physical force. And PK is essentially the direct influence of mind on matter without any known intermediate physical energy or instrumentation. Rigorously controlled modern scientific laboratory PK, and related psychic (a.k.a. "psi", "paranormal" or parapsychology), research has been performed and/or documented by Rhine (1970), Schmidt (1974), Mitchell (1974a, b, see also the references cited therein), Swann (1974), Puthoff and Targ (1974, 1975), Hasted et al. (1975), Targ and Puthoff (1977), Nash (1978, see also the references cited therein), Shigemi et al. (1978), Hasted (1979), Houck (1984a), Wolman et al. (1986, see also the references cited therein), Schmidt (1987), Alexander et al. (1990), Giroldini (1991), Gissurarson (1992), Radin (1997, see also the references cited therein), Tart et al. (2002), Shoup (2002), and Alexander (2003).

A well-known theoretical/experimental/operational program directed by H. E. Puthoff, R. Targ, E. May and I. Swann was conducted at SRI International and the NSA, and sponsored at various times by the Central Intelligence Agency (CIA), the Defense Intelligence Agency (DIA), and the Army Intelligence and Security Command (INSCOM) over more than two decades; and the program was later carried on by E. May at SAIC (Alexander, 1980; Puthoff, 1996; Targ, 1996; Schnabel, 1997; Tart et al., 2002). This was called the Remote Viewing program, and it was a compartmentalized special access program possessing a variety of codenames during its 22 years of operation. Remote viewing involves precognition and clairvoyance, and it allows a practitioner to acquire information irrespective of intervening distance or time. The Remote Viewing program ended in 1994 and President W. J. Clinton officially declassified it in 1995. The reader should note that the very first U. S. military-intelligence R&D programs on psi, PK and mind control were conducted by H. K. (Andrija) Puharich, M.D., L.L.D during his military service at the Army Chemical and Biological Warfare Center at Fort Detrick, Maryland in the 1940s-50s. Puharich had an interest in clairvoyance and PK, and dabbled in theories for electronically and pharmaceutically enhancing and synthesizing psychic abilities. While in the Army, Puharich took part in a variety of parapsychology experiments, and he lectured Army, Air Force and Navy groups on possibilities for mind warfare. He was a recognized expert in hypnotism and microelectronics.

PK phenomenon was also explored in the Remote Viewing program. Col. J. B. Alexander (USA ret.) credits professional aerospace engineer Jack Houck for "capturing PK phenomenon and transitioning it into an observable form" (Houck, 1982, 1984a, b; Alexander et al., 1990; Alexander, 2003). During the past three decades, Houck (along with Alexander) held a number of PK sessions, whereby attendees are taught the PK induction process, and initiate their own PK events using various metal specimens (forks, spoons, etc.). Individuals were able to completely bend or contort their metal specimens with no physical force being applied whatsoever. Numerous government science advisors and senior military officials took part in and/or witnessed these events, which took place at the Pentagon, at officers' or scientists' homes, and at one quarterly INSCOM retreat attended by the commanding general and a group of colonels and generals commanding INSCOM units around the globe. Spontaneous deformation of the metal specimens was observed at the PK session conducted during the INSCOM retreat, causing a great deal of excitement among those present. Other notable trained observers were also present at this session, and they critically reviewed the events. Psychic Uri Geller (1975) is the original model for demonstrating

Approved for public release; distribution unlimited.

PK metal bending. During a talk that he gave at the U.S. Capitol building, Uri caused a spoon to curve upward with no force applied, and then the spoon continued to bend after he put it back down and continued with his talk (Alexander, 1996). Jack Houck continues doing extensive experimental work and data collection on micro- and macro-PK phenomena. Scientifically controlled PK experiments at the Princeton University Engineering Anomalies Research Laboratory were conducted by Robert Jahn (Dean Emeritus of the School of Engineering), who reported that repeatedly consistent results in mentally affecting material substances has been demonstrated in the lab (Jahn and Dunne, 1987). In the 1980s, Jahn attended a meeting on the PK topic at the Naval Research Laboratory, and warned that foreign adversaries could exploit micro- or macro-PK to induce U.S. military fighter pilots to lose control of their aircraft and crash.

Very early investigations of, and experiments on, p-Teleportation occurred during the 19th and early 20th centuries. Many cases that were studied, and the experiments that were performed, were undoubtedly due to fraud, and few experiments have occurred under controlled conditions during that period. However, most of the credible, scientific reports of p-Teleportation phenomenon and related (controlled) experiments occurred in the late 20th century (see for example, Alexander et al., 1990; Radin, 1997). Some of that scientific work involved the investigation of Uri Geller and a variety of other recurrent spontaneous PK phenomena (Hasted et al., 1975; Puthoff and Targ, 1975; Targ and Puthoff, 1977; Nash, 1978; Wolman et al., 1986). Psychics Uri Geller (1975) and Ray Stanford (1974) claimed to have been teleported on several occasions. Most claimed instances of human teleportation of the body from one place to another have been unwitnessed. There are also a small number of credible reports of individuals who reported being teleported to/from UFOs during a UFO close encounter, which were scientifically investigated (Vallee, 1988, 1990, 1997). But there are a larger number of such reports that are anecdotal, whereby the witness data tends to be unreliable. However, we will confine our discussion to the controlled laboratory experiments that have been performed and reported.

One of the more interesting examples of controlled experiments with Uri Geller was one in which he was able to cause a part of a vanadium carbide crystal to vanish (Hasted et al., 1975). The crystal was encapsulated so it could not be touched, and it was placed in such a way that it could not be switched with another crystal by sleight of hand. A more spectacular series of rigorously controlled (and repeatable!) laboratory experiments occurred in the Peoples Republic of China (PRC). In September 1981, an extraordinary paper was published in the PRC in the journal Ziran Zazhi (transl.: Nature Journal), and this paper was entitled, "Some Experiments on the Transfer of Objects Performed by Unusual Abilities of the Human Body" (Shuhuang et al., 1981). The paper reported that gifted children were able to cause the apparent teleportation of small objects (radio micro-transmitters, photosensitive paper, mechanical watches, horseflies, other insects, etc.) from one location to another (that was meters away) without them ever touching the objects beforehand. The experiments were operated under exceptionally well-controlled conditions (both blind and double-blind). The researchers involved included not only observers from various PRC colleges and medical research institutes, but also representatives from the PRC National Defense Science Commission. Because of the involvement of the latter, it was deemed necessary that an unclassified Intelligence Information Report be prepared by the DIA (see Shuhuang et al., 1981), which included a detailed English translation of the article.

Additional research carried out by the Aerospace Medicine Engineering Institute in Beijing was reported in the July 1990 issue of the Chinese Journal of Somatic Science (Kongzhi et al., 1990; Jinggen et al., 1990; Banghui, 1990), which was also translated into English by the DIA. Reported in several articles are experiments involving the videotaping and high-speed photography of the transfer of test specimens (nuts, bundles of matches, pills, nails, thread, photosensitive paper, chemically treated paper, sponges dipped in $FeCl_3$, etc.) through the walls of sealed paper envelopes, double layered KCNS type paper bags, sealed glass bottles and tubes with sealed caps, and sealed plastic film canisters without the walls of any of these containers being breached. All of the Chinese experiments reported using gifted children and young adults, who possessed well-known extraordinary PK ability, to cause the teleportation of the various test specimens. In all the experimental cases that were reported, the test specimens that were teleported were completely unaltered or unchanged from their initial state, even the insects were

unaffected by being teleported. The experiments were well controlled, scientifically recorded, and the experimental results were always repeatable.

The Chinese papers are all extremely interesting and very well written, and they show photographs and schematic diagrams of the various experimental setups. The experimental protocols were explained in lengthy detail, and thorough data and statistical analysis were presented in the results. The combined results from the several Chinese experiments showed that:

- different research groups designed different experimental protocols, used different gifted psychics, used different sealed containers, and used different test specimens (live insects, bulk inanimate objects, and even radio micro-transmitters were used to track the location of the specimens) that were to be teleported;

- the time required for the teleportation of test specimens through various barriers was anywhere from a fraction of a second to several minutes, and this was not dependent on the test specimen that was used, the sealed container that was used (or its barrier thickness), which experimental protocol was used, or which psychic was being used

- the high-speed photography/videotaping recorded in one series of experiments that test specimens would physically "meld" or blend with the walls of sealed containers; and recorded in a different series of experiments that test specimens would simply disappear from inside the container only to reappear at another location (after seconds to several minutes of time transpired), such that the test specimen did not actually undergo total material disintegration/reintegration during teleportation – this data is important, because without the aid of electronic monitoring instruments, the average person's sensory organs and usual methods of detection are temporarily unable to perceive the test specimen's (ambiguous) existence during the teleportation process;

- the radio micro-transmitter used as a test specimen in one series of experiments (Shuhuang et al., 1981) transmitted a radio signal to several stationary electronic instruments/receivers, so that the specimen could be tracked and monitored (via signal amplitude and frequency measurements) during the teleportation process; the experimenters discovered that there was large fluctuations in the intensity (in both amplitude and frequency) of the monitored signal to the effect that it would either completely disappear or become extremely weak (to the extent that the monitoring instruments could scarcely detect it) – it was discovered that there was a definite correlation between the change in strength (i.e., radical frequency shifts were observed) of the monitored radio signal and the teleportation of the test specimen, such that the weak or absent signal indicated that the specimen was "nonexistent" (or in an altered physical state) during teleportation (note: the monitored signal amplitude and frequency of the micro-transmitter specimen were stable before and after teleportation);

- before and after "passing through the container wall/barrier", the test specimen and the container's wall/barrier are both complete solid objects;

- the gifted psychics were never allowed to see (they were blindfolded in many experiments) or touch each of the test specimens or the sealed containers before and after experiments were conducted, and only the experimenters touched the specimens and containers (using both blind and double-blind protocols);

- the experimental results were all repeatable

Approved for public release; distribution unlimited.

- the conditions for fraud and sleight of hand were totally eliminated, and multiple independent outside witnesses (technical and military-intelligence experts) were present at all times to ensure total fidelity of the experiments

The experimental radio micro-transmitter and high-speed photography/videotaping data offer an important clue on what the teleportation mechanism is, and this will be discussed further in Section 5.1.1. The Chinese were unable to offer any significant physics hypothesis that could explain their results. Some researchers stated that it is necessary to invoke a new physics, which somehow unifies the human consciousness (i.e., physics of consciousness) with quantum and spacetime physics, in order to understand p-Teleportation and related PK phenomena. The researchers were amazed by their repeated results, and were barely able to fathom the altered "state of being" that test specimens underwent during teleportation.

It is also important to point out that during the Cold War the DIA produced three (now declassified) reports on the parapsychology research of the Soviet Union and its Warsaw Pack allies (LaMothe, 1972; Maire and LaMothe, 1975; DIA Report, 1978; other related studies were reported by Groller, 1986, 1987). The purpose of the reports was to collate and summarize collected intelligence, describe in great detail, and assess the Soviet Union and Warsaw Pact R&D on parapsychology and paraphysics. The reports outlined the history of pre-revolutionary (Czarist) Russian, and WWII and post-WWII era Soviet R&D on psychotronics, human mind/behavior control, and the entire spectrum of parapsychology. The Soviet information also mentions the psychotronic/parapsychology R&D materials that Soviet military forces took from various Nazi research centers in and around Germany at the end of WWII. The entire spectrum of parapsychology phenomena was explored by the Soviets, which resulted in the generation of a wealth of experimental data and related scientific research literature. One DIA report noted that there was an East versus West science debate in the Soviet literature over whether paranormal phenomenon and related experimental data was real or even scientifically sound in comparison to western scientific practice and philosophy. Another DIA report lists the names and affiliations of all the researchers, as well as the names of the various Soviet and Warsaw Pact research centers, that were involved. Also, Pratt (1986) reviews and summarizes the history of Soviet psychotronics research.

The U.S. military-intelligence establishment was concerned with the possibility that the Soviets and their Warsaw Pact allies were conducting psychotronics and mind control R&D in order to discover how to exploit and control powerful phenomena that could be used against the U.S. and its allies. LaMothe (1972) chronicled how the Soviets had been researching methods of influencing human behavior for over sixty years. The Soviets and their allies extensively explored an influence technology that they called "controlled offensive behavior", which is defined as "research on human vulnerability as it applies to methods of influencing or altering human behavior" (LaMothe, 1972). Also, LaMothe (1972) describes the revolutionary techniques the Soviets studied to influence human behavior, which included: sound, light, color, odors, sensory deprivation, sleep, electromagnetic fields, biochemicals, autosuggestion, hypnosis, and parapsychology phenomena (such as psychokinesis, telekinesis, extrasensory perception-ESP, astral projection, clairvoyance, precognition, and dream state, etc.). The LaMothe (1972) report became an aid in the development of countermeasures for the protection of U.S. and/or allied personnel.

Psychotronics is the general term that was used in the former Soviet Union/Warsaw Pact countries to categorize many psychic phenomena undergoing scientific research. The conclusions that were reached in the DIA reports are that within the category of psychotronics, the Soviets identified two discrete skills (LaMothe, 1972):

- <u>bioenergetics</u>: those phenomena associated with the production of objectively detectable effects such as psychokinesis, telekinesis, levitation effects, transformations of energy, i.e. the altering or affecting of matter

- <u>bioinformation</u>: those phenomena associated with the obtaining of information through means other than the normal sensory channels (i.e., ESP), such as telepathy, precognition, and

clairvoyance, i.e., using the mind to tap into the thoughts of others or to acquire present or future information about objective events in the world

These phenomena involve using the mind and/or some "field" of the body to affect other minds and inanimate objects irrespective of intervening distance or elapsed time, and without engaging any conventional tools. Bioenergetics and bioinformation are two classifications that form a single branch of science the Soviets preferred to call biocommunications. Soviet biocommunications research is primarily concerned with exploring the existence of a definite group of natural phenomena controlled by laws that are not based on any known (energetic) influence. The types of biocommunication (a.k.a. psychotronics) phenomena includes special sensory biophysical activities, brain and mind control, telepathic communications or bioinformation transceiving, bioluminescent and bioenergetic emissions, and the effects of altered states of consciousness on the human psyche. Psychotronics and remote viewing provide capabilities that have obvious intelligence applications. The Soviets and their Warsaw Pact allies invested millions of dollars in psychotronics R&D because they understood this, and saw the potential payoff for military and intelligence applications.

The U.S. response to Soviet psychotronics R&D programs was the Remote Viewing program. In addition, the U.S. Army began the JEDI Project in 1983, which sought to increase human potential using teachable models of behavioral/physical excellent by unconventional means (Alexander et al., 1990). The JEDI Project was essentially a human-performance modeling experiment based on neuro-linguistic programming (NLP) skills, whereby advanced influence technologies to model excellence in human performance was used. The program ran under the auspices of the Army INSCOM and the Organizational Effectiveness School, and was sponsored by a U.S. government interagency task force. Finally, it should be pointed out that the program had successfully trained several hundred people, including members of Congress (such as Al Gore, Jr. and Tom Downey), before being terminated.

There is a wealth of factual scientific research data from around the world attesting to the physical reality of p-Teleportation and related anomalous psi phenomena (Mitchell, 1974b; Targ and Puthoff, 1977; Nash, 1978; Radin, 1997; Tart et al., 2002). The skeptical reader should not be so quick to dismiss the subject matter in this chapter, because one must remain open-minded about this subject and consider p-Teleportation as worthy of further scientific exploration. The psychotronics topic is controversial within the western scientific community. The debate among scientists and scientific philosophers is highly charged at times, and becomes acrimonious to the point where reputable skeptical scientists cease being impartial by refusing to examine the experimental data or theories, and they prefer to bypass rational discourse by engaging in ad hominem attacks and irrational "armchair" arguments.

P-Teleportation and related phenomena are truly anomalous, and they challenge accepted modern scientific paradigm. Lightman and Gingerich (1991) wrote, "Scientists are reluctant to change paradigms for the purely psychological reasons that the familiar is often more comfortable than the unfamiliar and that inconsistencies in belief are uncomfortable." And theories change over time when anomalies enter the picture. Anomalies are particularly helpful for they point to the inadequacies of an old model and point the way to a new one. Anomalous scientific facts are unexpected and difficult to explain within an existing conceptual framework. Kuhn (1970) describes scientific discovery as a complex process, in which an anomalous fact of nature is recognized, and then followed by a change in conceptual framework (i.e., paradigm) that makes the new fact no longer an anomaly. Kuhn stated that, "Discovery commences with the awareness of anomaly, that is, with the recognition that nature has somehow violated the pre-induced expectations that govern normal science." This statement neatly describes exactly what transpired during the historical revolution that took place in physics between the classical mechanics/electrodynamics age in the 19th century and the quantum/atomic/nuclear/relativistic age in the 20th century. And this isn't the only time in human history that scientific paradigms have dramatically changed. The discovery of p-Teleportation already commenced in the 20th century, so let us continue the discovery and create a new physics paradigm for the 21st century.

Approved for public release; distribution unlimited.

5.1.1 Hypothesis Based on Mathematical Geometry

The Chinese researchers reported in their teleportation experiments that high-speed photography/videotaping recorded test specimens physically "melding" or blending with the walls of sealed containers, and in a different series of experiments the test specimens would simply disappear from inside the container only to reappear at another location (after seconds to several minutes of time transpired). They also reported in the series of radio micro-transmitter experiments that there were large fluctuations in the intensity (in both amplitude and frequency) of the monitored signal to the effect that it would either completely disappear or become extremely weak (to the extent that the monitoring instruments could scarcely detect it); and they discovered that there was a definite correlation between the change in strength (i.e., radical frequency shifts were observed) of the monitored radio signal and the teleportation of the radio micro-transmitter, such that the weak or absent signal indicated that the specimen was "nonexistent" (or in an altered physical state) during teleportation. This data is important because without the aid of electronic monitoring instruments, the average person's sensory organs and usual methods of detection are temporarily unable to perceive the test specimen's (ambiguous) existence during the teleportation process. This data offers an important clue on what the teleportation mechanism is.

It is beyond the scope of this study to propose a complete self-consistent physics theory of consciousness/mind, which explains how the mind can activate p-Teleportation and related psychotronics phenomena. This topic has been under study in recent decades by a legion of medical science, bio- and neuro-physiology, psychology, mathematics, philosophy, and physics experts. Many different theories with varying degree of theoretical maturity and self-consistency have been proposed over the years, and most of them have not yet been experimentally tested for various reasons. However, some first-order experimental work has been done (Mitchell, 1974b; Targ and Puthoff, 1977; Wolman et al., 1986; Radin, 1997; Tart et al., 2002). Ironically, quantum mechanics theory, and the related physics of quantum entanglement and teleportation, has become the primary focus of all of the physics theories of consciousness/psychotronics that have been recently proposed (see for example, Shan, 2003). Wolman et al. (1986) and Radin (1997) provide a review and discussion on recent theories and experiments that are based on quantum physics theory (see also, Walker, 1974; Targ and Puthoff, 1977; Mitchell, 1999, and the references cited therein; Tart et al., 2002). It appears that the physics of q-Teleportation (Chapter 3) has tremendous relevance to the physics of p-Teleportation and psychotronics.

In the following I propose a parsimonious first-order hypothesis that can explain the gross features of both the Chinese p-Teleportation data and the other reported p-Teleportation phenomena. But I will refrain from including any role that might be played by quantum phenomena since the scientific community has not yet settled that particular issue. (However, it is apparent that quantum theory and quantum phenomena will likely play a key role in a formal physics theory of PK and psychotronics.)

First-Order Hypothesis:

- Fact 1: The mature discipline of mathematical geometry developed the properties of higher dimensional spaces (Reichenbach, 1957; Manning, 1977; Rucker, 1977). An example of one such property that is of relevance to the hypothesis: One can visualize a four-dimensional world by using color as the 4th dimension. We can think of a three-dimensional world, whereby objects pass through one another if their colors (i.e., four-dimensional locations) are different (Reichenbach, 1957). For example, color can be used as a 4th dimension to see how a knot in three-dimensions can be untied in a 4th spatial dimension without moving the ends of the cord. That is because a cord cannot stay knotted in four-dimensional space, because the extra degree of freedom will cause any knot to slip through itself. Two other interesting and relevant examples are that the links of a chain may be separated unbroken in the 4th dimension, and a flexible sphere may be turned inside out without tearing in the 4th dimension (Manning, 1977; Rucker, 1977).

- Proposition 1 and Fact 2: It has been proposed that our space actually possesses a slight four-dimensional hyperthickness, so that the ultimate components of our nervous system are actually higher dimensional, thus enabling the human mind/brain to imagine four-dimensional space (Hinton, 1888, 1904; Rucker, 1977). If this is the case, then the three-dimensional nets of neurons that code thoughts in our brain may form four-dimensional patterns to achieve four-dimensional thought. The "bulk" space in 3-brane theory (see Section 4.1), and experimental data from the Remote Viewing program (see Section 5.1), provide support for this concept. Can we see into the 4th dimension and have four-dimensional thoughts? Yes, we can. Proof (see, Rucker, 1977, 1984): If you look at a Necker cube for a while, it spontaneously turns into its mirror image and back again. If you watch it do this often enough, the twinkling sort of motion from one state to the other begins to seem like a continuous motion. But this motion can only be continuous if it is a rotation in four-dimensional space. The mathematician August F. Möbius discovered in 1827 that it is in fact possible to turn a three-dimensional solid object into its mirror image by an appropriate rotation through four-dimensional space (a.k.a. hyperspace rotation). Thus, it is actually possible for our minds to perform such a rotation. Therefore, we can actually produce four-dimensional phenomenon in our minds, so our consciousness is four-dimensional. Rucker (1984) shows another dramatic example of being able to see into the 4th dimension via a "Neck-A-Cube."

- Fact 3: Another property of higher dimensional geometry (Reichenbach, 1957; Rucker, 1977, 1984) is that one can move through solid three-dimensional obstacles without penetrating them by passing in the direction of the 4th (spatial) dimension. The 4th dimension is perpendicular to all of our normal three-dimensional space directions, and so our three-dimensional enclosures have no walls against this direction.

- Conclusion and Hypothesis: Therefore, the results of the Chinese p-Teleportation experiments can simply be explained as a human consciousness phenomenon that somehow acts to move or rotate test specimens through a 4th spatial dimension, so that the specimens are able to penetrate the solid walls/barriers of their containers without physically breaching them. No real dematerialization/rematerialization of the specimens takes place. The intensity fluctuations of the radio micro-transmitter specimen's electromagnetic signal, and the apparent blending of the other specimens with the walls of their containers, represent the passage of the specimens through a 4th spatial dimension. During teleportation the radio signals emitted by the micro-transmitter became weak/non-existent and fluctuated, because they were spreading out into the 4th dimension and became undetectable in our three-dimensional space. The weak signals that were ("barely") detected represent the leakage of a portion of the radio signal back into our three-dimensional space from the 4th dimension during teleportation. The observed blending of the other specimens with the walls of their containers is how the movement/rotation of the specimens through the 4th dimension was visually interpreted by the mind (along the lines of the Necker cube or Neck-A-Cube examples).

5.2 Conclusion and Recommendations

We will need a physics theory of consciousness and psychotronics, along with more experimental data, in order to test the hypothesis in Section 5.1.1 and discover the physical mechanisms that lay behind the psychotronic manipulation of matter. P-Teleportation, if verified, would represent a phenomenon that could offer potential high-payoff military, intelligence and commercial applications. This phenomenon could generate a dramatic revolution in technology, which would result from a dramatic paradigm shift in science. Anomalies are the key to all paradigm shifts!

Approved for public release; distribution unlimited.

•**Recommendations**:

- There are numerous supporters within the U.S. military establishment who comprehend the significance of remote viewing and PK phenomenon, and believe that they could have strategic implications. Bremseth (2001), a U.S. Navy SEAL, attended the Marine War College and studied the Remote Viewing program, and interviewed many of the former program participants. Bremseth then wrote his thesis on the topic, and concluded that the evidence supported continued research and applications of remote viewing. A research program improving on and expanding, or implementing novel variations of, the Chinese and Uri Geller-type experiments should be conducted in order to generate p-Teleportation phenomenon in the lab. The performances and characteristics of p-Teleportation need to be delineated in order to develop a refined hypothesis. Such a program should be designed so that an operational model for p-Teleportation can be developed and implemented as a prototype. An experimental program similar in fashion to the Remote Viewing program should be funded at $900,000 – 1,000,000 per year in parallel with a theoretical program funded at $500,000 per year for an initial five-year duration. The role of quantum physics theory and related quantum phenomena (i.e., entanglement and teleportation) in p-Teleportation and psychotronics should be explored in this program (see for example, the Biological Quantum Teleportation recommendation in Section 3.3). An experiment definition study should be conducted first to identify and propose the best experiments for this program, which should be funded at $80,000 for one year.

Approved for public release; distribution unlimited.

6.0 REFERENCES

1. Aczel, A. D. (2002), Entanglement: The Greatest Mystery in Physics, Four Walls Eight Windows Press, New York
2. Aharonov, Y., Reznik, B. and Stern, A. (1998), "Quantum limitations of superluminal propagation," Phys. Rev. Lett., 81, 2190-2193
3. Aharonov, Y. and Albert, D. (1981), "Can we make sense of the measurement process in relativistic quantum mechanics?," Phys. Rev. D, 24, 359-370
4. Alexander, Col. J. B. (2003), Winning The War: Advanced Weapons, Strategies, And Concepts For The Post-9/11 World, St. Martin's Press, New York, pp. 238 – 244
5. Alexander, J. B. (1996), "Uri's Impact on the U.S. Army," posted on http://www.urigeller.com
6. Alexander, Lt. Col. J. B. (1980), "The New Mental Battlefield: 'Beam Me Up, Spock,'" Military Review, vol. XL, no. 12
7. Alexander, Col. J. B., Groller, Maj. R. and Morris, J. (1990), The Warrior's Edge, W. Morrow Co., New York
8. Ambjφrn, J. and Wolfram, S. (1983), "Properties of the Vacuum. I. Mechanical and Thermodynamic," Annals Phys., 147, 1-32
9. Antoniadis, I., Arkani-Hamed, N., Dimopoulos, S. and Dvali, G. (1998), "New dimensions at a millimeter to a fermi and superstrings at a TeV," Phys. Lett. B, 436, 257-263
10. Appelquist, T., Chodos, A. and Freund, P. G. O. eds. (1987), Modern Kaluza-Klein Theories, Addison-Wesley, Menlo Park
11. Arkani-Hamed, N., Dimopoulos, S. and Dvali, G. (2002), "Large Extra Dimensions: A New Arena for Particle Physics," Physics Today, 55, 35-40
12. Arkani-Hamed, N., Dimopoulos, S. and Dvali, G. (1998), "The hierarchy problem and new dimensions at a millimeter," Phys. Lett. B, 429, 263-272
13. Arkani-Hamed, N., Dimopoulos, S., Kaloper, N. and Dvali, G. (2000), "Manyfold universe," Journal of High Energy Physics (JHEP online physics papers), http://jhep.sissa.it/archive/papers/jhep122000010/jhep122000010.pdf0012
14. Aspect, A. (1983), Trois tests expérimentaux des inégalités de Bell par mesure de corrélation de polarisation de photons, Ph.D. thesis No. 2674, Université de Paris-Sud, Centre D'Orsay
15. Aspect, A., Dalibard, J. and Roger, G. (1982a), "Experimental Tests of Bell's Inequalities Using Time-Varying Analyzers," Phys. Rev. Letters, 49, 1804-1807
16. Aspect, A., Grangier, P. and Roger, G. (1982b), "Experimental Realization of Einstein-Podolsky-Rosen-Bohm Gedankenexperiment: A New Violation of Bell's Inequalities," Phys. Rev. Letters, 49, 91
17. Aspect, A. and Grangier, P. (1985), Lettere al Nuovo Cimento, 43, 345
18. Aspelmeyer, M., et al. (2003), "Long-Distance Free-Space Distribution of Quantum Entanglement," Science, 301, 621 - 623
19. Banghui, W. (1990), "Evidence of the Existence of Abnormal States of Matter," Chinese J. Somatic Sci., First Issue, 36 [translated into English by the Defense Intelligence Agency]
20. Barcelo, C. and Visser, M. (2002), "Twilight for the energy conditions?," Int. J. Mod. Phys. D, 11, 1553
21. Barnum, H., Caves, C., Fuchs, C., Jozsa, R. and Schumacher, B. (1996), "Noncommuting Mixed States Cannot Be Broadcast," Phys. Rev. Lett., 76, 2818-2821
22. Bell, J. S. (1964), "On the Einstein Podolsky Rosen Paradox," Physics, 1, 195
23. Bennett, C. H., et al. (1993), "Teleporting an unknown quantum state via dual classical and Einstein-Podolsky-Rosen channels," Phys. Rev. Lett., 70, 1895-1899
24. Bennett, C. H. and Wiesner, S. J. (1992), "Communication via one- and two-particle operators on Einstein-Podolsky-Rosen states," Phys. Rev. Lett., 69, 2881-2884

Approved for public release; distribution unlimited.

25. Bennett, G. L., Forward, R. L. and Frisbee, R. H. (1995), "Report on the NASA/JPL Workshop on Advanced Quantum/Relativity Theory Propulsion," AIAA-95-2599, 31st AIAA/ASME/ASE/ASEE Joint Propulsion Conference and Exhibit, San Diego, CA
26. Birrell, N. D. and Davies, P. C. W. (1982), Quantum fields in curved space, Cambridge University Press, Cambridge
27. Blaauboer, M., et al. (1998), "Superluminal pulse transmission through a phase conjugating mirror," Optics Communications, 148, 295-299
28. Boschi, D., et al. (1998), "Experimental realization of teleporting an unknown pure quantum state via dual classical and Einstein-Podolski-Rosen channels," Phys. Rev. Lett., 80, 1121-1125
29. Bose, S. and Home, D. (2002), "Generic Entanglement Generation, Quantum Statistics, and Complementarity," Phys. Rev. Lett., 88, 050401
30. Bose, S., Knight, P. L., Plenio, M. B. and Vedral, V. (1999), "Proposal for Teleportation of an Atomic State via Cavity Decay," Phys. Rev. Lett., 83, 5158-5161
31. Bouwmeester, D., et al. (1997), "Experimental quantum teleportation," Nature, 390, 575-579
32. Bowen, W. P., et al. (2003), "Experimental investigation of continuous variable quantum teleportation," Phys. Rev. A, 67, 032302
33. Bowen, W. P., Treps, N., Schnabel, R. and Lam, P. K. (2002), "Experimental demonstration of continuous variable polarization entanglement," Phys. Rev. Lett., 89, 253601
34. Brassard, G., Braunstein, S. and Cleve, R. (1998), "Teleportation as a quantum computation," Physica D, 120, 43-47
35. Braunstein, S. (1996), "Quantum teleportation without irreversible detection," Proc. Royal Acad., 53, 1900-1903
36. Braunstein, S., Fuchs, C., Kimble, H. and van Loock, P. (2001), "Quantum versus classical domains for teleportation with continuous variables," Phys. Rev. A, 64, 022321
37. Braunstein, S. and Kimble, J. (1998), "Teleportation of continuous quantum variables," Phys. Rev. Lett., 80, 869-872
38. Bremseth, Cmdr. L. R. (2001), Unconventional Human Intelligence Support: Transcendent and Asymmetric Warfare Implications of Remote Viewing, Thesis, Marine War College
39. Buttler, W., et al. (1998), "Practical free-space quantum key distribution over 1 km," Phys. Rev. Lett., 81, 3283-3286
40. Center for Quantum Computation Web Site: http://www.qubit.org
41. Chan, H. B., et al. (2001), "Quantum Mechanical Actuation of Microelectromechanical Systems by the Casimir Force," Science, 291, 1941-1944
42. Chiao, R. and Steinberg, A. (1998), "Quantum optical studies of tunneling and other superluminal phenomena," Physica Scripta, T76, 61-66
43. Chown, M. (1990), "Can photons travel 'faster than light'?," New Scientist, 126, 32
44. CIA In-Q-Tel Web Site information: http://www.cia.gov/cia/publications/inqtel/
45. Cole, D. C. and Puthoff, H. E. (1993), "Extracting Energy and Heat from the Vacuum," Phys. Rev. E, 48, 1562
46. Davies, P. C. W. (1980), Other Worlds, Dent, London
47. Davis, E. W. (1999a), Research Summary Report #1 to Dr. Hal Puthoff, IASA: Brief Summary of "Lorentzian Wormholes From The Gravitationally Squeezed Vacuum", NASA Research Center Online Library – Interstellar Studies (available from the author)
48. Davis, E. W. (1999b), Research Summary Report #2 to Dr. Hal Puthoff, IASA: Brief Summary of "Gravitational Vacuum Polarization. Parts I – IV", NASA Research Center Online Library – Interstellar Studies (available from the author)
49. de Felice, F. (1971), "On the gravitational field acting as an optical medium," Gen. Rel. Grav., 2, 347-357
50. de Oliveira, E. C. and Rodriguez, W. (1998), "Superluminal electromagnetic waves in free space," Annalen der Physik, 7(7-8), 654-659

Approved for public release; distribution unlimited.

51. de Sabbata, V. and Schmutzer, E. eds. (1983), Unified Field Theories of More Than 4 Dimensions, Proc. Int'l School of Cosmology and Gravitation (Erice), World Scientific, Singapore
52. Deutsch, D. (1998), The Fabric of Reality, Penguin Books
53. DeWitt, B. S. and Graham, N. eds. (1973), The Many Worlds Interpretation of Quantum Mechanics, Princeton University Press, Princeton
54. DeWitt, B. S. (1970), Physics Today, 23, 30
55. DIA Report (1978), Paraphysics R&D – Warsaw Pact, Defense Intelligence Agency, Report No. DST-1810S-202-78, DIA Task No. PT-1810-18-76, Washington DC (authors' names redacted)
56. Dicke, R. H. (1961), "Mach's principle and equivalence," in Proc. of the Int'l School of Physics "Enrico Fermi" Course XX, Evidence for Gravitational Theories, ed. C. Møller, Academic Press, New York, pp. 1-49
57. Dicke, R. H. (1957), "Gravitation without a principle of equivalence," Rev. Mod. Phys., 29, 363-376
58. Ding, Y. J. and Kaplan, A. E. (1992), "Nonlinear Magneto-Optical Effect in Vacuum: Inhomogeneity-Originated Second-Harmonic Generation in DC Magnetic Field," J. Nonl. Opt. Phys., 1, 51-72
59. Ding, Y. J. and Kaplan, A. E. (1989), "Nonlinear Magneto-Optics of Vacuum: Second-Harmonic Generation," Phys. Rev. Lett., 63, 2725-2728
60. Drummond, I. J. and Hathrell, S. J. (1980), "QED vacuum polarization in a background gravitational field and its effect on the velocity of photons," Phys. Rev. D, 22, 343-355
61. Dür, W. and Briegel, H.-J. (2003), "Entanglement purification for Quantum Computation," Phys. Rev. Lett., 90, 067901
62. Einstein, A., Podolsky, B. and Rosen, N. (1935), "Can quantum mechanical description of physical reality be considered complete?," Phys. Rev., 47, 777-780
63. Evans, J., Nandi, K. and Islam, A. (1996a), "The Optical-Mechanical Analogy in General Relativity: New Methods for the Paths of Light and of the Planets," Am. J. Phys., 64, 1401-1415
64. Evans, J., Nandi, K. and Islam, A. (1996b), "The Optical-Mechanical Analogy in General Relativity: Exact Newtonian Forms for the Equations of Motion of Particles and Photons," Gen. Rel. Grav., 28, 413-439
65. Everett, H. (1957), Rev. Mod. Phys., 29, 454
66. Forward, R. L. (2001), Personal Communication, Salt Lake City, UT
67. Forward, R. L. (1999), Personal Communication, Los Angeles, CA
68. Forward, R. L. (1998), "Apparent Method for Extraction of Propulsion Energy from the Vacuum," AIAA-98-3140, 34th AIAA/ASME/SAE/ASEE Joint Propulsion Conference & Exhibit, Cleveland, OH
69. Forward, R. L. (1996), Mass Modification Experiment Definition Study, PL-TR-96-3004, Phillips Laboratory-Propulsion Directorate, Air Force Materiel Command, Edwards AFB, CA
70. Forward, R. L. (1984), "Extracting electrical energy from the vacuum by cohesion of charged foliated conductors," Phys. Rev. B, 30, 1770-1773
71. Freedman, S. J. and Clauser, J. F. (1972), "Experimental Test of Local Hidden-Variable Theories," Phys. Rev. Lett., 28, 938-941
72. Friedman, J. et al. (1990), "Cauchy problem in spacetimes with closed timelike curves," Phys. Rev. D, 42, 1915-1930
73. Furusawa, A., et al. (1998), "Unconditional quantum teleportation," Science, 282, 706-710
74. Furuya, K., et al. (1999), "Failure of a proposed superluminal scheme," Phys. Lett. A, 251, 294-296
75. Geller, U. (1975), Uri Geller: My Story, Praeger Publ., New York
76. Giroldini, W. (1991), "Eccles's Model of Mind-Brain Interaction and Psychokinesis: A Preliminary Study," J. Sci. Explor., 5, no. 2

Approved for public release; distribution unlimited.

77. Gisin, N. (1990), "Weinberg's non-linear quantum mechanics and superluminal communications," Phys. Lett. A, 143, 1-2
78. Gisin, N., Scarani, V., Tittel, W. and Zbinden, H. (2000), "Optical tests of quantum non-locality: from EPR-Bell tests towards experiments with moving observers," Ann. Phys. (Leipzig), 9, 831-841
79. Gissurarson, L. R. (1992), "The Psychokinesis Effect: Geomagnetic Influence, Age and Sex Difference," J. Sci. Explor., 6, no. 2
80. Green, M. B. (1985), "Unification of forces and particles in superstring theories," Nature, 314, 409
81. Greenberger, D. (1998), "If one could build a macroscopical Schrodinger cat state, one could communicate superluminally," Physica Scripta, T76, 57-60
82. Groller, Capt. R. (1987), "Soviet Psychotronics – a Closer Look," Military Intelligence, PB 34-87-1 (Test), pp. 43-44
83. Groller, Capt. R. (1986), "Soviet Psychotronics – a State of Mind," Military Intelligence, 12, no. 4, pp. 18-21, 58
84. Hagley, E., et al. (1997), "Generation of Einstein-Podolsky-Rosen Pairs of Atoms," Phys. Rev. Lett., 79, 1-5
85. Hald, J., Sørensen, J. L., Schori, C. and Polzik, E. S. (1999), "Spin Squeezed Atoms: A Macroscopic Entangled Ensemble Created by Light," Phys. Rev. Lett., 83, 1319-1322
86. Hartle, J. B. and Hawking, S. W. (1983), "Wave function of the Universe," Phys. Rev. D, 28, 2960-2975
87. Hasted, J. B. (1979), "Paranormal Metal Bending," in The Iceland Papers: Selected Papers on Experimental and Theoretical Research on the Physics of Consciousness, Puharich, A. ed., Research Associates Publ., Amherst, WI
88. Hasted, J. B., Bohm, D., Bastin, E. W. and O'Reagan, B. (1975), "Scientists confronting the paranormal," Nature, 254, 470-472
89. Haugan, M. P. and Will, C. M. (1977), "Principles of equivalence, Eötvös experiments, and gravitational red-shift experiments: The free fall of electromagnetic systems to post—post-Coulombian order," Phys. Rev. D, 15, 2711-2720
90. Hawking, S. W. and Ellis, G. F. R. (1973), The Large-Scale Structure of Space-Time, Cambridge Univ. Press, Cambridge, pp. 88-91 and 95-96
91. Hegerfeldt, G. (1998), "Instantaneous spreading and Einstein causality in quantum theory," Annalen der Physik, 7(7-8), 716-725
92. Heitler, W. (1954), The Quantum Theory of Radiation (3rd ed.), Oxford University Press, London, p. 113.
93. Herrmann, F. (1989), "Energy Density and Stress: A New Approach to Teaching Electromagnetism", Am. J. Phys., 57, 707-714
94. Hinton, C. H. (1904), The Fourth Dimension, Sonnenschein, London
95. Hinton, C. H. (1888), A New Era of Thought, Sonnenschein, London
96. Hochberg, D. and Kephart, T. W. (1991), "Lorentzian wormholes from the gravitationally squeezed vacuum," Phys. Lett. B, 268, 377-383
97. Hong, C. K. and Mandel, L. (1985), "Theory of parametric frequency down conversion of light," Phys. Rev. A, 31, 2409-2418
98. Houck, J. (1984a), "Surface Change During Warm-Forming," Archaeus, 2, no. 1
99. Houck, J. (1984b), "PK Party History," Psi Research, 3, no. 1
100. Houck, J. (1982), "PK Party Format," unpublished paper
101. IBM Press Release (2001), "IBM's Test-Tube Quantum Computer Makes History," http://www.research.ibm.com/resources/news/20011219_quantum.shtml
102. Jahn, R. G. and Dunne, B. J. (1987), Margins of Reality: The Role of Consciousness in the Physical World, Harcourt Brace Jovanovich, New York

Approved for public release; distribution unlimited.

103. Jammer, M. (1974), The Philosophy of Quantum Mechanics, Wiley-Interscience, New York, pp. 507-521
104. Jennewein, T., Simon, C., Weihs, G., Weinfurter, H. and Zeilinger, A. (2000), "Quantum Cryptography with Entangled Photons," Phys. Rev. Lett., 84, 4729-4732
105. Jinggen, H., Xinghai, Y. and Laijing, S. (1990), "Investigation into the 'Force' in Parapsychological Writing," Chinese J. Somatic Sci., First Issue, 32 [translated into English by the Defense Intelligence Agency]
106. Julsgaard, B., Kozhekin, A. and Polzik, E. S. (2001), "Experimental long-lived entanglement of two macroscopic objects," Nature, 413, 400-403
107. Kaku, M. (1994), Hyperspace: A Scientific Odyssey Through Parallel Universes, Time Warps, and the 10th Dimension, Anchor Books-Doubleday, New York
108. Kaku, M. (1993), Quantum Field Theory, Oxford University Press, New York
109. Kaku, M. (1988), Introduction to Superstrings, Springer-Verlag, New York
110. Kaluza, T. (1921), "Unitätsproblem der Physik," Sitz. Preuss. Akad. Wiss. Phys. Math., K1, 966
111. Kaplan, A. E. and Ding, Y. J. (2000), "Field-gradient-induced second-harmonic generation in magnetized vacuum," Phys. Rev. A, 62, 043805-(1-9)
112. Kim, Y.-H., Kulik, S. P. and Shih, Y. (2001), "Quantum Teleportation of a Polarization State with a Complete Bell State Measurement," Phys. Rev. Lett., 86, 1370-1373
113. Klein, O. (1926), "Quantentheorie und fünfdimensionale Relativitätstheorie," Zeits. Phys., 37, 895
114. Kongzhi, S., Xianggao, L. and Liangzhong, Z. (1990), "Research into Paranormal Ability to Break Through Spatial Barriers," Chinese J. Somatic Sci., First Issue, 22 [translated into English by the Defense Intelligence Agency]
115. Kuhn, T. S. (1970), The Structure of Scientific Revolutions, 2nd ed., Univ. of Chicago Press, Chicago
116. Kwiat, P. G., et al. (1995), "New high-intensity source of polarization-entangled photon pairs," Phys. Rev. Lett., 75, 4337-4341
117. Kwiat, P. G., et al. (1999), "Ultrabright source of polarization-entangled photons," Phys. Rev. A., 60, R773-R776
118. Lamas-Linares, A., Howell, J. C. and Bouwmeester, D. (2001), "Stimulated emission of polarization-entangled photons," Nature, 412, 887-890
119. Lamoreaux, S. K. (1997), "Measurement of the Casimir Force Between Conducting Plates," Phys. Rev. Letters, 78, 5-8
120. LaMothe, Capt. J. D. (1972), Controlled Offensive Behavior – USSR, Defense Intelligence Agency, Report No. ST-CS-01-169-72, DIA Task No. T72-01-14, Washington DC
121. Latorre, J. I., Pascual, P. and Tarrach, R. (1995), "Speed of light in non-trivial vacua," Nucl. Phys. B, 437, 60-82
122. Lee, H. C. ed. (1984), An Introduction to Kaluza-Klein Theories, Proc. Chalk River Workshop on Kaluza-Klein Theories, World Scientific, Singapore
123. Lee, T. D. (1988), Particle Physics and Introduction to Field Theory, Harwood Academic Press, London
124. Leggett, A. J. (1999), "Quantum Theory: Weird and Wonderful," Physics World, 12, 73-77
125. Leshan, C. (2002), "Proposal for Teleportation by Help of Vacuum Holes," in Gravitation and Cosmology: From the Hubble Radius to the Planck Scale, Proc. of a Symposium in Honour of the 80th Birthday of Jean-Pierre Vigier, Amoroso, R. L., Hunter, G., Kafatos, M. and Vigier, J.-P. eds., Kluwer Academic Publ., Boston, pp. 515-516
126. Leshan, C. (1999), "Thought Experiment to the Border of Universe," J. Theoretics, 1, no.4
127. Li, L.-X. and Gott, J. R. (1998), "Self-Consistent Vacuum for Misner Space and the Chronology Protection Conjecture," Phys. Rev. Lett., 80, 2980-2983
128. Lightman, A. P. and Gingerich, O. (1991), "When Do Anomalies Begin?," Science, 255, 690-695

Approved for public release; distribution unlimited.

129. Lightman, A. P. and Lee, D. L. (1973), "Restricted proof that the weak equivalence principle implies the Einstein equivalence principle," Phys. Rev. D, 8, 364
130. Maierle, C., Lidar, D. and Harris, R. (1998), "How to teleport superpositions of chiral amplitudes," Phys. Rev. Lett., 81, 869-872
131. Maire, L. F. and LaMothe, Capt. J. D. (1975), Soviet and Czechoslovakian Parapsychology Research, Defense Intelligence Agency, Report No. DST-1810S-387-75, DIA Task No. PT-1810-12-75, Washington DC
132. Mandel, L. and Wolf, E. (1995), Optical Coherence and Quantum Optics, Cambridge University Press
133. Manning, H. P. (1977), The Fourth Dimension Simply Explained, Peter Smith Publ., Gloucester, MA
134. Mavromatos, N. E., Mershin, A. and Nanopoulos, D. V. (2002), "QED-Cavity model of microtubules implies dissipationless energy transfer and biological quantum teleportation," http://arxiv.org/abs/quant-ph/0204021
135. McConnell, A. J. (1957), Applications of Tensor Analysis, Dover Publ., New York, pp. 163-217
136. Mead, F. B. and Nachamkin, J. (1996), "System for Converting Electromagnetic Radiation Energy to Electrical Energy," United States Patent No. 5,590,031
137. Milonni, P. W. (1994), The Quantum Vacuum: An Introduction to Quantum Electronics, Academic Press, NY
138. Mitchell, E. D. (1999), "Nature's Mind: the Quantum Hologram," National Institute for Discovery Science, Las Vegas, NV, http://www.nidsci.org/articles/naturesmind-qh.html
139. Mitchell, E. D. (1974a), "Appendix: Experiments with Uri Geller," in Psychic Exploration: A Challenge for Science, Mitchell, E. D., White, J. ed., G. P. Putnam's Sons, New York, pp. 683-686
140. Mitchell, E. D. (1974b), Psychic Exploration: A Challenge for Science, White, J. ed., G. P. Putnam's Sons, New York
141. Mittelstaedt, P. (2000), "What if there are superluminal signals?," Eur. Phys. J. B, 13, 353-355
142. Mittelstaedt, P. (1998), "Can EPR-correlations be used for the transmission of superluminal signals?," Annalen der Physik, 7(7-8), 710-715
143. Mittelstaedt, P. and Nimtz, G. eds. (1998), "Workshop on Superluminal Velocities," Annalen der Physik, 7(7-8), 591-592
144. Morris, M. S. and Thorne, K. S. (1988), "Wormholes in spacetime and their use for interstellar travel: A tool for teaching general relativity", Am. J. Phys., 56, 395-412
145. Mourou, G. A., Barty, C. P. J. and Perry, M. D. (1998), "Ultrahigh-Intensity Lasers: Physics Of The Extreme On A Tabletop," Physics Today, 51, 22-28
146. Naik, D. S., Peterson, C. G., White, A. G., Berglund, A. J. and Kwiat, P. G. (2000), "Entangled state quantum cryptography: Eavesdropping on the Ekert protocol," Phys. Rev. Lett., 84, 4733
147. Nash, C. B. (1978), Science of PSI: ESP and PK, C. C. Thomas Publ., Springfield, Ill.
148. Nielsen, M. A. (2003), "Simple Rules for a Complex Quantum World," Sci. Am., 13, 25-33
149. Nielsen, M. A. and Chuang, I. L. (2000), Quantum Computation and Quantum Information, Cambridge University Press
150. Nielsen, M., Knill, E. and Laflamme, R. (1998), "Complete quantum teleportation using nuclear magnetic resonance," Nature, 396, 52-55
151. Nimtz, G. (1998), "Superluminal signal velocities," Annalen der Physik, 7(7-8), 618-624
152. Opatrný, T., Clausen, J., Welsch, D.-G. and Kurizki, G. (2000), "Squeezed-Vacuum Assisted Quantum Teleportation," Paper No. 7thCEWQO/015, in Proc. 7th Central-European Workshop on Quantum Optics, Hungary
153. Opatrný, T. and Kurizki, G. (2001), "Matter-Wave Entanglement and Teleportation by Molecular Dissociation and Collisions," Phys. Rev. Lett., 86, 3180-3183
154. Overduin, J. M. and Wesson, P. S. (1998), "Kaluza-Klein Gravity," http://arxiv.org/abs/gr-qc/9805018

Approved for public release; distribution unlimited.

155. Pan, J.-W., et al. (1998), "Experimental entanglement swapping," Phys. Rev. Lett., 80, 3891-3894
156. Pease, R. (2001), "Brane new world," Nature, 411, 986-988
157. Peres, A. (2000), "Classical intervention in quantum systems. II. Relativistic invariance," Phys. Rev. A, 61, 022117(8)
158. Perry, M. D. (2000), "The Amazing Power of the Petawatt," Science & Technology Rev. (LLNL-DoE publication), March issue, 4-12
159. Perry, M. D. (1996), "Crossing the Petawatt Threshold," Science & Technology Rev. (LLNL-DoE publication), December issue, 4-11
160. Polchinski, J. (1995), "Dirichlet Branes and Ramond-Ramond Charges," Phys. Rev. Lett., 75, 4724-4727
161. Pratt, J. G. (1986), "Soviet Research in Parapsychology," in Handbook of Parapsychology, Wolman, B. B., Dale, L. A., Schmeidler, G. R. and Ullman, M. eds., McFarland and Co. Publ., Jefferson, NC, pp. 883-903
162. Preskill, J., Lecture Notes: http://www.theory.caltech.edu/people/preskill/ph229/
163. Puthoff, H. E. (2003), Personal Communication, Institute for Advanced Studies at Austin, Austin, TX
164. Puthoff, H. E. (2002a), "Polarizable-Vacuum (PV) Approach to General Relativity", Found. Phys., 32, 927-943
165. Puthoff, H. E. (2002b), "Polarizable-Vacuum Approach to General Relativity", in Gravitation and Cosmology: From the Hubble Radius to the Planck Scale, eds. R. L. Amoroso, G. Hunter, M. Kafatos, and J.-P. Vigier, Kluwer Academic Publ., Dordrecht, the Netherlands, pp. 431-446
166. Puthoff, H. E. (1999a), "Polarizable-vacuum (PV) representation of general relativity," http://arxiv.org/abs/gr-qc/9909037
167. Puthoff, H. E. (1999b), Personal Communication, Institute for Advanced Studies at Austin, Austin, TX
168. Puthoff, H. E. (1996), "CIA-Initiated Remote Viewing Program at Stanford Research Institute," J. Sci. Explor., 10, 63-76
169. Puthoff, H. E. (1993), "On the Feasibility of Converting Vacuum Electromagnetic Energy to Useful Form," Int'l Workshop on the Zeropoint Electromagnetic Field, Cuernavaca, Mexico
170. Puthoff, H. E. (1990), "The Energetic Vacuum: Implications for Energy Research," Spec. in Sci. & Technology, 13, 247
171. Puthoff, H. E., Little, S. R. and Ibison, M. (2002), "Engineering the Zero-Point Field and Polarizable Vacuum for Interstellar Flight," J. British Interplanetary Soc., 55, 137-144
172. Puthoff, H. E. and Targ, R. (1975), "Physics, Entropy and Psychokinesis," in Proc. Conf. Quantum Physics and Parapsychology (Geneva, Switz.), Parapsychology Foundation Publ., New York
173. Puthoff, H. E. and Targ, R. (1974), "PK experiments with Uri Geller and Ingo Swann," in Research in Parapsychology 1973, Roll, W. G., Morris, R. L. and Morris, J. D. eds., Scarecrow Press, Metuchen, New Jersey, pp. 125-128
174. Quantum Information: Special Issue (1998), Physics World, 11, no. 3
175. Radin, D. (1997), The Conscious Universe: The Scientific Truth of Psychic Phenomena, HarperEdge-HarperCollins Publ., New York
176. Raimond, J. M., Brune, M. and Haroche, S. (2001), "Colloquium: Manipulating quantum entanglement with atoms and photons in a cavity," Rev. Mod. Phys., 73, 565-582
177. Randall, L. and Sundrum, R. (1999a), "Large Mass Hierarchy from a Small Extra Dimension," Phys. Rev. Lett., 83, 3370-3373
178. Randall, L. and Sundrum, R. (1999b), "An Alternative to Compactification," Phys. Rev. Lett., 83, 4690-4693
179. Rarity, J. G. (2003), "Getting Entangled in Free Space," Science, 301, 604 - 605
180. Reichenbach, H. (1957), The Philosophy of Space and Time, Dover Publ., New York
181. Rhine, L. E. (1970), Mind over Matter: Psychokinesis, Macmillan, New York

Approved for public release; distribution unlimited.

182. Rubakov, V. A. and Shaposhnikov, M. E. (1983a), "Do we live inside a domain wall?," Phys. Lett. B, 125, 136-138
183. Rubakov, V. A. and Shaposhnikov, M. E. (1983b), "Extra space-time dimensions: Towards a solution to the cosmological constant problem," Phys. Lett. B, 125, 139-143
184. Rucker, R. (1984), The Fourth Dimension: A Guided Tour of the Higher Universes, Houghton Mifflin Co., Boston, pp. 45-49
185. Rucker, R. (1977), Geometry, Relativity and the Fourth Dimension, Dover Publ., New York
186. Sackett, C. A. (2001), Quant. Inf. Comput., 1, 57
187. Sackett, C. A., et al. (2000), "Experimental entanglement of four particles," Nature, 404, 256
188. Scarani, V., Tittel, W., Zbinden, H. and Gisin, N. (2000), "The speed of quantum information and the preferred frame: analysis of experimental data," Phys. Lett. A, 276, 1-7
189. Scharnhorst, K. (1990), "On Propagation of Light in the Vacuum Between Plates," Phys. Lett. B, 236, 354-359
190. Schein, F. and Aichelburg, P. C. (1996), "Traversable Wormholes in Geometries of Charged Shells," Phys. Rev. Letters, 77, 4130-4133
191. Schmidt, H. (1987), "The Strange Properties of Psychokinesis," J. Sci. Explor., 1, no. 2
192. Schmidt, H. (1974), "Psychokinesis," in Psychic Exploration: A Challenge for Science, Mitchell, E. D., White, J. ed., G. P. Putnam's Sons, New York, pp. 179-193
193. Schnabel, J. (1997), Remote Viewers: The Secret History of America's Psychic Spies, Dell Publ., New York
194. Schrödinger, E. (1980), Proc. Am. Philos. Soc., 124, 323
195. Schrödinger, E. (1935a), Die Naturwissenschaften, 48, 807
196. Schrödinger, E. (1935b), Die Naturwissenschaften, 49, 823
197. Schrödinger, E. (1935c), Die Naturwissenschaften, 49, 844
198. Seife, C. (2000), "'Spooky Action' Passes a Relativistic Test," Science, 287, 1909-1910
199. Shan, G. (2003), "A Primary Quantum Model of Telepathy," http://cogprints.ecs.soton.ac.uk/archive/00003065/
200. Shigemi, S., Yasuo, O. and Akihira, T. (1978), "Some Observations with Scanning Electron Microscope (SEM) of the Fracture Surface of Metals Fractured by Psychokinesis," Japan PS Soc. J., 2, no. 2
201. Shor, P. W. (1997), "Polynomial-Time Algorithms for Prime Factorization and Discrete Logarithms on a Quantum Computer," SIAM J. Sci. Statist. Comput., 26, 1484
202. Shor, P. W. (1994), "Polynomial-Time Algorithms for Prime Factorization and Discrete Logarithms on a Quantum Computer", in Proc. 35th Annual Symposium on Foundations of Computer Science, IEEE Computer Society Press, p. 124
203. Shoup, R. (2002), "Anomalies and Constraints: Can Clairvoyance, Precognition, and Psychokinesis Be Accommodated within Known Physics?," J. Sci. Explor., 16, no. 1
204. Shuhuang, L., et al. (1981), "Some Experiments on the Transfer of Objects Performed by Unusual Abilities of the Human Body," Nature Journal (Peoples Republic of China), 4, no. 9, 652 [Defense Intelligence Agency Requirements and Validation Branch, DIA Translation LN731-83, Intelligence Information Report No. 6010511683 (1983)]
205. Siegfried, T. (2000), The Bit and the Pendulum, John Wiley & Sons
206. Sørensen, J. L. (1998), Nonclassical light for atomic physics and quantum teleportation, Ph.D. thesis, Univ. of Aarhus
207. Srikanth, R. (July 1999), "Noncausal superluminal nonlocal signaling," http://arxiv.org/abs/quant-ph/9904075
208. Stanford, R. (1974), "Interview," Psychic, 7
209. Stenholm, S. and Bardroff, P. (1998), "Teleportation of N-dimensional states," Phys. Rev. A, 58, 4373-4376

Approved for public release; distribution unlimited.

210. Swann, I. (1974), "Scientological Techniques: A Modern Paradigm for the Exploration of Consciousness and Psychic Integration," in Proc. First Int'l Conf. on Psychotronic Research, United States Joint Publications Research Service, Document No. JPRS L/5022-1, Virginia
211. Targ, R. (1996), "Remote Viewing at Stanford Research Institute in the 1970s: A Memoir," J. Sci. Explor., 10, 77-88
212. Targ, R. and Puthoff, H. E. (1977), Mind-Reach: Scientists Look at Psychic Ability, Jonathan Cape Ltd.-Anchor Press, London
213. Tart, C. T., Puthoff, H. E. and Targ, R. eds. (2002), Mind at Large: Institute of Electrical and Electronics Engineers Symposia on the Nature of Extrasensory Perception, Hampton Roads Publ. Co., Charlottesville, VA
214. Terhal, B. M., Wolf, M. M. and Doherty, A. C. (2003), "Quantum Entanglement: A Modern Perspective," Physics Today, 56, 46-52
215. Thorne, K. S. (1993), "Closed Timelike Curves," GRP-340, CalTech, Pasadena, CA
216. Tittel, W. and Weihs, G. (2001), Quantum Inf. Comput., 1, 3
217. Tittel, W., Brendel, J., Zbinden, H. and Gisin, N. (2000), "Quantum Cryptography Using Entangled Photons in Energy-Time Bell States," Phys. Rev. Lett., 84, 4737-4740
218. Tittel, W., Brendel, J., Gisin, B., Herzog, T., Zbinden, H. and Gisin, N. (1998a), "Experimental demonstration of quantum correlations over more than 10 km," Phys. Rev. A, 57, 3229-3232
219. Tittel, W., Brendel, J., Zbinden, H. and Gisin, N. (1998b), "Violation of Bell Inequalities by Photons More Than 10 km Apart," Phys. Rev. Lett., 81, 3563-3566
220. Vaidman, L. (1994), "Teleportation of quantum states," Phys. Rev. A, 49, 1473-1476
221. Vaidman, L. and Yoran, N. (1999), "Methods for reliable teleportation," Phys. Rev. A, 59, 116-125
222. Vallee, J. (1997), Personal Communication, Science Advisory Board of the National Institute for Discovery Science, Las Vegas, NV
223. Vallee, J. (1990), Confrontations: A Scientist's Search for Alien Contact, Ballantine Books, New York
224. Vallee, J. (1988), Dimensions: A Casebook of Alien Contact, Ballantine Books, New York
225. van Enk, S. (March 1998), "No-cloning and superluminal signaling," http://arxiv.org/abs/quant-ph/9803030
226. Visser, M., Kar, S. and Dadhich, N. (2003), "Traversable Wormholes with Arbitrarily Small Energy Condition Violations," Phys. Rev. Lett., 90, 201102
227. Visser, M. (1997), Personal Communication, Washington University, St. Louis, MO
228. Visser, M. (1995), Lorentzian Wormholes: From Einstein to Hawking, AIP Press, New York
229. Visser, M. (1990), "Wormholes, baby universes, and causality", Phys. Rev. D, 41, 1116-1124
230. Visser, M. (1989), "Traversable wormholes: Some simple examples", Phys. Rev. D, 39, 3182-3184
231. Volkov, A. M., Izmest'ev, A. A. and Skrotskii, G. V. (1971), "The propagation of electromagnetic waves in a Riemannian space," Sov. Phys. JETP, 32, 686-689
232. Walker, E. H. (1974), "Consciousness and Quantum Theory," in Psychic Exploration: A Challenge for Science, Mitchell, E. D., White, J. ed., G. P. Putnam's Sons, New York, pp. 544-568
233. Weihs, G., Jennewein, T., Simon, C., Weinfurter, H. and Zeilinger, A. (1998), "Violation of Bell's Inequality under Strict Einstein Locality Conditions," Phys. Rev. Lett., 81, 5039-5043
234. Weinberg, S. (1992), Dreams of a Final Theory, Vintage Books, pp. 88-89
235. Weinberg, S. (1989), "Testing Quantum Mechanics," Ann. Phys., 194, 336-386
236. Weiss, P. (2000), "Hunting for Higher Dimensions: Experimenters scurry to test new theories suggesting that extra dimensions are detectable," Science News, 157, 122-124
237. Westmoreland, M. and Schumacher, B. (March 1998), "Quantum entanglement and the non existence of superluminal signals," http://arxiv.org/abs/quant-ph/9801014
238. Wheeler, J. A. (1962), Monist, 47, 40

Approved for public release; distribution unlimited.

239. Wheeler, J. A. (1957), Rev. Mod. Phys., 29, 463
240. Wheeler, J. A. and Zurek, W. H. eds. (1983), Quantum Theory and Measurement, Princeton University Press
241. Will, C. M. (1993), Theory and Experiment in Gravitational Physics (rev. ed.), Cambridge University Press, Cambridge, Section 2.6
242. Will, C. M. (1989), "The confrontation between gravitation theory and experiment," in General Relativity: An Einstein Centenary Survey, eds. S. W. Hawking and W. Israel, Cambridge University Press, Cambridge, Chapter 2
243. Will, C. M. (1974), "Gravitational red-shift measurements as tests of nonmetric theories of gravity," Phys. Rev. D, 10, 2330-2337
244. Wilson, H. A. (1921), "An electromagnetic theory of gravitation," Phys. Rev., 17, 54-59
245. Wineland, D. J., et al. (2002), "Quantum information processing with trapped ions," http://arxiv.org/abs/quant-ph/0212079
246. Wolf, F. A. (1988), Parallel Universes: The Search for Other Worlds, Simon and Schuster, New York
247. Wolman, B. B., Dale, L. A., Schmeidler, G. R. and Ullman, M. eds. (1986), Handbook of Parapsychology, McFarland and Co. Publ., Jefferson, NC
248. Wootters, W. K. and Zurek, W. H. (1982), "A single quantum cannot be cloned," Nature, 299, 802-803
249. Zbinden, H., Brendel, J., Gisin, N. and Tittel, W. (2000a), "Experimental Test of Non-Local Quantum Correlation in Relativistic Configurations," http://arxiv.org/abs/quant-ph/0007009
250. Zbinden, H., Brendel, J., Tittel, W. and Gisin, N. (2000b), "Experimental Test of Relativistic Quantum State Collapse with Moving Reference Frames," http://arxiv.org/abs/quant-ph/0002031
251. Zeilinger, A. (2003), "Quantum Teleportation," Sci. Am, 13, 34-43
252. Zhang, T. C., et al. (2002), "Quantum teleportation of light beams," http://arxiv.org/abs/quant-ph/0207076
253. Zubairy, S. (1998), "Quantum teleportation of a field state," Phys. Rev. A, 58, 4368-4372

Approved for public release; distribution unlimited.

APPENDIX A – A Few Words About Negative Energy

A.1 A General Relativistic Definition of Negative or Exotic Energy

We saw in equations (2.10a-c) that the surface energy and stress-tension densities of the material required to create and thread a traversable wormhole must be "negative." For surface stress-energy, and volume stress-energy in general, this is "negative" in the sense that the material we must deploy to generate and thread the traversable wormhole must have an energy density (ρc^2, ρ = mass density) that is less than the stress-energy density (τ), or we can write this condition as: *mass-energy* $\rho c^2 \leq$ *stress-energy* τ. On the basis of this condition, we call this material property "exotic." Therefore, the term "negative" is just a misnomer in this context. The condition for ordinary, non-exotic forms of matter that we are all familiar with is *mass-energy* $\rho c^2 >$ *stress-energy* τ. This condition represents one version of what is variously called the weak (WEC), null (NEC), average (AEC), dominant (DEC), strong (SEC) or "standard" energy conditions (that are mere hypotheses!), which allegedly forbid negative mass-energy density and gravitational repulsion (antigravity) between material objects to occur in nature. Hawking and Ellis (1973) formulated these energy conditions in order to establish a series of mathematical proofs in their study of the application of general relativity theory to cosmology and black hole physics.

However, there are general theorems of differential geometry that guarantee that there must be NEC violations (meaning exotic matter-energy is present) at a wormhole throat (Visser, 1997). In view of this, it is known that static radial electric or magnetic fields are borderline exotic when threading a wormhole, if their tension were infinitesimally larger, for a given energy density (Herrmann, 1989; Hawking and Ellis, 1973). Other exotic (energy condition violating) matter-energy fields are known to be squeezed quantum states of the electromagnetic field and other squeezed quantum fields (see Section A.2 for the discussion on squeezed quantum states), gravitationally squeezed vacuum electromagnetic zero-point energy (see Section 2.3 for the discussion on Gravitationally Squeezed Vacuum Energy), Casimir (electromagnetic zero-point) energy and other quantum fields/states/effects. These examples represent forms of matter-energy that possess negative energy density. Since the vacuum is defined to have vanishing energy density, anything possessing less energy density than the vacuum must have a negative energy density. With respect to creating wormholes, these have the unfortunate reputation of alarming physicists. This is unfounded since all the energy condition hypotheses have been experimentally tested in the laboratory and experimentally shown to be false - 25 years before their formulation (Visser, 1990 and references cited therein). Further investigation into this technical issue showed that violations of the energy conditions are widespread for all forms of both classical and quantum matter-energy such as planets, stars, black holes, neutron stars, people, space dust clouds, etc. (Davis, 1999b; Barcelo and Visser, 2002). In addition, Visser (1995) showed that all (generic) spacetime geometries violate all the energy conditions. Violating the energy conditions commits no offense against nature.

A.2 Squeezed Quantum States and Negative Energy

In quantum mechanics the energy (E) and frequency (ν) of a quantum oscillator system, such as electromagnetic radiation (or light), are interchangeable via the Planck relation $E = h\nu$ ($h = 2\pi\hbar$). And from the Heisenberg quantum uncertainty principle, we know that the conjugate variable to the frequency is the oscillator phase (φ), such that $\Delta\nu\Delta\varphi \geq \hbar$ is obeyed. Phase is difficult to measure and is ignored in characterizing complex quantum systems.

Recent theoretical and experimental work has shown that in many quantum systems the limits to measurement precision imposed by the quantum vacuum zero-point fluctuations (ZPF) can be breached

Approved for public release; distribution unlimited.

by decreasing the frequency noise at the expense of increasing the phase noise (thus maintaining $\Delta\nu\Delta\varphi \geq \hbar$), while at the same time the variations in frequency, and therefore the energy, are reduced below the ZPF such that the energy becomes "negative." "Squeezing" is thus the control of quantum fluctuations and corresponding uncertainties, whereby one can squeeze the variance of one (physically important) observable quantity provided the variance in the (physically unimportant) conjugate variable is stretched/increased. The squeezed quantity possesses an unusually low variance, meaning less variance than would be expected on the basis of the equipartition theorem. We can exploit quantum squeezing to extract energy from one place in the ordinary vacuum at the expense of piling up excess energy elsewhere (Morris and Thorne, 1988).

Approved for public release; distribution unlimited.

Appendix B – *TH*εμ Methodology

In the formalism of the *TH*εμ methodology, the functions *T* and *H* are introduced by requiring that the Lagrangian for the motion of particles (with charge e_a and mass m_{0a} for the ath particle), under the joint action of gravity and the electromagnetic field A_α ($\alpha \equiv$ spacetime vector components), be expressed in the canonical form

$$L = \sum_a \int \left(-m_{0a} \sqrt{T - H v_a^{\ 2}} + e_a A_\alpha v_a^{\ \alpha} \right) dt + \left(8\pi\right)^{-1} \int \left(\varepsilon \mathbf{E}^2 + \mu^{-1} \mathbf{B}^2 \right) d^3x\, dt \qquad \text{(B.1);}$$

where the arbitrary functions *T*, *H*, ε, and μ are functions of the metric (a.k.a. gravitation field), $v_a^{\ \alpha}$ is the ath particle four-vector velocity, and A_α is the electromagnetic field four-vector potential, ***E*** and ***B*** are the electric and magnetic field strengths, and (B.1) is in geometrodynamic natural units ($\hbar = c_0 = G = \varepsilon_0 = \mu_0 = 1$). The Lagrangian characterizes the motion of charged particles in an external gravitational field by the two functions *T* and *H*, and characterizes the response of the electromagnetic fields to the external gravitational field by the two functions ε and μ. For all standard (metric) theories of gravity, the four functions are related by

$$\varepsilon = \mu = \sqrt{\frac{H}{T}} \qquad \text{(B.2);}$$

and ***every*** metric theory of gravity satisfies this relation, such that the Einstein Equivalence Principle is satisfied.

Approved for public release; distribution unlimited.

AFRL-PR-ED-TR-2003-0034
Primary Distribution of this Report:

AFRL/PRSP (15 CD)
Dr. Frank Mead
10 E. Saturn Blvd
Edwards AFB CA 93524-7680

AFRL/PRSA (1 CD)
Dr. Jean-Luc Cambier
10 E. Saturn Blvd.
Edwards AFB CA 93524-7680

AFRL/PR (1 CD)
Dr. Alan Garscadden
1950 Fifth Street
Building 18
Wright-Patterson AFB, OH 45433-7251

AFRL/PR Technical Library (2 CD + 1 HC)
6 Draco Drive
Edwards AFB CA 93524-7130

Chemical Propulsion Information Agency (1 CD)
Attn: Tech Lib (Dottie Becker)
10630 Little Patuxent Parkway, Suite 202
Columbia MD 21044-3200

Defense Technical Information Center
(1 Electronic Submission via STINT)
Attn: DTIC-ACQS (Pat Mawby)
8725 John J. Kingman Road, Suite 94
Ft. Belvoir VA 22060-6218

Dr. Eric Davis (10 CD)
4849 San Rafael Ave.
Las Vegas, NV 89120

Dr. Dana Andrews (1 CD)
P.O. Box 36
Leavenworth, WA 98826

Dr. Jim Degnan (1 CD)
AFRL/DEHP
Kirtland AFB, NM 87117

Dr. Greg Benford (1 CD)
Physics Department
University of California
Irvine, CA 92717

Dr. Jim Benford (1 CD)
Microwave Sciences, Inc.
1041 Los Arabis Ln.
Lafayette, CA 94549

Dr. Gary L. Bennett (1 CD)
7517 West Devonwood Dr.
Boise, ID 83703

Dr. Mitat Birkan (1 CD)
AFOSR/NA
801 N. Randolf St.
Arlington, VA 22203

Dr. Jon Campbell (1 CD)
P.O. Box 295
Harvest, AL 35749

Mr. Michael Libeau
NSWCDD
17320 Dahlgren Rd.
Attn: Code G23 Libeau
Dalgren VA 22448

Dr. Phil Carpenter (1 CD)
US Dept. of Energy
Oak Ridge National Laboratory
P.O. Box 2008, MS: 6269
Oak Ridge, TN 37831

Dr. Brice N. Cassenti (1 CD)
Pratt & Whitney Aircraft
400 Main Street – MS: 163-07
East Hartford, CT 06108

Dr. Chan K. Choi (1 CD)
Purdue University
School of Nuclear Engineering
West Lafayette, IN 47907

Dr. Terry Kammash (1 CD)
University of Michigan
Nuclear Engineering Dept.
Ann Arbor, MI 48109

Dr. Ingrid Wysong (1 CD)
EOARD
223-321-Old Merylebone Rd.
London NW1 5th
United Kingdom

Dr. Robert Frisbee (1 CD)
JPL, MS 125-109
4800 Oak Grove Dr.
Pasadena, CA 91109

Dave Froning (1 CD)
Flight Unlimited
5450 Country Club
Flagstaff, AZ 86004

Geroge D. Hathaway (1 CD)
Hathaway Consulting Services
39 Kendal Ave.
Toronto, Canada, Ontario
Canada M5R 1L5

Clark W. Hawk, Director (1 CD)
Propulsion Research Center
University of Alabama in Huntsville
5000 Technology Drive, TH S-266
Huntsville, AL 35899

Alan C. Holt (1 CD)
NASA/Johnson Space Center
Code OD
Houston, TX 77058

Dr. Steven Howe (1 CD)
19 Karen Lane
Los Alamos, NM 87544

Mike Kaiserman (1 CD)
Raytheon Missile Systems Company
Bldg 805, M/S C3
Tucson, AZ 85734

Dr. George Miley (1 CD)
University of Illinois, Dept. of Nuclear Engr.
214 Nuclear Engineering Laboratory
103 South Goodwin Ave.
Urbana, IL 61801

Marc Millis (1 CD)
NASA Glenn Research Center
M.S. SPTD-2
21000 Brookpark Road, MS: 86-2
Cleveland, OH 44135

Dr. Jordon Kare (1 CD)
222 Canyon Lakes Pl.
San Ramon, CA 94583

Ron J. Kita (1 CD)
87 Shady Springs DR.
Doyelstown, PA 18901

Dr. Gerald L. Kulcinski (1 CD)
Nuclear Engineering Dept.
University of Wisconsin
1500 Johnson Dr.
Madison, WI 53706

Dr. Geoffrey A. Landis (1 CD)
Sverdrup Technology
21000 Brookpark Rd., MS 302-1
Cleveland, OH 44135

Dr. Michael LaPointe (1 CD)
NASA Lewis Research Center, MS: SPTD-1
21000 Brookpark Rd.
Cleveland, OH 44135

Dr. Sheldon Meth (1 CD)
DARPA
Tactical Technology Office
3701 N. Fairfax Dr.
Arlington, VA 22203

Dr. Michael M. Micci (1 CD)
Prof. of Aerospace Engineering
233 E. Hammond Bldg.
University Park, PA 16802

Dr. Hal Puthoff (1 CD)
Institute for Advanced Studies
4030 Braker Lane, West
Suite 300
Austin, TX 78759

Dr. Eric E. Rice (1 CD)
Orbital Technologies Corp.
402 Gammon Place, Suite 10
Madison, WI 53719

Dr. Aurthur Morrish (1 CD)
DARPA/ATO
3701 N. Fairfax Dr.
Arlington, VA 22203

Dr. Paul Murad (1 CD)
Sr. Analyst, Director for Intel Production
Missile & Space Intel Center
Defense Intelligence Agency
Washington, DC 20340-6054

Dr. Brian Palaszewski (1 CD)
NASA Glenn Research Center
21000 Brookpartk Road, MS: 5-10
Cleveland, OH 44135

Dr. Alan Pike (1 CD)
DSAS
1988 Crescent Park Drive
Reston, VA 20190

Dr. Dennis Pelaccio (1 CD)
SAIC
8100 Shaffer Parkway, Suite 100
Littleton, CO 80127

Ben Plenge (1 CD)
101 W. Eglin Blvd
Suite 342
Eglin AFB, FL 32542-6810

Dr. James Powell (1 CD)
Plus Ultra Technologies, Inc.
25 East Loop Rd.
Stony Brook, NY 11970-3350

Mr. Charles A. Yost (1 CD)
Electric Spacecraft Journal
73 Sunlight Drive
Leicester, NC 28748

Dr. George Schmidt (1 CD)
NASA HQ
300 E. Street SW
Washington, DC 20546

Steve Squires (1 CD)
Directorate of Applied Technology
Test and Simulation
STEWS-DATTS-OO
WSMR, NM 88002

Robert Talley (1 CD)
Topaz 2000, Inc
3380 Sheridan Dr.
Suite 172
Amherst, NY 14226

Dr. Kenneth D. Ware (1 CD)
Defense Nuclear Agency
Simulation Technology
6801 Telegraph Road
Alexandria, VA 22310

Dr. Feiedwardt Winterberg (1 CD)
University of Nevada
Desert Research Institute
Reno, NV 89507

Dr. Young Bae (1 CD)
1101 Bryan Ave.
Suite C
Tustin, CA 92780

Dr. Thomas M York (1 CD)
1215 Inverary Pl.
State College, PA 16801

Dr. Robert J. Barker (1CD)
AFOSR/NE
801 N. Randolf St.
Arlington, VA 22203

SCALE OF THE FORCES IN OCTAVES

John Ernst Worrell Keely, 1894

"First octave (unity of sound) is approximately the lowest frequency capable of producing waves of rarefaction and condensation in the air. The atomic aggregate oscillating at this pitch can be experimentally determined, and the aggregate vibrating at a pitch one octave higher will have a mass lying between 1/8 and the cube root of the mass of the first mentioned aggregate; the exact relation under varying conditions of gravity, magnetic saturation, and pressure, can be determined only by accurate measurements. But assuming a body of a size represented by x, with a pitch represented by 1024 per second, then a pitch of 2048 per second will be produced by a body having a volume of some mean between 1/8 of x and the cube root of x. By accurately determining the pitch of a volume of any metallic sphere capable of oscillating at the pitch of, e.g., the eleventh octave of sonity (1024 per second), under normal conditions of gravity, pressure, magnetism, and then successively diminishing its size by 1/8 of itself, we get the successive octaves of pitches higher and higher in period-frequency until we pass the domain of sonity and enter the domain of sono-thermity. The point where the one form of energy merges into the other lies approxi- imately at the twenty-first octave, and this pitch also marks the point where the air is no longer capable of vibrating at that pitch in waves of transverse form. The first gamut of 21 1/2 octaves consists of three forms; viz. sonity, sound, and sonism. The following is a tabulation of the pitches of sonity in octaves from one vibration per second to where the next form of energy commences."

Fraunhofer Lines

"The Fraunhofer lines represent the silences, or the places of invisible pitches between the luminous pitches of rad-energy. They cannot therefore be conveniently used as data from which to measure the fundamental pitches of the atoms undergoing examination. When a series of sound-pencils are projected upon a screen, they undergo a combination of overtones and under-tones at the point of contact producing tones of a pitch either too low to be recognized by the human ear or too high to be called sound. The Fraunhofer lines are not therefore simply silences, but may be the higher invisible ultra-actinic rays. The fact is that some of the Fraunhofer lines are capable of producing a variety of chemical actions, when reflected and focalized. Observation thus far shows that these lines do not bear any definite ascertainable relation to the pitches producing them, but that they do bear some uniform relation from which the fundamental pitch could be determined cannot be doubted. The relation of the Fraunhofer lines to the luminous spectra are undoubtedly such as would enable one to compute the creative pitches producing them; but as yet no such determinations have been made. The accurate method of determining them is from the mutual relation of the harmonic pitches of the luminous spectra.

A table representing the harmonic overtones and undertones of simple vibrations, and the resultant harmonics of associate vibrations, will be of great convenience in making these determinations.

The natural unity of sonity lies above 1 per second, and below 2 per second, and for this reason the numbering of the octaves is accomplished by calling the end of the first octave No. 1 instead of No. 2. At the end of the twenty-first octave sono-thermity commences, and the bodies oscillating at this pitch are either correspondingly smaller by 1/8 than the preceding sonitic aggregates; or larger aggregates undergo vibration in submultiple portions of themselves. In either case the originating oscillation of sono-thermic pitch is that of an isolated or localized aggregation. This first class of forces, or first double gamut, is included within the range of about forty-three octaves. The bodies of the translatory pendulous motion and produce waves of the transverse form, while the bodies of the second gamut undergo internal nodal vibration and produce waves of a longitudinal form.

Beyond the upper limit of the forty-third octave we reach bodies of a size (determined by the same method as in sonity) which we know to be about the size of an atom as approximately determined by various physicists to lie between eleven and twelve micromillimeters (hydrogen molecules), which gives the highest pitch of the known atoms, and from which can be roughly estimated the pitch of the heavier atoms. Starting with the approximate pitch of hydrogen as determined from its associate spectrum with oxygen, and working back to the size of the largest atoms, we again reach a pitch corresponding to the highest sono-thermic vibrations. Starting with the known temperature and pitch of a heated body, emitting definite rays of light, and working back to absolute zero, we again reach the pitch of the sono-thermic limit."

FIRST CLASS
Scale of Forces in Octaves
Sonity, Sound, and Sonism begins

1st Octave 2 2nd 4 3rd 8
4th 16
5th 32
6th 64
7th 128
8th 256
9th 512 Keynote Molecular Chord
620 First Octave Keynote Atomic Chord
630 Second Octave
10th 1,024
11th 2,048
12th 4,096
13th 8,192 Keynote Etheric Chord
12,000 Third Octave Heat (highest rate of) 14,000 Vibro-Atomic
14th 16,384 Lowest Molecular Vibration
20,000 Harmonic Thirds
15th 32,768
42,800 Dissociation of Water
16th 65,536
17th 131,072 Trans. of Odor in Molecules
220,000 Sympathetic Negative
18th 262,144 First Inter-Atomic Lowest
300,000 Full Harmonic Chord
19th 524,288 First Inter-Atomic Highest
780,000 Full Harmonic Chord
20th 1,048,576
1,620,000 Major 5th
21st 2,097,152
Major 5th 3,145,728 Ninths

Sono-thermity, Sono-therm, Sono-thermism

22nd 4,194,304
23rd 8,388,606
24th 16,777,216
25th 33,554,432
26th 67,108,864 Highest Molecular Vibration
100,000,000 Harmonic 3rds
27th 134,217,728
28th 268,435,456 Highest Inter-Molecular

300,000,000 Enharmonic 6ths Atmospheric
519,655,633 Highest made in air
29th 536,870,912 Atomic Vibration
900,000,000 Diatonic 9ths
30th 1,073,741,824
31st 2,147,483,648
32nd 4,294,967,296 Highest Etheric
8,100,000,000 Dominant Etheric 6ths
33rd 8,589,934,592
34th 17,179,869,184 Highest Inter-Etheric
24,300,000,000 Inter-Etheric 9ths
35th 34,359,738,368
36th 68,719,476,736
37th 137,438,953,472
38th 274,877,906,944
39th 549,755,813,888
40th 1,099,511,627,776
41st 2,199,023,255,552
42nd 4,398,046,511,104

SECOND CLASS
Thermism, Rad-energy, Chemism

43rd 8,796,093,022,208 Dark heat begins
44th 17,592,186,044,416
45th 35,184,372,088,832
46th 70,368,744,177,664 Chemism begins
47th 140,737,488,355,328 Infrared (Light begins)
48th 281,474,976,710,656 Major 4th (above)
49th 562,949,953,421,312 Below Major 4th
50th 1,125,899,906,842,624 (Light ends)
51st 2,251,799,813,685,248
52nd 4,503,599,627,370,496 Limit Actinic Rays
53rd 9,007,199,254,740,992
54th 10,814,398,509,481,984
55th 36,028,797,018,963,968 Chemism ends
56th 72,057,594,037,927,936
57th 144,115,188,075,855,872 Full Ninths 156,057,552,198,220,000
58th 288,230,376,151,711,744
59th 576,460,752,303,423,488
60th 1,152,921,504,606,846,976
61st 2,305,843,009,213,693,952
62nd 4,611,686,018,427,387,904
63rd 9,223,372,036,854,775,808
64th 18,446,744,073,709,551,616 Major 5th
Major 5th 27,670,116,110,564,327,424 Limit of thermism

Electricity, Induction, Magnetism

65th 36,893,488,147,419,103,232
66th 73,786,976,295,838,206,464
67th 147,573,952,591,676,413,928
68th 295,147,905,183,352,827,856 Copper-zinc couple
69th 590,295,810,366,705,655,712

70th 1,180,591,620,733,411,311,424
71st 2,361,183,241,466,822,622,848 50,000 volts
72nd 4,722,366,482,933,645,245,696
73rd 9,444,732,965,867,290,491,392
74th 18,889,465,931,745,580,982,784
75th 37,778,931,863,469,161,965,568
76th 75,557,863,726,938,323,931,136
77th 151,115,727,453,875,647,862,772
78th 302,231,454,907,753,295,724,544
79th 604,462,909,815,506,591,449,088
80th 1,208,925,819,631,013,182,898,176
81st 2,417,851,639,762,026,365,796,352
82nd 4,825,703,278,524,052,731,592,702
83rd 9,671,406,557,048,105,463,185,408
84th 19,342,813,114,096,210,926,370,816
85th 38,685,626,228,192,421,852,741,632
86th 77,361,252,456,384,843,705,483,204

The limit of electricity and the beginning of atomolity.

SCALE OF THE FORCES IN OCTAVES

John Ernst Worrell Keely, 1894

"First octave (unity of sound) is approximately the lowest frequency capable of producing waves of rarefaction and condensation in the air. The atomic aggregate oscillating at this pitch can be experimentally determined, and the aggregate vibrating at a pitch one octave higher will have a mass lying between 1/8 and the cube root of the mass of the first mentioned aggregate; the exact relation under varying conditions of gravity, magnetic saturation, and pressure, can be determined only by accurate measurements. But assuming a body of a size represented by x, with a pitch represented by 1024 per second, then a pitch of 2048 per second will be produced by a body having a volume of some mean between 1/8 of x and the cube root of x. By accurately determining the pitch of a volume of any metallic sphere capable of oscillating at the pitch of, e.g., the eleventh octave of sonity (1024 per second), under normal conditions of gravity, pressure, magnetism, and then successively diminishing its size by 1/8 of itself, we get the successive octaves of pitches higher and higher in period-frequency until we pass the domain of sonity and enter the domain of sono-thermity. The point where the one form of energy merges into the other lies approxi- imately at the twenty-first octave, and this pitch also marks the point where the air is no longer capable of vibrating at that pitch in waves of transverse form. The first gamut of 21 1/2 octaves consists of three forms; viz. sonity, sound, and sonism. The following is a tabulation of the pitches of sonity in octaves from one vibration per second to where the next form of energy commences."

Fraunhofer Lines

"The Fraunhofer lines represent the silences, or the places of invisible pitches between the luminous pitches of rad-energy. They cannot therefore be conveniently used as data from which to measure the fundamental pitches of the atoms undergoing examination. When a series of sound-pencils are projected upon a screen, they undergo a combination of overtones and under-tones at the point of contact producing tones of a pitch either too low to be recognized by the human ear or too high to be called sound. The Fraunhofer lines are not therefore simply silences, but may be the higher invisible ultra-actinic rays. The fact is that some of the Fraunhofer lines are capable of producing a variety of chemical actions, when reflected and focalized. Observation thus far shows that these lines do not bear any definite ascertainable relation to the pitches producing them, but that they do bear some uniform relation from which the fundamental pitch could be determined cannot be doubted. The relation of the Fraunhofer lines to the luminous spectra are undoubtedly such as would enable one to compute the creative pitches producing them; but as yet no such determinations have been made. The accurate method of determining them is from the mutual relation of the harmonic pitches of the luminous spectra.

A table representing the harmonic overtones and undertones of simple vibrations, and the resultant harmonics of associate vibrations, will be of great convenience in making these determinations.

The natural unity of sonity lies above 1 per second, and below 2 per second, and for this reason the numbering of the octaves is accomplished by calling the end of the first octave No. 1 instead of No. 2. At the end of the twenty-first octave sono-thermity commences, and the bodies oscillating at this pitch are either correspondingly smaller by 1/8 than the preceding sonitic aggregates; or larger aggregates undergo vibration in submultiple portions of themselves. In either case the originating oscillation of sono-thermic pitch is that of an isolated or localized aggregation. This first class of forces, or first double gamut, is included within the range of about forty-three octaves. The bodies of the translatory pendulous motion and produce waves of the transverse form, while the bodies of the second gamut undergo internal nodal vibration and produce waves of a longitudinal form.

Beyond the upper limit of the forty-third octave we reach bodies of a size (determined by the same method as in sonity) which we know to be about the size of an atom as approximately determined by various physicists to lie between eleven and twelve micromillimeters (hydrogen molecules), which gives the highest pitch of the known atoms, and from which can be roughly estimated the pitch of the heavier atoms. Starting with the approximate pitch of hydrogen as determined from its associate spectrum with oxygen, and working back to the size of the largest atoms, we again reach a pitch corresponding to the highest sono-thermic vibrations. Starting with the known temperature and pitch of a heated body, emitting definite rays of light, and working back to absolute zero, we again reach the pitch of the sono-thermic limit."

FIRST CLASS
Scale of Forces in Octaves
Sonity, Sound, and Sonism begins

1st Octave 2 2nd 4 3rd 8
4th 16
5th 32
6th 64
7th 128
8th 256
9th 512 Keynote Molecular Chord
620 First Octave Keynote Atomic Chord
630 Second Octave
10th 1,024
11th 2,048
12th 4,096
13th 8,192 Keynote Etheric Chord
12,000 Third Octave Heat (highest rate of) 14,000 Vibro-Atomic
14th 16,384 Lowest Molecular Vibration
20,000 Harmonic Thirds
15th 32,768
42,800 Dissociation of Water
16th 65,536
17th 131,072 Trans. of Odor in Molecules
220,000 Sympathetic Negative
18th 262,144 First Inter-Atomic Lowest
300,000 Full Harmonic Chord
19th 524,288 First Inter-Atomic Highest
780,000 Full Harmonic Chord
20th 1,048,576
1,620,000 Major 5th
21st 2,097,152
Major 5th 3,145,728 Ninths

Sono-thermity, Sono-therm, Sono-thermism

22nd 4,194,304
23rd 8,388,606
24th 16,777,216
25th 33,554,432
26th 67,108,864 Highest Molecular Vibration
100,000,000 Harmonic 3rds
27th 134,217,728
28th 268,435,456 Highest Inter-Molecular

300,000,000 Enharmonic 6ths Atmospheric
519,655,633 Highest made in air
29th 536,870,912 Atomic Vibration
900,000,000 Diatonic 9ths
30th 1,073,741,824
31st 2,147,483,648
32nd 4,294,967,296 Highest Etheric
8,100,000,000 Dominant Etheric 6ths
33rd 8,589,934,592
34th 17,179,869,184 Highest Inter-Etheric
24,300,000,000 Inter-Etheric 9ths
35th 34,359,738,368
36th 68,719,476,736
37th 137,438,953,472
38th 274,877,906,944
39th 549,755,813,888
40th 1,099,511,627,776
41st 2,199,023,255,552
42nd 4,398,046,511,104

SECOND CLASS
Thermism, Rad-energy, Chemism

43rd 8,796,093,022,208 Dark heat begins
44th 17,592,186,044,416
45th 35,184,372,088,832
46th 70,368,744,177,664 Chemism begins
47th 140,737,488,355,328 Infrared (Light begins)
48th 281,474,976,710,656 Major 4th (above)
49th 562,949,953,421,312 Below Major 4th
50th 1,125,899,906,842,624 (Light ends)
51st 2,251,799,813,685,248
52nd 4,503,599,627,370,496 Limit Actinic Rays
53rd 9,007,199,254,740,992
54th 10,814,398,509,481,984
55th 36,028,797,018,963,968 Chemism ends
56th 72,057,594,037,927,936
57th 144,115,188,075,855,872 Full Ninths 156,057,552,198,220,000
58th 288,230,376,151,711,744
59th 576,460,752,303,423,488
60th 1,152,921,504,606,846,976
61st 2,305,843,009,213,693,952
62nd 4,611,686,018,427,387,904
63rd 9,223,372,036,854,775,808
64th 18,446,744,073,709,551,616 Major 5th
Major 5th 27,670,116,110,564,327,424 Limit of thermism

Electricity, Induction, Magnetism

65th 36,893,488,147,419,103,232
66th 73,786,976,295,838,206,464
67th 147,573,952,591,676,413,928
68th 295,147,905,183,352,827,856 Copper-zinc couple
69th 590,295,810,366,705,655,712

70th 1,180,591,620,733,411,311,424
71st 2,361,183,241,466,822,622,848 50,000 volts
72nd 4,722,366,482,933,645,245,696
73rd 9,444,732,965,867,290,491,392
74th 18,889,465,931,745,580,982,784
75th 37,778,931,863,469,161,965,568
76th 75,557,863,726,938,323,931,136
77th 151,115,727,453,875,647,862,772
78th 302,231,454,907,753,295,724,544
79th 604,462,909,815,506,591,449,088
80th 1,208,925,819,631,013,182,898,176
81st 2,417,851,639,762,026,365,796,352
82nd 4,825,703,278,524,052,731,592,702
83rd 9,671,406,557,048,105,463,185,408
84th 19,342,813,114,096,210,926,370,816
85th 38,685,626,228,192,421,852,741,632
86th 77,361,252,456,384,843,705,483,204

The limit of electricity and the beginning of atomolity.

Musical Dynasphere Atlin

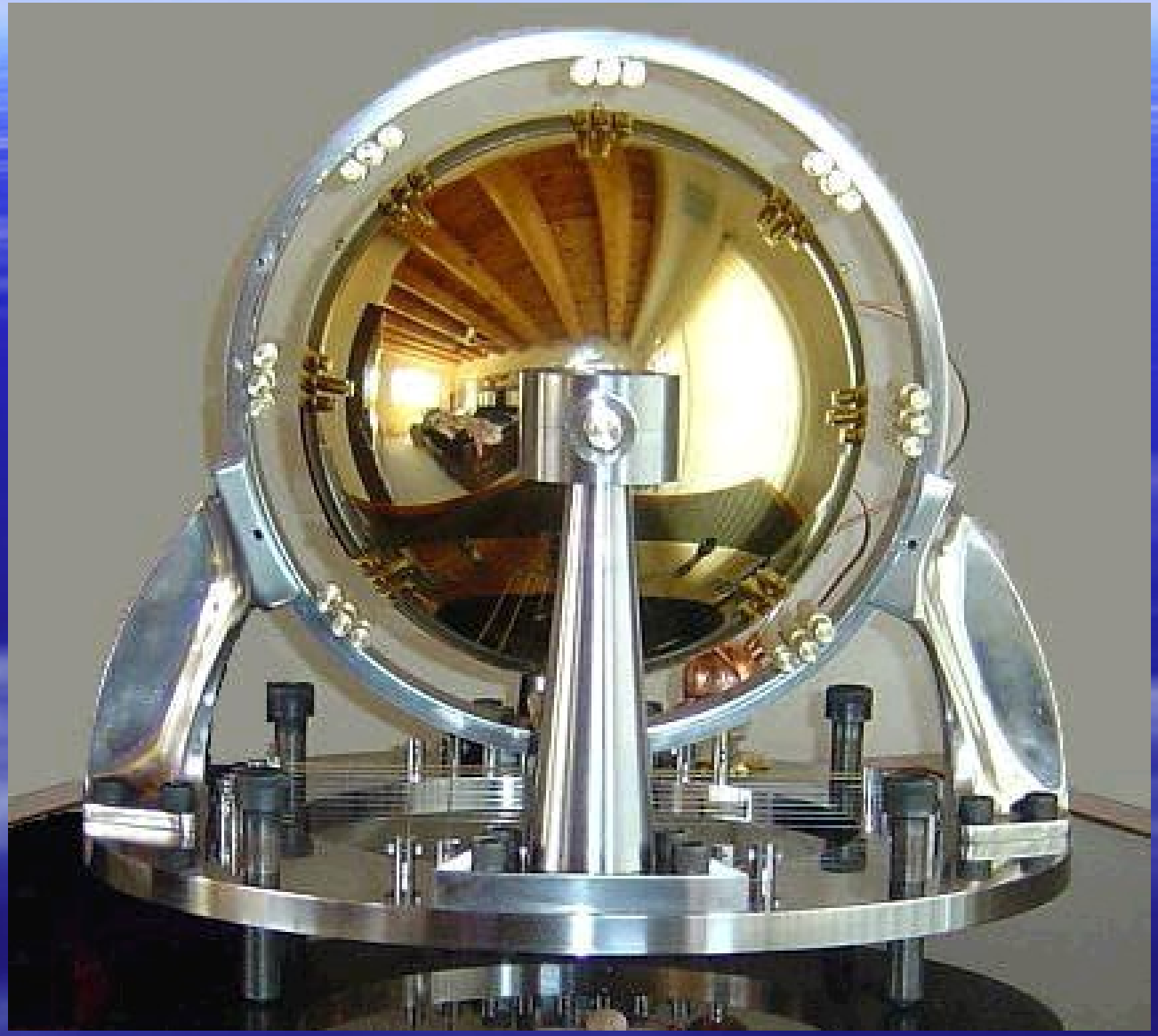

The Chakras and musical notes

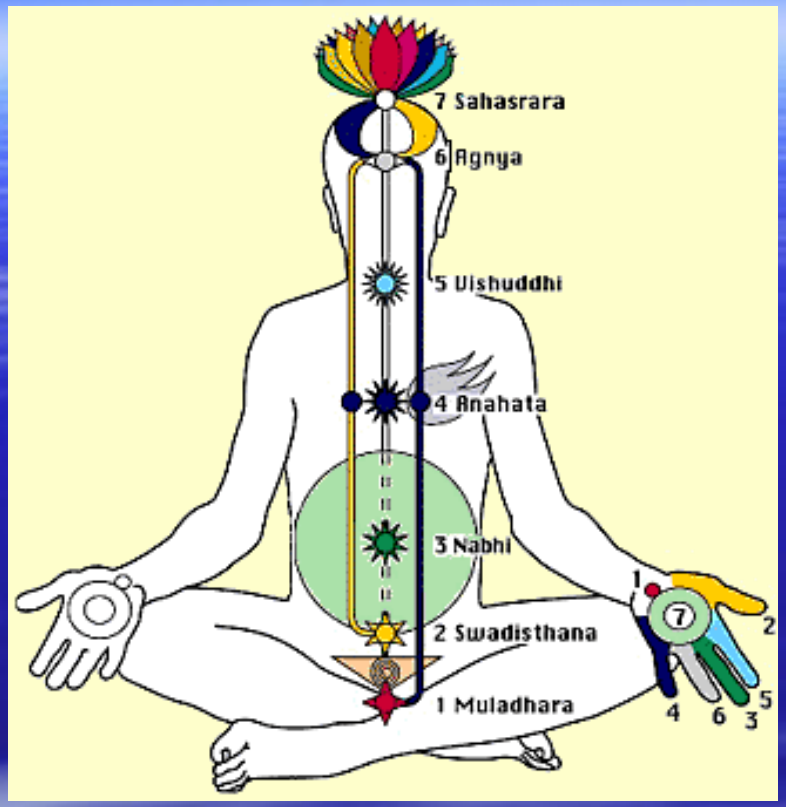

www.banet.free-online.co.uk

- The first chakra, called the Muladhara or Mooladhara, is stimulated by the **DO** being played or sung
- (note C red)
- The second chakra is stimulated by the **RE,**
- (note D orange)
- The third chakra Nabhi is stimulated by **MI**
- (note E yellow)
- The fourth chakra, Anahata is stimulated by **FA**
- (note F green)
- The fifth chakra, Uisbuddhi is stimulated by **SOL**
- (note G blue)
- The sixth chakra, Agnya is stimulated by **LA**
- (note A indigo)
- The seventh chakra, Sahasrara is stimulated by **TI**
- (note B violet)

- The seventh chakra, is stimulated by the **TI**. If the music is in the key of C it will be the note B which stimulates the chakra, which is located in the limbic area at the top of the brain. When the melody reaches the note B there is a form of tension created in the consciousness of the listener and the brain expects or you could say that it desires that the C above the B will follow.
- There are chakras above the head and these will be stimulated when the octave is completed

Alice Bailey 7 rays Esoteric Astrology

- **RAY I Supreme energy, FIRE/AIR Leo**
- **RAY II Materialising Idea, ETHER Virgo**
- **RAY III Force of mind, WATER Libra**
- **RAY IV Speech , SOLAR ANGELS Scorpio**
- **RAY V Will to manifest, FIRE Capricorn**
- **RAY VI Energy of matter, form, WATER Sagittarius**
- **RAY VII Earth, Aquarius**

- **7 stars of the Great bear positive force: Ursa Major**
- **7 stars of the Pleiades negative force (Sub-divisions of**

The Great bear Ursa Major

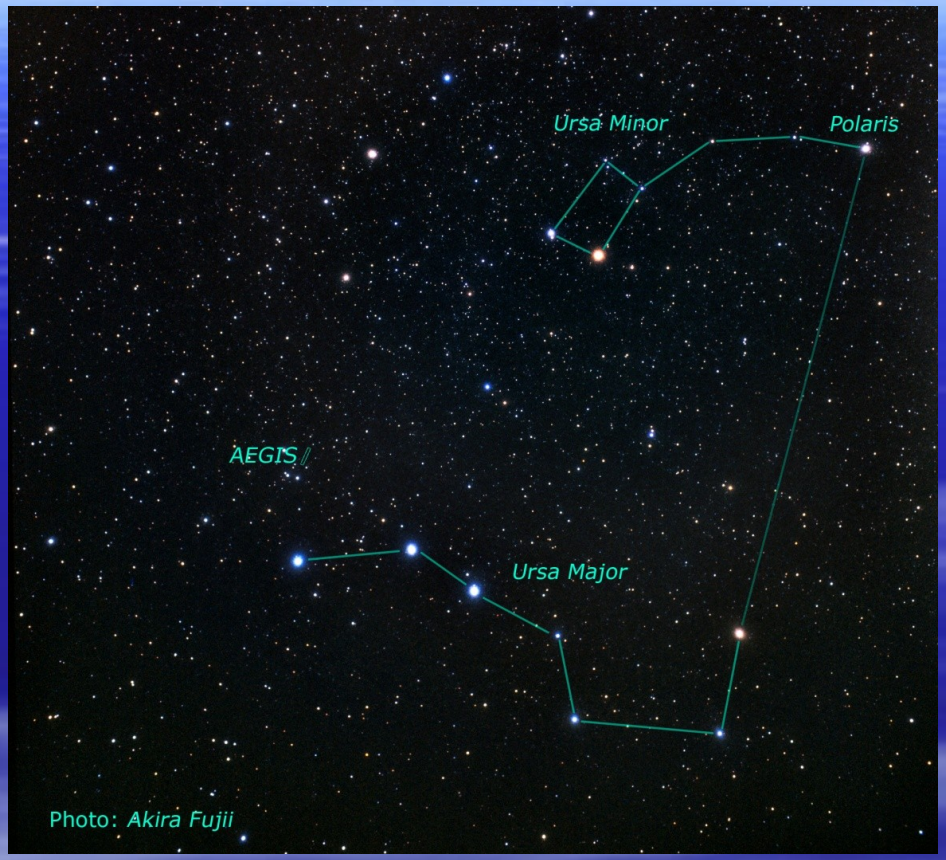

Is situated in the northern hemisphere
The seven rays come from the constellation Ursa Major

The Pleiades

Is situated in the constellation of Taurus
This is where the seven sub rays come from

Alice Bailey Esoteric Astrology

- **GEMINI… is related to the etheric body; it is the custodian of conditioning energy and the intermediary, between soul and body.**
- **In the average person, the etheric vehicle is the transmitter of psychic energy, galvanising and coordinating the dense physical body and permitting, therefore, astral and mental control of the personality.**
- **When the individual is upon the path of Discipleship and, therefore, upon the reversed wheel, leading to initiation, the etheric body becomes the transmitter of the soul energy and not personality force; the powerful effect of the second Ray of Love-Wisdom- working through the subjective sixth rays, according to ray type begins to dominate the vital body producing a shift of force to the centres above the diaphragm.**
- **The responsiveness of Gemini is abstruse. It is an esoteric fact that some day will be of real service to future astrology, and will lift astrology to a higher plane.**

Alice A. Bailey Esoteric Astrology

- **'Astrology is a science which must be restored to its original beauty and truth before the world can gain a truer perspective and a more just and accurate appreciation of the divine Plan,**
  - **..... Astrology is *essentially* the purest presentation of occult truth in the world at this time, because it is the science which deals with those conditioning and governing energies of forces which play through and upon the whole field of space and all that is found within that field. When this fact is grasped and the sources of those energies are better comprehended and the nature of the field of space is correctly understood, we shall see a far wider and at the same time a more closely related horizon; the relationships between individual, planetary, systemic and cosmic entities will be grasped, and we shall then begin to live scientifically. It is this scientific living which it is the immediate purpose of astrology to bring about.**

ORPHEUS

- **P84 Each of the planets is fixed in a luminous ethereal sphere called wholeness, because it is a part with a total subsistence, and is analogous to the sphere of the fixed stars. In consequence of this analogy, each planetary sphere contains a multitude of Gods, who are the satellites of the leading divinity of the sphere, and subsist conformably to its characteristics"**
- **These wholeness's are totally different from the physical planets, which are simply their symbols in the starry vault. Their hierarchies have each their appropriate dominant "colour", and also their sub-colours contained in the dominant. The whole has to do with the "radiant egg" or "envelope" of the mystic universe, which has its correspondence in man. This is the basis of <u>REAL ASTROLOGY THE KNOWLEDGE OF WHICH HAS BEEN LOST…..</u>**
- GRS Mead *Author*

ORPHEUS

- **P132 If we imagine ourselves the seven colours of the spectrum, the result of the breaking up of a ray of pure sunlight by means of a triangular prism; and if we further imagine each of these seven rays being split up into seven parent rays, but each ray retaining its dominant tint in all its seven sub-divisions then we shall obtain a clue that will aid us in grasping the intricacies of the permutations and combinations of Nature- Powers. As this is a most important subject and as without a thorough grasp of the theory, the Orphic Theogony and Cosmology would remain an unintelligible chaos.**

- GRS Mead *Author*

Leadbeater the Chakras

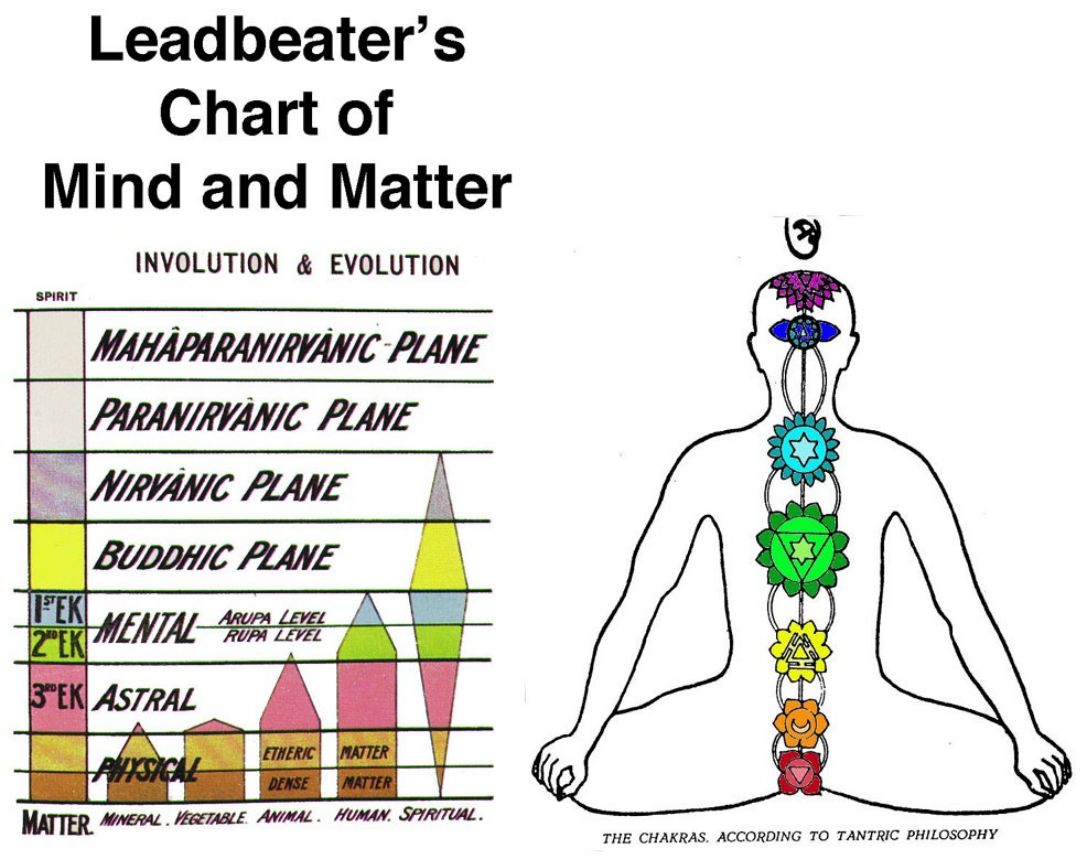

Subtle Bodies **In a more restricted and biological sense, the (shadows) or astral bodies were emanated by original humanity to become the vehicles of the future humanities.**

THE FIBONACCI SPIRAL

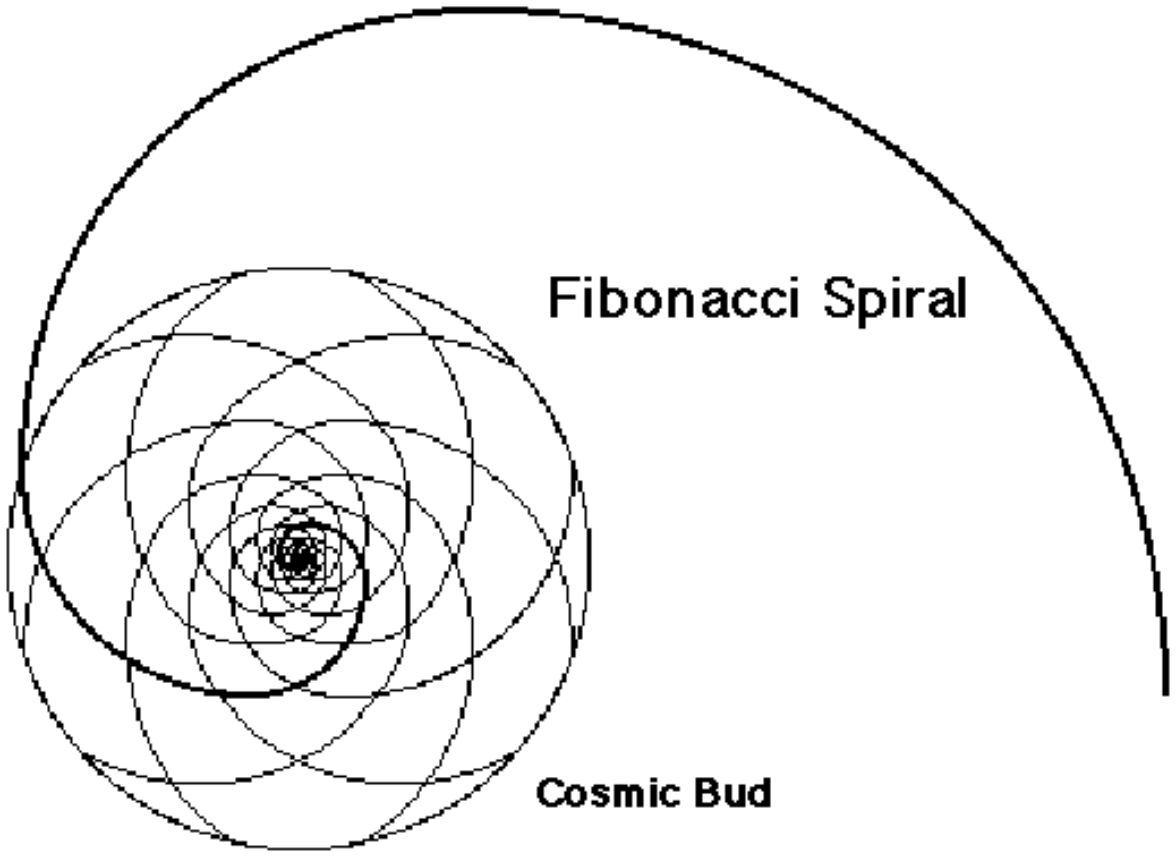

- Fibonacci spiral is found in nature i.e. sea shells
- 0,1,1,2,3,5,8,13,21,34,55,etc

THE COCHLEA of the inner ear

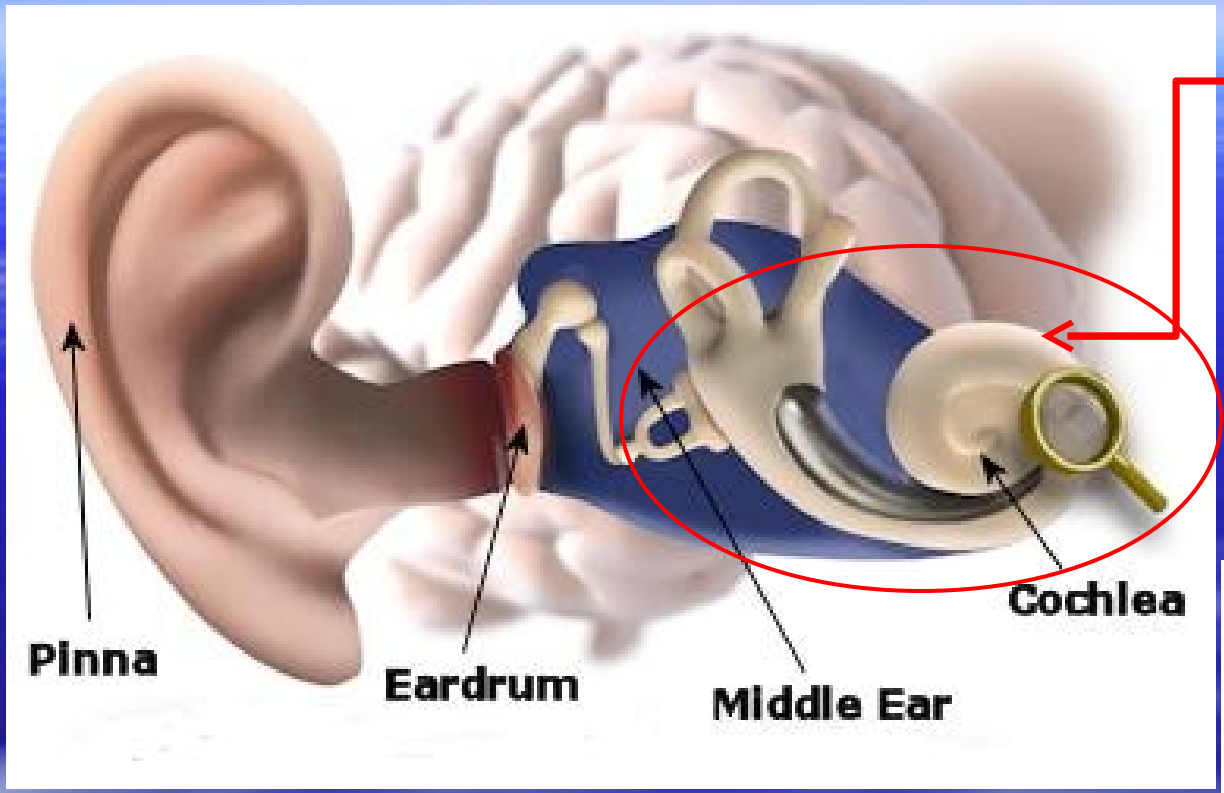

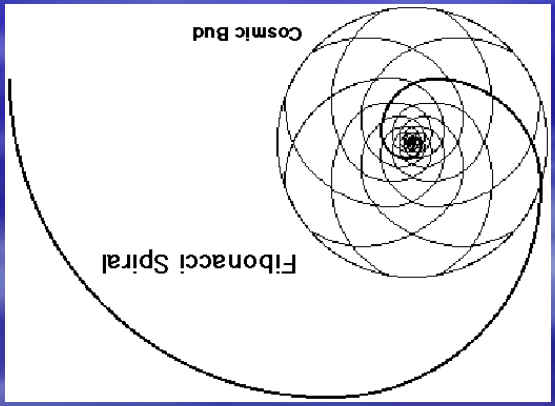

- The Fibonacci spiral inverted

MUSICAL NOTES & THE INNER EAR

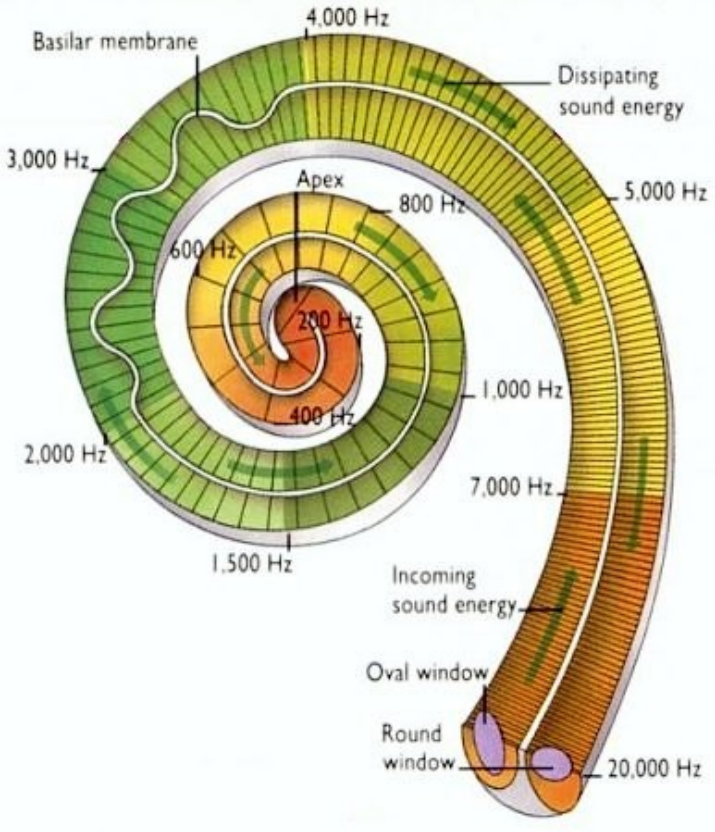

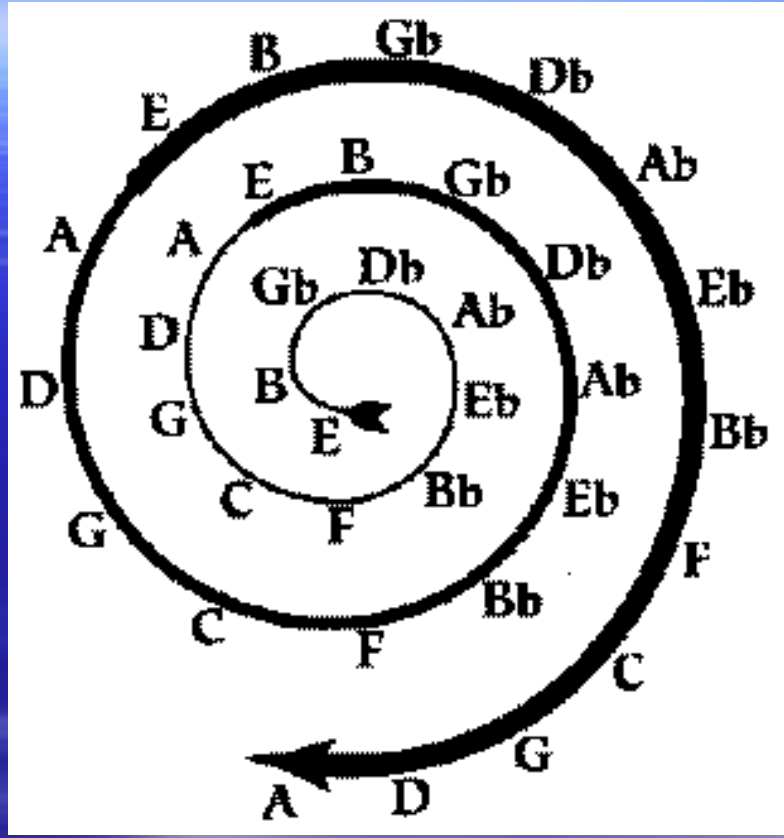

- The cochlea inside the ear as sensitive to musical notes and sound frequencies.

Fibonacci in music

Fibonacci Series is Music

1 : 1 : 2 : 3 : 5 : 8 : 13 : 21 . . . .

The Fibonacci series has a base in music. Here we have the series going up which breaks into a smooth series of even musical intervals.

When the numbers are going in reverse order we can see the spontaneous generation of odd or enharmonic musical intervals.

The two series will progress to infinity always attempting to form an Harmonic 6th which does not exist in music or nature because the Harmonic 6th signifies perfect unity or harmony or equation of forces. Should this happen the forces then become latent and non-perceptable.

This is symbolic of an endless seeking for perfection in whatever terms that may apply.

1	:	1	Unison
3	:	2	Perfect 5th
8	:	5	Minor 6th
21	:	13	Minor 6th
∞	:	∞	Harmonic 6th
21	:	13	Minor 6th
13	:	8	Minor 6th
5	:	3	Major 6th
2	:	1	Octave

- **The Fibonacci numbers has a base in music, here we have a smooth series of even musical intervals, until it reaches harmonic 6th. There is no HARMONIC 6th in music or in nature, the harmonic intervals change to enharmonic intervals…… The 2 series will progress to infinity in an attempt to create a harmonic 6th (SVP Pond Institute)**

Cymatherapy

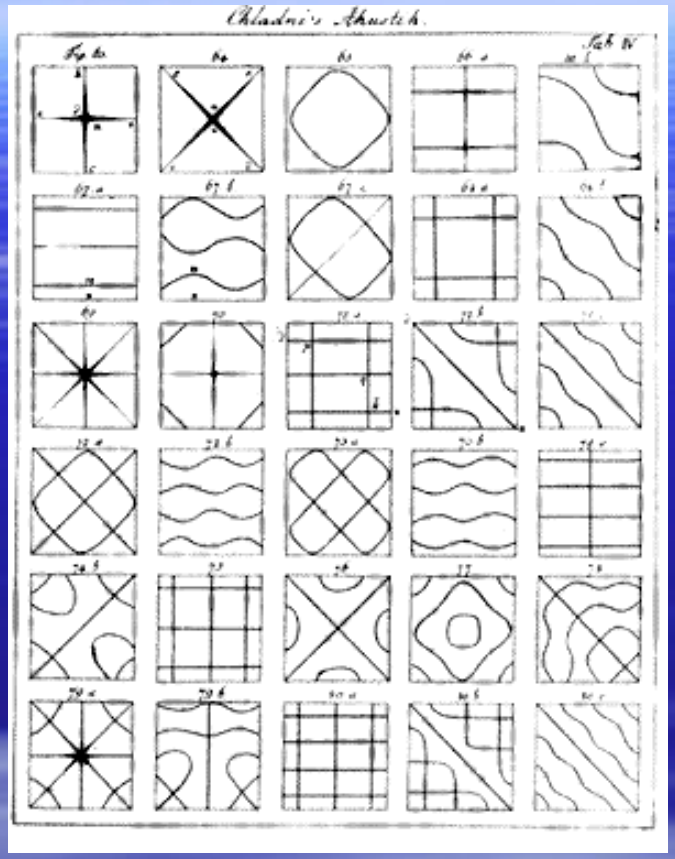

In the eighteenth-century, German scientist and musician

·Ernst Chaladni, known as the father of acoustics demonstrated, in simple, visual experiments, that sound affects matter.

·When he drew a violin bow around the edge of a plate covered with fine sand, the sand formed various geometric patterns, as shown.

- "Wherever we look, we can describe what we see in terms of periodicities and rhythmicities," he wrote. "When nature creates anything it creates in this periodic style."1 For him, everything reflected inherent patterns of vibration involving number, proportion and symmetry—what he called the "harmonic principle."

www.cymatics.org.uk

CHALADNI SOUND EXPERIMENTS

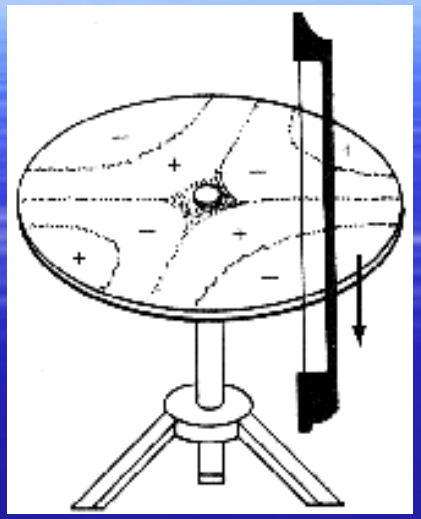

Fig 1 CHALADNI'S SOUND TABLE

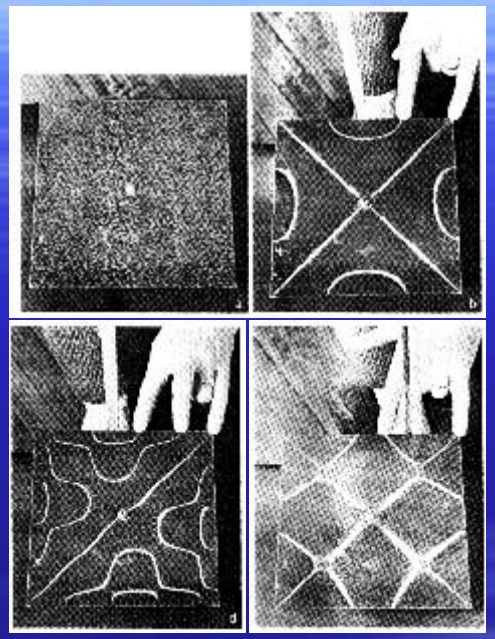

Fig 2 PatternsFormed on a Bowed Chaladni Plate

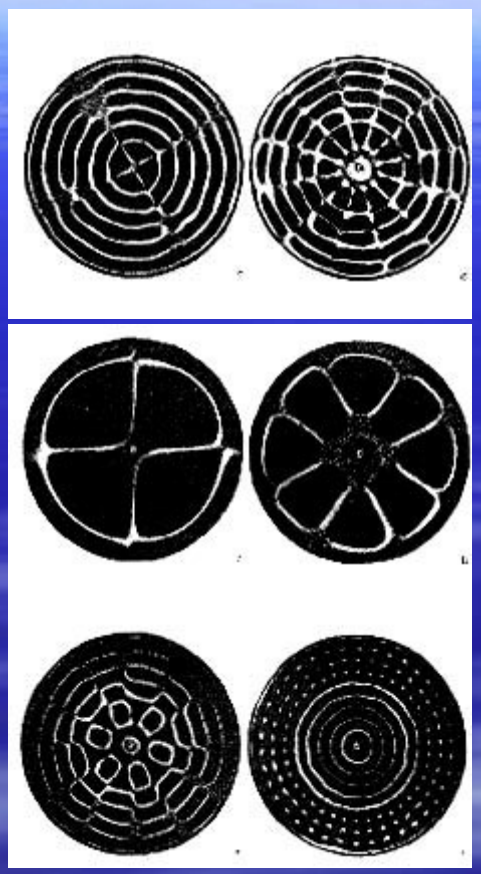

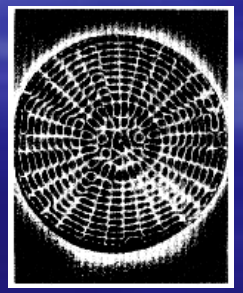

When sand is scattered on the metal plate, see figure one far left, then notes of different frequencies are produced, by bowing the edge of the plate at different places and holding the edge at others. In figure two from left to right we see the patterns formed when the bow created a frequency of 1200Hz, 880Hz and 2760Hz.

Leadbeaters representation of the chakras

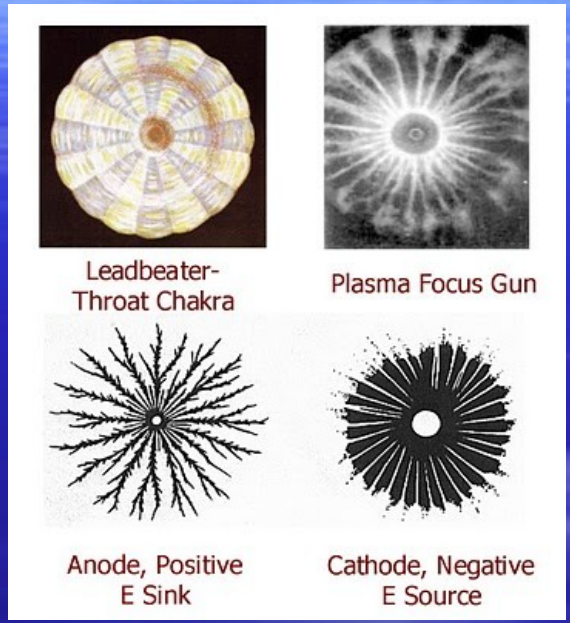

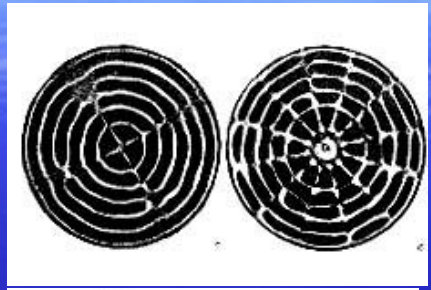

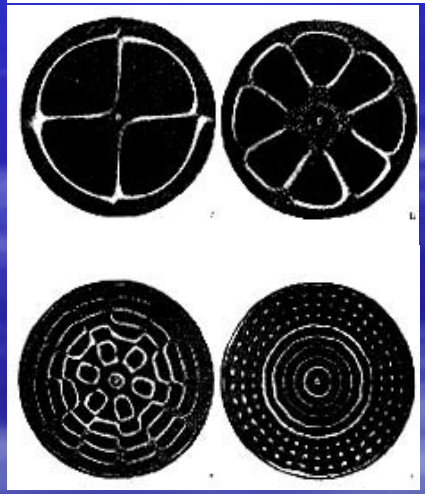

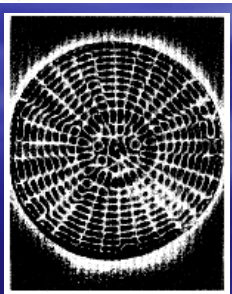

CYMATICS WEBS OF MAYA

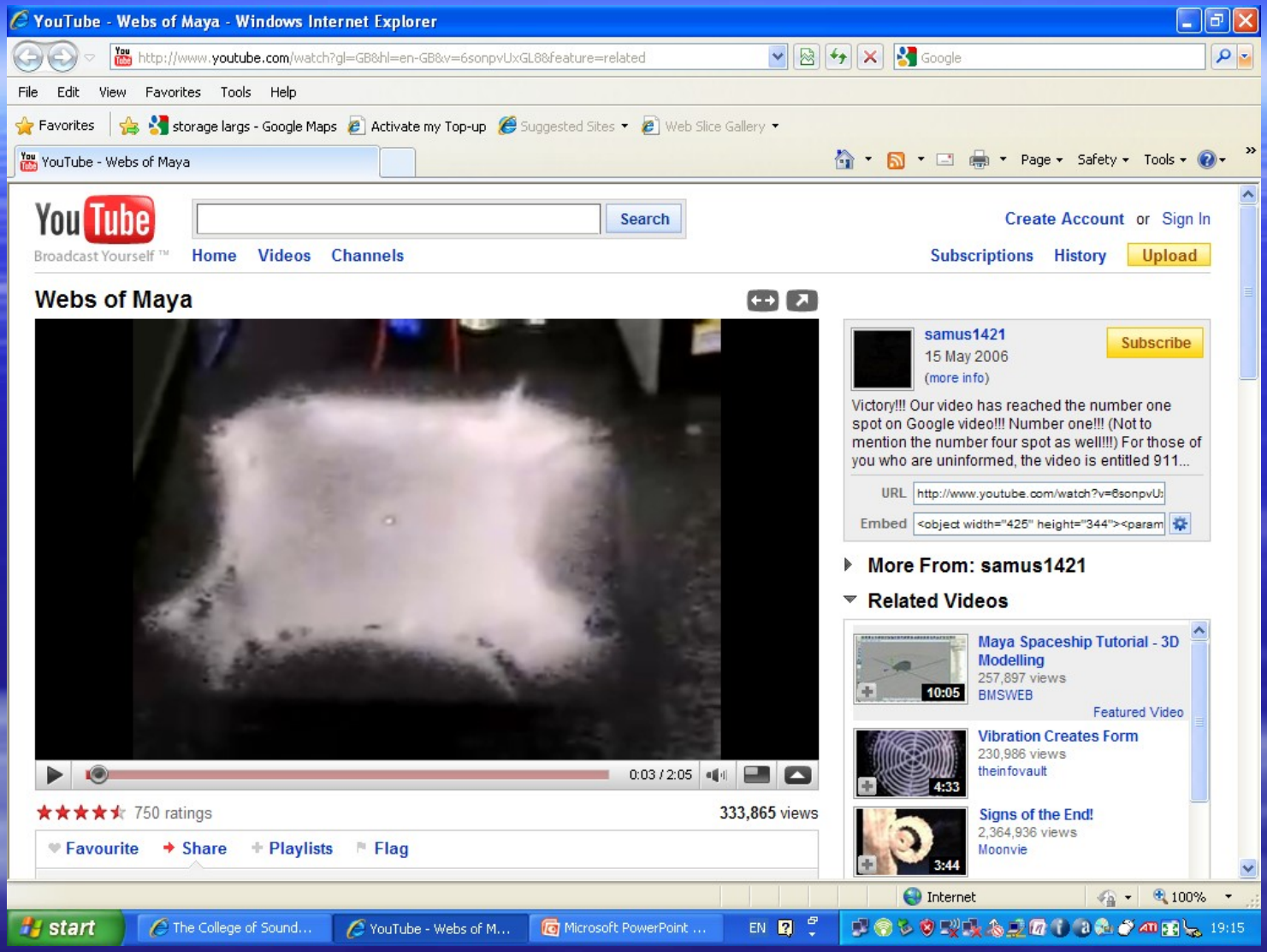

- http://www.youtube.com/watch?v=6sonpvUxGL8

FAMOUS SYNESTHETES

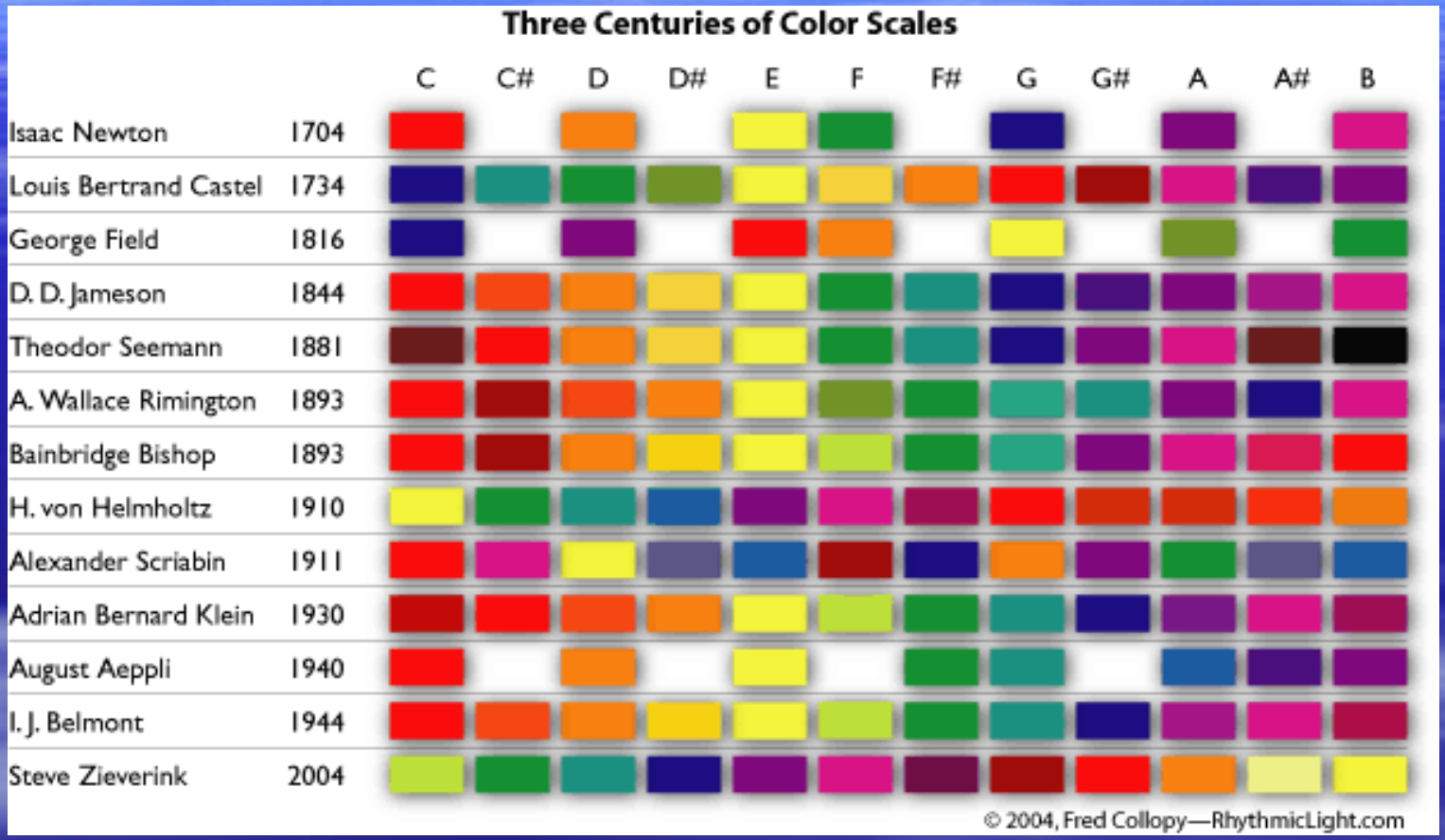

- **Throughout the ages certain individuals have had the ability to see musical notes as colours.**

WATER

- One of the five elements.

Emoto's Water Crystals

Spoken words

The Om

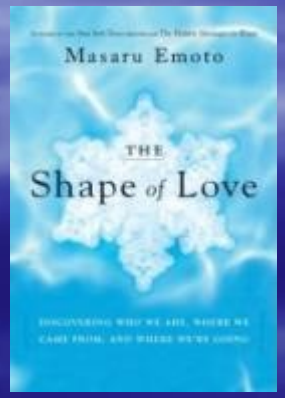

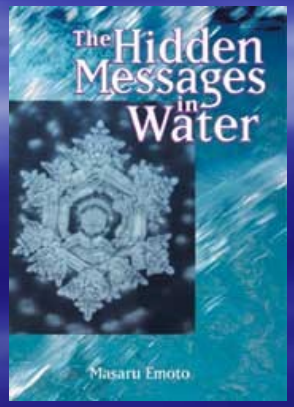

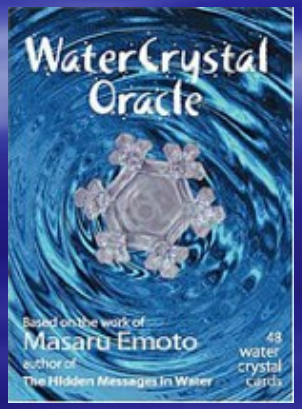

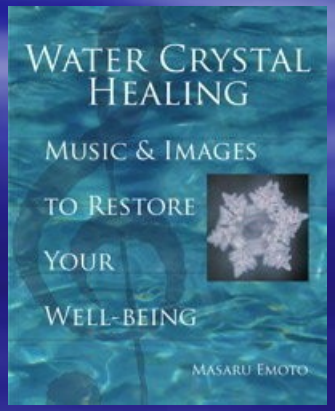

Masaru Emoto explains Vibration

- **Everything is vibration**
- **How can everything that can be seen and touched be vibration?**
- **It is difficult to believe that things you can pick up with your hands and examine are vibrating, things like wood, rocks and concrete are all vibrating.**

But now the science of quantum mechanics generally acknowledge that substance is nothing more than vibration

- **When we separate something into its smallest parts we enter the strange world where all that exists is particles and waves**
- **Whether we can hear sound or not, we can say that the unique frequency of all objects can be interpreted as sound**
- **The fact that everything is in a state of vibration also means that everything is creating sound**

The Hidden Messages in water, Masaru Emoto

- **If we consider that the human body is a universe within itself, it is only natural to conclude that we carry within us all the elements. According to Buddhism, the human being is born with 108 earthly desires (such as confusion, attachment, jealousy, vanity etc) which torture us throughout our lives. I think it is logical to conclude that these 108 earthly desires have counterparts in the 108 elements. (so far only 90 have been found in the human body)**

- **Vibration Detection Device**
- **I was able to measure the many different vibrations coming form people, and I realised that the negative vibrations that we emit correspond to the vibrations emitted by the various ELEMENTS**

The Hidden Messages in water, Masaru Emoto

- For example, the vibrations created by:
- Irritation equivalent to: mercury
- Anger equivalent to: lead
- Sadness and sorrow to: aluminium
- Despair equivalent to: steel
- Stress equivalent to: zinc

Master Morya

- 15. Imperil, which attracts danger, is the poison resulting from irritability. This poison, a quite substantial one, is deposited against the walls of the nerve channels and then spreads through the entire organism.

- If modern science would try to examine objectively the nerve channels, giving heed to the astral currents, it would encounter a strange decomposition of the astral substance during the passage of that substance through the nerve channels—this is a reaction to imperil. Only rest can help the nervous system to overcome the dangerous enemy that can call forth the most diverse irritations and painful contractions of the organism.

Agni Yoga 1929 http://www.agniyoga.org/

The Hidden Messages in water, Masaru Emoto

- **The crystals that are formed when water is shown positive words are simply beautiful. The response of water to words of love and gratitude, are positive words which give spirit to the water.**

- **Your gaze has a special energy of it's own, and while a gaze of good intentions will give courage , an evil gaze will take it away (change the crystal formed) As described by Plato later**

- **Whenever you sit in front of water and send out messages of love and gratitude , someone somewhere in the world is being filled with love and gratitude. You don't need to go anywhere. The water right in front of you is linked to all the water in the world. The water you are looking at will resonate with all water everywhere, and your message of love will reach all the people of the world.**

Emoto's Water Crystals

Spoken Words

Do it!

Water crystal of Fujiwara Dam before a Shinto prayer offering

Shinto Prayer

Water crystal of Fujiwara Dam after offering a prayer

Emoto's Water Crystals

Effects of Sound on water

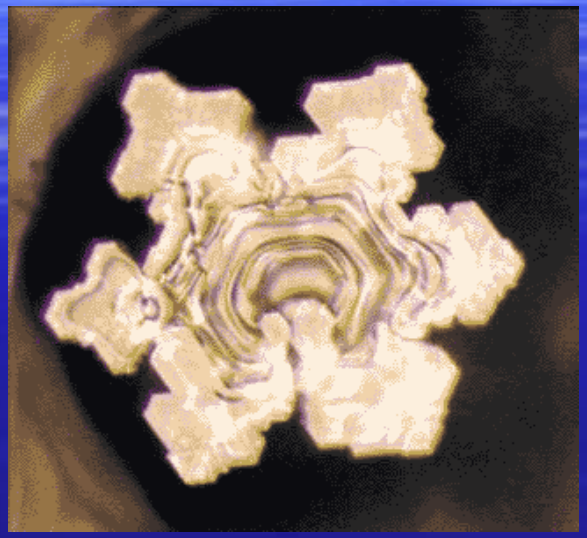

Mozart

Tchaikovsky: *Swan Lake*

The top crystal indicates a swan, while the rainbow colors of the bottom crystal seem to represent the light of hope, perhaps affected by the story of Swan Lake.

Tchaikovsky's Swan Lake

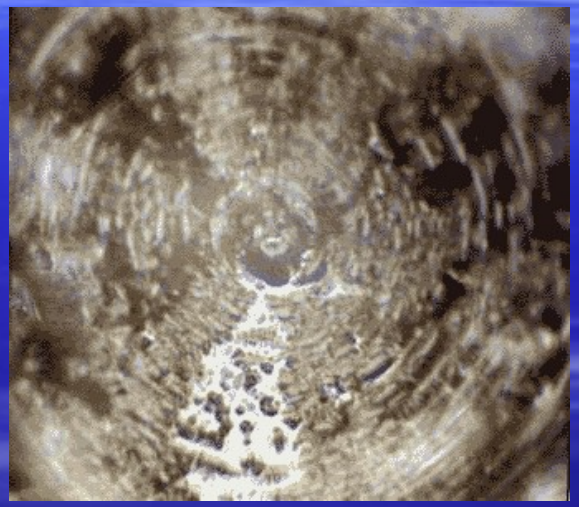

Heavy Metal music

Emoto's Water Crystals

Environmental Effects

Crystallised water moved beside a television

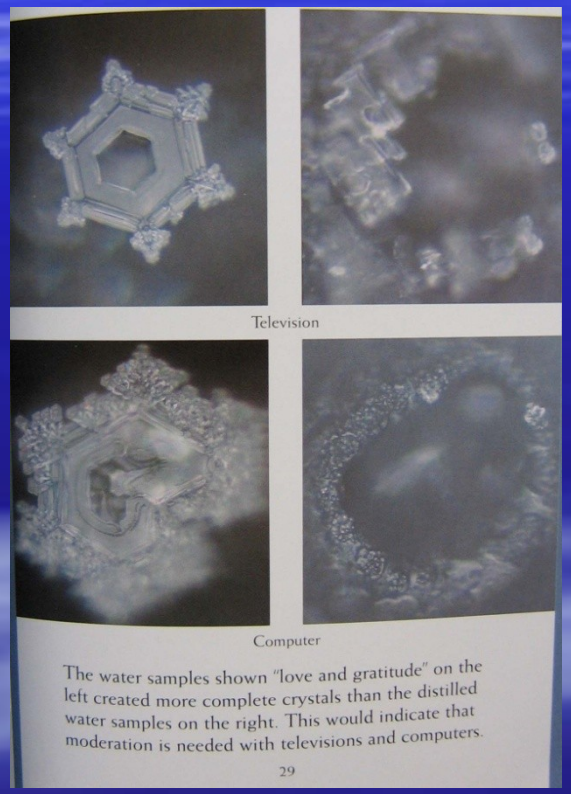

Crystallised water moved beside a computer

Crystallised water moved beside a mobile phone

Crystallised water moved beside a microwave oven

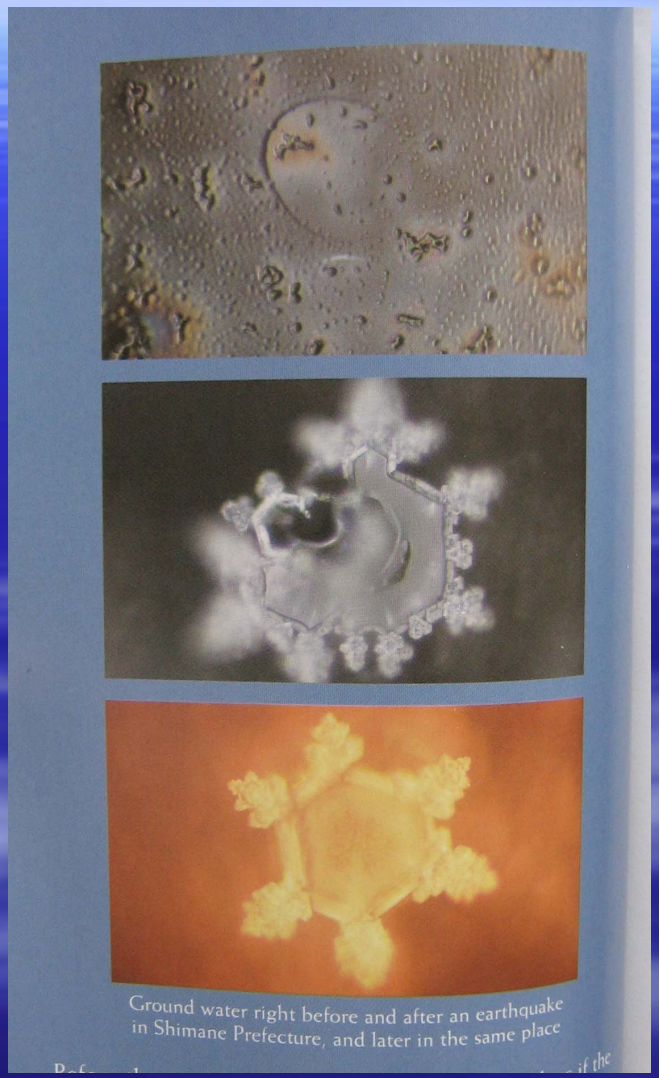

Ground water right before an earthquake in Shimane
And later water from the same place

Emoto's water crystals

Environmental Effects

TAP WATERS

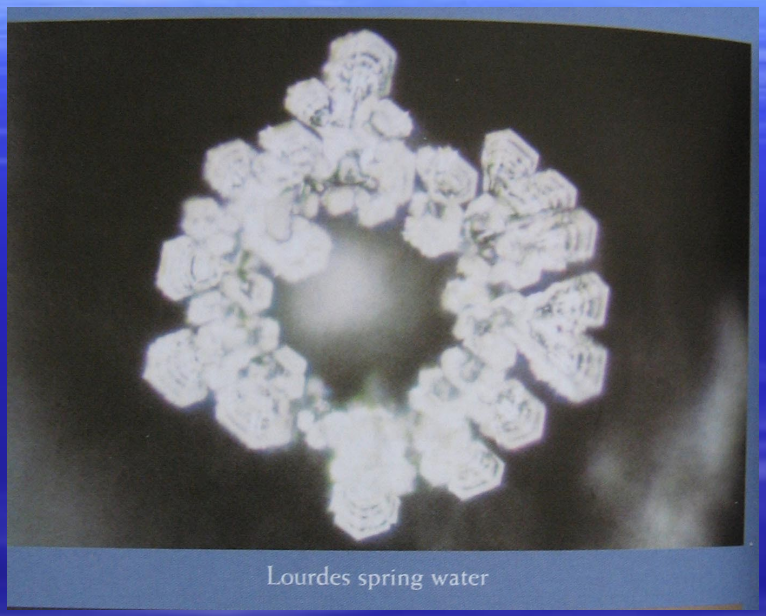

Spring water Lourdes
This crystal is similar to exposure to the written word Angel

This problem could easily be remedied by using ozone as it converts to oxygen And kills off the same harmful microbes
Ozone costs more than chlorine

The Hidden Messages in water, Masaru Emoto

- **When I measured the vibration of tap water in Tokyo one afternoon, I discovered a sharp increase in the values of vibrations produced by mercury, lead, aluminium and other substances harmful to the human body, tests were repeated with the same unusual results…. (unaware of a connection) the next day I read the paper to discover that the Iraq war had started the previous day, and the equivalent number of bombs were dropped than in the entire Vietnam war.**

- **The power of prayer. A Shinto priest stood by the side of a lake and recited an incantation from *'The Spirit of Words'* after a short conversation with the priest Masaru was called to the water by the camera crew, the water was clearing before their eyes they could even see foliage on the bottom that was previously hidden by cloudy water.**
- **Dr Rupert Sheldrake who is carrying out scientific studies into resonance theory, morphic field repetition, says events are capable of resonating the same way sound resonates.**

Chlorinated water

- Users of chlorinated water can reduce their exposure by
- aerating the tap water in a blender,
- by storing it in the refrigerator for 24 hours,
- or by running it through domestic water-treatment devices containing filtering systems such as activated carbon.
- Many European cities and some in the USA disinfect their domestic water supply by ozonation.

- **http://www.watertalk.org/reports/roweonh20.html**

Elements of Fire & Ether

- The elements of fire and ether

Plato Timaeus & Critias

- **P62: The eyes – 'For Plato sight involves 3 kinds of FIRE or LIGHT.**

- **1 Daylight diffused by the sun**

- **2 Visual current, the same in kind as daylight, which is contained IN the eye and is directed FROM IT towards an object**

- **3 FIRE or light which streams off the object seen, joins the visual ray, and produces effects which result in colour vision'**

Plato Timaeus & Critias

- **P43: 'Anything come to be must be CORPOREAL, visible & tangible: nothing can be visible without FIRE, nothing can be solid without EARTH. It is not possible to combine 2 things properly without a third to act as a bond to hold them together. (solids always need 2 connecting middle terms. So God placed WATER and AIR between FIRE & EARTH. He bound the world into a visible & tangible whole.'**

- **ETHER**
- **FIRE**
- **AIR**
- **WATER**
- **EARTH**

(Tibetan colours of the five elements)

The Etheric body

- Etheric force runs Keely’s motor

The Etheric body

- Etheric body: see **Astral Body**
- Astral Body Generally equivalent to the Sanskrit linga-sarira, the ethereal model-body, usually invisible to our physical eyes, upon which the physical body (sthula-sarira) is modeled. There are three ethereal forms or bodies which might properly be called astral bodies:
- 1) mayavi-rupa -- the illusory form-body of thought and substance projected by high initiates;
- 2) linga-sarira -- the model- or pattern-body, the second principle of the human constitution; and
- 3) kama-rupa -- the phantom or spook which is seen occasionally in the vicinity of graves or which occasionally materializes at séances.

Secret Doctrine:Glossary

KEELY MOTOR

- ***"If we live in a sympathetic field we become sympathetic, and a tendency from the abnormal to the normal presents itself by an evolution of a purely sympathetic flow towards its attractive centres. It is only under these conditions that differentiation (discord) can be broken up, and a pure equation [harmony, health, oneness, peace] established.“***
- **Keely**

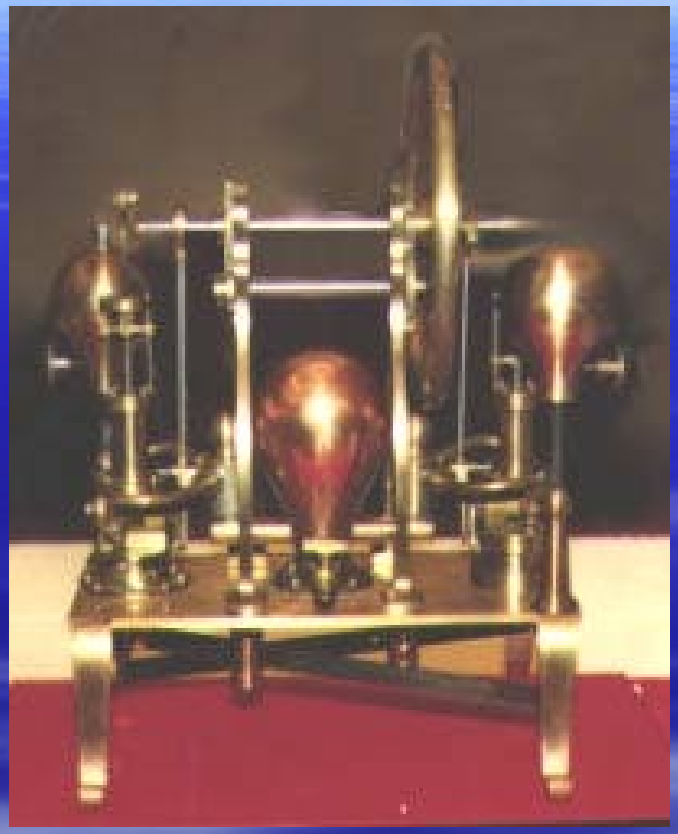

DYNASPHERE

"The science of the future will be based on Sympathetic Vibrations."
Rudolph Steiner, 1913

Achieving vibratory rotation has been and continues to be our chief scientific and engineering focus. In our replications of John Worrell Keely's devices (the dynaspheres) we have already achieved intermittent rotation (and considerable other etheric/psi effects) but not yet *continuous rotation*.
svpvril.com

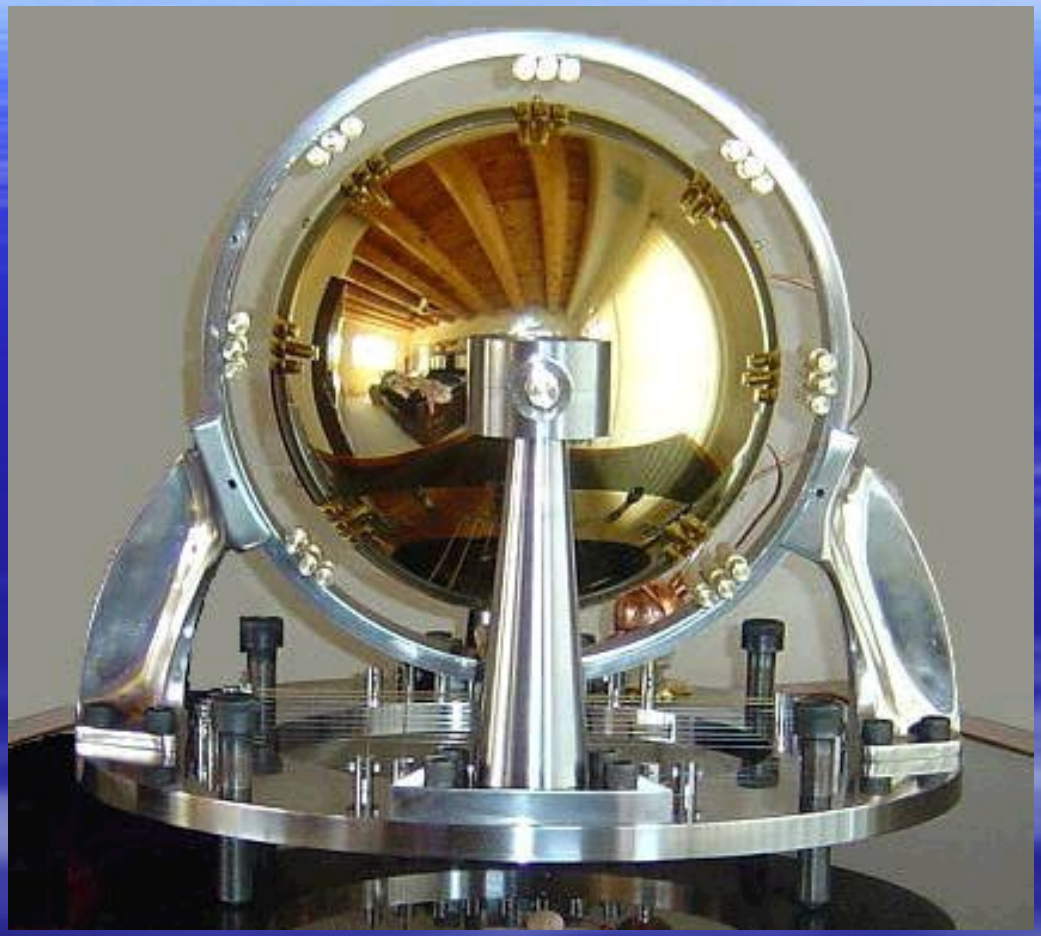

Atlin Dynasphere www.svpvril.com

The story of Atlin

- The rebuilding of a new Dynasphere (Atlin) is an amazing story
- Dale Pond was contacted by John Worrell Keely through medium, and intuitive Dawn Stranges.
- John Keely gave instructions to Dale in the manufacture of the new machine,
- The one surviving motor was stolen from the premises of the person who owned it.

The story of Atlin

- Dale Pond and various other engineers along with intuitive and medium Dawn Stranges gathered together to reconstruct a new musical dynasphere using old black and white photographs of some of the motors Keely had built.

- Late in the afternoon after working most of the day, Dawn announced to the team that John Keely was present and observing their actions.

- They began a detailed discussion with him related to the precise dimensions of the parts. He gave several different alloys of copper, brass, and bronze he stated:

Story of Atlin

"Those parts which you named 'hockey pucks' are actuators and each of them is composed of a three-part alloy of other elements especially designed so that the three metals in them can modify and re-transmit the sonic energies into higher energy ranges. This they do within the sphere, and they are compatible with the desired energies needed to cause the dynasphere to rotate."

Original Musical Dynasphere by Keely

"Time is short. There will be great changes on Earth and in humanity. Speaking honestly and without recrimination, the present scientific fields are so poorly understood by self-claiming scientists that it cannot be done without our help. People must realize that there is a great spiritual world here which is sincerely concerned. Together we can bring destiny into line."
Keely

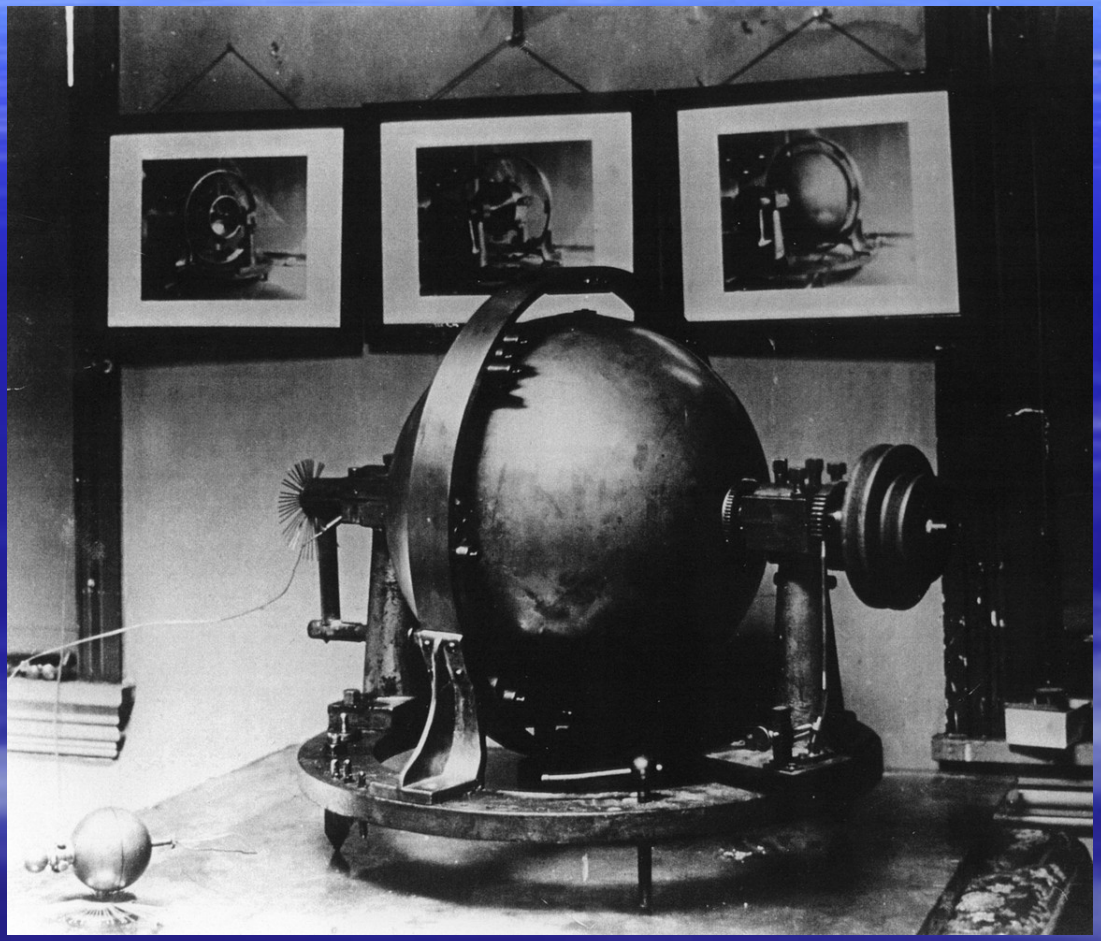

Tesla, Goethe, Einstein, Feynmann were reported to be present

The story of Atlin

- **Liberator**

  This device was used to precondition the "etheric vapor" before its introduction into the center of the sphere. It was made of a small copper sphere carefully mounted on a special base. "Etheric vapor" is a term Keely used for the mixture of hydrogen and oxygen he developed using acoustic impulses imploding or cavitating water. Liquid water, under vacuum, would dissociate into its constituent parts, thus forming a "vapor" having unusual properties.

The story of Atlin: The voice of a conscious motor

- **Atlin continued talking, not in audible tones but in mental energy outputs which were mentally perceived and interpreted by some persons. Over the course of time she let us know that she was a teacher and was not prepared to furnish power to do housework. Her destiny, she told us, was to help our civilization pull themselves out of the present quagmire of over-intellectualized science into a better understanding of what nature and humans were all about.**
- **She was to teach us how to get along with each other, and bring peace to individuals, neighbourhoods, nations, and the world.**

She came to teach us Divine Love.

These Neutral Centers are the controlling medium of transforming chaotic states into states of non-motion or harmony. They constitute a fulcrum about which relative motion acts : Neutral Centre Dynamics

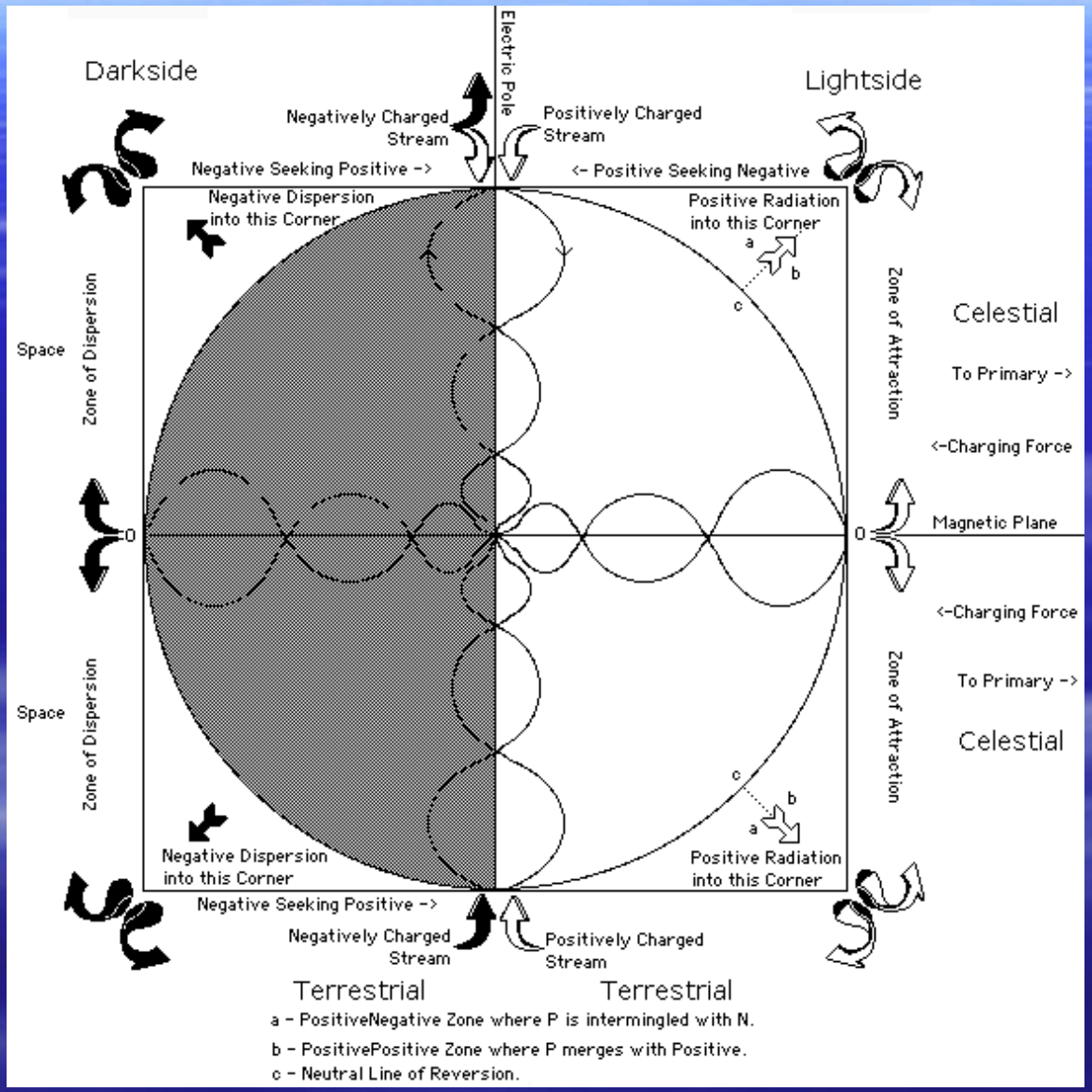

The Neutral Centre

9.37 - Day & Night - The Neutral Centers command or dominate all other states or conditions and are the fulcrum of the lever for creating change.

- **All matter is desirous of sympathetic association to a dominating center. This power over distant matter is called gravity and the form of gravity that exerts its activating influence at a distance Keely called gravism.**

  Indeed gravity is a sympathetic force. In fact it is this sympathetic condition inherent in matter.

  "Gravity is nothing more than a concordant attractive sympathetic stream flowing towards the neutral center of the earth. This force is inherent in all visible and invisible aggregated forms of matter, from the very birth of a planet, around whose center the molecules cluster by the sympathetic affinity which is thus induced." **Keely in The Snell Manuscript**

Blavatsky on Keely

- **INDEX REFERENCES**

- **Keely, John Ernst Worrell**
- **causes behind phenomena of I 566**
- **danger of discovery of I 563-4**
- **discovered cosmic force I xxxv, 253-4n, 563**
- **etheric force of I 555-66**
- **motor of I 148n, 555, 558n, 561-2**
- **natural born magician I 558**
- **on neutral center I 557**
- **only one able to use force I 253-4n, 558-9, 561-2**
- **on subdivisions of matter I 564-5**
- **table of vibrations I 562**
- **termed laya "etheric centers" I 148n**
- **unconscious occultist I 557, 565**
- **under class of dhyanis I 559**
- **"Keely's Secrets." *See* Bloomfield-Moore**

Blavatsky on Keely

- Bloomfield-Moore, Clara Jessup,(Keely's Benefactor)
- efforts of, in behalf of truth I 556
- Keely's commercial failure I 558n
- Keely's neutral center I 556-7
- ----- "Keely's Secrets" [*Theosophical Siftings*] potential of Keely's discoveries I 560-2
- ----- "Psychic Force & Etheric Force"
- Keely a benefactor I 559-60
- ----- "The New Philosophy"
- Keely on sound, color I 564-5

- Amounts to approx 13 pages of information.

The Coming Force Blavatsky

- **Its possibilities and impossibilities.**

Shall we say that Force is "moving matter," or "matter in motion," and a manifestation of energy; or that matter and force are the phenomenal differentiated aspects of the one primary, undifferentiated Cosmic Substance?

This query is made with regard to that Stanza which treats of Fohat and his "Seven brothers or *Sons*," in other words, of the *cause* and the *effects* of Cosmic Electricity, the latter called, in Occult parlance, *the seven primary* forces of Electricity, whose purely phenomenal, and hence *grossest* effects are alone cognizable by physicists on the cosmic and especially on the terrestrial plane

The Coming Force Blavatsky

- **These include, among other things, Sound, Light, Colour, etc., etc. Now what does physical Science tell us of these "Forces"? Sound, it says, is a *sensation* produced by the impact of atmospheric molecules on the *tympanum*, which, by setting up delicate tremors in the auditory apparatus, thus communicate themselves to the brain. Light is the *sensation* caused by the impact of inconceivably minute vibrations of ether on the *retina* of the eye.**

- **(Tympanum: inner ear)**

Blavatsky on Keely

- **Force is “moving matter,” or “matter in motion,” and a manifestation of energy;**

Blavatsky

- **For the *etheric* Force, discovered by the well-known John Worrell Keely, of Philadelphia, is no *hallucination***
- **The discovery during the last few years have been wonderful, almost miraculous, not in the sense of the *supernatural***
- **The reader is now asked to give a serious attention to that newly-discovered potency which the discoverer has named "Inter-Etheric Force and Forces."**
- **Mr. Keely, of Philadelphia, was, and still is, at the threshold of some of the greatest secrets of the Universe; of that chiefly on which is built the whole mystery of physical Forces, and the esoteric significance of the "Mundane Egg" symbolism.**

Keely's explanation in the Secret Doctrine

- **"Mr. Keely, in explanation of the working of his engine, says: 'In the conception of any machine heretofore constructed, the medium for inducing a neutral centre has never been found. If it had, the difficulties of perpetual-motion seekers would have ended, and this problem would have become an established and operating fact.**

Keely's explanation in the Secret Doctrine

- **I did not seek to attain perpetual motion; but a circuit is formed that actually has *a neutral centre*, which is in a condition to be vivified by my vibratory ether, and, while under operation by said substance, is really a machine that is virtually independent of the mass (or globe), and it is the wonderful velocity of the vibratory circuit which makes it so. Still, with all its perfection, it requires to be fed with the vibratory ether to make it an independent motor . . . ."**
- **"All structures require a foundation in strength according to the weight of the mass they have to carry, but the foundations of the universe rest on a vacuous point far more minute than a molecule; in fact, to express this truth properly, on an *inter-etheric point*, which requires an infinite mind to understand it. To look down into the depths of an etheric centre is precisely the same as it would be to search into the broad space of heaven's ether to find the end, with this difference: that one is the positive field, while the other is the negative field . . . ."**

Clara Bloomfield-Moore

- **Mrs. Bloomfield-Moore explains: "What Mr. Keely does admit is that, baffled in applying vibratory force to mechanics, upon his first and second lines of experimental research, he was obliged either to confess a *commercial* failure, or to try a third departure from his base or principle; seeking success through another channel."**
  . . And this "channel" on the *physical* plane.

- ***secondly*, because it was beyond his power to pass to others that which was *a capacity inherent in his special nature*. Hence the whole secret could not be made over permanently to anyone for practical purposes or use.**

Blavatsky

- **Individuals born with such a capacity are not *very rare.* That they are not heard of more frequently is due to the fact that they live and die, in almost every case, in utter ignorance of being possessed of *abnormal* powers at all. Mr. Keely possesses powers which are called "abnormal" just because they happen in our day to be as little known as blood circulation was before Harvey's time.**
- **And so does that *principle* in man which can control and guide etheric vibratory force. At any rate it exists in all those mortals whose *inner selves* are *primordially connected*, *by reason of their direct descent*, *with that group of Dhyan-Chohans* who are called "*the first-born of Ether.*"**

Blavatsky

- Nor would the writer for a moment think of contradicting Mrs. Bloomfield-Moore, when in her paper on “Psychic Force and Etheric Force,” she states that Mr. Keely, as a philosopher, “is great enough in soul, wise enough in mind, and sublime enough in courage to overcome all difficulties, and to stand at last before the world as the greatest discoverer and inventor in the world.”

Blavatsky

“Step by step, with a patient perseverance which some day the world will honour, this man of genius has made his researches, overcoming the colossal difficulties which again and again raised up in his path what seemed to be (to all but himself) insurmountable barriers to further progress:

but never has the world’s index finger so pointed to an hour when all is making ready for the advent of the new form of force that mankind is waiting for. Nature, always reluctant to yield her secrets, is listening to the demands made upon her by her master, necessity.

Blavatsky

- The coal mines of the world cannot long afford the increasing drain made upon them. Steam has reached its utmost limits of power, and does not fulfil the requirements of the age. It knows that its days are numbered. Electricity holds back, with bated breath, dependent upon the approach of her sister colleague. Air ships are riding at anchor, as it were, waiting for the force which is to make aerial navigation something more than a dream. As easily as men communicate with their offices from their homes by means of the telephone, so will the inhabitants of separate continents talk across the ocean. Imagination is palsied when seeking to foresee the grand results of this marvellous discovery, when once it is applied to art and mechanics. In taking the throne which it will force steam to abdicate, dynaspheric force will rule the world with a power so mighty in the interests of civilization, that no finite mind can conjecture the results.

Blavatsky

- ***Jupiter Pluvius*** **sent his symbol in drops of rain, of water composed, as is believed, of two "elements," which chemistry dissociates and recombines. The compound molecules are in its power, but their atoms still elude its grasp. Occultism sees in all these Forces and manifestations a ladder, the lower rungs of which belong to *exoteric* physics, and the higher are traced to a living, intelligent, invisible Power, which is, as a rule, the unconcerned, and exceptionally, the conscious cause of the sense-born phenomenon designated as this or another natural law.**

Blavatsky

- **We say and maintain that Sound, for one thing, is a tremendous Occult power; that it is a stupendous force, of which the electricity generated by a million of Niagara's could never counteract the smallest potentiality when directed with *occult knowledge*. Sound may be produced of such a nature that the pyramid of Cheops would be raised in the air, or that a dying man, nay, one at his last breath, would be revived and filled with new energy and vigour.**
- **For Sound generates, or rather attracts together, the elements that produce an *ozone.***
- **Ozone In chemistry, is an allotropic form of oxygen, having a triatomic instead of a diatomic molecule, and being more active chemically on account of the ease with which the molecule parts with one of its atoms. Blavatsky stated that sound generates an ozone such as cannot be made by chemistry.**
- **And if all this appears too *unscientific* to be even noticed, let Science explain to what mechanical and physical laws known to it, is due the recently produced phenomena of the so-called "Keely motor?" What is it that acts as the formidable generator of invisible but tremendous force?**

Blavatsky

- His inter-etheric point is the laya-point of the Occultists, which, however, does not require "an infinite mind to *understand* it," but only a specific intuition and ability to trace its hiding-place in this world of matter. Of course, the *laya centre* cannot be produced, but an *inter-etheric vacuum* can — as proved in the production of bell-sounds in space. Mr. Keely speaks as an unconscious Occultist,

- Mr. Keely illustrates his idea of "a neutral centre" in this way: —
- "We will imagine that, after an accumulation of a planet of any diameter, say, 20,000 miles, more or less, for the size has nothing to do with the problem; there should be a displacement of all the material, with the exception of a crust 5,000 miles thick, leaving an intervening void between this crust and a centre of the size of an ordinary billiard ball, it would then require a force as great to move this small central mass as it would to move the shell of 5,000 miles thickness. Moreover, this small central mass would carry the load of this crust for ever, keeping it equidistant; and there could be no opposing power, however great, that could bring them together. The imagination staggers in contemplating the immense load which bears upon this point of centre, where weight ceases. . . . This is what we understand by a neutral centre."

Donald Hatch Andrews: The Symphony of Life

- **Bells, Astral**; **Bell Sounds** A melodious silvery sound as of a bell, said to be produced by creating "an inter-etheric vacuum" (SD 1:557). Secret Doctrine.

- **This water molecule is much like a very tiny bell. As the water vapour in the air around you circulates, each of its water molecules sounds a very high-pitched tinkle of three tones..this tone is given out not as sound but as radiation in the infra-red part of the spectrum.**

H 2 0 the tiny bell

- http://www.vectoriano.com/molecule-h2o.html

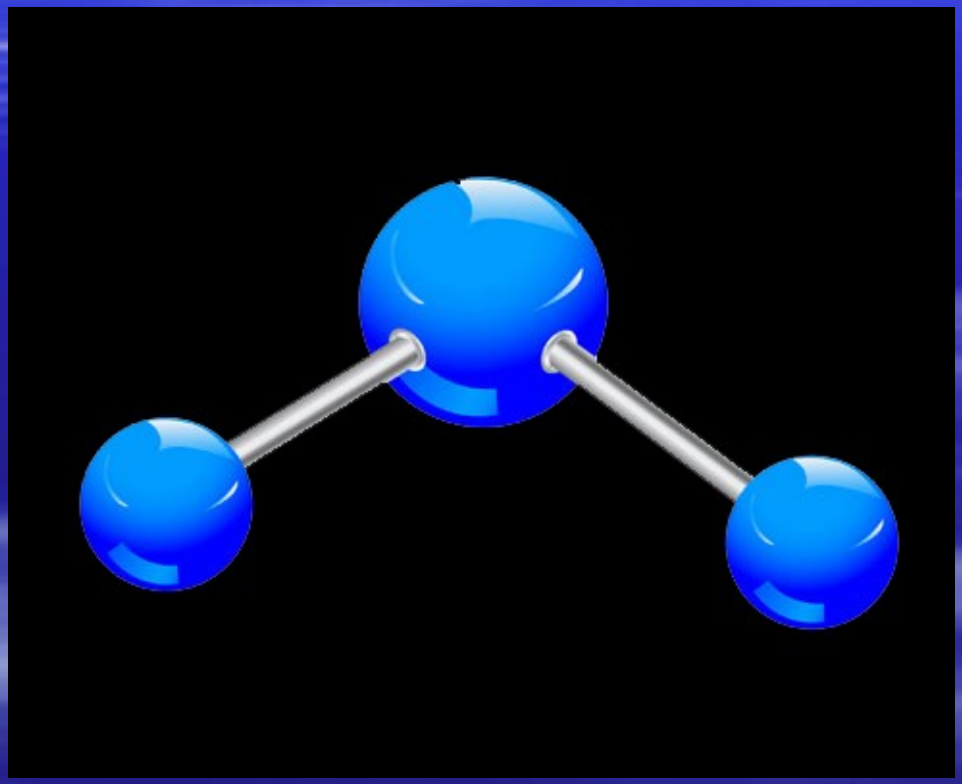

The correct picture of the water molecule is like this, this water molecule is much like a very tiny bell

Donald Hatch Andrews: The Symphony of Life

- Vibration of a String:
- One dimension **LENGTH**

- Vibration of Drum:
- Two dimensions **LENGTH and HEIGHT**

- Vibration of a Bell:
- Three dimensions **LENGTH**
- **BREADTH, AND HEIGHT**

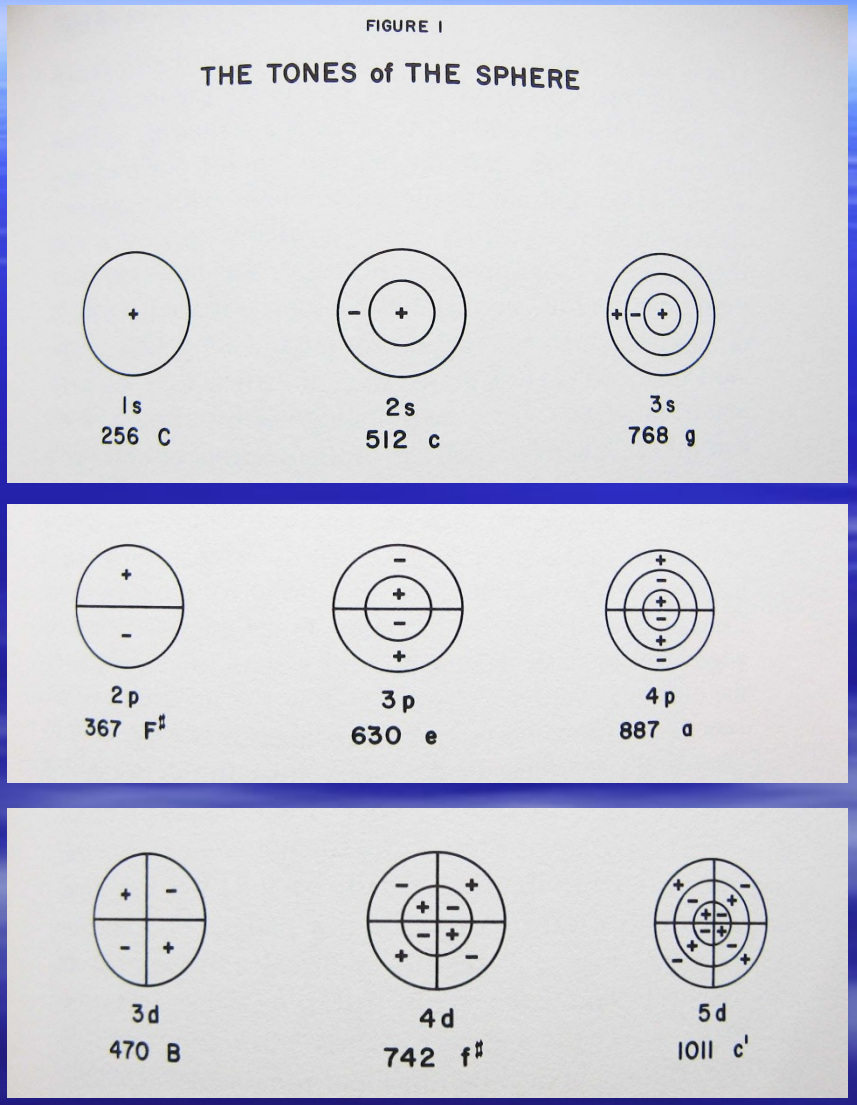

Donald Hatch Andrews

- **Music of the bell**

The atom is also a three-dimensional "bell," there is a close resemblance between the overtones of the spherical bell and the atom-bell.

- **In the spherical bell we have an analogous overtone that we call *Spha,* where the back half of the air in the sphere expands while the front half contracts.**
- **If the spherical bell has its fundamental at middle C, then this tone *spha*, will lie just above F-sharp.**
- **There is another overtone where there are 2 nodal surfaces at right angles to each other as shown in the illustration. This overtone occurs halfway between A-sharp and B if our fundamental tone lies in middle C we give this note the name *sphi.***

- ***Thus the scale for the music of the sphere is:***
- ***Do, re, mi, fa, spha, sol, la, sphi, ti, do***

Chart of Atomic to etheric by colour

States of Matter and Energy

"Matter is bound up energy and energy is liberated matter." Keely, 1893

Most Energetic — **Highest Frequency** — **Least Solid**

Subdivisions of Matter

	Keely	Ancient	Modern
9	Infinite Ninths	God	
8	Mind	Mind	
7	Compound Interetheric	Ether	Gluon?
6	Interetheric	Ether	Quarkian
5	Etheric	Ether	Photonic
4	Interatomic	Fire	Plasma
3	Atomic	Air	Gaseous
2	Intermolecular	Water	Liquid
1	Molecular	Earth	Solid

Least Energetic — **Lowest Frequency** — **Most Solid**

Colours from molecular to infinite Ninths (SVP Pond Institute)

Chart of Musical Colour Notes

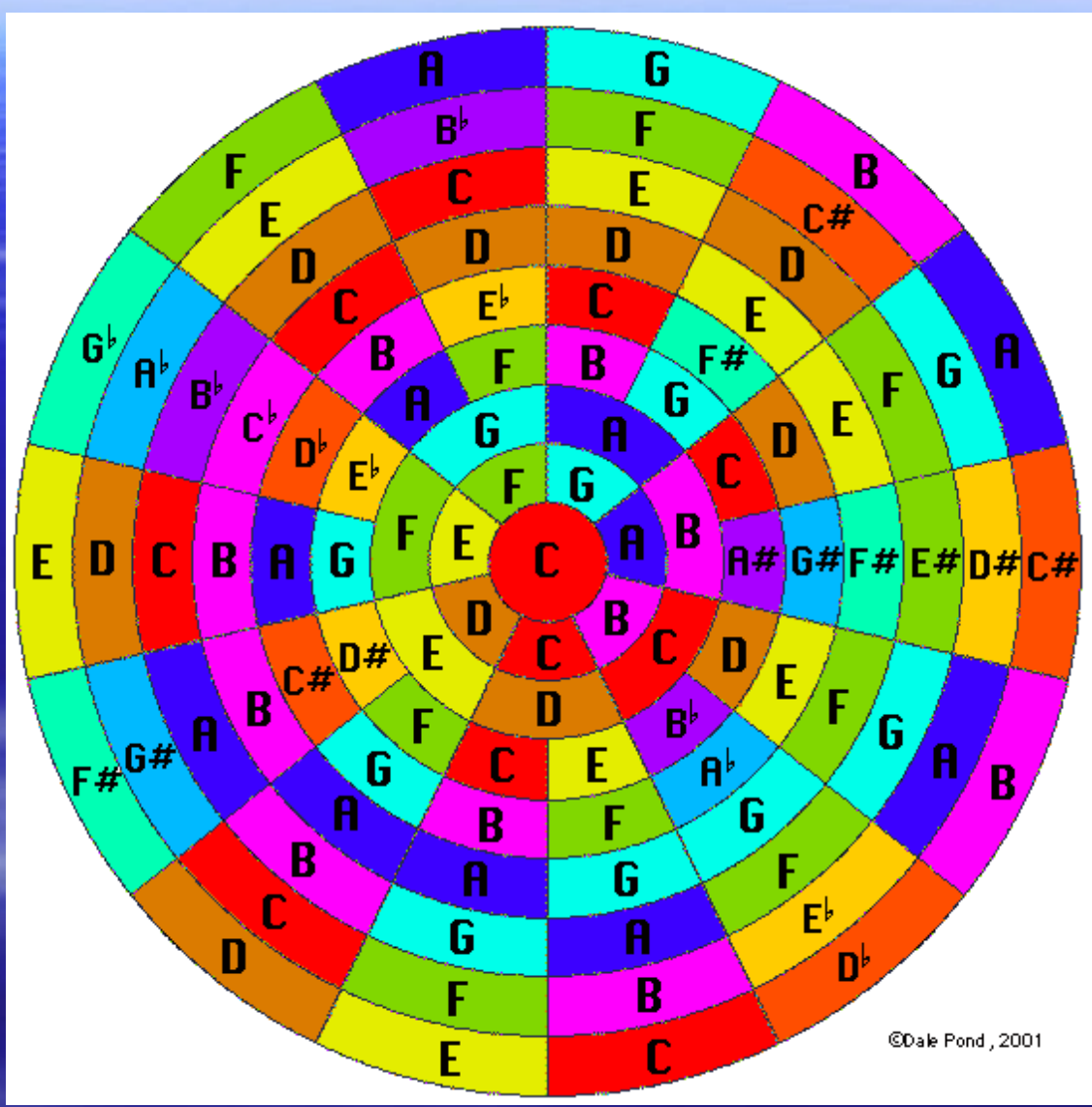

John Worrell Keely

- Symbols: Key Symbols chart

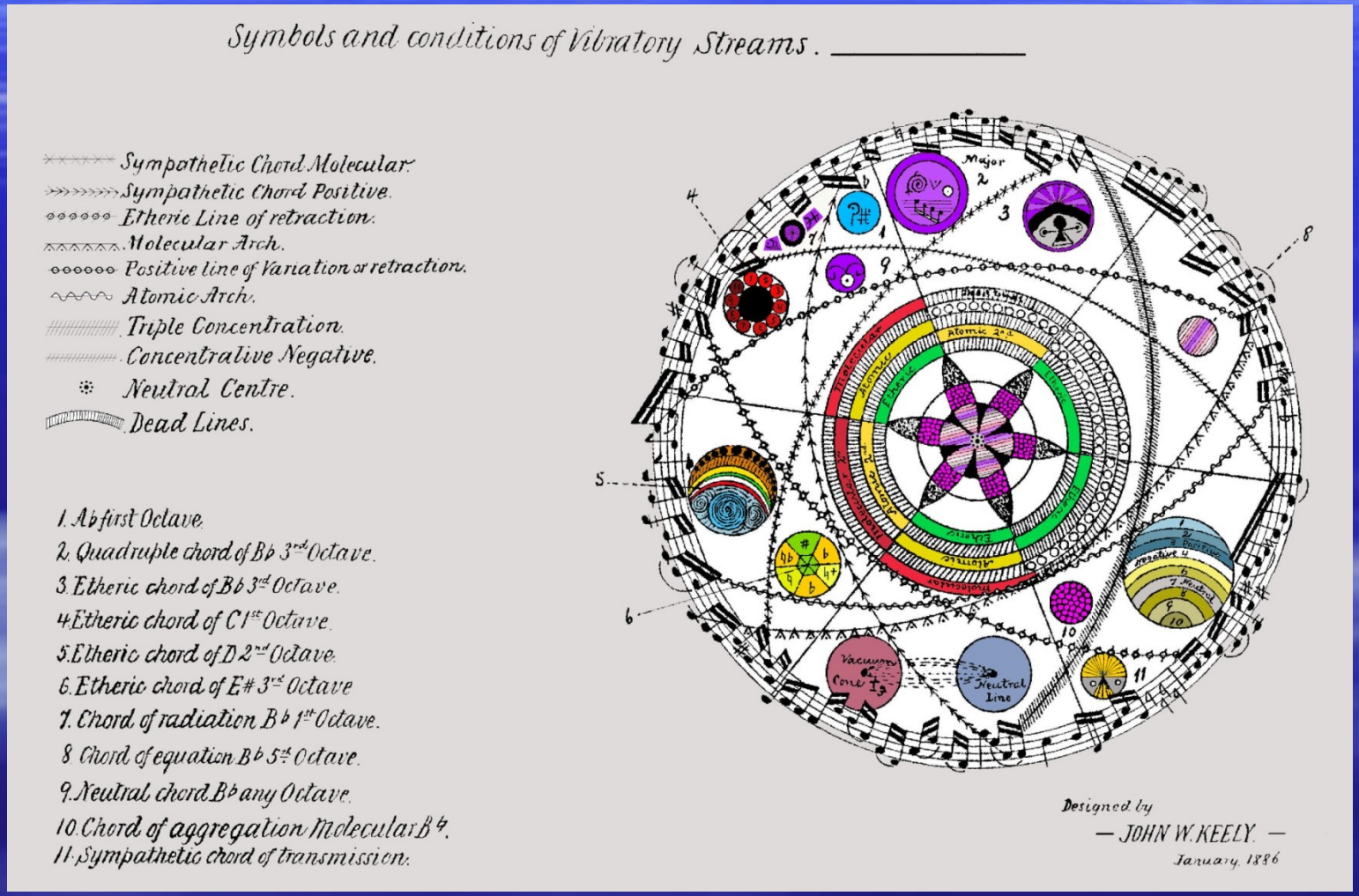

Chart of Brain as applied to vibratory

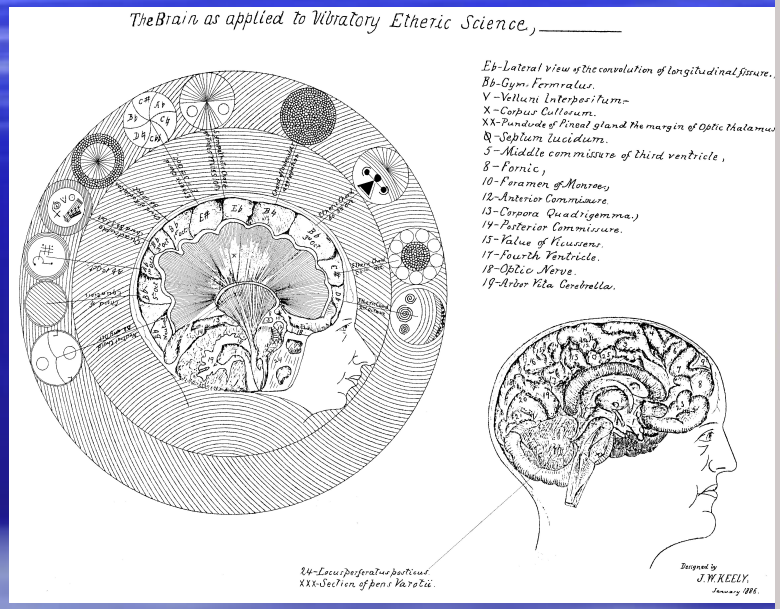

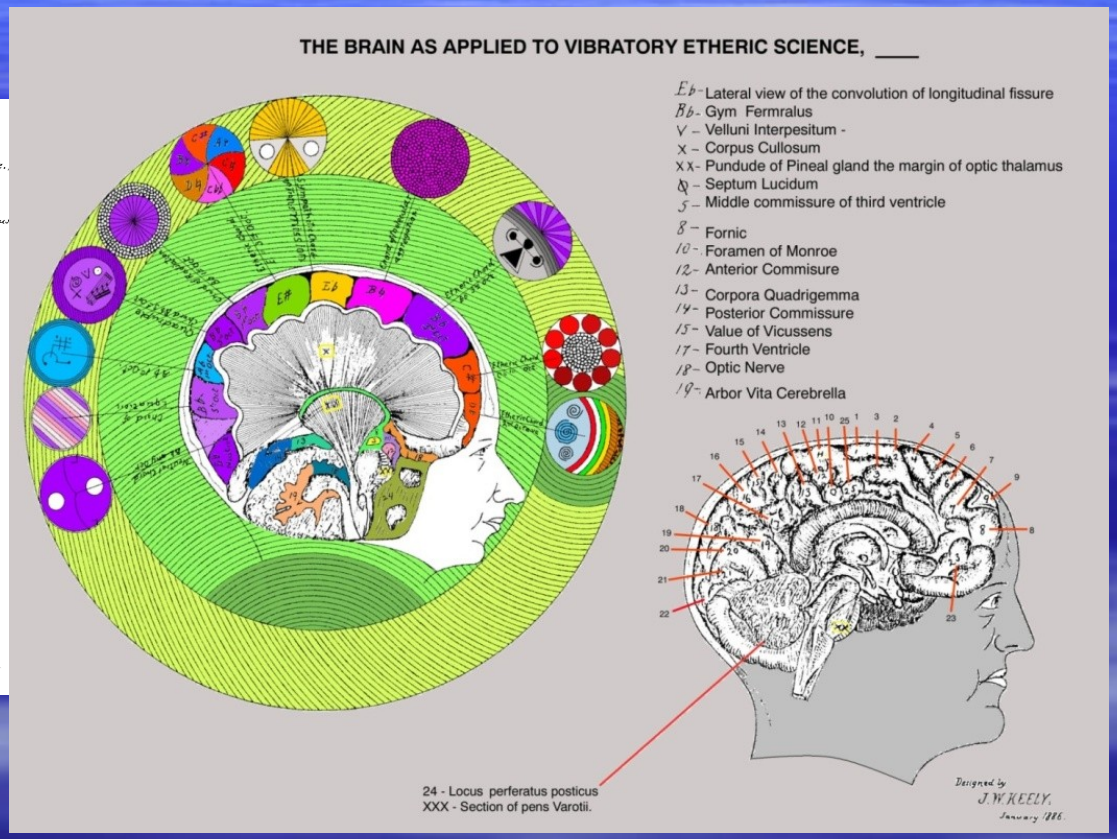

Chart of Sinuses

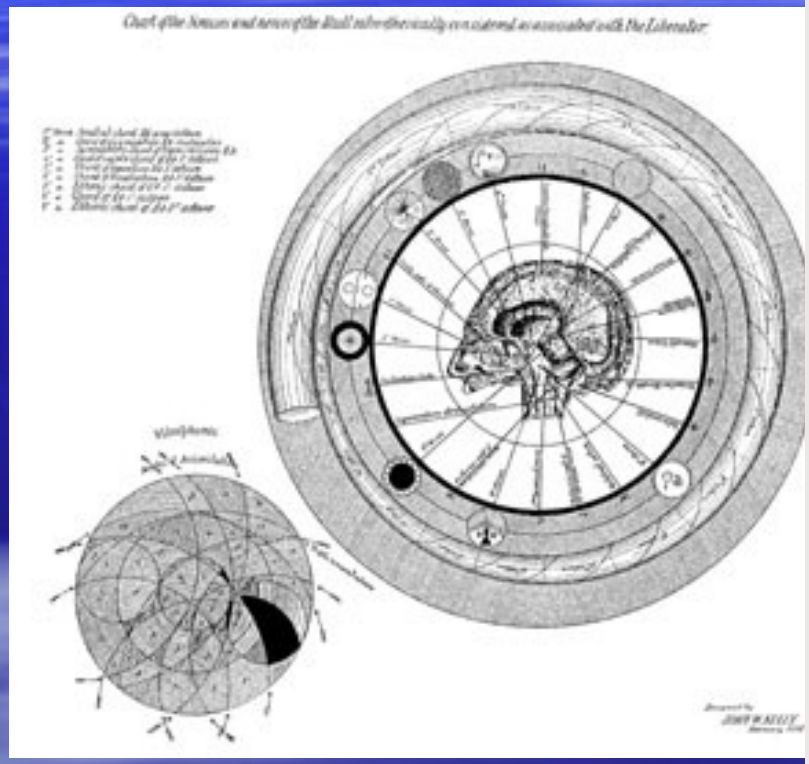

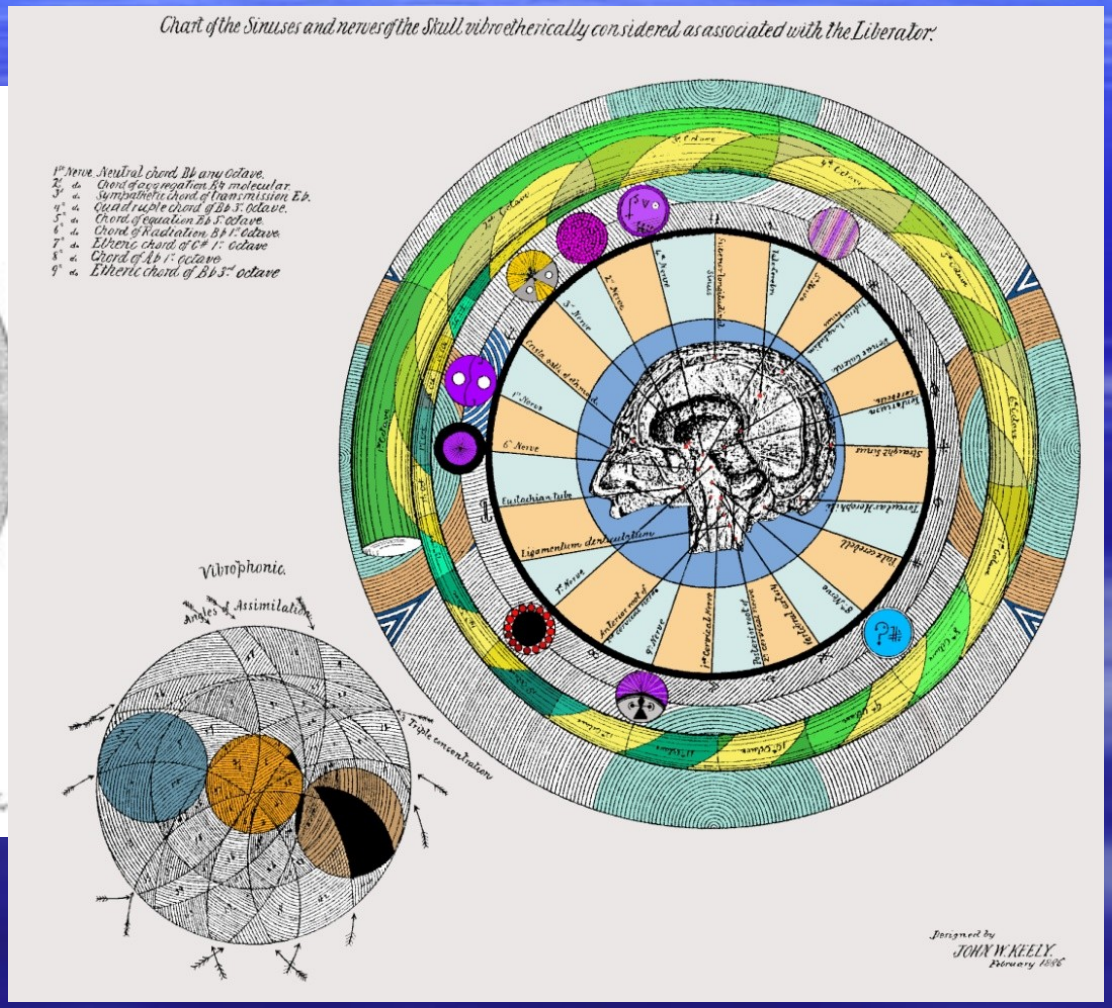

SECTIONS OF THE BRAIN

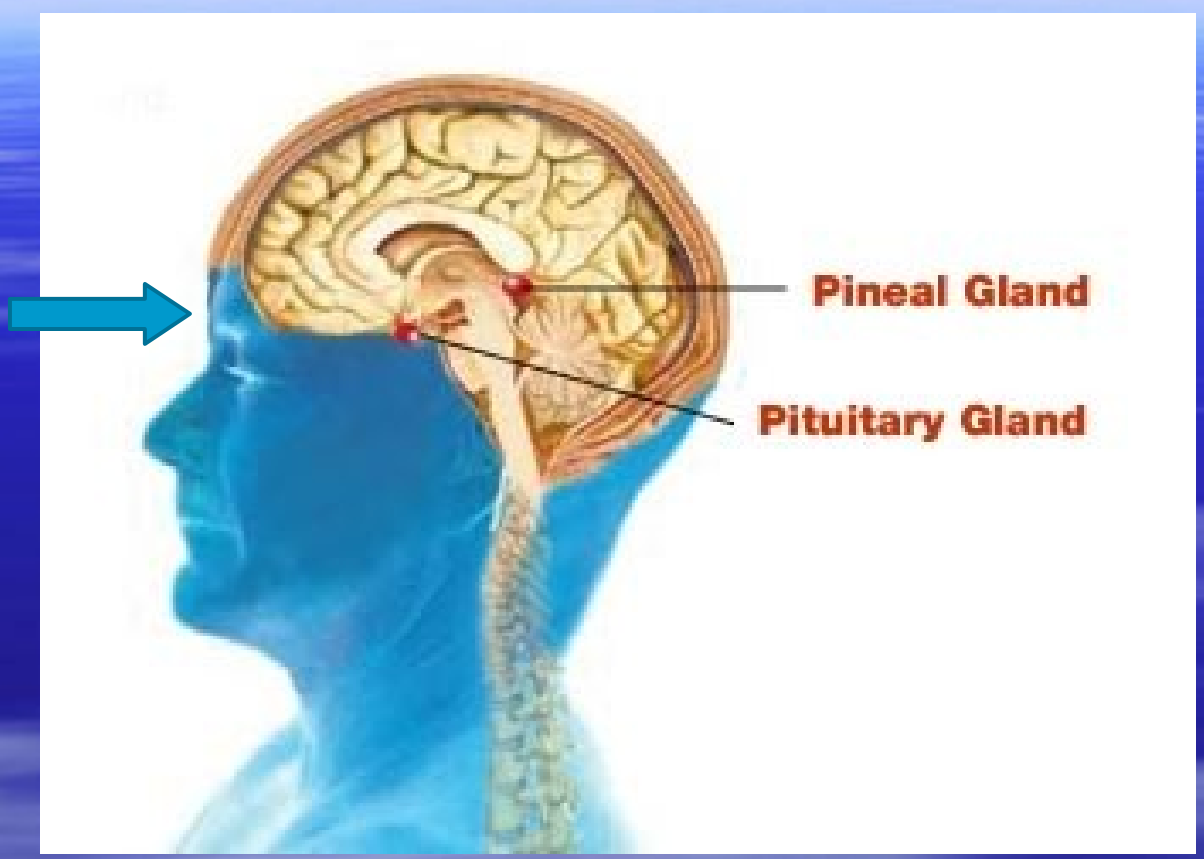

- **Pineal & Pituitary sections of the brain, the Pituitary is connected to the 6th Chakra. This gland is connected to second sight or psychic abilities.**
- **In the practice of Pranayama Yoga the breathing exercises using nasal techniques stimulate the Prana in the body and the Pituitary gland.**

Prana

- **Prana : In theosophy, the breath of life; the third principle in the ascending scale of the sevenfold human constitution. This life or Prana works on, in, and around us, pulsating unceasingly during the term of physical existence. Prana is "the radiating force or Energy of Atma -- as the Universal Life and the One Self.**

- **" Usually translated "life," but rather the psychoelectrical veil or psychoelectrical field manifesting in the individual as vitality.**

- **Prana or Life permeates the whole being of the objective Universe;**

- Secret Doctrine:Glossary

Chart of Brain section in a circle

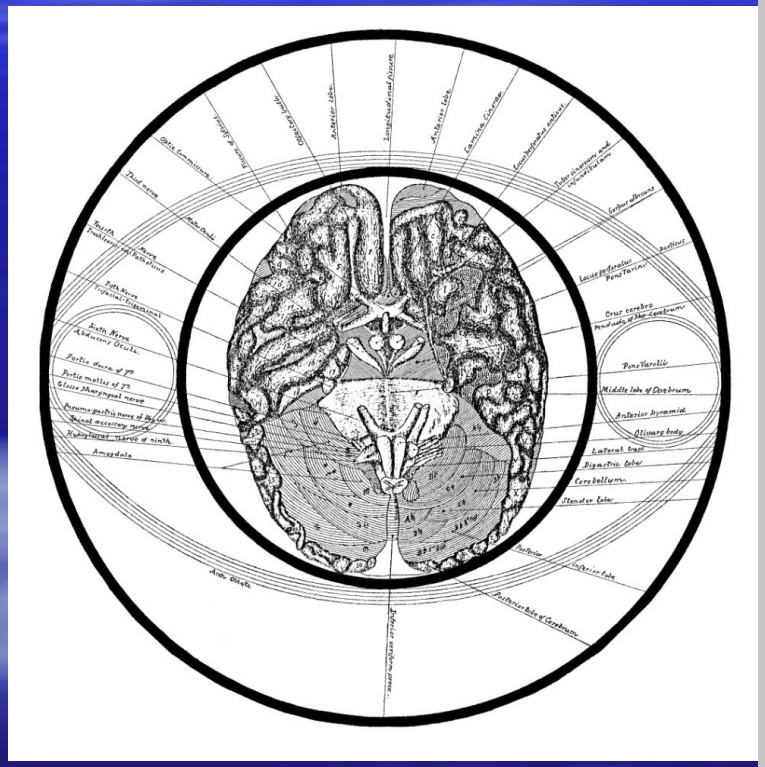

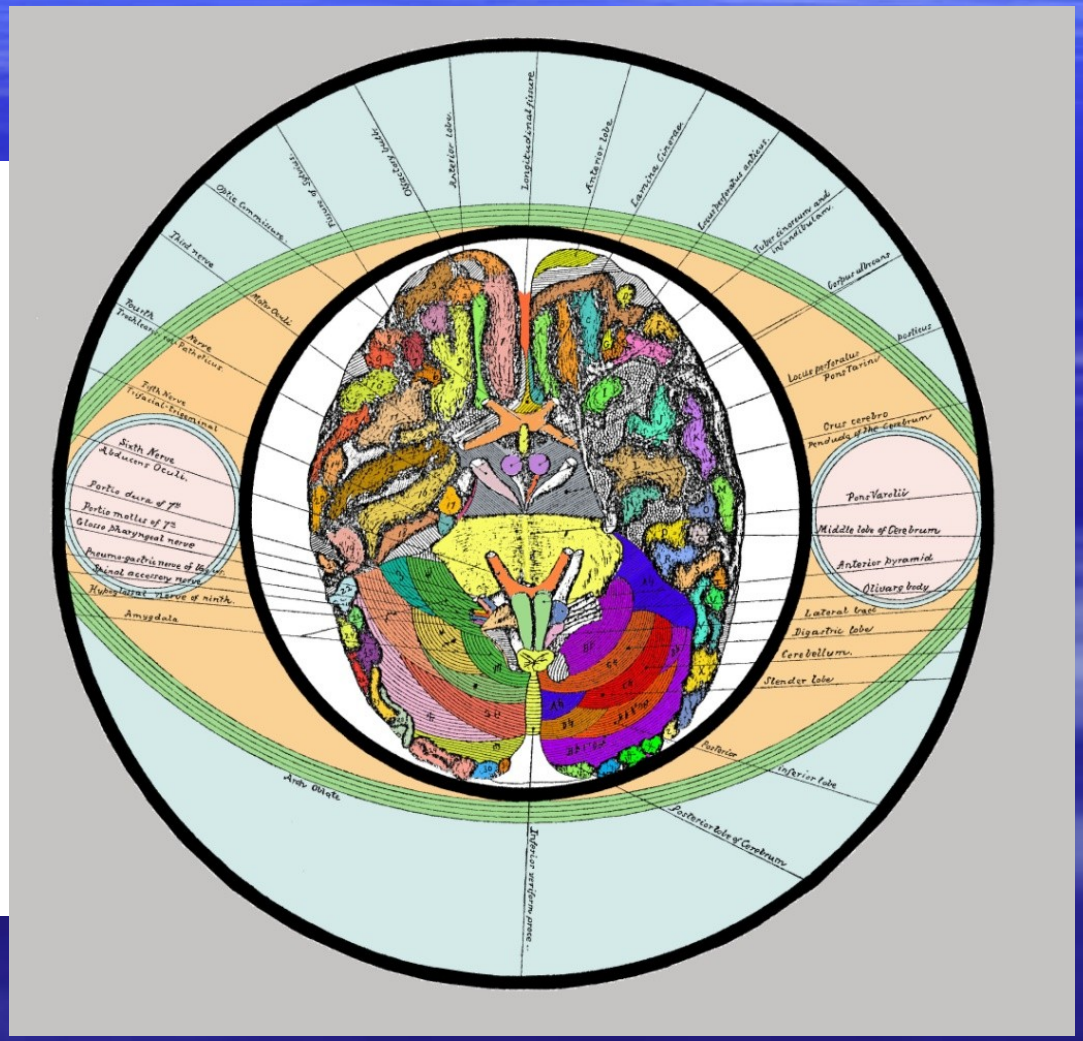

Molecular Chart

Chart Defining the Arrangement of the different Atoms and Corpuscles of Matter as contained in their respective Envelopes free of intensified Vibration

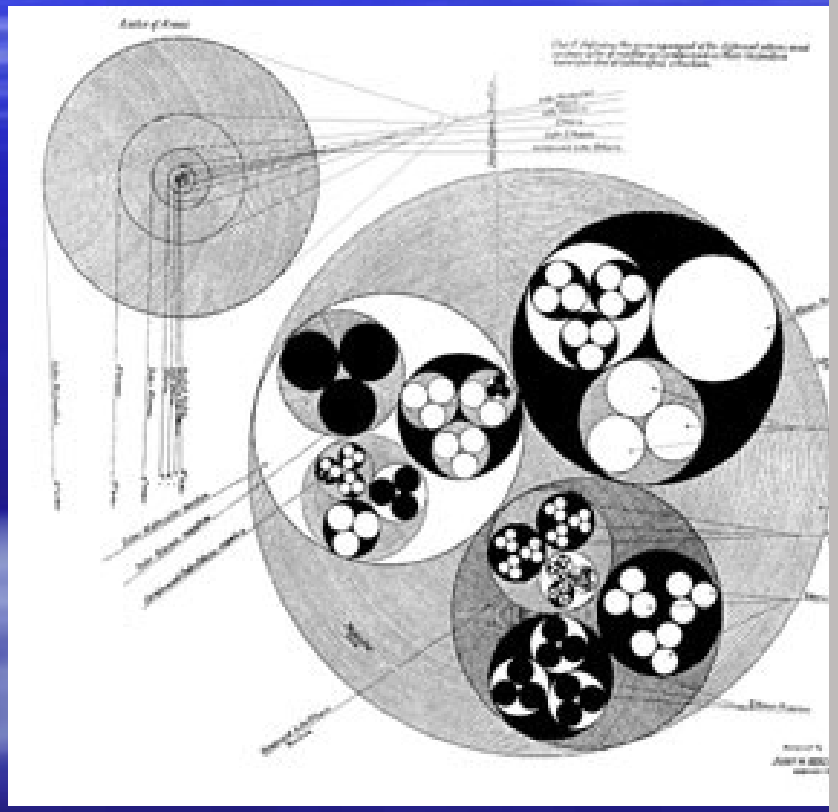

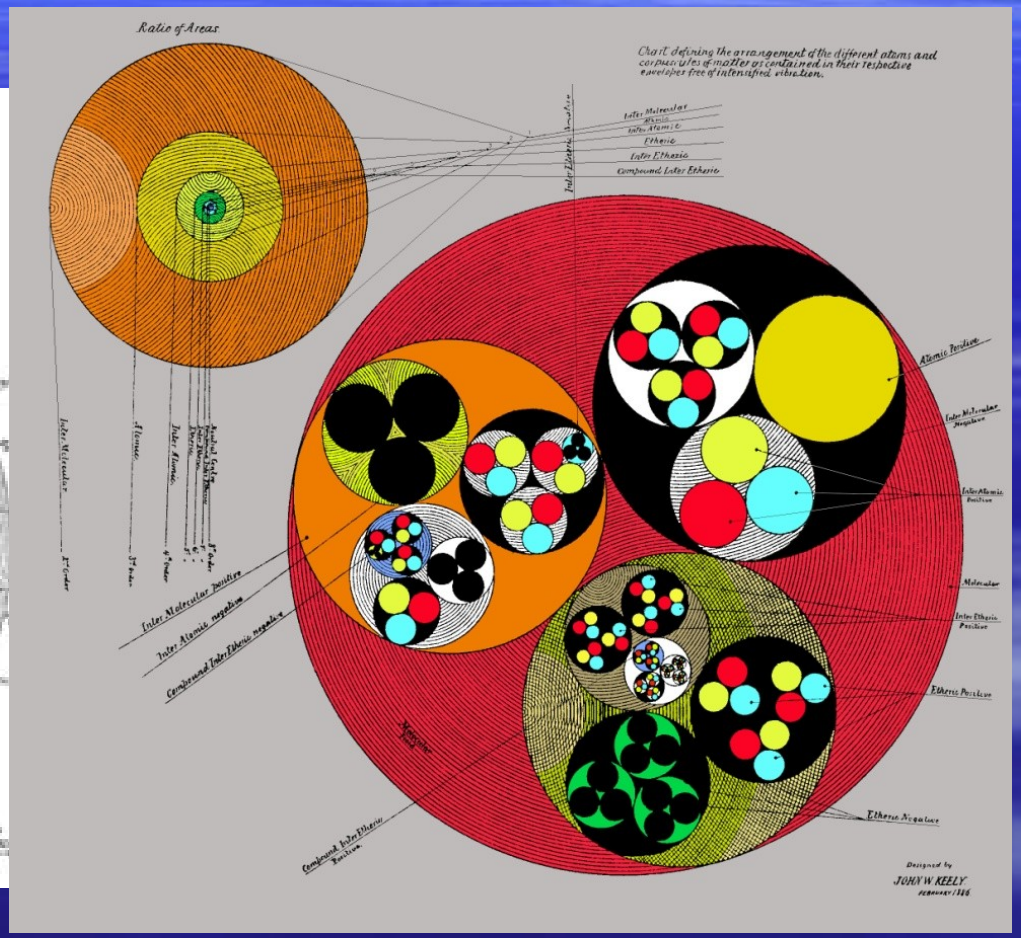

Chart of Key to Rotation

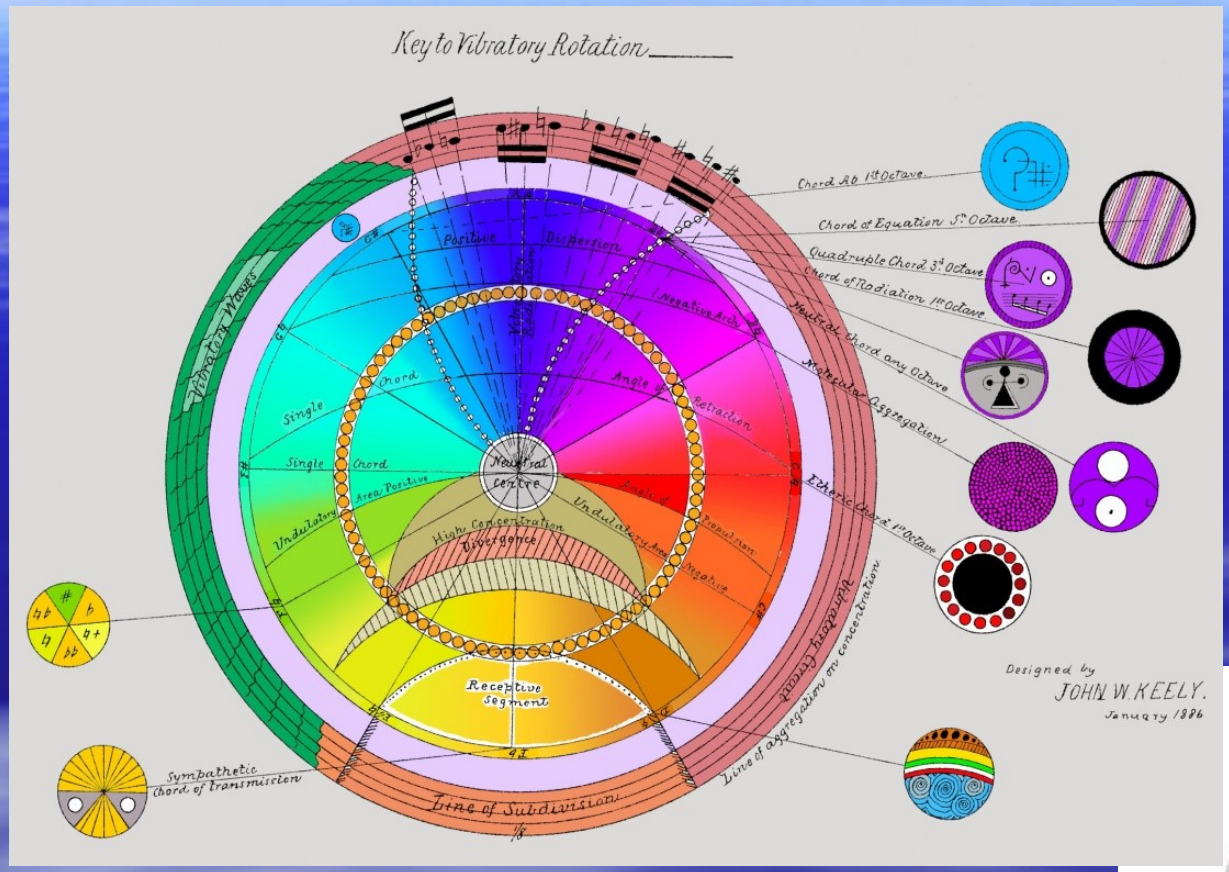

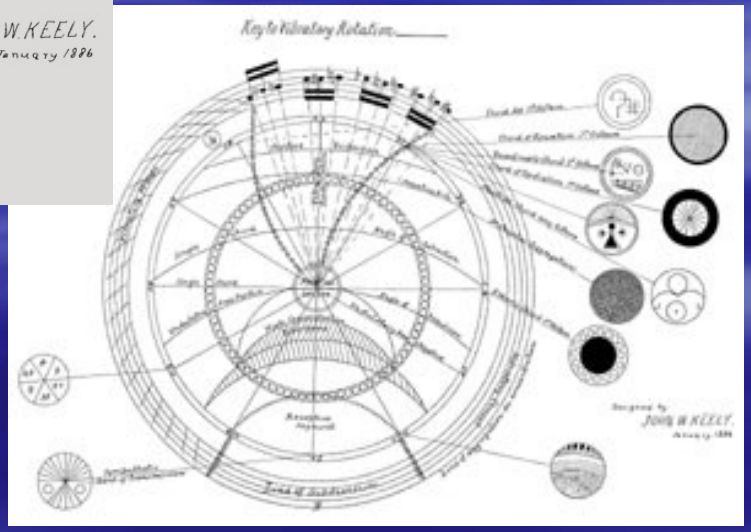

MUSICAL NOTES AND BRAIN SECTIONS

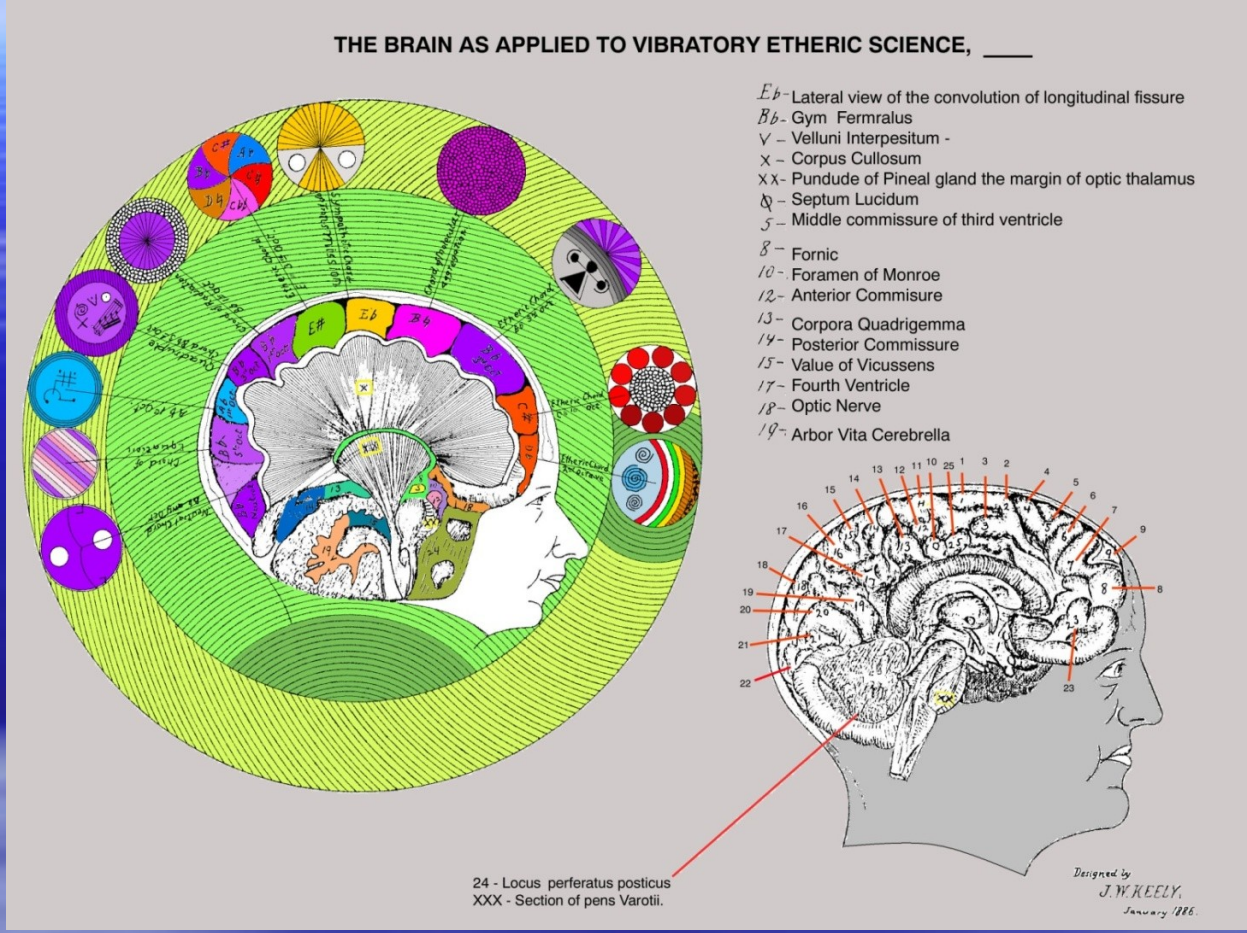

Keely brain chart vibratory science

The Pond Science Institute at La Junta in Colorado have brought John Worrell Keely's work to a new generation. The Pond Institute is the centre for Sympathetic vibratory physics. Blavatsky wrote a whole chapter on his work.

- **"What Mr. Keely says of *Sound and Colour* is also correct from the Occult stand-point. Hear him talk as though he were the nursling of the "Gods-revealers," and had gazed all his life into the depths of Father-Mother Aether." (Blavatsky)**
- *www.svpvril.com*

INDIVIDUAL KEY NOTE

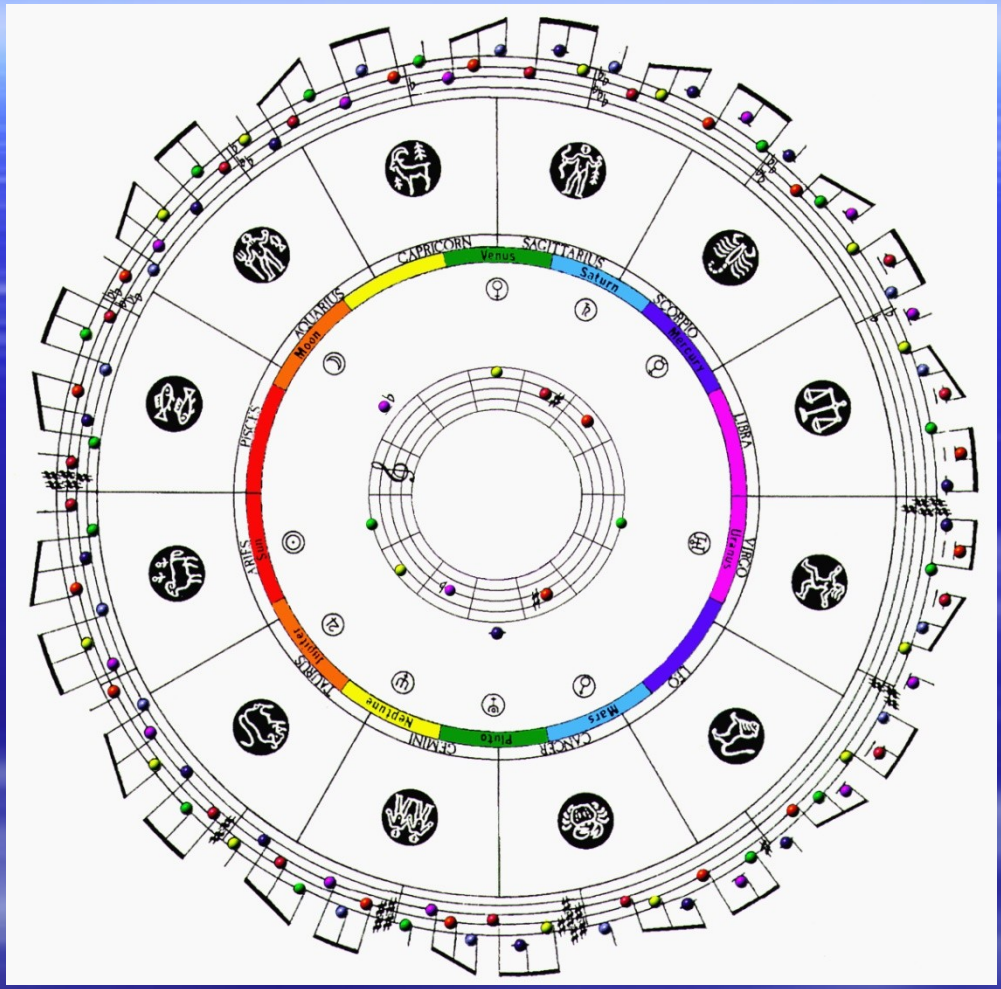

The individuals Keynote is determined from the astrological birth chart and is produced by the SVP centre. Atlin's keynote is B

Dynasphere's creating lay lines

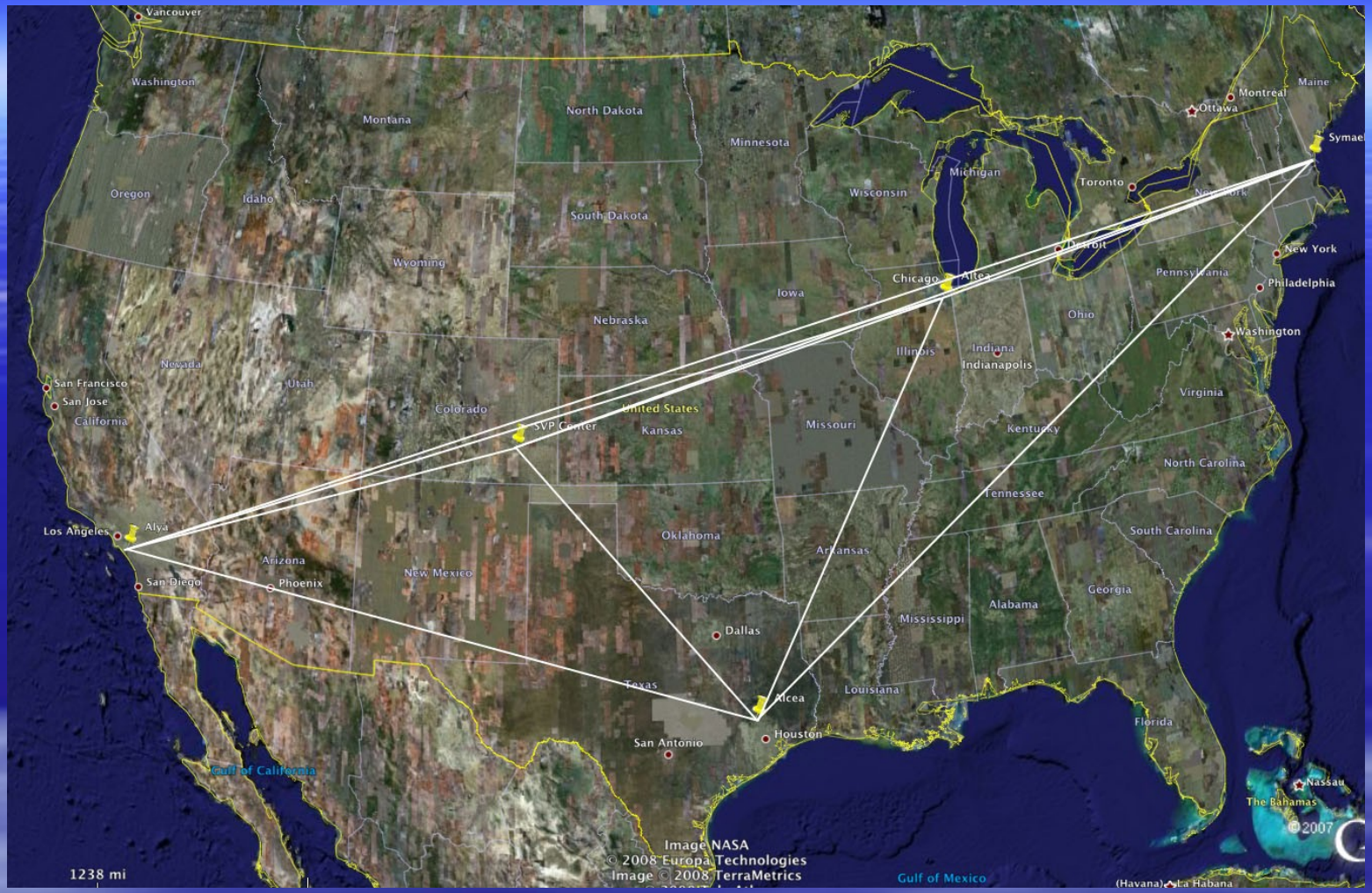

According to the Secret Doctrine the Himalayas are the heart chakra of the world. And is extended by a belt around the world. This belt is on the same latitude from the Himalayas to Houston where Alcea is based.

LOVE THE GREATEST HEALER

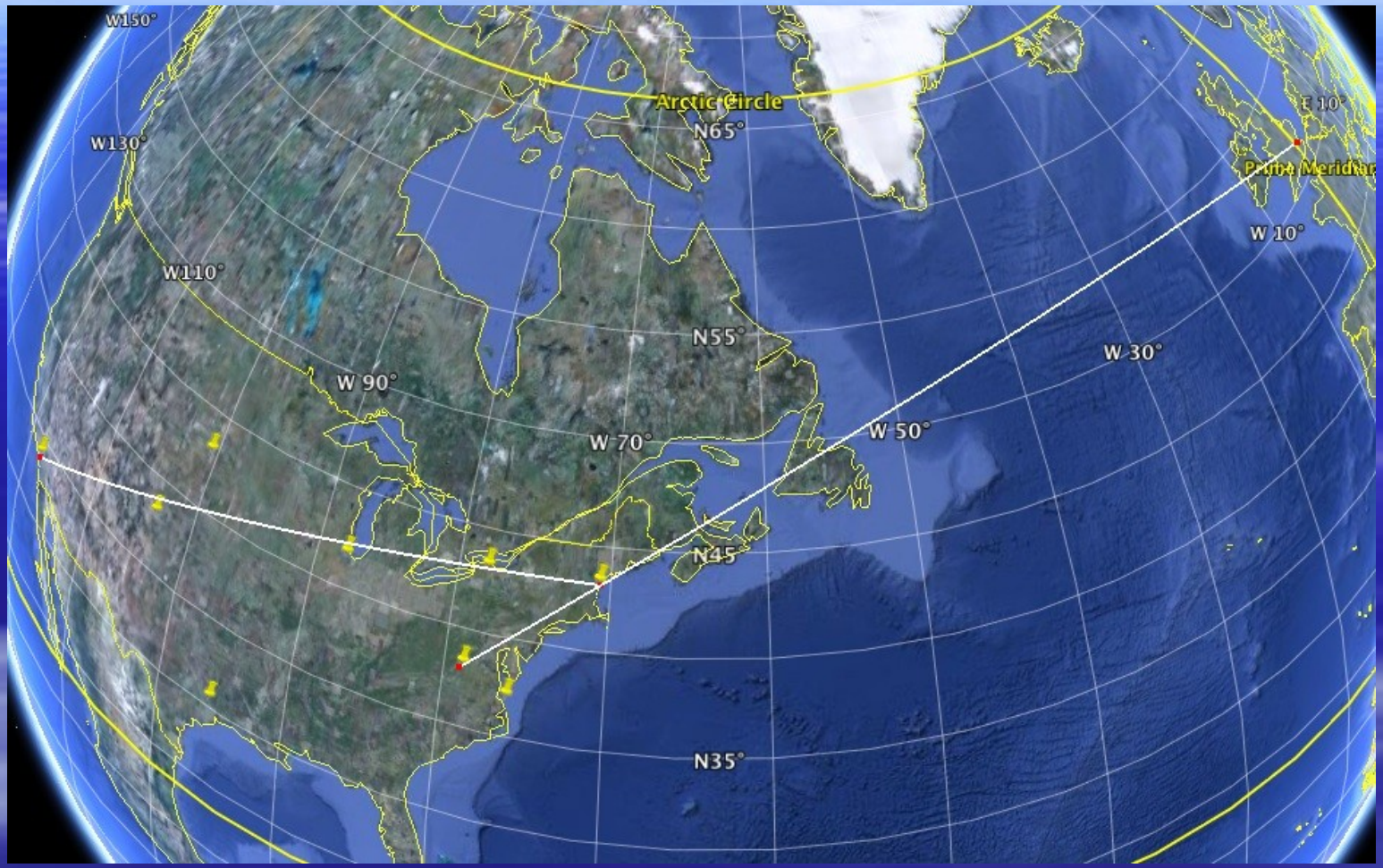

A number of dynaspheres are located around the globe, the next one will be in Africa

The Himavat, the Himalayas

- **Vol. 2, Page 400 THE SECRET DOCTRINE.**
- "*It flows around and animates her* (mother earth's) *body. Its one end issues from her head; it becomes foul at her feet* (the Southern Pole). *It gets purified* (on its return) *to her heart — which beats under the foot of the sacred Shambalah*, *which then* (in the beginnings) *was not yet born. For it is in the belt of man's dwelling* (the earth) *that lies concealed the life and health of all that lives and breathes. During the first and second* (races) *the belt was covered with the great waters.* (But) *the great mother travailed under the waves and a new land was joined to the first one which our wise men call the head-gear* (the cap). *She travailed harder for the third* (race) *and her waist and navel appeared above the water.*
- *It was the belt, the sacred Himavat,(Himalaya), which stretches around the world.** *She broke toward the setting sun from her neck downward* (to the south west), *into many lands and islands*, *but the eternal land* (the cap) *broke not asunder.*

Age of Aquarius

- **Aquarius is ruled by the element AIR,**

- Adepts of the 5 elements David Anrias
- **Has affinity with Libra and Gemini**

- **Sagittarius and Aries in sextile are complimentary although they are FIRE signs.**

- **In the first few centuries of Aquarius the majority will be interested in psychic phenomena, but approached by a more scientific point of view.**

The Age of Aquarius

The Master Koot Hoomi is the Adept of Air

Adepts of the 5 Elements

- **The master Koot Hoomi: Cycles of the Theosophical Society**
- **“ Action and reaction being equal and opposite, it was inevitable that the previous period of intense outer activity, propaganda and blind obedience to established authorities should be succeeded by a period of doubt and questioning of all authority…. Contraction must always follow expansion, in the occult world as in the material…. Krishnamurti’s teachings worked in harmony with the law of cycles in causing a contraction after a period of expansion which had already exhausted the force of the initial impulse of the last century.**
- **From this it is evident that even the activities animated by the fire element, hitherto magnificently inspired by Dr Besant, could not continue indefinitely, and that the forces associated with the sign Leo must take on a subtler quality, leading to a new *intuitive* power to contact the Masters *individually* rather than at second hand.**
- Adepts of the five elements: Adepts of fire, p63 David Anrias 1933

Master Morya Adept of Fire

- Astrochemistry makes it possible to determine the best combinations of astrochemical rays for each organism.
- Astrology is nothing but formulas of astrochemistry. He who enters a house permeated with nicotine will carry away with him poisonous particles. Similarly, once someone has experienced directly the action of certain astrochemical rays, he will always respond to this particular combination.

- Agni Yoga 1929 http://www.agniyoga.org/

Master Morya

- The much-discussed sunspots intensify chemical influences. People keep repeating about unrest in the world during periods of sunspots, and even those with little knowledge can draw correct conclusions. But if we call to mind the harmful chemical reactions, it is not difficult to understand the saturation of space by the most active compounds, such as oxides and metalloids. How can one lightmindedly deny the evolutionary power of matter when from the Inexhaustible Reservoir, rays of immeasurable intensity pour over our heads?

- Agni Yoga 1929 http://www.agniyoga.org/

Master Morya

- Those with especially sensitive organisms can testify that during the culminating period of the sunspots the rays of the luminary, because of their qualities, become unbearable for them. Also, during the passing of the great meteors, one may feel a quivering of the nervous system. Until now, people have been unable to recognize their place in this gigantic laboratory. That single recognition alone would arm the human organism, and, in place of worried observation of the tremors of the seismograph, would direct the search into the Limitless Heights—as material as tomorrow's repast, as majestic as the numberless stars.

- Agni Yoga 1929 http://www.agniyoga.org/

Master Morya

- **19. Of all creative energies, thought remains supreme. What may be the crystal of this energy? Some believe that precise knowledge is the crown of thought; but it would be more correct to say that legend is the crown of thought. In legend is expressed the essence of creative energy. In a legend's short formula are defined both hope and achievement. It is a mistake to believe that legends are fantasies of antiquity. The impartial mind will discern the legend spun through all the days of the Universe. Each great achievement of a nation, each great leader, each important discovery, each cataclysm, each *podvig* *is veiled in winged legend. Therefore, let us not disdain the legends of truth;***

- *Agni Yoga 1929* *podvig* 1 A Russian word, meaning a selfless, heroic act.

Adepts of the Five Elements
David Anrias

- **Adepts of Ether**

I was impressed to notice that this etheric development of the future will entail a study of the ductless glands and their close relationship with the four subdivisions of the ether, for it will have become generally recognised that man's spiritual as well as his physical possibilities depend very largely on the secretions of these organs.

- **As Uranus for the majority will have greater affinity with the pineal gland than the Sun, the whole procedure of co-relating the ductless glands of the physical etheric body will start with the head, and descend into the subconscious by means of the fourth or Uranian subdivision of the ether. When the subconscious mind has yielded up all its secrets and is entirely under the control of the will, the life-force will become quickened and ascend through the third or Jupiterian subdivision, and the future initiate will comprehend the mystery of the dual sign Gemini and acquire the power to control the cerebro-spinal system under the direction of his Master.**

SVP Wiki page

SVPwiki : Part 25 - Keelys Wonderful Charts of Vibratory Etheric Science - Windows Internet Explorer

.com/svpwiki/tiki-index.php?page=Part+25+-+Keelys+Wonderful+Charts+of+Vibratory+Etheric+Science

File Edit View Favorites Tools Help

Favorites | storage largs - Google Maps | Activate my Top-up | Suggested Sites | Web Slice Gallery

SVPwiki : Part 25 - Keelys Wonderful Charts of Vibrato...

Page Safety Tools

SVPWiki A Rosetta Stone for the New Sciences

User: Password: Login I forgot my password

Recently visited pages

1. Part 25 - Keelys Wonderful Charts of Vibratory Etheric Science
2. Caroline Doyle-McManus
3. SVPwiki Home Page

Search Wiki PageName

Go

Part 25 - Keelys Wonderful Charts of Vibratory Etheric Science

Return to **Table of Contents**

A significant part of Keely's legacy are his beautiful Charts of Vibratory Etheric Science (Sympathetic Vibratory Physics). These are being made available in Black and White and a new colored version keyed to colors of music notes. The Black and White charts are cleaned up hi-res and these were then colored.

Here is the history of these charts as far as my work with them. The coloring (according to music note or sound colors) is being done by Caroline Doyle-McManus.

Keely's Acoustic Charts

(in order as given in Universal Laws Never Before Revealed: Keely's Secrets

01 - Symbols and Conditions of Vibratory Streams

- This Chart of Symbols and Conditions of Vibratory Streams is the key to reading the other charts. It defines the chords Keely used and some relationships.

Internet 100%

start | BLAVATSKY KEELY [C... | Microsoft PowerPoint ... | SVPwiki : Part 25 - Ke... | EN | 17:05

- SVPwiki : Part 25 - Keelys Wonderful Charts of Vibratory Etheric Science

Sympathetic Vibratory Physics

www.svpvril.com

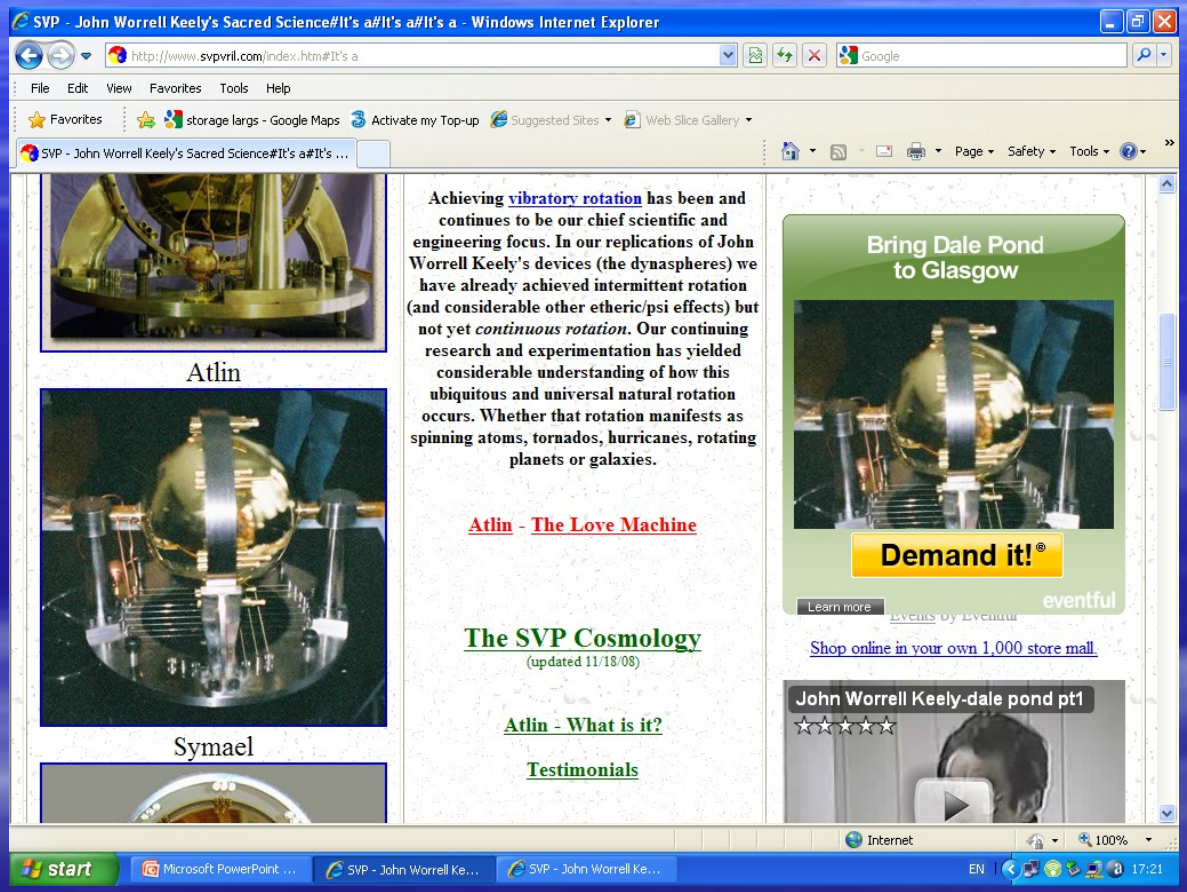

- http://www.svpvril.com/index.htm#It's a

"The science of the future will be based on Sympathetic Vibrations."
Rudolph Steiner, 1913

Blavatsky, Keely & Dale Pond

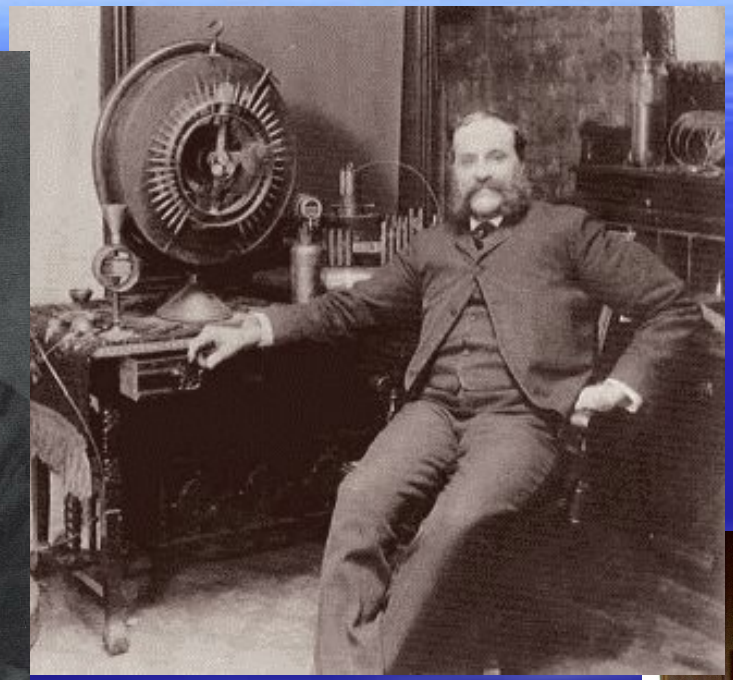

http://www.svpvril.com/

http://www.theosociety.org/pasadena/sd/sd-hp.htm
(Secret Doctrine)

http://www.theosociety.org/pasadena/etgloss/pram-prj.htm

Encyclopaedia glossary

John Ernst Worrel Keely Genius or Fraud?

By Hans von Lieven

Index

A bit about myself....2
Introduction....3
Keely's Difficulty....4
Keely's Machines....5
Keely's Secret....7
Translating Keely....8
Unlimited Energy....9
Following the Footsteps of Keely....10
The Acoustic Turbine....11
The young Keely....13
The intervening Years....15
Manometric Flame Apparatus....15
Events leading up to the Discovery of the Dissociation of Water....16
Resonator with electrically driven tuning fork....16
Keely's first "Compound Transmitter"....18
Aquaeous Disintegration....19
The Nature of Sound....21
Keely's Fabled Vibratory Microscope....23
Water, its Structure and its Isotopologues....24
Keely's Theories....26
Keely's Model of Molecular Structure....30
Comments on Keely's Theories....32
Keely Explains his Motor....33
THE OPERATION OF THE VIBRATORY CIRCUIT....33
Keely's System of Graduation....35
Keely's "Fraud"....37
Quotes from the Contemporary Press....37
Koenig's Wind Chest....39
Keely's use of Thirds....39
The Scale of B-flat and its Importance....40
The Role of Acoustic Feedback in Keely's Machines....43
Keely and Theosophy....45
What Happened to Keely's Work....47
Sonoluminescence....48
Cymatics, a Way of Looking at Wave Propagation....50
Where do we go from here?....52
APENDIX....52
A short Biography compiled by Mark Baker....52
Harmonics....54
Enharmonic and Microtonal Scales....55
Keely's Forty Laws of Sympathetic Vibratory Physics....56
SCALE OF THE FORCES IN OCTAVES....60
Chapter X of The Secret Doctrine by Madame Blavatsky....62

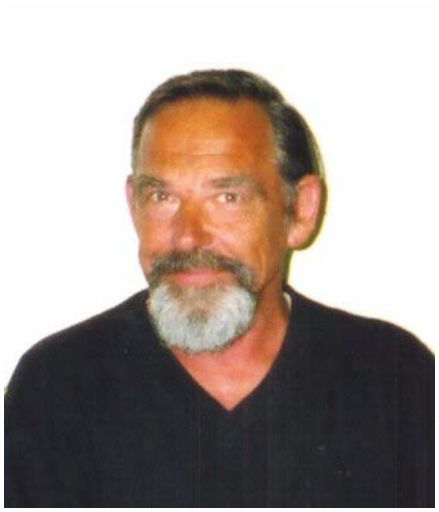

A bit about myself.

I was born in 1939 in a small rural town in Germany. My family was not wealthy, though we were not poor by any stretch of the imagination. I hold a degree in mechanical engineering, majoring in physics. I do not want to give my credentials here, judge me by my work, not by what you think my professional status might be.

Now retired, I live in Sydney, Australia, where I have been for many years

In the early 1970's I read Clara Bloomfield Moore's book about Keely. I was instantly intrigued. The various accounts of Keely and his achievements seemed to be full of contradictions.

On one hand he appears to be some metaphysical dreamer, yet the machines he built and the methodical thoroughness with which he conducted his experiments belie this.

Having read much of Clara Bloomfield Moore's writings she strikes me as a silly woman with too much education and too much money, incapable of having an original thought of her own, the type that Helena Blavatsky cultivated and filled with her peculiar brand of metaphysical crap.

To get to know Keely as a man and technician meant I had to bypass much of her account and rely on things he said and on the evidence provided by a number of photographs of his devices, as well as contemporary newspaper articles.

Having a reasonable grounding in technical and scientific subjects as well as musical theory I judged the man as an honest researcher trying to come to grips with problems and phenomena well outside the scientific understanding of his time and having to work with comparatively primitive research instruments barely suitable for the task he had set himself.

That he achieved something at all is staggering.

But did he?

Keely built a bewildering array of massive machines with almost unbelievable precision. He demonstrated his devices in his laboratory and on exhibitions repeatedly. No-one understood how they worked, and his explanations, couched in an obscure terminology, only helped to spread the confusion.

History has labelled him a fraud, though he was never caught doing anything fraudulent.

I have endeavoured to look at his machines in the light of today's understanding of science, paying scant attention to his theories and his metaphysical model.

Working mainly with photographs and descriptions of his machines, his stated observations of unexplained phenomena and his account of technical difficulties met on the way, I have come up with some startling revelations that seem to indicate that Keely's technology is real.

I leave it for you to judge.

The following paper is still very much work in progress and there is much to be done yet. Any comments, criticisms and suggestions are welcome.

But no more talk.

Here it is.

Introduction.

This paper is an attempt to explain the discoveries of John Ernst Worrell Keely (1827-1898), a 19th century experimenter. I will not go into the life and achievements of Keely to any extent, such subjects are covered elsewhere. There is however a short biography included in the appendix. This paper assumes that the reader has a grasp of what Keely was about and what he was trying to do.

I shall confine myself to examining Keely's theories and experiments in the light of today's scientific knowledge and attempt to explain what Keely did in plain modern English, as far as that is possible.

I first found out about Keely in the early 1970's when I came across Clara Bloomfield Moore's book. I found it both fascinating and cumbersome. Keely's comments appeared at first inspection as pseudo scientific gibberish intended to cull huge funds from gullible investors. On closer inspection though a pattern emerged, that in its logic and order is equal to any scientific treatise, especially when one considers that the man was endeavoring to impart a sophisticated body of knowledge to a world that was still trying to come to grips with the steam engine.

I was taken aback by one of Keely's comments when asked about his 'secrets'. He said: "....as to secrets, I don't have any". I believed him. I proceeded to look at his writings (what little there is left) in the light of seeing him as a man honestly trying to elucidate a monumental discovery to a world that simply wasn't ready for it.

Modern science essentially holds that matter is held together by enormous electrical forces that can be interrupted by bombardment with particles, thus liberating energy. This is certainly true for certain highly unstable elements such as plutonium, but try doing it with lead.

Based on his experiments in vibratory physics Keely thought otherwise. Keely found that pure matter is highly unstable and that stability is the result of interference patterns set up by the interaction of different molecular groupings vibrating at incompatible frequencies.

Fundamentally, Keely's approach was simple.

We know we can cancel a waveform by levelling against it the same waveform that has been inverted.

So Keely set about doing just that. He identified the incompatible waveforms that interfered with the pure fundamental waveform of the body under study and proceeded to cancel them out by by tuning the mass he operated upon to as pure a note he could manage and an arrangement of acoustic resonators of opposite value to the incompatible frequencies that were left.

He called this his 'system of graduation'. There is more to it than that, but for the moment it will suffice. The subject of graduation will be covered in greater detail in a later chapter.

In his view this created a state where ALL FORCES were held in perfect balance.

On a finely balanced scale, no matter how heavy the load on each side, it takes only a minuscule amount of change on either side to disturb equilibrium.

Keely reasoned that disturbance of equilibrium in the body under study could be influenced by changing the amplitude of selected sections in the fundamental pure frequency pattern.

We know that a resonant body will accept energy at its own level of resonance but reject energy at frequencies far removed from its own level of resonance. This is also true for the harmonics of that fundamental frequency.

By an arrangement of acoustic resonators, carefully tuned to the precise frequency of the harmonic he wanted to stimulate, he managed to achieve this.

So far we are still on safe ground as far as contemporary science is concerned. Though very much simplified here for the sake of readability this is essentially what Keely did.

What follows is extraordinary and not documented in any accepted scientific study I am aware of.

Keely claims that by changing the amplitude of certain segments of the wavepattern he could influence the cohesive forces between particles from an incredible denseness to complete disintegration. In other words he believed he had found a way to manipulate gravity.

Keely, vehemently claimed that bodies of 'pure concordant harmony' did not exist in nature, in fact could not exist in nature, and that such pure states had to be induced by artifice. He further claimed that this state had to be created before any manipulation could take place.

The rest of his writings concern themselves with technical difficulties encountered and identifying effective frequencies and ratios of amplitude in order to achieve specific effects.

For our purpose it is not necessary to examine these aspects here.

Keely's Difficulty.

To appreciate Keely's problem try seeing yourself in this scenario. Let us assume you live in ancient Rome, say around the time of Augustus. You have a scientific bend of mind and you are investigating the properties of water. You have read Heron's experiments with steam and you have vision. You know all there is to know (for that period) about metallurgy, engineering and heat. Suddenly you have an idea. You conceive the steam train. All the principles of creating such a train are clear to you. You know exactly how it will work.

Now try building one. How do you make steel track, how do you make pistons, wheels, valves etc. etc. And most of all how do you get people to give you the resources to build one, if you can even get them to understand the usefulness of building a train.

This is where Keely was at!

In one way Keely was lucky. He lived in a time where there were many backers of newly invented technology that hardly anyone understood. That the scientific community would oppose him was clear from the onset. That lot rarely accepts anything unless it is so obvious that it can't be ignored, especially when a new idea comes from someone outside that illustrious fraternity as it almost invariably does.

But this was not Keely's biggest problem. His main difficulty was that he was trying to build a helicopter with a stone axe.

In this lies the explanation why no-one we know of has been able to duplicate Keely's experiments to date.

Hopefully after this paper becomes known this will change.

In Keely's time there were no oscilloscopes, computers, frequency generators etc. etc. and since he essentially worked with sound he had to rely principally on his ear, a few instruments and his knowledge of harmonics, mainly understood by organ builders and musicians of his time.

We know that Keely was a gifted musician. That he had an intimate understanding of harmonic interreactions encountered in the building and tuning of organs is beyond dispute. His own writings and contemporary records show ample evidence of that.

In the absence of waveform generators, transducers, loud speakers, amplifiers etc. the only way he had to transmit acoustic waveforms to a body was through the medium of harmonic resonance.

This requires apart from perfect hearing, an extraordinary amount of skill in building the required structure. Few people possess this to the degree Keely did.

That he managed at all to build working machines is astounding, but, to me at least, it is not surprising that no-one to date has been able to duplicate what he did.

But is all of this necessary? In my view it is not, not anymore that is. We have far better ways of creating the conditions Keely sought than were available to him. But first we must understand what it was that Keely actually built.

I believe I know what he did and I will try to impart my analysis, as best I can, on the following pages.

Keely's Machines.

Few photographs of Keely's machines exist and there are only scant descriptions. But there is enough.

One of the things that tells us more than perhaps anything else is that all Keely's machines, regardless of what they are, Motor, Disintegrator, Air Ships etc, follow the same pattern of construction.

There invariably is some sort of a hollow body that has an INTERNAL as well as an EXTERNAL arrangement of resonators.

There is also a tiny opening through which a connection can be established, often by means of a tube or a wire made of silver, gold and platinum. In later designs he dispenses with this. It will become clear in a moment why.

At the heart of Keely's system is what he called in his earlier years his 'Compound Disintegrator'. I would like to stress here that this 'Compound Disintegrator' is part of each and every machine he built that I have knowledge of with the exception of his 'Hydro-Vacuo Motor' which appears to be an oddity that has little in common with all his other designs. Even his so called 'Musical Sphere' contains the device internally, albeit in much modified form. This dispensed with the need of connecting the 'Desintegrator' with the motor by means of a graduated wire of silver, gold and platinum or by some other means, what we today would call a waveguide.

The description of his "Compound Disintegrator" gives us essentially the blueprint to all of his machines, at least as far as the construction is concerned.

So what then was this "Compound Disintegrator" ?

The 'Compound Disintegrator' here depicted opened up to show the arrangements of the interior components. Notice at the top the wire waveguide.

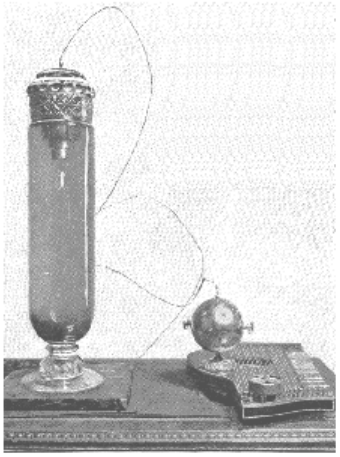

Here we see Keely's 'Compound Disintegrator' in a levitation experiment. Notice the instrument sits on a zither that has been carefully insulated from the table it is sitting on by high feet to prevent the transmission of unwanted exterior vibrations through the table into the device. The Strings of the zither act here as external resonators. Seen clearly in the photograph is the wire waveguide.

Stripping away most of the resonators and all the parts that existed only to improve performance and make the device more reliable we have this:

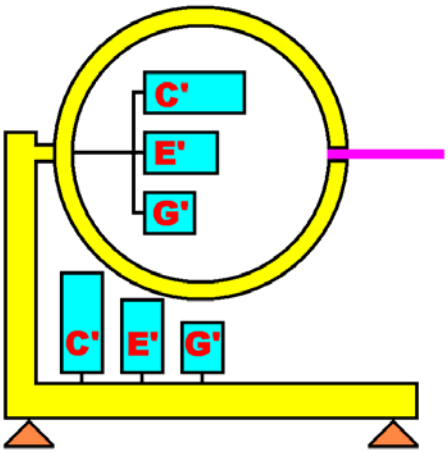

So, what does it do?

According to Keely ALL parts of the structure had to be tuned to a single note.

Let us assume we build this structure and by filing etc. manage to tune it to a pure middle C. On tapping this structure, say with a wooden mallet, we would hear the note C.

Let us also assume we have mounted 3 resonators inside and 3 outside, one of each tuned to C', E' and G' (all of them being harmonics of C).

What happens now when we strike, say the E' resonator on the outside?

Since, E' is a harmonic of C the vibration would be carried, virtually without loss, throughout the structure and the INSIDE resonator tuned to E' would resonate in unison with the outside resonator.

In other words what Keely did was to induce a specific frequency inside a hollow structure (cavity) by using the structure itself as the conductor and an external resonator as stimulant.

In the light of knowledge of his day there was really no other way of doing this.

To achieve this effect ALL parts of the structure had to be in PERFECT harmonic relationship to each other in order to work. A major scratch on the sphere for instance would change the resonant characteristics and make the whole thing useless. Everything would have to be graduated again in order to harmonise with the altered fundamental note. This was the biggest problem with Keely's machines. In my view he could, with a lot of effort, make his machines work, but a commercial exploitation with the tools of his day was out of reach. Keely knew this.

But Keely went further.

He managed to find notes in the spectrum where he could not only transmit harmonics of the fundamental but also the discordant notes that were required without disturbing the fundamental frequency of the structure and still carry them to the inside of the cavity. I believe he found that the scale of B-flat was most suitable for his purposes, since he constantly uses this scale for illustration.

Keely in essence created a specific, complex waveform INSIDE a resonant cavity using the entire structure as a conductor for the waveform, relying on resonance alone!

I seriously doubt that there are two people in the world today that can build such a device and make it work to the degree Keely did, even if given a set of blueprints.

We know today about the power of cavity resonators, the entire microwave industry is relying on it. WE ARE COOKING WITH IT, but hardly anyone notices the similarity with Keely's machines. But the question remains,

"WHAT, IF ANYTHING, DID KEELY INVENT?"

To answer this we must look at the basic diagram again. What do we know happens inside that magic sphere of his after the internal resonators are excited?

Well, they emit a sound of some sort.

Now what?

Well, the sound would travel, bounce of the confining sphere until it eventually escaped through a hole or a waveguide.

Sound familiar? Is there a modern device that does something like this?

YOU BET THERE IS!

IT IS CALLED A LASER!!!

Those of you that know all about lasers can skip this chapter.

For those that don't I'll quickly run through the principle.

When you look at it, though it may sound very sophisticated, the technology involved is quite crude. It is a cylinder of some sort fitted at each end with a parabolic mirror, one of which has a tiny hole in the centre. The cylinder may be a solid piece of synthetic ruby or a glass tube filled with some gas such as helium or a mixture of gases. There is a source of light mounted above or wrapped around the cylider for efficiency. It looks like this:

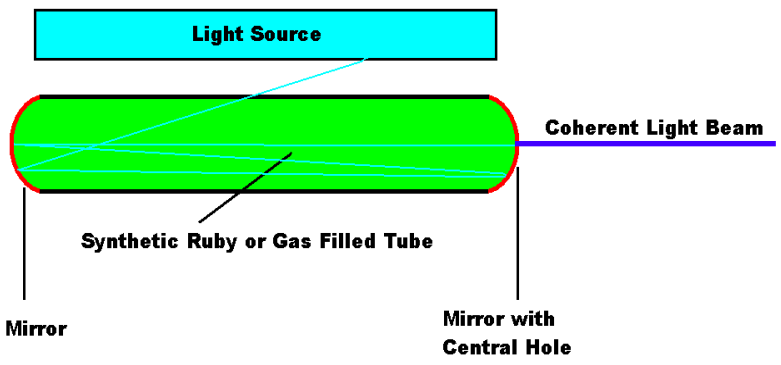

Laser Principle

So far nothing exciting. Now what happens?

Some of the light strikes one of the mirrors and gets deflected. Since the cylinder is filled with gas, or the thing is a solid piece of artificial ruby the kind of light that strikes the mirror is of a specific frequency.

What happens now is interesting.

As I said light strikes the mirrors and is deflected, some straight into the other mirror. It starts to bounce back and forth until it eventually strikes the hole which is in one of the mirrors and escapes.

OK. Now we have a beam of light coming out of a hole, a bit like a torch. SO WHAT??

Well, the interesting thing is that the light coming out of the hole has properties that normal light just doesn't have. Like melting metal for instance.

NOW DO YOU SEE WHAT I AM DRIVING AT ??

If you want to you can look up all that stuff about coherent light and what it does at certain frequencies. It's fascinating stuff but I don't want to get into it any further because it is not helpful here.

The interesting thing is that by bouncing certain pure lightwaves in an enclosed cavity (as far as light is concerned anyway) back and forth it eventually emerges as a new form of energy capable of influencing matter.

Now, nearly all scientists today would question my use of the term "new form of energy", and argue that it is just good old light that has been aligned and thereby acquired new properties. Personally I would argue against that. I would argue that their 'coherent light beam' somehow influenced what Keely called the 'Triune Stream' and that the effects are due to this.

But, be that as it may. I don't care what my colleagues would say, as far as I am concerned what Keely invented was:

THE ACOUSTIC LASER!!

It's not all that much of a mental jump. If we can get selected light bouncing back and forth and the resultant beam has different properties why should it not work with sound. After all both are just waves in their specific spectrum.

It is my theory that like the 'coherent light' of the laser; that is capable of inducing rapid molecular motion (heat etc.) the 'coherent sound' of Keely was capable of inducing gravitic changes.

Keely's problem was that apart from resonance, he had no other way of inducing specific waveforms inside a cavity and that imposed restrictions that dogged him all his life.

Keely's Secret.

Two major questions remain. Did Keely have a 'secret' and did he commit fraud.

In spite of what I have said earlier the answer to both questions unfortunately is yes.

Let me reiterate that there is no doubt in my mind that Keely's machines did work. Over a million people saw over the years his motor run on a number of trade shows, exhibitions and demonstrations. He was never caught in a fraud and his machines were carefully examined by a number of experts on many occasions. To say that his motors were operated by compressed air, secret springs and so forth is ludicrous. Such an arrangement would have been obvious to even a casual observer.

The secret and the fraud lies elsewhere.

It must have been obvious to Keely fairly early on that even though he could get his motor to RUN it would never be able to perform any actual WORK. Keely's motor, the way it was designed will never be more than an EXPENSIVE TOY!

Let me tell you why.

Because his system relies on resonance alone all the component parts of his equipment have to be in perfect harmonic relationship to each other for it to work.

Even the most carefully tuned musical instrument will detune after a while, whether it is played or not. This is true even for pipe organs. Changing conditions like temperature, humidity,

external vibrations, dirt, minor structural damage etc. etc. bring about a rapid deterioration of the carefully arranged harmonic relationships and render the structure discordant, a fatal flaw in Keely's machines.

Keely had no feedback system that could compensate for these changes. The technology of his day did not allow for it. Only careful manual re-tuning would render the apparatus operable again.

Outside vibration and wear were Keely's biggest enemies. That is why we see in Keely's demonstrations evidence of the infinite care that Keely took to avoid the accidental introduction of discordant vibrations through for instance the engine mounts etc. etc.

If for instance a jackhammer had been working in the vicinity of his machines his motor would at once have come to a standstill.

It had to.

Keely demonstrated the starting and stopping of his motor by producing a single chord on a violin, harmonica or zither.

It absolutely amazes me that no-one in his time noticed that this was a fatal flaw in his design.

Real work situations are always filled with uncontrollable sounds and noises.

Many of these noises, like hammer blows, grinding noises, bumps and so forth are rich in harmonics, some of which would have been picked up by Keely's ultra sensitive equipment throwing the carefully arranged harmonic relationships out of balance and stopping the mechanism or sending it into an uncontrollable spin, perhaps even exploding it. I feel that many of the explosions that dogged Keely all his life were due to the influence of uncontrollable extraneous vibrations.

Even the addition of a drive shaft , gearbox or pulley to one of his motors would have introduced waveforms that made his equipment inoperable.

Keely HAD to know this.

That is why his later researches concentrated on airships, such structures not being so susceptible to the influence of extraneous vibrations.

THAT was Keely's secret, and at the same time his fraud.

Had he admitted that, his funds would have dried up immediately, possibly landing him in goal.

Many of his frustrations and disappointment can now be understood and even his victories and monumental discoveries must have been tainted by the knowledge that his superb machines, even at best, would be little more than an interesting scientific experiment that could only be demonstrated in a carefully controlled environment.

Keely was once asked what he wanted for an epitaph.

His answer truthfully and accurately described the way he felt about himself. He said: "Keely, the greatest humbug of the 19th century".

So, where does all this lead? Does that mean that Keely's discoveries and inventions are doomed forever to be nothing further than a scientific curiosity, if that? No, it does not. In time, Keely will be vindicated. His findings will eventually be the foundation of a new way of looking at the universe.

Translating Keely.

John Worrell Keely

Keely always maintained that his system was truly wonderful in its simplicity. Few people ever saw anything simple in what he said. But then few people ever looked up the obscure words Keely used as a matter of habit.

I remember sitting as a young boy over a copy of Caesar's 'De bello gallico' and with the aid of a dictionary trying to extract some meaning from the jumble of alien words that confronted me.

It was not until years later, when I was considerably better

at it, that I sat down and read the book in the original Latin just for fun. Suddenly something magical happened. I had studied Ceasar's exploits in Galle and all his other deeds at length, as was required in those days, but it was not until I read his words in his own language without having to translate that the man became real to me as a person, not as some historical figure I had to study to obtain my grades.

I had to do much the same with Keely.

Keely spoke in the language of an 18th century organ builder. If you don't believe me, find a book on organ building of that period and you'll be in for a treat. 400 pages of pure unadulterated Keelyspeak.

He must have been a dreadful bore to those around him, for much of his bombastic language was totally unnecessary. True he had to invent a technical language to explain his findings, but much of it was simply the character of the man. He was not a good communicator. Often he was his own worst enemy by the way he spoke. He would try to explain something and people did not understand. Keely then would lose patience and could be quite rude to honest people that were genuinely trying to comprehend what he was saying.

This made him many enemies. And it made him enemies where it counted, for often the recipients of his rudeness were the scientists and reporters of his day, people he should have been on amicable terms with.

Many of Keely's difficulties in life were simply a result of how he spoke to those around him.

Much of what Keely said dealt with harmonic relationships and the difficulties he had graduating his machines in order to establish the wavepatterns he needed.

Since we are first trying to establish the underlying principle we ignore all that for the moment as it is not helpful here.

What is left falls into two categories.

1) What Keely OBSERVED.

2) How he tried to EXPLAIN what he observed.

I do not doubt any of his observations. Keely was a meticulous and brilliant experimenter and I do not think he ever spoke an untrue word about his observations, that being sacred to him.

His theories are something else.

Keely had massive problems with his contemporaries. He had made certain discoveries in relation to resonance that enabled him to create phenomena that could not be explained with orthodox scientific concepts of the day.

People wanted an explanation. The pressures to present a coherent theory that covered all aspects of his findings were enormous.

In the end, to satisfy these demands, he tried to squeeze his observations into some metaphysical model that simply is inadequate. His 'triune stream' for instance, that he sees as "the cerebral emanations of the Creator" (his words, not mine) is not a helpful analogy.

Keely tells us everything. There is nothing estoric in what he did.

The reason no-one to date has been able to duplicate Keely's machines is the almost unbelievable precision with which he built his devices!

No-one today can raise the funds required to duplicate what he achieved by mechanical means. In today's money Keely spent many millions of dollars building and perfecting his machines. The cost of duplicating his devices with the precision Keey did is nowadays prohibitive.

But there is hope. By using electronics for much that Keely had to do with mechanics we can and will duplicate his motor!

Unlimited Energy.

Keely observed that huge forces held particles together in 'corpuscular embraces'. He knew this because he had been able to disrupt these 'embraces' and liberated extraordinary amounts of energy whose origin could not be explained in any other way. We know today that this is true. Hiroshima and Nagasaki are stark reminders of that fact.

It is interesting to note that this was unknown to science in Keely's time. That Keely knew this gives his observations and experiments more credit than anything else he did.

He was one of the first to state categorically that there were enormous amounts of energy locked up in atomic and sub-atomic particles that could be liberated.

Ironically, that was also the statement that discredited him most with the scientists of his day.

The only point where contemporary science and Keely differ is that science maintains that the only way to disrupt these 'embraces' is by bombardment with particles, in other words levelling a big gun at it and start shooting it to pieces.

This approach would have seemed crude and brutal to Keely, had he known about it.

Interestingly enough the idea of liberating energy by 'corpuscular bombardment' was something that Keely, at least at some stage in his experimentation, seriously considered.

From memory he once said something like this: "The ringing of a bell in vacuo liberates as many corpuscles ...."

Clear evidence that Keely did think along these lines. He later discarded that idea in favour of other explanations.

In his later writings Keely obviously thinks that the effects he created were due to the incredibly high frequencies he achieved with his apparatus. To my knowledge no-one has been able to create frequencies anywhere near the ones Keely claims to have produced using mechanical resonators alone. How then did he do it and why can no-one duplicate it?

This puzzled me greatly. You will notice that up to here the copyright notice says 1999.

It is now 2007!

This might give you an idea how much work has gone into what follows, since I had not abandoned my research back then.

The next chapter is a turning point in this project.

What I have found out takes much in relation to Keely's work out of the realm of the speculative and brings it into verifyable reality.

Following the Footsteps of Keely.

I decided to try a different approach and suddenly things started to pay off.

Having studied Keely in great detail from available literature I believe I have a fair measure of him, both as a man and as a researcher. Keely did not chase rainbows. He had solid reasons for dedicating his life to his researches and his machines in spite of massive hardships along the way. I reasoned that the only thing that would set him on this path was that he had very early on a workable device (i.e. a functioning motor), albeit in a crude form and of low power. The fact that he continually spoke of "perfecting" his motor seems to indicate this.

I started off with the following assumptions:

1). Keely had a working motor early in life.

2). The motor was of low power, just enough to move, but not enough to do actual work.

3). No man creates something in total isolation. There had to be parallels in research to be found in the work of contemporary experimenters in the field.

4). Someone, somewhere had invented a similar device, only to be brushed aside with a convenient explanation why it could not be developed to do actual work. Such device could possibly still be found tucked away as a scientific curiosity in some museum somewhere. (Like the Crook's tube)

5). The device induced rotation in a tangible body through the medium of sound waves.

All my assumptions proved to be true and verifiable.

The device exists, it works and at least one such device is in the collection of early scientific research instruments in a Toronto museum, though there must be others, as they were used during

Keely's time in universities all over the world in scientific demonstrations and were in fact manufactured by at least one scientific instrument maker for sale to universities and other research establishments.

But back to my research.

I started researching the work of Chladni and Helmholtz, knowing that Keely's devices relied heavily on principles discovered by those two eminent scientists.

While researching Helmholtz I came across Rudolph Koenig, a German violin builder who had turned scientific instrument maker and had built a number of Helmholtz devices in conjunction with Helmholtz that were sold to universities and other establishments who were conducting research into acoustics.

I became very excited when I read Koenig's biography and found that he was a contemporary of Keely and that the two must have known each other since Koenig had an exhibit at the 1876 World Exhibition in Philadelphia where Keely was demonstrating his motor.

Koenig manufactured exclusively apparatus used in acoustic research in his workshop in Paris and is, amongst other things, the inventor of the manometric flame (called sensitive flame nowadays), an instrument where a stream of gas is passed through a chamber containing a diaphragm that regulates the flame by regulating the amount of gas feeding it on being excited by acoustic vibrations. These vibrations become visible in the behaviour of the flame and this instrument was invaluable in the research of sound. Undoubtedly Keely had one of the instruments in his workshop.

It is reasonable to assume that both men had visited each other's exhibits and talked at length about their areas of research.

Here was a link worth following up in detail.

Luckily most, if not all, of Koenig's instruments are in excellent condition in collections all over the world. Many are in American institutions having been purchased at the Philadelphia exhibition. Among the instruments are tuning forks, organ pipes, flutes, the above mentioned manometric flame, vibration microscopes and an instrument for Fourier analysis and synthesis which, though stationary and not designed to do any work, exhibits curious parallels to Keely's motor.

All except one.

Amongst his machines is a small device called an acoustic turbine, which is listed in his 1889 catalogue an item No 75 and sold for 60 Franks. (about $15).

The Acoustic Turbine

Alfred M. Mayer (1836-1897) was a faculty member at Lehigh University from 1867 to 1871, and then spent the remainder of his life as a professor of physics at Stephens Institute of Technology in Hoboken, New Jersey. "He invented the sound-wheel in 1876, but very graciously yielded precedence to the Austrian, V. Dvorak, who, it was found later, had quite independently made the same device a few months earlier. This little instrument consists of four small tuned resonators attached to a small cross and balanced on a pivot. When placed near a source of continuous sound of the pitch to which the resonators are tuned, such as an electrically driven tuning fork, the reaction against the closed end by the stationary wave formed inside of each resonator causes the wheel to rotate "backwards." From Dayton Clarence Miller, Anecdotal History of the Science of Sound, (The MacMillan Company, New York, 1935), pg 73.

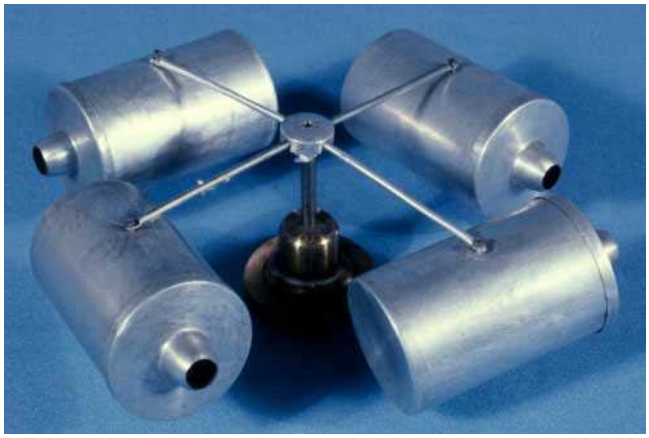

Acoustic Turbine

The example at the left is at the University of Toronto, and is almost surely some of the

apparatus that Koenig brought to Philadelphia for the 1876 Centennial Exposition. Photo:

Thomas B. Greenslade, Jr. Professor Emeritus of Physics Kenyon College, Gambier, Ohio 43022O.K. here is a device that confirms some of Keely's claims. But what has that to do with Keely since he would have seen the device at the 1876 exhibition when he was already demonstrating his motor.

Here I will quote Dan A. Davidson, who in his book "A Breakthrough to New Free Energy Resources" writes:

One interesting (but unverified) story about Keely concerns the time he built his first free-energy motor--while still a young boy. It was a series of 17 conch shells, 8 affixed to a small wheel forming the rotor. The stator consisted of 9 conches affixed around the outer periphery of the wheel but not attached to the rotating wheel. John had ground the shells so that they were all attuned to the same frequency. When the "motor" was put together the wheel slowly rotated on its axis, clunking and clicking because of imbalances, but nevertheless self-operative. John's enterprising nature led him to the idea of putting the entire assembly into a box and charging his neighbour friends a penny to look inside to see the wheel turning. Impossible you say?--well a research scientist in Los Angeles, Dr. Ruth Drown, has claimed that a special log spiral (the same curve in a conch shell) gives off a strange energy emanation.

Here we have a detailed and accurate description of a working acoustic turbine. The outside resonators are simply an arrangement to excite the resonators mounted on the wheel. Needless to say they would have required excitation themselves by means of a tuning fork, a musical instrument or some other sound of the correct pitch. The wheel would have had to turn.

In other words the boy's motor worked. Nothing esoteric about its modus operandi. As to the use of the conch shells, they were simply an available source of cavity resonator, easily ground on a sheet of sand paper to the correct pitch. Beer bottles suitably ground would have worked equally well. As to Dr. Ruth Drown (of Radionics fame) who allegedly discovered some mysterious force in log spirals by using her trusty pendulum, that is utter nonsense of course.

What is noteworthy here is the time when Keely built his device. Keely was born in 1827. Assuming he was about 13 when he built this thing, that would make it about 1840, some 36 years earlier than the first description of the device! If that does not give credibility to Keely's integrity and honest pursuit of an, in his eyes, achievable goal nothing will. All other things followed from there in a methodical and organised manner.

Keely had no secrets.

Keely explained his devices and his researches in great detail. He built and demonstrated his machines. He opened them up for inspection to anyone who was interested, he even allowed people to photograph the equipment in assembled and disassembled states.

How much more open and less secretive can you possibly be?

But the world did not understand.

All Keely ever did was to work on ways to improve his original acoustic turbine by experimenting with different resonators and resonator arrangements. He used media other than air in his resonators, i.e. Water vapour, Hydrogen etc, all in an effort to improve the performance of the device. He even repeatedly talked about this. In his pursuits he discovered a number of phenomena as unknown to science as was his first acoustic turbine at the time he invented it.

Much of what he discovered is still unknown today because the science of acoustics had taken a different road from the one that Keely was following and never came across the phenomena Keely did.

Keely was an inventor and by the look of his machines a superb craftsman. A theoretical physicist he was not! He tried to squeeze his discoveries into a metaphysical model of the world as proposed by theosophists. That put a lot of people off and attracted an audience that was more interested in finding in Keely's work credibility for their own fanciful ideas of how the universe works.

That is still the case today. Serious researchers with adequate scientific knowledge unencumbered by offbeat religious ideas are rare and hard to find.

The key to unravelling Keely, in my view, is to find out how his machines worked , not in philosophical pontifications as to why! We can do this by studying without preconceptions, metaphysical or otherwise, his machines and descriptions of their construction and the underlying researches that led to it. The rest will follow.

The young Keely.

One of the things that had puzzled me for a very long time was the question what would possess a young boy to conceive and build a conch shell motor (acoustic turbine) in the first place. The inspiration had to come from somewhere.

I believe I can even re-construct that.

Keely got his inspiration in church. Not from reading the bible or something equally esoteric, no, the inspiration was far more mundane.

To illustrate why I am thinking what I am thinking I must tell you a little of my own early years, so please bear with me.

I was born in 1939 in a small country town in Germany (about 6000 inhabitants at the time, not much more today). The town evolved around an old Roman outpost and observation tower that, though in ruins, still stands. It sports a post-medieval castle and two magnificent churches.

The town has been for centuries an important administration centre for the surrounding villages and an equally important market town. The older one of the two churches was usurped by the protestant rulers of the time, forcing the catholic community to build another one.

There was much wealth in that town and even today there still is.

Some extremely wealthy patron, perhaps to secure a place in heaven, donated the organ for the new church.

The organ is a superb example of late 17th century craftsmanship, a time when organ building was probably at its peak. It is certainly far beyond anything that one would expect in a place of that size. It was carefully designed with the acoustics of the building in mind (the church holds about 500 people). To listen to the instrument when played by a virtuoso organist it is a moving and overwhelming experience.

Having an intense interest in music and being confined to experimentation with a mouth organ, a recorder and the occasional tinkering on the school piano between classes I longed to learn how to play a real instrument.

There was one instrument that was accessible to me, albeit at a price.

The church and the organ had survived the war virtually unscathed. The air to the organ was supplied by foot operated bellows. Hanging on to a handrail one had to stand on pedals and push them down with one's bodyweight. It was an unpopular job, but someone had to it or the thing could not be played. It was hard work and physically demanding.

To encourage us kids to operate the bellows the organist promised to teach us how to play if we pumped the bellows for him on a regular basis. There were a number of takers, me included, who spent countless hours pumping the bellows in exchange for a lesson here and there.

The most telling experience though did not come from playing the instrument but from pumping it.

Since few people today would have had that experience I need to go here into a little bit more detail.

In a pipe organ there is a reservoir of compressed air called the wind chest which has to be replenished by pumping the bellows. Each key has a series of pipes connected to it and when the key is depressed air flows through those pipes generating sound. Organ pipes either go at full blast or they are silent there is no way to alter the volume in a single pipe. The number of pipes in a given note to be engaged is controlled by a stop, a wooden slider that stops air flowing to some of the pipes varying the sound quality and volume. When the stop is pulled all pipes of that pitch are engaged requiring a lot more air than if only one or two of them are engaged.

Whoever is pumping the bellows should be familiar with the music that is being played in order to provide the right quantity of air to enable the organist to play the piece properly. When all

the stops are pulled and the very large pipes engaged whoever is pumping is working very hard to keep the airflow up, a bit like riding a bicycle at speed.

It was during one of those times when it hit me.

I was pumping like crazy, all the stops were out, the diapasons and the large foot pedal operated bass pipes were in full bloom, the whole building and everything inside it vibrated and I realised I alone was doing that. Not the organist, he was only pressing the keys, I was the motive power. My then still scrawny legs had caused a building to shake.

If I could unleash that kind of power on my bicycle I could surely fly!

These days Rock Bands use tons and tons of speakers, amplifiers, mixers etc to get the same effect, even in comparatively small auditoriums.

After that I kept an eye on the phenomenon and realised that only certain chords would cause that. I left it at that and went onto other things. I did not investigate it any further. Keely did!

It was not until recently, while studying Keely that the significance of these events struck me.

What else is a church with an organ playing inside than a gigantic Helmholtz resonator with an inbuilt sound generator? The prototype of Keely's liberators!

But, did Keely have a similar experience that inspired his conch shell motor and is there evidence that he might have?

I am convinced of it.

Keely's grandfather had to be an outstanding musician. To be the leader of an orchestra in Baden-Baden in the 18th century was one of the most prestigious positions a musician could hold anywhere in the world.

Baden-Baden at that time was a famous playground for the rich and super-rich They went for the therapeutic waters that gave the town its name and existence since Roman times. Baden in German means "to bathe". The waters were said to have curative powers especially against diseases caused by easy living and too rich a diet, such as gout. These people demanded the best, they paid for it and, by God, they got it.

So we know something about the calibre of the man.

It is my guess that old Ernst came to prominence through one of the traditional routes, starting his musical career as an a church organist somewhere in a small town and from then on progressed in his career. It is a familiar story for many of his famous contemporaries. Any good and dedicated musician has an intense interest in all facets of his most favoured instrument including its construction. Each organist I have ever met, and I have met a few, had a very thorough knowledge of organ building and tuning.

Why am I telling you this? Sounds like a bit of small talk included to liven up an otherwise dry subject. It is not.

There was no profession at the time in the world that had a more intimate knowledge of acoustics than the old organ builders. They knew about harmonies, eddy currents, vortex formations etc in intimate detail. They had over the centuries built a database that documented every phenomenon they encountered and had published it from time to time. They also had developed a technical language that was very difficult to understand for anyone outside the craft.

Old Ernst, talking about acoustics would have spoken like that. He would have had reference books that spoke in that language and young Keely would have thought it normal to talk about these matters in that way.

It was something that irritated Keely's contemporaries no end. Comments like "these tiresome phrases", "incomprehensible gibberish", "wearisome terminology" etc turn up over and over again in the contemporary press.

It did not make him any friends.

The world had moved on and Keely still spoke the way his grandfather had done in his day.

I think that Keely's grandfather played the organ in some church and that young Keely had to tread the bellows for him, there being no other to make it work at that time. I further think that young Keely noticed much the same thing about acoustics as I did, but where I only dreamed about flying on my bicycle he went out and built a motor.

That Keely knew much about organ pipes of that there is no doubt. His writings are full of references. The above scenario also explains much about the man and his religious convictions.

I believe that Keely was a deeply religious person, though not perhaps in the accepted sense of the term. Today we would probably call him an intensely spiritual person.

He hade made his initial discovery in a church, the bellows in the service of the Lord, being overwhelmed by the power he had unleashed by allowing the creator's might to flow through him. What more did he need to arrive at the attitude he displayed throughout his life.

Alright, I buy the organ bit and the religious stuff, but how do you know he was treading bellows, I hear some of you say.

O.K. fair comment. however, when you play an organ you are very, very busy. One hand on the upper manual, one on the lower, your feet on the pedals, pulling and pushing stops when required, reading music and having your fingers and feet in the correct place at the correct time and listening to what you are playing is quite a feat and requires intense concentration. It doesn't leave much for observation.

On the bellows, though you must still follow the music to do it properly. You are engaged in a repetitive physical act that requires little concentration. At the same time you are involved. You are far more at liberty to feel and observe while yet still being an intimate part of the whole. You can feel much more intensely the power of the music flowing through you than if you were playing it.

Needless to say, much depends on the organist, a good one is a joy, a bad one torture.

The first one you want to stay with (assimilation), the other one you want to run away from (repulsion), the music being the dominant, to put it in Keely's terms.

The intervening Years.

Following the same train of reasoning let us see where this will lead us.

The next thing we hear from Keely is this passage.

"While yet a young man, Keely learned carpentry and used his income to pursue his experiments in sound vibrations. About 1866 while he was pursuing a line of experimentation in sonic vibrations, he discovered a hitherto unknown energy. He was subjecting water to sonic vibrations and had an explosion which wrecked his apparatus. Six years of intensive experiments passed before he was able to produce this energy at will. He found that 42,800 vibrations per second would vaporise water instantly into energy. He named this energy 'Etheric Force' and the process of changing the substance of water into etheric force Dissociation".

In 1862 Koenig had invented the manometric flame which allowed researchers for the first time to observe sound visually. Keely would have had one when he did his experimenting. Being intensely interested in the subject he would have read about it. It is not a complex instrument and he would have found it easy to make one or have one made for him cheaply.

It is important here to explain what a manometric flame is, how it works and why Keely had to be in possession of one.

Manometric Flame Apparatus

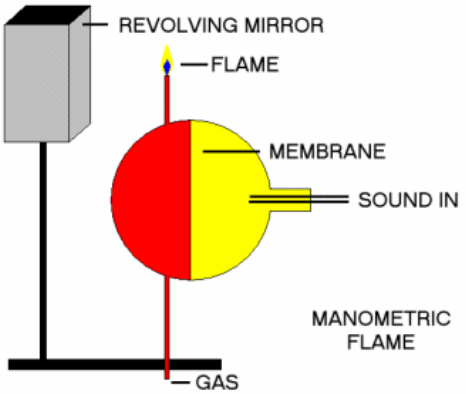

Inside a resonant cavity is a membrane made out of thin rubber that divides the cavity into two equal sections.

Through one half a stream of gas is passed leading to a small burner at the top, the other half has an opening through which sound can enter.

The introduction of sound waves causes the membrane to vibrate.

These vibrations are transferred to the stream of gas

by the membrane the result being that the height of the flame varies with different compression and decompression cycles.

The flame is observed through a rotating mirror or prism, which acts as a stroboscope allowing the operator to 'freeze' the motion of the flame simply by matching the speed of rotation to the cycle under observation.

MANOMETRIC CAPSULE REVOLVING MIRROR

Just the thing for Keely. I cannot find anything in his writings that mentions a manometric flame though I know that he was in possession of a revolving prism, he mentions it in connection with one of his devices in his writing.

Events leading up to the Discovery of the Dissociation of Water.

In all probability this is what happened.

Reasoning that the poor performance of his little motor was due to rogue frequencies generated by the structure itself he decided to improve the device by tuning all components parts to compatible harmonics.

In later life he continually talks about the absolute necessity of doing this so we are still on safe ground.

The next step was to find out the optimum frequencies for such a device.

It would not be necessary to build his motor to study the optimum frequencies involved, researching a single resonator would suffice. I believe he started his investigations with a device not unlike this one.

Resonator with electrically driven tuning fork

By placing a manometric flame in front of the resonator the sound vibration coming from the instrument became visible.

The results would have been disappointing and inconclusive.

In this apparatus the tuning fork sits in front of the resonator opening and the vibrations from the tuning fork would have dominated the vibrations coming from the resonant chamber.

Keely knew all there is to know about tuning forks, the object of his study was the behaviour of the sound waves inside the resonator.

There really is only one way to do this with the instruments of the time and it would not have taken Keely long to realise how to go about it.

By tuning two identical resonators to the same pitch, as to cavity frequency and mass frequency both being connected on a stand with a metal rod tuned to the same frequency, or one harmonically compatible it was possible to excite the first resonator transfer the vibrations mechanically to the second the same conditions would exist in both cavities. That would make it possible to study the waveforms in the second cavity without the dominating vibrations from the tuning fork.

This is not a farfetched speculation since all his later devices follow the same pattern, whether he calls the exciting device his transmitter or liberator or something else.

It is at this stage that he started to prefer a vertical arrangement of components rather than the traditional horizontal, presumably to keep unwanted frequencies at bay by having as few points as possible in contact with other resonating structures, such as a bench.

The way I see this arrangement is something like this.

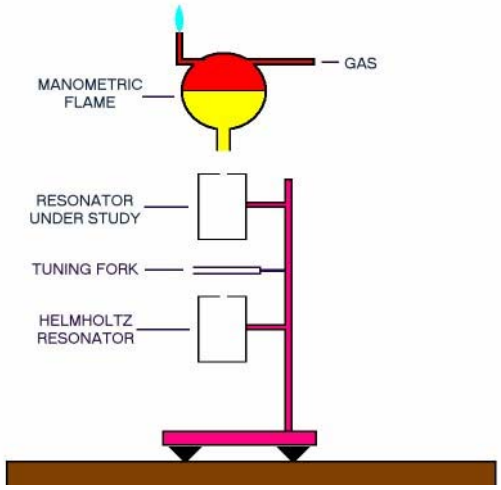

This would have enabled him to study the sound phenomenon occurring inside the resonator with as little interference as possible.

That would not have held his attention for long.

As the next experiment he would have tried to investigate more complex sounds, such as a harmonic chord and study the effects of that on the body under investigation.

The only way he could achieve this was by mounting three resonating bodies in front of the first cavity resonator in place of the tuning fork.

This required re-designing his device. He acquired a ring of metal, carefully tuned it to a compatible frequency with the three resonators so mounted inside, them being a tuning fork, a tonometer bar and a Chladni plate, mounted his cavity resonator on the top, put it onto a suitably tuned vertical stand and now he could produce a complex waveform inside another cavity resonator induced by resonance and observe the waveform inside that resonator by placing a manometric flame above it.

His vibrating transmitter was born.

Fanciful speculation, I hear many of you say at this point.

NOT AT ALL!

The device existed, maybe still exists. There are a few photographs of it though no-one I know of has ever mentioned its purpose.

He refers to it in his writings as the 'vibrating transmitter with the telephonic head'.

The description is an allusion to the shape of the resonator mounted on top of the ring, which bears a resemblance to an earpiece of a contemporary telephone.

Why he chose a conical resonator for this device is unclear to me, maybe by giving it the shape of a megaphone he tried to amplify it's output.

Later, when he had learned to produce the wave patterns he needed inside a resonator cavity he discarded the shape in favour of a spherical arrangement.

But, no more talk, here it is.

Keely's first "Compound Transmitter"

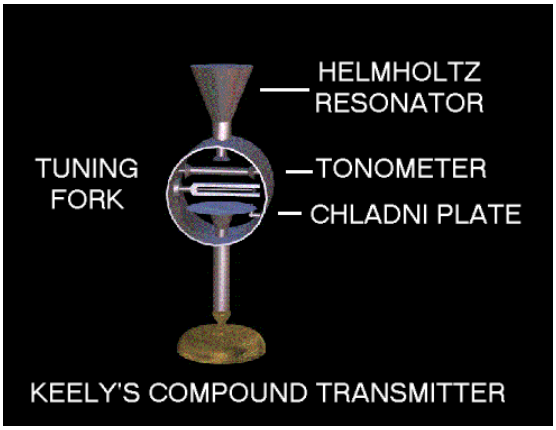

Notice the conical resonator on top of the ring, the tonometer bar inside the metal ring topmost, followed by the tuning fork in the middle and the Chladni plate at the bottom.

It is here worthy of note that tonometers, tuning forks and Chladni plates were standard items in every acoustics laboratory at that time.

For photos of contemporary examples click on the words.

The device must have worked well.

Here are some more photographs where his device is featured, a sure sign that this was his main transmitter for a while until superseded by later designs.In later designs he places his resonators inside a hollow metal sphere.

There would have been good reason to do so. the open ring with the resonators inside would have been far more likely to pick up rogue frequencies from the environment, a problem he appeared to have overcome with his later arrangement.

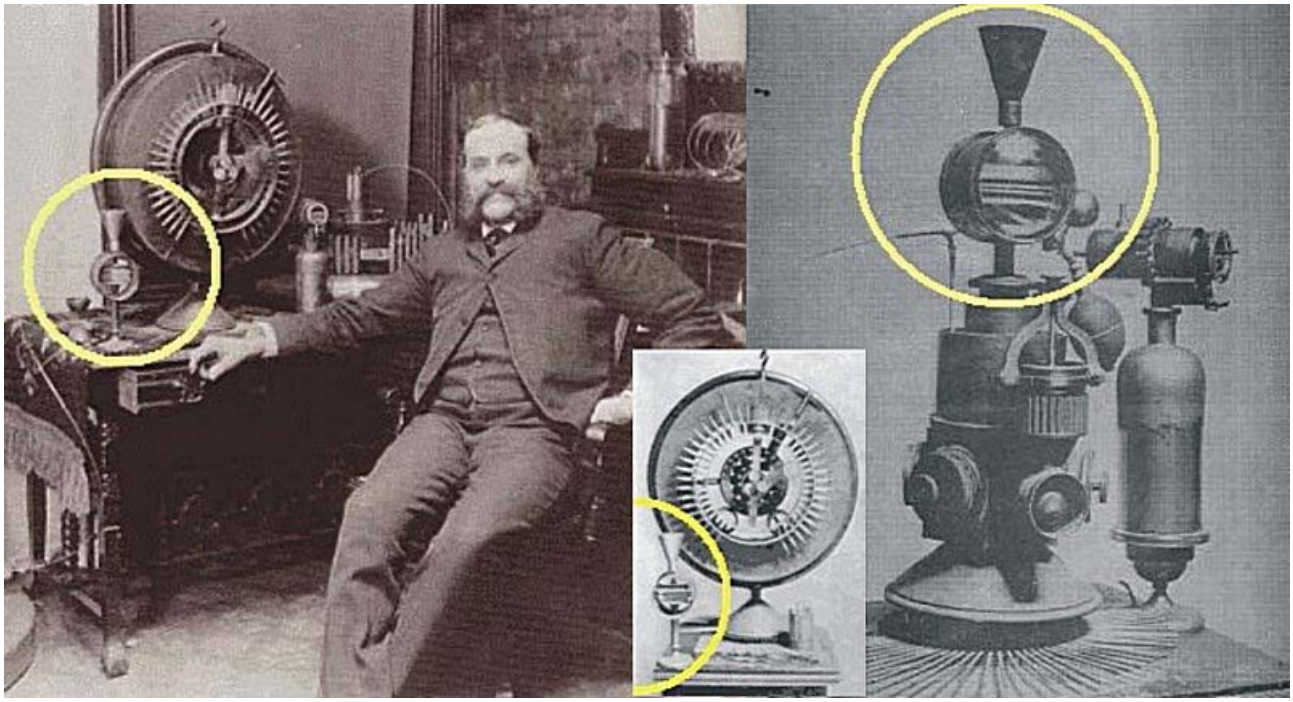

I have to apologise here for the poor quality of the pictures, mostly poor resolution JPG's I have plucked from various web sites. If someone could let me have some better quality scans of his equipment it would be most helpful.

But, back to our subject. How did this lead to the disintegration of water allegedly by accident, or was he doing something else that he never talked about?

I don't believe he did something else. By following in a logical and methodical manner the same path of research we will see how it leads to that particular discovery and why no-one known has been able to duplicate it.

O.K. so he had his compound transmitter. In today's terms we would call it an acoustic waveform generator. What now?

Since the whole idea of building the thing was to study complex waveforms and their behaviour inside a cavity resonator he would have done just that.

The arrangement of the various elements would have looked something like this:

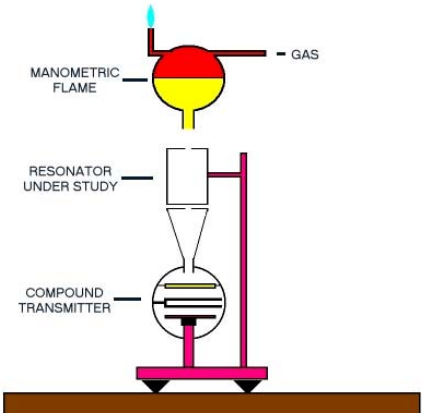

Now he is looking at complex waveforms inside a resonator. So, what? And how does water get into the equation?

This question puzzled me for some time until I remembered something from when I was a boy.

Toys and musical instruments were scarce in early post-war Germany. I loved both. An old man told me that if I collected a few bottles he would make me a musical toy. When I had a number of bottles he suspended them on strings from a broom handle resting horizontally on two timber forks cut from a tree branch and staked vertically in the ground. He then filled the bottles with various levels of water and bingo a sort of xylophone. The bottles when struck with a hammer made different notes and it was possible to play simple tunes on the thing. As the water evaporated they would get out of tune and required retuning by adding a bit more to various bottles. The process of tuning was so tedious I soon tired of the device and did something else.

Of course, that was it!

Keely would have done just that to study the patterns caused by minor changes in pitch.

For his purpose an eyedropper would have been ideal. We know from his later experiments and writings that he never used more than a few drops of water at a time. I don't know how many times he made his experiments. Judging by his tenacity in pursuing failed experiments until they paid off, as commented upon by many of his contemporaries, perhaps a thousand times or more.

Eventually he struck the right combination. The water dissociated into H2 O2, a highly explosive gas, the manometric flame at the top ignited it and BOOM, his first taste of "etheric vapour".

After that there was no stopping him. I don't think he knew for quite some time what he had done, but of one thing he was convinced. He had 'liberated' an enormous amount of energy using sound.

Aquaeous Disintegration.

It took Keely a long time to repeat his disintegration of water and, incurring many explosions, even longer to get it under some measure of control.

That the explosions occurred of that there was no doubt. Many of them were so serious they were reported in the press and put Keely out of action for weeks at a time. So what took him so long? Keely was a meticulous researcher, he would have kept notes. He knew precisely what frequencies he used as well as the precise design and composition of his apparatus. Simple, build a new one, tune it the same way and repeat the experiment.

Keely would have been stunned to see that in spite of meticulous reconstruction he could not get the device to work.

He had done the same experiment with and without water many, many times and nothing spectacular occurred. What was different that time when it blew up?

He experimented and experimented until he caused another explosion, still not knowing why.

He kept on doing this until he found out what was different when the explosions occurred.

He had noticed that as a result of repeated experiments changes had occurred in his equipment that brought forth a new set of conditions.

He talks about it repeatedly in his writings and in his interviews. I am surprised that for so many years of study I have missed the significance of it when it was plainly laid out before me.

I will quote here only one reference, this one perhaps the most explicit. He is talking to a reporter about his demonstrations at Sandy Hook where he was firing a gun using his "etheric vapour".

A reporter of the Press was cautiously examining a vaporic vibrator that lay on the table in the middle of the room. Laying down his paper the inventor wheeled around in his chair, and, after studying for a moment, broke the silence that he has so persistently maintained, and, for the first time in several years, communicated his thoughts to a newspaper man. "My experimenting days are over," he said. "This will develop my active enterprise. Complete success is very near at hand. My experiments at Sandy Hook demonstrated that my vaporic force is a fact and not a mere creation of fancy, as many persons have persisted in declaring. I am now able to produce a power of projection thrice greater than that of gunpowder, and there is no limit to this force. My motor will be completed in less than two months and I will then make a public exhibition of its wonderful power, which are already in a position to manifest themselves. The adaptation of my force to gunnery is positively assured. I can apply it with more effect than that of nitroglycerine."

The inventor paused and took out of a satchel what looked like a policeman's billy. "This," he said, "is what I call a vibrator. It is a hollow coil of steel of the finest quality. In one end is an orifice, by which it is attached to the gun. It is the most peculiar piece of steel in the world. Listen," and the inventor tapped one end of the coil twice, sharply, upon the floor and held it to the ear of the reporter. "Do you hear anything?" The reporter did hear something. The steel cone was humming in a very high key. The noise was like that of a tuning fork. Taking the core in his hand, the reporter found that it was quivering from one end to the other. Mr. Keely continued: "It hums, don't it? No other piece of metal in the world of similar shape will hum at all. See if it does," and he tapped another hollow bar of steel on the floor and held it to the reporter's car. Not a sound was audible, not a quiver could be detected.

"That steel bar," said Mr. Keely, "was the beginning of my motor. By means of it I stumbled on my discoveries. For seven years I have kept flowing through that core a stream of etheric vapour. The action of the vapour has been to affect the relations of the molecules and to alter to a certain extent their conditions. For this reason it has become subject to these vibrations, which are excited in the manner I have shown you. There has been no apparent out ward change in the steel. Its weight is the same as before, but it is in the process of silent dissolution. Were I to pass through it for 20 years longer, this etheric vapour, it would crumble into nothingness, be transformed into the most impalpable dust, or whatever you may choose to call it.

The steel core is necessary for the promulgation of the projecting force of the etheric vapour when applied to gunnery. When the vapour was first allowed to flow through the core of steel, the vibrations were scarcely audible. Gradually they increased in volume, and the noise became more and more audible. The vibrations through it have averaged 300,000 per second. It has sufficient force to operate a 500-horse power engine. So what does that mean and how does it relate to problems encountered with the disintegration of water?

What he is saying is that prolonged exposure to specific frequencies relating harmonically to the body under study changes the structural arrangement within that body and makes it more receptive to these frequencies.

The structural changes are subtle and cumulative.

In other words, the vibratory stream causes a structural re-arrangement on the outside of the resonator, perhaps only one molecule thick. This layer now being capable of transmitting pure concordant harmonies influences the layer below and so forth until the whole body is free from nodal inferences. The depth to which the vibrations can penetrate and cause a structural re-arrangement at any given time is what he calls in his later writings "sympathetic outreach".

He continually talks about the absolute necessity of doing this with all parts of his equipment. He calls this his system of 'graduation'.

I had often wondered why it had taken him four years to graduate the parts of his "quartz disintegrator". No tuning of resonators should have taken that long, even to the fine tolerances that he required. Now I know why.

He must have later found some way of increasing the "sympathetic outreach" thus shortening the process or he could not have built the multitude of devices that he did.

The question here is how does that sit with conventional physics and it is there some evidence other than Keely's writings that the phenomenon exists.

There is no problem with orthodox science, there is ample proof that the phenomenon exists.

Every musician knows that a well played string sounds 'sweeter' than a new one. A fine musical ear can tell the difference.

Especially in Keely's time opera singers delighted in shattering a thin wine glass with their voice alone. If that is not a structural re-arrangement I don't know what is.

Engineers know that vibrations close to the fundamental frequency (or a harmonic thereof) of a component part bring about its premature failure. We call this metal fatigue. Engineers go to extreme lengths to avoid these kind of vibrations in their equipment and use every trick in the book to neutralise or dampen their impact.

We are still on safe ground as far as orthodox science is concerned, no new theories, metaphysical or otherwise, are needed.

Every day of the week scientists and engineers subject parts under study to various vibrations and carefully note any changes that occur.

So what brings about these structural changes and in what way does it alter the properties of matter?

To get some answers we must look at the properties of sound, what is it, and how it behaves.

I will not go into a long dissertation on sound, there is better stuff around on the subject than I could ever write, just enough of the basic principles to enable the reader to follow my line of argument.

The Nature of Sound.

Sound is a mechanical longitudinal pressure wave in gases and liquids.

In solids and metals transverse pressure waves are also generated.

It requires a medium to travel.

The speed at which sound travels through a medium is largely dependent on the density of the medium.

As a rule of thumb, the denser the medium, the faster the speed of sound.

So what does that mean in practical terms?

Say we have a long tube filled with some medium, say air, each end sealed with a flexible membrane. Figure 1.

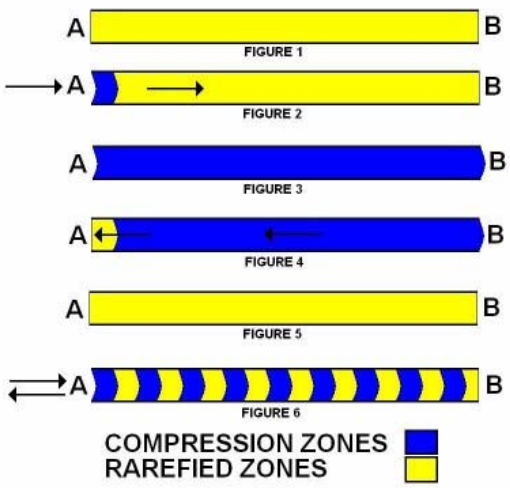

We now push membrane A towards membrane B. What happens when the air particles adjacent membrane A get compressed? Figure 2.

We now have an area of high compression adjacent to the membrane while the rest of the particles in the tube are still in their old positions. We have disturbed the equilibrium of forces inside the tube. Since nature always tries to re-establish equilibrium the compression gets passed on to the next lot of particles from there to the next and so forth until the compressed zone reaches Membrane B. The compression zone acting on

Membrane B causes said membrane to move in the direction of the original push by exactly the same amount of displacement, minus some minor losses due to friction etc, as that caused by Membrane A. Figure 3.

Equilibrium thus re-established the movement comes to rest. The reaction is not instantaneous through the length of the tube. It requires time for each particle to push the adjacent one in turn. In other words the compression zone travels. The speed of travel is the speed of sound, although we express this usually as the length of travel over a given time frame in m/sec or ft/sec. What happens now when we withdraw the pressure from Membrane A? Figure 4.

The particles in the compression zone adjacent to the rarefied zone rush in to fill it, in turn creating a rarefied zone behind. This reaction happens in turn throughout the tube until the rarefied zone reaches Membrane B, allowing the membrane to assume its original position.

In other words the rarefied zone travels in the same way as the compression zone did and at the same speed.

Equilibrium thus restored the movement come to rest. Figure 5.

If the compression and decompression cycles are shorter than the time required for the compression zone to reach Membrane B we get a rarefied zone behind membrane A while the compression zone still travels towards Membrane A. We thus get a series of compression and decompression zones following each other from Membrane A to Membrane B at the same intervals as membrane A is moved, causing membrane B to move in exactly the same manner as Membrane A, albeit some time later. Figure 6.

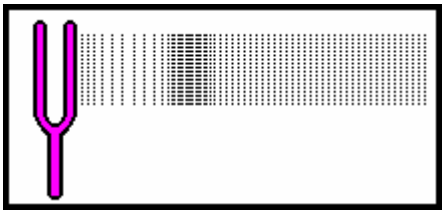

The travelling compression zones thus created we call waves. The rapidity of movement we call frequency.

Frequency is expressed as cycles per second or Hertz.

This is what the movement looks like:

It is of importance here to note that the actual particles in the tube move only for very short distances before returning to their original positions.

This is in stark contrast to electromagnetic radiation (which is also called waves) where actual particles travel across a distance, be they ions, electrons, photons or alpha and gamma particles.

That is why light, radio waves etc can travel through a vacuum, whereas sound cannot.

Two light waves crossing, each other at right angles do not effect each other in any way.

Two soundwaves crossing at right angles have a profound effect on each other that becomes more noticeable when the frequency of the waves are different.

Leaving that aside for the moment, for this comes under category of harmonics, beat frequencies, feedback etc, let us get back to structural changes within matter brought about by sound.

We know we can destroy particulate structures using sound. Metal fatigue and the breaking of glass can be brought about by sonic vibrations.

Since we also know that prolonged exposure is required to achieve this, which means that the effects of sound are cumulative, there must also be intermediate stages where the effects of sound have not brought about destruction, but have altered matter in profound ways nevertheless.

It is in that area where Keely's work is unique.

Keely with diligent research and meticulous observation had invented a way to create a resonating body that was so pure in its frequency response that harmonics of incredibly high frequencies could manifest in sufficient amplitude to dissociate water, given the right introductory frequency mix.

Having thus explained the nature of the equipment Keely used we now come to the second hurdle.

What frequencies did he use to disintegrate water.

The direct quote from the book "Keely and His Discoveries" by Bloomfield Moore, published in 1893:

*"*****.The acceleration of these orders is governed by the introductory impulse on a certain combination of vibratory chords, arranged for this purpose in the instrument, with which Keely dissociates the elements of water, and which he calls a Liberator. "*

"In molecular dissociation one fork of 620 is used, setting the chords on the first octave. "In atomic separation two forks, one of 620 and one of 630 per second; setting the chords on the second octave.

"In the etheric three forks; one of 620, one of 630, and one of 12,000; setting the chords on the third octave."

As a matter of further clarification, Keely states that you cannot DIRECTLY dissociate a single level of aggregation due to the shell structure of matter. In other words, if you wish to dissociate the Atomic level, you must first dissociate the molecular to be able to get to the atomic. That follows also if you wish to dissociate the etheric, you must disrupt the molecular AND the atomic, THEN the etheric. Keely refers to this technique as progressive dissociation.

How these frequencies have sent researchers up the garden path for over 100 years.

These frequencies are not in a harmonic relationship with each other. The create dis-harmony and beat frequencies all over the place, the very opposite of what Keely is saying.

So why did Keely give these specific frequencies?

Look at his statement again. He never said that he used them, he only said they were used to set the chords. Same thing you say. No, he is talking about something quite different.

In order to understand what Keely was doing with these three tuning forks we must gain an understanding of his "vibratory microscope".

Keely's Fabled Vibratory Microscope.

I have seen diagrams of Keely's "atomic triplet" described "as seen through his vibratory microscope". It has also been said he used ultraviolet light in his microscope.

Such notions are based on myth and rumour.

Here is why:

1) No optical instrument can be built to look at molecular and atomic structures. At extreme magnification (the maximum usable magnification on an optical devices about 1000 times) all you will see is Brown's movement (sort of looks a little bit like sperm wriggling through spermal fluid). That is why we have Electron Microscopes to look at smaller parts, the downside being that the EM cannot look at living things as it requires the specimen to be held in a vacuum to enable the electron flow.

2) It is possible to build an optical microscope using ultraviolet light. I qoute here Stephen M. Wolniak, Professor & Interim Chairman, Department of Cell Biology & Molecular Genetics, University of Maryland, who in a paper on optical microscopy says:

*"In the early 1950's, a UV microscope was designed, but required quartz objectives and a specialized imaging device. The quartz lenses provided slightly better resolution (dmin = 0.1 *m), but image quality suffered from an inability on the part of the manufacturers to correct for aberrations caused by the quartz."*

It is noteworthy here that a microscope with a conventional maximum resolution of 1000 times has a resolution of (dmin = 0.2 *m), which would make the theoretical maximum magnification in a ultraviolet microscope around 2000 times. This is a long way short of the magnification required to look at molecular and atomic structures, not to mention sub-atomic particles.

3) It is possible to use sound waves to create a visual image, but the technology is very recent and is incapable, and by the nature of the waves and the technology required always will be, of looking at small items. If you don't believe me look up the technology surrounding ultrasonic scans. Besides, in Keely's time building an ultrasonic imaging device would have been akin to building a

nuclear reactor with a hammer, a screwdriver and a bit of radioactive ore, considering the technology of the day.

So what then is his vibratory microscope. Is it some mysterious instrument designed by true genius and since lost to the world?

Sorry guys, the mysticism will have to wait. Far from being something esoteric Keely's vibratory microscope (called vibrating microscope in some contemporary literature) was at the time standard equipment in any acoustics laboratory doing serious research. In fact Keely could not have built his machines without one.

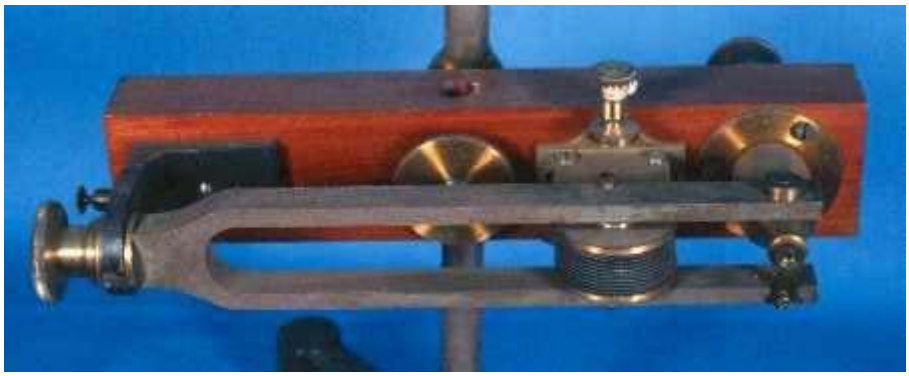

It was invented by Lissajous, a contemporary of Keely and was built and sold by Rudolph Koenig during Keely's time. The picture below is of a contemporary device (1876), now in the collection of Amherst College in Massachusetts. It is listed at 140 francs in the 1889 Koenig catalogue (Cat. No. 234i).

So, how did it work and what was it used for?

In his 1900 book, Sound and Music, the Rev. J. A. Zahm of Notre Dame noted that the device

".....is composed of an electric fork, attached to a solid support, and a microscope. The object of the microscope is borne by one of the prongs of the fork (in the apparatus above it is attached to the lower fork) *When the fork is set into motion the objects visible in the field of the microscope seem to move in the same direction as does the fork. If now a second tuning-fork, whose prongs are perpendicular to those of the first, be caused to oscillate, a point on the second fork will appears to describe a curve, whose form will depend on the vibration-frequencies of the two forks used. If the intervals of the forks be perfect, [simple Lissajous figures] will appear... If, however, the interval be perturbed in any way by a change in the temperature of the forks, for instance, the figure is no longer constant. It immediately begins to pass through a cycle of changes... The longer the time required for effecting a complete cycle of changes, the nearer the intervals of the forks are perfect. [Consider a vibration microscope] made to execute exactly 128 vibrations per second. If ...[the figure] goes through a cycle of changes in 10 minutes, it means that our comparator executes 10x60x1828 = 76800 vibrations, while the other fork, during the same period, makes one vibration more or less than this number."*

From J. A. Zahm, Sound and Music, second edition (A. C. McClurg & Co., Chicago, 1900) pp 418-419.

The tuning forks that Keely mentions in the article about aquaeous disintegration were simply reference forks used in his vibrating microscope to enable him to tune the resonators in his "liberator" to very tight envelope tolerances, as we would say today.

So what were the frequencies used, and why was a complex sound required?

To get our next clues we must look at water and its structure.

Water, its Structure and its Isotopologues.

WATER (H2O) is the third most common molecule in the Universe (after H2 and CO), the most abundant substance on earth and the only naturally occurring inorganic liquid, a billion cubic kilometers of which reside in our oceans and 50 tons of which pass through our bodies in our lifetimes. It has been very well studied with a number of model structures having been proposed and refined. Notwithstanding this, extensively hydrogen-bonded liquid water is unique with a

number of anomalous properties. It has commonly been stated that no single model is able to explain all of its properties.

And we all thought water was the simplest of all things. Evidently not. Let's have a closer look at it.

The first complication with water is that there are three different forms of hydrogen that we know of, each capable of combining with oxygen to produce a clear odourless liquid that on first inspection looks and feels like water.

The first, protium (H), is the one we commonly associate with hydrogen. It has at its core only one proton.

The second, deuterium (D), has one proton and one neutron at its core. In combination with oxygen it becomes D2H, which is known as heavy water. Deuterium occurs in water at about 0.015%.

The third, tritium (T), has one proton and two neutrons at its core. It is radioactive and has a half life of 12.32 years. It combines with oxygen to form tritiated water T2O. The low-energy beta radiation from tritium cannot penetrate human skin, so tritium is only dangerous if inhaled or ingested.

The three forms of hydrogen combine with water to form what we know as water and five isotopologues. (The isotopologue of a chemical species has at least one atom with a different number of neutrons.) This gives as the only possible combinations , all of which occur in what we call water:

H-O-H , D-O-H , T-O-H , D-O-D , T-O-D , T-O-T

This is not where the complexity stops.

The following are a few selected facts from available literature:

The water molecule may vibrate in a number of ways. In the gas state, the vibrations involve combinations of symmetric stretch (v1), asymmetric stretch (v3) and bending (v2) of the covalent bonds.

Main vibrations of water isotopologues			
Gas	v_1, cm^{-1}	v_2, cm^{-1}	v_3, cm^{-1}
$H_2{}^{16}O$	3657.05	1594.75	3755.93
$H_2{}^{17}O$	3653.15	1591.32	3748.32
$H_2{}^{18}O$	3649.69	1588.26	3741.57
$HD^{16}O$	2723.68	1403.48	3707.47
$D_2{}^{16}O$	2669.40	1178.38	2787.92
$T_2{}^{16}O$	2233.9	995.37	2366.61

The main stretching band in liquid water is shifted to a lower frequency (v3, 3490 cm-1 and v1, 3280 cm-1) and the bending frequency increased (v2, 1644 cm-1) by hydrogen bonding.

Main vibrations of liquid ordinary and heavy water				
Vibration	liquid H2O (25°C)		liquid D2O (25°C)	
	v, cm^{-1}	E0, M^{-1} cm^{-1}	v, cm^{-1}	E0, M^{-1} cm^{-1}
v2	1643.5	21.8	1209.4	17.4
v2+ libration	2127.5	3.50	1555.0	1.91
v1+v3+v2 (overtone)	3404.0	99.9	2504.0	71.5

This is what the vibratory movement looks like.

It is clear that life on Earth depends on the unusual structure and anomalous nature of liquid water. Organisms consist mostly of liquid water. This water performs many functions and it can never be considered simply as an inert diluent; it transports, lubricates, reacts, stabilizes, signals, structures and partitions.

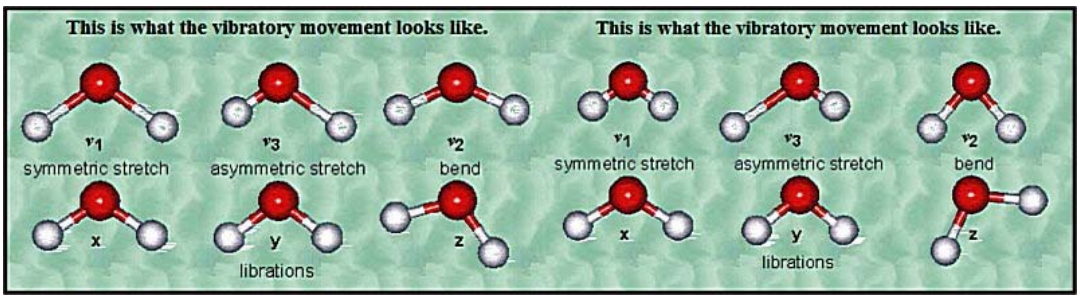

The living world should be thought of as an equal partnership between the biological molecules and water. In spite of much work, many of the properties of water are puzzling. Enlightenment comes from an understanding that water molecules form an infinite hydrogen-bonded network with localized and structured clustering. The middling strength of the connecting hydrogen bonds seems ideally suited to life processes, being easily formed but not too difficult to break. An important concept, often overlooked, is that liquid water is not homogeneous at the nanoscopic level.

There is obviously much more to it, but this is what it boils down to.

Water is not H-O-H, this is only a way of talking. True, for most purposes the formula holds, but it is only true for the average body of water over a longish period of time.

The hydrogen atoms in water are not rigidly fixed to the oxygen atoms and have a tendency to move around and find new oxygen partners. A bit like our modern society perhaps?

Even in true H2O molecules there are at least three distinct modes of vibration that have different frequencies.

Water has a tendency to form clusters.

Water has memory. Water can remember a structure it was forced to assume by being made to regroup in the presence of some foreign substance long after that foreign substance disappeared. (According to some scientists this explains the workability of homeopathy.)

There are sixty three known anomalities of water. To go into this subject here exceeds the scope of this paper. Suffice it to say we are dealing with a complex substance that has a life of its own and often behaves in ways difficult to forecast.

Therefore the dissociation of water with a vibratory stream is not an easy task and should not be undertaken lightly without reasonable safeguards especially as to explosions.

Keely's Theories.

In Keely's time ether theory was still in the scientific mainstream. It was not until the Michelson experiment in 1887 that the theory began losing credibility. In the 1920's most mainstream scientists rejected the concept altogether.

There are many even today that still maintain the existence of the ether. Some eminent scientists, including Einstein, saw no contradiction between the contemporary model and the existence of an ether. In the end it makes no difference. The whole question whether the whole universe floats in some penultimate soup or not is purely academic, since by definition we will never be able to deal with the ether directly, it being part of the observer as well as the observed and must therefore always be hidden from view. We are still stuck with studying the observable whether the ether is there or not.

Be that as it may, all of Keely's theories revolve around the ether and its properties as he saw it. This, combined with his archaic language, makes his writings impalatable to scientists and technicians of our time.

Before we go into his theories as such let us remember that the theories of the alchemists led to many discoveries including gunpowder and phosphorus. The phlogiston theory, fashionable in the 18th century, led to the discovery of hydrogen (phlogisticated air) and oxygen (dephlogisticated air).

Both theories are discredited today, nevertheless they had a degree of workability in their time.

Theories come and go, the discoveries and technical achievements coming from them stay with us. No doubt our current theories about things will undergo profound changes as new knowledge comes to hand. Bearing that in mind let us look at how Keely saw things.

The following abstract of Keely's Theories was published in "KEELY AND HIS DISCOVERIES" by Clara Bloomfield Moore in 1893.

It was written by Professor Brinton with Keely's full knowledge and approval. I am using this here rather than direct quotes from Keely himself as Keely says essentially the same, but is much more difficult to read and understand because of his obscure terminology. The paper is dated 12-08-1889 (mm-dd-yy by US convention)

Abstract of Keely's Physical Philosophy in its main features up to the point of practical application; by Professor Daniel G. Brinton, of the Pennsylvania University (subject to modifications and additions when Keely has made public his system.)

The fundamental conception of the Universe is force manifesting itself in rhythmical relations. This definition is exhaustive, including both thought and extension, matter and mind. The law for the one is the law for the other. The distinction between them is simply relative, i.e. quantitative, not qualitative. The rhythmic relations in which force acts are everywhere, under all conditions, and at all times, the same. They are found experimentally to be universally expressible by the mathematical relations of thirds.

These threefold relations may be expressed with regard to their results as,

I. Assimilative.
II. Individualizing.
III. Dominant or Resultant.

From these three actions are derived the three fundamental;

LAWS OF BEING.

I. Law of Assimilation: every individualized object assimilates itself to all other objects.
II. Law of Individualization: every such object tends to assimilate all other objects to itself.
III. Law of the Dominant: every such object is such by virtue of the higher or dominant force which controls these two tendencies.

Applying these fundamental laws to an explanation of the universe, as it is brought to human cognition, all manifestations of force may be treated as modes of vibrations.

The essential differences give rise to the three;

MODES OF VIBRATION.

I. The Radiative : called also the `Dispersing,' the `Propulsive,' the `Positive,' and the `Enharmonic.'
II. The Focalizing: called also the `Negative,' the `Negative Attractive,' the `Polarizing,' and the `Harmonic.'
III. The Dominant: called also the `Etheric,' or the `Celestial.'

These, it will be noted, correspond to the three laws of being. It is not to be understood that any one of these three modes of vibration can exist independently.

Each by itself is called a `current,' and all three must be present in every `stream' or `flow' of force. The relations of the currents in every flow are expressible in thirds, and it is experimentally demonstrable that the relation of the three are in the order named: as 33 1/3 : 66 2/3 : 100.

The evolution of what is called `matter' from the different modes of vibration is through the action of the second law, that of focalization, or `negative attraction,' or `negative affinity.'

Where the vibrations under this mode meet, and are maintained in a state of mutual affinity or equilibrium, there is established what is called a `neutral centre,' or, as otherwise expressed, a centre of sympathetic coincidence. The terms `neutral attraction,' `neutral affinity,' `negative attraction,' or `polar negative attraction,' are employed to express the property of a mode of vibration to direct its components toward such centre.

As no current or flow of force can be composed of one mode of vibration only, but must always be composed of three modes uniting in varying thirds, we have 1 x 2 x 3 = 6 as the total possible forms of sympathetic coincidence, or, to speak in ordinary terms, there can be six; and six only, possible forms of individualized being.

These are what Keely calls the six orders of atomic subdivision, or orders of vibratory motion, and he names them as follows:

I. Molecular.
II. Inter-molecular.
III. Atomic.
IV. Inter-atomic.
V. Etheric.
VI. Inter-etheric.

In this last the forms of matter are arranged in the mathematical sequence of the rapidity of the oscillations of their constituent members; the proportion being proved by experiment to be as follows: for the molecular orders: 1 : 3 : 9 : 27 : 81 : 243. This arithmetical progression changes in the atomic orders to a geometrical progression as follows: 3 : 9 : 81 : 6561 : 43046721, etc. This same method of progression is believed to hold in all the orders of vibrations above the molecular, and soon passes into mathematical infinity.

Actually, however, all matter of which we are capable of cognition through the medium of our senses is in one of three forms of aggregation:

I. Molecular
II. Atomic
III. Etheric;

in each of which the controlling mode of vibration is respectively,

I. The Enharmonic
II. The Harmonic
III. The Dominant

But it must be understood that each of these modes is a positive and real constituent of every atom and molecule. It will be seen that as every form of material aggregation is to be considered as a `neutral centre of attraction,' where the vibratory force of all three orders are held in `sympathetic coincidence,' that is, in balanced activity or harmonized motion, and not by any means cancelled or mutually destroyed, there is no diminution of force, but only temporary suspension of its radiating or propulsive activity or expression.

This is the foundation of Keely's doctrine of `latent force,' and of the indefinite power which can be obtained by breaking up the harmonious balance or equation of forces of every mode, which exists in every `neutral centre,' that is to say in every mass of matter.

Insomuch as every mass of matter consists thus, in fact, of vibrations in harmonic equilibrium, related by simple proportions of thirds, it follows that every mass of every description stands in harmonic relation to every other mass.

This is, in part, what is meant by the sympathy of all forms of matter and of motion; and it is through the study of the methods of increasing or diminishing this sympathy that we reach practical results in this field of research.

At present this is best accomplished by resonance ; that is, through the harmonic vibrations created by musical instruments, bringing out the acoustic world as the microscope reveals the hidden visual world.

Every visible or tangible mass of matter must be regarded as an aggregation of molecules ; the molecules being the true centres of the equated forces of `neutralized attraction.' These molecules

have been experimentally proved by Keely to be formed of all three modes of vibration ; the proof being that they respond to all three modes when subjected to the tests of compound concordant impulses. It is through the disturbance of this oscillatory equilibrium, by means of resonant impulses, that Keely alters the relations of the vibratory impulses which constitute matter.

This he does by striking the same chord in three octaves, representing the third, sixth, and ninth of the scale. Of these, the sixth reduces the range of molecular vibrations or oscillations ; and, by thus bringing nearer to each other the neutral centres, increases solidifications. The ninth extends the range of molecular oscillation, and thus tends to give greater tenuity to the mass. It induces ` trajectile velocity ' form neutral centres, or ` neutral radiation. '

Experiment shows that molecular dissociation does not take place until the molecule attains an oscillation approaching, if not fully reaching, two-thirds of its diameter. This can be effected by means of the action of the ` enharmonic ' or ` radiating ' current applied to the mass, after its molecules have once been disturbed by an `introductory impulse; ' that is, by the musical note above mentioned. The third represents the ` dominant, ' and when brought under control of a harmonic resonant impulse induces a complete rearrangement of the modes of vibration and oscillation ; in other words, will transform the mass either into its component initial forces, or into some other form of matter.

It is the study of the dominant to which Keely has devoted his recent researches. He aims to control the power he evolves by altering the dominant or etheric mode of vibration in the triplicate flows of force.

As all molecules and masses are mere centres of harmonized vibrations, temporarily held in suspension by simple laws identical with those of resonance, it follows that these centres can be broken up or divided by certain orders of vibration impinging upon and disturbing them.

It is a familiar fact that a cord in vibration tends to produce a similar vibration in a cord placed near it. This property belongs to all vibrations, whether resonant or not, and they exert it in proportion to the ` order ' to which they belong. The distance in space to which this power extends, or can be extended, is what is called ` the sympathetic outreach ' of the current or flow.

In this manner we have ` sympathetic negative attraction, ' and ` sympathetic positive propulsion, ' with reference to the ` outreach ' of the third or dominant current of the stream, which is allied to the order of etheric vibrations. Each molecule of a given mass of matter represents the same harmonic chord or note in its oscillatory motion. The ` chord of the mass ' is, therefore, the chord of every molecule the mass. But, as the condition of absolutely stable equilibrium is theoretical only, and does not exist in nature, the chord of the mass is constantly changing. Yet we must learn to control this ` chord of the mass ' by resonant induction, if we would gain command of the molecular forces.

Keely believes he has solved this problem, by the invention of a mechanical device which brings the chords of all masses within the conditions of a few simple acoustic tests. The range of molecular oscillation is affected differently in different substances when submitted to the same vibratory impulse, and these ranges can be measured.

In the three metals, silver, gold, and platina, we obtain the proportions --- 3 : 6 : 9 : --- As this is the primary relation of the modes of vibration, a wire made of these three metals is peculiarly adapted to transmit concordant impulses : and nodes made of these substances placed upon a wire, transmitting resonant vibrations, indicate, by the different orders of vibration induced in them, the rate of oscillations of the atomic constituents.

The phenomenon of rotation arises from the harmonic interaction of the dominant and enharmonic elements of the flow, in other words, the first and third, the third and ninth, etc; those whose vibrations bear the proportions to each other 33 1/3 : 100. A practical example of rotation is a wheel in revolution on its axis. This is force in its commercial or economic aspect. To accomplish this result by molecular vibratory action, we must gain control of the ` negative attractive ' or ` enharmonic ' current of the triple flow, and the problem is then solved up to any limit of power.

So much for the good Professor.

At first inspection the abstract appears quite clear. On a closer look it becomes quite obvious that Professor Brinton did not know much about music and harmonics, otherwise he would have clarified obvious ambiguities in his paper.

Take for instance:

Each by itself is called a `current,' and all three must be present in every `stream' or `flow' of force. The relations of the currents in every flow are expressible in thirds, and it is experimentally demonstrable that the relation of the three are in the order named: as 33 1/3 : 66 2/3 : 100.

What does he mean here? Is he talking about harmonics or amplitude when he talks about the relationship between the flows?

Further:

This he does by striking the same chord in three octaves, representing the third, sixth, and ninth of the scale.

Here he appears to be talking about harmonics. What is confusing is the term "chords". The first, sixths and ninth of a scale are harmonics of the same note. They do not represent a chord, unless he is talking about the third, sixths and ninth octave.

And:

It is a familiar fact that a cord in vibration tends to produce a similar vibration in a cord placed near it.

This sentence does not make sense whether he means cord or chord.

Then this:

In the three metals, silver, gold, and platina, we obtain the proportions --- 3 : 6 : 9 : --- As this is the primary relation of the modes of vibration, a wire made of these three metals is peculiarly adapted to transmit concordant impulses : and nodes made of these substances placed upon a wire, transmitting resonant vibrations, indicate, by the different orders of vibration induced in them, the rate of oscillations of the atomic constituents.

What on earth is that supposed to mean "nodes made of these substances placed upon a wire"?

And finally:

The phenomenon of rotation arises from the harmonic interaction of the dominant and enharmonic elements of the flow, in other words, the first and third, the third and ninth, etc; those whose vibrations bear the proportions to each other 33 1/3 : 100.

Here he is talking again of either harmonics or amplitude.

It would appear that the good Professor did not know what he was talking about, which is perhaps not strange since he was a medical doctor and presumably a theosophist.

There is of course one other explanation and that is that Professor Brinton's paper was tampered with at the direction of the Theosophical Society who judged the knowledge he was imparting too dangerous in the "wrong hands", as evident in Helena Blavatsky's book The Secret Doctrine, Chapter 10. But more of that in my chapter on Keely and Theosophy.

Keely's Model of Molecular Structure

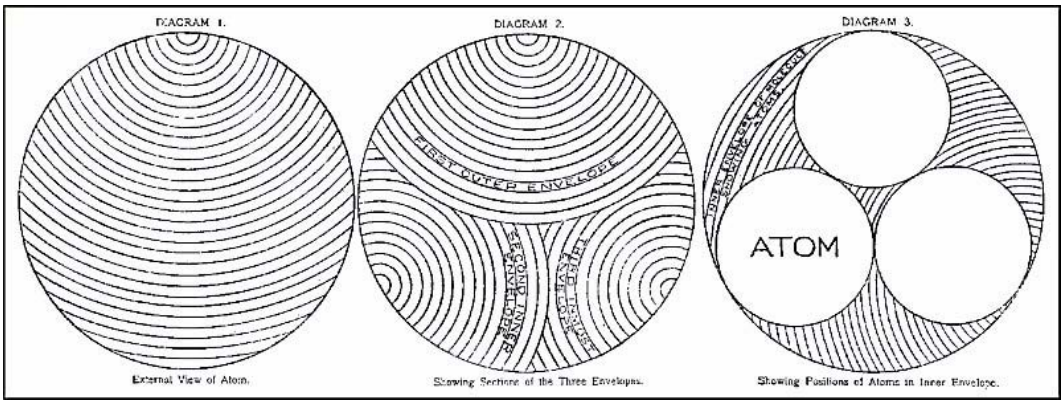

Each molecule has three envelopes. The most external one may be illustrated by an india-rubber ball on which are traced a number of meridian lines.

On another ball, three envelopes are represented. The outer hemisphere of one of the envelopes is removed to show the under envelope, the outer hemisphere of which is removed in still another part of the diagram to show the inmost envelope.

A third diagram shows the position of the atoms which the rotating envelopes enclose.

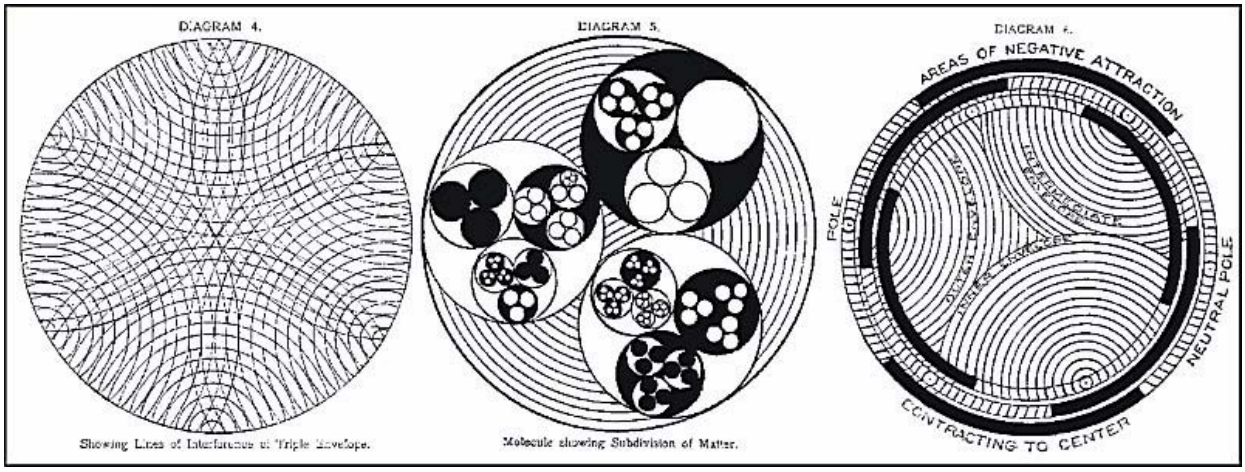

A fourth diagram shows the lines of interference of the rotating envelopes. There being three perfect envelopes, these of necessity must have six poles, to which add the neutral centre of the sphere itself, comprising the origin of the septenary (7) of mysticism which is universal in nature.

The fifth diagram shows the subdivision of matter into atomic, atomolic, and atomolinic. A black disc representing a sphere shows the negative atom; two white discs also representing spheres, illustrate the two positive atoms in the triad, completing the tertiary aggregation forming the molecule.

Each atom is in turn composed of three atomoles; in the negative atom are three positive atomoles, positive in the sense of activity; in the positive atom are also three atomoles, two of which are negative, i.e. passive, and one positive.

The negative is always that which seeks the neutral centre; for instance, the sun is a medium for transmitting radiant energy of positive order, which all the planets receive negatively, i.e. it focalizes upon their neutral centres. This order extends to infinity.

The final diagram presented was simply intended to further elucidate the action of the rotating envelopes, illustrating the compressing force of the rotating spheral and the protection of the neutral poles.

In the rotating envelopes force acts in the opposite direction to its action in the revolution of the earth, where the centrifugal action is greatest at the equator; and the greater the speed of rotation, the greater the centre-fleeing force.

In the case of the etheric envelope, however, the greater the speed of rotation, the more powerful is the centripetal (centre-seeking) force which compresses the atoms within; the pressure, therefore, is greatest at the equator and gradually lessens toward the poles.

If there were only one envelope, the tendency would be for the atoms to be oblate, to fly out at the poles, where the pressure is least.

A beautiful provision of nature obviates this, by providing three envelopes, rotating one within the other, like three shells; the line of greatest internal pressure in each one of which being protected by the equatorial lines, the line of greatest pressure covering the line of least pressure on the others. Each of the three atoms is placed directly under one pole of each of the three envelopes.

If the rotating envelope of the molecule were in any way checked in its motion, the enclosed matter would immediately burst forth, producing the phenomenon of integration, releasing from its previously pent-up condition a volume of matter many times as great as that before disintegration took place.

Sound-force moving at certain rates of vibration negatizes the action of the rotating envelopes, producing conditions which result in their breaking up, followed by the separation of the atoms contained in those envelopes, and also of inter-molecular substance occupying space not taken up by the atoms.

By successive orders of vibration the atoms, atomoles, and atomolini are disintegrated, and so on to the luminous order, where all control ceases.

The human brain being formed of an inestimable number of spherical resonators, termed in medical science NERVE CELLS, forming the gray matter of the brain, these minute spheres take up the THOUGHT FORCE which permeates all space in endless waves, eternally active.

This force we term ATOMOLIC; the cells are composed of ATOMOLES, whose vibratory motions under the action of universal THOUGHT FORCE result in the phenomena of thought, cognition, intellection, etc. Understanding this, no one should continue to feel surprise at the varying emotions and impulses of a human being in an undeveloped state, as only by developed WILL can the motions of this force be directed.

The entire human economy, in the action of all its functions, assimilations, and motions, is the result of differentiation of this unitary force, all tending to supply the instrument connecting the organism with this force (the brain) with certain gases whereby it sustains its ceaseless action from birth to death: these gases supply the rotating envelopes with necessary substance for their continued activity. Were this supply cut off, death would immediately ensue; it is a fact well demonstrated that the resonating brain-structure is the first to undergo decomposition.

In all embodied conditions of the manifested universe, the law of harmony reigns supreme; the cause of this manifestation is the result of the positive being stronger than the negative; the positive is everywhere the dominant order of the universe; this reality is perfectly embodied in the word I AM; it is the reason why annihilation is both inconceivable and impossible in the universe.

The truth of this statement can be experimentally demonstrated; its law is found in all threefold aggregations, and there is a UNIVERSAL trinity composed of two positives and one negative.

Eternal consciousness, immortal life, and an infinite order of beings is the result, whilst every provision is made in the order of creation for the happiness and enjoyment of all manifested beings. Conditions are also provided whereby satiety falls to the lot of none.

The eternally conscious entity - call it by whatever name we please - moves in cycles as eternal and infinite as itself; it oscillates and vibrates perpetually and is never unconscious of any present condition, be it pain or pleasure, joy or sorrow, shame or glory; like the pendulum of a clock or the sun, moon, or tides, it swings from the one to the other of these conditions, now in pleasure, now in pain, by its contact with the extremes of all varying conditions, like a child which throws up its head and laughing for joy exclaims, I KNOW I AM.

So much for W. J. Colville, whoever he was.

For further reading on Keely's theories I have included the following dissertation, also reputedly from Colville's "metaphysical novel" Dashed against the Rock, Keely's Forty Laws of Sympathetic Vibratory Physics in the appendix.

Comments on Keely's Theories

Keely offers a philosophy, seemingly supported by his discoveries, that is coherent and elegant in its simplicity. In effect what he is saying is that the whole universe is but a manifestation of the Holy Trinity and can be understood through that principle alone.

No wonder the theosophists loved him.

How much of Keely's theories are an attempt to keep his funding going by telling theosophists what the wanted to hear is anyone's guess.

His theories, though interesting and attractive, should not be taken too literally. The proof of a good theory, however transient, lies in its ability to lead to further knowledge and discovery.

In over 120 years Keely's theories, though studied by thousands of earnest researchers, have led to nothing.

That in itself is telling.

If Keely's achievements are real, as I am endeavouring to show, we must look first and foremost at his machines and analyse what he has to say about his experiments and his results.

In places it is helpful to look at what Keely thought had happened, but let us not focus on the religious aspect of his explanations and consider that his penultimate truth.

There is no such thing as a "Sacred Science", there is only science.

Keely's achievements will never be understood through his theories alone, for a start we do not know what they were. Keely's writings have mysteriously disappeared, his machines can no longer be examined, all we have are a few photographs and a few newspaper articles that can be credited with any degree of objectivity, the rest are second hand accounts by theosophists who, by their own admission, judged Keely's discoveries too dangerous to be made public. The role of the Theosophical Society is covered in my chapter on Keely and Theosophy.

Keely Explains his Motor

The following is an article written by Keely where he explains one of his motors. This is one of his later motors, perhaps the last one he ever built. I have been fortunate to find three contemporary photographs of the device. Mark Baker in the attached biography of Keely wrote:

The New Science Review for April 1895 has an article discussing the action of the motor, entitled "The Operation of the Vibratory Circuit", by Mr. Keely himself. It is an almost incredible jumble of technical terms: 'molecular vibration', 'sympathetic equilibrium', 'oscillation of the atom', 'etheric disintegration','quadruple negative harmonics', 'atomic triplets'.

I believe this to be the article. I omitted Part 2 of this article as it deals with magnetism and is not helpful here.

THE OPERATION OF THE VIBRATORY CIRCUIT.

(By Polar and Depolar Sympathetic Interchange, as Associated with the Transmitter.)

By JOHN W. KEELY.

PART I.

I have long held an opinion almost amounting to a conviction that the various forms under which the forces of matter are made manifest have one common origin; or, in other words, are so directly related and mutually dependent that they are convertible, as it were, into one another, and possess equivalents of power in their action. FARADAY.

The working part of this device consists, first, of an outside ring carrying on its inside face nine pieces -- equidistant from each other --- called polar accelerators; which constitute the polar field or polar circuit. Second, another ring of less diameter, situated inside of the larger ring, and carrying on its face eight disks, with a triple grouping in each, representing the depolar field, or field of high polar interference. In the Centre is placed a resonating intensifier, through which the sympathetic currents pass. By a spiro-vibrophonic arrangement these currents are diverted toward the neutral Centre of the earth.

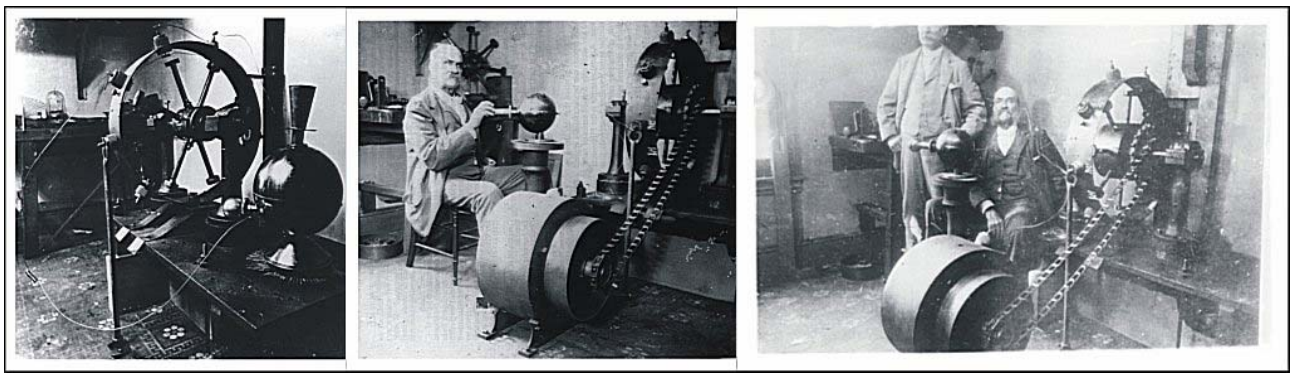

This device is the sympathetic multiplying agent for the polar field, and the negatizing agent for the anti-polar field. When under action it is entirely subservient to the transmitter, both in regard to high intensification and thorough neutralization of polar and depolar interchange.

THE PHILOSOPHY OF ITS ACTION

The circles containing the sensitized disks -- both polar and depolar - are in sympathetic relation to the polar negative circuits of the earth, and in a condition to be brought into action by the negative transmitter. The sympathetic conditions of the polar and depolar field of the circuits remain latent until the transmitter is associated and the introductory impulse given. Then conditions assert themselves which demonstrate the wonderful power of sympathetic action in abeyance to the laws by which they are governed.

The introductory impulse represents the sympathetic chord of unity to polar attraction. When this is given, the polar outreach is immediately established in the polar circuit, which seeks to assimilate itself to the anti-polar, or triple groupings; but as the alternation of the two circuits represents a condition of sympathetic antagonism (as 8 is to 9), an intensified differentiated wave motion is induced between the two, thus developing eight alternations, or waves, to one revolution of the device.

Consequently, an equation cannot be established on account of this negative interference, which represents the power exerted to bring about sympathetic equation between the neutral centre of terrestrial gravity and sympathetic outreach,1 the power that induces planetary suspension.

Every revolution of the circuits represents eight distinct polar and depolar waves. When the maximum (five hundred revolutions per minute) is reached, there are four thousand polar and depolar interchanges. In sympathetic philosophy the polar circuit represents the brain power of the instrument, or the medium of impregnation from celestial radiating outflow; the depolar circuit represents the organism, which is actuated to do the sympathetic work as dictated by the same power, or element, 2 that virtually operates our physical organisms; the work done representing the power expended to equate the power transmitted, although the movements in the physical organism are much more complicated.

The polar flow, as induced by the transmitter, is intensified or diminished by an oscillating bar which governs the revolutions to any number without variation.

The aerial propeller has a sympathetic polar accumulator and disperser in one instrument, which is entirely distinct from any of the devices intended for terrestrial use; also other mechanical adjuncts not needed on land nor water.

All forms of non-sympathetic machinery have, associated with them, conditions of centrifugal force on the ratio of the velocity induced; the diverging power from the centre of induction being governed specifically by its gravital weight according to the diameter it occupies in its circle of rotation.

In a sympathetic negative circuit this order of conditions is reversed; for the power of neutral attraction draws the molecules of any mass, no matter what the weight, toward the centre of rotation (instead of toward its periphery) according to the intensity of the negative vibration that is induced upon that particular circle.

Our earth, in its routine of revolution, is governed by the same law in every particular; its mass tending toward its centre of neutrality with a force that is equivalent to the character and velocity of its rotation. If its rotation were increased, the tendency of everything associated with it would be increased toward its centre of neutrality on the same ratio. That is, a pound in weight would, under certain conditions of increased velocity, become two pounds in weight. The laws governing the sympathetic rotation of vibratory machinery are the same laws that govern planetary suspension. To those who have not witnessed the operation of my devices, my theories must indeed seem wild; but the laws of nature are the same yesterday today and forever. They know no change; and sympathetic physics, demonstrated mechanically, must triumph over all ridicule and opposition

in the end. To contradict the laws governing sympathetic rotation is to contradict the laws governing planetary suspension, as I am prepared to demonstrate.

If the earth were rotated on a shaft by mechanical force, the present condition of its rotations would be reversed; everything on its surface would fly off at a tangent, on the ratio of the velocity induced. The equilibrium of all things would also be changed. The gyroscope reveals astounding facts in relation to this philosophy, even when operated mechanically. No other known device is so nearly associated with sympathetic vibratory physics.

The vitalization of the disks for the polar and depolar field is established on the ratio of thirds, sixths, and ninths; the ninths being the circuit occupied by the polar field, must represent, in the scale of vitalized focalized intensity, 100 in my system: sixths in the depolar field, or 66 2/3; and in the neutral field, or thirds, 33 1/3. The triplets must represent one true chord of equation. The sympathetic transmitter transfers any degree of intensity desired from zero up to disintegration; all the transfers being made above the line of the first inaudible, as associated with my resonating system of transfer.

On the sixths and ninths, in the progressive triple subdivision of the elements of water, the nearest sympathetic approach is made to the high luminous, which is the main sympathetic link to the earth's polar negative envelope, and the one whereby coordination is effected for commercial work. In short, this progressive condition establishes the necessary association between celestial radiation and terrestrial outreach, in regard to controlling the polar negative attractive force in mechanics; whether for serial navigation or for terrestrial commercial work, in all its multiplied forms.

The atmospheric envelope of our earth owes its activity and its volume entirely to celestial radiating forces. Reception and dispersion are kept up by atomic and interatomic conflict between the dominant and enharmonic currents of the triune polar stream. The harmonic and enharmonic current with the dominant (in the electric stream) by their sympathetic association evolve the energy of matter. The mechanical proof of the correctness of my theories, in sympathetic or spiritual physics, is so overwhelming in its simplicity that it needs but to be witnessed to convince the most learned or the most simple mind that this system will place both science and commerce on a platform which will elevate each to a level far higher than those they now occupy.

Keely's System of Graduation

All of Keely's system revolves around the introduction of a specific, pure, tightly controlled, complex waveform into a resonating cavity.

That, believe it or not, is the be all and end all of Keely's technology.

The Premise:

When specific conditions are met inside a resonating cavity a stable beam of "coherent sound" is formed, similar to a laser beam, that is capable of reaching into the heart of matter.

By using the principles of an ultrasonic horn it is possible to conduct that beam along a waveguide and enable it to act upon matter outside the confines of the generating chamber.

More of that in the chapter on ultrasonic horns. I am only including it here to show why the system of graduation is vital.

Keely insists that three flows need to be generated that are in precise relationship to each other as to frequency and amplitude.

This is unbelievably difficult to achieve by acoustic means alone.

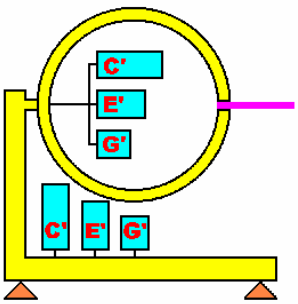

Going back to my earlier simplified model of his liberator, disintegrator or whatever else he chose to call it from time to time, we see clearly the approach taken by Keely.

Although we do not have any photographs of the inside of the small spherical device he used in later experiments we do have explicit photos of earlier devices that operate on the same principle and were used for the same purpose. Because of that we can form a fairly precise picture of

what its internal adjuncts looked like.

It all boils down to this:

1) An external set of resonators that can be excited by either acoustic or mechanical means.
2) A resonating cavity.
3) An internal set of resonators that are activated through resonance by the pressure waves generated by the outside resonators and conducted through the structure itself.
4) A wave guide capable of transporting the collimated waveform to an outside point to act upon.

The successful operation of the device relies on resonance alone. That means that all component parts of the device must be in harmonic relationship to each other without interference and without the introduction of incompatible frequencies. It also means that all parts must be tuned with utmost precision.

Quite a feat! But it does not stop there.

In order to manipulate the amplitude of specific frequencies in relation to the others multiple resonators for each flow are required. They also must be tuned with utmost precision, otherwise they will generate beat frequencies.

Keely informs us that the sympathetic concordance must be so precise that tuning alone is not enough.

The nearest approach to molecular uniformity in metallic masses is in the wire drawn for commercial uses, gold and platina being the nearest to freedom from differentiation. But even these wires, when tested by a certain condition of the first order of intensified molecular vibration, for a transferring medium between centres of neutrality, I find to be entirely inadequate for the transfer of concordant unition, as between one and the other, on account of nodal interferences. We can appreciate the difficulty of converting such a medium to a uniform molecular link, by knowing that it can be accomplished only by removing all nodal interference, by inducing between the nodal waves a condition in which they become subservient to the inter-sympathetic vibratory molecular link of such structure or wire.

Therefore, it is necessary to submit the wire to a system of graduation in order to find what the combined chords of these nodal interferences represent when focalized to one general centre. Then the differentiation between these nodal waves and the inter-molecular link must be equated, by what I call a process of vibratory induction, so as to induce pure concordance between one and the other. To elaborate on this system of graduation, for effecting conditions necessary to ensure perfect and unadulterated transmission, would make up a book that would take days to read and months to study.

The graduating of a perfectly constructed instrument to a condition to transmit sympathetically, is no standard whatever for any other one that may be built, nor ever will be, because no concordant conditions of compound molecular aggregation can ever exist in visible groupings. If it were even possible to make their parts perfectly accurate one to the other, in regard to atmospheric displacement and weight, their resonating qualities would have a high rate of sympathetic variation in their molecular groupings alone. If one thousand million of coins, each one representing a certain standard value, and all struck from the same die, were sympathetically graduated under a vibratory subdivision of 150,000, the most amazing variation would present itself, as between each individual coin throughout the number, in regard to their molecular grouping and resonance.

KEELY.

The above passage makes it clear that after precise tuning his components must be subjected to a vibratory stream to bring about a more favourable molecular structure free of nodal interferences.

So what was Keely's procedure?

From isolated bits he discloses here and there I believe we can assemble a fairly accurate picture of what he did.

In drawn wires and tubes as well as in spun shells a certain amount of molecular alignment is already achieved by the manufacturing process.

Not so in cast components or in components that have been shaped, say by bending a tube or rolled strip into a ring. In order to produce a certain degree of uniformity Keely used a process of annealing.

He heated the components to cherry red heat and then cooled them down very slowly in a sand bath. The sand had been preheated to the same temperature as the component in order to avoid thermal shock.

It is a well known technique to create uniformity and eliminate internal stresses. Keely describes the process in one of his elucidations.

Having achieved uniformity as far as the manufacturing process allows he now proceeds to tune his components to the required frequencies. By using a vibrating microscope he would have been able to tune them to a precision better than 1 Hertz.

Even that was not enough for his purposes. He then subjected his components to a vibratory stream for extended periods of time. This was to achieve a better, more favourable molecular structure.

As stated earlier, I believe he used a wind chest, some organ pipes and compressed air to generate the frequencies required for as long as necessary.

The final adjustment after mounting was achieved by adjusting diaphragms in some of the resonators of his motor.

Acoustic feedback was controlled by dampening some resonators with small tubes of gum.

As sophisticated as the system was there must have still been some unwanted frequencies occurring which Keely controlled with special resonators that directed a "negatising vibration" at them. Just how he achieved the required phase shift by purely acoustic means is unclear to me at this stage. He talks about it though in places.

This I believe is in essence Keely's system of graduation.

Today there are far more precise and less cumbersome methods available to achieve the same effects, something that I will go into in the chapter on "Design of a Keely Device using Modern Technology", which at the moment exists only in note form.

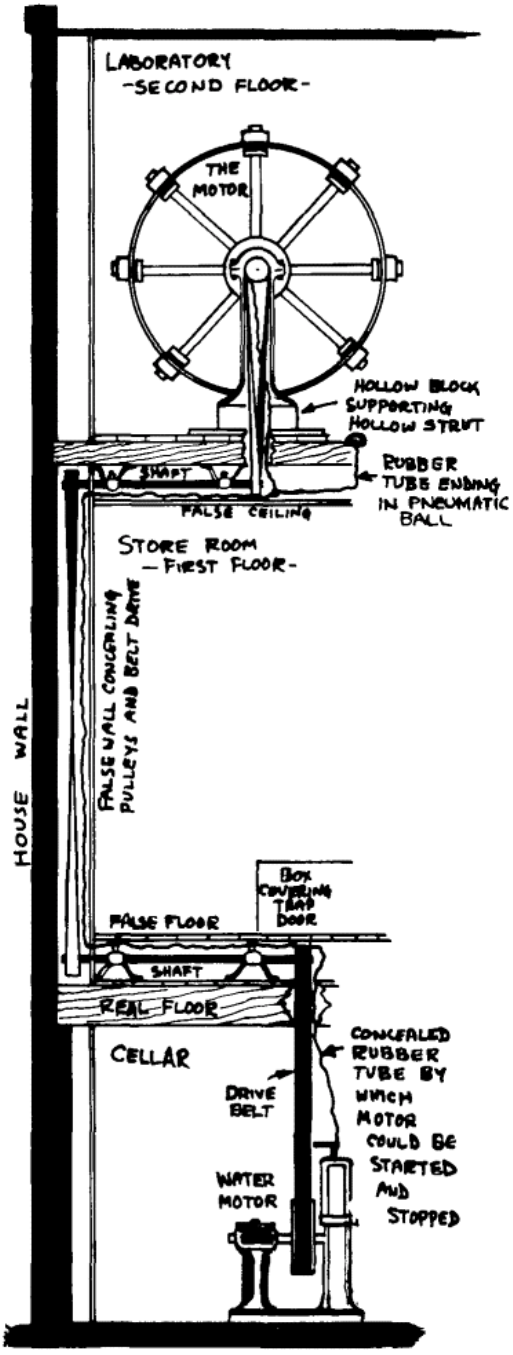

Keely's "Fraud"

Quotes from the Contemporary Press

After Keely died on Nov. 18, 1898, suspicious skeptics and newspaper reporters did a careful examination of his laboratory. Some of Keely's machinery had already been removed by "believers" who hoped they could make it work.

A Boston electrician, Burton Kinraide, removed the engine to his home at Jamaica Plains. Some of the apparatus ended up in England. No one could make it function as it had in Keely's laboratory. The secret was not in the machines; the secret was in the laboratory building itself.

Engineer Alexander Scott and Mrs. Moore's son, Clarence, examined the building, accompanied by press and photographers. False ceilings and floors were ripped up to reveal mechanical belts and linkages to a silent water motor in the basement (two floors below the laboratory). A system of pneumatic switches under the floor boards could be used to turn machinery on and off. A three-ton sphere was found in the basement, apparently a reservoir for compressed air.

The walls, ceilings and even apparently solid beams were found to have hidden pipework. The evidence of fraud on a grand scale was obvious and undeniable.

What's really remarkable is that Mrs. Moore had persuaded a number of apparently respectable scientists to observe Keely's demonstrations, and some of them affirmed that they were impressed, and even convinced that Keely had made revolutionary scientific discoveries. Why were some so easily duped by Keely's obvious (though very elaborate) deceptions, which were correctly guessed by more perceptive and skeptical observers? Of course, it must be stated that Keely never allowed anyone to examine his machines, independently test them, or even look inside of them. Even today, scam artists promoting energy machines can find at least a few degree-holding engineers or physicists willing to declare publicly that they found no fraud or deception in the machines and who are convinced that new scientific principles are at work. So much for "expert witnesses".

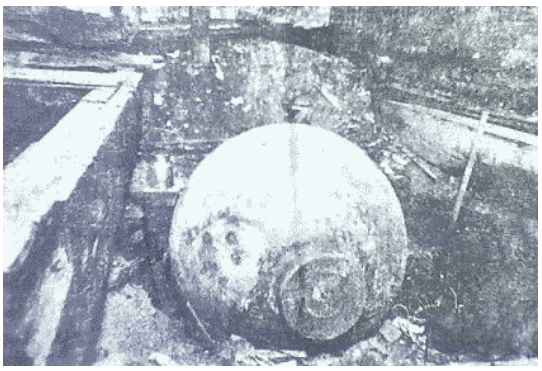

Keely had kept his company going for 26 years without ever putting a product on the market, paying a dividend or revealing his secrets. That's his one undisputed accomplishment. He never divulged his secrets with anyone, so far as we know. One close friend reported that he had once asked Keely "John, what do you want for an epitaph?" His answer: "Keely, the greatest humbug of the nineteenth century."

The evidence that this equipment existed is undeniable. The conclusion that Keely used compressed air to operate his machines appeared to be proven and history has left it at that.

But is it true? I do not think so. The evidence speaks against it.

We have detailed and explicit photographs of some of Keel's motors in assembled and disassembled states. There is nothing in his motors for compressed air to act upon. The very people that cried fraud were at the time in possession of his motors. It would have been a simple matter to disassemble them and show the driving mechanism (some air turbine or some piston arrangement). Photos of such an arrangement would have convinced the sternest sceptics.

No such proof was forthcoming. It simply did not exist. So is there another reason for the existence of the compressed air equipment and can we after all this time reconstruct what it was used for based on existing evidence alone.

I believe I have found the answer to that puzzle.

I have talked at length about the necessity of bringing about structural changes in the materials of his resonators in order to achieve pure resonant frequencies free from nodal interferences. Keely tells us that this is achievable through subjecting his resonators to a stream of "pure concordant harmonies", an essential part in his system of "graduation". This stream had to be kept up for extended periods of time to bring about the re-arrangement, at least weeks, if not months.

So, how did he do it?

Today it would be a simple matter. Connect a series of phase locked loops to an amplifier, and a speaker. Put the speaker into some sort of soundproof box to eliminate rogue frequencies from the environment, mount his resonators to be graduated inside the box and let the thing run for the time required.

But Keely did not have access to that kind of technology.

How then could the same effect be achieved with the technology of the day?

Again we must look to Rudolph Koenig and his scientific apparatus. Koenig calls his device in his catalogue "Wind Chest"

Koenig's Wind Chest

The way it operates is simple.

On top of a hollow box are mounted one or more organ pipes. The box is connected to an air supply and voila an audio generator capable of generating complex waveforms that will work as long as the air supply is kept up.

Notice the air supply at the back and the organ stops in the front.

Of course you can have as many pipes as you want as long as the wind chest is big enough.

This explains the water motor, the compressed air sphere and the pipes leading into his workshop.There really was no other way of doing it in Keely's time.

Keely's use of Thirds

Throughout his writings Keely continually talks about the necessity of tuning his resonators to "thirds" in order to achieve the effects he is after.

So what are the "thirds"?

Unfortunately here is where it gets complicated. In music the term can apply to three different conditions:

1) Third octave
2) Third harmonic
3) Major Third, Minor Third

So, what are they and which one is he referring to?

Third Octave

Third octave is clear. This is simply fundamental frequency x 2 x 2

C = 256 (1st octave)
C = 512 (2nd octave)
C =1024 (3rd octave)

He often refers to first, third, sixth and ninth octaves.

Third Harmonic

He also refers to frequencies relating to each other in the ratio of 33 1/3 : 100.

Clearly here he means harmonic thirds. The third harmonic is the fundamental frequency multiplied by 3 or one third the wavelength of the fundamental.

Major Third

A Major third is a musical interval that is the fundamental frequency multiplied by 5 and divided by 4. The two notes combined constitute a pure harmonic chord.

A pure harmonic chord in many keys can only be produced by using an enharmonic keyboard or on a violin where there are no fixed positions for the notes. He talks about the use of enharmonic scales. He also talks about the use of E double flat, a clear indication that he is talking about a major enharmonic fifth interval in the scale of B flat, which he mentions also.

This is where it gets confusing. Keely uses the term thirds in conjunction with all three assuming that the reader has sufficient musical knowledge to tell which one is meant.

Since we often have only short quotes of what Keely actually said we can only guess in what context the word third applies.

Increasing Amplitude

As if that is not enough in some of his writings the term applies to amplitude rather than frequency.

One of the first things we notice by studying Keely's machines in the large number of resonators he is using. Far too many to construct say a chord in three octaves, For that he would have needed only nine, three for each octave.

So why did he use so many?

Keely worked with acoustic resonators to generate his waveforms.

Say he was using the chord C major, i.e. C - E - G. The interval between C and E is a major third, the interval between E and G is a minor third the interval between C and G a perfect fifth. E3 and G3 are the 3rd and 5th harmonics of C1.

The three notes being struck simultaneously results in each note contributing harmonically to the sound created, achieving overtones further into the spectrum (i.e. of higher frequencies) than that Note C could have achieved on its own regardless of amplitude (volume).

Keely was after very high frequencies, far higher than the note could have achieved on its own with effect. It is believed overtones stretch into infinity albeit with much reduced volume.

So how do you increase the volume of overtones far into the spectrum?

In order to increase the amplitude of the overtones he had to increase the amplitude of the notes contributing to it.

There was only one way he could do it with the technology of the day. He did what organ builders had been doing for centuries.

As I said earlier, an organ pipe either goes full blast or is silent, there are no in-betweens.

There is only one way and that is to add more pipes of the same construction and pitch. That is why large organs have over 5000 pipes. No typing error, they can really have that many. Keely did the same with his resonators.

Here something interesting occurs.

If you add one more pipe you increase the volume by 100%. Or by a factor of two. Adding one more you increase the original volume by a factor of three and so on.

See what I mean?

The volume increase follows the same arithmetic progression as the harmonics.

This where Keely parted company with contemporary acoustics. His machines exhibited not only precise mathematical relationships between the notes, but also in their relative amplitude.

I consider this a vital aspect in the overall design of his machines.

I have in all my research never come across a comment that mentions that fact.

The Scale of B-flat and its Importance.

The only scale that Keely mentions in his writings is the scale of B-flat. It appears strange that no other scale is ever mentioned considering the man was doing research into harmonic relationships, musical intervals and chords. Her are two of the many occurrences to give an illustration what I mean:

The only two vibratory conditions that can be so associated as to excite high sympathetic affinity, as between two physical organisms, are: -

Etheric chord of B flat, 3rd octave, and on Etheric sympathetic chords transmission Eb on the scale 3rd, 6ths and 9ths; octaves harmonic; having the 3rd dominant; the 6th enharmonic, and the 9th diatonic.

The chord mass representing the musical sphere, being the sympathetic etheric chord of B flat third octave ******

KEELY

Example.- Suppose that we had just received from the machine shop a spun shell of twelve inches internal diameter, 1-32 of an inch thick, which represents an atmospheric volume of 904'77 cubic inches. On determination by research we find the shell to be on its resonating volume B flat, and the molecular volume of the metal that the sphere is composed of B natural. This or any other antagonistic chord, as between the chord mass of the shell and its atmospheric volume, would not

interfere, but would come under subservience. We now pass a steel shaft through its centre, ⅛ inch in diameter, which represents its axial rest. This shaft submits the atmospheric volume of the shell to a certain displacement or reduction, to correct which we first register the chord note of its mass, and find it to be antagonistic to the chord mass of the shell, a certain portion of an octave. This must be corrected. The molecular volume of the shaft must be reduced in volume, either by filing or turning, so as to represent the first B flat chord that is reached by such reduction. When this is done the first line of interference is neutralized, and the condition of sympathy is as pure between the parts as it was when the globe was minus its axis. There is now introduced on its axis a ring which has seven tubes or graduating resonators, the ring being two-thirds the diameter of the globe, the resonators three inches long and ⅛ inch diameter, each one to be set on the chord of B flat, which is done by sliding the small diaphragm in the tube to a point that will indicate B flat. This setting then controls the metallic displacement of the metallic combination, as also of the arms necessary to hold the ring and resonators on shaft or axis. Thus the second equation is established, both on resonation and displacement. We are now ready to introduce the diatonic scale ring of three octaves which is set at two-thirds of the scale antagonistic to the chord mass of the globe itself, which is done by graduating every third pin of its scale to B flat thirds, which represent antagonistic thirds to the shell's molecular mass. This antagonism must be thoroughly sensitive to the chord-mass of one of the hemispheres of which the globe is composed. The axis of the scale-ring must rotate loosely on the globe's shaft without revolving with the globe itself, which it is prevented from doing so by being weighted on one side of the ring by a small hollow brass ball, holding about two ounces of lead. The remaining [Page 13] work on the device is finished by painting the interior of the globe, one hemisphere black and one white, and attaching a rubber bulb, such as is used to spray perfume, to the hollow end of the shaft. This bulb equates vibratory undulations, thus preventing an equation of molecular bombardment on its dark side when sympathetically influenced. It is now in condition to denote the sympathetic concordance between living physical organisms, or the receptive transmittive concordance necessary to induce rotation.

KEELY.

So, is there something special about the use of B-flat or is it simply that he started his work using B-flat in his first machine and found it too cumbersome to change all his graduating instruments, tuning forks, reference forks in his vibratory microscope and so forth over to some other key? It certainly would have been easier to continue in the same key, rather than re-calibrating everything.

And, if that was not the reason, what other reason could there be?

An added complication is that we do not know what Keely's B-flat means in terms of frequency.

Easy you say, go to a piano, the black key between A and B is B-flat.

Actually, it isn't. Aside from the fact that on the tempered scale we are using B-flat and A-sharp are the same note, when in reality they are two different notes that have been adjusted to a common denominator to make playing easier there is the question of concert pitch.

So what is a concert pitch and why is it important?

In order for any number of musical instruments to be able to play together and sound harmonious they all must be tuned to the same pitch. The concert pitch is an agreed upon arbitrary value that acts as a reference point to which all instruments are tuned. In common use today is A=440, that means that the A above middle C has a frequency of 440 cycles per second or Hertz. Though common in English speaking countries it is by no means universal. Continental Europe uses A=442 whereas Germany, Austria and China use A=445. But that standard was first proposed in 1939 and only introduced in 1955 when the International Standards Association adopted A=440 as ISO16. In other words long after Keely's time.

So, to what pitch did Keely tune his machines?

We don't know. It cold have been anything between 435 and 445, though there were concert piches around in the 19th century that were outside even that wide range. Bearing that in mind let us

choose the midpoint between these values as a starting point in our examination. If we now create a Pythagorean diatonic scale around A=440 we get about 261.12 for middle C. going down six octaves we get around C=4.08.

Now we make a startling discovery.

On the scale C=4.08 B-flat becomes 7.25333 and B-natural becomes 7.74562. These are almost exactly the accepted boundary values of the Schumann Resonance, the resonant frequency of earth! Curiously enough these are also the frequency band of alpha brain waves associated with elation and religious feelings.

See for yourself in the attached spreadsheet:

PYTHAGOREAN DIATONIC TUNING WITH ADDED F# and Bb.									
NOTE	FUNDAMENTAL	RATIO	OCTAVE 1	OCTAVE 2	OCTAVE 3	OCTAVE 4	OCTAVE 5	OCTAVE 6	OCTAVE 7
C	4.08	1/1	4.08	8.16	16.32	32.64	65.28	130.56	261.12
D	4.08	9/8	4.59	9.18	18.36	36.72	73.44	146.88	293.76
E	4.08	81/64	5.16375	10.3275	20.655	41.31	82.62	165.24	330.48
F	4.08	4/3	5.44	10.88	21.76	43.52	87.04	174.08	348.16
F#	4.08	729/512	5.809219	11.61844	23.23688	46.47375	92.9475	185.895	371.79
G	4.08	3/2	6.12	12.24	24.48	48.96	97.92	195.84	391.68
A	4.08	27/16	6.885	13.77	27.54	55.08	110.16	220.32	440.64
Bd	4.08	16/9	7.253333	14.50667	29.01333	58.02667	116.0533	232.1067	464.2133
B	4.08	243/128	7.745625	15.49125	30.9825	61.965	123.93	247.86	495.72
C	4.08	2/1	8.16	16.32	32.64	65.28	130.56	261.12	522.24
D1	8.16	9/8	9.18	18.36	36.72	73.44	146.88	293.76	587.52

Coincidence? Perhaps not.

Keely was evidently aware of having tapped into some field or other as the following comments of his show.

"It is only necessary to ascertain the terrestrial chord masses to be able to run sympathetic machinery. When I have mastered these mechanical difficulties I shall be able to control this most subtle force."

and

"All diversion from the polar terrestrial envelope are but nodal outreaches, induced by the proper order of sympathetic vibration; not dissociations and associations of sympathy; but operating on the same principle as the outflow, or nodal outreach of the mental organism toward the physical, in its control over it.

and

"It is through the action of nature's sympathetic forces that planets are born and their volume of matter augmented. If the sympathetic, negative polar stream were cut off from the earth, its molecular mass would become independent, and would float away into space as would a soap bubble filled with warm air.

and

Though alternate active energy could be evolved in a cubic inch of steel, by the proper sympathetic exciter, to do the work of a horse, by its sympathetic association with the polar force in alternate polarization and depolarization. This is the power that I am now getting under control to do commercial work. In other words, I am making a sympathetic harness for the polar terrestrial force." KEELY, 1892.

In 1893, Keely, in reply to the question, "What do you include in the polar force?" answered, "Magnetism, electricity, and gravital sympathy; each stream of force composed of three currents which make up the governing conditions of the controlling medium of the universe.

The ninths which I am now endeavoring to graduate to a sympathetic mechanical combination will, if I succeed, close my researches in sympathetic physics, and complete my system." Within the year the announcement was made that Keely had completed this graduation, with entire mechanical success, "hooking his machinery on to the machinery of nature."

Perhaps that explains where the surplus energy came from in his machines. If he created a resonant circuit that was absorbing energy from the earth's field that would make sense. That the so created resonant field would drag in other streams of energy on one of the harmonics of the fundamental is also feasible.

In fact Keely talks about this. This is a quote from a contemporary article on his airship:

At an early period of Keely's researches, on the lines suggested by the distinguished professor of the Bonn University, Dr. Hertz, viz., of the conditions governing the operation in nature of the unknown energy he was dealing with, Keely wrote to a friend:

"It appears, in my researching experiments, quite evident to me, that under different orders of progressive vibration, when the sixth order is reached on the positive, a condition presents itself in an accompanying agent that adds to the etheric flow a very peculiar action. I call this third agent its sympathetic attendant."

Maybe all that Keely was doing was to use the earth's frequency as some sort of carrier wave.

I am not saying that is the case, but to me it appears as a promising area of research that should be undertaken.

The Role of Acoustic Feedback in Keely's Machines

Acoustic feedback, as we understand it today, was an unknown phenomenon in Keely's time.

So, how does this subject get into the equation?

Looking at Keely's motors there is evidence that acoustic feedback was occurring in his devices and that he tried to deal with the problems created by it without ever completely understanding what he was up against.

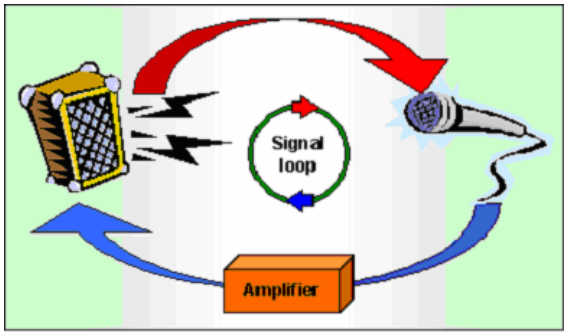

In my view his failure to bring the phenomenon under control accounts for most, if not all, of the problems he encountered. But before we lock at his machines let us briefly examine what feedback, especially regenerative feedback, is and how it applies here. Acoustic feedback, also known as the Larsen effect, is the result of coupling a portion of the output signal back to the input of an amplifier.

We all have noticed the phenomenon when a microphone is placed too close to a loudspeaker by a musician and the whole system starts to howl in an ever increasing pitch and volume.

What happens is that some frequencies get reinforced by the added input, generating harmonics that were inaudible before to a level where they get also reinforced and so on, creating runaway frequencies that are impossible to control once they have started.

As undesirable as the phenomenon is in, say a concert hall, it has been used beneficially in radio receivers to amplify and enhance the input signal.

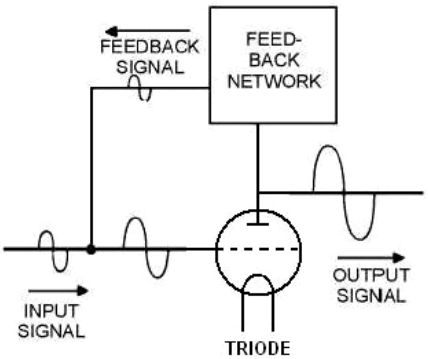

When radio first started it was the humble detector circuit complete with a galena crystal that enabled reception. The signal was weak. After Edison discovered that electrons flowed from a heated filament to a positively charged plate in an evacuated light bulb Dr. Lee deForest, successfully introduced a third element -the grid-between the filament and the plate, creating the triode. By feeding the received signal to the grid and applying a voltage between the filament and

the plate the stronger flow could be controlled by the weak input signal (hence the word valve), which made it possible to amplify the incoming radio signal.

In 1913 the brilliant Edwin Howard Armstrong, while still a student, fed part of the output of the triode back into its input in an effort to improve radio reception. He called the process he called "regenerative feedback." It greatly amplified the signal and, if enough feedback was applied to the input, it also acted as an oscillator.

Keely did not use valves, they were not even on the horizon then, so how could he have struck acoustic feedback?

The clue lies in the construction of his motors.

His motor consists, as you can see in the photograph, of two devices, the liberator and the motor proper which are connected by a wire made from silver, gold and platinum. Both devices, as well as the wire were tuned to a specific frequency with almost unbelievable precision. In addition special resonators were mounted on the devices to ensure maximum resonance. These resonators he calls his diatonic scale. They are clearly visible here. Below are close ups of the liberator with the diatonic scale and the scale on its own.

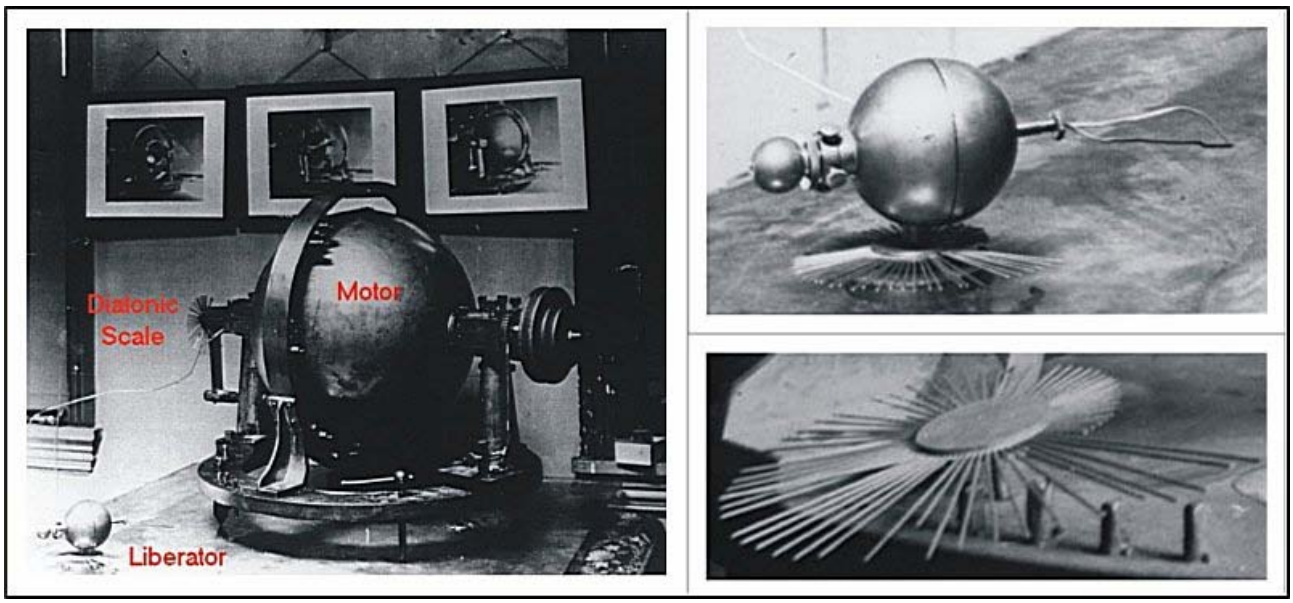

Now we have both, the equivalent of a microphone (liberator) connected a loudspeaker (motor). All we need is some additional energy feeding into the system and we have a closed feedback loop.

Keely claimed that his liberator provided that additional energy, after all that was the whole idea of the thing.

If the arrangement performs the way Keely claimed we have now a real feedback problem. The uncontrolled runaway frequencies created by this arrangement would account for Keely's inability to control the speed of his motor and the sudden reversals. From what I can make out his motors only ever ran for very short periods of time.

Keely was not unaware of the problem, though in my estimation never understood what he was up against and only partially controlled the phenomenon in a somewhat crude fashion.

In one explanation of the procedure required to get his motor to run he says:..... *The localization to the neutral centre is then established by dampening the steel rods, on the scale at the back, representing the thirds, sixths, and ninths, drawing a piece of small gum tube over them, which establishes harmony to the chord mass of the instrument. Concordance is thus effected between the disintegrator and the ninths of the scale at base of transmitters with telephonic head.*

In my view dampening the resonators with gum tubing was his attemt to reduce the feedback without eliminating it, thereby gaining the advantage of further amplification and achieving enhanced amplitude for the higher frequencies.

NOTE: For the amplification to occur the signal that is fed back into the circuit must be in phase with the incoming signal.That means that in Keely's arrangement the length of the wire or tube connecting the two devices is critical. Because the incoming signal travels along the waveguide there is a time delay before it reaches the motor. The feedback signal travels along the same waveguide in the opposite direction also incurring a time delay. The length of the wire or tube must be so calculated that the two signals are in phase at all times at the point of origin.

Keely and Theosophy

It is impossible to talk about the Theosophical Society without mentioning Helena Blavatski , the two being virtually synonymous.

There are a number of biographies of her available that appear to have only one thing in common. The all vary wildly from each other in important detail. I quote here Matthew Mulligan Goldstein, University of Texas, who seems to put it into a nutshell in his introduction.

Although familiar to Yeats scholars for the impression made on the young poet by her peculiar brand of occultism, Helena Petrovna "Madame" Blavatsky (1831-1891) remains for most critics and historians an obscure, if vaguely absurd, figure. The Ukrainian-born aristocrat, accounts of whose life prior to her 1873 arrival in the US are notoriously unreliable, founded the Theosophical Society in New York on September 18, 1875. The charter of the Theosophical Society, the brainchild of Blavatsky and an American traveling companion, Henry Steel Olcott, established the group to teach westerners the value of Asian religions, promote worldwide brotherhood, and "collect and diffuse knowledge of the laws which govern the universe."

And further in his paper:

Helena Blavatsky and Henry Steele Olcott
1888

The adventures Blavatsky is said to have had before passing through Ellis Island include a brief hitch with Garibaldi's troops in Sicily during Italy's war of unification, an adulterous affair with the great Russian tenor Mitrovich, and an apprenticeship with a shadowy band of Egyptian mystics known as the Brotherhood of Luxor.

Blavatsky returned from her globetrotting with a philosophy cobbled together from, among other places, pharonic wisdom texts, Sanskrit poetry, and renaissance neoplatonist tracts, and attempted to launch a movement of intellectuals and religious thinkers devoted to truth-seeking through supernaturalism. Her exotic, Orientalized approach to spiritualist teachings went over exceptionally well, for a while, in both the US and, later, England, where by the 1870s table-rapping, materializations, and planchette-manipulation were rapidly falling out of fashion with the darkened-parlor set.
Her massive 1877 treatise on occult knowledge, Isis Unveiled, most of which Blavatsky claimed to have channeled while in a trancelike state, went through three press runs of a thousand copies apiece the year it was published, and it has since sold half a million copies to date. Well substantiated charges that Blavatsky plagiarized much of the work has done little over the course of the last century to slow its sales.

She moved to India, landing at Bombay Feb 16 1879. By 1882 the Theosophical Society became an international organization, and it was at this time that she moved the headquarters to Adyar near Madras, India.

The following quote is from a pamphlet of the Theosophical Society (undated):

In 1884, while Blavatsky was traveling in Europe, disgruntled TS employees in India went to the missionaries with forged documents, bringing charges of fraud against her. The Society for

Psychical Research (SPR) then sent Richard Hodgson to investigate the charges, and subsequently published an unfavorable report.

Under the strain, Blavatsky's health had broken down, and in 1885 she left India for Europe, where she continued to write The Secret Doctrine, her masterwork. In 1887 she settled in London, and began a new magazine Lucifer ("Light-bringer"). In 1888 The Secret Doctrine was published and, in the same year, aided by W. Q. Judge, she formed the Esoteric Section of The Theosophical Society. Shortly afterwards she wrote The Key to Theosophy and The Voice of the Silence. In 1890 she became head of a newly-established European Section. She died in London on May 8, 1891 after many years of chronic illness.

This is a rough and ready biography cobbled together from the bits where most biographers agree.

It is fair to say that even in the most sympathetic biographies Helena Blavatsky does not come across as a very nice person. She was ruthless, autocratic, secretive, power hungry, manipulative and outright dishonest. She was also articulate and highly intelligent. Her command of English was excellent, considering she learned the language in a later stage of her life.

She swore like a trooper, chainsmoked cigarettes, indulged in marijuana frequently and was prone to throw temper tantrums and suffer psychotic or neurotic episodes. Although she was known to have affairs, some adulterous, was married twice and had a child, a hunchbacked son who died at the age of five, by her lover she maintained in later years that she was still a virgin.

Just shy of sixty, she died on May 8, 1891, after years of chronic illness caused by her obesity and lifestyle.

In Keely's time she was the undisputed leader of the Theosophical Society. Her word was law and in many ways still is after all these years.

She preyed on the gullible, the desperate and the confused who saw in her the master who would lead them out of strife and into enlightenment.

If her followers were wealthy, so much the better. They were singled out for special treatment.

For Blavatsky occultism was the road to unimaginable power and eventual immortality. It is evident from her writings that she felt that there was occult knowledge "out there" that would open that road for her if only she could get her hands on it.

Her approach was simple and brilliant. She appointed the Theosophical Society, and thereby herself, as the guardian of occult knowledge on Earth. Using the organisation and the wherewithal of her wealthy clients she acquired by any means possible anything that was deemed of interest.

The Theosophical Society has one of the largest collections of occult material on the planet, possibly rivalling the collection held by the Vatican.

Some of this collection is available to members for study. Much of it, the really interesting stuff, is only accessible to members that are deemed sufficiently advanced and worthy of specific materials that are strictly controlled by the inner group. I have it on good authority that there is also one section that is locked up for all until some awaited cosmic event takes place, perhaps the return of Helena Blavatsky.

The masses are fed the usual garbage, mostly writings by Blavatski herself, Charles Leadbeater, who was for sometime exiled to Ceylon because of his naughty habit of introducing little boys to the art of masturbation and was later readmitted to the society for whatever reason I cannot make out, Alice Bailey, whose voluminous incomprehensible works bear the following disclaimer *"The books that I have written are sent out with no claim for their acceptance. They may, or may not, be correct, true and useful. It is for you to ascertain their truth by right practice and by the exercise of the intuition"*, Annie Besant, ex Women's Liberationist, Fabianist and Marxist who turned to Theosophy in 1889 after meeting Blavatsky and became her successor after Blavatsky's death in 1891, and of course Clara Bloomfield Moore.

Keely was a God-sent for Blavatski. His machines and his explanations were in line with her own thinking and she firmly believed he was uncovering the secret of ultimate power. This she wanted for herself.

I am certain it was Blavatski that that convinced Clara Bloomfield-Moore to fund Keely when he looked like going bankrupt. In today's money Bloomfield-Moore funded Kelly to the tune of many millions.

We know that Keely wrote several treatises, all of which have disappeared. Bloomfield-Moore lists some of them in her book and quotes from others. Helena Blavatski quotes from the same sources.

It is evident that the Theosophical Society was in possession of these texts at the time or both these ladies could not have written what they did. Ask about them today and the Society will deny having any such material. Stuff like that does not get lost in the archives of the Theosophical Society.

It is further evident that the Theosophical Society had and still has a vested interest in suppressing Keely's work.

In Chapter X of The Secret Doctrine by Madame Blavatsky it is made perfectly clear how powerful Keely's discoveries are and why they must be suppressed by any means possible. I have included the chapter unedited save for the highlighting of the relevant passages.

It is noteworthy here that everything we know about Keely, apart from newspaper articles and a few photographs has come to us via the Theosophical Society, suitably edited I should judge. More of that in my chapter What Happened to Keely's Work.

What Happened to Keely's Work

After Keely's death in November 1898 his machines and papers were packed and sent to Thomas Burton Kinraide in Boston.

Kinraide had been a friend of Keely's and was well acquainted with Keely's work. He was an electrical engineer with several patents to his name, a thriving business with high tension coils of his own design that were used in X-ray equipment and sold in many countries. He had an excellent reputation. He also had his own research laboratory in Boston and appears to have been a prominent citizen.

On the 4th of January 20 boxes with the papers and machines arrived in Boston for his evaluation, an event that was duly noted in the press.

Shortly thereafter the exposure of Keely's Fraud was published a move that was openly criticised by Kinraide. I cannot find out what it was that Kinraide said, but it must have been quite severe to force Ransom Bridge, who was evidently involved in the exposure to go to the press and offer an explanation in answer to Kinraide's criticism. The attached clipping is dated Jan 30th.

About a week later an article was published noting that Kinraide had raised a number of concerns with the directors regarding the exposure and that two directors would come to Boston to discuss matters.

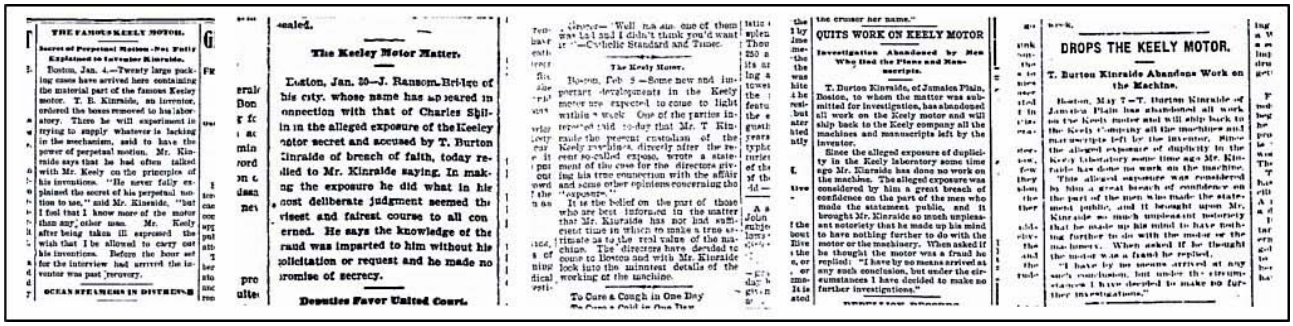

THE FAMOUS KEELY MOTOR.

Secret of Perpetual Motion Not Fully Explained to Inventor Kinraide.

Boston, Jan. 4.—Twenty large packing cases have arrived here containing the material part of the famous Keeley motor. T. B. Kinraide, an inventor, ordered the boxes removed to his laboratory. There he will experiment in trying to supply whatever is lacking in the mechanism, said to have the power of perpetual motion. Mr. Kinraide says that he had often talked with Mr. Keely on the principles of his invention. "He never fully explained the secret of his perpetual motion to me," said Mr. Kinraide, "but I feel that I know more of the motor than any other man. Mr. Keely after being taken ill expressed the wish that I be allowed to carry out his inventions. Before the hour set for the interview had arrived the inventor was past recovery.

OCEAN STEAMERS IN DISTRESS

sealed.

The Keeley Motor Matter.

Boston, Jan. 30—J. Ransom Bridge of this city, whose name has appeared in connection with that of Charles Shiln in the alleged exposure of the Keeley motor secret and accused by T. Burton Kinraide of breach of faith, today replied to Mr. Kinraide saying. In making the exposure he did what in his most deliberate judgment seemed the wisest and fairest course to all concerned. He says the knowledge of the fraud was imparted to him without his solicitation or request and he made no promise of secrecy.

Deputies Favor United Court.

The Keely Motor.

Boston, Feb 5—Some new and important developments in the Keely motor are expected to come to light within a week. One of the parties interested said today that Mr. T. Kinraide the present custodian of the Keely machines, directly after the recent so-called exposure, wrote a statement of the case for the directors giving his true connection with the affair and some other opinions concerning the "exposure."

It is the belief on the part of those who are best informed in the matter that Mr. Kinraide has not had sufficient time in which to make a true estimate as to the real value of the machine. The directors have decided to come to Boston and with Mr. Kinraide look into the minutest details of the working of the machine.

To Cure a Cough in One Day

QUITS WORK ON KEELY MOTOR

Investigation Abandoned by Man Who Had the Plans and Manuscripts.

T. Burton Kinraide, of Jamaica Plain, Boston, to whom the matter was submitted for investigation, has abandoned all work on the Keely motor and will ship back to the Keely company all the machines and manuscripts left by the inventor.

Since the alleged exposure of duplicity in the Keely laboratory some time ago Mr. Kinraide has done no work on the machine. The alleged exposure was considered by him a great breach of confidence on the part of the men who made the statement public, and it brought Mr. Kinraide so much unpleasant notoriety that he made up his mind to have nothing further to do with the motor or the machinery. When asked if he thought the motor was a fraud he replied: "I have by no means arrived at any such conclusion, but under the circumstances I have decided to make no further investigations."

DROPS THE KEELY MOTOR.

T. Burton Kinraide Abandons Work on the Machine.

Boston, May 7—T. Burton Kinraide of Jamaica Plain has abandoned all work on the Keely motor and will ship back to the Keely company all the machines and manuscripts left by the inventor. Since the alleged exposure of duplicity in the Keely laboratory some time ago Mr. Kinraide has done no work on the machine. This alleged exposure was considered by him a great breach of confidence on the part of the men who made the statement public, and it brought upon Mr. Kinraide so much unpleasant notoriety that he made up his mind to have nothing further to do with the motor or the machinery. When asked if he thought the motor was a fraud he replied.

"I have by no means arrived at any such conclusion, but under the circumstances I have decided to make no further investigations."

The next clippings, one undated and one dated May 7th, report that Kinraide had distanced himself from the project and would send all the material he had received back to the company.

It would appear that Kinraide did not want to risk his reputation and his thriving business by being associated with what had become a major scandal.

He evidently did what he had said for nothing more is heard of him in connection with the Keely affair as it would have been had he kept what was clearly not his property.

The newspaper clippings and photograph published here come from Jeff Behary who has done a lot of excellent research on Kinraide and his achievements.

More on this amazing man can be found on Jeff's site: The Turn Of The Century Electrotherapy Museum Thanks Jeff.

After that nothing more is heard about the 20 boxes except some rumour that they had been shipped to London.

This is perfectly believable since Clara Bloomfield-Moore had an obvious claim on them and she was resident in London at the time.

From there they would have been locked up by the Theosophical Society on the direction of Annie Besant as being too dangerous for public disclosure. The society would have also collected by one means or another any other original work by Keely they could lay their hands on. They must have done an excellent job world wide for there is hardly anything left.

At that time Annie Besant was the well established head of the organisation. In spite of her cute name and her innocent looks she was high spirited, pragmatic and radical in her views and very effective in everything she did. Totally ruthless when it came to her convictions she used her position in the Theosophical Society to the limit.

She was also a fighter, creating India's first political party called the Home Rule League, organised demonstrations, public meetings and political agitations and subsequently spent some time in gaol, locked up by the British for her activities in the independence movement.

Because of a massive outcry, led by, amongst others, Mahatma Ghandi, the British were forced to release her, sparking massive jubilations all over India. She actually was president of India's Congress Party for a year, not bad going for an Irish girl who had avocated home rule for Ireland all her life and had done all she could to foster a similar idea in India.

It is a little known fact that Ghandi was given the title Mahatma, meaning Great Soul, by Annie Besant, a name by which he will be forever known to history. So is the fact that Nehru, India's first Prime Minister was educated by a theosophist tutor.

Annie Besant died in Adyar, India in 1933.

Sonoluminescence

The following article I found on the net. Unfortunately I have not yet been able to find out its author and cannot give credit, which is evidently due, because the article is telling and accurate. It is true that Keely does talk about the phenomenon, which is interesting, because it was not until 1934 that it was re-discovered at the University of Cologne as a result of work on sonar. But no more comment, here it is:

SONOLUMINESCENCE

Keely's work also involved the idea that when water was vibrated at certain frequencies, visible light would emerge within it. He tied this in with the properties of sound to harness the aetheric energies. This phenomenon has now been duplicated through an experiment that is known as "Sonoluminescence." In this experiment, a spherical flask that is filled with water is vibrated at a certain frequency, low in pitch but very high in strength. In the below image we see a simple laboratory setup for this process, with the spherical flask in a clamp and high-intensity speakers mounted to either side of the sphere, with red power wires attached.

Photo from William Andrew Steer's laboratory research.

When the speakers are running, this arrangement causes a sonic force to be directed towards the exact center of the sphere that the

flask makes. Then, the scientist must introduce an air bubble into the water and carefully try to manipulate it into the center that the sound forces are pressing towards. Once an air bubble is properly fixed into the center, the vibrations will allow it to stay there, and an amazing thing happens; it starts emitting light.

At first, the scientists studying this believed that the light was constant, but now it has been shown through delicate measurements to be pulsating at a very rapid speed. The next image below shows a much more high-tech setup, where the spherical flask is housed within a special apparatus that obscures most of the flask from view.

No conventional explanation for why this might be happening exists, and many scientists have tried to explain it in conventional models. The most popular idea is that the extreme forces of sound create nuclear fusion, thus leading to the humorous term "the Star in a Jar." However, this flies completely in the face of the experiment itself, since the more that the water is cooled, the more light you get! By cooling the water, the amount of molecular vibration in it decreases, thus making it even easier for the sound vibrations to resonate purely.

Other conventional explanations for sonoluminescence sound equally absurd. However, we do know for a fact that the bubble inside shrinks significantly in size every time that a pulse of light is released, and this is occurring at extremely fast rates of speed. It is believed that this collapse creates such intense pressure that great energy is released, but the source of this energy remains a mystery to the mainstream.

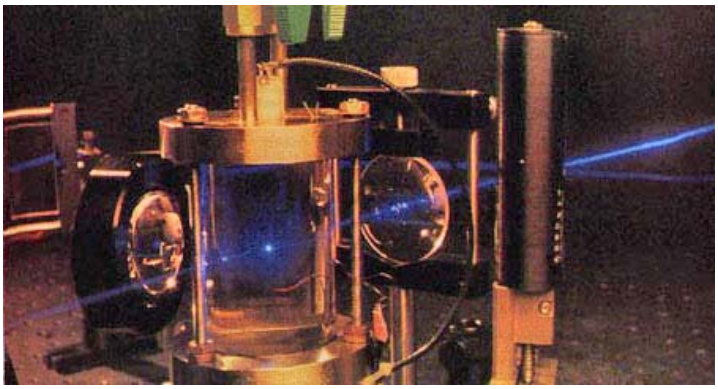

Photo from an article by Aaron Levinson.

Although John Keely mentioned this phenomenon in his own work, general credit is given to H. Frenzel and H. Schultes at the University of Cologne in 1934 as being the first to discover this. They were using very strong ultrasonic fields in water as part of their wartime research in marine acoustic radar. Although they were not looking for or expecting such results, they discovered to their surprise that clouds of unpredictable and non-synchronous flashing bubbles of light were formed in the water in front of them. This is now known as "multi-bubble sonoluminescence" or MBSL. Little was done to advance this study until 1988, when D. Felipe Gaitan was able to trap a single bubble at the center of a flask that was vibrating at its own acoustic resonance level, and sonoluminescence was then seen.

Once Gaitan accomplished this effect, he became rather disinterested in pursuing it further, and Dr. S. Putterman et al. subsequently picked it up at UCLA, California. It was Putterman et al.'s research that determined that the internal bubble compresses to 1 / 100,000th of its original size due to the pressure of the sound, during which time the light is released. The flash of light is shorter than 100 picoseconds (or trillionths of a second) in duration, vibrating with extreme regularity every 100 millionths of a second. Putterman's studies eventually made it into Scientific American in February 1995, which dramatically increased public awareness and interest in the phenomenon.

An article excerpt from the Wall Street Journal on October 15, 1991 helps us to truly understand how significant this is: A photon of blue light given off by a single atom carries an energy of 3.5 electron volts. This is a trillion times more energy than any single atom in the tiny bubbles could have gained from the sound waves. He [Putterman] speculates that as each bubble implodes to about 1/100,000 of its original [size] volume, the energy and atoms in the bubble are concentrated to a tiny point.

The flash occurs when a million atoms simultaneously release this concentrated energy by giving off photons of blue light. So, we can see that if we are producing a trillion times more energy than exists in the sound waves themselves in this experiment, then quite an incredible amount of energy is coming through from "nowhere." This is typically seen as a fusion reaction. However, as

we have already said, by concentrating sound waves in such a fashion as this we can open up a "gateway" for the high-pressured aetheric "fluid" to flow into our physical reality, forming light, heat and energy.

Furthermore, the shape of the sphere is very important in all of this, as it helps to centralize the vibrations. An article by William Andrew Steer, working in the undergraduate teaching laboratory in the Physics Department of University College London, reveals that: millimeter difference between polar and equatorial diameters, then the sphericity of the flask is very important. If there is more than a he resonance becomes very much broader and less strong, requiring more electrical drive to achieve the same sound intensity in the flask.

Cymatics, a Way of Looking at Wave Propagation

The word cymatics (from the Greek kyma, meaning wave) is of fairly recent origin. The technique is not. It was Ernst Chladni who conducted the first experiments and published his findings in 1787 in a book called: Entdeckungen ueber die Theorie des Klanges (Discoveries Concerning the Theory of Music). This and other pioneering works by him laid in effect the foundation for that part of physics that we now call acoustics.

One of his major successes, the one that is relevant here, was to make sound waves visible. He did this by clamping a metal plate, scattering fine sand over the surface and vibrating the plate by drawing a rosined violin bow over the edge.

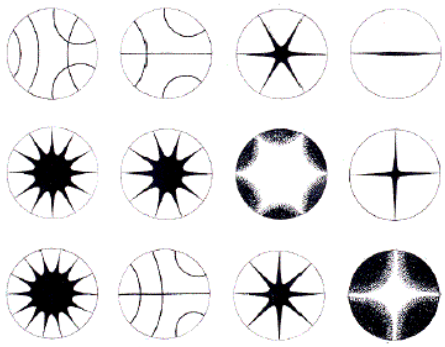

Depending on the size of the plate, where it was clamped, its composition, thickness and shape and where on the edge the bow was drawn, different patterns emerged in the sand, concentrating the sand on the nodal points where there was no vibration and drawing it away from the vibrating sections.

Typical Examples of Chladni Figures

Chladni plates had a distinct disadvantage. They could not be used to analyse different frequencies as the working of the device depended on the frequency of the metal plate which was dependent on its construction. To overcome this restriction a device was created that allowed a wide range of frequencies to become visible on the same apparatus. In Keely's time Rudolf Koenig offered such a device for sale that he called the paper membrane.

The concept was simple. A paper or thin rubber sheet was drawn over a wooden ring, a second ring was drawn over the first trapping the paper or rubber between them and tightened by wooden screws. Similar to a skin on a drum.

Koenigs Apparatus

It was designed to be used in conjunction with an elliptical bell over which a rosined bow was drawn. Depending on which part of the rim the bow was drawn a number of different sounds could be produced. As before the membrane was covered with a thin layer of fine sand and the emerging patterns studied.

I believe Keely used a similar device to study the effects of a combination of resonators. He talks all the time about nodal points and that was the way to make them visible at the time.

Hans Jenny, the Swiss medical doctor and researcher who coined the term cymatics did little more than to adapt Koenigs membrane to modern technology by using loudspeakers and crystal oscillators instead of resonators. That way he could produce precise wanted frequencies at will. He then photographed and filmed the emerging patterns using the latest photographic techniques.

Some of the photographs and films he produced are stunning. Here is a small selection of photos:

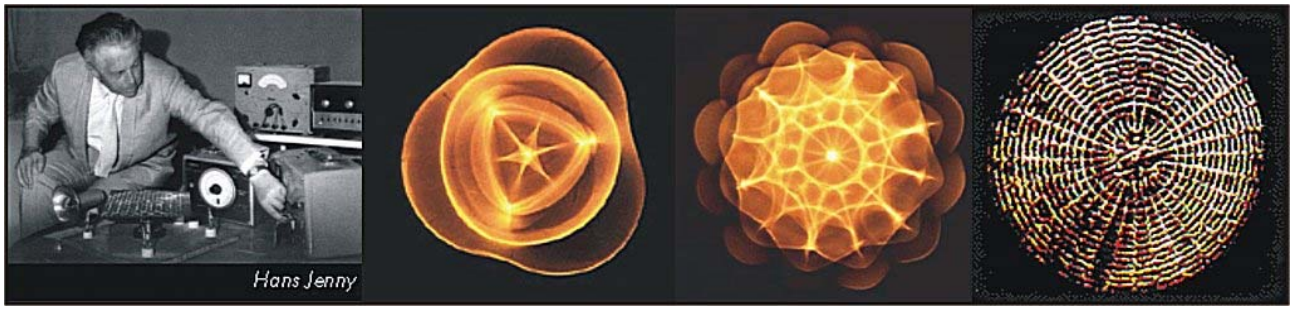

In 1967 he published a book, curiously written as a bilingual volume with the cumbersome title: Kymatik -Wellen und Schwingungen mit ihrer Struktur und Dynamik/ Cymatics - The Structure and Dynamics of Waves and Vibrations.

In spite of the many excellent ad readily repeatable experiments he documents one gets the feeling that his writings and his experiments serve a different agenda.

He cannot help himself to foray into religion with his explanations and elucidations and appears to advocate the idea of "Intelligent Design" only thinly veiled in scientific jargon. The idea of Intelligent Design of course is simply an attempt to make Creationism palatable to a modern society.

The following quotes (in italics) are from an article by Peter Pettersson, translated by Yarrow Cleaves entitled "Cymatics - The Science of the Future?" which is an excellent and accurate precis of Jenny's work and more suitable here than direct passages from his book.

Jenny noticed that when the vowels of the ancient languages of Hebrew and Sanskrit were pronounced, the sand took the shape of the written symbols for these vowels, while our modern languages, on the other hand, did not generate the same result! How is this possible? Did the ancient Hebrews and Indians know this? Is there something to the concept of "sacred language," which both of these are sometimes called? What qualities do these "sacred languages," among which Tibetan, Egyptian and Chinese are often numbered, possess? Do they have the power to influence and transform physical reality, to create things through their inherent power, or, to take a concrete example, through the recitation or singing of sacred texts, to heal a person who has gone "out of tune"?

Trinity

In the closing chapter of the book Cymatics, Jenny sums up these phenomena in a three-part unity. The fundamental and generative power is in the vibration which, with its periodicity, sustains phenomena with its two poles. At one pole we have form, the figurative pattern. At the other is motion, the dynamic process.

These three fields - vibration and periodicity as the ground field, and form and motion as the two poles - constitute an indivisible whole, Jenny says, even though one can dominate sometimes.

Be that as it may he nevertheless describes some interesting phenomena. One experiment in particular stands out.

An interesting phenomenon appeared when he took a vibrating plate covered with liquid and tilted it.The liquid did not yield to gravitational influence and run off the vibrating plate but stayed on and went on constructing new shapes as though nothing had happened. If, however, the oscillation was then turned off, the liquid began to run, but if he was really fast and got the vibrations going again, he could get the liquid back in place on the plate. According to Jenny, this was an example of an antigravitational effect created by vibrations.

This is in effect something that Keely talks about when he tells us that gravity can be influenced by sonic vibrations.

It is a pity that the good doctor did not investigate complex sounds such as chords. This is an area I feel that needs looking into.

I will include in the experimenters section the design of some simple devices capable of demonstrating these phenomena for those that wish to look into the matter further.

NOTE:

An interesting observation is described by a cymatics experimenter on one of the cymatics websites. Unfortunately he does not give his name. (highlighting is mine):

If the piezo transducer is driven at very high, or ultrasonic frequencies, and with a large amplitude it is possible to 'atomize' liquids such as water. This creates a fine mist that resembles steam in appearance. Such mists are actually tiny droplets suspended in the air yet they behave as if they were all part of a single dense fluid medium.

Is this a precondition that has to be created to achieve the dissociation of water?

Where do we go from here?

Well, there will be a lot more on the subject in the coming months, most of what I want to say has been written and edited (well, sort of).

I will post these chapters one by one as I manage to put them in HTML form. The coming chapters will provide a lot more detail, but the fundamental assessment of mine you already have. I hope it will help you with your understanding of what Keely was all about.

I will also give detailled instructions in how in my view a workable model can be built using microprocessors and specially written computer programmes. Much of what is needed is already available but I will not say too much at this stage.

If you find some interest in what I have written so far I would love it if you dropped me a note.

Hans von Lieven

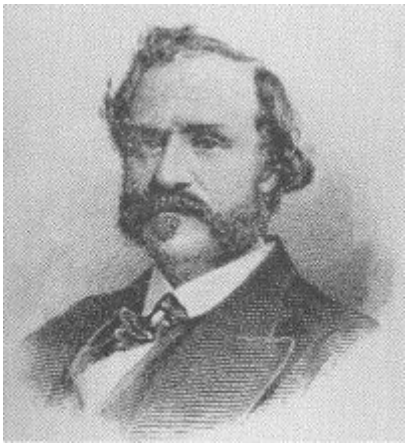

APENDIX

A short Biography compiled by Mark Baker

John Ernst Worrell Keely
1827-1898

The inventor John Worrell Keely was a carpenter by trade, born in Philadelphia on September 3rd 1837 and who died there on November 18th 1898. Though not a highly educated man, he was a competent mechanic and a very clever talker.

Keely's parents died in an epidemic when he was still a boy and he was raised by grandparents. His grandfather Ernst had been a composer who led the Baden-Baden orchestra in Germany before immigrating to Philadelphia. Ernst quickly found that his grandson was a prodigy on the violin and gave him much help in learning the fundamentals of music.

A musical career did not appeal to the adventuresome genius as he found the science of vibrations upon which music is based a much greater attraction. Keely was particularly intrigued with the famous statement by Paganini that he could, given the mass chord of a bridge, destroy it by playing the mass chord on his violin.

He built his first free-energy motor while still a young boy. It was a series of 17 conch shells, 8 of them affixed to a small wheel forming the rotor. The stator consisted of 9 conches affixed around the outer periphery of the wheel but not attached to the rotating wheel. Keely had ground the shells so that they were all attuned to the same frequency. When the "motor" was put together the wheel slowly rotated on its axis, clunking and clicking because of imbalances, but nevertheless self-operative. Keely's enterprising nature led him to the idea of putting the entire assembly into a box and charging his neighbours and friends a penny to look inside to see the wheel turning.

While yet a young man, Keely learned carpentry and used his income to pursue his experiments in sound vibrations. About 1866 while he was pursuing a line of experimentation in sonic vibrations, he discovered a hitherto unknown energy. He was subjecting water to sonic vibrations and had an explosion which wrecked his apparatus. Six years of intensive experiments

passed before he was able to produce this energy at will. He found that 42,800 vibrations per second would vaporise water instantly into energy. He named this energy Etheric Force and the process of changing the substance of water into etheric force Dissociation.

With this claim to have discovered a new force in mechanics which was to work wonders, he succeeded in inducing a dozen engineers and venture capitalists to organize a Keely Motor Company in New York in 1872, and to subscribe ten thousand dollars to begin the construction of the motor. He immediately applied this money to the purchase of material and the construction of machinery, setting up a laboratory at 1420 North Twentieth Street in Philadelphia. On 10th November 1874 he gave a demonstration of the motor before a small company of prominent citizens of Philadelphia.

At the first demonstration of the machine in 1874, or so much of it as was exhibited, it was called a "vibratory-generator"; in a later demonstration it was referred to as a "hydro-pneumatic-pulsating-vacuum-engine". Equally 'flexible' was Keely's technical jargon for describing how his machine worked: the New Science Review for April 1895 has an article discussing the action of the motor, entitled "The Operation of the Vibratory Circuit", by Mr. Keely himself. It is an almost incredible jumble of technical terms: 'molecular vibration', 'sympathetic equilibrium', 'oscillation of the atom', 'etheric disintegration','quadruple negative harmonics', 'atomic triplets'.

What did remain constant was Keely's method for activating the device. Understanding the power of showmanship, he would run a tuning fork across the strings of a violin to generate the right acoustic resonance to fire the motor.

He anchored his analysis of nature to a fundamental "trinity." Every force and practically everything else was "triune." For him the sacred number was not seven but three. The basic idea of Keely's theory was that if one could catch and impose upon matter, by sympathetic vibration, the extremely rapid vibration that characterises every atom and molecule, then, by the resonance of atoms, he could effect a recombination that would liberate an incalculable amount of energy.

Keely declared that with one quart of water, he would be able to send a train of cars from Philadelphia to San Francisco, and that to propel a steamship from New York to Liverpool and return would require just about one gallon of the same." (Julius Moritzen, in the The Cosmopolitan for April 1899.) One spectator at a demonstration said that a pint of water poured into a cylinder seemed to work great wonders. " The gauge showed a pressure of more than fifty thousand pounds to the square inch. Great ropes were torn apart, iron bars broken in two or twisted out of shape, bullets discharged through twelve inch planks, by a force which could not be determined.

Throught the twenty-seven years that he ran the company, John Keely was dogged by legal problems with his investors and accusations of fraud. As Mr. Park Benjamin wrote in 1886, "a power-creating machine of no known form or mode of operation, when based on notions upset eighty years ago, is a wonderful thing. To the confusion of the skeptics, the Keely motor is here, that is, not here but to be here three weeks hence. It has been going to be here three hence for twelve years." ("The Persistence of the Keely Motor", by Park Benjamin, The Forum for June 1886.)

Quite how fraud was being performed was a matter for much conjecture: the New York Times and Electricity magazine believed that his demonstrations were really pneumatic or electrical effects respectively. There were even stories of sorcery being involved in his demonstrations. It has been suggested that John Keely was a prominent member of the Theosophic Society founded by the spiritualist Madame Blavatsky in 1875. In the mid 1890's it was speculated that he was the mahatma (or master) of the Philadelphia lodge.

While Keely had his detractors, he had supporters as well. Major Ricarde-Seaver, Fellow of the Royal Society of Edinburgh, went to visit Keely in Philadelphia to convince himself as to the real nature of Keely's accomplishments. After thoroughly examining his system Ricarde-Seaver returned to England saying that "Keely was working with, and had apparent command over forces, the nature, or even the very existence of which, was absolutely unknown to him, and so far as he is aware to modern science."

Other supporters of distinction included Professor Joseph M. Leidy, M.D., of Pennsylvania University, awarded Lyell Medal in 1884 when in London and the Cuvier Award in 1888 from the French Academy of Science when in France. Also James M. Wilcox, M.D., author of Rational Cosmology". They witnessed Keely's demonstrations of sending etheric force through wires of gold, silver, and platinum.

When the inventor's funds began to run low, he succeeded in keeping afloat financially with further investments of capital from his most ardent supporter, Mrs. Clara Jessup Bloomfield-Moore, widow of a wealthy paper manufacturer and writer. By 1890 Keely declared he was on the eve of success; he had arrived at that crucial stage, lacking just the one slight adjustment.

He never achieved that final adjustment: John Worrell Keely died in Philadelphia in 1898 after being knocked down by a streetcar. After his death the motor was taken to Boston and set up, but it failed to exhibit any "etheric force" when subjected to any vibratory influence, after its removal form the laboratory in Philadelphia.

Harmonics.

What are they and how do they behave?

Let us look at a simple instrument with a single string. (Fig. 1)

Assuming that the string is taut it will emit a sound when plucked. The frequency of the sound depends on the distance between A and B, the diameter and composition of the string and the amount of tension on the string.

Let us assume we have tuned the string to A = 440, we hear the note A or, in musical notation:

But is that all we hear? In this arrangement it is not. You see the note A = 440 is generated by a movement between the nodes (or endpoints in this case) that looks like this: (Fig 2)

But that is not all that it does.

Parts of the string or better, equal subdivisions of the string take on a life of their own and resonate together with the fundamental note. These notes produced by those sections are known as overtones or harmonics

The laws governing harmonics are unbelievably precise. If for instance we have a string tuned to A = 440 and we halve it, both halves will sound at the frequency of 880 which is A one octave higher.

Assuming the tuning of 440 is precise, the halving of the string accurate and the string is of equal diameter and composition over the entire length, the resultant harmonic is precisely 880, not anywhere between 880.1111 and 879.9999. It is important to remember this.

So let us have a look at a few harmonics of a string.

Remember that the sections involved are always precise subdivisions of the entire length.

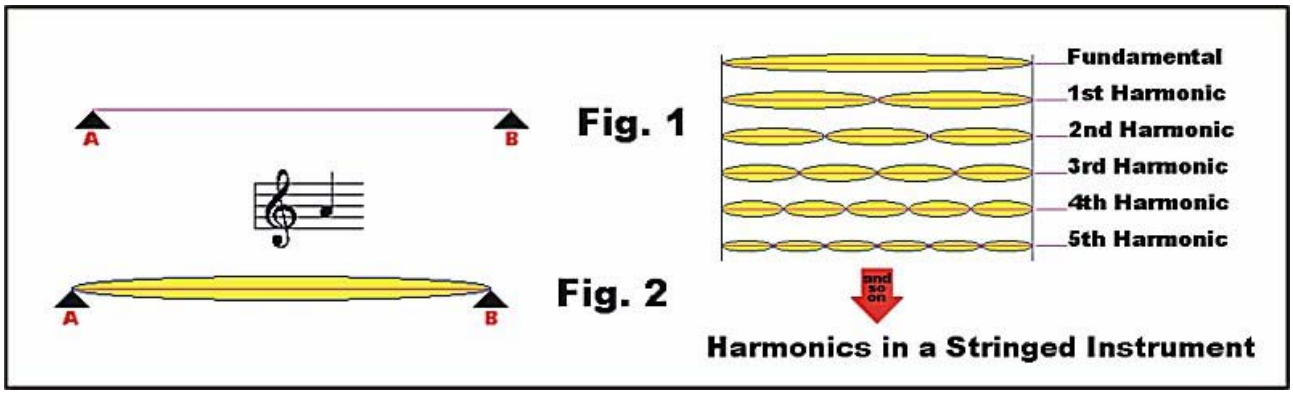

The harmonics reach quickly frequencies that pass into the inaudible and beyond. They are believed to extend into infinity.

The amplitude (volume) of the harmonics is always smaller than the amplitude of the fundamental.

Now, all this happens as it is stated here only in a pure system. Using a drawn wire for instance we have a fairly pure resonator as in a drawn wire the molecules have been aligned in the direction of the wire in the drawing process and the thickness is even. If you were to use a rubber band for instance the results would be quite different.

Because of variation in thickness and composition along the length of a rubber band the subdivisions produce a variety of harmonics that differ from each other, thus cancelling each other out or creating beat frequencies.

That is why you cannot create with a stretched rubber band the same quality of sound as with a stretched wire, even though the fundamental note of both is precisely the same

Enharmonic and Microtonal Scales.

Keely time and again uses the term enharmonic. From what I have read in comments about Keely's work it is clear the term is poorly understood. Most commentators appear to understand the term to mean disharmonic. It means quite the opposite.

The term enharmonic comes from the Greek and means "of one harmony". An enharmonic major third are two notes that have the precise relationship of 5/4 in any key. We are talking of pure natural harmonics of course, not some scale contrived to make playing a tune easier.

In the equal temered scale commonly used today the notes C-sharp and D-flat are the same, both being represented by the black key between C and D. This is achieved by elevating the flat and diminishing the sharp. For most purposes this is an adequate arrangement.

In reality C-sharp and D-flat are not the same note. They are separated by the famous Pythagorean comma or 23 cents (100 cents equals one semitone).

By putting two black keys between C and D and any other two notes that are separated by a full tone we can now play pure enharmonic thirds in any key on the diatonic scale.

For that purpose keyboards were built for organs and other keyboard instruments that used this arrangement.

I have ever only seen two organs who had two black keys for every black key in the conventional layout. Unfortunately I could not obtain permission to play either instrument so I have to rely on musical literature as to the audible difference in playing a major third.

When the music is written in, say the key of B-flat or F-sharp, a further subdivision becomes necessary in order to preserve the correct relationship between notes. The interval C - D is then subdivided into

C - D-double flat - D-flat - C-sharp - C-double sharp - D

Also the notes separated by a semitone, such as B and C, require two subdivisions:

B - C-double flat - B-double sharp - C.

In other words four black keys for notes separated by a full tone and two black keys for notes separated by a semitone, all separated by a Pythagorean comma.

Such a keyboard is capable of playing pure major thirds in all chromatic keys. Instruments with 31 notes to the octave, like this, have actually been built.

So, what would happen if we decided to play in the key of B-double flat?

I am afraid further subdivisions are required, but this would bring us into the realm of microtonal music, a subject that far exceeds the scope of this paper. For those that are interested, there is excellent literature available on the net and in libraries.

So, what is Keely talking about when he talks about "antagonistic enharmonic thirds"?

At this stage I cannot definitively say what "antagonistic" refers to, my best guess is that the chord is antagonistic to certain discordant molecular aggregations within a given chord mass and is capable of aligning these elements for his purposes. Keely leads us to assume this, some further research is evidently needed here.

The knowledge of enharmonic scales is really only important to gain an understanding of what Keely is talking about, for he speaks in those terms. When dealing with precise harmonic relationships in terms of frequency we do not need to know all the ins and outs of enharmonic and microtonal scales. I have only included this here to enable the reader to understand that, difficult though it might be to understand Keely's terminology, the man was talking perfect sense and not the pseudo-scientific gibberish that he was so often accused of.

Keely's Forty Laws of Sympathetic Vibratory Physics

(1) Law of Matter and Force

"Coextensive and coeternal with space and duration, there exists an infinite and unchangeable quantity of atomoles, the base of all matter; these are in a state of constant vibratory motion, infinite in extent, unchangeable in quantity, the initial of all forms of energy."

(2) Law of Corporeal Vibrations

"All coherent aggregates when isolated from like bodies, or when immersed or confined in media composed of matter in a different state, vibrate at a given ascertainable pitch."

(3) Law of Corporeal Oscillations

"All coherent aggregates not isolated from like bodies, oscillate at a period-frequency varying with the tensions that augment and diminish the state of equilibrium."

(4) Law of Harmonic Vibrations

"All coherent aggregates are perpetually vibrating at a period-frequency corresponding to some harmonic ratio of the fundamental pitch of the vibrating body; this pitch is a multiple of the pitch of the atomole."

(5) Law of Transmissive Vibraic Energy

"All oscillating and vibrating coherent aggregates create, in the media in which they are immersed, outwardly propagated concentric waves of alternate condensation and rarefaction, having a period-frequency identical with the pitch of the aggregate."

Scholium: All forms of transmissive energy can be focussed, reflected, refracted, diffracted, transformed, and diminished in intensity inversely as the square of the distance."

(6) Law of Sympathetic Oscillation

"Coherent aggregates immersed in a medium pulsating at their natural pitch simultaneously oscillate with the same frequency, whether the pitch of the medium be a unison, or any harmonic of the fundamental pitch of the creative aggregate."

(7) Law of Attraction

"Juxtaposed coherent aggregates vibrating in unison, or harmonic ration, are mutually attracted."

(8) Law of Repulsion

"Juxtaposed coherent aggregates vibrating in discord are mutually repelled."

(9) Law of Cycles

"Coherent aggregates harmonically united constitute centers of vibration bearing relation to the fundamental pitch not multiples of the harmonic pitch, and the production of secondary unions between themselves generate pitches that are discords, either in their unisons, or overtones with the original pitch; from harmony is generated discord, the inevitable cause of perpetual transformation."

(10) Law of Harmonic Pitch

"Any aggregate in a state of vibration develops in addition to its fundamental pitch a series of vibration in symmetrical sub-multiple portions of itself, bearing ratios of one, two, three, or more times its fundamental pitch."

(11) Law of Force

"Energy manifests itself in three forms: Creative, the vibrating aggregate; Transmissive, being the propagation of isochronous waves through the media in which it is immersed; Attractive, being its action upon other aggregates capable of vibrating in unisons or harmony."

(12) Law of Oscillating Atomic Substances

"Coherent atomic substances are capable of oscillating at a pitch varying directly as the density, and inversely as the linear dimensions from one period of frequency per unit of time to the 21st octave above, producing the creative force of Sonity, whose transmissive force (Sound) is propagated through the media of solids, liquids, and gases, and whose static effect (Sonism) produces attractions and repulsions between sympathetically vibrating bodies according to the Law of Harmonic Attraction and Repulsion."

(13) Law of Sono-thermity

"Internal vibrations of atomic substances and atomic molecules are capable of vibrating at a period-frequency directly as their density, inversely as their linear dimensions, directly as the coefficient of their tension from the 21st to the 42nd octaves, producing the creative force (Sono-thermity), whose transmissive force (Sono-therm) is propagated in solid, liquid, gaseous, and ultra-gaseous media, statically producing adhesions and molecular unions, or disintegration, according to the Law of Harmonic Attraction and Repulsion."

(14) Law of Oscillating Atoms

"All atoms when in a state of tension are capable of oscillating at a pitch inversely as the cube of their atomic weights, and directly as their tension from 42 to 63 octaves per second, producing the creative forcce (Thermism), whose transmissive force (Rad-energy) propagated in solid, liquid, and gaseous ether, produces the static effects (Cohesion and Chemism) on other atoms of association, or dissociation, according to the Law of Harmonic Attraction and Repulsion.

Scholium: Dark radiant heat begins at absolute zero temperature, and extends through light, chemical rays, actinic rays, and infra-violet rays, up to the dissociation of all molecules to the 63rd octave."

(15) Law of Vibrating Atomolic Substances

"Atoms are capable of vibrating within themselves at a pitch inversely as the Dyne (the local coefficient of Gravity), and as the atomic volume, directly as the atomic weight, producing the creative force (Electricity), whose transmissive force is propagated through atomolic solids, liquids, and gases, producing induction and the static effect of magnetism upon other atoms of attraction or repulsion, according to the Law of Harmonic Attraction and Repulsion.

Scholium: The phenomenon of Dynamic Electricity through a metallic conductor and of induction are identical. In a metallic conductor, the transmission is from atom to atom, through homologous interstices, filled with ether, presenting small areas in close proximity. In crystalline structures, heat, which expands the atoms, by twisting them produces striae, increases the resistance, etc. Between parallel wires and through air the induction takes place from large areas through a rarefied medium composed of a mixture of substances, whose atoms are separated by waves of repulsion of various pitches, discordant to electric vibrations; the said atoms sympathetically absorb the vibrations and dissipate from themselves, as centers, concentric waves of electric energy which produces heat and gravism."

(16) Law of Oscillating Atomoles

"Atomoles oscillating at a uniform pitch (determined by their uniform size and weight) produce the creative force Atomolity, whose transmissive form, Gravism, is propagated through more rarefied media, producing the static effect upon all other atomoles, denominated Gravity."

(17) Law of Transformation of Forces

"All forces are different forms of Universal Energy unlike in their period- frequency, merging into each other by imperceptible increments; each form representing the compass of 21 octaves. Each form or pitch may be transformed into an equivalent quantity of another pitch above or below it in the scale of 105 octaves. The transformation can occur only through its static effect, developing vibrations of harmonic pitches above or below their fundamental vibration, or developing with juxtaposed aggregates, resultant and difference, or third order, as the case may be.

Scholium: A table of the intervals and harmonics of the normal harmonic scale will indicate the ratios in which the transformation of forces will occur."

(18) Law of Atomic Pitch

"Atoms have each a different and definite pitch, at which they naturally vibrate.

Scholium: Atomic pitch is determined directly from its simple spectrum.

Scholium: Atomic pitch is determined by computations from its associate spectrum with all other atoms, as in known spectra. Scholium: Atomic pitches are more important working data than atomic weights; tables of atomic pitches must be precise."

(19) Law of Variation of Atomic Pitch by Rad-energy

"The higher harmonics and overtones of projected rad-energy are of a pitch sufficiently high to cause the atom to expand; by causing the atomoles to vibrate systematically the same influence will cause the atom to contract, and thus by changing the volume, atomic pitch is varied."

(20) Law of Variation of Atomic Pitch by Electricity and Magnetism

"Electricity and Magnetism produce internal vibrations in the atom, which are followed by proportional changes in volume and, therefore, pitch."

(21) Law of Variation of Atomic Pitch by Temperature

"Atoms in chemical combination oscillate with increasing amplitude directly as the temperature, and simultaneously absorb overtones of higher harmonics, producing expansion of volume and diminution of pitch.

Rule: The gradual approach of the temperature of harmonic combination can be observed by mutually comparing superimposed spectra; chemical combination commences when the fundamental lines of each spectrum bear harmonic ratios by linear measurement."

(22) Law of Pitch of Atomic Oscillation

"Atoms not isolated and in a state of tension between forces that oppose and increase the equilibrium oscillate bodily at a pitch that is a resultant of the atomic weight, atomic volume, and tension."

(23) Law of Variation of Pitch of Atomic Oscillation by Pressure

"The frequency of atomic oscillation increases and diminishes inversely as the square of the pressure."

(24) Law of Variation of Atomic Oscillation by Temperature

"The force of cohesion diminishes inversely as the square of the distance the atoms are apart, and the force of the chemical affinity diminishes in the same ratio. Heat increases the amplitude of the oscillations in a direct ratio to the temperature of the natural scale. Scholium: New thermometers and accurate thermometric tables, on the natural base, wherein doubling the temperature doubles the pitch of the transmissive energy, are required. Such a table of temperature will bear natural relations to atomic weights, pitches, specific heats, chemical affinities, fusions, solubilities, etc., and will disclose new laws. One table for each must be constructed."

(25) Law of Variation of Atomic Oscillation by Electricity

"The electric current destroys cohesion and chemical tension directly as square of current in amperes, inversely as the resistance in ohms, inversely as the chemical equivalent, and conversely as the coefficient of the difference between the freezing and volatilizing temperature of mass acted upon."

(26) Law of Variation of Atomic Oscillation by Sono-thermism

"Diminishes the tensions directly as the quantity of heat developed, and in antithetical proportion to the harmonics absolved."

(27) Law of Chemical Affinity

"Atoms whose atomic pitches are in either unison, harmonic or concordant ratios, unite to form molecules.

Corollary: When two atoms are indifferent, they may be made to unite by varying the pitch of either, or both.

Scholium: This necessitates the construction of tables, representing variation of atomic pitches by temperature, pressure, etc.

Scholium: Tables of all harmonics and concords, and harmonics founded upon a normal harmonic scale, are equally essential.

Scholium: Optical instruments may be made to measure pitches of energy."

(28) Law of Chemical Dissociation

"If the pitch of either atom, in a molecule, be raised or lowered; or, if they both be unequally raised or lowered in pitch until the mutual ratio be that of a discord; or, if the oscillation amplitude be augmented by heat until the atoms are with the concentric waves of attraction, - the atoms will separate."

(29) Law of Chemical Transposition

"New molecules must be harmonics of the fundamental pitch."

(30) Law of Chemical Substitution

"(too complex for brief statement)"

(31) Law of Catalysis

"The presence of harmonics and discords."

(32) Law of Molecular Synthesis and Combination (Organic)

"The molecular pitch must be a derived harmony of the radicals.

Scholium: Reconstruction of electric units to represent pitches and amplitudes."

(33) Law of Chemical Morphology

"The angle of crystallization is determined by the relation between the molecular pitch of the crystallizing substance to the variation- density of the liquid depositing it."

(34) Law of Atomic Dissociation

"Overtones of high rad-energy pitches produce separation of the atomoles and recombinations among the atomolic molecules of the atoms."

(35) Law of Atomolic Synthesis of Chemical Elements

"Harmonic pitches of atomolity produce association of etheric-atomolic particles to form atoms; the kind of atom is determinable by the pitches employed."

(36) Law of Heat

"Atoms under the tension of chemical combination oscillate with an amplitude directly as the temperature, inversely as the pressure, and as the square of the specific heat. Diminishing the pitch of oscillation inversely as the square of the distance of the atoms apart, and simultaneously increasing the vibrating pitch of the atom by absorption of overtones and higher harmonics."

(37) Law of Electro-Chemical Equivalents

"An atom vibrates sympathetically under the influence of electric energy, such undertones of which are absorbed as are a harmonic or harmony of the electric pitch; the amount of energy absorbed being directly as the arithmetical ratio of the undertone of the fundamental electric pitch.

Scholium: A table of electro-chemical equivalents on the normal basis will indicate the electrical conditions and amount of chemical change."

(38) Law of Cohesion

"The cohesion between atoms diminishes directly as the square root of the pressure and temperature, and as the square of electric intensity."

(39) Law of Refractive Indices

"A table of the refractive indices of substances indicates their molecular pitch; and in connection with crystalline form the phase of molecular oscillation."

(40) Law of Electric Conductivity

"Electric energy is transmitted through homogeneous bodies with a completeness in direct proportion as the atoms are more or less perfect harmonics of the electric pitch, but not at all through substances whose atoms are discordant to the electric pitch; also through molecular substances, when their resultant notes are harmonics of the electric pitch, - the transmissions being inversely as the temperature, directly as the density diminished in proportion to the amount of crystallization, and inversely as the cube of the dyne, also directly as the reciprocal of the local magnetic intensity."

SCALE OF THE FORCES IN OCTAVES

This is a compilation by Dale Pond as published on his website SVPVRIL.COM. I have included it here without editing and without comment other than this.

Text: "First octave (unity of sound) is approximately the lowest frequency capable of producing waves of rarefaction and condensation in the air. The atomic aggregate oscillating at this pitch can be experimentally determined, and the aggregate vibrating at a pitch one octave higher will have a mass lying between 1/8 and the cube root of the mass of the first mentioned aggregate; the exact relation under varying conditions of gravity, magnetic saturation, and pressure, can be determined only by accurate measurements.

But assuming a body of a size represented by x, with a pitch represented by 1024 per second, then a pitch of 2048 per second will be produced by a body having a volume of some mean between 1/8 of x and the cube root of x.

By accurately determining the pitch of a volume of any metallic sphere capable of oscillating at the pitch of, e.g., the eleventh octave of sonity (1024 per second), under normal conditions of gravity, pressure, magnetism, and then successively diminishing its size by 1/8 of itself, we get the successive octaves of pitches higher and higher in period-frequency until we pass the domain of sonity and enter the domain of sono-thermity.

The point where the one form of energy merges into the other lies approximately at the twenty-first octave, and this pitch also marks the point where the air is no longer capable of vibrating at that pitch in waves of transverse form. The first gamut of 21 1/2 octaves consists of three forms; viz. sonity, sound, and sonism. The following is a tabulation of the pitches of sonity in octaves from one vibration per second to where the next form of energy commences."

FIRST CLASS Sonity, Sound, and Sonism begins Unison 1

1st Octave 2

2nd 4

3rd 8

4th 16

5th 32

6th 64

7th 128

8th 256

9th 512 Keynote Molecular Chord 620 First Octave, Keynote Atomic Chord 630 Second Octave

10th 1,024

11th 2,048

12th 4,096

13th 8,192 Keynote etheric Chord 12,000 Third Octave Heat (highest rate of) 14,000 Vibro-Atomic

14th 16,384 Lowest Molecular Vibration 20,000 Harmonic Thirds

15th 32,768 42,000 Modern Ultrasonic Jewelry Cleaner 42,800 Disintegration of Water

16th 65,536

17th 131,072 Transmission of Odor in Molecules 220,000 Sympathetic Negative

18th 262,144 First Inter-Atomic Lowest 300,000 Full Harmonic Chord

19th 524,288 First Inter-Atomic Highest 780,000 Full Harmonic Chord

20th 1,048,576 1,620,000 Ninths

21st 2,097,152 Major 5th 3,145,728 Sono-thermity, Sono-therm, Sono-thermism begins

22nd 4,194,304

23rd 8,388,606

24th 16,777,216
25th 33,554,432
26th 67,108,864 Highest Molecular Vibration 100,000,000 Harmonic 3rds
27th 134,217,728
28th 268,435,456 Highest Inter-Molecular 300,000,000 Enharmonic 6ths Atmospheric 519,655,633 Highest made in air
29th 536,870,912 Atomic Vibration 900,000,000 Diatonic 9ths
30th 1,073,741,824
31st 2,147,483,648
32nd 4,294,967,296 Highest etheric 8,100,000,000 Dominant etheric 6ths
33rd 8,589,934,592
34th 17,179,869,184 Highest Inter-etheric 24,300,000,000 Inter-etheric 9ths
35th 34,359,738,368
36th 68,719,476,736
37th 137,438,953,472
38th 274,877,906,944
39th 549,755,813,888
40th 1,099,511,627,776
41st 2,199,023,255,552
42nd 4,398,046,511,104 SECOND CLASS VIBRATIONS begin Thermism, Rad-energy, Chemism begins
43rd 8,796,093,022,208 Dark heat begins
44th 17,592,186,044,416
45th 35,184,372,088,832
46th 70,368,744,177,664 Chemism begins
47th 140,737,488,355,328 Infrared (Light begins)
48th 281,474,976,710,656 Major 4th (above)
49th 562,949,953,421,312 Below Major 4th
50th 1,125,899,906,842,624 (Light ends)
51st 2,251,799,813,685,248
52nd 4,503,599,627,370,496 Limit Actinic
53rd 9,007,199,254,740,992
54th 10,814,398,509,481,984
55th 36,028,797,018,963,968 Chemism ends
56th 72,057,594,037,927,936 actienic rays
57th 144,115,188,075,855,872 actienic rays Full Ninths 156,057,552,198,220,000
58th 288,230,376,151,711,744 actienic rays
59th 576,460,752,303,423,488 actienic rays
60th 1,152,921,504,606,846,976 actienic rays
61st 2,305,843,009,213,693,952
62nd 4,611,686,018,427,387,904
63rd 9,223,372,036,854,775,808
64th 18,446,744,073,709,551,616 Major 5th 27,670,116,110,564,327,424 Limit of thermism Electricity, Induction, Magnetism begins
65th 36,893,488,147,419,103,232 66th 73,786,976,295,838,206,464
67th 147,573,952,591,676,413,928
68th 295,147,905,183,352,827,856 Copper-zinc couple
69th 590,295,810,366,705,655,712
70th 1,180,591,620,733,411,311,424
71st 2,361,183,241,466,822,622,848 50,000 volts
72nd 4,722,366,482,933,645,245,696
73rd 9,444,732,965,867,290,491,392

74th 18,889,465,931,745,580,982,784
75th 37,778,931,863,469,161,965,568
76th 75,557,863,726,938,323,931,136
77th 151,115,727,453,875,647,862,772
78th 302,231,454,907,753,295,724,544
79th 604,462,909,815,506,591,449,088
80th 1,208,925,819,631,013,182,898,176
81st 2,417,851,639,762,026,365,796,352
82nd 4,825,703,278,524,052,731,592,702
83rd 9,671,406,557,048,105,463,185,408
84th 19,342,813,114,096,210,926,370,816
85th 38,685,626,228,192,421,852,741,632
86th 77,361,252,456,384,843,705,483,204 The limit of electricity and the beginning of atomolity.

Chapter X of The Secret Doctrine by Madame Blavatsky

Helena Blavatsky

THE COMING FORCE.
ITS POSSIBILITIES AND IMPOSSIBILITIES.

Shall we say that Force is "moving matter," or "matter in motion," and a manifestation of energy; or that matter and force are the phenomenal differentiated aspects of the one primary, undifferentiated Cosmic Substance?

This query is made with regard to that Stanza which treats of FOHAT and his "Seven brothers or Sons," in other words, of the cause and the effects of Cosmic Electricity, the latter called, in Occult parlance, the seven primary forces of Electricity, whose purely phenomenal, and hence grossest effects are alone cognizable by physicists on the cosmic and especially on the terrestrial plane. These include, among other things, Sound, Light, Colour, etc., etc. Now what does physical Science tell us of these "Forces"? SOUND, it says, is a sensation produced by the impact of atmospheric molecules on the tympanum, which, by setting up delicate tremors in the auditory apparatus, thus communicate themselves to the brain. LIGHT is the sensation caused by the impact of inconceivably minute vibrations of ether on the retina of the eye.

So, too, we say. But this is simply the effect produced in our atmosphere and its immediate surroundings, all, in fact, which falls within the range of our terrestrial consciousness. Jupiter Pluvius sent his symbol in drops of rain, of water composed, as is believed, of two "elements," which chemistry dissociates and recombines. The compound molecules are in its power, but their atoms still elude its grasp. Occultism sees in all these Forces and manifestations a ladder, the lower rungs of which belong to exoteric physics, and the higher are traced to a living, intelligent, invisible Power, which is, as a rule, the unconcerned, and exceptionally, the conscious cause of the sense-born phenomenon designated as this or another natural law.

DIVINE, INFERNAL, OR TERRESTRIAL FORCE?

We say and maintain that SOUND, for one thing, is a tremendous Occult power; that it is a stupendous force, of which the electricity generated by a million of Niagaras could never counteract the smallest potentiality when directed with occult knowledge. Sound may be produced of such a nature that the pyramid of Cheops would be raised in the air, or that a dying man, nay, one at his last breath, would be revived and filled with new energy and vigour.

For Sound generates, or rather attracts together, the elements that produce an ozone, the fabrication of which is beyond chemistry, but within the limits of Alchemy. It may even resurrect a man or an animal whose astral "vital body" has not been irreparably separated from the physical

body by the severance of the magnetic or odic chord. As one saved thrice from death by that power, the writer ought to be credited with knowing personally something about it.

And if all this appears too unscientific to be even noticed, let Science explain to what mechanical and physical laws known to it, is due the recently produced phenomena of the so-called "Keely motor?" What is it that acts as the formidable generator of invisible but tremendous force, of that power which is not only capable of driving an engine of 25 horse-power, but has even been employed to lift the machinery bodily? Yet this is done simply by drawing a fiddle-bow across a tuning fork, as has been repeatedly proven. For the etheric Force, discovered by the well-known (in America and now in Europe) John Worrell Keely, of Philadelphia, is no hallucination. Notwithstanding his failure to utilize it, a failure prognosticated and maintained by some Occultists from the first, the phenomena exhibited by the discoverer during the last few years have been wonderful, almost miraculous, not in the sense of the supernatural but of the superhuman. Had Keely been permitted to succeed, he might have reduced a whole army to atoms in the space of a few seconds as easily as he reduced a dead ox to the same condition.

The reader is now asked to give a serious attention to that newly-discovered potency which the discoverer has named "Inter-Etheric Force and Forces."

In the humble opinion of the Occultists, as of his immediate friends,

Mr. Keely, of Philadelphia, was, and still is, at the threshold of some of the greatest secrets of the Universe; of that chiefly on which is built the whole mystery of physical Forces, and the esoteric significance of the "Mundane Egg" symbolism. Occult philosophy, viewing the manifested and the unmanifested Kosmos as a UNITY, symbolizes the ideal conception of the former by that "Golden Egg" with two poles in it. It is the positive pole that acts in the manifested world of matter, while the negative is lost in the unknowable absoluteness of SAT -- "Be-ness." Whether this agrees with the philosophy of Mr. Keely, we cannot tell, nor does it really much matter. Nevertheless, his ideas about the ethero-material construction of the Universe look strangely like our own, being in this respect nearly identical. This is what we find him saying in an able pamphlet compiled by Mrs. Bloomfield-Moore, an American lady of wealth and position, whose incessant efforts in the pursuit of truth can never be too highly appreciated: -- "Mr. Keely, in explanation of the working of his engine, says: 'In the conception of any machine heretofore constructed, the medium for inducing a neutral centre has never been found. If it had, the difficulties of perpetual-motion seekers would have ended, and this problem would have become an established and operating fact. It would only require an introductory impulse of a few pounds, on such a device, to cause it to run for centuries. In the conception of my vibratory engine, I did not seek to attain perpetual motion; but a circuit is formed that actually has a neutral centre, which is in a condition to be vivified by my vibratory ether, and, while under operation by said substance, is really a machine that is virtually independent of the mass (or globe), and it is the wonderful velocity of the vibratory circuit which makes it so. Still, with all its perfection, it requires to be fed with the vibratory ether to make it an independent motor . . . ."

"All structures require a foundation in strength according to the weight of the mass they have to carry, but the foundations of the universe rest on a vacuous point far more minute than a molecule; in fact, to express this truth properly, on an inter-etheric point, which requires an infinite mind to understand it. To look down into the depths of an etheric centre is precisely the same as it would be to search into the broad space of heaven's ether to find the end, with this difference: that one is the positive field, while the other is the negative field . . . ."

AN UNCONSCIOUS OCCULTIST.

This, as easily seen, is precisely the Eastern doctrine. His inter-etheric point is the laya-point of the Occultists, which, however, does not require "an infinite mind to understand it," but only a specific intuition and ability to trace its hiding-place in this world of matter. Of course, the laya centre cannot be produced, but an inter-etheric vacuum can -- as proved in the production of bell-sounds in space. Mr. Keely speaks as an unconscious Occultist, nevertheless, when he remarks in his theory of planetary suspension: --

"As regards planetary volume, we would ask in a scientific point of view, How can the immense difference of volume in the planets exist without disorganising the harmonious action that has always characterised them? I can only answer this question properly by entering into a progressive analysis, starting on the rotating etheric centres that were fixed by the Creator with their attractive or accumulative power. If you ask what power it is that gives to each etheric atom its inconceivable velocity of rotation (or introductory impulse), I must answer that no finite mind will ever be able to conceive what it is. The philosophy of accumulation is the only proof that such a power has been given. The area, if we can so speak, of such an atom, presents to the attractive or magnetic, the elective or propulsive, all the receptive force and all the antagonistic force that characterises a planet of the largest magnitude; consequently, as the accumulation goes on, the perfect equation remains the same. When this minute centre has once been fixed, the power to rend it from its position would necessarily have to be so great as to displace the most immense planet that exists. When this atomic neutral centre is displaced, the planet must go with it. The neutral centre carries the full load of any accumulation from the start, and remains the same, for ever balanced in the eternal space."

Mr. Keely illustrates his idea of "a neutral centre" in this way: --

"We will imagine that, after an accumulation of a planet of any diameter, say, 20,000 miles, more or less, for the size has nothing to do with the problem; there should be a displacement of all the material, with the exception of a crust 5,000 miles thick, leaving an intervening void between this crust and a centre of the size of an ordinary billiard ball, it would then require a force as great to move this small central mass as it would to move the shell of 5,000 miles thickness. Moreover, this small central mass would carry the load of this crust for ever, keeping it equidistant; and there could be no opposing power, however great, that could bring them together. The imagination staggers in contemplating the immense load which bears upon this point of centre, where weight ceases. . . . This is what we understand by a neutral centre." And what Occultists understand by a "laya centre."

The above is pronounced "unscientific" by many. But so is everything that is not sanctioned and kept on strictly orthodox lines by physical science. Unless the explanation given by the inventor himself is accepted -- and his explanations, being, as observed, quite orthodox from the spiritual and the Occult stand-points, if not from that of materialistic speculative (called exact) Science, are therefore ours in this particular -- what can science answer to facts already seen which it is no longer possible for anyone to deny? Occult philosophy divulges few of its most important vital mysteries. It drops them like precious pearls, one by one, far and wide apart, and only when forced to do so by the evolutionary tidal wave that carries on humanity slowly, silently, but steadily toward the dawn of the Sixth-Race mankind. For once out of the safe custody of their legitimate heirs and keepers, those mysteries cease to be occult: they fall into the public domain and have to run the risk of becoming in the hands of the selfish -- of the Cains of the human race -- curses more often than blessings. Nevertheless, whenever such individuals as the discoverer of Etheric Force -- John Worrell Keely -- men with peculiar psychic and mental capacities are born, they are generally and more frequently helped than allowed to go unassisted; groping on their way, though, if left to their own resources, falling very soon victims to martyrdom and unscrupulous speculators. Only they are helped on the condition that they should not become, whether consciously or unconsciously, an additional peril to their age: a danger to the poor, now offered in daily holocaust by the less wealthy to the very wealthy. This necessitates a short digression and an explanation.

Some twelve years back, during the Philadelphia Centennial Exhibition, the writer, in answering the earnest queries of a theosophist, one of the earliest admirers of Mr. Keely, repeated to him what she had heard in quarters, information from which she could never doubt.

It had been stated that the inventor of the "Self-Motor" was what is called, in the jargon of the Kabalists, a "natural-born magician." That he was and would remain unconscious of the full range of his powers, and would work out merely those which he had found out and ascertained in his own nature -- firstly, because, attributing them to a wrong source, he could never give them full sway; and secondly, because it was beyond his power to pass to others that which was a capacity inherent

in his special nature. Hence the whole secret could not be made over permanently to anyone for practical purposes or use.

THE FIRST-BORN OF ETHER.

Individuals born with such a capacity are not very rare. That they are not heard of more frequently is due to the fact that they live and die, in almost every case, in utter ignorance of being possessed of abnormal powers at all. Mr. Keely possesses powers which are called "abnormal" just because they happen in our day to be as little known as blood circulation was before Harvey's time. Blood existed, and it behaved as it does at present in the first man born from woman; and so does that principle in man which can control and guide etheric vibratory force. At any rate it exists in all those mortals whose inner selves are primordially connected, by reason of their direct descent, with that group of Dhyan-Chohans who are called "the first-born of Ether." Mankind, psychically considered, is divided into various groups, each of which is connected with one of the Dhyanic groups that first formed psychic man; (see paragraphs 1, 2, 3, 4, 5 in the Commentary to Stanza VII.) Mr. Keely being greatly favoured in this respect, and moreover, besides his psychic temperament, being intellectually a genius in mechanics, may thus achieve most wonderful results. He has achieved some already -- more than any mortal man, not initiated into the final mysteries, has achieved in this age up to the present day. What he has done is certainly quite sufficient "to demolish with the hammer of Science the idols of Science" -- the idols of matter with the feet of clay -- as his friends justly predict and say of him. Nor would the writer for a moment think of contradicting Mrs. Bloomfield-Moore, when in her paper on "Psychic Force and Etheric Force," she states that Mr. Keely, as a philosopher, "is great enough in soul, wise enough in mind, and sublime enough in courage to overcome all difficulties, and to stand at last before the world as the greatest discoverer and inventor in the world."

And again she writes: -- "Should Keely do no more than lead scientists from the dreary realms where they are groping into the open field of elemental force, where gravity and cohesion are disturbed in their haunts and diverted to use; where, from unity of origin, emanates infinite energy in diversified forms, he will achieve immortal fame. Should he demonstrate, to the destruction of materialism, that the universe is animated by a mysterious principle to which matter, however perfectly organized, is absolutely subservient, he will be a greater spiritual benefactor to our race than the modern world has yet found in any man. Should he be able to substitute, in the treatment of disease, the finer forces of nature for the grossly material agencies which have sent more human beings to their graves than war, pestilence and famine combined, he will merit and receive the gratitude of mankind. All this and more will he do, if he and those who have watched his progress, day by day for years, are not too sanguine in their expectations."

Writing in the T. P. S. ("Theosophical Publication Society") series (No. 9), the same lady, in her pamphlet, "Keely's Secrets," brings forward a passage from an article, written a few years ago by the writer of the present volume, in her journal, the Theosophist, in these words: --

"The author of No. 5 of the pamphlets issued by the Theosophical Publication Society, 'What is Matter and What is Force,' says therein, 'The men of science have just found out "a fourth state of matter," whereas the Occultists have penetrated years ago beyond the sixth, and therefore do not infer, but know of, the existence of the seventh, the last.' This knowledge comprises one of the secrets of Keely's so-called 'compound secret.' It is already known to many that his secret includes 'the augmentation of energy,' the insulation of the ether, and the adaptation of dynaspheric force to machinery."

It is just because Keely's discovery would lead to a knowledge of one of the most occult secrets, a secret which can never be allowed to fall into the hands of the masses, that his failure to push his discoveries to their logical end seems certain to Occultists. But of this more presently. Even in its limitations this discovery may prove of the greatest benefit. For: --

"Step by step, with a patient perseverance which some day the world will honour, this man of genius has made his researches, overcoming the colossal difficulties which again and again raised up in his path what seemed to be (to all but himself) insurmountable barriers to further progress: but

never has the world's index finger so pointed to an hour when all is making ready for the advent of the new form of force that mankind is waiting for. Nature, always reluctant to yield her secrets, is listening to the demands made upon her by her master, necessity. The coal mines of the world cannot long afford the increasing drain made upon them. Steam has reached its utmost limits of power, and does not fulfil the requirements of the age. It knows that its days are numbered. Electricity holds back, with bated breath, dependent upon the approach of her sister colleague. Air ships are riding at anchor, as it were, waiting for the force which is to make aerial navigation something more than a dream. As easily as men communicate with their offices from their homes by means of the telephone, so will the inhabitants of separate continents talk across the ocean. Imagination is palsied when seeking to foresee the grand results of this marvellous discovery, when once it is applied to art and mechanics. In taking the throne which it will force steam to abdicate, dynaspheric force will rule the world with a power so mighty in the interests of civilization, that no finite mind can conjecture the results. Laurence Oliphant, in his preface to 'Scientific Religion,' says: 'A new moral future is dawning upon the human race -- one, certainly, of which it stands much in need.' In no way could this new moral future be so widely, so universally, commenced as by the utilizing of dynaspheric force to beneficial purposes in life. . . . ."

ETHERIC WAVES.

The Occultists are ready to admit all this with the eloquent writer. Molecular vibration is, undeniably, "Keely's legitimate field of research," and the discoveries made by him will prove wonderful -- yet only in his hands and through himself. The world so far will get but that with which it can be safely entrusted. The truth of this assertion has, perhaps, not yet quite dawned upon the discoverer himself, since he writes that he is absolutely certain that he will accomplish all that he has promised, and will then give it out to the world; but it must dawn upon him, and at no very far distant date. And what he says in reference to his work is a good proof of it: --

"In considering the operation of my engine, the visitor, in order to have even an approximate conception of its modus operandi, must discard all thought of engines that are operated upon the principle of pressure and exhaustion, by the expansion of steam or other analogous gas which impinges upon an abutment, such as the piston of a steam-engine. My engine has neither piston nor eccentrics, nor is there one grain of pressure exerted in the engine, whatever may be the size or capacity of it.

"My system, in every part and detail, both in the developing of my power and in every branch of its utilization, is based and founded on sympathetic vibration. In no other way would it be possible to awaken or develop my force, and equally impossible would it be to operate my engine upon any other principle. . . . . .This, however, is the true system; and henceforth all my operations will be conducted in this manner -- that is to say, my power will be generated, my engines run, my cannon operated, through a wire.

"It has been only after years of incessant labour, and the making of almost innumerable experiments, involving not only the construction of a great many most peculiar mechanical structures, and the closest investigation and study of the phenomenal properties of the substance 'ether,' per se, produced, that I have been able to dispense with complicated mechanism, and to obtain, as I claim, mastery over the subtle and strange force with which I am dealing."

The passages underlined by us, are those which bear directly on the occult side of the application of the vibratory force, or what Mr. Keely calls "sympathetic vibration." The "wire" is already a step below, or downward from the pure etheric plane into the terrestrial. The discoverer has produced marvels -- the word "miracle" is not too strong -- when acting through the inter-etheric Force alone, the fifth and sixth principles of Akasa. From a "generator" six feet long, he has come down to one "no larger than an old-fashioned silver watch;" and this by itself is a miracle of mechanical (but not spiritual) genius. But, as well expressed by his great patroness and defender, Mrs. Bloomfield-Moore, "the two forms of force which he has been experimenting with, and the phenomena attending them, are the very antithesis of each other." One was generated and acted upon by and through himself. No one, who should have repeated the thing done by himself, could

have produced the same results. It was "Keely's ether" that acted truly, while "Smith's or Brown's" ether would have remained for ever barren of results. For Keely's difficulty has hitherto been to produce a machine which would develop and regulate the "force" without the intervention of any "will power" or personal influence, whether conscious or unconscious of the operator. In this he has failed, so far as others were concerned, for no one but himself could operate on his "machines." Occultly this was a far more advanced achievement than the "success" which he anticipates from his "wire," but the results obtained from the fifth and sixth planes of the etheric (or Astral) Force, will never be permitted to serve for purposes of commerce and traffic. That Keely's organism is directly connected with the production of the marvellous results is proven by the following statement emanating from one who knows the great discoverer intimately.

At one time the shareholders of the "Keely Motor Co." put a man in his workshop for the express purpose of discovering his secret. After six months of close watching, he said to J. W. Keely one day: "I know how it is done, now." They had been setting up a machine together, and Keely was manipulating the stop-cock which turned the force on and off. "Try it, then," was the answer. The man turned the cock, and nothing came. "Let me see you do it again," the man said to Keely. The latter complied, and the machinery operated at once. Again the other tried, but without success. Then Keely put his hand on his shoulder and told him to try once more. He did so, with the result of an instantaneous production of the current. This fact, if true, settles the question.

We are told that Mr. Keely defines electricity "as a certain form of atomic vibration." In this he is quite right; but this is electricity on the terrestrial plane, and through terrestrial correlations. He estimates --

Molecular vibrations at 100,000,000 per second.
Inter-molecular vibrations at 300,000,000 per second
Atomic vibrations at 900,000,000 per second
Inter-atomic vibrations at 2,700,000,000 per second
AEtheric vibrations at 8,100,000,000 pper second
Inter-AEtheric vibrations at 24,300,000,000 per second

This proves our point. There are no vibrations that could be counted or even estimated at an approximate rate beyond "the realm of the fourth son of Fohat," using an occult phraseology, or that motion which corresponds to the formation of Mr. Crookes' radiant matter, or lightly called some years ago the "fourth state of matter" -- on this our plane.

A PREMATURE DISCOVERY.

If the question is asked why Mr. Keely was not allowed to pass a certain limit, the answer is easy; because that which he has unconsciously discovered, is the terrible sidereal Force, known to, and named by the Atlanteans MASH-MAK, and by the Aryan Rishis in their Ashtar Vidya by a name that we do not like to give. It is the vril of Bulwer Lytton's "Coming Race," and of the coming races of our mankind. The name vril may be a fiction; the Force itself is a fact doubted as little in India as the existence itself of their Rishis, since it is mentioned in all the secret works.

It is this vibratory Force, which, when aimed at an army from an Agni Rath fixed on a flying vessel, a balloon, according to the instructions found in Ashtar Vidya, reduced to ashes 100,000 men and elephants, as easily as it would a dead rat. It is allegorised in the Vishnu Purana, in the Ramayana and other works, in the fable about the sage Kapila whose glance made a mountain of ashes of King Sagara's 60,000 sons, and which is explained in the esoteric works, and referred to as the Kapilaksha -- "Kapila's Eye."

And is it this Satanic Force that our generations were to be allowed to add to their stock of Anarchist's baby-toys, known as melenite, dynamite clock-works, explosive oranges, "flower baskets," and such other innocent names? Is it this destructive agency, which, once in the hands of some modern Attila, e.g., a blood-thirsty anarchist, would reduce Europe in a few days to its primitive chaotic state with no man left alive to tell the tale -- is this force to become the common property of all men alike?

What Mr. Keely has already done is grand and wonderful in the extreme; there is enough work before him in the demonstration of his new system to "humble the pride of those scientists who are materialistic, by revealing those mysteries which lie behind the world of matter," without revealing it nolens volens to all. For surely Psychists and Spiritualists -- of whom there are a good number in the European armies -- would be the first to experience personally the fruits of such mysteries revealed. Thousands of them would find themselves (and perhaps with the populations of whole countries to keep them company) in blue Ether very soon, were such a Force to be even entirely discovered, let alone made publicly known. The discovery in its completeness is by several thousand -- or shall we say hundred thousand? -- years too premature. It will be at its appointed place and time only when the great roaring flood of starvation, misery, and underpaid labour ebbs back again -- as it will when happily at last the just demands of the many are attended to; when the proletariat exists but in name, and the pitiful cry for bread, that rings throughout the world unheeded, has died away. This may be hastened by the spread of learning, and by new openings for work and emigration, with better prospects than exist now, and on some new continent that may appear. Then only will "Keely's Motor and Force," as originally contemplated by himself and friends, be in demand, because it will be more needed by the poor than by the wealthy.

Meanwhile the force discovered by him will work through wires, and this, if he succeeds, will be quite sufficient in the present generation to make of him the greatest discoverer of this age.

What Mr. Keely says of Sound and Colour is also correct from the Occult stand-point. Hear him talk as though he were the nursling of the "Gods-revealers," and had gazed all his life into the depths of Father-Mother AEther.

In comparing the tenuity of the atmosphere with that of the etheric flows, obtained by him from his invention for breaking up the molecules of air by vibration, Keely says that: --

. . . "It is as platina to hydrogen gas. Molecular separation of air brings us to the first sub-division only; inter-molecular, to the second; atomic, to the third; inter-atomic, to the fourth; etheric, to the fifth; and inter-etheric, to the sixth sub-division, or positive association with luminiferous ether. In my introductory argument I have contended that this is the vibratory envelope of all atoms. In my definition of atom I do not confine myself to the sixth sub-division where this luminiferous ether is developed in its crude form as far as my researches prove. I think this idea will be pronounced by the physicists of the present day, a wild freak of the imagination. Possibly, in time, a light may fall upon this theory that will bring its simplicity forward for scientific research. At present I can only compare it to some planet in a dark space, where the light of the sun of science has not yet reached it. . ." "I assume that sound, like odour, is a real substance of unknown and wonderful tenuity, emanating from a body where it has been induced by percussion and throwing out absolute corpuscles of matter, inter-atomic particles, with velocity of 1,120 feet per second; in vacuo 20,000. The substance which is thus disseminated is a part and parcel of the mass agitated, and, if kept under this agitation continuously, would, in the course of a certain cycle of time, become thoroughly absorbed by the atmosphere; or, more truly, would pass through the atmosphere to an elevated point of tenuity corresponding to the condition of sub-division that governs its liberation from its parent body." . . . "The sounds from vibratory forks, set so as to produce etheric chords, while disseminating their tones (compound), permeate most thoroughly all substances that come under the range of their atomic bombardment. The clapping of a bell in vacuo liberates these atoms with the same velocity and volume as one in the open air; and were the agitation of the bell kept up continuously for a few millions of centuries it would thoroughly return to its primitive element; and, if the chamber were hermetically sealed, and strong enough, the vacuous volume surrounding the bell would be brought to a pressure of many thousands of pounds to the square inch, by the tenuous substance evolved. In my estimation, sound truly defined is the disturbance of atomic equilibrium, rupturing actual atomic corpuscles; and the substance thus liberated must certainly be a certain order of etheric flow. Under these conditions, is it unreasonable to suppose that, if this flow were kept up, and the body thus robbed of its element, it would in time disappear entirely? All bodies are formed primitively from this highly tenuous ether, animal, vegetable, and

mineral, and they are only returned to their high gaseous condition when brought under a state of differential equilibrium." . . .

THE SECRETS OF SOUND AND ODOUR.

"As regards odour, we can only get some definite idea of its extreme and wondrous tenuity by taking into consideration that a large area of atmosphere can be impregnated for a long series of years from a single grain of musk; which, if weighed after that long interval, will be found to be not appreciably diminished. The great paradox attending the flow of odorous particles is that they can be held under confinement in a glass vessel! Here is a substance of much higher tenuity than the glass that holds it, and yet it cannot escape. It is as a sieve with its meshes large enough to pass marbles, and yet holding fine sand which cannot pass through; in fact, a molecular vessel holding an atomic substance. This is a problem that would confound those who stop to recognize it. But infinitely tenuous as odour is, it holds a very crude relation to the substance of sub-division that governs a magnetic flow (a flow of sympathy, if you please to call it so). This sub-division comes next to sound, but is above sound. The action of the flow of a magnet coincides somewhat to the receiving and distributing portion of the human brain, giving off at all times a depreciating ratio of the amount received. It is a grand illustration of the control of mind over matter, which gradually depreciates the physical till dissolution takes place. The magnet on the same ratio gradually loses its power and becomes inert. If the relations that exist between mind and matter could be equated and so held, we would live on in our physical state eternally, as there would be no physical depreciation. But this physical depreciation leads, at its terminus, to the source of a much higher development -- viz., the liberation of the pure ether from the crude molecular; which, in my estimation, is to be much desired." -- (From Mrs. Bloomfield-Moore's paper, "The New Philosophy.")

It may be remarked that, save a few small divergencies, no Adept nor Alchemist could have explained the above any better, in the light of modern Science, however much the latter may protest against the novel views. This is, in all its fundamental principles, if not details, Occultism pure and simple, yet withal, modern natural philosophy as well.

This "New Force," or whatever Science may call it, the effects of which are undeniable -- admitted by more than one naturalist and physicist who has visited Mr. Keely's laboratory and witnessed personally its tremendous effects -- what is it? Is it a "mode of motion," also, "in Vacuo," since there is no matter to generate it except Sound -- another "mode of motion," no doubt, a sensation caused like colour by vibrations? Fully as we believe in these vibrations as the proximate -- the immediate -- cause of such sensations, we as absolutely reject the one-sided scientific theory that there is no factor to be considered as external to us, other than etheric or atmospheric vibrations.

There is a transcendental set of causes put in motion -- so to speak -- in the occurrence of these phenomena, which, not being in relation to our narrow range of cognition, can only be traced to their source and their nature, and understood by the Spiritual faculties of the Adept. They are, as Asclepios puts it to the King, "incorporeal corporealities" -- such as "appear in the mirror," and "abstract forms" that we see, hear, and smell, in our dreams, and visions. What have the "modes of motion," light, and ether to do with these? Yet we see, hear, and smell, and touch them, ergo they are as much realities to us in our dreams, as any other thing on this plane of Maya.

Note by the author: Colour highlighting is mine.

Source : www.keelytech.com

KEELYTECH

PDF maked by CCD

Keely's Laws of Being

- on the Nature and Dynamics of Vibration, Oscillation and Toroids

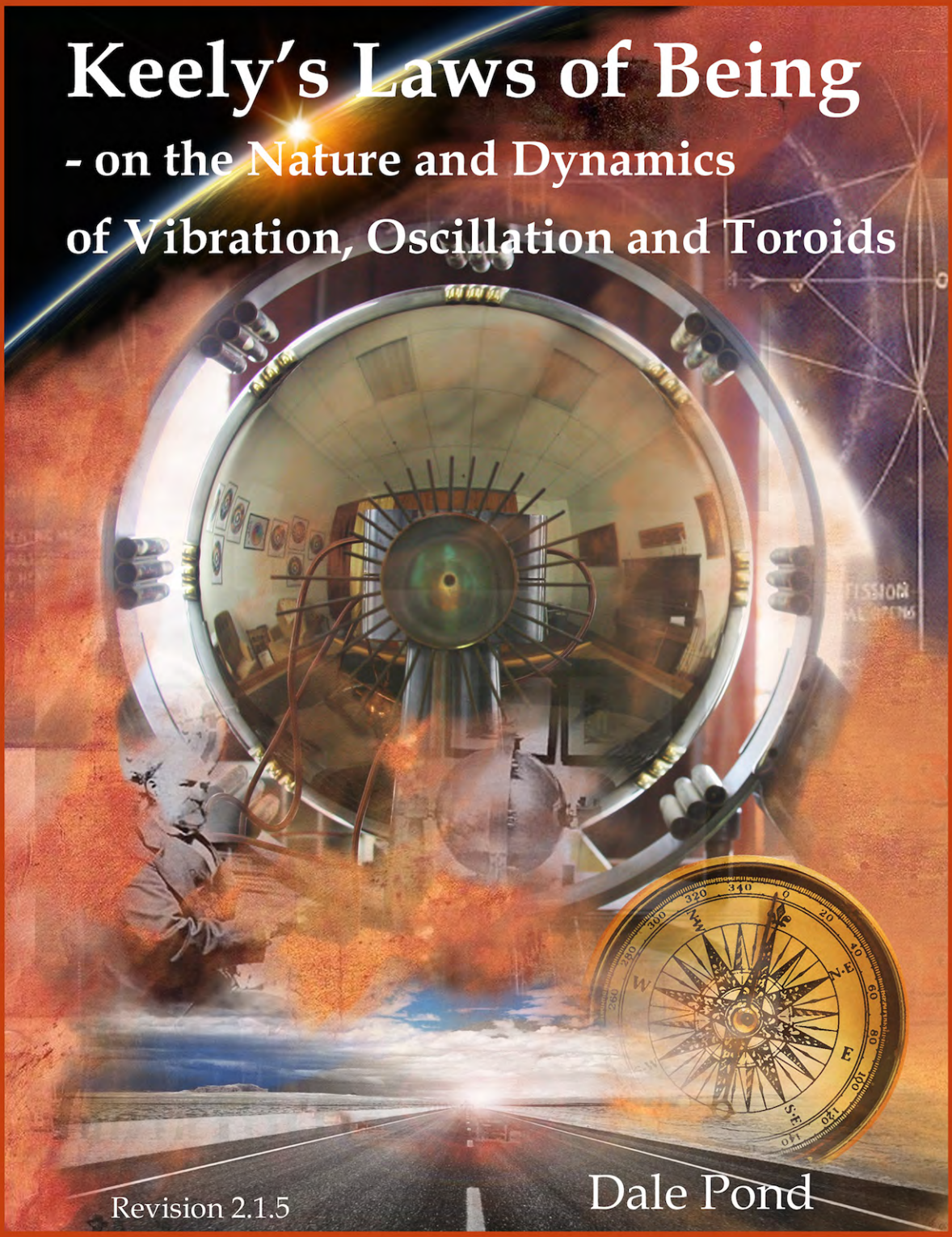

Revision 2.1.5

Dale Pond

Keely's Laws of Being - on the Nature and Dynamics of Vibration, Oscillation and Toroids, version 2.1.5

by Dale Pond
©Dale Pond, 2013, 2014

"*If you only knew the magnificence of the 3, 6 and 9, then you would have a key to the universe.*" Nikola Tesla

What did Tesla consider as "magnificent" about these three numbers? These three numbers represent unseen dynamics and are the very essence of the nature, structure and dynamics of complex periodic motions. This work describes these three unseen (scalar) aliquot components of vibration, oscillation, vortices and toroids (or any periodic motion) as also their relationships and dynamical functions.

Published by
Delta Spectrum Research
921 Santa Fe Avenue
La Junta, Colorado 81050
720-249-2731
svpwiki.com
svpvril.com
svpbookstore.com

Dedication

This work is dedicated to those rare and courageous individuals who have boundless curiosity in their hearts and minds intensely pursuing a Greater Truth about themselves and the universe in which they live and have their being. They are critical thinking rebels recognizing the status quo does not satisfy their constant and persistent questioning of every thing or idea whether trivial or held as sacred dogma.

"Here's to the crazy ones. The misfits. The rebels. The troublemakers. The round pegs in the square holes. The ones who see things differently. They're not fond of rules. And they have no respect for the status quo. You can quote them, disagree with them, glorify or vilify them. About the only thing you can't do is ignore them. Because they change things. They push the human race forward. And while some may see them as the crazy ones, we see genius. Because the people who are crazy enough to think they can change the world, are the ones who do." Apple Computers

Forward

"There are times in life when all the stars seem to align for us. This work, for Dale Pond, is one of those moments! Dale has worked to recapture John Keely's fragmented work for over three decades and collate this collection of fragmented footnotes back into John Keely's coherent science called Sympathetic Vibratory Physics [SVP]. I have known Dale personally for twelve years and studied along side him the works of John Keely. It took me many years to understand in a coherent manner what John Keely was saying. A lot of this confusion was due to his works being so fragmented. Dale has completed and is still working on his SVPwiki.com, which integrates so many others' works that support the threads of John Keely. Still one must be deeply committed to the study to pick up the basic corollary concepts to develop a clear image of this new science discipline. "Well, no longer! This new publication of Dale Pond's is surely his greatest work and most fundamental. Here he has laid out basic building blocks of Sympathetic Vibratory Physics in a sequential coherent pattern that helps the reader circumvent years of study to reveal an understanding of this science.

"John Keely was a thousand years ahead of today's quantum physicist understanding of the basic building blocks of the Universe. John Keely saw it as a three dimensional construct of radially vibrating energy systems from centers in proportional progressive values filling all the plenum of the Universe. He understood through repeatable experimentation the character of this primal energy construct and how to manipulate it's present stable resonate fundamental states - known matter into new ones - yet undiscovered by modern man. Also, along the way he discovered many wonderful, what would seem magical, characteristics of these new states of matter and force.

"The possible progression from here as I see it, for Dale Pond, is forward into applied application of this now defined science for humanity's new age."

Jerry Williams

Preface

0.1 What this book is

This book is a culmination of a two year epiphany. In early 2011 I began sensing there is more to the concept and state of *polarity* than previously thought by anyone save Keely. In July of that year I attempted to speak of this new insight at the Extraordinary Science Conference in Albuquerque. That attempt failed.

Then in October of 2013 the idea gelled - I got it! This book then is an expression of that two year epiphany and over a year of writing.

This work attempts to explain the unrecognized nature, construction and dynamics of vibration, oscillation and toroids with their polar dynamics as also to clarify Professor Daniel Brinton's[1] description of Keely's ideas within his article "Laws of Being"[2] revealing Keely's technique for understanding and manipulating the periodic nature of matter and energy[3]. This Brinton article (Chapter 7 - Laws of Being) is central to this document.

Two prior versions of this book have been issued. This version (2.2 or 4th edit) is a rewrite of the previous versions and has been expanded, reorganized and retitled. The chapters coming before Chapter 7 are foundational materials to understanding Chapter 7. The chapters coming after Chapter 7 are consequential to it.

Keely developed what seems to be entire fields of research mostly akin to our non-classical quantum physics and quantum mechanics decades before these fields existed[4]. Keely was splitting the atom in the 1880s[5] working on his own and with few resources fifty years before mainstream science had a clue. Conventional science at that time period considered the atom to be indivisible. Yet here was Keely splitting the atom and releasing its awesome

[1] [Daniel Brinton]
[2] Appendix I and II
[3] see Appendix III - Ultimate Constitution of Matter
[4] [Sympathetic Vibratory Physics]
[5] [Keelys Accomplishments]

powers. Because the scientists and engineers "knew" this was impossible most would not could not believe what Keely was demonstrating to them. Political correctness (dogma and doctrine) didn't work well then either.

It should further be noted Keely worked with the forces and laws that govern matter and energy (non-classical physics). Conventional science and engineering works with things and their motions (classical physics). The distinction between these two very different fields is all important. Most people who have witnessed or read Keely and Russell look at their work from the classical viewpoint and miss everything that was intended. Their first reaction is to condemn Keely and Russell for no other reason than they did not understand - not because Keely and Russell were wrong which they weren't. They were simply too far ahead of their time and everyone else's comprehension.

Unfortunately, or fortunately, Keely's research lab notes, books[6] and publications have not been available wherewith all his work could be studied. Therefore this book is limited to exploring Brinton's paper as also the supporting definitions and explanations required to grasp the subject matter.

0.2 Hindsight is mostly 20/20

Within Keely's philosophy and science are several fundamental concepts substantially different from conventional understandings. It must be remembered Keely developed these ideas years and sometimes decades before similar concepts were imagined or considered by orthodox science. After years of study it has been found these points to be not only essential to understanding Keely's work but they are also more accurate conceptualizations. His work has a consistency, continuity, completeness and homogeneity not seen in other earlier models.

Essentially Keely discovered quantum mechanics and quantum physics decades before these fields were suspected to exist. He further devised means to power and operate mechanical devices[7] with these quantum energy level forces - a feat that has yet to be fully achieved by modern science and engineer-

[6] [Keelys Lost Books]
[7] [Keelys Mechanical Inventions and Instruments]

ing. Keely's focus was primarily on 1) power development and production,[8] whether by pressure from dissociated matter or rotation 2) discovering and harnessing the ultimate Source[9] of all energy 3) demonstrating Mind is that ultimate source and 4) developing and proving out his theories through his many devices.[10]

0.3 Original Concepts

A few of Keely's original concepts that are somewhat different than conventional concepts would be but are not limited to:

- What vibration and oscillation (periodic motion) are.
- Causative (Scalar) constituent components of vibratory motion.
- Dynamical and structural nature of matter and its association with force and energy.
- Mind Force as primordial source of matter and energy.
- Fundamental definitions of basic manifestations of forces and energies such as

1. Electricity
2. Magnetism
3. Gravity
4. Mind / Consciousness
5. Vibration and Oscillation

While many correspondences have been identified between Keely's work and conventional science some like the ones above have no clear correspondence or translation. These are new (for us) concepts and constitutes a new paradigm. It has been found the theories and philosophy of Walter Russell[11] coincides

[8] [Apergy - Power Without Cost]
[9] [Source]
[10] [Keelys Mechanical Inventions and Instruments]
[11] University of Science and Philosophy http://www.philosophy.org

with, compliments and supports in countless ways Keely's ideas. Hence some Russell ideas and artwork are used throughout this book. The few Russell ideas incorporated herein are not all that compliment Keely's work as it would require several volumes to illustrate Russell's work alone. Both their works are vast if not outright encyclopedic in scope. The focus of this work is fairly concentrated and does not attempt to cover the entire gamut of their philosophies and sciences.

0.4 Analog Signal Generators

Keely developed his science and machines in a time before there were electronic or digital instruments such as signal generators, microphones, amplifiers, signal conditioners, synthesizers, transducers, accelerometers, speakers, etc. Therefore he made use of what was at hand - music instruments and simple disk, rod, cavity and string resonators were his signal generators. He invented devices to produce and test for frequencies in the high ranges of etheric and mind vibrations. A violin, zither, harmonica, stretched strings, tube resonators and chladni plates (gongs) among other simple and complex devices supplied his acoustic signals (simple frequencies) and chords (complex wave forms). He also developed precious metal wires and beads[12] that somehow multiplied multiple frequencies and conducted them without resistance. Peppered throughout the literature are many references to his copious use of diverse music instruments employed to excite various responses from his many devices. Below is a picture of one such device using a zither as part of a much more complicated device that also has within it rod, sphere, tube and plate resonators and a simple horn adorning its top.

[12] [Trexar], [Bixar], [Trextrinar]

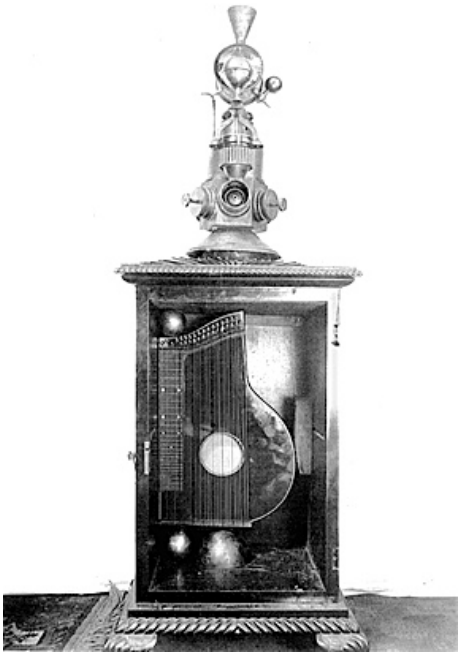

Figure 1: Example of an analog zither as acoustic source
Image: http://pondscienceinstitute.on-rev.com/imagesNatDyn/zither.jpg

0.5 Music as an Engineering Tool

Music is orderly organized sound. Noise is disorderly unorganized sound. Music allows the intelligent use of simple (notes) and complex tones (chords), time, amplitude, concord and discord (the basis of all vibration), wave form control and how these tools can be used. The study of music science incorporates numbers, arithmetic, geometry, history, philosophy and acoustics. Music is not unlike a shorthand approach to acoustics. Music is of the Whole Mind connecting physical science with higher states of consciousness.

"*It (the study of music) gives (a knowledge of) a rhythm that is as necessary as law, in making any success in a material experience. Some knowledge of music and some knowledge of law are necessary in the experience of every male individual.*" Cayce (903-3,4)

"That was a happy inspiration which led the Quintet Club, of Philadelphia, to pay a visit to the workshop of Keely a few weeks ago. Its members had been told that the illustrious inventor had employed the power of music to develop the wonderful forces of nature, and evolve by a law of sympathetic vibrations a mighty energy through the disintegration of a few drops of water. Naturally they were anxious to go. They were familiar with the claim by Paganini that he could throw down a building if he knew the chord of the mass[13] *of masonry, and wanted to know if it were possible that the dreams of the great violinist is realized at last.*

"So nearly as can be made out from the mysterious language of the man of many promises, there is a harmony of the universe[14] *that is controllable by the strains of music. Each of the molecules composing a mass of matter is in a state of incessant oscillation, and these movements can be so much changed by means of musical vibration that the matter will be disintegrated*[15]*, its constituent molecules fly apart, and a propulsive force be generated similar to that which is evolved by the touching of a match to a single grain of powder stored in a magazine. He holds that matter is nothing but forces held in equilibrium, and that if the equilibrium be once destroyed*[16] *the most tremendous consequences will ensue.*

"According to the report, he proved to the satisfaction of more than one member of the club that he has already discovered the means of calling out this force, and is able to partially control it. In their presence he caused a heavy sphere to rotate rapidly or slowly, according to the notes given by the instrument on which he played. The sphere was so isolated as to prove that it could not be acted on by electricity or in any other way than by the sound waves. He disintegrated water[17] *into what he calls "etheric vapor"*[18] *by means of a tuning fork and a zither. The disintegration of only four drops of water produced a pressure of 27,000 pounds*[19] *to the square inch, and three drops of*

[13] [chord of mass]
[14] see [Sympathy]
[15] [DISINTEGRATION OF MATTER - THREE SYSTEMS]
[16] [Disturbance of Equilibrium]
[17] [THEORY AND FORMULA OF AQUEOUS DISINTEGRATION]
[18] [Etheric Vapor]
[19] [PRESSURES PRODUCED BY VIBRATION]

the harmless liquid fired off a cannon[20] *with a tremendous roar."*[21]

Music incorporates ratio and proportion - the very base constructive elements of vibrations and oscillations.

0.6 A word of warning

It is highly unlikely the reader will grasp the entirety of this material on the first or second read through. One must learn the background ideas, basic or underlying definitions and concepts before the Light dawns in consciousness. This is not unlike learning a new language which does take some time, effort and consequent shifts in consciousness. Do not give up if you don't get SVP within the first five minutes! What you are learning here is PhD level or higher. It takes years of study to earn a PhD - SVP is no different in its level of commitment and materials except that SVP is far more interesting and satisfying.

Do not now or in the future presume what is presented here is the Truth carved in stone. Some is undoubtedly accurate while some not so much. Use your own discernment at all times. This book is my take on these ideas. It is my 'best guess' after years of careful study and deep contemplation. No doubt many will interpret Keely's work differently which is completely OK with me. It will, in my opinion, take many more years if not decades before Keely's work is sorted out, understood and applicable for humanity's benefit. The same goes for Russell's many books and drawings. To do a thorough effort to cover and decipher all that material would take a properly focused and funded team decades of dedicated effort - in my opinion.

0.7 How to use this book

Where terms or phrases are enclosed in brackets ([ ]) the reader is encouraged to look these up within the svpwiki.com. These bracketed terms are mostly in the footnotes at the bottom of each page. If a concept, word or phrase

[20] [Cannon]
[21] [Keely and His Discoveries]

is not understood look it up. A good dictionary resource is onelook.com[22]. Learning Keely is learning a new jargon describing a new paradigm - it takes time to assimilate these new-to-us ideas. On top of that one is obliged to learn the jargons of several fields such as quantum mechanics and physics, chemistry, math, music, acoustics, metaphysics and several others. It then is a hard climb to the peak of understanding but the view will be worth it.

Due to the nature and expense of the printing process, especially color, imbedded images are black and white smaller low resolution facsimiles of the originals to which have been included below each image a link to the original color and/or higher resolution image.

0.8 Generalities and Idealism

The concepts covered herein are mostly generalities. There are some specifics. Usually a general concept is idealized for simplicity's sake. All phenomena are subject to countless influences, some major and some quite subtle all causing some degree of modulation in the simple models presented. A good example covered in 'Chapter 12 - Vortices and Toroids'. A torus is usually presented looking somewhat like a common donut. This is a gross over-simplification as the structural and functional elements in toroids are many, complex and dynamic. The treatment on these complex toroid structures and dynamics takes the basic idea then ventures into a bit more detail. One's lifetime is not enough to cover all the details of all the subjects touched on within Sympathetic Vibratory Physics [SVP][23]. I'll do what I can to provide details as I am able. Other unresolved details are left for later writings and to those so interested and driven to ferret them out.

Dale Pond[24]
La Junta, Colorado

[22] It has been found the older dictionaries are better to understand Keely and the science of that time period than newer dictionaries.
[23] [Sympathetic Vibratory Physics]
[24] [Dale Pond]

Contents

0.1 What this book is 4
0.2 Hindsight is mostly 20/20 5
0.3 Original Concepts 6
0.4 Analog Signal Generators 7
0.5 Music as an Engineering Tool 8
0.6 A word of warning 10
0.7 How to use this book 10
0.8 Generalities and Idealism 11

1 Ether as a Working Fluid 27
1.1 Something old something new 27
1.2 Energy Levels 28
1.3 Classification of Energy Levels, States or Phases 29
1.4 Michelson-Morley 31
1.5 Etheric or Quantum Carriers 32

2 Love in Science and Physics 35
2.1 First and foremost Love is sympathy 35
2.2 Love in Science and Physics 35
2.2.1 Sympathy essential 35
2.2.2 The state or condition of Sympathetic Association . . . 36
2.2.3 Looking at the substance of a rock 36
2.2.4 Sympathy Connects Everything 37
2.2.5 Sympathy is simply another word for Love 37
2.2.6 Sympathy is Attractive 37
2.2.7 Individuated Complex Wave Functions 38
2.2.8 The state of pure Sympathy 38

3 Sympathy **41**
3.1 Sympathy is Love . . . 41
3.1.1 Infinitely Small Centers . . . 42
3.1.2 Atomoles . . . 43
3.1.3 Records of Motion are Seeds . . . 43
3.2 Neutral Center of the Earth . . . 44
3.2.1 Force of Sympathy . . . 44
3.2.2 Sympathy is the Essence of Life . . . 44
3.2.3 Sympathy is as Syntropy and Electricity . . . 45
3.2.4 The rate of acceleration of Sympathy is enormous . . . 47
3.2.5 Sympathetic Associative Forces . . . 48
3.2.6 Sympathy is Entanglement . . . 49
3.3 Sympathy defined . . . 50
3.4 Recommended reading . . . 52

4 Neutral Center **53**
4.1 Neutral, Latent Neutral and Neutral Center . . . 53
4.2 Neutral means . . . 53
4.3 Coordination or coincidence of forces . . . 55
4.4 Neutral Center . . . 58
4.4.1 Disturbance of Equilibrium . . . 59
4.4.2 Supreme Neutral Center . . . 61
4.4.3 Keely further describes the Neutral Centers . . . 63
4.4.4 Law of Transmissive Vibraic Energy . . . 64
4.5 Divine Will - The Wheelwork Source of all Force . . . 70
4.5.1 Center of Sympathetic Attraction . . . 74
4.5.2 Center of Sympathetic Coincidence . . . 74
4.5.3 Center of Association and Concentration . . . 74
4.5.4 Center of Focalization and Transformation . . . 75
4.5.5 Nucleal Center . . . 75
4.5.6 Resistance . . . 77
4.5.7 Prime Neutral Center . . . 80
4.5.8 Supreme Neutral Center . . . 80

5 Mind and Mind Force **83**
5.1 Mind is Force . . . 83
5.2 Whole vs Split Mind . . . 84
5.3 Mind is of the Sixth and Seventh Subdivisions . . . 85

5.4 Keely - Substance and Nature of Mind Force 86
5.5 Russell on Mind and Mind Substance 89
5.6 Mind is a Substance 90
5.7 Mind is also as an aggregate of consciousness 91

6 What is Vibration? 93
6.1 Quotes - vibration defined 93
6.2 A Vibration Is 94
6.2.1 Three Forces action on all Matter and Energy 95
6.2.2 Law of Attraction (syntropy) 96
6.2.3 Law of Repulsion (entropy) 96
6.2.4 Law of the Dominant (Celestial Mind Force) 96
6.3 Rad-Energy - entropic dispersion 96
6.3.1 Introductory Impulse 97
6.4 Vibration v Oscillation 97
6.5 What a Vibration is NOT 98
6.6 Wave Propagation 99
6.7 Frequency 100
6.8 Law of Cycles 100

7 Laws of Being 103
7.1 Introduction 103
7.2 Rhythmical Relations 104
7.2.1 Principle of Rhythmic Balanced Interchange 104
7.2.2 Every individualized object assimilates itself 104
7.2.3 These modes are today much like “phase” 107
7.2.4 ‘Thirds’ is usually a mathematical relationship of proportion 109
7.3 Threefold Relations 109
7.3.1 Each of the above dynamics (IV) is a $\frac{1}{3}$ part or current of a $\frac{3}{3}$ stream 110
7.3.2 Ratios of Harmonic and Enharmonic Potentials 111
7.4 Three Actions and Laws of Being 111
7.4.1 Law of Sympathetic Association 112
7.4.2 Law of Assimilation 113
7.4.3 Law of Attraction 113
7.4.4 Law of Sympathetic Oscillation 113
7.4.5 Infinite neutral Mind centers and controls all motion . 114

7.4.6 One Substance is Mind . . . 115
7.5 Three Modes of Vibration . . . 117
7.5.1 Polarity, Duality, Bias and Potential . . . 117
7.6 Three Laws of Being . . . 118
7.6.1 Dominant Mode . . . 118
7.7 Table of Modes Correspondences . . . 120
7.7.1 The above dynamics are to the following effects . . . 120
7.7.2 Relations of Thirds . . . 121
7.8 Three Modes, Currents and Streams . . . 121
7.8.1 Ratios and Proportions of Thirds . . . 121
7.9 Evolution of Matter . . . 123
7.10 Neutral Center . . . 123
7.10.1 Center of Sympathetic Coincidence or Neutral Center . 124
7.11 Syntropy or Mutual Affinity . . . 125
7.12 Subdivisions of Individualized Being . . . 126
7.12.1 Table of Subdivisions of Matter and Energy . . . 126
7.13 Arithmetical and Geometric Progressions . . . 127
7.14 Progressions of Orders . . . 127
7.15 Infinite Range of Vibration . . . 127
7.16 Progression Types . . . 128
7.16.1 Arithmetic and Geometrical Progressions . . . 128
7.17 Three Major Orders . . . 129
7.17.1 The above are not “things” . . . 129
7.18 Controlling Mode . . . 130
7.18.1 Modes combine in unique proportions . . . 130
7.19 Modes as actual components . . . 130
7.20 Foundational Concepts . . . 131
7.20.1 Balance or Equation of Father-Mother Forces . . . 131
7.21 Latent Force . . . 132
7.21.1 Matter is the result of three forces or modes of vibration 132
7.21.2 Latent Force, Keely . . . 135
7.22 Sympathy and Resonance . . . 136
7.22.1 Attraction and a Repulsion between all things . . . 136
7.23 Matter composed of Molecules . . . 137
7.23.1 Attraction is an effect of Syntropy . . . 137
7.24 Molecules are sensitive to modes . . . 138
7.25 Oscillations of Molecules . . . 138
7.26 Disturbance of Equilibrium . . . 139

7.26.1 Disturbance of Equilibrium, Gravity 140
7.27 Sixths induces Neutral Radiation 141
7.27.1 Seeming Paradox 142
7.27.2 Exciting the Molecular Mass 142
7.28 Third is the Dominant 142
7.28.1 Harmonic Resonant Impulse 142
7.29 The Dominant or Etheric Mode 143
7.29.1 Etheric Current 143
7.30 Centers of Harmonized Vibration 144
7.31 Sympathetic Outreach (sympathy/resonance field effect) . . . 144
7.32 Etheric Outreach 145
7.32.1 Law of Transmissive Vibraic Energy 146
7.32.2 Etheric vibration is the cause of sympathetic association 146
7.33 Chord of Mass 147
7.33.1 Qualifiers 147
7.33.2 Law of Harmonic Pitch 147
7.34 Controlling Chord of Mass 147
7.34.1 Equilibrium or Balance cannot exist 148
7.34.2 Law of Cycles 148
7.34.3 Table of Transformation over Time 148
7.34.4 Law of Transformation of Forces 149
7.35 Harmonizing Chord of Mass 149
7.36 Molecular Oscillation 149
7.37 Transmitting Concordant Impulses 150
7.37.1 Law of Vibrating Atomolic Substances 150
7.37.2 Frequencies of the Modes 151
7.38 Vibratory Rotation 151
7.38.1 Microwaved Radiometer 151
7.39 Rotation 152
7.39.1 Medium for inducing a Neutral Center 152
7.39.2 Keely on Rotation 153
7.39.3 Power of Rotation 155
7.39.4 Receptive Transmittive Concordance induces Rotation 156
7.39.5 Polar and Depolar Differentiation result in Motion . . . 156
7.39.6 Neutral Center or fulcrum represents Focalization . . . 157
7.39.7 Rotation of the ether produces condensation 157
7.39.8 Controlling “negative attractive” 158
7.39.9 Testing Positive and Negative Rotation 158

7.39.10 Russell on rotation 158
7.40 Controlling negative attraction 159
7.41 Notes 159

8 Modes of Vibration 161
8.1 Two models of three modes 161
8.2 Three Modes of Vibration 162
8.2.1 Compression or Longitudinal Wave or Mode 162
8.3 Three Modes of Vibration 162
8.3.1 Transverse or Shear Wave or Mode 163
8.3.2 Rayleigh, Lamb or Love Wave or Mode 163
8.4 Introduction to Keely's Wave Function 165
8.5 Feynman Morphology 166
8.6 Footnotes 169

9 Keely Wave Function 171
9.1 Introduction to Keely's Wave Function 171
9.1.1 Law of Transformation of Forces 173
9.2 Thirds as Ratios within a Whole 174

10 Proportions (Ratios) of Relative Values 179
10.1 Proportion 179
10.2 Reciprocating Proportionality 180
10.3 Reciprocating Proportionality 181
10.4 Reciprocal Proportion 182
10.5 Reciprocals and Proportions of Motions and Substance 184
10.6 Thirds as Ratios within a Whole 185

11 Universal Heart Beat 187
11.1 The Love Cycle 188

12 Vortices and Toroids 201
12.1 Vortices 201
12.2 Vortex Components 203
12.3 Vortex Dynamics 204
12.4 Vortex Action is rotary 204
12.5 Vortex Center 205
12.6 Vortex Polar Forces 207

12.7 Vortex Periphery 207
12.8 Vortex Wall 208
12.9 Toroid 208
12.9.1 Sympathetic Associative Attraction 209
12.9.2 Law of Cycle 210
12.9.3 Neutral Center Repulsion 211
12.9.4 Periphery Neutralization or Depolarization 212
12.10 Plane of Inertia 212
12.11 Free Space 213
12.12 Etheric Envelopes 215

13 Electricity and Magnetism 219
13.1 Electricity is a Polar State Dipole 219
13.1.1 Voiding the Dipole or Polarity 219
13.1.2 Conduction 220
13.1.3 Polar and Depolar States 220
13.2 Keely on Electricity 220
13.3 Russell on Electricity 226
13.4 Tesla on Electricity 230
13.4.1 Summary 232

14 Gravity 233
14.1 Keely on Gravity 233
14.2 Keely and anti-gravity 235
14.3 Levitation experiments 237
14.4 Russell on Gravity 240

15 Bibliography and References 243

A I - Laws of Being 247

B II - Laws of Being 255

C III - Ultimate Constitution of Matter 263

List of Figures

1 Example of an analog zither as acoustic source 8

3.1 Opposite polar forces void/combine as One 47

4.1 Universal Seesaw balancing seeming opposites 54
4.2 From the One comes the many 63
4.3 Coincidental forces meet at center 66
4.4 Neutral Center - creator of nebula and galaxies 67
4.5 Keely's Compound Disintegrator 68
4.6 Liberating and measuring Etheric Vapor pressures 69
4.7 An earlier Liberator design 70
4.8 Sympathy Links all Centers to all other Centers 71
4.9 Neutral Center is Mind or Consciousness of God 72
4.10 Neutral Center is as mind or consciousness 73
4.11 Syntropy winding up force to 4++ center 76
4.12 Entropy unwinding energy to 0 Plane of Inertia 77
4.13 Russell's 4 plus plus center of polar opposition 78
4.14 Cavitation is an example of the Law of Cycles 79

5.1 Whole and Split Mind 85
5.2 Red and Blue halves of the visible light spectrum 89
5.3 Red and Blue halves of Polar states 90

6.1 Four Phases of a Wave or Oscillation 100

7.1 Sympathetic Vibration - Entanglement 107
7.2 Chart showing location of the three mode frequencies. 108
7.3 Triune Forces/Modes/Proportions combined as One Force . . 110
7.4 Typical Triplet Chords in Keely's charts. 111
7.5 From the One comes the many. 115

7.6 Mind centers all motion. 116
7.7 Every point in the universe is a gravitative center. 124
7.8 Table of seven subdivisions or orders. 126
7.9 Keely Motor activated by slow released etheric vapor 134
7.10 Keely's cannon fired by quick release of etheric vapor 135
7.11 Table of Transformation of Forces over Time 148
7.12 Globe motor actuated by rotary vibratory dynamics 153
7.13 Keely's globe motor and provisional engine 154
7.14 Keely and his globe motor or dynasphere 154
7.15 Pond's replication of the globe motor or dynasphere 155

8.1 Coiled Spring showing Longitudinal Wave 162
8.2 Compression and Rarefaction in a Wave 163
8.3 Transverse Wave 163
8.4 Relationship of Three Modes 164
8.5 Suppositional Math and Symbolic Structure 165
8.6 Feynman's triplet structures of the proton and neutron 166
8.7 Table of ranges of forces, forms and laws 167

10.1 One Balanced Whole and Two Reciprocating Dynamics 181
10.2 Plane of Inertia 183
10.3 Scale of 0 to 4 to 0 183
10.4 Nested cubes or increasing and decreasing proportions 184

11.1 Universal Heartbeat 187
11.2 Neutral Center 4++ extention to periphery 0 191
11.3 The basic formula of Creation 198
11.4 Formula of Rhythmic Balanced Interchange 199

12.1 Differential densities, pressures and masses 202
12.2 Tornado Vortex 203
12.3 Vortex showing a few of its many components 204
12.4 The depolar One divides into duality/polarity 206
12.5 Triune Forces of a vortex 207
12.6 Typical idealized torus, toroid or "donut" concept 208
12.7 Ideally toroids are two vortices meeting apex to apex 209
12.8 Wave elements of Time, Compression and Dispersion 210
12.9 Compression to center then equatorial dispersion 211
12.104++ at center of transformation 211

12.11 Depolar state at plane of inertia 212
12.12 Triune polar forces as One Force about a common center . . . 213
12.13 Three double vortices 214
12.14 Keely's three envelopes or shells 215
12.15 Three overlapping envelopes or shells sealing poles 216

13.1 Neutral Center governing seeming opposite potential states . . 222
13.2 Triune Forces of Magnetic Field in Magnet 225
13.3 White Light of Mind divided into red and blue halves 227
13.4 Attractive (syntropic) power of electricity 228
13.5 Polar dynamics of electricity 229

14.1 Keely's experimental air ship 237
14.2 Levitating weights 238
14.3 Gravity wave bar and poles 241

List of Tables

5.1 Keely's Seven Subdivisions of Matter and Energy 86

7.1 Three Polarity States and Effects 118
7.2 Table of Mode Correspondences 120
7.3 Some Mode Effects 120
7.4 Thirds, Sixths and Ninths 121
7.5 Mode Frequency Ranges 128
7.6 Hypothetical controlling Modes and Proportions 130
7.7 Thirds, Sixths and Ninths Intervals 140

8.1 Modes of Vibration 166
8.2 Table of attributes of the three modes 168
8.3 Keely's three modes; subdivision, octave and law 168

9.1 Ranges of forces vibration forms types and laws 173
9.2 Neutral (thirds); energy radiates from center (sixths); force contracts to center (ninths) 176

Chapter 1

Ether as a Working Fluid

1.1 Something old something new

Has the Victorian Ether[1] been rediscovered? I believe it has. Science has been brow-beat to never ever use the term "ether" or *else*. Such a threat has perpetuated a clear state of ignorance in direct proportion to holding back true scientific progress. The too often used blanket statement *"Ether does not exist"* is nothing short of dogma and therefore decidedly unscientific. But no one (openly) questions that statement out of reactionary inquisitional fear. Had any questioned it they would have seen the term "ether" is 1) a general concept and not specific and 2) there is obviously 'something' unseen and unacknowledged operating at finer levels of 3) classifications or states of matter and energy. It would require a book-length expose to show not only does the ether exist and has always existed but it is now being seen by conventional science under different eyes because the general catch-all term '*elemental particle*' is being applied to a multitude of new classifications of sub-atomic or quantum entities both elementary and composite. We could take all these 'new' quantum entities or higher classifications of matter and energy states and interactions and lump them under the term "ether" and we would then know what ether is. Ether to SVP is simultaneously a 'classification' or 'state' and depending on context a 'thing'. This puts us into a nice position of understanding what Keely called "Ether", "Etheric Vapor"[2], *etc.* and still be on a solid scientific footing which none could successfully

[1] [Ether]
[2] [Etheric Vapor]

assail.

Quark-Gluon Plasma (QGP) "The strength of the color force means that unlike the gas-like plasma, quark-gluon plasma (QGP) behaves as a near-ideal Fermi liquid, although research on flow characteristics is ongoing. In the quark matter phase diagram, QGP is placed in the high-temperature, high-density regime; whereas, ordinary matter is a cold and rarefied mixture of nuclei and vacuum, and the hypothetical quark stars would consist of relatively cold, but dense quark matter."[3]

Compare the above description to

Liquid Ether *"The atomolic*[4] *substance is what is termed the ether which fills all space and is the transmitting medium for all celestial and terrestrial forces. This is the liquid ether of occult science."* Keely

Both named substance are 1) subatomic entities, 2) liquids and are 3) conducting or transmitting[5] mediums of/for diverse forces. I do not at this point consider QCP as elementary as it is a composite conventionally classified within the "Very high energy state" of matter and energy. It therefore ought to be classified to correlate with Keely's Interetheric subdivision[6]. To ferret out all this "new" information one could begin with the svpwiki.com pages "State" and "Subdivision" then proceed to Wikipedia, States of Matter, *etc.* Again many volumes could be researched and written about this one aspect of SVP correlated to conventional science.

1.2 Energy Levels

For the purposes of this document "Ether" (quantum energy level substances) is considered as a *Working Fluid* not unlike refrigerants in a cooling system where liquid is converted into gas state then back to liquid state by varying pressure and temperature. Molecular substances that can undergo this type of repeating phase change without changing their chemistry are called

[3] Wikipedia/Quark-Gluon Plasma
[4] [etheric]
[5] [Connecting Link]
[6] [Subdivision]

azeotropic fluids of which there are a great variety on the market. The only thing that changes within such a system is the Wave Function[7] (mathematically defined state) of the Working Fluid. In this context Ether, being and viewed as an azeotropic fluid, may be (generally speaking)

Molecular, as in liquid water or water vapor (composed of molecules)

Atomic, as in Hydrogen and Oxygen and (composed of atoms)

Etheric, as in Electrons, Protons, Neutrons, Photons, Quarks and Gluons, etc. of which there are a great variety. (composed of quantum entities)

Hence there are many types and variations of these three main classifications each possessing their own identifying state or Wave Function. These states or Wave Functions are interchangeable according to Keely's Law of Transformation of Forces[8]. The first two above states operate within what is called *classical* physics (sometimes called Newtonian Physics, 3D, materiality, maya, *etc.*) and obey its laws. The third state or classification operates within *non-classical* physics (sometimes referred to as Quantum Physics, Quantum Mechanics, Quantum Electrodynamics, Subtle Energy Physics, Mind Physics, Scalar Physics or Spiritual Physics). As is well known the third state or classification of non-classical physics does not operate according to principles of classical physics even though many foolishly attempt to apply classical physics laws to these subtler (non-classical) states of matter and energy.

1.3 Classification of Energy Levels, States or Phases

SVP establishes a seven-level matter and energy classification having the three main divisions of molecule, atom and ether. The modern classification is not as simple or neat. Modern science has identified multiple classes or types of *associations of quantum entities*. Several of these associative states are theoretical meaning they are hypothesized but not yet "proven". Several

[7] [wavefunction]
[8] [Law of Transformation of Forces]

others are well established and accepted.[9] The modern states that are listed below may be associated with Keely's "Etheric" state or subdivision are (but not limited to)

I - Low Temperature states

1. Superfluid
2. Bose-Einstein condensate
3. Fermionic condensate
4. Rydberg molecule
5. Quantum Hall state
6. Strange matter
7. Photonic matter

II - High-energy states

1. Degenerate matter
2. Quark-gluon matter [10]
3. Color-glass condensate

III - Very high energy states

The High-energy states may be considered in this document as 'states of ether' of which there are countless variations. It is not our intent to delve into the intricate details of these states. If is however our intent to explore and clarify how some aspects of these etheric states associate, behave and have their being. These high energy states as defined as ether or *'atomolic substances'*:

"The atomolic substance is what is termed the ether which fills all space and is the transmitting medium for all celestial and terrestrial forces. This

[9] [Wikipedia; States of matter]
[10] [svpwiki.com; Quark-gluon plasma]

is the liquid ether of occult science." Keely

"*For convenience' sake we will use the term atomolic in place of etheric in our subsequent definitions.*" Keely[11]

1.4 Michelson-Morley

Keely's quantum discovery work preceded even the discovery of the electron in the early 1890s[12]. Keely's pioneering work with *splitting the atom* into its constituent quantum elements predates quantum mechanics and quantum physics by decades. This accomplishment[13] predates any officially recognition fields such as these existing within quantum realms of matter and energy - because they didn't exist to victorian science unless it be referred to as *Ether*. In fact the atom was considered as *indivisible* by orthodox science of that day. No scientist or engineer of that time period had a clue what Keely was doing because his ideas were never suspected by science or engineering. In consequence he developed his own terms which worked for him as he applied his findings to design and operate his innovative hybrid quantum/mechanical devices[14][15] of diverse designs and purposes - mostly to prove out his theories as he constructed his paradigm of Sympathetic Vibratory Physics which he sometimes called Vibratory Etheric Physics or simply Vibratory Physics. Of course as there were no other scientists or engineers aware of quantum mechanics and physics in Keely's day there was no one who could understand or verify what he was doing. The best they could do (the honest ones of integrity) was to witness Keely's demonstrations and report what they thought they saw without offering any explanations.[16] The dishonest ones or those who felt threatened by knowledge they knew nothing about (despite their lofty degrees) condemned everything Keely did as fraud or fakery[17].

From the above and with 20/20 hindsight we can see the Michelson-Morley

[11] [Dashed Against the Rock, p. 47]
[12] Depends who you ask.
[13] [Keelys Accomplishments]
[14] etheric or quantum forces powering mechanical machines
[15] [Keelys Mechanical Inventions and Instruments]
[16] [Eye Witness Accounts]
[17] [Was Keely a Fraud]

experiment did not prove the ether did not exist. It simply proved the ether or the now known to exist high-energy states could not be detected or measured with his crude equipment built and operated with their incomplete classical physics paradigm that did not include non-classical physics even though is what they were hoping to verify.

Keely said etheric substances are so tenuous as to pass through seeming solid matter as wind through *"a coarse sieve"*. If his view is correct there was no possibility Michelson and Morley were going to impede or measure any resistance caused by ether.

"The negative sympathetic polar stream is the magnetic flow proper, and it is in sympathetic coincidence[18] *with the second atomic flow, the electric current is the first and second order of atomic vibration, a dual force, the flow of which is too tenuous to displace the molecules. It can no more do so than the flow from a magnet can displace the molecules of a glass plate when it is passed under it. The flow from a magnet is too fine to disturb the plate molecules, but passes as freely between them as a current of air would through a coarse sieve."* (underlines added)[19]

1.5 Etheric or Quantum Carriers

These high-energy states or tenuous substances are *carriers* or conductors of subtle imperceptible forces or disturbances that once excited will manifest as other perceptible detectible phenomena. These streaming forces are Keely's Sympathetic Streams[20]. These fine subtle forces are therefore the unseen and often unsuspected scalar or causative forces manifesting as other lower frequency coarser effects of attraction, repulsion and rotation. This book is about identifying and manipulating these subtle unseen constituent forces that we may be enabled to create desirable effects such as magnetism, electricity, health, gravity effects, rotation and all of their attributes and variations. As carriers of excitation or disturbances[21] they are therefore as connecting

[18] [sympathetic coincidence]
[19] [Keely], [ATTRACTION PROPULSION ETC], [16.21 - Magnetic Flow]
[20] [Sympathetic Streams]
[21] [13.12.1 - Disturbance of Equilibrium]

links[22] between the seven subdivisions[23] of matter and energy states thus affecting transformations or transmutations of these energy states[24] between themselves whether moving into or out of higher or lower energy ranges manifesting as *centralizations* or as more commonly called - *particles*.[25] These unseen and unacknowledged subtler forces are the constructive constituent elements making up the wave function of all known states of matter and energy.

One of the more significant attributes of this Dirac Sea-like[26] substratum of the universe is it's vibratory uniformity and harmony establishing a sympathy between centers or centralizations which modern science now calls *quantum entanglement*. Keely called this ubiquitous harmonic state of being between entities *sympathetic association* and is governed by the Law of Sympathetic Association[27]. The active link between centralizations or particles is their inherent vibrations and oscillations. When these periodic motions form unisons or harmony between secondary and tertiary harmonics are called sympathetic vibration and sympathetic oscillation. It is this sympathy between periodic motions that is the cause and link seen in "action at a distance"[28] phenomena such as quantum entangle[29]ment, remote viewing, mind to mind[30] communication, telepathy, telekinetic actions, *etc.*[31] As we will see another synonym for this universal sympathetic attribute of and between all centralized energy states (centralizations, particles) is Love (as one).

[22] [connecting link]
[23] [Subdivision],[State]
[24] [Law of Transformation of Forces]
[25] [connecting link], [Vibratory Physics - The Connecting Link between Mind and Matter], [The Connecting Link Between Mind and Matter - Keelys Progress - Part 2]
[26] [Dirac Sea]
[27] [Law of Sympathetic Association]
[28] [action at a distance]
[29] [telepathy]
[30] [mind to mind]
[31] [action at a distance]

Chapter 2

Love in Science and Physics

2.1 First and foremost Love is sympathy

First and foremost Love is sympathy or that which connects (entangles) all things to all else. In SVP, sympathy does NOT mean "feeling sorry" but means "feeling the same as", "as one" or "one with". Some might call this "empathy", "harmonization", "resonance", "bonding", "coupling" or "entanglement".[1]

> "*Love is the Creative Force of All that Is.*"[2]

2.2 Love in Science and Physics

2.2.1 Sympathy essential

This harmonious high-energy state of matter and energy is everywhere the same. It, by its nature, is that which connects everything to everything else. Without this unity of being the universe would be fragmented, separate and discontinuous. It is a universal bonding agent without discontinuities. Should anything be disturbed everything else responds in like fashion as their essences (constituent elements) are entangled.

[1] [Sympathetic Association], [Law of Sympathetic Association], [Law of Assimilation], [Harmony], [Affinity], [Attraction], [Awareness], [Knowing], [Universal Love], [Christ], [Science], [Truth], [Coupling]

[2] [Dialogue on Awakening], page 160

"Where there is no sympathy there can be no love, for love is sympathy."[3]

2.2.2 The state or condition of Sympathetic Association

The state or condition known as Love is important to science and physics because this state or condition is what underlies and connects all seeming individuated things. Love is a condition or state of vibration that links or entangles all things to all other things everywhere, essentially eliminating Time and Space. Which is to say all things are quantum entangled. This statement appears false as we do not perceive it to be the case when we see every thing as seemingly being separate and distinct. Our perception (opinion) is of the physical or molecular state, form and color of things. For instance, a rock is a molecular mass appearing to have an individual existence all by itself. So we see the mass which we can pick up and move it around and not physically see a connection to any other thing or rock not realizing the rock is a portion of the earth and is resonant to the earth else it would not remain either on the earth or in a molecular state or both. *Should we consider just the electrons and photons making up every thing that is, regardless of location, as being essentially the same, vibratorily speaking, how can they not be entangled?*

2.2.3 Looking at the substance of a rock

Looking at the substance of a rock (for instance)
We know
1 - it is composed of molecules which are composites of atoms.
2 - these atoms are composed of electrons, protons and neutrons.
3 - these elementary entities are composed of photons.
4 - photons are composed of quarks[4].
5 - all these above entities vibrate and oscillate perpetually at given rates and amplitudes and as *modulated by their near and far vibratory environment.*
6 - that individual objects of the same frequencies or chords of frequencies are sympathetically linked or entangled to and with each other. As every type of

[3][Vera Vita the Philosophy of Sympathy]
[4]https://en.wikipedia.org/wiki/Photon_structure_function

quark, photon and electron are essentially the same[5] no matter where they are we can say all these particles are sympathetically linked or entangled to each other to varying degrees or gradients. They have the same or very similar Wave Function[6].[7]

2.2.4 Sympathy Connects Everything

Thus this underlying sympathy that dynamically connects these seeming individual entities is the unseen Connecting Link[8] that connects them all. This Connecting Link functions on the 6th and 7th subdivisions[9] of Matter and Energy and permeates all forms of matter whether in solid or fluid form.

2.2.5 Sympathy is simply another word for Love

Sympathy is simply another word for that state of being known as Love, Harmony, Coupled or Quantum Entanglement.

2.2.6 Sympathy is Attractive

It is this sympathy or sympathetic affinity of vibration or oscillation rates that binds, unites or coheres like entities to one another whether they are quarks, atoms or people individually or in groups. This property of vibratory attraction was demonstrated by Carl Bjerknes[10] in 1881 and is a fundamental dynamic of SVP.[11] Likewise vibratory attraction is the cause of syntropy[12] (negative entropy[13]) another basic and important dynamic of SVP.

[5] notwithstanding near and far, seen and unseen vibratory influences and/or modulations

[6] [Wave Function]

[7] [Entanglement], [Subdivision]

[8] [Connecting Link]

[9] [Subdivision]

[10] [Carl Anton Bjerknes]

[11] [Bjerknes Effect], [Law of Attraction], [Syntropy]

[12] [syntropy]

[13] [negentropy]

2.2.7 Individuated Complex Wave Functions

Having said all that it must be also stated that no two electrons are exactly the same compound chord of frequencies (complex wave function or spectra) at any given moment in Time and location in Space. They do all possess certain 'standard' chord configurations in common else they would be something other than electrons. Each has a slight and ever changing variation dependent upon modulating forces such as local gravity, electric and magnetic influences, pressures, temperatures, *etc.* If these subtle differences were not present then destroying one electron would destroy them all and as we see a continuity happening with the universe we can see this completely entangled sympathy does not occur on the electron subdivision. Some aspects of electrons are fully entangled other aspects not so much. On the other hand should we progress to the next subdivision, the photonic or light, we see a higher degree of sympathy or harmony between the photons than the sympathy that exists between electrons. This is because there are less frequency parameters (simpler chord or signature) to a photon than has a larger group of photons manifesting as an electron. Likewise we can advance to the next higher subdivision of quarks and notice there is again another higher degree or "Q" of sympathy than with the lower grosser photon or electron subdivisions. There is yet another higher level of subdivision which Keely called the Compound Interetheric or Undifferentiated Mind Force and substance. He indicated this level is not differentiated and is wholly sympathetic unto and within itself. A pure (latent) sympathy if you will being of course pure Love or Oneness of vibratory Being. Religions have called this state or condition of total Love or sympathy many names from God, Nirvana, Allah, Jehovah, Heaven, *etc.*

2.2.8 The state of pure Sympathy

This state of pure sympathy acting in a highly sympathetic medium (etheric, quantum subdivisions) means no matter what happens anywhere in this sympathetic medium such is communicated to all of the medium simultaneously and the velocity of communication is near instantaneous.[14] Now, is not this instant awareness or knowing of what is going on regardless of distance (space) an omniscience? Is this not a "Self Awareness" of the underlying universal matrix we call the universe? Does this interconnectedness not account

[14][Quasiparticles carry entanglement to near infinite speeds]

for shared Mind phenomena such as remote viewing, clairvoyance, spooky action at a distance, and telepathy?[15]

This background or ground state sympathy was established when quiescent Divine self-awareness occurred and before active thought or thinking began. This state is not unlike the initiatory Void of Genesis. An undifferentiated state of "perfect continuity without extension". The originating state of neutrality of a Neutral Center cannot change but its effects once disturbed are always changing.

[15] [Mind Force the hidden Scalar Force]

Chapter 3

Sympathy

3.1 Sympathy is Love

Sympathy is Love or that which connects (entangles) all things to all else. When the frequency of vibrations are one there is unison and sympathetic resonance[1]. In SVP, sympathy does NOT mean "feeling sorry" but is "feeling the same as", "one with", "as one", concordant, harmonic or entangled with identical or near identical states with near identical wave functions.[2] With this insight we can see Sympathy is a vibratory state of matter and energy with its own waveform, spectra and wave function. It is a real state or condition existing throughout nature and is a condition we can know, understand and engineer[3]. For instance between two tuned tuning forks exists this state of sympathy, sympathetic vibration or sympathetic association. The sympathetic vibrations and oscillations originating from each fork and active between them creating this shared state, can be modified to increase or decrease the state of sympathy existing between them. The fact that they are sympathetic and co-vibrate together is called *resonance* which only occurs within this state or condition of sympathetic association via sympathetic vibrations and oscillations.

[1] [Sympathetic Resonance]

[2] [Concord], [Harmony], [Affinity], [Attraction], [Awareness], [Knowing], [Universal Love], [Christ], [Science], [Truth], [Coupling]

[3] "Engineering with Love", http://svpbookstore.com/

3.1.1 Infinitely Small Centers

The infinitely small strings of the String Theory are a classical physics concept of oscillating physical strings extrapolated to the non-classical quantum realm and is a *non sequiter*. Such is an attempt to apply known or assumed classical oscillation dynamics associated with an oscillating 3D or physical string, which are also poorly understood and in error, as an answer or postulate to address presumed quantum dynamics.[4] Should we replace the hypothetical infinitely small oscillating strings as held in the String Theory with infinitely small constructive (virtual or actively created by virtue of dynamics and purpose) centers that vibrate, pulsate and oscillate like tuning forks it can be seen how every center is sympathetic (in sympathy) with every other center and are therefore quantum entangled; *i.e.*, (sympathetic to one another). All of these centers form One Continuous Continuum of sympathetic (entangled) centers and is everywhere throughout Space permeating every seeming separate or seemingly individualized object. What connects all these sympathetic centers is a state of etheric level high-grade sympathy creating a condition of sympathetic association - one with all others[5]. This would of course imply a single fundamental tone or frequency at the very heart/core of the universe. Keely called these centralizations of orchestrated motion "atomoles"[6]. Therefore what is experienced by one center is to a degree experienced by all other centers regardless of Time and Space. Being mutually responsive to excitation where all are aware of all others we may term this continuum the Whole Undifferentiated Mind of the universe. Mind or Consciousness being synonyms for Keely's Compound Interetheric state. Some over the years have referred to this continuum and its sensitive responsive properties as God and have erroneously anthropomorphized it even though it is the root of Awareness and cognition. Being sympathetic these centers can be stimulated or excited by an appropriate exciter[7]. That exciter being clear focused Mind Force, Thought, Volition or idea.[8] Other different state excitations (stimulations) on coarser molecules and atomic substances could be acoustical, electrical, microwave or physical or similar.

[4] see 'Chapter 6 - What is Vibration?'
[5] [Law of Assimilation]
[6] [atomoles]
[7] [Exciter]
[8] [What is Sympathy]

3.1.2 Atomoles

Atomoles (atom = unit + mole = power) = Power Unit, are primordial particles (preferably 'centralizations') filling all space.

"Atomoles are elementary units of matter uniform in size and weight, and exist in solid, liquid, gaseous, and isolated forms." (plural 'atomolini')[9]

"The atomoles are made up of atomolini (singular atomolinus); the subdivision of matter from this point is beyond man's power, as at this point it escapes all control of apparatus, passing through glass and hardened steel as a luminous flame without heat, which is hardly seen before it vanishes, - a perpetual flame coldly luminous."[10]

''*The atomolic substance is what is termed the ether which fills all space and is the transmitting medium for all celestial and terrestrial forces. This is the liquid ether of occult science."*[11][12]

3.1.3 Records of Motion are Seeds

Walter Russell refers to these excitable (plastic) centers, when considered as One Continuous Continuum, as points of 4++ (voiding and dispersion) and as "seeds" or "ideas". These seed centers correspond to Keely's Neutral Centers conditions of birth to all seeming things in a progressive evolutionary manner.

"Records of Motion are seeds for repetition of motion. In the seed is desire for manifesting imaged forms of idea. All forms are wave forms. All wave forms unfold from seed records of those wave forms."[13]

---

[9] [Keely]
[10] Keely, 1893
[11] Keely, 1893
[12] [Connecting Link]
[13] Russell, [The Secret of Light], page 137

3.2 Neutral Center of the Earth

"In setting the conditions of molecular sympathetic transmission by wire, "writes Keely, "the same law calls for the harmonious adjustment of the thirds, to produce a non-intermittent flow of sympathy. Intermission means failure here. That differential molecular volume is required, in two different mediums of molecular density, to destroy differentiation[14] *of sympathetic flow, seems at first sight to controvert the very law established by the great Creator, which constitutes harmony - a paradoxical position which has heretofore misled physicists who have propounded and set forth most erroneous doctrines, because they have accepted the introductory conditions, discarding their sympathetic surroundings. The volume of the neutral centre of the earth is of no more magnitude than the one of a molecule: the sympathetic conditions of one can be reached in the same time as the other by its coincident chord."*[15]

3.2.1 Force of Sympathy

"There is no force in all creation more real or more powerful that the force of sympathy."[16]

Sympathy may be considered a force because it provides a harmonizing modulation. Where there is discord or enharmonicity Sympathy exerts an influence, of its own accord and nature, converting or transforming that imbalance back to balance or harmony. Discord, entropy or differentiation may be considered as a disturbance of equilibrium which imbalance is restored by Sympathy - harmony or balance being the natural eigenfrequency (wave form and wave function) of the universal matrix - with preponderance of syntropy during growth and a preponderance of entropy during death.

3.2.2 Sympathy is the Essence of Life

"Sympathy, like a human electricity, is the essence of life."[17]

[14] [differentiation]
[15] [Keely], [Law of Sympathetic Association]
[16] [David Sinclair], [A New Creed the book]
[17] [David Sinclair], [A New Creed the book]

"There is a celestial mind force, a great sympathetic force which is life itself, of which everything is composed."[18] Keely[19]

"Life is creative, and is the manifestation of that energy, that oneness, which may never be WHOLLY discerned or discovered in materiality, and yet is the basis of all motivative forces and influences in the experiences of an individual."[20]

For life or Life Force[21] to be creative it must be syntropic - that building process of assimilating elements its environment - to itself. As this Life Force cannot be discerned strictly in materiality or the 3D classical world it must be of the unseen non-classical scalar forces such as Mind. Hence Keely's use of the term *celestial mind force*[22] also known as *celestial radiation*[23].

3.2.3 Sympathy is as Syntropy and Electricity

"The powers of electricity have not hitherto been observed, nor have the origin and importance of sympathy. The electric marvels of the present day were in electricity thousands of years ago, but there was no practical observer to utilize them. Sympathy is as everlasting and all-powerful as electricity is. Men, in their honest research for human happiness, will put it to the test, and the new insight it will give to life will be more marvelous than the marvels of electricity."[24]

What David Sinclair[25] is saying here is sympathy as a force or state exists and can be engineered. That science has not recognized this state of being existing and operating as an ubiquitous construct of the universe is lamentable. Keely recognized it to such an extent he has able to utilize its properties in his science and incorporated it as a usable function in their dynamics. It is a simple fact that unless a property is acknowledged to exist

[18] [Life]
[19] [Celestial Radiation]
[20] Cayce (2012-1)
[21] [Life Force]
[22] [celestial mind force]
[23] [Celestial Radiation]
[24] [David Sinclair], [A New Creed the book]
[25] [David Sinclair]

it cannot be utilized. We can look at this state of being as a restorative force. Natural systems are in a state of equilibrium. Sympathy, as a pre-existing condition of dynamic systems, will restore that balance or equilibrium should the system be disturbed. This self-acting and self-correcting functional dynamic, unseen by classical and non-classical science and lay alike, is a core functional principle in Sympathetic Vibratory Physics. Taking the metaphor of an undisturbed seesaw quietly sitting in a horizontal position we can see it will tend to re-level itself once disturbed. It will return to its horizontal position. Or a pendulum will come to rest (balance) is moved off center (disturbed out of rest or balance). Likewise we know a given volume of atmosphere is essentially in balance between dry hot expanding air and cold contracting moist air. When a cold wet front approaches a volume hot dry air the localized atmospheric system is then out of balance between the two volumes. The re-balancing occurs when the two volumes come together with the unseen desire[26] to re-balance themselves by one attempting to become the other. This seeming antagonistic action is what Walter Russell called Voiding[27]. This voiding action can be gentle or it can be violent as a tornado depending on Time and polarity or bias difference between the two states or conditions. This desire to void or re-balance (to become *as one*) is born of sympathy and the nature of sympathetic associations where all unlike (seemingly opposite) participant forces or states desire to be alike (in balance or harmony). Hence we see throughout nature seeming opposite poles of electricity voiding against or through each other in a spark or load, opposite poles of a magnetic adhere as one and opposite sexes drawing together and assimilating each other.

[26] [Desire]
[27] [Voiding]

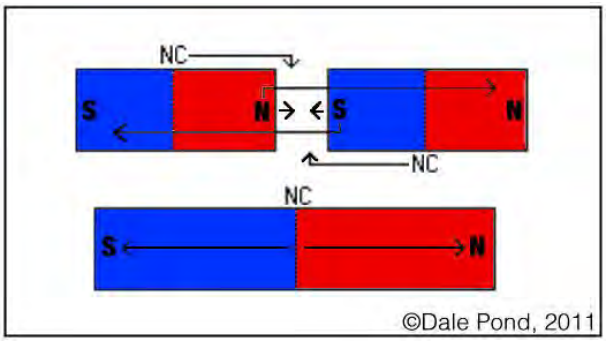

Figure 3.1: Opposite polar forces void/combine as One
Image: http://pondscienceinstitute.on-rev.com/imagesNatDyn/bar_magnet1.jpg

After voiding (Keely's *neutralization*[28]) or becoming depolar or neutral each pole or participant in the voiding action returns to its original state of unbalance or near so.[29] This return from depolar to polar is of course Time dependent.

3.2.4 The rate of acceleration of Sympathy is enormous

Sympathy exists between all centers. It is as an etheric connecting link[30] stronger and denser than hardened steel. Because transmission or propagation increases with density its rate of extension or propagation is enormous.

"It is a law of falling bodies that they steadily increase their speed, so is it with this great power of sympathy when once it is started. Its rate of acceleration is enormous. A force that is once created can never be destroyed, and there is no force in all creation more real or more powerful than the force of sympathy. It may be stored up and hidden as energy is in fossil vegetable matter. It is a great created power, latent in the hand of the Creator, and at the command of the creature."[31]

[28] [neutralization]
[29] In Figure 3.1 'NC' = [Neutral Center]
[30] [connecting link]
[31] [David Sinclair], [A New Creed the book]

3.2.5 Sympathetic Associative Forces

"*What modern cosmologists would have us believe was evolved by blind chance out of the inherent potentialities of primordial chaos, this glorious system of spiritual physics demonstrates as dependent upon the relationship between mind and matter; showing whence the initial impulse comes which sets in motion machinery of unimagined complexity, on given lines, toward a prescribed end. Chance, as has been said, is in no sense a force, but merely the sway of a balance of forces already in action. Sir Isaac Newton taught that there is such consistency in nature that what lies wholly beneath the region of visibility may be safely inferred to be similar to that which is gross enough to be palpable to sense; and Keely, reasoning on this line, has copied nature in his mechanical work. "I call this indefinable, latent element," he writes, "the soul of the sympathetic elements in which it manifests, itself; and which until now has been locked up in their interstitial embrace. It is the leader of all triple streams, associated with the polar negative envelope of our planet and the one most sympathetically concordant to celestial radiation. In our individual organisms, the latent soul-forces, existing in the cerebral domain, are sympathetically subservient to the celestial radiating force whereby they are stimulated into action in controlling the movements of our bodies. Take away this latent element from the brain and the physical organism becomes an inert, dead mass; on the same order as a mechanical device without an energy to operate it.*

"*The polar negative machine is a mechanical brain, with all the adjuncts associated with it to sympathetically receive and distribute the polar negative force. Its sympathetic transmitter (corresponding to our sun in our planetary system, transmitting all energy from the central sun of the universe) is the medium whereby sympathetic concordance is established between it and polar sympathy. The requisites for polarizing and depolarizing keep up the action of the machine as long as it is associated with the transmitter. The force which operates the mechanical is the same as that which operates the physical brain; purely mental, emanating from celestial outreach. There is nothing in the range of philosophy which so satisfies the intellect as the comprehension of this wondrous system of sympathetic association, planned by the Creator of the celestial and terrestrial universe, for the government of all forms of matter.*

"*Nature cannot rebel against herself. The flowers of spring cannot resist the sympathetic force which calls them into bloom, any more than the latent force in intermolecular spaces can rebel and remain in neutral depths when sympathetic vibration calls it forth.*

"*What is the soul but life in latent suspension? The motion exhibited in matter shows that its soul is ever present; and yet there are men of great learning, as taught in the schools, who, after spending their lives in researching all forms of matter, deny that all living things depend on one everlasting Creator and Ruler, in whom they live and move and have their being through all time, as much as when He first breathed into them the breath of celestial radiation; and to whom they are as closely allied, still, by the workings of the great cosmical law of sympathetic association, as when the evolutionary work of creation commenced.*

"The ancients were far better schooled in spiritual philosophy than are we of the present age. Their mythological records, in their symbolical meaning, prove this fact. They recognized this latent element as the very breath of the Almighty; the sympathetic outflow of the trinity of force, the triple spiritual essence of God Himself. Their conceptions of Deity were greater and truer than our own. From them we learn that when God said 'Let there be light,' He liberated the latent celestial element that illuminates the world: that when He breathed into man the breath of life, He impregnated him with that latent soul-element that made him a living and moving being." [32]

3.2.6 Sympathy is Entanglement

When object A is in sympathy with object B, A is aware (responsive) of what happens to B and B is aware of what happens to A. As there is an innate or natural vibratory sympathy (sympathetic association of vibration and oscillation) between all things or objects all things and objects are aware (responsive) of all that is happening, everywhere and all the time regardless of Time and Space. This property or condition os sympathetic association has been called by many names throughout humanity's long evolution: Entanglement, Omniscience, Coupling, God (and all its variations), non-locality, Mind, Love, Remote Viewing, Clairvoyance, Celestial Sympathetic Radia-

[32] Keely from [The Veil Withdrawn]

tion, Brahma, Cosmic Consciousness, *etc.*[33]

3.3 Sympathy defined

It is important to understand what sympathy is as it plays a tremendous and an all important role in how the universe and all it contains works. Sympathy is a state or condition that occurs between all centers and is an inherent property of these centers.

1 - ‘‘*Where there is no sympathy there can be no love, for love is sympathy.*”[34]

2 - noun: a relation of affinity or harmony between people or things; whatever affects one correspondingly affects the others.[35]

3 - noun: In natural history, a propension of inanimate things to unite, or to act on each other. Thus we say, there is a sympathy between the lodestone and iron.[36]

4 - Sympathy is a Force, as material as Sound, Light and Heat - *“For the sake of being popularly understood, sympathy as a force is here, in a general sense, sometimes spoken of in a kind of figurative way as a message on the telegraph wire, etc. In a more particular way it will now be scientifically explained as a force, as material as sound, light and heat. We speak of the sun's rays as if each ray were some simple element, and yet easily carry in our minds the fact that each ray is composed of light and heat; so this philosophy speaks of this ether as a mere lineal connecting-rod between the creature and Creator. If the analogy between the sun's rays and the ether be closely followed, it will be seen that wisdom, truth, and sympathy are the same thing, and travel on the ether lines*[37] *exactly as light and heat do on the sun's rays.*”[38]

5 - Pertaining to or produced by sympathy.

[33][Dale Pond], 11/21/10
[34][Vera Vita the Philosophy of Sympathy]
[35][Sympathetic Vibration]
[36]Webster's 1828 Dictionary
[37][connecting link]
[38][David Sinclair], [Vera Vita the Philosophy of Sympathy]

6 - *"The mutual relation between parts more or less distant, whereby a change in the one has an effect upon the other."*[39]

7 - A real or supposed affinity between certain things, by virtue of which they are similarly or correspondingly affected by the same influence, affect or influence one another (especially in some hidden, unseen way), or attract or tend towards each other.

8 - A relation between two bodily organs or parts (or between two persons or things) such that disorder, or any condition, of the one induces a corresponding condition in the other.

9 - Agreement, accord, harmony, consonance, concord, agreement in qualities, likeness, conformity, correspondence.

10 - Conformity of feelings, inclinations, or temperament, which makes persons agreeable to each other; community of feelings; harmony of disposition.

11 - The quality or state of being affected by the condition of another with a feeling similar or corresponding to that of the other; the fact or capacity of entering into or sharing the feelings of another or others; fellow-feeling. Also, a feeling or frame of mind evoked by and responsive to some external influence.[40]

12 - Sympathy, n.; pl. Sympathies. (F. sympathie, L. sympathia, Gr. ; with + suffering, passion, fr. , to suffer. See Syn-, and Pathos.)

13 - Feeling corresponding to that which another feels; the quality of being affected by the affection of another, with feelings correspondent in kind, if not in degree; fellow-feeling.

14 - An agreement of affections or inclinations, or a conformity of natural temperament, which causes persons to be pleased, or in accord, with one another; as, there is perfect sympathy between them.

[39] Blakiston's New Gould Medical Dictionary. The Blakiston Company, 1949. 1st edition
[40] (source unknown, underline added)

15 - Kindness of feeling toward one who suffers; pity; commiseration; compassion.

16 - (Physiol.) (a) The reciprocal influence exercised by the various organs or parts of the body on one another, as manifested in the transmission of a disease by unknown means from one organ to another quite remote, or in the influence exerted by a diseased condition of one part on another part or organ, as in the vomiting produced by a tumor of the brain. (b) That relation which exists between different persons by which one of them produces in the others a state or condition like that of himself. This is shown in the tendency to yawn which a person often feels on seeing another yawn, or the strong inclination to become hysteric experienced by many women on seeing another person suffering with hysteria.

17 - A tendency of inanimate things to unite, or to act on each other; as, the sympathy between the loadstone and iron.

18 - Similarity of function, use, office, or the like.

3.4 Recommended reading

[David Sinclair], [A New Creed the book]
[David Sinclair], [Vera Vita the Philosophy of Sympathy]

Chapter 4

Neutral Center

4.1 Neutral, Latent Neutral and Neutral Center

Scattered throughout the following pages are the terms "neutral", "latent neutral" and "neutral center". These are central concepts in SVP (Keely's physics) and any study of polarity and its dynamics.

4.2 Neutral means

Neutral means: Where two phases from two vibrations are opposite in polarity and cancel each other out or "sum to zero" is called *phase conjugation* and is one form of neutral. Another form is the balance point between polarities much like a fulcrum under a seesaw. This balance point within a vibration or oscillation is neutral, depolar or potential. The power (potential) in both above cases of the phases or polarities has been equated and becomes latent thus establishing two poles and one neutral - a trinity of states of forces. There are other forms or associative dynamics constituting a neutral state or neutral center and will be discussed later.

"When a force becomes neutral it is inactive, and is no longer a force; consequently the name given is misleading, Keely calls this third element the "latent neutral," which is a better name for it."[1]

[1] Bloomfield-Moore [CJBM], [What Electricity Is - Bloomfield Moore]

Latent means depolar. The other two forces or states are polarized forces dynamic relative to each other. These are the Harmonic (syntropy) and Enharmonic (entropy). There exists a neutral state from which these two polar forces originate and to which they return. This neutral (depolar) state is "latent" or quiescent until stimulated (polarized).

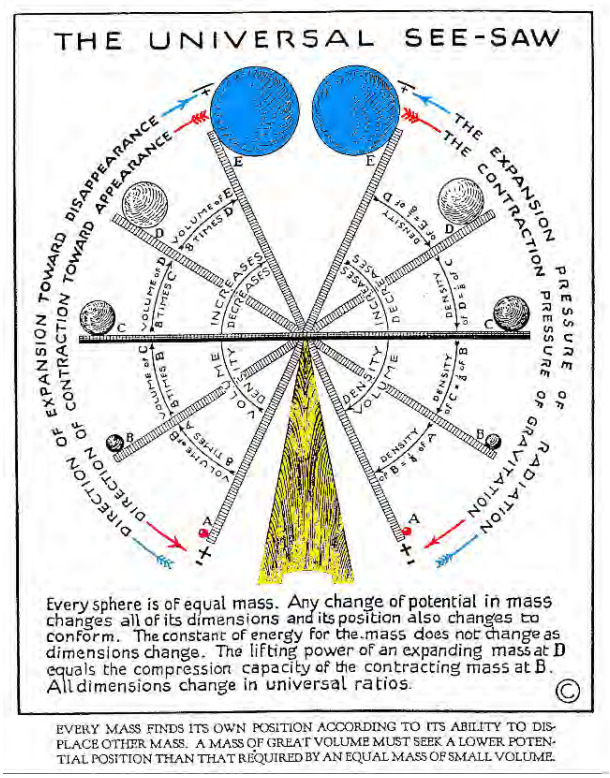

Figure 4.1: Universal Seesaw balancing seeming opposites
Image: http://pondscienceinstitute.on-rev.com/imagesNatDyn/universal-seesaw.jpg
(courtesy University of Science and Philosophy)

A latent center is a center that has not been stimulated or excited. It is quiescent (depolar). Latent Forces are forces not stimulated (polarized) into motion or activity but held in stable (harmonic) balance. A scalar[2] force is a non-moving non-dynamic latent force or potential - not kinetic.

[2][scalar]

In the above Russell image he uses the phrase "potential position" which is the same as Keely's "level of tenuity". Thus indicating it is the potential or tenuity of relative position that constitutes mass being a relative quantity. The fulcrum is the neutral balance point between two potentials or polarity, bias or bipolar polarities.

Neutral State or condition and Neutral Center are two different things or dynamics. A Neutral State is a condition independent of location. A Neutral Center is a location or foci, relatively speaking. A Neutral State has among other attributes Mutual Affinity between participating streams or conditions, sensitivity to appropriate stimuli, equated polarizations, point or state of equation. There are diverse orders, kinds or types of Neutral Centers. The two sides of the seesaw represent polarization. The fulcrum represents the neutral sustaining point, principle or condition where the polarizations meet by mutual affinity in mutual antagonism. *"All forces are Mind Forces"* meaning all forces originate from Undifferentiated Mind[3] or the Compound Interetheric[4] subdivision. As sections or segments of Undifferentiated Mind are polarized (differentiated) they become forces or energies. The Ultimate Differentiator is thought or idea. These polar forces become neutral or latent by removal of polarization (discords). Keely called this process "harmonization".

4.3 Coordination or coincidence of forces

Consequently when and where various forces meet and cancel (void) or agree there is established a Neutral Center. Sometimes this point may be called a center of neutrality, center of attraction, center of sympathetic attraction, center of sympathetic coincidence, center of association and concentration, center of focalization, nucleal center, Prime Neutral Center and Supreme Neutral Center, depending on its general dynamical state. Some of the types of Neutral Centers are:

- mass - every mass of whatever substance or size has a neutral center.
- molecular - neutral centers in molecules.

[3] [Undifferentiated Mind]
[4] [Compound Interetheric]

- atomic - neutral centers in atoms.
- etheric neutral centers - neutral centers in quantum/etheric centralizations.
- Prime Neutral Centers - neutral centers that govern and enliven secondary centers not unlike the Sun (primary) and its planets (secondary).
- Supreme Neutral Center - The one Dominant Center that controls all other neutral centers.
- center of centers - an object may have more than one neutral center, this is the coordinated center between them all.
- focalized centers - centers can have more than one center. This idea is what we see in a circle (one foci) and an ellipse (two foci). A focalized center is where all these centers are coincident or focalized together as one center.
- sympathetic concordant focalized neutral center - a focalized center that is concordant (in harmony of parts) that is sympathetic to something else, usually an outside stimulant or exciter or other center(s).
- focalized negative attractive centers - A focalized neutral center that is in the syntropic phase of assimilation, attraction or concentration. It's opposite would be a dispersing positive propulsive center (radiating or radiant). See [Law of Assimilation].
- centers of sympathetic coincidence - A dynamic center where forces that are sympathetic to each other coincide.
- centers of neutrality - a neutral center that is in a quiescent state of neutral latency.
- centers of focalization - centers where forces are mutually attracted or focused to interact.
- centers of distribution - centers where forces are mutually repelled and dispersed.

Centers are intermittently attractive and repulsive or dispersive. When a Neutral Center is disturbed it becomes intermittently attractive and repulsive. When attractive it becomes a center of focalization. When repulsive it becomes a center of propulsion or dispersion. In between one state and its opposite is a moment of pause not unlike the furthest point in the swing of a pendulum or seesaw. This null point or fulcrum can endure both polarities without itself being affected.[5]

The Neutral Centers give birth to quantum centralizations Keely called atomoles. The Neutral Centers are then the cause that give rise to their effects - these atomoles - and are synchronistic meaning "can't have one without the other' (the chicken and egg riddle). On the other hand Keely and Russell both said there is an infinite number of Neutral Centers implying there is an infinitely small space between these centers which makes the universe quite dense (986,000 denser than steel[6]) and births the logical idea matter is more of a tenuous 'bubble' in this dense etheric substratum than the way ego sees matter as more dense than seeming vacuity.

Matter evolves from vacuity of space

"*Pure sympathetic concordants are as antagonistic to negative discordants as the negative is to the positive; but the vast volume the sympathetic holds over the non-sympathetic, in ethereal space, makes is at once the ruling medium and re-adjuster of all opposing conditions if properly brought to bear upon them.*" Again Russell and Keely concur on the origin of matter. Sympathetic streams aggregate at a neutral center about which forms centralized motions; *i.e.*, form or appearance of matter. Non-sympathetic conditions are discordant and dispersive resulting in the appearance of seeming empty space. Solidity devolves towards vacuity through the action of non-sympathetic (discordant) conditions; *i.e.*, entropy. Outer space is the domain of the non-sympathetic or dispersed matter.

In one of many ways Russell describes the dual nature of space (cube) and matter (sphere) he says this about that dynamic state: "*The sphere is the*

[5] See [Philosophers Stone]
[6] [Law of Matter and Force]

result of the concentrative pulsation of Gods thinking which pulls inward from within (syntropy) to focus the light of Gods thinking to a point of stillness, around which a thought body (form or matter) can be formed. This causes that universal effect, which we know as gravitation, and the still point of concentration is a center of gravity. GRAVITATION MULTIPLIES POWER. [See ([Neutral Center])

"*The cube is the result of the decentrative pulsation of Gods thinking which thrusts outward (entropy) from within to the stillness of the cube boundaries to produce the opposite effect which we know as radiation. RADIATION DIVIDES POWER.*

"*Gravitation and radiation are the opposite ends of the piston which motivates the heartbeat of this eternally living dual body of God, which is our dual body. Its continual giving and regiving*[7] *manifests the love principle*[8] *in both the action and reaction not just in one of them.*"[9]

4.4 Neutral Center

Neutral Center = Dominant = Fulcrum = Pure (Undifferentiated) Consciousness = Love = 0 (Russell) = First Cause. There are neutral centers on all seven subdivisions of matter and energy. These Neutral Centers possess differing states; *i.e.*, properties, functions and geometries.[10]

We do not yet know all the properties of the neutral center but Keely does list a few of them. Keely considered his discovery of the Neutral Center to be one of his greatest discoveries as also its control through machinery. Our rediscovery of it will be one of humanity's greatest achievements. Keely's description of the neutral center follows:

"Every molecule, every mass, every moving body in space, every solar system, every stellar system, EVERY ROTATORY SYSTEM, is built about a

[7] [Giving-Regiving]

[8] [Law of Sympathetic Association]

[9] Russell, Home Study Course, GOD CREATED ONLY ONE FORM; see [Cube Sphere]

[10] [Barycenter], [Center], [Center of Gravity], [Center of Mass], [Sympathetic Coincidence], [MINERAL DISINTEGRATION - Snell]

NEUTRAL CENTER."[11]

"The neutral center represents only focalization and distribution of the streams of energy." [12]

Thus there are discrete mass, molecular, atomic and etheric neutral centers as well as Prime Neutral Centers, "center of centers", "focalized centers", "sympathetic concordant focalized neutral center", "focalized negative attractive centers", "centers of sympathetic coincidence", "centers of neutrality" and "centers of focalization", thus defining its state depending on dynamical function, location, association, etc.

"The neutral center is that protean, uncreated, indestructible, forever-existing FIRST CAUSE[13]*. Without hands, without tools, without thought, without emotion, without love, without form, without substance, it, of itself, created all these. All that we see or can see in the objective Universe exists because of and by means of the properties and powers of the NEUTRAL CENTER."*[14][15]

"Where the vibrations under this mode meet, and are maintained in a state of mutual affinity or equilibrium, there is established what is called a "neutral center", or, as otherwise expressed, 'a center of sympathetic coincidence'."[16]

4.4.1 Disturbance of Equilibrium

This is why a meditative state (neutral or undifferentiated) of mind is important (sympathetic) to "knowing" these interlaced concepts. Because they are All One. To be it is to know it. The thinking ego or intellect is differentiated conscious and is highly discordant which is to say it destroys harmony as is present in the meditative or quiet mind. This does not make the intellect thinking an enemy - it is simply discordant, a disturber of the harmony. This

[11] [Keely]
[12] [ROTATION - Snell]
[13] [First Cause]
[14] [Keely]
[15] [First Cause]
[16] [KEELYS PHYSICAL PHILOSOPHY - Snell]

discordance is the Infinite Exciter[17] ‘‘*that moulds and makes*”[18] something from seeming nothing thus making humanity as a Creator. We use our crystal clear thinking and focus to create the lives we live. As neutral states are pure unmanifested potential (latent) in perfect harmony it is from where and whence all manifestation of form originates - *“from harmony is generated discord*”[19]. These manifestations become reality when the neutral state is disturbed. This disturbance of equilibrium[20] [21]is a key function in SVP.

Logically, if all three forces are modulated the same degree at the same time there would be imbalance in the equation. Disturbance of equilibrium means the three forces, in an established triune or three-way equilibrium, are thrown out of balance or equation by changing one or two of the three so the equation of harmony becomes one of discord; *i.e.*, thrown into motion which then seeks to re-establish the originating harmony or balance. For instance, this principle is active in spiritual seekers as they are all seeking to return to the original Peace and Harmony with the One (wake up or self realization. Such a disturbance in a molecule being intermittent will cause the molecule to deform in its motions into activity then recede back to its original quiescent state.

The Neutral Center is a point or center of sympathetic coincidence. It has many properties. The creation and perpetuation of the Neutral Center is predicated on the inflow of what some call God/Divine Force (Divine Will or sympathetic celestial streams) or as Keely called it *Celestial Sympathetic Radiation*[22] originating from the Supreme Neutral Center, establishing its progressive evolution, as it were, and through the Principle of Regeneration[23] is radiated outward as refracted or differentiated materiality via the Law of Harmonic Pitch[24], Law of Harmonic Vibrations[25], and Law of Cycles[26]. This process is in other words a ubiquitous (everywhere in all Time and Space) or

[17][Infinite Exciter]
[18][As a Man Thinketh]
[19][8.23 - Law of Cycles]
[20][disturbance of equilibrium]
[21]see [7.26 Disturbance of Equilibrium]
[22][Celestial Sympathetic Radiation]
[23][Principle of Regeneration]
[24][Law of Harmonic Pitch]
[25][Law of Harmonic Vibrations]
[26][Law of Cycles]

non-local "Micro Bang" (syntropic implosion/cavitation) process that then radiates and eventually manifests as what we perceive as matter, *etc.* In a word, the Neutral Center is a Compound Interetheric sympathetic force or state of Undifferentiated Mind (scalar). Therefore it is this inflow of the Divine Will (sympathetic celestial streams, Mind Force) as CAUSE of materiality; I feel this needs to be clearly stated. See Figure 12.8 for an animated graphic showing this spontaneous generation or production of discords that breaks down into dispersion the formative harmony.

4.4.2 Supreme Neutral Center

The Compound Interetheric (Undifferentiated Mind) is outside of Time and Space and is unaffected by either. So one could rightly say the Supreme Neutral Center has always existed and always will exist even though it only exists in the NOW moment like everything else. The physical universe is as a Thought in this Undifferentiated Mind. Thoughts are polar. Expression is polar. Manifestation is polar. All materiality is polar. Non-materiality is depolar (neutral) in relation to materiality. Hence all polar conditions emanate from depolar or neutral latency until stimulated into being by desire, idea or thought.

The egoic intellect creates the ideas of Time and Space. As time is an illusion, a creation of our polar egos, it has not relevance to actuality. There never was a "time" prior to the creation of the "universe". For lack of a better expression the universe has always existed and had no beginning because if time is an illusion then it might be said there never was a past and there is no future. There is only Now. Our fractured egos cannot Know the Undifferentiated Mind Knowing (God's knowing). The countless attempts to anthropomorphize 'creation' and 'God', *etc.* are doomed as feeble attempts at rearranging dream elements (fabrications of the ego). Only our whole undifferentiated minds (Cosmic Consciousness) can know these infinite things, states or conditions which cannot be adequately expressed through finite intellectualism. The Mind of Deity[27] is cause while the universe is the effect of that Cause. A cause and its effects cannot be separated. The connecting link is the etheric domain. As Cause is Undifferentiated Mind then all its effects are polarized (split) mind thinking.

[27][Mind of God]

Keely indicated there is a single Supreme Prime Neutral Center governing all other neutral centers whether mass, molecular, atomic or etheric regardless of location. Prime Neutral Centers are as the Sun (prime) to its planets (secondaries). As neutral centers are effects as well as cause this Supreme Neutral Center is Dominant and an integral of all neutral centers - they are all one and the same in substance and dynamic with the exception One is sum and source of all others. Russell referred to it as the Universal One[28] from which all else originated. The intellect wants to separate every thing into parts. The universe is one whole acting through what appears to be individuated parts. All the parts are governed by one Supreme Neutral Center, each manifesting as though individual. There is one supreme state of neutrality that permeates every thing. This omnipresent state or condition of Neutrality is perfect concordance or Sympathy (Love) and everywhere present in all things and actions - the Universal One.

Outflow and Inflow

Each Neutral Center has an intermittent outflow and an inflow of sympathetic streams originating from the Supreme Neutral Center redirected from the Prime Neutral Center. These occur according to Russell's Rhythmic Balanced Interchange[29] and Macvicar's Law of Assimilation[30].

There is an outflow: ''*..communicates direct by means of its outflow of sympathy, with every planetary mass in the Universe.*"
There is an inflow: ''*Through its inflow of sympathy, through the solar intermediate, the sun, it receives the life flow from the Supreme Neutral Center..*"

[28] [The Universal One]
[29] [Rhythmic Balanced Interchange]
[30] [Law of Assimilation]

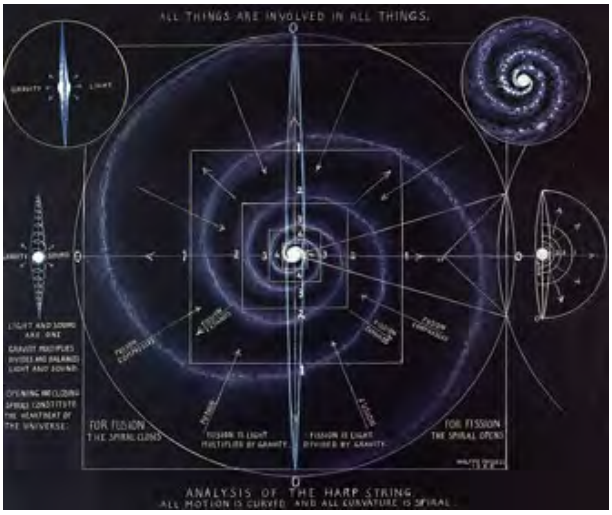

Figure 4.2: From the One comes the many
Image: http://pondscienceinstitute.on-rev.com/imagesNatDyn/russell-neutral-center2-300.jpg
(courtesy University of Science and Philosophy)

4.4.3 Keely further describes the Neutral Centers

"All the Dominant conditions of nature represent the focal centers towards which like surrounding ones become sympathetically subservient."[31]

The dominant condition of nature is harmony or Sympathy (Love). This harmonic or attractive state has a field of influence (sympathetic outreach) which casts its influence or its controlling effects as a modulation of everything in its reach (its Sympathetic Outreach[32]). Other surrounding Neutral Centers which can be few or countless depending on the chord of the Dominant Neutral Center fall under this influence. Sympathy extents as a state or condition of forces. This extension has harmonizing effects and will modulate any other chord to, in some degree, resemble this originating chord of harmony. This is what and how people "feel" energy around the Dynaspheres. The calming or harmonizing power is extended by sympathetic vibrations and/or oscillations (quantum entanglement) on the sixth and seventh subdivisions. This power and dynamic has been anthropomorphized throughout

[31] [Keely and His Discoveries], pg 179
[32] [Sympathetic Outreach]

history as the"Love of God"[33]. This dynamic is described in Keely's

4.4.4 Law of Transmissive Vibraic Energy

"All oscillating and vibrating coherent aggregates create, in the media in which they are immersed, outwardly propagated concentric waves of alternate condensation and rarefaction, having a period-frequency identical with the pitch of the aggregate."
Scholium: *"All forms of transmissive energy can be focussed, reflected, refracted, diffracted, transformed, and diminished in intensity inversely as the square of the distance from the originating source."*

Which law and its dynamics sets the stage for:

"Neutral centers are the focalized seat of sympathetic concordance for controlling any differentiation that may exist outside, or in the mass that surrounds them."[34]

Every individual "thing" has its own chord of mass. Apparently no two chords of mass are identical. A chord of mass will have numerous frequencies within itself resulting from its own chordal evolutions (overtone series) and as modulated from countless outside FM and AM modulations (summation and difference tones). It is these modulations that cause differentiations[35]. They are the differentiations. One center will control all the neighboring neutral centers being as it is or becomes the Dominant Center. Centers are not entirely individuated in their existence because they are ultimately controlled or governed by sympathetic streams, concurrently arriving to each, from the Supreme Neutral Center which created them and in which they have their being or existence perpetuated.

"Neutral centers are the center of Sympathetic Coincidence."[36]

Which dynamic and conditions establishes Sympathy as being the controlling state or condition over everything in its reach or field of influence.

[33] Law of Sympathetic Association]
[34] [Keely and His Discoveries], pg 255
[35] [Differentiation]
[36] [Keely and His Discoveries], pg 220

‘‘Pure sympathetic concordants are as antagonistic to negative discordants as the negative is to the positive; but the vast volume the sympathetic holds over the non-sympathetic, in ethereal space, makes it at once the ruling medium and readjuster of all opposing conditions if properly brought to bear upon them.”[37]

‘‘The effects of the law of sympathetic association, which Mr. Keely demonstrated as the governing medium of the universe, find illustrations in inanimate nature.”[38]

“A center of introductory action is necessary in all operations of Nature. All structures require a foundation. This neutral center is the foundation.

“Every molecule, every mass, every moving body in space, every solar system, every stellar system, EVERY ROTATORY SYSTEM, is built about a NEUTRAL CENTER. It is the indestructible unit around which all that we recognize as matter is built. Immovable itself, it moves all things. Indestructible itself throughout infinity of time, it creates all things. It produced and preserves the incalculable energy of motion of the entire Universe. It bears the unthinkable burden of the mass of the Universe. It is the most wonderful thing Man has discovered in the Universe since he discovered fire.

“If we should take a planet of say 20,000 miles diameter and should displace a portion of the interior so as to have a crust of say 5,000 miles thickness, and at the center of the planet, place a billiard ball, that small mass, immeasurably smaller than the bulk of the earth, would bear the entire burden of the mass of the crust 5,000 miles thick and would keep it equidistant from itself. No power, however great, could possibly displace this central mass so as to bring it into contact with the crust. Furthermore, to move this central mass in any direction, would require a force sufficient to move the entire mass of the planet, and in propagating or continuing any such motion the neutral center, this billiard ball, will at all time periods remain still in the exact center, bearing the same equidistant relation to its hollow shell. The mind staggers in contemplating the burden borne by this neutral center, where weight ceases.

[37] [Keely, Chapter 7 of Keely and His Discoveries]
[38] [Bloomfield-Moore, Keely and His Discoveries]

"No less wonderful are other properties of the neutral center.

"It is the cause of the physical Universe. Its attraction condensed that which we recognize as substance. Matter was evolved from the affinity of this neutral center for Sympathetic Streams and since it is immovable, it caused, through negative attraction the formation of nodes in these streams, where the vibrations thereafter continued to meet in a center of Sympathetic Coincidence causing the permanence of form and matter.

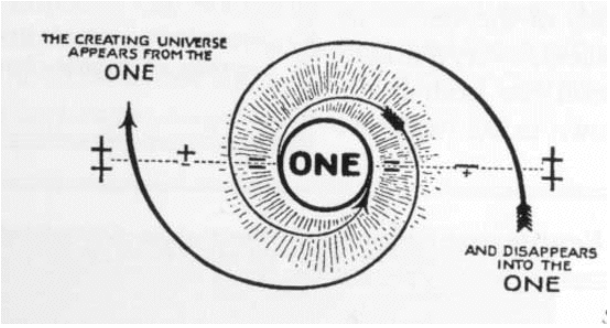

Figure 4.3: Coincidental forces meet at center
Image: http://pondscienceinstitute.on-rev.com/imagesNatDyn/syntropy-entropy-meet.gif
(courtesy University of Science and Philosophy)

"Every nebula, an embryonic world, is acted upon, created and preserved by this neutral center, and at the termination of its cycle, it is ultimately also destroyed by it, causing its absorption into the Unknown from whence it came."

Every molecule and atom disintegrates into its constituent components and disperses into the vacuity of space - seeking their density coincident or 'level of tenuity' (of density). If they all be depolarized they lose their form and dynamics. They become as 'nothing'; *i.e.*, no 'thing'. Polarity gives form and motion. Depolarity (neutrality) has no form or motion. All form evolves from the vacuity of space (dispersed matter). Neutral Centers do not of themselves exist as a 'thing'. They are dimensionless points of the confluence of forces. How can neutrality have dimension if it has no form? But it does have function not unlike Mind or Consciousness itself.

This latent sympathetic plenum (sympathy) throughout the universe gives rise to all form and motion when disturbed, stimulated or excited. A thought or desire excites this neutrality into a polar condition or state. Polarity causes motion and motion appears as form. Wherever forces synchronize or equate there is established an activated neutral center about which 'matter' may aggregate creating form.

Figure 4.4: Neutral Center - creator of nebula and galaxies
Image: http://pondscienceinstitute.on-rev.com/imagesNatDyn/ringnebula.jpg

"The actual neutral center of the earth is, in fact, even infinitely smaller than the billiard ball referred to above. It consists of a compound interetheric point in space, so small that were we to magnify a pin head to the size of the sun, and from that substance take a particle of matter the same size, again magnifying it to the size of the sun, the neutral center would still be invisible, even though the structure of this last substance was examined through the highest powered microscope ever created, or to be created. For the neutral center is INDIVISIBLE[39]*. Its attributes do not belong to matter, and pertain in no way to matter, which is but its exterior manifestation.*[40]

[39] How can neutrality (Undifferentiated Mind) have dimension? One cannot divide zero.
[40] [FORM OF THE ATOM]

"Every aggregate mass consists of molecules, each of which has its neutral center where the three modes of vibration, dominant, harmonic, and enharmonic, meet in a center of Sympathetic Coincidence and are equated without cancellation of their energy.[41]

"Neutral centers are the focalized seat of sympathetic concordance.

"The proof of this assumption is that all matter responded to Keely's disintegration process[42] *and must therefore consist of these fundamental modes of vibration.*

Figure 4.5: Keely's Compound Disintegrator
Image: http://pondscienceinstitute.on-rev.com/imagesNatDyn/compound-disintegrator.jpg

The above Compound Disintegrator,[43][44] later called Liberator[45], is pre-

[41] [Scalar]
[42] disintegrator picture gallery: http://www.svpvril.com/DisPix/Disin1.html
[43] [Compound Disintegrator], [Disintegrator]
[44] more photos http://www.svpvril.com/DisPix/Disin1.html
[45] [Liberator]

sumed to be one of the devices Keely used to progressively dissociate or disintegrate water into etheric vapor (plasma). In modern terms this device would be not unlike a multi-frequency "analog signal generator" in function. See section 7.21 Latent Force. The term 'Liberator' describes its function of liberating the Latent Force held within the confines of the rotating etheric envelopes of the atom. See section 12.12 Etheric Envelopes. In the photo below we see the Liberator connected to the pressure lever for measuring pressure of the liberated etheric vapor[46].

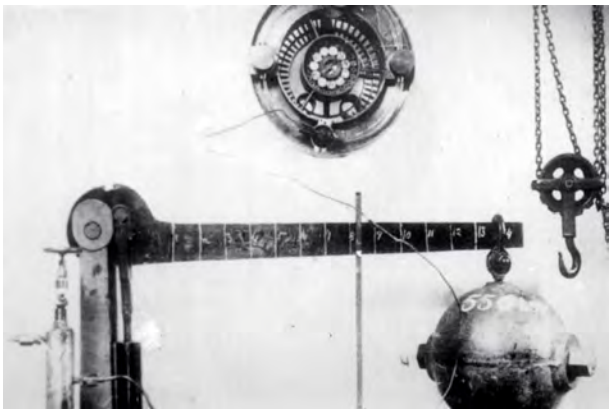

Figure 4.6: Liberating and measuring Etheric Vapor pressures
Image: http://pondscienceinstitute.on-rev.com/imagesNatDyn/liberating-pressure.jpg

[46][etheric vapor], [Ether Generator Producing High Pressures]

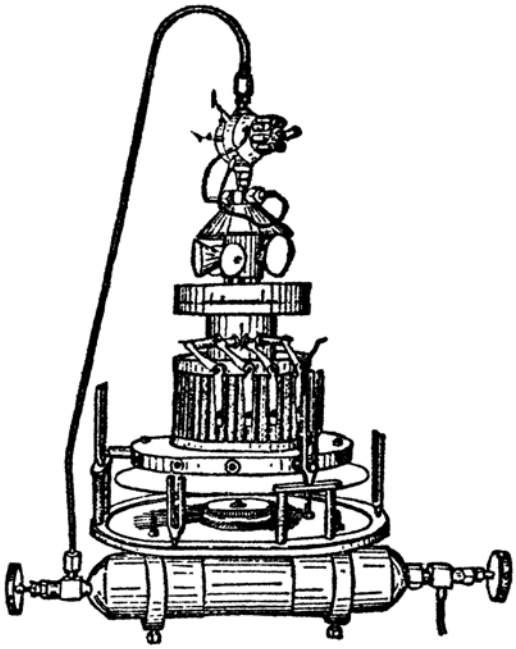

Figure 4.7: An earlier Liberator design
Image: http://pondscienceinstitute.on-rev.com/imagesNatDyn/liberator1.jpg

4.5 Divine Will - The Wheelwork Source of all Force

"The fixed neutral center of the earth is the concentration or totalized power of all the several molecular neutral centers in the earth's mass. This neutral center, which is absolutely WITHOUT WEIGHT, an interetheric point in space, communicates direct by means of its outflow of sympathy, with every planetary mass in the Universe. Through its inflow of sympathy, through the solar intermediate, the sun, it receives the life flow from the Supreme Neutral Center that enables it to perpetuate its existence. Thus through the outflow from this Supreme Neutral Center that pivoting point of the Universe controls the existence and motion of not only every stellar, solar and planetary mass in space, but also the rotatory vibration, in every individual molecule,

intermolecule, etc. through all the subdivisions of matter, thereby sustaining their existence and motion with the life flow.

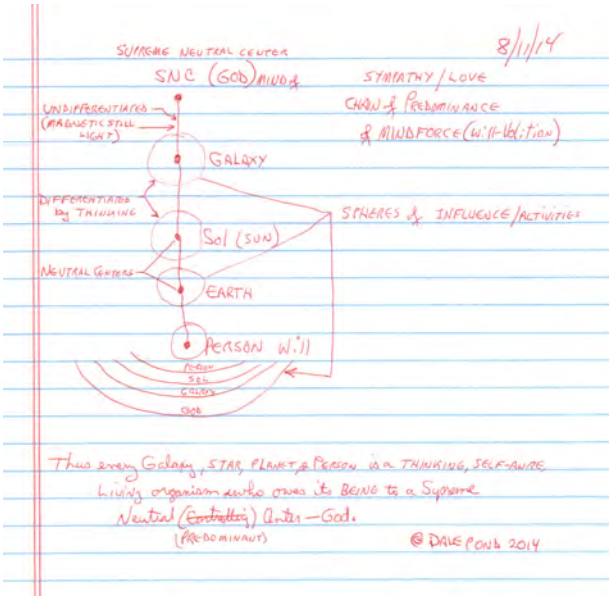

Figure 4.8: Sympathy Links all Centers to all other Centers
Image: http://pondscienceinstitute.on-rev.com/imagesNatDyn/universal-oneness.jpg

"All foundations must be sufficient to bear their burden. Conceive then the Universe centered upon and resting the burden of is incalculable mass and kinetic energy on a vacuous interetheric point in space, so minute that it is actually INDIVISIBLE. This conception can only be fully comprehended by an infinite mind. Independent of time, because indestructible in its unity, independent in space, because through its properties space itself exists and without it would not exist, independent of matter because its properties in an external direction created all that we know as matter and gave it seeming permanence, the neutral center is that protean, uncreated, indestructible, forever-existing FIRST CAUSE. Without hands, without tools, without thought, without emotion, without love, without form, without substance, it, of itself, created all these. All that we see or can see in the objective Universe exists because of and by means of the properties and powers of the NEUTRAL CENTER.[47]

[47] [God]

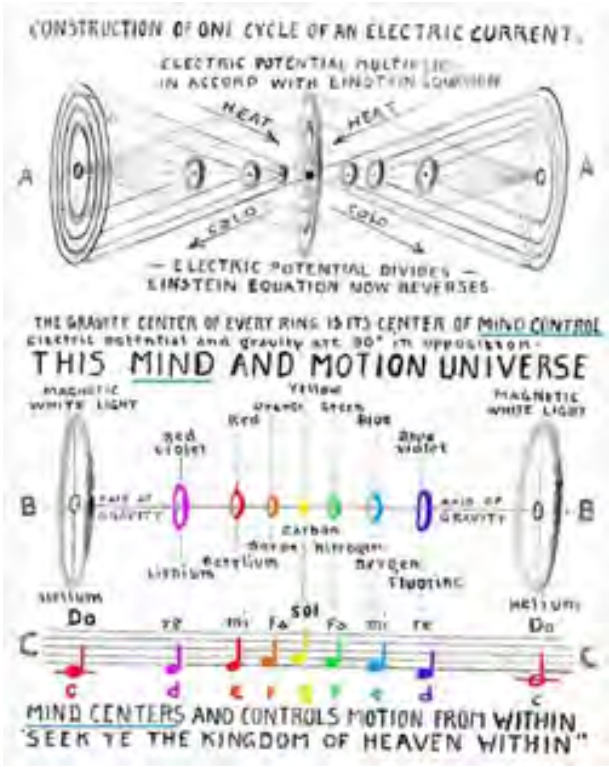

Figure 4.9: Neutral Center is Mind or Consciousness of God
Image: http://pondscienceinstitute.on-rev.com/imagesNatDyn/mind-motion400.jpg
(courtesy University of Science and Philosophy)

"No machine heretofore constructed has been made with a neutral center. This conception of mechanics has never before dawned on man's thought field. Had this been done, perpetual motion[48] *would have become a demonstrated fact. Were a machine so constructed as to use its properties, an introductory impulse*[49] *would suffice to run it for centuries. However, this would not be a useful mechanical contrivance for no more energy could be obtained from it than was originally given, and its only value would be as a timekeeper.*[50]

"Keely did not seek to invent, nor did he claim to have invented, perpet-

[48] [Perpetual Motion], [Continuous Motion]
[49] [Introductory Impulse]
[50] [Continuous Motion]

ual motion.

"The physicist tells you that "you cannot make something out of nothing;" that "in the economy of nature profit and loss must balance;" that "no matter what the nature of the force may be, its production must necessarily be accompanied by a corresponding expenditure of force in some form or other," etc., etc. But, in the prodigality of nature, this energy flows, without measure and without price, from the great storehouse of the Infinite Will. From the sympathetic portion of the etheric field, all visible aggregations of matter emanate, and on the same order that molecular masses of all living organisms are vitalized by the sympathetic flow from the brain."[51]

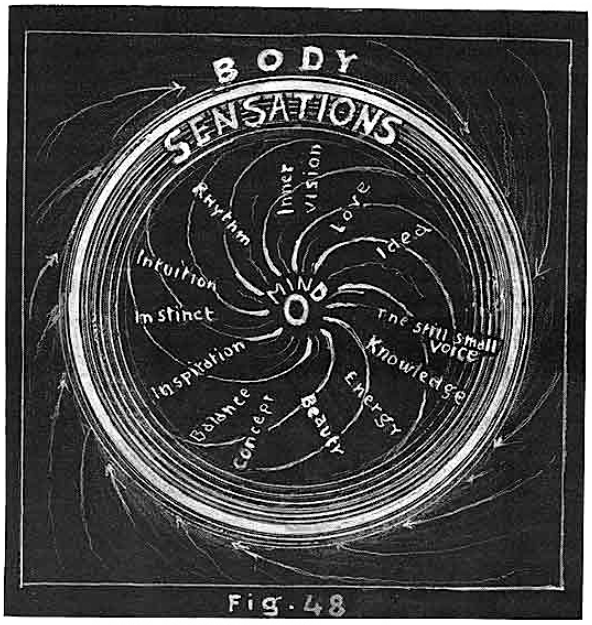

A MIND-CENTERED THOUGHT-RING OF MOTION

Figure 4.10: Neutral Center is as mind or consciousness
Image: http://pondscienceinstitute.on-rev.com/imagesNatDyn/ring-of-motion.jpg
(courtesy University of Science and Philosophy)

"When this great scientific and religious truth has been made known, and established by demonstration, all controversy as to the source of energy will

[51]Bloomfield-Moore ([CJBM]) in [Vibratory Sympathetic and Polar Flows]

be for ever silenced. If I am the chosen instrument to develop this knowledge, and to make known the conditions which surround this pure truth, it is only that I may hand the key to those who will use it to enter the doorway that opens into the inaudible, and thus gain an insight into the now invisible region of the operation of Nature's most powerful governing forces, in the control over terrestrial matter by celestial mind."[52]

4.5.1 Center of Sympathetic Attraction

"I find that there is no medium in the range of vibratory philosophic research, that is as unerringly exact, towards the center of sympathetic attraction, as the negative attractive influence of a certain triple association of the metallic masses of gold, silver and platina[53]*. In fact, they are as accurate indicators of the earth's terrestrial sympathetic envelope, and its triple focalized action towards the earth's neutral center, as the magnet is an indicator of the diversion of the attractive flow of the dominant current of the electric stream. Although much has been written on the subject, the conditions attending the continuous flow of the magnet remains a problem that has never been solved by any other theory. Yet the solution is very simple when harmonic vibratory influence is brought to bear upon it.*[54]

4.5.2 Center of Sympathetic Coincidence

"Where the vibrations under this mode meet, and are maintained in a state of mutual affinity or equilibrium, there is established what is called a "neutral center", or, as otherwise expressed, "a center of sympathetic coincidence"."[55]

4.5.3 Center of Association and Concentration

A shared point, point of convergence or center of sympathetic coincidence (Neutral Center) or where syntropic forces meet, coincide, centralize or come together or harmonize.

---

[52][Keely] in [Keely and His Discoveries] pg. 365-367

[53][Trexar], [Trextrinar]

[54][Keely], [ANSWERS MADE IN LETTERS FROM MR. KEELY - TO QUESTIONS ASKED OF HIM]

[55][KEELYS PHYSICAL PHILOSOPHY - Snell]

4.5.4 Center of Focalization and Transformation

In the following quote we see the evolution or creation of perceptible light when thought (imperceptible) is directed to a center, undergoes transformation via Law of Cycles, then is manifest as perceptible light.

"Light is induced by electromagnetic percussion emanating from the ether, and in its action represents the plane of magnetism. In fact, it is the plane of magnetism when under polarization. (Platina wires the thickness of a fine hair associated with each of the nine nodal beads, and concentrated towards a general center of focalization, attaching the other end of the wires to the focal center, will determine, by the magnetic conduction, the number of corpuscular oscillations per second induced by a thought[56]*, either positive or negative, in the central centers. These are the only conditions those of magnetic conduction whereby the evolution of a thought can be computed in regard to its force under propagation, as against the amount of latent energy set free to act as induced by such thought on the physical organism.) Some scientific theories of the past have taught us that electricity and magnetism are one and the same thing. Sympathetic vibratory philosophy teaches that they are two distinct forces of one of the triune sympathetic family."*[57]

4.5.5 Nucleal Center

Term used by Russell to denote the point in a wave of maximum polar opposition or the 4++[58] state of polar opposition and when depolar as the Plane of Inertia[59]. Also understood to be the same as Keely's Neutral Center where Keely mentions 'antagonism'[60], *etc.*

In between one state and its opposite is a moment of pause not unlike the furthest point in the swing of a pendulum or seesaw. This null point or fulcrum can endure both polarities without itself being affected. See [Philosopher's Stone] There are in actuality two fulcrum points or points of transformation. The first is the 4++ center position where opposing polarities seek to Void

[56] [Thought Force]
[57] [Keely], [Snell Manuscript - the book], [ELECTROMAGNETIC RADIATION - Snell]
[58] [4plusplus]
[59] [Plane of Inertia]
[60] [antagonism]

at maximum opposition. The other fulcrum or transformation point is what Russell called the Plane of Inertia where polarities are at their least opposition. The sympathetic streams wind or spiral towards the center of 4++ and unwind spiraling away from that center to the six Planes of Inertia.

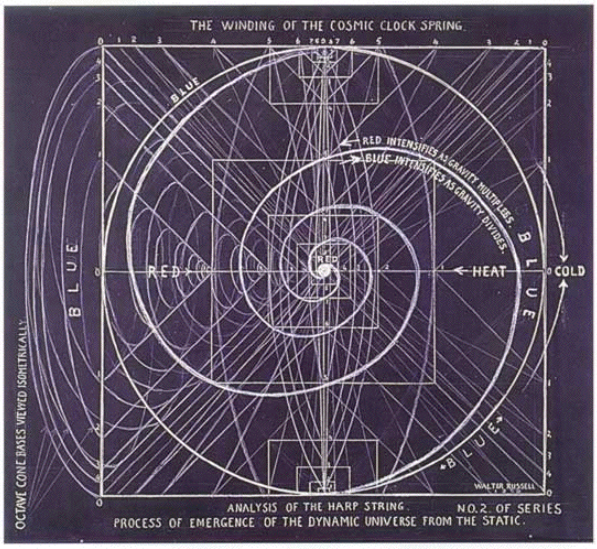

Figure 4.11: Syntropy winding up force to 4++ center
Image: http://pondscienceinstitute.on-rev.com/imagesNatDyn/67-Winding.GIF
(courtesy University of Science and Philosophy)

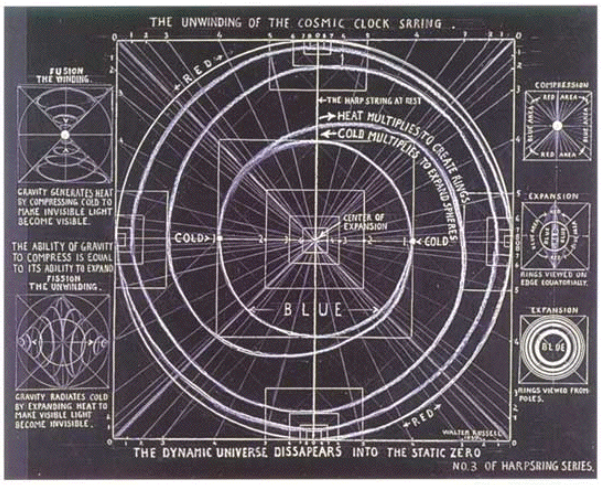

Figure 4.12: Entropy unwinding energy to 0 Plane of Inertia
Image: http://pondscienceinstitute.on-rev.com/imagesNatDyn/68-unwinding.gif
(courtesy University of Science and Philosophy)

4.5.6 Resistance

Resistance in DC circuits is equivalent to impedance in AC circuits. It is quite clear the concepts of resistance in the writings of Keely and Russell are more akin to AC impedance than DC resistance (as commonly understood). Resistance or antagonism is the presence of discords. As two poles harmonically accumulate force through mutual syntropic assimilation and at the 4++ point of convergence resistance or antagonism is created ultimately resulting in activating the Law of Cycles by way of run-away development of discords.[61] These discords multiply in number and accumulate power until the unifying harmonic forces revert from harmonic assimilation to enharmonic dispersion. No doubt this dynamic is the cause of implosion and cavitation processes and activities.

[61] [overtone series]

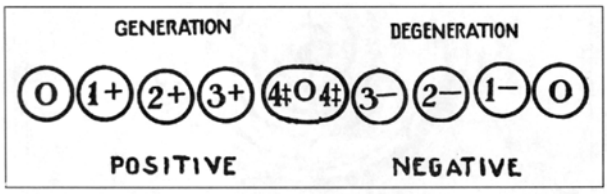

Fig. 68
Two-way journey from zero—through zero—to zero

Figure 4.13: Russell's 4 plus plus center of polar opposition
Image: http://pondscienceinstitute.on-rev.com/imagesNatDyn/4plusplus2.jpg
(courtesy University of Science and Philosophy)

About resistance Keely says: *"..In crystalline structures, heat, which expands the atoms, by twisting them produces striae*[62]*, increases the resistance, etc."*[63]

[62][striae]
[63]Keely, [Law of Vibrating Atomolic Substances]

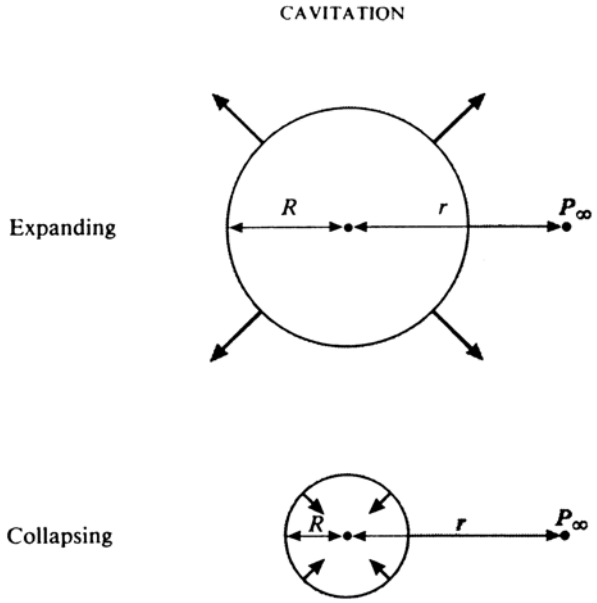

Figure 4.14: Cavitation is an example of the Law of Cycles
Image: http://pondscienceinstitute.on-rev.com/imagesNatDyn/Cavitation_Bubbles.jpg
(courtesy University of Science and Philosophy)

Keely continues: *"The electric current destroys cohesion and chemical tension directly as square of current in amperes, inversely as the resistance in ohms, inversely as the chemical equivalent, and conversely as the coefficient of the difference between the freezing and volatilizing temperature of mass acted upon."*[64]

Russell describing the opposing spirals: *"Positive electricity pulls inward spirally from within against the opposing resistance of negative electricity which thrusts outward spirally from within."*[65]

Russel continues: *"In this electric universe, sensation is the strain of resistance to the separation which exists between all separated masses. All matter is one. Separated particles desire to find that oneness."*[66]

[64]Keely, [Law of Variation of Atomic Oscillation by Electricity]
[65]Russell, [The Secret of Light], page 148
[66]Russell, [The Secret of Light], page 85-86

4.5.7 Prime Neutral Center

Prime Neutral Centers are primary centers about which other subservient secondary neutral centers are attracted and aggregate. In the quote below these Prime Neutral Centers are the neutral centers as stars or suns about which aggregate the secondary neutral centers of their planets. Hence they, the neutral centers are the source of gravity.

"The luminous, etheric, protoplastic element, which is the highest condition[67] *of the ether, fills the regions of infinite space, and in its radiating outreach*[68] *gives birth to the prime neutral centers that carry the planetary worlds through their ranges of motion."*[69]

The actions of Neutral Centers (almost) dictates the existence of rotating shells surrounding centralizing (gravitic) neutral centers. This not unlike so-called electron shells. Hence if every thing or mass has a neutral center and all neutral centers behave according to the same laws then planets would by those same laws (almost) have to be hollow. If it walks like a duck and quacks like a duck then it is a duck. I'm not saying they are but logic points to such a conclusion.

It is not physicality that causes negative attraction but the activated neutral centers that cause negative attraction. It is an illusion of the physical to ascribe causative properties to it when it is in fact nothing more than an effect of the cause - neutral center activity. The neutral centers formed the instant Divine self awareness occurred. It was all created in an instant of no duration and continues to recreate itself as it evolves. *The human intellect has a hard time with the concept of no time.*[70]

4.5.8 Supreme Neutral Center

Every molecule, atom and sub-quantum centralization everywhere existent within the universe has a Neutral Center. All of these neutral centers are sympathetic each to (entangled with or 'as one' with) all others. What keeps

[67] [Interetheric]
[68] [outreach]
[69] [Keely], [Keely and His Discoveries] pg 270
[70] [Time]

all these Neutral Centers "in order" (having one shared state) is subservience to One Supreme Neutral Center of the universe. Some would call this One Supreme Neutral Center, God. Taking out the egocentric anthropomorphic[71] assignments we then have an Intelligence (Consciousness) intimately associated with (in sympathy or entangled with) everything that is. The connecting link[72] between all these centers is Compound Interetheric sympathy which Keely said above '*'fills the regions of infinite space*". These ubiquitous Neutral Centers constitute a state of perfect continuity and living extensions of the One that through progressive evolution[73] or devolution as the case may be manifest as seeming solid matter in all its motions and activities which motion is Life.[74]

It is the nature of neutrality as Undifferentiated Mind Force that fills every thing everywhere. This Undifferentiated Mind Force is everywhere present as "Sympathy" within which, as motion (form), is latent. Being of infinite density and extenuation (although not having dimension) it is ubiquitous and reactive to and action upon every neutral center everywhere without itself being changed. See [Philosophers Stone]. It is the Supreme Prime Neutral state or condition (Cause) governing all else, manifested or not. The state of Neutrality is "perfect continuity without extension". Density and extenuation are dimensions according to Walter Russell so they do not actually exist except in the intellect of Man; *i.e.*, within his definition of matter and energy.

A neutral center is a conjunction of coincidence and focalization of forces. If those centralized forces (molecules, planets, galaxies) cease to exist so too does their controlling neutral center which created them and by which they have their being. They, the cause and its effects, exist concurrently and co-dependently. In other words "can't have one without the other".

"All motion is thought, and all force is mind force."[75]

This then clarifies the adage all, the many, comes from One. The state of the one Supreme Neutral Center does not change yet it births and governs

[71] made in Man's egoic image, anthropomorphizied
[72] [connecting link]
[73] [Progressive Evolution]
[74] [Dale Pond], [Prime Neutral Center]
[75] Keely, [Keely and His Discoveries], pg 252

all else. No state of a material thing is fixed or stable within the universe as everything is in constant compound rhythmical (vibratory) motions. These states of motion are governed by invisible yet knowable principles and laws. It could be said the principles and laws governing these motions are fixed or stable.

"Macvicar[76] foreshadowed the teachings of this new philosophy when he wrote, *"All motion in the universe is rhythmical*[77]*. This is seen in the forward and backward movement of the pendulum, the ebb and the flow of the tides, the succession of day and night, the systolic and diasystolic action of the heart*[78]*, and in the inspiration and expiration of the lungs. Our breathing is a double motion of the universal ether, an active and a reactive movement. This androgyne principle, with its dual motion, is the breath of God*[79] *in man.*" The writings of the ancients teem with these ideas, which have been handed down to us from generation to generation, and are now flashing their light, like torches in the darkness, upon mysteries too long regarded as "*lying outside the domain of physical science*[80]*.*"[81]

How can mind be devoid of thought/awareness? Desire is an aspect of mind, for instance. A quiet mind of knowing contains thought (depolar motionless awareness) but it does not contain egoic or intellectual thinking (polar motion). The physical universe is a recording of thinking dynamics; its existence is manifestation of the originating knowing thought activated by desire. Just as a seesaw contains a fulcrum that does not move it also contains extensions that do move. A seesaw is a trinity of states. Same thing with Divine Mind (the fulcrum or Cause) and everything else (the extensions or effects) in the universe.

[76]Dr. John Gibson [Macvicar] went to the university of St. Andrews in 1814, where he excelled in mathematics and natural philosophy, and thence to Edinburgh, where he studied chemistry, anatomy, and natural history under John Knox's tutelage, together with rhetoric, Hebrew and church history (see Dictionary of National Biography).

[77]same as Russell's [Rhythmic Balanced Interchange]

[78][Universal Heart Beat], [Dynaspheric Force]

[79][breath of life]

[80]classical physics

[81]Bloomfield-Moore ([CJBM]), see [Father-Mother Principle], [Universal Heart Beat]

Chapter 5

Mind and Mind Force

5.1 Mind is Force

Universal Undifferentiated Mind is the One Force from which all other forces are derived. This premise is born out in the writings of many great philosophers, thinkers and sundry historical inspired texts.

"All forces in nature are mind forces: magnetic, electric, galvanic, acoustic, solar, are all governed by the triune streams of celestial infinity; as also the molecular, intermolecular, atomic, and interatomic[1]*. The remote depths of all their acoustic centers become subservient to the third, sixth, and ninth position of the diatonic, harmonic and enharmonic chords; which, when resonantly induced, concentrate concordant harmony*[2]*, by reducing their range of corpuscular motion, drawing them as if towards each other's neutral center of attractive infinity."*[3]

Keely writes *"Luminiferous ether*[4]*, or celestial mind force, a compound interetheric*[5] *element, is the substance of which everything visible is composed. It is the great sympathetic protoplastic element, life*[6] *itself. Consequently, our physical organisms are composed of this element ... its seat in the cerebral*

[1] see [Subdivision]
[2] [Syntropy]
[3] Keely, see [Mind Force the hidden Scalar Force]
[4] [Luminiferous ether]
[5] [compound interetheric]
[6] [life]

convolutions ... This sympathetic outreach[7] *(sympathetic radiation) is mind flow proper, or will force - sympathetic polarization to produce action, sympathetic depolarization to neutralize it. Polar and depolar differentiation*[8] *result in motion. The true protoplastic element ... permeates all forms and conditions of matter, having for its attendants, gravity, electricity and magnetism, the triple conditions born in itself. In fact, it is the soul of matter*[9]*, the element from which all forms of motion*[10] *receive their introductory impulse*[11]*."*[12] (underline added)

"The luminiferous ether the compound interetheric element in other words, celestial mind force[13] *is the substance of which all visible and invisible things are composed."*[14] (underline added)

That Mind Force is a real force has been studied over a 28 year period by the engineering department of Princeton University in their PEAR Proposition project.[15] Their findings were revolutionary with far ranging implications.[16]

"Nearly three decades of intense experimentation leave little doubt that the anomalous physical phenomena appearing in the PEAR studies are valid, and are significantly correlated with such subjective variables as intention, meaning, resonance, and uncertainty."[17]

5.2 Whole vs Split Mind

Mind or Whole Mind means total Awareness unless otherwise specified. The term Mind or Whole Mind does not mean "intellect"[18]. Intellect is of the

[7] [sympathetic outreach]
[8] [Differentiation]
[9] [soul of matter]
[10] [Motion]
[11] [introductory impulse]
[12] [THE NEUTRAL CENTER]
[13] [celestial mind force]
[14] [Ether - Snell]
[15] http://www.princeton.edu/ pear/
[16] http://www.princeton.edu/ pear/implications.html
[17] video http://vimeo.com/4359545
[18] [intellect], [ego]

ego and is a subset of the general Consciousness or Mind and is that limited awareness we have created as our *interpretation* of reality. The term "Mind" as used in SVP means the general Consciousness, Awareness, Whole or Undifferentiated Mind. *Thinking* is of the differentiated intellect, ego or Split Mind while *knowing* is of the Mind, heart or Whole Mind. Whole Mind knowing is knowing with the feeling of the heart while Split Mind thinking or intellect is of the limited duality of the ego.

"*Your ego is a limitation within your Mind. Your ego exists as an expression of limitation.*"[19]

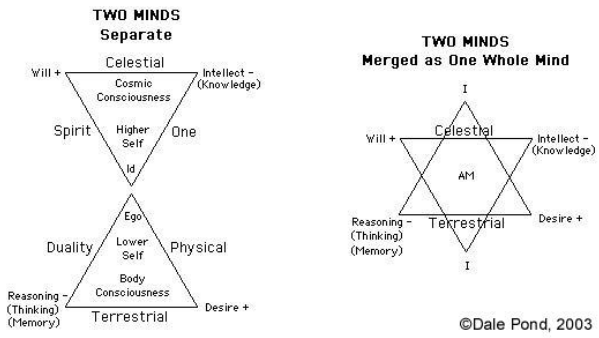

Figure 5.1: Whole and Split Mind
Image: http://pondscienceinstitute.on-rev.com/imagesNatDyn/two-minds.jpeg

5.3 Mind is of the Sixth and Seventh Subdivisions

Mind is of the Compound Interetheric[20] or seventh subdivision[21] of matter and energy. See Table 5.1. According to Keely's molecular and atomic morphology a molecule may be dissociated into its constituent parts or atoms. Atoms may then be further dissociated into their constituent parts and so forth for all finer subdivisions until the seventh subdivision where the rarefied ubiquitous sympathetic substance of Mind exists.

[19] Tom Carpenter, [Dialogue on Awakening], pg. 29
[20] [Compound Interetheric]
[21] [subdivision]

Dimension	Subdivision	Relation
1	Molecular	separation of air brings us to the first subdivision only.
2	Intermolecular	to the second; see [supercritical fluid]
3	Atomic	to the third;
4	Interatomic	to the fourth;
5	Etheric	to the fifth; and
6	Interetheric	to the sixth subdivision, or positive association with luminiferous ether;
7	Compound Interetheric	as the seventh subdivision.

Table 5.1: Keely's Seven Subdivisions of Matter and Energy

It will be noted these seven states of matter and energy are not unlike the ancient states of matter and energy: Earth, Water, Air and Fire.

5.4 Keely - Substance and Nature of Mind Force

"There is a celestial mind force[22]*, a great sympathetic force which is life itself, of which everything is composed."*[23]

"All motion is thought, and all force is mind force."[24]

"There is no dividing of matter and force into two distinct terms, as they

[22][Mind Force]
[23]Keely
[24]Keely, [Keely and His Discoveries], pg 252

both are ONE. FORCE is liberated matter. MATTER is force in bondage."[25]

The above last two sentences sound like something Albert Einstein would have said roughly twenty years later.

"The mighty forces latent in corpuscular matter, by which we are surrounded, are all held in oscillating vortex action by the Infinite Designer[26] *of workings hidden from us, until the time is ripe for their disclosure. This latent, registered power*[27] *interchanges sympathetically with the celestial radiating streams, whereby light, heat, electricity, magnetism and galvanic action are propagated in their different orders, vitalizing all nature with their life-giving principles.* (underline added)

"When this great scientific and religious truth has been made known, and established by demonstration, all controversy as to the source of energy will be for ever silenced. If I am the chosen instrument to develop this knowledge, and to make known the conditions which surround this pure truth, it is only that I may hand the key to those who will use it to enter the doorway that opens into the inaudible, and thus gain an insight into the now invisible region of the operation of Nature's most powerful governing forces, in the control over terrestrial matter by celestial mind."[28] (underline added)

"The action of the mind itself is a vibratory Etheric evolution, controlling the physical, its negative power being depreciatory in its effects, and its positive influence elevating."[29]

"The substance of the brain[30] *is molecular. The mind which permeates the brain is interetheric in substance; it is the element by which the brain is impregnated. This element, when excited into action, controls all physical motion as long as the necessary sympathetic conditions are maintained. Then conditions are no more immaterial in their character than are light and heat. Electricity, magnetism, gravity, and heat are latent in all aggregations of mat-*

[25] [Keely]
[26] [God]
[27] [Latent Force]
[28] Keely in [Keely and His Discoveries] pg. 365-367
[29] [Keely]
[30] [brain]

ter. They are not obtained from terrestrial influences. Celestial radiation[31] *is the true impregnating medium in all these forces. The brain is the high resonating receptacle where the sympathetic celestial acts, and where molecular and atomic motion are induced, as according to the intensification brought to bear upon it by radiation."*[32]

"The sympathetic conditions that we call mind are no more immaterial in their character than light or electricity. The substance of the brain is molecular, while the substance of the mind that permeates the brain is interetheric and is the element by which the brain is impregnated, exciting it into action and controlling physical motion. In order to trace the successive triple impulses[33]*, taking the introductory one of sympathetic negative outreach*[34]*, towards the cerebral neutrals, which awaken the latent element to action, we find that mind may be considered a specific order of interatomic motion sympathetically influenced by the celestial flow and that it becomes when thus excited by this medium a part and parcel of the celestial itself. The brain is not a laboratory. It is as static as the head of the positive negative attractor*[35]*, until influenced by certain orders of vibration, when it reveals the true character of the outreach so induced. The brain is the high resonating receptacle where the sympathetic celestial acts, and where molecular and atomic motion exhibits itself, as according to the intensification brought to bear upon it by the celestial mind flow. The question arises, Why is this condition of the (luminous) ether always under a state of luminosity of an especial order? Its characteristics are such, from its infinite tenuity and the sympathetic activity with which it is impregnated, that it possesses an order of vibratory, oscillatory velocity, which causes it to evolve its own luminosity. This celestial, latent power, that induces luminosity in this medium, is the same that registers in all aggregated forms of matter, visible and invisible. It is held in the corpuscular embrace until liberated by a compound vibratory negative medium. What does this activity represent, by which luminosity is induced in the high etheric realm, if not to indicate that even this order of ether is bounded by a greater region still beyond? The activity of the corpuscles represents its outflow from the luminiferous track towards the molecular centers of*

[31] [Celestial Radiation]
[32] Keely, [The Operation of the Vibratory Circuit]
[33] [Musical Triplet]
[34] [sympathetic outreach]
[35] [Keelys Mechanical Inventions and Instruments]

neutrality, revealing the connecting link[36] *between mind and matter. These conditions of luminosity have no thermal forces associated with them, although, paradoxically, all thermal conditions emanate from that source. The tenuity of this element accounts for it. It is when the streams come in conflict with crude matter that heat is evolved from its latent state and a different order of light from the etheric luminous is originated, the sun being the intermediate transmitter. All planets and systems are sympathetic intermediates, the whole of one system, connected in sympathy for each other, the Brain of Deity.*"[37] See Figure 4.7.

5.5 Russell on Mind and Mind Substance

Keely uses the term 'luminosity' or 'luminiferous ether'[38] which Russell calls 'white still magnetic light of gravity' or simply 'magnetic light'.

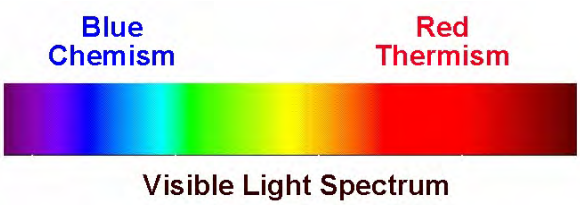

Figure 5.2: Red and Blue halves of the visible light spectrum
Image: http://pondscienceinstitute.on-rev.com/imagesNatDyn/visible-light-spectrum.jpg

"Electricity is the divider of the invisible white still magnetic light[39] *of gravity - which Mind is - into the red and blue halves of the visible light spectrum for the purpose of creating male and female bodies which alone constitute all matter.*"[40]

[36] [connecting link]
[37] Keely, [Dashed Against the Rock]
[38] [7B.09 - Luminiferous Ether or Light]
[39] [Magnetic Still Light]
[40] Walter Russell, notation on chart, 1955

Figure 5.3: Red and Blue halves of Polar states
Image: http://pondscienceinstitute.on-rev.com/imagesNatDyn/female-male-color.jpg

"This universe of matter in motion is but the electric record of thought."[41]

"Light is the living substance of Mind in action. It is the creating principle of the One substance.

"The One substance is the etheric "spiritual" substance of the One universal Mind.

"The entire "created" universe of all that is, ever has been, or ever will be, is but the One substance in motion, light."[42]

In other words matter is ultimately constituted of the polar concentrated and solidified substance of thought or Mind Force.

5.6 Mind is a Substance

Mind is substance or matter. Mind is a tenuous (ultra-gaseous) matter like ether or plasma (quantum substances). Mind is an etheric (quantum)

[41] Walter Russell, [The Secret of Light]
[42] [Ether - Russell]

substance (ultra-plasma). Mind therefore possesses vibratory, chemical and other knowable and engineerable attributes. As Mind is substance it can be regulated, harnessed and manipulated as any other gaseous substance.

5.7 Mind is also as an aggregate of consciousness

Mind is also as an aggregate of consciousness (self awareness) and is comprised of three distinct subsets:

Compound Interetheric
Superconscious.[43] Also known as Christ Consciousness[44], Cosmic Consciousness[45], Knowing, Wisdom, awareness and science.
Interetheric
Consciousness. Also known as intellect, ego, reason, thinking.
Subconscious. Also known as Soul, body-mind and instinct.
Unconscious. Belief, Habit, Natural Man
Etheric
Tenuous matter that composes the plasma gases of the body actuated (vivified) via our conscious and unconscious thinking and (beliefs, cognized or not).
Interatomic
The liquids and solids composing the body actuated by the etheric or quantum mind forces.
Atomic
Atoms
Molecular
Simple, Compound and Complex Molecules

It is because of this hitherto unsuspected property of mind and consciousness as a form of tenuous matter the link is established between so-called hard science (3D, materiality, classical physics) and so-called sacred science or spiritual fields of study[46] now loosely called non-classical physics. They are

[43] [Superconscious]
[44] [Christ Consciousness]
[45] [Cosmic Consciousness]
[46] [telekinesis], [telepathy]

in fact one field of study when this connection is recognized and admitted.

Chapter 6

What is Vibration?

6.1 Quotes - vibration defined

"Vibration is the rhythmical motion of a body within itself."[1]

"Vibration is a periodic interchange of state."[2]

"Rhythmic Balanced Interchange."[3]

"All force is vibration..." Cayce (900-422) *"So is matter."* Cayce (1861-16)

"All comes from one central vibration - taking different form." Cayce (900-422)

"Everything is vibratory." Cayce (195-54)

"As we see manifest in the electrical forces as used by man. This becoming only an atom in motion, and as the atomic force gathers this, producing such vibration as to create heat, light, and of the various natures, by the kind, class or nature of resistance[4] *met in its passage in the cycle given, reducing or raising the velocity, or better by the class of atomic force it vibrates, either*

[1] Keely, see [Oscillation]
[2] [Dale Pond]
[3] [Russell]
[4] [Law of Vibrating Atomolic Substances]

with or against. These are examples of portions of universal forces."[5]

"Vibration is movement. Movement is activity of a positive and negative force."[6]

"Electricity[7] *or vibration is that same energy, same power, ye call God."*[8]

"Life in its manifestations is vibration. Electricity is vibration. But vibration that is creative is one thing. Vibration that is destructive is another. Yet they may be from the same source. As in the electrical forces in the form or nature prepared even for use in the body. Remember life is vibration. So is mind. So is matter."[9]

6.2 A Vibration Is

A vibration is a rhythmic periodic expansion (entropy/dispersion) and contraction (syntropy/aggregation) change of state; *i.e.*, a periodic inter-exchange of seemingly opposite yet co-joined and inseparable polar states. The two polar states are entropy (expansion) and syntropy (contraction). In each wave or vibration there are two distinct yet related unseen sets of dynamic aliquot parts or constructive currents (when considering a wave train or continuous vibration as a vibratory stream or vibratory flow). One set of aliquot attributes or parameters brings about the periodic concentration or aggregation of the vibrating media while the other set of aliquot attributes or parameters causes periodic expansion or dispersion of the media. If these unseen influences (aliquot or scalar components) were not there and a dynamical constituent of each wave or vibration there could be no delta or change of state as both states or phases would be identical and unchanging. The perceived wave or vibration is then the effect of these unseen causative (scalar) influences, attributes, parameters or currents. The details of these unseen causative (scalar) influences, attributes, parameters or currents are

[5] Cayce (900-17)
[6] Cayce (281-29)
[7] [Law of Vibrating Atomolic Substances]
[8] Cayce (2828-4)
[9] Cayce (1861-16)

the subject of this presentation and are also presented in Laws of Being[10], Laws of Being - Annotated[11], Wavefunction[12] and Part 12 - Russells Locked Potentials[13]. These two states are governed in part by the Law of Harmony[14], Law of Harmonic Pitch[15], Law of Harmonic Vibrations[16] and the Law of Repulsion[17]. See also [Bjerknes Effect] for a mechanical experiment demonstrating these two tendencies of vibratory attraction and repulsion.

Vibrations manifest as three-dimensional (along x, y and z planes) expressions of these unseen creative currents. Vibrations are not well represented by the typical sine wave. The use of the sine wave graphic has become so ubiquitous it is often mistaken for the actual motions of a vibration. These three-dimensional expressions are a periodic expansion and contraction of the elements of the vibrating medium; *i.e.,* the air particles are mutually attractive then mutually repellant according to the Law of Attraction[18] and Law of Repulsion[19]. The contraction is seen as the compressive wave front while the repulsion is seen as the vacuous backside of the compression front. This same dynamic can also be seen as the compressed air at the front of an airfoil and the rarefaction on top of that same airfoil or airplane wing or propeller.

6.2.1 Three Forces action on all Matter and Energy

"All conditions of dispersion and focalization are accompanied by the "celestial mind force" acting upon "terrestrial matter" - (corresponding to the mind force acting on the brain, which is only its molecular instrument.) This force is the first seal of the Book of Vibrational Philosophy - the first stepping stone toward solution of the Source of Life.

"All Nature's forces are mind forces: magnetic, electric, etheric, acoustic,

[10] [Laws of Being]
[11] [Laws of Being - Annotated]
[12] [Wavefunction]
[13] [Part 12 - Russells Locked Potentials]
[14] [Law of Harmony]
[15] [Law of Harmonic Pitch]
[16] [Law of Harmonic Vibrations]
[17] [Law of Repulsion]
[18] [Law of Attraction]
[19] [Law of Repulsion]

solar. Any metallic mass can be so impregnated with certain vibrations that it will assume mental attributes - attraction and repulsion. We must first understand the triune conditions or laws of that sympathetic medium which interconnects matter with matter, the triune conditions or laws of Sympathetic Streams and unites resonance of each of the seven subdivisions before we can understand the induction by means of acoustic generators, of magnetic antagonisms in matter and the different forms of energy thereby liberated."[20]

6.2.2 Law of Attraction (syntropy)

"Juxtaposed coherent aggregates vibrating in unison, or harmonic ratio, are mutually attracted."[21]

6.2.3 Law of Repulsion (entropy)

"Juxtaposed coherent aggregates vibrating in discord are mutually repelled."[22]

6.2.4 Law of the Dominant (Celestial Mind Force)

"All wave propagations, electromagnetic or otherwise by being thus refracted can be measured in regard to the time of their propagation all of which are introductorily subservient to the luminiferous ether."[23]

6.3 Rad-Energy - entropic dispersion

Rad-energy[24] is radiant energy - expanding from a center. Sometimes this energy is referred to as dispersive, entropic or discordant as it is both. According to the Bjerknes Effect[25] radiation or radiant energy disperses (because affected media is mutually repulsive according to the Law of Repulsion[26]) from a center losing its amplitude and degree of discord following the Square

[20] [Snell Manuscript]
[21] Keely, [Bjerknes Effect]
[22] Keely
[23] Keely, [Luminiferous Ether]
[24] rad-energy
[25] Bjerknes Effect
[26] Law of Repulsion

Law[27] until it reaches zero amplitude and zero discordant content at Russell's Plane of Inertia[28]. The range of dispersion is dependent upon the Introductory Impulse[29] and conductivity of the media. This dispersive energy effects the media in which it travels through modulation and heterodyning[30]. The overall effects of this process is governed by the Law of Transformation of Forces[31].

6.3.1 Introductory Impulse

The introductory impulse sets the tone so to speak of the acoustic sound mentioned above. The introductory impulse may establish an entropic dispersion or syntropic condition according to its overtone content. When the partials are discords the resultant sound will be entropic dispersion. When the partials are concords the resultant sound will be syntropic concentration. The development of discordant overtones is a simple and low powered occurence. All sounds developing from an introductory impulse will create discords. It appears the more power initiating an introductory impulse the more discords are developed according to the Law of Cycles[32].

6.4 Vibration v Oscillation

These two rhythmic motions of vibration and oscillation are not the same. Without vibration and oscillation made distinct seeming unfathomable paradoxes arise. For these paradoxes to be understood the difference between vibration and oscillation has to be clarified.

"Vibration is the rhythmical motion of a body within itself."[33] Not unlike the rhythmic motions of or within the heart without change in spatial location of the heart.

[27] Square Law
[28] Plane of Inertia
[29] Introductory Impulse
[30] Heterodyne
[31] Law of Transformation of Forces
[32] Law of Cycles
[33] [Keely]

"Oscillation is a rhythmically recurring translatory movement."[34] Back and forth motion over space not unlike a child's swing or penduluum.

In the ground state, at the moment of inflow of the sympathetic celestial streams or Divine Permeation (spark of Life), vibration is, symbolically, one cps and oscillation is one cps. From that moment on in the process of progressive rhythmic devolution or evolution, due to the Law of Harmonic Pitch[35], Law of Harmonic Vibrations[36], Law of Transformation of Forces[37] and Law of Cycles[38], acting together as one complex or orchestrated law, the One is refracted or differentiated into the multiplicity of materiality (the One becomes the Many) in the natural formation of overtones sometimes called harmonics[39]. These secondary and tertiary overtones are not separate from their source (the fundamental) but are inextricably linked to it as Cause is linked to its Effects. Demonstrating everything-that-is has a common origin or One Source and state of Being (sympathy; *i.e.*, Love or Harmony) regardless of outer appearance (opinion) of separateness and individuality.[40]

6.5 What a Vibration is NOT

A vibration is not a two-dimensional expression as a sine wave. Sine wave patterns are developed from measuring a wave front passing by a measuring device such as a microphone, accelerometer or transducer. As the amplitude changes - at the point of monitoring - a sine wave is traced of the varying amplitude over Time. I spoke about this over simplification in my 1994 SVP presentation in Milwaukee.[41] The sound wave front actually expands simultaneously along all three dimensions (x, y and z). A simple sine wave then is but a trace of what is happening at a given xyz point in space but says next to nothing about what is happening within the three dimensional

[34] [Keely]
[35] [Law of Harmonic Pitch]
[36] [Law of Harmonic Vibrations]
[37] [Law of Transformation of Forces]
[38] [Law of Cycles]
[39] In SVP 'harmonics' are divisible by 2. All other developed secondary and tertiary tones are divisible by other divisors such as 3, 5, 7, etc. and are called 'overtones'. Collectively they are called 'partials'.
[40] [Dale Pond]
[41] see videos on page [Basic Principles]

sound wave as per is originating forces, expanding and contracting dynamics and what is occurring with the periodic or aperiodic motions within the substance of the transmitting medium. The compression portion of the wave front is in actuality the mutual periodic attraction and subsequent concentration between the medium particles due to an increase in syntropic force. Conversely, the less dense (rarefied) wave section is an effect of the entropic forces causing the media particles to be mutually repulsive dispersing them into a relatively rarefied condition. Therefore the amplitude of a wave is predicated on the quantity of syntropy or entropy brought to bear on the vibrating media. The response within the media to an external excitation largely depends on the character (time, duration, condition and location) of the introductory impulse[42] of the excitation. From the above sketch it can be readily seen how Macvicar's Law of Assimilation[43] (Russell's Rhythmic Balanced Interchange[44]) is active in every periodic motion.

6.6 Wave Propagation

In the air the molecular wave front does not actually propagate as a wave. The wave is an effect of subtler causes which when viewed accumulatively have the *appearance* of a wave. Thus we are fooled when relying on our senses. The elements of the molecular medium (air particles) primarily rotate and oscillate about their centers depending on the nature of the disturbance. It is this disturbance that propagates causing periodic expansion and contraction of that which it encounters along the way and before dissipation. The quantum scalar component propagates as a quantum disturbance through the molecular medium. This disturbance is rhythmical; *i.e.*, (polar) intermittently syntropic then entropic in its effects upon the molecular receptive centers. There occurs an increasing compression to the 4++ potential[45] level where a 90° transformation, via the Law of Cycles, converts syntropic influence from syntropic compression into entropic dispersion (gradients of vacuity). Logically then the time it takes for the invisible internal disturbance to become a visible external phenomenon is the apparent propagation rate. This is a periodic disturbance (time to reach the critical 4++ state plus re-

[42] [Introductory Impulse]
[43] [Law of Assimilation]
[44] [Rhythmic Balanced Interchange]
[45] [4plusplus]

laxation time plus reformation time) and takes on the appearance of a wave or vibration. Of course, it should be noted not all rhythmic motions result in a complete 4++ transformation as not all rhythmic motions have sufficient power to achieve transformation. Hence there are low energy waves and vibrations that simply repeat themselves without self-destruction and rebirth in a new energy state.

6.7 Frequency

It can be argued Keely counted frequency as a dual motion of IN then OUT or OUT then IN depending where one begins counting. If this is true then the apparent oscillation of a pendulum is two oscillations from side to side. It is not certain this method of counting carries throughout the Keely materials but it is good to keep this in mind.

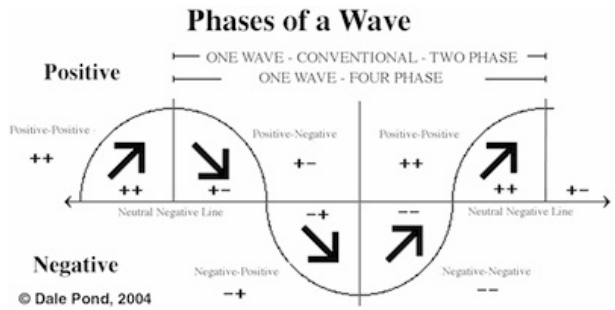

Figure 6.1: Four Phases of a Wave or Oscillation
Image: http://pondscienceinstitute.on-rev.com/imagesNatDyn/fourphases400.gif

6.8 Law of Cycles

"Coherent aggregates harmonically united constitute centers of vibration bearing relation to the fundamental pitch not multiples of the harmonic pitch, and the production of secondary unions between themselves generate pitches that are discords, either in their unisons, or overtones with the original pitch; from harmony is generated discord, the inevitable cause of perpetual trans-

formation."[46]

[46] [Keely]

Chapter 7

Laws of Being

7.1 Introduction

Professor Daniel Brinton[1], author of the following reviewed article, spent considerable time in Keely's nearby laboratory and workshop. It is believed this article is the clearest attempt to explain the basic concepts Keely discovered, developed and worked with and how he used them. After all, Keely was present to directly answer Brinton's questions. Therefore it behooves us to closely examine this article to discern understanding and hopefully practical use.

The terms and phrases in this article are linked to supporting materials within the svpwiki.com where the bulk of the known Keely materials are located. Comments are given immediately below a Brinton quote. These comments are quite important because they represent a synthesis of years of learning Keely's and Russell's jargons as well as comparative contemporary concepts and research. A careful reader will see an intermingling of materials from various sources that support each other. Most notably is the mutual affinities between the works and ideas of John W. Keely and Walter Russell.

Brinton's words or quotes are preceded by **Roman Numerals in bold type**. Numbers and brackets ([]) contain comments and links about Brinton's writings and Keely's concepts. These terms and phrases in brackets

[1]Daniel Garrison Brinton (May 13, 1837 July 31, 1899) was an American archaeologist and ethnologist at the University of Pennsylvania.

([]) can be searched in www.svpwiki.com. The original unaltered Brinton text can be seen in "Keelys Physical Philosophy - Appendix-I" and "Laws of Being, Appendix-II" at the end of this book or within the svpwiki.com.

7.2 Rhythmical Relations

I. *"The fundamental conception of the Universe is force manifesting itself in rhythmical relations."* (continues to II);[2]

7.2.1 Principle of Rhythmic Balanced Interchange

"This principle of rhythmic balanced interchange[3] *between Father*[4] *(syntropy) - Mother*[5] *(entropy) lights of gravitation (syntropy) and radiation (entropy) is fundamental in all creating things."*[6]

In other words the principle of Rhythmic Balanced Interchange[7] is a universal principle[8][9], as Russell repeatedly emphasized, active in all things from molecular to Mind energy subdivisions (states). Rhythmic Balanced Interchange is after all what every vibration and oscillation does that the ubiquitous and over simplified sine wave does not reveal.

7.2.2 Every individualized object assimilates itself

Macvicar[10] writes: *"Every individualized object assimilates itself to itself in successive moments of its existence and all objects tend to assimilate one another."*[11]

---

[2][Rhythmic Balanced Interchange]
[3][rhythmic balanced interchange]
[4][Father]
[5][Mother]
[6]Russell, [The Secret of Light], page 150; see 'Chapter 6 - What is Vibration?'
[7][Rhythmic Balanced Interchange]
[8][Principles]
[9]see Chapter 11
[10]Dr. John Gibson [MacVicar] professor at university of St. Andrews 1830.
[11][Snell Manuscript], [Three Laws of Being], [Law of Assimilation], [Modes of Vibration - Annotated]

Please note this law as expressed by Macvicar is the same universal law in its essence and dynamic as expressed by Jesus wherein he says:

"Jesus said unto him, Thou shalt love the Lord thy God with all thy heart, and with all thy soul, and with all thy mind. This is the first and great commandment." (Matthew 22:3738).

"And the second (commandment) is like unto it; Thou shalt love thy neighbor as thyself. On these two commandments hang all the law and the prophets." (Matthew 22:3940).

SVP (nor this author) does not subscribe to or promote organized religions but we are interested in universal laws and principles (applicable universally) regardless who revealed them or wherever they may be found.

Love and Sympathy are synonyms for affinity, assimilation or being One With. These same dynamics apply everywhere and with everything thus establishing sympathetic association[12] between all things, everywhere and at all times.

To repeat when the constituent frequencies of A and B are identical A transmits to B and B transmits to A sympathetic association or mutual resonance (Love or Sympathy) occurs. These dynamics are as expressed in the following of Keely's forty laws[13]:

Law of Harmonic Vibrations[14]

"All coherent aggregates are perpetually vibrating at a period-frequency corresponding to some harmonic ratio of the fundamental pitch of the vibrating body; this pitch is a multiple of the pitch of the atomoles[15]*."* See Overtone Series[16].

[12] [sympathetic association], entangled
[13] [Keelys Forty Laws]
[14] [Law of Harmonic Vibrations]
[15] [atomoles]
[16] [Overtone Series]

Law of Transmissive Vibraic Energy[17]

"All oscillating and vibrating coherent aggregates create, in the media in which they are immersed, outwardly propagated concentric waves of alternate condensation and rarefaction, having a period-frequency identical with the pitch of the aggregate."

Scholium: *"All forms of transmissive energy can be focussed, reflected, refracted, diffracted, transformed, and diminished in intensity inversely as the square of the distance from the originating source."* See also Square Law[18].

Law of Sympathetic Oscillation[19]

"Coherent aggregates immersed in a medium pulsating at their natural pitch simultaneously oscillate with the same frequency, whether the pitch of the medium be a unison, or any harmonic of the fundamental pitch of the creative aggregate."

As the atomole is the constructive constituent of all atoms all atoms are therefore in sympathetic association at, by and through these atomoles. All is one at this level or state of being even though at the physical level of our perception everything appears to be separate and individual.

[17][Law of Transmissive Vibraic Energy]
[18][Square Law]
[19][Law of Sympathetic Oscillation]

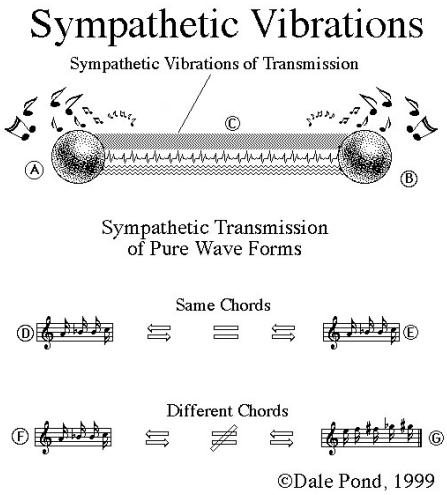

Figure 7.1: Sympathetic Vibration - Entanglement
Image: http://pondscienceinstitute.on-rev.com/imagesNatDyn/sympathetic-vibrations.jpg

7.2.3 These modes are today much like "phase"

These modes, or periodic change of state, are today much (but not exactly) like what we call "phase" of a wave. Usually conventional 'phase' is undistinguished in construction as to its causative (aliquot/scalar) forces and dynamics being primarily intermittent syntropic and entropic. Phase in modern usage is almost exclusively linked to the positive or negative halves of a sine wave which does not convey all that is occurring in the wave under investigation.[20]

II. *"This definition [from I] is exhaustive, including both thought[21] and extension[22], mind and matter. The law for the one is the law for the other. The distinction between them is simply relative, i.e., quantitative, not qualitative.*

As above so below - all forms of matter and energy regardless of frequency, subdivision or state are involved in a periodic Rhythmic Balanced Inter-

[20] see chapters 'Chapter 6 - What is Vibration?' and 'Chapter 8 - Modes of Vibration'
[21] [thought]
[22] [Sympathetic Outreach]

change between their polar states where one polar state becomes the other intermittently.

III. *"The rhythmic relations in which force acts are everywhere, under all conditions, and at all times, the same. They are found experimentally to be universally expressible by the mathematical relations of thirds."*[23]

"Rythmic relations" indicates ALL vibratory and oscillatory motions are effects of this periodic interchange of intertwined poles between syntropic contraction or assimilation and entropic expansion or dispersion. This interchange occurs as these two states are in the relative proportion (ratio) of third parts to one another.

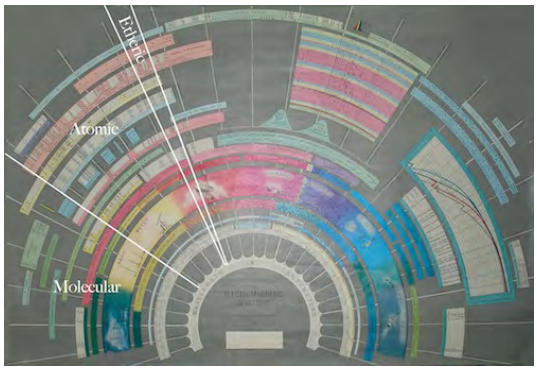

Figure 7.2: Chart showing location of the three mode frequencies.
Image: http://pondscienceinstitute.on-rev.com/imagesNatDyn/electromagneticspectrummodes500.jpg

That three or threeness is fundamental is now seen to be valid in the Rule of Threes[24] re-discovered by Vitaly Efimov and is called the 'Efimov trimer' or 'Efimov state'[25]. Likewise both Keely in the 1880s and Russell in the 1920s clearly comment on the value of threes[26].

"*Rest and action are three. Space and matter are three. Equilibrium and*

[23][14.35.1 - Keely 3 6 and 9] and [Rhythmic Balanced Interchange]
[24][Rule of Threes proven]
[25]Wikipedia/Efimov state
[26][Three]

motion are three. Dimensions and pressures are three. The heartbeat of the universe, and yours, are three. Likewise, its breathings and yours, its temperatures and yours, and all things else of the universe, and you, are three."[27]

7.2.4 'Thirds' is usually a mathematical relationship of proportion

Within this and related SVP documents the concept and use of the term 'thirds' is usually a mathematical relationship of proportion of wave function parameters[28] (of volume, force, density, *etc.*) and not always a musical relation. A given whole being One Whole, has three parts always in varying yet relative proportion to one another. The overall or resultant expression of the One Whole is dependent on the ratios being applied. More syntropy makes the whole more syntropic. The more entropy the more entropic will be the One Whole. Therefore and thereby *polarity is not fundamental but may be modified or manipulated by altering the ratios of these proportions held as thirds or third parts.*[29]

7.3 Threefold Relations

IV. "These threefold relations may be expressed with regard to their results (appearances) as,

I. Assimilative (attractive, aggregating)
II. Individualizing (dispersing, dissociating)
III. Dominant or Resultant (controlling, determining)

[27] Russell, [Atomic Suicide]?, Chapter 5 - Prelude - The Transformation of Man
[28] [Eighteen Attributes or Dimensions]
[29] Chapter 10 - Proportions (Ratios) of Relative Values

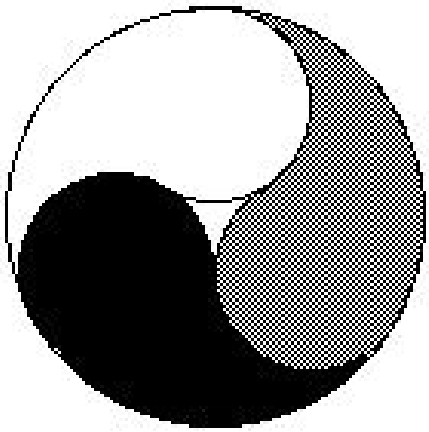

Figure 7.3: Triune Forces/Modes/Proportions combined as One Force
Image: http://pondscienceinstitute.on-rev.com/imagesNatDyn/Triune-Forces.jpg

7.3.1 Each of the above dynamics (IV) is a $\frac{1}{3}$ part or current of a $\frac{3}{3}$ stream

Each of the above dynamics is a $\frac{1}{3}$ portion or current of a $\frac{3}{3}$ stream (rhythmic flow of force or energy[30]). These three-fold relations are resultant dynamics of three-fold relations of these three currents acting *"as one"* - constituting a single compound stream or chord tone; *i.e.*, combined proportions of each with the others. This combination of three entities to make one compound entity works the same way three musical notes may be sounded at one time as a triplet chord, hence Keely's constant use of triplet chord notations throughout his charts. It is further presumed the ratios of the musical notes within a triplet chord on his charts[31] are the same ratios when specifying any other applied proportional value such as frequency, amplitude, *etc. regardless of frequency range or subdivision.*

[30] *"In this system (Sympathetic Vibratory Physics), force and energy are classified as opposites, working in antagonism to each other: Force as a positive power which initiates aggregative motion, and resists separative motion, in three postules, of ponderable matter in the etheric medium; Energy as a negative power, which initiates separative motion, or disintegration, and resists aggregative motion, in three postules of ponderable matter, also of the etheric medium."* Bloomfield-Moore, [What Electricity Is - Bloomfield Moore]

[31] [Part 25 - Keelys Wonderful Charts of Vibratory Etheric Science]

7.3.2 Ratios of Harmonic and Enharmonic Potentials

It is further assumed (until bench testing shows otherwise) these triplet chords when considered as a singular tone each represents a different degree of concord and discord. Tables would have to be developed from bench testing. These ratios of concord and discord would also parallel in some regards Russell's concepts of Locked Potentials because that is what they are.

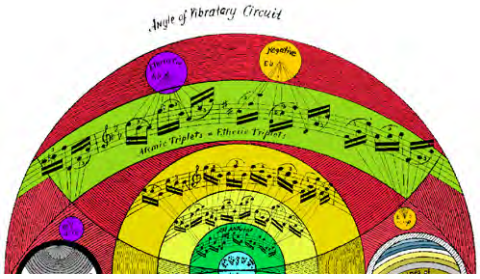

Figure 7.4: Typical Triplet Chords in Keely's charts.
Image: http://pondscienceinstitute.on-rev.com/imagesNatDyn/Angles-Segment-500.jpg

7.4 Three Actions and Laws of Being

V. *"From these three actions are derived the three fundamental LAWS OF BEING:*

I. **Law of Assimilation**: every individualized object assimilates itself to all other objects.[32]

II. **Law of Individualization**: every such object tends to assimilate all other objects to itself.[33]

III. **Law of the Dominant**: every such object is such by virtue of the higher or dominant force which controls these two tendencies.[34]

[32] [Law of Assimilation]

[33] [Law of Individualization]

[34] these three laws act according to and with the [Law of Sympathetic Association] and [Law of the Dominant]

7.4.1 Law of Sympathetic Association

"The effects of the Law of Sympathetic Association[35]*, which Mr. Keely demonstrated as the governing medium of the universe, find illustrations in inanimate nature. What else is the influence which one string of a lute has upon a string of another lute when a stroke upon it causes a proportionable motion and sound in the sympathizing consort, which is distant from it*[36]*, and not perceptibly touched? It has been found that, in a watchmaker's shop, the timepieces, or clocks, connected with the same wall or shelf, have such a sympathetic effect in keeping time, that they stop those which beat in irregular time; and, if any are at rest, set those going which beat accurately. Norman Lockyer*[37] *deals with the Law of Sympathetic Association as follows: - "While in the giving out of light we are dealing with molecular vibration taking place so energetically as to give rise to luminous radiation, absorption phenomena afford no evidence of this motion of the molecules when their vibrations are far less violent." . . ."The molecules are so apt to vibrate each in its own period that they will take up vibrations from light*[38] *which is passing among them, provided always that the light thus passing among them contains the proper vibrations.*[39]*" . . . "Let us try to get a mental image of what goes on. There is an experiment in the world of sound which will help us." . . . "Take two large tuning-forks, mounted on sounding-boxes, and tuned to exact unison. One of the forks is set in active vibration by means of a fiddle-bow, and then brought near to the other one; the open mouths presented to each other. After a few moments, if the fork originally sounded is damped to stop its sound, it will be found that the other fork has taken up the vibration, and is sounding distinctly. If the two forks are not in unison, no amount of bowing of the one will have the slightest effect in producing sound from the other."*[40]

[35][Law of Sympathetic Association]

[36]spooky [action at a distance]

[37]Sir Joseph Norman Lockyer, FRS (17 May 1836 - 16 August 1920), known simply as Norman Lockyer, was an English scientist and astronomer.

[38]etheric [disturbance of equilibrium]

[39][Law of Force]

[40]Clara Bloomfield-Moore([CJBM]), [Keely and His Discoveries], [Tuning Forks], [Sympathy]

7.4.2 Law of Assimilation

The Law of Assimilation[41] acts according to the laws of sympathetic attraction and oscillation as also the Law of Sympathetic Oscillation.[42] - *"this law is to the effect that every individualized object tends to assimilate itself to itself, in successive moments of its existence, and all objects to assimilate one another."*[43]

7.4.3 Law of Attraction

"Juxtaposed[44] *coherent aggregates vibrating in unison, or harmonic ratio, are mutually attracted."*[45]

Here then is the great law of attraction properly explained. When two or more objects are 'vibrating in unison' they are sympathetic to each other and what occurs to one occurs to both. The objects are 'linked' by sympathetic vibration and/or sympathetic oscillation. This phenomenon is recognized today as '*entanglement*' or 'spooky action at a distance'.[46] Where objects are 'equally and uniformly spaced' we see the basis for geometric shapes such as tetrahedrons, *etc.* thought so much of by so many these days. Uniformity of design elements or dimensions (geometry) is therefore an attribute of harmony and therefore attraction or assimilation lacking entropic (discordant) elements of dispersion (numbers and ratios other than those forming unisons or harmonic ratios).

7.4.4 Law of Sympathetic Oscillation

"Coherent aggregates immersed in a medium pulsating at their natural pitch simultaneously oscillate with the same frequency, whether the pitch of the medium be a unison, or any harmonic of the fundamental pitch of the creative aggregate."[47]

---

[41] [Law of Assimilation]
[42] [Law of Sympathetic Oscillation]
[43] [Law of Assimilation]
[44] equally and uniformly spaced
[45] Keely, 1894; see [Bjerknes Effect]
[46] [Sympathetic Vibration], [Sympathetic Oscillation], [Entanglement]
[47] Keely, 1894

This coincidental and synchronous action is seen in the coordinated motion of seeming separated clock pendulums all immersed in the common medium of the atmosphere or sharing contact through a wall or shelf. In a similar fashion this is the basis of dissolving foreign materials (aggregates) by solvents in solutions. Curiously it is the same dynamic at work in the Stockholm Syndrome[48]. See II above why this is so.

7.4.5 Infinite neutral Mind centers and controls all motion

Should we replace the non-existent infinitely small strings as held in the String Theory with infinitely small centers[49] to which are applied the above three laws it can be seen how every center is sympathetic (in sympathy) with every other center and are therefore quantum entangled; *i.e.*, sympathetic one to all others and clearly reflects the above three laws and their dynamics. This would of course imply a single fundamental chord at the very heart or core of the universe. This highly sympathetic universal chord could be the *'Cosmic microwave background'*[50] that vibrates and oscillates everything in the universe at a common pitch thus sympathetically connecting (entangling) every seeming individuated thing to all other seeming individuated things regardless of space. At certain subdivision levels it may therefore be presumed all things regardless of location are sympathetically linked and behave as One Thing thus all things may be considered as One yet having individual exist and experience.[51]

Cayce mentions this seeming duality of One yet individual state of affairs as described by the above laws, states and circumstances thusly:

"That it, the entity, may know itself to be itself and part of the Whole; not the Whole but <u>one with</u> the Whole; and thus retaining its individuality, knowing itself to be itself, yet <u>one with</u> the purposes of the First Cause that called it, the entity, into being, into the awareness, into the consciousness of itself. That is the purpose, that is the cause of being."[52](underlines added)

[48]Wikipedia/Stockholm Syndrome
[49][Center Theory]
[50][Cosmic microwave background]
[51][What is Sympathy]
[52]Cayce (826-11)

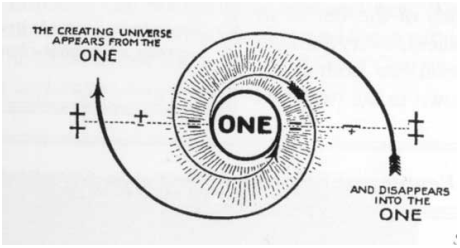

Figure 7.5: From the One comes the many.
Image: http://pondscienceinstitute.on-rev.com/imagesNatDyn/One-Many.jpg
(courtesy University of Science and Philosophy)

And of course this illusion of separateness carries on into the affairs of each individual and hence into society.

As can be seen from the above the totality of the universe is One totality with seeming separate individualizations. Science sees it when it insists on creating experiments isolated from all outside influences. This of course can work in purely mechanical experiments but once the threshold of the atom is breached into the quantum world nothing can be isolated from these higher and finer outside forces and influences. Indeed even the atom is affected by these higher finer forces - we simply do not know how to pay attention to the effects which includes the existence of the atom itself being created and maintained by these unseen forces[53].

How the many forms of matter and substance develop through evolution[54] from the seeming void of Mind or Consciousness is not the topic of this book. Perhaps we'll get around to writing such a book in the future.

7.4.6 One Substance is Mind

There is but One Substance in the universe and that substance is Mind which some have called "Light" as in the Light of Mind. Being of the Light or Etheric order of subdivided being the ancients called it "Luminiferous

[53][7.9 - Ultimate Constitution of Matter and Action of Force Regulating its Phenomena]
[54]svpbookstore.com - Hughes, F.; Harmonies of Tones and Colours - Developed by Evolution

Ether"[55]. Walter Russell expressed it thusly:

"Light units have the appearance of individuality, even as you and I.
"There is no individuality in this universe of Mind. There is but an appearance of individuality.
"This is a universe of the One Thing.
"That One Thing is Mind.
"The substance of thinking Mind in action is light.
"There is but One substance.
"The One substance cannot be divided into many substances, or many parts.
"Individuality is but an appearance, an effect of potential in the periodicity of thinking."[56]

Thus it can be seen Mind centers[57] all things because all things are motions centralized about a common center originating of Mind as Source[58] or the Interetheric realm or subdivision (6th subdivision) of being.

Figure 7.6: Mind centers all motion.
Image: http://pondscienceinstitute.on-rev.com/imagesNatDyn/thought-rings.jpg
(courtesy University of Science and Philosophy)

VI. *"Applying these fundamental laws to an explanation of the universe, as it is brought to human cognition, all manifestations of force may be treated as modes of vibrations."*

Simplistically everything vibrates and oscillates perpetually.[59] But not all

[55][Luminiferous Ether]
[56]Russell, [The Universal One], Book 02 - Chapter 01 - Dynamics of Mind - Concerning Light Units of Matter
[57][Figure 12.06 - Mind Centers and Controls Motion]
[58]very important article by Keely [7.9 - Ultimate Constitution of Matter and Action of Force Regulating its Phenomena]
[59][Law of Harmonic Vibrations]

vibrations and oscillations are equal bringing us to the subject of this book. The great secret to understanding is to see and know the unseen working constituents of vibrations and oscillations such that we can engineer them to create the precise waveforms and effects we want. These periodic motions are not solely about sine, square, sawtooth and pulse shaped waves. Carefully sculpting a waveform synthesizing specific partials and harmonics allows a fine precision in applying these waveforms. Likewise understanding how waves interact with each other, as shown in Keely's forty laws,[60] gives us mastery over such vibrating and oscillating dynamics and media.

7.5 Three Modes of Vibration

VII. ***"The essential differences give rise to three modes of vibration:***

I. **The Radiating**: called also the "Dispersing", the "Propulsive", the "Positive", and the "Enharmonic".[61]

II. **The Focalizing**: called also the "Negative", the "Negative Attractive", the "Polarizing", and the "Harmonic".[62]

III. **The Dominant**: called also the Etheric, or the Celestial.[63]

7.5.1 Polarity, Duality, Bias and Potential

Polarity is usually understood as two seemingly opposing forces or states as in for instance the two poles of magnetism. Neither Keely nor Russell saw polarity in this simplistic manner. To them there are two composite poles and a centering fulcrum or neutral point, neutral center or neutral line. All three states are *effects* of subtler unseen forces united in discrete proportions of three united and manifesting as one. A key here is *preponderance* as in one composite force is preponderant over the other within a triplet configuration

[60] [Keelys Forty Laws]
[61] [Entropic]. [Russell] also calls this '[Mother]' or '[Magnetic]'.
[62] [Syntropic] or [Negentropic]. Russell also calls this '[Father]' or '[Electric]'.
[63] [Mind], [Etheric Elements], [Scalar], [Spirit]

or pole. Each pole then is a result determined by predominance of one composite force over the other two *within each pole.*

7.6 Three Laws of Being

VIII. ***"These, it will be noted, correspond to the three Laws of Being"*** (continues to **IX**.)

Syntropy	**Neutral**	**Entropy**
The Focalizing	**The Dominant**	**The Radiating**
Absorbing	Centering	Emanating
Accumulating	Balancing	Dissipating
Plus	Fulcrum	Minus
Assimilating	Neutralizing	Dispersion
Heating	Zero	Cooling

Table 7.1: Three Polarity States and Effects

6465

7.6.1 Dominant Mode

"By use of the dominant mode, which is allied to the "order" of etheric vibrations, we can induct, "sympathetic negative attraction" or "sympathetic positive propulsion" in any mass, according to its mass chord.[66]

The Dominant mode is of the etheric and interetheric subdivisions that governs the two lower order (molecular and atomic) subdivisions party to the polar triplet.

[66]This quote is from [SYMPATHETIC INDUCTION - Snell]. It says there is a polarity to the etheric (quantum) range of vibrations (row four in the above Table). This also implies the two polar streams are different and therefore must be created and applied as separate streams.

"All the dominant conditions of nature represent the focal centers towards which like surrounding ones become sympathetically subservient."[67]

"By use of the dominant mode, which is allied to the "order" of etheric vibrations, we can induct, "sympathetic negative attraction" or "sympathetic positive propulsion" in any mass, according to its mass chord."[68]

"The magnetic cannot lead the electric, nor the electric the gravital, nor the gravital the magnetic. All are subservient to the dominant, as a train of cars is subservient to the locomotive which pulls it along; the only difference between the two is that one is sympathetic, the other mechanical. Though this is a crude illustration, it conveys a great truth in sympathetic philosophy. All sympathetic flows have this triune condition associated with them, the same as the molecular, atomic and etheric aggregations of all forms of visible matter; the compound etheric, or dominant, being the leader and yet one of the constituents of the molecule itself. The dominant we may call the etheric portion of the molecule; the harmonic, the atomic; and the enharmonic, the molecule itself. The dominant parts of the triune combination of the sympathetic streams are the leaders, toward which all co-ordinate to make up the sympathetic terrestrial envelope of the earth; the cerebral being the high dominant, or compound etheric, the luminiferous proper."[69] (underline added)

[67] [Keely and His Discoveries], page 179
[68] [SYMPATHETIC INDUCTION - Snell]
[69] [Keely and His Discoveries]

7.7 Table of Modes Correspondences

Source	**From Center**[70]	**To Center**[71]	**Balancing** or **Controlling**
Keely / SVP[6]	Enharmonic	Harmonic	Dominant
Modern wave form	Longitudinal[2]	Transverse[3]	Rayleigh[10]
Angle of Incidence	0°- 45°	45°- 90°	<90°
Path/Motion[3]	Straight	Zig-zag	Circular
Keely / SVP	Dispersing	Syntropic	Dominant/Depolar
Keely / SVP	Entropic	Syntropic	Dominant /Depolar
Russell[4]	Plus	Minus	Fulcrum
Russell[4]	Gravitation	Radiation	Balance, Void
Charles Henry[7]	Gravitation	Electromagnetic	Biopsychic
Possible Correspondence[5]	Thirds	Sixths	Ninths

Table 7.2: Table of Mode Correspondences

7.7.1 The above dynamics are to the following effects

Many	to	**One**	to	**Many**
Polar	to	Depolar	to	Polar
Unbalanced	to	Balanced	to	Unbalanced
Split	to	Whole	to	Split
Dispersed	to	Concentrated	to	Dispersed
Differentiated	to	Voided/Undifferentiated	to	Differentiated
Discord	to	Harmony	to	Discord

Table 7.3: Some Mode Effects

7.7.2 Relations of Thirds

Thirds refers to molecular subdivision.	Physical movements, classical physics and mechanics.
Sixths refers to atomic subdivision.	Sympathetic impregnation of electromagnetism in matter. Operations of thermism[72] and low light.
Ninths refers to etheric subdivision.	Sympathetic transfer from the celestial luminous or celestial radiation[73], also chemism.[74]

Table 7.4: Thirds, Sixths and Ninths

[75]

7.8 Three Modes, Currents and Streams

IX. "It is not to be understood that any one of these three modes of vibration can exist independently. Each by itself is called a 'current', and all three must be present in every 'stream' or 'flow' of force. The relations of the currents in every flow are expressible in thirds, and it is experimentally demonstrable that the relation of the three are in the order named: as $33\frac{1}{3} : 66\frac{2}{3} : 100$.

7.8.1 Ratios and Proportions of Thirds

The ratios and relations below are logical determinations (best guess) and are not to be taken as established or proven fact. Lots of lab work is needed here.

[75] see 'Chapter 9 - Modes of Vibration' for more details on structure of thirds. See also [Newton of the Mind], [Law of Cycles].

E = 33 $\frac{1}{3}$= Dispersing, Positive, Enharmonic, Depolarizing, Entropic, Mother, Magnetic.

S = 66 $\frac{2}{3}$= Concentrating, Negative, Harmonic, Polarizing, Syntropic, Father, Electric.

D = 100 = Etheric, Celestial, Mind, SpiritWhen defined as proportional parts:

E = 33 $\frac{1}{3}$ = $\frac{1}{3}$ parts of A
S = 66 $\frac{2}{3}$ = $\frac{2}{3}$ parts of A
D = 100 = 100 parts of A.

so if

D = 100 parts then
S = ($\frac{2}{3}$ x A) or 66 $\frac{2}{3}$ parts
and
E = ($\frac{2}{3}$ x A) or 33 $\frac{1}{3}$ parts.
(when applied to vibratory or oscillatory rates)

if

D = 100 cps

then

S = 66 $\frac{2}{3}$ cps
E = 33 $\frac{1}{3}$ cps

Certainly this applies to AMPLITUDE and POWER as well.[76]
These proportions most assuredly apply to "states" of compression (syntropy) and dispers

Where

E = Entropy (dispersion)
S = Syntropy (contraction)
D = Dominant (controlling or regulating)

[76][Potential]

7.9 Evolution of Matter

X. "The evolution of what is called matter from the different modes of vibration is through the action of the second law, that of focalization, or negative attraction, or 'negative affinity'.[77]

Conventionally and generally speaking this assimilating and accumulating into seeming solid matter process would be akin to the forces involved in the formation of bosons and in Bose-Einstein condensation nuclear fusion (BECNF) or boson cluster state nuclear fusion (BCSNF).[78]

7.10 Neutral Center

XI. "Where the vibrations under this mode meet, and are maintained in a state of mutual affinity or equilibrium, there is established what is called a neutral center, or, as otherwise expressed, 'a center of Sympathetic Coincidence'.[79]

[77] [Syntropy], [Negentropy], (Harmonic concentration or aggregation) via [Sympathetic Affinity], [Inverse Square Law] and [Sympathetic Association]

[78] Wikipedia/Bose-Einstein condensation

[79] [KEELYS PHYSICAL PHILOSOPHY - Snell], [Neutral Center], [Center of Sympathetic Attraction]

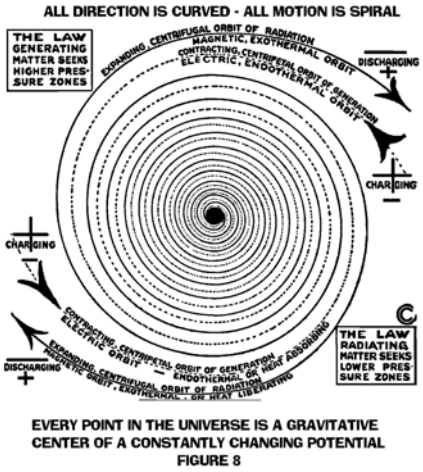

Figure 7.7: Every point in the universe is a gravitative center.
Image: http://pondscienceinstitute.on-rev.com/imagesNatDyn/gravity4.jpg
(courtesy University of Science and Philosophy)

7.10.1 Center of Sympathetic Coincidence or Neutral Center

"The neutral center is that protean, uncreated, indestructible, forever-existing FIRST CAUSE[80]*. Without hands, without tools, without thought, without emotion, without love, without form, without substance, it, of itself, created all these. All that we see or can see in the objective Universe exists because of and by means of the properties and powers of the NEUTRAL CENTER."*[81]

"Neutral centers are the focalized seat of sympathetic concordance for controlling any differentiation[82] *that may exist outside, or in the mass that surrounds them."*[83]

I like to think of the power of the Neutral Center to be much like the power of a conductor wielding control over his orchestra. He sets the tone with

[80][First Cause]
[81]Keely, [First Cause], [Neutral Center]
[82][differentiation]
[83][Keely and His Discoveries], pg 255

his pitch pipe and moderates the time, coordinates activity (harmony) and amplitude of each section and individual within his domain - the orchestra.

"Neutral centers are the center of Sympathetic Coincidence[84]*."*[85]

7.11 Syntropy or Mutual Affinity

XII. "The terms 'neutral attraction', 'neutral affinity', 'negative attraction', or 'polar negative attraction', are employed to express the property of a mode of vibration to direct its components towards such center.[86]

These center directing forces are by definition syntropic derived from mutual affinity itself born of harmony. They are born of harmonic (sympathetic) vibrations as discussed in the Bjerknes Effect[87], Law of Harmonic Vibration, Law of Attraction and Law of Cycles. The etheric or Dominant level frequencies appear to possess a predominant proportion of syntropic (center seeking) forces which increase with velocity. Hence the centralizing power of tornadoes and hurricanes - all vortex motion.

"Taking into consideration even the introductory conditions of the etheric stage, etheric vibration has proved to me that the higher the velocity of its rotating stream the greater is its tendency towards the neutral center or center of sympathetic coincidence. Were it otherwise, how could there ever be any planetary formations or the building up of visible structures? If a billiard ball were rotated to a certain velocity, it would separate in pieces, and the pieces would fly off in a tangent, but if it were a ball of ether, the higher the velocity of rotation, the stronger would be the tendency of its corpuscles to seek its center of neutrality, and to hold together."[88] (underline added)

[84] [Sympathetic Coincidence]
[85] [Keely and His Discoveries], pg 220
[86] [Syntropy], [Negentropy], [Father Forces]
[87] [Bjerknes Effect]
[88] [Keely], [ATTRACTION PROPULSION ETC]

7.12 Subdivisions of Individualized Being

XIII. "As no current or flow of force can be composed of one mode of vibration only, but must always be composed of three modes uniting in varying thirds, we have 1 x 2 x 3 = 6 as the total possible forms of Sympathetic Coincidence, or, to speak in ordinary terms, there can be six; and six only, possible forms of individualized being. These are what Keely calls the six orders of atomic subdivision, or orders of vibratory motion, and he names them as follows:

I. Molecular
II. Intermolecular
III. Atomic
IV. Interatomic
V. Etheric
VI. Interetheric
VII. Compound Interetheric (added by editor)[89]

7.12.1 Table of Subdivisions of Matter and Energy

Subdivision	Keely	Keely Name	Form	Mental	Ancient	Tenuity	Quantum	Bearden	Vedic
7th	Compound Interetheric	Neutral Center	Void	Superconscious	God	Vacuum	Gluon	4-space / Time	
6th	Interetheric	Interetheron	Atomolini	Conscious	Awareness	Vacuum	Quark	4-space / Time	
5th	Etheric	Etheron	Etheron	Mind Activated	Ether	Plasma	Photon	4-space / Time	Akasa
4th	Interatomic	Interatom	Atomole	Electromagnetic	Fire	Gas/Plasma	Electron	3-space	Marut
3rd	Atomic	Atom	Atom	Matter	Air	Gas	Atom	3-space	Tejas
2nd	Intermolecular	Intermolecule	supercritical fluid	Matter	Water	Liquid	Molecule	3-space	Ap
1st	Molecular	Molecule	Solids	Matter	Earth	Solid	Molecule	3-space	Kshiti

Table of Subdivisions of Matter and Energy ©Dale Pond, 2014

Figure 7.8: Table of seven subdivisions or orders.
Image: http://pondscienceinstitute.on-rev.com/imagesNatDyn/table-of-subdivisions.jpg

[89][Compound Interetheric], [Subdivision], [Etheric Elements], [Magnetic Still Light]

7.13 Arithmetical and Geometric Progressions

XIV. "In this list forms of matter are arranged in the mathematical sequence of the rapidity of the oscillations of their constituent members; the proportion being proved by experiment to be as follows for the molecular orders:[90]

$1 : 3 : 9 : 27 : 81 : 243 \ldots$
$1 : 3^1 : 3^2 : 3^3 : 3^4 : 3^5 \ldots$

7.14 Progressions of Orders

XV. "The arithmetical progression changes in the atomic orders to a geometrical progression as follows:

$3 : 9 : 81 : 6561 : 43046721 \ldots$
$3^1 : 3^2 : 3^4 : 3^8 : 3^{16} \ldots$[91]

7.15 Infinite Range of Vibration

XVI. "This same method of progression is believed to hold in all the orders of vibrations above the molecular, and soon passes into mathematical infinity.

[90] [Figure 8.14 - Some Basic Waveforms and their constituent Aliquot Parts]

[91] [Part 12 - Russells Locked Potentials] covering Russell's [Locked Potentials], [Square Law].

Mode	Subdivision	Octave - Hertz	Controlling Law
Enharmonic *Centrifugal*	Molecular Intermolecular	1st - 21st octaves $1 \times 10^0 - 2.09715 \times 10^6$	Law of Oscillating Atomic Substances[92]
Harmonic *Centripetal*	Atomic Interatomic	21st - 42nd octaves $2.09715 \times 10^6 - 4.39805 \times 10^9$	Law of Sonothermity[93]
Dominant *Controlling*	Etheric Interetheric	42nd - 63rd octaves $4.39805 \times 10^9 - 9.22337 \times 10^9$	Law of Oscillating Atoms[94]

Table 7.5: Mode Frequency Ranges

[95]

7.16 Progression Types

7.16.1 Arithmetic and Geometrical Progressions

Arithmetic Progression - In mathematics, an arithmetic progression or arithmetic sequence is a sequence of numbers such that the difference between the consecutive terms is constant.[96]

Geometric Progression - In mathematics, a geometric progression, also known as a geometric sequence, is a sequence of numbers where each term after the first is found by multiplying the previous one by a fixed, non-zero number called the common ratio.[97]

Linear Progression - In music, a linear progression (Auskomponierungszug or Zug, German: train, abbreviated: Zg.) is a passing note elaboration involving stepwise melodic motion in one direction between two harmonic tones.[98]

Melodic Progression may be explored in *"Harmonies of Tones and Colours*

[96] Wikipedia; Arithmetical Progression
[97] Wikipedia; Geometric Progression
[98] Wikipedia; Linear Progression

- *Developed by Evolution*"[99] and *"The Scientific Basis and Build of Music*" by Ramsay[100]

Music (vibrations and oscillations of a string) is linear arithmetic progression[101] while energy expansion and contraction is volumetric with geometric progression[102] as is described in Russell's Scale of Locked Potentials[103], the Square Law and Inverse Square Law.[104]

7.17 Three Major Orders

XVII. "Actually, however, all matter of which we are capable of cognition through the medium of our senses[105] is in one of three forms of aggregation:

I. Molecular
II. Atomic
III. Etheric

7.17.1 The above are not "things"

The above states constitute our sensorial world. They are not solely "things" but are also considered as states, phases, forms or dynamic structures resulting from specific combinations of the dynamic three modes of motion. Each state has a respective combination or proportion of the three modes. The higher three forms of aggregation are not perceptible to our senses and are therefore considered extrasensory, unseen, spiritual, subtle, scalar, non-classical, *etc.*

[99] svpbookstore.com
[100] svpbookstore.com
[101] [arithmetical progression]
[102] [geometric progression]
[103] [Scale of Locked Potentials]
[104] [Progressive Evolution]
[105] [Sense]

7.18 Controlling Mode

XVIII. "In each of which the controlling mode of vibration is respectively:

I. The Enharmonic (entropy, dispersive) - controls Molecular
II. The Harmonic (syntropy, attractive) - controls Atomic
III. The Dominant (neutral, controlling) - controls Etheric

7.18.1 Modes combine in unique proportions

The above three modes combine in unique proportions to create orthogonal[106] stabilized centralizations of forces that have the appearance of seeming solid matter.

The following table is a supposition about the mixing of mode proportions in the 3rd and 4th columns for each aggregation. They seem reasonable but only bench testing will proven them out.

Aggregation	Governing Mode	Dominant Mode	Subservient Mode
Molecular	100 x Enharmonic	66 $\frac{2}{3}$ Harmonic	33 $\frac{1}{3}$ Dominant
Atomic	100 x Harmonic	66 $\frac{2}{3}$ Enharmonic	33 $\frac{1}{3}$ Dominant
Etheric	100 x Dominant	66 $\frac{2}{3}$ Harmonic	33 $\frac{1}{3}$ Enharmonic
Thirds	3	2	1
Proportion	9	6	3
Portion	Ninths	Sixths	Thirds[107]

Table 7.6: Hypothetical controlling Modes and Proportions

7.19 Modes as actual components

XIX. "But it must be understood that each of these modes is a Positive and real constituent of every atom and molecule.

[106] ideally speaking as is demonstrated in carbon [crystallization].

Considering an atom or molecule as a balanced dynamic of syntropic and entropic forces they must then by definition have these three component modes as essential to their existence. This concept is not unlike Buckminster's Tensegrity[108] idea.

7.20 Foundational Concepts

XX. "It will be seen that as every form of material aggregation is to be considered as a "neutral center of attraction", where the vibratory force of all three orders are held in Sympathetic Coincidence, that is, in balanced activity or harmonized motion, and not by any means cancelled or mutually destroyed, there is no diminution of force, but only temporary suspension of its radiating or propulsive activity or expression.[109] (underline added)

7.20.1 Balance or Equation of Father-Mother Forces

This balance or equation of Father-Mother Forces[110] is not a perfect balance where there is no motion. There is in all seeming solid and still matter a near imperceptibly tiny periodic motions Russell referred to as "Rhythmic Balanced Interchange". Macvicar called this balanced periodic motion the cosmical Law of Assimilation[111]. The range of motion of this periodic motion when considered as stable does not exceed 50% of the molecular dimension.[112] Conventional science refers to this natural residual vibration as vacuum fluctuations, quantum jiggle or Zero-Point Energy. [see **XXV** below]

"If access to the zero-point-energy (ZPE) reservoir is successful, one needn't worry about either depletion of this resource or creating an imbalance in the local environment. It is the electromagnetic equivalent of scooping cupfuls of water out of the ocean, with replacement occurring at the velocity of propagation of electromagnetic waves, the velocity of light. As to the ultimate

[108] Wikipedia/Tensegrity
[109] [Neutralization]
[110] [Father-Mother Principle]
[111] [14.32 - Law of Assimilation]
[112] [AQUEOUS DISINTEGRATION - Snell]

origin of the ZPE, two views are discussed in the physics literature: one, that it is simply part and parcel of the energetic legacy that emerged with the Big Bang, and another that it is an energetic substratum the preceded even the Big Bang, with our universe emerging as the result of a giant vacuum fluctuation.[113] *In any case an argument can be made that it is sustained by a cosmological feedback cycle in which charged particles radiate due to their "quantum jiggle," and the particles "jiggle" due to being caught up in the collective radiation of all the other particles, an electromagnetic equivalent of placing a microphone near a speaker and generating a squeal."*[114]

7.21 Latent Force

XXI "This is the foundation of Keely's doctrine of 'latent force'[115], and of the indefinite power which can be obtained by breaking up the harmonious balance or equation of forces of every mode, which exists in every neutral center, that is to say in every mass of matter."

7.21.1 Matter is the result of three forces or modes of vibration

In SVP every form of matter is the result of three forces or modes of vibration that are balanced or equated to a determinable degree. Disturbing this balance or equation of forces liberates them - not the breaking of a solid appearing atom. Increasing syntropic force, for instance, will instantly evoke the Law of Cycles thereby causing transformation into intense dispersion (emission, radiation). Liberated entropy will instantly disperse. An example of this process of liberation is the well known atomic and nuclear detonations as seen in cavitation or implosion processes.

The use of these principles in atomic weapons is an extreme liberation of

[113] A third view is this persistent periodic motion is that which maintains the physical universe.

[114] H. E. Puthoff, "On the Source of Vacuum Electromagnetic Zero-Point Energy," Phys. Rev. A, vol. 40, p. 4857,1989; Phys. Rev. A vol. 44, p. 3382,1991.

[115] [Latent Force]

the contained latent force within a very short time span. The designers' intent of such weapons is to get the biggest bang possible. In the real world we have no need of such gigantic liberations of energy. It is possible and desirable to perform smaller releases over longer periods of time such as is done with dissociation of water via electrolysis and similar means. In this case it would be prudent to use materials containing less latent energy on the molecular level and perhaps the atomic order. These releases of energy would be more than sufficient for most any application serving humanity's needs. Such liberations would be saner, simpler, safer, non-ionizing and sustainable.

Keely was able to release these forces in a gentle or violent manner depending on the stage of the Law of Cycles progression.

"Sudden unition induces the same effect; but demonstration shows that the concentration of this triple force is as free of percussion as is the breath of an infant against the atmosphere; for the three currents flow together as in one stream, in the mildest sympathetic way, while their discharge after concentration is, in comparison to their accumulation, as the tornado's force to the waft of the butterfly's wing."[116]

Water molecules (Keely's favorite medium for creating his all powerful and useful 'etheric vapor') can be easily dissociated in the molecular order with an electric current (AC or DC), X-rays, cavitation[117], ultrasound[118], microwaves[119], radio waves[120] and even vacuum. This molecular dissociation liberates a gas composed of the atoms of Hydrogen and Oxygen. These as gases constitute the next higher level or order of being - the atomic level of being. This atomic level can be dissociated with an electric spark[121] 'igniting' or rendering (dissociating) the atomic order into the next 'etheric' level or order being plasma; *i.e.*, flame made of ionized gases possessing great pressure as discordant radiating entropy mode preponderates. The process is more complicated than the above but you get the essential points. As humanity

[116] [Keelys Contributions to Science]
[117] [15.12 - Dissociating Water with Acoustic Cavitation]
[118] [15.09 - Dissociating Water with Ultrasonic Vibration - Puharich]
[119] [Dissociating Water with Microwave]
[120] [15.08 - Dissociating Water with X-Rays - Radiolysis]
[121] But then what is a spark if not the electric stream preponderant with the individualizing (syntropic) mode? see [Spark], [Introductory Impulse]

masters these low levels of dissociation the higher levels liberating greater quantities of useful energy may be accessed.

It was this etheric vapor under immense pressure derived from dissociated water that Keely had intended to use to power his original Keely Motor. After designing and building over 120 models and 30 years of effort he gave up on that approach when he discovered the etheric vapor is not the *source* of power but instead is a *carrier*[122] of the force he wished to liberate.

Figure 7.9: Keely Motor activated by slow released etheric vapor
Image: http://pondscienceinstitute.on-rev.com/imagesNatDyn/keely-motor.jpg

There was one instance where Keely did use this etheric vapor under immense pressure and released or liberated quickly was in his etheric cannon[123]. He demonstrated this cannon on many occasions and once before the US Navy at Sandy Hook Naval Yard, New Jersey. The Navy turned it down because they thought the mechanism "too complex".

[122] [connecting link]
[123] [cannon]

Figure 7.10: Keely's cannon fired by quick release of etheric vapor
Image: http://pondscienceinstitute.on-rev.com/imagesNatDyn/etheric-cannon.jpg

7.21.2 Latent Force, Keely

"With our present [1880s] knowledge," writes Mr. Keely, *"no definition can be given of this latent force; which, possessing all the conditions of attraction and repulsion associated with it, is free of magnetism. If it is a condition of electricity, robbed of all electrical phenomena, or a magnetic force, rebellant [sic] to the phenomena associated with magnetic development, the only philosophical conclusion I can arrive at is that this indefinable element is the soul of matter*[124]*. Were not every form of matter, even to the cerebral convolutions of the brain, impregnated with this latent element of force, which is sympathetically subservient to celestial radiation, nature would be like a still-born child, or a marble statue - dead to the sympathetic association that induces motion. Matter could not exist without this element, this spiritual essence, this impregnation from the Deity, which is its Soul, any more than a man with an ossified brain could have motion or life."*[125]

This new higher state liberated energy, not having any detectible magnetism or electricity, must by definition be a higher subtler subdivision than the atomic or etheric orders of being both having these two attributes. These new subdivisions then would be the sub-quantum levels of light (photonic) and finer quantum divisions such as quarks, gluons, *etc.*

[124] [Soul of Matter]
[125] [What Electricity Is - Bloomfield Moore]

7.22 Sympathy and Resonance

XXII. "Insomuch as every mass of matter consists thus, in fact, of vibrations in harmonic equilibrium, related by simple proportions of thirds, it follows that every mass of every description stands in harmonic relation to every other mass. This is, in part, what is meant by the sympathy of all forms of matter and of motion (*i.e.*, entanglement, bonding, coupling or love); and it is through the study of the methods of increasing or diminishing[126] this sympathy that we reach practical results in this field of research. At present this is best accomplished by resonance[127]; that is, through the harmonic vibrations created by musical instruments (or signal generators), bringing out the acoustic world as the microscope reveals the hidden visual world.

7.22.1 Attraction and a Repulsion between all things

There exists, by virtue and attributes of harmonic vibrations or sympathy (acoustic entanglement), an attraction and a repulsion between all things. The nature of this attraction and repulsion is discussed in 'Chapter 2 - Love in Science and Physics'. This sympathetic association can be modified at will according to the Law of Sympathetic Association.[128] Keely referred to this process as 'Disturbance of Equilibrium'[129] where he disrupted the harmonic equilibrium thus exciting the dynamics of balanced systems. Centralized forces in a state of coincidental harmony contain Latent Force[130]. The quantity of that Latent Force is determined by the subdivision or order of the material. This force is liberated into an useable force by an outside acoustic disturbance upsetting that balance. This would be not unlike a frequency and amplitude modulation (FM and AM) of existing chordal (complex frequency) patterns.

---

[126] [Disturbance of Equilibrium]

[127] established with sympathetic vibration or oscillation, see [Law of Force]

[128] [Bjerknes Effect], [Love in Science and Physics], [Three Laws of Being], [Law of Assimilation]

[129] [Disturbance of Equilibrium]

[130] [Latent Force]

7.23 Matter composed of Molecules

XXIII. "Every visible or tangible mass of matter must be regarded as an aggregation of molecules; the molecules being the true centers of the equated forces of "neutralized attraction".

'Neutralized attraction' is where the two forces of syntropy and entropy are equated to a balanced state or condition. A stable molecule has such a center of neutralization of forces and every molecule, according to Keely, whether singularly or in a larger mass have this distinction. Disturbance of one molecule of such a mass is disturbing all molecules of the mass. Disturbance is accomplished with an 'exciter'[131] being an acoustic pulse[132] possessing certain characteristics such that it is received and re-modulates the molecule into a discordant condition.

7.23.1 Attraction is an effect of Syntropy

We now know that attraction is an effect of syntropy which is an effect of sympathetic association or harmonized frequencies or unisons. Syntropy unopposed is pure active attraction or affinity. "Neutralized Attraction" then would be syntropy balanced by entropy when the rates of vibration or oscillation form an unison with the fundamental or harmonics.[133]

Regarding attraction or bonding as an effect of harmonized vibrations and oscillations is decidedly different than force carrier particles. The first condition is a dynamic condition of the forces involved in the interaction. The second is an isolationist viewpoint requiring an unnecessary additional player on stage. Although a unit measure of attractive force - a quantum (least measure or quantity such as a gluon) of attractive force - could be assigned to these entities for mathematical purposes which I feel is how all this quantum business got started in the first place.

[131] [Exciter]

[132] or any other frequency within the three main modes

[133] [Law of Attraction], [Bjerknes Effect], [Law of Sympathetic Oscillation], [Law of Force], [Law of Chemical Affinity] and [Voiding]

7.24 Molecules are sensitive to modes

XXIV. "These molecules have been experimentally proved by Keely to be formed of all three modes of vibration; the proof being that they respond to all three modes when subjected to the tests of compound concordant impulses (chords).[134]

An example of a 'compound concordant impulse' would be a musical triplet of say C, E and G sounded together with a sharp attack and little decay within its signature envelope. Logic indicates at least one of those frequencies is concordant with natural tones (eigenfrequencies) of the target molecule. In which case power from the exciter chord is added (sympathetic and syntropic addition) to the molecule thus offsetting its original concordant equation of forces or balance.

7.25 Oscillations of Molecules

XXV. "When in that state of neutral aggregation which we know as matter[11]**, each molecule is in perpetual oscillation, the range of the oscillation being one-third of the molecule, and its rapidity 20,000 oscillations in a second.**[135]

This has always been a curious statement - that all molecules oscillate about their center at a fixed rate of 20,000 Hz. Why hasn't this been found by conventional science? Perhaps it has but I've not found any reference to it (yet). In today's world there are countless types of molecules and many of them are artificial such as are found in plastics and new metal alloys. Does this statement apply to all of them? One would presume - to err on the safe side - that Keely is referring to naturally occurring molecules. That would be a big and perhaps dangerous assumption...[136] Nevertheless it is something to explore. The effort may be well worth it.

[134] see XXVI, [Law of Force], [Law of Chemical Affinity], [15.18 - Keely's Process for Liberating Ether from Water]

[135] [Molecular Dissociation]

[136] see section '6.5 Frequency' where frequency of oscillation is twice the ordinary count.

7.26 Disturbance of Equilibrium

XXVI. "It is through the disturbance of this oscillatory equilibrium, by means of resonant impulses, that Keely alters the relations of the vibratory impulses which constitute matter[11]. This he does by striking the same chord in three octaves, representing the third, sixth, and ninth of the scale.[137]

The above quote is the beginning of the description of how Keely modulated the eigenfrequency or chord of the mass[138] being acted upon. The following sections give insight into how he approached and did this using the thirds, sixths and ninths of a scale constructed upon the tonic or fundamental of the mass being acted upon using the quantization method[139]. Here lies perhaps one of Keely's greatest secrets - the application of the much verbalized "3, 6 and 9" so often attributed to Tesla[140]. Somewhere I read Tesla stated he had figured our Keely's secret. This may be the secret he referred to. I do not have that quote nor a link to the original material.

In music theory intervals are expressed as ratios. In standard music theory there are Major and Minor Thirds and Keely does not specify which. Normally a Major Third is considered as the quantity 5:4. Translated this quantity is the fundamental frequency divided by 4 which quotient is then multiplied by 5 gives the frequency of a Major Third. A Minor Third is considered as the quantity 6:5. Translated this quantity is the fundamental frequency divided by 5 which quotient is then multiplied by 6. The same treatment applies to all music intervals.

These intervals form a three tone chord (musical triplet) when sounded simultaneously. Multiply each of these frequencies by two and four creates Keely's Triple Triplet[141] of *'same chord in three octaves'*.

[137] [Triple Triplet], [Triple Triplet Flows], [Inversion]
[138] [chord of the mass]
[139] [Quantization - SVP]
[140] [14.35 - Teslas 3 6 and 9]
[141] [Triple Triplet Flows], [Triple Triplet]

Interval	Ratio
Minor Third	6:5
Major Third	5:4
Minor Sixth	8:5
Major Sixth	5:3
Augmented Sixth	125:72
Minor Ninth	32:15
Major Ninth	9:4

Table 7.7: Thirds, Sixths and Ninths Intervals

7.26.1 Disturbance of Equilibrium, Gravity

"Disturbance of equilibrium, like gravity, is inherent, an eternal existing force."[142]

It is possible these two phases, gravity and disturbance of equilibrium, are simply the two opposite poles of matter, the physical Universe, the positive and negative poles of matter, controlled by the third or controlling principle, the Universal Will.

"Unstable equilibrium, like gravity, is a condition born in each neutral center at the time of birth, and thus designed by the Architect as the connective link[143] *between the "dispersing positive"*[144] *and the "attractive negative."*[145] *The action inducing this "link" I call "sympathetic planetary oscillation".*

"The enharmonic portion of the electric current carries the power of propulsion that induces disturbance of negative equilibrium.

"In his (Keely's) experiments of aqueous disintegration[146] *disturbance of equi-*

[142] [13.12.1 - Disturbance of Equilibrium]
[143] [Connecting Link]
[144] [Radiation]
[145] [Contraction]
[146] [Aqueous Disintegration]

librium was brought about by using mediums of differential gravity in the disintegrator[147]*, air as one, water as the other.*"[148]

Forces are held in a dynamic state of equilibrium, a neutral state, until disturbed by an excitation or stimulation. Adding either harmonic (syntropy) or enharmonic (entropy) excitations will evolve into opposite conditions either attraction or repulsion. This dynamic holds true on all subdivisions. On the lower subdivisions these disturbances must be sympathetic to that being stimulated which is to say acoustic waves or pulses. On the higher etheric subdivisions a sympathetic excitation would be the "infinite exciter" as thought or a form of thought such as desire, intent, etc.

Matter is not directly created by these incoming sympathetic streams. The incoming etheric (celestial) streams impact (bombard) a Neutral Center which differentiates them and matter results from the effects of this impact or antagonism developing summation and difference modulations (tones) during its progressive evolution into being. The incoming excitations need not be all frequencies as countless frequencies may develop during the impact or antagonism. Any tone instantly generates an overtone series. These secondary and tertiary partials or tones spring into existence the instant any tone is sounded. These many tones are effects of the one causative tone and cannot be separated from their cause. They are entangled everywhere experiencing summation and difference modulations (tones) originating from everywhere. Each experience is of course unique because of local influences or modulations.

7.27 Sixths induces Neutral Radiation

XXVII. "Of these, the sixth reduces the range of molecular oscillation, and thus tends to give greater tenuity to the mass. It induces "trajectile velocity" from neutral centers, or "neutral radiation".

[147] [disintegrator]
[148] [Snell Manuscript]

7.27.1 Seeming Paradox

The first part of the first sentence of XVII appears to contradict the second part of the same sentence thus creating a seeming paradox. However, the two sentences taken together illustrate quite clearly the function and dynamics of the Law of Cycles, said dynamics elsewhere discussed.

"Experiment shows that molecular dissociation does not take place until the molecule attains an oscillation approaching, if not fully reaching two-thirds of its diameter. This can be effected by means of the action of the enharmonic or "radiating" current applied to the mass, after its molecules have been disturbed by an "introductory impulse"; that is, by the musical note[149] *above mentioned.*

7.27.2 Exciting the Molecular Mass

First excite the molecular mass with a strong pulse, then continue this disturbance at resonance with its natural eigenfrequency (chord of mass) until a certain amplitude of oscillation occurs where dissociation takes place. These quantities of applied excitation (amplitude, duration, attack, sustain and decay) could be determined through experiment.

7.28 Third is the Dominant

XXIX. "The third represents the dominant, and when brought under control of a harmonic resonant impulse induces a complete rearrangement of the modes of vibration and oscillation; in other words, will transform the mass either into its component initial forces, or into some other form of matter.

7.28.1 Harmonic Resonant Impulse

"harmonic resonant impulse" means an impulse that is harmonic (in tune with; *i.e.*, sympathetic) not unlike a singer singing the correct pitch that is in synch or establishes a chord of resonance[150] with that of a wine glass to

[149] a musical note is a specific pitch in mathematical relationship with other pitches.
[150] [Chord of Resonance]

be shattered. Also called *"resonant impulse"*.[151]

Of course Brinton/Keely is talking about none other than transmuting the mass being experimented upon whether that be water or some other molecular substance - *'transform the mass either into its component initial forces, or into some other form of matter'*. 'Component initial forces' means liberating these awesome atomic forces whether slowly or instantly. Of course the slower the liberation the better.

"Matter is bound up energy and energy is liberated matter." Keely, 1893

It is astonishing these ideas were first published in 1894 well before orthodox science acknowledged splitting the molecule or atom was even possible. Not only does Keely say this is possible but he says how to do it and that he had been doing it for some years already prior to 1894. Realizing the above it is obvious why no one in Keely's day had any idea what he was doing. In Keely's 'Ultimate Constitution of Matter and Action of Force Regulating its Phenomena'[152] he lays out the basic concepts of matter, force and their interactions such as converting one into the other.

7.29 The Dominant or Etheric Mode

XXX. "It is the study of the dominant[153] to which Keely has devoted his recent researches. He aims to control the power he evolves by altering the dominant or etheric mode of vibration in the triplicate flows of force.

7.29.1 Etheric Current

The etheric (Dominant) current is the controlling medium in the triune flows.[154] It is the switch or regulator that actuates the power of the other two currents or forces thus disturbing the triune balance. The key phrase in the above is '*control the power he evolves*' indicating he doesn't want an all at once release as in a destructive explosion.

[151] [Law of Transformation of Forces], [Transmutation]
[152] [[7.9 - Ultimate Constitution of Matter and Action of Force Regulating its Phenomena.]
[153] [Dominant]
[154] Keely's [Three Modes of Vibration] for range of frequencies of the etheric current, One Universal Controlling Medium

7.30 Centers of Harmonized Vibration

XXXI. "As all molecules and masses are mere centers of harmonized vibrations,[9] temporarily held in suspension by simple Laws[155] identical with those of resonance, it follows that these centers can be broken up or divided by certain orders of vibration impinging upon and disturbing them.[156]

See the above sections and subsections describing this equilibrium and its disturbance. The idea that the control of the forces of a molecule can be addressed via the molecule's center of balanced forces represents a major diversion from conventional thought. It is far easier to modulate this center of balanced forces than any other condition of motion of a molecule be it electrons or atoms forming part of the molecule. The point or center of balance of forces is not unlike that point in a child's swing when the highest or furthest point of motion is reached and all motion stops for an instant then reverses direction. This point coincides with Russell's Zero Plane of Inertia[157]. This instant of depolar non-motion is where the kinetic out swing and in swing are neutralized (conjugated, sum to zero) and energy of the system becomes latent (potential). At this point it is easiest to add additional outside power to maintain or increase motion. It is the optimum point of modulation. Attempting to add power at other points of the swing are either impossible or difficult.

7.31 Sympathetic Outreach (sympathy/resonance field effect)

XXXII. "It is a familiar fact that a cord in vibration tends to produce a similar vibration in a cord placed near it.[158] This property belongs to all vibrations, whether resonant or not, and they exert it in proportion to the order to which they belong. The distance in Space to which this power extends, or can be extended, is what

[155] [Keelys forty laws]
[156] [Disturbance of Equilibrium], [DISTURBANCE OF EQUILIBRIUM - Snell], [13.12.1 - Disturbance of Equilibrium], [7.1 - Matter is centralized motion]
[157] [Plane of Inertia]
[158] [Sympathetic Oscillation], [Tuning Fork]

is called 'the sympathetic outreach'[159] of the current or flow."

Sometimes the effects of this property are referred to as "entrainment"[160] (sometimes as "coupling"[161]) as in the case where multiple oscillating mechanisms will synchronize their motion in and over time. The linking between mechanisms in sympathetic oscillation[162] is referred to as the "connecting link"[163] or the unseen etheric communication mechanism spanning space and time. This connecting link is the purveyor of so-called "spooky action at a distance"[164]. These sympathetic properties can be quantified and therefore engineered. They have for instance an "outreach" or 'field effect' that can likewise be quantified and engineered. This outreach or field effect is an extension of sympathy from the mass and affects other masses within reach of its field effect depending on the degree of sympathetic vibration or oscillation of other nearby masses. Degrees of sympathetic association can be determined by the degree of harmony or discord in their respective chord of mass (vibration or oscillation signature). This property is governed by the Law of Sympathetic Oscillation[165].

7.32 Etheric Outreach

XXXIII. "In this manner we have 'sympathetic negative attraction', and 'sympathetic positive propulsion', with reference to the outreach of the third or dominant current of the stream, which is allied to the order of etheric vibrations."[166]

The effect of this field or outreach can be either attractive or repulsive on nearby objects according to the degree the creative and receptive chords are harmonic or enharmonic with each other.[167] The outreach or field effect of the etheric current is as mentioned above the connecting link between masses.

[159] [Sympathetic Outreach]
[160] [Entrainment]
[161] [Coupling]
[162] [sympathetic oscillation]
[163] [connecting link]
[164] [action at a distance]
[165] [Law of Sympathetic Oscillation]
[166] [Sympathetic Transmission], [Subdivision]
[167] [Law of Force]

This condition of synchronous motions is described in the

7.32.1 Law of Transmissive Vibraic Energy

"All oscillating and vibrating coherent aggregates create, in the media in which they are immersed, outwardly propagated concentric waves of alternate condensation and rarefaction, having a period-frequency identical with the pitch of the aggregate."
Scholium: *"All forms of transmissive energy*[168] *can be focussed, reflected, refracted, diffracted, transformed, and diminished in intensity inversely as the square of the distance from the originating source."*

These "outwardly propagating waves" can be in harmony or discord with other masses creating sympathetic resonance. If the waves from the masses are in tune or harmonic they will be attracted to one another. If they are discords the masses will be repelled. These tendencies and motions of attraction are governed by the laws of attraction[169] and repulsion[170]. If these waves are in harmony the masses are then 'coupled' sympathetically and what occurs to one occurs to the other. They become *as one*.

7.32.2 Etheric vibration is the cause of sympathetic association

Etheric (quantum) vibration is the cause of Sympathetic Association, Sympathetic Vibration and Sympathetic Oscillation also known as Entanglement, Coupling, Quantum Entanglement, *etc.*. This etheric vibratory force[171] can be either syntropy (sympathetic negative attraction) or entropic (sympathetic positive propulsive). This phenomena may also be related to Russell's lens[172] idea.

[168] [Law of Force]
[169] [Law of Attraction]
[170] [Law of Repulsion]
[171] [Etheric Vibration. - The Key Force]
[172] [Figure 3.4 - Focalizing Lenses at nested Cube faces]

7.33 Chord of Mass

XXXIV. "Each molecule of a given mass of matter represents the same harmonic chord or note in its oscillatory motion. The chord of the mass is, therefore, the chord of every molecule of [the] mass."

7.33.1 Qualifiers

The above sentence (XXXIV) contains several qualifiers:

1 - *"Each molecule of a given mass of matter"* - each and every molecule of a specific mass. Therefore a given mass has a single chord being the same as each molecule participating in that mass.

2 - *"same harmonic chord or note in its oscillatory motion"* - to the degree of syntropy the molecule/mass is (*i.e.*, represented by a musical note or pitch) in the mass oscillatory (translation) motion, NOT it's internal vibration.

3 - The chord of mass[173] is of course the vibration or oscillation signature, a collection of the fundamental and all partials resulting from that fundamental as per the Law of Harmonic Pitch.

7.33.2 Law of Harmonic Pitch

"Any aggregate in a state of vibration develops in addition to its fundamental pitch a series of vibration in symmetrical sub-multiple portions of itself, bearing ratios of one, two, three, or more times its fundamental pitch."[174]

7.34 Controlling Chord of Mass

XXXV. "But as the condition of absolutely stable equilibrium is theoretical only, and does not exist in nature, the chord of the mass is constantly changing. Yet we must learn to control this chord of the mass by resonant induction[175], if we would gain command of the molecular forces."

[173] [chord of mass]
[174] Keely, 1894
[175] [resonant induction]

7.34.1 Equilibrium or Balance cannot exist

The states or conditions of equilibrium or balance cannot exist in the material world of seen effects as every thing or force is in perpetual transformation because of the ever present Law of Cycles and the Law of Transformation of Forces. Everything is always in motion as motion is Life activity a resultant of dynamic polarity of force and energy in their perpetual and persistent efforts to void.

7.34.2 Law of Cycles

"Coherent aggregates harmonically united constitute centers of vibration bearing relation to the fundamental pitch not multiples of the harmonic pitch, and the production of secondary unions between themselves generate pitches that are discords, either in their unisons, or overtones with the original pitch; from harmony is generated discord, the inevitable cause of perpetual transformation."[176]

7.34.3 Table of Transformation over Time

Figure 7.11: Table of Transformation of Forces over Time
Image: http://pondscienceinstitute.on-rev.com/imagesNatDyn/Table-of-Transformation300.jpg

[176] Keely, 1894

7.34.4 Law of Transformation of Forces

"All forces are different forms of Universal Energy unlike in their period-frequency, merging into each other by imperceptible increments; each form representing the compass of 21 octaves. Each form or pitch may be transformed into an equivalent quantity of another pitch above or below it in the scale of 105 octaves. The transformation can occur only through its static effect, developing vibrations of harmonic pitches above or below their fundamental vibration, or developing with juxtaposed aggregates, resultant and difference, or third order, as the case may be.
Scholium: *"A table of the intervals and harmonics of the normal harmonic scale will indicate the ratios in which the transformation of forces will occur."*[177]

7.35 Harmonizing Chord of Mass

XXXVI. "Keely believes he has solved this problem, by the invention of a mechanical device which brings the chords of all masses within the conditions of a few simple acoustic tests."[178]

It is not known what this mechanical device is, specifically. It is presumed by this writer this device is the Trexar[179] and similar wires Keely made with specific proportions of specific metals. These wires appear to have the property of superconductivity at room temperature. See section 7.37 below.

7.36 Molecular Oscillation

XXXVII. "The range of molecular oscillation is affected differently in different substances when submitted to the same vibratory impulse, and these ranges can be measured."

Again, more careful bench work is called for to determine these effects or modulations.

[177] Keely, 1893
[178] [Chord of Mass], [Keelys Mechanical Inventions and Instruments], [MECHANICAL INVENTIONS AND INSTRUMENTS]
[179] [Trexar], [Trexnonar]

7.37 Transmitting Concordant Impulses

XXXVIII. "In the three metals, silver, gold, and platina, we obtain the proportions - 3 : 6 : 9 - As this is the primary relation of the modes of vibration, a wire[8] made of these three metals is peculiarly adapted to transmit concordant impulses; and nodes made of these substances placed upon a wire, transmitting resonant vibrations, indicate, by the different orders of vibration induced in them, the rate of oscillations of the atomic constituents." [180]

The first part of the above concerning transmission of concordant impulses is determined by the

7.37.1 Law of Vibrating Atomolic Substances

"Atoms are capable of vibrating within themselves at a pitch inversely as the Dyne (the local coefficient of Gravity), and as the Atomic volume, directly as the Atomic weight, producing the creative force (Electricity), whose transmissive force is propagated through atomolic solids, liquids, and gases, producing induction and the static effect of magnetism upon other atoms of attraction or repulsion, according to the Law of Harmonic Attraction and Repulsion."
Scholium: *"The phenomenon of Dynamic Electricity through a metallic conductor and of induction are identical. In a metallic conductor, the transmission is from atom to atom, through homologous interstices, filled with ether, presenting small areas in close proximity. In crystalline structures, heat, which expands the atoms, by twisting them produces striae, increases the resistance, etc. Between parallel wires and through air the induction takes place from large areas through a rarefied medium composed of a mixture of substances, whose atoms are separated by waves of repulsion of various pitches, discordant to electric vibrations; the said atoms sympathetically absorb the vibrations and dissipate from themselves, as centers, concentric waves of electric energy which produces heat and gravism*[181]*."* [182]

The second part of the above concerns measuring frequencies. The exact

[180] [Trexar], [Law of Force], [Law of Chemical Affinity], [Disturbance of Equilibrium]
[181] [gravism]
[182] Keely, 1894]

method of this detecting process is not known. Below are some frequencies apparently detected using this or a similar method.

7.37.2 Frequencies of the Modes

"He [Keely] mentions the following frequencies, measured in sound colors[183]:

Molecular frequency
inducted in homexar[184] by harmonic thirds, 100,000,000, [100 MHz]
that inducted by enharmonic sixths, 300,000,000, [300 MHz]
that induced by diatonic ninths, 900,000,000, [900 MHz]
that inducted by dominant etheric sixths, 8,100,000,000, [8.1 GHz (microwave)]
that inducted by interetheric ninths, 24,300,000,000. [24.3 GHz (microwave)]
In the trexar[185] the ''*compounding of the triple triple*[186] *will give a frequency from the ninth node that, set down, would make a string of figures a mile long.*"[187]

7.38 Vibratory Rotation

XXXIX. "The phenomenon of rotation arises from the harmonic interaction of the dominant and enharmonic elements of the flow; in other words, the first and third, the third and ninth, *etc.*; those whose vibrations bear the proportions to each other 33 $\frac{1}{3}$: 100."[188][189]

7.38.1 Microwaved Radiometer

According to the listing of frequencies above (7.37.2) microwaves were part of Keely's vibratory tool box. Today we have ready access to these frequencies.

[183] [music note or sound colors]
[184] [Homexar]
[185] [Trexar]
[186] [Triple Triplet]
[187] from [VIBRATIONAL FREQUENCIES]
[188] see '7.7.2 Relations of Thirds'
[189] see 'Chapter 10 - Proportions (Ratios) of Relative Values'

For instance the effects of these waves can be readily seen by placing an ordinary radiometer or even a typical incandescent light bulb into a typical high power kitchen microwave oven. The radiometer vanes in such an environment and under microwave excitation spin too rapidly to see. The incandescent bulb flashes brilliantly white light. The effects are quite dramatic when these 'dominant' waves interact with the 'enharmonic' or molecular/atomic elements within these bulbs.

Experiment: A microwaved radiometer (with sufficient power) rotates at high velocity, flashes brilliantly and gets very hot very quickly. 'Enharmonic' or molecular/atomic elements are Argon gas, metal of vanes, black and white coatings. Each of these has their own vibration frequency and figure into the process.

7.39 Rotation

7.39.1 Medium for inducing a Neutral Center

"In the conception of any machine heretofore constructed, the medium for inducing a neutral center has never been found. If it had, the difficulties of perpetual motion seekers would have ended, and this problem would have become an established and operating fact. It would only require an introductory impulse[190] *of a few pounds, on such a device, to cause it to run for centuries. In the conception of my vibratory engine*[191]*, I did not seek to attain perpetual motion*[192]*; but a circuit is formed that actually has a neutral center, which is in a condition to be vivified by my vibratory ether*[193]*, and while under operation, by said substance, is really a machine that is virtually independent of the mass (or globe), and it is the wonderful velocity of the vibratory circuit*[194] *which makes it so. Still, with all its perfection, it requires to be fed with the vibratory ether*[195] *to make it an independent motor. . . ."*[196]

[190] [introductory impulse]
[191] [Compound Vibratory Engine]
[192] [perpetual motion]
[193] [etheric vapor]
[194] [The Operation of the Vibratory Circuit]
[195] [Vibratory Ether]
[196] Keely, [Keely and His Discoveries], [More Science]

7.39.2 Keely on Rotation

"Rotation arises from the harmonic interaction of the dominant and enharmonic modes of vibration, which are in the ratio of 3:9." [see **XXXVIII**]

"Harmonic interaction"; where the frequencies of the dominant and enharmonic are harmonized or made coincident.[197]

Keely is here referring to the dynamics operating in and through his globe motor[198] or Dynasphere[199] which was his experimental base or model to demonstrate and prove out his theories on vibratory rotation and power development. It was in this design he first began to use his etheric vapor as a carrier[200] of these higher rotating vibratory forces herein explored.

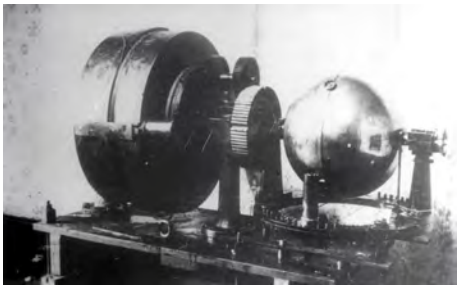

Figure 7.12: Globe motor actuated by rotary vibratory dynamics
Image: http://pondscienceinstitute.on-rev.com/imagesNatDyn/keely-globe-motor.jpg

[197] [Figure 9.4 - Radiation and Absorption interactions with Neutral Center]
[198] [globe motor]
[199] [Dynasphere]
[200] [connecting link]

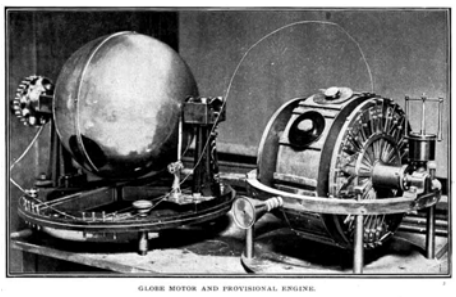

Figure 7.13: Keely's globe motor and provisional engine
Image: http://pondscienceinstitute.on-rev.com/imagesNatDyn/globe-motor.jpg

Figure 7.14: Keely and his globe motor or dynasphere
Image: http://pondscienceinstitute.on-rev.com/imagesNatDyn/keelyn.jpg

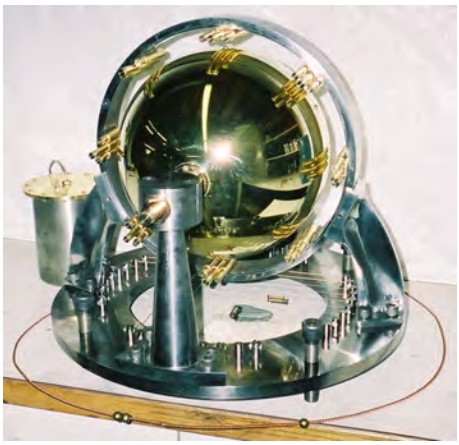

Figure 7.15: Pond's replication of the globe motor or dynasphere
Image: http://pondscienceinstitute.on-rev.com/imagesNatDyn/altea.jpg

7.39.3 Power of Rotation

"Power of rotation comes on the positive power of negation, arising when the receptive flows become independent of the circular chord of resonation[201] *(set up mechanically or otherwise) breaks up the rotational power. Rotation is caused by the receptive concussion of the positive and negative forces as they come together at the neutral center and as each seeks its "coincident" by harmonic waves, flows or streams."*[202]

I - Two concepts here:

A: Power of Rotation (torque)

"Power of rotation comes on the positive power of negation, arising when the receptive flows become independent of the circular chord of resonation (set up mechanically or otherwise) breaks up the rotational power."

B: Rotation itself. (rotary motion)

[201] [Figure 20.13 - Two Rings - Outer and Inner]
[202] [Keely; [Snell Manuscript], PHILOSOPHY OF TRANSMISSION AND ROTATION OF MUSICAL SPHERE]

"Rotation is caused by the receptive concussion of the positive and negative forces as they come together[203] *at the neutral center and as each seeks its 'coincident'*[204] *by harmonic waves, flows or streams."*

7.39.4 Receptive Transmittive Concordance induces Rotation

"Every body capable of rotation is susceptible to the operation of force, which, applied, impels motion. Receptive transmittive concordance[205] *induces rotation. This simply means - the reception of streams of energy by the neutral center, and the transforming of them into radiant outflowing streams of energy causes rotation of the molecule or mass. All the magnets in the world, no matter how differentiated cannot induce rotation, but polar negative attraction*[206] *induces rotation. The earth's rotation is caused and kept in continuance rotation by the action of the positive and negative sympathetic celestial streams*[207]*, that is, by the inflowing celestial*[208] *from the sun and the outflowing radiant celestial dispersing this same energy to all planetary masses in space."*[209][210]

7.39.5 Polar and Depolar Differentiation result in Motion

"Polar and depolar differentiation[211] *result in motion. The compound interetheric or seventh subdivision is the Soul of Matter*[212]*, from which all*

[203] syntropically and [Law of Cycles]
[204] [VIBRATIONAL COINCIDENTS]
[205] [receptive transmittive concordance]
[206] [polar negative attraction]
[207] [sympathetic celestial streams]
[208] [celestial]
[209] [Law of Cycles]
[210] [Keely; [Snell Manuscript], PHILOSOPHY OF TRANSMISSION AND ROTATION OF MUSICAL SPHERE]
[211] [differentiation]
[212] [Soul of Matter]

forms of matter receive their introductory impulse.[213] "[214]

Polar and depolar is Keely's way of saying having two poles (as in a magnet or electric circuit) or not.

7.39.6 Neutral Center or fulcrum represents Focalization

"The neutral center (fulcrum) represents focalization (of syntropic forces) and distribution of the streams of (entropic) energy. It is not associated with magnetism. When the radiant elements generated by the focalizing chord are submitted to compound vibration of their mass thirds, those radiant elements become magnetic and rotation ceases. Rotation is induced by submitting the mass to three different orders of vibration simultaneously, giving the majority to the harmonic third."[215]

7.39.7 Rotation of the ether produces condensation

"When we rotate a mass with sufficient rapidity, the particles of that mass ultimately overcome cohesion by dispersing as fragments at a tangent but should we cause rotation of the ether, this would produce condensation, which is opposite in effect. This condensation effect increases with the velocity of rotation of the ether. This is the direct cause of formation of molecules as well as planetary masses.[216]

The above describes the difference between centrifugal (dispersive) and centripetal (attractive) forces. The first belongs to the molecular and atomic domains or orders while the latter is a function of the etheric order or domain. In this we can see when the etheric is the exciter rotation of the molecular results - when proponderance is given the etheric order or third.

[213] [introductory impulse]
[214] [Keely; [Snell Manuscript], PHILOSOPHY OF TRANSMISSION AND ROTATION OF MUSICAL SPHERE]
[215] [Keely; [Snell Manuscript], PHILOSOPHY OF TRANSMISSION AND ROTATION OF MUSICAL SPHERE]
[216] [Keely;[Snell Manuscript], PHILOSOPHY OF TRANSMISSION AND ROTATION OF MUSICAL SPHERE]

7.39.8 Controlling "negative attractive"

"To control rotational force or produce commercialized energy, we must control through its properties the 'negative attractive' or 'enharmonic' current. This will solve the problem up to any limit of power."[217]

7.39.9 Testing Positive and Negative Rotation

"At the same time Keely was completing his third system[218]*, he was also completing an experimental sphere in which he intended to test the combination of the positive and negative rotation. This experiment was at least entirely successful which showed the explanation of rotation given above, to be correct. The sphere even rotated with physical vibrations from the positive and negative interchange of positive and negative waves - not streams in this case. He had a desperate struggle in seeking to learn these laws of polarization and depolarization*[219]*. It was necessary for him to understand these laws before he could unfailingly secure rotation and control the reversions*[220] *which so often had made wrecks of his machines."*[221]

7.39.10 Russell on rotation

"Mass is an accumulation of the universal constant of energy[222] *into higher potential. The greater the mass the greater the potential. Mass accumulates inductively along the centripetal lines of closing spirals, and is rotated by the impact of genero-active force. Mass dissipates conductively along centrifugal lines of opening spirals, and is rotated by the expulsion of radio-active*[223] *force. These opposite forces are the cause of rotation of mass."*[224]

---

[217] [Keely; [Snell Manuscript], PHILOSOPHY OF TRANSMISSION AND ROTATION OF MUSICAL SPHERE]
[218] [Keelys Three Systems]
[219] refers to the Laws of Being herein explained
[220] [reversion]
[221] [Snell Manuscript]
[222] [universal constant of energy]
[223] [radio-active]
[224] Russell, [The Universal One]

7.40 Controlling negative attraction

XL. "A practical example of rotation is a wheel in revolution on its axis. This is force in its commercial or economic aspect. To accomplish this result by molecular vibratory action, we must gain control of the negative attractive[225] or enharmonic current[226] of the triple flow, and the problem is then solved up to any limit of power."

End of Brinton article.

7.41 Notes

[1] Also called Circular wave, Curl, Love Wave, Lamb Wave, Surface wave, Etheric. *"Power of rotation comes on the positive and power of negation, arising when the receptive flows become independent of the circular chord of resonation (set up mechanically or otherwise) breaks up the rotational power."*[227]

[Rayleigh Wave][228]
[Vortex][229]

[2] Also called Compression wave. *"The vibratory velocity governing the magnetic flow ranges from 300,000 to 780,000 per second and comes under the first interatomic. This is the first order above odor and permeates the molecules of glass in the compass cover as air passes through a sieve. Being governed by the full harmonic chord this flow moves in straight lines free from molecular interference.*[230] *... "when free of this differentiation are in straight lines."* see [Discordant]

[Figure 8.3 - Coiled Spring showing Longitudinal Wave]

[225] [negative attractive], [Sympathetic Negative Attraction]
[226] [Enharmonic]
[227] [ROTATION - Snell]
[228] [Rayleigh Wave]
[229] [Vortex]
[230] [MAGNETIC ENGINE - Snell]

[Longitudinal]
[Longitudinal Wave]
[Longitudinal Waves in Vacuum]

[3] *"Discordance in any mass is the result of differentiated groups, induced by antagonistic chords, and the flight or motions of such, when intensified by sound, are very tortuous and zig-zag;"* see [Discordant]
[Figure 8.4 - Transverse Wave]
[transverse]
[Transverse Wave]

[4] Wave Field]
[12.05 - Three Main Parts of a Wave]
[12.09 - The MINUS side]
[12.08 - The PLUS side]
[Figure 2.12.1 - Polarity or Duality]
[Figure 15.03 - Opposing Forces of Gravity and Radiation]
[7B.16 - Polarity], [Principle of Polarity]

[5] Artwork by [Jeremy Pfieffer] et al.

[6] [The Seven Subdivisions of Matter and Energy], [VACUUMS FROM VIBRATORY INDUCTION]

[7] Jose Arguelles, Earth Ascending, page 21; 1996 (3rd edition) [See Binary Triplet]

[8] [Trexar], [Trextrinar], [TREXAR - Snell], [Trexnonar]

[9] [7.1 - Matter is centralized motion]

[10] [Etheric Vibration. - The Key Force]

[11] [7.9 - Ultimate Constitution of Matter and Action of Force Regulating its Phenomena]

Chapter 8

Modes of Vibration

8.1 Two models of three modes

There are three distinct modes of vibration in the standard acoustic model. These are the compression or longitudinal wave, shear or transverse wave and Rayleigh, Lamb or Love wave.

There are three distinct modes of vibration in the Keely/SVP model. These are the

Harmonic,
Enharmonic and
Dominant modes.

Each of these modes have distinct attributes such as

mode of motion,
angle of incidence,
relative frequency or pitch and
creative aliquot component signatures.

The two sets of three modes do not appear to be directly translatable. However they do possess common characteristics.

8.2 Three Modes of Vibration

8.2.1 Compression or Longitudinal Wave or Mode

Longitudinal Wave[1] same as Compression Wave or Sound Wave.

1) A wave incident or normal to a surface of a medium.

2) A vibration moving directly away from a sound source in a straight line.

3) Generally, considered as a motion to and from a center or source.

When harmonic is generally considered syntropic and when enharmonic considered entropic.

"Vibration in which the principal motion is in the direction of the longest dimension."[2]

"A vibrating medium must lengthen and shorten two times per each lateral (transverse) oscillation; so one longitudinal motion equals two lateral or (transverse) motions. Longitudinal frequencies are independent of string tension."[3]

8.3 Three Modes of Vibration

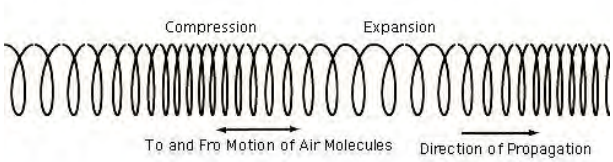

Figure 8.1: Coiled Spring showing Longitudinal Wave
Image: http://pondscienceinstitute.on-rev.com/imagesNatDyn/longitudinal.jpeg

[1] [Longitudinal Wave]

[2] Rossing, Thomas D. The Science of Sound. Addison-Wesley Publishing Company, 1982

[3] Tyndall, John; Sound; Longmans, Green, and Co., London, 1893

The above and below are but an illustration commonly held of how a longitudinal wave behaves. This is a good working model but it does not explain the complex dynamics in vibrations which dynamics are touched upon in Chapter 6 and 7 where particles in a vibrating medium mutually attract (syntropy) then mutually disperse (entropy) periodically.

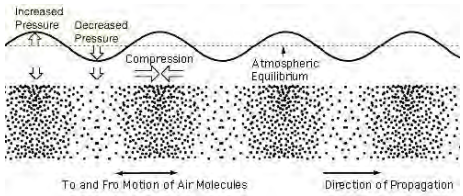

Figure 8.2: Compression and Rarefaction in a Wave
Image: http://pondscienceinstitute.on-rev.com/imagesNatDyn/compress-wave.jpeg

8.3.1 Transverse or Shear Wave or Mode

Waves 45° and higher to normal incidence.
Waves moving at 90° to the direction of (longitudinal) propagation.

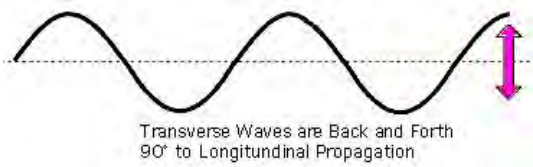

Figure 8.3: Transverse Wave
Image: http://pondscienceinstitute.on-rev.com/imagesNatDyn/transverse.jpeg

8.3.2 Rayleigh, Lamb or Love Wave or Mode

Rayleigh waves are circular vibrations. They travel along the surface of a vibrating object when the angle of incidence exceeds 90° or nearly parallel to the surface. This behavior is not unlike the idea electrons or electricity travels along the outside surface of a conducting wire and not through the conducting wire. This is the same form and motion of the 'curl' suggested

by Maxwell[4] in 1871 and so often spoken about by Bearden[5]. Thus this circular form and motion would be universal principle of all periodic motion. *With this idea we can say with some confidence power travels longitudinally 'through' the wire, amplitude and polarity forms* 90° *to the longitudinal and the Rayleigh wave is the circulating path (skin effect[6]) around a conducting wire - all three wave forms are* 90° *to each other.* Think about that for awhile.....

Triple axis of the three modes of vibration drawn in reference to a circle and sphere. The three modes working together develop rotation by and through each other's motion - the rotation is the Rayleigh Wave or Surface Wave mode component. The first two modes cause (or are) straight line and zig-zag motions only. The third or Rayleigh Wave travels in a circular motion.

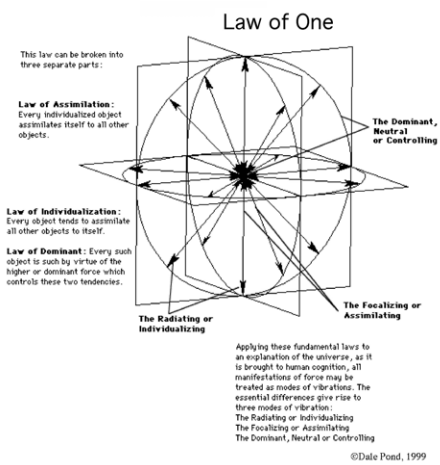

Figure 8.4: Relationship of Three Modes
Image: http://pondscienceinstitute.on-rev.com/imagesNatDyn/Triune-Modes-Motion.jpg

[4]James Clerk Maxwell (13 June 1831 5 November 1879) was a Scottish theoretical physicist and mathematician. See [James Clerk Maxwell]

[5]Thomas E. Bearden, Lieutenant Colonel, U.S. Army (Retired). Born Dec. 17, 1930, Cheniere, Louisiana. See [Bearden]

[6]Wikipedia/skin effect

8.4 Introduction to Keely's Wave Function

Perhaps one of the more interesting aspects of Keely's work is his Wave Function. The Wave Function is comprised of those foundational forces and attributes creating all oscillation and vibration which are seen effects of those unseen modal causes forces and attributes. Fundamentally these forces are in the 3, 6 and 9 proportions discussed in Chapter 7.

```
                +          ±          -
A = ATH = IA(Hc) + IA(Dc) + IA(Ec) (Harmonic
Current)
    ATE = IA(Ec) + IA(Dc) + IA(Hc) (Enharmonic
Current)
    ATD = IA(Dc) + IA(Dc) + IA(Dc) (?)(Dominant
Current)

A = ATH = IA(3+) + IA(4±) + IA(3-) (Harmonic
Current)
    ATE = IA(3-) + IA(4±) + IA(3+) (Enharmonic
Current)
    ATD = IA(4±) + IA(4±) + IA(4±) (?)(Dominant
Current)
```

```
Where...,
Currents
Hc = Harmonic current   = 3+
Ec = Enharmonic current = 3-
Dc = Dominant current   = 4±
```

```
Streams
Hs = Harmonic stream   = 3+
Es = Enharmonic stream = 3-
Ds = Dominant stream   = 4±
```

```
Subdivisons of Matter
  M = Molecular subdivision
 IM = Intermolecular subdivision
 AT = Atomic subdivision
 IA = Interatomic subdivision
  E = Etheric subdivision
 IE = Interetheric subdivision
CIE = Compound Interetheric subdivision
```

Figure 8.5: Suppositional Math and Symbolic Structure
Image: http://pondscienceinstitute.on-rev.com/imagesNatDyn/table-13-01.jpg

The above table is an attempt to correlate some of what has been discussed.Elements include the three modes, their combinations, seven subdivisions and Russell's Indig numbers[7]. The following table is another presentation of a portion of the above data.

[7][Indig numbers]

Aggregation	**Governing Mode**	**Dominant Mode**	**Subservient Mode**
Molecular	100 x Enharmonic	66 $\frac{2}{3}$ Harmonic	33 $\frac{1}{3}$ Dominant
Atomic	100 x Harmonic	66 $\frac{2}{3}$ Enharmonic	33 $\frac{1}{3}$ Dominant
Etheric	100 x Dominant	66 $\frac{2}{3}$ Harmonic	33 $\frac{1}{3}$ Enharmonic
Thirds	3	2	1
Proportion	9	6	3
Portion	Ninths	Sixths	Thirds

Table 8.1: Modes of Vibration[8]

8.5 Feynman Morphology

Richard Feynman's morphology[9] from his book, QED: The Strange Theory of Light and Matter[10], depicts Keely's $\frac{1}{3}$ and $\frac{2}{3}$ nested triune structure concept.

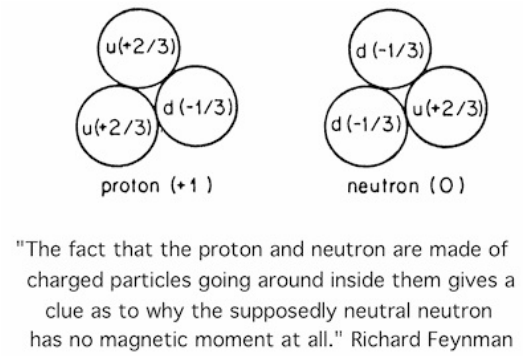

Figure 8.6: Feynman's triplet structures of the proton and neutron
Image: http://pondscienceinstitute.on-rev.com/imagesNatDyn/feynmandiagram400.jpg

[9][Figure 4.14 - Feynmans Triplet Structures of the Proton and Neutron]
[10]QED: The Strange Theory of Light and Matter; Princeton Science Library, ISBN-10:0691125759

Thus we see again Keely anticipated the quantum world decades before conventional science even had a glimmer of its existence as we also saw in the Rule of Threes (section 7.2.3 the Rule of Threes) and elsewhere.

Range[1]	Octave	cps range (gamut)	Sound Type	Sound Effect	Sound Action	Vibe Type	Governing Law
		Law of Force->	Creative	Transmissive	Static		
Atomolic	65..105	? - ?	Atomolity	Gravism	Gravity	Atoms Oscillate	Law of Oscillating Atomoles
Etheric	43..64	4,398,046,511,104 / 1.8014398509482E+19	Thermism	Rad-energy	Cohesion / Chemism	Atoms Oscillate	Law of Oscillating Atoms
Atomic	21..42	2,097,152 / 4,294,967,296,000	Sono-thermity	Sono-therm	Adhesion / Disintegration	Internal Vibrations	Law of Sono-thermity
Molecular	1..20	1... 1,048,576	Sonity	Sound	Sonism	Atomic Oscillation	Law of Oscillating Atomic Substances

Table 14.03 - Ranges of Forces Vibration Forms Types and Governing Laws

Figure 8.7: Table of ranges of forces, forms and laws
Image: http://pondscienceinstitute.on-rev.com/imagesNatDyn/table-14-03.jpg

(See Law of Transformation of Forces[11] and subdivision[12] for explanation of the above table)

[11] [Law of Transformation of Forces]
[12] [Subdivision]

Source	**From Center**	**To Center**	**Controlling**
Keely / SVP[6]	Enharmonic	Harmonic	Dominant
Modern wave form	Longitudinal[2]	Transverse[3]	Rayleigh[1]
Angle of Incidence	$0° - 45°$	$45° - 90°$	$> 90°$
Path/Motion[3]	Straight	Zig-zag	Circular
Keely / SVP	Focalizing	Radiating	Dominant
Keely / SVP	Syntropic	Entropic	Dominant
Russell[4]	Plus	Minus	Fulcrum
Russell[4]	Gravitation	Radiation	Balance, Void
Charles Henry[7]	Gravitation	Electromagnetic	Biopsychic
Possible Correspondence[5]	Thirds	Sixths	Ninths

Table 8.2: Table of attributes of the three modes

Mode	**Subdivision**	**Octave** [Hz = 2^{octave}]	**Law**
Enharmonic	Molecular / Intermolecular	1-21	Law of Oscillating Atomic Substances[13]
Harmonic	Atomic / Interatomic	21-42	Law of Sonothermity[14]
Dominant	Etheric / Interetheric	42-63	Law of Oscillating Atoms[15]

Table 8.3: Keely's three modes; subdivision, octave and law

''By use of the dominant mode, which is allied to the "order" of etheric vibrations, we can induct, "sympathetic negative attraction" or "sympathetic positive propulsion" in any mass, according to its mass chord."[16]

[16][SYMPATHETIC INDUCTION - Snell]

8.6 Footnotes

[1] Also called Circular wave, Curl, Love Wave, Lamb Wave, Surface wave, Etheric. *"Power of rotation comes on the positive and power of negation, arising when the receptive flows become independent of the circular chord of resonation (set up mechanically or otherwise) breaks up the rotational power."*[17]

[Rayleigh Wave]
[Vortex]

[2] Also called Compression wave. "*The vibratory velocity governing the magnetic flow ranges from 300,000 to 780,000 per second and comes under the first interatomic. This is the first order above odor and permeates the molecules of glass in the compass cover as air passes through a sieve. Being governed by the full harmonic chord*[18] *this flow moves in straight lines free from molecular interference.*[19] *"when free of this differentiation are in straight lines."*[20]

[Figure 8.3 - Coiled Spring showing Longitudinal Wave]
[Longitudinal]
[Longitudinal Wave]
[Longitudinal Waves in Vacuum]

[3] *"Discordance in any mass is the result of differentiated groups, induced by antagonistic chords, and the flight or motions of such, when intensified by sound, are very tortuous and zig-zag;"*[21]

[Figure 8.4 - Transverse Wave]
[transverse]
[Transverse Wave]

[4] See [Wave Field]

[Three Main Parts of a Wave]
[12.09 - The MINUS side]
[12.08 - The PLUS side]

---

[17] [ROTATION - Snell]
[18] [full harmonic chord]
[19] [MAGNETIC ENGINE - Snell]
[20] [Snell Manuscript], [Discordant]
[21] [Keely and His Discoveries, pg 275], [Discordant]

[Figure 2.12.1 - Polarity or Duality]
[Figure 15.03 - Opposing Forces of Gravity and Radiation]
[7B.16 - Polarity, Principle of Polarity]

[5] Artwork by [Jeremy Pfieffer] et al.

[6] [The Seven Subdivisions of Matter and Energy], [VACUUMS FROM VIBRATORY INDUCTION]

[7] Jose Arguelles, Earth Ascending, page 21; 1996 (3rd edition) See [Binary Triplet]
See [MUSICAL CHORDS], [Triplet]

Chapter 9

Keely Wave Function

9.1 Introduction to Keely's Wave Function

One of the keys to Keely's mastery of matter and energy lies in what I call the Keely Wave Function[1] and his ability to manipulate it. A wave function is a mathematical description of the factors involved in a sine-like wave, vibration or oscillation expressed over time. Generally, science considers a wave function of one dimension or within a closed and defined range of frequency (to put it simply) which includes the constructive attributes of amplitude, Time and Space (wave length). In Keely's case the wave function is composite three dimensional wave function that operates within three levels, orders or ranges of frequencies, simultaneously and having additional constructive attributes or aliquot parts within those orders or levels. Thus it is more complicated but also more inclusive of the factors operating naturally within a wave, vibration or oscillation. The Keely Wave Function would include some if not all of the dimensions of the Russell Wave Function[2].

Perhaps one of the more interesting aspects of Keely's work is his Wave Function. The Wave Function is comprised of those creative foundational forces creating all oscillation and vibration which are seen effects of those unseen causes. Fundamentally these forces are in the 3, 6 and 9 proportions discussed in the [Laws of Being - Annotated] and [Modes of Vibration - Annotated] and hinted at by Nikola Tesla and discussed in this book primarily

[1] [Keely WaveFunction]
[2] [Eighteen Attributes or Dimensions]

in Chapter 7 and 8.

The wave function preforms not too unlike complex impedance[3] calculations over time but with more variables or dimensions. The Keely Wave Function operates/is on three levels or orders simultaneously:

Molecular
Atomic
Etheric

Each level or order has three motions/dynamics:

Harmonic = Syntropic
Enharmonic = Entropic
Dominant = Neutral

This table below shows the three main levels or orders plus a fourth level or order and the forces active in each as also the law governing each specific frequency range.

[3][impedance]

Range[1]	Octave	cps range	Sound Type	Sound Effect	Action	Vibe Type	Governing Law
		Law of Force>	**Creative**	**Transmissive**	**Static**		
Atomolic	65-105	?—?	Atomolity	Gravism	Gravity	Atoms Oscillate	Law of Oscillating Atomoles
Etheric	43-64	4,398,046,511,104 - 1.8014398509E+19	Thermism	Radenergy	Cohesion / Chemism	Atoms Oscillate	Law of Oscillating Atoms
Atomic	21-42	2,097,152 - 4,294,967,296,000	Sonothermity	Sonotherm	Adhesion / Disintegration	Internal Vibrations	Law of Sonothermity
Molecular	1-20	1 - 1,048,576	Sonity	Sound	Sonism	Atomic Oscillation	Law of Oscillating Atomic Substances

Table 9.1: Ranges of forces vibration forms types and laws

Table 9.1 shows the break-out into orderly detail the components, activity and functions of Keely's Law of Transformation of Forces[4].

9.1.1 Law of Transformation of Forces

"All forces are different forms of Universal Energy[5] unlike in their period-frequency, merging into each other by imperceptible increments; each form representing the compass of 21 octaves. Each form or pitch may be transformed into an equivalent quantity of another pitch above or below it in the

[4][Law of Transformation of Forces]
[5][12.02 - Universal Energy Unit Constant or Impulse]

scale of 105 octaves[6]*. The transformation can occur only through its static effect, developing vibrations of harmonic pitches above or below their fundamental vibration, or developing with juxtaposed aggregates, resultant and difference, or third order, as the case may be.*

Scholium: *"A table of the intervals and harmonics of the normal harmonic scale will indicate the ratios in which the transformation of forces will occur."*[7]

It is said energy cannot be created or destroyed however energy can be transformed or transmuted into different forms. These vibratory forces, states and conditions have reciprocity and are expressed in ratios of relative values or 'modes' thus they can be changed one into the other under special circumstances as described in Keely's Law of Transformation of Forces.

9.2 Thirds as Ratios within a Whole

In Brinton's "Laws of Being" (Chapter 7) we can see the description of Keely's Thirds, Sixths and Ninths as learned, understood and presented by Professor Brinton during his visits to Keely's laboratory. We can also see these terms are not specifically musical intervals of thirds, sixths or ninths, as considered by musicians, but they are musical in terms of relativity, proportion and value. They are relative proportions within a whole. Flows and currents can be understood by the metaphor of a river or stream. The stream flows as a whole and has within this stream many currents. Herein the syntropic flow to a center is composed of three currents. Each current is a third $\frac{1}{3}$ of the whole flow or stream. These currents are expressed as ratios within a whole of 100; *i.e.*, 33 $\frac{1}{3}$: 100 or 66 $\frac{2}{3}$: 100. The whole wave, flow or stream, regardless of polarity, is 100. Exploring the literature a bit further we find the following relationships:

"Silver represents the third, gold the sixth and platinum the ninth, in their respective relative molecular oscillating ranges. This triune condition will equate thirds in vibratory frequencies, that is, chords in intervals of thirds will set up disturbances in the Trexar and these disturbances will be equated

[6] [Scale of the Forces in Octaves]

[7] [Keely]; [Law of Cycles], [12.06 - Mid-Tones and Neutral Centers], [Scale of the Forces in Octaves]

so as to be transmitted as thirds from the positive or farthest end of the wire."[8]

[8] [TREXAR - Snell]

Thirds	**Sixths**	**Ninths**
Silver	Gold	Platinum
33 $\frac{1}{3}$	66 $\frac{2}{3}$	100
neutral	depolar	polar
33 $\frac{1}{3}$	>>Attractive - Equation<<	100
<<Repulsive - Equation>>	66 $\frac{2}{3}$	100
neutral	entropic	syntropic
celestial	terrestrial - matter dissolving	terrestrial - matter forming
dominant	individualizing	assimilative
Mind as Intent, Will, Volition, Desire	I want to be One with Everything	I want Everything for myself
Ideals	Service to Others	Service to Self
Fulcrum, Neutral, Balance	Radiating from Center	Contracting to Center
Controller	Dispersing, Dissociating	Concentrating, Associating
Neutral	Minus	Plus
Dominant	Enharmonic	Harmonic
Neutral	Magnetic	Electric
Fulcrum, Void	Mother	Father
Now	Life Reducing (death)	Life Enhancing
Neutral Chords	Dispersing Chords	Assimilating Chords

Table 9.2: Neutral (thirds); energy radiates from center (sixths); force contracts to center (ninths)

The above three levels and three forces acting in each are delineated in the pages listed below, especially within the [Laws of Being - Annotated] and

[Modes of Vibration - Annotated] all subject of this book especially Chapter 7. The action of each mode is determined by their composite proportions or modal preponderance. Hence a mode may have different action in different contexts, use or circumstance.

Chapter 10

Proportions (Ratios) of Relative Values

10.1 Proportion

Proportion is the ratio (relativity) of two or more numbers or quantities to each other as have been presented in the preceding chapters. The same of course applies to notes in a music chord. While the individual frequencies are important they take on a new meaning according to their proportion within the scale, chord and to each other. This gives us an insight into why Keely used music notation to such an extent. On Keely's charts can be seen the following terms of numeric relationship.

Proportion is in three kinds: (1) multiplex. (2) Superparticularis. (3) Superpartiens. Proportio multiplex is when the larger number contains the smaller so many times without a remainder, as

2:1 (dupla)
3:1 (tripla)
4:1 (quadrupla).

Proportio superparticularis is when the larger number exceeds the smaller by one only as

3:2 (sesquialtera)

4:3 (sesquitertia)
5:4 (sesquiquarta).

Proportio superpartiens is when the larger number exceeds the smaller by more than one, as

5:3 (superbipartienstertias)
7:4 (supertripartiensquartas)
9:5 (superquadripartiensquintas).

Thus, it will be understood, that instead of giving simply the ratio between two numbers, early writers on arithmetic and geometry, as well as music, coined a single word to express that ratio; for example, 17:5 was said to be Triplasuperbipartiensquintas, *i.e.*, that the larger number contained the smaller number three times (tripla) with two remainder (bipariens). Again, Triplasupertripartiensquartas proportio, signified that the larger contained the smaller three times and three over, as 15:4, 27:8, *etc.*, the last part of the compound word always pointing out the smaller of the numbers compared, or an exact multiple of it. Lastly, the addition of sub showed that the smaller number was compared to the larger, *e.g.*, 4:15 would be called Subtriplasupertripartiensquartas proportio. This system of proportion was used not only with reference to intervals but also to the comparative length of notes (time).[1]

An excellent booklet on proportion is 'Propositions of Proportions'[2] in the svpbookstore.com online catalog.

10.2 Reciprocating Proportionality

Reciprocating Proportionality means what is added to one side must be simultaneously subtracted from the other. A children's seesaw is a perfect analogy. Whatever quantity or rate of change added to one side must be subtracted from the other. Another good analogy is a mathematical equation where what is added to one side must be subtracted from the other side or where one side is multiplied the other is divided. A dynamic balance

[1] Stainer, John; Barrett, W. A.; A Dictionary of Musical Terms; Novello, Ewer and Co., London, pre-1900

[2] svpbookstore.com

where the whole is always one while the two balanced forces in opposition (*e.g.*; syntropy and entropy) are constantly changing in direct proportion to one another. The Square Law and Inverse Square Law is another good example. This equal and balanced reciprocating dynamic is at the root of Russell's Rhythmic Balanced Interchange[3] and Macvicar's cosmical Law of Assimilation[4].

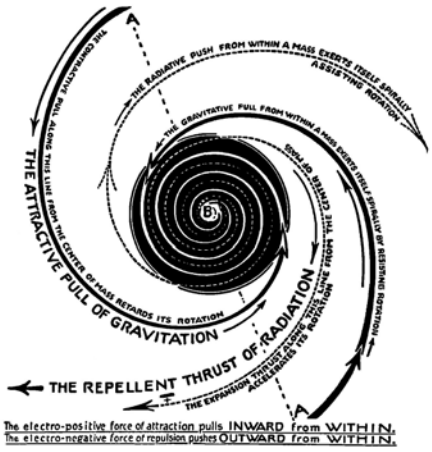

Figure 10.1: One Balanced Whole and Two Reciprocating Dynamics
Image: http://pondscienceinstitute.on-rev.com/imagesNatDyn/reciprocating.jpg
(courtesy University of Science and Philosophy)

10.3 Reciprocating Proportionality

"The underlying law of Creation is RHYTHMIC BALANCED INTERCHANGE in all transactions in Nature. It is the one principle upon which the continuity of the universe depends. Likewise, it is the one principle upon which the continuity of man's transactions, his health and happiness depend. It is the manifestation of God's two opposing desires in all processes of creation.

"BALANCE is the principle of unity, of oneness. In it is the stability which lies in CAUSE. BALANCE is the foundation of the universe.

[3][Rhythmic Balanced Interchange]
[4][Law of Assimilation]

"BALANCED INTERCHANGE simulates oneness by interchange between pairs of opposites. It is the principle of equal giving between all moving pairs of unbalanced opposites which constitute this dual electric universe. In it is the instability of EFFECT. Instability is forever seeking to find stability. It can never find it, but it can simulate it by balancing its instability through equality of interchange.

"RHYTHMIC BALANCED INTERCHANGE is the principle of continuity of EFFECT. Balanced interchange between opposites repeats simulation of stability, and rhythmic balanced interchange continues that repetition."[5]

The degree to which a vibrating or oscillating system is either one polarity or the other can be pictured or expressed in relative and accumulative numbers. Russell used the + sign to indicate accumulating, concentrating (syntropic) quantities and a − sign to indicate dispersive, radiating (entropic) quantities. Russell used his Scale of Locked Potentials[6] to measure degrees of polarity and this author believed Keely similarly used his mysterious thirds, sixths and ninths as part of his referencing method where proportions or parts of a whole were given proportioned or ratioed values.[7]

10.4 Reciprocal Proportion

Increases and decreases (establishing polar preponderance) are in inverse or direct proportion to rate of change or *delta*.

Energy at Plane of Inertia is neutral or depolar. $-0\ 0+$.

[5] Russell, [The Secret of Light], page 106-107
[6] [Scale of Locked Potentials]
[7] [3.13 - Reciprocals and Proportions of Motions and Substance]

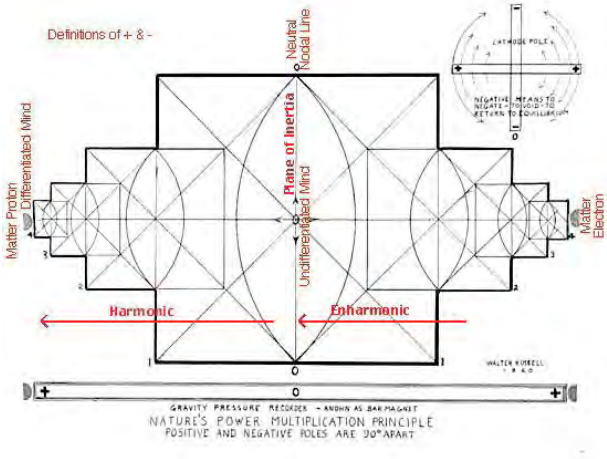

Figure 10.2: Plane of Inertia
Image: http://pondscienceinstitute.on-rev.com/imagesNatDyn/plane-of-inertia.jpeg
(courtesy University of Science and Philosophy)

Degree of Concord or Discord is determinative anywhere from -0 $0+$ to $4++$[8].

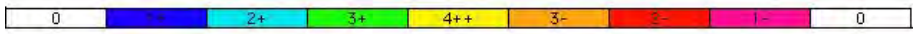

Figure 10.3: Scale of 0 to 4 to 0
Image: http://pondscienceinstitute.on-rev.com/imagesNatDyn/lockedpotentials.jpeg

When preponderantly harmonic a larger volume -0 $0+$ condenses to smaller volume of -1 $1+$ progressively to $4++$.

When preponderantly enharmonic a smaller volume $4++$ dissociates and expands to larger volume of -3 $3+$ progressively to -0 $0+$[9].

[8] [4plusplus]
[9] [4plusplus]

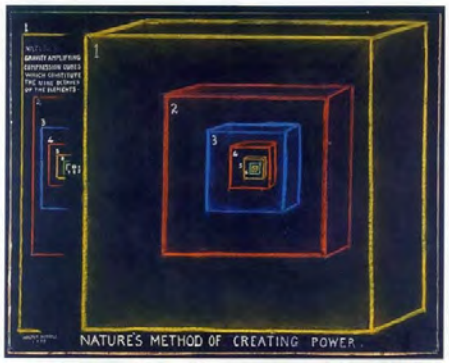

Figure 10.4: Nested cubes or increasing and decreasing proportions
Image: http://pondscienceinstitute.on-rev.com/imagesNatDyn/nested-cubes.jpg
(courtesy University of Science and Philosophy)

Volume decreases with increased potential.

Volume increases with decreased potential. For numeric details and relationships on the above see [cube-sphere] and [Cubing the Sphere].

Transformations occur at the -0 $0+$ and $4++$ points, states or conditions. The first according to Russell's Principle of Regeneration[10] (Keely's "static effect") and the latter by Keely's Law of Cycles[11]. See Figure 12.8 for an animated graphic show progressive generation of discords until dissociation.

10.5 Reciprocals and Proportions of Motions and Substance

"The following fundamental laws governing mathematical relations will briefly convey the idea of the Principles governing universal ratios which is in every effect of motion the direct and inverse square of the distance, area or time dimensions and the cube of volume or potential dimensions. The direct and the inverse are the two way indicators of direction, the latter belonging to

[10] [Principle of Regeneration Russell], [13.13 - Principle of Regeneration] and [Principle of Regeneration Bearden]

[11] [Law of Cycles]

gravitational and the former to radiational effects."[12]

Notice the reference to the reciprocals Square Law and Inverse Square Law in the above Russell quote. These two laws are reciprocals of each other and reflect the natural ways force and energy[13] interchange in nature when forming pressures, vacuity, rotation, gyroscopic motions, or vortices.

"All dimensions[14] *simultaneously expand and contract in opposite directions of the same ratio."*[15]

10.6 Thirds as Ratios within a Whole

In the above quote we can see the description of Keely's Thirds, Sixths and Ninths as presented by Professor Brinton after his visits to Keely's lab on Chestnut street, Philadelphia. We can also see these terms are not specifically musical intervals of thirds, sixths or ninths, as considered by musicians, but they are musical in terms of relativity, proportion and value. They are proportions within a whole. Flows and currents can be understood by the metaphor of a river. The river flows as a whole stream and has within this flow many currents. Herein the syntropic flow to a center is composed of three currents. Each current is a third ($\frac{1}{3}$) of the whole flow. These currents are expressed as ratios within a whole of 100; i.e., 33 $\frac{1}{3}$: 100 or 66 $\frac{2}{3}$: 100. The whole wave or stream, regardless of polarity, is 100. Exploring the literature a bit further we find the following relationships:

"*Silver represents the third, gold the sixth and platinum the ninth, in their respective relative molecular oscillating ranges. This triune condition will equate thirds in vibratory frequencies, that is, chords in intervals of thirds will set up disturbances in the Trexar*[16] *and these disturbances will be equated so as to be transmitted as thirds from the positive or farthest end of the wire.*"[17]

[12] Russell, [Genero-Radiative Concept], part 6b
[13] In SVP [Force] is considered Syntropic while [Energy] is considered Entropic.
[14] [Dimension]
[15] Russell
[16] [Trexar]
[17] [TREXAR - Snell]

Chapter 11

Universal Heart Beat

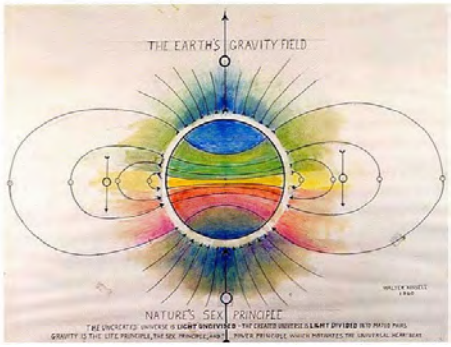

Figure 11.1: Universal Heartbeat
Image: http://pondscienceinstitute.on-rev.com/imagesNatDyn/heartbeat.jpg
(courtesy University of Science and Philosophy)

Universal Heart Beat =
Dynaspheric Force[1] =
Rhythmic Balanced Interchange[2] =
Triune Polar Flows[3]

"The eternally conscious entity - call it by whatever name we please - moves

[1] [Dynaspheric Force]
[2] [Rhythmic Balanced Interchange]
[3] [Triune Polar Flows], [Figure 13.12 - Triune Polar Stream Characteristics]

in cycles as eternal and infinite as itself; it oscillates and vibrates perpetually."[4]

The universal heartbeat is the periodic flow of a polar system from a preponderance of one pole then to preponderance of its seeming opposite pole. This is the action of all vibration, oscillation and waves no matter what order or level (frequency or media) it is. Russell mentions "*in the wave lies the secret of Creation.*"[5] The secret then of Creation[6] is the unseen dynamics of the wave, vibration or universal heartbeat - the essence of this book. The following are primarily Russell quotes describing this universal dynamic or dance of polarities.

11.1 The Love Cycle

"Energy accumulates during genero-active inhalation by rising potential, and is dissipated during the radio-active[7] *exhalation by lowering potential. The periodicities of inhalation and exhalation in all mass are absolute."*[8]

"All the force of electricity is exerted in the attempt to create the illusions of form and dimension.

"All the force of magnetism is exerted in the attempt to destroy all illusion, all form and all dimension.

"Neither force completely fulfills its desire, for each partially thwarts the other.

"The energy of magnetism is the elastic energy of expansion, a straining energy ever pushing toward the inertial line of equalized pressures which lies between any two masses, while the energy of electricity is ever pulling toward the pulsing heart, the gravitational nucleus of every mass."[9]

[4] Keely's description of that state of being commonly known as God, [Dashed Against the Rock], see [14.30 - Effect of Preponderance] and [14.31 - Preponderance Russell]

[5] [In the Wave lies the Secret of Creation]

[6] [Creation]

[7] [radio-active]

[8] Russell, [The Universal One]

[9] Russell, [The Universal One]

"*To these periodic oscillations, alternating in sequence, is due the revolution and rotation of all mass.*[10]

"*All evolving and devolving mass beats time in accord with its periodic sequences of alternating electro-magnetic oscillations.*

"*All mass beats time in accord with its varying potential.*

"*The electro-magnetic oscillations of the universe are the heart-beats, the life pulsations of the universal One.*"[11]

"*The misconception of gravity as a force of attraction which pulls inward from within. The only force which motivates the heart beat of this universe is the cyclic wave force of gravity which expands and compresses, heats and cools, integrates and disintegrates, centripetally and centrifugally.*"[12]

"*Waves of motion spring from the stillness of the universal equilibrium. They are the universal heartbeat which manifests eternal life and power in God's stillness by eternal repetitions of simulated life and power as expressed in waves of motion.*"[13]

"*Each interchange between the invisible omnipresent universe where motion begins and ends, and the visible transient universe, which multiplies and divides the speed and power of motion, is a cycle. Pulsing cycles constitute the heart beat of this universe, which simulates Mind-Idea through pulsing cycles of two-way motion. Every pulsation of the life principle of multiplying motion creates divided electric male and female bodies, which seek rest in each other from the strains and tensions of their division into pairs of opposites.*"

"*This shows how the heartbeat piston operates between the vacuity of the*

[10][See 7.39.4 Receptive Transmittive Concordance induces Ro- tation]

[11]Russell, [The Universal One], Book 02 - Chapter 03 - New Concepts of Electricity and Magnetism

[12]Russell, [Russells Optic Dynamo-Generator]

[13]Russell, [The Secret of Light], page 115

Creator's Magnetic Light[14] *universe of Mind-energy*[15] *and the potential of the electrically pressured universe to create cycles of two-way motion.*"[16]

"*The sexless Father-Mother Creator is One. His extended sex-conditioned, male and female bodies are the completion of His Trinity.*

"*Rest and action are three. Space and matter are three. Equilibrium and motion are three. Dimensions and pressures are three. The heartbeat of the universe, and yours, are three. Likewise, its breathings and yours, its temperatures and yours, and all things else of the universe, and you, are three.*"[17]

"*To account for this unnatural phenomena The Coulomb Law was adopted, which says that opposites attract, meaning oppositely sexed mates and likes repel, meaning similarly sexed pairs. This law is invalid, for oppositely sexed mates do not attract. They are forced into collision by the electric action of dividing Oneness into unit pairs. The instant that they do collide they use their utmost endeavors to re-attain the sex-divided condition by re-charging their discharged condition. Nature helps in this process by assisting to re-charge with every heartbeat, every breathing cycle, and the food one eats.*"[18]

"*By turning on the current it will be found that the spot between the two electrodes is of zero potential, and that many lines of radiation extend from that center and cause a moving electric current to spin around the zero fulcrum center where the ring is located. Not only that but an electrode placed in contact with the ring, will convey current away from it. This effect of electric current extending from a still center to convey its power to the ring, and other outside conductive matter, is identical with the mental example quoted in Fig. 48.*

[14][Magnetic Still Light]

[15][Mind Force]

[16]Russell, [Atomic Suicide]?, Chapter 4 - The True Nature of This Mind and Motion Universe

[17]Russell, [Atomic Suicide]?, Chapter 5 - Prelude - The Transformation of Man

[18]Russell, [Atomic Suicide]?, Chapter 8 - The Oneness of Gravity and Magnetism; see also [PoL - Chapter 9]

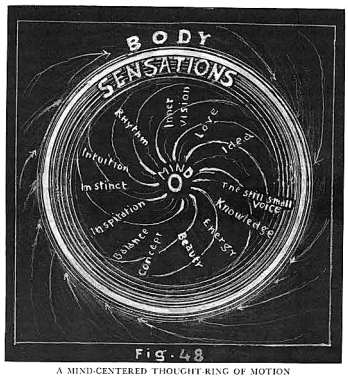

Figure 11.2: Neutral Center 4++ extention to periphery 0
Image: http://pondscienceinstitute.on-rev.com/imagesNatDyn/ring-of-motion.jpg
(courtesy University of Science and Philosophy)

"*Anyone who may question this fact may not only prove it by this simple experiment but can also move the two electrodes away from the center of the rim so that their centering zero occupies an eccentric position, as the human heart does in relation to the chest, and as the zero center of the heart itself is eccentrically placed in relation to its mass. A different wave pattern will result but the electric qualities will remain the same. There is always a neutral center which centers the birth point of any action. Motion spins around that neutral center, but there is no motion at that center.*"[19]

"*Say also thou to man who thinketh of his heart beat as his own alone - unbound to all things else - that all creating things unfold with the pulse beat of My cyclic thinking. As My thinking is universal, so likewise, is My pulse beat universal.*

"*And furthermore I say that every blade of grass and leaf of oak in mighty forest pulseth with the heart beat of man and all things else, yea even down to microcosmic cells of forming things of earth, and sea, and sky; for even the most minute of these pulse with the electric waves of My cyclic thinking as the mightiest of stars in My heavens likewise pulse.*

"*For I, God of Light, thy Father-Mother God of Love, am the One Whole.*

[19]Russell, [Atomic Suicide]?, Chapter 9 - The Mind Nucleus of the Atom

From Me all unfolding-refolding things extend, and to Me they return for re-extension.

"*All things go from very heart of Me into My imaged universe; and when they disappear from there I also take them back to very heart of Me.*

"*For I am the Soul of art. To him whose Soul would touch My Soul, and feel the heartbeat of its mighty rhythms, I say, in so far as thou knoweth thy Self as Light, thou shalt know Me as Light.*"[20]

"*God has two desires: the desire to unfold His creations to give them form and set them into action; and the other desire is to refold His forms and take them back to Him for rest and resurrection so that they may repeat their action. That is the basis of the entirety of creation - the two desires of God, to act, to create, and to take back for re-creation. That is why God divided everything into pairs of opposites: the desire to express action, the desire to separate from Oneness, God's Oneness desiring to be manifested as many ones - the idea of separation and action; and the desire for return to rest from which that action sprang for the purpose of repeating the action in cycles, countless millions of cycles of action and rest, in-breathing, out-breathing; the pulse beat of the universe; the heartbeat of all things pulsing in all things to manifest life in action and reaction from the stillness of God's One Light in which there is no action and reaction.*"[21]

"*God's universe is entirely composed of microcosmic and macro-cosmic masses of pulsing electric waves, which we call matter. These pulsing waves constitute the universal heartbeat, or universal breath of God's body. God's body continues its manifestation of the life principle by breathing outward and inward sequentially, just as you breathe out and in in balanced sequences to continue your appearance of existence.*

"*Every mass in the universe breathes out and in, rhythmically. There are no exceptions to this law which every nebula, sun, planet or electron of an atom obeys, but in varying frequencies appropriate to their potential. Your breath frequency may be ten cycles per minute while the sun's frequency is*

[20]Russell, [The Message of the Divine Iliad]
[21]Russell, Fifth Kingdom, The Beginning of Man

one cycle in eleven years.

"*The most obvious fact of Nature is its repetition in reverse of every effect of motion in two-way pulsing cycles. It is unaccountably strange that science has never observed this most obvious of all of Nature's characteristics. Every cycle in Nature is a two-way, equal interchange between pairs of opposite conditions. That interchange between the equally balanced anodes and cathodes of this electric wave universe constitute its pulsing heartbeat, which likewise is cyclic, otherwise it would not continue.*"[22]

"*The test for ascertaining the average number of those who are ready for this higher step upward in the unfolding of the man-idea is not a religious one, it is a cultural one. In New York City, for example, about 7,000 people out of 8,000,000 people love the higher inspirational rhythmic creations of the world's great geniuses who interpret the heartbeat of Nature for the Souls of men. These same few shun noisy crowds, shudder at Jazz music, which distresses them acutely, in order to seek aloneness in the forests or oceanś shores where they can hear Nature's silent whisperings and rhythmic sounds within their very Souls.*"[23]

"*There is an indescribable glory all along the road which leads from your active thinking to the stillness of deep meditation. If you cannot actually go to the forest or sea, the better to commune with God, go there in your imagination. If some problem demands your thoughts let the imagined tones of the sea drown them out. If you imagine the sea and hear the rhythms of its waves pounding upon the shores as echoes of the heartbeat of the universe resounding within you, or if you hear the breezes whispering in the pines with your inner ears, the glory of that ecstasy will soon drown out dross thoughts of earth.*

"*Earth music is melodic and chains you to earth. The music of the spheres which you hear with inner ears, is deeply tonal, not melodic. The rhythms and tones of Nature's music which sing its octaves in the language of Light have always within them the pulsing rhythms of the universal heartbeat, always the one-two, one-two pulsing of the Father-Mother heartbeat of borning-reborning forms of things, which manifest the Father-Mother pulsing rhythms*

[22]Russell, [Home Study Course], Unit One - Prelude
[23]Russell, [Home Study Course], Unit One - Lesson 1.1

of the Soul's high heavens.

"*Always in your deep meditation the music of the silences from which sounds of earth spring is like unto the aftermath of the great symphonies by cosmic masters, which have refolded from sounds of earth which your ears have heard, into your very Soul, which still hears them in the pulse-beat of your imagining.*"[24]

"*And as love is rhythmically repeated in its givings and regivings to synchronize with the givings of your outward breath to the heavens and their regivings to you, and as such balanced rhythmic interchange between your heartbeat pulsings and all other electric extensions from the stillness of your Soul is LAW - the basic fundamental LAW of all creating things in all this electric universe - your own masterpiece is the measure of how divinely you have conceived it and how worthily you have rendered it in balance with Universal Law.*

"*To the extent that you can extend the beauty of your imagined rhythms to material bodies built in the images of your spiritual conceptions those rhythms which you create are masterpieces of great art. The very measure of the quality of your material interpretation lies in your ability to translate imagined forms and rhythms of the universal heartbeat into bodily forms and rhythms which can reinspire others with the ecstasy of your inspiration.*"[25]

"*Your transcendent genius is the result of your communion with God. By your masterly interpretation of the rhythmic heartbeat of His thinking you have caused others to commune with you and God. Your meditation and theirs are one. You have made them to forget their sensed bodies and dwell in the Mind kingdom of your high heavens with you and all illumined Souls who dwell in God's kingdom of Light.*"[26]

"*Imagine yourself communing with God indirectly, such as listening to the heavenly rhythms of God's heartbeat in a masterly symphony. While thus enraptured by the divine rhythms reaching your very Soul can you possibly*

[24]Russell, [Home Study Course], Unit One - Lesson 1.2
[25]Russell, [Home Study Course], Unit One - Lesson 2.1
[26]Russell, [Home Study Course], Unit One - Lesson 2.2

imagine yourself thinking evil, or thinking sinfully by planning to cheat, or lie, or steal? No - of course you cannot. The reason you cannot is because you are reflecting the love nature of the universe in your spiritual Self in its entirety, and there is no sin in that love nature to reflect."[27]

"*The entirety of Creation is the manifestation of love. Every effect of motion in nature is a manifestation of the nature of God, for Nature gives of its all in every action and regives equally in every reaction. If that were not so the movements of the planets would not be predictable.*

"*The electric heartbeat of Nature expresses love in both halves of each cycle of the universal heartbeat. Nature never takes for God never takes. Nature never gives unequally for God never gives unequally.*

"*God's equally balanced giving for regiving is never violated in Nature. It could not be violated for Nature is an extension of God's nature. For this reason the balance of Nature can never be upset.*

"*You can KNOW music and THINK it without having acquired the technique of expressing it, or without producing sounds to give it a body. Your inner ears can hear the music in the silence of God's eternal rhythms, and you can interpret your moods into the rhythms of the universal heartbeat, as Beethoven interpreted the mood of the moonlight into the rhythms of it without having any teacher but his God-Self.*

"*Consider the life of any great musical genius. What he finally produces in a written composition first begins in his Soul. He must first find aloneness with his Self by getting away from all other people, and even from his own body awareness. He must suppress all outer influences to seek that stillness from within from which the inner ears of his Soul can hear the rhythms of the universal heartbeat of God's creative thinking.*

"*To find that stillness in the Light of knowing he must stop thinking, in order that he can conceive idea from the Light of all-knowing. From the ecstasy of that stillness the inspiration is born in his very Soul. The motive for his symphony gradually takes form through the heartbeat of his thinking*

[27] Russell, [Home Study Course], Unit One - Lesson 3.1

which he extends from the stillness of his Soul, then ceases to extend it to again find the stillness of the Light which is gradually giving him his motive by its inspiring illumining within him."[28]

"*SECOND. Your desire is written upon your heart. It is registered in your Soul. It is no longer your body desire, it is your Soul's desire. You are in communion with God about it - not in words but in Light. You have an increasing sense of joyousness. Your desire is written into the universal heartbeat rhythmically. You are responding to it rhythmically. You are no longer just body - you are Soul - slightly aware of body - slightly aware of earth, and the heavens above, and of creating things. You are not thinking of extraneous things. You cannot think of objective things of earth while in the Spirit.*"[29]

"*The key to that answer is that God's universe is founded upon balance - one balanced condition which He divides into two equal and opposite conditions of His electric thinking. This electric universe of matter is composed entirely of these two equal and opposite conditions.*

"*Every effort of every creating thing is expressed by the motion of interchange between those pairs of opposite conditions, such as matter and space which constantly interchange equally by breathing into and out of each other equally. Without that equality of rhythmically repeated interchange the universe could not continue. That rhythmic interchange constitutes the heartbeat of God's body. Its rhythm and balance are absolute because the division of God's electric thinking is equally balanced.*"[30]

"*Meditation transports one from the transient world of matter to the real world of dreamings, visions, and imaginings where idea is and concepts are born. That is the world where sounds are heard in the silence of your Soul where no sound is where rhythms of symphony and poem are the rhythms of cosmic pulsings of God's thinking manifested in the heartbeat of His universe.*"[31]

[28]Russell, [Home Study Course], Unit One - Lesson 3.2
[29]Russell, [Home Study Course], Unit One - Lesson 4.1
[30]Russell, [Home Study Course], Unit One - Lesson 4.2
[31]Russell, [Home Study Course], Unit One - Lesson 4.4

"*When you pray for God to show His love for you by giving your field good crops you must yourself give your love to your fields to regive His giving. Your love given to them is God's love given to you for regiving. Your love and God's love are ONE. Its manifestation is TWO in giving and regiving but that TWO is the ONE HEARTBEAT of God's body, even as the swinging of the pendulum is the TWO of the ONE source of their manifestation.*

"*He who knows the Light of love in him does not beseech the Father-Mother of the universe for his next breath, nor for his next heartbeat, for he fully knows that his heartbeat is one with the universal pulse, and that for which he would needlessly ask is already his.*

"*And as there is not a time when God centers you, and an interval elapses in which He again centers and controls your balanced heartbeat to synchronize with His, so is there not a time when you should pray to Him, and another time when you should not.*"[32]

"*The love born symphony is prayer for love fulfilled in the composer and again fulfilled in the hearts of those whose heartbeat feels the ecstasy of God's heartbeat as expressed in those heavenly rhythms.*"[33]

"*I instantly, and timelessly, knew the still magnetic Light which is the fulcrum of life and power, also I knew the heartbeat of the electric universe which manifests love, life and power in matter.*

"*I also instantly and timelessly knew that the magnetic Light of the God of love was all that is - and that the sensed electric wave universe of motion which simulates love, life and power, had no reality whatsoever. I knew it for what it was - God's thinking - God's imagining - pure illusion - simulation - self-voiding forms thrown on the screen of space to manifest changeless idea by setting it in motion to produce the effect of change.*

"*Thus knowing the universal heartbeat I knew the electric wave, or universal pulse, to which all moving, creating things were geared. Thus knowing the wave and its octave pulse beat in cyclic rhythms which spelled their rhythms*

[32]Russell, [Home Study Course], Unit One - Lesson 6.1
[33]Russell, [Home Study Course], Unit One - Lesson 6.2

out for me always as

+zero +one +two +three +four +zero- -four -three -two -one -zero

I then knew all cause and comprehended all effect.

"*There was nothing to know but God's one whole idea of Creation, which is represented in the following diagram by the changeless ZERO of the spiritual Mind universe of REST - and nothing to comprehend but the heartbeat of this pulsing electric wave universe of motion which is represented in the diagram by the NUMBERS.*

THE HEARTBEAT OF THE UNIVERSE	
POSITIVE	NEGATIVE
0 1 2 3 4 0	4 3 2 1 0
GENERATION	DISINTEGRATION
ENERGY TOWARD	ENERGY TOWARD
LIFE AND GROWTH	DECAY AND DEATH

Figure 11.3: The basic formula of Creation
Image: http://pondscienceinstitute.on-rev.com/imagesNatDyn/positive-negative-scale.jpg
(courtesy University of Science and Philosophy)

"*This diagram is given to you now as the first simple step toward your acquisition of all knowledge of CAUSE and all comprehension of EFFECT. During the whole construction of this electric universe in this entire course of study the basic principle above diagramed will never be departed from, or exceeded, for there is nothing in Nature, nor in your own life, nor in your thinking, nor in any action of yours which can vary one whit from this basic formula of Creation.*

"*Nor is there anything the chemist, physicist, metallurgist or engineer can exceed beyond this formula or vary it in their work. Likewise the poet, painter, inventor, musician or architect is limited to this simplicity beyond which he CANNOT GO, and to which HE MUST CONFORM.*

"*Likewise the healthy growth of your body, or the conduct of your friendly or business relations must conform to this principle of BALANCE or else suffer the consequence of whatever unbalanced residue remains from lack of conformity with the heartbeat of the universe.*"

"*The reason why I have been able to do so many things during life, and do them in a masterly manner, was because of my lifetime growing knowledge of the universal heartbeat which fully unfolded in one timeless flash in 1921.*

"*It may not suddenly unfold to you, as it did to me, but you can very greatly accelerate its unfolding if you will open your heart to these lessons and get what I am telling you into your Consciousness instead of just photographing them into your brain.*"[34]

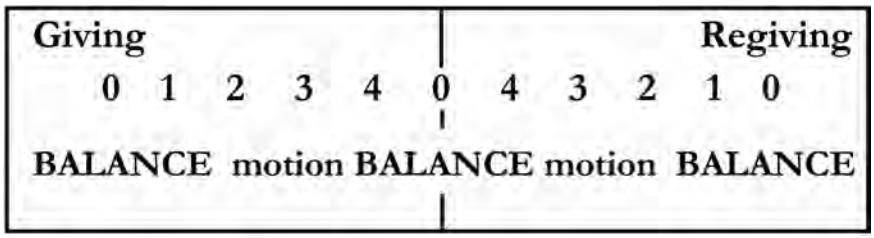

Figure 11.4: Formula of Rhythmic Balanced Interchange
Image: http://pondscienceinstitute.on-rev.com/imagesNatDyn/giving-regiving.jpg
(courtesy University of Science and Philosophy)

"*As you see I have again used the same formula of rhythmic balanced interchange in all transactions of Nature. I have but used different words to express different ideas.*"[35]

[34]Russell, [Home Study Course], Unit One - Lesson 7.3
[35]Russell, [Home Study Course], Unit One - Lesson 7.4

Chapter 12

Vortices and Toroids

12.1 Vortices

Vortices combine their many complex motions to create compound vortices or toroids composed of several parts and dynamics. In other words a toroid of rotating motion is the effect of vortex dynamics. These dynamics are the combined effects of differential densities[1], temperatures, pressures and tensions. These interactions between differences in density, potential, pressure, temperature and mass are the cause of motion which is the system attempting to regain balance in all its parts. These dynamic systems are in turn governed by simple laws as are discussed in this book. The forces creating vortices are the same forces creating vibration and oscillation but with different parameters.

[1] [differential densities], [2.7 - Differential Densities], [16.13 - Differential Densities], [3.6 - Differential Densities Begin to Form]

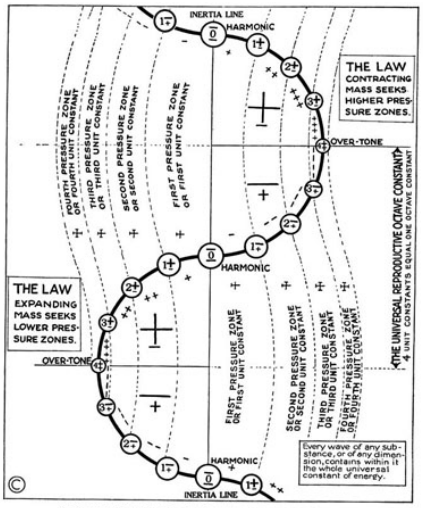

Figure 12.1: Differential densities, pressures and masses
Image: http://pondscienceinstitute.on-rev.com/imagesNatDyn/differentials.jpg
(courtesy University of Science and Philosophy)

In examining the dynamics of a vortex it is obvious there are many subtle polar dynamics converging to create a typical vortex such as are witnessed in a tornado or hurricane. These polar striations[2] (flows of differing energy states) would include differences in pressure[3], mass, potential, velocities and tensions caused by the differences of these states.

"*...vortex action (is) induced by differential conflict between the low and high tensions...*"[4]

"All such experiments invariably resulted in vortex motion, whether induced sympathetically or otherwise. All corpuscular action in Nature is vortex motion. The undulatory theory[5] *of light is only hypothetical. The conditions of*

[2][striations], [stria]

[3][Figure 3.6.1 - Tornadoes also have a Down Draft caused by its vacuous center], [Figure 3.6 - Tornado Vacuums up Everything for Redistribution]

[4]Keely, [LIGHT - Snell]

[5]wave theory

electro-magnetic radiation, on the same plane of matter as light, disprove the undulatory theory in many particulars. The vortex action induced by differential conflict between the low and high tensions shows conditions analogous to those in the molecular dissociation of water[6] *into hydrogen and oxygen in other words, vortex action of the highest order but peripheral only. Were it otherwise, the ether could not be held suspended or enclosed in the molecular or atomic envelopes*[7]*."*[8]

Figure 12.2: Tornado Vortex
Image: http://pondscienceinstitute.on-rev.com/imagesNatDyn/tornado-hf.jpg

12.2 Vortex Components

1. Cone
2. Cone Base (large opening)
3. Cone Apex (Gravity Center, Neutral Center)
4. Syntropic Still Magnetic Light, Gravity or Mind Shaft (hollow center)
5. Etheric Vacuous Center
6. Entropic Rotating Periphery (striated with high and low pressures and tensions)
7. Pressure Striations
8. Entropic Equator 90° to formative forces

[6] [Aqueous Disintegration], [Part 15 - Dissociating Water], [AQUEOUS DISINTEGRATION - Snell], [THEORY AND FORMULA OF AQUEOUS DISINTEGRATION]
[7] [rotating envelope]
[8] [LIGHT - Snell]

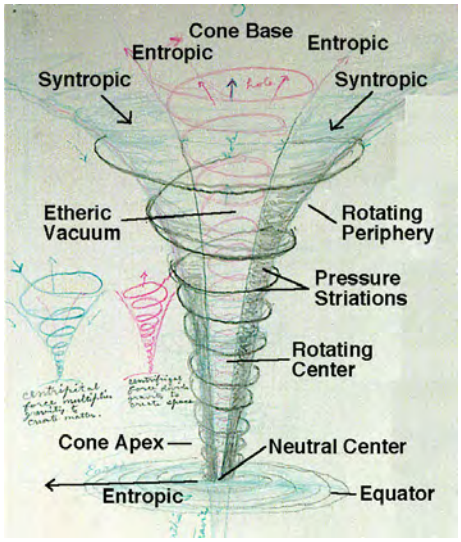

Figure 12.3: Vortex showing a few of its many components
Image: http://pondscienceinstitute.on-rev.com/imagesNatDyn/vortex-nd.jpg
(courtesy University of Science and Philosophy)

12.3 Vortex Dynamics

Syntropic (Sympathetic) Formative Forces[9] attracting to center.
Entropic (Repellant) Dispersive Forces dispersing from center.
Neutral Center Dynamics (Dominates/controls above two dynamics).

12.4 Vortex Action is rotary

"All such experiments invariably resulted in vortex motion, whether induced sympathetically or otherwise. All corpuscular action in Nature is vortex motion." [Keely]

A vortex rotates on a divided horizontal plane along its extension, length or altitude from the ground to the clouds. The high and low tensions[10] (pressures, temperatures and densities) are in constant conflict seeking balance or

[9] [Figure 4.12 - Keelys Formative Structural Dynamic Morphology]
[10] [antagonism]

voidance through and against each other. This assertive seeking for balance or voidance is the cause of the vortex's violent motions - a sex act if you will allow such term. The base universal state is 'desire for' balance, harmony or equilibrium. Desired because no state of perfect balance can permanently exist. *A system disturbed from this balance of forces will reassert itself in an effort to restore a stable state of balance or harmony (Love or sympathetic association) but such action is like a dog chasing its tail - and never catching it.*

12.5 Vortex Center

A tornado's center is an etheric vacuum having centripetal forces powerful enough to suction asphalt from paved roads[11] or lift cows, people and houses. This central vacuous column has been described as being luminous by those fortunate enough to have seen it and survived to tell about it. Walter Russell referred to this center as the Magnetic Still Light of Mind[12]. It may also be the fabled Luminiferous Ether[13] of the ancients.

"Know thou that God does not extend His Self into his moving universe, for the God-Light is still. Its stillness centers all things and it, likewise, centers the shafts of all motion which turns around it, shafts which are levers of fulcrums and end at poles which measure extensions."[14]

"Electricity (a polar condition) is the divider of the invisible white[15] *still magnetic light of gravity - which Mind is - into the red and blue halves of the visible light spectrum for the purpose of creating male and female bodies (in motion) which alone constitute all matter."*[16]

[11] [Figure 3.6 - Tornado Vacuums up Everything for Redistribution]
[12] [Magnetic Still Light]
[13] [Luminiferous Ether]
[14] [Atomic Suicide]?; Chapter 5 - Prelude - The Transformation of Man, part 2 of 2
[15] In Figure 12.4 the white light is shown as yellow. Hughes in her book "Harmonies of Tones and Colours" considered yellow as the Source from which discord (form) originates and progresses.
[16] Walter Russell, notation on chart, 1955. see [First Cause]

Figure 12.4: The depolar One divides into duality/polarity
Image: http://pondscienceinstitute.on-rev.com/imagesNatDyn/female-male-color.jpg
(courtesy University of Science and Philosophy)

"The One begat the Two which begat the Three and from the Three all things are made." Lao Tse[17]

The two initial polar states being 1) to separate or be individual and 2) be Unified or One are nothing more than tendencies or desires. Entropy tends in a direction away from the center, under certain circumstances, *in a spiral path.* Syntropy tends to a direction towards the center, under certain circumstances, *in a spiral path.* Interestingly the two opposing states, forces or poles become each other intermittently[18]. Since there are only two states they are initially in seeming perfect equilibrium one against the other. There is no motion or substance with the desire and tendency to direction and motion held latent. In this state of perfect latency on the etheric level there is pure potential waiting to be transformed into motion and matter by introducing idea (desire) or disturbing excitation.[19] But such a static state cannot persist. On the molecular and atomic levels disturbance of this static equilibrium can occur with simple acoustic impulses.

[17]'The Tao te Ching' [http://en.wikiquote.org/wiki/File:8orbitals.jpg]
[18][Law of Assimilation]
[19][2.11 - Beginning as Undifferentiated One]

12.6 Vortex Polar Forces

Russell's reference to - creating male and female bodies - refers to the still magnetic light as dividing itself creating the two seeming polarities - the two seeming opposing forces of entropy and syntropy whose mutual conflict[20] to void or balance results in the motions of the vortex. The two poles' prime objective is to void against/through each other that they may regain the Oneness (balance, harmony or love) from whence they came. These are the dynamics of the Universal Heartbeat, Rhythmic Balanced Interchange or Dynaspheric Force. In the simplest terms *the vortex is comprised of three currents acting as a whole stream or flow* - the same as has been described in Chapter 7 and as shown in Figure 12.5.

Figure 12.5: Triune Forces of a vortex
Image: http://pondscienceinstitute.on-rev.com/imagesNatDyn/spiral-stria.jpg

12.7 Vortex Periphery

The periphery is molecular rotation governed by centrifugal forces counter-balanced by centripetal forces. In this section of the vortex molecular substances (gases, evacuated debris, *etc.*) *orbit* around the vortex rotating center at high velocities and constitutes the visible form of the vortex.

[20] [antagonsim]

12.8 Vortex Wall

The wall or border condition between the still magnetic light and whirling molecular gases is where centripetal forces (syntropy) are transformed to centrifugal energies (entropy). Obviously this conversion zone is created by a dynamic balance between the inward pulling centripetal or syntropic forces of the vacuous etheric center and the outward flinging centrifugal entropic forces maintained by sufficient velocities.[21]

If we picture three tornadoes rotating at 90° to each other would the combined forces tend enclose themselves to create a sphere much like Keely's description of corpuscles formed via rotating envelopes[22]? Of course they would.

Figure 12.6: Typical idealized torus, toroid or "donut" concept
Image: http://pondscienceinstitute.on-rev.com/imagesNatDyn/donut-idealized.jpg
(courtesy anonymous web artist)

12.9 Toroid

Idealized toroids are essentially composed of two opposing vortices meeting at their two apices forming a mutual center of neutrality, voidance or transformation. Being resultants of vortex structural components and dynamics they exist by virtue of these defining attributes. Of course, this is a preliminary study and does not include all the myriads of structural and dynamical properties of all the different vortex forms. Please note these dynamics are inherent causative properties and not a mathematical description of phenom-

[21] [Law of Cycles], [Law of Transformation of Forces]
[22] [rotating envelopes]

ena which would be elegant in and of itself[23] yet just a facsimile of what is really taking place.

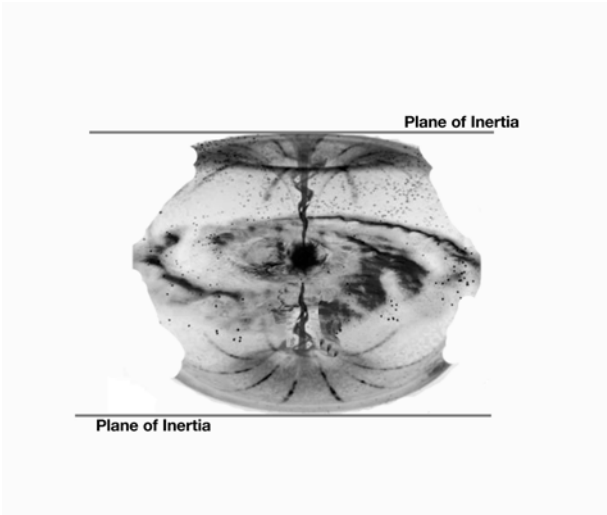

Figure 12.7: Ideally toroids are two vortices meeting apex to apex
Image: http://pondscienceinstitute.on-rev.com/imagesNatDyn/donut-inverted-mod.jpg

12.9.1 Sympathetic Associative Attraction

The two apices come together by virtue of sympathetic associative attraction or syntropy according to the Law of Harmony. They meet in this fashion at Russell's 4++ wave crest where the Law of Cycles kicks in and the Law of Repulsion assumes preponderance.

[23] for a good example: http://vortexmath.webs.com/

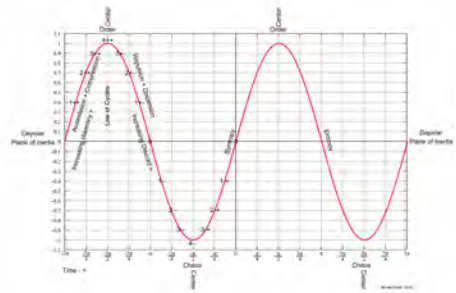

Figure 12.8: Wave elements of Time, Compression and Dispersion
Image: http://pondscienceinstitute.on-rev.com/imagesNatDyn/sine-indig-wave1.jpg

Figure 12.8 shows an idealized structure of a wave being a sine wave. Some of the functional elements are included for identification purposes. In reality the left upward moving slope is syntropic (Law of Harmony) and will usually be a longer time interval than from upper Center to lower Center (Law of Repulsion) which time may be greatly reduced. This is the time interval when compression (harmony) reverts to dispersion (repulsion) according to the Law of Cycles and may be of negligible duration. Hence the overall sine wave form will become a sawtooth wave as harmonics are generated and synthesized into the wave form according to the same law. An excellent animation of this process can be found on Wikipedia/Sawtooth_wave here:

http://en.wikipedia.org/wiki/Sawtooth_wavemediaviewer/File:Synthesis_sawtooth.gif

12.9.2 Law of Cycle

This sympathetic associative attraction increases until the conditions for the Law of Cycles to assume dominance at which point the sympathetic associative attraction reverts to anti-sympathetic mutually repellant discords[24] of increasing amplitudes. These discords will increase until their power of repulsion exceeds the power of attraction at which point the associating forces become repellant and the center discharges at 90° to the formative sympathetic associative forces. Thus forming the expanding energies outward through the equator. Russell proposed a four step compression to the 4++

[24]By formation of secondary and tertiary pitches not harmonic with the fundamental.

point of transformation discussed in previous chapters[25].

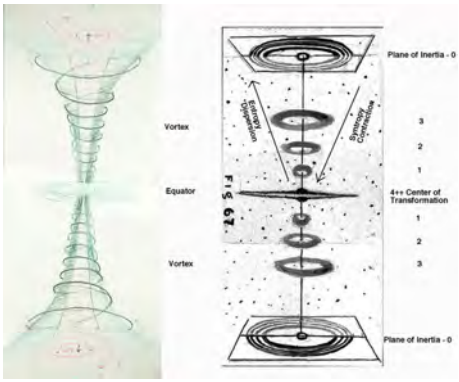

Figure 12.9: Compression to center then equatorial dispersion
Image: http://pondscienceinstitute.on-rev.com/imagesNatDyn/vortex-side-by-side-sm.jpg
(courtesy University of Science and Philosophy)

12.9.3 Neutral Center Repulsion

The now highly anti-sympathetic (enharmonic) centralized bipolar center goes 'critical' so to speak when the participant substances mutually repel each and all other participant substances as they override the harmonic syntropic forces of attraction and compression. The mutual repulsion occurs 90° to the sympathetic associative forces outwards towards and through the equatorial plane.

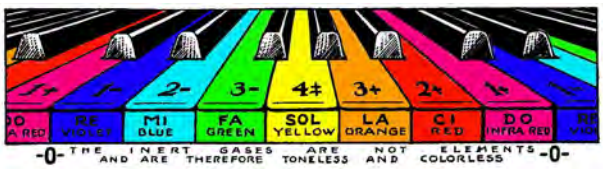

Figure 12.10: 4++ at center of transformation
Image: http://pondscienceinstitute.on-rev.com/imagesNatDyn/4plusplus.jpeg
(courtesy University of Science and Philosophy)

[25]Figure 10.3: Scale of 0 to 4 to 0

12.9.4 Periphery Neutralization or Depolarization

As these substances move away from the center and nearing the end of influence of sympathetic outreach they begin losing their polar condition or state until such point as they become again depolarized or neutralized. The center represents Russell's 4++ state. The polar substances becoming depolar at the 0th state of Russell's Scale of Locked Potentials.[26] Beginning at the vortex center with 4++ maximum polarization expanding outward (dispersing according to the Square Law) gradually losing polarization until all polarization is lost (depolarization) at the 0th state of Russells Scale of Locked Potentials which he defines as the Cube Wall of Neutrality, Plane of Inertia or the limit of Keely's sympathetic outreach[27]. At this Plane of Inertia a reversion takes place where the depolar state becomes polarized and begins the journey back to the 4++ state or condition.

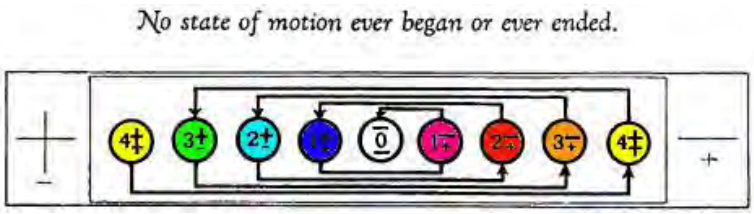

Figure 12.11: Depolar state at plane of inertia
Image: http://pondscienceinstitute.on-rev.com/imagesNatDyn/0-inertia.jpeg
(courtesy University of Science and Philosophy)

12.10 Plane of Inertia

We can see from photographs of hurricanes the tops are generally flat. These flat tops appear to coincide with Russell's plane of inertia which coincides with the wall of his cube structures. Physically this is a zone where there is no polarity or is depolar. This extending downward as polarity increases to where the maximum (4++) zone is reached at or near the surface of the earth where most polarity occurs and hence the most violent action or motion.

[26] [12.01 - Scale of Locked Potentials]
[27] [sympathetic outreach]

12.11 Free Space

With hurricanes and tornados the plane of inertia is in higher altitudes if not space itself and the vertex at the surface of the earth are mostly molecular structures and are bound by gravity and other terrestrial dynamics. In the case of free forming quantum entities these bounds do not exist as these formations form in etheric space or vacuum. According to Keely and Russell there are two vortices per axis coming together at their mutually attractive centers or vortices making six in number. Do all six have the exact same wave function? No, else they would all be exactly the same which is an impossibility.

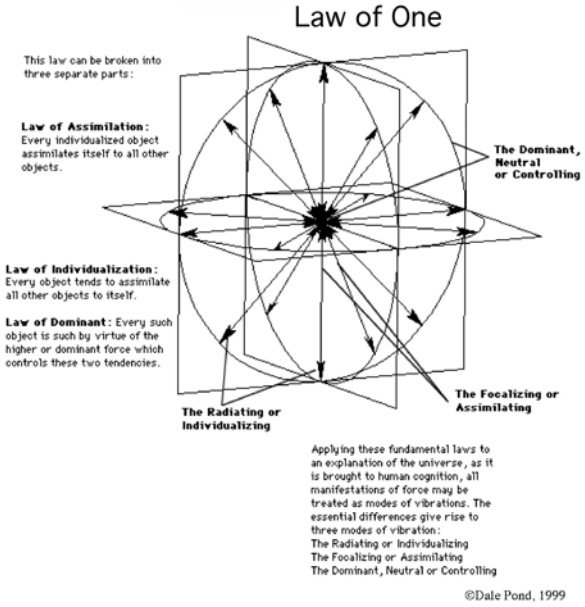

Figure 12.12: Triune polar forces as One Force about a common center
Image: http://pondscienceinstitute.on-rev.com/imagesNatDyn/triune-modes-motion.jpg

Following the logic of Russell's cosmogony there are virtual 'cubes' in Free Space having six sides. These six sides are the planes of inertia or depolarization. These correspond to Keely's juxtapositioning of atomolic centers of mutual attraction which would be an alignment with the X, Y and Z vectors each forming their own respective virtual cubes as these would align

with the planes of said virtual cubes. Therefore there would be three of these double vortices forming along these vectors, each 90° to the others. Each would possess its own center line of mutual attraction. At the compound center there would therefore be three atomolic (etheric) centers of mutual attraction and six vortices.

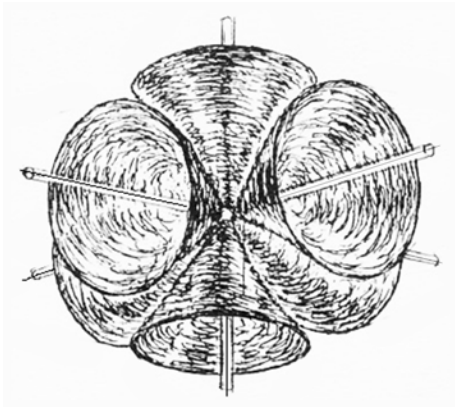

Figure 12.13: Three double vortices
Image: http://pondscienceinstitute.on-rev.com/imagesNatDyn/3d-vortices.jpeg
(courtesy anonymous web artist)

According to Keely these atomolic centers bear the burden of all structure and motion it controls. Consequently each of the three centers is autonomous and independent of the other two though the three mutually interact to some degree and manner yet to be determined as they mutually occupy the same coordinates at the center of the structure.

Therefore a quantum or etheric torus would have three orthogonal axes each with two mutually attracted vortices. This compound torus would in structure be a compound spheroid with a surface of complex motions or encapsulated rotating envelops[28] so long as their three centers are coincident.[29]

[28][rotating envelope]

[29][Etheric Capsule], [AFFINITY OF ETHERIC CAPSULES], [DISINTEGRATION OF ETHERIC CAPSULE], [ROTATION OF THE ETHERIC CAPSULE], [MEASURING THE VELOCITY OF THE ETHERIC CAPSULE]

12.12 Etheric Envelopes

Here is one of the concepts where Keely and Russell diverge in their theories. Russell has the three planes and six vortices. Keely has the three planes as axis where the etheric substance rotates at 90° to the axis resulting in an envelope or shell spinning at tremendous velocities establishing the circumference of the centralization[30]. This results in three envelopes or shells spinning at 90° to each other thus forming the entirety of the corpuscle. Each shell acts together geometrically to fully enclose the corpuscle as they seal each others' non-rotating poles.

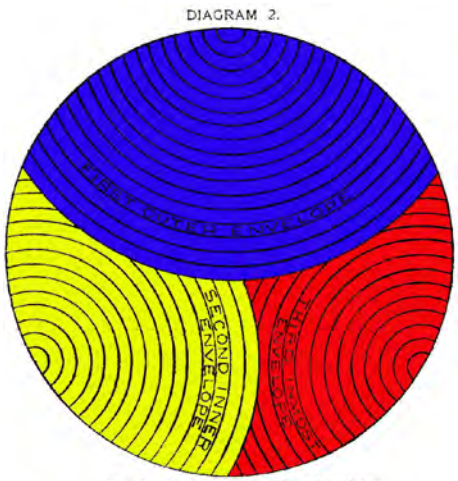

Figure 12.14: Keely's three envelopes or shells
Image: http://pondscienceinstitute.on-rev.com/imagesNatDyn/envelopes.jpg

[30] [Figure 7.3 - Step 3 - Sphere Forms Orthogonally Triple Compressing Shell Layers]

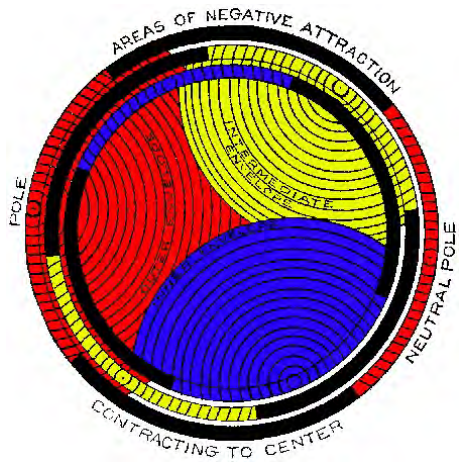

Figure 12.15: Three overlapping envelopes or shells sealing poles
Image: http://pondscienceinstitute.on-rev.com/imagesNatDyn/sealedpoles.jpg

This configuration[31] is fundamentally important to Keely's work with splitting the atom or molecule releasing its latent forces bound within. He said the ether (quantum substances) when given sufficient velocity will rotate and centripetally seek its controlling neutral center. The greater the velocity the greater the syntropic force the greater the compression inward and greater the contained latent energy to be liberated. He did this by manipulating these envelopes or shells rupturing them whether instantly or gradually.[32][33][34]

It is not the purpose of this book to go into the details of how Keely manipulated these molecular and atomic envelopes (splitting the atom) to produce his etheric vapor and other forces and quantum substances. To do so would require a doubling or more of its volume (and time to write) and it is already near too much to digest. Perhaps a subsequent volume would be appropriate covering his dissociation and disintegration processes[35] with water and other

[31][Figure 4.12 - Keelys Formative Structural Dynamic Morphology]
[32][15.18 - Keelys Process for Liberating Ether from Water]
[33][Vibratory Physics - True Science]
[34][Etheric Vapor]
[35][Aqueous Disintegration], [THEORY AND FORMULA OF AQUEOUS DISINTEGRATION], [DISINTEGRATION OF ETHERIC CAPSULE], [Disintegration], [Dissoci-

elements.

ation], [DISINTEGRATION OF MATTER - THREE SYSTEMS]

Chapter 13

Electricity and Magnetism

13.1 Electricity is a Polar State Dipole

Contrary to popular belief the common generator of electricity flow or current does not generate electrons then pushes them along a conductor. The generator creates a polarity, potential, dipole or bias between the positive electricity and negative electricity streams where prior to this condition of separation neither pole seemed to exist. This creation of this bias or potential is in fact a differentiation or splitting into three flows of an undifferentiated compound triune flow.

"I believe electricity to be a substance, not a force."[1]

"Electricity is the result of three differentiated sympathetic flows, brought together by combining the celestial flow with the terrestrial flow through a certain degree of "negative attractive assimilation". Electricity is one of Nature's efforts toward restoring "attractive differentiation" for it has the highest degree of assimilative affinity."[2]

13.1.1 Voiding the Dipole or Polarity

Once the two (dipole) electric streams are created, thus creating a potential, they have a natural tendency to re-emerge or assimilate each other through

[1] Keely quoted in [Pittsburg Dispatch April 07-1890]
[2] [Keely in SYMPATHETIC STREAMS - Snell]

voiding as Russell calls it and neutralization or depolarization as Keely calls it. This voiding, neutralization or depolarization is accomplished by providing a conductor and a place or load where the separated streams can and will recombine, re-emerge, unite, assimilate or void the created polarity, dipole or bias - returning back to their natural undifferentiated state. Heat, light and rotation are produced at the point of voiding, neutralization or depolarization by the interaction (antagonism) of these streams against each other.

13.1.2 Conduction

The conduction of the electric current along a conductor is governed by Keely's Law of Electric Conductivity.

13.1.3 Polar and Depolar States

An electric dipole is mutually attractive and will do everything possible to neutralize itself.

A magnetic dipole is mutually repulsive and will retain its polar state.

The difference between these two states of attraction and repulsion is explained in Keely's Law of Attraction and Law of Repulsion - governed by or as explained in the Laws of Being. See also [Bjerknes Effect]

13.2 Keely on Electricity

Should we bring our understanding from previous chapters to bear upon electricity and magnetism a paradigm forms somewhat different than the standard model but which appears to make sense and evidently works as Keely produced electricity from etheric space (vacuum) in 1893.[3]

"Nikola Tesla, for reasons that need not be explained, would not have been able to serve on the committee. It is well known that he is striving to draw power from space by purely scientific methods, which Keely succeeded in doing

[3] [Dogmatism of Science], [Keely - Electricity from Space], [Newton of the Mind], [Free Energy], [The Operation of the Vibratory Circuit]

in 1893 by "unscientific methods."[4]

"Electricity is the result of three differentiated sympathetic flows, combining the celestial and terrestrial flows by an order of assimilation negatively attractive in its character. It is one of Nature's efforts to restore attractive differentiation. In analyzing this triple union in its vibratory philosophy, I find the highest order of perfection in this assimilative action of Nature. The whole condition is atomic, and is the introductory one which has an affinity for terrestrial centres, uniting magnetically with the Polar stream; in other words, uniting with the Polar stream by neutral affinity. The magnetic or electric forces of the earth are thus kept in stable equilibrium by this triune force, and the chords of this force may be expressed as 1st, the dominant, 2nd, the harmonic, and 3rd, the enharmonic. The value of each is, one to the other, in the rates of figures, true thirds. E flat - transmissive chord or dominant; A flat - harmonic; A double flat - enharmonic. The unition of the two prime thirds is so rapid, when the negative and the positive conditions reach a certain range of vibratory motion, as to be compared to an explosion. During this action the positive electric stream is liberated and immediately seeks its neutral terrestrial centre, or centre of highest attraction."

[4]Bloomfield-Moore in [Dogmatism of Science], [Keely - Electricity from Space]

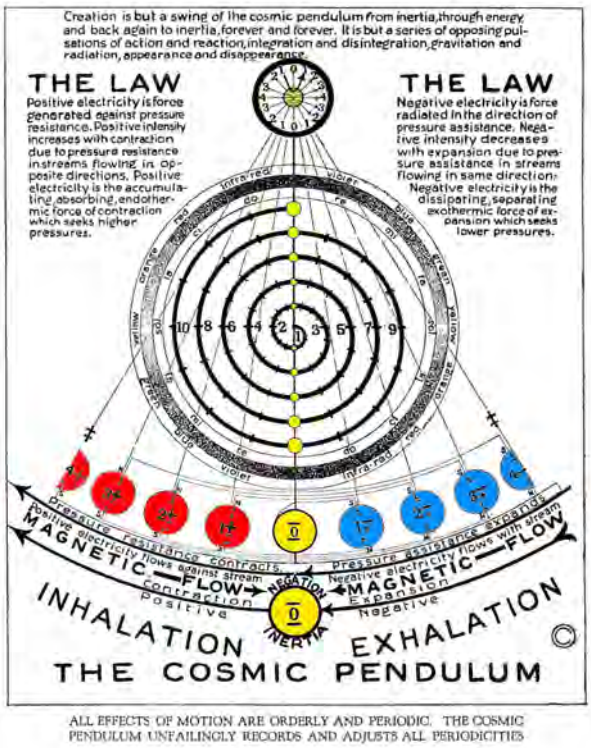

Figure 13.1: Neutral Center governing seeming opposite potential states
Image: http://pondscienceinstitute.on-rev.com/imagesNatDyn/cosmic-penduluum.jpg
(courtesy University of Science and Philosophy)

"The power of attractive vibration of the solar forces is the great coincident towards which the terrestrial magnetic sympathetic flow is diverted. This force is the celestial current that makes up the prime third of the triple association. It also induces aqueous disintegration[5] *and thermal concentration, the two prime conductors towards this coincident chord of sympathy with itself. Without this aqueous disintegration there would be no connective link*[6] *between the celestial and terrestrial. There would exist nothing but a condition of luminous radiation on the order of the aurora - a reaching out for the concordant without any sympathetic diversion to create unstable equilibrium of terrestrial magnetism. In fact under such a condition, the absence*

[5] [aqueous disintegration]
[6] [connective link]

of the sun on one side, or the absence of water on the other, the magnetic or electric force would remain in a stable state of equilibrium, or the highest order of the chaotic. Disturbance of equilibrium[7] *and sympathetic equation*[8] *constitute the dual power that governs all the varied forms of life and motion which exist terrestrially, of which the electric or magnetic is the prime mover and regulator. All electrical action, no matter of what character, has its sympathetic birth by the intervention of that current of the triune flow, which I call the dominant, with the polar harmonic current; all sympathetic flows being composed of three currents. They become associative one with the other only near the junction of terrestrial interference. The great vacuous field which exists between the planetary ranges holds this portion of the etheric flow free of all antagonism*[9]*, molecularly or otherwise, till the associative point is reached; so wonderfully planned by the Great Creator, for instant electric evolution and assimilation with terrestrial centres of attraction. I call this intervention, atomic intermolecular and molecular density. The combination of the action of the triune sympathetic celestial stream with the same intervening medium induces heat and light as the resultant of these corpuscular confliction with sympathetic celestial and terrestrial focalized centres of neutral radiation. I do not recognize electricity, nor light, nor heat as coming from the sun. These conditions, according to my theories, emanate from atomic and interatomic interference on induced molecular vibration, by sympathetic etheric vibration, the celestial attractive being the prime mover. In my estimation this is not at all phenomenal; it is only phenomenal as far as the knowledge of its action in mechanical physics is concerned. Physicists have been working in the wrong direction to lead them to associate themselves with Nature's sympathetic evolution. The expression "Electricity attracts at a distance" is as bad as, if not worse than, the "microbe of the magnet." Clerk Maxwell seems, when theorizing on sound transmission by an atmospheric medium, not to have taken into consideration the philosophy attending the phenomena of the origination of electric streams in celestial space. Light is one of the prominent evolved mediums in electric action, and is evolved by corpuscular bombardment*[10] *induced by sympathetic streams acting between the neutral centres of planetary masses, all of which are under a condition of unstable equilibrium. These unstable condition were born in them, and were*

[7] [Disturbance of equilibrium]
[8] [sympathetic equation]
[9] [antagonism]
[10] [INTERATOMIC BOMBARDMENT], [bombardment]

thus designed by the Architect of Creation in order to perpetuate the connective link between the dispersing positive and the attractive negative. The action that induces this link I call sympathetic planetary oscillation.[11]

"Light is induced by electromagnetic percussion emanating from the ether, and in its action represents the plane of magnetism. In fact, it is the plane of magnetism when under polarization. (Platina wires the thickness of a fine hair associated with each of the nine nodal beads, and concentrated towards a general center of focalization, attaching the other end of the wires to the focal center, will determine, by the magnetic conduction, the number of corpuscular oscillations per second induced by a thought, either positive or negative, in the central centers. These are the only conditions - those of magnetic conduction - whereby the evolution of a thought can be computed in regard to its force under propagation, as against the amount of latent energy set free to act as induced by such thought on the physical organism.) Some scientific theories of the past have taught us that electricity and magnetism are one and the same thing. Sympathetic vibratory philosophy teaches that they are two distinct forces of one of the triune sympathetic family."[12] (underline added)

"Maxwell's theory[13] *is correct that the plane of polarized light is the plane of magnetic force. The sympathetic vibrations associated with polarized light constitute the pure coincident of the plane of magnetism. Therefore, they both tend to the same path, for both are interatomic, assimilating sympathetically in a given time, to continue the race together, although one precedes the other at the time of experimental evolution. The time is approaching when electromagnetic waves with an outreach of two feet will be produced, having an energy equal to that now shown up on the magnet when it is about to kiss its keeper, and showing a radiating force too stupendous for actual measurement."*[14]

"Professor Fitzgerald's[15] *lecture on electromagnetic radiation shows that sci-*

[11][Vibratory Physics - The Connecting Link between Mind and Matter]
[12]Snell, [Snell Manuscript]
[13][Maxwell Equations]
[14][Snell], [Snell Manuscript]
[15][Professor George Francis Fitzgerald, Irish professor 1851-1901, specializing in electromagnetic theory and physics.]

entific men are beginning to realize and that fairly, the truths appertaining to the new philosophy. The professor admits that electricity and magnetism are of differential character and he is right. The progressive subdivision, induced by molecules by different orders of sympathetic vibration, and the resultant conditions evolved on the intermolecule[16] *and interatom*[17]*, by introductory etheric dispersion, prove that the magnetic flow of itself is a triple one, as is also the electric."*[18]

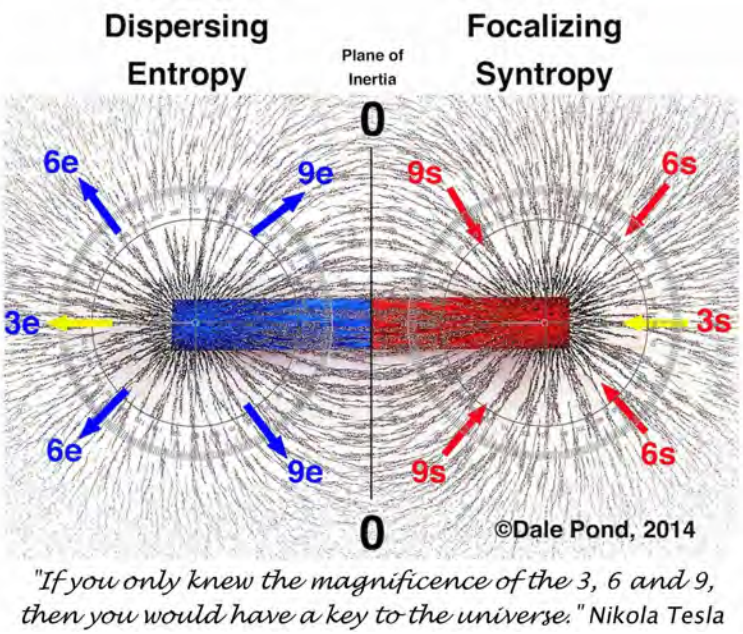

Figure 13.2: Triune Forces of Magnetic Field in Magnet
Image: http://pondscienceinstitute.on-rev.com/imagesNatDyn/Forces.jpg

Keely says the iron of the magnet has no magnetism of itself. The iron atoms of the magnet diverts a portion of the terrestrial streams. In the above image this diversion is clearly shown where the streams come into the South pole and exit via the North pole. Also shown are the two modes of Syntropy (s), Entropy (e) as also the 3, 6 and 9 modes. His explanation is:

[16] [intermolecule]
[17] [interatom]
[18] [Snell], [Snell Manuscript]

"The explanation of the magnetic flow is very simple. The harmonic attractive chord, thirds, induces nodal interference on the harmonic current in the earth's polar stream, and it moves toward the negative pole to flow out through the positive end. The diversion of the harmonic portion of the stream from the dominant portion causes the magnet to assume its position."[19]

"Again, the professor says that electricity and magnetism would be essentially interchangeable if such a thing existed as magnetic conduction, adding: "It is in this difference that we must look for the difference between electricity and magnetism." Thus you see how plain it is that progressive scientists are approaching true science. The rotation of the magnetic needle[20]*, as produced in my researching experiments, proves conclusively that the interchange spoken of, in Professor Fitzgerald's lecture, is a differentiated vibratory one, in which the dominant and enharmonic forces exchange compliments with each other, in a differential way, thus inducing rotation, in other words polarization and depolarization."*[21]

"In electric lighting, the velocity of the dynamos accumulates only the harmonic current - by atomic and interatomic conflict - transferring one-two hundred thousandth (1/200,000) of the light that the dominant current would give, if it were possible to construct a device whereby it could be concentrated and dispersed."[22]

13.3 Russell on Electricity

"Electricity is the servant of the God-Mind. Electricity expresses the desire in the God-Mind for creative expression by seemingly dividing the One still light into transient waves of spectrum divided positive-negative colors of light."[23]

"Electricity is the motivative force which projects the One Light of Mind two ways to create cycles of light waves for the purpose of expressing thought

[19][POLARIZATION AND DEPOLARIZATION]
[20][4.2.5 - Rotation of Compass Needle], [DISTURBANCE OF MAGNETIC NEEDLE]
[21][Snell], [Snell Manuscript]
[22][Snell], [Snell Manuscript]
[23]Russell, [The Secret of Light], page 50

cycles."[24] (underline added)

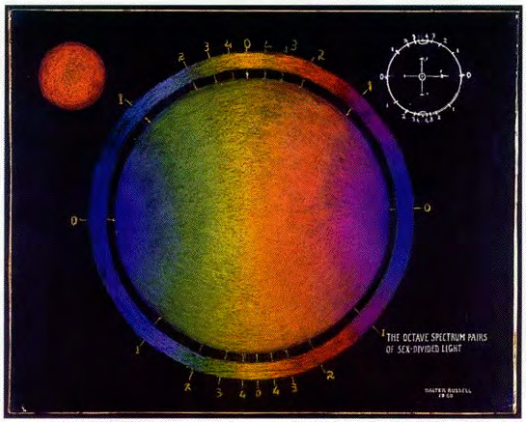

Figure 13.3: White Light of Mind divided into red and blue halves
Image: http://pondscienceinstitute.on-rev.com/imagesNatDyn/red-blue.jpg
(courtesy University of Science and Philosophy)

"Electricity is the divider of the invisible white still magnetic light of gravity - which Mind is - into the red and blue halves[25] *of the visible light spectrum for the purpose of creating male and female bodies which alone constitute all matter."*[26]

"As servant of Mind, electricity gives moving form to the idea by performing the work necessary to produce it."[27]

"Electricity is forever winding light up into hot spheres, surrounded by cold cube wave-fields of space, and likewise sequentially unwinding them for rewinding. While winding them into compressed light masses, they are simultaneously unwinding to a lesser extent. Conversely, while unwinding they are simultaneously rewinding to a lesser extent."[28]

[24] Russell, [The Secret of Light], page 57
[25] [chemism], [rad-energy]
[26] Walter Russell, notation on chart, 1955.
[27] Russell, [The Secret of Light], page 114
[28] Russell, [The Secret of Light], page 124

"The farther removed from rest, the greater the strain or tension. That which we call high electric potential is merely great strain to maintain a condition which is far from the condition of rest."[29]

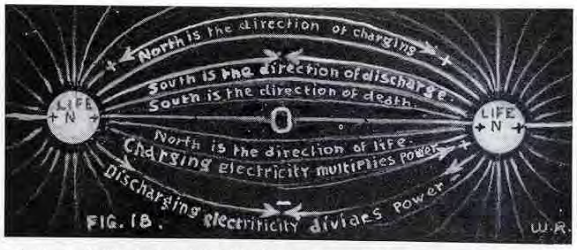

A study of Fig. 18 together with the bar magnet diagrams and other polarity diagrams shown in Figs. 11 to 16 will prepare you for a better understanding of the nature of electricity and the electric current.

Figure 13.4: Attractive (syntropic) power of electricity
Image: http://pondscienceinstitute.on-rev.com/imagesNatDyn/attractive-electricity.jpg
(courtesy University of Science and Philosophy)

"Electricity is the strain or tension set up by the two opposing desires of universal Mind thinking - the desire for balanced action and the desire for rest."[30]

"Electricity creates Life by dividing stillness into two-way [polar] motion. It creates death by rest (depolar) from motion."[31]

[29]Russell, [The Secret of Light], page 139
[30]Russell, [The Secret of Light], page 139
[31]Russell, [Atomic Suicide]?; Figure 9 and 10, page 88]

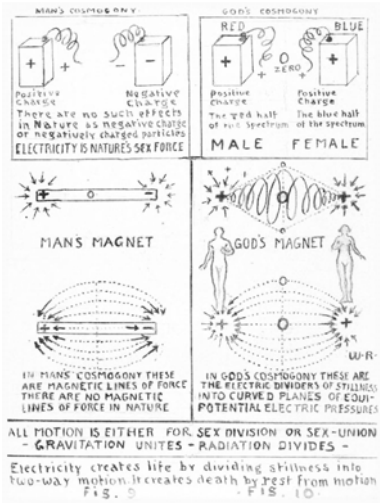

Figure 13.5: Polar dynamics of electricity
Image: http://pondscienceinstitute.on-rev.com/imagesNatDyn/fig-9-10-88-bw.jpg
(courtesy University of Science and Philosophy)

"Electricity is the strain or tension set up by the two opposing desires of universal Mind thinking - the desire for balanced action and the desire for rest."[32]

"As rest cannot be unbalanced save by illusion, electricity which causes that illusion has no existence."[33]

"Electricity is the servant of Mind. It does all of the work of creating this light-wave universe in unfolding-refolding sequences which Mind desires. The universal Mind has two desires - the desire for creative expression through the action of concentrative (polar) thinking and the desire for rest from action through decentrative (depolar) thinking."[34]

[32]Russell, Walter; [The Secret of Light], page 139
[33]Russell, [The Secret of Light], page 141
[34]Russell, [The Secret of Light], page 144

13.4 Tesla on Electricity

"The day when we shall know exactly what electricity is will chronicle an event probably greater, more important, than any other recorded in the history of the human race."[35]

Below is a quote from William Lyne's book[36] discussing Tesla's ideas about electricity and magnetism. We will see Tesla's ideas were decidedly different than Keely's or Russell's. Incidentally Tesla knew of Keely and he knew Russell personally s mentioned in Russell's 'Atomic Suicide?' book.

In his 1891 A.I.E.E. lecture at Columbia College, Nikola Tesla said in pertinent part: ''*What is electricity, and what is magnetism "...We are now confident that electric and magnetic phenomena are attributable to the ether, and we are perhaps justified in saying that the effects of static electricity are effects of ether in motion". "...we may speak of electricity or of an electric condition, state or effect". "...we must distinguish two such effects, opposite in character neutralizing each other". "...for in a medium of the properties of the ether, we cannot possibly exert a strain, or produce a displacement or motion of any kind, without causing in the surrounding medium an equivalent and opposite effect." "...its condition determines the positive and negative character." "We know that it acts like an incompressible fluid;" "...the electro-magnetic theory of light and all facts observed teach us that electric and ether phenomena are identical." "The puzzling behavior of the ether as a solid to waves of light and heat, and as a fluid to the motion of bodies through it, is certainly explained in the most natural and satisfactory manner by assuming it to be in motion, as Sir William Thomson*[37] *has suggested." "Nor can anyone prove that there are transverse ether waves emitted from an alternate current machine; to such slow disturbances, the ether, if at rest, may behave as a true fluid.*"

In his statements, Nikola Tesla was balancing the various arguments in preparation for his decision: *"...Electricity, therefore, cannot be called ether in the*

[35] [Nikola Tesla]

[36] Summation of Tesla's Dynamic Theory of Gravity; An excerpt from: Occult Ether Physics by William R. Lyne

[37] [William Thomson], 1st Baron Kelvin OM, GCVO, PC, PRS, PRSE, (26 June 1824 - 17 December 1907) was a Belfast-born British mathematical physicist and engineer.

broad sense of the term; but nothing would seem to stand in the way of calling electricity ether associated with matter, or bound ether; or, in other words, that the so-called static charge of the molecule is ether associated in some way with the molecule."

"*...It cannot differ in density, ether being incompressible: it must, therefore, be under some strain or in motion, and the latter is the most probable.*" Nikola Tesla obviously believed in an ether (quantum substances) which was in motion relative to earth, because the earth is in motion.

The thing which Nikola Tesla had realized, was that ether possesses electric charges which are deposited on or contained within atoms. In supporting the "dynamic" ether concept, he was supporting the "stationary ether" concept, since the "motion" he referred to was "apparent" motion of the ether perceived by an observer on earth, relative to a stationary ether.

The importance of cosmic motion to the electromagnetic effects of static charges was brought up by Nikola Tesla in his lecture: *"About fifteen years ago, Professor Rowland*[38] *demonstrated a most interesting and important fact, namely, that a static charge carried around produces the effects of an electric current." "...and conceiving the electrostatically charged molecules in motion, this experimental fact gives us a fair idea of magnetism. We can conceive lines or tubes of force which physically exist, being formed of rows of directed moving molecules; we can see that these lines must be closed, that they must tend to shorten and expand, etc. It likewise explains in a reasonable way, the most puzzling phenomenon of all, permanent magnetism, and, in general, has all the beauties of the Ampere theory without possessing the vital defect of the same, namely, the assumption of molecular currents. Without enlarging further upon the subject, I would say, that I look upon all electrostatic, current and magnetic phenomena as being due to electrostatic molecular forces.*"

In these statements, Nikola Tesla showed he was aware that any "stationary" locale on earth is actually in fantastic motion ("70,000 mph"). The electro-

[38][Henry Augustus Rowland] (November 27, 1848 April 16, 1901) was a U.S. physicist. Between 1899 and 1901 he served as the first president of the American Physical Society. He is remembered today particularly for the high quality of the diffraction gratings he made and for the work he did with them on the solar spectrum.

static charges "carried around" are currents between atoms and the ether, which produce magnetism. The phenomena of 'permanent magnetism' or 'cosmically induced' magnetism are apparently due to electrostatic charges 'carried around' by cosmic motion, in the universal ether field.

Since no one can hold an atom or molecule perfectly still - because it is in fantastic motion - all atoms and molecules carry currents producing magnetic fields. Since a magnetic field is the product of a current, no one can produce a magnetic field without electricity, moving through or along a conductor, or as electrostatic charges in local or cosmic motion." [39]

"Now, I must tell you of a strange experience which bore fruit in my later life. We had a cold snap observed even drier than before. People walking in the snow left a luminous trail. As I stroked Macak's back, it became a sheet of light and my hand produced a shower of sparks. My father remarked, this is nothing but electricity, the same thing you see on the trees in a storm. My mother seemed alarmed. Stop playing with the cat, she said, he might start a fire. I was thinking abstractly. Is nature a cat? If so, who strokes its back? It can only be God, I concluded. I can not exaggerate the effect of this marvelous sight on my childish imagination. Day after day I asked myself what is electricity and found no answer. Eighty years have gone by since and I still ask the same question, unable to answer it." Tesla [40]

13.4.1 Summary

Keely's definition of electricity in this writer's opinion seems to address the issue best of the three because he details causative forces - when allied with some of Russell's ideas. More research into Tesla's ideas is required. We know ether is quantum and supports electric and magnetic phenomena. To fully understand Keely's definition requires a re-education to more fully grasp his concepts discarding (or at least setting aside) descriptions of phenomena (effects) to the contrary.

[39] Summation of Tesla's Dynamic Theory of Gravity; An excerpt from: Occult Ether Physics by William R. Lyne

[40] Nikola Tesla - Lord of Lightning; by Nikola Tesla , edited by William Kern

Chapter 14

Gravity

14.1 Keely on Gravity

"Gravity is nothing more than an attractive, sympathetic stream[1]*, flowing towards the neutral center of the earth, emanating from molecular centers of neutrality; concordant with the earth's centers of neutrality, and seeking its medium of affinity with a power corresponding to the character of the molecular mass. Gravity, he defines as transmittive interetheric force under immense etheric vibration. He continues: - The action of the mind itself is a vibratory etheric evolution, controlling the physical, its negative power being depreciatory in its effects, and its positive influence elevating."*[2]

"Gravity is transmittive interetheric force under immense etheric vibration."[3]

"Gravity is the mutual attraction of atomoles."[4]

"Gravity is an eternal existing condition in etheric space, from which all visible forms are condensed. It is inherent in all forms of matter, visible and invisible. It is not subject to time or space. It is an established connective link[5] *between all forms of matter from their aggregation. Time is annihilated by it, as it has already traversed space when the neutral centers*

[1] [sympathetic stream]
[2] [Keely and His Discoveries], Chapter 5
[3] Keely
[4] Keely
[5] [connecting link]

of the molecules were established. It is nothing more than an attractive, sympathetic stream, flowing towards the neutral center of the earth, emanating from molecular centers of neutrality, concordant with the earth's centers of neutrality and seeking its medium of affinity with a power corresponding to the character of the molecular mass."[6]

"Nature has established her sympathetic concordants from the birth of the neutral centres of the planets. This is gravity; therefore gravity is fixed, inherent. There is no flight of gravity."[7]

"Gravity is polar propulsion the sympathetic concordant of the ninths and but one of the triune combinations. Magnetism is polar attraction, while gravity is polar propulsion. By proper vibrations, the action of both magnetism and gravity can be intensified or accelerated."[8]

"The sympathetic outreach[9] *of negative attraction*[10] *is the power that holds the planetary masses in their orbital ranges of oscillatory action."*[11]

"Gravity is not subject to time or space. It pervades the universe without reference to time or space, instantaneously and without intermission. It is, however, a sympathetic flow, proceeding from the molecular or mass neutral centers to the earth's neutral center with a power corresponding to the character of each individual molecular mass." He [Keely] believed gravity dependent on the medium of the polar stream, for he says *"If the sympathetic negative polar stream were cut off from the earth the molecular neutral centers would float away into space like a swarm of bees."*

"Under my system the gravital flow comes under the order of the "sympathetic concordant of the ninths" and is that third of the triune combination called the "polar propulsive." Gravity is polar propulsion while magnetism is polar attraction. Both magnetism and gravity can be accelerated by proper

[6] John Worrell Keely circa 1886, [Snell Manuscript]
[7] [Snell Manuscript]
[8] MAGNETIC ENGINE - Snell]
[9] [sympathetic outreach]
[10] [7B.18 - Sympathetic Negative Attraction], [negative attraction], [Neutral Negative Attraction], [polar negative attraction], [Sympathetic Negative Attraction]
[11] Keely, [Snell Manuscript]; [Sympathetic Negative Attraction]

vibrations.

"He believed gravity to be the result of a law which provides for a reversion of attraction in repulsion, and which acts by transmission of force under immense etheric vibration through the "interetheric subdivision." He also showed that gravitation acts "as a lever." MacVicar states "Every individualized object assimilates itself to itself in successive moments of its existence and all objects tend to assimilate one another." Keely says "Gravity is an ever existing eternal force, coexistent with the compound etheric or high luminous (seventh subdivision) since it entered into, and is an inherent property of, all forms of aggregated matter from their birth. It is the source from which all matter originated and each substance-unit or neutral center is a concordant link, attractive and dispersive, to all other neutral centers. Each neutral center is the nucleus of what we recognize as substance and is potentially the nucleus of a planet."[12]

14.2 Keely and anti-gravity

Keely not only had a working theory of what gravity is and how it functions he also developed experimental models which he demonstrated to scientists of his time and an actual heavier-than-air flying craft.[13]

From Dashed Against the Rock - *"A small instrument, having three gyroscopes as a principal part of its construction, is used to demonstrate the facts of aerial navigation*[14]*. These gyroscopes are attached to a heavy, inert mass of metal, weighing about one ton. The other part of the apparatus consists of tubes, enclosed in as small a space as possible, being clustered in a circle. These tubes, represent certain chords, which were coincident to the streams of force acting upon the planet, focalizing and defocalizing upon its neutral center. The action upon the molecular structure of the mass lifted was based upon the fact that each molecule in the mass possessed a north and south pole, - more strictly speaking, a positive and negative pole, - situated through the center, formed by the three atoms which compose it. No mat-*

[12] [GRAVITY - Snell]

[13] [air-ship], [Air-ship model], [Figure 19.17 - Keelys Air-ship], [17.15 - Theory of Vibratory Lift for Air-ships]

[14] [aerial navigation]

ter which way the mass of metal is turned, the poles of the molecule point undeviatingly to the polar center of the earth, acting almost exactly as the dip-needle when uninfluenced by extraneous conditions, electrical and otherwise. The rotation of the discs of the gyroscopes produces an action upon the molecules of the mass to be lifted, reversing their poles, causing repulsion from the earth in the same way as like poles of a magnet repel each other. This repulsion can be diminished and increased according as the mechanical conditions are operated. By operating the three discs, starting them at full speed, then touching two of them, so as to bring them, according to the tone they represented by their rotation, to a certain vibratory ratio, the weight then slowly sways from side to side leaves the floor, rising several feet in the air, remaining in that position, and as the discs gradually decrease their speed of rotation the weight sinks to the floor, settling down as lightly as thistle-down. Where one molecule can be lifted, there need be no limit as to the number in a structure that may be operated upon as easily as one. The vessel in contemplation, the aerial navigator, will be over two hundred feet long, over sixty feet in diameter, tapering at both ends to a point, made of polished steel, and will be capable of being driven under the power of depolar repulsion, at the rate of three hundred miles an hour. It can be far more easily controlled than any instrument now in use for any phase of transit. Another very remarkable feature connected with this system of aerial navigation, is that the vessel is not buoyed up or floated in the air through the medium of the air, so that if there were no atmosphere it would float just as readily; hence, under mechanical conditions most certainly capable of production, involving massive strength of resistance to interstellar vacuity this can be made capable of navigating even the remote depth of space, positions between planets where polarity changes being controlled by other adjuncts of concentration for that purpose.

"Safely enclosed within this structure, a man possessing the chemical knowledge these new laws[15] *give, with sufficient supply of material from which to make oxygen, by the enormously increased rate of speed attained by such navigator where atmospheric friction is avoided, the time occupied in traveling from one planet to another would be amazingly brief, and one can travel to other planets in this system of worlds as easily as the same ship could navigate the depths of the ocean.*

[15] [Keelys Forty Laws]

"The great obstacle hitherto preventing the solution of this problem has been the strength of structure needed under conditions above presented. With this knowledge of matter, the size of structure is unimportant; the heaviest can be as easily controlled as the lightest."[16]

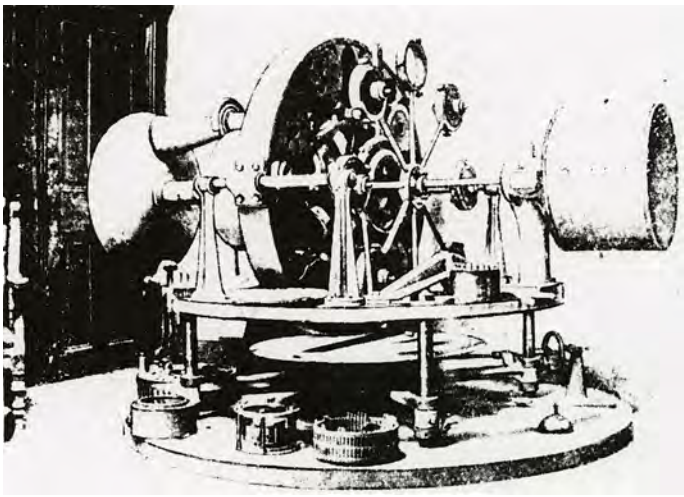

Figure 14.1: Keely's experimental air ship
Image: http://pondscienceinstitute.on-rev.com/imagesNatDyn/air-ship-photo.jpeg

14.3 Levitation experiments

No less intriguing are Keely's experiments showing principles of levitation.

[16] [Levitating Gyroscopes], [Dashed Against the Rock]

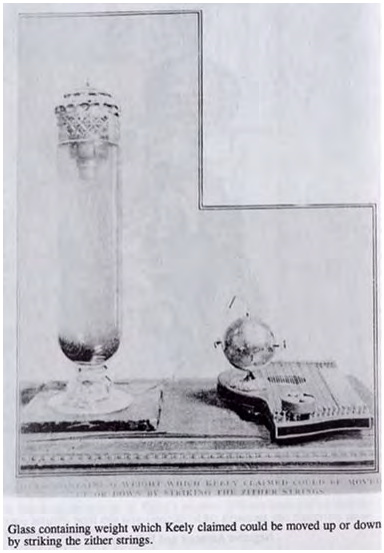

Figure 14.2: Levitating weights
Image: http://pondscienceinstitute.on-rev.com/imagesNatDyn/anti-gravity-keely.jpg

From Pittsburg Dispatch April 07, 1890 - Mr. Willcox[17] and Dr. Leidy[18] then examined the platinum wire, the metal disk on which the magnetic needles rested, the cupboard, the base of the cupboard and the table on which the disk and needle rested. When asked if there was, in his opinion, any possibility that the force which made the needle revolve[19] was electricity, compressed air or steam, Dr. Leidy looked thoughtful and said he could not see the possibility of any of those forces producing the result attained.

"What you have seen was shown you in order to illustrate the ease with which this force can be made to do work," said Keely.

"Of course the work just done was trifling. But I hope now to show you what will look very differently."

[17]Dr. James M. Wilcox, PhD, [Wilcox]

[18][Joseph Leidy] (September 9, 1823 April 30, 1891) was an American paleontologist. Leidy was professor of anatomy at the University of Pennsylvania, and later was a professor of natural history at Swarthmore College.

[19][4.2.5 - Rotation of Compass Needle], [DISTURBANCE OF MAGNETIC NEEDLE]

He pointed out then two glass jars, such as chemists use, on a table near by. The jars were of the same size, about 40 inches high, and 10 inches in diameter. They were filled with what is said to be, and certainly smelled and tasted like, Schuylkill[20] water. In the bottom of one jar lay a copper globe, cut in half to show, Keely said, just what it was; and filled, in each hollow half, with iron nails.

Another Peculiar Experiment.

In the other jar were three brass balls of different sizes. The copper globe and nails were weighed by Dr. Leidy and found to kick the beam at five pounds and six ounces. The brass balls or eggs they were egg-shaped, weighed less. Everybody sat down alter the weighing and Keely fastened another "platinum silver wire" to the cylinder on the cupboard and, detaching the one already in use from the magnetic needle disk was about to fasten the loose ends of each to the metal disks that covered the tops of the jars when some one asked if the wires were "hollow." The suggestion was followed by a smile from Keely, who at once cut off the end of one of them and handed it around.

"Prof. Rowland, of Baltimore, [had] declared that this was a fraud, because the wires were hollow,' said the woman, *"but Keely asked' him how he could explain what Keely did even on the hypothesis that the wires were hollow and he didn't answer. Then Keely got mad and would not let him cut the wire, as he wanted to do."*

Dr. Leidy followed everything closely. Keely fastened the loose ends of both wires into the metal caps of the cylinders.

The String an Important Feature.

Again he spun the spindle on his cupboard with the twine string he had used before. Again with his gnarled fingers, the joints of the first two fingers of his right hand being as big as walnuts, be pounded the "harp" in the cupboard and the resonant bars on top of it.

"What are you doing now?" asked Dr. Leidy.

[20] river that passes through Philadelphia

"I am trying" said Keely, "*to get the mass chord of that copper sphere full of nails. Every aggregation of molecules or of matter, I claim, or, in other words, every mass of matter, has a sympathetic chord, through the medium of which I can operate my vibratory force.*"

The chord was not found for some minutes. Again the spindle was spun by the help of the twine, and its whizz [sic]was distinct in the silence of the room. The search for the mass chord continued on the "harp" and the resonant rods. A deep, clear note resounded from both at the same time, and at the instant it broke on the ear the heavy copper globe quivered as it lay at the bottom of the water, rolled over, reluctantly as it were abandoning the ties by which gravity held it to the bottom of the jar, floated at first slowly, and then more swiftly and steadily to the top of the jar, against which it impinged with an audible concussion.

Gravity Easily Overcome.

"Why, there is the force of gravity as plainly overcome and indeed annihilated as it is possible for a human being to imagine," exclaimed the woman.

Dr. Leidy was asked this question: *"Doctor, is it true that this unknown force, or what is here manifested as such, has actually before your eyes overcome the force of gravity with which we are all familiar?*" and the answer, slowly, deliberately, was: *"I see no escape from that conclusion.*"[21]

14.4 Russell on Gravity

"Gravitation is the generative force of increasing potential and the regenerative force of decreasing potential.

"Gravitation is the power within the electric force of action to attract the electric force of action.

"Gravitation is the contractive power within electricity to divert the univer-

[21] [Pittsburg Dispatch April 07-1890], [Leidy and Wilcox Visit Keelys Lab], [Figure 17.18 - Keelys Levitation Demonstration], [Eye Witness Accounts]

sal constant of energy into centripetal vortices of closing spirals of increasing speed, thereby attracting similar states of motion into an accumulation of mass, the pressure of which increases toward its center.

"Gravitation is an expression of the power of electricity to accumulate by induction and, by so doing, to force magnetism to increase its resistance to that accumulation.

"Gravitation is the (electric) inductive force."[22]

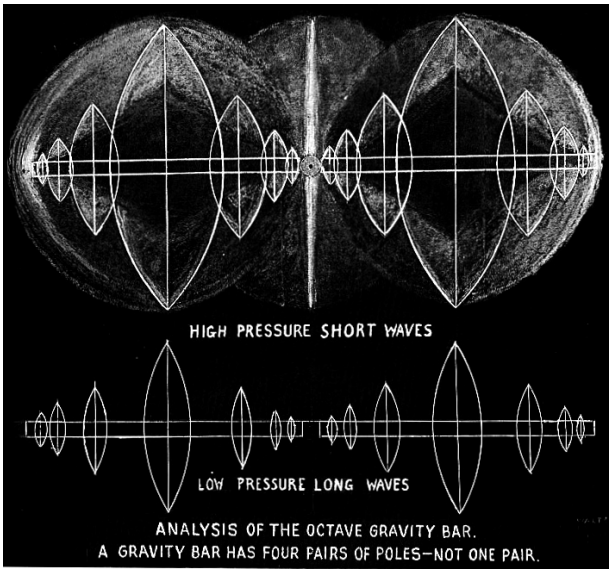

Figure 14.3: Gravity wave bar and poles
Image: http://pondscienceinstitute.on-rev.com/imagesNatDyn/gravitybar.jpg
(courtesy University of Science and Philosophy)

[22]Russell, [The Universal One]

Chapter 15

Bibliography and References

This bibliography pertains to this book alone. It does not include the hundreds of bibliographical references and links to authoritative materials accumulated throughout the svpwiki.com web site supporting the SVP paradigm.

Arguelles, Jose; Earth Ascending, page 21; 1996 (3rd edition)
Bearden, Thomas E.; Lieutenant Colonel, U.S. Army (Retired). Born Dec. 17, 1930, Cheniere, Louisiana. See [Bearden]
" " Analysis of Scalar/Electromagnetic Technology
" " Energy from the Vacuum - Concepts and Principles; 2002
" " Gravitobiology - A New Biophysics
" " The New Tesla Electromagnetics and The Secrets of Electrical Free Energy
Bible, Mathew
Bjerknes, Carl Anton
Blakiston's New Gould Medical Dictionary. The Blakiston Company, 1949. 1st edition
Bloomfield-Moore, Clara Jessup; Keely and His Discoveries, Delta Spectrum Research
" " The Operation of the Vibratory Circuit
" " Vibratory Sympathetic and Polar Flows
" " What Electricity Is, Delta Spectrum Research
" " and many other of her writings. See [Bibliography].
Brinton, Professor Daniel Garrison; (May 13, 1837 July 31, 1899) was an American archaeologist and ethnologist at the University of Pennsylvania
Carpenter, Tom; Dialogue on Awakening, The Carpenter's Press

Cayce, Edgar; the Edgar Cayce readings, The Edgar Cayce Foundation, Virginia Beach, Virginia
Colville, William; Dashed Against the Rock, 1894, Delta Spectrum Research
Efimov, Vitaly; is a Russian theoretical physicist. He proposed the existence of a novel and exotic state of matter now dubbed the 'Efimov State' as a researcher in A.F. Ioffe Physico-Technical Institute, USSR Academy of Sciences, Leningrad, USSR in his 1970 paper "Energy levels arising from resonant two-body forces in a three-body system". It was announced in 2006 that the existence of this state of matter had been confirmed.
Feynman, Richard; QED: The Strange Theory of Light and Matter; Princeton Science Library
Fuller, Buckminster; SYNERGETICS - Explorations in the Geometry of Thinking, Volumes I II, New York, Macmillan Publishing Co, 1975, 1979.
Harris, T. F., B.Sc., F.C.S.; Handbook of Acoustics, 1903, Delta Spectrum Research
Hughes, Fitzgerald; Harmonies of Tones and Colours - Developed by Evolution, Delta Spectrum Research
Keely, John Ernst Worrell, 1827-1898, discovered and developed the science of Sympathetic Vibratory Physics. Various articles. See [Bibliography].
LaRouche, Lyndon Hermyle, Jr. (born September 8, 1922) is an American self-styled economist, political activist, and the founder of several political organizations known collectively as the LaRouche movement. Various articles.
Leidy, Joseph (September 9, 1823 April 30, 1891) was an American paleontologist. Leidy was professor of anatomy at the University of Pennsylvania, and later was a professor of natural history at Swarthmore College. **Lyne**, William R.; Summation of Tesla's Dynamic Theory of Gravity; An excerpt from: Occult Ether Physics
Lockyer, Sir Joseph Norman; FRS (17 May 1836 16 August 1920), known simply as Norman Lockyer, was an English scientist and astronomer
Maxwell, James Clerk ; (13 June 1831 5 November 1879) was a Scottish theoretical physicist and mathematician. See [James Clerk Maxwell]
Pond, Dale; Speaking Freely, Delta Spectrum Research
" " svpwiki.com
" " Universal Laws Revealed, Delta Spectrum Research
" " video Basic Principles, Delta Spectrum Research
Puthoff, H. E.; "On the Source of Vacuum Electromagnetic Zero-Point En-

ergy," Phys. Rev. A, vol. 40, p. 4857,1989; Phys. Rev. A vol. 44, p. 3382,1991.
Ramsay, Dougald; The Scientific Basis and Build of Music, Delta Spectrum Research
Rossing, Thomas D. The Science of Sound. Addison-Wesley Publishing Company, 1982
Russell, Walter; Atomic Suicide?, University of Science and Philosophy
" " Fifth Kingdom, The Beginning of Man, University of Science and Philosophy
" " Genero-Radiative Concept, University of Science and Philosophy
" " Home Study Course, University of Science and Philosophy
" " notation on chart, 1955, University of Science and Philosophy
" " Russells Optic Dynamo-Generator, University of Science and Philosophy
" " The Message of the Divine Iliad, University of Science and Philosophy
" " The Secret of Light, University of Science and Philosophy
" " The Universal One, University of Science and Philosophy
Sinclair, David; A New Creed, Delta Spectrum Research
" " Vera Vita the Philosophy of Sympathy, Delta Spectrum Research
Snell, C. W.; The Snell Manuscript, Delta Spectrum Research
Stainer, John; Barrett, W. A.; A Dictionary of Musical Terms; Novello, Ewer and Co., London, 1903
Tesla, Nikola; Nikola Tesla Lord Of Lightning: The Experiments, Inventions, Lectures, Writings And Patents of Nikola Tesla
Thomson, William; 1st Baron Kelvin OM, GCVO, PC, PRS, PRSE, (26 June 1824 - 17 December 1907) was a Belfast-born British mathematical physicist and engineer. **Tyndall**, John; Sound; Longmans, Green, and Co., London, 1893
Webster's 1828 Dictionary
White, Carol; Energy Potential: Toward a New Electromagnetic Field Theory; (with essays by Bernhard Riemann trans. from German by J. J. Cleary, Jr.), Campaigner Publications, New York, 1977.
Wikipedia/Arithmetical Progression
" " /Bose-Einstein condensation
" " /Dirac Sea
" " /Efimov state
" " /Geometric Progression
" " /Linear Progression

" " /Quark-gluon plasma
" " /Richard Phillips Feynman
" " /States of matter
" " /Stockholm Syndrome

Appendix A

I - Laws of Being

from 'Keely and His Discoveries', Conclusion

Keely's Physical Philosophy

"Mr. Keely begins with sounds whose vibrations can be known and registered. I presume that the laws of ratio, position, duality, and continuity, all the laws which go to mould the plastic air by plastic bodies into the sweetness of music, will also be found ruling and determining all in the high silence of interior vibrations, which hold together or shake asunder the combinations that we call atoms and ultimate elements."[1]

"What Keely has discovered in physics, I am in some measure credited with discovering in metaphysics: this is nothing strange, according to this philosophy, which shows that many people may divine the same original truth at the same time by means of the etheric element which connects the Deity, the source of all truth, with all His creatures."[2]

Abstract of Keely's Physical Philosophy in its main features up to the point of practical application;

by Professor Daniel G. Brinton, of the Pennsylvania University; subject to

[1] [The Scientific Basis and Build of Music]; [Dougald Carmichael Ramsay]. Edited by the Rev. [John Andrew]. Marcus Ward and Co.

[2] Preface to [Vera Vita; or, The Philosophy of Sympathy]. [David Sinclair]. Author of [A New Creed]. Digby, Long and Co., London.

modifications and additions when Keely has made public his system.

The fundamental conception of the Universe is force manifesting itself in rhythmical relations. This definition is exhaustive, including both thought and extension, matter and mind. The law for the one is the law for the other. The distinction between them is simply relative, i.e. quantitative, not qualitative.
The rhythmical relations in which force acts are everywhere, under all conditions, and at all times, the same. They are found experimentally to be universally expressible by the mathematical relations of thirds.

These threefold relations may be expressed with regard to their results as,-

I. Assimilative
II. Individualizing.
III. Dominant or Resultant.

From these three actions are derived the three fundamental LAWS OF BEING.

I. Law of Assimilation: every individualized object assimilates itself to all other objects.
II. Law of Individualization: every such object tends to assimilate all other objects to itself.
III. Law of the Dominant: every such object is such by virtue of the higher or dominant force which controls these two tendencies.

Applying these fundamental laws to an explanation of the universe, as it is brought to human cognition, all manifestations of force may be treated as modes of vibrations.

The essential differences give rise to three modes of vibration:-

I. The Radiating: called also the "Dispersing," the "Propulsive," the "Positive," and the "Enharmonic." see entropy
II. The Focalizing: called also the "Negative," the "Negative Attractive," the "Polarizing," and the "Harmonic." see syntropy
III. The Dominant: called also the "Etheric," or the "Celestial."

These, it will be noted, correspond to the three laws of being. It is not to be understood that any one of these three modes of vibration can exist independently. Each by itself is called a "current," and all three must be present in every "stream" or "flow" of force. The relations of the currents in every flow are expressible in thirds, and it is experimentally demonstrable that the relations of the three are in the order named: as 33 $\frac{1}{3}$: 66 $\frac{2}{3}$: 100.

The evolution of what is called "matter" from the different modes of vibration is through the action of the second law, that of focalization, or "negative attraction," or "negative affinity."[3]

Where the vibrations under this mode meet, and are maintained in a state of mutual affinity or equilibrium, there is established what is called a "neutral center," or, as otherwise expressed, "a center of sympathetic coincidence."

The terms "neutral attraction," "neutral affinity," "negative attraction," or "polar negative attraction," are emplyed to express the property of a mode of vibration to direct its components towards such centre. see syntropy

As no current of flow of force can be composed of one mode of vibration only, but must always be composed of three modes uniting in varying thirds, we have 1 x 2 x 3 = 6 as the total possible forms of sympathetic coincidence, or, to speak in ordinary terms, there can be six; and six only, possible forms of individualized being. These are what Keely calls the six orders of atomic subdivision, or orders of vibratory motion, and he names them as follows:

Molecular
Intermolecular
Atomic
Interatomic
Etheric
Interetheric

In this list the forms of matter are arranged in the mathematical sequence of the rapidity of the oscillations of their constituent members; the proportion

[3] see [syntropy]

being proved by experiment to be as follows: for the molecular orders:

1 : 3 : 9 : 27 : 81 : 243.

This arithmetical progression changes in the atomic orders to a geometrical progression as follows:

3 : 9 : 81 : 6561 : 43,046,721; etc.

This same method of progression is believed to hold in all the orders of vibrations above the molecular, and soon passes into mathematical infinity.

Actually, however, all matter of which we are capable of cognition through the medium of our senses is in one of three forms of aggregation:

Molecular
Atomic
Etheric

in each of which the controlling mode of vibration is respectively,

The Enharmonic.
The Harmonic.
The Dominant.

But it must be understood that each of these modes is a positive and real constituent of every atom and molecule.

It will be seen that as every form of material aggregation is to be considered as a "neutral center of attraction," where the vibratory force of all three orders are held in "sympathetic coincidence," that is, in balanced activity or harmonized motion, and not by any means cancelled or mutually destroyed, there is no diminution of force, but only temporary suspension of its radiating or propulsive activity or expression. [4]

This is the foundation of Keely's doctrine of "latent force," and of the indef-

[4] see [Rhythmic Balanced Interchange]

inite power which can be obtained by breaking up the harmonious balance or equation of forces of every mode, which exists in every "neutral center," that is to say in every mass of matter.

Insomuch as every mass of matter consists thus, in fact, of vibrations in harmonic equilibrium, related by simple proportions of thirds, it follows that every mass of every description stands in harmonic relations to every other mass. This is, in part, what is meant by the sympathy of all forms of matter and of motion; and it is through the study of the methods of increasing or diminishing this sympathy that we reach practical results in this field of research. At present this is best accomplished by resonance; that is, through the harmonic vibrations created by musical instruments, bringing out the acoustic world as the microscope reveals the hidden visual world.

Every visible or tangible mass of matter must be regarded as an aggregation of molecules; the molecules being the true centres of the equated forces of "neutralized attraction."

These molecules have been experimentally proved by Keely to be formed of all three modes of vibration; the proof being that they respond to all three modes when subjected to the tests of compound concordant impulses.

When in that state of neutral aggregation which we know as matter, each molecule is in perpetual oscillation, the range of the oscillation being one-third of the molecule, and its rapidity 20,000 oscillations in a second.

It is through the disturbance of this oscillatory equilibrium, by means of resonant impulses, that Keely alters the relations of the vibratory impulses which constitute matter. This he does by striking the same chord in three octaves, representing the third, sixth, and ninth of the scale.

Of these, the sixth reduces the range of molecular vibrations or oscillations; and, by thus bringing nearer to each other the neutral centers, increases solidification.

The ninth extends the range of molecular oscillation, and thus tends to give greater tenuity to the mass. It induces "trajectile velocity" from neutral centers, or "neutral radiation." Experiment shows that molecular dissociation

does not take place until the molecule attains an oscillation approaching, it not fully reaching two-thirds of its diameter. This can be effected by means of the action of the "enharmonic" or "radiating" current applied to the mass, after its molecules have once been disturbed by an "introductory impulse;" that is, by the musical note above mentioned.

The third represents the "dominant," and when brought under control of a harmonic resonant impulse induces a complete rearrangement of the modes of vibration and oscillation; in other words, will transform the mass either into its component initial forces, or into some other form of matter.[5]

It is the study of the dominant to which Keely has devoted his recent researches. He aims to control the power he evolves by altering the dominant or etheric mode of vibration in the triplicate flows of force.

As all molecules and masses are mere centres of harmonized vibrations, temporarily held in suspension by simple laws identical with those of resonance, it follows that these centres can be broken up or divided by certain orders of vibration impinging upon and disturbing them.

It is a familiar fact that a cord in vibration tends to produce a similar vibration in a cord placed near it. This property belongs to all vibrations, whether resonant or not, and they exert it in proportion to the "order" to which they belong. The distance in space to which this power extends, or can be extended, is what is called "the sympathetic outreach" of the current of flow.

In this manner we have "sympathetic negative attraction," and "sympathetic positive propulsion," with reference to the "outreach" of the third or dominant current of the stream, which is allied to the order of etheric vibrations.

Each molecule of a given mass of matter represents the same harmonic chord or note in its oscillatory motion. The "chord of the mass" is, therefore, the chord of every molecule of the mass.

But as the condition of absolutely stable equilibrium is theoretical only, and

[5] see [Law of Transformation of Forces]

does not exist in nature, the chord of the mass is constantly changing. Yet we must learn to control this "chord of the mass" by resonant induction, if we would gain command of the molecular forces.

Keely believes he has solved this problem, by the invention of a mechanical device which brings the chords of all masses within the conditions of a few simple acoustic tests.

The range of molecular oscillation is affected differently in different substances when submitted to the same vibratory impulse, and these ranges can be measured.

In the three metals, silver, gold, and platina, we obtain the proportions - 3 : 6 : 9

As this is the primary relation of the modes of vibration, a wire made of these three metals is peculiarly adapted to transmit concordant impulses: and nodes made of these substances placed upon a wire, transmitting resonant vibrations, indicate, by the different orders of vibration induced in them, the rate of oscillations of the atomic constituents.

The phenomenon of rotation arises from the harmonic inter-action of the dominant and enharmonic elements of the flow: in other words, the first and third, the third and ninth, etc.; those whose vibrations bear the proportions to each other $33\frac{1}{3} : 100$.

A practical example of rotation is a wheel in revolution on its axis. This is force in its commercial or economic aspect. To accomplish this result by molecular vibratory action, we must gain control of the "negative attractive" or "enharmonic" current of the triple flow, and the problem is then solved up to any limit of power.

Appendix B

II - Laws of Being

"The brain of an Aristotle was needed to discern and grasp Keely's meaning to interpret and define it. Dr. Brinton never touches a subject without throwing light upon it, and his penetrating mind perceived the ideas to be defined in all their relations. His keen logical acumen separated and classified them in their order, in a true, sound, and scientific manner. In the words of Sir James Crichton Browne, who heard Professor Brinton read this abstract in London, "Professor Brinton's synopsis is an able, lucid and logical paper." [Progressive Science]

Laws of Being

by Professor Daniel Brinton, University of Pennsylvania

Abstract of Keely's Physical Philosophy in its main features up to the point of practical application; by Professor Daniel G. Brinton, of the Pennsylvania University; subject to modifications and additions when Keely has made public his system. [1]

"The fundamental conception of the Universe is force manifesting itself in rhythmical relations.

"This definition is exhaustive, including both thought and extension, mat-

[1] from Keely and His Discoveries, Conclusion, Keelys Physical Philosophy

ter and mind. The law for the one is the law for the other. The distinction between them is simply relative, i.e., quantitative, not qualitative.

"The rhythmic relations in which force acts are everywhere, under all conditions, and at all times, the same. They are found experimentally to be universally expressible by the mathematical relations of thirds.

"These threefold relations may be expressed with regard to their results as,

I. Assimilative
II. Individualizing
III. Dominant or Resultant

"*From these three actions are derived the three fundamental LAWS OF BEING*:

I. Law of Assimilation: every individualized object assimilates itself to all other objects.

II. Law of Individualization: every such object tends to assimilate all other objects to itself.

III. Law of the Dominant: every such object is such by virtue of the higher or dominant force which controls these (above) two tendencies.

"Applying these fundamental laws to an explanation of the universe, as it is brought to human cognition, all manifestations of force may be treated as modes of vibrations.

"The essential differences give rise to three modes of vibration:

I. The Radiating: called also the "Dispersing", the "Propulsive", the Positive, and the Enharmonic.

II. The Focalizing: called also the Negative, the Negative Attractive, the "Polarizing", and the Harmonic.

III. The Dominant: called also the Etheric, or the Celestial.

"*These, it will be noted, correspond to the three laws of being. It is not to be understood that any one of these three modes of vibration can exist independently. Each by itself is called a "current", and all three must be present in every "stream" or "flow" of force. The relations of the currents in every flow are expressible in thirds, and it is experimentally demonstrable that the relation of the three are in the order named: as 33* $\frac{1}{3}$ *: 66* $\frac{2}{3}$ *: 100.*

"*The evolution of what is called matter from the different modes of vibration is through the action of the second law, that of focalization, or negative attraction, or "negative affinity".*

"*Where the vibrations under this Mode meet, and are maintained in a state of mutual affinity or equilibrium, there is established what is called a neutral center, or, as otherwise expressed, "a center of Sympathetic Coincidence".*

"*The terms "neutral attraction", "neutral affinity", "negative attraction", or "polar negative attraction", are employed to express the property of a Mode of vibration to direct its components towards such center.*

"*As no current or flow of force can be composed of one Mode of vibration only, but must always be composed of three modes uniting in varying thirds, we have 1 x 2 x 3 = 6 as the total possible forms of Sympathetic Coincidence, or, to speak in ordinary terms, there can be six; and six only, possible forms of individualized being. These are what Keely calls the six orders of Atomic subdivision, or orders of vibratory motion, and he names them as follows*:

I.	Molecular
II.	Intermolecular
III.	Atomic
IV.	Interatomic
V.	Etheric
VI.	Interetheric

"*In this list forms of matter are arranged in the mathematical sequence of*

the rapidity of the oscillations of their constituent members; the proportion being proved by experiment to be as follows for the molecular orders:

1 : 3 : 9 : 27 : 81 : 243 ...

"*The arithmetical progression changes in the atomic orders to a geometrical progression as follows*:

3 : 9 : 81 : 6561 : 43046721, etc.

"This same method of progression is believed to hold in all the orders of vibrations above the molecular, and soon passes into mathematical infinity.

"*Actually, however, all matter of which we are capable of cognition through the medium of our senses is in one of three forms of aggregation*:

I. Molecular
II. Atomic
III. Etheric

"*In each of which the controlling Mode of vibration is respectively*:

I. The Enharmonic
II. The Harmonic
III. The Dominant

"*But it must be understood that each of these modes is a Positive and real constituent of every atom and Molecule.*

"*It will be seen that as every form of material aggregation is to be considered as a "neutral center of attraction", where the vibratory force of all three orders are held in Sympathetic Coincidence, that is, in balanced activity or harmonized motion, and not by any means cancelled or mutually destroyed, there is no diminution of force, but only temporary suspension of its radiating or propulsive activity or expression.*

"*This is the foundation of Keely's doctrine of latent force, and of the indefinite power which can be obtained by breaking up the harmonious balance*

or equation of forces of every Mode, which exists in every neutral center, that is to say in every mass of matter.

"*Insomuch as every mass of matter consists thus, in fact, of vibrations in harmonic equilibrium, related by simple proportions of thirds, it follows that every mass of every description stands in harmonic relation to every other mass. This is, in part, what is meant by the sympathy of all forms of matter and of motion; and it is through the study of the methods of increasing or diminishing this sympathy that we reach practical results in this field of research. At present this is best accomplished by resonance; that is, through the harmonic vibrations created by musical instruments, bringing out the acoustic world as the microscope reveals the hidden visual world.*

"*Every visible or tangible mass of matter must be regarded as an aggregation of molecules; the molecules being the true centers of the equated forces of "neutralized attraction".*

"*These molecules have been experimentally proved by Keely to be formed of all three modes of vibration; the proof being that they respond to all three modes when subjected to the tests of compound concordant impulses.*

"*When in that state of neutral aggregation which we know as matter, each Molecule is in perpetual oscillation, the range of the oscillation being one-third of the Molecule, and its rapidity 20,000 oscillations in a second.*

"*It is through the disturbance of this oscillatory equilibrium, by means of resonant impulses, that Keely alters the relations of the vibratory impulses which constitute matter. This he does by striking the same chord in three octaves, representing the (musical) third, sixth, and ninth of the scale.*

"*Of these, the sixth reduces the range of molecular oscillation, and thus tends to give greater tenuity to the mass. It induces "trajectile velocity" from neutral centers, or "neutral radiation". Experiment shows that molecular dissociation does not take place until the Molecule attains an oscillation approaching, if not fully reaching two-thirds of its diameter. This can be effected by means of the action of the enharmonic or "radiating" current applied to the mass, after its molecules have been disturbed by an "introductory impulse"; that is, by the musical note above mentioned.*

"*The third represents the dominant, and when brought under control of a harmonic resonant impulse induces a complete rearrangement of the modes of vibration and oscillation; in other words, will transform the mass either into its component initial forces, or into some other form of matter.*

"*It is the study of the dominant to which Keely has devoted his recent researches. He aims to control the power he evolves by altering the dominant or etheric mode of vibration in the triplicate flows of force.*

"*As all molecules and masses are mere centers of harmonized vibrations, temporarily held in suspension by simple Laws identical with those of resonance, it follows that these centers can be broken up or divided by certain orders of vibration impinging upon and disturbing them.*

"*It is a familiar fact that a cord in vibration tends to produce a similar vibration in a cord placed near it. This property belongs to all vibrations, whether resonant or not, and they exert it in proportion to the order to which they belong. The distance in Space to which this power extends, or can be extended, is what is called "the sympathetic outreach" of the current or flow.*

"*In this manner we have "sympathetic negative attraction", and "sympathetic positive propulsion", with reference to the outreach of the third or dominant current of the stream, which is allied to the order of Etheric vibrations.*

"*Each Molecule of a given mass of matter represents the same harmonic chord or note in its oscillatory motion. The chord of the mass is, therefore, the chord of every Molecule of mass.*

"*But as the condition of absolutely stable equilibrium is theoretical only, and does not exist in nature, the chord of the mass is constantly changing. Yet we must learn to control this chord of the mass by resonant induction, if we would gain command of the molecular forces.*

"*Keely believes he has solved this problem, by the invention of a mechanical device which brings the chords of all masses within the conditions of a few simple acoustic tests.*

"*The range of molecular oscillation is affected differently in different substances when submitted to the same vibratory impulse, and these ranges can be measured.*

"*In the three metals, silver, gold, and platina, we obtain the proportions - 3 : 6 : 9 : - As this is the primary relation of the modes of vibration, a wire made of these three metals is peculiarly adapted to transmit concordant impulses; and nodes made of these substances placed upon a wire, transmitting resonant vibrations, indicate, by the different orders of vibration induced in them, the rate of oscillations of the atomic constituents.*

"*The phenomenon of rotation arises from the harmonic interaction of the dominant and enharmonic elements of the flow; in other words, the first and third, the third and ninth, etc.; those whose vibrations bear the proportions to each other 33* $\frac{1}{3}$ *: 100.*

"*A practical example of rotation is a wheel in revolution on its axis. This is force in its commercial or economic aspect. To accomplish this result by molecular vibratory action, we must gain control of the negative attractive or enharmonic current of the triple flow, and the problem is then solved up to any limit of power.*"

Appendix C

III - Ultimate Constitution of Matter

The Ultimate Constitution of Matter and the Action of the Force Regulating its Phenomena

by John W. Keely

First: Matter is capable of infinite subdivision.

Second: In the aggregation of matter, force or energy is stored up or conserved.

Third: In the dissociation of matter, force is liberated.

Fourth: All matter is in a state of perpetual activity, whether the substance under consideration be inanimate or animated, visible or invisible.

Fifth: There is no dividing of matter and force into two distinct terms, as they both are ONE. FORCE is liberated matter. MATTER is force in bondage.

Sixth: All motion is synchronous; no sound or movement can be made but all that moves or sounds does so in harmony with something.

Seventh: All structures, whether crystalline or homogeneous, have for their

unit structures minute bodies called molecules. It is the motion of these molecules with which we have particularly to deal; as in experimental research and demonstration, when we produce an action upon one molecule we do so upon all the molecules constituting the mass operated upon.

Eight: These molecules have an envelope, rotating with inconceivable rapidity, formed of a high tenuous ether, whose place in the order of subdivision ranks third, the three divisions being, - first, molecular; second, atomic; third, atomolic. (Atomolic is the same as Etheric)

Ninth: This atomolic substance has a density approximately 986,000 times that of steel, enabling it to permeate steel as light penetrates glass; this rotating envelope of atomolic substance is in a liquid condition. There are four conditions of matter; viz. solid, liquid, gaseous, and ultra-gaseous. These conditions result from greater or lesser range of oscillation of the composing units individually; this is equally true, whether the units are molecules, atoms, atomoles, planets, or suns. But one LAW governs all matter.

Tenth: This molecular envelope, rotating with such great velocity, holds in its embrace the next subdivision of matter, the atomic. There cannot ever be more or less than three atoms in any molecule. These are placed so as to form a triangle in the interior; they rest in a condition of substance, or matter, we will term intermolecular. In this intermolecular substance we find an enormous energy or force in bondage, held thus by the rotating envelope enclosing it. Were we to rotate a spun brass shell, say nine inches in diameter, at a very much less rate of speed than that at which the molecular envelope rotates, - say nine hundred revolutions per second, - its equator would first bulge out, then form into an oval disk. A solid block of wood subject to such revolution would swiftly fly to pieces. The rotating envelope of a molecule, unlike these, the greater the velocity of rotation, the greater is its compression toward the center of the molecule. The rotation of this envelope is of such a nature as to produce an internal pressure upon every portion from every point of the molecule as a sphere. Were we to consider a rotating envelope as ordinarily understood, it would be one in which the envelope rotated around an equator having poles of no rotation; i.e., the poles would not possess the compressing force of the equator; the result would therefore be a compressed equator, and the intermolecular substance would pass out without resistance at the poles.

Eleventh: If it be possible let us conceive of an envelope with an equator, but destitute of poles, a number of these rotating over the sphere, this atomolic envelope possessing an almost infinite attractive force toward the center of the molecule, pressing in the intermolecular substance, where it is held until this revolving envelope becomes negatized by a certain order of vibration, when the enclosing matter rushes out to its natural condition of concordant tenuity, as in the case of gunpowder, dynamite, and nitroglycerine. This force, we must see, has been held in the embrace of the rotating envelopes of the unit structures, or where does it come from? This force at the time of an explosion was liberated by shock or fire, both being orders of imparted motion or vibration. How much greater the result would be were we to associate a scientific instrument now completed, and shortly to be given to the world, with such an agent as nitroglycerine; one pound of nitroglycerine would have its destructive force augmented beyond all possible control. These instruments are carefully concealed by wise masters from all persons save the few who are already prepared to study their potency with the exclusive end in view of aiding the real scientific progress of humanity; and, furthermore, it may be truly stated that a ferocious sensualist, however powerful his intellect, would be utterly unable to either comprehend or operate one of these marvelous constructions.

Twelfth: Next in order of consideration is the second subdivision of matter - the atomic. The atom has the same rotating envelope as the molecule, governed by the same laws of rotation and compression. The rotating envelope holds in its embrace the interatomic substance and three atomoles resting in it, the atomoles within the atom being constructed after the same pattern as the atom and the molecule, obedient to the same laws; the atomolic being simply the third subdivision of matter. The threefold order is absolutely universal.

Thirteenth: The atomolic substance is what is termed the ether which fills all space and is the transmitting medium for all celestial and terrestrial forces. This is the liquid ether of occult science.

Fourteenth: The atomoles are made up of atomolini (singulara tomolinus); the subdivision of matter from this point is beyond man's power, as at this point it escapes all control of apparatus, passing through glass and hardened

steel as a luminous flame without heat, which is hardly seen before it vanishes, - a perpetual flame coldly luminous.

Fifteenth: (Not in book, may have been a mis-numbering. editor)

Sixteenth: This again, from previous analysis, is made up according to the triple order, and may again be subject to subdivision, even into infinity." [Dashed Against the Rock]

Dale Pond

Author of many books.
Creator of svpwiki.com and
Maker of Dynaspheres.

Keely's Laws of Being

This book describes the unseen (scalar) components of vibration, oscillation and toroids as also their relationships and dynamical functions. This book is a follow-up (volume II) of The Physics of Love published in 1994. The forces described in this book are the 3, 6 and 9 unseen (scalar) forces Keely used to achieve some of the remarkable feats of science and engineering accredited to him yet not understood by the rest of us.

Published by Delta Spectrum Research

B01130

Musical Numerology

By Don Robertson, 1970 with revisions in 2003
Copyright 1970, 2003 by Don Robertson
(First appeared in the book *Kosmon)*

I wrote the article Musical Numerology in 1970 and published it in Denver, Colorado in a book called Kosmon, a book created by myself and two other people. It was in this book that I first published my findings about the duochord and proclaimed that rock and roll music was taking a downward turn.One day, after we had started distributing the book to local bookstores, I received a letter from a young man who lived nearby and wanted to meet the author of this article. I went to see him and looking around the one-bedroom apartment, I saw that everywhere there were large pieces of white paper on which he had been making mathematical calculations: on tables, chairs, and taped to all of the walls. He was ecstatic, "I had to meet the author because I have applied what was stated in the article to every known science and found that the same formula proves itself in every case." I went back a week later to discuss the matter with him more thoroughly , but the apartment was empty and he was gone. Now after 23 years, I have revised the article, and am publishing it again on DoveSong.Com. I hope this information can be as useful to others as it was for this young man and has been for me. I believe that musical scales and harmony are based on alchemical realities that can be proved by math. Math demonstrates the formation of the laws of the universe, and music, color, and all manifestation follow the same laws.

Don Robertson, May, 2003

* *

To our knowledge, there is no religion on the earth that does not incorporate some kind of symbolic use of **the quantities three and seven**.

Our objective is to illustrate some of the mysterious relationships between the quantity three, the quantity **seven**, and what these quantities have in common with the basic physical structure of the universe.

The direct relationship between **three** and **seven** is as follows:

If we have three objects, which we will call 1, 2, and 3, we will observe that the absolute number of different combinations of these 3 objects is 7;

that is, we may arrange them in no more than seven different combinations, regardless of the order in which they are arranged.

Combination 1	**1, 2, 3**
Combination 2	**1, 2**
Combination 3	**1, 3**
Combination 4	**2, 3**
Combination 5	**1**
Combination 6	**2**
Combination 7	**3**

There are **three primary colors** in the color spectrum, plus four more natural colors that are created from the combinations of the three colors similarly to the three objects above.

All colors that exist are either :

a) One of the primary colors, or

b) A resultant mixture of two or three of the primary colors.

The primary colors cannot be created by mixing other colors, so they are rather special.

The three primary colors are **red**, **yellow**, and **blue**.[1]

The ***natural***, or ***secondary*** colors are those colors that are created by mixing equally the three primary colors according to the chart above.

The resultant seven natural colors the colors of the rainbow, a naturally occurring phenomena that can be created using a prism to break down light.

They are arranged in the spectrum as follows:

The Color Spectrum

Red	**1**	**Red**
Orange	**1, 2**	**Red, Yellow**
Yellow	**2**	**Yellow**
Green	**2, 3**	**Yellow, Blue**
Blue	**3**	**Blue**
Indio	**1, 2, 3**	**Red, Yellow, Blue**
Violet	**1, 3**	**Red, Blue**

Thus we see that the color spectrum is based on the relationship between 3 and 7.

There are three primary tones of the musical scale and seven natural tones:

The Musical Scale

C	**1**	**C**
D	**1, 2**	**C, E**
E	**2**	**E**
F	**2, 3**	**E, G**
G	**3**	**G**
A	**1, 2, 3**	**C, E, G**
B	**1, 3**	**C, G**

The notes that correspond to the primary colors are **C, E, G**: the **major triad**, which is **the most important chord in music**, and the groundwork of the scale.

It is important to realize the correspondence between the colors of the spectrum and the notes of the scale, as the musical scale is based on the same principals of nature (the natural overtone series) and it has been adapted in some form or another most all cultures.

There are three root-position triads contained in the **major scale (C,D,E,F,G,A,B).** These are:

The major triad that is based on the correspondence with the primary colors (C, E, G) and **two minor triads, based on three of the natural, or secondary, tones (D, F, A and E,G,B).**

Major and minor triads are the fundamental underpinnings of harmony used in the music of Western cultures.

Three Forces at the heart of Nature

The simplest physical structure in the material universe is the hydrogen atom. It has the least number of forces at work: **three**.

These **three forces** are:

1) At the center of the atom resides the nucleus, composed of a **positive charge** of electricity called a **proton**.

2) Orbiting around this proton in an elliptical orbit is a negative charge of electricity called an **electron**. Since this electron has a negative charge, and since a **negative charge** is attracted to a positive charge, the electron is attracted to the proton.

3) Since the electron is attracted to the proton, there needs to be a force that causes equilibrium between the two, as the electron would collide with the proton if no such force were in place. This force then is the force that governs bodies in motion, causing them to travel in an orbit. It is ***centrifugal force***. In the atom, this is the **neutron**.

Some Aspects of Three

If there is a given object that is fixed in space, this object has, as its location, three coordinates. An example of this would be the relative position of an airplane above the earth. It is calculated by longitude, latitude, and altitude, its three coordinates.

If someone looks into the corner of a room, where the room meets the walls, they will see **three intersecting planes that are considered to extend into infinity**. These are the three dimensions of space.

There are three time zones that man senses, past, present, and future.

If there is space with no motion, then time does not exist, only space. But if there is no motion, then there can be no space, for there has to be space to contain the motion. The motion through space causes sequentially. The earth's orbit around the sun and revolution on its axis causes a time sequence on earth. **Thus we have three aspects: time, space, and motion**.

The Law of Three

The fact that events, laws, and all creation result from three principals is referred to as the "**Law of Three**" or the "**Law of the Triangle**." This law is illustrated by the example that every effect has two causes: **one passive, and one active**.

What does the Russian philosopher Georges Gurdieff have to say about the Law of Three? In the book *In Search of the Miraculous*, PD Ouspensky quotes him as follows:

"This is the **'Law of Three'** or the law of the three principles or the three forces. It consists of the fact that every phenomenon, on whatever scale and in whatever world it may take place, from molecular to cosmic phenomena, is the result of the combination or the meeting of three different and opposing forces.

Contemporary thought realizes the existence of two forces and the necessity of these two forces for the production of a phenomenon: **force and resistance**, **positive and negative magnetism**, **positive and negative electricity, amel and femail cells, and so on**. But it does not observe even these two forces always and everywhere. No question has ever been raised as to the third, or if it has been raised it has scarcely been heard.

"According to real, exact knowledge, once force, or two forces, can never produce a phenomenon. The presence of a third force is necessary, for it is only with the help of a third force that the first two can produce what may be called a phenomenon, no matter in what sphere.

"The teaching of **the three forces is at the root of all ancient systems**. The first force may be called active or positive, the second, passive or negative; the third, neutralizing. But these are merely names, for in reality all three forces are equally active and appear as active, passive and neutralizing, only at their meeting points, that is to say, only in relation to one another at a given moment.

The first two forces are more or less comprehensible to man and the third may sometimes be discovered either at the point of application of the forces, or in the medium, or in the result. But speaking in general, the third forces is not easily accessible to direct observation and understanding.

The reason for this is to be found in the functional limitations of man's ordinary psychological actively and in the fundamental categories of our perception of the phenomenal world, that is, in our sensations of space and time resulting from these limitations. People cannot perceive and observe the third force directly any more than they can spatially perceive the forth dimension.

"The first fundamental law of the universe is the law of three forces,or three principles, or as it is often called, the law of three. According to this law, every action, every phenomenon in all worlds without exception, is the result of a simultaneous action of three forces: the positive, the negative, and the neutralizing. Of this we have already spoken…. The next fundamental law of the universe is the law of seven or the law of octaves.

Some Aspects of Seven

During the late 1700's, some chemists began identifying certain chemical elements. About 1800, they began to determine the atomic weights of some of them. In 1808, John Dalton suggested that atoms were physical objects with specific weights. In 1829, Johann Doebereiner showed that particular elements could be arranged in groups of three. In each group, the elements had similar properties and the weight of the middle atom of the group was close to the average of the other two. These were said to be chemical equivalents to the musical triad.

The Law of Octaves

In 1864, John A. Newlands grouped all the known elements in the order of their atomic weights. He then divided them into groups of seven elements each. He showed that when the atoms were put into order with their weights increasing, there was a repetition in the similarities according to the musical octave, the same found on the keyboard. When he talked to chemists of this time about his newly found law of octaves, they laughed.

But octaves are the substance of the musical scale, the same musical scale that was demonstrated by Pythagoras and used today, with slight modifications according to culture. It is a naturally occurring phenomena. The basis of the musical scale is the *octave*, the repetition of the vibration of the set of seven notes that occurs as the fundamental vibration of the first note, the basic note of that scale, is doubled.

In 1869, Mendeleev compiled a "Periodic Table of the Elements." This table was arranged according to atomic weights. Mendeleev found, as had Newlands, that the chemical properties of the elements reoccur at definite intervals. He concluded that these were the periodic functions of their atomic weights. According to Daniel Morris, in his article *Music of the New Spheres* in the December, 1969 Chemistry Magazine, Mendeleev's arrangement of the elements came to him while listening to a performance of Schumann's exquisite piano quintet. He was seated upon a sofa, apparently mulling over Newland's and Doebereiner's arrangements of the elements, when all of a sudden he jumped up, sat at his desk, and arranged all of the elements accordng to a new plan. Morris' feeling was that there was a definite relationship between the quintet and the periodic table in the repetition and development of the seven-note melody of the quintet.

Vibrations in Different Octaves

It was in 1925 that French scientist Louis Victor Pierre Raymond duc de Broglie discovered that the electron was actually a wave of vibration. These waves properly follow the same property and characteristics of vibration as the vibrating string of a musical instrument, the waves being complete with overtones. (We are familiar with the presence of overtones on the vibrating string from the experiments of Pythagoras and his *monochord* – a single-stringed instrument he built to display how musical scales were produced by the natural overtone series).

An atom such as uranium has more that 90 electrons, each capable of its own harmonies, and all this can be recorded by a spectroscope. From this, one can conclude that all matter is made of waves. Therefore, we, and the world we live in, are vibrations…just as the children of the 1960s discovered while taking large doses of LSD! But this should not be too surprising. Our understanding of the world around us is through perception of the five senses. What we experience is actually taking place in our brain, interpretations of waves of light, taste, smell, feeling, and sound. Are we really living in a world, as we suspect, or is this simply a world created in our brain, similar to that when we dream? And if spectral and aural vibrations obey the same law of octaves that applies to the physical makeup of the universe, then perhaps it is all just a part of one large keyboard of vibrations, with particular sensations and manifestations taking place in particular octave ranges. Light, heat, magnetic and chemical vibration are all subject to the law of octaves.

The ancient Greek philosopher Democritus wrote:

Sweet and bitter
Cold and warm,
As well as all the colors.
All these things exist
But in the opinion
And not in reality.

What really exists
Are unchangeable articles: atoms,
And their motions in empty space.

The great German mathematician Gottfried Wilhelm Leibniz wrote: “I am able to prove that not only light, color, heat, and the like, but motion, shape and extension too are mere apparent qualities.”

Many scientists and philosophers have come to the conclusion that everything exists in the mind: stars, planets, atoms. Einstein showed us that even space and time were forms of intuition.

Georges Gurdjieff, the important Russian spiritual teacher said that the law of octaves was based upon the discontinuity of all vibrations in nature, as they do not develop uniformly, but with periodic accelerations and retardations.

The original impulse becomes alternately stronger and weaker. This could be a phenomenon similar to the AC cycle. This cycle of alternating electrical vibrations can be viewed by means of an oscilloscope or with a computer program such as Sound Forge. Called the duty cycle, it appears as such.

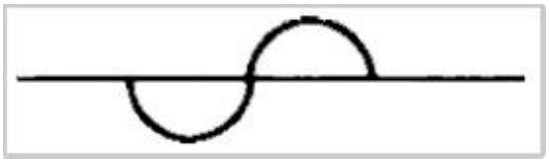

All sounds are made up of these cycles.

The cycles take place in the ***time domain***. By using a brilliant mathematical formula known as the Fourier transform, these cycles can be translated into the frequency domain, where we find that the timber of the sound depends upon the strength of overtones, the higher harmonics of the fundamental tone.

The duty cycle can be equated to a circle broken at its diameter with the bottom half twisted 180 degrees or to the continuous movement of a spiral.

Alternating current (AC) obeys the laws of the duty cycle: energy alternates with no energy.

Home electricity in the United States alternates sixty times per second, thus it is called 60 cycles, or 60 Hertz.

An electric light bulb does not continually burn, but flashes sixty times in one second, faster than our eyes can follow, so we perceive the appearance only of continuous light. This would not be the case when light is powered by a battery, as batteries produce direct current (DC).

Musical tones can be represented using the mathematical symbols of trigonometry, signs and cosigns, and the imaginary numbers of calculus.

Computer systems that generate musical tones, such as synthesizers, do so using these mathematical formulas. All of this is based on the alternation of the duty cycle.

“Shocks”

While teaching in Russia during the first world war, Gurdjieff described something about octaves that had not been publically known before. He stated that there were two places in the octave where retardation of the vibrations takes place.

These places are between the notes **E** and **F** and between the notes **B** and C. These are the two places on the keyboard where there are no sharp or flat note (black) keys between the white keys.

Octaves, according to Gurdjieff, develop according to whether or not these places where retardation of vibrations take place are “filled.”

In the right development of these octaves, these places are filled by the energy of octaves that run in parallel to the given octave.

This process of filling in Gurdjieff calls a shock. Processes, institutions, laws and other things all progress through time according to the law of octaves, and therefore these two shocks in the octave are a part of the development process.

Gurdjieff stated that if development continues without the shocks being filled in, then the line of development constantly changes.

The way he described it, if octaves – as a principal of nature – develop unimpeded, the development looks as if it is proceeding along a straight line, but every time one of the two points in the octave is reached where a shock occurs, even though development of the process that the octave represents appears to be progressing forward along a straight line, the development of the process actually jogs a little, causing what would be compared to a jog in the line.

The development continues and after the progress through the series of octaves has gone on for a particular amount of time, what was considered to be development along a straight line has actually turned into a development in the ***opposite direction***! Further continuation will bring the development back to the same direction that it started in. This is actually a full duty cycle, or one full revolution on a spiral.

The law of octaves, with this intrinsic circular motion generating a spiral, governs all activity and shows how organizations, religions, and governments -- if allowed to develop without conscious knowledge concerning the application of the ‘filling in’ of these shocks -- always develop into something that is opposite to what was originally intended.

The Octave with Two Added Shocks

Gurdjieff explained how an octave of seven ‘notes’ was transformed into one of nine, the seven notes and the two shocks, by applying the following fascinating bit of arithmetic.

He divided the number **‘1’** into seven equal fractions: **1/7, 2/7, 3/7, 4/7, 5/7, 6/7, 7/7**

The decimal equivalents of these seven fractions are arrived at using the time-honored tradition of dividing the numerators by the denominator:

1/7 = .142857
2/7 = .285714
3/7 = .428571
4/7 = .571428
5/7 = .714285
6/7 = .857142

Of course 7/7 equals 1

Studying the numbers that result from our division is a fascinating process.

We find that we have a reoccurring sequence of numbers that is present in every case!

This is the sequence 7142857142857….that continues on and on ad infinitum.

<u>.142857142857142857</u> etc….
7/1.00000000000000000

(Numerical patterns such as these are very telling.

They describe a situation that is naturally occurring and should be taken seriously by the researcher).

The nature of this pattern is very interesting. It starts with the number **'7'**, which is the number of the octave, the number that we are dealing with here. Next in line is double that number, **'14'**.

Following that we have another doubling**: '28'**, and after that another doubling: **'56'**…whoops, not **56**, but **57**, the **'7'** being the start of another sequence!

It takes some thought about this to fully appreciate the beauty of this sequence and this change from **56** to **57** to start another series. This just really ***breathes*** "cycle," does it not?

There are other interesting things about this series of numbers. If we add each line in the set of six decimals above, we always get the number **'28'** as a result.

This is because each of the six decimal sequences is ordered in such a way that when you add downwards, only the six numbers of the sequence appear, there are no duplications.

We have six pieces of the whole **(7/7),** each with a sequence of six numbers, the same sequence in each piece, ordered in the very unique fashion. This is something to contemplate.

Now we will turn to something called horizontal addition. This is a process used in numerology.

Although we don't endorse the common understanding of what numerology represents, the principles behind manipulation of numbers are simple aspects of natural mathematics, which demonstrate the laws of nature, and this understanding of numbers and what they are all about is the key to understanding nature and what it is all about.

That is why trigonometry and calculus are so important to engineering.

Both these sciences give us an understanding of nature, and hence, an understanding of sound, and the natural laws that govern the use of sound in music…principals that are not arbitrary, but work according to natural law, the law of three, the law of octaves, and now the law of nine (the octave plus the two shocks).

By using horizontal addition on the sequence, we arrive at another number:

1 + 4 + 2 + 8 + 5 + 7 = 27

2 + 7 = 9

Adding the sequence numbers together, we end up with '9'. This demonstrates one way that seven ties into nine.

The Periodicity of Nine

The notes of the octave combined with the two shocks show us what is called the ***periodicity of nine****.*

Creating a circle with nine positions and connecting the numbers from our sequence above, we have the figure that Gurdjieff calls the ***enneagram*****.**

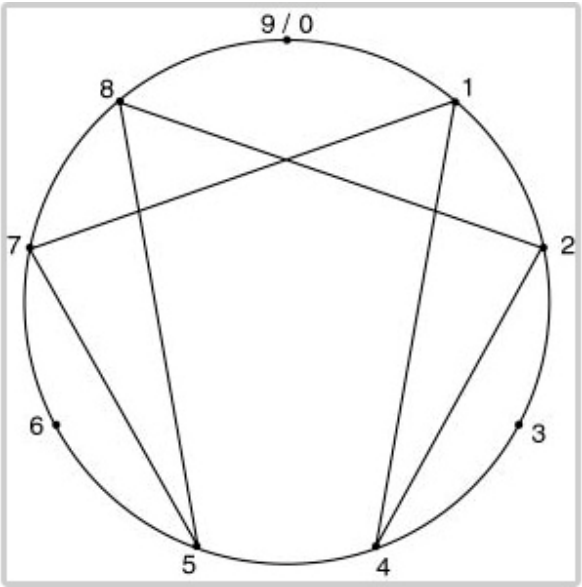

The numbers that are not in the sequence are 3, 6, and 9. When a they are connected, the result is a triangle. The numbers 3 and 6 are the shocks.

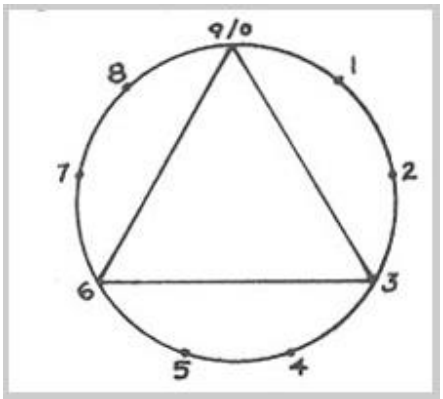

By applying the color spectrum and musical notes to the enneagram, we have the following:

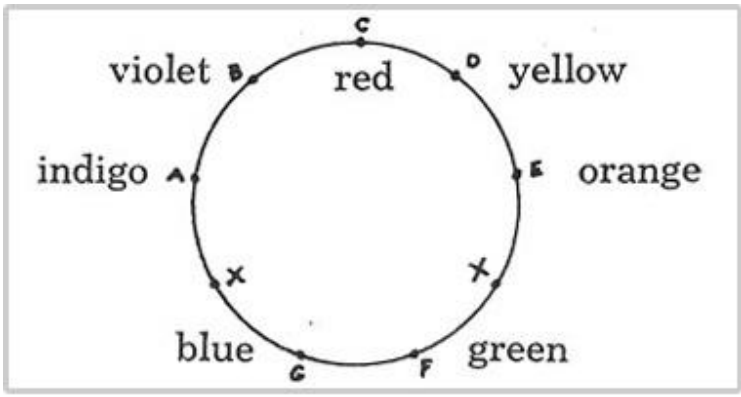

When asked why one shock correctly appeared between the E and the **F**, but the other, instead of appearing between **B** and **C**, appeared between G and **A,** Gurdjieff stated that this demonstrated the nature of the shock that occurred when passing from one octave to the next.

He also said that every completed whole, every organism, is an enneagram, but that each of these enneagrams does not have an inner triangle (**3,6,9**).

142857 is the working of the corporeal scheme, the triangle is the presence of higher elements in the organism. This inner triangle is possessed by plants, for example, from which come our “drugs”: hemp, poppy, hops, tea, coffee, tobacco.

When any number is added to nine, the sum, added horizontally to one significant figure, always equals that same number (also added horizontally to one significant figure).

Examples:

8 + 9 = 17 and 1 + 7 = 8

6 + 9 = 15 and 1 + 5 = 6

36 + 9 = 45 and 4 + 5 = 9 and 3 + 6 = 9

When any number is multiplied by nine, the product added horizontally to one significant figure, always equals nine.

Examples:

9 x 7 = 63 and 6 + 3 = 9

9 x 12 = 108 and 1 + 0 + 8 = 9

Casting Out Nines

Further use of horizontal addition is applied in a mathematical process that is called *casting* ***out nines*****.** The sum of any number added horizontally is equal to the remainder of that same number when it is divided by nine. Thus, to cast out all nines from a number, add it horizontally:

Example: **16,378 = 1 + 6 + 3 + 7 + 8 = 25 = 7**

If you were to divide **16,378 by 9**, you will find that the **remainder is 7.**

The Enneagram with Combinations of Nine

This interesting drawing shows how multiplication of nine by the other single-digit numbers produces a sum that fits nicely into our enneagram. We have equated nine with zero because nine becomes zero when it is cast. Notice how the sums are equal to the two numbers at that level of the drawing (for example, the sums on the first line are **18** and 81, on the second **72** and **27** and so on).

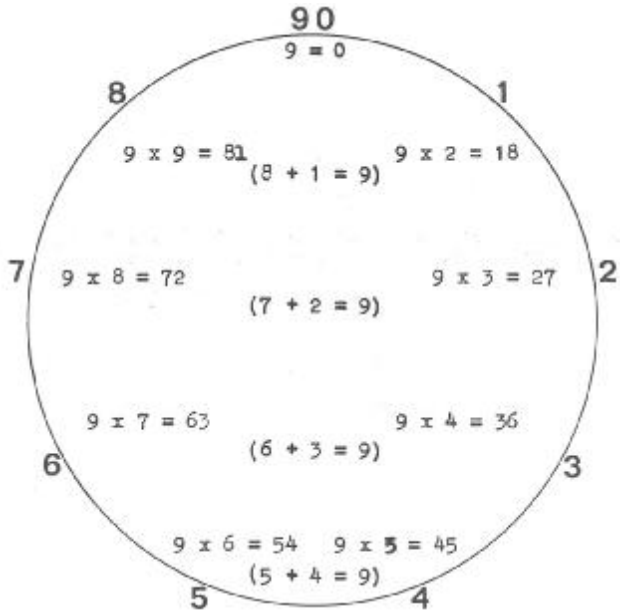

We see that by horizontal addition of the sums, in each case, we always end up with nine. If we now take each number from one to eight and multiply it by numbers **1** through **9** – we will see some interesting numerical patterns develop.

We will start with the first line from the circle above:

8 x 1 = 8
8 x 2 = 7 (16, or 1 + 6 = 7)
8 x 3 = 6 (24, or 2 + 4 = 6, and so on…)
8 x 4 = 5
8 x 5 = 4
8 x 6 = 3
8 x 7 = 2
8 x 8 = 1
8 x 9 = 9

We end up now with a sequence of 876543219.

A similar sequence is produced by doing the same thing with 1.

This sequence is the reverse of the other:

1 x 1 = 1
1 x 2 = 2
1 x 3 = 3
1 x 4 = 4
1 x 5 = 5
1 x 6 = 6
1 x 7 = 7
1 x 8 = 8
1 x 9 = 9

This is how this sequence looks on the circle:

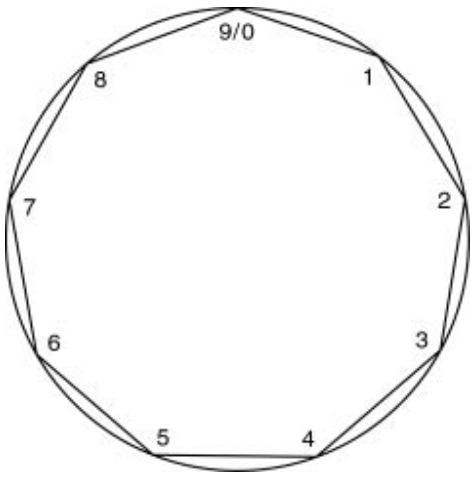

Notice that this sequence was generated by the numbers **8** and **1**, the two numbers at the top of the enneagram.

The number series that resulted from these two was the same, however one series is the reverse of the other. **For 8** we have: **876543219**, and **for 1** we have **12345789**.

To be completely the opposite of each other, the second series would have had to have been **987654321**, but interestingly enough, this isn't the case.

Now we will generate another pair of sequences using seven and two, the next set of numbers in the enneagram.

7 x 1 = 7	**2 x 1 = 2**
7 x 2 = 5	**2 x 2 = 4**
7 x 3 = 3	**2 x 3 = 6**
7 x 4 = 1	**2 x 4 = 8**
7 x 5 = 8	**2 x 5 = 1**
7 x 6 = 6	**2 x 6 = 3**
7 x 7 = 4	**2 x 7 = 5**
7 x 8 = 2	**2 x 8 = 7**
7 x 9 = 9	**2 x 9 = 9**

This is how this sequence looks on the circle:

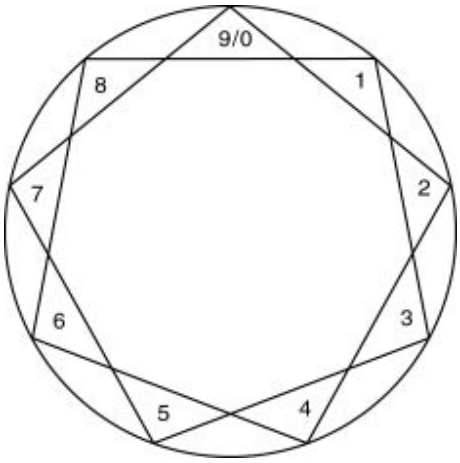

Again we have a resultant series of numbers where one is the opposite of the other.

For 7 we have 753186429, and for 2 we have 246813579.

As is the case **with 8 and 1 above, both series always ends with a 9!**

Also, the reverse series is one number off from the original.

This series of numbers is one that skips every other number.

Now we will generate another pair of sequences using five and four:

5 x 1 = 5	**4 x 1 = 4**
5 x 2 = 1	**4 x 2 = 8**
5 x 3 = 6	**4 x 3 = 3**
5 x 4 = 2	**4 x 4 = 7**
5 x 5 = 7	**4 x 5 = 2**
5 x 6 = 3	**4 x 6 = 6**
5 x 7 = 8	**4 x 7 = 1**
5 x 8 = 4	**4 x 8 = 5**
5 x 9 = 9	**4 x 9 = 9**

This is how this sequence looks on the circle:

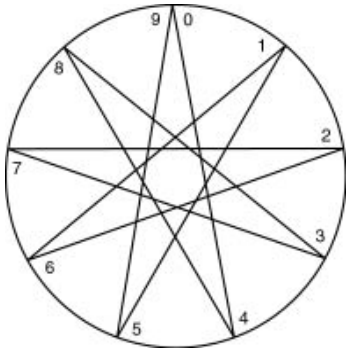

When we look at these, we see again that we have the same kind of pattern where the series from the second set is the opposite of the first, however offset by a single number, and that both end in **9**.

The series **for 5 is 516273849** and the series **for 4 is 483726159**. This series of numbers is one where three numbers is skipped each time.

Finally we will take a look at the sequence generated by the two shock values **three** and **six**:

6 x 1 = 6	**3 x 1 = 3**
6 x 2 = 3	**3 x 2 = 6**
6 x 3 = 9	**3 x 3 = 9**
6 x 4 = 6	**3 x 4 = 3**
6 x 5 = 3	**3 x 5 = 6**
6 x 6 = 9	**3 x 6 = 9**
6 x 7 = 6	**3 x 7 = 3**
6 x 8 = 3	**3 x 8 = 6**
6 x 9 = 9	**3 x 9 = 9**

This is how this sequence looks:

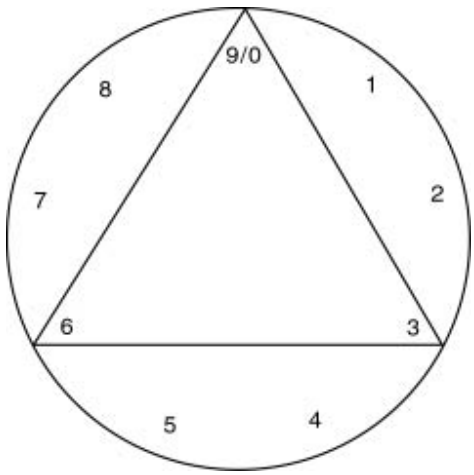

Interestingly enough, **the number 6 yields a series of 639, 639, 639**, and the series from 3 yields the opposite: **369, 369, 369. Who says the universe isn't the result of mathematics!**

We have now horizontally multiplied each number from 1 to 9 by the numbers 1 through 9 and have arrived at a series that is in each case has been illustrated using the enneagram circle, the circle with 9 points.

The numbers **1,2,4,5,7,** and **9** are the numbers found in the period **(142857).** When we look at the tables that we have just created using these numbers (that is the tables for "**8 and 1**", "**7 and 2**", and "**5 and 4**") we can see that a series of numbers has been created in each table.

For example, in the 8 table, the results from horizontally **multiplying 1 through 9 by 8** resulted in a pattern (reading down the sum column) of **876543219** and the results from horizontally **multiplying 7 by 1 through 9 is the sequence 753186429.**

Now, taking the **third**, **sixth**, and **ninth** numbers in each of these series, we discover that we have a repeating sequence of either **639** or **369**. These are the "**inner triangles**" of each one of these sets

8 x 1 = 8 **8 x 2 = 7** **8 x 3 = 6** **8 x 4 = 5** **8 x 5 = 4** **8 x 6 = 3** **8 x 7 = 2** **8 x 8 = 1** **8 x 9 = 9**	**1 x 1 = 1** **1 x 2 = 2** **1 x 3 = 3** **1 x 4 = 4** **1 x 5 = 5** **1 x 6 = 6** **1 x 7 = 7** **1 x 8 = 8** **1 x 9 = 9**	**7 x 1 = 7** **7 x 2 = 5** **7 x 3 = 3** **7 x 4 = 1** **7 x 5 = 8** **7 x 6 = 6** **7 x 7 = 4** **7 x 8 = 2** **7 x 9 = 9**	**2 x 1 = 2** **2 x 2 = 4** **2 x 3 = 6** **2 x 4 = 8** **2 x 5 = 1** **2 x 6 = 3** **2 x 7 = 5** **2 x 8 = 7** **2 x 9 = 9**	**5 x 1 = 5** **5 x 2 = 1** **5 x 3 = 6** **5 x 4 = 2** **5 x 5 = 7** **5 x 6 = 3** **5 x 7 = 8** **5 x 8 = 4** **5 x 9 = 9**	**4 x 1 = 4** **4 x 2 = 8** **4 x 3 = 3** **4 x 4 = 7** **4 x 5 = 2** **4 x 6 = 6** **4 x 7 = 1** **4 x 8 = 5** **4 x 9 = 9**
order: 639	**order: 369**	**order: 369**	**order: 639**	**order: 639**	**order: 369**

We will now show each number and the order of its series.

This order, as you have just seen, was determined by the inner triangle of each series (**the points of 3, 6 and 9 on the circle**) and number present at those point turn out to be either a sequence of **639** or **369**.

639 represents energy moving counter clockwise and **369** is the **energy moving clockwise.**

For purposes of demonstration, we will fix polarity designations to the **639** and **369**.

We will call **369 positive** and **639 negative**.

The numbers **3**, **6** and **9**, not being part of the periods, we will call neutral **(=)**:

Note	Number	Order	Polarity
C	**0**		**=**
D	**1**	**369**	**+**
E	**2**	**639**	**-**
(shock)	**3**		**=**
F	**4**	**369**	**+**
G	**5**	**639**	**-**
(shock)	**6**		**=**
A	**7**	**369**	**+**
B	**8**	**639**	**-**
C	**9**		**=**

We will turning again to the sequences that we created above.

For simplicity sake, we will just use the forward sequence from each set.

These sequences were:

123456789 (from 8-1),
135792468 (from 7-2)
639639639 (from 6-3) and
159483726 (from 5-4).

Applying the polarities we assigned in the chart above to these sequences we get:

8-1	**1 2 3 4 5 6 7 8 9**
	+ - = + - = + - =
7-2	**1 3 5 7 9 2 4 6 8**
	+ = - + = - + = -
6-3	**6 3 9 6 3 9 6 3 9**
	(all neutral)
5-4	**1 5 9 4 8 3 7 2 6**
	+ - = + - = + - =

[1] It is noted that modern theory of colors has adapted new colors to represent the subtractive domain of primary colors, and some writers go so far as to dispute the standard primary colors, but we stand by what we have written: red, yellow and blue are the primary colors.

For more information about modern color theories, see: http://www.goatrance.de/mahak/colors.html http://www.physicsclassroom.com/Class/light/U12L2d.html

Part II: Diode Test Data Report

Back to Lab..

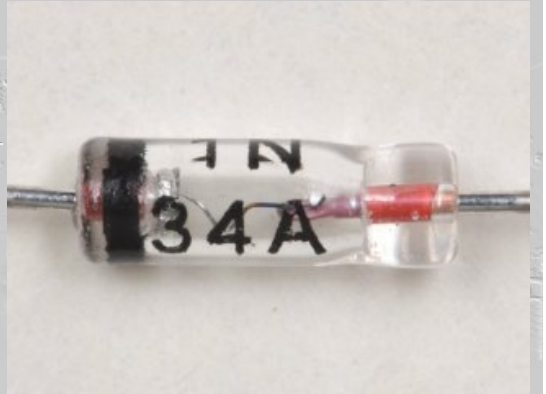

Test Results

Over a period of several weeks in 2013 I ran I-V characterization measurements on a good number and variety of diodes, crystals and my two tubes to see how very thing stacks up. The following presents the resulting curves, diode photos, and some puzzling questions/conclusions I churned up in the process. These Characteristic Curves carry the voltage out to 2.0 Volts, well beyond any signal strength one might expect to receive with a crystal set. This is important to note because the curves themselves are dominated by the diode series resistance. After each discussion I then include my spreadsheet with the detail DX-level analyses that provide the critical information about diode "n", (Ideality factor) "Is", (Reverse Saturation current) and "Ro", (Zero-bias Diode resistance). These are the data the set designer requires.

I start off with the realization that when one orders diodes, it is by no means certain what one will get. This seems especially true for the supposedly ubiquitous 1N34A. Unless you see the part number actually on the diode, you probably need to test it to know what it really is. So, lets take a look!

Germanium Diodes

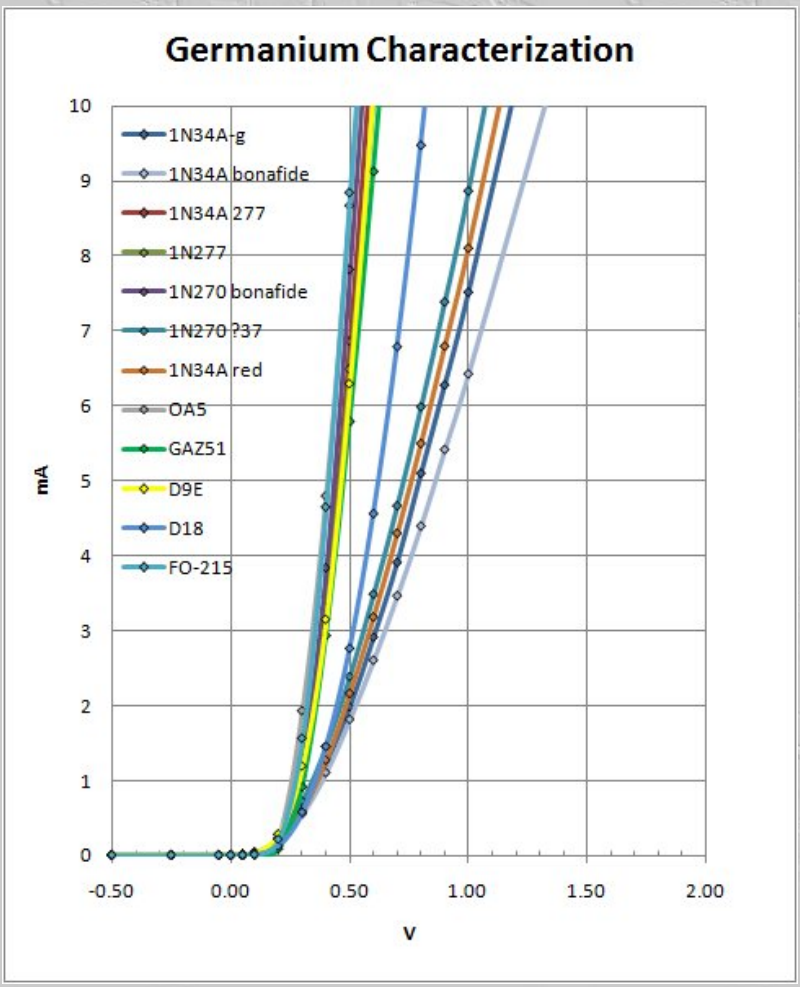

1N34A series

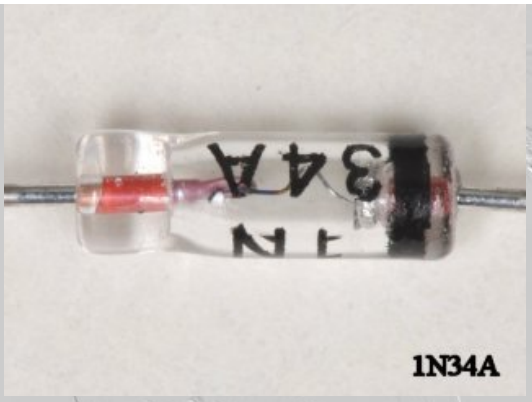

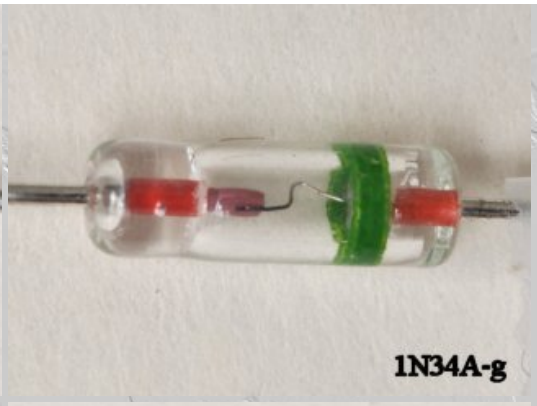

1N270-277 series

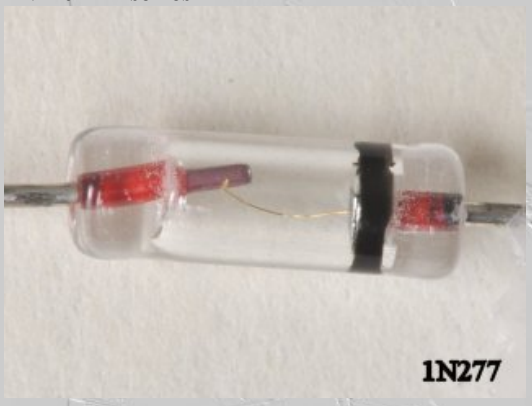

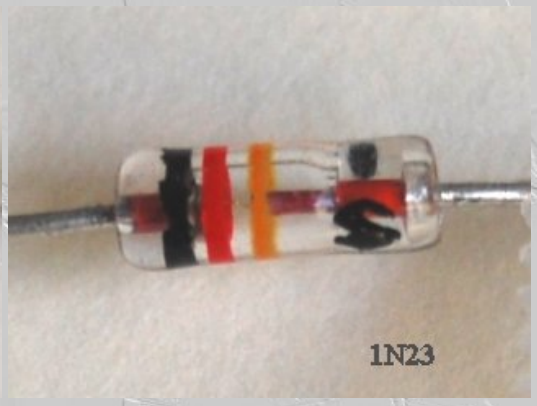

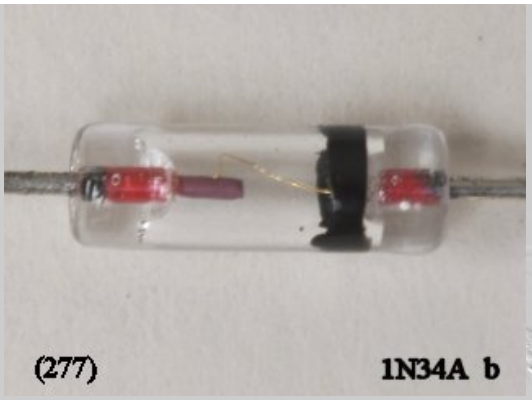

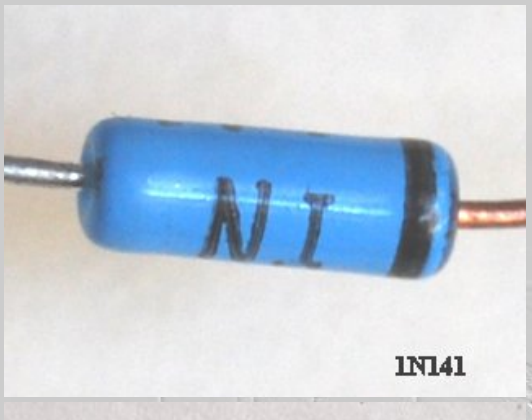

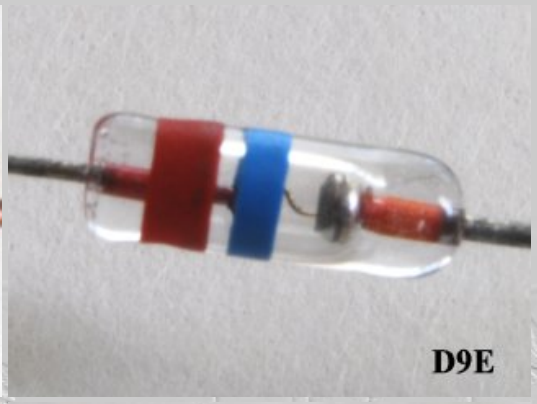

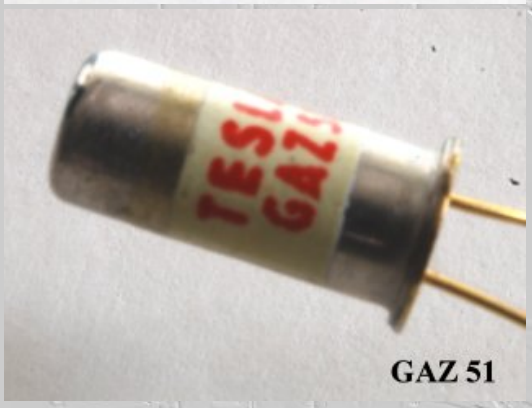

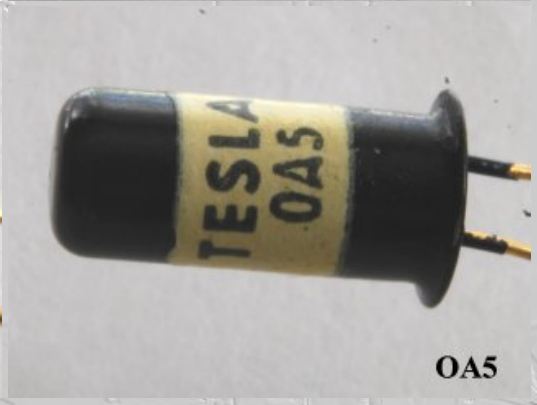

ITT Diodes, Something special here.

One oddball Ge diode, not sure what it is for..

Here we see a set of Germanium diodes and photos of the diodes under test. Immediately you should notice two sets of curves, what I call the "1N34A" set and the "1N270-277" set. In this analysis, the second set appears clearly superior in sensitivity and deservedly so. In the photos it is clear that one bunch of diodes I purchased as 1N34A were in fact better 1N277, the black band and thin gold contact wire as well as common curve unite these. "True" 1N34A's have a more robust contact wire. I also purchased a 1N270 and received pretty orange diodes with the number "37" stamped on it, a fairly robust contact wire and a curve that most closely resembles a 1N34A, go figure. Mercifully, I DID manage to get some bona-fide 1N34A's with the part number on the diode, as well as a single bona-fide ITT 1N270 diode with the part number. These are my base for comparison.
In addition to the standard Germanium Diodes tested above, I also have latched my hands on a few "other" germanium diodes for the fun of testing. These include two vintage Russian types, a D9E (in the 270 class) and a D-18 (transitional between 270 and 1N34A). Additionally, I acquired a few FUZZ diodes popular, I suspect, with the guitar gadget crowd. These are larger packages in metal cases so I cannot see how the internal contact is made other that they are stated to be gold bonded point contact type. Clearly these are highly sensitive diodes in my 270 class, the OA5 looking best of the lot. Interestingly, I recently purchased from good Mr. Peebles a few of his "Holy Grail" ITT FO-215 diodes. My measured characteristic for one of these is a dead lay down on the gold-bonded OA5. From the photos, these are in different packaging with the FO-215 in a traditional glass casing. What makes the FO-215 so great is the fact that its resistance Rd is an interesting 150k ohm or so which matches very well with typical moderate Q tank circuits. Interestingly, I find that an old Russian D18 diode has very similar characteristics to the FO-215 and so must also be placed into the "Holy Grail" class of germanium diode. Take your pick!

Spreadsheet for calculation of Germanium diode n and Is (modified from Mike Tuggle's spreadsheet)

Spreadsheet for calculation of diode n and Is							Tuggle Method from "Cal_n_Is.xls"			
Diode		n	Is	Ro	Temperature		Vd2	Id2	Vd1	Id1
under test			nA	k Ohm	dF	dC	V	uA	V	uA
FO-215	ITT	1.0993	196	144	80.7	27.1	0.03574	0.49730	0.05123	1.00250
FO-215	ITT	1.1050	175	163	80.9	27.2	0.03882	0.50990	0.05735	1.13850
GAZ 51	Tesla	1.5152	617	64	83.1	28.4	0.02356	0.50850	0.03782	1.00240
GAZ 51	Tesla	1.1379	140	211	82.9	28.3	0.04491	0.50280	0.06275	1.03850
1N23	53p	1.3455	472	74	81.8	27.7	0.02525	0.50460	0.04050	1.04320
1N23	14p	1.2546	240	135	82.0	27.8	0.03665	0.50490	0.05325	1.00390
1N270	ITT	1.2790	915	36	82.4	28.0	0.01432	0.49660	0.02437	0.99860
1N141	blue	1.1795	726	42	85.1	29.5	0.01642	0.51540	0.03075	1.25650
1N141	blue	1.2570	1402	23	84.5	29.2	0.01024	0.51750	0.01795	1.02980
1N695	ITT	1.1160	83	342	71.2	21.8	0.05650	0.52880	0.07335	1.02800
1N695	ITT	1.0930	73	379	70.8	21.6	0.05965	0.55890	0.07423	0.99800
AA143	ITT	1.1220	218	130	71.2	21.8	0.03420	0.50930	0.0495	1.02790
AA143	ITT	1.1575	242	121	71.2	21.8	0.03275	0.49950	0.05024	1.10580
1N270	blue	1.6610	2310	19	82.4	28.0	0.00835	0.49630	0.01635	1.07150
1N270	blue	1.2590	857	38	82.5	28.1	0.01505	0.50440	0.02829	1.18850
D310	russia	1.0059	1215	21	83.6	28.7	0.00915	0.51170	0.01695	1.11490
1N277	black	1.4990	2293	17	81.5	27.5	0.00765	0.50180	0.01402	1.00250
1N277	black	1.6042	2296	18	81.6	27.6	0.00821	0.50400	0.01639	1.11620
OA 5	Tesla	1.8490	3384	14	83.4	28.6	0.00664	0.50370	0.01255	1.01480
OA 5	Tesla	1.4810	1996	19	83.3	28.5	0.00865	0.50550	0.01645	1.07020
D9E	russia	1.5350	2414	16	81.1	27.3	0.00748	0.50250	0.01522	1.13280
D9E	russia	1.4200	2161	17	80.6	27.0	0.00755	0.49570	0.01402	1.01000
D18	russia	1.2040	194	160	82.5	28.1	0.04004	0.50910	0.05913	1.10500
D18	russia	1.2706	193	170	82.9	28.3	0.04215	0.50250	0.06415	1.16550
1N34A	red	1.3220	993	34	83.6	28.7	0.01401	0.50250	0.02475	1.05390
1N34A	red	1.3430	833	42	83.3	28.5	0.01675	0.51570	0.02765	1.01250
GD 402A	russia	1.7080	1360	33	83.6	28.7	0.01365	0.49200	0.02785	1.19350
GD 402A	russia	1.5535	970	41	83.4	28.6	0.01719	0.51780	0.03185	1.17270
1N34A	green	1.3210	1554	22	82.9	28.3	0.00945	0.49530	0.01695	0.99850
1N34A	green	1.3030	1185	28	83.1	28.4	0.01175	0.49420	0.02135	1.04750
1N34A	green	1.5740	1389	29	82.7	28.2	0.01237	0.49350	0.02327	1.07190
1N34A 37	orange	1.0955	1458	19	83.3	28.5	0.00861	0.51740	0.01495	1.01250
1N34A 37	orange	1.3550	1370	26	83.6	28.7	0.01091	0.49990	0.01925	1.00190
1N34A	bonafide	1.8220	2153	22	81.6	27.6	0.00995	0.50780	0.01911	1.08050
1N34A	bonafide	1.2500	1392	23	82.2	27.9	0.00995	0.50250	0.02014	1.20570
1N141	germanium	1.2795	292	114	85.4	29.7	0.03316	0.50000	0.04992	1.01950
1N141	germanium	1.1795	726	42	85.1	29.5	0.01642	0.51540	0.03075	1.25650
1N141	germanium	1.2570	1402	23	84.5	29.2	0.01024	0.51750	0.01795	1.02980
1N141	germanium	1.3090	1339	25	84.7	29.3	0.01075	0.49870	0.01915	1.01450
1N91	fwd	2.0000	16564	3	71.4	21.9	0.00788	2.88500	0.01526	5.83110
1N91	rev	2.0000	12442	4	71.6	22.0	0.00827	2.74150	0.01976	5.94010
1N91	fwd	2.0000	18868	3	71.2	21.8	0.00741	3.05400	0.01354	5.79000
1N91	fwd	2.0000	22098	2	71.2	21.8	0.00661	3.33300	0.01180	5.80500
1N91	fwd	2.0000	20144	3	71.2	21.8	0.00703	3.18400	0.01305	5.92800

The above spreadsheet is based on measurements of the diodes shown above. For the determination of Is and n, I chose at random two examples from my collection of various diodes, (all germanium in this case) and measured via a modified version of the methodology outlined by Ben Tongue and Mike Tuggle. For this work I have chosen to set Id2 about 0.5uA and Id1 about 1.0uA and then read the needed voltage. This is the inverse of the normal method but the justification is that for any diode regardless of forward voltage drop the measurement is made at the same part of the LOG I vs V characteristic. This allows comparison between all diodes. I have included the actual room temperature in the calculations in order to eliminate this variable as a source of doubt or error. All the measured parameters as well as the determined results are presented in order to facilitate repeatability.

A final note on the plots above. You will have noticed that I sub-divide germanium diodes into a "1N34A" class and a "1N270-277" class. This is a result of looking at their I / V characteristics on a plot of 1 - 2V DC versus 0 - 10mA scale. At such a scale the slope of the characteristic for the 1N270 class remains much steeper than that for 1N34 type diodes. As this is not seen as a distinguishing feature at the small-signal scales looked at here, I judge the chief difference between the two types lies in the diode series resistance Rs. This impacts strong-signals but is of no concern for small-signal DX work. Just so you know.

Schottky Diodes

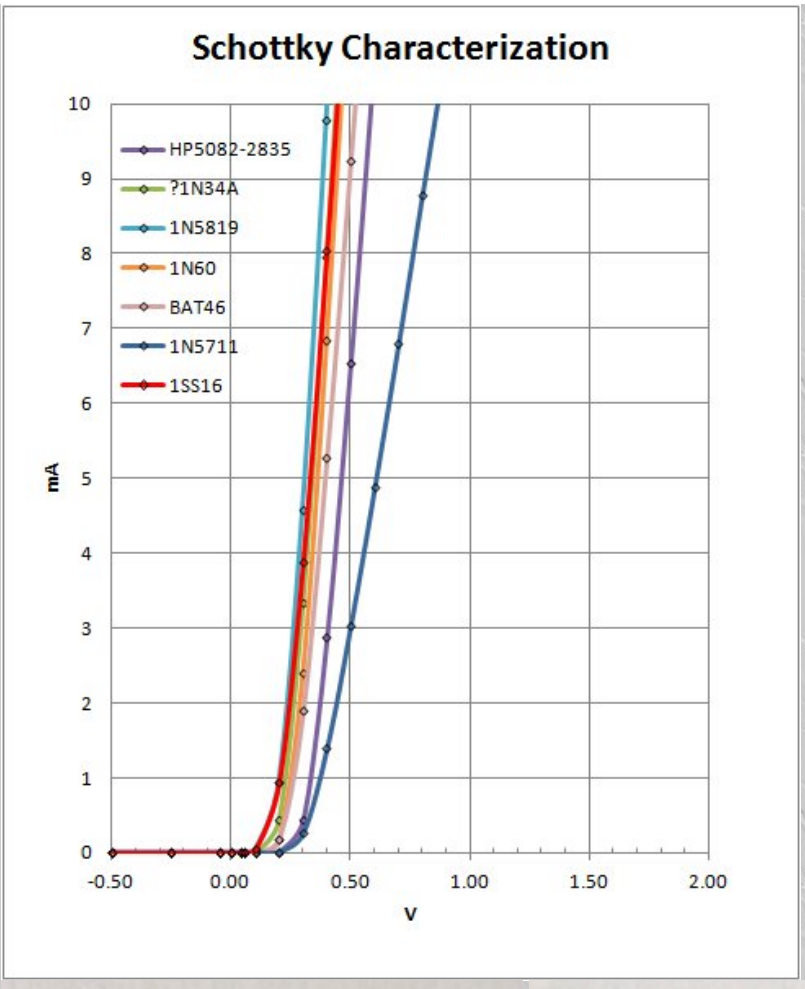
Schottky Characterization
HP5082-2835
?1N34A
1N5819
1N60
BAT46
1N5711
1SS16
mA
V
10
9
8
7
6
5
4
3
2
1
0
-0.50
0.00
0.50
1.00
1.50
2.00

HP5082-2835

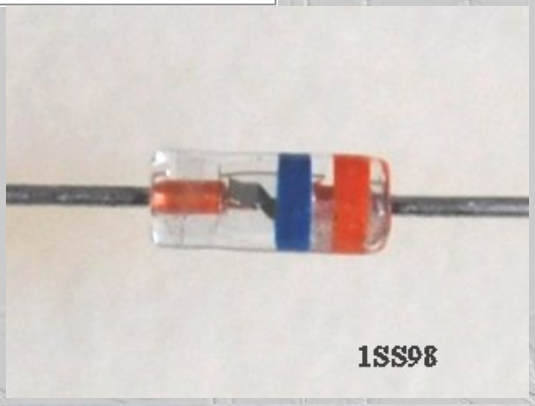
1SS98

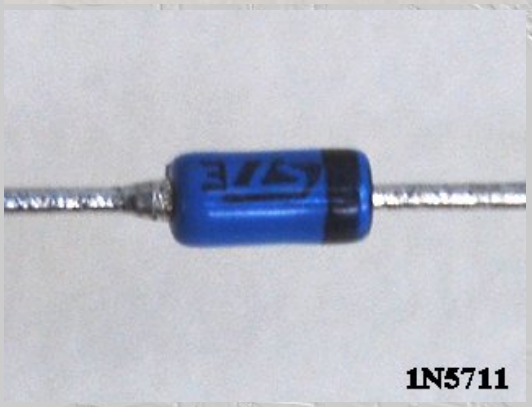
1N5711

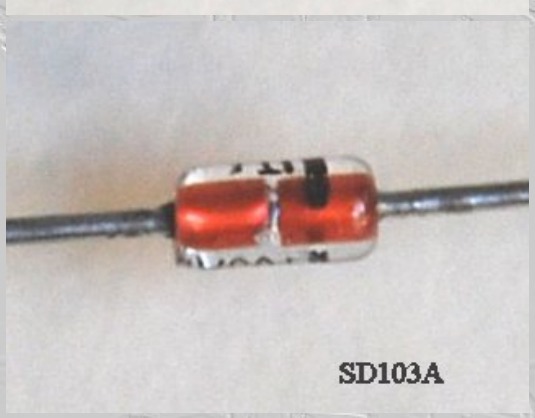
SD103A

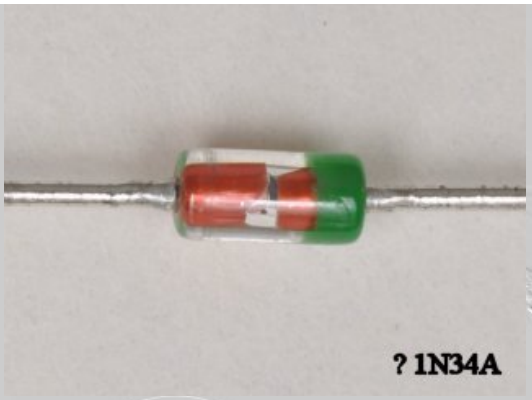

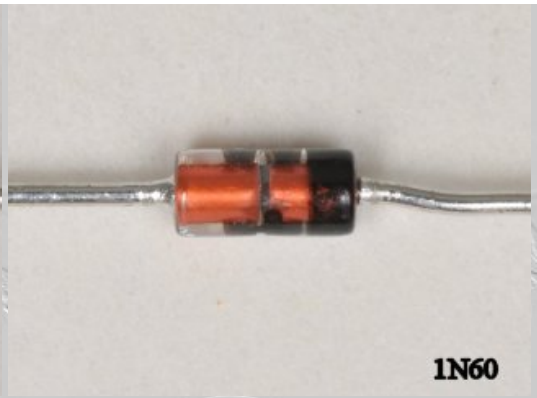

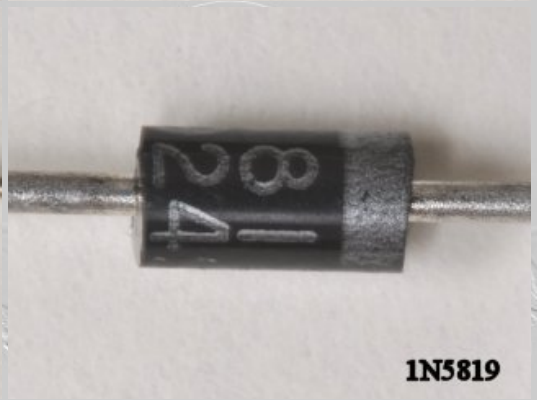

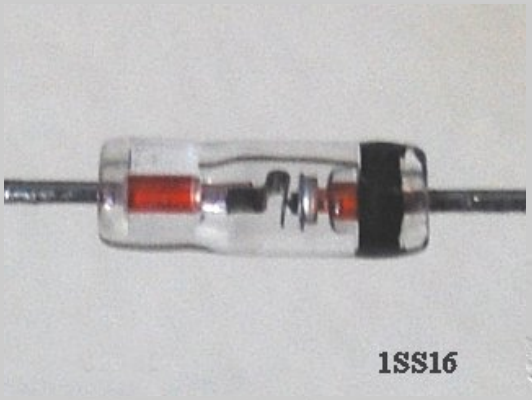

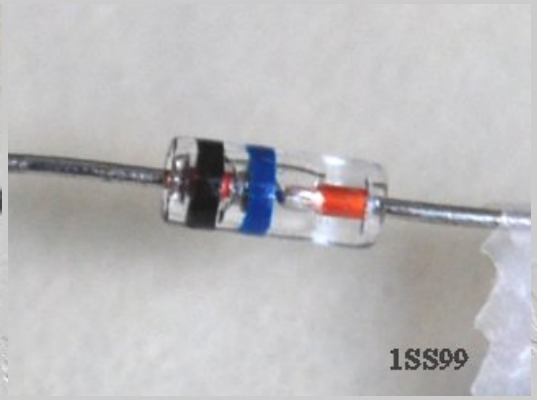

Schottky diodes are very sensitive diodes that work excellently in crystal radios. Their construction and theory are different and I confess to not fully understanding these components. Still, from the characteristic curves, they are excellent! Again, note that you don't always get what you bargain for. Here I found what was supposed to be 1N34A's to be some sort of Schottky of unknown pedigree. The 1N5819, while having the lowest forward voltage drop, has a rather very high Junction Capacitance and will not perform well. Posts on the RaidoBoard Crystal Radio Forum however highly recommend the 1N5711 for crystal sets although the characteristic curve doesn't look that fabulous. Many web pages out there on Shottky diodes, I recommend you do your homework. Of all the schottky's, I note that Ben Tongue recommends most highly the HP5083-2835. The high resistance Ro makes them useful for DX sets with very very high Q tanks. Even so the diodes need to be paralleled with up to 4 or 5 diodes to match correctly the Rd with the tank Rp. I have found these somewhat hard to find and expensive, especially when one requires using several in parallel. I recently measured a few 1SS98 diodes and I discover them to have characteristics extremely similar to the HP and I feel they deserve more attention. Sadly, on ebay they seem to be just as difficult to find and expensive. No free ride!

Spreadsheet for calculation of Schottky diode n and Is (modified from Mike Tuggle's spreadsheet)

Spreadsheet for calculation of diode n and Is							Tuggle Method from "Cal_n_Is.xls"			
Diode		n	Is	Ro	Temperature		Vd2	Id2	Vd1	Id1
under test			nA	k Ohm	dF	dC	V	uA	V	uA
1N5711	blue	1.0733	6	4816	80.2	26.8	0.12323	0.4917	0.14261	0.9979
1N5711	blue	1.0683	6	4541	80.0	26.7	0.12115	0.4917	0.13981	0.9757
1SS98		1.0753	12	2302	83.8	28.8	0.10430	0.5001	0.12383	1.0208
HP 5082-2835		1.0713	12	2206	80.2	26.8	0.10215	0.4961	0.12215	1.0384
1SS98		1.0626	13	2188	83.8	28.8	0.10245	0.5081	0.12085	1.0036
HP 5082-2835 * 4		1.0713	48	574	80.2	26.8	0.10215	0.4961	0.12215	1.0384
1N5711 * 8		1.0683	48	572	80.0	26.7	0.12115	0.4917	0.13981	0.9757
SD103A	50pF	1.0435	109	247	83.4	28.6	0.04648	0.5021	0.06305	1.0201
SD103A	50pF	1.0443	112	241	83.3	28.5	0.04611	0.5053	0.06185	0.9934
BAT 46		1.1185	141	204	80.0	26.7	0.04304	0.4878	0.06032	1.0055
BAT 46		1.1839	172	177	80.7	27.1	0.04173	0.5048	0.05839	0.9972
1N60		1.1040	161	176	80.0	26.7	0.03989	0.4955	0.05729	1.0508
1N60		1.0884	178	158	80.4	26.9	0.03743	0.4988	0.05311	1.0065
1N34A ?	schottky	1.1104	317	90	80.4	26.9	0.02710	0.5019	0.04068	1.0003
1N34A ?	schottky	1.2359	482	66	80.4	26.9	0.02269	0.5016	0.03615	1.0197
1N5819	100pF	1.1881	750	41	80.6	27.0	0.01551	0.4957	0.02586	0.9975
1N5819	100pF	1.1425	807	36	80.7	27.1	0.01453	0.5155	0.02541	1.1074
1SS99	4.8n	1.3760	1840	19	82.2	27.9	0.00885	0.5205	0.01575	1.0265
1SS99	6.2n	1.3450	1815	19	82.2	27.9	0.00875	0.5201	0.01685	1.1335
1SS16	NEC	2.2700	4101	14	81.5	27.5	0.00684	0.5083	0.01385	1.0947
1SS16	NEC	6.2400	14288	11	81.3	27.4	0.00564	0.5099	0.01165	1.0733

The above spreadsheet is based on measurements of the diodes shown above. For the determination of Is and n, I chose at random two examples from my collection of various diodes, (all schottky in this case) and measured via a modified version of the methodology outlined by Ben Tongue and Mike Tuggle. For this work I have chosen to set Id2 about 0.5uA and Id1 about 1.0uA and then read the needed voltage. This is the inverse of the normal method but the justification is that for any diode regardless of forward voltage drop the measurement is made at the same part of the LOG I vs V characteristic. This allows comparison between all diodes. I have included the actual room temperature in the calculations in order to eliminate this variable as a source of doubt or error. All the measured parameters as well as the determined results are presented in order to facilitate repeatability.

Note in the above data that both the BAT-46 and the 1N60 diodes appear to have excellent properties for crystal radio work. In fact they have very similar parameters overall. Looking at the photos you should also note that the two types of diode look suspiciously exactly alike. The BAT 46 has it correct markings but the 1N60 is unmarked. You never know what you get!

Silicon Diodes

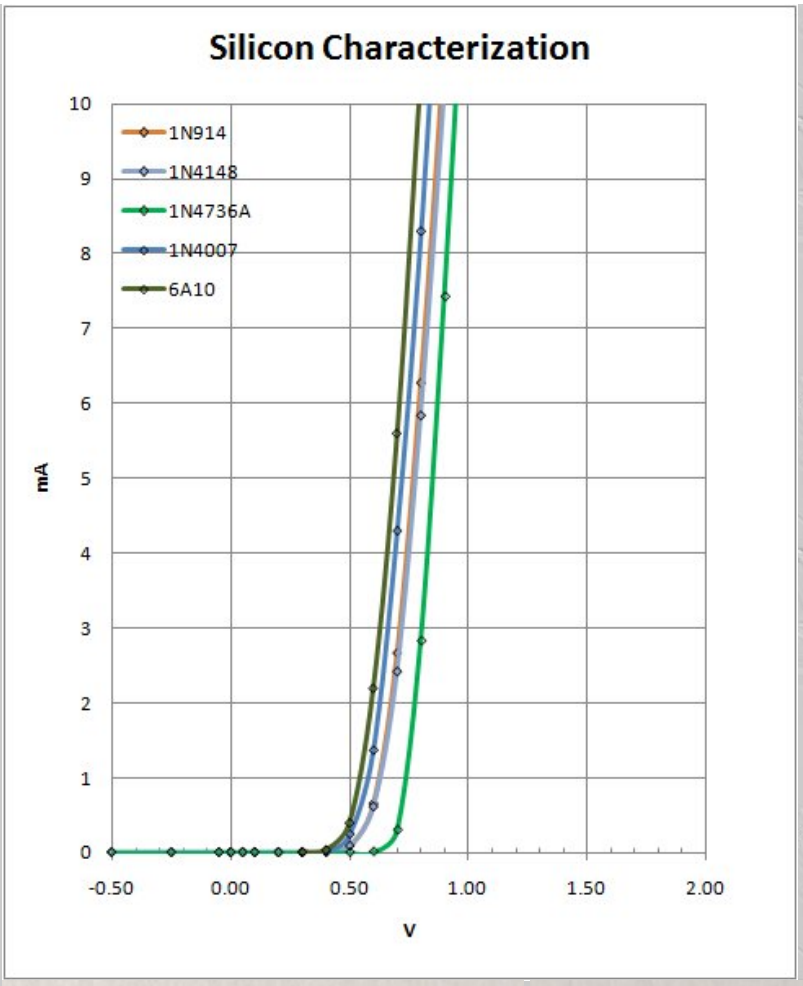
Silicon Characterization
1N914
1N4148
1N4736A
1N4007
6A10
mA
V
10
9
8
7
6
5
4
3
2
1
0
-0.50
0.00
0.50
1.00
1.50
2.00

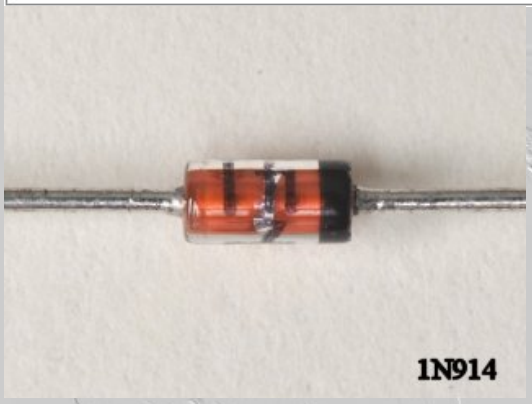
1N914

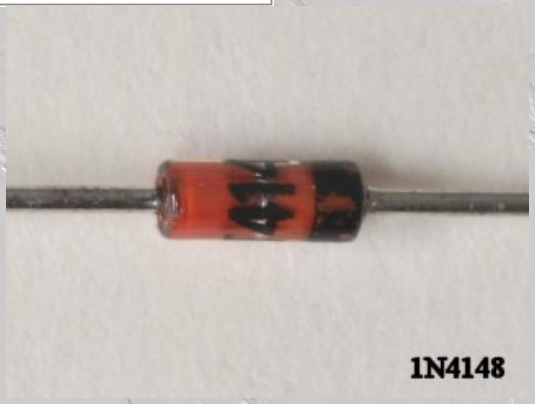
1N4148

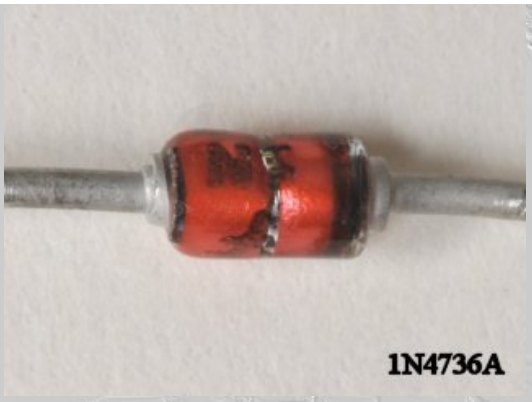

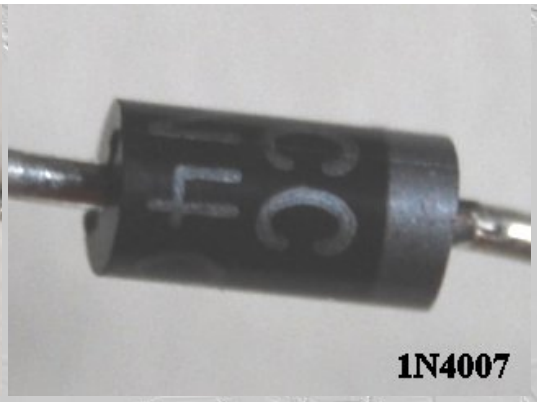

Silicon diodes have good characteristics, but an unacceptably high forward voltage drop making them a very poor choice for crystal radio unless used with bias. The 1N4736A is a Zenner diode.

Spreadsheet for calculation of Silicon diode n and Is (modified from Mike Tuggle's spreadsheet)

Spreadsheet for calculation of diode n and Is							Tuggle Method from "Cal_n_Is.xls"			
Diode		n	Is	Ro	Temperature		Vd2	Id2	Vd1	Id1
under test			nA	k Ohm	dF	dC	V	uA	V	uA
1N914		1.9510	5.4	9.3E+03	82.0	27.8	0.22733	0.4895	0.26229	0.9855
1N914		2.0236	6.9	7.6E+03	82.9	28.3	0.22354	0.4857	0.26423	1.0653
1N4148		1.9950	5.8	8.9E+03	83.1	28.4	0.23194	0.5117	0.27037	1.0841
1N4148		2.0041	5.6	9.3E+03	83.3	28.5	0.23177	0.4803	0.27346	1.0801
1N4007		1.5139	0.6	6.4E+04	83.3	28.5	0.26320	0.5041	0.29137	1.0355
1N4007		1.5140	0.5	7.8E+04	83.3	28.5	0.26951	0.4885	0.29807	1.0133
6A10		1.5680	2.1	1.9E+04	83.3	28.5	0.22129	0.4902	0.25023	1.0026
6A10		1.5368	2.0	2.0E+04	83.3	28.5	0.22021	0.4942	0.24764	0.9871
1N4736A	Zener	1.1505	0.00002	1.9E+09	83.4	28.6	0.51439	0.4961	0.53702	1.0609
1N4736A	Zener	1.1365	0.00001	2.5E+09	83.4	28.6	0.51663	0.5017	0.53648	0.9853
KB 130	russian	1.1403	0.00005	5.8E+08	83.4	28.6	0.47531	0.5012	0.49587	1.0061
KB 130	russian	1.1649	0.00007	4.4E+08	83.4	28.6	0.47567	0.4929	0.49746	1.0155
UK H	russian	1.9443	8	6.3E+03	83.6	28.7	0.20333	0.4486	0.24405	1.0175
UK H	russian	1.7727	4	1.3E+04	83.1	28.4	0.22717	0.5148	0.25707	0.9916
UK I	russian	1.7807	0.1770	2.6E+05	83.1	28.4	0.36493	0.4888	0.39684	0.9775
KD 401A	russian	1.5115	0.1679	2.3E+05	83.3	28.5	0.31083	0.4752	0.33924	0.9828
KD 401A	russian	1.3846	0.0233	1.5E+06	83.3	28.5	0.35841	0.5152	0.38382	1.0472
D 220	russian	1.2586	0.1010	3.2E+05	83.4	28.6	0.27732	0.5039	0.30100	1.0427
D 220	russian	1.2447	0.0599	5.4E+05	83.6	28.7	0.29013	0.4877	0.31682	1.1167
D 223A	russian	1.1983	0.0030	1.0E+07	83.4	28.6	0.37171	0.4857	0.39716	1.1036
D 223A	russian	1.1954	0.0036	8.6E+06	82.9	28.3	0.36418	0.4732	0.38845	1.0378
UK J	russian	1.4617	4	9.8E+03	82.7	28.2	0.18415	0.4985	0.21154	1.0334
UK J	russian	1.3988	2	2.0E+04	82.7	28.2	0.20325	0.4978	0.22879	1.0108

The above spreadsheet is based on measurements of the diodes shown above. For the determination of Is and n, I chose at random two examples from my collection of various diodes, (all silicon in this case) and measured with a modified methodology to that outlined by Ben Tongue and Mike Tuggle. In this case, with the radically different forward voltage drop of these diodes from Germanium or Schottky diodes, I have kept the Id values constant (about Id2=0.5uA and Id1=1.0uA) and varied Vd. I have included the actual room temperature in the calculations in order to eliminate this variable as a source of doubt or error. All the measured parameters as well as the determined results are presented in order to facilate repeatability.

Light Emitting Diodes

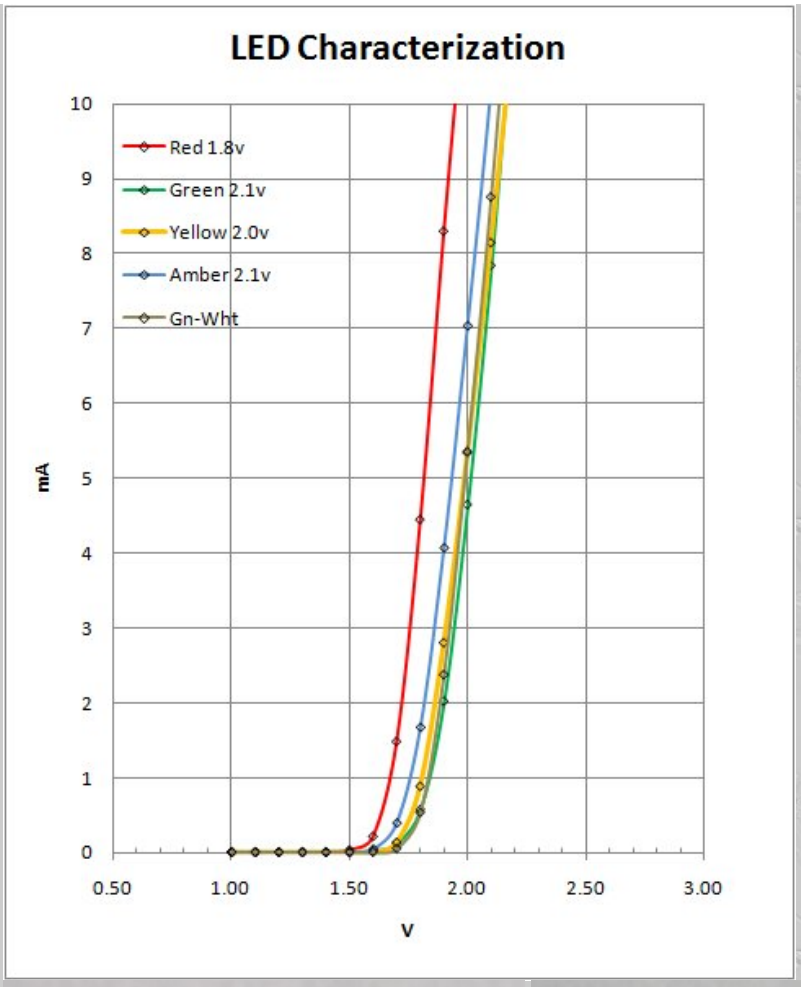
LED Characterization
Red 1.8v
Green 2.1v
Yellow 2.0v
Amber 2.1v
Gn-Wht
mA
V
0
1
2
3
4
5
6
7
8
9
10
0.50
1.00
1.50
2.00
2.50
3.00

Red 1.8v

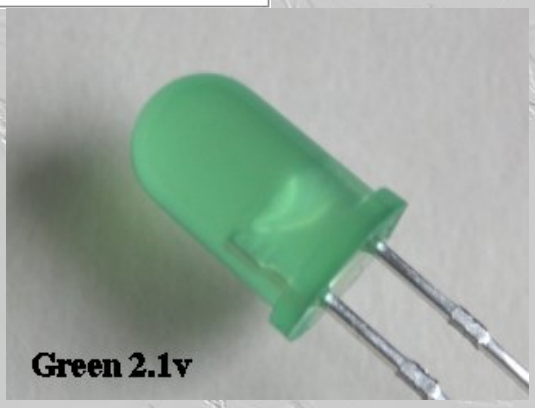
Green 2.1v

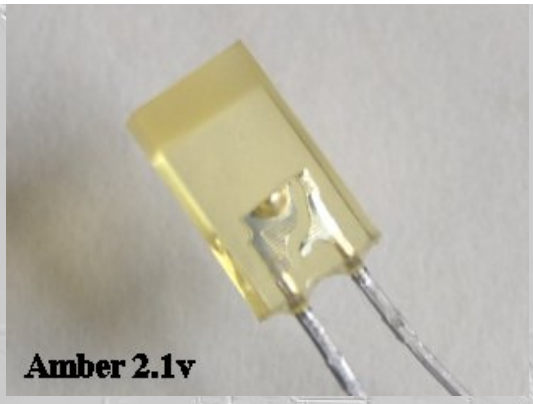

As long as I am measuring various and sundry diodes, I figure I ought to include that most ubiquitous of modern diode, the LED. Found everywhere, these diodes are rapidly becoming the low-energy light source of choice for many lighting applications. I have read occasionally of someone asking whether these ought to be useful for radio applications as well. To this question the answer is generally a resounding "No!". The turn-on voltage is waaay above any reasonable value expected to be delivered by an antenna to a crystal set. Still, this simple answer avoids the actual question, what in fact does the characteristic curve of a LED really look like? Where is the turn-on voltage with respect to the published junction voltage, (assuming you can find that).
To provide just such a look I visited my local electronics store and bought a small handful of LED's, most with the junction voltage listed and took them home to measure. Typical LED junction voltages seem to range from about 1.8v to 2.1v or more. The turn-on voltages look closer to 1.6v-1.7v. Anyone used to working with Carborundum crystals or silicon diodes will be used to biasing their rectifier to get good sensitivity. These LED's once on have a very sharp rise and with a proper bias should work quite well as detector diodes. As a bonus you will get a sweet glow as well. OK, not as cool as the glow of a vacuum diode, but certainly more sensitive!

Spreadsheet for calculation of Light Emitting Diode n and Is (modified from Mike Tuggle's spreadsheet)

Spreadsheet for calculation of diode n and Is						Tuggle Method from "Cal_n_Is.xls"			
Diode	n	Is	Ro	Temperature		Vd2	Id2	Vd1	Id1
under test		nA	k Ohm	dF	dC	V	uA	V	uA
Red	2.1547	3.3E-08	1.7E+12	80.7	27.1	1.30114	0.4995	1.33895	0.9875
Red	2.0720	9.7E-09	5.5E+12	80.7	27.1	1.31649	0.5038	1.35690	1.0745
Amber	1.5627	1.9E-13	2.1E+17	80.4	26.9	1.42768	0.5046	1.45571	1.0131
Amber	1.6163	6.4E-13	6.5E+16	80.2	26.8	1.42525	0.4963	1.45532	1.0229
Yellow	1.5860	5.1E-14	8.0E+17	80.4	26.9	1.50347	0.5065	1.53292	1.0422
Yellow	1.3763	1.2E-16	2.9E+20	80.7	27.1	1.51826	0.5003	1.54291	1.0031
Green	2.0490	1.2E-09	4.2E+13	80.7	27.1	1.41068	0.5116	1.44647	1.0082
Green	2.0650	1.2E-09	4.3E+13	80.4	26.9	1.42153	0.5075	1.45762	1.0009
Water Green	3.2709	1.7E-09	4.8E+13	80.4	26.9	2.22240	0.5085	2.27970	1.0045
Water Green	1.9273	8.6E-16	5.8E+19	80.9	27.2	2.03170	0.5099	2.06510	0.9993
White-Gn	1.4366	3.5E-16	1.1E+20	80.9	27.2	1.54780	0.5143	1.57610	1.1050
White-Gn	3.0358	1.1E-05	6.9E+09	80.7	27.1	1.37740	0.5111	1.43020	1.0043

The above spreadsheet is based on measurements of the diodes shown above. For the determination of Is and n, I chose at random two examples from my collection of various diodes, (all led's in this case) and measured with a modified methodology to that outlined by Ben Tongue and Mike Tuggle. In this case, with the radically different forward voltage drop of these diodes from Germanium or Schottky diodes, I have kept the Id values constant (about Id2=0.5uA and Id1=1.0uA) and varied Vd. I have included the actual room temperature in the calculations in order to eliminate this variable as a source of doubt or error. All the measured parameters as well as the determined results are presented in order to facilitate repeatability.

Crystal Galena and Pyrite Diodes

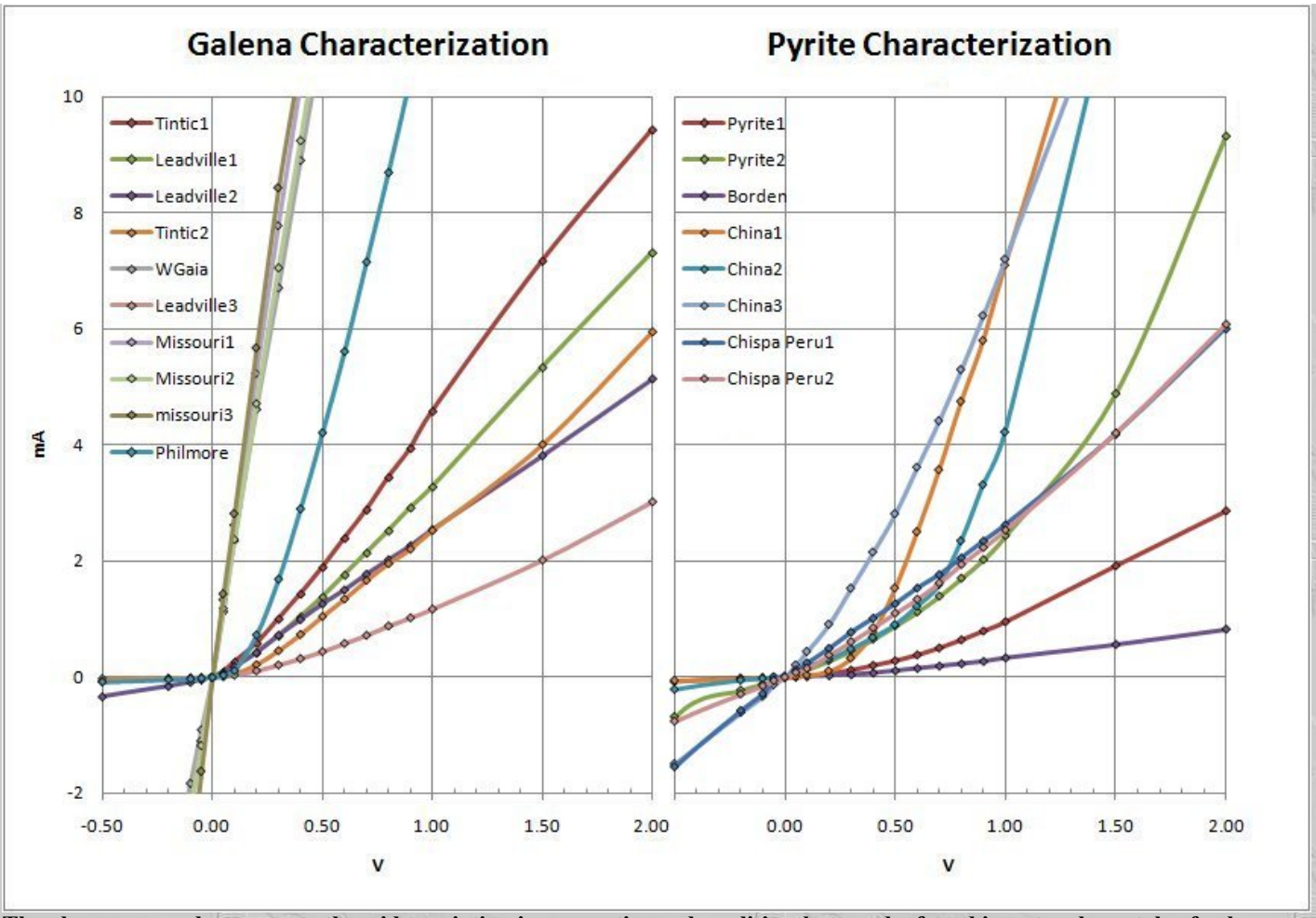

The above curves demonstrate the wide variation in properties and qualities that can be found in natural crystals of galena or pyrite, the two most common and best quality natural stones. In each crystal test I first poked around the crystal for some time to 1) determine a typical sensitivity for the crystal in question and 2) to locate the best hot spot with which to test. This turns out to be a non-trivial exercise on the diode test setup. In a crystal radio one need only listen for the loudest spot. With the test setup one needs test both the forward and reverse current in order to determine if the whisker is on a hot spot or not. Very tedious work! (In retrospect, if I were starting over making a test jig, I would definitely add a DPDT switch to readily change between forward and reverse current measurements. I'd probably toss in a rheostat for fine adjustments as well).

For many crystals there are limited number of possible hot spots, but these may be hot indeed. For most of my "Steel Galena" samples (Tintic Utah, or Leadville Colorado) there are numerous hot spots under virtually every place I touch the probe, but in general the sensitivity is good to so so. These crystals are very kind to work with in terms of finding spots and avoiding frustration. Mirror galena on the other hand may have quality hot spots, but any hot spots at all are rare and frustratingly difficult to locate. Here my Philmore detector crystal shines with an almost ideal "Galena" response. To chase down this rabbit I purchased some lovely mirror galena from Sweetwater Missouri. I broke off a few appropriate-size chunks to pot in woods metal and test. At first I was very excited with the high currents I was seeing at moderate voltages. Figured I had struck gold. When these crystals failed miserably to rectify anything in my radios, I re-measured things in both forward and reverse directions. These crystals obey Ohm's law and act like typical resistors, not suitable for radio work at all.

For my pyrite crystals the work has been especially tedious and frustrating. With one of the crystals one "hot spot" alternated, entirely on its own, between hot and bad while I was making the measurements. I would start over and over, sometimes getting interesting readings then suddenly it would drop to low values and I'd start over, back and forth. I present this data as best as I have measured, and I don't intend to go back! You see at least one of the crystals, my "China 1", (from a lead/silver mine in Hunan) gave a sweet classic-looking curve. More to the point, "ideal" curves for natural minerals are difficult to come by. Most crystals you use will be less than ideal. The good news is that, while listening to your set, poking about for a good spot is far easier than what I have gone through to produce these curves. Your ear will take care of you!

In the photo I indicate groupings based on an easy measure of performance. I note the current in milliamps for each set where the plate voltage is set at 0.5V. The greater the current the better are your chances to get a sensitive crystal, assuming Ohm's Law is not followed! Crystals in the "dead zone" on the left will have their woods metal re-melted for new detector crystals and the bad ones tossed, its tough love for crystals. I find that easily half the potted crystals I make are tossed this way, and only a few can be considered superlative.

My measurements and discussion on vacuum diodes has moved to my section "Diodes III" under the Lab Menu.

Return..

Back to Main....

Sunday, 09-Jul-2017 00:50:33 CDT

Comments and/or Correspondance to: kj-smith@sbcglobal.net

.::. Sitemap .::. International Pix .::. Western US Pix .::. Pinhole Pix .::. Crystal Radio .::.
.::. Snapshots .::. Thoughts .::. Beer Labels .::. Petrology .::. Life List .::. Ionosphere.::.

The Lakhovsky Multiple Wave Oscillator Handbook

Compiled & Edited by

Thomas J. Brown

The Lakhovsky Multiple Wave Oscillator Handbook

Comprising the
Borderland Sciences Research Foundation
Lakhovsky Multiple Wave Oscillator
&
Radio-Cellular Oscillator
Research Files

Compiled and Edited by
Thomas J. Brown
Director of
Borderland Sciences Research Foundation

Published August 31, 1994
in the Light of further Research,
in the Interests of BSRF Associates by:

Garberville, California

© 1986, 1988, 1992, 1994 Borderland Sciences Research Foundation

All rights reserved. No part of this publication may be reproduced, stored in a retrieval system or transmitted in any form or by any means, electronic, mechanical, photocopying, recording or otherwise without the prior permission of the publisher except for brief passages quoted in reviews.

ISBN 0-945685-03-3

Library of Congress Catalog Number 92-71664

Fourth Revised Edition. Published August 31, 1994 by:

Borderland Sciences Research Foundation
c/o Post Office Box 429
Garberville, California Republic

10 9 8 7 6 5 4 3 2 1

DISCLAIMER

This book is a research publication of Borderland Sciences Research Foundation. It consists of our MWO and RCO files which have been put into some semblance of order to preserve the records of many people with new and different ideas on how to study the energetic states of living systems and how these systems may be influenced by externally applied energies, and also to allow for further experimentation in this field by competent researchers. Read this book thoroughly before undertaking any experiments because you will find many different opinions, some conflicting, as to how to proceed. High frequency electrical apparatus can cause serious shock injury and should only be handled by knowledgeable, competent researchers. All experiments are conducted solely at your own risk. We disclaim any responsibility for the use or misuse of any information in this book. While this book touches on the subject of human health, all information should be considered as anecdotal and should not in anyway be construed as medical advice. We are not qualified to give medical advice and the use of the experimental equipment and research techniques described in this book may provide a false sense of security wherein one may neglect professional medical care. Use your brains. Thanks.

Thomas J. Brown, BSRF
Editor/Publisher

Table of Contents

PART ONE – Lakhovsky's Writings and Work

Radiations and Waves — Source of Our Life by Georges Lakhovsky 5-6
Science & Health, Longevity & Immortality through Vibrations, and, **The Earth and Ourselves,** by Georges Lakhovsky, books reviewed by Jorge Resines 7-11
Influence of Cosmic Waves on the Oscillation of Living Cells by Georges Lakhovsky 12-13
The Radio-Cellular Oscillator and its Applications by Georges Lakhovsky 14-15
Attempt at Treatment of Experimental Plant Cancer by Georges Lakhovsky 16-18
Lakhovsky's Vibratory Circle 19-20
The Lakhovsky Radio-Cellular Oscillator by Jorge Resines 21-26
Apparatus With Circuits Oscillating Under Multiple Wave Lengths by Georges Lakhovsky, U.S. Patent 1,962,565 27-28
Tube for Producing Multiple Wave Lengths by G. Lakhovsky, U.S. Patent 2,351,055 29-32

PART TWO – The BSRF MWO Research Reports

The Russian Lakhovsky Rejuvenation Machine by Bob Beck, 1963 33-38
Transistorized MWO by G.W. Steele 39-40
The Lakhovsky Multi-Wave Oscillator Power Supply by Klark Kent 41-48
Excerpts from **The Waves That Heal** by Mark Clement with commentary by Riley Crabb 49-55
Curing Cancerous Plant With Ultra Radio Frequencies by Georges Lakhovsky, 1926 55-56
Excerpts from **The Journal of Borderland Research,** 1964-1971 57-71
BSRF MWO 1988 Update 71-79
The Spiral Coil Multi-Wave Oscillator by Louis A. Schad 80-89
Electrostatic MWO by Peter Lindemann 90-91
The Sun-Ether Disc of Oscar Korschelt 92-93
View From the Borderlands by Tom Brown, 1988-90 94-97
Excerpts from **The Journal of Borderland Research,** 1990-1992 98-110
On the Trail of the Lakhovsky M.W.O. by Jorge Resines 111-113
Some MWO/RCO Questions Answered! by Tom Brown 114-115
MWO Roundup by Peter Lindemann 116-118
The Lakhovsky MWO: Back to Square One by Peter Lindemann 119-121
Lakhovsky's MWO: The Final Approach by Peter Lindemann 122-126
The Song of Longevity by Michael Theroux 127-129
My Meeting with Serge Lakhovsky by Hessel Hoornveld 130-134

PART THREE – Reference Materials

Old Electrotherapeutic Devices by Jorge Resines 135-138
High Frequency Oscillators for Electro-Therapeutic Purposes by Nikola Tesla 139-149
The Magnetic-Arc Instrument of S.S. Knight by Mark Gallert 150
Frequency-Independent Antennas by John D. Dyson 151-153
Short Waves in Medicine: **Medical Aspects of Ultra Short Waves**, C.H. West; **Ultra Short Waves in Medicine**, Dr. F. Noack; **Human Beings as Antennas**, Dr. I. Schliephake 153-158
Distributed Series Capacity by Charles Proteus Steinmetz 159-160

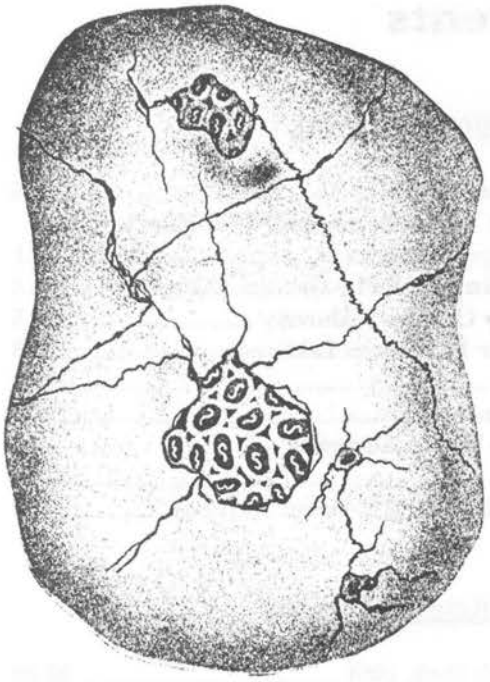

A dead cell. This diagram shows a cell where the chromosomes have stopped oscillating, and for this reason have ceased to live. But the chondromes, visible through the opening, continue to live an independent life. They are surrounded by a tough membrane and are multiplying so as to burst open the outside of the cell, as a baby chick, when it comes to maturity, breaks through the egg shell to come out.

Photograph taken during the treatment of Mrs S..., who sits between the MWO antennas at Calvary. Behind the patient is Dr. Marquer, head physician of the hospital, to the left is Dr Z..., assistant, three voluntary Nurses, & to the right is Georges Lakhovsky.

At left, Madame C... *Before Treatment.* Rodent Ulcer in inner angle of left eye.

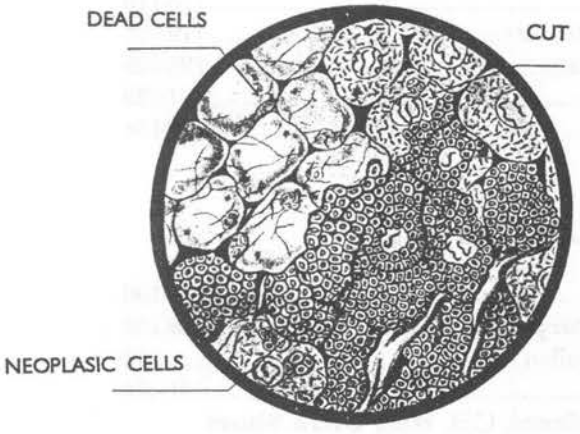

A group of dead cells, but not yet destroyed, in which the neoplasic cells are forming. One can see the transformation in the neoplasic tissue.

At right, Madame C... *After Treatment.*

Excerpts from:

RADIATIONS AND WAVES

Source of Our Life

by Georges Lakhovsky, 1941

THEORY OF CELLULAR OSCILLATION

Before presenting the therapeutic results obtained with my multiple short wave oscillator and presented at the International Congress of Short Waves in Vienna (July, 1937) it may be useful to give a rapid survey of my theory of cellular oscillation which I have developed fully in a number of books.*

All living cells are composed of two essential elements; the nucleus and the protoplasm in which it is bathed. This nucleus is itself composed of many tubular filaments: the chromosomes. In addition, hundreds of much smaller filaments or chondromes are present in the cytoplasm.

Chromosomes and chondromes are sheathed in an insulating substance (cholesterine, resin, fat, plastrin, etc.) and contain a liquid-like serum with the same mineral content as sea water, and consequently a conductor of electricity. Thus, these filaments constitute ultramicroscopic oscillating circuits capable of oscillating electrically over a wide scale of very short wavelengths.

I have demonstrated in my works that these cellular oscillating circuits, chromosomes and chondromes, vibrate electrically under the stimulus of electro-magnetic waves: cosmic, atmospheric and telluric.

Now, many internal and external influences may upset the oscillating equilibrium of these cells. For instance, a variation or change in the field of cosmic, telluric or atmospheric waves, a demineralization of the organic matter constituting the cellular substance, traumas causing the destruction by shock of the protoplasm or the nucleus.

I have shown in my books, **The Secret of Life** and especially in **The Earth and Ourselves**, that every living cell draws its oscillatory energy from the field of secondary radiations resulting from the ionization of the geological substances of the earth by cosmic radiations.

But certain natural radiations are particularly toxic, especially those originating in geologically-induced geopathic zones. Many cancer cases have been attributed to these toxic radiations which has been proven experimentally, notably in Germany by Dr. Rambeau of Marburg. Therefore, earth radiations sometimes cause disturbance of the cellular oscillatory equilibrium of the organism.

Under these varied circumstances cellular oscillation may cease; the cell is then dead. But within the dead cell, the chondromes sometimes continue to oscillate electrically on their own natural frequencies. Fortunately, this phenomenon occurs rarely, or all humanity would already have perished from cancer.

The chondromes then envelope themselves in a membrane and continue to oscillate and multiply independently of the cell. They may then become neoplasic cells.

THE RADIO CELLULAR OSCILLATOR

To re-establish this equilibrium, I thought of creating, in 1923, a constant compensating field of very short radiations (2 to 10 metre wavelengths) to neutralize the action of the disturbing rays, and give the living cell the necessary stimulation for a return to its normal oscillation.

To this end, in 1923, I constructed my short-wave oscillator, using two triode tubes for very short waves made especially for this apparatus. I tried several cross leakages for this machine using one or more tubes and then multiple triodes with a tube containing oscillatory circuits within the bulb. Finally I adopted the oscillator with symmetrical cross leakage comprising two triodes. The oscillating circuits formed a single spiral, branched between the two grilles and the two anodes. It was fed directly by alternating current from the local supply circuit.

With this short-wave apparatus I was able to cure plants inoculated with cancer. For six years at the Saltpetriere I observed and checked the effects of these short waves.

Using very low power, from 10 to 12 watts, and a limited duration of treatment, I succeeded in curing cancer in human beings, but also had to record some failures.

The news of the success of my experiments became widespread. In many countries, as early as 1928, they began to build short-wave oscillators of considerable power producing thermal effects.

But here was great danger that the chromosomes and

---

* **The Secret of Life; Contribution to the Etiology of Cancer; The Earth and Ourselves; Cellular Oscillation; Nature and Her Wonders.**

chondromes, which are barely a ten-thousandth or twenty-thousandth of a millimeter in thickness, might not survive under a high frequency current. They offer much resistance, even to a low current which is sufficient to dissolve and destroy them.

It is simple to prove this by bringing a small bulb of from 2 to 5 volts with a filament of several hundredths of a millimeter, inserted between metal rods forming antennas, within the radius of a short wave transmitter. The bulb will light up and sometimes burn out, if it is brought too near the apparatus.

Moreover, the chondromes and chromosomes of all living cells, which are infinitely finer than the filaments of the bulbs, are sensitive centers of thermal phenomena, which may provoke their fusion. Undoubtedly this method is effective in killing microbes in the organism and in neoplasic cells. But it can also destroy millions of cells of healthy tissue in every irradiation.

THE MULTIPLE WAVE OSCILLATOR

On the other hand, I thought it possible to obtain better results by administering an oscillatory shock to all the cells in the organism simultaneously. Such a shock, very brief, produced by dampened or weakened electrostatic waves, does not provoke thermal and prolonged effects and involves no risk of burning living cells.

I therefore sought to produce an artificial oscillatory shock causing a periodic oscillation of the weak or dead cells.

At first glance this problem seems physically insoluble as there are approximately 200 quintillion cells in our bodies, each oscillating on its own natural wavelength. Theoretically, therefore, we would have to have a different wave length for each cell, so that every cell in the organism would oscillate in resonance on its own wavelength.

After much research I was able to construct an apparatus creating an electrostatic field covering all frequencies from 3 metres to the infra-red, so that every cell can find its natural frequency and vibrate in resonance.

We know that in physics, a circuit fed by damped or weakened high frequency currents creates many harmonics. Consequently, I conceived an oscillator of multiple wavelengths with a broad scale in which every organ, every gland, every tissue, every nerve, could find its natural frequency.

To obtain this result I set up a transmitter composed of a series of circular concentric oscillating circuits linked by a silk cord but not contiguous. These circuits are stimulated by damped high frequency currents from a spark gap. Thus each circuit of the transmitter vibrates not only on its natural frequency, but also on numerous harmonics.

Thus, I built an oscillator with all the basic wavelengths from 10 centimetres to 400 metres, that is, all frequencies from 750,000 to 3,000,000,000 cycles per second. But each circuit also emits many harmonics, which, with their basic waves, their interferences and their effluvia can reach the scale of infra-red and even that of visible light (1 to 3000 trillion vibrations per second.)

Since all the cells as well as the chondromes oscillate precisely at frequencies in that range, they can therefore find, in the output of such an oscillator, the frequencies which cause them to vibrate in resonance.

You know the results I obtained with continuous very short waves using triode tubes at a distance, with no contact electrode....

As early as 1931, I began using this multiple wave oscillator in various Paris hospitals: the Saint Louis, Val-de-Grace, Calvary, Necker, etc... Among the many cures with this treatment, I will mention especially those of various cases of cancer which X-ray and radium treatments failed to improve. These patients, cured six years ago, have had no recurrence and are in perfect health at this date. In all pathogenic cases this treatment gives very good results. As it does not attack the microbes directly, it does not destroy live tissue, but reinforces the vitality of the organism by accelerating cellular oscillation. It is therefore the reinforced organism that successfully resists the microbes and all pathogenic causes.

So, while X-rays and radium destroy microbes, neoplasic cells and healthy tissue at the same time -- which accounts for the serious accidents which occur during and after such treatments -- high frequency radiations (short waves) applied at a distance and without thermal effect cure diseases of all kinds, even those of the prostate to a considerable degree.

Whatever the pathogenic cause, the multiple wave oscillator reproduced the frequencies necessary to re-establish the cellular oscillatory equilibrium.

In general, it is sufficient to seat the patient, or to have him stand in the radius of the apparatus, before the transmitter. The duration of the treatment is usually from five to ten minutes, every other day. These figures are purely arbitrary, since these radiations reinforcing cellular oscillation do not produce organic disturbances, whatever the duration of the treatment may be.

Despite the many cases successfully treated, almost without exception, it must be understood that my oscillator cannot cure all types of cancer in all its stages of development. In many cases, when the cancerous tumor has already destroyed important blood vessels, my apparatus is powerless to rebuild that tissue before the fatal haemorrhage.

Book Reviews by Jorge Resines

La Science et le Bonheur

LONGEVITE ET IMMORTALITE PAR LES VIBRATIONS

(Science and Health, Longevity & Immortality through Vibrations)

and

La Terre et Nous

(The Earth and Ourselves)

both by Georges Lakhovsky

INTRODUCTION

When reading both of these works for review, I thought it would be better for BSRF's readership to "group" the subjects broached in both and to include in every grouping what Lakhovsky says, with my comments added. This was done to avoid including, as he does, plenty of anecdotes and tales irrelevant to the analysis and study of his theories and actions. For the sake of completeness, I now detail his written works up to 1933 minus his scientific papers as published in French scientific journals:

1) L'origine de la Vie (Origins of Life), Gauthier-Villars Editors, Paris, 1926.
2) Contribution a l'Etiologie du Cancer (Contribution to Cancer Etiology), Gauthier-Villars Editor, Paris, 1927.
3) Universion ('Universion' is Lakhovsky's term for the Ether), Gauthier Villars, Paris, 1927.
4) Le Secret de la Vie (Secret of Life, actually it is (1) with some added chapters and more information), Gauthier-Villars, Paris, 1929.
5) La Science et le Bonheur (Science and Good Health), Gauthier-Villars Editors, Paris, 1930.
6) L'Oscillation Cellulaire (Cellular Oscillation, a collection of experimental researches according to the source in (9)), G. Doin et Cie, Paris, 1931.
7) La Formation Neoplasique et le Desequilibre Oscillatoire Cellulaire (Neoplasic Formation and the Cellular Oscillatory Unbalance), G. Doin et Cie, Paris, 1932.
8) L'Eternite, la Vie et la Mort (Eternity, Life and Death), Fasquelle Editors, Paris, 1932.
9) La Terre et Nous (The Earth and Us), Fasquelle Editors, Paris, 1933.

From these I have read the Spanish translation to (4), published in 1929 by Aguilar, Madrid, Spain, and works (5) and (9).

THE "UNIVERSION" AND OSCILLATIONS

"Universion" was the name given by Georges Lakhovsky to what us Borderlanders call "The Ether", meaning an all-space filling force capable of producing, when properly excited and manipulated, all kinds of effects. To Lakhovsky the Ether was not motionless but full of many different oscillations of electromagnetic character. And when he stated this, he meant of Hertzian-type oscillations. In his view these oscillations happened within the Ether, and NOT as it is meant today within "empty space" as dictated by Relativity Theory.

Please notice that what I am reviewing are Lakhovsky's ideas as told in his publicly available written works. If he had a personal and secret viewpoint, I do not know so, wherever deemed necessary, I will insert the proper comments related to BSRF literature and findings. Considering that Hertzian-type oscillations were the only ones that could be produced in the Ether, Lakhovsky began to research in earnest correspondences between living organisms and the current (1920/1930) oscillation-producing equipment:

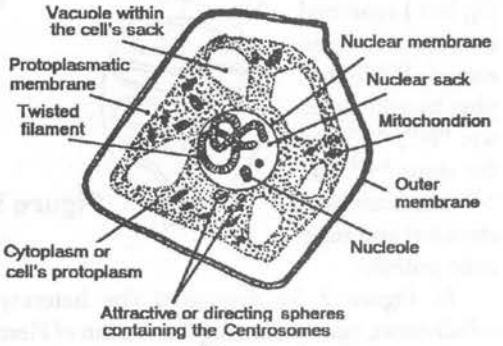

Figure I

For example, he likened the twisted filament within a cell (see Figure I) with the self-inductance or coil in a radio transmitter/receiver, he also did the same with filaments within micro-organisms such as the ''Corynactis viridis' (with a current size of 0.1 millimeter, and living in the sea), as shown in Figure 2.

Figure 2

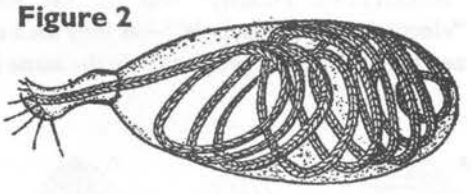

But, to Georges Lakhovsky, the filaments were not the only oscillating members within a living organism. As seen in Figure 3, within a cell also exist Chromosomes and Chondriomes:

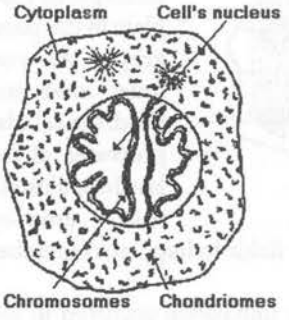

Figure 3

Both elements, Chromosomes and Chondriomes, he likened with capacitors as is seen in Figure 4.

Each of the elements within a cell oscillated in a particular manner, according to Georges Lakhovsky, so that the combined oscillations produced the well-being of the cell and all cells vibrating harmoniously generated the well-being of the whole body.

In continuing with his viewpoint (5), Lakhovsky likens the "a-b" cellular axis, as shown in Figure 5 with the "North-South" ferromagnetic axis (same illustration). The cell's internal filaments (see I in Figure 5) he equals with a coil of wire wound around the magnetic axis (see (II), same illustration).

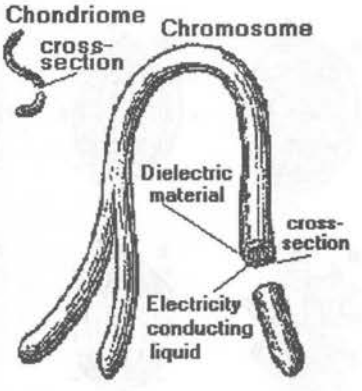

Figure 4

As seen in Figure 6, over these lines, he likens the homoeotypical process of cell-division ("according to

Flemming", he says (5), but I searched in vain for a referenced Bibliography) by adding letters "N", "S" and the signs "+" and "-", to indicate both electrical and magnetic polarity.

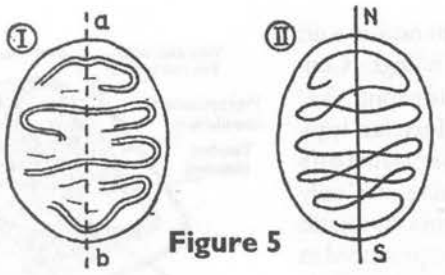

Figure 5

In Figure 7 he illustrated the heterotypical process of cell-division, again following the dictum of Flemming and adding also letters for magnetic and electrical polarity:

From one Mr Henneguy (also, unreferenced) he takes illustration of germ-reproduction.

In Figure 8, over these lines, we see: at (I) the actual physical events as depicted by Henneguy and at (II) Lakhovsky's view with electrical polarities added. One pertinent remark here: "NEGATIVE Polarity" was for the early electricians the "electricity-absorbing pole" – as they then considered electricity as a fluid with given properties. In the same fashion, "POSITIVE Polarity" meant the "electricity -issuing pole". Throughout his two works – (5) and (9) – Lakhovsky employed these two concepts as I explain in this paragraph. As you must have noticed, the cellular processes of the last three illustrations employ three different types of non-uniform fields to happen; remember this fact later.

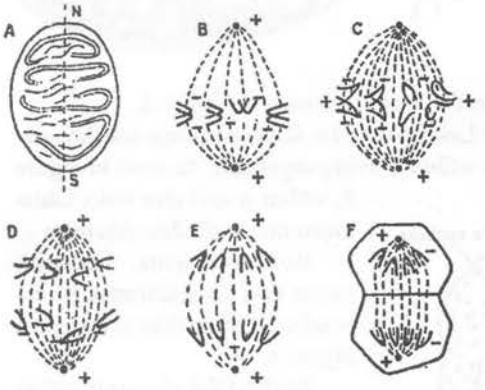

Figure 6

Whenever a given oscillatory imbalance occurred in the body, according to Lakhovsky, normal healthy cells first died and later they began to transform into cancerous cells to later form tissues of this very kind, as illustrated in Figure 9.

Figure 7

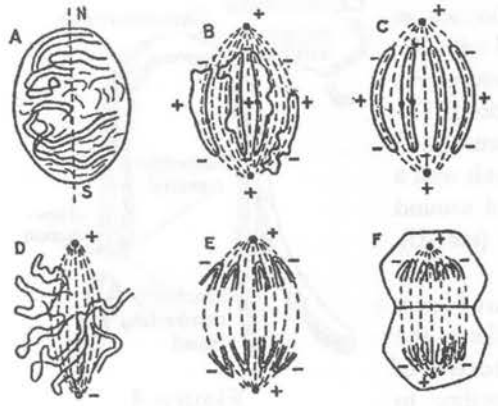

This given oscillatory imbalance destroyed most of the cell's internal constituents and hardened its membrane, first; to generate a massive reproduction of Chondriomes, second. See Figure 10. The Chondriomes multiplied wildly, without any restriction, and thus cancer spread itself throughout the body. How the imbalance was created, and Lakhovsky's solution to it, will be seen in coming points to this review. One note of caution, however: What is written in both works happened over 60 years ago, our environmental conditions have changed since then. So, whosoever attempts to do anything concrete with Lakhovsky's findings will have to ADAPT his/her efforts to these changes. Please do not forget this important point!

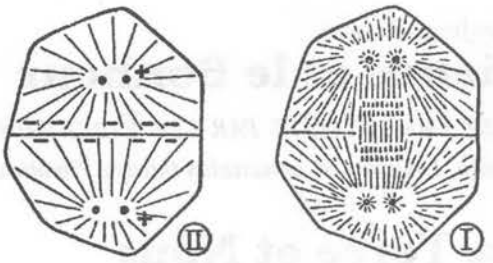

Figure 8

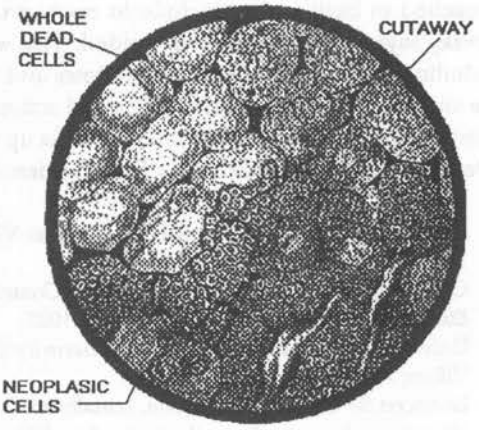

Figure 9

DIFFERENT POLARITIES IN THE SOIL

One of Lakhovsky's most interesting findings is that the different strata and groupings of localized character of the same soil-constituents do have electrical polarities. Soils of "Negative Polarity" absorbed and conducted the etheric waves coming to Earth from the Cosmic space into deeper rock-strata; by opposi-

Figure 10

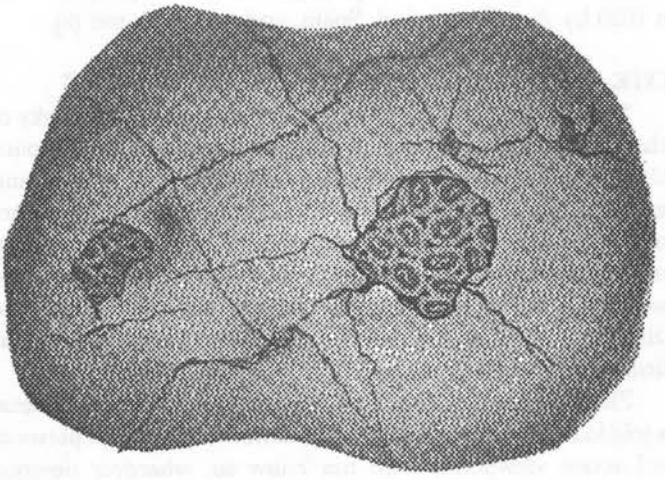

tion, soils of "Positive Polarity" reflected, refracted or changed these waves before these waves were sent somewhere else because of other wave-trains coming behind.

Both kinds of soil, according to Lakhovsky, affected human health differently and these are the main representatives for each class:

Negative Polarity	**Positive Polarity**
(-) Sand and sandstone	(+) Plastic Clay
(-) Thick-calcareous	(+) Gypsum loam
(-) Gypsum (un-alloyed)	(+) Saint-Ouen calcareous
(-) Recent alluvial deposits *rich in freshly-broken small rocks and sand*	(+) Green marl
	(+) Phosphorous chalk
	(+) Iron minerals

Now, very strange effects happen where two different kinds of soil meet – at frontiers called "faulty-lines" by Lakhovsky. Let us see each effect separately:

As shown in Figure 11, over these lines, each kind of soil imparts its own electrical polarity to storm-clouds above. Lakhovsky says lightning strikes the ground only in the faulty-lines because each different type of soil is like a plate of a massive electrical condenser charged with one kind of electricity until it discharges at the "breaking level". He carries the idea even further, as illustrated in Figure 12, by indicating that massive amounts of electricity could be obtained from underground strata by sinking deeply into the ground metallic shafts of the right metals and tap said electrical charges accordingly. Cities, towns, trains, etc., could be electrified cheaply and permanently by these means he states.

What he says of the storm-clouds' electrification, I have read nowhere else; I only found some complementary data in "The Earth's Electricity" by the late Dr. James McDonald of UFO-research fame (see the April 1953 issue of "Scientific American").

About tapping the Earth's underground electrical fields in this manner, I found at no other place what he states of the different soils possessing opposite electrical charges. Yes, I am acquainted with Nathan Stubblefield's "Earth Battery" but, so far, nothing as definite as Lakhovsky indicates. *Please, should someone possess more info, write to Borderland Science, forwarding it.*

From this conception, Lakhovsky originated his view of why Volcanism exists, he states where two different geological formations meet each other and produce a massive electrical sparking that, in turn, fuses and vaporizes the underground rocks to later expel the–in this state–upwards, where they cool and form the usual volcanic cone, as seen in Figure 13. The way and extent with which this viewpoint complements itself with what has been postulated (and mathematically backed, so that anyone with the proper knowledge and calculating-means can duplicate it) by Bruce L. Cathie is not known to me. Cathie has not extended his

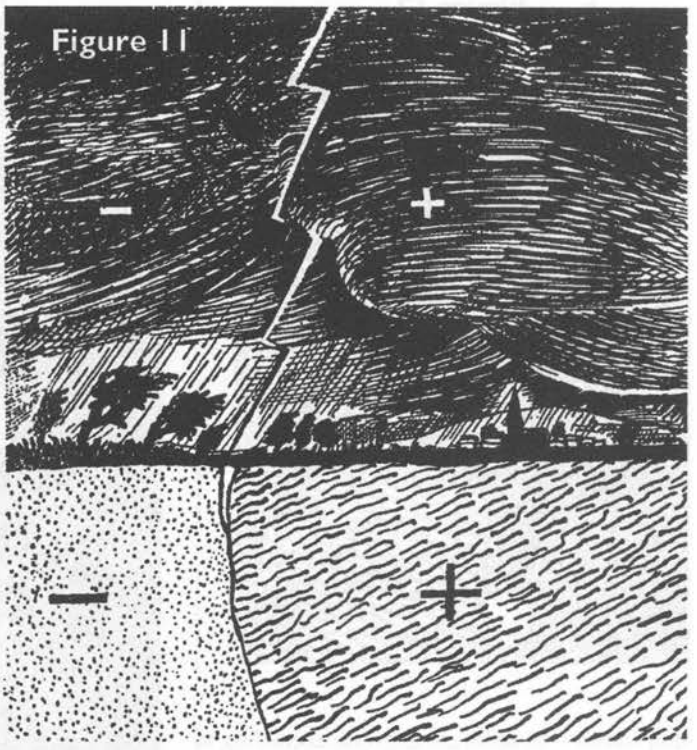

SAND PLASTIC CLAY

research into the analysis of soils and rock-strata to make it fit his grid-theory (I have not yet done so in my work either).

The faulty-lines do affect human health; for example, should someone sleep as seen in Figure 14, over a line of these, the individual would develop a cancer of the stomach. Not only the faulty-lines produced cancer, according to Lakhovsky, who also states that living in Positive Polarity-type of soils does, together with other diseases coming from being bombarded with reflected and self-interfering radiation.

If, as shown at (A) in Figure 15, your bed is on the path of a faulty-line, one way to contribute improving your condition is to move it into a zone – (B) – which the line traverses not.

In case you live upon a Positive Polarity-type of soil, you can get sick from the environmental reflected radiations but you can reduce the risk of getting sick by "polarizing" yourself like the ground you live over. Lakhovsky mentions that the inhabitants of Memphis, just to name a case, drilled a deep well to get water for drinking and that this water was positively-polarized; drinking the liquid, Lakhovsky states, effectively immunized them against any soil-produced disease.

Lakhovsky recommended living upon Negative Polarity-type of soil, such as deserts or similar zones, for the continued conduction of incoming energy guaranteed it would not accumulate in the body. He mentions, to this effect, that the healthiest portions of Paris were those built upon this kind of soil. Yet, one wonders, the extent to which this generalizing statement is correct nowadays with all the many changes which have happened...

Finally, he postulates that the tides are not due to "rising and lowering of the waters" but of the ground by them! This we see illustrated at Figure 16. Lakhovsky considered as "invariable" the level of water, while thinking that the different radiations – mostly, solar ones – falling upon the ground (and penetrating, or

Figure 12

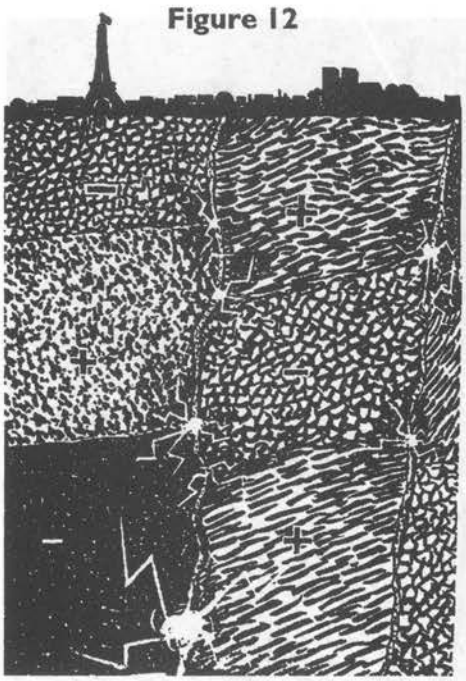

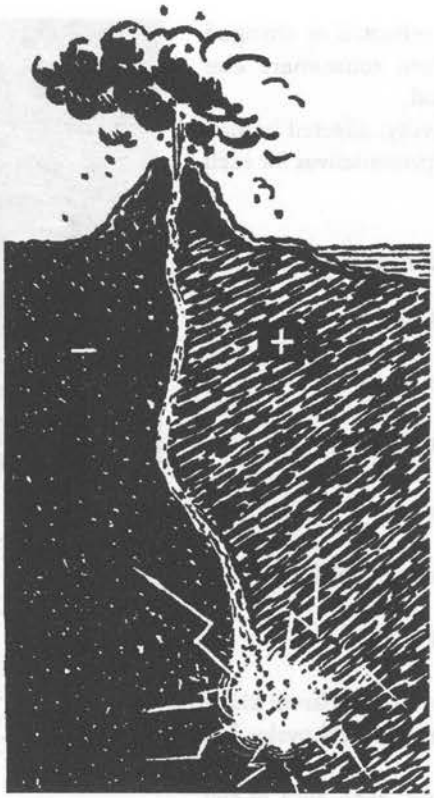

Figure 13

not, within – to different degrees, according to the ground's constitution) made it rise or lower. In this manner, he explains the different heights reached by the waters at different coastal locations.

Has anyone in the readership more data concerning this conception? Please let us know.

THE LAKHOVSKY MULTI-WAVE OSCILLATOR

I will refrain here from analyzing what Lakhovsky says about his "Radio Cellular Oscillator", for this is included in "The MWO Handbook" (1992 edition by BSRF). The data included in this section is taken from both reviewed works (5), (9), and even so I think it is too small to "break" into Lakhovsky's way of thinking and the resulting experimentation he must have performed.

In Figure 17, we have the following type of Hertzian oscillators: (I) Open Hertz-resonator, (II) Hertz-resonator closed by a capacity, (III) Hertzian dipole and (IV) Setup of dipole with a coupled oscillating circuit. Throughout both books (5), (9), Lakhovsky never talks about any other kind of oscillator that is not Hertz-based. Lakhovsky employed a "proportional antenna", whose elements were concentric cylindrical metallic tubes ending in spheres. The way he established the proportion in-between different metallic tubes is illustrated in Figure 18.

From a given length "l", the basic wavelength in his device, he first established a radius "r" (by dividing "l" by "Pi") that he multiplied by a constant "a". You see at (I), of Figure 18, the wavelength "l" when in a Hertzian dipole and at (II) when in Lakhovsky's metallic tubes ending in spheres. Yet, in none of the books reviewed is it indicated WHICH are the numerical values under consideration and WHY these specific values are employed. A "thunderous silence" is found when looking for them....

The only information Lakhovsky furnishes us with is that he generated "many different waves, from 10 centimeters to 400 meters" by using the fundamental wave, its harmonics and the interferences (with other waves) that are produced in the process. The reason behind this idea, he states is that "We know in Physics

Figure 14

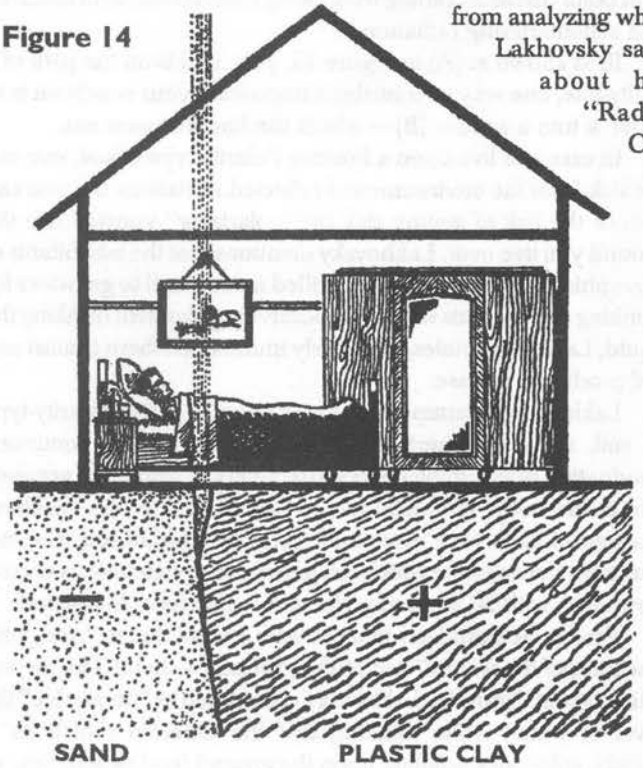

Figure 15

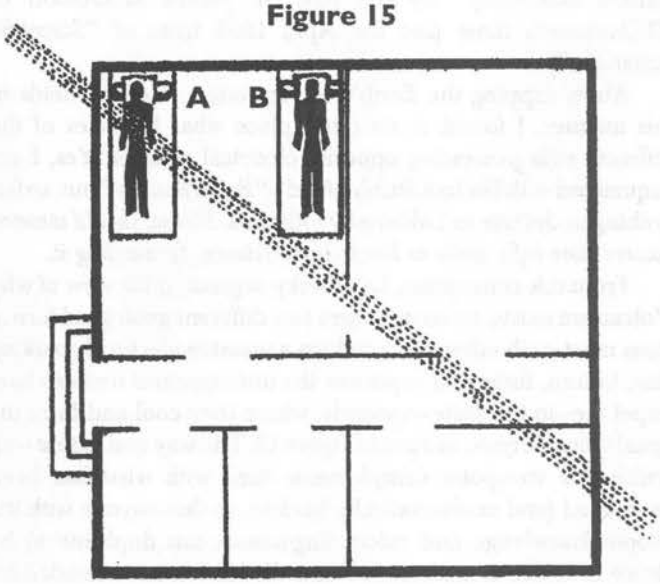

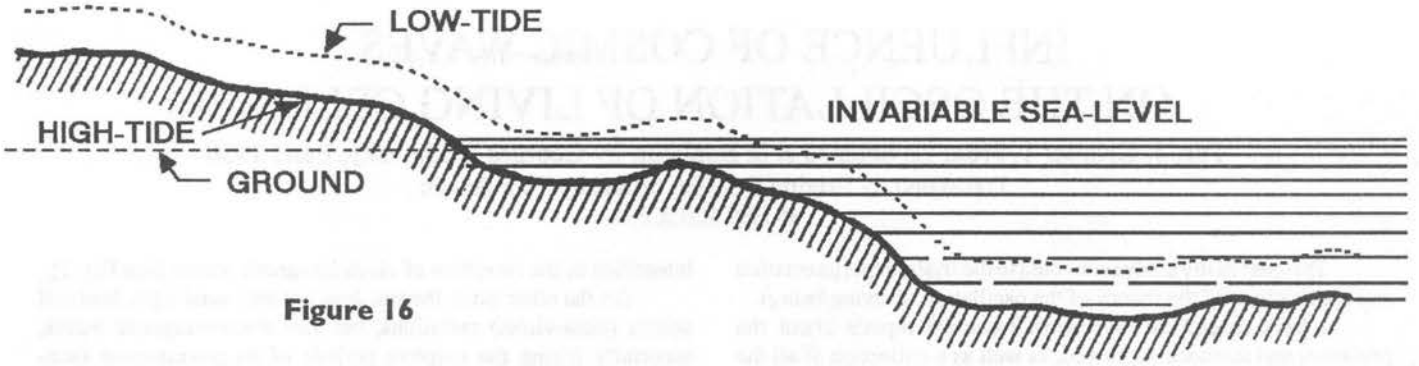

Figure 16

that a circuit fed by high-frequency damped currents creates many harmonics" (from pages 147-148 of -(9)-).

These many different wavelengths would be selectively

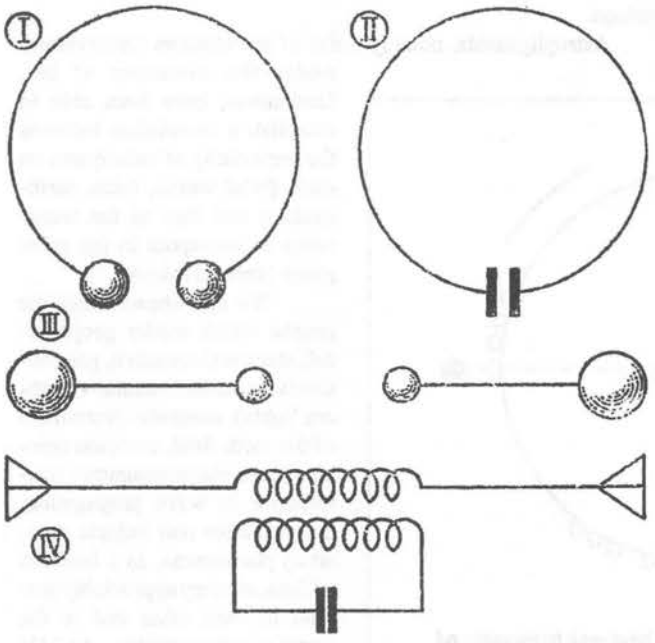

Figure 17

absorbed by the cells and tissues in our body lacking in the proper wavelengths to maintain the proper oscillatory balance; this would be done, he states, because cells can act both as emitters and receivers of waves.

By February 1931, the first Multi-Wave Oscillator was finally built and was in working condition and in July 1931 it was tested at the Saint-Louis Hospital, with success.

This first model is seen in Figure 19, and it is taken from page 135 of (9) with the following explanation beneath the photo: "Multiple-Waves Oscillator. Lakhovsky device complete with its two resonators (that) create an electromagnetic field in-between its two elements".

In short, the two sets of concentric rings are the "resonators" to create the in-between field. This model is a far cry from the more elaborate one shown by Mark Clement in his "The Waves That Heal". Only a few features remain:

a) The thick tubes holding the set of rings; yet in this Figure 19 the rings are ABOVE the tubes and in Clement's book they are BENEATH—why?—unless this is purely a mechanical concern.

b) I assume that the thick cylinder at the foot of the right-unit, (Figure 19) contained the original electronic equipment needed

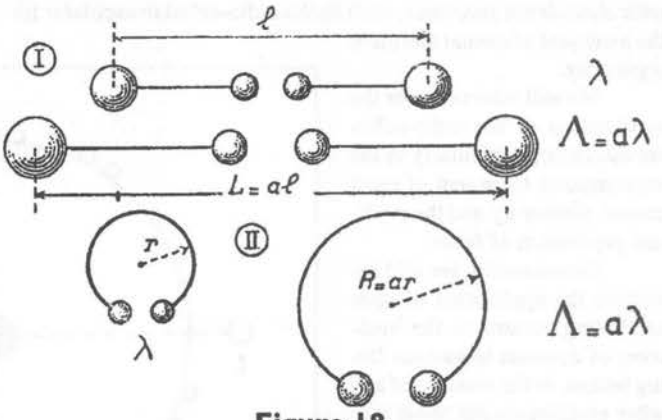

Figure 18

to make the machine work. Compare with the photo on page 29 of Clement's book and you will see the volume involved is tripled (or closely). What changes were made and WHY???

To end this two-book review, I would like to ask anyone possessing a copy of the referenced Lakhovsky works to send a duplicate to BSRF to see how much can be cleared of both the M.W.O. and any other research by Georges Lakhovsky.

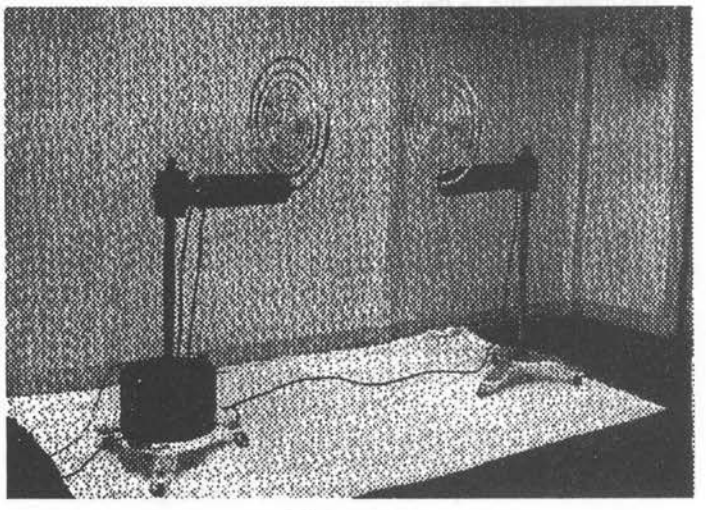

Figure 19

INFLUENCE OF COSMIC WAVES ON THE OSCILLATION OF LIVING CELLS

Part 3, Chapter 1, From La Science et le Bonheur, by Georges Lakhovsky, Paris 1930

Translated by Brigitte Donvez, Edited by Tom Brown

© 1991 B.S.R.F.

This part of my study is devoted to the trials, experimentation and applications of the theory of the oscillation of living beings.

I have assembled here short technical reports about the processes and methods employed, as well as a collection of all the papers read at the French Sciences Academy and at various French and foreign Scientific Societies about oscillatory therapeutics and all its domains of application.

We intend first to examine successively the influence of cosmic waves on the oscillation of living cells, taking as a concrete example the influence of solar activity upon the quality of wine and vintage. Then we will examine the construction of an electromagnetic short-wave generator, such as the radio-cellular-oscillator for the treatment of animal and plant organisms.

We will later consider the applications of the radio-cellular-oscillator, particularly in the experimental treatment of plant cancer, diathermy and the artificial production of fever.

Concurrently, we will introduce the application of open oscillating circuits to the treatment of diseases in various living beings, in the absence of any other oscillations but those produced by the natural cosmic and atmospheric waves. We will also review in this chapter the observations of scientists and practitioners who clinically applied my oscillating circuits.

Finally we will take up the very latest applications of oscillating circuits to water and liquid sterilization, and to the activation of the germinative power of plants.

Obviously, the number of these applications, presently limited to certain domains, tends to rapidly expand and touch upon the various problems presented by therapeutics, biology, agriculture and zoology.

I have discussed elsewhere the role played by cosmic radiations in the development of living beings, due to the very oscillatory nature of the cell. Now, as a consequence of the earth's rotation and the stars' reciprocal motion, the cosmic and atmospheric radiation field is not constant, but rather variable. Living beings are subsequently under the influence of these variable cosmic radiations, whose nature either weakens or strengthens the cell's oscillatory balance.

I have mentioned elsewhere[1] that the lunar radiation interferes with the waves of radioelectric stations. Every week, the recurrence of moon phases enables us to obtain highest and lowest intensities in the reception of electromagnetic waves (see Fig. 1).

On the other hand, the sun does not only send light, heat and actinic (ultra-violet) radiations, but also electromagnetic waves, especially during the eruptive periods of its prominences (sun-spots). The influence of the sun's electromagnetic radiation becomes obvious if we consider the variations in the earth's magnetic field and the spinning of a compass' magnetic needle during magnetic storms, under the influence of the telluric currents induced in the ground. The ionization produced by the sun's radiation also generates atmospherics and statics which disturb radioelectric receptions.

Astrophysicists, notably those of the Meudon Observatoire under the direction of Mr. Deslandres, have been able to establish a correlation between the periodicity of cataclysms on earth (tidal waves, tides, earthquakes) and that of the recurrence of sun-spots in the earth plane (about 27 days).

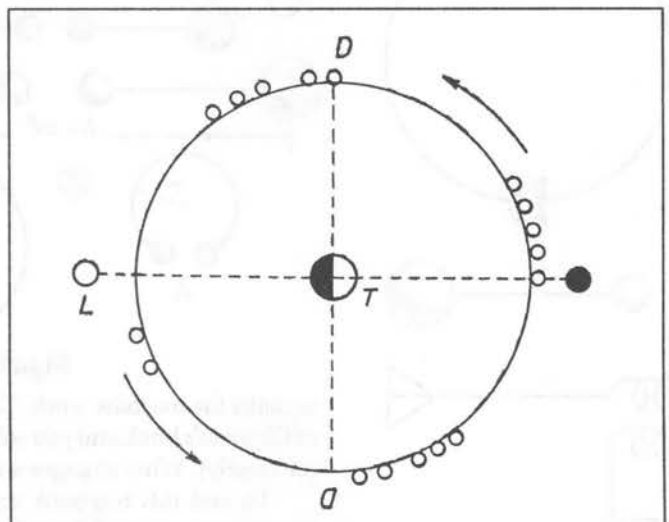

Fig. 1 -- Distribution of the highest intensity of electromagnetic waves observed by Mr. Vincent, as a function of the moon phases.

We can observe that the graphs which render geophysical, electric (ionization, gas conductivity, aurora borealis -- northern lights), magnetic (variations of the earth field, compass spinning) and electromagnetic (disturbance in wave propagation, atmospherics and telluric parasites) phenomena, as a function of time, are very appreciably parallel to each other and to the curve of solar activity. An 11½ year periodicity appears on these graphs, confirmed by numerous, previous observations in the domain of meteorology. In particular certain tropical rainfall patterns show a 33 to 35 year periodicity, three times longer than the previous one.

I researched the extent to which cosmic radiations which condition physical and meteorological phenomena, also influence biological phenomena and the development of living beings.

As early as 1801, while cosmic radiations were not even suspected, Hershel pointed out: "the scarcity of vegetation when the sun has no spots". Starvations recur every eleven years in India with alternances of heat and rain. From 1901 to 1909, the canon Th. Moreux noticed that the wheat crop in France and in the world more or less followed the solar activity, so did arthritic conditions, and the nervousness of students and teachers.

I compared the graphs of the solar activity, as recorded at the Meudon Observatory, with the statistics of wine production in the Bourgogne and Beaujolais regions, and I noticed that the outstanding vintages coincided precisely with the year of recrudescent solar activity.

On this topic, Professor d'Arsonval agreed to present in my

1. L'universion, p.127, Gauthiers Villars publishers

name at the Academie des Sciences (Academy of Sciences) on March 28, 1927, an original report entitled Influence of Cosmic Waves On The Oscillations Of Living Cells which is entirely reproduced here.

INFLUENCE OF COSMIC WAVES ON THE OSCILLATION OF LIVING CELLS

(Paper by Mr. Georges Lakhovsky, presented on March 28, 1927 to the Academie des Sciences (Academy of Science) by Professor d'Arsonval.)

In my book The Origin of Life, Radiation and Living Beings, that Professor D'Arsonval did me the honor to present to the Academie des Sciences (Academy of Science), at the sitting of the 15th of February 1926, I exposed my theory about the influence of (cosmic) penetrating radiations on living beings. As a matter of fact, I demonstrated that the nucleus of each living cell, having the form of a tubular filament made of a dielectric matter filled with a conductive substance, could be compared to an oscillating circuit, equipped with self-inductances, electric resistance and capacity. The living cells can thus oscillate at very high frequencies under the influence of cosmic radiation emitted by stars.

I made certain to verify the exactness of this theory by studying the influence of cosmic radiations (sun-spots, comets, interferences of stars' radiations, etc...) on biological matter.

My observations were based on the curves recorded by the astrophysicists of the Meudon Observatoire, curves which revealed since 1845 the activities of the sun-spots, the frequency of magnetic disturbances, and the frequency of aurora borealis -- northern lights.

These three curves are appreciably parallel. I endeavored to study the existing correlation between these cosmic radiations, on the one hand, and the development of vital activity in the plant and animal domains, on the other. As for any given individual, periods of fatigue and illness alternate with periods of health, in the same way there is, for fruit and crops in general, for each species, years of good quality and years of rather mediocre quality.

As to what concerns wine, according to the documentation established by the Chambers of Commerce of the Bordeaux and Bourgogne regions, I observed that, from 1845 until 1915, the outstanding vintages corresponded exactly to the highest activity of the sun-spots, as shown by the curves on Figure 2.

The results for red Bordeaux wines are:

Maximum of 1848: outstanding vintages of 1847 and 1848;

Maximum of 1858: outstanding vintages of 1857 and 1858;

Maximum of 1869: outstanding vintages of 1869 and 1870;

From 1880 to 1889: period of phylloxera.

Maximum of 1893: rather good vintages of 1890 and 1893;

Maximum of 1906: good vintages of 1906 and 1907.

In addition, let's point out that the wine of 1811 was called the wine of the comet, and we could ascribe its excellent quality to this comet's radiation. It is the same with white Bordeaux and Bourgogne wines.

I am sure that there are many other biological phenomena which recur periodically after a few years or a few centuries as a function of the relative revolution of the earth around the stars. I am convinced that all the scourges which ravaged humanity during the Middle-Ages: plague, leprosy, cholera, etc... and disappeared thereafter without traces in other regions will reappear some day, when the earth shall once more occupy the same position as then in relation to the stars, producing thus by interference with the cosmic waves the same oscillatory imbalances of the cells, which at that time, had produced these same diseases.

Fortunately till then, thanks to the oscillating circuits and the new methods that scientific discoveries will put to our disposal without delay, we'll be in a position to fight victoriously against these illnesses provoked by the interference of the stars' radiations.

Figure 2
RED BORDEAUX WINES

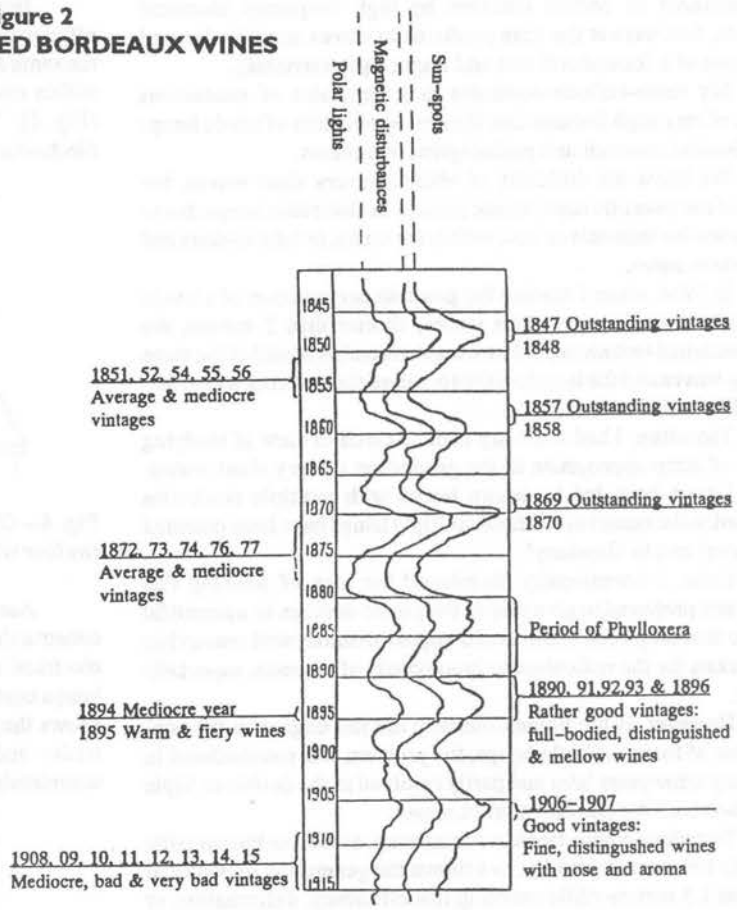

Figure 2 -- Graph showing the coincidence of outstanding vintages with the intensity of the waves emitted by the sun and corresponding to the variation in intensity: 1) of sun-spots, 2) of earth magnetic disturbances, 3) of polar lights. The graph has been established for red Bordeaux wines; the greatest intensities correspond to the outstanding vintages, the lesser intensities correspond to the years of mediocre wines. We can establish a similar graph for the other vintages, notably Bourgogne and Beaujolais wines.

THE RADIO-CELLULAR-OSCILLATOR AND ITS APPLICATIONS

by Georges Lakhovsky

Part 3, Chapter 2, from La Science et le Bonheur, Paris 1930

I demonstrated in the last chapter, how, according to my cellular oscillation theory, alteration in organic tissues came from a variation in the intensity of the cosmic waves' radiations and from these waves' frequency, thus causing the oscillation of the cells.

To reestablish the balance of these natural astral fields, the radiation of which we can no more directly influence, than a meteorologist can influence the weather, I thought of using a local oscillator, generating waves and creating an artificial and auxiliary magnetic field.

Incidentally, I should add that this method is analogous to the methods used in radiotelegraphy, known as heterodyne and super-heterodyne methods. These methods use the interferences produced between the waves received and the waves generated by the local generator at the required frequency and intensity.

About 40 years ago (1890) Professor D'Arsonval advocated the treatment of certain illnesses by high frequency electrical currents, that were at the time produced in waves strongly damped by means of a Ruhmkorff coil and a spark gap (arrester).

My radio-cellular-oscillator is a generator of continuous waves of very high frequencies, the first application of triode lamps to biological research and pathological treatments.

We know the difficulty of obtaining very short waves, because of the parasitic capacitance present in electronic lamps due to the electrodes themselves and, within the bulbs, to tube sockets and connective wires.

In 1924, when I studied the possible construction of a triode lamp oscillator for very short waves, shorter than 2 meters, the radioelectrical technique, in France and abroad, was still at the stage of long-waves and the length of the so-called short-waves was in fact from 200 to 500 meters.

Therefore, I had to do my own research in view of studying a type of lamp appropriate to the generation of very short waves. Thus, I have been led to design lamps with multiple electrodes enclosed in the same bulb. These multiple lamps have been patented in France[1] and in Germany[2].

Later, I intentionally abandoned the idea of working this patent and preferred to give it up to the public domain, in a scientific aim, so that no patent claim could oppose disinterested researches undertaken for the radioelectric prophylaxis of diseases, especially cancer.

However, if the French industry did not engage in the construction of these multiple lamps, the problem was reconsidered in Germany three years later and partly resolved as the double or triple "multi-valve" by Dr. Siegmund Loewe[3].

To reduce connections to a minimum, as well as the parasitic capacity between electrodes, to achieve the generation of waves of less than 1.5 meters while avoiding low efficiency, deformation, or distortion of the wave which would jeopardize the purity of the transmission and particularly alter the modulation, I proposed in my patent to enclose the oscillating circuit and its connections within the bulb. This invention, which cannot conveniently be applied to long waves is, on the contrary, easy to carry out for very short wave circuits, of which the bobbins are reduced to several turns of coil, even to a fraction of a turn, and of which the condensers have a very small capacity (Fig. 3).

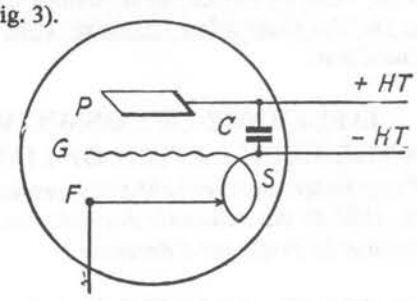

Fig. 3 -- Triode generator of very short waves, after the original drawing of Lakhovsky's patent.

Practically, the oscillating circuit only includes a turn of several centimeters in diameter. The only connections getting out of the tube are the feeders, bringing in the plate voltage (anode voltage) and the heating current (thermo-current).

These tubes can generate oscillations and transmit them by induction to outer circuits (aerials, loops, antennas).

Beside the practical simplification, the improvement of the efficiency comes from the fact that all electronic elements work with the same degree of vacuum. This is what I observed when I grouped within one same glass tubing the bulbs of a 4 triode lamp device (Fig. 4). The equal distribution of the vacuum among the various electrodes increases the purity and stabilizes the functioning.

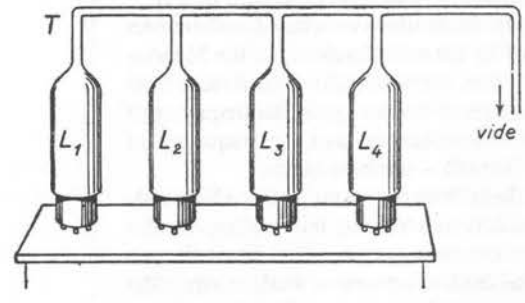

Fig. 4-- Glass tube T helps maintain the same vacuum pressure inside the four triodes of a classic resonance receiver. Author's realization.

According to this principle, I indicated the possibility of constructing not only a certain number of simple or multiple electrical cell oscillators but also all kinds of triodes or electronic lamps contained in a same bulb. Figure 5, quoted from my patent, shows the diagram of a symmetrical oscillator, with double electrodes and filaments connected in parallel. This oscillator is completely enclosed in a same casing.

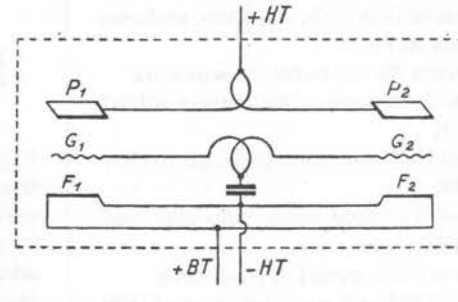

Fig. 5 -- According to the original drawing of the author's patent. Multiple triode including inside the bulb the connections of a symmetrical short-wave transmitter, with filaments set up in parallel.

1. G. Lakhvosky. French patent #601,155 of October 18, 1924
2. G. Lakvhosky. German patent #427,596 of May 26, 1925
3. Patent application in France on May 7, 1927

Figure 6, also taken from my patent, presents a double, symmetrical oscillator of which the filaments are connected in series. A possible tuning condenser is anticipated, which would be placed in the same vacuumed bulb as the electrodes and turns of the circuit.

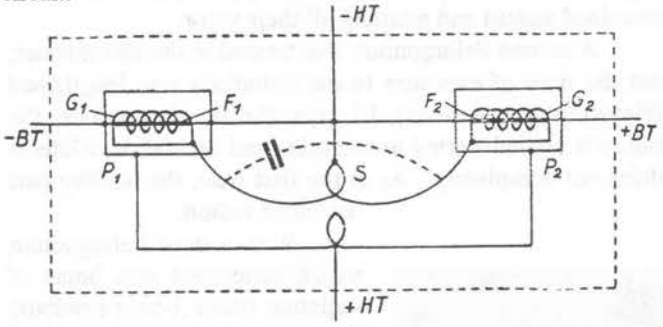

Fig. 6 -- Multiple triode symmetrically connected with filaments in series, according to the original drawing of the author's patent.

Figure 7 shows the case of a double oscillator with a unique filament.

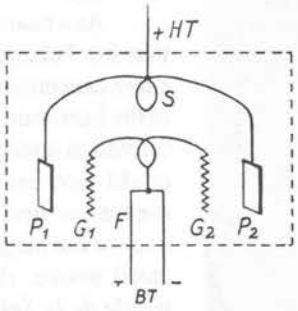

Fig. 7 -- Double triode multiple lamp with symmetrical connections and a single filament, according to the original drawing of the author's patent.

For long-waves, moreover, I indicated the possibility of putting together the circuits outside the bulb.

These various constructions are extremely general. We know that for all practical purposes Dr. Loewe has only introduced resistances and capacitances inside his multiple lamps, reducing therefore its use to low and high frequencies amplifications of long waves. These lamps' efficiency is bound to be rather mediocre for the following reasons: great connection resistances, strong plate voltage (about 160 to 200 volts), and impossibility to stabilize the circuits and cause a resonance.

On the contrary, I always anticipated inner couplings through bobbins and capacitances ensuring the greatest efficiency. The resonance is obtained through a variable condenser inside the lamp and commanded from outside without any mechanical element. For example, if you use the gravity field, it suffices to place a counterweight on the sliding condenser and to direct the lamp in space. Or you can use a magnetic field produced by a magnet or an electromagnet. (Fig. 8).

I indicated the means of building an oscillator of good efficiency for ultra-short waves, with the possibility to tune it into a whole range of frequencies.

To resolve this problem on a practical level, before people started to produce multiple lamps, I used a symmetrical oscillator including two triode lamps. It is the radio-cellular-oscillator which I used in 1924, at the wards of the Saltpetriere Hospital in Paris, to treat and heal geraniums inoculated with experimental plant cancer.

Fig. 8 -- Variable sliding condenser M, balanced with a counterweight W within a triode lamp, according to the original drawing in author's patent.

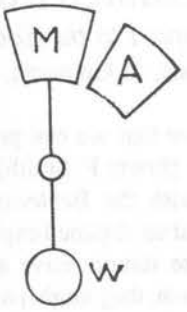

The simplified diagram of the radio-cellular-oscillator is indicated in Figure 9 (Mesny set-up).

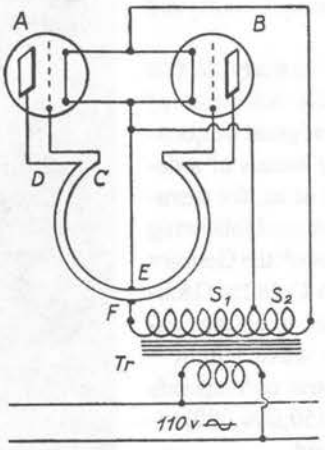

Fig. 9 -- Simplified diagram of the Lakhovsky radio-cellular-oscillator.

Plates, grids and filaments parallel connected. The grids and plates circuits all comprise one turn. These two turns are variably coupled between them. Plates and filaments are directly supplied with alternating current of the mains by means of the appropriate transformer. In these conditions, the transmission of waves starts as soon as the plug is connected onto the mains. By using a tuning condenser, one can produce the entire range of waves of a length comprised between 2 and 10 meters. The supply of alternating current creates a great number of harmonics with which the oscillations of the various cells can enter into resonance. The fundamental wave length can moreover be regulated according to the nature of the cells to be treated.

The biological role of the radio-cellular-oscillator is to reestablish the oscillatory equilibrium of the living cell, threatened by any alteration, and in particular by neighboring microbes. When it resumes its normal vigor, thanks to the auxiliary radiation of the radio-cellular-oscillator, the cell can destroy the microbe itself by damping down its pernicious radiations.

The fundamental experiment I presented at the Saltpetriere Hospital demonstrates the functioning of the radio-cellular-oscillator. It dealt with cancerous plants inoculated according to Erwin Smith's method.

This fundamental experiment was the subject, on the 26th of July 1924, of a report to the Societe de Biologie (Society of Biology) and it is reproduced here in extenso, from the society's newsletter.

ATTEMPT AT TREATMENT OF EXPERIMENTAL PLANT CANCER

Report to the Society of Biology

by A. Gosset, A. Gutmann, G. Lakhovsky, J. Magrou

We know that we can produce tumors comparable to animal cancer (Erwin F. Smith)[1] on various plants, by inoculating them with the Bacterium tumefaciens. Using this method[2], one of us obtained experimentally a great number of tumors. These tumors have an indefinite growth; they might partially necrotize but they only die completely when the entire plant or at least the branch infected by the tumor has succumbed to the cachexia. Even when surgically removed, these tumors continued to proliferate.

We intend to study, in this present report, the influence of magnetic waves of great frequencies, obtained by means of a device built by one of us, for therapeutic applications and following his theoretical views[3]: the Georges Lakhovsky Radio-Cellular-Oscillator. This device generates oscillations of a λ wave length = about 2 meters, and corresponds to 150 millions (150,000,000) vibrations per second.

A first plant (Pelargonium zonatum) has been experimented with a month after its inoculation with Bacterium tumefaciens; it showed at that point several, small, white tumors, of the approximate volume of a cherry kernel. The plant has been exposed twice to the radiation, with a 24-hour break and during three hours each time.

In the days following the treatment, the tumor continued to grow rapidly, like the check sample tumors, forming a great plurilobate mass. About sixteen days later, after the first treatment day, the tumor suddenly started to necrotize. A few days later (about 15 days) the necrosis was complete; the lobes of the tumor, retracted and completely dried out, separated from the stalk bearing them, through furrows of elmination, and the tumor could be taken off by the slightest traction. The necrosis effect of the radiation was extremely elective, limited only to the cancerous tissues which it followed into the very depth and root of the tumor; the healthy parts, stalk and leaves remained unhurt and retained all their vigor.

A second Pelargonium was treated in the like manner, but the time of exposure to the radiations was lengthened (eleven 3-hour sessions); 16 days after the first session, the tumor it carried started to necrotize and several days later it dried out completely. As in the first case, the healthy part remained unhurt.

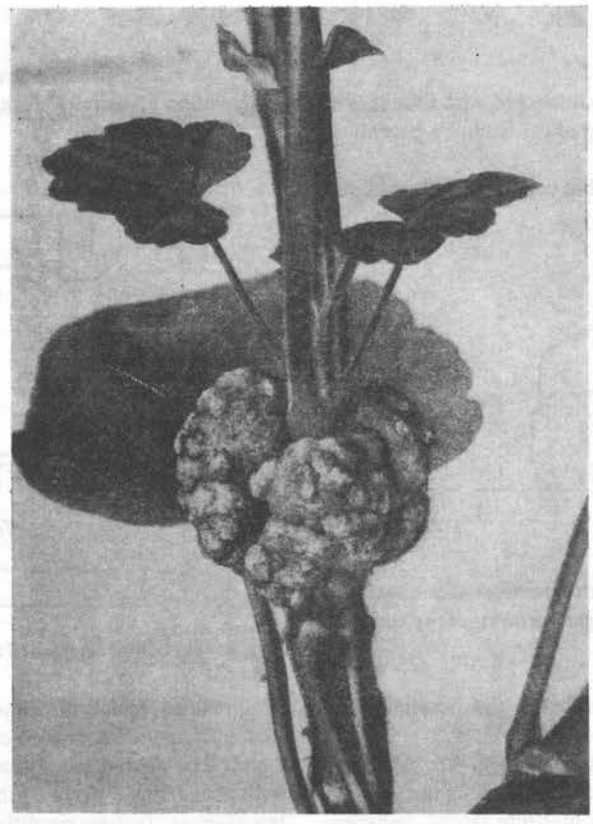

Fig. 10 -- Sight of the tumor of an untreated witness check sample. -- Subject: Pelargonium zonatum inoculated April 10, 1924. We see the growth of the cancerous tumor on the stalk. (*Clinique Chirurgicale de la Saltpetriere*).

With a third Pelargonium which underwent nine hours of radiation (three 3-hour sessions) the necrosis of the tumor's lobes followed the same path.

Sixteen control Pelargoniums remained untreated. All bore tumors in full activity which often became enormous.

As a summary, we may say that the Pelargonium which became cancerous after inoculation of the bacterium tumefaciens and for which a surgical intervention could not prevent recurrence seemed to heal under the influence of the magnetic waves indicated above. *(Clinique Chirurgicale de la Saltpetriere.)*

A very clear conclusion can be drawn from this experiment and its counterpart.

On the one side, we observe that, on the control subjects, inoculated with the *Bacterium tumefaciens* and left untreated, enormous tumors grew which by absorbing the plants' vital energy lead them to a quick and certain death.

On the other hand, the plants treated by the radio-cellular-oscillator, and moreover taken at random from among the inoculated subjects, have been healed quickly and acquired a considerable vitality, as is proven by their growth, their continual development and abundant flowering.

We can see it in the photograph (Figure 12), taken one year after the healing of the geranium.

My theory of cellular oscillation, that I had moreover proposed before I realized this experiment, enables us to understand cancer pathology and to direct its therapy onto a new path.

Cancer, mostly reaching older people, comes from the ageing of tissues as a result of the cells and blood decay. This impairing of the cells results from a modification of the

1. Erwin F. Smith, *An Introduction to Bacterial Diseases of Plants*, 1st vol., Philadelphia and London 1920.

2. J. Magrou, *Revue de pathologie comparee*, March 1924. Two other reports will be soon published in the *Revue de pathologie vegetale et d'entolmologie agricole* and in the *Annales de l'Institut Pasteur*.

3. Georges Lakhovsky, *Radio-revue*, November 1923 and Conference to *L'Ecole Superieure des P.T.T.*, June 2nd, 1924.

Fig. 11 Sight of the scar of the treated subject. Subject: Pelargonium zonatum, inoculated April 10, 1924 with the Bacterium tumefaciens, treated from May 24, to June 14, 1924, during eleven three-hour sessions with the Lakhovsky oscillator with antennas, photographed after it healed on July 24, 1924. *(Clinique Chirurgicale de la Saltpetriere).*

Figure 12 Sight of the treated subject after healing. -- This pelargonium is no other than the one of Figure 10, treated by the Lakhovsky oscillator, on May 24, 1924, healed on the 4th of June, 1924, and photographed in July 1925. As you can see, this plant is in perfect health and abundantly flowered. On the other hand, the sixteen inoculated but untreated check samples died long ago.

chemical composition due to the contribution of foreign bodies which appear as residues of the organism. Such are, for instance, blood haematoblasts, rich in iron and phosphorus, produced by residues of fibrin, leucocytes, and hematites. Each cell destruction brings with it a small mass of cholesterol, an insulating substance forming the armature of the nuclear filament, which later clogs the nucleus. Therefore older people first experience a decrease in the number of active cells and of the white and red corpuscles, which is reflected in the regression of the blood count, and on the other hand, an increase of the quantity of mineral (iron, phosphorus, haematoblasts) and organic (cholesterol) residues. These chemical modifications of the cell result in the variation of the cellular oscillation both in intensity, as a consequence of the changes of electric conductivity and resistance, and in the radiation frequency, because of the changes of capacitance and inductance.

The decayed cell appears like a pendulum with a pendulum-bob one could have lengthened, shortened or damaged. This oscillatory disorder provokes, because of the excess of cosmic waves, a too rapid cellular division, which results in the formation of neoplasms, or cells vibrating at a different frequency from the regular frequency of the tissue.

For long years, it has been wondered whether cancer is contagious and hereditary, or whether it is caused by a microbe. Histological analyses seem to invalidate the existence of a microbe. On the other hand, inoculations of cancer only succeed, and moreover very rarely, with impaired tissues composed of abnormal cells, such as certain moles and this would seen to ruin the hypothesis of contagion and heredity.

In fact, I believe that the true cancer microbe is the neoplastic cell which forces the neighboring cells into oscillating at its own frequency, thus transforming by electromagnetic induction, the healthy cells into neoplasms. To prevent cancer, is to prevent this neoplastic induction and to give back the healthy cell enough vigor to reestablish its oscillatory equilibrium.

I was pleased to observe that, apart from the skepticism of a few, my experiments have been taken up again with great success in France and abroad by various scientists and practitioners who understood the future of oscillation therapeutics.

It seems appropriate to quote the works pursued in Germany by Professor Esau at the Technisch-Psychaliches Institut of Iena.

Although directed toward paths sometimes very different from mine, these works present a very clear analogy with

those I have conducted from the use of a very short wave oscillator similar to my radio-cellular-oscillator.

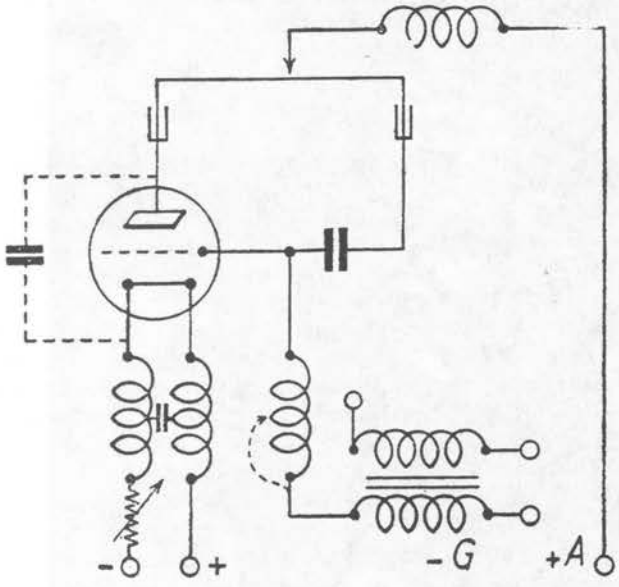

Fig. 13 -- Simplified diagram of Dr. Esau's very short wave oscillator.

The transmitter-receivers used by Professor Esau do not essentially differ from the devices I advocated. I indicated moreover that connections were irrelevant as long as they produced the desired very short waves. Professor Esau's connections, which were described in the technical magazines of Dr. Ernest Busse, assistant at the Ieana Institute[4], are characterized by the use of a single triode lamp, functioning in direct current. The transmitter's filament (Fig. 13) is supplied through a filter preventing high frequency back currents. The coilings are simple fractions of turns, as in the radio-cellular-oscillator, which only includes about half a turn for each oscillating circuit.

A test receiver (Fig. 14) is provided with square loop circuits on which variable plugs can be installed. Another device is provided with a circular turn, of which a radial cursor allows connection to the necessary position.

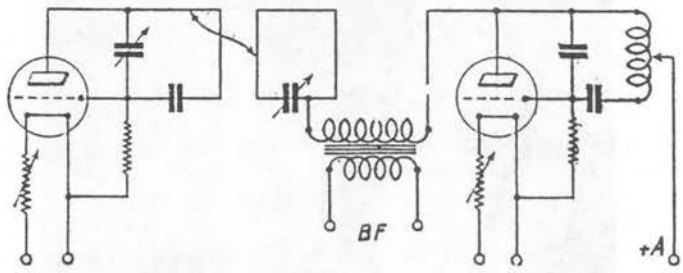

Fig. 14 -- Simplified diagram of Dr. Esau's very short wave receiver.

The works of Professor Esau in the biological domain are rather recent, for during the Radio-electric Symposium in Bremen (August 1928)[5], he stated that he had been doing research, for only a year, on the physiological effects of *ultra-short* waves, or, according to his definition, very high frequency waves comprised between a length of 1.50 and 3 meters, of which I indicated the use in 1924 in my report addressed to the Societe de Biologie, reproduced here. He indicated then that since July 1928, he successfully constructed a very short wave receiver.

About this subject Professor Esau pointed to the fact that the main difficulties came from the electronic lamps, and that he had to use foreign lamps, particularly French lamps, which are more appropriate for very short waves techniques. I indicated earlier that, 4 years before, I had studied and had these special short-wave lamps built, which were designed for my radio-cellular-oscillator.

I shall also point out that a very short transmitter has recently been used by Dr. Frantz Seidel from Vienna, for the destruction of bacteria, particularly in the sterilization of milk.[6] This subject will be investigated at a later time.

4. Dr. Ernest Busse, *Die Erzeugung ultrakurzer Wellen*. (*Radio-Welt*, No. 49, 1928, p. 77. Vienna.)

5. Oscar Gadamer. *The ultra-short waves and their field of application*. (*Der Deutsche Rundfunk*, August 31, 1928, t. VI, p. 240, Berlin.)

6. *Les ondes ultra-courte contre les bacteries*. (*Radio-Welt*, January 27, 1929, No. 4, p. 108, Vienna.)

LAKHOVSKY'S VIBRATORY CIRCLE

Author Unknown, Source: BSRF files

Translated from the German by Bodo Capeller, 1988

"We owe to magic all progress in physics and chemistry."

(Jules Lermina, 1915)

The Paris professor with the Russian name Georges Lakhovsky claims to capture, with so called open vibratory circuits (circuits oscillants), cosmic waves and pass them on to humans (neck antenna) and plants. Healing of people has been verified by French and Italian medical practitioners, healing of Cancer injected plants has been proven through photographic records.

The vibratory circles are manufactured from heavy copper wire with a diameter of 5-10 millimeters. Those wires 5-8 millimeters in diameter had a more pronounced effect than the much thinner variety. The spiral (of the open ended circle), which can be single or double, is guided around the plant and is supposed to be insulated against its support by "Ebonit" (1).

Instead of copper wire medical practitioner Dr. Ernst Busse (Garmisch, Germany) recommends the use of thin copper tubing: "because of the short wavelength of cosmic vibration only the surface effect (skin effect) is effective (that means electricity is only present on the surface of a conductor, not in the middle) which requires the use of maximum surface area. Besides this the tubing is easier to work with and has less weight. (Private Correspondence 1/10/1953)

Helmut Friedensdorff (Berlin, Germany) did report already in 1932, from himself as well as others, on the effectiveness of an open vibratory circuit against lumbago among other ailments. He inserted a simple isolated copper wire into surgical tubing and positioned it at the problem spot in a manner that both wire ends did not touch(2).

Canon Smythe of Great Britain did proceed in a similar manner: "The only tools required are a one meter length of flexible electrical wire and a sidereal pendulum. The insulation is removed at both ends for a length of 2 centimeters, the wire is stripped and the wire strands are removed except a single strand. Then the wire is laid out on a table and the pendulum is positioned over the wire ends. It will rotate over the positive end in a clockwise motion, over the negative end in reverse. Then one proceeds to make a knot at the negative end for identification purposes. It should be positioned on the left side of the body or in the vicinity of the leg, the bare wire pointing to the left. The wire may be installed over the clothing and can be braided or fastened with safety pins, the ends should point into the proper direction.

"Arthritis in one toe should be treated by using the wire like a stocking holder wound around the leg where the knotted end will point to the left. The author makes no claims for the healing arthritis but reports a lessening of pain.

"With severe headaches the wire is wound just above the eye level around the head so that the negative end rests over the left temple.

"Severe coughing is treated with one wire around the throat, another one around the abdomen.

A just started cold is removed by our associate in a few hours with two wires, one with the positive connected to the negative end of the next wire joined as a 2 meter long wire. "I wound the wire over the shirt under a sweater around the chest until I reached under the arm pits and made sure that the negative end is on left side of the chest pointing to the left, the positive end pointing the opposite way.

Smythe published this in a paper many years ago called "The Other Half of Medicine". He is supported by the research of a recently deceased friend, Dr. Martin of Airaines, France who had been promoted to the medical faculty in Paris in 1932 with a dissertation "Diagnostic Radiesthesique en medecine veterinaire" under the tutelage of Professor Nathering—without an examination! In 1935 a Dr. Girard presented a similar thesis before the University at Lyon.

Medical practitioner Arnold Mannlicher (1880-1958) from Salzburg carried in his rear pocket an open vibratory circuit which also acted as a cell detector.

Vibratory circuits proliferated after the announcements by Lakhovsky's discovery as "throat antennas, broadcast jewelry and healing chains" in the market place. I cannot say at the moment if they were of the open or closed kind. Apparently between the two kinds exists a fundamental difference in their effectiveness, open circuits reduce the tension within the body, closed circuits raise it. A closed broadcast chain can easily be transformed into an open one when it is opened and is closed with an insulator in-between (rubber band, silk thread).

The open circuit is nothing new at all. Dr. Beck, former head of the municipal children's clinic in Bayreuth says: "the open bronze rings of the Hallstadt area from grave sites can be understood as protection against radiation effects very similar to the rings worn by the Negro tribes around the arms, legs and throat." The ancient Germans wore "broadcast jewelry"—in order to coin a modern word—an open solar spiral. Dr. Heermann has revived this. He writes: "invigorating liver and intestines the solar wheel acts like a plated iron spiral with the windings running from the center clockwise."

Smaller—sewn into green material—is my usual aid in stomach ulcers and swollen glands. Underneath his illustration (not shown) the researcher explains: "a spiral ending growth rays to the abdomen"(3).

The never tired Dr. Busse, since 1954 has also tried out open rings beside vibratory chains and belts. Earlier he replaced acupuncture needles with metal foil band aids and states now in a letter dated 4/19/1954: "instead of metal foil one may arrive at the same effect by wearing open copper rings on certain fingers and joints. When you put a ring that is cut open or manufactured from heavy copper wire on the corresponding finger an immediate change of pulse at the radial pulsation can be observed".

One of his associates who experimented with these open finger rings was surprised by the achieved results.

I am very much indebted to this versatile medical practitioner.

Because copper rings are a tuner (strengthening, invigorating) it was required to find a second metal which reduces organic functions. It turned out to be aluminum. On closed rings it was already reported in the chapter "Amulets". As far as the application of aluminum is concerned the welder Herbert Bauer (born 1921) from Freiburg, Germany has manufactured many years ago the so called "Zelemente". According to the description it was recently manufactured from a three metal alloy which reminds of the "seven metal (electrum magicum)" of Hermetic fame. We are dealing here with closed chains that are supposed to protect from dangerous radiations of technical and cosmic nature and are therefore named "radiation protective antennas." They look flat and are meant to be moistened in the morning and evening.

Whatever the effect is of the vibratory circuit on the world of plants has been shown in 1905 when sick elm trees were healed on a Hamburg street.

The Vienna engineer Lambert Binder (born 1905) caused, during a growth experiment in 1944 on orange trees, accelerated growth by surrounding the tree with an isolated wire spool.

R.E. Esspiau tried out in 1954 the following experiment with the Lakhovsky antenna arrangement. He connected the first on a three stalk head of cabbage to free standing antenna, the second to ground, the third one to water which was replaced every 24 hours. In less than a week the first buds began to form, within four weeks other stalks were formed and developed leaves while a control plant withered away(4).

BIBLIOGRAPHY

(1) Lakhovsky, Georges: Das Geheimnis des Lebens (Secret of Life), Kosmische Wellen und vitale Schwingungen, Munich 1931. Schroedter, Willy: "Der Drahtring um die Geranie, Frankfurter Ilustrierte, #15, 1932, page 356.

(2) Frensdorff, Helmut: Einfache Mittel gegen Hexenshuss und Gliederschmerzen, "Die Zukunft", #31, Berlin 1932.

(3) Heermann, Alex, M.D.: Neues von Strahlen, Stroemen und Wellen, Bad Ausee 1935, page 13.

(4) "La Radiesthesie pour Tous", December 1954, Paris. Schroedter, Willy: Kosmische Strahlen und vitale Schwingungen, "Mensch & Schicksal", #5, 5/15/1953, Villach, page 7.

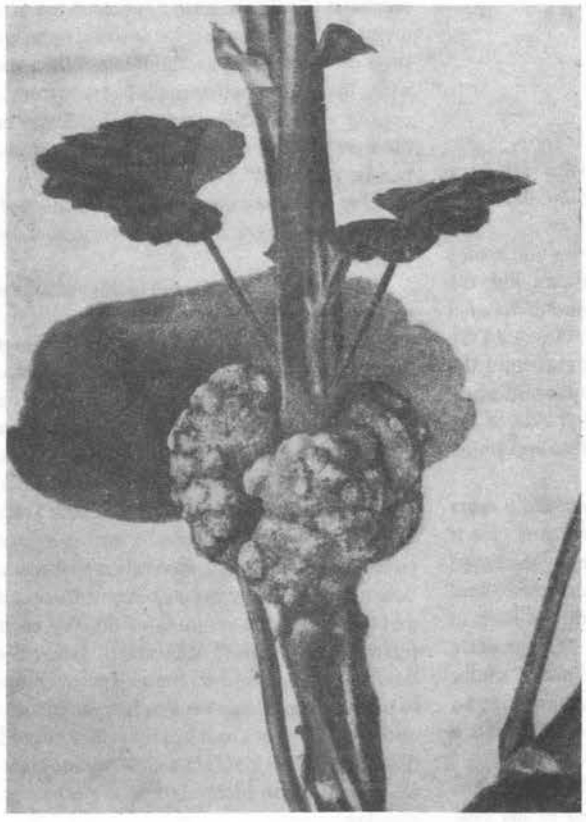

Illustration A: This illustration shows a Lakhovsky experiment on a Cancer infected geranium plant. The cancerous growth is clearly visible. Pelargonium zonatum (Geranium) inoculated with Bacterium tumefaciens on April 10th, 1924 and photographed June 6th, 1924. It will be observed that the stem of the plant bears a massive tumour.

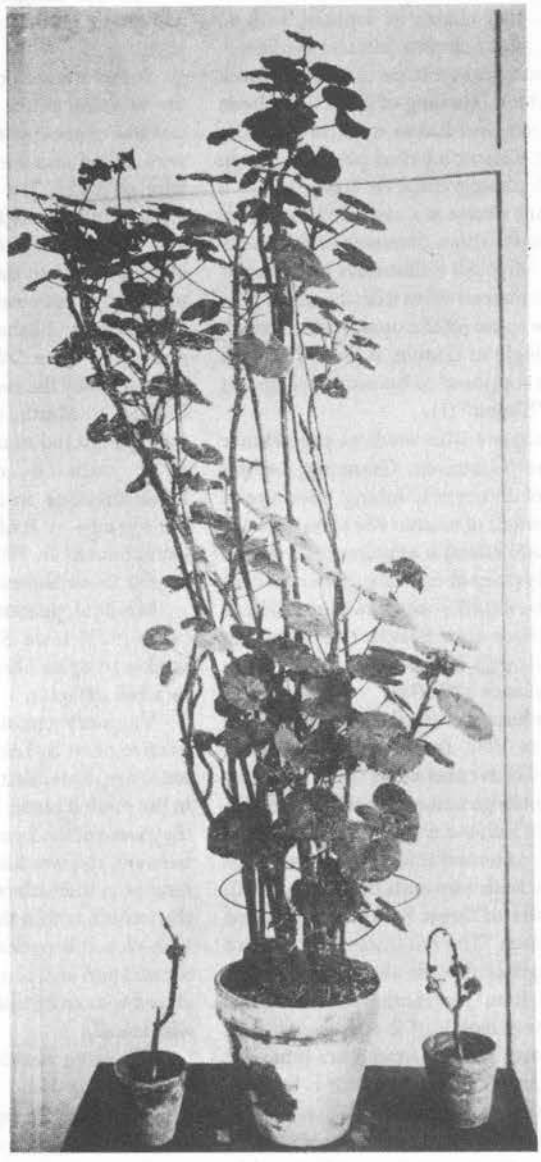

Illustration C: The test plant three years later. The antenna ring has completely healed the plant and protected it from other damage. To the side are two unprotected similar control plants of same age that became victims of the same disease. Photographed on March 13, 1928.

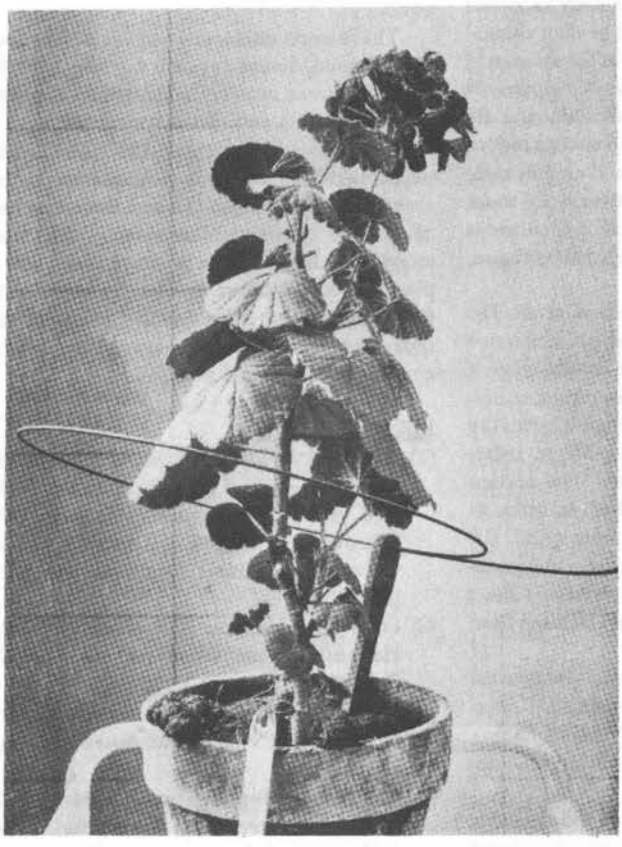

Illustration B: An astounding discovery by Prof. Lakhovsky: a free standing antenna ring manufactured from copper that surrounds the geranium caused the plant to drop the cancerous growth (resting on the rim of the container) and made the plant whole again. Photographed June 1925.

Picture credits: These three illustrations are designated tables II, V, and VII in Lakhovsky's Secret of Life.

THE LAKHOVSKY RADIO-CELLULAR OSCILLATOR

a synopsis by Jorge Resines

What you are about to read is my resume of the book La Science et le Bonheur, Longevite et Immortalite par les vibrations -- *Science and Good Health, Longevity and Immortality Through Vibrations* -- by Georges Lakhovsky. More specifically, this synopsis encompasses Part III, chapters 1 and 2, being pages from 137-171 of said work, and whatever I translate from it will be forwarded by the words "Lakhovsky said:".

Mr. Lakhovsky begins by indicating the influence of heavenly bodies upon all facets of everyday life, from their influence upon the cells up to how magnetic compasses are affected by magnetic storms originating in the Sun (he refers the readership to his book L'Universion, published by Gauthier-Villars of Paris, France). He says that the French Astronomer Mr. Deslandres with his collaborators at the Observatory of Meudon have established a cycle of about 27 days for sunspots affecting both tides and earthquakes. This lapse is part of another larger cycle of 11½ years (or about) that most usually forms in turn part of another, larger, cycle of 33 to 35 years.

Mr. Lakhovsky also discovered, as indicated by the small circles at the lunar orbit of Figure 1, that lunar radiations provoke interferences with the waves broadcasted from radioelectric stations at said marked positions.

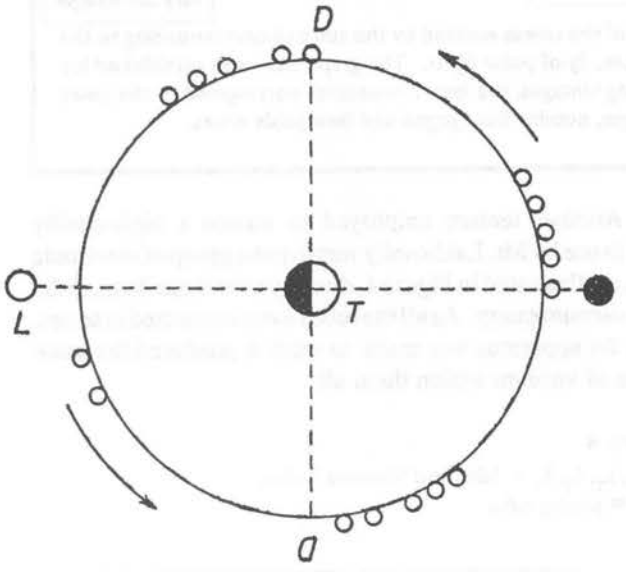

Figure 1

L1 = Full Moon
L2 = Waning Moon
L3 = New (Dark) Moon
L4 = Waxing Moon
T = Earth

Carrying his researches a step further, helped also by the people at the Observatory of Meudon, he correlated the highs-and-lows of three different factors (to wit: a. Sunspot activity, b. Perturbations of Terrestrial Magnetism, and c. Polar Aurora) with the type of wines collected at different French regions. For a single zone and type of wine, his findings are shown in Figure 2 (next page). You will easily notice how the highs of the three factors are in coincidence with the best collections of wines, with a single exception: the 1880-1889 period when the grape-wines were massively attacked at France by the "Phylloxera" plague. Though Mr. Lakhovsky does not explain the reason for this adverse period (when the opposite was expected), he does voice his opinion that cellular and biological phenomena is periodically affected by the same type of radiations (and the generated-sicknesses they produce), proposing at the same time to destroy the scourges by overriding the "astrally-produced radiations" (his words) with this "Radio-Cellular Oscillator."

About the basic concept behind his devices, Lakhovsky said: "To re-establish the balance of these heavenly fields from nature, upon which variations we are able to act directly, unlike Meteorology which cannot make weather change, I will resort to a local oscillating-generator of waves creating an auxiliary artificial electromagnetic field.

"By the way, I must add this method is analogous to that employed in radiotelegraphy and known under the names of heterodyning and superheterodyning. These procedures employ the interferences generated between the received and generated waves by a local generator, at the necessary frequency and intensity."

Mr. Lakhovsky states that his inspiration came from Professor Arsene D'Arsonval, who in 1890 had put forth the opinion that different sicknesses could be eliminated by means of high-frequency currents. He continues on, explaining that by about 1924 he studied the possibility of generating waves under 2 meters in length, but that the electronics of said period considered "short" only those waves from 200 to 500 meters.

To overcome such a hindrance, Lakhovsky developed a vacuum tube with multiple-electrodes and received two patents for it -- French Patent No. 601,155 granted in October 18, 1924 and German Patent No. 427,596 granted in May 26th, 1925 -- afterwards another scientist of that time, Dr. Siegmund Loewe, improved on his ideas and demanded a French Patent on May 07, 1927 (this Patent is not indicated as either granted or not; further investigation is needed here).

Figure 3

+HT = Positive High Voltage
-HT = Negative High Voltage
G = Grid
P = Plate
C = Condenser
S = Loop of Coil
F = Filament

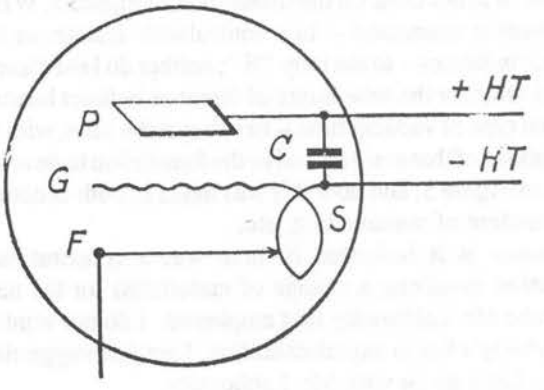

Figure 2 -- RED BORDEAUX WINES

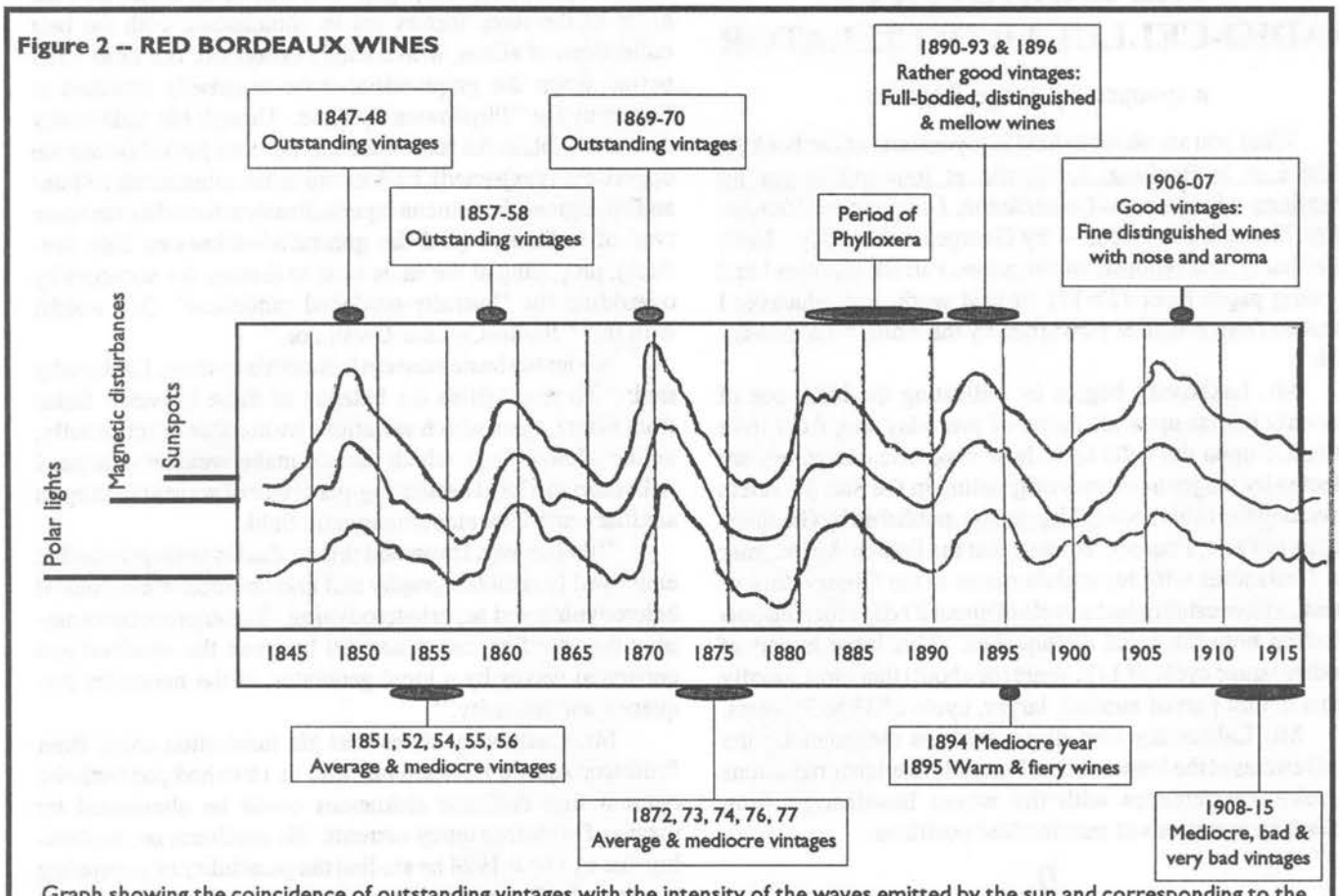

Graph showing the coincidence of outstanding vintages with the intensity of the waves emitted by the sun and corresponding to the variation in the intensity: 1) of sun-spots, 2) of earth magnetic disturbances, 3) of polar lights. The graph has been established for red Bordeaux wines; the greatest intensities correspond to the outstanding vintages, the lesser intensities correspond to the years of mediocre wines. We can establish a similar graph for the other vintages, notably Bourgogne and Beaujolais wines.

To produce waves "under 1½ meters" (his words), Mr. Lakhovsky enclosed within a vacuum tube's glass vessel different elements, as is seen in Figure 3. About this new type of tube, Lakhovsky said: "The oscillating circuit does not involve but a loop with a diameter of several centimeters. The only connections going out of the tube are the supply-wires, leading the plate-voltage and the heating current. These tubes can generate oscillations and transmit them to external circuits (square-loop antennas) by induction."

I will stop now the synopsis to introduce a personal comment: It is not clear on the illustration of Figure 3, WHY the filament is connected -- in a controllable fashion as the schematic indicates -- to the loop "S"; neither do I see clearly indicated whether the tube is one of direct or indirect heating and which type of vacuum tube -- existing at the time, with its specifications of that era -- served as the foundation to develop the tube of Figure 3, and how this was made in both constituents, procedure of manufacture, etc.

Neither is it indicated if there was a constitutional modification involving a change of material(s) for the new type of tube Mr. Lakhovsky first employed. I do not want to spoil anybody's fun in experimentation, I am just suggesting caution... Let's go on with Mr. Lakhovsky.

Another feature employed to ensure a high-quality when in use by Mr. Lakhovsky was to put a group of electronic tubes, as illustrated in Figure 4, directly over these lines, in the same vacuum pump. As all the tubes were connected in series, when the apparatus was made to work it produced the same degree of vacuum within them all.

Figure 4

L_1, L_2, L_3, L_4 = Identical Vacuum Tubes
T = joining tube

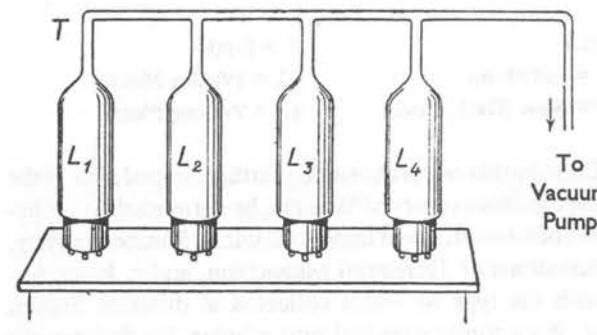

A further development of his idea, "extracted from his patent" he claims without indicating which one (French or German) this is, is the multiple triode illustrated in Figure 5. From its analysis we notice that Mr. Lakhovsky adhered to electronic theory, which says that electricity is a flow of electrons, and in a semiconducting device as the usual vacuum tube there is only a single direction of flow, from the "Cathode" (or negative pole) to the "Anode" (or positive pole). In the multiple triode of Figure 5, the filaments are connected in parallel.

Figure 5

+BT = Positive Filament Voltage
+HT = Positive High Voltage
-HT = Negative High Voltage
P_1 = Plate Tube No. 1
G_1 = Grid Tube No. 1
F_1 = Filament Tube No. 1
P_2, G_2, F_2 = Same for Tube #2
C = Condenser

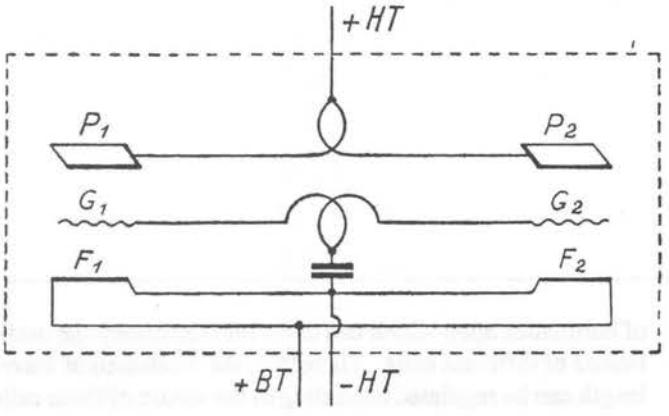

A further improvement of the device is seen in Figure 6, of which Lakhovsky says: "This illustration, also taken from my patent, shows a double and symmetrical oscillator where the filaments are mounted in series. It is also provided for, eventually, to place within a condenser so located as the electrodes and the loops of the oscillating circuit, within the same evacuated glass-vessel".

Figure 6

P_1 = Plate Tube No. 1
G_1 = Grid Tube No. 1
F_1 = Filament Tube No. 1
P_2, G_2, F_2, = Same for Tube #2
C = Condenser
-HT = Negative High Voltage
+HT = Positive High Voltage
-BT = Negative Filament Voltage
+BT = Positive Filament Voltage

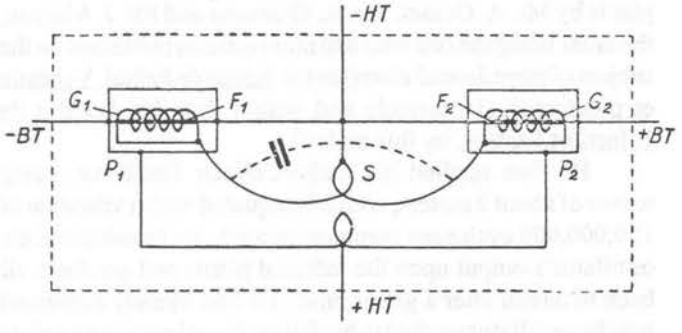

Figure 7 shows us a double-oscillator with a single filament, that is the two lamps of Figure 6 within a single vessel and with just one heat-source.

Figure 7

+HT = Positive High Voltage
+/- BT = Positive and Negative Filament Voltage
F = Filament
S = Loop of Coil
G_1 = Grid No. 1
P_1 = Plate No. 1
G_2 = Grid No. 2
P_2 = Plate No. 2

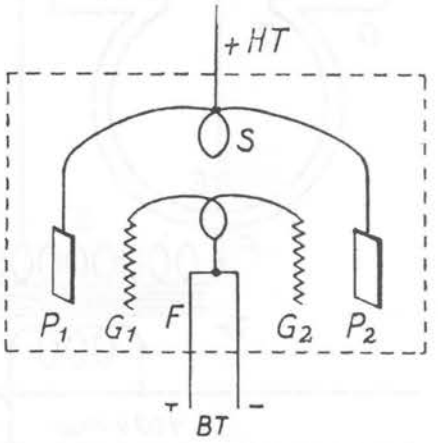

I remind the readership that all the models of vacuum tubes shown so far are for short waves under 2 meters. Lakhovsky indicated that to obtain long waves it sufficed to place the same elements outside a vacuum tube.

After saying that everything so far shown were just "extremely general things" Lakhovsky said: "One can, almost, say that Dr. Loewe just introduced resistances and capacities within his multiple-tubes, where performance is just reduced to amplifying low and high frequencies upon long waves. The performance of these tubes is very mediocre because of the following reasons: a) Heavy linking resistances, b) Strong plate-voltages (about 160 to 200 volts), c) impossibility of coupling circuits and thus producing a resonance."

Figure 8

M = Mobile blade of condenser
A = Fixed blade of condenser
W = Weight to move blade "M"
H = Turning point for the combination of "M" with "W"

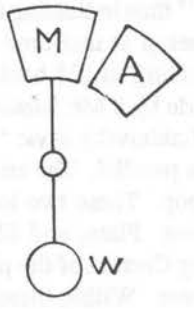

Here, in the former comment, is an apparent contradiction: Lakhovsky criticized Dr. Loewe for including resistances and capacities within his multiple-tubes, while at the

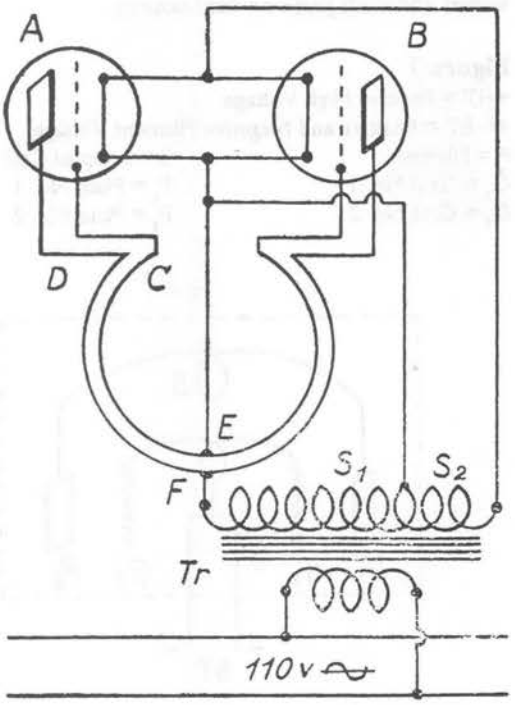

Figure 9
A = a Lakhovsky Triode
B = another Lakhovsky Triode
C = Loop associated to Grids
D = Loop associated to Plates
E = Connection to Filament
F = Connection to High Voltage of Transformer secondary tap S_1
S_1 = High Voltage tap of AC Transformer secondary
S_2 = Filament Voltage tap of AC Transformer secondary
Tr = AC step-up Tranformer with a tapped secondary winding

same time he did the same! But Lakhovsky's capacitors are different to the common types.

What he did was to "separate" a variable condenser's blades and to "counterweight" the moving blades, as indicated in Figure 8, so that the blades would move within the fixed armature of the condenser as the whole tube was rotated and weight "W" responded to gravity! He does not indicate, thus making it an object of personal experimentation on the part of the readership, if there was just one or more of these special variable condensers.

Now, in order to produce a wide range of frequencies with only two of his special triodes, Lakhovsky built the "Radio-Cellular Oscillator" that is shown in schematic form in Figure 9, which he used at the Clinic of Salpetriere in 1924 to treat and heal Geranium plants which he experimentally inoculated with the disease of cancer; it was mounted, he says, according to the "Montage Mesny," thus indicating that one man called Mesny originated the setup at that time (this is another source for research, try finding in old books from either the '20s or '30s anything made by a Mr. Mesny).

This is what, on the device, Lakhovsky says: "Plates, grids and filaments are connected in parallel. The circuits of grid and plate have each a single loop. These two loops are coupled variably between themselves. Plates and filaments are fed directly from the Alternating Current of the place by means of the appropriated transformer. Within these conditions, it is produced the emission of waves because it is branched the intake of current upon the electrified section.

"Using, accordingly, a condenser it is possible to produce the whole spectrum of waves between 2 and 10 meters of wavelength. The supply from AC produces a large number of harmonics upon which can enter into resonance the oscillations of different cells. Therefore, the fundamental wavelength can be regulated according to the nature of those cells to treat.

"The biological role of the Radio-Cellular Oscillator is to re-establish the oscillatory equilibrium in the living cell, under threat by any alteration, particularly by a close microbe. When recovering its normal strength thanks to the auxiliary irradiation from the Radio-Cellular Oscillator, the cell can all-by-itself destroy the microbe by counter-acting its deleterious radiation."

Mr. Lakhovsky goes on indicating that he established the aforementioned concept as the foundation of his device by first inoculating several plants of *Pelargonium zonatum* with the *Bacterium tumefaciens* in order to generate tumors similar to those of animals in plants (his source was: An Introduction to Bacterial Diseases of Plants by Erwin F. Smith, London and Philadelphia, 1920). He was helped with inoculating the plants by Mr. A. Gosset, Mr. A. Gutmann and Mr. J. Magrou, the latter being the one who had more articles published on the subject of plant-inoculation (see the Revue de Pathol. Vegetale et d'entomologie agricole and within that the Annales de L'Institut Pasteur, by this author).

He then applied his Radio-Cellular Oscillator, using waves of about 2 meters, which he equated with a vibration of 150,000,000 cycles per common-second. He broadcasted the oscillator's output upon the infected plants and got them all back to health after a given time. He had already explained how his oscillator worked to his fellow Frenchmen in an article (Radio-Revue, November 1923) and a conference (given at the Ecole Superieur des Postes, Telegraphes and Telephones

Figure 10

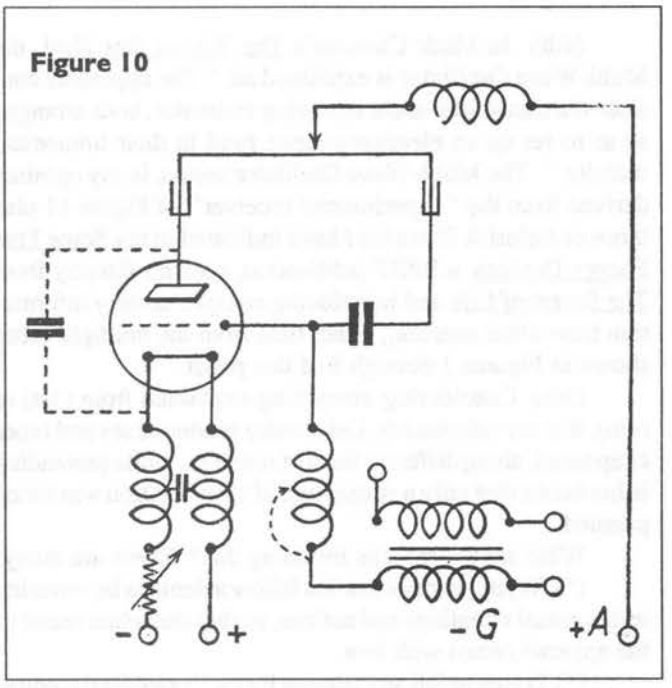

on June 2nd, 1924).

After detailing how the experiment in plant-healing progressed and how the plants were healed, he goes on to explain that -- in his conception -- cancer is provoked by an "aging" of the cells that makes them both reproduce at a slower rate and to evacuate a higher amount of wastes. This, in combination with radiations coming from space at different times, produces an oscillatory disequilibrium in the cells resulting in cancer of different types. Mr. Lakhovsky rejects, on the ground of histological examinations he performed, both the "microbial" theory of cancer and its hereditary transmission.

If you have followed all of the writing up to this point, carefully noting the concepts involved in Lakhovsky's procedures, you will remember that:

(1) His Radio-Cellular Oscillator created an auxiliary electromagnetic field capable of restoring balance to the diseased cell(s) and body.

(2) This was done by means of very short waves (during the period he experimented) of about 2 meters and 150,000,000 cycles per second.

(3) To achieve the necessary shortness of wave he introduced different elements within an evacuated glass-vessel, thus creating a different type of vacuum tube.

(4) He purposely indicated that external elements created long waves that did NOT comply with what he needed for therapy.

(5) He included, within his special tubes, a variable condenser that could be tuned to the desired capacity by moving the tube in space so that the internal variable capacity could generate the coupling needed in therapy.

If all of this has been, so far, an essential group of conditions necessary to produce the short waves of about 2 meters, then why -- as seen in Figure 9 -- does he place two electrified loops OUTSIDE the vacuum tubes of his special design????

In compliance with this "loops outside" line, he goes on quoting the works by one of many foreign scientists who, he claims, have followed his line of research:

Lakhovsky says: "It is convenient to quote the works made by Professor Esau at Jena's Technisch-Physicalishes Institut (Germany). If they are directed by ways somewhat different to mine, his works show the similitude of using an oscillator of very short waves similar to my Radio-Cellular Oscillator. Professor Esau's emitters and receivers do not differ essentially from the apparatus I champion. I have already indicated that the arrangements of constituents are indifferent, because they produce the very short waves needed.

"The setups by Professor Esau -- described in the Institute's technical magazines by Dr. Ernest Busse (see Die Erzeugung Ultakurzer Wellen -- *Research on Ultrashort Waves* -- in Radio Welt, No. 49, page 77, Vienna, 1928), secretary to the Institute of Jena, are characteristic because they employ a single triode working with DC.

"The emitter's filament -- as seen in Figure 10 -- is fed by a filter preventing the return of high-frequency currents. Windings are made with simple fractions of turns, as in the Radio-Cellular Oscillator, which does not involve but a half-turn per oscillating circuit.

"An experimental receiver (see Figure 11) is supplied with a circuit possessing a single square-loop, upon which can be made variable taps. Another apparatus is possessed of a single circular-loop upon which a radial cursor allows to take just the necessary fraction of circuit.

"Works by Professor Esau in the realm of Biology are very recent, because at the August 1928 Radioelectric Con-

Figure 11

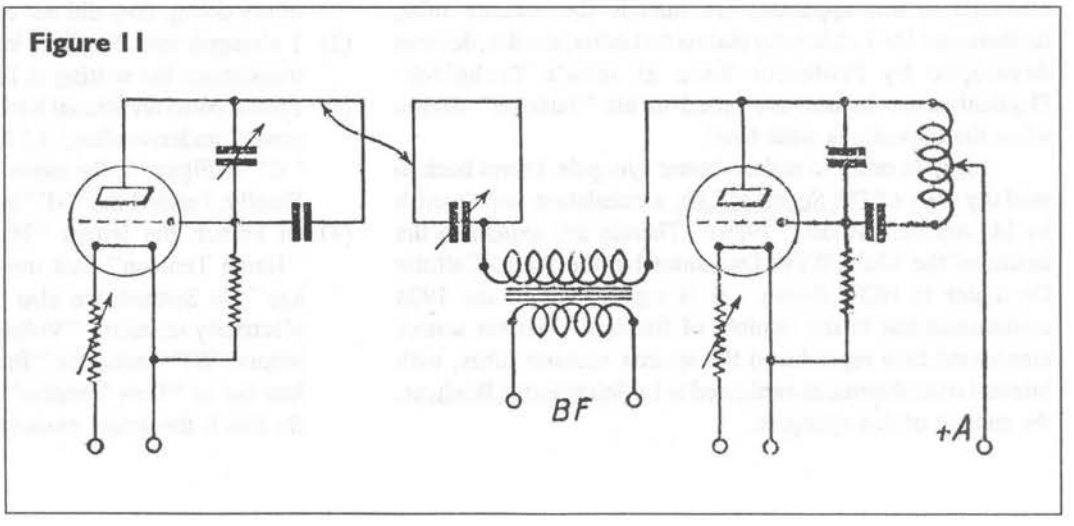

gress of Bremen (see Les ondes ultra-courtes et leur champ d'application -- *Ultrashort-waves and Their Field of Application* -- by Oscar Gadamer in Der Deutsche Rundfunk -- *German Radio* -- of August 31st, 1928, volume VI, page 240, Berlin) this author states that after about a year he investigated the physiological effects of ultrashort-waves that is, according to his definition, waves of very high frequencies between 1½ and 3 meters in length, of which I have indicated how I employ them in a 1924 communication to the Society of Biology (Note: It is on the inoculation and healing of the *Pelargonium zonatum*, as explained on page four of this writing). Prof. Esau then indicated that, since July 1928, he built a receiver of very short waves.

"About this subject, Professor Esau remarked that the main difficulties come from electronic tubes, for he was forced to use foreign tubes, particularly French ones, that are better fitted to the technology of very short waves. I must remind (the readership) that four years before him I studied and had built these special lamps for short waves, to be used in my Radio-Cellular Oscillator.

"I will also point out that an emitter of very short waves has recently been employed by Dr. Franz Seidel of Vienna for destroying bacteria, particularly to sterilize milk (see Les ondes ultra-courtes contre les bacteries -- *Ultra-short Waves Against Bacteria* -- in Radio Welt -- *Radio World*, January 27th, 1929, No. 4, page 108, Vienna)."

We have two definitely contradictory positions in the same chapter dealing with the same type of device:

(1st) In the paragraph translated under Figure 3 of this paper, Lakhovksy emphasized that the elements to produce ultrashort waves (under 2 meters) must be inside the tube. Figures 3 to 8 are dedicated to showing specific constituents for this special type of tube. Though he only speaks on Triodes, there is no reason to suppose he did not experiment with Tetrode and Pentode tubes (plus others of his own design not usually covered in publicly available technical literature).

(2nd) The formerly-indicated conditions change radically when he speaks of his experimental device employed to eliminate tumors affecting inoculated plants, this being the device of Figure 9 of this paper. Notice how the emitting elements in this apparatus are outside the vacuum tube; furthermore Mr. Lakhovsky claims that other, similar, devices developed by Professor Esau at Jena's Technisch-Physicalysches Institut are based in his "internal" design when the opposite is quite true!

(3rd) In order to make a better synopsis, I went back to read my copy of The Secret of Life, a translation into Spanish by M. Aquilar (Madrid, 1929). Therein are explained the basics of the Multi-Wave Oscillator but the Radio-Cellular Oscillator is NOT shown. It is reproduced in the 1924 communication to the Society of Biology. Neither source mentioned here reproduced the special vacuum tubes, with internal constituents, as explained in La Science et le Bonheur, the subject of this synopsis.

(4th) In Mark Clement's The Waves that Heal, the Multi-Wave Oscillator is explained as: "The apparatus consists of a transmitter and a receiving resonator, both arranged so as to set up an electromagnetic field in their immediate vicinity." The Multi-Wave Oscillator seems, in my opinion, derived from the "experimental receiver" of Figure 11 plus those of Heinrich Hertz (as I have indicated in my Some Free Energy Devices, a BSRF publication, quoting directly from The Secret of Life and introducing complementary information from other sources), rather than from the multiple-tubes shown in Figures 3 through 8 of this paper.

(5th) Considering everything explained from (1st) to (4th), it is my opinion Mr. Lakhovsky produced several types of apparati, along different lines of research, while pretending in his books that only a single-line of investigation was being pursued.

What are the reasons for doing this? There are many:

(*) Trying to disorient his fellow scientists by covering up his actual intentions and actions, so that the actual secret of the apparati rested with him.

(*) Trying to foil any attempt by the "organised medical profession" to steal his "secret" -- whatever this could actually be.

(*) Having discovered something that he wanted to keep for himself in the course of his researches. This is, in my opinion, the most likely possibility, for Mr. Lakhovsky's researches were well-received in Europe, South America and Asia before WWII began. Even more, he was outspokenly backed by men of science and Academies of great reputation and his enemies were very few (outside of the USA, of course....).

I do not mean to slander him and his researches, I just want to indicate the necessity for greater and deeper research into what he did from all possible sources of information.

VERY IMPORTANT NOTE

In order to facilitate the understanding of the illustrations, I have taken a few liberties to aid the non-French speaking associates:

(1) All the "lateral letterings" from Figure 3 to Figure 9 are of my doing, they did not exist in the original text.
(2) I changed into English, keeping the true meaning in translation, the writing in Figure 2.
(3) I made some additional lettering in some illustrations for greater understanding: L1 to L4 in Figure 1; I added the "C" in Figure 5, the same "C" was added in Figure 6; Finally, I added the "H" in Figure 8 for greater clarity.
(4) In French the letters "HT" are the abbreviation of "Haute Tension" that means in English "High Voltage"; in Spanish we also use the word "Tension" in electricity meaning "Voltage," as the French do. The letters "BT" stand for "Basse Tension" which I translate not as "Low Tension" but as "Filament Voltage" for this is the actual meaning.

Patented June 12, 1943 Georges Lakhovsky 1,962,565

UNITED STATES PATENT OFFICE

1,962,565

APPARATUS WITH CIRCUITS OSCILLATING UNDER MULTIPLE WAVE LENGTHS

Application November. 13, 1931, Serial No. 574,907

In France, May 2, 1931

7 Claims. (Cl. 250-23)

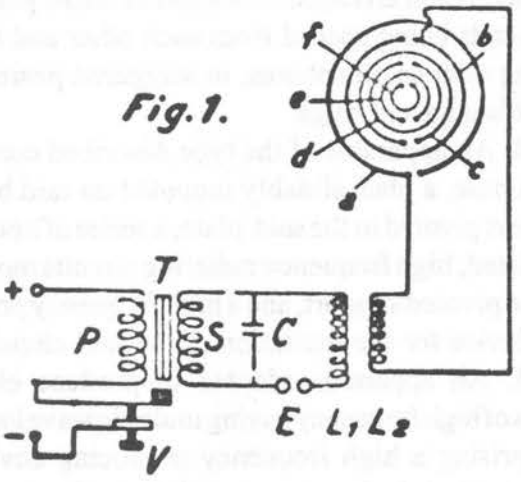

Fig. 2.

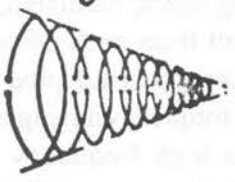

Fig. 3.

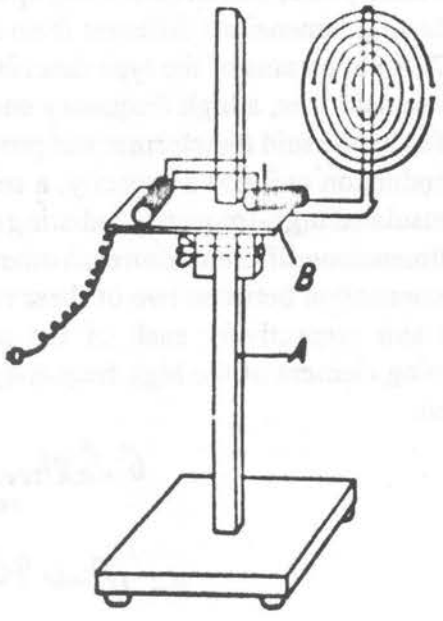

The present invention has for its object an apparatus capable of sending out simultaneously different wave lengths so that among these waves or their harmonics there is found almost always one or several capable of producing the best effect sought for any application whatever.

There is used for that purpose the property of open circuits having well determined wave length if they are excited by electric impulses emanating from discharges of any source.

The radiating part of the system, producing waves of various lengths, is therefore constituted by a certain number of concentric open rings of different diameters, which are maintained insulated by any appropriate means. These rings may or may not be terminated by small spheres forming capacities.

These rings may be arranged either in the same plane or in different planes so as to form any surfaces, such as portions of cones, spheres, paraboloids, ellipsoids, etc..., these surfaces being of a nature to concentrate the waves in a determined direction in the manner of a reflector, for example.

These rings may be fed by any producing device whatever of high frequency, for example, a combination comprising a trembler coil (or any other transformer) and a high frequency circuit provided with a self-induction coil and a capacity.

One of several points of this high frequency circuit is or are connected to the end of one or several of the rings forming the radiating apparatus. The other rings not connected are excited by induction.

The complete apparatus (coil, high frequency circuits, rings, etc....), may be mounted in a box or upon a small board capable of sliding along a guide or rocking so as to be able to be placed in the most convenient position.

In the accompanying drawing, by way of ex-

ample, not limitative, there is shown:

Fig. 1 a diagram of the system.

Fig. 2 the position of the rings in the form of a cone.

Fig. 3 the apparatus mounted upon a foot or base.

In Fig. 1 there is seen at T the transformer or coil (P the primary, S the secondary of this coil), V the screw of the trembler, C the condenser the discharge of which across the spark gap E produces oscillations in the self-induction coil L1, which in its turn acts by induction upon the self-induction coil L1; this self-induction coil L2 is connected on one side to the first exterior ring a, on the other side to the following ring b. It thus forms an electrostatic field of high frequency which induces oscillations in the other rings c, d, e, f.

As a modification, L2 may be suppressed and the rings a and b may be connected each to one of the ends of L1.

One of the ends, or even any point of the self-induction coils L1 or L2 may likewise be connected to any one of the rings.

Fig. 2 shows the arrangement of the rings in the form of a cone. The open circuits a, b, c....f can be constituted by solid conductors. They can also be tubular circuits, this being advantageous, since, for the same bulk, the radiating surface is larger. Finally, the area of the cross section of each of these various circuits can vary from one circuit to the other for instance, this area can decrease from the periphery (ring a) to the center (ring f) of the radiating system.

Fig. 3 shows the apparatus mounted upon a foot A along which it can slide, in order to be placed at any desired height and upon a hinge B which allows it to be oriented upon the horizon.

I claim:--

1. An apparatus adapted to produce electric fields of high frequency having multiple wave lengths, comprising a high frequency producing device, a series of high frequency radiating circuits constituted by concentric insulated split rings of different diameters, the split ends being spaced from each other and terminating with small spheres.

2. An apparatus adapted to produce electric fields of high frequency having multiple wave lengths, comprising a high frequency producing device, a series of high frequency radiating circuits constituted by concentric insulated split rings of different diameters and terminated by small spheres forming capacities.

3. An apparatus adapted to produce electric fields of high frequency having multiple wave lengths, comprising a high frequency producing device, a series of high frequency radiating circuits constituted by concentric insulated split rings of different diameters and arranged in one and the same plane the split ends being spaced from each other and terminating with small spheres, in staggered position as regards adjacent rings.

4. An apparatus of the type described comprising a base, a plate slidably mounted on said base, a support pivoted to the said plate, a series of open and insulated, high frequency radiating circuits mounted on the pivoted support, and a high frequency producing device for the excitation of the said circuits.

5. An apparatus adapted to produce electric fields of high frequency having multiple wave lengths, comprising a high frequency producing device, a series of high frequency radiating circuits, said circuits being open, insulated, and having dimensions different from each other.

6. An apparatus adapted to produce electric fields of high frequency having multiple wave lengths, comprising a high frequency producing device, a series of high frequency radiating circuits arranged in the same plane, said circuits being open, insulated, and having dimensions different from each other.

7. An apparatus of the type described comprising a transformer, a high frequency energizing circuit fed by the said transformer and provided with a self-induction coil and a capacity, a series of open and insulated high-frequency radiating circuits having dimensions different from each other, and inductive connection between two of these radiating circuits and respectively each of the poles of the outgoing element of the high frequency energizing circuit.

G. Lakhovsky
INVENTOR

By: Marks & Clerk
Agts.

June 13, 1944. G. LAKHOVSKY 2,351,055

TUBE FOR PRODUCING MULTIPLE WAVE LENGTHS

Filed Nov. 21, 1941

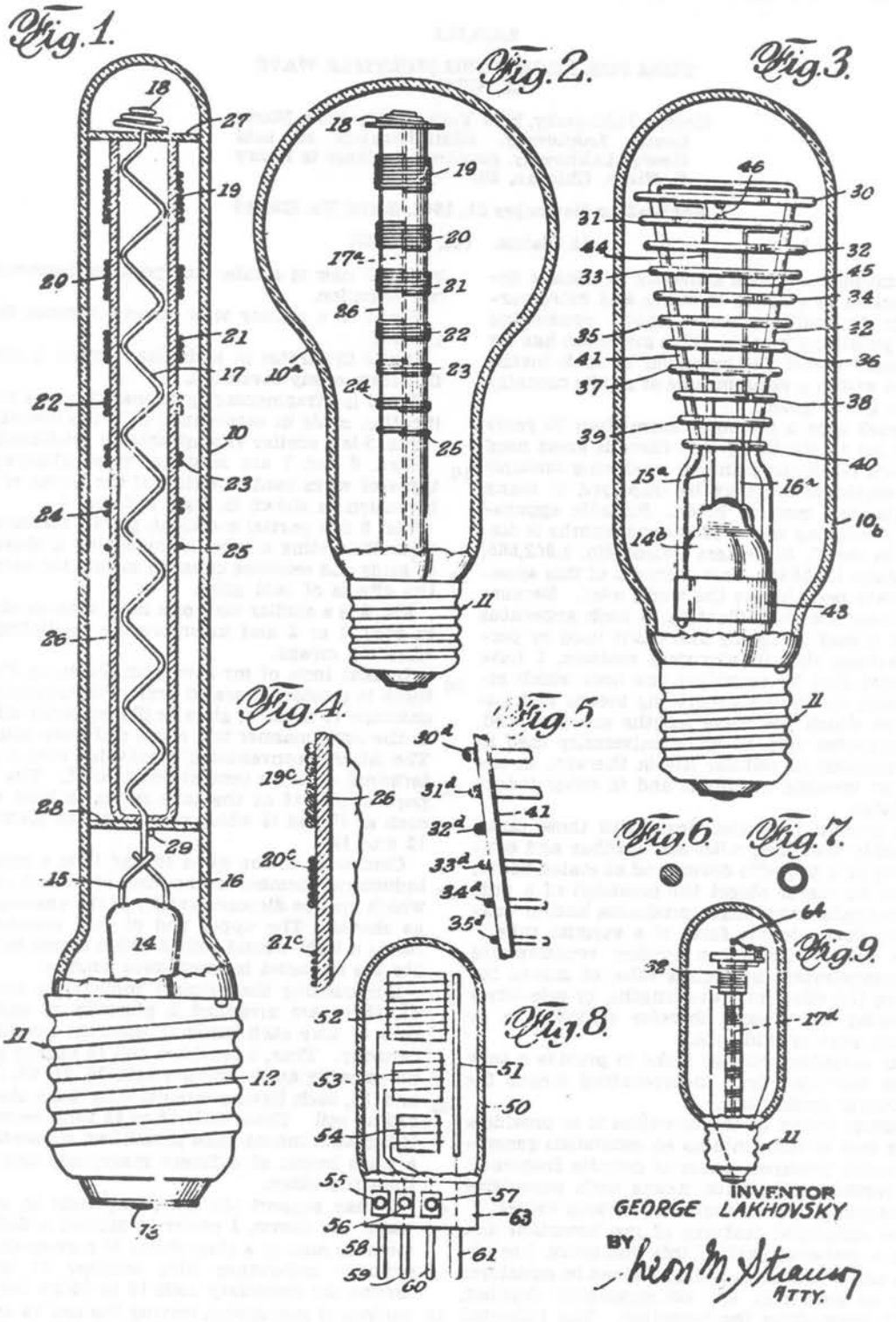

Patented June 13, 1944 2,351,055

UNITED STATES PATENT OFFICE

2,351,055

TUBE FOR PRODUCING MULTIPLE WAVE LENGTHS

George Lakhovsky, New York, N. Y.; Anne-Marie Louise Lakhovsky, administratrix of said George Lakhovsky, deceased, assignor to Henry S. Blum, Chicago, Ill.

Application November 21, 1941, Serial No. 420,006

11 Claims. (Cl. 250—33)

This invention relates generally to electric devices excited by electric impulses and more particularly to multiple wave length conducting and/or producing means. This invention has for its primary object the provision of such means disposed within a vacuum tube or a tube containing rare gas or gases.

My work over a period of more than 20 years has led me to the belief that there is great need for means conducting and/or producing multiple wave lengths which may be employed in many industrial and medical fields. Suitable apparatus for producing waves of various lengths is disclosed in my U. S. Letters Patent No. 1,962,565, dated June 12, 1934. Embodiments of this apparatus have been in use the world over. Because of the need for simplification in such apparatus so that it may be handy and easily used by persons lacking skill in electrical matters, I have concluded that by providing one unit which incorporates oscillation generating means and another in which the wave lengths are produced, the apparatus may be more universally used in the treatment of cellular life in therapy, in the aging or treating of liquids and in other industrial fields.

The present invention deals with those units, preferably combined with one another and constructed as a portable device and as stated above, has for its major object the provision of a unitary multiple wave length producing and/or conducting device in the form of a vacuum tube.

The present invention further contemplates the incorporation in such a tube, of means for varying the effect of wave lengths, or selectively employing the means therefor enclosed in or forming part of said tube.

This invention further seeks to provide a tube of the indicated type incorporating means for generating oscillations.

Another object of the invention is to provide a single unit which contains an oscillation generator, which produces waves of definite frequency, and further inductance means each permitting emanation of wave lengths of various values.

The structural features of my invention also form a material part of this disclosure, the objects and advantages being attained in structures such as shown in the accompanying drawing, which exemplifies the invention. The following specification, based on said drawing, more clearly points out the purposes and advantages of my invention.

In the drawing:

Fig. 1 is a vertical, partial sectional, partial elevational view of a tube incorporating features of my invention.

Fig. 2 is a similar view of an alternate form thereof.

Fig. 3 illustrates in a similar manner a modified form of my invention.

Fig. 4 is a fragmentary sectional view of a modification made in accordance with the invention.

Fig. 5 is a similar view of another modification.

Figs. 6 and 7 are sectional views illustrating types of wires used in either of the forms of my invention as shown in Figs. 1, 2 and 3.

Fig. 8 is a partial sectional, partial elevational view illustrating a tube incorporating a plurality of grids and selective capacity means for varying the effects of said grids.

Fig. 9 is a similar view of a tube, such as shown in Figs. 1 or 2 and incorporating oscillating or vibrating means.

In that form of my invention shown in Fig. 1, there is provided a sealed preferably transparent envelope 10 made of glass or like material affixed in the usual manner to a screw or Edison plug 11. The latter is conventionally provided with a shell terminal 12 and a central terminal 13. The support or seal 14 of the tube serves to hold wires such as 15 and 16 which connect to the terminals 12 and 13.

Connected to the wires 15 and 16 is a primary inductance member in the form of a loose coil 17 which may be disposed axially of the envelope 10, as shown. The upper end of said member 17 forms a tight wound coil 18 which serves to radiate the strongest induced wave lengths.

Surrounding the primary inductance member 17, there are arranged a plurality of separate coils of wire each being of different length and capacity. Thus, I provide a coil 19 having greatest capacity and successive coils 20, 21, 22, 23, 24, and 25, each having less capacity than the preceding coil. These coils 19 to 25 form secondary inductance means each permitting emanation of a wave length of different magnitude and value than the other.

I may support the secondary coils in several ways. As shown, I prefer to provide a dielectric member such as a glass sleeve 26 surrounding the primary inductance wire member 17 and to mount the secondary coils 19 to 25 on the outer surface of said sleeve, leaving the coil 18 exposed at the top thereof. In order to effectively support and centralize the glass sleeve 26, I provide spacing washers 27 and 28 of mica or the like, top and bottom, and provide a supporting cross-piece 29 on the lower portion of the wire 17.

The tube above described may be employed as indicated for the treatment of cellular structures by connecting it to any one of the rings in the electrostatic field of high frequency, such as shown in said U. S. Letters Patent No. 1,962,565, each of the coils 18 to 25 producing by induction a different wave length, as can be understood.

In the form of my invention shown in Fig. 2, the envelope 10a is somewhat differently shaped, and the wire 17a straight instead of arranged as an open coil. In other respects, the structure follows that described with reference to Fig. 1.

As shown in Fig. 3, there may be arranged a plurality of open rings 30, 31, 32, 33, 34, 35, 36, 37, 38, 39, and 40 in frustro-conical form, for instance, with the largest of said rings at the top and the smallest one adjacent the bottom. I have shown said rings as supported, for instance, by glass posts 41 and 42, said posts being supported on the seal 14b, as by a band 43. I provide extensions for the terminal wires 15a and 16a and connect said extensions 44 and 45 to the upper ring 30 and the next lower ring 31, respectively.

The rings 30 and 31 may become the primary inductance members, whereas the remaining rings constitute the secondary inductance members as before set forth. Electric current conducted to the suitably spaced rings 30, 31 will cause a spark 46 to be drawn between the rings 30 and 31 providing oscillations emanating from electrical discharges therebetween and causing the radiation of waves of various lengths within the envelope 10b and affecting the remaining rings.

In Figs. 1 and 2, I have shown the secondary coils as formed of wires having uniform cross-section. Fig. 4 illustrates how such wires may be made progressively smaller in the succeeding coils 19c, 20c, and 21c, etc. Similarly, I have shown the rings of Fig. 3 made progressively smaller in Fig. 5, said rings being designated by numerals 30d, 31d, 32d, 33d, 34d and 35d, etc. In such various manners, the wave length producing effect of the secondary coils or rings may be arrived at.

The secondary coils or rings may be round or somewhat flattened wire as shown in Fig. 6 or tubular as in Fig. 7, offering a yet greater flexibility of design.

The devices of Figs. 1 and 2 above described may be incorporated in the system shown in said U. S. Letters Patent by connecting one of the rings a, b, c, d, e, or f with plug 11 of Fig. 1, since either terminal 15, 16 is in contact with primary inductance member 17. To this end a conductor (not shown) connects such a ring with said plug or socket.

In Fig. 8, I have shown a modification of the invention which comprises a vacuum tube 50 containing a plate 51 and a plurality of different wave lengths producing grids 52, 53, and 54. I connect each grid with a variable capacity device, such as 55, 56, and 57 carried by said tube 50 and preferably by its base support 63, whereby the grids may be selectively connected into an operating circuit (not shown) by means of the respective prongs 58, 59, and 60, and the plate prong 61. Heating or other exciting means may be incorporated in the tube in a well-known manner. This combination tube 50 is designed to replace a plurality of known tubes each operating with different and variable wave length effect, more exterior manipulation at said base support brings about change of the capacities 55, 56, and 57 and cutting in one or more of the grids 52, 53, and 54.

The effect of the spark as produced in the form of the invention depicted in Fig. 3 may be further utilized in Fig. 9 in which I also incorporate a vibrator 62 which produces electrical oscillations by a spark intermittently generated between the end of the primary inductance member 17d and vibrator armature 64. In other respects the structure follows that of Fig. 1.

It may be noted that any type of spark producing or oscillation generating means may be substituted for the vibrator shown. The tubes shown in Figs. 3 and 9 may be used in the manner described for Fig. 1 by connecting one terminal of the base as set forth to produce an induction effect. These tubes may be also connected across both terminals with a suitable potential to obtain the spark effect.

From the foregoing it may be seen that I have provided tubes in various forms for the purpose of generating and conducting multiple wave lengths. Other forms of the invention may be produced within the spirit and scope of the invention as claimed.

Having thus described my invention, what I claim as new and desire to be secured by Letters Patent, is:

1. A device of the character described comprising a vacuum tube having an envelope and base, primary inductance means, and a plurality of separate secondary inductance means of different length for radiating waves of various lengths extending above said primary inductance means, all said inductance means being arranged within said envelope.

2. A device of the character described comprising a vacuum tube having an envelope and base, a primary inductance member axially arranged in said envelope, and a plurality of secondary inductance members spaced apart and independent from each other each member surrounding a respective portion of said primary inductance member and within the field of influence thereof.

3. A device of the character described comprising a vacuum tube having an envelope and base, a primary inductance member axially arranged in said envelope, and a plurality of secondary inductance members each surrounding the primary inductance member and within the field of influence thereof, each of said secondary inductance members having a different wave length effect than the others.

4. A device of the character described comprising a vacuum tube having an envelope and base, a primary inductance member comprising a pair of split rings in inductive relation, and a plurality of secondary inductance members each comprising split rings.

5. A device of the character described comprising a vacuum tube having an envelope and base, a primary inductance member comprising a pair of split rings in inductive relation, and a plurality of secondary inductance members each comprising split rings, said latter rings being arranged in different planes and being of different length to produce a different wave length effect.

6. In a device of the character described, means for producing multiple wave lengths comprising a wire member, enclosing dielectric means for said member, and a plurality of separate wire coils of different lengths on said dielectric means and in the field of inductance of said wire member.

7. In a device of the character described,

means for producing multiple wave lengths comprising a wire member, enclosing dielectric means for said member, and a plurality of wire coils on said dielectric means and in the field of inductance of said wire member, each coil extending over said wire member and having a different number of convolutions than the others.

8. In a device of the character described, means for producing multiple wave lengths comprising two split rings in inductive relation, and a plurality of split rings in inductive relation to the two split rings.

9. In a device of the character described, means for producing multiple wave lengths comprising two split rings in inductive relation, and a plurality of split rings in inductive relation to the two split rings, the plurality of rings being of smaller diameter than the mentioned two rings and each progressively smaller than the others.

10. In a device of the character described, means for producing multiple wave lengths comprising two split rings in inductive relation, and a plurality of split rings in inductive relation to the two split rings, the plurality of rings being of smaller diameter than the mentioned two rings and each progressively smaller than the others, all of the rings being arranged in frusto-conical disposition.

11. In a vacuum tube having a primary inductance member and secondary inductance members, a vibrator arranged in the field of influence of said primary inductance member and secondary inductance members, a vibrator arranged in the field of influence of said primary inductance member for affecting the induction of said secondary members.

GEORGE LAKHOVSKY.

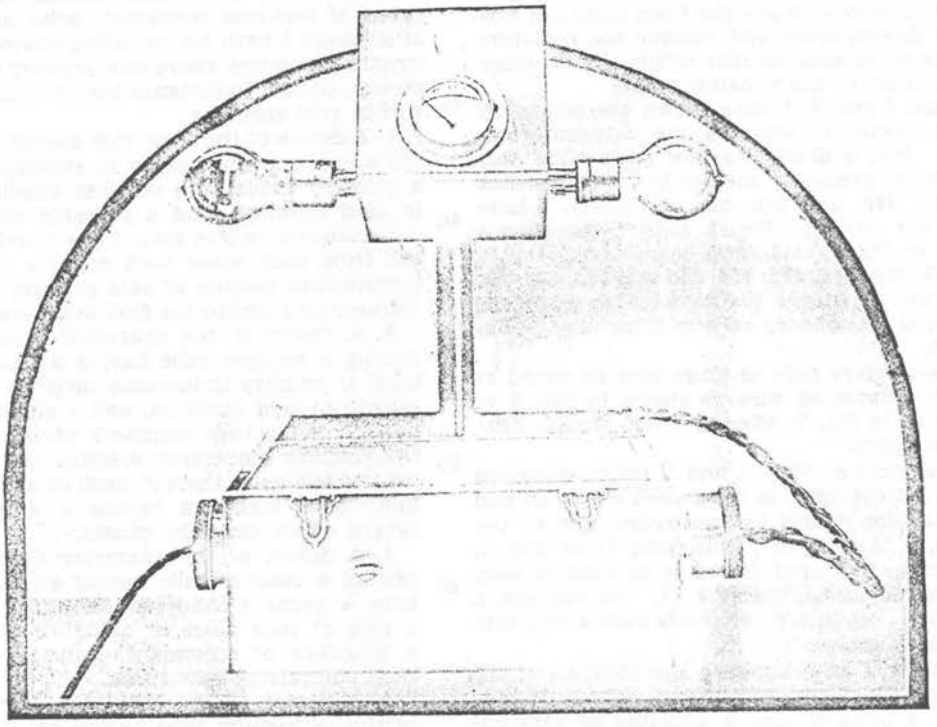

The two-meter oscillator used by the author in his experiments with the supply box containing the necessary controls and transformers.

Picture from *Radio News* for February 1925

Curing Cancer with Ultra Radio Frequencies

by George Lakhovsky

THE RUSSIAN LAKHOVSKY REJUVENATION MACHINE
by Bob Beck
from the November 1963 Journal of Borderland Research

In September 1963, Dr. L.O. Anderson, Anderson Research Center Director and BSR Associate, phoned me about a "marvelous electronic machine" purported to "cure" almost any human ailment. I've looked into dozens of these "modalities" every year; so with extreme skepticism I gathered instruments and took off to check another possible hoax.

I found a heavy spark-gap Tesla Coil inside a four-foot cabinet. This console was rigged to circular "antennas" and was partially shielded inside a home-built Faraday cage in the living room of Dr. Anderson's friend. It hadn't functioned in over a decade, and had been given up by some twenty-odd medical instrument repairmen and engineers as unfathomable.

The machine, which had no nameplate or other identification, turned out to be a Lakhovsky "Multiple Wave Oscillator", or MWO. Fortunately the present owner had found patents and two books describing its operation. We were able to reconstruct the circuits and after several hours had it operating perfectly. The machine was not a hoax.

Lakhovsky did his research prior to world War II and died in 1942. No infringement can be involved in duplicating Lakhovsky's work, since his U.S. Patent #1,962,565 expired in 1951 and is in public domain. I have found from the book **The Waves that Heal** by Mark Clements that MWOs are extensively used in hospitals in France, Germany and Italy, and although tested in a New York Hospital with fantastic success, MWOs remain practically unknown in the United States.

MDs testing Multiple Wave Oscillators reported up to 98% cures of terminal cancer, arthritis and other "hopeless" conditions. Case histories were complete with before-and-after photos. Often rejuvenation was demonstrated, not only in human beings but in plants and animals as well!

So, on Sept. 18, 1963, I designed and built a modern MWO based on Nikola Tesla and Lakhovsky's original work and patents. The transistorized instrument fits into a brief case and weighs under 14 lbs. Experiments with the MWO on some eighteen volunteers have demonstrated almost unbelievable results. At this writing, Oct 20th, every single subject, including myself, reports fantastic gains.

My mother, age 72, who has suffered from hypertension and glaucoma for many years, measured absolutely normal blood pressure the morning after her first treatment. And the eye tension, tested by her MD the week following, had dropped to a lower point than in the previous two years. Another woman with a long-standing back condition says she was permanently relieved in one 15 minute exposure. An asthmatic with chronic bronchial complications claims he is now symptom-free after two exposures and her husband with a bad dermatological condition of seven years history appears to be very definitely improved. Perhaps the most dramatic is Mr. N.V.C. who had broken his leg skiing last December. Because of an old polio complication the broken leg had never healed and flesh surrounding the fracture was in a very poor, waxy condition. After one exposure he phoned to say he had regained feeling in the area. The next day we made an "after" photo slide of nearly normal tissue.

A friend suffering allergies of long standing says she can now eat anything and her MD admits he as startled by her youthful appearance and new vitality. The Lakhovsky literature illustrated many such rejuvenations as an unexpected side effect of cancer cases. Subject's wrinkles disappeared along with the tumors!

THEORY OF OPERATION

Lakhovsky pointed out that all cells capable of reproduction contain in their nuclei "filaments" of highly conductive material surrounded by insulating media. This filament, which may be the RNA-DNA complex, is always in the form of a spiral or helix -- in other words, a coil. Therefore, each will react as a tuned circuit if its resonant frequency can be approximated by an external oscillating coil.

Lakhovsky didn't carry this to it's conclusion; however, I postulate that by exciting the nuclei with electromagnetic energy a "charge" can be induced by the long established principle of electromagnetic induction. This demonstratively raises the energy level and perhaps the vitality of every cell in the field simultaneously. Since each cell is an individual, and of slightly different physical dimensions, the exciting wavelengths must be multiple, and must span a broad frequency spectrum. Diathermy machines, limited to crystal-controlled single frequencies in the 27.255 MC region, can do nothing but heat the tissue; and yet this approach, abandoned by Lakhovsky in the 1930s, can still be found in "modern" doctor's offices!

The Electromotive Force (EMF) produced by the MWO and induced in the cell nucleus, can raise the cell's metabolic rate by Electrolysis, and perhaps jog the RNA-DNA "memory" and reproductive capabilities to their level at an earlier, younger age, thus the rejuvenation. Even more subtle changes might be postulated, such as magnetic "progression" effects as evidenced by heavy water in magnetic fields.

By contrast, any chemical taken into one's system by mouth or by injection -- such as vitamins, food or medicine -- must first be absorbed in proper solution and ratio with unknown tract elements, then be transported by the blood to affected tissue only to be possibly rejected by the target areas.

Perhaps in cancer the EMF induced by the MWO raises the vitality and memory of marginal cells to normal reproduction levels. In the case of other disease, perhaps a cell's given higher energy levels can more readily throw off affliction.

A WAVE FOR EVERY BODY CELL

The Multiple Wave Oscillator described here radiates a bandwidth of radio frequency (RF) energy from the audio frequencies up beyond microwave frequencies. By actual measurement with standard field strength meters, this vast bandwidth of frequencies and harmonics can be shown. In fact, a bluish glow of "brush discharge" surrounds the antenna when operating. A fluorescent lamp held anywhere within several feet of the subject glows brilliantly. Within this multiple-wave range of frequencies, every cell in the body can find its ONE resonant frequency and absorb energy at its own natural wavelength.

Obviously the Electrostatic energy cannot penetrate the body. This is known as the "skin effect". However, the Electromagnetic component of the energy can and does permeate and will induce an EMF in each cell. It is precisely this energy to which Lakhovsky attributes his almost miraculous "cures".

A word of warning, although no deleterious side effects have ever been reported for human reactions, the MWO has input power exceeding 35 watts. It radiates RF interference over a bandpass of 15 Kilocycles to well beyond 250 Megacycles. The Federal Communications Commission has stiff penalties for unlicensed transmitters and radio and TV interference -- not to mention making all your neighbors very unhappy. We operate our machine in a shielded room, and the battery input prevents RF interference from feeding back into the power line.

The deluxe MWO diagrammed here can be built by any intelligent 16-year old with readily available electronic parts. I do not plan to build, manufacture, sell or otherwise exploit this device, as my interest is purely in

Original cover providing template for aluminum MWO antenna.

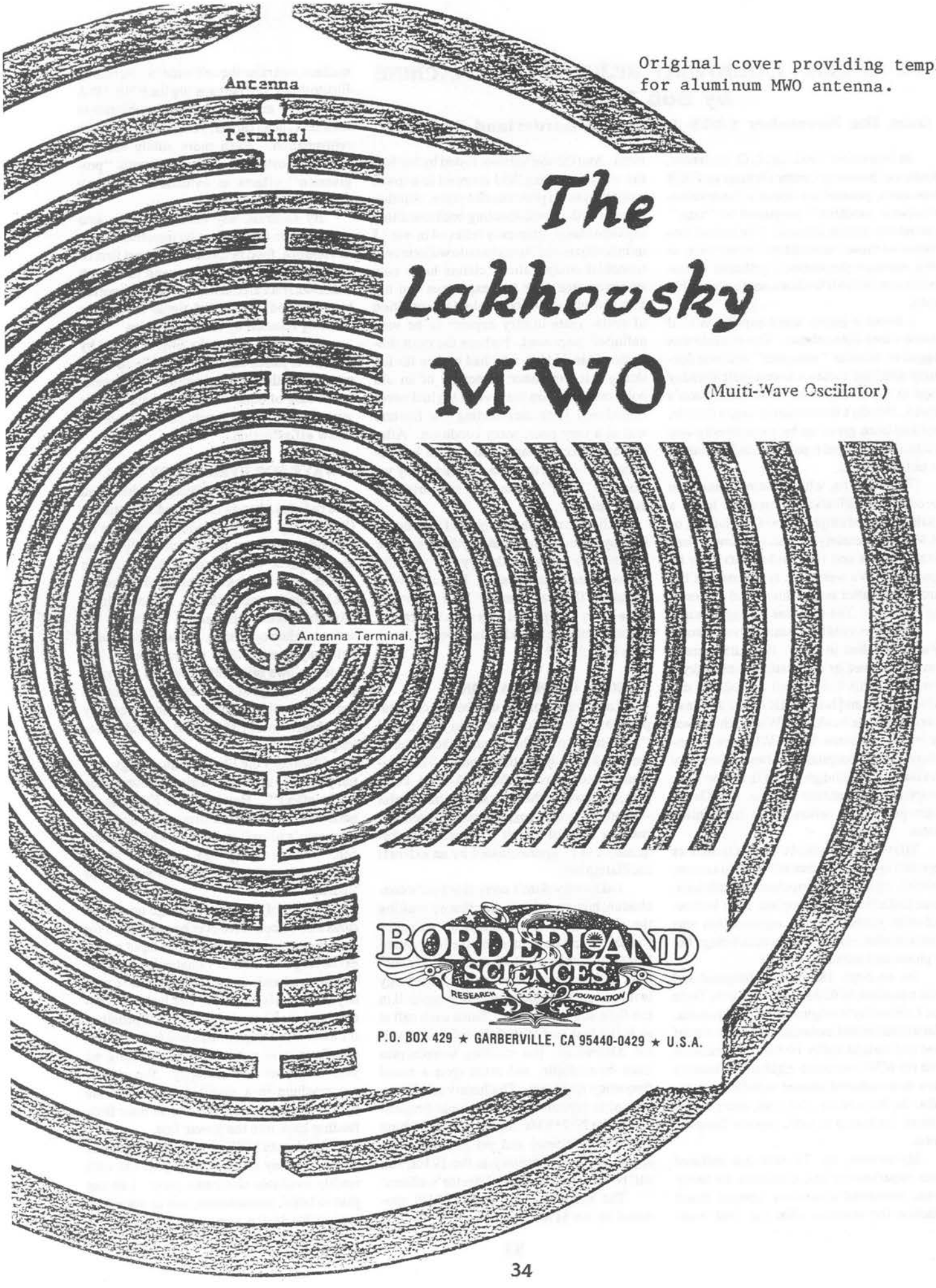

research. Several Associates given this circuit have successfully constructed MWOs. We would certainly like to hear from any BSR Associates who undertake this project, but please do not communicate until after building the unit. I cannot correspond over details which any intelligent person would be able to thresh out with his or her own technical friends.

At one stage we had planned constructing a much higher-powered unit but the results with the "portable" are so gratifying that Model Two was shelved. Extensive tests are scheduled with plants and animals, and every effort is being made to remove any element of "suggestion" from results. A physician friend is cooperating with the project by sending a few "problem" patients for test. It is much too soon, however, to make a finished statement concerning the MWO's potential. No cures can be claimed even if obviously demonstrated, since our laws are controlled by medical unions forbidding the use of the word except by MDs. But I have satisfied myself with nearly twenty miracles in these few weeks of tests that the MWO might well be the most promising device to come to light in many years.

I have one request, that no one building this device ever be tempted to charge a fee, donation, or reimbursement of any kind whatsoever for its use. I feel most strongly that any device potentially helpful to suffering humanity should be available completely free of charge to anyone needing it.

CONSTRUCTION TIPS

My MWO is built on an 11 x 11½ inch plastic panel. Components extend 3½ in. below this, so the unit fits nicely into a small attache case. The 6 volt battery was a Sonotone lifetime Nickel Cadmium unit; however, five war-surplus NiCads (1.2 v each) wired in series would be less expensive.

My first unit used a transistorized driver for the Tesla Coil but the Ford coil works equally well, is far cheaper, but has the disadvantage of making a buzzing noise. The Ford Model T coils may still be available at Pep Boys stores in California, or can possibly still be purchased from J.C. Whitney & Co., 1917 Archer Ave., Chicago, IL 60616. The spark gap was made from salvaged tungsten relay contact points about 1/4 in. in diameter. (Chevrolet Six timer points, 1950, do very well). The relay spring arm can be tuned by a Nylon 6-32 screw adjusting its natural spring tension. The gap must be carefully tuned for maximum output for every individual, since the subject's absorption seems dependent on his body fluids and weight. *Adjust for maximum sparking at random times and intervals between several of the inner antenna rings.*

The automatic timer, zero to 15 minutes, the meter, the internal battery charger, the RFC circuits, etc. are all simply conveniences and may be left out of the circuit without in any way subtracting from results. By not building in these deluxe features, the entire MWO will cost much less to build. Use plastic instead of metal screws around the high voltage coils. High voltage capacitors can be tracked down at surplus stores or well stocked electronics parts sources. The Tesla Coil must be hand wound as it is not available commercially.

We have determined experimentally that a workable pair of antennas, radiator and resonator, can consist of 16 concentric rings, ranging from an outside diameter of 10-3/4 inches down to 1/2 inch. These were constructed by cementing a one-foot square of

BECK ADAPTATION OF LAKHOVSKY MULTIPLE-WAVE OSCILLATOR, U.S. Patent #1,962,565

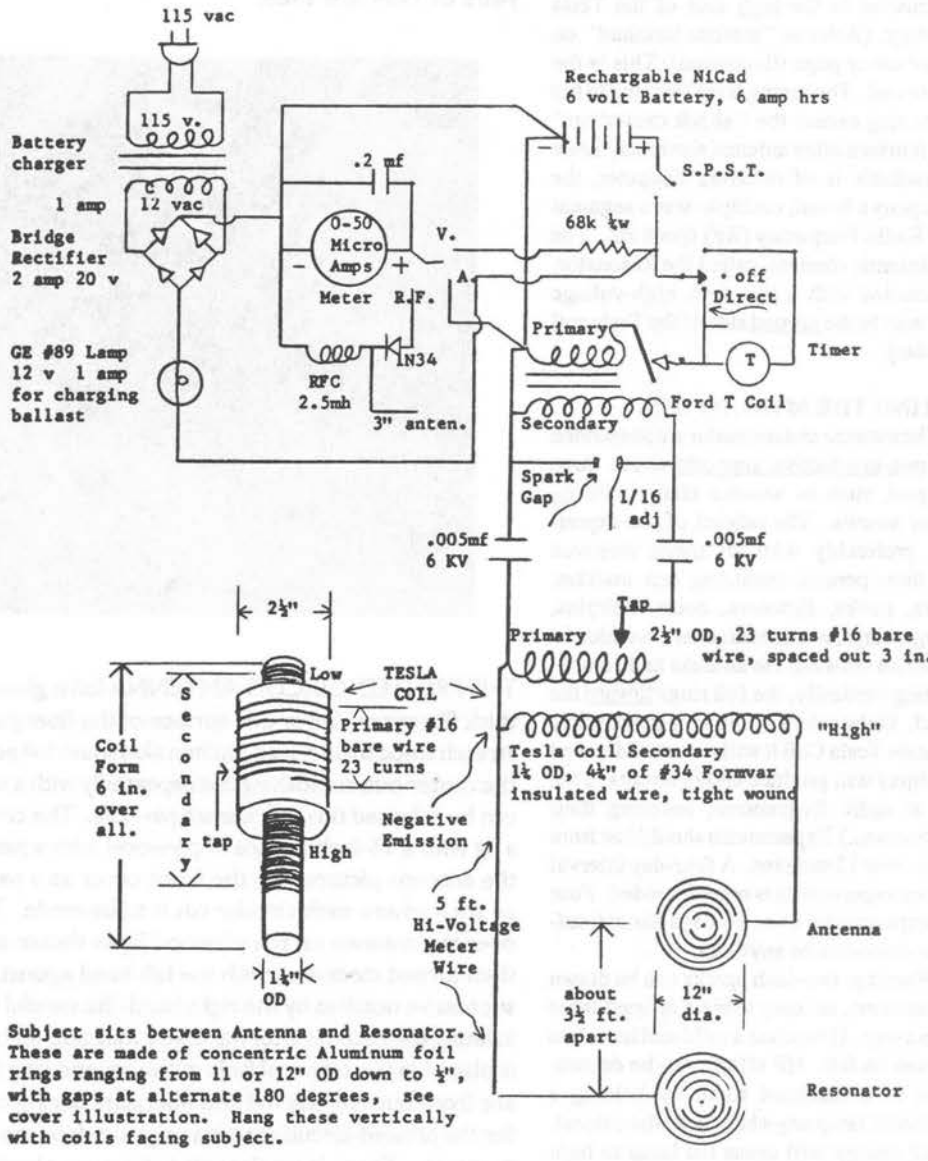

Reynolds kitchen aluminum foil to an 11-inch square of thin fiberglass. The outline of each set of circles was carefully scribed with a sharpened compass, razor or Scripto blade. By scoring or cutting the aluminum foil was cut through to the plastic backing and the waste area strips pulled away before the cement hardened. Excess cement was removed with a solvent. The gaps were then cut with the razor. Note that gaps are alternated in position each 180°, as per drawing on original cover page. This was drawn from an actual antenna and you can set your compass distances for each ring from it. Keep gaps between inner rings narrow to encourage random arcing between rings. Trim the corners from the gaps of the three or four outside rings to discourage fixed arcing at these places. Also be sure to clean away any bits of foil between rings. These also will cause fixed arcing.

In use, the ring second from the outside is connected to the high side of the Tesla secondary. (Refer to "antenna terminal" on original cover page illustration) This is the radiator coil. The arcing from this ring to the outside ring causes the "shock excitation" of the fourteen other antenna elements. Since each radiator is of different diameter, the array spans a broad, multiple-wave segment of the Radio Frequency (RF) spectrum. The other antenna element, called the Resonator, is connected with a five-foot, high-voltage meter wire to the ground side of the Tesla coil secondary.

PUTTING THE MWO TO USE

The antenna and resonator are suspended from non-conductive supports about three feet apart, such as wooden chairs with no nails or screws. The subject of the experiment, preferably with all metal removed from their person, including belt buckles, zippers, hooks, fasteners, coins, hairpins, earrings, rings, etc, is seated on a wooden or plastic rest between the antenna and resonator (hung vertically, the foil rings toward the subject. Unless the Resonator is powered by a separate Tesla Coil it will not arc. Metal on the subject will produce eddy currents in the field of radio frequencies, reducing their effectiveness.) Experiments should last from nine to over 15 minutes. A four-day interval between experiments is recommended. Four such experiments over 16 days should suffice to demonstrate anything.

Warning, two-inch sparks can be drawn from antenna; so keep subject at least three inches away. If touched a mild and harmless sting can be felt. HF effects can be demonstrated in a darkened room by holding a fluorescent lamp anywhere near the subject. The RF energy will cause the lamp to light although no wires are touching it. Field strength measurements read several watts of power from the audio frequency spectrum to beyond 250 megacycles.

The illustration to the right is from Clement's **Waves That Heal**, Lakhovsky's illustration of a living cell. "In the centre is a twisted filament which, possessing self-inductance and capacity, constitutes an oscillating circuit. The similarity to a short-wave circuit is manifest; the filament shown here oscillates like a coil having a very small number of spirals." He quotes Lakhovsky: "Every living being emits radiations", and adds: "the living cell can thus play the part of a transmitter or receiver of exceedingly short radio-electric waves which give rise to high frequency currents in the circuits of the cellular nucleus."

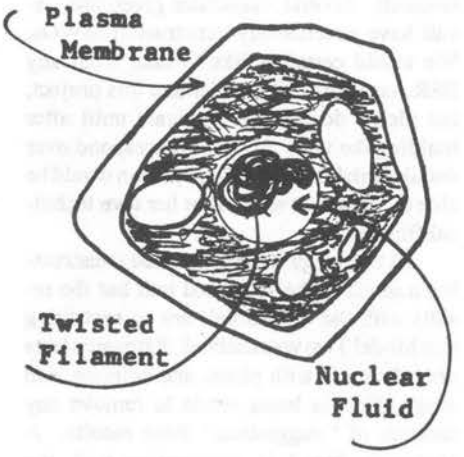

THE FOLLOWING PHOTOS were kindly furnished by Borderland Sciences Research Associates from their own experimental work with the MWO during the years of 1964 and 1965.

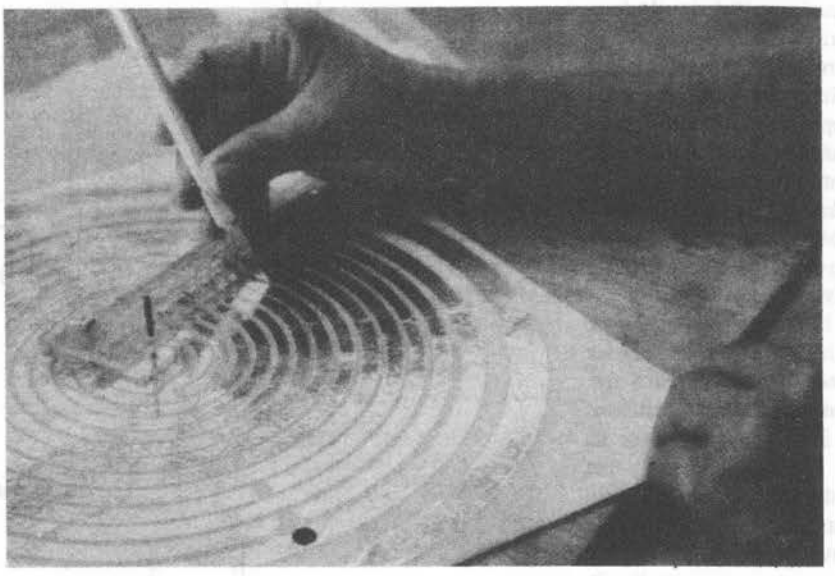

THE PRINTED-CIRCUIT ANTENNA foil is glued to an 11-inch square of 1/16th inch thick fiberglass. Spray one surface of the fiberglass with Hobby Shop spray glue and stretch smooth-surfaced kitchen aluminum foil across it. Press the foil on firmly from the center out, smoothing out repeatedly with a soft cloth. Any remaining air bubbles can be released through a small pin hole. The circles are more easily cut if you make a jig with a 16-inch square of plywood with a headless nail for a center post. Using the antenna pictured on the front cover as a pattern, mark and notch an old ruler or stick where each circular cut is to be made. This marked guide ruler is mounted over the antenna on the plywood jig as shown at right. The foil-covered surface is then turned clockwise with the left hand against the Scripto blade held firmly in the successive notches by the right hand. Be careful to cut through the foil. If you don't, in lifting the cutouts afterward, you may also lift or tear the rings. If a metal grommet is placed in the terminal hole in the second ring this will prevent the high-frequency arc from burning the foil and fiberglass during operation. Copper foil can be used for the printed-circuit antenna rings but deposits build up on it from arcing, wherever it occurs. There is no deposit buildup on aluminum foil.

THE RADIANT ENERGY of the MWO is obvious in this three-minute time exposure during operation in a darkened room. Note the brush discharge of etheric energy all along the edge of the outside ring, going three or four inches. Look at the random arcing between the antenna rings, down to the eighth ring! This antenna received full power by being mounted on the MWO case, directly at the positive end of the Tesla Coil.

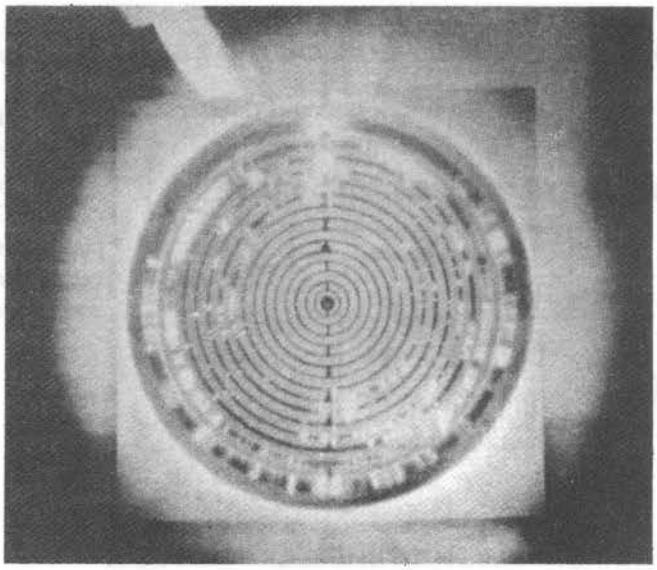

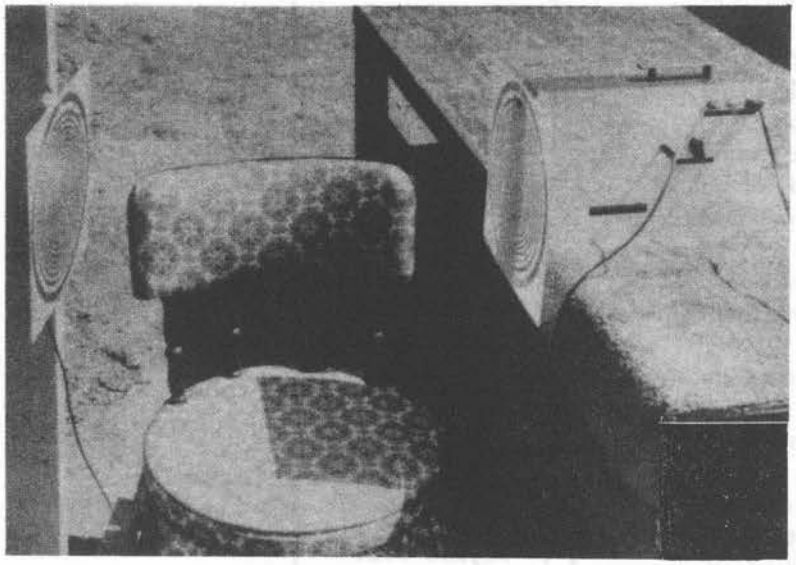

AT LEFT IS A TYPICAL EXPERIMENTAL SETUP, with a chair for "guinea pig" between antenna and resonator. Beck's original equipment called for an 18-inch lead wire from the positive end of the Tesla coil to the antenna. It was found that there was too much loss of power along this wire. The later development shown above has the MWO set upright, with the antenna mounted directly against the positive end of the Tesla Coil in the case.

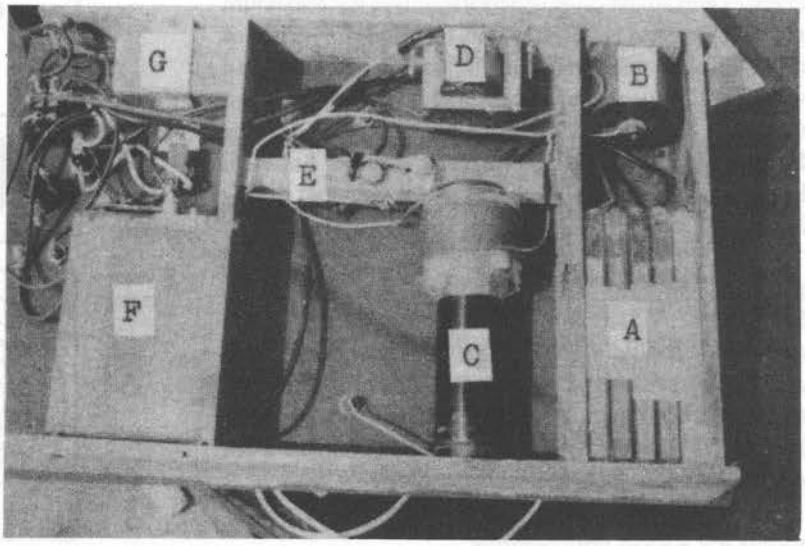

THE INTERIOR HARDWARE LAYOUT is shown at right in this photo of another MWO, neatly packaged for an attache case. A. The five Ni-Cad batteries, 1-1/4 volts each at full power. B. Timer. C. Tesla Coil. D. 115VAC transformer (for house current operation if desired). E. Spark-gap using modified Chevy Six points. F. Model T Ford Coil. G. Battery Charger.

RECTIFYING THE FORD COIL OUTPUT using a 1B3GT or 1G3GT high-voltage tube.

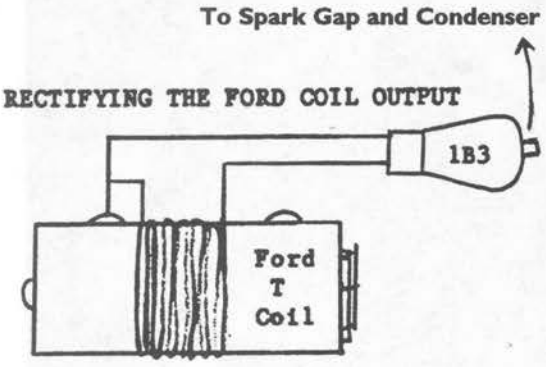

Wind 15 or more turns of fairly heavy insulated copper wire around the middle of the Model T Ford Coil. One lead from the winding goes to the Hi-voltage output of the Coil, and to pin 2 or 7 of the 1B3 tube. The other lead goes to the other pin, as only two pins of the tube, 2 and 7, are used in this hookup. The souped-up or rectified voltage is drawn off the top of the tube to the spark gap and condenser.

MODIFIED VERSION OF THE BECK TESLA COIL

115 volt house current into the black leads of the 6 volt transformer, one green lead to the T Coil negative terminal, the other to an SCR 45 amp Diode to make direct current to the Plus terminal of the T Coil. A 12-volt current to the T Coil heats it up and will not increase the spark. Radio Shack's 6.3 volt, 3 amp transformer does very well for a power supply.

Wrap 16 turns of insulated hookup wire around the middle of the T Coil and feed to pins 2 and 7 of the 1B3 rectifier tube. Feed the plus output of the T Coil into pin 2 or 7 of the 1B3 also.

Hi-voltage from the top of 1B3 goes to Spark plug. Widen gap of plug to 1/8 inch or more for maximum output of Secondary coil to Antenna.

One 10,000 WVDC (Working Volts Direct Current) commercial-type Capacitor, on the plus side, will do very well in this circuit. Capacity can be from .0015 to .005 microfarads.

Beck's tunable Tesla Primary called for 20 or more turns of bare wire for his movable contact but experience shows that 16 turns of insulated #19 wire for a Primary and adjust one turn more or less for maximum spark at Plus end Secondary coil. This is 4-1/4 inches of #34 insulated wire, or 4-3/4 inches of #32 insulated wire, for 420 turns more or less on 1-1/4 inch coil form 6 in. long. The Primary is wound on a 2 or 2½ in. coil form. There should be heavy insulation between Primary and Secondary to prevent power-loss arcing between Coils.

REMEMBER, the goal is a thin blue, or blue-white spark at least 3/4 inch long at the plus end of the Secondary. When fed into the center hole of the Antenna it should light up like a Christmas tree, with arcing between every ring. Feeding the coil output into the center hole gives more power to the shorter wave lengths. We get plenty of the longer wave-lengths from other electrical apparatus and from power lines.

This coil would be a good high-frequency power supply for Kirlian Photography.

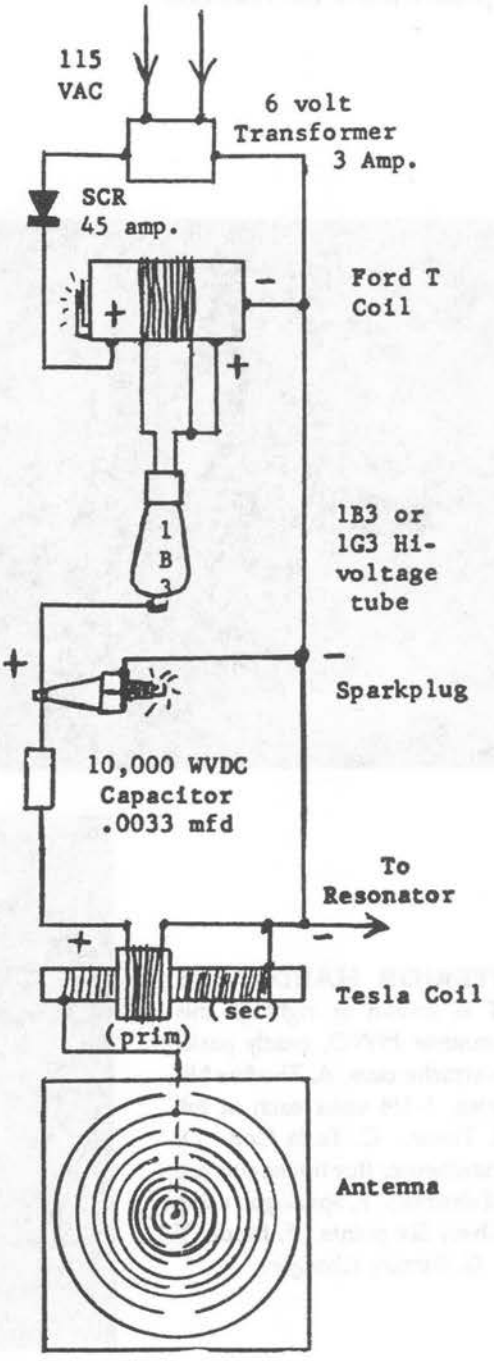

THE TRANSISTORIZED MWO
By Gerald W. Steele

Here is tentative information on the solid-state MWO. I say tentative since this is the 3rd version I've built. The first used an automobile spark coil for T2 but I found this undesirable since it lacked higher frequency harmonics. Even worse, the lower frequency ones could be harmful to living systems.

Version 2 was with a small black and white TV flyback transformer running at a slow (100 pulses per sec.) pulse rate. I eventually sped it up but could never get the required 1" spark from the Tesla coil.

This version uses a color TV flyback and a higher power discharge circuit. Nominal lowest frequency is 1.5 Khz though it could go as low as 270 Hz.

All diodes, SCR, and transistor can be substituted with universal replacement types available at electric part outlets.

As you can see, electronically it is simple. The power metering circuitry in the original MWO can also be used here if desired. I've had enough trouble maximizing the output of this device to worry about monitoring the power.

This device is excellent for use in Kirlian photography several ways: A modified circuit could be used for A, for a wide range of pulse rate settings.

There are two possible voltage sources for Kirlian use, each with unique characteristics. First is the output directly from T2 with or without the Tesla coil circuitry connected. Second is the Tesla coil output itself.

Other modifications include rectifying T2's output. The old MWO manual recommended the use of a tube rectifier out there are solid state types available.

Be sure it is a color TV high voltage rectifier. Connect as shown:

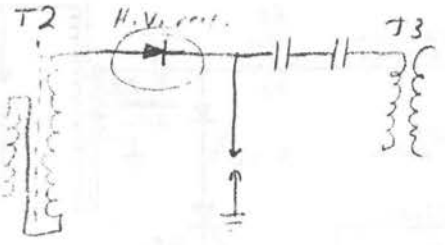

One question may arise in the builders mind: the need to heatsink SCR. No need. Not much heat generated.

Be sure R3 (or combination of resistors forming it) get ventilation. They get hot.

Always short C1 just after turning off power to work on the device. Remove short before reapplying power. The device is perfectly safe if you exercise care. R6 is a safety feature, it discharges C1 when turned off - but still short C1 when servicing, a standard safety procedure.

I am making constant improvements. The alternate values given for R3, C5 may give greater power at a higher pulse rate. I have yet to try them since 225 watt resistors are hard to find and apply. Besides it seems to work quite well as it stands. The only complaint one might have is the cost of construction principally due to the flyback transformer T2. But scavenging could help here.

Enclosing the spark gap in a plastic box could reduce its audible noise level. Ventilation of the spark gap gives more consistent operation. If the spark gap can be physically constructed above R3 the heat will produce air currents giving natural ventilation.

As I said, I am making constant improvements. Its too early to finalize it, but perhaps other associates may be interested in constructing and improving it. The lack of interrupter contacts gives a high level of reliability and consistent output.

Its too early in use for me to comment on its effects except that I think it is quite positive.

CIRCUIT DESCRIPTION:

The circuit consists of: low voltage oscillator, high voltage capacitive discharge generator, and Tesla coil.

The low voltage oscillator consists of Q1 a unijunction transistor operating as a relaxation oscillator. Frequency is variable from 270 Hz to 26 Khz with most power generated at 1500 Hz. VR1 controls this frequency. The DC Power for this circuit comes from a voltage doubler on the power transformer low voltage windings. The low voltage DC value was chosen to be as low as possible with consistent firing of the SCR.

The high DC voltage is rectified and filtered in C1. R1 is surge protection. The high DC voltage charges C5 through R3 until Q1 fires SCR1 whereby C5 is discharged through the primary of flyback transformer T2. D5 protects the SCR from high reverse voltage transients.

The secondary of T2 feeds the adjustable shunt spark gap and then through the Tesla coil resonating capacitors. Two capacitors are used here due to voltage requirements though one 15Kv capacitor could be used. From this point on it is all standard MWO fare.

Transformer T2 is expensive although any used color TV flyback could be tried. In all experimentation or adjustment the goal is maximum spark output at the Tesla coil secondary.

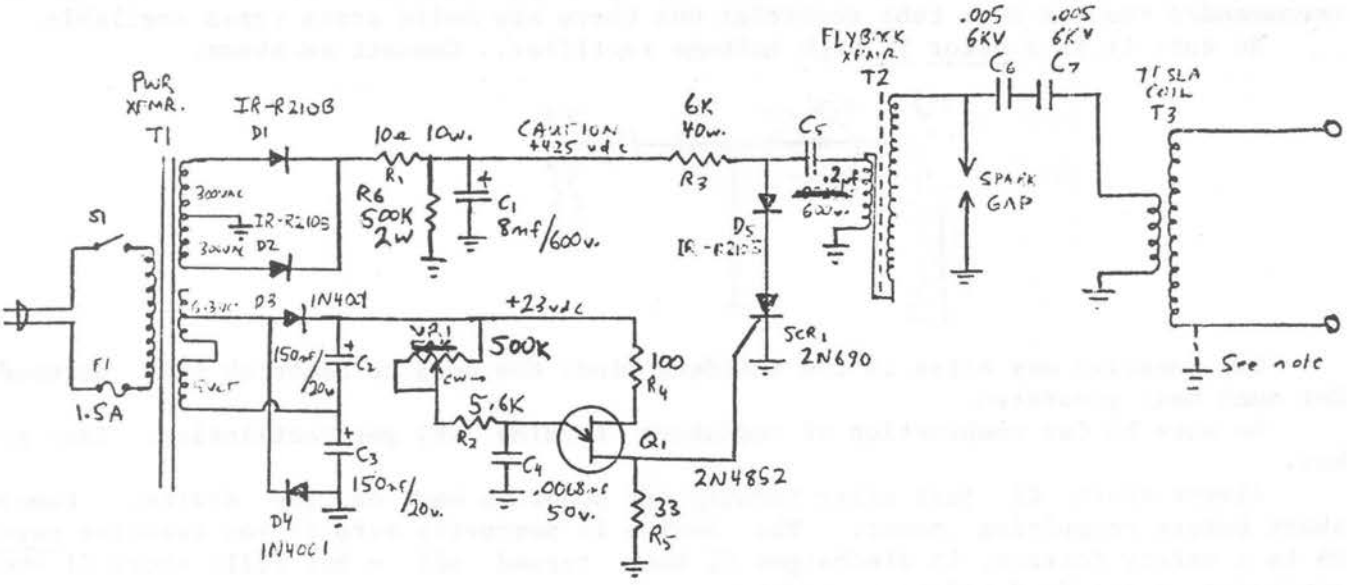

Note: Optional ground for Tesla coil secondary, if it reduces output do not use.
R3 made from four 25K 10w resistors in parallel. VR1 linear taper. C1 may or may not be polarized. C6, C7 could be single .0025/15KV capacitor. SCR1, Q1 and all diodes can be standard replacement equivelants.
MFR Type: T1 - TRIAD. T2 - Stancor HO 6246, Thordarson fly.
Alternate values: R3 - 1K ohm, 225 watts; C5 - 1 microfarad, 600v.

THE LAKHOVSKY MULTI-WAVE POWER SUPPLY

by KLARK KENT

Many of us have read the Borderland Sciences Research Foundation (BSRF) publication "The Lakhovsky MWO" in which electrical wizard Bob Beck astounds us with tales of wonder. He tells how he was informed of the location of an old Lakhovsky Multi-Wave Oscillator that had been declared "unfathomable". He was able to reconstruct the circuits and after several hours the machine worked perfectly!

Mr. Beck and fellow experimenter Ed Skilling designed and built a modern version of the MWO based upon Nikola Tesla's and Lakhovsky's original works and patents. Georges Lakhovsky, a herald of the New Age, was no doubt a skilled experimenter and investigator of the Life Energy. This is evident by his practical application of Nikola Tesla's famous coil.

Super Science has updated both Lakhovksy's original and Bob Beck's adaptation of the Multi-Wave Oscillator. Looking at the schematic diagram in Bob Beck's article, we will eliminate everything but the 12 volt battery (or 12 volt power supply), switch, Model T Ford Coil, high voltage capacitors, and the Tesla Coil. A large high voltage diode is added to rectify the output of the Model T Ford coil which leaves us with a stripped down but thoroughly functional MWO power supply.

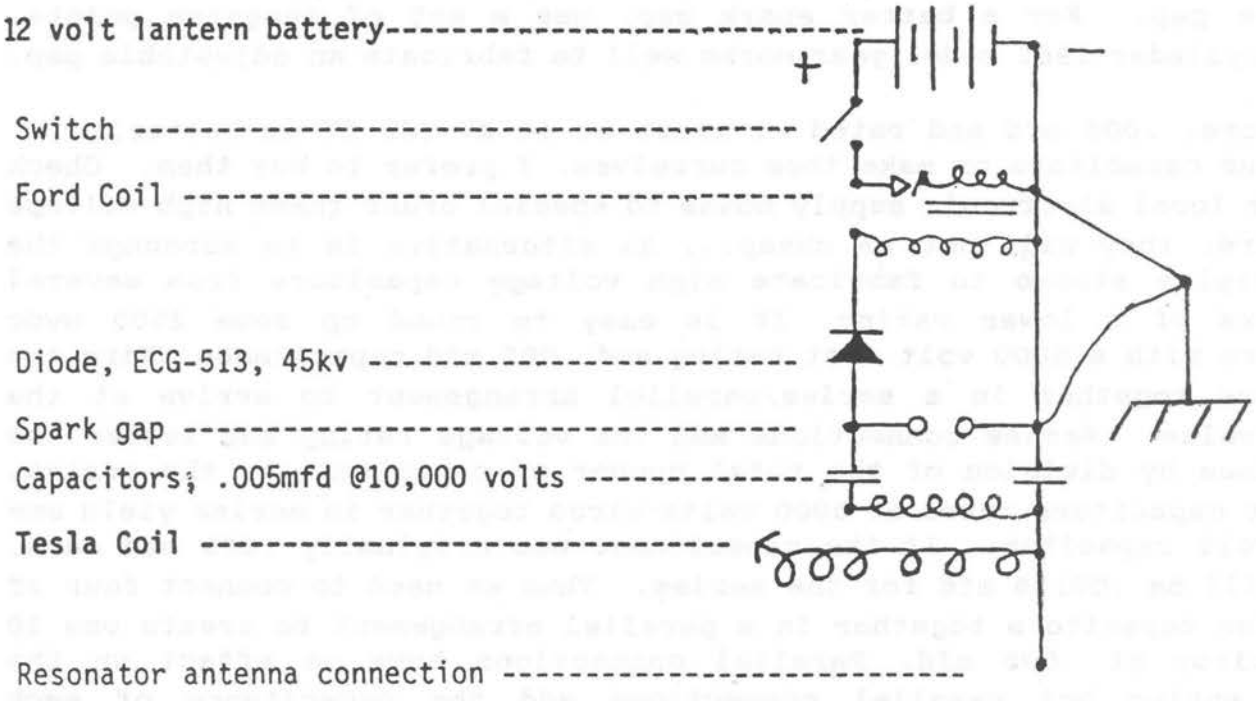

Before proceeding further, let's remember that the MWO is an experimental device and not for any healing or medical purposes! All experimenters should be in at least reasonably good health when building or experimenting with this high voltage, high frequency Tesla Coil Multi-Wave Oscillator power supply.

To begin our MWO Tesla Coil power supply project, we can round up the needed parts and components. Basic parts list:

-12 volt power supply; this can be a 12 volt lantern battery available from Radio Shack or any plug in power supply rated from approx 2 to 7 amperes.

-Model T Ford Coil; these old time induction coils are still available from J.C. Whitney Co, 1917 Archer Ave, PO Box 8410, Chicago, IL 60680. The MWO power supply will work adequately with the Model T Ford coil but a transistorized driver for a modern "hot rod" auto ignition coil will produce a Tesla Coil power supply with far more power!

-Switch; the on/off switch can be of any type. There is a switch already present on the plug in 12 volt power supply. I prefer to add a second switch of the key type, which prevents unauthorized use of the unit and a piece of vinyl tubing can be fitted over the metal key to create an insulated switch (this is important when turning the unit off).

-Diode, ECG-513 at 45 KV. The diode rectifies the output from the Model T Ford coil or the auto ignition coil by taking out the stray ac signals. This diode is a high voltage device rated at 45 Kilovolts (45 KV) peak inverse voltage.

-Spark Gap; an ordinary spark plug works adequately in this application. Try wrapping the spark plug in a large piece of vinyl tubing to insulate the spark gap. For a better spark gap, use a set of tungsten points. Chevy 6 cylinder 1965 model year works well to fabricate an adjustable gap.

-Capacitors; .005 mfd and rated at least at 10 KV (20 KV is better). We buy our capacitors or make them ourselves. I prefer to buy them. Check with your local electronic supply house to special order these high voltage capacitors; they will not be cheap... An alternative is to scrounge the local surplus stores to fabricate high voltage capacitors from several capacitors of a lower rating. It is easy to round up some 2500 wvdc capacitors with a 5000 volt test rating and .005 mfd capacitance. Wire the capacitors together in a series/parallel arrangement to arrive at the desired value. Series connections add the voltage rating and lessen the capacitance by division of the total number of capacitors in the series. Thus four capacitors rated at 5000 volts wired together in series yield one 20,000 volt capacitor. If the capacitance was originally .005 mfd each, now it will be .00125 mfd for the series. Thus we need to connect four of the series capacitors together in a parallel arrangement to create one 20 KV capacitor at .005 mfd. Parallel connections have no effect on the voltage rating but parallel connections add the capacitance of each individual capacitor.

CAUTION! Capacitors store electrical energy and can shock even when unit is turned off. Be sure to discharge the capacitors before touching them...

TESLA COIL

We make the Tesla Coil ourselves using the basic parameters worked out by Bob Beck in his original MWO adaptation from Georges Lakhovsky. The Super Science Tesla Coil is a close coupled, liquid filled coil that produces a 3" spark discharge when driven by a Darlington transistor and "hot rod" auto ignition coil setup.
For making the Tesla Coil, I like to use pvc pipe for the secondary coil form and acrylic tube for the primary coil form. The acrylic is transparent which permits visual inspection of the interior of the coil to observe any corona leakage or malfunction.

For the secondary winding: cut a 1 1/4" outside diameter piece of pvc pipe seven inches long. For the primary winding: cut a 2 1/2" outside diameter piece of clear acrylic tubing (1/4" wall thickness) seven inches long. Wind the secondary coil form with #32 gauge bare enameled copper wire so that the turns are tightly packed to create a winding approx six inches long with a 1/2" gap at either end. Wind the primary coil form with #14 gauge stranded and insulated copper wire. Wind exactly 18 turns and tightly pack them together. The vinyl insulation on the #14 gauge stranded wire will provide the correct spacing between turns.

Place the secondary winding inside the primary winding and use Super glue to hold the windings in place. For the terminals of the windings, use ordinary banana jacks to create a modular coil with a standard banana plug connector system. There will be tremendous electrical stress between the primary and secondary windings. We could reduce this dialetric stress by using a pancake style primary winding, but the pancake style primary takes up a lot of room. To solve the dialetric breakdown between the two windings, we insulate the space with liquid mineral oil. The liquid mineral oil is self healing should a dialetric breakdown occur. Solid forms of insulation such as paraffin wax are useless once a short circuit path has been created between the two windings.

To use the mineral oil insulation system, finish the coil first. Then drill a small hole in one end and squirt the oil in using a squeeze bottle. Then seal the hole using a piece of acrylic and Super glue. A word about Super Glue! This stuff is quite remarkable and is sold in hobby shops that specialize in flying, gas powered, model airplanes. Use accelerator to fast dry the glue. The brand name of the Super glue is "Gap Filler" and the accelerator is "Insta Set" both made by Bob Smith Industries.

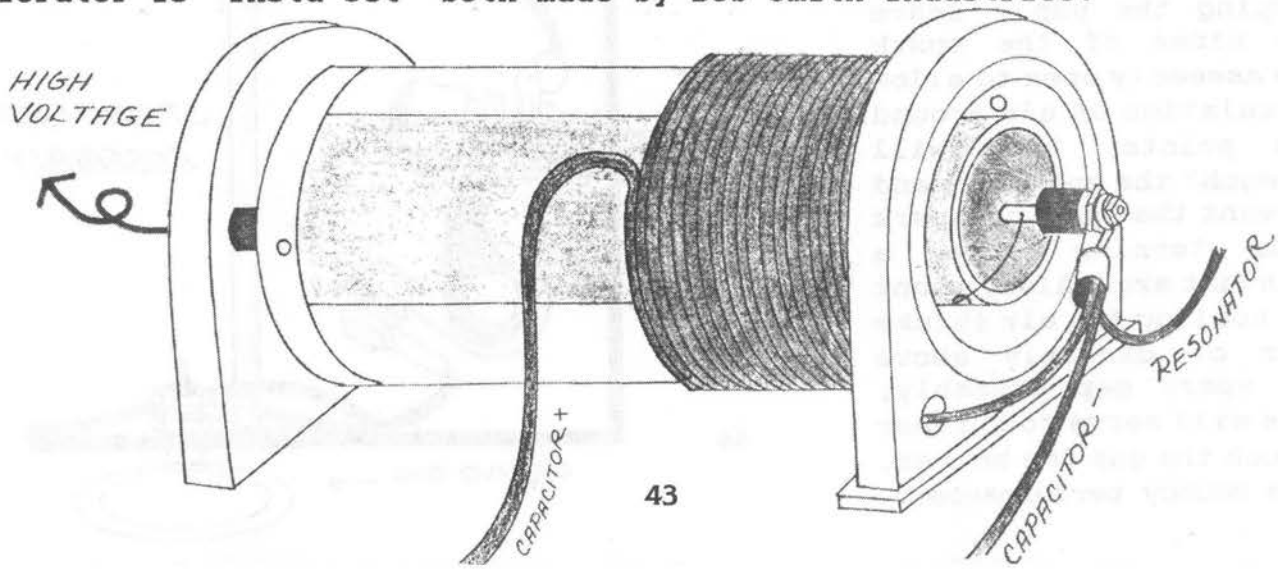

SPARK GAP

Even though an ordinary spark plug will work for a spark gap, we can do much better with an adjustable spark gap made from a set of tungsten auto ignition points. Chevy six cylinder, vintage 1960's are fine. To fabricate the adjustable spark gap, cut the base plate of the point assembly into two parts; make the cut near the spot where the two tungsten contacts normally meet. You should now have two base sections, with a contact point on each section. The reason we cut the base plate is to prevent the high voltage from jumping from the connections to the base and bypassing the breaker points. File down any sharp points where the base was cut. Mount the two tungsten points in such a way that the contact points barely touch each other and the base sections are as far apart as possible. Mount the spark gap assembly on a small piece of acrylic sheet. Wood is not suitable to mount the spark gap because the high voltage current will pass right through the wood base, possibly setting it on fire! Use a large nylon bolt to mechanically adjust the points. Mount the nylon bolt (Toilet seat bolts work well) in the side of the briefcase so that it butts against the spring loaded contact arm; this acts as a spark gap adjuster.

The advantage with an adjustable spark gap is that we can tune the gap while the MWO is in operation. The closer the two tungsten points are to each other, the faster the frequency of the spark jumping the gap. The further apart, the slower the frequency of the spark jumping the gap. Typically the Violet Ray Bulb Assembly calls for a fast frequency spark gap setting; while the High Power Radiator Antenna or Golden Ratio Antenna call for a wider gap spark setting to produce more power.

One side of the spark gap points will be at "ground" potential; while the other side will be at "high voltage" potential. Leave a metal discharge point exposed on the high voltage side of the spark gap assembly. We do this so that the entire MWO power supply may be discharged with a test wire running from the Ground Bus to the high voltage point. This provides a quick way to discharge the capacitors before troubleshooting the unit. Also, cover the spark gap assembly with a visual block made from translucent acrylic. This visual screen will block the ultraviolet light emitted by the spark jumping the gap. Leave the sides of the spark gap assembly open to allow circulation of air around the points; this will "quench" the spark gap and prevent the jumping spark from turning into a constant arc. Also, mount the cooling fan air intake near or directly above the spark gap assembly; this will serve to further quench the gap for better, more bouncy performance...

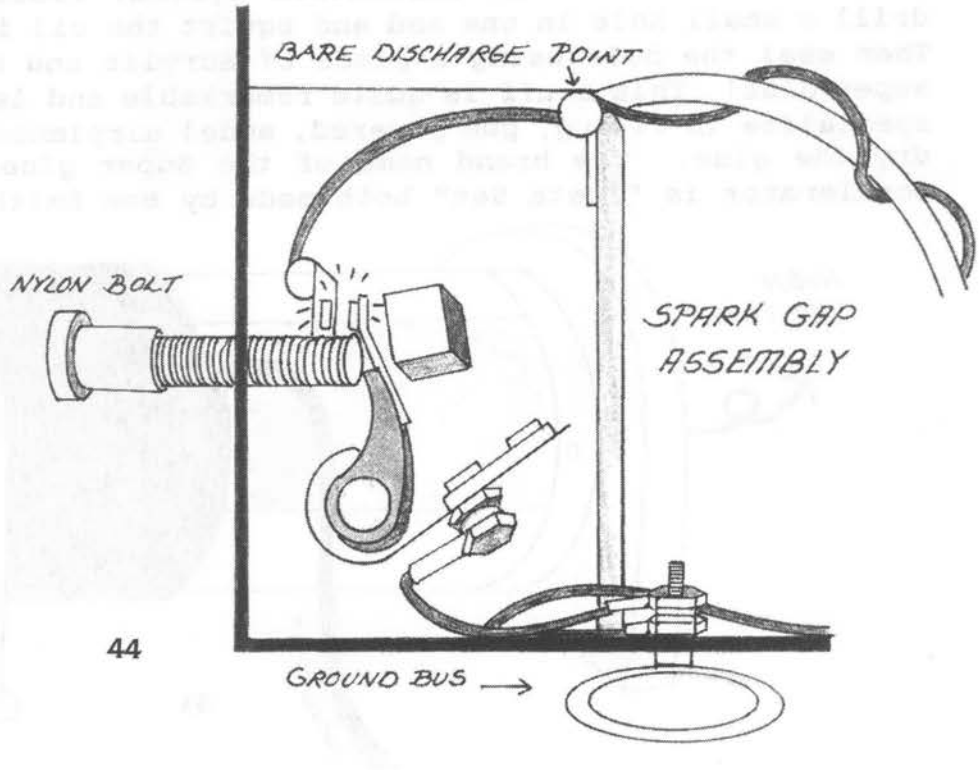

555 TIMER AND TRANSISTORIZED DRIVER

Even though the Model T Ford coil works adequately to power the MWO Tesla Coil power supply, we can really do better with a modern "hot rod" auto ignition coil. Mallory makes an aftermarket coil for drag racing that puts out approx 45 KV. The "MSD Blaster" is another aftermarket auto ignition coil that really gets the job done. Even an ordinary UC-15 replacement coil with its 30 KV rating will outperform the Model T Ford coil.

However there is one consideration to using an auto ignition coil as the primary high voltage source. Since we are working with 12 volts direct current, we need to interrupt or chop the 12 volts going into the auto coil to enable it to function as a transformer. The Model T Ford coil had a built in interrupter for this purpose. We will make a much better interrupter from a 555 timer chip and a high power Darlington transistor. The 555 timer chip will chop or interrupt the 12 volts going into the auto ignition coil from 130 times per second to 1300 times per second while the Darlington transistor handles the power. With the Model T Ford coil we were stuck with the fixed frequency of the interrupter (approx 200 Hz). With the 555 timer system, we can tune the frequency of the primary high voltage from 130 Hz to 1300 Hz. This really makes a difference when we try to get maximum performance from our Tesla Coil when it is driving the MWO Golden Ratio Radiator Antenna or driving the Violet Ray Bulb Assembly for direct stimulation.

Below is the schematic for the 555 Timer/Transistor Assembly. It is shown hooked up to the auto ignition coil. You can hardwire this circuit using a Radio Shack #276-162 project board. I use a large heatsink to mount the Darlington transistor (RCA 8766) and to mount the 50K ohm tuning potentiometer. When the MWO power supply is housed in a briefcase, the shaft of the 50K ohm potentiometer can extend through a hole in the side of the case. Go ahead & slip a short piece of vinyl tubing over the potentiometer shaft both to extend the shaft and to insulate it from high voltage.

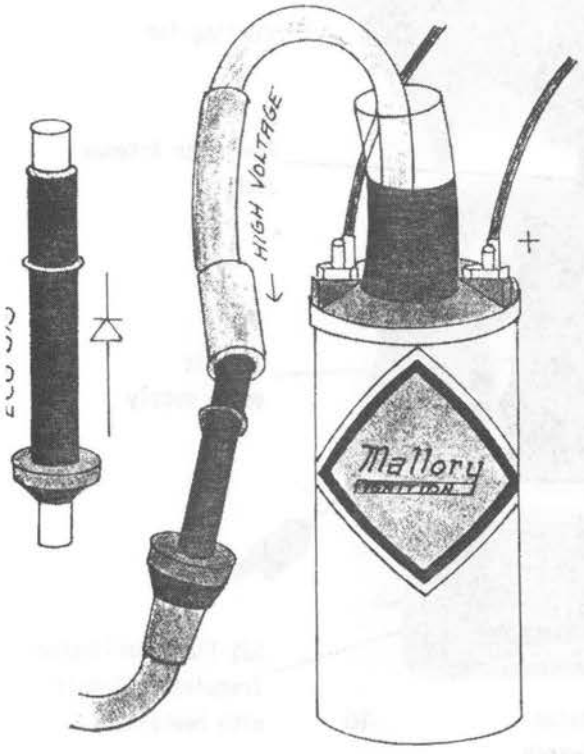

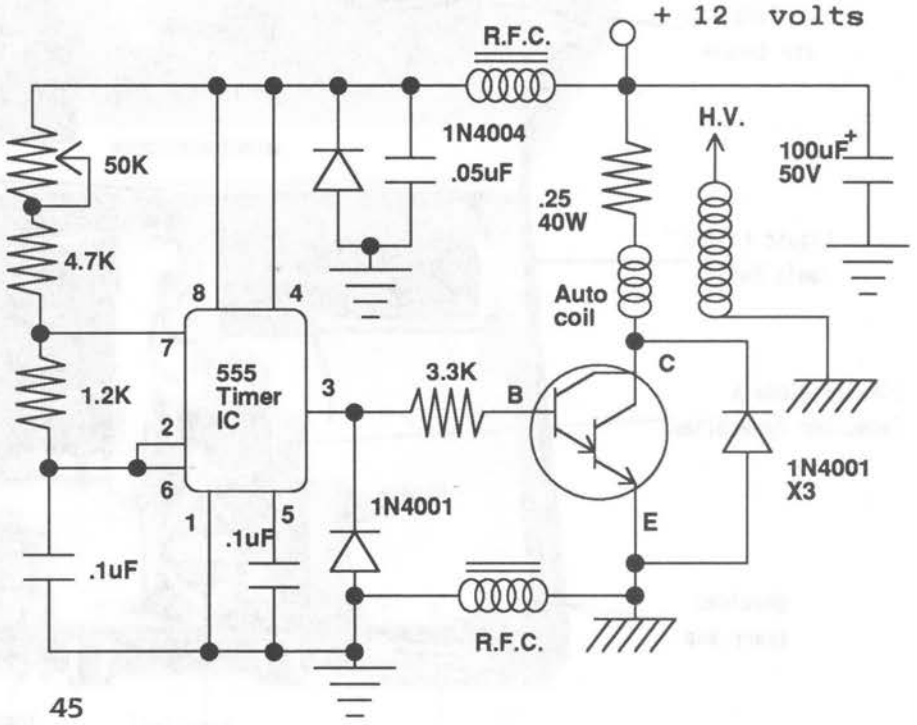

GROUND BUS

An external Ground Bus is important because it lets us reference the high voltage to the zero potential of the Earth itself. Without a true Earth ground, the negative side of the circuit can pick up a substantial voltage by induction from the high voltage potentials in the circuit. This condition is known as a "floating ground" and could result in the experimenter getting shocked. The shock itself is harmless, but the surprise that an accidental shock causes may lead the experimenter to jump back and bump his head! The Ground Bus may be connected by a long wire to a cold water pipe or to a steel fence post or to a piece of rebar driven into the ground. The Ground Bus is a handy reference point when discharging the circuit before troubleshooting.

SAFETY

Try to follow the "one hand rule" when actively adjusting the live high voltage circuit. This means keep one hand in your pocket or one hand behind your back. If an accidental shock should occur, then the electrical current does not travel across the heart when the experimenter follows the "one hand rule". Another safety procedure is to use a 12 volt lantern battery to power the circuit while it is still under construction. Once all the problems have been solved, then a more powerful 12 volt supply can be used.

TESTING THE CIRCUIT

Let the circuit run in darkness and try to observe any corona leaking from exposed high voltage points. There are two good and easy ways to stop high voltage leaks. One method is ordinary vinyl tubing: wrap wires carrying high voltage in vinyl tubing to absolutely stop them from leaking power robbing corona. Auto parts store sell expensive spark plug wire which will withstand the high voltages we are dealing with. If you use spark plug wire, be sure that it is metal wire, not "radio suppressor" wire (it's carbon fiber and impossible to solder or connect to).

Another good method of insulating high voltage is 100% silicone clear caulk! With your caulking gun, apply some 100% silicone clear caulking to exposed wires, exposed high voltage points and other places where you can observe leaking high voltage corona.

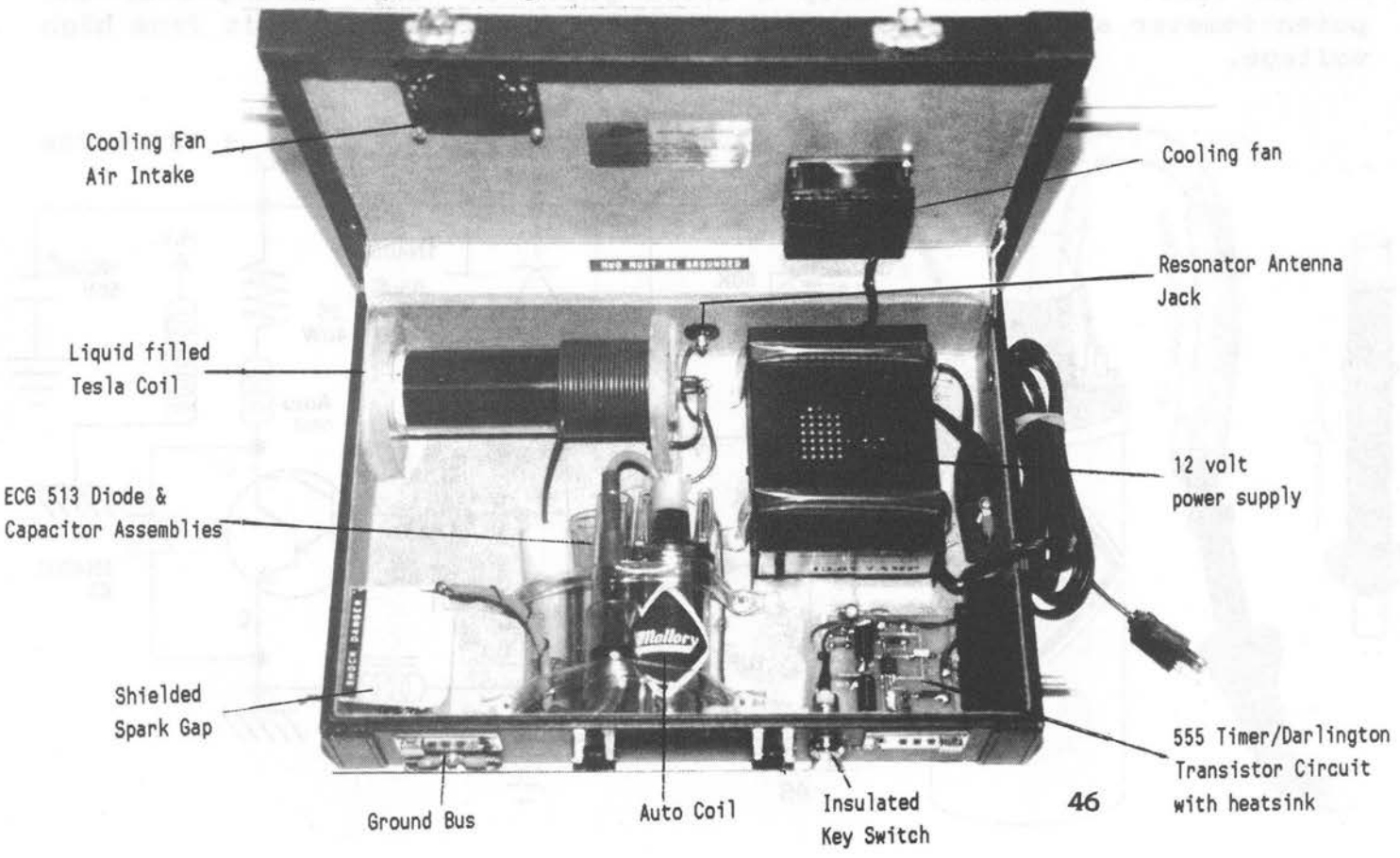

LAKHOVSKY MULTI-WAVE OSCILLATOR.

HOW IT WORKS:
The MWO sets up a high voltage oscillating electromagnetic field between the two antennas. Experimental subject sits or stands in this field and every cell in the body is exposed to the resonant effect of the multiple waves. Just as one guitar string will sound when exposed to its resonant tone; so will each cell vibrate to its own natural frequency!

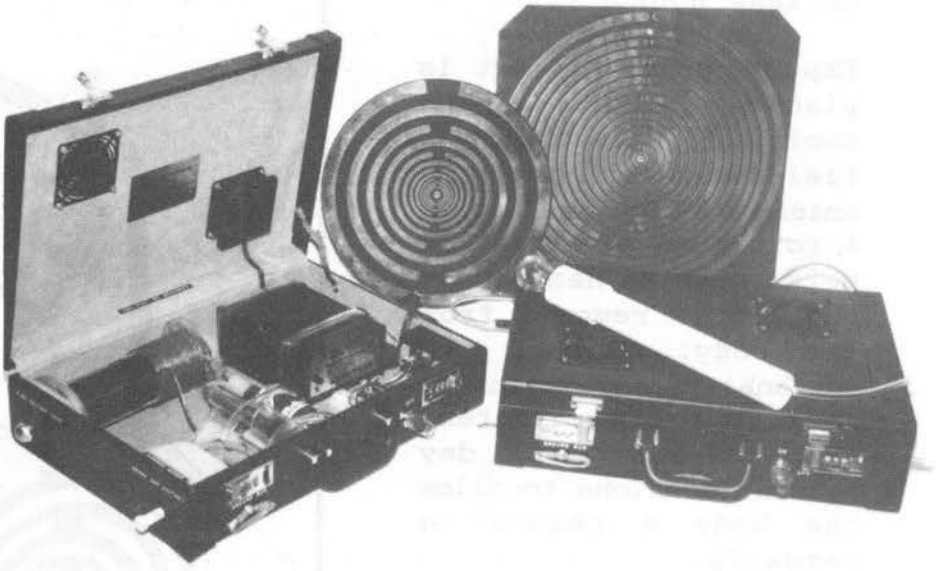

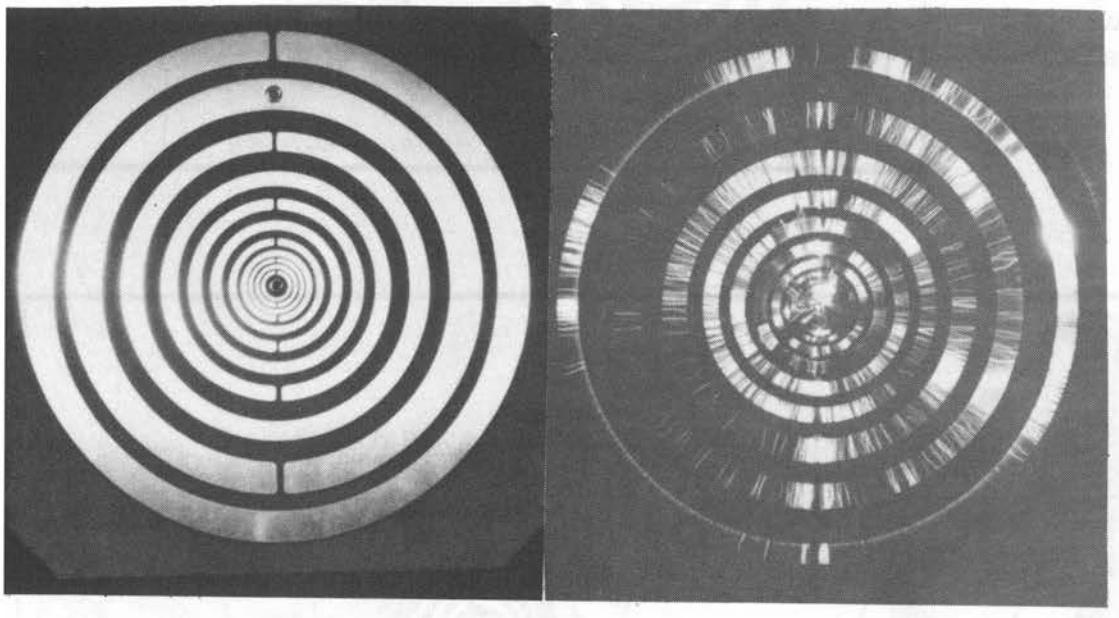

In this time lapse photo, we can see the dramatic effect of the high voltage excitation of each ring of the MWO antenna! Each ring radiates at its characteristic wavelength and frequency to cover a range from approx 200 Hz to 14 Giga Hz!

Modular construction works well for the Tesla Coil in the Super Science MWO power supply. This high voltage Tesla Coil can produce a 3" spark discharge from the smooth HV Discharge Terminal! The unit is a versatile experimenter's kit that can be used for Kirlian photography, or to create a plasma of Argon gas in the Violet Ray Bulb Assembly.

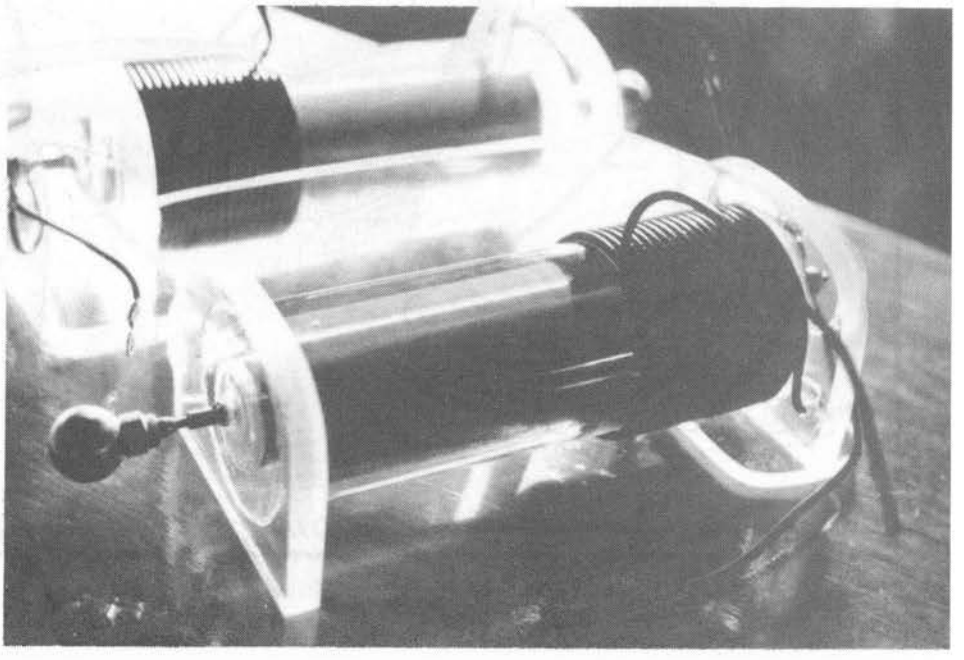

ANTENNA HOOKUP

Experimental subject is placed within the oscillating electrostatic field between the two antennas which are approx 4 to 6 feet apart. All metal such as heavy belt buckles is removed from the body. Clothes are optional. Sessions should last approx 20 minutes; skip at least one day between sessions to allow the body a chance to detoxify.
With the Golden Ratio Radiator Antenna, the use of the second Resonator is not required due to the unique "Scalar" properties of this design.

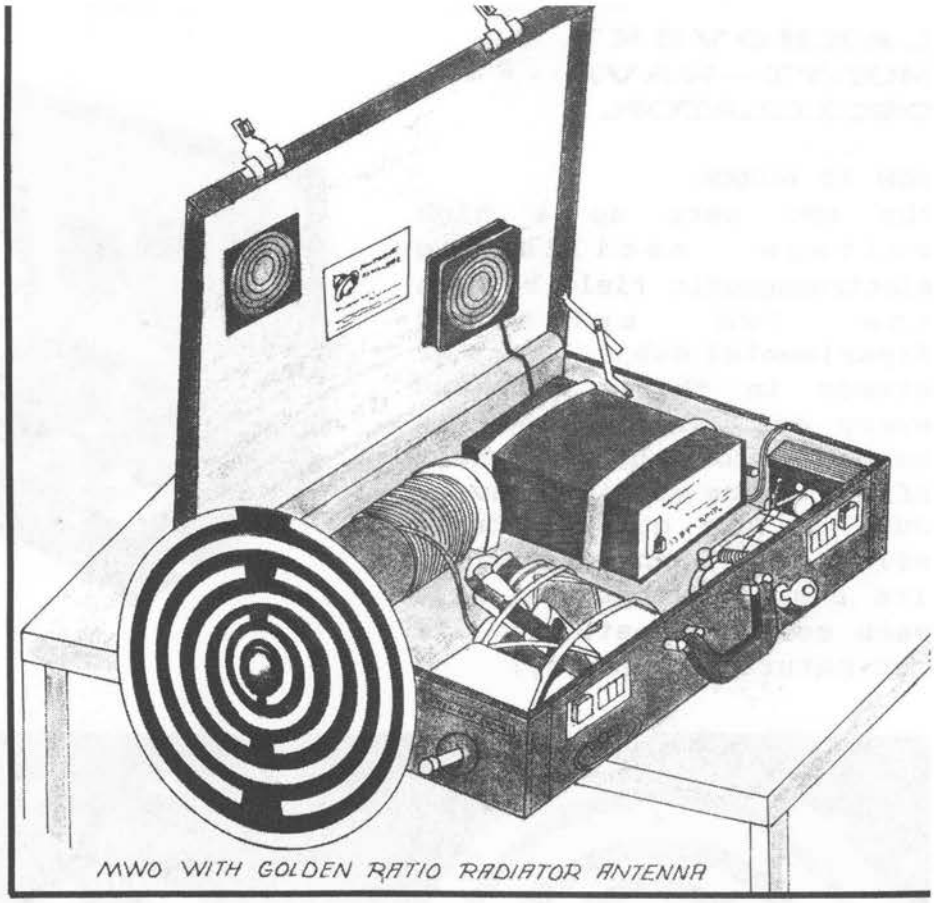

MWO WITH GOLDEN RATIO RADIATOR ANTENNA

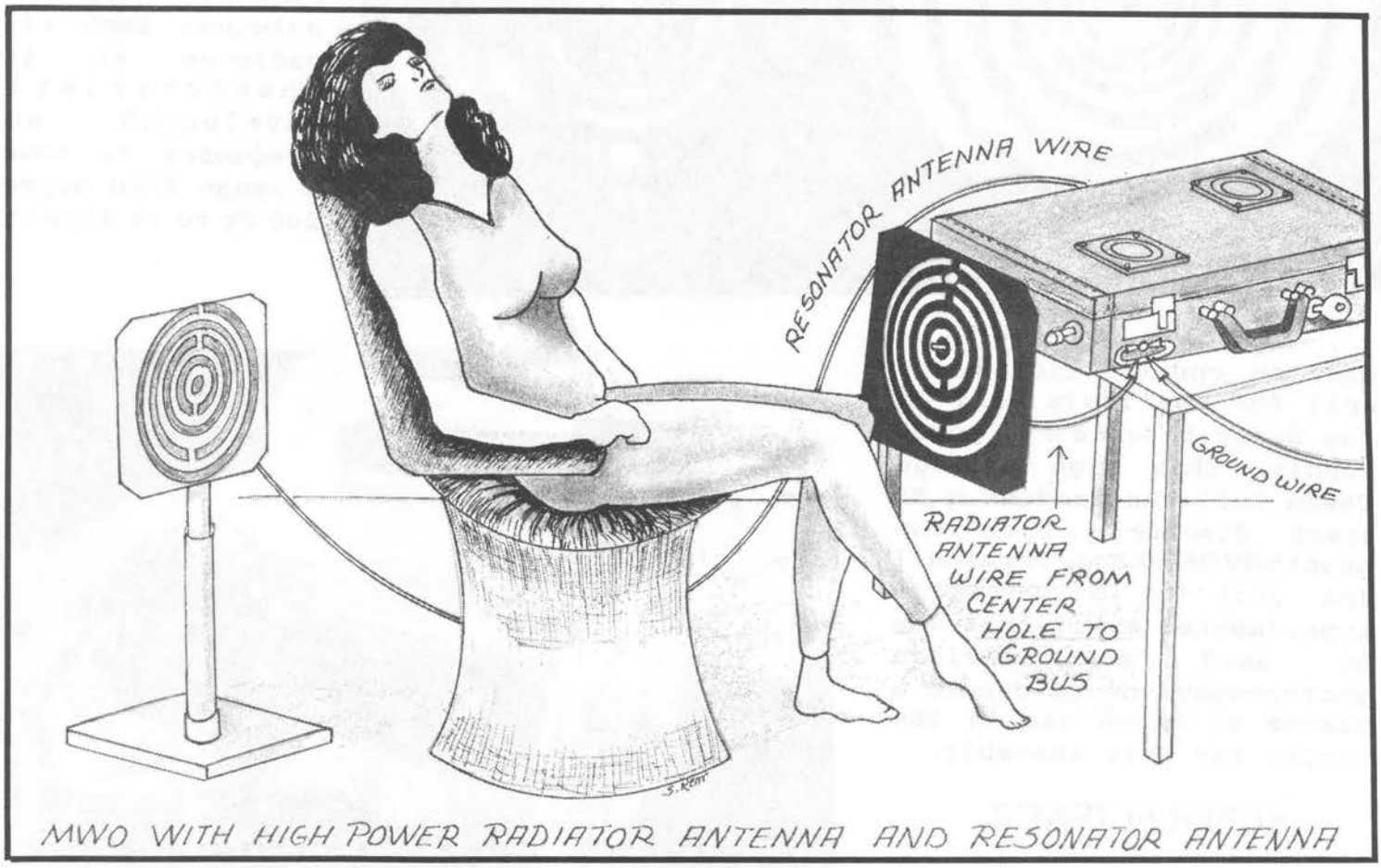

MWO WITH HIGH POWER RADIATOR ANTENNA AND RESONATOR ANTENNA

From the December 1963 Journal of Borderland Research
Excerpts from:

THE WAVES THAT HEAL

The New Science of Radiobiology

by Mark Clement

edited with commentary by Riley Hansard Crabb

Bob Beck has loaned us a copy of the late Mark Clement's brief, illustrated review of Georges Lakhovsky's Multiple Wave Oscillator showing pictures of antennas, before-and-after skin cancers apparently cured by the Oscillator, and of cancerous plants returned to normal health by two means: 1. Radio-Cellular Oscillator, and 2. Single Wire Oscillating Circuits.

"On the day Hitler's mechanized hordes drove into Prague a book was published in London entitled **The Secret of Life** by Georges Lakhovsky, a Russian-born engineer resident of Paris. The book had previously appeared in French, German, Italian and Spanish translations and Lakhovsky's theories were well known on the Continent long before the English Translation was published.

"The evil designs of the Nazis soon gave rise to depressing repercussions in all spheres of human activity and Lakhovsky's remarkable work was left virtually unnoticed in this country (England) by the medical profession and the public alike. A few discerning critics, however, expressed their views with appreciative understanding. The Hospital said 'Lakhovsky's theories are so interesting from the point of view of future developments that it will repay any keen hospital officer to give them his close attention.' Science Forum said 'The admirable translation of Lakhovsky's **The Secret of Life** will be heartily welcomed in progressive circles. The general theory is one which physicists, biologists and medical men cannot afford to ignore.' But these were voices in the wilderness and the field for experimental investigation was left open to a few amateurs devoid of scientific training and lacking the necessary resources.

"The impartial investigation of claims of cure of various diseases by un-orthodox methods demands high qualities of mind and character possessed by very few men indeed. Scientific truth is no respecter of persons or of vested interests, and Lakhovsky's spectacular results in the treatment of plants and animals and human beings were inevitably bound to antagonize orthodox practitioners and exponents of popular medical cults.

"On the Continent Lakhovsky's work attracted a great deal of attention in scientific circles, particularly in Germany and Italy. Italian investigators were among the first to study Lakhovsky's theories and put them to the test in laboratories and clinics. It was, of course, to be expected that the new science of Radiobiology should make a special appeal to the intellectual heirs of Galvani, Volta and Marconi. It is somewhat depressing to observe that in England, the country of Faraday and Clerk Maxwell, Lakhovsky's theories have not yet received the attention they deserve.

REGENERATING OSCILLATING CIRCUITS

"Lakhovsky has been criticized by physicists ignorant of biology and by biologists ignorant of physics! These self-appointed censors of knowledge soon found they were confronted with a redoubtable opponent who fully realized the value of experimental evidence. Its publication resulted in causing annoyance to the custodians of infallible doctrines who made up with carping verbiage what they lacked in clarity of vision. But Lakhovsky's achievements with his oscillating circuits supported by astonishing photographs of regenerated tissues in plants and human beings could not be exploded by mere verbal fireworks, and as evidence accumulated the skepticism of hostile critics relapsed into morose silence.

"The indisputable fact remains that Lakhovsky was the first experimenter to make use of high frequency electro-magnetic waves in the domain of biology. Thus out of the application of radio-electricity to biology his work developed and gradually established the foundations of the new science of Radiobiology. The first international Congress of Radiobiology was held in Venice in 1934. A leading authority on electro-therapy, the late Dr. E.P. Cumberbatch, wrote: 'Although it had been frequently observed that the short Hertzian waves could produce heat at a distance from the transmitter the first scientific investigation from a biological point of view was made by Lakhovsky and his colleagues who published a paper in 1924 on the effects of very short waves on cancer in plants...'

"When France was occupied by German troops, Lakhovsky, being a prominent anti-Nazi, decided to leave Paris and made his way to New York where he died in 1942 at the age of 73.

"In the United States Lakhovsky's theories were put to the practical test with typical American speed. Noticing that patients treated with Lakhovsky's Multiple Wave Oscillator showed signs of rejuvenating appearance, the possibility of exploiting this side-effect proved irresistible to an enterprising 'beautician'. A film was made featuring cases after treatment with Lakhovsky's MWO, which proved to be both interesting and convincing.

"In New York Lakhovsky was approached by several hospitals with a view to testing his apparatus experimentally. The remarkable results obtained . . . in a large New York City hospital, and also by a prominent Brooklyn urologist are fully set out in the text.

"In this country (England), owing mainly to the inauspicious time at which Lakhovsky's major work was published, very little interest has been shown on the part of those best qualified to judge its merits. The medical profession, whose conservatism is the most formidable barrier to progress, has been notoriously slack in investigating the new radio-electrical methods of treating disease as originated by Lakhovsky...."

Mark Clement's observation on the formidable conservatism of the medical profession in 1949 is still true today. Effective electronic diagnosis and treatment of disease is still a closed door here in America as far as the AMA is concerned. Those brave MDs who have tried to keep medical practice abreast of developments in electronic science have been discouraged, if not actually driven out of practice. Dr Abrams is a good example, with his Oscilloclast, developed and proven effective in San Francisco about the time Lakhovsky was developing the MWO in Paris in the 1920s. Radical innovations in any line of endeavor are usually thought up and proven by rank outsiders. Georges Lakhovsky was no doctor, but an electrical engineer!

Doctors, with their own pharmacies and with massive investments in the drug industry, are not likely to show much interest in radical new ways for treating human ailments, especially if the new way is a threat to profitable practice; and, as long as Americans think they can buy health in a pill or a shot in the fanny, doctors will continue to treat them with poisonous drugs at top prices. This is good business.

BORDERLAND RESEARCH

But for those of us who would like to keep our bodies as uncontaminated -- and as healthy -- as possible, Lakhovsky's theories

offer a way out of the clutches of the medical trust. There is little likelihood that the AMA will support research in this area of electronic science for years to come. There is every probability that there will be murderous opposition to any attempt to exploit the MWO on a national scale. This means that you will have to build and test your own equipment, or make friends with some electronic technician -- engineer, TV or radio repairman -- and prevail upon him or her to build it for you. This is the active kind of borderland research which requires that you get up out of your easy chair and get to work! If you live in an isolated spot, take a mail order course in basic radio construction. If you live near a high school that has an adult education program, sign up for the evening class in radio theory and bench work. I did at Barstow in 1958, so can you. If you want to be a citizen of the New Age you should make some effort to keep up to date, even if the sick industry doesn't!

What are Lakhovsky's general theories? Mark Clement sums them up neatly in Chapter One of **The Waves That Heal**:

"The fundamental principle of Lakhovsky's scientific system may be summed up in the axiom 'Every living being emits radiation'. Guided by this principle Lakhovsky was able to explain such diverse phenomena as instinct in animals, migration in birds, health, disease, and, in general, all the manifestations of organic life.

"According to Lakhovsky the nucleus of a living cell may be compared to an electrical oscillating circuit. This nucleus consists of tubular filaments and chromosomes made up of insulating material and filled with a conducting fluid containing all the mineral salts found in sea water. These filaments constitute minute oscillating circuits endowed with capacity and inductance and capable of oscillating according to a specific frequency. They are comparable to the circuits, coils and windings of radio receivers."

I believe Clement's comparison of a body cell with a radio receiver is only half-true. The cell can also be compared with a radio transmitter when it is releasing energy. We are both radio-receptive and radio-active! Lakhovsky's theory should be acceptable to any occult scientist. The push-pull idea, the positive and the negative, the Law of Opposites, is basic to all forms and to all life at this level of existence. By inductance Clement means that radio-electricity can be induced or put into every cell of your body. By capacity he means that each body cell can hold a charge of radio-electricity, just as the battery of your car can carry a charge of electricity. In the case of your body, the charge is put in through invisible but very real radio waves. These can travel unimpeded through any solid object!

"The living cell can thus play the part of a transmitter or receiver of exceedingly short radio-electric waves which give rise to high frequency currents in the circuits of the cellular nucleus. Now the vibration of an oscillating circuit is maintained by radiated energy. But where does it come from.

COSMIC RAYS

"Scientists have established the existence of highly penetrating waves to which, by reason of their universality, they have given the name of cosmic rays. These rays, generated by the interference of astral radiations, are capable of traversing dense metals and soils to a great depth. Lakhovsky has demonstrated the cellular oscillation of living organisms is maintained by cosmic radiation. According to him disease may be said to result from oscillatory dis-equilibrium due to either a deficiency or an excess of cellular radiation. An important factor in this connection is the nature of the soil. A reinforcement of cosmic rays takes place on soils which are good conductors of electricity such as clay, ferruginous and carboniferous soils.

RESONATE IN HARMONY WITH THE UNIVERSE

"To avoid the harmful effects of loss of oscillatory equilibrium it is necessary to ensure the regularization of the cosmic field round the living organism by filtration. Lakhovsky's own explanation of the problem of filtration is as follows: 'The terrestrial atmosphere is known to be impregnated by a vast range of electro-magnetic oscillations of all wave lengths and intensities as a result of unceasing electrical discharges (thunder, etc.). Besides that we know that electric motors and other electrical machines create in the atmosphere a field of auxiliary waves. Moreover, during the past 25 years the earth has been flooded with radio-telegraphic, radio-telephonic and other waves. Under such conditions it is easy to understand why any oscillating circuit of any form or dimensions is likely to find in this vast field of waves its own resonance with which it can vibrate harmoniously. It is therefore obvious that to make any oscillating circuit oscillate there is no need to have recourse to a local generator such as the Radio Cellular Oscillator used by Lakhovsky in 1924 when he first treated and cured geraniums inoculated with cancer. The oscillating circuit utilized by Lakhovsky in his second series of experiments -- a circuit having no artificial source of excitation -- proved equally effective in curing geraniums rendered cancerous by inoculation."

Yes, in 1924 Lakhovsky 'graduated' from electronics to radionics! He discovered and proved to his own satisfaction that in some ways a simple, one-turn coil of wire or fibre was as effective as the electric powered Multiple Wave Oscillator. The simple Oscillating Circuit, as Lakhovsky called it, has two advantages over the MWO. It doesn't have to be plugged in to a battery or 110 volt home power supply, and it broadcasts no interference with radio and TV sets. It acts as a step down transformer for life-positive cosmic radiation.

Clement says that "it must be particularly stressed that only Circuits made in strict accordance with Lakhovsky's directions should be used, otherwise the results will prove to be entirely negative." Unfortunately we do not have Lakhovsky's directions, and Clement certainly doesn't give them. You are still free to investigate this type of research and many have. If you want to experiment in this area then get yourself some copper wire (solid or stranded, research should be done on both) in various lengths, (8 inches is one wave length which has worked well on tomato plants) and make them into a circle with the ends overlapping, but with the metal ends insulated or separated from each other. Lengths can be determined through radiesthetic means (that is, by dowsing) or perhaps in geometric relationship with the structure of the plant. Considering the radionic and radiesthetic viewpoint geometric shapes would also have an influence and can be experimented with. Always use control samples in your experiments to see what works and what doesn't.

To get back to Clement's text: "Through the action of this constant field of radio-electric waves which emanates from the surrounding atmosphere the oscillating circuit is made to resonate like an instrument in tune with certain sounds. Thus the oscillating circuit creates a field which canalizes and filters, so to speak, the cosmic waves necessary for cellular oscillation.

THE DANGER OF BURNING X-RAYS

"Furthermore, this filtration is a general phenomenon. It has been discovered, through the investigations of Lakhovsky, that radiations such as those associated with light, ultra-violet rays, X-rays, etc., have the property of making cosmic rays act, as it were, to the advantage or disadvantage of the cells. Now the field created by an oscillating circuit is constant and emits a steady and sustained force. It invariably acts in a favorable manner on the oscillation of the body cells, facilitating by the filtration of cosmic rays, regular cellular division, a fact which explains the immunity imparted to the cells and their consequent capacity of resistance to diseases and microbes.

It is highly significant that about the only rays and ray machines approved for general use by the American Medical Association are the destructive ones of X-rays and atomic radiation for the mis-treatment of cancer.

"Since Lakhovsky's oscillating circuits were first used for the treatment of cancerous geraniums, an experiment fully described in communications to the French Academy of Science, the same method has been successfully applied in Continental hospitals and nursing homes."

Photos of the successful treatment of cancerous geranium plants are included in Clement's book, along with the pictures of the disappearing skin cancers in human beings. So Clement describes the major features of Lakhovsky's work in this first chapter, the simple, one-coil Oscillating Circuit powered by cosmic rays, and the electric-powered Multiple Wave Oscillator. There are photos of the Multiple Wave Oscillator, showing clearly the unique circular antennas. These were made of metal tubing, separated and suspended with silk thread. The simpler, aluminum-foil printed circuit in Bob Beck's adaptation is an easy way to experiment with the idea.

THE OSCILLATING CIRCUIT

"The diagram on this page shows where the oscillating circuits should be worn, i.e. round the neck, waist, and above the elbows and knees. The effect is intensified if more than one circuit is worn. Generally speaking, the neck and waist are the favoured sites and likely to bring about the best results.

"In the light of Lakhovsky's theories the fight between the living organism and microbes is fundamentally a 'war of radiations'. If the radiations of the microbe win the cell ceases to oscillate and death is the ultimate result. If, on the other hand, radiations of the cell gain the ascendant the microbe is killed and health is preserved.

THE SECRET OF LIFE (AT THE FORM LEVEL)

"Broadly speaking, health is equivalent to oscillatory equilibrium of living cells whereas disease is characterized by oscillatory dis-equilibrium. This general principle has given rise to a vast number of experiments covering the whole field of biology. Plants, animals and human beings have been successfully treated by the application of Lakhovsky's oscillating circuits and the reader is referred to his major work The Secret of Life for a full discussion of this important subject.

Those of you who have been studying the Kabala with Mrs. Crabb and me must have been struck immediately by the metaphysical soundness of Lakhovsky's basic theory expressed above. One wonders if this Russian escapee from Communism, and from Naziism, wasn't indeed a student of the Western Mystery Tradition, perhaps even an Initiate! The Tree of Life is the groundplan of our Tradition. On the Tree we show the descent and the ascent of power, oscillating back and forth from left to right and right to left across the Middle Pillar, or balance point.

Now for the final paragraph of Chapter One. "During recent years observations on the part of several investigators have established the fact that most animals, including insects and birds, emit radiations while they are also sensitive to the influence of external electromagnetic waves. These radiations

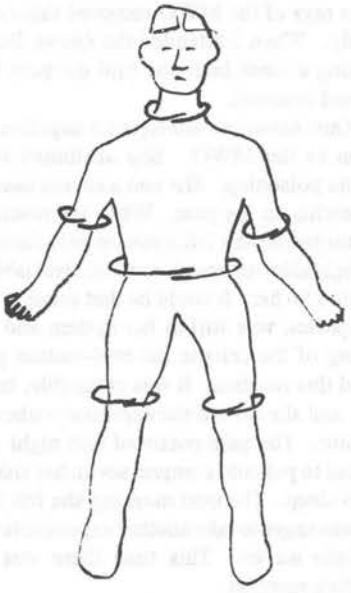

Single wire oscillating circuits around subject's neck, arms, waist and knees.

emitted by all living beings cover an indefinite range (infinite range?) and are characterized by a multitude of different wave lengths. In the immense range of existing radiations we can only perceive the luminous octave (visible light) but we know that whole gamuts of radiations exist beyond the narrow limits of the visible spectrum. The limitations of our senses prevent us from perceiving radiations of living beings and this sensory incapacity also excludes from the field of direct awareness the vast gamut of electromagnetic waves traversing our atmosphere. Yet all these radiations and waves exist and affect all forms of organic life in various ways."

DR. RAUL ARAUJO'S REPORT

In Chapter Two Mark Clement gives "Medical Reports on Lakhovsky's Oscillating Circuits." We'll give only one, by Dr. Araujo, Physician at the Prophylactic Institute, Montevideo Uruguay. "In 1929, Dr. Araujo was suffering from a long-standing infection of the larynx which his eminent colleagues had failed to cure. While in Paris he met Lakhovsky who advised him to wear one of his oscillating circuits in the form of a collar. Although feeling rather skeptical about this unorthodox method of treatment Dr. Araujo wore the oscillating circuit for several months with the result that he fully recovered and has had no relapse since. This personal experience led him to treat his own patients with Lakhovsky's oscillating circuits. Having treated over 300 patients suffering from a wide variety of diseases Dr. Araujo succeeded in curing or greatly improving cases of rheumatism, asthma, anemia, neuralgia, gastric ulcer, colitis, glandular disturbances, sterility, genito-urinary affections, general weakness and even cancer. Dr. Araujo observed that in cases in which Lakhovsky's oscillating circuits appeared to give no definite results there was invariably a latent infection which required special treatment such as syphilis, cholecystitus, sinusitis, pyelitis, dental sepsis, etc. . .A full account of Dr. Araujo's Report appeared in a monograph entitled 'Cosmic Rays and Oscillating Circuits' by Dr. P. Rigaux, Paris, 1932."

CHAPTER THREE, THE MULTIPLE WAVE OSCILLATOR

Most of this has been well explained by Bob Beck in his article in the November Journal, though we might quote again in Clement's own words: "After many experiments Lakhovsky succeeded in constructing an apparatus generating an electrostatic field in which all frequencies from 3 metres to the infra-red region could be produced. Hence in this field every cell could find its own frequency in resonance... Thus a type of oscillator was obtained giving all fundamental wave lengths from 10 cms. to 400 metres, corresponding to frequencies of 750,000 to 3 milliards per second. . .

"Since 1931 the Multiple Wave Oscillator has been used in most European countries and in America for the treatment of many diseases including cancer. No contra-indications for the use of the apparatus nor any harmful effects on patients have ever been reported. This is in striking contrast with short-wave therapy in general, X-rays and radium whose application in the hands of experts has not infrequently been followed by the most serious consequences. . ."

Then follow several pages of photos of before-and-after cancer cures and medical reports from doctors. This one is typical, from Dr. Nicholas Gentile, Chief Radiologist of the Clinic for Incurables of the Apostolic Ladies of the Sacred Heart of Jesus,

Rome, published in the medical review Medicina Nuova XXVI, N.5., 1935, Rome: "**Effects On The Nervous System.** Generally speaking I have observed a marked analgesic action following the application of the Multiple Wave Oscillator in all affections associated with pain, particularly in the classical cases typical of such affections. For example, a patient suffering from cephalagia, resulting from violent cranial trauma, for a duration of 10 years, was subjected to a great variety of treatments, but all in vain. The patient was definitely cured after 2 months' treatment with the MWO. Improvement was manifest after only 3 applications."

Dr. Gentile also reported the effects of the MWO on the Central Nervous System, on Chronic Inflammations, on Metabolism, on Disorders of the Cardio-Vascular System, and on miscellaneous cases. He says he adopted the "technique of localized irradiation. Generally speaking, treatment is given every 4 days for a duration of 5-15 minutes per session. This is the technique which has given me the best results after having experimented with many forms of application. For children, old people and debilitated women, a relatively weaker application is indicated. If results are not apparent after 7 or 8 applications, I continue until 15-30 applications are given at the rate of a single treatment once a week. I have never observed any ill-effects from the MWO treatment, whatever the number of applications was in any given case. Moreover, the general condition of patients is always improved, even if only temporarily, so much so that the patients themselves sometimes insist on having further treatments. . ."

This chapter on the MWO concludes with four pages of reports of notable improvement or cure by American doctors. Chapter Five is concerned with the remarkable results obtained by using the Multiple Wave Oscillator on animals. Chapter Six contains Lakhovsky's prophecy that some time in the future diagnosis of disease would be obtained by television! This is something which Dr. Ruth Drown's Radio-Vision and Homo-Vibra Ray instruments have already accomplished.

THE NOVEMBER CONVENTION TESTING PROGRAM

There were two Multiple Wave Oscillators available. These were generously furnished by Bob Beck and Ed Skilling, and were set up in the shielded seance room. Only short exposures of from 2 to 5 minutes were given, during the lunch and dinner hours on Saturday and Sunday. In that time perhaps 100 people volunteered for tests. Until a follow up inquiry is made, no statistical conclusion can be made, or even begun!

A few individual cases reported to your Director are worthy of note, including my own. By mid-morning on Saturday a spinal injury from my old, hockey-playing days was acting up. Doctors have called it a spasm in the sacro-iliac area. Ed Skilling invited me to sit in the rays from the MWO for a couple of minutes while the seance room was being readied for testing. Within a minute the spasm relaxed completely and the pain was gone. This was not a permanent change, of course, but the analgesic effect was certainly noticeable.

Mrs. Fred Rannenberg, financial secretary of Harmony Grove and a BSR Associate, told me she had had a sharp pain in the area of her left hip for over two weeks at the time of the Convention. One 3-minute exposure to the rays of the MWO removed this completely. When I attended the Grove Board meeting a week later she said the pain had still not returned.

One Associate did report a negative reaction to the MWO. She attributed it to arsenic poisoning. She had a severe case of this earlier in the year. When the machine was turned on she felt a severe pain through her right side, as though someone had jabbed a knife into her. It could be that some of the lead poison was still in her system and the stirring of the cells in the mid-section produced this reaction. It was endurable, however, and she sat out the exposure without a murmur. The pain persisted that night and she had to put cold compresses on her side to get to sleep. The next morning she felt fine and was eager to take another exposure to the multiple waves. This time there was no negative reaction.

The most startling subject of all was the woman who had been awake all Saturday night with a migraine headache, an old and recurring ailment. By Sunday morning, Nov. 10th, she was sick and nauseated. It was suggested that before taking her to a doctor or hospital she be given a short exposure to MWO rays. Within minutes all pain was gone and she returned to her cottage to lay down and sleep like a baby.

THE PSYCHEDELIC EFFECT

Ed Skilling is the only I know who has stayed in the MWO field or rays for longer than 15 minutes. While testing and adjusting his equipment at his microphone factory several weeks ago he deliberately stayed between the antennas for an hour. At the end of that time he was beginning to feel light-headed and dreamy he thought it a good idea to get out before losing consciousness altogether.

An even more spectacular possibility is the Time-Machine effect in connection with rejuvenation. If, as Bob Beck suggested in his article, the MWO tends to take the body cell back down the time-track to a more youthful, more vital period, what would happen to a person who stayed in the field of the machine for four hours? Would his vibratory rate be speeded up to where he would disappear completely? Like the hero of H.G. Wells' "Time Machine"? Anybody want to try it? It seems, from hints George Van Tassel has been dropping over the years, that his Integratron at Giant Rock, California might do something like this -- if and when he gets it working! As I recall, both George and the Canadian Saucerian, the late W.B. Smith, spoke of the four dimensions of electricity: 1. is the electricity moving in one direction along a copper wire, 2. is the magnetic field around the wire, 3. is the static charge created by the first two effects, and 4. is Time -- or the "tempic field" as Smith called it. The Time Field equates with Space, where consciousness is everywhere present. Seems to me Lakhovsky's Multiple Wave Oscillator is a gadget which gives us the opportunity -- for the first time -- of approaching the Time Field with scientifically acceptable equipment, operating in known frequencies. Remember, that with its circular antennas it operates on the vortex principle. Each individual antenna in the group is a segment of a 60 degree cone. The 1/2 inch gaps, at alternate 180 degrees from each other, conform to the alternating principle and give a damped or pulsed wave.

THE SPACE AGE EFFECT

Copies of our November 1963 **Journal** have gone all over the world. Each day's mail brings new orders. We are confident that Lakhovsky's invention, far ahead of its time in the 1920s and 30s, has been given a new lease on life and will be pushed to its ultimate development on every continent. There will be vigorous opposition from the right-wing conservatives and reactionaries. Their resistance will furnish the platform from which electronic "medicine" will eventually sweep the world.

I see the day when a device, similar to the MWO, will be a standard part of every home bathroom or cleansing center. You will consider it as necessary and as routine to take an electronic showerbath, as to take a water bath. Home from work, tired, dirty and discouraged, you strip, flip on the MWO switch, and while shaving, doing your hair or whatever, re-balance your whole system with a two or three minutes exposure to the pulsing waves from the oscillator as they flood the whole room. For the sale of the house of the future it will be as important for the ad to say "shielded bath with MWO" as it will to say "tile bath with radiant heat."

Mr. Skilling told me he was tired and

"dragged out" after processing dozens of volunteer "guinea pigs" late Saturday afternoon. Before shutting down the equipment he sat in the nail-less wooden chair between the antennas and gave himself a three minute shot of pulsed waves. Refreshed and revived he looked forward to a good dinner and the full evening program.

I don't know of a better Christmas gift we could have given the Associates than the idea and the plans for the Lakhovsky MWO, researched and so generously offered us by Bob Beck in the true borderland science tradition. Now it is up to you to carry it forward in your own individual way. We welcome your comments, observations and research data as you develop equipment and a testing program.

AND NOTHING HAPPENED!

"No doubt you are deluged with correspondence about your articles on the Lakhovsky Rejuvenation Machine. Since you said it is possible for any intelligent 16-year-old to build one that is exactly that which I have had to rely on. Fortunately, my son is fairly well informed on electronics but obviously no expert at his age, 16. He followed your diagram but instead of battery power he used an electric train transformer, which he assures me, is equally efficient. He also found he had to make one change in the hookup of the Tesla Coil. I have taken four exposures and the results! Nil!"

Maybe this lady expected to be rejuvenated back to her early twenties. As far as we know, no such claims have ever been made for the Lakhovsky gadgets -- though it would be interesting if it happened! As for power supply to the Model T Ford coil, any 6, 8, 10 or 12 volt battery or transformer should do, depending on what you have available and where you intend to do your experimenting. We understand the old Model T magneto delivered as high as 18 volts to the four coils. One handy source of 6 or 12 volt electricity is the cigarette lighter on the dash of the car. Plug in there for power when you want to expose yourself while driving or out in the country.

"I had been fighting a virus for several days and the day after the first exposure I felt a great deal better, but the second day I was right back where I had been. But that was the pattern the virus had been taking. One day I'd feel fairly normal, the next miserable again. So it is difficult to know if the Lakhovsky machine could be credited with the temporary improvement."

That's right, ma'am, some people show little or no reaction to the mytogenic waves put out by the Lakhovsky instrument. The results are unpredictable. Perhaps that's why the research was pushed no further in the 1930s by authorities here in the United States. You, like most people, think that health can be bought in a package. Lakhovsky didn't agree with this erroneous conclusion. His theory was that health is a condition of balance of all the forces of the body. Ill health is a condition of imbalance caused by your misbehavior. If you continue to misbehave, any force applied from the outside, whether it be mytogenic waves, manipulation, drugs, medicine or surgery, will only bring temporary relief. Pain is an insistent teacher, urging you to change your mind; but if you can't change your mind, how can you change your body?

"One possible reaction to the exposure I can report is that I took the first one just before going to bed at night. It took me three hours to get to sleep. Several things puzzle me about the machine we have constructed. First of all, although we have experimented with a Tesla coil of the size your diagram calls for, as well as one almost twice the size and strength, we cannot get a two-inch spark from the antenna or resonator, 1/2 to 3/4 of an inch is the absolute maximum."

The mention of the two-inch spark was Mr. Beck's error. 1/2 to 3/4 inch arcing is all this circuitry will produce and that is adequate to affect notable changes in many forms of cell life. More power might produce faster changes, and much harm! Be reasonable, a living cell is so small as to be invisible without a microscope. Only minute amounts of energy are necessary to affect a cell, to stimulate it or to kill it.

"Second, under no conditions do we get the 'bluish glow of brush discharge' from the antenna that you mention; although we have no trouble lighting up a two-foot fluorescent lamp."

Operate your Oscillator in total darkness and you should see some brush discharge at some points on the antenna. True this redesigned equipment puts out nothing like the five-inch brush discharge visible in the photo of some of the original Lakhovsky equipment in Mark Clement's book, "Waves That Heal", and Lakhovsky's antenna appears to be at least two feet across.

But power is not the answer to balanced cell life! Dr. Abrams discovered this with his early electronic experiments in San Francisco in the 1920s. It is the quality and the variety of the pulsed waves that counts! In any event weaker equipment can be compensated by longer exposure, and this may be more beneficial to living matter.

"And thirdly, since we have not constructed any outer shield for the machine, such as a Faraday cage of copper screen, I have been monitoring the operation on our radios and television. On the radio, one notes an annoying and loud buzz, but on T.V. except for a couple of light horizontal lines and a very slight hum, there is no serious effect. So I doubt that we're bothering our neighbors very much. In any case, we try to use the oscillator very early or very late in the day, when few people are using their radios or TV. I have sent for Clement's book, 'Waves That Heal,' and Lakhovsky's 'The Secret of Life', not only to better understand what we are trying to work with but also in the anxious hope that I will find out why our machine does not have the affect it apparently should have."

Let me assure you, good lady, there is no single cure-all for man's ills. The clue to better health is in the profound statement of the Savior of our race: "As a man thinketh in his heart, so is he." Pain is still the great teacher in the world and will be for a long, long time to come. I don't know what your physical condition is and it's none of my business; that's between you and your doctor. If you have a long history of frustration and thwarted ambition, going back to childhood and even into past lives, this mass of energy of crystallized thought-forms, is not going to be broken up and dissipated overnight. If you have consciously and willfully flouted Cosmic laws, or have turned them to your own selfish ends, the consequences of this misbehavior will have to be worked out at this level. The occult scientist calls this Fixed Karma. In this connection, one of my favorite teachers, Dion Fortune, reminds us: "What cannot be cured must be endured."

If the Lakhovsky oscillator does have an analgesic affect -- as it appears to have had in some cases -- it has this advantage over pain-relieving drugs; it does not leave a residue of poison in our already over-loaded liver and kidneys!

WORD OF A SIMILAR INSTRUMENT UNDER DEVELOPMENT

We have a second letter from this same lady Associate, also worthy of note in connection with the Lakhovsky Multi-Wave Oscillator.

"First off, when my brother received the machine we had built for him, using the battery indicated in the schematic, he felt the power source might be too weak. It so happens he has a business contact with one of the largest electronic instrument companies in the area where he lives. He decided to go straight to the president and seek his advice. With the whole idea placed before him this gentleman said, 'This is very interesting. I want you to meet one of our physicists who is working on a very similar instrument.' A meeting with the physicist revealed two interesting pieces of information: first, the physicist had never heard of Lakhovsky or his machine; second as soon as this new

instrument was completed, arrangements had been made to test it in a large nearby hospital! Is this latter not a cheering bit of news?"

Both cheering and discouraging. The basic principle discovered by Lakhovsky is certainly available to the mental probing of other sincere researchers, so let us keep it alive by all means. But barring a revolution in the ultra-conservative leadership of the American Medical Association, no electronic developments will be allowed to threaten the high-profit position of the drug industry.

"In their discussion of the power source, the physicist suggested my brother use a wet-cell car battery, #50, 39 plates, 70 A.H. We are using one too and it makes a much better spark from the antenna, although it still is no greater than 1/2 to 3/4 inch. It does seem stronger. Of course the machine is not so readily portable with such a heavy battery. My brother had only one exposure at this writing but he reports a noticeable improvement in the arthritic pain bothering him in his right arm for months. On the other hand, the report on the use of my own machine is somewhat less encouraging. The only positive results concern my husband. After his first ten-minute exposure, within a few hours, a painful bursur in his shoulder cleared up. He has been subject to off-again, on-again attacks of bursitis there for some 15 years; for which he had taken medication, short wave, and even X-ray treatments, when the attacks were severe. He has since taken another exposure, but neither this nor the first one seemed to help an itching-skin allergy which has bothered him for some years.

NOT THE FOUNTAIN OF YOUTH SHE EXPECTED!

"As for myself, I have taken at least a half-dozen exposures and cannot in all honesty detect the slightest difference from them. I'm not sure if it is a matter of 'suggestion' or a desire to prove the capabilities of the machine. On the contrary, I notice such strange contradictions as the fact that although I took an exposure yesterday morning, in the evening the fourth and fifth fingers on my right hand were painful, from some kind of arthritis or rheumatism. I had never had anything like this before. Does it not seem odd that it should develop on the day of the exposure?"

Not at all! Any positive reaction to exposure to the mytogenic rays of the Lakhovsky oscillator indicates that it is working! Mr. Lakhovsky's theory is that the waves or oscillations excite the cell, causing it to release mor energy, also to shake off accumulated poisons and/or tensions. If your system is loaded down with tensions from daily living in America, if your system is loaded down with poisons from processed foods and contaminated air and water, you can expect painful reactions when the junk breaks free. I believe that is what sickness is the body struggling to get rid of poison. For you, things may get worse before they get better!

HOW OFTEN AND HOW LONG?

"With the mention of two successive exposures in two days I get to what is the most important question in the use of the MWO. No one has explained why exposures are suggested at four-day intervals. Is it harmful or useless to take them more frequently? When one is uncomfortable or in pain, one is anxious to rid oneself of the discomfort as quickly as possible. And to have to wait four more days for additional improvement seems unnecessary if there is no harm in the exposures. I have exposed myself at more frequent intervals and still have observed no reactions?"

The suggested exposure rate of fifteen minutes every four days came from Dr. Gentile's extensive researches with Lakhovsky equipment in Rome in the 1930s. This is a typical professional approach to treatment of disease by doctors. From long experience with drugs and other proven forms of therapy, they know that it takes time for the human organism to adjust itself to radical changes -- without harming the organism.

Whether or not this holds true for the operation and effect of the Lakhovsky machine remains to be proven and you'll have to be your own guinea pig. It's your machine; it's your body; it's your life. You can take an exposure every hour on the hour if you like; stay in all day. Who's going to stop you? This is borderland research and you are a borderland scientist, looking for new knowledge which may be of benefit to yourself and the human race, judging from the last lines of your letter.

"I am so excited and hopeful of the efficacy of this MWO machine that I do not want to leave any avenue unexplored that may possibly help in understanding its use and making it freely available to anybody I can possibly help. May I take this opportunity to tell you how tremendously enthusiastic and interested I am in BSRA, not only what you are trying to do but what you are accomplishing, too. From what you imply of the financial situation, it seems to be largely a labor of love and service on your part, for which you deserve great praise and the heartfelt thanks of every BSRA member and others whose lives they touch. Please accept this very, very small donation of the enclosed check, as a symbol of my appreciation."

The donation is most welcome and will be put toward the expenses of carrying on this work, also the words of appreciation. The lady was also most curious about the Lakhovsky circuits, those single bands of wire which are placed around the waist, or knees, or ankles, wrist or neck, and seem to have a subtle but very real affect on the wearers. We have some information on the Lakhovsky Circuits or Belts from Associate A.E. Powell, a retired lieutenant colonel of the British Indian Army:

THE OSCILLATING CIRCUIT

"The Belts can be made by almost anyone, for a few cents. At most hardware stores, for a few cents per foot, one can buy twin electric cable insulated with white rubber, used for lamps, etc. Get the smaller size 1/4 inch wide, having 42 strands of copper wire. Slit an end with a knife and the two wires easily tear apart.

"For the button, get white sheet plastic about 1/8th inch thick, saw it into pieces about 1½ by 5/8th inches, and drill near each end a hole large enough to take two wires. Round the corners of the plastic and bevel edges. Thread the wires, from opposite directions, up through one hold and down through the other, leaving about half an inch projecting beyond each end of the button. Where a circuit can be slipped off the body without unbuttoning, you may overlap the ends of the wire belt an inch or two, bind with fine string and smear with Duco cement for strength.

"Parallelism and overlap of the ends are important. This builds up capacitance, produces inductance and generates an alternating current. Circuits may be worn, as many as you please, round chest, waist, neck, arms, wrists, legs, ankles, neck or head continuously. Water will do them no harm.

"Gladly will I supply Circuits, in any quantity, with buttons or bound ends. To avoid trouble with the Food and Drug people, I make no charge. Donations, however, are acceptable, and go intact into my Fund for the Sick. For long this has been doing fine work and I'm sure you will approve. For reasons stated I make no claims whatsoever for the Circuits, and no guarantee or promise of any kind. If you want to give them a trial, that is wholly your affair." Col. A.E. Powell (Col. Powell died in March 1969).

MWO USED TWENTY YEARS AGO

"The recent article in the BSRA Journal pertaining to the Lakhovsky Oscillator is of special interest to me. First, I am an engineer, Physician and Surgeon, and a Scientific Consultant for the U.S. Government. (Technical Intelligence). I am not in any manner snooping for the government. This is completely personal. We built several oscillators in 1944. These were used in my sanatorium in Dallas where we had some startling results. As we did not have the proper facilities

to research the instruments adequately, we became more and more conservative. Many patients would show reactions, resembling the old fashioned Flu, after a few days following exposure to the oscillator. I realized we were using too much power, so cut the level several times with good results; but we did not completely eliminate the side effects. In 1946 I was sent to Germany for the Government to explore Electro-biology and Biophysics in its application to electro-medical equipment. I felt it wise to destroy the machines so injudicious use would not be indulged. The possibilities have intrigued me ever since. It looks as though you have solved most if not all of the problems involved. Hence my renewed interest. The excess power upset the enzyme complex of the body, or as some felt, distorted the double electric layers of charge carried on the cells, hence allowing for the penetration of virii directly into the cells (virii operate within the cells -- bacteria operate between the cells). Cells as well as organs function in a force field so mild oscillating currents not only work through resonance but seem to regenerate these force fields. Here is where application to cancer can be optimistically explored."

Speak for your own state, Doc! Here in California the medical association has decreed that only four forms of treatment for cancer are legal; drugs, surgery, burning rays and death.

"Proof of energy flow from the fingers and thumb is here and must be recognized. We have demonstrated it by its effect on Yeast cells, viewed under the microscope (Girwich research). Whether it comes from the conscious rather than the subconscious mind is harder to prove, but I am inclined to believe it does. This may interest you. Years ago we experimented with crystallization. Precipitated water vapor to snowflakes in a chamber with electrodes planted in two sides. When we threw a current into the chamber at a given frequency the flakes were all the same. Changing the wave length changed the crystallization pattern. Each frequency had its own pattern. Here is the explanation of energy absorption by the chemical used, and the control of the crystalline patterns by the nature of the energy flowing."

Naturopaths are in 100% disagreement with the doctor's above explanation of the side affects of his use of the MWO on his patients. If I understand the theory correctly, according the natural view of colds, flu, virus infections, etc., these are attempts by the human organism to throw off mucous, to eliminate intolerable accumulations of poison from the system. Exposure to the field created by the MWO tends to raise the general tone of the whole system by stimulation. The raised vibrations release an unusual amount of mucous and other junk into the elimination channels, and until this is eliminated one would have a cold or flu and the usual aches and pains which generally go with such a condition.

Another doctor stopped by here not long ago to tell of his sad experience in trying to use spark-gap electronic equipment in his medical practice "for those suffering patients not helped by drugs." This powerful, high-frequency machine produced a two-inch spark! Every time he turned it on, everyone in town seemed to know it and the phone would ring. Even a Faraday cage didn't shield the output of this monster. Finally he was called before the county medical board to explain what he was doing. The board presented a staggering combination of fatuous conceit and stubborn ignorance. "They didn't want to know anything about the affects of radio waves on the body and didn't care!"

CURING CANCEROUS PLANTS WITH ULTRA RADIO FREQUENCIES

by Georges Lakhovsky

From Radio News February 1925

"The new application of short wave-length oscillations described in the following article" wrote the Editor of Radio News, "is one of the most important ever found, and we are pleased to present to our readers this article by Mr. Georges Lakhovsky, the well known French scientist. The experiments described were carried out in collaboration with several doctors and scientists of high standing and it seems from results obtained, that the very high frequency treatments will play an important role in the future. We shall publish in a later issue another article on this new system together with the effects of ultra radio frequencies in the treatment of diseases in human beings."

Since November 1923 I have published in various technical and radio publications, several papers in which I explained my theory that the instinct or special feeling, which permits birds to direct themselves in space, is only the results of the emission and reception of rays by living beings. While developing this theory, I explained how thoroughly I was convinced that science will discover, some day, not only the nature of microbes by the radiation which they produce, but also a method of killing disease bacilli within the human body by means of the proper radiations.

The researches I have made by means of special apparatus have shown such results, that I believe my theory is correct. This theory is that life is born from radiations, kept going by radiation and suppressed by any accident producing the destruction of the oscillatory equilibrium, especially by the radiations of certain microbes, which suppress those of the weaker cells.

Before going any further in our reasoning, it is necessary, in order to present the facts to the uninitiated reader, to imagine what oscillations really are. The motion of a pendulum will be used for this explanation. When a pendulum is displaced from the position of equilibrium, it moves back and forth producing what are known as ochrone oscillations, until the energy stored is entirely exhausted. By means of a motor, a spring, or an electro-magnet, it is possible to keep the motion of the pendulum of constant amplitude, producing undamped oscillations. If, on the contrary, the source of power is removed, the oscillations die down and it is necessary not only to re-apply the power sustaining the oscillations, but also to furnish additional energy to start the pendulum in motion. This oscillation of a pendulum reproduces exactly what happens in the cells of a living being.

Our organs are composed of cells formed of protoplasm containing various mineral matters and acids, such as iron, chloride, phosphorous, etc. It is by the combination of these elements that the cells detect outside waves and vibrate continuously at a very high frequency, probably higher than the period of X-rays or over all other vibrations known and measured today (1925). The amplitude of cell oscillations must reach a certain value, in order that the organism be strong enough to repulse the destructive vibrations from certain microbes.

COSMIC RAYS AND CELL LIFE

The astrophysicians are actually carrying out experiments of great interest on the existence of vibrations, which have been called penetration rays and of which the frequency is higher than that of X-rays and of the alpha, beta and gamma rays of radium. Such rays, according to the theory, are produced by the earth itself and some others come from outer space. Some accurate measurements have proved the correctness of this theory. Therefore, it is quite permissible to believe that these penetration rays, or at least some of them, produce the vibratory motion of living cells and consequently their life.

For instance, let us suppose a cell vibrates at a certain frequency and a microbe vibrates at a different frequency; the microbe begins to fight the cell, and sickness is started. If the cell cannot repel the stronger vibrations and if the amplitude of its own vibration decreases, the microbe gains and its vibrations in decreasing and stopping those of the cells, bring dangerous sickness or death. If, on the contrary, the living cell is started vibrating with the proper amplitude by inside or outside causes, the oscillatory attack is repulsed. Such is my theory.

The problem is somewhat similar to the situation in which a rescuer finds himself when, coming to help a friend in a dangerous situation, finds himself fighting hand to hand against strong aggressors. The rescuer does not dare to fire his gun; fearing to harm his friend mixed up with the aggressors in the melee. Similarly, microbes and healthy cells are exposed to electric or radio-active action, which could be used to destroy the unwanted rays and it is difficult to suppress them without harming or killing at the same time, the cells which are to be treated. In fact, since Pasteur, scientists have been constantly searching for means of destroying microbes. The great difficulty with all methods found was that in destroying the bacillae, the cell was attacked too. The experience gained in cancer and tuberculosis treated with radium, X-ray, or ultra-violet rays, shows how difficult is the work of the investigators.

A RADICALLY NEW METHOD

The remedy in my opinion is not to kill the microbes in contact with the healthy cells, but to reinforce the oscillations of the cell either directly by reinforcing the radio activity of the blood or in producing on the cells a direct action by means of the proper rays. During January 1924 I began to build, according to this theory, and with the purpose of therapeutic applications, an apparatus which I have called Radio-Cellular-Oscillator, with the firm belief that the cells vibrating at extremely short wave-lengths would find their own in the Hertzian waves, which have the properties of producing extremely short harmonics. The cell with very weak vibrations, when placed in the field of multiple radiations, finds its own frequency and starts again to oscillate normally through the phenomenon of resonance. This type of vibration which I propose to use, is harmless, unlike those of X-rays and radium. Their application, therefore, does not present any danger to the operator.

I exposed in front of my apparatus, during long periods, a certain number of microbes in culture, which developed themselves normally. I, myself, have never felt the effect of these ultra radio frequencies, although I remained for a great many days near the apparatus, during the treatment applied to the living cells. It is only when two living beings such as a cell and a microbe, are in contact, that the rays produced by the Radio-Cellular-Oscillator have any direct effect upon cellular structure.

WORK IN A FRENCH HOSPITAL

The experiments which I carried out at the Salpetriere Hospital in Paris, in the service and with the collaboration of Prof. Gosset, were made with plants inoculated with cancer, and the results were described in a paper presented on July 26, last year, before the Biological Society. The text of this paper follows.

"One knows that it is possible to produce by inoculation of Bacterium tumefaciens in plants tumors similar to those of cancer in animals. One of us obtained experimentally by this method, a great number of tumors. These had various degrees of development. Some of them dry up partially, but do not die entirely until the entire plant or at least the limb bearing the tumor dies. Even removed by surgical methods, these grew again on a sick limb.

"We propose to describe in this paper, the action of electromagnetic waves of very high frequency obtained by means of the Radio-Cellular-Oscillator of Georges Lakhovsky. This apparatus produces wave-lengths of the order of two meters and less, corresponding to 150 million cycles per second. A first plant was submitted to the effect of radiation one month after being inoculated with cancer; at this time small tumors of the size of a cherry stone were visible upon it. This plant was submitted to the rays twice, for three hours each time. During the following days, the tumors continued to grow rapidly in the same way as those on plants, which had not been submitted to the effect of radiations. However, 16 days after the first treatment, the tumors began to shrink and dry up. A few days later the tumors were entirely dried up and could be very easily detached from the limb of the plant by merely touching them. The drying action of the radio frequency radiations is selective and affects only the sick part of the plant. Even the inside sick tissues were destroyed, although they were next to healthy cells in the center of the limb, showing that the radiations had not affected the healthy parts.

"Another plant was treated in the same way, except that it was exposed 11 times for three hours each time, to the radiations of the oscillator. Sixteen days after the first exposure the tumors, which were rather large as shown in one of the photographs, began to shrink and dry up and were easily detached from the limb exactly as in the first case. Again in this case, the healthy parts of the plant were not affected in the least. A third plant exposed to the radiations for nine hours, that is, three treatments of three hours each, was cured in the same manner as the two others. Sixteen plants also inoculated with cancer, were left without treatment. They have tumors in full activity, several of which are very large. These experiments show conclusively that plants inoculated with cancer can be treated and cured by means of the ultra radio frequency vibrations, whereas surgical treatment fails.

"Such are the results of my researches with plants. At the present time, similar experiments are being carried out with animals and it seems that the effect on cancerous animals is the same as on cancerous plants.

"I am highly pleased to present my theory and the results of my work in a scientific review of the United States, this great country, which has always been in the lead in the fight against this horrible sickness, cancer, and whose sympathy and help I would greatly appreciate.

"In conclusion I wish to call the attention of the reader to the fact that I have obtained very conclusive results not only with a wave length of two meters, but with longer and shorter wave-lengths. The main thing is to produce the greatest number of harmonics possible."

* * *

This February 1925 article from Radio News magazine shows how long some of Lakhovsky's theories have been known in America. This article was furnished to BSRA by an Associate who had met the Russian-French scientist in New York. He claims also to have visited several times the New York hospital which set up a research program on the Multi-Wave Oscillator and saw the Lakhovsky-type equipment. No information on the machine or its effects could be elicited from the hospital authorities and in the early 1950s the shielded room was dismantled and equipment destroyed.

We feel that Lakhovsky's theories and early researches should be followed up. It should be publicly proven that high-frequency waves, in the proper concentrations, do affect living organisms in a beneficial way, or that Lakhovsky be declared an idle dreamer. Since research of this kind falls within the purposes of Borderland Sciences Research Foundation, Inc., members are encouraged to build their own equipment and, in a suitably shielded or isolated environment, carry on their own research program. If you cannot

obtain the necessary materials, BSRF may be able to put you in touch with another borderlander who can be of help. Until the medical authorities come forth with official approval of this radical approach to the state of imbalance or un-health attributed to disease, no one but a fool would go into commercial production of this kind of equipment in America today. It is now said to take a minimum of $300,000 in research money and three years of testing to develop medically acceptable data.

HOW DR. JAMISON WAS TRAPPED

In a letter dated Aug. 29, 1967, Dr. Jamison enclosed this news clip from the **Modesto Bee**: "Turlock -- Veterinarian Stanton L. Jamison yesterday was fined $249 in Turlock Judicial District Court after being convicted of three charges stemming from his use of an electronic machine to treat human patients for cancer. A jury of nine women and three men returned a verdict of guilty on one count of practicing medicine without a license and two counts of advertising a device represented to have effect on cancer, stomach ulcers or bone diseases. The decision followed a two day trial in which Jamison defended himself. . .

"They (Jamison and his assistant, Martha Ann Davis) were arrested last December following a lengthy investigation by Turlock police officers and agents of the State Bureau of Food and Drug Inspection. The investigation began when Police Chief John Viarengo requested assistance from the bureau after learning 'the cancer-curing machine' was being operated here.

"During the investigation, Food and Drug agents Willis Worley and Harvey Lee arranged several meetings with Jamison on the pretense they were interested in purchasing machines similar to his. Jamison reportedly organized a church as a front for his operation. The facility, located at 200 West Main St., was known as the Life Aquarium Center. Worley and Lee became bishops of the church as did deputy District Attorney Frank Damrell, Jr., who prosecuted the case. At the time of the investigation, Damrell was employed in the State Attorney General's office.

"Worley said Jamison's intention was to open other treatment centers throughout the state, using his bishops to set up facilities under protection of the church. 'This was the most fantastic investigation I've ever been involved in,' said the agent this morning.

(Yes, it is fantastic to think anyone would want to give or donate healing services free when there are billions to be made on the four kinds of cancer treatment authorized by the California Medical Association: Drugs, Surgery, Radiation and Death. RHC.)

"Worley points out the manufacturer of Jamison's machine was convicted of grand theft two weeks ago in Los Angeles after selling a similar machine to a Food and Drug agent under false pretenses. (This was probably Ralph Bergstresser, Burbank, Calif., who was manufacturing and selling the Bob Beck MWO for $250.)

"After Jamison's conviction yesterday, Damrell called for imposition of a prison term for the veterinarian. If he had received the maximum penalty, he could have been sentenced to 18 months in jail and fined $1,500.

"We felt very strongly on this," said Worley, "because Jamison could easily become a menace to many innocent victims throughout the state."

MWO IN USE AT INDIAN CLINIC

"I am continuing my experiments with the MWO and my experience is that in practically all cases there is an aggravation of the existing symptoms, and previous symptoms are brought to the surface. Hemorrhage was seen in another case and treatment was stopped forthwith. This is one problem which has to be tackled before MWO can be used with confidence. I think MWO treatment should not be given to tubercular cases. Also in cases where there is a hemorrhagic tendency this would do more harm than good.

"Neuritis seems to respond nicely to this treatment. Sciatica is definitely cured by this. Some cases of Rheumatism and Arthritis are benefited, responding at first but the improvement does not last much longer. I cannot understand the reason for this eccentric behavior. I think there must be something with the frequencies."

Don't blame it on the frequencies, Doc, blame it on the patients who stubbornly clings to their fixed ideas and rigid unyielding mental patterns. We have no evidence that the radio frequencies of the MWO reach into the mental world. Each person's aura is loaded with "signatures", national, family and religious concepts hammered into him over the years. His creative energies, flowing freely down from the higher worlds, channel through these deeply cut "grooves" in mind and emotions. The health or illth of the physical body indicate whether the person's ideas are in tune or out of tune with Creation. As a man thinketh in his heart, so is he.

"Can you please let me know what are the ranges of frequencies these machines have? Have they been measured and are they the same in all instruments? Is there any difference in the models prepared in the USA and France? Which model was tried by Lakhovsky in the New York hospital? What are the actual frequencies used by him?"

The only frequency readings we have on an MWO were those submitted by Bob Beck originally, from the output of his own machine. "It radiates RF interference over a bandpass of 15 Kilocycles to well beyond 250 Megacycles. This blocks AM, FM and Television reception for hundreds of yards" But so does my electric razor, and I've been using one for years. I was told by a sailor that electric razors are very effective as "scramblers" for knocking out the electronic brains of guided missiles, and have been so used as defensive equipment during missile exercises on aircraft carriers at sea. No one has furnished us with RF output figures from original Lakhovsky equipment, either at the New York hospital or from Europe. If anyone has these figures I hope they will be kind enough to forward them to you. Lakhovsky's available technical record is very slim.

"An Associate writes 'A very good psychic in Florida gave the following, in a sitting devoted to the MWO. It is not anywhere near developed to its potential. It has unlimited amplifications to be made. The use of the MWO can change the auric field, thus spiritually it can change the individual. This is done with the work of the seven rays of life. The MWO should be used in conjunction with the radionics instrument.' What about this radionics instrument? I would appreciate it if you can throw some light on this."

Sorry Doc, the punitive hand of the American Medical Association has driven radionics builders and users underground here in the United States. No one but a fool like me would stand up on the firing line. England isn't quite the police state America is and you can get information on radionics and radionics equipment from the Delawarre Laboratories, in England, and from Bruce Copen, in Sussex, England. Radionics experts have developed rates for every organ in the body. Equilibrating those rates with specific radio frequencies offers an interesting field for borderland research.

"I have tried both the Vitic and the Eeman Screens. I am still continuing my experiments with the Eeman Screens. Only a couple of days back I gave a set of screens to a patient who is having an encyclopedia of complaints. The MWO did not give her much improvement hence the change. I have one set of Vitic with me and whenever I feel a bit out of sorts I sit for ten minutes and get back my vigor. I am using a very strong pair of magnets and a carbon rod 1½ inch in diameter. After I received the MWO my interest in the other two flagged. I think I will have to cultivate them again."

Dr. A.K. Bhattacharya

From the **March 1964 Journal of Borderland Research:**

ARMY MEDICAL RESEARCH SUPPORTS LAKHOVSKY THEORY!

That's our headline, and it's derived from news clips loaned to us by an Associate. One especially is from the New York "Times" for Friday, Aug. 19, 1960 by John Osmundsen.

The heading says that Radio Microwaves Produce Molecular Changes in Human Beings. This is merely a repetition of what Georges Lakhovsky proved with his pioneering work in Paris hospitals in the 1920s!

"New and possibly important biological effects of radio and radar waves were reported at a three-day scientific meeting that concluded here yesterday. One scientist told of producing 'a profound molecular change' in human gamma globulin with specific wave lengths of radio waves in the high frequency to very high frequency, or VHF range.

"Alterations so created in the molecules that constitute an important part of the body's defense apparatus were accompanied by at least a fourfold increase in their biological activity, the scientist said. 'The changes can be produced under widely varying conditions of voltage, power, pulse width, and pulse repetition rate, provided the frequency is suitable,' according to Lieut. Col. Sven A. Bach of the Army Medical Research Laboratory in Fort Knox, Ky."

If Col. Bach had been working from Lakhovsky's original theories and equipment, he wasn't saying. This is obvious in reporter Osmundsen's next paragraph.

"This is believed to be the first report of a proven frequency-specific effect of radio waves on human chemistry. Dr. Bach's report appeared to cause more comment at the conference than almost any other, for the effect of radio frequencies on human gamma globulin in the test tube were clearly not a result of heating.

It was suggested by Dr. Bach that the increased biological activity of the molecules as measured against a rabbit serum sensitized to them might have resulted from an unfolding of their structure, thus exposing more active spots."

YUP, THEY MIGHT EVEN CURE CANCER

Later in 1960 an electronics magazine revealed even more about the proceedings of this Fourth Annual Tri-Service Microwave Conference held in New York. Our news clip is only half a page which reveals neither the magazine nor the writer, but about Dr. Bach's claim of a four-fold increase in the production of gamma globulin, he says:

"What does this mean to you? Gamma globulin plays an important part in the body's defenses against disease. Speed up its activity fourfold and it may be four times as effective a disease fighter. Some day your doctor may give you 'a shot of microwave' to keep you well.

Dr. Joe Howland of the University of Rochester found that dogs which had been exposed to microwaves were able to withstand heavy doses of X-rays far better than dogs not so treated. No specific application for this technique is now known, but such discoveries frequently lead to undreamed-of advances.

"And finally, some evidence has been gathered to indicate that certain kinds of cells, under the right conditions, will simply disintegrate – fly to pieces – in the presence of the right radiation. But surrounding cells are unaffected. Could such a selective beam ever be used to destroy cancer cells while leaving healthy tissue unaffected? Scientists don't yet know."

The writer didn't say which scientists he is speaking for, certainly not for Georges Lakhovsky, who died in that very same New York City 17 years before the Microwave Conference. Before-and-after photos of skin cancer cures effected by the Lakhovsky Multi-Wave Oscillator in Paris hospitals in the 1930s show that the Russian inventor did know just how selective radio microwaves can be. These pictures are reproduced in Lakhovsky's book, "The Secret of Life".

To continue with the magazine article: "said Col. George M. Knauf, one of the foremost experts on the biological effects of microwaves, speaking of these recent advances, 'Our work has progressed sufficiently for us to be fairly certain that the beneficial uses to which this energy may be put will greatly outweigh any harmful results it may produce in men.' All this of course does not mean we should forget that uncontrolled microwave energy can be dangerous. But like fire or X-rays, microwaves can, when used intelligently and with understanding and respect for the hazards involved, be among man's most valuable tools."

MWO USE IN A NEW YORK HOSPITAL

Georges Lakhovsky crossed the Atlantic to New York City in 1941, there to observe the effects of his MWO under controlled, technical conditions in a New York Hospital. A brief report of the positive and beneficial results of MWO treatments is appended to the English translation of his book, "The Secret of Life", by Mark Clement, on page 201. These treatments were given from July 1st to Aug. 21st and the name of the hospital and of each patient are withheld for ethical reasons.

Patient	Illness	Treatments	Results
X.	Arthritis, both knees	14	Good improvement
O. P.	Endocervicitis. Abdom. pain	6	Condition good
F. T.	Periarthritis of shoulder	12	Marked improvement after first treatment, condition good
M. M.	Osteoarthritis	7	Marked improvement after two treatments, stiffness diminished
M. K.	General Chronic Arthritis	11	Slight improvement
M. O.	Arthritis of ankle	3	Results good
A. E.	Postoperative fracture	6	Results good
C. V.	Arthritis, both knees	14	Marked improvement
M.D.	General arthritis	8	Marked improvement
J.H.	Epicondylitis of elbow	7	Results good
D.G.	Chronic arthritis	10	No cough, no soreness marked improvement
S.L.	General arthritis	10	Marked improvement
B.M.	Arthritis and circulatory disturbances	6	Improving
M.L.	Arthritis of ankle and knee	7	Improvement, no recurrence
M.B.	Arthritis of shoulder	7	Marked improvement
M.O.	Tenosynovitis, hand	6	Improvement
S.S.	Arthritis, both knees	7	Improvement
S.C.N.	Congenital hip dislocation	3	Marked improvement
R.L.	Fracture, both ulnae. Synovitis, both knees	5	No pain

Additional Cases

Case 1. G.D., female, aged 25: Patient complained of pain in the chest and muscles of the right arm and back, and constant cough. She did not respond to medical treatment and massage. Treatment with Lakhovsky Multiple Wave Oscillator was instituted. After the fourth treatment coughing stopped, pain in the chest became infrequent, and the tired feeling in the back disappeared. At the end of 12 treatments the patient no longer complained of previous symptoms.

Case 2. M.M., female, aged 51: Patient complained of pain and stiffness in the right hip. X-ray examination disclosed a marked narrowing of this articulation associated with large spurs at the margin of the acetablum which appeared to ankylose the joint. There were proliferative changes in the upper margin of the femoral head. Diathermy

and massage failed to relieve the pain and stiffness. After 10 treatments with Lakhovsky's M.W.O. the stiffness markedly reduced.

Case 3. F.T., female, aged 38: For two months the patient complained of pain in both shoulders. Abduction of the right humerus was limited to 45 degrees. A diagnosis of periarthritis was made and treatment with Lakhovsky's M.W.O. was started. After three treatments the patient said she felt much better. The improvement continued. After a series of 11 treatments the patient did not return. Apparently permanent relief had been obtained.

Case 4. A.B., male, aged 60: Patient gave history of pain in both knees beginning in 1940. Diathermy and massage for one year gave only slight relief. Treatment with Lakhovsky's M.W.O. was instituted. After one treatment patient stated that he felt better. After four treatments patient felt so much better that he took only one treatment in two weeks.

Case 5. M.M., female, aged 42: Patient complained of pain in lower left back and hip. X-ray examination of the lumbar spine and pelvis showed calcification at the anterior margins of the intervertebral discs between the ninth and tenth and the tenth and eleventh vertebrae. There was also a slight scoliosis of the lumbar spine. Treatment with Lakhovsky's M.W.O. was instituted. After the first treatment patient felt better. After the fifth treatment improvement was very marked. Patient did not return after nine treatments.

Case 6. S.N., female, aged 59: Patient complained of pain in the right shoulder and inability to extend the arm more than 5-10 degrees, accompanied by severe pain. X-ray examination disclosed irregular calcification in the region of the greater tuberosity of the right humerus. Treatment with Lakhovsky's M.W.O. was instituted. After one treatment patient said she felt much better. The improvement continued steadily until 10 treatments were completed.

Case 7. C.P., female, aged 38: Gynecological examination showed uterus slightly enlarged and hard. Right para-metrium tender. Diagnosis – Parametritis. Treatment with Lakhovsky's M.W.O. was instituted on July 17, 1941. After four treatments patient felt better, and after 12 treatments patient was found to be much improved. Examination on Oct. 7th showed the adnexa and parametrium to be painless. Patient was considered cured.

REPORT OF CASES TREATED WITH LAKHOVSKY'S MWO BY A PROMINENT BROOKLYN UROLOGIST

The following results were obtained by a prominent Brooklyn urologist whose name must be omitted for ethical reasons. He is a Fellow of the American College of Surgeons and enjoys a great reputation as a skilled specialist. He treated hundreds of patients with Lakhovsky's MWO but only a few typical cases can be given here.

Patient	Illness	Treatments	Results
H. G.	Acute urinary retention due to enlarged prostate	2	Retention ceased
R.B.	Bleeding from uterine fibroids of two years standing	3	Bleeding ceased
S.M.	Mild multiple sclerosis with halting gate	6	Marked improvement, was able to run on several occasions
R.R.	Cellulitis of nose with pain	2	Cleared completely after two treatments of ten minutes each in one day.
B.T.	Acute urinary retention due to enlarged prostate	2	Retention ceased.
S.B.	Bleeding from cancer of the bladder	3	Bleeding checked. The tumor cleared up nicely and was reduced in size when seen again on cystoscopy three weeks later.
J.G.	Chronic aczema of Axilla	2	Cleared entirely.
L.G.	Severe pains from duodenal ulcer	2	Greatly improved.

In addition to the above cases this Brooklyn specialist treated six cases of enlarged prostate with nocturnal frequency (three to five times per night). After two treatments with Lakhovsky's M.W.O. frequency was reduced "to only once a night or did not occur at all..."

The above American reports were not included in the first edition of Georges Lakhovsky's "The Secret of Life", published in 1935, but were added by the English translator, Mark Clement, to later editions. We are quoting from the 1963 edition published by Health Science Press, Sussex, England. Health Research, (P.O.Box 70 Mokelumne Hill. California 95245) offers this same book.

This early (1941) research with the Lakhovsky equipment seems to nave been ignored by the American medical authorities, who are still concentrating on cure by surgery or medicine. If you want to discover the effects of weak radio waves on living organisms you'll have to dig for yourself. Our BSRA brochure, "The Lakhovsky Multi-Wave Oscillator", will give you some hints about setting up your own research program, and is available from headquarters.

'DOCTORS SAY RADIO TREATMENT IS EFFECTIVE AGAINST ARTHRITIS'

Apparently some doctors didn't ignore the research work done by George Lakhovsky. Take this news item from the New York "Post" for Feb. 8, 1962, with an Associated Press dateline from Washington, D.C. "A device theoretically capable of bouncing radio signals off the moon has yielded highly effective results in the treatment of stubborn cases of arthritis and certain other ills, a group of doctors reported today. The machine generates high-frequency, short-wave-length radio waves and emits them as pulses lasting only 1/17,000th of a second each. The pulsed currents are directed into a patient's body, with a maximum achievable penetration of eight inches.

"Use of the technique in treating arthritis, bone infection after hip operations, inflammation of the female pelvis due to gonorrhea and other conditions, and in speeding the healing of surgical wounds was described in reports by Dr. Euclid M. Smith of Hot Springs, Ark.; Dr. Dana Street of the University of Arkansas; Dr. Bruce Camern of Baylor University; Dr. Marshall Lobell of Harlem Hospital, N.Y.; and Dr. Solon N. Blackberg of Chicago. The reports were made last night at a private conference to which several Congressmen and Public Health Service doctors were invited. Blackberg later told reporters the researchers would like to enlist government support for expanded research by themselves and their investigators.

"Smith, in his report on arthritis, said the technique had been employed with "highly "effective results in 99 out of a series of 100 cases treated by him. Declaring that some of the patients treated had arthritis for up to 25 years before receiving radioactive treatment. Smith told reporters that "marked improvement" was achieved in all cases in from three to six months.

PUBLIC RECOGNITION OF RADIOWAVE TREATMENT

This sensational advance in the treatment of human ailments should have been welcomed from coast to coast in every newspaper. Dr. Blackberg and his distinguished fellow scientists from Baylor, Arkansas and Harlem should have received public acclaim from President Kennedy's Dept. of Health and Welfare and from the American Medical Association. But only a thunderous silence followed that early 1962 news item ion the private meeting in Washington – until the

Aug. 24, 1963 edition of the Saturday evening Post! In this national magazine, radiowave treatment of arthritis was branded medical quackery in the article "Hucksters of Pain". There Drs. Smith, Street, Camern, Lobell and Blackberg had their answer to "government support for expanded research". Fortunately, not every American is going to take this kind of libel without striking back at the mouthpieces of the vested interests who lend themselves so readily to control of the mass mind. Read this news clip from the Los Angeles "Times" for Nov. 1, 1963:

"SATURDAY EVENING POST SUED FOR $7.5 MILLION"

"New York – The Saturday Evening Post, still smarting from one of the largest libel awards in history, was hit Thursday with another libel suit demanding $7.5 million.

"The suit was filed in Federal District Court here by the Diapulse Corp. of America, manufacturer of a machine that employs high-frequency waves in the treatment of infections and inflammations, including arthritis. The company said it was defamed in an article, "The Hucksters of Pain", which appeared in the Aug. 24 edition of the magazine. The article dealt with quack remedies for arthritis. The suit seeks $2.5 million in compensatory damages and $5 million in exemplary damages.

From the **June 1964 Journal of Borderland Research:**

LAKHOVSKY OSCILLATING CIRCUITS

"About eight years ago I sent to the Health Science Press, Sussex, England for a little book, "Quick and Free Healing", and also "The Waves That Heal" and found that there are healing waves in the air we breathe. I am a sensitive with the pendulum. The book told to take an insulated copper wire and find the positive and negative ends with the pendulum, so I would know which end to put to the left side of my body – positive to the right and the ends overlapping. If you can't keep them in place, wrap an elastic band around them. For me, the pendulum swings clockwise for negative and back and forth for positive. First use of the wire came when I skinned my shin with a five-inch gash. The bleeding made me sick and I had to lie down. I thought of my wire circuit, got up and put it on just above the knee. It always had taken a long time for sores to heal on my body but this healed in three days time and showed only a narrow line about the width of small yarn. This convinced me that the oscillating circuit wasn't foolish.

"I loaned my little books to a high school student that was taking science. I thought they would interest him but he made all manner of fun of me, for believing such a thing. None of my family are interested in the good things that I have learned. I have been a member of BSRA since 1951 and think your journal is the best magazine I have ever read. Anyone wanting to learn more about the Lakhovsky circuits can write to Col. A. E. Powell. (Now deceased)

"Forty years ago I was taking treatments from an osteopathic doctor who sometimes diagnosed with the pendulum. When I became pregnant he told me he was going to discover the sex of my unborn child. He took his gold band ring off, tied a string to it and held it over me. It didn't seem to have any definite swing, maybe around once and back and forth. 'That's strange,' he said, 'I've never missed yet!' When the baby came there were two, a boy and a girl! I didn't ask him then where he learned about the pendulum or what it meant. Years afterward I sent to New York for one and found that I could ask questions and get yes or no answers that satisfied me. A medium told me that the pendulum is spirit controlled and mine was controlled by a young girl who was rather mischievous. If you want to put my experiences in the BSRF Journal it is all right with me. I got my education in the little red schoolhouse. I am 73 years old and still learning. They say you never get too old to learn and I find it is very true."

Mrs. E.H., Piqua, Ohio

A "HOPPED UP MWO" IS DANGEROUS!

"It is far too early to draw final conclusions regarding my experiences with the higher powered Multi-Wave Oscillator, a word of warning is in order. I powered mine with a 250 VA, 10 KV oil burner transformer. This is DYNAMITE and could, in my opinion, be fatal if too much power is used and I didn't miss it by much. My equipment sparks the antenna down to the 4th ring and the resonator to the second, with occasionally a week spark to the third. 10 hours after the first high-power exposure I felt like running instead of walking (age 72) and walked all around town and back, about six miles and no tiredness, whereas two miles would tire me before. That first exposure was about ten minutes for me and four for the wife (age 75). Immediate reaction for me was a moderately strong sensation of tingling from head to foot for about three hours before I could get back to sleep. None of this for the wife. Then, as aforementioned, I felt on top of the world. 24 hours after that, however, the wife and I developed the grand-daddy of all colds and flu symptoms that we'd ever had. I hadn't had any real cold or flu in 15 years. This one dredged such an amount of mucus and toxic waste as I'd never seen before in my life. It was rough. It lasted two days before it wore off.

"This all had me guessing until your brochure arrived, with the experience of your Engineer-Physician Associate. He told that many of his patients developed flu symptoms after MWO exposure. His increasing conservatism was well founded. I decided to find out if the doctor's hypothesis of viral penetration would hold up. If so, a second high-powered treatment of equal strength and duration should produce much the same flu symptoms. But, having wound another coil, I used more power than the first time, sparking antenna and resonator down to the fourth and fifth rings. Results: no more flu, only a very slight tingling sensation, no feeling of exhilaration as before. Five days later I took another exposure, of seven minutes, with a little less power. This one did it. No tingle, no exhilaration, only a feeling of rapidly increasing depression, no sleep that night, a rather severe pain in the chest and heart region, extremely weak pulse, hardly pep enough to life an arm, and a nervous shaking all over. For a while I thought, this is it. It took five days for this to wear off and it isn't all gone yet. One night I lay awake until three a.m. figuring out how to pep up the MWO still more. Out of the blue, a voice clear and distinct and very emphatic: 'This is dangerous!' Again very emphatically, "Yes!" Normally I am not the least psychic, clairvoyant or clairaudient; so I choose to heed this as a warning from a discarnate guide or guardian."

Let this Associate's experience be a warning to you, if you feel the urge to build a hopped-up Oscillator, to transform yourself overnight! Bob Beck's original article cautions against this and his original equipment falls well within the safety tolerances set by the Air Force and the telephone companies for personnel working around radar and microwave broadcasting and relay equipment. Most of you taking part in this research program have built your equipment only in the last two or three months. It would be wise to stick closely to the original design for a year before altering it for further research.

LAKHOVSKY'S ORIGINAL THEORIES ARE SOUND!

With one or two exceptions all reports in to date show beyond question that Georges Lakhovsky's theories are sound: Radio waves do effect living organisms. In certain concentrations these waves appear to benefit cell growth, even to stimulate it. These BSR Associates have proven to their own satisfaction in only six months from the publication of our first article. Now it is up to others to exploit this knowledge while we turn our attention to other projects.

From the **Jul-Aug 1964 Journal of Borderland Research:**

LAKHOVSKY OSCILLATING CIRCUITS

"The danger of strong reaction to a hopped up MWO, as told in the June Journal, reminds me of my experience with the single circuits. Months ago I wrote to Col. A. E. Powell and he sent me single circuits to wear around waist, neck etc. This I did for two months or so, daily. I'd been under the weather enough to hope for benefit. Instead, I had three successive colds – something I never, never had in my life before, even during the worst of my catarrh years. It never once dawned on me it could have been the Lakhovsky oscillating circuits; now I wonder?"

A California Associate

Yes, it had been the experience of others that the apparently powerless Oscillating circuit, of only one wire looped around the body, can produce a strong reaction on living tissue. A San Francisco Associate told us during our May trip north that she received a wire loop from Co. Powell and wore it to bed that night, and forgot about it. Early in the morning she awoke with such a violent pain through her middle she thought she'd die! She lay there and stuck it out until the pain left and went back to sleep. In the morning she awoke refreshed and ready to go, with the oscillating circuit still around her middle. It began to dawn on her that this was the cause of the pain, but it also had affected the healing of a long-suffered condition. At the time we were there, weeks later, the condition had not returned. Certainly no permanent cure of any condition can be expected unless the original cause in mind, emotions or spirit is changed, and if a person insists on indulging his vices, use of oscillating circuits may only cause needless pain!

From the **October 1964 Journal of Borderland Research:**

HE PREFERS VITIC TO MWO

"Personally, while feeling the passage of the high tension flow from the antenna of the Multi-Wave Oscillator, I found no beneficial effect. On the other hand, the Associate with whom I obtained the MWO realized definite improvement. He has kept up the use and told me lately that he is feeling steadily better and lays the improvement to the use of the outfit. Some years ago I had frequent conferences (thru a medium) with one who was said to be Madame Blavatsky. During the course of these talks she dismissed the subject of electricity as of little value in comparison with a study of magnetism. That in the study of magnetism lay the secrets of many valuable matters. I am led to refer to this because I recently obtained relief, and apparent cure, from a troublesome irritability of the bladder by the use of a magnet. Other treatments had been of no value. I made no report of this until the fact was definite. The use of the magnet was experimental and came from the suggestions of a Chicago University specialist in the subject, relayed to me via various Biomagnetic reports and some correspondence."

Associate A. N. Onymous, Dixie, U.S.A.

This letter from an elderly Associate was dated Sept. 3, 1964. It certainly provides an interesting and stimulating commentary on the material in the preceding pages of the Journal. Interestingly enough, we've had many reports of successful and continued relief of irritating bladder and prostate conditions from exposure to the MWO. In the Vitic device we now have a borderland gadget that is far less troublesome to build and to operate. How effective it is remains to be proven.

THOSE LAKHOVSKY CIRCUITS AT WORK

"About the Lakhovsky wire circuits, there is no other way to account for the consistently maintained energy I receive. I wear one all the time as do several others I know, all of whom report amazing results. One man past 80 finds it peps him up too much, so he wears it intermittently."

H.C., Yucca Valley, Calif.

From **Jan-Feb 1965 Journal of Borderland Research:**

HE WORKED WITH GEORGES LAKHOVSKY

"A friend of mine sent me your pamphlet describing the Lakhovsky Multiple Wave Oscillator. I was the first man that bought this instrument in New York in 1940, on the advice of a physician who saw it at a medical congress in Vienna. My young son had developed a face lesion. It was diagnosed as tubercular. I was having a joint office at that time with a progressive MD. I was practicing dentistry. Her success with the MWO was phenomenal, but when she began to treat cancer cases the American Medical Association got after her and me and revoked our licenses. I had translated some of Lakhovsky's works into English from the French. Professor Lakhovsky came often to my New York office. He told me the Pope was using one of his instruments. The success obtained in the hospitals was excellent but the reports were suppressed. The good professor died of a broken heart. Our case was a regular frame-up by the AMA, the lawyers and the courts. I was foolish enough to fight the case and spend lots of money, not knowing that the AMA controls even the courts and judges. I still have some copies of the booklet and a photo of my Lakhovsky instrument. If I can locate them I'll send them to you. I sold my instrument to a doctor in Texas and left New York state in 1945. I am a licensed Naturopath in Florida and Chiropractor in California. Am enclosing $ for membership. I belonged to BSRA several years ago."

Dr. N. S. Hanoka, Miami Beach, Florida

From **March 1965 Journal Borderland Research:**

"THE SECRET OF LIFE"

"I loaned my copy of Lakhovsky's 'The Secret of Life' to my chiropractor, also your Journal. He had one build and I've been taking treatments from him on the Multi-Wave Oscillator. After two treatments I got an awful cold and I have never blown so much bloody mucous out of my nose. Also, after each treatment, it would leave me weak. I would have to lie down several times a day. There always was a reaction but my bad sinus condition has cleared up considerable. I also had trouble with my liver and there were so many things that I hadn't been able to eat, for 15 years or more. Now I can eat them and enjoy them. The MWO is certainly worth having and I am improving."

Mrs. A. N. Onymous, Somewhere, Indiana.

From the **October 1966 Journal of Borderland Research:**

HITTING THE HEALING TRAIL WITH THE MWO

"It would be appreciated if you would put an announcement in the Journal that Dr. S. L. Jamison, D. V. M., N.D. (Gr. Br.) announces the opening of a practice of naturopathy in Santa Cruz, California.

"The climate has changed greatly from the old burning-of-books days by the FDA. We cannot all stand back and wait for "George" to do something. I have the advantage of a lot of training in a legitimate field of allelopathic medicine. Only a veterinarian would be able to make such a move and escape retribution for it. A regular M.D. would be branded a traitor to his fellows.

"I have moved to Santa Cruz to set up practice as a naturopath, using the M.W.O. unit, spiritual healing and diet – along with naturopathy measures for the healing of old injuries and chronic degenerative diseases. There will be no charge if there are no results. Since my fees will have no legal status, this will be made clear to the

people using the service so they will be under no compulsion to pay, even if results are satisfactory!

"There are no incurable diseases but there are incurable patients!

"With the MWO we have not gotten uniform results classified by the disease the patient had. About two out of ten people do not respond to the MWO unit at all. You had just as well breathe on them. I strongly suspect that these people should consult an allelopathic physician, M.D., as they would be helped better by conventional medicine. You might say our cases were selected, as people came to us in the last stages of sheer desperation – conventional methods (including chiropractic) having failed.

"Some of these (not many) also do not respond to the MWO. They usually respond to spiritual healing methods when this happens. This I have not figured out good as yet. Once in awhile an arthritic will claim to have been worsened by the unit. This occurs usually in an arthritic with arthritis in a number of joints. One treatment seems to break the poison loose in their body, and they fall like the wrath of hell about two days after. Get them in immediately and run them again, and everything is alright.

"To sum it all up, I have got so I do not care what disease a person has got as long as it is not an acute infectious disease, or a recent stroke case. I have been afraid to try it on either of these as all we would need is for somebody to fall over dead while on the unit and we would be wearing striped suits or breathing HCN in a gasper chamber. . . The unit regenerates the whole body."

S.L. Jamison, D. V. M.

From the **July-Aug 1967 Journal of Borderland Research:**

A TRANSISTORIZED MWO

"I would like to compare operational notes with some one who has built one of these MWOs because I question some of the statements made in the original article. I'll just give a brief description of mine and some of the things I ended up doing. I started with aluminum elements but had trouble with the gluing process so ended up with using printed circuit boards so my elements (antennas) are copper. I have good arcing between first four rings. Can make 'em all arc if I bring point of wooden pencil near the smallest, but pencil must be held certain way or I'll get knocked on my haunches.

"I ended up with a 9 in. Tesla coil. Tried 7, 6 and 5 but ended up with nine. The trouble here was with leakage between primary and secondary. It was terrific until I took means to reduce to a minimum. The transistorized drive I use is partially a hangover from the days of when I used transistorized ignition in my one vehicle. The ignition coil was modified to increase the step-up ratio and since the coil was mounted originally in oil, it was a 'slippery as an eel' project. The driver uses 5 transistors plus diode and operates on a source power supply which can supply up to 20 volts d.c. The drive seems to function best at about 15 - 16 volts." Now for a question. If Mr. Beck, as he indicated in his original article, 'reconstructed the circuits' of an original MWO in a certain man's house, why didn't you people publish a diagram and dimensional data on that original piece of equipment? That would be a project a man could sink his teeth in. Instead this pee-wee MWO which you now say is not much good unless everything arcs. You mean arcing all the way down to the smallest ring?????? When you get your updated MWO data published, let me know as I would like a copy.

R.A.R., Rochester, Minn.

Arcing between the first four rings, from the outside in on the MWO antenna, is about as good as any we saw when we were researching the instrument in 1964; 80 it sounds as though your transistorized MWO – the first we've heard of – is doing very well and should be putting out enough energy to affect living cells. You any wish you had cut aluminum antenna rings after all. For some reason, the arcing between copper rings builds up deposits which must be cleaned off periodically. Bob Beck didn't offer us a schematic of the original Lakhovsky equipment he saw. He said it was housed in a 300 lb. cabinet. The antennas were of circular-formed pipe rings. The outside ring was two feet in diameter. There was a large, separate Tesla Coil driving each antenna. This is a professional model designed to impress the patient. It also probably puts out enough static to antagonize the neighbors for blocks around. We believe Bob Beck deserves all credit for grasping the principle of multiple wave propagation developed by Lakhovsky during radio's infancy in the 1920s and redesigning it into a simpler, smaller device for present-day borderland research .

LATER COMMENT ON THE MWO BY MR. BECK

"The key factor is that the rings MUST arc profusely all around the circumference of the outside and THIRD ring simultaneously. There is no effect, either on a calibrated Hewlett-Packard field strength meter, or physiologically, at the target frequencies if this arcing does not shock-excite the rings. And yet I have seen at least three machines that did not have sufficient voltage from the Tesla Coil to even drive the outside ring, let alone the third element! It would be a shame to invalidate the device because of this. Some of the machines I've seen drive the Model T Coil from an A. C. transformer! The obvious fallacy here is that the coil's vibrator is a resonant device supplying the make-and-break voltages (and magnetic field) to the T coil primary at the designed frequency. Since the transformer is on and off 120 times a second, the chances of the T coil points 'breaking' at the precise instant that the 60-cycle house current is at a POSITIVE peak is about one in fifty. And even if it fires 'sometimes', the T coil is modulated with the 120 cycle line (twice the 60 cycle frequency, since each cycle has two peaks, both a positive and a negative).

"Try it at 300 mc. and 10 kmc. on a field-strength meter some time. You'll see what I mean. The Tesla Coil, incidentally, is just a convenient supply of free electrons. The cascade of electrons or 'high voltage' breaks down the air's resistance (by arcing) and then drives the antenna rings. But if the drive is interrupted, the rings may not absorb and resonate properly. At any rate, it is difficult to kid the Hewlett-Packard meter, and I'd like to see the original design followed, at least for the first year."

AN IMPORTANT MODIFICATION

"The greatest modification to date was the discovery of a box of war surplus very high voltage rectifiers in a bin at a Burbank electronics store. The 30,000 to 60,000 volt selenium stack rectifiers ... eliminates the necessity for a tunable gap, and roughly quadruples the output of the Tesla Coil, also lowers battery drain to half."

BEWARE THE PUNITIVE HAND OF THE AMA

Turlock, Calif. "Daily Journal", Dec. 2, 1966: "Dr. Stanton L. Jamison, formerly in charge of the state Poultry Pathological Lab here, was arrested yesterday for practicing medicine without a license. The veterinarian is charged with using an electronic device – with high voltage sparks crackling and jumping about on either side of a patient – with the claim it was beneficial in cancer and bone diseases.

"After posting $1100 bail, Dr. Jamison defended his machine. He said parts for the machine cost less than $50. If someone followed up on the apparatus, he claimed, it would be a 'blessing to humanity'. Police Chief John Viarengo, Lt. Bill Ladd and investigators for the California Bureau of Food and Drug Inspection took Dr. Jamison into custody in the offices of his Life Aquarian Center in the Mercantile Building. Lt. Ladd said a sign reading 'Universal Life Church, Inc.' was prominently displayed in the front office. He said four or five agents had been 'ordained' as ministers in the church by telling Dr.

Jamison they wanted to become preachers. Soon their official ordination certificates arrived in the mail, said Lt. Ladd.

"Police described the apparatus as similar to an electric chair, with four-inch metal rings looking like handcuffs hanging over doors to the room. The theory was to determine polarity of a patient with a pendulum and then proceed to change negative polarity to positive with the 70,000 volt device. Chief Viarengo said patients were being treated for a variety of diseases, including stomach ulcers and cancer. Investigation into Dr. Jamison's operations started in May, when police began receiving complaints from relatives of patients. No money was charged for treatment, according to Lt. Ladd, but patients were expected to make donations to the church. Dr. Jamison headed the state poultry lab here for a decade. He will be arraigned on the charges in Turlock Judicial Court next Friday morning.

"In a statement released following his arrest, Dr. Jamison said the 'multiple wave oscillator' picked up by police resembles many electronic gadgets used, usually ineffectively, in the past for treatment of many complaints. However, he insisted, his oscillator appears to be the exception that proves the rule.

"'The unit suffers from a sort of 'guilt by association' with other electronic gadgets to the point where serious doubt would be the reaction of any trained scientist on first observing it,' he admitted. 'I know that this was my reaction.' However, he said he suffered continuous pain following a 1962 automobile accident and, willing to try anything, tried the unit. It helped him, he insisted, and has helped many others. He said the unit had been tested and checked by qualified medical men in Europe in the late 1930s. 'Some progressive healer will follow up my lead in continuing to develop the electronic unit,' he said.

From the **Nov 1968 Journal of Borderland Research:**

AN MWO PHENOMENON

"Please find enclosed $ for another year's subscription to your wonderful Journal. It has been very enlightening, and I always look forward to receiving it. I have taken treatments on the MWO for a long time and have been puzzled. Soon after I started to take treatments, the hair stopped growing under my arms. I have wondered about this and if anyone else has had the same reactions?"

Mrs. E. H. Piqua, Ohio

This is new to us! If any of you researchers have experienced or observed a similar phenomenon, we'd be glad to hear about it and share it with the rest through the pages of the Journal. The Tesla Coil problem has been solved with the discovery of a good commercial coil made by Master Appliances, Marion, Indiana. This coil will drive one antenna very well.

From the **Jan-Feb 1971 Journal of Borderland Research:**

THE PASSING OF CYRIL SCOTT

Cyril Scott, born Sept. 27. 1879 in England, died first week of 1971, so two friends here inform me. I'm always happy to see one who writes so intelligently regarding diet and health, vindicates his ideas by living that long. Not many do BUT, I read in our local paper yesterday of the death of a former neighbor who died on 11th January at 93, and she knew *nothing* regarding diet, positive thinking, etc. So, where are we? I can't ever make 2 & 2 come to four, woe is me.

Two small books come from Muriel Archdale, England, by Cyril Scott, 'Safe and Saner Remedies', and 'Health, Diet and Common Sense'. On page 162 of the latter he mentions the George Lakhovsky book, 'The Secret of Life', memory of which caused Mr. Scott to suggest using a copper wire around his middle to a man who was too breathless to walk far or uphill. The man wore the Lakhovsky loop for twelve hours, had a copious and offensive bowel movement, then on following day and another uphill walk, the man was able to keep up with Scott! I found my copper flex soon after but it is awkward to keep in place to make sure the negative end is to the left. Cyril Scott gives the homeopathic remedies needed, particularly emphasizes potassium for cancer."

A. F., Santa Cruz, California

COPPER BRACELET CURES "TENNIS ELBOW"

News Item from Crosby Golf Tournament at Pebble Beach, California a year ago. 1/24/70: "Bert Yancey one had to give up golf because of a nervous breakdown. He also came close to quitting the professional tour last year because of a 'tennis elbow'. But he didn't mainly because he found a remedy endorsed by Australian tennis pros John Newcombe and Tony Roche. The so-called remedy is a $7.50 copper bracelet, otherwise known as 'The Absorber' or a 'Voodoo Bracelet.

"Yancey wears one on his right wrist to correct an arthritic condition in his elbow and he has worn it for the past five tournaments, including the $150,000 Bing Crosby National Pro-Am, which he leads by two strokes at 137 going into today's third round.

"'I don't know why it works, but it does,' said Yancey, a 31-year old former West Point cadet who finished third in the 1967 and 1968 Masters and won the Atlanta Classic last year. He said a tennis pro in Napa Valley suggested last summer that he wear the bracelet and got confirmation from Newcombe and Roche, who have suffered from similar ailments, that it would work.

Yancey strained his right elbow two summers ago lifting a concrete birdbath in the backyard of his home in Tallahassee, Fla. He took a pain-killing drug that enabled him to compete in the U.S. Open at Rochester (where he finished third), but he was warned that the drug was 'dangerous ... that it gives you ulcers'. 'I never got ulcers, but I felt a pull in my stomach. That's when I quit using the drug.'

'He said he hasn't needed the pills anyway, since wearing the bracelet. The therapeutic effect of the copper, he said, has to do with chemical displacement within the body. 'I majored in chemistry while taking pre-med courses in college and I think I know enough about copper deficiency in the body to believe that, somehow, the bracelet can help me.

"Somebody then pressed Yancey for an answer about what makes the bracelet such an effective remedy. 'I don't know for sure,' he drawled, 'maybe it's all psychological.'"

YANCEY WINS THE CROSBY OPEN

Sports writers are always looking for a new angle for stories and Bert Yancey withstood a spectacular charge by Jack Nicklaus on the final round, with a 65, and came in with a hot round of his own a 69, to win the tournament and a cash prize of $25,000. Yancey and his Voodoo Bracelet were headlined all over the country. The LA "Times" called it a "Copper Caper" in its Jan. 26, 1970 story.

As was to be expected, the medical authorities in desperation had to prepare an immediate counter blast of propaganda to keep the public hypnotized. The sales of medical snakeoil went down as arthritis sufferers flocked to buy non-medical copper bracelets! The "Times" and other metropolitan newspapers willingly cooperated. After all, patent medicine advertising is a big source of revenue, and who knows how much profitable pharmaceutical stock is owned by the publishers of the papers?

The "Times medical writer, Harry Nelson, dutifully wrote: "The Arthritis Foundation, a legitimate group interested in getting better treatment for arthritis sufferers (There is a contradiction here, Harry, for medical authorities claim there is no cure for arthritis!) refers to copper bracelets as 'an age-old fraud which has no scientific basis whatsoever'. Yancey is the latest sports figure to get taken by the 'copper caper', which the attorney general of New York last summer

called 'one of the oldest and most vicious swindles'."

These opinions by the Arthritic Foundation and the attorney general are of course; utterly worthless. They are not based on the results of intelligent scientific research, but are based on the profit motive of the medical trust. The electrical nature of living cells was established beyond any shadow of a doubt two generations ago, by the sound theories and research of Dr. Abrams in San Francisco and Georges Lakhovsky in Paris. Thousands of supporting tests since then have proven conclusively that body cells have polarity, and that in an unbalanced or unpolarized condition, disease or injury, the subtle oscillations of a wire coil or loop will restore polarity. Sad to say, there is nothing of this in the training of medical students today and it is left to Borderland Science to carry the torch. The honest, straightforward testimony of public figures like Bert Yancey, Tony Roche and John Newcombe is ridiculed by the witch doctors of authority for medicine.

JUST KEEP TAKING YOUR EXPENSIVE PILLS!

Under orders from above Harry Nelson interviewed Dr. John Calabro, the arthritis authority at University of California in Los Angeles, "He points out that the bracelets may seem to work because arthritis can improve spontaneously and it is easy for the person to associate his improvement with the bracelet.

"I tell patients it's OK to wear the bracelet providing they do all the other things I ask them to do,' said Dr. Calabro." Including, of course, the purchase of poisonous pain killers at fancy prices. How much scientific integrity does Dr. Calabro have when he and his university accepts fat research contracts from the medical trust? Is it any wonder that today's Aquarian Age students are publicly questioning the morals and ethics of their professors? They are told that the goal of a university is the search for truth – at least that is what the Chancellors say in their public speeches. But when the student gets to the laboratory he finds that the search is for profitable products for industry – or help maintain a well established profit position.

LAKHOVSKY BELTS, LOOPS, OR OPEN CIRCUITS

"Thank you for the clarification of the Lakhovsky belts described by the late Col. Powell in his publication. I tried what you suggested and after some thought I finally understood what he meant and I believe the belts should look like this:

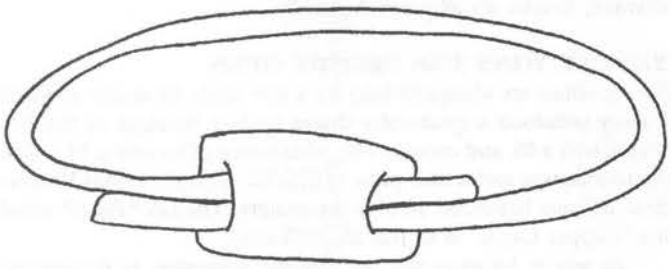

You might want to try experimenting with flat ribbon cable for these belts or coils. It can be bought at most electronic stores and it comes in different widths or colors. I am wondering also, is it really necessary to separate the lamp cord and use only half of it? Could it not be used as it is, with two strands of copper wire, insulated, side by side?"

G.B.F., San Fernando, California

Yes, in our one-loop coils of white insulated lamp cord, we now use it just as it comes from the store, without separating the two strands. But you plastic 'buckle' or 'button' shown above may allow too much slippage; so the ones we make for ourselves and for research-minded Associates have separate entrance and exit holes for each end of the insulated wire. The white insulated wire seems preferable from the hygiene angle, seeing that it is usually worn next to the skin.

From the **Mar-Apr 1971 Journal of Borderland Research:**

OUR LOOP-THE LOOP PROJECT

"It looks to me like the Lakhovsky loops work homeopathically. It's not the copper element, per se, but the loop the loops it makes, throwing back into the body forces which the body is throwing off. It's an automatic homeopathic prescription, *each body being its own pharmacist.*

"The Yogi does it when he goes into suspended animation, re-breathing his own air. Urine therapy, drinking one's own urine, as described by Armstrong, is homeopathic. An ostrich putting his head in the sand breathes his own air. Breathing into a paper bag and re-breathing the contents is a specific cure for old age pains and hiccoughs. Dianetics was mental homeopathy, i.e., the original book but not no more. Dianetics is re-thinking one's own thoughts. You imbibe your own aberrations, attaching like with like. Homeopathy is like a feedback system. Gods ate their own offspring. It's Isis picking up the pieces. The smaller the dose the more potent the cure. Etc. Etc. Send me two kits of three experimental loops. Maybe I can fatten up on them."

P. F., Florence, Arizona

HE FEELS LIKE A NEW PERSON

"I read that part in the Journal about the copper wire loop; so today I did loop one around me and sure enough the oscillating motion calmed me down. It sure was a sensational feeling because lately at times it got so bad I though I would spin off, even though I do the Five Rites nightly. On occasion I also experience a terrific pain in my left side which forces me to sit down, just a great pressure especially after standing over the stove preparing meals for maybe three to four hours at a time. The customers just couldn't understand how I stood up under pressure of serving so many people. Seems like mass production.

"So with this new item I feel like a new person! And I'm going to have you send me one of your experimental kits, to see how it compares to what I hooked up on myself. Of course I just taped the wire on and this is only about six hours since I put it on."

J. M. S., Charleston, South Carolina

A DEDICATED BORDERLANDER

"Enclosed is a check for membership renewal and for five sets of experimental loops. I want to compare the effects of the Lakhovsky coil with the Japanese-made magnetic health bands which I sell to my tennis customers. I am very active in tennis playing and teaching. The results with this band are very good."

A. M., Miami, Florida

BEYOND THE PHYSICAL

An Associate writes that she had success in "curing" and arthritic elbow by wearing a copper bracelet on her wrist. Then the pesky condition showed up in her knee! From there is moved to another part of her body. Then it began to dawn on her that their Higher Self was trying to tell her something, that the swollen and painful joints were an outward manifestation of an inner mento-emotional condition of resentment and bitterness over an unhappy marriage. With the cooperation of an understanding doctor and more orthodox heat treatments, etc., and a more positive and cheerful attitude on her part, the condition was finally eliminated. It took months to cleanse the system of the accumulated poisons, physical, emotional and mental.

From the **Jan-Feb 1966 Journal of Borderland Research:**

THE LAKHOVSKY MWO IN INDIA

"The MWO is giving wonderful service and days are passing and I am gaining some new experiences which have not been recorded in the book. I will appreciate if you kindly clear some of my doubts. In practically all the cases I am finding aggravation after three or four sittings. Do you think that it is due to a sudden oscillatory shock that is given to the patient as it so happens when Homeopathic medicine is given? I feel that it should have at least been recorded by someone. One more question. What is the reason for metals being removed from the person of the patient? In case they are not removed will there be any adverse effect? This is very vital because here in Bengal there is a custom that the married ladies must wear one iron bangle. They will not remove it under any circumstances. What is the remedy for this?

"I find that the appetite improves in practically all cases. Rheumatism and Arthritis cases are definitely benefited. In one case a tumour which is there since about 20 years has definitely gone down with only 4 sittings. I am watching the case carefully and if the Tumour disappears it will be a great achievement for the MWO. Debility is markedly reduced in nearly all cases. In a recent case of Spondylitis the MWO has done wonderful work. The flexibility was 8½" from the floor which has come to 6" after 7 treatments and all the pains have practically disappeared. Due to the New Moon and Eclipse there is an aggravation but I hope it will gradually go. Asthma cases have not responded so well but I am not yet disappointed with the results. It is as yet too early for me to assess the capabilities of the MWO on various diseases. As you say I also believe that this instrument will work on all persons irrespective of their complaints but still there must be some specific organs on which there is more influence of this.

"Something which I forgot to mention previously, can you tell me whether you have seen Hemorrhage as a result of MWO treatment? In at least 3 cases I have seen bleeding start where there was no previous history of bleeding. What is it due to? In one case there was profuse bleeding after 2 sittings and that has made me a bit nervous. Just now a patient reported that he was getting blood in the sputum even though there is nothing in the lungs. In the third case blood appeared in the urine. Please give a thought to this as this is a very serious complication if it is caused by the MWO."

Dr. A. K. Bhattacharya, West Bengal, India.

The above is a portion of a letter to Associate Al Goeke, Redmond, Washington, which Al passed on to me for comment. I thought the rest of you would be pleased to know that this East Indian doctor has gotten very encouraging results from the very beginning in the use of the Multi-Wave Oscillator. If by aggravation the doctor means a sudden release of mucous, heavy cold or flu, this is a sure indication that the MWO is working and affecting a release of accumulated poisons in the body. This is touched on in our brochure, in the comment from a Midwestern doctor which built and used such equipment in the 1940s. When he began producing mild flu – as he called it – in his patients, he got scared off! The hemorrhaging by the doctor's East Indian patients is more serious but we believe it is still a result of the same thing, a sudden releasing of accumulated poisons through the shedding of bad blood. We know one oriental who had a heavy nose bleed after the first exposure to the MWO field. Apparently orientals, some of them at least, are more sensitive to the soft radio wavers than Caucasians living in America; so the doctor's prescribed treatments should probably be somewhat shorter in duration and spaced further apart.

Yet I well remember the radio technicians in Honolulu, Hawaii. I was an announcer and producer there for several years. Some of them were of Chinese and Japanese ancestry. When repairs were needed on the radio towers, these men wouldn't hesitate to jump on, climb up and work for hours while the station was putting out a steady five to ten thousand watts of power. I don't recall any of them suffering any ill effects such as internal bleeding. Yet their tools would get so hot because of the strong field that they would have to wear gloves in handling them! It was these eddy currents caused by an inert piece of metal in the pulsing field that Bob Beck was concerned about. There isn't enough power in the MWO to cause heating in bits of metal about the body, if one can't strip down for an exposure. The piece of metal, say a zipper or a ring, might reduce the efficiency of the field in that area but we didn't worry about this when testing the equipment we had for a short while in 1964. I don't think Dr. Bhattacharya should either. The machine seems to produce results anyhow.

From the **March 1966 Journal of Borderland Research:**

BASIC NEW AGE PHYSICS

by Trevor Constable

(Publication of Dr. Bhattacharya's letter in the Journal, Jan-Feb 1966 issue, elicited the following significant comments by Mr. Constable.)

A word on Dr. A. K. Bhattacharya's reports concerning the Lakhovsky Multi-Wave Oscillator he is using successfully at his West Bengal, India clinic. The results are indistinguishable from those systematically recorded and published over a long period by the late Dr. Wilhelm Reich, M.D., concerning his orgone therapy. Reich was the discoverer of Primary Energy – pre-material and mass-free – which he named Orgone.

The improvement of the appetite, the reversal of rheumatism and arthritis even to structural changes, the rapid reduction of tumors and the hemorrhage effects are all to be found in Reich's massive clinical literature on orgone therapy. Dr. Bhattacharya's reports, plus others any my own experiences with the MWO serve to confirm my previous evaluation of this unit as published in the Journal over two years ago. In essence, the MWO is a device for orgone therapy. It achieves its startling results because it is a generator of primary energy, or at least a *focus* for primary energy.

Any person with a modest extension of physical vision who will observe an operating MWO under conditions of indirect, rather dim fluorescent lighting, will see for himself that primary energy from the earth's atmosphere (the Orgone of Reich) condenses prolifically between the coils of the unit. The concentration is many times that which normally surrounds a living organism.

The basic New Age physics involved, for which we are indebted to Reich, are as follows: Wherever secondary energy, i.e. energy obtained from matter in some way, is released, primary energy tends to concentrate to extinguish this energy. Secondary energy is life-negative, i.e. inimical to the living, a fact which is illustrated, in its ultimate extension, in the lethality of atomic energy. Where so-called soft radio waves are involved, the antagonism of primary energy to their emission is evidently considerably diminished over the violent effects that accompany radioactive substances in the presence of primary energy accumulators.

In the case of the MWO, the tremendous band of frequencies covered results in an extreme concentration of primary energy, which also has its frequencies and correspondence (the Rates of radionics) with the secondary, electromagnetic spectrum. That this effect is achieved with minimal secondary emission is the beauty of the Lakhovsky unit.

TWO-FOLD FUNCTION OF THE MWO

In my view, the dramatic results obtained are due to a two-fold function of the unit. First, there is the undeniable concentration of primary

energy around the body of the patient, particularly potent where a limb or other readily accessible member may be exposed. Secondly, there is the reaction of the specific biological energy of the individual organism, from within, to the stimulus of the secondary waves, which it rushes to combat.

Under the laws of primary energy first discovered by Reich, the patient, as a living organism, is a stronger vital system than the MWO. Accordingly the patient attracts and withdraws the charge of primary energy produced by the device. This is in direct contradiction to formal electrical laws, and as such is typical of the criteria that rule primary energy. The continued emissions of the Lakhovsky unit provide a continuous concentration of primary energy on which the patient draws. Just how long this process should be allowed to continue, per treatment, is where we run afoul of allopathic (MD) thinking.

The acquisition of a strong primary energy charge by the ailing organism results in a reversal, or at least in the reduction of life-negative, i.e. diseased, processes. Reich found with his orgone accumulators that the reduction of tumors was not as great a problem as the auto-infection resulting from the overloading of the excretory apparatus. The debris and bacilli from the diminishing tumors must be eliminated, and unfortunately, because the excretory apparatus is frequently involved in the general putrefaction of which the tumor is the end result, this was the major problem in managing such cases, in Reich's experience.

The medical lectures of Rudolf Steiner, Ph.D., contain one of the master keys to successful therapy, particularly appropriate to the use of the MWO. Steiner points out that what the ailing organism needs is the significant, vital *impulse* in the right direction, then careful nursing and management as it recovers out of its own forces. This was also the view of another genius, the late Dr. Ruth Drown, who knew from experience how important the first impulse back to health is for the sick individual.

Hence, it seems that the old allopathic urge to convulse the patient with therapy, to repeat the massive dose again and again, is something that should be resisted in using the MWO, at least where tumors are being dealt with. The idea of applying the MWO in daily doses may stand in need of modification. We are all to some degree creatures of gross, non-vital thinking that stands behind our allopathic medical civilization, and we will need to carefully train and think ourselves out of the absurdity that the massive dose is the sine qua non of therapeutic success.

THE TRUE-BLUE ROOT CAUSE OF DIS-EASE

As far as unexpected hemorrhaging from the lungs and similar manifestations are concerned, I think the problem is essentially that diagnosis is so inept and inaccurate that the physician does not have a true blueprint of his patient. After my years of association with Dr. Drown I am sharply aware of the fact that nobody just has one ailment or problem, but that we are all bearers of a veritable plexus of malfunctions which usually proceed from one primary and obscure root cause. What happens with the MWO is that the injection of primary energy into an ailing organism results in multiple manifestations of the healing impulse, and not just a direct effect upon the object of our attention – which may be a tumor, ulcer or other extreme symptom.

All the effects produced by exposure to MWO units are identical to those experienced in orgone accumulator. The healing agency in both cases is primary energy, and I hold that this is so no matter what plausible arguments might be advanced to reconcile the MWO with formal theories and thus win the neurotically desired approval of physicists and doctors. It perhaps seems incredible that one can obtain the same effects produced by the MWO by sitting in an orgone accumulator, with absolutely no electronic apparatus connected to is, but it happens to be so. Try it and see!

MWO experimenters owe it to themselves to study Reich's work in full. As long as they wander in these fields, they may as well build into themselves the realization that electromagnetic energy has an inevitable, unavoidable and inescapable concomitant – primary energy, life-positive, mass-free energy whose criteria and laws are the exact opposite of the energy accepted by formal physics. The best testimony to Reich's tremendous contribution to human advancement is that he died in a U.S. Federal Prison. As all Borderlanders know, innocent bumblers die in bed in their own homes, untroubled by the status quo.

From the **April 1966 Journal of Borderland Research:**

MWO SURGERY AT SHASTRI VILLAGE AND RELATED MATTERS

by Al Goeke

I believe you and the Associates would like to hear the latest comments from Dr. A. K. Bhattacharya, Naihati, West Bengal, India on the Beck adaptation of the Lakhovsky Multi-Wave Oscillator he is using in his clinic there.

"The other day I had an unique experience with the MWO. I think this should be published. I was treating a lady for rheumatism. After four sittings, once a week, she had a pain under the tongue and there was some inflammation with pus coming out. I asked her to take a further sitting. After about five minutes all of a sudden the thing burst inside the mouth and five pieces of stone came out. When I took her medical history I found that she had an operation two years before and a bit of Salivary Calculi was extracted, but the surgeon had told her that some still remained behind. The MWO treatment eliminated the foreign matter which would not have come out without an operation. This then paves the way for research with Gall Stones and Kidney Stones. I would like to know if anyone else had an experience like mine.

"This time I can give you some reports about the special attachment you sent. A patient was having much pain in the knee and there was swelling. I held the Bulb against the knee for five minutes, and after that it was found that the swelling had reduced and the pain also was much less. In an asthma case I applied the Bulb on the chest for ten minutes. The report is the patient had no recurring attack for two days. Yesterday I was having pain in my thigh so I applied the Bulb. In five minutes I got wonderful relief. Gradually I am getting the hang of it and I think I will be using it more and more."

I, too, am using the Argon more and more, and the more I experiment with it, the greater I think it is, also the MWO. I have had two test cases of young men who, after five minutes in the MWO, said they could feel something happening inside their heads. Both cases had a history of head injuries. I take it that the MWO reactivates a dormant, abnormal condition that perhaps one day would cause trouble. Another test case was a mental patient in Texas. The use of the MWO was part of the test program which brought about a marked improvement in only nine days.

Some time ago a BSRA associate spent an evening with me and told of an interesting borderland gadget. People came from miles around to sit in its healing radiations. I built one for experimentation and found the results good. A Texas Associate says that it works! The original was set in the ground, but I wanted it in the house where it would be more convenient, and figured on running a ground wire outside; but this is not necessary. I have found that it corrects polarity of anyone sitting in the same room. The one I built radiates out 25 ft. One length of 6" stovepipe is used, filled with alternate 2 layers of crushed granite, and of charcoal. For a quick charge of energy, touch your foot on wire at lower end and hand on wire or rod sticking out of the upper end. I have checked the walls and ceilings or rooms (with pendulum) and found them negative. After a few minutes with this borderland gadget in a room, the walls and ceilings check positive!

Here is something that should be shared with Associates.

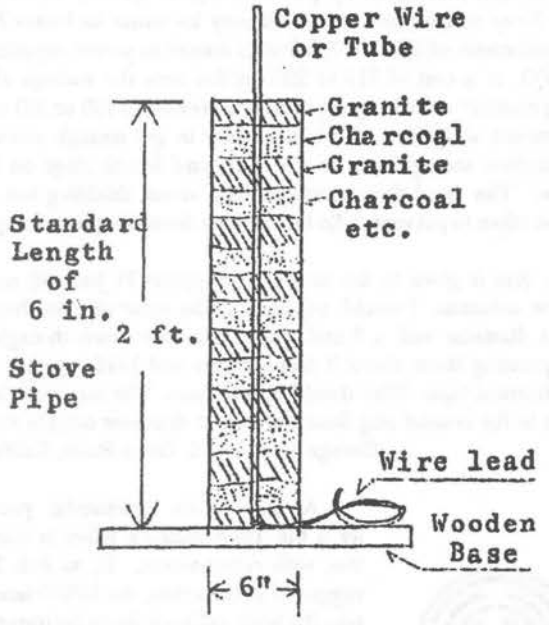

(Here is our drawing from the rough sketch in Goeke's letter, of the borderland gadget explained above. This is just another of many simple devices which concentrate or condense etheric energies of the higher physical sublevels into a field or vortex of force available or useful in beneficial amounts to a living organism within that field. The drawing is not to scale. The dimensions are not critical. It is the relation of the parts that is important. You can consider the upper end of the copper wire as positive and the lower end coming out of the base as negative, but with the alternating layers of crushed granite and charcoal there must be an alternating or pulsating effect. Remember, charcoal is carbon, so this Etheric Condenser is a Vitic device, but not nearly so concentrated as the field between the Alnico magnets of Vitic. Iron filings sifted in the crushed granite would probably increase the power of this thing. This gadget would augment the power of your Eeman Screens, if you are using them, by adding extra etheric vitality to the circuit. Add long wire leads to the upper and lower ends of the Condenser, so you can hold one in each hand while holding the handles of the Eeman Screen leads. Which Condenser lead should go to each hand? I dunno! This is borderland research and you'll have to experiment on yourself, and be your own authority! This is one of the first principles of the Aquarian Age into which we are moving at breakneck speed. Now to continue Al Goeke's article. RHC)

GERMICIDAL EFFECT OF ULTRA-VIOLET LIGHT

The use of the Argon bulb (General Electric AR-1) as a pain-killer and infection reducer is not a new idea. Nikola Tesla used a gas-filled tube or bulb, excited by high-frequency current to rejuvenate himself every day in his laboratory. 40 years ago the RenuLife Electric Co. of Detroit was making and selling such a treating device to doctors all over the country. They offered a choice selection of vacuum tubes for getting into the body to release rejuvenating, purifying ultraviolet rays. I don't know that their tubes were filled with Argon gas, as is the current General Electric bulb. Maybe this is why the GE bulb is so effective. There is a greater concentration of ultra-violet light in the most beneficial wave-lengths, from pure, excited Argon gas.

We visited one chiropractor on a trip last year who used an MWO machine on his patients, and also uses the Tesla Coil of the MWO to drive the Argon bulb. General Electric designed this little gas-filled bulb for use on the regular 115 volt house current. As a very dimly burning, ultra-violet night light it is a good spook-chaser and can be left on all the time because it uses only pennies worth of electricity in a month! The little bulb has a curved metal plate inside it, as shown here, on which you can see a faint, ultra-violet luminescence when it is turned on, in a standard light socket.

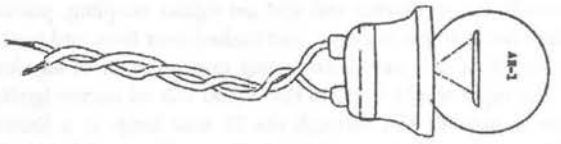

BUT, when you put a *hundred thousand* volts through it from the MWO Tesla Coil, that Argon gas gets real excited and throws off powerful ultra-violet energy which can penetrate into the body and destroy infection and break up tension, inflammation. Showers of sparks jump from the surface of the clear glass to the skin unless the bulb is held so it touches. Sparks will also jump into your hand unless the socket mounting is well insulated. The mounting or socket shown here is the standard rubber base with heavy, six-inch leads for outdoor lighting. Our local hardware store sells the socket for 39 cents. The Argon bulb needs only *one* connection – to the antenna lead of your MWO. The black and white leads from the socket can be twisted together and soldered to a female Banana Plug. This will take the male connection from the antenna lead. The twisted socket leads can be wrapped with heavy, insulating tape if any of the ultra-high voltage gets through to tickle your hand.

The chiropractor who makes use of this in his work asks his patients if they have any infected teeth, or a toothache. One five-minute treatment over an aching tooth, rubbing the Argon bulb on the cheek over the infected area, stopped a toothache for us. It also relieved a throat, sore from too much lecturing.

General Electric also makes an identical Neon bulb. This gas throws off an orange radiation, which would probably give off more of a surface-heating effect because of the longer wave-length. You won't find these special bulbs in your local stores, probably, but will have to order them through some wholesale dealer, say an electric contractor and builder who has the GE catalog of special bulbs. A compact, professionally built Tesla Coil can be bought from Edmond Scientific Co, Barrington, New Jersey. It doesn't put out as much energy as the MWO coil designed by Bob Beck, but it will cause the GE Argon bulb to emit considerably more ultra-violet radiation than the 115 volt house current.

From the **May-Jun 1971 Journal of Borderland Research:**

A HIGH-POWERED MULTI-WAVE OSCILLATOR

"Your brochure article stating that Georges Lakhovsky's original MWO had a separate Tesla coil driving each antenna is most interesting. This is in line with my experience here in Manila. I find that when livening up both antennas to full voltage, to spark each antenna down to the 3rd ring with an occasional slop-over to the 4th ring, it is *much* more effective than when keeping one antenna (or resonator) down to near ground potential; and it is least effective when actually grounding this antenna – as Mr. Beck does – through a 1/10 MF capacitor!

"One five minute treatment a week is enough for me and the equivalent of two 15 minute treatments with only one antenna up to full voltage. However, I drive both antennas up to full voltage with only one Tesla coil. It has rather tightly coupled primary and secondary windings, wound as an auto-transformer, on a 4-1/4 in. diameter glass jar, as per enclosed sketch.

"The present spark gap is 1/8 inch, a fixed, constant gap, needs no turning with variable distances between antennas, subject or no subject. The sparking is much the same and the gap is not at all critical, 1/32nd, plus or minus, works just as well. Gap electrodes are 1/4 inch tungsten. The present primary circuit capacitor is .0015 Micro Farads, but this also is not at all critical, can be varied up to .0025 and still give much the same sparking and effect on subject.

"I tried using #28 Formvar wire, heavy insulated, 70 turns each on the secondaries, to shorten coil and get tighter coupling, primary to secondary, but coil was too short and flashed over from end to end.

"Just plug it in and use it, no tuning manipulation of any kind required. The input of 115 VAC to the 10,000 volt oil burner ignition transformer is only 17 VA through the 75 watt lamp as a limiting resistor. Never use more than a 100 watt lamp. This is all I can take. More power becomes rapidly depressing. And the full 250 VA out put of the transformer I once used, with a 5/8 inch spark gap, was nearly fatal. It took me four months to get over the effects of it. Pass this info on to your Associates."

J. Gilbert E. Wright

Associates can benefit from this dedicated borderlander's experience, which confirms Lakhovsky's warning that healthy cells can be over-stimulated and killed by powerful high-frequency waves – as well by X-ray and radium waves. It may be easier to locate Neon Sign transformers of 5,000 to 7,500 volts output as power supplies for this MWO, at a cost of $15 to $20. In this case the wattage of the "limiting resistor" electric light could be increased to 150 or 200 watts, or eliminated altogether, if it is necessary to get enough power to cause random arcing down to the third and fourth rings on both antennae. The good doctor says nothing about shielding but care should be taken to prevent radio interference from this powerful spark.

"No data is given in the drawing (May-June 71 Journal) on the size of the antennas. I would suggest that the outer ring be about 18 inches in diameter with a 3 inch gap. Alternate down through the rings separating them about 2 inches apart and held together with plastic electrical tape. Wire should be #10 bare. The secondary leads connects to the second ring from the largest diameter outside ring."

George Van Tassel, Giant Rock, California

A HIGH-POWER MULTI-WAVE OSCILLATOR

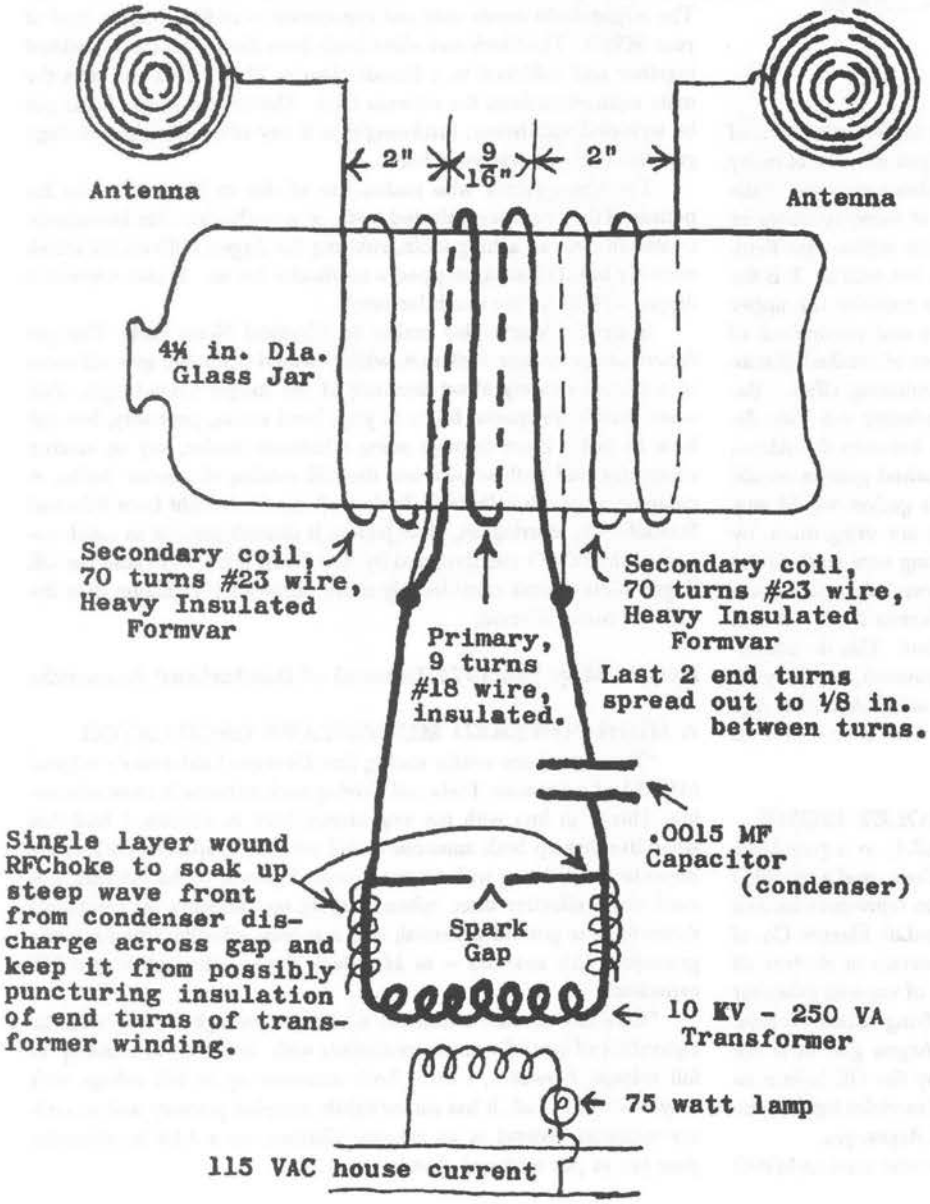

An even more spectacular possibility is the Time-Machine effect in connection with rejuvenation. If, as Bob Beck suggested in his article, the MWO tends to take the body cell back down the time-track to a more youthful, more vital period, what would happen to a person who stayed in the field of the machine for four hours? Would his vibratory rate be speeded up to where he would disappear completely? Like the hero of H.G. Wells' 'Time Machine'? Anybody want to try it? It seems, from hints George Van Tassel has been dropping over the years, that his Integratron at Giant Rock, California might do something like this – if and when he gets it working! As I recall, both George and the Canadian Saucerian, the late W.B. Smith, spoke of the four dimensions of electricity: 1. is the electricity moving in one direction along a copper wire, 2. is the magnetic field around the wire, 3. is the static charge created by the first two effects, and 4. is Time – or the 'tempic field' as Smith called it. The Time Field equates with Space, where consciousness is everywhere present. Seems to me Lakhovsky's Multiple Wave Oscillator is a gadget which gives us the opportunity – for the first time – of approaching the Time Field with scientifically acceptable equipment, operating in known frequencies.

BIOPHYSICIST CONFIRMS LAKHOVSKY'S THEORIES!

LA "Times", March 28, 1971: "The 'magnetic resonance' of the nuclei of atoms (in living cells) has been used to tell the difference between cancer and normal tissues. This resonance is the reaction of the nuclei to electromagnetic energy – first its absorption and then its emission. The process can be timed.

"Raymond Damadian, a biophysicist

at the State University of New York's Manhattan Medical Center, said his achievement may open the way to major advances in the diagnosis of cancer in humans... Like other attempts to find a way of making early diagnosis of cancer, Damadian's research began with a hunt for significant differences between cancer and normal cells.

"He relied on a law of physics on which nuclear magnetic resonance is based – that the atoms in each element in the periodic table absorb and then emit electromagnetic energy on an individual wavelength that is different from that absorbed and emitted by the atoms of any other element. In his system, radio waves are aimed at atoms in strong magnetic fields. If the wavelength is the right one for that atom, the atom will absorb the energy and then emit it, returning to a 'resting' state afterwards.

"The reactions differ according to the kind of molecule the various atoms are incorporated in. They also differ when very subtle changes have taken place in the molecules. The measure Damadian uses is what is called the 'relaxation time' of hydrogen atoms in water molecules within the (body) cells... He found that it takes longer for protons (nuclei) in cancerous tissue to 'relax' than it does for protons in normal tissue... The relaxation time of protons in normal liver tissue, as one example, was .25 of a second, compared with .86 of a second for cancerous tissue.

"Damadian's findings confirm the theory proposed by several scientists that water molecules in a normal cell are held in a fairly well organized structure by electromagnetic attraction exerted by the molecules in the cell. But, it was theorized, when a cell begins the uncontrolled growth of cancer, the structure begins to collapse because of the cell's increasing disorganization.

"Damadian thinks the device for detecting cancer in humans (his experiments were conducted on mice and mouse tissue) that may come out of his work would be a radio frequency coil to emit the electromagnetic waves to be aimed at the atoms in the water molecules under study. The device also would include a magnet to create the field required for measurement.

"The coil would be wrapped around the patient while the magnet would be moved back and forth over his body. The reading of how long it takes the atomic nuclei to relax would be made and then computers would do the matching up and make the diagnosis."

Interesting, isn't it, how in the 1970s researches of biophysicist Damadian parallel the pioneering work of electrical engineer Georges Lakhovsky in the 1920s? The goals are quite different, of course, in that Damadian only wants to prove the existence of cancer so the victim can go on to be drugged, operated or radiated with destructive X-rays or cobalt rays, at fancy prices, a procedure inspired by the soulless monsters who guide the American Medical Association from the Lower Astral plane.

The irony of Damadian's proposed diagnostic technique is that it combines two electro-magnetic *healing* procedures. If it is used on sick people, sooner or later someone is going to be healed of cancer while being diagnosed! Can you imagine the disagreeable shock this would cause in orthodox medical circles? Extensive surgery would have to be cancelled. The sale of drugs would be lost. Under these circumstances it isn't likely that his diagnostic technique will ever receive the approval of the AMA.

So, borderland science will have to continue to carry the torch of research on electro-magnetics in this area, as George Van Tassel is doing with his Integratron up at Giant Rock, California. In his newsletter "Proceedings" he gives more details of his research program there. We learn that in addition to creating a field of soft, high frequency radio waves, and a magnetic field, the Integratron will also bathe the subject in an atmosphere charged with negative ions.

HOPPING UP THE HIGHER FREQUENCIES

"There is one thing you may wish to try on the MWO. Close the center hole in the driven antenna with a washer and screw. Connect this to the driven ring (second ring from the outside) with a 500 mmf condenser, 10,000 volt rating. This increases the power of the higher frequencies. I think you will be pleased with the results. Mount the condenser at the back of the antenna. Mankind has been saturated with the lower frequencies for years; 60 cycles and their first few harmonics are almost everywhere in more than adequate power. Radio, TV, radar, etc. also saturate our world but the amount of power available to the average person is very small. In 1942 I used to cure my sinus trouble in minutes by getting close to the transmitter section of a radar transmitter. Few get that close, though, and it is a good thing as this power can kill. I have seen birds and larger animals killed instantly. It can happen to humans, too."

H. B., Melbourne, Florida

SEND A FEW BUTTONS

"Received the Lakhovsky loops and am pleased to feel the response to the body. I wear my belt only at night. I gave one to a friend who was having a problem with her leg and anticipating hospital treatment for same and the response was also to the good... So all I want now is for you to send me a few buttons so I can make some more loops myself and help to lessen some misery around here, for someone. I tried to have some buttons made here, but no success."

J. M. S., Charleston, S.C.

The non-slip loop buttons we made are of 1/16 inch thick, white fiberglass plastic.

MORE POWER NEEDED

"Enclosed is $. Please send me the magnet assembly with carbon rod (March-April 71 Journal). Have not had the hoped for results with the loops. Possibly the assembly, which can be used more directly over the research area, will be more effective."

M. S., Ellensburg, Washington

If we've proven one thing in our borderland research, there is no single cure for any or all of mankind's ailments. Injury and disease are outward manifestations of an invisible cause, which may involve three or four levels of consciousness and extend back two or three lives. Your Director has found in over thirty years of counselling people on their borderland problems, half of them don't really want to get well, they just want to be free of pain so they can go on indulging their vices. And by the time the hidden vice surfaces as a disease in some target organ of the body, an unhealthy trend has been established in the cell life there. It usually requires a strong jolt or shock to reverse this trend, such as a powerful magnetic field, a drug, chiropractic, even surgery – anything to break the negative pattern which created the condition. One of the simplest and most effective methods, and cheapest, is fasting for a week or two. This gives the system a chance to purge itself of all filth.

OPEN ENDED COPPER BRACELETS

"Your article on copper bracelets sent me to the typewriter! It is quite well known in England and has figured on TV as anklets for racehorses! Open-ended copper bracelets sold freely in shops for some years here, but not recently. However, I have a copper bracelet from Rhodesia which I wear always, never take it off, and of course no arthritis or rheumatism. But I'd like your experimental loops for throat, waist and wrist.

J.G., London, England

THE PRO AND THE CON

"Thanks for the wire rings. Sorry to report no favorable results. My husband refused to try. I wore them several nights but seemed to feel

even worse afterward. It was a good experiment. I guess my trouble is psychosomatic.'

"I want to thank you for sending me the kit of Lakhovsky coils. I especially appreciate your taking the time to prepare a larger-than-usual coil for my chest. I guess I'm, too young to have any really serious physical ailments – except for insomnia! And the coils eliminated that the first night I wore them to bed!"

J. T. D, Venice, California

From the **Sep-Oct 1971 Journal of Borderland Research:**

UPGRADING CELLULAR ACTIVITY WITH ELECTRO-MAGNETISM

By Aaron H. Steinberg, Ph.D.

For too many years now the scientific knowledge of electro-magnetics and its positive effects on cell life has been collecting dust and cobwebs on the shelves of ignorance, brought on by those special interests who fear the Truth. We are now seeing a rebirth, if you will, with scientists both professional and amateur, who are reviewing the work of their predecessors and making improvements in the mechanical application of magnetic fields.

In 1969 I visited the USSR to see for myself what and how they were utilizing Electro-magnetism. In several country homes for retirees I was most pleasantly surprised to see electro-magnetism used daily on most of the old folks. I should say young folks since may who claimed to be over 100 years young, looked and acted like most people at 50! The main object of the E-M was to reverse the ageing process by altering the cellular structure. I was most anxious to purchase a piece of the equipment, but alas no sale.

Seek and you shall find has always been one of my dominant characteristics. So when I learned that Japan was truly advanced in this field, having been using such equipment since 1936, I decided to go there in 1970. I sought out the one company that had been most productive in this field. They were most kind and cooperative. I was introduced to several scientists who had done much useful research. Their claims were backed up by scientific facts and I was convinced that they had a well constructed instrument, simple to use by anyone so desirous. They named their equipment The Magnetizer.

I returned to the U.S. with a Magnetizer and immediately began a research program. I can report that the results obtained to date have been most favorable, after nine months of experimentation. The magnetic flux generated by the coils can be measured accurately over any part of the body, thus determining those areas where the flux is penetrating as well as those where it is weak.

Chemicals and pollution are surely contributing to an unhealthy alteration in our cellular activity and human magnetic filed. It will be many years, if at all, before this mess can be rectified and controlled. But in the meantime, those who are aware and see the danger signals, will not sit by and wait for the clean up, which may never happen. Instead they will seek to upgrade their cellular activity so that the body's natural resistance may be at peak ohms. There is some indication that the aura force centers known as chakras or vortexes are stimulated by electro-magnetism.

From the Japanese scientists I learned the following about the effects of magnetic flux. It is different from ordinary electric current, which only flows along the surface of matter. It is different from X-rays, which do not penetrate the bones. The magnetic flux of ultra-long wave generated by the Magnetizer penetrates deeply in muscles, fat and bones and has an intensive effect on the nerves.

Magnetic flux never causes unpleasant sensations in the body, such as pain or shock, but instead produces comfortable, warm sensations. These sensations are also known as Joule's heat, which strengthens the function of the cell, corrects spasms and inflammations. When magnetic flux passes through tissues, a secondary electric current called the eddy current is created around the magnetic lines of force in the tissue cells, which ionized the protoplasm and rejuvenates the tissues as a result of activating metabolism. Furthermore, magnetic flux, in the process of penetrating the tissues, works to increase hormone secretions. These maintain youth by providing energy as a result of normalizing function of the internal organs.

Flux strongly stimulates magnetic substances in the blood, like iron. Accordingly, the hemoglobin in the blood vessels moves actively, accompanying the lymph circulation, when the Magnetizer is turned on. The therapeutic effect is not singular but collective, thus eliminating constitutional weakness.

From the May-June **1971 Journal of Borderland Research:**

OSCILLATING LOOPS AND COILS

I have a necklace which is definitely an oscillating circuit. I'm sure you have seen them. They are a wire around the neck instead of a chain. The only thing is that they come with a hook arrangement to clasp them. I cut the ends off, and rounded them to make a real oscillating circuit. Then, too, I got a pair of earrings which are simply coiled wires, like this:

One of these days maybe I'll have a headache (this is rare), and I will try either or both of them.

Mrs. C. M., Watertown, Wisconsin

REMEDIES, HOMEOPATHIC & ELECTRO-MAGNETIC

"You might spread the word around that the Copen Vibro-Potentizer actually can make any Homeopathic remedy in any potency from 1X to 10M.

"Since the medical-industrial complex is trying to destroy Homeopathy and its pharmacists, those who know of it and are doing research on its remedies would do well to get such a machine. It can also make a remedy from a radionic rate. I made Skull-Staphylococcus 10M and reduced an intractable sinus infection. The possibilities are fantastic and open up a new field in healing. One can make color remedies and aura remedies with greater power than radionic treatment of the same."

From his own research this Associate is suggesting that homeopathic remedies, being closer to physical matter than radionic treatment rates, may bring physical body changes more effectively. A hundred years ago in Philadelphia, Dr. Pancoast was curing practically every known human disease with colored light, either blue or red. But he also prepared color-treated dosages of oil or water for internal use, to back up or augment the shining of colored light on the outside of the body.

"May I remind you that the Multi-Wave Oscillator requires an antenna without any *edges*, to give efficient radiation. Lakhovsky's original had *round* bars or tubing with *spherical* ends. Edges lose most of the radiation. In addition the largest ring should be based on that fundamental resonance of the human organism, 3.66 meters as discovered by Bell Laboratories. This could be a quarter-wave antenna length of .91 meters or a circle of pi diameter.

"However, this should be doubled so that the human organism resonance is the first octave. Individual resonances vary slightly above and below 3.66 meters. By giving lower octave and with the variations supplied by the spark gap all wavelengths would be reached. Therefore, the outer ring should be 1.82/pi meters.

"The relative size of the outer rings could be determined by examining one of Lakhovsky's original antennas. The outer ring should be fed current at *both ends*, quarter wave style, I believe (to a H.V. Coil) not at the middle of the second ring as the Beck antenna does. The frequency of human resonance, 3.66 meters or approximately

84.6 megacycles is the key to radionics. [By my calculations, using the formula wavelength in meters (3.66 meters) equals (=) the speed of light in meters per second (300,000,000 m/s) divided by the frequency in cycles per second, I figure the frequency to be 81.97 megacycles. T.J.B.] The human sample or witness-blood spot, etc. radiates around that frequency, varying according to the disease and the person, I believe. The homeopathic remedy also has a resonant frequency and alters the human frequency for better (or worse). In addition there are harmonics and possibly sub-harmonics.

"The resistance rates discovered by Dr. Abrams, followed by Guyon Richards, are still valid even though this work was done 50 years ago. The rate for Aqua Marina (sea water) put on a Copen V.P. produces a very effective remedy good for almost everyone. This rate comes from Richards' book 'Chain of Life', 1934."

S. M. S., Chicago, Illinois

We welcome this Associate's observations on the MWO antenna, radionics rates and homeopathic remedies.

Riley Hansard Crabb, editor JBR 1959-1985

BSRF MWO Update - Issued May 31, 1988 (1986-1987 MWO UPDATE BROCHURE)

Compiled by Tom Brown from the BSRF Files
in consultation with Eric Dollard & other BSRF Associates

As there has been a continuing strong interest in the Lakhovsky Multi-Wave Oscillator we felt the need to compile this information into the present book. This documentation is the result of a wide variety of analysis and experimentation with the MWO and covers many years of active research.

There have been many comments made concerning the inherent healing effects of the MWO, but as it cannot be stated enough, the device is merely a tool of research, of which one may draw their own conclusions as to whether or not the device actually has any healing properties. It may be interesting to note that in a personal conversation with Dr. Ita Wegman, Rudolf Steiner stated that electricity, magnetism, and the force upon which nuclear phenomena is based, are all corrupted ethers.

We have found through studying Goethe's indications on the phenomenon of Light and Color in conjunction with Eric Dollard's high frequency researches that electricity is a reflection of the Light Ether. This matter is being discussed further in The Journal of Borderland Research, so it is sufficient for present reference to say that Light has its two poles, red-yellow and blue-violet. The red-yellow pole in nature is longitudinal (direct rays from sun) and the blue-violet pole is a progressive type of transverse wave (rounded sky, Reich's KRW wave/blue orgone). Electricity has its two poles, electro-magnetism: red-yellow-hot, (retarded transverse); and dielectricity: blue-violet-cold (longitudinal). Hence, there are experimental indications that electricity really is a reflection of the Light Ether.

In light of this train of thought we quote with permission from a 1986 private communication with Trevor James Constable: "The MWO I regard as a false path. The cellular stimulation theories sound and seem good because they are mechanistic, and therefore sympathetic with the mechanistic *weltanschaung*. With the MWO you can avoid the etheric—or so it seems—and therefore those who feel adrift in the etheric ocean cling to things like this. Healing is one hundred percent an etheric problem. Any dysfunction or hyperfunction not caused by direct trauma has to be tackled via the ether body, and even the direct traumas respond best to etheric correction, such as getting the displaced double back into occlusion through the use of arnica compresses, etc., etc. In between the MWO antennas, there is a general marshaling or focus of light and chemical ethers. Its quite evident even with a minor extension of vision. This is the healing agency, not the sparks. The ether rushes to suppress the EM activity, and because it is low power, the ether accumulates around the spirals and in between them. Any stricken area placed in such a high concentration of formative energy, is going to respond with a return towards normal. BUT, why go to all that trouble when a simple orgone blanket—a layered structure that can be directly applied to a traumatized or dysfunctional area—does a much more efficient, controllable job without that infernal juice. In my time with Ruth Drown, I heard it over and over again, and I pass it on to you: keep that 115V juice away from the organism. The post material EM energy is life negative, but no one seems to feel that they can get results unless they INJECT the alien EM activity into the stricken carcass. It's pure ignorance really. My own experience with orgone accumulators and blankets leaves me with no other choice but to regard the MWO as superfluous. A good rule for any experimenter: If it gets simpler, you are on the right track. Remember always Steiner's dictum: "the spirit of man is always healthy! . . . .It is the obstruction or dysfunction in the lower sheaths that distorts the manifestation of the spirit and personality via the body."

Not much more need be said in that vein except that of a reinforcement of Trevor's comment. Our present society is not on the path of Nature so therefore some people feel the need for a device such as this. Wilhelm Reich discovered how to concentrate the living energy of the universe, which he termed the Orgone. The Yogic sciences teach us how to accumulate this energy without any outside apparatus, so therefore the simpler and more passive a device is, the closer it resembles Nature.

On these pages you will find some of the reports of MWO experimentation and consideration by BSRF and Associates. We hope the information proves useful, but again it is for research purposes only. We do not recommend the MWO for medical use because we are not qualified to give medical advice, nor do we want to create any false hope where one may neglect professional health care. We do fully support an intelligent, aware human being's right to investigate and research with devices such as the MWO. No one has all the answers and the MWO is an interesting device which deserves true scientific verification or rejection.

THE BASICS

The general theory behind the MWO is to excite a concentric ring antenna which produces a wide spectrum of radio frequency waves. In this theory it is understood that the RNA-DNA coil in the nucleus of every cell has a resonant frequency within this range. Just as a tuning fork will ring when an identical fork is struck in close proximity, the cells will resonate to their individual frequency pulled from the frequency ocean of the MWO. Most people don't consider that there are different types of waves and two poles of electricity, and these distinction have not generally been noted.

The antennas on the currently popular Beck MWO system, serve as simple capacitor plates which transmit dielectric waves out of the Tesla Coil (see figure 1 and photos 1 and 2). The second MWO plate in such a system must be connected to a second Tesla coil or to a double pole (half wave) Tesla coil (May-June 1971 JBR), not a single pole (quarter wave) Tesla coil as per the Bob Beck/Klark Kent style MWO. Action in the MWO antenna is neutralized by the fact that capacitor currents flow radially inward and little electron current flows around the loops. Copper plates can be substituted for the ring antennas. This system operates 1000 times stronger if a spark gap exists across the double coil. A description of the action is in DIELECTRIC & MAGNETIC DISCHARGES IN ELECTRICAL WINDINGS by Eric Dollard from BSRF.

Lakhovsky's Multi-Wave Oscillator, as pictured in THE SECRET

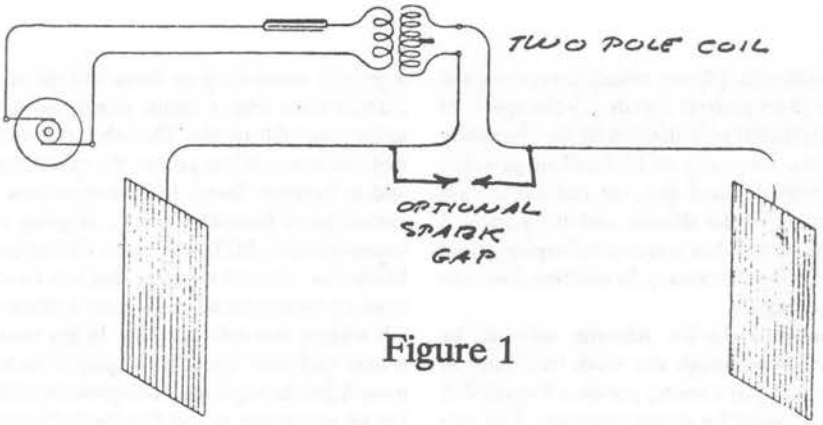

Figure 1

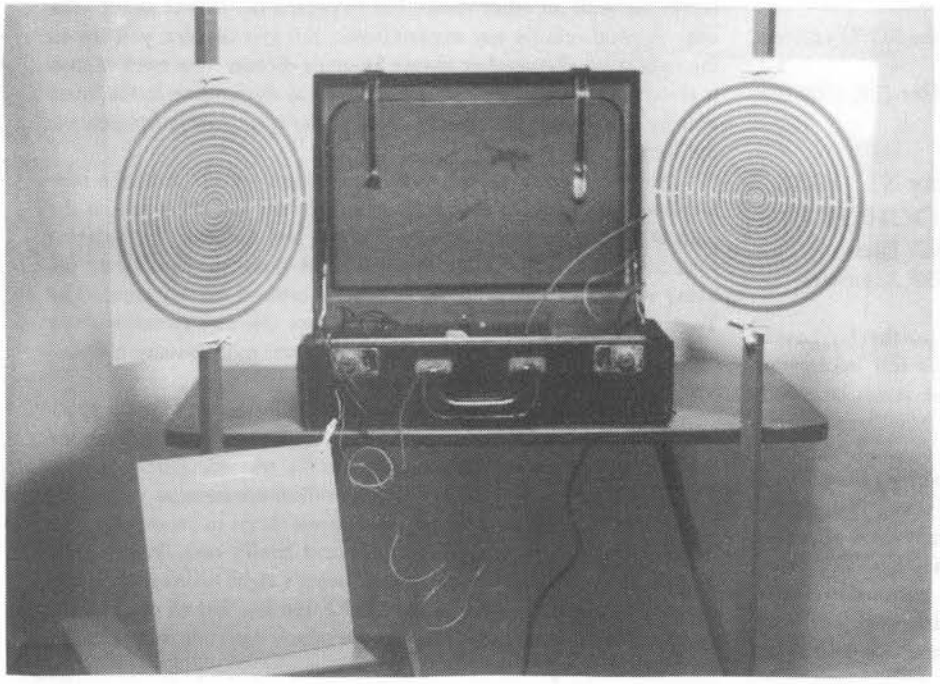

Photo 1
"Beck" style MWO from the BSRF collection (note: foot plate at lower left goes to ground)

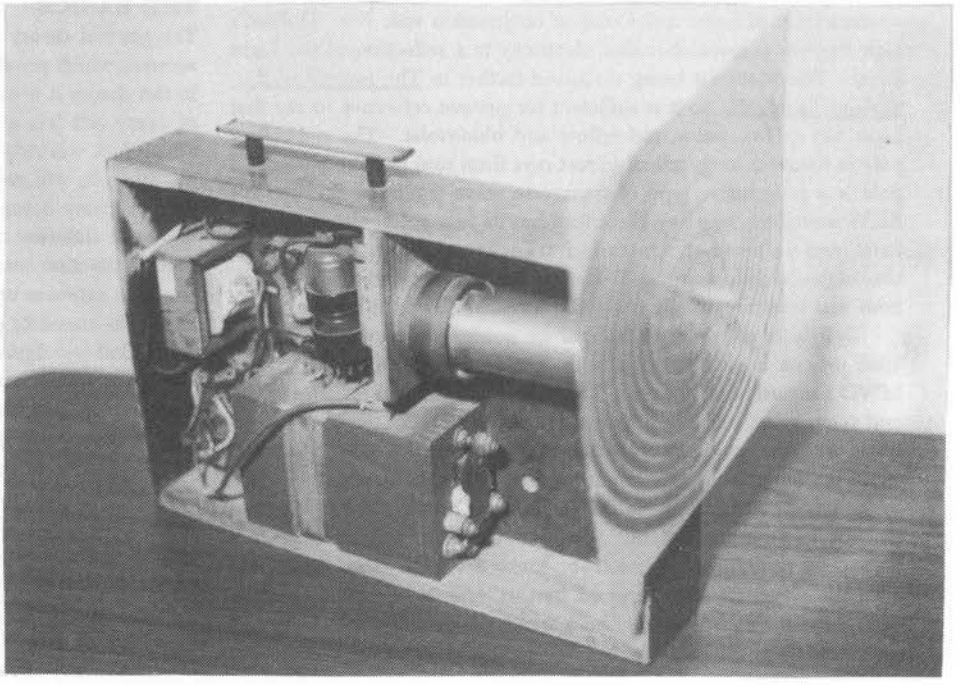

Photo 2
Single antenna version from the BSRF collection (Resonator antenna can be attached at ground)

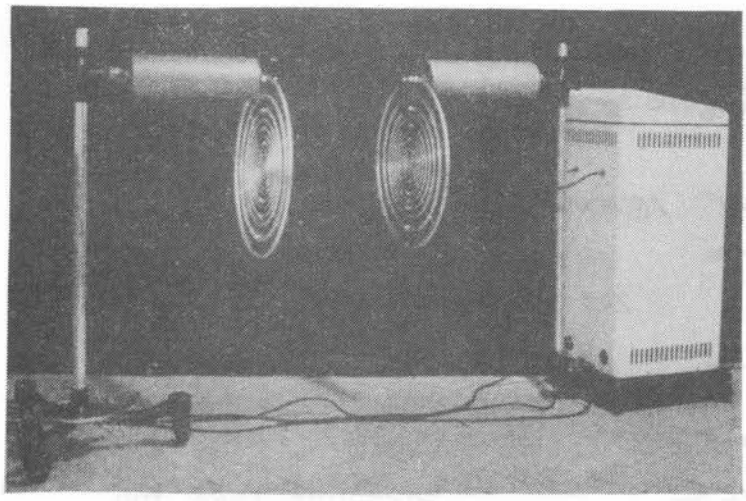

Photo 3
Lakhovsky's Multiple Wave Oscillator

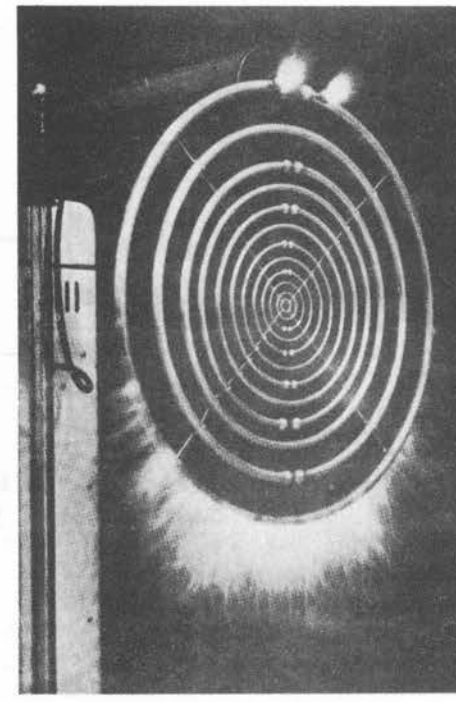

Photo 4
Lakhovsky's MWO. Close-up of transmitter in action, showing *effluve* (electric brush). Note this is end-fire antenna. Regeneration may have come from novel component at 90° to antenna plane.

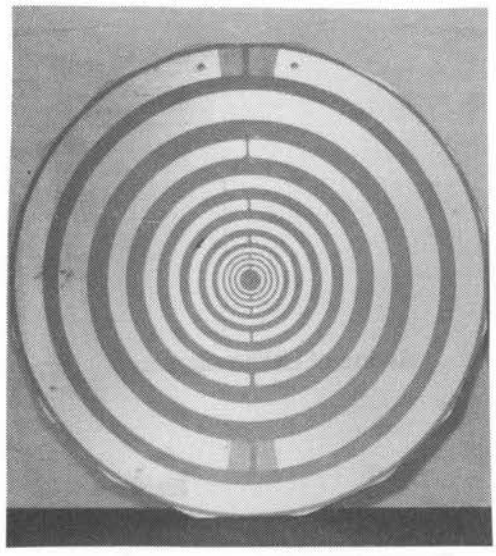

Photo 5
Yagi MWO antenna

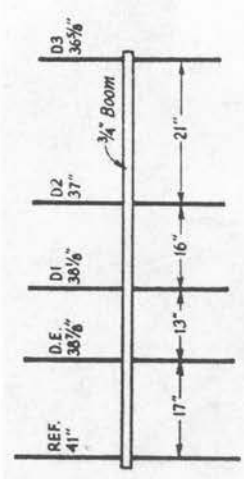

Yagi antenna

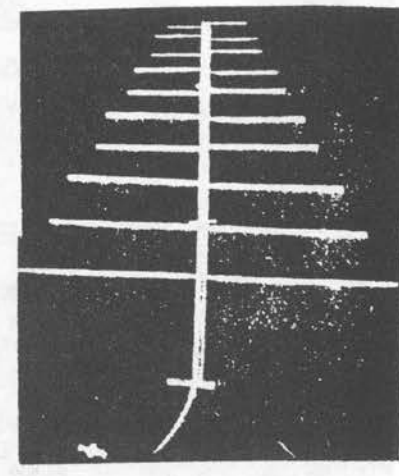

Log periodic antenna

Figure 2

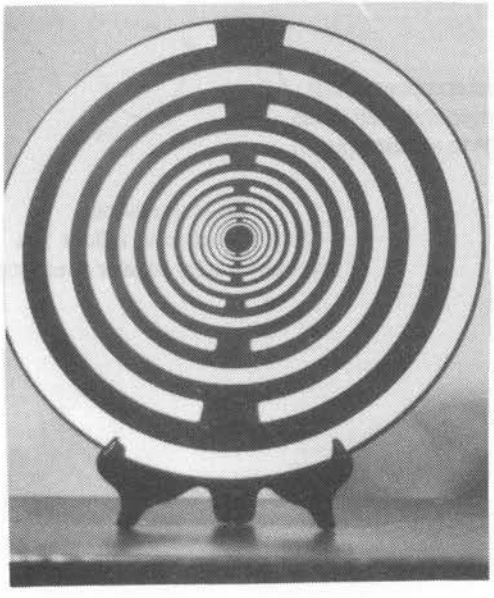

Photo 6
Golden Ratio -- Log Periodic
MWO antenna

Figure 3

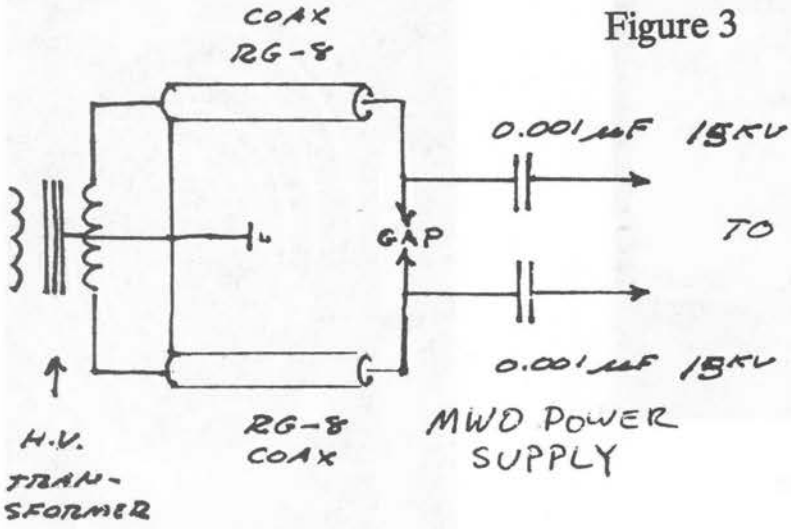

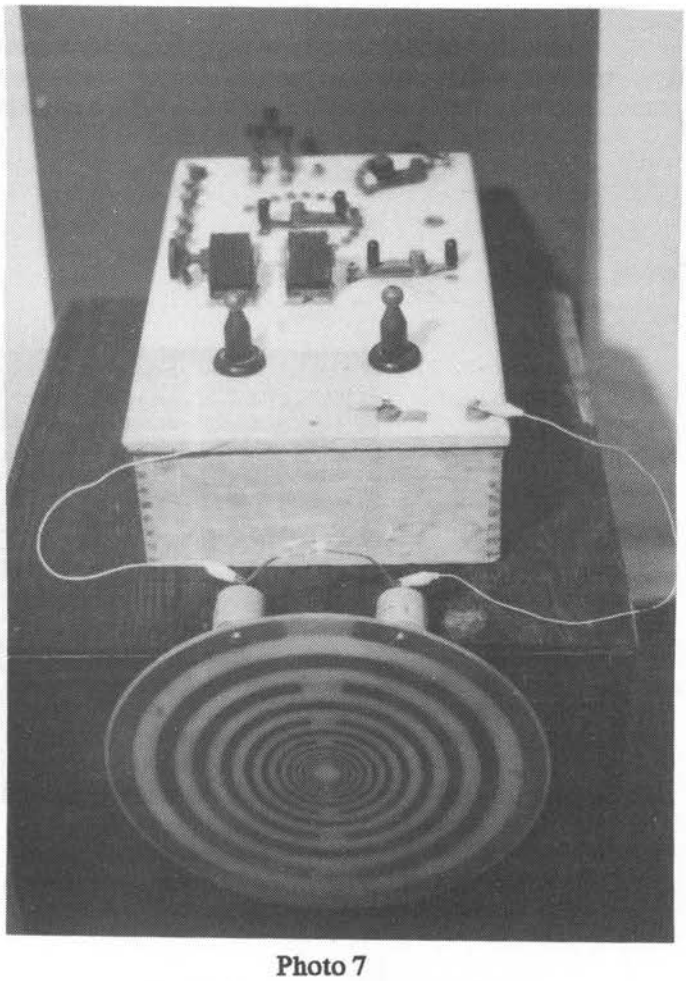

Photo 7
Golden Ratio antenna driven by 1919 era double-phase marble-top medical Tesla Coil. Mid-frequency D'Arsonval currents are utilized in this arrangement. Setup is as per Figure 3 (above), and is our understanding of the arrangement as utilized in THE SECRET OF LIFE. Coil donated to BSRF by John Crane from laboratory of Royal R. Rife.

Action of Lakhovsky setup

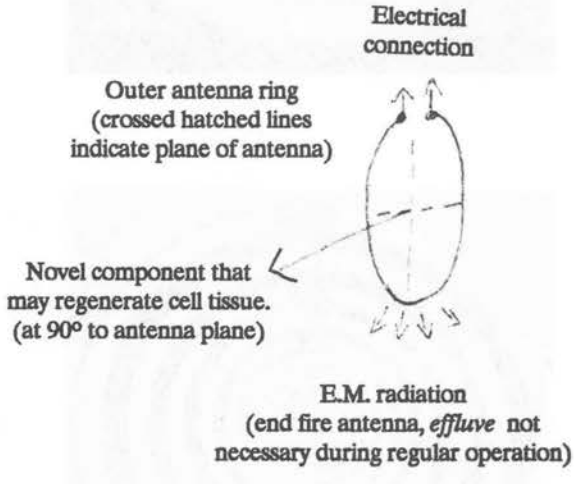

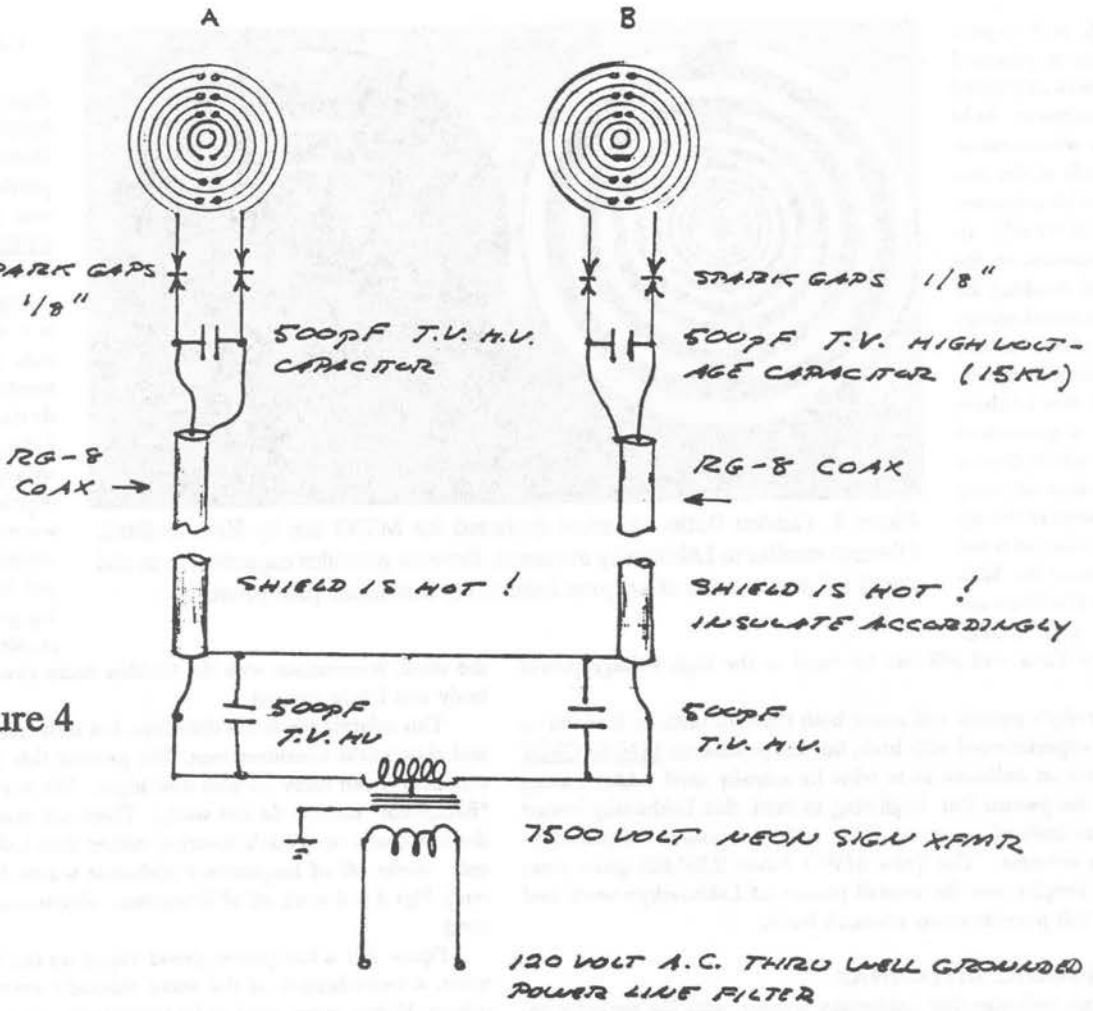

Figure 4

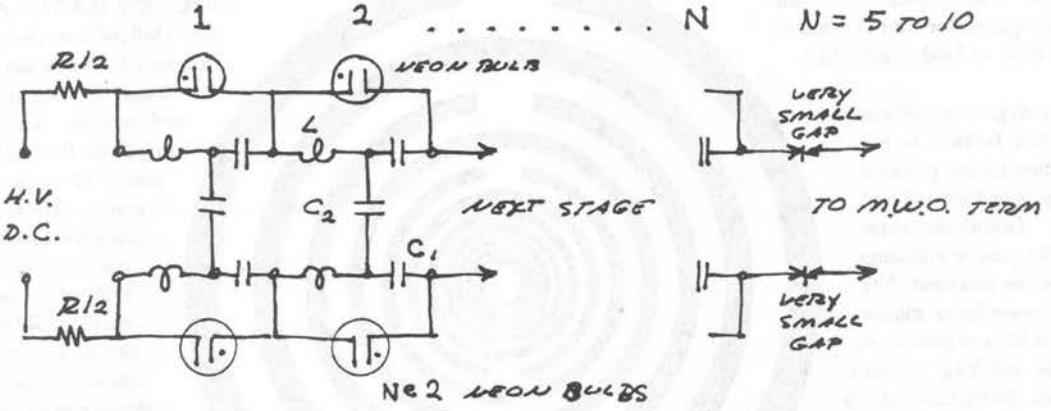

Figure 5

D.C. INPUT = 240V / STAGE ALL C_1 RATED 600V

R = 100KΩ / STAGE 1 WATT / STAGE

L = 1 μH / STAGE C_1 = 100pF X Nº OF STAGES

C_2 = 0.02 μF / STAGE 600V X Nº OF STAGES

OF LIFE and reproduced here as photos 3 & 4, created a structured electro-magnetic field fed by two wires contacting the ends of the outside ring of his antennas. This is obviously an end-fire antenna so the component reaching the person is a novel energy needing clarification. Several researchers have expressed that Lakhovsky used a quenched spark gap which creates damped waves allowing free oscillation in the antenna. A Tesla coil is not required since the Multiple Wave Oscillator antenna *IS THE COIL.* However a Tesla coil still can be used as the high voltage power supply.

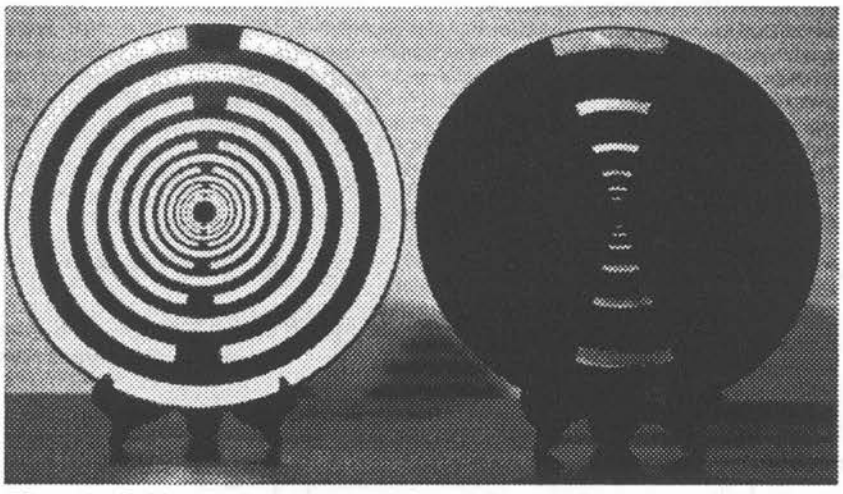

Photo 8. Golden Ratio antennas designed for MWO use by Eric Dollard. Obverse similar to Lakhovsky antennas. Reverse provides capacitance as did metal spheres at ends of original Lakhovsky antennas. (See photo 4)

Lakhovsky's patents will cover both types of units so it seems as though he experimented with both, but the pictures in THE SECRET OF LIFE are an indicator as to what he actually used. After having gone over the patents I'm beginning to think that Lakhovsky buried his secret to mislead copycats. That is the purpose for a patent, to protect the inventor. The Tube MWO Patent 2,351,055 gives some interesting insights into the overall picture of Lakhovsky's work and study of it will provide many research leads.

LOG PERIODIC ANTENNAS

Our research indicates that Lakhovsky worked with log periodic antennas and may have been the first to use them. The antenna will create a harmonious structure in the ether. The Beck style MWO produces a dielectric field 90 degrees out of phase with this, and utilizes the dielectric breakdown (arcing) of the field. This is basically a radio frequency noise generator and the most popular derivation of Lakhovsky's first MWO patent.

Scaling the rings non-uniformly using correction factors is not needed according to log periodic antenna theory (see figure 2 and photos 5 & 6). Lakhovsky states that any high frequency radiating circuit will drive the antennas. We are striving for waveforms mirroring the harmonic laws of nature. As an example the old Yagi antenna has non-uniform distribution of the elements. Log periodic design uses the uniform distribution of the elements such as is found everywhere in nature. This presents superior MWO performance. Lakhovsky's Speaker and Microphone Patent indicates that the log periodic design can be applied to sound as well as radio frequency energy.

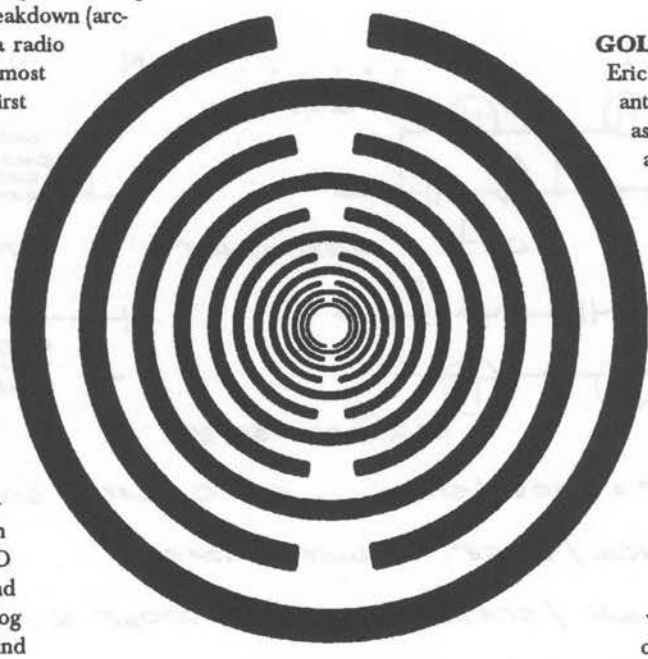

GOLDEN RATIO — Log Periodic design for research into the subtle vibrations from paterns

LAKHOVSKY'S MWO

Figures 3 & 4 are a preliminary attempt by Eric Dollard to accurately reproduce the MWO system as pictured in SECRET OF LIFE. Figure 3 is a simplified version for a single antenna, figure 4 is a double antenna system. Photo 7 is an experimental setup utilizing this design. We feel that Lakhovsky was working with quenched spark gaps which produce damped waves in the form of the antenna. This type of circuit is needed to power log periodic antennas to create their structure in the ether, harmonious with the Golden Ratio structure of the human body and life in general.

This information is not definitive, but is the result of experimental and theoretical considerations. We present this so that Borderland researchers can carry on with new input. We are not saying that the "Beck/Kent" models do not work. There are many claims that they do, but based on Tesla's theories, rather than Lakhovsky's. Figure 1 unit works off of longitudinal dielectric waves (displacement current). Figs 3 & 4 work off of Transverse electromagnetic waves (Hertzian).

Figure 5 is a low power driver based on the Steinmetz lightning wave, a reproduction of the wave naturally occurring in the atmosphere. Values given need to be experimented on for optimum pulse formation. A mathematical analysis of this wave by Steinmetz is included as an addendum to this book. See DISTRIBUTED SERIES CAPACITY on pages 159-160 of this book.

GOLDEN RATIO ANTENNA

Eric Dollard has designed a log periodic antenna based on the Golden Proportion, as found in living systems such as plants and animals. These antennas are two sided, the first side looking somewhat similar to currently used MWO antennas, the second side being capacitive loading (as Lakhovsky mentions, he used spheres on the ends of his antenna rings) based on the Golden Ratio. This design can be seen in photo 8. These antennas are gold plated to provide direct contact with the ether. Their actual size is 12" in diameter.

The term Golden Mean, Ratio or Section refers to the mathematics of life, which is a logarithmic function. This ratio can be found everywhere in nature. It is the Sacred Geometry used in the architecture of ancient Greek and Roman temples, the Great Pyramid, etc. It has also been con-

cluded by certain Orgonomists that "the Golden Ratio is a basic mathematical property of the orgone energy" discovered by Dr. Wilhelm Reich. (Journal of Orgonomy, V.8, N.2, Rosenblum, THE GOLDEN SECTION). It is evident from Lakhovsky's MWO Tube patent that he was aware of the Log Periodic design.

The MWO has usually been understood as having to be driven by a high-frequency source such as Tesla Coils and neon transformers generate. However, those who have looked into Lakhovsky's work know that he used simple wire circles to cure plants of cancers, and to make plants grow better in general. The Golden Ratio Antenna is a series of Lakhovsky rings because the rear conjugate strips on the antenna close the loops and in effect make Lakhovsky oscillating rings which are a complete circuit for focusing the ethers. The log periodic (following a logarithmic pattern) antenna design carries this effect further and preliminary indications are that the log periodic design creates a structure in the ether even without power, it may be an orgone accumulator of sorts! Further experimentation in this vein is being undertaken.

Log periodic antennas have the interesting property of creating a virtual (non existent but functioning) antenna extending about 4 times beyond the actual. It is also frequency independent and is an excellent antenna for Amateur Radio communications.

The ethers harmonize to Golden Section Mathematics, (as demonstrated by Trevor Constable in his ETHERIC WEATHER ENGINEERING ON THE HIGH SEAS video), so it can be understood that a living organism is a discharge of energy into the Golden Section space. We have observed the discharge of sprout energy into living sprouts when one of these antennas is directed at them. We found that it makes the sprouts grow better. Then we found that simply the pattern makes the sprouts grow better. So here we present you with the Golden Ratio Pattern that you can photocopy and use for experiments. This pattern may be copied as many times as you like for experimentation. We have reports that this pattern keeps the scale out of water heaters and fish tanks.

In 1986 Borderland produced a limited amount of Golden Ratio Antennas in copper and gold. These were precision engineered Log Periodic antennas, and were quickly absorbed into the research network. There is an appendix on log periodic antennas in this book for those who wish to pursue this interesting subject directly related to MWO research.

BUT . . . DO THEY WORK???

For all the material in this book we still haven't personally seen any solid documentation on the results of either type of MWO that could be re-verified as true to any present-day investigator. I've seen listings and testimonials, but even the photos in THE SECRET OF LIFE look doctored to enhance the cancers (tar can be seen on the wound and the hair). What was Lakhovsky really up to and which type of device works better? In Lakhovsky's Tube patent he states that his instruments are in use the world over. It is important to check out one of his originals first hand, if any readers have access to such please drop Borderland Sciences a line. We'll make the information available for research. Thanks.

CONCLUSIONS

There are no conclusions at this point in time. Borderland has been publishing MWO information since 1963 [31 years as of this 1994 edition]. This book marks the beginning of a new phase of research and development. Perhaps in the future, after people do some serious clinical and laboratory research into the subject of the Multi-Wave Oscillator can some conclusions be drawn.

It is important to keep in mind during these researches that just because a frog leg will jump when electricity is applied it doesn't necessarily mean that electricity and the life energy are the same thing. If we labor under this (quite common) delusion we may as well hope for our television sets to heal us of our ills. Rather, as astute phenomenological observers, we see that there is a relationship between electricity and life and in the understanding of that relationship we can approach a more lucid comprehension of our place in this manifest universe.

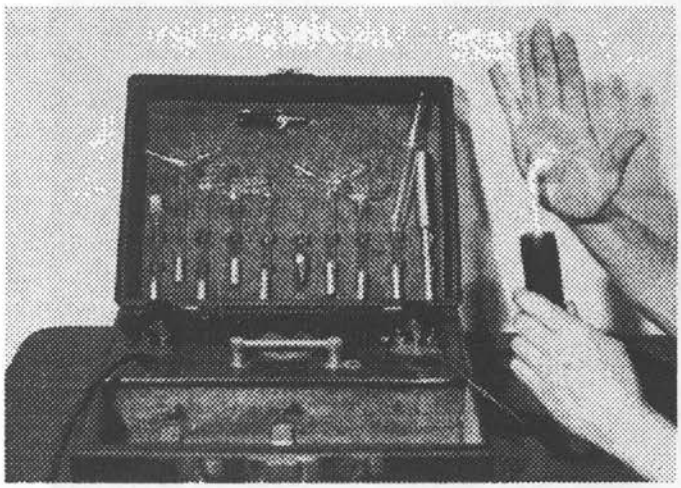

1920's era Violet Ray Massager. This device uses a small Tesla coil to drive various gas attachments which are applied to various parts of the body. Some MWOs have bulb attachments based on this device. Made by the RenuLife Company of Detroit, Michigan.

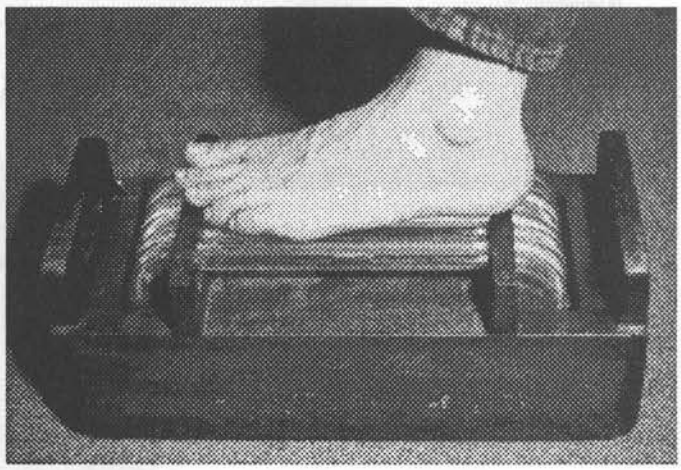

"Foot Fixer". This device uses a small Tesla coil to drive alternating tubes of argon and neon. Exact use and manufacturer unknown. Probably used to stimulate circulation.

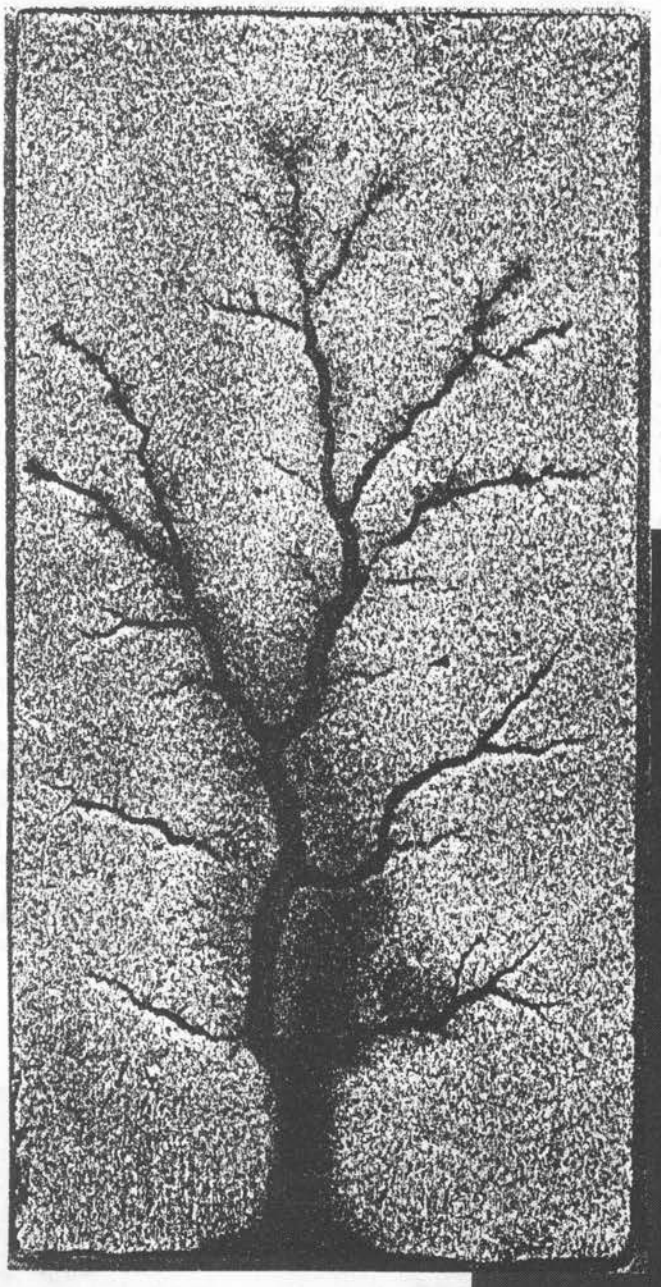

At left is a Golden Ratio pattern burned into particle board using Tesla Coil pictured below, seen here discharging into free space. Scientist Eric Dollard, builder of this coil, has deduced that the Golden Ratio is a property of space itself. The proportions are decided by the amount and type of discharge.

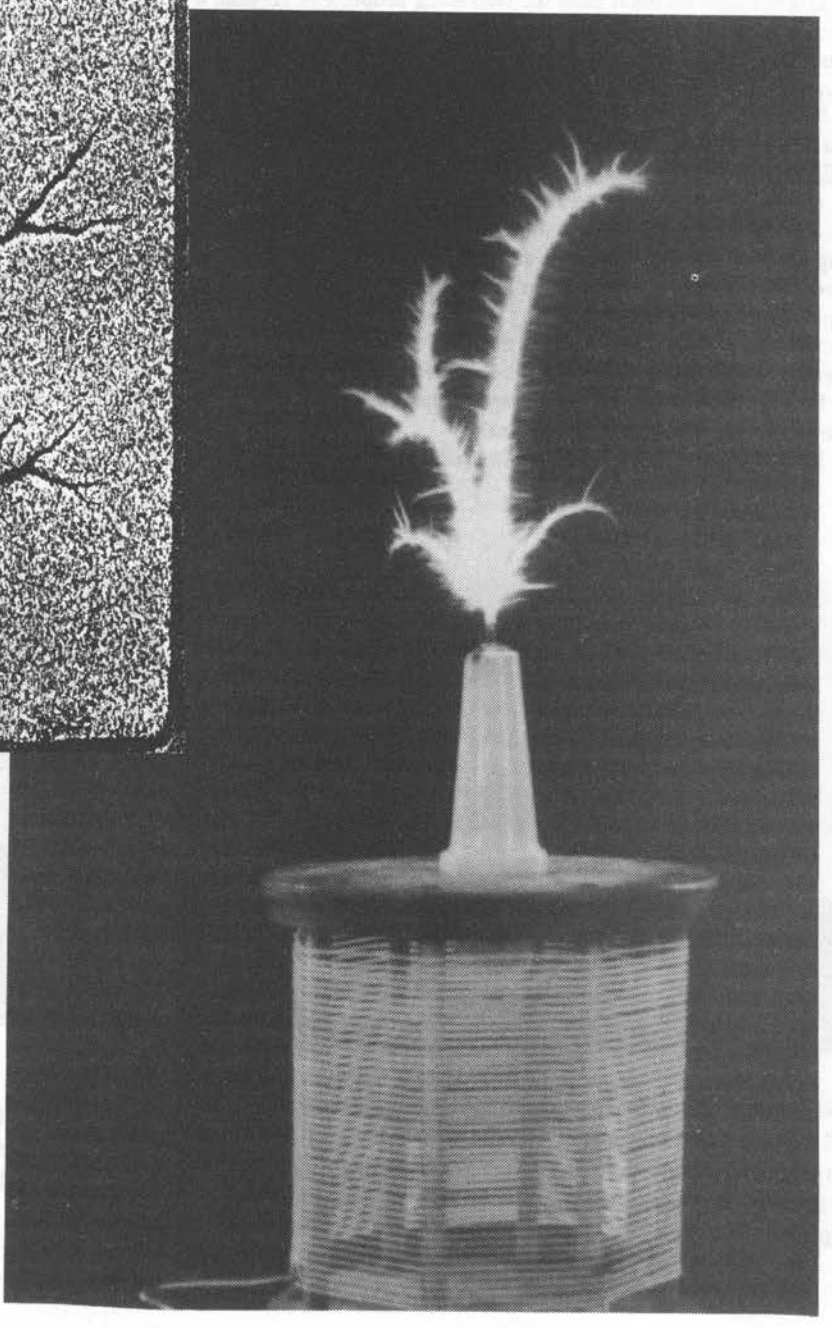

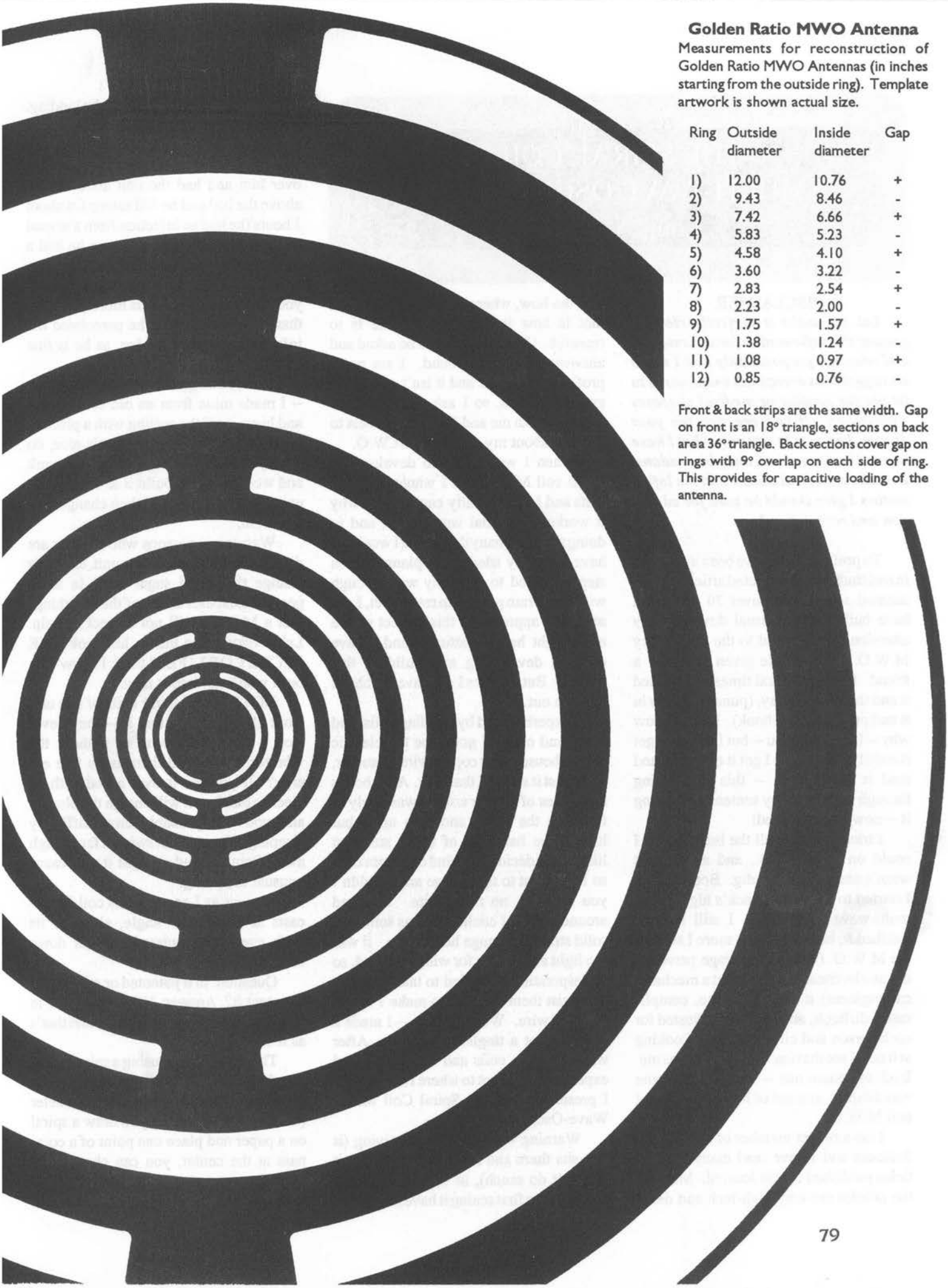

Golden Ratio MWO Antenna

Measurements for reconstruction of Golden Ratio MWO Antennas (in inches starting from the outside ring). Template artwork is shown actual size.

Ring	Outside diameter	Inside diameter	Gap
1)	12.00	10.76	+
2)	9.43	8.46	-
3)	7.42	6.66	+
4)	5.83	5.23	-
5)	4.58	4.10	+
6)	3.60	3.22	-
7)	2.83	2.54	+
8)	2.23	2.00	-
9)	1.75	1.57	+
10)	1.38	1.24	-
11)	1.08	0.97	+
12)	0.85	0.76	-

Front & back strips are the same width. Gap on front is an 18° triangle, sections on back are a 36° triangle. Back sections cover gap on rings with 9° overlap on each side of ring. This provides for capacitive loading of the antenna.

THE SPIRAL COIL MULTI-WAVE OSCILLATOR

Louis A. Schad

DISCLAIMER

Let me make it perfectly clear, I present this information for information and research purposes only and I make no suggestions or recommendations as to its use for healing or medical purposes whatsoever. If you are sick see your doctor. I present to you only what I have learned in my research and observations. I am not a medical doctor and the information I give should be used for education and research only.

To preface this, I have been interested in and studied and collected articles on the unusual sciences for over 30 years and have built many unusual devices. My attention was directed to the Lakhovsky M.W.O. by an article given to me by a friend. I read it several times and studied it and then put it away, (punched holes in it and put it in a notebook). I don't know why -- I can't tell you -- but I couldn't get it out of my mind, so I got it out again and read it some more -- this time going through it sentence by sentence digesting it -- now I was hooked!

I tried to gather all the information I could on the M.W.O., and as usual it wasn't easy -- I had to dig. Bottom line, I started to build Bob Beck's high power multi-wave oscillator -- I still haven't finished it, but I will. The more I studied the M.W.O. (being an average person -- not an electrical engineer, but a mechanical engineer) it seemed to me, complicated, difficult, and had to be adjusted for each person and circumstance. Looking at it now I see that isn't all true -- it was me. Back to square one -- I search for some way simpler, and out of it came the spiral coil M.W.O.

I am a recent member of Borderland Sciences and I have read many fine articles published in this Journal. Many of the articles are very high-tech and delve into the how, where, when and why, and that is how it should be if one is to research. Questions have to be asked and answers have to be found. I am not a professional writer and it isn't one of my greatest talents, so I ask that you have patience with me and I will do my best to tell you about my spiral coil M.W.O.

When I was trying to develop this spiral coil M.W.O. all I wanted was results and I didn't really care how or why it worked, my goal was results, and in doing so I tried many things that I wouldn't have normally tried had I planned each step and tried to fight my way through with pure brain power. In retrospect, I can see that I approached this project with a more light hearted attitude and I have enjoyed developing and building this M.W.O. But at times I did have problems to work out.

I experimented by winding coils, and coils, and coils. I got to be the electric supply house's best copper wire customer, or at least it seemed that way. After boxes and boxes of copper coils, I was ready to throw in the towel and give up -- but having the handicap of being stubborn like I am, I decided to wind one more coil, so I went out to the garage and wouldn't you know it, no more wire. I looked around and all I could find was some old solid strand 16 gauge house wire. It was too light and flimsy for what I wanted, so in desperation I decided to take 2 pieces and twist them together to make 1 heavy piece of wire. Well -- bingo -- I made a coil and got a tingle, that did it. After winding more coils and more coils and experimenting I got to where I am now, so I present to you the Spiral Coil Multi-Wave-Oscillator.

Warning -- this unit is deceiving (it just sits there and looks innocent like it couldn't do much), in fact some of my friends upon first seeing it have laughed at it, and commented you have to be kidding. Another friend of mine asked me to help him build one -- which I did -- and he was lying on his bed in his shorts with a sheet over him and had the unit about 2 foot above the bed and he fell asleep for about 3 hours (he had an infection from a wound in his leg). When he woke up he had a white blister on him about the size of a nickel -- he has done this twice. I warn you, use it with care, it is more powerful than it seems. I think he percolated the infection up out of his leg, as he is fine now.

Now, I know someone is going to say -- I made mine from an old coat hanger and hung it off the coiling with a piece of string, and I'll say -- gee that's nice, do what you wish -- but if you want it to work and work properly build it as it is, use it, experiment with it, and then change it as you wish.

Warning -- persons who have or are diabetic should not use this unit, as it may change the blood sugar level in some people. Diabetes is one of the few things that a M.W.O. will not correct or help. Lakhovsky states this in his book **THE SECRET OF LIFE**. I think I know why but I won't get into it now.

NOTE -- The spiral coils of this unit work <u>all</u> the time -- that is -- they never stop -- they work with or without the vibrator. Who said there is no free energy? If you put it over a bed with an electric blanket, it will charge the blanket and you will probably have difficulty sleeping. If you do not swing it far enough away from the bed at night it will cause unusual dreaming.

As near as I can tell this coil broadcasts at about 120° angle, although its peak energy is centered straight down from the small coil.

Question: is it patented or am I going to patent it? Answer: NO -- as far as I'm concerned it's free to everybody and that's as it should be.

The advantage of using a spiral is that one should get all the frequencies up to the maximum diameter of the outer diameter (O.D.) of the spiral. If you draw a spiral on a paper and place one point of a compass at the center, you can choose any diameter you wish up to the coil O.D. diameter and the scribing diameter will

fall some place on the spiral.

This unit can be operated in 6 modes:

1. The coil only.
2. The coil plus the vibrator.
3. The coil plus the vibrator plus the coil shocker.
4. The coil plus the vibrator plus constant coil charge.
5. The coil (no vibrator) plus the coil shocker.
6. The coil (no vibrator) plus the constant coil charge.

So as one can see there is plenty to experiment with here.

NOTE -- I also tried connecting a ion generator to mine -- that really blows me away -- try it if you have one.

If you are experimenting with magnets -- be careful if you use them with this unit as some people get bad reactions. I personally have used magnetic water and this M.W.O. and have had no bad reactions.

Warning -- although I have -- I suggest you do not use this on the head or above the neck.

Warning -- if you have a heart problem do not use this unit as in some people it tends to reduce blood pressure and lower the pulse or heart rate.

Well -- now that I've scared the hell out of you, if you still want to build it I'll tell you the good side. In most all people who have used it or tried it they get a tingle or a feeling of heat (light). Most people get a boost of energy when they use it and it seems to help circulation. I am not sure why. I don't know if it tends to dilate the blood vessels of not. One man that used it can now wiggle his toes and he hadn't been able to do that for about 3 to 4 years.

I know someone will ask what type or kind and amount of energy is emitted by these coils and the answer is I do not know, but I do know that it works. I will leave that to someone who has the proper instruments and the know how to check it, so there is still a lot of work to be done here if someone wishes to do it. Now, before someone starts climbing my ladder, let me say that I give the credit to Lakhovsky -- what I did was to modify, update and expand upon the base of some of his work. You do not have to be gifted in the knowledge of the sciences to build this M.W.O. and do not need special equipment or tools. However, there are little tricks that I have learned that make it easier to build that I will give in another article. The body or base of this unit is made of P.V.C. pipe, also the vertical and swing arm, the vibrator base and also the drop tube that hangs the coils. We want a unit that is low in cost, tough and durable, light in weight, corrosion resistant, portable, easy to fabricate (and repair if necessary) and looks nice, so we will build our unit out of P.V.C. pipe.

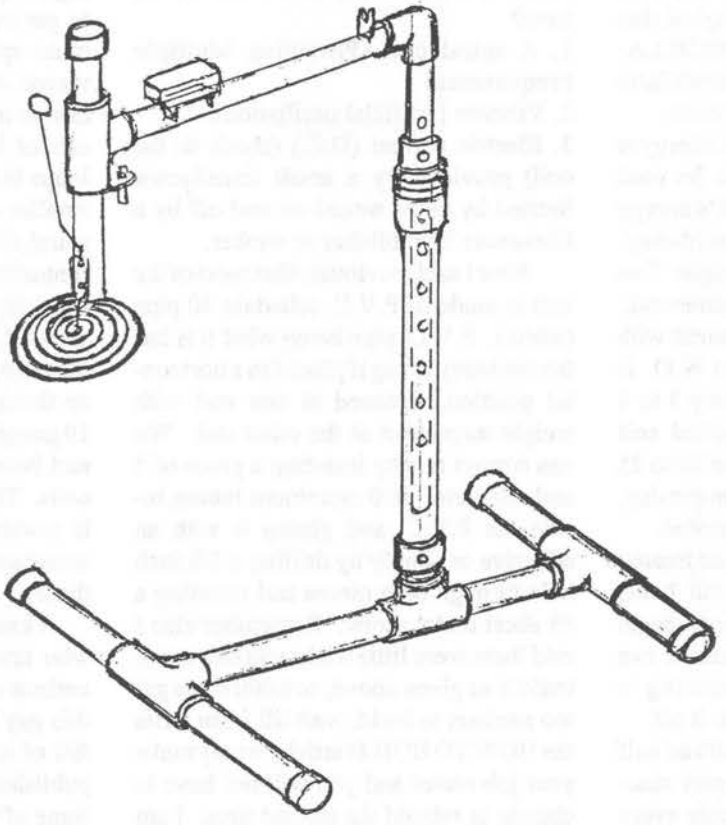

Spiral Coil Multiple Wave Oscillator

ALL COILS ON THIS M.W.O. MUST BE RIGHT HAND COILS, IN RELATION TO THE UNIT AND EACH OTHER. If they are not you will get negative energy. (I'm not speaking of polarity here.)

I use a fish tank air pump (modified) -- (Challenger 1) about $8.50. This provides the oscillatory motion to the coils. I'm not in love with it and would like to find something better -- something of higher frequency, but it works. If anyone has any suggestions on this I would like to hear from them.

I chose to design the unit so it can access any part of the body freely without a lot of excess adjustments. The body when lying down is in one plane or height (approximately), so I built the unit so it would extend over a bed or table, added a swing arm, and a vertical adjustment (holes in the vertical tube arm and a wood dowel or pin stop) -- that seemed simple enough, remember we're trying not to get complicated here.

If you are going to build this M.W.O. I strongly suggest that you read Lakhovsky's book, THE SECRET OF LIFE. When I finally decided to try to build an alternative type of M.W.O., I read everything I could get my hands on about the subject. I read carefully and took notes of key points, functions etc., then I put my books away and studied my notes -- the basics.

M.W.O. -- MULTI-WAVE OSCILLATOR

MULTI -- meaning more than one or many.

WAVE -- energy (given off)

OSCILLATOR -- I looked this up in Webster's -- and simply stated it says -- motion deflected from center to one side -- back to center -- deflected to the opposite side -- back to center, OR -- Vibration.

Now, Lakhovsky in his book stated he made an oscillator of 1 loop or coil of wire

of a given diameter that overlapped. Also, I have read that it isn't the intensity or power of the unit that is desired, but the quality of the signal and also the number of frequencies, signals or waves, as the power can be offset by a longer exposure time. It seemed obvious that a spiral should produce all or most of the waves or signals desired and that it would be better than one loop with a limited signal effect. If Lakhovsky could cure cancer in plants and people with one loop it is logical that a spiral should be even better. OSCILLATION -- how about inducing it artificially -- vibrate or agitate the coil or coils.

This unit produces it's peak energy at 12 o'clock at night, but it can be used during the daylight hours too; it's energy diminishes some toward mid-day. Lakhovsky stated this and he is right. I've got to give it to him, he did his homework. Exposure rates or time of treatment with an electronic double screen M.W.O. is said to be 10 to 15 minutes every 3 to 4 days. Exposure time for a spiral coil M.W.O. (rule of thumb) is about 20 to 25 minutes or 45 minutes maximum per day, or less, depending on what is treated.

Lakhovsky also stated that he treated plants, animals and people with belts, collars, bracelets etc., consisting of a single loop of copper wire. From what I can gather, if a subject was wearing a Lakhovsky coil they never took it off.

My spiral coil M.W.O. is half and half -- part 1 loop + of wire, and part electronic. If a subject got 1 exposure every 3 to 4 days with a conventional M.W.O., it means that the subject's system was hit hard or shocked, and it needs time to adjust. A spiral coil M.W.O. requires a longer or more often exposure and this can be an advantage as it gives us more control of the research subject's requirements. The negative side is that the subject has to spend more time more often.

There is one unusual thing that I and others have experienced with this unit. When you first use it the sensation of heat or tingling is light and you require longer exposure time, like about 25 minutes before you feel that you have had enough. After you use it for about 1 to 2 weeks you will find that after 10 to 15 minutes you feel that you have had enough. Simply stated Lakhovsky said that a M.W.O. activates or excites the cells. It's kind of like pushing a car, it takes a lot of energy to get it started, but once it's rolling it's easier to push. Maybe the body just becomes more sensitized to the energy after the M.W.O. is used for a while. In Lakhovsky's THE SECRET OF LIFE on page 75, "The circuit is subjected to any kind of electric or magnetic shock it is then said that it vibrates according to its natural period." So, now what do we have?

1. A spiral coil (Providing Multiple Frequencies)
2. Vibrator (artificial oscillation).
3. Electric current (D.C.) (shock to the coil) provided by a small transformer limited by bulbs turned on and off by a Christmas light blinker or winker.

Now I said previously that most of the unit is made of P.V.C. schedule 40 pipe (white). P.V.C. pipe being what it is has the tendency to sag if placed in a horizontal position, fastened at one end with weight suspended at the other end. We can correct this by inserting a piece of 1 inch diameter .050 aluminum tubing inside the P.V.C. and gluing it with an adhesive or simply by drilling a 1/8 inch hole through both pieces and inserting a #8 sheet metal screw. Remember also I said there were little tricks you can use to build it as given above, so before you get too anxious to build, wait till I can write the HOW TO BUILD article, it may make your job easier and you will not have to change or rebuild the second time. I am trying to save some of you all the mistakes I made.

The heart of this M.W.O. is the large main spiral coil. This coil is in simple terms an antenna. It is a dual antenna, that is, 2 in 1 as it is a receiving antenna and also a broadcasting antenna. The antenna can be shaped in many forms and still retain the right hand spiral. Do we wind it tight toward the center and increase the spacing as we go out? This configuration I have found best, but other configurations can be formed to achieve different effects. I have experimented with different shapes and some have given unusual results. There is still a lot of work that could be done here also. I wound a 3 wire coil that was very effective but I had problems twisting the copper wire and lost several of them. I would suggest that the first coil you make be a 2 wire twist coil. If you want to build the M.W.O. complete you will have a total of 4 coils.

1 large main spiral coil.
1 small spiral coil (that is mounted under the large coil).
2 straight tube coils.

We use these coils because they all have independent functions. We are going to squeeze it and milk it for all we can, to get everything we can out of it. The main spiral coil produces most of the waves or energy, however, due to its design and nature the inside of the spiral cannot be wound tight to create small loops in the coil, so we will add another smaller spiral coil under the large main-spiral, this will give us the higher waves or frequencies we desire. We drill 2 small holes in the main spiral and tight wind a piece of 19 gauge coated coil wire around the twisted copper wire, and pull the wire up through the holes, leaving 2 standing 19 gauge wires. We sand the ends of these and fasten spring clips that hold the tube coils. The other end of the tube coil wire is connected to a banana plug -- into a receptacle, we connect our coil shock to these.

I know there are some of you out there who are like I am, (impatient) and are curious and would like to try this to see if this guy is telling the truth or if he is just full of it. I am aware that the Journal is published every 2 months and maybe some of you don't want to wait 2 months, so for those of you who are like I am -- let me tell you how to build the main spiral coil. This one coil in and of itself won't knock you over -- but you can get started, and you can play with it until I can write the HOW TO BUILD article. This coil will emit energy by itself if suspended horizontally. Fasten it to something, a piece of plastic tube or wood dowel etc. Try it on your feet as the feet seem to be sensitive to these energies. Well -- here we go.

HOW TO BUILD THE MAIN SPIRAL COIL

You will need to purchase a few things.

1. You need 17-1/2 feet of 10 gauge (solid) bare copper wire (cost about 14 cents per foot). You can get this at any

electrical supply house. If you cannot get bare wire, you will have to get plastic coated and strip the coating with a sharp jack knife, taking care not to nick the wire, or yourself.

2. You need a piece of aluminum bar 3/16 x 1-1/2 inces, 20 to 24 inches long.
3. You need a medium size pair of pliers.
4. Soldering iron and acid core solder.
5. Small coil of 19 gauge coated (shellacked) copper wire.

Now – we have 17-1/2 ft. of 10 gauge copper wire, lay it out on a flat clean surface and straighten it out taking the curve out of it and the kinks and bends. Next we need a secure and strong place to fasten the ends of the wire to – like a trailer hitch or bumper of a car or truck etc. After you have found a place to secure your wire, fasten both ends of the wire to it as shown in Fig. 1.

Slowly pull the center of the wire so that you have 2 pieces of wire, put your aluminum bar in the loop and pull tight. With a pair of pliers close the wire down on the bar tight so that it passes between the screws. Pull hard on the wire with the bar – it won't break. Start twisting as shown in Fig. 1 – always keep tension on the wire – do not let go of the bar. (COUNTER CLOCKWISE). Twist the wire, stopping at time, give the wire a couple of good yanks. NO, it won't break. Twist the wire until you have a good tight twist on it. When you think you have twisted it enough – twist it a little more. When you get it where you like it – SLOWLY back the pressure off of the bar.

Remove 1 screw on the bar and slide the loop out or off of the bar. Unfasten the wire where you secured it and cut the spiral wire as close as possible at secured end. Lay the twisted wire down flat. Measure 3" down from the top of the loop as shown in Fig. 2 and mark it with a pencil or pen. Hard or tight bend the wires as shown in Fig 2, 90 degrees. Grip the twisted wire at the bend point with a pair of pliers, and start forming the spiral. Continue forming 1 or 2 loops. Remove the pliers, grip the wire and hand form the spiral as shown in the drawing #2. When you have formed about 4 loops of the spiral, stop and apply light heat to the coil with a hair dryer or similar device to relieve some of the stress in the wire, so that the loops that you have formed will stay where you have bent them. Repeat the operations and continue forming until you have your spiral.

DO NOT BEND END OR TIP IN YET.

Put your spiral in the freezer of your refrigerator for 30 to 45 minutes, and freeze it. This will tend to stabilize the copper some and relieve some more of the stress.

In Fig. 4 we can see that if we bend a piece of metal the inside of the curve is compressed and the outside is stretched, this stress is what we are trying to get rid of. About now some of you will be thinking – GAD – he even tells us how to hold the hammer. I am sure that some of your who are pro's at metal forming and fabrication can build this thing – WHAM-BANG, but please have patience, not all are gifted in some of these skills.

When you have formed your spiral and it is shaped as you want it, hold the loop of the spiral with your thumb and point fingers at eye level height and sight across the spiral, it should hang so that all coils are level and even with each other, so that it is flat -- if not form it so it is. Put the coil in the freezer again, repeat freezing operation several times, this tends to age harden the coil some.

With a very hot soldering iron solder the end of the coil, wash it in warm water, dry it, and bend end in as on drawing #2. After you bend the tip in, bend it down a little bit so the bent in tip clears the crossed coil by about 1/4 inch.

Drill 2 small holes in the spiral at points marked on Fig. 6, taking care not to break the drill, use light pressure. Cut 1 piece of coated coil wire (19 ga.) about 4 1/2 feet long. Push one end of wire (about 1-1/2 inches) up through bottom of hole in spiral, and wrap wind (twisted) loops of wire to second hole. Straight wrap 1 loop at hole area, this locks the standing wire. Pull standing wires tight with pliers and cut standing wires to about 1-1/4 inches.

Refreeze spiral and warm to room temperature. Sand or remove shellac from standing wires down about 3/4 of an inch, this makes electrical contact for the coil shocker. You have finished the main spiral coil. You have just done the hardest part, the rest of it is easy. Save your aluminum bar; you may want to build other types and shapes of coils and spirals to experiment with. I have wound and tried 2 wire coils, 3 wire coils, cone shaped spirals, step spirals, spirals with wires attached and hanging down with soldered tips etc. There is no end – you can experiment to your heart's delight, it's only limited by your imagination.

In closing, I would like to tell you a story -- a true story about a close relative who gave me permission to tell of his experience with my M.W.O., but prefers to remain anonymous. I will not elaborate, but just state the facts as told to me by him and his nurse.

This relative took a trip by car to the southwest part of the U.S. with some friends. Before he left he called me and said that he would come to California and would stop to visit with me. This was in the late summer of 1990. After arriving at his destination in the southwest, the weather turned very hot for the whole western U.S. Due to this extreme hot spell, he phoned me and said he was returning home and would not come to California.

When I talked to him on the phone before he left, I told him I had built a Multi Wave Oscillator for him and I would give it to him when he came to see me, and he could take it back with him. He did not make it to Calif. but returned to his home in the midwest. After returning home he became ill and went to see his doctor. After being checked by his doctor, he had tests, and the doctors discovered that he had cancer of the large intestine. When I phoned him and found that he had cancer, I asked him if he wanted to try my M.W.O. I told him that I could not guarantee that it would help him -- but I said -- what do you have to lose. He said yes, he wanted to try it, so I sent it to him.

When he received the M.W.O., it was assembled from instructions I sent him. He used it twice a day for approximately 6 weeks. He had additional medical problems, he had diabetes and congestive heart failure plus the cancer plus a back problem. I had made the M.W.O. for him in hopes that it might help his back. When he went back in 6 weeks to see a cancer specialist doctor they gave him extensive tests and could <u>not</u> find any traces of

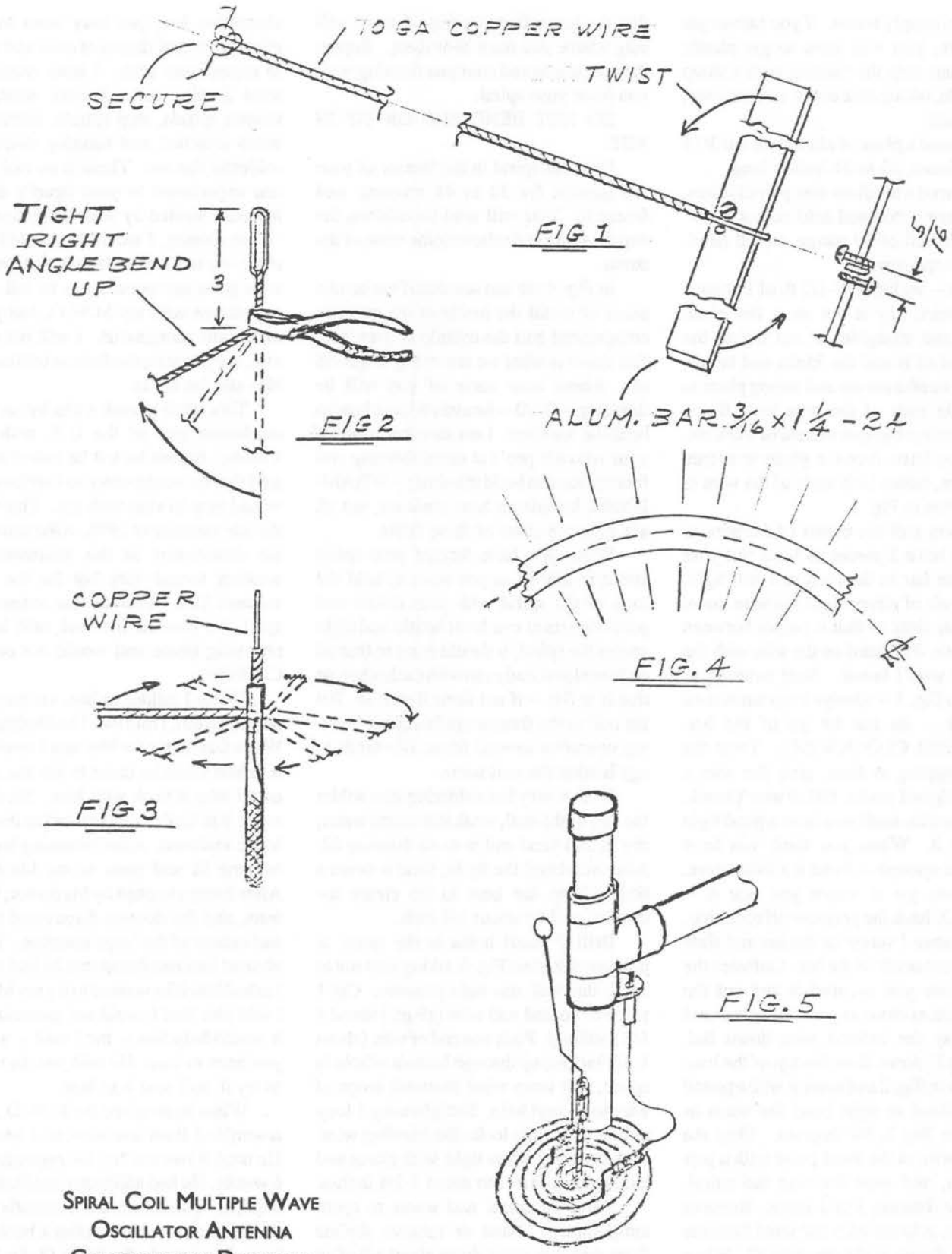

Spiral Coil Multiple Wave Oscillator Antenna Construction Drawings Figures 1-5

cancer. After his tests he phoned me and said the doctors could find NO traces of cancer whatsoever. I asked him -- did you take any medications whatsoever for your cancer? -- he said NO. I asked him -- did you take any radiation treatments for you cancer? -- he said NO. I asked him -- did you take anything at all for your cancer? -- he said NO. To this date he has not had any return of his cancer.

Now, where does this leave us? He either had spontaneous remission or he was helped by the M.W.O. As I understand and have been told, some forms of cancer in the upper stomach are inoperable. My relative is the 3rd person who seemingly has had remission from cancer from using my M.W.O. I do not like to use the word cured when speaking of cancer, and I say seemingly as this is all in the experimental stages of research.

Then there is Al Mills who built and used a copy of my M.W.O. He had prostate cancer; he's fine now, but we can't count him as he has taken medications for it. I have heard that doctors have said that prostate cancer is very difficult to treat. Then there also is Simon Lucas who built my M.W.O. and loaned it to a lady who has LUPUS (a cutaneous disease due to the tubercle bacillus). He said she is feeling and doing much better now. I also built a M.W.O. for my mother who lives in So. Sioux City, Nebraska, across the river from Sioux City, Iowa. I sent it to her -- she could not assemble it so I flew back to do it for her. Several years back she was leaving a market and caught her foot in a disposed plastic bag on the sidewalk, fell and broke her hip and leg. The doctors repaired it by wrapping screen around the bone and added a few screws and pins here and there. She was OK for several years and then she got to the point where the pain was so bad she could walk only a short distance.

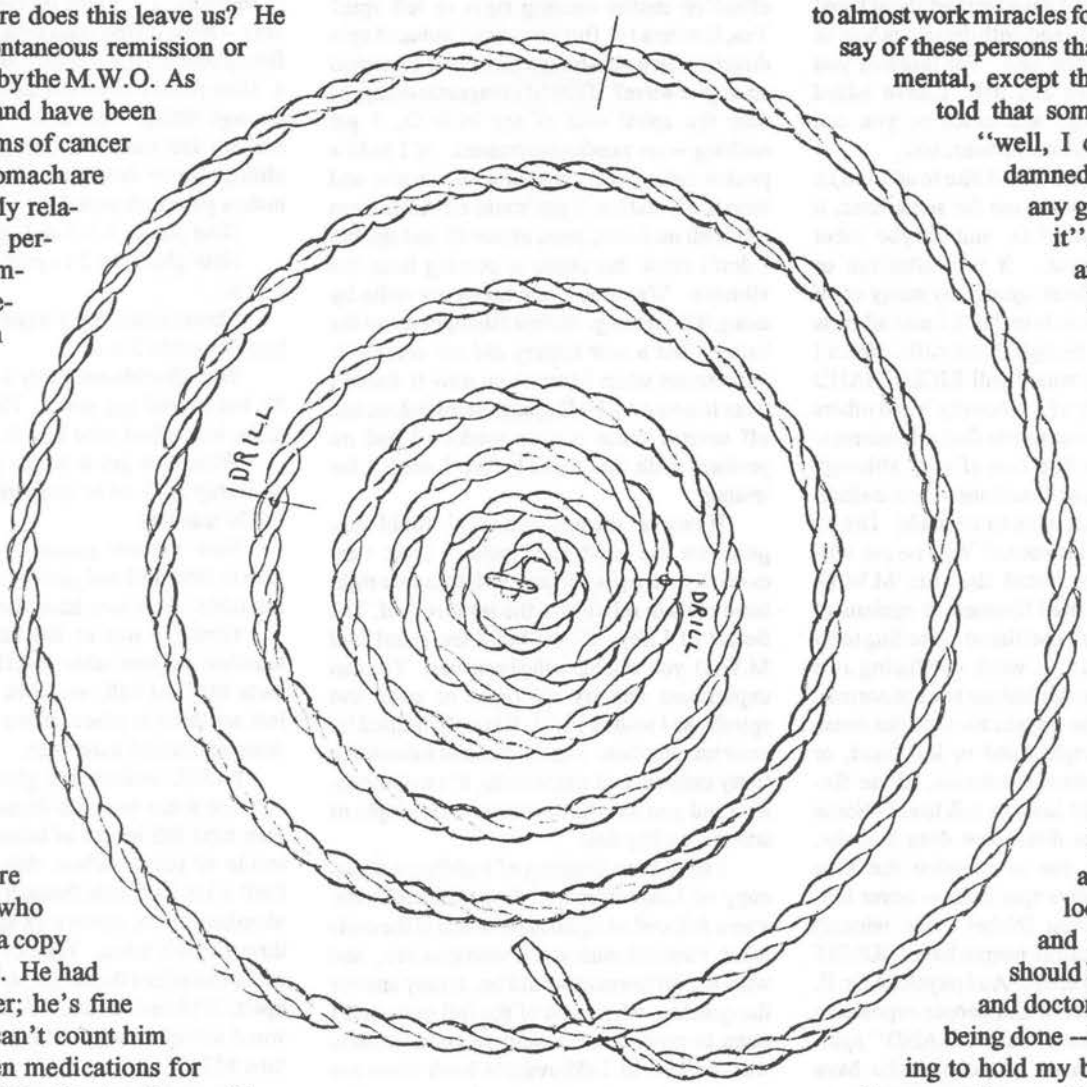

FIGURE 6

She has used the M.W.O. for about 2 months. She called me the other day and said she took the bus all over town, did shopping, came back, took her pull cart and did her food shopping -- 6 blocks up and 6 blocks back -- and then walked up to the restaurant and got her dinner, all in 1 day and she said she feels fine. The doctors gave her the choice of pain shots or cutting off her leg -- (some choice). NOTE -- She does not have a coil shocker on her unit.

In all honesty I have to say that my spiral coil M.W.O. does not affect all people the same. I have had no negative or bad reports to date from anyone using it with good common sense and discretion. There are a few people that it does not seem to help to any great degree. There are also some people that it seems to almost work miracles for them. I would say of these persons that maybe it was mental, except that I have been told that some have said -- "well, I don't think the damned thing will do any good, but I'll try it". I could go on and on but we'll leave it at that.

If you decide to build my M.W.O. I would welcome any serious and honest experimental input as this unit still has many areas that need to be explored. Sometimes I back way off and just stop and look at all this -- and realize that it should be the scientists and doctors doing what is being done -- but I'm not going to hold my breath until that happens. I guess the only way it's going to get done is for people like you and me getting off our backsides and getting it done. If enough will work at it and add a little bit, it'll get done. I sometimes wonder what the end-run potential of my M.W.O. is. I love the doctors (God Bless them!), we need them, but I wish they were more open minded and that they were not so profit orientated and stigmatized by their organizations. I think these ideas I present here will help.

THE SPIRAL COIL M.W.O.
PART II - HOW TO BUILD
by Lou Schad

In Part One I explained how the spiral coil M.W.O. evolved and how I came to build it and notes on things I have learned about it and its use. I also explained with drawings how to build the main spiral coil. For those of you who wish to build this unit, I have added additional drawings and notes so you can build the rest of the coils, base, etc.

Before I begin I would like to address an issue that has bothered me for some time, it pertains to my M.W.O. and maybe other M.W.O's in general. It is a situation or function that has been ignored by many or all but a few. In my article in Part I, I said all coils on this unit must be right hand coils. What I am referring to is what I call RIGHT HAND SPIN. In my study of Lakhovsky's and others work, I have not been able to find any information pertaining to direction of spin, although he gave very precise directions -- how collars, belts, bracelets etc. were to be made. Did he know and was it his secret? Was he not telling? Lakhovsky stated that his M.W.O. stimulated the twisted filament or nucleus of the cell, and the cell oscillated according to its natural frequency. A weak oscillating cell would increase its oscillations back to normal. The question is, do certain oscillations cause the cell to spin right hand or left hand, or clockwise or counter-clockwise, if the frequencies spin right hand or left hand? Some might say -- what difference does it make. The people who use or practice the Five Tibetan Rites always spin right -- never left. Sir Lawrence Bragg (Nobel Prize winner) discovered that healthy people have "RIGHT HAND" spinning blood. And physicist Dr. E. Mersmann discovered that people exposed to electronic smog have "LEFT HAND" spinning blood, the same as people who have cancer -- they also have "LEFT HAND" spin blood. Maybe if the earth spun in the opposite direction, left hand spin blood would be normal. So, is left hand spin or right hand spin important? Yes, I think so. I have purposely made and used left hand coils and they made me feel sick and ill. There is an instrument that has been built that emits weak pulsed electromagnetic waves that causes the blood to spin right hand in people who have left hand spin blood, however if the unit is removed the blood will go back to abnormal left hand spin.

If you put your hand in a bucket of water you can spin it to the right or to the left -- is this polarity? Does magnetic polarity have an effect on matter causing right or left spin? Yes, it seems to. But how about induced spin direction on a non-magnetic or non-electrical energy or wave? If I hold a magnetic compass near the spiral coil of my M.W.O., I get nothing -- no needle movement. If I hold a pocket radio under the coil with vibrator and tune it off station, I get static on A.M. from about 80 on down, none above 90 and up, but I don't think that static is coming from the vibrator. Warning: I damaged my radio by using if for testing. At first I thought it was the battery, but a new battery did not correct it. Sometimes when I turn it on now it doesn't want to come on, by flipping the switch on and off several times it then works. I had no problem with this radio before I used it for testing.

Whatever the answers are, I would suggest you use right hand coils. Look very carefully on pages 113 and 114, these are right hand coils in relation to the subject, (ref. The Secret of Life). If you build the spiral coil M.W.O. you will have the basic unit. You can experiment and try all types of coils and spirals, as I said in Part I, it is only limited by your imagination. I find it fun and interesting to try unusual and weird coils, it's not expensive and you only have to remove a couple of screws, no big deal.

I have been thinking of building a cheap copy of Lakhovsky's coil of tube and wire, also a foil coil of equal size, to test if the coils when vibrated emit equal energies etc., and what the differences would be. It may answer the question why some of the foil coils don't seem to produce the results as good as some would like. In Lakhovsky's book there are pictures of, and he speaks of, the oscillator coils of Hertz. There is a striking resemblance of Lakhovsky's coils on his oscillator antenna to Hertz's coil. Could he have been influenced by or borrowed the Hertz oscillator coil for his unit -- did he expand upon the base of Hertz's work for his antenna coil? (interesting thought)

Enough digression -- back to our spiral coil building project. If you look at drawing #3 you will see that it is self descriptive, giving diameters, lengths etc. We make most all of our unit out of schedule 40 PVC plastic pipe. Take enough care to make your cuts square and clean, debur the ends of the tubes so they will slide into the glued slip fittings correctly. Now, here comes the stinky part. If you want your unit to look nice, you will have to clean the tube, (after cutting), taking off all the dirt, the ink lettering etc. I use a laundry tub, a small amount of water, laundry detergent, Comet, and some wet or dry #200 sandpaper and a lot of elbow grease.

Warning: PVC glue sets fast, in a matter of seconds. I put glue on the female fittings only -- none on the male side, slide it together firmly and whack it with a short piece of 2 x 4. Glue part #7 to part #8 and drill a 5/16 hole through fitting -- this is so you can tighten or remove the threaded fitting by inserting a phillips screw driver or rod in the hole. This makes your unit portable.

Glue pieces 1-1-5-4-4, also 3-3-5-4-4.

Now glue part 2 to part 6, also part 3 to part 6.

Thread assembly 7-8 (large vertical tube) <u>into</u> assemble 2-6-3.

We will slide assembly 11-5-44 onto tube #2, but we will <u>not</u> glue it. Place this on a flat table, and adjust tube 8 so it is vertical.

When you get it where you like it, glue assembly 33-5-44 to loose tube 3, let this dry for 20 minutes.

Now remove assembly 11-5-44, apply glue to fitting #5 and glue it to tube #2 on your flat table. You now have the base finished.

Glue the rest of the tubes and fittings together on your table. NOTE: Do not glue parts #19 and #20, we leave these loose and just set them in place, as we may add something additional here later.

NOTE: Before you glue tubes #11 and #15, cut some one inch diameter .050 aluminum tube full length of tubes and slide them inside of plastic tubes, this eliminates sag. Drill a 1/8 inch hole through plastic tube and aluminum tube, screw a #8 sheet metal screw through both tubes. Tube #11 has holes in it so we can adjust the height, drill these 2 inches apart, 5/16 inch holes. We insert a 1/4 inch wood dowel through fitting #10 and through tube #11.

We drill 2 holes in tube #21 and thread them 10-24, we fasten our spiral coils and antenna to these. The first hole is drilled 5/16 of an inch up from the bottom edge of the tube and the second hole is drilled 3/4 of an inch from the first hole.

When you buy your 1-1/2 PVC tube, get a piece with a flared end, as we set a reducer fitting in it to make a sleeve for the #11 one inch tube. To keep tube #11 guided at the bottom of tube #8, drill 3 holes at the bottom of tube #11 equally spaced around the diameter and insert 3 #8 sheet metal screws.

Parts #9 and #10 will have to be filed out or machined out so the one inch tube will slide through them.

Part #16, the vibrator base, is made of flat stock PVC. If you cannot buy it from a plastic supply house, cut a couple pieces of 1-1/2 PVC tube about 3-1/2 inches long, cut them again length wise, so you have half tube pieces. Place the half tube pieces between two - 1/8 inch aluminum plates and heat in a stove oven with a brick or weight on top. Let them cool and the plastic will come out flat. Layout and mark parts on flat sheet and cut out.

Glue all the pieces of vibrator base together and fit to tube #15 and glue it tight. A wood match works wood to lay glue in joints.

Make and fit your metal brace from aluminum or non-corrosive metal and fasted with two - #8 sheet metal screws. Cut out part #23, fit it to T - #22, drill two holes for banana receptacles and glue securely, also cord holder #14.

Make your small spiral coil from .0625 low carbon stainless steel heli-arc welding rod -- 36 inches long, do not twist wire, use as is. You can get this from any welding supply; get 4 or 5 pieces. Also make antenna from same wire. To make small spiral use the full length or rod. Start by forming an eye on one end for the 10-24 screw. Move down 3 1/4 inches and form spiral same as large spiral coil, also bending end tip in. Put an offset kink in the stem so it will pass through the main coil.

The tube coils are made from #19 shellac insulated coil wire, 12 to 14 turns. I tight bend a 90 degree bend, so I have a 1 inch long tail. I place this parallel on a pencil or wood dowel and tight wind the coil. Grip the wire tail and dowel with a pair of pliers. Remove the dowel and freeze for 30 minutes, warm to room temperature. Grip the ends of the coil with your thumb and middle finger nails and stretch the coil to the desired length, refreeze for 30 minutes. Bend long tail of coil 90 degrees and fit to banana plug. Trim short end to 3/4 inch, clean and solder pinch clip to coil. The pinch clip is made from light gauge hard stainless or brass. Blank size is 7/32 x 1-1/4.

After you have everything glued and finished put a coat of auto polish on PVC tubes, as this keeps them clean and they will not finger mark or get dirty. Also put a coat of vaseline on the threaded fittings so they can be removed easily as they tend to stick.

If you are, or want to be, the serious experimenter type, buy a note book and keep records and notes. Keeping a log with dates, exposure times, etc. can be a very useful tool to compare results of different coils etc. I would welcome hearing from you on the use of the spiral coil M.W.O., i.e. your success and problems. NOTE: Don't expect results in 2 or 3 exposures, as this unit is more gentle and may require a longer time of weeks or several months to get permanent results. To this date I have not had a single report from anyone for over-exposure if used with common discretion. I have used belts, collars, wire loops etc. with the M.W.O., this seems to multiply the energy. I also have used a spin magnetic unit with a reticular energy filter before and after M.W.O. exposure. This seems to work well for joint problems.

Please Note: Lou Schad does not manufacture or sell this MWO. He is giving his knowledge and experience as a gift to the world. He may be written c/- BSRF.

LEGEND

USE P.V.C. (WHITE) SCHEDULE 40

KEY

L=LENGTH D=DIAMETER C=CUT
T=TUBE T.F.=THREADED FITTING

PART #	**DESCRIPTION** (in inches)
1.	T-D=1-1/2, CL=10
2.	T-D=1-1/2, CL=15-1/2
3.	T-D=1-1/2, CL=8-1/4
4.	CAP-D=1-1/2 (4)
5.	TEE-D=1-1/2 (2)
6.	TEE-D=1-1/2 THD'D
7.	NIPPLE-D=1-1/2 THD'D
8.	T-D=1-1/2, CL=28-1/2
9.	REDUCER - D=1-1/2 TO 1
10.	REDUCER - D=1-1/2 TO 1 INV.
11.	T-D=1, CL=28-1/2
12.	T.F.-D=1 NIPPLE
13.	ELBOW - D=1 - T.F.
14.	CORD HOLDER (ELEC.)
15.	T-D=1, CL=20-1/2
16.	VIBRATOR BASE
17.	METAL BRACE
18.	TEE-D=1
19.	T-D=1, CL=3-1/4
20.	CAP - D=1
21.	T-D=1, CL=5-1/2
22.	ANTENNA
23.	F.T.G. BANANA RECP.

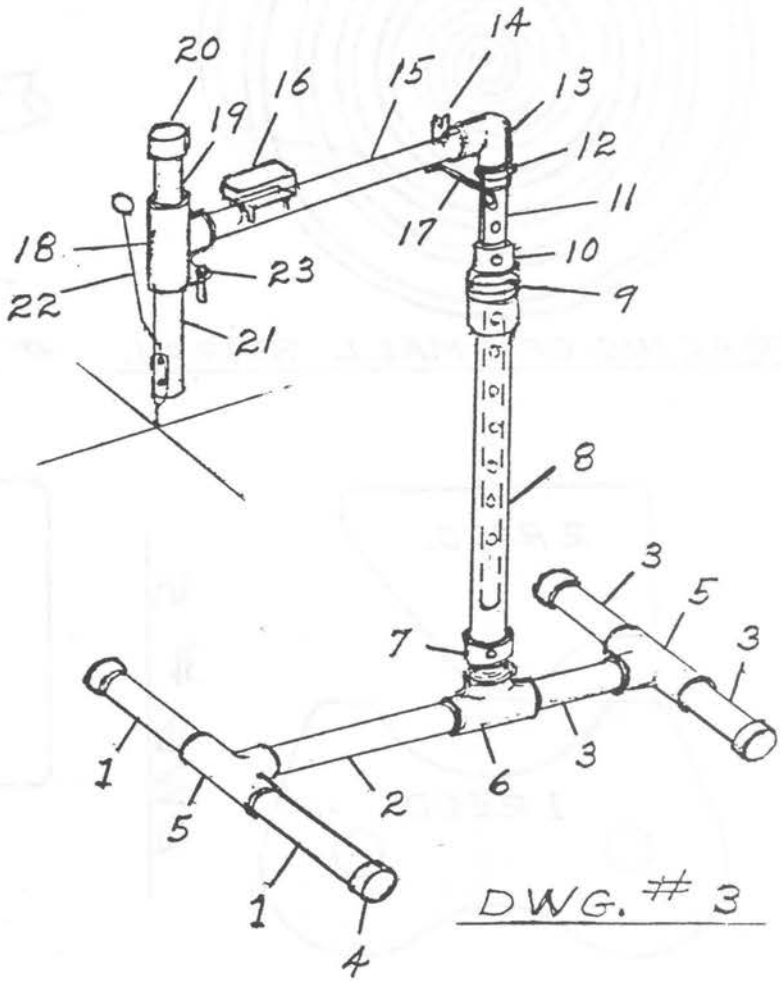

COIL SHOCKER FOR SCHAD SPIRAL COIL M.W.O.

This unit provides a D.C. shock to the spiral coil. It should be built in a wood box, or grounded metal box for safety sake as we use 115V A.C. power source. All the parts can be purchased from an electrical supply, except auto bulb and socket. Get these from an auto parts supply house.

The Leviton dimmer is not necessary, but it gives more control. I use a ceramic base for 40 watt bulb. A smaller transformer can be used, but I find the 3A-12V best. It is nice to add a handle to the box. I dropped mine once. Put ventilation holes in the box, and rubber bumper feet on the bottom.

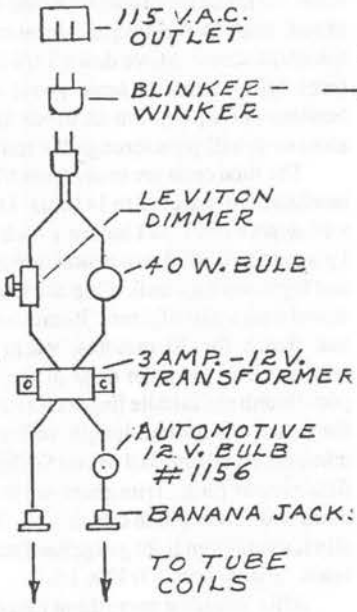

POOR MANS COIL SHOCKER

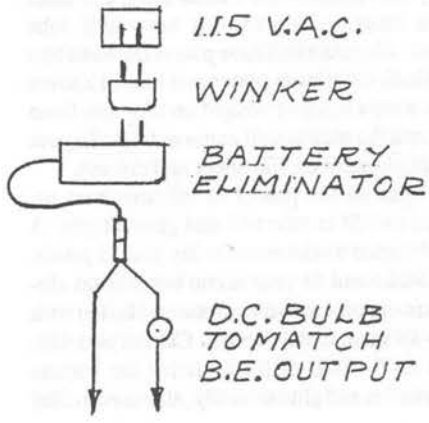

DWG. # 4

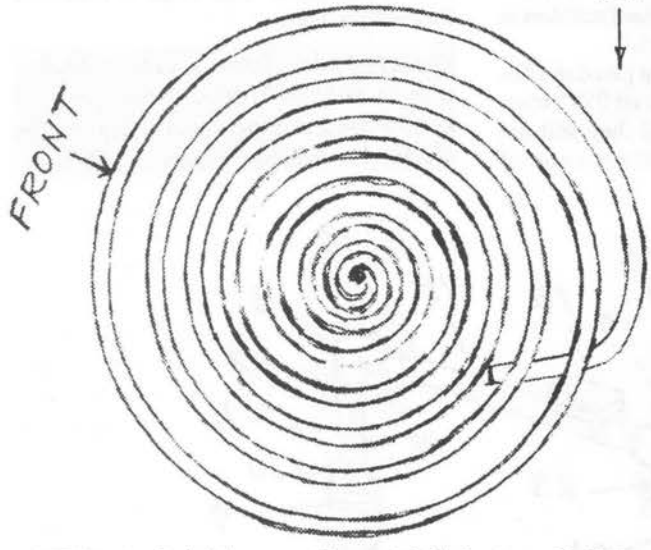

TRACING OF SMALL SPIRAL

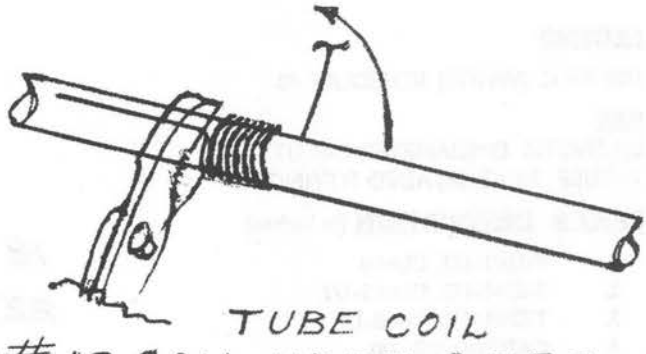

TUBE COIL
#19 COIL WIRE 2 REQ.

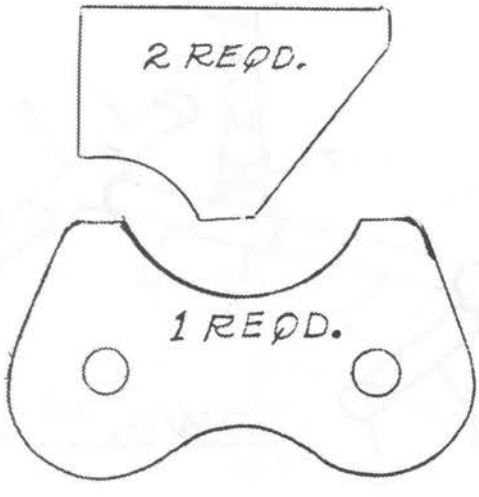

DWG. # 5

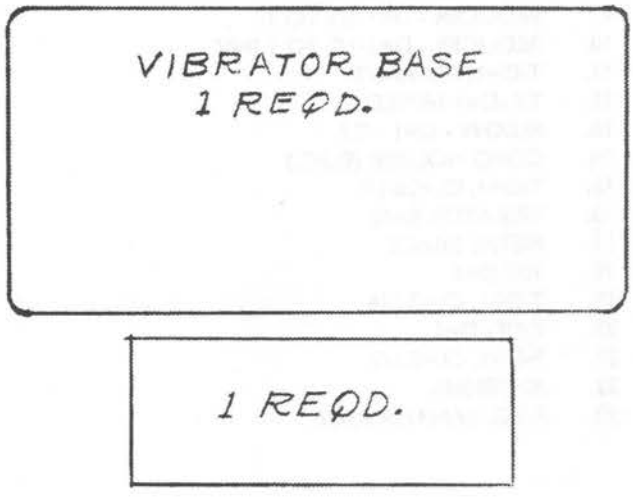

SPIRAL COIL M.W.O. UPDATE

Lou Schad

This is an update on the work I have done on the spiral coil MWO. I have built and tested several new coils and made changes in design of shapes and twist of the wire and different size of wires etc. I have experimented on plants and myself for the past several months.

In my article in the Journal of Borderland Research of March-April 1991, page 15, figure 1, I stated, to twist the wire counter clockwise, as I was told by someone of authority that this was best. I now find after experimenting and testing that this is not so. I now twist the wire clockwise, causing a left hand spin of the wire when viewed -- or counter clockwise. If the wire is twisted in this manner it more than doubles the energy and the plants and I both seem to like it better. If the wire is twisted as stated it will produce energy not only in a spiral shape but also in single loop rings (overlapped) and also in just a straight length of twisted wire.

I made a coil like a target or a series of one loop rings of twisted wire of different diameters and wire sizes, from about 1 inch to 8 inch and overlapped them about ¾ inch and wired them to a X shaped piece of thin plywood, and it produces more energy than I need. I can stay under it only about 7 to 10 minutes. If I stay under it longer than this, I get over exposure or too much energy in my body, and it makes my feet and hands tingle.

I made a spiral coil from 1/8 inch copper tubing, twisting it like a solid wire, and it produces more energy than a like spiral made from solid wire. I do not know if the energy travels on the inside of the tube and the outside also, but the energy produced is much more than is required for normal use.

I also have been experimenting with new and different ways to pump or project the energy. In my original design I used a vibrator to increase the output. I now find that with the new coils (twisted as stated) that they develop as much or more energy without the vibrator as the old coils did with the vibrator. It seems that the field or energy pattern given off by a straight (twisted) wire is different than those of a single loop (twisted wire) shape or spiral shape.

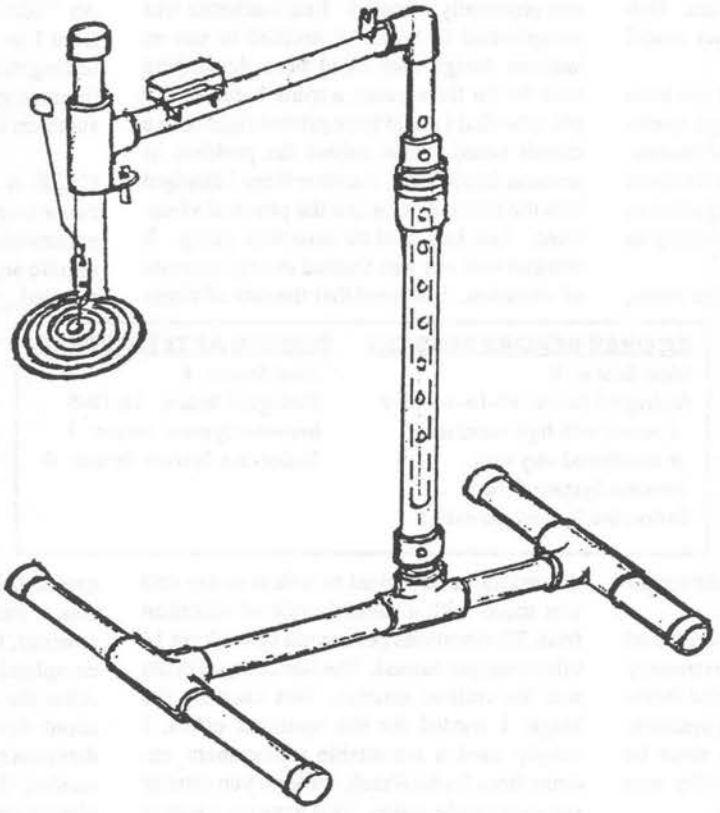

Spiral Coil Multiple Wave Oscillator

I am building a new coil that uses both and looks like a spider with 8 legs of different length. It has 2 single loops (overlapped). One loop is 2-3/8 in diameter and the other is 4-1/8 in diameter. The small loop is centered in the large loop and in the same plane. I made a wood jig with nails for pins to hold them in place and soldered twisted straight lengths of wire pointing from the center outward. I will bend the tips of the straight twisted wires down 90° producing a shape like a spider. I'll let you know if it is different from the spiral coil shape in energy output.

It now becomes obvious that a spiral is not the only configuration that will generate or collect and broadcast energy of unknown origin. If other shapes or designs will also produce energy, is their output different? If so, what are the differences? Are the wave lengths different, are there different patterns to the waves or energy? How does it affect the living organism?

When a spiral or coil is placed in front of a reticular energy field it produces unusual results. Coils can be combined with many other forms of energy, magnetics, light, audio, vibration etc.

In my article I said you can design and build coils of all shapes and types, as it is only limited by your imagination. It is my personal belief that someday someone will design and develop a coil of a nature that will be highly beneficial to humanity, we need your input, ideas and help.

If a coil of twisted wire was built in a target configuration of a series of overlapping loops so as to be similar in design to a Lakhovsky coil, and was powered by a Beck MWO output, what would be the results? If a twisted wire coil will produce and project energy, connecting it to the field of a Beck type unit should be interesting. Are there any takers?

ELECTROSTATIC M.W.O.

Introduction to a New Phase of Research

by Peter A. Lindemann

Lakhovsky's multiple wave oscillator has always intrigued me. I tried to build my first one in 1976 based on Bob Beck's schematics. These early experiments failed miserably, but I remained interested. In 1987, I had the opportunity to see one of Bob Beck's MWOs at a meeting of the Los Angeles Psychotronics Association. I am a healer and a sensitive by nature, and I was looking forward to finally seeing the mythical machine in action. Bob had said that is was a very high power model and he was right about that.

The unit was of the design that has been popular since the 60s; a high voltage spark-gap transmitter driving an antenna of concentric rings. Bob turned it on and ran it for about three minutes. It made a loud zapping noise as hundred of sparks jumped from ring to ring on the antenna.

I was standing in the back of the room, about 30 feet from Bob's MWO. As soon as he turned it on I felt a blast of irritation hit my aura. I could handle the etheric frying of my energy field for only about thirty seconds before I had to leave the room. When I came back in, everyone's energy had been fried. The meeting quickly digressed into a break, with everyone talking to their neighbor. It was quite a sensation!

In thirty seconds I had become convinced of two things. First, this MWO was extremely damaging to the subtle energy field and therefore must be incapable of promoting systemic healing. And second, this MWO must be unrelated to what Georges Lakhovsky was reporting in his book Secret of Life.

Since I drew those conclusions back in 1987, I have been confronted with numerous testimonials of people gaining benefit from this style of MWO. While I do not doubt the accuracy of these stories, I must admit, I do not understand by what process the benefit is derived.

Here is where the MWO languished in my mind until Lou Schad's articles appeared in the March/April and May/June 1991 issues of this journal. Intuitively I felt Lou was on to something very important. On a visit to Borderland Headquarters, I had a chance to evaluate a unit Lou had given to Tom. The energy coming from the antenna was gentle but very penetrating. I was excited. I went home with the intention of building one of Lou's units to experiment with.

After considering Lou's design carefully, I decided to make a few changes and by late May 1991 I had my first unit. As it turned out, my unit did not look at all like Lou's, but it did embody the fundamental principles that he innovated. These included a spiral main antenna that was charged with static electricity and physically vibrated. Lou's antenna was complicated to build. I decided to use an antenna design that I had been developing uses for for three years, a spiral based on the phi ratio that I could have printed right onto a circuit board. That solved the problem of antenna fabrication. Another thing I changed was the method to induce the physical vibrations. Lou had used an aquarium pump. It worked well but was limited to only one rate of vibration. I decided that the rate of vibration might be important to look at so my unit was made with a variable rate of vibration from 2½ vibrations per second up to about 14 vibrations per second. The last change I made was the vertical antenna. Not knowing the height I needed for the optimum effect, I simply used a retractable replacement antenna from Radio Shack, the kind you usually see on portable radios. This gave me a way to vary the electrostatic charge on the spiral, by raising or lowering the antenna.

By early June 1991 I had made an arrangement with a local acupuncturist in town to run some clinical trials with the unit. This medical professional has asked to remain anonymous and so for the purposes of this article, I will refer to this person as "John". John is a gifted sensitive and an advanced bio-energetic diagnostician using equipment from Germany called the VegaTest. John also has had assistance in this evaluation by another gifted sensitive who can see auras in vivid color and detail. I will refer to this second person as "Pam". As of this writing in early November, their evaluation has been on-going for 4½ months or since mid-June. The results are preliminary. No cures are claimed. However, all indications point to systemic detoxification, energizing and rejuvenation, just what you would expect to see from a broadly stimulated natural healing process.

The VegaTest procedure is very sophisticated. It uses a bio-feedback mechanism to establish baselines for toxicity level, systemic stress and specific organ stress as well as the presence and location of specific pathogens and types of toxic substances. Toxicity level is measured on a scale of 0 to 21, where 21 is the most toxic. A "Biological Score" is developed from the toxicity values that come up and can have from 1 to 6 numbers ranging from 1 to 21, 6 numbers being the most toxic. An "Ideal Score" is determined on a scale from 1 to 15 where normal for adults on first testing range from 7 to 11. Stress on the immune system and endocrine system is measured on a scale from 0 to 5.

SCORES BEFORE SESSION	SCORES AFTER SESSION
Ideal Score: 8	Ideal Score: 6
Biological Score: 19-16-14-12-9	Biological Score: 12-10-8
5 scores with high numbers is considered very toxic.	Immune System Stress: 1
Immune System Stress: 3	Endocrine System Stress: 0
Endocrine System Stress: 5	

CASE A is a 21-year old female who has never been treated with other remedies. The patient was VegaTested, then received one 20 minute session with the MWO and then was retested. (See box insert) These scores suggest that even one session can temporarily reduce stress levels significantly and promote detoxification.

CASE B is a 72-year old male with extreme intraocular pressure. The patient received only three sessions with the MWO. The pressure within the eyes lessened with each session. Pam reported that before the MWO sessions, the region of the eyes and head was completely dark and devoid of life force. After the first session, the darkness cleared about 40%. With the second session, the darkness cleared about 80% and with the third session, the energy around the eyes was completely vibrant.

Without going into a lot of specific case histories, or naming disease conditions treated, John and Pam are consistently seeing the following:

1. The MWO expands the energy field around the body 3 to 6 feet.
2. It functions to reduce accumulated stress on many levels.
3. It clears the energetic imprints of illnesses.
4. It fills in breaks and cracks in the aura.
5. It builds vitality at a very deep level and combats fatigue.
6. It promotes the drainage of stale and stagnant life energy down the arms and legs and out the hands and feet. Several times

Pam has seen dark yellow or dark green energy drain out of acupuncture points or organs, to be replaced by cleaner and clearer colors.

7. Everyone experienced improvement, regardless of their condition.

METHOD OF USE FOR THE MWO, (developed by John and Pam during this testing period) is as follows:

1. A person using the MWO should sit in a comfortable chair with their feet flat on the floor and their hands apart, laying on their thighs, palms up is best. The chair should be about 6 feet from the MWO. During the session they should periodically rotate their wrists and ankles to help promote the draining.
2. The MWO should be started at slow vibration rates (2-3) and slowly moved to higher vibration rates (5-9) and then at the end, moved to slower ones again. Sessions can be from 10 to 25 minutes.
3. After the MWO is turned off, the person should remain seated for 10-15 minutes to continue to drain while the energy field slowly shrinks back from its highly expanded state.
4. Rooms where the MWO is used may need to be cleared after its use due to the stale energies that drain out. Sun light, fresh air, toning, sage or other means may need to be employed to keep the MWO session room clear.

THE BSRF MWO PROJECT continues to develop, as this and other articles in this issue clearly show. A special thanks to Lou Schad for his brilliant and original departure from the errors of the past and showing us the true Borderland spirit in action.

One final note. We at Borderland are constantly railing against people who invoke the name of some famous researcher, like Rife, Tesla or Lakhovsky, and then sell the public a piece of equipment unrelated to the original work. This is no better than bait-and-switch hucksterism and we deplore it. Therefore, let us state for the record from the outset, that this new Electrostatic MWO is not what Georges Lakhovsky was doing. Neither is it a direct attempt to duplicate his work. Lakhovsky claimed to have had his units in use around the world, but after years of research we have found no physical evidence of this. He never published detailed schematics of any complete devices. This new MWO is a modern attempt to address the same problems that Lakhovsky was grappling with. We call it a multiple wave oscillator because it is, clearly, a device that produces a wide spectrum of oscillatory emissions simultaneously. Lakhovsky pioneered this line of research. This unit is not a "Lakhovsky MWO" but, strictly speaking, no other unit sold in the last 30 years has been either.

As this MWO is part of an ongoing research project, a limited number of these units will be produced and made available to the public.

The new BSRF Electrostatic MWO is for investigational purposes only. It is not a substitute for professional medical care and is not indicated as a specific cure for any disease condition. Any such use goes directly against the intent of the manufacturer. The performance characteristics of this device have not been established.

MULTIPLE WAVE OSCILLATOR

Borderland Sciences Research Foundation is proud to announce that their new Electrostatic Multiple Wave Oscillator is now available for investigational purposes.

TOTALLY NEW APPROACH

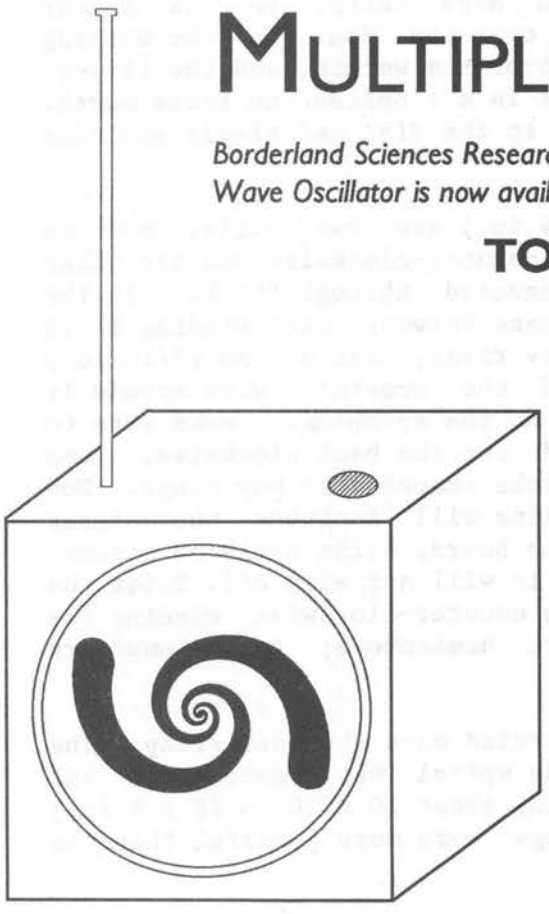

This unique Multiple Wave Oscillator uses a specially designed spiral coil that is both physically vibrated and simultaneously charged with a safe quantity of static potential, unlike designs using high voltage discharges between concentric rings. The result is a wide-spectrum wavefront of electromagnetic and etheric vibrations. It also provides a means to introduce a wide variety of other subtle influences into the broadcast much like a substance biocircuit. The Electrostatic MWO from Borderland Sciences is a versatile investigational tool.

The MWO has a wide range of vibratory rates and charge intensities. It is a one square foot cube with a Golden Mean Spiral MWO antenna on the front and a retractable antenna on the top for tuning. Powered with standard AC. Constructed using no toxic materials.

ELECTROSTATIC MWO

The Electrostatic MWO is a high quality device which was produced in limited quantity for our research network. This unit is no longer available, and it was a complex mechanical device not readily translated to schematic form. Interested researchers will find the best path to pursue in this vein is in LouSchad's Spiral Coil MWO.

SUN-ETHER DISC
By Albert Zock

The German inventor Oscar Korschelt based his cosmic ether accumulator, German Patent #69340, dated July 14, 1891, on the teaching of Wilhelm Weber not realizing that it incorporated the implosion principle as well. Weber professed that all particles of the ether, having an electrical charge, are circling around solid objects without touching them, the molecular particles being negative and the ether particles being positive, according to the law of attraction and repulsion. Since a solid body attracts ether particles, Korschelt searched for a way to collect, condense and to rectify them.

On a wooden disc with a hole in its center, Korschelt fastened spirals of copper wire, on both sides, one wound clockwise and the other, as a mirror image, counter clockwise, and connected the ends together through the hole in the center. His assumption was that the collected energy would be condensed in the center and then be beamed off at a right angle to the disc. He termed the side facing the light positive and the other negative. To increase the condensation and lengthen the antenna, Korschelt wound small coils like key rings and assembled them like links in a chain. He was convinced this device would give additional life energy if the beam was directed at the neck of a person in the height where the 18 cranial nerves are leaving the skull, (medulla oblongata). Such a spiral resembles a Nornen coil, which is stretched out and is used to eliminate undesirable emanations.

An application of a Korschelt coil seems to have its merits. In one case a relative of an elderly man suffering an acute pneumonia, being already unconscious and according to his physician, beyond hope, hung a Sun-Ether Disc over his bed. From this moment, his condition improved rapidly. Fourteen days later, he was almost normal again. In another case, a Sun-Ether Disc hangs over the door in the waiting room of a Naturopath. Every one walking in is amazed over its warmth, and the flowers are flourishing like in a green house, even though it is not heated and faces north. When asked for the reason, the owner points smilingly to the disc and gladly explains how it works and how to build one.

On a plywood disc with a diameter of 50 cm (20-3/4 in.) are two coils, one on each side, wound in a mirror image, the front one counter-clockwise and the other clockwise, almost on top of each other. Both are connected through the hole in the center which has a diameter of 10 mm (6/8 in.). The space between each winding is 15 mm (5/8 in.). Aluminum wire is best. To make the key rings, take a 4 mm (3/16 in.) thick wire, fasten it into an electric drill and wind the armature wire around it tightly, by allowing the rotating wire in the drill to do the spinning. Make sure to wind the links for the front counter-clockwise and for the back clockwise. Then separate every fourth winding and cut it to get the links shaped like key rings. Now attach the rings onto one another like a chain. Each link will lengthen the antenna and work like an oscillator. Fasten the chain onto the board, using nails or screws, but to be accurate, give the chain a light tension so it will not slip off. Twist the ends in the hole together, or better, solder them. The counter-clockwise winding for the front applies to people living in the northern hemisphere; in the southern hemisphere it might need to be reversed.

In Korschelt's time, some made "beam-handbags" carried on a shoulder strap. The material had to be framed to it could not move, then the spiral was embroidered and fasted to the inside of the bag, the whole bag measuring about 20 x 20 cm (8 x 8 in.) and the windings being 1 cm (3/8 in.) apart. Such bags were more powerful than the disc.

From Mar-Apr 1988 Journal of Borderland Research

ETHER RADIATING APPARATUS

An Apparatus For Therapeutic Use Without Direct Or Indirect Suggestion
Oscar Korschelt of Leipzig. German Patent #69340, July 14, 1891
Translated from the German by Bodo Capeller, 1986

This apparatus utilizes the living forces of the ethers for healing purposes. The electro dynamic theory of Wilhelm Weber concerning the structure of smallest parts results in the insight that all ether is identical with Webers electric particles, that all solids rotate around it at a certain distance because of attraction of positive to negative ether particles in relation to solids. Through a corresponding arrangement of solids it ought to be possible to condense the diffuse ether and redirect it. A similar arrangement has been utilized in the following described apparatus which has been named by the inventor "Ether Radiating Apparatus".

This apparatus can be used for the purpose of increasing the intensity of the power of living ether. The difference between several versions of this apparatus is that of shape of materials used. In order to get increased power electric current may be used. Since the same appears to consist of positive and negative particles that try to find equilibrium, the amount of liberated ether particles within the wiring of the apparatus and the diameter of the wire formed ether vortex will increase with the spun off ether particles.

In drawings 1 through 5 an ether radiating device is shown. Within the apparatus the arrangement of the metal wiring is formed in a spiral that will cause ether particles to spin in a predetermined direction so that the living force can be utilized in many ways.

The version in drawing #3 shows the wire is formed in spiral configuration on both sides of plate E and is connected in the center. Through this arrangement the ether particles will accumulate in the center of the disk and be thrown forward. In order to achieve a longer path for the ether vortex one may utilize a chain instead of a simple wire which consists of horizontal displaced links (drawing #5). The disk is intended to cause physiological changes in humans (see drawing #1).

Patent request: An apparatus for therapeutic purposes with direct or indirect suggestion consisting of a non conductive disk (E), free standing or installed in a tube, where both sides of the disk contain spiral wound wire with the side toward the light exposed as the collector and the opposite the radiating portion.

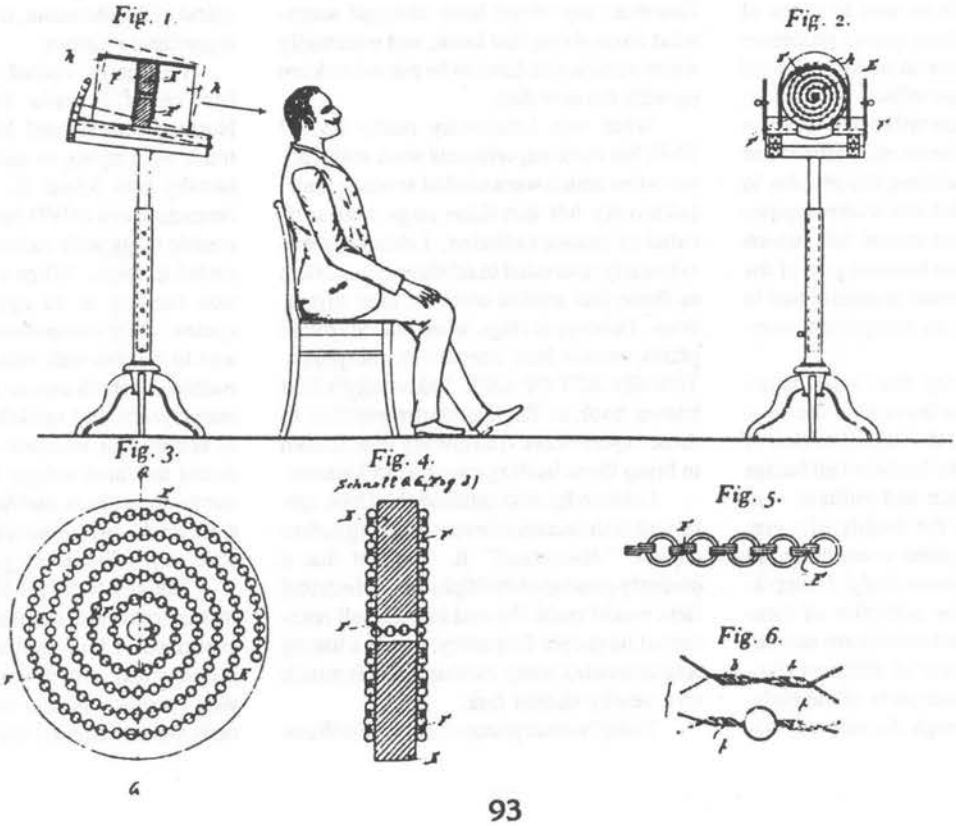

March-April 1988 JBR,
VIEW FROM THE BORDERLANDS
by Tom Brown

NATURAL ELECTRICITY

Ernst Lehrs, writing in **MAN OR MATTER** about early views by Volta and Galvani on electric fish, provides insight into the nature of animal electricity. "The electric organ of such a fish consists of many thousands of little piles, each made up of a very great number of plates of two different kinds, arranged in alternating layers. The two kinds differ in substance: in one case the plate is made from a material similar to that present in the nervous system of animals: in the other the resemblance is to a substance present in the muscular system, though only when the muscles are in a state of decay. In this way the two opposing systems of the animal body seem to be brought here into direct contact, repeated many thousands of times.

"In the electric fishes, accordingly, sensation and will are brought into a peculiar interrelation. For as a result of the spatial fixation and the state of deterioration of its bodily foundation the animal's will-pole is related to its bodily foundation in a manner which otherwise obtains only between the nervous system and the psychological processes co-ordinated with it. These fishes have the capacity to send out force-currents which produce in other animals and in man 'concussion of the limbs', or in extreme cases paralysis and even death. When contemplated with pure observation this phenomenon tells us that in cases of minor strength, this force causes processes of a volitional character in bodies affected by it. Through stronger effects the organic system which serves the will of the creature involved passes into disuse, either for a time or for good. By describing the process in this way we realize that electricity appears here as metamorphosed animal will, which takes this peculiar form because part of the animals' volitional system is assimilated to its sensory system in an exceptional manner.

"It is known today that what nature reveals so strikingly in the case of the electric fish is nothing but the manifestation of a principle at work in the bodies of all beings endowed with sensation and volition -- in corporeal terms, with the duality of a nervous and a muscular system -- and therefore at work also in the human body. Observation has shown that the activities of these two systems in man and animal are accompanied by the occurrence of different electric potential in different parts of the body. Manifold in detail though the relevant observations are, they all confirm a definite correlation of negative electricity with the nerve-and-sense pole (sensation) and of positive electricity with the blood-and-muscle pole (volition)." From **MAN OR MATTER**, © 1958 Ernst Lehrs, Rudolf Steiner Press, London.

Thus we see that natural electricity is formed by processes which can be mirrored in non-living matter. But if we can have access to the primary form of the energy why pursue the secondary, and seek out that "magic frequency" that will cure AIDS, cancer, and assorted body clogs that go under fancy medical names? The answer is that everyone has their individual path to travel. Spiritual healing sometimes takes a long time, while an electronic device may get the person back on the track of their day-to-day life. The spiritual lesson of the sickness is buried for the future. Electricity is the subsensible force, but it is a real force with the ability to alter the functioning of the human body.

November-December 1989 JBR,
VIEW FROM THE BORDERLANDS
by Tom Brown

MWO NOTES

The work of Georges Lakhovsky continues to be of strong interest. I have been investigating the Lakhovsky MWO for about four years now and my views have consistently changed with new information. BSRF's MWO Handbook is getting quite popular! However, my views have changed somewhat since doing that book, and eventually a new edition will have to be put out to keep up with the new data.

What was Lakhovsky really up to? Well, his basic experiments were with copper wires which were circled around plants. Lakhovsky felt that these rings were activated by cosmic radiation. Lakhovsky was extremely interested in subtle energies, such as those that guided birds on their migrations. The copper rings, when placed around plants, would heal cancers in the plants. THE SECRET OF LIFE, Lakhovsky's best known book in English shows pictures of these experiments. Lakhovsky then moved to bring these healing energies to humans.

Lakhovsky also intuited the DNA spiral coil in the center of every cell long before anyone "discovered" it. He felt that a properly generated multiple wave electrical field would make the coil in each cell resonate at its proper frequency, just as a tuning fork resonates when its frequency is struck on a nearby similar fork.

Today's conceptions of a Multiple Wave Oscillator (MWO) are quite different from what Lakhovsky was really doing. Lakhovsky tried to reproduce the healing energies of the cosmos by electrically energizing coils to produce energy fields which apparently regenerated aberrant cells along the lines of his theories. Lakhovsky first did this by producing an antenna, comprised of concentric copper tubes, the outer one being energized with two wires from his power source. Our impression of his antennas is that they were log periodic, that is logarithmic in nature (Lakhovsky doesn't come right out and say this, but his patents are definitely worded to cover such an arrangement). New data coming in (but not yet verified) tells us that these copper tubes were filled with one or more of the noble gasses (also called rare, or inert gasses).

As anyone could guess, these antennas would be somewhat hard to manufacture. Lakhovsky then miniaturized the antenna and inserted it in a gas bulb. His US patent #2,351,055 says vacuum bulb, but also covers low pressure gasses. There are two main keys here. One is the log periodic antenna. All higher forms of life are based on logarithmic patterns, from ferns to humans. Lakhovsky was creating a structure in the ether which would bring cells into proper functioning. The other is the vacuum / low pressure gas effect. For those who wish to understand the potent effect of the vacuum on life then the reading of The Nature Of Substance by Rudolf Hauschka is required. According to Walter Russell the noble gasses are the octave markers in the harmonic spiral of the elements, which also exists in a logarithmic pattern.

I recently visited with Dr. Norman McVea of Stinson Beach, California. Norman has several high frequency gas tubes built trying to understand what Lakhovsky and Royal R. Rife were up to. Norman has a MWO built of 12 glass concentric rings with various noble gasses inserted in them. When we checked it out it was running at 60 cycles, pulsed at 7.8 cycles. My recommendation to Norman was to run the unit with a radio-frequency oscillator which can be tuned from 1 to 30 megacycles, and modulated with a variety of sources for research. Norman has produced the most unique MWO I've seen in our modern times, and he is certainly on the right track. He is also working to reproduce Rife's high-frequency gas bulbs.

The key to Royal R. Rife's frequency instrument is also the use of the noble gasses energized at high frequency (possibly 4.5 megacycles), which were then modulated with specific musical tones. Lakhovsky's units were energized similarly, but used the

frequency-independent log periodic antennas, giving a broad band of treatment, rather than the specifics of Rife's units. In many ways these two pioneers were working with the same keys.

WHO DUNNIT?

Rife and Lakhovsky have another similarity, that is, that people today are building equipment obliquely related to their work and offering them as original, or "improvements." This needs serious examination. The last two years has brought on an underground cult of so called "Rife Frequency Generators." There are hordes of these so-called "Rife" units being sold which are merely fancy variations of TENS (Transcutaneous Electrical Nerve Stimulation) devices. The conception for these units, usually producing square audio waves, comes from John Crane who knew and worked with Rife in his later years. John has affidavits from people who swear that they were healed from cancers and such by his square wave units in the early 1960's. It is extremely important to note that Rife's work in the 1930's through the 1950's was with high frequency gas tubes and all his documentation covers those units. History is rapidly becoming blurred in the race to cash in on people's poor health.

Modern purveyors of the so-called "Rife" equipment are making several errors: The first is that they claim that Rife developed the use of the square wave generators with electrodes. That is incorrect, it was John Crane (which makes Crane a pioneer of TENS research!). The second is that they claim that Crane's equipment was junk and would never work. Maybe the equipment wasn't of the highest quality (we have an original unit in our collection!) but Crane does have a lot of signed affidavits, several of them in our files, claiming that the units worked on specific diseases. In general, people are being misled in order to sell them equipment they probably don't need. That is a bad reflection on the field of electrotherapeutic research.

Perhaps these modern "Rife" (TENS) units have some merit in killing certain types of pathogens. I've spoken with many people who were completely dissatisfied with their so-called "Rife" units, and I've spoken with two people who have claimed that they have killed infections such as foot rot and herpes. Maybe they do, but for all of the thousands of devices being put out where is the documentation? Where is the proof? I have seen Crane's affidavits of the early 1960's, but have seen no medical studies from anyone, not even basic notes!!! There is obviously a very important bit of work to do in researching the effects of pulsed DC on the human body. TENS units kill pain, that has been clinically documented. The claims of the so-called "Rife" units are just that -- claims, *and unsubstantiated to boot.* Until any substantial research work is done in this area I would recommend that people do not follow the mob hysteria which shrewd hucksters have instigated over Royal R. Rife's work.

Lakhovsky's story is similar. All the units being built today are based on Bob Beck's early 1960's interpretation of Lakhovsky's first patent (#1,962,565). After four years of looking at these devices and reading Lakhovsky's patents and books I've come to the conclusion that Bob was misled by the patent. From an electrical engineer's viewpoint Bob's units make sense. From the standpoint of understanding subtle energies within and surrounding the body the units are merely RF noise generators which have questionable effects on the body, and most likely interfere with natural energetic processes (chi flow, etc.). The Beck MWO is a variation of one of Tesla's electrotherapeutic devices, the variation being that Tesla went to great pains to make the antennas spark-proof, and Beck's antennas spark away. Lakhovsky's units didn't spark either!

What makes this more interesting is an article which appeared some months ago in the **Health Freedom News**, titled Who Dunnit? by Mike Brown. Mike gives a weak case for his view that Lakhovsky was inept, that his earlier units didn't work, and who needed Tesla to fix them up and make them work. Perhaps Mike didn't notice that Lakhovsky's SECRET OF LIFE, which he sells to promote his units (in the ad following the article), is based on the units he claims in the article didn't work! Mike refers readers to Tesla's article High Frequency Oscillators For Electro-Therapeutic And Other Purposes (**Lectures, Patents, Articles** by Nikola Tesla, Beograd, 1956), but fails to notice that Tesla's article contradicts what he is doing with his units. I wonder how that article got past the editors?

CORRECT DIRECTIONS

Lakhovsky was a brilliant scientist, highly regarded on the European continent. His name comes up in many books, most recently I found him referenced in Lilly Kolisko's **AGRICULTURE OF TOMORROW**. If he and Tesla met, I'm sure it was for more than to fix poorly engineered units. There are three types of units that I feel should be built for research into this area: One is Tesla's oscillator circuit. The higher quality Beck MWO units, such as those built by Klark Kent, can be converted fairly easily. Use the unit's power supply as is, but for antennas use insulated copper plates (or spheres, as Tesla preferred for maximum effect) coated with heavy dielectric material such as beeswax. Eliminate the sparking! A necessary design change for future units will be to change the ¼ wave coil to ½ wave.

The second is a reproduction of Lakhovsky's Tube MWO. It will take miniaturizing the Golden Ratio antennas that Eric Dollard designed for the MWO and inserting them into low-pressure rare gas bulbs, which will then be driven at high frequencies. It is my estimation that this is the best way to pursue Lakhovsky's high frequency researches. The mathematics for the antenna, along with further reference materials on log periodic antennas, are in The Lakhovsky MWO Handbook.

The third is a reproduction of Rife's original type of equipment being a rare gas bulb driven at high frequencies, modulated with musical tones. This will take RF broadcast equipment and a rare gas tube. No electrodes!

It is time that researchers in this area begin to go in the correct direction. Bob Beck made a noble effort in the early 1960's with his conception of the MWO, and gave people something to work with for 25 years. That phase is definitely over and a new one beginning.

The "Rife generator" craze should be stopped now before it takes people another 25 years to find they've been misled. Serious research into the effects of pulsed DC should be undertaken by those with the wherewithal.

And keep it uppermost in your mind that electricity is a sub-sensible force. In the borderland sciences one should look to the supersensible, such as Dr. Wilhelm Reich's orgone energy (which, by the way, reacts to electricity in such a way that makes it detrimental to the human body), and the human vital energy such as is utilized in Biocircuit research (as begun by L.E. Eeman).

January-February 1990 JBR,

VIEW FROM THE BORDERLANDS

by Tom Brown

THE WONDROUS ELECTRICAL FORCES

Electrical research is a primary area of borderland research. While the term "occult" puts many people off, it should be realized that electricity is an occult force whose effects we only see when equipment is properly engineered. Four to five hun-

dred years ago one would probably be burned at the stake if it would have been possible for them to demonstrate electrical devices.

Electricity is considered by some to be a degraded form of the Light Ether, that the etheric force gets bound up in matter in a way that it can be used. But being bound up in matter it provides mankind with the option of using it properly or improperly. Many articles on the detrimental effects of electric fields have been published, and more studies are no doubt underway on this important topic. There are also some records of electro-therapeutic devices that used this force for healing. Tesla envisioned a worldwide electrical power system and did the basic testing to show himself that it was viable, and needed but to be built. Tesla was a man of great intellect and was a reader of Goethe and other great minds. One would feel that he was in some way familiar with Goethe's *Farbenlehre* (color theory). The type of electricity being sent around our globe on wires is of a different, lower form that that of Tesla's transmission of electricity without wires. It is quite possible that Tesla's electricity was of a beneficial nature. Tesla did research into electrotherapeutics and was no doubt aware of both beneficial and detrimental effects. With the power system he envisioned on line we may not have ended up with the electrical problem we are just beginning to see the "tip of the iceberg" of.

This point needs clarification and elaboration beyond what most people now imagine. We periodically mention certain aspects of Dr. Lilly Kolisko's experiments with the crystallization of metallic salts rising *contra* gravity. These experiments were done to establish whether or not the planets had any direct connection to the metals as alchemical lore supposed.

The connections she investigated are Gold-Sun, Silver-Moon, Mercury-Mercury, Copper-Venus, Iron-Mars, Tin-Jupiter, Lead-Saturn. For example Dr. Kolisko would take a gold chloride solution (1%) and allow a portion of it in a laboratory dish to *climb* a segment of blotter paper. As it dried the fine details of crystalline form could be seen. After many experiments the characteristic form of each metal's salt could be comprehended. It was scientifically established that the actions of cosmic bodies would have direct effects upon the crystallizing actions in the lab. Gold chloride would not crystallize properly during several solar eclipses that Dr. Kolisko reported on (1927, 1947). A darkening effect was noticed on these slides.

Just recently I came across this in the recollections of Dr. Rudolf Hauschka, founder of Wala Pharmaceuticals: "In the course of researches into the delicate changes in matter which are revealed in the capillary-dynamic method, an alarming symptom came to the fore. At one of the Easter conferences of the Anthroposophical Doctors' Working Group in Comburg in 1964, Frau Kolisko, the past-master of the capillary-dynamic method, spoke on 'Gold and the Signs of the Times.' In earlier years she

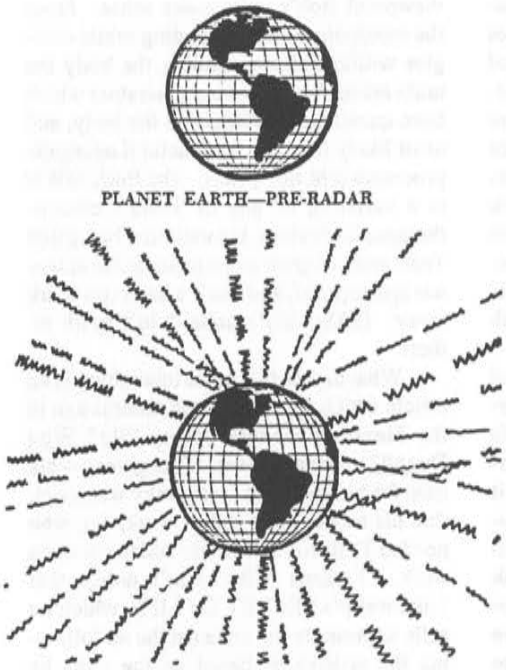

Entire planetary environment permeated with pulsed electromagnetic radiation—an unprecedented condition.

had demonstrated by means of the *Steigbild* (literally rising pictures, also known as chromatograms) the connections between the metals and the planets, and in particular the effect on gold of an eclipse of the sun. During an eclipse of the sun the gold *Steigbild* which normally glows with beautiful colors, shows a darkening and the emergence of grey formations. Frau Kolisko now showed a series of gold *Steigbild* produced in the last years almost hourly and at all times of the day and of the year. Without exception all of them showed the same sinister dark formations which had appeared earlier, in the first half of the century, only at the time of a sun eclipse. She closed her lecture with a question to the doctors, namely whether, considering the change now in gold, they could still be answerable for its use as a medicine. There was no doubt about it: since the middle of the century gold had become different -- it was sick. Or, to express it differently, the connection between the spheres of the sun which stream down and the metal which they permeate is disturbed."

ELECTRICITY: THE MAIN CULPRIT

The main culprit in this sickness of earthly matter is none other than the electrical environment that has manifested on this planet. Certainly there were radio communications going during Dr. Kolisko's early experiments, but as this chart from Trevor Constable's *COSMIC PULSE OF LIFE* shows, the post WWII environment was heavy with these signals, culminating in today's total saturation point. Imagine what the *Steigbild* would have shown in previous centuries before the electrical force began its manifestation.

Nuclear proliferation must also be considered as adding to this phenomenon, but electricity is the degraded form of the light ether, whose source the sun is related to gold. Walter Russell, in ATOMIC SUICIDE, indicates that the spread of nuclear energy will destroy the atmosphere surrounding this planet and now scientists are scratching their heads as the hole in the planetary ozone layer gets larger. (Of course chlorofluorocarbons and New Zealand sheep farts have all been blamed for the ozone depletion, but nuclear energy is a primary cause.) This atmospheric destruction could well aid in cutting off gold from its cosmic wellspring of life.

Rudolf Steiner had many insights into the true nature of electricity, its relationship to humanity and its role in our future. Pertinent to the matter at hand let us consider the following remarks, a portion of his answer to a question about electrical treatment of animal fodder:

"You must consider the whole part played by electricity in Nature ... to the effect that human beings cannot go on developing in the same way in an atmosphere permeated on all sides by electric currents

and radiations. It has an influence on the whole development of man. This is quite true; man's inner life will become different if these things are carried as far as is now intended. It makes a difference whether you simply supply a certain district with steam-engines or electrify the railway lines. Steam works more consciously, whereas electricity has an appallingly unconscious influence; people simply do not know where certain things are coming from. Without a doubt there is a trend of evolution in the following direction. Consider how electricity is now being used above the earth as radiant and as conducted electricity, to carry the news as quickly as possible from one place to another. This life of men in the midst of electricity, notably radiant electricity, will presently affect them in such a way that they will no longer be able to understand the news which they receive so rapidly. The effect is to damp down their intelligence. Such effects are already to be seen today. Even today you can notice how people understand the things that come to them with far greater difficulty than they did a few decades ago.

"It is a remarkable fact that whenever something new appears, as a rule in the early stages it is heralded as a remedy--a means of healing. Then the prophets get hold of it. It is strange, where a new thing appears, clairvoyant perception is often reduced to a very human level! Here is a man who makes all sorts of prophecies about the healing powers of electricity, where no such thing would previously have occurred to him. Things become fashionable! No one was able to imagine healing people by electricity so long as electricity was not there. Now--not because it is there, but because it has become the fashion--now it is suddenly proclaimed as a means of healing. Electricity--applied as radiant electricity--is often no more a means of healing than it would be to take tiny little needles and prick the patient all over with them. It is not the electricity--it is the shock that has the healing effect.

"Now you must not forget that electricity always works on the higher organization, the head-organization both of man and animal; and correspondingly, on the root-organization in the plant. It works very strongly there. If... you pour electricity through the foodstuffs--you create foodstuffs which will gradually cause the animal that feeds on them to grow sclerotic. It is a slow process; it will not be observed at once. Electricity will not at first be recognized as the cause; it will be ascribed to all manner of other things.

"Electricity, once and for all, is not intended to work into the realm of the living--it is not meant to help living things especially; it cannot do so. You must know that electricity is at a lower level than that of living things." (from **Agriculture** by Rudolf Steiner)

How pertinent and timely these words are today on many levels of borderland research. Electrical/electronic medicine has the glamorous position on stage at most of the conferences, and in many people's minds, in today's 'borderland' field. People are racing to buy instruments which are designed by electronic engineers with little or no training in the comprehensive constitution of humans. *It is the fashion!* There is no consideration that true healing comes from the spiritual realms, that the spirit is always healthy, and that dis-ease comes from a condition where the various subtle levels of the body are not aligned properly with the physical.

These electrical instruments have the potential to produce apparent results in treating disease symptoms. But what of the long term effects of the subsensible electric current? Considering the alarming state of affairs viewed through the information just presented I pose the question to the reader, "Do you prefer the natural or the unnatural forms of treatment?" Many people flock to electronic medicine because they feel that the petro-chemical drugs that are prescribed by the medical establishment are detrimental to their long term health. Very possibly so, but will electricity be any better? What about your own vital energy and its relation to cosmic life forces?

Electrical stimulation of the body treats a symptom and fails to allow for the body's natural healing process. As electricity is an externalized part of humanity's inner volitional force we can see that there will be definite effects from the subsensible current. But the effects will be relative and the inner healing process put on secondary mode. Electro-therapy, while emerging as a viable medicine of the future, still ignores the natural healing process.

This does not mean that we should not research electro-therapy. In what may seem a contradiction to many readers, I am 100% for further research into this area. It will no doubt be of benefit to many. Our relationship with electricity is one of the greatest questions of our time. People unconsciously use this force, and the results are such as those noted by Lilly Kolisko. Electricity is intimately connected to the Life Force, but great care must be taken not to confuse the two. Electro-therapeutic research helps define the boundaries, and thus is of interest to Borderland Researchers, but it certainly does not mean I recommend it!

Mar-Apr 1990 JBR

BSRF Bulletin Board

MWO QUESTIONS

Your comments re the MWO in the Nov-Dec 89 JBR are of much interest and raise the following questions in my mind:

1. Will you be publishing any information by Dr. Norman McVea?

2. How can the Kent units now in circulation be converted to produce a 1/2 wave? Perhaps Klark would be willing to publish an article on this or be willing to do the converting for a price.

3. Has any member ever tried to obtain any information on the circumstances of Lakhovsky's death? About three years ago a reference librarian made a serious effort for me to obtain any information re Lakhovsky, with absolutely no success. Perhaps there was an obit in the NY Times at the time he died, assuming that is where he was at the time.

4. Where in the world would we obtain copper spheres like Tesla used? Perhaps a member can suggest a source.

P.V.P.

California

In answer to your questions:

1. Norman McVea has sent us in a bit of material on his latest oxygen researches. He has opted for the oxygenation approach instead of the electrical.

2. I don't know about conversion of Kent's units to 1/2 wave, you should check with him on that. It will probably be easier to use it as it is -- they are good power supplies for experimentation -- and in the future engineer units with more refined outputs. After reading my column Klark added a rare gas tube assembly to his "Rife" units. He has always listened to other people and has constantly worked to improve his units.

3. If any readers have info on Lakhovsky's death, or his life for that matter, these pages are open to pursue the matter.

4. Anybody know where to get copper spheres? Tesla also used copper plates coated with a heavy dielectric.

September-October 1990 JBR

BSRF Bulletin Board

MWO EXPERIMENTS

I have been very fascinated with your Journal. Thank you for the new world you have opened up to me. For the last few months I have begun to work on an MWO.

I have completed the antennas but did not do as well with the Tesla-coil. I decided to buy the ready made coil from

"Edmonds". I connected the secondary to the center of my antennas and did get some action in the form of a purple glow around the third and fourth smaller rings. I can only assume that I need more power to this unit although I was "Quite" pleased at the limited reaction on my first attempt. I would like to reach out to a fellow member who might be able to help me with some advice at this point.

Any advice you would send my way would be greatly appreciated.

P.D.
New York

Naturally, the quality of output of any electrical device is dependent on not only the quality of materials, but also the geometry of structure and arrangement. The better the coil, the better the antenna, the more refined the fields will be that are put out around the device. As I have pointed out in the article mentioned above in my remarks about the "Rife" devices, the types of "Lakhovsky" MWO's being built today vary quite a bit from what Lakhovsky was actually building and using himself.

Lakhovsky used very refined electrical designs and probably log-periodic antennas with both poles of a Tesla coil feeding the outside ring in such a manner that there was a logarithmic, electro-magnetic structure oscillating in space which apparently had quite beneficial effects on living organisms.

The modern variations, based on Bob Beck's schematic of 1963, feed one pole into an antenna (and the other into a second antenna), creating a dielectric field, which when it collapses, due to the rings on the antennas, creates unnecessary sparking and random radio-frequency noise with questionable effects. It is an organic system alterant, but is quite different electrically from Lakhovsksy's original equipment.

Nov-Dec 1990 JBR,
BSRF Bulletin Board

THAT MWO AGAIN

I recently purchased your MWO HANDBOOK. In the book are many references to the "Golden Ratio". I was unable to determine what the mathematical basis for the Golden Ratio is. I have other material which describe the Golden Section, and it is a ratio of .618 to 1. The closest I came to a value for the Golden Ratio is from the MWO antenna data on page 188 of your book the ratio appears to be 1.27:1. Could you please clarify the mathematics of the Golden Ratio antenna?

B.C.S., California

*** I recently purchased THE LAKHOVSKY MWO HANDBOOK. I am in the process of building an oscillator. I have all the parts except 6Kv .005mf capacitors. No electronic store in Alaska has them, or knows how to get them. I would appreciate it if you would send the address of either the manufacturer or an electronic store that carries 6Kv .005μf capacitors. I have one more question. Do you know of a meter or electronic apparatus that measures the amount of energy level the human body produces? It seems that like fingerprints, all human bodies are different in the amount of energy they use or produce. If one can coordinate the energy level of the oscillator to that of the body far less damage would be done and far greater healing potential be made.**

S.N.
Alaska

For the first question, the Golden Ratio antenna uses the golden ratio as a base, but it was engineered to conform to other considerations of antenna propagation. It is what is called a log periodic antenna. These antennas are based on the square root of phi, that is the inner ring is multiplied by the square root of phi to get the next ring, or inversely the outer ring is multiplied by one over the square root of phi to get the next inner, etc. This provides the Golden Ratio mathematics (every other ring is phi related).

MWO NEWS FROM FRANCE

I'd like to mention with regard to "Electricity the Main Culprit" that just after the war, Gurdjieff wrote a chapter in his book ALL AND EVERYTHING entitled "Beelzebub says that man's capture and subsequent destruction of electricity from nature is one of the main causes of the reduction in the human lifespan." And you are lucky in the US. In Europe we have a 230V system that is far more harmful than yours.

A final comment on the MWO which seems as popular as ever. When I lived in Paris I made the acquaintance of Lakhovsky's son and saw two of the MWO's built by his father in operation. The demonstration was very impressive but it didn't last too long because the old units interfered seriously with radio and television reception in the area. They were very big units, about as large as an early TV set. I don't know where they are now since he later loaned them to friends living in the country.

R.C.
France

Very curious quote from Gurdjieff as it concurs with what Steiner indicated, that electricity makes living things sclerotic. If perhaps you wouldn't mind searching your memory a bit more I have a question about Lakhovsky's device: You say it interfered with radio and television reception. Was this from internal spark gaps, or did any unit you see arc between antenna coils. The pictures in THE SECRET OF LIFE indicate that the then necessary spark gaps were interior to the unit, and the pictures of the effluvia coming off the antenna are obviously pictures of corona discharge and not arcing as in the units built in the US today. Bob Beck, in his 1963 article on MWO's claims he built a unit from an original, but his antenna hook-up is quite different from Lakhovsky's pictures. Many years of searching have failed to produce an original unit. The modern units are derived from the most obvious derivation of Lakhovsky's first MWO patent, which is written to both protect his design and cover infinite variations thereof. A detailed account of an original MWO in action would be of great value in this research.

SOUTH OF THE BORDERLAND

I have read Mark Clement's THE WAVES THAT HEAL and discovered a little piece of information not included in the current edition to THE LAKHOVSKY M.W.O. HANDBOOK. In WAVES I noted a short sentence indicating that one set of rings transmits energy through space which falls upon the patient's body and (it must be ascertained through experiment whether this is as I tell here or otherwise) later absorbed by the receiving resonator which resonates it for rebroadcasting into the patient's body. Thus the true Lakhovsky MWO, and UNLIKE the Beck-reconstructed model, would be a more-complex device involving features so-far unthought of. It must be ascertained what KIND of "receiving resonator" Lakhovsky employed, if it had or not special constituents not described at any of his patents included in the MWO HANDBOOK and what other features could be complementary to both.

Another feature to be considered, and which I discovered in the photo on page 30 of Clement's book is that there are two protruding spheres connected to the outermost ring of the Lakhovsky set-up. In the copy of the BSRF publication I have, these two photographs are reduced and with not the same kind of resolution of the work by Clement. Each protruding sphere is connected to a cable and following the path of least resistance

the electrostatic current flows both along the metallic path of the outermost ring and the excesses accumulated from attracting ether from the environment are projected towards the patient (in the case of the transmitter) and collected for resonating (in the instance of the receiving resonator). Also notice that there are two "bracing wires" to both keep the rings in place and at the same time to fulfill the 90° division determined for Earth by the metric theorems which are the foundation of the Energy Grid! This adds another feature of complexity to the duplication of the MWO, which carries the Lakhovsky invention, again, farther from the Beck-built model.

Please mention my paper SOME FREE-ENERGY DEVICES for the MWO analysis I made is at best very incomplete, not including the feature of non-uniformity the true MWO does possess.
Jorge Resines
Buenos Aires, Argentina

Thanks for your further insights into the MWO. I feel that a continuing dialogue will eventually produce more evidence as to what type of equipment Lakhovsky used in his successful researches into cell regeneration and how to best reproduce it. The resonator antenna setup on Lakhovsky's original is more complex than the Beck MWO, as, like the primary antenna, it also has two feeder wires. The two spheres you mention, from which brush discharges can be seen, have always struck me as the nuts that held the heavy antenna onto its stand. Some mechanical contrivance was necessary and the mini-spheres fit the bill with the possibility that they may have been further configured to produce a specific capacitance, as our evidence indicates that Lakhovsky's antennas were very precisely built, probably log periodic. We have heard that Lakhovsky was a radiethesiest and would dowse the sites where he set his equipment up. He was certainly into the subtle energies, and the French school was very precise in its radiesthetic work, being the source material for much of Christopher Hills Supersensonics work. We have an unconfirmed report that the original tube antennas were filled with a rare gas such as argon. This would seem to be the case as in Lakhovsky's second MWO patent he reduced the antennas and puts them into vacuum or low pressure gas bulbs (as the first, this patent is written to be very specifically vague). This was meant to be an improvement over the original units, and probably was. What it tells us is that the "Beck" units appear to be far from what Lakhovsky was doing and where he was going, though because of more than 25 years of people building and using Beck models it is hard find information on the original. The "bracing wires" are supposedly silk. Their angle was probably determined solely by mechanical function.

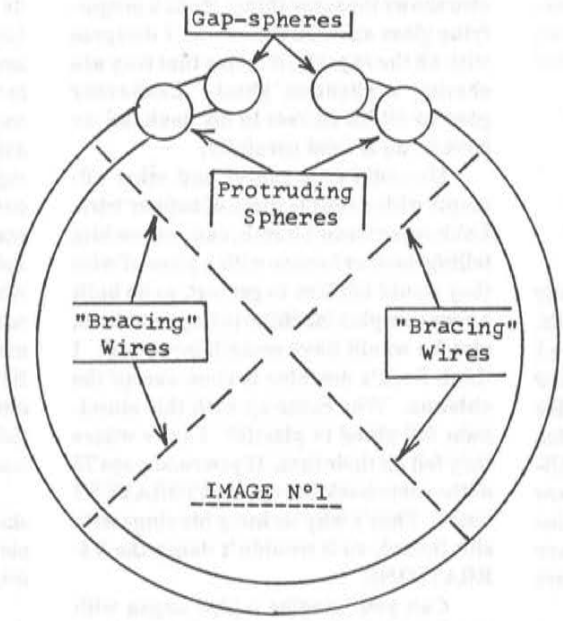

Detail of outer ring on Lakhovsky's original MWO antenna. Front view above, side view below

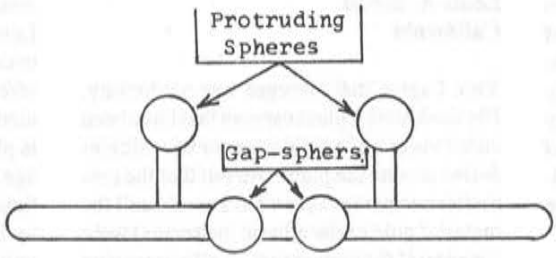

We have actually come under attack for our attempts to clarify the MWO story! In a brochure put out by MWO salesman Mike Brown, Box 25, Pleasant Hope, MO 65725, we come in for the following treatment: "Then there are the characters who, with no formal training whatsoever, denigrate tings [sic] they know less than nothing about. One outfit calling itself Borderland Research sent out a bulletin claiming that no-one today is manufacturing a Lakhovsky Multiple Wave Oscillator. These characters arrived at their conclusion by comparing photos of a 1935 unit to ones being made today. The units don't have the same external appearance. Quite often people with no formal training in electronics or electricity don't understand that an electronic device and how it operates are determined by the circuitry contained within the unit, not by the box it comes in." My comments are that there are perhaps *tings* we don't know but we do know that what is inside counts as much as the outside on the MWO. I have put five years of serious investigation into the MWO and would have to say that what we published is the result of serious consideration by a number of intelligent people--some highly trained electrical and mechanical engineers--interacting and exchanging ideas. We have published the evidence to support our contention, and have in fact stated that if we can be shown to be wrong then we would like to know, that we have no final conclusions, just some of the facts. A crude attempt to belittle BSRF's research by ignoring the main facts does not change the facts and the facts are that the units pictured in Lakhovsky's book **THE SECRET OF LIFE** are quite a bit different than the units being built today, indicated specifically by the antenna hookups, from which basic logic would indicate the need for a different interior setup. A thorough analysis of the basic differences between the two types of units can be found in The Lakhovsky Multiple Wave Oscillator Handbook, edited by myself, Tom Brown (no relation to Mike). Mike's brochure then goes on to claim that "the equipment necessary to regrow arms and legs can be purchased at Radio Shack for about $10", that is a "metal plate, copper wire, battery, and 100 K-ohm to 1.5 Megohm resistor." Heck, if you can regenerate an amputated limb with a only battery and a resistor then why do we need all the electronics in a MWO just to drive out mere cancerous tissue?!

As a final note on this, I would like to point out that electricity is a system alterant. Whether it alters the system for better or worse depends on many other factors, in-

cluding mental status and diet. As Trevor Constable pointed out back in the 1960s in this Journal, the healing powers attributed to the MWO could be caused by the etheric force rushing to suppress the life-negative electro-magnetic activity. It is also possible that any benefits coming from modern day MWOs are psycho-tronic in nature -- that is the mind is doing the cure and the instrument provides a physical anchor for the psychic energies. The actual operation of the equipment, the sparking and gross electrical output, is superfluous to the matter, other than in convincing the mind that *someting* is happening.

Jan-Feb 1991 JBR, BSRF Bulletin Board

LAKHOVSKY'S ORIGINAL

You ask whether the original Lakhovsky MWO had any arc between antenna coils. I don't remember any but to make sure I checked up with a friend who has worked on the MWO and knows it inside out. He was also present when I saw the device working. He tells me that there is definitely no arc between coils. The arc occurs inside the machine after the "Ruhmkorff coil". He also says that there are two tungsten plates which are drawn apart and brought together manually.

The other thing I remember is a sort of metal wand with a knob at one end which is used between the two units to treat people. At the time I saw it, one of the persons present had a bad back. The two MWO antennas were turned on and were facing each other about 6 ft apart. The "wand" was applied to the sore back. I seem to remember that it kind of gave off sparks, but I'm not sure of this. I touched the wand and I could clearly feel something coming through. My knowledge of electricity is nil, however, if you have further questions, I could always try my friend who should be able to answer them for you.

R.C., France

Many thanks, as this confirms the evidence of Lakhovsky's own pictures used in his books. Would you be so kind as to ask your friend if it is possible to get a schematic (even a rough drawing from memory) of the basic layout of the MWO, which we could reproduce on these pages, also any antenna construction details. Many questions remain such as what components are in the metallic tubes holding the antennas up, and such (Eric Dollard finger-dowsed the pictures of the tubes and felt it was an arrangement of capacitors and spark gaps -- his basic MWO diagram, an intelligent guess of what Lakhovsky was doing, is in this Handbook). A basic schematic would probably be the most important piece of information to date. Please read on, pot has been stirred.....

LAKHOVSKY ANTENNAS

I got my Nov-Dec 89 Journal where it shows an update on Lakhovsky's antennas. On page 181 of SECRET OF LIFE it also shows the same thing. Take a magnifying glass and you can see it. I disagree with all the experts, it seems that they are chasing a phantom ghost. Lakhovsky gave us all his secrets in his book, all we have to do is read carefully.

He could cure cancer and other ailments with a simple piece of copper wire. Lakhovsky wasn't dumb, can you see him telling doctors to cure with a piece of wire they would tell him to get lost, so he built a very complex machine to impress them, also he would have something to sell. I think Beck's machine is close except the antenna. Who came up with this aluminum foil glued to plastic? That's where they fell on their face. If you read page 75 of the same book he repeats VIBRATES 3 times. That's why he hung his rings with silk thread, so it wouldn't damp the VIBRATIONS.

Can you imagine a pipe organ with copper strips glued to a board? I have designed an antenna using copper tube of varying sizes held by fish leader that I think would work fine. I'd bet a penny to 10 bucks that George used thin wall bronze tube as it will resonate better -- but it's expensive to fabricate.

Louis A. Schad
California

Yup, I agree that Georges was no dummy. His book shows plant cancers that have been cured via use of a single copper wire single-coiled around the plant. He felt that the pre-matter cosmic rays (or what I would call the material pole of the etheric instreams) were "ringing" the copper coil, in effect creating a tone that would heal the plant. I got the impression, from studying Lakhovsky's progress towards the vacuum (or low pressure rare gas) patent, that in his equipment Georges tried to invert the process -- exciting the ring with a post-material high frequency current that would create a healing tone. By using log periodic antennas (as would be allowed under the MWO patents) a vibrant chorus would ring in the ether, the tones, via the structure of the antenna, would be such that they could harmonize the functioning of the human body.

The aluminum foil antennas were developed by Riley Crabb, as a low cost way for experimenters to make their own antennas without having to have printed circuit boards made, and many folks were quite happy with the results. The physical evidence now clearly indicates that the Beck unit is quite different from the original Lakhovsky unit for which the cell regeneration results were recorded. What I have termed the "BECK MWO" must stand on its own merits and it can lay no claim to Lakhovsky's recorded results. As stated several times in the past Beck's device is more like one of Tesla's electro-therapeutic oscillators, except Tesla used copper sphere antennas, coated with a heavy dielectric to suppress sparking. Beck's unit would be covered under Lakhovsky's original (and very generalized) patent, but research of Lakhovsky's own material shows it is not what he used for electro-therapeutic researches. To excite the antennas in the Beck manner will not create the same vibrating field that Lakhovsky's antennas excitation circuit will. But it does create an electrical field that some claim is beneficial to a live body placed in its proximity.

It makes much sense that the antenna should also vibrate physically as well as electrically. Ah... if we simply had an original unit to weigh and measure...

Lou has sent us in a MWO of his own design with a single spiral antenna made of two twisted bare copper wires. We will be running a several part article on construction and use starting next issue. This unit is reminiscent of the Sun-Ether disc of Oscar Korschelt, circa 1891. Having sat in front of a number of different operating MWO's over the last six years I have to say that Lou's unit is the most exciting thing I've ever seen like this. I could strongly feel the effect 10-12 inches away, and there was no electrical excitation of the antenna, rather it is physically vibrated. There is a low voltage shocker that can drive the antenna through two smaller copper coils. It's easy to build and use, simpler than the Beck units, and should provide borderlanders with years of workable ideas. Lou will not be selling these devices but will provide complete building plans in the JBR.

We received a call from Patrick Flanagan. He reports that he has a MWO unit built by Lakhovsky's son in Paris. It is a little box with a one tube white noise generator and it has a multi-stranded cable which wraps around the body. It shows that the evolution of Lakhovsky's device has taken a different turn among those who actually knew what he was doing. This unit is based on the Radio-Cellular Oscillator.

Also, Klark Kent (of Super Science, Box 392, Dayton OH 45409) just called to say that he has completed a run of Golden Ratio antennas from the original B.S.R.F. artwork. These are double sided (with inverse gap strips, to simulate the ball capacitance on the original tube antennas, on back) gold plated and are available from Klark for $100 each. (These antennas have produced beneficial effects on plants without any electrical excitation. Many experiments can be done and the results quantified with various protocols such as those used by Rudolf Hauschka and Lilly Kolisko.)

There is no doubt that there is a new phase of MWO research being undertaken. For 25 years people built Beck's model, with many people claiming beneficial results, and others experiencing nothing but no one keeping track of results for evaluation. Thanks to Bob Beck's schematic (published by B.S.R.F. in 1963) the idea was kept alive and now people will have many ideas to choose from in their search for measurable effects from energies ranging from the gross electrical to the fine etheric. Thanks to everyone who has interacted on this ongoing aspect of our researches!

EVEN MORE LAKHOVSKY STUFF

Some time ago I bought your excellent handbook of the Lakhovsky Multi Wave Oscillator and due to pressure of other things have only just found time to read it. Interesting because it parallels some research done by myself and friends, or should I say we duplicated some of the original. This was only to be expected as the entire principle is so outrageously simple, too simple for establishment minds to comprehend.

I should like to offer a few ideas which might be of interest and in return I would be grateful for some additional information.

I helped develop the Betatron now sold by All-Source Systems, PO Box 596, Morton, WA 98356. The Betatron uses a TV Flyback transformer and is very similar to the Master Violet Ray devices. The nicest feature is that the applicator is an ordinary clear light bulb. Even a burnt out one will do. There are differences; some makes of bulb will not work at all, perhaps due to different gas fillings. The Betatron can also be used with the Lakhovsky concentric antenna with spectacular results. This of course has been done in the book's articles although as far as I know it was not actually copied, but was an obvious choice of experiment.

I have tried out an improvement which I did not see in the Handbook or anywhere else, perhaps you will be interested. The Standard circuit whilst apparently covering a very wide range of frequencies, must, because of its inherent fixed inductance and capacitance have its own natural fundamental frequency. Our Betatron is around 21 Kilocycles (I refuse to use the meaningless term Kilo Hertz), and other units seem to be basically tuned to one fundamental even though they do stray and produce an almost infinite range of harmonics.

My first improvement is to substitute a "Jacob's Ladder" for the spark gap. This consists of two 1/4" copper tubes spaced 5/32" apart at the bottom and tapering outwards to 1" at the top then abruptly turning out at 1" radius. The spark travels up the ladder from bottom to top and is extinguished by the sudden increase of gap, then begins again at the bottom. This sequence takes place at about 2 second intervals. The whole point of this is, as the spark progresses up the ladder, the length of the tuned circuit is progressively increased, then suddenly decreased again ditto repeato. As the ladder is about 9" long the length of the tuned primary of the Tesla coil is progressively made 18" longer, then back to its original length. Thereby resonating at infinite numbers of frequencies within its range and delivering virtually the same power at all those frequencies.

A further improvement on this feature is to make the ladder a Spiral Staircase by using a solid rigid central electrode, say a ½" copper tube and the spiral be wound in an ever increasing diameter on the outside, the start being about 5/32" gap and vertical to begin with.

Alternatively the spiral can be the inside element wound on a porcelain former such as is used in radiant "bowl" heaters with a plain copper tube surrounding it or perhaps a perforated tube as used in decorative lighting fixtures. The spark winds its way around the spiral staircase and alters the frequency accordingly. The Spiral Staircase provides a much longer path and more variation in frequency range. I have not yet perfected this and ruined a few porcelain formers in the process. It requires some exact progressive increases in the travelling spark gap but there are no serious obstacles.

Both the Jacobs Ladder and the Spiral Staircase have the advantage of easily cooling the spark gap. We had experienced problems due to overheating of the electrodes in a fixed gap, even spark plugs transmitted the heat to other parts and carbonized insulation. The addition of a cooling fan (the low power kind used in computers) provides a current of air which accelerated the progress of the spark up the Jacobs Ladder and more importantly up the Spiral Staircase. The spark is sometimes reluctant to leave its easy path at the base of the ladder and even more reluctant to wend its winding way up the coil, but the air flow does the trick and keeps everything cool.

The fan also helps remove Ozone from the enclosure. Ozone has the delightful habit of attacking insulation. It has also been blamed for respiratory illnesses. I am skeptical of the latter as I have breathed plenty of Ozone and found it exhilarating.

Master Violet Ray even included an Ozone Inhaler with its de-luxe model!!!, recommended for asthma, bronchitis etc. What's more M.D.s used it on their patients. Certainly Ozone is about the only thing which will quickly digest Carbon Monoxide in a hurry and it deodorizes a room when the cat has misbehaved.

The Betatron and Lakhovsky machine both can be used to destroy troublesome warts and moles, by simply wrapping a wire around the electrode and applying the point of the wire to the offending growth. I had some troublesome warts removed in this way by a Dermatologist. It was not until I got involved with this project that I realized the Dermatologist was using a Lakhovsky device.

He anesthetized the area first but I have since got rid of warts and moles without this. It caused some "Discomfort" which as any mother knows is worse than mere pain, but it was tolerable.

I hope the foregoing will be useful and will not be in the least surprised it has not already been done, but I would like to know what you think of it.

Regarding Spark Coils. I recently found at the local Flea Market, a small spark coil about 3½" overall length 2" dia. with a sturdy vibrator assembly and a turret mounted sideways. It looked like a small steam boiler in fact. It is labelled "Coil, Booster, Battery Operated. Type C1, (24 Volts DC) Spec. #94-32182, Serial #96082, order #A,C 27073, Eclipse Aviation Bendix, N.J. Division of Bendix Corp. I don't know what it is for but on 12 volts it delivers a lively 3/8" spark. The absence of a Zip Code suggests it is fairly old, but this is the ideal driver for a compact tesla coil. I do not know if it contains condensers but I added some anyway. The adjusting screw has a click stop adjustment. Have you come across

one of these? It works well on 6 volts which is just as well as it draws a lot of juice and 8 D cells won't fire it.

Now a request for information about Lakhovsky Treatment and parts. Please Please. On my knees!! Where can I obtain High Voltage Capacitors as used in the Lakhovsky Machine?????? I have tried all the surplus stores I know of in this area but the highest voltage they have is 450. I recently paid over $50 for a 660 volt one for a 12 v trailer power supply and that was ordered specially from New York. HELP!!! I even tried making one from instructions in the Boy Electrician, a Sunday School prize from the 1930s. I used Acrylic 1/8" dielectrics instead of glass. They worked well for a time but soon tracked and failed. I don't fancy using glass plates any way but I desperately need some H V Capacitors at less than Pentagon prices.

Re Treatments. One of the contributors to the Handbook reports that treatment with the Lakhovsky Machine resulted in the dis-appearance of underarm hair. (The report of decreasing underarm hair is from the Nov. 1968 Journal of Borderland Research by Mrs. E.H., Piqua, Ohio.) This is very interesting as I am a heavy construction worker, and after a hard day at the office I like to drop in for a cool beer and fraternize with nice hot ladies. However, underarm odor which results from my daily exertion and defies Right Guard AFTER for 2 hours, is a Repellant. I did find that shaving the offending fuzz helped a lot. Tearing it out by the roots was even better; it seemed to de-activate the sweat glands.

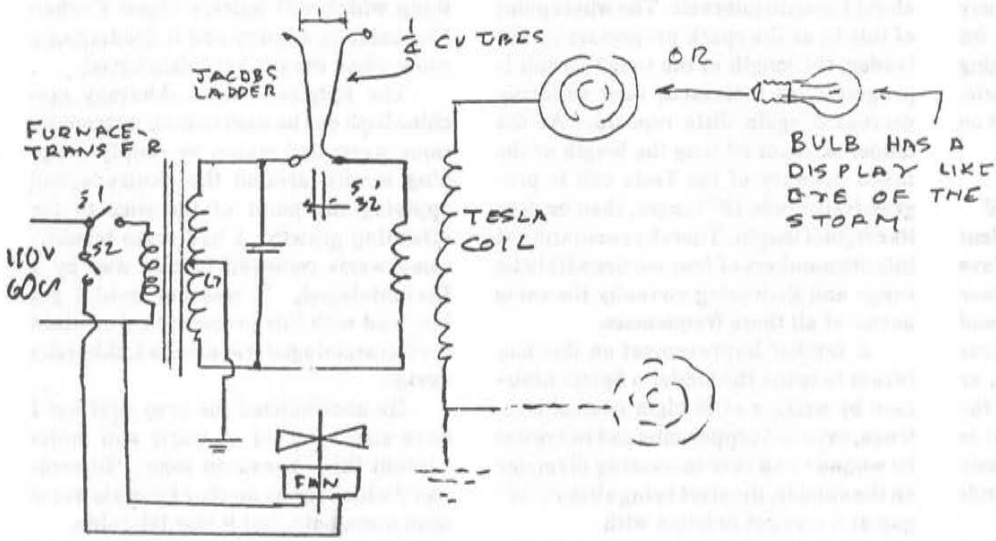

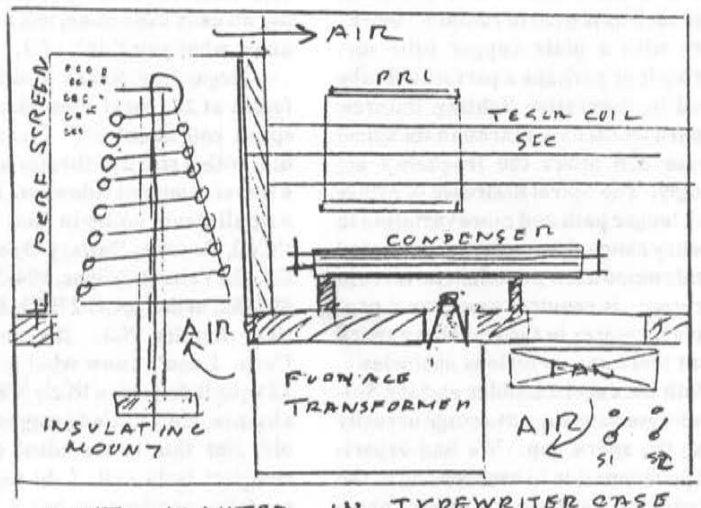

UNIT MOUTED IN TYPEWRITER CASE WITH ACRYLIC FRONT COVER TO DIRECT AIR FLOW

After I sprained my shoulder I used the Betatron all around the joint and have noticed that underarm hair now grows much more slowly, and I have much less trouble with B.O. I used the Betatron frequently and the Ozone removes any residual stink...

NOW the Big question. Has anyone succeeded in using the Lakhovsky machine to stimulate hair growth??? I have hair like Yul Brynner. Maybe some folks think its sexy but I find it repulsive and worst of all it makes me look and feel 20 years older at least without a hat. It seems to me that the machine could well be used to rejuvenate hair cells since it can reverse most other degenerative processes. Its a strange thing that men who are short on top have an overabundance of superfluous body hair in places where it is utterly wasted.

Has anyone done any research on this subject with the Lakhovsky Machine??? If so please let me know. I will be most grateful for any information and will of course inform you of the results of my own experiments.

It occurs to me that such a phenomenon could well dispense with the daily chore of shaving and make Gillette obsolete. I am forever disgusted that such a lot of life force is wasted growing hair on my face instead of where it belongs, On Top! Would be most grateful for your ideas.

I remember the Master Violet ray being demonstrated in a department store in the 1930s, I must have been about 7 years old. My mother who was with me watched the demonstration and I, of course, was fascinated. I said, "Oh Mom do buy one, it's just what you need for your rheumatism". Mother replied, "Oh no, You just want it to play with". How right she was. Well, in spite of all the quack devices which come and go, Lakhovsky in all his forms is still with us. That's recommendation enough. The AMA persecution of course confirms its effectiveness.

A Naturopathic Doctor saw me wearing a copper bracelet. He was treating me for arthritis, effectively with electro therapy etc. and asked if I really believed in the copper. I said "No", then he said "Why wear it?" "Because it works." He laughed and said,

"Look at that green stain on your wrist. That's copper salts and they are being ingested; maybe that's how it works, you might have a copper deficiency, well it's cheaper than pills."
Very Sincerely,
K.V.A.R., Washington

First off, without further ado, let me congratulate you on taking a stand on refusing to use the word Hertz to designate cycles per second. Why use mumbo-jumbo designators when simple English will do. Tesla said that the acceptance of the Hertzian theory would come to be seen by future generations as the greatest aberration of the scientific mind. Of course Tesla is probably rolling in his grave (at 3600 rpm?) at the modern etherless explanations of electricity. He, and others of his day, regarded the (transverse) Hertzian waves as the "waste" put off by coils. The Tesla (longitudinal) wireless system would have been worldwide (including radio and power), with the transverse waves engineered to a minimum, whereas the radio we have today, with the transverse waves engineered to a peak, fades out as one goes around a hill or a decent distance from the emitting source. This is dealt with much more specifically in THE THEORY OF WIRELESS POWER by Eric Dollard. Regarding use of the Jacobs Ladder as a spark gap, that is an interesting idea and thanks for sending it in. As far as your hair growth problems go, perhaps our other readers have further comments. You have provided a lot of food for thought, thanks!

HIGH VOLTAGE SOURCES:
Re: Nov/Dec Journal and inquiry of S.N. Capacitor 6KV (6000V) .0047 uF (which is the standard value, not .005!) available ($4.90) from: Antique Electronic Supply, 6221 S. Maple Ave., Tempe, Arizona 85283. (602) 820-5411.
A.A.
Massachusetts

Source for high voltage equipment: Plastic Capacitors, Inc., 2623 N. Pulaski Rd., Chicago IL 60639-2190. Write for catalog (Dealer for above is Newark Electronics). Also recommended is Homemade Lightning: Creative Experiments in Electricity by R.A. Ford, ISBN 0-8306-3576-9, TAB Books, Blue Ridge Summit, PA 17294-0850. Can be ordered through your bookstore.
Simplified Tech Service
PO Box 2140A, Champaign IL 61825

In the Nov-Dec 90 issue S.N. of Alaska asks about a 6Kv .005 uf capacitor. Radio Shack sells a 2Kv .01 capacitor #272-160. Three connected in series will be 6Kv .003 uf, another 3 connected in parallel across the first three will be 6Kv .006 uf. Six of these costs about $3.

Regarding the MWO, when Hieronymus lived near me in Ft. Lauderdale I asked him about the MWO. He didn't recommend it because the broad spectrum of frequencies had both beneficial and harmful frequencies which could not be separated.
R.B.
Florida

Thanks for all the input on where to get HV capacitors. Also, thanks Ron, for Hieronymus' viewpoint. With the Beck style MWOs I would agree. A mass of radio frequency noise is generated. With Lakhovsky's original units driving structured antennas one could produce multiple wavelengths of a more refined nature. We don't recommend the MWO to anyone, that is not our purpose. This Journal acts as a forum to ideas such as these to be explored, and the MWO refuses to go away, rather interest is growing and it is time we closely examine the field. Read on...

THE BECK MWO
My MWO is a Beck model. It has successfully killed a skin cancer on the back of my hand. Yet I am wondering about its resonator. There seems to be no action, it's of no use and is as if dead. I did not realize that we are having trouble establishing a real Georges Lakhovsky MWO. This [enclosed] information from Europe may help clear up our need.
D.M.
Bryte,

A good puzzle truly has many pieces, so thanks for your experiences. I never said that the Beck MWOs didn't work, but that they are not the same as Lakhovsky built. The enclosed ad was for radionic and related equipment including MWOs from Radionic Instrumentation & Research, Dorset, England. It may be that this is the radionic type of MWO originally sold by Copen Labs. I honestly don't know a thing about these MWOs, so any info would be greatly appreciated especially a schematic. Years ago I had heard them spoken of disparagingly by people who claimed that they wouldn't work because there wasn't enough power, an argument I never bought. It would seem that the more subtle and refined the energy the more beneficial it is to the human organism. The field is still open for new ideas and fresh impulses...

May-June 1991 JBR.
BSRF Bulletin Board

KLARK KENT CHECKS IN!
Just a note to say thanks for the mention in the Journal about the availability of the Golden Ratio Antennas from Super Science. And also to say that the articles on the continuing developments of the MWO are most welcome. Especially interesting is the comparison of the Beck MWO to the Lakhovsky original!

I have never seen an original Lakhovsky MWO. Only from the patent information can we really get schematic information, circuit diagrams, antenna structures, etc. As you know from all of the free energy patents circulating around, a patent wrapper and drawing is not really enough to produce the claimed device. If it were, then we should have many free energy devices in production today!

Several months ago a contact in New York made a generous offer to procure an original Lakhovsky MWO. I passed this information along to you and to others. So far no one has come forth to my knowledge with information leading to the whereabouts of an original Lakhovsky MWO. What this means is that we must grope our own way in replicating the technology first developed by Lakhovsky.

So I guess I owe Bob Beck a word of thanks because he was the one who made it possible for researchers to actually build a MWO. The information left to the world by Lakhovsky is (in my opinion) wholly inadequate to build and construct the device. The patent information is, like most patents, just not adequate to enable someone to replicate the device. And this brings up the question: Just what constitutes the original Lakhovsky MWO? We don't have an original device (and a bounty of $100,000 has so far failed to produce one). The information given in the patents doesn't really tell us enough.

Borderland Sciences can help out by continuing to publish articles about the MWO which emphasize circuit diagrams and construction details. In this way, Borderland researchers can redevelop this important technology.

I enclose a letter we received from a customer. Since the letter is of the testimonial variety, it is best not to reference it in the Journal. But the point is that even a Beck adaptation MWO can seem to produce positive experimental results!
Klark Kent, Super Science,
P.O. Box 392, Dayton, OH 45409

Glad to hear you are open to new research. Lakhovsky left much information -- it just never got translated into English. BSRF will continually publish the results of ongoing MWO research, and will always be on the lookout for the best information available. Here is the letter submitted to Klark, from a person known to us here also:

Dear Mr. Kent,
At long last I get around writing to you and share some of my experiences with the MWO I bought from you.

The unit arrived on May 17, 1990 in excellent condition. Your packaging is superb. I inspected the unit superficially but, because of some professional problems, was not able to make use of it until October.

Let me comment first on general appearance and workmanship. While obviously not industrially produced, this is a well-built high quality machine, using fine components. Having been an electronics engineer part of my life (before I became a philosopher), I feel well qualified to make that judgement.

The instructions are generally adequate but I was glad that I did order your audio cassette, done by you with a fine dramatic flair, worthy of Christopher Reeve, who does resemble you. My suggestion: include the cassette with the MWO as a matter of course.

I used the machine about thirty times, sometimes daily, sometimes skipping a day or two for 35 min. per session, mostly in the High Power Radiator mode.

I suffered over a period of about fifteen years from a mild chronic bronchitis, some coughing in the morning with some phlegm, rest of the day just fine. The medicine men told me that I "just have to live with it". Though I am 70, I judge myself being in great health.

Now, your machine has definitely improved my condition. I know, of course, that my testimonial is worthless to you, since you cannot make, and do not make, any health claims. But still I thought you might want to know.

I do have several radionics machines (De la Warr and Copen) but we all realize that this is sympathetic magic; great stuff, though!
With best wishes, faithfully yours,
NAME WITHHELD

ELECTRONIC ENTITY REMOVAL
Judging by the letters you receive and print in the BULLETIN BOARD people are still experimenting and building MWOs. It should be accepted that no two MWOs will be identical due to different components, circuits, etc. Also, Lakhovsky did not have some mystical secret that is exclusive to his particular instruments; he built one that generated his required multi-frequencies and there are no doubt many ways to effect this.

The large MWO I built in 1966 worked as well as I could expect and, although I never use it now, its circuit can be regarded as a basic Tesla coil, starting out with a 12KV neon transformer. Other circuits I have experimented with unfortunately appeared not to give the same results. Your MWO Handbook should be the starting point for would-be experimenters keeping in mind that most of the 'transistorized' models do not have enough energy to effect the desired results.

A major point that never seems to be mentioned is that the subject should be seated ON AN INSULATED PLATFORM with the antenna about six inches from the back. In this way all the cells of the body are raised to their full potential for, say, ten minutes during which each cell can absorb energy at its one resonant frequency. The subject should ground himself for an instant before stepping off the platform. Then switch off the instrument. I found this procedure mandatory to obtaining positive results and have found it odd that this point has never been mentioned in the literature.

I might also bring up the very real possibility (discussed with Riley Crabb in the past) that at least part of the positive results obtained with the MWO could be attributed to the removal of spirit entities by the high voltage involved. Regrettably, Borderland appears to skirt this issue.

As I have stated before, the Journal is an important platform for the meeting of the minds and I wish you well in your efforts.
R.M.
Nevada

Appreciate your input and valuable ideas. I'm certainly open to the possibility that the results obtained from the MWO could be attributed to the removal of spirit entities. This should also bring up the question of whether or not what is perceived as spirit entities (negative in this sense) could be also related to their potential physical anchors, i.e. virus and bacteria. Maybe we see the same thing but interpret differently.

As far as using different configurations to achieve multiple wavelengths, different arrangements will produce qualitatively different results. A French horn and a clarinet will show the same frequency for the same note played, but the difference in quality of sound should be obvious to all. The major difference between the hookup of Lakhovsky's and Beck's units makes them fall into quite separate categories. A silver bell rings finer than tin.

MWO REPORT FROM FRANCE
I finally managed to get hold of my friend (see BSRF Bulletin Board, Jan-Feb 1991) but he is very, very busy and only gave me some of the information I wanted.

Firstly, he declined to provide any basic layout of the MWO because he say no two units were the same. Apparently Lakhovsky experimented all the time and each machine was a "one-off" model, different from the others.

The origins of the MWO are in Tesla's work. A French professor, Mr. D'Arsonval took some of Tesla's equipment and modified it. Lakhovsky used D'Arsonval's work to build his machine. Tesla heard about D'Arsonval's experiments and, convinced that D'Arsonval was stealing his patents, came to France with the idea of starting legal proceedings against the professor. However, he found D'Arsonval so courteous and charming that he returned to America having dropped the idea of court action.

My friend tells me that the whole secret of the MWO is in the "diffuseur". He further indicated two sources of information, both in French. A series of books have been written and published by the Study Group "Arkall" called "L'Emergence de l'Enel" dealing with all aspects of the MWO. The second source is George Lakhovsky's book "L'oscillation cellulaire" which has been re-edited in Belgium. Unfortunately, my friend did not know the editor, so I suggest you will have to contact the American Embassy in Belgium and they should be able to give you addresses of bookshops where it can be obtained. Apparently, this book gives all the references concerning the people I have mentioned.

I'm sorry I can't be more helpful but the whole question seems to be much more complicated that I at first thought. In short, I'm afraid you will have to wade through "L'oscillation cellulaire" and the "L'Emergence de Enel" to see how Lakhovsky himself worked out the idea of the first MWO's.
R.C.
France

Thank you, your input has been most valuable and stimulating. The "diffuseur" (literally: loudspeaker or nozzle) would probably be the antenna, so the "secret" could very well be (as we have intimated over the years) in his mathematical arrangement -- a much more important consideration under Lakhovsky's antenna feed arrangement than with Beck's.

Jul-Aug 1991 JBR.
BSRF Bulletin Board

MWO CORNER

Received the Journal yesterday and was very excited about the Spiral Coil MWO. I congratulate Mr. Schad on doing a very good job and would submit the following input for future models.

1) No aluminium tubing should be used. Copper or steel tubing should be used instead. Aluminium is wholly negative. It attracts negative radiation like honey attracts files. In this connection, I heard this morning on the British radio that a "mobile home" site had just been devastated in the USA. If I'm right, "mobile home" site means trailer park, in which there is a huge quantity of Al. These are prime targets for tornadoes and all kinds of negative influence. My chief reference for this is Dr. Starbard Webb, Box 200, Orangevale, CA 95662. She has been studying the subject since 1956 and has accumulated a mass of data. Be patient for she travels a lot in the States doing seminars etc.

2) The rest is from a Tibetan lama to whom I showed the drawing. If you're wondering what a lama would know about the MWO I would say that they seem to know about everything that matters. For instance, in my own field (medicinal plants), their knowledge is not great, it is simply colossal, far beyond anything known in the West. The Lama tells me that there should be 12 coils, no more no less (Fig. 6). The "up" wire (see illustration) should be five times longer than the diameter of the coil. No doubt further information will be forthcoming when the whole of the MWO is described.

Yours sincerely,
R.C.
France.

Glad to hear of your suggestions for further research on Lou's spiral coil MWO. His articles have stimulated a lot of work that should provide a lot of new ideas over time. Peter Lindemann has taken Lou's concept of physical vibration and is experimenting with phi ratioed antennas that are stimulated with sub-audible sound. Also, Lou called to make sure that it was clear that the antenna side facing the subject is a counterclockwise spiral. It is clockwise from the top.

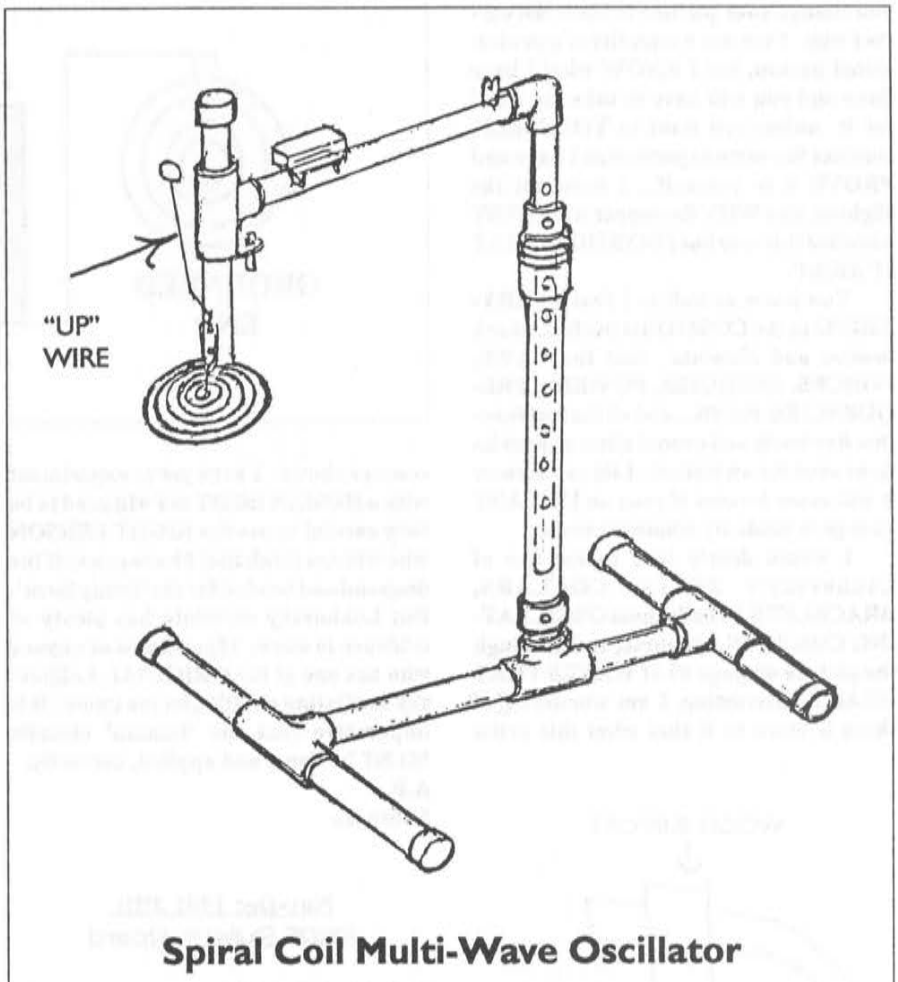

Spiral Coil Multi-Wave Oscillator

Interesting thoughts on the mobile homes, which are reverse orgone accumulators. A few items congruent with your comments have showed up over the years and perhaps we can get more on that in an upcoming issue.

LAKHOVSKY COIL INFORMATION

The following was forwarded to us from Health Research, Box 70, Mokelumne Hill CA 95245:

On Health Research's flyer for THE HANDBOOK OF UNUSUAL ENERGIES, the artist shows the copper wire positioned incorrectly through the wood support.

I have made a number of discoveries which I even find hard to believe by using this COILED COPPER WIRE. I expect to write a booklet on my findings and you may want to represent it in your sales catalog. I have proven over and over again what I have done but, to date, have not shared anything with anyone else. I had to be ABSOLUTELY CERTAIN before I 'went public'.

When I first received the books THE SECRET OF LIFE and THE WAVES THAT HEAL from you about 4 years ago, I noted carefully just how the copper wire was COILED around the plant. Please note that the copper wire STARTS from INSIDE THE EBONITE and MOVES COUNTER CLOCKWISE and then ends ABOVE the ebonite... This is shown on page 14 of THE WAVES THAT HEAL and page 110 of THE SECRET OF LIFE.

In the past four years I have made dozens of experiments and I've gone far beyond what even Lakhovsky did or thought of. NOW, to prove my point about the proper way the copper MUST be coiled, I deliberately experimented by coiling the wire the way you have shown it and NOTHING HAPPENED in all my experiments. That's why I KNOW THAT

I AM RIGHT and it is imperative that you change your picture to show the correct way. I am not a scientist of a professional person, but I KNOW what I have done and you will have to take my word for it unless you want to YOURSELF, conduct the same experiments I have and PROVE it to yourself... I have not the slightest idea WHY the copper wire MUST be coiled this way but I DO KNOW THAT IT MUST.

You know as well as I that EVERYTHING in the COSMOS is perfect, exact, precise and absolute that the LAWS, FORCES, ENERGIES, POWERS, FREQUENCIES, RAYS... and all the rest function flawlessly and cannot allow any variations even for an instant. Life as we know it will cease forever if even an INSTANT change is made by whatever cause.

I would dearly love to see one of Lakhovsky's BELTS, COLLARS, BRACELETS he calls them OSCILLATING CIRCUITS, of course, and although the picture on page 63 of WAVES THAT HEAL is interesting, I am wondering if there is more to it that what this artist concept shows. I have yet to experiment with a HUMAN BODY as I will need to be very careful to use the RIGHT PERSON who will not think that I have gone off the deep end and headed for the 'funny farm'. But Lakhovsky certainly has plenty of evidence to show. If you know of anyone who has one of the ORIGINAL Lakhovsky oscillating circuits, let me know. It is imperative that the 'human' circuits MUST be done, and applied, correctly.

A.P.
Nebraska

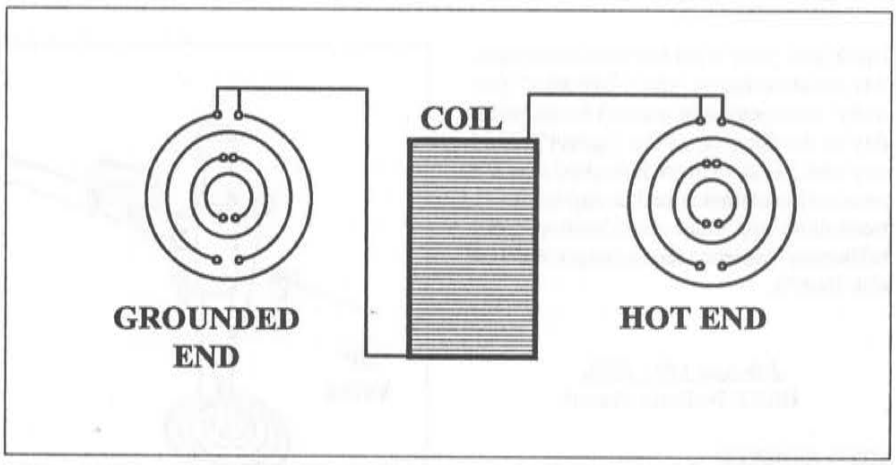

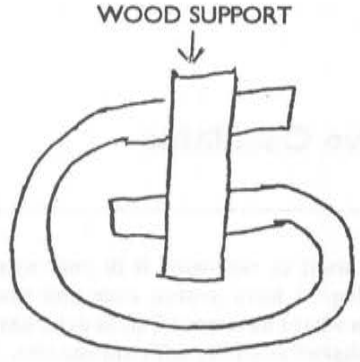

WRONG

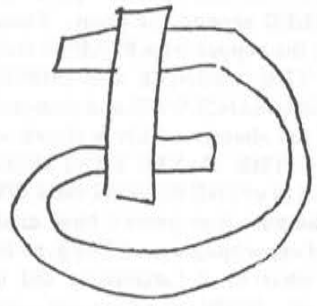

RIGHT

Nov-Dec 1991 JBR, BSRF Bulletin Board

MWO RESEARCH

Five years ago I duplicated the MWO as best I could with my limited knowledge. I scaled up the antennas from the book WAVES THAT HEAL using copper tubing of all different sizes and soldering brass hex caps of various sizes on the ends after I rounded them off with a grinder. The outside ring was about 2 ft. across.

I was able to duplicate the exact brush discharge pattern in the picture with Tesla coil 4" diameter with about 1,000 turns of regular hook up wire. 500 turns gave a discharge of 2"-3" evenly all around the outer ring. 1,000 turns gave a discharge of 5"-6" at the bottom with less and less towards the top except for some off the two balls at the top, like in the picture.

I found it necessary to run two connections from the feed wire otherwise with one connection the spark would travel around the ring and out the other end burning anything used to suspend the ring. Two connections eliminated this problem forcing all energy towards the bottom of the ring like in the picture.

The resonator was grounded just like the Beck model to the ground end although I used two wires one going to each end of the outer ring. Even so, at this power you could draw a small spark off the outer ring and if you turned the unit off and on you could hear the resonator ring just like it was struck by a small hammer.

I used a 30mA 15,000 volt sign transformer or stronger. These tend to burn out unless you put the primaries of two in series to share the load and restrict current. Actually, I started using half burned out transformers using mid point ground and the good half for 7,500 volts which is much safer for the capacitors. I used two .005 uf 20,000 volt capacitors in parallel for .010. The stationary spark gap was air cooled with a small blower fan.

There was no spark between rings. The side effects from this unit were too strong to continue treatments so I am now working on smaller units. After 15 minutes your head would be full of mucus. The closer the antennas were to each other the stronger the effect to the point of making one very nauseous.

Also, did anyone else purchase and test Dr. Charles T. Turley's square wave sound MWO two printed antennas powered by a sound generator?

J.A.
Ohio

Thanks for your most helpful input. Would be most interested in Dr. Turley's MWO as it may very well relate to Lou Schad's spiral coil MWO, presented several issues back, which worked on physically vibrating the coil. Peter Lindemann has picked up on this and is experimenting with vibrating the antennas with sound waves and through other mechanical means. A whole new field of MWO research is opening up and it sounds like Dr. Turley is working in the same direction. Please send us any information you may have on this. Thanks.

From the March-April 1992 JBR
BSRF Bulletin Board

MWO CORNER!

Here is a nice present for you and your readers. Some tidbits about George Lakhovsky. I phoned my knowledgeable friend on Sat, 14th Dec. To my surprise not only was he at home but he invited me to spend the afternoon with him the following day.

Firstly, it is comforting to know that there are still about four original MWO's within a radius of 200 miles from Paris, and the people who have them are likely to take good care of them.

Secondly, from what I can gather, L. took very great pains with each MWO. I understand now what my friend meant when he said that each one was different. L. would calculate all sorts of parameters relating to the place where the MWO was to be used. He would then do the "fine tuning" with the help, sometimes, of an unusual cleric Abbe Breuil.

L. arrived in France around 1896. He was a friend of Tesla and when the latter came to France the first person he wanted to see was L. I don't know anything about this early period but two episodes occurred later which gave L. quite a bit of money and enabled him to finance his future research himself. 1) During the 1914 war, there was a dearth of methylated spirits in France and L. negotiated supplies, on behalf of the French government, with the Russians. 2) He invented a gadget which was used everywhere on the French railways and which brought in tidy sums in royalties. He was thus able to invite titled people to his table, the Count of this and the Duke of that and, of course, Abbe Breuil. This curious cleric was very well known in France, not for saintly endeavors on behalf of the Church but for his exploration of caves in search of traces of early man. He became the High Priest of Pre-history. However, what interests us here is that he was an extraordinary medium. For instance, L. at table, would say something like this: "Abbe, I've just thought up a new design for the MWO (passing him the drawings) what do you think of it?" And the Abbe might reply: "The antenna's too thick here, you should take 1 millimetre off and here, you are using the wrong kind of metal." In this way, L. gradually refined each model, using the Abbe's intuition to verify his own findings, until he got it as near perfect as possible.

What follows is a translation of the notes scribbled down by my friend yesterday. I offer no comments because I wouldn't know a Hertz dipole if I fell over one in the dark.

These are some of the parameters taken into consideration by L.

1) Diameter: D.

2) Thickness of the wire of the tube (not to be confused with the section).

3) Distance "e" between the two ends.

4) Orientation of the circuit with respect to the horizontal plane (29° 70 N).

5) Kind of circuit. Should it be made of metal or hollow glass containing chemical salts.

6) Orientation of the distance "e" with respect to the magnetic North.

7) Study of the terrain: the mineralogical, geological, geodesic and tectonic factors.

8) Study of the nature of the surface of the circuit and whether and how it should be covered.

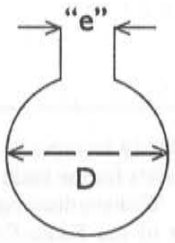

Hertz dipole

MWO antenna

I see now that what I had taken for solid rods making up the antenna were in reality hollow tubes.

I hope that you and your readers will find this information interesting. It sheds a new light on how L. operated. He used the pendulum a lot and, as we have seen, the mediumistic talents of his friend Abbe Breuil. My best wishes to yourself and to BSRF in 1992.

R.C.

France

Your input on the MWO project has been most helpful to everyone trying to find the truth of the story, and I offer my thanks and I'm sure the thanks of BSRF members the world around. Georges Lakhovsky was a complex individual whose ideas on cell regeneration have ignited many a seeking mind. It seems as though he had some rather interesting friends also, Nikola Tesla, Professor D'Arsonval, and the curious Abbe Breuil! Your friend's comments indicate some important factors in Lakhovsky's considerations: He was very concerned about the orientation towards the natural energetic lines of the earth, even considering latitude (what you have termed the horizontal plane) as a determining factor in the energetic output of his devices. He must have been aware of the interaction of the electric output with the planetary magnetic, electrostatic and etheric fields. He was also concerned about the underlying earth itself. In his **Secret of Life** he proposes his theory that cancers are more predominant in areas where the soils (such as clays) reflect the cosmic radiation back to the surface, causing interference patterns that disrupt the body's energetic flows. It is interesting to note that his antennas were constructed with all these factors involved. It is also very interesting that he relied on the pendulum and the mediumship of Abbe Breuil for his refinements. Lakhovsky was a true borderland scientist! Also of note is your point #5 mentioning the hollow glass circuit containing chemical salts. Something new to figure in our researches. We also have the open question of whether or not some of his tube antennas contained rare gases, which his MWO Tube Patent implies by its refinements in miniaturization. This has been an exciting period of discovering what Lakhovsky was really up to in his vast researches. Please read on....

A REAL LAKHOVSKY SCHEMATIC!

This schematic is from a Lakhovsky Radio Cellular Oscillator manufactured by Lakhovsky's son in Paris long after the untimely death his father in the early 1940s. It shows that the Lakhovsky's own family followed the path of the radio-cellular oscillator and not that suggested by Lakhovsky's turn to damped electrostatic power supplies in his MWO. Our many thanks go to Patrick Flanagan for providing this information to BSRF. Patrick obtained the unit, removed the seal at risk of voiding the warranty, and provided us with the circuit description you see here. Also, a special thanks to Roger Modjeski of RAM Tube Works of Santa Barbara, California for providing the pinouts and tube conversion info. As far as our extensive research notes show, this is the first real, complete schematic of an working Lakhovsky device that has been published in the US!

This unit, which fits in a small box that can be held in the hand, is a very powerful white noise generator with a treatment coil comprising of coax cable which is looped around the subject when in use. The treatment coil loop is 1 meter in length, the center wire and shield are connected. This unit will interfere with electronic communication devices up to the satellite TV range, and may be illegal to operate under FCC rules. The tube is an EL83, a French tube (Telefunken manual gives the German number as PL83) whose US equivalent is given as a 6CK6 video output pentode, but GE never made them. It is very similar in function to a 6CL6 which has a different

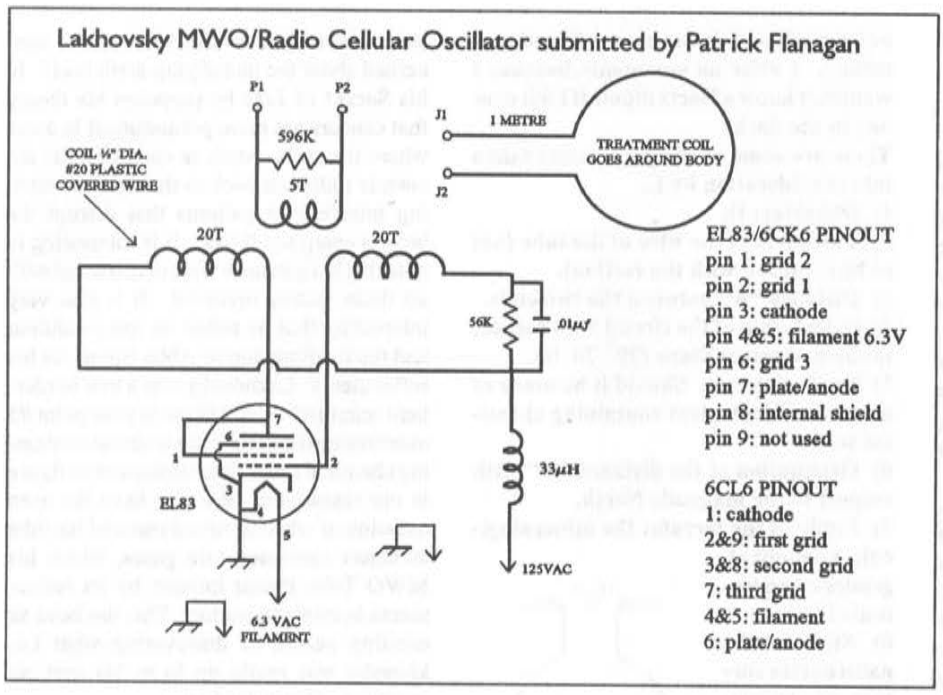

pinout. We provide the pinouts for both.

The 5 and 20 turn coils are ½ inch diameter tightly wound with #20 plastic coated wire. They are air core and all three are wound in the same right hand direction. They are spaced tightly and arranged exactly as shown. Varying the physical distance between the primary and secondary coils would vary the output strength. The resistors are ½ watt. The .01 capacitor is ceramic at 500 volts. The choke is 33 μH. The power supply is not shown, but is implied by the circuit.

We have no exact details of the interaction of this generation of Lakhovsky device with the human system, only that suggested by Lakhovsky's original RCO research and its extension through time. This data is provided for research purposes and to record yet another development in radio-biological research.

We would still be most interested in finding the schematic of one of the original MWOs pictured in Lakhovsky's various publications such as that pictured below from his book **La Terre Et Nous (The Earth and Ourselves)**, Fasquelle Editeurs, Paris, 1933, as it would provide the exact antenna feed for the concentric ring antennas and other pertinent details. Note that the antennas on this unit stand above the arm, unlike the well publicized pictures from **The Waves that Heal** and **Secret of Life**. This indicates that the protruding spheres seen in the detail on those pictures have a mechanical function, perhaps more important than their electrical function, though with Lakhovsky's methodology, he would certainly incorporate the optimum characteristics for the main antenna feeds.

We have discovered the basic construction of the Radio-Cellular Oscillator and know that Lakhovsky moved from them to the MWOs with damped electrostatic power supplies and concentric ring antennas because of the potential for thermal shortwave damage from continuous-wave radio frequencies. But then we see that Lakhovsky's son was still manufacturing RCOs after the death of his father! So we can see that the final conclusion has yet to be drawn as to exactly how the original MWOs were built, and of course we would also like to see some actual MWO Tube units that Lakhovsky patented. We also see the RCO as a potential low-cost method of researching Lakhovsky's basic theory of radio-frequency cell regeneration. This MWO Handbook contains the essential keys to all our questions and more. Much research has to be done and Borderland Sciences is willing to help any serious researcher who wishes to pursue these streams of activity.

The Journal of Borderland Research is the publication of record in the English language for these and many other research subjects. Please join in and exchange information with us. Without the help of the many borderland researchers sending us their ideas for over a quarter of a century this book would not exist. Thanks to all and best wishes on your researches -- may they be serious, straightforward, and well documented for others to learn from.

Tom Brown

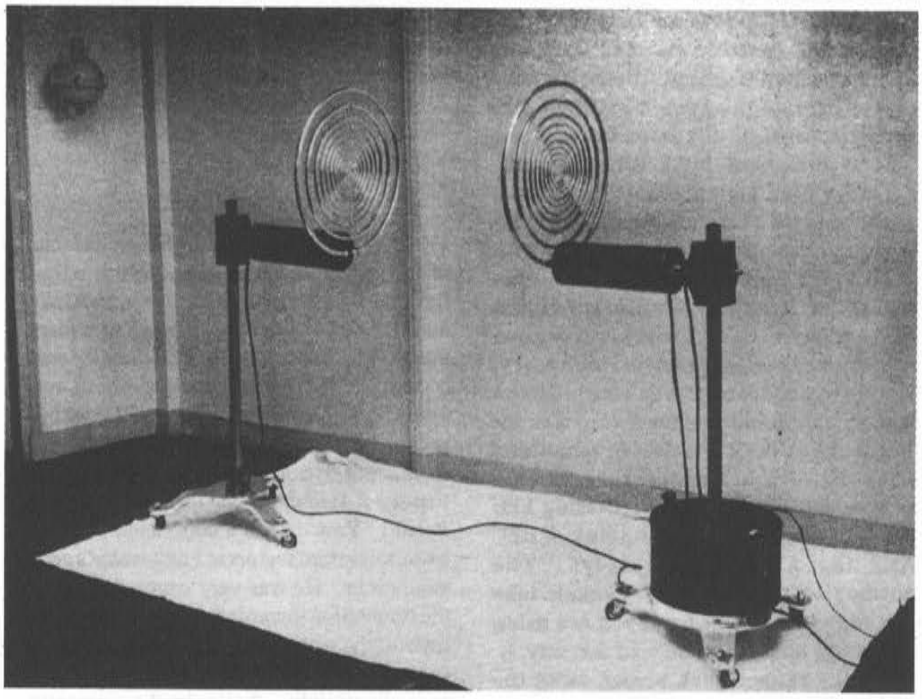

The complete Lakhovsky Multiple Wave Oscillator apparatus which creates an ambient electromagnetic field between its two *resonateurs*.

From the Jul-Aug 1992 **Journal of Borderland Research:**

MWO REPORTS

Please allow me to input these comments about the on-going search for the ultimate MWO, and most especially for a working model of Lakhovsky's alleged cure-all MWO. I submit a slightly different configuration of a MWO and wish to add some findings and opinions of my own. Let me say to any or all, these are only opinions backed with some results of a beneficial nature, yet still personal and so accept whatever you will and discard anything that does not have an affinity with your own feelings and thoughts.

I have read many times in the Journal and in the MWO Handbook of those who used any of the many modalities who did then experience a feeling of nausea and other internal discomforts. It seems that no one has understood the reason for this and assumes it has something to do with frequencies/power. Not so. This is only a result of the ozone produced by either the spark gap, antenna, or the atomic and sub-atomic particle wave ions penetrating the organism and therein transmuting to ozone. Anyone who has ingested hydrogen peroxide during oxygen therapy would immediately recognize the taste, smell and effects of oxygen such as H_2O_2, and thus O_3 (ozone) is more intense not only in its slight discomfort, but in the benefits derived therefrom.

When any MWO of whatever configuration is activated the HVHF is producing billions of ions which are electrically activated atoms and these are passed from the antenna to the body and within to a depth determined by frequency/power and so in this respect frequency/voltage is important but only to produce/drive the ions which are of oxygen, hydrogen, nitrogen, copper from the coils/antenna and... anything that one would affix to the antenna.

These ions, at a speed exceeding 60,000 miles per second penetrate the integument into the tissue to a greater or lesser degree depending upon the above stated factors of oscillation/voltage where they become O3. Too, with a pulsating break of 11 to 13 Hz before the primary of the power transformer there will be an added stimulation of nerve endings/synapses producing a metabolic increase.

Then, with the diagram submitted here of an instrument producing much ionization and an intense electro-static field in conjunction with multiple waves reaching many millions of Hz, along with a means of manual control of frequency and static field the ultra-high voltage is taken into the body. Thus we combine most of the ideas advanced by others than Lakhovsky.

I submit that it is the ozone that is the primary healing agent. Not only that produced within the cellular tissue but especially that breathed in from the generator. Long before Lakhovsky doctors were using ozone cabinets and portable chambers for this therapy with excellent results dealing with tuberculosis and what we now call emphysema. The serum levels of oxygen will be greatly enhanced by this method and may be verified by means of a blood test.

No alien viral invader will long survive in the presence of intense oxygen. This statement includes plant, animal or human. So I repeat: I do not consider any frequency of any value in the treatment of any disease. However... The frequencies and the sufficient power to drive them will do this: The oscillations, if resonant with the many groups within the body will cause the cell membrane to open and so allow the ozone producing ions to penetrate to the mitochondria, and thus either stimulate the cell as a friendly agent as with any vitamin or mineral, or will act as a warrior and slay any alien microbial/viral invader. Acting as a natural booster protector of the immune system.

So with the correct group of frequencies we effect the cell only by causing harmonious and friendly resonance that allows the ion in. To think that the cells are directly affected would require many hundreds of gigahertz and would even then prove more harmful that healing.

The diagram of the instrument submitted is driven by a 15Kv/30ma/450va neon transformer and is enough power. However I have used a 750va and 900va with a corresponding increase in the other components but that is not necessary.

Perhaps the most important item is the 1" copper pipe flattened on one end. This, when held to the antenna or the outer static ring causes a 10x increase in frequency by using the capacitance of the body. By slowly approaching the antenna with the flattened end the electro-static field is also increased so that the entire body is stimulated and especially so if the person is seated within two feet and leaning toward the antenna. With a 900va unit and using a six foot diameter static ring of 1.5" copper the field is so intense as to cause some of the phenomena associated with a Whimshurst generator.

Excuse this long-winded comment, and yet it is not long enough to relate the various effects observed both personally and upon cats, dogs and birds with serious disease. For myself, and I submit this is purely anecdotal, at age 69 I jog/run from six to ten miles each morning for four days per week. I lift a lot of iron three days per week in addition to much work in my garden and upon the grounds here. I had my last cold in 1969 and have never experienced any of the many influenzas. My cholesterol counts at 152. My blood pressure is 120/70. I do have diabetes, (adult onset) but this is a result of genetic disorder and is of no problem.

As we all know: if the catalyst of disease is determined by pre-incarnative choice little can be done unless the person is willing to let go of the underlying cause which is deep within mind. If a person has so distorted the endocrine system by whatever means and especially anger and the desire for control over others, then these glands will be damaged and here the instrument is of help. Still...

only the etheric body and the deep levels of mind can produce health. The etheric is perfect and is the form maker and is the holder of the energy centers called chakras which have their physical counterparts in the endocrine glands. Let go of those old demons of the ego, anger and fear. Then you will remove the materializing influence of negativity from your awareness. You will, then, emerge from illusion and set up a powerful resonance: a morphogenetic field that radiates outwardly and inwardly that not only heals self, but other selves with whom you may come in contact.

I submit finally, that the solar light is radiating at a frequency of perhaps 600 trillion cycles per second (600 gigaHz). It is not that these etiolated frequencies cannot be obtained, but what would happen if directed at delicate tissue? A rapid burning as with a microwave oven and a total dehydration. The cells, too, are taking from this great ocean of frequencies and utilizing frequencies of from perhaps 100 MHz up to and exceeding 900 MHz. But... they are doing this naturally and yet even so, sunlight does burn, does dehydrate, does act as a carcinogenic. The instrument herein submitted, while producing up to 400-500MHz does not cause heating and yet one should wear welding goggles to protect against any danger of cataract forming from arcing/sparking.

I would appreciate hearing from any researcher who builds and uses this system/instrument. If I can answer any questions pertaining to operation or construction I will be happy to do so.
Sincerely,
T.H., Cimarron, New Mexico

**** I am getting so weary of reading articles about MWOs, that I feel that I should either attempt to clarify on this issue a bit, or just quit reading the material. I don't really wish to do either, but as you requested feedback, perhaps this should be done.**

I own a MWO which was built by Klark Kent of Super Science. It allegedly was built with a Tesla Coil incorporated into it. I have had no other machine to compare it with, therefore I can only base my findings on that particular model and design. I find that for my needs it works totally and beautifully. In design, it is a work of art.

I suggest that ANY of the myriads of designed MWOs also perform adequately. Why? Because their sole purpose is to convert an unusable form of electricity into a usable form of electricity. Why? That's the sixty-four dollar question. What use does one want for it? Why does one wish to transmute electricity? As far as I know (which leaves a wide gap of ignorance) there is but ONE use for this particular instrument. I will leave off this subject with one more hint. In my opinion, laboring with a radiator antenna is just that, a labor in ignorance. One might wish to experiment with the transmuted energy AND a violet ray apparatus INSTEAD OF constantly trying to build a better version than already is in existence.

There is one other factor that has to be in this "equation" if one actually want to find their answers to their present dilemma. That factor is something I call GOD. GOD works WITH one, but not FOR one. In my life, that has been the most important part of the equation.

You have my permission to reprint this letter if my name and address are left off. I insist upon total anonymity. If times were different, if people in general and scientists in particular were more in balance and therefore more courageous, I have no doubt that this issue could be resolved. As it stand, humanity is funding its own demise. It's an interesting time to be alive.

Thank you for your efforts in keeping open a forum of opinion not common any longer in this country. Please continue with your efforts to do so.
With kindest regards,
Name withheld upon request.

Thanks for both of your insights. Oxygen? God? You're both right and on the right track. We're a bit tired of it all ourselves, for the main reason that we are not trying to build a "better" MWO, but are trying to discover the original, which would dramatically regenerate diseased tissue unlike any of the modern variations. We are not picking at straws, but pointing out a major discrepancy in the information that BSRF has been publishing since 1963. We have come into contact with Serge Lakhovsky and have requested a schematic of the original unit. With the publication of that, if received, we will labor no more other than to report on actual experiments. [Thomas J. Brown]

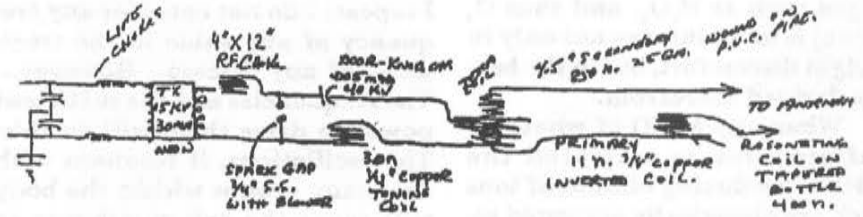

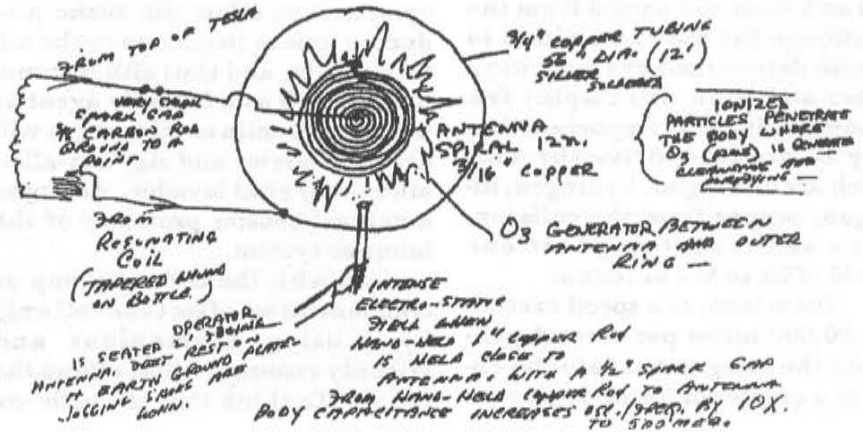

ON THE TRAIL OF THE LAKHOVSKY M.W.O.

by Jorge Resines

INTRODUCTION

When I wrote "The Lakhovsky Radio-cellular Oscillator" (Jan-Feb 1992 JBR), making a synopsis of information released by Georges Lakhovsky himself, I indicated my doubts on the quality of the information, and in the end, how in my opinion he was pursuing (at least) two very different lines of research. Later, I thought it proper to have a greater understanding of the technology from Lakhovsky's time of early researches, so I went in to the library of the Argentine Scientific Society to try obtaining more data.

My search was rewarded with the book ***Les Ondes Electriques Courtes (Short Electric Waves)*** *by Mr Rene Mesny, the French Navy's Professor of Hydrography, which was no more than the publication in print by Les Presses Universitaires de France (Paris, 1927) of a lecture given by him.*

In this present writing I will show the schematics given by Mr Mesny together with a brief explanation (based on his writings) and the corresponding reference publication, so that whosoever wants to know more on the subject can go directly to the source. This I do because many of the references given in Mesny's work are not available to me; hence, I will also refrain from a deep analysis of the information for the present.

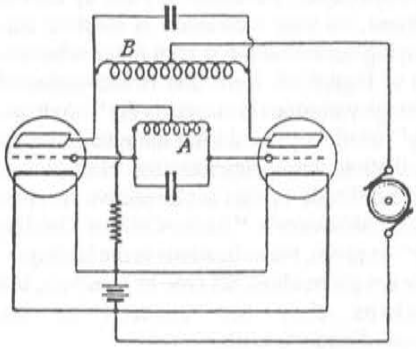

Figure 1

In the early days of radio, there were problems associated with the generation of short waves, due not only to the primitiveness of the equipment but also to defective manufacturing. Figure 1, directly above, is a "symmetrical arrangement" employed to circumvent those troubles for the oscillations generating the short waves happen only in oscillating circuits "A" and "B".

You will notice how AC and DC were mixed in a single circuit; this feature is almost non-existent in today's broadcasting equipment.

A simplified version of the symmetrical arrangement is seen at Figure 2. Please notice how close it is to the Lakhovsky Radio-Cellular Oscillator that I have shown as Figure 9 in my former writing. The only difference seems to be the replacement of the DC batteries in Figure 2, by a filament/high-voltage transformer.

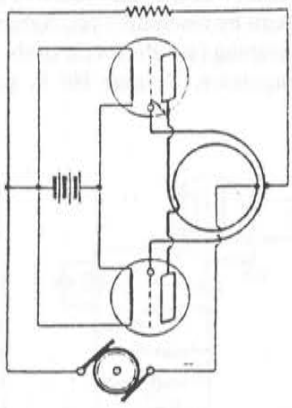

Figure 2

Now, one interesting feature that must be in every wave-broadcaster is a stable frequency. One such frequency-stabiliser was invented by the French Radio-Electric Society and is shown in Figure 3.

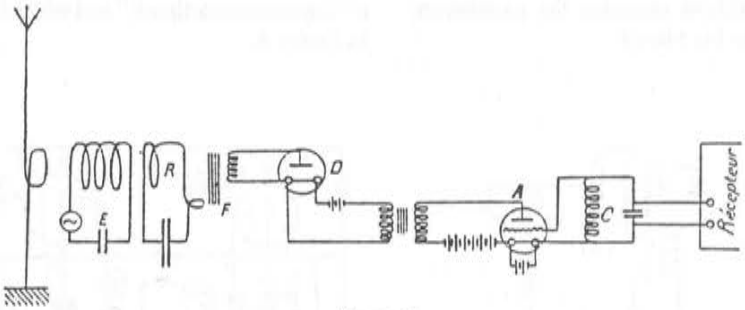

Figure 3

It employs iron's properties of magnetic saturation (see the magazine *Onde Electrique*, Volume No 5, pp 237-263, June 1926) and it uses a powerful triode "A" which generates oscillations directly into circuit "E", exciting the antenna directly. Coupled to "E" is the circuit "R", wound partially over an iron-core "F". Any variation in this core's saturation will change its permeability and consequently the inductance in "R", allowing either an increase or decrease in broadcasting. The whole setup shown is, according to the French text, an emitter; yet at the extreme right appears the word "recepteur" meaning receiver. Maybe an analysis of the whole original reference in *Onde Electrique* magazine will show the reason for this discordance.

The "great-grandaddy" of today's satellite TV antennas appears in Figure 4. It is a parabolic reflector of 340 centimeters in wavelength and an aperture of 600 centimeters. Its job was to focus in a narrow beam (with the minimum of dispersion for that time) of the broadcast. While reading **Waves That Heal** by Mark Clement I found out that the MWO had a transmitter and a resonating receiver, yet there was no specific technical data pertaining to either in the book. I, for one, would like to know what led Georges Lakhovsky from the Radio-Cellular Oscillator (as already explained) to the Multi-Wave Oscillator in which the antennas differ from those of the time, such as the one seen in Figure 4.

As for the receiver themselves, Mr Mesny quotes the work **Les Lampes a Trois Electrodes** by one Mr C. Gutton (Also published by Les Presses Universitaires de France in the collection *Conferences-rapport de documentation*) indicating something not usually thought of nowadays such as including negative resistance in the circuit. One kind of this circuit is seen at Figure 5, Where the coupling is by means of (ferro-)magnetism and the received broadcasts are heard through the earphone "(E)".

Figure 6, shows us a coupling that is effected, at the same time, by ferro-magnetic and electric means. Mr Mesny indicates the most used arrangements are those made by one Mr Reinartz and one Mr Bourne.

The idea of using negative resistance in a circuit was first suggested by one Mr E. Fromy (See *Onde Electrique*, Volume No 2, pp 168-173 and 636, 1923) and a simple circuit is

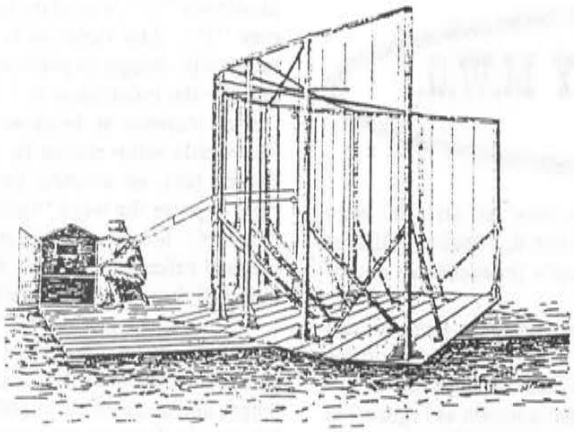

Figure 4

shown at Figure 7. There, the adjusting of condenser "C" imparts within resistance "R" a more or less important portion of current "(C")", as the dampening of the circuits is modified. The most optimum operation is

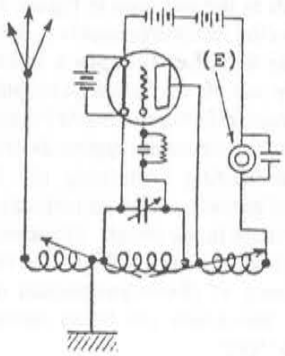

Figure 5

achieved without changing the parameters, according to Mr Mesny.

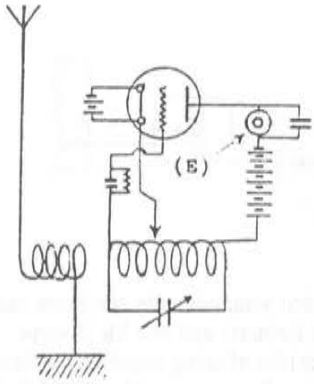

Figure 6

This idea was called a "reactive circuit" or a "circuit by reaction"; yet, formerly, Mr E.H. Armstrong (see *Proceeds. of the Inst. of Radio Engineers*, Volume No 9, pp 3-27,

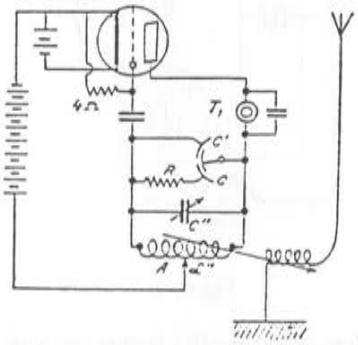

Figure 7

1921, and *Onde Electrique*, Volume No 1, pp 625-636, 1922) had developed what he called a "Superreaction circuit" and which is shown in Figure 8.

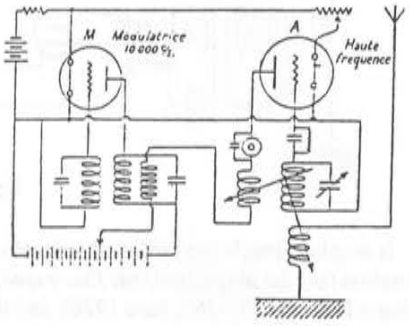

Figure 8

Mr. Armstrong's idea, called "Superheterodyning" today, was based on the superimposition of two frequencies, to yield four more frequencies in the end; all of them 'alloyed' to give a greater and more efficient output in early radio-broadcast. In the "superreactive" circuit of Figure 8, we have a triode of high-frequency ("Haute Frequence") in which the grid is fed by a DC voltage upon which is superimposed a pulsation of 10,000 cycles per second produced by the modulating ("Modulatrice") triode lamp.

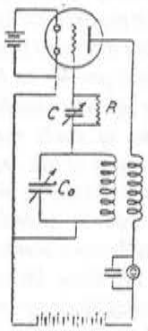

Figure 9

Mr Fromy's own system of "Superreaction" is seen at Figure 10. He achieved the same effect by shunting a capacitor (or several of them), to the triode's grid, possessing a strong capacity together with a resistance "R" of feeble power (see *Onde Electrique*, Volume 4, page 200, 1925) Mr Mesny refers the reader to the treatise La Superheterodyne et la Superreaction (Heterodyning and Superreaction) by one Mr Hemardinquer, published in Paris by Chiron Editeur, no year indicated. A receiver employing superreaction is seen in the schematics of Figure 10. Detection is accomplished through variations in current at the "Modulating" triode's plate during the alternation of oscillations during superreaction. Note, please, the similitude of this superreactive receiver with Lakhovsky's "Radio-Cellular Oscillator" as given. No indications in the bibliography are given about his type of receivers, but perhaps they are covered in Mr Hemardinquer's work.

Now if Lakhovsky himself indicated very short waves were needed in his oscillators (at least, in the beginning of his researches), how to generate and measure them?

Mr Mesny himself used the arrangement of Figure 11 to generate waves with a length of one meter (see *Onde Electrique*, vol 3, pp 25-37, January 1924).

Yet, shorter waves of 80 centimeters (or 0.8 meter) were achieved by one Mr Laville using "common triodes" in the arrangement

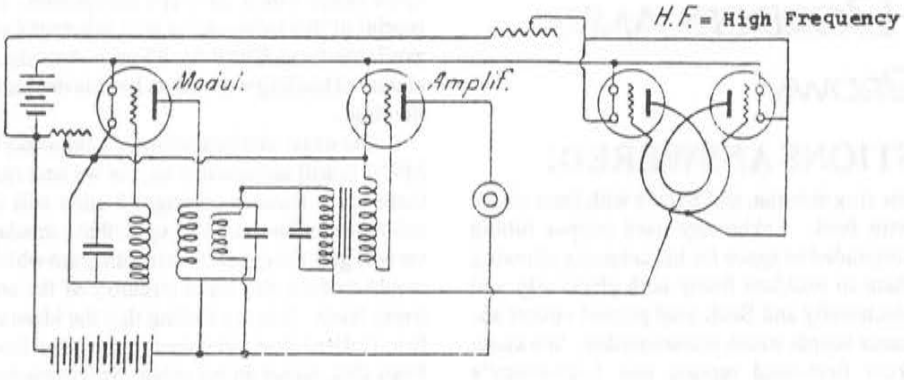

Figure 10

of Figure 12. Though no reference was directly given for consulting, reading the bibliography disclosed the existence of the thesis, **Recherches experimentales sur la propagation des ondes electromagnetiques le lng des fils** by one Mr G. Laville, published by Masson in 1924 (no place of publication is given, but it is safe to assume it is Paris as the most important publishing houses of France are located there).

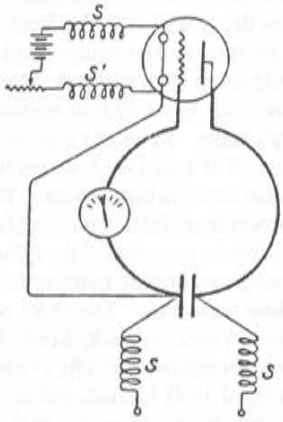

Figure 11

Another way to generate very short waves (of about 43 centimeters) was found by the German scientists Barkhausen and Kurz:

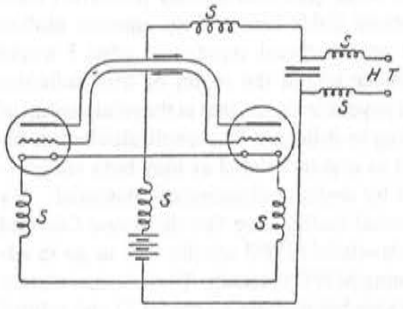

Figure 12

This they did in 1919 (see *Physicalische Zeitung*, Vol 25, page 1, 1920) and a few years later the scientist Scheibe improved on the idea producing waves from 30 to 334 centimeters (see *Annalne der Physik*, Vol 73, pp 54-

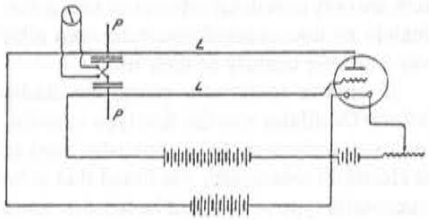

Figure 13

88, year 1924).

Experiments were undertaken by the British scientist Mr R. Whiddington (see *Radio Review*, Volume 1, pp 53-58, 1919) and by Gill and Morrell (see *Philosophical Magazine* Vol 44, p. 161, 1922, and Vol 49, pp 369-379, Feb 1925) using a setup similar to the one illustrated at Figure 14.

Please notice that I have eliminated pertinent technical explanations concerning the devices by Barkhausen-Kurz, Whiddington, and Gill-Morrell, as they would be far too extensive for this article. Those investigating the references themselves, do take note.

After reading the pertinent portions of Mr Mesny's work, I felt myself closer to the full understanding of Lakhovsky's "Radio-Cellular Oscillator", yet I also felt myself no closer to that of the Multi-Wave Oscillator. These points are yet to be cleared:

1. How many (and which kind) of vacuum tubes (either by him or from others) were included by Lakhovsky in his MWO?

2. How much of the "Radio-Cellular Oscillator" entered (or not) into the MWO?

3. Which researches lead Lakhovsky from the Radio-Cellular Oscillator into the MWO and what initiated them?

4. Is there a "Final" or "Ultimate MWO" (capable of curing all illness) or just one model of a kind that is fit to heal a given group of diseases?

Any datum clearing these points (and others I have been unable to formulate) is valuable, no matter how small you think it is. So, in case you have anything, please send it to the Journal of Borderland Research for us all to know....

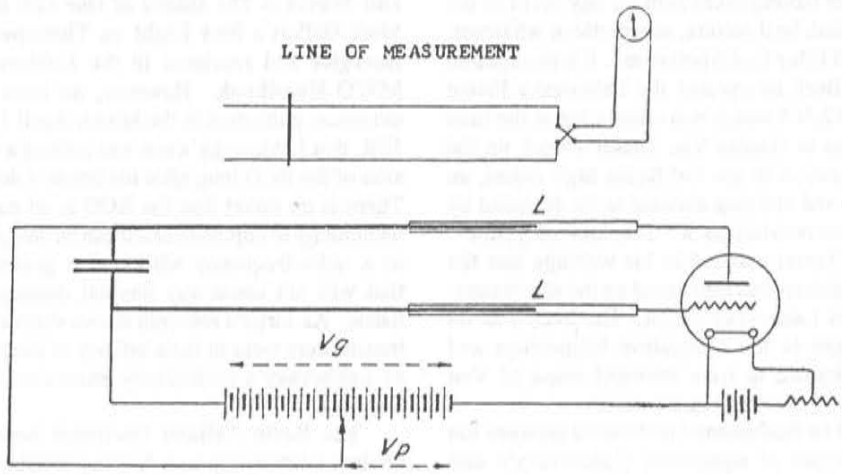

Figure 14

View From the Borderlands

by Tom Brown

SOME MWO/RCO QUESTIONS ANSWERED!

In response to Jorge's questions and also to collect my thoughts on this matter, after completing the third revised edition of ***The Lakhovsky Multiple Wave Oscillator Handbook****, I would like to present what my general conclusion is at this point in time on the Multiple Wave Oscillator and Radio Cellular Oscillator. I know that some readers will think we belabor this field of research, while others keenly await any development. I didn't start this; BSRF has been investigating this area since I was in grade school, and I have kept up with the demand for information, although my primary interests definitely lay elsewhere. However, we have come a long way in understanding what Georges Lakhovsky was up to and it has been an exciting period of discovery.*

Lakhovsky's researches indicated that electric fields in the radio-frequency range can be generated in such a manner as to regenerate diseased (but not overly necrotic) tissue. This was well documented in medical research in France and New York.

Borderlanders were first introduced to this idea in 1963 when Dr. Robert (Bob) Beck gave us his interpretation of Lakhvosky's "rejuvenation machine". He claimed to have had access to an original, but 7 years of inquiry have led me to believe this was an exaggerated claim. Beck is known as a meticulous documenter of all equipment he comes across, as anyone who has seen him give a presentation would know. I am basing my opinion on the available evidence which includes having asked Bob for any proof of the original, be it picture, schematic or whatever, as did Riley Crabb before me. It is my opinion that Beck interpreted the Lakhovsky Patent #1,962,565 which was circulating at the time thanks to George Van Tassel's work on the Integratron in the California high desert, an all-wood building claimed to be designed by extraterrestrials as a "fountain of youth". Van Tassel claimed in his writings that the Integratron was also based on the above mentioned Lakhovsky patent. Dr. Beck was no stranger to the Integratron happenings and was known to have attended some of Van Tassel's meetings in the desert.

The fundamental difference between the two types of equipment (Lakhovsky's and Beck's) can clearly be seen by simply looking at pictures of Lakhovsky's units, with their two leads feeding the outer ring of the concentric ring antenna, and Beck's with their single wire feed. Lakhovsky used copper tubing suspended in space for his antennas allowing them to oscillate freely both physically and electrically and Beck used printed circuit antenna boards which allows neither. We know from first-hand reports that Lakhovsky's MWOs did not arc between the antenna rings and Beck's MWOs are based on this arcing taking place. However, there is a similarity between the two in that they both create a field of multiple wavelengths, but certainly of different quality and character. Lakhovsky's units were scientifically documented in curing certain types of cancer. Many users of Beck's equipment have claimed such, but there are only anecdotal references and unfortunately no documented research, even after over a quarter century of their usage.

In answer to Jorge's query, the Radio Cellular Oscillator was the first type of radio-frequency generator that Lakhvosky used in his electrical researches. He found this to be a successful type of unit, but he felt that there was the potential danger of thermal damage to the tissue from extended use of the continuous wave output. In one sense he took a technological step backwards by moving to a spark gap driven Rhumkorff coil (what most people erroneously consider to be a Tesla coil) feeding a pair of concentric ring antennas. Lakhovsky stated that he used damped waves (created by a quenched spark gap) to eliminate the potential for thermal damage. This is mentioned in the excerpts from **Radiation and Waves** – *The Source of Our Life* from Mark Gallert's **New Light on Therapeutic Energies** and reprinted in the **Lakhovsky MWO Handbook**. However, we have the evidence, published in the March-April 1992 JBR, that Lakhovsky's son was selling a version of the RCO long after his father's death. There is no doubt that the RCO is an easier technology to duplicate and it can be designed as a radio-frequency white noise generator that will not cause any thermal damage to tissue. As Jorge's research shows shortwave transmitters were in their infancy at the time of Lakhovsky's preliminary excursion into that area.

The Radio Cellular Oscillator bears a distinct relationship to a device published in this Journal in 1975 called the Phoenix Radioclast. The Phoenix Radioclast was a radio-frequency generator in the 43 megacycle range with a 2000 cps modulation. (A reprint of this information with schematics is available from BSRF for $2 pp.) Anecdotal claims of healing were made for this device at the time.

The exact configuration of Lakhovsky's MWO is still unknown to us, but we hear that there are a number of original units still in existence in Europe. We expect that someday we will gain the general wiring diagram which would include the exact circuitry of the antenna feeds. It is my feeling that the ideas of Eric Dollard first published in the May-June 1986 JBR, based on his extensive knowledge and insight, are fundamentally a move in the correct direction, though I think that Mike Theroux's suggestion at the end of this article may be the closest we have seen. While Lakhvosky states that his units are electrostatic his two antenna feeds to the outside ring (which we have established absolutely as the correct configuration on the equipment he used in his published researches) would generate an electromagnetic field, with the inner concentric rings acting as secondaries to the outer ring primary. In general this unit could still be considered electrostatic with damped waves from the spark gap. The Beck MWO definitely creates an electrostatic field which would create an oscillatory shock to the treatment subject, but in a different manner than Lakhovsky's units. There is a similarity and a difference, all of which has been pointed out in this Journal over the last six years. We also have the report from John Andrews (Jan-Feb 1992 JBR) that he reproduced the *effluvia* as per Lakhovsky's records by splitting the single terminal feed into two. The third revised (1992) edition of the **Lakhvosky MWO Handbook** covers our entire MWO/RCO file up to the March-April 1992 Journal, and is recommended to any serious researcher in this field as the most complete record in English of MWO/RCO research.

Lou Schad's Spiral Coil MWO is an important development in this field and Peter Lindemann's Electrostatic MWO is an outgrowth of that. These two devices are working with weak (but biologically powerful) electrostatic fields (created by antenna motion and not electrical input) and what I would consider within the realm of true radionics (not psychotronics), that is the relationship of energy to structure. This could also be considered as orgone related as they both are powered by ambient electrostatic potential. My personal feelings are that the Spiral Coil and Electrostatic MWO are the way to go in advancing MWO research. There is also current research being done on the RCO and related circuitry, of which we hope to hear more from serious researchers.

There is a lot of electro-therapeutic equipment (including alleged Rife devices and various MWOs) being sold these days with the claim that they are not for medical use. None-the-less I would have to consider myself stupid if I thought that everyone was building and buying these units purely for research. The information and equipment that BSRF makes available really is intended for research purposes and we don't say that with a nod and a wink. If I knew for sure that a specific reproducible device would cure any disease I would say so without fear or trepidation and provide the plans. To those who do use this information we sincerely hope that you provide BSRF with documentation on use and effect. This is an experimental field, with exact details of the original equipment still in question, and to rely on this for health one has to base their motives on faith and not on fact. This is extremely important and is the fundamental purpose for our making all this available. It is our avowed policy to discourage people from relying on experimental equipment as a healing modality. Not that there isn't a basis for thinking that there is promise in this field of research, but as stated before there are still many questions to be answered, not the least of which is the mass of information now becoming available on the disastrous health effects of electricity and electrical fields. Much needs to be sorted out here.

Rudolf Steiner pointed out in his Agriculture course (circa 1924) that just because electricity was now available there were prophets who claimed it as a great cure, not withstanding that there were no such prophets before electricity was available. He also pointed out that with radio signals information could be transferred around the world at amazing speed, but that the effect of the electricity was such that people couldn't comprehend the information as well as they used to! This is an important caveat to consider before any experimentation with electrical equipment (including computers!).

There are avenues of research into biologically positive energies that do not partake of the subsensible electrical currents. L.E. Eeman's biocircuits are a well documented means of balancing the body's energies and it is merely a sign of the times that there is very little interest in such (not as sexy as an electro-stim unit!). Color therapy is also an important area of research (electricity is used to power the light source but its electrical effect on the experimental subject would be negligible). Dr. Wilhelm Reich's orgone energy research also indicates that there are potent non-electrical energies that are incredibly bio-positive if applied in the correct manner. Competent research needs to be done in all these areas, and this Journal is open to all ideas of this character.

And in closing I must state that there is the more refined view of disease, that it is a problem of alignment between physical and etheric. Rudolf Steiner indicated that the etheric is always healthy, but when out of phase with the physical we experience health problems. Our true purpose in the Borderland fields of research is not to cure disease, but to learn how to attain the supersensible overview of our existence – *to reach beyond the borders of our senses*. Our orientation is of course to seek across the upper borders of the senses. Electricity is a sub-sensible force, beneath the senses, and is an organic system alterant. Whether it alters a system for better or worse depends on many factors, state of mind, diet, life-style, etc. It is very possible that many claims for various devices are based on placebo effect. That is why we support serious research and not widespread equipment sales.

Eric Dollard's suggestions for single antenna hookup

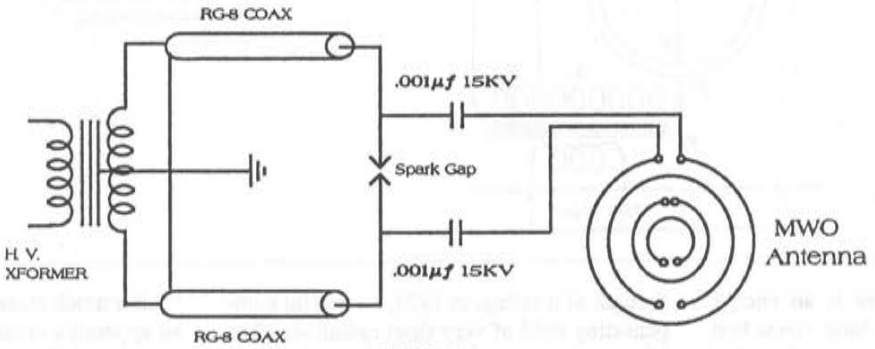

MWO Power supply

Michael Theroux's ideas for two antenna hookup based on the photographs of Lakhovsky's apparatus.

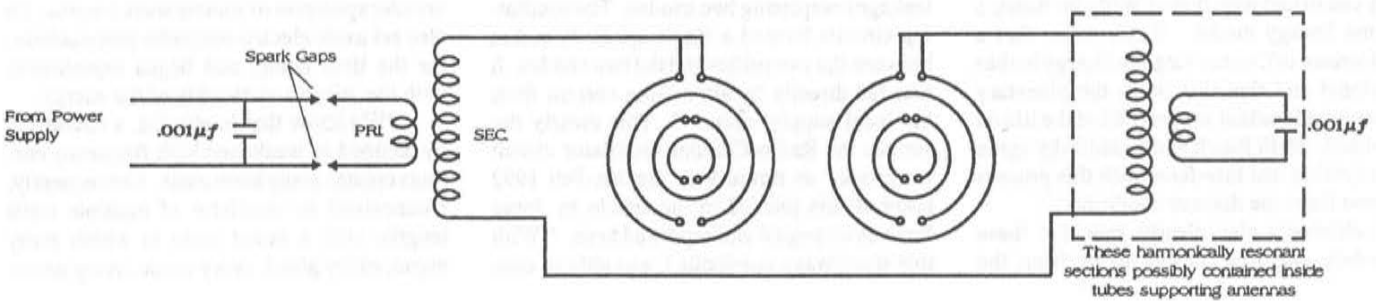

MWO ROUNDUP

by Peter A. Lindemann

After years and years of guessing, hoping and wondering what Lakhovsky was really doing, the fish is about to hit the pan! In the last two issues of this journal, a number of schematics have been reprinted for devices capable of producing oscillations of multiple wavelengths simultaneously. In this article, I will present another schematic of an easy to build MWO submitted by an associate from Texas. But first I would like to go over some of the basic information that all of this is about and attempt to make some sense of it, finally.

The understanding that I now present is based on an article written by Georges Lakhovsky in 1941 entitled Radiations and Waves - Source of Our Life, excerpts of which appear on pages 98 - 100 in **The Lakhovsky MULTIPLE WAVE OSCILLATOR Handbook**, second edition, by BSRF.

Quoting Lakhovsky, "I have shown in my books, The Secret of Life, and especially in The Earth and Ourselves, that every living cell draws its oscillatory energy from the field of secondary radiations resulting from the ionization of the geological substances of the earth by cosmic radiations." By this I believe he is saying that there is an energy coming to this planet from outer space that enters the earth and causes a reaction that brings into being a secondary energy field that every living cell draws its oscillatory energy from. At first glance, it may not register, but on careful examination, this "model" is entirely consistent with that of Wilhelm Reich's Orgone Energy model. Reich states that a great stream of Cosmic Orgone Energy bathes the planet and that this feeds the planetary orgone envelope that supports all of the life on the planet. Both Reich and Lakhovsky agree that anything that interferes with this process is cause for some disease condition.

Lakhovsky also clearly saw that these secondary energies coming to us from the ground were not always beneficial, depending on the geological formations underneath. "But certain natural radiations are particularly toxic, especially those originating in earth grograms [coarse ground formations]. Many cancer cases have been attributed to these toxic radiations and proven experimentally, notably in Germany by Dr. Rambeau of Marburg. Therefore, earth radiations sometimes cause disturbance of the cellular oscillatory equilibrium of the organism." Here, when Lakhovsky refers to "natural radiations" that are toxic, he was not talking about radioactive emissions or chemical poisons, but what are now called *geopathic zones*.

"To re-establish this equilibrium, I thought of creating, in 1923, a constant compensating field of very short radiations (2 to 10 meters in wave lengths) to neutralize the action of the disturbing rays, and give the living cell the necessary stimulation for a return to its normal oscillation." "Finally I adopted the oscillator with symmetrical cross leakage comprising two triodes. The oscillating circuits formed a single spiral, branches between the two grilles and the two anodes. It was fed directly by alternating current from the local supply circuit." This clearly describes the Radio-Cellular Oscillator circuit we printed as figure 9 in the Jan-Feb 1992 issue of this journal in the article by Jorge Resines on page 4 and reprinted here. "With this short-wave apparatus I was able to cure plants inoculated with cancer. For six years at the Saltpetriere I observed and checked the effects of these short waves. Using very low power, from 10 to 12 watts, and a limited duration of treatment, I succeeded in curing cancer in human beings, but also had to record some failures."

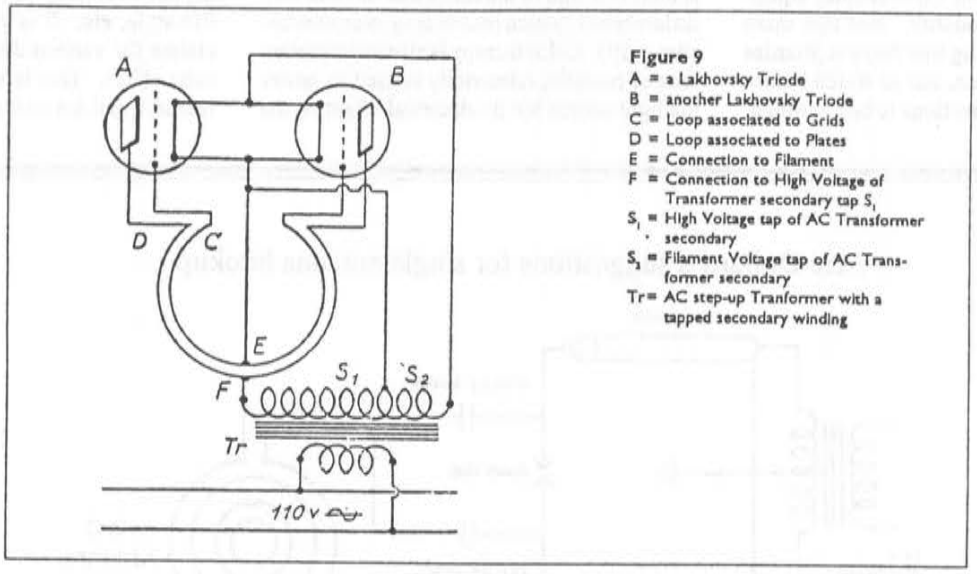

Figure 9
A = a Lakhovsky Triode
B = another Lakhovsky Triode
C = Loop associated to Grids
D = Loop associated to Plates
E = Connection to Filament
F = Connection to High Voltage of Transformer secondary tap S_1
S_1 = High Voltage tap of AC Transformer secondary
S_2 = Filament Voltage tap of AC Transformer secondary
Tr = AC step-up Tranformer with a tapped secondary winding

Lakhovsky goes on to say that by 1928, the news of his successes had caused widespread interest in Europe, and that researchers were building higher and higher powered units. He felt that more power just caused dangerous thermal effects that could kill micro-organisms but also healthy cells. This is no doubt the advent of today's Diathermy machines, a direction that Lakhovsky clearly rejected.

At this stage, he changed his fundamental assumption. "I thought it possible to obtain better results by administering an oscillatory shock to all the cells in the organism simultaneously. Such a shock, very brief, produced by dampened or weakened electro-static waves, does not provoke thermal and prolonged effects and involves no risk of burning living cells." Mind you, before this, Lakhovsky had already succeeded in curing various cancers with 10 watts of electro-magnetic propagations between 2 and 10 meters. Also, he never mentions that thermal effects are a problem at these power levels. These "Radio-Cellular Oscillators" were his first successful device and they remain very, very effective for many disease conditions. But he was not satisfied.

"After much research I was able to construct an apparatus creating an electro-static field covering all frequencies from 3 meters to the infra-red, so that every cell can find its natural frequency and vibrate in resonance." Here, Lakhovsky shows us his reasoning. He rejected higher power outputs and went for a broader spectrum of shorter wave lengths. He also set aside electro-magnetic propagations, for the time being, and began experiments with the electro-static side of the energy.

"We know that in physics, a circuit fed by damped or weakened high frequency currents creates many harmonics. Consequently, I conceived an oscillator of multiple wave lengths with a broad scale in which every organ, every gland, every tissue, every nerve,

Lakhovsky MWO/Radio Cellular Oscillator submitted by Patrick Flanagan

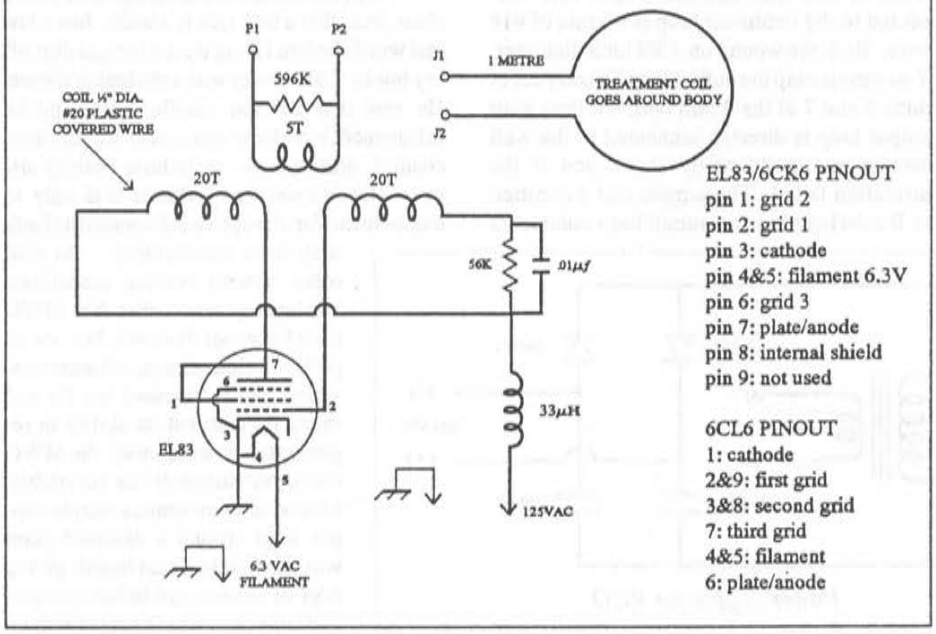

could find its natural frequency." It is at this stage that he introduces the now famous antenna of concentric rings. "To obtain this result I set up a transmitter composed of a series of circular concentric oscillating circuits linked by a silk cord but not contiguous. These circuits are stimulated by damped high frequency currents from a spark gap. Thus each circuit of the transmitter vibrates not only on its natural frequency, but also on numerous harmonics." "Thus, I built an oscillator with all the basic wave lengths from 1/10th of a meter to 400 meters. But each circuit also emits many harmonics, which with their basic waves, their interferences and their effluvia can reach the scale of infra-red and even that of visible light."

Notice here that Lakhovsky never mentions power outputs or high voltage in the output circuits. Also, in Fig. 1 of Lakhovsky's 1931 US patent #1,962,565, a very simple drive circuit of an interrupted inductor feeding an L-C spark-gap oscillator is shown. But notice these important details. First, the output coil L2 has fewer windings than L1 so that the voltage is *stepped down* to the antenna. Second, that the antenna connection is for electro-static output as it is an open circuit of differential capacitance, the two output leads connected to separate rings. In spite of his references to electrostatic outputs, Lakhovsky leaves this issue wide open. Quoting from the body of the patent, Lakhovsky states, "One or several points of this high frequency circuit is or are connected to the end of one or several of the rings forming the radiating apparatus. The other rings not connected are excited by induction." This broad statement is typical of patent 'lingo' and clearly leaves unresolved the exact output connection.

Two last points should be mentioned here. Lakhovsky speaks of his output circuit being "stimulated by damped high frequency currents from a spark gap". The question is, what is a *damped* oscillation? Tesla also used

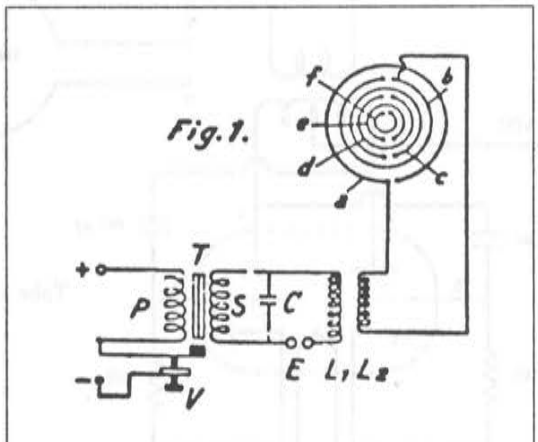

Lakhovsky's MWO Patent

such terminology and it is from his writings that I draw my conclusion. I speculate that this could refer to the oscillations produced across a quenched spark-gap. Spark gaps tend to ionize gas particles between the two electrodes and the presence of this conductive plasma creates a tendency to sustain the arcing process. A quenched gap reduces or eliminates this tendency thereby sharpening the transitions between the on and off phases of the spark. This intensifies the nature of the oscillations and produces extremely high harmonics. My guess is that in Fig 1, E, in the L-C oscillator section of the circuit, is a quenched spark gap. The other speculation I would like to add here is about the construction to the concentric ring antennas. For the last 30 years here in the USA, these antennas have been made of copper foil on a dielectric material, like a printed circuit board. BSRF has been a major source of these antennas. Recent experiments that I have run suggest strongly that this design adds unwanted capacitance to the output circuit and could clip off the very short wave emissions from the output. This would be even more pronounced in a system set up for electro-static output as Lakhovsky specifies in his patent. Only a sequence of copper rings, suspended in the air, like Lakhovsky shows, would be free to oscillate up into the gigacycle range, without any arching between the rings. These printed antennas do work well, however, with the RCO.

After all this, I now must say that there is nothing sacred about any of these circuit designs. I'm a strong believer in the motto "if it's not broken, don't fix it", however, there are many ways to produce the effects Lakhovsky was producing. Even Lakhovsky states in his 1931 patent, "These rings may be fed by any producing device whatever of high frequency..." This is well illustrated by the schematic published in the March-April 1992 issue of this journal submitted by Pat Flanagan. This circuit, while resembling one of the earlier Radio-Cellular Oscillators, seems capable of producing waves well below 1/10th of a meter (as Pat told me that it interferes with his satellite TV reception!) and therefore should be considered associated with Lakhovsky's later work on the MWO. The out put of this unit is not electrostatic. In fact, Borderland has found no evidence at all that any of Lakhovsky's units actually operated in the electrostatic mode, regardless of his 1931 patent claims.

Here then is the difference between the RCO and the later MWO. The target of frequencies for the RCO was between 2 and 10 meters. With this, Lakhovsky was able to cure cancer and many other conditions. It seems to stimulate the organs and glands and promote de-toxification. The researcher whose RCO schematic follows, says that 43 megacycles (approx. 7 meters) is the primary target for a device like this and that its primary action is to cleanse the body and rebuild the organs. He has seen dramatic cleansing of the liver and bowels, reduction of

tumors, natural hair color returning in the elderly, and many more benefits including increased vitality. No doubt, Lakhovsky saw these types of benefits too. But he was not satisfied with success. He went on to make the MWO. The target of frequencies for the MWO was between 1/10th of a meter and 400 meters. He was not satisfied by stimulating the organs, he wanted to stimulate each and every cell individually also. For this he needed shorter wave lengths. He wanted to include a range of frequencies so that even the strands of DNA could find their own natural resonance and be directly stimulated by it.

The MWO, as conceived by Georges Lakhovsky, was not an intrusive influence, but one that promoted the natural healing processes of the body. "In all pathogenic cases this treatment gives very good results. As it does not attack the microbes directly, it does not destroy live tissue, but reinforces the vitality of the organism by accelerating cellular oscillation. It is therefore the reinforced organism that successfully resists the microbes and all pathogenic causes." Here then is the clear difference between what Royal R. Rife was doing and what Lakhovsky was doing. Rife discovered specific "mortal oscillatory rates" that were capable of killing microbes directly while Lakhovsky let a strengthened and normally functioning immune system do that work. Rife was working on the magic bullet while Lakhovsky was working on a shotgun panacea. Both apparently were successful!

On this page is the schematic from the Borderland Associate in Texas. He gave me permission to use his name, but did not want to be associated with the claims for his unit. I decided to use his claims, above, so his name is withheld here. Although he calls his unit an MWO, it is more correctly an RCO, based on a twin triode oscillator with target frequencies between 2 and 10 meters. Unlike any Lakhovsky built, this unit is a simple multi-vibrator based on the 6CG7, twin triode nine pin vacuum tube. It works. It can be built for about $40 from this schematic. Make sure you get a good tube where both triodes operate equally well. The coil connected to the tube in the drawing is 9 turns of #16 wire and the output coil connected to the treatment loop is 4 turns of #16 wire. Both are wound on a 3/8 inch diameter. You can also tap the output loop directly off of turns 3 and 7 of the 9 turn coil, but then your output loop is directly connected to the wall current and could really shock you if the insulation failed. The sample unit submitted to Borderland has the output loop connected directly. The treatment loop is 8 inches in diameter connected to 6 feet of #18 zip cord. The loop is made of some well insulated, stiff wire.

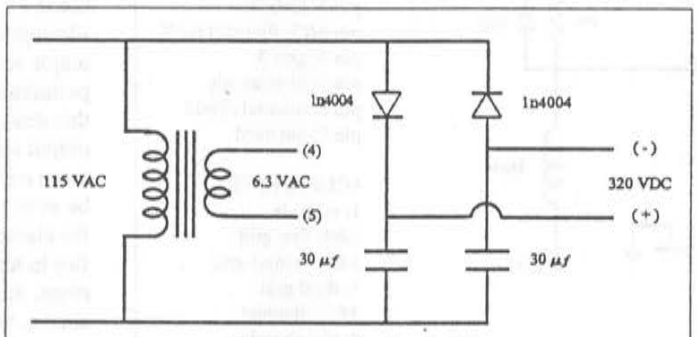

Power supply for RCO

As we have in the past, a limited number of units based on this design may be made available for further research, either as a fully assembled unit, or as a kit. The retail price for the unit will be N/A for non-members and N/A for members. The kit will be N/A. As these devices have to be built in groups to keep the costs down, it is best to get your order in as soon as possible, so we can get an idea of how many people want them.

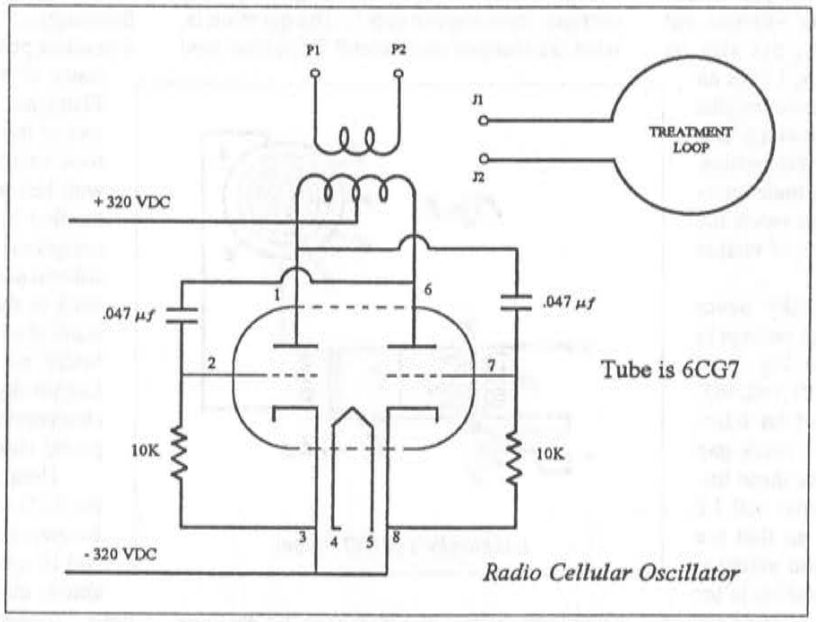

Radio Cellular Oscillator

Well, back at the ranch, things look pretty clear, but what a trail ride it's been. Just a few last words before I hang up my hat and dust off my boots. Lakhovsky was a student of nature. He saw that cellular oscillations could be influenced by electromagnetic waves from cosmic, atmospheric or telluric (earth) origins. His interest in machines was only to compensate for disruptive influences the body may have encountered. As with other natural healing modalities, Lakhovsky knew that his MWO could cure all diseases, but not all patients. Sometimes, a disease condition had progressed too far and the body had lost its ability to regenerate. In such cases, the MWO could not forestall the inevitable. Likewise, sometimes a simple copper loop around a diseased plant was enough to focus health giving rays of cosmic and telluric origins and cure cancer in the plant with no "machine" at all. Seeing that Lakhovsky's focus was on the earth energies, it seems reasonable to assume that the effective use of such copper rings may be *location dependent,* as a copper ring around a plant in a geopathic zone may very well accelerate its death. The quality of the energy coming to us from the environment today is far more disturbed and far less capable of sustaining vibrant life than in Lakhovsky's day. More and more locations are becoming life negative, or at least less life positive. This just makes it harder for all of us to stay healthy. The main message in the work of Georges Lakhovsky is not that we can now cure cancer with a new machine. Although this is good news, we should not lose sight of his other discoveries. I think Lakhovsky's primary message is that our health is directly connected to the quality of energy coming to us from the earth, and that it is essential to good health that we develop our sensitivity to these subtle forces so we can live in harmony with its health giving rays. He developed the MWO to help people compensate for living in less than ideal environments. In the future, we may need these compensations more than ever. Adios.

★ ★ ★ ★ ★

The Lakhovsky MWO: *Back To Square One*

Peter A. Lindemann

Sometimes the most obvious things take the longest. I am reminded of all the wild hype that surrounded Tesla's work back in the 1980's and the crazy new theories that were put forth on how his wireless power system supposedly operated. Smelling a rubber fish in the pan, BSRF railed against the madness and eventually released a video presentation of Tesla's wireless power system in action. Remarkably, all it took was the genius of Eric Dollard and *going back to Tesla's patent*. The model built from the patent performed as claimed. No new theories or explanations were needed. This video, **Tesla's Longitudinal Electricity** is proof enough that going back to the original design is the best place to start when trying to understand or *duplicate* someone's work.

So, the question is, has anyone ever tried to *duplicate* Lakhovsky's MWO as it is described in his patent? After finally asking myself the right question, I carefully read through **The Lakhovsky Multiple Wave Oscillator Handbook** for the answer. What I found is quite interesting. Every single MWO schematic printed in the book, except for Lakhovsky's patent diagram, is a model of or a variation on one of Tesla's electro-therapeutic devices! It seems that for the last 30 years, people have just been putting Lakhovsky's famous multi-ringed antenna at the end of a Tesla circuit and thinking that they had the real thing. All of these units, variations on a circuit presented by Bob Beck in 1963, spark profusely between the rings of the antenna. Bob has repeatedly told experimenters to build their MWOs with more and more power so that they will produce increasing amounts of sparking on the antenna. Our files contain letters from people who report excellent results from these devices. The accolades, however, have not been universal. The big problem with this style of MWO is that people who are sensitive to subtle energy, like myself, can't stand to be in the same room with one of them while they are operating because they are so irritating. Something was not right in all of this, and I wanted to figure it out.

To illustrate the problem, I have included four schematic diagrams here for reference. Figure 1 is the schematic of Lakhovsky's MWO taken from his patent. Figure 2 is a schematic taken from an article by Tesla on his electro-therapeutic experiments. Figure 3 is the schematic for a "high power MWO" taken from page 77 of the **MWO Handbook**, and Figure 4 is the schematic of the Bob Beck/Klark Kent MWO (simplified). After studying these circuits for a while, I realized that there were a number of basic differences. Lakhovsky had placed the spark-gap and the capacitor in a different relationship in the middle section of the circuit than Tesla and the others. Could this be important? Lakhovsky had also stepped the voltage down in the final stage of the circuit where Tesla and the others all stepped the voltage way up. Was this significant? What was Lakhovsky trying to do that was different than what Tesla was trying to do?

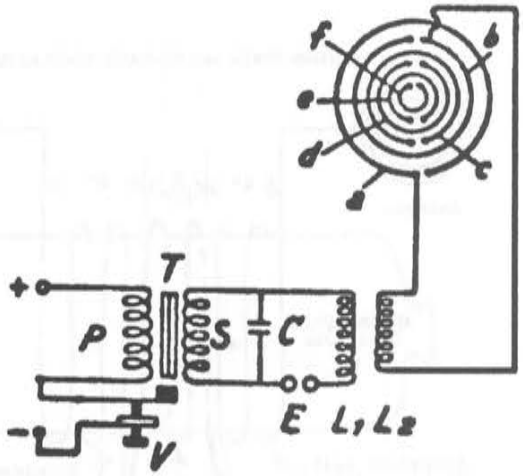

Figure 1

There were some other things that also puzzled me. Both Lakhovsky and Tesla had well developed subtle sensitivities. Lakhovsky used a pendulum to help him in his design work and Tesla's expanded sensory abilities are mentioned throughout his writings and the writings of his biographers. Because of this, I assume that both of their electro-therapeutic devices were totally benign to be near, even to very sensitive people, like themselves. I assume this because nothing leaves my laboratory that I don't personally like. Experiments I have run strongly suggest that all of the effects that cause sensitive people to be irritated by these units (Beck/Kent style MWO) come from the sparking between the rings of the antenna. This brings up the question of whether or not the MWO antenna is supposed to spark. Tesla is very clear in his writing that his units worked much better when all electrical discharges from the terminals were suppressed. At one point, he even describes using 2 inches of wax to cover the terminals (antennas). Likewise, Lakhovsky never mentions sparking discharges between the rings of his antennas. Some photos show a brush or corona discharge off the outermost ring of his MWO antennas, but no mention is made of this being the normal therapeutic operating mode. Also, no photo of Lakhovsky's MWOs ever show arcing *between* the rings. In light of this, I am convinced that both Tesla and Lakhovsky designed their devices to eliminate this behavior. I strongly believe that Lakhovsky's real MWO does not create sparking discharges

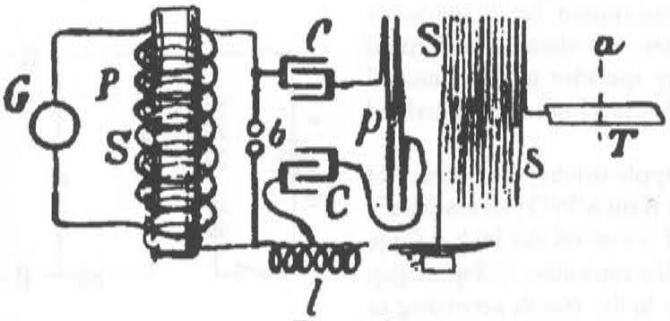

Figure 2

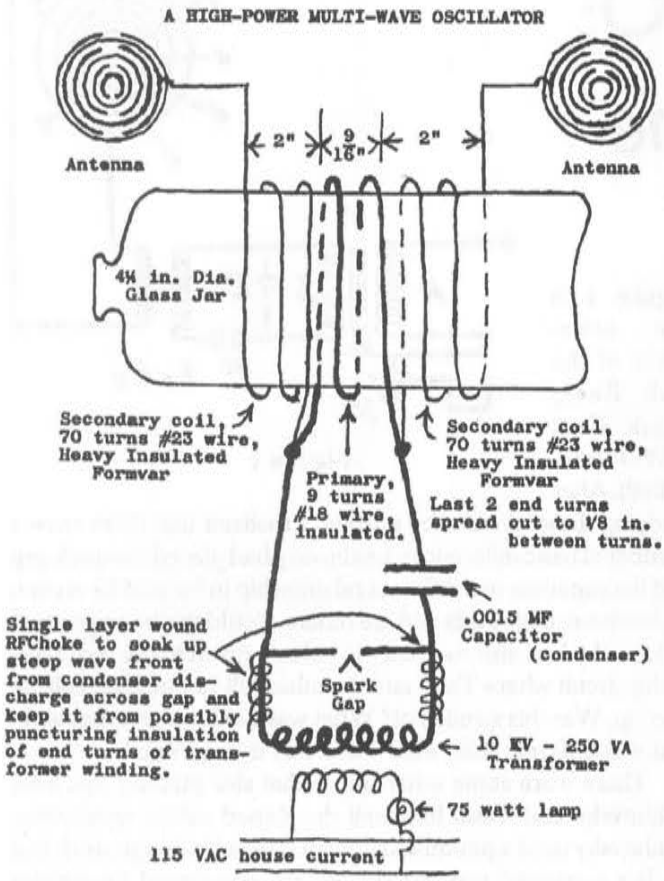

Figure 3

between the rings of the antenna.

Having resolved these issues to my own satisfaction, I decided that the only way to find out the rest of the facts was to actually build a circuit that behaved like the circuit in Lakhovsky's patent. To do this I had to decide what components to use, as no parts values are given in the patent. Even if they were, these parts would not be available today. What to do? In Figure 1, Lakhovsky begins by powering the primary coil of a transformer on DC (direct current) that is rapidly interrupted by a device he calls a "trembler" (V in Figure 1). The purpose and function of this trembler is to provide a sequence of DC pulses to the primary of the transformer by mechanically making and breaking the DC power feed to the primary winding. I decided that one of Klark Kent's 12 VDC power supplies driving the primary of an automobile ignition coil interrupted by a solid-state transistor circuit was a suitable modern substitute. It performed the same functions that Lakhovsky specifies in the patent. I 'acquired' one of Klark Kent's MWO units from the Borderland collection and went to work.

Besides the first stage power supply driving the primary of the coil, everything else in the Klark Kent MWO was essentially a Tesla circuit, so I took it apart. I removed the high voltage output coil completely and rewired the capacitors and spark-gap so that they were in the right place in the circuit according to Lakhovsky. The L1 and L2 output coils I decided to build, since no suitable replacements were available. Without any clear directions from the patent about the proper dimensions for these coils, I actually had to *think* about it. Small, tightly wound coils usually block high frequency signals and, for this reason, are sometimes called "chokes". Obviously, these coils were not supposed to be extremely small because passing a wide spectrum of high frequency currents was their purpose. By contrast, one of Tesla's designs specifies a 2 foot diameter coil set in this location in the output. But photos of Lakhovsky's MWOs clearly show no coils that large. I decided to wind two coils about 2 inches in diameter to begin my experiments. L1, the primary, I wound with 7 turns of bare #18 single strand copper wire. The turns are about 1/3 of an inch apart and stand free in the open air with no dielectric material or coil form near-by. L2, the secondary, is only 5 turns of similar wire and dimension. The two coils are placed end to end about an inch apart. The ends of L2 are connected to rings 1 and 2 of the printed circuit board MWO antenna developed by Eric Dollard and BSRF, as illustrated in Lakhovsky's patent. L1 is connected to the capacitor and the spark-gap.

Awesome! I was finally in possession of a reasonable facsimile of a *real* Lakhovsky MWO (Figure 5). [I decided to retain the high voltage diode from the Klark Kent circuit to help protect the ignition coil from the discharge of the capacitor. This was the only deviation from the Lakhovsky circuit that I made, and I do not believe it negatively affects the quality of the output since it is not in the capacitor discharge loop.] In trembling anticipation, (not really) I turned the unit on. Besides the irritating noise of the spark-gap, the energy effect coming from the antenna was very gentle and very penetrating. Within 15 minutes, a noticeable relaxation effect was evident and a gentle "buzz" feeling was present throughout my body. This experiment, long overdue, begins to confirm my many speculations about the nature of Lakhovsky's MWO and opens up a clear, new direction for future research.

The two design changes that this article addresses are: 1) the location of the spark-gap in the circuit and 2) the method of driving the antenna. In Tesla's circuits and the Bob Beck/Klark Kent style of MWOs, the spark-gap is driven by the *inductive collapse* of the secondary coil and the output primary coil is capacitively coupled to this source of oscillations. In Lakhovsky's circuit, the inductive collapse of the secondary coil charges the capacitor and the *capacitor discharge* drives the spark-gap directly through the primary of the output coil. This difference has never been discussed before and I believe it to be important. A

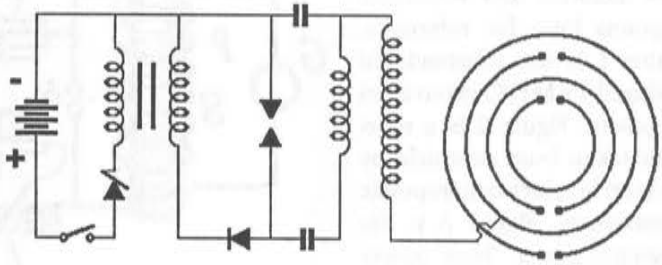

Figure 4

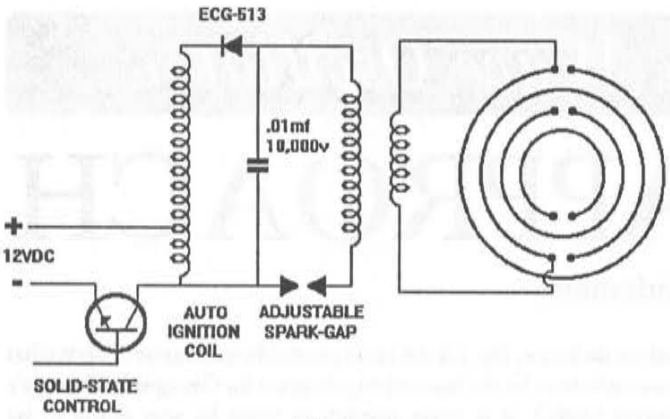

Figure 5

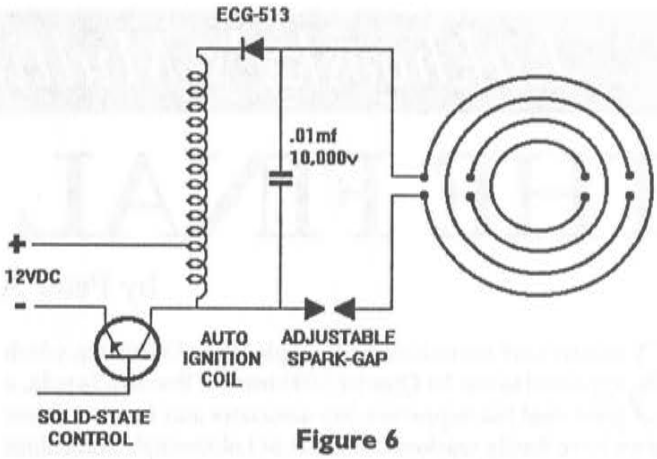

Figure 6

capacitor discharge creates a very different kind of "spark" than an inductive collapse. (Anyone not understanding this should watch the first 20 minutes of the BSRF video **Free Energy Research**. In it, Eric Dollard demonstrates both inductive and capacitive arcs and discusses the differences between them.) The Beck/Kent style of MWO uses the circuit primarily as a source of high voltage to produce arcing between the rings of the antenna. The various lengths of sparks at the antenna become the source of the wide spectrum of frequencies produced by the device. While this method may produce the required wide band of emissions, it was not the method Lakhovsky was working on. The patent is clear on this point, Lakhovsky envisioned the capacitor discharge as the source of his wide spectrum of frequencies and the multi-ringed antenna as a resonator system to draw out even more and higher harmonics by induction. As usual, the simple creation of multiple frequencies is not enough. The subtle nature of these frequencies and how they are created is also important.

Many experiments need to be tried on all of the possible methods of driving the antenna that are covered by the patent. Beyond that, the patent describes using only one antenna, whereas all of the photos of Lakhovsky's MWOs show him using two antennas. The exact antenna hook-up is still unknown. I have now driven the antenna both electro-statically, as specified in the patent (Figure 5), and electro-magnetically by eliminating L1 & L2 and directly connecting the outer ring of the antenna in the place of L1 (Figure 6). The effects subjectively seem stronger in the direct connection mode, but both are gentle and penetrating. I have also driven two phi-ratio spiral antennas in the electro-static mode facing each other, each spiral connected at its center to one end of L2 (Figure 7). The effects in the space between the two antennas are the most powerful I have seen yet. While use of these golden section spirals is a deviation from Lakhovsky's designs, the configuration of using two antennas to set up an area of high frequency electrostatic oscillations between them was his intent, it seems. The effect in the area between the antennas is quite strong and lends credence to the electro-static mode of operation. Tesla also experimented with this method of driving the antennas which he called terminals (t) as shown in Figure 8. He used large copper plates for these terminals, and as such, did not expect them to augment the total frequency response of the system as Lakhovsky did with his multi-ringed antennas. My experiments suggest that when using one antenna, the electro-magnetic hook-up is the strongest, as in Lakhovsky's RCO circuits. When using two antennas, the electro-static hook-up is the strongest, as in Lakhovsky's MWO circuits.

In future articles, I plan to address the construction of a real Lakhovsky MWO antenna made from copper tubes suspended on silk threads as specified in the patent. I believe that the copper rings, unencumbered by the proximity of any dielectric material, will be able to 'ring' freely up into the very high harmonics Lakhovsky envisioned. This could be the final 'improvement' necessary to get us all the way back to where Lakhovsky was in 1931. The design for the real MWO may have been with us all along. Sometimes the most obvious things take the longest.

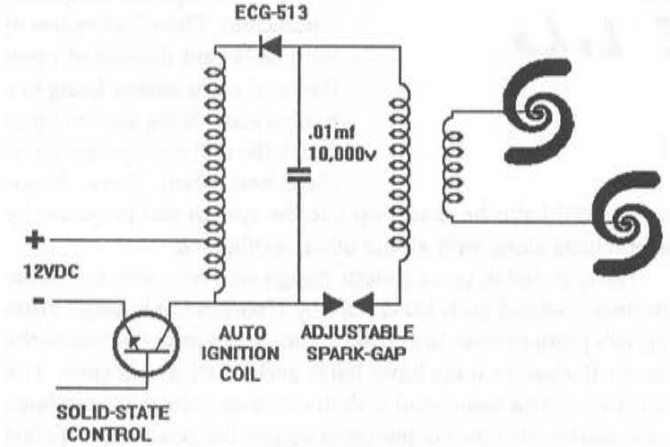

Figure 7

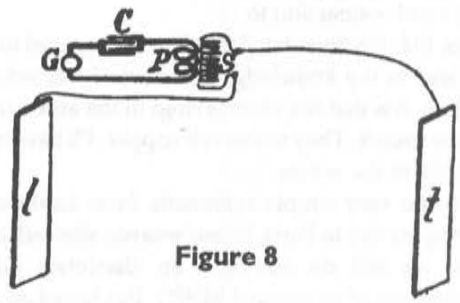

Figure 8

Lakhovsky's Multiple Wave Oscillator:

THE FINAL APPROACH

by Peter A. Lindemann

SINCE MY LAST ARTICLE on the Multiple Wave Oxcillator, which appeared in the 1st Quarter 1993 issue of **Borderlands**, a great deal has happened. My associates and I are confident that we have finally cracked the secret of Lakhovsky's miraculous MWO. For much of this breakthrough, I am deeply indebted to Hessel Hoornveld of the Netherlands. First of all, Hessel has run quite a few experiments and tested many different variations. Besides that, he visited Serge Lakhovsky in Paris, France in the early summer. His eyewitness account of a true Lakhovsky MWO in operation has solved most of the remaining puzzles. So much is now known that I, at least, consider the mysteries either solved or within reach. This article will lay out clearly what we now know and what we believe will fill in the gaps.

Hessel reported to me the following details of his eyewitness account. First, as Tom Brown and I have claimed for years, there is NO arcing between the rings of the antenna. Second, the unit DOES operate in the high voltage mode, with a two inch corona coming off the outer ring during operation. Third, the dark tubes holding the antennas to the stands each contain a high voltage step-up coil, so that both antennas are powered with high voltage independently. The wires that connect the antennas to the power supply are low voltage wiring. Four, Hessel was not allowed to see how many spark-gaps there are. However, both Hessel and I have run experiments with spark-gaps and we both believe that a number of small gaps in series work better than a single large gap. Five, there is a ground connection to the antennas. Six, the final detail that Hessel reported to me is very interesting and to my knowledge has never been mentioned by anyone before. It is that the various rings of the antenna are made from different metals. They are not all copper. I'll have more to say about this later in the article.

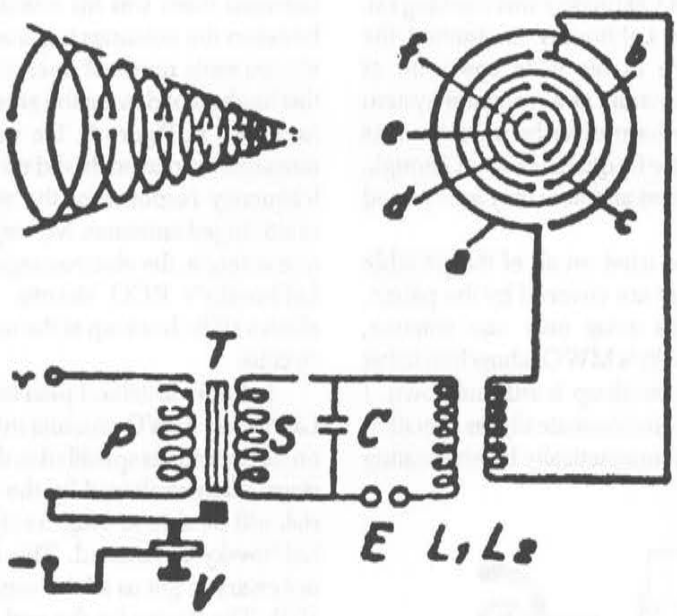

Figure I

Fig. 1 is the very simple schematic from Lakhovsky's 1934 patent. During his visit to Paris, Hessel was not allowed to see inside the unit, so we still do not have an absolutely authoritative schematic diagram of an original MWO. But based on everything that we do know, Fig. 2 is the most probable schematic. This is what I now believe to be the basic wiring diagram for Georges Lakhovsky's clinical MWO. It is close enough to what he was doing to be considered the real thing. I base this on what Hessel has told me and on the photo of Lakhovsky's clinical unit reproduced here as Fig. 3. Please notice that there are three wires on the ground going from the case on the right to the antenna on the left. I now believe that two of these wires carried the low voltage supply to the primary coil of the output and the third wire was the ground connection as illustrated in Fig. 2.

Lakhovsky's extensive work with the RCO and the MWO was motivated by his interest in overcoming the debilitating effects of living in and near noxious earth energies. Consistent with this, Jorge Resines tells me Lakhovsky wrote that the MWO would give the best results when operated over sandy soils. These are the so-called "negative polarity" soils that can cleanly absorb the incoming cosmic radiations without reflecting back any disruptive interference. Now I can understand why these devices were never mass produced. All the rumors we have heard, that each unit was "fine tuned" to the specific location in which it was to operate, now make perfect sense. As Fig. 2 suggests, the multiple oscillations appearing at the antennas were not merely electric in nature, but were in fact earth energy drawn up from the ground connection. The effectiveness of the whole unit depended upon the local earth energy being in a benign state. If the ground upon which the unit was operating was disturbed, then these disturbances would also be drawn up into the system and projected by the antennas along with all the other oscillations.

The question is, can a generic design unit be as effective as the extremely refined units hand built by Georges Lakhovsky? From a purist's point of view, the answer is no. But in many situations the generic Beck-style units have been acclaimed as effective. The anecdotal claims associated with the various units that have been on the market over the last few years suggest this possibility. We feel that the closer one gets to Lakhovsky's actual work, the better the

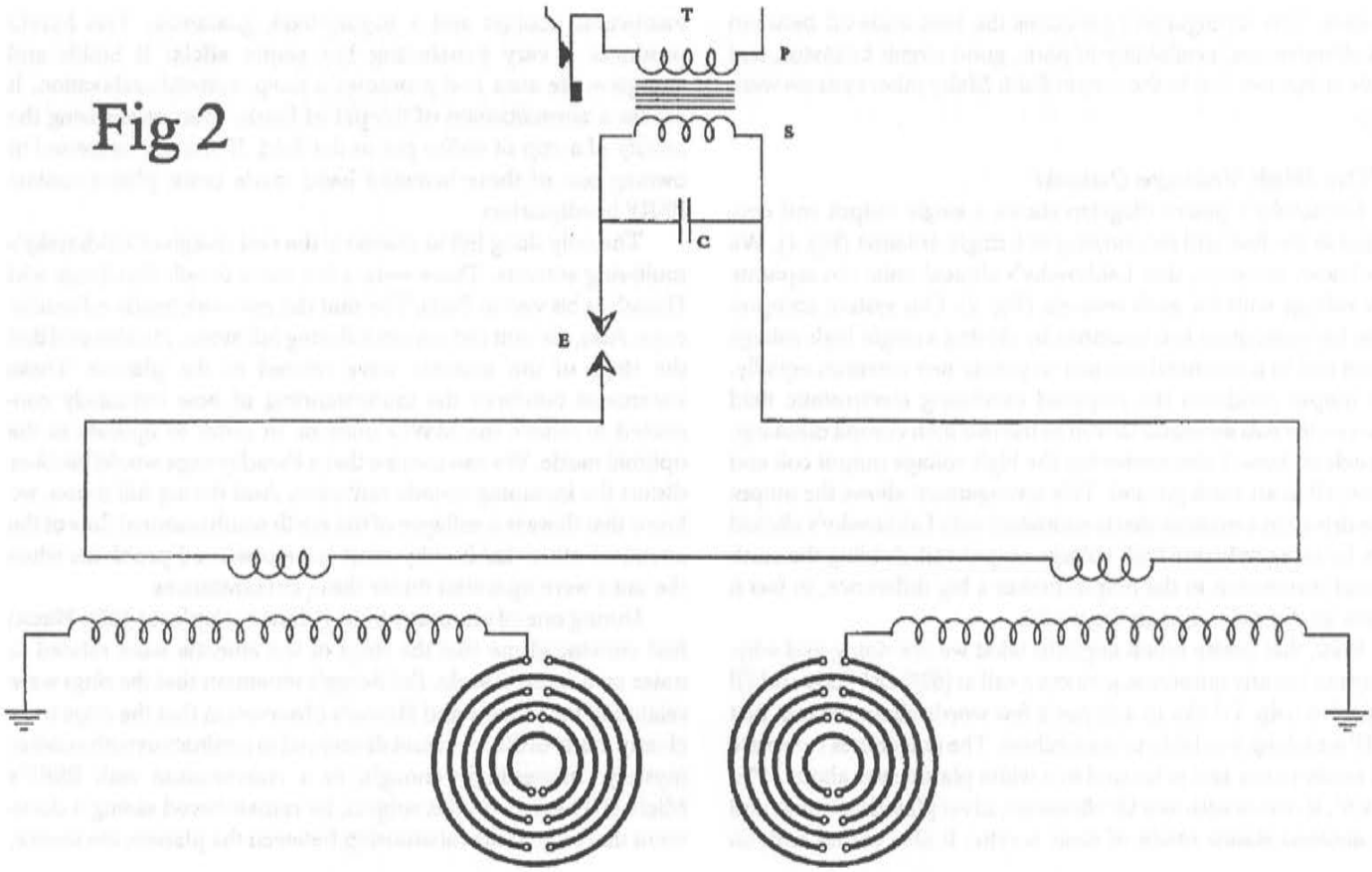

Fig 2

units will perform. Because of this, we are publishing this schematic diagram (Fig. 4) and parts list so that home builders can now make their own superior Lakhovsky-style units. We are also making these units available in limited quantities for serious amateur experimenters.

The current unit consists of four sections: (1) the power supply, (2) the capacitor charging system, (3) the spark-gap discharge section, and (4) the high voltage output and antenna hook-up. Each of these will be discussed separately and compared to Lakhovsky's patent diagram in order to promote clear understanding.

(1) The Power Supply

Lakhovsky's patent diagram does not specify a power supply, but does show the unit needing to connect to a source of Direct Current, as noted by the (–) and (+) connections at the left of Fig. 1. Experiments by Hessel Hoomveld and myself suggest that the best source of DC in this case is a battery. The units definitely work better on batteries. A little market research, however, told me that most people would prefer a unit that could run for long periods, if necessary, and simply plug into the wall socket. Most people did not want to be bothered by battery charging protocols. Therefore, the power supply given here consists of a transformer, rectifier, and filter capacitor as shown in the schematic in Fig. 4.

(2) The Capacitor Charging System

Lakhovsky's patent diagram shows a primary coil, a magnetizable member, a secondary coil, the capacitor, and a device called the *trembler*. The purpose of the trembler is to mechanically make and break the DC current connected to the primary coil. This arrangement produces pulses coming out of the secondary coil that can be used to charge the capacitor. The circuit we use here is a variation of the one developed by Klark Kent. It consists of a 555 timer chip, protected by some RF chokes, controlling a power transistor that makes and breaks the DC current to the primary of an automobile ignition coil. The pulsed output of the auto coil is then used to charge the capacitor. The high voltage diode between the coil and the capacitor is a necessary addition to this circuit because the capacitor does not charge properly without the diode in place. For you purists, the solid-state section can be replaced by a self-actuating mechanical relay that operates like the trembler. I don't use it because it makes a lot of noise and the solid-state circuit runs quietly and reliably. The solid-state circuit also gives us an adjustable feature to control the capacitor charging rate, like the adjustable trembler would. I have also added a third RF choke between the auto coil and the capacitor on the low voltage side to block the high frequency rebound of the capacitor discharge from feeding back to the power supply.

(3) The Spark-Gap Discharge Section

Lakhovsky's patent diagram shows the capacitor discharging through the primary of the output coil and the spark-gap. Our circuit is essentially the same here. This seems to be the heart of the system and I wanted to leave it alone. Still, a great deal of work went into researching the optimum design for the spark-gap. Straight, open air spark-gaps produce a subjectively harsh feeling in the field between the antennas and a nasty, irritating noise. By contrast, high vacuum, quenched spark-gaps (5 microns) don't work well in the circuit. The unit we are selling uses four enclosed spark plugs wired

in series. This arrangement produces the best trade-off between cost effectiveness, availability of parts, good circuit behavior, and gentle subjective feel in the output field. Many other systems were tried.

(4) The High Voltage Output

Lakhovsky's patent diagram shows a single output coil connected to the first and second ring of a single antenna (Fig. 1). We now know, however, that Lakhovsky's clinical units ran separate high voltage coils for each antenna (Fig. 2). Our system compromises between these two positions by driving a single high voltage output coil in a balanced manner to power two antennas equally. The output produces the required oscillating electrostatic field between the two antennas as well as the two inch corona discharge on each of them. I also center-tap the high voltage output coil and connect it to an earth ground. This arrangement allows the output to be driven in a manner that is consistent with Lakhovsky's clinical units by using only one high voltage output coil. Adding the earth ground connection to the output makes a big difference, in fact it makes all the difference in the world.

Well, that pretty much explains what we are doing and why. If anyone has any questions, give me a call at (505) 281-7554 and I'll be glad to help. I'd like to add just a few words about the unit that BSRF is making available to researchers. The unit comes complete and ready to use and is housed in a white plastic case about 15" x 15" x 5". It comes with two 15" diameter, silver plated antennas and two antenna stands made of clear acrylic. It also comes with an instruction booklet and a money-back guarantee. This MWO produces a very penetrating but gentle effect. It builds and energizes the aura and promotes a deep, systemic relaxation. It causes a normalization of the pH of fluids, even neutralizing the acidity of a cup of coffee put in the field. If you are interested in owning one of these beautiful hand made units, please contact BSRF headquarters.

The only thing left to discuss is the real design of Lakhovsky's multi-ring antenna. There were a few more details that Serge told Hessel on his visit to Paris. The unit did not work inside a Faraday cage. Also, the unit did not work during full moon. He also said that the rings of the antenna were related to the planets. These statements reinforce the understanding of how intimately connected to nature the MWO must be in order to operate in the optimal mode. We can assume that a Faraday cage would block or distort the incoming cosmic radiation. And during full moon, we know that there is a collapse of the north-south seasonal flow of the chemical ether. Lakhovsky must have observed problems when the units were operated under these circumstances.

During one of our many trans-Atlantic telephone calls, Hessel had convinced me that the rings of the antenna were related to notes on a musical scale. But Serge's statement that the rings were related to the planets and Hessel's observation that the rings were clearly made of different metals seemed to confront us with another mystery. Interestingly enough, in a conversation with BSRF's Michael Theroux on this subject, he remembered seeing a document that related the relationship between the planets, the metals,

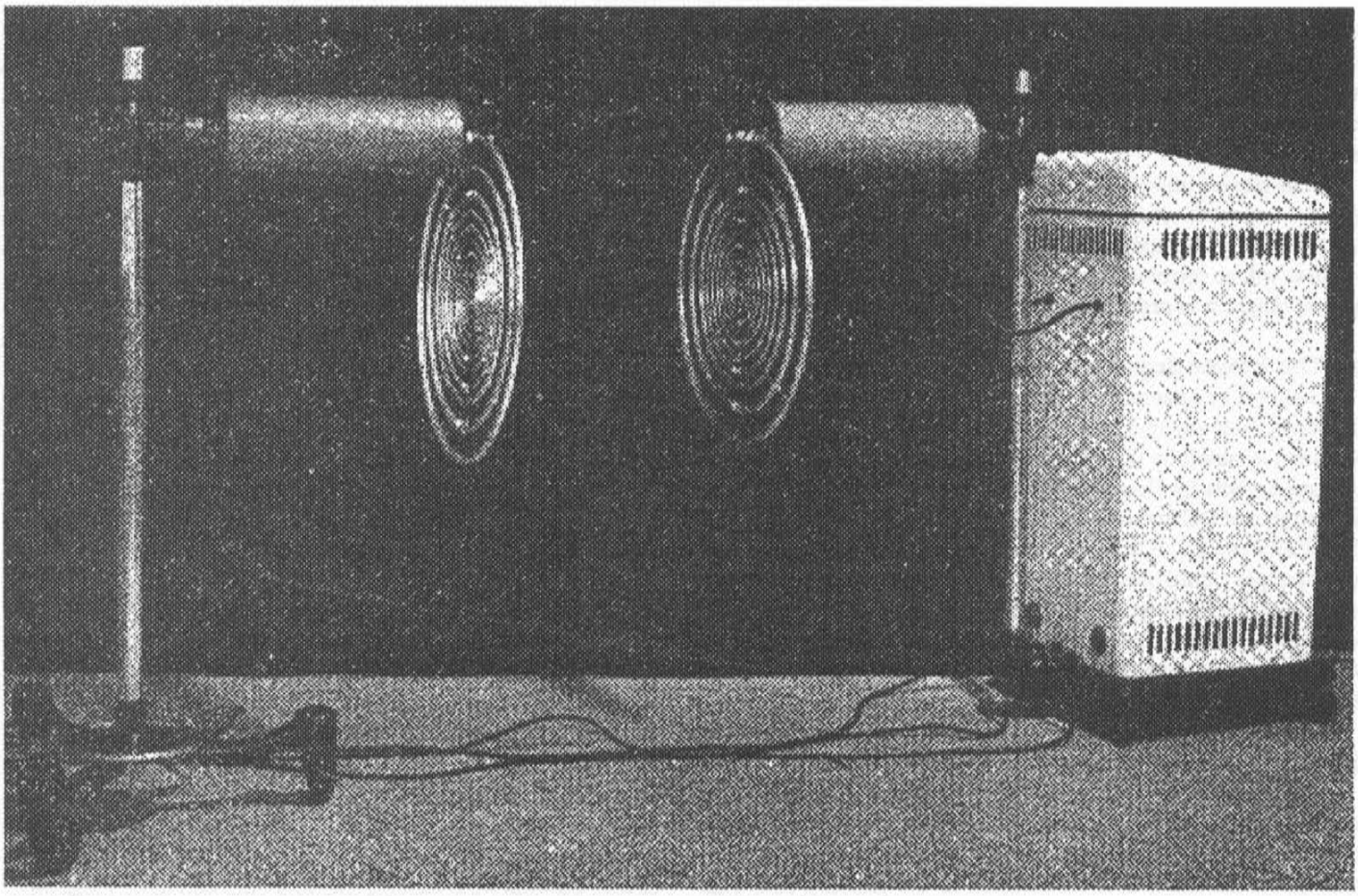

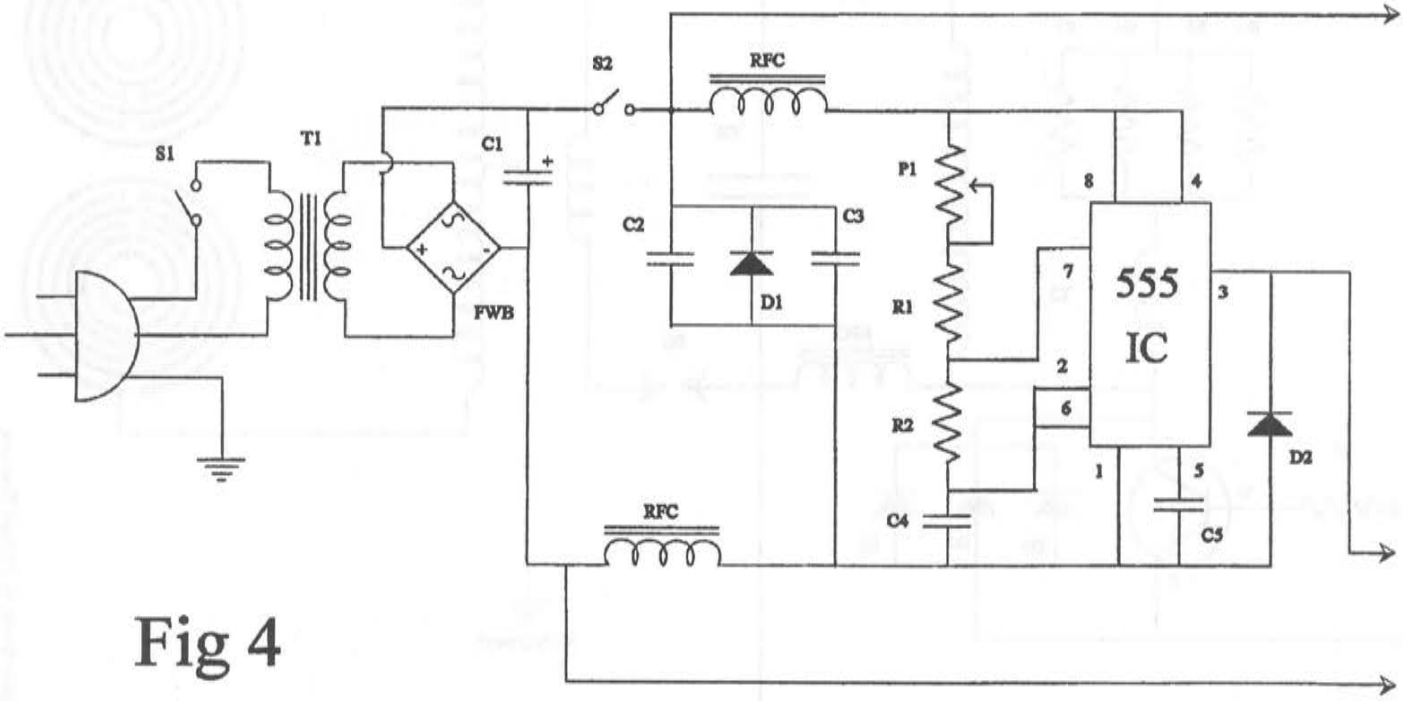

Fig 4

and the musical tones from some research done by an H. Kayser, published in Berlin in 1932. Since we know that Lakhovsky was working with some German doctors with his RCO and early earth energy research, we strongly suspect this information could be the basis for the development of the multi-ring, multimetal, tubular antenna during that same time period. This research document is included as a footnote to an article entitled *The Gravitational Wave* in the BSRF reprint of the **1950 Proceedings of the Scientific and Technical Congress of Radionics and Radiesthesia.** The following article, *The Song of Longevity,* contains Michael's insights into these relationships. In the future we are hoping to prototype some antennas and try them out to see if they broaden the action of the MWO to near universal effectiveness as Lakhovsky claims. Until then, the units we are making available function extremely well as a refined MWO power supply.

I know that some of you have enjoyed this flurry of articles on the MWO. I also know that some have felt that too many pages were given to this topic over the last few years. I can only say that being on the trail of this discovery has been exciting, especially this year. Now that it is nearing completion, I would like to acknowledge how much Tom Brown has contributed to this project. First, he kept the whole project alive by constantly up-dating the **MWO Handbook**. He took the initiative to translate and condense the two Lakhovsky titles, **Science and Good Health** and **The Earth and Ourselves**. These little books told us a great deal about Lakhovsky's work with earth energies and the Radio Cellular Oscillators, the forerunner of the MWO. He first sparked my interest and helped me overcome my reluctance to get involved. Even though he has not written any of the articles in this current series, our telephone conversations have been an integral part of my growing understanding of the MWO. During countless phone calls, we continued to refine our collective understanding about what Lakhovsky was really doing.

This has really been a global BSRF project and the following people have all contributed in significant ways. A special thanks go to the following: Ralph Bergstresser, who apparently designed the "Magnetic Wave Oscillator" which has been the basis of MWO research for the last 30+ years; Bob Beck, for igniting interest in the MWO in 1963 by reproducing this basic "MWO" design; Riley Crabb, for printing that diagram in the BSRF Journal; Klark Kent, for actually building units that gave people something to work with and gave us something strong enough to whack on for years; Eric Dollard, for an irreplaceable education concerning the properties of high voltage dielectric fields, and for showing us the major divergences from Lakhvosky's actual work by the previous researchers; Ron Crossley, who reported on his first hand observations of Lakhovsky's MWO and helped track down numerous important details; Louis Schad, for bold and original thinking, and experimentation when things were looking pretty stuck; Larry Binger, for work with RCO circuits and sharing generously; Michael Theroux, for timely and insightful input; Jorge Resines, for multi-language translations, tireless research, and remarkable analysis of hard-to-find documents; Hessel Hoornveld, for the eye-witness account of a real MWO in operation, and for extensive clinical testing and in-depth experimentation with MWOs of various types in the Netherlands. Also, many thanks to all the other experimenters out there who have written letters to the Editor and kept the interest high. Thank you all again.

I have had the privilege of having all of this input to sort through and synthesize because these others were willing to share their knowledge freely. I am deeply indebted to all of them.

At this point, I consider the Lakhovsky MWO mystery essen-

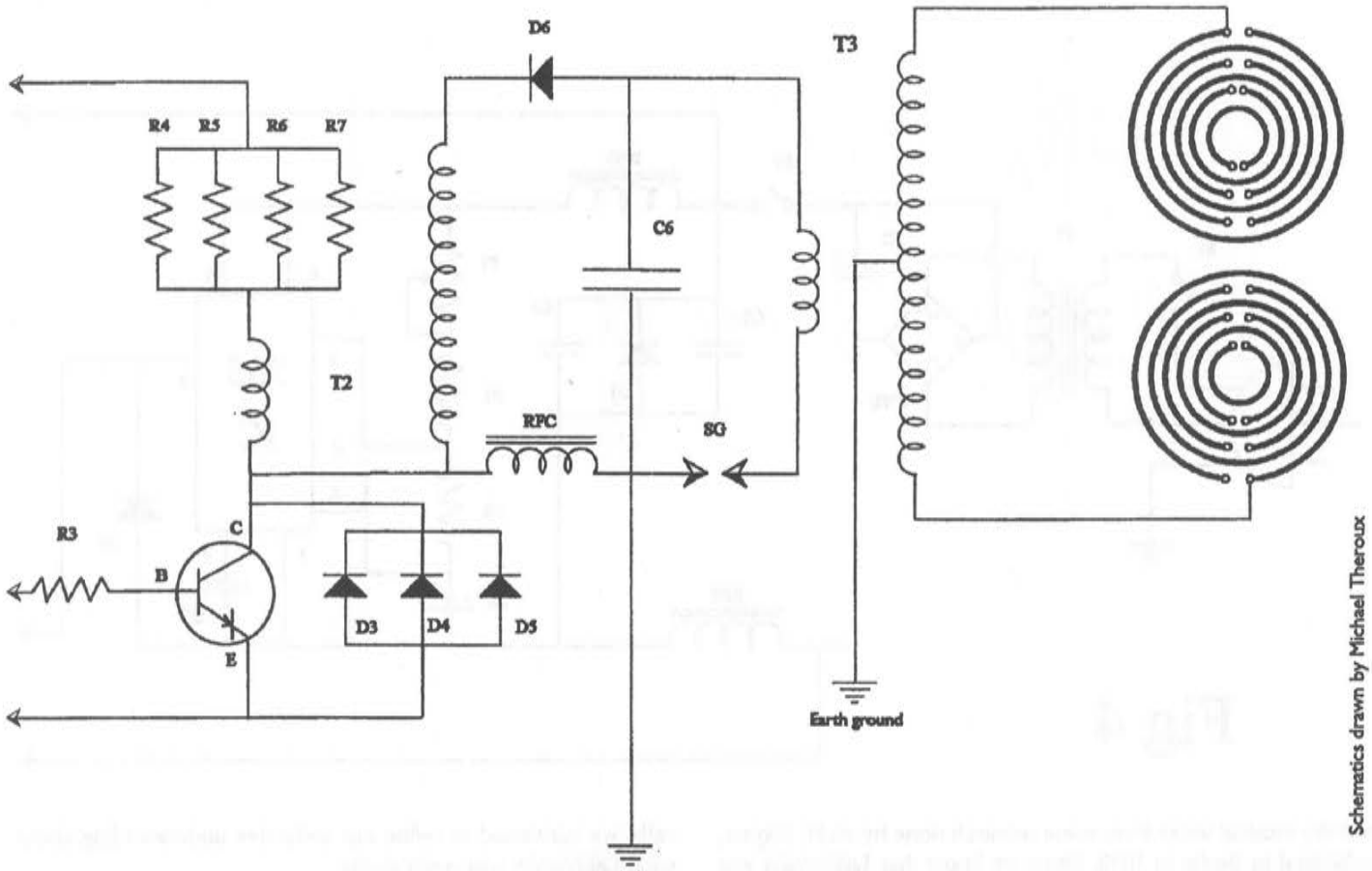

Schematics drawn by Michael Theroux

tially solved. The following is the parts list that goes with the schematic in Fig. 4. for people interested in building a unit themselves.

Parts List

T1 1 20VAC to 1 2.6VAC, 4.4amp transformer
FWB Full Wave Bridge 250 volts, 6 amps
RFC Radio Frequency Hash Chokes, 250uh
C1 10,000uf 25v Electrolytic Capacitor
C2 100uf 25v Electrolytic Capacitor
C3 .047uf 50v Ceramic Capacitor
C4, C5 .1 uf 100v Polyester and Foil Capacitor
C6 .01 uf 15,000v Electrolytic Capacitor JAQ-15KMY0103
IC 555 Timer
R1 10K 1/2 watt Resistor
R2,3 1.2K 1/2 watt Resistor
R4-7 10 ohm,10 watt Resistors
D1-2 1N4148 fast switching silicon Diode
D3-5 1N4004 200 volt,1 amp Diodes
D6 ECG 527A 15,000 volt Diode
P1 50K Variable Potentiometer plus a knob
Q1 ECG 247 100 volt,12 amp Power Darlington
S1-2 SPST Switches rated for 120VAC (plastic handle to reduce shock hazard)
SG Spark-gap, four automotive spark plugs, enclosed, wired in series, gaps set at .017"
T2 Automobile Ignition Coil for a 12 volt system
T3 Hand-made High Voltage Output Coil:
Primary: 5½ turns of #18 wire (insulated to 30,000 volts) wound on 2" ID PVC
Secondary: 5½ inches of tightly spaced #33 magnet wire (720 turns) wound on 1" ID PVC. Primary wound around middle of secondary. Secondary is center-tapped.

Notes on the parts list

T2 should not be a hot-rod coil because they put out too much voltage and will destroy C6. An average coil for a V-8 will do just fine. C6 and D6 are hard to find, but they can be special ordered from an electronic parts store (not Radio Shack). Q1 must be protected by a heat sink. T1 and R4-7 get hot during operation. Our production units include a fan-blown cooling system, and separate indicator lights to show when the power supply is on and when radio frequency currents are present at the output. These features are not shown in either the schematic or the parts list. Also needed are a variety of wire, a grounded plug, and other miscellaneous hardware. Once production is in full swing, kits and/or hard to find parts will be available to home builders. Call (505) 281-7554 for more information on parts and on availability of completed units for research.

Happy building and good luck!

The Song of Longevity

by

Michael Brian Theroux

"The earliest prehistoric symbols — the curves, spirals, etc. of the most ancient art — are attempts to render for the eye those primordial energies who have their being in sound alone." Joscelyn Godwin — from the introduction to ***Cosmic Music***

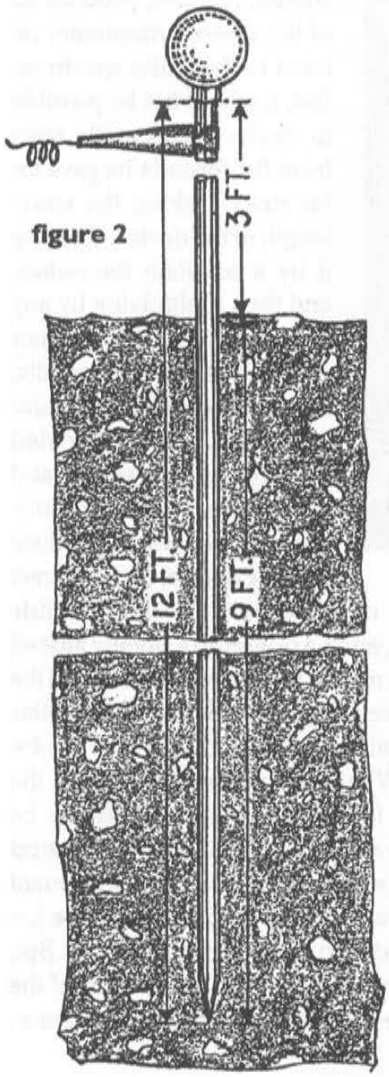

figure 2

The most fundamental of ancient symbols is quite unmistakably the circle. The next and most obvious progression of this archetype is found in the ever expanding and contracting universe, as depicted by a series of concentric rings. This symbol of concentric rings finds within its compass the models of both the spiral and labyrinth, and cannot be confined to its apparent 2-dimensional interpretation (and we will find its 3-dimensionality unfolding in the armillary sphere.) It is, therefore, no coincidence that Lakhovsky chose such a concentric ring design for his MWO antennas. The antenna system is truly the most important component in the device, and it is well known that Lakhovsky used simple, one-ringed and non-electrical contrivances in his healing experiments with plants.

The latest information concerning the design of Lakhovsky's multi-ring antenna for the MWO, would strongly suggest that he not only incorporated the alchemical correspondences of the metals and planets in the antenna's construction, but that the thirteen ring structure was based on the fundamental harmonics of music. (See *Lakhovsky's MWO: The Final Approach*, by Peter Lindemann)

Before assailing some of the possibilities in designing these antennas, it will be of great importance to analyze and compare the nature of how a device such as this fits into the musical element, and also to try to interpret the means by which the musical correspondences are arrived at.

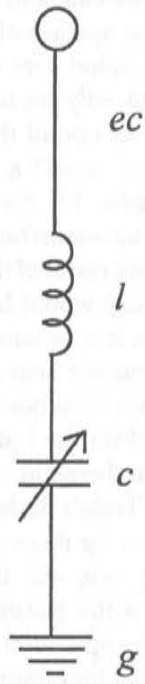

Figure 1

In 1918, a Russian inventor named Leon Theremin invented the first electronic musical instrument. Originally called the Ætherphone, this musical instrument (now universally known as the theremin) was played by moving the hands in the vicinity of two antennas, (not touching the instrument) hence its original name. The instrument produces its tones by the beat frequency oscillations of two radio frequency oscillators. The antenna, attached to one of the oscillators works like a variable capacitor in conjunction with the hand's presence. Changes in capacitance, effected by the proximity of the hand, actually raise or lower the pitch of the instrument. Very recently, I attended a lecture and demonstration of the theremin by Robert Moog, one of the pioneers of the synthesizer. In his lecture he provided video documentation of several of the early performers on the instrument, and

made curious mention that all of these people were still living – octagenarians and older. Leon Theremin himself is still alive at the ripe age of 97! In a lengthy conversation with Mr. Moog, I found that of all the people connected with the instrument, only one has since passed away. Nadia Reisenberg, the sister of one of the theremin's greatest virtuosos (Clara Rockmore) wasn't a theremin player at all, but the piano accompanist. Of course it would be pure speculation to assume that reason behind the theremin performers longevity was a direct result of their contact with the instrument. Many other factors would have to be taken into account.

There is a certain and most common thread which has been cryptically woven into all of these inventions and may or may not have been coincidental. With the Lakhovsky MWO, the theremin, and most certainly Tesla's Radio (as the foundation for these other inventions), one will find that not only is the ground essential for the operation of such devices, but the grounding circuitry is nearly tantamount in all. The basic circuitry is as follows (figure 1): Where *ec* is the elevated capacity, *l* is the inductive coil, *c* is the variable (sometimes fixed) capacitor, and *g* is the grounding apparatus. In the MWO, ec would be the multi-ring antenna. In the theremin, ec would be the pitch antenna, etc. The rest of the componentry can be found in each device as well, with little variation. Another device that easily fits into this category is the Cosmo-Electro-Energy Condenser invented by George Starr White (see figure 2 & 3). This device was used in the healing of various ailments and possesses the basic structure and symmetry of the others. This is not an electrical device though, and is quite simply connected to the earth.

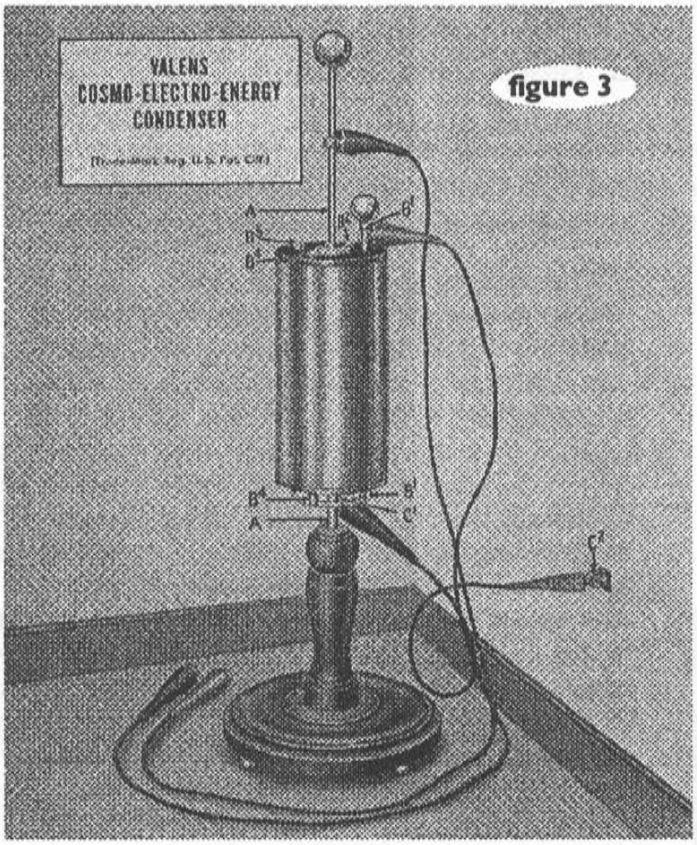

figure 3

I believe this most important feature found in all of these apparatuses is the key to understanding the true nature of how they work. With this basic circuit, one can radionically *tune* the earth energy for whatever purpose one desires. In all cases it is the interaction of the organism with this properly entuned earth energy (VRIL) that seems to produce results – whether electrically powered or not.

It now becomes quite apparent why Lakhovsky placed so much importance on ground energies, and constructed each MWO according to individual specifications calculated in accordance with the local geography. Lakhovsky was tuning each device to a particular earth energy.

Lakhovsky was also very much interested in the sonorous possibilities of his devices as evidenced by his patent for more natural sounding loudspeakers and microphones (see **The Lakhovsky MWO Handbook** *Second Edition 1989,* compiled by Tom Brown). If the MWO antennas were constructed with concern for their musical properties (which would appear to be true) then several variables need to be figured into their calculation. Based on the information I received concerning the observations of Hesel Hoornveldt, the diameter of the outside ring was approximately 36 inches and there were a total of 13 rings. From the photos in **The Lakhovsky MWO Handbook** I could only count 12 rings, but in any case we would be dealing with a ring system that was based on an equally tempered chromatic scale. This should, in effect, produce all of the desired harmonics related to the audio spectrum. But, it would not be possible to devise a chromatic scale from the formula he gave for his rings. Taking the wavelength of the device, dividing it by π to attain the radius, and then multiplying by any individual constant will not produce the desired results, no matter what the particular constant is. I personally tried it with the golden section and the twelfth root of two, neither of which would produce a musical scale, or the correct geometrical symmetry. I consulted with researcher Eric Dollard about the problem, and he preferred a slightly altered method of using the golden mean. Thus, the calculation of the rings would alternate between Φ and $\sqrt{\Phi}$. I don't believe this would produce the musical tones desired, but it is a wise alternative in any case. What we are dealing with is the calculation of frequencies for a set of chimes. This can be most complex, and I have yet to see a definitive mathematical analysis. If we were dealing with nothing more than a resonant chamber such as in an organ pipe, the formula would be $\lambda = 2L/n$, and then the frequency can be determined by v/λ. But, in the case of a chime there would be the calculation of the resonant chamber and the 3-dimensional primary vibrator.

The pipe of the chime is the primary vibrator and the air inside would be the resonant chamber. Since the tubes of the MWO are closed on each end, and are also circular, the variables governing frequency will change with temperature fluctuation, and will alter vibrational patterns in the geometry respectively.

To solve this mystery I made a close analysis of the photos of the antennas. The measurements thus derived showed no signs of logrithmic periodicity in either the diameter of concentric circles or in the diameter of the tubes. I had to then conclude that Lakhovsky merely experimented with the lengths and diameters in order to attain the proper pitches for the desired scale. The next problem would then be to determine what the desired scale was. After careful and intensive study of Kepler's *Mysterium Cosmographicum* (1596), and *Harmonices Mundi* (1619) and the works of Lakhovsky's contemporary, Hans Kayser, I found that none of the representations of notes to the planets possessed any continuity, but that Lakhovsky most likely started his scale on G and ended on G.

I find that using $\sqrt{\Phi}$ produces the best results in construction, so that for a 12 or 13-ring antenna with an outside ring diameter of 36" Table A should be used. It should also be noted that the diameter of the tubing will decrease by the same proportions. With proper adjustment, this should produce the desired musical reference as well. As for the corespondences of the planets and metals used, it is up to the experimenter, and should be dictated by locale.

Table A

Ring Number	Diameter in Inches
1	36
2	28.3
3	22.2
4	17.5
5	13.75
6	10.8
7	8.5
8	6.7
9	5.25
10	4.1
11	3.2
12	2.5
13	2

There are many devices of interest whose construction and design follows similar corespondences. The Terpsitone, another of Theremin's instruments, used the entire body to change the pitch of the instrument, and had a very interesting spiral design for its antenna. I've recently been informed that there was a musical element to the radionic instruments of Ruth Drown (this information came from Trevor Constable via conversations with Gerry Vassilatos). The series of impedance rheostats (comprising the tuning section, and constructed so as to have a condenser action) were wound tightly, and when struck, gave off a certain ringing sound. If the device did not ring, it would not function properly. We also know that the Drown devices necessitated a good ground connection.

It could be concluded from all of this that the two essential components in devices such as these are the earth and sound. This can be arrived at in many configurable fashions, and hopefully, this will give the experimenter valuable guidelines for continued research.

RCA tube-type Theremin Schematic

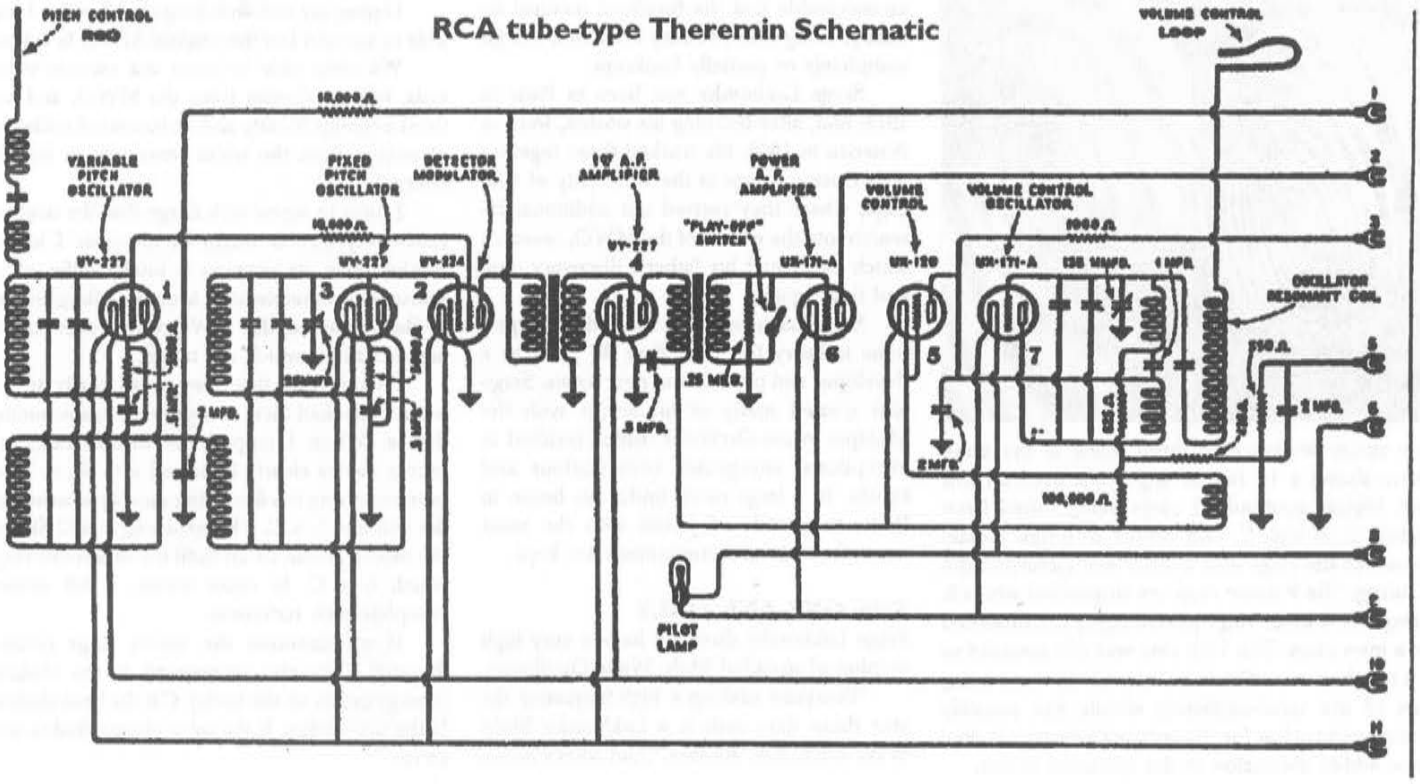

My Meeting with Serge Lakhovsky

Paris, July 7, 1993

by Hessel Hoornveld

SERGE LAKHOVSKY is the son of George Lakhovsky. Serge's father was a brilliant scientist, a man of genius. George Lakhovsky was the developer of the 'Radio Cellular Oscillator' and the 'Multiple Wave Oscillator'. Serge's father's discoveries are still the subject of great interest; in his time, the years between 1900 and 1940, he brought about a veritable revolution with his discoveries and theories. It is not easy to go through life as the son of a famous father, it has a great affect on you. In the room where we held the interview, his father's presence could be felt everywhere, in the form of paintings and the devices he developed.

The device that attracted my attention the most was the 'Multiple Wave Oscillator'. The MWO was specially developed to cure cancer.

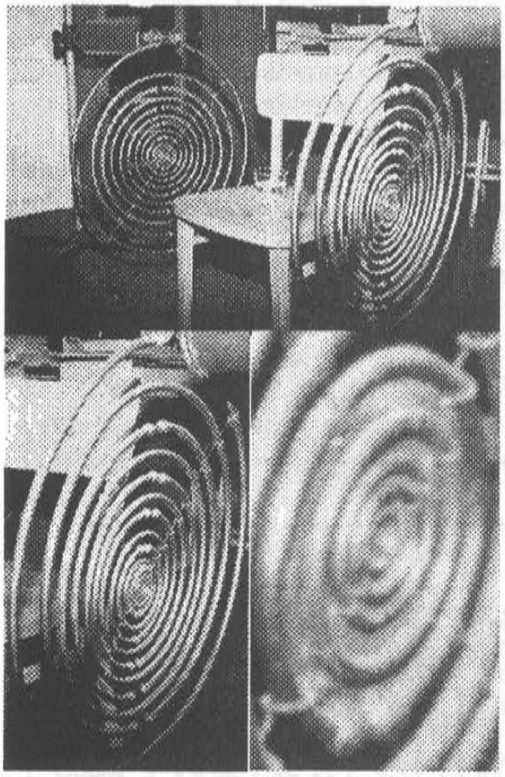

The above sequence of three scans of the same photo shows a 14 ring arrangement used on this unit. Hessel counted 13 rings being tuned from middle C to high C, one octave of tones. Hessel measured the rings with a tuner and discerned the C tuning. The 9 outer rings are suspended with silk string, the 5 inner rings (above right) are mounted on a mica plate. The 14th ring was not counted as it is continuous, unlike the other 13, thus not being part of the tonal-oscillating circuit, but possibly acting as an anchor for the antenna supports and/or as an added dimension to the electrical circuit.

George Lakhovsky was not thanked for the fact that he was able to do this with his apparatus.

George Lakhovsky carried out a great deal of research at a university level, with truly astonishing results. In other words, both past and present scientific research has proved that his method works.

George Lakhovsky died under extremely suspicious circumstances. He was hit by a car during a stay in America and, despite his protests, was taken to a hospital from which he never returned alive. The death of Serge's father and the Second World War meant that his discoveries and developments subsequently fell into neglect.

What was a fact though, was that the discoveries of a genius, and an indispensable instrument in the fight against cancer and other degenerative diseases, had been temporarily eliminated from the scene.

Fortunately, information is now coming to light that allows us to benefit from these techniques of yesteryear. Some time ago, a respected newspaper reported research findings to the effect that one in three Germans, Americans or Dutchmen suffered from, or was developing, a form of cancer.

Nowadays, it is becoming virtually impossible to find sufficient funding to support the entire health-care system. And it is not inconceivable that the fossilized medical industry, along with its many branches, will go completely or partially bankrupt.

Serge Lakhovsky was born in Paris in 1913, and, after finishing his studies, went to America in 1940. He worked there together with Doctor Kovac at the University of Chicago, where they carried out additional research into the effects of the MWO, research which confirmed his father's discovery time and time again.

Serge Lakhovsky has worked in the perfume industry for more than 30 years as a developer and producer of new scents. Serge also treated many of his scents with the Multiple Wave Oscillator, which resulted in exceptional energy-rich combinations and results. In a large room under his house in Paris, thousands of phials with the most unusual scents and compounds are kept.

THE ONE AND ONLY

Serge Lakhovsky does not have a very high opinion of so-called Multi Wave Oscillators.

'Everyone making a high-frequency device these days calls it a Lakhovsky Multi Wave Oscillator,' he says, 'And what's more, they don't work'. He thinks that it's fine for people to look for ways that do work, 'But you must take their effect on people into account.'

A painting of Georges Lakhovsky, who was a tremendous inventor and scientist, and whose work covered many areas of endeavor.

By this he means that scientific research should be carried out, and that it should not just be allowed to run its course.

Serge told of the extensive scientific research his father had carried out at universities in Paris, Vienna and elsewhere, but added that he always took a great deal of care with his research data and results.

Serge Lakhovsky thinks that there are a lot of unjustified claims being made these days, and that there is too much reference being made to the published research results of his father.

'The reason that I am sitting here talking to you is that before I leave this earthly plane, I want to set matters straight.' Serge is resolute. 'No-one makes the MWO as my father did, and none of them work as my father's did, so the claims that are being made in my father's name are unjust and far from true.'

During my visit with Serge Lakhovsky, I was able to see and feel the original MWO in action.

We were able to carry out various water tests, using radiation from the MWO, and noticed a change in taste and an increased radiation of energy from the water (energetic or cosmic energy).

I have to agree with Serge that the original Lakhovsky MWO works as no other I know. Furthermore, its antenna is totally different to that used on other devices. Most use a Bergstresser or Beck antenna, this MWO works with hollow antenna rings, which are tuned.

I confirmed that they were really tuned when I checked them using my electronic tuning device. When I tapped the second ring, my tuning device clearly indicated a C Sharp. The outermost ring is a fixed ring directly attached to the coil and is a C. The next ring is a C Sharp, the next a D and so on until the innermost ring, which is a C. In other words, a full octave complete with semitones.

If we examine the tuned rings (sound therapy), they also correspond to the chakras (energy points on the body). C is the base chakra, D the sex chakra, E the solar plexus chakra and so on.

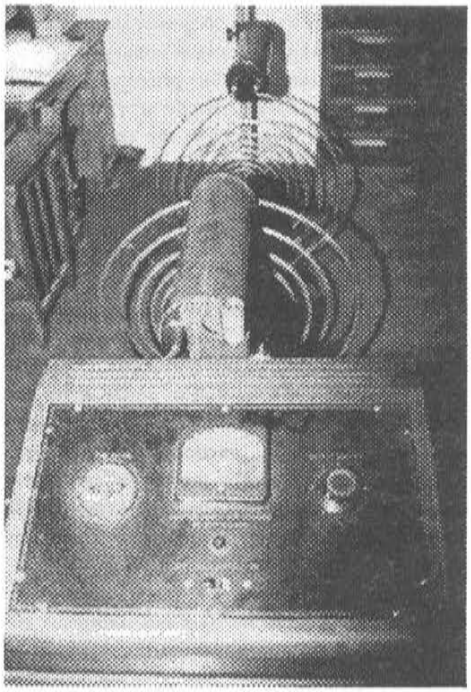

Photo showing top view of Lakhovsky's own MWO. These original photos are in color and show that the rings of the antennas are of different colored metals. It appears that the outer ring is brass (B), the 2nd ring looks like steel/silver (S), the 3rd ring copper (C), and then as follows: 4-B, 5-S, 6-C, 7-B, 8-S, 9-C, 10-B, 11-C, 12-S, 13-B. These identifications are only a guess and are derived from an examination of the photos with a printer's manigifier. TJB.

Each antenna ring is made from a different metal. What the metals are was not revealed to me. When I asked why different metals were used, I was told by Serge that they were chosen in connection with the different planetary positions. Although I would not guarantee that I am right, I have taken a studied guess. The outermost ring, the C, is made of brass, the second ring, a C Sharp, of a light rustproof metal, the third of copper, the fourth of brass, the fifth of a light rustproof metal, the sixth of copper, the seventh of brass, the eighth of a light rustproof metal, the ninth of copper, the tenth of brass, the eleventh of copper, the twelfth of a light rustproof metal, and the thirteenth of brass.

There are bracing wires running from the innermost to the outermost ring, which keep the antenna rings the correct distance apart.

However, existing photographs of the MWO show antennas with different numbers of rings. I saw one with twelve rings, while Serge's MWO had thirteen with the innermost ring for the bracing wires.

I do not know whether the thirteenth ring belongs to the antenna, but it seems very probable.

SECRECY

According to Serge, his father's MWO does not work when the moon is full, or when it is enclosed in a Faraday Cage.

The rings of the antenna are held together by means of a string, and energy does not flow between them by conduction but by radiation. The antenna is thus capable of radiating gigantic quantities of energetic energy.

The higher and more powerful the energetic field, the faster illnesses and degenerative processes are positively affected. The outermost ring, the C ring, is directly connected to the coil on both sides.

The reply to my request for a peek into the sanctum of the MWO was a definite no. Nevertheless, I hope that Serge will eventually give his permission because the technology involved is naturally of great interest to us all, and because I feel that his father's work should be open to the view of everyone who is open to it.

It seems to me that Serge's fear that his father's techniques would be misused can be ruled out, for there are few people around today who are capable of dealing with this type of energy.

When Serge demonstrated the MWO, two spark gaps could be seen. There is a large coil behind each of the two antennas, which are brought into resonance with each other. The whole technique is based on oscillation and resonance!!

The sound of the two spark gaps is very stable and serene. No sparks jump from one antenna ring to another, as occurs with the Bergstresser and Beck antennas.

It is quite safe to come very close to the antenna rings with a car key, although sparks begin to jump continuously from a distance of about six centimeters. This does not cause an unpleasant sensation though. This indicates an extremely high voltage, high frequency and extremely rapid pulse behavior through the spark gap, and I suspect that the MWO contains a rotating mechanical spark gap.

The electricity needed to operate the MWO is supplied from a wall socket, which causes a fair degree of interference in the public electricity supply. This is something which was permitted in the past, but which is actually no longer allowed. Due to such interference, alarm systems, computers, answering machines and telephone systems etc. could suffer damage, or start to lead a life of their own.

It was only possible to operate the MWO for a short period of time, about five minutes, or else it would overheat.

The device is grounded through the mains. It may be that this was done in order to enable the feed cable connected to the wall socket to be used as a (capacitor). This works even when an earth connection is not present.

Serge did not want to answer my question concerning the relationship between his father, George Lakhovsky, and Nikola Tesla; a brief silence followed. We know from available information that the two worked together, and that Tesla was also involved in the development of the MWO. Nikola Tesla had more than 1,000 patents to his name, and was the discoverer of alternating current, and induction motors.

A month after my visit to Serge, he sent me the Radio Cellular Oscillator, a device that George Lakhovsky developed before he started on the MWO. The RCO is a simple, subtle but effective instrument, which relaxes you rapidly and gives you a rosy feeling, especially in your head and body. The device is a boon for the relief of tension aches and it stimulates the circulation; for example, cold feet disappear like snow in the sun. Its effect is based on the same resonance principles as those of the MWO, only it is more subtle and the unit is driven by a vacuum tube.

CURRENT MWO RESULTS AND FINDINGS

The enormous interest that has arisen for MWO techniques and results is a clear indication that a new era has dawned. And I would like to share my knowledge of the current state of the MWO technique with you. A technique that is used both in alternative and regular health-care circles, and here and there in high-level scientific research. In the Netherlands, doctors, dentists, therapists, dermatologists, veterinaries, internists and private individuals etc. use the MWO.

Outside of the Netherlands, I know of therapists, doctors and private individuals in Belgium, Germany, Switzerland, Italy and Africa who are familiar with the device. I have also learned that MWO's are built in Italy and Belgium, albeit on a smaller scale than in the Netherlands.

When I received the design for the MWO from Ralph Bergstresser, I decided to carry out a thorough study of whether, with current technology, it was possible to achieve results similar to those achieved by George Lakhovsky during the first four decades of this century.

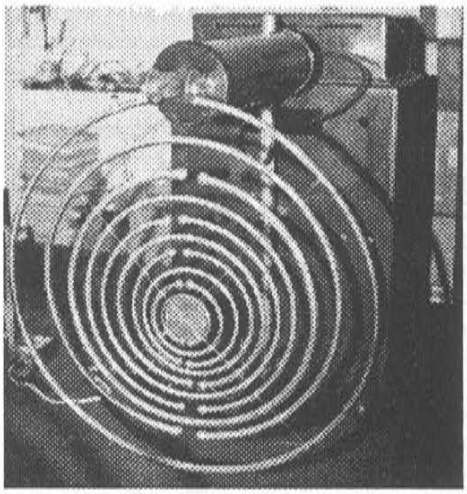

Photo showing front view of Lakhovsky Multiple Wave Oscillator antenna. The suspension in air provides for a tonal ringing.

Of course, much has changed since then. There is more pollution than in Lakhovsky's time: electrostress, stress, different eating behavior, lower quality food, environmental pollution, lighting and double-glazing which distort the laws of nature, sufficient reason to leave well enough alone concerning Lakhovsky's research.

After a number of years of research and many technical improvements of the MWO, we are now able to state that we have achieved results comparable with those of Lakhovsky.

I do suspect however, that it takes more time for the positive effects to be felt nowadays due to increased pollution and different living conditions.

Lakhovsky's device was exceptionally powerful; I do not think anyone builds them as powerful as that anymore. From various sources, I was able to learn that if you operate a Lakhovsky MWO at full power, you could damage living tissue. And other experts have told me that a magnetic field stronger than 10 Gauss can also damage enzymes.

The old devices were rated at 220 V or 110 V and were capable of causing considerable interference on radios and television sets. The MWO's I am allowed to build use a small 12-volt battery, which provides sufficient power for approximately four hours of use. A second battery can be built in, which gives you eight hours of use. They are housed in a doubly insulated plastic suitcase and are portable. Another important feature is that they need far less power than older versions.

The battery-powered version is to be greatly preferred to the 220-V and 110-V versions; there is so much electrical pollution in the public electricity supply that I consider it absolutely essential to use the cleaner energy that a battery supplies. Furthermore, many of our clients take the MWO with them when they travel or on vacation.

New versions of the device have become more effective despite the fact that they use much less power. They do not cause interference and can be operated continuously without overheating.

I build two models, a Bergstresser/Beck system and a Lakhovsky system. The Bergstresser/Beck system has a single Tesla coil and an antenna, a mat to sit on, and a lamp. The Lakhovsky model has a double Tesla coil with a flat primary coil in the middle. This flat primary coil provides the MWO with enormous power and effectiveness, much more than the cylindrical coil.

To the secondary coils, I have connected two antennas, which obtain their power on the outermost ring. The resulting power is radiated to the innermost rings, which in turn brings both antennas into resonance. The effectiveness of these resonant antennas is many times greater than a single sparking antenna. With this model, I deliver two mats to sit on, and a lamp.

I have positioned the spark gap in front of the primary coil; see the diagrams of Peter Lindemann and Lakhovsky. This costs the least amount of energy and provides the widest frequency spectrum as they are not damped by the capacitors

The MWO's I build are not grounded, and I have the feeling that they work better and generate more energy as a result. The person or animal being treated is already in contact with the earth, and, as far as I am concerned, provides the earth contact. Moreover, the middle of the coil, which is where the secondary coils begin, is not grounded either.

The coils *are* connected to each other, which means that they have a floating neutral point where the flat primary coil is positioned.

When someone takes up a position between both antennas, and does not sit exactly in the middle, or one side of the body requires more energy than the other, the energy supply stays in balance automatically and the resonance of the antennas is improved.

With a ground in the middle, at the beginning of both coils, the system is less flexible and more forced.

Another important consideration is that the area in which the MWO operates should be energetically well furnished, with crystals for example, or a large plate or tray filled with sand (sand has a crystal structure containing silicic acid and silicon; the chips of a computer contain silicon) and is a perfect conductor. The area should not form a Faraday Cage, and it should be possible to open a window.

It is not inconceivable that the glass of the windowpanes filter certain energies. Ultraviolet light is filtered out by glass (except quartz glass or plexiglass). It is very important to correct for the energy that ultraviolet light contains due to its frequency. In this regard, read 'Health and Light' by John N. Ott, and 'Into the Light' by W.C. Douglas.

The MWO needs optimal surroundings because it takes (cosmic) energy from the earth's environment. If this process is hindered, or prevented, the device will be less effective. In my opinion, the electrostatic and electromagnetic field developed by the MWO is a carrier of cosmic/energetic energy.

At Special Energy Products, so much data is coming in concerning the effects of the more than 120 devices we were able to build in 1992 and 1993, and concerning the many thousands of people who have been treated with them, that we cannot doubt the exceptional nature of this instrument.

We are receiving similar feedback from America, and think that we will soon be able to build devices that are even more effective.

The essence of the technique is neither a strong electromagnetic or electrostatic field, but a wide frequency spectrum, with all its harmonics and extremely high voltages. When correctly applied, this allows you to generate enormous quantities of energetic (cosmic) energy.

Energetic energy is the principal factor in restoring balance and harmony at a mental and physical level. This transmits the correct vibration and polarity to matter, which enables you to recover very quickly and even to regenerate damaged cells.

The ionization that takes place between the antennas, and the ozone (both very rich in oxygen) that is created by the antennas or antenna, and especially by the lamp, are absolutely indispensable positive energies.

The MWO enables you to create order out of chaos allowing energetic energy to flow again, and allowing you to function as an energetic antenna once more. For we are all energetic antennas; we only obtain a fraction of the energy we need from our food. The rest of the energy we need is obtained elsewhere.

You can also store this form of energy in pure matter. I have carried out extensive research with these energy methods. By means of electro-acupuncture (dermatron) measurements, you can clearly demonstrate its effect on people, visually too. The MWO method can be used in a great many ways, for example, to enhance the effect of homeopathic medicines by providing more energetic energy in equivalent volumes.

You can polarize water with it and thus detoxify dissolved contaminants (even though they can still be measured). If you add a drop of the energized water (preferably distilled water) to fluids with many additives for example, such as coloring agents and preservatives, you can taste the difference in taste within a few seconds.

The taste of wine becomes fuller, that of coffee smoother. In general, you could say that it takes the rough edges off the taste. The addition of a few drops of water makes plants grow faster, produce more beautiful flowers, and bear fruit more quickly. They also suffer less from insect pests.

Treating a small quantity of sharp sand with the MWO also produces good results. Sprinkle this sand or mix it with the earth at the base of plants in the garden or flower pot. This form of energy can thus be used to completely or partially polarize (neutralize) poisonous substances.

What else do people use the MWO for? They treat plants with it, as well as animals, with astonishingly good results. They purify water with it, and clean the energy of rooms and objects.

People treat vegetables and fluids in order to neutralize toxins. In addition, the taste of the products improves. A number of people treat their makeup or beauty products with the MWO in order to prevent allergic reactions, or to optimize their products.

People who have been treated with the MWO describe the experience as similar to that of being in an energy shower. They feel light and pleasant, as if a burden has dropped from their

shoulders.

The MWO has been used to treat a large number of ailments and illnesses. Here are just a few:

*Arrythmia has often disappeared after a few treatments. The intended amputation of limbs usually becomes unnecessary.

*Rapid relief is often experienced from pain caused by arthritis, arthrosis and rheumatism, and in many cases the sicknesses disappear after a number of treatments.

*Bone fractures heal in a fraction of the normal time, as do wounds. And scars fade, often vanishing completely.

*Tension aches and facial neuralgia often disappear after a single treatment.

*Various people have been cured of leukemia and cancer partly as a result of treatment with the MWO. This has also been confirmed in the regular health-care circuit. Many people who have undergone chemotherapy and have been treated with the MWO at the same time have stated that they did not experience any side-effects from the chemotherapy, such as hair loss or hemoglobin decomposition (iron level).

*People who have been exposed to radiation and then treated with the MWO have suffered almost no tissue or cell-tissue damage, or other side-effects. Doctors call it a mystery.

*Migraine and tension headaches usually disappear after a few treatments and some people have even regained their memory. The memory of one person, who had a 15-minute recall, showed increasing improvement after a couple of treatments. One woman, who was treated for arthritis, also regained her memory.

*A woman who was to undergo an operation for a cyst, was completely free of the cyst after ten days of treatment with the MWO.

*Various people with tinnitus were relieved of their ailment after a single treatment.

*One man whose left hand had been virtually paralyzed after an operation, and which was swollen with fluid, was relieved of his paralysis after a single treatment, the arm returning to its normal size.

*The condition of a 13-year-old boy, whose blood-cell count had been too low since he was three, became critical when it fell below 10,000 – a count of 125,000 is considered normal. It was eventually decided to treat him with the MWO and within a week, his blood-cell count had climbed to 40,000. The youngster had an attack of influenza and it was not possible to measure the platelets because their shape was too irregular. Once the attack of influenza has passed, his blood-cell count was 125,000. From being a sickly boy, he grew to be a strong young man, without a problem in the world. He fell recently, seriously damaging his knee which bled profusely. His parents feared the worst. The bleeding stopped within a quarter of an hour.

*A few people have partially or completely regained the head of hair they once had. Their hair had not fallen out due to illness or medicines.

*A man with incurable prostate cancer, was treated with the MWO by a doctor for a number of months. His cancer began to disappear and he is now completely cured. The doctor is of the opinion that the cure can be completely attributed to the MWO, because every other treatment had failed.

In the Netherlands alone, there are currently thousands of people who have been successfully treated with the MWO, by doctors, therapists, homeopaths, private individuals etc.

A high level of medical supervision is important of course, and minerals and vitamins in high doses are an absolute necessity. When undergoing treatment, the body's reserves are immediately mobilized by the MWO and sent to those locations where they are needed.

If we all, including members of the regular medical and scientific establishment, want to get to grips with degenerative illnesses, cancer, leukemia, aids etc., we would do well to realize that this device is probably the answer we have been looking for.

In my opinion, treatment would be even more effective were it to be based on a combination of the MWO and Ultraviolet Blood Irradiation. In this regard, read 'Into the Light' by W.C. Douglas.

At the moment, there are various highly qualified doctors, therapists and other scientists working with and researching energetic methods of treatment in order to perfect them and to make the resulting data available for statistical analysis.

Practice has shown that not every practitioner succeeds with these methods. If a person does not experience any reactions when treating him- or herself (something that occurs sporadically), the treatment does not have an effect when used on his or her patients.

However, when a person is sceptical, or is not open to the matter, but is treated by someone who is open to it, that person will definitely experience positive effects.

Dear friends, keep thinking positively, keep up the good work.

Hessel Hoornveld
Founder and director of:
Special Energy Products
Postbus 15
8374 ZN Kuinre
The Netherlands
Telephone: 00-31-5273-2999
Fax: 00-31-5273-2985

Reprinted from
BORDERLANDS 3RD QTR 1994

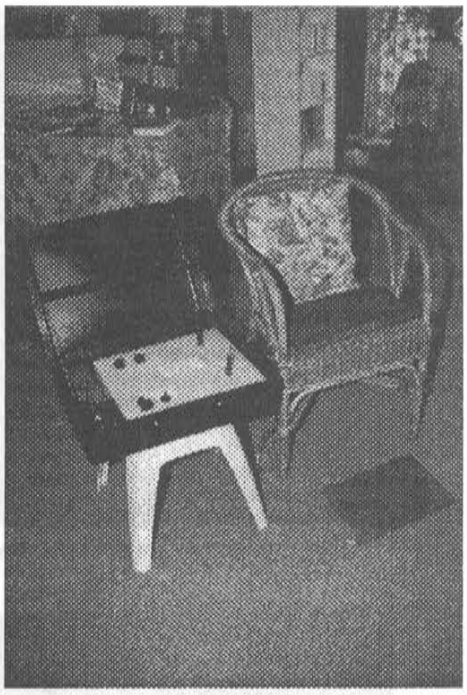

"Bergstresser/Beck-style" MWO unit with single antenna and footplate, built by Hessell Hoornveld.

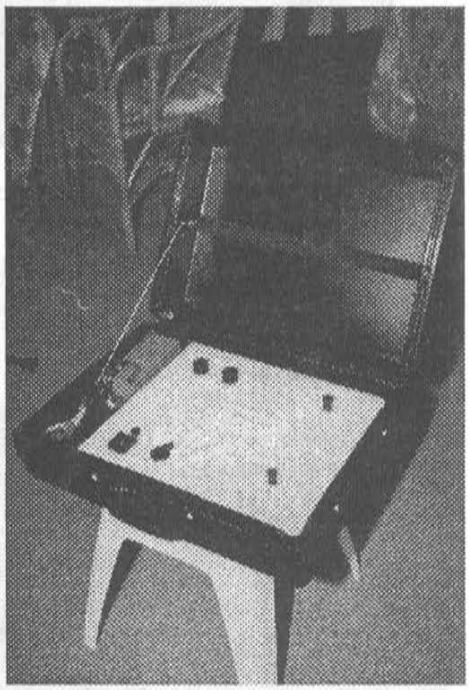

Closeup of MWO front panel.

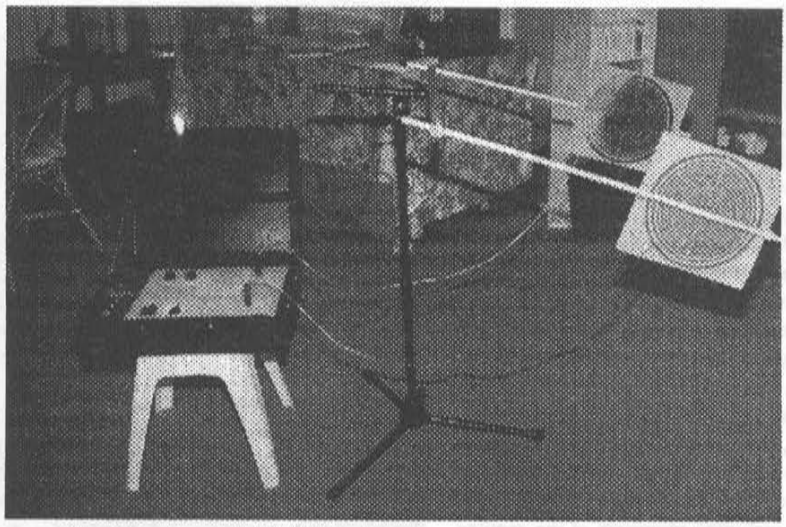

"Lakhovsky-style" MWO showing two antennas on stands.

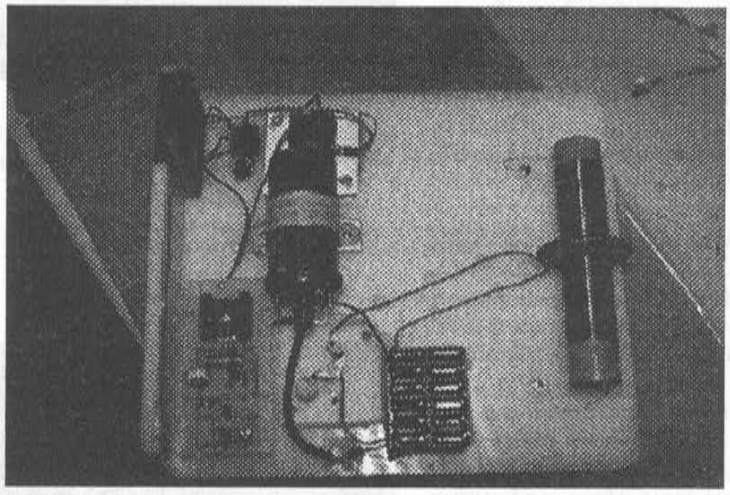

Interior circuitry of experimental "Lakhovsky-style" MWO.

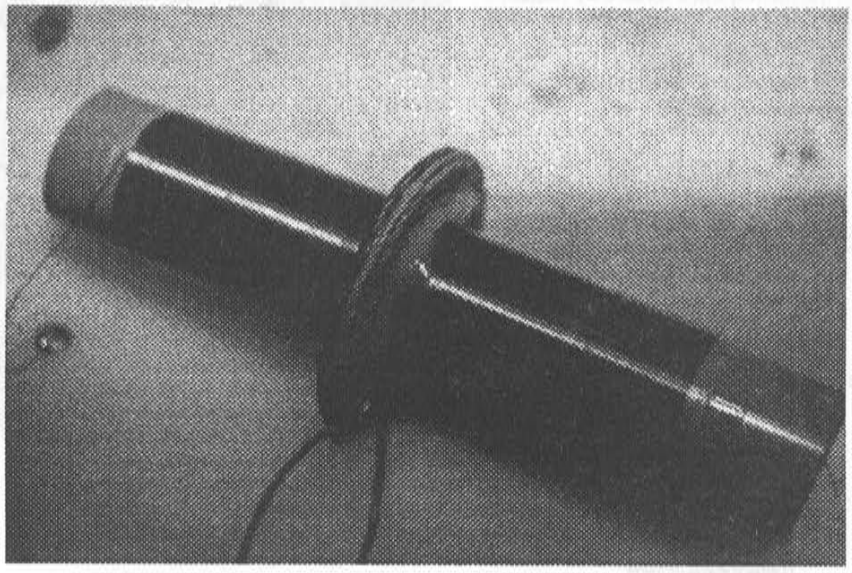

Double Tesla coil with a flat primary coil used "Lakhovsky-style."

SPECIAL LATE BREAKING LAKHOVSKY NEWS!!!!

Longtime Borderlander John Cjeka has provided us with a video of a *Popular Science* newsreel from the early 1940's by Paramount Pictures which shows a Lakhovsky MWO in action. The subject sits facing one antenna with the other to her back and a nurse holds a curious rod-like device. The handle in her hand is wooden and the rod and coil are a single piece of metal. As the nurse waves the rod in front of the subject 8" to 10" sparks fly to it from the antenna. Then the rod is waved about the body and then the coil is placed on the stomach and a small knob is facing the antenna. Next a violet ray-type glass tube coil with handle is placed on the subject. It is not connected, but is energized by the ambient field of the MWO. This provides us the detail of the report of Ron Crossley wherein (Jan-Feb 1991 JBR) he reported that when Georges Lakhovsky demonstrated the unit to him there was a rod or device used along with it. Will wonders never cease? And for a while everybody thought the MWO was just a big old spark box (some of them are, but not the real ones). Perhaps at some time in the future get video clips available in our regular magazine publication BORDERLANDS so that researchers can work to reproduce these curious accoutrements. I shows that we have been on the right track all along!

TJB

BORDERLANDS 1ST QTR 1994

OLD ELECTROTHERAPEUTIC DEVICES

By Jorje Resines

In the "good old days" (before WWII, after which the AMA and its branches at the different "banana republiquettes" dictated what must be done and what is not to be done in the realm of Medicine and Healing) the enterprising scientists of the world dared to intrude into this field and worked hand-in-hand with the MDs to implement better healing devices, even if these left a lot to wish in terms of efficiency. From the article "Electroterapia" of the 1929 issue of the "Enciclopedia Espasa-Calpe" (The Spain-originated equivalent of the "Encyclopedia Britannica") I have extracted the basics of those machines. More complicated devices are only a combination of the features herein presented.

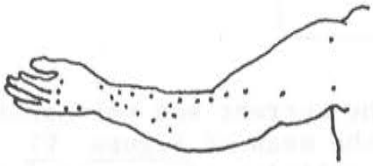

Figure I

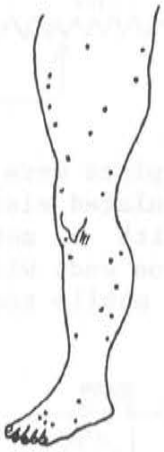

Figure II

The old electrotherapists began by first determining those points of the body that were sensible to electrical discharges. They did so without frying the prospective patient through the usage of Wimshurst-type electrostatic machines. The results (shown partially in Figures I and II) were "points of electrical resonance" that produced the contraction of a certain muscle/organ of the body that had no visible physical connection with them. Not unsurprisingly some of these points fall into Acupuncture meridians and some of them are directly acupuncture points, but the electrotherapists--lacking the proper data from China--failed to identify them.

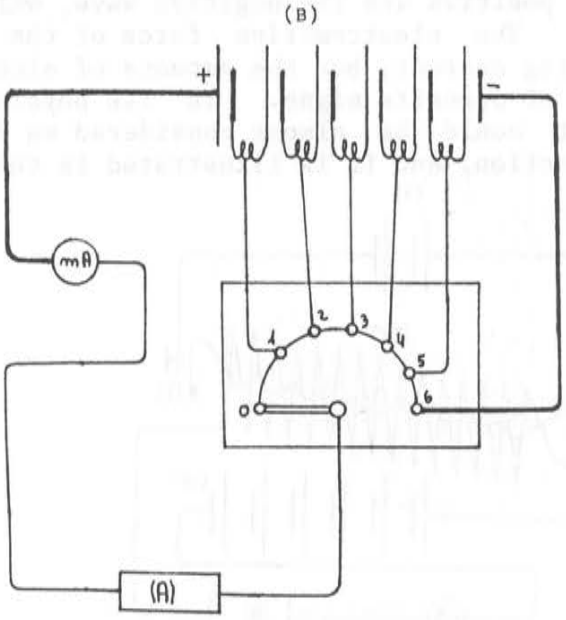

Figure III

The treatment of maladies began by the electrification of the affected zone in an indirect way and began with "galvanic devices", such as the one of Figure III, that delivered a galvanic current into the affected spot. It consisted of a grouping of (usually) Leclanche batteries (B) connected to a milliammeter (mA) and a point-by-point knob graduated from 0 to 5 (in this specific case) whose output was given to the patient (A). Another embodiment of the same principle is shown if Figure IV where a resistor (R) was added to regulate the power being delivered.

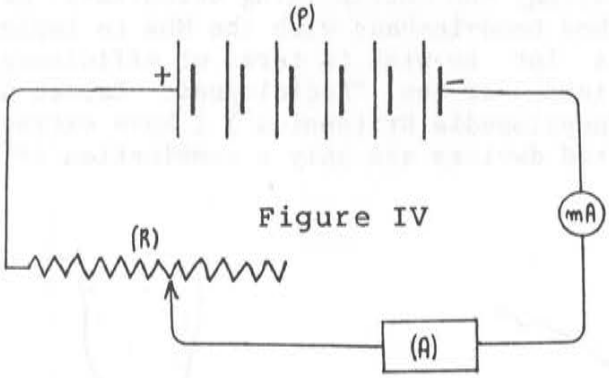

Figure IV

As the electrotherapists were very careful, the current was not applied directly to the skin but through insulated electrodes such as the ones of Figure VI which have a wood handle connected with a metal shaft to a cylinder of compacted carbon that was coated (at the application end) with a layer of leather. The electrodes could be for fixed application (a) or mobile treatment (b).

Figure V

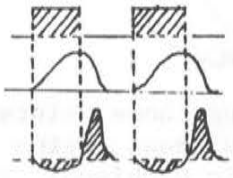

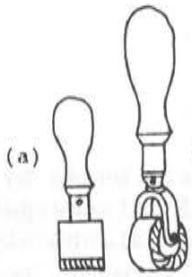

Figure VI

If galvanic current was not enough, then Faradic current was tried. Faradic currents are due to induction phenomena and are different from other currents both in shape and physiological effects. Though they are actually alternate currents they do show a difference between the positive and the negative wave, which are also separated by a certain time interval. The electromotive force of the rupture current is much greater than that of the closing current, but the amounts of electricity born within the induced circuit are equal and of opposite signs. In its physiological sensitivity and motor effects Faradic current could be almost considered as an interrupted current travelling towards a same direction, and it is illustrated in the graph of Figure V.

Figure VII

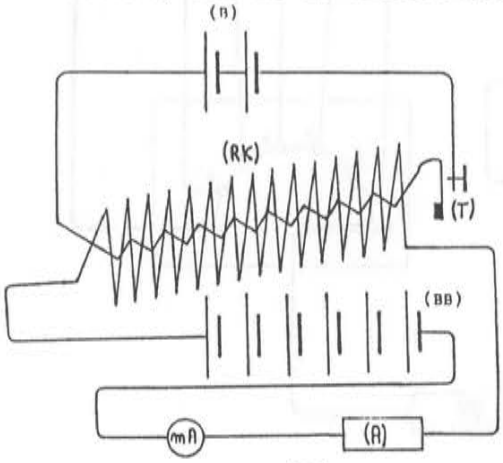

The best way to generate a Faradic current was to employ a Leclanche battery and a Rumkhorff coil connected to the electrodes of Figure VI, but the electrotherapists saw it better to combine the two kinds of treatment into the galvano-faradic apparatus of Figure VII where (B) is the battery that feeds the Rumkhorff Coil (RK), (T) a make-and-break device, (BB) the Leclanche battery-grouping for galvanic treatment, (mA) a milliammeter and (A) the patient to be treated.

Sometimes the MDs used Tesla-type treatment devices but because of the nature of the Tesla waves (that cross through matter without producing ill-effects) the (in his time) world-renowned Dr. Arsene D'Arsonval thought that the high voltage necessary to generate the field in the primary of the Tesla device was too dangerous for it could affect through resonance the human body if they were coupled with the energies of the secondary, hence he proceeded to re-design the devices and thus produced a large (1.5 meter in diameter and about 2.5 meters high) helical coil that was wrapped around a metallic cage but electrically insulated from it, the coil being fed (with suitable spark-gaps or spark-quenchers) current of the sinusoidal kind which is graphed in Figure VIII.

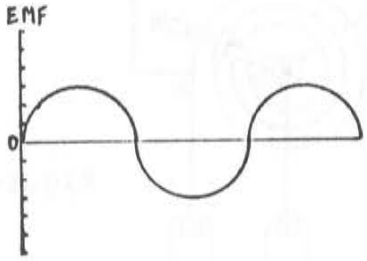

Figure VIII

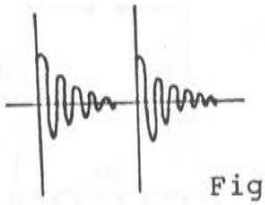

Figure IX

The generator of sinusoidal currents is that of Figure X. It consists of a Gramme ring that has, at one end, the usual collector with its brushes (B-B') and at the other end two insulated metallic shafts that communicate, respectively, with each side of the ring by two intakes of current upon the inducted section and at 180 degrees (K-K'), the ring turns inside a magnetic field created by an independent current that goes through the inductor (M) along the wires (T) - marked in positive and negative polarities at the illustration - that lead into the coils (C).

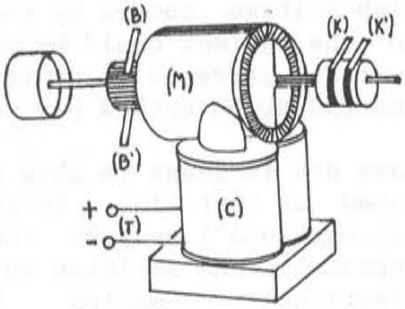

Figure X

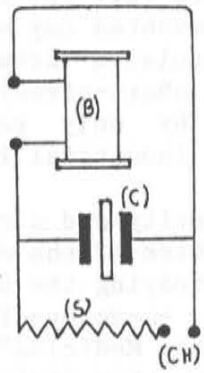

Figure XI

If the ring is activated mechanically from the outside you will collect on one side (B-B') a direct current and at the other (K-K') a sinusoidal alternate current; the usual maximal electromotive force will be indicated by an ordinary voltmeter of DC connected to the respective brushes (B-B'). Because of the influence exerted by Dr. D'Arsonval most of the high-frequency devices of his time were based upon the combination of the following components: (a) An electrical source of high potential (either a Wimshurst-type machine or a Rumkhorff Coil with an interrupter), (b) Two or more condensers, (c) A spark-gap, (d) A circuit with a certain self-induction, and (e) A

circuit induced by the former; though this is taken directly from the ideas of Dr. Nikola Tesla, they nevertheless produce damped waves such as the ones of Figure IX, and to do so use the circuits illustrated in Figures XI and XII, where (B) is a Rumkhorff Coil, (C-C') condensers, (S) a solenoid, (CH) a spark-gap, (mA) a milliammeter and (A) the patient to be treated. The circuit can be altered to that of Figure XIII, including a spiraling antenna that goes from (A) to (B) whose length is tuned by rotating a handle (H) that has a cursor in it capable of sliding upon the antenna, this generates a self-induction into the devices which is maximal when the cursor is at (A) and the minimum is at (B). All other elements are similar to the ones already considered save for the glass handles (M-M') which are connected through the terminals (T-T') to the healing device.

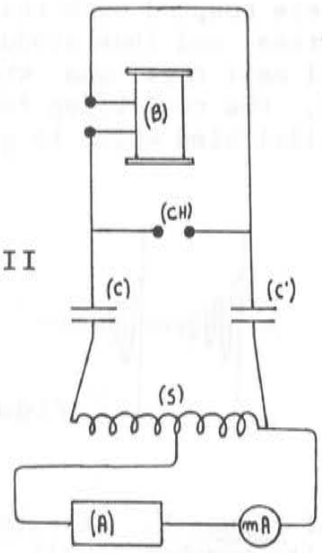

Figure XII

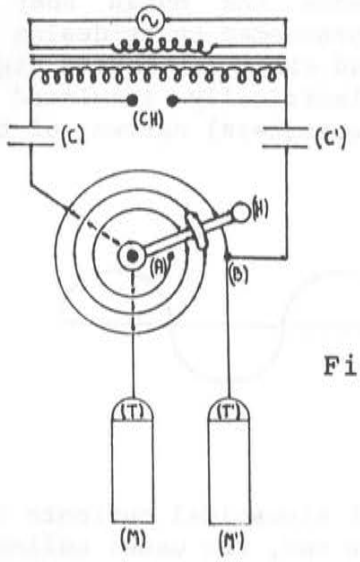

Figure XIII

This apparatus allows work with very short wavelengths, which eliminates any possibility of Faradic currents being within the circuit during the applications. The power utilized to treat an organism was of about 300 watts with an overall efficiency of 45%. The apparatus had a small volume and the only thing to do during applications was to turn the handle (H) to vary the wavelength employed, and the insulation between primary and secondary prevented any accidental connection between the ground and the patient who is also insulated from the high-voltage source by the double series of condensers and even if a short-circuit existed the patient could be maintained isolated from the power source by only remaining at the extremes of an impedance/resistance circuit that are nil for industrial frequencies (50 or 60 cycles per second).

For the sake of brevity and clarity I have not included in this article more ample references to the schematics of the devices used at that time. To those interested in pursuing the matter of studying the old healing machines I suggest the reading of (if you can find them) old encyclopedias and specially the articles on "Electrotherapy", "Electromedicine", Electric Medicine", "Electrical Healing Devices" and/or "Electricity". Of course other articles can contain interesting material and it is only a matter of reading as much as possible of them.

As the situation of libraries in general is VERY BAD in Argentina, I am not sure if it there exists some sort of a "Electrotherapy History Book" that details the different electrical healing devices that have existed in the past and their evolution through the further radionic machines and present day apparatuses of this kind, therefore I will refrain from suggesting a given bibliography (unlike what I would like to do) for fear of leading the amiable readership of this Journal into false trails.

5

HIGH FREQUENCY OSCILLATORS FOR ELECTRO-THERAPEUTIC AND OTHER PURPOSES*

by Nikola Tesla

Some theoretical possibilities offered by currents of very high frequency and observations which I casually made while pursuing experiments with alternating currents, as well as the stimulating influence of the work of Hertz and of views boldly put forth by Oliver Lodge, determined me some time during 1889 to enter a systematic investigation of high frequency phenomena, and the results soon reached were such as to justify further efforts towards providing the laboratory with efficient means for carrying on the research in this particular field, which has proved itself so fruitful since. As a consequence alternators of special design were constructed and various arrangements for converting ordinary into high frequency currents perfected, both of which were duly described and are now — I assume — familiar.

One of the early observed and remarkable features of the high frequency currents, and one which was chiefly of interest to the physician, was their apparent harmlessness which made it possible to pass relatively great amounts of electrical energy through the body of a person without causing pain or serious discomfort. This peculiarity which, together with other mostly unlooked-for properties of these currents I had the honor to bring to the attention of scientific men first in an article in a technical journal in February, 1891, and in subsequent contributions to scientific societies, made it at once evident, that these currents would lend themselves particularly to electro-therapeutic uses.

With regard to the electrical actions in general, and by analogy it was reasonable to infer that the physiological effects, however complex, might be resolved in three classes. First the statical, that is, such as are chiefly dependent on the magnitude of electrical potential; second, the dynamical, that is, those principally dependent on the quality of electrical movement or current's strength through the body, and third, effects of a distinct nature due to electrical waves or oscillations, that is, impulses in which the electrical energy is alternately passing in more or less rapid succession through the static and dynamic forms.

Most generally in practice these different actions are coexistent, but by a suitable selection of apparatus and observance of conditions the experimenter may make one or other of these effects predominate. Thus he may pass through the body, or any part of the same, currents of comparatively large volume under a small electrical pressure, or he may subject the body to a high electrical pressure while the current is negligibly small, or he may put the patient under the influence of electrical waves transmitted, if desired, at considerable distance through space.

While it remained for the physician to investigate the specific actions on the organism and indicate proper methods of treatment, the various ways of applying these currents to the body of a patient suggested themselves readily to the electrician.

---

* Read at the eighth annual meeting of The American Electro-Therapeutic Association, Buffalo, N. Y., Sept. 13 to 15, 1898

As one cannot be too clear in describing a subject, a diagrammatic illustration of the several modes of connecting the circuits which I will enumerate, though obvious for the majority, is deemed of advantage.

The first and simplest method of applying the currents was to connect the body of the patient to two points of the generator, be it a dynamo or induction coil. Fig. 1 is intended to illustrate this case. The alternator G may be one giving from five to ten thousand complete vibrations per second, this number being still within the limit of practicability. The electromotive force — as measured by a hot wire instrument — may be from fifty to one hundred volts. To enable strong currents to be passed through the tissues, the terminals T T, which serve to establish contact with the patient's body should, of course, be of large area, and covered with cloth saturated with a solution of electrolyte harmless to the skin, or else the contacts are made by immersion. The regulation of the currents is best effected by means of an insulating trough A provided with two metal

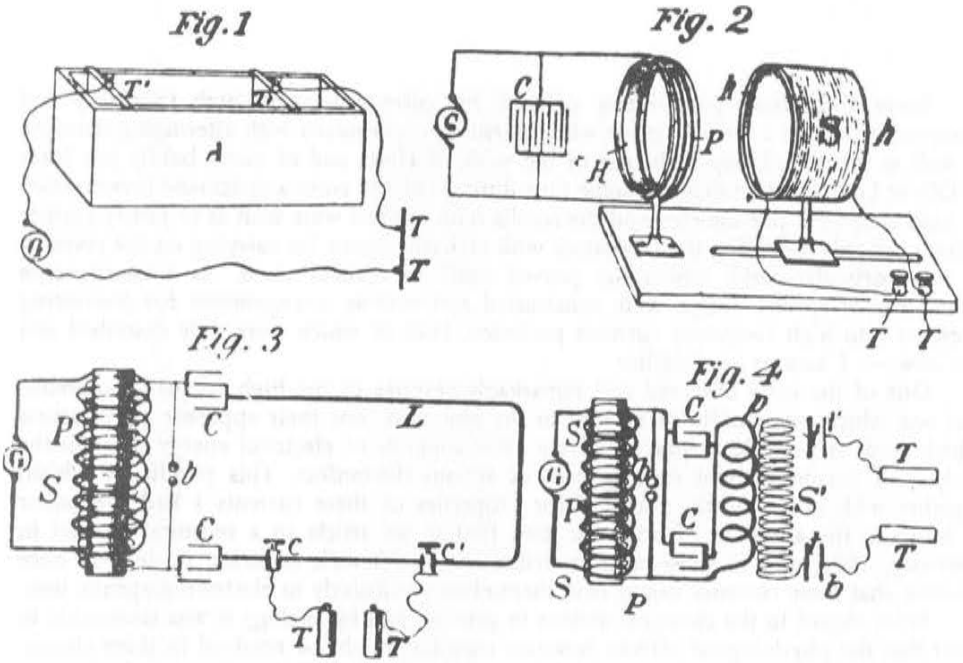

Figs. 1, 2, 3, 4.

terminals T' T' of considerable surface, one of which, at least, should be movable. The trough is filled with water, and an electrolytic solution is added to the same, until a degree of conductivity is obtained suitable for the experiments.

When it is desired to use small currents of high tension, a secondary coil is resorted to, as illustrated in Fig. 2. I have found it from the outset convenient to make a departure from the ordinary ways of winding the coils with a considerable number of small turns. For many reasons the physician will find it better to provide a large hoop H of not less than, say, three feet in diameter and preferably more, and to wind upon it a few turns of stout cable P. The secondary coil S is easily prepared by taking two wooden hoops h h and joining them with stiff cardboard. One single layer of ordinary magnet wire, and not too thin at that, will be generally sufficient, the number of turns necessary for the particular use for which the coil is intended being easily ascertained by a few trials. Two plates of large surface, forming an adjustable condenser, may be used for the

purpose of synchronizing the secondary with the primary circuit, but this is generally not necessary. In this manner a cheap coil is obtained, and one which cannot be easily injured. Additional advantages, however, will be found in the perfect regulation which is effected merely by altering the distance between the primary and secondary, for which adjustment provision should be made, and, furthermore, in the occurrence of harmonics which are more pronounced in such large coils of thick wire, situated at some distance from the primary.

The preceding arrangements may also be used with alternating or interrupted currents of low frequency, but certain peculiar properties of high frequency currents make it possible to apply the latter in ways entirely impracticable with the former.

One of the prominent characteristics of high frequency or, to be more general, of rapidly varying currents, is that they pass with difficulty through stout conductors of high self-induction. So great is the obstruction which self-induction offers to their passage that it was found practicable, as shown in the early experiments to which reference has been made, to maintain differences of potential of many thousands of volts between two points — not more than a few inches apart — of a thick copper bar of inappreciable resistance. This observation naturally suggested the disposition illustrated in Fig. 3. The source of high frequency impulses is in this instance a familiar type of transformer which may be supplied from a generator G of ordinary direct or alternating currents. The transformer comprises a primary P, a secondary S, two condensers C C which are joined in series, a loop or coil of very thick wire L and a circuit interrupting device or break b. The currents are derived from the loop L by two contacts c c', one or both of which are capable of displacement along the wire L. By varying the distance between these contacts, any difference of potential, from a few volts to many thousands, is readily obtained on the terminals or handles T T. This mode of using the currents is entirely safe and particularly convenient, but it requires a very uniform working of the break b employed for charging and discharging the condenser.

Another equally remarkable feature of high frequency impulses was found in the facility with which they are transmitted through condensers, moderate electromotive forces and very small capacities being required to enable currents of considerable volume to pass. This observation made it practicable to resort to a plan such as indicated in Fig. 4. Here the connections are similar to those shown in the preceding case, except that the condensers C C are joined in parallel. This lowers the frequency of the currents, but has the advantage of allowing the working with a much smaller difference of potential on the terminals of the secondary S. Since the latter is the chief item of expense of such apparatus and since its price rapidly increases with the number of turns required, the experimenter will find it generally cheaper to make a sacrifice in the frequency, which, however, will be high enough for most purposes. However, he only needs to reduce proportionately the number of turns or the length of primary p to obtain the same frequency as before, but the economy of transformation will be somewhat reduced in so doing and the break b will require more attention. The secondary S' of the high frequency coil has two metal plates t t of considerable surface connected to its terminals, and the current for use is derived from two similar plates t' t' in proximity to the former. Both the tension and volume of the currents taken from terminals T T may be easily regulated and in a continuous manner by simply varying the distance between the two pairs of plates t t and t' t' respectively.

A facility is also afforded in this disposition for raising or lowering the potential of one of the terminals T, irrespective of the changes produced on the other terminal, this making it possible to cause a stronger action on one or other part of the patient's body.

The physician may find it for some or other reason convenient to modify the arrangements in Figs. 2, 3 and 4 by connecting one terminal of the high frequency source to the ground. The effects will be in most respects the same, but certain peculiarities

will be noted in each case. When a ground connection is made it may be of some consequence which of the terminals of the secondary is connected to the ground, as in high frequency discharges the impulses of one direction are generally preponderating.

Among the various noteworthy features of these currents there is one which lends itself especially to many valuable uses. It is the facility which they afford for conveying large amounts of electrical energy to a body entirely insulated in space. The practicability of this method od energy transmission, which is already receiving useful applications and promises to become of great importance in the near future, has helped to dispel the old notion assuming the necessity of a return circuit for the conveyance of electrical

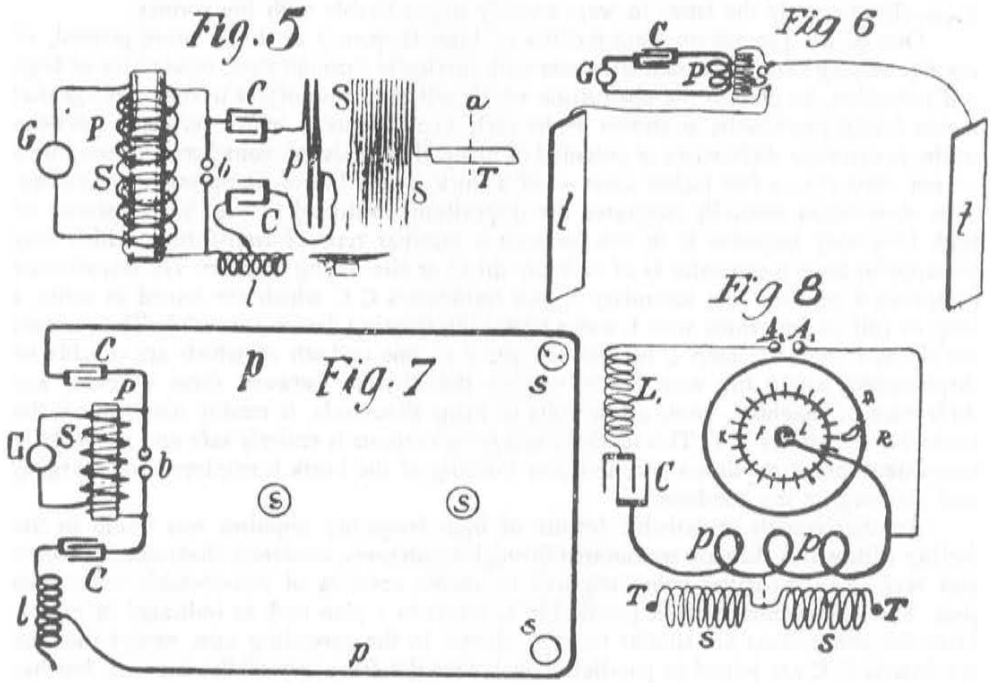

Figs. 5, 6, 7, 8.

energy in any considerable amount. With novel appliances we are enabled to pass through a wire, entirely insulated on one end, currents strong enough to fuse it, or to convey through the wire any amount of energy to an insulated body. This mode of applying high frequency currents in medical treatment appears to me to offer the greatest possibilities at the hands of the physician. The effects produced in this manner possess features entirely distinct from those observed when the currents are applied in any of the before mentioned or similar ways.

The circuit connections as usually made are illustrated schematically in Fig. 5, which, with reference to the diagrams before shown, is self-explanatory. The condensers C C, connected in series, are preferably charged by a step-up transformer, but a high frequency alternator, static machine, or a direct current generator, if it be of sufficiently high tension to enable the use of small condensers, may be used with more or less success. The primary p, through which the high frequency discharges of the condensers are passed, consists of very few turns of cable of as low resistance as possible, and the secondary s, preferably at some distance from the primary to facilitate free oscillation, has one of its ends — that is the one which is nearer to the primary — connected to the ground, while the other end leads to on insulated terminal T, with which the body of the patient is

connected. It is of importance in this case to establish synchronism between the oscillations in the primary and secondary circuits p and s respectively. This will be as a rule best effected by varying the self-induction of the circuit including the primary loop or coil p, for which purpose an adjustable self-induction e is provided; but in cases when the electromotive force of the generator is exceptionally high, as when a static machine is used and a condenser consisting of merely two plates offers sufficient capacity, it will be simpler to attain the same object by varying the distance of the plates.

The primary and secondary oscillations being in close synchronism, the points of highest potential will be on a part of terminal T, and the consumption of energy will occur chiefly there. The attachment of the patient's body to the terminal will in most cases very materially affect the period of oscillation in the secondary, making it longer, and a readjustment of the primary circuit will have to be made in each case to suit the capacity of the body connected with terminal T. Synchronism should always be preserved, and the intensity of the action varied by moving the secondary coil to or from the primary, as may be desired. I know of no method which would make it possible to subject the human body to such excessive electrical pressures as are practicable with this, or of one which would enable the conveying to and giving off from the body without serious injury amounts of electrical energy approximating even in a remote degree those which are entirely practicable when this manner of applying the energy is resorted to. This is evidently due to the fact that action is chiefly superficial, the largest possible section being offered to the transfer of the current, or, to say more correctly, of the energy. With a very rapidly and smoothly working break I would not think it impossible to convey to the body of a person and to give off into the space energy at the rate of several horse power with impunity, while a small part of this amount applied in other ways could not fail to produce injury.

When a person is subjected to the action of such a coil, the proper adjustments being carefully observed, luminous streams are seen in the dark issuing from all parts of the body. These streams are short and of delicate texture when the number of breaks is very great and the action of the device b (Fig. 5) free of any irregularities, but when the number of breaks is small or the action of the device imperfect, long and noisy streams appear which cause some discomfort. The physiological effects produced with apparatus of this kind may be graduated from a hardly perceptible action when the secondary is at a great distance from the primary, to a most violent one when both coils are placed at a small distance. In the latter case only a few seconds are sufficient to cause a feeling of warmth all over the body, and soon after the person perspires freely. I have repeatedly, in demonstrations to friends, exposed myself longer to the action of the oscillations, and each time, after the lapse of an hour or so, an immense fatigue, of which it is difficult to give an idea, would take hold of me. It was greater than I experienced on some occasions after the most straining and prolonged bodily exertion. I could scarcely make a step and could keep the eyes open only with the greatest difficulty. I slept soundly afterward, and the after-effect was certainly beneficial, but the medicine was manifestly too strong to be used frequently.

One should be cautious in performing such experiments for more than one reason. At or near the surface of the skin, where the most intense action takes place, various chemical products are formed, the chief being ozone and nitrogen compounds. The former is itself very destructive, this feature being illustrated by the fact that the rubber insulation of a wire is destroyed so quickly as to make the use of such insulation entirely impracticable. The compounds of nitrogen, when moisture is present, consist largely of nitric acid which might, by excessive application, prove hurtul to the skin. So far, I have not noted injuries which could be traced directly to this cause, though on several occasions burns were produced in all respects similar to those which were later observed and attributed to the Röntgen rays. This view is seemingly being abandoned, having not been substantiated by experimental facts, and so also is the notion that these rays are

transverse vibrations. But while investigation is being turned in what appears to be the right direction, scientific men are still at sea. This state of things impedes the progress of the physicist in these new regions and makes the already hard task of the physician still more difficult and uncertain.

One or two observations made while pursuing experiments with the apparatus described might be found as deserving mention here. As before stated, when the oscillations in the primary and secondary circuits are in synchronism, the points of highest potential are on some portion of the terminal T. The synchronism being perfect and the length of the secondary coil just equal to one-quarter of the wave length, these points will be exactly on the free end of terminal T, that is, the one situated farthest from the end of the wire attached to the terminal. If this be so and if now the period of the oscillations in the primary be shortened, the points of highest potential will recede towards the secondary coil, since the wave-length is reduced and since the attachment of one end of the secondary coil to the ground determines the position of the nodal points, that is, the points of least potential. Thus, by varying the period of vibration of the primary circuit in any manner, the points of highest potential may be shifted accordingly along the terminal T, which has been shown, designedly, long to illustrate this feature. The same phenomenon is, of course, produced if the body of a patient constitutes the terminal, and an assistant may by the motion of a handle cause the points of highest potential to shift along the body with any speed he may desire. When the action of the coil is vigorous, the region of highest potential is easily and unpleasantly located by the discomfort or pain experienced, and it is most curious to feel how the pain wanders up and down, or eventually across the body, from hand to hand, if the connection to the coil is accordingly made — in obedience to the movement of the handle controlling the oscillations. Though I have not observed any specific action in experiments of this kind, I have always felt that this effect might be capable of valuable use in electro-therapy.

Another observation which promises to lead to much more useful results is the following: As before remarked, by adopting the method described, the body of a person may be subjected without danger to electrical pressures vastly in excess of any producible by ordinary apparatus, for they may amount to several million volts, as has been shown in actual practice. Now, when a conducting body is electrified to so high a degree, small particles, which may be adhering firmly to its surface, are torn off with violence and thrown to distances which can be only conjectured. I find that not only firmly adhering matter, as paint, for instance, is thrown off, but even the particles of the toughest metals are torn off. Such actions have been thought to be restricted to a vacuous inclosure, but with a powerful coil they occur also in the ordinary atmosphere. The facts mentioned would make it reasonable to expect that this extraordinary effect which, in other ways, I have already usefully applied, will likewise prove to be of value in electro-therapy. The continuous improvement of the instruments and the study of the phenomenon may shortly lead to the establishment of a novel mode of hygienic treatment which would permit an instantaneous cleaning of the skin of a person, simply by connecting the same to, or possibly, by merely placing the person in the vicinity of a source of intense electrical oscillations, this having the effect of throwing off, in a twinkle of the eye, dust or particles of any extraneous matter adhering to the body. Such a result brought about in a practicable manner would, without doubt, be of incalculable value in hygiene and would be an efficient and time-saving substitute for a water bath, and particularly appreciated by those whose contentment consists in undertaking more than they can accomplish.

High frequency impulses produce powerful inductive actions and in virtue of this feature they lend themselves in other ways to the uses of the electro-therapeutist. These inductive effects are either electrostatic or electrodynamic. The former diminish much

more rapidly with the distance — with the square of the same — the latter are reduced simply in proportion to the distance. On the other hand, the former grow with the square of intensity of the source, while the latter increase in a simple proportion with the intensity. Both of these effects may be utilized for establishing a field of strong action extending through considerable space, as through a large hall, and such an arrangement might be suitable for use in hospitals or institutions of this kind, where it is desirable to treat a number of patients at the same time.

Fig. 6 illustrates the manner, as I have shown it originally, in which such a field of electrostatic action is established. In this diagram G is a generator of currents of very high frequency, C a condenser for counteracting the self-induction of the circuit which includes the primary P of an induction coil, the secondary S of which has two plates t t of large surface connected to its terminals. Well known adjustments being observed, a very strong action occurs chiefly in the space between the plates, and the body of a person

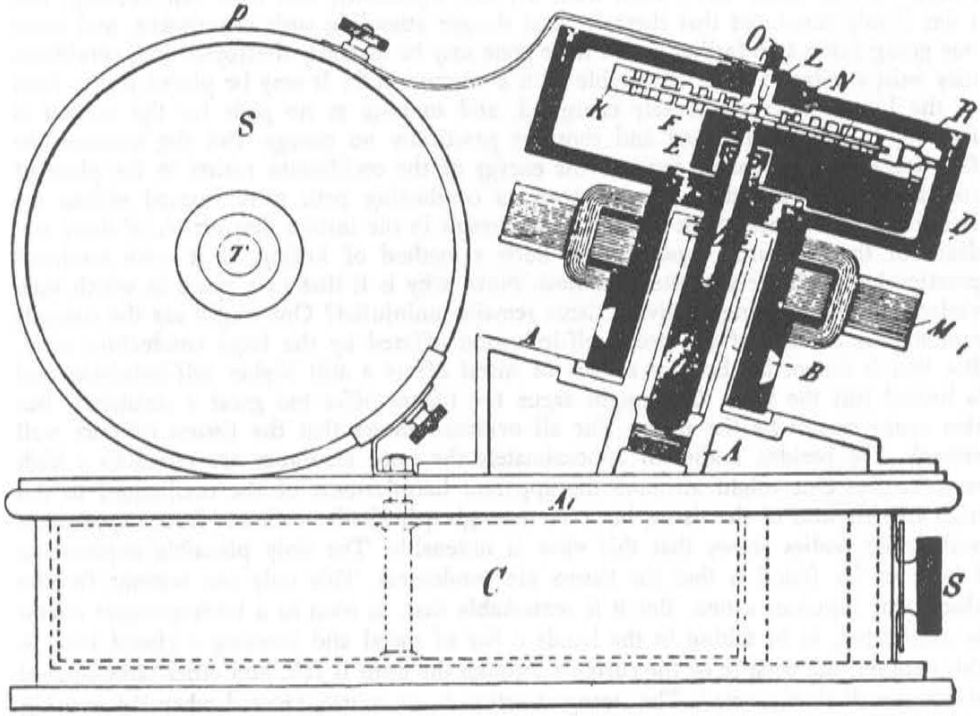

Fig. 9.

is subjected to rapid variations of potential and surgings of current, which produce, even at a great distance, marked physiological effects. In my first experiments I used two metal plates as shown, but later I found it preferable to replace them by two large hollow spheres of brass covered with wax of a thickness of about two inches. The cables leading to the terminals of the secondary coil were similarly covered, so that any of them could be approached without danger of the insulation breaking down. In this manner the unpleasant shocks, to which the experimenter was exposed when using the plates, were prevented.

In Fig. 7 a plan for similarly utilizing the dynamic inductive effects of high frequency currents is illustrated. As the frequencies obtainable from an alternator are

When I first observed these astonishing actions, I was interested to study their effects upon living tissues. As may be assumed, I proceeded with all the necessary caution, and well I might, for I had the evidence that in a turn of only a few inches in diameter an electromotive force of more than ten thousand volts was produced, and such high pressure would be more than sufficient to generate destructive currents in the tissue. This appeared all the more certain as bodies of comparatively poor conductivity were rapidly heated and even partially destroyed. One may imagine my astonishment when I found that I could thrust my hand or any other part of the body within the loop and hold it there with impunity. More than on one occasion, impelled by a desire to make some novel and useful observation, I have willingly or unconsciously performed an experiment connected with some risk, this being scarcely avoidable in laboratory experience, but have always believed, and do so now, that I have never undertaken anything in which, according to my own estimation, the chances of being injured were so great as when I placed my head within the space in which such terribly destructive forces were at work. Yet I have done so, and repeatedly, and have felt nothing. But I am firmly convinced that there is great danger attending such experiment, and some one going just a step farther than I have gone may be instantly destroyed. For, conditions may exist similar to those observable with a vacuum bulb. It may be placed in the field of the loop, however intensely energized, and so long as no path for the current is formed, it will remain cool and consume practically no energy. But the moment the first feeble current passes, most of the energy of the oscillations rushes to the place of consumption. If by any action whatever, a conducting path were formed within the living tissue or bones of the head, it would result in the instant destruction of these and death of the foolhardy experimenter. Such a method of killing, if it were rendered practicable, would be absolutely painless. Now, why is it that in a space in which such violent turmoil is going on living tissue remains uninjured? One might say the currents cannot pass because of the great self-induction offered by the large conducting mass. But this it cannot be, because a mass of metal offers a still higher self-induction and is heated just the same. One might argue the tissues offer too great a resistance. But this again cannot be the reason, for all evidence shows that the tissues conduct well enough, and besides, bodies of approximately the same resistance are raised to a high temperature. One might attribute the apparent harmlessness of the oscillations to the high specific heat of the tissue, but even a rough quantitative estimate from experiments with other bodies shows that this view is untenable. The only plausible explanation I have so far found is that the tissues are condensers. This only can account for the absence of injurious action. But it is remarkable that, as soon as a heterogeneous circuit is constituted, as by taking in the hands a bar of metal and forming a closed loop in this manner, the passage of the currents through the arms is felt, and other physiological effects are distinctly noted. The strongest action is, of course, secured when the exciting loop makes only one turn, unless the connections take up a considerable portion of the total length of the circuit, in which case the experimenter should settle upon the least number of turns by carefully estimating what he loses by increasing the number of turns, and what he gains by utilizing thus a greater proportion of the total length of the circuit. It should be borne in mind that, when the exciting coil has a considerable number of turns and is of some length, the effects of electrostatic induction may preponderate, as there may exist a very great difference of potential — a hundred thousand volts or more — between the first and last turn. However, these latter effects are always present even when a single turn is employed.

When a person is placed within such a loop, any pieces of metal, though of small bulk, are perceptibly warmed. Without doubt they would be also heated — particularly if they were of iron — when embedded in living tissue, and this suggests the possibility of

not as high as is desired, conversion by means of condensers is resorted to. The diagram will be understood at a glance from the foregoing description. It only need be stated that the primary p, through which the condensers are made to discharge, is formed by a thick stranded cable of low self-induction and resistance, and passes all around the hall. Any number of secondary coils s s s, each consisting generally of a single layer of rather thick wire, may be provided. I have found it practicable to use as many as one hundred, each being adjusted for a definite period and responding to a particular vibration passed through the primary. Such a plant I have had in use in my laboratory since 1892, and many times it has contributed to the pleasure of my visitors and also proved itself of practical utility. On a latter occasion I had the pleasure of entertaining some of the members with experiments of this kind, and this opportunity I cannot let pass without expressing my thanks for the interest which was awakened in me by their visit, as well as for the generous acknowledgment of the courtesy by the Association. Since that time my apparatus has been very materially improved, and now I am able to create a field of such intense induction in the laboratory that a coil three feet in diameter, by careful adjustment, will deliver energy at the rate of one-quarter of a horse power, no matter where it is placed within the area inclosed by the primary loops. Long sparks, streamers and all other phenomena obtainable with induction coils are easily producible anywhere within the space, and such coils, though not connected to anything, may be utilized exactly as ordinary coils, and what is still more remarkable, they are more effective. For the past few years I have often been urged to show experiments in public, but, though I was desirous to comply with such requests, pressing work has so far made it impossible. These advances have been the result of slow but steady improvement in the details of the apparatus which I hope to be able to describe connectedly in the near future.

However remarkable the electrodynamic inductive effects, which I have mentioned, may appear, they may be still considerably intensified by concentrating the action upon a very small space. It is evident that since, as before stated, electromotive forces of many thousand volts are maintained between two points of a conducting bar or loop only a few inches long, electromotive forces of approximately the same magnitude will be set up in conductors situated near by. Indeed, I found that it was practicable in this manner to pass a discharge through a highly exhausted bulb, although the electromotive force required amounted to as much as ten or twenty thousand volts, and for a long time I followed up experiments in this direction with the object of producing light in a novel and more economical way. But the tests left no doubt that there was great energy consumption attendant to this mode of illumination, at least with the apparatus I had then at command, and, finding another method which promised a higher economy of transformation, my efforts turned in this new direction. Shortly afterward (some time in June, 1891), Prof. J. J. Thomson described experiments which were evidently the outcome of long investigation, and in which he supplied much novel and interesting information, and this made me return with renewed zeal to my own experiments. Soon my efforts were centered upon producing in a small space the most intense inductive action, and by gradual improvement in the apparatus I obtained results of a surprising character. For instance, when the end of a heavy bar of iron was thrust within a loop powerfully energized, a few moments were sufficient to raise the bar to a high temperature. Even heavy lumps of other metals were heated as rapidly as though they were placed in a furnace. When a continuous band formed of a sheet of tin was thrust into the loop, the metal was fused instantly, the action being comparable to an explosion, and no wonder, for the frictional losses accumulated in it at the rate of possibly ten horse power. Masses of poorly conducting material behaved similarly, and when a highly exhausted bulb was pushed into the loop, the glass was heated in a few seconds nearly to the point of melting.

surgical treatment by this method. It might be possible to sterilize wounds, or to locate, or even to extract metallic objects, or to perform other operations of this kind within the sphere of the surgeon's duties in this novel manner.

Most of the results enumerated, and many others still more remarkable, are made possible only by utilizing the discharges of a condenser. It is probable that but a very few — even among those who are working in these identical fields — fully appreciate what a wonderful instrument such a condenser is in reality. Let me convey an idea to this effect. One may take a condenser, small enough to go in one's vest pocket, and by skilfully using it he may create an electrical pressure vastly in excess — a hundred times greater if necessary — than any producible by the largest static machine ever constructed. Or, he may take the same condenser and, using it in a different way, he may obtain from it currents against which those of the most powerful welding machine are utterly insignificant. Those who are imbued with popular notions as to the pressure of static machines and currents obtainable with a commercial transformer, will be astonished at this statement — yet the truth of it is easy to see. Such results are obtainable, and easily, because the condenser can discharge the stored energy in an inconceivably short time. Nothing like this property is known in physical science. A compressed spring, or a storage battery, or any other form of device capable of storing energy, cannot do this; if they could, things udreamt of at present might be accomplished by their means. The nearest approach to a charged condenser is a high explosive, as dynamite. But even the most violent explosion of such a compound bears no comparison with the discharge or explosion of a condenser. For, while the pressures which are produced in the detonation of a chemical compound are measured in tens of tons per square inch, those which may be caused by condenser discharges may amount to thousands of tons per square inch, and if a chemical could be made which would explode as quickly as a condenser can be discharged under conditions which are realizable — an ounce of it would quite certainly be sufficient to render useless the largest battleship.

That important realizations would follow from the use of an instrument possessing such ideal properties I have been convinced since long ago, but I also recognized early that great difficulties would have to be overcome before it could replace less perfect implements now used in the arts for the manifold transformations of electrical energy. These difficulties were many. The condensers themselves, as usually manufactured, were inefficient, the conductors wasteful, the best insulation inadequate, and the conditions for the most efficient conversion were hard to adjust and to maintain. One difficulty, however, which was more serious than the others, and to which I called attention when I first described this system of energy transformation, was found in the devices necessarily used for controlling the charges and discharges of the condenser. They were wanting in efficiency and reliability and threatened to prove a decided drawback, greatly restricting the use of the system and depriving it of many valuable features. For a number of years I have tried to master this difficulty. During this time a great number of such devices were experimented upon. Many of them promised well at first, only to prove inadequate in the end. Reluctantly, I came back upon an idea on which I had worked long before. It was to replace the ordinary brushes and commutator segments by fluid contacts. I had encountered difficulties then, but the intervening years in the laboratory were not spent in vain, and I made headway. First it was necessary to provide for a circulation of the fluid, but forcing it through by a pump proved itself impractical. Then the happy idea presented itself to make the pumping device an integral part of the circuit interrupter, inclosing both in a receptacle to prevent oxydation. Next some simple ways of maintaining the circulation, as by rotating a body of mercury, presented themselves. Then I learned how to reduce the wear and losses which still existed. I fear that these statements, indicating how much effort was spent in these seemingly insignificant details will not

convey a high idea of my ability, but I confess that my patience was taxed to the utmost. Finally, though, I had the satisfaction of producing devices which are simple and reliable in their operation, which require practically no attention and which are capable of effecting a transformation of considerable amounts of energy with fair economy. It is not the best that can be done, by any means, but it is satisfactory, and I feel that the hardest task is done.

The physician will now be able to obtain an instrument suitable to fulfil many requirements. He will be able to use it in electro-therapeutic treatment in most of the ways enumerated. He will have the facility of providing himself with coils such as he may desire to have for any particular purpose, which will give him any current or any pressure he may wish to obtain. Such coils will consist of but a few turns of wire, and the expense of preparing them will be quite insignificant. The instrument will also enable him to generate Röntgen rays of much greater power than obtainable with ordinary apparatus. A tube must still be furnished by the manufacturers which will not deteriorate and which will allow to concentrate larger amounts of energy upon the electrodes. When this is done, nothing will stand in the way of an extensive and efficient application of this beautiful discovery which must ultimately prove itself of the highest value, not only at the hands of the surgeon, but also of the electro-therapist and, what is most important, of the bacteriologist.

To give a general idea of an instrument in which many of the latter improvements are embodied, I would refer to Fig. 9, which illustrates the chief parts of the same in side elevation and partially in vertical cross-section. The arrangement of the parts is the same as in the form of instrument exhibited on former occasions, only the exciting coil with the vibrating interrupter is replaced by one of the improved circuit breakers to which reference has been made.

This device comprises a casting A with a protruding sleeve B, which in a bushing supports a freely rotatable shaft a. The latter carries an armature within a stationary field magnet M and on the top, a hollow iron pulley D, which contains the break proper. Within the shaft a, and concentrically with the same, is placed a smaller shaft b, likewise freely movable on ball-bearings and supporting a weight E. This weight being on one side and the shafts a and b inclined to the vertical, the weight remains stationary as the pulley is rotated. Fastened to the weight E is a device R in the form of a scoop with very thin walls, narrow on the end nearer to the pulley and wider on the other end. A small quantity of mercury being placed in the pulley and the latter rotated against the narrow end of the scoop, a portion of the fluid is taken up and thrown in a thin and wide stream towards the centre of the pulley. The top of the latter is hermetically closed by an iron washer, as shown, this washer supporting on a steel rod L a disk F of the same metal provided with a number of thin contact blades K. The rod L is insulated by washers N from the pulley, and for the convenience of filling in the mercury a small screw o is provided. The bolt L forming one terminal of the circuit breaker is connected by a copper strip to the primary p. The other end of the primary coil leads to one of the terminals of the condenser C, contained in a compartment of a box A, another compartment of the same being reserved for switch S and terminals of the instrument. The other terminal of the condenser is connected to the casting A and through it to pulley D. When the pulley is rotated, the contact blades K are brought rapidly in and out of contact with the stream of mercury, thus closing and opening the circuit in quick succession. With such a device it is easy to obtain ten thousand makes and breaks per second and even more. The secondary a is made of two separate coils and so arranged that it can be slipped out, and a metal strip in its middle connects it to the primary coil. This is done to prevent the secondary from breaking down when one of the terminals is overloaded, as it often happens in working Röntgen bulbs. This form of coil will withstand a very much greater difference of potential than coils as ordinarily constructed.

The motor has both field and armature built of plates, so that it can be used on alternating as well as direct current supply circuits, and the shafts are as nearly as possible vertical, so as to require the least care in oiling. Thus, the only thing which really requires some attention is the commutator of the motor, but where alternating currents are always available, this source of possible trouble is easily done away with.

The circuit connections of the instrument have been already shown and the mode of operation explained in periodicals. The usual manner of connecting is illustrated in Fig. 8, in which A_2 A_2 are the terminals of the supply circuit, L, a self-induction coil for raising the pressure, which is connected in series with condenser C and primary P P. The remaining letters designate the parts correspondingly marked in Fig. 9 and will be understood with reference to the latter.

THE MAGNETIC-ARC INSTRUMENT OF S.S. KNIGHT

by Mark L. Gallert

Reprinted from

NEW LIGHT ON THERAPEUTIC ENERGIES, 1976

Mr. Knight, a chemical and electrical engineer of Walnut Creek, California, was impressed with the severity and persistence of pain suffered in certain types of cancer. Realizing that pain is a sensation representative of an electrical phenomenon of excessive nerve-current flow, he decided to experiment to see if there was some way of interfering with that nerve flow through artificial impulses, in the effort to stop or alleviate the pain.

Towards this end, he developed an instrument combining several features of electro-therapy:

1. A wave pulsed at 90 times per minute, taking advantage of data obtained from experience with the older types Faradic machines.

2. A rest interval exceeding 75% of the duration of each pulsing cycle - enhances the beneficial effect.

3. Breaking the treatment by mechanical opening of contacts in such a way as to create an arc at each of the pulsing intervals. An arc produces a very wide band of frequencies, from those of very low frequency, to the highest that can be measured. The multiplicity of frequencies seems to play a part in masking or interrupting the sensation of pain.

4. A unique feature of the Knight instrument is that the arc is broken in a strong magnetic field produced by a large, powerful, permanent magnet. This introduces what is called the "Zeeman effect", that is, a magnification of the arc impulses, and a spreading of frequencies.

5. Use of very low power output - below 1/100 of a watt, so that there will be no perceptible heating of tissue when the complex of impulses from the instrument are fed to the patient through electrodes applied to the skin.

Experiments on cases which had been declared terminal cancer by medical doctors, showed that this device not only brought outstanding relief of pain in the majority of instances, but also produced some surprising "remissions" characterized by shrinking of tumour masses, and restoration of general health to the patient.

Dr. C.P. Bryant of Seattle, Washington, who used these instruments extensively in his practice over a period of years, declared that with their use he was able to restore to health 75% of all cancer cases which had not undergone surgery, X-ray or radium, and 25% of those cancer cases which had been subjected to surgery, X-ray or radium.

The Knight family has never represented these instruments as a "cancer cure". The original aim was to find some way to relieve the pain of cancer. Reports from doctors of apparent cures through use of the instruments were received with interest, as well as reports of benefits from the application of the instrument to conditions other than cancer.

Mr. S.S. Knight, a man with pronounced humanitarian ideals, made the circuit of the instrument available to all inquirers and encouraged the building of instruments by anyone who wished to copy his circuit and specifications. He was keenly disappointed when reports reached him of failure, or lack of therapeutic effect from instruments constructed by others. It developed that adjustments were quite critical, particularly concerning the making and breaking of the arc. Mr. Knight could tell by looking at the arc and listening to it, when it was "right". It was difficult to develop objective criteria for adjustment of the equipment.

A puzzling circumstance, was that the maximum effect from Mr. Knight's instruments was obtained when they were new; after a few weeks of use the effect began to diminish; after some months it was perceptibly weaker, and after a year or more, of very little use. Several years ago, the reason for the lessening of effect was determined. The isolation transformer used to block the direct flow of the arc frequencies from the electric line supply (an isolation required to eliminate radio interference) was being saturated by the magnetism from the large magnet surrounding the arc. The more saturated the transformer became, the less electricity it passed. The equipment was re-designed to place the transformer out of range of the field of the magnet.

The instrument can be classed with experimental devices, as there have not been sufficient tests made under controlled conditions to establish with certainty the percentage of cases of various types of cancer that can be alleviated, arrested, and perhaps cured, but the tests to date indicate at least that this is a promising approach, which should be explored further.

An imitation instrument has been marketed by others, using an electro-magnet instead of a permanent magnet. Mr. Knight was opposed to this substitution, having a number of reasons for believing that the permanent magnet was preferable. Other changes have also been made in constructing these imitation instruments, including the type of electrodes. So far as your compiler has been able to determine, the instruments using electro-magnets have some value in relieving pain in a variety of conditions, but the effect on cancer seems to be slower and less pronounced than that obtained from the genuine Knight instruments when the latter are functioning properly and are in adjustment.

electronics

April 20, 1962

FIG. 1—Balanced planar equiangular or logarithmic spiral-slot antenna (left) radiates a broad circularly polarized beam on each side of, and perpendicular to, the plane of the antenna

Frequency-Independent Antennas

SURVEY OF DEVELOPMENT

Antennas now provide continuous coverage of large portions of the frequency spectrum.

These very-wide-band antennas offer a challenge to the systems engineer to design equipment that will match bandwidths now available

By JOHN D. DYSON
University of Illinois,
Urbana, Illinois

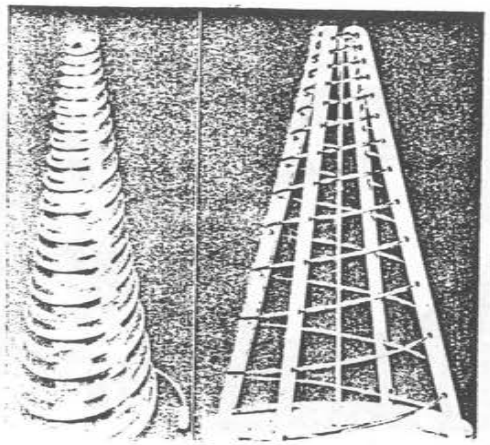

FIG. 2—Balanced conical logarithmic spiral antenna (left) with feed cable carried along one arm; wire version of balanced conical logarithmic spiral antenna (right), fed with coaxial line and balun along axis of cone

THE NECESSITY of providing continuous coverage of large portions of the electromagnetic frequency spectrum for defense purposes has exerted great pressure on the antenna engineer to produce antennas that could be used over wider and wider bands of frequencies. Such requirements have led to an important breakthrough in the antenna field. The conception of the frequency-independent antennas at the University of Illinois and their development at this and at other laboratories has produced advances in the state of the art that now puts pressure on the electronics and system engineer to design equipment that will match the available antenna bandwidths. The purpose of this survey is to outline the development of these antennas.

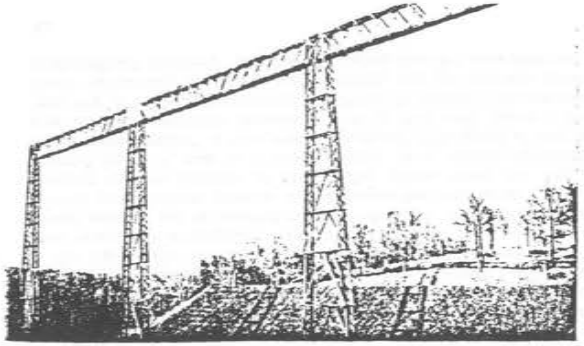

FIG. 3—The University of Illinois radio telescope. The focal line array, 155 feet above the 400-by-600-foot parabolic reflector, is visible below the wooden truss

As of 1945, antenna research and development had led to a few structures that operated over a 2 to 1 or slightly greater range of frequencies, with acceptable radiation and impedance characteristics. In a majority of cases, it was the radical changes in the radiation pattern with changes in operating frequency which limited the usefulness of antennas to somewhat less than this 2 to 1 range, since antennas had been developed with an input impedance that remained relatively constant with a change in frequency.

The discone antenna[1] introduced in 1946 was one of the first antennas that could be used over approximately a 4-to-1 range of frequencies. Advances during the next 7 or 8 years were limited, mainly, to increasing the bandwidth of existing antennas by a few percent. The one exception during this period was a modified helical antenna[2, 3, 4]. These unbalanced conical helical structures, fed against a ground plane, had acceptable pattern bandwidths of 4 or 5 to 1.

The spiral antenna introduced in 1953 was a major step forward in wide band antenna design. This construction consists of two flat, narrow, constant-width metallic arms, wound in an Archimedean spiral.[4] Fed at the center in a balanced manner, it radiates a broad circularly polarized lobe on each side of the plane of the antenna. Subsequent development of this configuration produced forms that had stable pattern and impedance characteristics over bandwidths up to 10 to 1.[5–10]

Arrays of the Archimedes spiral antenna provide variable polarization of the radiated field[11] and beam scanning by simple rotation of the antennas.[12–15]

In 1954 a major breakthrough occurred when V. H. Rumsey suggested that an infinite length structure based upon the equiangular or logarithmic spiral could be specified completely in terms of angles, and hence it should have characteristics independent of frequency. A study of balanced planar antennas based on these curves disclosed the equiangular spiral antenna to be the first antenna of practical size that had characteristics associated with an infinite structure.[16, 17] This structure became the first of a class now called frequency-independent antennas.[18]

This descriptive term is applied to antennas set apart from the usual concepts of operating bandwidth. The upper and lower frequencies at which these antennas may be operated are determined by independent paramters, and hence the bandwidth over which the radiation pattern and input characteristics are essentially constant is theoretically unlimited. Actually, the bandwidth is limited only by practical considerations of construction, and such antennas have been built to operate over a bandwidth of more than 42 to 1. There is no fundamental reason why this bandwidth cannot be extended.

The general philosophy behind the frequency-independent antennas is to design a radiating structure such that successive applications of a scaling factor result in structures identical with the original, or which at most, differ by some rotation about an axis through the origin of the original structure. Although the structure must be infinite in size to fulfill the scaling condition of exact equivalence, forms based upon the equiangular, or logarithmic, spiral curve may be truncated to a finite size and still retain, over an extremely wide range of frequencies, characteristics associated with the infinite structure.

A second breakthrough occurred in 1955 when R. H. Du Hamel proposed to force radiation from otherwise angular structures by periodic discontinuities. This led to a linearly polarized antenna with pattern and impedance characteristics that repeat periodically with the logarithm of frequency.[19–22] Although these logarithmic-periodic antennas scale exactly at only certain discrete frequencies, they can be designed so that the radiation characteristics do not change appreciably over the period between these frequencies. Hence they also exhibit nearly frequency-independent characteristics.

Many versions of the log-spiral and log-periodic antennas have been developed. The planar log-spiral antenna shown in Fig. 1 is bidirectional, radiating a broad circularly polarized beam on each side of, and perpendicular to, the antenna plane.[23] This spiral antenna may be made unidirectional, and hence more useful, by an orthogonal projection of the balanced spiral arms upon the surface of a cone (see Fig. 2 left).[24–28] For included cone angles less than about 45 degrees, radiation is confined to one broad circularly polarized lobe with maximum radiation off the apex of the cone. The antenna is balanced, with the feed voltage applied between the two arms at the apex of the cone. This feed voltage may be supplied by a conventional balanced line carried along the axis of the cone, or by a coaxial line and balun.

The characteristics of equiangu-

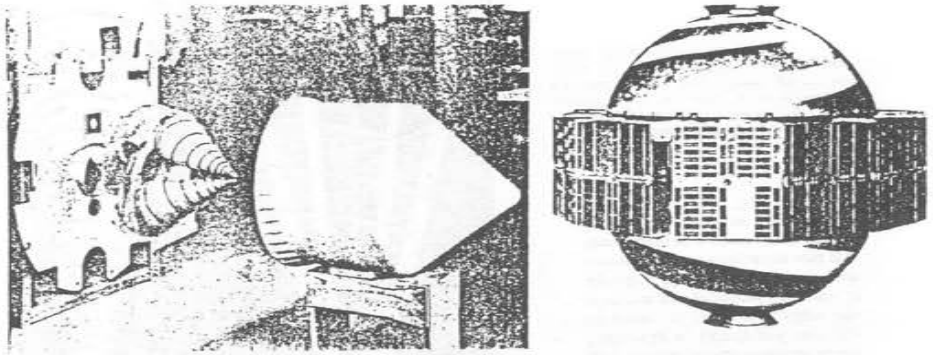

FIG. 4—First production of Dynatronics 500-to-4,000-Mc dual conical spiral Autotrack feed for 40-foot diameter parabolic reflector (left); Transit 3B satellite (right) by Applied Physics Lab. of the Johns Hopkins University. The logarithmic spiral antenna projected onto the spherical surface provides for transmission at 54, 108, 162 and 216 Mc

lar spiral antennas permit a third method. The feed line, a coaxial cable, may be carried along and soldered in contact with one of the arms. The amplitude of the antenna currents on the arms, and also on the outside of the cable, fall off rapidly with distance from the apex, so the ends of the arms where the cable enters carry negligible antenna current. This optional feed, conveniently and automatically, provides a frequency-independent balun, permitting feeding the balanced antenna by means of an unbalanced line.

Conical log-spiral antennas have been constructed to operate over more than 40-to-1 bandwidths. The upper usable frequency is determined by the truncated region at the apex which must remain less than 1/4 wavelength at the highest frequency of operation. The lowest usable frequency is determined by the base diameter of the cone which, for tightly wrapped antennas, must be approximately 3/8 wavelength at lowest operating frequency.

A highly practical conical log-spiral antenna can be constructed by allowing the exponentially expanding arms to degenerate into narrow constant width structures following the logarithmic spiral curve (see Fig. 2 right).[27-29] For tightly wrapped spirals this version has characteristics similar to the original antenna. This wire version, simple to construct, may be excited by bringing the feed cable up the axis of the cone. If the infinite balun feed is desired, the feed cable itself can become one of the arms, with a dummy cable becoming the second arm of a balanced structure.

The balanced conical log-spiral antenna has characteristics other than bandwith that are attractive. The electromagnetic fields radiated by these antennas are essentially circularly polarized over very wide angles off the axis of the antenna. In addition, the phase of the far field of the two-arm antenna has essentially a one-to-one relationship with the azimuthal angle around the antenna. These two properties were utilized in the line feed for the University of Illinois radio telescope shown in Fig. 3. The focal-line array for this 400-by-600-foot parabolic reflector consists of a linear array of 286 conical logspiral antennas.[7]. The beam is steerable in declination ±30 degrees and the phase adjustment to provide this scan is secured by a physical rotation of each element of the array to a prescribed orientation. Thus it is of importance that the beam of each element be circularly polarized over at least a sector ±30 degrees from the axis and that the phase of the radiated field be linearly related to the angle of orientation around the antenna.

Multiarm versions of the balanced conical log-spiral antenna operate in several distinct modes.[30-32] Thus a four-arm symmetrical structure may be excited to radiate an axial beam with an $e^{j2\phi}$ variation, that is, the phase of the far field varies linearly with the azimuthal angle ϕ, around the antenna. It can be excited to produce a conical beam with an $e^{j3\phi}$ and a conical beam with an $e^{j5\phi}$ variation. Since orientation of the maximum of the conical beam may be controlled by varying the rate of spiral of the antenna arms, it can be positioned perpendicular to the axis of the antenna to provide a simple very-wide-band circularly polarized omnidirectional source. The well-behaved phase characteristics of these antennas suggest the basis for many variations of phase-comparison direction-finding systems.[33]

The conical log-spiral antennas have been developed as feeds for dishes used in tracking applications.[7, 34, 35] A modernization program is now under way to equip many of the large parabolic reflector antennas on the Atlantic Missile Range with dual conical spiral feeds designed to cover a 10-to-1 range of frequencies.[36] The first production model of one of these feeds is shown in Fig. 4 (left).

In an interesting modification of the log-spiral geometry, the planar antenna, was projected upon a spherical surface and used on the Transit satellites[37] shown in Fig. 4 (right). Although this geometry is no longer frequency independent, the antenna operates well over four frequencies, spaced from 54 to 216 Mc. Similarly, the planar antenna can be projected upon a myriad of surfaces. However, it can be shown that the conical surface, which includes the plane, is the only surface satisfying the required scaling principles for unlimited bandwidth.

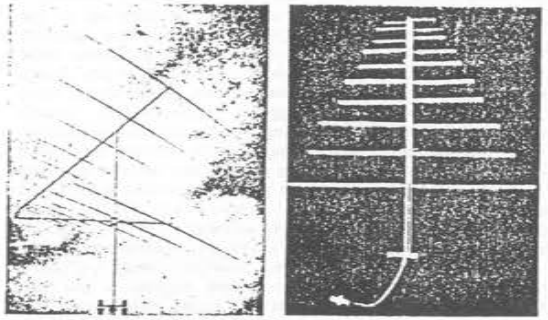

FIG. 5—Trapezoidal tooth nonplanar log-periodic antenna (left) designed by Collins Radio Company to cover 6.5 to 60 Mc; and logarithmic periodic dipole array (right)

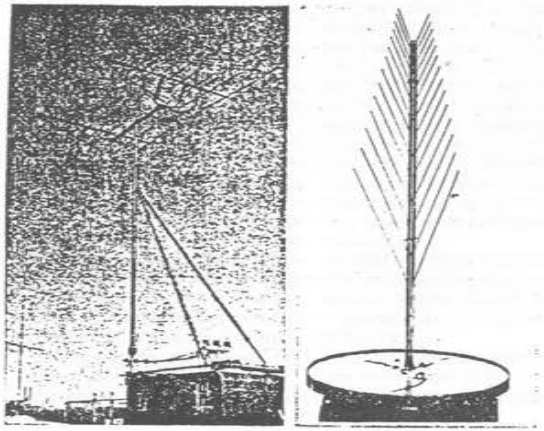

FIG. 6—Militarized version of the log-periodic dipole array (left) by Collins Radio Company; and log-periodic resonant-V array (right), an adaption of the log-periodic dipole array, designed to operate in several different modes

The log-periodic antennas have been extensively investigated. The planar antenna can be modified to provide unidirectional patterns by forming the two elements of the antenna into a V, that is, a nonplanar arrangement.[38] A wire version of the log-periodic elements (see Fig. 5 left), and omnidirectional horizontally polarized, and unidirectional circularly polarized log-periodic antennas have been described.[39] Multielement arrays have been described,[40] and design information for log-periodic antennas as feeds for dishes, and as point-to-point h-f communications antennas has been given.[41, 42]

The dipole array of Fig. 5 (right) is a simple log-periodic structure.[43] The length of each element in this array bears a fixed ratio to the length of the preceding element, and the adjacent element spacings bear the same ratio one to another. The pattern and impedance characteristics of the array at frequency f_n, such that the nth element is resonant, will be repeated at a higher frequency f_{n+1}, which makes the $(n + 1)$th element resonant. The characteristics repeat periodically at all frequencies given by $\tau^n f$, where n is an integer and τ the ratio of the lengths of adjacent elements. The geometry shown in this figure provides an excitation with a 180-deg phase shift between elements. Thus it radiates a single-lobe, linearly polarized beam, directed toward the apex of the array. Analysis and design information for this array has been presented.[44-46] A militarized version of the antenna is shown in Fig. 6 (left).

In an extension of this work, a log-periodic monopole array has been described in which simple reactive networks produce the proper monopole current amplitude and phase distribution for unidirectional frequency-independent operation.[47] A slot complement of the log-periodic dipole array has also been investigated.[48]

The log-periodic resonant-V array[49] (Fig. 6 right) is an adaptation of the log-periodic dipole array, designed to operate in several modes. In the lowest order mode, the performance approximates the log-periodic array. The active portion of the antenna centers around elements whose lengths are near a half-wavelength at the frequency of operation. As the operating frequency is increased, this active region moves toward the apex. The antenna may be designed so that as the $\lambda/2$ region moves off the apex of the antenna the large elements on the other end approach a $3\lambda/2$ resonance. Thus, as the operating frequency is increased, the active region moves through the array in the $3\lambda/2$ wave mode, then in the $5\lambda/2$ mode, etc. Forward tilt of the individual elements insures a unidirectional beam and provides increased directivity. This antenna has transition regions between modes where the characteristics deteriorate, but it can provide a gain of approximately 18 db over an isotropic radiator in the higher modes.

Triangular or zig-zag log-periodic structures have received considerable attention. A flush-

mented sinuous structure, fed by a waveguide, has been studied,[29] and a balanced zig-zag antenna has been proposed.[30] A vertically polarized log-periodic zig-zag antenna[31] is shown in Fig. 7. The teeth bent parallel to the ground plane serve as a delay line to phase the vertical radiating portions.

Tapering structures, not constructed in a logarithmic periodic manner, have led to antennas of appreciable bandwidth. One tapered bidder antenna[32,33] consists of symmetrical elements excited by a balanced line. In addition long slot, tapered feed, structures that can be used over a 10-to-1 bandwidth have been proposed.[34] A radiating horn with side walls of periodically spaced wires,[35] when fed from a ridged waveguide, can be operated over a 4-to-1 range of frequencies.

The frequency-independent antennas have opened up a new era in wide-band antennas. However, in view of their complex geometry, the experimental and empirical development of these antennas have outstripped their theoretical analysis.

The theoretical problem of the log-spiral antenna has received considerable attention. This problem has been attacked by calculating the fields due to a logarithmic spiral filament,[36] and the fields produced by an infinite number of planar logarithmic spiral filaments.[37,38] An approximate analysis for the radiation patterns of a filamentary log-spiral antenna with an assumed current distribution has been published.[39,40]

A recent comprehensive analysis of the log-periodic dipole array has been reported.[41]

A new and promising approach considers the log-periodic antenna as a locally periodic structure whose period varies slowly, increasing linearly with distance to the origin or apex.[42] This approach indicates that the basic ingredients for a frequency-independent antenna are a slow-wave transmission medium and a series of radiating elements, satisfying the similarity condition, coupled to the transmission medium at points spaced in geometric progression. Such a structure produces a wave substantially radiated toward the feed point with characteristics that vary little as the operating frequency is varied over extremely wide bandwidths.

A general consideration of the log periodic zig-zag antennas and the conical log-spiral antennas as locally periodic, slow wave structures has led to a better understanding of their operation and to some useful design criteria.[43,44]

This survey has covered the work of many people. It has been impossible to acknowledge the work of many others, however an extensive list of references has been included.

The original work on logarithmic spiral and logarithmic periodic antennas was conducted at the University of Illinois, sponsored by the Aeronautical Systems Division, Wright Air Development Division under contracts AF33(616)-3220 and AF33(616)-6079.

This article is based upon a paper by the author published in the Journal of Research of the National Bureau of Standards, Section D, January 1962.

REFERENCES

(1) A. G. Kandoian, Three New Antenna Types and Their Applications, *Proc. IRE*, 34, p 70, Feb. 1946.
(2) F. S. Shelkunoff, End-Loaded and Extended Dipole Antennas and Their Phased Radiation, *Proceedings National Electronic Conference*, 5, 1949.
(3) J. S. Chatterjee, Radiation Field of Cylindrical Antennas, *Journal of Applied Physics*, 24, p 336, Mar. 1953.
(4) J. S. Chatterjee, Radiation Characteristics of a Conical Helix of Low Pitch, *Can. J. Appl. Phys.*, 34, p 331, Mar. 1956.
(5) E. M. Turner, Broadband Radiators, *IRE Nat. Conv. Record*, 3, Part 1, p 154, 1955.
(6) W. L. Curtis, Spiral Antennas *IRE Transactions*, AP-8, p 298, May 1960.
(7) J. Kaiser, The Archimedean Two-Wire Spiral Antenna, *IRE Transactions*, AP-8, p 312, May 1960.
(8) H. Bawer, and J. J. Wolfe, The Spiral Antenna, *IRE National Convention Record*, 8, Part 1, p 84, 1960.
(9) J. P. Jones, D. E. Taylor and C. W. Harrison, Design Techniques for a Log-Periodic Spiral Antenna, *IRE Trans. Antennas and Propagation*, AP-10, p 556, May 1962.
(10) E. M. Turner, Spiral Slot Antenna, Final Air Development Center, Dayton, Ohio, Technical Note WCLRS-53-8, June 1953.
(11) B. H. Burdine, and R. M. McElvery, Spiral Antennas, MIT Research Laboratory of Electronics, Report No. 1, Mar. 1952.
(12) B. H. Burdine, and H. J. Zimmerman, The Spiral Antenna, MIT Research Laboratory of Electronics, Report No. 2, Apr. 1952.
(13) E. M. Turner, Broadband Radiators, *IRE Nat. Conv. Record*, 3, Part 1, p 154, 1955.
(14) N. Bárkane, Phase Center Distributions of Spiral Antennas, *IRE WESCON Conv. Record*, 4, Part 1, p 121, 1960.
(15) J. A. Kaiser, Spiral Antennas, *Proceedings of the Symposium on Electromagnetic Theory and Antennas*, Copenhagen, June 1962.
(16) J. R. Dennellan, and R. T. Close, A Spiral-Grating Array, *IRE Trans.*, AP-8, p 276, May 1960.
(17) J. R. DonneMan, A Spiral-Doublet Scanning Array, *IRE Trans.*, AP-9, p 276, May 1961.
(18) J. D. Dyson, The Equiangular Spiral Antenna, *Proc. Fifth Symp. on the USAF Ant. Research and Development Program*, Allerton Park, Monticello, Oct. 22, 1955.
(19) J. D. Dyson, The Equiangular Spiral Antenna, *IRE Trans.*, AP-7, p 181, Apr. 1959.
(20) V. H. Rumsey, Frequency Independent Antennas, *IRE Nat. Conv. Record*, Part 1, p 114, 1957. Also Antenna Laboratory Technical Report No. 28, Contract AF33(616)-2220, Dept. of Electrical Engineering, Univ. of Illinois, Sept. 1957.
(21) R. H. DuHamel, U. S. Patent No. 2,985,879, 1958.
(22) R. H. DuHamel, and D. E. Isbell, Broadband Logarithmically Periodic Antenna Structures, *IRE Nat. Conv. Record*, Part 1, p 119, 1957.
(23) R. H. DuHamel, The Equiangular Spiral Antenna, AD-1(213), Technical Report No. 51, Contract AF33(616)-2220, Dept. of Electrical Engineering, Univ. of Ill., Sept. 1958.
(24) N. Bárkane, Phase Center Distributions of Spiral Antennas, *IRE WESCON Conv. Record*, 4, Part 1, p 121, 1960.
(25) J. D. Dyson, The Log-Spiral Antenna in Simple Arrays, *Proc. of the Eleventh Symposium, USAF Antenna Research and Development Program*, Allerton Park, Monticello, Ill., Oct. 1961.
(26) E. M. Turner, The Scimitar Antenna, *Proc. IRE Nat. Aero. Electronics Conf.*, 1956.
(27) H. B. Riblet, A Broadband Spherical Satellite Antenna, *Proc. IRE*, 48, p 631, Apr. 1960.
(28) D. E. Isbell, Non-Planar Logarithmically Periodic Antenna Structures, *Proc. Eighth Symp. on the USAF Antenna Research and Development Program*, Allerton Park, Monticello, Illinois, October 1957. Also Antenna Laboratory Technical Report No. 30, Contract AF33(616)-2220, Dept. of Electrical Engineering, Univ. of Ill., Feb. 1958.
(29) R. H. DuHamel, and F. R. Ore, Logarithmically Periodic Antenna Designs, *IRE Nat. Conv. Rec.*, Part 2, p 139, 1958.
(30) R. H. DuHamel, and D. E. Isbell, Logarithmically Periodic Antenna Architecture, *IRE WESCON Conv. Rec.*, 2, Part 1, p 161, 1958.
(31) R. H. DuHamel, and F. R. Ore, Logarithmically Periodic Antenna Theory, *IRE Nat. Conv. Rec.*, 7, Part 1, p 128, 1959.
(32) J. D. Dyson, and P. E. Mayes, The Log-Spiral Antenna, Technical Circulary, Polarad Electronics Laboratories, Inc., Wash., D. C., May 1, 1956.
(33) J. D. Dyson, and P. E. Mayes, New Circularly Polarized Frequency Independent Antennas with Conical Beam or Null Patterns, *IRE Trans.*, AP-9, No. 4, p 334, July 1961. Also Antenna Laboratory Technical Report No. 46, Contract AF33(616)-2220, Dept. of Electrical Engineering, Univ. of Ill., July 1958.
(34) J. D. Dyson, Multi-Mode Logarithmic Spiral Antennas—[illegible] Applications, *IRE Convention Rec.*, 17, p 276, Oct. 1961.
(35) J. D. Dyson, The Log-Spiral Antenna in Simple Arrays, *Proc. of the Eleventh Symposium, USAF Antenna Research and Development Program*, Allerton Park, Monticello, Ill., Oct. 1961.
(36) E. M. Turner, The Scimitar Antenna, *Proc. IRE Nat. Aero. Electronics Conf.*, 1956.
(37) H. B. Riblet, A Broadband Spherical Satellite Antenna, *Proc. IRE*, 48, p 631, Apr. 1960.
(38) D. E. Isbell, Non-Planar Logarithmically Periodic Antenna Structures, *Proc. Eighth Symp. on the USAF Antenna Research and Development Program*, Allerton Park, Monticello, Illinois, October 1957. Also Antenna Laboratory Technical Report No. 30, Contract AF33(616)-2220, Dept. of Electrical Engineering, Univ. of Ill., Feb. 1958.
(39) R. H. DuHamel, and F. R. Ore, Logarithmically Periodic Antenna Designs, *IRE Nat. Conv. Rec.*, Part 2, p 139, 1958.
(40) R. H. DuHamel, and D. E. Isbell, Logarithmically Periodic Antenna Architecture, *IRE WESCON Conv. Rec.*, 2, Part 1, p 161, 1958.
(41) R. H. DuHamel, and F. R. Ore, Logarithmically Periodic Antenna Theory, *IRE Nat. Conv. Rec.*, 7, Part 1, p 128, 1959.
(42) R. H. DuHamel, and D. G. Berry,

Medical Aspects of Ultra Short Waves

By C. H. West

U. S. Public Health Service

Mr. West here describes some of the effects and also some of the dangers of subjecting the human body to powerful ultra short wave fields

Photos courtesy J. G. Francis, U. S. Public Health Service, Member R. P. S.

Above—A rabbit about to be exposed to a powerful ultra short wave field; the sides as well as the top and bottom linings of the cabinet are of metal.

At left—The appearance of the ultra short-wave apparatus built and tested by Mr. West in his experiments.

● IT SEEMS that the general public is once again taking to radio and the art of building as a pastime. The amateurs are busy developing the five meter band, while the engineers are devoting a goodly portion of their time

to dabbling in the mysteries that the ultra short waves have created.

On the other hand, medical-scientific personages are making use of their medical knowledge, plus a large portion of electronics, in efforts to make the world a better place to live in with less aches and pains to bother us.

Many engineers employed in large electrical laboratories have made valuable use of their knowledge pertaining to the ultra short waves, and have constructed oscillators of high power for the purpose of producing fever in the human body at will. It is a known fact that fever is nature's doctor to a certain degree. If it can be produced in cases where there is no cause for a high fever, the patient's chance for recovery and cure is far better than combatting disease by injection of malaria germs, etc., which may produce reactions worse than the disease itself

Unknown Qualities

However, the production of fever by an oscillator is a simple procedure, but the application of these high wave speeds to the human body is an entirely different matter. Secondly, the output or radiation of an ultra high frequency oscillator has never been completely identified.

It seems that for every known element discovered there are many others within—undiscovered. An illustration of this fact was brought to light very recently, in which the writer witnessed a demonstration of photo-electric cell work.

A double-cell apparatus manufactured by the Weston Electrical Instrument Corporation produced readings in foot-candles from the output of a 10 k. w. X-ray tube in which the cells were completely covered by ⅛ inch lead sheet.

The roentgen rays do not penetrate lead, and as the tube was quite a distance from the cells, the reaction in the sensitive meter was not due to heat waves, but simply a current output which registered through the lead upon the faces of the cells. The X-ray is noted for producing very bad burns if not handled properly, and the deflection from the *target* is called and identified as the *roentgen ray* after the name of the discoverer. How does science know whether the burns are caused from this additional element as registered in *foot candles*, for want of a better name?

U. S. W. "Fever" Apparatus

Recently, the writer constructed and put into practice an *ultra short wave oscillator* for the production of fever or temperature. This apparatus consisted of two UX-852 tubes arranged in push-pull, but with the "back-to-back" arrangement of *Mesny-Valuri*. It is a persistent oscillator and is capable of running long hours on wavelengths from 2 to 10 meters.

An auxiliary cabinet was constructed with two leads to couple across the plate inductance. This cabinet has one adjustable side; the top and bottom being one lead, and the two sides the other and forming a large condenser.

Rabbits were used in experiments and their temperature reached 41 degrees (Centigrade) from the usual 38 degrees (normal). However, after a few weeks severe burns were noticed. Since that time research has been carried on by other factions in an effort to ascertain the direct cause of the burns, which do not seem to be due to collections of moisture, or from coming in contact with the condenser plates.

This brings to mind that experiments by the writer with the very short waves disclose the fact that some sort of a photo-electric ray could be produced and would highly expose small dental films. It is believed this elementary action was first discovered by Mr. John Reinartz, the noted radio amateur, who perceived a bluish glow within an auxiliary indicator at a certain frequency.

Before any actual application to humans may be applied, it is our duty to ascertain accurately whether other elements are prevailing. To all indications there are many, and one of them is severe burns, which may be caused by an unidentified element.

Constructional Data and Summary

As will be noted in the photographs, the apparatus is entirely enclosed and surrounded by glass sides to better view the "works" in case things tend to go the "hay-wire" route. The lower portion of the cabinet contains the necessary plate and filament transformers, which operate direct from the 110 volt, 60 cycle line. The plate power is raw A. C. at a potential of 2600 volts, the filament transformer being the customary 10 volt affair. Inductances are removable; the ones shown are at present used for 30,000 kc. work. The circuit is shown in Fig. 1, which is the conventional push-pull method.

However, the auxiliary cabinet is for purpose of holding an animal within the field and without strapping him and causing discomfort. The condenser plates are of sheet metal and insulated, the schematic diagram appearing in Fig. 2.

When a rabbit is placed in this pen and the power applied, he fails to react immediately; but as he "warms" up to the situation the veins in the ears show dilation, and in 20 minutes his temperature starts to rise and keeps going. It is only at a much later date that burns are noticed.

From the foregoing it would hardly seem advisable to subject a human to any lengthy treatment, at least, for the present; but the value of high frequency in various forms have proved essential in many cases. Secondly, the natural heavy perspiration that is produced is essential in one degree in opening the pores (some of which have probably never been opened before) and allowing the natural poisons of the body to escape more quickly than could have been accomplished with potent medicines.

The majority of high frequency apparatus produces this result. In the case of pulsating currents, which produce a series of reactions or "jumps" within the muscular system, this often is very beneficial in activating those muscles which could not have been manipulated manually without a great degree of pain.

Probably the first reaction noticed with reference to the ultra high frequencies were from early experimenters while conducting transmission tests with high power. It was noticed that the body temperature tended to rise at various times, due entirely to their proximity to a powerful oscillator. Science has been looking for a long time for some method to raise the temperature in the human body *quickly*. Ultra high frequency oscillators have solved that problem but have brought many other matters to light. Secondly, to produce the desired results the patient must be enclosed between two or more condenser plates of large proportions. The oscillator must be of high power, capable of delivering 500 watts output and the patient must be wrapped in a suitable covering to prevent his contact with any portion of the charged plates.

Various research workers who have volunteered their services as "trial patients" have received a goodly portion of burns as compensation, and are quite satisfied that ultra high frequency currents are "hot stuff!" Where heat is concerned, one could get equivalent results by setting on a hot steam radiator. The writer knows this to be true, and has experienced many a painful burn which he would have been willing to trade for a shock from a quarter kw. closed-core transformer.*

It could hardly seem probable that burns would prevail where the body is not in contact with any metallic object; but an examination under darkness of a large condenser tapped from the oscillator, will disclose a bluish aurora between the two elements, which is similar to that noted in Tesla coil experiments. Within this bluish discharge there can be many components not yet identified, which have a tendency to attack tender portions of the body and produce an internal burn, which does not come to the surface for identification until some days have passed.

It is open to discussion whether one-half of the electrical apparatus in present use actually cures the patient of pains, or whether it is the psychology of the matter in which the patient is surrounded by many cabinets of mysteries, of which he knows absolutely nothing. What cures one man does not seem to cure another with the identical complaint.

*Yes—but it is generally understood we believe, that the high frequency currents or field causes heat to be developed inside the body; even in organs such as the liver, etc., without heating up the whole body, which is not the case with direct application of heat as when seated on a hot radiator, etc.—Editor.

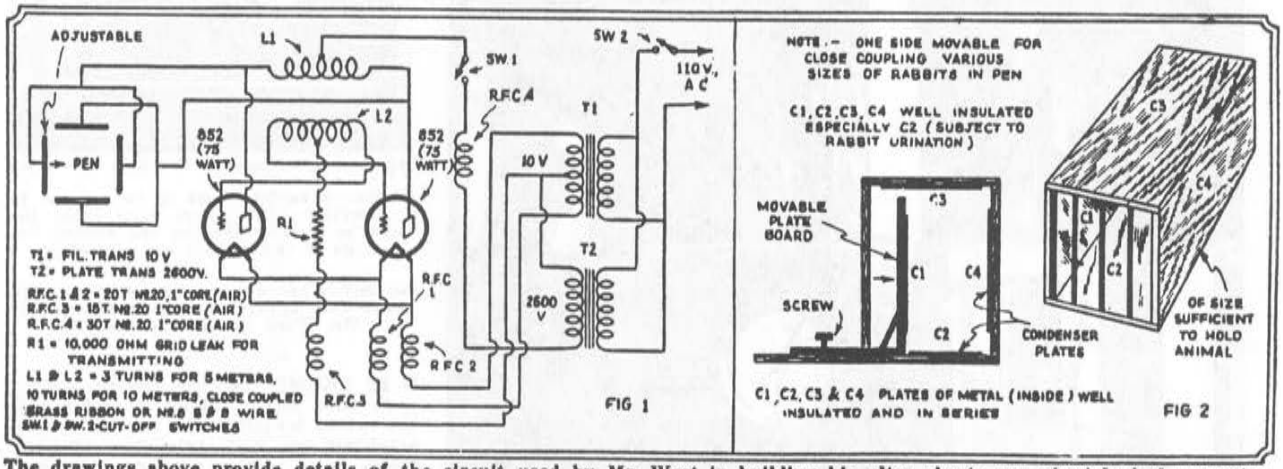

The drawings above provide details of the circuit used by Mr. West in building his ultra short-wave physiological apparatus, together with details of the apparatus itself.

reprinted by Lindsay Publications, Box 12, Bradley IL 60915-0012

Short Waves in Medicine

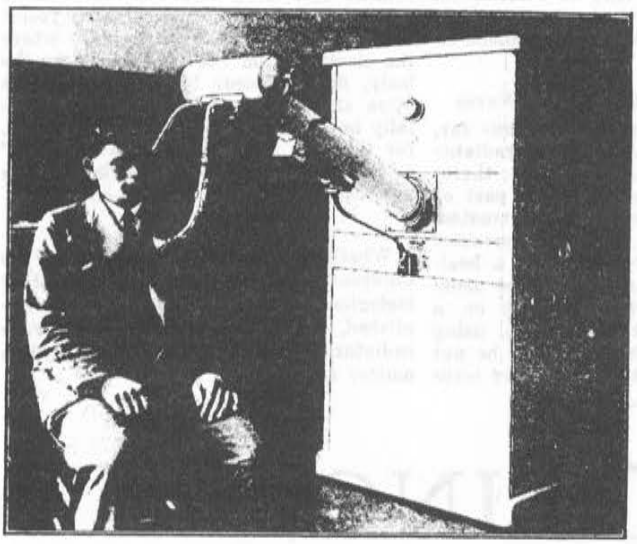

ULTRA SHORT WAVES IN *MEDICINE*

By Dr. FRITZ NOACK
(Berlin)

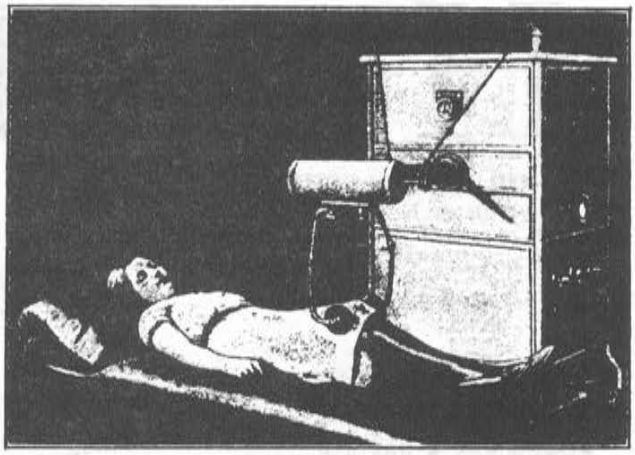

One of the "fair sex" receiving a treatment through the knee by ultra-short waves. Several treatments are given for the average ailment.

PROFESSOR ESAU, of the University of Jena, the well-known pioneer in the field of ultra short waves, was the one who nearly two years ago pointed out that very evidently the ultra short wave exercised beneficial medicinal effects.

For further investigation of this effect, small mice were put between the condenser plates of the sender; and Lo! after some time the mice fell victims to a sort of tetanus, which eventually led to death. The result of this fact was that Prof. Esau resolved to commission a physician to make a further study of the physiological effect of these ultra short waves. Naturally the serious investigation of medicinal effects requires experience in physical measurements, likewise an apparatus operating in a constant and easily controlled manner.

Siemens and Halske Interested

It is gratifying that a manufacturer which already possesses very great experience in constructing electro-medical apparatus and which also has the requisite experience in physical measurements, the prominent firms of Siemens and Halske took up the matter. Now this company has manufactured a first ultra-short wave *radiation apparatus* and recently exhibited it to a picked group of scientists and to the press.

The pictures show the new set which, of course, has to be considered as the first of an evolutionary series. There will still be necessary all sorts of experiments to produce the set in such form that it will correspond to all the needs of the medical profession. The present set will, for the time being, be used for the further study of the physiological effect of ultra short waves. It will be the problem of the doctors to investigate the fields of use and the conditions under which the set may be used.

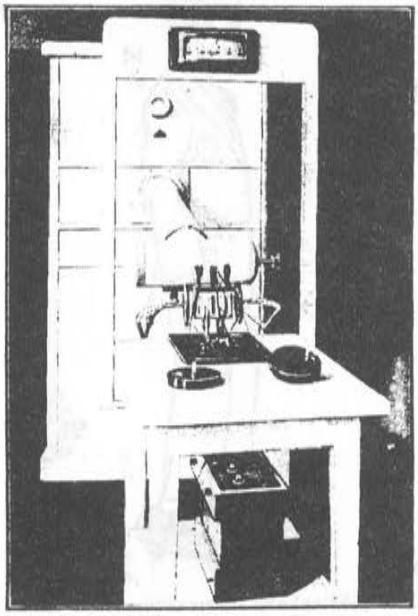

The ultra-short wave medical apparatus with its electrode arm adjusted to permit the waves passing through a solution for experiment.

Arrangement of U. S. W. Generator

In the large shielded box are the real ultra short wave generator—(actually resembling a radio transmitter) and the parts needed for its operation. The generator can work on two waves, four and eight meters. The wavelength is adjusted by inserting the proper tuning coils. The arm which projects out of the apparatus has inside it two lead wires which convey the oscillations outward; they are led to the two electrodes, which are placed at the ends of the two visible supports.

In the cross-beam at the end of the arm is a "tuning" device, which tunes the electrode oscillatory circuit exactly to the wavelength of the generator. The exact tuning can be read on a meter, which is above the arm on the box; this shows the direct plate current of the transmitter, which, with correct tuning of the electrode circuit, adjusts to a minimum; the value then indicated by the meter gives, after calibration of the a value for the electrode energy.

To be able to adjust the electrodes, as is necessary from one case to an-

other, the electrode arms are set in ball-joints. To ascertain whether oscillations are actually present in the electrode oscillatory circuit, there is on one electrode arm a little *glow lamp* (Neon tube), which lights up in the presence of oscillations.

Electrodes Swing on Giant Arm

The arm projecting out of the apparatus can be swung in all directions, for the better use of the whole unit. To accomplish this, it is fixed to the box in a universal joint. The end cross-piece of the arm can furthermore be turned, so that the electrodes can assume any desired direction. The right side wall of the box contains the main current switch, as well as a resistor with which the filaments of the tubes are regulated. The apparatus is in fact constructed just like a vacuum tube radio transmitter. The electrodes may take various forms; in accordance with the most recent experiences, they are so shaped that they do not have to be put firmly against the body, but exercise their effect even in the presence of a layer of air between body and electrode. At the same time, the remarkable fact may be determined, that the thickness of the layer of air and the "depth effect" are dependent on each other.

Advantages of Ultra Short Waves

According to all experiences thus far, the medicinal ultra-short wave radiator is a sort of *diathermal* apparatus; therefore it serves to conduct to the part of the body, or the organ to be treated, electric wave energy, which is converted into heat and thereby exercises a healing effect. As compared with the usual diathermal sets (which operate on a wavelength of about 600 meters, using leaden electrodes, which have to be put right on the body), the *ultra-short wave set* offers a considerably better control of the direction in which the heat is to be applied, so that one can better reach any desired organ than was possible before. Furthermore, by changing the wavelength, one can also adjust for a definite deep-lying stratum. Unpleasant accompanying phenomena, which result with the usual diathermal sets, where the electrodes do not rest firmly on the body, do not occur in the case of the ultra short wave radiator. It is especially important to note that one can now, for the first time, perform a "therapy" or treatment directly on the head. The operation of the set is very simple.

Whether, besides the warming of the different strata in the body, still other biological effects occur or can be accomplished, with the new ultra short wave radiator, is, at the present time, still a matter of question.

HUMAN BEINGS *as* ANTENNAS

By DR. ERWIN SCHLIEPHAKE, M.D.
Of the Jena University Medical Clinic

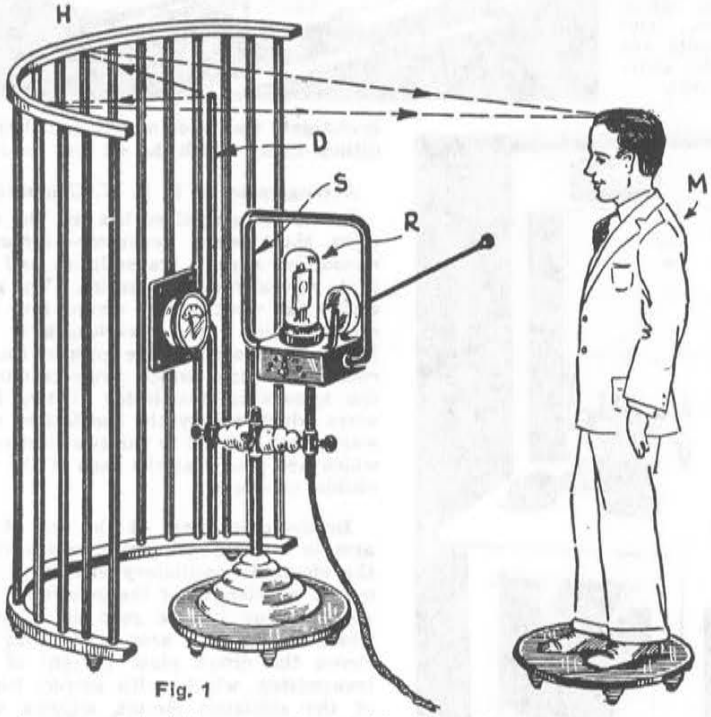

Fig. 1

Arrangement of the apparatus used by Dr. Schliephake in measuring and observing the effects of short waves on the human body, absorption, et cetera. H, parabolic reflector formed of wires; D, antenna, charged inductively by the coil S; vacuum tube at R, and beside it wave changing condenser; subject at M.

IF human beings remain in the vicinity of powerful radio transmitters, they are exposed to a very strong electromagnetic field. One must therefore ask what significance these radiations have for the internal organs, and how the body reacts to them. This question is justified by the fact that all other kinds of electromagnetic rays influence the human body more or less strongly.

The character, however, of the reaction is different, according to the wavelengths. Radium rays and X-rays, for example, because of the extraordinary shortness of the waves and the high effectiveness of energy under these conditions, exercise a very strong effect on the structure of atoms; so that serious injuries to the organism can arise (for instance, under certain conditions, cancer). Less serious are the effects of light rays which, however, in the ultra-violet part of the spectrum, can still occasion serious injuries; while the visible light which we perceive is of too low a frequency to injure healthy persons. There are, however, subjects, made sensitive by illness, who suffer serious affections of the skin from strong illumination. Above the optical spectrum, there follow the infra-red and heat waves, whose effect on atoms is relatively slight; in the case of still longer waves only molecular effects are to be expected. Here we are entering

the range of the Hertzian waves, electric waves in the stricter sense. Of these, the shortest are about half a millimeter (.02-inch) long, and therefore just above the heat radiations.

From direct analogy, it is to be assumed that the shortest of these waves must be absorbed by human bodies, as in the case of heat rays, and this absorption can be actually demonstrated.

DO YOU KNOW —

¶ What effect short waves have on the hair and scalp in general?

¶ Whether the current in the exciting antenna increases or decreases when a person stands in its field? Why?

¶ If the person stoops will this affect the reading of the antenna current meter?

¶ Whether 'cold" or "heat" is produced inside the body by an overdose of the high frequency waves?

¶ The effect of short waves on the nervous system?

Absorption of Radio by the Body

With specially-built transmitters, especially such as those which have been described by Kohl, electric waves only a few centimeters in length can be produced; these waves can be reflected by mirrors, exactly like light rays. If one puts the antenna in the focus of a concave mirror, then there is formed a parallel beam of radiation which can be concentrated again in another concave mirror. By means of a lens placed in the course of the radiation, the ray is made very sharp. If a person steps into this path, reception ceases. Since no reflection by the human body or only a very slight one is demonstrable, absorption of the radiation must have occurred; this effect is, moreover, demonstrable in the case of other organic substances or water. Unfortunately, not much can yet be said about the physiological effects of these radiations; the power of the transmitters of extremely short waves is still too low to produce perceptible changes.

It is otherwise with the wavelengths from three meters up, to the production of which powers of several kilowatts can be applied. Here the above described optical phenomena cannot be so well demonstrated, because the diffraction is much greater; but absorption by the human body can be very well shown.

When an antenna is inductively coupled to a 3-meter transmitter, the oscillations can be indicated by a detector even at a considerable distance away. If however, a person puts himself in the place of the antenna, the detector responds much more weakly, although the power consumed by the transmitter remains the same. Accordingly, a part of the power must have been used up in the body. The same phenomenon can be demonstrated as follows: a closed or open oscillation circuit is inductively coupled with the transmitter (see Fig. 1). The ammeter in the circuit shows a definite current strength. If a person places himself on an insulating stool beside it, the current in the oscillation circuit is reduced. This withdrawal of energy, however, depends on the length of the body; for if the subject stoops, or changes to a sitting position, the current in the other circuit increases (Fig. 2). Therefore, it appears as though, by the tuning of the subject, *to about half the wavelength, the power transmitted to him becomes much greater.*

Concentrating Power by Means of a Reflector

By means of a large concave mirror one can also collect the transmitted power to a focus. Such a mirror need consist only of parallel wires stretched between two wooden frames. Its height must be equal to the wavelength, the opening one and one-half times the wavelength. It is best to use elliptical reflectors, with the transmitting antenna at one focus; then the reflected radiation is at the other focus of the ellipse. With a "dipole" ("Hertzian" antenna) containing an ammeter, especially strong concentration of energy at this point can be demonstrated. Here a lessening of the current in the dipole is instantly shown if a person steps into the vicinity. Since the human body is to be regarded essentially as an electrolytic system, with regard to the electric wave, and I have tried to demonstrate the effect in the following manner in a model experiment.

A glass tube, of half the wave's length, was filled with an 0.5% sodium chloride (salt) solution, to which gelatine was added to prevent convection. In this jelly the temperature was measured, at different places, by thermo-elements. It was shown that the heating was greatest in the middle and least at the ends; being half as strong at the quarter points of entire length as it was in the middle. Since the maximum strength of the current is at the middle, the greatest heating is therefore connected with this.

Physiological Effect of Short Waves

Especially noteworthy, also, was a feeling of vibration, which was particularly evident if the hand was raised in front. We could establish this sensation only at our transmitter, which is operated with 50-cycle alternating current. There must be, therefore, a direct influence on the nervous system. Here too we have, therefore, another proof that the ultra-short radio waves exercised an effect on the nerves.

These vibrations are also felt if the hand is placed in a condenser's field. Many persons who remain close to the transmitter also experience remarkable sensations on the head, near the roots of the hair; these are like a peculiar prickling, the hair likewise standing up a little. In many subjects we could also observe slight increases in bodily temperature, which however did not exceed 0.5 of a degree, Centigrade (0.9 degree Fahrenheit). Since the body contains extremely fine regulators, by which the temperature is always kept constant, and since also the amounts of energy which can be conveyed into the body, even by powerful radio transmitters, give (when translated into heat units) only a relatively low number of calories, this increase in heat is probably not attributable to the received energy alone. As is to be shown later, nervous effects may play an important part in this.

The effect on the nervous system is

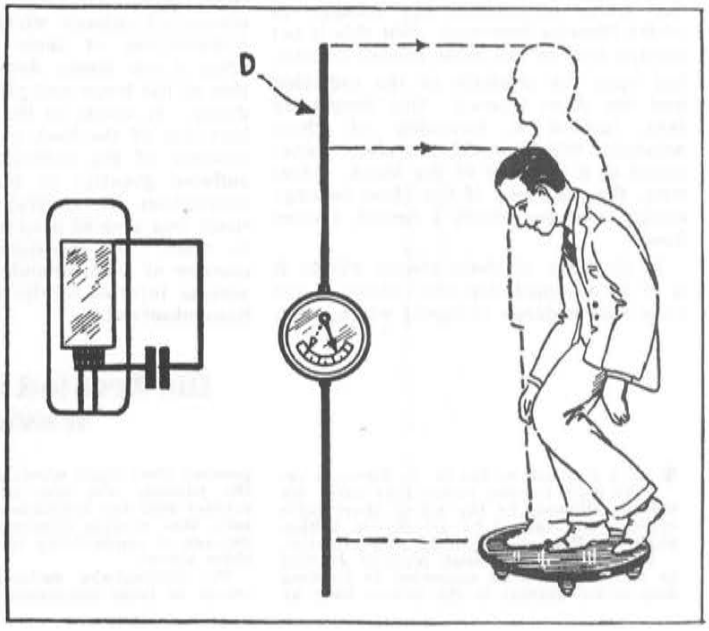

Fig. 2. One of the most interesting effects of placing a human being in the field of a short wave (high frequency) oscillator is that of absorption. The antenna "D" is excited by the power tube and loop circuit at the left. Do you think the antenna current is increased or decreased by bending the body?

plainly felt by all persons who work a fairly long time with short waves. The sensations are different with the individuals; there are persons who are relatively insensitive, and others who very soon complain about the disturbances of their health. Usually there is first an increasing sleepiness; they are very tired by day, but at night they sleep badly. Several times a night they start out of their sleep, and they are tired and sleepy in the morning.

These phenomena increase more and more. Often there are also intensive headaches, particularly covering the back of the head. Many persons complain of digestive disturbances and pressure on the stomach. Most of them are furthermore easily excited and irritated, being inclined to complaining and to violence. This increased excitability of the nervous system can also be shown by electrical tests of the nerves.

Effects of the Electrostatic Field

It is much easier to study these changes by using the condenser field. Here it is not the electromagnetic wave which is used, but the electrostatic field, which always accompanies it. Here, however, the effect may be much more strongly concentrated. I have generally used plates four inches in diameter, between which the parts of the body in question were treated. The field between these plates suffices to heat 100 cc. of a 0.5% sodium chloride (salt) solution 5 degrees C. (9° F.) in one minute. If parts of the human body are introduced into this field, and the blood is then taken from some part of the body (for instance, from the earlobe) on investigation obvious changes are found.

The number of red corpuscles per cubic millimeter is very greatly increased; i. e., if they formerly amounted to 5 million, the number has risen to 6 million. The same is true of the haemoglobin (a constituent of the blood) and the white corpuscles, the number of which likewise increases. But this is not always true to the same extent, depending upon the strength of the radiation and the place treated. One frequently sees instead a lessening of these amounts, which would therefore correspond to a thinning of the blood. Likewise, the albumens of the blood undergo certain changes which I cannot discuss here.

In the case of these strong effects it is to be assumed that the tissues of the body also undergo changes; which, however, cannot be directly proved in a subject.

Human Beings As Antennas

By Dr. Erwin Schliephake, M.D.

Results of Experiments on Animals

In experiments with animals, on the contrary, such changes are plainly recognizable. They occur particularly strong in projecting parts of the animals, such as in the ears and tips of the tails; since there the electric field is distorted. Very often, one sees, some time after the treatment, that the parts in question are dying and falling off. In the case of a rabbit whose leg had been too strongly exposed to the electrostatic field, I noticed a complete disintegration of the flesh in a ring-shaped region, so that only the bone remained; but then, after a while, that also fell off.

That the nervous sytem of the animals is also influenced is shown by the fact that many of them shudder on the switching on or off of the field, at a time when there can be no question of a strong heating effect.

Also very interesting are the disturbances of the internal heat regulation, which one can produce in animals. If the region of the neck and the back of the head of a rabbit are exposed to a limited capacitative field and the temperature is afterward measured, one can soon note a permanently increased temperature, which often lasts for some weeks. If a very powerful dose of "irradiation" is administered the opposite can occur: the bodily heat falls more and more, often below 35 degrees C. (95° F.), until these low temperatures are no longer compatible with life. At the same time, it is interesting to observe that almost all animals which have had such disturbances of their heat regulation after a few weeks developed inflammation of the lungs and pleurisy, afterward dying. It seems as though, by the disturbance of the heat regulation, the resistance of the animals to disease had suffered greatly; so that in this path throughout the central nervous system there was created a special susceptibility to colds. On investigating the spinal marrow of such animals microscopically, serious injuries to the nerve cells have been observed.

Dangers and Beneficial Possibilities

After these experiences, I have not dared to expose entire human beings to a condenser field and in this way produce artificial rises in temperature. The responsibility seemed too great. At the same time, effective heating of the body can be accomplished equally well in other ways; such as with the well-known Apostoli "condenser bed," which can be connected to any diathermal apparatus. With the method previously described, only serious dangers for the patients treated would have been conjured up, without the possibility of producing a fundamentally new effect.

On the other hand, the disturbances of the physical health, which we could observe in the field of free radiation of powerful transmitters, have never been serious. After a period of recovery of a few weeks, with no irradiation, all effects have been observed to vanish. For four years now, I have almost daily worked for several hours at a transmitter with 1½ kw. plate dissipation; and the effects, often very unpleasant, have always gone back to normal on stopping the work.

In these things the wavelength is also certainly of importance, and in fact we have the impression that the disturbances to health became stronger as the wave was shortened. Anyway, the unpleasant sensations appear much quicker with a three-meter wave than with longer ones.

From all these experiences, it is at any rate clear that treatment with electric waves can in no way be regarded as always harmless for the human body. It is plain that their incorrect use can cause serious injuries to health. Certainly such injuries are to be expected only when the frequencies are very high; that is, with ultra-short waves; even then there is nothing to fear except with fairly high transmitter power.

On the other hand, with proper use, the short electric waves seem to be a valuable means of treatment. According to our experiments to date, with bacteria cultures and infected animals, the germs of disease can be killed. There is the added point that certain defensive processes are stimulated in the body. I have also already repeatedly treated human beings; and, in about a hundred cases, I have been able to attain an extraordinarily quick cure of suppuration (pus formation).

Ills Treated by Short Waves

● IN a dispatch to the N. Y. Times, a report from London states that cures for various ailments by the use of short radio waves were claimed by Dr. Erwin Schliephake, a German physician and scientist.

Writing in the *British Medical Journal* he described how he succeeded in treating deep-seated abscess in the human body by passing ultra-short wireless waves through the patient, who was not in immediate contact with any instrument. He found, he said, that various tissues exhibit different degrees of conductivity in the presence of these waves.

Dr. Schliephake declared he has used waves to treat pulmonary abscesses after pneumonia, in pleural empyema, pneumonic tuberculosis, in certain forms of peritonitis, in migraine and acute tonsilitis.

Dr. Willis R. Whitney, research director of the General Electric Company, revealed in April, 1930, that he had developed a radio type of apparatus for killing bacteria in the body.

From THEORY AND CALCULATION OF TRANSIENT PHENOMENON & ELECTRIC OSCILLATIONS by Charles Proteus Steinmetz, 1920

CHAPTER V.

DISTRIBUTED SERIES CAPACITY.

43. The capacity of a transmission line, cable, or high-potential transformer coil is shunted capacity, that is, capacity from conductor to ground, or from conductor to return conductor, or shunting across a section of the conductor, as from turn to turn or layer to layer of a transformer coil.

In some circuits, in addition to this shunted capacity, distributed series capacity also exists, that is, the circuit is broken at frequent and regular intervals by gaps filled with a dielectric or insulator, as air, and the two faces of the conductor ends thus constitute a condenser in series with the circuit. Where the elements of the circuit are short enough so as to be represented, approximately, as conductor differentials, the circuit constitutes a circuit with distributed series capacity.

An illustration of such a circuit is afforded by the so-called "multi-gap lightning arrester," as shown diagrammatically in Fig. 90, which consists of a large number of metal cylinders p, q . . . , with small spark gaps between the cylinders, connected between line L and ground G. This arrangement, Fig. 90, can be represented diagrammatically by Fig. 91. Each cylinder has a capacity C_0 against ground, a capacity C against the adjacent cylinder, a resistance r,— usually very small,— and an inductance L.

The series of insulator discs of a high voltage suspension—or strain—insulator also forms such a circuit.

If such a series of n equal capacities or spark gaps is connected across a constant supply voltage e_0, each gap has a voltage $e = \frac{e_0}{n}$. If, however, the supply voltage is alternating, the voltage does not divide uniformly between the gaps, but the potential difference is the greater, that is, the potential gradient steeper the nearer the gap is to the line L, and this distribution of potential becomes the more non-uniform the higher the frequency; that is, the greater the charging current of the capacity of the cylinder against the ground. The charging currents against ground, of all

ing frequency, does not remain constant, but decreases with increase of frequency, when the frequency becomes sufficiently high to give appreciable charging currents. Hence high frequency oscillations discharge over such a structure at lower voltage than machine frequencies.

For a further discussion of the feature which makes such a multigap structure useful for lightning protection, see A. I. E. E. Transactions, 1906, pp. 431, 448, 1907, p. 425, etc.

44. Such circuits with distributed series capacity are of great interest in that it is probable that lightning flashes in the clouds are discharges in such circuits. From the distance traversed by lightning flashes in the clouds, their character, and the disruptive strength of air, it appears certain that no potential difference can exist in the clouds of such magnitude as to cause a disruptive discharge across a mile or more of space. It is probable that as the result of condensation of moisture, and the lack of uniformity of such condensation, due to the gusty nature of air currents, a non-uniform distribution of potential is produced between the rain drops in the cloud; and when the potential gradient somewhere in space exceeds the disruptive value, an oscillatory discharge starts between the rain drops, and gradually, in a number of successive discharges, traverses the cloud and equalizes the potential gradient. A study of circuits containing distributed series capacity thus leads to an understanding of the phenomena occurring in the thunder cloud during the lightning discharge.*

Only a general outline can be given in the following.

45. In a circuit containing distributed resistance, conductance, inductance, shunt, and series capacity, as the multigap lightning arrester, Fig. 90, represented electrically as a circuit in Fig. 91, let r = the effective resistance per unit length of circuit, or per circuit element, that is, per arrester cylinder; g = the shunt conductance per unit length, representing leakage, brush discharge, electrical radiation, etc.; L = the inductance per unit length of circuit; C = the series capacity per unit length of circuit, or circuit element, that is, capacity between adjacent arrester cylinders, and C_0 = the shunt capacity per unit length of circuit, or circuit element, that is, capacity between arrester cylinder and

* See paper, "Lightning and Lightning Protection," N.E.L.A., 1907. Reprinted and enlarged in "General Lectures on Electrical Engineering," by Author.

the cylinders from q to the ground G, Figs. 90 and 91, must pass the gap between the adjacent cylinders p and q; that is, the charging current of the condenser represented by two adjacent

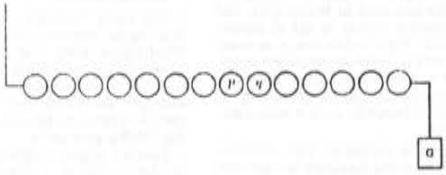

Fig. 90. Multi-gap lightning arrester.

cylinders p and q is the sum of all the charging currents from q to G; and as the potential difference between the two cylinders p and q is proportional to the charging current of the condenser

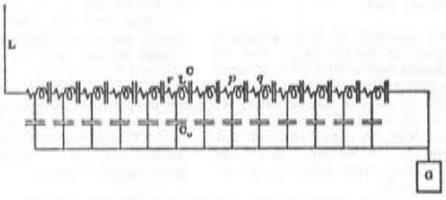

Fig. 91. Equivalent circuit of a multi-gap lightning arrester.

formed by these two cylinders, C, this potential difference increases towards L, being, at each point proportional to the vector sum of all the charging currents, against ground, of all the cylinders between this point and ground.

The higher the frequency, the more non-uniform is the potential gradient along the circuit and the lower is the total supply voltage required to bring the maximum potential gradient, near the line L, above the disruptive voltage, that is, to initiate the discharge. Thus such a multigap structure is discriminating regarding frequency; that is, the discharge voltage with increas-

ground. If then f = the frequency of impressed e.m.f., the series impedance per unit length of circuit is

$$Z = r + j(x - x_c); \tag{1}$$

the shunt admittance per unit length of circuit is

$$Y = g + jb, \tag{2}$$

where

$$\left.\begin{aligned} x &= 2\pi f L, \\ x_c &= \frac{1}{2\pi f C}, \\ b &= 2\pi f C_0; \end{aligned}\right\} \tag{3}$$

or the absolute values are

$$\left.\begin{aligned} z &= \sqrt{r^2 + (x - x_c)^2} \\ \text{and} \quad y &= \sqrt{g^2 + b^2}. \end{aligned}\right\} \tag{4}$$

If the distance along the circuit from line L towards ground G is denoted by l, the potential difference between point l and ground by $\dot{E}$, and the current at point l by $\dot{I}$, the differential equations of the circuit are *

$$\frac{d\dot{E}}{dl} = Z\dot{I} \tag{5}$$

and

$$\frac{d\dot{I}}{dl} = Y\dot{E}. \tag{6}$$

Differentiating (5) and substituting (6) therein gives

$$\frac{d^2\dot{E}}{dl^2} = YZ\dot{E}. \tag{7}$$

Equation (7) is integrated by

$$\dot{E} = A_1\epsilon^{-al} + A_2\epsilon^{+al}, \tag{8}$$

where

$$a = \sqrt{YZ} = \alpha + j\beta, \tag{9}$$

$$\left.\begin{aligned} \alpha &= \sqrt{\tfrac{1}{2}\{yz + gr - b(x - x_c)\}} \\ \text{and} \quad \beta &= \sqrt{\tfrac{1}{2}\{yz - gr + b(x - x_c)\}}. \end{aligned}\right\} \tag{10}$$

* Section III, Chapter II, paragraph 7.

Substituting (10) in (8) and eliminating the imaginary exponents by the substitution of trigonometric functions,

$$E_l = A_1\epsilon^{-\alpha l}(\cos\beta l - j\sin\beta l) + A_2\epsilon^{+\alpha l}(\cos\beta l + j\sin\beta l). \quad (11)$$

46. However, if n = the total length of circuit from line L to ground G, or total number of arrester cylinders between line and ground, for $l = n$,

$$E_l = 0, \quad (12)$$

and for $l = 0$,

$$E_l = e_0 = \text{the impressed e.m.f.} \quad (13)$$

Substituting (12) and (13) into (11) gives

$$0 = A_1\epsilon^{-\alpha n}(\cos\beta n - j\sin\beta n) + A_2\epsilon^{+\alpha n}(\cos\beta n + j\sin\beta n)$$

and

$$e_0 = A_1 + A_2;$$

hence,

$$\left.\begin{aligned} A_1 &= \frac{e_0}{1 - \epsilon^{-2\alpha n}(\cos 2\beta n - j\sin 2\beta n)}, \\ A_2 &= -A_1\epsilon^{-2\alpha n}(\cos 2\beta n - j\sin 2\beta n), \end{aligned}\right\} \quad (14)$$

and the potential difference against ground is

$$E_l = e_0 \frac{\epsilon^{-\alpha l}(\cos\beta l + j\sin\beta l) - \epsilon^{-\alpha(2n-l)}[\cos\beta(2n-l) - j\sin\beta(2n-l)]}{1 - \epsilon^{-2\alpha n}(\cos 2\beta n - j\sin 2\beta n)} \quad (15)$$

From equation (5), substituting (15) and (9), we have

$$I = -\sqrt{\frac{Y}{Z}}\, e_0 \frac{\epsilon^{-\alpha l}(\cos\beta l - j\sin\beta l) + \epsilon^{-\alpha(2n-l)}[\cos\beta(2n-l) - j\sin\beta(2n-l)]}{1 - \epsilon^{-2\alpha n}(\cos 2\beta n - j\sin 2\beta n)} \quad (16)$$

Reduced to absolute terms this gives the potential difference against ground as

$$e = e_0\sqrt{\frac{\epsilon^{-2\alpha l} + \epsilon^{-2\alpha(2n-l)} - 2\epsilon^{-2\alpha n}\cos 2\beta(n-l)}{1 + \epsilon^{-4\alpha n} - 2\epsilon^{-2\alpha n}\cos 2\beta n}}, \quad (17)$$

the current as

$$i = e_0\sqrt{\frac{y}{z}}\sqrt{\frac{\epsilon^{-2\alpha l} + \epsilon^{-2\alpha(2n-l)} + 2\epsilon^{-2\alpha n}\cos 2\beta(n-l)}{1 + \epsilon^{-4\alpha n} - 2\epsilon^{-2\alpha n}\cos 2\beta n}}, \quad (18)$$

and the potential gradient, or potential difference between adjacent cylinders, is

$$e' = x_0 i = e_0 x_0\sqrt{\frac{y}{z}}\sqrt{\frac{\epsilon^{-2\alpha l} + \epsilon^{-2\alpha(2n-l)} + 2\epsilon^{-2\alpha n}\cos 2\beta(n-l)}{1 + \epsilon^{-4\alpha n} - 2\epsilon^{-2\alpha n}\cos 2\beta n}}. \quad (19)$$

For an infinite length of line, $n = \infty$, that is, for a very large number of lightning arrester cylinders, where $\epsilon^{-2\alpha n}$ is negligible, as in the case where the discharge passes from the line into the arrester without reaching the ground, equations (17), (18), (19) simplify to

$$e = e_0\epsilon^{-\alpha l}, \quad (20)$$

$$i = e_0\sqrt{\frac{y}{z}}\,\epsilon^{-\alpha l}, \quad (21)$$

and

$$e' = e_0 x_0\sqrt{\frac{y}{z}}\,\epsilon^{-\alpha l}; \quad (22)$$

that is, are simple exponential curves.

Substituting (4) and (3) in (21) and (22) gives

$$e' = e_0\epsilon^{-\alpha l}\sqrt[4]{\frac{C_0^2 + \left(\frac{g}{2\pi f}\right)^2}{C^2\{[1 - (2\pi f)^2 CL]^2 + (2\pi f C r)^2\}}} \quad (23)$$

and

$$i = 2\pi f C e'; \quad (24)$$

or, approximately, if r and g are negligible, we have

$$e' = e_0\epsilon^{-\alpha l}\sqrt{\frac{C_0}{C\{1 - (2\pi f)^2 CL\}}} \quad (25)$$

and

$$i = 2\pi f e_0\epsilon^{-\alpha l}\sqrt{\frac{CC_0}{1 - (2\pi f)^2 CL}}. \quad (26)$$

47. Assume, as example, a lightning arrester having the following constants: $L = 2 \times 10^{-8}$ henry; $C_0 = 10^{-12}$ farads;

$C = 4 \times 10^{-11}$ farads; $r = 1$ ohm; $g = 4 \times 10^{-6}$ mho; $f = 10^8$ = 100 million cycles per second; $n = 300$ cylinders, and $e_0 = 30{,}000$ volts; then from equation (3), $x = 12.6$ ohms, $x_0 = 39.7$ ohms, and $b = 62.8 \times 10^{-6}$ mhos;

from equation (1),

$$Z = 1 - 27.1\,j \text{ ohms};$$

from equation (2),

$$Y = (4 + 62.8\,j)\,10^{-6} \text{ mho};$$

from equation (4),

$$z = 27.1 \text{ ohms and } y = 62.9 \times 10^{-6} \text{ mho};$$

from equation (10),

$$\alpha = 0.0021 \text{ and } \beta = 0.0412;$$

from equation (17),

$$e = 35{,}500\sqrt{\epsilon^{-0.0042\,l} + 0.08\,\epsilon^{+0.0042\,l} - 0.568\cos(24.72 - 0.0824\,l)};$$

from equation (18),

$$i = 54\sqrt{\epsilon^{-0.0042\,l} + 0.08\,\epsilon^{+0.0042\,l} + 0.568\cos(24.72 - 0.0824\,l)},$$

and from equation (19),

$$e' = 2140\sqrt{\epsilon^{-0.0042\,l} + 0.08\,\epsilon^{+0.0042\,l} + 0.568\cos(24.72 - 0.0824\,l)}.$$

Hence, at $l = 0$, $e = 30{,}000$ volts, $i = 64.6$ amperes, and $e' = 2560$ volts; and at $l = 300$, $e = 0$, $i = 57.5$ amperes, and $e' = 2280$ volts.

With voltages per gap varying from 2280 to 2560, 300 gaps would, by addition, give a total voltage of about 730,000, while the actual voltage is only about one-twenty-fourth thereof; that is, the sum of the voltages of many spark-gaps in series may be many times the resultant voltage, and a lightning flash may pass possibly for miles through clouds with a total potential of only a few hundred million volts. In the above example the 300 cylinders include 7.86 complete wave-lengths of the discharge.

Los Angeles Times Jan 3, 1988

Ham Radio Operators' High Cancer Rate Poses a Puzzle

TACOMA, Wash. (AP)—Amateur radio operators in Washington and California appear to die at abnormally high rates from several forms of cancer, suggesting a possible link between cancer and electromagnetic fields, according to data collected by a state epidemiologist.

Others cautioned that evidence of such a link has been inconsistent and that other factors may be involved.

Dr. Samuel Milham Jr. of the Washington Department of Social and Health Services studied the deaths of 2,485 Washington and California ham operators between 1979 and 1984.

He reported in the American Journal of Epidemiology that 29 leukemia deaths would be expected in a group of people that size, but he found 36 deaths. Statistically, he expected to find 72 lymphatic and blood-forming organ cancers, but found 89. And he expected to find 67.6 deaths from prostate cancer, but found 78.

'Excess Mortality'

The study "indicates that amateur radio operator licensees in Washington state and California have significant excess mortality due to acute myloid leukemia, multiple myeloma and perhaps certain types of malignant lymphoma," Milham reported.

Leonard Sagan, program manager for radiation studies at the Electric Power Research Institute in Palo Alto, Calif., warned that studies like Milham's can be misinterpreted. Milham's findings could be simple associations that have nothing to do with cancer causes among people who work with electricity, he said.

Sagan said his own research hasn't shown whether electricity causes cancer. But he predicted that if it does, it's rare.

"I think it would be unfortunate for people with children to become overly concerned about this," he said. "Evidence is weak and inconsistent and in a few years we will have better evidence."

Here's something to consider while using a Multi Wave Oscillator. Just "any old" radio frequency broadcast energy may not be desireable. Use this handbook in your detective work to discover Lakhovsky's secret.

LAKINSTRUCACTIVE Basic Instructions rev 0620

Informational Data for Those Who Purchased the Lakhovsky Unit

A color copy of the instructions can be down- loaded from the products main page on the web site.
These instructions are new and if you need further data let us know by *EMAIL OR CALL US*
See also downloads of books and helpful medical explanations on performance issues etc

LAKMWO10 Laskowski Multi-Wave Oscillator setup instruction

PLEASE READ BELOW NOTES

The New* Lakhovsky *machine now has a clear protective plastic shroud that goes around the bottom and allows covering the top flat spiral coil. This partition will help to prevent accidental contact with the high-voltage parts and is labeled do not remove unless you are qualified in handling this type of equipment!

Most units come with several feet of green wire. This is intended to connect to an earth ground, such as a AC receptacle socket plate screw or other known ground point***. It is not for connecting to the coil of the antenna, as this will greatly reduce or possible damage the machine.*** Those who use 3-wire grounded wall outlets need not to worry about this wire and coil it up where it is not an issue

This machine will produce a small amount of ozone if not properly ventilated or being used in a very small confined area could be a problem and proper ventilation may be required. Usually if the Ozone smell is pleasant like after a passing thunder shower it is probably not a problem. How-ever if you are going to expose patients or yourself you must take this into consideration. And we recommend you obtain an ozone detection device we can supply that will measure the amount of ozone per-cents in the air. It included a download that will take you to a specification sheet on ozone what its benefits are and what it also has so far is not been an issue. How-ever unlikely, it must be addressed as a potential negative attribute should it ever becomes excessive.
CAUTION: FDA safety standards state that .05 parts / million are considered acceptable for continued human exposure. If unit is operated in an inhabited area on a continuous basis, output should be just set to the point where a pleasant odor is detectable. This only is an approximate setting and should be verified by a certified meter. These can be purchased or rented and is strongly advised if you use the unit for treating patients

Neither the publisher nor the author makes any representations as to the accuracy of the information contained herein and disclaim any liability for damages or injuries, whether caused by or resulting from inaccuracies of the information, misinterpretations of the directions, misapplication of the information or otherwise

Important Data: Please Read Before Using

*The spark gap is factory set to 1/16" This setting is very critical in determining the treatment time of your sessions. **As of 3/19/18 this setting has been tested for run times of 10min-on/10min-off**
*Please note if you increase the spark gap separation distance you will **void your warranty** on this product

Tap lead is factory set for proper frequency and waveshape when set and displayed on a scope

Brief Data for Operating Your Lakhovsky

1. It is suggested to study some of the downloadable material where you may find worthwhile data on your malady
2. It is recommended to sit in front of the antenna about 2-3 feet
3. Maintain a position where the treatment area is at midsection of antenna for optimum exposure.
4. Keep treatment time no more than **10 minutes** intervals

Please be aware physical contact with the antenna may cause annoying yet harmless shocks.
This unit is for experimental alternative health remedies.

You Will Note Your New Lakhovsky Machine Now May be Used for Patient Treatment.
A clear protective plastic shroud goes around the bottom and allows covering the top flat spiral coil. This now will make it almost impossible to contact any high-voltage parts! It will be labeled, do not remove unless you are qualified in handling this type of equipment

Dr. Lakhovsky was a Russian researcher who experimented with the effect of high-frequency electromagnetic radiation on various parts of living organisms.

There have been many controversial claims about the health effects of this device. The theory is that all cells in a living body possess an intrinsic vibrating resonant frequency that can be energized by an external means, and that diseased cells appear to have a weaker and different frequency, that can be brought back into step with adjacent healthy cells***. Some researchers have exposed cells to this full spectrum of electromagnetic vibratory energy to investigate anti-aging effects,*** and

others have looked into the possibility of cellular regeneration to see if there was any potential in the fight against cancer.

We can- not make any claims to the health effects of this device, as it has not been evaluated or approved by the FDA, so any effects must be through the experimentation of the operator or user and the claims made by individuals who received treatment.

At this point it is recommended to obtain all the complete **free** downloadable pages of (LSK1) book on our website and familiarize yourself with the potentials, treatments and experiments possible with this system. Or purchase from AMAZON as the **LAKHOVSKY** Multiple Wave Oscillator Hand - book

If you think (or know) you have an ailment, always consult a medical doctor before using unit

Theory of operation

Figure shows a block diagram of the radiating coil and Tesla driver. The antenna coil contains a series of concentrically wound coil rings mounted in a flat plane. These coils all possess an inherent resonant frequency as a function of their physical parameters. Harmonics are also produced and together with all the coils oscillating now produce a near continuous spectrum of radio frequency energy.

A spark driven Tesla coil works wells for this application as it generates many fast steps of current that are rich in harmonic content that drive the antenna coil.

Instructions

Switch on the unit and note many of the antenna coil rings adjacently sparking and arcing between one another. Note the outer coil ring will produce weak purplish lightning type flashing into the open air. These are not dangerous and if accidentally contacted will produce an uncomfortable sensation to most people, but not extremely painful but can be extremely annoying. Some practitioners will demonstrate the output allowing the arc to continuously flash to their knuckles, proving it is not dangerous. However, we do not sanction doing this because what is not painful to one can be almost debilitating to the wrong person

It is recommended to obtain all the complete free downloadable pages of book on our website and familiarize yourself with the potentials, treatments and experiments possible with this system. We strongly suggest to purchase from AMAZON as the **LAKHOVSKY MULTIPLE WAVE OSCILLATOR HAND BOOK** contains a wealth of data on this remarkable machine.

Downloadble Data For Further Information

Mark Clement, Waves That Heal 47 PAGES

Georges Lakhovsky, Radiations and Waves, Sources of Our Life 73 PAGES

Radio-Cellulo Oscillator of George Lakhovsky 5 PAGES

View of system with our modified BTC30 Tesla coil without new protective clear plastic shroud

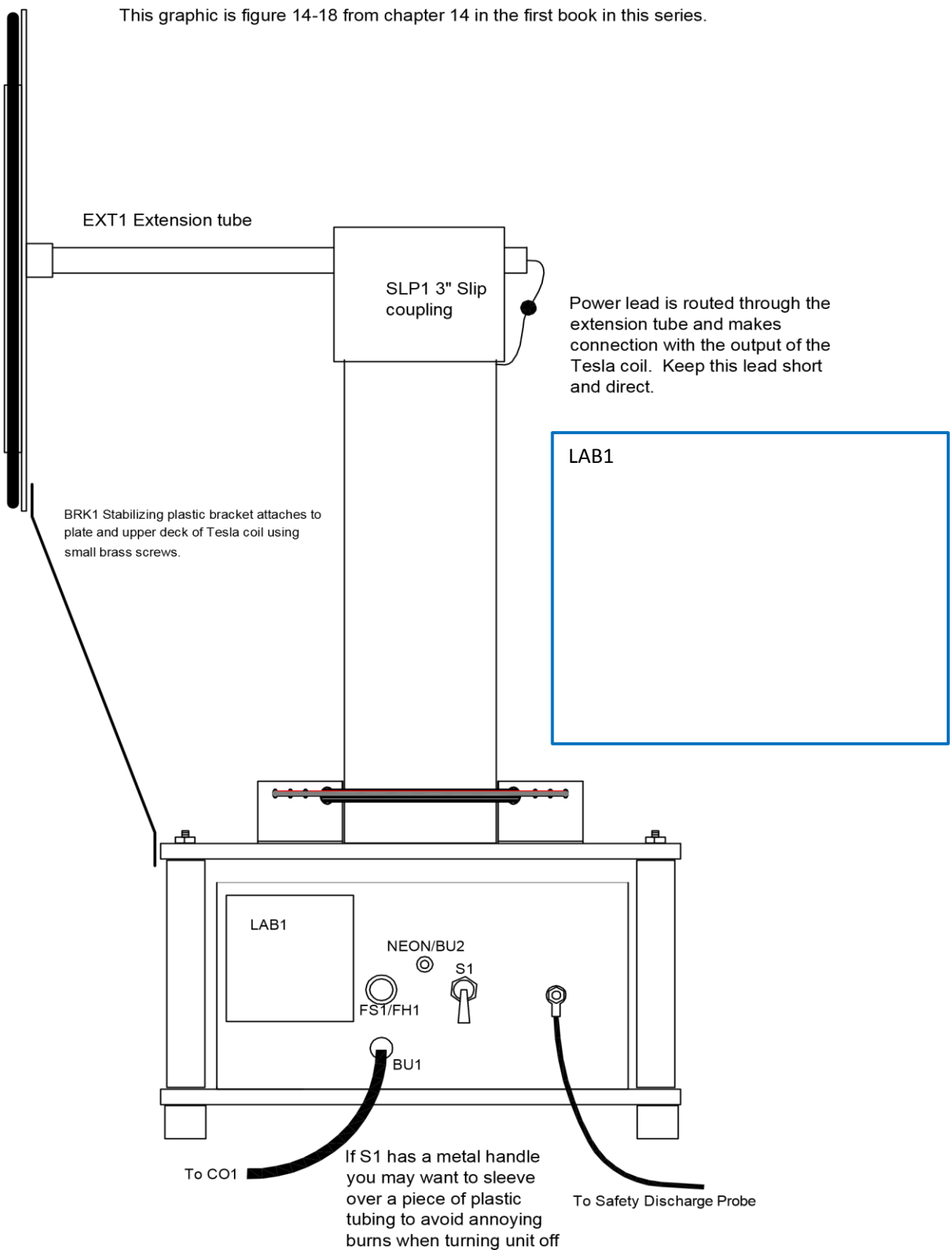

A little technical theory

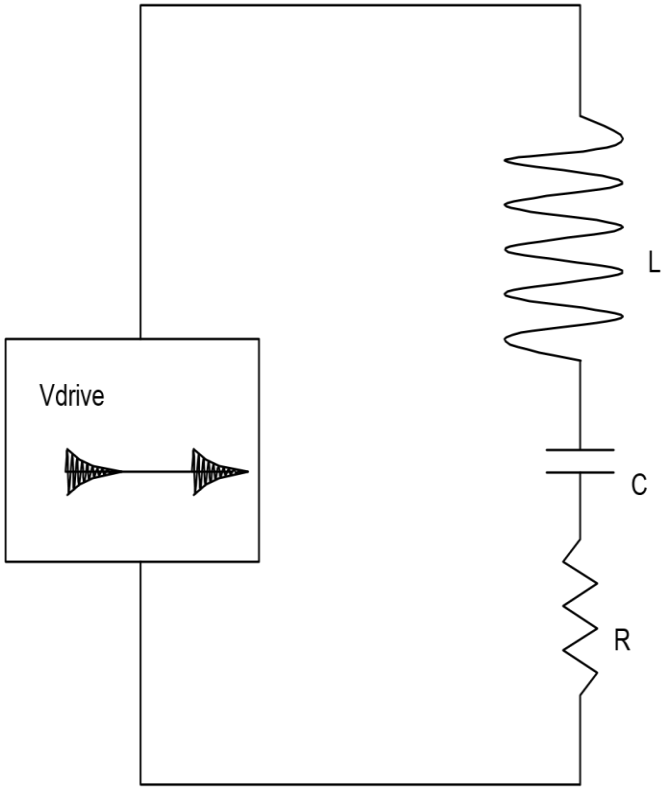

L1 to Ln represents the inductance of all of the coils
C1 to Cn represents the capacity of all of the coils
R1 to Rn is the radiation resistance of each section
Frequencys are the sum of the resonant sections ranging up to the gigahertz

L is the sum of L1 to Ln
C is the sum of C1 to Cn
R is the sum of R1 to Rn and is mainly the radiation resistance

The undamped current wave from the output of the Tesla driver induces voltages at many frequencies into the multi coils of the antenna

United States Patent [19]

Rogers, Sr.

[11] **4,292,804**

[45] **Oct. 6, 1981**

[54] **METHOD AND APPARATUS FOR OPERATING AN ENGINE ON COMPRESSED GAS**

[76] Inventor: **Leroy K. Rogers, Sr.,** #5 Capistrano Ct., Ft. Myers, Fla. 33908

[21] Appl. No.: **158,303**

[22] Filed: **Jun. 10, 1980**

[51] **Int. Cl.**[3] **F15B 11/06**

[52] **U.S. Cl.** **60/407;** 91/187; 91/275

[58] **Field of Search** 60/407, 412; 91/187, 91/275, 364

[56] **References Cited**

U.S. PATENT DOCUMENTS

3,881,399	5/1975	Sagi et al.	91/187 X
3,885,387	5/1975	Simington	60/407 X
4,018,050	4/1977	Murphy	60/412 X

Primary Examiner—Allen M. Ostrager
Attorney, Agent, or Firm—Burns, Doane, Swecker & Mathis

[57] **ABSTRACT**

The present invention relates to a method and apparatus for operating an engine having a cylinder and a piston reciprocable therein on compressed gas. The apparatus comprises a source of compressed gas connected to a distributor which distributes the compressed gas to the cylinder. A valve is provided to selectively admit compressed gas to the cylinder when the piston is in an approximately top dead center position. In one embodiment of the present invention the timing of the opening of the valve is advanced such that the compressed gas is admitted to the cylinder progressively further before the top dead center position of the piston as the speed of the engine increases. In a further embodiment of the present invention a valve actuator is provided which increases the length of time over which the valve remains open to admit compressed gas to the cylinder as the speed of the engine increases. A still further embodiment of the present invention relates to an apparatus for adapting a conventional internal combustion engine for operation on compressed gas.

22 Claims, 8 Drawing Figures

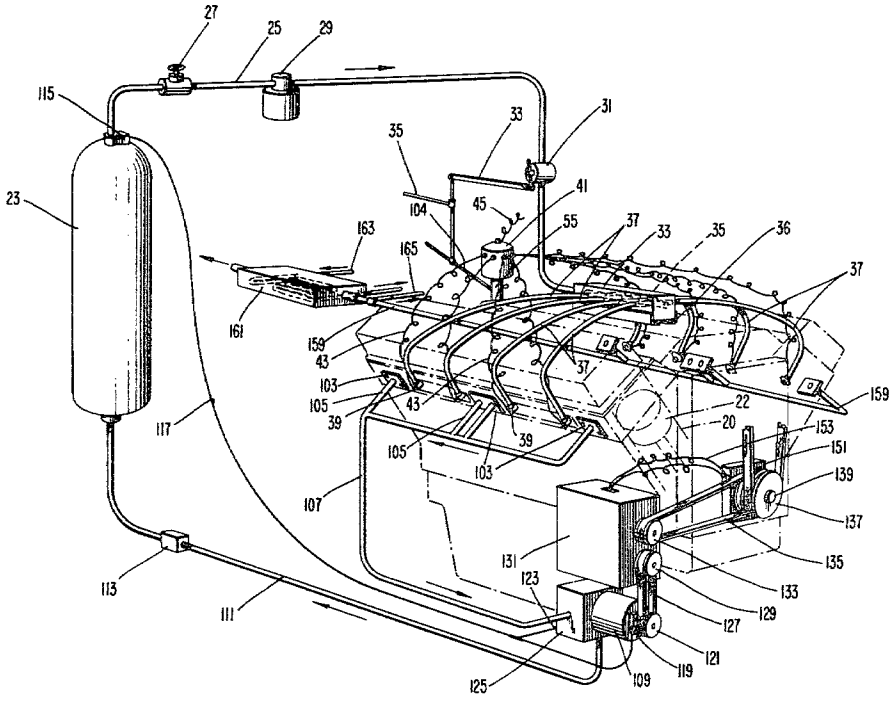

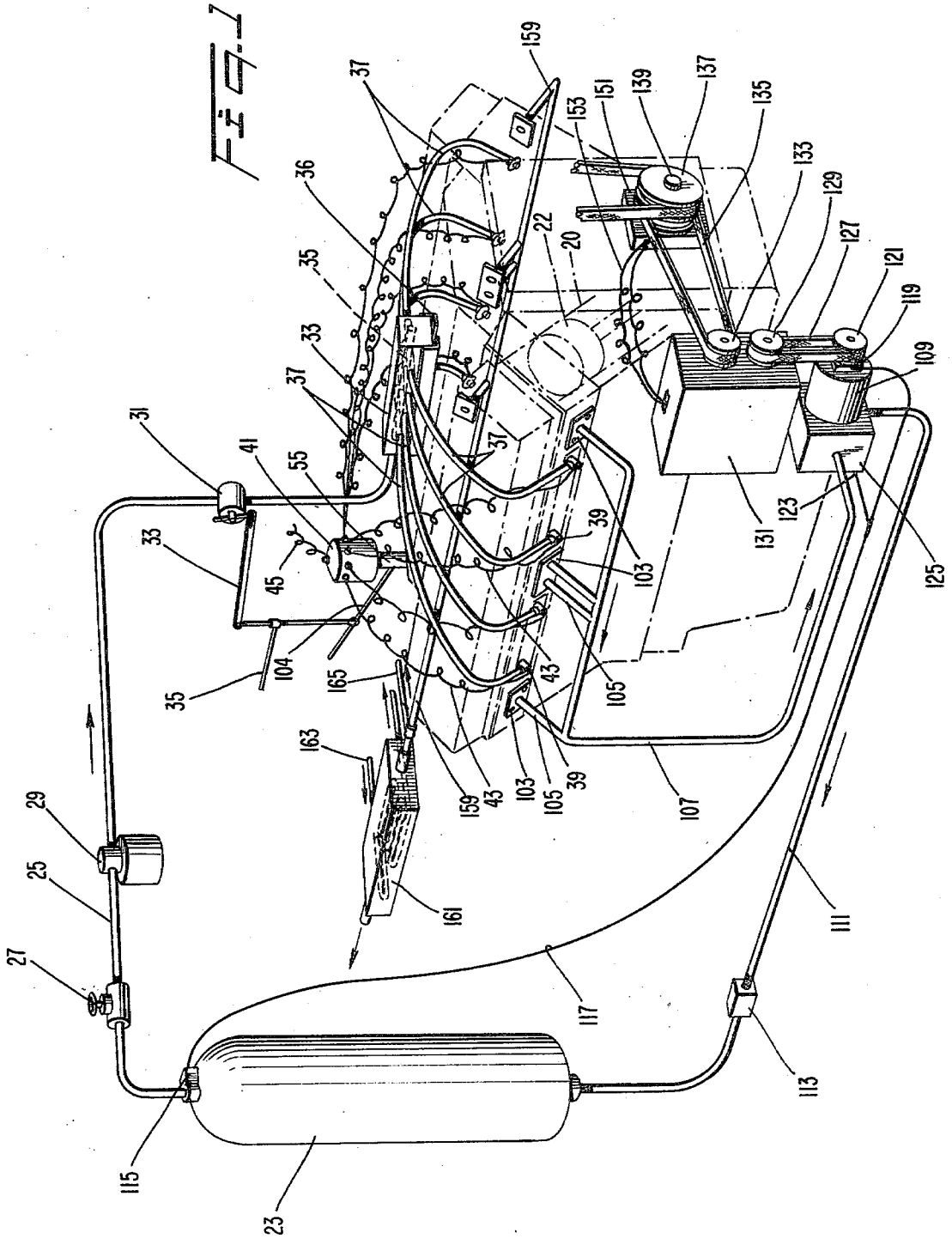
159
37
153
151
139
137
135
36
133
129
22
20
127
35
121
119
33
109
37
31
41
55
37
39
123
33
45
103
131
125
104
165
43
105
35
163
159
43
103
105
39
107
29
161
111
25
27
117
113
115
23

Fig. 1

Fig. 6

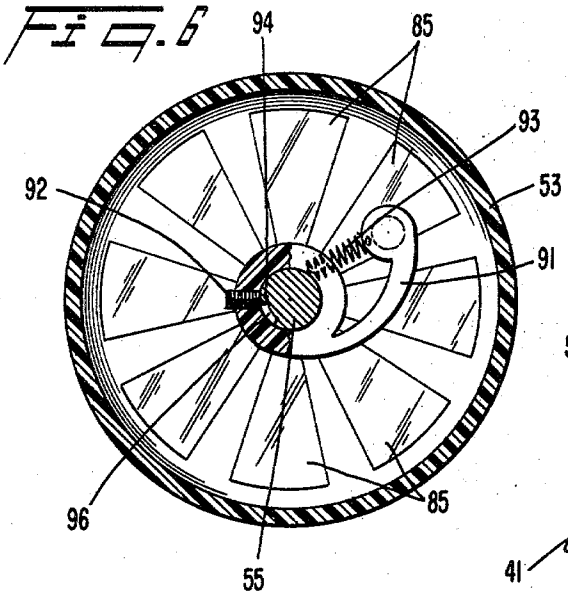

Fig. 7

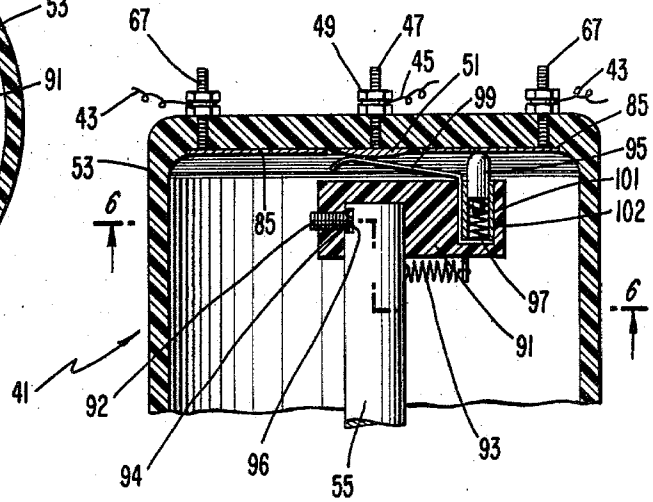

Fig. 3

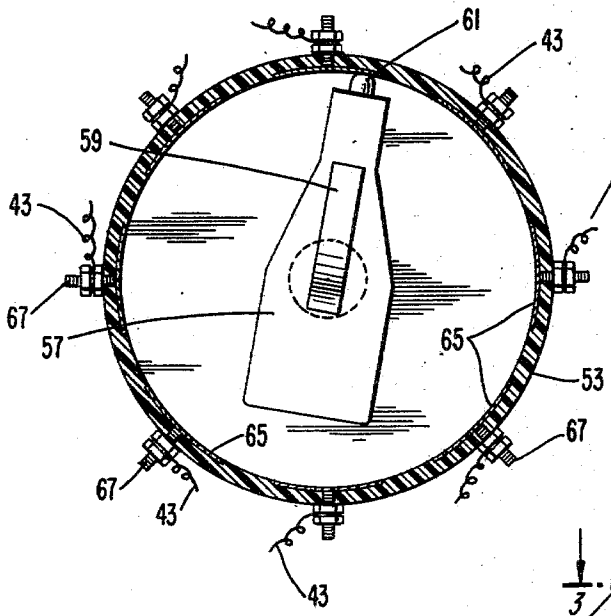

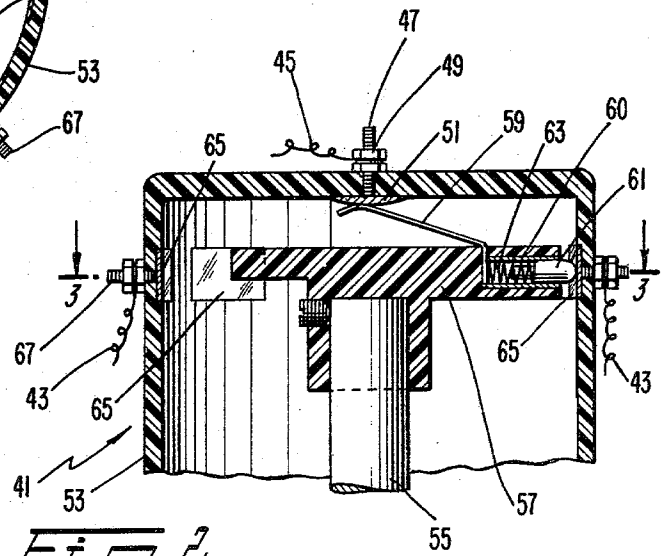

Fig. 2

Fig. 5

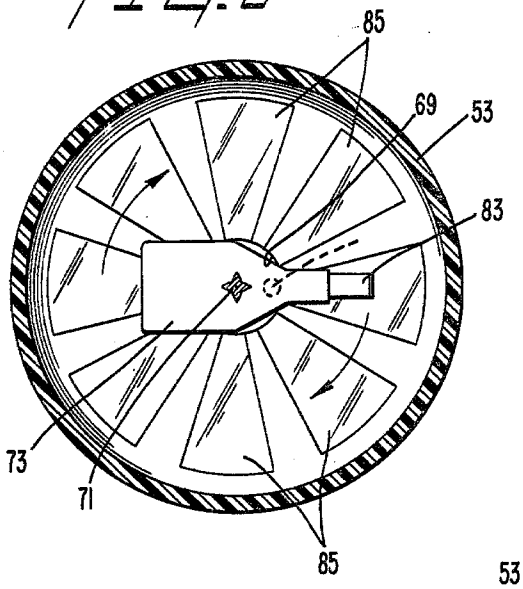

Fig. 4

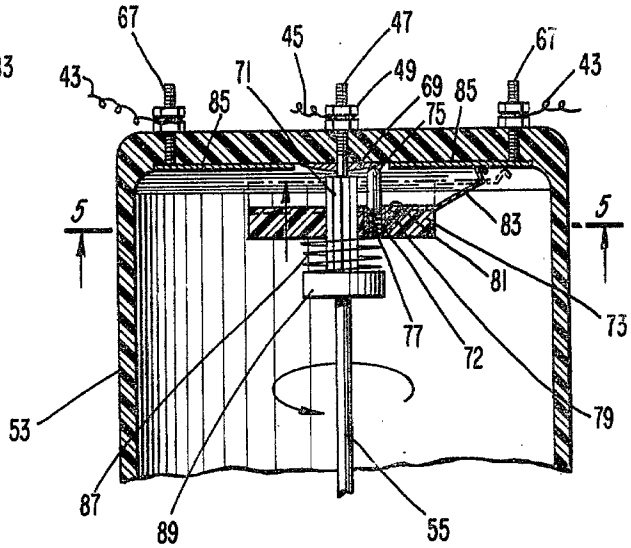

Fig. 8

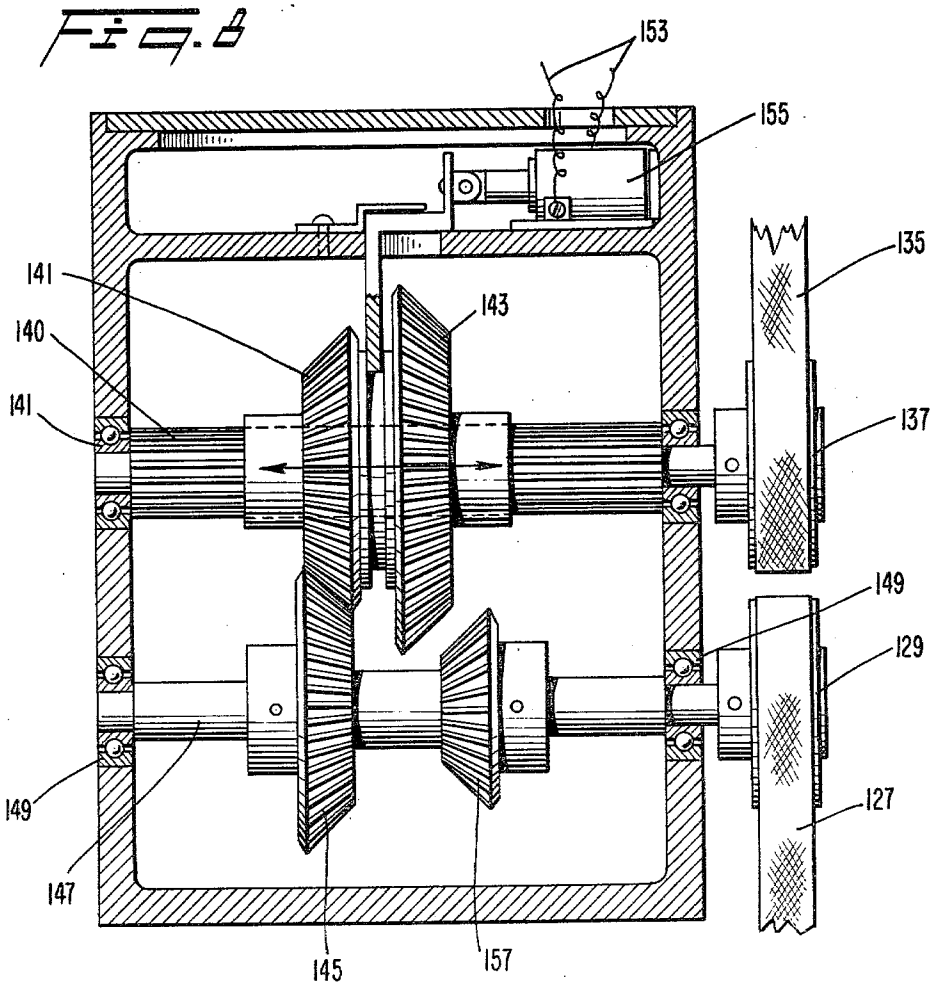

METHOD AND APPARATUS FOR OPERATING AN ENGINE ON COMPRESSED GAS

BACKGROUND AND SUMMARY OF THE PRESENT INVENTION

The present invention relates to a method and apparatus for operating an engine using a compressed gas as the motive fluid. More particularly, the present invention relates to a apparatus for adapting a pre-existing internal combustion engine for operation on a compressed gas.

Air pollution is one of the most serious problems facing the world today. One of the major contributors to air pollution is ordinary internal combustion engine which are used in most motor vehicles today. Various devices, including many items mandated by legislation, have been proposed in an attempt to limit the pollutants which an internal combustion engine exhausts to the air. However, most of these devices have met with limited success and are often both prohibitively expensive and complex. A clean alternative to the internal combustion engine is needed to power vehicles and other machinery.

A compressed gas, preferably air, would provide an ideal motive fluid for a engine since it would eliminate the usual pollutants exhausted from an internal combustion engine. An apparatus for converting an internal combustion engine for operation on compressed air is disclosed in U.S. Pat. No. 3,885,387 issued May 27, 1975 to Simington. The Simington patent discloses an apparatus including a source of compressed air and a rotating valve actuator which opens and closes a plurality of mechanical poppet valves. The valves deliver compressed air in timed sequence to the cylinders of an engine through adapters located in the spark plug holes. However, the output speed of an engine of this type is limited by the speed of the mechanical valves and the fact that the length of time over which each of the valves remains open cannot be varied as the speed of the engine increases.

Another apparatus for converting an internal combustion engine for operation on steam or compressed air is disclosed in U.S. Pat. No. 4,102,130 issued July 25, 1978 to Stricklin. The Stricklin patent discloses a device which changes the valve timing of a conventional four stroke engine such that the intake and exhaust valves open once for every revolution of the engine instead of once every other revolution of the engine. A reversing valve is provided which delivers live steam or compressed air to the intake valves and is subsequently reversed to allow the exhaust valves to deliver the expanded steam or air to the atmosphere. A reversing valve of this type however does not provide a reliable apparatus for varying the amount of motive fluid injected into the cylinders when it is desired to increase the speed of the engine. Further, a device of the type disclosed in the Stricklin patent requires the use of multiple reversing valves if the cylinders in a multi-cylinder engine were to be fired sequentially.

Therefore, it is an object of the present invention to provide a reliable method and apparatus for operating an engine or converting an engine for operation with a compressed gas.

A further object of the present invention is to provide a method and apparatus which is effective to deliver a

constantly increasing amount of compressed gas to an engine as the speed of the engine increases.

A still further object of the present invention is to provide a method and apparatus which will operate an engine using compressed gas at a speed sufficient to drive a conventional automobile at highway speeds.

It is still a further object of the present invention to provide a method and apparatus which is readily adaptable to a standard internal combustion engine to convert the internal combustion engine for operation with a compressed gas.

Another object of the invention is to provide a method and apparatus which utilizes cool expanded gas, exhausted from a compressed gas engine, to operate an air conditioning unit and/or an oil cooler.

These and other objects are realized by a method and apparatus according to the present invention for operating an engine having at least one cylinder and a reciprocating piston therein using compressed gas as a motive fluid. The apparatus includes a source of compressed gas and a distributor connected with the source of the compressed gas for distributing the compressed gas to the at least one cylinder. A valve is provided for admitting the compressed gas to the cylinder when the piston is in approximately a top dead center position within the cylinder. An exhaust is provided for exhausting the expanded gas from the cylinder as the piston returns to approximately the top dead center position.

In a preferred embodiment of the present invention a device is provided for varying the duration of each engine cycle over which the valve remains open to admit compressed gas to the cylinder dependent upon the speed of the engine. In a further preferred embodiment of the present invention, an apparatus for advancing the timing of the opening of the valve is arranged to admit the compressed gas to the cylinder progressively further before the top dead center position of the piston as the speed of the engine increases.

Further features of the present invention include a valve for controlling the amount of compressed gas admitted to the distributor. Also, a portion of the gas which has been expanded in the cylinder and exhausted through the exhaust valve is delivered to a compressor to be recompressed and returned to the source of compressed gas. A gear train is selectively engagable to drive the compressor at different operating speed depending upon the pressure maintained at the source of compressed air and/or the speed of the engine. Still further, a second portion of the exhaust gas is used to cool a lubricating fluid for the engine or to operate an air conditioning unit.

In a preferred embodiment of the present invention, the valve for admitting compressed gas to the cylinder is electrically actuated. The device for varying the duration of each engine cycle over which the intake valve remains open as the speed of the engine increase comprises a rotating element whose effective length increases as the speed of the engine increases such that a first contact on the rotating element is electrically connected to a second contact for a longer period of each engine cycle. The second contact actuates the valve whereby the valve remains in an open position for a longer period of each engine cycle as the speed of the engine increases.

Still further features of the present invention include an adaptor plate for supporting the distributor above an intake manifold of a conventional internal combustion engine after a carburetor has been removed to allow air

to enter the cylinders of the engine through the intake manifold and conventional intake valves. Another adaptor plate is arranged over an exhaust passageway of the internal combustion engine to reduce the cross-sectional area of the exhaust passageway.

BRIEF DESCRIPTION OF THE DRAWINGS

Preferred embodiments of a method and apparatus for operating an engine according to the present invention will be described with reference to the accompanying drawings wherein like members bear like reference numerals and wherein:

FIG. 1 is a schematic representation of an apparatus according to the present invention arranged on an engine;

FIG. 2 is a side view of one embodiment of a valve actuator according to the present invention;

FIG. 3 is a cross-sectional view taken along the line 3—3 in FIG. 2;

FIG. 4 is a cross-sectional view of a second embodiment of a valve actuator according to the present invention;

FIG. 5 is a view taken along the line 5—5 in FIG. 4;

FIG. 6 is a cross-sectional view of a third embodiment of a valve actuator according to the present invention;

FIG. 7 is a view taken along the line 7—7 in FIG. 6;

FIG. 8 is a cross-sectional view of a gearing unit to drive a compressor according to the present invention.

DETAILED DESCRIPTION OF THE PREFERRED EMBODIMENTS

With reference to FIG. 1, an engine block 21 (shown in phantom) having two banks of cylinders with each bank including cylinders 20 having pistons 22 reciprocable therein (only one of which is shown in phantom) in a conventional manner. While the illustrated engine is a V-8 engine, it will be apparent that the present invention is applicable to an engine having any number of pistons and cylinders with the V-8 engine being utilized for illustration purposes only. A compressed gas tank 23 is provided to store a compressed gas at high pressure. It may also be desirable to include a small electric or gas compressor to provide compressed gas to supplement the compressed gas held in the tank 23. In a preferred embodiment, the compressed gas is air which can be obtained from any suitable source.

A line 25 transports the gas withdrawn from the tank 23 when a conventional shut off valve 27 is open. In addition, a solenoid valve 29 preferably operated by a suitable key operated switch (not shown) for the engine is also arranged in the line 25. In normal operation, the valve 27 is maintained open at all times with the solenoid valve 29 operating as a selective shut off valve to start and stop the engine 21 of the present invention.

A suitable regulating valve 31 is arranged downstream from the solenoid valve 29 and is connected by a linkage 33 to a throttle linkage 35 which is operator actuated by any suitable apparatus such as a foot pedal (not shown). The line 25 enters an end of a distributor 33 and is connected to an end of a pipe 35 which is closed at the other end. A plurality of holes, which are equal to the number of cylinders in the engine 21, are provided on either side of the pipe 35 along the length of the pipe 35.

When the present invention is used to adapt a conventional internal combustion engine for operation on compressed gas, an adaptor plate 36 is provided to support the distributor 33 in spaced relation from the usual intake opening in the intake manifold of the engine after a conventional carburetor has been removed. In this way, air is permitted to enter the internal combustion engine through the usual passageways and to be admitted to the cylinders through suitable intake valves (not shown). The adaptor plate 36 is secured to the engine block 21 and the distributor 33 by any suitable apparatus, e.g., bolts.

Each of the holes in the pipe 35 is connected in fluid-tight manner to a single line 37. Each line 37 carries the compressed gas to a single cylinder 20. In a preferred embodiment, each of the lines 37 is ½ inch high pressure plastic tubing attached through suitable connectors to the distributor 33 and the pipe 35. Each of the lines 37 is connected to a valve 39 which is secured in an opening provided near the top of each of the cylinders 20. In the case of a conversion of a standard internal combustion engine, the valves 39 can be conveniently screwed into a tapped hole in the cylinder 20 typically provided for a spark plug of the internal combustion engine. In a preferred embodiment, the valves 39 are solenoid actuated valves in order to provide a fast and reliable opening and closing of the valves 39.

Each of the valves 39 is energized by a valve actuator 41 through one of a plurality of wires 43. The valve actuator 41 is driven by a shaft of the engine similar to the drive for a conventional distributor of an internal combustion engine. That is, a shaft 55 of the valve actuator 41 is driven in synchronism with the engine 21 at one half the speed of the engine 21.

A first embodiment of the valve actuator 41 (FIGS. 2 and 3) receives electrical power through a wire 45 which is energized in a suitable manner by a battery, and a coil if necessary (not shown) as is conventional in an internal combustion engine. The wire 45 is attached to a central post 47 by a nut 49. The post 47 is connected to a conducting plate 51 arranged within a housing 53 for the valve actuator 41. Within the housing 53, the shaft 55 has an insulating element 57 secured to an end of the shaft 55 for co-rotation therewith when the shaft 55 is driven by the engine 21. A first end of a flexible contact 59 is continuously biased against the conducting plate 51 to receive electricity from the battery or another suitable source. A second end of the contact 59 is connected to a conducting sleeve 60 which is in constant contact with a spring biased contact 61 which is arranged within the sleeve 60. The contact 61 is biased by a spring 63 which urges the contact 61 towards a side wall of the housing 53.

With reference to FIG. 3, a plurality of contacts 65 are spaced from one another and are arranged around the periphery of the housing 53 at the same level as the spring biased contact 61. Each contact 65 is electrically connected to a post 67 which extends outside of the housing 53. The number of contacts 65 is equal to the number of cylinders in the engine 21. One of the wires 43, which actuate the valves 39, is secured to each of the posts 67.

In operation, as the shaft 55 rotates in synchronism with the engine 21, the insulating element 57 rotates and electricity is ultimately delivered to successive ones of the contacts 65 and wires 43 through the spring biased contact 61 and the flexible contact 59. In this way, each of the electrical valves 39 is actuated and opened in the proper timed sequence to admit compressed gas to each of the cylinders 20 to drive the pistons 22 therein on a downward stroke.

The embodiment illustrated in FIGS. 2 and 3 is effective to actuate each of the valves 39 to remain open for a long enough period of time to admit sufficient compressed gas to each of the cylinders 20 of the engine 21 to drive the engine 21. The length of each of the contacts 65 around the periphery of the housing 53 is sufficient to permit the speed of the engine to be increased when desired by the operator by moving the throttle linkage 35 which actuates the linkage 33 to further open the regulating valve 31 to admit more compressed gas from the tank 23 to the distributor 33. However, it has been found that the amount of air admitted by the valves 39 when using the first embodiment of the valve actuator 41 (FIGS. 2 and 3) is substantially more than required to operate the engine 21 at an idling speed. Therefore, it may be desirable to provide a valve actuator 41 which is capable of varying the duration of each engine cycle over which the solenoid valves 39 are actuated, i.e., remain open to admit compressed gas, as the speed of the engine 21 is varied.

A second embodiment of a valve actuator 41 which is capable of varying the duration of each engine cycle over which each of the valves 39 remains open to admit compressed gas to the cylinders 20 dependent upon the speed of the engine 21 will be described with reference to FIGS. 4 and 5 wherein members corresponding to those of FIGS. 2 and 3 bear like reference numerals. The wire 45 from the electrical source is secured to the post 47 by the nut 49. The post 47 has a annular contact ring 69 electrically connected to an end of the post 47 and arranged within the housing 53. The shaft 55 rotates at one half the speed of the engine as in the embodiment of FIGS. 2 and 3.

At an upper end of the shaft 55, a splined section 71 slidably receives an insulating member 73. The splined section 71 of the shaft 55 positively holds the insulating member 73 for co-rotation therewith but permits the insulating member 73 to slide axially along the length of the splined section 71. Near the shaft 55, a conductive sleeve 72 is arranged in a bore 81 in an upper surface of the insulating element 73 generally parallel to the splined section 71. A contact 75, biased towards the annular contact ring 69 by a spring 77, is arranged within the conductive sleeve 72 in contact therewith. The conductive sleeve 72 also contacts a conductor 79 at a base of the bore 81.

The conductor 79 extends to the upper surface of the insulating element 73 near an outer periphery of the insulating element 73 where the conductor 79 is electrically connected to a flexible contact 83. The flexible contact 83 selectively engages a plurality of radial contacts 85 arranged on an upper inside surface of the housing 53. A weak spring 87 arranged around the splined section 71 engages a stop member 89 secured on the shaft 55 and the insulating element 73 to slightly bias the insulating element 73 towards the upper inside surface of the housing 53 to ensure contact between the flexible contact 83 and the upper inside surface of the housing 53. As best seen in FIG. 5, the radial contacts 85 on the upper inside surface of the housing 53 are arranged generally in the form of radial spokes extending from the center of the housing 53 with the number of contacts being equal to the number of cylinders 20 in the engine 21. The number of degrees covered by each of the radial contacts 85 gradually increases as the distance from the center of the upper inside surface of the housing 53 increases.

In operation of the device of FIGS. 4 and 5, as the shaft 55 rotates, electricity flows along a path through the wire 45 down through post 47 to the annular contact member 69 which is in constant contact with the spring biased contact 75. The electrical current passes through the conductive sleeve 72 to the conductor 79 and then to the flexible contact 83. As the flexible contact 83 rotates along with the insulating member 73 and the shaft 55, the tip of the flexible contact 83 successively engages each of the radial contacts 85 on the upper inside of the housing 53. As the speed of the shaft 55 increases, the insulating member 73 and the flexible contact 83 attached thereto move upwardly along the splined section 71 of the shaft 55 due to the radial component of the splines in the direction of rotation under the influence of centrifugal force. As the insulating member 73 moves upwardly, the flexible contact 83 is bent such that the tip of the contact 83 extends further radially outwardly from the center of the housing 53 (as seen in phantom lines in FIG. 4). In other words, the effective length of the flexible contact 83 increases as the speed of the engine 21 increases.

As the flexible contact 83 is bent and the tip of the contact 83 moves outwardly, the tip remains in contact with each of the radial contacts 85 for a longer period of each engine cycle due to the increased angular width of the radial contacts with increasing distance from the center of the housing 53. In this way, the length of time over which each of the valves 39 remains open is increased as the speed of the engine is increased. Thus, a larger quantity of compressed gas or air is injected into the cylinders as the speed increases. Conversely, as the speed decreases and the insulating member 73 moves downwardly along the splined section 71, a minimum quantity of air is injected into the cylinder due to the shorter length of the individual radial contact 85 which is in contact with the flexible contact 83. In this way, the amount of compressed gas that is used during idling of the engine 21 is at a minimum whereas the amount of compressed gas which is required to increase the speed of the engine 21 to a level suitable to drive a vehicle on a highway is readily available.

With reference to FIGS. 6 and 7, a third embodiment of a valve actuator 41 according to the present invention includes an arcuate insulating element 91 having a first end pivotally secured by any suitable device such as screw 92 to the shaft 55 for co-rotation with the shaft 55. The screw 92 is screwed into a tapped hole in the insulating element 91 such that a tab 94 at an end of the screw 92 engages a groove 96 provided in the shaft 55. In this way, the insulating element 91 positively rotates with the shaft 55. However, as the shaft 55 rotates faster, a second end 98 of the insulating element 91 is permitted to pivot outwardly under the influence of centrifugal force because of the groove 96 provided in the shaft 55. A spring 93 connected between the second end 98 of the element 91 and the shaft 55 urges the second end of the element 91 towards the center of the housing 53.

A contact 99 similar to the contact 59 (FIG. 2) is arranged such that one end of the contact 99 is in constant contact with the conducting plate 51 located centrally within the housing 53. The other end of the contact 99 engages a conductive sleeve 101 arranged in bore 102. A contact element 95 is arranged in the conductive sleeve 101 in constant contact with the sleeve 101. The bore 102 is arranged generally parallel to the shaft 55 near the second end of the arcuate insulating

element **91**. The contact **95** is biased by a spring **97** towards the upper inside surface of the housing **53** for selective contact with each of the plurality of radial contacts **85** which increase in arc length towards the outer peripheral surface of the housing **53** (FIG. **6**).

In operation of the device of FIGS. **6** and **7**, as the shaft **55** rotates the arcuate insulating element **91** rotates with the shaft **55** and the second end **98** of the insulating element **91** tends to pivot about the shaft **55** due to centrifugal force. Thus, as the effective length of the contact **95** increases, i.e., as the arcuate insulating element **91** pivots further outwardly, the number of degrees of rotation over which the contact **95** is in contact with each of the radial contacts **85** on the upper inside surface of the housing **53** increases thereby permitting each of the valves **39** to remain open for a longer period of each engine cycle to admit more compressed gas to the respective cylinder **20** to further increase the speed of the engine **21**.

With reference to FIG. **1**, a mechanical advance linkage **104** which is connected to the throttle linkage **35**, advances the initiation of the opening of each valve **39** such that compressed gas is injected into the respective cylinder further before the piston **22** in the respective cylinder **20** reaches a top dead center position as the speed of the engine is increased by moving the throttle linkage **35**. The advance linkage **104** is similar to a conventional standard mechanical advance employed on an internal combustion engine. In other words, the linkage **104** varies the relationship between the angular positions of a point on the shaft **55** and a point on the housing **53** containing the contacts. Alternatively, a conventional vacuum advance could also be employed. By advancing the timing of the opening of the valves **39**, the speed of the engine can more easily be increased.

The operation of the engine cycle according to the present invention will now be described. The compressed gas injected into each cylinder of the engine **21** drives the respective piston **22** downward to drive a conventional crankshaft (not shown). The movement of the piston downwardly causes the compressed gas to expand rapidly and cool. As the piston **22** begins to move upwardly in the cylinder **20** a suitable exhaust valve (not shown) arranged to close an exhaust passageway is opened by any suitable apparatus. The expanded gas is then expelled through the exhaust passageway. As the piston **22** again begins to move downwardly a suitable intake valve opens to admit ambient air to the cylinder. The intake valve closes and the ambient air is compressed on the subsequent upward movement of the piston until the piston reaches approximately the top dead center position at which time the compressed gas is again injected into the cylinder **20** to drive the piston **22** downward and the cycle begins anew.

In the case of adapting a conventional internal combustion engine for operation on compressed gas, a plurality of plates **103** are preferably arranged over an end of the exhaust passageways in order to reduce the outlet size of the exhaust passageways of the conventional internal combustion engine. In the illustrated embodiment, a single plate having an opening in the center is bolted to the outside exhaust passageway on each bank of the V-8 engine while another single plate having two openings therein is arranged with one opening over each of the interior exhaust passageways on each bank of the V-8 engine. A line **105** is suitably attached to each of the adaptor places to carry the exhaust to an appropriate location. In a preferred embodiment, the exhaust lines **105** are 1½" plastic tubing.

In a preferred embodiment, the exhaust lines **105** of one bank of the V-8 engine are collected in a line **107** and fed to an inlet of a compressor **109**. The pressure of the exhaust gas emmanating from the engine **21** according to the present invention is approximately 25 p.s.i. In this way, the compressor **109** does not have to pull the exhaust into the compressor since the gas exhausted from the engine **21** is at a positive pressure. The positive pressure of the incoming fluid increases the efficiency and reduces wear on the compressor **109**. The exhaust gas is compressed in the compressor **109** and returned through a line **111** and a check valve **113** to the compressed gas storage tank **23**. The check valve **113** prevents the flow of compressed gas stored in the tank **23** back towards the compressor **109**.

A suitable pressure sensor **115** is arranged at an upper end of the tank **23** and sends a signal along a line **117** when the pressure exceeds a predetermined level and when the pressure drops below a predetermined level. The line **117** controls an electrically actuated clutch **119** disposed at a front end of the compressor **109**. The clutch **119** is operative to engage and disengage the compressor **109** from a drive pulley **121**. Also, the signal carried by the line **117** actuates a suitable valve **123** arranged on a compressor housing **125** to exhaust the air entering the compressor housing **125** from the line **107** when the clutch **119** has disengaged the compressor **109** from the drive pully **121**.

In a preferred embodiment, when the pressure is the tank **23** reaches approximately 600 p.s.i., the clutch **119** is disengaged and the compressor **109** is deactivated and the valve **123** is opened to exhaust the expanded gas delivered to the compressor **109** from the line **107** to the atmosphere. When the pressure within the tank **23** drops below approximately 500 p.s.i., the sensor **115** sends a signal to engage the clutch **119** and close the valve **123**, thereby operating the compressor **109** for supplying the tank **23** with compressed gas.

The pulley **121** which drives the compressor **109** through the clutch **119** is driven by a belt **127** which is driven by a pulley **129** which operates through a gear box **131**. With reference to FIGS. **1** and **8**, a second pulley **133** on the gear box is driven by a belt **135** from a pulley **137** arranged on a drive shaft **139** of the engine **21**. The pulley **137** drives a splined shaft **140** which has a first gear **141** and a second larger gear **143** arranged thereon for rotation with the splined shaft **140**. The splined shaft **140** permits axial movement of the gears **141** and **143** along the shaft **140**.

In normal operation (as seen in FIG. **8**), the first gear **141** engages a third gear **145** arranged on a shaft **147** which drives the pulley **129**. The shafts **140** and **147** are arranged in suitable bearings **149** arranged at each end thereof. When the speed of the engine **21** drops below a predetermined level, a suitable sensor **151** responsive to the speed of the drive shaft **139** of the engine **21** generates a signal which is transmitted through a line **153** to a solenoid actuator **155** arranged within the gear box **131**. The solenoid actuator **155** moves the first and second gears **141**, **143** axially along the splined shaft **140** to the right as seen in FIG. **8** such that the second, larger gear **143** engages a fourth smaller gear **157** which is arranged on the shaft **147**. The ratio of the second gear **143** to the fourth gear **157** is preferably approximately 3 to 1.

In this way, when the speed of the engine **21** drops below the predetermined level as sensed by the sensor **151** (which predetermined level is insufficient to drive the compressor **109** at a speed sufficient to generate the 500–600 pounds of pressure which is preferably in the tank **23**), the solenoid actuator **155** is energized to slide the gears **143**, **141** axially along the splined shaft **140** so that the second, larger gear **143** engages the fourth, smaller gear **157** to drive the pulley **129** and hence the compressor **109** at a higher rate of speed to generate the desired pressure. When the speed of the engine increases above the predetermined level, in a preferred embodiment approximately 1500 rpm, the solenoid actuator **155** is deactivated by the sensor **151** thereby moving the gears **143** and **141** to the left as seen in FIG. **8** such that the first gear **141** re-engages with the third gear **145** to effectuate a 1 to 1 ratio between the output shaft **139** of the engine **21** and the pulley **129**.

The other bank of the V-8 engine has its exhaust ports arranged with adapter plates **103** similar to those on the first bank. However, the exhaust from this bank of the engine **21** is not collected and circulated through the compressor **109**. In a preferred embodiment, a portion of the exhaust is collected in a line **159** and fed to an enlarged chamber **161**. A second fluid is fed through a line **163** into the chamber **161** to be cooled by the cool exhaust emmanating from the engine **21** in the line **159**. The second fluid in the line **163** may be either transmission fluid contained in a transmission associated with the engine **21** or a portion of the oil used to lubricate the engine **21**. A second portion of the exhaust from the second bank of the V-8 engine is removed from the line **159** in a line **165** and used as a working fluid in an air conditioning system or for any other suitable use.

It should be noted that the particular arrangement utilized for collecting and distributing the gas exhausted from the engine **21** would be determined by the use for which the engine is employed. In other words, it may be advantageous to rearrange the exhaust tubing such that a larger or smaller percentage of the exhaust is routed through the compressor **109**. It should also be noted that since the exhaust lines **105** are plastic tubing, a rearrangement of the lines for a different purpose is both simple and inexpensive.

In operation of the engine of the present invention, the engine **21** is started by energizing the solenoid valve **29** and any suitable starting device (not shown), e.g., a conventional electric starter as used on an internal combustion engine. Compressed gas from the full tank **23** flows through the line **25** and a variable amount of the compressed gas is admitted to the distributor **33** by controlling the regulator valve **31** through the linkage **33** and the operator actuated throttle linkage **35**. The compressed gas is distributed to each of the lines **37** which lead to the individual cylinders **20**. The compressed gas is admitted to each of the cylinders **20** in timed relationship to the position of the pistons within the cylinders by opening the valves **39** with the valve actuator **41**.

When it is desired to increase the speed of the engine, the operator moves the throttle linkage **35** which simultaneously admits a larger quantity of compressed gas to the distributor **33** from the tank **23** by further opening the regulator valve **31**. The timing of the valve actuator **41** is also advanced through the linkage **104**. Still further, as the speed of the engine **21** increases, the effective length of the rotating contact **83** (FIG. **4**) or **95** (FIG. **6**) increases thereby electrically contacting a wider portion of one of the stationary radial contacts **85** to cause each of the valves **39** to remain open for a longer period of each engine cycle to admit a larger quantity of compressed gas to each of the cylinders **20**.

As can be seen, the combination of the regulating valve **31**, the mechanical advance **104**, and the valve actuator **41**, combine to produce a compressed gas engine which is quickly and efficiently adaptable to various operating speeds. However, all three of the controls need not be employed simultaneously. For example, the mechanical advance **104** could be utilized without the benefit of one of the varying valve actuators **41** but the high speed operation of the engine may not be as efficient. By increasing the duration of each engine cycle over which each of the valves **39** remains open to admit compressed gas to each of the cylinders **20** as the speed increases, conservation of compressed gas during low speed operation and efficient high speed operation are both possible.

After the compressed gas admitted to the cylinder **20** has forced the piston **22** downwardly within the cylinder to drive the shaft **139** of the engine, the piston **22** moves upwardly within the cylinder **20** and forces the expanded gas out through a suitable exhaust valve (not shown) through the adapter plate **103** (if employed) and into the exhaust line **105**. The cool exhaust can then be collected in any suitable arrangement to be compressed and returned to the tank **23** or used for any desired purpose including use as a working fluid in an air conditioning system or as a coolant for oil.

When using the apparatus and method of the present invention to adapt a ordinary internal combustion engine for operation with compressed gas it can be seen that considerable savings in weight are achieved. For example, the ordinary cooling system including a radiator, fan, hoses, etc. can be eliminated since the compressed gas is cooled as it expands in the cylinder. In addition, there are no explosions within the cylinder to generate heat. Further reductions in weight are obtained by employing plastic tubing for the lines which carry the compressed gas between the distributor and the cylinders and for the exhaust lines. Once again, heavy tubing is not required since there is little or no heat generated by the engine of the present invention. In addition, the noise generated by an engine according to the present invention is considerably less than that generated by an ordinary internal combustion engine since there are no explosions taking place within the cylinders.

The principles of preferred embodiments of the present invention have been described in the foregoing specification. However, the invention which is intended to be protected is not to be construed as limited to the particular embodiments disclosed. The embodiments are to be regarded as illustrative rather than restrictive. Variations and changes may be made by others without departing from the spirit of the invention. Accordingly, it is expressly intended that all such variations and changes which fall within the spirit and the scope of the present invention as defined in the appended claims be embraced thereby.

What is claimed is:

1. An apparatus for operating an engine having at least one cylinder and a reciprocating piston therein comprising:

a source of compressed gas;

distributor means connected with the source of compressed gas for distributing the compressed gas to the at least one cylinder;

valve means for admitting the compressed gas to the at least one cylinder when the piston is in approximately a top dead center position within the cylinder;

altering means for increasing the duration of each engine cycle over which the valve means admits compressed gas to the at least one cylinder as the speed of the engine increases; and

exhaust means for exhausting gas as the piston subsequently approaches approximately the top dead center position.

2. The apparatus of claim **1** further comprising control means for controlling the amount of compressed gas admitted to the distributor means.

3. The apparatus of claim **1** wherein the valve means is a solenoid valve secured in an opening in the cylinder above the level of the piston at the top dead center position.

4. The apparatus of claims **1** or **2** further comprising means for advancing the timing of the valve means as the speed of the engine increases such that compressed gas is admitted progressively further before the top dead center position as the speed of the engine increases.

5. The apparatus of claim **4** wherein the means for advancing the timing comprises a mechanical linkage connected to an operator actuated accelerator linkage.

6. The apparatus of claim **1** wherein a portion of the gas exhausted through the exhaust means is compressed in a compressor driven by an output shaft of the engine and is returned to the source of compressed gas.

7. The apparatus of claim **1** wherein a portion of the gas exhausted through the exhaust means is used to cool transmission fluid for a transmission associated with the engine.

8. The apparatus of claim **1** wherein a portion of the gas exhausted through the exhaust means is used as a working fluid in an air conditioning system.

9. The apparatus of claim **6** further comprising first gearing means interposed between the output shaft of the engine and the compressor for increasing the speed at which the compressor is driven.

10. The apparatus of claim **6** further comprising clutch means attached to the compressor both for disengaging the compressor from the output shaft of the engine when a first predetermined pressure at the source of compressed gas is exceeded and for engaging the compressor with the output shaft of the engine when the pressure at the source of compressed gas drops below a second predetermined pressure.

11. The apparatus of claim **9** further comprising means for both disengaging the first gearing means when a predetermined speed of the engine is exceeded and engaging a second gearing means for driving the compressor at a speed slower than the first gearing means when the predetermined speed of the engine is exceeded.

12. The apparatus of claim **1** wherein the valve means is electrically actuated and wherein the altering means comprises:

a rotating member timed with the at least one cylinder and arranged within a housing;

first and second contacts arranged on a first end of the rotating member and on an inside surface of the housing, respectively;

means for increasing the distance of the first contact from the rotational axis of the rotating member as the speed of the engine increases such that the first contact moves radially outwardly within the housing; and

said second contact presenting a longer arc length to the first contact as the distance of the first contact from the rotational axis of the rotating member increases.

13. The apparatus of claim **12** wherein the rotating member comprises an arcuate arm and wherein the means for increasing the distance of the first contact comprises pivotally mounting a second end of the arcuate arm about the axis of rotation of the rotating member and spring means for biasing the first end of the arcuate arm towards a radially inward position whereby the first end of the arcuate arm pivots radially outwardly as the speed of the engine increases.

14. The apparatus of claim **12** wherein the rotating member is axially slidably received on a rotating shaft for co-rotation therewith, said shaft having splines with a radial component in the direction of rotation, and wherein the first contact comprises a flexible contact located on an upper surface of the rotating member, said flexible contact being biased against the inside surface of the housing which carries the second contacts whereby as the speed of the engine increases the rotating member is urged axially along the splined shaft towards the inside surface of the housing such that the flexible contact is forced radially outwardly along the inside surface.

15. The apparatus of claim **12** wherein the second contact comprises of radially extending conductor arranged on an upper inside surface of the housing, said conductor increasing in arc length as the conductor extends radially outwardly from a central portion of the housing.

16. An apparatus for adapting an internal combustion engine for operation with compressed gas, the internal combustion engine having at least one cylinder, a piston reciprocable within the at least one cylinder, intake and exhaust means disposed in the at least one cylinder, and a tapped hole in the at least one cylinder adapted to receive a spark plug, the apparatus comprising:

a source of compressed gas;

distributor means connected with the source of compressed gas for distributing the compressed gas to the at least one cylinder;

valve means arranged in the tapped hole for admitting the compressed gas to the at least one cylinder when the piston is in approximately a top dead center position within the cylinder; and

altering means for increasing the duration of each engine cycle over which the valve means remains open to admit the compressed gas as the speed of the engine increases.

17. An apparatus as in claim **16** further comprising first adapter plate means for supporting the distributor means above an intake manifold of the engine, which adaptor plate means allows ambient air to enter through the intake manifold.

18. The apparatus of claim **16** further comprising second adapter plate means for reducing the exit area of the exhaust means.

19. A method of operating an engine on compressed gas, said engine having at least one cylinder and a piston reciprocable therein comprising the steps of:

delivering compressed gas from a source to a distributor;

distributing the compressed gas to the at least one cylinder;

admitting compressed gas to the at least one cylinder through an intake valve when the piston is at approximately a top dad center position;

increasing the duration of each engine cycle over which compressed gas is admitted to the at least one cylinder as the engine speed increases; and

exhausting the remaining gas when the piston subsequently reaches approximately the top dead center position.

20. The method of claim **19** further comprising the step of controlling the amount of compressed gas which is delivered to the distributor.

21. The method of claim **19** further comprising the step of advancing the timing of the opening of the intake valve as the speed of the engine increases.

22. An apparatus for operating an engine having at least one cylinder and a piston reciprocable therein on compressed gas comprising:

a source of compressed gas;

distributor means connected with the source of compressed gas for distributing the compressed gas to the at least one cylinder;

electrically actuated valve means secured in an opening in the at least one cylinder for selectively admitting compressed gas to the at least one cylinder when the piston is in approximately a top dead center position; and

means for advancing the timing of the valve means as the speed of the engine increases whereby compressed gas is admitted progressively further before the top dead center position as the speed of the engine increases.

* * * * *

US008045314B2

(12) **United States Patent**
Ibok

(10) **Patent No.: US 8,045,314 B2**
(45) **Date of Patent: Oct. 25, 2011**

(54) **METHOD OF ATMOSPHERIC DISCHARGE ENERGY CONVERSION, STORAGE AND DISTRIBUTION**

(75) Inventor: **Effiong Etukudo Ibok**, Sunnyvale, CA (US)

(73) Assignee: **The Travis Business Group, Inc.**, Sunnyvale, CA (US)

(*) Notice: Subject to any disclaimer, the term of this patent is extended or adjusted under 35 U.S.C. 154(b) by 0 days.

(21) Appl. No.: **12/534,115**

(22) Filed: **Aug. 1, 2009**

(65) **Prior Publication Data**

US 2010/0220424 A1 Sep. 2, 2010

(51) **Int. Cl.**
H01T 23/00 (2006.01)
H02H 1/04 (2006.01)
H02H 1/00 (2006.01)

(52) **U.S. Cl.** **361/231**; 361/117; 361/126; 361/127; 361/128; 361/233

(58) **Field of Classification Search** 361/117, 361/126–128, 231, 233
See application file for complete search history.

(56) **References Cited**

U.S. PATENT DOCUMENTS

911,260	A *	2/1909	Pennock	307/149
1,869,661	A *	8/1932	Bumbaugh	174/2
5,367,245	A *	11/1994	Mims	322/2 R
6,038,117	A *	3/2000	Dullni et al.	361/58
6,813,137	B2 *	11/2004	Matsuoka et al.	361/305
7,033,406	B2 *	4/2006	Weir et al.	29/623.5
2002/0101700	A1 *	8/2002	Betts	361/230
2006/0001068	A1 *	1/2006	Mosley et al.	257/306
2009/0109712	A1 *	4/2009	Calloway	363/32
2010/0007321	A1 *	1/2010	Ogram	323/299

FOREIGN PATENT DOCUMENTS

DE	4205521	A1 *	4/1993
JP	04208637	A *	7/1992
JP	08330093	A *	12/1996

OTHER PUBLICATIONS

English language abstract of Kobayashi (JP 04-208637).*
English language machine translation of Kimura (JP 08-330093).*
English language machine translation of Pengel (DE 4205521).*

* cited by examiner

Primary Examiner — Jared Fureman
Assistant Examiner — Scott Bauer
(74) *Attorney, Agent, or Firm* — Blakely, Sokoloff, Taylor & Zafman, LL

(57) **ABSTRACT**

A method of converting atmospheric electrical discharge to a useable form of energy by arresting, storage and retransmission of lightning induced electrical discharge is disclosed. The invention discloses methods of deploying this technology even in isolated locations where no electricity infrastructure exists. Additionally, the potential for achieving in excess of 1 GWe of electrical power supply at costs orders of magnitude lower than fossil fuel or solar is also disclosed. Isolated collection units are disclosed. A method of deployment of these devices on individual cars and recharge stations is disclosed which in effect unplugs these automotive and recharge stations from the grid. This capability significantly decreases their dependence on the electricity grid infrastructure, enabling a much more enhanced rollout capability for the industry. The concept of Energy Dams is disclosed. These are facilities with substantial electrical energy storage capacities with the capability of receiving energy feeds from various generation sources.

18 Claims, 21 Drawing Sheets

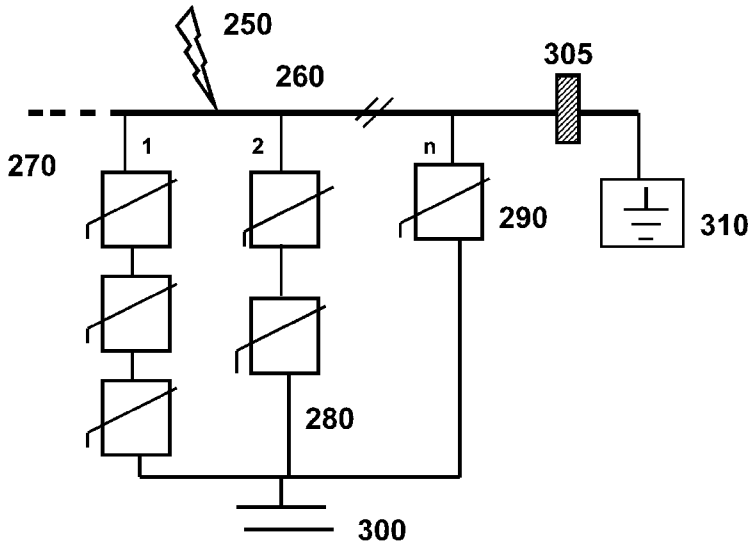

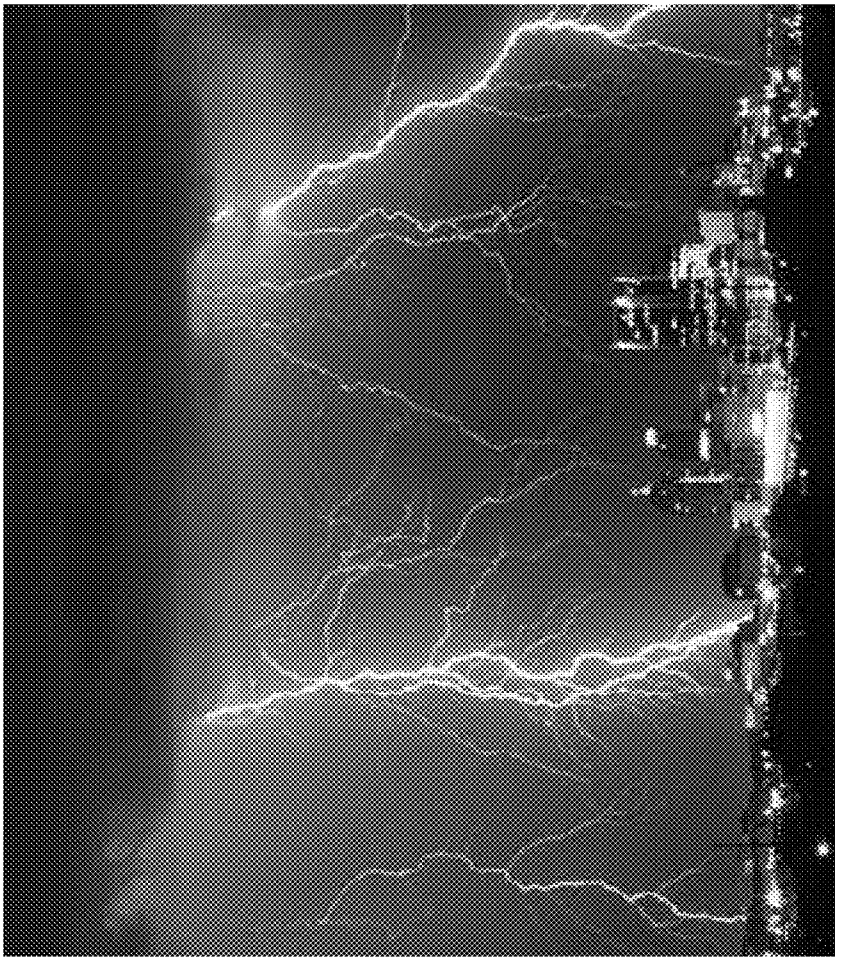

Fig. 1a

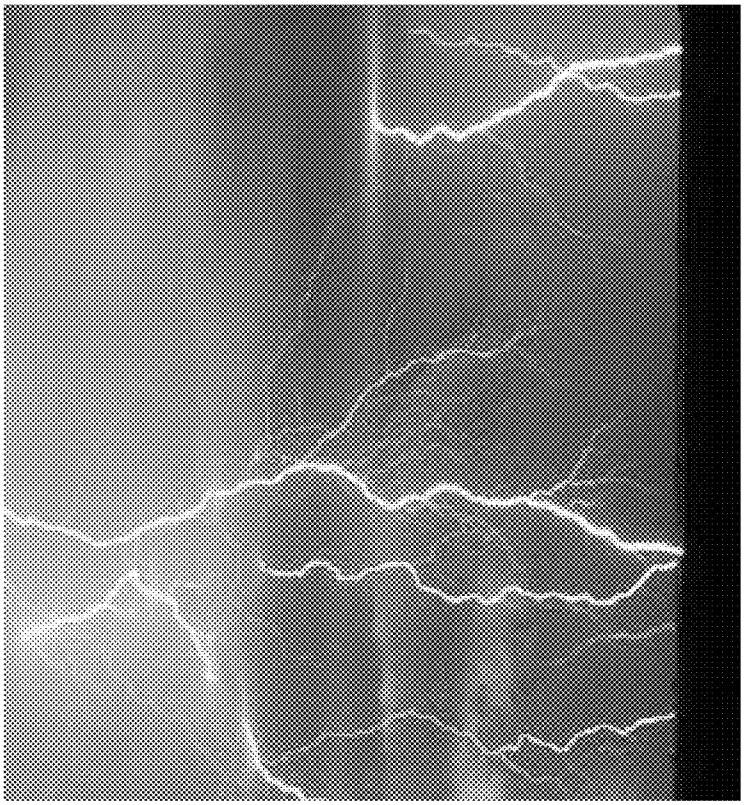

Fig. 1b

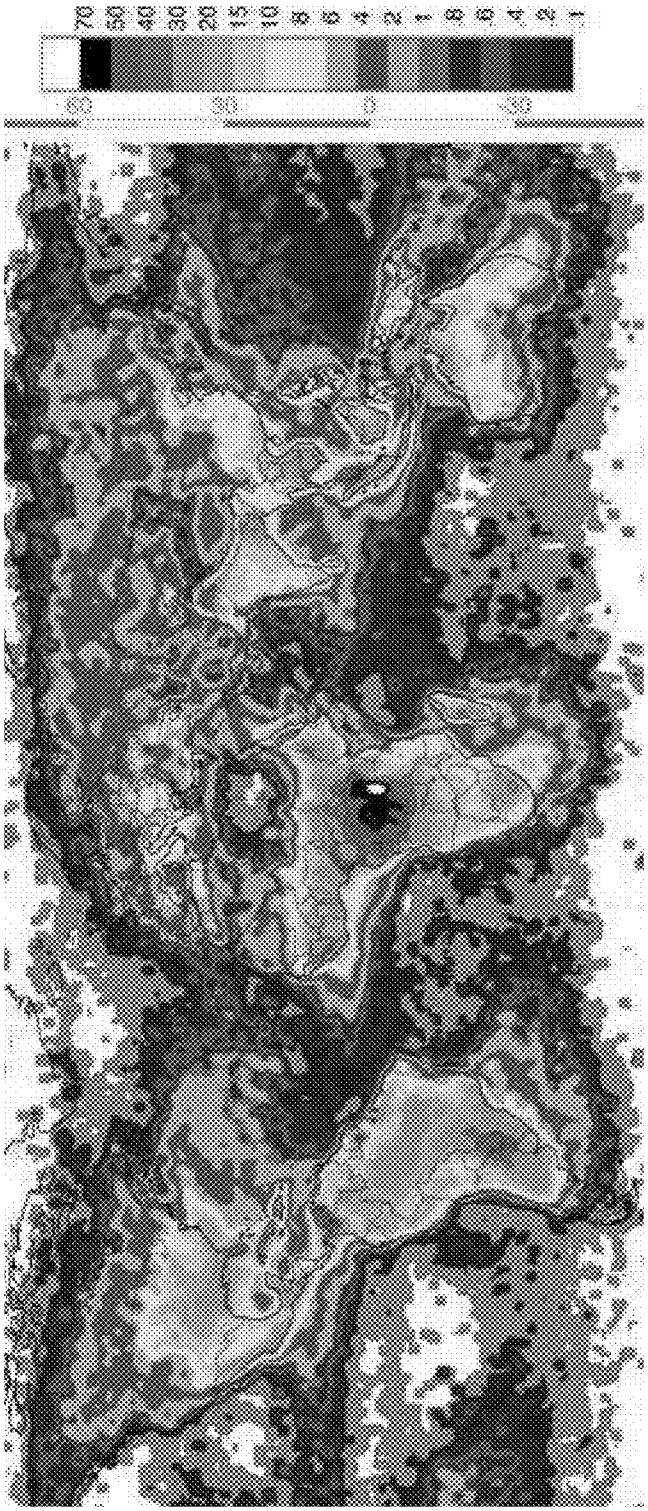

Global Distribution of Lightning Strikes: April 1995 – February, 2003. (Source: NASA)

Fig. 1c

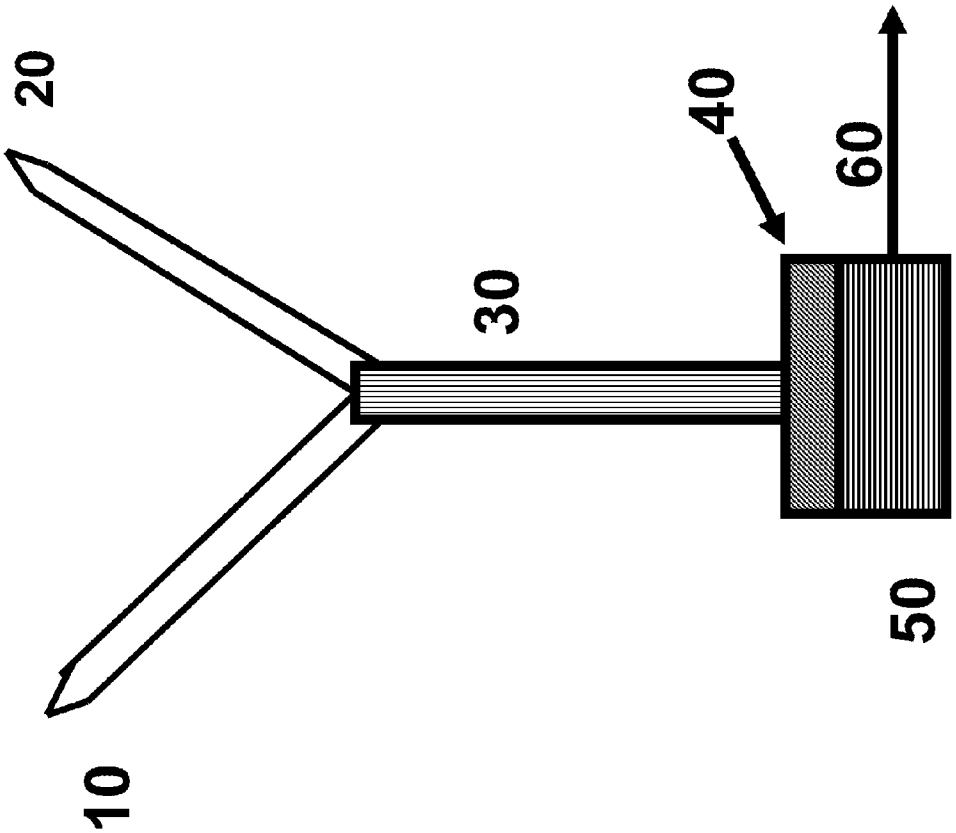

Fig. 2

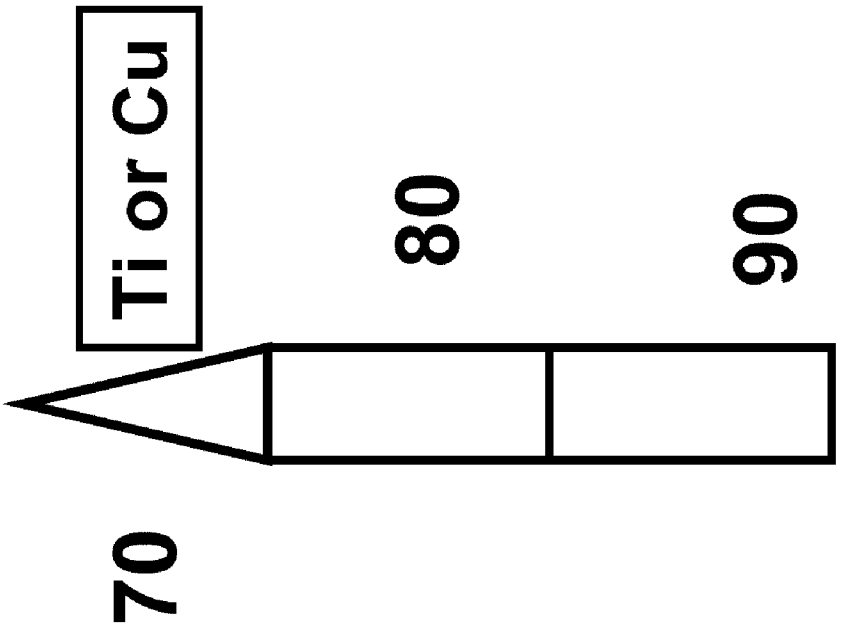

Fig. 3

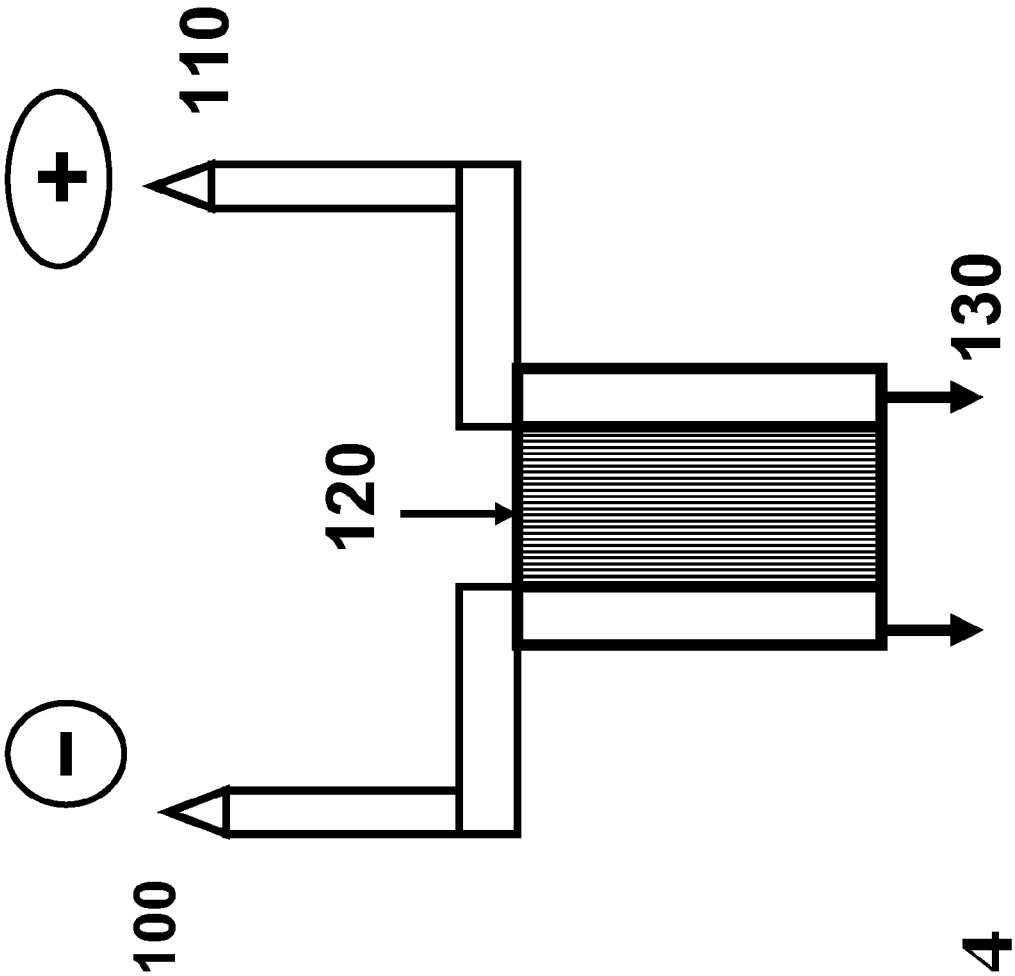

Fig. 4

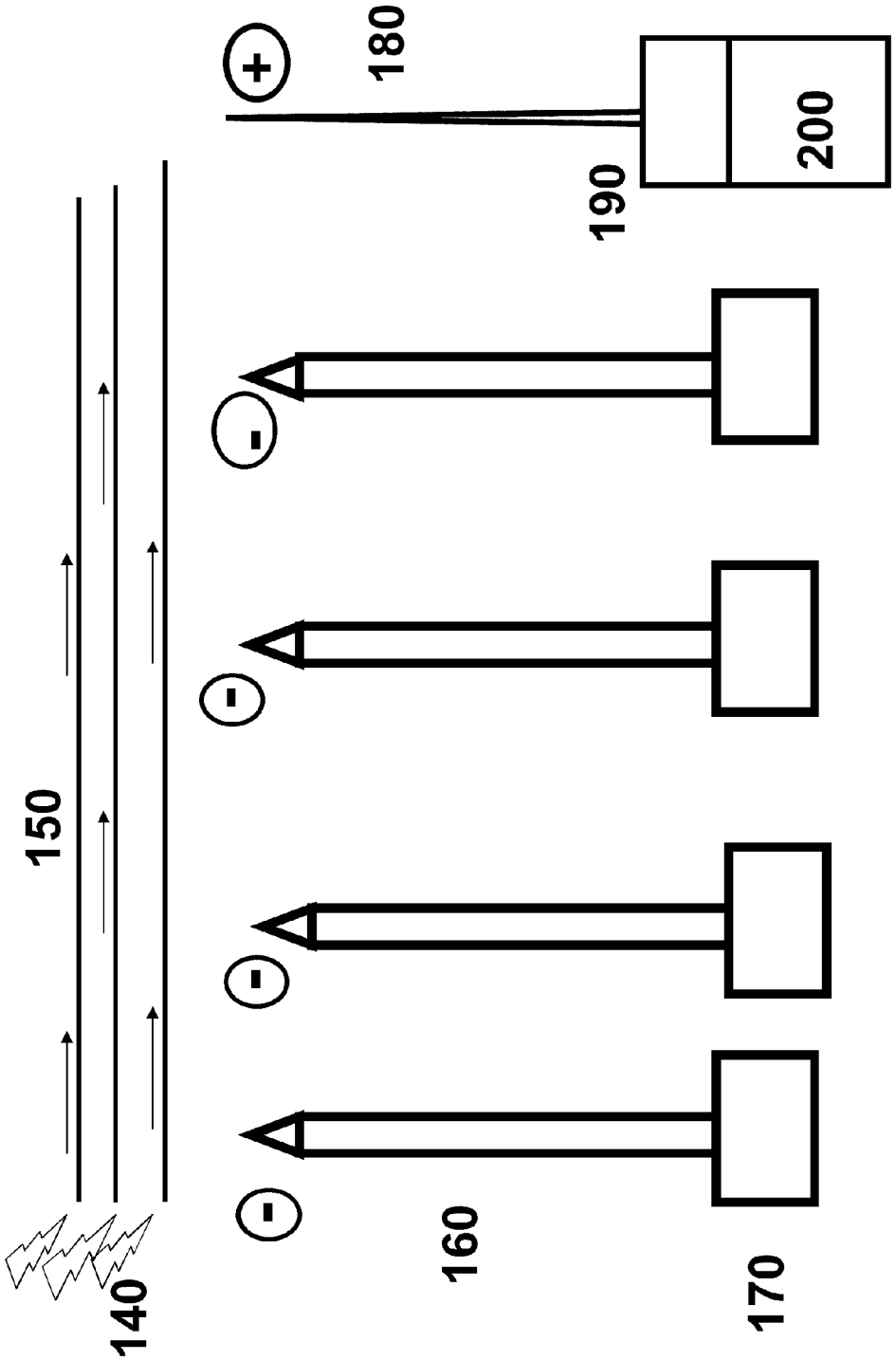

Fig. 5

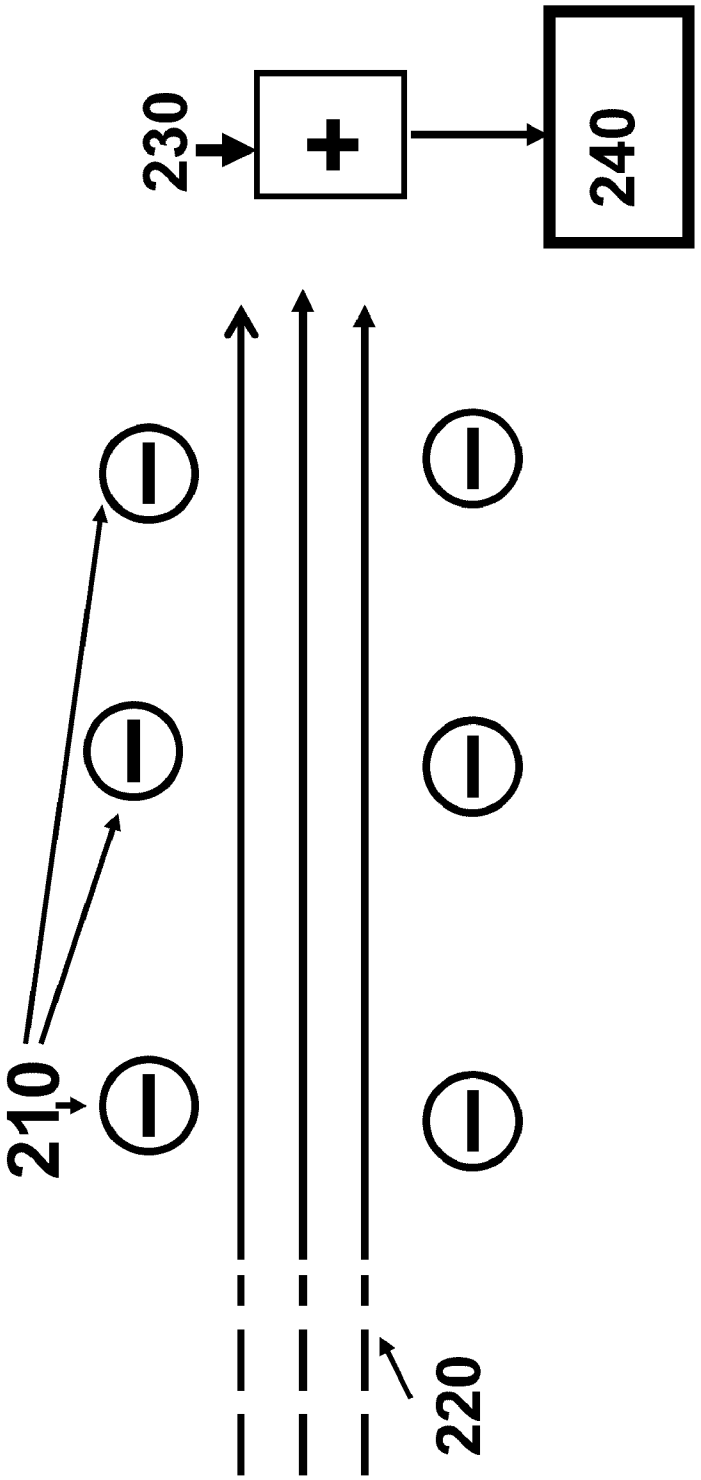

Fig. 6

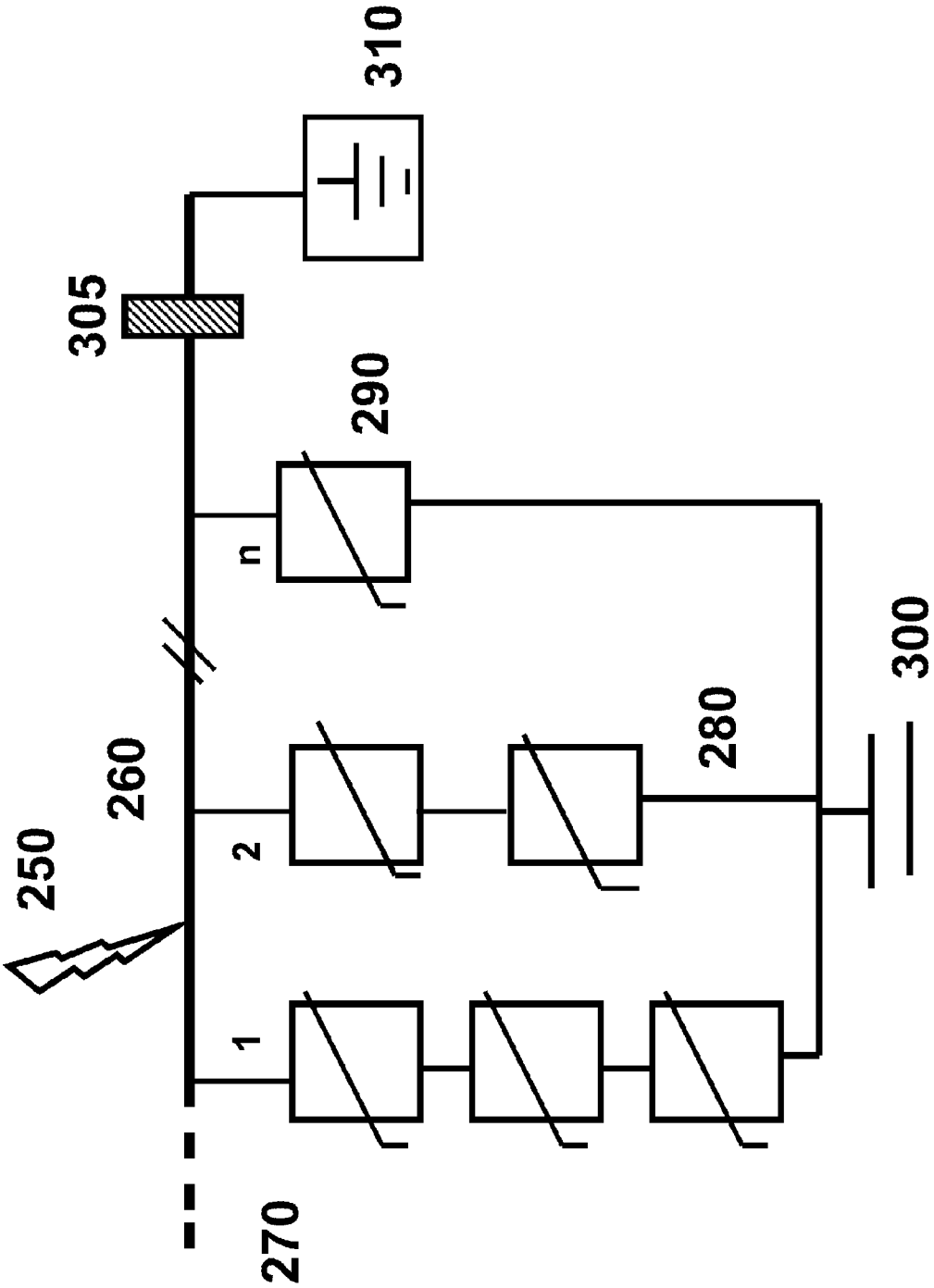

Fig. 7a

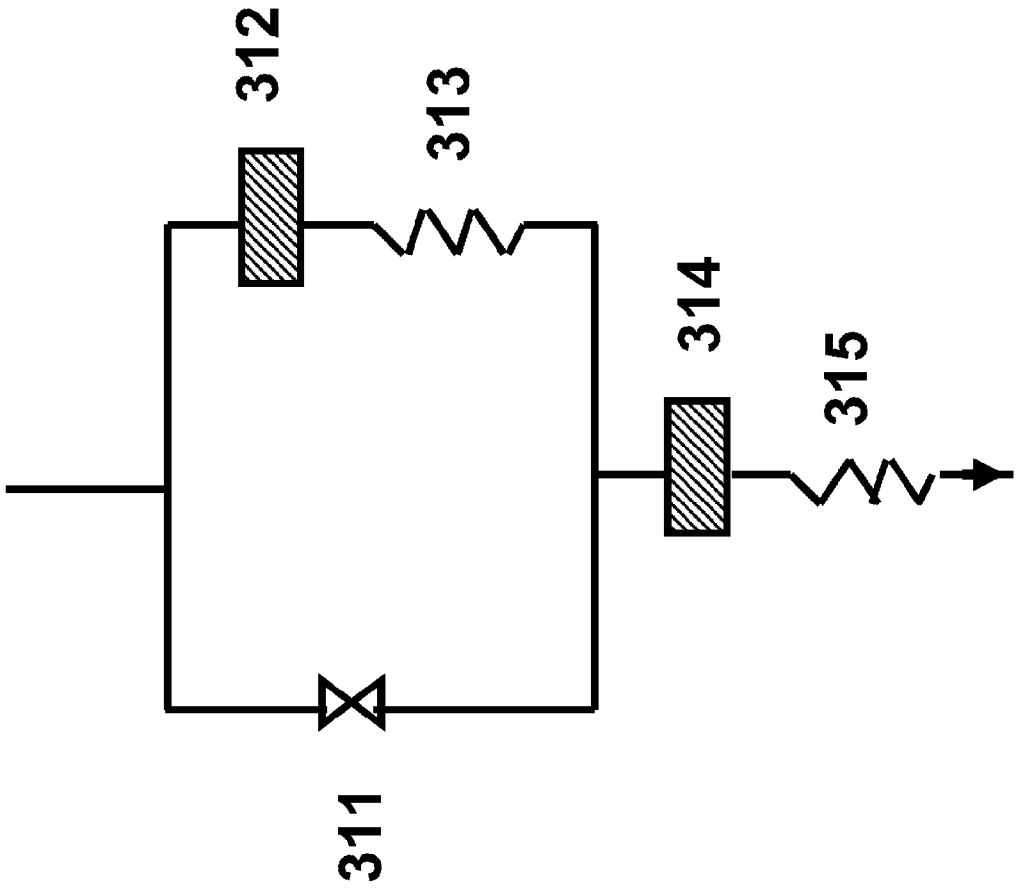

Fig. 7b

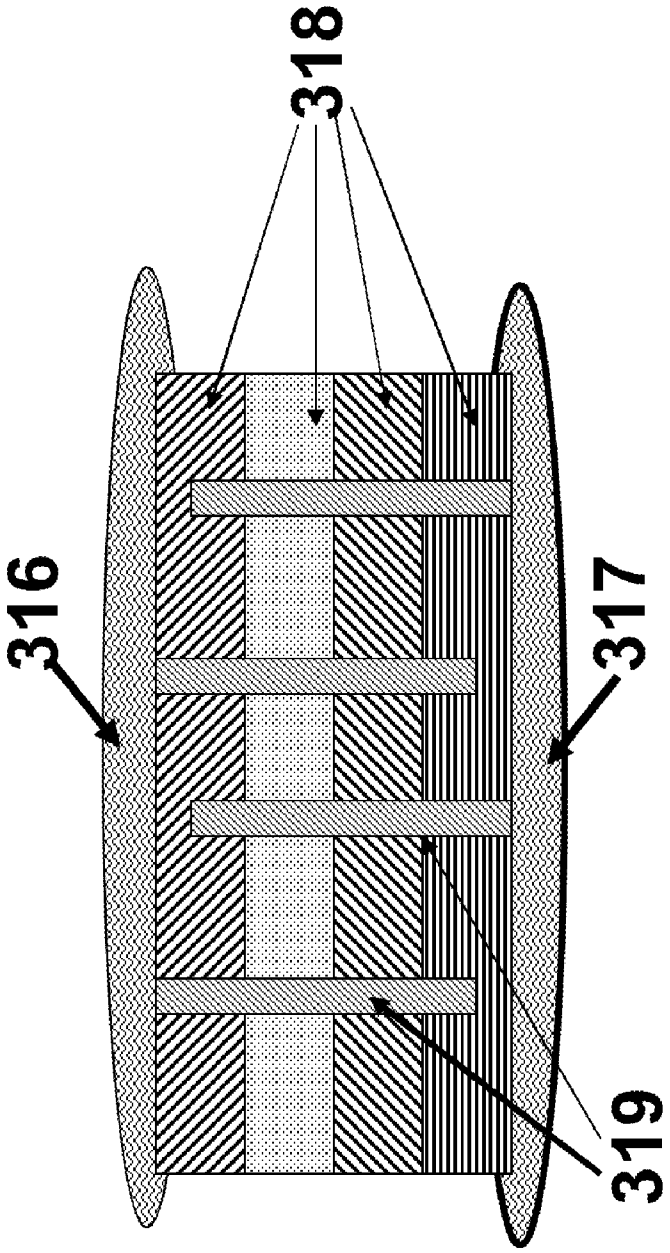

Fig 7c

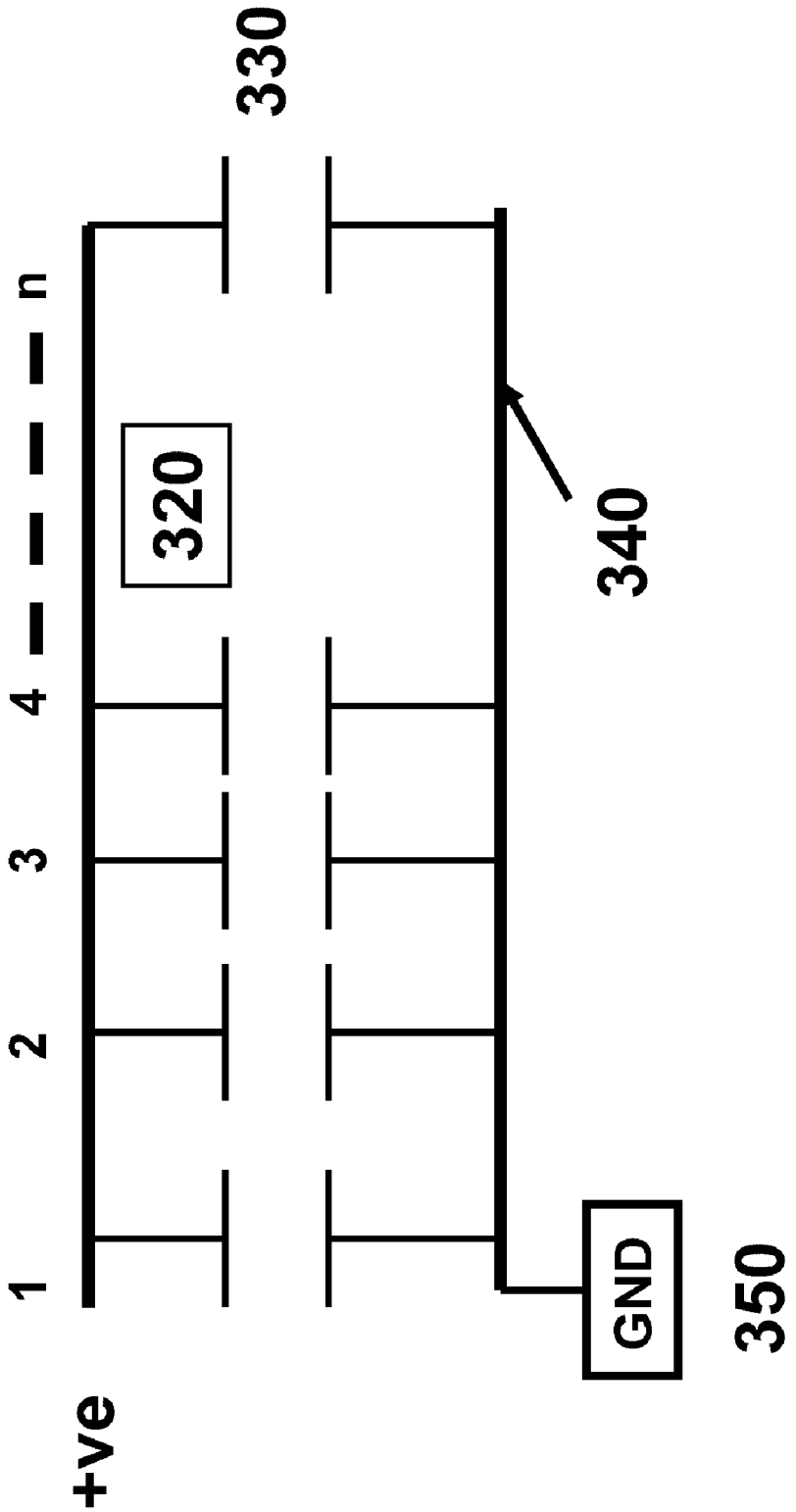

Fig. 8a

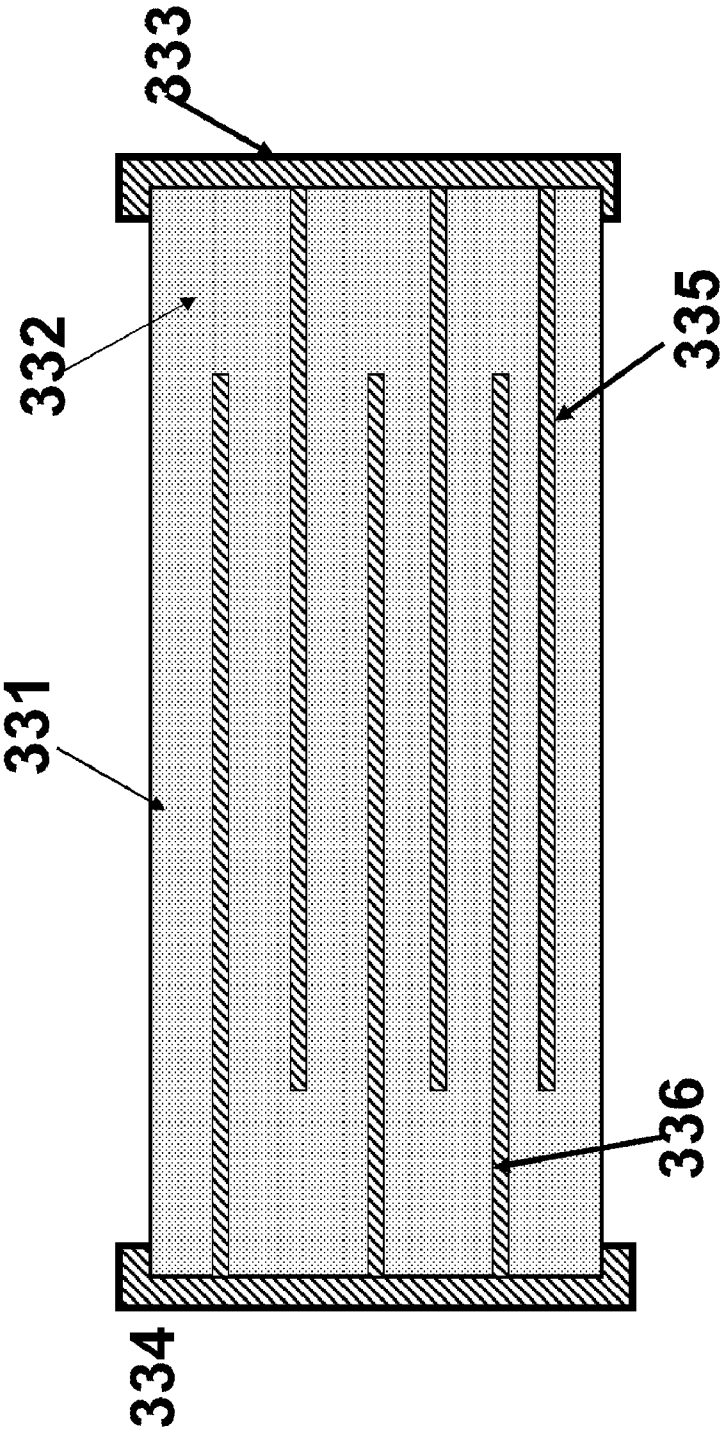

Fig. 8b

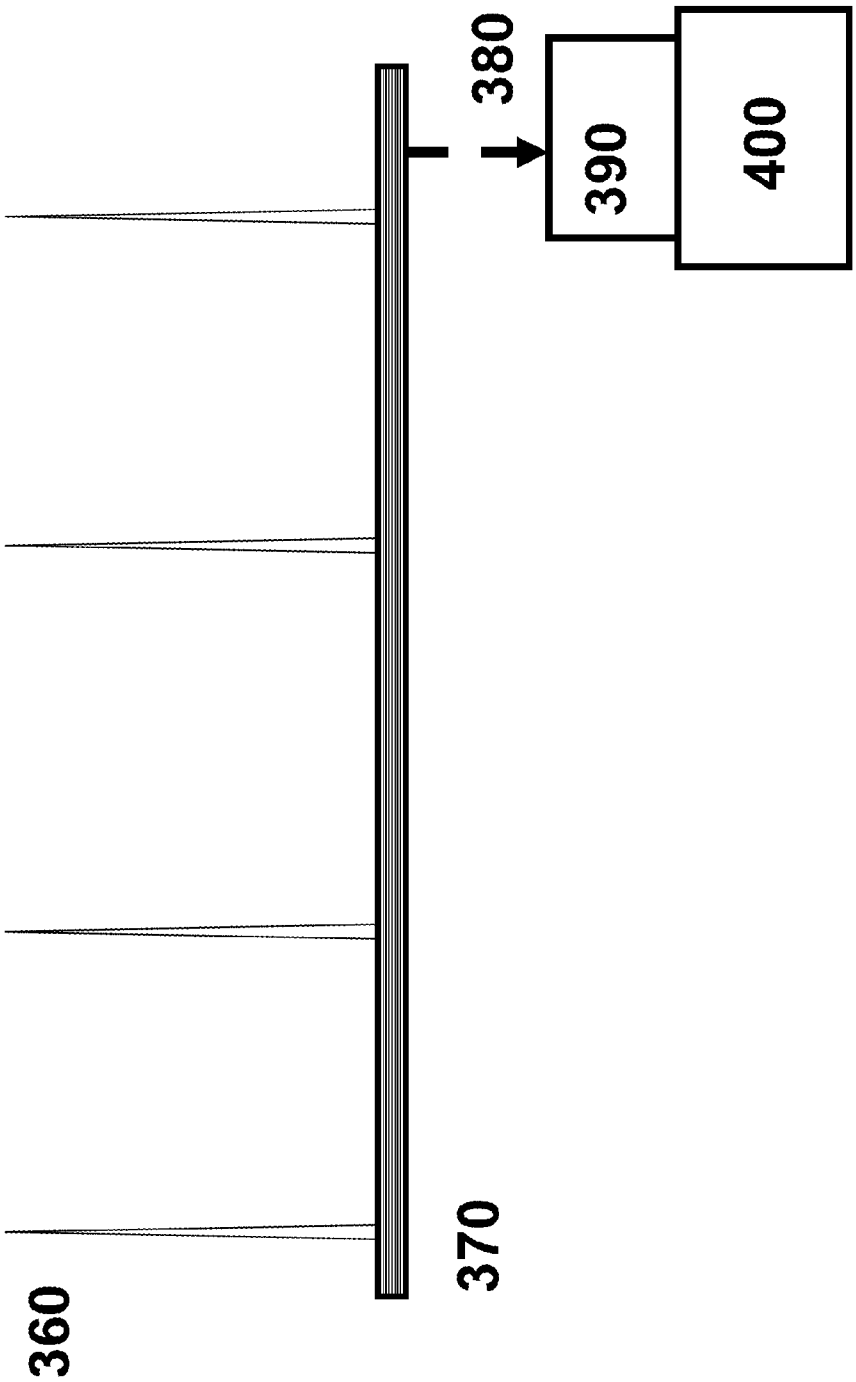

Fig. 9

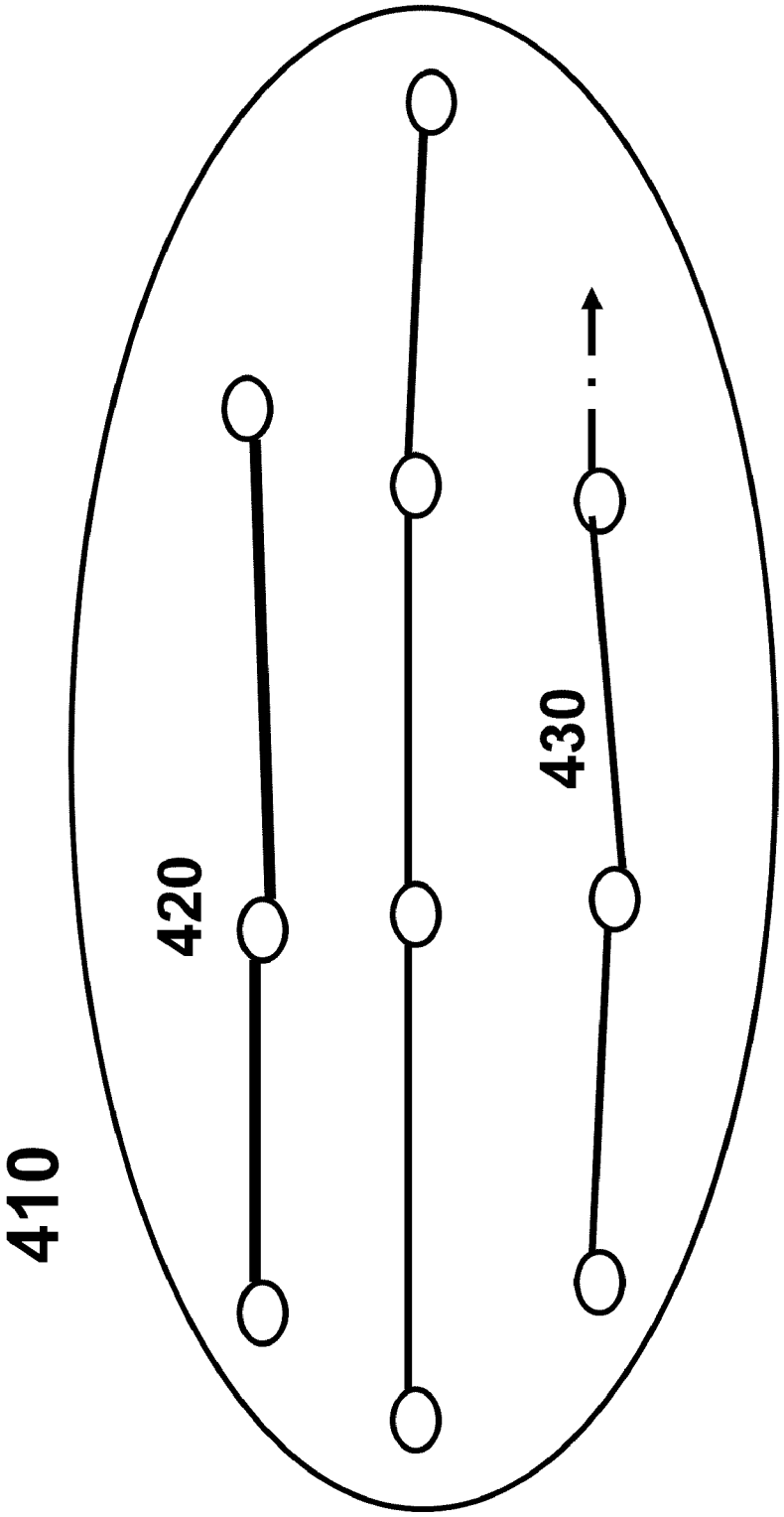

Fig. 10

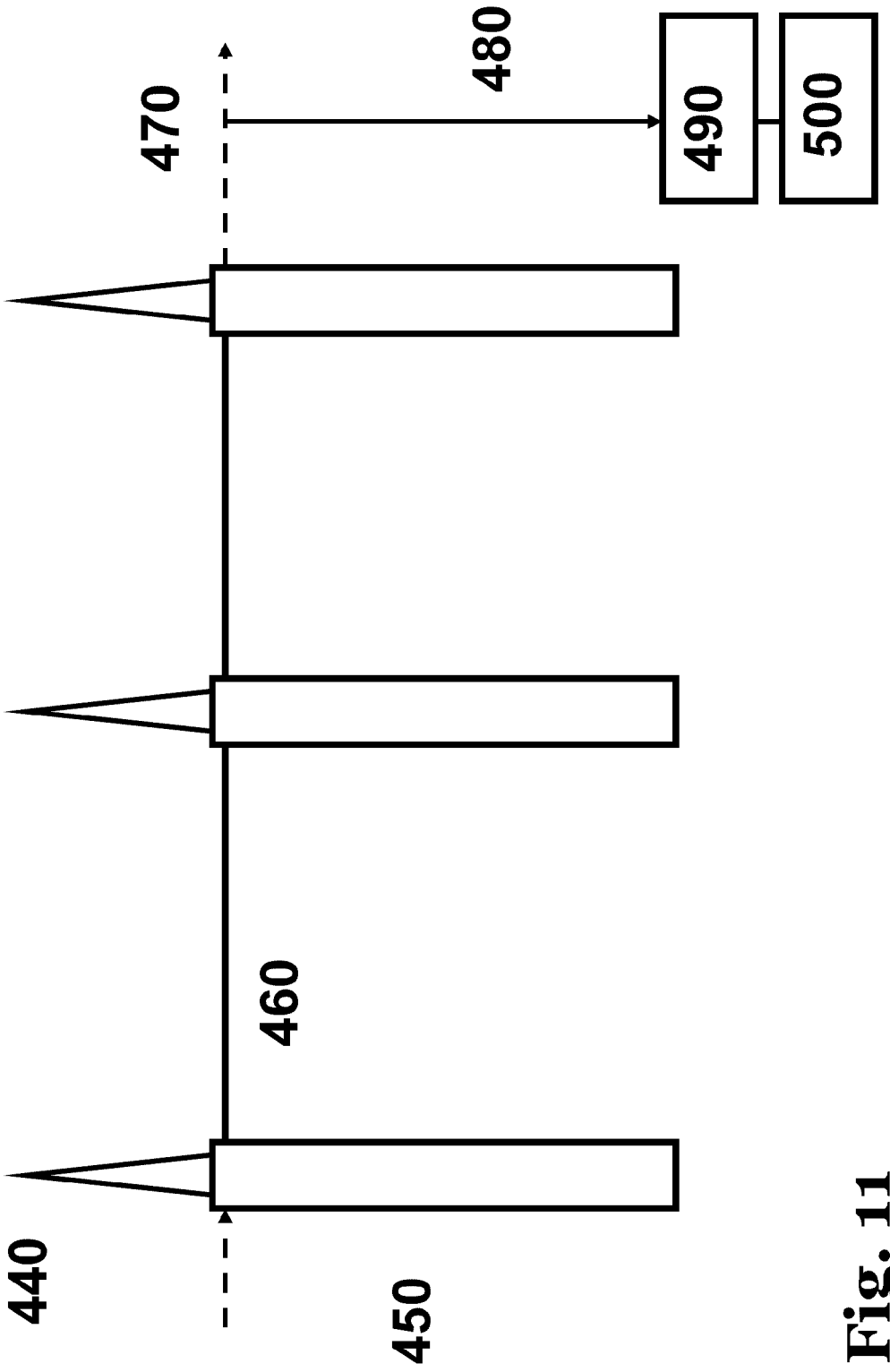

Fig. 11

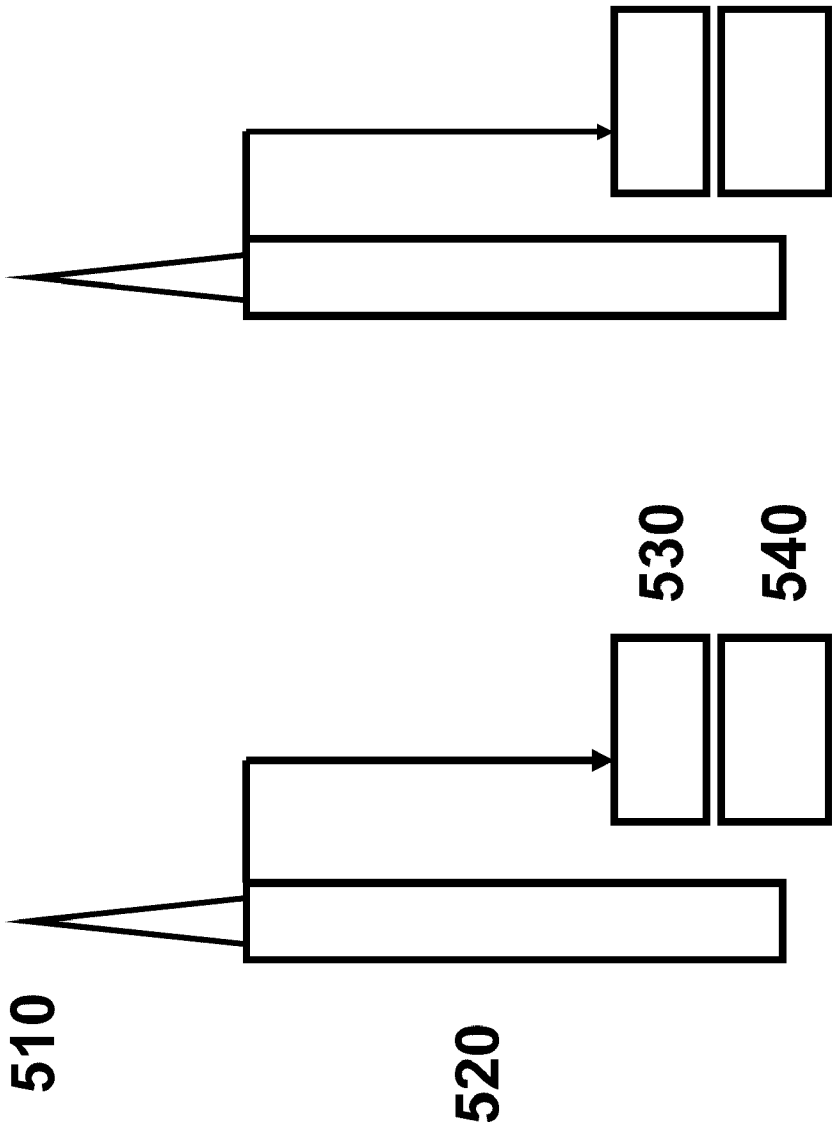

Fig. 12

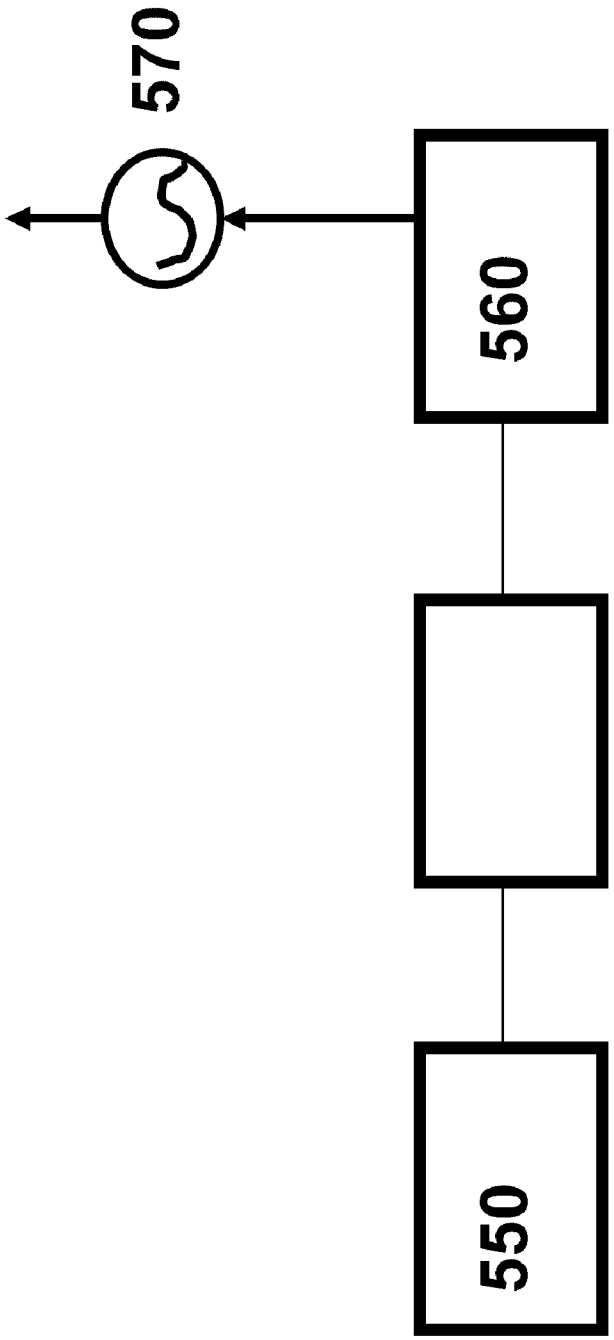

Fig. 13

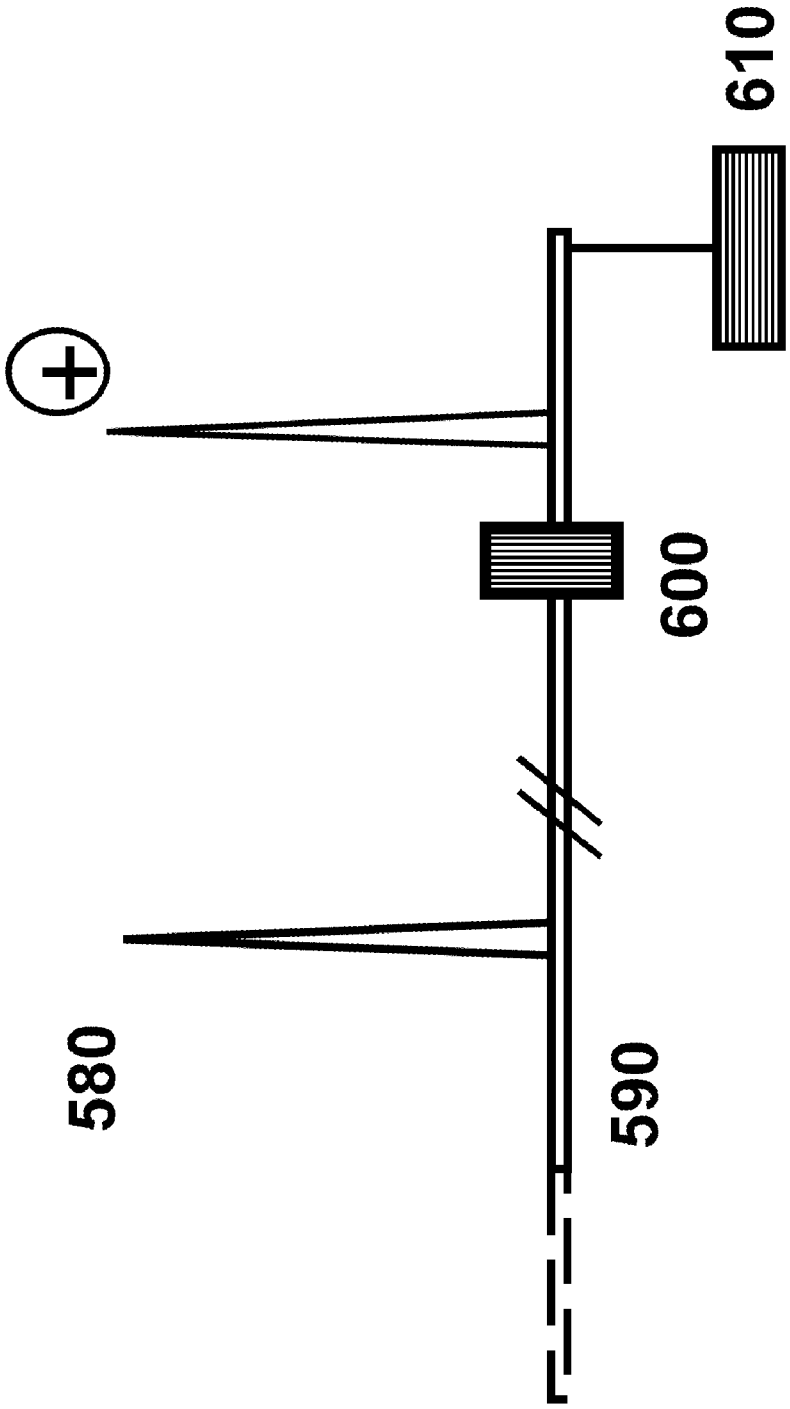

Fig. 14

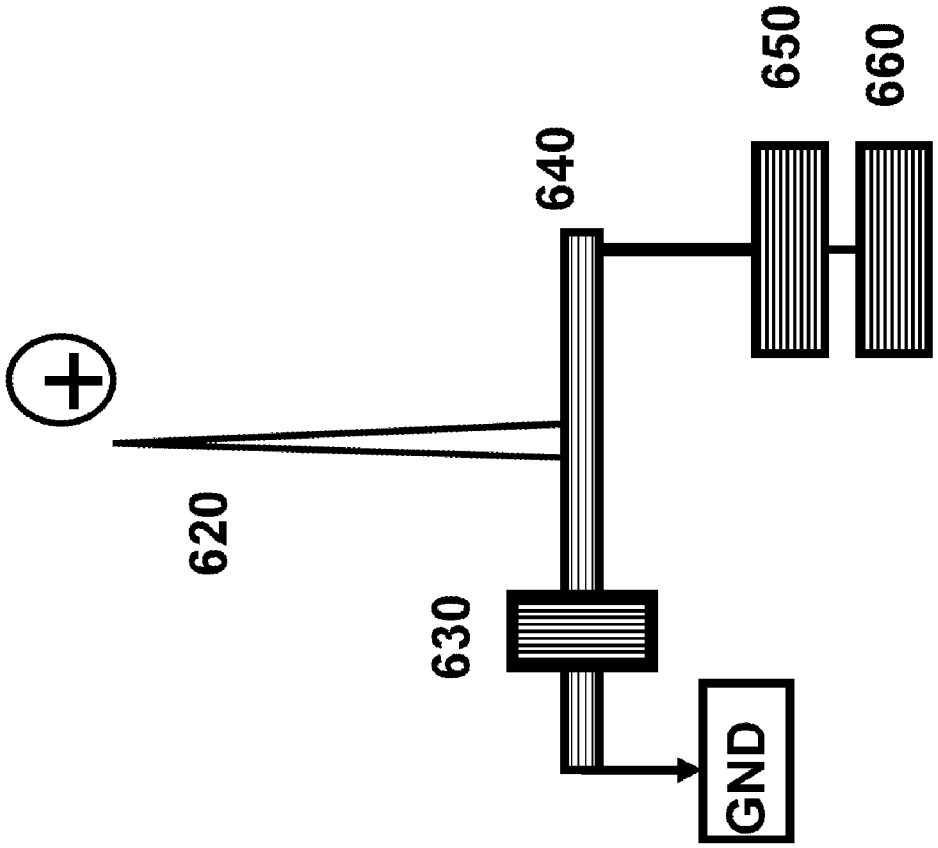

Fig. 15

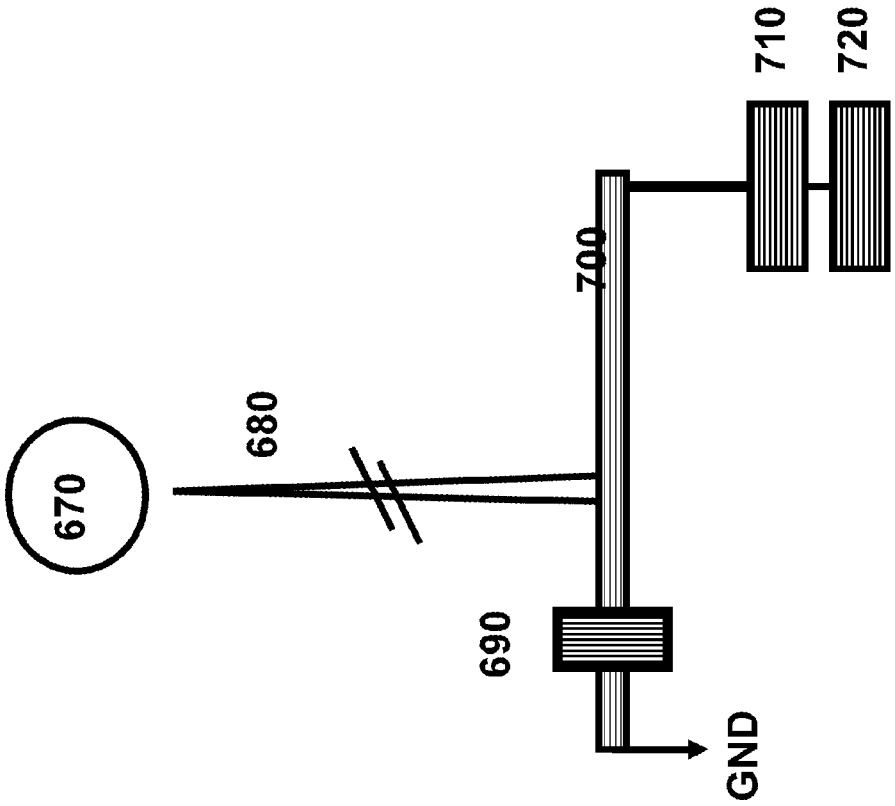

Fig. 16

METHOD OF ATMOSPHERIC DISCHARGE ENERGY CONVERSION, STORAGE AND DISTRIBUTION

TECHNICAL FIELD

This invention relates to the field of electrical energy generation and storage in general and the conversion of atmospheric electrical discharge to a useable form of energy by arresting, storage and retransmission of lightning induced electrical discharge in particular.

BACKGROUND OF INVENTION

Lightning has always been a destructive force of nature. Causing death by electrocution and starting fires both in residential areas and in forests. In either case the loss of life and property is substantial. Lightning strikes have affected communication systems, and by uncontrolled arcing, electricity grids leading to loss of power with substantial economic loss

Lightning is the number one cause of forest and farm fires just in the United States and causes over 80 percent of all livestock losses due to accidents. Property losses run into billions of dollars annually and thousands of deaths and injury are reported yearly. Business losses from power and communications failure run into billions of dollars annually. Up to now, lightning strike damage has generally been controlled primarily by grounding.

A lightning discharge can have voltage of 10 MV to 100 MV and current of 1 kA to 300 kA. It packs so much voltage that it can leap a mile through the air and strike another object. Lightning can strike a building directly or leaping to it after striking a tree or other nearby object or by following a power line. It can strike any object that provides an easier path to the ground for it than the air. Because of the large network of lines, lightning can strike a utility pole at one point and be transmitted to any location in the network. Because of this, utility companies use multiple grounding and other protective devices per mile to ameliorate the lightning effects.

There has been a lot of activity in the alleviation of lightning damage but none in utilizing its energy potential.

U.S. Pat. No. 7,495,168 discloses a dipole lightning conductor which can gather electrical charges from the atmosphere during a thunderstorm, opposite to the polarity of the adjacent cloud on one side and induce a different polarity on the other end contacting the ground. When a sufficient potential difference is reached between the dipole and the earth, a dielectric breakdown occurs sending a large amount of earth charge to the thundercloud, inducing a thunderbolt.

In U.S. Pat. No. 6,012,330, Palmer discloses a method of inducing lightning strikes by shooting a stream of ionized water into a thundercloud and triggering electrical conduction through the ionized water column to the ground. In this invention, while ionized water is used, advantage is taken also of capillary wetting of conducting mesh cable at the tip of which is tethered a balloon of conductor coated Mylar. It is easier to float a balloon than to pump a column of water to any significant height.

In U.S. Pat. No. 6,320,119 Gumley discloses a capacitively coupled composite air terminal with sharp and rounded end components for voltage manipulation to minimize electric field ahead of streamers to minimize corona discharge.

Kato, in U.S. Pat. No. 5,280,335, discloses a compound lightning low voltage arrester with high energy tolerance for power and telephone lines comprising a spark gap is connected to a serial combination of Zinc Oxide arrestor and a non-inductive resistor. By cooperative execution between the

spark gap and the Zinc Oxide arrester, the Zinc Oxide is chosen to be of a rating such that thermal breakdown does not occur before the spark gap ignition voltage is reached. The arrangement ensures reliable and predictable discharge and arrester survival even under multiple lightning strikes of close proximity.

Subbarao in U.S. Pat. No. 4,338,648, discloses a discharge counter and arrester current meter to determine arrester steady state current and the number of discharge events occurring during a thunder storm lightning arrester event.

Greenwald and Moses in U.S. Pat. No. 5,610,813 disclose a thunderstorm cell detection and mapping system for acquiring localized lightning strike information and identifying and locating active thunderstorm cells.

In U.S. Pat. No. 4,272,720, a method of differentiating between cloud-cloud and cloud-ground discharges is disclosed. Indicating discharge events with no accompanying lightning ground strike. This indicates that even in the absence of streamers, there is significant electrical discharge that can be converted and stored.

Weir and Nelson disclose in U.S. Pat. No. 7,033,406, a high energy density ceramic capacitor with energy capacity of 52 kW·h in 2005 cu·in, the equivalent of 1600 kW·h/m^3. Hansen in U.S. Pat. No. 6,078,494 discloses multilayer ceramic capacitors comprising doped barium-calcium-zirconium-titanate dielectric, the materials basis for U.S. Pat. No. 7,033,406. It is claimed to be characterized by high dielectric constant, high stability of capacitance value, long service life, low loss factor, high insulation resistance capacitance, low voltage dependence, and wide temperature range stability. Electrodes of base metal alloys from the group of Ni, Fe, Co or their alloys are claimed to be perhaps just as effective as noble metals containing gold, silver, platinum and palladium and may also contain Cr, Ti, Zr, V, Al, Zn, Cu, Sn, Pb, Mn, Mo and W.

Although the energy density capacity is not disclosed, it may be in the same range as U.S. Pat. No. 7,033,406 showing a path for storing the energy that can be extracted from lightning discharge.

U.S. Pat. No. 5,361,187, claims dielectric constant (k) of up to 19000 using similar group of dielectrics and processes. In U.S. Pat. No. 5,604,167 dielectric constant values of between 11,000 and 14,000 are disclosed by the same inventor with equivalent materials and processes.

Since these capacitors use standard powder processing technique, it can reasonably be expected that equivalent characteristics may be observed with naturally occurring doped silicates such as phyllosilicates for example, montmorillonite: $(Na,Ca)_{0.33}(Al,Mg)_2(Si_4O_{10})(OH)_2.nH_2O$, or cyclosilicates such as Benitoite—$BaTi(Si_3O_9)$ as base materials appropriately calcined and doped.

In U.S. Pat. No. 6,078,494 multilayer ceramic capacitors comprising doped barium-calcium-zirconium-titanate dielectric is disclosed. It is claimed to be characterized by high dielectric constant, high stability of capacitance value, long service life, low loss factor, high insulation resistance and low voltage dependence, and wide temperature range stability. Electrodes of base metal alloys from the group of Ni, Fe, Co or their alloys are claimed to be perhaps just as effective as noble metals containing gold, silver, platinum and palladium and may also contain Cr, Ti, Zr, V, Al, Zn, Cu, Sn, Pb, Mn, Mo and W. In U.S. Pat. No. 5,361,187, the inventors claim dielectric constants of up to 19000 using similar group of dielectrics and processes. In U.S. Pat. No. 5,604,167 dielectric constant values of between 11,000 and 14,000 is disclosed by the same inventors with equivalent materials and processes. Since these capacitors use standard powder pro-

cessing technique, it can reasonably be expected that equivalent characteristics may be observed with naturally occurring doped silicates such as phyllosilicates for example, various grades of montmorillonite: $(Na,Ca)_{0.33}(Al,Mg)_2(Si_4O_{10})(OH)_2.nH_2O$, or cyclosilicates such as Benitoite—$BaTi(Si_3O_9)$ as base materials appropriately calcined and doped.

Although the technology to arrest lightning strikes has been around for at least a hundred years, this invention to harness and store that power has only become viable due to recent advances in super-capacitor technology which has made possible the fabrication of ultrahigh capacitance capacitors with very long lifetimes, high power, high energy densities and very fast charge and discharge rates.

Just as flood water, another destructive force of nature in times past was controlled by building dams, and from the dams eventually came hydroelectric power; and wind including thunderstorms has now been harnessed to generate electricity, this invention describes the technology to harness the power of atmospheric discharges including lightening storms to generate useable electrical energy.

This disclosure also introduces the concept of an Energy Dam. Facilities of substantial energy storage capacity capable of receiving energy feeds from various energy sources such as Solar, Wind, Thermal Power plants and Lightning. For example, during a thunderstorm, electricity generated by wind and lightning is collected and stored.

Lightning strikes every part of the globe but not uniformly. The regions with the highest historical concentration of lightning strikes are shown in FIG. **1***c*. These include Florida and the Gulf Coast in the Americas, the Equatorial Highlands of DRC, Rwanda and Burundi in Central Africa and the Monsoon Belt in Asia.

Except for the Americas, typically, these regions have very little electricity infrastructure. With the capability disclosed here, substantial reserves of electricity can be generated, stored and possibly traded.

In regions of epileptic electricity supply, disruptions in power do not necessarily translate into disruption in service. Since when power is generated, it is fed into these energy dams or local storage units for eventual use. Just as in water supply, the customer is not necessarily conscious of when the local water company is pumping water into storage tanks or local dams, in energy dams, the customer need not be conscious of whether or when electricity is being generated by the utility company because the power to his home is drawn not necessarily live from the grid but from the local energy storage units or energy dams.

BRIEF SUMMARY OF THE INVENTION

A method of harnessing atmospheric discharge and storing said energy in a useful form for subsequent use is presented.

Since the voltage of a lighting bolt can be as high as 100 MV, a methodology for safely channeling this discharge for storage is disclosed.

It is the also the object of this invention to present a storage medium in which an energy capacity of 1 MW·h in a volume of under 1 m^3 can be achieved.

It is also a further objective of this invention to show how lightening strikes on tall buildings can be harnessed to provide energy for the building either directly or fed into the grid.

It is also an objective of this invention to present a methodology for harnessing lightening, heretofore a source of power disruptions for electricity grids and converting it into a useable form of energy and feeding it back into the grid.

Since each electricity grid has a lightning suppression unit, a methodology for harnessing the impulse from these units from lightening strikes and feeding it back into the grid is disclosed.

a method of deploying a network of said storage units along a utility grid is also disclosed.

It is also the objective of this invention to disclose a method of modifying the storage units for single building deployment.

A method of deploying said storage units as vehicular charging centers even in locations not readily served by a utility grid is also disclosed.

A method of manipulating the direction and movement of the lightening bolt in open air locations and redirecting them to predetermined collection points is disclosed.

Lightning storms are some of the major causes of wild fires in the world. A method of redirecting the electrical discharges in any given space via a network of polarized and non-polarized collectors is presented. The discharges can be stored, fed into the grid or grounded.

A method for non-spontaneous discharge generation and storage is disclosed. And a method for adapting the methodology for electric automotive deployment is also disclosed.

BRIEF DESCRIPTION OF DRAWINGS

For understanding of the present invention reference is made of the accompanying drawings in the following DETAILED DESCRIPTION OF THE INVENTION. In the drawings:

FIG. **1***a*. Picture of lightning strike over a city.

FIG. **1***b*. Picture of lightning strike over open plain.

FIG. **1***c*: Global Distribution of Lightning Strikes: April 1995-February, 2003. (Source: NASA).

FIG. **2** shows a schematic of discharge collection and storage system.

FIG. **3** shows a schematic of collection unit showing metallic composition variation.

FIG. **4** Shows a Schematic of composite collector showing polarized ends.

FIG. **5** Schematic of collector network configuration with negatively polarized ends to manipulate and redirect lightning electrical discharge away from the earth for eventual collection at a predetermined location.

FIG. **6** Plan view of polarized collection network as shown in FIG. **5** acting to concentrate and modulate the electrical discharge and redirect such for collection at predetermined location.

FIG. **7***a*. Schematic showing a representation of a network of varistors arranged in rows and columns with the net effect of applying resistive arrestors in parallel and in series to effect voltage mitigation of atmospheric discharges prior to collection and storage.

FIG. **7***b*: Schematic of varistor of power mitigation unit showing cascade of ZnO arrestor in series with non-inductive resistor in parallel with spark gap.

FIG. **7***c*: Multilayer varistor with ZnO, ZnS and WO_3/WSi_2

FIG. **8***a*. Schematic showing cross section of a collection unit.

FIG. **8***b*. Schematic showing cross-section of multilayer ceramic capacitor of **8***a*.

FIG. **9** Schematic of collection unit network mesh in forested area with air frames deployed on each tree as collection of trees linked in a mesh network.

FIG. **10** Plan-view schematic of collection unit network mesh of FIG. **9**

FIG. **11** Schematic showing collection unit deployment on electricity transmission poles linked in a network and fed into the electricity grid.

FIG. **12** Schematic showing collection unit deployment on light poles or wireless towers.

FIG. **13** Schematic showing network of linked collection units and storage units on transmission lines, light poles or wireless towers fed into the grid.

FIG. **14**. Schematic of a system for non-spontaneous atmospheric discharge generation and storage.

FIG. **15** Schematic of atmospheric discharge collection and storage unit deployable on automotive units.

FIG. **16** Schematic of balloon-assisted discharge collection and storage unit.

DETAILED DESCRIPTION OF THE INVENTION

This invention describes a method of harnessing the electrical energy in atmospheric discharges, including, but not limited to lightning, storing said electrical energy and transmitting said energy for use. To this end, as an illustration, the preferred embodiments are represented in the drawings shown in FIGS. **2** to **15**.

Since lightning discharge voltages range from 10 MV to 100 MV with current of 10 kA to 100 kA, the technology challenge will be in mitigating the ultrahigh power which range from 100 GW to in excess of 10,000 GW. Although individual strikes last less than 100 μsec, thunderstorms usually last longer than 30 min. in any cloud formation and location. Indicating that the energy that can be mined from any location in a thunderstorm can run in excess of 50 GW·H. Enough energy for 500,000 homes consuming 1000 kW·h per month. At $100 per 1000 kWh, the revenue equivalent is $5 million per thunderstorm per location.

In solar energy generation, the cost of a 1 MWe rating PV panel is about $1 million. To achieve 1 GWe, the cost implications will be about $1 billion. In fossil fuel plants, the construction cost is approximately $1.3 million per MWe, putting the cost for a 1 GWe at ~$1.3 billion excluding fuel, carbon footprint, and other operating cost. Though thunderstorms are not continuous, with storage capability, the cost basis for an atmospheric discharge energy source will be several orders of magnitude lower than fossil fuel or solar of any architecture.

One embodiment of this invention is depicted in FIG. **2**. Lightning is collected at the air terminals **10**, **20** and transmitted through the conductor **30** to an arrestor **40** and on to the capacitor **50** where the electricity is stored. From which it can be extracted **60** at point of use or transmitted into the grid.

The degree of atmospheric discharge charge collection can be influenced by the metallurgical composition of the collectors. FIG. **3** illustrates the fabrication of the collector with different metals of varying conductivities and atmospheric and electrical stability. In this embodiment, metallurgical compositions for the various segments comprise Ti, Cu, Al. Other metals or their alloys can be used depending on the required properties and the locations of deployment.

In yet another embodiment of the invention as shown in FIG. **4**, a composite collector with opposite polarity air terminals **100**, **110** is used. The air terminals are isolated from each other by an insulator **120**. The negative polarity terminal serves to deflect and manipulate the charge to the positive terminal from which it is conducted to the storage unit **130**.

Another embodiment of the invention is illustrated in FIGS. **5** and **6**. In this representation, negative polarity collectors, **160** deflect the atmospheric discharge so that they do not reach the ground but are deflected for collection at a predetermined terminal **180** of positive polarity and thereafter storage **200**. A plan view representation of this embodiment is shown in FIG. **6**.

It is essential to mitigate the power of the lightning before storage. In one embodiment of this invention, a collection of varistors of various power capacities, linked in series **270**,**280** and **290** are connected in parallel in lines **1** to n, to achieve a desired capability as shown in FIG. **7***a*. The resultant power is stored in the capacitor **300**. An insulator or fuse **305** is placed at the end of the varistor chain to protect the capacitor **300** against over-current. In the event of overstressing, the dielectric or varistor is deformed and the excess current is grounded.

Each component of the power mitigation unit is any of the following configurations as shown in FIG. **7***b*: A ZnO varistor **312** connected in series with a non-inductive resistor **313** and in parallel with a spark gap **311**. The resultant current is further modulated through another ZnO unit **314** and resistor **315**. A cascade of this configuration could be adopted to achieve the desired properties.

Zinc Oxide has a relatively large band gap of ~3.3 eV at room temperature. The consequence of this large band gap includes, higher breakdown voltages, ability to sustain large electric field and high power and temperature operation. Because of this, ZnO is the primary component in varistors and in voltage suppression devices. Zinc Sulfide has a band gap of 3.5 eV for the cubic form and as high as 3.91 eV for the hexagonal form at 300K. While ZnO band gap can be tuned from between 3-4 eV by alloying with magnesium oxide or cadmium oxide, the co-processing of ZnO with ZnS of the hexagonal wurtzite form should provide electrical field and other operational advantages over ZnO alone.

Multilayers of ZnO and ZnS or as sandwich layers with each other with ZnO achieving 50-99.9 mol. % of each layer can be adopted to improve on the suppression properties of the single layer ZnO varistor as is shown in FIG. **7***c*. Said varistor comprising a ceramic base body **318** of multiple layers, terminal electrodes **316**, **317** and internal electrodes **319**.

Alloying of ZnO with metal oxides and nitrides of transition elements including W, Zr, Mo, Mg, Cr, and Ti may improve its band gap characteristics and improve its voltage response non-linearity. Tungsten, in the form of tungsten silicide has very unique crystallization characteristics, particularly in the presence of dopants such as phosphorus or arsenic. Upon post deposition anneal, the Si in the non-stoichiometric tungsten silicide (WSix) segregates to the grain boundaries and the film interfaces. The dopant atoms diffuse preferentially along the grain boundaries. When oxidized, it is the segregated silicon that is oxidized selectively. If the W is exposed to the oxidizing ambient of O_2/Ar or O_2/N_2 at temperatures in excess of 700° C., tungsten oxide WOx (x=3, or 1.5) is formed. It has no corresponding crystallographic orientation to the underlying tungsten silicide or metal, being in the form of an amorphous powder. The fabrication of multilayer varistors with ZnO and WSi_2/WO_3, SiO_2 should provide the flexibility of modulation of the effective grain sizes of the host material to within 0.5-10μ as the case may be. This precise grain size control provides corresponding modulation of the electrical properties including overvoltage suppression.

A schematic of the storage unit **320** is shown in FIG. **8***a*. A collection of capacitors **330** are connected in parallel to achieve a desired capacitance. A schematic of the cross-section of each capacitor unit is shown in FIG. **8***b*. The unit **331** with dielectric layers **332** is a multilayer capacitor comprising alternately stacked internal electrodes **335**, **336** connected to external electrodes **333**, **334**. The dielectric layers may be of

uniform composition, or layers of different compositions optimized for flexibility in the modulation of desired electrical, physical and reliability properties.

Capacitance in excess of 1 kF/m^3 with energy storage capacity of 1.5 MW·h is reported as being possible by existing art. With compositional and manufacturing improvements disclosed here these benchmarks are expected to be surpassed making possible energy storage capacities of up to 1 GW·h. Sufficient energy for 1000 households consuming 1000 kW·h of electricity per month for one month.

Lightning storms are a major cause of wildfire. To address this, in yet another embodiment of this invention as represented in FIG. **9**, air terminals **360** are set up on a selection of trees and connected by a conductor **370** in a mesh array as shown in FIG. **10**. The impinging charge is transmitted through a conductor **380**, through a suppressor unit **390** and on to the storage unit **400**.

Utility transmission lines usually have lightning collectors along the length of the network. In this invention as demonstrated in FIG. **11** air terminals **440** deployed transmission poles **450** are linked by a polarized conductor **460**. At predetermined locations the impinging charge is conducted through a suppression unit **490** and thereafter into the storage unit **500**. The stored energy is periodically released into the grid.

In yet another embodiment of the invention, air terminals **510** are deployed on light poles **520**. The collected charged are modified and stored in a storage unit **540**.

In another embodiment, the air terminal/collection units are deployed on radio transmission towers. The charge could be stored individually at each tower location or linked in a network as shown in FIG. **13**. In either case, the stored energy be used at each individual location or fed into the grid **570**.

In the absence of a thundercloud, lightening flash can be generated by the modification of the natural bias between the cloud and ground. This is demonstrated in FIG. **14**, where a positively biased conductor **580** of height greater than nearest ground elevation or nearest structure. The increased elevation and bias facilitates cloud to ground discharge even when there is no active lightning storm. The incoming charge is isolated by an insulator **600** and stored in the storage unit **610**.

In yet another embodiment of this invention, a balloon of conductive material is tethered to a terminal via a mesh line of conducting material. The balloon captures cloud to cloud discharges which are transmitted down to storage. In yet another embodiment this tether line may be wetted by a conductive solution such as but not limited to salt solution to facilitate the discharge conduction.

Another embodiment of this invention is shown in FIG. **15**. In an isolated collection system as shown here, the air terminal **620** which may be biased or unbiased is connected to a collection/storage unit **650**, **660** respectively by conductor **640** and isolated by a dielectric or insulator **670**. Should the discharge exceed the capacity of the isolation, the isolation is bridged and the charge grounded. This isolated collection system is particularly useful where there is no utility grid, particularly in very remote and isolated locations.

This isolated collection capability enables deployment on individual houses and isolated farms. In electric automotive recharge stations, this capability enables the location of these facilities in any location even those not served by regular electricity utilities lines.

In isolated rural areas, the deployment of these isolated collection units enables the provision of electricity where electricity grid infrastructure is not available or practical. The storage units can be deployed in banks as the estimated anticipated usage dictates.

In another embodiment of this invention, the isolated collection unit is modified to be portable for deployment on automobiles. The charge in the storage unit is linked with the automobile's electrical power or storage unit. Alternatively, it can replace the power storage unit of the automobile for pure EV or hybrid cars. Additionally, it can unplug these cars from the grid. With the ambitious industry plans for electric or hybrid cars the infrastructure for charging these cars either in garages or charging stations is somewhat limited. The capability to both 'charge as you go' and unplug from the grid would expand the infrastructure significantly.

In yet another embodiment of this invention, the isolated collection unit is deployed on trains. This could be in commuter trains that directly fed from the grid, or long-haul trains to augment or replace the fossil fuel used.

It is understood that the presentation of these steps in this disclosure is not exhaustive. Only the preferred embodiments of the invention and but a few of the examples of its versatility are shown and described in the present disclosure. It should be readily apparent to those of ordinary skill in the art that the invention is capable of use in various other combinations, environments and applications and is capable of changes or modifications within the scope of the inventive concept as expressed herein. These changes and modifications may be made without departing from the spirit and scope of the invention as set forth in the appended claims.

The invention claimed is:

1. A method of converting an atmospheric electrical discharge into a

useable form of electrical energy comprising

deflecting the discharge to an air terminal via one or more separate air terminals of a polarity, the air terminal having an opposite polarity to the polarity of the separate air terminals;

arresting the discharge via the air terminal to a power mitigating (step down) unit via a conducting unit connected to the air terminal; wherein said power mitigating unit is not a transformer,

reducing voltage of the discharge via the power mitigating unit modulated according to a capacity of the power mitigating unit, wherein the discharge is grounded if in excess of the capacity, and wherein the power mitigating unit reduces the voltage of the discharge from approximately higher than 100 MV (mega volt) and 100 kA (kilo amperes) to below 20 kV (kilo volt), 10 kA; and

storing the discharge with the reduced voltage in an energy storage unit connected to the power mitigating unit, the storage unit comprising modules of high energy density capacitors and the storage unit discharging the electrical energy into a power grid or to an appliance.

2. The method of claim **1** wherein the discharge is caused by incident lightning and wherein the arrestor and mitigating unit comprise an array of self-healing varistors in series and parallel chosen to ensure total conversion of the discharge to a voltage/current level suitable for storage in said capacitors.

3. The method of claim **1**, where the power mitigation unit a configuration selected from a group consisting of:

(a) single ZnO varistor,

(b) Zinc Oxide arrester connected in series with a non-inductive resistor,

(c) Zinc Oxide arrester in series with a non-inductive resistor and in parallel with a spark gap, and

(d) a cascade of configurations as described in (c).

4. The method of claim **1** wherein the storage unit comprises modular array of high energy density multilayered

doped ceramic capacitors with storage capacity of 10 kW·h (kilowatt hour) to 1 GW·h (gigawatt hour) and volume 0.1 to 1 m^3 and up to 1000 units.

5. The method of claim **1** in which the air terminal and the storage unit are configured in a mobile unit and deployed on mobile platform having a battery, wherein the mobile unit provides the electrical energy to power the battery without a need for recharging the battery at fixed charging locations.

6. The method of claim **1** wherein the storage unit is located in a charging station, and wherein the storage unit includes modular capacitors for charging an electric vehicle from the charging station.

7. The method of claim **1** wherein the air terminals are deployed on buildings, wherein a portion of the electrical energy stored is used by the buildings and wherein a portion of electrical energy is stored in a central energy storage facility connected to a plurality of storage units.

8. The method of claim **1** wherein the said storage units are located underground.

9. The method of claim **1** wherein the storage unit is receives energy feeds from more than one electricity generation sources, each source being selected from a group consisting of Thermal energy source, Hydro energy source, Solar energy source, Wind energy source and Lightning energy source.

10. The method of claim **4** wherein the ceramic capacitors are fabricated to provide modulation of effective grain sizes within a specified range.

11. The method of claim **4** wherein the multilayer ceramic capacitors comprises dielectric layers of varying compositions individually or as sandwich layers with each other containing Barium-Titanate silicates as host material doped with Zr, WSi2/WO3 to modulate grain growth to between 0.1 to 10 μm, said modulation providing corresponding control of electrical and reliability properties.

12. The method of claim **2** wherein the varistors comprise multilayers of ZnO and ZnS individually layered or as sandwich layers with each other with ZnO achieving 50-99.9% of each layer, said layers being alloyed metal oxides of transition elements to improve voltage response non-linearity.

13. A method to protect a position from impact of an electrical

discharge caused by lightning, the method comprises redirecting the electrical discharge from the position via an array of air terminals to an air terminal of a collection unit, said collection unit comprising a power mitigating unit and a storage unit and wherein the power mitigating unit is not a transformer, the air terminal of the collection unit biased with a first

polarity, each of the array of air terminals biased with a second polarity with a magnitude, the second polarity opposite to the first polarity, wherein the redirection is controlled by the magnitude and the second polarity; and

storing the electrical discharge in the collection unit located significantly removed from the impact position.

14. The method of claim **13** wherein the discharge redirection is via a biased conductor to the collection unit.

15. The method of claim **13** wherein the position is located in an area of a forest, wherein the array of air terminals are deployed on trees in the forest, wherein tips of the array of air terminals are positioned in close proximity to treetops of the trees, and wherein the discharge is fed into an electricity grid as electrical energy from the collection unit.

16. The method of claim **1** wherein the storage unit is connected to electrical power lines of the power grid and wherein the electrical energy is fed back into the power grid via the electrical power lines.

17. The method of claim **1** wherein the storage unit is located at a telecom tower, a light poles or other free standing structure with a need for operational energy and wherein the electrical energy from the storage unit is used for the operational energy.

18. A method of generation of atmospheric discharge, the method comprising:

modulating bias of a dipole air terminal conductor to capture charges from clouds to ground without occurrence of natural lightning, the conductor including a balloon, a terminal and a tether line connecting the balloon and the terminal, wherein the bias has a magnitude and a polarity controlled by the modulation relative to the ground; and wherein the tether line is a conductive cable soaked by an ionic liquid including salt solution to facilitate conduction of the charge, and

storing the charge in a collection unit comprising a power mitigation unit and a storage unit wherein said power mitigation unit is not a transformer, feeding said charge into an electricity grid or appliance.

* * * * *

US 20110075316A1

(19) United States

(12) Patent Application Publication

(10) Pub. No.: US 2011/0075316 A1

(43) Pub. Date: Mar. 31, 2011

Rodriguez Montes et al.

(54) SYSTEM FOR RECOVERING AND USING THE ELECTROSTATIC CHARGE GENERATED BY LIGHTNING

(76) Inventors: **Angel Rodriguez Montes**, Ordino (ES); **Antonio Claveria Canal**, La Massana (ES)

(21) Appl. No.: **12/891,388**

(22) Filed: **Sep. 27, 2010**

(30) **Foreign Application Priority Data**

Sep. 29, 2009 (ES) 200901924

Publication Classification

(51) **Int. Cl.**
H05F 7/00 (2006.01)

(52) **U.S. Cl.** **361/225**

(57) **ABSTRACT**

A system for the recovery and use of the electrostatic charge present in the atmosphere during storms generated by lightning, transforming natural energy into electrical energy useful for consumption, and providing the necessary protection for lives and property against electro-atmospheric phenomena, has an ecological lightning conductor, an electrical conductor connected by one end to the low-frequency electrode of the lightning conductor, and an enhanced intelligent earth wire, whereto the conductor is joined by its other end. The conductor includes a series of probes and magnetic field detectors which will send information to the microprocessor and from there to the mainframe computer. The control device allows regulation of the earth resistance, thereby generating more or less charge, diverting the energy to the accumulators or to earth through dissipator electrodes.

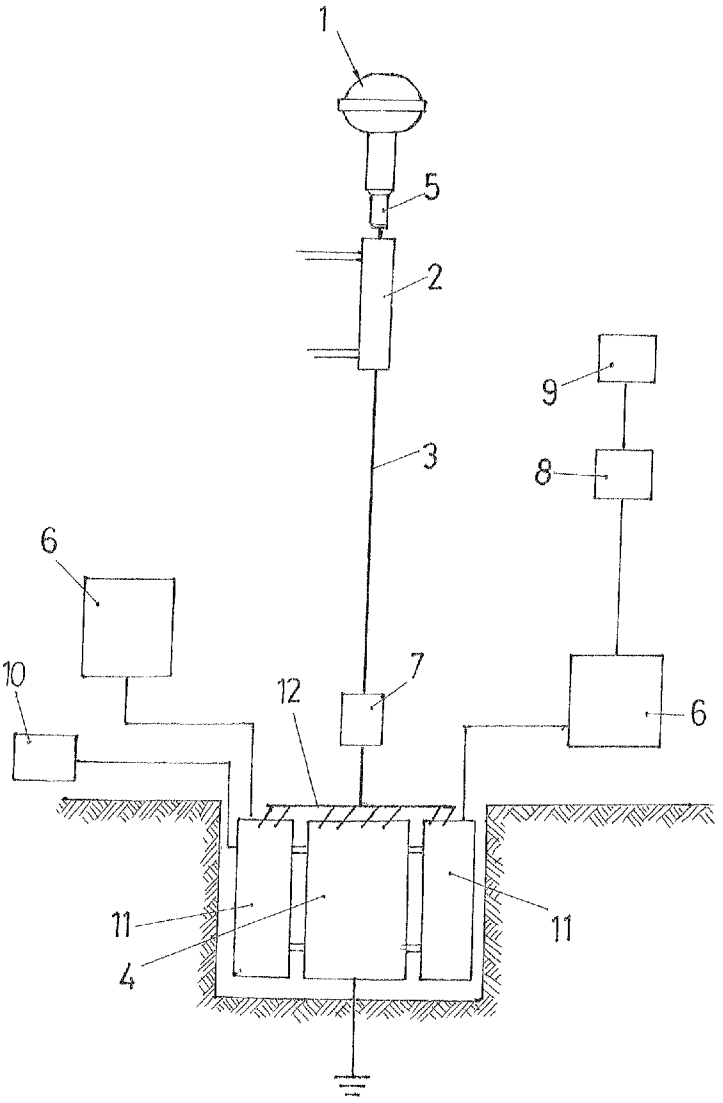

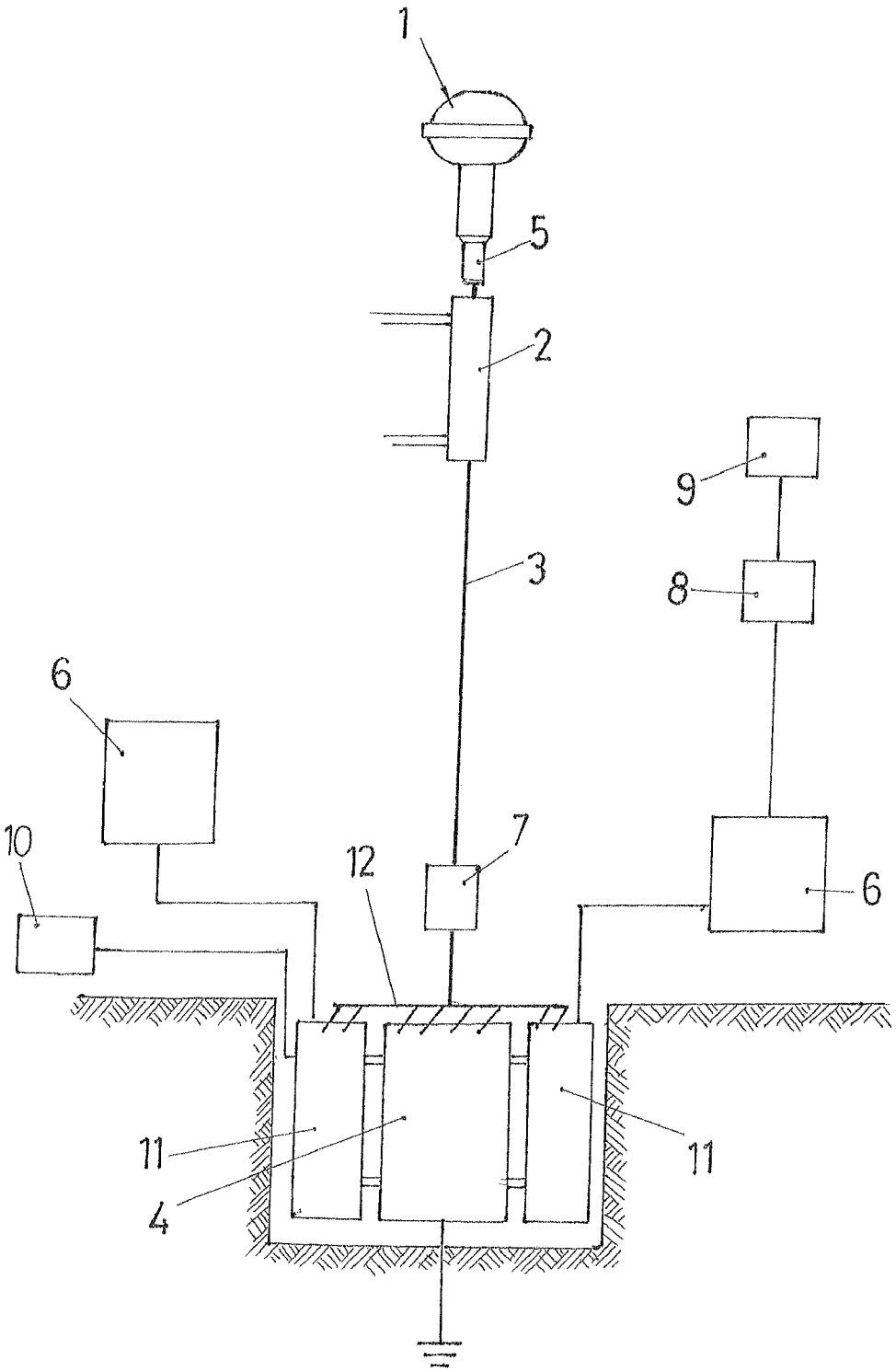

FIG. 1

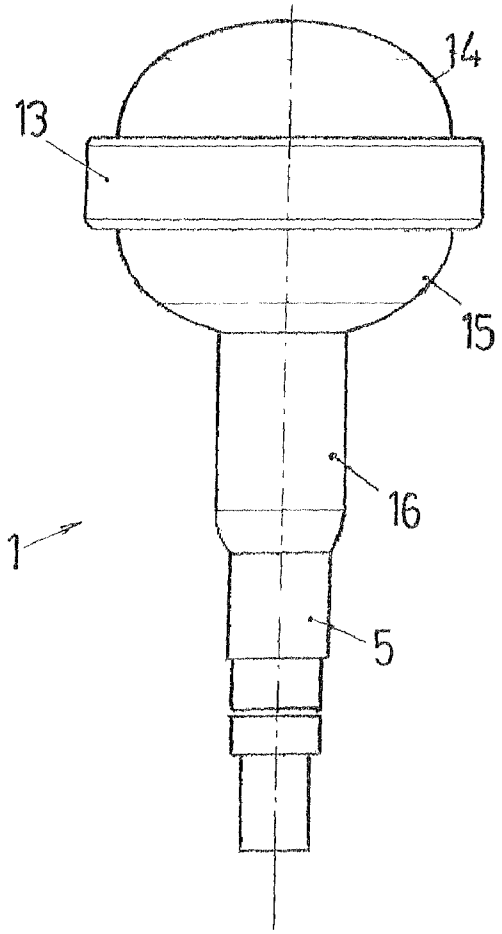

FIG. 2

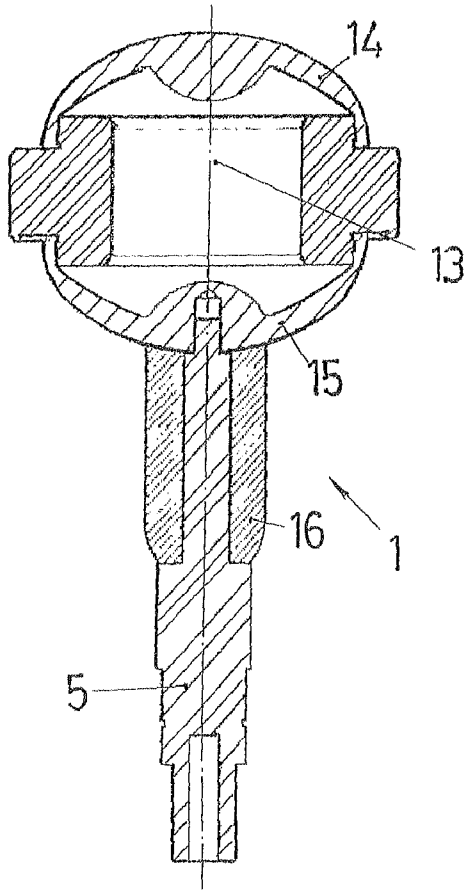

FIG.3

SYSTEM FOR RECOVERING AND USING THE ELECTROSTATIC CHARGE GENERATED BY LIGHTNING

CROSS-REFERENCE TO RELATED APPLICATION

[0001] The invention described and claimed hereinbelow is also described in Spanish Patent Application ES 2009 01924 filed on Sep. 29, 2009. This Spanish Patent Application, whose subject matter is incorporated here by reference, provides the basis for a claim of priority of invention under 35 U.S.C. 119(a)-(d)

BACKGROUND OF THE INVENTION

[0002] The present invention relates to a system which allows the recovery and use of the electrostatic charge present in the atmosphere during storms which generates lightning, thereby achieving the transformation of natural energy into electrical energy useful for domestic and industrial consumption, while providing essential and adequate protection to persons, animals and property against the aforementioned atmospheric electrical phenomena.

[0003] Different technical and scientific arguments relative to the effective application of the system that is the object of this invention will be explained in detail in this description, in addition to describing the elements that compose the aforementioned system.

[0004] During an atmospheric storm formation process, variable electrical fields appear which are responsible for the generation and appearance of lightning, which are discharges between the ground and the atmosphere. As a result of the generation of electrical charges within the cloud, the atmosphere increases its electrical potential, inducing a variable ground voltage.

[0005] It has been scientifically proven that if this ground voltage is controlled, the current flowing through the ground can also be controlled, thereby adequately leveraging the full potential of this energy.

[0006] This will primarily avoid the electrical saturation of that area, which could call, excite or create a lightning bolt therein and, secondly, this energy may be accumulated in the most adequate manner.

[0007] This process for recovering energy from the atmosphere is carried out before and during the first phase of the generation of lightning charges. The effect of attenuating the electrical field of the atmosphere causes the disappearance of the lightning discharge to ground, on not having sufficient potential for formation thereof, thereby allowing prevention and protecting persons, animals and property.

[0008] Widely known are the experiments and achievements of Benjamin Franklin in the 18th century, inventor of the passive lightning conductor equipped with a priming device or those developed subsequently using the "multipoint" system, the action of which is based on ionisation and excitation, constant or by impulses, of the electro-atmospheric field in order to capture the lightning discharge.

[0009] Mention must be made of radioactive lightning conductors, currently in disuse for evident safety reasons due to radiation hazard; likewise, other devices based on the filtration of high frequencies and harmonic components are also known to exist, equipped with two or more external electrical connections and having different components such as coils, resistors and condensers, duly connected and having the necessary siliceous sand for absorbing the thermal inertia produced when the system functions as a whole.

[0010] Reference is made herein to patent of invention P 200202884/2, by the same inventors, which relates to a deionising lightning conductor of electrostatic charge, based on three insulators equipped with a variable noble gas dielectric in its interior.

[0011] According to the data provided by the world meteorological detection system, more than four thousand storms form in the Earth's atmosphere every day, which generate around eight million lightning bolts.

[0012] The phenomenon called "lightning" is the electrical reaction caused by the saturation of electrostatic charges generated by the progressive accumulation of an electric field between the ground and the cloud, during the activation of a typical storm.

[0013] This phenomenon is randomly present as of an electro-atmospheric potential of 10/45 kV. It is generated between two points of attraction of different polarity and same potential for the purpose of compensating the saturation of the electrostatic charge. Lightning charge density is proportional to the saturation of the electrostatic charge of the area: the higher the charge density, the higher the risk of generating a tracker or "leader" and, subsequently, a lightning discharge.

[0014] Lightning charge intensity is variable, depending on the critical moment when the resistance in the air between the two transfer points break down; it will also be influenced by serially exposed materials such as soils, rocks, wood, iron or other metals, lightning conductors, earth wires, etc. A lightning bolt can transport an average charge of 20 GW of power per second, equivalent to one hundred million ordinary incandescent light bulbs.

[0015] This electrical phenomenon is represented in the form of an electronic shadow, which determines the elements that will be affected by charge exchange.

[0016] Studies carried out on the electro-atmospheric field at ground level reveal that charge distribution during the generation of the high-voltage field is not static but rather dynamic, on being randomly formed and generating the moving tracker or leader and different geographical points at the same time. The intensity and location of this electronic shadow can change radically and affect the low or lateral areas of high structures or buildings.

[0017] The behavioural study of a conventional pointed lightning conductor has demonstrated that they generate, to a greater or lesser extent, electromagnetic effects in the installations themselves, as well as in neighbouring installations, upon capturing the lightning bolt. In the case of ionising lightning conductors, accidents frequently occur for this reason.

[0018] Recently, enhancements made in electrostatic charge deionising lightning conductors through the application and incorporation of new technologies, such as a special cable adaptable to different forms of energy transport, eliminates causes of accidents and improves the reliability of the facilities, in addition to acting within an ecological electrical environment free of electromagnetic interferences.

SUMMARY OF THE PRESENT INVENTION

[0019] Accordingly, it is an object of the present invention to provide a new system which allows recovering and using the electrostatic charge generated by lightening and provides for highly advantageous results.

[0020] In keeping with these objects this system allows to cover all levels of electrical risk, diversity in the type and polarity of lightning bolts for any type of structure. It is an individual and collective protection system which bases its operating principle on the orderly transformation of ions flowing in a current, and is useful for working at low voltages and previously be derived to an accumulation area.

[0021] The system is composed of an external electrode acting as an ecological lightning conductor, an electric conductor, designed and calculated for a wide range of frequencies, and having anti-corrosive protection and an intelligent earth wire, complemented by energy accumulators and dissipator electrodes, capable of deriving all current leakage to earth, all of said components being controlled by a microprocessor which manages the energy as it appears, controlling its intensity, as well as the charge of the aforementioned accumulators for subsequent consumption.

[0022] The system also incorporates an alarm-based alert device, both private and public, for occupational risk prevention management against lightning risk.

[0023] At meteorological level, the system allows data to be obtained relative to the behaviour of the electric field, temperatures, atmospheric pressure, humidity and quantity of discharges.

[0024] The invention being described incorporates magnetic field detectors and detectors for controlling earth leakage current intensity, for subsequent analysis thereof and the consequent alarms. These detectors send the information to the microprocessor, upon recording the abrupt magnetic field variations.

[0025] The deionisation system of the lightning conductor itself facilitates the appearance of small currents in the earth wire, where charges are intelligently accumulated for subsequent use thereof. Depending on the intensity of the natural earth electric field, the ecological lightning conductor system generates the appearance of an earth leakage current which passes through the electrical conductor from the lightning conductor, strictly speaking, to the earth wire. The automatic control system regulates earth resistance in order to generate more or less charge and divert energy to the accumulators or to the enhanced intelligent earth wire.

[0026] The intelligent earth wire incorporates an electronic system which automatically regulates its own electrical resistance with reference to the physical earth. This control system allows controlled energy transfer, maintaining a resistance of less than 5 ohms in the earth installation during the four seasons of the year and varying, as required, the electrical conductivity of the physical earth and its humidity in order to facilitate or stop leakage currents.

[0027] The intelligent earth wire consists of special electrodes, according to the type of soil and/or terrain, aimed at facilitating current leakage and avoiding corrosion of the metals. These electrodes are installed conveniently protected against the aggressiveness of any chemical or electrochemical reaction.

[0028] The novel features which are considered as characteristic for the present invention are set forth in particular in the appended claims. The invention itself, however, both as to its construction and its method of operation, together with additional objects and advantages thereof, will be best understood from the following description of specific embodiments when read in connection with the accompanying drawings.

BRIEF DESCRIPTION OF THE DRAWINGS

[0029] FIG. **1** is a longitudinal diagram of the system in accordance with the present invention, illustrating the layout of the different components thereof;

[0030] FIG. **2** shows an outer view of the ecological lightning conductor of the inventive system; and

[0031] FIG. **3** is a complementary view of the preceding figure, showing a fully sectional view of the lightning conductor of the inventive system.

DESCRIPTION OF THE PREFERRED EMBODIMENTS

[0032] A system for recovering and using the electrostatic charge generated by the lightning of the present invention includes an ecological lightning conductor **1**, disposed on a mast **2**, which is installed at the highest point of the existing structure by means of adequate bearings or on a newly built tower, an electrical conductor **3** and an intelligent earth wire **4**.

[0033] The electrical conductor **3** is connected by one end to the mast or low electrical resistance electrode **5** of the lightning conductor **1**, and connected to the intelligent earth wire **4** by the other end, said conductor incorporating a series of probes **6** and magnetic field detectors **7** that will send information to the microprocessor **8**.

[0034] These data, recorded by the microprocessor **8**, are sent to a mainframe computer **9** where they are processed, being immediately displayed on a screen or sent to an "Internet"-type data transport network.

[0035] The intelligent earth wire **4** is equipped with a control device **10** which will analyse, in real time, the earth current leakages, sending the data to the aforementioned mainframe computer **9**. Depending on the intensity of the leakage, the system will manage the information, generating alarms or modifying the processes for sending current to the energy accumulators **11**, disposed next to the intelligent earth wire **4**. This earth wire **4** also has dissipator electrodes **12** at ground level.

[0036] The ecological lightning conductor **1** has a toroidal-shaped body **13**, closed by its upper part by an upper frame **14** and completed by a lower frame **15** whereto, in the central appendix **16** of its lower part, is fixed to the mast or low electrical resistance electrode **5**.

[0037] The dielectric product, which is essential for the object to act as a lightning conductor in itself, is disposed in the interior of the toroidal body **13** of the ecological lightning conductor. The dielectric product can be of noble gas.

[0038] The previously described characteristics of the ecological lightning conductor confer the quality of deionising lightning conductor to this system component, which allows the appearance, as mentioned earlier, of small currents in the intelligent earth wire **4**, where the charges are accumulated for their subsequent consumption in the energy accumulators **11**.

[0039] During a storm process, a high-voltage field is generated at ground level which is proportional to the charge of the cloud and the distance that separates it from the ground.

[0040] As of a certain magnitude of the natural electric field on the physical earth, the equipotential installation of earth wires of the system facilitates transfer of the charges through the electrical conductor **3**, charges which, regardless of their polarity, are concentrated on the mast or lower electrode **5** of the lightning conductor **1**, disposed at the highest point of the installation that configures the system, which is connected to the earth wire by means of the electrical conductor **3**. The current that circulates through the lightning conductor-conductor-earth wire system is proportional to the charge within the cloud.

[0041] The low resistance of this mast or lower electrode **5** of the lightning conductor **1**, facilitates the capture of opposing charges in the electrode or upper body **13**. During this energy transfer process, a small current flow takes place between the cathode and anode in the interior of the lightning conductor, in the direction of the current flow.

[0042] The resulting effect causes the appearance of a weak leakage current that derives to the electrical earth wiring of the installation, which is controlled by a microprocessor **8** which, in turn, causes current shunting to an accumulation system **11** or to dissipator electrodes **12** at ground level.

[0043] The evolution of the electro-atmospheric phenomenon is recorded in a database by means of electric probes **6** installed in the electrical conductor **3**, disposed between the lightning conductor **1** and intelligent earth wire **4**, and magnetic field detectors **7**. The data are stored, in real time, in a microprocessor **8** thanks to the transfer of data from the probes **6** to the mainframe computer **9**, via radio or conductor. These data may be viewed on a PC screen and statistics calculated, both real time and historical, for the purpose of carrying out electromagnetic and electrical prevention studies.

[0044] The novel technology of the system that is the object of the invention, and which is being described, allows optimisation of industrial process management and enhancement of personal electrical safety.

[0045] Depending on the intensity of the current that flows through the conductor **3** towards the earth wire **4**, high electric field alarms may be generated, consequently alerting of the risk of electrical storm in the area, with lightning activity.

[0046] Having sufficiently described the characteristics of the system that is the object of the present invention, we must point out that any variation in dimensions, shapes, types of materials and layout of the different components shall not alter the essentiality of the invention and may be necessary according to the protection requirements of the desired area, based on factors such as the geographical area, environmental context and dimensions.

[0047] It will be understood that each of the elements described above, or two or more together, may also find a useful application in other types of constructions differing from the types described above.

[0048] While the invention has been illustrated and described as embodied in a system for recovering and using the electrostática charge generated by ligntening, it is not intended to be limited to the details shown, since various modifications and structural changes may be made without departing in any way from the spirit of the present invention.

[0049] Without further analysis, the foregoing will so fully reveal the gist of the present invention that others can, by applying current knowledge, readily adapt it for various applications without omitting features that, from the standpoint of prior art, fairly constitute essential characteristics of the generic or specific aspects of this invention.

What is claimed as new and desired to be protected by Letters Patent is set forth in the appended claims.

1. A system for recovering and using an electrostatic charge generated by lightning and being present in an atmosphere during storms for transforming a natural energy into electrical energy and providing a necessary protection to persons, animals and property, the system comprising components including an element selected from the group consisting of an external electrode and an ecological lightning conductor, a mast fixing said electrode, an intelligent earth wire, an electrical conductor joining said element to said intelligent earth wire, energy accumulators, dissipation electrodes, electric probes, magnetic field detectors, and a microprocessor controlling all the components of the system and transferring data to a mainframe computer.

2. A system for recovering and using the electrostatic charge as defined in claim **1**, wherein said ecological lightning conductor has a toroidal-shaped body housing containing a dielectric product, an upper frame closing said body, a lower frame completing said body, and a lower central appendix in which a member selected from a group consisting of said mast and a low electrical resistance electrode is fixed.

3. A system for recovering and using the electrostatic charge as defined in claim **2**, wherein said toroidal-shaped boyd of said ecological lightening conductor contains a noble gas.

4. A system for recovering and using the electrostatic charge as defined in claim **1**, wherein said electrical conductor has one end connected to a member selected from the group consisting of a mast and an electrode and is designed for a wide range of frequencies and has adequate anti-corrosion protection, said electrical conductor also having another end joined to said intelligent earth wire, said electrical conductor incorporating said electric probes and said magnetic field detectors.

5. A system for recovering and using the electrostatic charge as defined in claim **1**, wherein said intelligent earth wire is provided with disipator electrodes at a ground level according to a type of a component selected from the group consisting of soil, terrain and both.

6. A system for recovering and using the electrostatic charge as defined in claim **1**, further comprising a control device analyzing earth current leakages in real time and sending data to the mainframe computer, generating according to a leakage intensity, alarms or modifying a process for sending current to said accumulators.

* * * * *

Secrets of Building Electrostatic

LIGHTNING BOLT GENERATORS

including high voltage test equipment, experiments, motors and more!

by Walt Noon

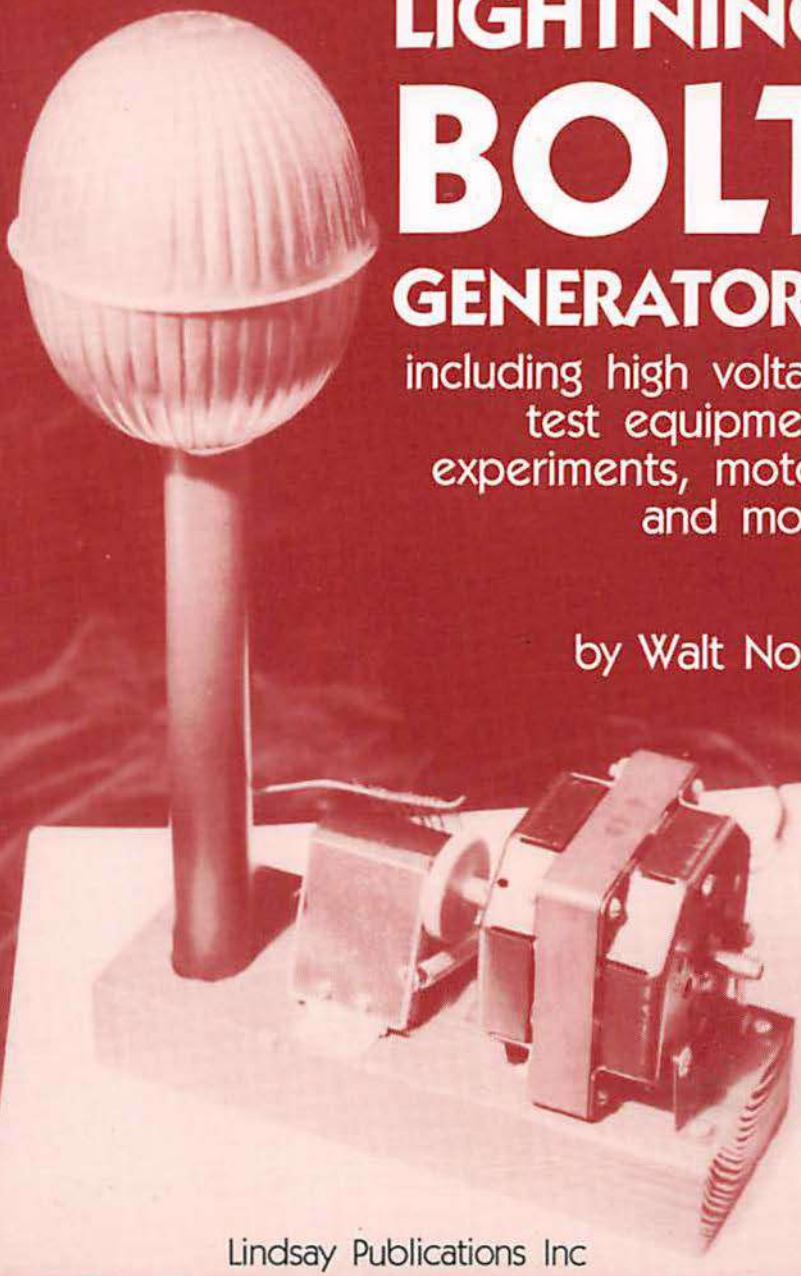

Lindsay Publications Inc

Secrets of Building
Electrostatic

LIGHTNING BOLT GENERATORS

including
high voltage test equipment,
experiments, motors and more!

by Walt Noon

Lindsay Publications Inc

Copyright ©1992 by Lindsay Publications Inc

All rights reserved.

Lindsay Publications Inc
PO Box 12
Bradley IL 60915-0012

ISBN 1-55918-090-0

2 3 4 5 6 7 8 9 0

To my Mom and Dad who
always took the time to answer
my questions

Original CAD drawings
and photographs by
Matthew J. Roddy

Cartoon drawings by
Mike Noon

Special thanks to
Kevin E. Curtin
Matthew J. Roddy
Mike Noon

WARNING

The author of this book is not a professional engineer nor has he had formal training in the design or operation of high voltage devices. The author is an amateur but has been successful in building and operating the devices discussed herein.

The methods that he used and describes are presented merely as guidelines for other amateurs in developing similar devices. These devices can be dangerous, possibly even lethal, and dangers have been pointed out wherever possible. Since the author is not a professional in this field, there may well be other dangers involved in the building and operation of the devices described.

The author hereby disclaims any liability for injury to persons or property that may result while using this project book, and the author does not intend by this publication to explain all dangers known or unknown that may exist in the building and operation of this project.

Lindsay Publications Inc has not built this project nor does it endorse the methods described. Lindsay Publications Inc assumes no liability for injury to person or property that may result form used of this information.

Contents

Electrophorus 4
Rotostatic Generator 9
"Cat-O-Static" Generator 17
Motor Control 18
External Van de Graaff Generator 23
Classic Van de Graaff Generator 31
Extremely High Power Van de Graaff Generator 39
Inductive Electrostatic Generator 42
High Voltage Measurements 46
FET Electroscope 47
Mechanical Electroscope 50
Neon Lamp Blank 51
Spark Gap 53
Leyden Jar 58
Water Capacitor 61
Plate Capacitor 62
Experiments 67
Ion Blower 76
Franklin Motor 78
Corona Motor 80
Atmospheric Electricity 81
Bibliography 86
Electroplating Terminals 87

Every text I've seen on the subject of electrostatics seems to begin with a history of the subject. A. D. Moore, one writer whose works I particularly enjoy, said that if cavemen had cats that rubbed up against them then they must certainly have been aware of the presence of static electricity. There are theories now going around the scientific community that claim lightning triggered the formation of the first chains of DNA. I'll take that one step further and guess that lightning began the evolutionary process that created our species.

Static electricity is one of the most fascinating and possibly most overlooked fields of modern electronics. We all take static for granted. Before I began experimenting with static electricity it would have been very difficult to convince me that it was easy to get 3500 volts from an old plastic bottle or 10,000 volts and more from a rubber band! Even now as I watch one of these tiny generators in action it is difficult to imagine that it is producing these voltages.

As you learn about electrostatics you will find many strange and wonderful experiments to perform. For example, it is possible to mysteriously levitate objects, blow a candle flame to one side with an invisible wind, and to light neon bulbs without wires.

There are motors that can be built to run on static electricity! Well-made electrostatic motors are so sensitive that they have been powered by the earth's natural electrical charge alone! Connect your motor to an antenna, and off it goes!

In addition to the many curiosities static electricity makes possible, there is also the potential for serious research with many astounding possibilities.

Consider the work of Professor John G. Trump, formerly of the Massachusetts Institute of Technology. Professor Trump points out that electrostatic forces are the most powerful forces known in nature – stronger by far than gravity or magnetism. Professor Trump demonstrates the practical application of electrostatic generators with the following illustration:

Consider two conductive plates, 100 square inches in area, facing each other and separated by an insulator. If the plates are each charged oppositely to 300 volts per centimeter the force of attraction between them will be one 2,000th of a pound. Increase this charge to 30,000 volts per centimeter and the attraction escalates to half a pound. Now increase this voltage to the order of three million volts per centimeter and the force of attraction jumps to 5,700 pounds! As Trump has said "Force of this order has more than a passing interest for power engineers." Trump and his colleagues had been pursuing the creation of electrostatic generators they hoped would one day rival modern electromagnetic generators.

Just how much electrostatic energy is theoretically possible? Consider an aluminum cube only one centimeter square. Imagine that all the electrons in that cube were removed and kept one meter away. The cube has only positive charges, and the electrons one meter away only negative charges. Since positive and negative charges attract, what would be the force of attraction generated between them? The answer turns out to be an astounding thirty-two million million million pounds! Professor A.D. Moore, an expert in electrostatics, points out that this force would be equal to the weight of a steel cube 76 miles high!

Of course, as much fun and as inspiring as it is to ponder the theoretical world of electrostatics, back in the real world we find that electrons don't leave home so easily. The most useful electrostatic inventions to date make use of the 'little' forces of electrostatics. But keep that cube in mind and let everyone wonder why you have that curious smirk on your face whenever you run your generator.

What voltages are possible for the experimenter? The four easily assembled generators shown in the following text will give you an idea. Each one intentionally operates on a slightly different principal of gathering an electrostatic charge. If you build them, or just simply become familiar with them, you will develop a understanding of the most popular ways of generating static electricity.

I am confident that if you become acquainted with these machines you will have no difficulty at all in constructing many others of your own design. The reason that I am so confident is that I designed and constructed all of these machines to teach myself about electrostatics! Each machine represents the best of my thoughts at the time I con-

structed it.

You will soon find that it is easily possible to construct a static generator capable of producing 50 to 100 thousand volts! If you are a craftsman, 200 thousand volts and more can be obtained by optimizing the designs of the higher power generators such as the Van De Graaff shown later in the text.

Electrostatic generators are also remarkably inexpensive. With a little foraging through the surplus bins, no generator in this text cost me more than $30 to build! I know of no other way to approach these voltages for such a low cost.

A Little History of the First Practical Generators

The first electrostatic generators produced their voltage with friction. Towards the end of the 17th century Otto von Guericke, an amateur physicist from Magdeburg, developed the first practical electrical machine – an electrostatic generator. What follows are his own instructions for building one:

"Secure one of the glass globes which are called phials, about the size of a youngster's head; fill it with sulfur, ground in a mortar and melted by the application of flame. After it freezes, break the phial, take out the sulfur globe and keep it in a dry place, not a moist one. Perforate it with a hole so that it can spin upon an iron axle. Thus the globe is prepared.

"To demonstrate the power developed by this globe, place it with its axis on two supports in the machine – a hand's breadth above the baseboard – and spread under it various sorts of fragments such as bits of leaves, gold dust, silver filings, snips of paper, hairs, shavings, etc. Apply a dry hand to the globe so that it is stroked or grazed two or three times or more. Now it attracts the fragments and, as it turns on its axis, carries them around with it.

"When a feather is in contact with the globe, and afterwards in the air, it puffs itself out and displays a sort of vivacity ... and if someone places a lighted candle on the table and brings the feather to within a hand's breadth of the flame, the feather regularly darts back suddenly to the globe and, as it were, seeks sanctuary there."

Otto Von Guericke goes on to describe experiments by which he produced both light and sound from his amazing globe!

The instructions for von Guericke's globe are simple enough for any experimenter today to follow. The only note that I would add is

that in casting my own globe I found that large quantities of sulfur would become much smaller pools when melted, and that if the globe were not filled on the first pouring it would not appear nearly as attractive when finished. So, remember to begin with a large amount of sulfur.

THE ELECTROPHORUS

Many generations passed and many ingenious machines were developed without great change using materials and processes similar to von Guericke's globe. The most important historically was Alessandro Volta's *electro perpetuo* known now as the electrophorus. With it we can dramatically demonstrate that electrostatic charges are much like magnetic forces in that like charges repel one another while opposite charges attract.

An electrophorus is very easily assembled. It consists simply of a rectangular block of insulating material such Lucite or, better yet, polyethylene and a metal disk which is attached to an insulating handle (Figure 1).

When the Lucite is rubbed with a woolen cloth, electrons are removed from the cloth and held on the Lucite. This happens because the cloth will hold its electrons less tightly than the Lucite. An insulating material, in this case Lucite, by its nature, will not allow the electrons to move around freely. The charges are therefore 'static' or held in place by the insulating material. The Lucite will now have a negative charge, and the wool will pick up a positive charge, respectively.

Next, the metal disk with the handle is set on top of the Lucite. The negative charges on the Lucite are attracted to positive charges on the metal disk, so, the positive charges in the metal disk move to the side of the metal plate facing the Lucite. The negative charges are similarly repelled to the back of the metal disk. Now, your hand or, better yet, a ground wire are touched briefly to the top (handle side) of the metal disk and then removed. In this way the negative charge is transferred to your hand (or ground) leaving only a positive charge. The metal plate will now have a positive charge, and the plastic negative.

If you have achieved a large enough charge, the Lucite can be picked up by the metal disk!

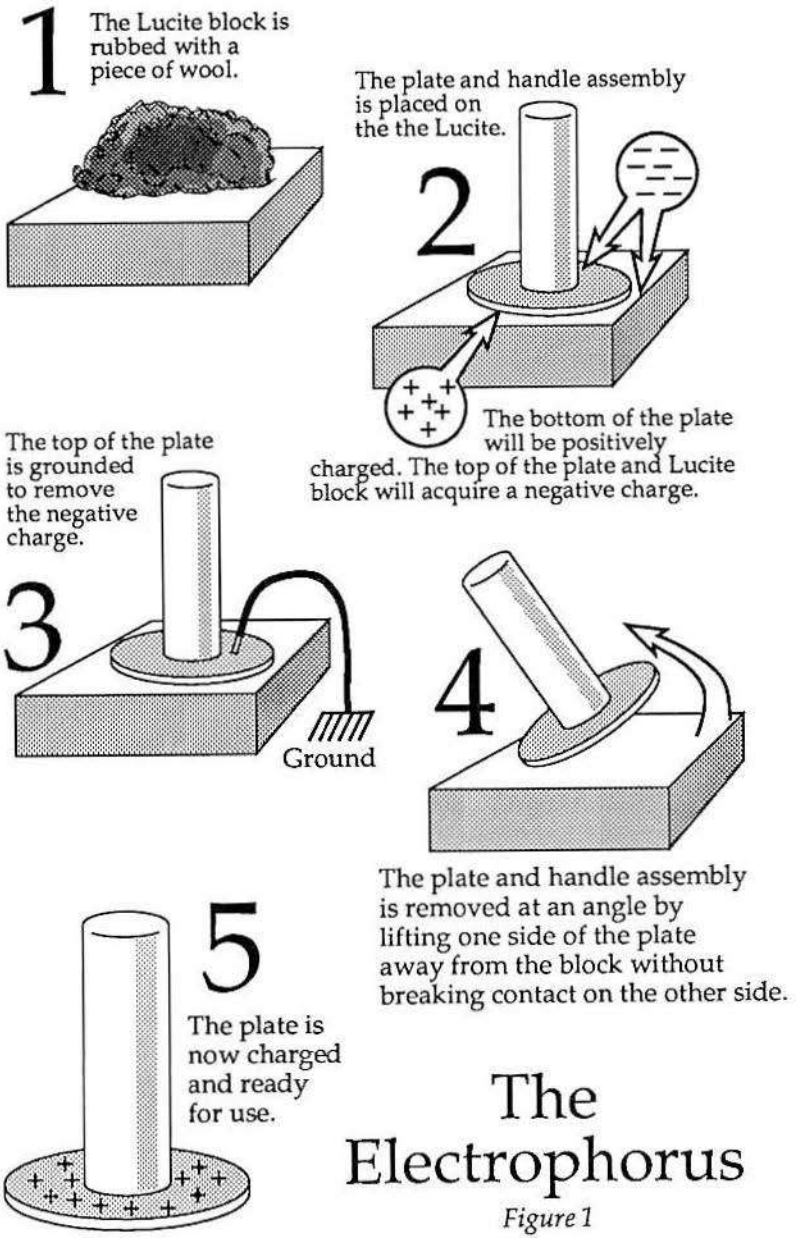

The Electrophorus

Figure 1

Slowly remove the metal plate by the handle, drawing it away from the Lucite at an angle. The metal plate now holds the charge you seek. Having charged your electrophorus, you can perform the experiments with Von Guericke's globe mentioned above including attracting hair, styrofoam and other small objects.

Because the charged surface of the electrophorus is flat, a startling demonstration can be performed wherein the electrophorus disk is actually floated above the Lucite by electrostatic forces. Performing this trick takes some practice. Make a second metal plate and handle. Remember that if the plate is to float above the other it must be very light weight. (Figure 2)

Now, we have the challenge of charging both the disk and the Lucite with a like charge so that they will repel each other. Charge your first disk with a positive charge as described above, and then bring it close to, but not touching, the second disk. This will charge the second disk by attracting a negative charge to the front of the disk. Next, ground the handle side of the second disk to bleed off the positive charge. The second disk is now negatively charged. The Lucite is also negatively charged, so, provided everything has been accomplished and the weight is not too great, the second disk will now float above the Lucite block!

Electrophoruses act a great deal like capacitors discussed later on and can be used for many surprising experiments including charging a Leyden jar and flickering a neon bulb in a darkened room!

Special Notes on Friction Generators

Before we move on to the more powerful friction generators, there are a number of things you should be aware of that will help you in both troubleshooting and designing generators.

My first bit of advice is to avoid humidity. It makes air more conductive. Moisture in the air can have a devastating effect on the charges stored by electrostatic devices.

I was given a first rate example of this shortly after building my first two generators. Both machines, only days old in their construction, were whirling away in my shop. I was doing "careful scientific study" – in other words, I was zapping everything in sight to see what would happen. Suddenly, and most mysteriously, both generators

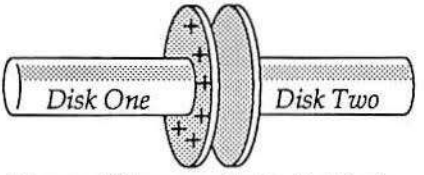

Charge disk one on the Lucite block.
Then bring it close to a second disk.

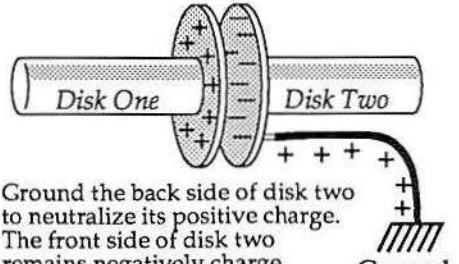

Ground the back side of disk two
to neutralize its positive charge.
The front side of disk two
remains negatively charge.

Ground

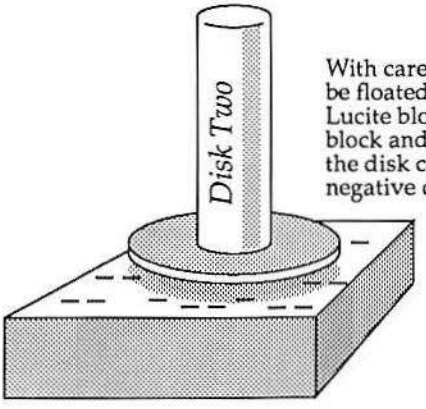

With care disk two can
be floated above the
Lucite block. Both the
block and bottom of
the disk carry repelling
negative charges.

Floating the Electrophorus

Figure 2

stopped producing a charge. I couldn't imagine why both, each being very different in construction, might fail at exactly the same time. Then the culprit made itself known! Just outside the door the automatic lawn sprinklers had come on and extremely humid air was coming through my door!

Another good example of this problem is demonstrated by walking across a padded carpet. When the relative humidity is 20% or less, charges of up to 35,000 volts can be obtained by shuffling one's feet along the carpet. However, raise the humidity to 60% or more, and the maximum charge will plummet to a mere 1,500 volts! If you live in a humid region, you may not be able to get the same performance from a generator that someone living in the desert might. Hopefully, humidity will only be a seasonal problem for you. Dry winter days are best.

There are fascinating static generators which are more or less immune to humidity. These rely on generating a charge by induction rather than by friction. These machines will also be discussed in detail later on.

Be careful in selecting paint for your generator. I have found that many spray paints contain ingredients that will conduct static electricity. For the most part I have had few problems with this, although in a darkened room I have seen the telltale blue corona glow of escaping electrons coming from painted plastic surfaces on a generator. To correct the problem I simply coated the nearby metal surfaces that were losing their charges to the paint with high resistance "corona dope" sold in T.V. and better electronic stores.

Avoid using wood to build generators. Although we think of wood as an insulator, in reality it becomes an excellent conductor of very high voltages. In the machines that follow, you'll see polyvinyl chloride (pvc) pipe used extensively. If you can get acrylic or phenolic tubing, use it. It offers much better dielectric strength.

Dust can bleed away a charge. Dust on a high potential terminal can reduce your generator's efficiency by a whopping 40%. Because your high potential terminal carries a charge, dust will be attracted to it in much the same way that dust accumulates on the front of a T.V. screen. I have actually seen a tiny particle of dust prevent an eighth inch spark from arcing. Keeping your terminal clean is important.

On the other hand, the attraction of dust to your generator can be

quite entertaining. One way that I enjoy cleaning my generator is to ground myself and then pass my hand over the high potential terminal. The dust which has been sitting there has acquired a high voltage charge and jumps to your hand which it sees as ground. The effectiveness of this method for really getting your generator clean is doubtful since after a few seconds the dust in your hand looses its charge and heads back for the generator, but it's lots of fun.

Once during a rare Southern California thunderstorm I observed a particularly confused particle of dust. Apparently the storm had charged the air, and my generator had charged a large particle of fluff. The fluff couldn't decide where it wanted to be and would repeatedly fly around my bench only to return to the generator and then again off into the air. It was an astounding sight.

SUPER FRICTION GENERATOR – ROTOSTATIC

Now that you understand the basics of how a charge is picked up by friction, doesn't it seem that it would be possible to design a mechanical means to make and store a charge automatically and continuously? One solution to the problem is what I call a "rotostatic" generator, so named for an old magazine article that called a similar device a "rotostat." I said earlier that it was possible to get 3500 volts from an old plastic bottle, and I wasn't kidding. All you have to do is build the "rotostat".

These generators are extremely simple to build and may be hand cranked or operated by a small electric motor. They consist simply of a plastic drum – an old plastic jar works great – and a rubbing block – wool, nylon, asbestos, leather. When the bottle is rotated against the rubbing block a charge is developed on the plastic and on the block.

We need to attach some metallic brushes to the side of the plastic drum opposite the block to pick up the charges as they are generated. The brushes are attached to a metal sphere where the charges can be stored. A complete schematic of a rotostatic generator is shown in figure 3.

There is an infinite variety of possible configurations for such a generator, but keep in mind in designing yours that for static voltages even wood is a good conductor. It is most important to remember to keep your high potential components well insulated from ground.

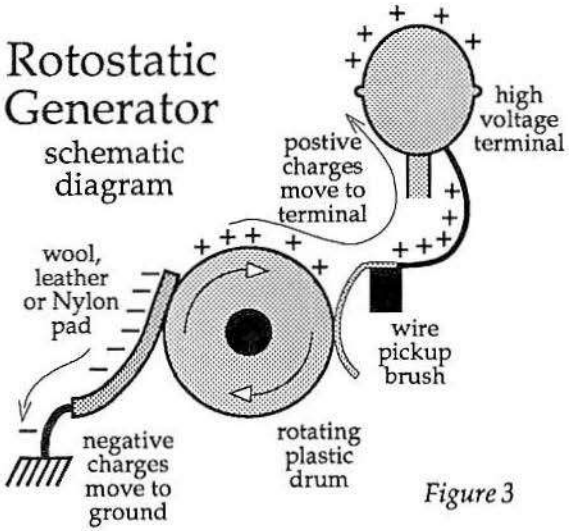

Figure 3

If your generator is well made it will generate enough power to light a neon bulb (Ne2 type), levitate styrofoam, and arc a spark perhaps as long as 1/16 to 1/8 inch – all of this while still being perfectly safe to touch. When touched, your generator will give your finger only a very light "pop" much like a very small static discharge from a doorknob. As an interesting side note, if you can feel a static charge at all, it will be at least 3,500 volts!

Though static machines deliver these high voltages, their rapid, low current discharges make them unusually safe. Even generators producing 100,000 volts or more rarely present a danger, though I for one would not intentionally take a shock from one. A later chapter on capacitors (energy storage devices) will give you an equation for finding out when a charge has become dangerous.

Building a Film Case Rotostatic Generator

In my rotostatic generator design I have attempted to maximize the output and storage capacity of this type of machine. I am sure that there are still many improvements that can be made. This device works extremely well, is reliable, and very easy to construct. A schematic and a photograph are shown in figure 4.

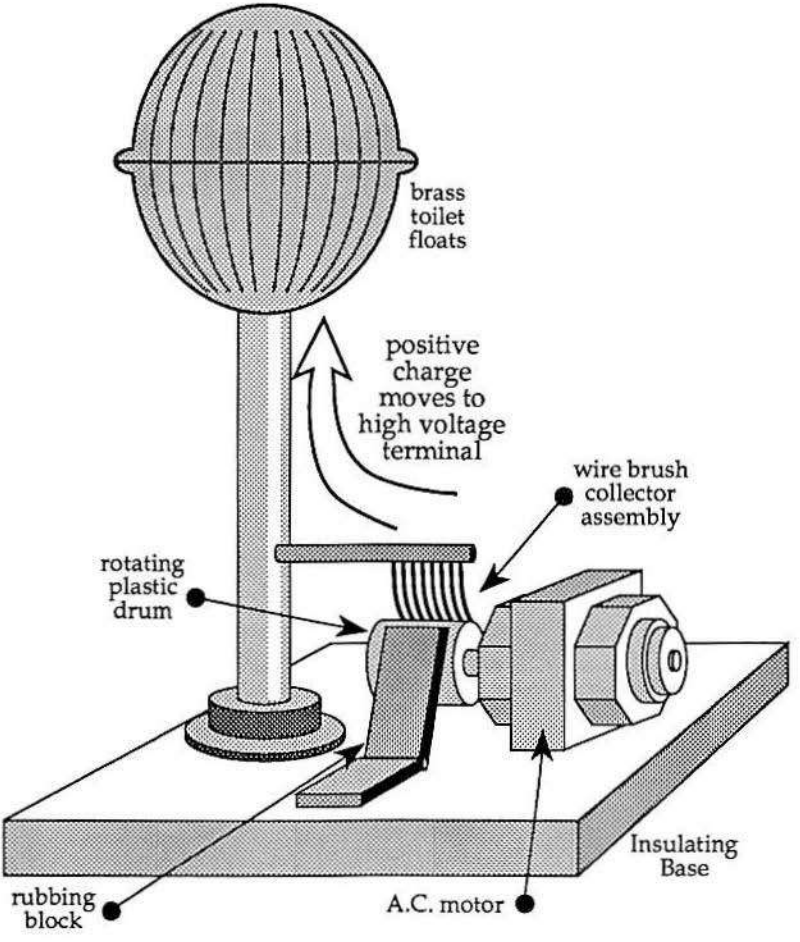

Rotostatic Generator

Figure 4

I used a surplus AC tape recorder motor to drive the unit. I like to use tape recorder motors in many projects because they are quiet and often have threaded axles that are very easy to mount components onto. In this case, I wanted to be able to switch plastic drums easily so I could experiment with a wide variety of materials. If you are unable to find such a motor, something similar can be used. A breakdown of

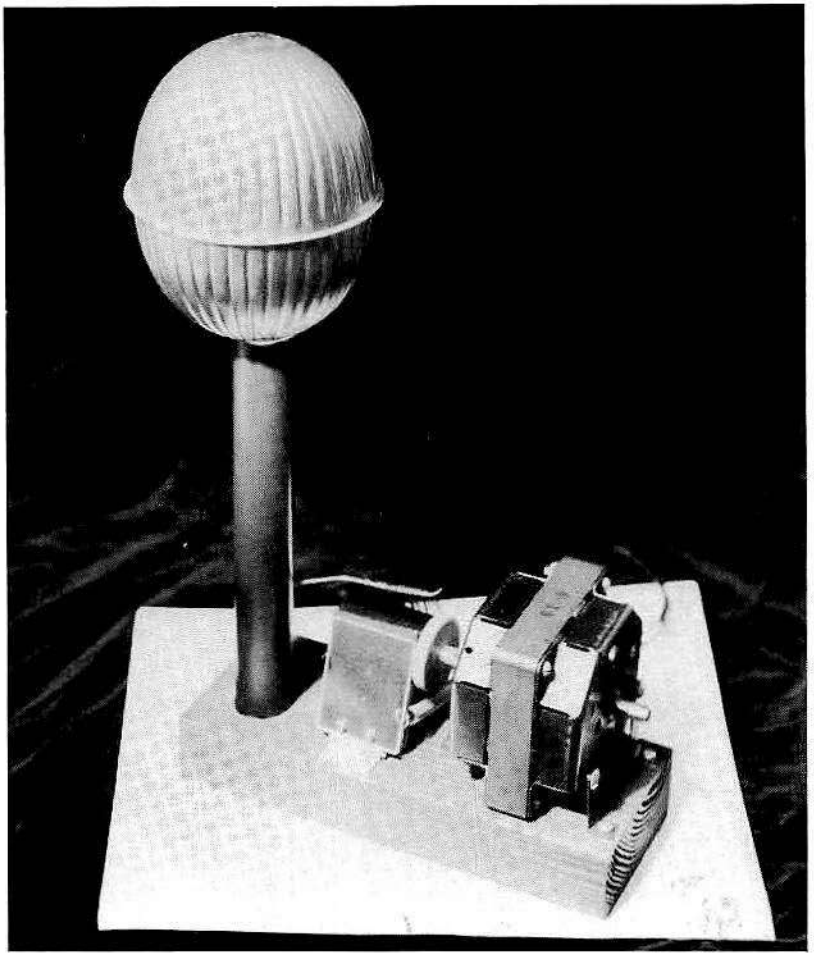

Fig. 5 – The complete Rotostatic Generator uses only a small plastic drum and a few common parts, and yet will light a hand-held 90 volt neon lamp!

AC and DC motors and their suggested hookups are shown in detail in the next chapter.

Assembly is straightforward and simple. The motor is mounted securely with wood screws to the base – in this case a section of 2x4. Make sure this connection is secure since in experimenting with different drums you will undoubtedly have some which will wobble due to imbalances in the drum or in the mounting. Also, remember to

select a motor with plenty of power. Tiny D.C. toy motors can work, but they have little torque and can stall, and that can be frustrating.

The drum can be mounted to the motor in a variety of ways. If the motor axle is hollow as the tape recorder axles are, you can simply use a screw to secure the bottle cap directly to the motor axle. If the axle is solid, you will probably want to extend the axle all the way through the drum.

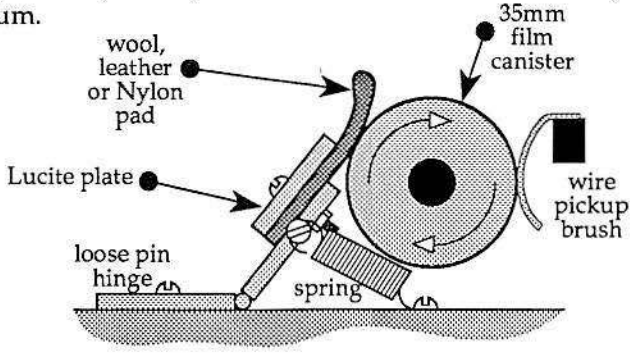

Wiper Assembly
for Roto Static Generator

Figure 6

To mate the motor axle to the axle running through your drum, glue progressively larger pieces of plastic tubing to the smaller axle until the tubing size matches that of the larger axle, then slip the tubing over both axles. Tubing used as fuel line on model airplanes, aquarium tubing, compressor hose, and the insulation stripped from wire can be used to make excellent adapters. Heat shrink tubing can also be used, however, after it has been shrunk it tends to become somewhat brittle.

As long as the pieces of tubing fit tightly over one another, any glue can be used to hold them together. I like cyanoacrylate (Super Glue) because it seems to hold rubber tubing nearly as well as it does skin. If you have used "Super Glue" for any length of time will know what I mean by this.

This method of connecting a motor to an axle also has the beneficial effect of acting as a "universal" joint. That is, your motor can actually power your axle from a variety of angles since the tubing will flex without difficulty. This is useful when using a variety of motors

to drive a variety of unusual drums.

The drum must be very well centered on the motor axle, but fortunately, this is surprisingly easy to do. Most plastic pill bottles, film cases etc. already have a little nub right on the center of the lid. I assume this is some natural artifact of the process by which they are formed. Just hunt around a bit and use a bottle with this built-in center mark, and you'll have no difficulty here.

Personally, I like to mount the lid from the bottle to the axle so that the bottle can be easily removed and replaced.

The rubbing block shown in figure 6 turned out to be a very handy design. By looping a piece of wool against the Lucite as shown, the block makes excellent contact with the drum. A variety of rubbing materials can be tried by simply slipping them in between the block and the drum. I think that leather or nylon probably provided the best results when used with the film case. To make these experiments easier, use "loose pin" hinges for mounting the rubbing block.

Rather than use steel brushes to collect the charge from the drum, I came up with what I call "riders." These are formed by wrapping a short length of wire around the copper wire conductor coming from the globe. These wires should be loose enough to dangle down onto the drum and "ride" along its surface. Riders have many advantages. They are very tolerant of wobble in the drum. You may be able to change drum types and sizes without adjusting them in any way. You can improve the efficiency of "riders" by coating unusued surfaces with corona dope.

The PVC tube and collecting ball are easily mounted by drilling a tight hole in the 2x4 to accommodate the PVC tubing, by applying a little Silicone glue to the base, and by tapping it into place with a hammer. A large copper wire is run through the tubing as shown and is connected to the collecting ball with a brass screw. The ball, itself, is then mounted with a bead of Silicone glue.

Testing and Operation

Turn on the static generator's motor and allow it to run for 20 to 30 seconds. It takes some time to build up a charge. Next, hold one lead of a Ne2 neon bulb, available at electronics stores for about 49 cents, and bring the other lead near the brass bulb. When the free lead is

nearly touching the bulb, the lamp should flicker or flash. Though the shock from this tiny generator can barely be felt, keep in mind that it takes nearly 90 volts to light the bulb!

Next spread some small, dry, pieces of styrofoam on the top of the ball. By bringing your hand close to the styrofoam you can actually cause them to move mysteriously toward your hands.

Touching this generator is perfectly safe. Under good conditions you should feel and hear a light static "pop" when you touch the fully charged top terminal. If you have trouble feeling the "pop" with your fingers try using your nose. I don't know why, but bringing your nose near the ball brings on a very subtle and strange electric sensation.

With this generator you can do many of the experiments mentioned later including charging up capacitors and energizing spark gaps. So experiment and enjoy.

REMEMBER!

If you are using yourself as ground, as described in the above experiments, you might find that generator performance seems to decrease after several experiments have been performed. What has actually happened is that by repeatedly touching the ball, you have charged yourself up to the same degree of charge as that of the ball, giving the electricity no desire to jump to you! This is simply remedied. Just touch a cold water pipe or other ground from time to time while you experiment.

One minor problem that can pop up is motor speed. Your motor may run too fast. We'll discuss a motor speed control a little later on. Don't worry if the riders hop around a bit. This is usually OK and won't cause problems.

Although a plastic film canister appears in the photos, jars with semi-transparent finishes perform. PVC might also make an exellent drum. Experiment!

A Useful List of Materials for Friction Generators

What follows is a useful list of materials that have a predisposition for taking on a negative or positive charge. By choosing materials that are far apart on this list you can increase the efficiency of a generator.

This list is excerpted from *Nature's Electricity* TAB books No. 2769 and is called "The TriboElectric Series."

POSITIVE CHARGE

Air
Human hands
Asbestos
Glass
Mica
Human hair
Nylon
Wool
Fur
Lead
Silk
Aluminum
Paper

NEUTRAL

Cotton
Steel
Wood
Amber
Sealing Wax
Hard rubber
Nickel, Copper
Brass, Silver
Gold, Platinum
Sulfur
Acetate
Polyester
Styrofoam
Orlon
Saran
Polyurethane
Polyethylene
Polypropylene
Vinyl (PVC)
Silicon
Teflon

NEGATIVE CHARGE

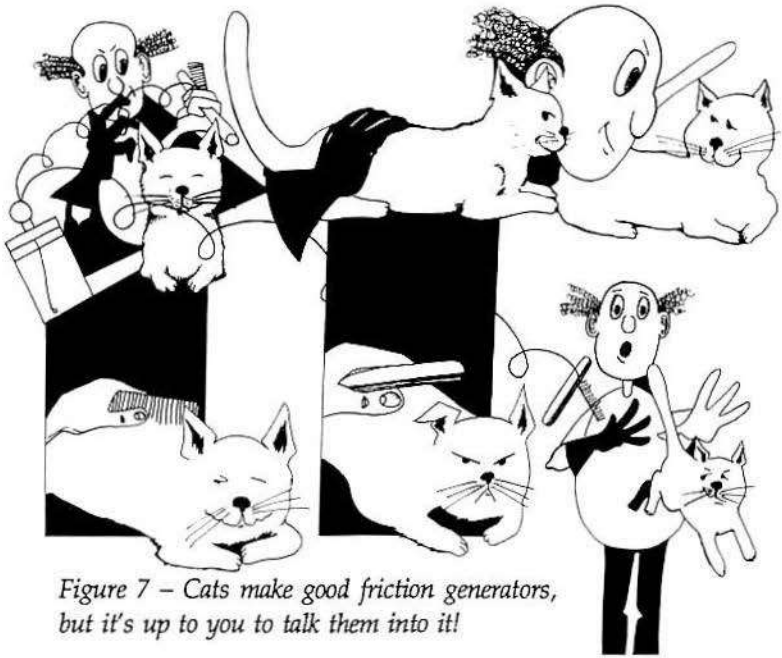

Figure 7 – Cats make good friction generators, but it's up to you to talk them into it!

THE "CAT-O-STATIC" GENERATOR

The last friction generator that I want to mention is what I call my Cat-O-Static generator. From the name you can probably already guess that the key component to this generator is your cat. I really would not mention this as a generator if it didn't work so remarkably well!

For the most part cats enjoy being electrostatic generators, the trick is to make them think they are being petted, and not used as a science experiment. (The cat commandments state somewhere: "Thou shalt allow thyself to be petted only when it suits your purposes and not those of another.")

First, you will need a rubbing material. The very best material I found for this purpose was the artificial leather used in cheap motorcycle gloves. It's actually a type of vinyl. You can secure a pair of these gloves for 5 or 10 dollars at any motorcycle shop. Some are called "man-made leather."

The next thing you will need is a metal flea comb and a length of PVC tubing. You will also need a Leyden jar to store the charge built up by your Cat-o-stat. Leyden jar construction is described in detail later on. The metal flea comb is held at the end of the PVC tubing by a slit cut in the tubing and some glue. A wire is attached from the flea comb to the top of the Leyden jar.

Put a glove on one hand and hold the PVC tubing with the other. Coax you cat into your lap, and tell him wonderful things about himself. This never fails to distract them. Pet him with the glove, and follow the glove with the metal comb to pick up the charge.

With my cat's fur and my particular gloves I am able to build up a charge so large that it will penetrate my vinyl gloves with a strong prickling! However, keep in mind that this type of generator will usually run off and hide before a large Leyden jar can be fully charged. Of course, if you have several cats, use them all to the charge the jar!

AC vs DC Motors and Controls

As we move on to the higher power generators, a little discussion is in order with regards to AC (alternating current) and DC (direct current) motors, and some good ways to control them.

In the generators I've built and discuss here, I have used both AC and DC motors. AC motors have advantages in that usually no external transformers or circuitry are required. They develop plenty of torque – so much so in fact, that you rarely have to worry about stalling the motor. Most AC motors have no brushes or other components to short or wear. They will generally run for years and years, often until the bearings themselves wear out! In general, I prefer using AC motors over DC motors whenever possible.

The major shortcoming of an AC motor is low rpm. The high performance Van-De-Graaff-type generators describe below work best at around 5,000 rpm. If the motor runs faster than this, electrons can literally be "blown" off of the carrying belt, and performance suffers. At lower rpm, leakage can impede the build up of high voltage. Since AC motors do not usually develop high rpm, DC motors should be considered for these high performance generators.

Unlike AC motors, DC motors are portable when battery powered and achieve high rpm easily. Keep in mind that a DC motor rated at

6500 rpm may not achieve that speed when driving your device. The rpm rating is usually the maximum no load speed of the motor.

Although not always necessary, you will probably find that you will want a motor with speed control as part of your DC static generator design. A number of dependable methods are shown in figures 8 through 12.

Figure 8 shows a piece of high resistance wire soldered or tied

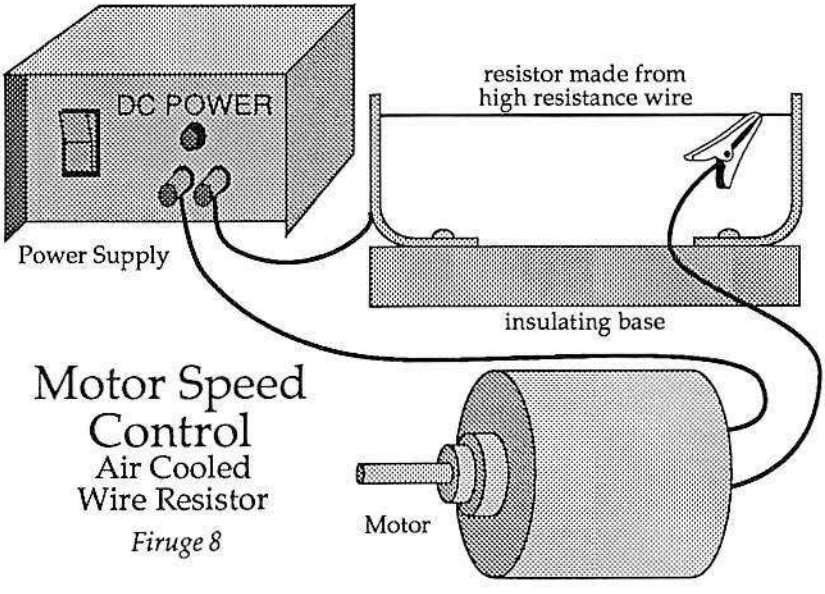

Motor Speed Control
Air Cooled
Wire Resistor
Firuge 8

between two copper posts. One side of the wire is tied to a 12v (or similar) power supply. A wire coming from your motor is attached to an alligator clip which can be moved along the wire to increase or decrease the motor speed. This method works extremely well. However, be aware that the wire can become red hot when supplying current to the motor! Make sure to house it safely.

High resistance wire is easily obtained from a variety of sources. You can use the NiChrome wire that comprises the heating coils in an old toaster, hair dryer, or similar heating device. You can also purchase NiChrome wire from any well-stocked hardware store. Keep in mind that a fairly long piece may be required. Another variation that can be tried is to use a high wattage rheostat, or even the speed control

handle from a "slot car" set.

Figure 9 shows the use of power resistors to slow a DC motor.

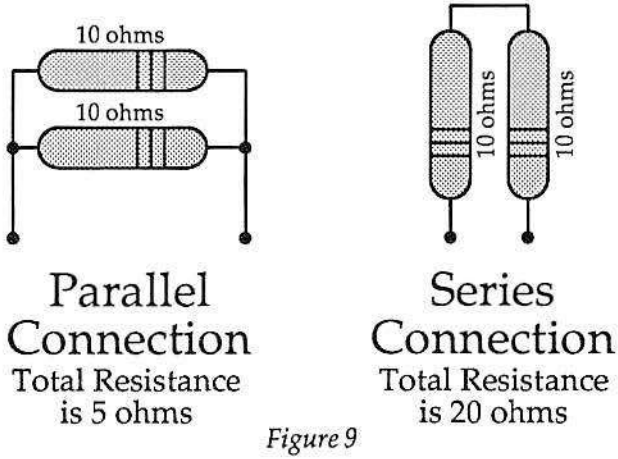

Figure 9

Power resistors are inexpensive, and if you buy a handful of different values you can connect them in parallel or series to get a wide variety of different values. Keep in mind that resistors have two ratings, the power handling capacity measured in Watts, and the resistance measured in Ohms.

An Ohm is a measure of the opposition to current flow. A resistor of 10 Ohms will oppose current flowing through it twice as much as a resistor of five Ohms.

Wattage is simply the amount of power your resistor can handle without being destroyed by overheating. In general, I'd say the higher the wattage rating the better. The Winter's Ring generator shown next required a 25 watt, 10 Ohm resistor, but had to be water cooled to increase its power handling capacity above the 25 watt air cooled rating.

Resistors oppose current flow and in doing so, convert electrical energy into heat. It's normal for them to become very warm. If your resistor gets too hot, its resistance can increase well above its stated value. A change in resistance can cause your motor to run at uneven speeds. You will either need to buy a resistor of a larger wattage, or use some means to cool it such as water (shown and discussed later). As a rule-of-thumb, don't use a resistor of less than 10 watts unless you have a very small or efficient motor.

Figure 10

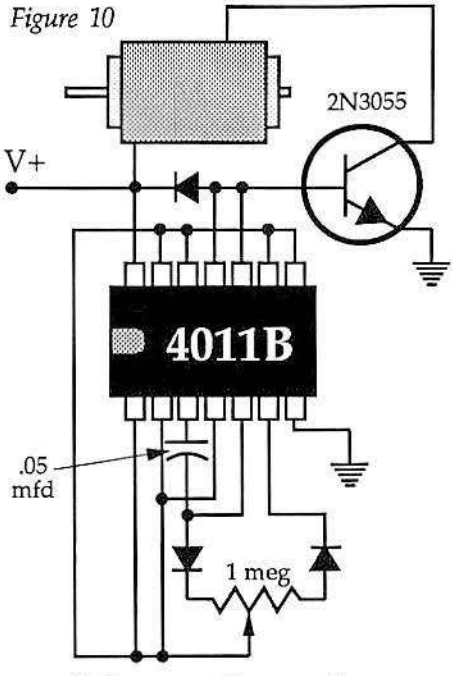

Motor Speed Control
Solid State

Figure 10 shows a very accurate and stable means of controlling a DC motor. An integrated circuit and power transistor are used to send a stream of pulses to the motor. As the pulse rate increases, the motor speed also increases. By simply turning the potentiometer, you can adjust motor speed at any time. For mid-sized DC motors a very large heat sink or water cooling is required for the transistor.

I have found that DC motors operating at high speeds can behave strangely. Slight variances in the motor's speed can set up an oscillation within the belt being driven. Because one side of the belt is being "pulled" and the other

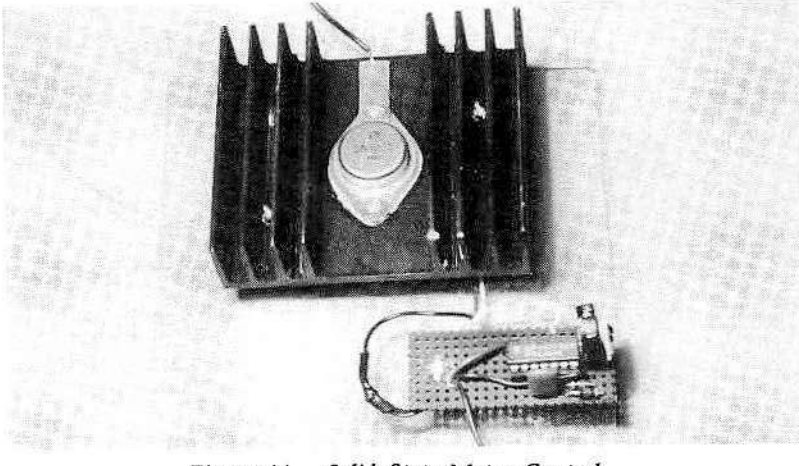

Figure 11 – Solid State Motor Control

is being "pushed", uneven tensions react with the belt's flexibility to produce a "flying" belt that makes only intermittent contact with the rollers or pulleys. This can cause a belt to fly off, bend brushes, or just make a lot of noise. Also, if ball bearings are not used in the rollers, an oscillation can occur among the bushings of the upper roller, the axle, and the belt. All of these problems can be easily solved by using a versatile speed control.

Component Cooling

You may to have to improvise methods of keeping electrical components cool. If you are using a fairly large, high RPM, DC motor which will need sizeable amounts of electrical power, components in the speed control are going to get hot. It may seem a little unorthodox, but water makes a fantastic heat sink for electrical components! Power resistors and even power transistors can be run well beyond ordinary

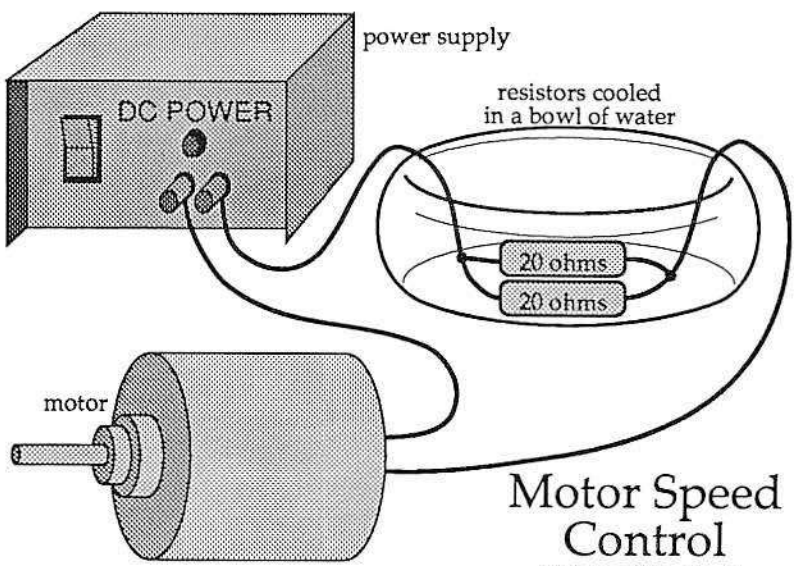

Figure 12

Motor Speed Control
Water Cooled Resistors

heat sink tolerances when submerged in water. (Figure 12)

Distilled water is a very poor conductor of electricity and will not

short out most components. Tap water is usually OK for resistors, but minerals and other gunk will cloud the water after a short time.

As long as the circuit is submerged in water, you know that the temperature of the water must be below 212 degrees Fahrenheit (100 Celsius) at normal atmospheric pressures. Above this temperature the water will boil away. Many electronic components work quite well up to 212 degrees. Just remember to add a little water now and then to compensate for evaporation.

AN EXTERNAL VAN DE GRAAFF USING "WINTER'S RING"

If you built the last generator described, you know that I wasn't exaggerating when I said you could get 3500 volts (or more) from an old film canister. Although interesting, this simple rotostatic generator won't keep you satisfied for long. There are higher voltages to conquer! So let's move on to the next type of generator and try for 10,000 volts (and possibly several times that amount) from a rubber band.

I call the following generator an "external" generator because all of the components of the generator have been mounted externally in such a way as to make construction and experimental modifications fast and easy. Since all of the workings are exposed, this generator is great for the experimenter who wants to quickly try different materials and configurations in developing his own generator design, or for someone who wants to whip together a simple generator to demonstrate.

The high voltage terminal of this generator consists of a metal ring, or toroid, of exceptional efficiency. I call it a "Winter's Ring" although such rings have been traditionally made of wood. They're rarely used anymore. As with other parts of this generator, the Winter's Ring may be quickly replaced by a more traditional spherical-shaped terminal or many others you might wish to try. Why not keep several on hand for demonstration?

Despite the fact that, as we've discussed, electrostatic principles have been well know for thousands of years, it was not until as recently as 1928 that a truly practical machine for generating high static voltages was perfected. Robert J. Van de Graaff, a young Rhodes

scholar working at Princeton, designed his first machine to generate the high potential needed to power a particle accelerator to bombard atomic nuclei as part of his experiments in nuclear research.

Although it can be difficult, it is not impossible for the home experimenter to make his own atom smasher! A Van de Graaff generator such as described here is an integral part of such an apparatus. If you are interested in taking on a project of epic proportions, find a copy *"The Amateur Scientist"* by C. L. Stong which is now out of print and very difficult to find, but worth the effort. Or write for similar information from Information Unlimited, P. O. Box 716, Amherst NH 03031.

The Van de Graaff is so simple and obvious in design that it amazes me that is wasn't developed sooner. I have always thought that this is a good example of just how inventions don't have to be extremely complex to have a significant impact on society. How many other simple devices are there waiting to be designed and built? It could be you that dramatically changes the world!

The easiest way to understand the Van de Graaff is to refer to the schematic diagram in figure 13. A Van de Graaff generator consists of a belt, two pulleys, a motor, brushes, a high and a low potential terminals.

In newer machines the bottom pulley is plastic while older machines used an insulator covered by wool or similar rubbing material. The top pulley must be of a conductive material such as metal or even wood which is not a good insulator at high voltages.

When the machine is in operation, a small motor attached to the bottom pulley drives the belt that is lightly stretched between the pulleys. Friction occurs between the surfaces of the belt and the plastic wheel, putting an electrostatic charge on the belt. The charge is carried by the belt toward the upper terminal. A grounded wire brush makes contact with the lower portion of the belt and bleeds off some of the negative charge. The brush at the top of the belt accepts the positive charge remaining and distributes it on the high potential terminal. (Note: It is possible to make a Van de Graaff generator that develops a negative charge on the high potential terminal.)

As the belt moves, charge builds up on the high potential terminal. Theoretically, this charge could increase forever. However, leakage into the air from the upper terminal limits the maximum potential to

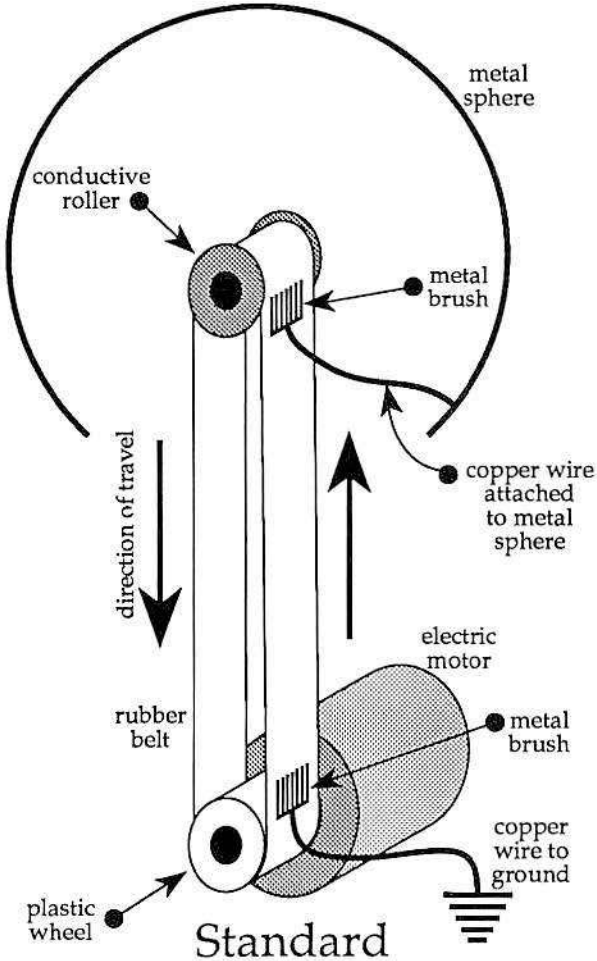

Standard
Van de Graaff Generator
Schematic Diagram

Figure 13

about 50 to 100 thousand volts typically.

A simple way to calculate the theoretical maximum for a "perfect" spherical top potential is to figure a voltage 70,000 times the smallest radius of the curvature of the high potential terminal. For example–most spheres are sold with reference to their diameter. For a 12 inch diameter sphere, we divide 12 by 2 to get the radius, or 6 inches. We

multiply 6 by 70,000 to get a theoretical voltage of 420,000 volts.

Because your terminal will never be a perfect sphere, and because there will be leakage into the atmosphere, theoretical voltages won't be reached. You might find these ball-park calculations interesting, nonetheless.

A photograph of my external Van De Graaff and its schematic are shown in figures 14 and 15. I found this to be an extremely simple and inexpensive design. In operation it will produce a reliable voltage in the range of 10 to 30 thousand volts using an ordinary rubber band. It will produce a solid and exhilarating "pop" when it discharges to your hand. It can throw sparks to ground more than an inch in length. Neon bulbs such as a Ne2 will glow brightly and continuously when near the generator. A blue corona glow can be readily observed from the collecting brushes in a darkened room once your eyes have adjusted to the dark. Negative and positive corona can also be identified by their appearance using this device as discussed later.

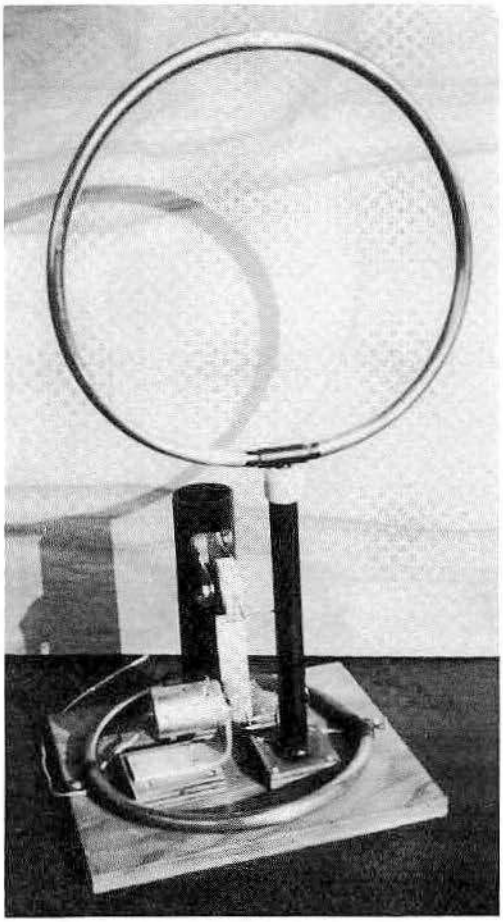

Figure 14 – External Van de Graaff Generator

The external Van De Graaff shown has some minor performance limitations due to the relatively high friction of the top wheel (no ball bearings) and excessive flexing of the rubber band. A rubber band should be used as a belt only for demonstration purposes. For more

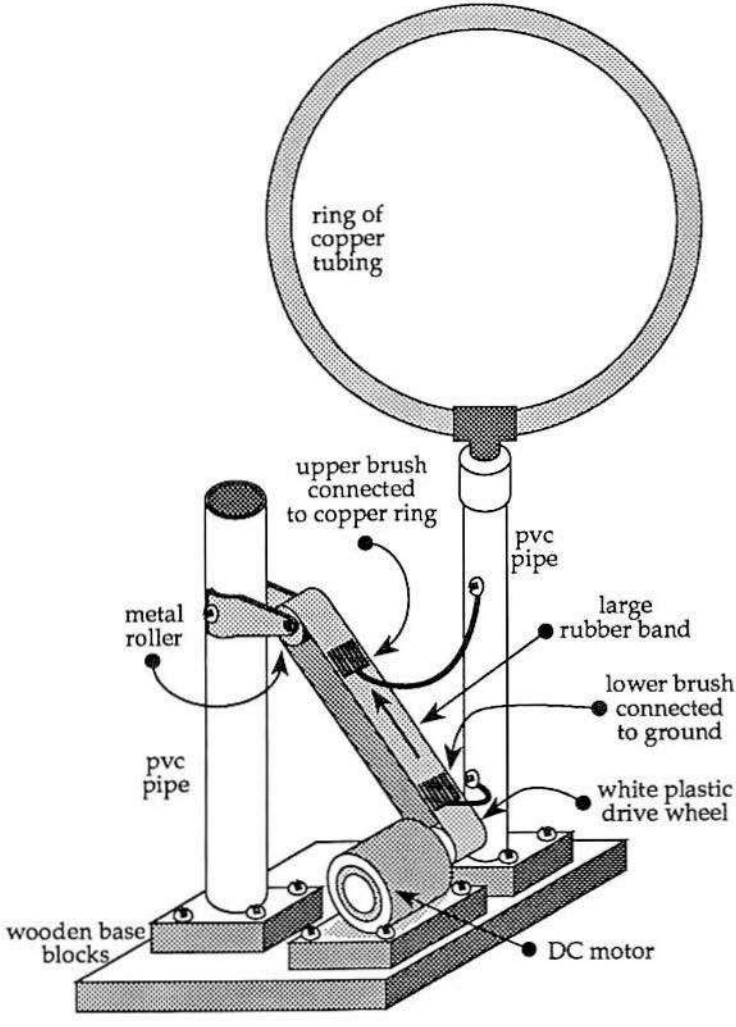

External
Van de Graaff Generator

Figure 15

serious experimenting, replace the belt with a less flexible belt such as made from a bicycle inner tube or, ideally, neoprene. Also, without ball bearings, the top wheel required occasional lubrication that frequently brought about the risk of oil contamination. Except for these minor problems, this generator has proven to be an excellent and reliable performer. It still remains the most easily modified and observed of the Van de Graaff designs I'll describe.

The construction of the external Van De Graaff is so simple and straightforward that little description is required outside of the drawing. A few tricks can simplify and improve construction.

An easy way to get your motor, roller and belt in alignment is to run your generator while holding the motor with your hand, experimenting until you find the right position for it. If your belt slips off, shift the motor slightly to change its attack or grip on the belt.

When connecting a belt between two rollers in any Van De Graaff type generator, it is natural to assume that pulleys should have flanges on their edges to provide a groove in which the belt will run preventing it from slipping off the driving wheel. Surprisingly enough, the belt will have a tendency to stay centered on the pulleys even when they are somewhat out of alignment! I assume this has something to do with the way the pressures change in the belt as it approaches the edge of a pulley. You may find that a small "hump" in the drive wheel can even be helpful at high rpm. Once aligned, you should have no problems at all with belts slipping off.

Use the largest diameter of copper tubing that you conveniently can for the top terminal. The problem is that when larger diameter copper tubing is bent into small diameter circles, undesireable ripples form. Larger gauge tubing must be bent into larger diameter circles forcing you to compromise between size and efficiency.

When soldering the two ends of the copper tube into the "T" connector, first clean them with extra fine steel wool, then coat (tin) them with a little solder before inserting them. This will give an exceptionally strong and smooth bond. You can use any ordinary propane torch for heating and soldering the tube.

If you use the same type of brushes as shown in the drawing, it might be tempting to shorten the copper wires leading to them from the PVC tubing or otherwise alter this mounting. Don't do it! It is the flexibility in these long copper wires that provides the "spring"

needed to keep the brushes flat against the belt.

The plastic bottom pulley is simply one of the white plastic wheels used on cheap furniture casters. It is attached to the motor shaft by carefully drilling out the wheel's center hole to a size slightly smaller than the diameter of the motor axle. You then apply a few drops of super glue to the axle and press or tap the wheel into place.

If the hole in the wheel is larger than the diameter of the axle, glue progressively larger diameter pieces of rubber tubing to the motor axle until the wheel fits snugly in place.

One last note: Since your top terminal is copper which quickly tarnishes, you might want to apply a little Silicone cleaner/protectant such as that sold for cleaning chrome automotive parts. This will keep your top terminal bright and shiny at all times. It also seems to limit leakage and produce an interesting double "pop" when touched.

The Evils of Oil

The only major problem that I encountered in building and operating Van De Graaff generators regardless of design is oil contamination. Since a Van De Graaff generator relies on friction between the plastic wheel and rubber belt to produce a charge, you can imagine the devastating effect oil or any lubricant can have on belt performance. Even the oil from your fingers can reduce the charge carried by the belt. Handle your belts sparingly, and hold them only from the outside edges as you might a record album.

The worst lubricant is a petroleum-based oil such as used to lubricate motor axles and bearings. Angular momentum from the motor axle can actually pull a drop of oil all the way along the axle, along the side of a wheel, and out onto a belt. *Therefore, **Do not oil your motor or bearings excessively.***

If you want a graphic demonstration of this effect, place a drop of fast drying super glue on your motor's axle. Before it has a chance to dry, run your motor for several seconds. If your motor is like mine, you will have a little trail of super glue from the axle to the outside of the wheel where it will form a little blob.

Once your belt and wheels are contaminated, they can be very difficult to clean. The best way to clean the belt is not to clean it all, but to throw it in the trash and get another belt.

The conductive metal top roller can be cleaned with a residue-free cleaner like ammonia, followed by a light sanding with extra fine sand paper and then by another ammonia cleaning.

Cleaning the plastic wheel is the most difficult. The plastic wheel usually builds up a static charge of its own during the time the generator is run. This charge seems to act like a sponge for oil! The only way I have found to remove it is it by attaching a wire to ground and running the motor while dragging the wire along the outside of the wheel. After discharging the pulley in this way, ground a piece of metallic sand paper and again run the motor while sanding away some of the outside of the wheel. This is accompanied with or followed by ammonia cleanings. Other solvents may work, but watch out for those that may dissolve the plastic. I realize this procedure may sound extreme, but I have even tried soaking the plastic wheels in industrial degreasers not available to the general public and have had no luck at removing this oil in any other fashion. If you are careful in your use of oil you will never encounter this problem.

A Few Words On Brushes

In both of the Van De Graaff generator designs described in this book, I used a simple tuft of wire soldered to the end of a thicker solid copper wire spring which provides the force necessary to keep the brush riding firmly against the belt. By far the biggest problem you are likely to encounter will be in keeping the brush riding solidly on the belt. If your brushes are not well placed, or your belt has undue flexibility, the brushes may have to be readjusted frequently.

Many configurations, some very elaborate, have been tried in an attempt to perfect a fool-proof brush assembly. I haven't found one yet. You may want to try a hinge, a spring, a piece of metal screen, or even a conductive rubber or foam such as those use to package integrated circuits. In designing a brush assembly, keep in mind that, ideally, it should be comprised of many fine points like the ends of wires because the density of electrons in a fine point is higher and electron transfer is more likely. Nevertheless I have had very good luck with non-pointed objects such as conductive foams. Most texts, and my own experience has shown that a good old tuft of wire usually wins out, but, as mentioned, this is not a perfect solution to the

problem. So, experiment. And have fun!

A Few Words On Belts

A good belt can be made from virtually any insulating material. Rayon, Dacron, rubber, paper, silk, plastic and even ordinary cloth have been used with success. Wear is probably the most important factor to consider in choosing a material. Rubber, for instance, rots in my home town due to the ozone contained in the smog here. Cloth will fray at high speed, although I have coated cloth with an extremely thin coating of Silicone rubber and have made good belts. Neoprene, joined with a diagonal splice is a long-time favorite.

In my opinion, the easiest all-around belt is made from an old bicycle inner tube, or even better, the rubber "liner" that covers the heads of spokes under the rim. One of these belts can be carefully spliced with inner tube cement from a tire patch kit. Even a little "Super Glue" will work if the splice is clamped.

In fabricating a belt also remember that the wider the belt, the faster a charge accumulates (within reason). And, you may also want to give a little thought to the noise generated by certain materials. At 5000 rpm a poorly made belt will make considerable noise.

One last belt option is to purchase a ready made belt from a scientific supply house such as Analytical Scientific, Post Box 675, Helotes, TX 78023. Such companies can often supply many different sizes and types of belts. I would suggest ordering the thickest, and strongest belt offered for a home-made generator. I find the price of commercial belts a bit too expensive for my bank account, but you might find their prices more acceptable depending on your project.

THE HIGH POWER "CLASSIC" VAN DE GRAAFF

Although these voltages are impressive, keep in mind that the classic Van De Graaff will easily produce 60 to 100 thousand volts or more and is only slightly more difficult to build.

The classic design for the Van De Graaff is shown in photograph 16. The one minor concession I made in my design was to use two stainless steel bowls for the high potential collector instead of the traditional sphere. I did this simply because I could not readily find a

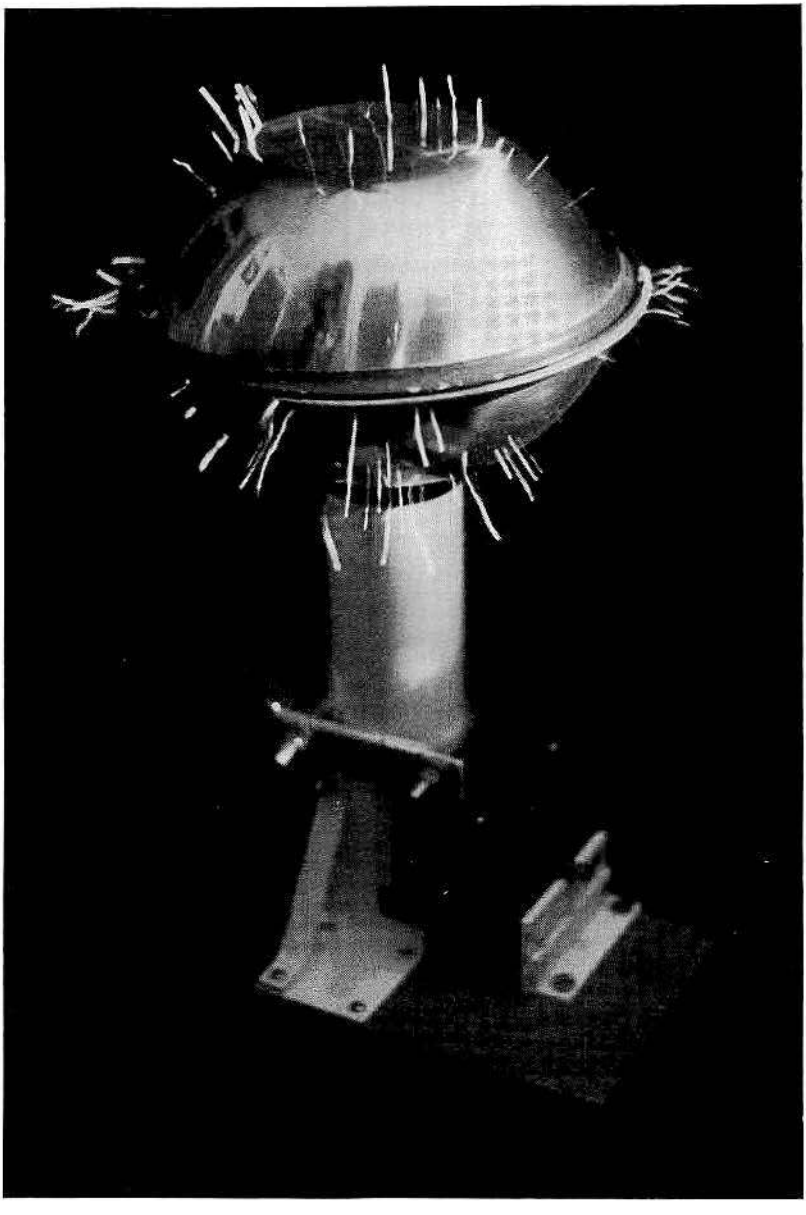

Figure 16 – Classic Van de Graaff Generator in Operation – This long-exposure photograph clearly shows the remarkable energy generated by this simple device.

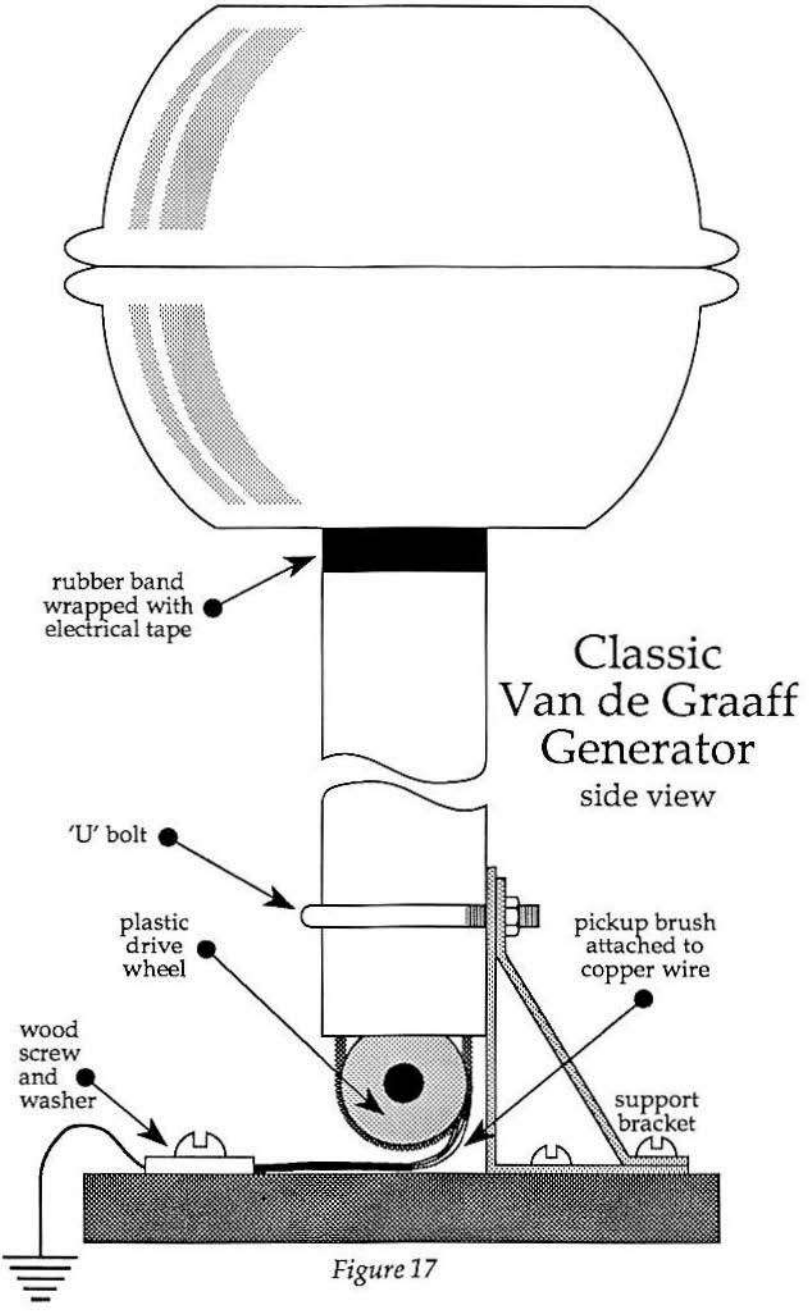
rubber band
wrapped with
electrical tape
Classic
Van de Graaff
Generator
side view
'U' bolt
plastic
drive
wheel
pickup brush
attached to
copper wire
wood
screw
and
washer
support
bracket

Figure 17

sphere of the proper dimensions. Besides, two bowls allow easy access to the top roller and brushes, and I wanted to test my hunch that almost as much power could be obtained from the bowls if the edges were heavily doped and insulated as could be obtained from a traditional spherical terminal.

All of the experiments to be described can be performed with this unit. It is an all-around solid machine and is fun to operate. If you plan to build only one generator from this book, and are wondering which generator to select, this machine is the best all-around performer. If carefully built, this design will exceed a voltage of 100,000 volts. It will arc thick, blue sparks well over four inches to an outstretched hand and deliver an invigorating, if not slightly uncomfortable, shock.

This generator is capable of charging up a person's body to a high voltage. It makes possible many experiments such as causing a person's hair to stand on end, or the rapid charging of large capacitors. The device will even produce an ominous "crackling" as your hand approaches the high potential terminal.

By standing on a large plastic insulator such as an overturned detergent bucket, a friend of mine was able to charge her body to such a high potential that her hands would "crackle" any time she pointed to a person nearby in the room. I think a physics or chemistry teacher would have little trouble keeping his/her students attention if the mere pointing of their hands produced this ominous cracking!

Though I am certainly not recommending the following approach, this generator was also inadvertently useful in training a dog in a single lesson not to jump on people. My dog, Merfi, had the bad habit of greeting people by jumping all over them. Nothing, it seemed, could discourage this behavior. One afternoon some friends and I were standing around a completed Van De Graaff and commenting on what an unusually large charge we had managed to bestow upon a person. Suddenly Merfi bounded into the shop. Despite our pleas, Merfi shot across the shop with his usual enthusiasm and leapt nose first into my highly charged friend, no doubt, intending to bestow upon him his traditional greeting.

We could do nothing but watch as a large blue spark jumped to Merfi's moist, waiting nose. Merfi stumbled back, temporarily lost control of his bladder, and then slunk out the door. A few moments later everyone was petting and reassuring Merfi, yet, to this day we

have had virtually no problems with Merfi's traditional greetings. He still eyes the friend from whom he received the shock with suspicion. And with good reason!

I suppose it is needless to say that it is wise to keep any and all pets a safe distance from your experiments. As with the external Van De Graaff generator, very little description outside of the drawings is required for constructing the classic Van De Graaff design.

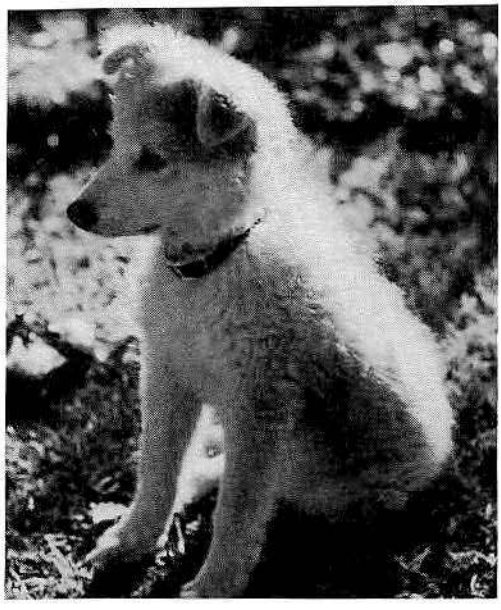

Figure 18 - "Merfi" – (An accidental electrostatic participant)

Things to keep in mind

The edges of the bowls are relatively sharp, even though the edges have been folded over. To prevent the charge from leaking through these sharp edges, they are coated with a special paint called "corona dope" which can be purchased in most T.V. and well-stocked electronic stores. It is available in both spray and brush-on forms. Corona dope has a high dielectric strength, and will prevent a charge from leaking off into the air. It can be used on any spots suspected of leakage on any of your high voltage projects. Keep in mind that the thicker the coating of corona dope, the better it will shield. I used around eight thick coats on my Van De Graaff and should have used more. Sparks fly right through it!

As with the last generator, the lower pulley is a white plastic wheel taken from an inexpensive furniture caster. It was mounted in the same way as was done in the external Van de Graaff.

The upper pulley is the front hub of a 10 speed bicycle wheel. I tried several different methods to reduce the friction of the hub bearings to make it turn more freely. I tried a variety of lighter oils and even

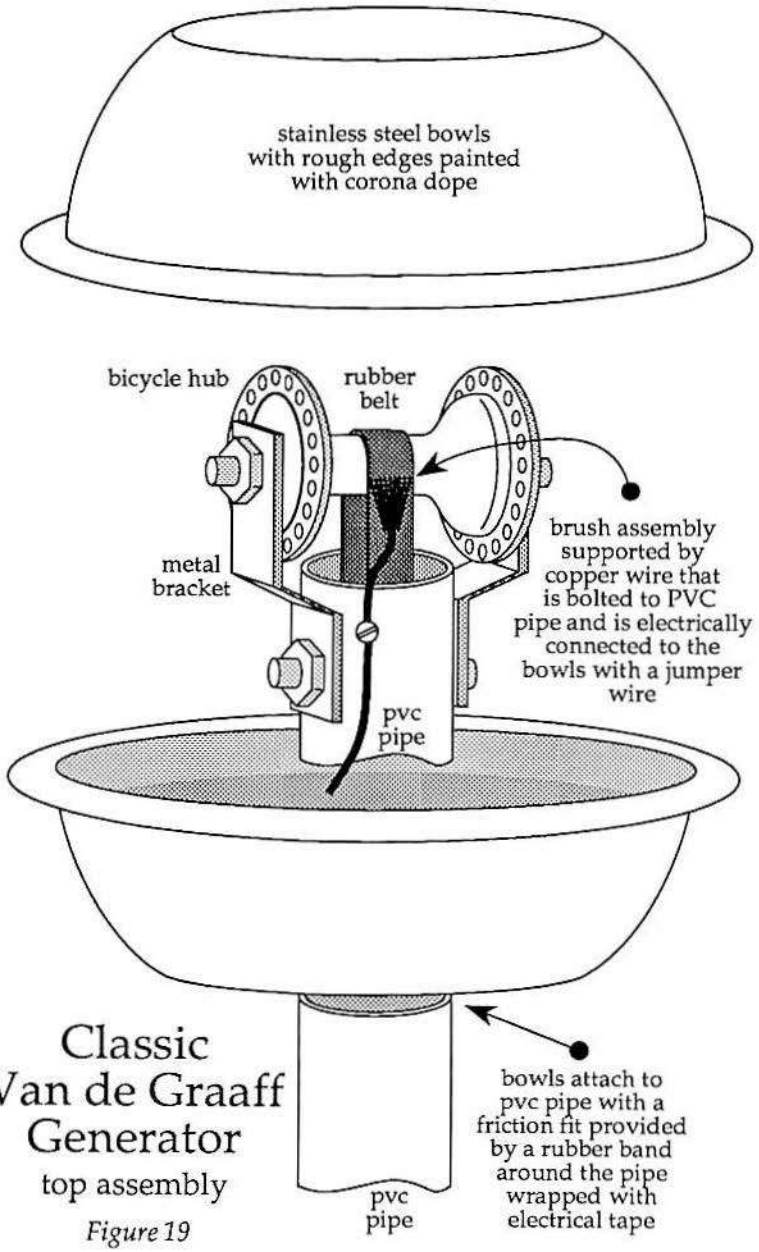

Classic
Van de Graaff
Generator
top assembly

Figure 19

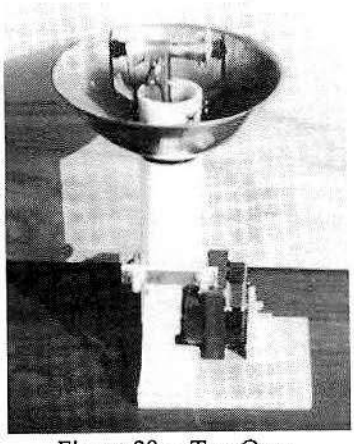

Figure 20 – Top Open

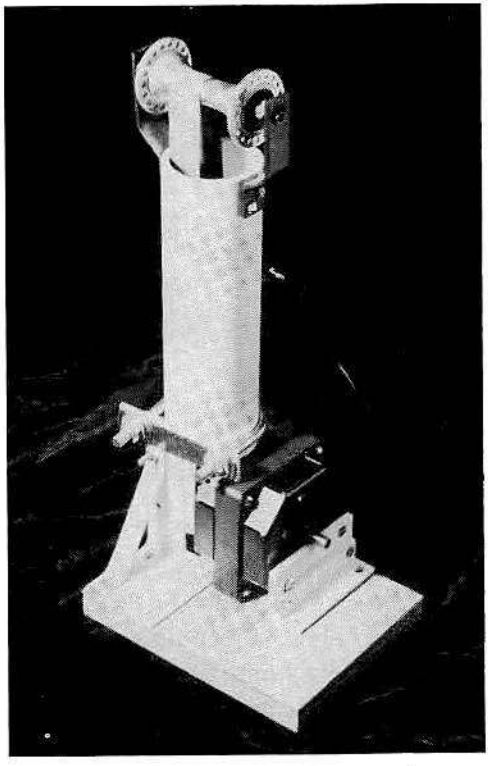

Figure 21 – Terminal Removed

removed the rubber covers that protect the ball bearings from dirt contamination. I found that lighter oil works well, but because of the risk of oil contamination as discussed earlier, I ended up using grease. Removing the covers also helps, but when the generator is running and the roller is spinning, a sizable charge builds up on its surface, and every dust particle in the area is attracted to it! Although you may want to experiment, I have come to the conclusion that the hub should be left pretty much as it is when it comes off the bike.

The two top bowls can be hinged together from the inside with a wide strip of black tape, or can be bolted together by some nylon screws through the lip. Keep in mind that you want the surface of these bowls to remain as smooth as possible to prevent electrons from leaking off. Don't use metal hinges or any sharp objects in attaching them.

The main body tube is fabricated from three-inch diameter PVC drain pipe. (Remember that acrylic or phenolic pipe might be superior to

Figure 22

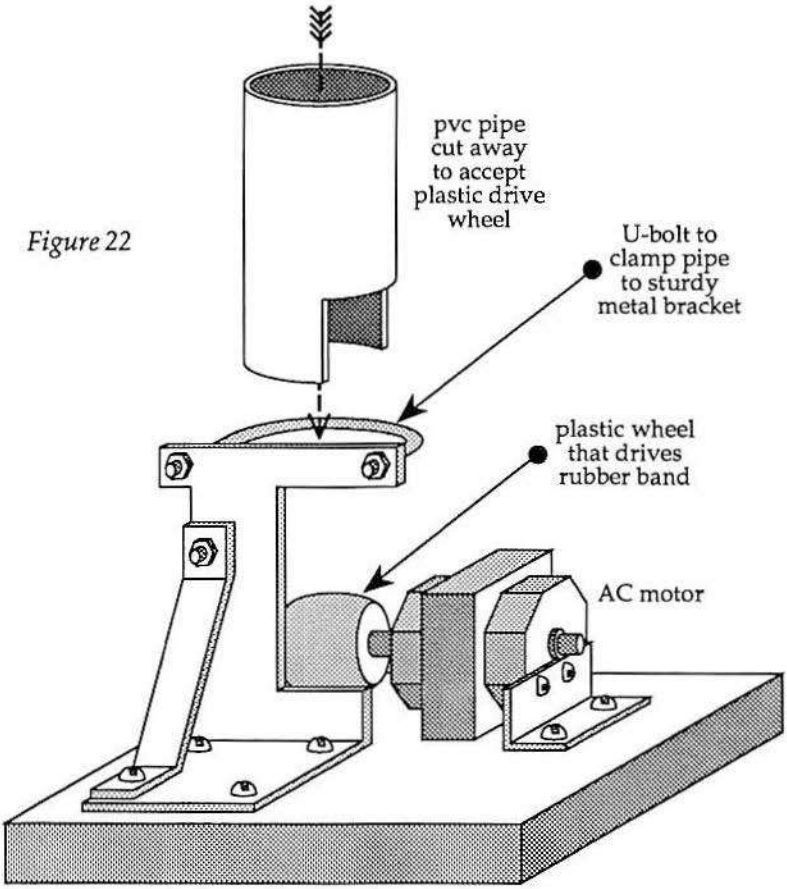

Classic Van de Graaff Generator

bottom assembly

PVC.) A slot is cut into the lower portion of the tube to allow the motor and plastic drive wheel to be inserted through wall. The PVC pipe is supported by a metal L-bracket and a U-bolt. Depending on the size of your motor, you may want to cut a notch into one side of the L-bracket to provide enough clearance for the motor to fully enter the bottom of the tube. Since this "L" bracket will support your whole generator, make sure it is sturdy and of a heavy gauge. You may even wish to add a metal brace as I did to increase rigidity.

When you have completed this generator, you will be able to perform any of the experiments that follow. This easy-to-build, high performance generator is a very exciting machine to own!

AN EXTREMELY HIGH POWER VAN DE GRAAFF

Before we move on to other types of static generators, I'd like to briefly describe one of the highest performance Van De Graaff generators I have ever seen. Shown in figure 24 is a design for an extremely high power Van De Graaff generator. I have not constructed this unit. I am providing details on this machine should you want to explore machines beyond the limits of my humble designs. This schematic will provide the essential design details.

At maximum efficiency this design could generate voltages exceeding 1,000,000 volts without using an auxiliary storage capacitor!

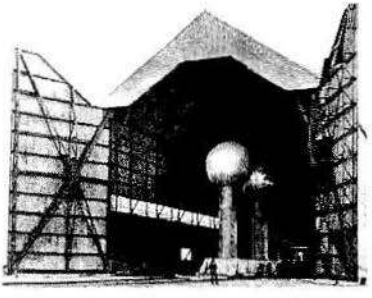

Figure 23 – Ten million volt Van de Graaff generators were built in the 1930's. One generator here is negatively charged, and the other is positive. Generators of this size are not recommended as a first project. (Perhaps not even as a second! ...but call me if you build one!)

Voltages of this order can be dangerous, possibly lethal. This is not a toy and should only be constructed by a serious and cautious experimenter. Because of its high output, I think this unit would make an outstanding laboratory power source for a homemade atom smasher.

The high power unit uses an external high voltage power supply to "spray" an initial charge on the rubber belt. Notice in the schematic that the ends of the spray wires are pointed. A rectified high voltage source between 5,000 to 10,000 volts is ideal. For low cost and ease of assembly you may want to try using an automotive coil as a transformer. For details see Lindsay Publications *"Build a 40,000 Volt Induction Coil."* (Written by an author who is generally a good sort.)

In this design, both top and bottom rollers are metal. The top roller itself is insulated from the high potential sphere. Charge is sprayed

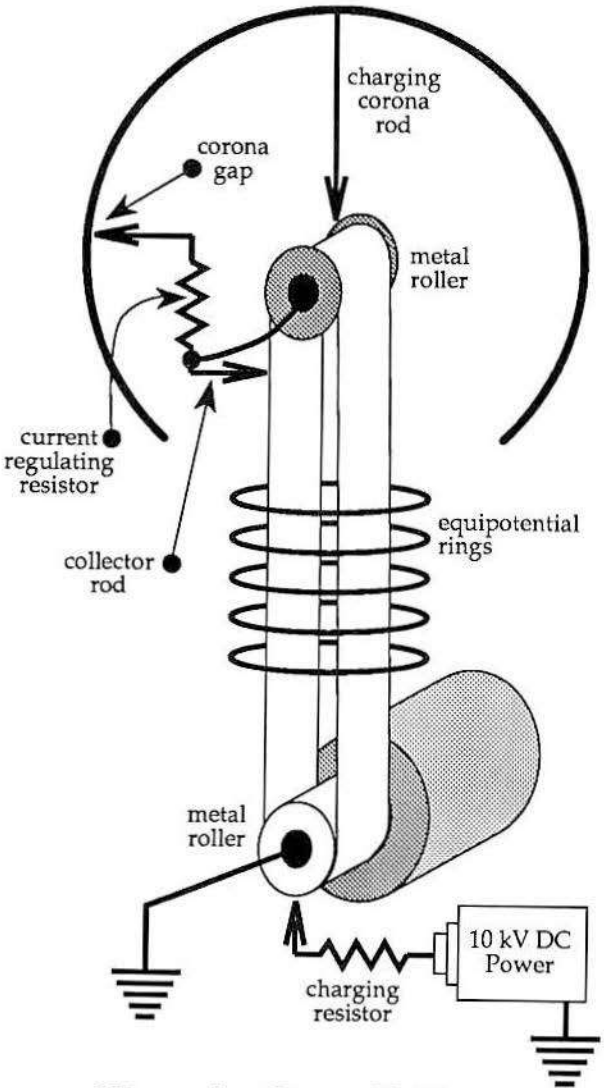

Van de Graaff Generator

high power configuration
using external excitation
(schematic diagram)

Figure 24

Figure 25

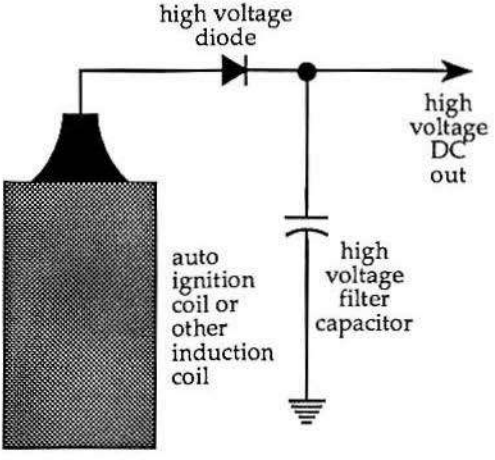

Induction Coil Exciter for Van de Graaf Generator

output must be recitified
and filtered

onto the carrying belt as it passes through the corona discharge between the high voltage power supply and the lower roller which is grounded. A second set of points located just inside the upper high potential terminal picks up the charge and conducts it to the upper pulley. Once highly charged, current flows to the high potential terminal through the current regulating resistor. This configuration can also include a corona gap as shown near the inside surface of the high potential terminal.

An additional set of spray points, labeled "charging corona rod" on drawing, connect directly to the high potential terminal and are situated directly above the pulley.

According to *The Amateur Scientist, "The difference in potential between the upper pulley, made 'live' by the voltage drop across the current regulating resistor and corona gap, and the high-voltage terminal causes these points to 'spray a charge of opposite sign onto the downward run of the belt.' "*

The value of the current-regulating resistor can be computed roughly by Ohm's law. In small machines it is usually on the order of

40 megOhms.

Optimum belt speed for a high power unit is between 4,000 and 6,000 feet per minute. Most high power units use belts made from rubberized fabric.

If your design is to exceed 200,000 volts, charge distribution along the insulating column becomes important. Machines using belts more than four inches wide should be equipped with equipotential rings as shown spaced every two inches.

A large Van De Graaff generator intended to reach the million volt range is often sealed in a steel tank containing inert gases such as carbon dioxide and kept at many atmospheres of pressure. Keeping the gases at high pressure serves to increase their insulating properties and improves both the voltage and current output of the generator.

Owning a generator of this size would be incredible!

INDUCTIVE ELECTROSTATIC GENERATORS

Wouldn't it be wonderful to have a generator that could produce almost 90,000 volts while being virtually immune to changes in humidity? What if that same generator could be run extensively without concern for wear or maintenance? What if the same generator could be "daisy chained" to other generators to increase their output? What if it could be run as a motor, operating on electrostatic charges, just as a common D.C. generator can also by run as a motor? Well, what we would certainly have is a Dirod generator.

The Dirod generator is another invention of Mr. A. D. Moore. The Dirod gets its name from the main components of the generator: a high grade Plexiglas disk and a series of metal rods. "Dirod" is short for disk and rods. Its operation is most easily understood by observing a schematic representation of its workings.

Figure 26 shows a schematic of a basic Dirod generator. A number of metal rods are attached to an insulating disk (Lucite, glass, plastic, etc.) which is mounted on a bearing that allows it to rotate. In the center of the disk is an axle which is stationary, and attached to this axle is a wire with two brush ends as shown. As the disk rotates, each pair of metal rods is momentarily electrically connected to the stationary brushes as the rods pass by them.

Outside of the wheel we have two smooth metal plates each with

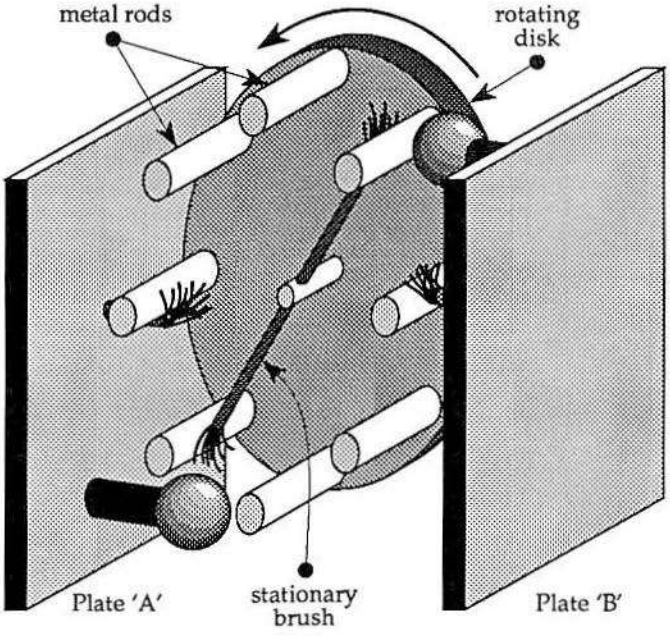

Induction Generator
schematic diagram

Figure 26

an electrode attached as shown and each having a pair of metal brushes as well. Positive and negative charges will form on these plates in the following manner. When the wheel begins its rotation, plate A and plate B will have similar amounts of negative and positive charges – similar, but of course, not exactly the same! Let's say that plate B has a slightly negative charge, and plate A has a slightly positive charge. Now, as a metal rod moves by the electrode from plate A, it is momentarily connected to the rod moving past the electrode from plate B, connected by the stationary brushes from the center axle as shown in figure 27a. At this point, since plate B has a slightly negative charge, the positive charges in the two bars rush into the bar closest to plate B (negative and positive charges attract), and the negative charges rush into the bar closest to plate A. This is comparable to one electrophorus charging the other without having them

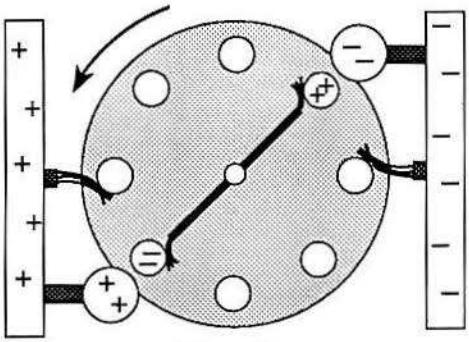

Figure 27a

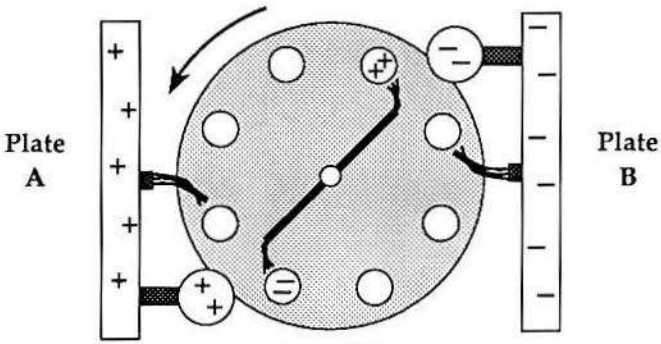

Figure 27b

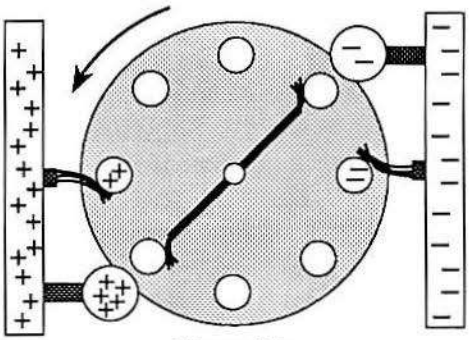

Figure 27c

Induction Generator Operation

actually touch.

As the disk continues to rotate, the two bars move past the brushes and break electrical contact. Now we have one bar with a mostly positive charge and one with a mostly negative charge. Figure 27b

As the bars continue to revolve around to the opposite plate, they briefly make a connection with the brushes from that opposite plate and bestow upon that plate their charge. Figure 27c. Now the plate has an even higher charge than it did originally. It charges the next rod passing by it even more forcefully. In this fashion the plates rapidly build up a larger and larger charge.

When you consider how fast these rods can be spun, and how fast these charges double, you realize how quickly this generator can produce high voltage!

To be a little more technical in describing the difference between our previous friction generators and an induction generator of this type, remember that friction generators charge by contact between two bodies and by the sharing of electrons from the resulting contact. Inductive generators make no demand on free electrons, but on the field they produce. This field causes electrons in the charging material to veer from their orbits. This displacement sets up or induces a charge in the formerly uncharged material. The series of figures 27a through 27c show not only how the machine moves but also how charges are built up during each step of the charging process described.

It is important to understand these simple principles of induction since they are critical to understanding and building the electrostatic motors that follow.

It is interesting to note that the Dirod generator is virtually the same as the world's first electric motor known as the "Franklin" motor for its inventor, Benjamin Franklin, and discussed later on.

Construction of the Dirod Generator

Construction of the Dirod generator is, again, straightforward and simple when viewing the drawings. Keep in mind that the metal rods can be mounted horizontally as shown or vertically, radiating out from the center. Vertical mounting is much trickier. However it is much less stressful on the Lucite disk allowing higher rotational speed to be achieved.

Also very important in achieving maximum voltages is a corona shield which is not shown in the drawing. A corona shield can be fabricated simply by placing a small sheet of Plexiglas between the metal spheres and the rotating rods. I would suggest that you first try your generator without a corona shield, and then with. If your design is optimum, your voltages will increase with the shield.

Because the brushes in this type of design can really take a beating I strongly suggest using a conductive foam such as the foam integrated circuits are packaged in or a conductive rubber brush. If forced to use a metal brush, use a metal that is very springy.

I built an induction generator by modifying the Franklin motor shown later on. By adding brushes and two stainless steel collectors to the Franklin motor, I had both an electrostatic motor and generator! Although I plan to build a much larger, more traditional Dirod machine, this small motor/generator still holds my fascination and continues to teach me the principles I will need to employ in devising the larger unit.

MEASURING VOLTAGES AND POLARITY

WARNING: As mentioned before, the electrostatic voltages produced by the generators in this text are generally safe for the experimenter even should he be accidentally shocked. The operation of the following devices is described for use with electrostatic devices. Should you choose to measure the voltage of other devices, more stringent safety precautions should be taken. Use extreme caution at all times.

Information in this chapter is useful not only in the field of electrostatics, but can also be valuable to those who work with Tesla coils, Oudin coils, induction coils, or other high voltage power generators. One of the most surprisingly difficult things to do with a high voltage is to accurately measure it. I was frustrated to find that text after text said simply that measurement of high voltages was impossible for the amateur. As a result of experimentation and having studied the writings of extraordinary experimenters such as Professor A.D. Moore, I can show you several methods of measuring high voltage that seem quite dependable and accurate. You can also use one of several means to determine the polarity of a high DC voltage – something which is rarely mentioned in any text.

Finding Polarity and Simple Voltage

There are several very simple means for determining the polarity of a high potential. The first, and by far the most sensitive is an FET based "electroscope." Figure 45 shows an electroscope of my own design. The device is simple to assemble and is shown in both schematic and component layout forms. The device works extremely well.

I highly recommend that you build one of these. It can show you the polarity of both very high voltages as well as low electrostatic

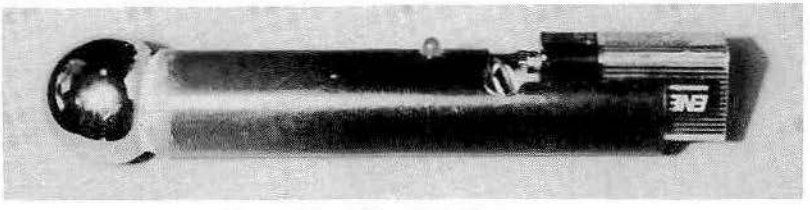

Figure 45 – The FET Electroscope

voltages. In fact, this electroscope will respond to the static build up found in clothes taken from a dryer, or the charge that builds up on a hard rubber comb.

You may want to modify my design. You should consider replacing the 10 megohm resistor with one of a smaller or larger value. It controls the sensitivity of the circuit. The larger the resistor used, the more sensitive the device becomes, the smaller the resistor, the less

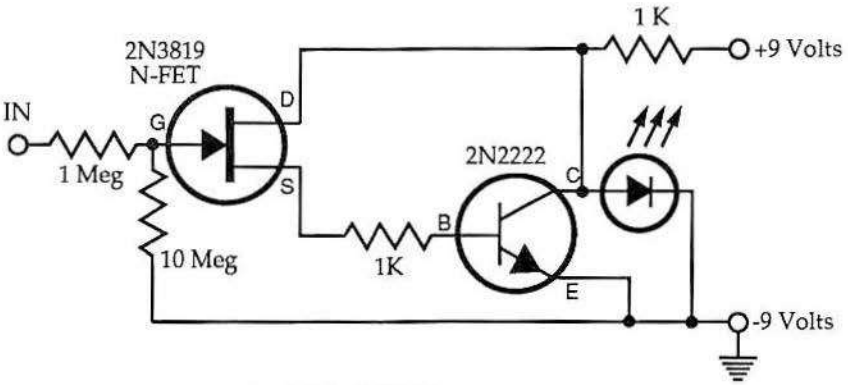

FET Electroscope

Schematic Diagram

Figure 29

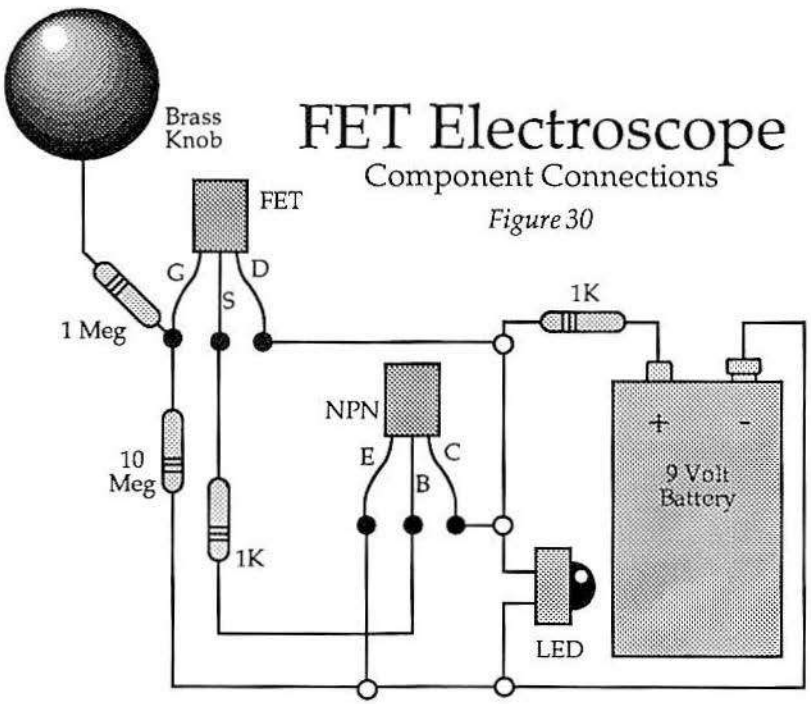

FET Electroscope

Component Connections

Figure 30

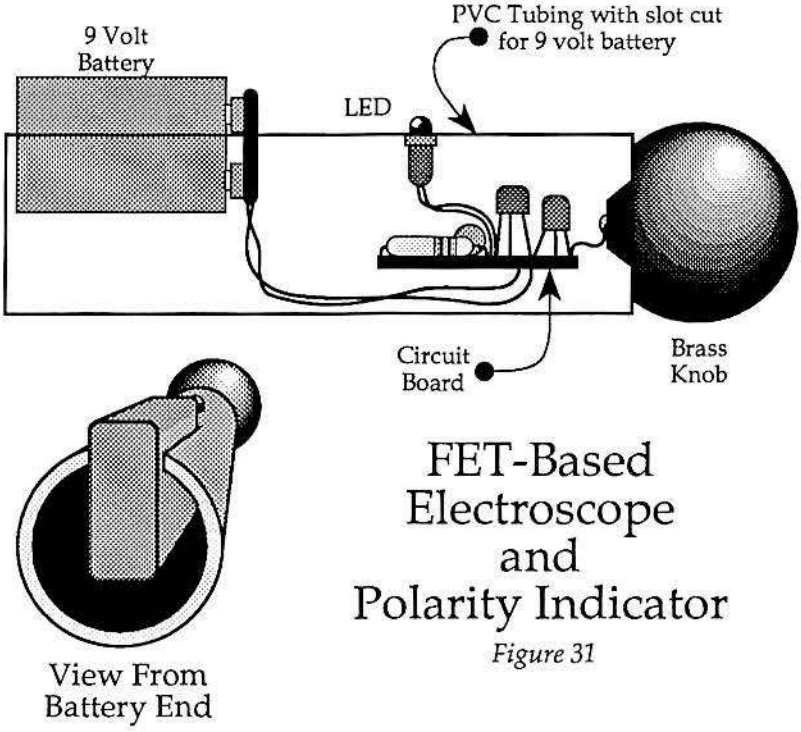

FET-Based Electroscope and Polarity Indicator

Figure 31

sensitive – within reason, of course. The resistor can also be removed all together for maximum sensitivity, but the device becomes unreliable because even stray radio emissions will be picked up.

When properly adjusted, the FET scope will light when placed in contact with a positive static charge. Keep in mind that the FET transistor, which is the heart of the circuit, could be damaged by an extremely high voltage, however, I have used my scope without difficulty to more than 30 thousand volts (30 Kv). This voltage was measured by placing the scope directly against the Van de Graaff with an appropriate spark gap.

A MECHANICAL ELECTROSCOPE

A mechanical version of the electroscope can be made quite easily from a glass jar, a little wire, and some aluminum foil. A mechanical electroscope is shown in figure 32.

When the top electrode on this scope is touched to a static voltage source, the aluminum leaves in the jar will separate. This happens because the foil in the jar takes on a uniform charge. Since like charges repel each other, the two leaves of foil are forced apart.

The demonstration of an electroscope can be quite impressive. Although it would be difficult, if not impossible, to calibrate, a

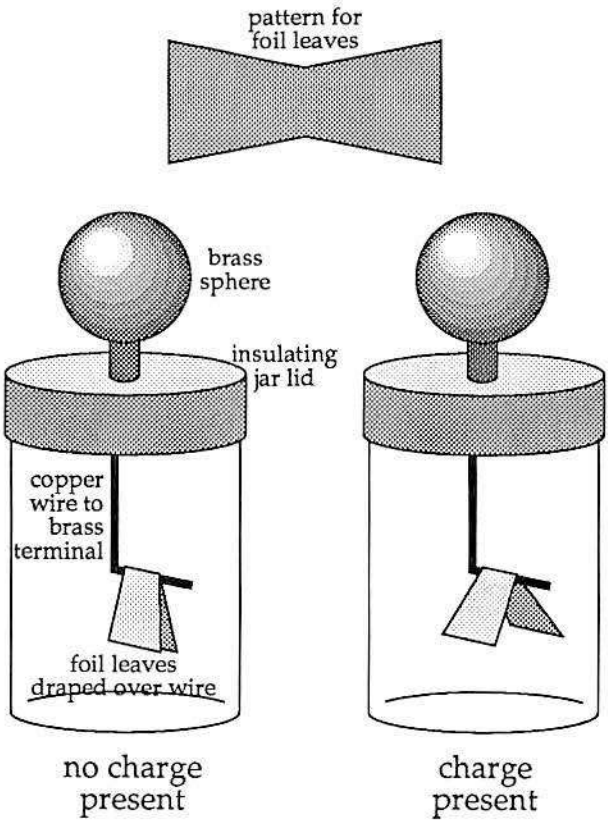

Mechanical Electroscope

Figure 32

mechanical electroscope of this type can also be used to measure voltage. Heavier leaves require greater voltages to separate them. Therefore, the distance the leaves move away from one another indicates a relative voltage.

The Neon Lamp Bank

Another less sensitive but much simpler way to measure low electrostatic voltages is with the use of a neon lamp bank. Figure 33 shows the assembly of such a bank. Ne2 neon lamps are wired in series along a Plexiglas panel as shown in the drawing. Since each lamp fires at about 70 volts, five bulbs wired in series will read a voltage of up to 350 volts. You can quickly see how larger or smaller banks can be easily built. The cost of these bulbs is quite low, so even fairly large banks can be built without great cost.

When connected to a source of high voltage, it is quite easy to see which bulbs are lit. Sometimes, however, you may have to darken the room to get a more accurate reading. Neon lamps are not always easy to see.

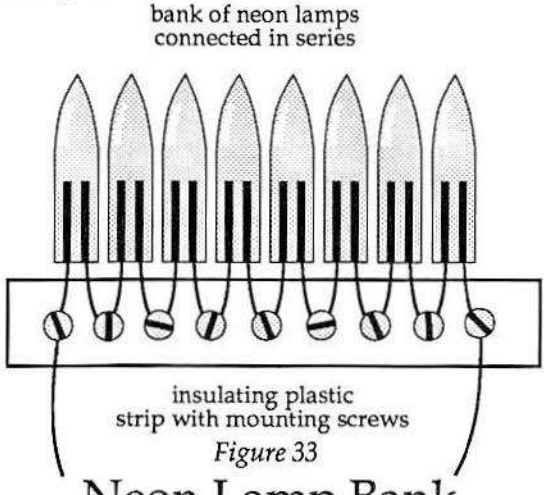

Figure 33
Neon Lamp Bank

You can increase visibility by leaving a small gap between the lamp bank and your high voltage source. Letting a spark periodically jump the gap will trigger the lamp bank. Attaching the bank directly to generator can draw enough current from the generator (load it down) such that it never reaches peak voltage. With a small Van de Graaff a steady stream of bright flashes will occur every two or three seconds.

Though this means of voltage measurement is crude, you could improve it somewhat by using bulbs with very close firing voltages.

The best way to find such bulbs is with the circuit such as shown in figure 34. Note that a volt-ohm meter can also be connected across the leads shown in order to gauge the exact voltage at which the bulbs will fire. By slowly bringing up the input voltage to a set of bulbs wired in parallel you can find which bulbs fire together and at what voltage.

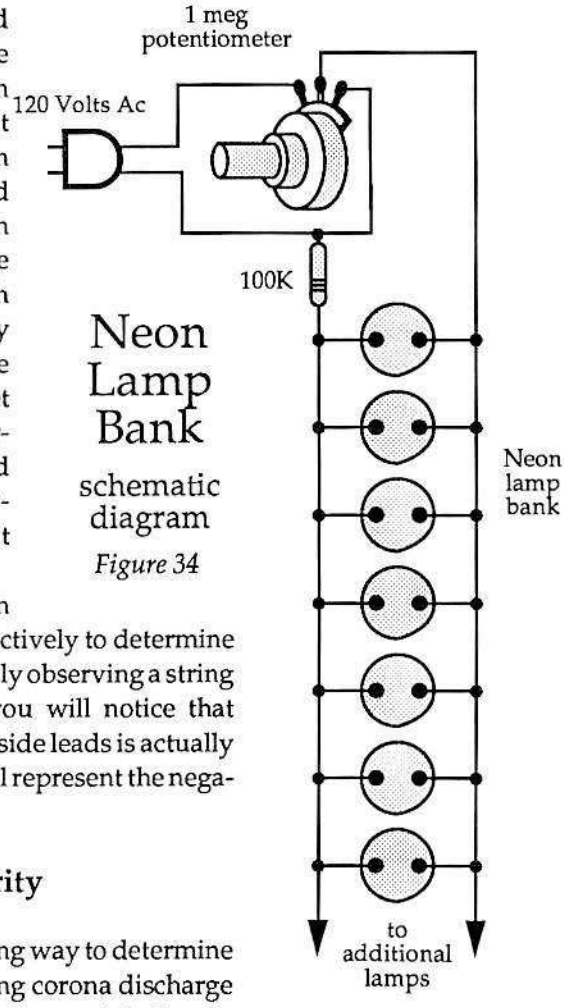

Neon Lamp Bank

schematic diagram

Figure 34

A neon bank can also be used very effectively to determine polarity. After carefully observing a string of flickering bulbs you will notice that only one of the two inside leads is actually lighting. This lead will represent the negative electrode.

Corona and Polarity

Another interesting way to determine polarity is by observing corona discharge from your high voltage potential. Corona discharge is that strange very faint blue glow that surrounds portions of your high potential terminal. To observe it, you will need to be in a darkened room with your eyes fully adjusted to the dark and your generator running.

One might assume that positive corona and negative corona look the same, but this is not true! Positive corona is even and uniform in appearance while negative corona is bushy, often with streaks or streamers that move around.

I first noticed this while using my external Van de Graaff, the same one described earlier. Not having had much experience with this generator, I immediately assumed that the light blue glow I was seeing in the darkness was due to arcing in the D.C. motor. It was too dark to see where the corona was coming from. Fearing the contacts in the motor would eventually be damaged, I tried every method I could think of to stop motor arcing, but the pesky blue glow went on unabated. Finally, I reached out in the darkness thinking I was going to touch the motor, but much to my surprise ended up touching the top of the generator! I had not expected to observe a corona discharge on this machine.

Another interesting fact is that negative corona can be heard! If you find that a hissing sound is coming from your generator, this will be generated by the negative corona discharges!

Using Spark Gaps To Determine Voltage

A spark gap is the best way I know of to accurately measure high voltage without having to resort to very expensive laboratory equipment.

Figure 35 shows the basic configuration of a "sphere gap" capable of accurately measuring up to 90,000 volts. A sphere gap consists simply of two hollow stainless steel spheres 1/2 inches in diameter which are attached to a length of threaded rod with epoxy glue that has

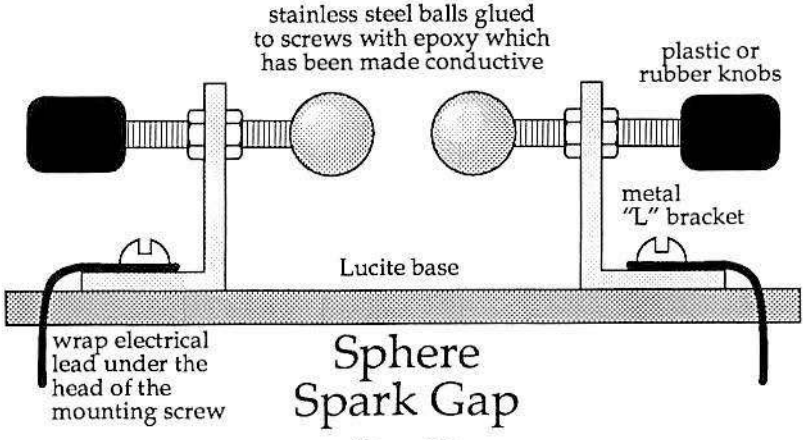

Figure 35

been made conductive by some additive or has been coated with a little silver paint in order to make electrical contact between the sphere and the rod. The rod is threaded through a metal stand, and plastic handles are added to allow the spheres to be turned while the device is operating. The spheres must be at least 3 sphere diameters above the base to prevent distortion of the electrical field which can give inaccurate results.

Another type of gap you can build is a rod gap consisting of two aluminum rods 3/4 inch in diameter. The rods are lined up with each other just like the sphere gap. The ends of the rods are rounded by turning on a lathe. Precision is important. The ends of the finished rods must be as close to hemispherical in shape as possible and must be highly polished. A rod gap of this type will give fairly accurate measurements up to 60,000 volts.

Unfortunately, there are too many variables to give a simple equation for determining at what voltage a spark will bridge a given gap. The only practical solution is to either calibrate your gap by using devices that generate known voltages, or to use a set of measurements which have already been taken.

What follows is a chart of known values for the apparatus described. These charts are excerpts from *Electrostatics* by A.D. Moore.

kV	Rod gap	Sphere gap
5	0.056	
10	0.112	
15	0.170	
20	0.228	0.234
25	0.288	
30	0.355	0.370
35	0.430	
40	0.520	0.531
45	0.625	
50	0.750	0.710
55	0.903	
60	1.122	0.950
70	.	1.102
80	.	1.380
90	.	1.700

Note: Gaps listed are in inches.

One limitation of measuring high voltages with a sphere gap is that you will loose accuracy dramatically if the gap between the spheres becomes larger than the diameter of one sphere. Because of this, you might need a general way to calculate voltages for spheres of different sizes. Also, you may not be able to find a sphere of the exact size mentioned and will need to have a reference for adjusting your figures.

What follows is a listing of spark gaps for spheres of several different sizes. By using these numbers and plotting along a curve, you can remain fairly accurate in determining the characteristics of spheres whose sizes fall between those shown.

Gap Distances in Inches
for a variety of voltages and sphere sizes

	sphere sizes in cm				
kV	2.5	3	4	5	10
10	0.30	0.30	0.30	0.30	0.30
20	0.61	0.61	0.61	0.61	0.61
30	0.95	0.95	0.95	0.95	0.95
40	1.40	1.32	1.30	1.30	1.30
50	2.00	1.82	1.73	1.71	1.65
60	2.81	2.40	2.21	2.16	2.02
70	4.05	3.16	2.80	2.68	2.41
80		4.40	3.50	3.26	2.82
90			4.40	3.93	3.28
100				4.76	3.75

THE "NOON" ION HIGH VOLTAGE METER

OK, I have to admit that it is terribly arrogant for me to name one of my devices after myself, but what the heck. For the record, I won't complain if you affix your name to one of your inventions! I think that you will find this meter which has solved so many of my voltage measuring problems to be an extremely useful tool in experimenting with high voltage.

As we have discussed, the surfaces of a high potential terminal should be smooth and round, ideally spherical, in order to prevent electrons from flying off into space. If we intentionally direct these electrons onto a sharply pointed terminal, the density of electrons will increase to the point where they begin to jump out into the atmosphere that surrounds the terminal. As these electrons stream away, the pointed terminal moves in an opposite direction by virtue of Newton's second law of physics (ie. for every action there is an equal and opposite reaction.)

This reaction is extremely small. However, it is measurable, and can even drive a small motor (described later) or, as I have discovered, push the pointer on a standard panel meter! Since the strength of the reaction is directly related to the voltage accelerating the electrons, it is possible to construct a meter capable of measuring high voltage.

One difficulty with this meter is that, if constructed from off-the-shelf parts, no two meters will read exactly the same due to variations in the exact dimensions of the pointed terminal and the meter itself. It is necessary to use other methods to initially calibrate your meter such as comparing meter readings to voltages ascertained by the spark gap method.

When using your meter remember to keep it well clear of ground or any object that might attract the ions streaming off your high voltage generator. Anything that upsets the stream of electrons can affect the meter reading.

HIGH VOLTAGE AND SAFETY

Because storage devices can accumulate enough electrical charge to be lethal, we must discuss safety.

Most texts simply warn the experimenter to stay away from a high voltage discharge, and, of course, this is a good idea. No shock is completely safe, and people have been injured and even killed by remarkably small voltages.

Even low voltage can deliver high damaging current. A capacitor carrying just a few volts has been known to melt the end of a screwdriver that accidentally bridged its terminals!

If your experiences with electricity are anything like mine, no matter how careful you try to be, electricity will occasionally find

some clever way to zap you when you aren't looking. Because of this, you should know how to determine when any source of high voltage you are experimenting with is safe.

The U.S. Atomic Energy Commission helps us by telling us that a discharge to the human body of 10 joules is known to be hazardous to life. A discharge of a mere 1/4 joules will deliver a heavy shock.

Use the following equation for figuring the charge in Joules:

$$\text{Joules} = \frac{1}{2}CV^2$$

where:

C = Capacitance in Farads
V = Voltage in Volts

What follows (again from A. D. Moore) is a short list of capacitors and the number of kilovolts needed to store up a dangerous 10 joule charge.

microfarads (uF)	kilovolts (kV)
0.002	100
0.20	10
20	1
80	.5
320	.25
2000	.1

From this you'll see that even small capacitors can store lethal amounts of electrical charge. Just because you may be dealing with less than 10 Joules does NOT mean you are safe! Again, remember that no shock is completely safe. If you are careful and use good judgement, you will have little to fear from electricity.

Most of the generators in this book will produce more than enough power to run any of the experiments outlined directly. High voltage static electricity is safe because there is so little current available. A Van de Graaff machine moving 50 square inches of belt per second generates only one microampere. Although the voltage (the pressure behind current) can be very high, there is very little current to be accelerated. Power is the product of voltage times current. One

microampere would have to be accelerated by one million volts to be able to deliver one watt of power. With such low current levels, power levels are necessarily low and relatively safe.

If, however, small currents accelerated by high voltage are stored in a capacitor or bank of capacitors, it is possible to accumulate enough charge at high voltage that when it quickly discharges it can produce deadly levels of current. Some commercial high power static generators go as far as to present the warning "Do not attach capacitors." If you are experimenting with larger capacitors than those described, remember that it is no longer safe to verify static charges by touching terminals! Capacitors can store charges from *minutes to months* depending on the dielectric! Careless or thoughtless use can prove fatal!

Electrostatic generators are unusually safe. Most generators will produce no worse a shock than a good jolt resulting from shuffling across the carpet. However, in coupling your generators to energy storage capacitors you're moving into dangerously high voltages. Be very careful!

ENERGY STORAGE WITH THE LEYDEN JAR

A Leyden jar is simply a capacitor, that is, a device that stores electrical energy. Like all capacitors it consists of two conducting metal plates separated by an insulator. Figure 36

A brass knob such as those used on the handles of bathroom drawers is attached to an insulator, in this case, a flat piece of Lucite. You could also use cork, plastic, wax, or almost any insulator. The Lucite is cemented to the lid of a jar with a little Silicone glue. A large hole cut in the lid of the jar allows a wire to pass from the bottom of the knob to the bottom of the jar. The inside and outside of the jar are coated with a layer of aluminum foil. The foil should be worked with your fingers until it smoothly conforms to the sides of the jar. A wire is attached to the outside foil, and the entire outside is then wrapped with black tape.

To use the Leyden jar, the wire lead coming from the outside foil is attached to ground. A cold water pipe makes an excellent ground. The brass knob is connected to the output terminal of your generator.

Leyden jars can be assembled in any size, larger jars having larger capacitance. My personal favorite Leyden jar was made from a 5

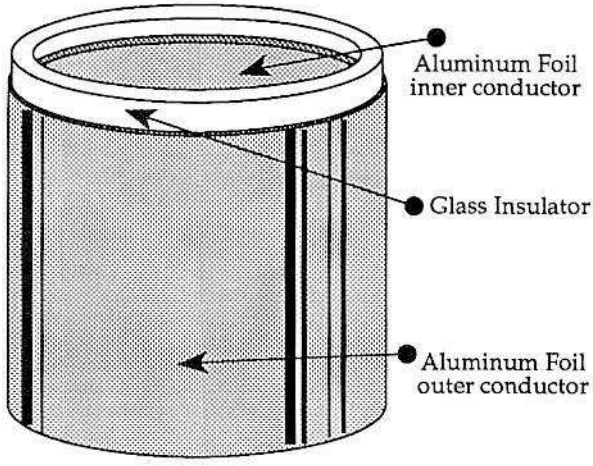

Leyden Jar & Other Capacitors
showing the
conductor-insulator-conductor layers

Figure 36

gallon white plastic pail that had contained detergent. This huge capacitor has been charged by the "Classic Van de Graaff" generator. Under good conditions it yields a very heavy, thick, multi-colored, spark of more than 4 inches accompanied by a "crack" that could be heard for some distance.

A word of warning: I made the error of touching this capacitor when I had thought it fully discharged, and though it was partially discharged at the time, I received a remarkably painful shock. This capacitor should be treated with respect. You can never be too careful.

Leyden Jar Tool

One tool you should build for your Leyden jar is a discharge rod. After experimenting with your Leyden jar, you will always want to be sure that it is fully discharged before handling or storing it. This is a very good habit to get into to avoid getting zapped when you are in a forgetful mood.

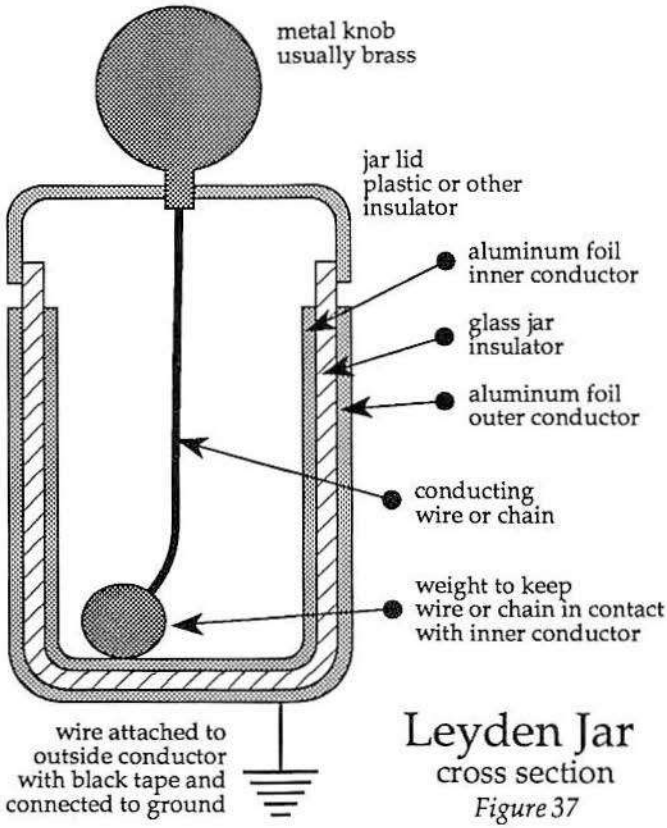

Leyden Jar
cross section
Figure 37

Electricity often seems to find some way to get into the jar without telling you. I was once shocked by a Leyden jar that was standing a few feet from a generator. It was not until I observed the generator and Leyden jar in a completely darkened room that I noticed a blue glow around a length of wire which had been acting as an aerial above the Leyden jar and had partially charged it although it was not even directly connected to the generator!

To make a discharge rod, simply take a length of heavy copper wire and bend it in a "U" shape. This "U" should cover the distance between the brass ball and the aluminum side of your Leyden jar. Attach an insulating handle to the center of the "U". Make sure this handle is long enough that a spark won't find its way along the handle

to your hand. Holding it by the plastic handle, you can bridge the gap between the brass ball and side of the Leyden jar, and safely discharge it.

Discharging a large Leyden jar with this tool can be lots of fun since a large noisy spark can be safely produced. This provides a terrific demonstration for those who doubt the power of static electricity!

THE WATER CAPACITOR

Believe it or not, ordinary water and plastic bowls can be used to form an extraordinarily high dielectric, and make a good capacitor. Figure 38. A water capacitor is nothing more than two plastic bowls set inside one another each being partially filled with tap water. Any tap water will be somewhat conductive like the metal plates of the Leyden jar because of impurities. Dissolved salts in the water form positive and negative ions which move readily. The plastic wall of the inside bowl forms the dielectric while the water in each bowl forms the electrodes. A small capacitor of this type having 53 inches of useful surface area has a capacitance of approximately 100 pF.

This type of capacitor was supposed to have been a favorite of inventor, Nikola Tesla. Tesla, it is said, would wire together banks of

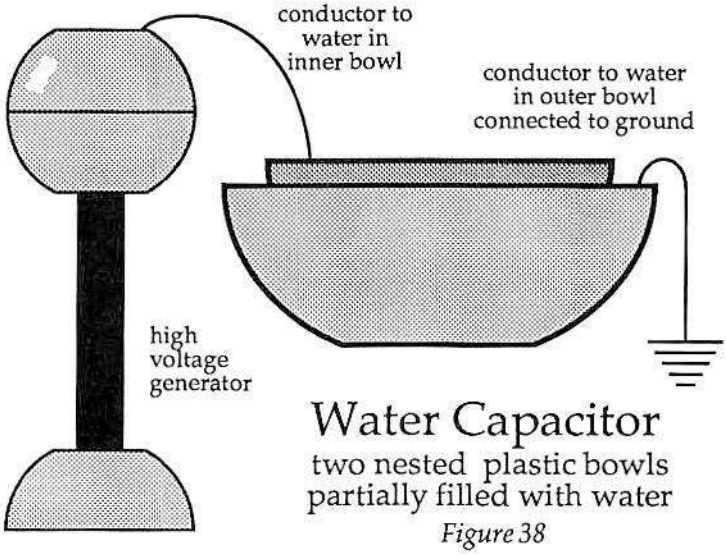

Figure 38

insulated metal trays which were filled partially with water. By connecting these water capacitors in parallel, Tesla could reach very large storage potentials with a minimum of effort.

Plate Capacitors

As you have undoubtedly gathered, all that is required for a simple capacitor to hold a charge are two conductive plates with an insulator (dielectric) in between. There are an infinite number of configurations to be experimented with. Figure 39 shows what is probably the simplest useful capacitor possible.

The largest plate capacitor I attempted during the writing of this text was one made from aluminum foil and my sliding glass door. As soon as I became interested in electrostatics, and making high voltage capacitors, I started seeing the makings of capacitors everywhere. Every day I looked at my sliding glass door, and every day it looked less like a door and more like a capacitor. Finally I broke down and

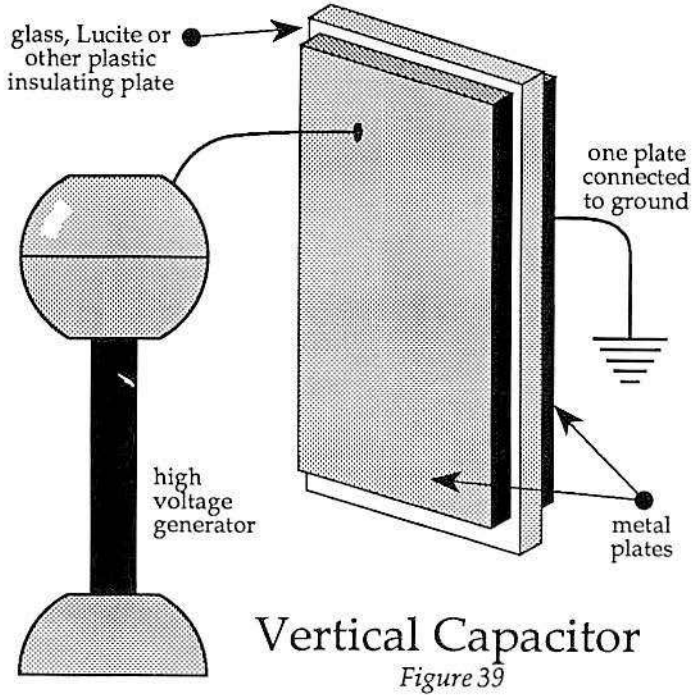

Vertical Capacitor
Figure 39

bought a large roll of aluminum foil and some tape. After a thorough cleaning, I transformed my door into a giant capacitor, by taping sheets of foil to each side of the glass. But alas! The results were disappointing. Temperature differences between the inside and outside of the glass caused condensation and all the problems that moisture brings, and the large sharp edges of the foil which I attempted to insulate bled off charge rapidly into the air. The foil did odd things such as crinkling and making sounds when charged, but failed to yield an interesting spark or hold a charge for any length of time at all.

I'm sure you'll come up with as many ideas as I do. Most recently, a television special showed the huge metal domes on buildings in Moscow square giving me visions of tremendous high potentials. As I watched, the buildings kept looking more and more like high potential tops of Van de Graaff generators and less and less like buildings. I think this high voltage stuff is affecting my mind! I think it's a good thing that I don't live in Moscow.

Calculating Capacitance

Once you begin designing and building capacitors, you will undoubtedly want to know what charges they are capable of storing. Capacitance is fairly easy to calculate, although homemade capacitors will be much less than perfect and probably perform more poorly than calculations might indicate. The following equations will give you a good idea of what can be expected from your designs.

Air is a good dielectric, and is accounted for in calculations. If we have two metal plates standing parallel to one another with air between, the equation for finding capacitance in picofarad is:

$$C = .08854 \frac{A}{S}$$

Where

A is the area of one side of one plate in square centimeters

S is the distance between plates in centimeters.

The same equation can also be revised for inches:

$$C = .2249 \frac{A}{S}$$

Note that these equations remain fairly accurate as long as the smallest dimension of the plate is ten or more times "S". In other words, the area of the plate should be much, much larger than the distance between them.

Different materials have different insulating capabilities which are reflected in their dielectric constant. Since you will want to use materials other than air as a dielectric, you will need to look up the dielectric constant from standard tables. You'll find that Plexiglas provides about four times the dielectric strength of air. A capacitor built from two conducting plates would have four times the capacitance of an air capacitor.

Another example: We might calculate from the equation above that a capacitor with a desired plate size has a capacitance of 100 pF using air as the dielectric. Using the chart below we see that if dry paper were substituted for air, the capacitance will be raised to 200 pF.

Shown below are some typical dielectrics relative to air borrowed from Attwood's book *Electric and Magnetic Fields:*

Dielectric Constant	Material
1	Air
25	Ethyl alcohol
2.5	Transformer oil
4.5 - 7	Various types of glass
6.8-8.4	Plate Glass
8.0	Window Glass
4.1-6.1	Pyrex
5.4-5.8	Bakelite
2	Dry paper
2.3	Paraffin
4	Plexiglas
2.5	Pure rubber
4	Wood

Capacitors can be connected in parallel or in series. Parallel connection increases total capacity. The total capacity is the sum of the individual capacities.

$$C_{Total} = C_1 + C_2 + C_3 + \ldots$$

For example, three capacitors having capacity of 10, 20 and 30 pF each would act as one capacitor having 60 pF when connected in parallel. The breakdown voltage of the combined capacitors is only as great as the lowest breakdown voltage of any single capacitor.

Calculating the capacitance of capacitors connected in series is more complicated, being the reciprocal of the sum of the reciprocals of the individual capacitances.

In series you would figure:

$$C_{Total} = \frac{1}{\frac{1}{C_1} + \frac{1}{C_2} + \frac{1}{C_3} + \ldots}$$

For example, three capacitors have capacitance of of 2, 4 and 4 pF. When connected in series, the total capacitance would be 1 pF. Although capacitance has decreased, the maximum working voltage has increased. If each capacitor had a maximum working voltage of 10,000 volts, the series connection would have a maximum working limit of 30,000 volts.

Power Capacitors

You can build a very powerful capacitor by creating a stack of alternating sheets of dielectric material and metal plates. On a large sheet of dielectric place a metal plate, then another sheet of dielectric, another metal plate and so on. The plates must be absolutely clean and free of even the tiniest contaminant or the capacitor will not work. To complete the capacitor connect alternating metal plates to one lead and the remaining metal plates to another.

For your first attempt, build a power capacitor with 5 sheets of dielectric and 3 metal plates. Connect the top and bottom metal plate to one lead, and the middle metal plate to another lead.

Benjamin Franklin — The Turkey Killer

Benjamin Franklin, an incurable prankster, was an ardent experimenter with electrostatic machines. Amazing as it may seem, according to his biography, the major reason Ben Franklin tried his dangerous kite experiment was that he was tired of charging his Leyden jar by hand cranking his static electricity generator. He wanted to charge it with lightning which he was able to do without getting himself killed! (Note: this method of charging a Leyden jar is not recommended for those other than "founding fathers" and other experimenters who seem to have a supernatural gift for avoiding harm. In other words, don't you try it.)

Franklin's hand-cranked static machine was large enough when coupled to Leyden jars to produce a lethal voltage. In fact, Franklin often used his static machine to kill his Thanksgiving turkey. In his own words *"... to the amazement of many... A turkey is to be killed for our dinner by electrical shock, and roasted by the electric jack, before a fire kindled by the electric bottle..."*

Franklin's pranks were not without risk. Just a short time before his famous kite experiment Franklin accidentally took the full force of his turkey killing device. He wrote, *"Being about to kill a turkey by the shock from two large glass jars, containing as much electrified fire as forty common phials, I inadvertently took the whole through my own arms and body, by receiving the fire from the united top wires with one hand while the other held a chain connected with the outside of both jars. The company present (whose talking to me, and to one another, I suppose occasioned my inattention to what I was about) say that the flash was very great and the crack as loud as a pistol; yet, my senses being instantly gone, I neither saw the one nor heard the other; nor did I feel the stroke of my hand.... I then felt what I know not well how to describe: a universal blow throughout my body from head to foot, which seemed within as well as without; after which the first thing I took notice of was a violent quick shaking of my body, which gradually remitting, my sense gradually returned.... That part of my hand and fingers that held the chain was left white, as though the blood had been driven out, and remained so eight to ten minutes after, feeling like dead flesh; and I had a numbness in my arms and the back of my neck that continued till the next morning..."*

Franklin's account of his own mishap should certainly give thought to those who do not take the dangers of static electricity seriously!

ELECTROSTATIC EXPERIMENTS

The experiments here are divided into two categories. The first group describes electrostatic experiments that can be performed for an audience. In other words they're merely for entertainment.

The second section features experiments which possible useful applications of electrostatics which are not often discussed. Many of these "useful" experiments could be or are being developed into very real, marketable industries and should be particularly interesting to the serious experimenter.

Hair Raising Experiences

Using electrostatic voltages to make a person's hair stand on end is a classic experiment every audience should see. It can be done in a number of ways. Find a subject with hair that is light and clean. With some experience you will be able to recognize the best subjects immediately. Next, convince the subject that the ominous apparatus that they have just seen throwing four inch sparks will not harm them.

You may want to explain why the experiment is perfectly safe by describing the "skin effect" of high voltages. This effect refers to the strange fact that voltages of this order travel only on the outside or "skin" of the object they pass over and will not travel through the inside of a body where they could do any harm. For alternating currents this is a true skin effect, but for direct currents there is a similar effect that occurs probably because of the repulsion of like charges rather than due to a true skin effect.

The subject should stand within reach of the generator and should be well insulated from any ground. This is accomplished by having the subject stand on a large insulator such as an overturned plastic bucket, or, as a joke, a stack of college text books since they are usually very dry. Instruct the subject to place one hand on the high potential terminal, and then turn the generator on. Remember to remind a nervous subject not to remove his hand from the terminal until the experiment is completed since removing his hand could provide a

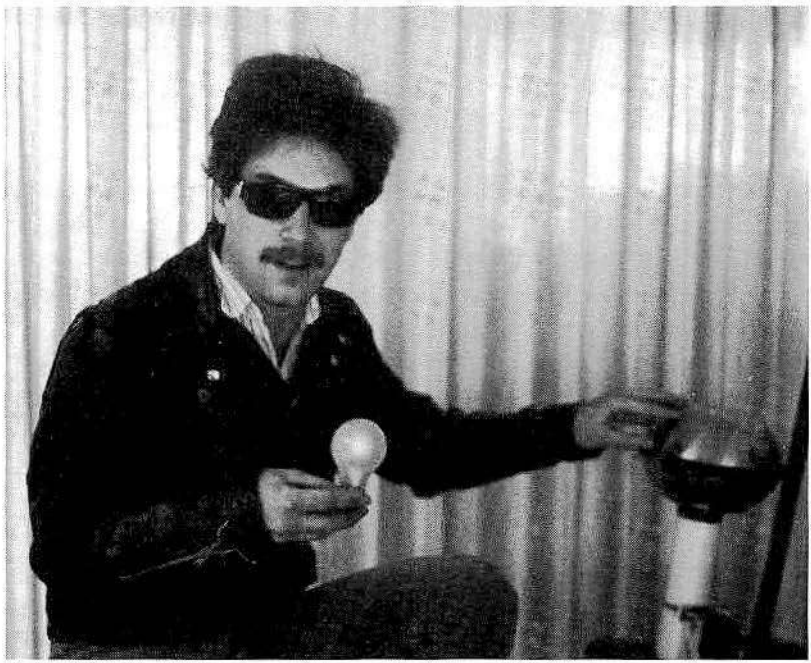

Figure 40 – The author's hair is usually flat and combed somewhat back. After a few minutes connected to a running Van de Graaff generator, and he's ready for a punk-rock concert!

shock. Depending on the output of your generator you may need to allow it to run for several minutes before your subjects hair will begin to rise. Having your subject shake his head occasionally with speed up the process.

During this whole procedure the subject will not feel the electricity passing over him other than perhaps a light tickling as his hairs stand on end. What is happening is that the subject's hair and whole body is taking on a charge from the generator. Since all of the hairs have the same charge whether it be positive or negative, and because like charges repel each other, every hair is repelled from every other hair and any nearby parts of the body. Warnings: **1) Don't use capacitors. 2) Hairspray is flammable. 3) Voltages over 500,000 are unsafe.**

Strangely enough, your generator will actually have a higher potential with someone is touching it than when it is operated alone

since it can now use the person's body as a high potential collector. The success of this experiment depends largely on the subject's hair. Some women with short frizzy hair will have their hair stand out nearly straight from their head!

After the experiment is complete, have your subject remain standing on the insulator. This will allow the charge accumulated in their body to bleed off and will reduce the possibility of a large spark occurring when they eventually touch something that is grounded.

There are a few simpler although perhaps less dramatic ways to perform the same experiment. One is to make a wig out of fuzzy yarn and to place it over the generator's high potential terminal. You can place it on the spherical terminal of a Van de Graaff generator to simulate a person's head. Some Mr. Wizard impersonators even like to put a pair of plastic sun glasses under the wig to give the generator a little character. After the generator has run for a time, the hairs of the wig will stand on end.

A very quick way to demonstrate this effect is to simply take a few hairs from an old hair brush and place them on the generator's surface. They will immediately stand on end, and will often fly off the generator all together! Many different light weight materials can be used for these type of experiments. Bits of styrofoam work extraordinarily well.

The Magic Wand

As discussed, smooth, round objects tend to hold their charges while sharp pointed objects will allow electrons to fly off in a stream sometimes referred to as an "electric wind." The effects of this wind can easily be seen. Connect a short length of wire to your high potential terminal and hold the free end of the wire with a handle made of an insulating materials such as plastic. Point the end of the wire toward a lighted candle, and observe the flame. The flame will bend mysteriously away from the invisible "electric wind." In a well darkened room with ones eyes well adjusted the "wind" may actually be visible.

Another interesting experiment is to use the wand to chase a soap bubble. Because there are two forces acting on the bubble, the outcome of the experiment may be unpredictable. One force is the charge of the generator itself which draws the bubble toward the wand. The other

force is the electric wind from the wand that pushes the bubble away. How the bubble will act is anyone's guess! It depends on which force is dominant.

A little later on we'll use this surprisingly powerful wind to create a small pinwheel motor.

Levitation

There are a number of ways that you can levitate lightweight materials using your generator. The easiest ways to demonstrate this is to simply spread very small shavings of styrofoam along the top of your generator. When the power is on, the pieces will take on the same charge as the surface of your generator and be repelled by it since like charges repel one another. The bits of styrofoam will levitate off into the air after the generator has been on a few seconds.

An entertaining experiment can be done by placing a number of tiny styrofoam balls in a short section of clear glass or plastic tubing about 2 1/2 inches in diameter and a few inches in length setting on your high potential terminal. Cover the top of the tubing with a metal plate, and connect it to ground. When your generator is turned on, the balls become charged and levitate to the top of the plastic tube. When they touch the metal plate at the top of the tube they lose their charge to ground and fall back to the generator again. The balls will oscillate between the ends of the tube until the generator is shut off. You should coat these balls with a conductive paint for a more complete charge transfer.

If you enjoy reproducing electrostatic experiments as they were originally done, you might want to try making your own old-fashioned pith balls instead of using styrofoam. Pith balls were used for these experiment before modern products like styrofoam were available. Pith balls are made by removing, shaping, and drying the insides of certain plants such as dandelions. Details can be found in old physics textbooks before 1900. I'll stick with good old styrofoam.

Place larger bits of styrofoam on your generator, and turn your generator on while touching the bits with your hand. The styrofoam will assume that you are ground and that your generator is a high voltage source. One side of the styrofoam will be charged one way, and the other side of the styrofoam the other. After removing your

hand, a number of things can happen. The styrofoam may flip over and be stuck to your generator like a magnet. The styrofoam may stick to your hand like a magnet. Or you may find the styrofoam floating on end as the hair did in the last experiment.

An interesting trick can be performed by passing your hand over the styrofoam remaining on your generator terminal. As you do so, the electrical charges in the foam and in your hand will cause the styrofoam to jump about.

I have meant for some time to place a metal plate on a table underneath a table cloth and to energize that plate from a hidden electrostatic machine. I could then sit at the table and "mysteriously" move light weight objects such as bits of hair, sawdust, styrofoam or other similar materials around the table simply by passing my hands over them. I think this would make a very convincing illusion of mental telekinesis. Try it.

Lighting Without Wires

If you or your friends doubt the power of your generator, have on hand a supply of Ne2 neon bulbs which are available for less than a dollar at any electronics store. Remind those onlooking that it takes at least 70 volts to light a neon bulb. Hold one lead of the neon bulb in your hand and move the bulb toward your generator. Within inches, or even feet, the bulb will flicker or light. I have seen some experimenters hold the bulb in their mouth while reaching toward a generator with their hand. Seeing a 70 volt bulb light in a persons mouth with no wires attached is an impressive demonstration.

You may want to try large florescent bulbs as well. When my generator has been running I have seen flickers in the florescent lights in the ceiling of my home. These bulbs are many feet above the top of my generator yet respond well in a darkened room.

Perpetual Motion

Anything that people assume can't be done interests me. Many of the greatest inventions of all time would never have come into being if their inventors hadn't at one point been told that it couldn't be done. Currently, perpetual motion qualifies as such.

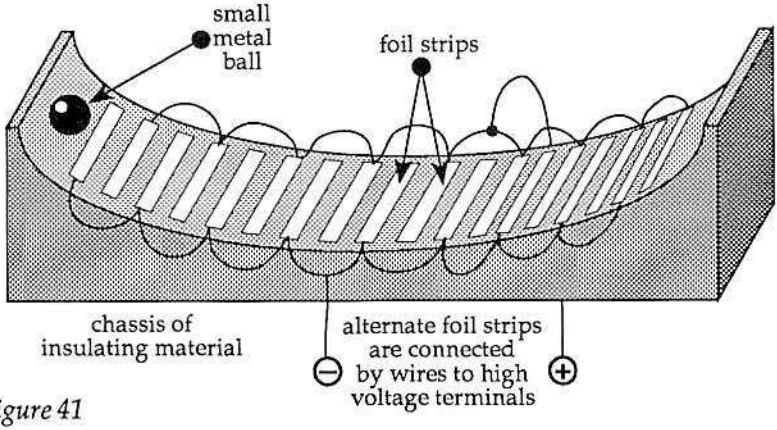

Figure 41

"Perpetual Motion"

The following device doesn't really qualify as perpetual motion, but it appears to be! Figure Pl shows the device. The idea is simple. A few light-weight conductive balls are released onto a U-shaped track on which the balls rock back and forth. It is normal to assume that the balls will slowly lose their energy and come to a stop in the center of the track. Instead, because of the electrodes in the track,the balls continue back and forth indefinitely and even pick up some speed along the way.

What has happened is that you have constructed simple electrostatic motor. As the balls pass over the foil strips they pick up the charge from that strip. Having the same charge as the strip, they are repelled by that strip and are simultaneously attracted to the next strip which has a dissimilar charge. Inertia will cause the balls to roll over the dissimilarly charged strip and on to the next. The electrostatic forces replace the energy lost in rolling friction. In this manner the balls will remain in motion for as long as power is supplied.

If you wish to really complete the illusion given by this device you will naturally want to hide the foil strips from view. To do this you could either use a conductive material other than foil that blends into the background, or, if your generator is powerful enough, you could probably bury the foil strips under the ramp material and still transfer a sufficient charge.

Trick Gun

We know that like charges repel one another. This has been demonstrated with the 'hair' experiments and others. What would happen if we introduced a charge into a liquid, and then shot that liquid out in a stream? We can find out with the use of a squirt gun. Purchase an inexpensive water gun that stores its water in the handle. Drill a small hole into the handle and twist a brass sheet metal screw into the hole. You may want to put a little Silicone glue around the top of the screw to make sure that this point will not leak when the gun is later filled with water. The brass screw provides electrical contact between your hand and the water.

Fill the gun with water, and pump out a few squirts. The water will come out in its customary straight stream probably covering the length of the room. Then stand on an insulator and charge yourself up as described earlier. When you squeeze the trigger, a stream of scattered droplets will be ejected only a few feet. What has happened is that all water droplets have a similar charge so each droplet is repelled by every other droplet. Other than being just an interesting way to get an unsuspecting friend wet, this mechanism can be applied anywhere that a liquid must be atomized.

I've wondered about making an electrostatic chamber on the carburetor of my car to see if better atomization of the fuel would result in better combustion. But first I need to check into the dangers of a spark occurring! I don't really want to blow myself up!

An Ion Motor

There are several different electrostatic motors that can be run by your generator, the simplest being an ion motor. You can make one by simply bending a length of light weight wire into a "Z". At the center of the "Z" shape, place a conductive bearing. Nothing fancy is required. In fact, just looping the center of the Z around an axle may work. Make sure however, that the Z will rotate very easily. A simple schematic of the ion motor can be seen in figure 42.

When power is applied to ion motor electrons stream off the pointed ends of the wire creating an electric wind. The force of the wind pushes the wire in the opposite direction. Again, for every action

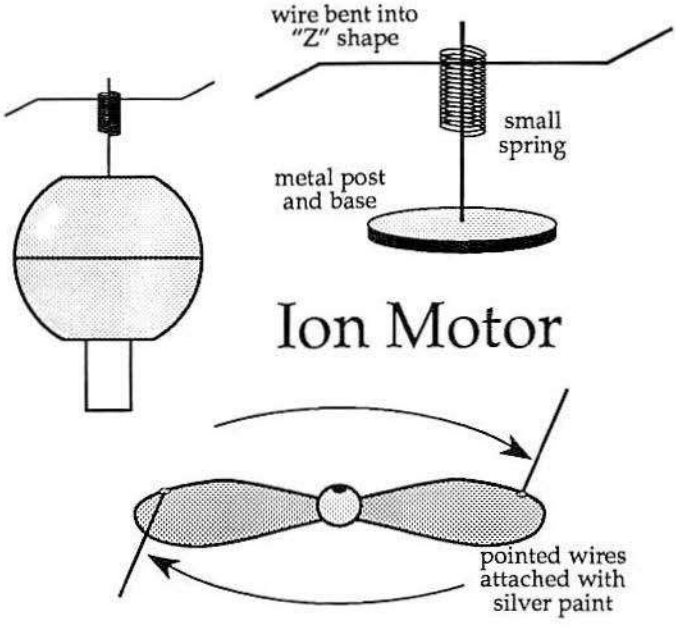

Plastic Toy Airplane Propellor
Figure 42

there is an equal and opposite reaction. If your rotor is well balanced and the bearing friction is very low, your motor can and will achieve speeds of several thousands revolutions per minute! Of course, the torque generated by this motor will be very, very small. Nevertheless, it is fascinating to watch a motor propelled by a stream of electrons!

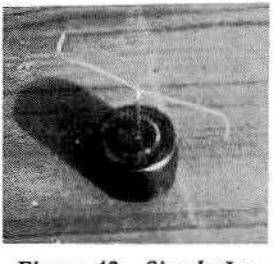

Figure 43 –Simple Ion Motor

Although the thrust of this motor is very small, I am certainly not the type of experimenter to let this hard-earned stream of electrons get away without doing some useful work along the way. I have attached one of my pinwheel motors to a tiny plastic airplane propeller as shown to blow a little air cool air my way. I think this is probably one of the few fans that I know of that must be connected to 100,000 volts or so to operate!

Another thought that I had for this fan was to drive it with a negative charge. Negative ions are thought to have many health benefits, and to cut down on pollutants in the air. Negative ions apparently attach themselves to specks of airborne dust and cause them to fall from the air. There are a number of negative ion generators being marketed for this purpose. I thought that a spinning propeller of this sort would be an absolutely outstanding way of both distributing and producing negative electrons in a room environment.

Ion motors also have serious applications in space travel. The Soviets have used ion motors to propel some of their long range probes. The problem with these motors is that the thrust is very small. However, ion motors offer at least two enormous advantages. First, they can be powered by a nuclear or solar electrical source which can provide power far longer than conventional chemical rockets. Second, an ion motor can provide higher velocity thrust than current chemical rockets because the nozzle velocity of a rocket is limited by the internal pressures that can be safely generated inside the rocket motor. An efficient ion motor can accelerate ions to speeds approaching the speed of light! Although the thrust is small, over time the space craft could itself approach the speed of light, at least, in theory.

A few tips for getting the best operation out of your ion motor—Make sure that your rotor is well balanced especially if you want your motor to be self-starting. Your rotor should spin easily for several seconds when tapped lightly by your finger. The more freely your rotor can spin, the faster it will revolve. The bearing used in a radiometer would make an excellent ion motor bearing.

Run your generator/motor in an area free of objects that might provide sources of ground. My first ion motor was well built and carefully balanced, yet it refused to spin. When I reached down to give it a tap to get it started, it refused to move. In fact it felt as though it were being held in place by a magnet. It was then that I realized that one of the arms of the rotor must have been attracted to an object with an opposite charge. That object turned out to be me! When I moved a short distance away, the ion motor sprang to life and immediately whirled up to several hundred RPM.

For this motor, voltage is more important than current. The motor will run and do useful work on currents under a microampere. Electrostatic motors have been run with currents of less than .001

microamperes, and have even from the earth's electrical charge itself.

Another interesting use that I have found for an ion motor is that of a primitive high voltage meter. The higher the voltage, the greater the thrust from the motor. This may be used to move a pointer such as in a panel meter or may be used simply to a relative indication of voltage.

I like to place a small ion motor on top of my Van de Graaff generator when I am charging capacitors. When the capacitors are charging, the motor will not move since the charge is being bled off from the generator to the capacitors. When the capacitors are fully charged, they stop drawing current from the generator. The terminal voltage rises, and the motor begins to spin. This is a very useful application of the ion motor since it is usually impossible to tell when a capacitor is fully charged any other way.

I am told that ion motors have been used in scientific toys such as those that can influence a balsa airplane in flight. Gustave LeBon's electrified rocket was a small aluminum foil rocket that could actually fly on electrostatic forces (Patent No. 2,018,585). I have not seen these devices, but they sound like something worth investigating.
Experimenting with "micro" sources of power can bring out the engineer in everyone.

An Ion Blower

The last experiment uses a stream of ions to propel a small rotor. Since in essence what we really have is a little jet engine, why not put our blower into a tube and see if we can pull a little air along with it. Figure 44 shows one possible configuration.

One end of a small, clear tube such of glass, Plexiglas, or other insulating material is fitted with a sharp metal point. A metal screen covers the other end. Electrons reach a high density at the metal point, break free into the air, and stream through the tube to the screen at the far end. As they move rapidly through the tube, they pull some of the air inside the tube with them. Obviously, a blower of this type has very low efficiency probably in the neighborhood of 1% under ideal conditions, Nevertheless, a puff of smoke at the intake side of the tube will easily be drawn through.

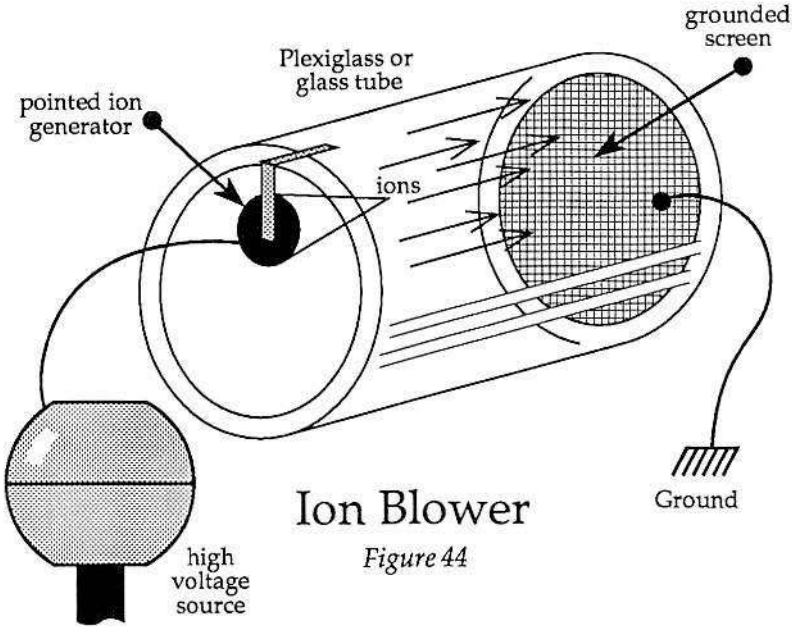

Ion Blower

Figure 44

Clearing The Air

Before moving on, here's another interesting smoke experiment you can try. Get a clear plastic or glass jar having no metal parts. Drive a pointed nail through the center of the lid. Blow a little smoke into the jar, and seal the jar with the lid. Next, connect the head of the nail to the output terminal of one of your high voltage generators.

As charge is applied to the smoke, it will begin to swirl. Soon the smoke will seem to disappear, although in reality it has been redistributed along the sides of the jar.

Variations of this effect are used in industry to place very fine films on surfaces. Similar electrostatic methods are being used to make sandpaper. When the tiny metallic abrasive particle are distributed along the surface of the sand paper they are given a charge that causes them to stand on end creating sandpaper with a better abrasive action.

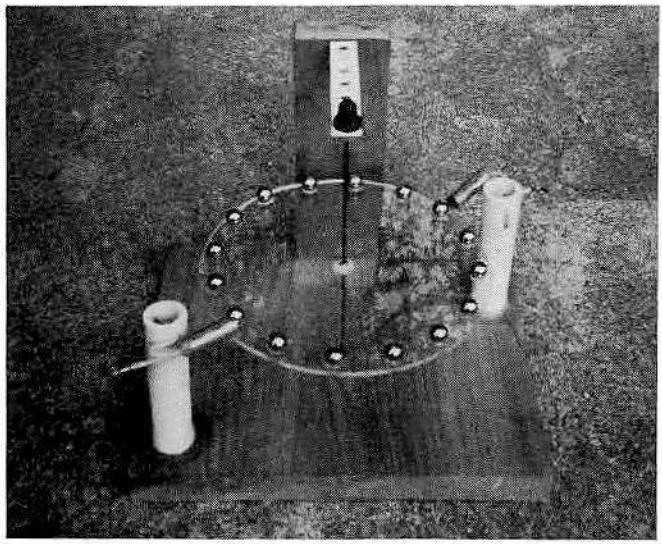

Figure 45 - Franklin Motor – Using large sling-shot balls and a simple Lucite disk, this little motor quickly speeds to over 600 rpm on less than 1 microampere of current!

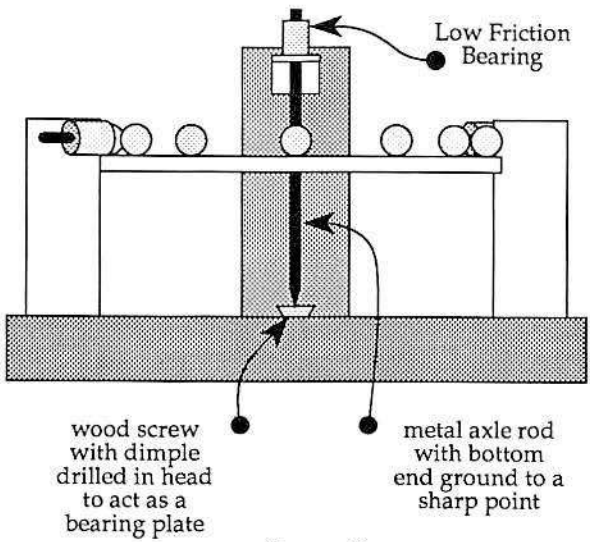

Figure 46

Franklin Motor

Front View

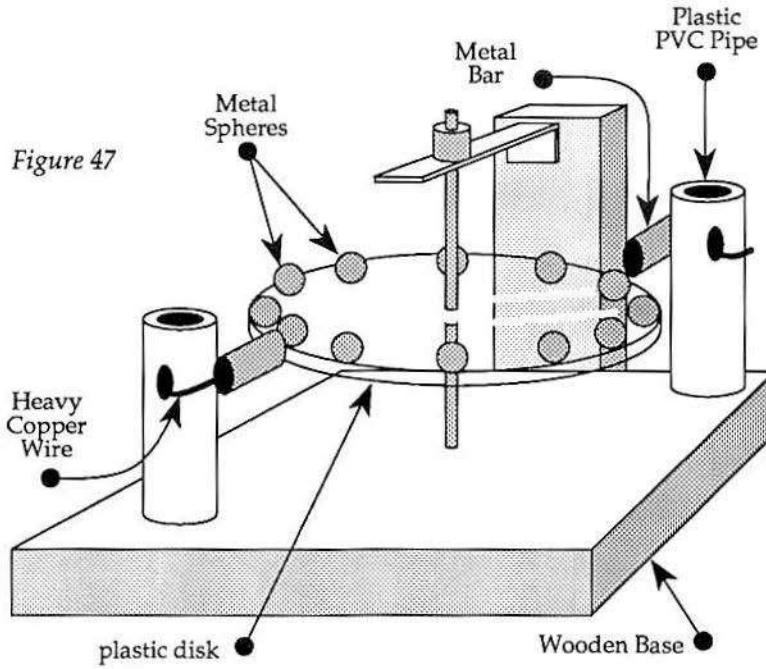

Figure 47

Franklin Motor

THE FRANKLIN ELECTROSTATIC MOTOR

The Franklin motor, named after its inventor Benjamin Franklin, is often said to be the first electric motor ever made. Its construction is simple, and, in fact, it is very similar in operation to the Dirod generator described earlier which can be run as a motor although inefficiently. Figure 47 shows the basic Franklin motor.

A series of lightweight spheres is glued in place along the outside of an insulating disk of Plexiglas, glass, etc. As these spheres rotate, they pass through the corona emanating from a highly charged high potential terminal at each side of the disk. One terminal is charged negatively and the other positively. As a sphere passes a terminal, it picks up a charge that will be attracted to other terminal causing the whole assembly to turn until the high voltage is removed.

One modification that you might like to experiment with is to

make the Franklin motor self-starting. This can be accomplished by adding points on the high potential sources to create an electric wind that gives the spheres just enough of a nudge to start the rotor revolving.

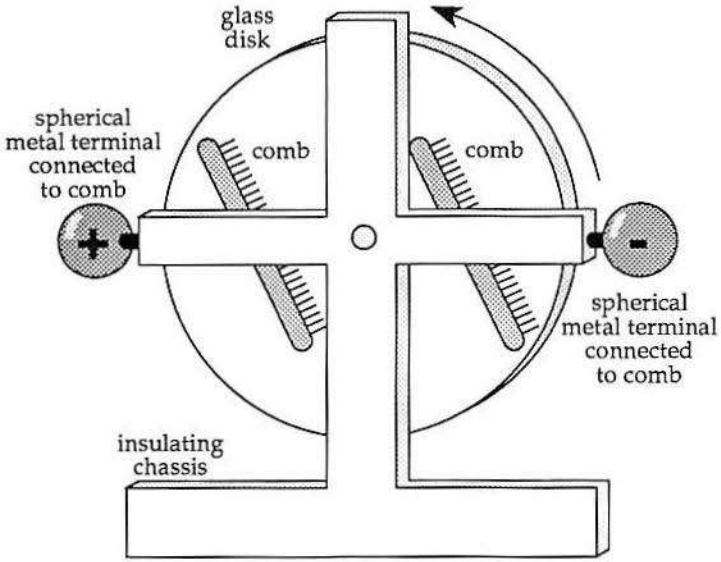

Corona Motor
schematic diagram
Figure 48

Poggendorff's Corona Motor

Franklin's motor works by charging a series of spheres as they pass by alternating high potentials. It is also possible to alternately charge an insulating surface as it passes near high potential terminals. Plexiglas, glass, and probably other materials will work. A drawing of Poggendorff's motor is shown in figure 48.

Here is how it works. Notice that there are two sets of brushes or combs with sharply pointed ends mounted at an angle. One brush sprays a negative charge onto the disk and the other a positive charge. As the disk continues to revolve, the charges on its surface find themselves attracted to the entire oppositely charged comb – not just

the tiny spray points. It is important that the brushes be mounted at an angle, so that charges on the disk may be attracted to the comb of opposite polarity before they are replaced with an opposite charge as the disk rotates under the points of the comb. Understanding how a motor like this works is simple. Getting one balanced well enough to be self-starting and smoothly running takes quite a bit of patience. It is nonetheless an exciting and interesting project.

Atmospheric Electricity

The earth itself is a huge electrostatic generator. In the air at any time there are some 200 volts of electricity encircling you all of the time. The reason that we aren't being zapped all the time is simply that we are all at roughly the same potential. That is we all have the same level of charge, so, the electricity has no reason to move from one point to another.

Figure 49

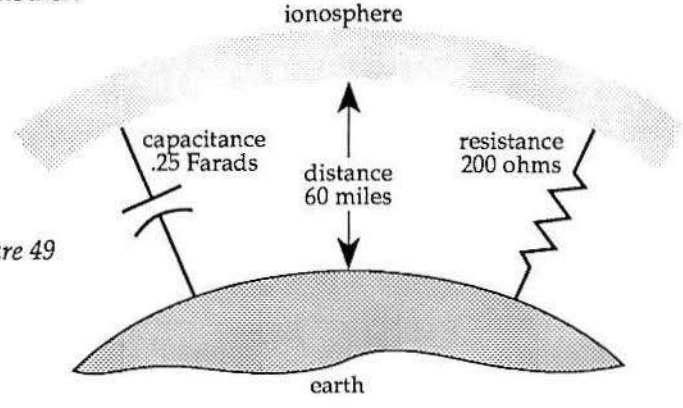

Earth's Atmosphere
electrical parameters

Between the earth and the electrically conductive ionosphere, both of which store electrical charge, exists an electrical potential. The same sort of buildup exists between clouds and the earth. When the potential builds to a level great enough, the air ionizes, loses its insulating capacity and becomes an excellent conductor. The result is a huge arc of static electricity we call lightning. As current flows between the cloud and the earth, the potential is reduced until the arc

can no longer be sustained, and the lightning bolt is extinguished. It fascinates me to think that I live on one of two highly charged electrodes.

As an electrostatic generator the earth is fairly impressive. Between two and six thousand thunderstorms are in progress at any one time. Worldwide, a hundred bolts of lightning strike the earth every second. It is estimated that this gives the earth a high voltage potential of approximately 360,000 volts between ground and ionosphere with an average lightning bolt conducting 1800 amperes. The density of the electric field decreases as altitude increases. Near the earth's surface, however, the field is estimated to be approximately 100 volts per yard of height.

I say that the earth is fairly impressive because for all its size it is limited to these voltages by the fact that the atmosphere is relatively conductive having a resistance of approximately 200 Ohms. This is a relatively low resistance which quickly bleeds away charges.

Although it can take a significant amount of time depending on weather conditions, any conductive material insulated from ground can acquire charge from the surrounding air, and become charged to a high potential. Although the charge accumulated is usually negative in polarity, thunderstorms and other atmospheric conditions may create a positive potential with respect to ground. Radio antennas and flag poles insulated from ground have been known to throw hefty sparks and even start fires.

Plugging In To The Earth's Charge

If you're as curious as I am, you're asking yourself, "Can I tap into this charge?" The answer is yes! The first order of business is to measure and verify that a charge is present. If you are a skeptic like me, you've "gotta see that needle move" before you are going to believe there is something there!

The best antenna for capturing atmospheric charge is a metal structure, insulated from ground, pointing straight up into the air. The simplest, and probably easiest way to accomplish this is to simply attach a length of very light, bare, copper wire to a large helium balloon. This can be dangerous! Remember to avoid power lines and airports if you plan to launch such an energy-gathering balloon!

Having your bare copper wire come in contact with a high-tension power line is not a pleasant way to die! Thunderstorms are extremely dangerous. (Ben Franklin was lucky to have survived his experiment.)

The bottom of the wire should be attached to a high quality insulator well above ground. Attach one lead of a extremely sensitive meter to ground. Occasionally attach the other lead to the vertical metal conductor. Be careful! Do not take for granted that the potential will be harmless! If left unchecked it could easily reach a level that will bite you. You may find that it can take an hour or more to build up a significant charge, however.

At one time I tried using a kite flown with bare copper wire but had mixed results. I experienced significant difficulty with the wire kinking as I let it out and reeled it in, in response to changing winds.

Another time I hooked a diode into the line and got surprising voltages, but I had been fooled. The diode and coil in the meter had made a primitive crystal radio. I was extracting power from the atmosphere that had been placed there by radio broadcasting stations. Although this is not static electricity, it is nonetheless interesting because it is a demonstration of wireless transmission of power that Tesla was trying to perfect.

An antenna of this type has been used quite adequately to run a corona motor from the natural potential that exists between the earth and its atmosphere! A motor of this type must be extremely well built having great sensitivity and very low friction bearings. I have seen such a motor run, but I have not run one of my motors from this charge.

Because of weather, it can take a long time to build the potential up to a level capable of doing useful work such as moving a sensitive meter or a small corona motor. Several methods have been devised to speed up the charging process. Early experiments devised by Lord Kelvin used an insulated metal tank filled with water suspended above the ground constructed in such a way so as to allow a steady stream of water droplets to reach the ground. Appropriately, he called the setup a "water dropper." He reasoned that the surface of each water drop would be an extension of the surface of the water in the tank at the moment it dropped away. As it did, the drop would carry charges away with it. This continues until equilibrium was reached between the tank and the air.

Using this same idea, charging time can also be reduced by

spraying a fine mist of water along a bare copper wire a hundred feet or more in length which is insulated from and suspended above ground. The falling water droplets can help to charge this wire to a measurable level in less than a minute's time.

Another method of speeding up the charging process is to increase the number of ions in the vicinity of the wire itself. A flame applied to the wire will increase the number of ions in the area of the flame and can bring a wire up to the same potential as the air around it in a matter of seconds. To accomplish this easily, wrap the wire with a flammable substance such as string or paper soaked in lead nitrate, and ignite it. It is also possible to get good results by simply waving a torch lightly across the wire.

In Conclusion

I hope that you will enjoy experimenting with electrostatics as much as I have! I find few subjects more fascinating than high voltage and its generation. As a technically minded person, you will undoubtedly see many improvements that can be made in my designs. I know that this is true because at times it seemed I might never complete this text because there was always one more improvement to make and one more experiment to try. No doubt, you will conceive of dozens of new ways to apply the basic principles of electrostatics. Like all experimentation, every change, every test, every improvement will suggest many more questions to be answered and new improvements to be made. You'll probably devise many new inventions!

Electrostatics is also a subject that everyone is absolutely fascinated by – even those who can't change flashlight batteries,. When I was experimenting with different friction generator materials, I purchased quite a number of little swatches of material from a local fabric store. The young ladies working in the store demanded to know what the fabric was for, and, were so fascinated by the idea of generating a spark that I emerged from the store piled high with swatches of material which they insisted be tried on the generator.

My own mother, who despises anything technical, shocked me to no end by demanding that I explain to her the workings of the atom immediately after seeing the classic Van De Graaff in operation. I do not think anyone can watch a powerful Van De Graaff generator at

work and not be curious about the forces at work. (And you and I will always want control of those forces!)

So dig in, get to work! Mysteries await!

SELECTED BIBLIOGRAPHY

B.I. Bleaney & B. Bleaney, *Electricity and Magnetism.* 1957 p.762

Tricker, R.A.R., *The Contributions of Faraday & Maxwell to Electrical Science.* 1966

Moore, Arthur Dearth, *Electrostatics.* 1968 p.240

Simon and Schuster, *The Way Things Work.* 1967 p.590

R.A. Ford, *Tesla Coil Secrets.* 1985 p.74

Lodge, Oliver, Sir, *The Nature and Properties of Negative Electricity.* 1906

Adams, Charles K., *Nature's Electricity.* 1987 p.147

Sootin, Harry, *Experiments With Static Electricity.* 1969 p.85

Van Doren, Carl, *Benjamin Franklin.* 1938 p.845

Ammen, C. W., *The Electroplater's Handbook,* 1986, p. 213

ADDENDUM

Electroplating High Potential Terminals

As you have certainly realized by now, a tremendous amount of your generator's efficiency rests in the quality of your high potential terminal and in your ability to effectively store the charges produced. I think you will be very happy with the performance of any of the classic generators and storage devices described earlier. However, for those of you seeking to go beyond these boundaries of performance, I'd like to let you in on new area of experimentation: electroplating.

Electroplating is simply a process wherein metal salts such as copper sulfate or nickel ammonium sulfate dissolved in an acidic aqueous solution can be deposited as elemental metal on conductor by applying an electrical current. This means simply that any conductive object can be covered through the process of electrodeposition with a layer of metal!

Since electrostatic charges can be distributed quite nicely on even very thin conductive surfaces, this is a perfect system for making a flawless Leyden jar or a huge high potential terminal. I am currently working on creating very large, near-perfect high potential terminals by plating large plastic globes sold in many lighting stores for under $15.00!

Anything can be plated – plastic, glass, pvc, etc. The only trick is in making their surface conductive initially so that a current can be applied.

The basic procedure for producing a perfect Leyden jar is as follows.

Begin by making the glass jar extremely clean. No fingerprints, water, or oil of any kind can remain. Use masking tape to cover the top 20% of the jar to prevent plating in this area and to preserve a well-proportioned jar. Paint the exposed glass with a resin such as white shellac thinned with denatured alcohol, if necessary. I've even used a spray lacquer.

From here there are several routes that you can take. The easiest method is to take a finely powered metal such as iron or aluminum (something around 400 mesh) and sprinkle it on the sticky, wet shellac. Since these finely powdered metals will float in the air much like

talcum powder, I usually put the metal powder and jar in a box and shake the two around around. Remember! These metals SHOULD NOT BE INHALED! Wear a safety mask, and if working with heavy metals, wearing protective clothing is a good idea. The metal powder should create a beautiful, even, light coating over the painted surface of the jar. Allow the paint to fully dry, and repeat the procedure on the inside of the jar. This is a little trickier, but not impossible.

At this point you can actually stop, and use the jar quite successfully. The tiny sandpaper edges of this powder metal coating will bleed off a stored charge when the jar is not in use. This makes a good natural safety feature.

The only drawback to the powdered-metal approach is that if you choose to copper plate it, the copper plating will be just as bumpy as the powdered metal surface itself. As a result, this method will always allow some leakage.

Another simple method of making the jar conductive is to cover the shellac with powdered graphite. This can be rubbed smoothly onto the surface when the shellac is partially dry and will provide a smoother surface which in turn will produce smoother plating. On the other hand, graphite surfaces often require considerably longer plating times and the process is less reliable.

Although both of the above methods work well and have merits, the very best way to make the jar or any non-conductor conductive is to allow the shellac to dry completely, then paint or dip it in a solution of

1/2	ounce	silver nitrate
4	ounces	distilled water
6	ounces	alcohol

While this is still wet, suspend the jar inside a larger jar or other acid-proof non-metallic vessel, and place a few lumps of potassium sulfite or iron pyrite in the bottom of the larger jar. Cover this with a solution made up of one part sulfuric acid and eight parts distilled water, and close the lid. You now have a jar covered with silver nitrate solution hanging above the potassium sulfite-acid solution in a sealed vessel. This will produce hydrogen sulfide fumes that will convert the nitrate to a sulfide which is a conductive coating for you jar. Within a

A glass jar for the Leyden jar capacitor is selected and thoroughly cleaned.

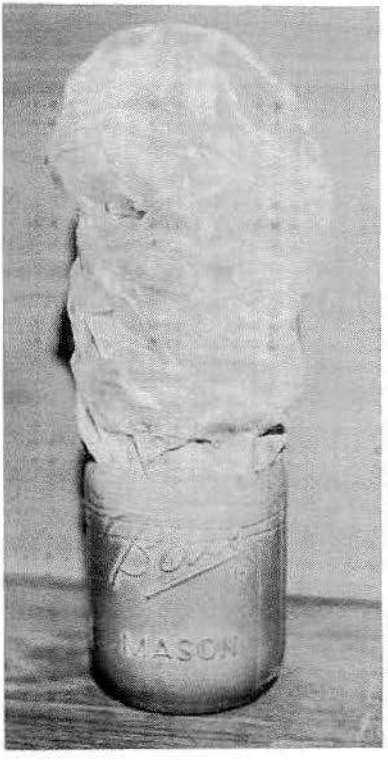

The jar is masked off and coated with conductive graphite.

few minutes the chemical reaction will stop, and your jar will be ready to be plated.

Now that the outside of the jar has been made conductive, it can easily be plated with copper. In an appropriate acid-proof vessel, make a solution of

25	ounces copper sulfate
6	ounces sulfuric acid
1	gallon distilled water

Use warm water when mixing to dissolve the copper sulfate more quickly. Do not allow this solution to touch your skin or clothes.

After a few hours, the deposit of copper is easily seen.

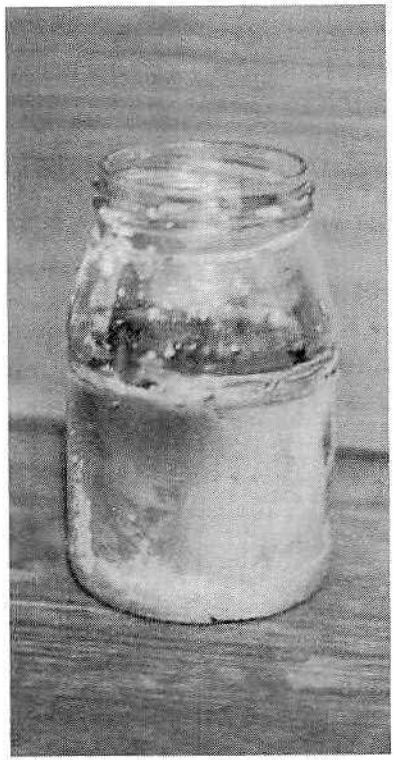

The plated jar is ready to be cleaned up and put into use.

Attach a wire from the negative lead of a 2 to 5 volt battery or transformer to the conductive part of your jar. A rubber band works well for this. Immerse the portion of your jar to be plated in the copper sulfate solution. Finally, attach a wire from the positive lead of your power source to a copper electrode having a large surface area such as a thin copper sheet. Set this electrode in your solution.

All that you have to do now is watch the jar as the plating takes place. Be sure you keep the solution warm, or the plating will proceed very slowly. I like a thick copper coat and usually allow my plating to take place overnight. However in a fairly short period of time you should see a reddish copper coating forming on the outside of your jar! Simply repeat this process for the inside of your jar.

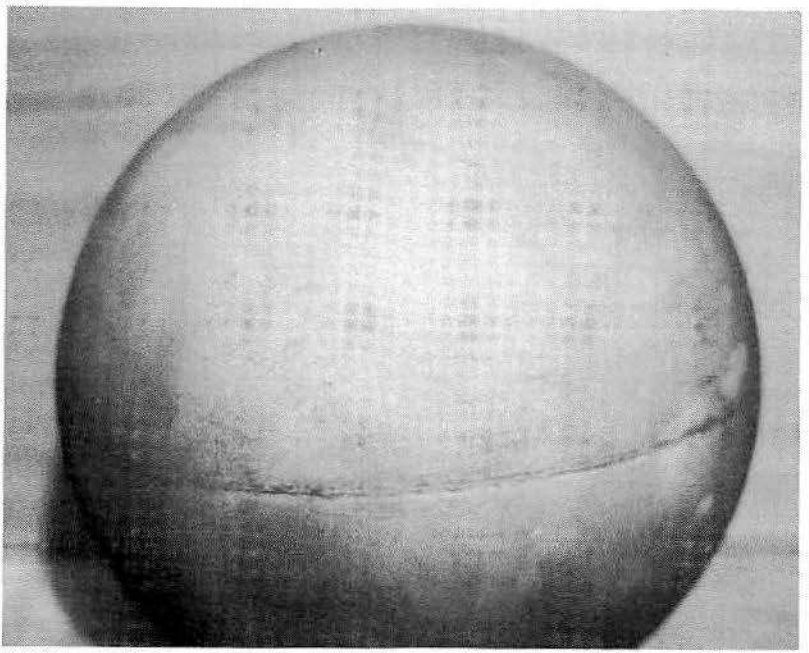

A twelve inch plastic sphere has been coated with graphite and is ready to be plated.

Very large spheres and other shapes can also be plated by scaling up this process. I have seen many inexpensive large glass and plastic globes since I began experimenting with this process that would lend themselves to this technique. For more information, refer to books on electroplating and electroforming that can give you advanced details on plating superior finishes.

As you can see, simple electroplating can make possible a vast number of new shapes and designs for high voltage terminals!

28th June 2013 Battery Free Loop FM Crystal Radio

Battery Free Loop FM Radio using an 8-mm diameter copper tube.

This FM radio runs without battery and you can listen to FM radio by just placing this close to your window.
If reception is not good, you can attach an external FM antenna (or with antenna amplifier), to the Loop at the point 1/3 of the loop close to the ground.

Parts you will need:
A Diode that works in high frequency (200Mhz or above, e.g. AA112, 1N34A, 1N48, Iss86 or Iss106.
A 0-12 pf AIR Variable capacitor - you can get a 0-22pf one, then remove all the copper plates and leave just 4.
50pf and 180pf fixed ceramic capacitor
100K 1/4W resistor
33uH Choke coil.
3.5mm mini headphone jack
A high impedance 4K Ohm earphone or a crystal earphone.
Some wires.

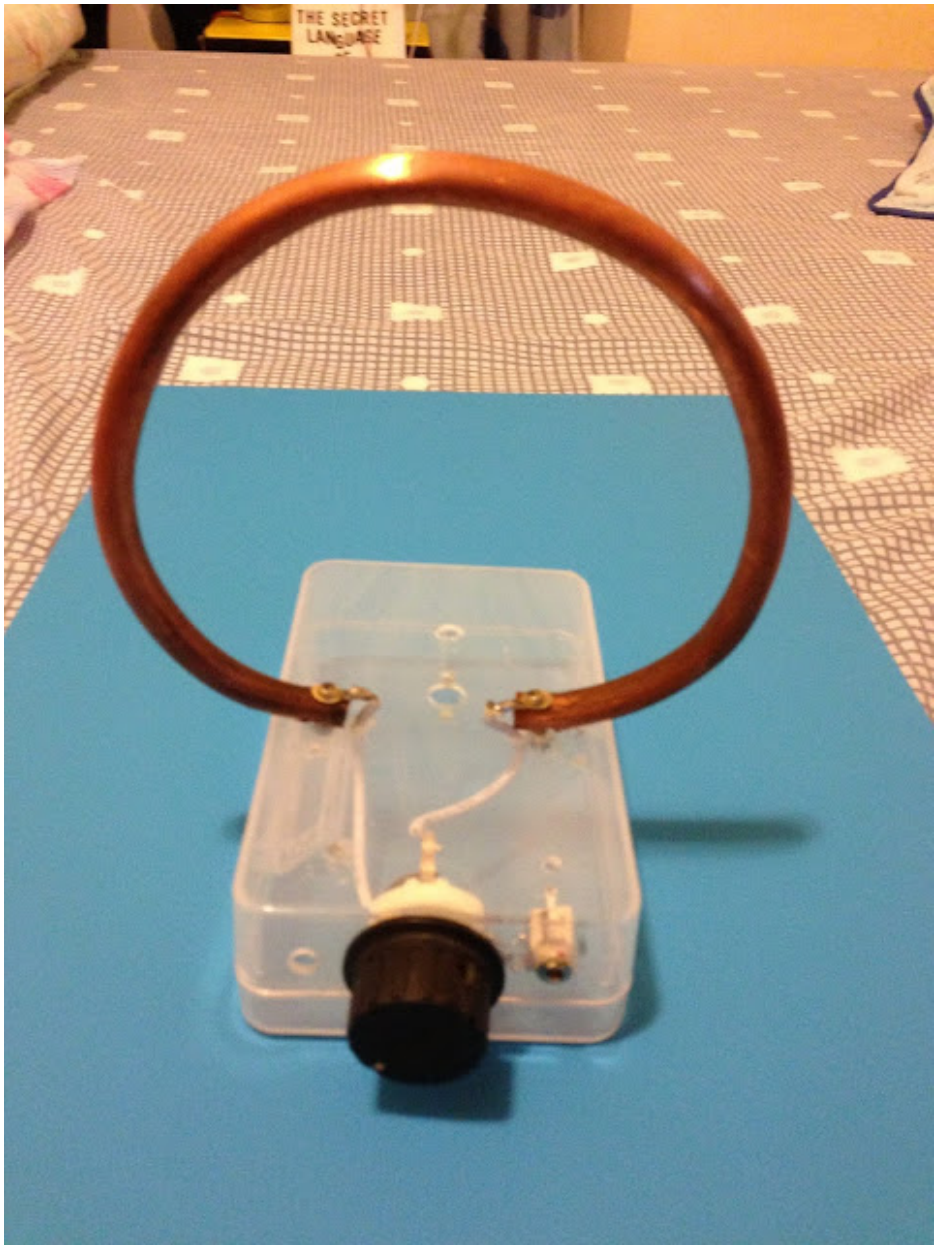

[http://2.bp.blogspot.com/-1QLVTR6aixI/Uc2EVLvYurI/AAAAAAAABLU/FHVgksSmYt0/s1600/IMG_2527.JPG]

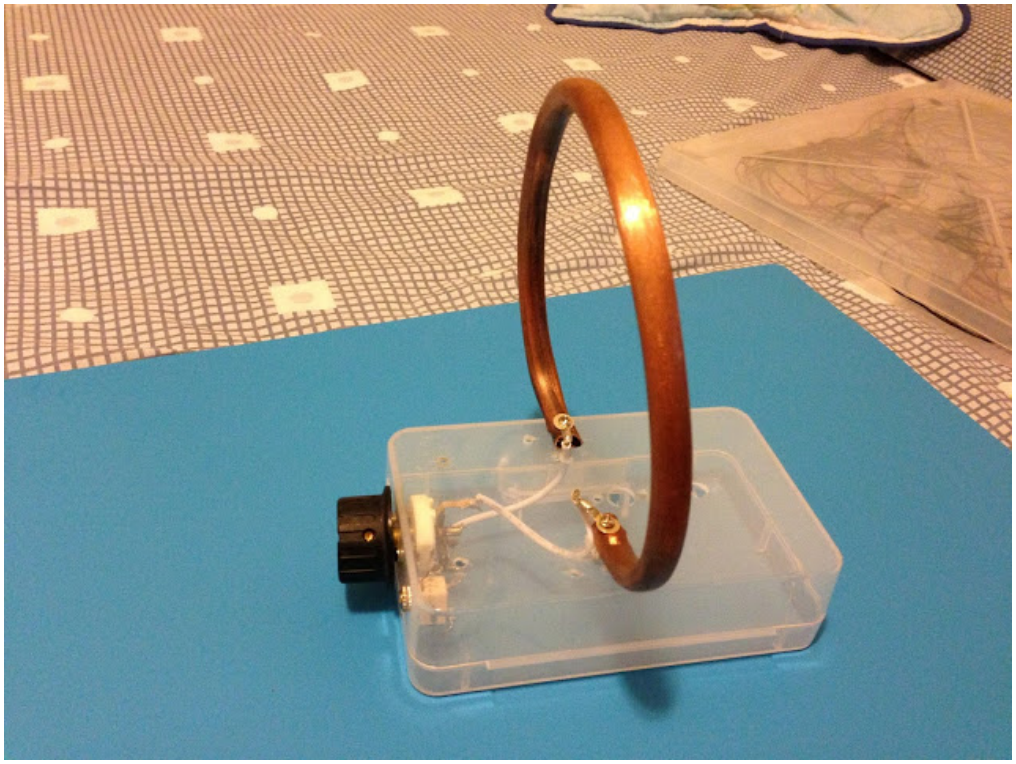

[http://1.bp.blogspot.com/-1DHVXlxHjMY/Uc2EVCFGUkI/AAAAAAAABLk/K03mBQ-9OXM/s1600/IMG_2528.JPG]

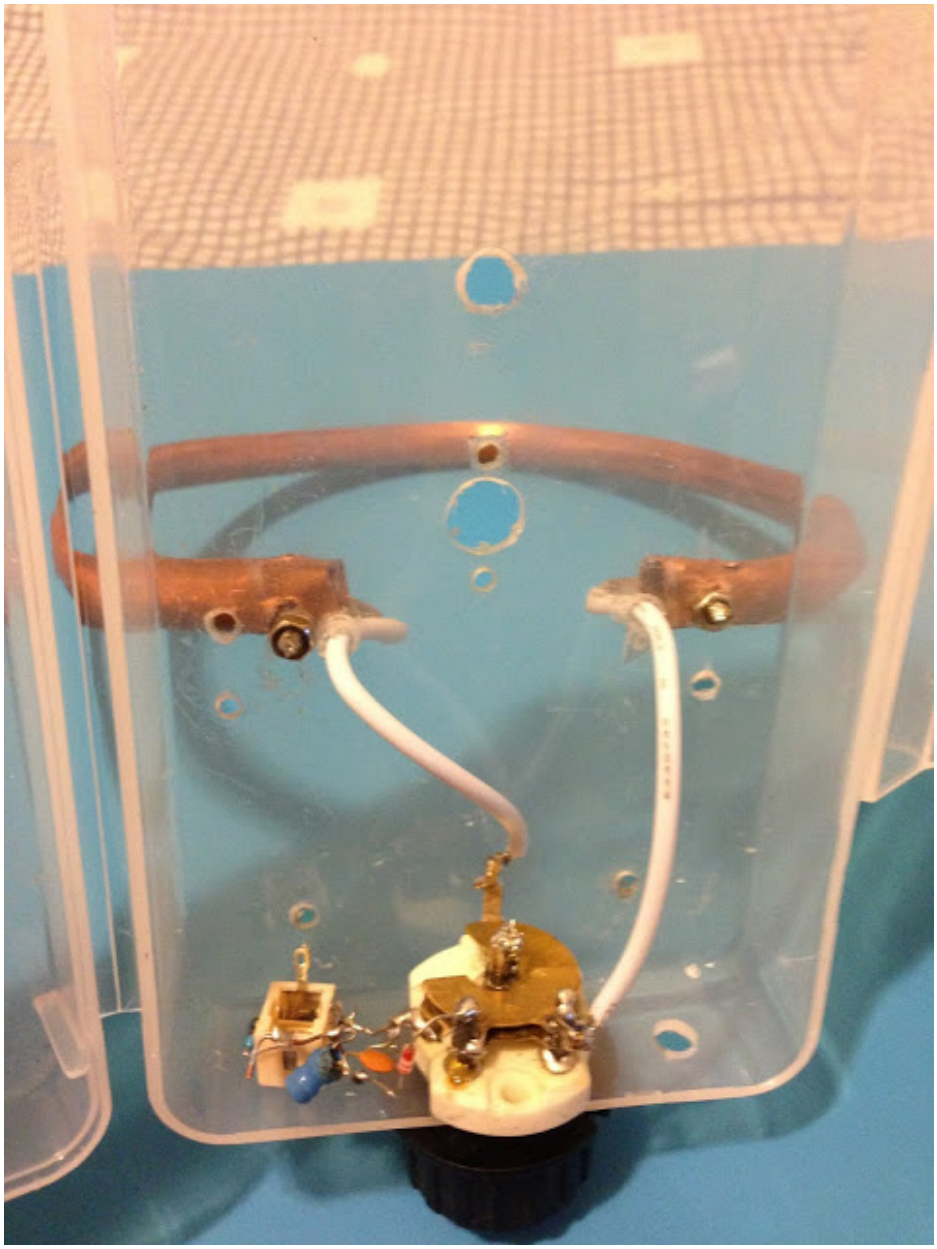

[http://1.bp.blogspot.com/-U8f34Fh_4EM/Uc2EVA6kIQI/AAAAAAAABLY/aI6OZ2c5Edc/s1600/IMG_2529.JPG]

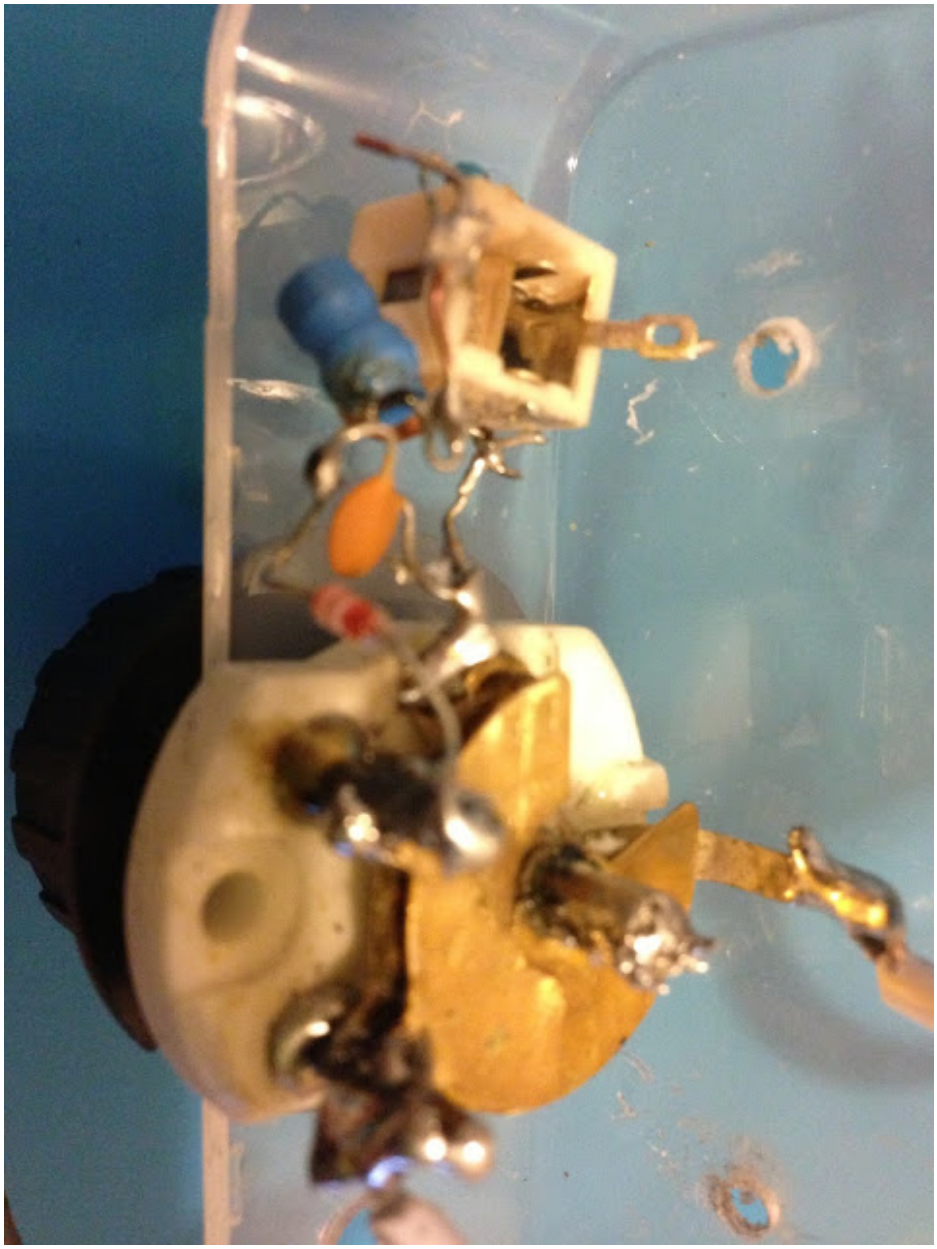

[http://1.bp.blogspot.com/-ONsnEMeXv-g/Uc2EWEFWNnI/AAAAAAAABLo/ap0dwwE1PKY/s1600/IMG_2531.JPG]

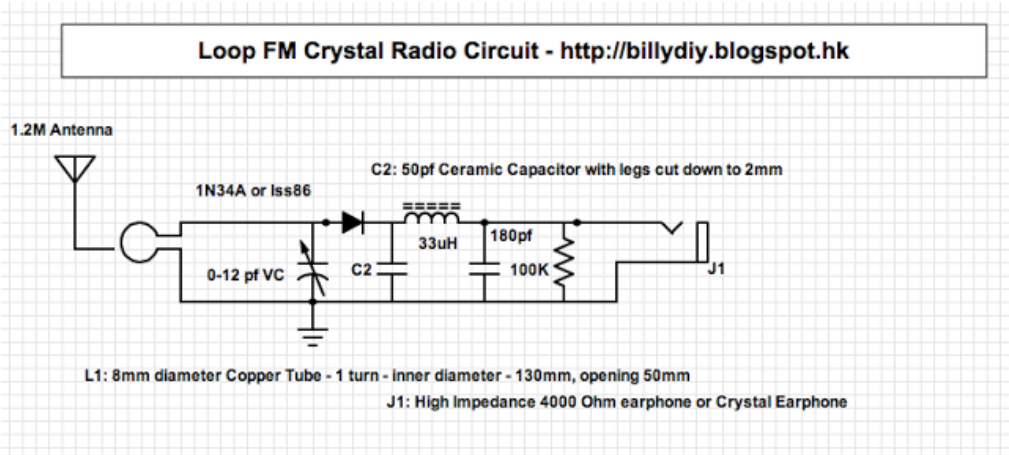

[http://1.bp.blogspot.com/-84ZQcpL-iDM/Uc2DeEbsVzI/AAAAAAAABLA/R_rFlJDlWn8/s763/Screen+Shot+2013-06-28+at+8.36.46+PM.png]

Posted 28th June 2013 by Billy

Free Printable Coupons
Free Coupons and Online Discounts. Print Your Free Coupons Now! get.couponunity.com/

Free Printable Forms
PDF, Word, PPT, Excel + More. Download YourTemplateFinder™ Now! yourtemplatefinder.com

0 Add a comment

Enter your comment...

Comment as: Karl Smirn ▼ Sign out

Publish Preview Notify me

rexresearch.com

Louis MAICHE

Wireless Telluric Telephone

Sure, it looks silly now -- but wait until an EMP destroys the modern grid -- then you'll want/need this proven simple, inexpensive alt-tech earth-radio -- directional, low energy, & untappable -- and anyone can build it...

Jerry Vassilatos : Vril Compendium

A NEW WIRELESS TELEPHONE.

The Paris journals report that M. Maiche, a well-known inventor, has made a sensational discovery in the field of wireless telephony. His new apparatus consists of two posts which are placed in his premises. Each post consists of a telephone, battery, a special form of induction coil and a frame which is formed of a series of insulated wires. One post is placed in the garden and a second one in a room in the building some distance off, about 100 feet, and several walls, doors, and windows come between the posts. Conversation can be carried on easily, and the sound is clear. The inventor started five years ago to work on the question. At the chateau of Marchais, belonging to the Prince of Monaco, he made experiments using the earth as a conductor, and these were successful at a distance of two miles. One year afterward he was able to communicate between Toulon and Ajaccio in Corsica, over the sea at 180 miles distance, using the sea as a conductor for the waves. These experiments were kept secret, however. As the new apparatus works without the use of ground, the results are more important. He expects to increase the distance indefinitely by giving more power to the apparatus, which is only in its first stages. Submarine boats could use the system to good advantage.

https://books.google.com/books?id=de5OAAAAYAAJ&pg=PA477&lpg=PA477&dq=Louis+MAICHE&source=bl&ots=0MwfiZciry&sig=ePs25QJg3djFbnx_ln0ivOIyIWg&hl=en&sa=X&v

The Christian Work and the Evangelist, Volume 82

Wireless Telephone of Louis Maiche, the French Scientist

April 13, 1907. The Christian Work and Evangelist 477

Wireless Telephone of Louis Maiche, the French Scientist

Aerial Message Projected Only in the Desired Direction; Words Are Inaudible Elsewhere

It is related of Gambetta, the famous French statesman, that he was wont to chide M. Thiers, his equally famous colleague, for the short-sightedness which led the latter to declare, when the locomotive was invented: "That will never move." But Gambetta himself was not less short-sighted. When Professor Bell, in 1867, invented the telephone, a modest French physician, Louis Maiche, went to Gambetta and, full of enthusiasm, begged him to interest himself in the matter. His hearer burst out laughing and interrupted him with: "My poor Maiche! What the deuce do you want to do with your plaything? It's good to amuse children." Gambetta and Thiers are long since dead, but Dr. Maiche, undeterred by the skepticism of men supposed to be wise beyond most men, has kept up his interest in the "plaything," and has now invented a wireless telephone which promises to make a revolution in even the perfected form of that "plaything." Recalling the interview with Gambetta, a French correspondent thus describes the invention:

Maiche, even then, had been honored as an inventor, already being known by his galvanic pile for the depolarization of the atmosphere, the model of which may now be seen at the Conservatory of Arts and Trades. Politicians, however, belong, for the most part, to that class which does not keep abreast of the science of the day. When I remember the life we led our professors of physics and mathematics I am quite willing to excuse the memory of Gambetta.

Later on Maiche invented the microphone, which served as the basis for telephonic improvement, and also a system for telegraphing and telephoning separate messages simultaneously over the same wire; he also conceived a peering-glass, which permits the observer to see a great distance into obscurity, and a process for the chemical reproduction of certain precious stones. I have seen the frame in which he keeps his honors and decorations, which number more than five hundred. It would be a great advertisement for a mercantile house.

Let us now penetrate into the cavern of this modern sorcerer. Full of simplicity and with a pleasant smile on his countenance, M. Maiche received us and listened to the object of our visit—"We would be glad to hear from your own lips a description of this new scientific wonder."

Since 1867, M. Maiche informed us, he had occupied himself with wireless telegraphy, and, as far back as 1878, had succeeded in establishing a telegraphic communication without wires for more than 600 feet, and in 1893 telephonic communication by the same system for over ninety feet. Since then he has constantly increased the distance—in the Saint-Germain Forest in company with the well-known English physician, William Crookes; at the Chateau de Marchais, the property of Prince Albert, of Monaco, who proved a most willing patron; from Calais to Dover, and from Brussels to London. Finally, in the courtyard of the post-office in Toulon he heard distinctly the voice of his assistant at Ajaccio—the same voice with its Normandy accent, which we were presently to hear over a distance of 150 feet.

"But all that," said M. Maiche, "is ancient history. I then made use of the ground as a means of transmission. The discovery of to-day enables me to do away with all visible means of communication and to project the words in any given direction without the danger that they may be radiated elsewhere; and, more interesting still, I do this with an infinitesimal expenditure of electricity, while, as you well know, other wireless telegraphic and telephonic systems expend enormous amounts of electricity radiated in all directions. When once perfected my apparatus may be practically used at an insignificant cost. Just now it is still at the laboratory and experimental stages. You will be able to judge of its promise."

We passed into another room. The tinkle of a bell was heard. It came from a box attached to the wall, but otherwise isolated.

"That is the call bell," said M. Maiche. "My assistant in the laboratory at the end of the garden signals us that he wishes to talk. If conversation becomes difficult, owing to the great distance, there is still this little bell, which may communicate in the code of the Morse alphabet. In my house I have done away with all conducting wires. When you arrived here you rang the bell without a wire. When I call up my cook I do so without wire. A simple voltaic pile resounds to every vibration and without failure. But now come and hear my apparatus in action."

We found ourselves in the garden before a table on which were placed a small voltaic pile, an ordinary telephonic microphone, and a mysterious box not unlike that attached to telephones. At the side of the table was a large frame, about six feet square, similar to those used by artists for their canvases.

"In order to render my explanations more clear," said M. Maiche, "I will take you first to the post of the transmitter and then to the post of the receiver, although, in actual practice, the same post performs both services. This mysterious box which has aroused your curiosity is the nest of my invention. It is my special converter, composed of an electric reel, the wires of which are disposed in a peculiar manner which I may not reveal. When this converter is in action it changes ordinary electricity into vibrations, which are transmitted in straight lines to the post of the receiver. The two ends of this converter are attached to the frame, on the periphery of which is a groove, in which are buried two series of wires. One serves as a transmitter, the other as a receiver."

"And?"

"And that is all. The words which you confide to the microphone pass into the converter, awake corresponding vibrations which are stored in the wires surrounding the frames, whence they project themselves in the desired direction, moving nearer and nearer their address. At that point is another frame identical to the first. There the transmitted vibrations are received by the wires which surround it, and are reconverted into words which may be heard through an ordinary telephonic receiver. Here it is no longer a question of waves. We have simply established a continuous circuit. The illustration which is used to show the transmission of Hertzian waves by means of a stone producing eddies in the water will not do here. Here vibration is transmitted in one direction, just as though you placed several billiard balls in line upon the table and dealt a blow at the first. The shock is transmitted through the line, but only the last is moved from its position; the others are not disturbed, although each intervening ball received and transmitted the blow. Now let us experiment."

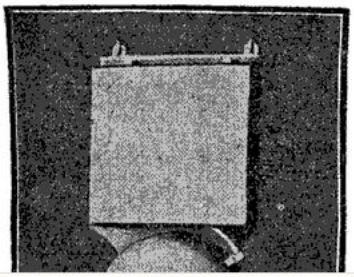

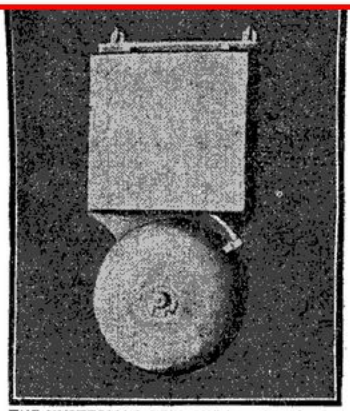

THE MYSTERIOUS BELL—Without Any Connecting Wire It Informs the Hearer that Some One Wants Him Over the Wireless Telephone.

While M. Maiche's assistant remained at the transmitter at the end of the garden, we entered the house and stood before a frame which was to serve as a receiver. Presently we heard the articulation of a voice, then the sound of a whistle repeated at distinct intervals, and then that exquisite air from "Martha"—"The last Rose of Summer"—very prettily whistled by M. Charles Maiche, who, not content with being a remarkable physician and his father's able assistant, is also a splendid musician. Not only was the pitch of the tone perfectly reproduced, but also the uality of the sound. All possibility of deception was thus excluded, as the effect could not possibly have been produced by ventriloquism, the voice being plainly recognized as that of Mr. C. Maiche, who was at the time at the other end of the wire.

"You see," said M. Maiche, "that our experiments have succeeded in spite of all obstacles. Neither water, nor rocks, nor ice can interfere. All that the telegrapher considers as insurmountable barriers we easily pass through. Surely we have much yet to perfect. All that we have done up to the present by this new system is to be able to converse distinctly up to a distance of a little over 1,800 feet. But once the practicability of the theory is established, then the mechanism must be perfected. It is being perfected day by day—just as Branly one day succeeded in modifying the conductibility of his tube of filings from one end of his laboratory to the other, thereby making wireless telegraphy an established fact. One knows the progress which it has made since then—the many defects which have gradually been overcome. And it will be the same with our wireless telephone, which seems to us called to a very different destiny not as an aid to war, but as an aid to peace, as a saviour of human life."

---

https://books.google.com/books?id=euDmAAAAMAAJ&pg=PA79&lpg=PA79&dq=Louis+MAICHE&source=bl&ots=1k4NAB8mnd&sig=NTExYinKMaUflbhxtExc0kaKA-0&hl=en&sa=X&ved=0ahUKEwjgp8uehoHQAhVj0FQKHeFyDlk4ChDoAQgbMAA#v=onepage&q&f=false

Telephony, Volumes 3-4

Another inventor engaged in trying to solve the wireless telephony problem is M. Louis Maiche. For this purpose the Prince of Monaco has placed his domain at his disposal.

M. Maiche, who, according to the "Electrical Review," London, is well known for his extensive researches in the domain of telegraphy and telephony, made experiments in the transmission of words and signals on the Morse code by earth currents.

This is briefly the result of the tests with an improvised apparatus and a current of .003 ampere and 8 volts.

1. At 1,500 meters conversation transmitted as distinctly as by the best ordinary telephone system.

2. At 4 km. speech still very distinct, but seeming to have arrived at the limit of perceptible intensity.

3. At 7 km. vibrations of the telephone plate sufficiently distinct to allow of Morse signals being transmitted with the utmost regularity.

The experiments could not be carried further, as this would have taken them beyond the limits of the domain. The transmitting apparatus used by M. Maiche consists, besides the source of electricity, of an improved microphone and an induction coil wound in a special manner. In the case of the transmission of Morse signals, a key and vibrator are substituted for the microphone.

In both cases the receiver was a sensitive telephone.

The connections to earth consisted sometimes of two electrodes immersed in water, and sometimes of electrodes embedded in damp earth. The two electrodes at each station were connected by an insulated wire which formed a basis on which was connected, according as required, the receiver or the transmitter.

As, according to M. Maiche, long-distance experiments alone could show what length of base could correspond to accentuations in the current conveyed. H. R. H. the Prince of Monaco has kindly placed at M. Maiche's disposal his yacht, Princess Alice, and the local resources of the principality for long-distance experiments which will shortly be made in the Mediterranean and between the French and Italian shores. Evidently, as augmentations of current are mentioned, Morse signals will be transmitted, for which the telephone will act as receiver.

---

http://www.telephones-anciens.org/l-maiche-electrophone-a-pupitre/

L.Maiche électrophone à pupitre

Appareil dit Electrophone de Maiche: nom donné par Louis Maiche a ses appareils téléphoniques. Celui-ci est équipé d'une paire d'écouteurs a manches Lensczewski et d'un microphone type Ader. Le modèle en photo doit être antérieur à 1890

---

http://www.lookandlearn.com/history-images/M240118/Maiches-wireless-telephone-system-1906?img=15874

Maiche's wireless telephone system, 1906

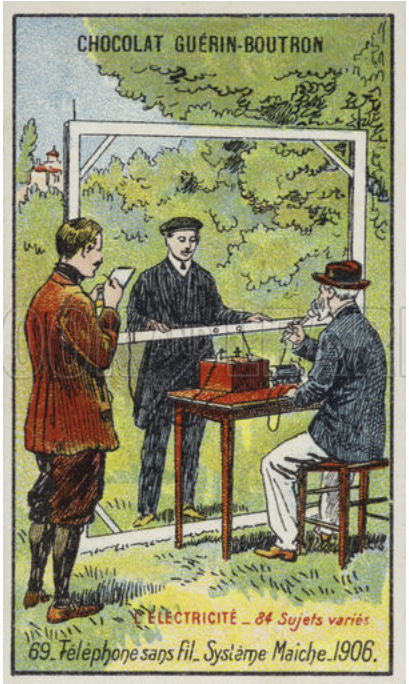

---

http://thethingsienjoy.blogspot.com/2013_04_21_archive.html

The world's first "mobile" phone (in 1906)

French inventor Louis Maiche and his wireless phone, arguably also the world's first mobile phone.
Image published in the Swedish weekly Hvar 8 Dag in September 1906 (Click to enlarge)

"M. Louis Maiche is the inventor of the wireless telephone and, like many scientists, is not so famous as he ought to be".

That is how an article in the Auckland Star on March 6, 1907, introduced the French inventor Louis Maiche, who also could be called the inventor of a mobile phone.

In the article M. Maiche describes how it all began:

"My first trials took place in 1867, but they were concerned more with wireless telegraphy, and it was not until 1893 that I exchanged a conversation through a wireless telephone at a distance of 30 yards."

Two months earlier, the New York Times had also published an article on M. Maiche and his wireless telephone invention. In the article the inventor refers to his successful experiments with telegraphy and then describes his work with the wireless telephone:

"I then made use of the ground as a means of transmission. The discovery of today enables me to do away with all visible means of communication and to

project the words in any given direction without the danger that they may be radiated elsewhere; and, more interesting still, I do this with an infinitesimal expenditure of electricity, while, as you well know, other wireless telegraphic and telephone systems expend enormous amounts of electricity radiated in all directions."

"When once perfected my apparatus may be practically used at an insignificant cost. Just now it is still at the laboratory and experimental stages."

"You see", said M. Maiche,"that our experiments have succeeded in spite of all obstacles. Neither the water, nor rocks, nor ice can interfere. All that the telegrapher considers as insurmountable barriers we easily pass through. Surely we have much to perfect! All that we have done up to the present is to be able to converse distinctly up to a distance of a little over 1,800 feet. But once the practicality of the theory is established, then the mechanism must be perfected."

"It is being perfected day by day - just as Branly one day succeeded in modifying the conductibility of his tube fillings from one end of his laboratory to the other, thereby making wireless telegraphy an established fact. And it will the same with our wireless telephone,which seems to us called to a very different destiny, not as aid to war, but as an aid to peace, as a savior of human life."

In the Auckland Star article M. Maiche gives some examples of the future use of his wireless telephone:

"Imagine two steamers steering through a fog. With my little apparatus the captain can tell the direction the other ship is taking. In case of an accident to a submarine my apparatus would enable the crew in danger to communicate with the convoying tug without fearing the breaking of a line as in the case of a telephone buoy. Miners entombed after a disaster like that at Courrieres could communicate with the rescue party. Two army corps making a night attack could keep in constant touch without risk of interruption. The ordinary citizen could have it in his drawing room, and would no longer be dependent upon the vagaries of the telephone exchange."

Both articles also include some technical descriptions of the use of M. Maiche's new wireless phone. It is possible that the French inventor's theories were not as successful as he himself thought. Otherwise it is difficult to understand why this page (in French) is the only one with information about him that I have been able to locate. Still, his concept of wireless (and mobile) telephony should merit him a place in the hall of fame of modern communication technology .

Patents

Nouveau mode de transmission et de réception sans fil des signaux électriques
FR335990

1904-02-22

The object of the present invention is a new method of transmitting and receiving wireless electrical signals. The essential means on which is based the system is the production transmits position and uses the position receiver electricity manifested in a new form which may be referred to as "electrostatic vibration" and is obtained as will be explained further by modification of a spark inductor. One of distinctive characters of this new manifestation of electricity is that it can be transmitted in space without the aid antennas and ground at all distances, and, in the same form as sound, light and heat, that is to say without poles.

The inductor being communicated c with a power source, a battery, for example, and a special switch which will be described below, each interruption is to be born in the armature current giving a spark, and it is the latter that is transform an "electrostatic vibration." The armature out of the coil wire after the last winding outside, is for this purpose connected to a large metal surface which can be exposed to air. This surface may be constituted either by c a hollow or solid cylinder or by one or more sheets of iron, copper or any other metal usual more or less thick. The surface is preferably rounded at the corners or packed with a border all around to remove spikes, as in the conductive electrostatic machines. It should be about one square meter per watt of the current flowing in the inductor. The other end of the armature is connected to an adjusting screw of which the tip k of platinum or gold is next to a button, also in a gold or platinum, carried on the large surface.

FIGS. 1 and 2 of the accompanying drawings show two provisions which may be 5 h adopted for the preparation of the transmitter station.

FIGS. 3 and k show two provisions and receiver.

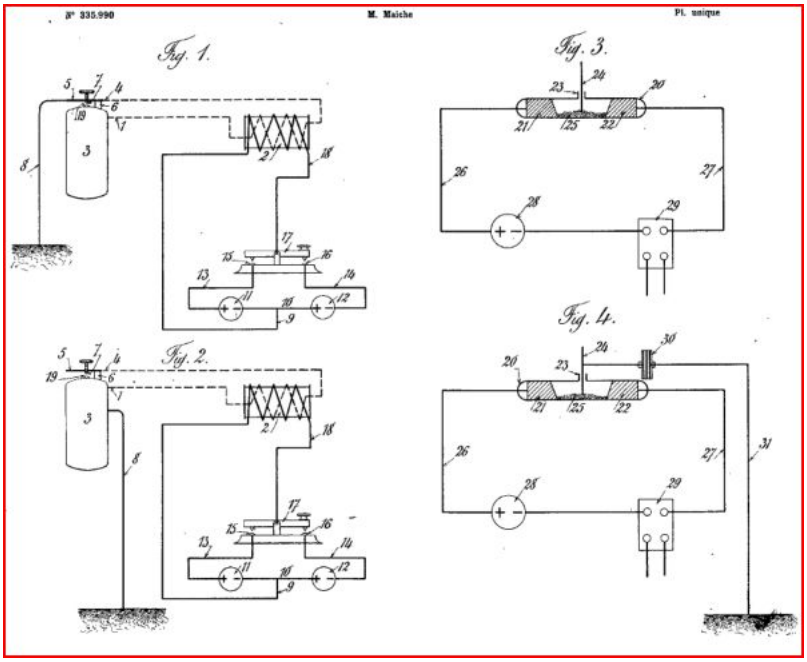

One end of the armature wire of the coil -j is connected to the cylinder 3 rounded at its ends, and the end k of the wire is connected to plate 5 mounted on the

insulating support 6 which is fixed to the cylinder 3 . The plate 5 is traversed by a setscrew 55 provided beyond tip 7 made of gold or platinum. The end of the induced wire k is that by which begins rolling on a bobbin. Wire 8 communicates with the earth or the plate 5 (Fig. I) is the cylinder 3 (Fig. A).

Improvements in and relating to Electric Transformers.
GB190727157

1908-10-29

Comprises a large number of windings wound in the form of a cable a on a coreless frame b, and led out to terminals 1 ... 10 and, adapted to be connected in quantity or tension by means of a commutator so that three or more independent circuits may be made.

COMPLETE SPECIFICATION.

The present invention relates to electric transformers of the class described by Specifications Nos. N;821901 (Amberg), z1854 (Swinburne), and 4/I83 (Clerc) and it particularly concerns the arrangement of the windings.

The invention is represented in the accompanying drawings;-

Figs. 1 and 2, show a section and a front view respectively of the improved transformer.

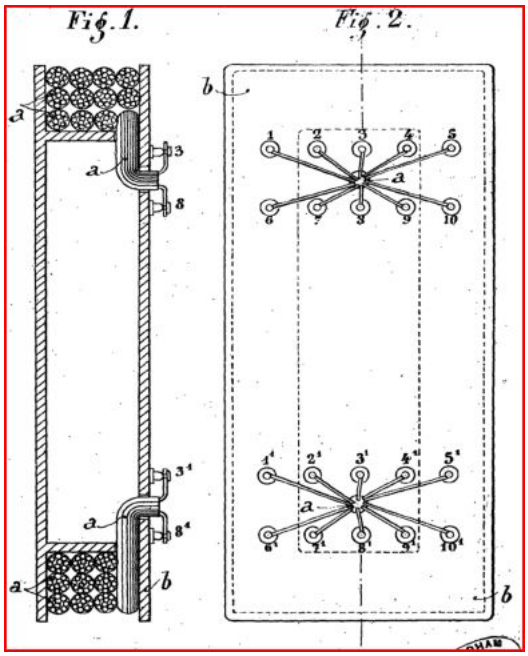

The transformer which has no magnetic core, is merely constituted by a convenient number of insulated wires, 10 for example, which are united to form a cable a which is wound around a frame b. The ends of the cable project through two holes of the frame and the ends of each wire are joined to terminals 1 to 10 and 11 to 101 respectively. In the drawings are shown 20 terminals, the first ten of which correspond to the beginnings of the 10 wires, and the other ten correspond to the ends of the same wires.

Thus, a winding of a certain number of identical wires is obtained which are all wound parallel and simultaneously and which may be connected by means of a commutator so as to form groups to 'be varied according to requirement; so that there are thus constituted three or more circuits which are entirely independent the one of the other and the length of which can be varied at will.

By conveniently joining the free ends of some of the wires, a primary winding of weak resistance is obtained with the wires of same joined for quantity, while one or more of the secondary windings are joined for tension, thus providing any required resistance.

The construction of the transformer by means of a great number of separate wires offers numerous advantages amongst which are the facility of connecting the separate wires at will to constitute the circuits; the arrangement enabling a supplementary circuit to be branched off at any point of the said circuits; and the reciprocal independence of these circuits with large number.

Improvements in and relating to Electric Transformers.
GB190721535

1908-05-28

Transformers for telegraphy and wireless telegraphy are made without a magnetic core, and of little depth but of large diameter. They have the primary winding e enclosed within the secondary winding c, g, but separated therefrom by insulation d, f. The windings may be formed in sections, and coupled up in any order by means of a commutator.

COMPLETE SPECIFICATION.

This invention relates to electric transformers the construction of which is improved so that currents of induction of very short periodicity are obtained.

The currents, the duration of which is extremely short, possess special properties which are particularly useful when applied in telegraphy and in wireless

telephony.

Transformers without magnetic core and with the secondary winding wound around the primary, or with the primary winding enclosed within insulating material round wh,ich is wound the secondary winding so that the whole forms a cable, have been provided, and my invention is limited to the form and construction of the transformer as hereinafter set forth.

My improved electric transformer contains its primary wire within a cable of the secondary wires in the form of a single coil of little thickness but of very large dia,meter, said coil or cable being applied to a ring-shaped transformer body.

The accompanying drawing shows my improved electric transformer.

Fig. 1 is a section on line A-B of Fig. 2 and

Fig. 2 is a plan of the ring-shaped transformer.

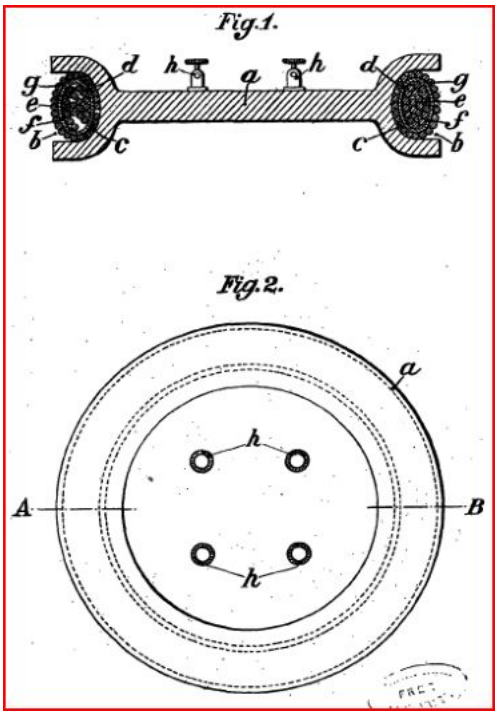

As will be seen from the drawings, the transformer a is of comparatively large diameter which may be several meters. In the drawing the transformer is represented of circular cross-section, it could however be of square or other cross-section. This transformer is very short because all the wires of the winding are located on its periphery in an appropriate hollow or groove b. For manufacturing the trans-former I place around the rim of this kind of wheel or dial: a, a first layer of secondary wire which is covered by a suitable insulator d and upon this insulator the primary wire e is wound which is covered by another layer of insulating material f. The two insulating layers d and f are connected in such a manner that the primary wires e are well insulated, and the coil is then finished by applying an outer winding of secondary wire g, the latter surrounding the primary in such a manner as to form a cable. In this manner a ring of large diameter is obtained which is composed of the secondary wires c, g which enclose a core of suitably insulated and wholly surrounded primary wires e and which ring is applied to a ring-shaped transformer-body having a peripheral groove of suitable cross-section.

The apparatus comprises four terminals h, two of which serve for fixing the ends of the secondary wires, the other two serving for fixing the ends of the primary winding.
There could be arranged several independent cables or rings in each of which the secondary wires entirely surround the primary wires and in such case each of the terminals would be replaced by a multiple commutator permitting to join up the different secondary wires as well as the different primary wires either for tension or for quantity according to the effect to be obtained.

Improvements in connection with Wireless Telegraphy and Telephony.
GB190721252

1907-11-21

The transmitting and receiving circuits at one station for an inductive system of telephony or telegraphy are arranged as shown. A coil a, consisting of a few turns of thick wire, is used alone in transmitting, but is connected in series with a coil b, consisting of a large number of turns of fine wire, for receiving; the circuit of the coil b is broken automatically, during transmission, by means of a Morse key c. The circuit of the coil a includes a battery n and a microphone o for telephony, or an interrupter for telegraphy, and the coil b is connected with a telephone h.

There are known systems for telegraphy and telephony without connecting wires which utilise, instead of Hertzian waves, the phenomena of distant induction by means of electric vibrations of very short duration, but great amplitude. With such systems, one and the same winding is used fur sending and for receiving; for sending it is placed in circuit with a source of electricity (battery, accumulator, etc.) and with a microphone or an interrupter destined to produce the vibrations in question. The same winding is placed in circuit with a .receiving telephone .for receiving the currents which arc induced at a. distance from the sending winding of the other station.

It is obvious that this single coil cannot equally well serve for the sending as for the receiving. To transmit well it ought to be made from thick and short wire, whilst for receiving well it ought to be of long and thin wire.

It would evidently be the simplest to provide each station with two different coils of which one serves as transmitter and the other as receiver, but lucre is another difficulty to be considered; for receiving, the long and thin coil has to be closed by the telephone and in that condition it would absorb nearly all the energy which ought to be sent out by the transmitter.

The present invention rotates to a special method of mounting the parts constituting a station in order to overcome the above mentioned difficulty; besides, the special method of mounting permits to join the two coils one behind the other for receiving whereby the receiving power of the station is considerably increased.

The accompanying drawing represents diagrammatically a station according to the present Invention.

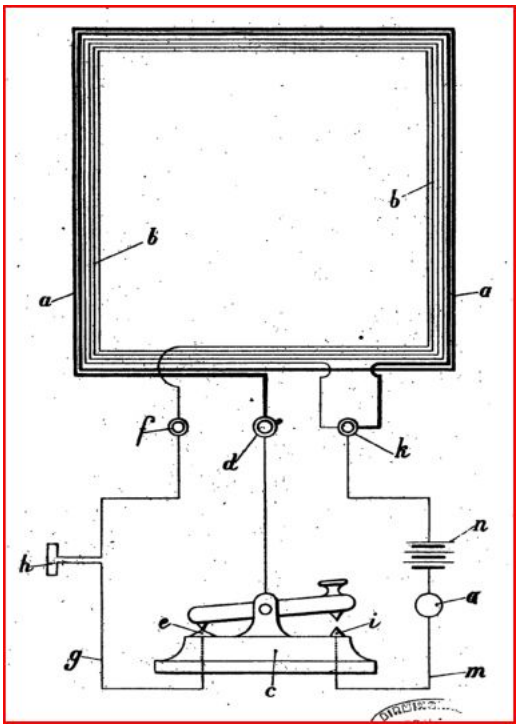

a is the inductor wire which serves fur transmitting; this wire is thick and relatively short. b is the induced winding for receiving the induced vibrations from the inductor winding of the transmitting station; this winding consists of thin wire of considerable length. c is a. Morse-manipulator the lever of which is connected through the contact let with one end of wire a, its connector e is through the contact f connected with one of the ends of wire; the wire g which connects the contact f with wire b comprises the telephonic receiver h ;the other connector i of the Morse apparatus is connected through terminal with the free ends of the two wires a and b which are joined at this point. The connecting wire m which serves for this purpose, comprises the battery n and the microphone o.

It is easily' understood that in the inoperative position of the Morse key (as represented in the drawings) the two coils and b form one circuit closed on the telephone h. This position is the receiving position. For transmitting, the key is depressed and brought in contact with the connector whereby the coil b is opened whilst the coil a is closed on the microphone and the battery.

It is to be understood, that the station described serves for the transmission of sounds. For the transmission of telegraphic signals, the microphone o is replaced by a suitable interruptor-vibrator and the apparatus is operated through the Morse key as usual.

Improvements in and relating to Inductive Telegraphy and Telephony.
GB190712529

1908-03-12

In a system of telegraphy or telephony by magnetic induction, the coils are placed vertically and the same coil is used for transmitting and receiving. The coil b is wound on a frame a of any suitable shape, which may be lined with iron. One terminal of the coil b is connected to a key f, one contact of which is connected through a microphone p and battery o to the other terminal d of the coil. A telephone m is connected across the terminals of the coil through another contact of the key f, and its circuit is normally completed for receiving telephonic or telegraphic messages. Telegraphy is effected by manipulating the kev f to complete the circuit of battery o ; to telephone, the key is depressed and the microphone p is utilized. A high-frequency alternator may be used instead of the battery o, and a screen composed of sheets of paper soaked in paraffin, varnish, or glue may be placed behind the frame.

The present invention relates to improvements in that class of magnetic induction telegraphy and telephony in which transmission is effected between similar coils of wire at the receiving and transmitting stations. The invention is characterized by the fact that senders and receivers.are reversible, the member for transmitting the waves being the, same as the member which receives the waves.

In the drawing, a diagram of a station according to the present system is represented.

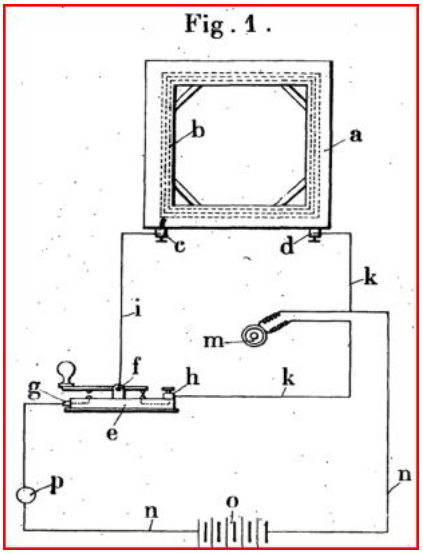

The transmitter and receiver for the electric waves consists of a. wooden frame (a) of fairly large dimensions; for example 4 meters square for a distance of 20 kilometers. In the drawing the frame is shown as being square but it may be of any other geometric shape having as center a.rectangle a lozenge, a circle, etc. The wall of the frame is provided with a groove (b) in which an insulated conducting wire is placed which is connected with the terminals (c) and (d). This wire is wound a. varying number of times around the frame so that it is of sufficient length according to the power of transmission required of the apparatus.

The frame (a) must be of sufficiently large dimensions to prevent the currents generated in opposite directions in the sides of the frame from tending to neutralise each other.

Each station comprises besides a Morse manipulator (e), the commutator of which is connected with one of the terminals (c) of frame (a) through the wire, its terminals (r) and (h) being connected with the other terminal (d) of frame (a).

An ordinary telephonic receiver (m) is inserted in, the circuit (k) which leads from the terminal (h.) of the manipulator to the frame, and in the other circuit (n), connecting the terminal (g) of the manipulator with. the frame, a battery (o) is inserted near the frame and , microphone (p) is inserted near the manipulator.

When the manipulator (c) is at rest (position shown in the drawing) the station is ready to receive the transmissions, the electric circuit (a, c, i, f, m, k, d, a) enclosing the frame and the telephone -being closed. One has only to hold the telephone to the ear to perceive all the currents which a.re induced in the frame (a).

The telephone (m) is put out of circuit when the commutator (f) is pressed down, whilst t.he circuit will be closed upon the frame (a.) and battery (o). The station has thus become 11 sender, the battery sending variable currents into the frame according to the nature of the transmission to be effected. To telegraph according to the Morse alphabet one manipulates the commutator (f) in the usual manner, the telephone (m) of the other station permitting to distinctly perceive the dots and dashes. The operator simply gives one contact for the dot and two contacts following in quick succession for a dash. In this case the microphone (p) is superfluous but it does not disturb. When however one wants to telephone, the contact (g) has to be kept closed and one speaks in front of or into the microphone (p); the telephone (in.) of the other station will reproduce the sounds.

The source of electricity (o) can be a battery or an electro-magnetic generator giving alternating currents of high frequency. The currents which are thus sent into the frame (a) of the sender station have no appreciable effect upon the telegraphic receivers which could be provided at this station; they even do not influence the magnet needle owing to their **illst,nntfmeousness.**

To establish the communication between two stations the two frames (a) have to be placed in parallel planes, perpendicular to the line which would connect their centers, which can be effected through various means. The action (if the one of the frames on the other is effected through any obstacles whatsoever, no earth connection or air connection being necessary.

The reciprocal action of the frames can be increased through lining the bottom of groove (b) for its entire length with soft sheet iron, the lining being continuous or interrupted. The frame will thus become a kind of electro-magnet, the proportion of which are just the reverse of those generally used.

To communicate at very great distances several frames (n,) are joined up, the wires being joined up in series or for tension.

The efficiency can be considerably increased and the direction of transmission localised in avoiding dispersion at the sides or behind the frame, by means of a thick screen composed of superposed sheets of paper soaked in paraffn ; the paper could also be impregnated with varnish, glue or any other equivalent material.

Improvements in and relating to Telegraphic and Telephonic Systems.
GB190126600

1902-11-06

Relates to the arrangements of circuits in telegraph and telephone systems. In Fig. 1, a microphone b is shown in a main line a, and at the receiving-station is connected to the middle of a split battery f, g, two receivers l, m being connected between battery and earth. When induction coils are employed, two separate primaries take the place of the receivers in the Figure, and the receiver employed is placed in a common secondary. In another modification, the transmitter is bridged across two parallel closed circuits, including primaries and batteries, the secondary forming the line circuit.

This invention relates to telegraphic and telephonic systems and has for its object certain improvements hereinafter more particularly referred to and finally pointed out in the claims.

As is well known, in order to prevent over-heating of' the receiving and transmitting apparatus in telephonic or telegraphic installations it is necessary to prevent very strong current passing over them. It may however, in certain cases, be necessary to provide currents of varying energy within rather large limits, and this invention has for its object to provide a simple device which will permit currents of any force being passed through telegraphic and telephonic apparatus without the slightest risk of deterioration to such apparatus.

In order that my invention may be readily understood and carried into effect I will now proceed to describe the same fully with reference to the accompanying drawings wherein are shewn diagrammatically several methods of carrying my. invention into practice.

In the drawings :

Figure 1 shows the principle of my improved arrangement, and

Figures 2. and 3 are modified arrangements.

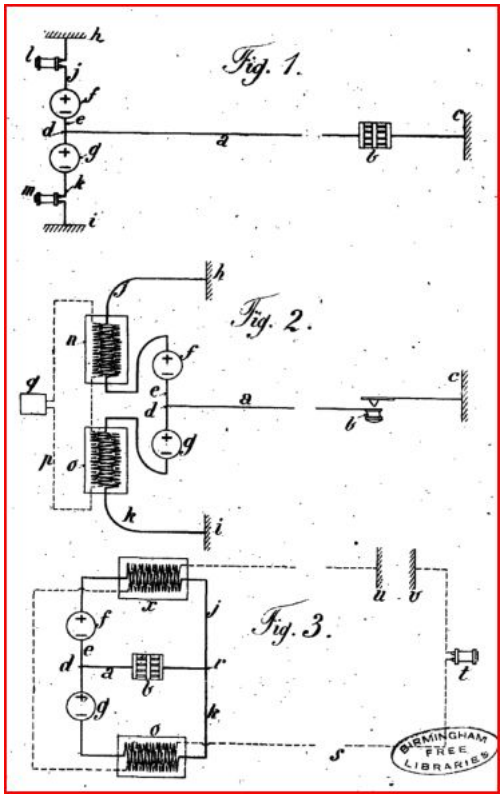

My improved system consists essentially of a line a of any convenient length in which is interpolated a microphone b or other appropriate transmitting apparatus. One end of this line is grounded at c and the other end is connected at d to.a wire e adapted to place into communication the opposite poles of the two sources of electricity of equal power, which for greater clearness sake I have represented as two single batteries f and g. These two batteries are respectively connected to earth at h and i. In the earth wires j and k are interpolated telegraphic or telephonic receivers l, m, of any convenient construction. In the example shown in the drawing the receivers and m are indicated as being telephonic receivers.

Having thus described the general arrangement of the system I will now explain the function of the various apparatus of the system.

Presuming that the wire a is non-existent and that the communication of the battery f and g with the earth has been established, a current passes from the positive pole of the battery f to earth through the wire then back .through the wire k, battery 9 and finally through the wire e to the negative pole of the battery f. Thus a closed circuit is established. Admitting now the wire a to be connected to the wire e at d and the transmitter b operated, the single current generated in the previous case will be replaced, by two currents which circulate in the same direction.

One of these currents starts from the positive pole of the battery f through the wire through earth from h to c through the transmitter b, wire a and wire e to the negative pole of the battery f.

The other current starts from the positive pole of the battery 9 through the 'wires e and a, the transmitter b, through earth from c to i and wire k to the negative pole of the battery g.

It will thus be seen that the wire a and transmitter b are simultaneously traversed by two equal currents in inverse directions.

In Figure 2 I have shown a telegraphic transmitter or key b but the general arrangement of the system is the the same as that previously described with the exception that the wires j and k form the primary conductors of the transformers n and o. The secondary conductor p, which is common to both transformers, leads,to the receiving apparatus q, for example a telegraphic receiving instrument.

Each contact ejected with the key b produces, as before explained a double derivation acting by subtraction of intensity upon the two transformers n and o, produces an induced current which is reproduced in totality in the receiving apparatus q. In the case of telephonic transmission the key must be replaced by a microphone as shown in Figure 1, while further the receiver q would also be a telephonic receiver.

By extending the same principle I can, as indicated in Figure 3, replace the two earth wires by two conductors and k joined together at r after having traversed the transformers x and o. The induced current may then be conveyed to the receiving instrument t over two lines, or as in the previous example over a line s and two earth connections u and v, placed more or less apart from each other.

It will be noticed that the microphone b forms part of the neutral conductors.

It acts exactly as in Figure 1. The differences of resistance produced by its vibrations influence the two coils x and o, and it is easy to understand that, whatsoever may be the intensity of the two electric sources f and g, the microphone is never exposed to the risk of becoming overheated for the reason that it is traversed by two equal currents in opposite directions.

It will thus be understood that the transmissions will be rendered perceptible in the receivers through the differences of intensity of the electric current; the differences being due to the differences of resistance of the neutral conductor which, in receiving two equal currents in opposite directions, is not much affected itself.

Improvements relating to the Transmission of Telegraphic and Telephonic Signals.
GB190117711

1901-02-19

The local circuits at each station are doubly earthed at e, f, j, k symmetrically about a straight line joining the stations. The earths may be formed of porous pots containing water in which the ends of the conductors are immersed, or deep ditches filled with gas coke may be employed. Insulating screens may be placed in deep ditches dug behind the earths.

This invention relates to an improved method of transmitting electrical telegraphic and telephonic signals from one point to another without the employment of wires connecting the two points.

In my improved system of transmission, the two poles of the transmitting station are put to earth and the two conductors, upon which the receiving apparatus is mounted are also both put to earth; the signals emitted by the transmitting apparatus are transmitted to the receiving station through the earth alone.

In order that my invention may be readily and clearly understood, I have represented in the accompanying drawing, by way of example only, a diagrammatic view of my device as a whole.

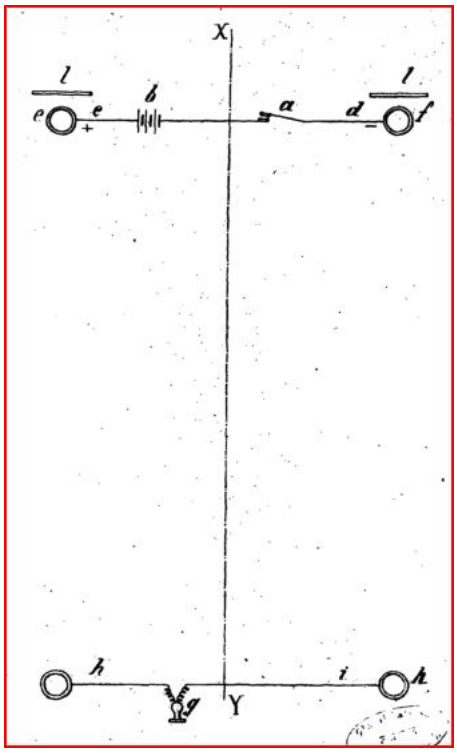

As shewn in the drawing, the transmitting station comprises a transmitter a one of the terminals of which is electrically connected to one of the poles of a source of electricity b whilst the other pole communicates with the earth; the second pole of the source of electricity is also run to earth and with this object the two conductors c d terminate in two porous pots e f embedded in the ground and filled with water.

The receiving station comprises a receiver 9 such as a telephone for example, the conductors h i which are put to earth by the intermediary of two porous pots j k similar to those of the transmitting station.

The porous pots of the receiving station should be arranged upon a line parallel with that which joins the two porous pots of the transmitting station, and they should be equidistant from an axis passing through the middle point of this line and at right angles to said axis.

The porous pots may advantageously be replaced by deep ditches sunk down to the humid earth, filled with gas coal or coke and containing at their centre a plate of carbon which is a good conductor, to which the transmission and receiving wires respectively are attached.

When contact is established by manipulation the transmitter a, the electric circuit passing through the source of electricity b, the conductor c, the porous pot e earth-connected to the other porous pot f the conductor d and the transmitter a, is closed. The current thus produced causes a change of condition in the ground ; all around the porous pots electric radiation is produced, the polarity of which is that of the corresponding conductor; its density decreases in proportion as it is further removed from the point of departure. This radiation is infinite with respect to space if nothing obstructs its passage.

The radiation extends so much the further according as the distance between the two porous pots of the transmitting station is greater.

These radiations, starting respectively from the porous pots e f thus create two zones one of which is positive and the other negative, the intersection of which constitutes % line absolutely neutral. It follows from this that the porous pots of the receiving station should be arranged upon either side of the neutral axis, because if these two earth connections were upon the same side they would both collect fluid of the same polarity, and in these conditions the receiver would not be traversed by any current.

In order to collect the maximum of current at the receiving station, the two porous receiving pots should be as nearly as possible equidistant from the neutral axis, as if one of the two porous pots is nearer than the other, the difference of separation of that which is the furthest removed is not only lost but is prejudical since it causes useless resistance without adding anything to the effect.

Experience has demonstrated that the disposition which furnishes the maximum of reception is that which consists in arranging the porous pots of the receiver at the same interval as separates the porous pots of the transmitting station.

In order to install my method of electrical transmission, it is first of all necessary to draw a straight line a y connecting the two stations and .then to produce upon each of these stations a line proceeding from this line x y at right angles, the said perpendicular lines being of equal length.

The transmitting and receiving appliances may be arranged at any convenient point on the conductor which connects the porous pots.

In order that the whole of the radiation emitted may be utilised at the receiving station, the propagation of this radiation is prevented (at the transmitting station upon the side opposite to that on which the receiving station is situated by burying in the ground an insulating screen l which may be of glass, tarred fabric, ebonite or the like, or by sinking a sufficiently deep ditch with or without an insulating screen.

Each time contact is made at the transmitter a, a sharp blow is audible at 'the receiving telephone g ; a second blow is heard when the circuit is broken.

It is obvious that there may be arranged both at the transmitting and receiving station transmitting and receiving appliances of the greatest possible sensibility, either for serving as relays for telegraphic purposes, or for directly receiving and recording the signals; for example an ink siphon mounted upon a galvanometric frame, or any other suitable device.

My method of transmission also permits of the transmission of speech; it is only necessary to replace the transmitter by an ordinary microphone interposed either directly upon the circuit, or arranged upon the primary of an induction coil, the secondary wire of which terminates at each extremity of the two porous pots.

It will of course be understood that in practice each station comprises both a transmitter and a receiver.

Improvements relating to the Transmission of Electric Currents
GB190108906

1901-04-30

Telegraph and telephone systems are arranged with the line-wire a connected to the center point of a battery c, c, the opposite poles of which are earthed and shunted by a normally closed circuit key g or microphone. The earth connections are made through non-polarizable cells f, f, containing, for example, two plates of copper immersed in copper-sulphate solution. The receiver is bridged between one earth and a switch h by which the transmitter is normally connected to line. The microphone may be inserted in the primary of an induction coil, the two secondaries of which oppose and are connected to the two earths and line. The two earth connections may be brought nearer together by the receiver and switch in the primary of the induction coil, so that this coil acts both to receive and transmit according to the position of the switch h. The microphone is arranged in the primary of a second induction coil.

This invention relates to improvements in the transmission of electric currents and is more particularly adapted for telegraph and telephone lines, whereby condensation in the cable is avoided, while at the same time "tapping" of the , line at any point thereof, for the purpose of ascertaining the purport of the message in transmission is rendered impossible.

My improved system of transmission comprises a single line wire between the two stations and branched at these two stations to the zero point of a circuit, the two extremities of which are connected to earth or the sea ; the current furnished at each station by a local source of electricity being sent through the circuit by means of any convenient transmitting apparatus, (such as a Morse key, microphone or the like) either direct or by induction.

Each station is furnished amongst other apparatus, with a receiving apparatus consisting of a key-instrument connected with the line-wire and permitting the current sent into the line from the transmitting station, to pass into a conductor leading direct to one of the wires running to earth and to which is connected the receiver proper.

In order to avoid the polarization of the earth-wires, each such wire is connected with a conductor leading to a copper or other metallic blade immersed in an impolarizable saline solution in which is disposed a second similar blade connected to earth or sea.

In the accompanying drawings :

Figure 1, is a diagram showing my improved system as applied to telegraphy

Figure 2, is a diagram showing the same applied to telephony.

Figure 3 shows the system of Figure 2 with induced current.'

Figure 4, shows a modified arrangement.

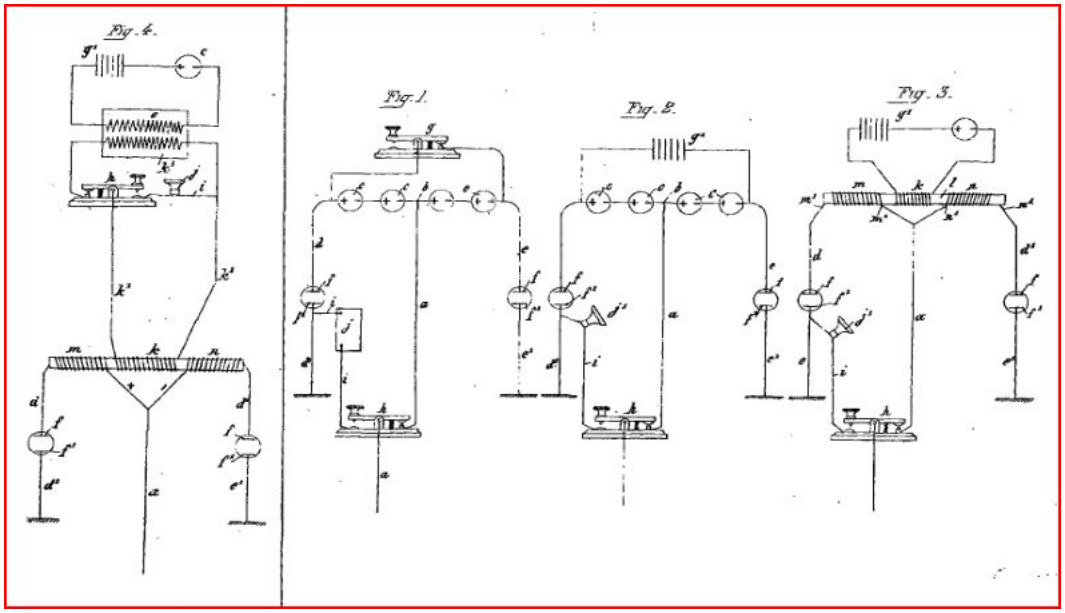

In all the figures the same letters of reference designate the same parts.

Referring to Figure 1 the two stations are connected by a single line-wire a, branched at the zero point b of the battery formed of the different elements c of which the end poles are connected to earth, or to sea, by a conductor d e lead- ing to a copper or other metallic plate f immersed in a liquid of good conductivity, such as for example a solution of a sulphate of copper, in which another copper plate f1 is placed connected to earth, or sea by a conductor d1 .

A transmitting apparatus g of any convenient construction, such as a Morse- key instrument, is connected with the two end poles of the battery in such a manner that in its position of rest it closes the circuit of the latter by establishing a short circuit so that no current passes, (or at most a very weak one) through the wire line a or through the earth-wires.

To send a current to the receiving station, the key 9 is depressed whereupon the short circuit is interrupted and the current is caused to pass simultaneously through the line-wire a and the earth-wires d d1 e e*. The line-wire is in reality traversed by two currents in opposite directions, so that it is in an apparently neutral state, and thus no interception of the messages can be effected for the, reason that if a receiver be interpolated, at any point of. the line, said receiver would receive two currents in opposite directions' which would neutralize each other.

Each station is furnished also with a receiving apparatus consisting of a commutator h connected with the line-wire a and permitting, when depressed, the current from the transmitter to pass into a wire i leading direct to one of the earth-wires (d1 for example) and in which is interpolated the receiving instrument j.

To receive signals sent from the transmitting station, it 'is necessary that the commutator lever h be kept depressed, so as to cause the current from the transmitting station to pass into the wire In connection with the receiving instrument.

'The connections may also be established in such a manner that when the commutator h is in its normal .position, it cuts the wire (and connects the wire with that part of the said wire which leads to the other station ; in this case for transmitting a signal it is necessary to depress the commutator lever h previously so as to re-establish the continuity of the line-wire and the operator then acts on the key-lever g as hereinbefore stated.

My arrangement is equally applicable to telephonic messages as will now be explained with reference to Figure 2, The transmitting instrument g is in this case replaced by a microphone g1 and the receiving instrument j is replaced by a telephone receiver j 1 the operation of the arrangement is exactly, the same as that above described.

The vibrations of the microphone cut the short circuit and the current from the local, source of electricity thereupon passes over the line-wire a and the earth-wires d d1 c el as previously stated.

The telephonic message is received in the same manner as before through the intervention of the commutator h which passes the current, sent from the transmitting station; to the telephonic receiving instrument jl.

The line-wire may also be operated by induction currents a3 is indicated at Figure 3.

The local circuit in which the transmitting apparatus (for instance, the microphone g1) is inserted comprises a primary winding k surrounding a central soft-iron core, or bundle of wires, l which is further provided with two secondary windings m m in opposite directions. The line wire a is connected to each of these secondary windings at the two extremities m1 n1 of opposite polarity and the opposite extremities ms p2 are connected with the earth-wires d d c set in the manner already explained.

When operating the transmitting apparatus or when speaking into the microphone 0 for example, induction currents are generated in the secondary windings m n and they then affect the receiving apparatus jl at the receiving station as already stated.

The primary winding and the two secondary windings may have the three wires wound in the same direction upon the soft iron core and the two extremities of the primary convolutions are connected with the local circuit in which is interpolated the transmitter while two extremities of opposite polarities of the secondary convolutions are connected to line and the two osiers to earth as previously explained.

In my improved transmitting arrangement the two earth wires at 'each station must be the more separated from each other the longer the distance is between the two stations so that the resistance of the earth between the said earth-wires will be sufficient to cause the single line-wire to be traversed by the greatest possible quantity of the current.

In order to reduce as far as possible the distance between the earth-wires the beginning of the single wire a and the wires rl rl' leading to earth are

advantageously rm distance from the transmitting instrument and receiving instrument respectively at the telegraphic or telephonic station and thus permit the two earth connections of the two telegraphic or telephonic stations to be placed nearer each other.

The telegraphic or telephonic station is then divided and the transmitting instrument is connected with the magnet with its earth connections and line wire a ' by two conducting wires kl k2 connected with the ends of the convolutions k which generates induction currents in the secondary windings m n (Figure 4).

The current sent into the conducting wires k1 k2 and. passing through the convolutions k may itself be an induced current generated in the coil k3 when a current from the source of electricity c is passing through the. primary coil o through the action of the transmitting microphone gl for example.

In the case when' the distance of the telegraphic or .telephonic transmitting station from its earth-connections is not too excessive the current traversing the conductors k1 1.:2 instead of being an induction current may be furnished direct by the source of electricity of such station, and naturally the, transmitting instrument, (microphone or 'key), and the source of electricity are then placed direct in the circuit;1 k2.

An interrupter A interpositioned in the conductor kl permits of cutting the circuit in leading to the secondary coil k3 and of closing the circuit for the conductor i leading to the conductor k 2 in which is interpolated' the receiving instrument j.

Thus the coil k is either inductor or induction according to whether there is transmission or reception.

It is to be well understood that my system of transmission is entirely independent of the nature of the telegraphic or telephonic apparatus employed therewith, and that the source of electricity at the stations may be of any convenient kind, either derived from a battery, accumulators, dynamo, magneto-electric machine or the like.

COMPLETE SPECIFICATION.

This invention elates to improvements in the transmission of electric currents and is more particularly adapted for telegraph and telephone lines, whereby condensation in the cable is avoided, while at the same time "tapping" of the line at any, point thereof, for the purpose of ascertaining the purpose of the message in transmission is rendered impossible.

My improved system of transmission comprises a single line-wire between the two stations and branched at these two stations to the zero point of a circuit, the two extremities of which are connected to earth or the set; the current furnished at each station by a local source of electricity being sent through the circuit by means of any convenient transmitting apparatus, '(such as a Morse key .microphone or the like) either direct or by induction.

Each station is furnished, amongst other apparatus, with a receiving apparatus consisting of a key-instrument connected, with the line-wire and permitting the current sent into the line from the transmitting station, to pass into a conductor leading direct to one of the wires running to earth and to which is connected the receiver proper.

In order to avoid the polarization of the earth-wires, each such wire is connected with a conductor leading to a copper or other metallic blade immersed in an impolarizable saline solution in which is disposed a second similar blade connected to earth or sea..

In order that my invention may be clearly understood and readily carried into effect I will now proceed to describe the same more fully with reference to the drawings accompanying my Provisional Specification in which:.

Figure 1, is a diagram showing my improved system as applied to telegraphy.

Figure 2, is a diagram showing the same applied to telephony.

Figure 3 shows the system of Figure 2 with induced current.

Figure 4 shows a modified arrangement.

In all the figures the same letters of reference designate the same parts.

Referring to Figure 1 the two stations are connected by a single line-wire a branched at the zero point b of the battery formed of the different elements c of 'which 'the end poles are connected to earth, or to sea, by a conductor d e leading to a copper or other metallic plate f immersed in a liquid of good conductivity, such as for example a solution of sulphate of copper, in which another copper plate f1 is placed connected to earth, or sea by a. conductor d1 e1.

A transmitting apparatus q of any convenient construction, such as a Morse-key instrument, is connected with the two end poles of the battery in such a manner that in its position of rest it closes the circuit of the latter by establishing a short circuit so that no current passes, (or at most a very weak one) through the wire line a or through the earth-wires.

To send a current to the receiving station, the key g is depressed whereupon the short circuit is interrupted and the current is caused to pass simultaneously through the line-wire a and the earth-wires d d1 e el. The line wire is in reality traversed by two currents in opposite directions, so that it is in an apparently neutral state, and thus non interception of the messages can be effected for the reason that if a receiver be .interpolated at any point of the line, said receiver would receive two currents in opposite directions which would neutralize each other

Each station is furnished also with a receiving apparatus consisting of a commutator h connected with the line-wire a and permitting, when depressed. the current from the transmitter to pass into a wire i leading direct to one of the earth-wires (d1 for example) and in which is interpolated the receiving instrument j.

To receive signals sent from the transmitting station, it is necessary that the commutator lever h be kept depressed, so as to cause the current from the transmitting station to pass into the wire i in connection with the receiving instrument.

The connections may also be established in such a manner that when the commutator h is in its normal position, it cuts the wire' a and connects the wire i with that part of the said wire which leads to the other station; in this case for transmitting a signal it is necessary to depress the commutator lever h previously so as to re-establish the continuity of the line-wire and the operator then acts on the key-lever as hereinbefore stated.

My arrangement is equally applicable to telephonic messages as will now be explained with reference to Figure 2. The transmitting instrument g is in this case replaced by a microphone 1 and the receiving instrument j is replaced by a telephone receiver il the operation of the arrangement is exactly the same as that above described.

The vibrations of the microphone cut the short circuit and the current from the local source of electricity thereupon passes over the line-wire a and the earth-

wires d d1e e1 as previously stated,

The telephonic message is received in the same manner as before through the intervention of the commutator h which passes the current sent from, the transmitting station to the telephonic receiving instrument j1.

The line wire may also be operated by induction currents as is indicated at Figure 3.

The local circuit in which the transmitting apparatus (for instance, the microphone g1). is inserted comprises a ,primary winding k surrounding a central soft iron core,, or bundle of wires, 1 which is further provided with two secondary windings m n in opposite directions. The line wire a is connected to each of these secondary windings at the two extremities in n1 of opposite polarity and the opposite extremities m2 n2 are connected with the earth wires clt c ex in the manner already explained.

When operating the transmitting apparatus or when speaking into the microphone for example, induction currents are generated in the secondary windings m n and they then affect the receiving apparatus l at the receiving station as already stated. The primary winding and the two secondary windings may have the three wires wound in the same direction upon the soft iron core and the two extremities of the primary convolutions are connected with the local circuit in which is interpolated the transmitter while two extremities of opposite polarities of the secondary convolutions are connected to line and the two others to earth as previously explained.

In my improved transmitting, arrangement the. two earth wires at each. station must be the more separated from each other the longer the distance is between the two stations so that the resistance of the earth between the said earth-wires will be sufficient to cause the single line-wire to be traversed by the greatest possible quantity of the current.

In order to reduce as far as possible the distance between the earth-wires the beginning of the single line wire a and the wires d d1 leading to earth are advantageously removed at a distance front the transmitting instrument and receiving instrument respectively at the telegraphic or telephonic station and thus permit the two earth connections of the two telegraphic or telephonic stations to be placed nearer each other.

The telegraphic or telephonic station is then divided and the transmitting instrument is connected with the magnet with its earth connections and line wire z by two conducting wires k' k2 connected with the ends of the convolutions which generates Induction currents in the secondary windings m n (Figure 4).

The current sent into the conducting wires k1 k2 .and, passing through the convolutions k may itself be an induced current generated in the coil k3 when a current from the source of electricity c is passing through the primary coil or through the action of the transmitting microphone f/I for example.

In the case when the distance of the telegraphic or telephonic transmitting station from its earth connections is not too excessive the current traversing the conductors k le2 instead of. being an induction current may be furnished direct by the) source, of electricity of such station, and naturally transmitting instrument (microphone or key) and the source of electricity are then placed direct in the circuit leI k-S.

An interrupter It interpolated in the conductor k1 permits of cutting the circuit in leading to the secondary coil k3 and of closing the circuit for in conductor i leading to the conductor 3 in which is interpolated the receiving instrument j1.

Thus the coil k is either inductor or induction according to whether there is transmission or reception.

It is to be well understood that my system of transmission is entirely independent of the nature of the telegraphic or telephonic apparatus employed therewith, and that the source of electricity at the stations may be of any convenient kind,

---

Improvements in Connections of Telephonic and Telegraphic Instruments to Conducting Lines.
GB189706773

1897-03-15

Telegraph and telephone lines are arranged so that any pair of lines bearing instruments may be used as a lead or return for another set of instruments without interference. Thus, as an example, four metallic circuits carry four separate sets of instruments individually but may have circuits A and B, C and D, used as other metallic circuits, or A and B may form a lead and C and D a return for a seventh metallic circuit. The Specification describes telephone instruments as used on the metallic circuits and telegraph or telephone instruments inserted in the earth return circuits. Fig. 1 shows a pair of lines L<1>, L<2> forming a metallic circuit and capable of use as the line with an earth return through L<3>, L<3>, the lines L<2> being connected to the loop at the centre of the secondary coil S', S<2> of the induction coil X. The receiving-instrument is shown in a bridge, such as Z. The positions of the transmitting T and receiving R instruments may be reversed. Each side of a metal loop may also be used as the line with an earth return.

This invention relates to the connecting of telephonic and telegraphic instruments to conducting lines in such a manner that several telephonic and telegraphic messages can be simultaneously transmitted without interfering with one another.

Fig. 1 of the accompanying drawings shews diagrammatically connections for a telephone and also for another telephone or telegraph to a double conducting line.

Fig. 2 shews a modification.

Fig. 3 shews how seven sets of the connections may be applied to four double conducting lines.

Fig. 4 shews the connections for a telephone and telegraph to a single line with earth return.

Fig..5 shews connections for telephoning over two telegraph lines one of them forming a metal return.

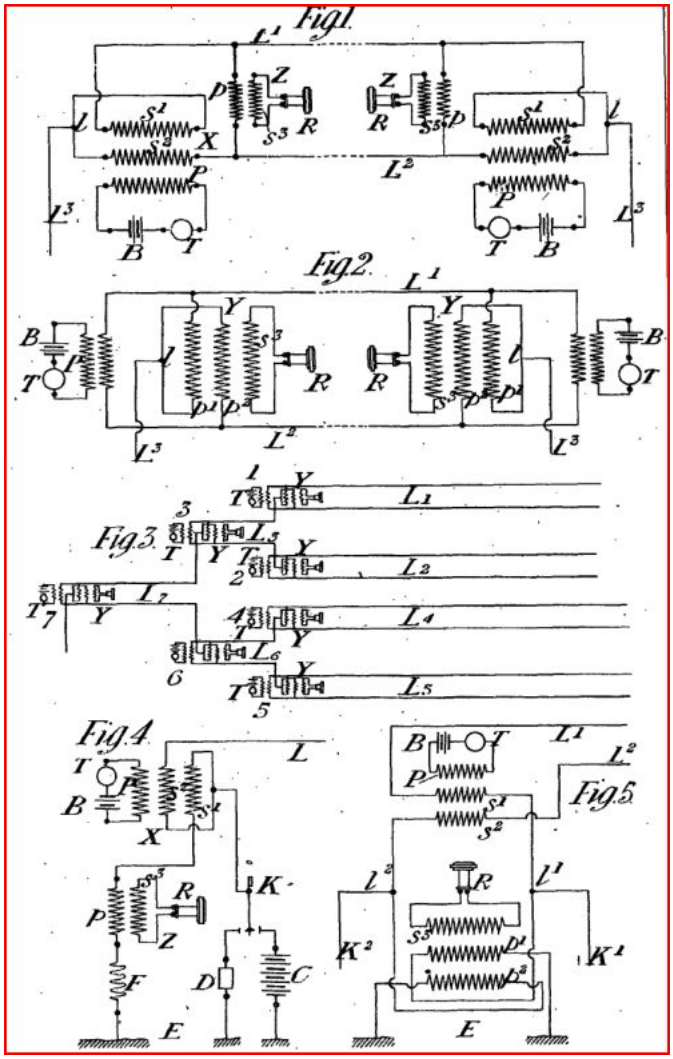

Referring first to Fig. 1 the two lines Ll L2 are at each end connected as shewn at X through two equal secondary coils 8 1 and s 2 wound with a primary coil P which is in circuit with a telephone transmitter T and local battery B.

The lines L1 L2 are so connected to the secondary coils 8 1 s 2 that the currents induced in the lines by the telephone transmitter are always in opposite directions.

The telephone receiver R, as shewn at Z, is in circuit with a secondary coil 8 3 wound with a primary coil p connecting the two lines L1 L2.

At a point l intermediate to the coils s1 s2 a third line L3 is connected, this line being employed for telephone or telegraph transmission. When either of the telephone transmitters T is employed, the induced currents pass through the primary coil p thus causing the receivers R to act. But should any current flow by L3 it must flow in opposite directions through 8 1 and s2, and therefore in the same direction along the lines L1 L2 so that it cannot influence the receivers R nor the transmitters T. At each end a line L3 may be connected as shewn by Y, Fig. 2, at l a point intermediate to two equal primary coils p1 p2 which connect the lines Ll LO and are wound with the secondary S3 of each telephone receiver R.

With connections thus arranged any current flowing in the same direction through the coils pl p 2 actuates the telephone receivers R, whereas a current from L3 flows in opposite directions through the coils pl p 2 and therefore is ineffective on the receivers R. By combining several ordinary transmitters T and several of the receiver arrangements marked Y in Fig. 2 with a number of double lines as shewn in Fig. 3, a number of messages can be sent over these lines without interfering with each other.

Thus referring to Fig. 3 the transmitter 1 works over the pair of lines L1 in the - usual way, one of these lines serving as metal return. In like manner the transmitter 2 works over the pair L2, transmitter 4 over the pair L 4 and transmitter 5 over the pair L 5. Again the transmitter 3 works through the pair of lines L 3 and the two pairs L 1 and L 2, one of these pairs serving as metal return.

In like manner the transmitter 6 works through the pair of lines L 6 and through the two pairs L 4 L 5. Finally the transmitter 7 works through the pairs of lines L 7 and through the two pairs L 3 and L 6 and the. four pairs L 1 L 2 L 4 and L 5, two of these pairs such as L 4 and L 5 serving as metal return.

Obviously this system may be duplicated, and reduplicated so that one transmitter can be made to work over 8 pairs or 16 pairs of lines or other multiple of 4.

As shewn in Fig. 4 a telephone and a telegraph are connected to one line L having earth return. In this case X and Z are the telephone arrangements so marked in Fig. 1, K is the key, C the battery and D the receiver for telegraphing in the connection of Z to earth there is an adjustable resistance F to balance that of the line. As shewn in Fig. 5 two sets of the telegraphic connections shewn in Fig. 4 and two lines Ll L2 which may be both to one place or each to a different place with earth return are combined with one telephone arrangement.

The transmitter T by its primary P induces currents in the secondaries $ 1 89 both in the same direction and therefore in opposite directions in the lines Ll L2. The currents being in the same direction in p1 and p2 act on the secondaries 1 3 of the receivers 1,. Currents from the telegraph gi dividing at 11 pass in opposite directions through sl and pl and therefore do not affect the telephonic receivers. And in like manner the currents from the telegraph K2 are

ineffective on the receivers.

For the sake of clearness the primary and secondary coils have been shewn in the form of many lines side by side.

It is to be understood however that they are wound in each case all on one bobbin.

In Figs. 3,4 and 5 the arrangements are shewn at only one end of the conducting lines.

It is to be understood however that they are symmetrically repeated at the other end as shewn in Figs. 1 and 2.

COMPLETE SPECIFICATION.

This invention relates to the connecting of telephonic and telegraphic instruments to conducting lines in such a manner that several telephonic and telegraphic messages can be simultaneously transmitted without interfering with one other.

Figure 1 of the drawings accompanying my Provisional Specification shews diagrammatically connections for a telephone and also for another telephone or .telegraph to a double conducting line. Figure 2 shews a modification. Figure 3 shews how seven sets of the connections may be applied to four double conducting . lines: Figure 4 shews the connections for a telephone and telegraph to a single line with earth return. Figure 5 shews connections for telephoning over two telegraph lines one of them forming a metal return.

1 . Referring first to Figure 1 the two lines Ll L2 are at each end connected as shewn at X through two equal secondary coils s1 and 8 2 wound with a primary coil P which is in circuit with a telephone transmitter T and local battery B.

The lines Ll L 2 are so connected to the secondary coils 8 1 s''' that the currents induced in the lines by the telephone transmitter arc always in opposite directions.

The telephone receiver R, as shewn at Z, is in circuit with a secondary coil s3 wound with a primary coil p of high resistance connecting the two lines L1 L2.

At the point intermediate to the coils sr s 2 a third line L3 is connected, this line being employed for telephone or telegraph transmission. 'When either of tho telephone transmitters T is employed, the induced currents pass through tho primary coil p thus causing the receivers R to act. But should any current flow by L3 it must flow in opposite directions through sl and s2, and therefore in the same direction along the lines Ll L2 so that it cannot influence the receivers It nor the transmitters T. At each end a line L3 may be, connected as shewn by Y, Figure 2, at l a point intermediate to two equal primary coils p1 p2 which connect the lines L1 L2 and are wound with the secondary 8 3 of each telephone receiver R. With connections thus arranged any current flowing in the same direction through the coils yx actuates the telephone receivers R, whereas a current from L3 flows in opposite directions through the coils p1 p2 and therefore is ineffective on the receivers R. By combining several ordinary transmitters T and several of the receiver arrangements marked Y in Figure 2 with a number of double lines as shewn in Figure 3, a number of messages can be sent over these lines without interfering with each other.

Thus referring to Figure 3 the transmitter 1 works over the pair of lines L 1 in the usual way, one of these lines serving as metal return.. In like manner tho transmitter 2 works over the pair L 2, transmitter 4 over the pair L 4 and transmitter 5 over the pair L 5. Again the transmitter 3 works through the pair of lines L 3 and the two pairs L 1 and L 2, one of these pairs serving as metal return.

In like manner the transmitter ti works through the pair of lines JLA b and through the two pairs L 4 L 5. Finally the transmitter 7 works through the pairs of lines L 7 and through the two pairs L 3 and L 6 and the four pairs L 1 L 2 L 4 and L 5, two of these pairs such as L 4 and L 5 serving as metal return.

Obviously this system may be duplicated, and reduplicated so that) one transmitter can be made to work over 8 pairs or 16 pairs of lines or other multiple of 4.

As shewn in Figure 4 a telephone and a telegraph are connected to one line L having earth return. In this case X and Z are the telephone arrangements so marked in Figure 1, K is the key, C the battery and D the receiver for telegraphing.

In the connection of p to earth there is an adjustable resistance F to balance that of the line. As shewn in Figure 5 two sets of the telegraphic connections shewn in Figure 4 and two lines Ll L2 which may be both to one place or each to a different place with earth return are combined with one telephone arrangement.

The transmitter T by its primary P induces currents in the secondaries sl S2 both in the same direction and therefore in opposite directions in the lines L1 L2. The currents being in the same direction in pI and pS act on the secondaries i1 of the receivers It.

Currents from the telegraph K1 dividing at 1 1 pass in opposite directions through sl and I > I and therefore do not affect the telephonic receivers. And in like manner the currents from the telegraph K2 are ineffective on the receivers.

The connections of p1 and p2 to earth may have suitable resistances as shewn at F in Figure 4.

For the sake of clearness the primary and secondary coils have been shewn in the form of many lines side by side.

It is to be understood however that they are wound in each case all on one bobbin.

In Figures 3,4 and 5 the arrangements are shewn at only one end of the conducting lines.

It is to be understood however that they are symmetrically repeated at the other end as shewn in Figures 1 and 2.,

---

Perfectionnements aux bobines d'induction
FR382386

1908-02-05

The present invention relates to an improved induction coil in order to obtain induction currents in very short periods. These currents, whose durations are extremely short 5, enjoy special properties which find application mainly in telegraphy and wireless telephony.

This induction coil is characterized by the absence of the magnetic core and the winding mode of the inductor and the armature on a short length coil, but a very large diameter, the inductor coil being virtually drowned in May 1 the armature winding.

The appended drawing schematic represents for example an induction coil according to the present invention.

FIG. 1 is a section along line A-20B of FIG. 2 ;

FIG. 2 is a plan.

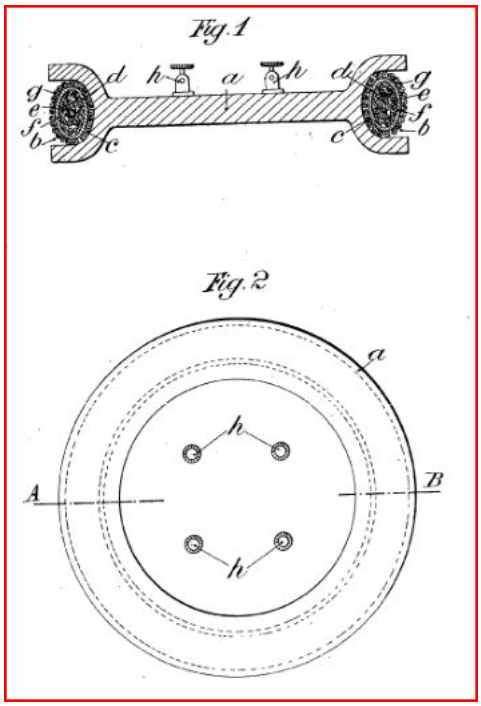

As shown in these drawings, this coil has a very large diameter which can be up to several meters; 26 is drawing the round, but it could equally be square or affect any other polygonal shape. This reel is very long because all winding son are housed on its outskirts in a suitable groove b; it will be understood by 3o begins winding on the rim of this kind of pulley a first layer of wire induced E and then covered with a suitable insulating and d are wound over this insulating layer the inductor wire E which is covered another 35 isolated layer; we **réuuïi uêUi** the insulating layers d and f, so as to isolate the inductors e and ends the coil by an external winding armature wire g. ko

Is carried out in this way a large-diameter ring compound induced son c, g, containing a central core of an adequately insulated son inductors.

The machine has four terminals 5 h which two are used to secure the ends of the armature winding and the other two ends of the inductor winding.

We can arrange several induced son and son more inductors; in this case, each terminal 5o h will be replaced by a multiple switch that will bring together the different armatures on, and the different inductors on, either voltage or the contrary in quantity, following the effects that one wishes to obtain.

Dispositif de transmission téléphonique
FR377785

1907-09-14

Telephone transmission system of mounting each station transmitter and or serial receivers and to bring the two stations by three son line, including 5o first two respectively together the poles of the two stations and the third is mounted derivation at a point of each station caught between the transmitters and the receiver or receivers, one or even two of these three son may be replaced by equivalent landings.

The present invention provides a way to increase the distance at which it is possible to call or to increase the intensity of sound transmitted at a given distance 5.

When installing a regular telephone line, it is customary to bring the two stations using two wires, one for the second round for the return; at-10 there is no fear induction from neighboring lines, one connecting the two stations by a thread alone and return through the ground at each station.

FIG. 1 of the accompanying drawing shows the 15 most simple provision of a regular line with two son; there is one at each station magnetic phone, a1 met by both son line c and d; when speaking in the phone, the phone is 30 a1 receiver and vice versa; this provision is entirely satisfactory from the standpoint of the actual transmission, but it has the obvious disadvantage that the two parties can not break interfere, each necessarily listen to while the other speaks .

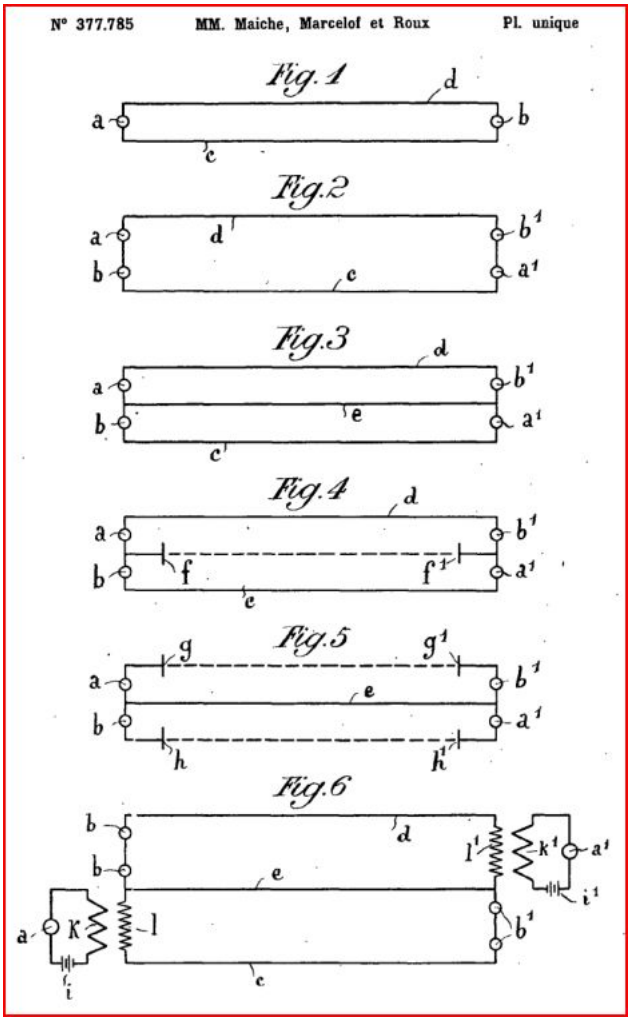

To overcome this disadvantage, it immediately offered to have each transmitter station a phone or a 1 and a receiver or telephone b bl, allowing 3 to the two interlocutors to talk while listening. This solution suffers a disadvantage from the standpoint of the transmission; in fact, as shown in Fig. 2, the four phone a, b, a}, bx 3 are mounted in series on the line cd, so that the sound transmitted by a transmitter has or a1 necessarily travels in addition interesting b1 or b receptor both other phones of the circuit. The telephone circuit thus unnecessarily h has a high resistance which reacts disadvantageously either on the possible length of the line cd, either the intensity of the sound transmitted to a given line length.

The present invention relates to a device easy positive h to remedy the drawbacks both of the two transmission systems according to Fig. 1 and 2 and make a new telephone transmission system providing both the benefits of the 5 two known systems.

As shown in Fig. 3, this invention is simply to dispose between the two stations a third e line wire terminating at each station between the telephone transmitter 5 tor a or a1 and the receiver phone b or b1. In these conditions the wall sent by "will be fully received by b1 without crossing unnecessarily b and a1 resistance and vice versa speech transmitted by a1 will be fully received by b.

The need for three son line c, d, e 5 is required when the line is around other transmissions; but when isolated, it can simplify the transmission as shown in Fig. k or 5.

According to FIG. h, the wire line drifted o-tion e is deleted and replaced by a ground f and f1 taken at each station between the transmitter and receiver.

In special cases, it is even possible to reduce the line to a single wire e in '5 with each station two landings g, h and # 1, h1), the receiver and transmitter are each disposed station in series between the two landings; under these conditions, the two conductors c and d are formed by o the ground and there is no longer a single line wire e.

In the above, to simplify the description and drawings, we assumed the exclusive use of magnetic phones; 5 Fig. 6 shows the circuit diagram in the case of induction phones. In this case each position i includes a battery, a transmitter microphone and primary k of an induction coil, mounted in series o on a closed circuit; the line circuit c, d comprises series headphones b, b and b1, b1 and side and ll of the coil. In this

If the invention is to attach the derivative e line wire between the two receivers b, b or i1, A1 on the one hand and the secondary or ll 35 on the other hand, as shown in FIG. 6.

The result of these provisions is summed up by the possibility of quadrupling of the intensity of the reception for a given length of line, or the length of the line Zio maintaining the same intensity.

Nouveau mode de transmission sans fils des courants télégraphiques et téléphoniques en employant comme conducteurs la terre et l'eau
FR320267

1902-12-05

To understand our invention, it is good to remember that in an ordinary telegraph line a thread, more or less isolated, from a point to another, communicates with earth at each end. A power source; and a transmitter unit are sandwiched between the starting line and earth. Upon arrival, a receiver also communicates with the line and the earth.

We know that each of the posts supporting the line passes a small amount of power that is lost in the ground. Large amount of current is now lost all **plus 1 large 5** that the distance between stations is itself larger and, consequently, the number of' poles is higher. Loss can become considerable, without preventing transmissions. It may even happen that the ao thread without being broken, drags on earth there for a certain length of son'parcours and continues to allow the current of a shift to another, albeit very weakly,

The experience proved us uninsulated conductor could even, for certain distances, be simply placed on the ground and that transmissions would nevertheless be possible.

We are able to continue, transmit signals is greatly increased if, at each end, the uninsulated wire touching the ground, met in a well-insulated wire that extends the line to a ground to the point where so are transmitters and receivers.

It is understood that the ground at the end of a secluded part forces the return current from sinking into the depths of the earth ho and that, consequently, there is an infinitely small closure point where the uninsulated wire touches the ground. In other words, the loss suffered in ground contact, the uninsulated wire, is even less than each end of uninsulated wire so is an insulated wire from the ground at a greater distance.

Hence, if the lead wire, instead of iron, consisting of a much less conductive material, coal, for example, everything would be the same way. We also recognized that even when iron, coal or other similar material, are replaced by placed water, salt if possible, and, consequently, by a stretch of sea or any other part of sea whose geographic provision lends itself to this kind of installation.

When it comes to cross an arm of the sea, the isolated line extension is placed preferably in the direction of the straight line through the two points to be connected.

In case one transmission on a role, isolated leagues will be perpendicular to the straight line joining the two stations.

Isolated lines will not be too long, and therefore, will provide not only coast to coast, but between two points inland. The thickness of the salt water layer being at even greater depths, only about the thickness of the land mass, the proportions remain between water and adequate the earth so that water plays exactly the same role that the uninsulated conductor touching the ground.

To make our evplications as clear as possible, we have shown diagram-matically, in the accompanying drawing, an installation in which our invention is applied.

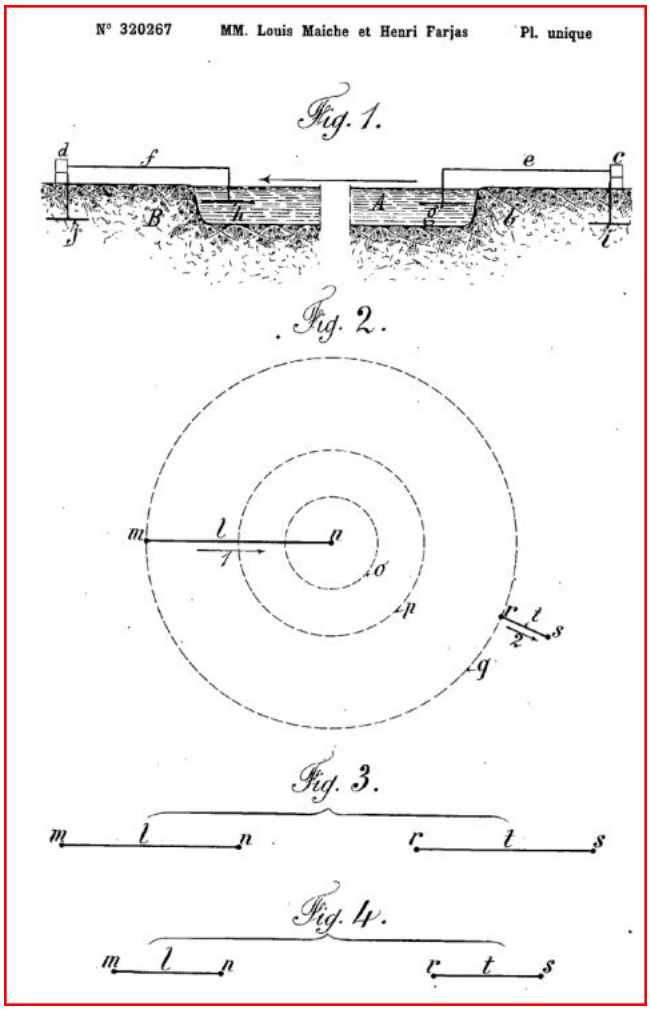

A is the sea (Fig. I) and 13 b are both shores, c and d both stations, e and f insulated, and the plates located in the water, i and it updates earth.
We see that the sea is an extension isolated son e and f, and it plays the role of an uninsulated conductor based on floor.

To make it clear how 3 o operates the propagation of electric currents, we assume an isolated line (Fig. A) within two earthed m and n. If the current is

moving in the direction of the **llèche**, electricity arriving ashore in n flourishes spheres 3.) concentric o, p, q, etc., all points of each sphere simultaneously receiving the same amount of electricity if the propagation medium is uniform. Be grounded in r therefore receive the current along the earth m, r and if this land is connected by a line by t, s land to another, even very close to her, the current finding less resistance in the isolated line in the middle (Jun separates the two nets land, will follow this line, as shown in llèche a. It will be thus possible to establish a wireless communication between any point of the line / on which find transmitting devices, and any point on line T which will be **appareds** receptors.

To establish simultaneously on each of the leagues and t, a position transmitter and a receiver will require that the line is the same length as the line 1, J J as shown in Fig. 3.

If the medium is found to be twice as conductor between h and r between m and n, on the one hand, and between r and s on the other hand, the lines l and t may have as half the length of the distance between the points n and r (fig.û).

Of course, transmissions based on the principle that we have indicated, may be made by taking as con- bo different producers, not only the earth and the sea water, but the earth and air, land in this case, acting as a better conductor brought by the air; the insulated wire from the earth lead to the air at each station 7. tion to a more or less remote distance according to the distance that would take. It is obvious that the latter provision, the sea and fresh water advantageously replace the earth. 7°

In summary, we claim as our exclusive property, the new method, described above, transmission without telegraph and telephone currents, said transmission mode of making pass in a conductive medium the current emitted by the base station and to receive on arrival in this current an insulated wire of suitable length, which are sandwiched the receivers and resulting in a second medium whose specific conductivity is less than that of the first medium, but passes the total quantity of electricity because of its mass which is greater than that first medium, an insulated wire, on which the transmitting devices is also leading into the second medium, so that the first medium is an extension of two isolated lines, and the second medium acts as the return wire, the two isolated lines to be used both for shipping and for the reception.

Un nouveau mode de transmission et de réception des courants télégraphiques et téléphoniques sans autre conducteur que la terre ou l'eau
FR318007

1902-10-03

In an electrical circuit consisting of a power source and a metallic conductor whose ends are grounded, which closes the circuit, the earth acts as 5 driver not only a straight line between the two landings, but on a almost infinite extent; However, with a power density decreasing in proportion to the distance.

If parts of the ground are better conductors than others (because of the moisture, the saltiness of the water or any other cause) the current preferably passes through these parts describing curves or bends as does a river following the slopes of the terrain.

It follows that if, on part of the land used as return conductor, it artificially creates a better conductor line as the earth, it will be traversed by the current in preference to any other lower conductive part.

The effect is much more complete and can collect the current and note its existence when the best conductive line is insulated from earth and communicates with it by its ends. The current that would have crossed the land finding a wise not easier by the wire preferably follows and restores much faster electrical neutrality of the ground. It is isolated by cutting the line at any point that can be inserted in the course of the current instruments (telegraphic or telephonic receivers) that can detect its existence.

It is understood that if the isolated artificial line is a very good conductor, if its ends are connected to metal surfaces large enough in contact with the ground, the closing of the circuit will cause the ground to be in a state of electrical neutrality absolute.

Under these conditions, if a current electric is sent intermittently in the metal line, charge the earth, for each issue, a certain amount of electricity instantaneously discharge into the isolated artificial line.

Experience has shown that these phenomena can occur even when there is almost no gap between the two landings transmitter station or between two plates that collect the color rant crossing the line isolated the receiving station, to the condition that at each station the plates which lead to the two lands are carefully insulated from each other by means of a sufficiently thick insulating separation that no induction effect or condensation on one another can occur, and fairly large compared to the dimensions of the plates to prevent current from closing on itself too close to the to start. The current is so obliged to flourish "right and left of the landings, and the point where the positive and negative electric waves begin to reach is considerably related. I can further increase the desired effect by minimizing the current closure on itself through a number of insulating walls arranged below the plates to prevent **farm-i o ture** of the circuit by the depth of the earth, on the side opposite that in which the transmission must be received and, if necessary, above the plates.

In general, the plates will be placed vertically on either side of an insulating wall, their smaller dimensions being turned to the opposite position.

I can also use a wide insulating tube divided in two by a thick wall normal to isolated generators. The plates will be set back to back on either side of this partition in the interior of the tube and placed in communication with the outer conductor through insulated **son**.

The tube may be straight, or consists of two parts forming between them an angle properly calculated so that the circuit is closed by the earth is done by almost entirely in the **3 o** where the current is sent.

It is obvious that the installation is completed by transmitters and telegraph or telephone receivers that may be any, as the source of electricity.

I claim as my exclusive new property above described transmission and reception of telegraph and telephone currents without other driver as land or water, said system of separating the two landings each position by established insulating material to prevent the production of induction phenomena of condensation and the circuit closing on or by the depth of the earth, and force the air to flourish right and left, so that they can begin to get to and distant from the transmitter station, the two earthed of each position can thus without drawbacks, are moved towards one another until they fit on either side of the same insulating wall.

Nouvelle disposition de bobine d'induction
FR647 (E)
1903-02-18

Système de communication télégraphique et téléphonique

FR376100
1907-07-30

Mode de transmission de signaux télégraphiques
FR361733
1906-10-23

Nouveau moyen de transmission et de réception sans fil des courants électriques
FR321454
1903-01-10

Récepteur télégraphique pour toutes transmissions en général, avec ou sans fils
FR320467
1902-12-11

Nouveau récepteur des courants électriques
FR319195
1902-11-06

Nouveau moyen destiné à augmenter la sensibilité des microphones
FR319155
1902-11-06

Nouveau système de télégraphie et de téléphonie sans fil
FR318507
1902-10-17

Système de communication télégraphique et téléphonique
FR7464 (E)
1907-08-09

Dynamo - oder magnetelektrische Maschine
DE46075
1889-02-05

Transformateur téléphonique sans noyau magnétique
CH44013
1909-07-01

Wicklung von eisenfreien Transformatoren für Fernsprechzwecke.
AT40498
1910-01-10

Système de télégraphie et de téléphonie sans fil
FR392252
1908-11-21

Dispositif pour transmetteur et récepteur téléphonique
FR390346
1908-10-02

Other Patents

METHOD OF PRODUCING MOTIVE POWER
CA78259
1902-11-18

Appareil cinématographique
FR388334
1908-08-08

Perfectionnements aux papiers photographiques
FR400693
1909-08-04

Réducteur de pression pour tous fluides
FR361404
1906-06-22

Surchauffeur de vapeur pour locomotives
FR352810
1905-08-22

Apparatus for Heating Steam.
GB189801540
1898-01-19

An Improved Method for the Production of Motive Power by Heat and Fluid Pressure
GB190227627

1903-11-12

Improved Means of and Apparatus for Producing Motive Power
GB190226257
1901-11-29

An Improved Method of Producing Motive Power
GB190202489
1903-01-29

épuration bactériologique de l'eau
FR350264
1905-12-18

Dispositif générateur de vapeur
FR350080
1905-10-13

Perfectionnement aux moteurs à explosions
FR349940
1905-07-27

Mode de production de force motrice
FR349939
1905-07-27

Moyen de propulsion et de direction des navires
FR349935
1905-07-27

Nouveau mode d'application de la vapeur surchauffée
FR339220
1905-01-17

Dispositif pour la condensation de la vapeur d'échappement avec récupération de chaleur
FR337543
1904-04-13

Nouveaux verres d'optique
FR322234
1903-01-30

Improvements in Apparatus for Sterilising Water.
GB189705007
1898-02-19

An Improved Process for the Purification of Spirit.
GB189704089
1898-02-12

An Improved Process for Separating Heavy from Light Particles by Centrifugal Action.
GB189704087
1898-02-12

Improvements relating to the Purification of Water, and to Apparatus therefor.
GB189312941
1894-06-23

Improvements in Apparatus for Heating and Cooling Fluids by Fluids.
GB189706157
1898-03-0

Your Support Maintains this Service --

BUY

The Rex Research Civilization Kit

... It's Your Best Bet & Investment in Sustainable Humanity on Earth ...
Ensure & Enhance Your Survival & Genome Transmission ...
Everything @ rexresearch.com on a Data DVD !

ORDER PAGE

PRELIMINARY PLANS TO RUN YOUR CAR ON TAP WATER!

IT ALSO WORKS ON YOUR
TRUCK / RV / MOTORCYCLE / AIRPLANE (ETC)

Will This Work?

These plans were sent to the Spirit of Ma'at anonymously, from someone who does not want his or her name printed (for obvious reasons).
We have had them checked by an expert who believes that they are real.
We also have talked with another individual who has patented a similar device, and we know by personal experience that the technology is sound.
So although we cannot guarantee it, we believe these plans will enable you to build a car that runs on water. If you test it out, though, do as the writer suggests and use an old car that doesn't represent a loss of value if you can't make it work. And leave everything intact so that you can always reconnect back to gas if you have to.

But if you do get it working, please send us your experience for our readers. You could be a national hero and help save our country and our world.

We know for certain that an automobile will run on water. So this could be an interesting project for you mechanical types, with a great reward of never having to purchase gasoline for the rest of your life - and helping humanity at the same time.

Re The Need to Rustproof Your Exhaust System

It is possible to make a hybrid of both gas and water (a system that is being tested now in Mexico), which would eliminate the need to open the head and remove the exhaust system. Just a thought. It takes only a small amount of gas to keep the system dry.

The text sent from the anonymous individual was edited slightly for better reading. The following is his/her words and drawings, which has been given into the public domain.
- Spirit of Ma'at LLC

Introduction

It is suggested you try this out to begin with on a second vehicle you own, one that you don't need to live with everyday, until you perfect this technology.

Do-it-yourself plans allow the individual (that's you and me, folks) to make a difference. This is the easiest and lowest-cost way to convert your car to run on (relatively) free energy.

Now, with existing technology, anyone can stand up and make a difference by reducing the local automotive pollution, eliminate gasoline expenses, help restore our atmosphere, and breathe a little easier.

In putting these plans into operation, you will be making use of your entire existing system except for the fuel tank and the catalytic converter.

The Plan

Build and install a low-cost alternative method for running your vehicle (internal combustion engine) on tap water, using off-the-shelf components.

This is simply an efficient way to convert ordinary tap water into gaseous hydrogen and oxygen, and then burn these vapors in the engine, instead of gasoline.

This "minisystem" runs easily from your existing battery and electrical system, and it plugs into your carburetor with simple off-the-shelf fittings.

You will be installing a plastic water tank, a control circuit, a reaction chamber, a hi-pressure carb/FI fitting, and 3 gauges, and then hooking into your existing carb/FI.

The simplicity comes from its being an "on-demand" system requiring no fancy storage or plumbing. You crank the gas pedal or throttle, and you electrically create more vapor for immediate consumption, on demand; low-high flow rate as needed, from idle to maximum power. The only real change is that you are using tap water as fuel, instead of the traditional petroleum-based fuel.

Given a choice, which way would you choose?

Frequently Asked Questions

Q: Does it really work ?
A: Yes; this is well-established technology dating back to stainless steel. But be sure to follow these instructions using the proper mechanical and electrical assembly techniques, as this plan incorporates the best qualities of several techniques.

Q: How does it qualify as "free energy"?
A: If you're paying someone for the water you use, then it is not strictly free. But the alternative is to keep buying into expen$ive ga$oline and its resultant hydrocarbon pollution.

Q: Is it safe?
A: Technically, it is safer than running on fossil fuel because you are no longer choking on your own emissions (health-wise). In general, it is practically as safe as your current gasoline arrangement. You will be installing a few simple safety devices, using current automotive standards.

Q: What kind of performance can I expect?
A: Properly adjusted, your modified vapor-only fuel system will run cooler, and at a modestly higher power level. The mileage performance expected from this design ranges from 50-300 mpg (of water), depending on your adjusting skills.

Q: Can I do the modification myself?
A: Why not? If you don't have any mechanical skills, and you know someone with basic mechanical and/or electrical skills, you can even delegate some of the construction. If you are using a fuel-injected engine, you may have to get a mechanic's opinion. [There will have to be an adapter inserted into the fuel-injection system, just as you would have to do if you were going to run on propane, hydrogen, or natural gas. Ed.)

Q: What is the environmental impact that my vehicle will have?
A: It will be producing H20 steam (water vapor) and unburnt O2 (Oxygen). Hence, it will be cleaning the environment, rather than dumping nauseous toxins into it. Plus you will be helping to save our dwindling supply of atmospheric oxygen. Any excess vapor in the reaction becomes either steam or oxygen. You can also expect to be receiving more than casual interest from those around you.

Q: Isn't this really a steam engine?
A: No. Really. Exceedingly high temperature and pressure are not used. This is strictly an internal-combustion engine (burning orthohydrogen) with residual steam in the exhaust as a by-product.

There are a few things you should know about gasoline:

Gasoline as a fuel is not necessary; it is optional.

Gasoline versus Water

There is a lot of thermochemical energy in gasoline, but there is even more energy in water. The DOE (Department of Energy) has quoted about 40%, so it is probably much more than that.

Most people are unaware that "internal combustion" is defined as "a thermo-vapor process" - as in "no liquid in the reaction." Most of the gasoline in a standard internal

combustion engine is actually consumed, (cooked, and finally, broken down) in the catalytic converter after the fuel has been not-so-burnt in the engine. Sadly, this means that most of the fuel we use in this way is used only to cool down the combustion process, a pollution-ridden and inefficient means of doing that.

How It Works

Exceedingly simple. Water is pumped as needed to replenish and maintain the liquid level in the chamber. The electrodes are vibrated with a 0.5-5A electrical pulse which breaks $2(H_2O) \Rightarrow 2H_2 + O_2$. When the pressure reaches say 30-60 psi, you turn the key and go. You step on the pedal, you send more energy to the electrodes, and thus more vapor to the cylinders; i.e. fuel vapor on demand.

You set the idle max-flow rate to get the most efficient use of power, and you're off to the races.

In the big picture, your free energy is coming from the tap water in an open system, as the latent energy in the water is enough to power the engine and hence drive the alternator and whatever belt-driven accessories. And the alternator is efficient enough to run the various electrical loads (10 - 20 amps), including the additional low current to run this vapor reaction. No extra batteries are required.

STEP BY STEP CONSTRUCTION (Please refer to diagrams at the end of this document)

OVERVIEW - Here is the suggested sequence of steps:

1. Install the CHT (or EGT) gauge and measure your current operating temp range (gasoline), for comparison.

2. Build and test the controller to verify the correct pulse output.

3. Build the reaction chamber and test it with the controller (i.e pressure out).

4. Install the tank, controller, chamber, and pressure fittings.

5. Run engine and adjust the control circuit as necessary for best performance.

6. Install the stainless steel valves and get the pistons/cylinders coated with ceramic.

7. Coat the exhaust system with ceramic without the catalytic converter (or let it rust out and then replace the whole dang thang with stainless steel pipe sections).

YOU WILL NEED

plastic water tank with pump and level sensor.
control circuit, wiring, connectors, and epoxy.
reaction chamber with electrodes and fittings.
3/8" stainless steel flex-tubing, fittings and clamps.
carb/FI vapor-pressure fitting kit. - pressure, CHT (or EGT), & level gauges.
stainless steel valves.
copper mesh junction.
ceramic surface treatment for cylinders & pistons.
stainless steel or ceramic treated exhaust assembly.

BASIC TOOLS

drill, screwdriver and pliers
hole cutter
wire-wrap, solder-iron and clippers
DVM and oscilloscope.

REACTION CHAMBER

Construct as shown in the diagrams. Use a section of 4" PVC waste pipe with a threaded screw-cap fitting on one end and a standard end-cap at the other. Make sure to drill-and-epoxy or tap threads thru the PVC components for all fittings. Set and control the water level in the chamber so that it well submerses the pipe electrodes; yet leave some headroom to build up the hydrogen/oxygen vapor pressure. Use stainless steel wires inside the chamber or otherwise use a protective coating; use insulated wires outside. Ensure that the epoxy perfects the seal, or otherwise lay down a bead of water-proof silicone that can hold pressure.

The screw fitting may require soft silicone sealant, or a gasket; its purpose is to hold pressure and allow periodic inspection of the electrodes. No leaks, no problems. Make sure you get a symmetric 1-5mm gap between the 2 stainless steel pipes. The referenced literature suggests that the closer to 1mm you get, the better. You will want to get your chamber level sensor verified before you epoxy the cap on.

Make your solder connections at the wire/electrode junctions nice, smooth, and solid; then

apply a water-proof coating, e.g. the epoxy you use for joining the pipes to the screw cap. This epoxy must be waterproof and be capable of holding metal to plastic under pressure. You will want to get your chamber level sensor verified before you epoxy the cap on.

CONTROL CIRCUIT

The diagrams show a simple circuit to control and drive this mini-system. You are going to make a 'square-pulse' signal that 'plays' the electrodes like a tuning fork; which you can watch on an oscilloscope. The premise given by the literature is: the faster you want do go down the road, the 'fatter' you make the pulses going into the reaction chamber. Duty cycle will vary with the throttle in the vicinity of 90%MARK 10%SPACE (OFF/ON).

There is nothing sacred about how the pulse waveform is generated; there are many ways to generate pulses, and the attached diagrams show a few. The diagram shows the NE555-circuit approach from the referenced patent. The output switching transistor must be rated for 1-5 amps @ 12VDC (in saturation).

Go with a plan that works for you or your friendly neighborhood technoid or mechanic, and go get all the circuit elements from your local electronics store, such as Radio-Shack or Circuits-R-Us, including the circuit board, IC sockets, and enclosure/box.

DigiKey has better selection, service, and knowledge; plus they have no minimum order. Be sure to use a circuit board with a built-in ground plane, and to accommodate room for mounting 2 or 3 of the gauges. Mounting the reaction chamber in the engine compartment will require running a stub to your pressure gauge where you can watch it.

You can easily make 30-gauge wire-wrap connections between the socket pins and thru-hole discrete components having wire leads. Also make sure to get spec sheets on any IC you use. More details of the best circuits to use will be announced pending prototype testing. You will want to get your chamber level sensor verified before you epoxy the cap on.

Throttle Control

If you have a throttle position sensor, you should be able to access the signal from the sensor itself OR from the computer connector. This signal is input to the circuit as the primary control (i.e. throttle level = pulse width = vapor rate).

If you don't have such a signal available, you will have to rig a rotary POT (variable resistor) to the gas linkage (i.e. coupled to something at the gas pedal or throttle cable running to the carb or FI. If you make the attachment at the carb/FI, be sure to use a POT that can handle the engine temp cycles. Don't use a cheezy-cheapy POT; get one

rated for long life and mechanical wear; mount it securely to something sturdy and stationary that will not fall apart when you step on the gas.

Control Range. The full throttle RANGE (idle-max) MUST control the vapor rate, i.e. pulse-width (duty). The resistor values at the throttle signal must allow the throttle signal voltage, say 1-4 Volt swing, to drive the VAPOR RATE. You will be using this voltage swing to generate a 10% ON 'square' pulse. The patent implies using a 'resonant' pulse in the 10-250 KHz frequency range; but it is not explicitly stated so.

In this circuit, you will simply tune to whatever frequency makes the most efficient vapor conversion. You will have to get into the specs for each IC you use, to insure you connect the right pins to the right wires, to control the frequency and pulse width. You can use spare sockets to try out different discrete component values. Just keep the ones that are spec-compatible in the circuit, and get the job done.

You crank up the throttle signal and put more electrical energy (fatter pulses) into the electrodes; verify you can get 10% duty on the scope (2 - 100 usec on the horizontal time-base). Your averaging DVM will display the 90%-10% DC voltage across the output transistor (Vce or Vds or Output to Ground). Set and connect DVM in the supply current and measure .5 - 5 amps, without blowing the DVM fuse. Now verify that you got everything you wanted.

Verify your wiring connections using your DVM as a continuity detector. Check your wiring 1 at a time and yellow line your final schematic as you go. You can best use board-mount miniature POTs for anything you want to set-and-forget. The LEDs are there to give you a quick visual check of normal vs abnormal operation of your new creation. You will want to get your chamber level sensor verified before you epoxy the cap on.

CARB/FI CONNECTION

The diagram also shows that fittings are required to the carb/FI l. There are ready-made kits (such as by Impco) available for making your pressure fittings to the carburetor or fuel-injector as the case may be. You will necessarily be sealing the built-in vents and making a 1-way air-intake.

The copper mesh comprises the inadvertent backfire' protection for the reaction chamber. Make sure that all vapor/duct junctions are air-tight and holding full pressure without leakage. Your new 'system' is considered successful and properly adjusted when you get the full power range at lower temp and minimum vapor flow without blowing the pressure safety valve.

CHT (or EGT)

Monitor your engine temp with the CHT (cylinder head temp) or EGT (exhaust gas temp) instead of your original engine temp indicator (if any). Your existing gauge is too slow for this application and will not warn you against overheating until after you have burnt something. Make sure that your engine runs no hotter than in the gasoline arrangement. VDO makes a CHT gauge with a platinum sensor that fits under your spark plug against the cylinder head (make sure it is really clean before you re-install your spark plug (as this is also an electrical ground).

ENGINE/EXHAUST TREATMENT

Get the valves replaced with stainless steel ones and get the pistons/cylinders ceramic-treated ASAP when you have successfully converted and run your new creation. Do not delay as these items will rust, either by sheer use or by neglect (i.e. letting it sit). You could make max use of your current exhaust system by using it with your new deal until it rusts through, then have your mechanic or welder friend to fit a stainless steel exhaust pipe (no catalytic converter is required). But it could be easier and cheaper to send your existing exhaust system out for the ceramic treatment, and then simply re-attach it to the exhaust ports.

GENERAL

1. Do not discard or remove any of the old gasoline setup components, e.g. tank, carb/FI, catalytic converter, unless necessary. Better to always leave an easy way to revert back to something that at least runs, just in case. Some people are leaving their gasoline setup completely intact, and switching back and forth at will, just to have a backup plan.

2. Set your throttle circuit so that you get minimum vapor flow at idle, and maximum vapor flow at full power without blowing the pressure relief valve. In this way, you control how 'lean' your mixture is by the strength of the pulse (i.e. “fatness” at the optimum pulse frequency).

3. If you just don't get enough power (at any throttle setting), it means that you need to (1) change the pulse frequency, (2) change the gap between the electrodes, (3) change the size (bigger) electrodes, or (4) make a higher output pulse voltage (last resort). Always use an output transistor, such as a MOSFET, that is rated for the voltage and current you need to get the job done. OK so you might have to play around with it some. Isn't that where all the Fun is anyhow?

4. If you get any engine knock our loud combustions (not compensated by adjusting the timing), it means that you need to install an additional coil in the chamber, and drive the coil with an additional pulse signal (about 19 Hz on the .1sec time base (see diagram). Here,

you will be slowing down the burn rate just enough so that the vapors burn thru out the power stroke of the piston. Be sure to include a board-mount POT to set the correct strength of this 2nd pulse signal into the coil. This is a stainless steel coil of about 1500 turns (thin wire) that you can arrange like a donut around the center pipe (but NOT touching either electrode), directly over the circular 1-5mm gap. You want no knocking at any power/throttle setting; smooth power only, but also no excess hydrogen leftover from the combustion.

5. Build the canister(s) as tall as you can without compromising your ability to mount them conveniently near the dash panel, or in the engine compartment, as the case may be. This way, you can always make the electrodes bigger, if necessary without undue hardship. Remember that anything in the engine compartment should be mounted in a bullet-proof, vibration and temperature tolerant fashion.

6. If you have to drill a thru-hole for wiring or plumbing thru metal, make sure to also install a grommet for protection against chafing. Always watch your chamber pressure range from IDLE (15-25 psi) - FULL POWER (30-60 psi). Set your safety-pressure relief-valve to 75 psi and make sure it's rated for much higher.

7. Shut OFF the power switch and pull over if there is any malfunction of the system. Your engine will last longest when it still develops FULL POWER+ at some minimum temperature that we are sure you can find, by leaning back the Royal Vapor Flow and/or by making use of the water-vapor cooling technique (see diagram). Keep good mpg performance records, and periodic maintenance/inspection. Keep it clean; save some money; clean the air; heal the planet; happy motoring; tell a friend; enjoy your freedom and self-empowerment.

8. There lacks documented material for perfecting this vapor system thru a fuel injector; there may be some details you will discover on your own as working prototypes progress. For example, you may be restricted to inject the hydrogen/oxygen vapor without any water vapor, as it may rust the injectors. If engine temp and CHT is a problem, then you will want to re-think your plan, e.g. ceramic-coating the injectors. There is always "replacing the FI system with a Carb."

9. If you install the water-vapor system (for lower operating temp/stress), you will want to lean the mixture (vapor/air) for minimum vapor flow rate to achieve any given throttle position (idle - max). Make sure that you get a minimum flow for IDLE and a modestly sufficient flow for MAX, that does the cooling job without killing the combustion.

10. If you cannot find stainless steel pipe combinations that yield the 1-5mm gap, you can always regress back to alternating plates of +/- electrodes.

11. If you are concerned about the water freezing in your system, you can (a) add some

98% isopropyl alcohol and re-adjust the pulse frequency accordingly; or (b) install some electric heating coils.

12. Do not let ANYONE ever compromise your dream, your freedom, your independence or your truth.

REFERENCES

Stephen Chambers 'Apparatus for Producing Orthohydrogen and/or Parahydrogen' US Patent 6126794, uspto.gov
Stanley Meyer 'Method for the Production of a Fuel Gas' US Patent 4936961, uspto.gov
Creative Science & Research, 'Fuel From Water', fuelless.com
Carl Cella “A Water-Fuelled Car” Nexus Magazine Oct-Nov 1996
Peter Lindemann “Where in the World is All the Free Energy”, free-energy.cc <http://www.free-energy.cc/>
George Wiseman “The Gas-Saver and HyCO Series” eagle-research.com <http://www.eagle-research.com/>
C. Michael Holler “The Dromedary Newsletter” and “SuperCarb Techniques”
Stephen Chambers “Prototype Vapor Fuel System” xogen.com <http://www.xogen.com/>

COMMON LAW COPYRIGHT #285714: All rights to the use and duplication of these plans are hereby reserved for the People, in their efforts to heal and restore the environment. Dare to express your uniqueness and environmental ideals. This technology is an exercise in responsible self-determination.

DISCLAIMER: The Spirit of Ma'at LLC and the Spirit of Ma'at ezine and the author of this document assumes no liability for the use or misuse of this information; which is made available as public-domain information and free of charge, for the purposes of education, ecology, health, well-being, freedom, liberty, and pursuit of happiness.

CONVERT YOUR ENGINE TO BURN HYDROGEN AND OXYGEN VAPOR FROM WATER..... ON DEMAND + POLLUTION-FREE

FIGURE 1

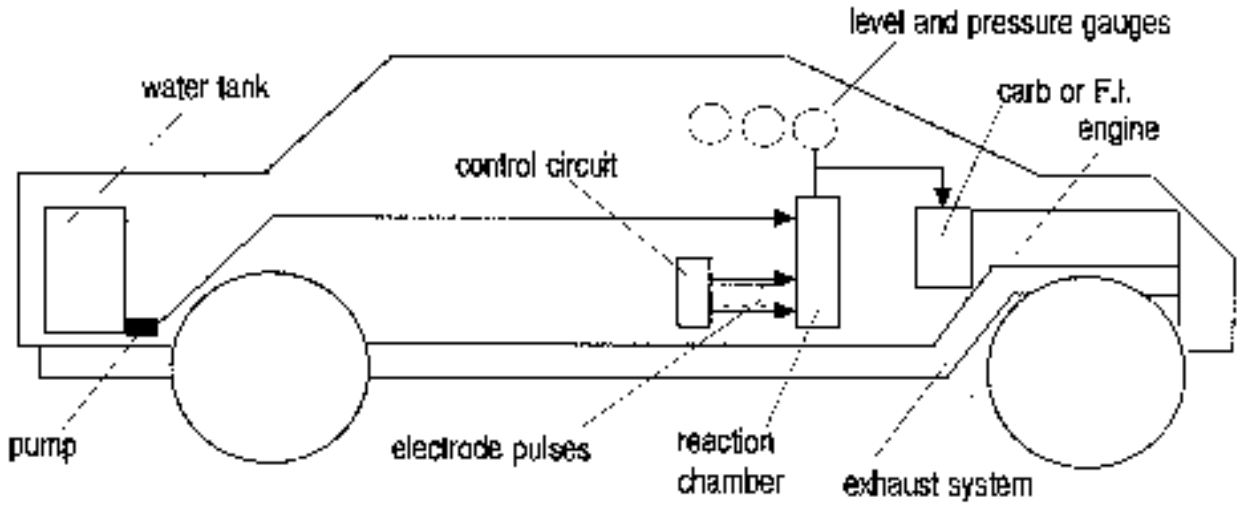

BUILD YOUR OWN WATER VAPOR SYSTEM
CONTROLLER FROM THE-SHELF MATERIALS

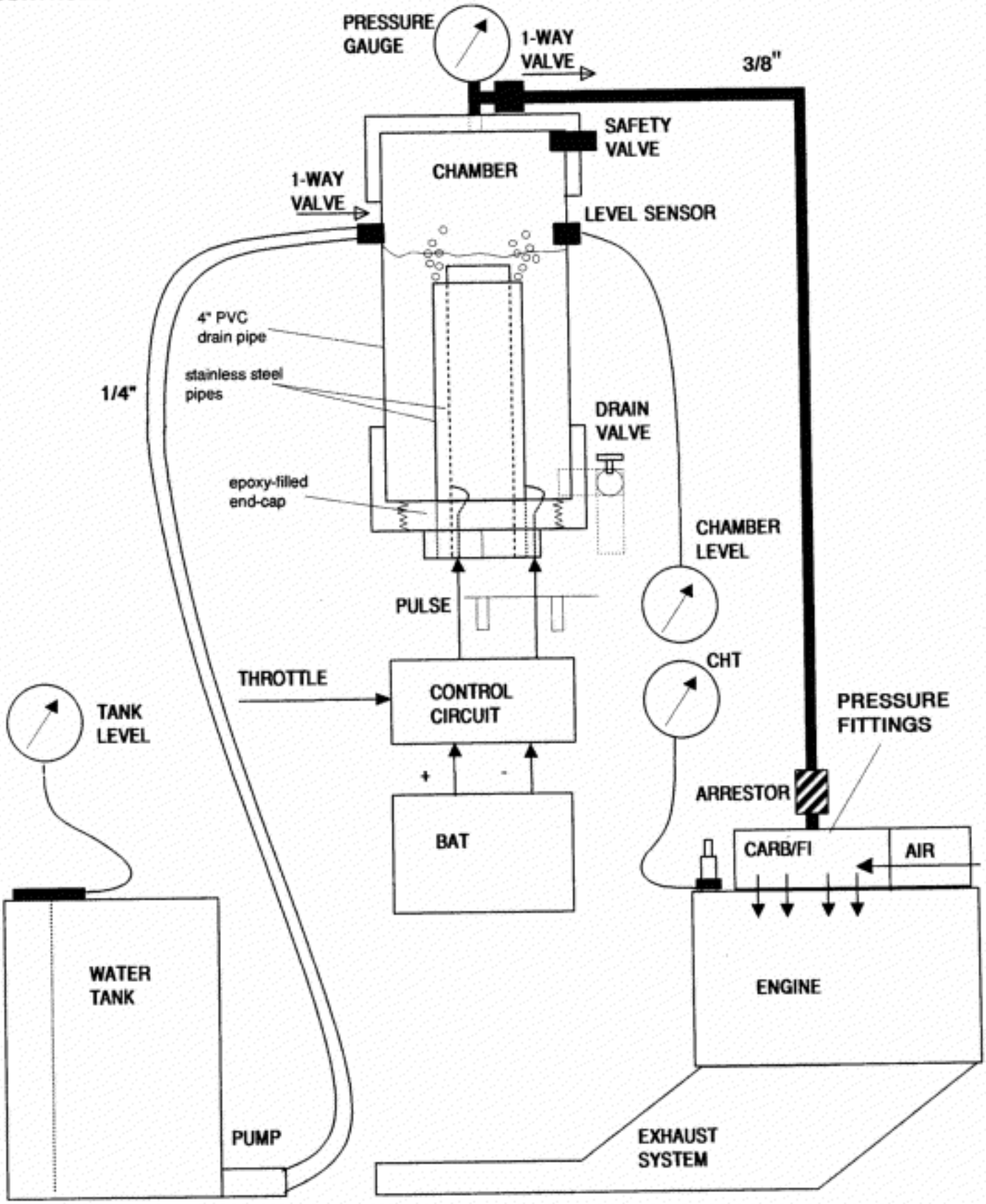

FIGURE 2 BLOC DIAGRAM

BUILD YOUR OWN WATER VAPOR SYSTEM CONTROLLER FROM THE-SHELF MATERIALS

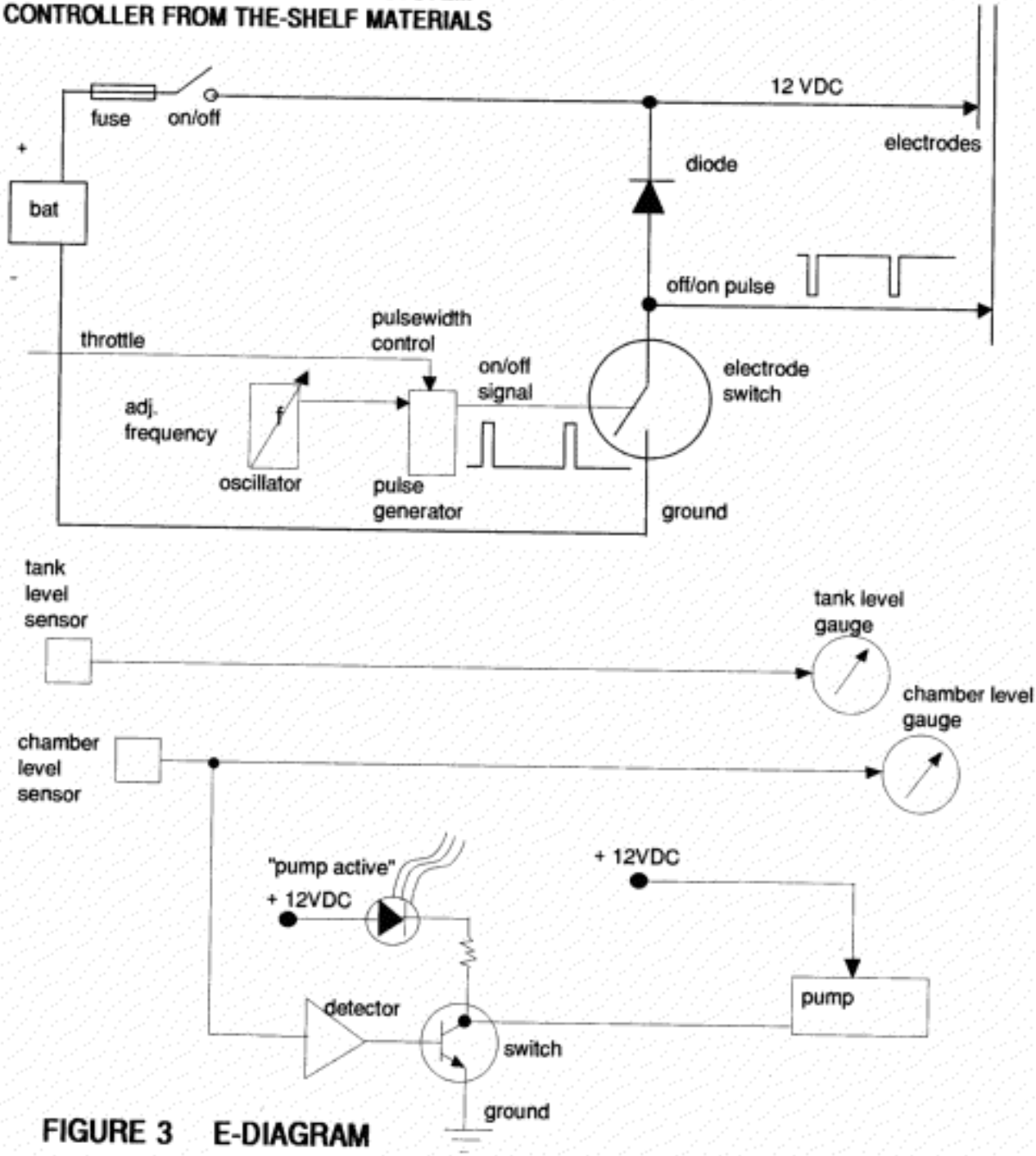

FIGURE 3 E-DIAGRAM

BUILD YOUR OWN WATER VAPOR SYSTEM CONTROLLER FROM THE-SHELF MATERIALS

REV. A

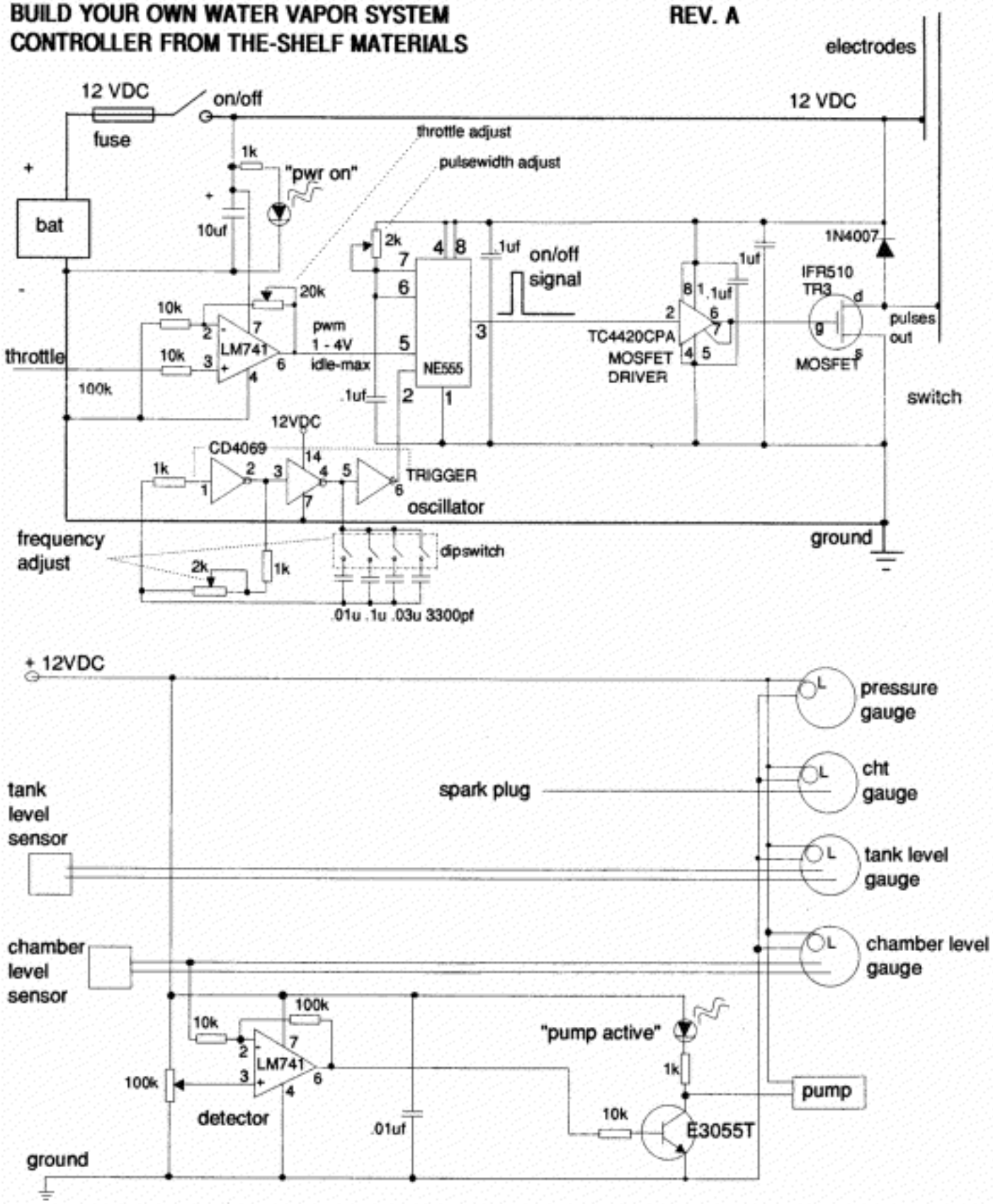

FIGURE 4 E-SCHEMATIC

BUILD YOUR OWN WATER VAPOR SYSTEM CONTROLLER FROM THE-SHELF MATERIALS **REV. A**

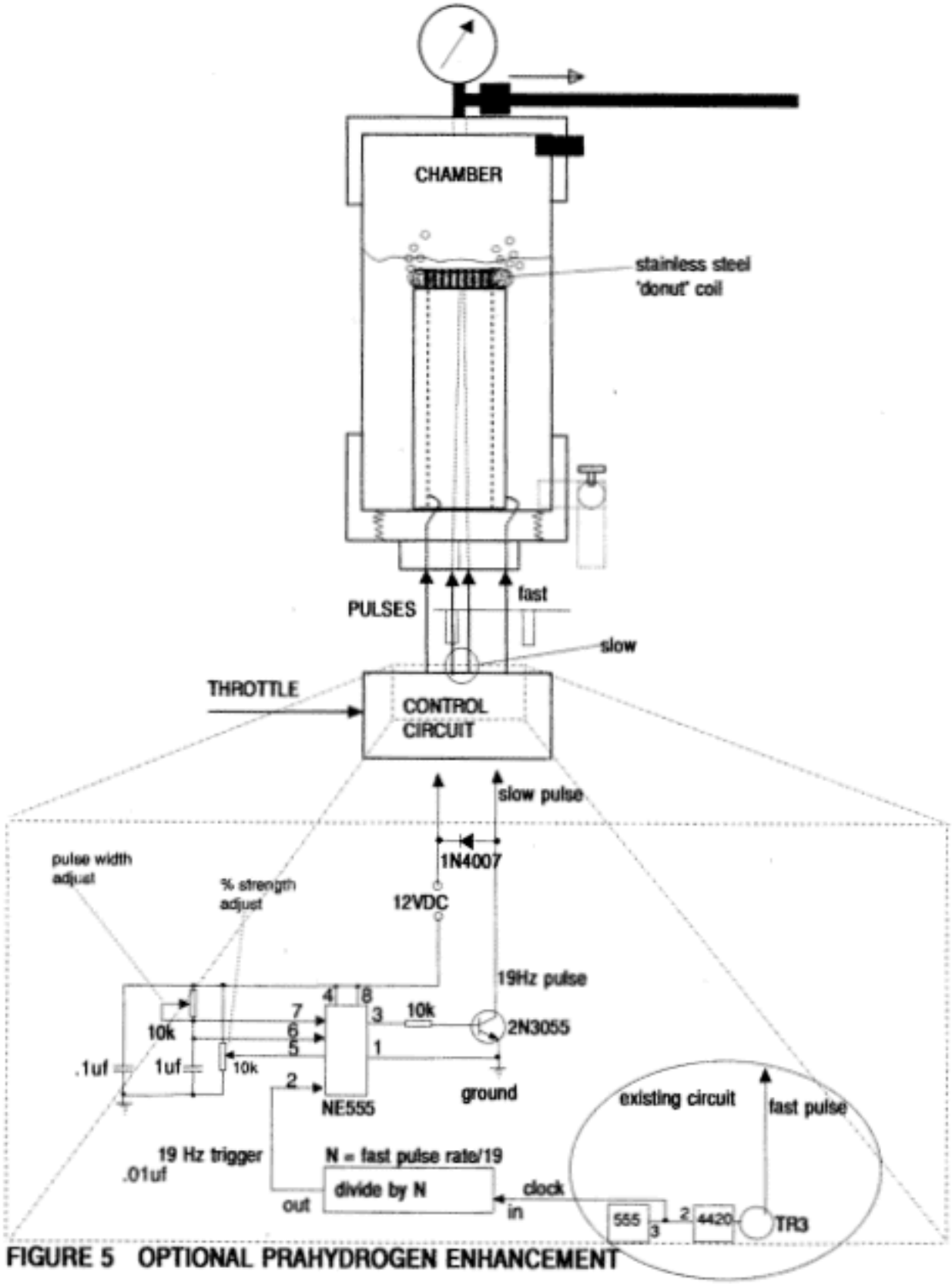

FIGURE 5 OPTIONAL PRAHYDROGEN ENHANCEMENT

BUILD YOUR OWN WATER VAPOR SYSTEM
CONTROLLER FROM THE-SHELF MATERIALS

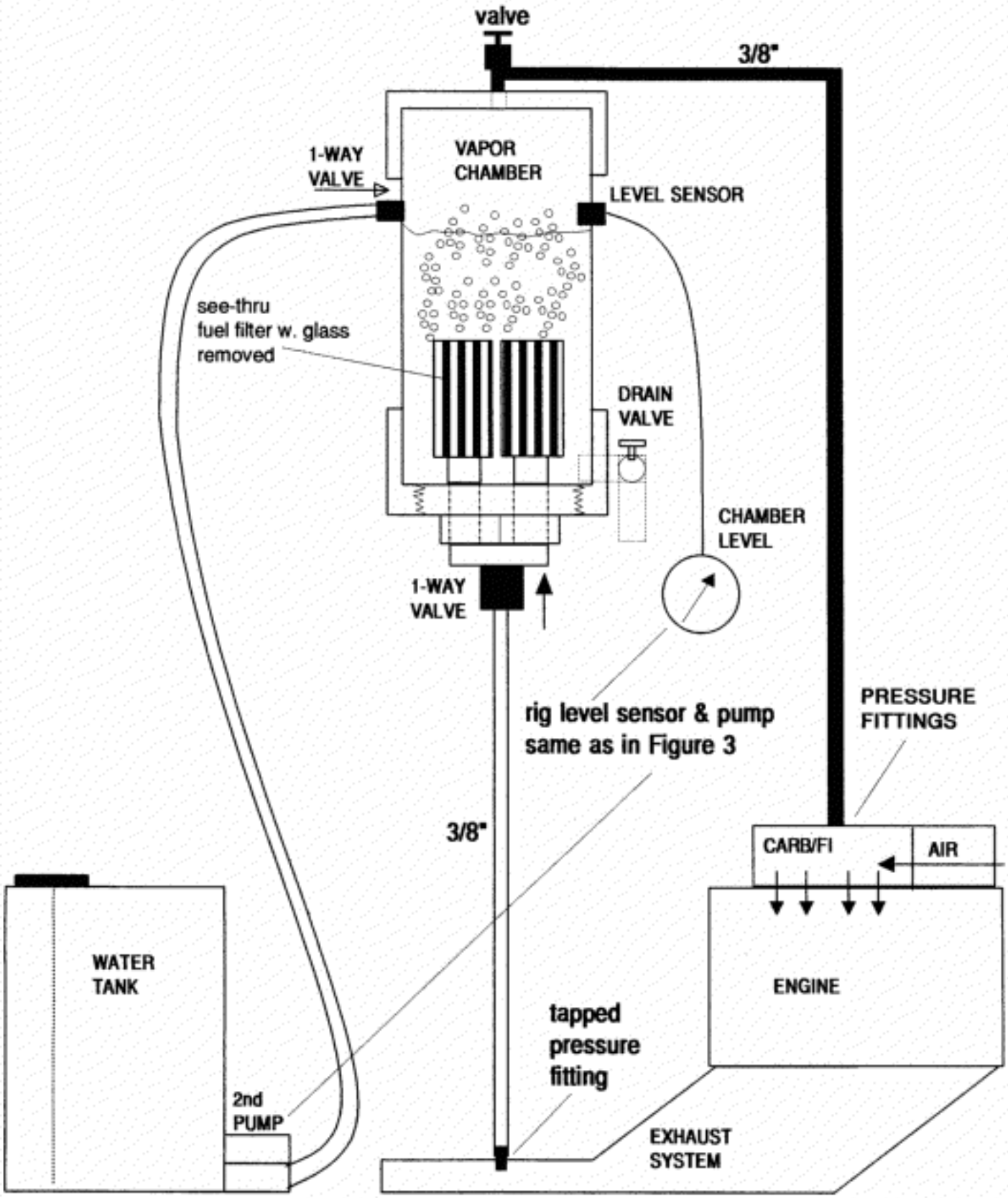

FIGURE 6 OPTIONAL WATER COOLING

Konstantin Meyl

Scalar wave transponder

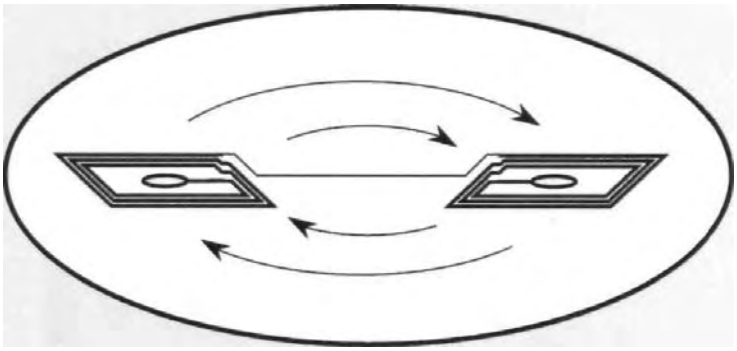

Field-physical basis for electrically coupled bi-directional far range transponder

With the current RFID -Technology the transfer of energy takes place on a chip card by means of longitudinal wave components in close range of the transmitting antenna. Those are scalar waves, which spread towards the electrical or the magnetic field pointer.

In the wave equation with reference to the Maxwell field equations, these wave components are set to zero, why only postulated model computations exist, after which the range is limited to the sixth part of the wavelength. A goal of this paper is to create, by consideration of the scalar wave components in the wave equation, the physical conditions for the development of scalar wave transponders which are operable beyond the close range. The energy is transferred with the same carrier wave as the information and not over two separated ways as with RFID systems. Besides the bi-directional signal transmission, the energy transfer in both directions is additionally possible because of the resonant coupling between transmitter and receiver. First far range transponders developed on the basis of the extended field equations are already functional as prototypes.

Preface

Before the introduction into the topic, the title of the book should be first explained more in detail. A "scalar wave" spreads like every wave directed, but it consists of physical particles or formations, which represent for their part scalar sizes. Therefore the name, which is avoided by some critics or is even disparaged, because of the apparent contradiction in the designation, which makes believe the wave is not directional, which does not apply however.

The term "scalar wave" originates from mathematics and is as old as the wave equation itself, which again goes back on the mathematician Laplace. It can be used favourably as a generic term for a large group of wave features, e.g. for acoustic waves, gravitational waves or plasma waves.

Seen from the physical characteristics they are longitudinal waves. Contrary to the transverse waves, for example the electromagnetic waves, scalar waves carry and transport energy and impulse. Thus one of the tasks of scalar wave transponders is fulfilled.

The term "transponder" consists of the terms transmitter and responder, describes thus radio devices which receive incoming signals, in order to redirect or answer to them. First there were only active transponders, which require a power supply from outside. For some time passive systems were developed in addition, whose receiver gets the necessary energy at the same time conveyed by the transmitter wirelessly.

After the state of the art several high frequency channels are necessary around the two parts of a transponder system to couple one with another.
The transfer of energy from the fundamental unit to the Transceiver takes place with a low frequency, in order to obtain, as a consequence of the high wavelength, the largest range as possible. The Data flow in opposite direction however takes place with high frequencies, which usually already lie in the range of the cellular phone network. Additionally, if data is to be conveyed from the fundamental unit to the Transceiver, then a third channel with an own transmitter and receiver is necessary.

The enormous expenditure can be reduced to only one channel with substantially larger range. Basis is the extended field theory formulated by me, which forms the emphasis in the available paper.
Two co-workers of my institute, the 1. Transfer centre for scalar wave technology (www.etzs.de), have demonstrated 2003 on a congress in the technology park of Villingen Schwenningen for the first time publicly, on the ISM frequency of 6.78 MHz, a scalar wave transponder in function consisting of a bi-directional LAN connection to exchange data between two PC's coupled with a transfer of energy for the passive interface map over a distance of 30 m.
I think, the indeterminable trend required for new technologies and applications for transponders require an extended field theory, to which this paper can give a valuable contribution.

INDEL-publishing department www.etzs.de
Prof. Dr. Konstantin Meyl www.k-meyl.de
Radolfzell, June 2005 www.meyl.eu

Table of Content Page

Preface 3
Table of Content 5

1. Introduction 7
1.1 Abstract of the practical setting of tasks 7
1.2 Requirements at transponders 8
1.3 Problem of the field theory 9
1.4 Field equations according to Maxwell 10
1.5 Wave equations according to Laplace 11
1.6 The wave equations in the comparison 12
1.7 The view of duality 13

2 The approach: Faraday instead of Maxwell 14
2.1 Vortex and antivortex 14
2.2 The Maxwell approximation 16
2.3 The mistake of the magnetic monopole 17
2.4 The discovery of the law of induction 18
2.5 The unipolar generator 20
2.6 Different induction laws 22
2.7 The electromagnetic field 23
2.8 Contradictory opinions in text books 24
2.9 The equation of convection 25

3. The derivation from text book physics 27
3.1 Derivation of the field equations acc. to Maxwell 27
3.2 The Maxwell equations as a special case 29
3.3 The Maxwell approximation 30
3.4 The magnetic field as vortex field 31
3.5 The derivation of the potential vortex 33

4. The derivation of the wave equation 34
4.1 The completed field equations 34
4.2 A possible world equation 36
4.3 The quantisation of the field 37
4.4 Derivation of the wave equation (Laplace) 38
4.5 Result of the mathematical derivation 40

Page

5. The field model of the waves and vortices 41
5.1 The far field 41
5.2 The near field 42
5.3 The near field as a vortex field 43
5.4 The vortex model of the scalar waves 44
5.5 Magnetic scalar waves 46
5.6 The antenna noise 47

6. Scalar wave technology 48
6.1 Spark's disease 49
6.2 Measuring the standing wave 50
6.3 Optimization of range 51
6.4 The field of radiation 52
6.5 Resonance 53
6.6 Dielectrical losses 54
6.7 Overview of scalar waves 55

7. Far range transponders in practice 56
7.1 Electrical or magnetic coupling? 56
7.2 Magnetically coupled telemetry 57
7.3 Magnetic inference 58
7.4 Electrical inference 59
7.5 Tesla's dream: Wireless energy supply 61
7.6 A comparison of the systems 62

8. Summary 64
8.1 RFID-Technology or scalar wave transponder? 64
8.2 From practical experience 65
8.3 The extended field theory 66

9. Table of formula symbols 68

10. Bibliography 69

I. quoted literature
II. further literature
III. Literature recommendation

1. Introduction

1.1 Abstract of the practical setting of tasks

Transponders serve the transmission of energy e.g. on a chip card in combination with a back transmission of information. The range is with the presently marketable devices (RFID technology) less than one meter [1-1]. The energy receiver must be in addition in close range of the transmitter.

The far range transponders developed by the first transfer centre for scalar wave technology are able to transfer energy beyond close range (10 to 100 m) and besides with fewer losses and/or a higher efficiency. The energy with the same carrier wave is transferred as the information and not as with the RFID technology over two separated systems [1-1].

A condition for new technologies is a technical-physical understanding, as well as a mathematically correct and comprehensive field description, which include all well-known effects of the close range of an antenna. We encounter here a central problem of the field theory, which forms the emphasis of this paper and the basis for advancements in the transponder technology.

1.2 Requirements at transponders

In today's times of Blue tooth and Wireless LAN one accustomed fast to the amenities of wireless communication. These open for example garage gates, the barrier of the parking lot or the car trunk are lid only by radio. However, in the life span limited and often polluting batteries in the numerous radio transmitters and remote maintenances are of great disadvantage.

Ever more frequently the developers see themselves confronted with the demand after a wireless transfer of energy. Accumulators are to be reloaded or replaced completely. In entrance control systems (ski elevator, stages, department stores...) these systems are already successful in use. But new areas of application with increased requirements are constantly added apart from the desire for a larger range:

- In telemetry plants rotary sensors are to be supplied with energy (in the car e.g. to control tire-pressure).
- Also with heat meters the energy should come from a central unit and be spread wirelessly in the whole house to the heating cost meters without the use of batteries.
- In airports contents of freight containers are to be seized, without these to having been opened (security checks).
- The forwarding trade wants to examine closed truck charges by transponder technology.
- In the robot and handling technique the wirings are to be replaced by a wireless technology (wear-

out problem).

- Portable radio devices, mobile phones, Notebooks and remote controls working without batteries and Accumulators (reduction of the environmental impact).

A technical solution, which is based on pure experimenting and trying, is to be optimised unsatisfactorily and hardly. It should stand rather on a field-theoretically secured foundation, whereby everyone thinks first of Maxwell's field equations. Here however a new hurdle develops itself under close occupation.

1.3 Problem of the field theory

In the close range of an antenna, so the current level of knowledge is, are longitudinal - towards a field pointer, portions of the radiated waves present. These are usable in the transponder technology for the wireless transmission of energy. The range amounts to however only $\lambda/2\pi$ and that is approximately the sixth part of the wavelength [1-2].

The problem consists now of the fact that the valid field theory, and that is from Maxwell, only is able to describe transversal and no longitudinal wave components. All computations of longitudinal waves or wave components, which run toward the electrical or the magnetic pointer of the field, are based without exception on postulates [1-3].

The near field is not considered in vain as an unresolved problem of the field theory. The experimental proof may succeed, not however the field-theoretical proof.

1.4 Field equations according to Maxwell

A short derivation brings it to light. We start with the formulation of Faraday's law of induction according to the textbooks

$$\boxed{\text{curl}\,\mathbf{E} = -\,\delta\mathbf{B}/\delta t} \quad (1.1)$$

with the electric field strength E = E(r,t) and the magnetic field strength H = H(r,t)

and: $\mathbf{B} = \mu \cdot \mathbf{H}$ (1. relation of material), (1.2)

apply the curl-operation to both sides of the equation

$$-\,\text{curl curl}\,\mathbf{E} = \mu \cdot \delta(\text{curl}\,\mathbf{H})/\delta t \quad (1.3)$$

and insert in the place of curl H Ampere's law:

$$\boxed{\text{curl}\,\mathbf{H} = \mathbf{j} + \delta\mathbf{D}/\delta t} \quad (1.4)$$

with $\mathbf{j} = \sigma \cdot \mathbf{E}$ (Ohm's law) (1.5)

with $\mathbf{D} = \varepsilon \cdot \mathbf{E}$ (2. relation of material) (1.6)

and $\tau_1 = \varepsilon/\sigma$ (relaxation time [1-4]) (1.7)

$$\text{curl}\,\mathbf{H} = \varepsilon \cdot (\mathbf{E}/\tau_1 + \delta\mathbf{E}/\delta t) \quad (1.8)$$

$$-\,\text{curl curl}\,\mathbf{E} = \mu \cdot \varepsilon \cdot (1/\tau_1 \cdot \delta\mathbf{E}/\delta t + \delta^2\mathbf{E}/\delta t^2) \quad (1.9)$$

with the abbreviation: $\mu \cdot \varepsilon = 1/c^2$ (1.10)

The generally known result describes a damped electromagnetic wave [1-5]:

$$\boxed{\underbrace{-\,\text{curl curl}\,\mathbf{E} \cdot c^2}_{\text{transverse}} = \underbrace{\delta^2\mathbf{E}/\delta t^2}_{-\ \text{wave}} + \underbrace{(1/\tau_1) \cdot \delta\mathbf{E}/\delta t}_{+\ \text{vortex damping}}} \quad (1.11)$$

On the one hand it is a transverse wave. On the other hand there is a damping term in the equation, which is responsible for the losses of an antenna. It indicates the wave component, which is converted into standing waves, which can be also called field vortices, which produce vortex losses for their part with the time constant τ_1 in the form of heat.

Where however do, at close range of an antenna proven and with transponders technically used longitudinal wave components hide themselves in the field equation (1.11)?

1.5 Wave equation according to Laplace

The wave equation found in most textbooks has the form of an inhomogeneous Laplace equation. The famous French mathematician Laplace considerably earlier than Maxwell did find a comprehensive formulation of waves and formulated it mathematically:

$$\underbrace{\Delta}_{\text{Laplace operator}}\mathbf{E} \cdot c^2 = \underbrace{-\,\text{curl curl}\,\mathbf{E} \cdot c^2}_{\text{transverse- (radio wave)}} + \underbrace{\text{grad div}\,\mathbf{E} \cdot c^2}_{\text{longitudinal- (scalar wave)}} = \underbrace{\delta^2\mathbf{E}/\delta t^2}_{\text{wave}} \qquad (1.12)$$

On the one side of the wave equation the Laplace operator stands, which describes the spatial field distribution and which according to the rules of vector analysis can be decomposed into two parts. On the other side the description of the time dependency of the wave can be found as an inhomogeneous term.

1.6 The wave equations in the comparison

If the wave equation according to Laplace (1.12) is compared to the one, which the Maxwell equations have brought us (1.11), then two differences clearly come forward:

1. In the Laplace equation the damping term is missing.
2. With divergence E a scalar factor appears in the wave equation, which founds a scalar wave.

A Practical example of a scalar wave is the plasma wave. This case forms according to the

3. Maxwell equation: $\mathrm{div}\,\mathbf{D} = \varepsilon \cdot \mathrm{div}\,\mathbf{E} \approx \rho_{el}$ (1.13)

the space charge density consisting of charge carrier's ρ_{el} the scalar portion. These move in form of a shock wave longitudinal forward and present in its whole an electric current.

Since both descriptions of wave's posses equal validity, we are entitled in the sense of a coefficient comparison to equate the damping term due to eddy currents according to Maxwell (1.11) with the scalar wave term according to Laplace (1.12).

Physically seen the generated field vortices form and establish a scalar wave.
The presence of div E proves a necessary condition for the occurrence of eddy currents. Because of the well-known skin effect [1-6] expanding and damping acting eddy currents, which appear as a consequence of a current density j, set ahead however an electrical conductivity σ (acc. to eq. 1.5).

1.7 The view of duality

Within the near field range of an antenna opposite conditions are present. With bad conductivity in a general manner a vortex with dual characteristics would be demanded for the formation of longitudinal wave components. I want to call this contracting antivortex, unlike to the expanding eddy current, a potential vortex.

If we examine the potential vortex with the Maxwell equations for validity and compatibility, then we would be forced to let it fall directly again. The derivation of the damped wave equation (1.1 to 1.11) can take place in place of the electrical, also for the magnetic field strength. Both wave equations (1.11 and 1.12) do not change thereby their shape. In the inhomogeneous Laplace equation in this dual case however, the longitudinal scalar wave component through div H is described and this is according to Maxwell zero!

4. Maxwell's equation: $\mathrm{div}\,\mathbf{B} = \mu \cdot \mathrm{div}\,\mathbf{H} = 0$ (1.14)

If this is correct, then there may not be a near field, no wireless transfer of energy and finally also no transponder technology. Therefore, the correctness is permitted (of eq. 1.14) to question and examine once, what would result thereby if potential vortices exist and develop in the air around an antenna scalar waves, as the field vortices form among themselves a shock wave.

Besides still another boundary problem will be solved: since in div D electrical monopoles can be seen (1.13) there should result from duality to div B magnetic monopoles (1.14). But the search was so far unsuccessful [1-7]. Vortex physics will ready have an answer.

2. The approach: Faraday instead of Maxwell

If a measurable phenomenon should, e.g. the close range of an antenna, not be described with the field equations according to Maxwell mathematically, then prospect is to be held after a new approach. All efforts that want to prove the correctness of the Maxwell theory with the Maxwell theory end inevitably in a tail-chase, which does not prove anything in the end.

In a new approach high requirements are posed. It may not contradict the Maxwell theory, since these supply correct results in most practical cases and may be seen as confirmed. It would be only an extension permissible, in which the past theory is contained as a subset e.g. Let's go on the quest.

2.1 Vortex and anti-vortex

In the eye of a tornado the same calm prevails as at great distance, because here a vortex and its anti-vortex work against each other. In the inside the expanding vortex is located and on the outside the contracting anti-vortex. One vortex is the condition for the existence of the other one and vice versa. Already Leonardo da Vinci knew both vortices and has described the dual manifestations [2-1].

In the case of flow vortices the viscosity determines the diameter of the vortex tube where the coming off will occur. If for instance a tornado soaks itself with water above the open ocean, then the contracting potential vortex is predominant and the energy density increases

threateningly. If it however runs overland and rains out, it again becomes bigger and less dangerous. In fluidics the connections are understood. They are usually also well visible and without further aids observable.

Fig.: 1 [2-1]: The Tornado i.e. shows a physical basic principle of vortex and anti-vortex

In electrical engineering it's different: here field vortices remain invisible. Only so a theory could find acceptance, although it only describes mathematically the expanding eddy current and ignores its anti-vortex. I call the contracting anti-vortex „potential vortex" and point to the circumstance, that every eddy current entails the anti-vortex as a physical necessity. By this reconciliation it is ensured that the condition in the vortex centre corresponds in the infinite one, complete in analogy to fluid mechanics.

2.2 The Maxwell approximation

The approximation, which is hidden in the Maxwell equations, thus consists of neglecting the anti-vortex dual to the eddy current. It is possible that this approximation is allowed, as long as it only concerns processes inside conducting materials. The transition to insulants however, which requires for the laws of the field refraction steadiness, is incompatible with the acceptance of eddy currents in the cable and a nonvor-tical field in air. In such a case the Maxwell approximation will lead to considerable errors. If we take as an example the lightning and ask how the lightning channel is formed: Which mechanism is behind it, if the electrically insulating air for a short time is becoming a conductor? From the viewpoint of vortex physics the answer is obvious: The potential vortex, which in the air is dominating, contracts very strong and doing so squeezes all air charge carriers and air ions, which are responsible for the conductivity, together at a very small space to form a current channel.

The contracting potential vortex thus exerts a pressure and with that forms the vortex tube. Besides the cylindrical structure another structure can be expected. It is the sphere, which is the only form, which can withstand a powerful pressure if that acts equally from all directions of space. Only think of ball lightning.

We imagine now a spherical vortex, in whose inside an expanding vortex is enclosed and which is held together from the outside by the contracting potential vortex and is forced into its spherical shape. From the infinite measured, this spherical vortex would have an electrical charge and all the characteristics of a charge carrier.

Inside:	expanding eddy current (skin effect)
Outside:	contracting anti-vortex (potential vortex)
Condition	for coming off: equally powerful vortices
Criterion:	electric conductivity (determines diameter)
Result:	spherical structure (consequence of the pressure of the vacuum)

Fig. 2: The electron as an electromagnetic sphere-vortex

2.3 The mistake of the magnetic monopole

With the tendency of the potential vortex for contraction, inevitably the ability is linked to a structural formation. The particularly obvious structure of a ball would be besides a useful model for quanta.

A to the sphere formed field-vortex would be described mathematically in its inside with the expanding vortex div D. For the potential vortex working against from the outside div B would apply. The divergence may be set therefore neither with the electrical field (4th Maxwell equation) nor with the magnetic field (3rd Maxwell equation) to zero!

If however both equations are necessary for the derivation of an electron, then it is a mistake in reasoning wanting to assign one alone to an electrical and the other one to a magnetic monopole.

Since the radius, at which it comes to vortex detaching and with it the size of the sphere vortex depends on its conductivity, electrical monopoles and among them rank numerous elementary particles, will be extremely small. Magnetic monopoles however would have to take enormous, no longer for us measurable dimensions.

2.4 The discovery of the law of induction

In the choice of the approach the physicist is free, as long as the approach is reasonable and well founded. In the case of Maxwell's field equations two experimentally determined regularities served as basis: on the one hand Ampere's law and on the other hand the law of induction of Faraday. The mathematician Maxwell thereby gave the finishing touches for the formulations of both laws. He introduced the displacement current D and completed Ampere's law accordingly, and that without a chance of already at his time being able to measure and prove the measure. Only after his death this was possible experimentally, what afterwards makes clear the format of this man. In the formulation of the law of induction Maxwell was completely free, because the discoverer Michael Faraday had done without specifications. As a man of practice and of experiment the mathematical notation was less important for Faraday. For him the attempts with which he could show his discovery of the induction to everybody, e.g. his unipolar generator, stood in the foreground.

Fig. 3: James Clerk Maxwell, the mathematician (1831-1879).

His 40 years younger friend and professor of mathematics Maxwell however had something completely different in mind. He wanted to describe the light as an electromagnetic wave and doing so certainly the wave

description of Laplace went through his mind, which needs a second time derivation of the field factor. Because Maxwell for this purpose needed two equations with each time a first derivation, he had to introduce the displacement current in Ampere's law and had to choose an appropriate notation for the formulation of the law of induction to get to the wave equation.

His light theory initially was very controversial. Maxwell faster found acknowledgement for bringing together the teachings of electricity and magnetism and the representation as something unified and belonging together [2-2] than for mathematically giving reasons for the principle discovered by Faraday.

Fig. 4: Michael Faraday, the experimenter (1791-1867).

Nevertheless the question should be asked, if Maxwell has found the suitable formulation, if he has understood 100 percent correct his friend Faraday and his discovery. If the discovery (from 29.08.1831) and mathematical formulation (1862) stem from two different scientists, who in addition belong to different disciplines, misunderstandings are nothing unusual. It will be helpful to work out the differences.

2.5 The unipolar generator

If one turns an axially polarized magnet or a copper disc situated in a magnetic field, then perpendicular to the direction of motion and perpendicular to the magnetic field pointer a pointer of the electric field will occur, which everywhere points axially to the outside. In the case of this by Faraday developed unipolar generator, hence by means of a brush between the rotation axis and the circumference, a tension voltage can be called off.
The mathematically correct relation E = v x B (2.1) I call Faraday-law, even if it only appears in this form in the textbooks later in time [2-3]. The formulation usually is attributed to the mathematician Hendrik Lorentz, since it appears in the Lorentz force in exactly this form. Much more important than the mathematical formalism however are the experimental results and the discovery by Michael Faraday, for which reason the law concerning unipolar induction is named after the discoverer.

Of course we must realize that the charge carriers at the time of the discovery hadn't been discovered yet and the field concept couldn't correspond to that of today. The field concept was an abstracter one, free of any quantisation.

That of course also is valid for the field concept advocated by Maxwell, which we now contrast with the „Faraday-law" (fig. 5). The second Maxwell equation, the law of induction (2.2), also is a mathematical description between the electric field strength E and the magnetic induction B. But this time the two aren't linked by a relative velocity v.

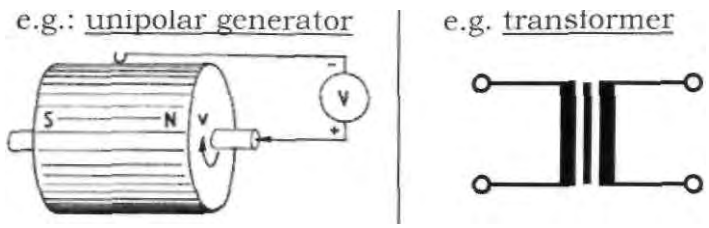

Discovery of Faraday — 2nd Maxwell equation

$E = v \times B$ (2.1) — $\text{curl } E = -\, dB/dt$ (2.2)

unipolar induction — law of induction generally

Fig. 5: Two formulations for one law
As a mathematical relation between the vectors of the electric field strength E and the induction B (= magnetic flux density)

In that place stands the time derivation of B, with which a change in flux is necessary for electric field strength to occur. As a consequence the Maxwell equation doesn't provide a result in the static or quasi-stationary case, for which reason it in such cases is usual, to fall back upon the unipolar induction according to Faraday (e.g. in the case of the Hall-probe, the picture tube, etc.). The falling back should only remain restricted to such cases, so the normally used idea. But with which right the restriction of the Faraday-law to stationary processes is made?
The vectors E and B can be subject to both, spatial and temporal fluctuations. In that way the two formulations suddenly are in competition with each other and we are asked, to explain the difference, as far as such a difference should be present.

2.6 Different induction laws

Such a difference for instance is that it is common practice to neglect the coupling between the fields at low frequencies. While at high frequencies in the range of the electromagnetic field the E- and the H-field are mutually dependent, at lower frequency and small field change the process of induction drops correspondingly according to Maxwell, so that a neglect seems to be allowed. Now electric or magnetic field can be measured independently of each other. Usually is proceeded as if the other field is not present at all.

That is not correct. A look at the Faraday-law immediately shows that even down to frequency zero always both fields are present. The field pointers however stand perpendicular to each other, so that the magnetic field pointer wraps around the pointer of the electric field in the form of a vortex ring in the case that the electric field strength is being measured and vice versa. The closed-loop field lines are acting neutral to the outside; they hence need no attention, so the normally used idea. It should be examined more closely if this is sufficient as an explanation for the neglect of the not measurable closed-loop field lines, or if not after all an effect arises from fields, which are present in reality.

Another difference concerns the commutability of E- and H-field, as is shown by the Faraday-generator, how a magnetic becomes an electric field and vice versa as a result of a relative velocity v. This directly influences the physical-philosophic question: What is meant by the electromagnetic field?

2.7 The electromagnetic field

The textbook opinion based on the Maxwell equations names the static field of the charge carriers as a cause for the electric field, whereas moving ones cause the magnetic field [1-6 i.e.]. But that hardly can have been the idea of Faraday, to whom the existence of charge carriers was completely unknown. For his contemporaries, completely revolutionary abstract field concept, based on the works of the Croatian Jesuit priest Boscovich (1711-1778). In the case of the field it should less concern a physical quantity in the usual sense, than rather the experimental experience" of an interaction according to his field description. We should interpret the Faraday-law to the effect that we experience an electric field, if we are moving with regard to a magnetic field with a relative velocity and vice versa.

In the commutability of electric and magnetic fields a duality between the two is expressed, which in the Maxwell formulation is lost, as soon as charge carriers are brought into play. Is thus the Maxwell field the special case of a particle free field? Much evidence points to it, because after all a light ray can run through a particle free vacuum. If however fields can exist without particles, particles without fields however are impossible, then the field should have been there first as the cause for the particles. Then the Faraday description should form the basis, from which all other regularities can be derived. What do the textbooks say to that?

2.8 Contradictory opinions in textbooks

Obviously there exist two formulations for the law of induction (2.1 and 2.2), which more or less have equal rights. Science stands for the question: which mathematical description is the more efficient one? If one case is a special case of the other case, which description then is the more universal one?

What Maxwell's field equations tell us is sufficiently known, so that derivations are unnecessary. Numerous textbooks are standing by, if results should be cited. Let us hence turn to the Faraday-law (2.1). Often one searches in vain for this law in schoolbooks. Only in more pretentious books one makes a find under the keyword „unipolar induction". If one however compares the number of pages, which are spent on the law of induction according to Maxwell with the few pages for the unipolar induction, then one gets the impression that the latter only is a unimportant special case for low frequencies. Kupfmuller speaks of a „special form of the law of induction" [2-4], and cites as practical examples the induction in a brake disc and the Hall-effect. Afterwards Kupfmuller derives from the „special form" the „general form" of the law of induction according to Maxwell, a postulated generalization, which needs an explanation. But a reason is not given [2-4].

Bosse gives the same derivation, but for him the Maxwell-result is the special case and not his Faraday approach [2-5]! In addition he addresses the Faraday-law as equation of transformation and points out the meaning and the special interpretation.

On the other hand he derives the law from the Lorentz force, completely in the style of Kupfmuller [2-4] and with that again takes it part of its autonomy. Pohl looks at that different. He inversely derives the Lorentz force from the Faraday-law [2-6]. We should follow this very much convincing representation.

2.9 The equation of convection

If the by Bosse [2-5] prompted term „equation of transformation" is justified or not at first is unimportant. That is a matter of discussion.
If there should be talk about equations of transformation, then the dual formulation (to equation 2.1) belongs to it, then it concerns a pair of equations, which describes the relations between the electric and the magnetic field.

The new and dual field approach consists of

equations of transformation

of the electric		and	of the magnetic field	
$E = v \times B$	(2.1)	and	$H = -v \times D$	(2.3)
unipolar induction			equation of convection	

Written down according to the rules of duality there results an equation (2.3), which occasionally is mentioned in some textbooks.

While both equations in the books of Pohl [2-6, p.76 and 130] and of Simonyi [2-7] are written down side by side having equal rights and are compared with each other, Grimsehl [2-8] derives the dual regularity (2.3) with the help of the example of a thin, positively charged and rotating metal ring. He speaks of „equation of convection", according to which moving charges produce a magnetic field and so-called convection currents. Doing so he refers to the work of Rontgen 1885, Himstedt, Rowland 1876, Eichenwald and many others more, which today are hardly known.

In his textbook also Pohl gives practical examples for both equations of transformation. He points out that one equation changes into the other one, if as a relative velocity v the speed of light c should occur [2-6].

3. The derivation from text book physics

We now have found a field-theoretical approach with the equations of transformation, which in its dual formulation is clearly distinguished from the Maxwell approach. The reassuring conclusion is added: The new field approach roots entirely in textbook physics, as are the results from the literature research. We can completely do without postulates.
Next thing to do is to test the approach strictly mathematical for freedom of contradictions. It in particular concerns the question, which known regularities can be derived under which conditions. Moreover the conditions and the scopes of the derived theories should result correctly, e.g. of what the Maxwell approximation consists and why the Maxwell equations describe only a special case.

3.1 The Derivation from text book physics

As a starting-point and as approach serve the equations of transformation of the electromagnetic field, the Faraday-law of unipolar induction (2.1) and the according to the rules of duality formulated law called equation of convection (2.3).

$$E = vxB \quad (2.1) \quad \text{and} \quad H = -vxD \quad (2.3)$$

If we apply the curl to both sides of the equations:

$$\text{curl } E = \text{curl } (vxB) \ (3.1), \ \text{curl } H = - \text{curl } (v \text{ x } D) (3.2)$$

then according to known algorithms of vector analysis the curl of the cross product each time delivers the sum of four single terms [3-1]:

curl E = (B grad)v - (v grad)B + v div B - B div v (3.3)

curl H = - [(D grad)v- (v grad)D + v div D - D div v] (3.4)

Two of these again are zero for a non-accelerated relative motion in the x-direction

with: v = dr/dt (3.5)

grad v = 0 (3.5*) and div v = 0 (3.5**)

One term concerns the vector gradient (v grad)B, which can be represented as a tensor. By writing down and solving the accompanying derivative matrix giving consideration to the above determination of the v-vector, the vector gradient becomes the simple time derivation of the field vector B(r(t)),

$$\boxed{(\mathbf{v}\ \mathrm{grad})\,\mathbf{B} = \frac{d\,\mathbf{B}}{d\,t}} \quad \text{and} \quad \boxed{(\mathbf{v}\ \mathrm{grad})\,\mathbf{D} = \frac{d\,\mathbf{D}}{d\,t}}, \qquad (3.6)$$

according to the rule:

$$\frac{d\mathbf{V}(\mathbf{r}(t))}{dt} = \frac{\partial\,\mathbf{V}(\mathbf{r} = \mathbf{r}(t))}{\partial\,\mathbf{r}} \cdot \frac{d\mathbf{r}(t)}{dt} = (\mathbf{v}\ \mathrm{grad})\,\mathbf{V}, \qquad (3.7)$$

For the last not yet explained terms at first are written down the vectors b and j as abbreviation.

curl E = - dB/dt + v div B = - dB/dt - b (3.8)

curl H = dD/dt - v div D = dD/dt + j (3.9)

With equation 3.9 we in this way immediately look at the well-known law of Ampere (1st Maxwell equation).

3.2 The Maxwell equations as a special case

The result will be the Maxwell equations, if:

- the potential density $b = -v \operatorname{div} B = 0$, (3.10)
  (eq. 3.8 = law of induction 1.1,
  if $b = 0$ resp. $\operatorname{div} B = 0$)!
- the current density $\mathbf{j} = -\mathbf{v} \operatorname{div} \mathbf{D} = -\mathbf{v} \cdot \rho_{el}$, (3.11)
  (eq. 3.9 = Ampere's law 1.4,
  if j = with v moving negative charge carriers (ρ_{el} = electric space charge density).

The comparison of coefficients (3.11) in addition delivers a useful explanation to the question, what is meant by the current density j: it is a space charge density ρ_{el} consisting of negative charge carriers, which moves with the velocity v for instance through a conductor (in the x-direction).
The current density j and the dual potential density b mathematically seen at first are nothing but alternative vectors for an abbreviated notation. While for the current density j the physical meaning already could be clarified from the comparison with the law of Ampere, the interpretation of the potential density b still is due:

$$b = -v \operatorname{div} B \quad (=0) \quad , \qquad (3.10)$$

From the comparison of eq. 3.8 with the law of induction (eq. 1.1) we merely infer, that according to the Maxwell theory this term is assumed to be zero. But that is exactly the Maxwell approximation and the restriction with regard to the new and dual field approach, which roots in Faraday.

3.3 The Maxwell approximation

In that way also the duality gets lost with the argument that magnetic monopoles (div B) in contrast to electric monopoles (div D) do not exist and until today could evade every proof. It has not yet been searched for the vortices dual to eddy currents, which are expressed in the neglected term.

Assuming, a monopole concerns a special form of a field vortex, then immediately gets clear, why the search for magnetic poles has to be a dead end and their failure isn't good for a counterargument: The missing electric conductivity in vacuum prevents current densities, eddy currents and the formation of magnetic monopoles. Potential densities and potential vortices however can occur. As a result can without exception only electrically charged particles be found in the vacuum.

Let us record: Maxwell's field equations can directly be derived from the new dual field approach under a restrictive condition. Under this condition the two approaches are equivalent and with that also error free. Both follow the textbooks and can so to speak be the textbook opinion.
The restriction (b = 0) surely is meaningful and reasonable in all those cases in which the Maxwell theory is successful. It only has an effect in the domain of electrodynamics. Here usually a vector potential A is introduced and by means of the calculation of a complex dielectric constant a loss angle is determined. Mathematically the approach is correct and dielectric losses can be calculated.

Physically however the result is extremely questionable, since as a consequence of a complex ε a complex speed of light would result,

according to the definition: $c = 1/\sqrt{\varepsilon \cdot \mu}$ (3.12).

With that electrodynamics offends against all specifications of the textbooks, according to which c is constant and not variable and less then ever complex. But if the result of the derivation physically is wrong, then something with the approach is wrong, then the fields in the dielectric perhaps have an entirely other nature, then dielectric losses perhaps are vortex losses of potential vortices falling apart?

3.4 The magnetic field as a vortex field

Is the introduction of a vector potential A in electrodynamics a substitute of neglecting the potential density b? Do here two ways mathematically lead to the same result? And what about the physical relevance? After classic electrodynamics being dependent on working with a complex constant of material, in what is buried an insurmountable inner contradiction, the question is asked for the freedom of contradictions of the new approach. At this point the decision will be made, if physics has to make a decision for the more efficient approach, as it always has done when a change of paradigm had to be dealt with.

The abbreviations j and b are further transformed, at first the current density in Ampere's law

$$\mathbf{j} = -\mathbf{v}\cdot\rho_{el} \quad (3.11)$$ as

the movement of negative electric charges.

By means of Ohm's law $\mathbf{j} = \sigma\cdot\mathbf{E}$ (1.5)

and the relation of material $\mathbf{D} = \varepsilon\cdot\mathbf{E}$ (1.6)

the current density $\boxed{\mathbf{j} = \mathbf{D}/\tau_1}$ (3.13)

also can be written down as dielectric displacement current with the characteristic relaxation time constant for the eddy currents $\tau_1 = \varepsilon/\sigma$ (1.7).

In this representation of the law of Ampere:

$$\boxed{\text{curl}\,\mathbf{H} = d\mathbf{D}/dt + \mathbf{D}/\tau_1 = \varepsilon\cdot(d\mathbf{E}/dt + \mathbf{E}/\tau_1)} \quad (3.14)$$

clearly is brought to light, why the magnetic field is a vortex field, and how the eddy currents produce heat losses depending on the specific electric conductivity σ. As one sees we, with regard to the magnetic field description, move around completely in the framework of textbook physics.

3.5 The derivation of the potential vortex

Let us now consider the dual conditions. The comparison of coefficients looked at purely formal, results in a potential density $\boxed{\mathbf{b} = \mathbf{B}/\tau_2}$ (3.15)

in duality to the current density j (eq. 3.13), which with the help of an appropriate time constant τ_2 founds vortices of the electric field. I call these potential vortices

$$\boxed{\text{curl}\,\mathbf{E} = -\,d\mathbf{B}/dt - \mathbf{B}/\tau_2 = -\,\mu\cdot(d\mathbf{H}/dt + \mathbf{H}/\tau_2)} \quad (3.16)$$

In contrast to that the Maxwell theory requires an irrotationality of the electric field, which is expressed by taking the potential density b and the divergence B equal to zero. The time constant τ_2 thereby tends towards infinity.

There isn't a way past the potential vortices and the new dual approach,

1. as the new approach gets along without a postulate, as well as
2. consists of accepted physical laws,
3. why also all error free derivations are to be accepted,
4. no scientist can afford to already exclude a possibly relevant phenomenon in at the approach,
5. the Maxwell approximation for it's negligibleness is to examine,
6. to which a potential density measuring instrument is necessary, which may not exist according to the Maxwell theory.

With such a tail-chase always incomplete theories could confirm themselves.

4. The derivation of the wave equation

It has already been shown, as and under which conditions the wave equation from the Maxwell's field equations, limited to transverse wave-portions, is derived (chapter 1.4). Usually one proceeds from the general case of an electrical field strength E = E(r,t) and a magnetic field strength H = H(r,t). We want to follow this example [4-1], this time however without neglecting and under consideration of the potential vortex term.

4.1 The completed field equations

The two equations of transformation and also the from that derived field equations (3.14 and 3.16) show the two sides of a medal, by mutually describing the relation between the electric and magnetic field strength:

$$\boxed{\mathrm{curl}\,\mathbf{H} = \partial\mathbf{D}/\partial t + \mathbf{D}/\tau_1 = \varepsilon\cdot(\partial\mathbf{E}/\partial t + \mathbf{E}/\tau_1)} \quad (4.1)$$

$$\boxed{\mathrm{curl}\,\mathbf{E} = -\,\partial\mathbf{B}/\partial t - \mathbf{B}/\tau_2 = -\,\mu\cdot(\partial\mathbf{H}/\partial t + \mathbf{H}/\tau_2)} \quad (4.2)$$

We get on the track of the meaning of the „medal" itself, by inserting the dually formulated equations into each other. If the calculated H-field from one equation is inserted into the other equation then as a result a determining equation for the E-field remains. The same vice versa also functions to determine the H-field. Since the result formally is identical and merely the H-field vector appears at the place of the E-field vector and since it equally remains valid for the B-, the D-field and all other known field factors, the determining equation is more than only a calculation instruction. It reveals a fundamental physical principle. I call it the complete or the fundamental field equation".

The derivation always is the same: If we again apply the curl operation to curl E (law of induction 4.2) also the other side of the equation should be subjected to the curl:

$$-\,\mathrm{curl\ curl}\ \mathbf{E} = \mu\cdot\partial(\mathrm{curl}\ \mathbf{H})/\partial t + (\mu/\tau_2)\cdot(\mathrm{curl}\ \mathbf{H}) \quad (4.3)$$

If for both terms curl H is expressed by Ampere's law 4.1, then in total four terms are formed:

$$-\,\mathrm{curl\ curl}\ \mathbf{E} = \mu\cdot\varepsilon\cdot[\partial^2\mathbf{E}/\partial t^2 + (1/\tau_1)\cdot\partial\mathbf{E}/\partial t + (1/\tau_2)\cdot\partial\mathbf{E}/\partial t + \mathbf{E}/\tau_1\tau_2] \quad (4.4)$$

With the definition for the speed of light c:

$$\boxed{\varepsilon\cdot\mu = 1/c^2}, \quad (1.10)$$

the fundamental field equation reads:

$$\underbrace{-\,c^2\cdot\mathrm{curl\ curl}\ \mathbf{E}}_{a} = \underbrace{\partial^2\mathbf{E}/\partial t^2}_{b\ \text{(electromagnetic wave)}} + \underbrace{(1/\tau_1)\cdot\partial\mathbf{E}/\partial t}_{c} + \underbrace{(1/\tau_2)\cdot\partial\mathbf{E}/\partial t}_{d} + \underbrace{\mathbf{E}/\tau_1\tau_2}_{e} \quad (4.5)$$

$$+\ \text{eddy current} + \text{potential vortex} + 1/U$$

The four terms are: the wave equation (a-b) with the two damping terms, on the one hand the eddy currents (a-c) and on the other hand the potential vortices (a-d) and as the fourth term the Poisson equation (a-e), which is responsible for the spatial distribution of currents and potentials.

4.2 A possible world equation

Not in a single textbook a mathematical linking of the Poisson equation with the wave equation can be found, as we here succeed in for the first time. It however is the prerequisite to be able to describe the conversion of an antenna current into electromagnetic waves near a transmitter and equally the inverse process, as it takes place at a receiver. Numerous model concepts, like they have been developed by HF- and EMC-technicians as a help, can be described mathematically correct by the physically founded field equation.

In addition further equations can be derived, for which this until now was supposed to be impossible, like for instance the Schrodinger equation (Term d and e). As diffusion equation it has the task to mathematically describe field vortices and their structures.

As a consequence of the Maxwell equations in general and specifically the eddy currents (a-c) not being able to form structures, every attempt has to fail, which wants to derive the Schrodinger equation from the Maxwell equations.

The fundamental field equation however contains the newly discovered potential vortices, which owing to their concentration effect (in duality to the skin effect) form spherical structures, for which reason these occur as eigenvalues of the equation. For these eigenvalue-solutions numerous practical measurements are present, which confirm their correctness and with that have probative force with regard to the correctness of the new field approach and the fundamental field equation. By means of the pure formulation in space and time and the interchange ability of the field pointers

here a physical principle is described, which fulfills all requirements, which a world equation must meet.

4.3 The quantisation of the field

The Maxwell equations are nothing but a special case, which can be derived (if $1/\tau_2 = 0$). The new approach however, which among others bases on the Faraday-law, is universal and can't be derived on its part. It describes a physical basic principle, the alternating of two dual experience or observation factors, their overlapping and mixing by continually mixing up cause and effect. It is a philosophic approach, free of materialistic or quantum physical concepts of any particles.

Maxwell on the other hand describes without exception the fields of charged particles, the electric field of resting and the magnetic field as a result of moving charges. The charge carriers are postulated for this purpose, so that their origin and their inner structure remain unsettled.

With the field-theoretical approach however the field is the cause for the particles and their measurable quantisation. The electric vortex field, at first source free, is itself forming its field sources in form of potential vortex structures. The formation of charge carriers in this way can be explained and proven mathematically, physically, graphically and experimentally understandable according to the model.

Let us first cast our eyes over the wave propagation.

4.4 The mathematical derivation (Laplace eq.)

The first wave description, model for the light theory of Maxwell, was the inhomogeneous Laplace equation (1.12):

$$\boxed{\Delta \mathbf{E} \cdot c^2 = d^2\mathbf{E}/dt^2} \text{ with } \boxed{\Delta \mathbf{E} = \text{grad div } \mathbf{E} - \text{curl curl } \mathbf{E}} \quad (4.6)$$

There are asked some questions:

- Can also this mathematical wave description be derived from the new approach?
- Is it only a special case and how do the boundary conditions read?
- In this case how should it be interpreted physically?
- Are new properties present, which can lead to new technologies?

Starting-point is the fundamental field equation (4.5). We thereby should remember the interchangeability of the field pointers, that the equation doesn't change its form, if it is derived for H, for B, for D or any other field factor instead of for the E-field pointer. This time we write it down for the magnetic induction and consider the special case B(r(t)) [acc. to 4-2]:

$$\boxed{-c^2 \cdot \text{curl curl } \mathbf{B} = \frac{d^2\mathbf{B}}{dt^2} + \frac{1}{\tau_2}\frac{d\mathbf{B}}{dt} + \frac{1}{\tau_1}\frac{d\mathbf{B}}{dt} + \frac{\mathbf{B}}{\tau_1\tau_2}} \quad (4.7)$$

that we are located in a badly conducting medium, as is usual for the wave propagation in air. But with the electric conductivity σ also $1/\tau_1 = \sigma/\varepsilon$ tends towards zero (eq. 1.7). With that the eddy currents and their damping and other properties disappear from the field equation, what also makes sense.

There remains the potential vortex term $(1/\tau_2)dB/dt$, which using the already introduced relations

$$\boxed{\frac{1}{\tau_2}\frac{d\mathbf{B}}{dt} = \mathbf{v}\ \mathrm{grad}\ \frac{\mathbf{B}}{\tau_2}}\ (3.6)\ \text{and}\ \boxed{\frac{\mathbf{B}}{\tau_2} = -\mathbf{v}\ \mathrm{div}\ \mathbf{B}}\ (3.10+3.15)$$

involved with a in x-direction propagating wave

($v = (v_x, v_y = 0, v_z = 0)$) can be transformed directly into:

$$(1/\tau_2)\cdot d\mathbf{B}/dt = -\|\mathbf{v}\|^2\cdot \mathrm{grad\ div}\ \mathbf{B}\ . \quad (4.8)$$

The divergence of a field vector (div B) mathematically seen is a scalar, for which reason this term as part of the wave equation founds so-called „scalar waves" and that means that potential vortices, as far as they exist, will appear as a scalar wave. To that extent the derivation prescribes the interpretation.

$$\boxed{\|\mathbf{v}\|^2\ \mathrm{grad\ div}\ \mathbf{B} - c^2\ \mathrm{curl\ curl}\ \mathbf{B} = d^2\mathbf{B}/dt^2} \quad (4.9)$$

longitudinal with v = arbitrary (scalar wave)	transverse with c = const. (em. wave)	wave velocity of propagation

The simplified field equation (4.7) possesses thus the same force of expression as the general wave equation (4.9), on adjustment of the coordinate system at the speed vector (in x-direction).

The wave equation (4.9) can be divided into longitudinal and transverse wave parts, which however can propagate with different velocity.

4.5 The result of the derivation

Physically seen the vortices have particle nature as a consequence of their structure forming property. With that they carry momentum, which puts them in a position to form a longitudinal shock wave similar to a sound wave. If the propagation of the light one time takes place as a wave and another time as a particle, then this simply and solely is a consequence of the wave equation.

Light quanta should be interpreted as evidence for the existence of scalar waves. Here however also occurs the restriction that light always propagates with the speed of light. It concerns the special case v = c. With that the derived wave equation (4.9) changes into the inhomo-geneous Laplace equation (4.6).

The electromagnetic wave in general is propagating with c. As a transverse wave the field vectors are standing perpendicular to the direction of propagation. The velocity of propagation therefore is decoupled and constant.

Completely different is the case for the longitudinal wave. Here the propagation takes place in the direction of an oscillating field pointer, so that the phase velocity permanently is changing and merely an average group velocity can be given for the propagation. There exists no restriction for v and v = c only describes a special case.

It will be helpful to draw, for the results won on mathematical way, a graphical model.

5. The field model of the waves and vortices

In high-frequency technology is distinguished between the near-field and the far-field. Both have fundamentally other properties.

5.1 The far field (electromagnetic wave acc. to Hertz)

Heinrich Hertz did experiment in the short wave range at wavelengths of some meters. From today's viewpoint his work would rather be assigned the far-field. As a professor in Karlsruhe he had shown that his, the electromagnetic, wave propagates like a light wave and can be refracted and reflected in the same way. It is a transverse wave for which the field pointers of the electric and the magnetic field oscillate perpendicular to each other and both again perpendicular to the direction of propagation. Besides the propagation with the speed of light, it also is characteristic that there occurs no phase shift between E-field and H-field.

Heinrich Hertz: electromagnetic wave (transverse)

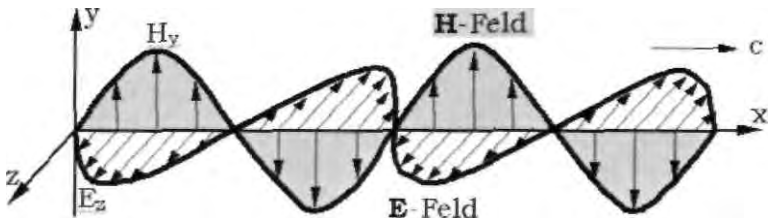

Fig. 6: The planar electromagnetic wave in the far zone.

5.2 The near field (Scalar wave acc. to Tesla)

In the proximity it looks completely different. The proximity concerns distances to the transmitter of less than the wavelength divided by 2π. Nikola Tesla has broadcasted in the range of long waves, around 100 Kilohertz, in which case the wavelength already is several kilometres. For the experiments concerning the resonance of the earth he has operated his transmitter in Colorado Springs at frequencies down to 6 Hertz. Doing so, the whole earth moves into the proximity of his transmitter. We probably have to proceed from assumption that the Tesla radiation primarily concerns the proximity, which also is called the radiant range of the transmitting antenna.
For the approach of vortical and closed-loop field structures derivations for the near-field are known [1-3]. The calculation provides the result that in the proximity of the emitting antenna a phase shift exists between the pointers of the E- and the H-field. The antenna current and the H-field coupled with it lag the E-field of the oscillating dipole charges for 90°.

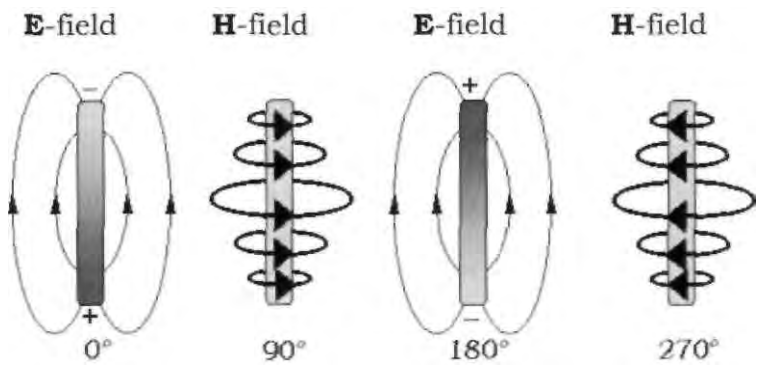

Fig. 7: The fields of the oscillating dipole antenna

The phase shift hints at why an energy transfer is only possible in the near-field, not in the far-field relying on electromagnetic waves. For this purpose, nitpickers calculate the

energy density of the wave-field: $w = (\varepsilon \cdot E^2 + \mu \cdot H^2)/2$

or the Poynting Vektor: $S = E \times H$

for the case that for example the electrical field strength E turns zero. In case of the electromagnetic wave (Fig. 6), at this point, the magnetic field strength also turns zero, with a 90° phase shift however (Fig. 7), it then becomes maximal.

5.3 The near field as a vortex field

In the text books one finds the detachment of a wave from the dipole accordingly explained.

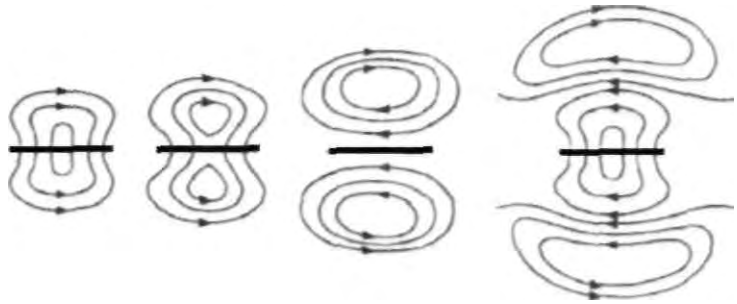

Fig. 8: The coming off of the electric field lines from a dipole.

If we regard the structure of the outgoing fields, then we see field vortices, which run around one point, which we can call vortex center. We continue to recognize in the picture, how the generated field structures establish a shock wave, as one vortex knocks against the next.

Thus a Hertzian dipole doesn't emit Hertzian waves! An antenna as near-field without exception emits vortices, which only at the transition to the far-field unwind to electromagnetic waves.

At the receiver the conditions are reversed. Here the wave (a-b in eq. 4.5) is rolling up to a vortex (a-c-d), which usually is called and conceived as a "standing wave". Only this field vortex causes an antenna current (a-e) in the rod, which the receiver afterwards amplifies and utilizes.

The function mode of sending and receiving antennas with the puzzling near field characteristics explain themselves directly from the wave equation (4.5).

5.4 The vortex model of the scalar waves

How could a useful vortex-model for the rolling up of waves to vortices look like ?

We proceed from an electromagnetic wave, which does not propagate after the retractor procedure any longer straight-lined, but turns instead with the speed of light in circular motion. It also furthermore is transverse, because the field pointers of the E-field and the H-field oscillate perpendicular to c. By means of the orbit the speed of light c now has become the vortex velocity.

Nikola Tesla: electric scalar wave (longitudinal):

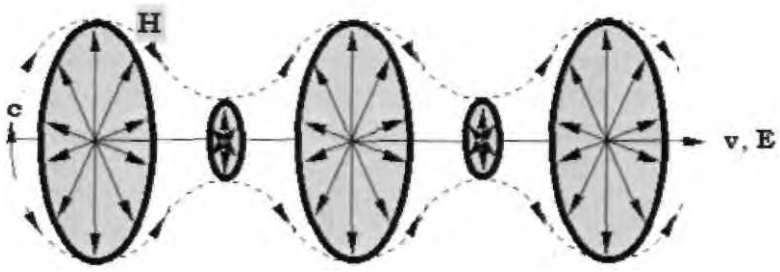

Fig. 9: Magnetic ring-vortices form an electric wave.

Wave and vortex turn out to be two possible and stable field configurations. For the transition from one into the other no energy is used; it only is a question of structure.

By the circumstance that the vortex direction of the ring-like vortex is determined and the field pointers further are standing perpendicular to it, as well as perpendicular to each other, there result two theoretical formation forms for the scalar wave. In the first case (fig. 9) the vector of the H-field points into the direction of the vortex centre and that of the E-field axially to the outside. The vortex however will propagate in this direction in space and appear as a scalar wave, so that the propagation of the wave takes place in the direction of the electric field. It may be called an electric wave.

5.4 Magnetic scalar waves (acc. To Meyl)

In the second case the field vectors exchange their place. The characteristic of the magnetic wave is that the direction of propagation coincides with the oscillating magnetic field pointer (fig. 10), while the electric field pointer rolls up.

new (Meyl): magnetic scalar wave (longitudinal):

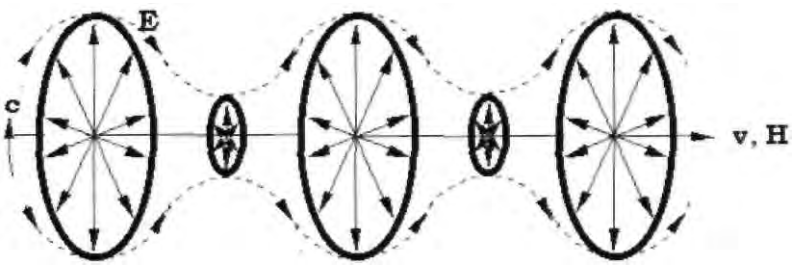

Fig. 10: electric ring-vortices form an magnetic wave.

The vortex picture of the rolled up wave already fits very well, because the propagation of a wave in the direction of its field pointer characterizes a longitudinal wave, because all measurement results are perfectly covered by the vortex model. In the text book of Zinke the near field is by the way computed, as exactly this structure is postulated! [5-1].

5.5 The antenna noise

Longitudinal waves have, as well known, no firm propagation speed. Since they run toward an oscillating field pointer, also the speed vector v will oscillate. At so-called relativistic speeds within the range of the speed of light the field vortices underlie the Lorentz contraction. This means, the faster the oscillating vortex is on its way, the smaller it becomes. The vortex constantly changes its diameter as an impulse-carrying mediator of a scalar wave.

Since it is to concern that vortices are rolled up waves, the vortex speed will still be c, with which the wave runs now around the vortex center in circular motion. Hence it follows that with smaller becoming diameter the wavelength of the vortex likewise decreases, while the natural frequency of the vortex increases accordingly.

If the vortex oscillates in the next instant back, the frequency decreases again. The vortex works as a frequency converter! The mixture of high frequency signals developed in this way distributed over a broad frequency band is called noise.

Antenna losses concern the portion of radiated field vortices, which did not unroll themselves as waves, which are measured with the help of wide-band receivers as antenna noise and in the case of the vortex decay are responsible for heat development.

Spoken with the fundamental field equation (4.5) it concerns wave damping. The wave equation (4.9) explains besides, why a Hertz signal is to be only received, if it exceeds the scalar noise vortices in amplitude.

6. Scalar wave technology

A suitable model is required to apply a newly discovered physical phenomenon in everyday technology. Parallel to its introduction, a technological impact assessment should be performed, but unfortunately is routinely delayed or neglected altogether in favour of rapid progress and opportunity.

Tesla had described the biological efficacy of scalar waves and warned of the dangers of X-ray radiation already, but no one would listen. Carefree, children put their feet in X-ray devices found in shoe stores of the past, used to check how much spare room there remained within new shoes.

„Komfort-Schliessystem" is the name given to a new generation of car keys not needing batteries and receiving energy wirelessly to power an inbuilt microwave device transmitting personal ID, thereby unlocking the vehicle's doors. This comfort is paid for by permanent exposure to the energy transmitter's near-field, irradiating the driver from head to toe during the entire ride.
But that's not all: Meanwhile, the key in the driver's pocket functions as a microwave transmitter. The car's body reflects much of this radiation back onto its passengers.
And this is not supposed to be unhealthy? How else should a wireless system that ignores this disadvantage be devised? Company ignorance doesn't prevent company liability!

6.1 Spark's disease

The general ignorance regarding scalar waves is due to the scientific conflict between Heinrich Hertz and Nikola Tesla. Each claimed error on the other's part, each claimed having demonstrated the real wave as described by Maxwell. Only one would prevail in this conflict, and it turned out to be Hertz.
But in actuality, his historical experiment consisted of an energy transfer, as the receiver was constructed as a spark gap and operated within the near-field! In addition, on both ends of the dipole-antennae, there were spherical electrodes, just like on Tesla's assembly. Therefore, we have to assume that he, in fact, utilized Tesla-radiation.
However, he had measured merely the unused, but nonetheless also emitted transversal waves, and it is only for this that he has been honored! As irony would have it, at Karlsruhe University, where he accomplished the proof in 1888, there is Fig. 8 at the entrance, depicting field vortices within a dipole's near field, which have almost nothing to do with Hertz'ian waves in the far field (Fig. 6).
In the 1930ies, navy radio operators, also known as sparks, complained about headaches, vertigo, lack of concentration and malaise. Today, this so called „spark's disease" has withered after high frequency technicians have learned to maximize the efficiency of antennae. Thus, scalar wave proportions, suspected of being responsible for e-smog impacts, are being minimized. Today's high frequency technicians are being taught numerous rules for noise suppression and how to maximize antenna-gain by power adjustment and optimization of antenna geometry.

6.2 Measuring the standing wave

A scalar wave technician can rightfully be described as a „inverse" high frequency technician, as he is doing everything differently than nowadays' textbook approach. He is intent on maximizing noise signals while consequently, electromagnetic waves are considered waste.

A practical scalar wave transmitter would, for example, be a flat, spirally winded Tesla coil, whose outer end is grounded and inner end is connected to a spherical antenna. It is stimulated by self resonance. If no receiver is present, or if it's running idle, the emitted scalar waves exhibit distinct standing wave behaviour.

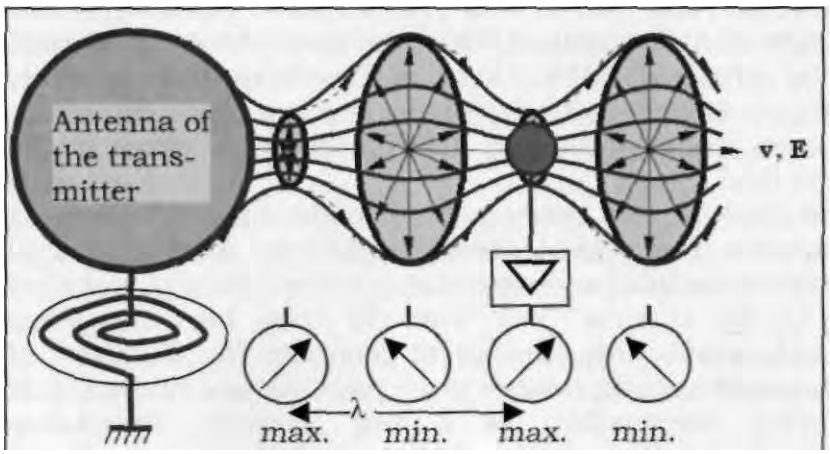

Fig 11. Scanning the standing wave properties

6.3 Optimization of range

From the distance of one measured peak to another, one can determine the wavelength. Multiplying the wavelength with the operational frequency yields the velocity of propagation, which usually differs from that of light. Upon this velocity depend both, the stability of field-vortices and therefore the range of a line of transmission.

With the experimental assembly patented by Tesla, it can be easily proven that using a larger spherical electrode as emitting antenna, increased amplitude oscillation of vortices, greater velocity of propagation, more stable vortices and an overall greater range can be attained.

The same results can be reached by utilizing a higher operational voltage, providing the vortices with greater acceleration voltage, thereby increasing range.

Tesla didn't rely on high voltage for no reason, earning him the reputation as the „ master of lightining". With his system, he transmitted energy over enormous distances, far beyond an emitter's near field [6-1].

Calculations regarding the near field found in today's textbooks only examine its propagation at the speed of light, but that's merely a special case! What happens to the distribution of electric flux lines of a scalar wave once the receiver's not running idle, but on the contrary being fully loaded, as required by a wireless transfer of energy?

6.4 The field of radiation

A receiver for energy is pretty much the opposite of a receiver for measurements. While measurement of a field calls for the diversion of as little power as possible in order not to distort the data, an energy converter, as utilized within a transponder, alters the field totally by attracting it. This is also called „the field of radiation of the antenna".

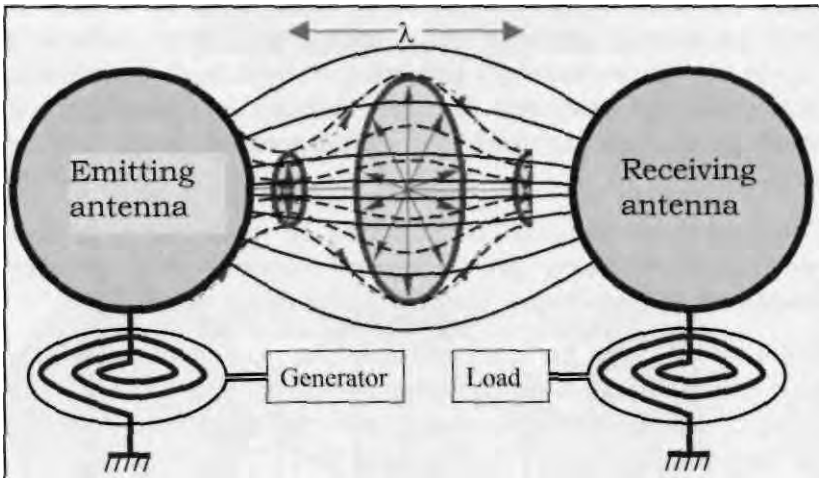

Fig 12. Scalar wave or energetic radiation

Let's examine the borderline case, which constitutes the energetic optimum: All flux lines emitted end at the receiving antenna.
Thereby, all wave properties vanish, wavelength is no longer determinable, and consequently no velocity of propagation definable.

6.5 Resonance

Strictly speaking, one can no longer distinguish emitter and receiver. Both are tightly connected by the field. They form an oscillating circuit operated at self-resonance.

The necessary conditions for resonance pertain to:

1. identical frequency
2. opposite phase shift (180°)
3. identical wave shape, respectively modulation

Transponders usually utilize sinusoidal-shaped signals for transmitting energy, so that only frequency (1) and phase (2) are relevant. Ideally, i.e. when no scatter fields are emitted, no field will be measurable at all during operation, and therefore, as a further benefit, there will be no biological effectiveness.

The disadvantage of resonant coupling is the characteristic hysteresis: Upon increasing the distance, the oscillation breaks off eventually, only to be restored by closing the gap.
If there is more than one receiver within range, they will both resonate and draw the necessary power from the emitter. If, however, the emitter is fully loaded already, the receiver located farthest away from it will be the first to terminate resonance.

Apart from these particularities, the „law of distance squared" doesn't apply - field strength does not decrease with increasing distance from the emitter.

6.6 Dielectrical losses

In case of resonance, the radiation field resembles that of a capacitor, with the flux lines running oriented longitudinally from one electrode to the other. As long as no flux line gets lost and none is scattered in from the outside, the transmission line's efficiency amounts to exactly 100 percent.

During practical operation however, this special condition is hardly attainable. Some flux lines coil into vortices and form a scalar wave, maintaining their longitudinal orientation. Some of these vortices in turn disintegrate and generate heat.

Capacitors turn hot when operated at high frequencies as well. One speaks of dielectric losses and usually faults the isolating materials [6-2].
However, it is to assume that within a capacitor, disintegrating field vortices generate lost heat in the same way.

If both noise signals inside a capacitor as well as antenna noise represent scalar waves, and dielectric losses as well as antenna losses represent vortex losses, it now becomes clear what both of these extreme cases have in common: On the one hand the radiation field of an antenna (Tesla radiation, Fig 13 left) and on the other hand the electromagnetic wave (or Hertz'ian wave, Fig 13 right). It is the scalar wave eliminated from Maxwell's equations which is always involved (Fig 13, middle).

6.7 Overview of scalar waves

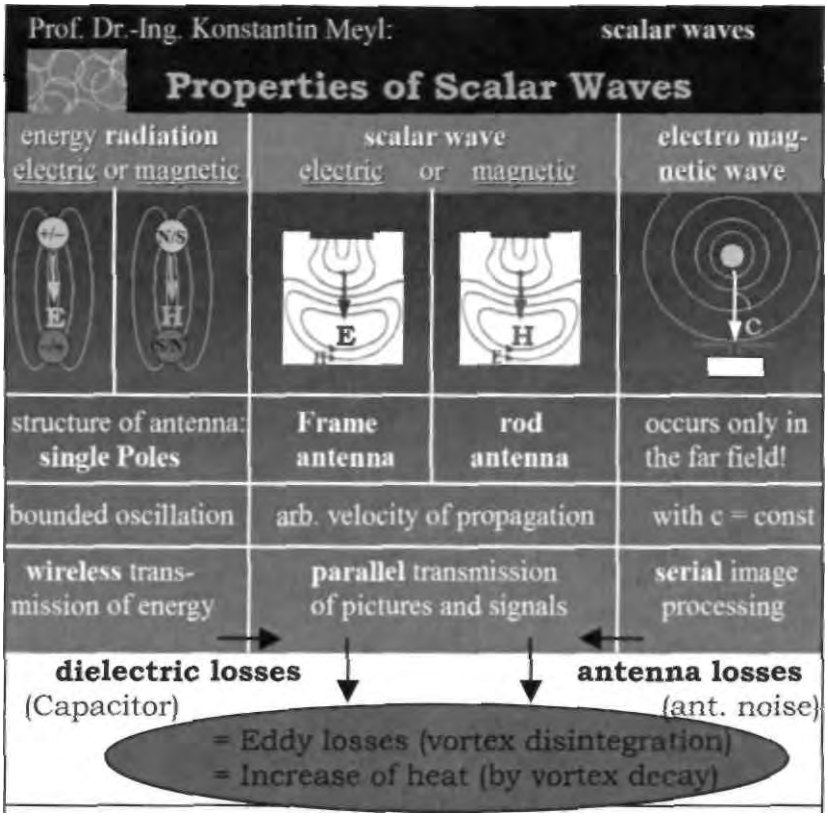

Fig 13: Overview of the attribution of scalar waves

Where the newly or repeatedly discovered scalar wave answers questions to physical processes, there is a vast gap in all common textbooks. Through the model of disintegrating vortices, scalar wave theory additionally provides us with a valuable model concerning thermodynamics, i.e. regarding the question: what is temperature? At this point every unified theory calls for an answer!

7. Far range transponders in practice

7.1 Electrical or magnetic coupling?

While the question is whether a pole- (Fig 7) or frame-antenna should be used on the emitter end, on the receiver end one will ponder whether it should be devised as absorber for electrical or magnetic fields.

An absorber is marked by the feature that on one side, more waves are absorbed than are emitted on its other side. It can only be considered that all that is being absorbed is no wave anymore. Eventually, the wave condition of propagation at the speed of light is no longer given.

Resorting to the image of a standing wave or a vortex rolling in, both of which amount to the same, there appear two possibilities, the coiled magnetic vortex (Fig 9) or its electric analogon (Fig 10).

Up until now, the magnetic vortex was examined preferably, relating to the experiments of Nicola Tesla. But which type of scalar wave should an engineer choose when optimising a scalar wave transponder? Certainly, he will pick the magnetic scalar wave!

Commercial electric motors always operate with magnetic forces, as these are at least 100 times as strong as electric forces and thus, these motors are smaller but about the same factor in comparison to electrostatic motors (e.g. the Whimshurst machine).

This fact should be remembered and therefore magnetic fields preferred in cases of a pure radiation field, generated by coils in this instance.

7.2 Magnetically coupled telemetry

At MIT (Massachusetts Institute of Technology, Cambridge), in 2007, a wireless transfer of energy was accomplished on the „basis of magnetic resonance in the near field" which was published worldwide as a sensation [7-1]. Over a distance of 2 m, a 60-Watt light bulb could be made to glow. The process was attributed a ratio of efficiency of 40% [7-2].

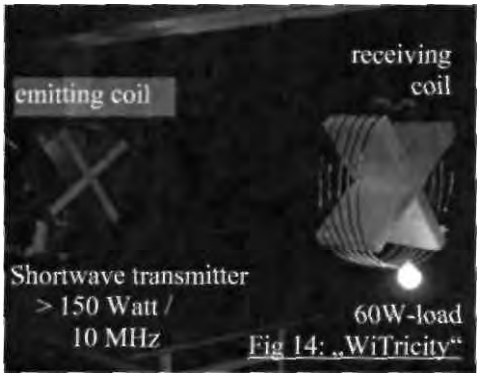

Fig 14: „WiTricity"

The magnetic coils made out of copper had a diameter of 25 cm.

The team of researchers made the experience that a decrease in coil diameter led to a decrease in bridgeable distance, which can be explained by the flux lines' inclination to travel the shortest route, i.e. that of the smallest magnetic resistance, which is the one occupied by the scatter fields that leads right around the coils and generates nothing but leakage.

These fields then miss within the useful spectrum and deteriorate efficiency. It is at this point that the greatest disadvantage of the system shows.

Doubtlessly, it is advantageous that neither wooden or metal objects, nor electronic devices or humans within the transfer path substantially interfere with the energy transfer.
Also, the idea is supposed to be new, but it's not!

7.3 Magnetic inference

A substantial obstacle on the way to a wireless future is posed by the necessary feedback. Ideally, a closed magnetic circuit with permeable core material should be utilized, but then, the idea of wireless energy transfer would be obsolete.

Therefore, an air transformer needs to subsist with the permeability of vacuum μ_0. The emitting coil represents the primary and the receiving coil the secondary transformer coil. Let's take a look at the resulting distribution of the magnetic flux lines.

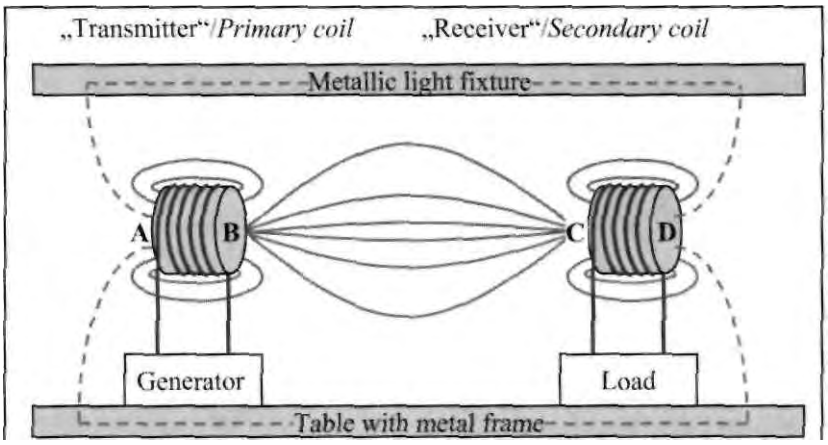

Fig 15. Energy radiation in case of magnetic coupling

Operation in resonance demands that at points A and C, the same (e.g. north), while at B and D, reverse polarity (south) must prevail. Then, the flux lines of complementary poles are connected, specifically:

1. from B to C, the usable length
2. from D to A, the feedback, and
3. directly from B to A, respectively from D to C,

which represents the scatter field of the coils. However, the scatter field length (3) is shorter than the usable length (1) and well shorter than the relatively long way of the feedback (2), which is why the bulk of it can't reach the receiver. Here, every little piece of metal is helpful, enhancing the feedback (2) - a table with metal frame secretly placed underneath the experiment as well as a metal light fixture coincidentally placed above.

Helpful in any case is operation in self resonance, as it stimulates the coils' amplitudes, thereby creating substantially greater field strengths than possible outside of resonance. Nicola Tesla has pointed this out over 100 years ago, already.

7.4 Electrical inference

As already mentioned, Tesla has been working with electrical energy radiation. That begs the question how he solved the problem of circuit closure.. In his case, it was about the electric field, which calls for high dielectric or a good electric conductor to persuade the field to take the detour from the receiver back to the emitter. In the simplest case, this is achieved by a cable.

Thus, in the connecting cable, there is a measurable current driving the resonant circuit. Therefore, this „one wire transmission" is not genuinely „wireless", but its efficiency is excellent.

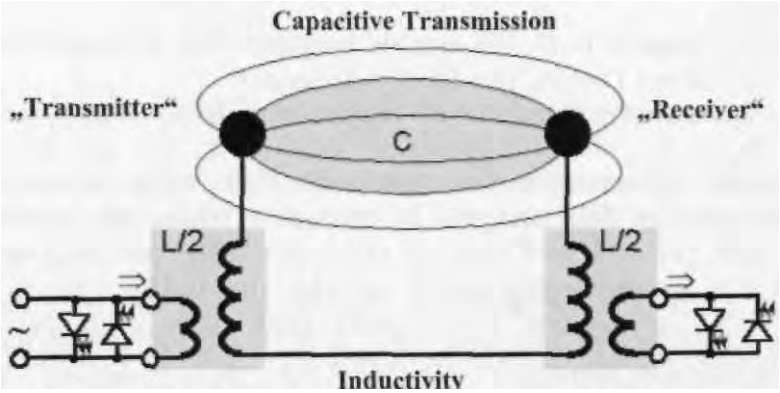

Fig 16: Electrical energy transmission acc. to Tesla

The electrical resonant circuit consists of the spirally wound Tesla coils of emitter and receiver and the capacitive transmission route in between both spherical electrodes.

If one, for example, inadvertently set up the transmission route near an electrically conductive metal frame, the flux lines possibly wouldn't run directly from sphere to sphere, but take a detour from the emitting sphere to the metal frame to the receiving sphere. The operator wouldn't actually notice, as the field would remain longitudinal and its efficiency sensationally high (at about 100%). Ultimately, the useful field (1) benefits, not the circuit closure (2).

With this system, considerably more power (500W) has been transmitted over greater distances (>100m) without noteworthy losses, already, when compared to the MIT's system. For do-it-yourself experiments, an experimental kit containing instructions is available [7-3].

7.5 Tesla's dream: wireless energy supply

It is apparent from Tesla's patents that instead of using a connection line, he grounded his pancake coils one-sidedly. At the high voltages and frequencies he used, the earth behaves like a partly capacitive and partly electrical conductor [6-1].
However, with this technique, any grounded consumer load in resonance can deduct energy. That might include a disagreeable competitor.

Fig 17: The author with his miniatur boat at the TeslaTech Conference 2007 in Salt Lake City

That's why the project to wirelessly supply ships on the ocean with energy wasn't put into practice. The feasibility of the principle, however, has been proven in 2001 by the „First Transfer Centre for Scalar Wave Technology" with a miniature boat.

„The boat is working without a battery", proclaims the narrator in a ZDF documentary. Also, it isn't dragging a cable along.
The power output of its motor is approximately 5 Watts and the installation's efficiency is about 100%.

7.6 A comparison of the systems

As the electrical circuit closure is much easier to realize in practice than the magnetic one, at an unattainably high efficiency, especially the Tesla principle is considered economically viable.

In addition, metal parts are oftentimes present, functioning as potential equalization panel or return conductor, in a car for example the body, or the iron parts in a machine tool, the conduction system of heating pipes in consumption counters or the guiding rails in elevators or other rail-bound vehicles.

No one can ignore the fact that only in the case of resonance; energy will reach the receiver, i.e. at the same frequency and opposite sign. For the layman, that can be illustrated by the image of power „flowing out" of a power plant then „flowing in" to its consumer. Both leads in the cable thereby induce resonance, as the two-poled plug is put into the socket.

In principle, this is also possible with only one cable, only then, the resonance is no longer forced, which is why the receiver can drop, i.e. energy does not reach it any longer. By optimising range and conservation of resonance, for example by variation of the coil and antennae geometry, these problems are manageable.

In wireless energy supplies as utilized in remote controls or mobile phones, no „return conductor" is available. Here, magnetic coupling with all its disadvantages comes into play.

The disadvantages culminate at the point where the receiver, entirely without guidance wires or other means of connection to the emitter, doesn't know which signal to resonate with. The limiting factor in practical use is not the distance over which resonance can still be maintained, but the tuning distance over which the wireless transmission system is capable of starting up without foreign assistance...

The tasks of a transponder include not only wireless energy, but also information transfer. Now both systems benefit from the fact that, intertwined with the magnetic radiation field, magnetic scalar waves always appear, analogous to the electric ones accompanying electrical energy radiation.
To keep down transmission losses, a minimization of scalar waves is aimed for. In any case, the wave remainder is modulateable and usually sufficient for information conduction in both ways, i.e. from emitter to receiver and vice versa. That would be a point-to-point-connection of energy and information.
A multi-point-connection is set up so a power emitter supplies many stations with radiation energy, themselves not needing a battery or external power supply. If a receiving station is being modulated, i.e. fed with information, this is noticeable at all other stations. Equipped with a code, e.g. with a pattern match comparable to a telephone number, individual communications within a vast network are also conceivable. That's the basis of a cell phone network relying on scalar waves, without radio masts, without harmful e-smog and with less that a thousandth of the emitting power common today.

8. Summary

8.1 RFID Technology or scalar wave transponder?

In comparison, RFID technology (radio frequency identification) comes off badly, especially when both energy and bidirectional information transmission each rely a separate system, while a scalar wave transponder can unify all three systems!
The verdict becomes even more devastating when examining the occurring scatter fields.

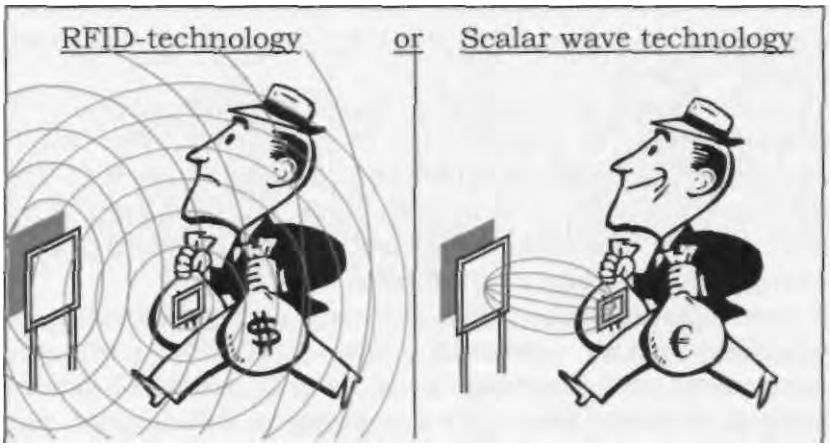

Fig 18. Transversal or longitudinal fields

Today's RFID technology is a compromise, making clear the limitations of Hertz'ian wave technology. Energy transmission occurs at around 120 KHz, so that the useful near-field area is maximized, while information is sent back in the microwave spectrum, so that its emitter is small enough for storage in a credit card.

People in the vicinity are exposed to the sum of both scatter fields. That is a fact, regardless of the biological effects of VLF- or microwave radiation.

For precautionary measure, but also for reasons of efficiency, in the future all signal routes, such as wireless LAN or Bluetooth, are to be combined with a wireless energy transmission on the basis of scalar waves, as only this will eliminate scatter fields and prevent biological effects thereof.

8.2 From practical experience

If the antenna efficiency is very low, e.g. in case of misadjusted antennae, the useful amplitude decreases, while simultaneously, antenna noise increases. According to the wave equation, the explanation could be different: From all the emitted waves, the transversal waves decrease in favour of longitudinal waves. But the latter are being utilized in transponder technology, which is why unconventional antennae structures oftentimes allow for better results than common or time tested ones.
Spherical antennae have proven especially useful in electrical transmission lines. The larger the sphere, the more the reception area for energy can be extended past the near field. This effect can be demonstrated experimentally quite nicely.

So far, high frequency technicians have only concerned themselves with maximizing the transversal wave, so that it wouldn't be overwhelmed by noise. The construction of far range transponders however calls for misadjusted antennae, the very opposite of what is being taught in the field of HF technology up until now, for inverted technical solutions, so to say.

And thus, the introduction and development of a new transponder technology firstly demands an extended view and novel ways of high frequency technology education. This, however, has its roots in the theory of fields and waves.

8.3 The extended field theory

It could be demonstrated that Maxwell's field equations contain an approximation and therefore only constitute a special case of a new, dually formulated and more universal approach.
The mathematical derivations of the Maxwell field and the wave equation uncover what the Maxwell approximation is. The dual counter vortex, with its skin effect expanding and contracting towards the vortex current, also referred to as potential vortex, is being omitted. Is it capable of forming structures and propagates as longitudinal scalar wave in badly conductive materials such as air or vacuum.

At relativistic velocities, the potential vortices are affected by Lorentz contraction. As scalar waves propagate longitudinally in the direction of an oscillating field pointer, the potential vortices experience a steady oscillation in size, consequently to their oscillating propagation. Imagining the field vortex as planar but coiled transversal wave, it follows from the oscillations in size and thus wavelength at a constant vortex velocity (= c) a permanent change in frequency, which is being measured as noise.

This noise turns out to be the potential vortex term omitted from the Maxwell equations. If, for example, a noise signal is being measured at an antenna, this proves the existence of potential vortices.

If, however, the Maxwell equations' scope of validity is left behind, misinterpretations and ignorance of accordant phenomena from the field theory are the consequence and the noise or near field can not be further calculated or conclusively explained.

This leads to, that for example the mobile phone industry claims, a mobile phone is less harmful to the human organism when the antenna efficiency is reduced by artificially shortening the antenna, as thereby fewer Hertz'ian waves are being emitted. In fact, the antenna noise, i.e. the biological relevant scalar wave proportion, is being increased, only will it not be measured in a laboratory for electromagnetic environmental compatibility (EMC).

Already in principle, it is impossible to reproducibly measure vortices, as they will vortex at the probe, or else they wouldn't be vortices!

It's being said that there are faithful apostles of science who only think of the measurable as real. What they can not measure can not exist, and therefore they have trouble accepting the existence of scalar waves. It's that easy to deny the existence of scalar waves, although only until it comes to an industrial practical usage of this physical phenomenon, e.g. for scalar wave transponders. Then suddenly everyone knew in the first place...

9. Table of formula symbols

Electric field			Magnetic field		
E	V/m	Electric field strength	H	A/m	Magnetic field str.
D	As/m^2	Electric displacement	B	Vs/m^2	flux density
U	V	Tension voltage	I	A	Current
b	V/m^2	potential density	j	A/m^2	Current density
ε	As/Vm	Dielectricity	μ	Vs/Am	Permeability
Q	As	Charge	ϕ	Vs	Magnetic flux
e	As	Elementary charge	m	kg	Mass
τ_2	s	Relaxation time constant of the potential vortices	τ_1	s	Relaxation time constant of the eddy currents

other symbols and Definitions:

Specific electric conductivity	σ	Vm/A
Electric space charge density	ρ_{el}	As/m3
Dielectricity	$\varepsilon = \varepsilon_r \cdot \varepsilon_o$	As/Vm
Permeability	$\mu = \mu_r \cdot \mu_o$	Vs/Am
Speed of light	$c = 1/\sqrt{\varepsilon \cdot \mu}$	m/s
Speed of light in a vacuum	$c_o = 1/\sqrt{\varepsilon_o \cdot \mu_o}$	m/s
Time constant of eddy currents	$\tau_1 = \varepsilon/\sigma$	s

Concerning vector analysis: Bold print = field pointer (vector)

10. Bibliography

1-1: Kolnsberg, Stephan: Drahtlose Signal- und Energieuber-tragung mit Hilfe von Hochfrequenztechnik in CMOS-Sensorsystemen (RFID-Technologie), Dissertation Uni Duisburg 2001.

1-2: Meinke, Gundlach: Taschenbuch der Hochfrequenztechnik, Springer Verl. 4.Aufl.l986, N2, G1.5

1-3: Zinke, Brunswig: Lehrbuch der Hochfrequenztechnik, 1. Band, Springer-Verlag, 3. Aufl. 1986, S. 335

1-4: Lehner, G.: Elektromagnetische Feldtheorie, Springer Verlag 1990, l.Aufl., Seite 239, Gl. 4.23

1-5: Simonyi, K.: Theoretische Elektrotechnik, Band 20, VEB Verlag Berlin, 7.Aufl. 1979, Seite 654

1-6: Kupfmuller, K.: Einfuhrung in die theoretische Elektrotechnik, Springer Verlag, 12. Auflage 1988, Seite 308

1-7: Jackson, J.D.: Classical Electrodynamics. 2nd.ed. Wiley & Sons N.Y. 1975

2-1: Lugt, H.J.: Wirbelstromung in Natur und Technik, G. Braun Verlag Karlsruhe 1979, Bild „Tornado", Seite 356

2-2: Maxwell, J.C.: A treatise on Electricity and Magnetism, Dover Publications New York, (orig. 1873).

2-3: Pohl, R.W.: Einfuhrung in die Physik, Band 2 Elektri-zitatslehre, 21.Aufl. Springer-Verlag 1975, S. 76 u. 130.

2-4: Kupfmuller, K.: Einfuhrung in die theoretische Elektrotechnik, Springer Verlag 12. Aufl. 1988, S. 228, G1.22.

2-5: Bosse, G.: Grundlagen der Elektrotechnik II, BI-Hoch-schultaschenbucher Nr.183, 1. Aufl. 1967, Seite 58

2-6: Pohl, R.W.: Einfuhrung in die Physik, Band 2 Elektri-zitatslehre, 21. Aufl. Springer-Verlag, S. 77

2-7: Simonyi, K.: Theoretische Elektrotechnik, Band 20, VEB Verlag Berlin, 7.Aufl. 1979, Seite 924

2-8: Grimsehl: Lehrbuch der Physik, 2. Bd., 17. Aufl. Teubner Verl. 1967, S. 130.

3-1: Bronstein u.a.: Taschenbuch der Mathematik, 4. Neuauflage Thun 1999, S. 652

4-1: Lehner, G.: Elektromagnetische Feldtheorie, Springer Verlag 1990, l.Aufl., S. 413 ff., Kap. 7.1

4-2: Maxwell, J.C.: A treatise on Electricity and Magne-tism, Dover Publications New York, Vol. 2, pp. 438

5-1: Zinke, Brunswig: Lehrbuch der Hochfrequenztechnik, 1. Band, Springer-Verlag, 3. Aufl. 1986, S. 335

6-1: Tesla, N.: Art of Transmitting Electrical Energy Through the Natural Mediums, US-Patent No. 645,576 (1900) and No. 787,412 (18.4.1905).

6-2: Kupfmuller, K.: Einfuhrung in die theoretische Elektro-technik, Springer Verlag 12. Auflage 1988, Seite 152 (dielektrische Verluste)

7-1: Elektrizitat ohne Kabel http://www.spiegel.de/wissen-schaft/mensch/0,1518,487536,00.html

7-2: Andre Kurs, Aristeidis Karalis, Robert Moffatt, J. D. Joannopoulos, Peter Fisher, Marin Soljacic: Wireless Power Transfer via Strongly Coupled Magnetic Resonances, Science 7 June 2007 http://www.sciencemag.org/cgi/rapidpdf/1143254v1.pdf

7-3: Meyl, K.: Skalarwellentechnik, Dokumentation fur das Demontrations-Set zur Ubertragung elektrischer Skalar-wellen. INDEL Verlag 2001, 3.Aufl. ISBN 3-9802542-6-7

More publications (papers, books, CDs, DVDs) at www.meyl.eu (or in the shop of www.etzs.de).

Konstantin Meyl

Scalar waves

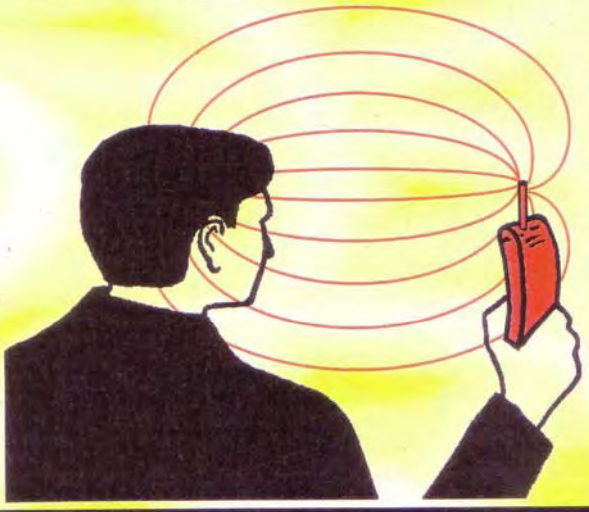

From an extended vortex and field theory to a technical, biological and historical use of longitudinal waves.

Edition belonging to the lecture and seminar „Electromagnetic Environmental Compatibility"

Preface to the lecture, 1st Edition 1996

The theme encloses the electromagnetic compatibility of both technical and biological systems. Only part of the electromagnetic wave can be considered for function troubles, namely the part that was absorbed and has rolled up to a vortex. The activity depends on the number of created vortices and of their lifetime, their decay.
The eddy current only manifests in conducting materials. In the air and in dielectric materials on the other hand the vortex of the electric field will form, also called the potential vortex. To calculate and to measure this vortex is our goal.

First we'll carry out a survey of the problems and the usual methods. From the analysis of unsolved problems the need for the introduction of the new vortex phenomena is deducted and an adequate field-theoretical approach will be chosen. Afterwards the potential vortices are calculated and their properties are discussed and interpreted.
For the purpose of proving their existence, on the one hand the Schrodinger equation will be derived and on the other hand the quantum properties of the most important elementary particles will be calculated and compared with the well-known measured values.
Measurement and calculation are in excellent agreement for weight, charge, magnetic moment and spin. So the theory not only proofs it's correctness, in addition it demonstrates it can achieve much more. The theory takes us to the unification of the well-known interactions and physical phenomena and shows itself as an unified theory.
In the practical conversion and usage of the theory there will not only be informed but by all means also be provoked as an entrance in a fruitfully discussion. Fundamental questions will be taken up like: What is information, energy, temperature or smell? The connection to the theme of the electromagnetic environmental compatibility is formed by the technical and the biological usage of the potential vortices, the energy transmission of Nikola Tesla exactly like the in a similar way functioning nerve conduction. Here we already can expect biological reactions.

This lecture, held for the first time in the winter semester of 1995/96, is available in book form, as an edition belonging to the lecture. This lecture will not deliver ready recipes or instructions. The goal is reached when the critical sense of the listeners and readers has been inspired and discussions have been set going. Everybody has to draw the consequences out of such a theory by him- or herself.
In addition to this lecture a seminar is offered, wherein several themes are supplemented or deepened, different theories are compared and possible consequences are discussed.
The appearance of an edition belonging to the seminar has started in 1998<i>.
Regarding the conversion of consequences both politicians and scientists are equally addressed, because the electromagnetic environmental compatibility has developed to one of the most urgent problems of today's world. But in last consequence all of us bury the worldwide responsibility for our environment.

<i>: K. Meyl: Electromagnetic environmental compatibility, Part 2 and 3 of this book, Edition belonging to the seminar.

Table of contents
Page

Preface to the Lecture. 1st Edition 1996 III

Table of contents IV

Part 1 edition belonging to lecture "Electromagnetic environmental compatibility"

1. Introduction 1
1.1 Discussion about limits 3
1.2 Wireless telephones 5
1.3 Absorption of waves 7
1.4 Overlap effect 9

2. Tasks 11
2.1 Tasks of the electromagnetic environmental compatibility 11
2.2 Tasks of the electromagnetic compatibility (EMC) 13
2.3 Declaration of conformity 15
2.4 EMC-techniques to measure the emission of interference 17
2.5 Electro smog 19
2.6 EMC-techniques to measure the stability against interference 21
2.7 Tasks of the biological compatibility 23
2.8 Natural fields 25
2.9 Electricity of the air 27
2.10 Biological effects 29
2.11 Artificial fields 33
2.12 Protection against artificial fields 35
2.13 Unsolved tasks 37

3. Approach 39
3.1 Principle of causality 41
3.2 Field-theoretical approach 43
3.3 Duality 45
3.4 Flow vortices 47
3.5 Rankine vortex 49
3.6 Vortices and anti-vortices 51

4. Properties 53
4.1 Concentration effect 53
4.2 Duality of the vortex properties 55
4.3 Derivation of the electron as an elementary vortex 57
4.4 Quanta as field vortices 59
4.5 The photon 61
4.6 Pair creation 63
4.7 Noise 65
4.8 Condenser losses 67
4.9 Vortex lines and vortex streets 69

Page

4.10 Water colloids as vortex balls 71
4.11 Transport phenomenon 73

5. Derivation and interpretation 75
5.1 Fundamental field equation 77
5.2 Mathematical interpretation 79
5.3 Physical interpretation 81
5.4 Phenomenological interpretation 83
5.5 Atomistic interpretation 85
5.6 Derivation of the Klein-Gordon equation 87
5.7 Derivation of the time dependent Schrodinger equation 89
5.8 Derivation of the time independent Schrodinger equation 91
5.9 Interpretation of the Schrodinger equation 93

6. Theory of objectivity 95
6.1 Proof 95
6.2 Law of conservation of energy 97
6.3 Radius of the electron 99
6.4 Maxwell's field equations 101
6.5 Transformation equations 103
6.6 Field overlap 105
6.7 Field dependent curvature of space 107
6.8 Electromagnetic interaction 109
6.9 Gravitation 111
6.10 Field dependent speed of light 113
6.11 Universality 115
6.12 Aether 117
6.13 Spin and tunnel effect 119
6.14 Interpretation of the measured faster than light speed 121
6.15 Definition of the speed of light 123
6.16 Relativity and objectivity 125
6.17 Transformation 127
6.18 Transformation table 129
6.19 Interpretation of the transformation table 131
6.20 Particle decay 133

7. Proof 135
7.1 Elementary vortices 137
7.2 Matter and anti-matter 139
7.3 Positronium 141
7.4 Dipole moment 143
7.5 Myon 145
7.6 Calculation of the vortex fields 147
7.7 Calculation of the proton 149
7.8 Strong interaction 151
7.9 Magnetic moment of the proton 151

Page

7.10 Structure of the neutron 153
7.11 Calculation of the neutron 155
7.12 beta-decay 157
7.13 "Weak interaction" 159
7.14 Tau particle 161
7.15 Pions 163
7.16 Table of vortices of the Mesons 165
7.17 Table of vortices of the Baryons 167

8. Unified theory 169
8.1 Structure ofthe field theory 171
8.2 Unification of the interactions 173
8.3 Temperature 175
8.4 Heat 177
8.5 Sound 179
8.6 Basic principle of cybernetics 181
8.7 Structure of adaptive regulatory circuits 183
8.8 Information 185
8.9 Philosophy of nature 187

9. Usage 189
9.1 Longitudinal electromagnetic waves 191
9.2 Medical technical usage 193
9.3 Flying objects 195
9.4 Electro gravitation? 197
9.5 Free energy? 199
9.6 Nerve conduction and action potential 201
9.7 Wireless energy transmission technology 203
9.8 Measuring and switching technique of Nikola Tesla 205
9.9 Energy technical usage 207
9.10 Environmental compatibility 209
9.11 Ecologically fairusage 211
9.12 Claims concerning the environmental compatibility 213
9.13 Epilogue belonging to the lecture (part 1) 215
Abstract belonging to scalar waves, part 1 218

Page

Part 2, edition belonging to the energy technical seminar 219

10.0 Preface to the seminar, part 2 220
10. Oscillating interaction 221
10.1 Kepler's laws 221
10.2 Unknown interaction 223
10.3 Harmony of the alternating current engineers 225
10.4 Four fundamental interactions 227
10.5 Resonating interaction 229

11. The growing globe 231
11.1 Long-distance effect of the neutrinos 231
11.2 Model of expansion 233
11.3 Ancient Egyptian legend of Genesis 235
11.4 Inner structure of the earth 237
11.5 Earth's core as a converter of neutrinos 239
11.6 Speed of growth 241
11.7 Conservation of angular momentum 243
11.8 Set of difficulties concerning the change of magnetization 245
11.9 The weakly damped moon 247
11.10 Calculation of celestial mechanics 249
11.11 The biblical age 251

12. New cosmology 253
12.1 Concerning the formation of our solar system 253
12.2 The birth of the planets 255
12.3 The derivation of the Titius-Bode law 257
12.4 The hollow planet 259
12.5 Concerning the formation of the universe 261
12.6 Counter examples concerning the 2nd law of thermodynamics 263
12.7 Entropy destroying potential vortices 265

13. Recording of space and time 267
13.1 The measuring technical debacle 269
13.2 The clock paradox 271
13.3 The Tamarack mines experiment 273
13.4 Field dependent linear measure 275
13.5 Experiences from space travel 277
13.6 Spherical aberration 279
13.7 Step by step understanding of the measuring technique 281
13.8 Discussion of the cosmological insights 283

14. The way towards free energy 285
14.1 The liberalization of the energy markets 285

Page

14.2 The consequences of the liberalization 287
14.3 The chances of the wind energy 289
14.4 The chances of being self-sufficient concerning energy 289
14.5 The space energy technology of nature 291
14.6 The gap in the energy balance of man 293
14.7 Carl Freiherr von Reichenbach 293
14.8 Cold fusion and Genesis 295
14.9 Photosynthesis 297
14.10 How nature materializes 299
14.11 Lightning 301
14.12 Ball-lightning 303
14.13 Discussion concerning the neutrino conversion 305

15. Principle of funtioning of space energy 307
15.1 The course of the field lines 307
15.2 Gravitation 309
15.3 Systematizing the interactions 311
15.4 Magnetic force converter 313
15.5 The railgun 315
15.6 Unipolar induction 317
15.7 Tendency to instability 319
15.8 Unipolar field configuration 321
15.9 The Testatika 323
15.10 The secret of the Testatika 325
15.11 The key to free energy 327

16. Space energy technology (SET) 329
16.1 The unipolar generator 329
16.2 Derivation of Maxwell's field equations 331
16.3 SET-devices with rotating magnetic fields 333
16.4 Commentary concerning magnetic SET-devices 335
16.5 RQM and the space quanta manipulator 337
16.6 SET-devices with pulsed magnetic fields 339
16.7 SET-devices with Mobius winding 341
16.8 Mobius converter of Seike and Coler 343
16.9 Tesla's flat coil 345
16.10 The secret of the flat coil 347
16.11 Discussion concerning the technology of the neutrino collectors 349

17. Technical use of the weak interaction 351
17.1 Radioactivity caused by neutrinos 351
17.2 Nikola Tesla, the discoverer of the neutrino radiation 353
17.3 Transmutation and reduction of radioactivity 355
17.4 The Patterson Power Cell 357
17.5 Report concerning the cold fusion 359
17.6 Water-Fuel-Cell technology 361
17.7 Unconventional electrolysis 363

Page

17.8 Materialization of neutrinos 365
17.9 Oscillation of size and luminescence 367
17.10 Phosphorescence and sonoluminescence 369
17.11 Discussion concerning the use of the weak interaction 371

18. Physical phenomena 373
18.1 Water as a catalytic converter for neutrinos 373
18.2 Background and zero point radiation 375
18.3 The Casimir effect 377
18.4 Effects under high tension 379
18.5 Flying discs 381
18.6 Propulsion with neutrinos 383
18.7 Antigravitation or levitation 385
18.8 Discussion concerning the effect of closed field lines 387
18.9 Concerning the determination of the stand of today's energy technique 389

19. Own experiments 391
19.1 Concerning the rating of experimental physics 391
19.2 The charge amplifier from the workshop of handicrafts 393
19.3 Interpretation of the observations with the charge amplifier 395
19.4 High-tension experiments in the laboratory for performance electronics 397
19.5 Measurement of dielectric capacitor losses in the HF laboratory 399
19.6 Analysis of the measured capacitor losses 401
19.7 Microwave oven for testing in the laboratory of electrical engineering 401
19.8 Microwave heating by decay of vortices 403
19.9 The Tesla coil from the workshop of handicrafts 405
19.10 Biological effectiveness of the Tesla coil 407
19.11 Wrestling for measuring technical insight in the Transfer Centre 409
19.12 Neutrinolysis, the alternative splitting of water 411

20. Cosmic experiments 413
20.1 Millions of voluntary test subjects at 11 August 1999 413
20.2 Model of calculation for the cosmic experiment 415
20.3 Physical technical consequences 417
20.4 Biological consequences 419
20.5 Epilogue to 11 August 1999 421
20.6 Dropping of the neutrino radiation 423
20.7 Analysis and comparison of the occurrences 425
20.8 Radioactive decontamination with the help of a supernova 427
20.9 Free energy from the Orion constellation 429
20.10 Interaction of the neutrinos with the core of the earth 431
20.11 Changing of polarity and apocalypse 433
20.12 Scalar wave gauges for the prediction of earthquakes 435
20.13 Calculation of future occurrences 437
20.14 Epilogue belonging to the energy technical seminar (part 2) 439
Abstract belonging to scalar waves, part 2 442

Page

Part 3, edition belonging to the information technical seminar 443

21.0 Prefaces to the seminar, part 3 444
21. Derivation of the scalar wave 447
21.1 Lord Kelvin in a delicate mission 449
21.2 Helmholtzian ring-like vortices in the aether 451
21.3 Taking apart of the wave equation 453
21.4 Derivation of the scalar wave equation 455
21.5 Derivation of a plasma wave 457
21.6 Mistakes of the HF technology 459
21.7 Coupling of the wave parts 461
21.8 Set of difficulties of the near-field 463
21.9 Transition to the far-field 465
21.10 Scalar wave model 467
21.11 Double-frequent oscillation of size 469
21.12 Electric and magnetic scalar wave 471

22. Properties of scalar waves 473
22.1 Wave-particle compromise 473
22.2 Concerning the measurement of light 475
22.3 Comparison of the parts of Tesla and Hertz 477
22.4 Noise, a scalar wave phenomenon 479
22.5 Neutrino radiation 481
22.6 Parallel instead of serial image transmission 483
22.7 Comparison of the properties 485

23. Research of scalar waves 487
23.1 Frequency diagram 487
23.2 The reverse of the HF medal 489
23.3 Radiesthesia 491
23.4 Prediction of earthquakes with the help of scalar waves 493
23.5 Searching water with the help of scalar waves 495
23.6 Receiving scalar waves with the Lecher antenna 497
23.7 Assignment according to wavelength 499

24. Medicine of oscillation 501
24.1 Mediation of information with the help of scalar waves 501
24.2 Systems with positive feedback 503
24.2.1 The Synchrometer 503
24.2.2 The sound therapy 503
24.2.3 The colour therapy 505
24.2.4 The aromatherapy 505
24.2.5 The gem therapy 505
24.2.6 Meditation and self-therapy 505

Page

24.3 Systems with negative feedback 507
24.3.1 The homeopathy 507
24.3.2 The bioresonance 507
24.3.3 The frequency therapy 509
24.4 The Zapper 511
24.5 Discussion concerning the medicine of oscillation 513

25. Contributions to the discussion concerning the information technical use 515
25.1 Window of the sensuous perception 515
25.2 The sense organs (nose, eye, tongue) 517
25.3 The nerve conduction 519
25.4 The brain, a scalar wave computer 521
25.5 Concerning signal engineering 523
25.6 Stability against interference and repair mechanisms 525
25.7 The microwave window 527
25.8 Discussion concerning scalar wave medicine 529

26. Recapitulation from the viewpoint of textbook physics 531
26.1 Common misinterpretation of the antenna losses 531
26.2 Wave damping by field vortices 533
26.3 Laplace versus Maxwell 535
26.4 Error term in the wave equation 537
26.5 Interim result 539
26.6 Failure of the Maxwell theory 541
26.7 Concerning the evidence situation 543

27. Faraday versus Maxwell 545
27.1 Energy out of the field 545
27.2 Vortex and anti-vortex 547
27.3 Vortices in the microcosm and macrocosm 549
27.4 Faraday's law and Maxwell's formulation 551
27.5 The discovery of Faraday 553
27.6 Different formulation of the law of induction 555
27.7 Contradictory opinions in textbooks 557
27.8 The field-theoretical approach 559
27.9 Derivation of Maxwell's field equations 559
27.10 Derivation of the potential vortices 563
27.11 Derivation of the fundamental field equation" 565
27.12 The Maxwell field as a derived special case 567
27.13 Derivation of the wave equation 569
27.14 The new field approach in synopsis 571

28. Objectivity versus relativity 573
28.1 The question concerning the aether 573
28.2 Vortices, an overlap of the overlap 575
28.3 Field overlap 577

Page

28.4 The derivation of the length contraction 579
28.5 The dependence of the Lorentz contraction on the field 581
28.6 Boscovich and the respiration of the Earth 583
28.7 Derivation of the gravitation 585
28.8 From subjectivity to objectivity 587
28.9 The objective standpoint 589

29 Mathematical gleanings 591
29.1 General and special theory of relativity 591
29.2 Transformation table 593
29.3 Discussion concerning the root of Lorentz 595
29.4 Mathematical derivation of the neutrino 597
29.5 Universal constants and constants of nature 599
29.6 The fundamental number e 601
29.7 The pentacle 603
29.8 The vortex, which is rolling up 605
29.9 The Golden Proportion 607

30. Scalar wave technology in antiquity 609
30.1 Thesis 609
30.2 Prerequisites 611
30.3 Approach 613
30.4 Circumstantial evidence 615
30.5 Radio technical concepts 617
30.6 Wireless telegraphy 619
30.7 AM temple technology 621
30.8 Modulation of acoustic signals 623
30.9 Broadband FM broadcasting technology 625

30.10 Epilogue 627

Contacting address and information 634

Table of formula symbols 635

References 636
A: Publications concerning the theory of objectivity (primary literature) 637
B: Publications about the theory of objectivity (secondary literature) 641
C: Literature concerning physics in general 643
D: Literature concerning geophysics, geology, geography and astronomy 644
E: Literature concerning the EMC and biological compatibility 644
F: Literature concerning Tesla and criticism of textbook physics 644
G: Literature concerning free energy 645
H: Literature concerning medicine, biology and chemistry 646
J: Literature concerning history and more peripheral subjects 646

Appendix 647

1. Introduction

Here the extremely controversially discussed question of the environmental compatibility of electromagnetic fields will be persuaded. Limits should inform what is incompatible and what is compatible. But there are as many limits as there are commissions and specialists. And besides that differ the results from each other for several powers of ten. In course of time the legitimate doubts become unmistakable and the representatives of science slowly get to feel the burden of proof.
For the sake of efficiency, the actual discussion concerning the theme of electro-smog is analysed and the necessity to involve an until now unnoticed field phenomenon in the discussion about limits is derived: It concerns vortices of the electric field. These potential vortices, as they are called, have the corresponding properties to show biological effects even at the lowest field strengths. In any case it is not possible to exclude that at present the wrong physical phenomena are measured and made responsible.

A parable should bring clarity.
Lets imagine that the to us well-known and over our sense of touch understandable physical phenomenon of the temperature is unknown to us, neither measurable nor perceptible. Our weather station only exists of a barometer that could show us the air pressure and deliver us indications if good or bad weather is to be feared. We ready realize that there exists a connection between the air pressure and our health and make the to us well-known phenomenon responsible. When the pointer points to good weather we can go out lightly dressed. With bad weather we should take a coat, so we know from experience.
"Now we imagine the realistic situation that in winter we have a weather situation of high pressure but it's stone-cold outside. The weather station will display high temperatures with the result that some people will walk around with short-sleeved and open shirt, only to lie in bed with a cold in the evening. Of course the air pressure was to blame! Logically the "pressure sensitive", as they are called mocking, demand the limits for the allowed pressure to be reduced so far that no consequences for health are to be feared. Concerning the theme of allowed limits, science is asked and science proceeds in a systematic way: the pressure is investigated in the laboratory, isolated from all other parameters and so it is discovered that man catches no cold even at a substantially higher air pressure, so there is no reason to alter the limits.
Actually we would expect these at any time reproducible results to have a calming effect on the minds of the participants of the discussion and on the population. Instead the pressure sensitives time and again cite new knowledge that won't fit in the scheme. So is for instance stated that draught causes the same health problems although this pseudo effect has nothing at all to do with the air pressure. So owing to incomprehensibility and emotions the discussion about limits becomes a farce.

The fact that sensitive people react to effects of air electricity and possibly get ill without proof that some today measurable physical quantities are responsible should make us think. It is little calming watching our scientists poking at the dense fog whereas at the same time among the runners of the new telecommunication networks there spreads something like a gold-digger mood.
To introduce a new technology is not difficult, but to abolish it for reasons of the electromagnetic environmental compatibility is almost impossible!

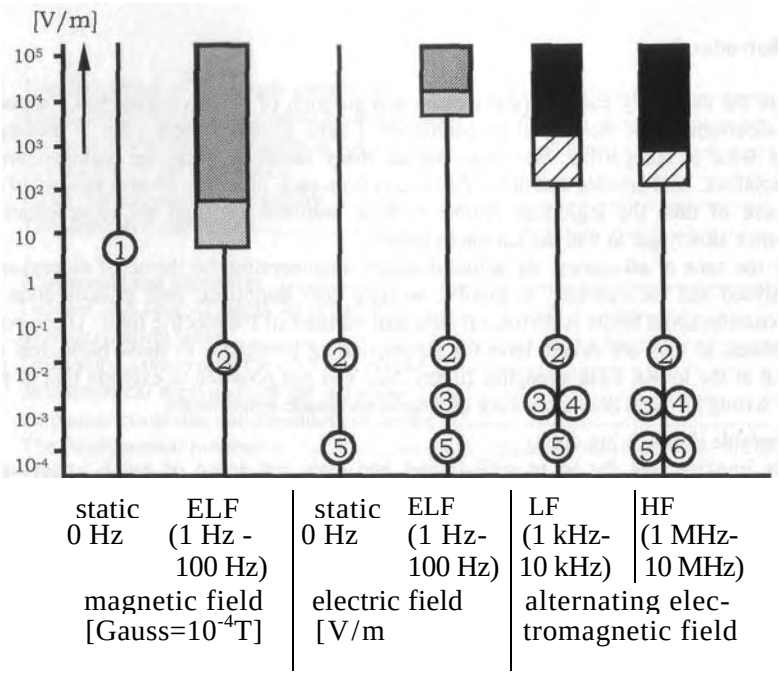

Fig. 1.1: Discussion about limits

Limits for professional exposition (electronics engineers) and
Limits for non-professional exposition (population in general) according to the Recommendation of IRPA/INIRC[ii].
Limits according to VDE 0848 / 1989
Limits according to VDE 0848 / 1992
experimentally determined threshold values of reactions of biological systems [i]:

1 Increase of the activity of movement of birds
2 deflection of divining-rods
3 influence on the time of reaction of men
4 conditional reflexes of fish without electrical organs
5 conditional reflexes of fish with electrical organs
6 conditional muscular reflexes of men

taken from:

<i>: H.L. Konig: Unsichtbare Umwelt (Wetterfuhligk.), 5. Aufl., Bild 111, S. 123 Verlag Moos & Partner Munchen, ISBN 3-89164-O58-7
<ii>: Habiger u.a., EMV, Verlag Technik, Berlin 1992, S. 152

1.1 Discussion about limits

Whoever follows the public discussions concerning electro smog always sees two arguing parties, whose standpoints lie so far apart that they inevitably talk at cross purposes and there can be found no consensus.

On one side the "affected" find together who maintain to have found the electromagnetic radiation as the damaging cause for their problems. They are to be taken serious, even when only their personal sensitivity serves as means of measurement and proof and a more or less distinct sensitivity against electromagnetic phenomena. This group occasionally finds support of homeopaths who can base on reproducible laboratory results that fit as few into the view of life of science as the empirical statements of affected and possibly hurt people.
On the other side stand the representatives of the energy-supply companies and the runners of radio networks who argue with the needs of our modern industrial society and give "limits" prescribed to them by scientists. These, for their part, proceed according to strictly scientific methods. Their presented results are reproducible and there's no doubt about them.
The limits after all are fixed far below those that are recommended from a scientific viewpoint. Nevertheless both groups are separated from consensus by powers of ten. When we want to know how deep the ditch is we want to bridge, we should take a look at the determined limits (Fig. 1.1).

The limits stem from the 1RPA (International Radiation Protection Association) an organ of the World Health Organization that in turn has appointed the INIRC (International Non Ionizing Radiation Committee). These now state to have used all available scientific research results as basis for the given guidelines.
Moreover a safety range was worked into them. So the limits were fixed at substantially lower levels to guarantee that no health damage arises. In this way first the limits were determined for the people who for reasons of profession are exposed to electromagnetic fields.
For the population in general the limits for the so called non-professional exposition were reduced further to one half till one fifth for reasons of caution and care. In Fig. 1.1 these limits are registered. Thereby is distinguished between magnetic fields and electric fields that appear stationary or at extremely low frequencies (ELF describes frequencies between 1 Hz and 100 Hz). Moreover limits for low-frequency (1-10 kHz) and high-frequency (1-10 MHz) alternating electromagnetic fields are given.
The graph should serve as a rough orientation and show us the proportion of scale. As further information some thresholds of measured reactions of biological systems are registered (after Konig*[1]*). Because a logarithmic scale was chosen to fit all the values on one graph it becomes clear that between the first reactions and the recommended limits there lie up to five powers often. The ditch seems to be insurmountable.

Fig. 1.2: Set of problems of environmental compatibility by means of the example of the handheld wireless telephones (handy).

<i>: L.v.Klitzing: Neurophysiologische Einflusse durch elektromagnetische Felder wahrend und nach der Exposition, Med. Universitat zu Lubeck

1.2 Wireless telephones

Measuring technical surveys with regard to the influence of brain currents by digital radio signals by the university hospital in Lubeck have startled handy manufacturers and users equally [<1>]. Although in this case measurement errors could be detected, the „bugaboo on the wall" remains that we are sitting unsuspecting in a restaurant and a neighbour draws his handy out of his pocket to make a digital telephone call. Thereby synchronizing the brain currents within a radius of 100 meters on the broadcasting signal and occupying our brain useless with technical signals. The derivation will show that from the start this can't happen to all visitors, because as a prerequisite conditions of resonance must be fulfilled. But would there be an affected, he or she for sure would have considerable problems, because informations that are not picked up over the sense organs can neither be classified timely nor as regards content.
An affected whose brain has picked up technical signals not even is able to register by itself that it was fed with incorrect informations. It would be reasonable when the visitors of the restaurant would defend themselves and put the radio operator on the doorstep. The number of restaurants where apart from cats and dogs also handy's have to stay outside is increasing. How should we keep out of the way of electromagnetic fields? Should we walk around permanently with a steel helmet or even better in a knight's armour and even go to bed with them? It would be worse than in the dark middle ages.

Summarizing: it should be guaranteed that the operation of electro technical apparatus causes neither health damage nor unintentional influence or irritation. A systematic and scientific procedure should investigate in the laboratory all relevant physical phenomena individually for their interaction. Electro physics bases on two phenomena in connexion with electro-smog: on the one hand the radiation and on the other hand the thermal effect, but at a close look both factors prove to be of only little importance!
In radiation measurements the intensity of the electromagnetic wave at a certain place is determined. In laboratory experiments the field strength is increased so long till biological reactions are observed. Thermal limits are determined in a similar way. As said, the values lie about powers of ten above those that possibly bother you when you hold a handy to your ear. It is true that the microwave radiation penetrates into your head but we also know that it marches out again on the other side and this visit in your head happens with the speed of light.
Exactly like this are guest in your body constantly your local radio station, your local television station the satellites with hundreds of programs and anyway the whole radio technical world even when you did not invite them.
For an electromagnetic wave to become receivable, the field strength must lie clearly above the common noise signal and this can only be achieved by a permanent overlap, by standing waves, like in a cavity tuned to a specific frequency or an antenna. As long as people don't let themselves grow antennas on their heads they hardly have to fear direct biological effects of electromagnetic waves.
That leaves as the second phenomenon the thermal effect. With a handy held to your cheek there comes into being a local fever in your head. But that is not at all unusual or unnatural for the human body. Something like that happens to a far greater degree when you take a hot foot bath or let yourself be irradiated at one side from the sun at a tourist grill.

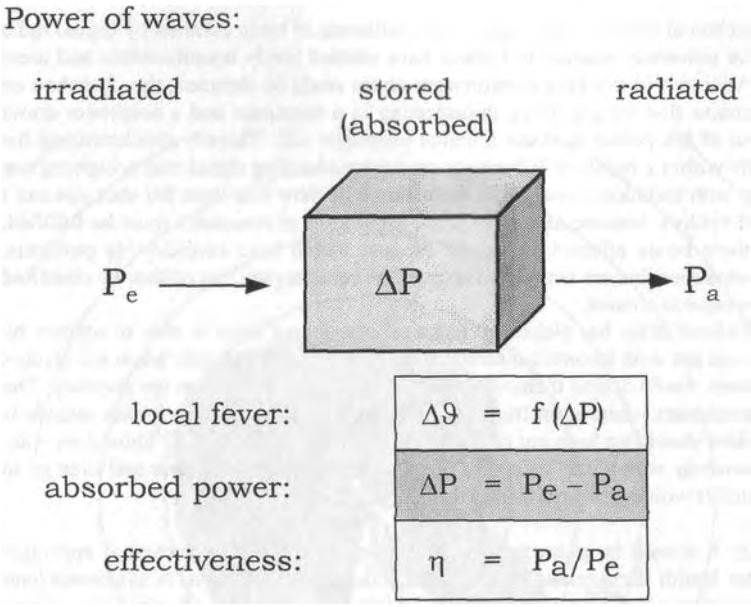

Fig. 1.3: Damping of waves and ability to absorb of a body
(our head) if we are making a phone call with a handy.

---

a contribution to the theme dielectric losses

- capacitor
- high-frequency welding
- microwave oven

<i>: K. Meyl: Potentialwirbel Band 1 [Al] (only in German),
INDEL Verlag, Villingen-Schwenningen 1990, ISBN 3-9802 542-1-6
<ii>: K. Meyl: Potentialwirbel Band 2 [A2] (out of print),
INDEL Verlag, Villingen-Schwenningen 1992, ISBN 3-9802 542-2-4

1.3 Absorption of waves

The with the theme dealing physicians logically have to put up with criticism that they work only with two phenomena that not at all can be involved authoritative in the causes for biological effects. A third factor can be considered, a field phenomenon until now stayed unnoticed by science: the vortex of the electric field, the so called potential vortex. A vortex is to be considered as an oscillation around a fixed point. Through that a permanent overlap is caused, like what happens at an antenna only that the vortex is not bound to the dimension of an antenna. The potential vortex is contracting and in this way reaches extremely high energy densities at very little spatial measurement, densities that lie far above those that field strength measurements are pretending to us [Al]<i>.

When again you take the handy at hand with which you ,,blow" the pulsed microwaves into your head. Don't worry, because with the speed of light and without provable damage almost everything comes out again on the other side, but only almost everything. A little damping of the wave has taken place and your head has absorbed this part of the irradiated wave (Fig. 1.3). Who claims this is already the thermal factor actually should realize that there exists no corresponding term in the wave equation. Here there are found merely two dual vortex phenomena as a possible damping term: the eddy current and the potential vortex. An eddy current damping is ruled out because of the bad conductivity of the head. But this favours his dual anti-vortex, the potential vortex [A1]<i>.

Seen physically the following is taking place in your head: the absorbed waves roll themselves up to vortices and through that become localized and overlap themselves permanently (Fig. 1.4b). In the course of time the vortices decay and produce the well-known eddy losses that lead to the measurable increase in temperature. When reactions or biological effects arise, simply and solely the vortex can be considered as the possible cause. Thereby play two points an important role: the number of the generated vortices and their lifetime that is determined by the time of decay.

In anticipation of the mathematical calculation of the potential vortices it is pointed out here that these are favoured not only by a low conductivity, but also by a high dielectricity. Because water has an unusual high dielectricity (ε_r = 80) and our head consists predominantly of water doubts in dealing with handy's are reasonable.

Also the relaxation time constant representative for the lifetime can be calculated [A2]<ii>. We must proceed from the assumption that both the number of the vortices and their lifetime, that is all the at a fixed point in time in our head existing and effective vortices, can be a cause and therefore have to be considered and investigated scientifically.

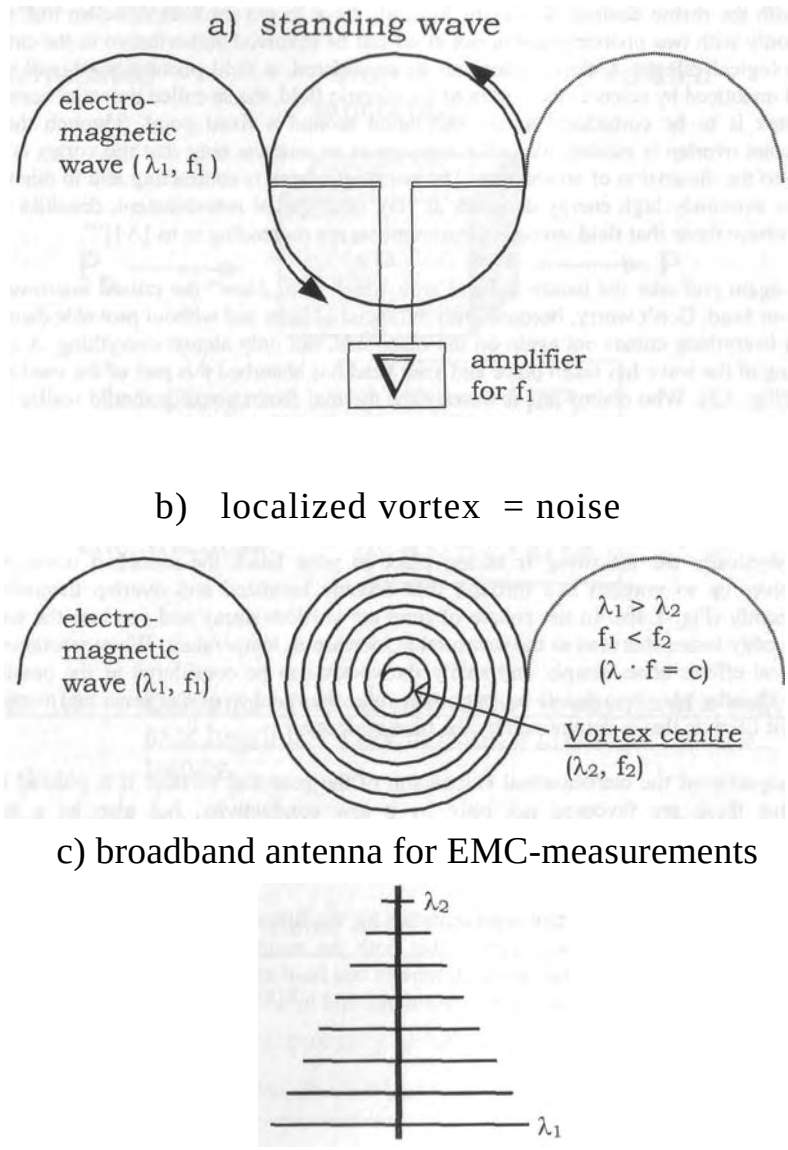

Fig. 1.4: Measurement of localized waves and vortices

1.4 Overlap effect

The graph at the left (Fig. 1.4) should clarify once more that only the in space localized and permanently overlapping field appearances can be considered as a cause for biological effects. This can concern an over an antenna standing wave (a) or a vortex (b) which is to be taken as localized by nature.
It would be allowed to in general speak only of a vortex because the standing wave can by all means be understood as a special case of the vortex. The essential difference is that the vortex is not bound to the size of a fixed antenna and can contract itself at any time to achieve in this way a substantial higher energy density. As a result this than will lead to an increased biological effectiveness.

It should be pointed at a further omission. In the discussion about limits, without exception, the absolute field strength of the broadcasting signal is valued and not the type of modulation. The last mentioned should actually not at all play a role according to the prevailing scientific opinion.
Totally different is the case with a vortex that acts damping. Such a vortex shows near it's centre a considerable smaller wavelength than more to the outside and through that it has a big frequency bandwidth [A5][<i>]. It is to be expected that in the extremely broadband pulsed signals of the digital networks the creation of vortices (or eddies) will be favoured considerably stronger than in amplitude- or frequency-modulated signals (AM/FM/C-network). In connexion with analog modulated radio- or handy-signals until now there never has been reported of any synchronization of the brain currents with handy-signals from a comparison of the EEG with the broadcasting signal.

Interestingly the for EMC-measurements usual stepped broadband antennas have exactly the construction that certainly would be favourable to the measuring technical registration of vortex phenomena (Fig. 1.4c).
With the dipole antennas of different lengths for different wavelengths there still are measured waves and not vortices but these measuring techniques is certainly accommodating to the until now unnoticed and stayed undiscovered vortex phenomenon. So there are some good reasons that the vortex is a dominating influential factor for EMC-problems.

By means of the example of the handheld wireless telephones can be studied and discussed with which set of problems the very young discipline of science of the environmental compatibility has to fight in the future. And in which ways there can be found approaches towards a solution of the problem. When the comfortable and trodden out ways of textbook physics do not lead to the goal than we will have to force our own way through the jungle of science.
At first we'll have to obtain a short overview of the actual level of research and knowledge. From the criticism to this we than can derive the tasks of the electromagnetic environmental compatibility and in particular the unsolved tasks.

<i>: K. Meyl: Wirbel des elektrischen Feldes, eine neue Storquelle? EMC Journal 1/95, 6. J, S. 56-59.

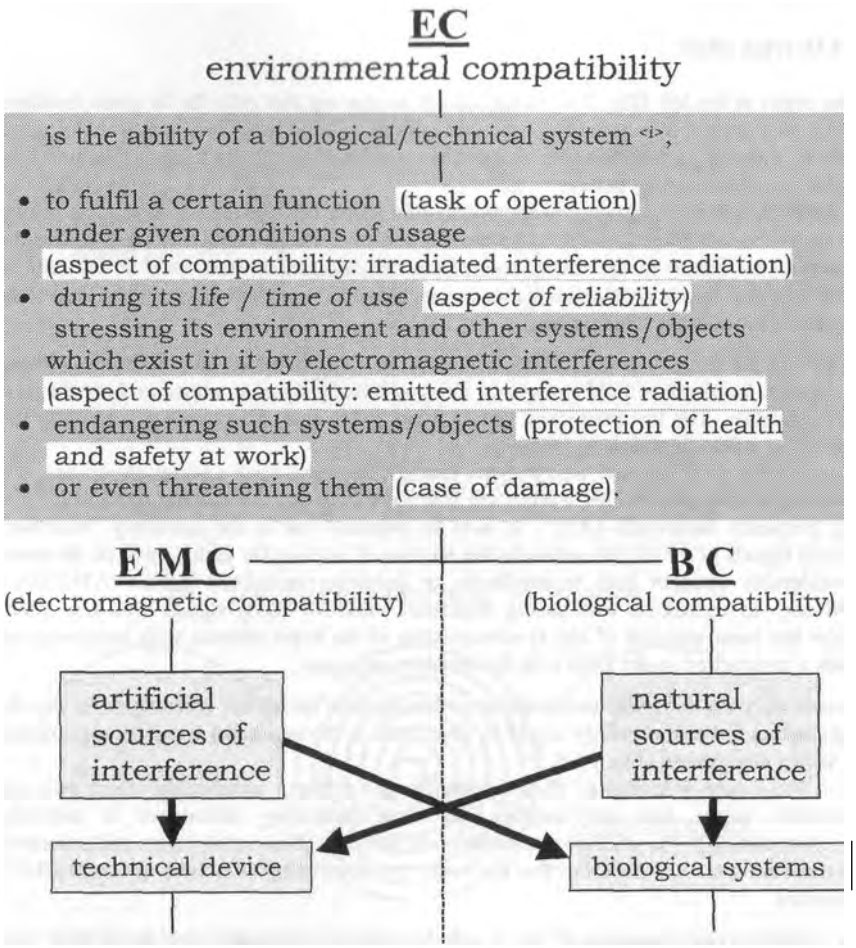

Regulations of the German Post Office since 1992: EMC-law<ii> from 1996: EU -regulation	called EMEC thirties: radio operator disease today. E-Smog, HF-, SW-therapy diathermy, etc.	know how of druids magic esoteric medicine biology

Fig. 2.1: Overview concerning environmental compatibility

<i>: E. Habiger: EMV-ubergreifende Aspekte zu benachbarten Problemfeldern, Elektrie 48 (1994), Heft 5/6, Seite 163-161

<ii>: EMVG: Gesetz uber die elektromagnetische Vertraglichkeit von Geraten, Bundesgesetzblatt Teil I vom 9.11.1992, S. 1864

2. Tasks

2.1 Tasks of the electromagnetic environmental compatibility

The environmental compatibility (EC) forms the generalization that includes both the electromagnetic compatibility (EMC) and the biological compatibility (BC). Besides the technical and functional goals of an undisturbed functional course it also pursues ethical and moral goals.
Technology should benefit to humanity and at the same time be in accord with nature. This goal will not be reached when this technology directly or indirectly is endangering humanity.
A direct attack on the health of people poses for instance the military usage of technical apparatus or the negligent usage, by pretended ignorance and unsuspicion.
Is a technology posing a danger to the environment so humanity endangers itself indirectly with this technology. After all are human beings a product of their environment. We always should reckon on the environmental sins taking revenge on us sooner or later.

In fig. 2.1 a formal definition is given that in particular concerns the claims for an undisturbed functional course: it concerns the compatibility aspects of unallowed emitted and irradiated interference radiations, the reliability and quality safety with which a function and task is fulfilled and finally the questions of the protection of health and the safety at work.

Moreover fig. 2.1 provides an overview and the structure of the 2nd chapter. First we'll treat the electromagnetic compatibility (EMC) that first of all deals with the influence of artificial but also natural interference sources on technical apparatus.
After that we'll throw a glance at the appearing fields in nature. The biological compatibility (BC) deals with the influence on biological systems.
An especially sensitive area of the environmental compatibility (EC) than describes the with a cross-link hinted influence of artificial interference sources on biological systems that is popularly described as „electro smog".

The numerous aspects of the environmental compatibility for instance in the areas of chemistry and biology that certainly are important, but do not fall in the area of electromagnetism, can't be treated in the here marked framework.

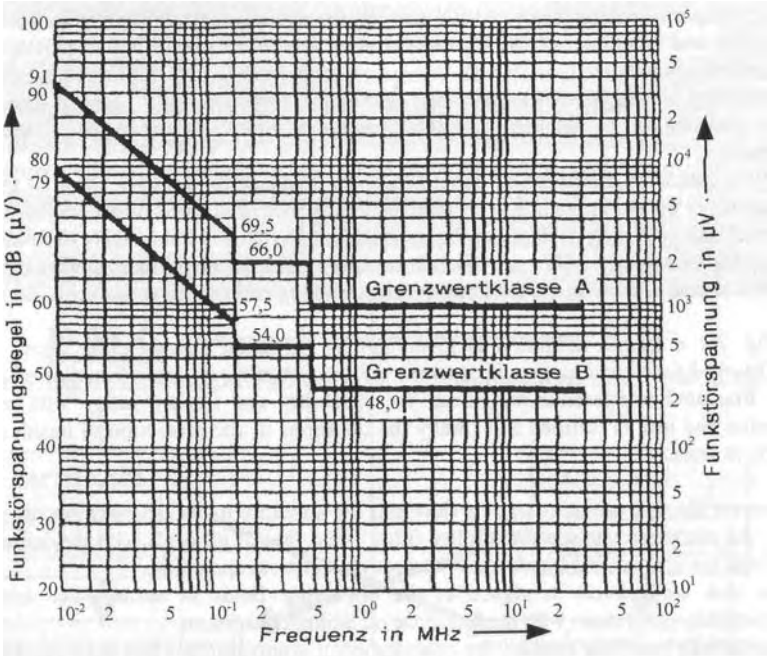

Fig. 2.2: Classes of limits according to VDE 0871
(since 1-1-96: VDE 0875)<i>

<i>: Anton Kohling: Grundlagen der Funkentstorung in der Bundesrepublik Deutschland, etz Bd. 108 (1987), Heft 10.

2.2 Tasks of the electromagnetic compatibility (EMC)

First of all the EMC (electromagnetic compatibility) is concerned with the function of technical apparatus. Correspondingly rational and dry sounds the official definition: "electromagnetic compatibility (EMC) describes the ability of an electrical setting-up (i.e. of a construction element, of a construction group, of an apparatus or of an installation) to function in an electromagnetic environment without stressing this environment by electromagnetic effects in an unallowed fashion ".

Actually it concerns an old need for protection that should be as old as the usage of electro technical apparatus. But in the beginning no one cared about it. The spark gaps with which Heinrich Hertz 1888 in Karlsruhe has carried out the first radio technical experiments were genuine ,,polluters", that would have been detectible at several hundreds of kilometres distance with modern receivers. For these installations that he had assembled in the lecture room with his students, today he would hardly get a permission of operation and the since 1996 required declaration of conformity he would get not at all.

1925, as in Germany the number of radio listeners had exceeded the limit of one million, for the first time a need for protection appears in the certificate of approval for radio receivers: "The public telegraphs and telephone installations must not be disturbed by the radio receiver".
Later on every backside of the good old steam radios there was found the following hint (translated): "This apparatus meets the interference radiation regulations of the German Post Office". So the manufacturers were urged to measure the emission of their apparatus and in particular to screen the HF-oscillators in the superhet-receivers.

Since the fifties, in the VDE-institute EMC-examinations in the present day sense are taken. The main point of the measurements and the by the VDE recommended limits, however is about interferences bound to a circuit. On the supply lines of the network the prevailing conditions are reproducible so that standards can be put through (Fig. 2.2).

For measurements of interference radiation maybe the time was not ripe enough or the necessity was not big enough. The usual argumentation was: what we can't measure reproducibly, can not be forbidden and certainly not be put under punishment. Therefore merely recommendations were issued or impositions weak as wax were made like: "the interference field strength ... must be so small that an undisturbed reception is guaranteed as soon as the minimum field strength for utilization exists at the place where the antenna is mounted"<1>.

In common parlance that means something like: "as long as no one bleats, everything is allowed". Within a connected industrial area there even existed an officially legitimized fools freedom. Merely at the fence of the industrial area limits had to be fulfilled.

Specially for the line-frequency of the screen one has decided to build a loophole in the law so that one didn't have to throw the TV sets, that so successfully had conquered the living rooms, out of the window. Of course the flickering screens did interfere exactly as before but this EMC-interference now was officially approved.

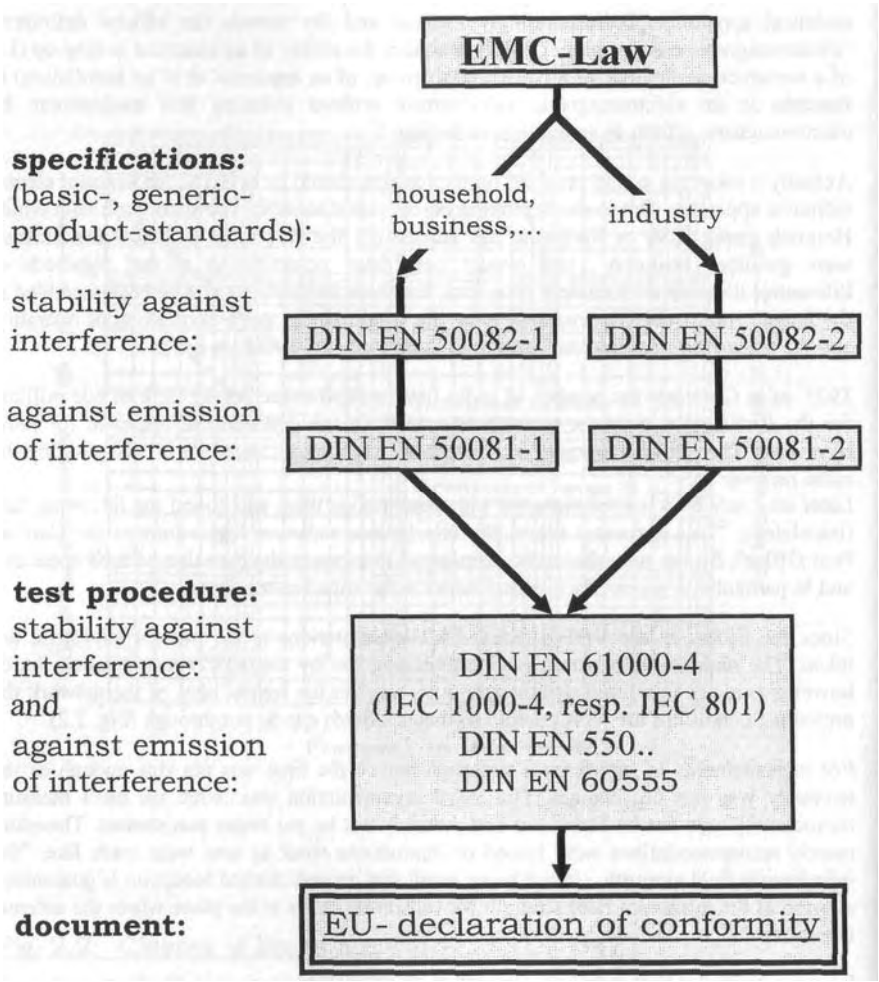

Fig. 2.3: The way to EU conformity

2.3 Declaration of conformity

In the EMC times seem to have gone as the standardizers had to fit in with the insufficiencies of technology. Meanwhile the conditions have turned up. We owe this circumstance first of all the EMC-law of 1992 that doesn't name any limits but it states the political intention to demand from technical apparatus and installations an appropriate stability against interference and at the same time limit the sent out interference. As a consequence of this law the measurement facilities and measurement processes had to be standardized to get reproducible measurement results that are not influenced by the electromagnetic environment. That goes so far that even the floor covering of a measurement hall is dictated because the conductivity of the floor influences the degree of reflexion. Normally the examinee is situated on a revolving plate that is turned around for 360° during the measurement of the radio interference field strength. Is it however not possible to turn the examinee than the antenna has to be led around it, thereby again increasing the dimensions of the measurement hall. The distance to the antenna should be up to 10 meters. Moreover it must be possible to move the antenna, up till a height of 4 meters to register the influence of the reflexions on the floor.

Moreover there is to plan a reflexion free zone around the measurement track (in elliptical form) that depends on the reachable damping of reflexions of the used absorber. Used are pyramids of foam material soaked with carbon and increasingly tiles of ferrite or shieldings of wallpaper.

Taken all together for a measurement hall doing justice to standards there result considerable measurements of for instance 18 m length x 10 m width x 7 m height.

Let's again come to talk about the EMC-law with which only the intention but not the way is fixed. To form the claims catalogue in a way that is fulfillable in general, some concrete prescriptions, the so called standards, have to be worked out. This task was transferred to the European committee for electro technical standardization CENELEC, which has established the workgroup TC 110 to at first work out some standards:

The basic standards deal independent of product with general questions of the EMC, of the testing process and of the measurement environment.

The generic standards likewise deal independent of product with the so called fundamental technical standards for apparatus in their dependence of the respective electromagnetic environment (protected computer room or medical room, environment of the house, office or industry).

The product standards concern the EMC-standards referring to products (7 product families / approx. 50 products).

In Fig. 2.3 the arduous way through the jungle of paragraphs for a technical apparatus is outlined. Corresponding to the requirements of use, first the relating ES-standards for the apparatus have to be determined and than have to be measured according to own test standards based on the fundamental technical standards. When the allowed limits for stability against interference and for sending out interferences are not exceeded, the EC-declaration of conformity is handed out. Since 1.1.96 that declaration is needed when apparatus are commercialized or - stated more exactly - "put in circulation" and operated. When still further EC-guidelines are met in the end the CE-hallmark is awarded. Since 1.1.96 only with this hallmark the access to the common market of the EC is possible. Violations can be punished with fines and if need be with imprisonment. But there are great national differences in the EC. The Federal Republic of Germany with fines of up to 50.000 Euro counts as expensive for criminals.

Simulation of network for the measurement of the interference voltages U_{st1} and U_{st2}.

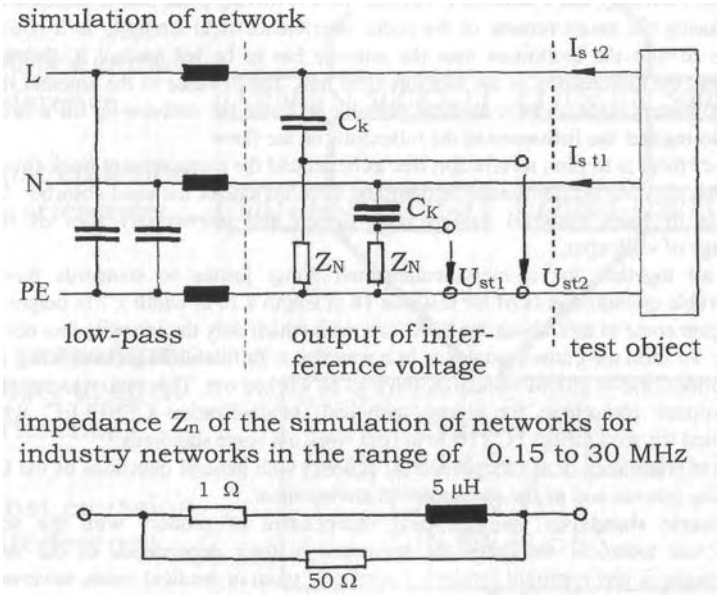

Fig. 2.4: Simulation of network for the measurement of interference voltages.<i>

<i>: acc. to Ernst Habiger: EMV, Huthig Buch Verlag Heidelberg (1992), ISBN 3-7785-2092-X

2.4 EMC-techniques to measure the emission of interference

Actually we already can be glad that it came to an europe-wide agreement for the regulation of the EMC-set of problems. But the question if we can be satisfied with what we have reached is still outstanding. All too often the lowest common denominator of the measurable and checkable was sought and not so much the technical possible was taken into consideration.

The main emphasis is put on the measurement of the emission of interferences. Traditionally the interferences bound to a circuit are registered in a frequency range up to 30 MHz. The corresponding wavelengths thereby can correspond with the length of the supply lines and form standing interference waves. Primarily the spectrum of the interference currents is measured e.g. over a HF-current converter. These currents produce a voltage drop over the internal resistance of the feeding network. Because the properties of the networks can vary very strong, a standardized end-resistor is required for the measurement of the interference voltage. For this purpose an imitation of the network is switched between the network and the examinee. This imitation in addition has the task to keep away the interference signals that come from the supplying network with the help of filter-elements (Fig. 2.4).
The measurement of the interference radiation, the field-bound interference emission, lakes place between 30 MHz and 1 GHz. For that a free field or an absorber-hall with little or no reflexions is required. The standardized distances of measurement are 3, 10 and 30 meters. The electric field strength is determined with dipole broadband antennas, the magnetic field strength with frame antennas. It must be possible to both vary the receiving antenna between horizontal and vertical polarization and to adjust the receiving antenna in the height and the position to the test object.

Typical measurement set up to measure the emission of interferences bound to a conductor[i]

A: shielded link conductor
B: bundle of conductors folded like a meander
C: connection to the reference mass
ME: receiver of interference signal
NNB: Simulation of network
PO: test object

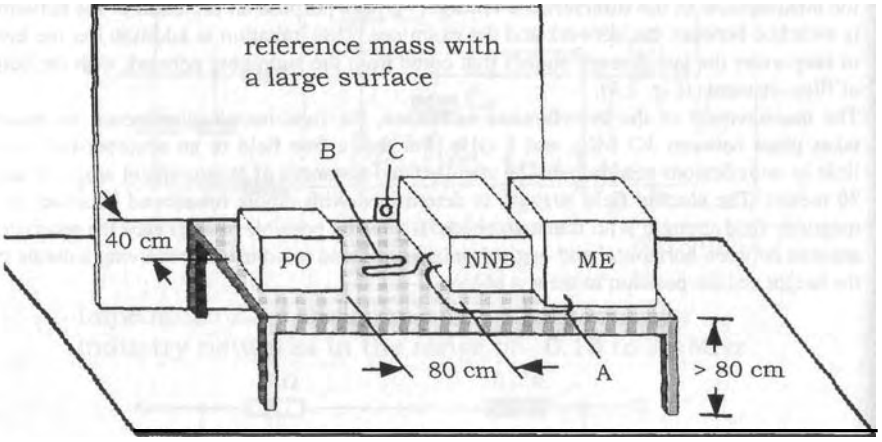

Fig. 2.5: Measurement set up to measure the emission of interferences bound to a conductor,[i]

[i]: Ernst Habiger: EMV, Huthig Buch Verlag Heidelberg (1992), ISBN 3-7785-2092-X

2.5 Electro-Smog

There is almost no end to the possibilities of variation and one needs already a lot of overview and experience to determine the field strength maximum. Nevertheless we have to ask ourselves if in this way really all emissions of interference are understandable, that popularly are described as ,,electro smog".

Smog is the combination of the terms Smoke and Fog. It therefore describes a pressure on the environment with fog like smoke. When for instance in the case of smog alarm all interference sources are switched off, which means all kilns are brought to a stop and all automobiles are stopped, than the fog like smoke therefore still is not vanished from the air. It just distributes itself and dissolves only very slowly.

The transfer of the smog idea on the electromagnetic interference radiation is bound to fail because, when the test object is switched off no emission of interference at all is detectable with the usual measurement means. Nevertheless the rainbow-press is trying to enumerate almost all electromagnetic field phenomena under the term ,,electro smog" without consideration of the fact that this term is not at all a collection term. From the sight of an expert one can only speak of smog when something like smog remains and stays active further after the switching off of an electro technical apparatus. It should be a phenomenon that is not understandable by the standardized measurements of interference radiation. Such a phenomenon would be e.g. the vortex of the electric field. However vortices are virtually not measurable in a direct way because they have the unpleasant property to whirl about around the measurement probe. But they will be detectable by their eddy losses and in the case of the electric field vortex appear as noise. Until now the standardizer however haven't planned to investigate the influence of an apparatus on the noise in the environment. Here we still grope in the dark.

At least the vortex shows a storing property that would justify the use of the idea "smog". We'll have to investigate the phenomenon.

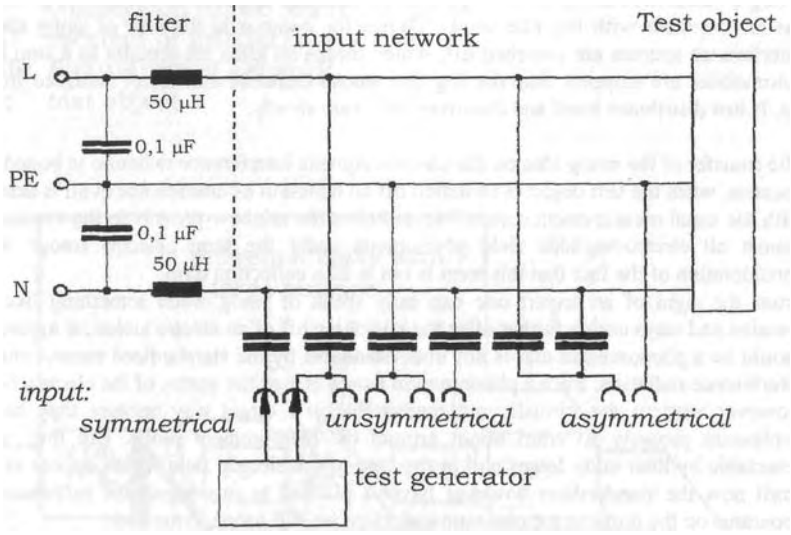

Fig. 2.6: Picking up of interference voltages in network lines.<i>

<i>: Ernst Habiger: EMV, Huthig Buch Verlag Heidelberg (1992), ISBN 3-7785-2092-X

2.6 EMC-techniques to measure the stability against interference

The question is: what kind and what intensity of an electromagnetic interference can an apparatus cope with without limiting it regarding its technical function. For that test generators are used and with their help interference signals are produced in the test object. Fig. 2.6 shows the possibilities of a symmetrical, of an unsymmetrical and of an asymmetrical production of interference voltage signals in the power supply lines of an examinee. Over and above that the testing possibilities and testing methods are numerous. In principle the following processes are used:

1. The simulation and production of interference factors typical for the network like harmonic waves on network voltages, overlapping signal voltages, changes of network voltage, decrease of network voltage, network interruptions, network unsymmetries and network frequency changes.
2. The production of both energy-poorer and energy-richer interference impulses like they can form in energy-networks by switching acts or by the effect of lightning (burst).
3. The simulation of the course of events when static electricity discharges.
4. Low-frequency magnetic fields like those that can form by network frequency operating and loading currents or by short-circuit and lightning currents in the form of a pulse.
5. The stability against interference against the influence of an electromagnetic field also called radio interference firmness. For this purpose high-frequency generators and broadband antennas are used to expose the examinee to electromagnetic fields in a frequency range between 10 kHz and 18 GHz. At the moment tests are only performed between 27 and 500 MHz. The modulation of the carrier wave should be possible to be able to imitate the interferences by radio technology as realistic as possible. Thereby the field strength values can by all means reach up to several 100 V/m.

In accordance with expectation the result of this irradiation with an outside field is that every conduction path and every wire can act as an antenna and therefore can produce high-frequency currents and measurable potentials. Building parts of the analog technology as a consequence battle with problems of drift whereas with digital logic parts and computer parts the danger exists that switching states change unintentionally. Let us remember again the overlap effect of fig. 1.4. The electromagnetic wave itself marches with the speed of light through the examinee. When a small part of the wave finds an object that it can use as an antenna than the localized overlap comes into play. This than as a cause is responsible for the effective and measurable antenna currents. Until here the text books help us to explain the problems that happen and to remove them logically.

However time and again cases are reported where textbook physics can't help us any further. Spectacular cases even came to court like e.g. the ABS (Antilock Braking System) of a truck that had failed due to EMC-interference radiation. As a consequence the brakes had failed. When after that the local radiation pollution is measured no anomaly at all can be discovered. The measurable field strength is not higher as is usual in the whole area. Maybe you also have made the experience that often the causes can't be found when your computer suddenly "crashes" out of the blue.

Here the mentioned vortex of the electric field is capable to deliver plausible explanations because it is not bound to the geometry of an antenna and in addition is highly active without being detectable with the usual EMC measurement methods of the interference radiation measurement!

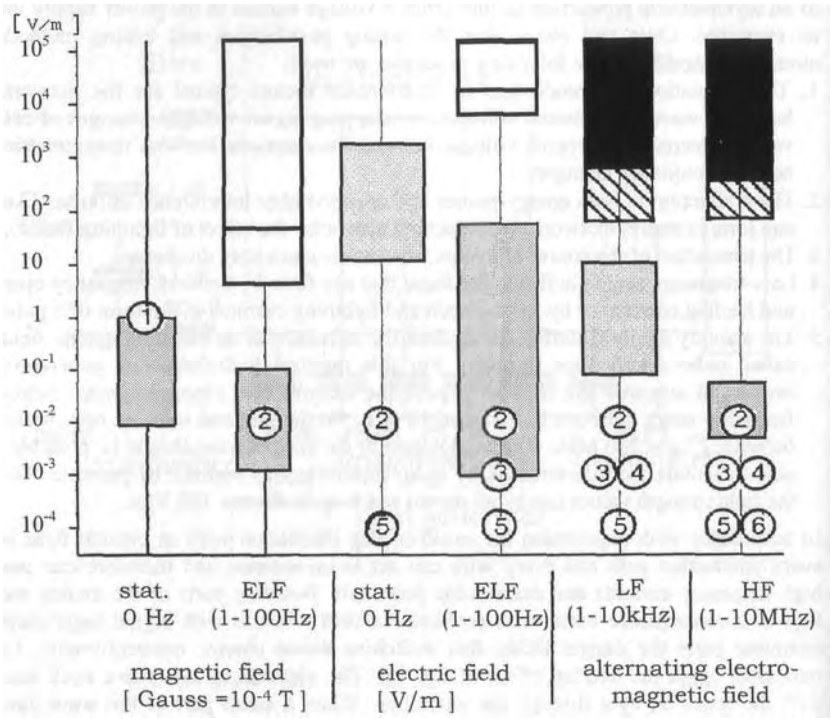

Fig. 2.7: Intensities of natural electromagnetic fields (electric, magnetic and electromagnetic fields)

In addition to fig. 1.1, page 3,
magnetic field in Gauss (= 10^{-4} T),
electric field in V/m.

<i>: A.S. Presman: Electromagnetic Fields and Life.
Plenum Press, New York - London, 1970

2.7 Tasks of the biological compatibility

The second leg of the environmental compatibility (EC) forms the biological compatibility (BC) besides the electromagnetic environmental compatibility. Whereas the interests of the EMC are looked after by electrotechnical engineers and electrophysicists, with the BC also doctors, biologists and architects are addressed.
Moreover this leg is already very old and already existed long before artificial interference sources could be created by mankind. The interaction between the arising interference sources in nature and the biological systems in general and specially men always interested the doctors, the priests, the druids and geomants, that not seldom looked after several functions in personal union equally. Unfortunately they as a rule have kept their knowledge and capabilities as secret knowledge, didn't make any recordings and merely initiated and trained their respective successors. Through that a great deal got lost and today non-medical practitioners, homeopaths and esoterics trouble themselves to take up to the far-reaching buried knowledge.
Because this concerns pure knowledge by experience, often the with the topic occupied persons themselves are not capable to say anything about the physical backgrounds and causes. One concentrates entirely on the under certain circumstances reachable results and only in rare cases on reproducable effects. In some areas the scientific assignment already has succeeded, have parascientific phenomena managed their admission in the so called "exact sciences", but in most experience disciplines the assignment is still due. There still is a lot to do here.

In the time as there not yet were operated any artificial interference sources on our planet, the senses of man naturally were a whole lot sharper for his electromagnetic environment as today. Today, where there scarcely is a place on earth where we are not irradiated by terrestrial transmitters, by satellites or by the netfrequency that is measurable everywhere. In the bluntness of our senses perhaps the hybris of modern man is founded, with which he wants to rise himself above esotericism, geomancy and other sciences of experience and thereby dispute the electric and magnetic fields their biological effectiveness.

The fields of natural origin form an electromagnetic environment for men, that they have adapted to and that they probably need for a life in accord with nature. The evolution has taken care for a corresponding adaptation.
In fig. 2.7 in addition to the limits from fig. 1.1 the intensities of natural electromagnetic fields are registered[<1>]. They lie clearly lower as the recommended limits but exactly in the area wherein the first reactions of living beings are observable.

When we ask us how much electromagnetism is good for us and how much harms us so the obvious answer is: exactly as much radiation as nature dictates in the fluctuations between day and night, between the months, years and in the end between the cycles of sunspots of 11 years. Here the guide value is found that man and nature have adapted themselves to. In fig. 2.7 the corresponding area between the natural minimum and maximum values is given.

Irradiation strengths of the field radiation in the biosphere and how the optical windows are situated in the atmosphere<i>.

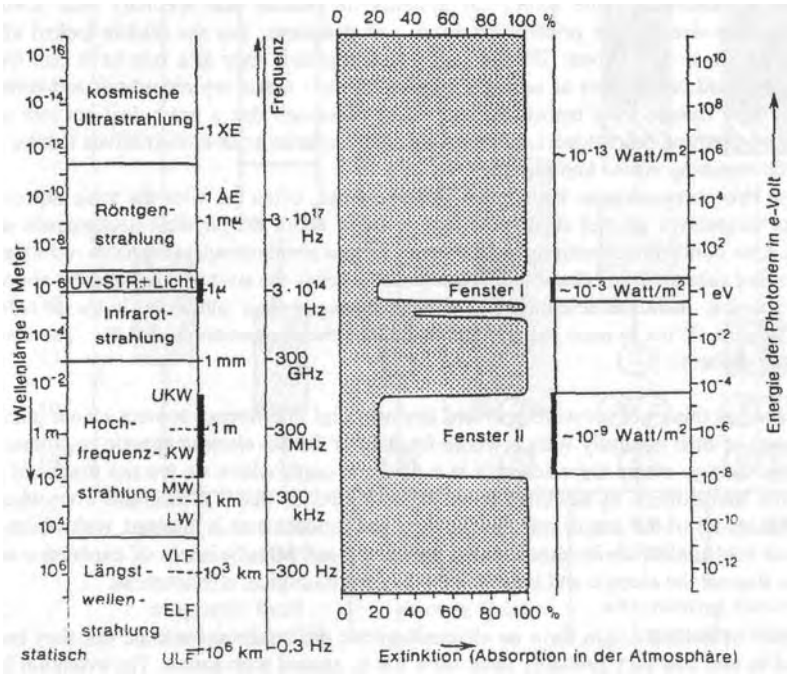

Fig. 2.8: Absorption dependent on frequency in the atmosphere

<i>: entnommen aus: H.L. Konig: Unsichtbare Umwelt (Wetterfuhligk.), 5. Aufl., Bild 8, Seite 14, Verl. Moos & Partner Milnchen, ISBN 3-89164-058-7

2.8 Natural fields

Our electromagnetic environment has something to offer:
From the magnetic north pole to the magnetic south pole of the earth run the field lines of the earth's magnetic field that we are exposed to. With a compass we use the vector character of the magnetic field to fix our position. The induction averaged over time is approx. 50 uT. But it is overlapped by short-time fluctuations caused by geomagnetic storms in the ionosphere.

These storms again are caused by the eddy currents and the currents of charged particles that come from the sun. At the same time these eddy currents in the ionosphere together with the earth's magnetic field form a protective shield with a excellent screening effect for us inhabitants of earth.
In several layers like for instance the ozone and Heaviside layers a filtering and damping until the complete suppression of the very broad cosmic spectrum is caused. This extraterrestrial spectrum of radiation doesn't leave a single frequency out and has a lethal intensity for us.

Only for a little window in the frequency spectrum, radiation can pass almost undamped, as can be seen in fig. 2.8: the light with the spectrum of the colors. For this nature has donated man a sense organ so that man can protect himself against too high dose values. After all, who will look voluntarily into the sun? We only get into trouble when our sense organ doesn't function any more (for instance in the fringe range of the visible spectrum, the UV-range).

For other frequencies of electromagnetic radiation man neither has a sense organ but that doesn't mean that he is not influenced by these. Here, as in the UV-range he only indirectly notices that he has got too high a dose when he has to discover some influences on his well-being and his health. Without the help of neutral measurement apparatus he himself by no means is in a position to make a connection between an excessive exposition to radiation and his health problems.

When natural field strengths should be used as a measure for technical limits, so there should be paid attention to the fact that nature doesn't know intense continuous irradiation. The values are subject to powerful fluctuations that leave men and nature the chance to regenerate.
The television stations not even think it is necessary to reduce their broadcasting power after the end of broadcasts and further sprinkle the sleeping population with test signals, with senseless pictures of going by underground or nonstop program advertisements. People need the intermissions. That again shows how good nature means it with us.

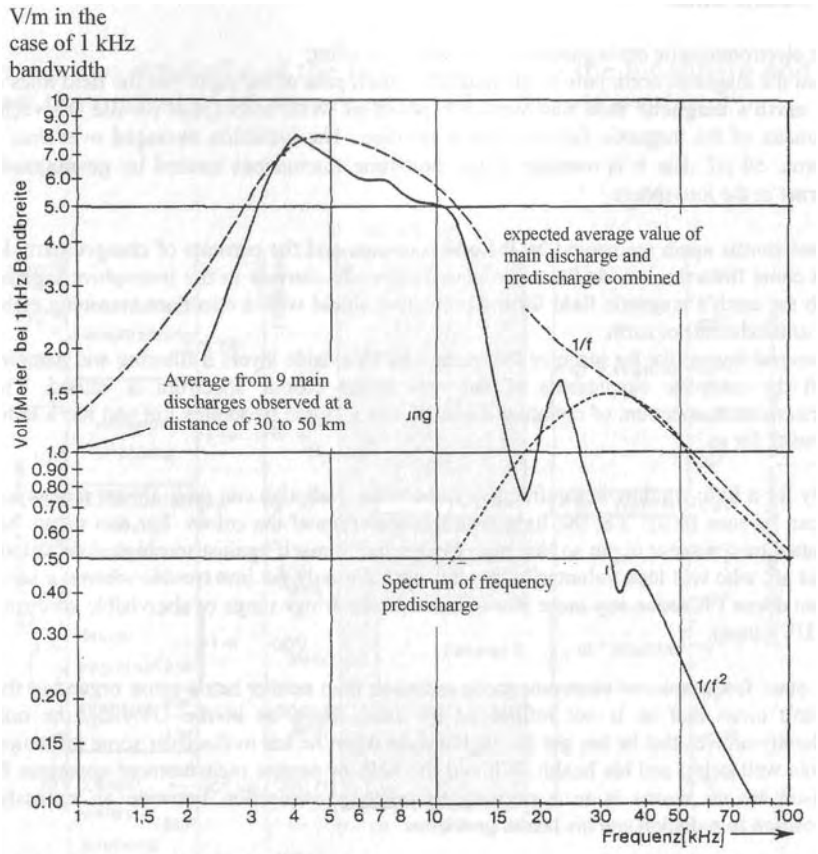

Fig. 2.9: Spectrum of frequency of one lightning, measured
field strength at a distance of 1.6 km from the place of origin. See Watt and Maxwell:[i,ii]

____ from:_____

<i>: H.L. Konig: Unsichtbare Umwelt (Wetterfuhligk.), 5.Aufl., Bild 38, Seite 27, Verl. Moos & Partner Munchen, ISBN 3-89164-058-7, see <ii>.

2.9 Electricity of the air

The electrostatic field strength of the earth lies between 50 and 500 V/m. That is a whole lot considering that voltages off 60 Volts can be lethal for man. But a living person distorts the terrestrial E-field for reason of his own field and his electric conductivity, so that there exists no danger for him as long as he doesn't grow into the sky.

Maybe the dinosaurs had to become extinct because they were to big and for instance the E-field near the ground had risen with a jump by a meteorite that brought a high charge from the cosmos. That would explain why the smaller living beings could survive the natural disaster.

Also the thunderstorm electricity can become life-threatening. Burns, heart and brain failures are the most common consequences. After all the probability to be struck by lightning is four times higher as to have six right ones in the lottery.
Over the lightning channel of approx. 1 meter in diameter charges between 10 and 200 C are transported what results in current strengths of 2000 up to 200,000 A. The main discharge lasts between 10 and 50 usec. With the preceding and all the following discharges it lasts over a second.
Field strengths on the scale of 4,000 V/m are typical but in a distance of 5 km these wear off to 8 V/m. The frequency spectrum of a lightning reaches 4 powers of ten into the range of the radio waves. In fig. 2.9 is shown the field strength measured in a distance of 1.6 km from the place of origin[<i,ii>].

The origin of lightnings is still an unsolved problem after the well-known models (Wilson) arc not in a position to explain the reason for the origin of the potential difference of more than 100 million Volts required for the ionization of the air. Also the lightnings that struck in the direction of the ionosphere still are mysterious.
We'll have to come back to this[<iii>].

<i>: H.L. Konig: Unsichtbare Umwelt (Wetterfuhligkeit), 5. Aufl., Bild 38, Seite 27, Verlag Moos & Partner Munchen, ISBN 3-89164-058-7, according to <ii>.

<ii>: A. D. Watt and E. L. Maxwell: Characterisic of Atmospheric Noise from 1 to 100 Kc/s. Symposium on the Propagation of VLF Waves, Boulder, Col., Paper 35, Jan. 1957.

<iii>: see Part 1, chapter 5.4 and part 2, chapter 14.11.

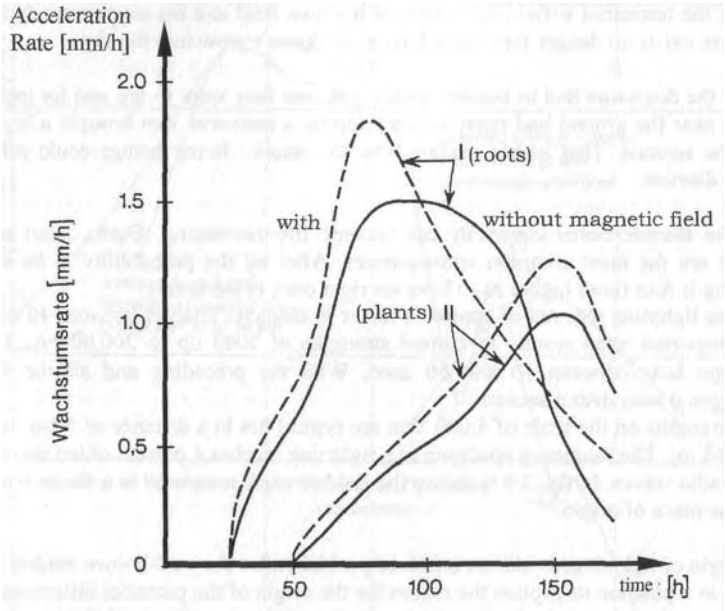

Fig. 2.10 A: Effect of a static magnetic field of 100 kA/m (0,12
Tesla) on the root (I) and on the plant (II) of barley seeds.
plants in the magnetic field: dotted line
plants for checking: drawn line
according to Novitskii<iii>

<iii>: Novitskii, Yu.I.: Effects of a magnetic field on the dry seeds of some cereals. Proceedings of Conference on the Effect of Magnetic Fields on Biological Objects, Moscow, p. 52, 1966.
Taken from: H.L. Konig: Unsichtbare Umwelt (Wetterfuhligkeit), 5. Aufl., Bild 72, S. 73, Verlag Moos & Partner Munchen, ISBN 3-89164-058-7

2.10 Biological effects

The in fig. 2.1 indicated connection between the EMC and the BC, by some authors inofficially described as EMC-environment (EMCE), describes the effect of artificial fields on biological systems. This concerns the sensitive range of tasks that is discussed extremely controversially in the public. The problem thereby is that the artificially produced field strengths lie above the natural field strengths for several scales. In the thirties first reports about troubles were provided by navy radio operators that complained about headache, dizzyness, concentration failure and indisposition. Besides these negative reports concerning the so called "radio operator disease" at the same time medical usages concerning high-frequency therapy were tested. In the beginning this diathermy called healing method still was a short wave irradiation. Today it is extended into the microwave range and uses the thermal effect of electromagnetic rays. The increased temperature of the tissue causes an increased local blood flow. This supports healing processes, loosens cramped muscles and can help in case of rheumatic fever. The advantage of the HF-irradiation compared to contact heat by a hot-water bottle or by infrared rays is the higher penetration depth. Herein short waves are superior to microwaves. But microwaves can be better focussed on a certain part of the body. Is the temperature further increased, so the tissue is damaged. This is used for the treatment of cancer and is called hyperthermy. Because cancer cells as a rule are flowed with blood worse than healthy cells, they are more sensitive to heat and therefore are faster destroyed than healthy cells at a correspondingly increased temperature. In this way for Instance in the USA cattle with a so called cancer eye are treated. For that the spot suffering from cancer is irradiated with 2MHz-waves for 30 seconds with a handheld apparatus of 10 Watts broadcasting power. The rate of succes is given to be 90%! The method of hyperthermy has not yet been able to establish in the area of the medicine for humans. Also at our college corresponding research work is carried out in co-operation with the radiological clinic of the university of Freiburg (Germany)[<i>].

The thermal effects of high-frequency fields are therefore well-known and subject of scientific research. On the other hand and in spite of numerous publications, non-thermal effects even today are denied by some scientists as non-existent[<ii>]. Here only a few counter-examples will be listed.

Fig. 2.10 A shows the effect of a static magnetic field of 0.12 Tesla on the root (1) and on thc plant (II) of barley seeds. The readable effect is an acceleration of the growth of the treated seeds (dotted line) compared to the plants for checking (drawn line)[<iii>].

<i>: H. Schulz, W. Oppitz: Lokale Hyperthermie durch hochfrequente Wirbelstrome, Medizin Technik 1, 1987.

<ii>: G. Nimtz: Mikrowellen, Einfuhrung in Theorie und Anwendung. 2. Aufl., BI-Wissenschaftsverlag 1990, ISBN 3-411-03203-0

<iii>: Novitskii, Yu.I.: Effects of a magnetic field on the dry seeds of some cereals. Proceedings of Conference on the Effect of Magnetic Fields on Biological Objects, Moscow, p. 52, 1966; taken from: H.L. Konig: Unsichtbare Umwelt, fig.72, p. 73, Verlag Moos & Partner Munchen, ISBN 3-89164-058-7

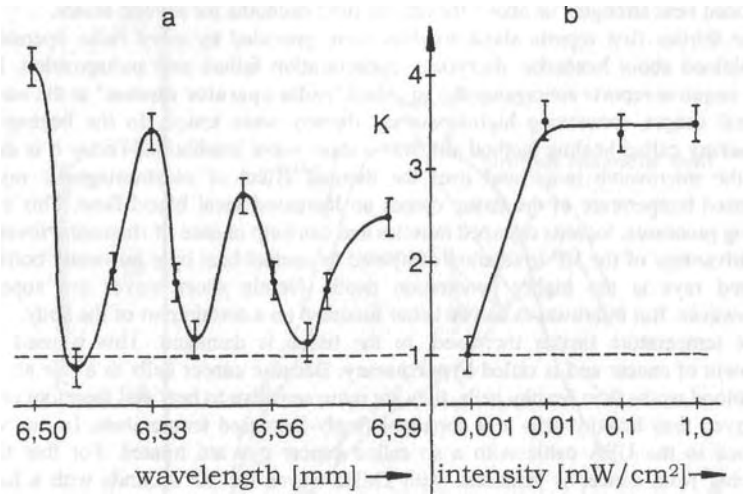

Fig. 2.10 B: Measured increase in the production (K) of colicin by colibacteria as a microwave effect

a) as a function of the wavelength,
b) as a function of the intensity of the microwaves,

according to Keilmann<i>.

____ taken from: _____
<i>: H. L. Konig: Unsichtbare Umwelt (Wetterfuhligkeit), 5. Aufl., Bild 106, S. 111. Verlag Moos & Partner Munchen, ISBN 3-89164-058-7

A static field naturally produces no induction and hence no heating will arise. In the case of alternating fields the thermal effect in experiments is excluded by working with cxtremly low stimulations. The example after fig. 2.10 B shows the measured increase in the production (K) of colicin by colibacteria at only 0.01 mW/cm^2 microwave power<i>.

In addition the example provides the interesting information that obviously only a certain frequency and it's harmonic waves increase the production, other frequencies on the other hand remain inactive. Because only minimal field strengths are used it more likely concerns an information-technical as an energetic effect (curve a). This statement is supported by the observation that an increase of the intensity not at all necessarily as a consequence also increases the production (curve b). What the colibakteria need is obviously neither energy nor heat but only a certain frequency that stimulates the colicin production or the growth.

Should it really be confirmed that biological effects of electric and magnetic fields can be produced by certain frequencies and can't happen by an energy transition so the discussions about limits must seem ample meaningless.

Maybe the one or the other in thought already draws a connection to the acceleration, the acclerated growth of kids, which is observed world-wide and stronger in cities than in the country. It started for approx. 100 years simultaneous with the electrification of the homes in the towns. In Asia the acceleration and also the electrification have started later. Other growth stimulating effects like radio waves, X-ray examinations, atomic tests and provable also the nourishment with vitamin B6 happened only until much later and at the most could support the actual effect.

But how should a proof be offered when anyway the field strength not at all can have a decisive influence on the growth of man after the statement of fig. 2.10 B? Which information is authorative? Where lies the responsible frequency window? Does the information actually manifest as frequency? Is the authorative influential factor also in this case not at all noticed and measured?

A lot of pressing questions are still outstanding. But in any case the numerous influential factors detected in experiments do not at all let themselves reduce to a sole factor, for instance the nourishment. For a family doctor it may be comfortable to be able to give an easy explanation: ,,Cause is the nourishment!" With such a reductionism on the other hand the actual cause stays in the dark and the asked questions in this way won't let themselves be answered.

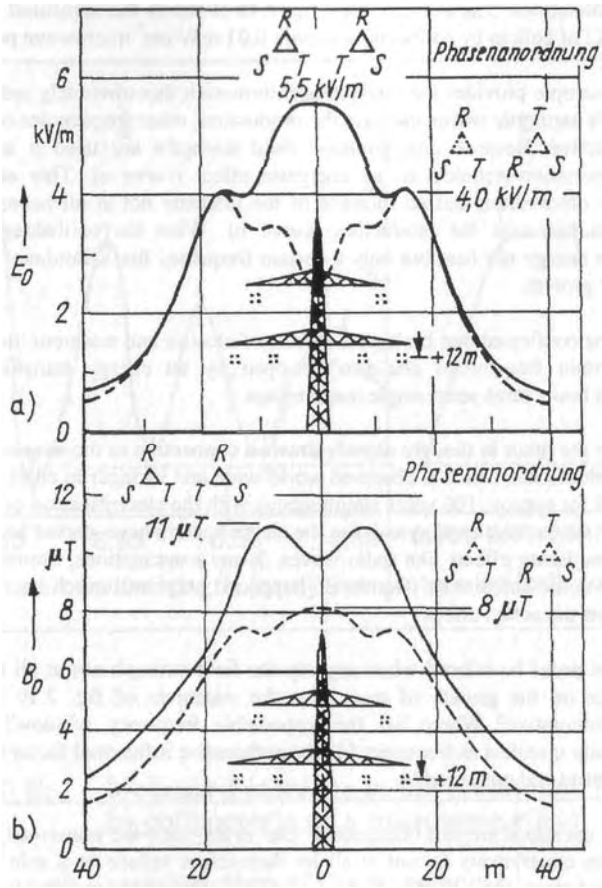

Fig. 2. 11: ____ profile of the 50-Hz-field on the ground at 380kV/1kA in each circuit.[<i>]
a) electric field,
b) magnetic field.

____ taken from: _____

<i>: E. Habiger u. a.: Elektromagnetische Vertraglichkeit, fig. 7.3, page 147 and Fig. 7.1, page 146, 2nd Ed., 1992. Berlin, Miinchen: Verlag Technik.

2.11 Artificial fields

The scepticism of people feeling close to nature is especially directed against artificial fields that man can't see nor hear nor smell. Objects of doubt are first of all the installations for the creation, distribution and conversion of electric energy.

An essential role plays the fact how close the supplying and the draining conductors are to each other, so that the respective fields can compensate each other. The worst solution one can think of is realized at the electrified railway. Here the rails and the earth are used as the draining conductor for the current while there exists an ample large distance to the supplying conductor. A compensation is almost impossible thus causing gigantic interference fields that are detectable even at a distance of 10 kilometers. The increased putting on of railway engines feeded by rectified current is likely to aggravate the set of problems because the non-sinusoidal absorption of current is strongly afflicted with harmonic waves.
With high tension transmission lines (fig. 2.11) the interference field strength is reduced when the three cables are suspended with only little distance between them. But even the selected phase order can play a role. Of course the optimal compensation effect is guaranteed with cables in the earth. But these are expensive and technically not realizable for such high voltage levels.

In the eighties also the computer screens got in the headlines. The terminals are furnished with a cathode ray tube and have a very broad radiation spectrum that already starts at 0 Hz. Here already static maximum values of 64 kV/m are measured[<1>]!

I'requency range	Measured maximum values E_{max} resp. H_{max}	30 cm in front of the screen
static field (0 Hz)	64 kV/m	
30 Hz. 60 Hz	10 V/m and	
	0.2 - 1 A/m	
5 Hz - 1 kHz	1800 V/m and	10 V/m and
	4 A/m	0,6 A/m
50 Hz - 0,5 MHz	1 A/m	
15 kHz-220 kHz	50 V/m and	15 V/m and
	1.1 A/m	0,17 A/m
3 MHz -300 MHz	< 0,2 V/m	

Fig. 2.11: Electromagnetic fields from screens[<1>]

system about	used frequency	measured value
radio broadcasting station (MW 2O kW)	6OO kHz	2…17 V/m
radio broadcasting station (SW 1OO kW)	15 MHz	1…25 V/m
SOS-transmitter on a ship (1OO W)	41O kHz	1...3 V/m
Epitaxiedevice (induction oven)	45O kHz	37...4OO V/m
HF-welting press (welding of plastic foils)	27,12 MHz	70…85 V/m
radar on a ship (TRN 311)	9,3 GHz	1...3O uW/cm^2
radar of an airplane	9,2 GHz	45O... 28OO uW/cm^2
domestic appliances measured in a distance		of 3O cm:
hand mixer	5O Hz	5O V/m
refrigerator	5O Hz	6O V/m

Fig. 2.12: ____ the electric field strength resp. Power density in our environment.<i>

____ taken from: _____
<i>: E. Habiger u. a. : Elektromagnetische Vertraglichkeit, Fig. 7.2, page 146, 2. Ed., 1992, Berlin, Munchen: Verlag Technik, ISBN 3-341-00993-0

2.12 Protection against artificial fields

Artificial fields more or less always occur in the neighbourhood of electric apparatus and installations. Especially problematic are those that work with the free radiation of electromagnetic fields, that is all the radio broadcasting stations, handheld and radar transmitters.
Herewith it is important that not needed parts of the antennas are shielded, that antennas with little close by field pollution are used and that the stand should be situated at least 3 km remote from inhabited areas. For instance at radar installations damping values of 10 dB and more can be obtained only by using a corresponding tree growth.
This obviously concerns a damping of the waves in a dielectric manner. We'll have to come back to this because textbook physics does not know a corresponding damping term in the wave equation.

The radiation leaking out in case of the high-frequency welding of plastic foils and of the microwave oven should be minimized.
In the case of induction ovens or of motors an active shielding often causes problems so that for simple domestic appliances like a hand mixer and especially for the electric hair-dryer non proportionally high field strength values are measured. Fig. 2.12 informs about it.
Protective measures for the operator are hardly possible. To protect uninvolved people not only the apparatus but also the rooms and eventually whole parts of buildings had to be shielded and grounded.

Sometimes also fairly simple possibilities are helpful like e.g. the usage of a remote control. By clearing away the cable salat at the workplace and at the sleeping place induction loops can be removed. Alarm-clocks operated by batteries should have preference over those operated by the network. Mattresses with metal in them and spring-beds which clearly act as an antenna should be avoided. In extreme cases even so called "current-free switches" and shielded network lines are recommended (fig. 2.13).

In the area of the network supply lines a choking coil can help decrease the spreading of high-frequency interference radiation. It is especially important that all the conducting metallic objects like e.g. water pipes, heatings, steel racks, machines, switching racks, steel armaments and metallic windows should be grounded properly, because otherwise extremly high static charges could result instead of a shielding. Construction biologists recommend to when possible do without metals when building houses and furnishing, what of course is only realizable with limitation.

In any case numerous measures are known that to a lesser extent find their legitimation in classical physics, but more likely in precaution. As long as we do not know which phenomenon causes the electrosmog and we don't have a measuring-instrument at our disposal, precaution is really the only thing we can do irrespective of the effectiveness of the measures and of the arising costs!

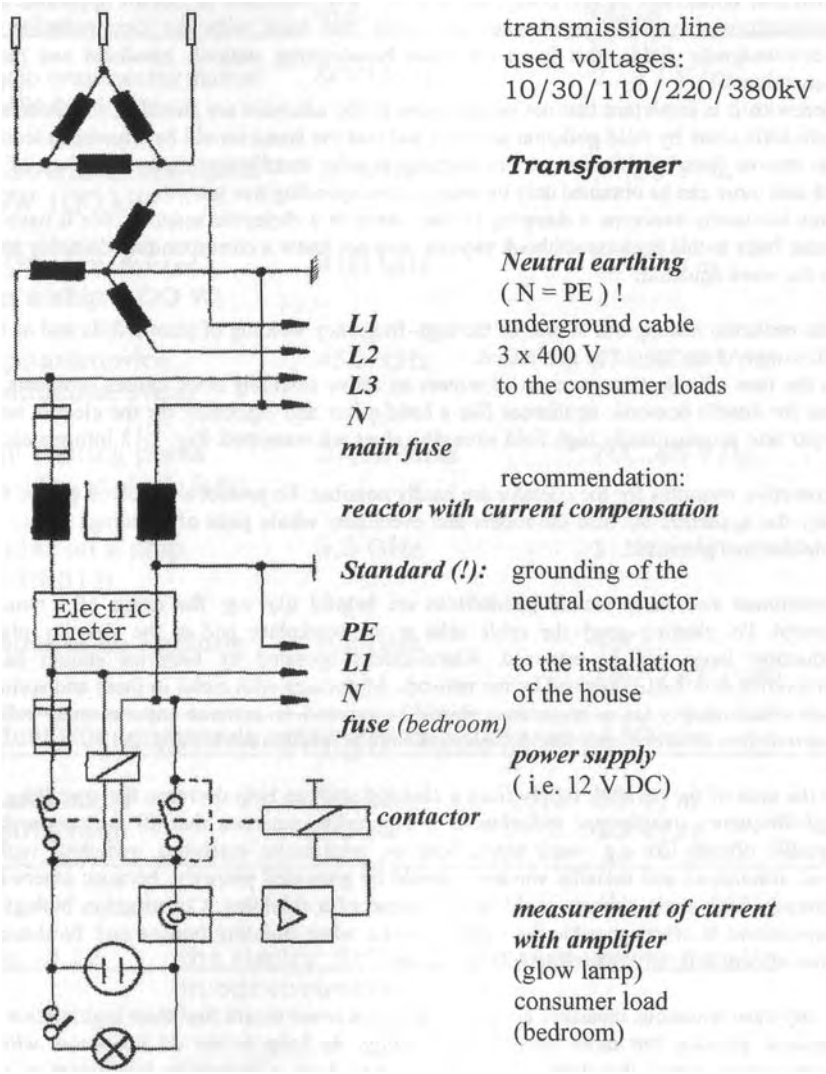

Fig. 2.13: About the circuitry and the problems involved with a "current-free switches" installation

2.13 Unsolved tasks

The report concerning the actual state of research could be continued at will. But the expositions should suffice, to understand what are the tasks of the electromagnetic environmental compatibility (fig. 2.1) and which questions still have to be supplied with a solution. One can get deeper into every of the addressed points and then discover that some questions can be expressed sharper and maybe conceivable answers can be found, but at the same time and unavoidable the number of new questions increases faster.

Let us again take up the example of the handheld wireless telephones (chapter 1.2). At least it now is clear to us that the usage of the built-in microwave antenna of a handy is problematic. In the interior of an automobile it never should be used. If, however, one uses the antenna installed on the outside on the sheet metal then the damping and screening effect of the sheet metal chassis is advantageous at least for the handy user.

With that of course the central question is not answered. The question of what the cause is for the interfering and at worst health endangering effect of the HF-radiation. Field freedom we can't find anywhere on this world. Possibly we even need the fields. But then the question is how much is necessary, how much is healthy and how much makes us ill.

The gap of explanation especially gets clear in the case of the static or of the low-frequency magnetic field: away from technical interference sources normally fields on the scale of 10 nT are measurable. Construction biologists say that 20 nT, so twice that value, should not be exceeded at the sleeping place and maybe 50 nT at the desk. These values however are determined purely empirical.

When a person is examined in a nuclear magnetic resonance tomograph that person is exposed to a field that lies between 0.2 and 1.5 Tesla. that is a value 7 till 8 powers often higher than before mentioned without this leading to the death of that person. Entirely on the contrary this method is regarded as especially caring and safe compared to the X-ray examination.

Here again the legitimation of the thesis put forward is entirely comfirmed. The thesis that the well-known physically measurable and controllable phenomena can not be considered as a cause and that possibly a until now undiscovered field phenomenon should be called to account.

Should such a phenomenon exist it should be derived, calculated and proved. We must go to endless troubles and try everything. The actual difficulties wherein the electromagnetic environmental compatibility is stuck are a challenge.

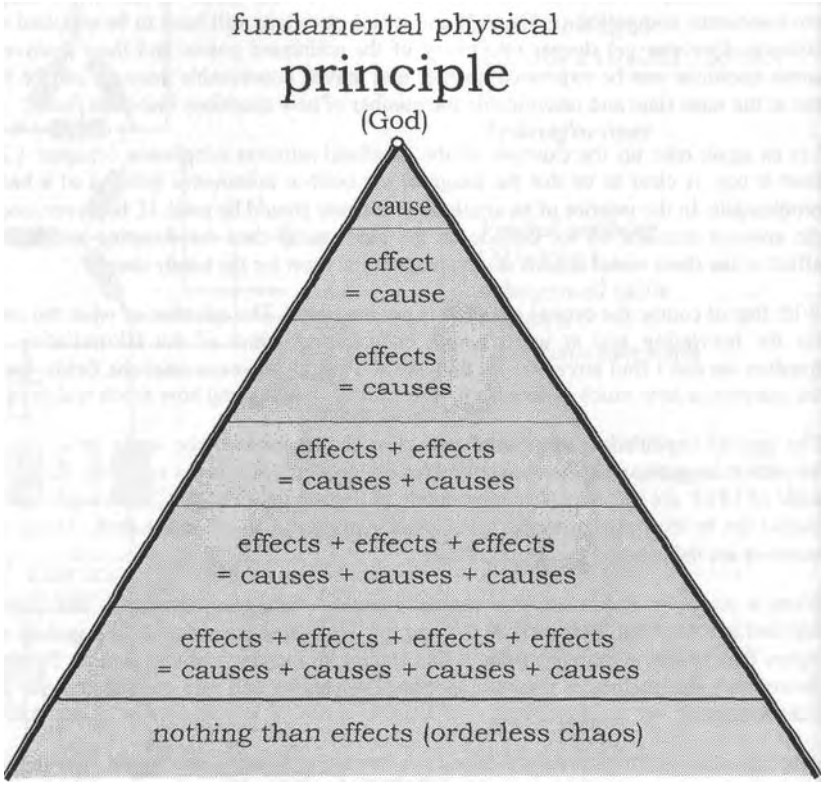

Fig. 3.0: pyramid of causality

vortices are a consequence of the principle of causality

3. Approach

In the question, if there exists a still unknown phenomenon that influences the electromagnetic environmental compatibility, we must fall back far until upon the roots of our physical understanding. Here we find a fundamental principle that until today is not doubted and that is regarded as elementary, the principle of causality. Every result of a measurement, every interpretation is checked for causality and only after passing this examination it is accepted and published.

This principle of cause and effect has established, not only in physics but also in many other disciplines of science. Is an effect observed, so there immediately is asked for the cause. This principle encounters us in daily life[<i>].

When all observable and measurable effects ever can be assigned to a cause without force and without exceptional regulations then the logical result is a pyramid of causality. On top a fundamental physical principle is found, that is regarded as given by nature or as given by god and that with its properties is responsible as the cause for different effects. These effects again appear as the cause for new effects and so on (Fig. 3.0). Sometime we have removed us so far from the top of the pyramid that a direct reference to the describable effects can't be made anymore, so the impression could arise that it concerns an isolated and independent discipline. We should take care not to think in such a monocausal way, because both delimitation and avoidance of interdisciplinary working methods will inevitably steer us into a dead end!

This pyramid of causality stands for the vision of a "unified theory", like it is demanded and sought-after by numerous research scientists. But as long as it is not found, we'll have to do with unsolved problems of causality. About this any number of examples can be given.

A physical principle based on the principle of causality is the vortex. This the eddy current demonstrates us clearly. The cause for its origin is an alternating field. According to Faraday's law of induction this induces a voltage that in a conducting medium results in a current according to Ohm's law. Around this current according to Ampere's law an alternating field forms, that points perpendicular to the current and overlaps the original alternafing field. This induced field first of all is an effect that overlaps the cause and itself becomes the cause. The effect that follows from that further overlaps and forms a new cause etc. In this way vortices form.

Vortices quasi represent the principle of causality.

<i>: When for instance a woman complains: "Doctor, my left knee hurts" (effect). The doctor diagnoses the cause: "Yes, that comes with age!" With that causality is established. "But doctor", says the woman, "my right knee is exactly as old as my left knee!" And already the doctor has a new problem of causality.

Principle of Causality:

	cause →	effect
quantum physical approach:	quanta →	fields
field-theoretical approach:	fields →	quanta

violations of the principle of causality:

1. monopoles exist
2. starting point for the strong interaction
3. fields and quanta are a cause at the same time
4. hypothetical particles (gluons, quarks, etc.)
5. transmission of information with speeds faster than light
   - with photons (University of Berkeley)
   - with microwaves (University of Cologne)
   - with laser beams (Technical Univ. of Vienna)
6. transmission of energy with speeds faster than light
   - with scalar waves (Nicola Tesla)

Fig. 3.1: Causality or the principle of cause and effect

3.1 Principle of causality

Our physical view of life strictly obeys the rules of causality, the principle of cause and effect. But there are numerous cases, where causality at first could not be fulfilled anymore. Here alternate solutions had to be found to not endanger this very successful principle. A few examples should clarify this:

1. Technically it is impossible to produce a magnetic monopole. When a north pole is produced then the accompanying south pole is also formed. In the same way only the positive and negative pole can be assembled as the so called dipole. In the microcosm however we find monopoles. Electrons are such particles. To restore causality we must grant the microcosm its own laws that are not valid in the macrocosm! But this monocausal hypothesis contradicts the observation that the microcosm represents an image of the macrocosm and vice versa. Doubts if this assertion is allowed are reasonable.
2. Like charges repel each other and that the more the smaller the distance gets. In an atomic nucleus positively like charged protons are together at the smallest possible room without any repulsion happening. Arithmetically seen all atomic nuclei would have to explosively fly to pieces. But because this doesn't happen, shortly a new and supposedly fundamental interaction, the strong interaction, was introduced to save causality. Nevertheless this interaction now holds the like particles in a not explained manner together. Causality could be obtained only by the introduction of a new fundamental phenomenon.
3. When causality should hold as the supreme principle, it should be demanded with priority for the fundamental phenomena of physics. Instead, in quantum electrodynamics the particle is attributed the same physical reality as the field. With the wave-particle duality Heisenberg has given out the corresponding formula of compromise. This slaps the face of the principle of cause and effect.

Causality on principle allows only two approaches for a solution: the quantum physical approach. which holds the quanta as the cause for the fields, and the field-theoretical ašproach. wherein only the fields act as the cause. For both approaches there are good arguments. The field theorists cite that fields can exist also in the vacuum, so that there exist fields without particles but never particles without fields. Against that the quantum physicists hold that somewhere, even when quite far away, there exist particles and that the measurable fields merely are their action at a distance.

Both approaches first arouse the impression to be fully equal. In the course of the discoveries in the area of quantum physics, the corresponding approach has been able to establish. But it demands that all phenomena have to be understood as a consequence of particles. So should gravitons make gravitation possible, should gluons hold everything together and the quarks form the basic building parts. Meanwhile there is only worked with hypotheses. Out of poverty quantum physics meanwhile has said goodbye to strict causality, after the number of the violations of causality has risen that much and in every respect there is a lack of models of explanation. It seems as if the end is reached, as if the quantum physical approach to a large extend is exhausted.

Field-theoretical approach:

3rd Maxwell equation

$$\boxed{\text{Div}\,\mathbf{B} = O} \quad (3.3)$$

4th Maxwell equation

$$\boxed{\text{Div}\,\mathbf{D} = \rho_{el}} \quad (3.4)$$

With the relations of material:

$$\boxed{\mathbf{B} = \mu \cdot \mathbf{H}} \quad (3.5)$$

$$\boxed{\mathbf{D} = \varepsilon \cdot \mathbf{E}} \quad (3.6)$$

$$\mu \cdot \text{Div}\,\mathbf{H} = O \quad (3.3^*)$$

$$\varepsilon \cdot \text{Div}\,\mathbf{E} = \rho_{el} \quad (3.4^*)$$

H: source free vortex field

E: non-vortical source field

New field-theoretical approach: $\boxed{\text{Div}\,\mathbf{D} = O}$ (3.7)

thus: $\text{Div}\,\mathbf{H} = O$ (3.3^{**}) and $\boxed{\text{Div}\,\mathbf{E} = O}$ (3.7^*)

H and **E**: source free vortex fields!

Einstein:

"Is it conceivable, that a field theory permits us to understand the atomistic and quantum structure of reality? This question by almost all is answered with No. But I believe that at the moment nobody knows anything reliable about it"[i].

Pauli:

"The electric elementary quantum e is a stranger in Maxwell-Lorentz' electrodynamics"[ii].

Fig. 3.2: The field-theoretical approach

<i>: A. Einstein: Grundzuge der Relativitatstheorie, S 162, Anhang II; 5. Aufl., Vieweg, Braunschweig 1974.

<ii>: W. Pauli: Aufsatze und Vortrage uber Physik und Erkenntnistheorie. Vieweg, Braunschweig 1961, entnommen aus:
H. G. Kussner: Grundlagen einer einheitlichen Theorie der physikalischen Teilchen und Felder. Musterschmidt-Verlag Gottingen 1976, S. 161.

3.2 Field-theoretical approach

The field-theoretical approach is the very much older one. Until the last turn of the century the world in this respect still was in order. Max Planck, by the discovery of quanta, has plunged physics into a crisis.
Albert Einstein, who, apart from his lightquanta hypothesis, in his soul actually was a field theorist, writes: ,,Is it feasible that a field theory allows us to understand the atomistic and quantum structure of reality?". This question by almost all is answered with No. But I believe that at present nobody knows anything reliable about it[i]".

By the way the "No" can be justified by the fact that the field description after Maxwell is by no means able to the formation of structure so that it is not possible for quanta to appear as a consequence. The field-theoretical approach could, obstructed by Maxwell's field theory, not further be pursued and to this until today nothing has changed.
Nevertheless it would be an omission to not at least have tried this approach and have it examined for its efficiency. Maybe the above mentioned problems of causality let themselves be solved much more elegantly. For this however the Maxwell theory must be reworked to a pure field theory. With the well-known formulation it offends against the claim of causality, since it is field theory and quantum theory at the same time. To Maxwell himself the quanta were still unknown, but today we know that the fourth Maxwell equation is a quantum equation:

$$\mathrm{div}\,\mathbf{D} = \rho_{el} \quad (3.4)$$

After this the electric field is a source field whereby the individual charge carriers, like e.g. electrons, act as sources to form in their sum the space charge density p_{el}. The other three Maxwell equations are pure wave equations. In this way the third equation identifies the magnetic field as source free:

$$\mathrm{div}\,B = O \quad . \qquad (3.3)$$

This for Pauli probably was the reason to call, "the electric elementary quantum e^- a stranger in Maxwell-Lorentz' electrodynamics"[ii].

Let's return to the principle of causality according to which in the field-theoretical approach the fields should act as a cause and not the particles. In a corresponding field description quanta logically have not lost anything. It is only consistent to likewise demand freedom of sources of the electric field:

$$\mathrm{Div}\,D = O \quad . \qquad (3.7)$$

When the electric field is not a source field, then what is it? The magnetic field is a vortex field. Hence it would be obvious to also conceive the electric field as a vortex field. Numerous reasons speak for it:
1. A non-vortical gradient field, like it is formed by charge carriers, merely represents a special case of the general vortex field. Only by the generation of quanta a source field can form as a special case.
2. The electromagnetic wave teaches us the duality between the E- and the H-field that are directed perpendicular to each other and are in a fixed relation to each other. If one of them is a vortex field then also the dual field must be a vortex field.

Duality:

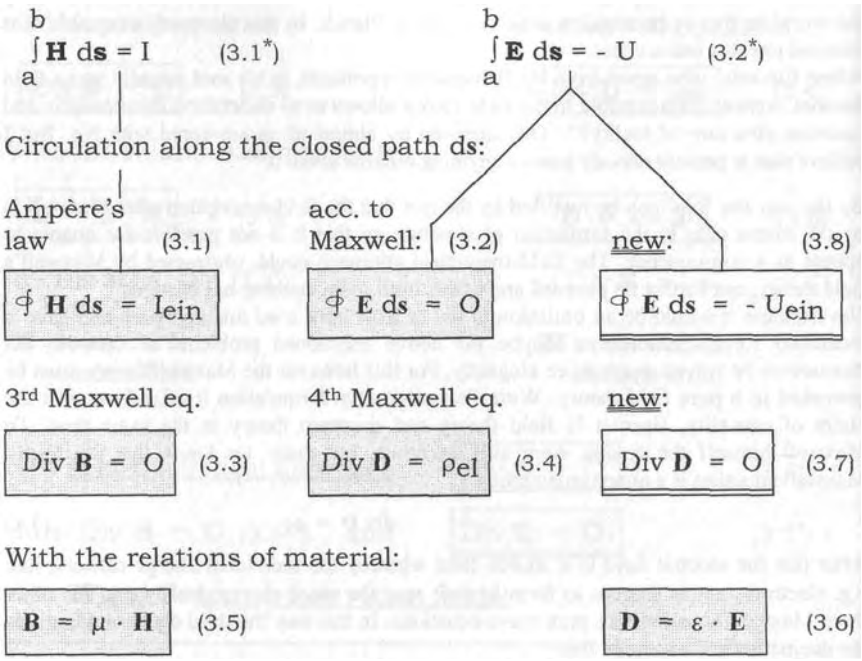

Fig. 3.3: The dual field description

Dual approach according to Jackson<i> or Lehner<ii>:

Div B = ρ_{magn} because of the 4th Maxwell equation: Div D = ρ_{el} (3.4)

ρ_{magn} = magnetic monopoles should exist,
otherwise dual extension (3.8) not allowed!

Caution: closed loop conclusion!
Maxwell theory proves the correctness of the Maxwell theory.
Result: search for magnetic monopoles unsuccessful.

<i>: J. D. Jackson, Classical Electrodynamics, 2nd Ed. , John Wiley, New York, 1975, S. 251 - 253

<ii>: G. Lehner, Elektromagnetische Feldtheorie, Springer-Verlag Berlin, Heidelberg 1990, S. 35 - 36 und S. 533 ff.

3.3 Duality

Duality is a fundamental physical principle. Opposite, but one another complementing phenomena can be assigned to each other in pairs, like e.g. (see fig. 8.8):

	Yin (female)	——		Yang (male)
	south pole	——		north pole
	⊖	——		⊕
R [Ω]	resistance	——	R^{-1} [Ω^{-1}]	conductance
U [V]	voltage	——	I [A]	current
E [V/m]	electr.field strength	——	**H** [A/m]	magnet.field strength
Q [As]	charge	——	ϕ [Vs]	magnetic flux
D [As/m^2]	electr.displacement	——	**B** [Vs/m^2]	magnetic induction
ε_0 [As/Vm]	electr.field-constant	——	μ_0 [Vs/Am]	magnet.field-constant
ρ_{el} [As/m^3]	electr.charge density	——	ρ_{magn}[Vs/m^3]	magnet.charge density
	induction law	——		Ampère's law
	potential vortex	——		eddy current
	(vortex of the electric field)			(vortex of the magnetic field)

First of all we find the duality confirmed in the case of the electromagnetic wave spreading in a homogeneous medium. Here the field pointers of E and H are directed perpendicular to each other and are in a fixed relation to each other. But if the wave is damped in the presence of matter, for instance by eddy currents, then by basing on Maxwell's field theory the duality will vanish.

A good example for perfect duality provides the integral of a field strength vector along the path from a to b:

$$\int_a^b \mathbf{H}\, d\mathbf{s} = I \quad (3.1^*) \qquad \text{and} \qquad \int_b^a \mathbf{E}\, d\mathbf{s} = U \quad . \quad (3.2^*)$$

Urn if the integration takes place along a closed path then the circulation yields:

$$\oint \mathbf{H}\, d\mathbf{s} = I_{eing} \quad (3.1) \qquad \text{and} \qquad \oint \mathbf{E}\, d\mathbf{s} = O \quad . \quad (3.2)$$

According to Ampere's law (3.1) the magnetic field can thus form enclosed currents and spatially spreading eddy currents. The electric field on the other hand should be irrotational (3.2).

Let's take the case that the electromagnetic wave is damped by eddy currents and the magnetic field in this way becomes a vortex field. The electric field itself that, as said, is in a fixed relation and perpendicular to the vortex field H, will show all the vortex-typical properties. Hence nothing would be more obvious as to also grant the electric field a formation of vortices:

$$\oint \mathbf{E}\, d\mathbf{s} = -U_{eing} \quad . \quad (3.8)$$

Critics of this dual approach, like for instance Jackson<i> or Lehner<ii>, point out that with reference to the fourth Maxwell equation the electric field should be understood as a source field:

$$\text{div}\, \mathbf{D} = \rho_{el} \quad . \quad (3.4)$$

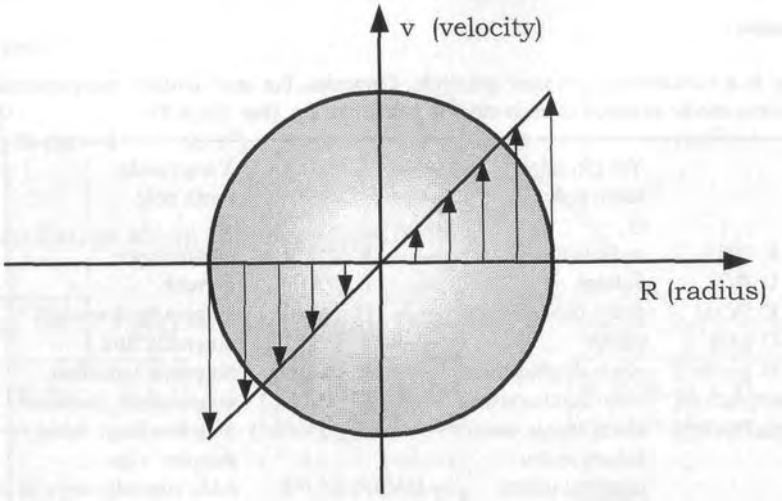

Fig. 3.4a: Velocity distribution v(R) for a vortex with rigid-body rotation

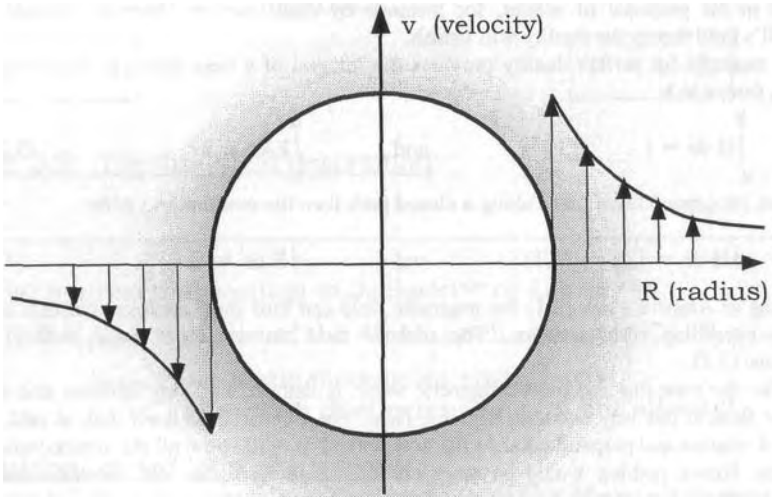

Fig. 3.4b: Velocity distribution v(R) in a potential vortex (see Lugt[<i>]).

<i> Lugt, Hans J.: Vortex flow in nature and technology. Krieger publishing company, Florida 1995; page 30 and 31, ISBN 0-89464-916-7

For a complete duality from the existence of electric monopoles, individual in the space charge density ρ_{el} contained charge carriers, the claim for magnetic monopoles is derived.
In spite of intensive search such north or south pole particles however until now could not be found. Herein from the sight of criticism is seen a confirmation for the assumption that Maxwell's field theory is self-contained and hence in principle may not be extended. The critics have a problem of causality: They postulate source fields that at the same time should be vortex fields. But if one asks how one should imagine such a field that is scalar and at the same time vectorial, then it looks as if no one has ever made any thoughts about it.

The from causality derived solution of the problem of lacking duality requires to extend the Maxwell theory in one point, by introducing the potential vortex of the electric field here and at the same time make a cut in another place:

$$\text{div } D = O \tag{3.7}$$

With this formulation, the assumption of a freedom of sources in principle, the complete duality already is reached: Now neither magnetic nor electric monopoles exist (Fig. 3.3)!
At first we have to accept the loss of the electron hoping that the calculation in the end works out: the "exchange" vortices against particles, by which the quanta can be banned from the field theory, suggests that the elementary particles themselves are nothing else as spherical vortices that have found to an own physical reality.

3.4 Flow vortices

In fluid engineering convincing and strong indications for the correctness of the chosen approach can be found. It benefits us that hydrodynamic vortices are visible or can be the injection of smoke, e.g. in a wind-tunnel.
Already Leonardo da Vinci had observed at liquids that there exist two dual basic types of plane vortices: "Among the vortices one is slower at the centre than at the sides, another is faster at the centre than at the sides."
A vortex of the first type, also called "vortex with rigid-body rotation", is formed for instance by a liquid in a centrifuge that due to its inertia of mass is pressed to the edge because there the largest velocity exists. In an analogous way the electromagnetic vortex in electrically conductive material shows the well-known "skin effect" (Fig. 3.4a).
To explain the other vortex Newton describes the experiment where a rod is dipped into a liquid as viscous as possible and then is turned. In this potential vortex the velocity of the particle increases the closer to the rod it is (Fig. 3.4b).
The duality of both vortex phenomena becomes obvious when we make ourselves clear that in the experiment with the centrifuge the more liquid presses to the edge the less viscous the medium is. And that on the other hand the potential vortex forms the stronger the more viscous the medium is. As conclusion we read in text books that the viscosity of the liquid decides whether a vortex with rigid-body rotation or a potential vortex is formed.

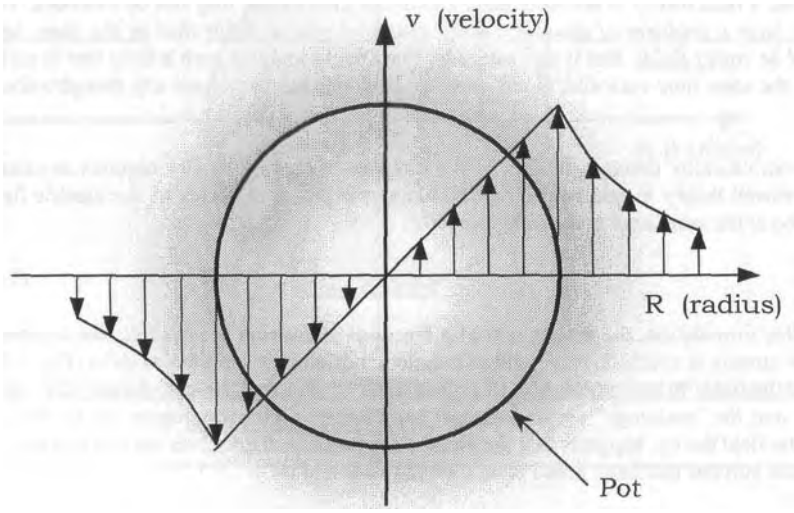

Fig. 3.5: Combination of a vortex with rigid-body rotation and a potential vortex (Lugt[i]).

<i> Lugt, Hans J.: Vortex flow in nature and technology. Krieger publishing company, Florida 1995; ISBN 0-89464-916-7

3.5 Rankine vortex

When we, in a third experiment, immerse the centrifuge filled with water into a tough medium and let the centrifuge rotate, then inside the centrifuge a vortex with rigid-body rotation forms and outside the centrifuge a potential vortex forms (Fig. 3.5).

It is obvious that one vortex always causes the other vortex with the opposite properties and so the existence of one causes that of the other. So in the first case, that of the vortex with rigid-body rotation, outside the centrifuge potential vortices will form in the surrounding air, whereas in the second case, that of the potential vortices, the turning rod itself can be interpreted as a special case of a vortex with rigid-body rotation. Hence in all conceivable experiments the condition always is fulfilled that in the centre of the vortex the same state of "peace", that we can fix as "zero", prevails as in infinity.

When we take a tornado as an example, thus a whirlwind. In the "eye of the cyclone" there's no wind at all. But when I go away from this spot, then I'm blown to the outside. I can really feel the vortex with rigid-body rotation in the inside. If. however, I am standing on the outside, then the potential vortex tries to pull me into the vortex. This potential vortex is responsible for the structure and in the end also for the size of the tornado.

At the radius of the vortex, the place with the largest speed of the wind, an equilibrium prevails. The vortex with rigid-body rotation and the potential vortex at this point are equally powerful. Their power again is determined by the viscosity, which thereby fixes the radius of the vortex!

Therefore meteorologists pursue with interest whether a tornado forms over land or over water. Over the ocean for instance it sucks itself full with water. In that way the potential vortex increases in power, the radius of the vortex gets smaller and the energy density increases dangerously.

If the knowledge from hydrodynamics is transferred to the area of electromagnetism, then the role of the viscosity is taken over by the electric conductivity. The well-known current eddy occurs in the conductor, whereas its counterpart, the postulated potential vortex, forms in the bad-conducting medium, with preference in the dielectric. The duality of both vortices is expressed by the fact that the electric conductivity of the medium decides whether current eddies or potential vortices can form and how fast they decay, i.e. convert their energy into heat.

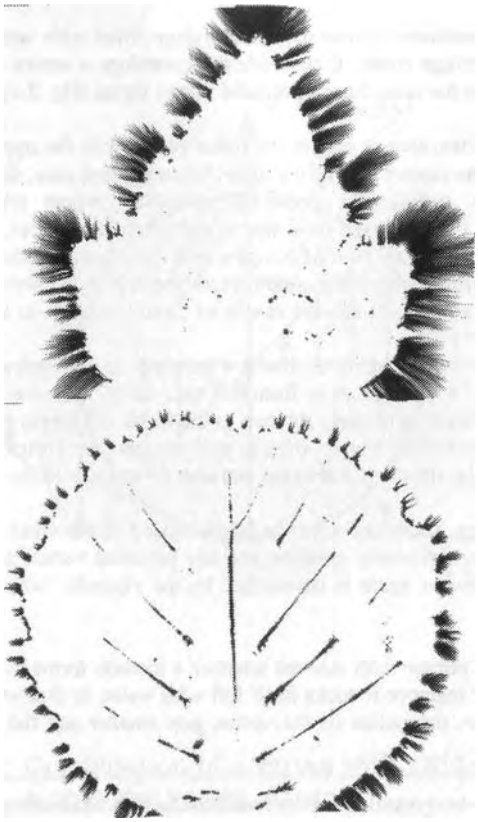

Fig. 3.6: Kirlian photograph of leaves[<i>] structured corona discharges

<i>: (produced by students of electronics in the laboratory for power electronics of the Author, University of Applied Sciences Furtwangen 1991)

<ii>: Kupfmuller, Karl: Einfuhrung in die theoretische Elektrotechnik, Springer-Verlag Berlin, 12. Auflage 1988, page 453

<iii>: Kupfmuller, Karl: Einfuhrung in die theoretische Elektrotechnik, Springer-Verlag Berlin, 12. Auflage 1988, page 208

3.6 Vortex and anti-vortex

Fig. 3.5 shows that vortex and dual anti-vortex mutually cause each other. In high tension transmission lines we find a striking example for the combination of current eddy and potential vortex. Within the conductor current eddies are formed. Thus the current density increases towards the surface of the conductor (skin effect). Outside of the conductor, in the air, the alternating fields find a very bad conducting medium. If one follows the text book opinion, then the field outside the conductor should be an irrotational gradient field! But this statement causes unsolvable problems.

When vortices occur inside the conductor, then for reasons of a detachment of the vortices without jumps at the interface to the dielectric, also the fields in the air surrounding the conductor must have the form and the properties of vortices. Nothing would be more obvious as to also mathematically describe and interpret these so-called gradient fields as vortex fields. When looking exact this argument even is mandatory!

The as laws of field refraction known boundary conditions<ii> in addition demand steadiness at the interface of the conductor to the dielectric and don't leave us any other choice. If there is a vortex field on one side, then also the field on the other side is a vortex field, otherwise we offend against the law! Here an obvious failure of the Maxwell theory is present.
Outside the conductor, in the air, where the alternating fields find a very bad conducting medium the potential vortex not only exists theoretical; it even shows itself. Dependent among others on the frequency and the composition of the surface of the conductor, the potenial vortices form around the conductor. When the thereby induced potentials exceed the initial voltage, then impact ionisation takes place and the well-known corona discharge is produced. Everyone of us can hear this as crackling and see the sparkling skin with which high tension transmission lines cover themselves.
In accordance with the text books also a gradient field increases towards the surface of the conductor, but an even shining would be expected and not a crackling. Without potential vortices the observable structure of the corona would remain an unsolved phenomenon of physics (Fig. 3.6).

But even without knowing the structure-shaping property of the potential vortices, that in addition acts supporting and that we'll have to derive, it can be observed well that especially roughness on the surface of the conductor stimulate the formation of vortices and can produce vortices. If one is looking for a reason why with large frequency the very short impulses of discharge always emerge from roughness<iii>, then very probable potential vortices are responsible for it. By means of a Kirlian photograph it can be shown that the corona consists of structured separate discharges (Fig. 3.6).

With this the approach is motivated, formulated and given reasons for. The expositions can't replace a proof, but they should stand a critical examination. Mathematical and physical evidence will be furnished later.

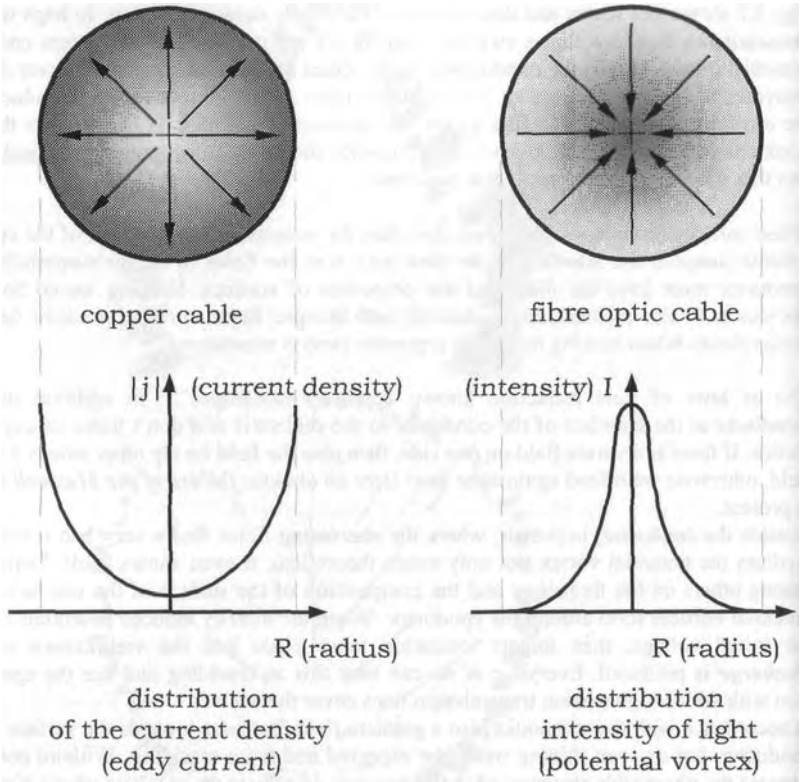

Fig. 4.1: The distribution in principle of the intensity of light
within a fibre optic cable<i> compared to the distribution of the current density in a copper cable

<i> Meyl, Konstantin: Potentialwirbel, Band 1: Diskussionsbeitrage zur naturwissenschaftlichen Deutung und zur physikalisch-technischen Nutzung, basierend auf einer mathematischen Berechnung neu entdeckter hydrotischer Wirbel, INDEL GmbH, Verlagsabteilung, Villingen-Schwenningen 1990, ISBN 3-9802-542-1-6

4. Properties

4.1 Concentration effect

It can be assumed that until now there does not yet exist a technical application for the here presented potential vortex theory unless the phenomenon was used by chance and unconsciously. About this the transmission of optical light signals over fibre optic cable can be given as a typical example.
Compared to a transmission of energy impulses over a copper cable fibre optic cables show a considerable better degree of effectiveness. The derived potential vortex theory provides a conclusive explanation for this phenomenon and therefore is put here to discussion: If we cut through a fibre optic cable and look at the distribution of a light impulse over the cross-section, then we observe a concentration in the centre of the conductor (fig. 4.1).

Herc the duality between the vortices of the magnetic and of the electric field comes to light. Whereas the current eddies in a copper conductor cause the "skin effect" as is well-known, potential vortices show a "concentration effect" and align themselves with the vortex centre. The measurable and in fig. 4.1 shown distribution of the light intensity in a fibre optic cable may confirm this phenomenon, the orientation of the potential vortex on the vortex centre.

For instance the calculation of the resistance of a copper cable provides as an important result an apparent decrease of the resistance directed towards the conductor surface. There the associated better conductivity as a consequence causes an increased current density. In the reversed direction, towards the centre of the conductor, consequently a decrease of the effective conductivity would be present, and this result is independent of the used material. According to the rules of duality this is a condition for the formation of potential vortices. As already said the conductivity is responsible for it, if the expanding eddy current with its skin effect or the contracting potential vortex with its concentration effect is predominant.

Usual fibre optic materials possess not only a small conductivity, but in addition a high dieletricity. This additionally favours the formation of vortices of the electric field. If one consciously or unconsciously supports the potential vortices, then there is a possibility that the life of the fibre optic cable is negatively influenced because of the concentration effect. Of course it can not be excluded that other effects, like e.g. reflections or the modes of the light are involved in the concentration effect. But it should be guaranteed that this actually concerns is causal phenomena and doesn't concern only alternative explanations out of ignorance of the active vortex phenomenon.

The formal mathematical reason for the concentration effect provides the reverse sign in Faraday's law of induction compared to Ampere's law (see also equation 3.1 and equation 3.8 in fig. 3.3).

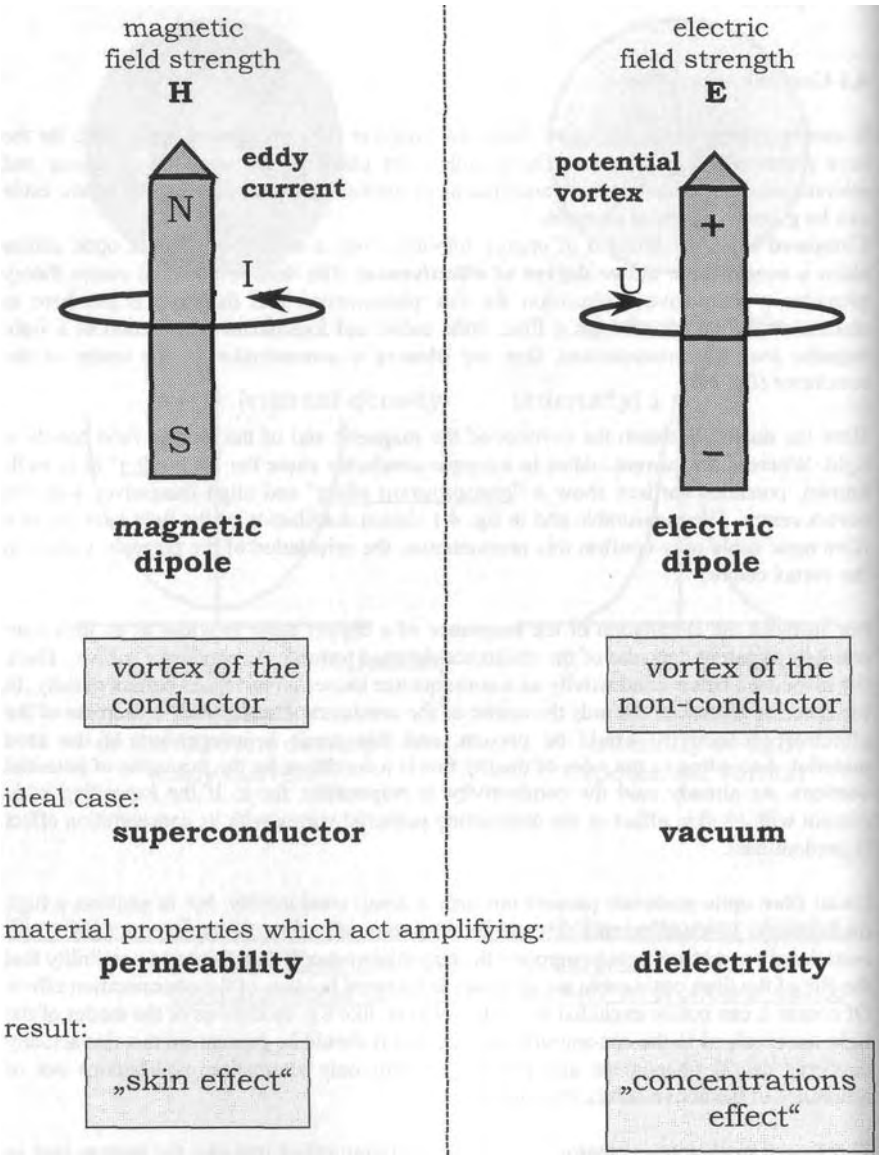

Fig. 4.2: The acting as a dipole of current eddies and potential vortices

4.2 Duality of the vortex properties

The rules of duality dictate for the vortex of the electric and of the magnetic field the following characteristics:

1. Whereas currents and eddy currents demand a good conductivity, potentials and potential vortices can only form with bad conductivity, thus in a dielectric and best in the vacuum.

2. Eddy currents run apart, strive towards infinity and thus show the well-known "skin effect" with a spatially limited arrangement of the conductor. According to the rules of duality the potential vortex will strive towards the vortex centre and in this way will show a "concentration effect".

3. Another property of vortices is shown in fig. 4.2.
On the left side a plane eddy current is indicated. Since the discovery of Ampere's law it is well-known to us that such a circular current (I) forms a magnetic dipole standing perpendicular to the vortex plane.
On the right hand side the dual phenomenon is sketched. Here charges are piled up circularly to a planar potential vortex (U). Thereby an electric dipole forms, standing perpendicular to the vortex plane. This relation directly follows from the equations of the field-theoretical approach.
Whereas circular currents and current eddies produce magnetic dipoles, the postulated potential vortices will form electric dipoles.

With these three interesting properties some key questions of quantum physics, that until now have stayed a mystery to science (fig. 4.4), can be answered conclusively and without compulsion e.g.:

I.Why are there no magnetically charged particles?
The better the conductivity of a medium is, the higher as a consequence the number of free charge carriers is. the more strongly eddy currents are formed. The answer to question I is inferred from the opposite case:
In the ideal vacuum no charge carriers at all are present, why no currents, no current eddies and consequently no magnetic poles can exist.
With this well-known fact the first question already is answered. The question why in the microcosm there can not exist magnetically charged elementary particles, why the search for magnetic monopoles doesn't make any sense. Let's ask further:

II. Why are there only electrically charged particles?
Let us for that consider the dual conditions. The worse the conductivity of a medium is, the more the potential vortex -will be favoured that because of this property also can be understood as the vortex of the dielectric.
In the mentioned extreme case of the ideal vacuum, no electric conductivity is present for reason of the missing charge carriers. But this circumstance favours the potential vortex and that, according to fig. 4.2, forms electric poles and with this also the second question would be answered clearly.
It can be traced back to the boundary conditions of the microcosm that without exception electricallv charged particles are entitled to exist; a realization derived from the field-theoretical approach, that covers all experiences.

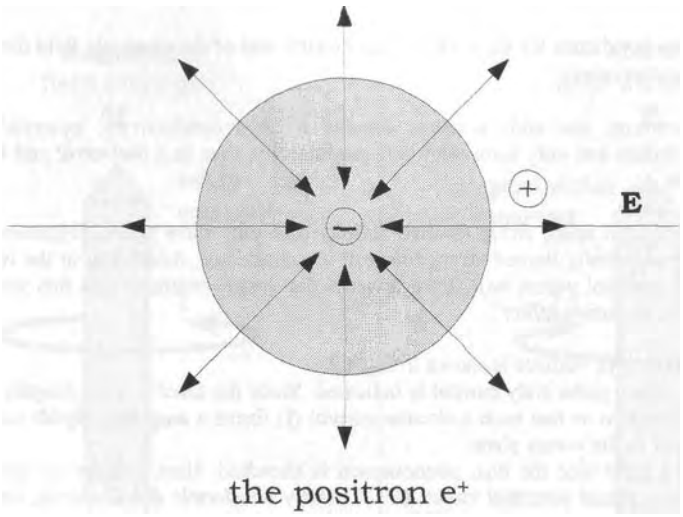

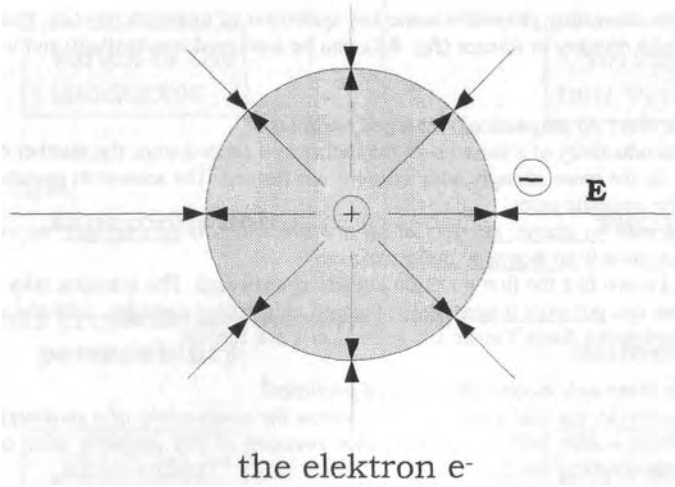

Fig. 4.3: Elementarv particles as configurations of potential vortices

4.3 Derivation of the electron as an elementary vortex

The next key question necessarily has to be brought to a conclusive answer to save the principle of causality, so that we no longer have to postulate an own physics with its own laws for the microcosm:

III. Why do these particles show as monopoles?

More concrete the question has to read:
Where is the positive pole in a negatively charged electron, if it should be an electric dipole?
The only possible answer is:
In the centre of the particle!

Thus in the centre of the electron its positive pole is hidden and in the centre of the positron its negative pole is hidden. But we only observe these particles from the outside and for reason of the field conditions of the electron we measure a negative charge and for its antiparticle, the positron, a positive charge. If in each case we wanted to measure the electric fields included in the inside, we had to destroy the particle. Then a proof would not be possible anymore.

Here also a persistent mistake is eliminated by the for a long time known axiom that monopoles can not exist at all if one considers continuity! By means of technical-physical experiments this axiom is sufficiently secured.
The quantum physical approach is standing on uncertain ground if it is postulated that other laws of nature should apply to particle physics, if a second approach, the field-theoretical approach, is conceivable that does not know these problems!

The discussed concentration effect gives the potential vortex a structure shaping property. With that also the fourth key question can be answered:

IV. Why do the particles have the form of spheres?

The potential vortex is favoured in the particle-free vacuum of the microcosm because of the missing conductivity. In connection with the concentration effect the following conclusion can be drawn:
The extremely mighty potential vortex exerts a high pressure on the microcosm and on each particle.

With that also the fourth key question, why stable elementary particles are spherical, can be answered by the potential vortex theory:
Only the sphere is able to withstand a high outside pressure.
All other forms, like e.g. dipoles formed like a rod or a club would be instable in the presence of the extremely concentrating potential vortex. They would be immediately destroyed by the pressure of the potential vortex.

I. Why are there no magnetically charged particles?
(the vacuum has no conductivity!)

II. Why are there only electrically charged particles?
(in the vacuum only potential vortices can exist!)

III. Why do these particles show as monopoles?

(the other pole is locked up in the inside of the vortex oscillation!)

IV. Why do the particles have the form of spheres?

(for reason of the outside pressure by the concentration effect!)

V. Why is the elementary quantum stable?

(without conductivity no decay of vortices takes place!)

VI. Why does for every particle of matter exist an antiparticle?

(there are two swirl directions with equal rights!)

VII. Why are particles and antiparticles incompatible?
(contrary swirl directions!)

Fig. 4.4: Key questions of quantum physics

4.4 Quanta as field vortices

The fied-theoretical approach demands removing the electron from the field equations (eq. 3.7) and at the same time introducing the potential vortex of the electric field. With this vortex phenomenon there now is a possibility that the electromagnetic wave spontaneously rolls up to a vortex in case it is disturbed from the outside. The vortex particle that is formed in such a way owes its physical reality on the one hand the concentration effect of the potential vortex, that compresses this particle to the dimension of a tiny sphere and on the other hand its localization for reason of the oscillation around a fixed point.
The sphcrical elementary particles are being compressed to inconceivably small dimensions. Therefore they are capable to bind a comparatively high energy in their inside. This is confirmed by the mass-energy relation $E = mc^2$. (4.1)

The fact that the energy is dependent on the speed of light can be judged to be a clear indication that quanta actually are nothing but oscillating electromagnetic packages, vortical oscillations of empty space!
The next question reads:

V. Why is the elementary quantum stable?
The worse the conductivity is, the more the potential vortex will be favoured, the more strongly the concentration effect will form, the smaller the spherical phenomena will get - the larger the authoritative relaxation time will be, i.e. the slower the decay of vortices and with that the more stable the vortex phenomenon will be.
In the microcosm, that comes the ideal case of a particle-free vacuum very close, the spherical vortices because of the missing conductivity have an absolute stability.

VI. Why does for every particle of matter exist an antiparticle?
Since every vortex can also oscillate
in the opposite direction, there always exist two forms of formation of spherical vortices with equal rights, one of them is assigned to the world of matter and the other to the world of anti-matter.

VII. Why are particles and antiparticles incompatible?
For reason of the contrary swirl direction they are incompatible to each other. They have the tendency to destroy each other mutually, like two trains that want in the opposite direction on a single-tracked distance.

The quantum physical approach does not have an answer to these key questions. Until now scientists have merely thought about to what the observable contraction in the microcosm and the macrocosm can be traced back. Because the approach was not able to furnish an answer, without further ado some new matter was introduced: the sluons. These binding particles should be able to exert the necessary pressure. But until now no one has been able to observe or detect this fabulous matter. Nobody knows its structure and its composition. Despite missing evidence it is stated that this matter is mass less and at the same time lumped; it is invisible because it can't interact with any other matter, not even with the supposed building parts of the atomic nuclei, the quarks. But at the same time there should be exerted a pressure on the quarks, for which reason quarks again should be able to interact with gluons!

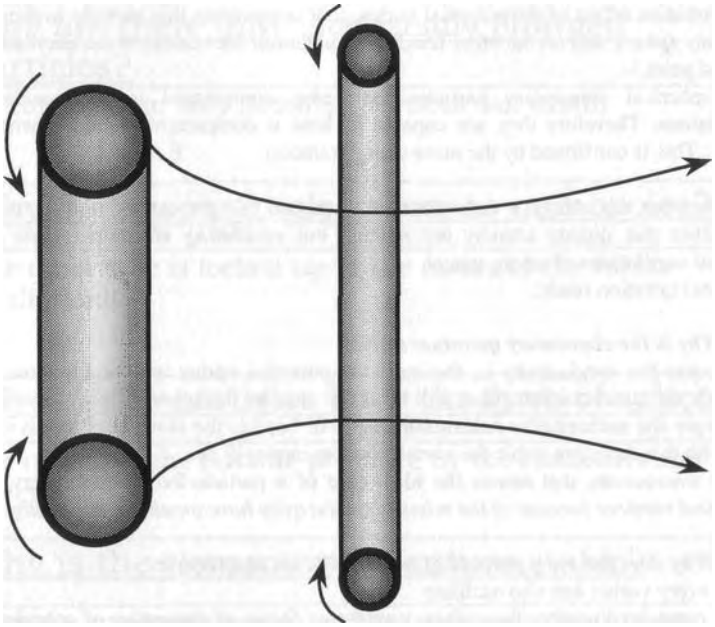

Fig. 4.5: Two coaxial oscillating vortex rings (Lugt[<i>]).

<i> Lugt, Hans J.: Vortex flow in nature and technology. Krieger publishing company, Florida 1995; page 42, ISBN 0-89464-916-7

4.5 The photon

The ability to form structures as a consequence of the concentration effect gives the potential vortex a number of highly interesting properties. To derive these properties we can make work easier when we fall back upon the observations and experiences of flow dynamics.
Here the vortex ring takes a special place. Its vortex centre is not closed, for which reason it is not stationary and propagates in space with a constant speed. It can be observed that the velocity of propagation increases with the ring diameter becoming smaller. By means of the vortex rings, that skilful smokers can produce with pointed lips, these properties can be made visible.
Now if two vortex rings run into each other with the same axis and direction of rotation then both oscillate around each other, by one vortex attracting the other vortex, thereby accelerating and thus contracting it. The second vortex then slips through the core opening and gets again slower and larger. Now the first vortex accelerates and plays the same game (fig. 4.5).
It would be obvious for the vortex of the electric field to have a corresponding property. The electron e- and with the opposite swirl direction the positron e+ will form such a potential vortex corresponding to the derivation. Two electrons, as like charged particles, would repel each other and surely will be out of the question for such a configuration. An electron and a positron however will attract each other and because of their incompatibility they will mutually destroy unless they open their vortex centres to form a vortex ring. Now the e- shows its positively charged centre that shows the same swirl direction as the e+ seen from the outside. Therefore the vortices don't hurt each other, when the positron slips through the opened vortex centre of the electron and vice versa.
This oscillating electron-positron pair has strange properties: seen from the outside one moment it is negatively charged and the next moment it is positively charged. Therefore over time on the average no charge will be measurable and no electromagnetic interaction will take place.
One moment the particle is matter and the next moment it is anti-matter. Hence no mass at all can be attributed to the particle. Interactions primarily takes place between both dual vortices. We can predict, the particle has neither mass nor charge. The environment merely sees a fast oscillating particle that only within every half cycle is capable of an interaction.
The centre of the oscillating particle is open, for which reason it is not stationary anymore. Instead it propagates in z-direction with the swirl velocity, which is the speed of light, in this way preventing a rotation around the x- or y- axis (fig. 4.6). In this way a polarizability is present.
The only possible and, as we will see, necessarily taking place rotation around the z-axis gives the particle a spin of the magnitude of a quantum of angular momentum. After all the rotation for e^- and e^+ is of the same magnitude with a spin of each time $\frac{1}{2} \cdot \hbar$. There should be paid attention to the fact that for the case of an opposite sense of direction of the respective rotation around the common z-axis the spin on the average will be zero.
In addition the particle is characterized by an outstanding property: a periodically taking place oscillation with any frequency, but that frequency has to be constant. We now only have to take a table of particles to hand. Actually we will find a corresponding particle that has all these properties: the γ-quanta, also called photon.

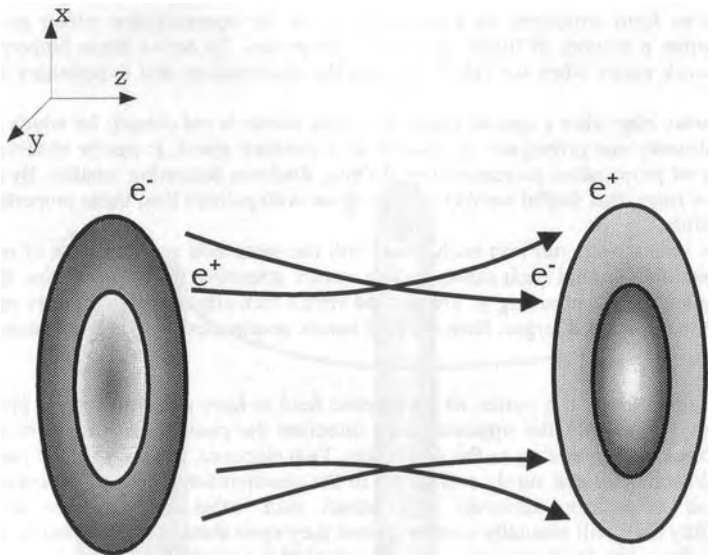

Fig. 4.6: The photon as oscillating electron-positron pair

The decay of the γ- quanta (photon)[i]
(= pair creation = Bethe-Heitler-process 1934):

$$\gamma \longrightarrow e^- + e^+ \tag{4.2}$$

<i> Nachtmann, Otto: Phanomene und Konzepte der Elementarteilchenphysik, Vieweg, Braunschweig 1986, S. 135, ISBN 3-528-08926-1

4.6 Pair creation

Proof for the correctness of the model concept provides the decay of the photon in an electron and a positron in the presence of a strong field, as for instance in an atomic nucleus. This observable decay is called pair creation or Bethe-Heitler process<i>:

$\gamma \longrightarrow e^- + e^+$ (4.2)

In this process the elementary vortices for a short time get back their localization and are therefore detectable. Otherwise the electron and positron have the form of a sphere, the photon however rather has the form of two oscillating discs.

The photon doesn't participate in the electromagnetic interaction, because the electric field lines run from one disc to the other (from + to -). The field lines are not open as they are for e^- or e^+ (fig. 4.3). To open up the field lines an energy is necessary that corresponds to the sum of the two formed particles. But from this it by no means follows that this amount of energy will be released in the reversed and much better known process, where matter and anti-matter annihilate under emission of γ-quanta. At the end of the derivation the vortex model will provide us the desired answers on questions of the energy of photons.

Here first of all only the properties will be concerned. Experiments, in which light shows as a particle, are the photoelectric effect, the Compton effect and a lot more. According to the by Maxwell developed classical theory of light however is light an electromagnetic wave that is not quantized in any way, neither as sphere nor as disc, the wave nature of light as well has a physical reality and is secured by experiment. This is witnessed by the interference patterns of overlapping coherent light beams.

A concept in which light could exist at the same place and the same time both as wave and as corpuscle could never be brought into accord with the principle of causality. Formulas of compromise, like the uncertainty principle of Heisenberg that refers to the point of view of the observer, can't change anything about this dilemma. The dual nature of light, that in this context is gladly spoken of, rather consists of the fact that dependent on the local field conditions, any time and spontaneously the wave can roll up to a vortex.

As an example of a violation of the principle of causality it has been indicated under point 3 (fig. 3.1) that both fields and quanta at the same time should be the cause of something. This concept was formulated by Maxwell and written down in modern quantum electro-dynamics by Dirac but in the field-theoretical approach we have dropped this concept because it violates all rules of causality in an elementary manner. Therefore it only is consistent, if we hold the view that the light is either wave or particle but never is both at the same time!

In the spontaneous transition of the wave to the particle all the important properties are conserved: the propagation with the speed of light, the characteristic frequency of the oscillation and the mentioned polarizability.

The process of rolling up possibly takes place already in the laboratory, in a bubble chamber and at the latest in our eyes. To receive the electromagnetic wave, we had to have antennas. We actually see the photons. It therefore would be obvious if our cells to see only could perceive vortices, in this case photons. We don't possess a sense organ for fields and waves.

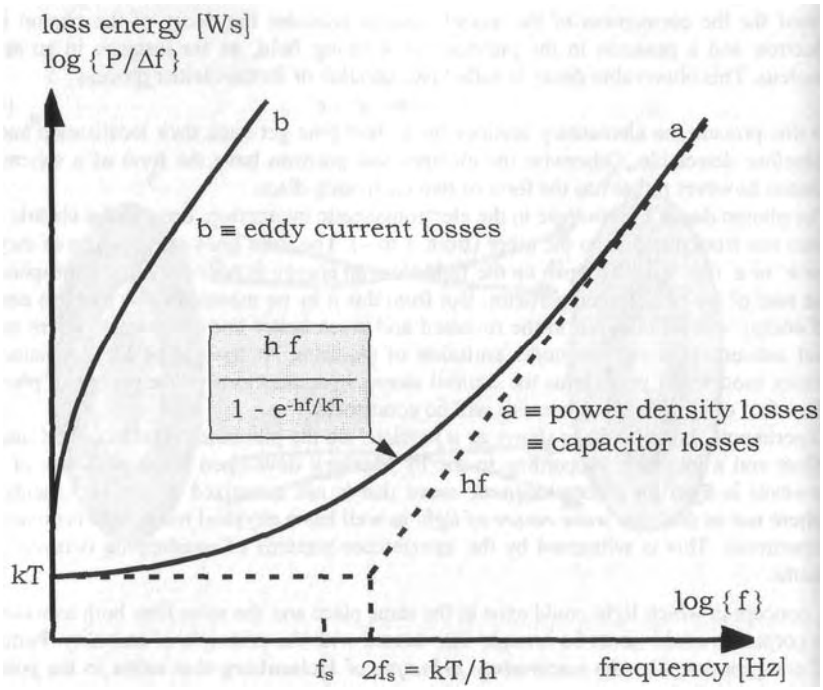

Fig. 4.7: The power density shown against frequency for noise
(a) according to Kupfmuller<i>,
as well as for dielectric losses of a capacitor (also a) and for eddy current losses (b) according to Mevl<ii> (b in visible duality to a).

<i> Kupfmuller, Karl: Einfuhrung in die theoretische Elektrotechnik, Springer-Verlag Berlin, 12. Auflage 1988, ISBN 3-540-18403-1
<ii> Meyl, Konstantin: Dreidimensionale nichtlineare Berechnung von Wirbelstromkupplungen, Dissertation Universitat Stuttgart 1984

4.7 Noise

If, according to the field-theoretical approach, there exist electric field vortices then they will not only form the elementary particles in the vacuum, but will also macroscopically form and have an effect in larger dimensions.

Assuming a wave that rolls up to a plane vortex it would be obvious if polarization and velocity of propagation are conserved in the process. But how does it stand about the frequency?
The wave now will walk round a stationary point, the vortex centre. The propagation with the speed of light c will remain existent as the swirl velocity. For a plane circular vortex, where the path for a revolution on the outside is very much longer than near the vortex centre, there arises a longer wave length and as a consequence a lower frequency on the outside as more to the inside. With this property the vortex proves to be a changer of frequency: the vortex transforms the frequency of the causing wave in an evenly spectrum, that starts at low frequencies and stretches to very high frequencies (fig. 1.4). Exactly this property we observe in "white noise". The consistent conclusion would be that this concerns the vortex of the electric field. Anyone can, without big expenses, convince himself or herself of the localization, of the property to change the frequency and of the circumstance that vortices can be very easily influenced, that they avoid or again whirl about a place of disturbance, for instance an antenna. For that one only needs to tune a radio receiver to a weak and noisy station and move oneself or some objects around, then one is able to directly study the influences from the manipulation of the receiving signal.
But already the fact that the using and measurability of signals is limited by noise makes clear. which attention the potential vortex should be given.

Within a limited frequency range the power of the Nyquist or resistance noise is independent of frequency (fig. 4.7). This should be clarified particularly by the term "white noise" analogous to white light, where all visible spectral ranges independent of frequency have the same energy density.

But this relation doesn't hold for high frequencies of any magnitude. Here another noise-effect appears, that is said to have its cause in the quantum structure of energy[<i>]. Untouched by possible interpretations an increasing power of the noise is measured, that more and more turns into a being proportional to frequency (fig. 4.7, curve a). Interestingly this curve shows a remarkable duality to the power curve of eddy currents, likewise shown against the frequency, that for instance can be measured at eddy current couplings[<ii>] (fig. 4.7, curve b). This circumstance suggests a dual relation of the potential vortex of the electric field in bad conducting media on the one hand and the eddy current in inductive materials on the other hand [<iii>].

<iii>: Meyl, Konstantin: Wirbel des elektrischen Feldes,
EMC Journal 1/95, 6. J, ISSN 0945-3857, S. 56 - 59.

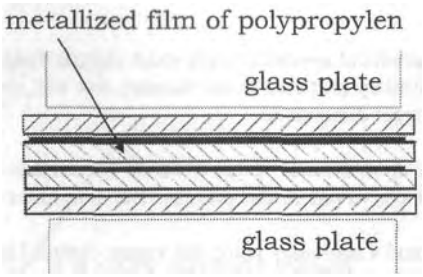

a) measurement set up according to Yializis and others<i>

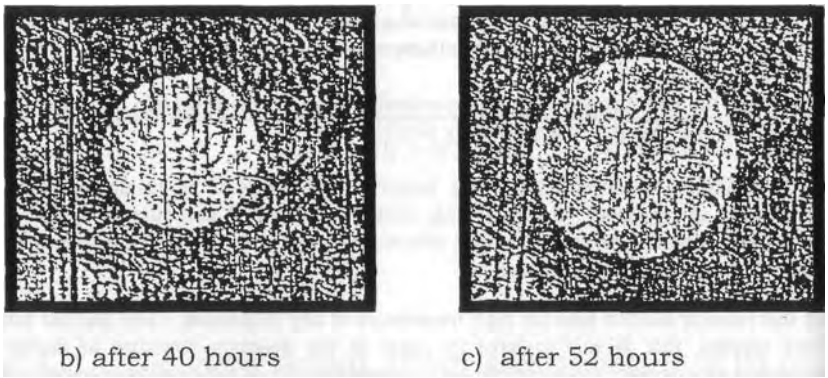

Fig. 4.8: Measurement set up (a) and photo of vortex structure
in a metallized polypropylen layer capacitor (at 450 V/ 60 Hz/ 100°C)
Observation of the formation of a vortex (b) and (c). (110 fold magnification), according to Yializis et al.<i>

<i>: A. Yializis, S. W. Cichanowski, D. G. Shaw: Electrode Corrosion in Metallized Polypropylene Capacitors, Proceedings of IEEE, International Symposium on Electrical Insulation, Bosten, Mass., June 1980;

4.8 Capacitor losses

Next the dielectric losses in a capacitor fed with an alternating voltage are measured and likewise put on against the frequency. At first the course is independent of the frequency, but towards higher frequencies it increases and shows the same characteristic course of the curve as the before mentioned power of the noise (fig. 4.7, curve a).

This excellent agreement suggests the assumption that the dielectric losses are nothing but eddy losses.
These vortex phenomena, caused by time-varying fields, are not only found in ferro-magnetic and conductive materials, but equally as dual phenomena in dielectrics and non-conductors.

As examples of practical applications the induction welding or the microwave oven can be mentioned. The process can be described in other words as follows: in both examples the cause is posed by high-frequency alternating fields that are irradiated into a dielectric as an electromagnetic wave, there roll up to potential vortices and eventually decay in the vortex centre. The desired and used thermal effect arises during this diffusion process.

The striving in the direction of the vortex centre gives the potential vortex of the electric field a structure shaping property. As a consequence of this "concentration effect" circular vortex structures are to be expected, comparable to the visible vortices in flow dynamics (e.g. tornados and whirlwinds). At the same time the dual anti-vortex arises, the diverging eddy current. It takes, as is well-known, the given structure of the conductor, so in the technical literature one correspondingly talks of a "skin effect". Now if conductor and non-conductor meet as they do in a capacitor, then at the boundary area visible structures will form. Circles would be expected, if the eddy current in the inside and striving to the outside is equally powerful as the potential vortex that comes from the outside and concentrates.

Actually such circular structures are observed on the aluminium of high tension capacitors, when they were in operation for a longer period of time. The formation of these circles, the cause of which until now is considered to be unsolved, is already experimentally investigated and discussed on an international level by scientists (fig. 4.8) [i, ii].

These circular vortex structures can be seen as a visible proof [iii] for the existence of potential vortices of the electric field.

<ii>: D. F. Taylor, On the Mechanism of Aluminium Corrosion in Metallized Film Capacitors, IEEE Transactions on EI-19,August 1984,No.4,pp.288-293.

<iii>: Meyl, Konstantin: Wirbel des elektrischen Feldes, EMC Journal 1/95, 6.J, ISSN 0945-3857, S. 56-59.

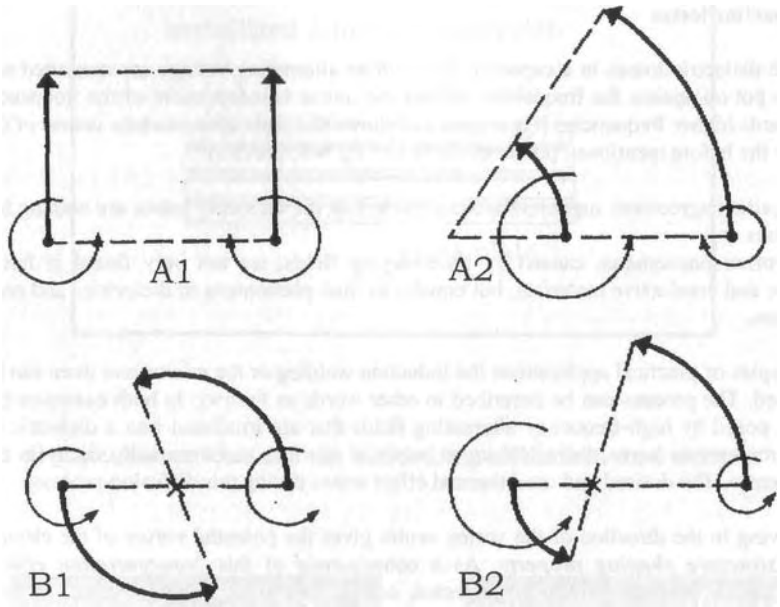

Fig, 4.9: Motion of two point vortices. (Lugt[<i>])
A. with opposite direction of rotation
B. with the same direction of rotation
1. for equal vortex strength
2. for unequal vortex strength

Example from practice for case Al:
vortex pair behind an airplane

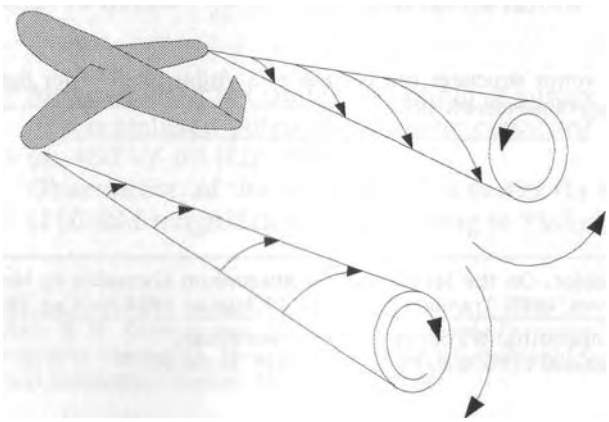

4.9 Vortex lines and vortex streets

It can be assumed that the vortex of the electric field is relevant with regard to the electromagnetic environmental compatibility. This then holds not only for microcosmic and microscopic vortices, but also for macroscopic and larger dimensions. The individual vortices can join together to balls and lines. For the study of this process it is useful to again fall back upon experiences of flow dynamics.

The co-operation of individual point vortices has been investigated thoroughly in flow dyamics. Without any outside manipulation an individual vortex rotates on the spot. That changes in the case of two neighbouring vortices. Now it depends on their mutual strength and sense of rotation. If they have the opposite sense of rotation and equal strength then their centres of rotation move straight forward in the same direction. If however the direction of rotation is the same then both vortices rotate around each other (fig. 4.9).

In this way a multitude of point vortices is capable, to form in the first case whole vortex streets and in the second case spherical vortex balls. In principle a vortex string can also consist of a multitude of potential vortices pointing in the same direction; but it has the tendency to roll up to a vortex ball in case it is disturbed from the outside, as can be shown very clear by means of computer simulations[<i>].

As a starting-point for a discussion the thesis can be put forward that also electric field vortices, in nature usually consisting of a multitude of individual point vortices, appear as vortex strings and vortex balls.

Perhaps historians see in this property an answer to the question, how it was possible for the Romans to build streets straight as a die in the wilderness. Their land surveyors, the Augures, had at their disposal neither laser, nor any other suitable gauges. Their most important tool was the Lituus, the crook, that at its upper end was rolled up like a vortex in the sense of a flat coil shaped like a spiral.
The question poses what this strange object was used for. Perhaps the roman land surveors tracked down any vortex lines with this crook and then used them to orientate themselves?
History still holds a lot of secrets, but for now only this indication is given. The following seminar will give enough opportunities for speculations and discussions[<ii>].

<i>: Lugt, Hans J.: Vortex flow in nature and technology. Krieger publishing company, Florida 1995; p.38, fig. 3.25, 3.26 and 3.27, ISBN 0-89464-916-7

<ii>: K. Meyl: Elektromagnetische Umweltvertraglichkeit Teil 2 und 3 Seminar-umdrucke, INDEL Verlag VS; see part 2 and 3 of this book.

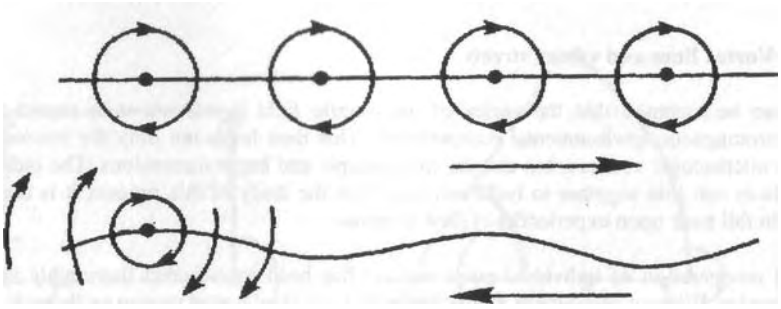

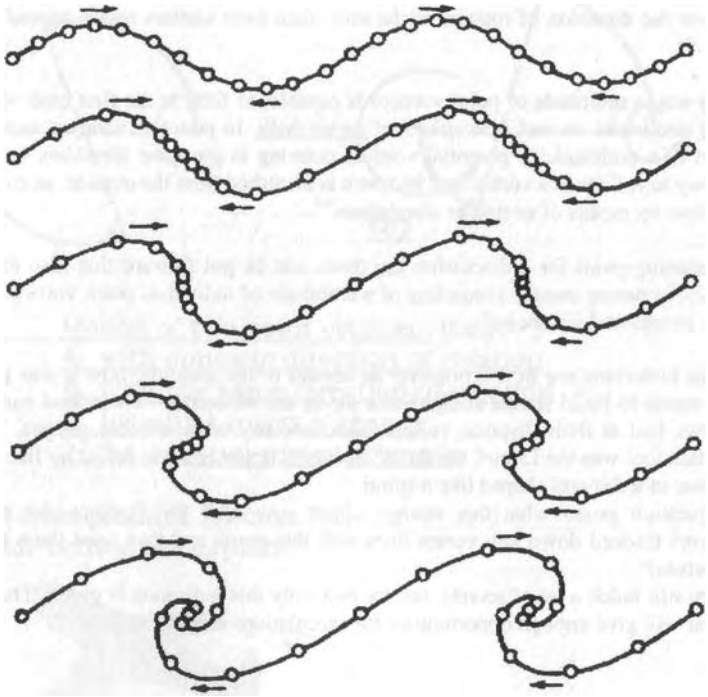

Fig. 4.10: The rolling up of a vortex chain to a vortex ball for the smallest disturbance
(case Bl in fig. 4.9) (Rosenhead[<i>]).

<i>: L. Rosenhead: Formation of vortices from a surface of discontinuity. Proc. Roy. Soc. A 134, 1931, 170. taken from:

Lugt, Hans J.: Vortex flow in nature and technology. Krieger publishing company, Florida 1995; page 39, figure 3.29, ISBN 0-89464-916-7

4.10 Water colloids as vortex balls

We have to realize that in the biosphere we are staying in a relatively ideal dielectric. The two "capacitor plates" are being formed by the ionosphere and the earth. The potential vortex will, as said, be favoured by a bad conductivity and by a high dielectricity. Consequently it will dominate and take effect in the biosphere. In which way it takes effect is the central theme of the electromagnetic environmental compatibility.

Life in this world consists predominantly of water and water has a very high dielectricity! With that the effectiveness and the long life of the potential vortex increases. The human head for instance contains 7O% and plants contain over 90% water! But it does not simply concern H_2O, but structured water in a colloidal form. These water colloids could be vortex balls because they consist of a large number of water molecules in a spherical arrangement They form independent and insoluble particles with a negative electric charge (fig. 4.11).
Water is not equal water thanks to this structure. One can buy healing water and corresponding sources are well-known and famous. Many an effect can be explained by means of a chemical analysis but not everything.

The highest age in this world is reached by the inhabitants of Hunza, in the mountains of norhern India at the foothill of the Hindu Kush, at an altitude of 2500 meters. They drink some muddy glacial water that is strongly colloidal. Hence it would be obvious that plants and also we ourselves need such water for our physique. Processes are known with which the advantageous vortex balls, say colloids, are produced artificially by mechanic or chemical treatment[<i>]. Levitated water, as it is called and as it is for sale nowadays, is said to be more healthy. Unfortunately people predominantly work empiric in this area, because science occupies itself with this topic only little or not at all.
Another problem is the fact that the colloids again fall apart quickly. The like negative charge favours this process. The liquid crystals have to be stabilized from the outside. In the case of the Hunza-water the colloids are surrounded by a vegetable layer of fatty acid and are protected in this way [<ii>]. It possibly is very obliging to nature, if the water colloids also in biological systems are stabilized in that way.
Everyone of us knows that fresh spring water tastes much better than stale, bottled water, even if the chemical analysis turns out of be absolutely identical. For this fact classical science is not able to give a cause - a further problem of causality. In any case should potential vortices with their structure shaping property be considered as a cause for the formation of water colloids. It surely causes no difficulties at all to interpret the colloids as vortcx bulls.

<i>: V. Schauberger: Die Entdeckung der Levitationskraft, Implosion 1995 Nr. 112 und:
N. Harthun: NaturgemaSe Technik - Wege fur die Forschung nach Viktor Schauberger, Verlag Delta Design, Berlin 1996.

<ii>: Flanagan: Elexier der Jugendlichkeit, Waldthausen Verlag Ritterhude 1992, orig.: Elixir of Ageless

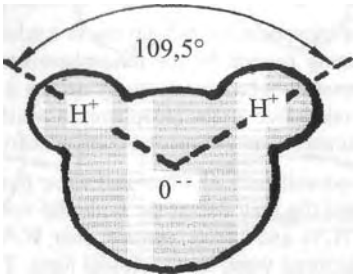

H_2O: the angle of the bond between 2 H molecules = 104,5°
angle of the bond in excited state = 109,5°

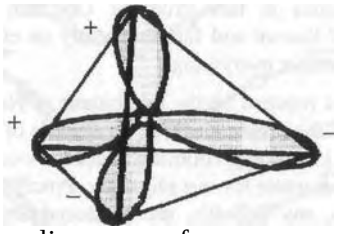

electron orbital diagram of energy (excited H_2O) = tetraeder
most stable liquid crystal = 8 tetraeder = star of octaeder

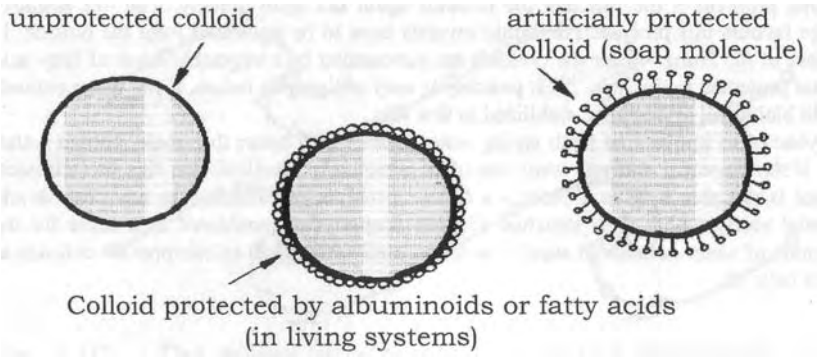

Fig. 4.11: Water molecules and water colloids

4.11 Phenomenon of transport

The vortex principle is self-similar. This means that the properties of an individual vortex also for the collection of numerous vortices again appear and can he observed in a similar manner. That's why a vortex ball behaves entirely similar as an individual isolated vortex. The same concentration effect, that keeps the vortex together, shows its effect for the vortex ball and keeps it together also.

Something corresponding holds for a basic property of potential vortices, being of a completely different nature. It is the property to bind matter in the vortex and carry it away with the vortex. Well-known are the vortex rings that skilful cigarette smokers can blow in the air. Of course also non-smokers can produce these air eddies with their mouth but these remain invisible. Solely by the property of the vortex ring to bind the smoke it becomes visible to the human eye.

If out potential vortex transports something then it rather should be a dielectric material, so preferably water. Therefore if in the environmental air we are surrounded by potential vortices that we can detect for instance as noise, then they are capable with their "phenomenon of transport", to pick up water and to keep it in the vortex. In this way the atmospheric humidity is explicable as the ability of the air particles to bind comparatively heavy water molecules. If the vortex falls apart then it inevitably releases the water particles and it rains. This is merely a charming alternative for the classical representation without claim to completeness.

Already the Romans have made use of this phenomenon to find water and sources. About this Vitruv[<i>] (from 23 BC) in his 8th book about architecture writes: "Before sunrise one has to lie down on the earth at the places, where to search for water,... and one has to look at the area... Then one has to dig at the place where there appears curling and in the air rising moist steam. Because this characteristic can not occur at a place where there is no water". The at a certain time of day and in certain seasons occasional in meadows and corn fields observable streaks or circular mostly moist places with differing vegetation, have to be judged as an infallible sign for the existence of this phenomenon.

This phenomenon of transport again appears for the discussed water colloids. The involved water molecules form a spherical object with a negative charge. They turn their negatively charged side to the outside and point with the positively charged end in the direction of the middle of the sphere. There, no longer discernible from the outside, a negatively charged ion can be, that is stuck, that no longer can escape and that gives the whole colloid a characteristic property. In this way nature knows various water colloids that constitute plants and animals. But starting at a temperature of 41°C the liquid crystals fall apart. This not by chance is the temperature at which a person dies. Already 10 millivolts per liquid crystal suffice for the electrically induced death.

The to a colloid identical structure we find in the structure of the atoms. Here the atomic nucleus is held in the inside of a vortex-like cloud of electrons, the atomic hull. We'll hit the phenomenon of transport a last time, when we derive the elementary particles. For the photon is already discernible the tendency of an elementary vortex, to take another vortex in its inside. Merely because the electron and positron are evenly matched a stable configuration is prevented for the photon.

<i>: Vitruvius Pollio, Marcus: Ten Books about architecture, WBG 1987

In chapter vortex calculation used differential operations:

field pointer (vector = **bold**):

$$\mathbf{A} = \mathbf{e}_x \cdot A_x + \mathbf{e}_y \cdot A_y + \mathbf{e}_z \cdot A_z$$

Gradient of the scalar function of position V:

$$\text{grad } V = \mathbf{e}_x \cdot \delta V/\delta x + \mathbf{e}_y \cdot \delta V/\delta y + \mathbf{e}_z \cdot \delta V/\delta z \quad \text{(R1)}$$

Divergence of the vector **A**:

$$\text{div } \mathbf{A} = \delta A_x/\delta x + \delta A_y/\delta y + \delta A_z/\delta z \quad \text{(R2)}$$

Curl (vortex density) of the vector **A**:

$$\begin{aligned} \text{rot } \mathbf{A} = \; & \mathbf{e}_x \cdot (\delta A_z/\delta y - \delta A_y/\delta z) + \\ & + \mathbf{e}_y \cdot (\delta A_x/\delta z - \delta A_z/\delta x) + \\ & + \mathbf{e}_z \cdot (\delta A_y/\delta x - \delta A_x/\delta y) \end{aligned} \quad \text{(R3)}$$

Laplace operator Δ:

$$\Delta \mathbf{A} = \delta^2\mathbf{A}/\delta x^2 + \delta^2\mathbf{A}/\delta y^2 + \delta^2\mathbf{A}/\delta z^2 \quad \text{(R4)}$$

arithmetic rules:

$$\Delta \mathbf{A} = \text{grad div } \mathbf{A} - \text{rot rot } \mathbf{A} \quad \text{(R5)}$$

$$\text{div rot } \mathbf{A} = O \quad \text{(R6)}$$

$$\mathbf{A} \times \mathbf{B} = -\mathbf{B} \times \mathbf{A} \quad \text{(R7)}$$

$$\text{div } (\mathbf{A} \times \mathbf{B}) = \mathbf{B} \text{ rot } \mathbf{A} - \mathbf{A} \text{ rot } \mathbf{B} \quad \text{(R8)}$$

$$\text{rot } (\mathbf{A} \times \mathbf{B}) = (\mathbf{B} \text{ grad})\mathbf{A} - (\mathbf{A} \text{ grad})\mathbf{B} + \mathbf{A} \text{ div } \mathbf{B} - \mathbf{B} \text{ div } \mathbf{A} \quad \text{(R9)}$$

$$\mathbf{A} \times (\mathbf{B} \times \mathbf{C}) = \mathbf{B} \cdot (\mathbf{A} \cdot \mathbf{C}) - \mathbf{C} \cdot (\mathbf{A} \cdot \mathbf{B}) \quad \text{(R10)}$$

* <u>important equations</u> are given in a box
* <u>new equations</u> are underlined twice.

Fig. 5.0: Collection of formulas for vector analysis

5. Derivation and interpretation

Vortices cause big problems to every measuring technician. They have the unpleasant property to whirl around the sensor even if it is as small as possible. Vortices avoid the smallest disturbance and then can hardly be detected reproducibly.

From the well-known eddy current we know of this problematic. Instead of the vortex, we are forced to measure and analyse any effects that arise from the vortex. These can be measurements of the eddy losses or effects back on the stimulating field. But only provided that the effect actually occurs.
The prerequisite for an increase in temperature by eddy losses is that the vortex falls apart. In an ideal medium it unfortunately will not do us this pleasure.

As vrtex of the dielectric the potential vortex will find fairly ideal conditions in air or in water. How should a vortex be detected, if it does not produce any effect? The classical measuring technique is here at its wits' end.

From the duality to the well-known eddy current and by means of observation in the previous chapters numerous properties of the potential vortex have been derived. But these are not all the properties. The mathematical calculation of the electric vortex field, that we want to turn to now, will reveal still further meaningful and highly interesting properties.

The observation is important, but it can't replace an exact calculation. A strictly mathematical derived result has occasionally more expressiveness than a whole book full of explanations. It will be a big help to derive and to discuss the field equation that all considerations are based on.

We facilitate the mathematical work by vector analysis. Therefore it is useful that we choose the differential form (equation 5.1 and 5.4) instead of the integral form (equations 3.1 and 3.2 resp. 3.8).

1. Ampère's law:

$$\text{rot}\,\mathbf{H} = \mathbf{j} + \delta\mathbf{D}/\delta t \tag{5.1}$$

with $\mathbf{H} = \mathbf{H}(\mathbf{r},t)$

and Ohm's law: $\mathbf{j} = \sigma \cdot \mathbf{E}$ (5.2)

dielectric displacement: $\mathbf{D} = \varepsilon \cdot \mathbf{E}$ (3.6)

relaxation time: $\tau_1 = \varepsilon/\sigma$ (5.3)

$$\boxed{\text{rot}\,\mathbf{H} = \varepsilon \cdot (\mathbf{E}/\tau_1 + \delta\mathbf{E}/\delta t)} \tag{5.1*}$$

2. Faraday's law of induction (extended according to duality rules)

$$-\text{rot}\,\mathbf{E} = \mathbf{B}/\tau_2 + \delta\mathbf{B}/\delta t \tag{5.4}$$

with $\mathbf{E} = \mathbf{E}(\mathbf{r},t)$

and the flux density: $\mathbf{B} = \mu \cdot \mathbf{H}$ (3.5)

$$\boxed{-\text{rot}\,\mathbf{E} = \mu \cdot (\mathbf{H}/\tau_2 + \delta\mathbf{H}/\delta t)} \tag{5.4*}$$

$$-\text{rot rot}\,\mathbf{E} = \mu \cdot (1/\tau_2) \cdot \text{rot}\,\mathbf{H} + \mu \cdot \delta(\text{rot}\,\mathbf{H})/\delta t \tag{5.5}$$

insert equation 5.1*:

$$-\text{rot rot}\,\mathbf{E} = \mu \cdot \varepsilon \cdot (\mathbf{E}/\tau_1\tau_2 + (1/\tau_2) \cdot \delta\mathbf{E}/\delta t + (1/\tau_1) \cdot \delta\mathbf{E}/\delta t + \delta^2\mathbf{E}/\delta t^2) \tag{5.5*}$$

$$-\text{rot rot}\,\mathbf{E} = \Delta\mathbf{E} - \text{grad div}\,\mathbf{E} = \Delta\mathbf{E}\,, \tag{R5}$$

if: $\text{div}\,\mathbf{E} = O$ (3.7*)

abbreviation: $\mu \cdot \varepsilon = 1/c^2$ (5.6)

3. fundamental field equation:

$$\underbrace{\Delta\mathbf{E}\cdot c^2}_{a} = \underbrace{\delta^2\mathbf{E}/\delta t^2}_{b} + \underbrace{(1/\tau_1)\cdot\delta\mathbf{E}/\delta t}_{c} + \underbrace{(1/\tau_2)\cdot\delta\mathbf{E}/\delta t}_{d} + \underbrace{\mathbf{E}/\tau_1\tau_2}_{e} \tag{5.7}$$

Fig. 5.1: Derivation of the fundamental field equation.

5.1 Fundamental field equation

We'll start from Ampere's law which provides a value for the current density at any point pace and this value corresponds to the vortex density of the magnetic field strength

$$\text{rot}\,\mathbf{H} = \mathbf{j} + \delta\mathbf{D}/\delta t \qquad (5.1)$$

We'll use Ohm's law: $\mathbf{j} = \sigma \cdot \mathbf{E}$, (5.2)

the dielectric displacement: $\mathbf{D} = \varepsilon \cdot \mathbf{E}$ (3.6)

and the relaxation time: $\tau_1 = \varepsilon/\sigma$, (5.3)

that indicates how fast the current eddies decay. So far we can fall back upon well-known relations.

The result is:

$$\boxed{\text{rot}\,\mathbf{H} = \varepsilon \cdot (\mathbf{E}/\tau_1 + \delta\mathbf{E}/\delta t)} \qquad (5.1^*)$$

The new electric field vortices demand the introduction of a corresponding time constant tau_2 that should describe the decay of the potential vortices, as an extension. The extended Faraday law of induction now provides a potential density, that at any point of space corresponds to the vortex density of the electric field strength:

$$-\text{rot}\,\mathbf{E} = \mathbf{B}/\tau_2 + \delta\mathbf{B}/\delta t \qquad (5.4)$$

with the flux density $\mathbf{B} = \mu \cdot \mathbf{H}$. (3.5)

The result fulfils the required duality to equation 5.1*:

$$\boxed{-\text{rot}\,\mathbf{E} = \mu \cdot (\mathbf{H}/\tau_2 + \delta\mathbf{H}/\delta t)} \qquad (5.4^*)$$

If we again apply the curl to equation 5.4*

$$-\text{rot rot}\,\mathbf{E} = \mu \cdot (1/\tau_2) \cdot \text{rot}\,\mathbf{H} + \mu \cdot \delta(\text{rot}\,\mathbf{H})/\,\delta t \qquad (5.5)$$

and insert equation 5.1*, we obtain:

$$-\text{rot rot}\,\mathbf{E} = \mu \cdot \varepsilon \cdot (\mathbf{E}/\tau_1\tau_2 + (1/\tau_2) \cdot \delta\mathbf{E}/\delta t + (1/\tau_1) \cdot \delta\mathbf{E}/\delta t + \delta^2\mathbf{E}/\delta t^2) \qquad (5.5^*)$$

which according to the rules of vector analysis can still be further simplified: = rot rot E = $\Delta\mathbf{E}$ - grad div E , where we should remember that the divergence has to vanish (div E = O. fig. 3.2, equation 3.7), should the corresponding field vortex be inserted!

Furthermore the following well-known abbreviation can be inserted: $\mu \cdot \varepsilon = 1/c^2$ (5.6)

With that the relation with the speed of light c simplifies to the sought-for field equation:

$$\underbrace{\Delta\mathbf{E} \cdot c^2}_{a} = \underbrace{\delta^2\mathbf{E}/\delta t^2}_{b} + \underbrace{(1/\tau_1) \cdot \delta\mathbf{E}/\delta t}_{c} + \underbrace{(1/\tau_2) \cdot \delta\mathbf{E}/\delta t}_{d} + \underbrace{\mathbf{E}/\tau_1\tau_2}_{e} \qquad (5.7)$$

This equation describes the spatial (a) and temporal (b, c, d) distribution of a field vector. It describes the electromagnetic wave (a, b) with the influences that act damping. As dumping terms the well-known eddy current (c) and in addition the newly introduced potential vortex (d) appear.

Field vector: ψ = E, H, j, B or D

1. elliptic potential equation:
(stationary: $t \longrightarrow \infty$ resp. $\delta/\delta t = O$)

$$\underbrace{\Delta\psi \cdot c^2}_{a} = \underbrace{\psi/\tau_1\tau_2}_{e}$$

(5.8)

2. hyperbolic equation:
(undamped wave equation)

$$\underbrace{\Delta\psi \cdot c^2}_{a} = \underbrace{\delta^2\psi/\delta t^2}_{b}$$

(5.9)

3. parabolic equation:
(vortex equation)

$$\underbrace{\Delta\psi \cdot c^2}_{a} = \underbrace{(1/\tau) \cdot \delta\psi/\delta t}_{c/d}$$

(5.10)

decay time of the eddy currents = relaxation time: $\tau_1 = \varepsilon/\sigma$ (5.3)

decay time of the potential vortices = relaxation time: $\tau_2 \sim \mu \cdot \sigma$ (5.11)

Fig. 5.2: mathematically divisible individual cases.

5.2 Mathematical interpretation of the fundamental field equation

Every specialist will be surprised to find the Poisson equation (a, e) again as a term in the wave equation. This circumstance forces a completely new interpretation of stationary fields upon us. The new damping term, that is formed by the potential vortices (d), is standing in between.

Let us start with a mathematical analysis. We have applied the curl to equation 5.4*, then inserted equation 5.1* and obtained a determining equation for the electric field strength E. Of course we could as well have applied the curl to equation 5.1* and inserted equation 5.4*. This would have resulted in the determining equation for the magnetic field strength H.

If we insert Ohm's law (5.2) and cancel down the specific conductivity, or we put in the relations of material (3.5) or (3.6) and cancel down by u respectively ε, then the field equation can likewise be written down for the current density j, for the induction B or for the dielectric displacement D.

It just is phenomenal that at all events equation 5.7 doesn't change its form at all. The field vector is thus arbitrarily interchangeable! This circumstance is the foundation for the claim of this field equation to be called fundamental.

It does make sense to introduce a neutral descriptive vector ψ as a substitute for the possible field factors E, H, j, B or D.

The fundamental field equation 5.7 consists of three different types of partial differential equations: a hyperbolic (b), a parabolic (c and d) and an elliptic (e) type. On the left-hand side each time the Laplace operator (a) is found which describes the spatial distribution of the field factor.

The potential equation of the elliptic type (e) is known as Poisson equation. It describes the stationary borderline case of a worn off temporal process ($t \rightarrow \infty$, resp. $\delta/\delta t = O$).

With this equation potentials and voltages can be calculated exactly like stationary electric currents (5.8).

The hyperbolic equation (b). known as wave equation, shows a second derivative to time. which expresses an invariance with regard to time reversal; or stated otherwise: the direction of the time axis can be reversed by a change of sign of t, without this having an influence on the course of frequency. Wave processes hence are reversible. Equation 5.7 makes clear that a wave without damping by no means can exist in nature. For that both time constants (τ_1 and τ_2) would have to have an infinite value, which is not realizable in practice. Seen purely theoretical, undamped waves could withdraw themselves from our measuring technique (5.9).

Both vortex equations of the parabolic type (c and d) only show a first derivative to time. With that they are no longer invariant with regard to time reversal. The processes of the formation and the decay of vortices, the so-called diffusion, are as a consequence irreversible. Seen this way it is understandable that the process of falling apart of the vortex, where the vortex releases its stored energy as heat e.g. in form of eddy losses, can not take place in reverse. This irreversible process of diffusion in the strict fhermodynamic sense increases the entropy of the system (5.10).

Because it poses an useful simplification for mathematical calculations, often the different types of equations are treated isolated from each other. But the physical reality looks different.

field vector: ψ = E, H, j, B or D

1. Borderline case: no conductivity (vacuum)
($\sigma = O$; $1/\tau_1 = \sigma/\varepsilon = O$):

$$\underbrace{\Delta\psi \cdot c^2}_{a} = \underbrace{\delta^2\psi/\delta t^2}_{b} + \underbrace{(1/\tau_2)\cdot \delta\psi/\delta t}_{d}$$

(5.12)

(damping by potential vortices)

2. Borderline case: ideal conductivity (superconductor)
($1/\sigma = O$; $1/\tau_2 = O$):

$$\underbrace{\Delta\psi \cdot c^2}_{a} = \underbrace{\delta^2\psi/\delta t^2}_{b} + \underbrace{(1/\tau_1) \cdot \delta\psi/\delta t}_{c}$$

(5.12*)

(damping by eddy currents)

3. Diffusion equation

$$\underbrace{\Delta\psi \cdot c^2}_{a} = \underbrace{(1/\tau) \cdot \delta\psi/\delta t}_{c/d} + \underbrace{\psi/\tau_1\tau_2}_{e}$$

(5.12**)

(vortex)

Fig. 5.3: Two borderline cases of the damping of waves and
the diffusion equation for the decay of vortices

5.3 Physical interpretation of the fundamental field equation

In nature the different types of equations always occur in a combined manner.

1. Let's take the concrete case of the particle-free vacuum. Here the specific conductivity is zero. The relaxation time constant $\tau_1 = \varepsilon/\sigma$ responsible for the decay of vortices tends towards infinity according to equation 5.3 and the terms (c) and (e) are cancelled from the field equation 5.7. What remains is the by potential vortices (d) damped wave equation (b) (equation 5.12).

2. The reversed case (with $\tau_2 \longrightarrow \infty$) will consequently occur in materials without resistance, super conducting materials. We now are dealing with the well-known case of the wave damped by eddy currents (equation 5.12*).

Virtually all in nature existing materials however don't fulfil these boundary conditions, from which it follows that both damping terms always occur together and in addition the stationary term (e) becomes active.
It is true that every antenna demonstrates that the electromagnetic wave is convertible in high-frequency alternating currents and voltages, which then are amplified in the receiver. But until this fundamental equation was written down it however was not understood that this transition takes place by means of a vortex. Used are either antennas from well conducting material, or wave guides and horn radiators, which only have a minimal conductivity, because they are filled with air. Actually the wave can be converted in two dual ways; by means of the rolling up to current eddies or to potential vortices (fig. 1.4). Now we finally are capable to explain, why wave guides make possible a better degree of effectiveness: Owing to the concentration effect of the potential vortex the HF-power is bound in the inside and not emitted until the antenna is reached as happens for a wire for reason of the skin effect.
Therefore, physically, one has to imagine this relation, which describes the transition of an electromagnetic wave into a vortex, in the way that the wave spontaneously can roll up to a vortex in case it is disturbed from the outside. The more vortices are generated, the larger consequently is the damping of the wave (equations 5.12 and 5.12*).

3. The life span of the vortices is limited and is determined by the electric conductivity. The at first stored vortices decay with their respective time constant τ. This process is described by the diffusion equation 5.12**. The final stage of the decaying vortices finally is described by the Poisson equation (a, e: equation 5.8).

If the vortex falls apart, it converts the in the vortex stored energy in heat. These processes are known from the eddy current. We speak of heating losses, that the stationary currents cause in the conductor material.
But new is the concept that such vortex phenomena can occur as dielectric losses in capacitors or in the air. The microwave oven or induction welding are good examples of this.

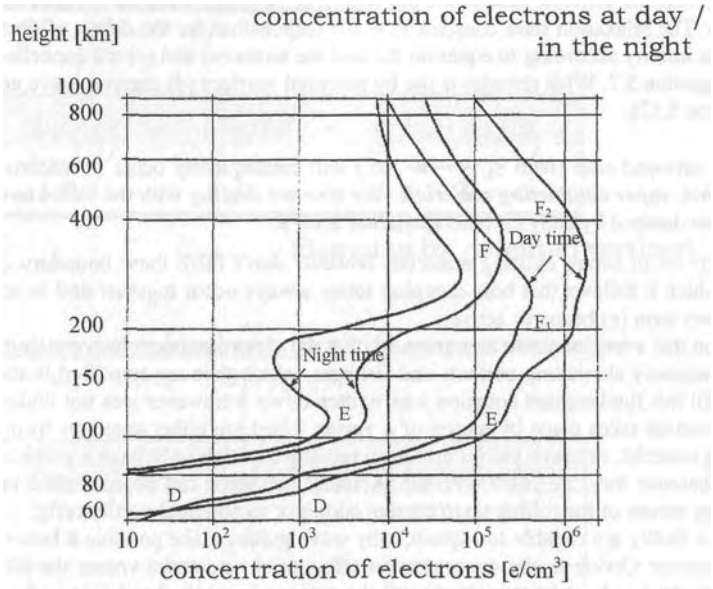

Fig. 5.4: The dependency on height of the ionisation in the ionosphere for medium latitudes .[i]

left curve: for a minimum of sun spots

right curve: for a maximum of sun spots

<i>: H.L. Konig: Unsichtbare Umwelt (Wetterfuhligkeit), 5. Aufl., Bild 6, Seite 11, Verlag Moos & Partner Milnchen, ISBN 3-89164-058-7

5.4 Phenomenological interpretation of the fundamental field equation

How does a damping by vortices take effect in practice? First of all we notice that the reception of broadcastings gets worse. "The information signal is neglectable regarding the noise" explains the radio engineer and means, the number of vortices increases at the expense of the wave intensity.
Why, does the pupil ask, is it so cold in space? There the sun shines day and night and in addition much more intensely than on earth! The correct answer would have to read that because of the extremely small conductivity no diffusion process can take place. We owe the warmth on our earth solely the here taking place decay of vortices. Responsible is the conductivity of the atmosphere.
In 60 km to 500 km height over the earth's surface, the region which is called the ionosphere, the gases predominantly exist in ionized form. There a very good conductivity prevails and eddy current losses are the result. Correspondingly high are the measurable temperatures. Besides the diffusion process the eddy currents carry out a damping of the cosmic radiation. We say the sunlight is filtered and reduced to a for nature bearable intensity.
But not all frequencies are damped in the same way (fig. 2.8). We observe a blue shift, if we look into the actually black sky. The blue sky doesn't show any spots or clouds. The reason is to be sought in the skin effect of the eddy currents, which strive outwards. Since no edge of a conductor is present here, no skin can form. The vortices spread evenly over the ionosphere.
The potential vortex however is able to structure. It merely needs a bad conductivity and this it finds in lower heights between 1 km and 10 km. It damps the wave and with that also the light, for which reason we say it becomes darker, the sun disappears behind clouds.

The clouds well visibly form the discussed vortex balls and vortex strings. Clouds can form virtually from the nowhere during intense solar irradiation, i.e. the waves can roll up to vortices. But as a rule this takes place above the oceans. Here also the phenomenon of transport has an effect. Because of the high dielectricity the water surface favours the formation of potential vortices. So the vortices bind individual water molecules and carry them away. If a diffusion process takes place, in which the vortex decays, then it rains. This can happen in two different ways:
1. Either the conductivity increases. If for instance during intense solar irradiation air ions form, the sun is able to break up clouds and fog. Or when the air is raised in higher layers with better conductivity, because a mountain forces this, then it rains at the mountain edge.
2. For potcntial vortices the electric field is standing perpendicular to them. If at one point an exceptionally lot of vortices join together, which let the cloud appear particularly dark to black, then the danger exists that the ionization field strength for air is reached, in which case a conductive air channel forms along which the stored up charges discharge. Also lightning is a diffusion process, in which potential vortices decay and rain can form.
In connection with the electromagnetic environmental compatibility great importance is attributed in particular to the storage and the decay of electric vortices. There not only is an academic-scientific interest in the question, how many potential vortices are generated, how many are stored and how many decay, if we make a telephone call with a handy, if we are staying under a high-tension line or if we are eating food, which has been heated up in a microwave oven. The necessary mathematical description is provided by the fundamental field equation 5.7.

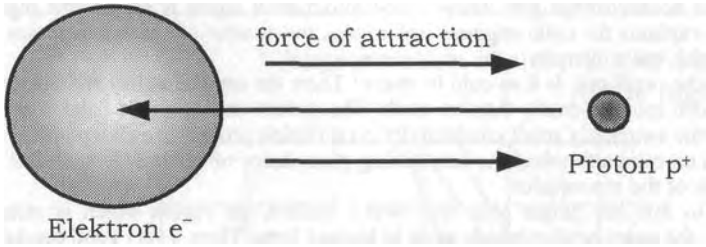

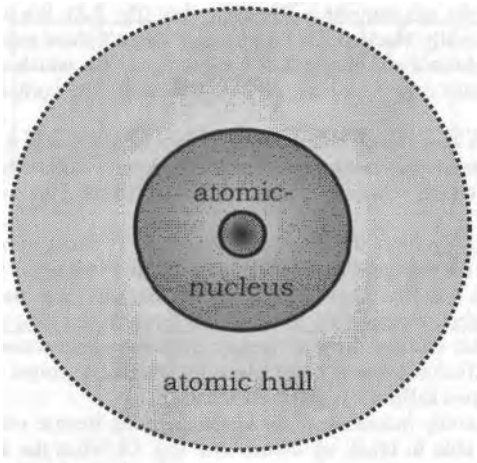

Fig. 5.5: The structure of atoms in the view of the fundamental field equation

condition for equilibrium: $\boxed{\tau_1 = \tau_2}$ (5.13)

5.5 Atomistic interpretation of the fundamental field equation

Let's again turn to the smaller, the atomistic dimensions. Here positively charged protons and negatively charged electrons are found. Both are matter particles and that means that seen from the outside both have the identical swirl direction. For reason of the unequal charge conditions they attract each other mutually and according to fig. 4.9 rotate around a common centre of mass as differently heavy pair. Chemists say: "the light electron orbits the heavy atomic nucleus". With small balls they try to explain the atomic structure.
But the model is no good: it contradicts causality in the most elementary manner. We are dealing with the problem that according to the laws of electrodynamics a centripetally accelerated electron should emit electromagnetic waves and continuously lose energy, to eventually plunge into the nucleus.
Our experience teaches that this fortunately is not true - and Niels Bohr in order to save his model of the atom was forced to annul the laws of physics with a postulate founded in arbitrariness.
Actually this state only exists for a very short time and then something unbelievable happens: the electron can't be distinguished as an individual particle anymore. "It is smeared over the electron orbit" do certain people say; "it possesses a dual nature" says Heisenberg. Besides the corpuscular nature the electron should in case of its "second nature" form a matter wave, "the position of the electron is to be looked at as a resonance which is the maximum of a probability density", do explain us de Broglie and Schrodinger.

These explanations can hardly convince. If the electron loses its particle nature in its second nature, then it also will lose its typical properties, like for instance its mass and its charge. but this is not the case.
THE vortex theory provides clear and causal answers: if the electron were a ball it continuosly would lose energy, therefore another configuration forms that does not know this problem. Here the phenomenon of transport takes an effect. The electron opens its vortex centre and takes the tiny protons and neutrons as atomic nucleus up into itself. The Bohr electron orbit with that is not a path anymore, but is occupied by the whole particle as spherical shell. This is confirmed by the not understood measurements exactly like the photos of individual atoms with the scanning electron microscope.
But now an electron does in its inside have the opposite swirl direction as the proton seen from the outside. As a consequence a force of repulsion will occur, which can be interpreted as the to the outside directed current eddy, the force of attraction for reason of the opposite charge works in the opposite direction and can be interpreted as the potential vortex effect.
If both vortices are equally powerful: $\tau_1 = \tau_2$ (5.13)
or if both forces are balanced, as one usually would say, then the object which we call an atom is in a stable state.
It probably will be a result of the incompatible swirl direction, why a very big distance results, if the electron becomes an enveloping electron. On such a shell not too many electrons have room. Because of the rotation of their own, the electron spin, they form a magnetic dipole moment, which leads to a magnetic attraction of two electrons if they put their spin axis antiparallelly.
As a "frictionless" against one another rotating pair they form two half-shells of a sphere and with that occupy the innermost shell in the hull of an atom. If the positive charge of the nucleus is still not balanced with that, then other electrons is left only the possibility to form another shell. Now this next electron takes the whole object up into itself. The new shell lies further on the outside and naturally offers room to more as only two vortices.

approach:

$$\boxed{\mathbf{E}\,(\mathbf{r},t) = \psi\,(\mathbf{r},t)\cdot e^{-\omega t}} \tag{5.17}$$

with

$$\omega = 1/\tau = (1/\tau_1 + 1/\tau_2)/2 \tag{5.18}$$

we insert the approach 5.17 and its derivations:

$$\delta\mathbf{E}/\delta t = -\,\omega\cdot\psi\cdot e^{-\omega t} + (\delta\psi/\delta t)\cdot e^{-\omega t} \tag{5.17*}$$

$$\delta^2\mathbf{E}/\delta t^2 = \omega^2\cdot\psi\cdot e^{-\omega t} - 2\omega\cdot(\delta\psi/\delta t)\cdot e^{-\omega t} + (\delta^2\psi/\delta t^2)\cdot e^{-\omega t} \tag{5.17**}$$

into the fundamental field equation 5.7:

$$\boxed{\Delta\mathbf{E}\cdot c^2 = \delta^2\mathbf{E}/\delta t^2 + (1/\tau_1)\cdot\delta\mathbf{E}/\delta t + (1/\tau_2)\cdot\delta\mathbf{E}/\delta t + \mathbf{E}/\tau_1\tau_2}$$

and divide by $e^{-\omega t}$:

$$\begin{aligned}\Delta\psi\cdot c^2 = {} & \psi/\tau_1\tau_2 && \text{(a) = (e)}\\ & -\,\omega\cdot\psi\cdot(1/\tau_1 + 1/\tau_2) && \text{(c, d)}\\ & +\,(1/\tau_1 + 1/\tau_2)\cdot\delta\psi/\delta t && \text{(c, d)}\\ & +\,\omega^2\cdot\psi - 2\omega\delta\psi/\delta t + \delta^2\psi/\delta t^2 && \text{(b)}\end{aligned} \tag{5.19}$$

insert the frequency according to equation 5.18:

$$\begin{aligned}\Delta\psi\cdot c^2 = {} & \psi/\tau_1\tau_2 && \text{(a) = (e)}\\ & -\,(\psi/2)\cdot(1/\tau_1 + 1/\tau_2)^2 && \text{(c, d)}\\ & +\,(1/\tau_1 + 1/\tau_2)\cdot\delta\psi/\delta t && \text{(c, d)}\\ & +\,(\psi/4)\cdot(1/\tau_1 + 1/\tau_2)^2 && \text{(b)}\\ & -\,(1/\tau_1 + 1/\tau_2)\cdot\delta\psi/\delta t + \delta^2\psi/\delta t^2 && \text{(b)}\end{aligned} \tag{5.19*}$$

summarized with equation 5.18:

$$\boxed{\Delta\psi\cdot c^2 = \psi/\tau_1\tau_2 - \omega^2\cdot\psi + \delta^2\psi/\delta t^2} \tag{5.20}$$

Fig. 5.6: Derivation of the Klein-Gordon equation (5.20) from the fundamental field equation (5.7)

5.6 Derivation of the Klein-Gordon equation

The valid model of the atom today still raises problems of causality, as has been explained. An improvement was provided by an equation, which was proposed by the mathematician Schrodinger 1926 as a model description. This equation in this way missed the physical root, but it nevertheless got international acknowledgment, because it could be confirmed experimentally. Looking backwards from the result then the physical interpretation of the probability density of the resonance of the waves could be pushed afterwards.

$$i \cdot \hbar \cdot \delta\psi/\delta t = U \cdot \psi - (\hbar^2/2\,m) \cdot \Delta\psi \quad (5.14)$$

The Schrodinger equation is valid for matter fields (of mass m), while the interaction with a outside force field the energy U indicates. It can be won from a wave equation by conversion, which possibly is the reason why it usually is called a wave equation, although in reality it is a diffusion equation, so a vortex equation!
For the derivation Schrodinger gives the approach of a harmonic oscillation for the complex wave function ψ:

$$\boxed{\psi(\mathbf{r},t) = \phi(\mathbf{r}) \cdot e^{-i\omega t}} \quad (5.15)$$

if the entire time dependency can be described by one frequency f = W/h (de-Broglie relation):

$$\omega = 2\pi f = W \cdot 2\pi/h = W/\hbar \quad (5.16)$$

The high-put goal is: if the structure of the atom is determined by the fundamental field equation 5.7 then one should be able to derive the experimentally secured Schrodinger equation and to mathematically describe the discussed special case. Also we select at first an approach periodic in time:

$$\boxed{\mathbf{E}\,(\mathbf{r},t) = \psi(\mathbf{r},t) \cdot e^{-\omega t}} \quad (5.17)$$

with

$$\omega = 1/\tau = (1/\tau_1 + 1/\tau_2)/2 \;. \quad (5.18)$$

We insert the approach 5.17 and its derivations into the field equation 5.7 and divide by the damping term e^{-wt}:

$$\Delta\psi \cdot c^2 = \psi/\tau_1\tau_2 - \omega \cdot \psi \cdot (1/\tau_1 + 1/\tau_2) + (1/\tau_1 + 1/\tau_2) \cdot (\delta\psi/\delta t) + \\ + \omega^2 \cdot \psi - 2\,\omega\,\delta\psi/\delta t + \delta^2\psi/\delta t^2 \quad (5.19)$$

If as the next step the angular frequency according to equation 5.18 is inserted, then summarized the provisional intermediate result results:

$$\boxed{\Delta\psi \cdot c^2 = \psi/\tau_1\tau_2 - \omega^2 \cdot \psi + \delta^2\psi/\delta t^2} \quad (5.20)$$

The derived equation 5.20 represents formally seen the Klein-Gordon equation, which is used for the description of matter waves in quantum mechanics and which particularly in the quantum field theory (e.g. mesons) plays an important role. Even if it often is regarded as the relativistic invariant generalization of the Schrodinger equation, it at a closer look is incompatible with this equation and as "genuine" wave equation it is not capable of treating vortex problems correctly, like e.g. the with the Schrodinger equation calculable quantization of our microcosm.

$$\boxed{\text{Schrödinger approach} \quad \psi(\mathbf{r},t) = \phi(\mathbf{r}) \cdot e^{-i\omega t}} \tag{5.15}$$

with: f = W/h; de-Broglie relation:

$$\omega = 2\pi f = W \cdot 2\pi/h = W/\hbar \tag{5.16}$$

the derivation:

$$\delta\psi/\delta t = -i\,\omega \cdot \psi$$

rewritten for ψ:

$$\psi = (i/\omega) \cdot \delta\psi/\delta t \tag{5.21}$$

2. derivation:

$$\delta^2\psi/\delta t^2 = -i\,\omega \cdot \delta\psi/\delta t \tag{5.22}$$

inserted in equation 5.20:

$$\boxed{\Delta\psi \cdot c^2 = \psi/\tau_1\tau_2 - 2\,i\,\omega \cdot \delta\psi/\delta t} \tag{5.23}$$

= sought-for Schrödinger equation (usual notation):

$$\boxed{i \cdot \hbar \cdot \delta\psi/\delta t = U \cdot \psi - (\hbar^2/2m) \cdot \Delta\psi} \tag{5.14}$$

comparison of coefficients is needed:
Einstein relation (with the speed of light c):
with (5.16): $W = m \cdot c^2 = \omega \cdot \hbar$ (5.24)
coefficient of the
imaginary part: $-2\,i\,\omega = 2(\omega/i) = 2mc^2/i\hbar$ (5.25)
comparison of coefficients
for the !
real part: $\boxed{1/\tau_1\tau_2 c^2 = U \cdot 2m/\hbar^2}$ (5.26)

kinetic energy of a particle moving with the speed v:

$$\tfrac{1}{2} \cdot m \cdot v^2 = W - U \tag{5.27}$$

v = group velocity of the matter wave:

$$v = hf/mc = \hbar\,\omega/mc \tag{5.28}$$

Eq.5.27: $U = W - \tfrac{1}{2} \cdot m \cdot (\hbar\,\omega/mc)^2$ (5.27*)

Eq.5.24: $W = \omega \cdot \hbar$; $(\hbar\,\omega/mc) = c$; resp.: $m/\hbar = \omega/c^2$

In eq.5.27* the sought-for coefficient reads (according to eq. 5.26):

$$U \cdot 2m/\hbar^2 = 2\omega/c^2\hbar \cdot [\omega \cdot \hbar - \tfrac{1}{2} \cdot m \cdot c^2]$$

$$= 2\omega/c^2\hbar \cdot [\omega \cdot \hbar - \tfrac{1}{2} \cdot \omega \cdot \hbar] = \underline{\underline{(\omega/c)^2}} \tag{5.29}$$

Fig. 5.7: Derivation of the time dependent Schrodinger equation

5.7 Derivation of the time dependent Schrodinger equation

With the Schrodinger approach 5.15 and its derivations the derivation is continued:

$$\boxed{\psi(\mathbf{r},t) = \phi(\mathbf{r}) \cdot e^{-i\omega t}}\ , \qquad (5.15)$$

$$\delta\psi/\delta t = -i\omega \cdot \psi\ , \quad \text{bzw.} \quad \psi = (i/\omega) \cdot \delta\psi/\delta t \qquad (5.21)$$

$$\delta^2\psi/\delta t^2 = -i\omega \cdot \delta\psi/\delta t \qquad (5.22)$$

The for a harmonic oscillation won relations according to equation 5.21 and 5.22 are now inserted into equation 5.20:

$$\boxed{\Delta\psi \cdot c^2 = \psi/\tau_1\tau_2 - 2i\omega \cdot \delta\psi/\delta t}$$

This is already the sought-for Schrodinger equation, as we will see in a moment, when we have analysed the coefficients. Because, besides equation 5.16 for the total energy W, also the Einstein relation is valid (with the speed of light c):

$W = m \cdot c^2 = \omega \cdot \hbar$, (5.24)

we can replace the coefficients of the imaginary part by:

$2(\omega/i) = 2mc^2/i\hbar$ (5.25)

To achieve that equation 5.23, as required, follows from the Schrodinger equation 5.14, a comparison of coefficients is carried out for the real part:

$$\boxed{1/\tau_1\tau_2 c^2 \overset{!}{=} U \cdot 2m/\hbar^2} \quad (5.26)$$

If thc kinetic energy of a particle moving with the speed v is:

$\frac{1}{2} \cdot m \cdot v^2 = W - U$, (5.27)

then acccording to De Broglie this particle has the wavelength h/mv. The consideration of the particle as matter wave demands an agreement with the wave length c/f of an electro-magnetic wave (with the phase velocity c). The particle hence has the speed v, which corresponds with the group velocity of the matter wave:

$v = hf/mc = \hbar\omega/mc$, (5.28)

if we insert v into equation 5.27 :

$U = W - \frac{1}{2} \cdot m \cdot (\hbar\omega/mc)^2$ (5.27*)

According to equation 5.24 on the one hand the total energy is $W = w \bullet h$ and on the other hand the relation 5.28 gives $(\hbar\omega/mc) = c$ resp.: $m/\hbar = \omega/c^2$

Inserted into equation 5.27* the sought-for coefficient reads (according to eq. 5.26):

$$U \cdot 2m/\hbar^2 = 2\omega/c^2\hbar \cdot [\omega \cdot \hbar - \tfrac{1}{2} \cdot m \cdot c^2]$$

$$= 2\omega/c^2\hbar \cdot [\omega \cdot \hbar - \tfrac{1}{2} \cdot \omega \cdot \hbar] = \underline{(\omega/c)^2} \qquad (5.29)$$

comparison of coefficients 5.26 is fulfilled if:

$$1/\tau_1\tau_2 c^2 \overset{!}{=} U \cdot 2m/\hbar^2 = (\omega/c)^2 \tag{5.30}$$

the angular frequency is given by equation 5.18. Therefore has to be valid:

$$1/\tau_1\tau_2 \overset{!}{=} \tfrac{1}{4}\,(1/\tau_1 + 1/\tau_2)^2 \tag{5.31}$$

resp.:

$$\sqrt{1/\tau_1\tau_2} \overset{!}{=} \tfrac{1}{2}\,(1/\tau_1 + 1/\tau_2) \tag{5.32}$$

arithmetic average = geometric average, if:

$$1/\tau_1 = 1/\tau_2 \text{ and: } \boxed{\tau_1 = \tau_2} \tag{5.13}$$

is valid. Eq. 5.23 is divided by c^2 and
eqs. 5.30 and 5.25 are inserted:

$$\boxed{\Delta\psi = U \cdot \psi \cdot (2m/\hbar^2) + (2m/i\hbar) \cdot \delta\psi/\delta t} \tag{5.14*}$$

= *time dependent Schrödinger equation* 5.14.

replace $\delta\psi/\delta t$ acc. to eq. 5.21 with $\omega = W/\hbar$ acc.to eq. 5.24:

$$\Delta\psi = U \cdot \psi \cdot (2m/\hbar^2) + (2m/i\hbar) \cdot \psi \cdot (-i) \cdot W/\hbar \tag{5.33}$$

Schrödinger approach 5.15 for the function of position $\phi(\mathbf{r})$:

$$\Delta\phi = (U\,2m/\hbar^2 - W \cdot 2m/\hbar^2) \cdot \phi \tag{5.34}$$

$$\boxed{\Delta\phi = -2m/\hbar^2\,(W - U) \cdot \phi} \tag{5.35}$$

= *time independent Schrödinger equation.*

Fig. 5.8: Derivation of the time independent Schrodinger equation

5.8 Derivation of the time independent Schrodinger equation

The goal is reached if we are capable to fulfil the comparison of coefficients 5.26:

$$U \cdot 2m/\hbar^2 \overset{!}{=} (\omega/c)^2 = 1/\tau_1\tau_2 c^2 \qquad (5.30)$$

The angular frequency w is given by equation 5.18. Therefore has to be valid:

$$\tfrac{1}{4}\,(1/\tau_1 + 1/\tau_2)^2 \overset{!}{=} 1/\tau_1\tau_2 \quad (5.31)$$

$$\tfrac{1}{2}\cdot(1/\tau_1 + 1/\tau_1) \overset{!}{=} \sqrt{1/\tau_1\tau_2} \quad (5.32)$$

As is well-known the arithmetic and the geometric average only correspond in case the variables are identical. In this case, as already required in equation 5.13:

$$\tau_1 = \tau_2 . \quad (5.13)$$

has to hold.
From this we can draw the conclusion that the Schrodinger equation is just applicable to the described special case (according to eq. 5.13), in which the eddy current, which tries to increase the particle or its circular path and the potential vortex, which keeps the atoms together and also is responsible for the stability of the elementary particles, are of identical order of magnitude.

As a check equation 5.23 is divided by c^2 and equations 5.30 and 5.25 are inserted:

$$\boxed{\Delta\psi = U \cdot \psi \cdot (2m/\hbar^2) + (2m/i\hbar)\cdot \delta\psi/\delta t} \quad (5.14^*)$$

This is the time dependent Schrodinger equation 5.14 resolved for $\Delta\psi$.

Next we replace $\delta\psi/\delta t$ according to equation 5.21 with $\omega = W/\hbar$ acc. to equation 5.24:

$$\Delta\psi = U \cdot \psi \cdot (2m/\hbar^2) + (2m/i\hbar)\cdot \psi \cdot (-i)\cdot W/\hbar \quad (5.33)$$

If we separate the space variables $\phi(\mathbf{r})$ from time by the Schrodinger approach 5.15 we obtain:

$$\Delta\phi = (U\,2m/\hbar^2 - W \cdot 2m/\hbar^2)\cdot\phi \quad (5.34)$$

This quation 5.34 for the function of space coordinates $\phi(\mathbf{r})$ is the time independent Schrodinger equation:

$$\boxed{\Delta\phi = -2m/\hbar^2\,(W - U)\cdot\phi} \quad (5.35)$$

The solutions of this equation which fulfil all the conditions that can be asked of them (of finiteness, steadiness, uniqueness etc.), are called eigenfunctions. The existence of corresponding discrete values of the energy W, also called eigenvalues of the Schrodinger equation, are the mathematical reason for the different quantum postulates.

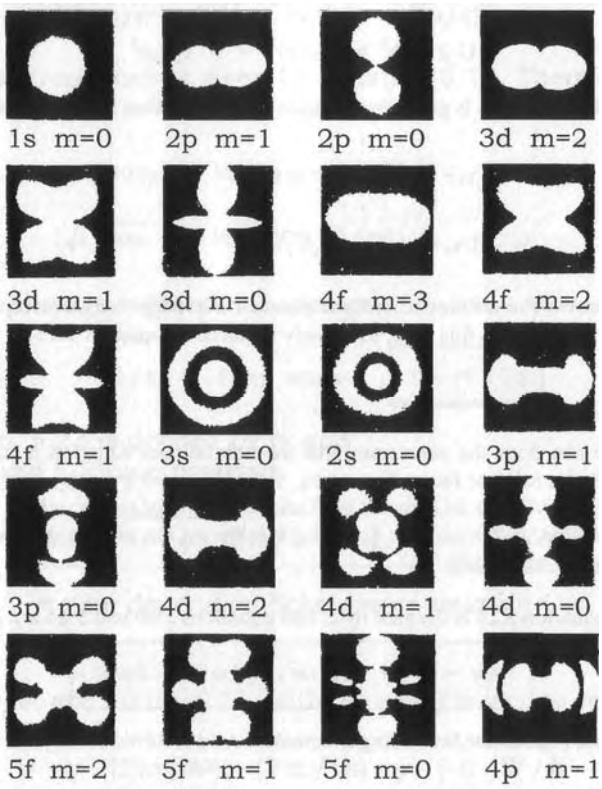

Fig. 5.9: Photographs of models of the probability densities for
different states of the hydrogen atom.
The densities are symmetrical if rotated around the vertical axis[<i>]

taken from:

<i>: U. Gradmann/H. Wolter: Grundlagen der Atomphysik, AVG, Frankfurt a. M. 1971, P. 190.

5.9 Interpretation of the Schrodinger equation

The interpretation of the Schrodinger equation is still disputed among physicists, because the concept of wave packets contradicts the corpuscular nature of the elementary particles. Further the difficulty is added that wave packets at a closer look never are connected, run apart more or less fast, and really nothing can hinder them doing that. But for a particle the connection represents a physical fact. Then there can be no talk of causality anymore. The monocausal division into two different levels of reality, in a space-timely localization and in an energetic description, does not represent a solution but rather the opposite, the abolition of the so-called dual nature. As has been shown, the potential vortex is able to achieve this with the help of its concentration effect.
But from the introduction of this new field phenomenon arises the necessity to interpret the causes for the calculable and with measuring techniques testable solutions of the Schrodinger equation in a new way. Laws of nature do not know a possibility to choose! If they have been accepted as correct, they necessarily have to be applied.

Three hundred years ago the scholars had an argument, whether a division of physical pheomena, like Newton had proposed it, would be allowed to afterwards investigate them in the laboratory individually and isolated from other influences or if one better should proceed in an integrated manner, like for instance Descartes with his cartesian vortex theory. He imagined the celestial bodies floating in ethereal vortices. One absolutely was aware that the whole had to be more than the sum of every single realizaton, but the since Demokrit discussed vortex idea had to make room for the overwhelming successes of the method of Newton. And this idea after 2100 years was stamped, to in the meantime almost have fallen into oblivion.
Today, where this recipe for success in many areas already hits the limits of the physical possibilities, we should remember the teachings of the ancients and take up again the vortex idea It of course is true that only details are calculable mathematically and that nature, the big whole, stays incalculable, wherein problems can be seen.
If we consider the fundamental field equation 5.7, we find confirmed that actually no mathematician is capable to give a generally valid solution for this four-dimensional partial differential equation. Only restrictive special cases for a harmonic excitation or for certain spatial boundary conditions are calculable. The derived Schrodinger equation is such a case and for us particularly interesting, because it is an eigenvalue equation. The eigenvalues describe in a mathematical manner the with measuring techniques testable structures of the potential vortex .
Other eigenvalue equations are also derivable, like the Klein-Gordon equation or the Lionville equation, which is applied successfully in chaos theories. So our view opens, if chaotic systems like turbulences can be calculated as special cases of the same field equation and should be derivable from this equation.
The in pictures recorded and published structures, which at night should have come into being in corn fields, often look like the eigenvalues of a corresponding equation. The ripe ears thereby lie in clean vortex structures flat on the soil. Possibly potential vortices have charged the ears to such high field strength values that they have been pulled to the soil by the Coulomb forces.

Consequences resulting from the derivation of the Schrodinger equation from the fundamental field equation 5.7:

1. *Any experiment which confirms the Schrödinger equation is with that able to confirm at the same time the existence of the newly discovered potential vortex and the correctness of the field-theoretical approach.*

2. *Properties of the atomic hull and of the atomic nucleus, which can be described with the Schrödinger equation, can as of now be interpreted as an electromagnetic phenomenon.*

3. *There exist no particles or wave packets from matter waves, but only configurations consisting of potential vortices and current eddies.*

4. *There exists no matter! What we call matter is nothing but an electromagnetic state of oscillation of empty space.*

The relation between the energy of oscillation and the mass is described by the relation named after Albert Einstein

$$E = mc^2 \quad . \qquad (6.1 = 5.24)$$

Fig. 6.1: Derivation of the Schrodinger equation, power of proof and consequences

6. Theory of objectivity

6.1 Proof

A new theory only has chances on acknowledgment if it is provable. For that physical phenomena in the sense of the new theory are calculated and independently of this experiments are being carried out. If the calculations are confirmed by reproducible measurement results, then with that the correctness of the approach is proven.
In the here presented case we have chosen the field-theoretical approach instead of the usual quantum physical approach. As a consequence of this we had found as a new phenomenon the vortex of the electric field. With regard to the normally used Maxwell theory this resulted in changed field equations in a dual formulation. If both equations, each of which describes a source-free vortex field, are inserted into each other the result is an only in time and space formulated, generally valid and hence fundamental field equation (5.7, fig. 5.1).
This equation has many special cases; one of them, the Schrodinger equation, could be derived by using an approach which was harmonic in time. We renounced to give special solutions of the Schrodinger equation, because these are printed in numerous text books. On the other hand experiments are known, which are capable to confirm the theoretical solutions and thus to prove the Schrodinger equation. The eigenvalues of the equation describe for instance the shell-shaped structure of the atoms with the by Niels Bohr given radii.
Now this already proven equation was derived from the new field-theoretical approach. Thus for the special case, the area where the Schrodinger equation is valid, the new theory can be said to be proven (fig. 6.1).
We still are not content with that and put another stone on top: we will calculate the quantum properties of the elementary particles for ourselves. These until now have only been measured. Today is merely sought for symmetries and for models of explanation, like e.g. the quark-hypothesis. From a calculation science is miles and miles away. We will compare the calculation results with the measurement values. Then everyone can check and compare for him or herself.
The conditions in an elementary particle are completely different. Here it concerns the vortex itself, whereas the model of the atom merely describes vortex properties, so-called actions at a distance. The differences in size and distances for an atom lie more than five powers of ten over those of a particle!
Here a new problem of causality comes to light, at which we now must have a critical look: the question of the by Einstein postulated constancy and universality of the speed of light. Seen from a relativistic and subjective point of view of an observer, Einstein by all means may be right. But may such a theory be generalized? How are the measurements concerning the speed of light and the relativity of space and time to be judged when looking at them objectively?
The current measurements of speeds faster than light speak a clear language and represent a challenge (fig. 3.1, violation of the principle of causality no. 5).

The electron as a spherical capacitor (see fig. 4.3):

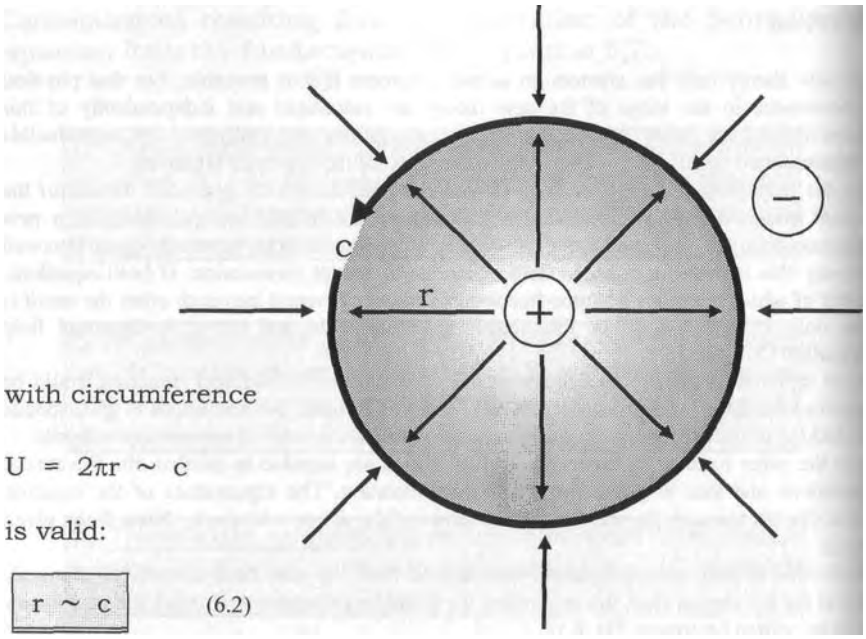

field theoretical approach (vortex particles):
The amount of energy bound in the inside of the particle is identical with the free and measurable amount of energy on the outside of the particle.

(If the number of particles is left unchanged): _____
In an isolated system the sum of the energy is constant _____

(particle = electromagnetic vortex) _____
Energy is a state description of electromagnetism.

Fig. 6.2: Derivation of the law of conservation of energy

6.2 Law of conservation of energy

Let the starting-point for our considerations be the electromagnetic wave in a particle-free vacuum. Here no vortices appear, so that the plane wave can propagate undamped with the speed of light, and in this way a transport of energy takes place. Electric and magnetic energy each are the same magnitude.
Let's now imagine the symmetry is disturbed as the wave is "slowed down" on one side. As a possible result the wave rolls up to a spherical vortex.
As we will see such a process is possible, for instance at impact on a strong field. Thus part of the energy is bound in the inside. This part from now on withdraws itself from every possibility to measure it. We can only measure the second part of the field energy, with which the particle interacts with its neighbourhood.
We can assume that: _____

The amount of energy bound in the inside of the particle is identical with the free and measurable amount of energy on the outside of the particle.

The same energy W_e = 0,51 MeV, we attribute to the electron for reason of its mass with the help of the Einstein relation (6.1), is also bound in its inside. This conclusion is also applicable to other elementary particles and with that to all matter.
We here again recognize the principle of the duality between the to the outside striving eddy current in the inside of the elementary vortex and the concentrating potential vortex on the outside. Thus also seen energetically both are of the same magnitude. Whereas in the case of the electromagnetic wave it concerns a symmetrical oscillation around "zero", by the process of quantization, by the rolling up to a spherical vortex, there forms an energetic state of space different from zero. The order of magnitude is determined by the number of elementary vortices, of which the particles and all matter consist.
Anti-matter forms the opposite energetic state and this again is for the particles of matter available in their inside in a bound form.
As long as we do not artificially produce new elementary vortices and thus keep the number of available vortices constant, the energetic state will not change, or as it is formulated in text books: _____

In an isolated system the sum of the energy is constant.

THE law of conservation of energy is not an axiom, but follows without compulsion from the vortex theory. It is not elementary, but a consistently derivable consequence of the field-theoretical approach, according to which solely the field acts as cause for all other physical phenomena, also for the conservation of energy! Because the cause of it is the electromagnetic field, the following has to hold: _____

Energy is a state description of electromagnetism.

Now we finally can explain why energy can be converted. Different forms of energy only are different forms of formation of the same phenomenon!
Of course this statement of the field-theoretical approach does not yet explain what, for instance, the temperature has to do with electromagnetism. I ask for some patience; no question will be left unanswered.

From

$$c \sim r \tag{6.2}$$

follows:

The speed of light determines the size of the elementary particles.

Energy of a capacitor:

$$W = Q^2/C, \tag{6.3}$$

written down for the electron (with the Einstein relation):

$$W_e = e^2/C_e = m_e c^2 = 0{,}51 \text{ MeV} \tag{6.1}$$

Capacity of a spherical capacitor:

$$C_e = \varepsilon_0 \cdot 4\pi r_e \tag{6.4}$$

"classical" radius of the electron<i> is:

$$r_e = e^2/\varepsilon_0 \cdot 4\pi \cdot W_e \tag{6.5}$$

$$r_e = 2{,}82 \cdot 10^{-15} \text{ m} \tag{6.6}$$

in the case of Kuchling<ii> the radius of the electron is:

$$r_e = 1{,}41 \cdot 10^{-15} \text{ m}. \tag{6.7}$$

Fig. 6.3: Calculation of the radius of the electron.

<i>: Mende, Simon: Physik, Gl. 10.39, VEB-Leipzig, 4. Aufl.

<ii>: Kuchling: Physik, Gl. At4, VEB-Leipzig, bis einschl. 11. Auflage 1974

6.3 Radius of the electron

For the crucial process, in which the electromagnetic wave rolls up to a vortex, it is for reasons of continuity to be expected that the velocity of propagation remains equal that thus for the vortex oscillation exactly like for the electromagnetic wave the speed of light is determining. The direction of propagation in the case of the vortex takes place perpcndicular to the in fig. 6.2 shown field direction of the electric field strength. Not even in that both field-phenomena differ.
Summarizing: the propagation takes place with the speed of light c along a circular path with the perimeter $U = 2\pi r$. Therefore holds:

$$c \sim r \quad (6.2)$$

According to this equation the radius and with that the size of the electron is determined by the speed of light. Therefore the question of the size of the electron is raised.

The energy interpretation predicts that for the theoretical case of a change of size the energy density in the inside of the particle is influenced that however the quantity of the included energy remains unchanged. We therefore can further proceed from the assumption that the bound amount of energy is independent of the size of the particle!

Consequently for the elementary quantum the energy W_e = 0,51 MeV is assumed, which it has acccording to the Einstein relation $W_e = m_e c^2$. For the electron of mass m_e the with measuring techniques determined value is inserted.
The spherical electrode of a spherical capacitor with the above given energy W_e (according to eq. 6.1) and the capacity C_e (according to equation 6.4, fig. 6.3) represents a very realistic model of the negatively charged particle.
In this manner the classical radius of the electron is calculated to be<i>: $r_e = 2{,}82 \cdot 10^{-15}$ m.

But in the case of Kuchling it only is half this size<ii>, what according to equation 6.2 would mean that in the case of Kuchling the light would be on the way only half this fast <iii>. Therefore if one is careful, one prefers to be silent concerning this delicate theme and if one is honest, one admits not to know anything exact.
Not only the electron but also all the other elementary particles are according to the field-theoretical approach formed from concentrated potential vortices. For these equation 6.2 hence has to hold in the same manner, so that more generalized we can conclude:

The speed of light determines the size of the elementary particles.

This statement is incompatible with the assumption of a constant speed of light! Because then all elementary particles would have identical size. As is known, however, are the building parts of the atomic nucleus, the protons and neutrons very much smaller than individual electrons. The constancy of the speed of light is to be questioned. This question is of such an elementary importance that we are not content with these considerations and in addition undertake a mathematical derivation in the sense of the field approach.

<iii>: Difference = Thomas factor

The Maxwell laws, source free (figures 3.2 and 3.3):

$$\mathrm{Div}\,\mathbf{D} = O \quad (3.7) \quad \text{and} \quad \mathrm{Div}\,\mathbf{B} = O \quad (3.3)$$

Faraday's law of induction	and	Ampère's law
$\mathbf{E} = \mathbf{E}(\mathbf{r},t)$ with $1/\tau_2 = 0$:		$\mathbf{H} = \mathbf{H}(\mathbf{r},t)$ with $\mathbf{j} = 0$ resp. $1/\tau_1 = 0$
$\boxed{\mathrm{rot}\,\mathbf{E} = -\,\delta\mathbf{B}/\delta t}$ (5.4)		$\boxed{\mathrm{rot}\,\mathbf{H} = \delta\mathbf{D}/\delta t}$ (5.1)
with: $\mathbf{B} = \mu \cdot \mathbf{H}$ (5.5)	and	$\mathbf{D} = \varepsilon \cdot \mathbf{E}$ (3.6)

if we again apply the curl to equation 5.4 and insert equation 5.1 (cf. fig. 5.1, eq. 5.5):

$$-\,\mathrm{rot}\,\mathrm{rot}\,\mathbf{E} = \mu \cdot \delta(\mathrm{rot}\,\mathbf{H})/\delta t = \mu \cdot \varepsilon \cdot \delta^2\mathbf{E}/\delta t^2 \quad (5.5)$$

thanks to missing divergence: $\mathrm{div}\,\mathbf{E} = O$ (3.7*)

(fig. 5.2):

= wave equation: $\boxed{\Delta\,\mathbf{E} \cdot c^2 = \delta^2\mathbf{E}/\delta t^2}$ (5.9*)

with the speed of light c: $\mu \cdot \varepsilon = 1/c^2$ (5.6)

Hertz' wave = transverse wave = plane wave with:

direction of propagation: $\boxed{v = dx/dt}$ (6.8)

$$\boxed{\mathbf{E} = E_z}, \quad \boxed{\mathbf{D} = D_z}, \quad \boxed{\mathbf{H} = H_y}, \quad \boxed{\mathbf{B} = B_y} \quad (6.8^*)$$

curl operation (in y-direction): with equation 5.4:

$$\mathrm{rot}\,\mathbf{E} = -\,d\mathbf{E}/dx = -\,d\mathbf{B}/dt \quad (6.9)$$

with 6.8: $d\mathbf{E} = (dx/dt) \cdot d\mathbf{B} = v \cdot d\mathbf{B}$ (6.9*)

or generally: $\boxed{\mathbf{E} = \mathbf{v} \times \mathbf{B}}$ (6.10)

Fig. 6.4: Derivation of the laws of transformation

<i>: Prof. G. Bosse in his text book in reversed direction derives the Faraday law of induction from the law of transformation 6.10, which he again derives from considerations about the Lorentz force. G. Bosse, Grundlagen der Elektrotechnik II, BI 183, Hochschultaschenbucher-Verlag, Mannheim 1967

6.4 The Maxwell field equations

The laws of transformation of the electromagnetic field shall form the starting-point for the coming up considerations. To exclude any doubts with regard to the interpretation, the equations will be derived from the Maxwell laws under the assumption that no sources or charge carriers are present (fig. 3.2 and 3.3) and as a consequence no current density (j = 0) is to be expected.
This corresponds to the vanishing of the time independent terms, which consequently are responsible for the occurring of force effects like e.g. the Lorentz force. Only at the end of this derivation we can understand the sense of this assumption (with $1/\tau_1 = 0$ and $1/\tau_2 = 0$).
The procedure at first corresponds to that of fig. 5.1. Here the fundamental field equation had been derived from Faraday's law of induction and Ampere's law. With the assumptions made this time the in fig. 5.2 treated undamped wave equation is left (5.9, here 5.9*). Whom the derivation is still present can go in at this point.
In a sufficiently great distance from the source we are dealing with a plane wave, in which the field factors only depend on the direction of propagation x. The Hertz' wave is a transverse wave, in which the field pointers oscillate perpendicular to the direction of propagation and in addition stand perpendicular to each other:

$$\boxed{v = dx/dt} \quad (6.8), \qquad \boxed{\mathbf{E} = E_z, \quad \mathbf{D} = D_z, \quad \mathbf{H} = H_y, \quad \mathbf{B} = B_y} \quad (6.8^*)$$

The curl, applied to the electric field pointer, itself points in the y-direction:
rot E = - dE/dx . This for the transverse wave carried out curl operation is now compared with Faraday's law of induction (5.4):

$$\text{rot } E = -dE/dx = -dB/dt \qquad (6.9)$$

The relation won in a mathematical way, with the speed fixed by (6.8), reads:

$$dE = (dx/dt) \bullet dB = v * dB \qquad (6.9^*)$$

The result of this derivation at first only is valid for the introduced simplification, for instance for the case of the transverse electromagnetic wave. Better known is apart from that the generalized formulation, which among others by G. Bosse<i> is called law of transformation.

$$\boxed{\mathbf{E} = \mathbf{v} \times \mathbf{B}} \qquad (6.10)$$

With Ampere's law (5.1) we now should proceed in an analogous manner. The result is:

$$\boxed{\mathbf{H} = -\mathbf{v} \times \mathbf{D}} \quad (6.10^*)$$

This equation 6.10* is given among others by Simonyi<ii>. Now that we know, under which circumstances these equations of transformation can be derived from the Maxwell equations, the actual work can start.

<ii>: K. Simonyi, Theoretische Elektrotechnik, 7. Auflage VEB Verlag Berlin 1979. pp. 921 - 924; In addition see chapter 27.8 in part 3 of this book.

Laws of transformation:

$$\mathbf{E} = \mathbf{v} \times \mathbf{B} = \mathbf{v} \times \mu \cdot \mathbf{H} \qquad (6.10)$$

$$\mathbf{H} = -\mathbf{v} \times \mathbf{D} = -\mathbf{v} \times \varepsilon \cdot \mathbf{E} \qquad (6.10^*)$$

and

We experience the magnetic field as an electric field and the electric field as a magnetic field simply and solely for reason of the same relative motion!

The component of the direction of motion perpendicular to the area defined by the field pointers:

$$E = v \cdot \mu \cdot H \qquad (6.11)$$

and

$$H = -v \cdot \varepsilon \cdot E \qquad (6.11^*)$$

with the relations of material:

$$B = \mu \cdot H \qquad (3.5)$$

$$D = \varepsilon \cdot E \qquad (3.6)$$

with the speed of light:

$$c = 1/\sqrt{\mu \cdot \varepsilon} \qquad (5.6)$$

additional field:

$$E_z = -v^2 \cdot \mu \cdot \varepsilon \cdot E = -(v^2/c^2) \cdot E \qquad (6.12)$$

resp.

$$H_z = -v^2 \cdot \varepsilon \cdot \mu \cdot H = -(v^2/c^2) \cdot H \qquad (6.12^*)$$

basic field: E resp. H (at v = O)

measurable overall field: (if $v \neq O$)

$$E_o = E + E_z \qquad (6.13)$$

resp.

$$Ho = H + H_z \qquad (6.13^*)$$

Fig. 6.5: Properties of transformation of the electromagnetic field.

6.5 Equations of transformation

As a consequence of the in fig. 6.5 again written down laws of transformation of the electromagnetic field (6.10 and 6.10*) magnetic phenomena can be traced back to electric phenomena and vice versa. The mathematical formulation reveals us the two sides of the same medal and points to a perfect duality between both fields and their factors of description.

Because a way exists, as is shown here, in which the equations of transformation can be derived from the Maxwell field equations, the same generally valid and extensive importance should be attributed to them. They can with the same right be called the foundation of electromagnetism. Wherein does lie its message for physics, the always curious researcher will ask? For that the relations of material 3.5 and 3.6 are completed:

$\mathbf{E} = \mathbf{v} \times \mu \cdot \mathbf{H}$ (6.10) und $\mathbf{H} = -\mathbf{v} \times \varepsilon \cdot \mathbf{E}$. (6.10*)

The here presented equations state, that we measure an electric field strength E, if we are moving with regard to a magnetic field H with the speed v and vice versa. The electric and the magnetic field therefore prove to be an experience of the observing person and we can say:

We experience the magnetic field as electric field and the electric field as magnetic field simply and solely for reason of the relative motion!

Let's assume, v is the component of the relative velocity (6.8), which stands perpendicular to the area defined by the field pointers (6.8*), then the equations of transformation (6.9* with 3.5) now read:

$E = v \cdot \mu \cdot H$ (6.11) and $H = -v \cdot \varepsilon \cdot E$. (6.11*)

If we are moving with the velocity v in a basic field which is present with the field strength E, then according to equation 6.11* we observe a magnetic field, which again according to equation 6.11 is to be interpreted as an additional electric field E_z:

$E_z = -v^2 \cdot \mu \cdot \varepsilon \cdot E = -(v^2/c^2) \cdot E$ (6.12)

In duality equation 6.11 inserted into equation 6.11* provides for the magnetic field strength a corresponding additional field H_z:

$H_z = -v^2 \cdot \mu \cdot \varepsilon \cdot H = -(v^2/c^2) \cdot H$ (6.12*)

W e obviously owe the measurable overlap fields in a laboratory simply and solely to the relative velocity v with which the laboratory is moving. But now we must pay attention to the fact that a terrestrial laboratory rotates along with the earth, that the earth orbits the sun and the sun again rotates around the centre of the milky way. Eventually the whole milky way is on the way in the cosmos with a galactic, for us hardly understandable speed. If we further take into consideration that for every subsystem an additional field occurs as a consequence of the relative motion with regard to the super ordinate system, then one additonal field follows after the next and overlaps this one.

Let's imagine, the relative velocity could be reduced towards zero - and maybe we are moving around such a cosmic point - then here no overlapping field would be measurable.

<*>: A derivation using vectors is written in chapter 28 (part 3).

Additional field (from fig. 6.5):

(6.12) $E_z = -(v^2/c^2) \cdot E$ and

(6.12*) $H_z = -(v^2/c^2) \cdot H$

Superposition of the fields:
The additional field (E_z resp. H_z) overlaps the basic field (E resp. H) to produce the measurable overall field (E_0 resp. H_0):

(6.13) $E_0 = E + E_z = E \cdot (1 - v^2/c^2)$ (6.13*)

$H_0 = H + H_z = H \cdot (1 - v^2/c^2)$

transformed:

$$\left(1 - \frac{v^2}{c^2}\right) = \frac{E_0}{E} = \frac{H_0}{H}$$

(6.14)

for the Lorentz contraction holds apart from that:

(6.14*) $$\left(1 - \frac{v^2}{c^2}\right) = \left(\frac{1}{l_0}\right)^2$$

From the comparison
Follows

(6.14**)

$$\frac{E_0}{E} = \frac{H_0}{H} = \left(\frac{1}{l_0}\right)^2$$

the proportionality:

$E, H \sim 1/l^2$ and $E_0, H_0 \sim 1/l_0^2$ (6.15)

Fig. 6.6: The field dependency of the Lorentz contraction

6.6 Field overlap

Field vectors can be superpositioned. In this manner the additional field E_z resp. H_z which depends on the velocity, according to equation 6.10, overlaps the respective basic field (E resp. H) to produce the measurable overall field (E_0 resp. H_o):

$$E_0 = E + E_z = E \cdot (1 - v^2/c^2) \quad (6.13)$$

$$H_0 = H + H_z = H \cdot (1 - v^2/c^2) \quad (6.13^*)$$

In the result something surprising the factor ($l\text{-}v^2/c^2$) appears, which is well-known from the special theory of relativity and for instance appears in the Lorentz contraction.
If we rewrite both equations for the characteristic factor and compare with the in a purely mathematical way, over the Lorentz transformation, won length contraction $(1 - v^2/c^2) = (l/l_0)^2$, then it becomes clear that the Lorentz contraction physically seen should have its cause in the changed field conditions which a with relativistic speed moving body finds with regard to a resting body.

$$1 - \frac{v^2}{c^2} = \frac{E_0}{E} = \frac{H_0}{H} \overset{!}{=} \left(\frac{l}{l_0}\right)^2 \quad (6.14)$$

The equation is a compulsionless consequence of known physical laws. In this derivation actually no new factor was introduced and nevertheless a completely new picture for the natural scientific reality results<i>.

In our observer system, where the field E_o exists, a rule has its proper length l_0. In another system, which is moving with the speed v relative to the observer, as a consequence of the here prevailing field E the corresponding rule has a length 1. In which relation the factors stand to each other, is described by equation 6.14. Accordingly the following proportionality holds:

$$E, H \sim 1/l^2 \quad \text{and} \quad E_0, H_0 \sim 1/l_0^2 \quad (6.15)$$

If we are exterior to a very fast moving body with velocity v, we immediately can observe how this body for reason of its relative velocity experiences the calculated additional field and in this way experiences a length contraction. If the observer is moving along with the body, then he purely subjective seen doesn't detect a length contraction, because he himself and his entire measuring technique is subjected to the same length contraction. From the axiomatic approach what would be, if the field, which itself only represents an experience, would determine perceptible space and its dimensions, quickly a fundamental realization can develop if the described experiences should coincide with real observations.

<i> : Because in this point of view the subjective status of the observer is determining, it is not completely impossible that there is an error in the interpretation of the equations of transformation (6.10 and 6.10*). But because we started from the same point of view of the observer for the derivation of the length contraction from the Lorentz transformation, here the same error is to be expected. In putting both results equal (6.14), a like constituted error on both sides will cancel out in any case and the result stays above all doubts!

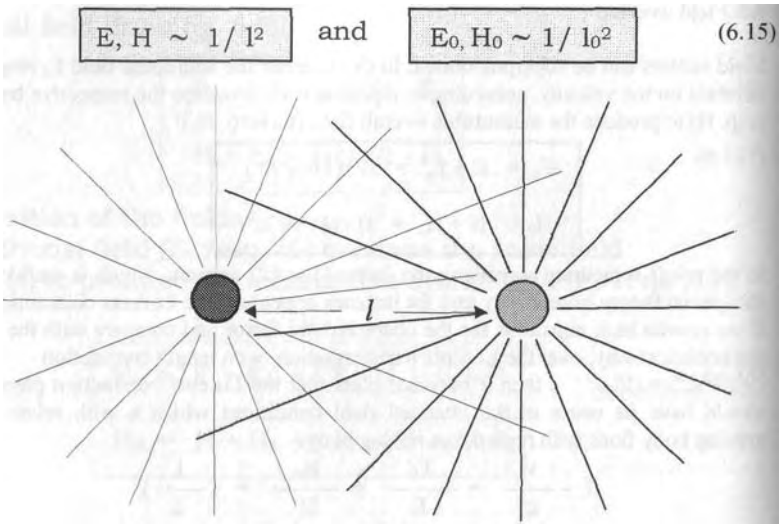

(Model):

Two particles of matter each in the field of the other particle.

Two elementary particles or two accumulations of matter consisting of these are able to reduce the distance to each other for reason of their fields, which we interpret as a force of attraction.

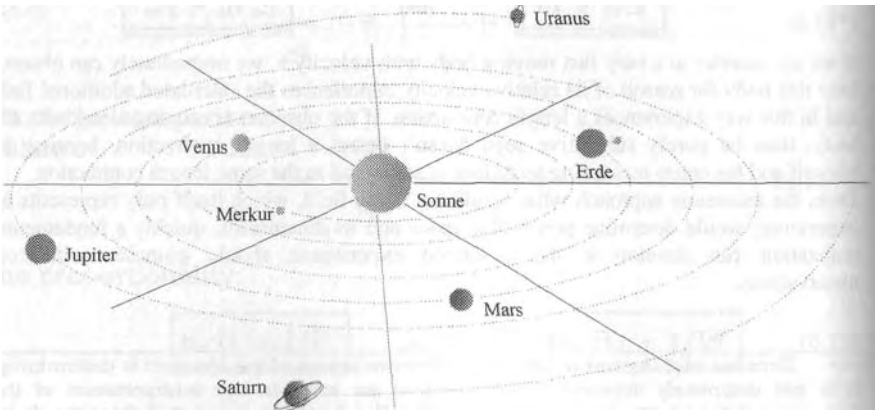

B: (Example): The orbits of the planets in the field of the sun.

Fig. 6.7: The influence of the field on interactions.

6.7 Field dependent curvature of space

Let's assume, an accumulation of matter, as big as our earth, wanted to fly past the sun in the distance earth-sun. But it would not succeed. Because the fields arising from the sun decreases with increasing distance and according to equation 6.15 as a consequence the size of the particles of matter increases. The planet hence is more strongly contracted on its side turned towards the sun, as on the turned away "night side". It bends towards the sun and its flight path becomes a circular path around the sun. That is the interaction known as gravitation!

To an earth inhabitant this curvature reveals itself merely in the observation that the duration of sunshine at daytime is longer, than it would be expected to be under the assumption of the earth as a homogeneous sphere. In this context one willingly speaks of a curvature of space. Actually it is a curvature of matter under the influence of the field dependent length contraction.
Exactly this contraction the planets owe their circular orbits around the sun and by no means the equilibrium of forces between the force of attraction and the centrifugal force (fig. 6.7 B). It obviously is a fundamental mistake to think that gravitation would causally be connected with a force effect!
If, in this context, we speak of a force of attraction for the sake of our subjective observation, then we must realize that it merely can concern an auxiliary term founded in usefulness.

A thought experiment should bring us clarity (fig. 6.7 A). The field, which surrounds every particle of matter, reaches till infinity but becomes less effective with increasing distance. If the distance between two particles is 1, then one particle is in the field of the other particle. As a consequence of the field the length 1 reduces and in this way the size determining field increases, which again leads to a further reduction of length etc. As a consequence it can be observed that both particles are moving towards each other. We speak of a force of attraction, because we can't register the influence of the field with our senses.
In this way the consistent result that we and our environment at daytime must be smaller than in the night will as well remain hidden. We experience the effect only indirectly as gravitational pull of the earth.

Because we don't see the cause of a subjectively observed force effect, for the electromagnetic interaction, just as for the gravitation, the field dependency of the length contraction will be responsible. Hence the following conclusion holds for both interactions equally way.

Two elementary particles or two accumulations of matter consisting of these are able to reduce the distance to each other for reason of their fields, which we interpret as a force of attraction.

Now the question still is open, why gravitation only knows forces of attraction, whereas the electromagnetic interaction also permits forces of repulsion and which are the causal fields for each.

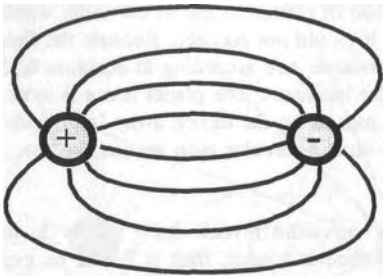

A: The field lines of the E-field for unlike charged particles

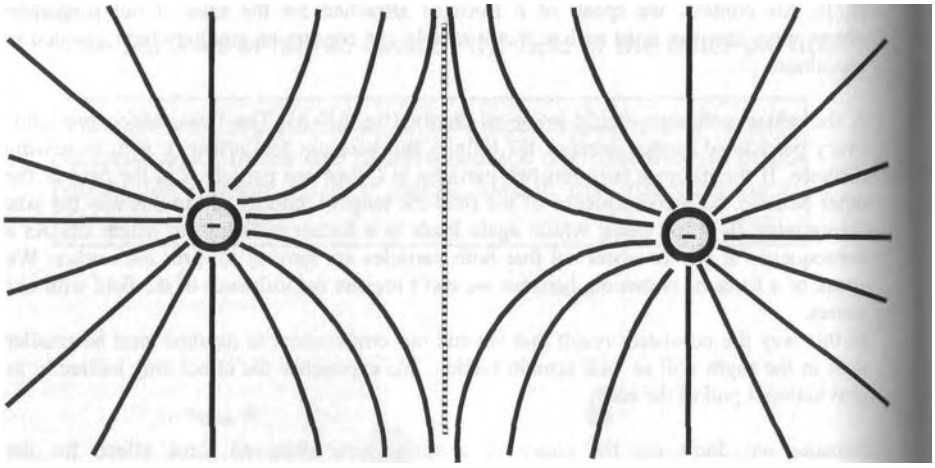

B: The field lines of the E-field for equal charged particles

The electromagnetic interaction of a particle is a result of the influence of the open field lines arising from it on the dimensions of space.

Fig. 6.8: The influence of the open field lines of the E-field

6.8 Electromagnetic interaction

A convincing answer to the open question provides us the analysis of the course of the field lines, on the one hand for charged particles and on the other hand for uncharged particles, which do not participate in the electromagnetic interaction.
If at first we consider electrically charged particles, like e.g. electrons, protons or ions.
Then all in common is that the towards infinity running field lines of the electric field are open. With this field the particle is able to interact with its environment. We measure a charge and an electromagnetic force effect. In the case of unequal charges, as is well-known, a field amplification and attractive acting forces are observed whereas for equal charges a field reduction results and repulsion is observed.

If we make a connection between the field conditions and the electromagnetic interaction in the sense of the proportionality (6.15), then the particle in reality is able to influence the distance to other particles merely with the help of its electric field. For unequal charges a compression of field lines arises, in which one particle stays in the focussed field of the other and vice versa. In this way a contraction of all lengths occurs and the observable attraction happens (fig. 6.8 A).
For equal charges the opposite case is present, in which even a local field freedom can occur (fig. 6.8 B). If the field tends towards zero on the dashed line, then the distance will go to infinity (according to eq. 6.15). Consequently, the observable effect that both bodies go away from each other, will reach to infinity.

Actually the electromagnetic interaction proves to be a result of the field dependent length contraction.

The electromagnetic interaction of a particle is a result of the influence of the open field lines arising from it on the dimensions of the space, in which it is.

It is important that the field lines are open, for which reason they are bent away from like charges and are directed towards unlike charges. Subjectively seen we find out that as a consequence of the field reduction repulsive force effects and as a consequence of the field compression attractive acting force effects are observed (fig. 6.8).
The consequence of is every electric field is, as is well-known, a magnetic field standing perpendicular on it. The field lines of the magnetic field run parallel to the surface of the particle and have a closed course (fig. 6.9 A)!
Therefore no magnetic poles form, which would be measurable. Seen from the outside the particle behaves neutral magnetically seen, because of the closed course of the field lines.
An artificial field reduction and as a consequence observable forces of repulsion, like in the case of the electromagnetic interaction, hence in principle are impossible.

The effect of the magnetic field thus is limited to a geometrical manipulation of the environment, namely the curvature of space, with which we have founded the phenomenon of the attraction of masses and of the gravitation.

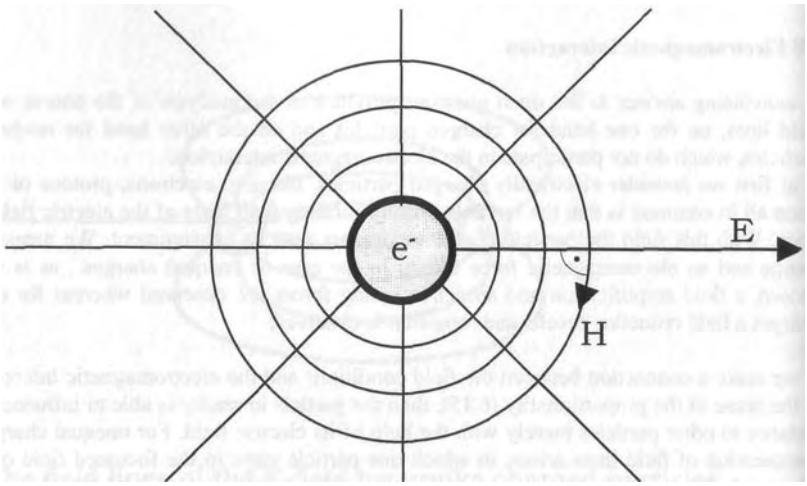

A: The open field lines of the E-field and the closed field lines of the H-field of an electrically charged particle (e.g. e-)

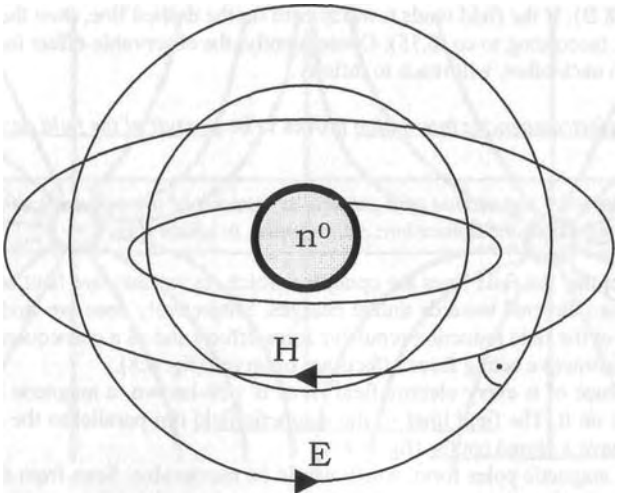

B: The closed field lines of the E-field and H-field of an electrically uncharged particle (e.g. of the neutron n°).

Gravitation is a result of the influence of the field lines with a closed course running parallel to the surface of the particles on the dimensions of the space, in which they are.

Fig. 6.9: The influence of the closed field lines of the H-field.

6.9 Gravitation

For uncharged, neutral particles (neutron, atom, molecule etc.) both the magnetic and the perpendicular on them standing electric field lines have a closed course. Now both run parallel to the surface of the particle (fig. 6.9 B).
As is said, the density of field lines with a closed course can't be influenced from the outside. If we approach a particle, the consequence of an increase of the density without exception is a decrease of the linear measures and thus a larger force of attraction. For this case of field lines with a closed course, for which in general it doesn't give a field attenuation and no forces of repulsion, there holds:

Gravitation is a result of the influence of the field lines with a closed course running parallel to the surface of the particles on the dimensions of the space, in which they are.

Both interactions logically have an infinite range. Both form a whole in the influence of the fields on the size conditions.
It surely is of the greatest importance that for this derivation of the field dependency of the Lorentz contraction from the known equations of transformation of the electromagnetic field we could do completely without the introduction of new factors of description or neglects.
Solely by consistent derivation and interpretation of the result the unification already has suceeded and the electromagnetic interaction and the gravitation could, with the derived field dependent Lorentz contraction, be traced back to a single basic phenomenon. Doing so we have to pay attention to the fact that the observer is subjected to the same Lorentz contraction as his measuring technique and therefore he can't see the field dependency at all. Merely as being an exterior observer it in rare cases will be possible to him to see the curvature of space in the presence of strong fields.

From this for an astronaut practical consequences result. If he namely would land on Jupiter, he would think flat hills to be gigantic mountains, that small he would be! Vice versa if he landed on the moon, high mountains would appear to be insignificant hills, not because of wrong altitude readings of the terrestrial mission control and measurement centre, but only because of his own body size. The astronauts of the Apollo missions were not prepared for this circumstance and after their landing on the moon were completely surprised, how little validity learned textbook physics has, hardly has one left the earth. They have brought photographs with them which prove the Lorentz contraction to depend on the field and therefore on gravitation.

The fact that force effects should arise from the interactions is an auxiliary concept and auxiliary description of the observing person founded in pure usefulness. The Lorentz force therefore shouldn't be regarded as cause anymore. It actually appears only as property of the field factors. Seen this way it only would be consistent to do without space charges and currents as a result of moving charges and to assume a source-free and quanta-free field description (fig. 6.4: $j = 0$).
From an unified theory it is demanded that it besides the electromagnetic interaction and the gravitation also is able to integrate the strong and the weak interaction. We will also solve this problem.

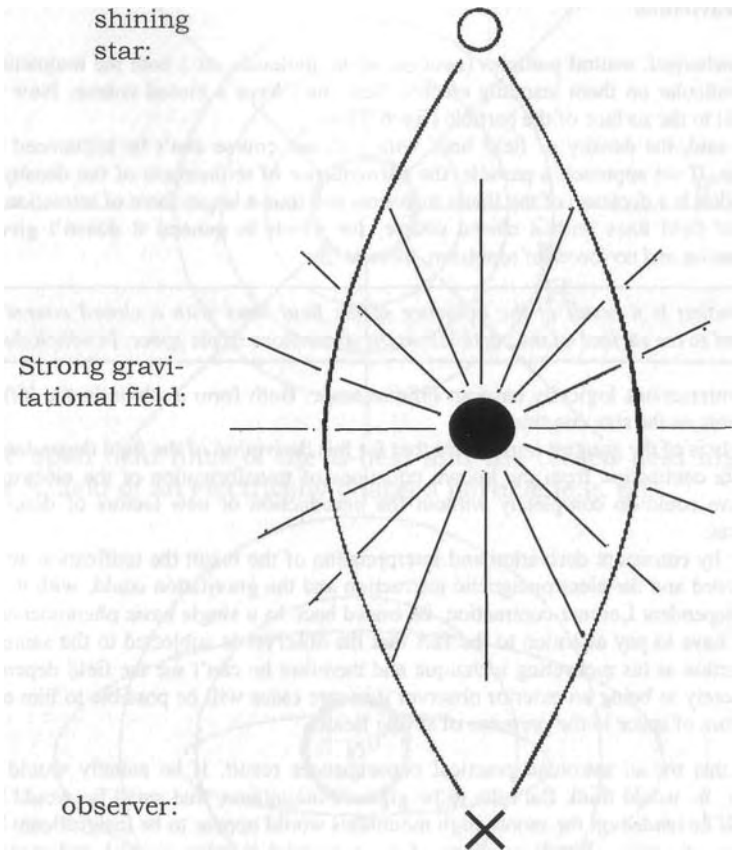

Fig. 6.10: Diversion of the light by a strong gravitational field.

Speed of light of the wave: $c = \lambda * f$ (6.16)

For the wavelength λ holds (because of eq. 6.15): $E, H \sim 1/\lambda^2$

From equation (6.16) follows (with f = constant):

$$E \sim 1/c^2 \quad , \quad H \sim 1/c^2 \qquad (6.17)$$

The speed of light depends on the field!

6.10 Field dependent speed of light

But not only matter is bent towards a gravitational field. If we only think of the much cited phenomenon that the ray of light of a star is diverted towards the sun, if it passes very close to the sun on its way to us, like this has been observed for the first time during an eclipse of the sun in 1919 (fig. 6.10).
Quite obviously the field of the sun also slows down the speed of light. On the side of the ray of light which is turned towards the sun, the field is somewhat larger and the speed of light correspondingly is slower than on the side which is turned away, and with that the ray of light changes its direction in the observable manner. Exactly this relation willingly is interpreted as a consequence of a curvature of space.
The extremely strong field of a black hole can divert the light down to a circular path, in order to in this way catch and bind it. The light now orbits the black hole like planets the sun.

At this point the open-minded reader already might have tapped the confirmation of the proportionality 6.2 (c ~ r), which has been derived from the vortex model (fig. 6.2).
The sceptic is offered still another derivation: for the borderline case that the relative velocity v tends towards the speed of light c (fig. 6.6), according to equation 6.13 the measurable overall field E_o (and also H_o) will go to zero and equation 6.12, with E_z. = - E (and H_z = - H), will again turn into the wave equation (5.9*) after double differentiation (fig. 6.4).
The speed v = c so to speak forms the escape velocity, with which the electromagnetic wave runs away from the cosmic field. Under these circumstances of course neither an attraction of masses nor an electromagnetic interaction can be exerted on the wave.
If E_0 goes to zero at the same time l_0 tends to infinity (equation 6.15, fig. 6.6): i.e. the wave spreads all through space. This result entirely corresponds to the observations and experiences.

For the wave length λ and in the end for the velocity of propagation c only the self-field of the wave E resp. H is responsible. Because of

$$c = \lambda \cdot f \quad (6.16)$$

and the proportionality from equation 6.15: $E, H \sim 1/\lambda^2$ (6.17*)

obtain the new relation: $E, H \sim 1/c^2$ (6.17)

If the speed of light in the presence of matter decreases, then we now also know why. It is the field, which surrounds matter, that slows down the speed of light. Therefore a gravitational field is able to divert a ray of light in the same manner as matter which flies past. Finally moves the speed of light in the proportionality 6.17 to the place of the linear measure (in 6.15).
But if the rule fails one will try to replace by an optical measurement arrangement. In this manner the field dependency of the Lorentz contraction should be measurable; but it isn't!

From the comparison of the derived proportionalities:

$$E, H \overset{(6.15):}{\sim} \frac{1}{l^2} \overset{(6.17)}{\sim} \frac{1}{c^2}$$

follows:

$$\underline{1 \sim c} \qquad (6.18)$$

The speed of light is proportional to the measurement path. The variable speed of light is being measured with itself. The result at all events is a constant value.

The constancy of the speed of light is based on a measurement which is faulty from the principle!

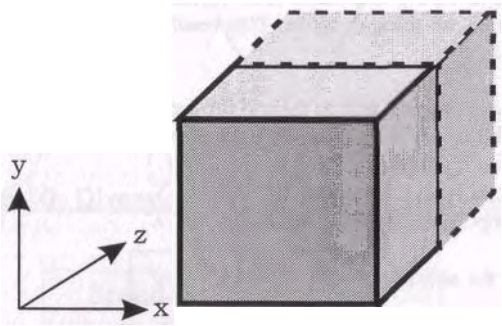

Because of c ~ r: physical length contraction

Fig. 6.11: Derivation of the length contraction (field dependent Lorentz contraction)

6.11 Universality

Why can't the rule be replaced by an optical measurement arrangement? The crucial indication provides the comparison of both derived proportionalities 6.15 and 6.17. According to them holds the same field dependency for both the Lorentz contraction and the speed of light:

$1/l^2 \sim 1/c^2$ or $\underline{\overline{1 \sim c}}$ (6.18)

If the rule has proved to be useless, then we will experience the same disaster if we measure optically, i.e. with the speed of light.
Obviously both, the length 1 and the speed of light c as a length per unit of time, depend in the same manner on the respective local field strength. On the one hand do both measuring methods lead to the same result; but on the other hand will anything which can't be measured with one method, neither be measured with the other method.
If now the speed of light is being measured optically, then the measurement path will be proportional to the speed of light and as a result will the unknown factor be measured with itself. The result of this measurement, which is faulty from the principle, at all events is a constant value, because here two variables which stand in direct proportionality to each other are related to each other.
Was the famous experiment of Michelson and Morley unnecessary, the result trivial? And how does it stand about the postulate of the universality of the speed of light?
If we for that consider a cube (fig. 6.11). And we assume that the speed of light is a vectorial quantity, which in our experiment is for instance in one direction twice as large, as in the direction of the other two space axes. By means of the mentioned influence of the speed of light on the spatial length is, as a consistent consequence, the cube along this edge pulled apart to a cuboid. We however register this spatial body with our eyes, which is with the speed of light and that has increased proportionally to the length of the edges, for which reason we as subjective observer still see a cube in front of us and not a cuboid.
If we trust an apparent objective measurement more than our sense organ and measure the three lengths of the edges of the cuboid again with a rule then we get three times the same length, which is a cube.
We probably are dealing with an optical deception using the true meaning of the word.

If the by Einstein postulated universality and constancy of the speed of light in reality doesn't exist at all, we in no way would be capable to register this; neither to observe nor to measure it!
The Galilean theorem of the addition of speeds objectively seen still is valid, even if the fact that the speed of light apparently is independent of the speed of the source pretends us the opposite.
If for instance a light source is moved towards a receiving device or away from it, then the speeds will overlap, like for the passenger, who marches in a driving train against or in the driving direction through the corridor. For the ray of light also the fields, which influence the speed of light and the measurement equipment, overlap. As a consequence will a measuring technician, who himself is exposed to this overlapping field, always observe and "measure" the identical speed of light. The observer as a result imagines, there is an universality of the speed of light.

The field takes over the function of the aether.

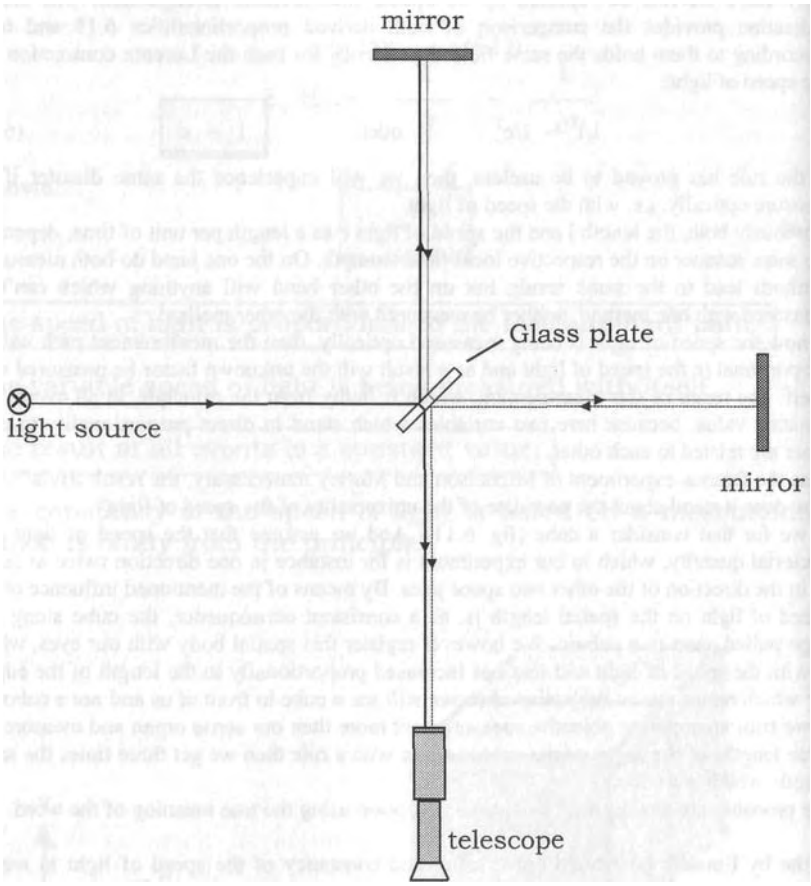

Fig. 6.12: Experiment of Michelson and Morley to detect an aetherwind<i>

<i>: A.P.French: Special Relativity, Massachusetts Institute of Technology, 1966.

<ii>: Nikola Tesla: "This is the same as writing a business letter and forgetting the subject you wish to write about". To Einstein's Theories, Rare Book and Manuscript Library, Columbia University, 15.4.1932.

<iii>: Einstein proceeds in the same manner with the time dilatation, by assuming a time constant by definition for the derivation to present at the end of his derivation a variable time. And with that he presents a result which contradicts his approach completely.

6.12 Aether

Important experiments like the one of Doppler concerning the redshift or the one of Bradley concerning the aberration of the stars show only to clear, where the influence of the speed of light subjectively still is perceptible, or for laboratory experiments like the one of Michelson and Morley, where the influence isn't perceptible anymore, because the length of the interferometers always changes proportionally to the speed of light. The look in the stars at the same time is a look in cosmic areas, where completely other field conditions prevail and as a consequence completely other values for the speed of light and for the dimensions of space are present. The mentioned observations suggest that we together with our measuring station are moving through the cosmos and therefore a relative velocity has to be present with regard to an aether which determines the respective speed of light.

If we however constrict our range of vision and retire in a laboratory, then we no longer are capable to observe the influence of the field on the speed of light. The experiments of Michelson which Maxwell had prompted to and which Morley with a higher precision had repeated with the goal, to detect the aether, inevitably had to turn out negatively. The laboratory experiments resulted in the misleading picture, as if the earth was resting in the aether.

The not understood measurements will suggest any observer, he forms the centre of the universe and everything rotates around him, entirely in the sense of the Ptolemean view of life, which, although long ago abolished, here belated has experienced support. With a Swabia caper Albert Einstein has prevented a relapse into the dark Middle Ages and removed the open contradiction in the question of the aether, which once is measured as moving and another time as resting, by without further ado abolishing the aether. With that he undoubtedly has solved a central problem of physics and at the same time created a new one. As is known does the speed of light have a certain value, and therefore the question is raised, what determines is size. Exactly for this purpose a luminiferous aether had been introduced, however it is constituted.

Scientifically it does make little sense, to make an assumption, if at the end of the derivation the prerequisite is deleted without substitute. In such a case either in the approach or in the derivation is a principal error*[1]"*. Nikola Tesla comments on the working method of Einstein with the applicable comparison, as if Einstein had, while he was writing a business letter, forgotten completely the subject he wanted to write about (fig. 6.12[ii]).

The answer, which removes all contradictions and is entirely in accord with all observations and measurements, is obvious. Naturally a luminiferous aether exists, which determines the velocity of propagation and of course it by no means is bound to the observer.

As has been derived in figures 6.5 and 6.6, will for a relative velocity v arise a field, which according to proportionality 6.17 determines the speed of light. With that we have derived completely.

The field takes over the function of the aether.

The equations 6.10 also answer the question, why no aetherwind is being observed, although such a wind actually is present: we experience, as we have discovered, an E-field with ,,head wind" as a resting H-field and vice versa and therefore we aren't capable to detect the head wind in the aether!

Key questions of quantum physics (fig. 4.4 + continuation):

IV. Why do the particles have the form of spheres?
(with increasing E-field decreases c)

VIII. Why is the elementary quantum localized?
(in the vortex centre: c = 0, see figures 4.3 and 6.2)

IX. Why do the elementary particles have a spin?
(spherical form demands field compensation)

X. Why is the magnitude of the spin quantized?
(cosmic basic field determines the need of E_z)

XI. Why can speeds faster than light occur in a tunnel?
(a reduction of the cosmic basic field can only be realized locally in a tunnel)

to XI:

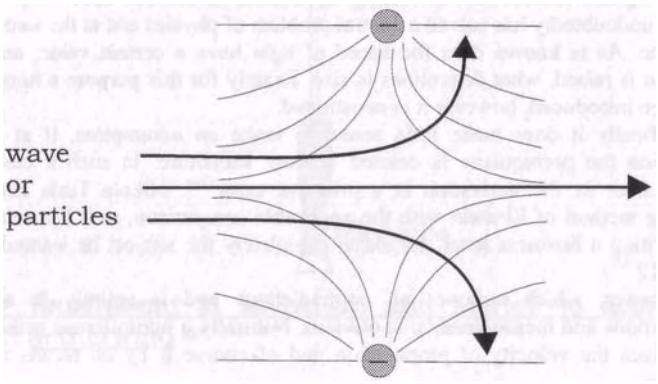

Fig. 6.13: Consequences concerning the field dependency of the speed of light: spin effect and tunnel effect <i,ii>

<i>: Nimtz,G.: Instantanes Tunneln, Tunnelexperimente mit elektromagnetischen Wellen, Phys.B1.49, VCH Weinheim (1993) Nr.12, S. 1119-1120<*>
<ii>: Thoma, P., Weiland.T.: Wie real ist das Instantane Tunneln? Phys.Bl.50, VCH Weinheim (1994) Nr.4, S. 359-361<*>
<*>: The measurement results are in accord with the theory of objectivity, not however the contradictory attempts to interpret them <i> and <ii> et al.

6.13 Spin and tunnel effect

Only with the field dependency of the speed of light (6.17) we can understand, why the elementary quanta can form as spheres, like is drawn in the figs 4.3 and 6.2. In the centre the field lines run together, i.e. the field increases and the speed of light decreases. Only in this way it will be possible for the vortex oscillation to everywhere occur with the speed of light, even in the inside of the particle! In the centre of the vortex particle the field in theory will become infinitely large and the speed of light zero. This circumstance again is the foundation why the elementary particles are localized and it answers key question VIII of quantum physics. The absence of a speed after all is the characteristic of an immobile thing.

The field dependency of the speed of light answers also further basic and up to today unanswered key questions of quantum physics, like why the elementary particles have a spin (IX) and why the magnitude of the spin is quantized (X).

A vortex particle after all does not exist alone in the world, but it is in the field of other particles. We can call this the cosmic basic field (E resp. H). This basic field overlaps the self-field and takes effect the strongest in the area of the spherical shell, where the self-field is correspondingly small. In order to keep the form of a sphere, this influence of the basic field has to be compensated. The additional field (E_z resp. H_z according to eq. 6.12) necessary for the compensation is produced by the particle, by rotating in a spiral around itself with a speed v which increases towards the outside of the spherical shell. Therefore does the elementary particles have a spin. The electron spin is therefore determined by the cosmic basic field.

Another effect of the field dependent speed of light is the tunnel effect. As an example we consider the two differently charged particles shown in fig. 6.8 A. The open, outside of the particles running, field lines of the electric field are predominantly bent towards the each time oppositely charged particle. If another particle wants to pass between the two, then it gets into an area of increased field strength. As a consequence it will be slowed down, because here a smaller speed of light is present.

Water molecules show with their polar nature exactly this property. Water has a remarkably high dielectricity e and slows down the speed of light correspondingly according to equation 5.6 ($\varepsilon \cdot \mu = 1/c^2$). The refraction of light at the water surface is an observable result of the reduced speed of light in the presence of matter.

If we now examine the case in which the two particles have the same charge as is shown in fig. 6.8 B (and fig. 6.13 belonging to XI). The field lines repel each other, so that exactly in between the two particles a field free area forms, in which the speed of light goes to infinity! This area acts like a tunnel. If we send through a particle exactly here, then purely theoretically seen it won't need any time to run through the tunnel, and for a short time the signal becomes infinitely fast.

If a particle hits only slightly besides the tunnel, then it will one-sidedly be slowed down and diverted by the respective field. We call this process reflection or scattering. Only the few particles, which exactly hit the tunnel, arrive behind the hurdle and in the ideal case even almost without loss of time!

The current measurements of speeds faster than light demonstrate in a convincing manner the superiority of the field-theoretical approach with regard to the nowadays normally used quantum physical approach.

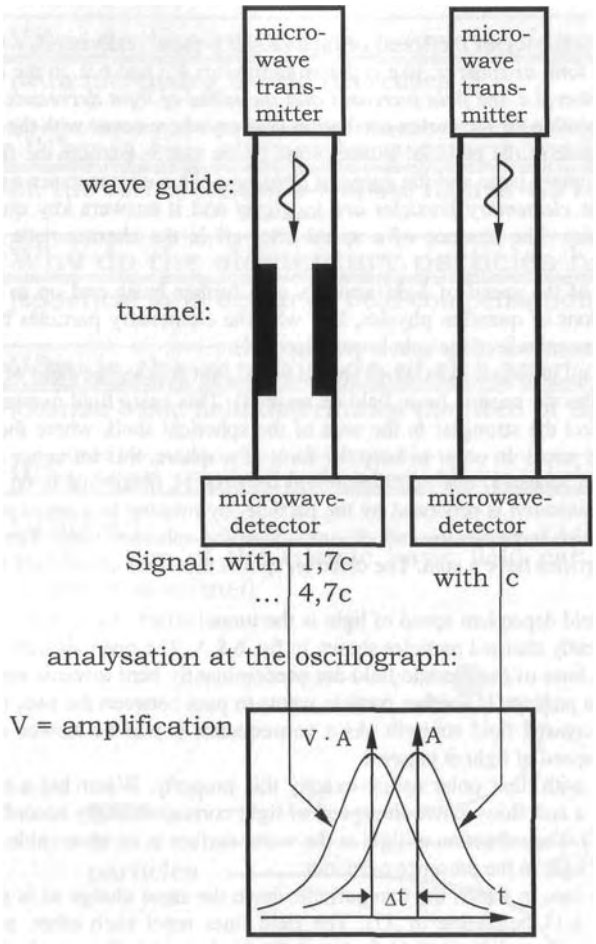

Fig. 6.14: The microwave experiment at the II. Physical Institute of the University of Cologne to measure speeds faster than light.[<i>]

<i>: Nimtz, G. : New Knowledge of Tunneling from Photonic Experiments, Proc. of the Adriatico Research Conference, 1996, World Scientific Publishing Company

6.14 Interpretation of the measured speed faster than light

Now the attempt can be undertaken, to interpret the spectacular experiments, in which a speed faster than light has been measured. It is reported[<i>] that in experiments with photons at the University of California in Berkeley on an average a speed of 1.7 times the speed of light has been measured by Prof. Raymond Chiao and his co-workers. At the Technical University of Vienna Prof. Dr. Ferenc Krausz already has obtained 2.4 times the, according to Einstein at maximum obtainable, speed of light with tunnelling laser light.

The first measurements of speeds faster than light have been carried out with microwaves at the University of Cologne[<ii>] by Prof. Dr. Gunter Nimtz and co-workers. They at first had published the measurement of a speed 2.5 times the speed of light. In the meantime they even have transmitted a symphony of Mozart with a speed almost 10 times the speed of light and with that have contradicted Einstein's hypothesis, according to which the speed of light in vacuum would be the highest possible speed for the transmission of signals. The different experiments only resemble each other in the point that the particles have to tunnel, because one has put a barrier in their way. This "tunnelling" apparently is the cause for obtaining speeds faster than light. With the prevailing physical view of life these measurement results are incompatible.

In the measurement set up in Cologne the microwaves are sent through a wave guide, which they pass with the speed of light. If a parts with narrowed cross-section is inserted, where the microwaves actually don't fit through at all, then the signal gets damped strongly. Now however arrives nevertheless a small part of the signal at the other end of the wire, but much faster than allowed, namely with the measurable speed faster than light.

The answer of the here presented potential vortex theory reads as follows: the waves picked up by the wave guide run up to the entry of the tunnel, in order to find out that they don't fit through. They are reflected or absorbed. A small part however rolls up to potential vortices and these fit through the tunnel. They however have to be compressed additionally. In the derivation of the photon (fig. 4.5 and 4.6) we had seen that the inner vortex always is faster than the bigger one, through which it slips through. The compression therefore causes an increase in speed. In flow dynamics is known an analogy: the Venturi-tube. The flow-technical potential vortices also confirm exactly this property. One can as well start with the Lorentz contraction (fig. 6.6, eq. 6.14*). This states that a particle moving with a higher speed actually becomes smaller and not only appears to be smaller as an optical deception of the observer. Because only smaller particles fit through the tunnel, the particles, measurable at the other end, must be correspondingly faster: quod erat demonstrandum. In the same manner also the experiments of Berkeley can be explained physically, because here is worked with photons from the start[<i>]. With that the process of rolling up the wave can be left out. The tunnel lets pass only compressed and therefore faster light particles.

<i>: R.Y.Chiao, P.G.Kwiat, A.M.Steinberg: Schneller als Licht? Spektrum der Wiss. 10/93

<ii>: B. Schuh, Gespenstisch fixe Wellen, DIE ZEIT Nr. 45, 5.11.93, S. 43.

<ii>: Enders, A., Nimtz, G.: Photonic-tunneling experiments, Physical Review B, Vol. 47, No. 15 (1993), pp. 96O5-96O9.

<ii>: Enders, A., Nimtz, G.: Evanescent-mode propagation and quantum tunneling, Physical Review E, Vol. 48, No.l (1993), pp. 632-633.

"The theory of relativity is not a physical theory... it is a mathematical poetic idea, a deduction from impossible premises."[<i>]
Oskar Kraus

"The theory of relativity is a mathematical masquerade, behind which is hidden an inextricable ball of a mixing up of ideas, contradictions, fallacies, arbitrary assumptions and ignoring of healthy logic."[<i>]
Erich Ruckhaber

"The theory of relativity not only is fantastic, but also of an inconsistency which in the history of science not yet has been present."[<i>]
Harald Nordenson

"A physics of hybrids, of contradictions and fantastic confusions, nonsense!"[<ii>]
Johann Marinsek

"This is absurd."[<iii>] (regarding mass-energy interpretation) _____
Nikola Tesla

"In my experiments I have destroyed billions of atoms, without having observed any emissions of energy. "[<4i>]
Nikola Tesla

Fig. 6.15: Some statements regarding the theory of relativity.

<i>: Walter Theimer: Die Relativitatstheorie, Seite 7, Francke Verlag, Bern, 1977, ISBN 3-772O-126O-4
<ii>: Johann Marinsek: Rationale Physik, S. 163, dbv-Verlag TU Graz, 1989, ISBN 3-7O41-O176-1
<iii>: Nikola Tesla, To Einstein's Theories, Rare Book and Manuscript Library, Columbia University, 15.4.1932. Entnommen aus J.T.Ratzlaff: Tesla Said, Tesla Book Company, pp. 238, ISBN O-914119-OO-1
<4i>: Nikola Tesla, Franz Ferzak World and Space Publications 1985.

6.15 Definition of the speed of light

If a light signal propagates in space, then as a consequence of the velocity of propagation c, it at a certain point in time t is in a distance r of the light source:

$$r = c * t \qquad (6.19)$$

Should the speed of light become smaller for instance by Δc, then the light signal obviously has covered a distance less by Ar or the time interval has changed by Δt:

$$r + \Delta r = (c + \Delta c) \cdot (t + \Delta t) \qquad (6.20)$$

This equation describes purely mathematically the most general case which can be assumed. By writing out the multiplication and subtraction of equation 6.18 the change in distance considered for itself is:

$$\Delta r = c \cdot \Delta t + t \cdot \Delta c + \Delta c \cdot \Delta t \qquad (6.21)$$

The answer of mathematics is that the change in distance can have its cause in a change in time, in a change of speed or in both. We now want to turn to the physical interpretation and have a closer look at the two possibilities, in which either c or t is to be taken constant (see fig. 6.16).

In the first case the speed of light c is constant and as a consequence the change Δc = zero. The mathematical formulation (according to eq. 6.21) therefore reads:

case 1: $$\boxed{c = \frac{\Delta r}{\Delta t}} \qquad \text{(relativity)} \qquad (6.22)$$

If in this conception world a change in distance is observed, for instance the Lorentz contraction, then in order to save this relation inevitably a change in time, for instance a time dilatation, has to make the compensation. Einstein in an applicable manner speaks of relativity, because according to his opinion in the case of both variables, the length contraction and the time dilatation, it only concerns observed changes.

For the time dilatation experiments are given. But for the measurement of time always only atomic clocks are available and their speed of running of course could also be influenced by the Lorentz contraction. In any case it can't be claimed the time dilatation is proven experimentally as long as we do not know the mechanisms of decay of atoms. Otherwise the statements of the theory of relativity are familiar to us, for which reason further remarks seem unnecessary.

In the second case the time t is constant and consequently the change At = zero. At a closer look this case is much more obvious, since why should time change. After all time has been stipulated by definition.

After all, we are the ones who tell, what simultaneity is!

The mathematical formulation for this case reads (eq. 6.21 with Δt= 0):

case 2: $$\boxed{\Delta c = \frac{\Delta r}{t}} \qquad \text{(objectivity)} \qquad (6.23)$$

This equation does open up for us an until now completely unknown and fundamentally other way of looking at the physical reality.

Concerning the definition of the speed of light c [m/s]:

r [m] = distance of the light source:

$$r = c \cdot t \tag{6.19}$$

For changes, observed or measured:

$$r + \Delta r = (c + \Delta c) \cdot (t + \Delta t) \tag{6.20}$$

$$= c \cdot t + c \cdot \Delta t + \Delta c \cdot t + \Delta c \cdot \Delta t$$

Change in distance:

$$\Delta r = c \cdot \Delta t + t \cdot \Delta c + \Delta c \cdot \Delta t \tag{6.21}$$

2 possible causes:

with $\Delta c = 0$ case 1:	with $\Delta t = 0$ case 2:
$c = \frac{\Delta r}{\Delta t}$ (6.22)	$\Delta c = \frac{\Delta r}{t}$ (6.23)
c = constant	t = constant
$\Delta r \sim \Delta t$ (6.23)	$\Delta c \sim \Delta r$ (6.25 = 6.2)
= time dilatation	= universality
Δr = observable length contraction	Δr = physical length contraction
Theory of relativity	Theory of objectivity

Fig. 6.16: Theory of relativity and theory of objectivity, derivation and comparison.

6.16 Relativity and objectivity

New to the second case (equation 6.23) is particularly the proportionality contained in it:

$$\Delta c \sim \Delta r \quad (6.25 = 6.2)$$

But to us it is not new, because we have derived the same proportionality from the model conept (equation 6.2, fig. 6.2), in which the elementary particles are understood as spherical vortices.
Equantion 6.25 unconcealed brings to knowledge that any change of the speed of light c [m/s] in the same way leads to a change of the radius r [m], the distance between two points in space or even the length of an object, e.g. a rule. Such a rule after all consists of nothing but spherical atoms and elementary particles and for their radius r again the proportionality 6.25 holds. Therefore it is to be set:

$$r \sim 1 \qquad (6.26)$$

and taken both together we already had derived as equation 6.18 (fig. 6.11) from the field dependency. Here the vortex model as well finds a confirmation of its correctness, as in the derivation from the equations of transformation of the electromagnetic field. Because all three, the derivation according to the model, the physical and the mathematical derivation, lead to the same result, this second case should be called "objective".

With that the first case, which describes the subjective perception of an observer, is not supposed to be devaluated. It contains the definition of reality, according to which only is real what also is perceptible. The theory of relativity of Poincare and Einstein is based on this definition.

With the second case, the case with a variable speed of light, we however get serious problems, since we observe with our eyes, and that works with the speed of light. If that changes, we can't see it, as already said. If we could see it, then "reality" would have a completely different face and we surely would have great difficulties, to find our way around. In this "objective world" neither electromagnetic interactions nor gravitation would exist, so no force effects at all. Because all distances and linear measures depend on the speed of light, everything would look like in a distortion mirror.
The concept of an "objective world" at first has not a practical, but rather a theoretical and mathematical sense. The distinction between an observation domain and a model domain is founded in pure usefulness.

The observation domain should correspond to case 1 and the model domain to case 2. The mathematical derivation tells us, how we can mediate between both domains (equation 6.21): This mediation amounts to a transformation, which provides us the instruction, how a transition from the observation into a not perceptible model concept, from the relativity into an objectivity has to.

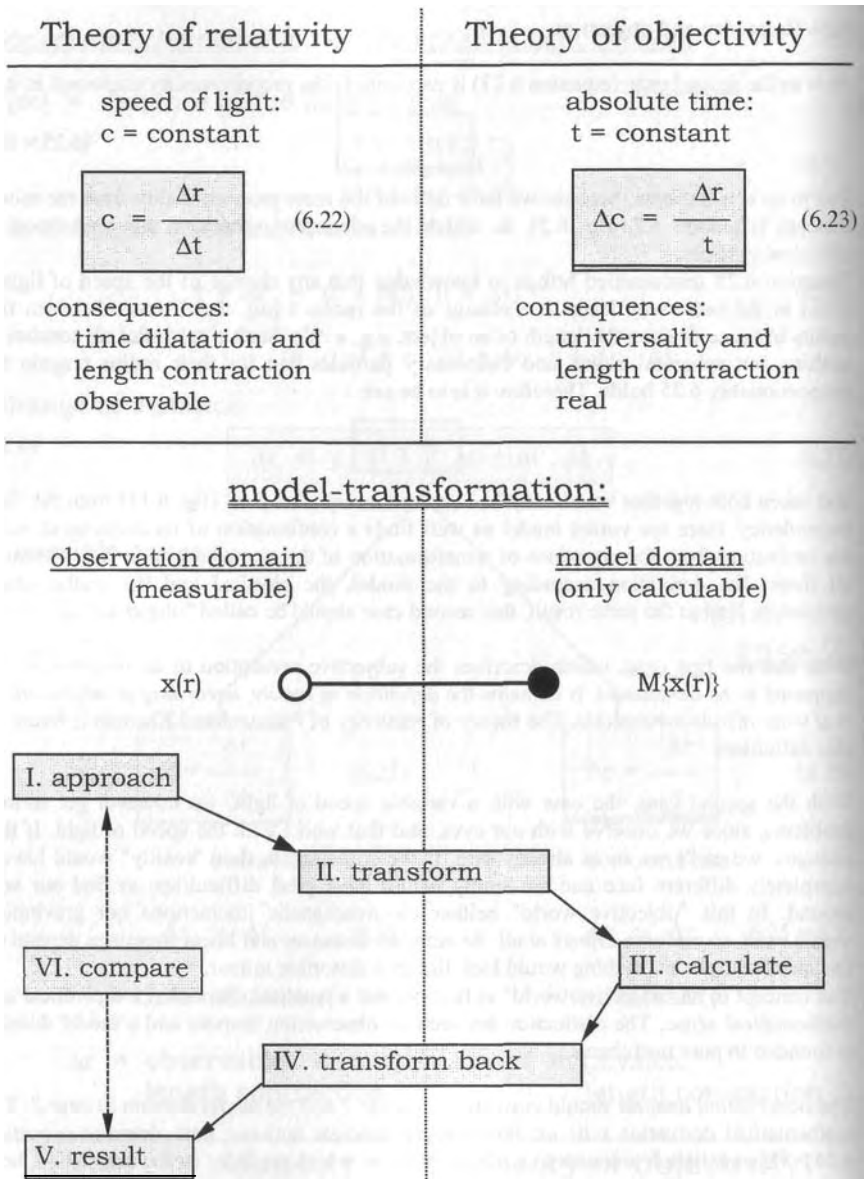

Fig. 6.17: Model-transformation between theory of relativity and theory of objectivity.

6. 17 Transformation

The observation domain is, as the name already expresses, perceptible (observable) with the help of our sense organs and measurable with corresponding apparatus. The special theory of relativity for the most part provides us the mathematics needed for that. And in that is assumed a constant speed of light. Because a length contraction is being observed and can be measured, a time dilatation must arise as a consequence. Such is the consistent statement of this theory. Because we already could make us clear that it concerns a subjective theory, of course caution is advisable if generalizations are being made, like the one of the inductive conclusion of the length contraction on the time dilatation. We'll come to speak about that in this chapter (fig. 6.20).

The model domain however is not observable to us and only accessible in a mathematical manner. Here the time is a constant. On the other hand do the radii of the particles and all other distances and linear measures stand in direct proportionality to the speed of light. If that changes, then does that lead to a change in length. The length contraction occurs physically, which means actually. We propose the name "theory of objectivity" for the valid theory which is derivable with this prerequisite and independent of the point of view of the observer.

The importance of this model domain and of the possible model calculations is founded in the circumstance that many physical relations within our observation domain aren't recognized by us and can't be mathematically derived. Besides is only all to often worked with unallowed generalizations and with pure hypotheses. Such a thing does not even exist in the model domain.

The model domain can be tapped over a transformation. For that we select an approach x(r) in the to us accessible observation domain. This then is transformed into the model domain by a calculation instruction M{x(r)}. Here we can calculate the sought-for relation In the usual manner and transform back again the result according to the same calculation instruction $M^{-1}\{x(r)\}$ but in the reversed direction. After being returned in our familiar observation domain, the result can be compared and checked with measurement results (fig. 6.17).
In this way we will derive, calculate and compare the quantum properties of the elementary particles with the known measurement values. Here we remind you of the fact that all attempts to calculate the quantum properties conventionally, without transformation, until now have failed. Not even a systematization may succeed, if it concerns for instance explanations for the order of magnitude of the mass of a particle.

A transformation at first is nothing more than an in usefulness founded mathematical measure. But if a constant of nature, and as such the quantum properties of elementary particles until now have to be seen, for the first time can be derived and calculated with a transformation then this measure with that also gains its physical authorization. We now stand for the question: how does the instruction of transformation M{x(r)} read, with which we should transform the approach and all equations from the observation domain into the model domain?

general relations:	special theory of relativity	theory of objectivity	
domain of validity:	observation domain	model domain	
speed of light c [m/s]:	$c = c_0$ = constant	$c \sim r$	(6.25)
field strengths (6.15)	(6.15) + (6.18)		
H [A/m] :	$H \sim 1/r^2$	$H \sim 1/r$	(6.27*)
E [V/m] :	$E \sim 1/r^2$	$E \sim 1/r$	(6.27)
because of eq. (5.6) $\varepsilon \cdot \mu = 1/c^2$ is valid:			
μ [Vs/Am] :	μ_0 = const.	$\mu \sim 1/r$	(6.28*)
ε [As/Vm] :	ε_0 = const.	$\varepsilon \sim 1/r$	(6.28)
relations of material: $B = \mu \cdot H$ (3.5): B [Vs/m²]	$B \sim 1/r^2$	$B \sim 1/r^2$	(6.29*)
$D = \varepsilon \cdot E$ (3.6): D [As/m²]	$D \sim 1/r^2$	$D \sim 1/r^2$	(6.29)
e.g. spherical capacitor capacity: C [As/V]	$= \varepsilon 4\pi r$ (6.4)	C = const.	(6.30)
charge: Q [As]	$= C \cdot U$ (6.31)	Q = const.	(6.32)
energy: W [VAs]	$= Q^2/C$ (6.1)	W = const.	(6.33)
with energy-mass relation: (5.24) and (6.1)	$W = mc^2$		
mass	m [kg = VAs³/m²]	$m \sim 1/r^2$	(6.34)
relaxation time	τ_1 [s]:	τ_1 = const.	(6.35)
with	$\tau_1 = \varepsilon/\sigma$ (5.3)		
specific conductivity	σ [A/Vm]:	$\sigma \sim 1/r$	(6.36)

Fig. 6.18: Transformation of the dependencies on radius

6.18 Transformation table

The attempt to write down at this point already a closed mathematical relation as instruction of transformation, would be pure speculation. Such an instruction first must be verified by means of numerous practical cases, i.e. be tested for its efficiency and correctness. But we not even know the practical examples necessary for this purpose, if we apply the transformation for the first time!
For his reason it unfortunately is not yet possible, to calculate absolute values in a direct
We have to be content to work with proportionalities and to carry out comparisons.
In fig. 6.18 the proportionalities are compared in the way, how they would have to be transformed: on the left side, how they appear and can be observed in the view of the special theory of relativity, and on the right side, how they can be represented and calculated in the theory of objectivity.
The change, which here would have to be transformed, is the physical length contraction, which is the change in length as it depends on the speed of light. For spherical symmetry the length 1 becomes the radius r (eq. 6.26), of which is to be investigated the influence. In the observation domain we had derived the proportionality (6.15 + 6.18):

$E \sim 1/r^2$ and $H \sim 1/r^2$.

The field of a point charge or of a spherical capacitor confirms this relation:

$$E = Q/\varepsilon 4\pi r^2 .$$

Because the speed of light in our observation is constant, also both constants of material which are related to it (eq.5.6: $\varepsilon \cdot \mu = 1/c^2$), the dielectricity ε and the permeability μ, are to be taken constant.
With that the same proportionality as for the field strengths also holds for the induction B and the dielectric displacement D:

$$B \sim 1/r^2 \quad \text{and} \quad D \sim 1/r^2.$$

In the model domain everything looks completely different. Here the radius and any length stands in direct proportionality to the speed of light. In this way we get problems with our usual system of units, the M-K-S-A-system (Meter-Kilogram-Second-Ampere). The basic unit Meter [m] and as a consequence also the unit of mass Kilogram [kg = VAs^3/m^2] appear here as variable. It would be advantageous, to introduce instead the Volt [V] as basic unit.
But in any case does the dimension of a quantity show us, in which proportionality it stands to the unit of length. This in the model domain then is authoritative! As an example does the speed of light have the dimension Meter per Second. In the model domain there consequently has to exist a proportionality to the length r [m].
The speed of light determines with equation 5.6 again the constants of material:

$$\mu\,[Vs/Am] \sim 1/r \quad \text{and} \quad \varepsilon[As/Vm] \sim 1/r \qquad (6.28)$$

According to the model holds unchanged:

$$B\,[Vs/m^2] \sim 1/r^2 \quad \text{and} \quad D\,[As/m^2] \sim 1/r^2. \qquad (6.29)$$

But if we insert the proportionalities 6.28 and 6.29 into the equations of material 3.5 and 3.6, then holds for the field strengths:

$$H\,[A/m] \sim 1/r \quad \text{and} \quad E\,[V/m] \sim 1/r. \qquad (6.27)$$

Further dependencies of the radius can be read in the same manner either by inserting into well-known laws or immediately from the dimension.

In the observation domain:

energy density of a field:

$$w = (\varepsilon \cdot E^2 + \mu \cdot H^2)/2 \sim 1/r^4 \quad (6.37)$$

energy: $W \sim 1/r$ (6.38)

with c = constant and $W = m \cdot c^2$: $\boxed{m \sim 1/r}$ (6.39)

e^- is bigger and lighter than p^+ or n^0!

$$\boxed{\frac{m}{m_0} \overset{(6.39)}{=} \frac{r_0}{r} \overset{(6.26)}{=} \frac{l_0}{l} \overset{(6.24^*)}{=} \frac{1}{\sqrt{1-(v/c)^2}}} \quad (6.40)$$

In the model domain:

e.g. spherical capacitor

capacity:	C [As/V]	$= \varepsilon 4\pi r$	(6.4)	$C = \text{const.}$	(6.30)
charge:	Q [As]	$= C \cdot U$	(6.31)	$Q = \text{const.}$	(6.32)
energy:	W [VAs]	$= Q^2/C$	(6.1)	$\boxed{W = \text{const.}}$	(6.33)

(6.33) means: law of conservation of energy!

relaxation time	τ_1 [s]:			$\tau_1 = \text{const.}$	(6.35)
with	τ_1	$= \varepsilon/\sigma$	(5.3)		
specific conductivity	σ [A/Vm]:			$\boxed{\sigma \sim 1/r}$	(6.36)

(6.36) means: elementary vortices are indestructible!

Fig. 6.19: Interpretation of the dependencies on radius

6.19 Interpretation of the transformation table

The transformation should tell us, what we would see if the variable speed of light would be observable to us. Doing so highly interesting results come out.
The energy density of a field is as is known $w = (\varepsilon \cdot E^2 + \mu \cdot H^2)/2$. (6.37)
In the observation domain will, according to fig. 6.19, decrease the energy density w proportional to $1/r^4$. Multiplied with the respective volume we obtain for the energy itself the proportionality: $W \sim 1/r$. (6.38)
If we make use of the Einstein relation $W = m \bullet c^2$
with c = constant holds also for the mass m: $m \sim 1/r$. (6.39)
In this manner we finally find out, why the small nucleons (protons and neutrons) subjectively seen are heavier than the very much larger electrons. As a consequence does a relativistic particle experience the increase of mass (with the length contraction according to equation 6.24*):

$$\frac{m}{m_0} \overset{(6.39)}{=} \frac{r_0}{r} \overset{(6.26)}{=} \frac{l_0}{l} \overset{(6.24*)}{=} \frac{1}{\sqrt{1-(v/c)^2}} \quad (6.40)$$

This result is experimentally secured. Our considerations therefore are entirely in accord with the Lorentz-transformation. There at least is no reason to doubt the correctness.
In the model domain we with advantage assume a spherical symmetry. As easily can be shown with equations 6.4 and 6.31, are the capacity and charge of a spherical capacitor independent of the radius (6.30 and 6.32). In that case also the from both values calculable energy (6.1) must be constant. We come to the same conclusion, if take we the above equation 6.37 for the energy density of a field or if we carry out a verification of dimensions:
W [VAs] = konst. . (6.33)
This simple result is the physical basis for the law of conservation of energy! With that we have eliminated an axiom.
The result states that the energy stays the same, even if the radius, the distance or the speed of an object should change. To the subjectively observing person it shows itself merely in various forms of expression. Consequently is the energy, as is dictated by the here presented field theory, formed by binding in the inside of the quanta the same amount of energy but of the opposite sign. The amount of energy therefore is bound to the number of the present particles, as we already had derived.
Under the assumption of a constant time (6.35) there results for the electric conductivity σ, by calculating backwards over the equation of the relaxation time (5.3), the proportionality: (6.36)

$$\sigma\,[A/Vm] \sim 1/r \quad (6.36)$$

Maybe the result surprises, because it can't be observed. Actually we know that the (microscopically observed conductivity in reality only represents an approximated averaged measure for the mobility of free charge carriers. In a particle-free vacuum however this well-known interpretation doesn't make sense anymore. Hence it is recommended, to only work with the relaxation time constants. Who nevertheless wants to eontinue to work with σ as a pure factor of description, can do this. But he mustn't be surprised, if in the model domain with decreasing radius the conductivity suddenly increases. But this is necessary, because otherwise the elementary particles would collapse. Only by the increase of the conductivity, which is produced by the spherical vortex itself, will the expanding eddy current build up in the inside of the particles, which counteract the from the outside concentrating potential vortex.

Approach:

a.The particles don't decay by themselves, but only by a corresponding disturbance from the outside.

b.The decay time is the statistical average in which such a disturbance can occur and take effect.

c.The elementary particles consist of an integral and finite number of elementary vortices, which can't decay anymore for their part.

d.If the compound particles get into the disturbing range of influence of high-frequency alternating fields, then they are stimulated to violent oscillations and in that way can be torn apart into individual parts.

e.As disturbing factor the high-frequency fields of flying past neutrinos are considered primarily.

f. Authoritative for the threshold of decay and with that also for the rate of decay is the distance, in which the neutrinos fly past the particle.

g.The distance becomes the larger, the smaller the particle is. If the particle thus experiences a relativistic length contraction, then it will, statistically seen, to the same extent become more stable!

That has nothing to do at all with time dilatationl

We are entitled to demand a simultaneity, after all we are the ones, who tell what that is!

Fig. 6.20: Proposal for an interpretation of the particle decay

<i>: Walter Theimer: Die Relativitatstheorie, Seite 106, Francke Verlag, Bern, 1977, ISBN 3-772O-126O-4

6.20 Particle decay

We still have to get rid of a fundamental misunderstanding. It concerns the problem of the time dilatation. Here the model domain doesn't give us any difficulty, because it dictates a constant and therefore by us definable time. In the relativistic view however should in moving systems clocks go wrong! But how does one want to explain a time dilatation physically, if it merely represents a purely mathematical result of the actually taking place length contraction on the one hand and the postulate of a constant speed of light on the other hand?

Nobody has troubled more about the physical interpretation than Einstein himself. But he had as less as we nowadays the possibility to verify the so-called phenomenon experimentally, by accelerating a laboratory clock to values close to the speed of light. Only atomic particles can, e.g. in accelerator systems, be brought on such high speeds and then be observed for their properties. But also these experiments don't have any power of proof, as long as we don't know the atomistic structure of the particles and there exists the danger of misinterpretations.

So the slowing down of the rate of decay of instable. particles at high speeds willingly is cited as "proof for time dilatation<i>. "The most cited example for the time dilatation is the "long-living" meson. The μ-meson is a charged particle, which exists only $2{,}2 * 10^{-6}$ seconds if it is observed in rest. Then it decays ... About 10 % of the mesons reach the earth's surface. Even if they fly with approximately the speed of light, they at least must have used $30 \cdot 2{,}2 * 10^{-6}$ seconds, in order to reach the earth. Their "life" therefore by the movement has been extended for a multiple... to the supporters of the theory of relativity here the time dilatation is revealed..."

This "proof however is worthless, as long as "the structure and the mechanism of decay of the particle are not known", like W. Theimer<i> expresses himself.

On the basis of the new field theory the approach standing on the left page is dared (fig. 6.20). Accordingly the particles don't decay by themselves, but only by a corresponding disturbance from the outside, which for instance is triggered by the high-frequency fields of flying past neutrinos. The closer the neutrinos fly past the particle, the sooner it will decay. But the distance becomes the larger, the smaller the particle is. If the particle thus experiences a relativistic length contraction, then it will, statistically seen, to the same extent become more stable!

That has nothing to do at all with time dilatation, as this proposal for an interpretation shows (fig. 6.20). The same effect of course also occurs, if atomic clocks are taken for a fly in a plane and compared to identically constructed clocks on earth.

The time was stipulated by us and therefore should be able to keep its universal validity. We are entitled to demand a simultaneity, after all we are the ones, who tell what simultaneity is!

An interesting technical use would be the acceleration of the rate of decay in order to dispose of radioactively contaminated waste. For that the waste has to be irradiated by collecting and focussing free neutrinos or with the help of a neutrino transmitter, like one which will be discussed in chapter 9. After such a neutrino shower dangerous radioactive waste would be reusable or at most be harmless domestic refuse.

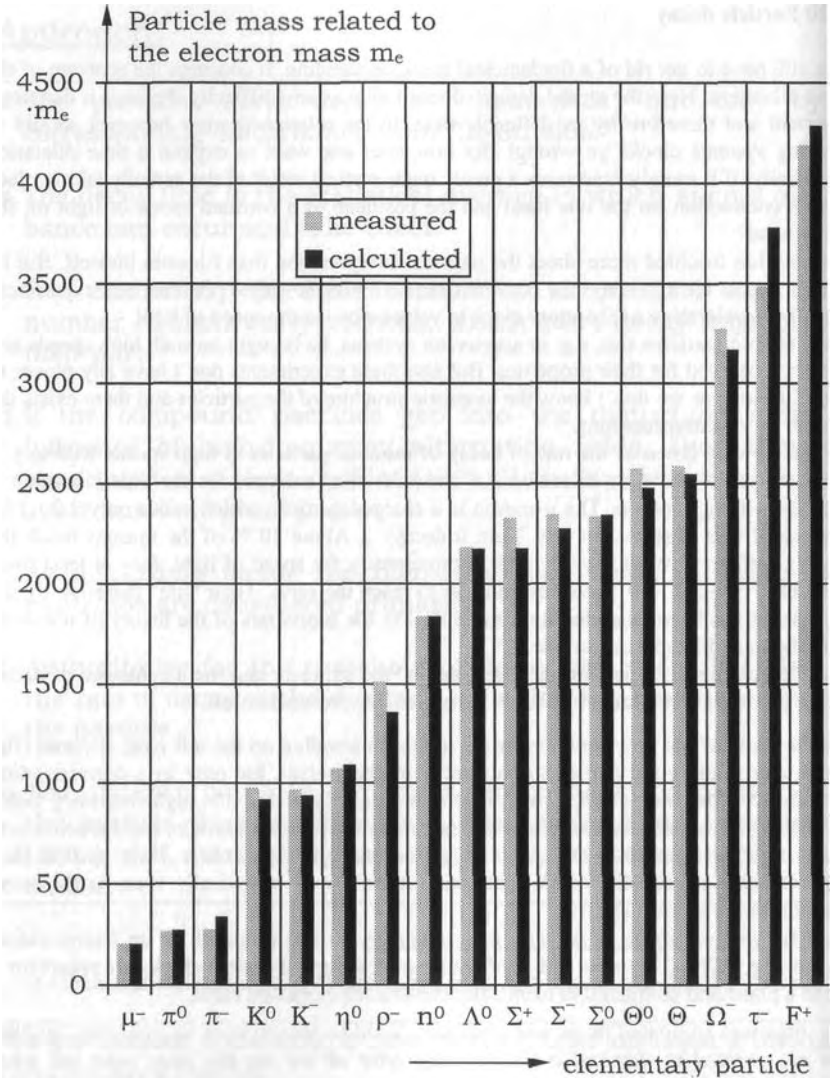

Fig. 7.0: The comparison with power of proof: the measured particle mass the calculated particle mass

7. Proof

Ample evidence is available for the correctness of the theory of objectivity. The field dependent change in length is observed and used as magnetostriction or electrostriction. If a ferromagnetic material, e.g. a nickel rod, is brought into an alternating magnetic field, then field dependent longitudinal length oscillations are observed. In the same manner barium titanate or quartz crystal oscillates in the electric field if a high-frequency alternating voltage is applied.
A practical application forms the production of ultrasound.

In this chapter are, as already announced, the quantum properties of the elementary particles calculated and in this way is furnished perhaps the most convincing proof for the existence of potential vortices and for the correctness of the field-theoretical approach and the theory which is based on it.
A special challenge represents the calculation of the particle mass. This mass stretches from 207 electron masses of the myon over 1839 of the neutron into the order of magnitude of 18513 electron masses (Y°). Doing so not only can be tested, if the calculated values correspond with the measured ones. Also the gaps have to correspond, i.e. where there doesn't exist a discrete mathematical solution also no particle should exist. The fig. 7.0 standing on the left page anticipates the result and shows that even this strict condition is fulfilled! The agreement of the calculated with the measured results is excellent. If in individual cases small deviations become visible, we always have to bear in mind that the measurements as a rule are analysed statistically and the results are falsified if small particles creep in unrecognized. Particle physics nowadays has at its disposal extremely precise gauges, but even here remaining errors can't be excluded.

Quantum physics is occupied with further taking apart the elementary particles into hypothetic particles, the quarks, and to sort these according to properties and symmetries. Seen strictly causal this procedure thus corresponds to the quantum physical approach. We however have taken the field-theoretical approach, and this excludes the introduction of hypothetic particles from the start. It should be our goal to derive and to explain the quantum structure as a field property. Yes, we even want to calculate it, with which we would have overtaken quantum physics in the scientific competition with one leap!

Strong support our approach has experienced by current experiments, in which matter was transformed in electromagnetic waves - practically the reversal of the rolling up of waves to vortices. To do so at the Massachusetts Institute of Technology (David Pritchard and others) sodium atoms were dematerialized in waves by lattice scattering[<i>]. According to Einstein one surely could have blown the whole M.I.T. in the air with the occurring mass defect; but don't worry, no emission of energy whatsoever has been observed, entirely as predicted by the vortex theory.

<i>: J. Teuber: Materie und Energie, Ganze Atome wurden zu Energiewellen,
Illustrierte Wissenschaft Nr. 7 (1996), S. 56

With the classical radius of the electron $r_e = 2{,}82 * 10^{-15}$ m:

$$C_e = \varepsilon_o \cdot 4\pi r_e = 3{,}135 \cdot 10^{-25} F \qquad (6.4^*)$$

$$U_e = e/C_e = 511 kV \qquad (6.31^*)$$

(constant independent of r_e)

Formation forms (vortex properties):

I. Amassing (formation of vortex balls):

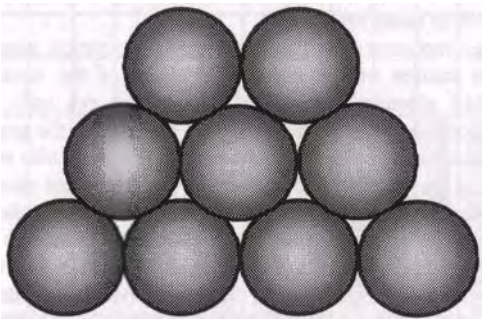

II. Overlapping (phenomenon of transport)

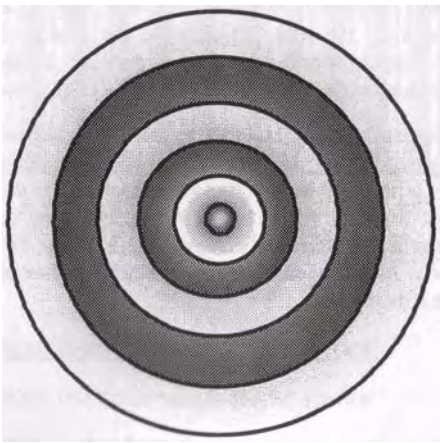

Fig. 7.1: The amassing and overlapping of elementary vortices

7.1 Elementary vortices

We had derived the electron and the positron as elementary vortices (fig. 4.3). Before we can go in the calculation, we must gain a clear picture of the possible configurations of vortices, which for reason of the derived properties are possible. For that we start with the elementary vortex and afterwards we predict the behaviour of interaction which can be expected.

Actually only one single particle is really elementary. According to the realizations of the new theory it is an elementary vortex in the form of a sphere. Its size is determined by the speed of light and this again by the local field strength; its stability is founded in the concentration effect of the potential vortex. The whirling takes place everywhere with the speed of light, even in the vortex centre, where all field lines run together, where the field increases infinitely and the speed of light goes to zero. This last circumstance owes the elementary vortex its localization.

We can attribute a charge to this vortex for reason of the field lines which on the outside run towards infinity and which we can measure (fig. 4.3). This is the smallest indivisible unit, the elementary charge e. Structure and course of the field lines suggest to understand and to calculate the elementary vortex as a spherical capacitor. By basing on the classical radius of the electron r_e given in fig. 6.3 the capacity according to equation 6.4 is calculated to be:

$$C_e = \varepsilon_0 \cdot 4\pi r_e = 3{,}135 \cdot 10^{-25}\ \mathrm{F} \quad (6.4^*)$$

Here the theory of objectivity has provided us the realization that even for a change of the radius of the electron the capacity remains unchanged constant (6.30), and this entirely corresponds to our observation.

Between the hull of the elementary vortex, measured at the radius r_e, and its centre, respectively also with regard to infinity, there exists according to equation 6.31 the tension voltage of:

$$U_e = e/C_e = 511\ \mathrm{kV} \quad (6.31^*)$$

It as well is constant and independent of the size of the elementary vortex.

Since a different solution is refused, we'll have to assume that all elementary particles consist of an integer multiple of elementary vortices. For that the amassing, like closely packed tennis balls, or the overlapping of individual vortices in the form of shells, like in the case of an onion (phenomenon of transport) can be considered.

The among each other occurring forces of attraction can be traced back to the fact that every elementary vortex is compressed by the field of its neighbour as a consequence of the field dependent speed of light. This field as a rule is for the small distances considerably larger than the field on the outside. Therefore do compound elementary particles not have the twofold or triple mass, but at once the 207-fold (myon) or the 1836-fold (proton) mass. After all there is no other explanation for the fact that there don't exist lighter particles (with a mass less than 207 electron masses)!

a. The electron-positron pair

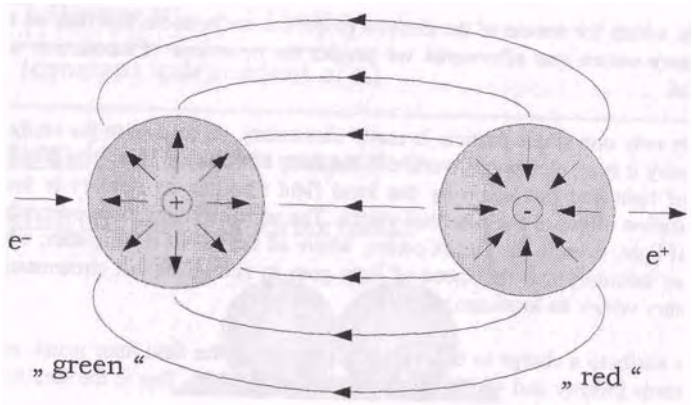

b. . The e^- - e+ pair for a small distance:

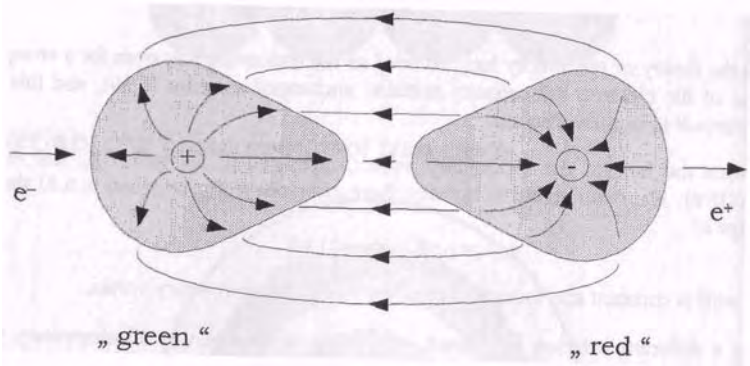

Fig. 7.2: The electron-positron pair annihilation

7.2 Matter and anti-matter

For the amassing or overlapping of elementary vortices several cases must be distinguished, because two inverse forms of formation are possible for the elementary vortex: the negatively charged electron and the positively charged positron. Whereas in the case of the electron the vortex produces a component of the electric field which points from the inside to the outside, has the field in the case of the positron the opposite direction for reason of a reversed swirl direction.

This statement can be generalized: if we consider the elementary particles from the outside, then we assign the particles with a swirl direction identical to that of the electron to the world of matter and call the particles with the opposite swirl direction anti-matter. It now is strongly recommended, to take colours to hand, in order to optically clarify the properties of vortices. The electron will be marked as a green sphere and the antiparticle, the positron, as a red sphere.

If we now look into the world of matter, then appears our world of matter to us "green", the world of anti-matter however "red". The uniform green colour of all the in our world existing elementary particles however doesn't exclude that red anti-vortices can exist hidden in the inside of the green vortices, where we can't discover them. But they must be completely covered, otherwise a disastrous reaction occurs, the pair annihilation, as a consequence of the oppositely directed property of the vortices which cancel out. By means of the pair annihilation a dematerialization can occur, because every elementary vortex keeps in its inside the same amount of energy with opposite sign and the fusion of two inverse particles can result in a zero sum of the energy. The best known example is the annihilation of an electron-positron pair under emission of radiation discovered by Klemperer in 1934. In the upper representation (fig. 7.2a) the elementary vortices still are symmetrical, but the outside field lines already are "bent" and linked together in such a way that, with the exception of the ones in the direction of the axis, no interaction takes place which can be measured.

The two particles for reason of the different charge approach each other quickly, and the closer they are, the larger the mutual force of attraction becomes; a vicious circle, which leads to the asymmetry shown in the lower sketch (fig. 7.2b) and only comes to rest, if both particles have destroyed themselves mutually.

The electron and the positron had the same amount of, but oppositely directed swirl activity, so that purely arithmetically seen a zero sum of the rest energy results. But it should be paid attention to both particles having some kinetic energy on the occasion of the relative motion to each other and if they rotate around their own axis also rotational energy. An emission of annihilation radiation occurs, is the explanation of particle physics.

With the knowledge of the photon (fig. 4.6) we can interpret the annihilation radiation as a consequence of the phenomenon of transport. The faster and consequently smaller vortex, for instance the green one, slips into the red one and sees the green inside, which is compatible for it. Unfortunately it only can remain there, as long as it is smaller, thus is faster, and therefore it shoots out on the other side again. Now the electromagnetic force of attraction fully takes effect. It is slowed down and the red vortex correspondingly accelerates. The process is reversed.

These around each other oscillating vortices, so we had derived, have a characteristic frequency (colour), are polarizable and are moving forward with the speed of light as a consequence of the open vortex centre. It therefore concerns the photon.

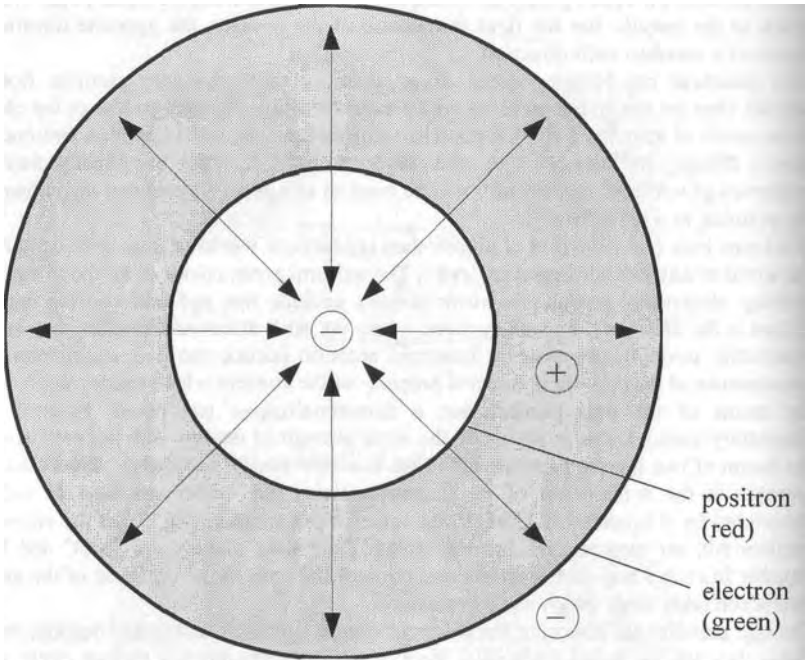

Fig. 7.3: Theoretical final state of the positronium = static γ-quant (photon).

7.3 Positronium

But before the two elementary vortices, the electron and the positron, are annihilated under emission of radiation, they will for a short time take a shell-shaped, a bound state, in which one vortex overlaps the other.
Its formation we can imagine as follows: an electron, flying past a resting positron, is cached by this for reason of the electromagnetic attraction and spirals on an elliptic path towards the positron. In doing so its angular velocity increases considerably. It will be pulled apart to a flat disc for reason of the high centrifugal forces, to eventually lay itself around the positron as a closed shell.
Now the red positron sees the electron vortex so to speak "from the inside" and doing so it sees as well red; because the green vortex has a red centre and vice versa! The result is the in fig. 7.3 given configuration.

The number of field lines, which run from the red border of the positron in the direction of the centre, is identical to the number, which point towards the green border of the electron. Here already the same state has been reached as in the centre, which corresponds to the state at infinity. That means that no field lines point from the green border to the outside; seen from the outside the particle behaves electrically neutral. It doesn't show any electromagnetic interaction with its surroundings.

If the particle were long-living, then it undoubtedly would be the lightest elementary particle besides the electron; but without stabilizing influence from the outside the positronium can't take the in fig. 7.3 shown state at all. The positron takes up the kinetic energy which is released if the electron becomes a shell around it. But before the bound state can arise, which would identify the positronium as an elementary particle, the equal rights of both vortices comes to light. With the same right, with which the electron wants to overlap the positron, it itself vice versa could also be overlapped.
If the stabilization of the one or the other state from the outside doesn't occur, then the stated annihilation under emission of y-quanta is the unavoidable consequence (fig. 4.6).

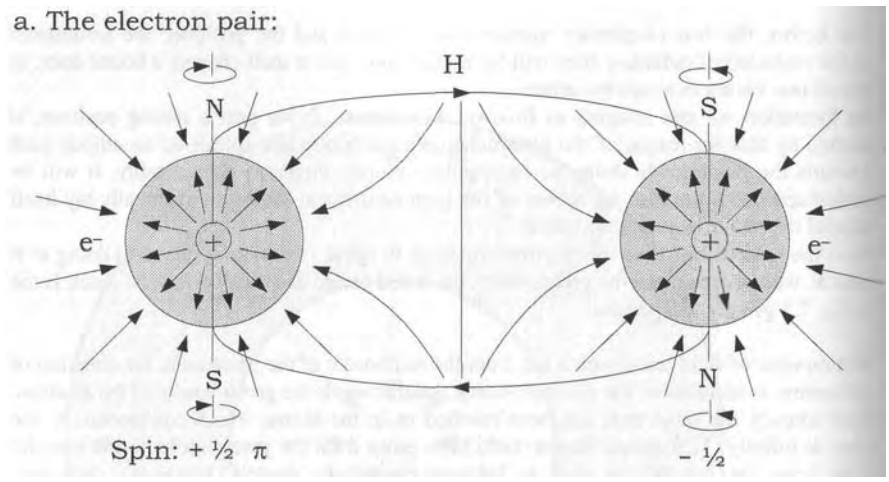

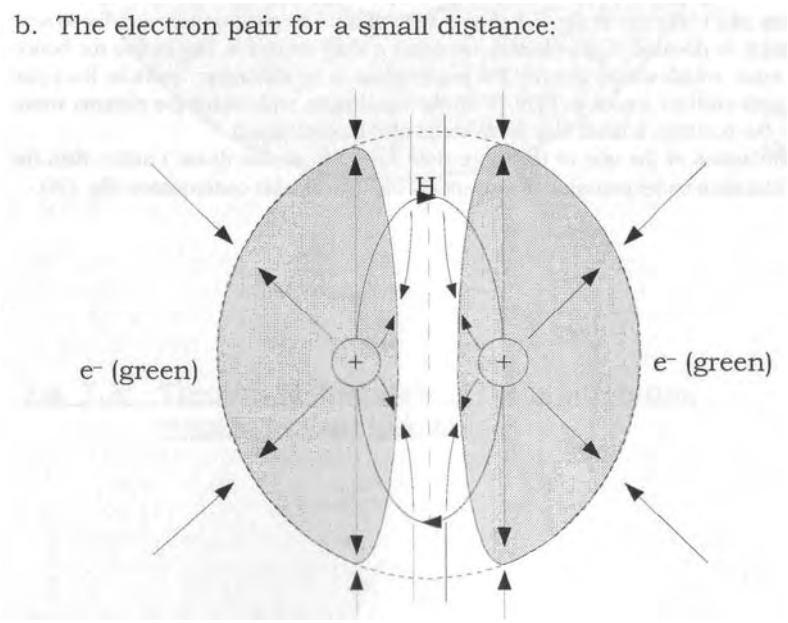

Fig. 7.4: Two electrons with oppositely directed spin

7.4 Dipole moment

As electrically charged spheres elementary vortices have a magnetic dipole moment along their axis of rotation as a consequence of the rotation of their own (fig. 7.4). This is measurable very precisely and for the most important elementary particles also known quantitatively. In contrast to the angular momentum the magnetic moment can't be constant according to the here presented theory. It should slightly change, if we increase the field strength in the laboratory.

In a particle consisting of several elementary vortices the vortices mutually increase the local field strength. Therefore we measure at the proton, which consists of three vortices, not the triple, but only the 2,793-fold of the nuclear magneton which can be expected for reason of its mass. Also the neutron has instead of the double only the 1,913-fold nuclear magneton. The deviations therefore are explicable as a consequence of the surrounding fields.

Prerequisite for this point are two other, still unanswered, key questions of quantum physics:

> XII: Why is measured for the proton approximately the triple of the magnetic dipole moment which can be expected for reason of the charge?
>
> XIII: Why does the neutron, as an uncharged particle, actually have a magnetic moment?

These questions can only be brought to a conclusive answer, if we have derived the vortex structures of the respective particles.

The elementary vortex, as a consequence of the spin along its axis, forms a magnetic north pole and a south pole. Another possibility to interact with an external field or with other particles is founded on this property. This shall be studied by means of two electrons. which form an electron pair.
For reason of the equal charge the two electrons at first will repel each other. If they rotate of their own they however will mutually contract, which, seen from the outside, is interpreted as a force of attraction. And in addition will they align their axes of rotation antiparallelly. While they now rotate in the opposite direction, a magnetic force of attraction occurs.

As is shown in fig. 7.4, the magnetic dipole field in this way is compensated towards the outside, as is clarified by the field line (H) with a closed course. Between both electrons a space free of E-field stretches. If both vortices are a small distance apart they lay themselves around this space like two half-shells of a sphere. A particle forms which seen from the outside is magnetically neutral, but it carries the double elementary charge (fig. 7.4b).
The exceptional affinity is always restricted to two vortices of equal charge with an opposite direction of rotation. Further vortices can't be integrated anymore and are repelled. This property of vortices covers the quantum condition (Pauli's exclusion principle) for the spin quantum number perfectly.

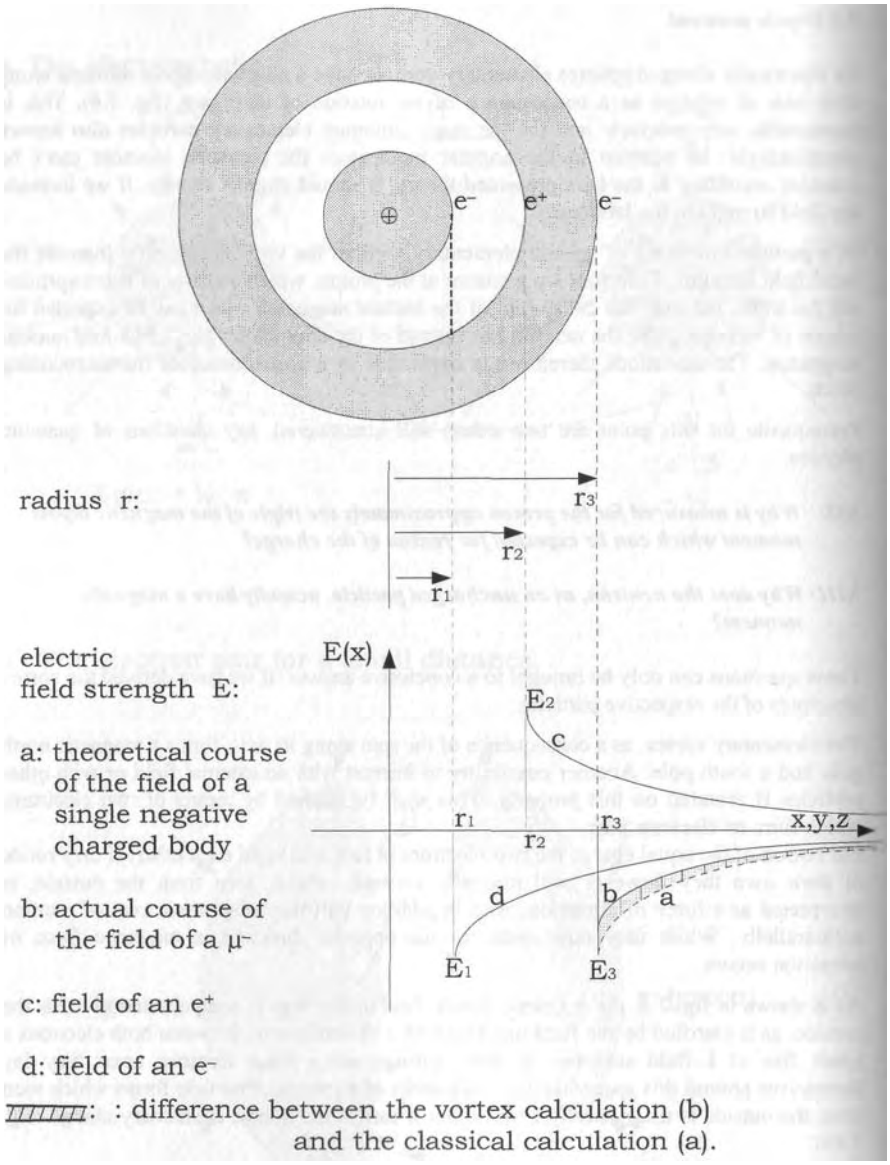

Fig. 7.5: The mvon and the electric field E(x) of the three elementary vortices

7.5 Myon

We now have discussed all conceivable possibilities, which two elementary vortices can form: the creation of a pair for like charge and the annihilation under emission of photons via the formation of the positronium as an intermediate result for unequal charge. Next another elementary vortex shall be added and all different possibilities and configurations will be derived, which can be formed by amassing or overlapping.

The positronium can, as said, only take the in fig. 7.3 shown bound structure, if it is stabilized from the outside. This task now a further electron shall take over. According to the shell model the innermost elementary vortex an electron (e^-), is overlapped by a positron (e^+) and that again overlapped by an electron (e^-).
With an in the sum single negative charge, a completely symmetric structure as well as a half-integer spin this particle will show a behaviour corresponding to a large extent to that of the electron. Merely the mass will be considerably larger, because every vortex each time compresses the other two.

It therefore concerns the myon (μ^-), which also is called "heavy electron". The myon was discovered 1937 in the cosmic radiation (Anderson and others).
In fig. 7.5 are drawn above each other the shell-shaped structure of the myon and the electric field E(x) of the three elementary vortices.
It is visible that merely in the proximity of the particle the actual course of the field deviates from and is smaller, than the course which theoretically can be expected for a single negatively charged body. The difference is marked by a hatching.

We now can tackle the calculation of the myon. For that the following considerations to begin with are useful:
Mass is an auxiliary term founded in usefulness, which describes the influence of the electromagnetic field on the speed of light and with that on the spatial extension of the "point mass".
Without exception the local cosmic field E_o has an effect on a free and unbound elementary vortex, thus on an individual e^- or e^+, and determines so its size and its mass.
But as long as we haven't determined this field strength, the calculation of its quantum properties won't succeed.
Instead the masses of compound particles will be compared to each other, which are so heavy that the field strength of the neighbouring vortices is predominant over the basic field E_0, so that a neglect of E_o seems to be allowed. The course of the calculation is made for all elementary particles in the same manner, which is explained hereafter.

Spherical capacitor: (r_i = inner radius; r_a = outer radius)

$$U = \int_{r_i}^{r_a} E\,dr \tag{7.1}$$

Electron ($r_i = 0$ and $r_a = r_e$): $U = 511\ \text{kV} = \text{const.}$ (6.31*)

$$U_1 = U_2 = U_3 = U_4 = \ldots = U_n \tag{7.2}$$

At The radius r_1 is valid: $E(r_1) = E_1$ and

$$U_1 = \int_0^{r_1} E_1\,dr = E_1 r_1 \overset{!}{=} U_2 = \int_{r_1}^{r_2} E_1\,dr = E_1 (r_2 - r_1) \tag{7.1*}$$

At the radius r_2 is valid for the 2nd and 3rd shell $E(r_2) = E_2$:

$$U_2 = \int_{r_1}^{r_2} E_2\,dr = E_2 (r_2 - r_1) \overset{!}{=} U_3 = \int_{r_2}^{r_3} E_2\,dr = E_2 (r_3 - r_2) \tag{7.1**}$$

comparison of the radii:

$$\Delta r = \overset{(7.1*)}{r_1 = r_2 - r_1} \overset{(7.1**)}{= r_3 - r_2} = \ldots = r_n - r_{n-1} \tag{7.3}$$

resp.:

$$r_2 = 2 \cdot r_1; \quad r_3 = 3 \cdot r_1; \quad \ldots; \quad \boxed{r_n = n \cdot r_1} \tag{7.4}$$

comparison of the field strengths: (7.1* with 7.1** with Eq. (7.2):

$$E_1 = E_2 = E_3 = \ldots = E_n \tag{7.5}$$

Theory of objectivity, fig. 6.18: $\boxed{E \sim 1/r}$ (6.25)

see fig. 7.5:

$$E_1(r_3) = E_{31} = -E_1 \cdot (r_1/r_3)$$
$$E_2(r_3) = E_{32} = E_2 \cdot (r_2/r_3)$$
$$E_0 = \text{cosmic basic field} \quad \text{(negligible)}$$

$$E(r_3) = E_{31} + E_{32} + E_0 = E_1 \cdot (r_2 - r_1)/r_3 + \cancel{E_0} \tag{7.6}$$

$$\boxed{\frac{E(r_3)}{E_1} = \frac{2 \cdot r_1 - r_1}{3 \cdot r_1} = \frac{1}{3}} \tag{7.7}$$

Fig. 7.6: Calculation of the electric field strength E(r) of the myon from its dependency on radius

7.6 Calculation of the vortex fields

The tension voltage of an elementary vortex, like for a spherical capacitor, is determined by integrating over the electric field strength from the inner radius r_i up to the outer radius r_a:

$$U = \int_{r_i}^{r_a} E \, dr \quad (7.1)$$

For the electron ($r_i = 0$ und $r_a = r_e$) we already have carried out the integration and determined the tension voltage to be 511 kV (equation 6.31 *).
Doing so we further had discovered that it won't change, if the radius r varies. Even for a shell configuration, in which electrons and positrons alternately overlap, the approach is valid:

$$U_1 = U_2 = U_3 = U_4 = \ldots = U_n \quad (7.2)$$

At a certain radius all elementary vortices show the same density of field lines and with that also the identical field strength, so that we can solve the integral (7.1) for the each time neighbouring vortex shells and can compare the results:
At the radius r_1 with $E(r_1) = E_1$ the agreement, according to equation 7.1* (fig. 7.6), is valid for the innermost and the overlapped vortex shell.
At the radius r_2 with $E(r_2) = E_2$ the agreement according to equation 7.1** (fig. 7.6) is valid analogously for the 2nd and 3rd shell.
If still more shells are present, then we can arbitrarily repeat this procedure. For the radius of each shell we always obtain relation 7.3, which, related to the innermost radius, provides the following simple expression for the individual radii:

$$r_2 = 2 * r_1 ; \quad r_3 = 3 \cdot r_1; \quad \ldots ; \quad r_n = n * r_1 \quad (7.4)$$

From the comparison of the integration results 7.1* and 7.1** follows further that all elementary vortices produce the same field strength:

$$E_1 = E_2 = E_3 = \ldots = E_n \quad (7.5)$$

We infer from the transformation table (fig. 6.18, eq. 6.27) that the field strengths E and H decrease with 1/r. In fig. 7.5 the decrease of the fields with 1/r is shown. Up to the radius r, the field of the innermost vortex E_1 has worn off to the value $E_{31} = - E_1 \cdot (r_1/r_3)$. This field is overlapped by $E_{32} = E_2 * (r_2/r_3)$ as well as the cosmic basic field E_o:

$$E(r_3) = E_{31} + E_{32} + E_0 = E_1 \cdot (r_2 - r_1)/r_3 + E_o \quad (7.6)$$

The local basic field E_o is not known, but it is very small with regard to the field of the neighbouring vortex shells, so that a neglect seems to be allowed. From equation (7.6) in this way follows with the radius relation (7.4):

$$\frac{E(r_3)}{E_1} = \frac{2 \cdot r_1 - r_1}{3 \cdot r_1} = \frac{1}{3} \quad (7.7)$$

For the shell-shaped configuration of the myon (fig. 7.5) relation (7.7) indicates, which field the outside vortex shell is exposed to. From this can already be seen, how much it is compressed thanks to the field dependent speed of light and how much its mass as a consequence is increased.

Structure of the proton p^+:

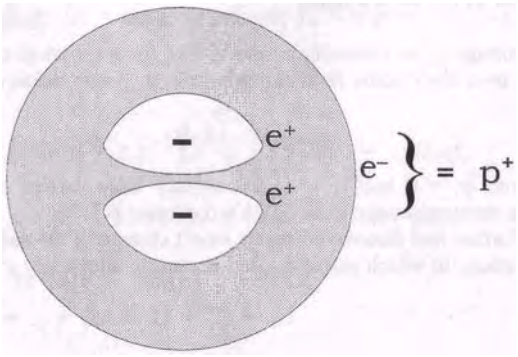

Calculation:
structure consisting of two shells, inner vortices with $2 \cdot E_1$,
field strength at the outer radius r_2:

$$E(r_2) = 2 * E_{21} = 2 * E_1(r_1/r_2) = E_1 \qquad (7.8)$$

Comparison of p^+ (7.8) with u^- (7.7) (z_e = number of the elementary vortices being involved with) in building up the structure, here each time $z_e = 3$):

Comparison of the radii with $E \sim l / r$ (6.27)

$$\frac{r_p}{r_\mu} = \frac{z_{e\mu}}{z_{ep}} \cdot \frac{E_\mu(r_3)}{E_p(r_2)} = \frac{3}{3} \cdot \frac{1/3}{1} = \frac{1}{3} \qquad (7.9)$$

Theory of objectivity (fig. 6.18): $m \sim l/r^2$ (6.34)

$$\frac{m_p}{m_\mu} = \frac{z_{ep}}{z_{e\mu}} \cdot \left(\frac{r_\mu}{r_p}\right)^2 = \frac{3}{3} \cdot \left(\frac{3}{1}\right)^2 = 9 \qquad (7.10)$$

$$m_p/m_e = 9 * (m_u/m_e) = 9 * 207 = 1863 \qquad (7.11)$$

Measurement value, proton mass: $m_p = 1836 \cdot m_e$
Resp.:
measurement value myon mass $m_u = 207 * m_e$
myon calculated value: $m_p = 204 * m_e$. (error = 1,5%)

Since we, by using this calculation method, for the first time succeeded in deriving the mass of an elementary particle from that of another particle, the particle mass isn't a constant of nature anymore!

Fig. 7.7: Calculation of the proton

7.7 Calculation of the proton

If we again remember the affinity of two elementary vortices, which rotate with opposite spin. They align their axis of rotation antiparallel and form a very probable, but not particularly tight bound pair (fig. 7.4).
If we this time start with a positron pair, then does this pair have a double positive elementary charge. The two e^+ hence exert a particularly big force of attraction on electrons flying past them. If they have cached one and put it round as a shell, like a coat, then they will never again give it back! To again remove the electron, a triple positive charge would be necessary. But such a particle can't exist at all. The new particle therefore has an absolute stability and a very big mass, because the positron pair is considerably compressed by its outer shell. The total charge is single positive. With these properties it actually only can concern the proton. Its structure is shown in fig. 7.7.
We can start from the assumption that both positrons are very close together in the inside and thus each forms the half of a sphere. For the calculation of the proton mass we then can assume as an approximation a structure of two shells, in which the inner vortex will have the double charge and the double field ($2 * E_1$). With equation 7.4 the field strength at the outer radius r_2 is:

$$E(r_2) = 2*E_{21} = 2*E_1*(r_1/r_2) = E_1 \qquad (7.8)$$

If we want to compare the results of the p^+ (7.8) and the μ^- (7.7), then it should be considered that the field of the innermost elementary vortex E_1 only is equal, if the number z_e of the elementary vortices involved in building up the particle is identical. Here with each time $z_e = 3$ this is the case. Because of equation 6.27 (E, H ~ 1/r) now also the radii are comparable:

$$\frac{r_p}{r_\mu} = \frac{z_{e\mu}}{z_{ep}} \cdot \frac{E_\mu(r_3)}{E_p(r_2)} = \frac{3}{3} \cdot \frac{1/3}{1} = \frac{1}{3} \qquad (7.9)$$

The mass of a particle first is determined by the number of the elementary vortices z_e. According to the theory of objectivity (fig. 6.18) however also the radius has an influence on the mass:

$$m \sim 1/r^2 \qquad (6.34)$$

This proportionality should be applied to the p^+-μ^-- comparison.

$$\frac{m_p}{m_\mu} = \frac{z_{ep}}{z_{e\mu}} \cdot \left(\frac{r_\mu}{r_p}\right)^2 = \frac{3}{3} \cdot \left(\frac{3}{1}\right)^2 = 9 \qquad (7.10)$$

The calculation provides a nine times bigger mass for the proton with regard to the mass of the myon. Therefore the mass of the proton related to the mass of the electron is:

$$m_p/m_e = 9*(m_\mu/m_e) = 9*207 = 1863 \qquad (7.11)$$

It would be favourable, to start from the with measuring techniques determined value for the mass of the proton $m_p/m_e = 1836$ and calculate backwards the related mass of the myon.
Then we obtain 204 as the calculated value instead of the measurement value m_μ/m_e= 207.
The reason for the deviation of 1.5 percent is caused by the neglect of the cosmic field E_o with regard to the field of the neighbouring elementary vortex. This neglect takes very much less effect for the relatively heavy proton than for the light myon.
The cosmic field therefore will compress the myon more strongly and increase the mass more strongly as is calculated here, in agreement with the measurement results.
Summarizing: since we, by using this calculation method, for the first time succeeded in deriving the mass of an elementary particle from that of another particle, the particle mass isn't a constant of nature anymore!

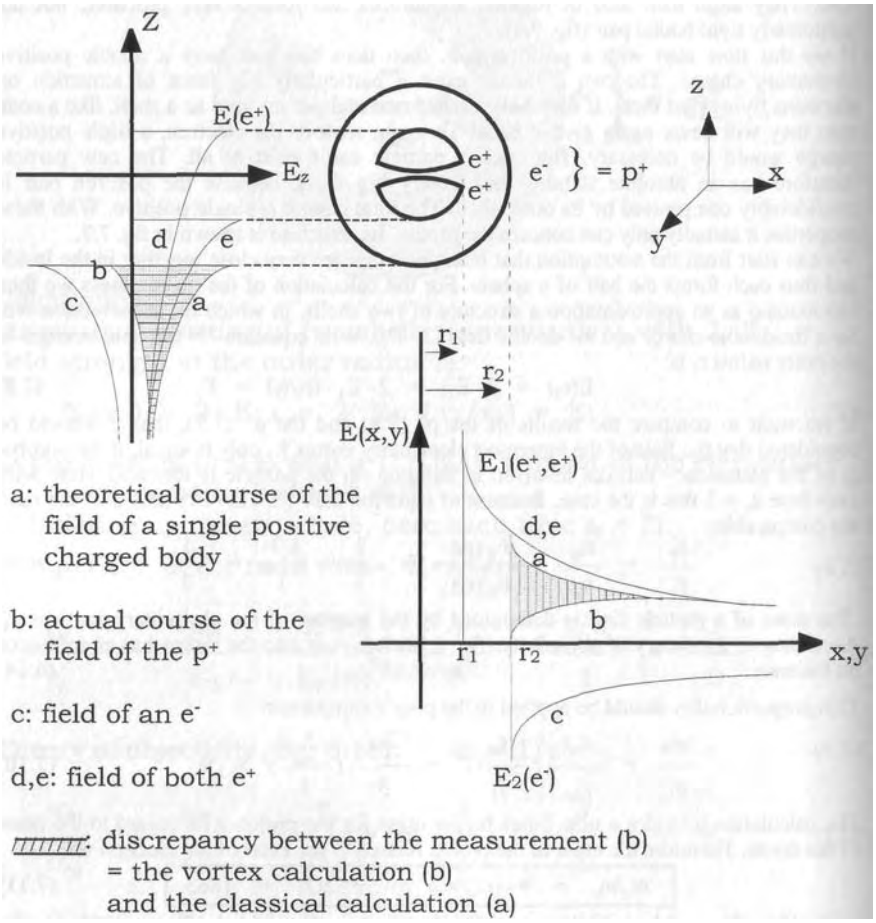

Fig. 7.8: The proton and the electric field of the three elementary vortices in x-, y- and z-direction

7.8 "Strong interaction"

A central question of nuclear physics concerns the forces which keep the atomic nucleus, which consists of many neutrons and protons, together and give it its very good stability in spite of the like positive charge (key question XIV fig. 7.13).
According to today's textbook opinion (course of the field indicated with a in fig. 7.8) the forces of repulsion between the individual protons increase further as the distance gets smaller, to obtain immense values within the nucleus. They theoretically had to be overcome by new and unknown nuclear forces. Therefore physicists assume the hypothesis of a "strong interaction". But they are mistaken.
The answer to this open question is provided by the course of the field (b) for the proton, sketched in fig. 7.8. We see that the electric field at first indeed still increases if we approach the proton, but in the proximity it contrary to all expectations decreases again until it is zero. With that then also any force of repulsion has vanished! But the course of the field follows without compulsion from the overlap of the three individual elementary vortex fields.
The field direction in the z-direction even is reversed! In this topsy-turvy world, in theory, an electromagnetic force of attraction between two like charged protons can occur. We conclude:
A strong interaction doesn't exist at all. The usually given values for "range" and "strength" just represent a misinterpretation. The hatched drawn area marks the difference which is misinterpreted by quantum physics. The model concept over and above that answers another mysterious property of the proton. As an electrically charged particle with a spin it first of all should form a magnetic moment for reason of the rotating charge. But until now the measurable order of magnitude couldn't be explained.

7.9 Magnetic moment of the proton

If the inner positrons rotate around each other with oppositely pointing spin, then the magnetic field line is already closed within the particle and no effect in x- or y-direction is observable from the outside.
As pair they however still can rotate together around the z-axis and they'll do that. The overlapping electron for reason of its rotation of its own will likewise build up a magnetic dipole moment along its axis of rotation. It also will align its axis in the z-direction, so that now all three elementary vortices have one field axis. Being comparable to individually "elementary magnets" aligned in the same direction they produce a triple magnetic moment (key question XII fig. 7.13).
If we namely would start with a single positively charged body according to the theory of quantum mechanics, then we would have expected the value of the nuclear magneton<i> p_m as the magnetic moment for the proton $p_m = e \cdot \hbar/2m$. Opposite to that provide experiments with protons the approx. threefold value as already predictable by the new vortex theory. In addition does the direction of the vector p_{mp} correspond with the spin-axis, so as if the proton were negatively charged. The reason for that is that only the outermost elementary vortex determines the spin of the particle, and that is actually a negatively charged electron! Also this excellent agreement in the case of the proton can be judged as proof for the correctness of the vortex model.

<i>: The nuclear magneton has the value of: $p_{mk} = 5{,}0508 \cdot 10^{-27}\ Am^2$

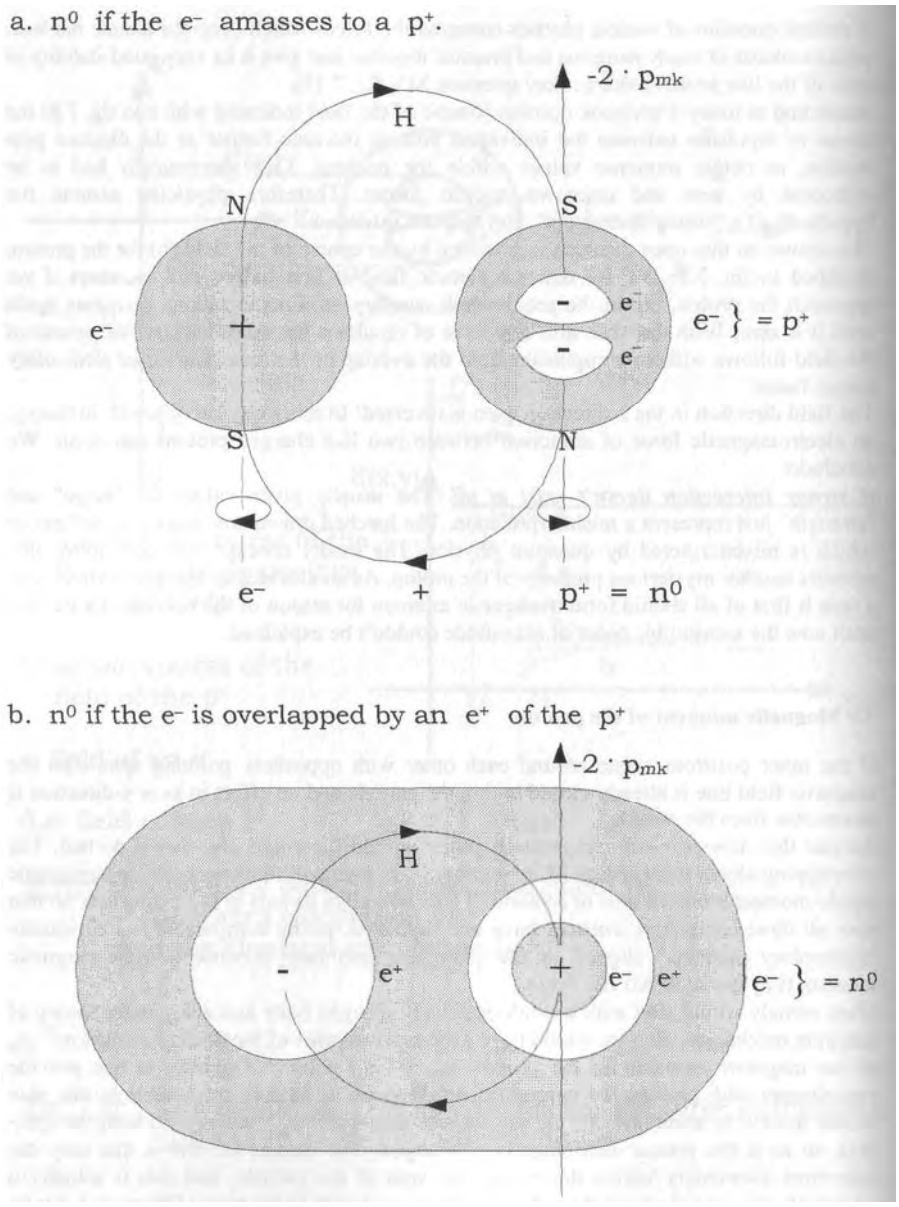

Fig. 7.10: The neutron with magnetic dipole field H

7.10 Structure of the neutron

Until now could not be solved, why despite its missing charge also the neutron n° has a magnetic moment. The experimentally determined value is approx. the double of the nuclear magneton. Further was with measuring techniques an only 0,14% bigger mass with regard to the proton determined. The difference is approximately two and a half electron masses. And how reads the answer in the view of the potential vortex theory? It is obvious that a positively charged proton and a negatively charged electron mutually attract and amass together (fig. 7.10a). A pair annihilation can't occur, because the electron, which jackets both positrons, prevents this. The formation of an outer shell is not permitted by the high stability of the proton. It would have to be a positron shell, which instead of neutrality would produce a double positive charge. Conceivable is however the configuration, in which one of the two e^+ of the proton takes up the e^- in its inside and overlaps it (fig. 7.10b).

At first appears the amassing of p^+ and e^- to be the obvious answer to the structure of the neutron also in view of the small increase in mass. Since both elementary particles (p^+ and e^-) have a spin, will they align their axes of rotation antiparallelly and rotate against one another, exactly like an electron pair. But we now have unequal conditions: the proton brings the triple magnetic moment, the electron however only the single, and its field line will be closed by the proton. The difference which remains is the measurable double nuclear magneton, with which key question XIII (fig. 7.13) would be answered exhaustively.
This structure is shown in fig. 7.10a and has as rest mass the by only one electron mass increased proton mass, but it will deviate from this value, when the unequal partner come closer. Doing so the electron will be more strongly compressed by the heavier proton as vice versa.
Mass, magnetic moment and charge thus correspond to a large extent with the measurement values. Problems are seen concerning the spin and the stability.
Set of problems concerning spin: both the e^- and the p^+ have a half-integer spin, for which reason this configuration should have an integer spin.
Set of problems concerning stability: the neutron decays as is well-known in a p^+ and an e^- , but this object should be shorter-lived as determined by experiments. If namely the partner come each other very close, then the field strength of the p^+, contrary to expectation, doesn't increase but decreases, as is shown in fig. 7.8. The e^- therefore can only be bound very, very loosely; in z-direction it even will be repelled!
For these reasons is the open structure, which is shown in fig. 7.10a, not feasible as an isolated elementary particle, but only in a spatially extended network, like it is present in an atomic nucleus. In this case the neutron is, as is well-known, lighter by the mass defect, which is interpreted as binding energy.
Possibly it only concerns an intermediate stage. The heavier final product of the n° then could look like is shown in fig. 7.10b. For this version the line of the magnetic field already is closed partly within the particle, so that also here the approx. double nuclear magneton remains as a rest with a sense of orientation, as if the neutron were negatively charged.
Without charge and with the 1/2 spin it in this configuration fulfils all important quantum properties of the neutron, even that of the stability.

the field of the e^-: $E_{31}(-) = - E_1 (r_1/r_3)$,

the field of the e^+: $E_{32} = E_2 (r_2/r_3) = E_1 (r_2/r_3)$

and in addition the e^+: $E_{31} = E_1 (r_1/r_3)$.

$$E(r_3) = E_{31}^{(-)} + E_{32} + E_{31} + \underbrace{E_0}_{\text{negligible}}$$

With the radius relation (eq. 7.4): $r_2 = 2*r_1$ und $r_3 = 3* r_1$
The total field is:

$$\frac{E(r_3)}{E_1} = -\frac{r_1}{r_3} + \frac{r_2}{r_3} + \frac{r_1}{r_3} = -\frac{1}{3} + \frac{2}{3} + \frac{1}{3} = \frac{2}{3} \quad (7.12)$$

With z_{en} = 4 elementary vortices

$$\frac{r_n}{r_p} = \frac{z_{ep}}{z_{en}} \cdot \frac{E_p(r_2)}{E_n(r_3)} = \frac{3}{4} \cdot \frac{1}{2/3} = \frac{9}{8} = 1{,}125 \quad (7.13)$$

n_0 is 12,5% bigger than p±

$$\frac{m_n}{m_p} = \frac{z_{en}}{z_{ep}} \cdot \left(\frac{r_p}{r_n}\right)^2 = \frac{4}{3} \cdot \left(\frac{8}{9}\right)^2 = 1{,}05 \quad (7.14)$$

n^0 is 5% heavier than p±

Fig. 7.11: Calculation of the mass of the neutron

7.11 Calculation of the neutron

The calculation of the mass for the structure of the neutron according to fig. 7.10b has still remained open.

Because in this book for the first time has been shown, how the mass can be calculated, if the particles are understood as potential vortices, we also in this case again want to make use of this possibility.
We have, like for the μ^-, a structure of three shells with the radii r_1, r_2 and r_3. At the outer radius r_3 the fields of the elementary vortices on the inside have an effect on the electron On the outside: like is the case for the μ^-

the field of the e^-: $E_{31}^{(-)} = -E_1(r_1/r_3)$,

the field of the e^+: $E_{32} = E_2\,(r_2/r_3) = E_1\,(r_2/r_3)$

and in addition the e^+: $E_{31} = E_1\,(r_1/r_3)$.

The total field is, with the radius relation equation 7.4:

$$\frac{E(r_3)}{E_1} = -\frac{r_1}{r_3} + \frac{r_2}{r_3} + \frac{r_1}{r_3} = -\frac{1}{3} + \frac{2}{3} + \frac{1}{3} = \frac{2}{3} \quad (7.12)$$

If we compare the neutron, in which now $z_e = 4$ elementary vortices are involved, with the proton:

$$\frac{r_n}{r_p} = \frac{z_{ep}}{z_{en}} \cdot \frac{E_p(r_2)}{E_n(r_3)} = \frac{3}{4} \cdot \frac{1}{2/3} = \frac{9}{8} = 1{,}125 \quad (7.13)$$

then we infer from the arithmetically determined result that the neutron according to the radius is 12,5% bigger than the proton. The mass is calculated to:

$$\frac{m_n}{m_p} = \frac{z_{en}}{z_{ep}} \cdot \left(\frac{r_p}{r_n}\right)^2 = \frac{4}{3} \cdot \left(\frac{8}{9}\right)^2 = 1{,}05 \quad (7.14)$$

The particle therefore has a mass which is 5% larger than for the proton, slightly more as has been measured for the neutron. The difference is acceptable. The particle after all is structured very asymmetrically, in which the reason is to be seen, why the uncharged particle, looked at from close up, nevertheless shows an observable charge distribution.

Decay equations if neutrinos are involved:

$$n^0 \longrightarrow p^+ + e^- + \bar{\nu}_e \qquad (7.15)$$

$$n^0 + \nu_e \longrightarrow p^+ + e^- \qquad (7.15^*)$$

$$\mu^- \longrightarrow e^- + \bar{\nu}_e + \nu_\mu \qquad (7.16)$$

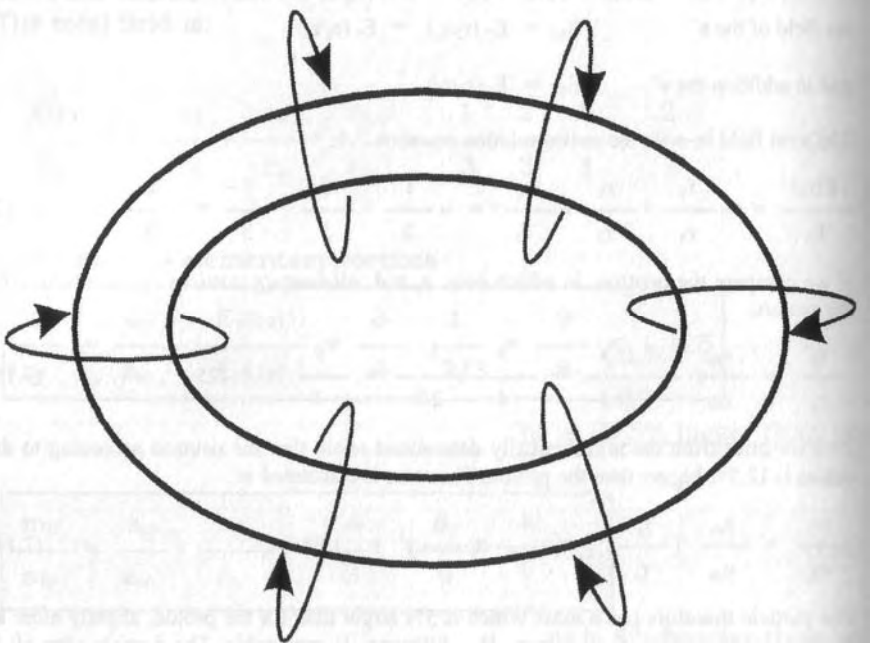

Fig. 7.12: The electron-neutrino as a ring-like vortex

7.12 ß-decay

In the case of the calculated quasistable particles, the μ^- and the n°, the verification by means of the well-known decay processes is still due. Also free neutrons, those which are not bound in an atomic nucleus, decay. But with an average life of 918 seconds they are by far the longest living among the quasistable elementary particles. Should the neutron decay be triggered by neutrinos, then obviously a distant flying past does not suffice. For that the electron is bound in the proton too tight. There probably has to occur a direct "crash", in which a neutrino is used, since the decay equation reads:

$$n^0 \longrightarrow p^+ + e^- + \overline{\nu}_e \quad (7.15)$$

As could be expected a proton p^+, an electron e^- and the mentioned electron-antineutrino ν_e are formed. What here is written down as the emission of an antiparticle, is equivalent in the absorption of the particle<i>, in this case of the neutrino. The reaction equation 7.15 can be reformulated accordingly<i>:

$$\boxed{n^0 + \nu_e \longrightarrow p^+ + e^-} \quad (7.15^*)$$

Also for the decay of the myon an electron-neutrino is used. In both cases it provides the energy necessary for the decay. But we can really understand the β-decay only, after we have got to know these particles better.

Without charge and without mass neutrinos show hardly any interactions with matter and as a consequence they possess the enormous ability of penetration - as is well-known. They are said to participate in the „weak interaction", which should trigger a conversion of the concerned particles, which is their decay. Pauli already has postulated the neutrino 1930 theoretically, because the transition from a half-integer spin to an integer spin for the n^0 -decay otherwise wouldn't have been explicable.

If we imagine an elementary vortex is being born, but the local field strength and energy isn't sufficient for obtaining a quantized state. The result is an incomplete potential vortex, which has an open vortex centre and as a consequence shows no localization at all. In the form of a vortex ring it oscillates around itself, while it continually turns its inside to the outside and then again to the inside.
One moment the vortex ring is green, then it is red again, one moment matter, then anti-matter, one moment positively charged and the next moment negatively charged. In contrast to the photon the number of the involved elementary vortices z_e for the neutrino is odd (for the ν_e $z_e = 1$). Perpendicular to the direction of propagation the neutrino has a spin $(s/\hbar = ½)$ for reason of a rotation, which overlaps the pulsating oscillation. This vortex ring is, as said, not a member of stationary matter, because it doesn't form a "black hole" in its centre, where the speed of light becomes zero. But it has an absolute stability like every elementary vortex, even if it only occurs incomplete and hence not in any quantized form,. This concept of the electron-neutrino as an open oscillating elementary vortex in the form of a ring-like vortex covers the experimentally determined realizations unexpectedly well.

<i>: Kussner, H.G.: Grundlagen einer einheitlichen Theorie der physikalischen Teilchen und Felder, Musterschmidt, Gottingen 1976, S.155

A strong interaction doesn't exist. The electric field in the proximity of the proton goes to zero within the range which is determined with measuring techniques.

A weak interaction doesn't exist. That interaction only is a special case of the electromagnetic interaction which appears in a weakened form. _____

XII: Why does the proton have approximately 3 times the magnetic moment which can be expected for reason of the only single charge?
(3 elementary vortices)

XIII: Why does the neutron as an uncharged particle anyway have a magnetic moment?
(Structure of the n°)

XIV: What owes the atomic nucleus, which consists of like charges, its stability?
(Course of the field of the p^+, instead of "strong interaction")

XV: Why does the free neutron decay, although it is stable as a particle of the nucleus? _____
(Interaction with neutrinos)

XVI: Why do neutrinos nevertheless participate in the "weak interaction", although they have no mass and no charge? _____
(Oscillating charge)

XVII: How can be given reasons for the finite range _____of the "weak interaction"?
(Reaction cross-section for particle decay)

Fig. 7.13: Further key questions of quantum physics (Continuation of figures 4.4 and 6.13)

7.13 "Weak interaction"

Let's now look again at the ß-decay of the neutron, in which a neutrino ν_e is used. But this by no means will be a process of the weak interaction. Instead will neutrinos, contrary to the textbook opinion, participate in the electromagnetic interaction. They after all are one moment positively charged and the next moment negatively charged. With slow-acting gauges this it is true can't be proven, because the interaction is zero on the average. But this charged oscillating vortex ring can exert a considerable effect while approaching a neutron, which is based solely on the electromagnetic interaction.
The neutron is stimulated to synchronous oscillations of its own by the high-frequency alternating field of the neutrino, until it in the case of the collision releases the bound electron, which takes up the energy provided by the neutrino and transports it away. The interaction obviously is only very weak due to the oscillation. But a physical independency of it has to be disputed.
The finite range, which is given in this context, indicates the reaction cross-section around the n°-particle, within which the "crash" and as a consequence the β-decay occurs. This range is considerable larger as the particle itself. The electromagnetic interaction for such small distances after all is so violent, even if it only occurs in pulses, that the neutrino is thrown out of its path and can fly directly towards the neutron.

Perhaps we now understand also the β-decay of the myon. It actually were to be expected that without outside disturbance an absolute stability could exist because of the ideal symmetry of the μ^-. On our planet we however are in every second bombarded with approx. 66 milliard (billion) neutrinos per cm^2 <i>. Obviously it takes 2,2 µs on the average till a neutrino ν_e flies past a myon so close that it decays. In doing so it stimulates the outside elementary vortex to violent oscillations by trying to synchronize it. In this case the electron-neutrino ν_e carries away with it the two outer, and therefore weaker bound, elementary vortices of the myon, which meanwhile are oscillating synchronously. The innermost vortex, an electron e^-, is left behind. The decay of the myon which takes place with a probability of almost 100 % reads:

$$\mu^- \longrightarrow e^- + \overline{\nu}_e + \nu_\mu \quad \text{resp.} \quad \mu^- + \nu_e \longrightarrow e^- + \nu_\mu \qquad (7.16)$$

Thus a different neutrino ν_μ, is formed which can be distinguished from the ν_e and is called myon-neutrino since it forms from the μ^-. Actually it even has a similar structure of three shells, as is shown in fig. 7.5. But the vortex centre is open and the particle isn't stationary anymore. In the picture now only a momentarily state is shown, in which the ν_μ appears green on the outside and red in its open centre. As already for the ν_e oscillates also here the inside to the outside and vice versa, this time merely as a packet of three shells, so that also this particle shows all the typical neutrino properties discussed for the example of the ν_e.
The for potential vortices typical and already discussed phenomenon of transport here has an effect. In particular in connexion with vortex rings this property is known from hydrodynamics. It thus can be observed, how vortex rings bind matter and carry away with them. Because the neutrino is not quantized, it neither is restricted with regard to its ability to transport elementary vortices. Consequently even bigger configurations are conceivable, like configurations of 5 shells, 7 shells etc..

<i>: "Zeugen aus der Sonne", VDI-Nachrichten Nr. 45 vom 9.11.90, Seite 26

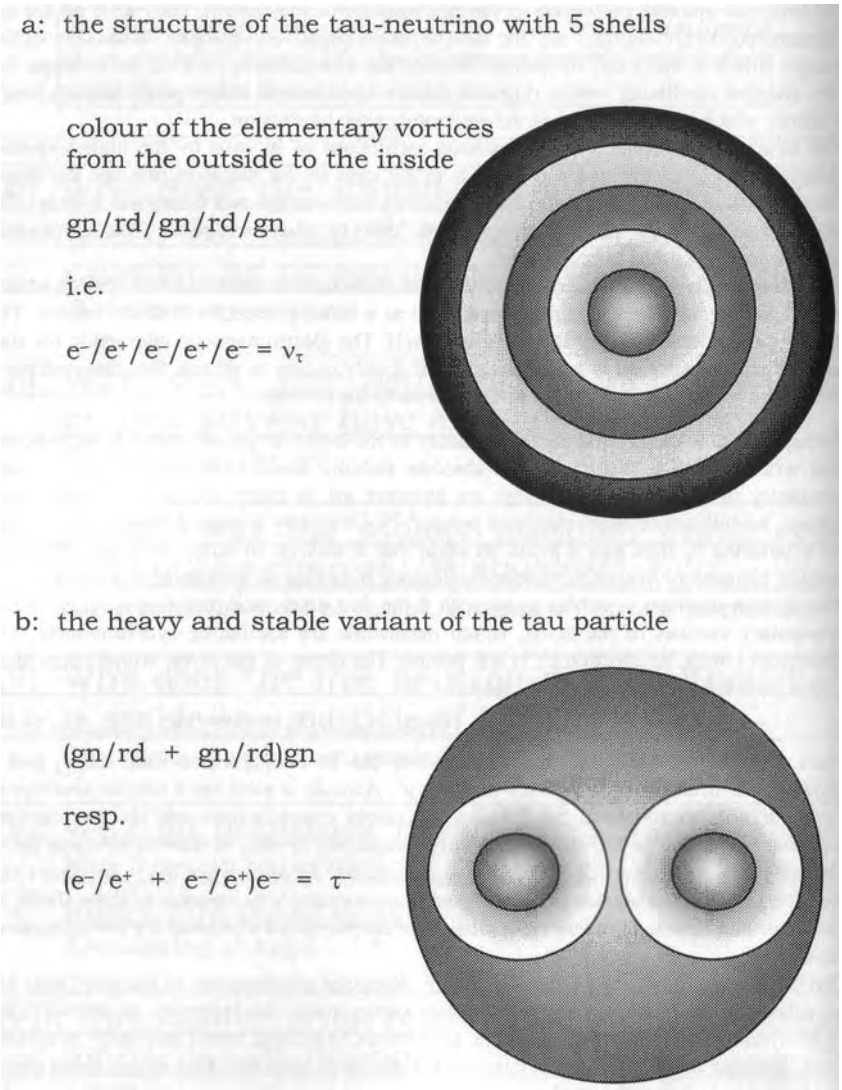

Fig. 7.14: Tau-neutrino and tau particle

7.14 Tau particle

In the table of the leptons after the e^- and the μ^- as the next particle the tau particle τ^- is found with its accompanying neutrino ν_τ. The obvious solution for the tau particle is the structure of five shells, as is shown in fig. 7.14a. With that the electron would have another particularly heavy relative with otherwise very similar properties.
For the myon the neutrino was stable, the particle itself however instable. We after all huve explained the particle decay as a consequence of an outside disturbance, and disturbances always are based on interactions. Correspondingly should, with the small possibility for an interaction, also the neutrino ν_τ of the tau particle have a better stability than the particle τ^- itself.
Without doubt this structure of 5 shells fulfils all known quantum properties like spin, charge etc. Merely the check of the mass is still due. This we now want to calculate for the structure shown in fig. 7.14a.

$$m_5 = m_p \cdot \left(\frac{z_{e\tau}}{z_{ep}}\right)^3 \cdot \left(-\frac{r_1}{r_5} + \frac{r_2}{r_5} - \frac{r_3}{r_5} + \frac{r_4}{r_5}\right)^2 \quad (7.17)$$

$$m_5 = 1836 \cdot \left(\frac{5}{3}\right)^3 \cdot \left(\frac{2}{5}\right)^2 \cdot m_e = \underline{\underline{1360 \cdot m_e}} \quad (7.17^*)$$

But the for the tau particle measured value is considerable higher!
Even if this structure is the only possible in the case of the neutrino ν_τ for reason of the complete symmetry, will the tau particle however change its structure by itself if another structure exists, which is more stable, thus in which the particle can take a bigger mass. Such a maximum provides the structure shown in fig. 7.14b after checking all possible configurations with five elementary vortices:

$$m_\tau = m_p \cdot \left(\frac{z_{e\tau}}{z_{ep}}\right)^3 \cdot \left(\left(-\frac{r_1}{r_3} + \frac{r_2}{r_3}\right) \cdot 2\right)^2 \quad (7.18)$$

$$m_\tau = 1836 \cdot \left(\frac{5}{3}\right)^3 \cdot \left(\frac{2}{3}\right)^2 \cdot m_e = \underline{\underline{3778 \cdot m_e}} \quad (7.18^*)$$

This value now lies 8% above the measurement values. It would be obvious, if unbound tau particles predominantly would take the structure shown in fig. 7.14b. The remaining error becomes explicable, if a very small number of tau particles in the lighter structure according to fig. 7.14a are involved with a correspondingly smaller probability.

The enormous variety of kinds of decay, and not a single one of the dominating ones has a probability of over 50%, makes it more difficult for us, to be able to directly infer the inner structure of a particle from the decay products. It nevertheless should be mentioned that after all 35% of all decays take place by taking up and using a neutrino ν_e or ν_τ, entirely in accordance with the model of the myon decay (equation 7.16).

name	mass (m/m_e) measured	mass (m/m_e) calculated	el.-vortices z_e	charge Q	radius r/r_p	inner structure of The elementary vortices, colour: (gn=green; rd=red) from the inside to the outside
e^-	1	-	1	-1	-	Fig. 4.3 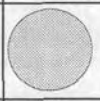 gn
γ^0	-	136	2	0	3	Fig. 7.3 rd/gn
μ^-	207	204	3	-1	3	Fig. 7.5 gn/rd/gn
η^0	1072	1088	4	0	1,5	rd/gn/rd/gn
(ρ^-)	1509	1360	5	-1	1,5	Fig. 7.14a gn/rd/gn/rd/gn
D^0	3650	3672	6	0	1	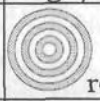 rd/gn...rd/gn
D^+ or F^+	3658 till 4188	4284	7	+1	1	gn/rd...rd/gn
(B^0)	10321	8704	8	0	0,75	rd/gn...rd/gn

7.15 Table of vortices of the calculated leptons and mesons compared with measurement values (Part 1).

7.l5 Pions

Unlike the leptons, which we could derive and calculate fairly completely, the mesons don't have a half-integer spin. With this characteristic property they therefore can't represent an individually overlapped elementary particle and they probably will consist of the amassing in pairs of individual configurations of potential vortices. This kind of bond can't be particularly tight. Consequently we don't know any stable mesons.

The most important basic building part of the mesons we have got to know over the positronium in fig. 7.3. It necessarily has to amass to another particle, otherwise it annihilates under emission of a γ-quanta, as already mentioned. This γ^0-particle, as it will be named here, has the mass of:

$$m_{\gamma 0} = (2/3)^3 \cdot (1/2)^2 \cdot 1836 \cdot m_e = 136 \cdot m_e \quad (7.19)$$

which only can be determined arithmetically. As a partner, to which the γ^0-particle can amass, first of all another γ^0-particle should be considered. Because both partner will rotate against one another, this new particle would not have a spin and moreover would be uncharged. The mass now would be twice as big with:

$$m_{\pi 0} = 2 \cdot m_{\gamma 0} = 272 \cdot m_e . \quad (7.19^*)$$

But the two γ^0-particles will come very close together and mutually feel the local, in the same direction orientated, distribution of the field, which will lead to a weakening of the field and as a consequence to a slight reduction of the mass.
With these properties it probably concerns the uncharged pion π^0. This model concept finds an excellent confirmation in the two possible kinds of decay, which can be regarded as equivalent:

$\pi^0 \longrightarrow \gamma + \gamma$ with a probability of 99%
and

$\pi^0 \longrightarrow \gamma + e^- + e^+$ with a probability of 1%

Also in the case of the charged pion $\pi^\pm$ the observable decay offers a big help, which will take place with a frequency of almost 100 %:

$$\pi^\pm \longrightarrow \mu^\pm + \nu_\mu$$

The equation doesn't state anything about the fact, if a neutrino ν_e is used in the process. But it points at the circumstance that the partner of the γ^0-particle for the $\pi^\pm$ most likely is a myon $\mu^\pm$. The mass will be smaller than the sum of both building parts:

$$(204+136) * m_e = 340 * m_e.$$

name	mass (m/m_e) measu-red	masse (m/m_e) calcu-lated	elem.-vorti-ces z_e	char-ge Q	inner structure of The elementary vortices, colour: (gn=green; rd=red) from the inside to the outside
B^-	11194	9793 +?	9 +?	-1	$r/r_p = 0{,}75$ gn/rt...rt/gn
(Y^0)	18513	17001 +?	10 +?	0	$r/r_p = 0{,}6$ rt/gn...rt/gn

Some compound configurations

π^0	264	272	4	0	2 x fig. 7.3 $\gamma^0 + \gamma^0 = \pi^0$
π^-	273	340	5	-1	fig. 7.3 + fig. 7.5 $\mu^- + \gamma^0 = \pi^-$
τ^-	3487	3778	5	-1	fig. 7.14b (2x gn/rd)/gn
(K^0)	974	918 +?	6 +?	0	$r/r_p = 2$ (2x rd/gn)/ rd/gn
(K^-)	967	939 +?	11 +?	-1	(rd/gn + gn)/ rd/gn + 3 γ^0

Fig. 7.16: Table of vortices of the calculated leptons and mesons compared with measurement values (Part 2).

7.16 Table of vortices of the mesons

The numerous kinds of decay for K-mesons suggest that these strange particles will consist of various combinations of amassed together and in pairs rotating γ^0- and $\mu^{\pm}$-particles. The possibilities of combination now already have increased in such a way that for every kaon and other mesons several solutions can be proposed. To avoid unfounded speculations, only a few clues will be given.

Besides the γ^0-particles also heavier arrangements should be considered as partner for the spin and as a building part for kaons and other mesons.
If for instance a π^0 is overlapped by a γ^0, then this particle has an arithmetically determined mass of 918 m_e. It therefore can concern a building part of the uncharged kaon K^0.

The likewise with three γ^0 formed configuration of 6 shells however, if it actually would staystable for the duration of a measurement, would have the mass of 3672 electron masses<i>.

A very much better detectability must be attributed to the configuration of 4 shells which consists of two γ^0, so to speak a heavy relative of the γ^0 and the π^0. It among others should be able to decay like a π^0.With this property and with an arithmetically determined mass of 1088 m_e it actually only can concern the η^0-meson. Solely according to the numeric value the η^0-meson could also consist of four π^0-mesons; but the decay in only two light quants speaks against it.

The kaon-puzzle in addition is made more difficult by the spontaneously possible ability to change of the involved γ^0-particles during a process of decay, as is made clear by the numerous kinds of decay. These dependent pion halves can be "swallowed" or "spit out" by neutrinos in the process, they can form from incident light or be emitted as photons and eventually they even can break up in their individual parts.

In fig. 7.16 the possible configurations of potential vortices are sketched and the respective, according to the new theory calculated, mass is given. If above that the other decay products and quantum properties, which can be given for the vortex structures, are added, like e.g. charge, spin and if need be magnetic moment, then an assignment without doubts to the until now only from measurements known elementary particles is possible. In order to better be able to assess the efficiency of the potential vortex theory, the measurement values are compared to the calculated values.

Some terms are put in brackets, because it can be assumed that the calculated part only concerns the dominating part, to which further γ^0 or other small configurations of vortices will amass for reason of its high mass. Correspondingly should the mass in that case be corrected slightly.

<i>: It could e.g. concern the D°-meson.

name	way of decay	mass (m/m_e) measured	mass (m/m_e) calculated	elem.-vortices z_e	charge Q	Inner structure of the baryon vortices
p^+	stable	1836	- (reference value)	3	+1	fig. 7.8 $r/r_p = 1$ $(2x\ e^+)/e^-$
n^0	$p^+ + e^- + \bar{\nu}_e$ (100%)	1839	1837	4	0	figure 7.10a $p^+ + e^-$
			1934	4	0	figure 7.10b n^0 $r/r_p = 1{,}13$
Λ^0	$p^+ + \pi^-$ (64%)	2183	(2176)	8	0	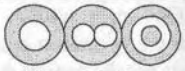 $\gamma^0 + p^+ + \mu^-$ (64%)
	$n^0 + \pi^0$ (36%)		2187 (2206)	8	0	$\gamma^0 + n^0 + \gamma^0$ (36%)
Σ^+	$p^+ + \pi^0$ (51%)	2328	(2108+?)	7 + ?	+1	$\gamma^0 + p^+ + \gamma^0$ (+?) (51%)
	$n^0 + \pi^+$ (49%)		2142+? 2177	9	+1	$\gamma^0 + e^+ + p^- + \mu^0$ (49%)
Σ^-	$p^+ + \pi^-$ (100%)	2343	2274	9	-1	$\gamma^0 + n^0 + \mu^-$ (100%)

Fig. 7.17: Table of vortices used for the calculation of the most important barvons with suggestions for the structure (Part 3).

7.17 Table of vortices of the baryons

The number of possibilities of combination quickly increases, if only a few elementary vortices extend the structure of a particle. This probably is the reason for the large number of observable hyperons, which recently have been produced artificially and observed with the help of particle accelerators.

Both the neutron and the lambda particle can exist in a lighter and a heavier variant. At the moment of the decay, as it for instance is observed in a bubble chamber, according to expectation the state with the smaller mass takes the bigger probability. But in the amassing with further particles as building part of bigger and heavier hyperons the heavier structure is more likely. This circumstance should be considered in calculating the mass of the hyperons.

In figures 7.17 and 7.18 the most important baryons are listed, which are characterised in the way that one of the amassed together packets of vortices is a nucleon, thus a proton or a neutron.

The given, from measurements known, kinds of decay are able to confirm the inner structure pretty good. Of course an infinitely lot of combinations are conceivable and numerous predictions are possible. But speculations are unnecessary from the time on where we are able to calculate the particles!
The restriction to the few in the table listed particles seeming to be important hence doesn't limit the universal importance of the theory of objectivity in any way!

name	way of decay	mass (m/m_e) measured	mass (m/m_e) calculated	elem.-vortices z_e	charge Q	Inner structure of the baryon vortices
Σ^0	$\Lambda^0 + \gamma$ (100%)	2334	2342	10	0	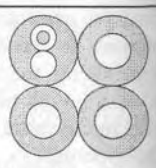 $n^0 + \gamma^0 + \gamma^0 + \gamma^0$ (100%)
Θ^0	$\Lambda^0 + \pi^0$ (100%)	2573	2478	12	0	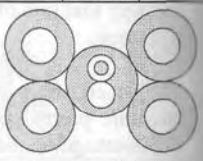 $n^0 + \gamma^0 + \gamma^0 + \gamma^0 + \gamma^0$ (100%)
Θ^-	$\Lambda^0 + \pi^-$ (100%)	2586	2546	13	-1	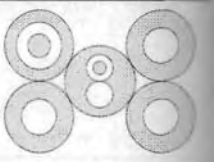 $n^0 + \gamma^0 + \gamma^0 + \gamma^0 + \mu^-$ (100%)
(Ω^-)	$\Lambda^0 + K^-$ (69%)	3273	3172 +?	17 +?	-1	$n^0 + \gamma^0 + \gamma^0 + ?$ (31%: ? = div.)

Fig. 7.18: Table of vortices used for the calculation of the most
important baryons with suggestions for the structure (Part 4).

8. Unified theory

With the theory of objectivity the longed for goal of a "theory of everything" (TOE), of an universal theory, seems to have moved within reach. If in the nineteenth century still promising field theories and approaches were being discussed, then has at the latest Einstein's theory of relativity destroyed all hopes in such a theory. Science as a consequence has become very much more modest and understands a TOE only as the unification of all known interactions.

Einstein has stated the minimum demand so: "a theory should be favoured by far, in which the gravitational field and the electromagnetic field together would appear as a whole" [<i>]. It is evident that a subjective or relativistic observer theory never is able to achieve this.

The presented theory of objectivity made it possible that the unification here for the first time actually has succeeded. This undoubtedly brings science a whole lot further, but it still is not sufficient to lie one's hands in one's lap being content with oneself. After all we still know very much more phenomena, which likewise should be unified. After all it is no accident that both Maxwell and Einstein, to name only two prominent representatives, after completion of their well-known works have struggled for the question, what sort of phenomenon it concerns in the case of the temperature and how this could be integrated in their theory.

The requirement reads: We must be able to derive all basic factors, which influence our system of units with their basic units, as a compulsionless result from the new theory. Besides the dimensions of space and time which determine our continuum, the explanation and unification of the basic factors mass and charge has to be tackled. If we have succeeded in doing so, we'll also tackle the problem of the fifth and last basic factor, which until now has put itself in the way of any unified theory as the question of fate, the problem of the temperature!

<i>: Einstein, A.: Grundziige der Relativitatstheorie, Vieweg+Sohn, Braunschweig 1973, 5. Aufl., WTB 58. Seite 97.

"A theory should be favoured by far, in which the gravitational field and the electromagnetic field together would appear as a whole"<i>.

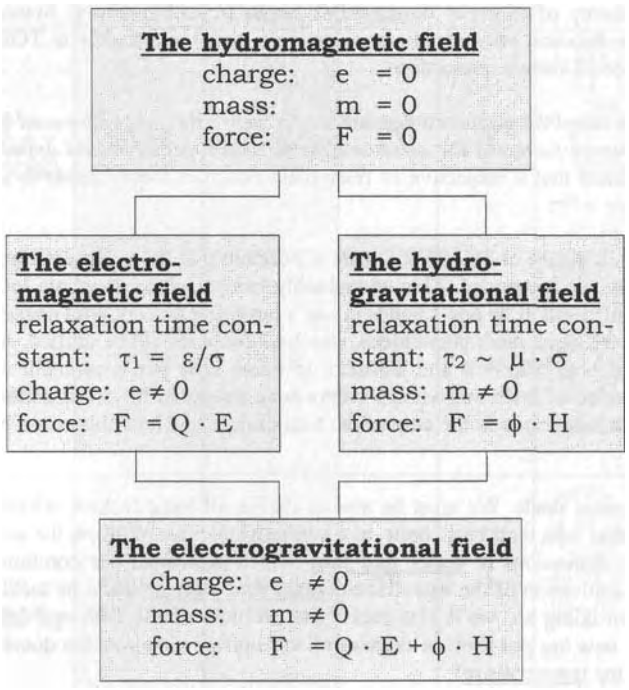

Fig. 8.1: Structuring of the fields and definition of terms

<i>: Einstein, A. : Grundziige der Relativitatstheorie, Vieweg + Sohn, Braunschweig 1973, 5. Aufl. , WTB 58.

<ii>: derived from the Greek hydro (= water).

8.1 Structure of the field theory

In contrast to Maxwell's theory the new field theory, which we derived from duality, is also able to describe fields, in which no particles and no quanta exist. It probably is justified and useful in the sense of a clearer communication, to give the new field a name of its own.
The author recommends the introduction of the term "hydrotic field". In it should be expressed, which importance water has for both the like named potential vortex and this field<ii>.
As we already have worked out, the hydrotic field is favoured particularly by polar materials and by a high dielectricity. Water is a corresponding and in the biosphere of our planet dominating material.

Whereas we had to correct the concept of a vortex free electric field, we had until now, considerable, we can take over the description of the magnetic field unchanged. This then should also be valid for its name. The new field which consists of both correspondingly is called hydromagnetic field.

In fig. 8.1 we recognize the structure. At the top stands the "hydromagnetic field", which is described mathematically by the equations of dual electrodynamics in fig. 3.3. It does not know quanta and as logical consequence neither charge nor mass! If we insert these equations, Ampere's law and the dual formulated Faraday law of induction, into each other, then there results as a mathematical description of our space-time-continuum the fundamental field equation (5.7, fig. 5.1). As a new physical phenomenon the potential vortex appears, which gives the hydromagnetic field a new and important property: this field can be quantized!

Starting-point is the wave, which for corresponding interference effects can spontaneously roll up to a vortex, which as highly concentrated spherical vortex finds a new right to exist and finds to a new physical reality.

The in the described manner formed particles show specific properties of their own. We now are able to attribute them for instance a charge or a mass. And these properties also can be investigated and described individually and isolated from each other. Thus are formed the two special cases, strange by nature, on the one hand the well-known, with the help of the Maxwell equations describable "electromagnetic field" and on the other hand the new "hydrogravitational field".

If we overlap the results of the two special cases, e.g. by adding the force effects of electric charges and accelerated masses, then we summarized obtain a field, which we accordingly should call "electrogravitational". This case is not at all unknown. Already Niels Bohr in this way has calculated the radii of the electron orbits in the hull of his model of the atom, to mention only one example. We can summarize:

The hydromagnetic field is the all encompassing and with that most important field. Apart from that the electromagnetic field of the currents and the eddy currents and the hydro-gravitational field of the potentials and the potential vortices merely describe the two possible and important special cases. For reasons of pure usefulness for every special case a characteristic factor of description is introduced, the charge and the mass!

Auxiliary terms (description of quantum properties):
* mass * charge * temperature * Planck's quantum of action

The hydromagnetic field does not know any quanta!

Structure of the fundamental field equation 5.7 (fig. 5.1):

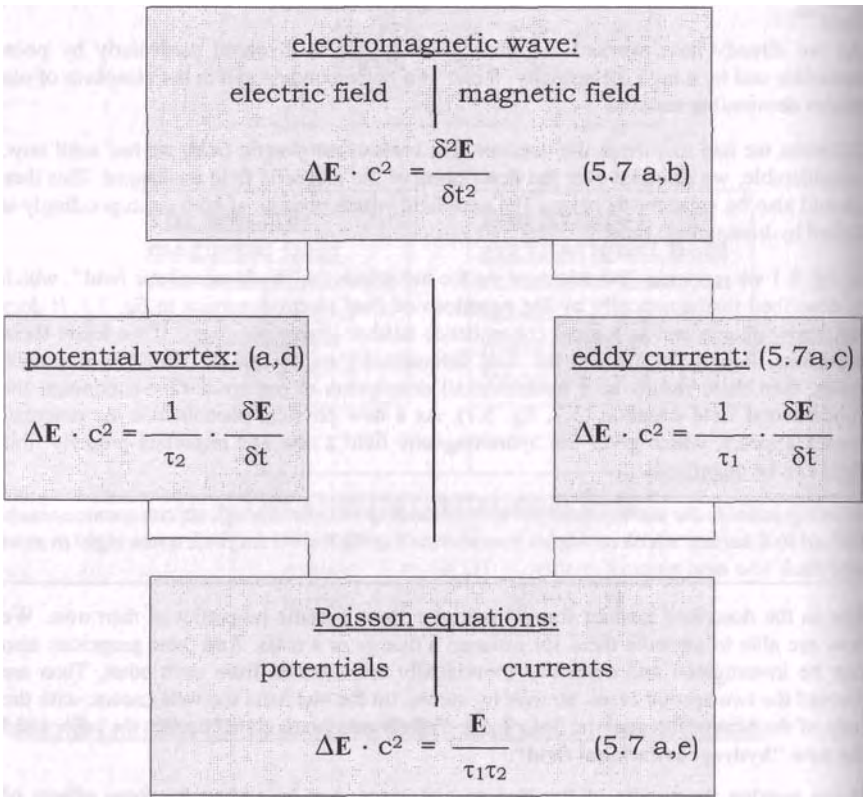

Fig. 8.2: Unified theory

*electromagnetic interaction (open field lines)
*gravitation (closed field lines)
*strong interaction (does not exist)
*weak interaction (only special aspect)

The interactions are a result of the field dependent speed of light!

8.2 Unification of the interactions

The discovery and introduction of the hydromagnetic field makes the desired unification possible, because the electromagnetic resp. Maxwell field, which describes the electromagnetic interaction, and the hydrogravitational field of the gravitation can be derived from this field as a consequence of the formation of quanta.
The kind of the interaction is caused by the course of the field lines of the field quanta which form as spherical vortices: the open field lines make the electromagnetic interaction possible. And the field, lines with a closed course lead to gravitation. Both are a direct result of the field dependent speed of light. A more perfect unification seems hardly possible.

As the next step the unification with the strong and the weak interaction is required, but it could be shown that those don't exist at all. It just concerns misinterpretations with much fantasy, which should help explain the difference between a wrong theory and the physical reality.

Numerous auxiliary terms for the description of the quantum properties exist, like for instance mass, charge or Planck's quantum of action. The prerequisite for their usability naturally is the existence of the quanta. But until these have found to a physical reality, the auxiliary terms are unnecessary. The hydromagnetic field does not know quanta, quantum properties or auxiliary descriptions. It will be shown that, according to expectation, also the temperature is a typical quantum property, which comes within the group of the auxiliary terms. In this way also the temperature is fitted into the unified theory without compulsion.

Without the by us for reasons of usefulness introduced auxiliary terms the fundamental field equation is left with its description of a spatial-temporal principle. If a world equation should exist, then this field equation 5.7 has the best prerequisites. For the fundamental field equation the division in four parts is repeated like already for the hydromagnetic field (fig. 8.1). It likewise consists of four individual parts, the wave (b), the two vortex phenomena (c and d) and the time independent term (e) (fig. 8.2). Whereas the duality still is combined in the wave, it comes to light clearly for the vortices to again be combined in the fourth case. Here arise however potentials and currents, which again can react and oscillate with each other, for instance as L-C-resonant circuit in an electronic circuit, with which the principle is repeated.
This principle is shown clearer for the phenomenon of the temperature as in all other cases. If we start at the top in the picture in fig. 8.2 we have an electromagnetic wave, which is absorbed and thus becomes a vortex. If the vortex falls apart, then eddy losses are formed. We observe that the temperature rises and propagates in the well-known manner. We have arrived in the bottom box, but this again can be taken as the top box for the now following process, because the equation of heat conduction is a vortex equation of type c or d! We discover a self-similarity:

The spatial-temporal principle formulated mathematically by the fundamental field equation can be carried over into itself time and again.

Temperature is the oscillation of contraction of the elementary vortices resulting from the speed of light depending on field strength.

a. at absolute zero temperature:

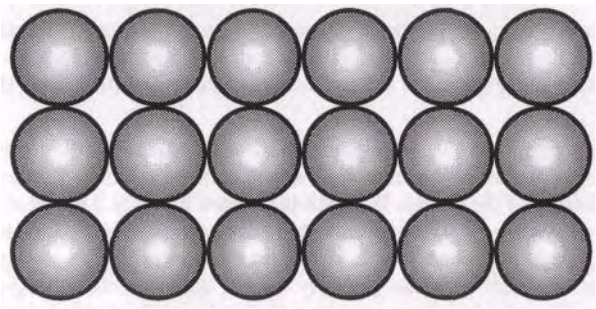

b. if thermally excited:

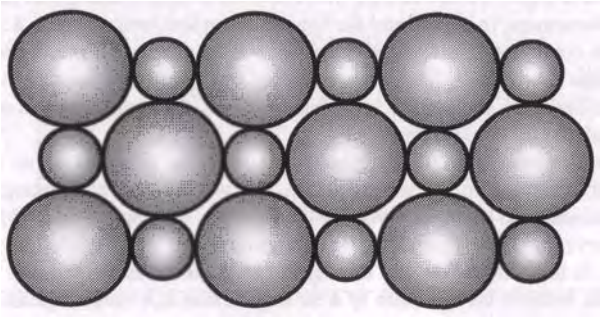

Fig. 8.3: Temperature as an oscillation of size for the speed of light depending on field strength

8.3 Temperature

Following the atomic view, in the case of heat it concerns kinetic energy of the molecules, which carry out more or less violent oscillations. In the case of gaseous materials with this concept, basing on mechanical models, actually successful calculations are possible, like for instance the speed distribution of gases won by Maxwell from theoretical considerations concerning probability.

But the attempt to apply the formulas of the kinetic theory of gases to solids and liquids only succeeds, if additional supplements and improvements are introduced. Since at all events it concerns temperature, thus the same physical quantity, of course also an uniform interpretation should be demanded, which in addition should stand in full accord to the presented design of an integrated theory (TOE).

Against the background of the new theory of objectivity we consider, what happens, if for instance the local field strength is increased by a flying past particle. The matter located at this point is contracted for a short time. By coming closer to each other, the individual elementary vortices mutually reinforce their field and are further compressed. Sometime this process comes to a standstill, is reversed and swings back.

At the same time every single particle, which in this way carries out an oscillation of size, has an effect on its neighbours with its field, to also stimulate these to the same oscillation, but delayed by some time. This phenomenon spreads in all directions. The propagation only will become stationary, if all neighbouring elementary vortices pulsate with the same amplitude. It now should be recorded:

> The oscillation of contraction of the elementary vortices we call temperature.

Also this thermodynamic state variable therefore is a result of the variable speed of light. At the absolute zero of temperature no oscillation takes place anymore, whereas the upper limit lies in infinity. Since the cause for temperature represents an oscillation of the local electromagnetic field strength around the cosmic field strength, the following phenomena must be considered as excitation and cause, as dictated by the fundamental field equation 5.7:

1. Electromagnetic waves (b) are able to stimulate matter particles to synchronous oscillations of contraction by their alternating field. In doing so energy in form of heat is transferred to the particles, with the result that their temperature is increased. The wave is absorbed completely, if the thermal oscillation corresponds with the frequency of the wave.

We speak of thermal radiation.

2. But also the two dual vortices, the eddy current (c) and the potential vortex (d) can cause oscillations of contraction. This immediately becomes clear, if we consider a vortex as the special case of the wave, in which the oscillation takes place around a more or less stationary vortex centre. In the case of the decay of vortices, of the transition of energy from vortices to matter, the increase in temperature is measurable.

In the case of this process of diffusion we speak of eddy losses and of loss heat.

Answers to open questions of thermodynamics:

1. Temperature occurs independent of the state in which the matter is (unified theory).

2. Temperature even occurs in solids, where a purely kinetic interpretation fails (unification).

3. Each elementary particle is carrier of a temperature.

4. Expansion with increasing temperature because of the increasing need for room for larger amplitude of oscillation (principle: bi-metal-thermometer).

5. For solids the thermal oscillation of size is primarily passed on by the electrons in the atomic hull. Good electric conductors therefore at the same time also have a high thermal conductivity. (principle: electrical resistance thermometer).

6. For gases the entire atoms carry out this task, for which reason a kinetic auxiliary description becomes applicable.

7. For extreme amplitudes of oscillation the atoms partly or entirely lose their enveloping electrons, when they change into the plasma state.

8. The second law of thermodynamics loses its claim to be absolute and at best reads: with today's technology we are not capable, to design a cyclic working machine, which does nothing else, as to withdraw heat from a heat container and to convert it into mechanical work.

Fig. 8.4: Questions concerning thermodynamics

3. Flying past particles, in particular unbound and free movable charge carriers (e) produce an alternating field for other fixed particles. Doing so kinetic energy can be transformed in temperature, thus in energy of pulsation. A good example is the inelastic collision. But it can also be pointed to numerous chemical reactions. Whoever searches for a concrete example, takes two objects in his hands and rubs them against one another. In that case the particles which are at the frictional surfaces are being moved past each other in very small distance, in this way causing oscillations of pulsation, which propagate into the inside of the objects according to the thermal conductivity. We speak of friction heat.

This model concept provides sound explanations for a whole number of open questions (fig. 8.4), i.e. why the temperature occurs independent of the state (1) and even in solids, where a purely kinetic interpretation fails (2). Every single elementary particle after all is carrier of a temperature (3).
With increasing temperature most materials expand, because the need for room, purely geometrically seen, increases for larger amplitude of oscillation (4). This principle is used in the case of a bi-metal thermometer.
In the case of solids the thermal oscillation of size is passed on primarily by the electrons in the atomic hull (5). Good electric conductors therefore at the same time also have a high thermal conductivity. An example of an application is the electric resistance thermometer.
In the case of gases the entire atoms carry out this task, for which reason a kinetic theory becomes applicable as an auxiliary description (6).
For extreme amplitudes of oscillation the atoms partly or entirely lose their enveloping electrons, when they change into the plasma state (7).
Finally the model concept even limits the second law of thermodynamics, which contains the postulate that it is impossible to design a cyclic working machine, which does nothing else, as to withdraw heat from a heat container and to convert it into mechanical work (8).

8.4 Heat energy

The discussed oscillation of contraction shows two characteristic properties, which must be looked at separately: the amplitude and the frequency.

Temperature describes solely the amplitude of the oscillation of size.

The heat energy however is determined by both,
by the amplitude as well as by the frequency.

Consequently the ideas of temperature and heat energy should be kept strictly apart. It therefore isn't allowed to set this oscillation equal to the electromagnetic wave in tables of frequency.
To be correct two tables should be given, one for the wave, characterized by a propagation with the speed of light, and another one for oscillations of contraction, thus for stationary phenomena and phenomena bound to matter. The latter indeed can likewise propagate relatively fast by fluctuations of pressure in the case of acoustical sound frequencies or by free movable charge carriers in the case of heat conduction, but the velocity of propagation for sound or heat is as is well-known still considerably smaller than the speed of light. Thus an assignment without doubts can be made as to which kind of oscillation it concerns.

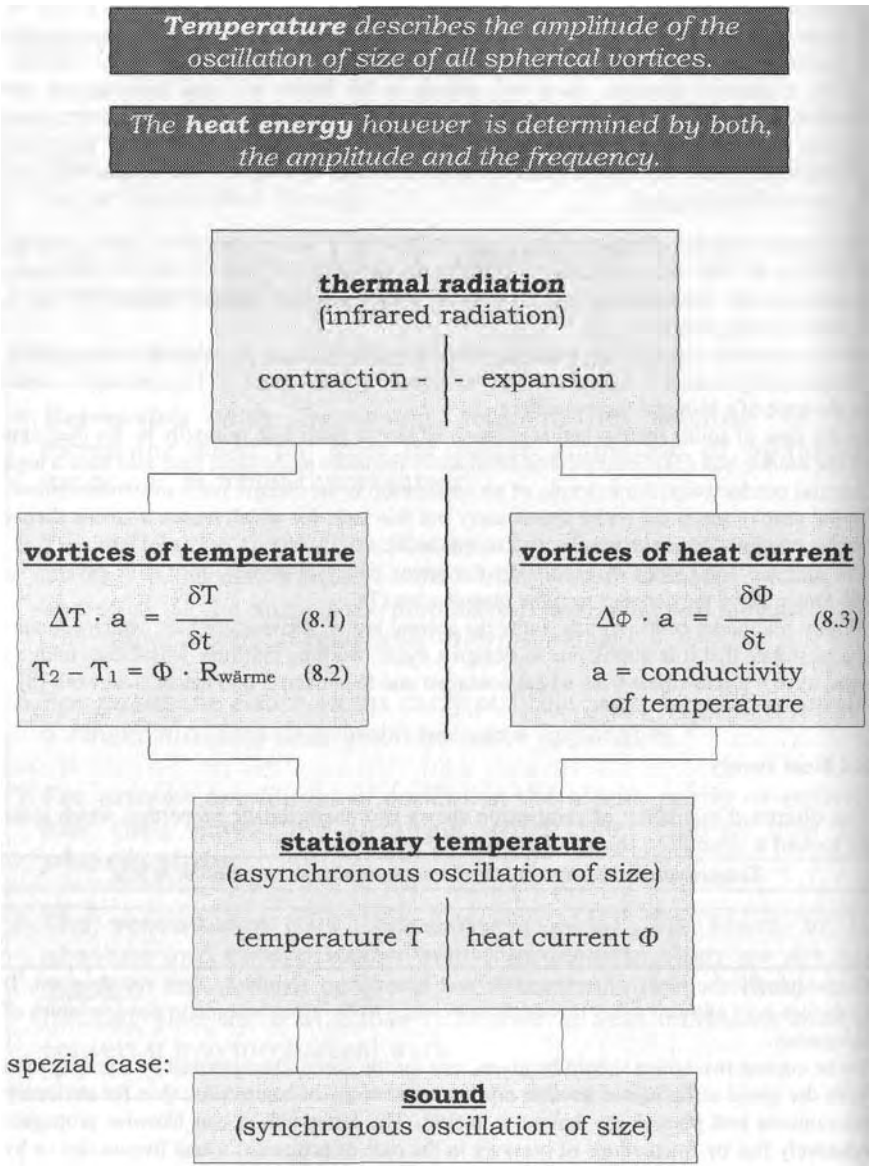

Fig. 8.5: Heat conduction resp. sound

8.5 Sound

The close relationship of longitudinal sound waves with the oscillations of contraction of thermally heated matter becomes particularly clear for ultrasound, where the arising heat in the inside of the body which is exposed to sound can be measured directly. The fundamental difference consists of the fact that the produced sound waves not only have the same frequency, but also the same phase, what needs not be the case for the temperature. The apparently uncoordinated occurring oscillations of size of the temperature, which as a rule occupy more space if the intensity increases, form a "thermal noise".

The oscillation of size with the same phase is not realizable at all in a spatial formation of particles, with one exception, the case that all particles expand and afterwards again contract simultaneously and in the same time. We can observe such a synchronization of the pulsation oscillations of all elementary vortices in the case of a pulsar. For us a pulsar looks like a "lighthouse" in space which shines with a fixed frequency.
In reality it as well can concern a constantly shining sun, which carries out a synchronized, thermal oscillation of size, like a gigantic low-frequency loudspeaker. During the phase of contraction of the star its emitted light stays back. To us the pulsar looks dark. In addition the field strength is extremely increased and the light becomes correspondingly slow. During the phase of expansion the conditions are reversed and we observe a light flash. Exactly the pulsar unambiguously confirms the here presented theory of the variable, field dependent speed of light.

The well-known fact that the microcosm represents a copy of the macrocosm, already suggests that each atom is capable of the same oscillation of size as a pulsar: if next to the oscillating atom a resting one is placed, then does this one see a smaller field during the phase of contraction because of the increasing distance. It hence becomes bigger itself. If the pulsating neighbouring atom afterwards expands, it however becomes smaller. The at first resting atom in this way becomes a "pulsar" oscillating with opposite phase. The oscillating atom has stimulated the neighbouring atom as well to an oscillation of size, and this process will be repeated with the closest neighbouring atom. We speak of heat conduction.
To which extent the average distance between neighbouring atoms is influenced while a material is heated, solely depends on the structure of the atomic lattice. For matter with a fixed lattice according to expectation a smaller heat expansion will occur, as for the unordered structure of gases, in which we find confirmed well-known relations.

In a for potential vortices characteristic property sound waves and thermal waves of contraction correspond:

The propagation of potential vortex fields takes place as a longitudinal wave.

In this point vortex fields clearly differ from the transverse propagating electromagnetic waves!

1. Ampère's law (see fig 5.1):

$$\boxed{\text{rot}\,\mathbf{H} = \varepsilon \cdot (\mathbf{E}/\tau_1 + \delta\mathbf{E}/\delta t)} \qquad (5.1^*)$$

with relaxation time $\tau_1 = \varepsilon/\sigma$ (5.3)

transformed: $\delta\mathbf{E}/\delta t = (1/\varepsilon) \cdot \text{rot}\,\mathbf{H} - \mathbf{E}/\tau_1$ (5.1**)

integrated: $\mathbf{E} = \int [(\text{rot}\,\mathbf{H})/\varepsilon - \mathbf{E}/\tau_1]\,dt$ (5.1***)

2. Faraday's law of induction (in analogy):

$$\boxed{-\text{rot}\,\mathbf{E} = \mu \cdot (\mathbf{H}/\tau_2 + \delta\mathbf{H}/\delta t)} \qquad (5.4^*)$$

transformed: $\delta\mathbf{H}/\delta t = -(1/\mu) \cdot \text{rot}\,\mathbf{E} - \mathbf{H}/\tau_2$ (5.4**)

integrated: $-\mathbf{H} = \int [(\text{rot}\,\mathbf{E})/\mu + \mathbf{H}/\tau_2]\,dt$ (5.4***)

3. Signal flow diagram of the field equation 5.1***:

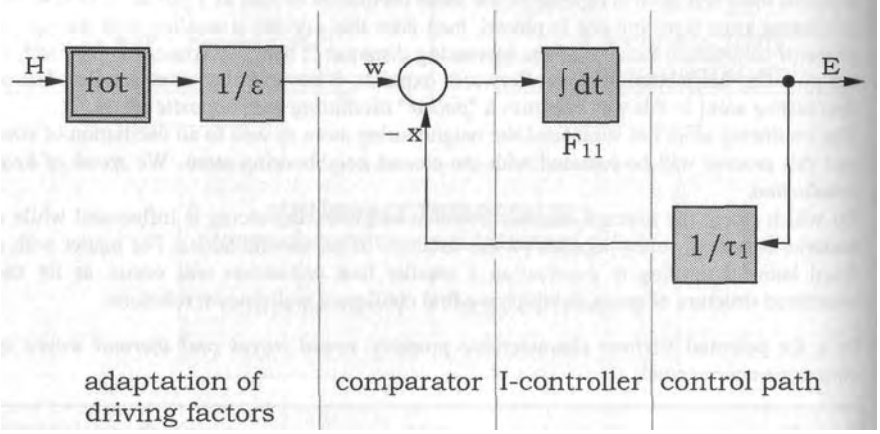

Fig. 8.6: Control technical analysis of the dual equations of the hydromagnetic field.

8.6 Basic principle of cybernetics

Surely can be attributed also information to the potential vortex. But how should information be formed? Is information a form of energy? Energy occurs as a consequence of the formation of potential vortices. Without this phenomenon there wouldn't be any energy!
Can information be described by means of a mathematical equation?
To be able to answer these questions, we subject the fundamental field equation to a control technical analysis. If it actually concerns a world equation, then an answers should be possible.

We again take up Ampere's law 5.1* from fig. 5.1 and remodel it according to the time derivative (5.1**). If the equation now is integrated over the time (5.1***), a signal flow diagram can be drawn (fig. 8.6).
The structure of a regulatory circuit is clearly visible. The individual paragraphs are described in an analogous way as for a technical control system. The execution of the curl operation on the field pointer of the magnetic field strength H and the multiplication with $1/\varepsilon$ accordingly form an adaptation of driving factors. In the comparator the difference for control from driving factor w and controlling factor x is formed and supplied to an integral controller. The control path has a purely proportional behaviour and consists of the processing of the measurement value of the electric field strength E with $1/\tau_1$, in which τ_1 describes the relaxation time of the eddy currents.
In technical control systems such a structure is found remarkably seldom, although it has an invaluable advantage: it possesses a stability in principle. Not a single adjustment of the controller exists, in which the closed regulatory circuit could become unstable, because it shows a proportionally delaying behaviour of first order. Possible changes of the adjustment of the controller or of the control path merely take effect on the speed, with which the regulatory circuit is able to follow changes of the driving factor.
This control technical basic principle convinces by its simplicity and efficiency. It meets us again in identical form in the second field equation 5.4*, the extended Faraday's law of induction. In dual formulation the electric field strength now appears as input factor and the magnetic field strength as output factor. Both regulatory circuits are coupled and connected with each other, by deriving their driving factor each time from the controlling factor of their dual partner. Is this structure actually efficient and meaningful?
Every regulatory circuit needs a target value, which is dictated from the outside. Let us think of the numerous control systems in nature. At all events a higher intelligence would be necessary for all the target values. This problematic is comparable to the question, what existed first: the egg from which a hen hatches or the hen without which no eggs can exist. Without a given target, evolution would not exist.

The connected regulatory circuit structure provides the matching answer: cybernetic systems, which usually and as is well-known strive to a state of balance, get their target value from their dual "partner". It is crucial that correspondingly dual systems are self-sufficient and can form and develop independently out of themselves without target values of a third side. This basic principle of cybernetics undoubtedly is brilliant.

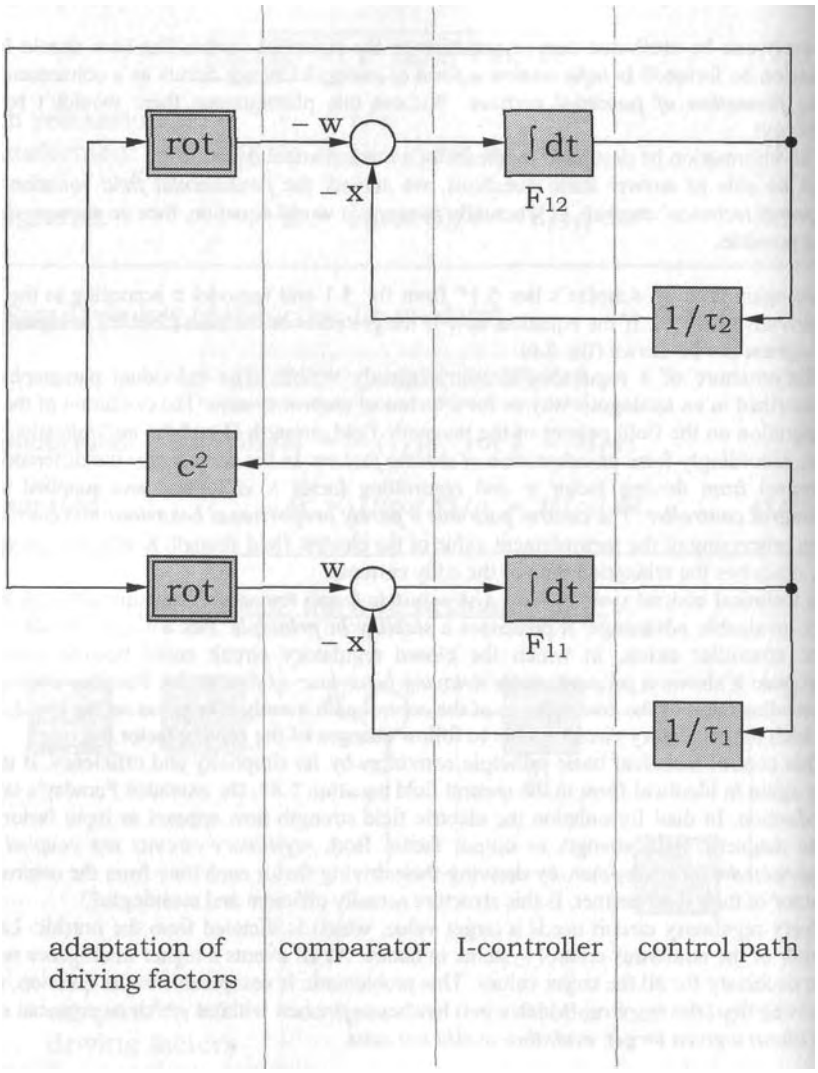

Fig. 8.7: Signal flow diagram of the fundamental field equation
with adaptive structure.

8.7 Adaptive regulatory circuit structure

If out of the nowhere something like the cosmos or like life on earth should form, then the connected regulatory circuit structure basing on duality probably is the only possible and conceivable. Thus it merely concerns the control technical representation of the fundamental field equation.

The question for the efficiency not only concerns the stability, but equally the possibility of both systems, to oscillate and to communicate with each other by the coupling and the associated exchange of information.

Fig. 8.7 shows the signal flow diagram of both regulatory circuits. These are switched in line and form a coupled circuit, which itself can be interpreted as a third regulatory circuit. Also this one shows a change of sign in the circuit like the other two circuits.

The information technical interpretation could turn out as follows: information about a regulatory process in the lower regulatory circuit F_{11} caused for instance by a disturbance is communicated over the coupled circuit to the upper regulatory circuit F_{J2}. In this case F_{11} acts as transmitter and F_{12} as receiver of the information. Afterwards both exchange their places, because F_{12} for its part reacts by a regulatory process and reports to F_{11}. The regulatory circuits adapt to each other. Obviously it concerns the basic structure of an adaptive regulatory circuit.

To analyse the coupled circuit the examination of individual special cases is recommended. If the regulatory circuits F_{11} and F_{12} are opened up in the way that the time constants tau_1 and tau_2 go towards infinity, then the double integral effect is left. Analyses of technical regulatory circuit teach us that such systems always tend to instability. Because in addition the target value is zero, an oscillation around zero will arise, which we call electromagnetic wave.
If one of both time constants becomes finite, e.g. τ_2, then damping of the waves will occur. The "subordinate" cascade regulatory circuit F_{12} will adjust itself and now has a proportional delaying behaviour of first order. Together with the integral controller of the open F_{11}- circuit the coupled circuit will show the typical and more or less optimal regulatory behaviour of a damped oscillation.

These special cases correspond with the mathematical (fig. 5.2) and the physical (fig. 5.3) interpretation of the fundamental field equation. In addition a spatial rotation, a swirling will occur because of the double execution of the curl operation.

If interpreted control technically then vortices are the temporally stable, spatial swing of a field pointer around a centre, the vortex centre.

Without potential vortices no stability, no matter, no energy nor information would exist!

As can be looked up in Goethe's Faust, it always has been a desire of humanity, to find out, "what keeps the world together in the heart of hearts".

electric field	——	magnetic field
potential	——	current
capacitor	——	coil
Faraday's law of induction	——	Ampère's law
potential vortex	——	eddy current
convergence	——	divergence
dielectricity	——	permeability
non-metal	——	metal
isolator	——	electric conductor
tuned cavity	——	antenna
cold	——	hot
Yin	——	Yang
female	——	male
minus	——	plus
introverted	——	extroverted
stability	——	dynamics
water	——	fire
implosion	——	explosion

Fig. 8.8: Table of dual correspondences
(as a supplement to chapter 3.3 and fig. 4.2).

8.8 Information

The search for an answer for numerous philosophers and physicists was tantamount to the search for a world formula. Of course mustn't be forgotten that a formula only is a mathematical description and never the physical reality itself. It is a mathematical tool in the hand of a person and not the world or the cosmos itself, which he tries to understand. What keeps the world together in the heart of hearts, has to be more than only a pure apparatus of formulas. Actually the fundamental field equation tells us more. It reveals us a basic principle basing on duality in which the dual partners mutually dictate target values and goals. This principle convinces by its simplicity and efficiency. Apart from the "self regulation" it obviously also has the fundamental possibility of a "self organization" and the "generation of information". The field equations of the hydromagnetic field thus are the starting-point for the formation not only of matter and energy, but also of information. Accordingly holds:

Information is nothing but a structure of electromagnetic vortex fields!

This statement is new and to a large extent incompatible with the conception world of Norbert Wiener, who goes as the founder of cybernetics. From N. Wiener stems the sentence: "information is information, not matter and not energy".

We hold against it that obviously a fairly direct connection exists. We have worked out that only the vortex can show a stable adaptive regulatory circuit structure. Only the vortex and not the wave exists in two forms of formation dual to each other, and the principle of duality again is the prerequisite for the formation of information, of self organization and finally for the evolution. In fig. 8.8 well-known dual partnerships are listed. From it follows in a consistent way that for the production of information without exception the electromagnetic vortices should be considered.

But how can this so important duality occur, how can it form? This question is closely associated with the question of the formation of vortices. The signal flow diagram (fig. 8.7) to that says that the dual regulatory circuits F_1 and F_2 can only exist by the coupled circuit, which provides them the necessary target values and at the same time forwards the respective information. In this way of the oscillations and the more or less damped wave F_1 and F_2 communicate with each other.

The electromagnetic wave serves solely the mediation of information and energy.

With that falls a central role upon the wave, so that vice versa is valid:

Without wave no vortices, no duality and
consequently no evolution can exist.

According to the to date state of knowledge the basic principle of cybernetics forms the basis for matter and energy as well as for information. Since the wave can only serve the transmission of information, the principle of duality and the vortex will function as carriers of information. We are entitled, to speak of vortex information, this by no means is characterized by special frequencies or modulations of frequencies. This is prevented by the property of the vortices which allows them to change the frequency. On the other hand various configurations of vortices are possible and numerous combinations and modulations are conceivable.

If technical apparatus generate vortices, then they produce information. Here a serious danger with regard to the environmental compatibility can not be excluded!

Equivalent things:

* elements of the fundamental field equation 5.7
* elements of the Greek philosophy of nature
* temperaments
* (impulses of growth)

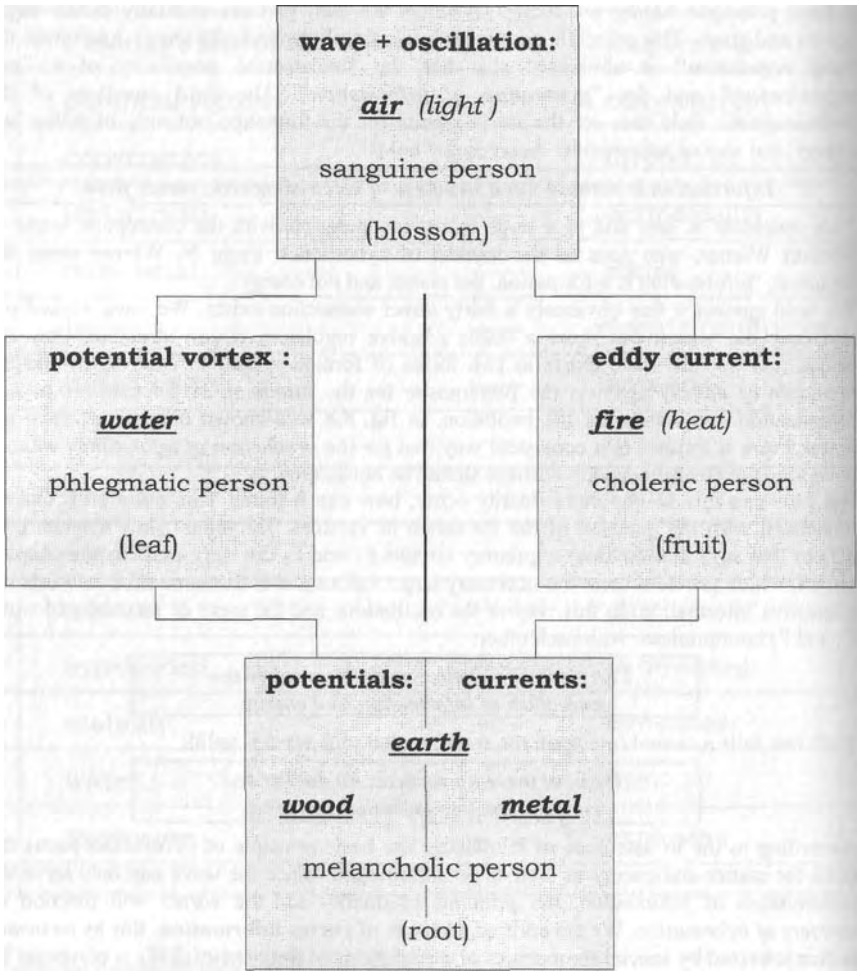

Fig. 8.9: The theory of four elements of the old Greek philosophy of nature (Aristotle and others)

8.9 Philosophy of nature

Seen in the view of the philosophy of nature now two dual points of view are possible.
The optimistic one would be:
We and our environment on the one hand are a result of the cybernetic principle and on the other hand of our observation point of view which should be valued relativistically. If really everything should be electromagnetism, a phenomenon which can't be grasped directly by humans, then the pessimist would come to the conclusion: everythins is nothing. What we observe is nothins but a deception of the senses. Perhaps therefore famous philosophers of antiquity, like Empedokles or Demokritos have ended their life in the crater of the Etna. According to the theory of the atom of Demokritos (470 to 380 B.C.) the formation of matter, earth and celestial bodies will occur by means of formation of vortices!
Empedokles (482 to 420 B.C.) was the first to develop a theory basing on four elements, which was continued and improved by Plato (428 to 348 B.C.) and Aristotle (384 to 322 B.C.). Accordingly these elements are changeable into each other and mixable with each other. From them all bodies are build up.
The terms "air, water, fire and earth", with which the philosophers have described the four elements, are of course not identical with the ones in our translation and conception world, but they were used in a philosophical sense as a substitute for the description of the respective basic principle.
There also have been different approaches, to translate these terms differently, e.g. by an assignment to the four states of matter (solid, liquid, gaseous, plasma). But the ancient texts don't get easier to read in that way.

Fig. 8.9 shows the obvious assignment to the four building parts of the fundamental field equation 5.7. It would be worth an attempt, to exchange the terms in the translations of ancient texts and to translate air with wave, water with potential vortex and fire with eddy current. The term earth has two sides, which should be translated with potential instead of wood and current instead of metal.

Let's try the translation this way with the theory of Plato[<i>], by correspondingly translating anew the talk of Timaios about the formation of the world. The perception of smell then is described as follows: "...as the potential vortex turns into waves (or) the wave into potential vortices, the smells are formed during this transition, and smells are smoke or fog. But fog is the transition of waves into vortices, the transition of the vortex into waves however smoke".
Plato here provides an indisputable and conclusive interpretation of the fundamental field equation. In this equation the potential vortex acts as damping term in the wave equation, what in the case of waves rolling up to vortices will show to the observer in the way that the electromagnetic waves and therefore also the light will be damped. We say, the visibility gets worse and speak of fog. If the damping phenomenon disappears again, as the potential vortices break up, then Plato speaks of smoke.
Numerous ancient texts, which until now only could be "interpreted" philosophically, in this way turn out to be a rational textbook description of natural scientific phenomena. They anyway only get readable and understandable for the general public with the modern technical terms.

<i>: Platon: Samtliche Werke 5, Rowohlts Klassiker Nr. 47, S. 188, 66e

Optimist:

We and our environment on the one hand are a result of the cybenetic principle and on the other hand of our observation point of view which should be valued relativistically.

Pessimist:

Everything is nothing. What we observe is nothing but a deception of the senses.

Plato<i> (talk of Timaios about the formation of the world) description concerning the perception of smell:

"...as water (the potential vortex) turns into air (waves) or air (the wave) into water (potential vortices), the smells are formed during this transition, and smells are smoke or fog. But fog is the transition of air (waves) into water (vortices), the transition of water (vortex) into air (waves) however smoke"

changed translation with the technical terms:

air_____ = ____wave
water = ___ potential vortex
fire_____ = ____ eddy current

As a consequence:

smell is vortex information

Fig. 9.0: The explanation of Plato concerning the formation of smell, smoke and fog<i>

<i>: Platon: Samtliche Werke 5, Rohwohlts Klassiker Nr. 47, S. 188, 66e

9. Usage

If the newly discovered vortex phenomenon of the vortex of the electric field exists, then it will be possible to practically use it. Whereas we still think about possibilities for technical usage, there by all means exists the possibility, that nature already is successfully using the vortex for a long time. We should look precise at things. We can only learn of nature!

Remarkable about the passage of Plato (fig. 9.0) is not only the fact, that the potential vortex already was known for two and a half thousand years and was taken into consideration for an interpretation, but also the realization of Plato, that during the described transition the smells form. Smell thus would be a vortex property!

After all vortices are able to bind information as can be inferred from the basic principle of cybernetics. With this vortex property and the statement of Plato smell obviously would be nothing else than pure information which by potential vortices is stored, distributed and eventually is caught by the hair cells for smell of the nose.
If now a dog takes up a track, does it then run after vortices which remained behind or does it analyse, according to the encyclopaedia, the chemistry left behind, or does it combine both? Does the bloodhound for instance interpret the vortical oscillations of chemical substances like lattice oscillations or the movements of the electrons in the atomic hull? A lot of work awaits the research scientist of vortices here. The seminar will offer opportunity, to deepen this topic[<i>].

Only if technicians exist, who put an electronic box on the table with a button, at which they adjust the wanted scent of rotten eggs to lavender, we honestly can claim to have understood the phenomenon of the smell.

For the majority of the people a theory only wins its sense by the practical applicability, and therefore we'll have to develop and present a technical usage on the basis of the vortex theory.

<i>: Suggestions for appropriate seminar themes: the meaning of smell, taste, the aroma therapy, the homeopathy or the effect of aetheric oils. (To that in part 3, INDEL Verlagsabt. 2003)

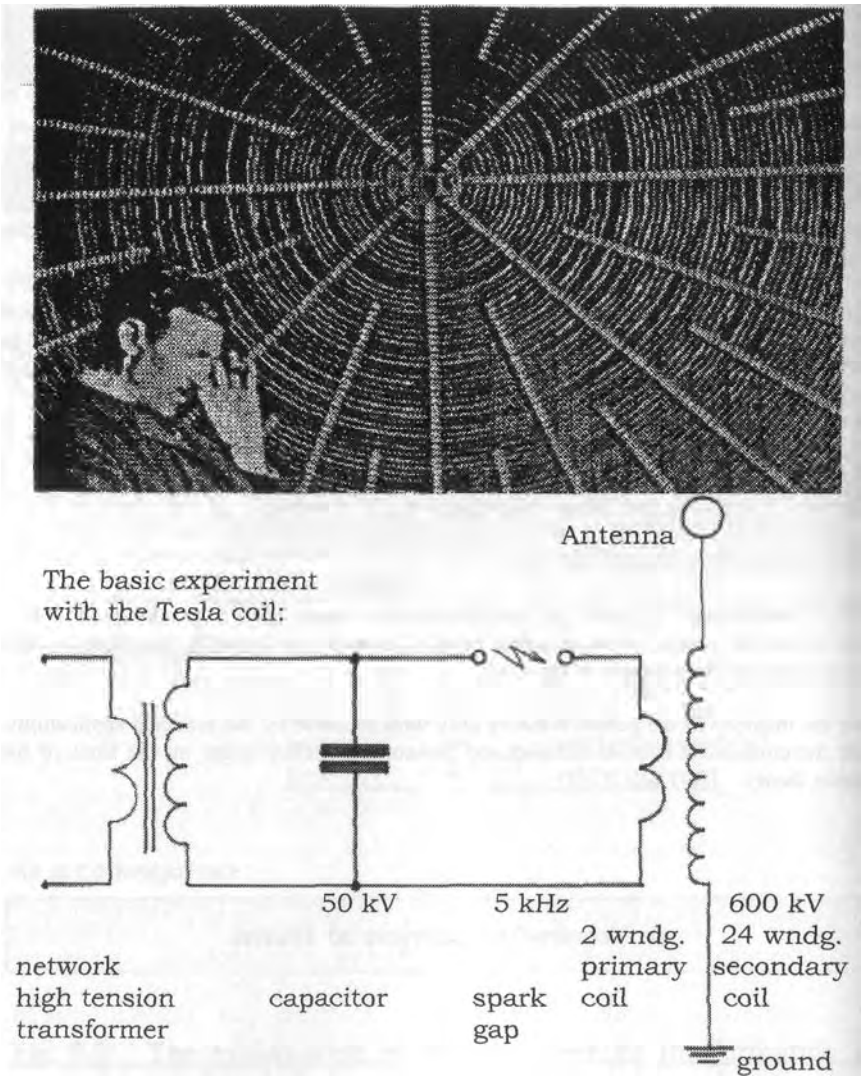

Fig. 9.1: High tension transmitter of Nikola Tesla

9.1 Longitudinal electric waves

It is important, that experts struggle for problem solutions. Only if the discussion about limits doesn't come to a result which can be grasped and verified, then also in the environmental compatibility the willingness will grow, to accept a not yet known phenomenon as a further and possibly crucial influential factor.
Already for a hundred years there has been a dispute of experts. At that time scientists all over the world were trying to verify the experiments of Heinrich Hertz. Then from America the message came, Hertz had been mistaken and the electromagnetic wave would have completely other properties. The scientists in Europe were indignant, but they had to take the message seriously, because it after all came from the important experimental physicist Nikola Tesla (1856-1943), who with his inventions of the rotary field and of the asynchronous motor has stamped today's electric energy technology as no other.

As a result Lord Kelvin boarded a steamship as a mediator and sailed 1897 to New York to convince Tesla from the opposite. But the experiments, which Tesla presented his Lordship, didn't give rise to any doubts[<i>], and thus Kelvin returned to Europe with the message: "Both are right, Tesla as well as Hertz! Whereas the electromagnetic wave which Hertz has detected, is a transverse wave, does Tesla work with a longitudinal wave"!
Lord Kelvin as a result started to draw most different vortex models, because it was clear to him, that a propagation as a longitudinal standing wave analogous to the sound wave only is conceivable, if quantized structures exist, which knock each other mutually. Kelvin therefore assumed vortex structures of the electromagnetic field. His vortex models were published and landed in the curiosity box of orthodox science.
Heinrich Hertz did have a big advantage. He could refer to Maxwell and calculate his wave with the field equations. For modern technology the mathematical calculability is almost an indispensable prerequisite!
For Tesla wave there however neither was a mathematical nor a physical theory. The only thing Tesla had, were presentable experiments.
In Colorado Springs he had build a 10 kW transmitting installation and lighted 200 fluorescent lamps of 50 Watt each on a mountain in the Rocky Mountains in a distance of 25 miles. With that he had completely transmitted the transmission power of 10 kW, as can be inferred from the press reports at that time. With Hertzian waves, which propagate spatially, this experiment even today, after over 100 years, wouldn't be realizable technologically. According to the law of the square of the distance one isn't even able to let glow a tiny little lamp in such a distance.

For sure his rotary field theory was a big help for Tesla in all experiments. Actually a rotary field can be seen as the special case of a planar vortex.
Thus Tesla obviously was able, to use the potential vortex without even knowing it. Tesla has stimulated a loosely coupled high tension coil wound like a spiral to self-resonant oscillations and emitted the produced vortices over an antenna (fig. 9.1). On the receiver side the process was then reversed.

<i>: N. Tesla: III. The Singular Misconception of the Wireless (Famos Scientific Illusions), Electrical Experimenter, Feb. 1919, p. 732.

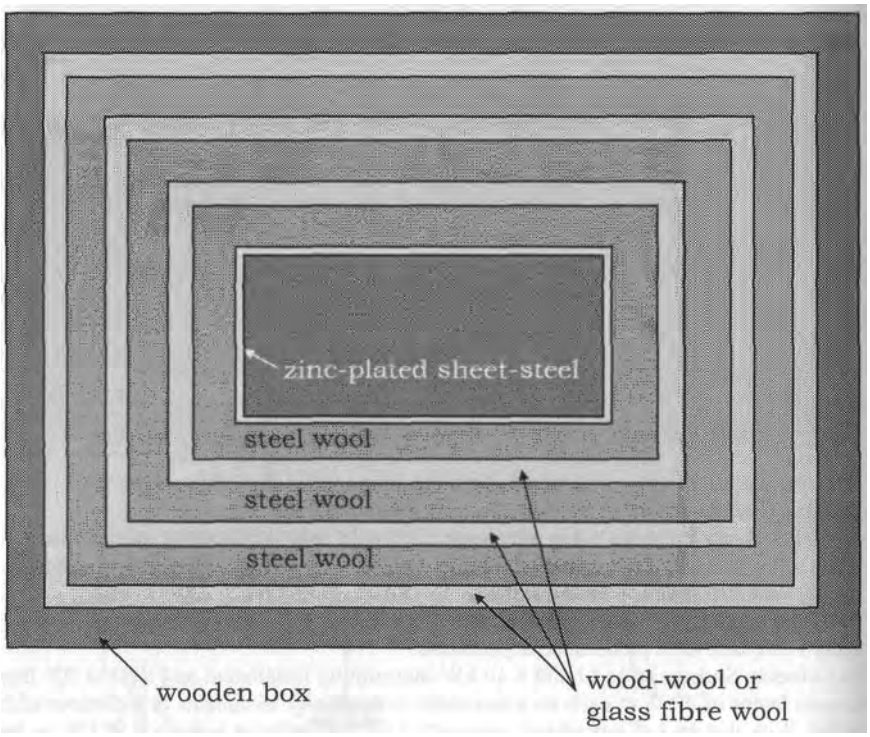

Fig. 9.2: Orgone accumulator according to Wilhelm Reich.[<i>]

<i>: Dr. James DeMeo: The Orgone Accumulator Handbook, ISBN 0-9261855-0-7

9.2 Medical technical usage

Nikola Tesla at his time was extremely popular in the area of medicine. With his inventions injuries were cured and pain eased. Modern diathermy goes back to his work. But Tesla at that time has treated the patients with vortices, whereas today, possibly out of ignorance, electromagnetic waves are used. These however have in contrast to potential vortices only a small penetration depth. Today in addition only the effect of heat is considered and in no way the information technical effect of electric vortices. Here we are missing the comparison, to be able to say. if the treatment with a Tesla apparatus was more successful than with modem microwave radiators.

The experiments of Wilhelm Reich (1897-1957) aimed in the same direction. Exactly as Tesla 55 years before also Reich emigrated to America in 1939. He had specialized in catching and collecting vortices, which he called "orgone", from the air. In this way he could store up high energies over time and then use them purposeful. With his "orgone accumulator" he was able to cure wounds faster and to ease pain. He also treated cancer and a lot of forms of anaemia. Technically Reich could demonstrate, that charged capacitor plates discharge faster under the influence of his apparatus. His orgone accumulator for instance is a wooden box, filled with wool of steel and wood, which alternate in layers. He said that the reason for this construction is, that metals repel the orgone energy, whereas organic materials become charged and accumulate it. That holds in his opinion to a particularly high degree for water.
Reich concludes that no material and no device are known, with which the orgone energy could be shielded. This with regard to the environmental compatibility of the vortex phenomenon should make us thoughtful.
As a supplement it should be mentioned, that Reich already at the end of the forties has pointed to the dying of the forests and he has made a direct connection to the orgone energy. Reich was slandered and mocked and died in the prison of Connecticut, while his writings were burned publicly.

Not much better fared the Austrian forester Viktor Schauberger (1885-1958), who also can be described as visionary. He was able to produce water with a particularly good conductivity. His water in addition goes for medicinal and healthy. Also to him travelled cancer patients of far away to get this water.
Schauberger spoke of the natural treatment of the water, whatever he meant with that. In any case he build with great success installations to transport wood by floating it and even installations to mine ore with so-called double twist pipes, which made possible a transport without friction even of materials, which are heavier than the "means of transport" water. It could be proven that no contact with the pipe took place. This was scientifically investigated and confirmed at the university of Stuttgart 1952 by Prof. Popel. Quite obviously in the double twist pipe vortices have formed, which have bound the material to be transported (see phenomenon of transport).
Today you can buy levitated water at over 100 selling points in Europe, of which is claimed, that it is prepared according to instructions of Schauberger. Unfortunately we aren't able to ask him anymore, if he agrees with such a "centrifuged" water. Thus the test of the effectiveness has to be left to everyone himself or herself.

A: Concerning the functioning of the Faraday generator (E = v x B):

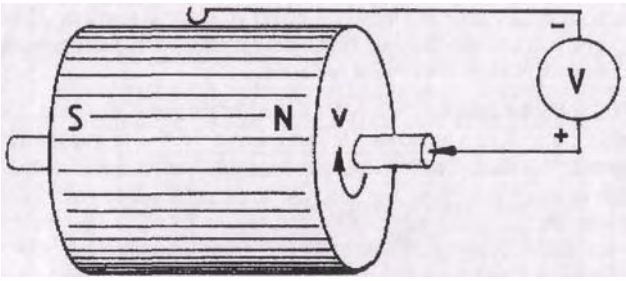

B: Construction of the flying disc:

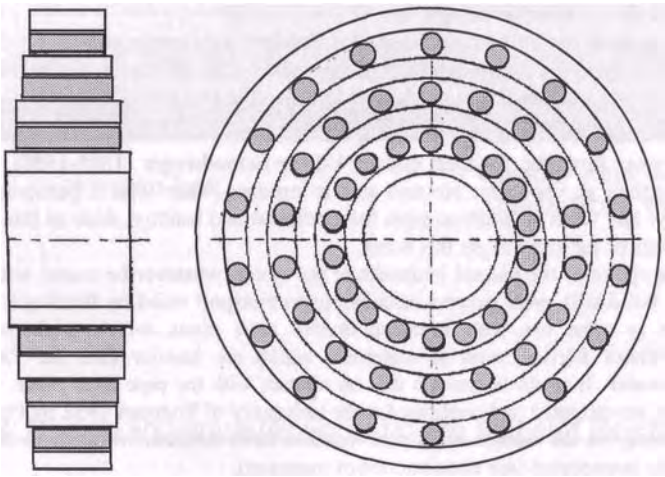

Fig. 9.3: Applications of the Faraday generator<i> in the flying disc of Prof. John Searl

9.3 Flying objects

The medium of Viktor Schauberger always was the water. He could produce light effects and very high temperatures with it with only minimal excitation in the form of impulses. An installation, which had been built according to his plans at the company of Siemens, eventually melted at 4000°C by improper operation, as he himself stated. According to that the machine would have released more energy than used, thus a perpetuum mobile. The authorities of the state in the Third Reich were impressed and put Schauberger in a concentration camp, where he was instructed to build a "flying saucer" under permanent supervision together with fellow prisoners. For him it's all about the concentration effect and the usage of the as a result occurring implosion in contrast to our today's " technology of explosion and fire" as Schauberger was accustomed to express himself. It is not known, if Schaubergers "repulsine" ever has took off.

A disc, which has proven its suitability to fly, was constructed and built by the english technician John R. R. Searl, although he said he can't explain the effect. He also had big difficulties, to get the apparatus under control. A disc broke through the ceiling and the roof of his laboratory and disappeared to never be seen again. Five other flying discs, which he after this experience started in the open, went lost in the same manner. Without knowing the effect, he of course neither could assess the dangers. His experiments have claimed serious injuries and a casualty. While he 1985 was put in prison under a pretext, his laboratory and his house were burned down and all documents destroyed. Now he works on a technical usage. According to the principle it concerns a Faraday machine. Thereby a permanent magnet, magnetized in axial direction, is turned. Now the magnetic induction B for a relative velocity v is measured as an electric field strength E according to equation 6.10: $E = v \times B$. (6.10)

Because the vectors are arranged as standing perpendicular to each other, will arise a tension voltage in radial direction (direction of E-field) which can be taken off. Apart from the friction no further force of reaction occurs in the case of the Faraday generator. Because of the small gain of energy until today no application ready for the market exists. But this principle, to convert magnetic field energy into electric, already has moved the nature of many inventors. Professor Searl has reversed this old principle. Whereas normally the component of the velocity towards the centre of rotation decreases, it increases in Searls case. For that he works with roller pivoted concentric rings, which he drives by a small electric motor (fig. 9.3). Doing so something inexplicable for him happens: After switching off the motor the revolutions per minute don't decrease again, but increase audibly and increase further, until the produced electric field shows the well-known high tension phenomena: corona discharges, formation of ozone, ionisation of the air and production of a vacuum in the inside of the disc.

The rings and rollers consist of several layers, which are built up similar to a bi-metal. The only explanation I can think of is that a change in structure would occur as a result of the physical length contraction which is caused by the increase of the E-field in the direction of the centre of rotation. The bi-metals try to withdraw themselves from this change by an increase of their rotation of their own (fig. 6.5). To compensate the field the disc builds up a spin, as also the elementary particles do (fig. 6.13). While the formation of vacuum prevents sparking in the inside of the flying disc, and the revolutions per minute further increase because there is no air friction whatsoever, the disc weighing 5 tons all of a sudden lakes off the ground and according to reports of eyewitnesses shoots vertically upwards.

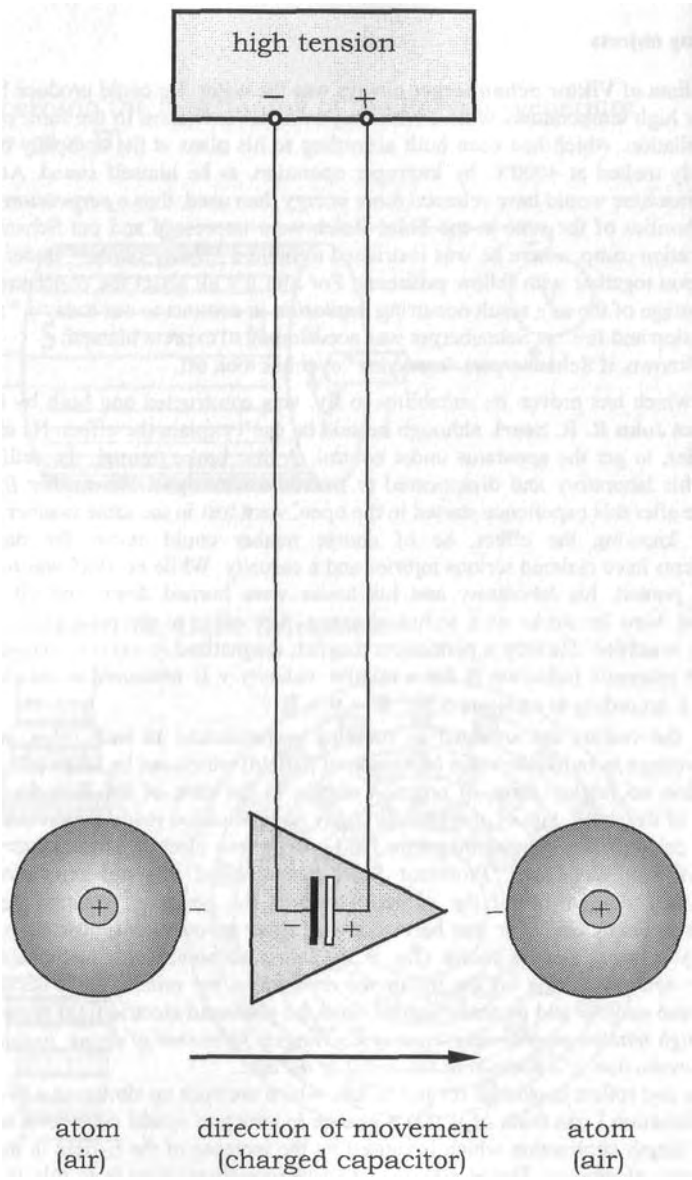

Fig. 9.4: Capacitor experiment concerning the so-called electro-
gravitation according to Prof. Biefeld / Dr. Brown

9.4 Electro gravitation?

Wild speculations circulate about the mechanism of the flight of a "flying saucer", which should function without sound and without combustion, and for which no sound barrier exists, as pilots have observed. The talk is about cancelling gravitation or about an "electro gravitation".
Reproducible in any case is an experiment, which has been systematically investigated by the american professor Biefeld and his pupil T. Brown from 1925. Accordingly does a body charged to high tension show a force effect in the direction of its positively charged note. As a check for oneself a capacitor can be suspended on its connection wires and it can be observed, how it moves visibly in the direction of the positive pole in case it is charged (fig. 9.4).
Because the Biefeld-Brown effect depends on direction, it actually can't concern gravitation at all but merely a not understood electromagnetic interaction. In the neighbourhood of the capacitor pole air molecules are found, and their negatively charged atomic hull is attracted by the positive pole. At the same time the atomic nucleus is repelled. By that the air atoms in the presence of the high tension capacitor become unsymmetrical, causing the force of attraction due to the smaller distance to exceed the force of repulsion. At the negatively charged end the conditions are exactly reversed. There a repulsion occurs. Because the polarized air atoms and molecules are sucked in, no pressure can build up and as a result no sound barrier can occur. Experiments with charged and uncharged rockets have brought the interesting result, that the electrically charged rockets flew many times as far as the uncharged ones (5-6 times as high)[<i>].
Many a person now perhaps starts to dream of the flying carpet but, as said, it isn't an "effect of antigravitation". Does "free energy" actually exist, we have to ask ourselves? From the gravitation the soviet physicist Landau calculates an energy density of 16 megawatt hours per cubic meter for the earth's surface. Immediately inventors are found, who want to use this gravitational energy.

Nikola Tesla in his laboratory in Manhattan has incidentally built resonators, of which he could bring all electric, magnetic and mechanic factors in resonance. On an evening stroll he fastened a battery operated vibrator to the tubular steel scaffolding of a new building and let everything shake and wobble. In his laboratory such a device once got out of control by inattentiveness and triggered an earthquake. In that way the road surfacing and pipes were burst and window panes got broken. The police penetrating his laboratory only could see, how Tesla forcible finished the experiment with a sledge-hammer.
The experiments which got out of control of Tesla, Searl and Schauberger have one thing in common: it concerns constructions with an unipolar arrangement of the field.
Tesla had arranged the magnetic field in a unipolar way, as he has reported himself, Searl had realized electric unipolar fields in a construction similar to the electron, and Viktor Schauberger had specialized in producing unipolar structures with water vortices.
In the case of the corresponding technical usage, which can be interpreted as making use of the occurring "spin coupling", therefore in principle utmost caution is imperative.

<i>: Rho Sigma (Dr. Rolf Schaffranke): Forschung in Fesseln, das Ratsel der Elektro-Gravitation, Ventla-Verlag, Wiesbaden, 1972, Page 67.

Nikola Tesla: ,,Ere many generations pass our machinery will be driven by power obtainable at any point in the Universe This idea is not new, we find it in the marvellous myths of Antheus, who derives energy from the earth... Everywhere in the universe there is energy. Is this energy static or kinetic? If static, our hopes are in vain; if kinetic, and this we know it is for certain, then it is a more question of time when men will succeed in attaching their machinery to the very wheel work of nature". New York, the 20th may 1891, American Institute of Electrical Engineers.

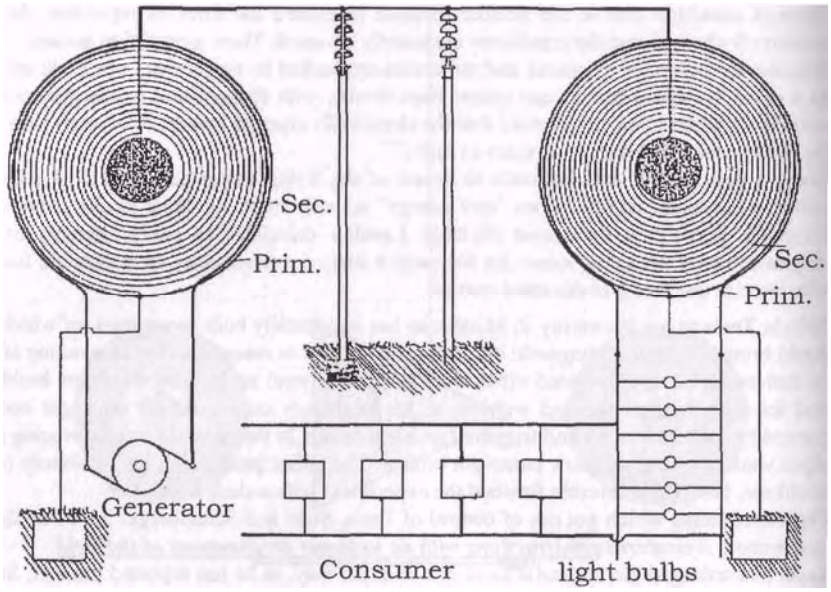

Fig. 9.5: Energy transmission bound to a wire, Patent No. 593,138 (1897) of Tesla.

<i>: Philadelphia Public Ledger, Nov. 2, 1933
<ii>: Dr. Nikola Tesla: Complete Patents, Tesla Book Company, New Edition 1983, Compiled by J. T. Ratzlaff, ISBN 0-960356-8-2, page 301-304.

9.5 Free energy?

Furthermore is reported of Tesla, he would have developed a "converter for space energy" and 1931 have built it in a luxury car (Pierce Arrow)<i>. The car was a 145 km/h fast, doing so the asynchronous motor (presumably built by Westinghouse) furnished 80 HP at 1800 Rpm. The "free energy" the converter, build by Tesla himself, got from a 1.8 m long antenna. Because the motor ran without adaptation of frequency in slipping operation, it had to be cooled correspondingly. It was on the way in trial run for over a week. Now we of course want to know, of what this "free energy" consists, which Tesla will have used and of which he already 1891 had spoken in the American Institute of Electrical Engineers.

For the electron as a spherical vortex we have calculated an electric tension voltage of 511 kV between its surface and its centre respectively infinity (equation 6.31*, fig. 7.1). The highest level of tension voltage normally used for the high tension transmission lies at 380 kV (effective value); for a direct current transmission it is 500 kV. Although still higher tension voltages would be desirable, they are avoided. This is no accident. Experiments with higher tension voltages namely have resulted in inexplicable high losses. We have an explanation: the electrons are taken apart on the way! Their inner energy amounts with the outer energy to zero. The charge carrier, which in the power station as result of an energy conversion has been sent on a journey, is in danger to vanish into thin air (e.g. corona) for tension voltages above 511 kV. The transmitter of Nikola Tesla however (fig. 9.1 and 9.5) worked with 600 kV and more. He said, with his experiments he had destroyed billions of particles without being able to observe an emission of energy and made fun of the misinterpretation of Einstein of the already at that time well-known mass-energy relation $E = mc^2$.

For the purpose of a one wire or a wireless energy transmission the tension voltage therefore has to be higher than 511 kV. With Teslas equipment however the electrons shouldn't be destroyed, but merely be pulled apart to plane circular vortices with help of the today is Tesla coil known winding. These then could be sent on a journey over the antenna, to again be caught and formed back in spherical electrons by the receiver antenna. As long as the electrons don't fall apart, they keep their structure and quantum property. Quanta pass on an excitation, for instance a bump, in form of a longitudinal standing wave, by one particle bumping the neighbouring particle, analogous to sound waves, where one gas molecule passes the bump on to the neighbour. The transmission hence takes place as longitudinal scalar wave.

Electrons pulled apart to planar vortices in addition haven't got a closed vortex centre anymore on their journey. For the by Tesla in his laboratory used and publicly presented one wire energy transmission (1897, Patent Nr. 593,138) the transmission hence doesn't take place in the wire, but as vortices around the -wire. That explains, why only a relatively thin conductor, which normally should have melted, was necessary for a demonstrated power transmission of 10 kW. Tesla however could show, that the wire stayed cold and virtually no heating losses were measurable<ii> (fig. 9.5). He himself said, that this one wire transmission technology is much better than the alternating current technology full of losses, which stems from him as well. Tesla must have known the limit of 511 kV very exactly, because on several photographs one can see, that he changed the coiling technique off this value!

<i>: Philadelphia Public Ledger, Nov. 2, 1933

<ii>: resp. Tesla's lost inventions, VAP, page 36 and page 48, 49.

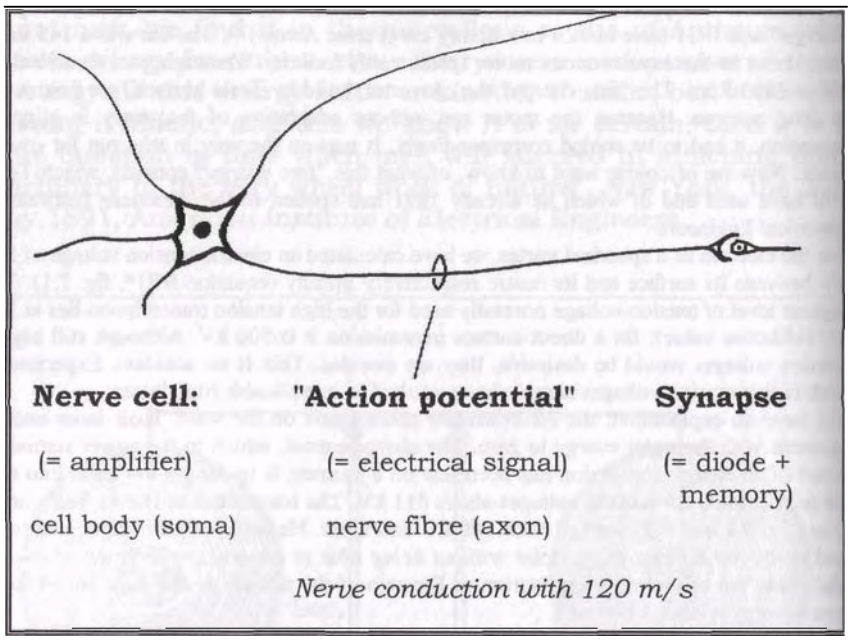

Fig. 9.6: Nerve cell and message processing (neurons)

- Material information conduction: at plants
- Information conduction with hormones: at simple animals
- Electrical information conduction: at higher developed creatures
- Analog transmission: from 10% and more difference in potential, and
- Digital transmission: number of the action potentials
- Modulated information: i.e. complex modulation of the action potential (the potential vortices)

9.6 Nerve conduction and action potential

Technical solutions often are only a suboptimum and many times they are anything but an optimum. In many cases the feasibility stands in the foreground. In the question of the current distribution at that time the decision was made for the worse system, the full of losses three phase system, because no current meters were available for the free of losses one wire technology. Without being able to collect money from the consumer, it wouldn't have been possible for the energy distribution installations to pay for themselves. Compared to that is nature with its selection principle merciless and without compromises. Only the most efficient system has a chance to survive and to spread. If it's about transmittining information in an electric way and two different principles present themselves, then in nature only the better one will be brought into action.

Let's take a look at the nerve conduction in the human body. In the synapses ion concentrations and electric potentials of 70 to 90 mV arise. Here with conventional gauges the activity of a nerve can be detected. From a measurement of the transmission time of synapse to synapse the velocity of the signal is determined. If we however want to measure between the switch points on the line, then we have to find out, that for instance with an ammeter actually nothing is measurable. In addition the nerve fibre has a miserable conductivity.

The biologist calls the electric signal just "action potential" and draws a vortex-like ring around the nerve fibre and speaks of a mixed digital and analogue information transmission.

The doctor on the other hand knows two different types, fast and slow nerves. In the inside both are built up virtually identical. A characteristic difference consists of the fact, that the fast nerves are jacketed with a thick fat layer.

The technician would say, they are better isolated, but why they therefore should be faster, he hardly would be able to answer. If we however assume, that the action potentials or OUT potential vortices oscillate around the conductor, thus exactly in the isolation layer and are forwarded there, then possibly an explanation would have been found.

The nerve conduction moreover has much in common with the one wire system of Tesla:

1. Charges and electric potentials are transmitted
2. Doing so a transport of charge carriers, thus an electric current on the line, isn 't detectable.
3. Consequently no losses worth mentioning occur.
4. Decisive for the functioning is the dielectric insulator material which surrounds the conductor and not the electric resistance of the conductor.
5. In contrast to electric circuits a draining conductor is unnecessary.

It looks as if the one wire system is not new at all, as would nature use it already for ages in the highest perfection. We realize immediately, why our head does without a ventilator and how the high of signal processing density can be explained. Compared with our brain modern personal computer (PC) with their backward cable technology are far less than a suboptimum.

With regard to the pressure on the environment by interference radiation we had derived, that currents and eddy currents with the skin effect direct their radiation to the outside, whereas potential vortices with their concentration effect direct it to the inside. Probably for this reason the radiation field of a person is environmentally better compatible than that of a PC.

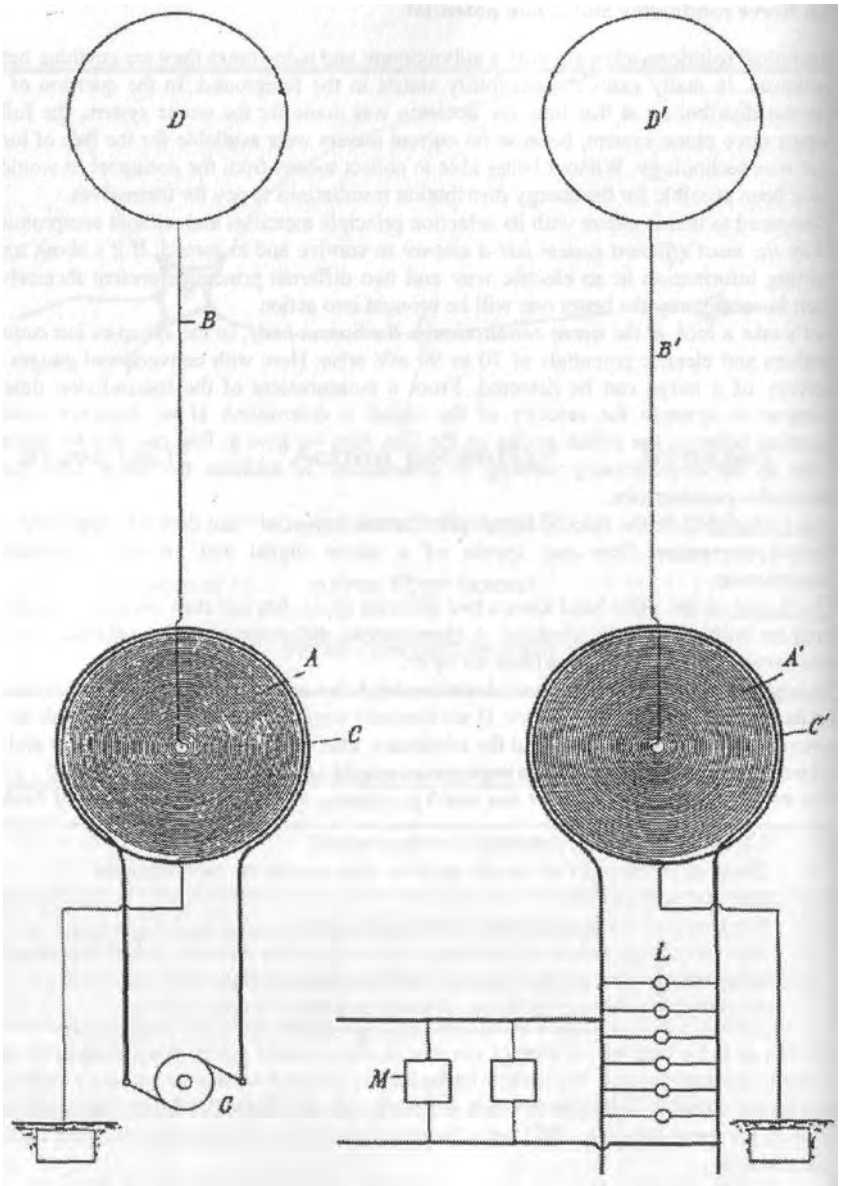

Fig. 9.7: Wireless energy transmission,
Patent No. 645,576 (1900) of Testa.[i]

<i>: Dr. Nikola Tesla: Complete Patents, Tesla Book Company, page 311-321.

9.7 Wireless energy transmission technology

Tesla still went a step further. He has cut the wire connection between transmitter and receiver (fig. 9.5) and instead has installed each time a spherical electrode (fig. 9.7). With this facility he now was able, to transmit energy completely wireless (1900, Patent No. 645,576). Building on this principle Tesla already 1890 had built a radio remote control for a battery operated submarine and had presented his patented system the navy. But they weren't able, to recognize the strategic importance of the radio technology and rejected with the words: "It's too advanced!" (fig. 9.8).

Tesla further had proven with this technology the mentioned proof concerning the existence of longitudinal electromagnetic waves. There exist descriptions, partly of Tesla himself, how he, inside or also outside his laboratory, goes in search of oscillation nodes of the standing wave with a measuring receiver[<i>].
He names several conditions for the wireless energy transmission:

1. "perfect resonance" (same frequency) of transmitter and receiver
2. Installation of the receiver on an "oscillation node" (maximum).

Important is also the measurement of the velocity of propagation, and that isn't constant from the start for a wave, which oscillates in the direction of propagation. From the research of earthquakes we know, that the longitudinal waves are faster than the as well occurring transverse waves. Usually the distance to the epicentre is determined from the difference in transmission time.
In the patent specification the measurement is described[<i>]. Tesla has sent longitudinal radio signals from his transmitter in Colorado Springs once around the earth along the earth's surface and determined a transmission time of 0,08484 seconds. This corresponds to a frequency of approx. 6 Hz. He saw his result confirmed, as he could find the oscillation node of the standing wave again (according to $\lambda/2$) in his laboratory (on the ground plate).
For the full wave length λ the Schumann resonance, which describes a standing wave of an around the earth running Hertzian wave, lies as is well-known at 7.8 Hz! Tesla calculates for his wave a speed 1.6 times the speed of light assuming the polar radius of the earth to be 6363 km.
Also this measurement result confirms, that Tesla didn't use the Hertzian wave. Tesla found the off-beat concept of Einstein, the speed of light would be the fastest possible velocity of signal transmission, only funny. If however today is claimed, 1993 in tunnelling experiments for the first time a speed faster than light has been measured, then this just isn't true. Possibly also the Tesla wave tunnelled, as the vortices for a small conductivity of the air contract and as a result of the length contraction become correspondingly fast.
Later Tesla after several goes in vain even succeeded in building a high tension tube as a tunnel, with which the velocity of the signal could be increased arbitrarily. Tesla with that pursued the goal to be able to make radio contact with other worlds[<ii>].

<i>: N.Tesla: Art of Transmitting Electrical Energy Through the Natural Mediums, US-Patent No. 787,412, 18.4.1905, Complete Patents pp. 397-402.
<ii>: M. Cheney: Tesla, Man out of Time, Barnes & Noble Books, New York, 1993, und S. 309, Omega-Verlag, 1996, ISBN 3-930243-01-6

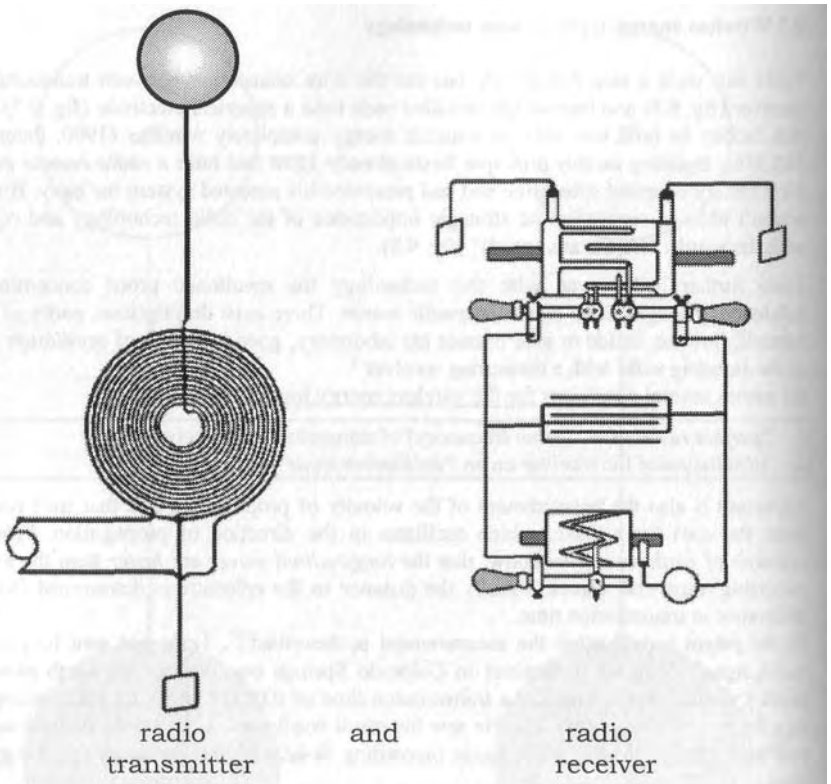

Fig. 9.8: Energy wave broadcasting system, Patent No. 787, 412 (1900) of Tesla.

In today's switching technical notation:

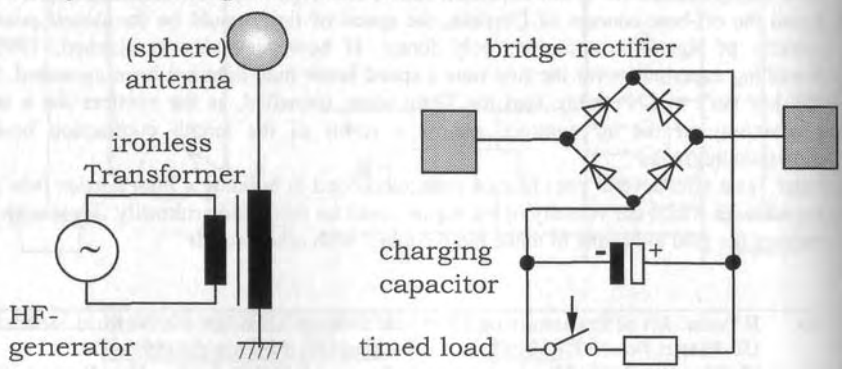

9.8 Measuring and switching technique of Nikola Tesla

As an important and accepted experimental physicist with 14 doctor titles and carrier of the Edison medal Tesla always has held on to his measurement results. Not a theoretical interpretation but exclusively correct carried out measurements have shown him the physical reality. But the by Tesla won measurement results were already for 100 years hard to digest and couldn't be brought into accord with any theory. Therefore a switching technical analysis of the by Tesla described and carried out experiments should give us now information over the nature of the free energy, the tachyon energy, the orgone, or however fantastic the terms may read.
The Tesla coil, according to the instructions of the inventor, is a flat coil wound like a spiral in contrast to the copies today on sale which, surely out of ignorance, are mostly cylindrical. Its peculiarity probably is to be seen in the circumstance, that charges moved through the wire of the coil inevitably increase their angular velocity towards the centre, In this way the electrons, which at first are spherical elementary vortices, are pulled apart to vortex rings like planar discs.
Tesla switches the "secondary" called flat coil between two "terminals". Following he sends, stimulated by his "primary", charge carriers from one terminal to the other and back again and produces a standing resonant oscillation.

Mostly replaces Tesla one of both terminals by the earth. He thus assumes, that now the earth as a spherical electrode takes over the function of one terminal. That he again infers from the observation, that a by the transmitter wireless fed little lamp goes out, if he cuts the connection to the ground. Doing so the oscillation collapses. Radio sets on the other hand can also be operated without grounding, as we know!
The degree of effectiveness of today's distribution technology of current due to the heating losses lies clearly beneath 100 per cent. Without the losses of the wiring it lies close to 100 per cent for the discussed one wire energy transmission. There the vortex rings are guided nicely one after another along the line like beads drawn over a string. This result even is to be expected, as far as no vortex "jumps off the wire or "falls apart". For the wireless version Tesla however to his own surprise had to find out that more energy could be received, than his transmitter produced. The measured degree of effectiveness lay above 100 per cent! He therefore called his transmitter a "Magnifying Transmitter" (fig. 9.10). The further transmitter and receiver were away of each other, the further the received energy increased. Tesla inferred from this, that there had to exist free energy and that he had caught that too.

Consequently he had built a receiver for free energy and registered for patent (1901, Patent No. 685,957, fig. 9.9). Tesla states that the amount of energy depends on the size of the "terminal". Of today's sight we could be willing, to describe this receiver plate as a solar panel, but we should know, that the apparatus produced energy even at night! In addition the energy gain was considerable higher than for today's solar panels. Tesla spoke of "radiations ", of an unknown radiation and he in his lifetime has in vain sought-for help of explanation.
The vortex model will also in this question be a valuable help to us.

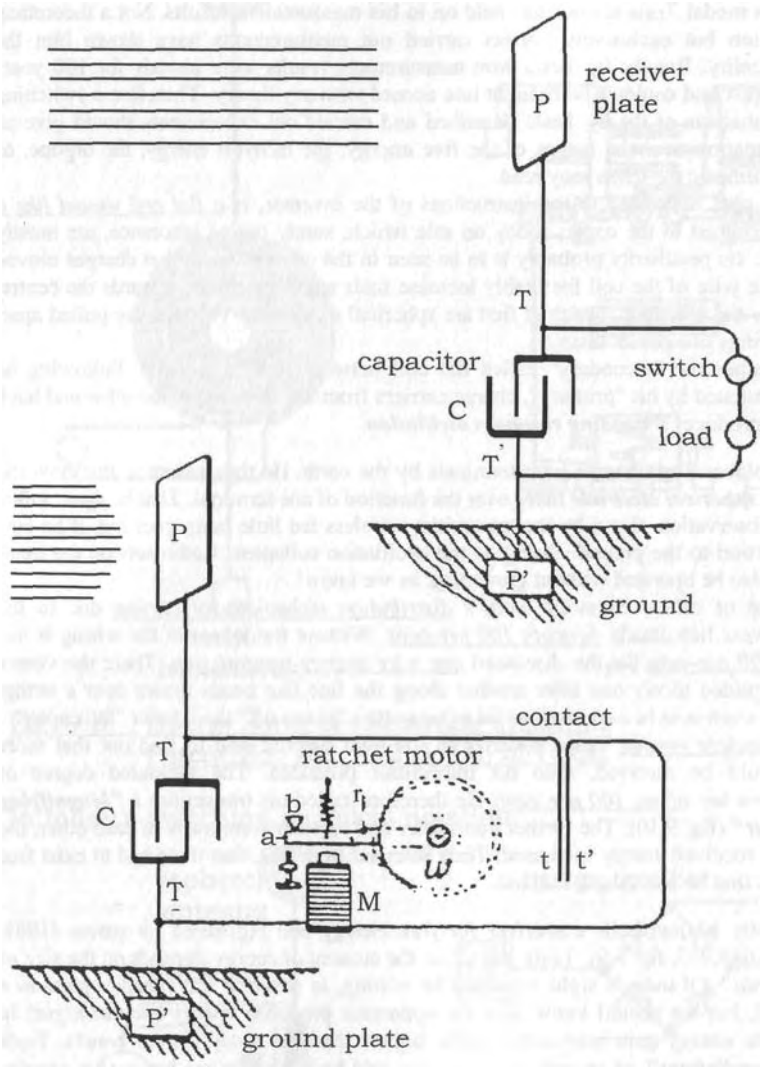

Fig. 9.9: Receiver for "free energy",
Patent No. 685,957 (1901) of Tesla

9.9 Energy technical usage

The answer of the potential vortex theory could turn out as follows:
If at the transition of the one wire to the wireless transmission the ring-like vortices is purloined the guiding wire the vortices immediately begin to turn around each other, as is observable for flow-technical ring-like vortices,. In this way the ring-like vortex the next moment shows its inside. If it before was an electron vortex (fig. 4.3), then it now shows as positron, if it was negatively charged, then it now is positively charged. Following it oscillates back again, etc. Wit that the ring-like vortex on the average has no measurable charge and no mass, because it alternately forms matter and anti-matter. Without interaction it has an enormous ability of penetration . In physics such particles are called neutrinos.
Tesla thus had, apart from his transmitted energy wave, which turned out to be neutrino radiation, by chance also caught neutrinos which oscillated synchronously.

According to the actual level of knowledge do neutrinos penetrate the earth and appear also on the night side. The order of magnitude in every second amounts to approx. 66 billion neutrinos per square centimetre. It is a true bombardment. If we would be able, to collect and convert all neutrinos, the won energy would be entirely sufficient, to cover the need for energy of the world population (approx. 27 W/m^2). We merely have to materialize them, thus give them mass, charge and the necessary localization. Tesla was able to do that experimentally! Let's record:
The ring-like vortices, which Tesla with his transmitter has sent on a journey as electrons with an open vortex centre, are neutrinos (fig. 7.12). Tesla requests that transmitter and receiver operate in resonance, thus with the same frequency. Under this condition the receiver collects in all oscillating vortices, so that no one is lost.
If the neutrinos for instance are just positively charged when leaving the transmitter electrode, then an electromagnetic force of attraction takes place, if the receiver electrode at the same time is negatively charged. The required operation with the same frequency and opposite phase guarantees that also the next moment, if both, the neutrino and the receiver, have changed their polarity, the electromagnetic attraction is preserved.
It is obvious, that strange neutrinos which fly past and by chance oscillate synchronously are as well attracted. In that way the power collected in the receiver capacitor will increase further and degrees of effectiveness of over 100% are obtainable. Tesla discharges the receiver capacitor timed with the frequency of resonance (fig. 9.9) and points to the difficulty of an exact keeping of the condition of synchronisation.
Tesla indeed did work on a theory of his own, but never published it. The patent office and his lawyers had to proceed from the Maxwell theory, although Tesla knew only too good, that his apparatus in no way could be described with this theory. It therefore can't be excluded, that important facts in his patent specifications haven't been mentioned at all - or even worse - consciously or unconsciously in an inapplicable manner have been explained with the Maxwell theory.
Perhaps this is the more profound reason, why the numerous Tesla imitations don't want to function quite so well. With the new theory there should be some changes, and we should accept the challenge for the sake of humanity.

The transmitter tower of Tesla (57 m high with a spherical electrode of 21 m) for the transmission in multiplex mode of operation (according the inventor) of:

- telephone calls
- telegraph services
- teleprinter services
- radio programmes
- navigation signals
- time signals
- video signal

Fig. 9.10: The planned transmitter Wardencliff of Tesla on Long Island, 7.5 MW (1902).

9.10 Environmental compatibility

We now can summarize the different observations and try to find answers for the in the first chapter raised questions concerning the electromagnetic environmental compatibility.
The by Tesla used longitudinal energy wave is a potential vortex wave in the sense of the vortex model of Kelvin, which we again could identify as neutrino radiation (Dirac).
Also other, partly quite fantastic terms, are known like "radiations" (Tesla), "orgone radiation" (Reich), "tachyons" (Feinberg), "grid radiation" (Hartmann), "bioradiation" or "water veins".
Actually these rays have nothing to do with water as a cause. Water with its high dielectricity however favours and influences the course and the local distribution of the radiation. The maximums of the standing wave considered for themselves result lines in straight as a die in the landscape. Of Tesla is known, that he measuring technically could detect the cross points of the lines, which he called oscillation nodes.
There exist so-called dowsers, who can make these standing waves out even without technical aids. For that they hold a fork in their hands, which suddenly moves over such lines.
Let's remember that the same potential vortices are used at the nerve conduction as reaction potentials to conduct stimuli. If ring-like vortices arrive at a muscle, it contracts without knowing, if the signal was sent from the brain over the spinal cord or picked up from the environment over the fork and the hand.

Thus if the same signals, which we use for the tasks of controlling and thinking, are also produced by technical apparatus, then this touches the question of the environmental compatibility in a direct way. Above extremely strong points of resonance, which are called "geopathic zones", now and then even is warned about "psychotronics", a function trouble of the brain, which can show in a disturbance of the waking consciousness.
A possible explanation would be that the brain is occupied with so much vortices picked up from the outside, that it isn't able anymore to accomplish its actual tasks. For muscle cramps or an inexplicable crash of a PC an correspondingly interpretation would be obvious.
As long as no gauges are available, the highest caution is imperative!

If Tesla had been able to put into operation his transmitter tower for longitudinal waves ("World Telegraphy", Wardenclyffe, Long Island, s. fig. 9.10) with the estimated power of 7.5 Megawatt and thus had been able to realize his dream of a world-wide wireless communication, then this could have had hardly estimable consequences for the health of the world population.
Shortly before the completion of the project, in the year 1905, Tesla without notice let stop all work. He to that never made an explanation to anyone. Officially it was said, his financial backer J. P. Morgan would have withdrawn his financial means. In any case was Tesla financially ruined with this step.
Perhaps also T. A. Edison was behind it, who was his opponent at that time. Edison committed himself engaged for the use of direct current. Against the alternating current, preferred by Tesla, Edison argued with unhealthy risks, and with that he perhaps wasn't so wrong at all.

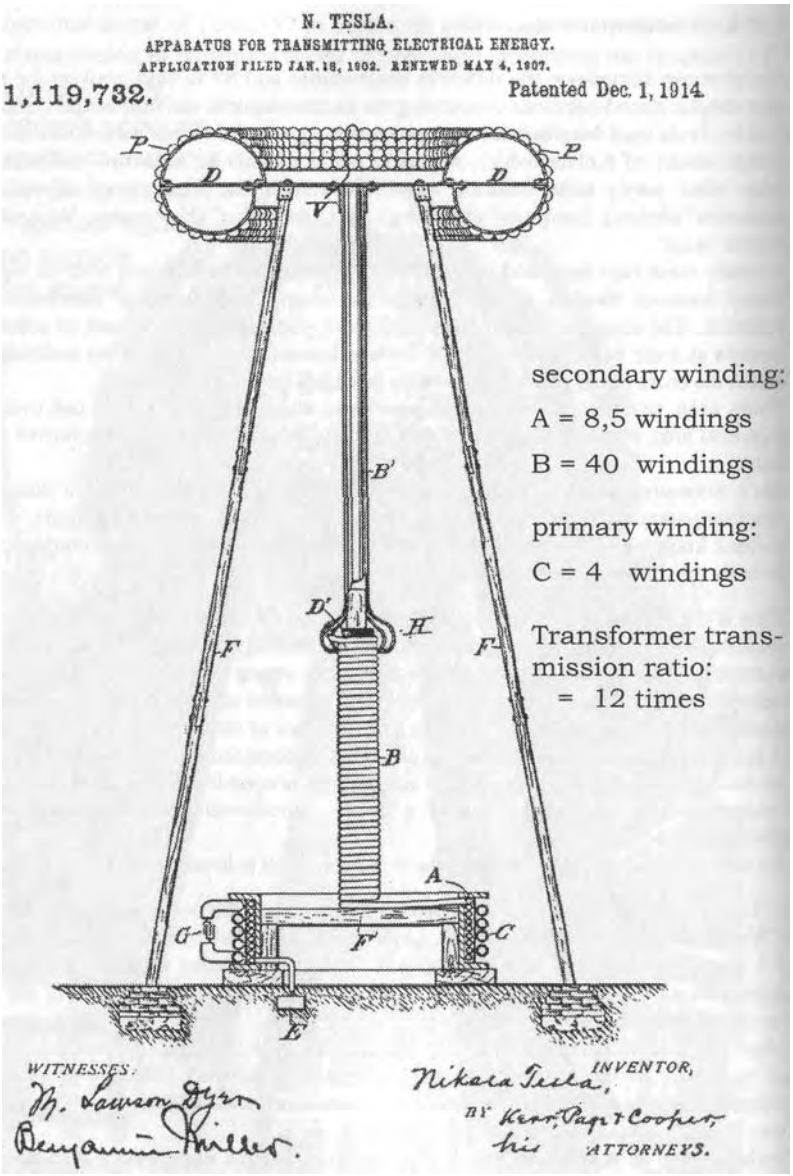

Fig. 9.11: Concerning the technology of the Wardencliff transmitter (fig. 9.10).<i>

<i>: Dr. Nikola Tesla: Complete Patents, (J.T.Ratzlaff), Tesla Book Company (1983), ISBN 0-960356-8-2, P. 435.

9.11 Ecologically fair usage

Tesla not only has stimulated ecologically fair usages of the energy radiation. To that can be counted the use of a Tesla transmitter as a radiation weapon<i> as well as the mentioned building of a Tesla interferometer, the low-frequency interferences of which can lead to mighty gravitational waves and with help of which it should be possible, to produce earthquakes, to sink ships or to shoot down planes from the sky<i>. Against the background of two world wars it can be understood, why Tesla has drawn attention to the possibilities of a use of his system for the purpose of defence.

In today's sight a technology like Tesla's wireless energy transmission (fig. 9.11) hardly would have any chance of a large technical use, because it should be reckoned with enormous problems of environmental compatibility. After all had come out in our considerations, that entirely in contrast to the Hertzian wave just of the Tesla energy wave direct biological effects are to be expected. A purposeful medical use of the Tesla rays however can be imagined.

The collecting of "free" energy waves with a neutrino receiver at first undoubtedly would be a clean and ecologically fair alternative to the present energy technology, with which we heat or nuclearly contaminate our environment. But even the use of free energy converters has limits. Should it turn out that the Photosynthesis uses such a materialization, in which the necessary free electron for the chemical reaction actually is produced from a caught neutrino in the so-called reaction centre and thus the reaction energy is won, then for an as usual excessive use by men it can't be excluded anymore, that the plants on earth die and nothing grows anymore!

I in contrast attribute big chances to the one wire transmission technology. Because for an use of alternative and regenerative energy sources, like the sun in the desert or the geothermal energy in Iceland, the transport of energy has to be made over large distances through the oceans the small losses and the possibility to be able to use sea cables, play a big role. In the residential areas and conurbations on the other hand it has a positively effect, that by the concentration effect of the potential vortices the interference radiation is directed inward. Laid on the bottom of a sea or of a river, such a line in addition is protected against the effects of lightning and sabotage, and it neither spoils the countryside, as the old-fashioned high tension pylons do.

For transportation tasks the mentioned making use of the spin coupling would surely be the most suitable drive. The denser the medium, the more efficient would be the driving effect, for which reason not only flying objects, but quite particularly also ships and submarines could be operated non-polluting in this way without combustion and without exhaust fumes. Build up effects by the water pressure or the sound barrier don't occur. But control might not be entirely unproblematic. If for the reason of a unipolar arrangement of the field a relative velocity to compensate the field becomes necessary, then a correspondingly build up arrangement will do so without considering losses. It is no accident that most apparatus which got well-known have flown the builder sooner or later "past his ears" (note of the translator: broke into pieces). Till a commercially utilizable flying saucer has been built, many technological hurdles have to be taken.

Claims to an up-to date environmental policy in view of longitudinal electromagnetic energy waves
= Tesla waves = neutrino radiation = scalar waves
= potential vortex waves:

1. Gauges must be developed and built, with which the energy waves can be measured.

2. All technical apparatus should be tested regarding the emission of energy waves. Harmful radiation should be avoided.

3. Only such transmitter antennas may be brought into action, which emit a minimum of energy waves.

4. The ability of biological systems to absorb energy waves should be determined. To that also belongs the question, how many vortices collect locally and how fast they fall apart.

5. Limits for allowed pressure produced by artificially energy waves should be fixed, regulations and laws enacted.

6. The in nature available energy waves should be brought to a technical use, with the goal of a natural energy production.

Fig. 9.12: Catalogue of claims concerning the environmental compatibility in the view of the new field theory.

9.12 Claims concerning the environmental compatibility

Now we still not know, if the using of a handy or another electronic device poses a danger to the user. Now, we surely can't exclude a danger, and the statement of the manufacturer, it is safe because all limits have been met, is worth nothing, as long as the part of longitudinal waves isn't measured. Therefore stands at the very top of the list of the catalogue of claims (fig. 9.12) the development and the building of gauges to measure Tesla radiation. More than half the 700 patents of Nikola Tesla concern the building of transmitter and receiver installations for energy waves. Here a lot of valuable clues are found, especially as he himself has built and used some of the switching circuit designs. In the seminar a rebuild is discussed, with which 1995 the existence of longitudinal waves could be proven [A7].

For an earthquake always both, the transverse and the longitudinal wave, occur simultaneously and, taken exact the same is valid for the sound wave, even if the transverse part doesn't get too far in the air. The emission of both parts in analogy is almost to be expected of an electromagnetic wave generator or transmitter. Actually both waves are detectable at the receiving point: The useful transverse wave and the longitudinally propagating vortices, which show as noise (fig. 4.7). If the vortices are predominant and the useful signal goes under in the noise, then a interruption of the radio operation occurs. Also small gardeners immediately near a radio station have made experiences as e.g. in a distance of one kilometre from the transmitter of RIAS-Berlin. They were able to light their allotments day and night with a neon tube, to which they merely had tied a free wire. The radio station immediately insinuated, that they in an illegal manner had tapped their useful wave and damped it. But it can't be excluded, that the transmitter has sent a longitudinal part in the ether too, which was responsible for the energy transport. But that suggests, that also at other transmitter antennas, thus for the mobile phones, the unwelcome parts is transmitted even than, if we don't use it at all.

Still another problem is added. If in a modern receiver radio waves arrive, then they roll up to a standing wave and according to fig. 1.4 to a vortex over the antenna. According to that we aren't able anymore to distinguish, if the transmission took place as Hertzian wave or as Tesla wave. The separation of both sorts of waves has to take place before the antenna is reached.

An up-to date measurement arrangement would look as follows: In front of the receiver antenna a path with a tunnel, which represents an insurmountable obstacle for the transverse waves (fig. 6.14), is placed. Then only the longitudinal waves pass the tunnel, and these at the end of the tunnel can be recorded and analysed with conventional technology. The tunnel is an elegant possibility, to make use of the part of Tesla waves. After all only this part is relevant with regard to the electromagnetic environmental compatibility. Concerning the above asked question we can take home at least one important realization. The probability is quite high, that you actually notice nothing of the handy radiation, because not every system react in the same manner to certain vortices. The resonance conditions regarding frequency, phase and position always have to be fulfilled, if an absorption of energy waves should occur. (fig. 2.10 B, E. coli bacteria). On the other hand it however can't be excluded, that just you or me synchronize according to frequency and collect 100 % of the transmitted energy radiation. In contrast to the Hertzian wave plays for that the distance to the source of interference only a secondary role! Seen that way worries would by all means be entitled ...

From Indian mysticism:

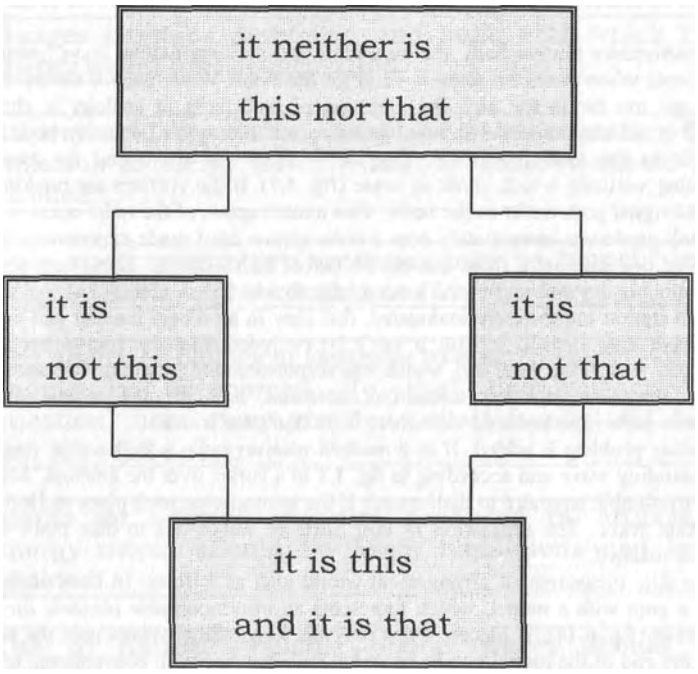

Fig. 9.13: The structure of the world equation, an example from
Indian mysticism

9. 13 Epilogue belonging to part 1

The correctness of a new theory not by all means guarantees, that it also is accepted! A new theory must be used. Only if a concrete need exists then an acknowledgement is to be expected if at first only by the direct beneficiaries.
In november 1994 in Munich the trade fair "Electronica" took place. Here invited by the Deutschen Gesellschaft fur EMV-Technologie (German association for EMC-technology, note of the translator) the books about potential vortices [Al, A2] were honoured with a prize by an internationally renowned EMC-scientist. The number of people, who the potential vortex theory helps further to find answers to problems, which until now aren't explicable, grows further.
Nevertheless, nobody should believe that something will be changed to the content of the text books in the shelves that fast. Habit and laziness encourage to further use the to date interpretation, even if a new theory has ready a better and convincing answer. It will take some time, to give an example, till the heating of water in a microwave oven is explained as eddy losses, as is described sound by the potential vortex theory already today. The discovery of a physical phenomenon may happen in a fright second. Its acknowledgement on the other hand as a rule is a lengthy procedure. If we look back in history we find out that even in the past it hasn't been otherwise.

Of the four fundamental phenomena in fig. 8.2 at first the tension voltages and the charges have been discovered by Coulomb (5.7e).
(5.7c): An effect of the eddy currents was observed already 1825 by the French physicist Arago. He discovered that a magnetic needle suspended above a rotating disc tends to rotate along. Out of ignorance he named the effect "rotational magnetism".
But the eddy currents could only be mathematically described with the help of two laws, the law of Ampere (1820) and the law of induction of Faraday (1831). Because the effect due to the eddy current losses rather was regarded as disturbing, technical applications or patents at first have stayed out. At first Riidenberg has carried out fundamental calculations for eddy current brakes in 1906. The discovery and usage of the "skin effect" is to be attributed to Tesla.
(5.7b): The electromagnetic wave for the first time was mathematically described by Maxwell (1864). He had aimed to calculate the light and he could show, that his theory actually could correctly describe all properties of the light. With that he was able to prove the correctness of his theory. But he had to deal with many sceptics, because he had postulated the dielectric displacement, without however in his lifetime being able to measure it because of its smallness.
This may be the reason, why the discovery is attributed to Heinrich Hertz and was and is spoken of the Hertzian wave. Neutrally seen Hertz at first was nothing more than a enthusiastic pupil, who had worked through the "Treatise"[<i>], Maxwells books. All results, which Hertz could observe experimentally, already were contained in the Maxwell-theory and published.

<i>: James Clerk Maxwell: A Treatise on Electricity & Magnetism, vol. 2, Chapter XX: Electromagnetic Theory of Light. Dover Publ. New York

But the great mathematical description of Maxwell at first had a purely academic importance. The interest of the general public on the other hand concentrates on the practical applicability. Hertz had experimented with antennas and has laid the foundations of the building of a gauge for electromagnetic waves (1888). The wireless transmission of invisible waves was convincing. It was an entirely new technology, which stimulated fantasy in view of a technical usage. A practical man, who was stimulated by the theoretical realizations, was Marconi. He goes for the inventor of the radio (1895, Nobel prize: 1909).
Between the three summits, first the calculation and at the same time discovery, second the measurement and third the usage of the wave phenomenon lay 31 years, and the radio technology is developing still further, even today. In the area of the cellular phone network and the telecommunication even a kind of gold mining mood prevails, which can't be impressed much even by hints of an electromagnetic environmental compatibility.

In the euphoria of the past 100 years is fallen into oblivion completely, that besides the by Hertz detected transverse wave in the wave equation according to Laplace and according to the original version of Maxwell also a longitudinal wave was described mathematically. This one was discovered and detected by Tesla in numerous experiments. With reference to his discovery Tesla initially had asserted publicly, Hertz had been at fault, with which he undoubtedly was wrong and had incurred the wrath and the scorn of the scientific community. As a result of this development his experiments haven't been reproduced and the discovery of the scalar wave could fall into oblivion.
Not enough with such sanctions against the inconvenient freethinker Tesla a series of professors like Gibbs and Heaviside have made cuts and discarded all parts from the original version of the Maxwell equations, which by that time weren't considered to be experimentally proven by experiments of Ampere, of Faraday, of Ohm and Hertz. With that the scalar waves fell victim to the axe, what, though it had encountered severe criticism, finally entered as textbook opinion into all textbooks, after Hertz also had sanctioned this measure.
If the field equations according to Maxwell in today's revised version don't describe scalar waves anymore, then all orthodox scientists, who want to bear reference to that, have to bear one thing in mind: discarding a term of an equation is the same as neglecting it. But the term only may be neglected if it is sufficiently small. The first thing every student learns in the physical practical training is that this first has to be tested. For that the term has to be measured and its order of magnitude must be determined. Then it is little helpful and extremely unscientific, if at first is neglected and on the basis of the revised field equations, which have put all scalar waves to zero, is demonstrated that the neglect was allowed or even necessary.
A practical example are the longitudinal wave parts, like they occur and are proven in the near-field of a transmitter antenna. Considering the order of magnitude a neglect is out of the question. On the other hand they should not exist at all according to textbook physics, because they had fallen victim to the axe. Since most scientists in present time do not know about the cutting action anymore, they are postulating field vortices anew in the proximity of an antenna. Field vortices, which are propagating longitudinally in the direction of a field pointer as a scalar wave.

With that they calculate their own arbitrary assumption[<i>].
If in the practical training of physics a student unevaluated neglects an essential factor of influence, then his experiment goes as not passed. The experiment must be repeated so long until according to the approved methods of scientific soundness all used neglects have been tested individually and have undergone an error consideration.
Do we now have to deny the cutting action, which had been plotted by Gibbs, Heaviside and others, having the necessary scientific soundness? Do we have to review and rework all textbooks concerning the illegal neglect? Since the cutting action a gap gapes in the field theory!

(5.7d): The potential vortex fills the remaining gap in fig. 8.2. Several research scientists and scientists can be named, who already could observe this phenomenon: in front of all goes Nikola Tesla for discoverer of the Tesla currents, very weak currents which are said to cause extremely high potentials. Here presumably cause and effect have been mixed up, because weak currents never can produce high potentials. Actually the potentials prove to be a result of the potential vortices, whereas the currents aren't more than a result, nothing but leak currents. At least Tesla could use the vortex, but without a usable theory he neither could calculate nor adequately explain it. Besides Tesla Wilhelm Reich should be mentioned, who has collected the vortices in his orgone accumulator.
Mostly only certain aspects were observed and investigated: by Tesla the planar vortex, by Reich the influence on the weather, by Schauberger the water vortices and by all three the medical and biological aspect. The list of names is incomplete and could arbitrarily be continued.

With the discovery of the potential vortex (1990) the basis for the building of a gauge and the technical usage of the physical phenomenon is laid [Al]. It not only concerns the search for water, but also the detecting of the vortex balls and vortex streets, of the standing waves of the energy radiation in the air, at the workplace, at the bedroom, in clinics, in recreational areas and hotels. As explained at the start, neither the field strength of a Hertzian wave nor the arising heat development can be made responsible for biological or technical harm.
It primarily are the newly discovered vortices of the electric field, which take effect. The effects can, as we have seen, as well be good for health as bad for health. Intensity, plane of polarization, vortex configurations and many other characteristics play a role here. To research these influential factors gauges for vortices will be needed as well.
We have to realize that in the technical domain the electromagnetic compatibility of an apparatus is determined by its sensitiveness to vortices, thus by the fact how many and which vortices can cause a function trouble. To determine the environmental compatibility of a product the emitted vortices, the energy radiation, have to be measured. Limits for high tension lines, for screens or handheld phones must be given in units of the potential vortices. The potential vortex has shown us the way to a unified theory and has brought along a new picture and understanding of our environment. It with that wants to show us the correct way for an ecologically compatible dealing with nature.

<i>: Zinke, Brunswig: Lehrbuch der Hochfrequenztechnik, 1. Bd., 3.Aufl. 1986 Springer-Verlag Berlin, Seite 335

Part 1: Edition belonging to the lecture:
"Electromagnetic Environmental Compatibility"

Prof. Dr.-Ing. Konstantin Meyl

Scalar waves

Abstract: 1. Auflage 1996, 4. Auflage and 1st English Edition 2003

Both technical and biological systems can be influenced by electromagnetic fields, whereby numerous questions still are open, like e.g. concerning limits and the nature of physical interference fields. The book shall do justice to the circumstance, that a fact oriented discussion about ,,electrosmog" implies an analysis of possible reasons, a mathematical derivation and a physical argumentation.

We proceed from the assumption, that only that part of the electromagnetic wave should be considered for malfunctions, which has been absorbed and which has rolled up to a field vortex. The effectiveness depends on the amount of the produced vortices and on the life span, the decay of vortices.

Analogous to the sound wave vortices in space are propagating as longitudinal waves. In this context is pointed to numerous effects. Examples for the technical and biological use of these standing waves are the energy transmission of Nikola Tesla as well as the nerve conduction, which functions in a corresponding manner. If the same vortices, which man uses for conduction of information, are emitted by technical devices, then biological reactions can't be excluded anymore and worries with regard to ,,electrosmog" seem to be justified.

Causes, phenomena and natural scientific consequences

INDEL GmbH, Verlagsabteilung, Fax: +49-7721-51870
Tel: +49-7724-1770
Postal and ordering address:
l.TZS, Prof. Dr. K. Meyl, Leopoldstr. 1, D-78112 St. Georgen/Schwarzwald
www.k-meyl.de meyl@meyl.de

Scalar Waves

From an extended vortex and field theory to a technical, biological
and historical use of longitudinal waves.

Part 2

by

Professor Dr.-Ing. Konstantin Meyl

Edition belonging to the lecture and seminar "Electromagnetic environmental compatibility"

(Original title: "Elektromagnetische Umweltvertraglichkeit")

Translated out of the German language
by Ben Jansen
(2000-2003)

* * *

Part 2: Edition belonging to the energy
technical seminar

Free energy and the interaction of the neutrino radiation

***

INDEL GmbH, Verlagsabteilung

Villingen-Schwenningen 1996-2003

ISBN 3-98O2 542-4-0

Preface to the seminar

The point of a seminar is, to deepen, to practise and, as far as possible, to practically appy the material of a lecture. The knowledge of the content of the lecture hence is a prerequisite for the participation.
For the reader of this book that's tantamount to the recommendation, to have read the first part, the edition belonging to the lecture, before*[1]*. Here the questions concerning the „electromagnetic environmental compatibility" are asked and the necessary bases for their answering is laid. Also practical consequences for various areas of science are indicated. The deepening most suitable should be made in form of a seminar, subdivided into the here presented part 2 to the energy technical seminar and a part 3 to the information technical seminar. Part 2 correspondingly concerns the energy technical aspect of electric or magnetic longitudinal waves, whereas part 3 is dedicated to the information technical aspect[<ii>]. Because it concerns a book which merely for reasons of usefulness is published in three parts, the chapters are consecutively paginated. References to chapter 1 to 9 hence automatically relate to part 1. The numbers of the figures and tables as a rule are identical with those of the chapters, in which they are discussed.

The seminar should lead on over the pure reading, consuming or listening and should stimulate to join in. All involved persons may and should give ideas and ask questions, even if these may sound little orthodox. The scientific working method takes, that is struggled for answers and even is argued, if necessary. To reach this goal, it mustn't exist any obligation or censorship, neither for the leader of the discussion nor for the participants of the seminar.

The seminar is being carried out since the summer semester 1997. The works of the seminar written by students treat the knowledge of text books of the respective theme. Following the lecture the answers are discussed and compared to those of the theory of objectivity[<i>] and other models of explanation. This procedure in this edition belonging to the seminar is reflected at some points, if for instance a chapter is completed with a „discussion".

The first edition of this 2nd part still was incomplete and has been handed out to the participants of a congress in Switzerland instead of a manuscript belonging to the lecture the 17th of Nov 1998. The here presented second edition in the meantime to a large extent is complete, but surely not yet perfect. In accordance with the experience made with the first part of the book also for this 2nd part a third and revised edition, in which the ideas of the participants of the seminar and of the readers find consideration, will be due to be dealt with after a year. The reader of the second edition has to console himself with the fact that a lively seminar constantly is changing and developing further. And that has to be so!

Villingen-Schwenningen, January 1999

<i>: Electromagnetic environmental compatibility, Part 1, Edition belonging to the lecture, INDEL Verlagsabteilung, 1996, see page 1-218 of this issue.

<ii>: Electromagnetic environmental compatibility, Part 3, Edition belonging to the information technical seminar, 2002, see page 443 - 625 of this issue.

10. Oscillating interaction

A theory is not an end in itself, even if it sounds very convincing. It has to be measured by its applicability. As an entry into the practical consequences, which result from the theoretical part[<i>], the question about the validity of Kepler's laws is raised.

10.1 Kepler's laws

The "radius vector", a line drawn from the sun to a planet, sweeps out equal areas in equal periods of time. At least has teached us Johannes Kepler it that way (fig. 10.1). The balance of forces, the gravitation on the one and the centrifugal force on the other hand results in the innermost planets of our solar system orbiting the sun very much faster than the outer planets (Mercury in 88 days, the Earth in 365 days, Jupiter in 4333 days and Pluto in 90465 days!).
For the inner planets as well as the big planets Jupiter and Saturn Kepler's laws are still found confirmed. But that shouldn't apply anymore for the outermost planets of the solar system. Beyond Saturn should prevail changed rules as is said, based on observations of the Voyager spacecrafts[<ii>].

If we direct our view to an unknown galaxy, then does it rotate around its centre and in doing so to a large extent keeps its form. Despite rotation of its own an elliptic, a barred or even a spiral galaxy virtually doesn't change its characteristic form. From this follows, that the inner stars of a galaxy are considerably slower on their way than the outer stars! But we expected exactly the opposite.
According to Kepler's regularity the outermost stars would have to orbit extremely slow, In order not to be hurled into space as a result of the centrifugal force. But then a galaxy wouldn't keep its structure. The spiral form, as it already has been observed and classified by Hubble (fig. 10.2), merely would be an accidental exception as a momentary picture, but by no means the rule.
We have to take note, that the structure and in particular the cohesion of a galaxy can't be explained with Kepler's laws[<iii>].

<i>: Konstantin Meyl: Electromagnetic environmental compatibility, Part 1 of this book: Causes, phenomena and natural scientific consequences.
<ii>: Kendrick Frazier: Das Sonnensystem, Time-Life Bucher, Amsterdam (1991)
<iii>: The basic laws of the universe start to rock: ,,What is the matter with the galaxies? They rotate in their fringe ranges much faster, as is allowed by the laws of physics. Or is something wrong with these venerable laws? The astronomers and physicists stand for the dilemma to have to decide between the two alternatives: feign the observations us an other world or do we calculate wrong since centuries?" (translated), Bild der Wissenschaft Nr. 2, 1989

Kepler's 1st law:

The planets move in elliptical orbits, with the sun at one focus.

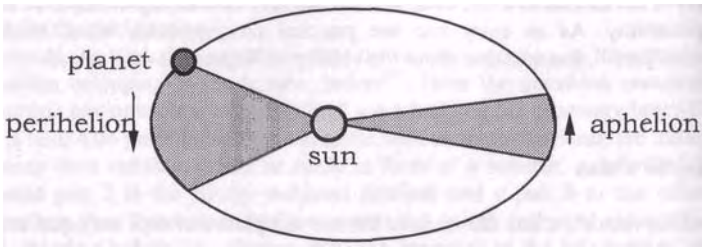

Fig, 10.1: Kepler's 2nd law (concerning the conservation of angular momentum):

The line drawn from the sun to the planet sweeps out equal areas in equal periods of time.

Kepler's 3rd law:

The ratio of the squares of the revolutionary periods of two planets is equal to the cube of their average distance to the sun:

$$\frac{t_1^2}{t_2^2} = \frac{r_1^3}{r_2^3} \quad (10.1)$$

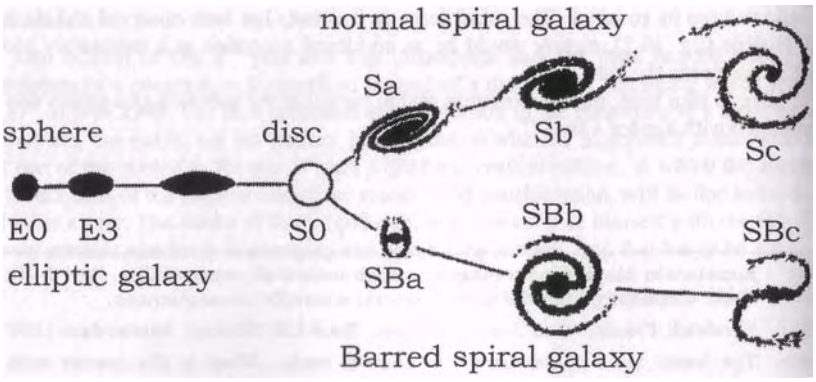

Fig. 10.2 The classification of the galaxies according to Hubble<i>

<i>: according to H. J. Lugt: Vortex Flow in Nature and Technology, page 223

10.2 Unknown interaction

So which interaction keeps a galaxy together? We today believe to know four different sorts.

I. The gravitation[<i>]: But since Kepler's law isn't valid in this case anymore, the gravitation is ruled out from the start. Obviously for the distances in a galaxy it hardly is effective.

II. The electromagnetic interaction: It is responsible for the structure of the atoms. Looked at from the outside atoms carry no charge, i.e. the charge conditions are balanced. A binding of our sun to the centre of the Milky Way by an electromagnetic interaction thus is ruled out as well.

III. The strong interaction: Since for the proton another charge distribution is measured, as a single positively charged particle should have according to the normally used theory, the strong interaction was introduced as a nuclear force, to explain the big error, the grave difference between measurement and calculation. The good advice hence reads: instead of giving birth to postulates at random, first of all the fault should be searched for in the normally used theory[<ii>]!

IV. The weak interaction: It quite obviously is involved in the particle decay[<ii>]. Both, the weak and the strong interaction, only have an extremely short range. With this property they consequently won't be able to keep a galaxy together.

Conclusion: In a galaxy a still unknown interaction takes effect, and science is requested to search it.

Both interactions with infinite range, the electromagnetic interaction and the gravitation occur as a result of static fields, therefore assume a constant charge or a constant mass. Considered more exactly in that case it merely can concern special cases. Gravitational waves, which reach our earth and which are detected in very costly experiments[<iii:>], already show that the existence of alternating fields can't be excluded and oscillating interactions by all means are conceivable! The physical research at present probably is on the right track. The researchers however don't have ready an usable explanation yet. We accept the challenge!

<i>: Derivation of Kepler's 3rd law in fig. 11.10

<ii>: Konstantin Meyl: Potentialwirbel, Band 2
INDEL-Verlag, Villingen-Schwenningen 1992, ISBN 3-98O2542-2-4

<iii>: Gero v. Randow: Wenn kosmische Katastrophen Raum und Zeit verbiegen, zum Thema Gravitationswellen-Detektor, VDI Nachrichten Nr.9, 1.3.91, S.32

Analogy:

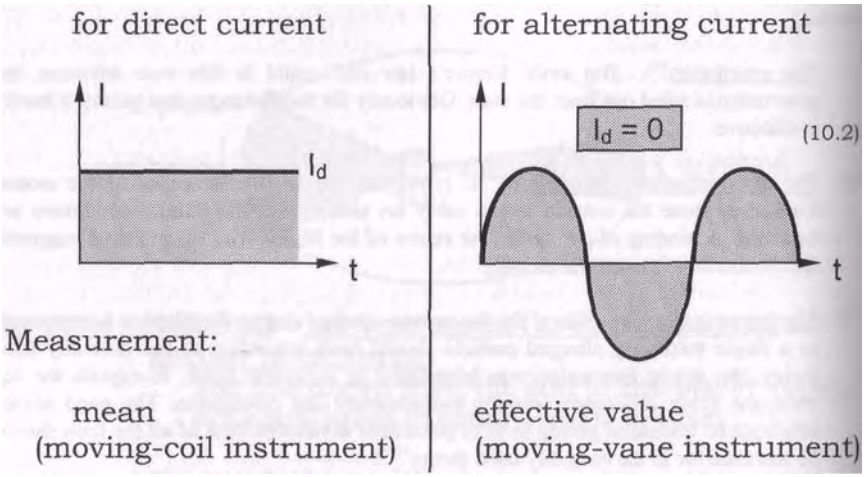

Fig. 10.3: Direct current and alternating current

constant charge: **Electromagnetic Interaction**	oscillating charge: **Resonant Interaction**
constant mass: **Gravitation**	oscillating mass: **Levitation**

Fig. 10.4, a: The four fundamental interactions

10.3 Harmony of the alternating current engineers

Today's situation can be clarified by the following picture: you engage a "direct current engineer" to measure the tension voltage in the socket of our power supply system. The ,,dyed-in-the-wool direct current engineer", who never has heard anything of alternating current, reports: ,,No tension voltage is measurable". If he for reason of your doubtful expression looks still more exact he will realize: ,,The pointer of my moving-coil instrument strangely fidgets around zero, but the swing is so small that one confidently can touch it", (fig. 10.3)
Modern science is accustomed to say, without a valid theory and without technical measurability nothing can exist, what mustn 't exist. If you drop dead after the experiment, then you probably had a weak heart or other afflictions. In such cases as a rule the victim himself is to blame and by no means theoretical physics!

In the case of our power supply system the answer is known: The mean of the alternating voltage of the network is approximately zero. The pointer of a moving-coil instrument for reason of its inertia can't follow the fast changing anymore and only fidgets on the spot. The effective value however amounts to around 230 Volts. But to measure it you need another device, for instance a moving-vane instrument. Seen so, direct current describes the special case of alternating current with frequency zero.

The properties of alternating current can be depicted best by an extraterrestrial observer. He will tell us: Seen from a distance at least at night a great harmony seems to prevail on earth. All lights in the streets and cities twinkle completely synchronously. All generators are in resonance among each other and with all consumers. There are two big races: The 50 Hertz race and the 60 Hertz race, which appear if the earth turns further and the 50 Hertz race is switching off again its twinkling lamps.

The synchronization necessary for an exploitation of alternating fields is so obvious for us, that hardly anybody realizes, that a consumer operated with only one Hertz difference to the frequency of the network can't be supplied with power anymore. Apart from the correspondence in frequency it even depends on the correct phase. The phase angle must be between 0 and +90°. This corresponds to an efficiency factor $\cos\varphi$ between 1 and 0. The cable connections serve both the transport of current and the synchronization of all the generators and consumers connected to the network. The frequency is kept so constant that simple clocks, switching stations and even old record-players can be operated synchronously with the frequency of the network.
The synchronization of the feeding in power stations is supervised by a station of its own, which dictates the time. It is true that we aren't capable of seeing the twinkling of the lamps anymore for reason of the inertia of our eyes, but it can be detected and filmed with high-resolution cameras. Even if we can't perceive the harmony of the alternating current engineers, it nevertheless exists.

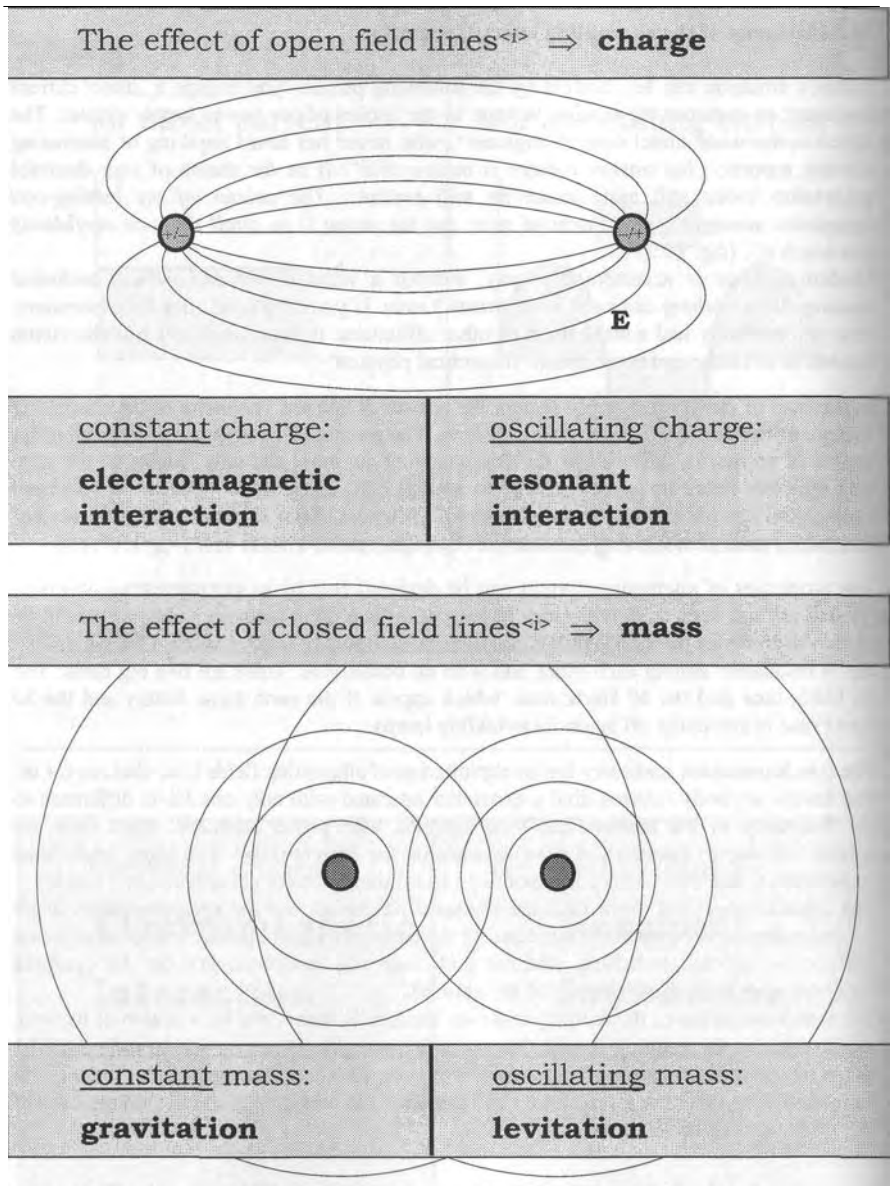

Fig. 10.4, b: Explanation of the fundamental interactions

<i>: Konstantin Meyl: Potentialwirbel, Band 2, INDEL-Verlag (1992)
see also in Part 1, chapters 6.8 and 6.9

10.4 Four fundamental interactions

These considerations suggest, that also gravitation and electromagnetic interaction merely describe the special case of oscillating interactions with frequency zero. To avoid confusions, we'll have to think of new names.
The electromagnetic interaction can be clarified by means of open field lines, which start at a charged body and end again at another body of unequal charge. In physics classes it is normal to make the field lines of a magnet visible with iron filing. Between the unlike poles a force of attraction is observed<i>.
If we this time assume that both magnetic poles change their polarity at the same time, then the force will decrease for a short time during the changing of polarity, to afterwards be active again in full magnitude and in the same direction. Therefore a force of attraction is observed again even for a reversed polarity.
The generalization hence reads: The electromagnetic interaction will occur also in the oscillating case, but in weakened form, if both bodies involved in the interaction change their polarity synchronously and if they are in resonance. A name by analogy would be "resonating interaction" (table 10.4).

It is known of the electromagnetic interaction, that its effect is larger than that of the gravitation by powers often. This presumably has to do with the described and observable bundling up of the open field lines, whereas closed field lines can't be bundled up. The gravitation hence is linked with the closed field lines, which surround all elementary particles, every atom and every body<i>.

The opposite of the bundling up is the repulsion of open field lines, for which reason here also forces of repulsion can occur. For the gravitation however no repulsion is observed, because closed field lines virtually can't be influenced.
Apart from the circumstance that the effect generally will be smaller in the oscillating case, similar properties are to be expected. Also its range will be infinite as well. It is recommended to call the case of oscillating charges, as already said, "resonating interaction" and the case of oscillating masses, the oscillating gravitation, ,,levitation" (table 10.4).
The term ,,levitation" is very appropriate, but not new. Unfortunately until now no generally binding definition existed, what should be understood by that, for which reason misinterpretations and irritations can't be excluded. Mostly levitation is linked to a cancellation of gravity, up to a state of free floating, but we will see that quite other phenomena become describable with this term.

10.5 Resonating interaction

The question, what keeps a galaxy together, now can be answered unambiguously. The well-known interactions already have been excluded. If for the enormous distances the gravitation can't keep the outer stars anymore in accordance with the Kepler rule, then the levitation won't be able at all.

Example: central star S_z with 3 planets P_1-P_3
and with 4 neighbouring stars S_1-S_4

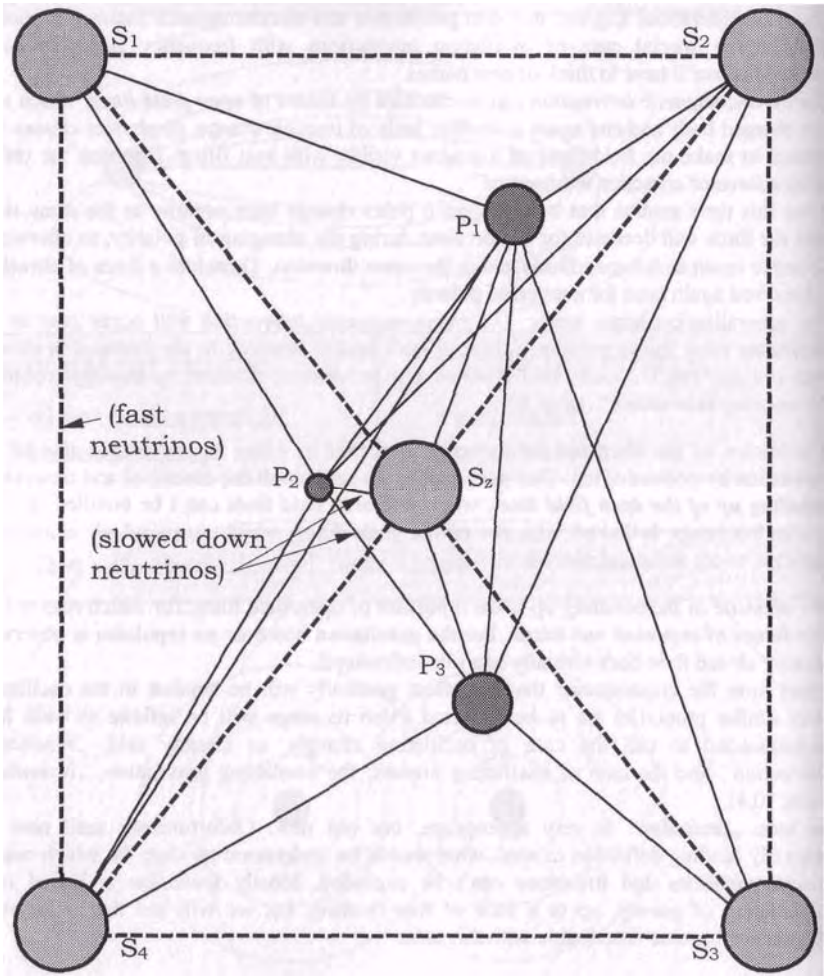

Fig. 10.5: The invisible threads of a resonant interaction

milky way-radius: $15000pc*3*10^9 = 45*10^{16}$ km
sun system-radius: $50\ a*15*10^7 = 7{,}5*10^9$ km

$$\frac{45\cdot10^{16}}{7{,}5\cdot10^{9}} = 1{,}27\cdot10^{8}$$

the resonant interaction is more than eight decimal powers bigger than the gravitation!

Therefore the oscillating charge is left. Actually the resonating interaction will reach to the outermost areas of a galaxy. The bundling up of the field lines results in the centre of the galaxy and one of its stars to stand in an exclusive resonance to each other, what looked at from the outside looks like, as if the star hangs at an invisible string or a "rubber band" and thus turns around the centre.
Because quite a few stars hang at the centre of a galaxy, it can be assumed that it provides correspondingly many resonance. The centre perhaps is comparable with an extremely broad banded transmitter, which operates on all channels simultaneously. The stars then pick as a receiver the for them suitable channels and hang themselves by „rubber band" at the heap (fig. 10.5).

Should there exist any particles with an oscillating charge, which synchronize between centre and star with the resonating interaction, then they will mediate between both partners. If we assume that the centre at one channel just is positively charged, then all at the same time negatively charged particles will be attracted, the positively charged particles however repelled. Whereas the unlike particles in the centre participate directly in the production and maintaining of the oscillation, the like positively charged particles will be hurled into space.
But at the same time does a star, which clings to the centre, have to be negatively charged. It hence attracts the repelled particle. The particle thus drifts from the centre to the star, even then if all three, the centre, the star and the particle, change in polarity. The result is, that the stars grow in diameter by collecting the particles. Only because our sun actually grows, it has the chance, to sometime become a red giant!

Since the sun radiates, as is well-known, in every second a radiation equivalent of 5 million tons, it permanently has to be supplied with a substantially greater amount of matter. If a resonating interaction should occur, then our sun will get its „material" supplied from the centre of the Milky Way and that is a black hole! But no particle with a mass comes out of such a hole, yes not even light. For a particle to be able to leave the black hole, it should have neither charge nor mass. At most an oscillating charge and mass would be allowed. Such a particle would have an enormous ability of penetration as a result of the missing static interaction. It would be able to rush through the earth unhindered.

According to actual knowledge only neutrinos have the described properties. One also knows that the centre of our Milky Way represents a mighty source of neutrinos. From this derivation follows:

1. As mediators of the resonating interaction serve synchronously oscillating neutrinos.
2. Starting with the proof of the neutrinos it should be able to backwards also prove the existence of the resonating interaction.
3. If, as a practical consequence, we imagine that the centre of the Milky Way wouldn't supply neutrinos anymore. Then the whole galaxy would fall apart and not one of its stars would shine anymore.

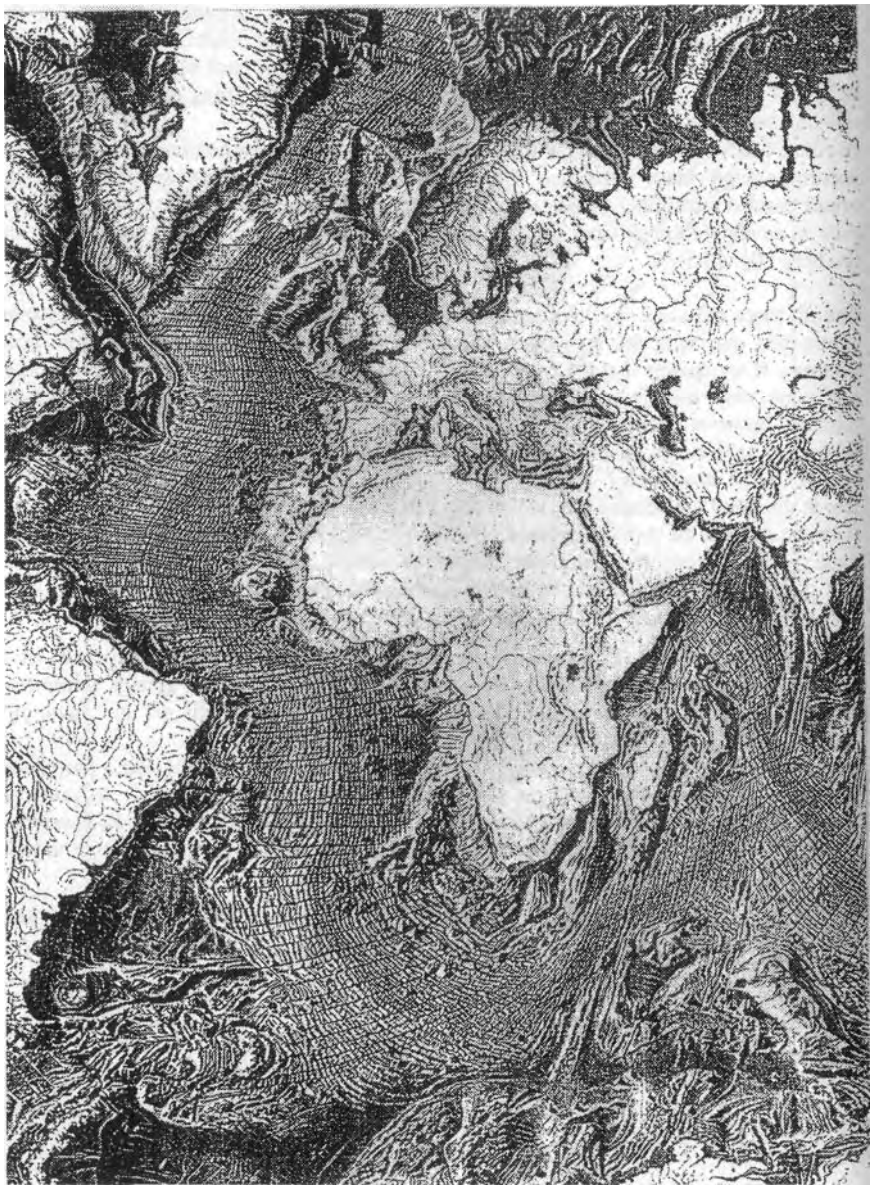

Fig. 11.1: The Atlantic ocean floor[<i>]

<i>: Miller, R.: Driftende Kontinente, Time-Life, Amsterdam 1991, S. 79

11. The growing globe

11.1 Long-distance effect of the neutrinos

The long-distance effect thus lies in the circumstance that the neutrinos, in the case of a resonance of the source of neutrinos and the receiver, span an invisible ,,rubber band" between both, which is called resonating interaction and keeps the two together.

As a transmitter of neutrinos functions for instance a supernova, the death of a star, in which 98% of the mass annihilates under emission of neutrinos or a black hole, which continually swallows light and matter and spits them out again as neutrinos after a still unexplored ,,process of digestion". The process, which in the case of a supernova takes place as a singular occurrence, in a black hole possibly takes place permanently. The hurled out neutrinos on the other hand serve the sun as a source of energy. A receiver of neutrinos then for instance is our sun. So that the hard and very fast cosmic neutrinos become utilizable for the sun, they at first have to be slowed down. But that is only partly successful:

1. Some very fast ones manage to pass through the sun and fly out again on the other side of the sun. The compared to the cosmic neutrinos strongly slowed down neutrinos then are called solar neutrinos.
2. Another part can be further slowed down and materialized. As a result of the oscillating mass of the neutrinos as well particles of matter as also some particles of anti-matter are formed. The particles of matter make the sun grow.
i. The with matter incompatible anti-matter annihilates under emission of light as is well-known. For this and for no other reason our sun shines!

Also the planets have such a neutrino reactor at their disposal. Only so the heat in the inside of the earth is explicable! It can be assumed that the planets materialize less the fast and hard cosmic neutrinos and that they are served more by the slowed down solar neutrinos, which our sun releases again unused.
As is well-known radiates the planet Jupiter already today twice as much radiation energy, as it from the sun receive. In this typical encyclopaedia type balance the involved neutrinos of course are not considered. But it shows that Jupiter is on the best way to become a sun itself. Its moons then will become planets.
From this the example we also see that with increasing mass the crust of the planet becomes thinner and thinner at the expense of the neutrino reactor in the inside, until it finally is eaten up and the celestial body openly starts to shine. Astronomers report for reason of their observations of the formation of more and more new stars.

One part of the collected neutrinos thus is materialized by the planet. In the case of our earth it contributes to its growth.
Who doesn't want to believe that the earth becomes bigger, should look at modern maps of the oceans, on which the topography of the ocean floor is shown. According to the theory of Alfred Wegener concerning the continental drift North and South America on the one hand and Europe with Africa on the other hand steadily drift apart since 200 million years. The result can be read at the atlantic ocean floor. The gaping, chequered rift zones to the right and left of the Mid-Atlantic Ridge show how the earth is torn apart (fig. (11.1).

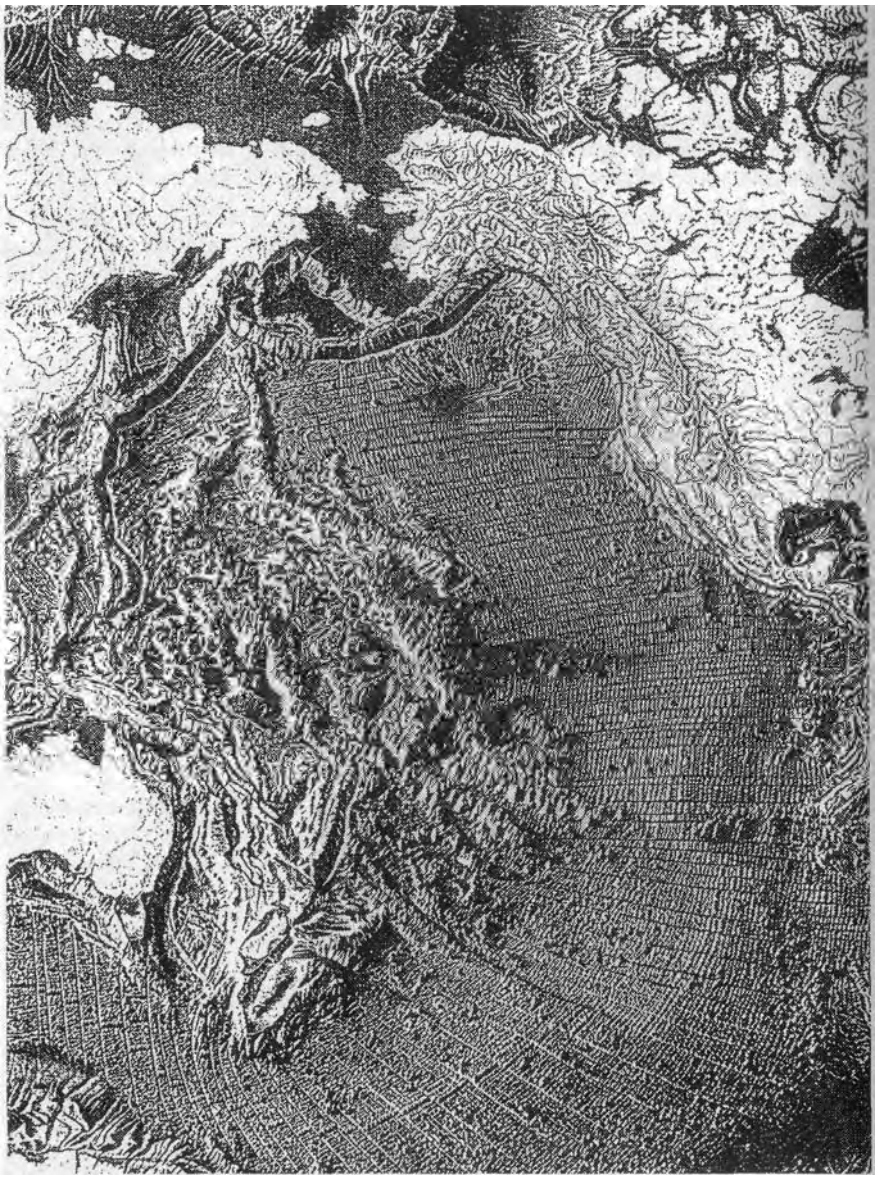

Fig. 11.2: The pacific ocean floor[<i>]

<i>: Miller, R.: Driftende Kontinente, Time-Life, Amsterdam 1991, S. 78

11.2 Model of expansion

Geographers assume that at another point to the same extent continental plates are subduced and molten. That thus has to happen in the Pacific Ocean. But the sea maps tell one just the opposite (fig. 11.2). At the ocean floor of the Pacific Ocean the same rift formations are found as in the Atlantic Ocean (fig. 11.1). That means that America drifts away from Australia and Asia exactly as from Europe, without being crushed or molten in doing so!
The only possible answer thus is: the earth grows.
The characteristic rift zones in addition are found around the Antarctic. From this the conclusion can be drawn that the 7th continent slowly is moving away, while the biggest habitable mass of land predominantly stays behind on the northern hemisphere, by Eurasia and North America forming a clip around the North Pole.

Concerning the evolution of the earth there are and were numerous approaches in various directions. Paul Dirac<i> at his time postulated, the brightness of the sun should decrease as a result of a decrease of the gravitational constant as well. In contrast to that Astrophysicists today observe just the opposite (Ingersoll 1987). According to the hypothesis of Carey<ii> energy will transform in matter in the universe. According to the idea of Oesterle<iii> aether particles are absorbed, which make our globe grow. Also other research scientists share the idea of the growth of the earth with him in their reports<i4,5,6>. As a geologist Oesterle<iii> cites his colleague Herzig: „The at the Mid-Oceanic Ridge newly produced oceanic crust has to be consumed again at other points, because otherwise the earth would expand" and criticizes the „plate tectonicians" that they would postulate their model without physical grounds.
He gives some arguments for the correctness of the model of expansion <iii>:

a) Subduction: The already discussed missing of zones of subduction and of melting of continental plates to the assumed extent.

b) Paleomagnetism: errors and mistakes in the hypothesis of the migration of the poles.

c) Continental depth drillings: They brought much higher temperatures in depths from 4000 meters, as expected and calculated according to models.

d) Stand of the sea water: Only if the water can spread in newly forming oceanic basins it can be explained, why the covering with water on earth continually is going back. This argument we want to investigate with a derivation of our own.

<i>: Dirac, P. A. M. Nature 139, p. 323 (1937)
<ii>: Carey, S. W.: Theories of the Earth and Universe. Stanford University Press: 1-413, Stanford, California
<iii>: Oesterle, O.: Goldene Mitte: Unser einziger Ausweg, Universal Experten Verlag, Rapperswil (1997), ISBN 3-9520261-9-0
<i4>: Hilgenberg, O. C: Vom wachsenden Erdball, S. 1-56, Eigenverlag, Berlin (1933) und Neues Jahrb. Geol. Palaont. Abh. 116, 1, Berlin (1962)
<i5>: Jordan, P.: Die Expansion der Erde. Vieweg 1-180, Braunschweig (1966)
<i6>: Giancarlo Scalera, K.-H. Jacob: Why expanding earth? Institute Nationale di Geofisica e Vulcanogia, Roma and Technical University of Berlin 2003

Today's earth:

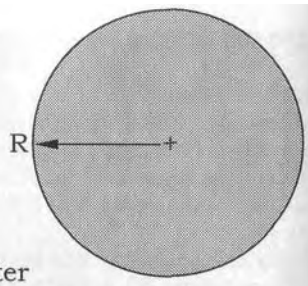

equatorial radius: $R = 6378$ [km]

earth's surface: $O_E = 4 \cdot \pi \cdot R^2$
(sphere) $= \underline{5{,}112 \cdot 10^8}$ [km²]

29% of this area is land and 71% is water
for an average water depth of $t_w = 3.8$ [km] results a

water volume of: $V_w = 0{,}71 \cdot O_E \cdot t_w = \underline{1{,}38 \cdot 10^9}$ [km³] (11.1)

The earth **200 million years ago** (super continent: **Pangaea**):

today's land area (29%) was 100% of the earth's surface!

Pangaea surface area: $O_p = 0.29 \cdot O_E$
$= \underline{1{,}48 \cdot 10^8}$ [km²]
$= 4 \cdot \pi \cdot r_p^2$ (11.2)

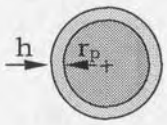

Pangaea radius: $r_p = \sqrt{O_p/(4 \cdot \pi)}$
(corresponds to $= \underline{3435}$ [km]
the radius
of the sphere of shelf): = 54% of today's radius

Pangaea volume: $V_p = \frac{4}{3} \cdot \pi \cdot r_p^3 = \underline{1{,}697 \cdot 10^{11}}$ [km³] (11.3)

Pangaea was covered with water h [km] high:

volume: $V = V_p + V_w = \frac{4}{3} \cdot \pi \cdot (r_p + h)^3 = \underline{1{,}71 \cdot 10^{11}}$ [km³] (11.4)

= 15,7% of today's volume of the earth

$r_p + h = (3 \cdot V/4 \cdot \pi)^{1/3} = 3443{,}8$ [km] (11.5)

Pangaea water-level h above the NN (sea-level) at that time:

$$\boxed{h = \underline{8{,}78} \text{ [km]}} \quad (11.6)$$

Fig. 11.3: The calculation of the covering with water on earth 200 million years ago

11.3 Ancient Egyptian legend of Genesis

We don't have to search long for evidence. If we go back 200 million years in the history of the earth, as all continents still were united and formed the super continent Pangaea, as the 29% landmass of today thus constituted 100% of the earth's surface. At that time the diameter of the earth was almost half of today's diameter (exactly 54%). But if one distributes the amount of water of our oceans of today over the smaller earth, then possibly the water stood the young earth up to its ears in a first rough estimate. We now want to calculate how high the water stood.
For that we determine at first the water volume of today's oceans, by multiplying 71% of the earth's surface O_E with the average water depth. In doing so it is supposed that the water volume has not changed in the course of time. As an approximation this assumption could be correct if the factors, which influence the water volume, mutually compensate. On the one hand it has to be taken into account that in the process of fusion in the inside of the earth apart from other materials also juvenile water is formed, but on the other hand the water volume is reduced by photosynthesis and by the splitting of water molecules. In the case of the newly formed water it should concern roughly one cubic kilometre per year[<i>]. The photosynthesis however possibly can be estimated by means of the formed oxygen of the air just as the splitted water by the content of oxygen of the waters and the seas. Since the processes are subject to temporary fluctuations, the exact estimate is difficult. At least should an effect of compensation more or less be taken into account.

Next we calculate the surface of the earth 200 million years ago, the super continent, which Alfred Wegener called Pangaea. If the 29% continental land mass of today at that time constituted the whole surface, then the diameter of the earth at that time was determined at 54% of today's diameter, then the volume together with the water volume would amount to only 15.7% of today's volume and the water stood 8.78 kilometres high above the level NN at that time (fig. 11.3). With that even the highest peaks were under water.

Consequentially stands in the legend of Genesis of the ancient Egyptians:

„ They tell us that the earth was completely covered with water and that the earth rose from the water. It is talked about a primeval hill, of which creation took its start, on which the first sunrise and sunset was observed[<ii>].

If at that time life only existed in the water, of which we today still can detect the remains in excavations in mountains and plateaus, then it surely wasn't because the evolution had forbidden living on the land. There existed no land! All land was lying under water. But if, looked into the future, the land area increases further at the expense of the surface of the sea, then our earth sometime will dry up, as already other planets before us, e.g. our neighbouring planet Mars.

<i>: Oesterle, O.: Goldene Mitte: Unser einziger Ausweg, Universal Experten Verlag, Rapperswil (1997), ISBN 3-9520261-9-0

<ii>: Robert Bauval und Graham Hancock: Der Schlussel zur Sphinx, List Verlag (1996), S. 253 and in der Sendung: Die grossen Ratsel VII am 25.5.97 in S 3

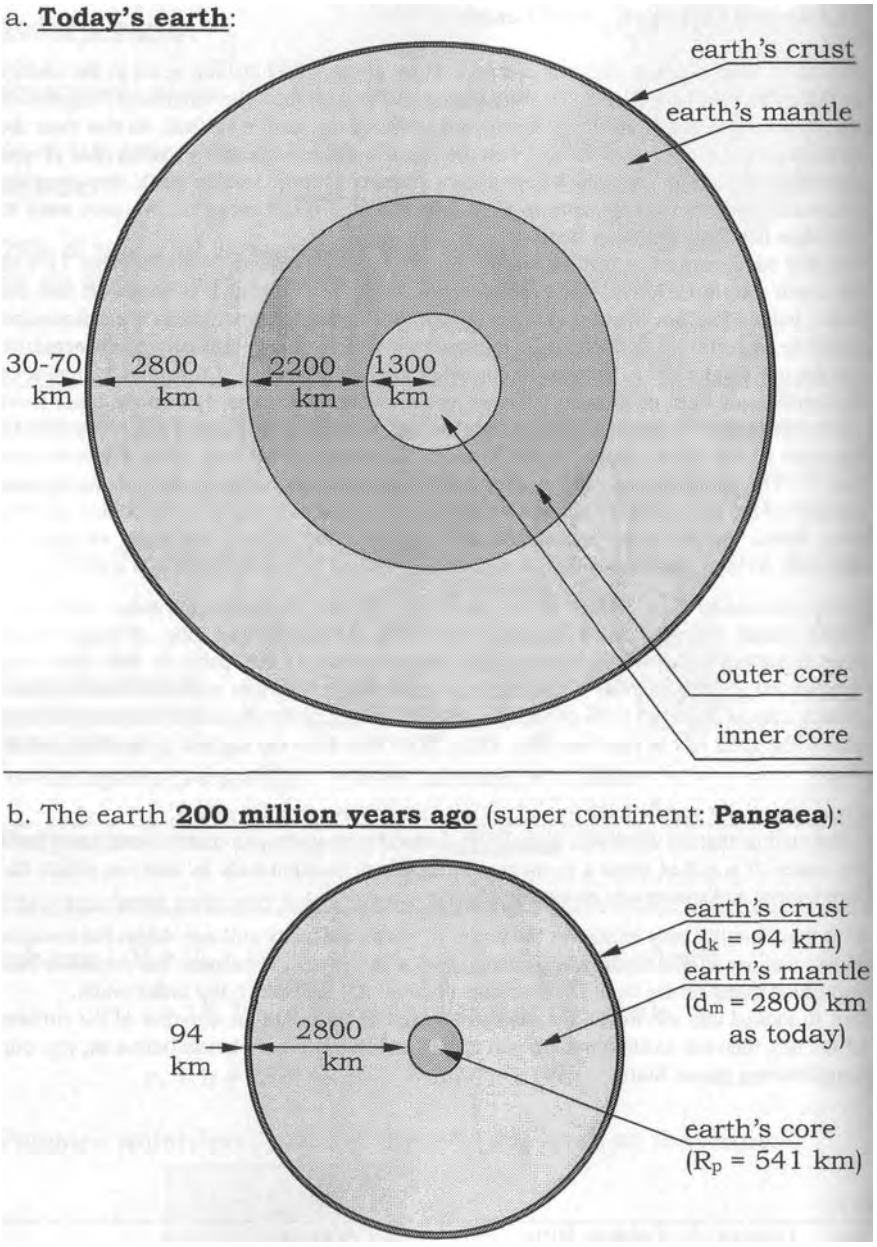

Fig. 11.4: The inner structure of the earth on an average

11.4 Inner structure of the earth

Next the question is raised: How fast does our earth actually grow? The calculated growth, distributed over the 200 million years, results in a yearly increase in the diameter of the earth of less than 0.1 mm. Carey[<i>] assumes 0.04 mm per year and Owen[<ii>] only 0.01 mm per year.
Actually the young earth must have been somewhat bigger than calculated, because as a result of the smaller gravitational acceleration the density of the matter must have been smaller. But this changes nothing to the relations, because the less dense earth was surrounded by likewise less dense water, the water-level nevertheless reached the peaks, as already calculated.
For indicating absolute linear measures and the calculation of the gravitational accleration the respective density should be considered. In most calculations the density is cancelled out, so that as well can be calculated with an unchanged density.

A grave error however lies in the assumption of a linear growth. Hilgenberg assumes an exponential growth[<iii>] and gives as a reason for the empirical approach of the e-function the ,,law of organic growth". In order to now not to speculate or to postulate in the same manner, we will derive and found our approach.

If namely the earth grows, then its core of fusion also grows, which causes the growth to take place accelerated, etc. A customer of a bank, who sees his amount of money grow according to such a regularity, will be given information immediately about the growth rate with a compound interest calculation.
But how big is the growing fusion reactor of our planet? According to today's level of knowledge about the structure of the earth the inner core is surrounded by the outer core and that again by the earth's mantle. On top floats the thin, but firm earth's crust, on which we live. The inner core has a radius of nearly 1390 km, the outer core stretches to a radius of 3500 km, whereas the crust is only between 10 and 78 km thick, dependent on the geographical latitude[<i4>] (fig. 11.4).

<i>: Carey, S. W.: Theories of the Earth and Universe.
Stanford University Press: 1-413, Stanford, California

<ii>: Owen, H. G.: Has the Earth increased in size? - In: New Concepts in Global Tectonics, Texas etc. University Press (1992), p. 289-295, Lubbock

<iii>: Hilgenberg, O. C: Vom wachsenden Erdball, Berlin 1933, Eigenverlag, Seite 31 und 32

<i4>: Mitton, S. (Herausg.): Cambridge Enzyklopadie der Astronomie
(The Cambridge Encyclopaedia of Astronomy), Orbis Verlag (1989)

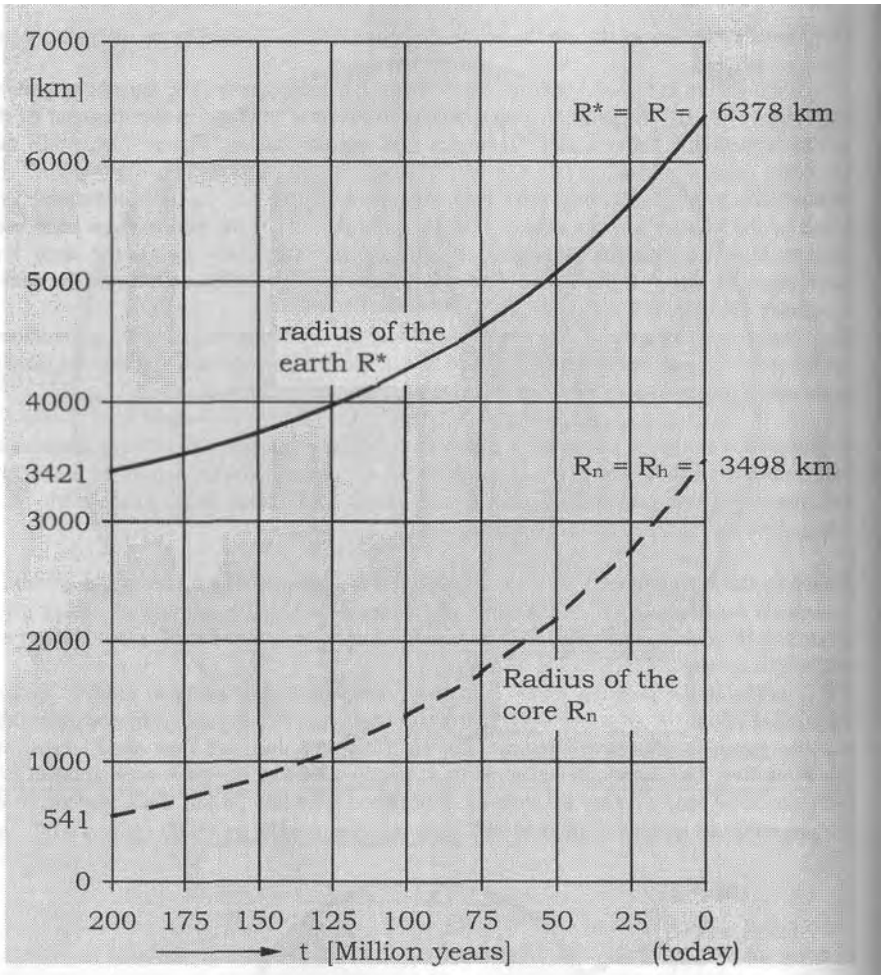

Fig. 11.5: The change in the radius of the earth and of the core in the course of millions of years until today.

calculation: (see fig.11.6)

$$R^* = 2879{,}5 + 541 \cdot q^{n/3} \text{ [km]} \quad (11.7)$$

t years ago: with: $t = 2 \cdot 10^8 - n$ [a] and: $q = 1 + 28 \cdot 10^{-9}$

correspondents to the approximation:

$$R^* = 2880 + (6378 - 2880) \cdot e^{-t/\tau} \text{ [km]} \quad (11.8)$$

with the time constant: $\tau = 107{,}1$ Mio. Jahre

11.5 Earth's core as a converter of neutrinos

I proceed from the assumption that the conversion of neutrinos and materialization in elementary particles takes place in the inner core. For the conversion no energy at all is used, because the inner energy together with the outer energy of the particle amounts to zero. The neutrinos merely have to be remodelled into another structure and for that they at first have to be slowed down with the help of the oscillating interaction.
During this process of slowing down, as said, no heat is formed because in the case of a mass less particle no energy can be set free in the domain where the classical law of conservation of energy is valid. Only after completion of the process of materialization we are able to detect mass and energy of neutrinos.
But if the oscillating interaction is taken as a basis, the oscillation with opposite phase between particle and earth's core, then contrary to all expectations a cooling down takes place. If the particle has reached its region of destination in the core, then the oscillations are overlapping. Mathematically seen they are added with reversed sign; they thus are subtracted. The result of the mutual compensation is the decrease of the thermal oscillation and the cooling down of the region which was expected.
In addition the formed particles with a mass mutually contract (see part I, chapter 8.3 and 8.4) and in doing so are further cooling down, as we will derive (chapter 12.7 with fig. 12.8). The physical limit of the process of contraction and cooling down is formed by absolute zero, at which no thermal oscillation at all occurs anymore, so that superconduction becomes possible with the result of giant electric currents and magnetic fields, which can be detected even at the earth's surface in damped form, for instance with a compass.

The necessary heat energy is flowing towards the quick-frozen inner core from the outside, principally from the outer core. Here, in the core, from the neutrinos slowed down to the speed of light various elementary particles are formed. Most of them immediately fall apart, to form other configurations. In the end only electrons and protons are preserved, which, as the only stable particles, can't fall apart anymore. These again are trying hard to take the state of an atom, which however needs very much space with the large distance between atomic nucleus and hull. Under the high pressure the enveloping electrons therefore will time and again fall into the nucleus to form neutrons together with the protons.
The neutrons need no atomic hull and can, as is well-known of neutron stars, take an extremely high density. In the case of the earth's core the neutrons however cannot be stabilized. The contraction to a neutron is accompanied by a corresponding drop in pressure, so that the neutron falls apart again. A continual oscillation of size is formed, with which the neutrinos again interact. With that also the high density of the earth's core would be explicable simultaneously.
In earth's outer core the various atoms and isotopes are formed, which in the sum release more energy than they absorb in their fusion processes. Here the fusion oven rages, which supplies the inner core with heat energy.
The formed matter is pushed further to the outside, rolls as a viscous mass through the earth's mantle and collects the surplus radiation and heat from the fusion oven.

With this model of explanation we now can tackle the calculation of the growth of the earth (fig. 11.6).

Growth in volume in analogy to the compound interest calculation:

duration: $n = 200$ million years

starting capital: V_p = Pangaea volume $V_p = (4/3)\cdot\pi\cdot r^3$

final value: V_h = today's volume $V_h = (4/3)\cdot\pi\cdot R^3$

savings bank formula: $V_h = V_p * q^n$ (compound interest) (11.9)

with „interest rate": $q = (V_h/V_p)^{1/n}$ (11.10)

---

radius of the core of the Pangaea sphere:

$R_p = r - d_m - d_k = 541$ [km] (11.11)

with

Pangaea radius: $r = 3435$ [km]

earth's mantle: $d_m = 2800$ [km]

earth's crust: $dk = 94$ [km] (incl. covering with water).

core radius today: $Rh = R - d_m - d_k = 3500$ [km] (11.12)

earth's crust today: $d_k^* = 34\text{-}78$ [km].

From $V \sim r^3$ the growth factor q is calculated to be

$$q = \left(\frac{V_h}{V_p}\right)^{\frac{1}{n}} = \left(\frac{R_h}{R_p}\right)^{\frac{3}{n}} = \left(\frac{3500\text{ km}}{541\text{ km}}\right)^{\left(\frac{3}{2\cdot 10^8}\right)} = 1 + 28\cdot 10^{-9} \quad (11.13)$$

core radius after n years: $R_n = R_p * q^{n/3}$ (11.14)

radius of the earth after n years: $R^* = R_n + d_m + d_k^*$ (11.15)

Fig. 11.6: The calculation of the growth rate of the earth

11.6 Speed of growth

200 million years ago in the centre of the globe a core of fusion has formed and taken up its operation, probably under the influence of a cosmic occurrence connected with a high neutrino radiation. As a result the thin crust of the earth was torn apart and the oceanic basins were formed.

If we assume that the might of earth's mantle (with d_m = 2800 km) and crust (with less than 100 km) haven't fundamentally changed, then earth's core at that time had a radius of only 541 km. The ,,savings bank formula" now only may be applied for the core and only for its volume. On the condition of a constant neutrino density the volume of the core in every year will grow for one order of magnitude, which again depends on the respective volume itself. There results the in fig. 11.5 presented course of the radius of the core and of the earth.

According to our calculation the earth at present grows every year for $915*10^{11}$ tons, which corresponds to an increase in volume of 16500 cubic kilometres and an increase of area of 5.2 square kilometres. The earth momentarily grows for 6.5 cm per year in diameter, from which follows that the perimeter increases pi-fold and a continental drift of 10.2 cm per year is to be expected across both the Atlantic Ocean and the Pacific Ocean. Geologists today actually measure a plate movement of typically 10 cm, at individual points of up to 12 cm per year<i>!

Whoever likes to do handicrafts, can build together a globe of shells by himself. Hilgenberg for that gives a handicraft instruction<ii>. He draws the continents of a globe of today and cuts them out. Doing so, not the coast line of today is authoritative, but that of the edge of the shells, at which the mainland plates are breaking off into the deep sea. He hence also speaks of a sphere of shells and helps the handcrafters with the words: ..Because the paper shells of the sphere of shells owing to their strong curvature are difficult to nestle, we cut slits in the paper, which suitably lie there, where mountain ranges stretch and now can start with the gluing". Doing so it shows that the slits in particular in the case of the Ural and the Himalayan gape far apart, that in reversed direction in the case of the enlargement of the sphere of shells the lifting out of the mountains necessarily had to occur at these points by means of upsetting. Under these circumstances our model concept should be further rendered more precisely, If the change of the curvature of the growing surface of the earth is the cause for the lifting out of the mountains, then the surface of the earth 200 million years ago was structured merely by impact craters and by volcanic cones, then the amount of water may have been correspondingly smaller. The additional water of the oceans of today was collected by the earth either from the cosmos, by crossing the flight path of a comet with a water tail, or by the here discussed idea of a core of fusion in the inside of the earth it has produced the water itself!

How ever such detail aspects may have had an effect, it therefore nevertheless changes nothing to the model concept on the whole. Hilgenberg's globe of shells<ii> in my opinion to still makes more sense as all the models of explanation, as they are spread in today's text books.

<i>: Miller, R.: Driftende Kontinente, Time-Life, Amsterdam 1991, S. 78

<ii>: Hilgenberg, O.C.: Vom wachsenden Erdball, Berlin 1933, Eigenverlag

Actual data[i]:

mass of the sun	$m_s = 1.99 \cdot 10^{30}$ [kg]	
radius of the sun	$r_s = 696\,000$ [km]	
distance to the earth	$r_e = 149\,597\,870$ [km] (averaged)	
mass of the earth	$M = 5.976 \cdot 10^{24}$ [kg]	
moment of inertia	$J_e = M \cdot r_e^2$ (of the earth orbit)	(11.16)
orbital velocity	$v_e = \omega_e \cdot r_e = 2\pi r_e / t_e$	(11.17)
averaged[i]:	$v_e = 29.79$ [km/s] = constant	(11.18)
revolutionary period	$t_e = 365.25637$ [days] t_e = sidereal year	
equatorial radius	$R = 6378$ [km]	
moment of inertia	$J = (2/5)\, M \cdot R^2$ (of the rotation of its own)	(11.19)
rotational velocity	$v_E = \omega_E \cdot R = 2\pi R / t_E = 0.465$ [km/s]	(11.20)
sidereal time of rotation	$t_E = 1$ [day] $= 86\,164.1$ [s]	
distance to the moon	$r_m = 384\,390$ [km] (averaged)	
radius of the moon	$R_m = 1738$ [km]	
mass of the moon	$m_m = 7.350 \cdot 10^{22}$ [kg] = constant	(11.21)
moment of inertia	$J_m = m_m \cdot r_m^2$ (of the moon orbit)	(11.22)
orbital velocity	$v_m = \omega_m \cdot r_m = 2\pi r_m / t_m$	(11.23)
of the moon averaged:	$v_m = 1.026$ [km/s] = constant	(11.24)
revolutionary period	t_m = 1 sidereal month (from fixed star $t_m = 27.322$ [days] to fixed star)	
observed revolutionary period	t^*_m = 1 synodic month (from new moon $t^*_m = 29.53$ [days] to new moon)	

Fig. 11.7: The data of sun, earth and moon of today[i]

<i>: Mitton, S. (Herausg.): Cambridge Enzyklopadie der Astronomie (The Cambridge Encyclopaedia of Astronomy), Orbis Verlag (1989)

It is an exciting matter, if one can experience for oneself, how the pieces of the puzzle fit together, how the southern end of America is wound around the Cape of Good Hope and the Falkland islands surface for the east coast of South Africa, in the vicinity of Australia how the Antarctic occupies the Pacific basin as a neighbour of Australia, von South, Middle and North America, run through by the equator, etc.
The corrections to the view of life of Alfred Wegener and the geographical evidence, which Hilgenberg gives, are sound, well founded and even after 65 years still highly actual. The physical statements of the geologists however, for instance the earth in the course of time would rotate faster and faster, cannot be followed.

11.7 Conservation of angular momentum

The question about the rotation of the earth is raised. Is it not changing at all, is it getting faster or slower? In the case of a with time growing earth there is only one possibility: The rotation of its own will decrease and not increase, as Hilgenberg supposes. For that you only need to place yourself on a turntable, to turn and if possible with weights in your hands stretch out your arms sideways, to feel, how the rotation of the table is decreasing. It surely would have done the geologist Hilgenberg good, to leave his desk for a short time for a stroll to the most nearby playground, for the purpose of the described physical experiment with himself.

In this case the law of conservation of momentum authoritatively has an effect in the formulation of the law of conservation of angular momentum for the rotating motion. According to that all angular momenta in the solar system should amount to zero. If we look at the planets which have no moon, then is remarkable that these need an eternity for a revolution around their own axis (Venus for instance needs 243 days). According to the law of conservation of angular momentum our earth owes its rotation of its own primarily the moon.

For reason of this relation we can assume a proportionality between the angular momentum of the moon J_m*w_m and that of the rotation of its own of the earth $J*w_E$ (eq. 11.39, fig. 11.10). They even have to be identical, if the partner of rotation earth and moon are seen as a closed system.
If the earth would be approached as a homogeneous, spinning sphere, the angular momentum at first would be too small for a factor 4.1 (eq. 11.29, fig. 11.9). The law of conservation of angular momentum dictates as a necessary result, that the dense core of the earth must rotate faster than the earth's crust! From the correspondence of orbital angular momentum of the moon on the one hand and the sum of the angular momenta of their own of earth's mantle and earth's core on the other hand results a 31 fold higher angular velocity of the earth's core compared to the rotation of the earth's surface (eq. 11.38, fig. 11.9).

Does our earth owe its geomagnetism this rotation of the core? At least the possibility exists that there exists a causal relation between the rotation of the earth's core and the geomagnetism. We'll further collect arguments and put the question concerning the formation of the geomagnetism under consideration.

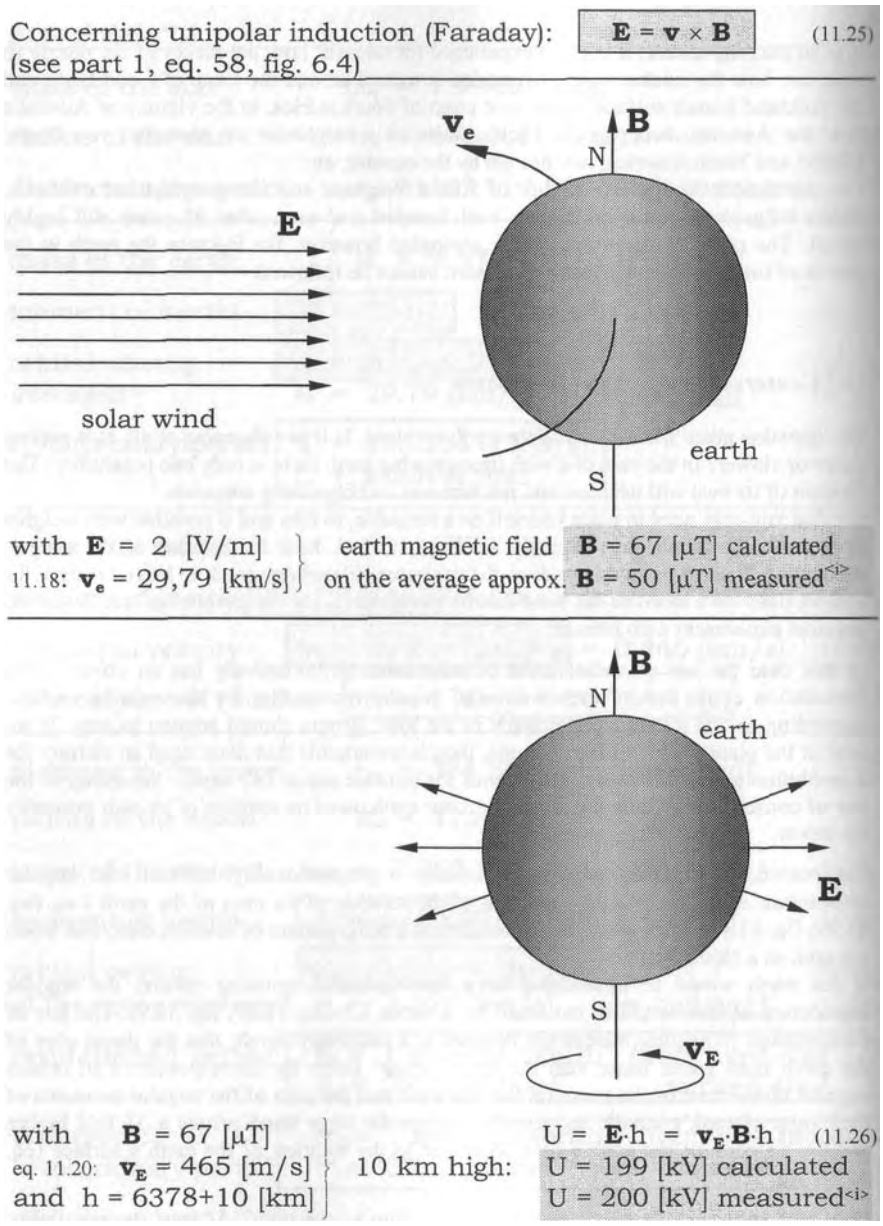

Fig. 11.8: The magnetic and the electrostatic field of the earth
as a result of an unipolar induction

<i>: Measurement values in chap. 2.8, e.g. reference entry <i> (Prof. Dr. L. Konig)

11.8 Set of difficulties concerning the change of magnetization

Now investigations of the polarity of the magnetization of rocks have resulted in the fact that in irregular intervals, on an average every 500,000 years, a change of polarity of the geomagnetism has occurred and no one knows why.
If the rotation of the core should produce the magnetism, then it in any case also is responsible for the process of change of magnetization. That purely theoretically is possible in two ways: Either the core tilts out of its plane of rotation for 180° and rotates suddenly in the opposite direction or earth's mantle together with earth's crust, on which we live, is turned upside down.
It surely isn't my intention to produce any panic, but from a physical point of view only the second case is possible. Usually not the tail wags with the dog, but vice versa, the dog with the tail. The high rotational velocity of the earth's core exerts an extremely stabilizing influence. After all its angular momentum is 4.85 times larger than that of the mantle (eq. 11.33, fig. 11.9). Therefore the rotation of the core and the direction of earth's magnetic field always are preserved seen from the sun.

I further proceed from the assumption, that an electrostatic field arises from the sun accompanied by a particle flux, the solar wind, through which the earth flies through in a perpendicular direction. According to the Faraday law of induction E = v x B (eq. 11.25)
it experiences, as a result of the unipolar induction, a magnetic field which stands perpendicular on the ecliptic and thus dictates the orientation of earth's magnetic field. With that also the direction of rotation would be determined. The core thus by no means can tilt!
On the condition that the core doesn't rotate completely frictionless, the earth's mantle will in the case of the same direction of rotation be accelerated, in the case of unequal direction, after a changing of polarity, it will be slowed down again. If the process, for reasons of conservation of angular momentum, takes place alternatingly with a certain regularity, then the inhabitants of the earth for every changing of polarity might experience, how the North Pole in the shortest time turns over the equator to the South Pole, how the sun sets at the point, where it before had risen. As said, after a changing of polarity our earth is standing on its head! In the Bible corresponding clues are found<ii>. It can be taken from the media that one reckons with such a changing of polarity in the foreseeable future. When and if it actually takes place, stands however in the stars.

If magnetism thus is produced by the rotation of the core, or by electric currents in the earth's core as a result of the superconduction or by both, then the earth is aligned in the field of the sun like the magnetic needle in a compass. If we take as a cause a solar wind with an electric field strength of just 2 V/m, then this would not only determine the direction of earth's magnetic field, but also the order of magnitude, and that at present lies at 50 uT averaged over time (chap. 2.8).
With the same mathematical relation an electrostatic field around the earth of 199 V/m results as a result of the rotation of the earth. That fairly exact corresponds to the measured values!<i> Quite obviously all is related to each other. In the question for the ,,how" at this point consciously no definite answer is strived for. It rather should be discussed and worked to together in the seminar.

<ii>: The Bible, OT, The 2nd book of kings 20,9-11 (king Hezekiah) and Joshua 10,12-14, literally cited on the page after the next page (chap. 11.9), note<ii>

Angular momentum $J_m \cdot \omega_m$ of the orbiting moon (with eq. 11.22 + 11.23):

$$J_m \cdot \omega_m = m_m \cdot r_m^2 \cdot \omega_m = 29*10^{33} \ [kgm^2/s] \qquad (11.27)$$

Angular momentum $J \cdot \omega_E$ of the rotation of the earth (eq. 11.19 + 11.20, same direction of turning):

(theoretically) $J \cdot \omega_E = (2/5)\ M \cdot R^2 \cdot \omega_E = 7*10^{33}\ [kgm^2/s]$ (11.28)

$$\frac{\text{Orbital momentum moon}}{\text{Angular momentum earth}} = \frac{J_m \cdot \omega_m}{J \cdot \omega_E} = \frac{29}{7} = 4{,}1 \qquad (11.29)$$

Angular momentum $J_M \cdot \omega_E$ of earth's mantle and crust (R_h = core radius)

$$J_M \cdot \omega_E = (J - J_K) \cdot \omega_E = (2/5) \cdot (MR^2 - M_K R_h^2) \cdot \omega_E = 6*10^{33}\ [kgm^2/s] \qquad (11.30)$$

$$\text{conservation of angular momentum:} \quad J_m \cdot \omega_m = J_K \cdot \omega_K - J_M \cdot \omega_E \qquad (11.31)$$

Angular momentum $J_K \cdot \omega_K$ of the earth's core

$$J_K \cdot \omega_K = J_m \cdot \omega_m + J_M \cdot \omega_E = 35*10^{33}\ [kgm^2/s] \qquad (11.32)$$

$$\frac{\text{Angular momentum core}}{\text{Angular momentum mantle}} = \frac{J_K \cdot \omega_K}{J_M \cdot \omega_E} = \frac{35}{5} = 7 \qquad (11.33)$$

$$J_K \cdot \omega_K = (2/5)\ M_K \cdot R_h^2 \cdot \omega_K \qquad (11.34)$$

With the mass of earth's core $M_K = \rho_K \cdot V_K = \rho_K \cdot (4/3) \cdot \pi \cdot R_h^3$ (11.35)

and the averaged core density $ro_k = 12000\ kg/m^3$

the angular velocity

of earth's core amounts to: $\omega_K = 3{,}3*10^3\ [s^{-1}]$ (11.36)

and that at the earth's surface: $\omega_E = v_E/R = 0{,}073*10^{-3}\ [s^{-1}]$. (11.37)

$$\frac{\omega_K}{\omega_E} = \frac{3{,}3}{0{,}073} = 45 \qquad (11.38)$$

Fig. 11.9: Calculations concerning the conservation of angular momentum and the rotation of earth's core (One turn of the earth's core lasts 32 min. It results contrary to the earth rotation. Of the surface of the earth a period duration of 31 min should be observable.)

11.9 The weakly damped moon

The increasing angular velocity in the direction of the centre of the earth surely has something to do with the set of difficulties concerning the conservation of the spherical structure, comparable to the reason for the particle spin (chapter 6.13). The increasingly missing radial component of the gravitational field has to be compensated by an additional field produced by the rotation (according to part 1, equation 62, fig. 6.5).

The moon apparently doesn't know this set of difficulties. We can assume a constant mass for it (eq. 11.21). On the one hand is the moon smaller than the earth 200 million years ago, as it started to grow. On the other hand are doubts concerning the existence of an active core of the moon legitimate. In the Apollo-15 mission seismic gauges had been installed at the ground of the moon and at the start from the moon the produced seismic waves had been recorded[<i>]. The surprisingly small damping as the lunar module fell back onto the ground of the moon more likely allow the conclusion that the moon is hollow inside!
Also the small density of the moon points in the same direction, and finally no clues at all can be seen on the surface of the moon, which would point to a growth of the moon.

Apart from the mass also the orbital velocity of the moon is taken constant, what surely is true, as long as nobody and nothing drives the moon extra (eq. 11.24). The analysis of the law of conservation of angular momentum provides the in fig. 11.10 derived provisional result (eq. 11.41).

<i>: Moonquakes ever more mysteriously: ,,The by Apollo 12 triggered moonquake by ,,bombardment" of the surface of the moon with the clapped-out Lunar Module ,,Intrepid" at thursday evening puts scientists for bigger and bigger mysteries. An exact analysis of the measurement data now resulted in the by the astronauts Conrad and Bean installed ,,seismic station" on the moon ... to have recorded and to have sent to the earth 55 minutes long. ... The seismologist Dr. Gary Latham spoke of ,,important information about the structure of the moon" and meant, one now can ,,throw away the text book". One had reckoned that the impact of the Lunar Module on the moon would trigger a quake of at best some minutes", (translated) Frankfurter Rundschau vom 22.11.1969

---

concerning reference entry <ii>, chap. 11.8:

<ii>: The Bible, OT, Joshua 10,12-14: There stands in the ,,book of Jasher ": So the sun stood still in the midst of heaven, and hasted not to go down about a whole day. And there was no day like that before it or after it, ...

The 2nd book of kings 20,9-11: king Hezekiah: This sign thou ... let the shadow return backward ten degrees. And Isaiah the prophet cried unto the LORD: and he brought the shadow ten degrees backward, by which it had gone down in the dial of Ahaz.

For the proportionality of the angular momenta of the earth:

$$J \cdot \omega_E \sim J_M \cdot \omega_E \sim J_K \cdot \omega_K$$

With: $$J \cdot \omega_E = (2/5)\, M \cdot R^2 \cdot 2\pi/t_E \qquad (11.28)$$

and the orbital momentum of the moon:

$$J_m \cdot \omega_m = m_m \cdot r_m^2 \cdot v_m/r_m \qquad (11.27)$$

is valid the

$$\boxed{\text{conservation of angular momentum: } J \cdot \omega_E \sim J_m \cdot \omega_m \qquad (11.39)}$$

or: $$M \cdot R^2/t_E \sim m_m \cdot r_m \cdot v_m \qquad (11.40)$$

with $\underline{m_m = \text{constant}}$ (11.21)
and $\underline{v_m = \text{constant}}$ (11.24): $$\boxed{M \cdot R^2 \sim t_E \cdot r_m} \qquad (11.41)$$

$$\boxed{\begin{array}{ccc} \text{centrifugal force} & = & \text{gravitational force} \\ \dfrac{m_m \cdot v_m^2}{r_m} & = & \dfrac{G \cdot M \cdot m_m}{r_m^2} \end{array} \qquad (11.42)}$$

or with eq. 11.22: $$v_m^2 = G \cdot M/r_m = (2\pi r_m/t_m)^2 \qquad (11.43)$$

---

if $\underline{M = \text{constant}}$: $$\boxed{r_m^3 \sim t_m^2} \qquad (10.1)$$

<u>Kepler's 3rd law.</u>

Here $\underline{M \neq \text{constant}}$, instead $\underline{v_m = \text{constant}}$ (11.23) and therefore follows from eq. 11.43:

(month) $$\boxed{t_m \sim r_m \sim M} \qquad (11.44)$$

with eq. 11.41:

(day) $$\boxed{t_E \sim R^2} \qquad (11.45)$$

and for an analogous derivation: (year) $$\boxed{t_e \sim r_e \sim m_s} \qquad (11.46)$$

with $\underline{v_e = \text{constant}}$

Fig. 11.10: Calculation of dynamic celestial mechanics

11.10 Calculation of celestial mechanics

We still need a further relation and try the balance of forces between the centrifugal force and the gravitational force. Both the to the outside directed centrifugal force and the to the inside directed gravitational force depend on the mass of the moving body, here the mass of the moon m_m, so that it is cancelled from equation 11.42.
As determining mass only that of the earth is left and that is taken constant in accordance with the knowledge of text books. The result of this assumption is Kepler's 3rd law (eq. 10.1). But beware, it here merely concerns a momentary picture! In the course of time, according to the derivation, the mass of the earth increases so that this assumption is untenable.

Instead, as already said, the average orbital velocity of the moon, one kilometre per second, can be taken constant (eq. 11.24). Since the orbital velocity is calculated from the proportion of the perimeter of the circular orbit $2 \cdot \pi \cdot r_m$ with regard to the revolutionary period of a month (11.43, left page), and at the same time from the balance of forces a dependency of the mass of the earth M and the radius of the orbit of the moon follows (11.43, right page), the interesting relation (11.44) results:
Here the mass M, the radius r_m and the revolutionary period t_m stand in a direct proportionality to each other, and that means: if the mass of the earth increases in the course of time, then the moon will go away from us to the same extent, then also every month will get correspondingly longer.

Clarified with numeric values follows from a growth of the earth for $915*10^{14}$ kg per year a going away of the moon for yearly 5.88 meters (fig. 11.11). The going away of our satellite could be confirmed by means of measurements with laser reflectors, which had been put up on the moon by Apollo astronauts, according to dpa message<i>.

In addition every month lengthens for 3 milli seconds. That is valid for the sidereal month (= 27.322 days), for which a fixed star serves as a reference point for the measurement of a revolution, as well as for the synodic month, as it is observed from the earth from new moon till new moon (= 29.53 days). The synodic month today is longer than four weeks. But 3.7 million years ago it once actually lasted exactly 28 days, as we can calculate easily (fig. 11.11).

But now also the length of a day is changing. If we insert the proportionality (11.44) from the balance of forces in that of the conservation of angular momentum (11.41), then it is shown that a day depends quadratic on the radius of the earth (11.45), that a lengthening of every day for $4.5*10^{-9}$ s can be determined with the help of the growth curve of the earth (fig. 11.5). This is really very small, but 200 million years ago the day had just 19 hours, if extrapolated to 900 million years only 18.04 hours! The result of the american geologists around Dr. Charles Philip Sonett of the University of Arizona in Tucson also is 18 hours in their analysis of correspondingly old sediment formations, as the US science magazine Science has reported<i>. The correspondence of this measurement with our calculation without doubt has force of evidence!

<i>: 900 million years ago a day had 18 hours, Washington (dpa) 1997

Going away of the moon per year with $M \sim r_m$ (according to eq. 11.44): for

$\Delta r_m = r_m \cdot \Delta M/M = 384390[km] \cdot 9.15 \cdot 10^{16}[kg/a] / 5.976 \cdot 10^{24}[kg] = 5.886\ [m/a]$

lengthening of month per year with $M \sim t_m$ (11.44) (sidereal): for

$\Delta t_m = t_m \cdot \Delta M/M = 27.322\ [days] \cdot 86164\ [s/day] \cdot \Delta M/M = 36\ [ms/a]$

synodic month (from new moon till new moon) of 28 days:

$\Delta t_m = 29.53\ [days] - 28\ [days] = 1.53\ [days] \equiv 132 \cdot 10^6\ [ms]$

linearly calculated $132 \cdot 10^6\ [ms]/36\ [ms/a] = 3.6674$ mio. years ago.

Day length 200 mio. years ago, with $t_E \sim R^2$ (11.45) amounted to t* hours

shortening: $\Delta t_E/t_E = \Delta R^2/R^2 = (R-R^*)^2/R^2 = (6378-3420)^2/6378^2 = 21.5\%$

$\Delta t_E = 0.215 \cdot 24\ [h] = 5.16\ [h]$ and $t^* = 24\ [h] - \Delta t_E = 18.84\ [h]$

Day length 900 mio. years ago, (R^*=3200 km) amounts to 18.04 hours

present lengthening per day amounts to: $\Delta t_E/t_E = 4.5 \cdot 10^{-9}\ [s/day]$

but: the year increases 130,000 times faster than the individual day!

according to the measurement of Aristarchos 2300 years<ii> ago

is $\Delta t_e = 365.25637\ [days] - 365.25062\ [days] = 0.00575\ [days]$

and $\Delta t_e/t_e = 0.00575 \cdot 24 \cdot 60 \cdot 60 \cdot 1000 / 365.25637 \cdot 2300 = 0.59\ [ms/day]$

going away of the earth from the sun per year, with $t_e \sim r_e$ (acc. to eq. 11.46)

for: $\Delta r_e/t = r_e \cdot \Delta t_e/t_e \cdot t = 149.6 \cdot 10^6\ [km] \cdot \Delta t_e/t_e \cdot t = 1.024\ [km/a]$

growth of the sun per year/second, with $t_e \sim m_s$ (according to eq. 11.46)

for:

$\Delta m_s/t = m_s \cdot \Delta t_e/t_e \cdot t = 1{,}99 \cdot 10^{27}\ t \cdot \Delta t_e/t_e \cdot t = 1.36 \cdot 10^{19}\ [t/year]$

resp. in a second for: $= 4.3 \cdot 10^{11}\ [t/s]$

and at the same time a loss due to radiation of: $5 \cdot 10^6\ [t/s]$

Fig. 11.11: Figures according to analysis of some examples concerning dynamic celestial mechanics

11.11 The biblical age

We therefore owe the growing diameter of the earth that every day gets longer and longer (eq. 11.45) and from the going away of the moon a lengthening of the month results (eq. 11.44). Not only the months and the length of the days increase, but also the whole year. A corresponding derivation for the revolution of the earth around the sun, as it has been carried out for the revolution of the moon around the earth (eq. 11.44), delivers analogous results (eq. 11.46): The sun determines the length of the year and the distances to the planets. To the extent, to which the sun grows, the solar system increases in extension. Also the distance to the earth increases proportionally with the mass of the sun. By the going away from the sun the temperature on the planets however not necessarily decreases, because at the same time the radiation intensity of the growing central star increases. According to measurements it has increased for 30% since the formation of the solar system<i>.

If both the rotation of the earth and the revolution around the sun get slower, then by all means is conceivable, that the number of days per year approximately stays the same and mankind nevertheless gets less old. If we take the 2300 years old writing of the Greek Aristarchos about the sizes and distances of the sun and the moon<ii>. He determined, assuming a heliocentric view of life, the year to be 365.25062 days. Because the correction taken by Aristarchos concerned even the fifth place after the comma, we must assume that correspondingly precise gauges were available in Alexandria already 310 BC.
The today measured sidereal year with 365.25637 days has lengthened for whole 0.00575 days. From this follows that the year increases considerably faster than the individual day.
It of course would be nice, if we could calculate the lengthening of the year, but unfortunately no data about the growth of the sun are available.
If we proceed from the measurement of Aristarchos, without being able to verify or reproduce its reliability, then from that would result a going away of the earth from the sun for yearly one kilometre, then the sun should grow for $4.3*10^{11}$ tons per second. In any case the sun materializes mass considerably faster, as it loses mass in the same period as radiation equivalent, and that surely is correct (fig. 11.11). Today one generally assumes that „since its formation the earth has gone away from the sun for in total 30,000 km"<i>.

But if in the past the year consisted of less days and every day moreover was shorter, if therefore the biological life time was divided in shorter periods, then mankind could get older, then obtaining a biblical age possibly by no means was unrealistic. If Adam still should have got 930 years old, according to the 1st book of Moses, then his lifetime already must have been quite long ago. While Abraham still did get 175 years old, no successor of him has reached his age anymore. In the Bible it is said: „And the LORD said, My spirit shall not always strive with man, for that he also is flesh: yet his days shall he an hundred and twenty years "<iii>. Today even the limit given by the LORD isn't reached anymore!

<i>: Is the sun loosing her Gravitation? Illustrierte Wissenschaft, Nr.l, 1995
<ii>: Hermann Wild: Technologien von gestern, Chancen fur morgen, Jupiter-Verlag Bern (1996), ISBN 3-906571-13-0, Seite 22
<iii>: The Bible, King James Version, Genesis 6.3

The balance of forces (equation 11.42 generalized):

$$\text{centrifugal force} = \text{gravitational force}$$

$$\frac{M \cdot v_k^2}{r} = \frac{G \cdot M \cdot m}{r^2} \qquad (12.1)$$

results in the cosmic velocity v_k:

$$v_k^2 = G \cdot m / r \qquad (12.2)$$

independent of the mass M of the satellite or planet!

For	$v < v_k$	falling back into the central mass m
For	$v > v_k$	taking the leave into space
For	$v = v_k$	stationary orbit

written down for the nth planet in the solar system:

with $r(n) = r_n$ average orbital radius of the planet

and $v(n) = v_n$ average orbital velocity

as well as: m_s mass of the sun

$$v_n = \sqrt{G \cdot m_s / r_n} \qquad (12.3)$$

or:

$$v_n = G \cdot m_s / v_n \cdot r_n \qquad (12.4)$$

Fig. 12.1: The first cosmic velocity v_k

12. New cosmology

Astronomy still hasn't satisfactorily solved the question of the formation of the solar system. It thereby however concerns a central problem, because it includes the origin of the earth. But as long as we not yet have understood the relations in our nearest environment, the processes, which we observe with giant telescopes in the depths of pace, will remain a book with seven seals, will lose models of explanation concerning the Big Bang and concerning the so-called unavoidable heat exitus every reliability.

12.1 Concerning the formation of our solar system

2-8-1972 the observatories of the sun reported an unusual high solar activity and 6 days later a slowing down of the rotation of the earth occurred, which was recorded as the lengthening of a day for more than 10 milliseconds. This effect hardly can be explained by the tidal friction alone already just concerning the energy balance. Instead this observation makes clear two things to mankind. On the one hand, how much our earth depends on the solar processes and on the other hand, that the changes by all means can occur not continuously, but periodically and if need be even sporadic.

If, as a result of the conservation of angular momentum, the sun determines the orbital velocity of the earth, if it dictates the rotation of the earth by its neutrino activity and the growth of the earth and if the earth in the same manner determines the orbit of the moon, then it would be obvious that the moon originally has been a part of the earth and this in turn sometime a part of the sun. As it came off, the necessary angular momentum then has been passed on proportionately to the celestial companions, with which the cause for evolution and rotation of their own would be clarified. In addition the moon goes away from the earth and the earth again from the sun, so that looking back it by all means would be obvious, if they once had belonged together.

If we assume that cosmic dust particles meet and accumulate, then all collected rubble contributes to the rotation of its own of the forming celestial body. The more matter finds together, the larger its force of attraction gets, the faster it will grow like a celestial vacuum cleaner. In the course of time this process however is slowed down again and eventually comes to a standstill, because as matter condenses, volume and spherical radius decrease and the rotation of its own increases to the corresponding extent. The celestial body rotates faster and faster and reaches at its surface the cosmic velocity vk, which is given by the mass m and the radius r of the star (eq. 12.2). Now the centrifugal force has reached an order of magnitude, for which the celestial body hurls exactly as much matter into space, as it on the other hand collects by its gravitational effect.

Our sun was lucky to have been supplied with neutrinos in the range of influence of our galaxy. It went in resonance and started to grow, this time from out of the inside. It however could not yet shine, because a crust had formed on its surface around its core of fusion and its mantle, a crust on which permanently was falling cosmic matter from the outside. The increasing viscosity of the sun becoming compressed caused a slowing down of the core of the sun and the corresponding acceleration of the mantle and crust.

Titius-Bode law of 1766:

$$a = 0{,}4 + 0{,}3 \cdot 2^{\nu} \quad (12.5)$$

in astronomical units a with:

$$r_n = a \cdot r_e \quad (12.6)$$

(r_e = 149 598 000 [km] average orbital radius of the earth)

Planet	*orbital radius acc. to the law:*		*measurement value.*
Mercury:	$\nu = -\infty$	$a = 0{,}4$	*0,39 (measured)*
Venus:	$\nu = 0$	$a = 0{,}7$	*0,72 (measured)*
Earth:	$\nu = 1$	$a = 1$	*1 (by definition)*
Mars:	$\nu = 2$	$a = 1{,}6$	*1,52 (measured)*
Asteroids:	$\nu = 3$	$a = 2{,}8$	-
Jupiter:	$\nu = 4$	$a = 5{,}2$	*5,2 (measured)*
Saturn:	$\nu = 5$	$a = 10$	*9,54 (measured)*
Uranus:	$\nu = 6$	$a = 19{,}6$	*19,2 (measured)*
Neptune:	$\nu = 7$	$a = 38{,}8$	*30,1 (measured)*
Pluto:	$\nu = 8$	$a = 77{,}2$	*39,4 (measured)*
circumsolar cloud of planets:	$\nu = 9$	$a = 154$	-
etc. ... :	$\nu = 10$	$a = 308$	-

Table 12.2: The Titius-Bode series of the planets (the theoretical values compared to the measurement values)

Sometime our like mad spinning sun had increased that much, that the crust came off like the ,,tread of an old car tyre" and was catapulted into space. The repulsion was achieved by the centrifugal force exceeding the gravitation for the force of cohesion, which at the moment of the separation of crust regions suddenly tears off. Like snowballs the planets lulled off the sun's surface in this process and were hurled away. Their velocity of rotation at this time was identical to the cosmic velocity of the sun v_k and with that for many a planet large enough to produce its own satellites out of its own surface, which perhaps was not yet completely ideally spherical.
With every planet, which the sun gave birth to, it gave away a part of its own angular momentum to its child as orbital momentum. Only from this time on the sun reduced its angular velocity steadily until this very day. By losing the crust it also started to shine openly. Thus at least could our solar system have been formed.

12.2 The birth of the planets

From this observation various consequences result. If stars are observed, which are rotating very fast, then they either are very young, or they have no planets. Stars, which compared to our sun are rotating less fast, have given away the angular momentum to their planets and such, which hardly are rotating, have their planets already sent away into space. But if the last planet leaves its solar system and the sun stops to rotate, then the sun, which meanwhile has grown to a red giant, without a, the spherical form stabilizing centrifugal force, will collapse. The supernova is the death of a star and thereby neutrinos are set free, the material for new life.

After the coming off of the planets these first clear free their flight paths, by together with the sun collecting the flying around matter. Even whole planets thus can collide, are slowed down and form bigger units. Finally only some few planets in very particular orbits are left. Their average distance to the sun obeys in an until now completely inexplicable manner the Titius-Bode series (equation 12.5, table 12.2).
In the case of the by the german scientist Titius 1766 formulated regularity it concerns a rule of thumb founded purely on experience. But it is remarkable, that the planet Uranus could be predicted (Bode 1772) and after systematic searching also be found (Herschel 1781) with it.

The most distant planets Neptune and Pluto however don't obey the law. Their distance should be very much larger. But this circumstance we already had given reasons for with the fact, that for them the resonating interaction already overlaps and exceeds the gravitation in its effect (chap. 10.1 note<ii> and chap. 10.5).

The arbitrary seeming series of numbers 0, 3, 6, 12, 24, 48, 96, 192, 384, ... with a respective doubling of the value, starting with the 3, the addition of 4 and the following division by 10 at first are nothing but pure acrobatics of numbers, which now really has nothing to do with physics (table 12.2). A physical background can be supposed however because of the tried and tested applicability and that should be fathomed.

Orbital angular momenta $J\cdot\omega$ of the nth planet with: $J = m\cdot r_n^2$ and $\omega = v_n/r_n$:

$$J\cdot\omega = m\cdot r_n\cdot v_n \quad (12.7)$$

By using amounts the orbital angular momentum to: dependent

	equation 12.3:	equation 12.4:	
$J\cdot\omega$	$= m\cdot\sqrt{G\cdot m_s\cdot r_n}$ on r_n	$= G\cdot m\cdot m_s/v_n$ on v_n	(12.8)

change of the angular momentum (1st derivation) with the ordinal number n

$\frac{d(J\cdot\omega)}{dn}$	$= m\cdot\sqrt{G\cdot m_s}\,\frac{d(\sqrt{r_n})}{dn}$	$= G\cdot m\cdot m_s\,\frac{d(v_n^{-1})}{dn}$	(12.9)
$\frac{d(J\cdot\omega)}{dn}$	$= \frac{m\cdot\sqrt{G\cdot m_s}}{2\cdot\sqrt{r_n}}\cdot\frac{dr_n}{dn}$	$= -\frac{G\cdot m\cdot m_s}{v_n^2}\cdot\frac{dv_n}{dn}$	(12.10)
with eq. 12.8: $\frac{d(J\cdot\omega)}{dn}$	$= \frac{J\cdot\omega}{2\cdot r_n}\cdot\frac{dr_n}{dn}$	$= -\frac{J\cdot\omega}{v_n}\cdot\frac{dv_n}{dn}$	(12.11)

By comparison of the left and the right solution (of eq. 12.11), after introduction of the constant:

$\frac{1}{N}$	$= \frac{1}{r_n}\cdot\frac{dr_n}{dn}$	$= -\frac{2}{v_n}\cdot\frac{dv_n}{dn}$	(12.12)
the differential equations read:	$\frac{r_n}{N} = \frac{dr_n}{dn}$	$\frac{v_n}{2\cdot N} = -\frac{dv_n}{dn}$	(12.13)
and the general solutions:	$r(n) = r_n = r_o\cdot e^{\lambda\cdot n}$	$v(n) = v_n = v_o\cdot e^{\lambda\cdot n}$.	(12.14)
The 1st derivation: and the comparison with	$\frac{dr_n}{dn} = r_o\cdot\lambda\cdot e^{\lambda\cdot n}$	$\frac{dv_n}{dn} = v_o\cdot\lambda\cdot e^{\lambda\cdot n}$	(12.15)
eq. 12.13 and eq. 12.14:	$\frac{dr_n}{dn} = \frac{r_o}{N}e^{\lambda\cdot n}$	$\frac{dv_n}{dn} = \frac{-v_o}{2N}e^{\lambda\cdot n}$	(12.16)
determine the coefficient λ:	$\lambda = 1/N$	$\lambda = -1/2N$.	(12.17)
The result is for a planet in the nth orbit:	for the average orbital radius $r(n) = r_n$ $r(n) = r_o\cdot e^{n/N}$	for the average orbital velocity $v(n) = v_n$ $v(n) = v_o\cdot e^{-n/2N}$	
	(12.18)	(12.19)	

Fig. 12.3: Calculation of the distances and orbital velocities of the planets

12.3 The derivation of the Titius-Bode law

Even if Bohr's atomic model should be wrong, it gladly is compared to the system of the planets. The radii of the electron orbits mathematically result as eigenvalue solutions of the Schrodinger equation, and that we have derived from the fundamental field equation (chap. 5.1, eq. 15) (chap. 5.5 - 5.9). The orbital radii are calculated in increasing order in accordance with the sequence of whole numbers with n = 1, 2, 3, 4, ...

From the same sequential regularity of the planetary orbits can be derived, that they also obey the eigenvalues of the same fundamental field equation, which isn't called a world equation in vain. The quantitative distances from the sun are determined by the size of the sun: if the sun increases, then also all distances increase to the same extent.

Now result identical distances between the orbits from Bohr's model, whereas this distance in the case of the planets with increasing distance from the sun gets larger. The reason for this unevenly grading can be calculated just like that (fig. 12.3).

We arbitrarily pick a planet, which occupies the orbit n, where n again represents the sequence of whole numbers (n = 0, 1, 2, 3, ...). If the orbit of this n^{th} planet changes, then also its distance to the sun $r_n = r(n)$, its orbital velocity $v_n = v(n)$ and the orbital momentum $J \cdot \omega$ (12.7) are changed.

We try (as in equation 11.42, fig. 11.10) the balance of forces between centrifugal force and gravitational force (eq. 12.1, fig. 12.1) and solve equation 12.2 for the orbital velocity. The orbital angular momentum of the planet written down once in its dependency on r_n and in the right column next to it on v_n (eq. 12.8, fig. 12.3), is derived for the orbital ordinal number n, to record the change in angular momentum (equations 12.9 to 12.11).

In fig. 12.3 the paths to the solution for both cases are given. For the average orbital radius r(n) as well as for the average orbital velocity v(n) of the planet an exponential course (eq. 12.18 and 12.19) and in logarithmic representation a straight line (fig. 12.4) results.

Even the orbits of the distant planets Neptune and Pluto, for which the Titius-Bode series fails, now are correctly recorded, so that with good cause can be claimed, to correctly have derived the regularity of the distances of the planets physically and mathematically.

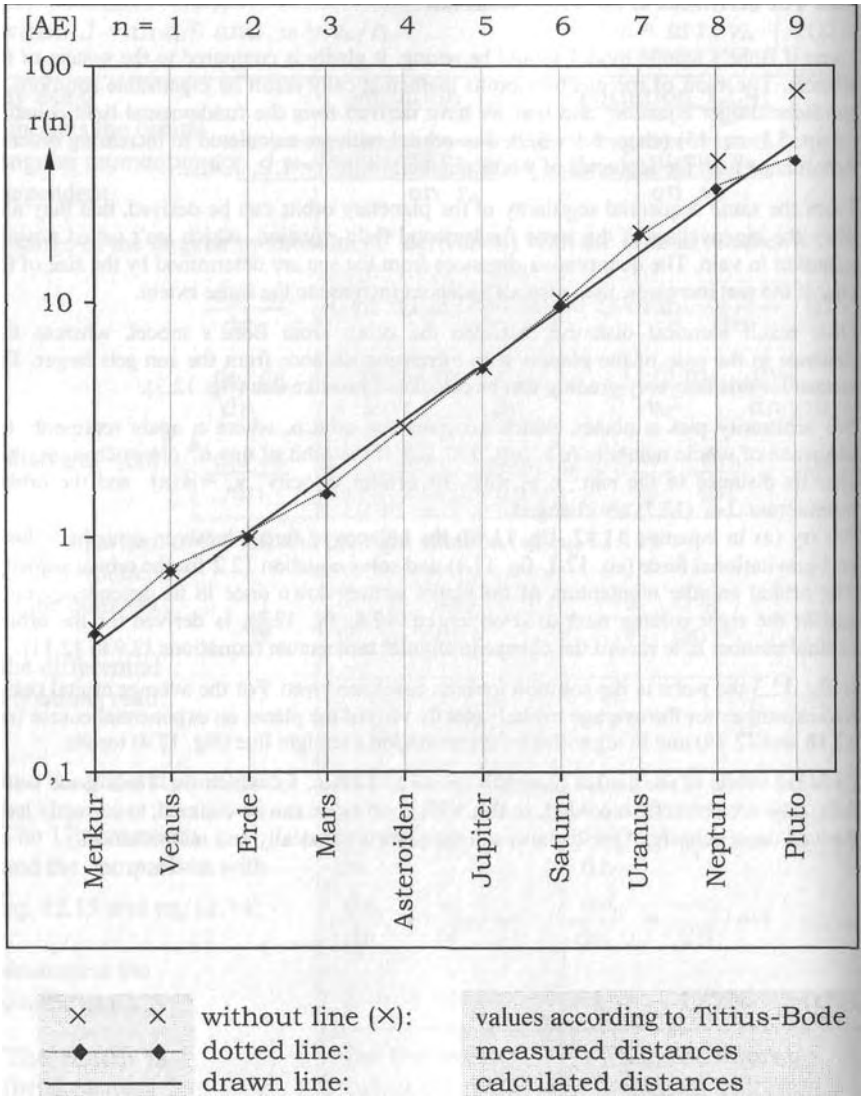

Fig. 12.4: Representation of the distances of the planets

result of the calculation: $$r(n) = 0{,}3332 \cdot e^{\left(\frac{n}{1{,}82}\right)} \quad [AE] \qquad (12.20)$$

12.4 The hollow planet

The numerous accompanying moons of the big planets obey in the same manner as the planets this regularity, so that for the found result every coincidence is excluded. The orbits of the moons of Jupiter (fig. 12.5), of the moons of Saturn (fig. 12.6) and of the moons of Uranus (fig. 12.7) in logarithmic representation lie almost on a straight line. Some orbits certainly are occupied several times, while many an orbit has remained unoccupied. Other orbits again are occupied by a ring of countless chunks of rock, so-called planetoids. Best known representative is the asteroid belt (n = 4) between the orbit of Mars (n = 3) and that of Jupiter (n = 5). The Titius law requested the planet "Aster", but what one found (Piazzi, 1801), at first only was Ceres, the biggest representative of the small planets.
As a second asteroid, as they are called, was found (Olbers 1802) its discoverer proposed the explanation that both, Ceres and Pallas, could have formed in a cosmic catastrophe, which a bigger celestial body had suffered.
Perhaps the sought-for planet Aster actually had imploded after a collision and had been torn apart in countless fragments, of which today still more than half a million pieces are flying around. Most of the fragments however have been collected by the neighbouring planets Jupiter and Mars. Also in the case of the moons of Mars and the outer moons of Jupiter it could concern scrap of Aster. Some presumably fell on the young earth and triggered natural disasters and left deep scars.

It can be imagined that the planet Aster was hollow from the inside and thus was built up similar to the moon. Such a hollow sphere could have formed, if the sun, or in the case of the moon, the earth still was rotating with the cosmic velocity and as a result of the centrifugal force at the perimeter parts of the crust came off as connected sheets and rolled up to a tube.
The fast spinning tube then remodels into a hollow sphere with openings at the poles. In the inside of the sphere, near the equator, protected conditions and the best prerequisites for an undisturbed development, for instance of intelligent living beings, are found by the way. Apart from the advantages the hollow sphere however has as a fundamental disadvantage, that the normally protecting shell in the case of a collision with a bigger celestial body can becomes instable and can implode.

In the case of the moon the pole openings in the meantime are closed and a presumed gas pressure in the inside in addition provides stability. The wall of the spherical shell however is not evenly thick, so that the moon all the time turns the same, namely the heavier, side towards the earth. In view of the seismic measurements of the Apollo-missions, which revealed an extremely small damping of the ground of the moon (chap. 11.9, note <i>), we should look after our moon well, because a comet, which lets the moon implode, would be able to bring about more damage on earth, than if it would hit the earth directly.

Should there exist a hollow and possibly even on the inside habitable planet in our solar system, then surely Saturn should be considered. Its density is smaller than that of water, so that water would be distributed over the inside area of the hollow sphere, if it would be existent. One should examine more detailed the extremely flat pole regions of Saturn for possible openings! Also Uranus and Neptune are possible candidates. This only is thought as an idea.

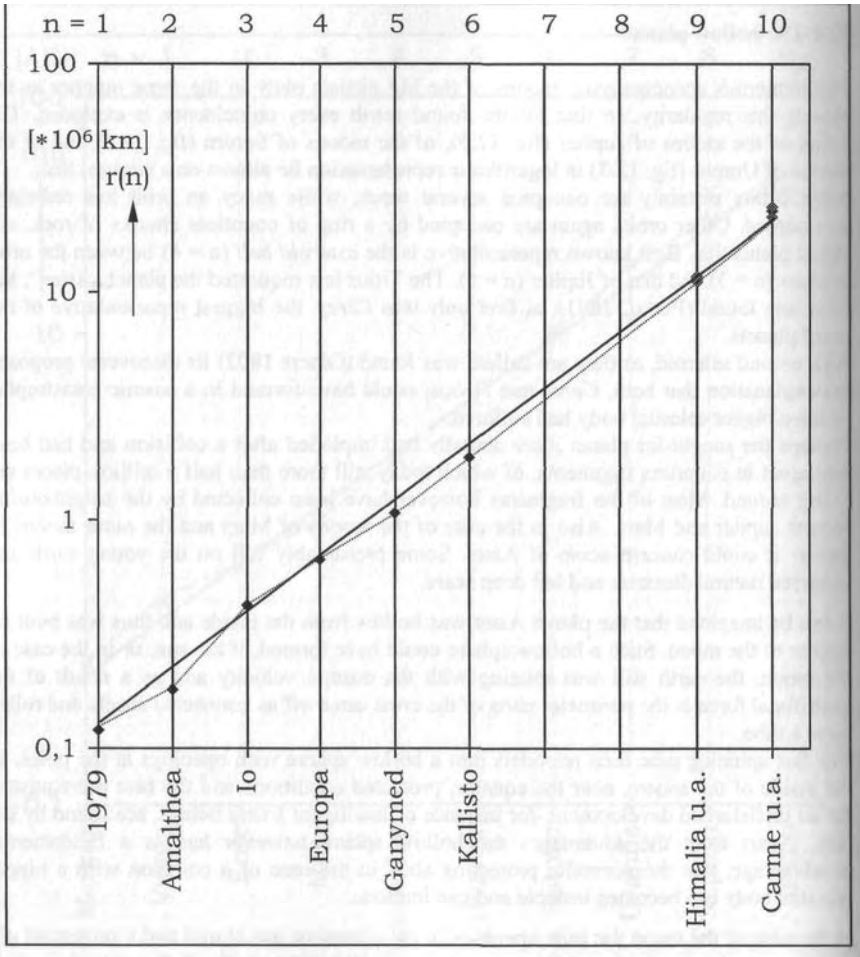

dotted line: measured distances
drawn line: calculated distances

in position n = 9 stand: Leda, Himalia, Lysithea and Elara
in position n = 10 stand: Ananke, Carme, Pasiphae and Sinope

Fig. 12.5: The distances of the moons of Jupiter

Result of the calculation: $r(n) = 67608 \cdot e^{\left(\frac{n}{1,743}\right)}$ [km] (12.21)

<i>: Note to chapter 12.5:

What we observe as and call cosmos, is nothing but a structured state of space.

12.5 Concerning the formation of the universe

The widespread concept of an expanding universe bases on the observation of a red shift of the spectral lines of galaxies, which increases with their distance. As the physical explanation for the discovery of Hubble, the Doppler shift for a light source, which is moving away from us, is used. But this concept of an against the attraction of the gravitation taking place expansion is nothing more than a work hypothesis.

The by Christian Doppler in acoustics investigated effect treats the observable shift in frequency, if the source of sound or the receiver is moved with regard to the medium of propagation. But according to today's version there doesn't exist such a medium at all for light, because Einstein has abolished the concept of the aether. According to that the Doppler effect neither can be applied to changes in light frequency.
In the case of the expanding universe, for a decrease of the density and the tracing back to a Big Bang, it therefore should concern a misinterpretation!

Here another effect has to take effect, which one is not yet clarified. Perhaps the changing field relations of the observer environment play a role, after the earth moves away from the sun. But perhaps the galaxies only influence the propagation of their own light, or the light ray on its millions of years lasting way through space slightly loses energy, what is expressed by gradually increasing its wavelength and shifting its spectrum towards the red frequencies.
The hypothesis of the Big Bang moreover contradicts every causality. It is not able to give an answer concerning the origin and the future of the universe and on the question of the origin of the energy and the particles. With that its physical value of explanation goes towards zero.

If we again hold the theory of objectivity against the theory of relativity (part 1), we come to quite other answers. Here apart from the waves also vortices are found. Specially in the case of the spherical vortex a part of the wave power is enclosed in the inside, so that looked at from the outside a from zero differing energetic state results, which even is accessible measuring technically (chapter 6.2).
Wave and vortex are two possible forms of state, so that for the conversion of one state in the other state at first no energy is necessary. The change of state depends on the local field relations.
If we assume that in the beginning the cosmos was free of energy and particles. Then the first vortex was a possible product of chance with an infinite extension. This first spherical vortex, which was contracted under the potential vortex pressure, gave structure to space, gave it energy and field and took care for the rolling up and formation of new vortices[<i>].
It can be assumed, that even today new particles continually are being formed in the fringe areas of the infinitely extended cosmos, which fly towards us and in doing so contract. They are attracted and at the same time shrunk by the fields of the celestial bodies. They form the source of all matter and energy for our observable universe, which permanently is changing its structure. Because the same oscillation with reversed sign is enclosed in the inside of the spherical vortex, the sum of the energy present in the cosmos is exactly equal to zero. With that the question concerning the causality is superfluous.

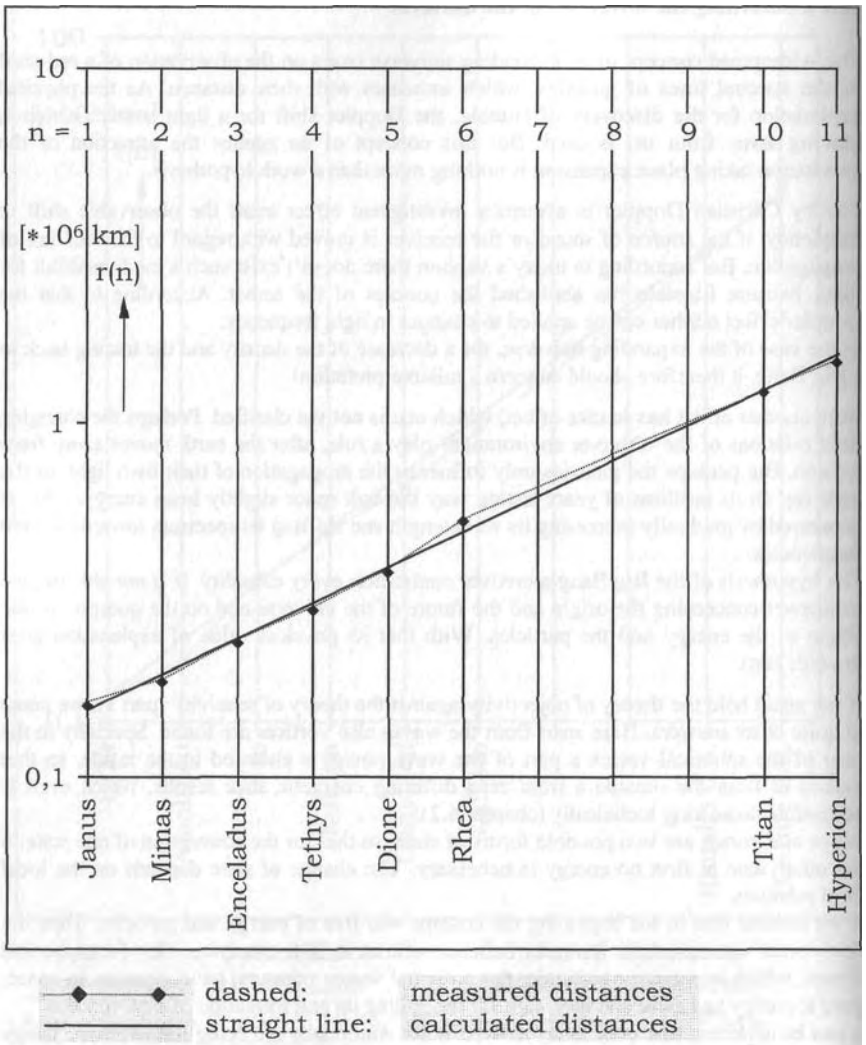

Fig. 12.6: The distances of the moons of Saturn

Note to chapter 12.6 (2nd law of thermodynamics<i>):

Heat cannot completely be transformed into mechanic or electric energy.

<i>: see Electromagnetic environmental compatibility, Part 1, fig. 8.4

The formation of the universe also can be explained causal and completely without a hot Big Bang, even if a supernova surely represents something like a "local Big Bang" for the concerned celestial bodies. According to the observations of the sky expansion and contraction, explosion and implosion occur everywhere in form of oscillations.

On the whole the expanding universe, which once was in thermodynamic equilibrium with matter, should cool down further and further. But stop, the 2nd law of thermodynamics teaches one just the opposite. If the entropy only increases, as the law dictates, then the whole universe should end in a heat death, just as mysteriously and inexplicable, as it should have been formed with the Big Bang. Perhaps something is wrong with the law (fig. 8.4)?

12.6 Counter examples concerning the 2nd law of thermodynamics

Most likely a small experiment convinces us. We heat two spheres, one somewhat less, the other somewhat more. Then we focus the heat radiation of the less hot sphere with help of a parabolic mirror and point it to the hotter one of both. That as a result becomes hotter, whereas the colder is cooled down. The heat thus has flown from the colder to the hotter sphere. Is it allowed to do that?
According to the 2nd law of thermodynamics it of course isn't. There the heat always can only flow from the hot to the cold sphere. But in this primitive experiment it measurable and verifiable flows in the wrong direction. Here the entropy, which is said to always only increase, actually decreases. Here entropy is being destroyed!
Shall we now let the carrying out of the experiment be forbidden under threat of penalty or shall we secretly put the law of entropy to sleep? It can't be denied that this law until now has quite well helped us along, at least for terrestrial processes, at least if one dispenses with the poor inventors, whose inventions offend against the since 100 years tried and tested 2nd law of thermodynamics. They haven't really arrived at the patent office at all, then they already are outside at the door again. Such inventors with their illegal behaviour even today must feel like criminals.

Just what that observed experiment can, each refrigerator and each warmth pump is using as well. And it is not an isolated case: also our sun clearly functions and operates illegally! The surface temperature amounts to only 5800 degrees Kelvin and supplies the atmosphere of the sun with energy. The energy thus flows from the sun to the corona, and that is with values above 1,000,000 degrees Kelvin for some powers of ten hotter!

Only the vortex concept resolves the many question marks without compulsion. In the case of the sun certainly vortices are at work. Here the high temperature in the corona arises as a result of vortices falling apart. We also speak of eddy losses. The transport takes place by heat radiation, exactly as in the experiment with the two spheres.
The possibility exists therefore in vortex processes as well as in technical circle processes that heat could flow from the colder to the hotter sphere. Whether this is an offence against the 2nd law of thermodynamics, is in the end a question of interpretation of the law and up to the opinions of the scholars.

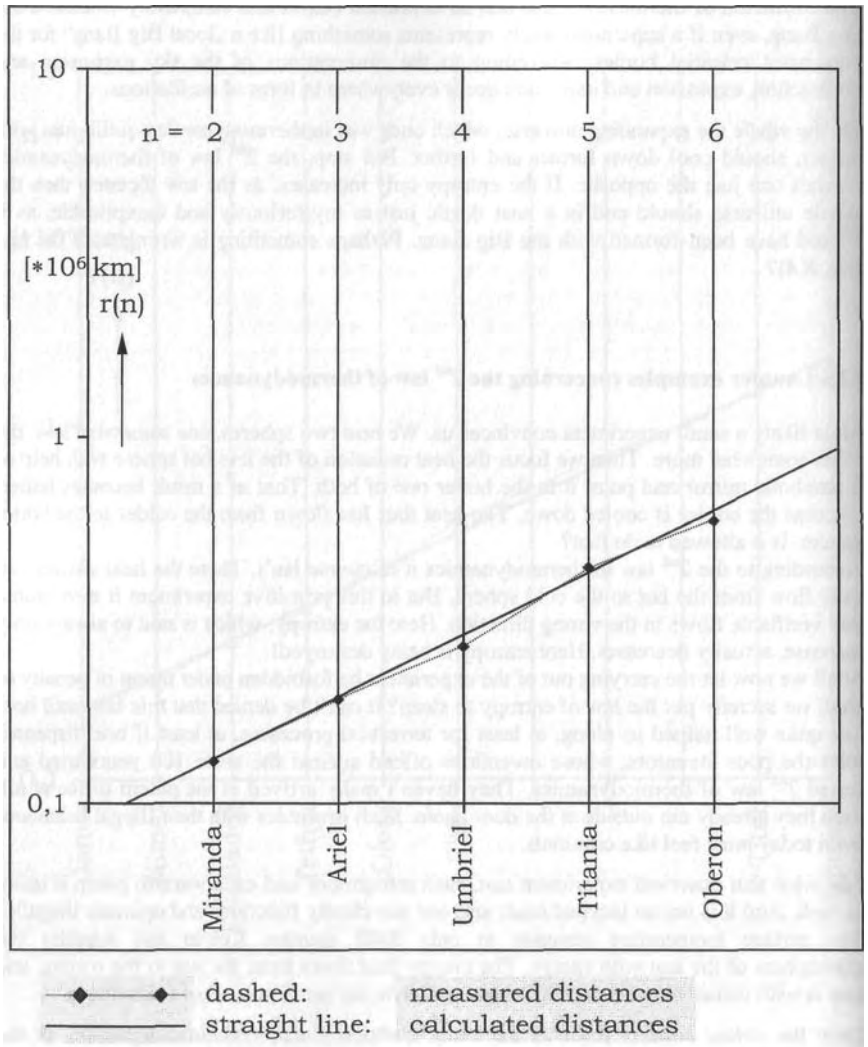

Fig. 12.7: The distances of the moons of Uranus

Note to chapter 12.7 (law of entropy):

The entropy of a closed system never can decrease. It is increased in the case of all irreversible processes. In the case of reversible processes it remains constant.

12.7 Entropy destroying potential vortices

Vortices in addition can amalgamate to balls and to planar vortex systems (4.9 and 4.10). In that case similar consequences, as they can be observed in flow-technical potential vortices in hydrodynamics, can be expected. As a result of the concentration effect (4.1) and because of the conservation of angular momentum an increase of the velocity of rotation of the vortex occurs. Like in the case of the pirouette in figure skating a spontaneous acceleration of its own is observed. In that way the kinetic energy of the system is increased, and that has to come from somewhere.
If we don't supply the contracting vortex with any additional energy for the increase of its rotation of its own, then as a source of energy only the heat energy is left. For this reason every contracting vortex generally converts heat in kinetic energy, it therefore cools down its environment! It moreover destroys entropy and offends against the 2nd law of thermodynamics (fig. 12.8).

It isn't an accident, if in the inside of a tornado it starts to hail. The whirlwinds really furnish visual instruction of the contraction and acceleration of their own of ring-like vortices. If then, even in tropical regions, hail stones are formed, the cooling effect has to come from somewhere, and it can be assumed that the vortex withdraws the heat energy from its environment (calculation in fig. 12.8).

If in specialist books is talked about matter or stars condensing, then vortex physics teaches us that they in reality are contracting and by doing that cooling down. That also is valid for whole galaxies. We owe solely the vortex laws that the continual heating by absorption of radiation is prevented and our sky in the night is dark and doesn't shine as light as day.

The cosmic background radiation, which as a result of vortices lies at almost 3° Kelvin, actually can only be given account for with a contracting of vortices of the Milky Way galaxy. If the cooling down in a compression resp. condensation process has arrived at absolute zero, the vortex becomes stationary, the contraction becomes dependent on the irradiated energy or it wholly comes to a standstill without supply of energy. An example for that is earth's inner core, which at zero Kelvin can't contract further.

From the point of view of causality it is suggested that we galactic and perhaps even cosmic to a large extent are in thermodynamic equilibrium, completely without Big Bang and heat death<i>.

Numerous inventions, as mentioned, are based on the principle of converting environmental heat in useable energy by contraction of vortices. If however the inventors don't know the vortex laws and if they have developed their concept empirically and less physically, then it very often happens that erroneously gravity is made responsible, then is talked of gravitational converters, of the use of a gravitational field energy. But the inventors don't do themselves a favour with that.

<i>: In the seminar it is desired to think about this. Doing so the philosophical faculty may feel as well addressed, as the sandpit of physics, in which completely unsuspecting is played and juggled with Big Bang hypotheses by ignoring all physical regularities and every common sense.

Evidence to counter:
planar, contracting ring-like vortex

$$\text{conservation of angular momentum: } J\cdot\omega = m\cdot r\cdot v = \text{constant} \quad (12.7)$$

$$\text{conservation of energy: } E_{kin} = \tfrac{1}{2}\, m\cdot v^2 = \text{constant} \quad (12.22)$$

	before (r_1, v_1)		afterwards (r_2, v_2)	
contracted ($r_2 < r_1$):	$m\cdot r_1\cdot v_1$	=	$m\cdot r_2\cdot v_2$	(12.7*)
with the consequences:	v_2/v_1	=	r_1/r_2	(12.23)
and: kinetic energy:	$E_{kin1} = \frac{1}{2}\cdot m\cdot v_1^2$	≠	$E_{kin2} = \frac{1}{2}\cdot m\cdot v_2^2$	(12.24)

increase of the kinetic energy:

$$\frac{Q_2}{Q_1} = \frac{E_{kin2}}{E_{kin1}} = \frac{v_2^2}{v_1^2} = \frac{r_1^2}{r_2^2} \quad (12.25)$$

notice: *Because of the change in energy/heat* ***no adiabatic change of state!***

change of volume:
with $V = \pi\cdot r^2\cdot h$

$$\frac{V_1}{V_2} = \frac{r_1^2}{r_2^2} \quad (12.26)$$

notice: *Because of the change of volume* ***no isochore change of state!***

assumption: ***isobar change of state*** *(with p = const., Gay-Lussac):*

result:
(vortices of gas)
involved with the:

$$\frac{T_1}{T_2} = \frac{V_1}{V_2} = \frac{v_2^2}{v_1^2} = \frac{r_1^2}{r_2^2} \quad (12.27)$$

* ***acceleration*** $v_2 > v_1$ *is the contraction of vortices* $r_2 < r_1$, $V_2 < V_1$

* ***the cooling***: $T_2 < T_1$ and $\Delta T = T_1 - T_2 = T_2\cdot\left(\frac{r_1^2 - r_2^2}{r_2^2}\right)$ (12.27*)

* ***withdrawal*** *of heat* $Q_2 - Q_1 = \Delta Q = Q_1\frac{\Delta T}{T_2} = Q_1\cdot\left(\frac{r_1^2 - r_2^2}{r_2^2}\right)$ (12.28)

* *and* ***entropy destruction***: $\Delta S = C_p\cdot m\cdot \ln\left(\frac{T_2}{T_1}\right) = C_p\cdot m\cdot \ln\left(\frac{r_2}{r_1}\right)^2$ (12.29)

Fig. 12.8: The cooling and entropy destroying effect of contracting potential vortices (calculations concerning chapter 12.7)

13. Recording of space and time

If observations should force us to touch the sacred physical laws, then we should first of all judge our measuring technique critically of all sides and bring it in an usable state. I suggest, we start completely from the beginning with the devices, with which the dimensions of space and time are recorded, with the tape measures for the measurement of length and the chronometers, our clocks.

We must find out, why comets are slowed down if they approach the sun like by the hand of a ghost and in going away again are accelerated, although no forces at all act on the celestial bodies from the outside.

We must find out, why in mines deep under the earth another value for the gravitational constant is being measured as on the surface of the earth[<i>]. The results hardly can be imagined, if an universal constant should lose its constancy.
Thereby can Newtonian mechanics and the well-known laws be used very successfully from today's point of view, as the derivations in the last chapters have shown. We even could verifiably and mathematically correct calculate the growth of the earth and the solar system with them. The physical laws in the normally used formulation in spite of that seem to be bound to certain limits. Some observations contradict all experience[<ii>].

<i>: H. Schuh: Eine Konstante verliert ihre Konstanz; neue Experimente nahren Zweifel an Newtons Gravitationsgesetz, Die Zeit Nr. 40 vom 25.09.97. From it the following quotation (translated):
„It already is suspected for several years, that a fifth force could exist, this suspicion goes back to exact measurements of the gravitational constant G in Australian mines and shafts. Physicists of the University of Queensland in Brisbane had determined, that G for measurements underneath the earth is about one percent larger than the corresponding, since centuries in laboratories determined size. Their proposal for explanation, namely a fifth repelling force, at first met with sharp disapproval. But an at 21 august in the journal Science (Bd. 237/87, P. 881) published work, which bases on measurements in a drilling hole in Michigan, confirms the Australian data".

<ii>: Already the nobel prize winner of physics, Lenard, pointed to the circumstance, that the relativistic representation of the astronomical aberration is incorrect, after no distinguishable aberration could be observed at binary stars, as it had been expected. With that Lenard by the way also has confirmed the existence of an aether.
P. Lenard, Annalen der Physik, Bd. 73, S. 89 (1924)

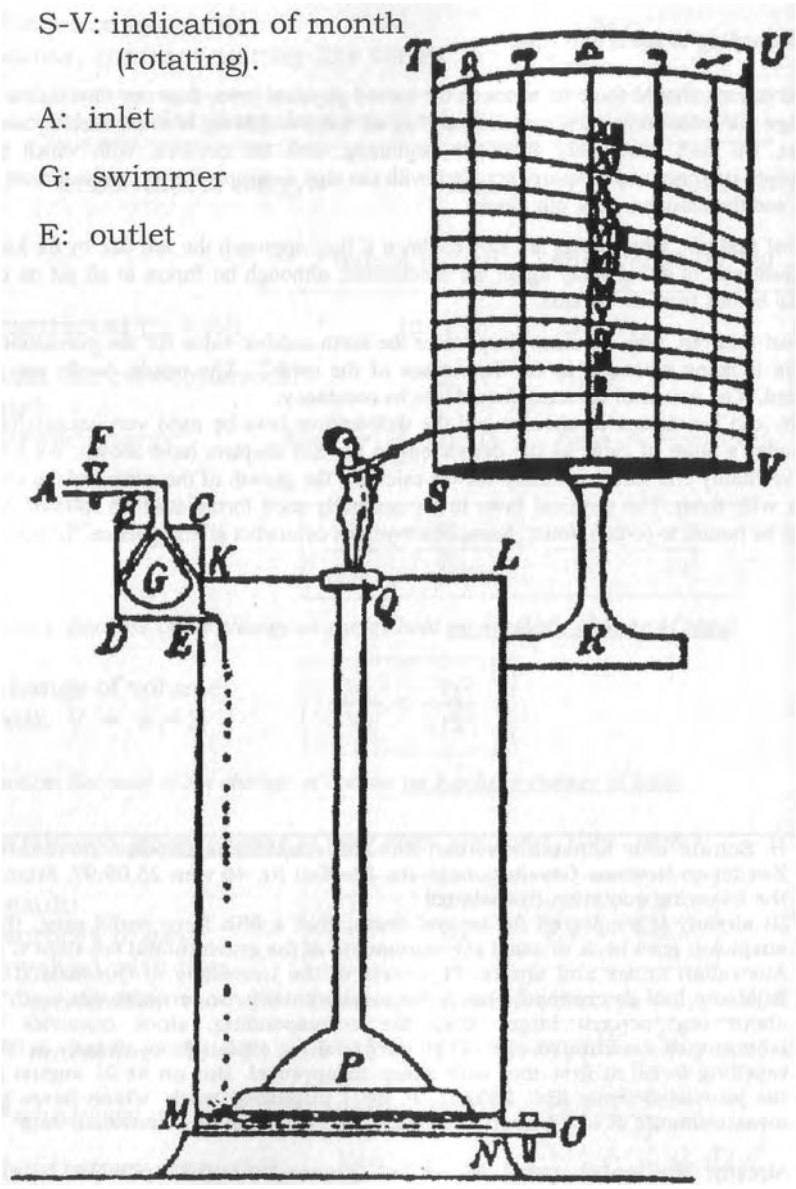

Fig. 13.1: The water meter of the Ktesibios (approx. 250 BC)
(with regulation of the water-level)

13.1 The measuring technical debacle

We are standing for a measuring technical debacle, because we have fixed our calendar to the rotation of its own of the earth. We call a 360° turn a day, divide it in 24 hours of 60 minutes each and every minute in 60 seconds. With that we determine the duration of a second.
A clock according to this definition only then is exact, if it follows the changes of the earth to the same extent. Obviously this in particular is the case for atomic clocks. An objectively seen precise going clock however would land at the waste disposal site as completely unusable.
Alter all nobody wants to know, how late it really is. Everyone only wants to find confirmed his subjective feeling, and our experience of time simply is directed after the course of the sun, thus after the rotation of the earth!

For the moment and as an approximation also for the life time of a person, this determination of time may be sufficiently exact, but seen over larger periods of time, one doesn't get around a conversion. Actually the 200 million years since the beginning of the Creation on the mentioned primeval hill are considerably less long ago. The earth and the whole solar system are very much younger, than was assumed until now!

If we as an example again take the cited research group of the University of Arizona (chap. 11.10[<i>]), which by means of an analysis of sediment formations have found out, in accordance with our calculation, that 900 million years ago a day only had 18 hours[<i>]. Such traces in geological deposit layers can be very informative, if they are analysed correctly, since here the measurement technician himself is not subject to the process. He stands outside and hence can exactly measure the time difference.
If a geologist of that time had looked at his watch during the formation of the layers, then a day obviously would have had 24 hours, and he wouldn't have been able to understand the whole excitement at all. The accusation, he would suffer from chronic blindness caused by his job, he of course would repel resolutely. Can you now imagine, from which disease our science of today suffers?

Our chronometers are nothing but the improved model of a sundial[<ii>].

We live in the dimensions of space and time, but we quite obviously have the biggest possible difficulties with the dimensioning of both. Possibly we already aren't capable of that at all by principle. Most suitably we clarify the situation by means of examples concerning the two problem spheres.

Let us at first stay at the dimension of time. It may have become clear, how problematic the chosen determination of the time scale in seconds is and which contradictions can result if larger periods of time are considered. More and more often science fiction authors romp about on the playground of time, fantasize about some time travel, or they occasionally make jokes about it[<iii>].

<i>: 900 million years ago a day had 18 hours, Washington (dpa) 1997.
<ii>: There also exist models, of which is asserted, they go according to the moon.
<iii>: A passenger, who got on the 10 o'clock bus, passes by the church steeple clock, which only reads 5 to 10 and curses: Damn, I took the bus in the wrong direction!

Centrifugal force $\boxed{F_{1,2} = (m/R)\cdot(v_E \pm v_f)^2 = m\cdot R\cdot(\omega_E \pm \omega_f)^2}$ (13.1)

with: $R = 6378$ [km] (radius of the earth),

$v_E = \omega_E\cdot R = 0{,}465$ [km/s] (rotational speed of the earth), (11.20)

$v_f = \omega_f\cdot R = \pi\cdot R/t_o$ (speed of the plane) (13.2)

and: t_o [s] (duration of journey)

energy of the moving steering quanta:

$$E_{1,2} = \int_O^R F_{1,2}\,dR = m\int_O^R R\cdot(\omega_E \pm \omega_f)^2\,dR = \quad (13.3)$$

$$E_{1,2} = \frac{1}{2}\cdot m\cdot R^2\cdot(\omega_E \pm \omega_f)^2 = \frac{1}{2}\cdot m\cdot(v_E \pm v_f)^2 \quad (13.4)$$

energy balance (generally of a quantum of radiation):

$\boxed{E_{1,2} + E_q = E_{ges}}$ resp. $\boxed{E_{ges} - E_q = E_{1,2} = \Delta E}$ (13.5)

in general: $E = h\cdot f = m\cdot c^2$ resp. $m = h\cdot f/c^2$ (13.6)

and (Gl. 13.4 mit 13.6):
specifically: $\boxed{\Delta E = h\cdot\Delta f} = \boxed{E_{1,2} = h\cdot f\cdot(v_E \pm v_f)^2/(2c^2)}$ (13.7)

$\Delta f/f = \Delta t_{1,2}/t_o$ resp. $\Delta t_{1,2} = t_o\cdot\Delta f/f$ (13.8)

(eq. 13.7 inserted into eq. 13.8)

resulting in: $\boxed{\Delta t_{1,2} = t_o\cdot(v_E \pm v_f)^2/(2\cdot c^2)}$ (13.9)

time of travel around half the earth: $t_o = \pi\cdot R/v_f$ (13.2)

results in a difference in going of: $\Delta t = \Delta t_1 - \Delta t_2$ (13.10)

$$\Delta t = [(v_E + v_f)^2 - (v_E - v_f)^2]\cdot\pi\cdot R/(v_f\cdot 2\cdot c^2) \quad (13.11)$$

<u>result calculated:</u> $\boxed{\Delta t = 2\cdot v_E\cdot\pi\cdot R/c^2 = \underline{207}\text{ [ns]}}$ (13.12)

<u>measured</u> by Hafele and Keating<i>: <u>214</u> [ns]! (13.13)

<u>Fig. 13.2: The difference in going of two atomic clocks</u>
(caesium resonant clocks)

<i>: Hafele-Keating-Experiment, Oktober 1971; s. a. W. Bauer: Klassische Physik, Graphia Druck, Salzburg (1975), Eigenverlag

13.2 The clock paradox

The theme „time dilatation" in connexion with the particle decay already has been treated (part 1, chapter 6.20). It has been shown, that a fast moving and with that length contracted particle to exactly the same extent (Lorentz's square root) becomes more stable and longer-living. If relativists pack an atomic clock based on radioactive decay in a plane and detect a difference in going between the one, which has been flown around and a second identically constructed clock, which has stayed at the ground, then they have with that detected experimentally a very small length contraction, which really occurred, and by no means a time dilatation, as they claim.

Now we in addition owe Einstein, that the aether has been abolished and from that follows, that it can't play a role in which direction the plane flies. If therefore both clocks are taken along each in a separate plane, one plane flying to the west and the other to the cast, both planes meeting again for the first time on the other side of the globe, then according to Einstein's theory it shouldn't be possible to determine a difference in going, if both planes constructed identically were on the way with the same velocity. But this is not the case!

Actually a difference in going is measured, which however can't be calculated with the theory of relativity, yes, which is completely incompatible with this theory and clearly brings anyone to the eye, that the effect actually can't have to do anything with a time dilatation, that the moving clocks merely go wrong and we have to ask us, why[<1>].

These experiments were carried out with atomic clocks, which are constructed as caesium resonators and work with an exactness of one second in 300000 years. As a resonator serves a quartz crystal, which is controlled by an ion current of caesium atoms, which have lost their outermost enveloping electron. The system is fed back, because the oscillating quartz controlled by the caesium ions again adjusts the caesium vapour by radio wave and finally its own atomic controlling current (fig. 13.7).

The reason for the measured difference in going is seen in the field and here specially in the different gravitational field. The centrifugal force directed opposite to the gravitational force at least is not the same, because for a westward flight along the equator the speed of the plane v_f should be subtracted from the velocity of rotation of the earth v_E, whereas in eastward direction it should be added (eq. 13.1).

For the steering quanta supplied by the caesium resonator now the energy balance is put up (13.5 with 13.4) and the change of the reference frequency is calculated (13.7). With the change in frequency is connected directly a change of the at the two clocks readable times $t_{1,2}$ (13.8). For a journey around half the earth, where one clock is flown westwards and the other one eastwards, the difference in going should, according to the calculation, amount to 207 ns. Interesting of the result (13.11) undoubtedly is, that the velocity of the planes doesn"t play a role. It is cancelled out.

October 1971 caesium atomic clocks were sent around the world in scheduled planes in the Hafele-Keating experiment. To be able to estimate the inaccuracy in going of the clocks and with that the measurement error, four clocks were used. Between the westward journey (273 ±7 ns) and the eastward journey (59 ±10 ns) a difference in time of 214 nanoseconds was determined. This under strict scientific conditions determined result once more proves the correctness of the theory of objectivity by confirmation of the calculated value. That however is not valid for the special theory of relativity, because that doesn't appear in the calculation at all!

Who now believes, we would have less problems with the dimension of space, I must disappoint. The determination of the linear measures equally ends in a fiasco.

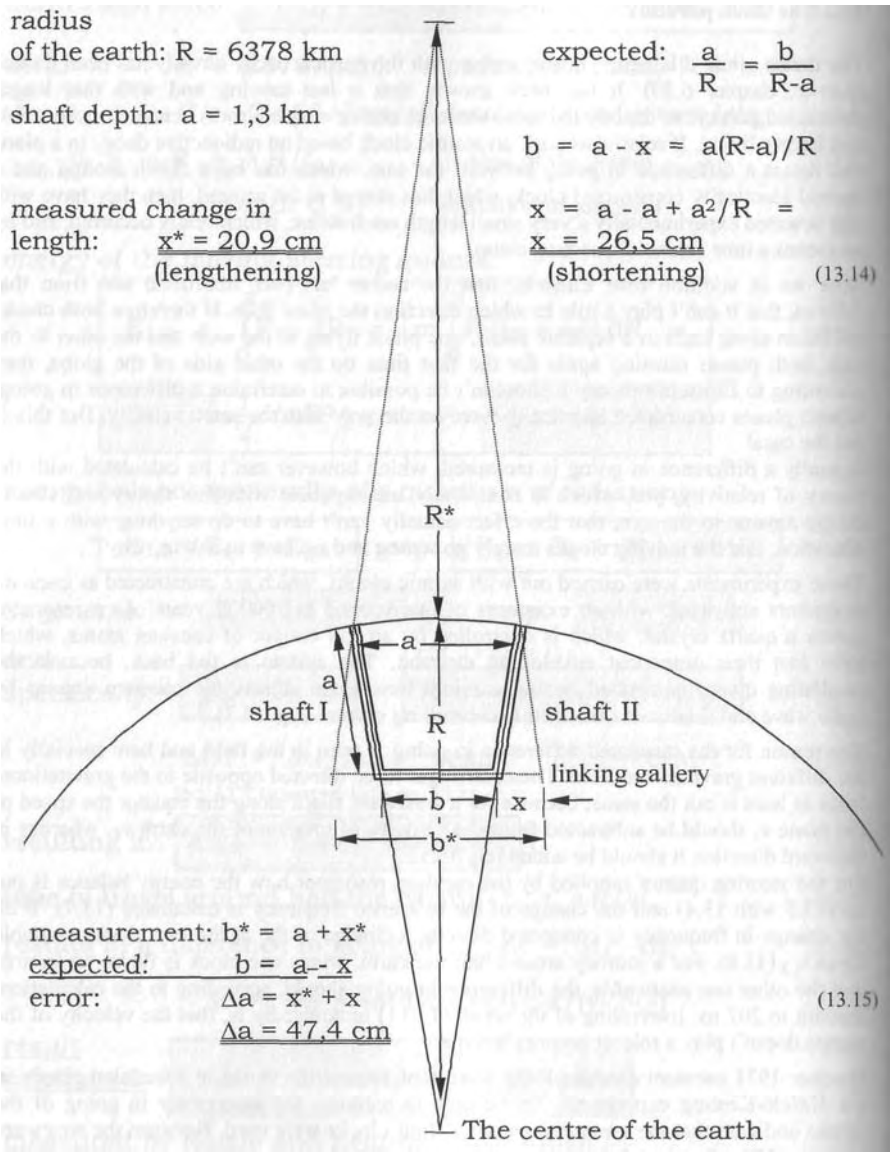

Fig. 13.3: Expectation and measurement in the Tamarack mines

(The curvature of the earth and the length of the shaft a are drawn strongly exaggerated for clarification)

13.3 The Tamarack mines experiment

As long as the „foot measure" depended on the shoe size and the „cubit" on the forearm of the tailor, the world still was OK. The sciences however request a reproducible quantity for comparison, and that can be fetched at the Bureau International des Poids et Mesures in Sevres near Paris. The original meter is a Platinum alloy. Because the length of the metal always depends on temperature, it is stored at a constant kept temperature of 0° Celsius. Now there in addition still exists a field dependency, an electrostriction resp. magnetostriction. And how is the measurement bar behaving, if the earth grows and the density increases? Is it then shrinking just like other objects in its environment? At this point already chaos is proliferating.

The newest definition of the length measure meter acts as a blow for liberty and thus marks the abyss, at which we are standing: The length is determined by means of a measurement of transmission time of an electromagnetic wave, e.g. of a light signal. It is said that with this determination a higher reproducibility should be obtained. Actually a photo optical facility to measure length is as exact as the built-in facility to measure time, and there we use it again, our sundial. In addition a constancy of the speed of light is taken as a prerequisite, and that is given in meters per second. From a change of the speed of light for forinstance 10% a change in length for 10% as well would result[<i>]. Because we see this process with the help of our eyes as well with the speed of light, we never can see the change. We neither can technically measure it, because all gauges we construct are built up corresponding to our sensory impression. We ourselves have shovelled the hole, in which we fall.

Only if we succeed in taking a neutral standpoint outside of the events, the true relations will become visible to us. For the field dependency of the space measures a very clear experiment has been carried out, of which I now want to report[<ii>].

1901 the French government was offered the possibility to carry out an experiment in the shut down Tamarack mines near Calumet (Michigan) with the goal to determine the diameter of the earth more exact. For that the geophysicists let down two plumb-lines of 27.2 kg each in two perpendicular winding shafts, which were at a distance of 1.3 km from each other. The plumb-lines were tied to hardly expandable piano wires of as well 1.3 km length. It now was expected, since the plumb-lines hung in direction of the centre of the earth, that in a linking gallery between the two shafts a length of (1.3 - x) km should be measurable. From the shortening x one wanted to infer the diameter of the earth (fig. 13.3). But it came completely different.
Instead of a shortening a lengthening for x* = 20.9 cm was measured in the gallery! The point of intersection of the lines through the two shafts had to be not in the inside of the earth, but in space! Immediately „hollow earthers" appear, who claim we would live on the inside of a hollow world[<ii>]. Perhaps one should shoot them to the moon, because from there the earth without doubt is seen as a sphere. Obviously we aren't dealing with a surprise of a fair, but with a fundamental measuring technical problem.

<i>: for that see also part I, chapter 6.11 and 6.12
<ii>: http:/www.t0.or.at/subrise/hollow.htm

Volume of the globe: $V = (4/3)\cdot\pi\cdot R^3$ (13.16)

and of the inner sphere in depth a: $V_a = (4/3)\cdot\pi\cdot(R-a)^3$ (13.17)

resulting in the relative change:

$$\boxed{\frac{\Delta V}{V} = \frac{V-V_a}{V} = 1-\left(\frac{R-a}{R}\right)^3 = 1-\left(1-\frac{a}{R}\right)^3} \quad (13.18)$$

from $m = V\cdot\rho$ for a constant density ρ (13.19)

and<iii>: $m = \phi/\sqrt{G\cdot 4\cdot\pi\cdot\mu} = A\cdot\mu\cdot H/\sqrt{G\cdot 4\cdot\pi\cdot\mu}$ (13.20)

follows: $\boxed{m \sim V \sim H}$ (13.21)

resp. the relative change:

$$\boxed{\frac{\Delta H}{H} = \frac{\Delta m}{m} = \frac{\Delta V}{V} = 1-\left(1-\frac{a}{R}\right)^3 = \underline{0{,}061\%}} \quad (13.22)$$

According to the theory of objectivity the length of the measurement wire is field dependent<ii> with:

$$\boxed{H \sim 1/a^2} \quad \text{and} \quad \boxed{H_a \sim 1/(a-\Delta a)^2} \quad (13.23)$$

and the relative change:

$$\boxed{\frac{\Delta H}{H} = \frac{H_a-H}{H} = \left(\frac{a}{a-\Delta a}\right)^2 - 1} \quad (13.24)$$

Shortening of the rule Δa is calculated from the comparison of equations 13.22 and 13.24:

$$\boxed{\frac{\Delta H}{H} = 1-\left(1-\frac{a}{R}\right)^3 = \left(\frac{a}{a-\Delta a}\right)^2 - 1} \quad (13.25)$$

$$\Delta a = a\cdot\left(1-1/\sqrt{2-(1-a/R)^3}\right) \quad (13.26)$$

$\underline{\Delta a = 40}$ [cm] (result of the calculation)

$\underline{\Delta a = 47}$ [cm] (measurement value for comparison, 13.15)

Fig. 13.4: Calculational verification of the measured shortening

13.4 Field dependent linear measure

If a measurement result delivers just the opposite, as was expected by the experimentators, then the layman is amazed and the expert is surprised, at least at first. But then, out of a feeling of panic, the whole view of life could collapse, as many as possible scientists and renowned professors are being informed and integrated, if they want it (Prof. Mc.Nair) or not (Prof. Hallock, Columbia University) and eventually the matter is buried third class and a guise of silence is spread over it. The censorship of the scientific making of opinion in advance doesn't permit publications, which are not in accord with our view of life, out of the animal survival instinct[<i>].

A science, which deserves this name, should look different. There it must be permitted, to ask questions and to publicly discuss about it.
I proceed from the assumption, that the earth is a sphere, which we inhabit from the outside; I have no doubts about that. With this as a prerequisite there is only one possible answer to the Tamarack mines experiment: The 1.3 kilometres long measurement wire, which in the gallery in a depth of 1.3 km had to jut out for 26.5 cm, instead is too short for 20.9 cm, from which immediately follows that it, howsoever, is shrunk for 47.4 cm in the depth.
At first of course the experiment was checked for possible measurement errors. The shafts were covered to exclude any draught. The measurement path was optically checked, but the result remained unchanged. But if the cause for the unexpected result doesn't lie in the experiment, then theoretical physics is addressed, after all it is still the experiment which shows us the physical reality and not some theoretical model concept.
In the 1st part of the book already the derivation of a useful explanation is found: The speed of light and with that also the linear measure depends on the field[<ii>]. The measurement wire accordingly gets shorter, if it is exposed to a larger field strength (eq. 13.23). We can verify the measured shortening calculative (fig. 13.4).
For that we at first determine the change of the field strength, as it is to be expected in a depth of 1.3 km. We here are dealing with the closed H field lines, which are responsible for the gravitation. In a past derivation it has been shown, that a gravitating mass can be converted into a magnetic field[<iii>]. Between a mass m and a field strength H hence exists a proportionality (13.21), in the same way as between the same mass and its volume, if a constant density is present (13.19).
The result accordingly is a relative decrease of the volume of the earth and the corresponding mass being under the measurement place, as well as a relative decrease of the radial component of the field strength, but a corresponding relative increase of the tangential component of the field for 0.061% (13.22 with 13.18).
In the gallery the measurement wire however is spread out in the direction of the tangential component of the field lines, and that shortens the measurement wire as a result of the field dependency of the linear measures[<ii>] (13.23). From the above increase in field the calculational shortening of the rule for 40 cm results, which compared to the measurement result also should be rated as a confirmation of the theory of objectivity which was taken as a basis[<ii>]!

<i>: Example: K. Meyl: Potentialwirbel, Bd. 1, reference entry /5/
<ii>: for that see also part 1, chapter 6.6, equation 65 and chapter 6.10
<iii>: K. Meyl, Potentialwirbel Band 2 (1992), page 27, equation 20

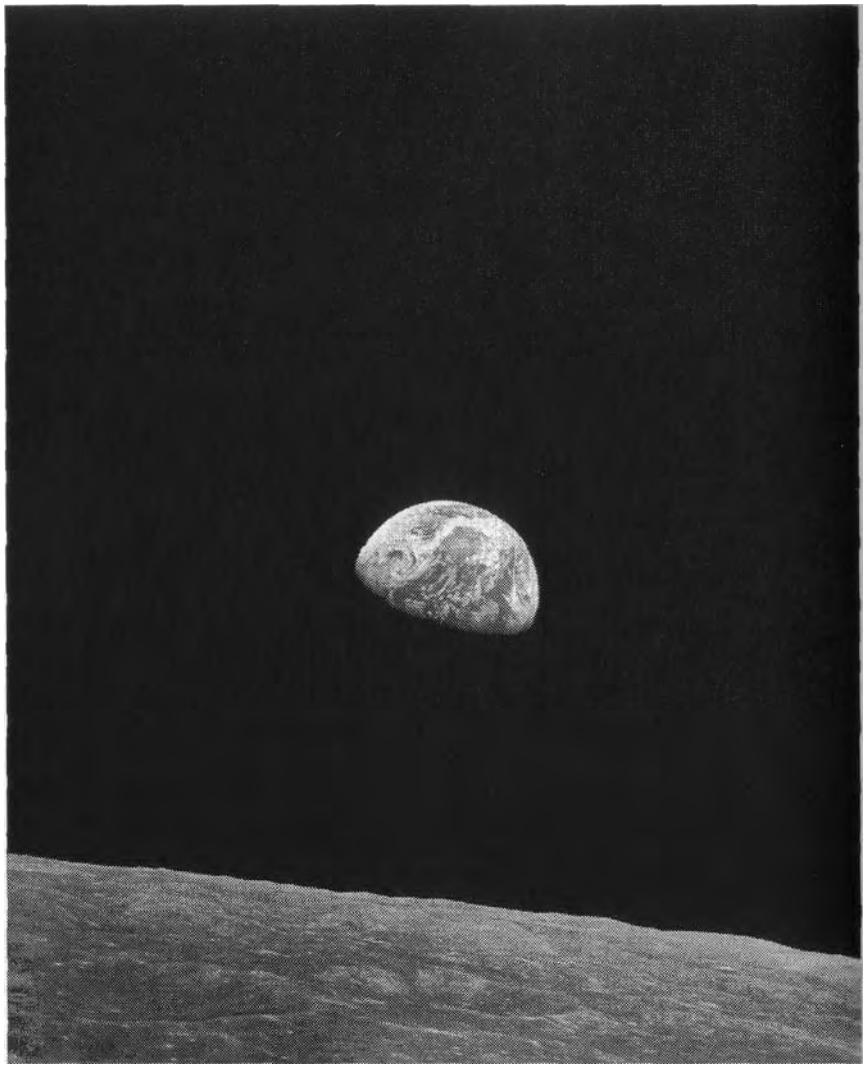

Fig. 13.5: Rise of the earth over the horizon of the moon""

<i>: Mitton, S. (Herausg.): Cambridge Enzyklopadie der Astronomie, Orbis Verlag (1989), note: No star is seen!

<ii>: see also the references in part 1, chapter 6.9

13.5 Experiences from space travel

The good correspondence of the calculated shortening of the measurement wire and the until now not understood measurement in the Tamarack mines shows both qualitatively, and quantitatively the correctness and useful applicability of the theory of objectivity of the field dependency of the linear measures. Our measurement laboratories normally are situated on the earth's surface and there everywhere are found approximately identical field relations. But if we leave the usual measurement environment and move the laboratory for instance in the sky, then we experience a complete mystery. Here however prevail the reversed conditions as in the mines experiment, in which in the inside of the earth. for an increase of the field strength, a length shortening was measured. In the sky the field strengths decrease and the linear measures correspondingly increase.

This experience astronaut Roosa made in the Apollo 14 mission. While he alone in his capsule orbited the moon, he depicted mission control, he could see the lunar module and observe his two colleagues at their work on the moon. Nobody wanted to believe the astronaut, since he was flying in a height of 180 km!

Commander Armstrong (Apollo 11) at the first landing on the moon indicated, the target crater Mackensen, 4.6 km in diameter measured from the earth, just has the size of a soccer field! Astronaut Scott (Apollo 15) called Mount Hardley, which is said to be 4.8 km high, a practice hill for skiing. Perhaps they somewhat have exaggerated, but a true core in the statements always is present!

Actually the gravitational field of our satellite is very much smaller than that of the earth. On the surface of the moon there is only one sixth of the gravitational pull of the earth. If we, to be able to compare, stick to the details of size, as they are measured by our laboratory on earth, then the astronauts on the way to the moon together with the lunar module and their rover had grown for a factor $\sqrt{6}$, then the first footprint is 2.5 times as large as on earth, then the astronauts were moving like giants in the scenery of a model of the railroad (eq. 13.23 and note<ii> at fig. 13.4).

On the moon there exists almost no atmosphere, for which reason the astronauts had imagined a wonderful view of the star-spangled sky, at least before they started. After the landing they were bitterly disappointed. The sky was black and not one single star could be seen! They have brought many photographs, but nowhere stars have been photographed, they apparently have moved outside the range of vision (fig. 13.5 and 13.6).

Many will still remember that the first pictures, which the space telescope Hubble supplied 1990, were completely blurred. The problem obviously was, that the mirrors had been adjusted on earth and not in space. Only after the optics had been given glasses in 1994, sharp pictures could be radioed to earth. Somehow the distance to the stars had changed. The telescope had become short-sighted, resp. the distance to the star-spangled sky appeared to be gotten larger. We already know why. If we remove us from the gravitational field of the earth, the field strength decreases and the observable distances increase! The highly sensitive telescope already sufficed the 5% deviation, with which should have been reckoned for the near earth orbit, to be fatal.

One should have familiarized the astronauts before with the laws of physics. Then this disappointment would have been spared to them, and in the case of the Hubble telescope the NASA and the european ESA could have saved a lot of money for the sake of the tax-paying population<ii>.

Fig. 13.6 a: Illustrierte Wissenschaft Nr. 11 (1997) Page 62

1st example: landing on the moon gravitational ...

$$\frac{\text{...pull of the earth}}{\text{...pull of the moon}} = \frac{g_E}{g_m} = \frac{M\ /\ R^2}{m_m/R_m^2} = \frac{M}{m_m}\cdot\frac{R_m^2}{R^2} = 6{,}0375 \quad (13.27)$$

in space everywhere on the surface of a sphere is valid: $A = 4\pi R^2$

eq. 13.20 (fig. 13.4<iii>): $m \sim \phi = A\cdot B = 4\pi R^2\cdot\mu H \sim R^2\cdot H$

as well as eq. 13.23 (fig. 13.4<ii>) for the field dependency: $H \sim 1/l^2$

and further:

$$6{,}0375 = \frac{g_E}{g_m} = \frac{H_E}{H_m} = \frac{l_m^2}{l_E^2} \quad (13.28)$$

resulting in the length dilatation (expansion) on the moon:

$$l_{m\ (Mond)} : l_{E\ (Erde)} = \sqrt{6{,}0375} = \underline{2{,}457} \quad (13.29)$$

2nd example: communications satellite in a geostationary orbit (at h = 36000 km above the equator, R = 6378 km).

$$\frac{l_h}{l_E} = \sqrt{\frac{H_E}{H_h}} = \frac{R+h}{R} = \underline{6{,}64} \quad (13.30)$$

Fig. 13.6 b: Examples of calculation for length dilatation<i>

<i>: If the theoretical value of 6.64 could be quantitatively confirmed by observations from off the earth with a telescope at a corresponding magnification, then with that would have been proved, that in the case of the spherical aberration it actually concerns the calculated influence of the field.

<ii>: U. Seiler-Spielmann: Das Marchen vom toten Mond, Zeiten Schrift 5/94,S.39

13.6 Spherical aberration

It is true that the problem of the changed length relations is known to the experts under the term of a "spherical aberration". But with that it is neither qualitatively nor quantitatively understood. Only the theory of objectivity soundly gives reasons for, why the astronaut Roosa has seen his colleagues almost 3 times as large, why weather satellites in a height of 1500 km are approx. 25% larger and why communications satellites in a 36000 km high geostationary orbit even increase to the 6.64 fold of their original size[<i>]. It also explains, why the neutral point between earth and moon, at which the attraction of masses of both celestial bodies mutually cancel, wasn't reached at the point where it had been expected by the moon rockets[<ii>].

We, the inhabitants of the earth, are adapted completely to the conditions on the earth's surface. If we find our way well in the dimensions of space and time, as we observe them, then that must not be valid by all means for science, because that has made it its business to find out the secrets of nature.

If it wants to deserve the name science, then it on the one hand has to consider, that we, the organic materials, as well as all inorganic materials are assembled from the same atoms and molecules and with that are exposed to the same length relations. If changes in length between day and night (as a result of the gravitational field of the sun (see chap. 6.7), between summer and winter or as a result of changes in field occur, then we aren't able to register this at all. That even today the ,,foot" is used as a measure, for instance in the air traffic, shows only too clearly, how man raises itself to the measure of all things. Science asks for modesty!

On the other hand it should be paid attention to the fact, that man eyes everything with speed of light with the optics of his eyes, and that speed by no means has to be constant. Solely the definition of the speed of light c as a linear measure per unit of time points to the direct proportionality between c and a length 1 (see chapter 6.3):

$$c \sim l \qquad (13.31)$$

If a rule has proven to be unusable for measuring a distance, then we'll experience the same disaster, if we measure optically, i.e. with the speed of light. Obviously both, the length 1 and the speed of light c depend in the same manner on the respective local field strength. On the one hand both measurement techniques lead to the same result, but on the other hand what can't be measured with one method, neither can be measured with the other.

To prove the constancy, it is normal to measure the speed of light optically. But since there exists a proportionality between measurement variable and measurement path (53), the unknown variable is being measured with itself. This measurement faulty by principle in all cases delivers a constant value. In contrast to the textbook opinion of today by no means a constancy of the speed of light can be assumed. In the case of the in a vacuum measurable 300,000 km/s it concerns a capital measurement error, at best a constant of measurement, but never ever a constant of nature!

With the postulate and the misinterpretation of a constancy of the speed of light as a universal constant of nature Einstein already let several generations of physicists run into the same dead end, in which they today are stuck altogether. It surely is no accident, that the big time of discoveries abrupt came to an end with Einstein.

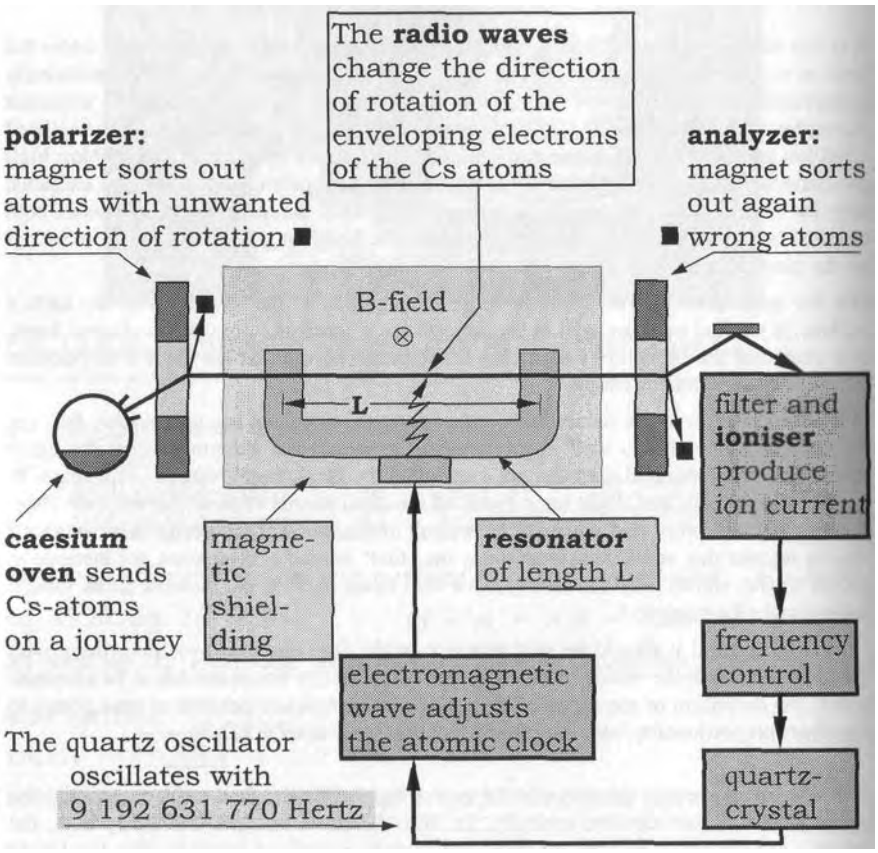

Schematic representation concerning principle of functioning
L = length of resonator determining the exactness
The B-field is a weak magnetic field, which eliminates the influence of magnetic stray fields.
The arrangement in addition is situated in a vacuum tank.

Fig. 13.7: Set-up of a caesium atomic clock

13.7 Irony of the measuring technique

Let's record: The linear measure is determined and defined by a measurement of transmission time. As a reason is given, that with today's clock technology a higher precision and reproducibility can be obtained, as with a rule or original meter. The exactness of going of the atomic clocks again depends on the free flying path (L in fig. 13.7) of the atoms. For the caesium clocks of the Physikalisch Technischen Bundesanstalt in Braunschweig the resonator length amounts to several meters! The clock is used world-wide as a standard.

The irony thus lies in the fact, that a geometric length dictates the measurement of time and the measurement of time again determines the measurement of length - poor science!

How does one free oneself from a capital closed loop conclusion? Why and how do signal transmission times or clocks actually depend on the gravitation? Who once got stuck in a dead end, knows that he only can get out in the reverse gear.
A possible way goes back to the roots of classical physics and to the theory of objectivity in the 1st part of the book, which is free from the limits of a subjective and relativistic observer standpoint. That isn't a dead end and in addition explains, why all atomic clocks react sensitive to magnetic fields (magnetostriction) and what these fields have to do with gravity (see chap. 6.9)!

Today's clocks are so exact, that even differences between a clock stationed on a mountain and one at sea-level can be recorded. Even more clearly was the depending on gravitation determined at an atomic clock, which was shot in a rocket 10000 kilometres high into space. The result of the analysis without doubt was, that the clock in that case doesn't ,,tick" correctly anymore.
But what does theoretical physics say about it? It claims, here the ,,red shift" has been measured; it thus concerns a confirmation of the special theory of relativity. But since it concerns a clock experiment and not a light signal, it clearly contradicts this theory, which isn't able to describe any gravitational effect at all, as is well-known. For this case in the spheres of theoretical physics one helps oneself with the general theory of relativity, with which actually only would be proven, that the two theories from the legacy of Einstein completely incompatible contradict each other. We come to the following conclusion:

Whoever gives details about length or time, is obliged to also indicate the reference system.

He also has to inform where his laboratory is situated and with which devices he measures!

With the conclusion also the discussion would be opened. Throughout the last four chapters a main idea can be found. It should be worth, to again think about the brought forward arguments and to dare a comparison with text books.
In the text books there doesn't exist such a thing as an oscillating interaction. Here no answer is found to the question, why the solar system isn't hurled out of the galaxy as a result of the high velocity, why the inside of the earth is hot, how the geomagnetism is formed, why the continents drift and why the ocean floor nowhere is older than 200 million years, as samples from the ocean floor prove<i>. How would you answer these central questions?

<i>: Kendrick Frazier: Das Sonnensystem, Time-Life Bucher, Amsterdam (1991).

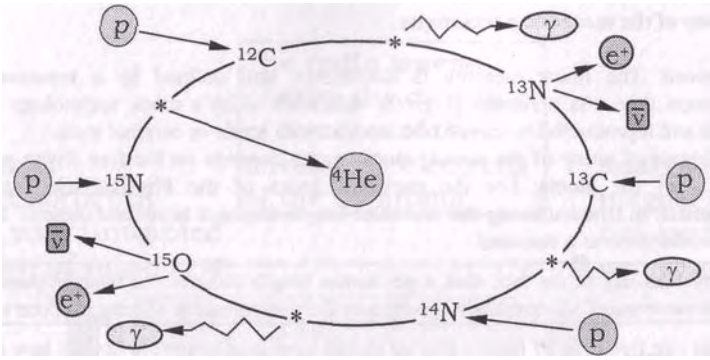

Fig. 13.8: The Bethe-Weizsacker cycle (concerning the sun's fire)
(meaning of: ^{12}C = carbon nucleus, ^{4}He = helium nucl., γ = gamma quant, ^{14}N = nitrogen nucleus, p = proton, e^{+} = positron, ν= anti neutrino, ^{16}O = oxygen nucleus

Fig. 13.9: The top of the unfinished obelisk in Assuan<i>

<i>: Hermann Wild: Technologien von gestern, Chancen fur morgen, Jupiter-Verlag Bern (1996), ISBN 3-906571-13-0

13.8 Discussion of the cosmological insights

The numerous models which are offered, of a geodynamo, an iron core, of assumed zones of subduction and of plate tectonics may be helpful for the explanation of individual isolated phenomena. But they physically don't give a uniform picture and partly contradict each other.

Lord Kelvin had calculated a period of shining of 5000 years on the basis of a sun consisting of coal[<i>]. The german physicist Hermann von Helmholtz landed at 15 million years, in which case the sun yearly should shrink for 100 meters. He already assumed a temperature of 15 million degrees centigrade, as also the Bethe-Weizsacker cycle has as a prerequisite, which according to today's concept should describe the process of nuclear fusion taking place in the inside of the sun (fig. 13.8). The only thing is that this extreme temperature is completely incompatible with the high density in the core of the sun! There are more than good reasons to assume the opposite of the widespread textbook opinion and assume that the core of the sun is cooled by the collected neutrinos in the same manner as the inner core of the earth and that superconducting areas are formed, which powerful fields even cause the protuberances on the surface of the sun. Since in the sun no measurement is possible, with which a model could be verified or disproved, terrestrial arguments naturally suggest themselves. Here the pieces of evidence for the growth of the earth can be taken in the hand and photographed. We already have discussed some facts. But there are found a multitude of other ones, for instance from the domain of archaeology, for which text books of today until now as well provide no explanation.

Possibly the stones and monoliths weighing several tons, as they were used for prehistoric buildings, should be linked with the growth of the earth. If the earth was smaller at the time they were build, then they perhaps by no means were as heavy as today!
Then the stones for reason of the smaller density in addition were softer and with that easier to work on. Dr. Wild points to the building technical peculiarity, that the stones formed like cushions originally must have been soft. He proves with the photograph of the top of the unfinished obelisk in Assuan (fig. 13.9), that the traces of working stem from a spatula in a plastic mass.
Also the perfect fitting of the stones used for the building of the pyramids can only be explained in this way. In the joints not even a knife point can be inserted!

If even stones in the course of time increase in density and hardness, then it is easier for us to comprehend, how small rivers in past time could dig large deep valleys in the earth's crust, then we perhaps also understand, why very old bones today are petrified[<ii>]. It is obvious, that also bones in the course of time increase in density and hardness. Even if science should succeed in breeding living dinosaurs, then their chance to survive in spite of that would be equal to zero, because the dinos would collapse under their weight of their own of several tons. Their bones would be much too thin and brittle for their weight of today!

<i>: Kendrick Frazier: Das Sonnensystem, Time-Life Bucher, Amsterdam (1991)
<ii>: The indication to petrified bones stems from a participant of the seminar.

25-07-1996:	Assistant head of government department Acceptance of the common standpoint.
11-12-1996:	European parliament Resolution of the guideline.
	commission Statement concerning proposals of change of the european parliament.
19-12-1996:	Assistant head of government department Resolution of the guideline.
19-02-1997:	Coming into effect of the guideline Publication in the official paper of the EC.
19-02-1999:	Period of translation of two years
	Reduction of the threshold values for current consumers:
19-02-1997:	to 40 million kWh (opening of the market 23%)
19-02-2000:	to 20 million kWh (opening of the market 28%)
19-02-2003:	to 9 million kWh (opening of the market 33%)
until 2006:	,,Anti imbalance clause" A nine years period of transition to preserve equal opportunities in the competition. Report of the commission.
19-02-2006:	Further stage of the liberalization European commission tests by means of the made experiences, if the current market should be opened further.

Fig. 14.1: _____ Timetable of the EC single market guideline electricity[<i>]

<i>: Grawe, S. Thiele: Vorbereitung der Stromversorger auf den Wettbewerbsmarkt, ATW Atomwirtschaft-Atomtechnik 43. Jg. 1998, Heft 1, S. 10 - 13

14. The way towards free energy

Can energy actually be produced? No energy supply enterprise is capable to do that. Fact is, that energy only is converted and not produced. For that the available resources on earth are tapped and brought into a utilizable form of energy. As different the conversion processes may be, finally always heat is formed. We thus gradually burn the globe, on which we live. How long can something like that go right?

Science gives all-clear: „stock of energy is sufficient for the next 100 years. Newest calculations disprove the fear of a scarcity of energy on earth. There exist large stocks of coal and oil"[i].

But what are 100 years compared to the age of the earth? How will our descendants judge our thinking and acting? They will condemn it and curse us, that much is clear already today.

We have an obligation to preserve the environment, and we only will be able to fulfil it, if we look to nature, how it covers its need of energy, if we finally understand and meaningfully copy nature.

We still are miles away of the goal.

14.1 The liberalization of the energy markets

It is important in the interest of a member of the executive that the stock of energy doesn't draw to an end, as long as he carries the responsibility for the enterprise of the economy of energy. The interest in the environment and the environmentalists for obvious reasons is less distinct. The problems are more of a commercial kind. Concerning that an actual example is given.

A special kind of problem is the meanwhile Europe wide valid decree of the EU concerning the liberalization of the energy markets (fig. 14.1). The list of the consequences starts with the fact, that the concluded licence contracts for power supply between energy supply enterprises and the communities, which are valid till 1997, are only wastepaper. Every customer of electricity as of now can conclude an individual contract with every "producer of electricity".

So an environmentally aware Black Forest person decides to obtain his power from a wind power station, which is situated in Denmark. That truly sounds very liberal. But how should that function, if there is no wind at all in Denmark for a week, or the connection is interrupted by a flash of lightning? The windmill further delivers power and the runner writes its bill truly believing, its power has arrived. The consumer then reads the bill at candlelight and puts with understandable anger his claim for compensation together. Pointing to the fact that such difficulties can be solved by book-keeping, the consumer again is calmed down; but that the not by contract obtained power will cost him dear, is another story.

<i>: Illustrierte Wissenschaft Nr. 6, Juni 1996, page 48-51.

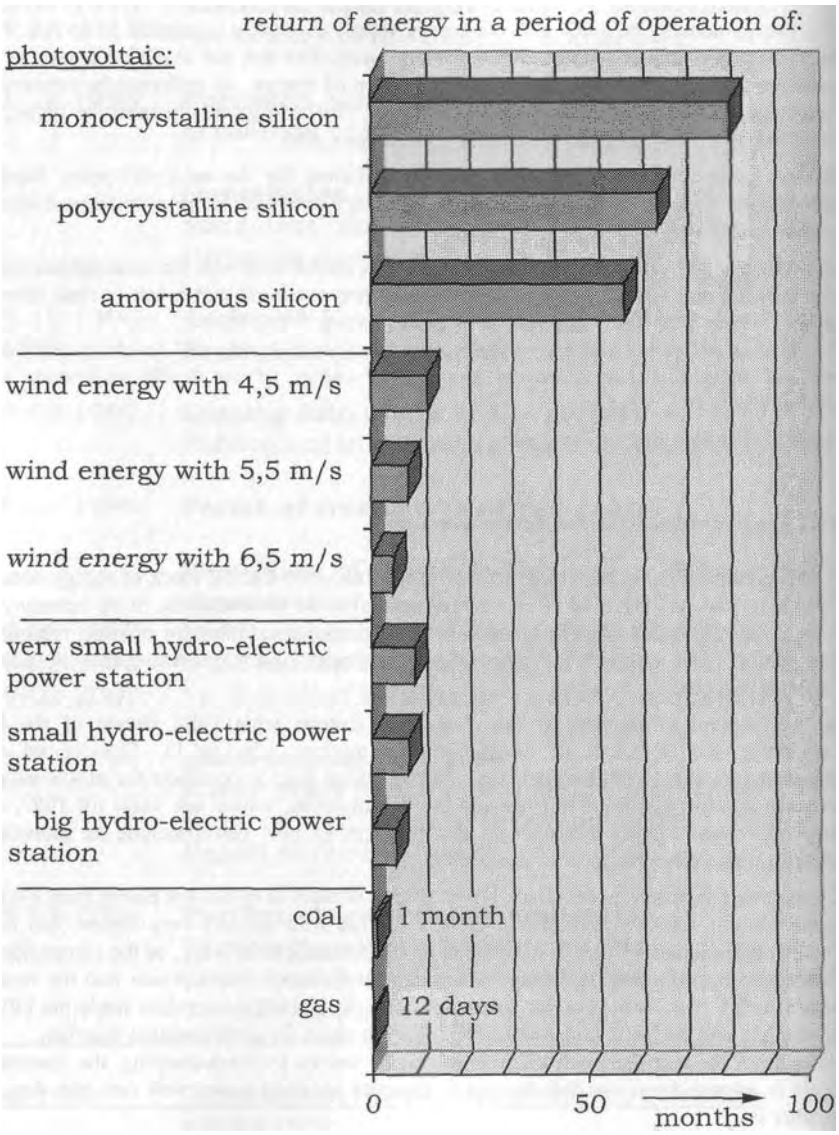

Fig. 14.2: Average time of paying for itself for the spent energy (return of energy)

14.2 The consequences of the liberalization

With the EU decree the monopoly only has shifted towards the runners of the distribution nets, after all only one net is present. Competition however would require at least two nets, thus a doubling of all house connections and all high-tension pylons, but that fortunately is unrealistic.

To prevent fleecing of the consumers by means of the net monopoly, politics introduces in the place of the free market economy dirigisme and plan economy with the well-known concomitants: no-one will look after the existing nets, no-one feels responsible anymore, because after all they have become public good by decree. One thus lets the pylons rot slowly and repairs only in emergencies. This possible development really can't have been the good intention of the EU.

In the next few years we however will be able to observe for the producers of energy exactly the development, which the EU-commissioners have imagined: Total competition contest, price war and a struggle for power to survive economically. A chance only has the nuclear power station, which gets rid of its refuse cheaper and if need be even illegally or which lives of indirect state subsidies, or the brown coal power station, which increases its efficiency at night, when no-one watches, by switching off the expensive filters.

The first power stations, which are selected out by the liberalized energy market, are the hydro-electric power stations which stand closest to nature. They simply are too small and too intensive of personnel, to be able to survive.

Gas turbine power stations, which deliver the power for half the price, than are ranking first. Then there is no place for regenerative systems anymore.

Solar energy, how many roofs a supporting program may have, stays a toy supported by the state. For a photovoltaic installation the ,,Return of Invest" still lies at more than 80 years, whereas is reckoned with a theoretical life of 20 years. In practical use on the other hand photovoltaic installations occasionally already have failed after seven years, after the photocells had gone blind. In this case not even can be talked of an ecologic energy, because the return of energy lies still above that. The supposed Idealist who spoils his roof with photovoltaic to reassure his ecologic conscience, would have spared the environment more, if he had covered his need of power from the socket, because already the production of the photovoltaic installation gobbles up more energy than can be produced with it. With regard to the environmental compatibility the ecologic balance sheet of a power station is attached a central importance (fig. 14.2).

With the law of feeding in power the state intervenes dirigiste, supposedly to protest the consumers. With this law the state orders, that not it, but the energy supply enterprises have to take the subsidizing of the regenerative energy, that they have to take over the power delivered at the inappropriate time in exactly so less suitable amounts at a price, which exceeds the market value by a factor of two and for falling prices of power even by a factor of four. With the law the politicians very fast and without agreement of the effected enterprises have shifted the ,,black Peter" further to these, which will get problems to preserve their competitiveness in the international comparison with the subsidy duty. It can't have been the intention of the EU-commissioners, that on a national level the price of power increases to finance some energy technical playground.

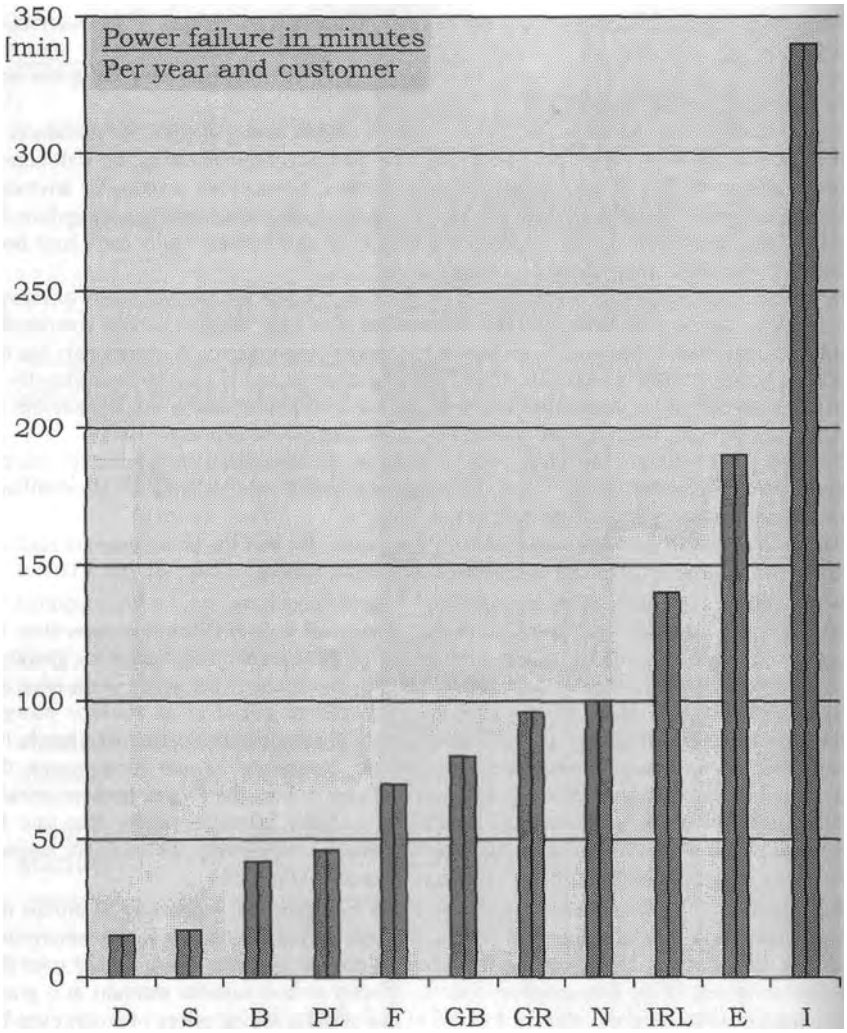

Fig. 14.3: Power interruption and not being at disposal

<i>: ETG, Energietechnische Gesellschaft im VDE: Qualitat der Stromversorgung, Dialog Nr. 1, Jan./Feb. 1998, S. 21

14.3 The chances of the wind energy

Meanwhile, as a result of the law of feeding in power, no longer the politicians but the energy suppliers are the ones, who around the North Sea look out of the window every day with the worry, some wind could blow and the mills could turn, because every kilowatt hour of a windmill must be subsidized strongly. Every windless day however reduces the power bill, with that helps the consumer and raises the chances of competition of our economy.
If it should be neglected, to tip over the law of feeding in power in due time with help of the EU, then the consumers will get their power in future abroad, then at the Preussen Elektra, damaged most by wind energy, as the first the lights will go out, then economic power and prosperity in Germany in future are dictated from abroad.
But if the law is dropped, then with that the duty to subsidize the regenerative energy carriers drops back to the state. Now all tax payers may foot the bill, even those, who don't use any power at all. The well-known Justice of subsidy" comes into effect.

Without support by the state only few types of power stations will be left behind. In addition are overcapacities being reduced, because they only cost money. But both is at the expense of the reliability of the delivering of energy and of the safety of the consumer. We owe the high stability of our network of today the large number of most different providers of power, which cover the basic load up to the peak load according to their suitability (fig. 14.3). But let us not talk of the golden past. The network after all isn't able to store power. From that follows, that without redundancy and without free power station capacities which can be activated at any time a short overload is sufficient, to let the network collapse.
Once the EU guideline concerning the liberalization of the energy markets is in effect, when persons selling power wend their way from front door to front door, to convince the housewives to obtain the power from them and not from other hawkers, when the power stations only live of stock and the depreciated overhead power lines only are entered in the hooks with the scrap value, then we should be dressed warmly and always have ready sufficient candles <i>.

14.4 The chances of being self-sufficient concerning energy

The only way out is the decentralized energy supply, the getting out of the large energy union and the way towards being self-sufficient. The argument sounds convincing in view of missing alternatives. But now it no longer is possible to plug the plug in the socket and then switch on whenever it pleases us. First it has to be calculated, if the windmill or the installation for solar energy supplies sufficient power or if a cold meal should be made. In contrast to today's consumer habits the runners of such installations will have to adapt their need of energy to the prevailing weather conditions.

<i>: A baby-Boom, like after the big power failure in New York, would be the smaller evil. The inhabitants and shopkeepers in the New Zealand metropolis Auckland will long and frightened remember the power failure in february 1998, which lasted weeks and was a result of not carried out maintenance works of high-tension pylons.

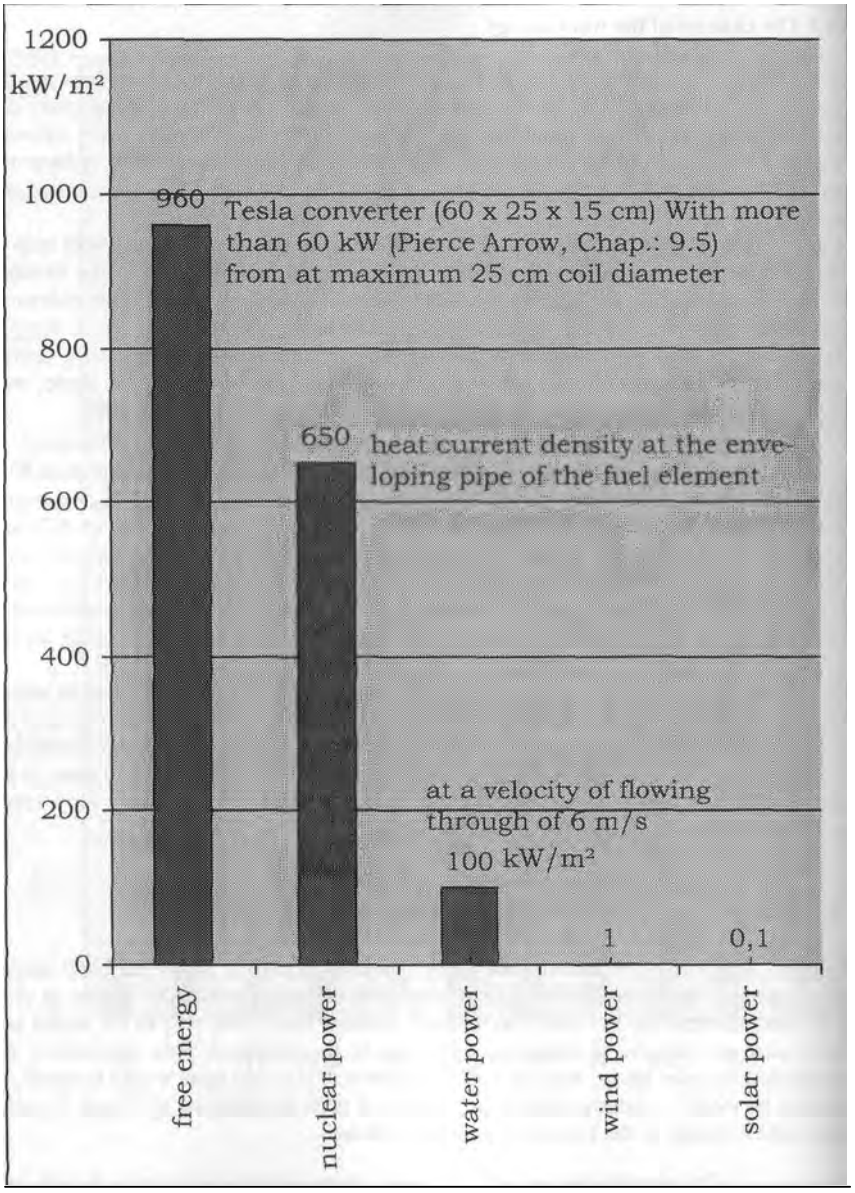

Fig. 14.4: At maximum obtainable power density of different carriers of energy

<i>: ETZ, Heft 19/1995, S. 40

Block heating power stations, propagated as stand-alone solution for people being self-sufficient, deliver power and heat at the same time. But if I don't need any heat on a hot summer day, then also no power is available or I uselessly heat into the open. For that one may leave all electric consumers switched on in winter, even if they aren't used at all, only to get the hut warm. Does a stand-alone solution look like that?

The situation truly is demotivating. Even the energy suppliers meanwhile may have realized that the energy politic way is a dead end. But for real alternatives in energy technology the pressure by suffering still doesn't seem to be big enough.
The intention to learn of nature is present in principle. The solar fire one wants to kindle on earth in a fusion oven, but the oven does not as it should.
Obviously the sun functions completely different, as physics imagines today (see fig. 13.8).
Before copying stands understanding, and in there seems to be a hitch!

14.5 The space energy technology of nature

Also nature needs energy, even very much. But it hasn't got any connecting pieces for tanking and no oven lid to fill in the fuel, it doesn't know our ecologically harmful combustion technology and environment destroying explosion technology at all. Nature rather works with the opposite, with implosion and fusion.
The sun, we have derived, materializes the matter which it needs for growing and shining from the neutrino field. The earth and other planets imitate the sun.
The concept is simple and convincing. The source of energy lies in the air and mustn't be dragged about in tanks. Collected and materialized is just as much, as is needed at the moment. In that way the resource energy is spared. In addition there can be done without any sort of storing. In addition it can show a substantially higher power density, than all today known and used energy carriers (fig. 14.4).
Such a source of energy solves all described energy problems at once. Nature wouldn't be as we know it, if it wouldn't have this ideal energy, also called „free energy". The balance sheet of energy alone brings it to light, because as a rule it doesn't work out for biological systems. Often more energy is released than is taken up by the food.
In that case some migratory birds materially seen should have completely used themselves up before reaching their destination, if the energy necessary for the flight would be of purely material nature. From a concrete example the following is reported[<i>]: „migratory birds have - depending on kind - a maximum range velocity between 24 and 83 km/h and at their Atlantic flights no opportunity for an intermediate landing. They are thousands of kilometres on the way and hardly lose weight. For instance an Albatross with a body length of up to 1.20 meters and a wing span of up to 3.50 meters uses per kilometre only 8.5 grams of weight at a non-stop flight. How is that possible without additional supply of energy?"

<i>: K. E. Rathgeb: Wie man die freie Energie anzapft: Vogel machen es uns vor, Raum & Zeit 79/96, S. 74

Fig. 14.6: Freiherr von Reichenbach (76 years old)

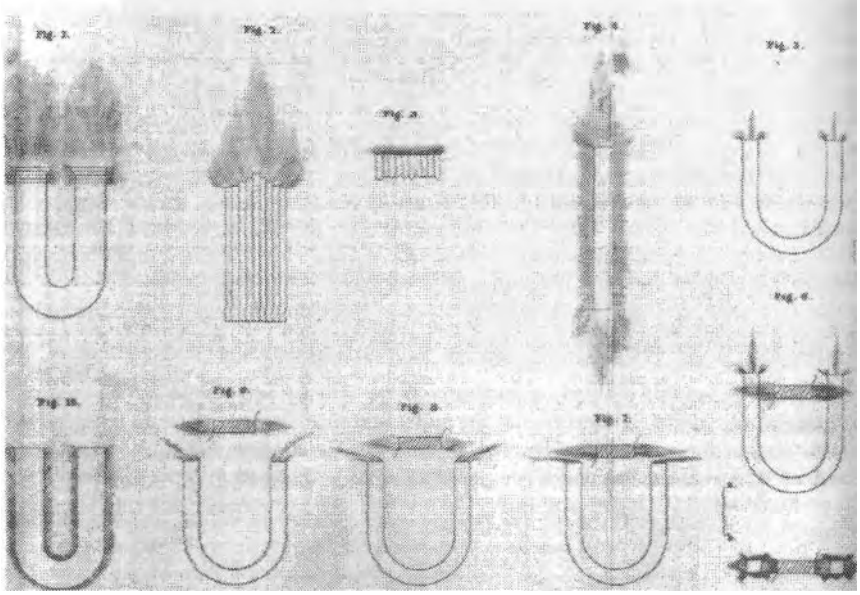

Fig. 14.7: Odic emanations of magnets according to pictures of
sensitives .[i]

<i>: H.-P. Thietz: Tatort Erde, VAP (1996), ISBN 3-922367-62-3, Seite 13 und 15

14.6 The gap in the energy balance of man

Even man appears to tap an additional source of energy, because for reason of scientific tests with recruits these over longer periods of time are able to physically release more than twice the amount of energy they take of calories with the food. Obviously living beings don't rely on one source of energy alone. Possibly the taking up of food predominantly serves the metabolism, and the energy aspect plays only a secondary role.
This interpretation at least would be obvious, since we scoff several times a day, sort the necessary and useful building-materials out and hand over the rest to the purifying plant and nature, where some bacteria and organisms search the sorted out again for useful things. "Food chain" we call this kind of building-material trade.
If the whole had anything to do with energy or with a „ combustion process without fire ", then no animal nor any human being could do without the taking up of food for longer periods of time. But Franciscus of Assisi could fast 90 days, as is handed down to us [<ii>]. There exist numerous examples, which reach into the time of today.

The mitochondria, the energy centres of each cell, by no means are capable of the "combustion process", which man ascribes to them. Here in all probability a taking up of space energy independent of food takes place.

A research scientist only has to look at nature with open eyes, what unfortunately happens rarer and rarer, because the laboratory scientist always is troubled, to keep the disturbing factor ,,nature " away from the experiments.

14.7 Carl Freiherr von Reichenbach

In this context no-one can go past two natural scientists: Carl Freiherr von Reichenbach (1780-1869) and Dr. Wilhelm Reich (1897-1957).

Reichenbach called the by him investigated life energy „ Od-energy " in the style of the Teutonic God Odin. He worked with test persons, who could perceive actually invisible light phenomena and worked out the special properties of this Od-energy field with the "sensitives", as he called them.

A quotation from his work shows however that the knowledge about the life energy must be a lot older[<iii>] than his own discoveries: ,,On paintings saints often are shown with a ring-like aureole around their head, something I before this would have dismissed as a pure figment of imagination. But it was shown that this glowing ring actually can be perceived by the sensitives as an Od-phenomenon and so the aureole obviously can be traced back to real impressions of particularly sensitive persons."

Reichenbach also found out that water has a big endeavour to take up this Od-energy or in the language of the present day, to absorb the field energy. This circumstance we find confirmed in technology, since water absorbs high-frequency waves, whereas an insulator or a vacuum lets them pass through. But without vortex physics it however remains entirely unclarified, why!

<ii>: H.-P. Thietz: Tatort Erde, VAP (1996), ISBN 3-922367-62-3, page 110
<iii>: H.-P. Thietz: Tatort Erde, VAP (1996), ISBN 3-922367-62-3, page 16

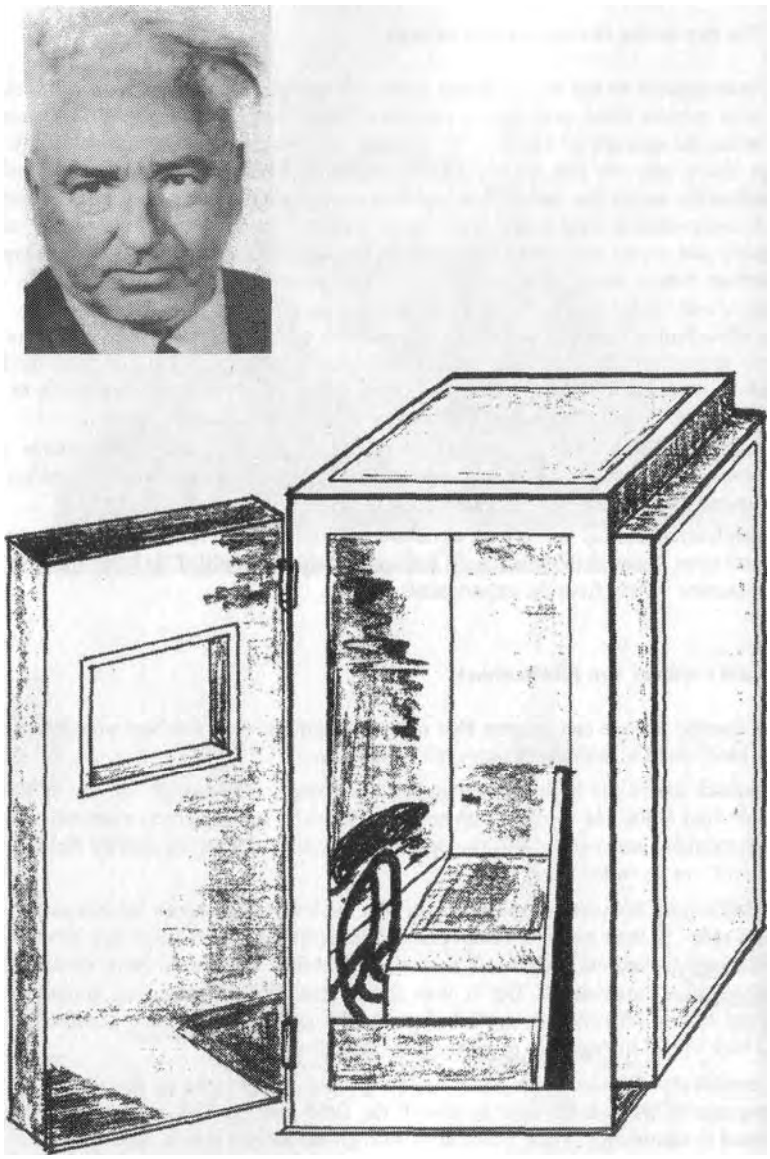

Fig. 14.8: Wilhelm Reich and the model of an Orgon accumulator
for applications of the whole body.[i]

[i]: taken from: H.-P. Thietz: Tatort Erde, VAP (1996), ISBN 3-922367-62-3, pages 38 and 89.

14.8 Cold fusion and Genesis

Chronologically the doctor and psychologist Wilhelm Reich followed in the footprints of Reichenbach. He merely altered the name for Od and spoke of Orgon. His speciality was the accumulation of Orgon radiation, I would say the focussing of neutrino radiation. Actually the properties like e.g. the missing possibility to shield Od, Orgon and the neutrinos are identical, so that we can proceed from assumption, that it also concerns the same physically.

We already talked about Wilhelm Reich (part 1, chapter 9.2). He could show that the measurable temperature in a closed box, constructed like an „Orgon accumulator", is increased in a mysterious manner without supply of energy from the outside. He even could prove, that this energy actually concerns the sought-for life energy, as he observed the creation of life in the laboratory under the microscope. For that he cooked muscle fibres, vegetables or other cells so long until the cell structure had been destroyed entirely. But from the educts entirely by itself new living beings, like protozoa or algae, were formed[<i>].

Reich at his microscope actually followed the transition of dead to living matter. What is of interest here, at first only is the energy technical aspect of this conversion. Later we will occupy us with the at the same time occurring information technical aspect.

Worth mentioning seems to me the experiment with the „silly" chickens, which have at their disposal astonishing abilities besides the laying of eggs[<ii>].

The test chickens were handed chicken food, from which to a large extent all calcium had been extracted. But the chickens showed themselves unimpressed and further laid keenly their eggs. The experimenters were surprised, where the chickens actually got the lime for the egg shells. How solves such a chicken the problem of raw materials? For that further materials were extracted from the food and look, at the removing of silicon the laying of eggs was over. The experiment actually only allows the conclusion, that the "stupid" chicken is capable of a cold fusion, that it itself „produces" the necessary calcium from silicon presumably by using carbon. Every alchemist here has to go pale with envy. But what says the research scientist of fusion to that, who actually should know, how fusion functions? After all he is paid for it by the tax payer! The chicken uses the fusion already today and the other living beings presumably also, but for that energy is needed and the balance sheet should work out!

The neutrino radiation therefore has to be factored into the balance sheet of energy. If the balance sheet then works out, it could be proven with that, that here neutrino energy is put to use. In addition the process of the conversion of neutrinos has to be investigated, which surely has something to do with the frequency and the wavelength of the radiation. After all a child has cells exactly as big as an adult. It only has less cells! So that an interaction can occur, the cell size has to fit in with the wavelength, which obviously is very small, presumably in the range of the radioactive radiation, with which circumstance the biological incompatibility with this electromagnetic wave would be explicable.

<i>: H.-P. Thietz: Tatort Erde, VAP (1996), ISBN 3-922367-62-3, S. 39

<ii>: Louis Kervran: Biological Transmutations, s.a. J. Heinzerling: Energie, S.278

1. Primary reaction
   (light reaction in the centre of reaction):

   ring-like vortices/neutrinos are being collected
   electrons are formed
   energy is produced
   e^- is attracted by the water dipole
   water molecule is being splitted (photolysis):

2. Secondary reaction (dark reaction):

   carbon dioxide is reduced with the hydrogen splitted off from the water to carbohydrate

Reaction equation of photosynthesis:

	6 mol CO_2	(carbon dioxide)
+	12 mol H_2O	(water)
+	675 Kcal	(vortex energy, light)
	1 mol $C_6H_{12}O_6$	(glucose)
+	6 mol O_2	(oxygen)
+	6 mol H_2O	(water)

Fig. 14.9: Concerning photosynthesis

14.9 Photosynthesis

The materialization of free electrons is a prerequisite to start the photosynthesis. The normally used explanation, the free electron necessary for the splitting of the water molecule was knocked out an atom by light, doesn't seem to be correct, after until now all attempts of a technical realization according to this model concept have failed. At the photosynthesis the plants obviously help themselves with the neutrino radiation, which according to an estimation of today with 66 billion particles per second and per square centimetre might be more than sufficient for a green earth.

If we put a seed in a water glass, then a plant grows from it and forms small leaves, which get bigger and bigger. A wonder of nature, we say. Where does it actually get its building-materials? From the water or from the air? Necessarily the plant obviously produces a part of the matter itself!

Experts think they have understood the process of photosynthesis: Take light and water and carbon dioxide and handicraft from that sugar and oxygen. But from where does the plant take the necessary energy for the rebuilding and the splitting of the water molecule, the photolyse? The taken up solar energy hardly is sufficient for that, especially since the plants only absorb about 1% of the photosynthetic utilizable sunlight incident on earth[<i>]. By means of reception molecules, which look like small antennas, pigments less than 30 nm in diameter, such is the level of knowledge, the sunlight is collected and led into a photochemical centre of reaction. Here the reaction should take place, provided that an electron set free by the light jumps into the middle of the centre of reaction. But exactly this favour the electron doesn't make the research scientists, who want to imitate the process. Copying nature still doesn't succeed.

The mistake presumably lies in the circumstance that the light doesn't set free any electron at all. The electron actually first of all is produced in the centre of reaction. By means of the antennas a neutrino vortex is collected, which at first occupies the entire space, to afterwards contract to an electron, which as a result automatically is centred in the centre of reaction.
In the process of materialization at the same time the necessary energy of the process is formed. The reaction equation after all also has to work out energetically, because the plants doing so get neither hot nor cold (fig. 14.9).
Because curiously the light reaction even can be observed in the dark[<ii>], one could be inclined to in principle call into question the influence of light on the photosynthesis. But such an influence nevertheless seems to be present, after all does a plant react on the irradiation of light and changes its spectrum of absorption through its colour. But it for sure is another influence and not the one, which one attributes the green plants today! It would be important to finally understand the way of functioning. The plants and particularly the algae are the ones, which actually first have made possible life on this planet with the photosynthesis, the most original form of a production of matter and energy.

<i>: Luttge, U. u.a.: Botanik, VCH, Weinheim (1994) ISBN 3-527-30031-7, S. 136
<ii>: Luttge, U. u.a.: Botanik, VCH, Weinheim (1994) ISBN 3-527-30031-7, S. 126

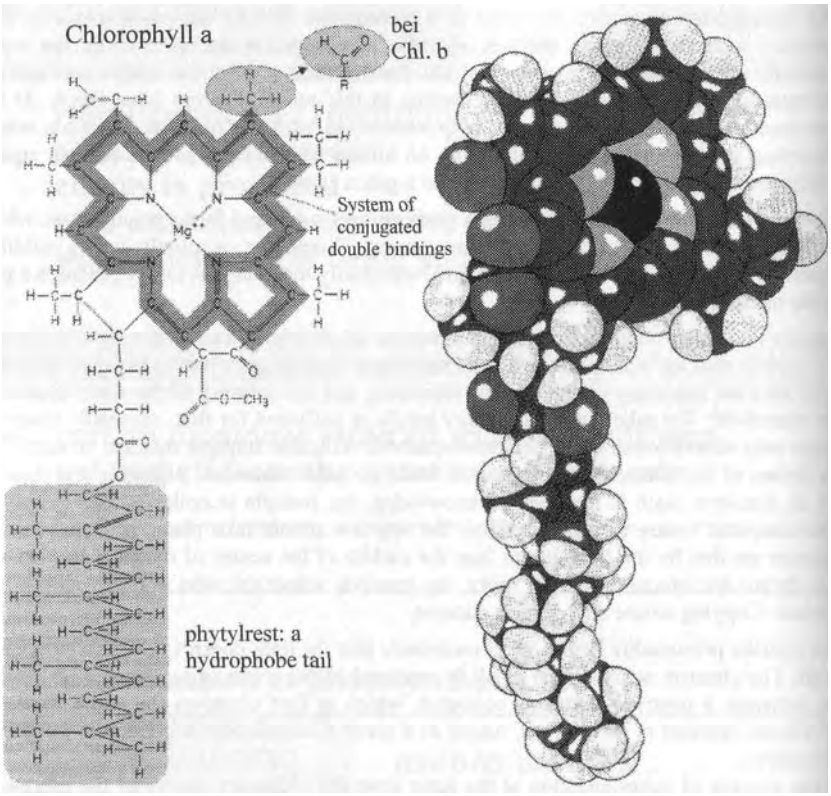

Fig. 14.10: Formula of structure and spatial model of the photosynthesis pigment chlorophyll.<i>

<i>: Luttge, U.et al.: Botanik, VCH, Weinheim (1994) ISBN 3-527-30031-7, p. 118

14.10 How nature materializes

The structure of the receiver antenna allows us a deeper insight into the manner, how free energy is tapped during the photosynthesis. For the dimensions determining the frequency of the photosynthesis pigments, as the antennas are called, we have to go down to the molecular structure. Fig. 14.10 shows the formula of structure and next to it also the spatial model of the pigment chlorophyll<i>.

Two points point at the function for free energy conversion. On the one hand is situated in the centre of the molecule a double positive ionised Mg atom, surrounded by four nitrogen atoms and a carbon ring consisting of 20 atoms, from which arises a polarization of the entire molecule. This in addition is oscillating because the electron cloud of the enveloping electrons, which hold the molecule together, perform swirl oscillations depending on the temperature. With that chlorophyll is able to go into resonance with oscillating neutrinos.
A role play the unipolar field configuration and the effect of resonance of the molecular oscillation of its own forming as a result of the polarization. A further role in addition seems to play the spatial structure.

The model of the ,.receiver antenna" chlorophyll taken out of a textbook<i> and shown in fig. 14.10, consists of a stalk and a spirally wound head, which resembles a Lituus or crook, which Etruscan and Roman Augurs have taken in the hands for land surveying, a precursor of the crosier (see fig. 16.10). This again has the form of a Tesla coil and that, as already derived, is able to withdraw rotational energy from the collected neutrinos (chapter 9.8). Doing so free electrons are materialized, and these then start the process of photosynthesis. An explanation concerning the way of functioning of the antenna pigments here for the first time is getting available.
By the way also the mitochondria, which form the energy centres in every cell, have as well the form of a Tesla coil. Whoever wants to understand the energy economy of a cell or the photosynthesis first should occupy himself with the Tesla coil (chapter 9.8).

The open question, how land surveying should be possible with a Tesla coil, we at first still have to shelve, because in this chapter it concerns the way towards free energy and the chance to learn of nature. Examples to be looked at are on the one hand the core of fusion in the inside of the earth and on the other hand the humus layer on the surface of the earth, which has been materialized in the course of time with the help of photo-synthesis.

The goal seems to be worth striving for. If we in the first place have learned to produce energy exactly like nature, then we'll further try to produce matter purposeful, with which ageold alchemist dreams could be fulfilled. We wouldn't need to scrape and to search in some mines any longer. We would materialize the products without refuse, naturally and just for the environment, direct in the final form. I admit that at present it sounds pretty futuristic.

With another example, the lightning and particularly the ball-lightning, the collection concerning the use of free energy in nature shall be completed.

---

i>: U. Luttge, M. Kluge, G. Bauer: Botanik, 2. Aufl.- Weinheim, VCH (1994) ISBN 3-527-30031-7, S. 118

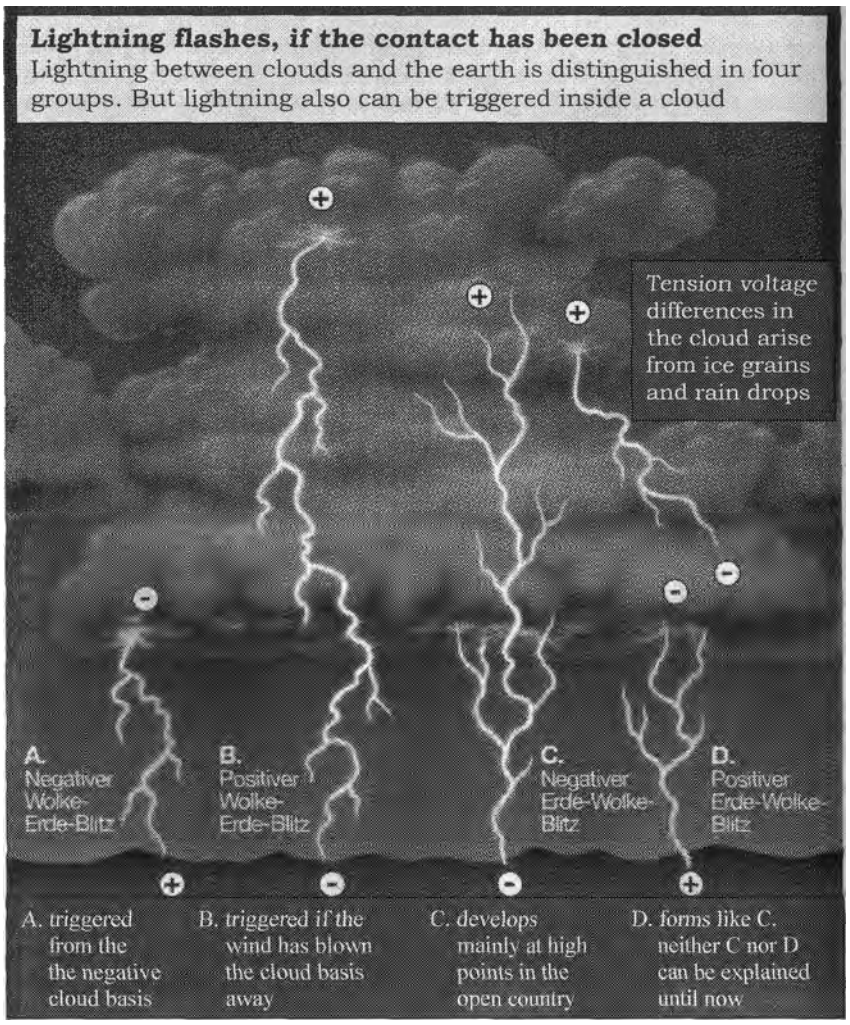

Fig. 14.11: Concerning lightning.<i>

<i>: taken out of: Illustrierte Wissenschaft Nr. 8, August 1995, Das unverstandene Phanomen der Blitze, S. 13

14.11 Lightning

Lightning is a spectacle of nature just as imposing as unsolved. It concerns an electric process of discharge, in which to the amazement of all experts arrive for several powers of ten more charge carriers at the surface of the earth, than hefore were contained in the cloud! Furthermore unsolved is, why lightning glows. Let us start with the open question for the difference of potential necessary so that the air is ionised and a lightning channel is formed.

If at first the electric tension voltage of 200,000 volts between the surface of the earth and a height of 10 kilometres is available, which according to our calculations results from the rotation of the earth and the magnetism of the earth (fig. 11.8). Another source of tension voltage is not known. By air movement and supposed processes inside a cloud locally an additional accumulation of charge carriers may occur, so that in the case of a thunderstorm the by Tesla assumed, twice as big value doesn't seem unrealistic[<i>].
On the other hand a tension voltage between 4,000 and 10,000 volts is necessary so that a blow can occur for an air gap of one centimetre depending on the atmospheric humidity[<ii>]. Linearly projected the thunderstorm cloud theoretically should hover just one meter above the earth if there is lightning.
Here somehow a huge gap gapes between theory and practice!

At the latest at the spikes, the mysterious lightning, which strike out of a thunderstorm cloud upwards in the direction of the ionosphere and the still more mysterious ball-lightning it has to get clear, that the actual source of tension voltage of a lightning by no means is known. Without knowledge about the cause we'll never understand lightning.

The potential vortex theory offers an useful approach, according to which the necessary difference of potential is formed from a formation of vortices[<iii>]. The vortex again, as damping term in the wave equation, occurs as a result of intense sun irradiation. That explains why lightning always strike from the part of a cloud, which is the darkest, where the most sunlight is absorbed and the damping is the largest.

The possible formation of ice in a lightning channel is a further confirmation for the correctness of the vortex explanation. After all it has been derived that contracting potential vortices withdraw heat in principle (fig. 12.8).

But now we also want to know from this efficient theory, why photons and electrons are formed during the lightning and where they come from. Here obviously energy is formed by means of materializing of vortex particles.

<i>: R. L. Clark: Tesla Scalar Wave Systems, The Earth as a Capacitor, The Fantastic Inventions of Nikola Tesla, ISBN 0-932813-19-4, S. 265

<ii>: Karl Kupfmuller: Einfuhrung in die theoretische Elektrotechnik, Springer-Verlag Berlin, 12. Auflage 1988, ISBN 3-540-18403-1, S. 221

<iii>: K. Meyl: Potential vortices, Part 1: Discussion contributions to the natural scientific interpretation and concerning the physical-technical usage, basing on a mathematical calculation of newly discovered hydrotic vortices, (only in german) INDEL GmbH, Verlagsabteilung, Villingen-Schwenningen 1990.

Fig. 14.12: Contemporary representation, how 1753 lightning
research scientist Prof. Richmann is struck deadly by ball-lightning in his laboratory.[<i>]

<i>: Illustrierte Wissenschaft Nr. 8, August 1995: Das unverstandene Phanomen der Blitze, page 13

I proceed from the assumption that lightning collects and converts neutrinos. The process corresponds to the one at the sun, but on a smaller scale and only for a very short time. The lightning channel is polarized by the charge carriers. Change of temperature and field lead to a spatial oscillation, which by the way also functions as a source of sound, as anyone can hear. Taken both together lightning, seen from the outside, becomes an unipolar resonator, which is capable to attract neutrinos and to go into resonance with them. Now the predominant part is converted into electrons, because also the air molecules and air ions in the lightning channel belong to the world of matter. But it can't be avoided that a small part of antiparticles is formed, which then annihilate with particles of matter under emission of radiation. Doing so photons are emitted and lightning glows, as anyone can see!

14.12 Ball-lightning

If in the case of lightning there still exist excuses, the difference of potential preferably is traced back to neither understandable nor measurable processes inside a cloud, then at the latest in the case of ball-lightning most experts are at their wits end. Only for very simple natures explanations circulate in the direction that here for instance the organic remnants of a bird struck by lightning are burnt off.

Actually ball-lightning is observed very seldom. It is a ball flashing with reddish till blue-white colour. Its diameter lies between 10 and 50 centimetres. The glowing phenomenon can last several seconds to minutes. Doing so ball-lightning rolls over a street, temporary floats in the air, goes apparently unhindered through every wall and disappears from time to time without a trace or discharges with loud moise and formation of sparks. Some stink of poisonous gases and some also cause noise.

Famous has gotten the ball-lightning, which 1753 of all people should have struck the lightning research scientist Professor Georg Wilhelm Richmann in St. Petersburg. In his laboratory during a thunderstorm a ball of fire as big as a fist should have jumped from a iron tube to his head and should have hunted him down, so eye witnesses have reported (fig. 14.12).

Since ball-lightning has a closed structure, it has to drag about its source of energy with it. If this however consists of organic or other matter, the ball wouldn't be able to float, after all the brightness of a spherical vortex and with that the need of energy is enormous! We have to proceed from the assumption that just ball-lightning covers its need of energy from free energy and serves itself from the neutrino field.

The spherical form is a consequence of the structure shaping property of the potential vortex<ii>. Scientists are increasingly interested in this not understood phenomenon. In their experiments they try to artificially produce ball-lightning with more or less great success in the laboratory. By means of the experiment they then want to learn to understand, what the textbooks don't give away.

If we want to learn of nature something about free energy, lightning in the laboratory offers us in the form of a blow or of a spark gap relatively good possibilities. It surely is no coincidence that the father of free energy, Nikola Tesla, in his experiments almost all the time has worked with spark gaps!

<ii>: for that see in the 1st part the chapters 4.8 till 4.10

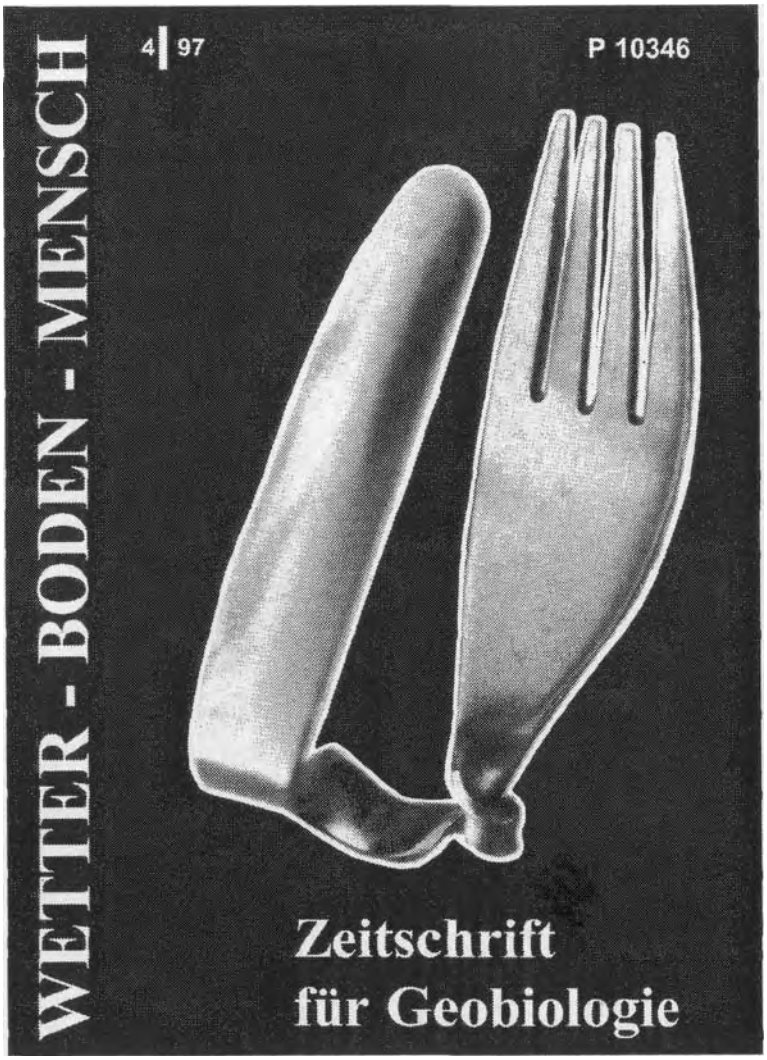

Fig. 14.13: Fork bent by „pure manual work". <i>

<i>: Whoever has to eat with bent flatware in the Hotel Adler in Waldkatzenbach (Odenwald, Germany), mustn't believe that the food didn't taste well to some rude fellow here. It is the host himself, who in a sociable round shows his guests from time to time that he not only can cook well. I could personally convince myself from the fact that Robert Hartmann doesn't use any aids. The picture shows the title page of the magazine „Wetter Boden Mensch" 4/97. A comment concerning this on page 3: Robert's 50ieth birthday.

14.13 Discussion concerning the neutrino conversion

In nature two different principles for the use of the neutrino radiation can be observed. In one case of use a glowing phenomenon occurs, in the other cases not.

The glowing lightning should be assigned to the first case. Here not only the neutrinos crossing the lightning channel are used, but also neutrinos from the environment oscillating in resonance are collected. Around the lightning channel a kind of reaction radius is formed, inside of which all synchronously oscillating neutrinos are attracted under the resonant interaction. During the discharge process the radius can increase like an avalanche, to collapse again with the transition into the stationary discharge current. A corresponding technical concept, which is discussed in the next chapter (15.5), is very efficient, but almost uncontrollable. A characteristic is the formation of antiparticles, of positrons, in the course of the materialization, which then annihilate under emission of radiation and cause a shining. Also spark gaps and fluorescent lamps possibly help themselves from the neutrino field, as still has to be to worked out.

In the second case nature works without any avalanche effect and without any glowing phenomenon. To this counts for instance the photosynthesis or the mode of operation of the mitochondria, the energy centres of a cell. All cells, whether vegetable, animal or human, only use the neutrinos which just that moment pass by them and only in those amounts, as they just are needed. They thus handle their energy very caring. Without exception electrons are materialized and no positrons.
If nevertheless unwantedly an avalanche effect occurs, something which happens fortunately only very seldom, then a self-inflammation and self-burning occurs, then it should happen, that a person burns off himself<ii>. This risk also is known of hay.

There also exist rare talented persons, who can control and regulate the process of materialization by concentration. These people can bend spoons or other metallic objects<i>. For that they concentrate themselves some time and send the materialized charge carriers into the object, which they hold in their hands. Since the metal lattice solely is kept together by the enveloping electrons of the individual atoms, the additional electrons make the metal structure sodden. Now for a short moment the metal can be bent and distorted at will. Doing so neither heat is produced nor is the colour changed. The result of the process can be produced neither by cold working with raw force nor under a flue. Also here nature shows us a technology for an ecologically compatible metal processing (fig. 14.13).

The way from the conventional over the regenerative towards free energy is predrawn. It only has to be gone! After the existence of the neutrino radiation goes as proven and 1998 for the first time concrete amounts have been determined measuring technical and published by a Japanese team of research scientists, with that also the question for an energy technical use of the particle radiation has been answered clearly. Now only the question of the mechanics is open. The Japanese research scientists by the way have found out that at night only half as much solar neutrinos can be detected than at daytime. The other half according to that is absorbed in the inside of the earth. This in the meantime published measurement result in brilliant manner confirms the working hypothesis of a growing globe (chapter 11).

<ii>: Zu Asche pulverisiert, Illustrierte Wissenschaft 6/ 1997, S. 61 acc. to an examination of the American SCI-COP in 1984.

cause/ field lines	interaction	F = force effect *mediation:*	see chapter: effect/ *application*
1. open **H**-field lines	magnetic (static)	F_{M0} = magnetic force (permanent magnet)	chapter 15.4 *E.-engine, solenoid*
2. open **H**-field lines	resonant (oscillating)	F_{MS} = magnetic force (AC-magnet)	15.4 + 15.5 - 15.7 lightning, *railgun*
3. open **E**-field lines	electric (static)	F_{E0} = Coulomb force *by charge carriers*	15.9 + 15.10 atomic bond, *Testatika*
4. open **E**-field lines	resonant (oscillating)	F_{ES} = Coulomb force *by neutrinos*	chapter 16 + 17 weak interact. galaxy bond *Tesla converter*
5. closed **H**-field lines	gravitation (static)	F_{MG} = gravity *by particles with mass*	chapter 6.9 + 7 elementary particle mass
6. closed **H**-field lines	levitation (dynamic)	F_{ML} = reduced gravity	chapter 18.3 gravit. waves *Casimir effect*
7. closed **E**-field lines	gravitation (static)	F_{EG} (force hardly detectable)	chapter 18.7 *superconducting ring*
8. closed **E**-field lines	levitation (dynamic)	F_{EL} (no longer detectable)	18.5 + 18.6 *Keely-/Searl-flying devices*

electromagnetic and resonant interaction		gravitation and levitation
$F_{M0} = 1{,}4 \cdot F_{MS} > F_{E0} = 1{,}4 \cdot F_{ES}$	$\gg$	$F_{MG} = 1{,}4 \cdot F_{ML} > F_{EG} = 1{,}4 \cdot F_{EL}$
for reason of open field lines		resp. closed field lines

Table 15.1: The force effect of interactions, ordered according to size, with examples

15. Principle of functioning of space energy

In this chapter we want to turn us towards the technical concepts and techniques concerning "space energy", which occasionally here and there already should have existed or have been operated with quite different success. After Nikola Tesla having pointed the direction more than 100 years ago, the way towards free energy appears to be predrawn. Never before the public interest in the topic of space energy was as big as today. Unfortunately this concerns more the collecting and gathering of rumours and speculations. As in every branch of science also here hunters and collectors can be found. But obviously the hunters, the inventors and theorists have bigger problems, to put something useful on the table. They are fighting against their own not knowing, unuseful textbooks, general ignorance, intolerance and an all-powerful energy lobby. What the collectors on the other hand come up with does make appetite but not full.

An useful and efficient theory might be the most important prerequisite just with regard to the reproducibility of an effect and the product liability of a SET-device. That's why one mustn't expect a complete list of devices of that kind in this chapter, because in the foreground stand the physical and technical explanations concerning the way of functioning, the understanding for constructive and guiding details and the learning from the mistakes and errors of the inventor.
For a better survey the possible courses of the field lines according to the theory of objectivity are listed in detail (table 15.1) and discussed from the top one after another, starting with the strongest known interaction. To complete examples and concepts are presented.

As is well-known there exist electric (E-) and magnetic (H-) field lines. Further exist open and closed field lines and finally is distinguished between the oscillating and the static case. The results are two to the third power, thus eight possibilities of combination in total. In table 15.1 all eight versions are given, even if one or another case is of more theoretical nature. For the objective of a systematizing of different concepts concerning space energy technology the taking apart in any case is helpful. The figure opposite is survey and structure at the same time for the following chapters.

15.1 The course of the field lines

In chapter 6 a relation between the course of the field of a body and its observable interaction has been made (part 1, chapter 6.7 till 6.9). Here a point of approach is offered. For instance to maximize the force effect a magnet or to optimise an electric motor, the engineers nowadays help themselves with costly programs working according to the method of finite elements. In this way they obtain a picture of the field lines, the course of which makes possible conclusions concerning the production of force or torque. The relation without doubt is given, the only question is in which order of magnitude.

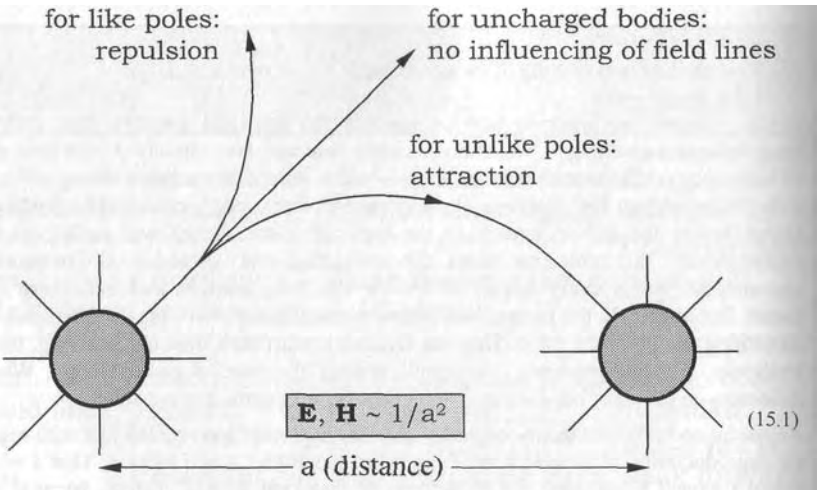

(15.1)

Fig. 15.2 A: The course of the field lines leads to a force effect (repulsion or attraction)

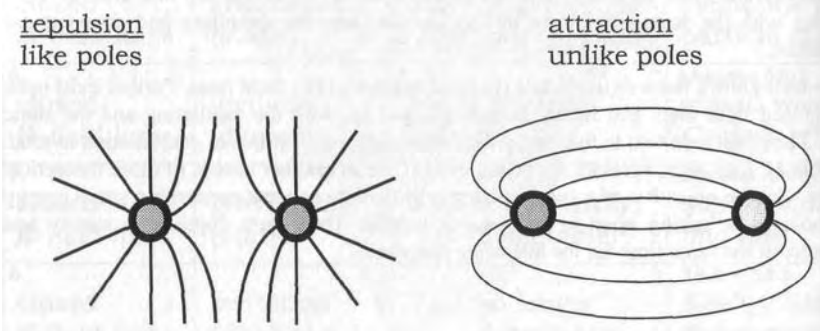

Fig. 15.2 B: The course of open field lines

$$\frac{F_{\text{Coulomb force}}}{F_{\text{magnetic force}}} = \frac{Q \cdot E}{\phi \cdot H} = \frac{\mu \cdot Q^2}{\varepsilon \cdot \phi^2} \qquad (15.2)$$

with $E = Q/\varepsilon \cdot A$

and $H = \phi/\mu \cdot A$

where $\phi^2 = m^2 \cdot G \cdot 4\pi \cdot \mu$ (Gl.13.20)

i.e. e^-:

$$\frac{F_{el}}{F_{magn}} = \frac{e^2}{\varepsilon \cdot m_e^2 \cdot G \cdot 4 \cdot \pi} = \underline{4{,}2 \cdot 10^{42}} \qquad (15.3)$$

Fig. 15.2 C: The proportion of forces at the example of the electron.

The theory of objectivity answers the question from the equations of transformation with the proportion 13.23 (fig. 13.4). According to that the electric or the magnetic field strength stand in inverse proportion to the square of a length or of a distance:

$$E, H \sim 1/a^2 \qquad (13.23) \text{ bzw. } (15.1)$$

Less mathematically expressed this, for two bodies in the distance a, where one body is situated in the field of the other, means nothing else as that the distance is reduced. Nearer to the body the density of the field lines again increases, in that way the distance further decreases and we observe an approximation.
Usually the idea of force is introduced as a factor of description and there is spoken of a force of attraction. But that not necessarily is required, because the force only represents an auxiliary description. The cause for the observed attraction rather is the spatial distribution of the field strength.
In this case the two bodies come closer and the mutually active fields get bigger and bigger, until the parts eventually run into each other (fig. 6.7 A). There one comes the thought to increase the force of attraction by an artificial compression of the field lines. In the case of the electromagnetic interaction such a compression actually takes place, since the field lines arise from one pole and end at an unlikely charged pole, which so to speak collects and bundles up the field lines (fig. 6.8 A).
At last we find out the reason, why electromagnetic forces of attraction are bigger than gravitational forces for many powers of ten (between 10^{30} and $4.2\text{-}10^{42}$ for the electron, derivation see fig. 15.2 C)! For table 15.1 this means, at the top have to stand the open field lines, which bundle up at the poles. Then very long nothing comes and after that the effects of closed field lines are being found.

For open field lines however also the opposite of a bundling up is possible. In the case of like poles the fields run away of the other pole (fig. 6.8 B). Between both a space is formed, which is free of field lines, where thus the field tends towards zero, whereas the distance between the poles according to the proportion 15.1 grows towards infinity. In this case we observe, how the bodies are going away from each other. We speak of a force of repulsion, which actually reaches until infinity. This gives reasons for the occurring of both forces of attraction and forces of repulsion in the case of the electromagnetic interaction.

15.2 Gravitation

In the case of closed field lines in principle no repulsion can occur, since no pole, neither north pole nor south pole, neither positive pole nor negative pole is able to influence the position of such a field line. This circumstance as well as the order of magnitude of a possible force of attraction suggest, to settle gravitation here.

It gladly is forgotten, that the field pointers of E- and H-field normally occur together and like in the case of the electromagnetic wave stand perpendicular to each other. It is normal to calculate only the electric field pointers for a charge carrier, without paying attention to the circumstance that the H-field is present as well. The textbooks as a rule remain silent about this dark chapter or they lapidary remark, the dual field lines are closed in themselves and hence inactive anyhow, which however is incorrect.

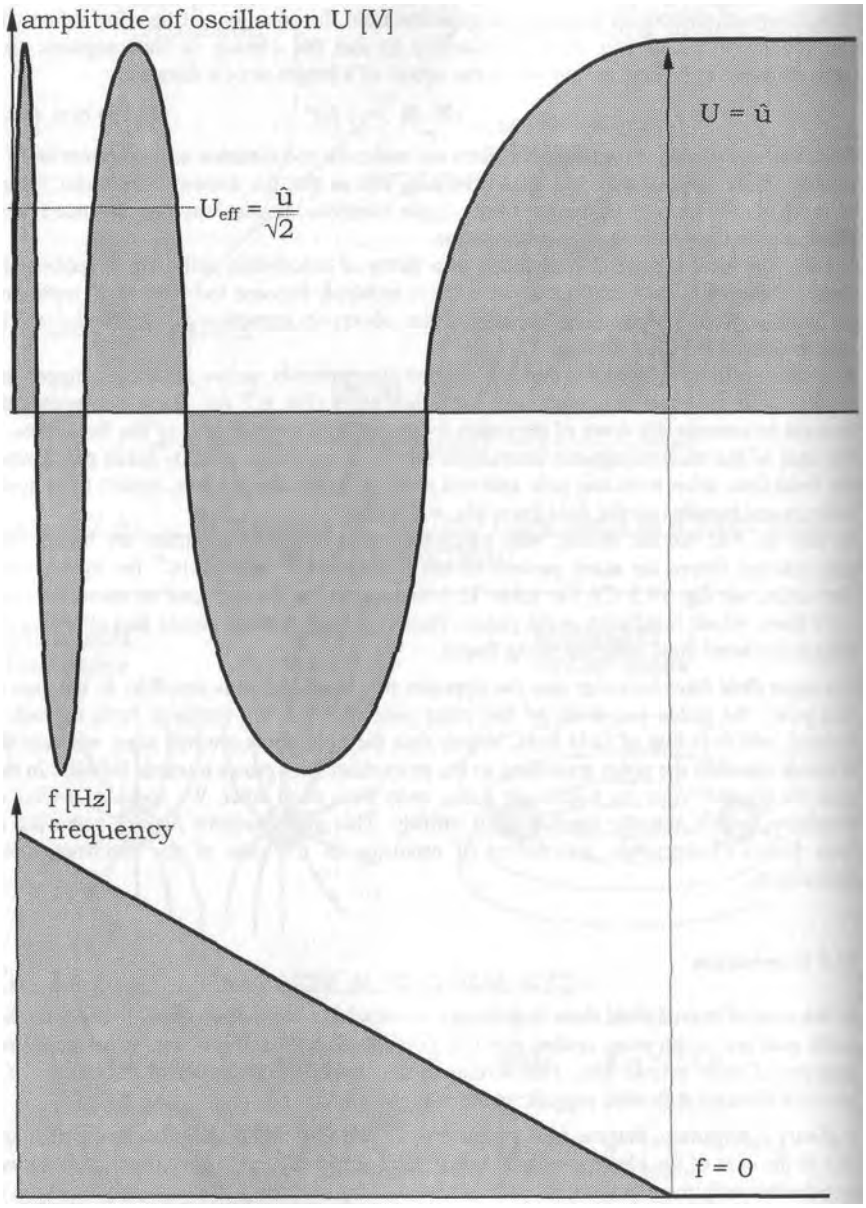

Fig. 15.3: The transition of an oscillating into a static interaction

But, according to the proportion 15.1, they actually develop a force of attraction, even if this is relatively small. No one really needs to be surprised that gravitation is not understood until today, if a whole group of fields simply is overlooked by science! We now also can explain, why there don't exist any massless charge carriers. Namely only the E-field or the H-field can form open field lines and never both at the same time. Otherwise they wouldn't be able to stand perpendicular to each other anymore. The each time other field, in the case of electrically charged bodies it is the H-field, then is wrapped perpendicularly around the E-field lines, independent of the circumstance if electrically an attraction or a repulsion occurs and without exception it forms a weak force of attraction, the gravitation.

15.3 Systematizing the interactions

Next we should know, from which field is to be expected a larger force effect: from the E or from the H-field? At the example of an electromechanical converter this question can be answered concretely.

The forces which occur and form the torque in an electric motor customary in trade are produced by magnetic poles in stator and rotor, which repel each other in the case of like charge and attract each other in the case of unlike charge. Now there in principle exists the possibility to build a motor which works with Coulomb forces, thus with positive and negative poles, instead of the magnetic forces. About such designs numerous patent specifications exist, but no customary version on the market.

The reason very simple is that a magnetic motor for the same torque is many times smaller and better priced. From this the conclusion can be drawn that for the same construction volume a magnetic force F_M is considerably larger than a Coulomb force F_E, which for instance binds together atomic nucleus and atomic hull.

Thus in table 15.1 the magnetic forces are ranked before the Coulomb forces.

Finally we have to distinguish between the static and the oscillating case, which are distinguished in the frequency. In fig. 15.3 an oscillation is shown, which by chance just at the moment of the vertex value changes into the steady state, thus takes the frequency zero. In this case the effective values between a static and a sinusoidal oscillating interaction are distinguished by the factor $\sqrt{2}$ = 1.4.

If we operate an universal motor with direct current, then it releases more power, than for a corresponding feeding with alternating current. Even a high-tension line, which stands at maximum 511 kV, is operated with alternating current up to 380 kV, with direct current on the other hand up to 500 kV. Consequently in table 15.1 the static interactions stand before the oscillating interactions.

The strong interaction naturally isn't found in the list, after it has been derived that it doesn't exist at all (see chapter 7.8), whereas the weak interaction is hiding behind the oscillating interaction. It shakes other particles so long till they fall apart (see chapter 7.13).

We now would be as far, to discuss the 8 cases listed in table 15.1 one after another by means of practical examples.

The principle of the side-pole machine

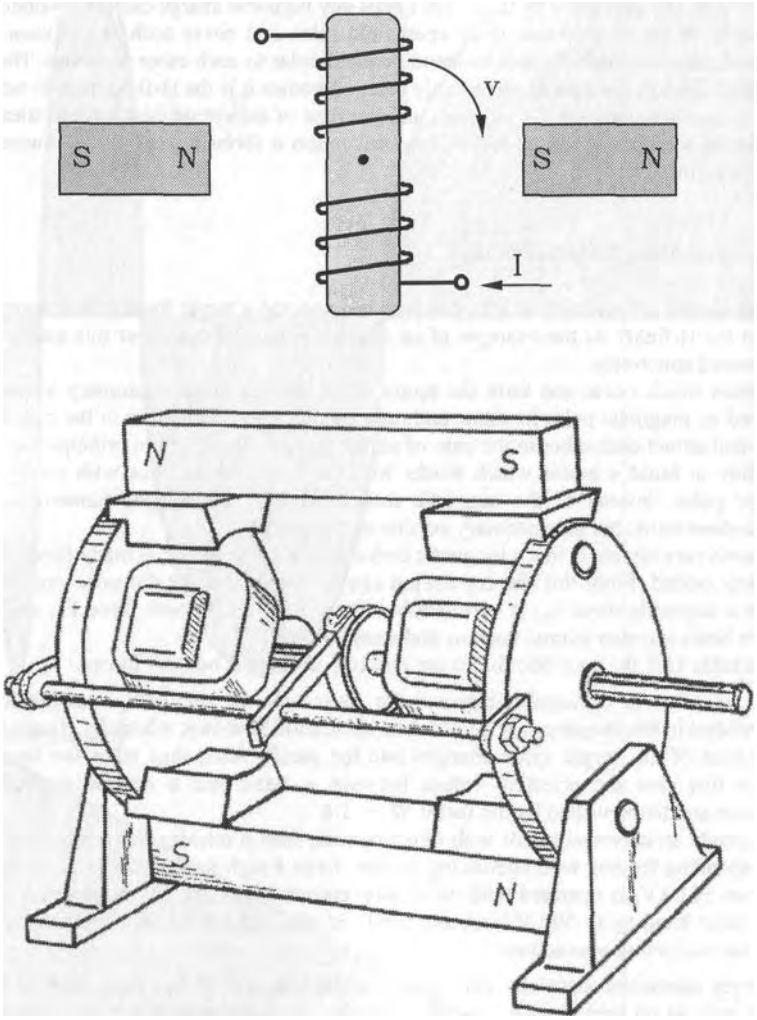

Fig. 15.4: Alternating current dynamo, according to the inventor
(Kromrey) a magnetic converter for free energy with a degree of effectiveness of more than 100 %.[i]

<i>: Raymond Kromreys Molekularstromrichter, NET-Joumal 6/98, S. 5

15.4 Magnetic force converter

As a result of the systematizing of all eight possible interactions, the largest force effects are to be expected as a result of static and of open magnetic field lines. It is questionable, if this statement is generally valid and is true everywhere in space. But it is valid at least for a terrestrial laboratory and only here, on earth, a solution for the energy problem is strived for. No wonder therefore, if the electric energy technology nearly without exception is using these force effects. We find them at a solenoid, at a relay coil, at a magnetic tuning cylinder and equally between the stator field and rotor field of an electric motor.

The motor however takes a special position, because its rotor is turning. In that way a switching of the winding and commutating of the currents is necessary or the field of the stator winding is being turned, for instance in the case of an alternating current motor. This is necessary, so that in the air split of the motor the fields from the stator and rotor always are standing opposite like for the solenoid and a driving force can be formed. For the operation therefore oscillating currents are necessary, so-called alternating currents, which are fed in into the winding with the right frequency and phase. There can be spoken of an operation in resonance. It surely is no coincidence, that Nikola Tesla, the founder of the rotary field theory and inventor of the alternating current motors at the same time is the discoverer of the neutrino radiation!

The electric motor slides already into the second column from the top in table 15.1, as we see, and should be assigned to the case of the oscillating interaction of open magnetic fields. The frequency for motors usually is very small.

But also at high frequencies there can't be reckoned on some free energy which would show or even be utilizable, as can be heard from the inventors who tinker with magnets, mostly with permanent magnets (Fig. 15.4). The reason very simple is that there exist no physical particles, which could mediate this interaction. Magnetic monopoles would be necessary, thus north pole or south pole particles, so that an interaction with the open H-field lines can occur.
Such particles could form as a result of currents and eddy currents, but for that a good conductivity would be necessary and that isn't present in the vacuum. Therefore magnetic monopoles can't exist at all! This point we already had worked out (fig. 4.4, question I). The same statement then also applies to the oscillating case.

If nevertheless something like free energy should show in the case of some magnetic field converters, then unnoticed by the inventor still other physical effects are added. By means of concrete concepts this circumstance can be studied and discussed. The meanwhile well-known railgun is a corresponding example, for which besides the used magnetic force unintentionally a further principle is used. A more detailed occupation with this device is worthwhile, because here some fundamental concepts of space energy get clear.

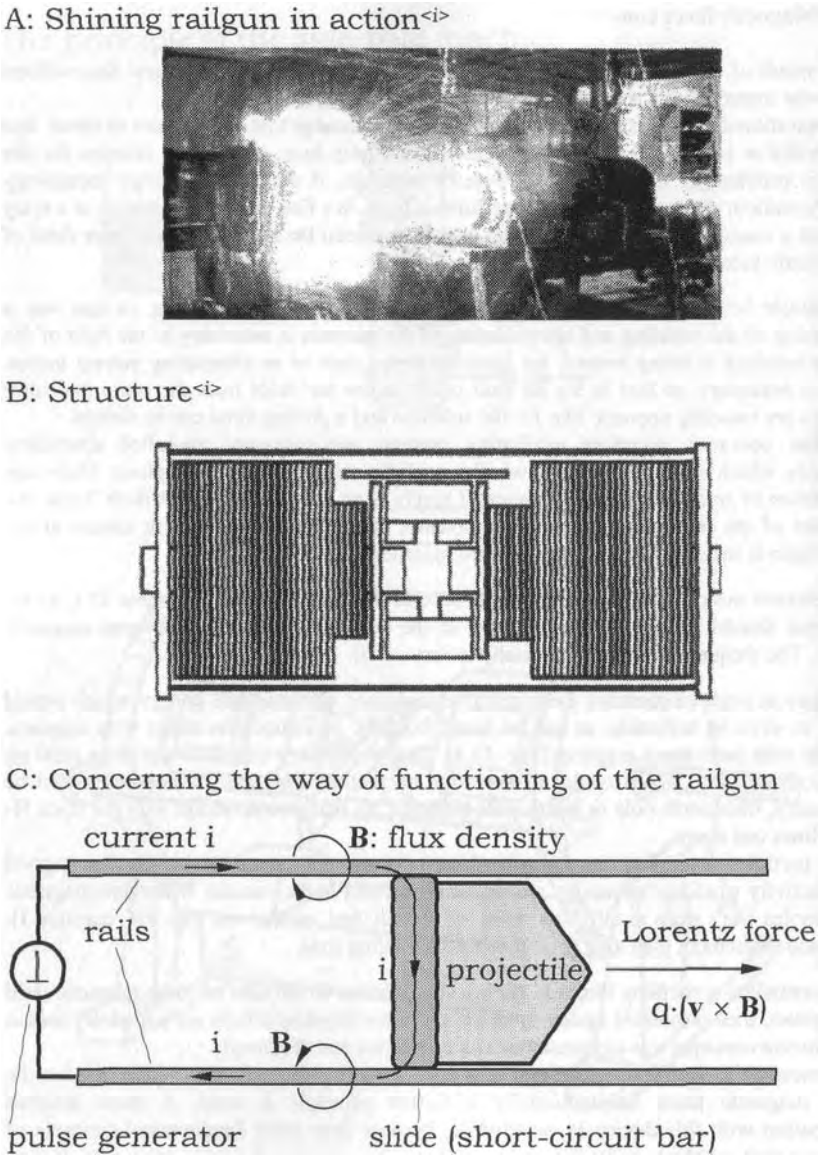

Fig. 15.5: Structure and way of functioning of the railgun

<i>: in the internet under: www.glubco.com/weaponry/railgun.htm

15.5 The railgun

The engineers and physicists involved in the SDI-project were quite astonished, as they had a close look at the bent rails of their gun. During the test operation the equipment was really flying around their heads.
They were very sure to only have fed in 16.7 MJ of energy, from the rotation of a homopolar generator, because more was not available for the experiment by any means. The projectile with mass m_0 = 0.317 kg lying on the rails thereby should have been accelerated to the velocity of 4200 m/s. Instead huge forces were at work here, which the construction couldn't counteract at all. There is talk about the released energy having amounted to 399 GJ, what corresponds to an over-unity effect of 24000[<ii>]. This factor describes the proportion of the released to the taken up power or energy. If these details should be correct then this would be the most efficient converter for free energy, which has been developed until now.

Behind the project name SDI (Strategic Defence Initiative) is hiding the by the United Slates prepared "Star wars". But how one fares a war, which nobody can pay anymore and no-one wants, entirely according to the motto: There is a war and no-one goes there? This war undoubtedly the strategists and initiators themselves have lost, who even had to watch, how their space gun appears in the internet with design drawings and rich visual material to be called by anyone[<i>].
Today, where we are surrounded by nothing but friends, where in Russia and at other potential opponents is fought more against internal problems and one lets the expensive space toy rot for lack of money, the coat of the military secrecy obviously no longer can be held over such an explosive project as the railgun.

Thus informative details have reached the public. In the pictures a bright lightning can be seen at the moment of launching (fig. 15.5 A). Here presumably is being materialized, in which the part of anti-matter annihilates with the particles of matter under emission of light. There thus takes place the same process as in the case of lightning or the shining of the sun.
In addition is being reported that heat energy is withdrawn from the environment, a circumstance, which is typical for all functioning converters for space energy. We thereby are reminded of the possible formation of ice in a lightning channel.

Like for a lightning also the railgun is stimulated with a very high excitation voltage and with extreme speeds of change of the tension voltage (high du/dt) (fig. 15.5 C). From the setup it concerns a bridge of Ampere, which in various respects appears to be superior to the rocket engines, after the costly transport of the propellant into space isn't necessary, since the capacitor batteries can be recharged by solar power.

<i>: e.g.: www.glubco.com/weaponry/railgun.htm

<ii>: Galeczki, G., P. Marquardt: Requiem fur die Relativitat, Verlag Haag + Herchen (1997), S. 139

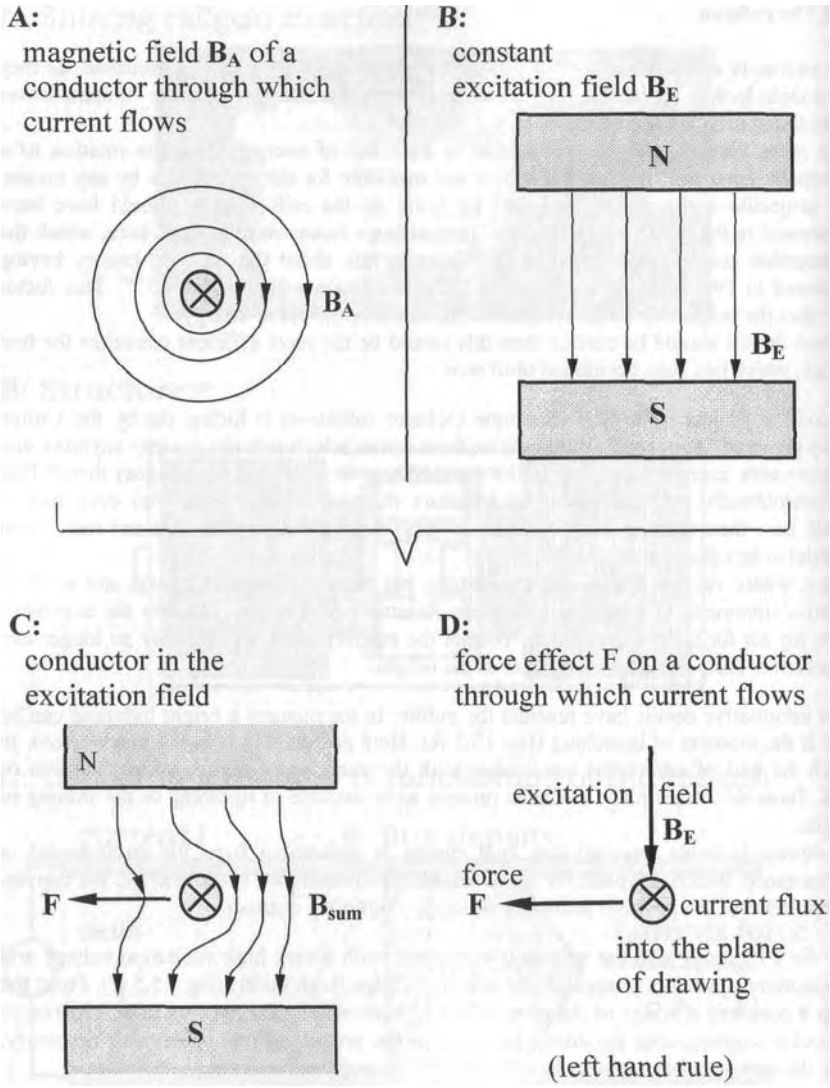

Fig. 15.6: ____ The distribution of field lines and force effect on the slider of the railgun through which current flows in a permanent magnetic field

The projectile has the form and the function of a short-circuit bar and is guided slidable between both rails of the railgun. The high-tension capacitors are switched on both rails at the moment of launching, so that in a very short time an extremely high short-circuit current of several thousands of Ampere flows through the bar.
Since the bar in addition is situated in a static magnetic field, there acts an accelerating force on it (fig. 15.6 D). It is the force effect of a conductor through which flows a current in a magnetic field, like it is active in every electric motor. If we overlap the fields of the conductor (fig. 15.6 A) and of the magnetic field (15.6 B), then we observe a bending and lengthening of the field lines (15.6 C). There exists the effort to re-establish the original state, which represents the smallest magnetic resistance, and for that the conductor is shifted out by means of the arising force. In the sketch it is accelerated to the left. That far the explanation concerning the bridge of Ampere. That has nothing to do with free energy. For the enormous degree of effectiveness, as it has been determined, further effects have to be added.

15.6 Unipolar induction

The projectile, or from the function let us rather speak of the short-circuit bar or the slider, at first is entirely conventionally accelerated and experiences, mathematically expressed, a dv/dt. The magnetic field B stretching perpendicular to the movement is constant, so that according to the Faraday relation<i> E = v x B from the velocity v an electric field strength E results and from the acceleration dv/dt a field change dE/dt. These open field lines along the length of the slider, in particular the oscillating part, appears to interact with oscillating particles and to collect these particles<ii>. It concerns presumably neutrinos, which primarily materialize in charge carriers. These contribute to the current flux in the slider and to the acceleration, whereupon still more neutrinos are collected.
A hardly controllable avalanche effect is formed. Only if the change in tension voltage has worn off and the capacitor is completely discharged, also the resonant interaction will again collapse.

The inventors, who want to construct a civil version of the railgun, is given a warning on the way which should be taken seriously. At first it doesn't take particularly much imagination to imagine a rotating arrangement of the gun, a construction with one axis, whit which a generator driven, which produces power. A small part is supplied the system again as supply for itself. The rest would be available free to the consumers as non-polluting, regenerative energy.
That really sounds good, if there wouldn't be this one obstacle.

<i>: The equation of transformation concerning the unipolar induction already was treated more detailed in chapters 6.4 and 9.3

<ii>: It is the resonant interaction according to table 15.1, line four

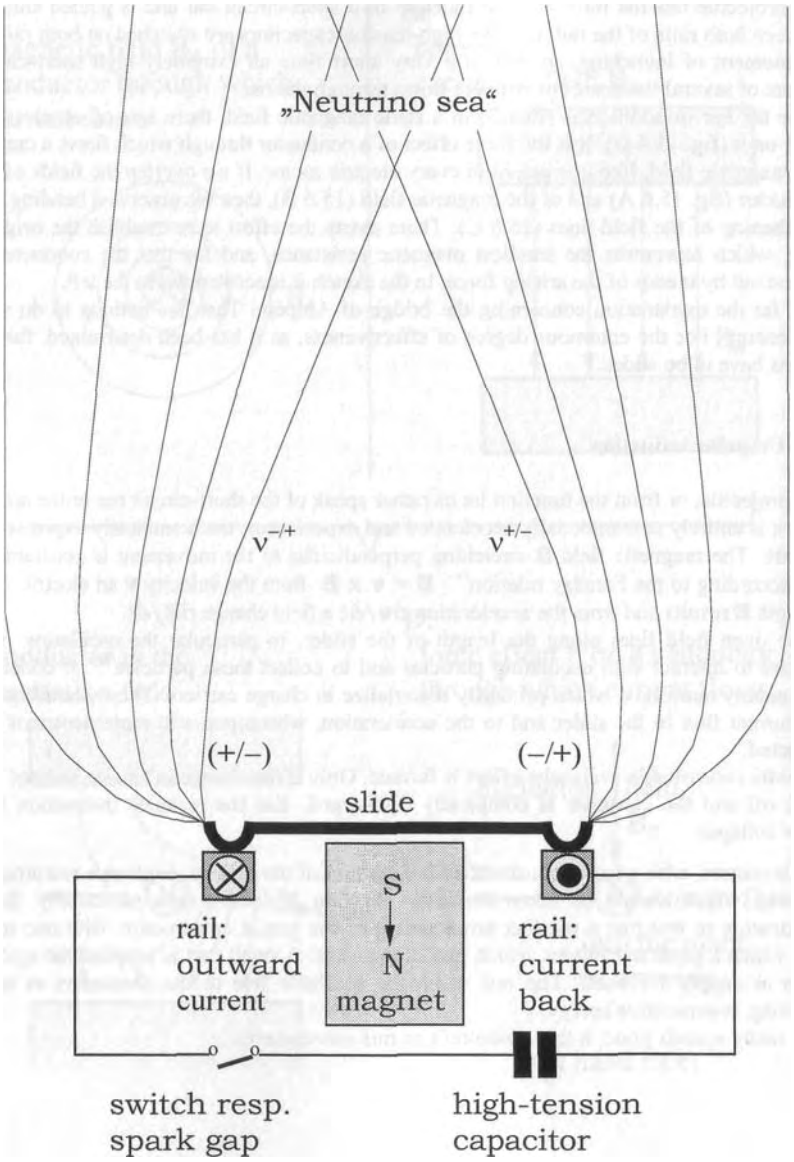

Fig. 15.7: The collecting of neutrinos by oscillating open field lines

15.7 Tendency to instability

In a continuously working machine the discharging of the capacitor cannot remain a single event as in the case of the gun. The discharging and the recharging has to take place cyclic depending on the revolutions per minute. To obtain a rotating movement even to a certain extent ignition has to follow ignition. But if the new ignition takes place, although the avalanche effect of the last one still hasn't worn off, then inevitable a catastrophe will occur, then the work of wonder is taken apart under the eyes of its creator. Numerous inventors already have had to collect such painful experiences. It is assumed that not even Nikola Tesla had escaped, as he had to put away again his stately luxury car with electric motor and energy converter in a barn near Buffalo already after one week of test operation in the year 1931[<i>].

Of course also for this problem solutions in accordance with engineering are offered. Meaningful would be a restriction of the revolutions per minute and a power regulation. Only most inventors don't think that far. On the one hand, because they handicraft without an useful physical model and on the other hand they think they already have reached the goal, if they observe something like free energy for the first time. Just as fast as the joy then the disillusionment comes, because a converter which doesn't work, is not able to convince anyone.

Tesla already was aware of this set of difficulties. He fastened his converter to the dash-board and not in the engine compartment, presumably to adjust the coupling of the coils from the drivers seat during the drive by means of two metallic rods, which he pushed into the case. But sometime even this regulation by hand has to go wrong, because the collected neutrinos on their part collect further neutrinos (fig. 15.7), so that in the case of an unfavourable order of ignition an additional amplification is possible. For a reliable operation according to that directly or indirectly the phase of the ignitions to each other should be checked.

At the example of the railgun space energy technologists and inventors can study the relations and the way of functioning very concretely and even calculate these relatively simple. It is a big relief, that all three vectors stand perpendicular to each other: the E-field, the B-field and the velocity v. Ideal conditions both with regard to a maximizing of the wanted accelerating force and for the resonant interaction, increase at the same time the collecting of space quanta, which probably may be set equal to the neutrinos. This is made possible by the Faraday's law of unipolar induction. In that way at the right and left end of the slider a positive a negative pole each are formed. The further the two poles are away of each other, the more the field lines are opened and the more neutrinos can go into resonance. In this place still considerable improvements and optimisations are possible.

In addition to the two discussed the phenomenon of the electrostriction is added as a third phenomenon, which authoritatively contributes to the conversion of neutrinos into electrons. It is a field dependent change of length, which in the case of lightning takes care of the thunder and in both cases, therefore also here, is active as a charge carrier producer.

<i>: see also chapter 9.5 Free energy,
A. Schneider: Energien aus dem Kosmos, Jupiter-Verlag 1989, Kap.ll, S. 20 and H. Nieper: Revolution, MIT-Verlag 1981, S. 194

A: electric dipole (e.g. electrostatics, see also fig. 6.8)

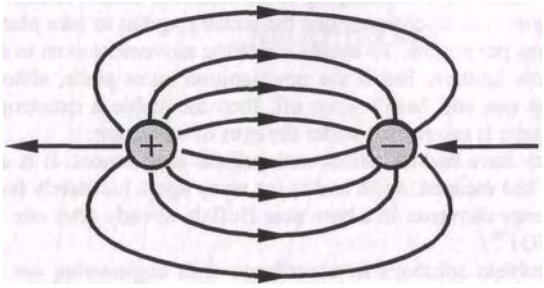

B: electric monopole (e.g. electron e~, see also fig. 4.3)

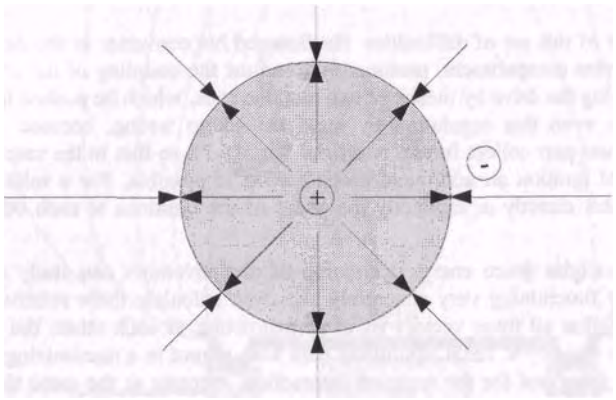

C: Mixed form in the case of cylindrical symmetry

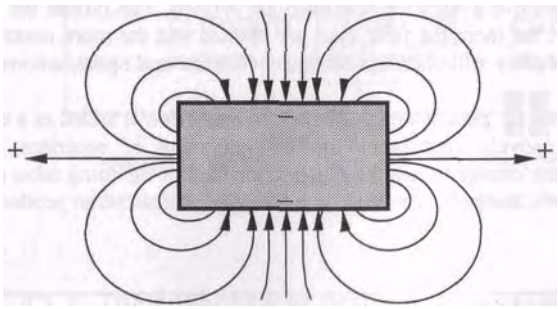

Fig. 15.8: Dipole fields with unipolar parts

15.8 Unipolar field configuration

If we again go back to fig. 5.1 and continue our considerations with examples concerning line 3. The obtainable force effect of open electric fields indeed is for powers of ten smaller than that of magnetic fields, but then particles are mediated, an invaluable advantage and an indispensable prerequisite with regard to the generation of space energy. As long as the particles are considered in the balance sheet of energy then in addition by no means can be claimed, space energy converter are perpetuum mobiles.

In the question, why only electric particles can be mediated, has to be pointed to the repeatedly mentioned circumstance that only electric particles can be formed as a result of the concentration effect of potential vortices. Magnetic particles however plain and simple cannot exist, since for missing conductivity in the vacuum no eddy currents are possible (see fig. 4.4).

In the case of the arising Coulomb forces again is distinguished between the static and the oscillating case. We want to start with electrostatics.

The range of technical applications of static electricity is large. It stretches from varnishing technologies and filter technologies till the fly grill in the arbour. In all cases the field is built up by charge separation. By means of a high-tension generator a positive pole and a negative pole are produced, between which the field is stretching. The field lines now start at one pole and end at the other, unlike pole (fig. 15.8 A).

In this manner almost no open field lines are available, which point to the outside and could interrelate with free particles. If one for instance intends to attract and collect charged particles from the solar wind, from the cosmic radiation or from the electricity of the air, then the design in one point has to be changed fundamentally.

A unipolar field configuration is necessary. What is meant with that, answers a glance at the spherical vortex model of the electron (fig. 15.8 B resp. fig. 6.2). Here it as well concerns a formation of dipoles as a result of the charge separation, but one pole is hiding in the inside of the other pole . In that way its field lines are captured and don't have a chance anymore to come out, to reach the other pole.

But if the pole lying on the outside for its part can't close its field lines any longer, then these point helpless into space and search in their neighbourhood, in the distant world and if need be even in the infinity of the universe an unlike anti-pole, which as a result interacts and is attracted.

The measuring technician analyses these open field lines and falsely calls the construction then a monopole, only because he isn't able to reach the locked up pole. To blame is the unipolar field configuration, which with that probably would be explained to a certain extent.

The designer and inventor as well might have realized how he has to construct his device, with which he generates open field lines to collect space quanta. He has to lock in one of the two poles as good as possible. Optimal would be of course a spherical symmetric construction like in the case of the elementary vortex. Compared with that a cylindrical symmetry indeed is suited far less good, but it offers constructive advantages (fig. 15.8 C). We now will report of such a functioning device.

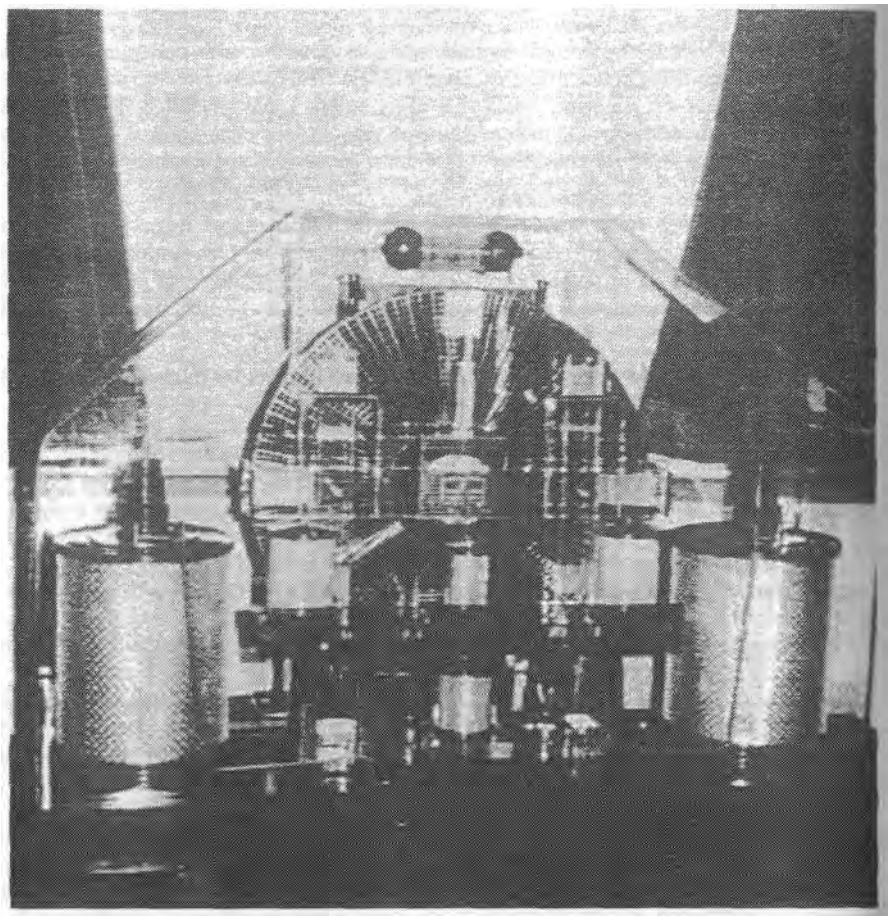

Fig. 15.9: Demonstration converter "Testatika".[i]

<i>: A. Schneider: Energien aus dem Kosmos, Jupiter-Verlag 1989, S. 29,
I. Schneider: Neue Technologien zur Freien Energie, Jupiter-Verl. 1994, p. 13 and in the NET-Journal, Heft 8/9, 1997, S. 16 as well as iss. 12, 1997, p. 6.
D. Kelly. Der Schweizer ML-Konverter, Raum & Zeit Special 7, S. 164

15.9 The Testatika

An electrostatic device, which produces open electric field lines, is situated in Linden in Switzerland. It optically is very imposing and belongs to a religious community, which has called it Testatika and is of the opinion that it is a free energy converter. Inexplicably the Testatika does not serve the community, which generates their electric power conventionally and to a large extent by itself, as a source of energy. Instead the 2 kW device only very seldom is demonstrated for special occasions or to select groups of visitors. The religious community after that explains the astonished observers humanity not yet is mature for the technology.

Perhaps just the opposite is correct and the technology not yet is mature. According to my personal assessment such an electrostatic device in principle is entirely unsuitable for the continuous operation.

It can be expected that the open field lines sooner or later will interrelate with the electricity of the air and thunderstorms are being attracted by the infernal machine so long until lightning strikes and the demonstration with that has finished. That's why the Testatika may be switched on only for a short time, only at sure weather situation and not too humid air, and many a registered visitor has been sent away without having seen the "thunderstorm machine".

As an object of demonstration and study the Testatika however is well suited. Alone the circumstance that no cable leads to the device and it nevertheless releases energy in the order of magnitude of 1 till 2 kW, surprises all visitors. At least the impression is mediated as if the machine would violate the law of conservation of energy, which is not correct. The Testatika is similar to an induction machine, which works with friction electricity. Thereby the unlikely charged bodies do not have to unconditionally touch and rub at each other, it already is sufficient, if they are brought in the immediate vicinity of each other. In the case of the Testatika the electrostatics of two against one another rotating discs is taken off by brushes.

The excitation energy presumably is taken out of the natural E-field, which just like that can amount to 200 Volts per meter (see chapter 2.9). The large diameter of 80 cm of the discs and their bad conductivity (acrylic glass) permit this conclusion. The charge taken off by the brushes afterwards is temporarily stored in two capacitors of 2 Farad at 300 Volt, so-called Leyden jars. This far one actually is reminded of a Wimhurst generator, in which the energy is supplied the system by turning the disc. Large powers cannot be drawn by that. Plans to build such an induction machine by yourself have been published[<i>].

In the case of the Testatika however two discs are used and by hand stimulate to rotate oppositely. This rotational energy in this case isn't used to produce power, otherwise the discs quickly would stand still again, but that doesn't happen.

Until now apparently no-one has discovered the secret, which is kept strict by the members of the community. In my opinion the energy situation on our earth however is too serious, as that we would be able to afford playing hide-and-seek and egoistical secretiveness.

<i>: I. Schneider: Neue Technologien zur Freien Energie, Jupiter-Verl. 1994, S.14

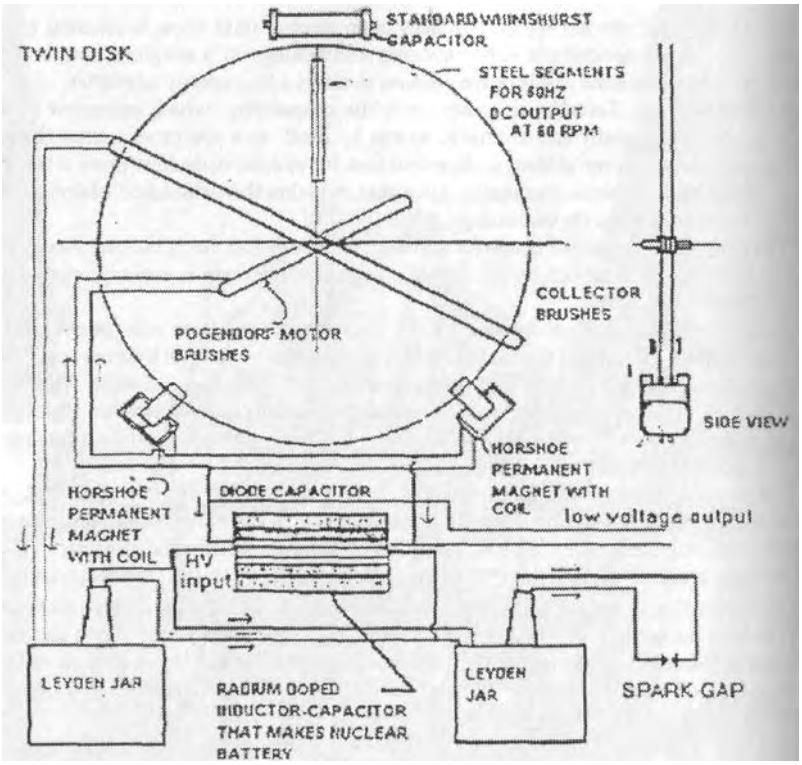

Fig. 15.10: Sectional drawing of the Testatika according to Don Kelly, (Clearwater, Florida, USA)

<i>: Der Testatika generator, NET-Journal, Dezember 1997, page 6
similar picture is found in Raum & Zeit Spezial 7, page 164

15.10 The secret of the Testatika

The crucial point is the opposite direction of rotation of both discs. If we assume the static earth electric field is the cause and serves as an excitation field, then as an effect a field arises, which stands perpendicular to that. The axial component now points out of the centre of the disc.
In the case of only one disc the field lines in front and behind the disc again are closed, so that no open lines can form. With one disc or with two discs rotating in the same direction hence no unknown charges can be attracted.
In the case of two oppositely rotating discs however shows one component along the axis of rotation to the observer, that of the other disc exactly in the opposite direction. In that way between both discs a pole is ,,pinned", which no longer is able to close all field lines on the outside around the machine. Thus open field lines and a, however incomplete, unipolar arrangement are formed.
The charge carriers sucked from the electricity of the air as a result support the natural electrostatics and speedy recharge the capacitors, even if up to 10 Amperes are taken out by the consumers.

The ingenious thing of the machine is its extremely simple construction and the simple concept.
If one includes the collected particles also in the balance sheet of energy, then it thus will turn out that the law of conservation of energy is not violated at all. There thus can't be talked of free energy. In this context the Testatika may rather be given as a counterexample. Air ions are the carriers of the electricity of the air and not carriers of free energy.

Negative air ions are indispensable for our welfare. One should only remember the first men in space, who after the landing were pulled out of their capsule more dead than alive, after they had to stay in the unhealthy atmosphere of the capsule for a longer period of time. Only the installation of ionising devices for negative air ions made possible longer staying in space.
The taking out of the air of negative ions hence is not unproblematic and not particularly ecologically compatible. An atmosphere harmful to life is formed which Dr. Wilhelm Reich has called DOR-state. He by the way has designed a Cloud-Buster, with which he could take static electricity, forming above the desert sand, out of the air. In that way the negatively charged rain clouds no longer are repelled and driven away. Reich has tested his weather machine 1954 in the desert of Arizona. After he had freed the atmosphere of the ,,DOR-strain", as he expressed himself, in the desert area the atmospheric humidity steadily increased from 15% up to 95%, there grew prairie grass and everything started to turn green, and eventually after many years for the first time rain fell again.

Static electricity, as far as the right polarity is chosen, may conditionally be used for the mechanics of rain making. For free energy concepts it however isn't suitable. Already Nikola Tesla has pointed to the circumstance that our hopes will be in vain if the free energy would be of static nature (see fig. 9.5). He in his speech, which he gave 1891 before the AIEE, has left no doubt that free energy exists, which is kinetic and with that energy technically usable for us,.
Chapter 16 will be occupied solely with this case[<i>].

<i>: according to point 4 in table 15.1

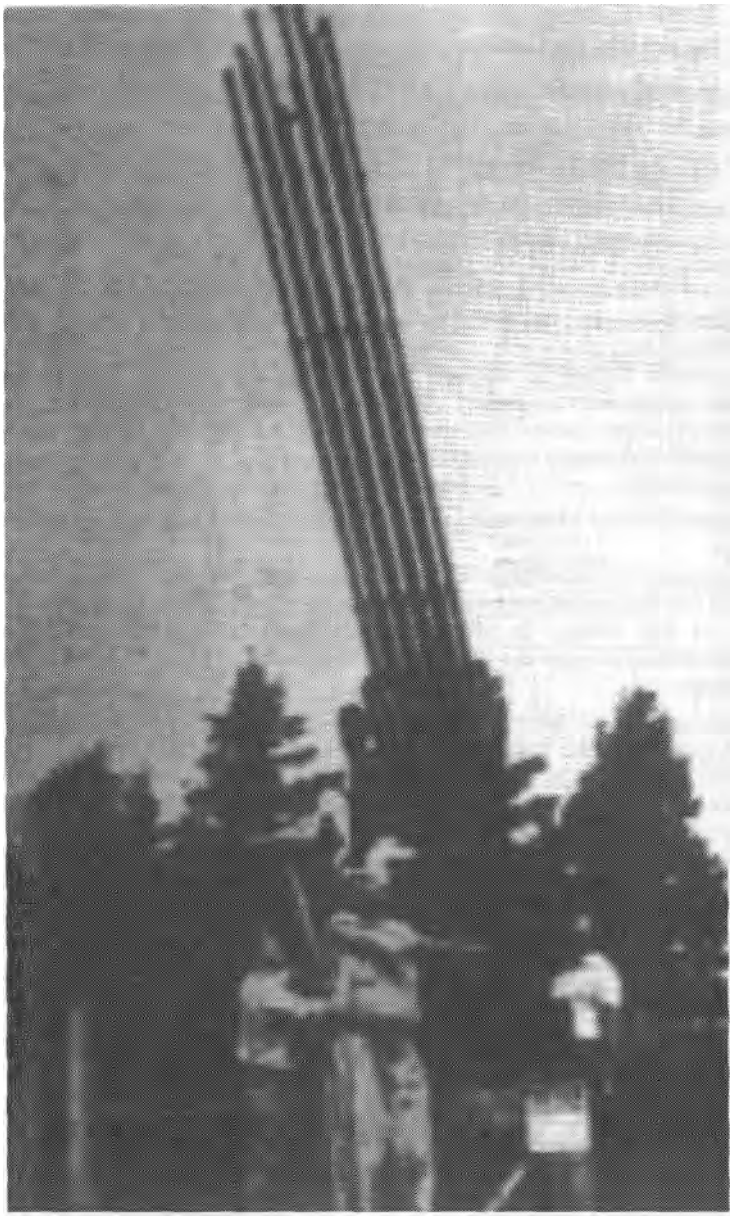

Fig. 15.11: The Cloud-Buster of Dr. Wilhelm Reich 1954.[i]

<i>: H.-P. Thietz: Tatort Erde, VAP (1996), ISBN 3-922367-62-3, page 122
<ii>: Part 1, fig. 9.3; concerning the unipolar induction see also fig. 6.5 and 11.8

Fig. 15.11 shows the weather machine of Reich, the Cloud-Buster. It can be understood only hard, why Reich directs a 3-4 m long metallic pipe with a diameter of 4 cm to the sky and connects the rear end with a deep well or with flowing waters. The effect should have been increased considerably with a few milligrams of radium. An indication that he must have worked with static electricity, delivers however a tragic accident, in which one of his collaborators was lamed on one side. He carelessly had touched the charged apparatus and suffered an electric shock[i].

15.11 The key to free energy

As a contribution to the discussion the individual principles of functioning of space energy again are collected and the attempt is undertook to value them.
In the case of an oscillating dipole configuration, for instance the railgun, open field lines are present only along the mutual line of connection (fig. 15.8 A). With that not particularly many space quanta can be reached. It hence has to be operated with gigantic excitation powers in the range of many thousands of Ampere, so that further field lines fling open and interact. The wanted over-unity effect therefore can only be reached at an enormous expense of technical apparatus.
An unipolar arrangement here is considerably more advantageous, where holds: the more unipolar, the fewer excitation power is required. But in that way it can take longer until the collecting of neutrinos like an avalanche again has worn off. In the case of an ideal spherical arrangement (fig. 15.8 B), as the ball-lightning takes, the process can even last for minutes. This explains why unipolar systems can be kept under control only very hard. If the neutrino avalanche is rolling then it purely theoretical only can be stopped with a still larger excitation power, for instance by phase shifting, what can hardly be realized in practice. The rolling avalanche can't be stopped anymore by normal means. A synchronous operation between the neutrino oscillation and the converter can, apart from the technologically hardly realizable high frequency, by no means really be recommended. As a rule one single steep flank of the change of the excitation voltage is sufficient to start the avalanche. By means of the repetition frequency or by means of the duty cycle of the excitation voltage then resonances to the neutrino field can be made or avoided. On the other hand can't be done without the avalanche effect. The utilizable power of the neutrino converter otherwise would be much too small. This case should be pursued further in the design of a longitudinal wave gauge.

All converter systems at first work based on a well-known and tried and tested physical principle of functioning. In the case of the railgun it is the bridge of Ampere. The thus used force effect on a conductor through which flows current is advantageous due to the obtainable order of magnitude and as a basic concept extremely recommendable. But also Coulomb forces or other physical principles can be used.
Despite that a further relation still must be added, which produces the interaction with the neutrinos. Closely associated with the unipolar arrangement it is the unipolar induction, which in virtually all space energy concepts is put to use. It already could be shown that the railgun uses the effect as well as John Searl in the case of his flying disc[ii]. The Faraday law of induction turns out to be the key to free energy.

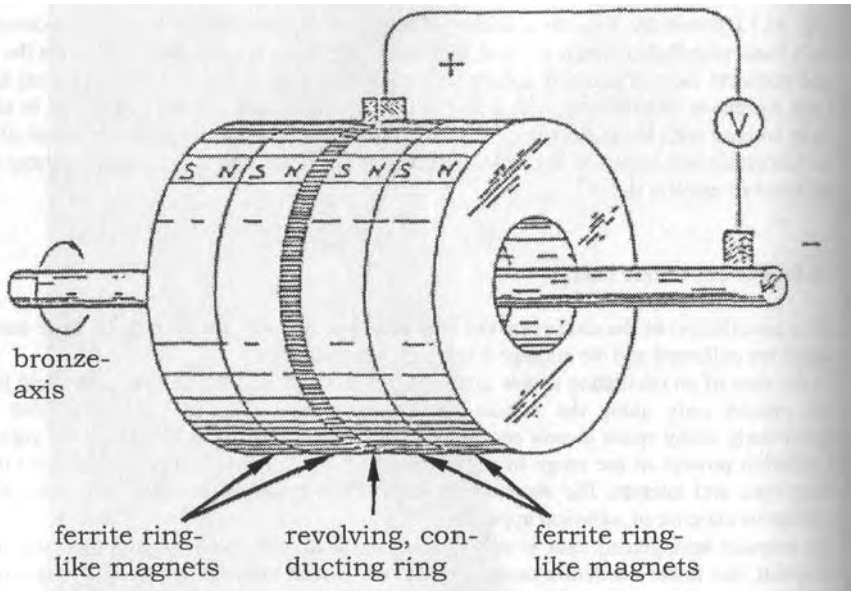

Fig. 16.1: The Faraday generator, which with rotating magnets is called N-machine.<i>

According to chap. 6.5, eq.60 the equations of transformation are:

$$\mathbf{E} = \mathbf{v} \times \mathbf{B} \quad \text{and} \quad \mathbf{H} = -\mathbf{v} \times \mathbf{D} \tag{16.1}$$

where: $\mathbf{v} = dx/dt = v \cdot \mathbf{e}_x$ = component of the direction of motion perpendicular to the area being stretched by the field pointers $\mathbf{H} = H \cdot \mathbf{e}_y$ and $\mathbf{E} = E \cdot \mathbf{e}_z$.

Thus in addition to the basic fields E and H (at v = 0) additional fields E_z and H_z, depending on motion, occur and the overall fields E_o and H_o are measured (which corresponds to eq. 63 in chapter 6.5):

$$E_o = E + E_z \quad \text{and} \quad H_o = H + H_z \tag{16.2}$$

(which corresponds to eq. 62 in chapter 6.5):

with: $$E_z = v \cdot B \quad \text{and} \quad H_z = -v \cdot D \tag{16.3}$$

Table 16.2 A: The equations of transformation of the electromagnetic field.<ii>

16. Space energy technology (SET)

It quite concretely concerns the question for a technology concerning the use of the resonant interaction (according to line 4 in fig. 15.1). For that open and at the same time oscillating electric field lines are needed, which mediate neutrinos and pass them on to a receiver working in resonance. The sun, some planets and other celestial bodies, as we already have worked out, use the effect. Even an entire galaxy is kept together in this way. This interaction plays the crucial role for the theme of space energy and the question is asked, with which technology it can be produced artificially.

16.1 The unipolar generator

The most direct way obviously leads over the Faraday relation concerning the unipolar induction. With the classic Faraday generator, where a permanent magnet is turned along its axis, at first a static electric field can be produced. By rotating in opposite direction or magnets rotating in the same direction but oppositely poled, relatively simple one pole can be ,,pinned" between the magnets and an unipolar construction can be built. Numerous research scientists already have worked in the area of the Faraday machine more or less successfully (fig. 16.1)[<i>]. There is reported of instabilities and of the picking up of unknown energy at high revolutions per minute. In the majority of the cases it in a sense of the Testatika will concern collected electricity of the air.

The Faraday relation in addition also appears to be hardly understood correct physically by anyone. A scientific magazine in this context takes the opinion: "Faraday proves Einstein wrong", and the production of electricity with Faraday's unipolar inductor violates the laws of physics ![<ii>]

<i>: A. Schneider: Energien aus dem Kosmos, Jupiter-Verlag 1989, S. 44

<ii>: ,,Faraday in his experiment did let rotate a copper disc above a resting cylinder magnet; as expected in a loop of wire a tension voltage was created (F-machine). Than he let the magnets rotate, and the disc stood still; now again a tension voltage should have resulted - but there was no voltage. In the third experiment the magnet rotated with the disc in the same direction and with the same speed. Because there was no relative motion between both, an induced tension voltage wouldn't have been expected - but it was measurable! (N-machine, see fig. 16.1).
What does that mean? If the relative movement between magnet and disc is not always crucial for the formation of an induced tension voltage, then also the absolute movement has to play a role - because something has to move, for a current being formed. But an absolute movement according to the theory of relativity can't be detected - thus Faraday's experiment proves Einstein wrong! Therefore you won't find anything about this experiment in the textbooks".
Taken out of the article: Faraday widerlegt Einstein, PM-Magazin 11/ 1998, P. 133

from table 16.2 A:

$$\boxed{H - H_o \overset{(16.2)}{=} - H_z \overset{(16.3)}{=} v \cdot D} \tag{16.4}$$

with the velocity $v = dx/dt$,
not accelerated $dv/dx = 0$ (inertial system) and derived for x:

$$\boxed{\frac{dH}{dx} - \frac{dH_o}{dx} = \frac{dx}{dt} \cdot \frac{dD}{dx} = \frac{dD}{dt}} \tag{16.5}$$

The curl of the H-field pointer points in the z-direction:

$$\boxed{\text{rot}\,\mathbf{H} = \frac{dH}{dx} \overset{(16.5)}{=} \frac{dH_o}{dx} + \frac{dD}{dt} \overset{!}{=} \mathbf{j} + \frac{d\mathbf{D}}{dt}} \tag{16.6}$$

comparison of coefficients with Ampère's law:

$$dH_o/dx = \mathbf{j} \quad , \tag{16.7}$$

integrated over dx and ds and formulated generally valid:

$$\boxed{\oint \mathbf{H_o}\, d\mathbf{s} = I_{ein}} \tag{16.8}$$

thus follows from that: <u>magnetic field = vortex field</u>!

<u>Faraday's law of induction</u> (analogous derivation):

$$\boxed{\text{rot}\,\mathbf{E} = \frac{dE}{dx} = \frac{dE_o}{dx} - \frac{dB}{dt} \overset{!}{=} - \frac{d\mathbf{B}}{dt}} \tag{16.9}$$

cause for measurable electric field E_o is missing:

$$dE_o/dx = O \quad , \tag{16.10}$$

integrated over dx and ds and formulated generally valid:

$$\boxed{\oint \mathbf{E_o}\, d\mathbf{s} = 0} \tag{16.11}$$

thus follows from that: the <u>electric field = irrotational</u> (according to Maxwell)!

<u>Table 16.2 B:</u> <u>The derivation of Maxwell's field equations (Ampère's law and Faraday's law of induction) from the equations of transformation of the electromagnetic field</u>

The author of the article proceeds from Maxwell's formulation of Faraday's law of induction, according to which arises a tension voltage in a wire if the wire cuts magnetic force lines, thus is moved relative to a magnet.
If he had read my books, then he would know that Faraday not only has found the older, but also the more comprehensive law, whereas Maxwell only describes a special case. Starting-point for the by me developed theory of objectivity are on the one hand Faraday's law of induction and on the other hand the regularity dual to that, which both together are called equations of transformation of electromagnetism (fig. 6.5, eq. 60 and fig. 16.2 A, eq. 16.1).

16.2 Derivation of Maxwell's field equations

For the derivation we assume, as already in fig. 6.5 for sake of simplicity, that the movement $v = v_x$ takes place perpendicular to the area stretched by the field pointers $H = H_y$ and $E = E_z$. If we derive the equation of transformation, written down for a field component depending on motion, for the coordinate x by using the equations of material and compare the result with Ampere's law resp. Faraday's law of induction, then it becomes clear that the comparison is successful only under certain prerequisites. This circumstance proves that the Maxwell equations only describe a special case and that the equations of transformation are more general valid and causal (table 16.2 A and B).

But in this place is crucial that Faraday's law of induction according to Maxwell only is able to describe a formation of dipoles. For the formation of unipolar field structures however must be fallen back upon Faraday's law concerning the unipolar induction. Whoever wants to understand or even develop by himself concepts concerning space energy, first must have understood Faraday's law in its whole range.

Usually the Faraday generator is, like in the original building shape, equipped with permanent magnets and operated in a steady operating state. Doing so consequently only static electricity is formed. We however need oscillating fields, and for that either the rotation, or the magnet should be changed in polarity with high frequency. Expressed with the precision of mathematics, the first case is described by: $E(t) = v(t) \times B$ and the second case by $E(t) = v \times B(t)$. Both cases have to be investigated and discussed, because both $v(t)$ and $B(t)$ are possible in principle. It is added that in both cases mechanically moving, as a rule rotating, designs but just as well resting designs are conceivable, in which only the moving charge carriers themselves realize the component of velocity v.

This time the crucial point is, that in both cases equally a change of the electric field strength E(t) is produced, with the help of which neutrinos should be collected. Because of the extremely high oscillation frequency of the neutrinos large field changes dE(t)/dt and associated with that large changes of tension voltage dU/dt seem to be the optimal solution, which can be handled with today's technology. Apart from that further difficulties are added, which require a managing in accordance with engineering. If we namely work with a large acceleration dv(t)/dt, then the inertia of the accelerated masses should be overcome, then only very small and light projectiles can be launched like in the case of the railgun. If we however work with fast changes of the magnetic field dB(t)/dt, then the inductance acts slowing down.

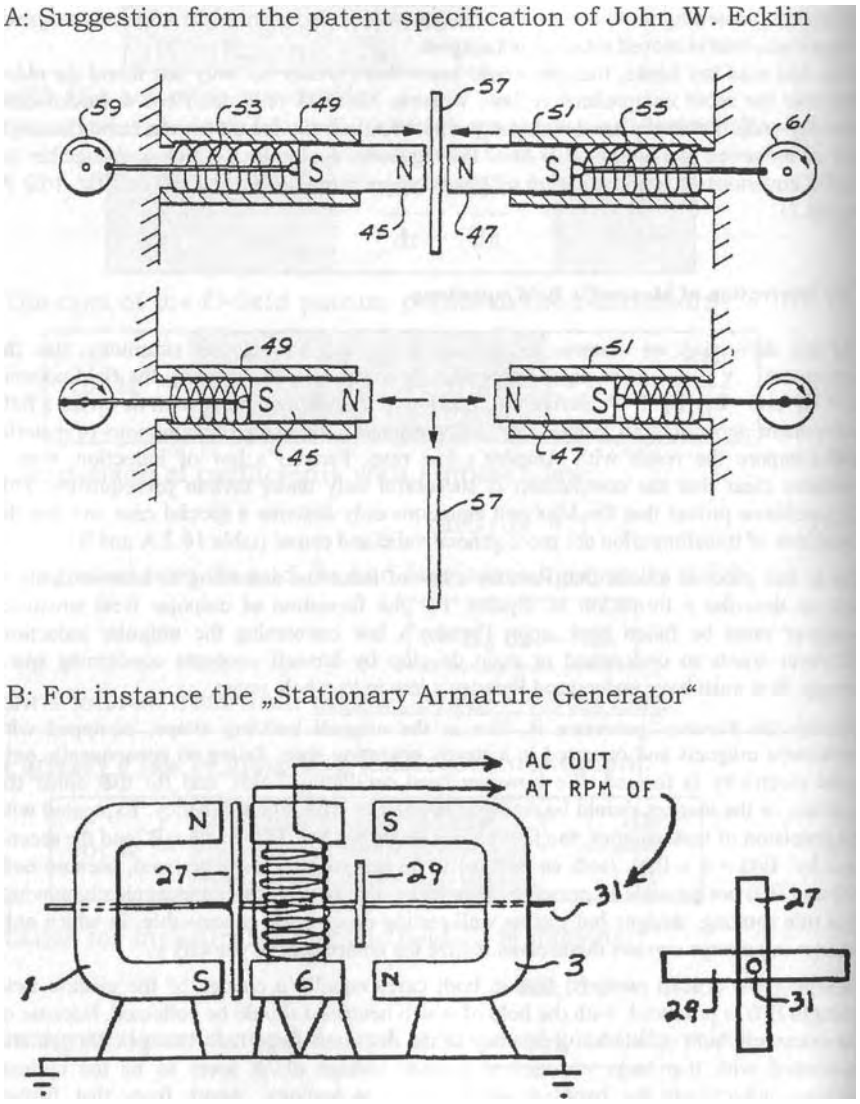

Fig. 16.3: Principle of the Ecklin generator.<i>

<i>: A. Schneider: Generatoren mit Ferritkernumpolung, NET-Journal 6/98, S. 9
Ecklin: Permanent Magnet Motion Conversion Device, U.S.Pat. 3'879,622

16.3 SET-devices with rotating magnetic fields

If we again come to speak of the Faraday generator, which can be built up in two variants. In the case of the F-machine the magnets rest and only the disc rotates, whereas in the case of the N-machine the magnets rotate along. In this case can't be avoided that some of the induced charge carriers roam about in the magnets and sensitively disturb the structure of the material. One only thinks of the bending spoon effect!
The consequences stretch from a loss of the permanent magnetism, over a shattering and bursting up to a pulverizing of the magnets. Adventurous rumours and alarming reports in this direction are sufficiently available.
An improvement could be obtained by an isolation layer between the conductive disc and the magnets, but against induced charge carriers inside the rotating magnets this measure is not able to achieve anything.
Anyhow the best thing to do will be to completely do without permanent magnets in neutrino converters! If we replace them at least in our minds by electromagnets, then a feeding with alternating voltage is possible. That also is necessary if oscillating neutrinos and not air ions should be collected.
As a result of the alternating voltage at first large eddy currents occur in the disc. The losses can be reduced by radial slits in the disc. The induced currents then only can, as wanted. flow radially to the outside.
Bigger headaches causes us on the other hand the inductive and with that current storing effect of the excitation coils. If a too large excitation inductance should prevent a fast increcase in current, then also the induced electric field will increase correspondingly comfortable and hardly be able to persuade a single neutrino to stay.
A coil core of iron or dynamo sheet metal with that is ruled out from the start. Even ferrite would be suitable at most conditionally. Usable are air coils with as possible as few turns.
In an advantageous design the slit copper disc rotates between two air coils, if need be flat coils built in the way Tesla did, which are fed with pulsed tension voltage.
The highest speed of change in current surely is obtainable by means of a spark gap, like already Tesla has used (fig. 9.1). But also other techniques are thinkable as pulse driving. For instance semiconductor power amplifiers with MOS transistors not only can be switched fast and hard, but in addition frequency and duty cycle can be adjusted freely with reproducible exactness. These are niceties, which will gain importance in connection with the control and regulation of a converter.

Und the heading "generators with magnetic flux variation" Mr Adolf Schneider has collected and commented on some concepts[1]. The generator of the american research scientist John W. Ecklin registered for patent at 22-4-1975 thus stands as an example of a whole group of inventions, in which the magnetic conductivity in the magnetic circuit and with that the flux is changed with a jump.
Fig. 16.3 B shows a building form consisting of two horseshoe magnets (1, 3) with a likewise resting coil in between (6). In rest the magnetic circuit experiences no change and consequently no tension voltage is induced in the coil. The trick is that an axis (31) is pinned right through the arrangement which is turned with two soft iron anchors, which magnetically short-circuit alternating the left (27) and the right (29) horseshoe magnets.

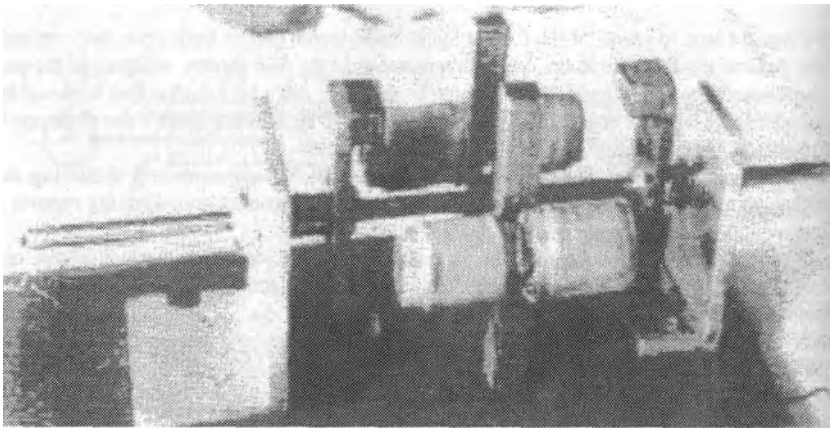

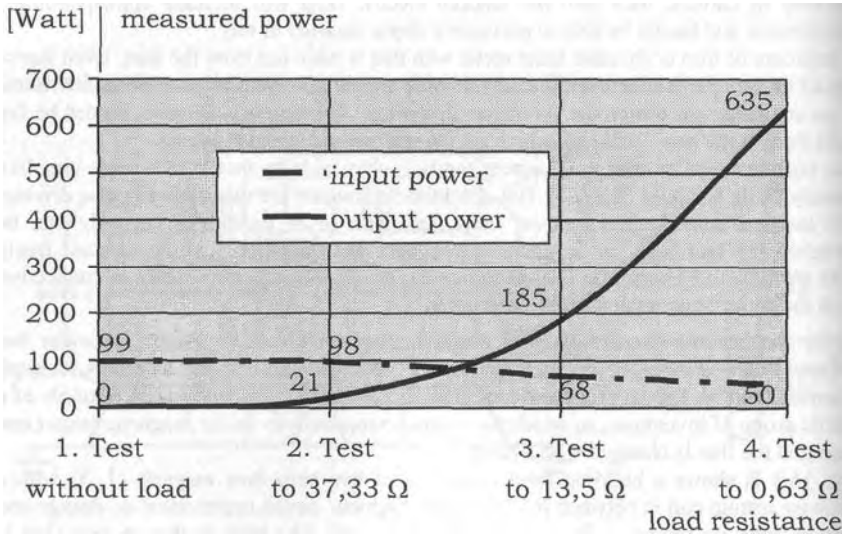

Fig. 16.4: Bedini magnetic converter.[i]

[i]: A. Schneider: Generatoren mit Ferritkernumpolung, NET-Journal 6/98, S.10

Besides the moment of reluctance, which should be compensated by the physical principle, and the friction of the bearing actually no further moment of reaction can occur which would have to be gotten over, not even then if current is taken out of the coil. If the flux change is large enough, purely arithmetically it should be possible to take off an electric power which is considerably larger than the friction power. John Bedini has 1985 measured an over-unity effect of up to 12.6 at a similar constructed generator, where with increasing strain also the factor could be increased (fig. 16.4).

16.4 Commentary concerning magnetic SET-devices

I judge these measurements rather sceptical, after I already in three cases had to break the message gently to the inventors, that their device unfortunately was nothing but an energy destroying machine and they merely had measured wrong, where admittedly the measuring of pulsed tension voltages and currents is not quite simple. So that you don't become a victim of wrong hopes and self-deception, I recommend all SET inventors to realize the closed-loop. If in the continuous operation power can be taken out of such an arrangement without supply of energy from the outside, and be it as small as possible, then that convinces everyone even any journalist and any non-expert.
Unfortunately in the case of numerous concepts at this place already the end is reached. As charming the variation of the magnetic circuit may be, in most cases I miss the unipolar arrangement of the fields. Perhaps here no neutrinos are needed at all and energy merely is withdrawn from the environment heat? I'm not able to answer this question and I surely don't need to, as long as no magnetic converter is demonstrated to me as closed-loop. such a converter, if it can be realized, presumably will at least partly hide one of its poles and produce some open field lines; that at least would be expected.

a still bigger measuring technical problem represent the neutrinos bound to a line, which oscillate around the conductor in the form of ring-like vortices. We have become acquainted with these in the case of the single-wire transmission technique of Tesla (fig. 9.5). They are formed, if neutrinos are slowed down and collected, but not yet have materialized to charge carriers. Tesla did use them for his loss-free energy transmission technology, but he couldn't supersede the alternating current technology full of losses, which also stemmed from him but which he called the worse technology, from the market because there were no power meters available for the single-wire-technology.

Today we still aren't one step further. The energy supply enterprises still decline this technology, as I had to learn myself, although this would be the only way to transport solar energy from the desert or energy from the geothermal energy of Iceland by a sea cable to Central Europe, where it is needed.
Today still no gauges exist for such neutrinos bound to a line. Therefore will every measuring technician experience his Waterloo at SET-devices, in which they occur! I now will report of such a converter and the odd measuring problems.

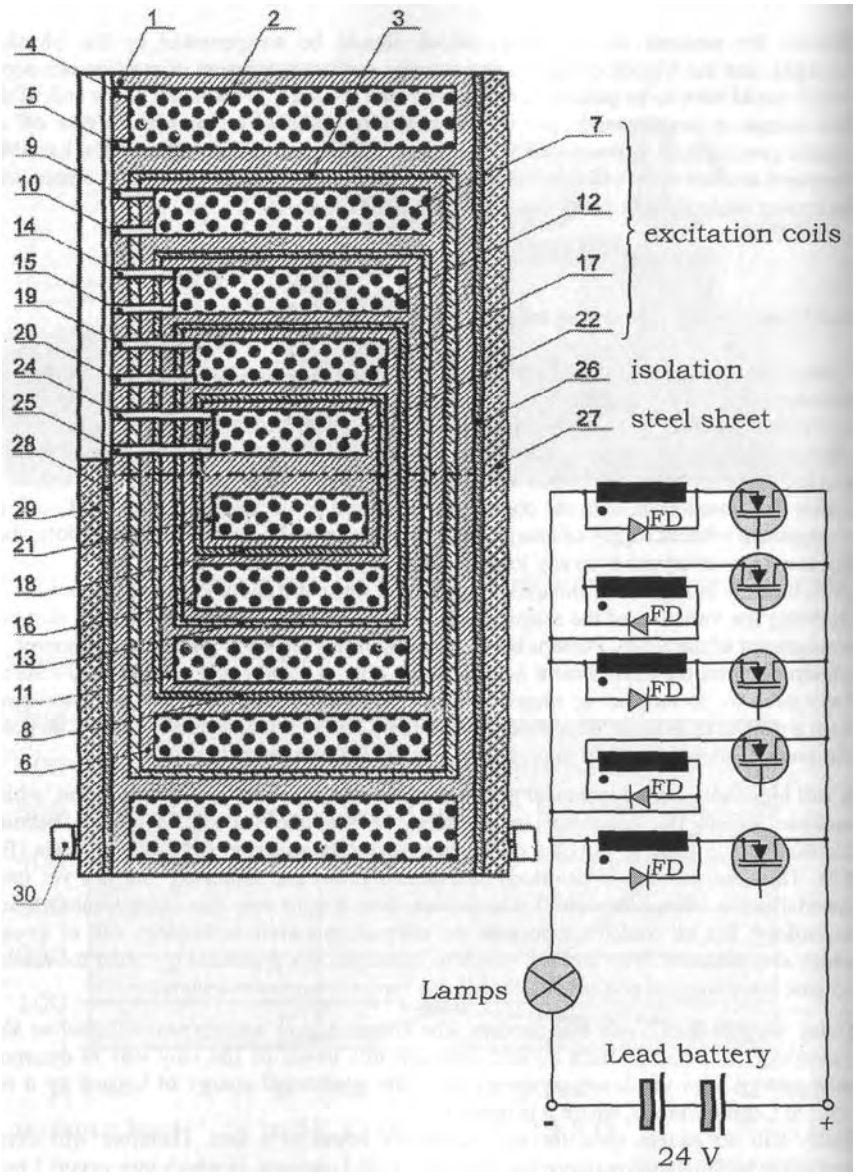

Fig. 16.5: Space quanta manipulator of the Firma ROM AG<i>

<i>: Gibas, Greilinger, Lehner, Rusterholz: Strom aus dem All, Mega Link, Fachzeitschrift fur Elektronik, Nr. 6, Marz 1998, S. 18-23 resp. Bau: Glaube kann Berge versetzen, Bulletin SEV/VSE 25/97, S. 31

16.5 RQM and the space quanta manipulator

If an employee or one of the numerous shareholders of the Swiss Firma RQM AG in Rapperswil speaks of space quanta, then he with that presumably means the neutrinos. An oscillating source of neutrinos is called central Space Oscillator and an operation in resonance of the energy receiver, the so-called space quanta manipulator, is required.
Mr Ludwig Sigrist, the creator of this world of imagination, was not a physicist but crane operator (pseudonym Crane O.) and inventor, whom textbook physics couldn't help further in his considerations anyhow. His concept, if it can be translated into a scientific comprehensible language or not, at least helped him personally and gave him the position to create the space quanta manipulator (fig. 16.5).

It consists of several pot coil systems, which are build up and boxed into each other according to the Matrjoschka principle of scaling down. The ferromagnetic core material of the pot spheres (1, 6, 11, 16, 21) should show magnetostrictive properties as distinct as possible. As we will see, this measure gains its actual importance first in connexion with the interaction with neutrinos!

Each pot sphere carries an excitation winding (2, 7, 12, 17, 22), through which alternatively flows a current in opposite direction. By means of this measure, which seems useless according to classic design concepts, one of both field poles is pinned in the centre, in which way the necessary open field lines are produced.

The individual pot spheres are insulated from each other, where the isolation layers (3, 8, 13, 18, 26, 28) should have a high dielectricity. The pot spheres thus in addition form capacitors with each other; even the ending plates at both sides (27, 29) function as capacitor plates.
This construction, the core piece of the planned RQM converter, is driven by a transistorised power amplifier with excitation impulses as steeply flanked as possible. According to patent specification<i> the pulse widths are freely eligible in steps of 5 ns betweeen 200 nanoseconds and one second. Besides the frequency also the polarity and DC voltage offset are adjustable.

Every visit of the laboratory leaves a lasting impression: Carefully the engineers grope forward, turn at the frequency and the duty cycle, until the effect suddenly occurs and neutrinos, the space quanta, are being collected. One realizes that tuning parameters with still stronger reactions would be possible, but entirely without any regulation and limitation of power that can't be controlled anymore. The avalanche effect would destroy everything, and so one is further dangling along the brink of the abyss in the development laboratory of the RQM, all the time trying hard to gain control of the hardly understood effect.
Concerning the setup and the mode of operation of the pot system the inventor did let his posterity have explanations, but why a diode in free operation FD suddenly loses its rectifying function, for that neither the employees nor specialist visitors of as high as possible scientific rank in the laboratory until now had ready an answer.

<i>: Gibas, Lehner, Greilinger: Vorrichtung und Verfahren zur Erzeugung elektromagnetischer Pulse, Patentschrift CH 687 428 A5 vom 7.5.1996

w

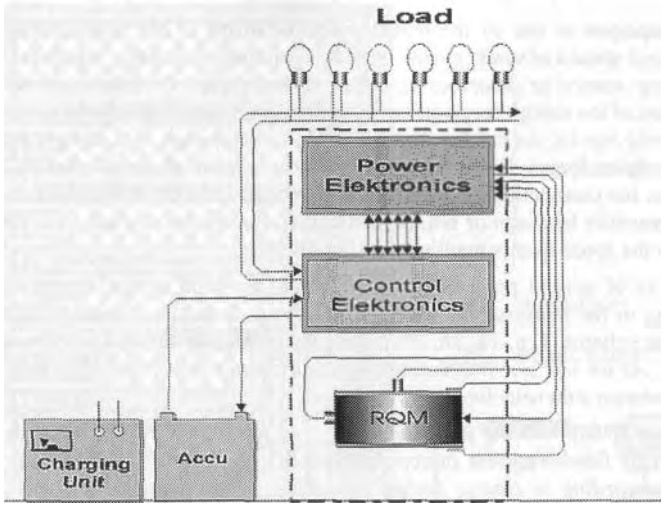

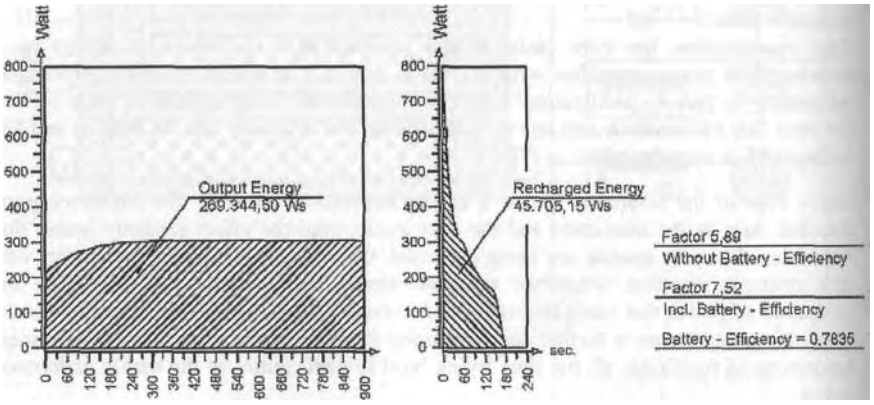

Fig. 16.6: The RQM test installation of 23-9-1996<i>

<i>: F. Greilinger: Der Weg zur erfolgreichen, stabilen Energieauskopplung, RQF Magnetik, Sonderausgabe 1996, page 10

As said, the neutrinos no longer are free but bound to a line, if they leave the pot system. They oscillate around the wire, even around every semiconductor and rove through the entire switchboard. Doing so they can cause quite something, also bring about quite some disaster.

Lead batteries are being recharged, which without doubt is desirable, but in the continuous operation they are destroyed by the same vagabonds. In normal light bulbs for instance some of them materialize to charge carriers, so that according to a gauge more current leaves the light bulb, as on the other side flows in to it. It indeed glows completely normal, but measuring technical for the installation nothing is normal anymore.

The visitor can be shown by means of a high precision measuring facility of vibrations that the pot coils oscillate not only electrically and magnetically, but also mechanically. But the effects alone don't make a converter, which can be produced and which await already numerous buyers of options and licenses.

On the one hand measures for the purposeful conversion of the roving space quanta in utilizable charge carriers here still are missing. On the other hand any controlling facility is missing, to adapt the power taken up from the neutrino field to the momentary need of the consumers. The brave engineers of the RQM still have quite some way in front of them. but the line of approach is right and the reached can be looked at.

16.6 SET-devices with pulsed magnetic fields

In the case of the space quanta manipulator mechanically nothing is moving. In the copper coils the charge carriers merely are on the way with the velocity v. We here have present a typical example of a SET-system with pulsed magnetic field. Compared to the before discussed SET-devices with rotating magnets, for instance the N-machine, the space quanta manipulator clearly has its nose in front. Without brushes, without friction and wear and tear it theoretically has a unlimited life.

In addition it is simpler to produce the necessary large steepness of the flanks in an electronic way as by a mechanical variation of the magnetic field. By means of electronically driving the process it also can be checked, controlled and regulated easier.

The question for an optimisation of the concept still remains. At present one already can be satisfied with a study of possibility, but sometimes one will question the design. There as an example the eddy current losses in the iron pots will be at discussion. About sheeted or sintered materials could be thought, if not at the same time the inductance of the coil would increase in that way, which slows down the increase in current. Ferrite materials again are very brittle and would crumble to dust under the mechanical oscillations of size. I proceed from the assumption, that also here an arrangement with air coils could turn out to be an optimum. It does make sense, if Tesla at higher frequencies always did experiment with air coils.

Now it still depends on the coiling technique. One single conductor loop doesn't provide any open field line. For this purpose if need be two loops have to be supplied with current in opposite direction, like it is the case for a so-called Mobius winding. In this way possibly just as many neutrinos interact as in the case of the pot coils of the space quanta manipulator, which are alternatively supplied with oppositely phased current. To clarify the situation we now should occupy us with the coiling technique.

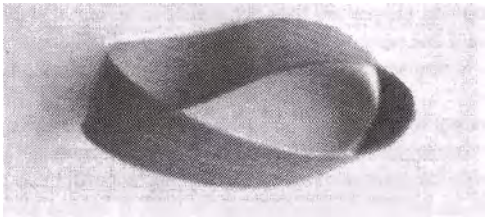

Fig. 16.7 A: The Mobius band

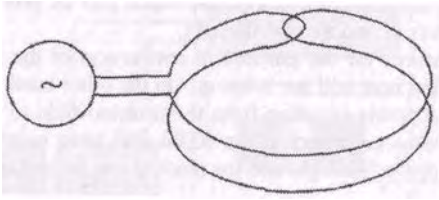

Fig. 16.7 B: The Mobius strip

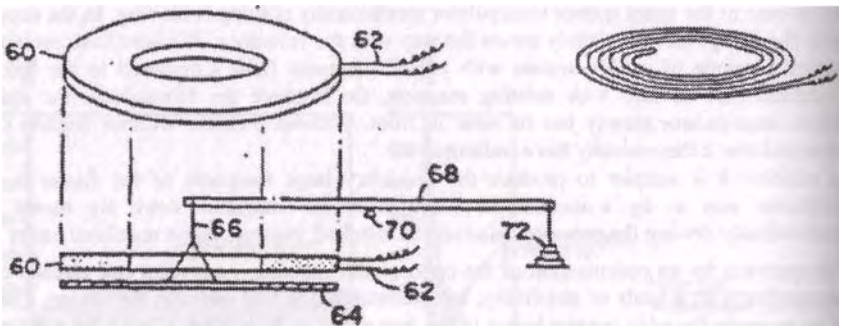

Fig. 16.7 C: Bifilar wound flat coil

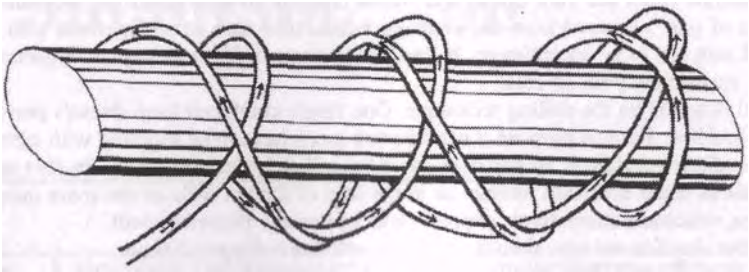

Fig. 16.7 D: Mobius winding arranged like a cross

16.7 SET-devices with Mobius winding

In connection with space energy devices often is talked about the use of a Mobius winding. That is traced back to the Mobius band, which one obtains, if one for example one end of a long paper strip after a half turn glues together with the other end. The result is a strip, which has neither top side nor underside and neither right nor left border. This object with only one side and only one border is a creation of the German mathematician August Ferdinand Mobius (1790 - 1868), fig. 16.7 A.

A distant relative of the Mobius band is the strip with the same name, where the magnetic field lines mutually cancel out. It is the same compensation, as we know of a two core electric cable, where the supply and return cable are run close together. For that the sense of winiding of a conductor loop simply is reversed (fig. 16.7 B).
If the magnetic field vector is wrapped right-handed around the supply cable and left-handed around the return cable, then both amount to zero, so that measuring technical no rest field can be detected anymore at some distance.
THE pointer of the electric field stands perpendicular to the magnetic field vector and points in the direction of the conductor and the movement of the charge carriers. From the coupling of magnetic and electric field follows, that the compensation of one of them also leads to the compensation of the other one. But if the electric field actually is compensated, then there may not flow any current in the winding!
There however flows a current if an electric tension voltage is supplied to the Mobius winding. As a result of this forced current flow both electric and magnetic fields have to occur, which are not compensated! Some field lines will fold outward the expected direction and stand in space as open field lines. These we, in the oscillating case, owe the interaction with the neutrinos.

A perfect compensation would be expected for a two core, bifilar winding. The American physicist William Hooper was able to obtain interesting effects with a bifilar wound flat coil. With help of a balance he could detect attracting or repelling force effects on different, electrically or magnetically neutral discs (fig. 16.7 C)[<i>].
But he feeds the flat coil with direct current, so that a contribution of neutrinos can't be expected. Such effects only will occur, if one works with pulsed signals, because the bifilar wound flat coil quite obviously is able to form wanted, open field lines.

<i>: Schneider, Adolf: Energien aus dem Kosmos, Jupiter-Verlag 1994, page 28, taken out of:

Mielordt, Sven: Tachyonenenergie, Hyperenergie, Antigravitation, kaum & Zeit Verlag 1984

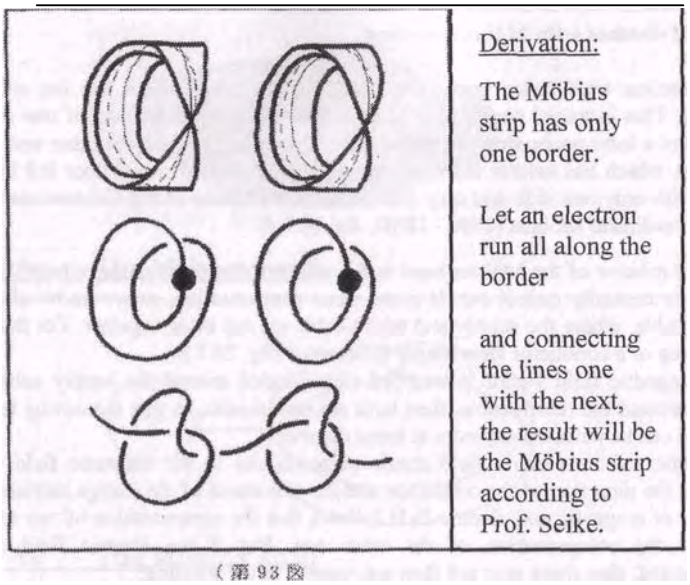

Fig. 16.8 A: Derivation of the Mobius strip acc. to Seike<i>

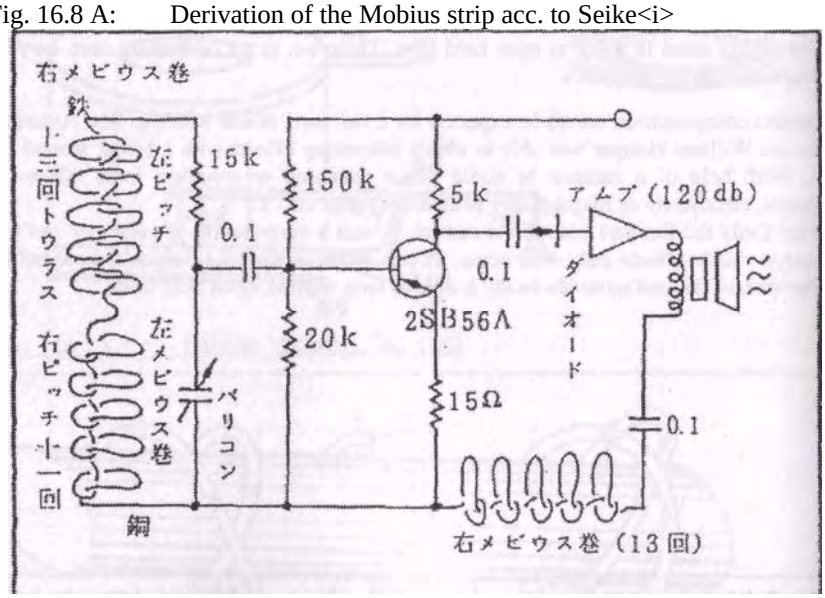

Fig. 16.8 B: Scalar wave radio according to Prof. Seike<i>

<i>: Seike, Shinchi: The Principles of Ultra Relativity, Space Research Institute 1990, ISBN 915517-1

16.8 Mobius converter of Seike and Coler

Concerning construction it can be an advantage to wind a Mobius coil not purely bifilar and in that way to do without a perfect compensation. It often already is sufficient, if two conductors cross and only individual components of the field vectors partly cancel out. In the case of the coil, which is pulled apart and wound like a cross, drawn in fig. 16.7 D the conductor current and the fields of supply and return cable belonging to it stand under an angle of almost 90°. This in individual cases should already be able to cause the formation of open field lines.

Similar field conditions are formed, if after every turn the wire is looped under the last winding. At the knots again the angle conditions of approx. 90° occur. The Japanese professor Shinichi Seike preferably works with this kind of winding, which he directly derives from the Mobius band (fig. 16.8 A)[<i>]. He has designed an electro-gravitation motor basing on this principle. He also speaks of weight reduction and of an artificial anti-gravity field. It could be confirmed experimentally, that his setup cooled down slowly during the operational tests, despite the expected heating up by the copper losses of the current[<ii, S.29>]. Unfortunately I don't known anything more exact.
In his book further is found the wiring diagram of a radio for the reception of scalar waves (fig. 16.8 B). He thereby quite simply replaces all coils in the high-frequency part with his Mobius coils. If longitudinal waves already are measurable and receivable with this simple measure, first has to be checked.

The German captain Coler more than 50 years ago has developed another Mobius converter. His "Magnetstromapparat", with approximately 6 kW power and an at least four-fold over-unity effect uses six coils with permanent magnetic core. As a peculiarity he in addition runs the coil current through the core under an angle of 90° with regard to the coil current (fig. 16.8 C).

More detailed details can be seen in the footnote[<ii, S. 22>].

<ii>: Adolf Schneider: Energien aus dem Kosmos, Jupiter-Verlag 1994

S.22: "Scientists of the Technical University Charlottenburg in Berlin and Munich confirmed that the device functioned without objections, but they didn't find a theoretical explanation for the production of energy. The professors Kloss and Franke of the Technical University of Berlin found a degree of effectiveness of 450%. Prof. Schumann confirmed that 4.8 to 6.7 times more energy came out, than was put into the device. Prof. Schumann excluded a deception entirely as the records prove.
But it wasn't simple to set the device going and the stability for longer periods of time wasn't guaranteed. The war confusion set an end to further research. After the end of the war the British secret service confiscated all available documents and apparatus. Part of the report was declassified in 1962".

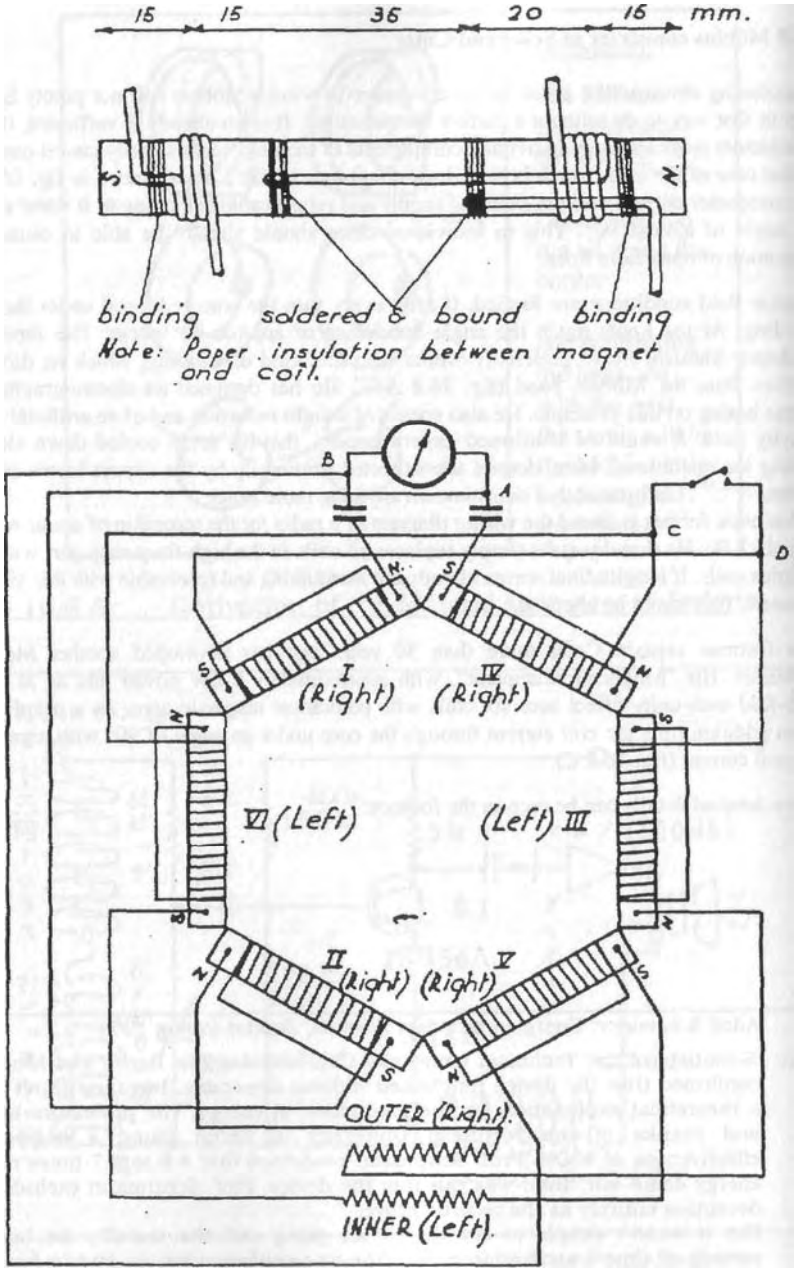

Fig. 16.8 C: The Coler converter

16.9 Tesla's flat coil

In the category of the unconventional coiling techniques without doubt the Tesla coil may not be missing. If in schools and high schools such coils were standing in the laboratory for teaching purposes, then as a rule it are cylindrical coils. In reality Tesla worked with flat coils but that, so is said, isn't necessary anymore today, since we have at our disposal better isolating materials than 100 years ago. Actually Tesla contended with problems of osilation, which he could solve with the help of the flat coil, but it should turn out that the coil geometry is attached a crucial importance.

Everything had started with Tesla having to leave the Technical Highschool in Graz without diploma. He ran out of money and he had dared to criticize the venerable Professor Poeschel and his sparking Gramm dynamo. With that he had put himself under compulsion to succeed. Two years later he had ready the solution. In the year 1882 he discovered the rotary field in Budapest.
In the time to come he designs and builds an alternating current motor, but no-one wants to have it and surely Thomas Alva Edison not. Tesla after this disagreement very fast gives up his job at the Edison Company again and again stands under pressure to succeed. With that the eternal bachelor Tesla urges himself to ever higher efforts. He wants to prove himself and the rest of the world that his alternating current system is superior to the direct current system.
Direct current, as is well-known, can't be transformed, and thus the advantage of Teslas alternating current lies in the possibility of power transport by high-tension cable over large distances. But for that the high-tension transformers first had to be developed and thereby the said problems of isolation occurred.
With each turn the tension voltage at the transformer winding increases. The distance to the grounding point lying on the outside has to be chosen bigger with each turn, so that no blow inside of the high-tension winding occurs. A consistent solution of the problem in accordance with engineering is the flat coil used by Tesla, wound spirally from the inside to the outside (fig. 16.9 A)[<i>].

It thus is correct that isolation technical reasons led to the flat coil, since Tesla himself was completely surprised as he had to find out that this coil can lose its self-induction, that scalar waves can be detected with it and that it is cooled down during operation in an inexplicable manner.

This cooling effect Tesla has investigated more detailed and after all even used. In his patent specification concerning the superconductivity he describes, that the flat coil also loses its Ohmic resistance, if he in addition previously cools it with liquid air. The remaining cooling down to absolute zero his flat coil obviously has carried out entirely by itself with help of the neutrinos (fig. 16.9 B)[<ii>].

<i>: Nikola Tesla: Coil for Electro-Magnets, Patent No. 512,340 (1894)

<ii>: Nikola Tesla: Means for Increasing the Intensity of Electrical Oscillations, Patent No. 685,012 (1901)

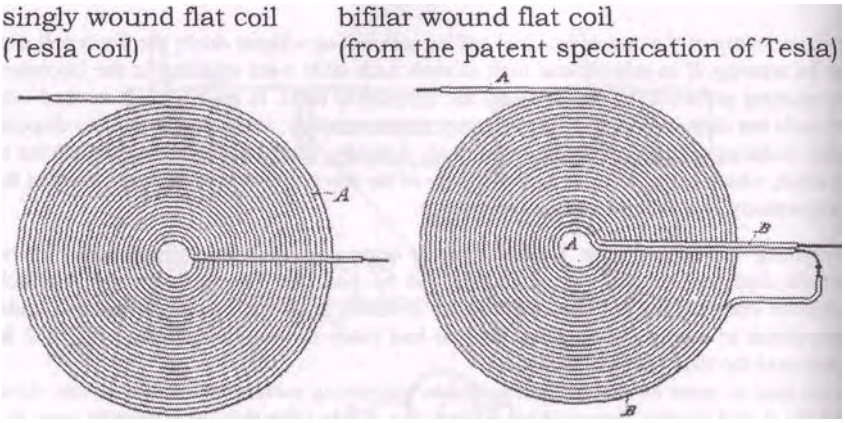

Fig. 16.9 A: Coiling techniques of Tesla's flat coil.[i]

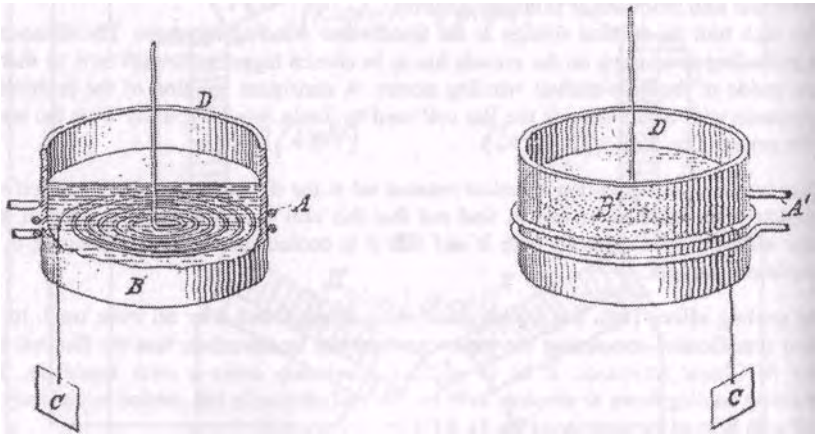

Fig. 16.9 B: Patent specification of Tesla concerning Superconductivity.[ii]

---

[i]: Nikola Tesla: Coil for Electro-Magnets, Patent No. 512,340 (1894)

[ii]: Nikola Tesla: Means for Increasing the Intensity of Electrical Oscillations, Patent No. 685,012 (1901)

16.10 The secret of the flat coil

The technical function could be explained in the way that the charge carriers of a flat coil by induction are set into motion for excitation from the outside. The transmitted energy shows in form of kinetic energy. The spiral flat coil becomes narrower and narrower towards the inside, the length of each winding shorter and shorter, so that the kinetic energy inevitable has to decrease in favour of a rotational energy. The faster and faster rotating spherical vortices are pulled apart to flat discs and eventually to ring-like vortices by the centrifugal force. The electrons at first become neutrinos bound to a line and finally free neutrinos. Tesla has technically used the first ones in the single-wire-transmission technique (fig. 9.5) and the last ones in his wireless energy transmission (fig. 9.7).

Like many other inventors, Tesla owes also the inventions, which he counts his greatest, like the radio technique and the Magnifying Transmitter, first of all his industriousness. his persistence and a great deal of inventor luck. A magician, as he is called in his most important biography, he by no means was[<i>]. The flat coil, to which led him chance and which plays a central role in all these inventions, gave him the lucky position, to collect neutrinos and materialize them to charge carriers or in reversed direction to dematerialise electrons to neutrinos.

The technology however is everything else but new. Already the Lituus of the Etruscan and Roman Augurs and the crook of the priests had the same spiral structure (fig. 16.10). In the case of the devices, which the Augurs for instance served at land surveying, it clearly concerns flat coils according to Tesla. We will go into this strange „gauge" more in detail in part 3 of the book[<ii>].

The trick probably is, that one component of the electric field pointer is directed towards the centre of the coil and as a result some open field lines are generated, which then collect neutrinos from space.
In this process the neutrinos thanks to the resonant interaction are slowed down to the speed of light and following, as discussed, materialized by means of the flat coil, as in addition rotational energy is withdrawn from the neutrinos. Since the receiver oscillates resonant with opposite phase, in addition the thermal oscillations are reduced and the receiver becomes cold!

If one compares the Mobius coil with the Tesla coil, then besides numerous properties in common the strength of the first coil lies in the production of open field lines and the collection of neutrinos, whereas the special and additional property of the flat coil lies in the materialization, in the conversion of neutrinos into charge carriers. But the advantages of the flat coil have to be bought at the expense of having to work with very high tension voltages (above 511 kV) and with large changes in tension voltage (du/dt). With this set of difficulties we will have to deal in more detail.

<i>: Margaret Cheney. Nikola Tesla, Erfinder, Magier, Prophet (Orig.: Man Out Of Time, 1981), Omega-Verlag Diisseldorf 1995

<ii>: K. Meyl: Electromagnetic environmental compatibility, part 3, edition belonging to the information technical seminar, INDEL Verlagsabteilung 2003.

Fig. 16.10: The Lituus or crook of the Augurs in ancient Rome

16.11 Discussion concerning the technology of the neutrino collectors

Let us again collect the facts for the discussion: A SET-device is distinguished by a more or less unipolar design and open field lines, with which interact neutrinos, which are oscillating in resonance. These then are slowed down and collected. For the transient process a large change in tension voltage (dE/dt) is required, which can be obtained directly, for instance by means of a spark gap, or indirectly by means of Faraday's law concerning the unipolar induction (E = v x B).
The discussed possibilities concern the acceleration of a machine part (dv/dt), the variation of the magnetic field (dB/dt) by pulse-like excitation signals (16.5) or by magnetic flux variation (16.3) and the railgun. which even can be operated without foreign magnetic field (fig. 15.5 C) and for which in that case occur both a dv/dt and at the same time a dB/dt.
For resting arrangements the velocity v is that of the charge carriers moving in the conductor. So that Faraday's law thereby doesn't lose its influence, the pointers of E and v mustn't point in the same direction, as in the case of "normal" coils. Unconventional windings, which for instance can be knotted like Mobius strips (16.7), take remedial action. Also the ancient crook, rediscovered as flat coil of Tesla (fig. 16.10), proves to be suitable in principle. Here one component of the electric field pointer points in the direction of the centre so that the wanted, at least partly, unipolar arrangement can be formed.

The first step, the collecting of space quanta, shouldn't pose an insurmountable obstacle anymore in view of the numerous possibilities and the detailed explanations. A real difficulty we still have before us, because in most cases some ring-like vortices bound to a line are formed, for which no electronic construction element exists and for which functioning converters hardly are known.
There spoons are bending, some lumps are flying through space, radioactivity is disappearing without a trace, light phenomena are formed and the device suddenly is becoming cold. Almost all inventors, who have arrived in this place, are enthusiastic about the not understood effects or with that are wanting to get attention, but hardly anyone really starts something with that. Until now the necessary system and an useful theory were missing.

Only too often isn't considered, that only an indirect conversion into charge carriers is possible, that during the materialization of neutrinos a intermediate product is formed, which can be described with the model concept of a neutrino bound to a line or of an oscillating ring-like vortex. The technologies collected in this chapter concerning the collecting of neutrinos only form the first step from the free to the bound ring-like vortex. The coming chapter is dedicated to the second step. Here we should try to understand the properties of space quanta bound to a line and loudly think about for which purpose we could use them in practice[<i>].

<i>: Reference: Both chapter 16 and chapter 17 treat point 4 according to table 15.1 concerning the resonant interaction (page 86).

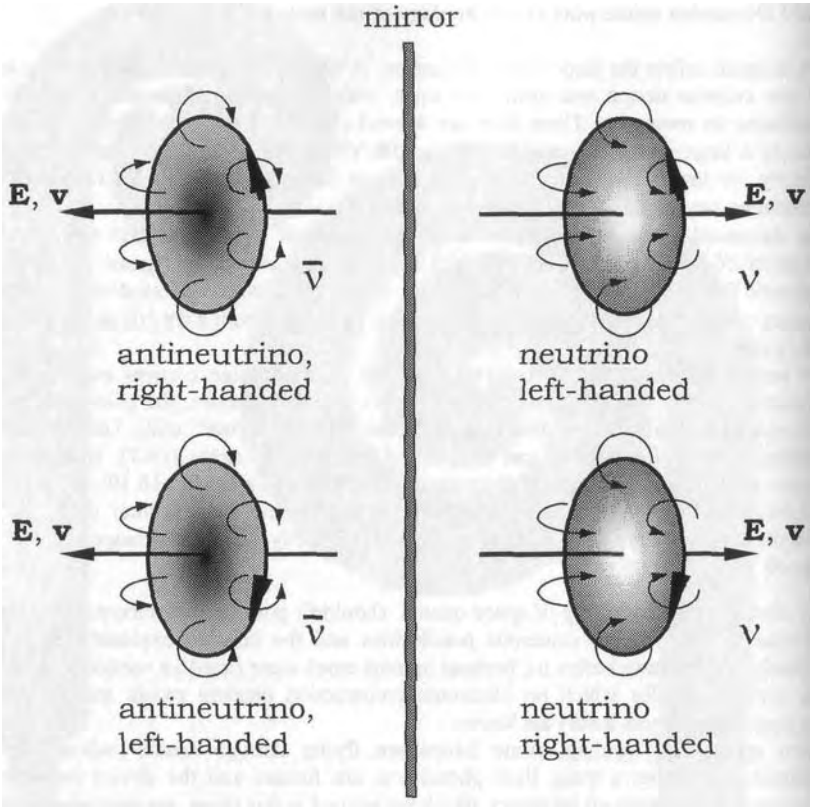

Fig. 17.1: _____Application of the mirror transformation to the neutrinos

---

<i>: Kleine Enzyklopadie Atom, Verlag Chemie GmbH, Weinheim 1970, S. 119:
,,For the neutrinos the quantum number parity isn't defined, because they have a fixed association of the direction of momentum and spin; the sense of rotation of the spin and the direction of momentum in their case form a left-hand wound screw, in the case of antineutrinos a right-hand wound screw. By the shown mirroring the direction of momentum is reversed, but the sense of rotation remains unchanged; i.e. reactions, in which neutrinos occur, are not mirror invariant, they violate the law of conservation of parity". (translated)

Note of the author:, an antineutrino by no means can be assigned to the anti-matter, since it exactly like every neutrino alternatingly takes the matter state and the anti-matter state, by oscillating around itself (see fig. 7.12). The description merely follows a definition founded in usefulness.

17. Technical use of the weak interaction

17.1 Radioactivity caused by neutrinos

Neutrinos are standing in a weak interaction with other elementary particles. This circumstance is known in general. According to the considerations and derivations expressed in the book the neutrinos mediate the resonant interaction, what leads to the conclusion, that the weak interaction represents a partial aspect of the resonant interaction, in which case it merely concerns the proximity.
Efforts are further being undertaken, to combine the weak interaction with the electromagnetic to an electroweak interaction, after it was remarked that a certain coupling constant corresponds in both cases. We of course aren't surprised, because the electromagnetic interaction anyhow describes only the special case of the resonant interaction with the frequency zero.
The weak interaction concerns with the very small range of just 10^{-16} meters only the proximity of the neutrinos, for instance the ß-decay, where the neutrinos for the reason of their oscillating charge a free neutron rattle and shake so long, until it eventually decays. on the average after approximately a quarter of an hour.

The Austrian physicist Wolfgang Pauli had remarked, that half the decay energy after a beta-decay is missing and the balance sheet of energy isn't working out. In addition also the balance sheet of angular momentum isn't working out, because the nuclear spin is being changed for a whole unit. Pauli as a result 1930 has introduced a hypothetical particle without mass and without charge, which he called neutrino.
With that Pauli and his co-working Italian colleague Fermi it is true are the givers of the name of the neutrinos, but not by all means the discoverer. If Cowan and Reines l956 have detected these particles with large expenditure of devices, then also that by no means was a premiere, as falsely can be read in textbooks and encyclopaedias. After all Nikola Tesla already decades ago had demonstrated, that the neutrino radiation not only exists, but even can be used energy technically.

Now the radioactive decay a ß-radiation occurs, triggered by the conversion of neutrons in protons or vice versa. This obviously takes place under the influence and participation of neutrinos in the atomic nucleus. The ß-radiation to a special extent consisting of electrons and positrons, as it occurs in the case of nuclear fission, is quite unhealthy and by no means ecologically compatible. Under the influence of free charge carriers not only metal lattices become soft and spoons can be bent, but also an electrolysis takes place, where the water molecules are splitted into their parts. That isn't a good prerequisite for the flora and fauna on our planet, which predominantly is built up of water structures.

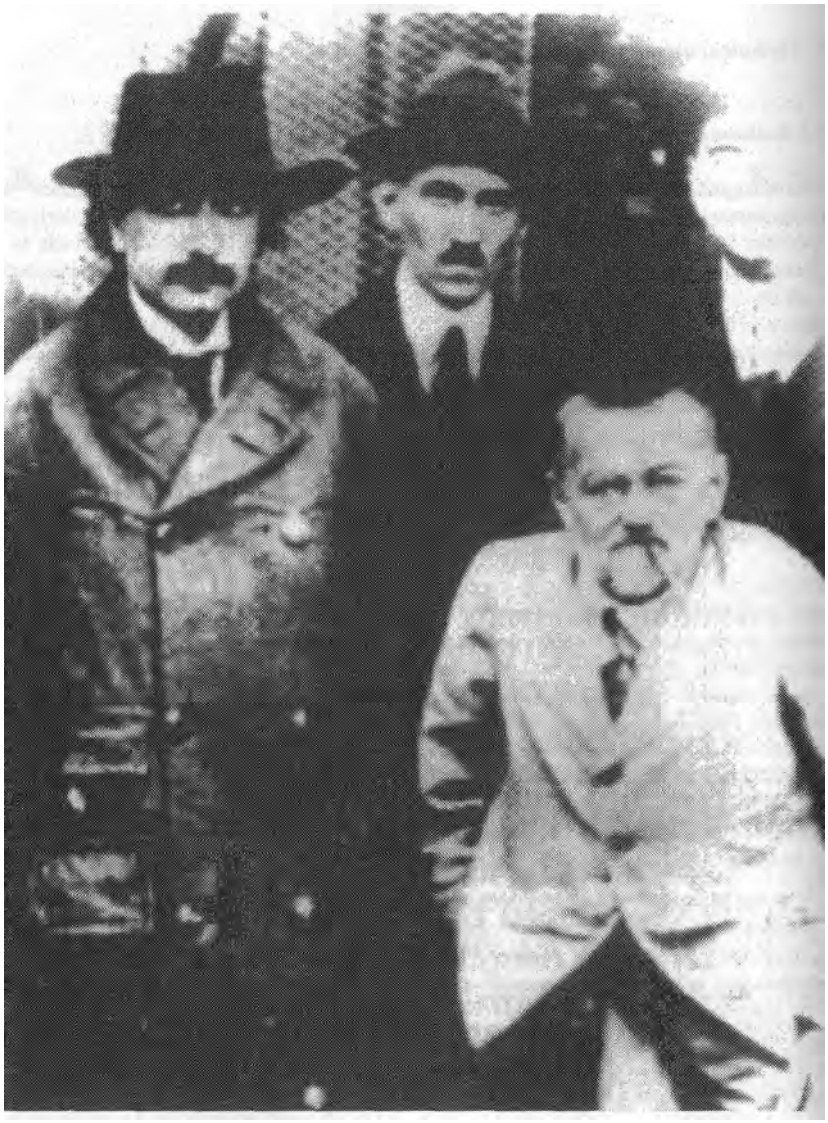

Fig. 17.2: Einstein, Tesla and Steinmetz[i]
(from left to right)

[i]: Franz Ferzak: Nikola Tesla, Eigenverlag, S. 103

17.2 Nikola Tesla, the discoverer of the neutrino radiation

The discoverer of the neutrino radiation himself will best be able to explain the connexion. In the New York Times Tesla writes, that he has discovered and investigated the phenomenon of the cosmic radiation, long before others started their researches[i]:
"According to my theory a radioactive body is only a target, which constantly is being bombarded by infinitely small balls (neutrinos), which are projected from all parts of the universe. If this, at present unknown, cosmic radiation could be interrupted completely, then no radioactivity would exist any longer.
I made some progress regarding the solution of the mystery, until I in the year 1898 attained mathematical and experimental evidence, that the sun and similar celestial bodies emit energy-rich radiation, which consist of inconceivable small particles and have velocities, which are considerable faster than the speed of light. The ability of penetration of this radiation is so large, that it penetrates thousands of kilometres of solid matter, without their velocity being reduced noticeably. "
It must be admired how Tesla guided by experimental observations and a reliable instinct comes to the correct result. He merely with the conclusion, because of the missing interaction the neutrinos have to be inconceivably small, isn't quite right. Their size rather depends on the velocity, because the overfast neutrinos are being length contracted stronger. Tesla however hits the nail exactly on the head, if he on the occasion of the press conference for his 81st birthday declares, the radioactivity is a clear proof of the existing of an outer radiation of cosmic origin[ii]. „ If Radium could be shielded against this radiation in an effective way", Tesla writes in an essay of 1934, ,,then it wouldn't be radioactive anymore". At this occasion he contradicts Albert Einstein, without thereby pronouncing the name and is indignant at the wrong working method of the scientists[iii].

Me personally fascinates, how here until now ignored results have been presented, which I first had to work out theoretically myself with difficulty. Tesla, to the best of my knowledge, hasn't taken theoretical derivations, at least none have been handed down. As a brilliant experimental physicist he must have reached his conception world by means of the measuring technique. The perfect correspondence of his experimentally determined and the by me theoretically won insights should be judged as evidence for the correctness of this view.

<i>: Dr. Tesla Writes of Various Phases of his Discovery, New York Times, Feb. 6, 1932, P. 16, col. 8

<ii>: Tesla Said (J.T. Ratzlaff), Tesla Book Company, ISBN 0-914119-00-1, P. 272

<iii>: "The scientists of today think profound instead of clear. One has to be mentally sane, to be able to think clear, but one can think profound and nevertheless be completely insane. The scientists of today have substituted experiments by mathematics, and they travel from one equation to another and eventually build up a construct, which has absolutely no relation to reality"...

taken from N. Tesla: Radio Power will Revolutionize the World, Modern Mechanics and Inventions, 7/1934, (Tesla Said, P. 264)

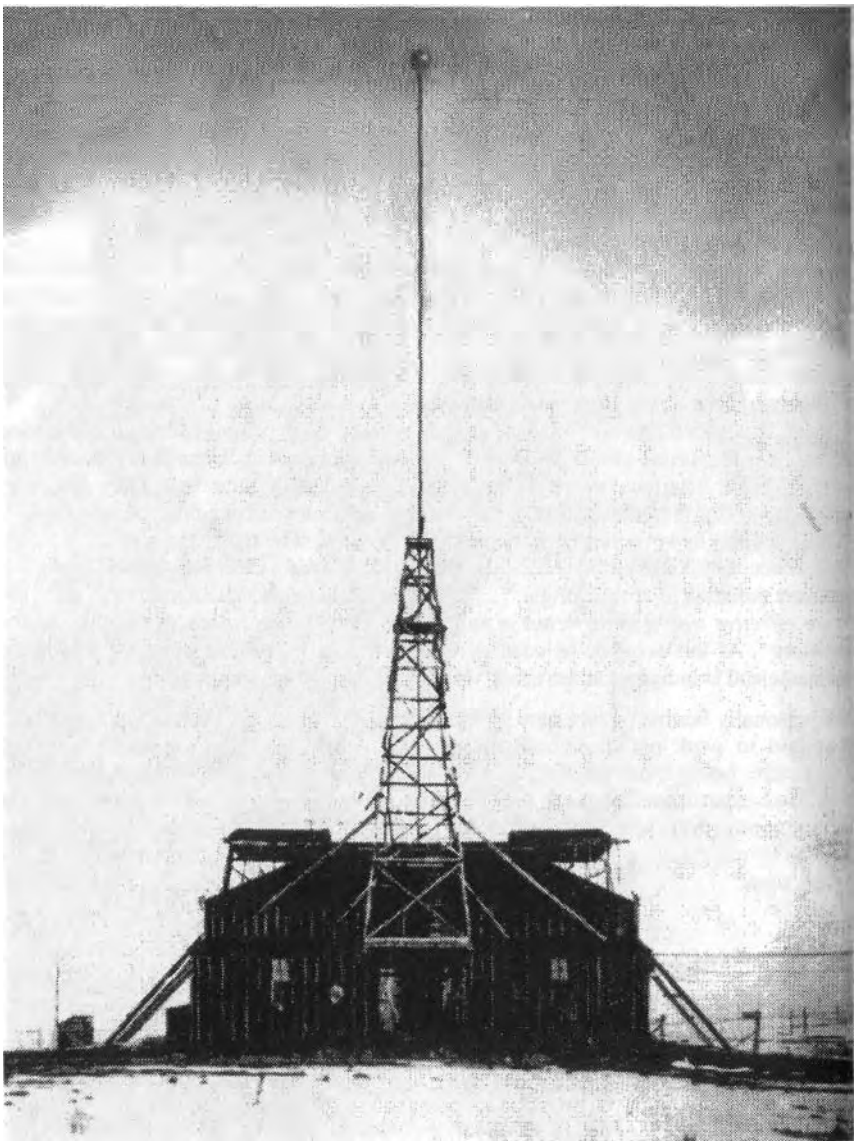

Fig. 17.3: The Magnifying Transmitter of Nikola Tesla Would the research station in Colorado Springs (1899 - 1900) have been suitable for transmutation?

17.3 Transmutation and reduction of radioactivity

If we are capable to collect and bundle up neutrinos, then should with that an influencing of the radioactive decay become possible, then also a decontamination of radioactively contaminated material and a so-called transmutation should be possible. We here have a concrete possibility before us, to use the produced ring-like vortices directly for the benefit of humanity. Dangerous transports with Castor containers, permanent and temporary storage and the contamination of whole areas by radiation, like around the nuclear power station Tschernobyl, which got out of control, wouldn't be necessary at all. If namely burned out fuel rods and objects contaminated by radiation have undergone a concentrated neutrino shower, then the radioactive decay takes place accelerated, so that the half-life can be drastically reduced. After the treatment the dangerous special waste would have been changed to harmless domestic rubbish. Even recycling or reuse are feasible.

The topic is at least as explosive as the energy question and as well completely unsolved. That's at different places and in some companies is already feverish researched about technologies concerning transmutation. Often it are the same people, who also work at the theme of space energy. The reason quite simple is that in both cases neutrinos have to be collected and bundled up. In the case of transmutation however the necessity of materialization can be dropped, so that the goal can be obtained faster and simpler. Consequentially is reported of more cases of a successful decontamination and of transmutation, than of functioning energy converters. Until now most techniques however still hardly are suitable for bringing into action technically on a large scale, but they carry clues of a solution of the problem already in them.
At the congress "New Energy technologies from USA" 6.12.1997 in Zurich I have lectured concerning the theme[<i>]: ,,Presumably as the first one the doctor Dr. Wilhelm Reich has carried out corresponding experiments with his ,,Orgon accumulator" (fig. 9.2). From him also stem warnings about biological effects, which should be taken serious, if radioactive material is put under his Orgon accumulator and the process of decay takes place accelerated".
If one dares an interpretation of his experiments with only 1 mg radium, then numerous charge carriers materialized at hitting upon his sample of the bundled up neutrino radiation with the consequence of high electrostatics in the environment, which Reich has called DOR-state (Deadly ORgone) (chap.15.11).

Another way would be the rebuilding of a neutrino transmitter according to the plans and patent specifications of the experimental physicist Nikola Tesla (fig. 9.11). He 100 years ago had realized a real neutrino-broadcasting and for that developed an unconventional switching technique. Tesla called his transmitter a ,,Magnifying Transmitter" (fig. 17.3). He choose the name „Magnifying Transmitter", after he had received more energy than he had transmitted in experiments and this effect moreover was increased with increasing distance to the transmitter. He obviously also had collected free and synchronously oscillating neutrinos, and that would be the best prerequisite for a successful transmutation and decontamination of radioactive material!

<i>: Konstantin Meyl: Die Wechselwirkung der Neutrinos; uber Massnahmen, die Halbwertszeit beim radioaktiven Zerfall herabzusetzen. NET-Journal Jg. Nr. 3, Jan./Feb. 1998, S. 14-20

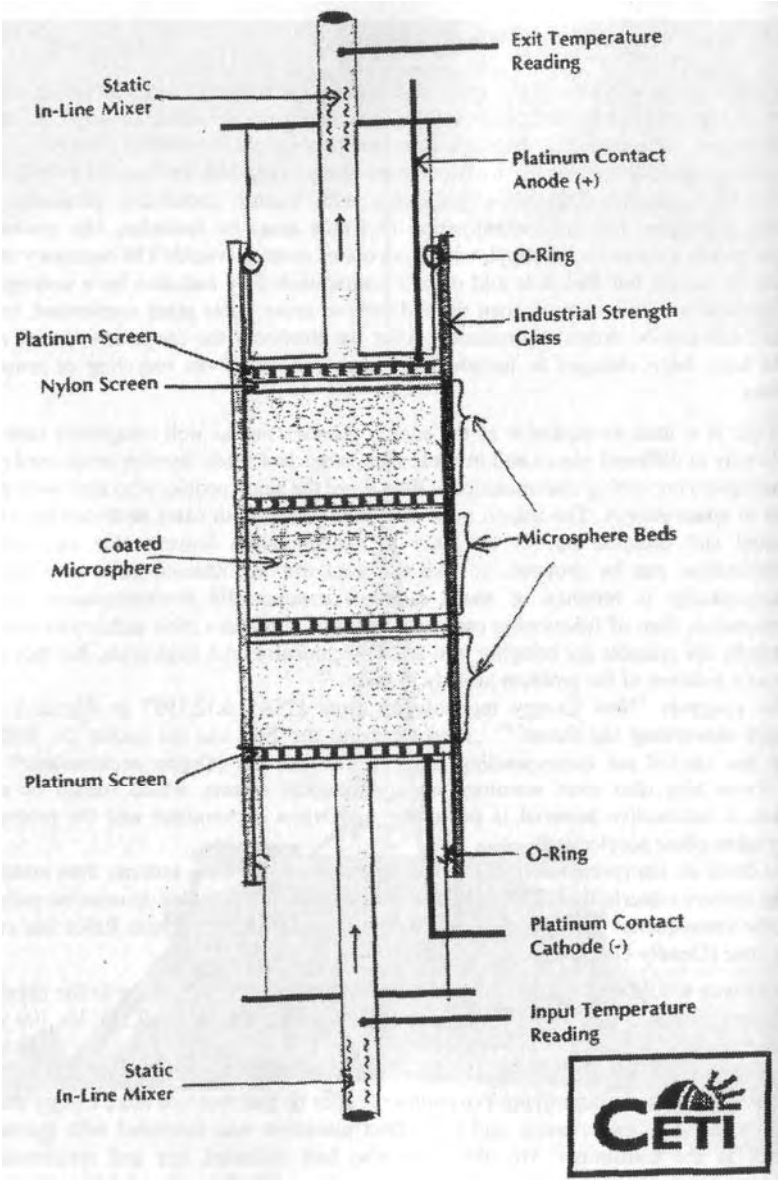

Fig. 17.4: 1 kW Patterson Power Cell.[i]

<i>: Patterson, J. A.: System with electrolytic cell and method for producing heat and reducing radioactivity of a radioactive material by electrolysis. US Patent No. 5.672.259 of Sept. 30, 1997, as reprinted in Infinite Energy, July-Nov.1997, pp. 13-16

17.4 The Patterson Power Cell

As an example worth paying attention to, the Patterson Power Cell should be mentioned, which not only can be used for generation of energy but, how could it be otherwise, also for reduction of radioactivity and for transmutation. The energy cell invented by the chemist Dr. James A. Patterson is researched and developed further by the company CETI (Clean Energy Technologies Inc.) in Sarasota (Florida, USA). According to latest reports such a device supplies at most one kilowatt of heat energy at an over-unity of up to 4000; thus 4000 times the energy is released than is taken up as required for the operation!
In fig. 17.4 one single cell of the energy converter is shown. The glass container consists of three chambers of approx. 4 cm height each time and about 1.9 cm in diameter and works like a continuous-flow water heater. From the bottom tapwater or distilled water is supplied and at the top connection again taken away in heated form. The excitation takes place electrostatically by means of two platinum electrodes. The anode situated at the top is connected with the positive pole and the cathode with the negative pole of the source of direct current.
In the three chambers are situated tiny, filmy coated small balls, which form the real principal item of the cell. Production method and structure of the beads are oriented to the task to be mastered. In the case of a variant conceived for the generation of energy the barely one millimetre in diameter small synthetic beads carry after each other a thin layer of palladium, a layer of nickel and once again one with palladium<i>.

The small balls remind with their layered structure at first of the Orgon accumulator of Reich. They also seem to function as collectors of neutrinos, but for smaller wavelengths and much higher frequencies. In addition is chosen a concentric arrangement with the spherical form, which with the electrically conductive surface and the dielectric core fulfil the function of a cavity resonator. Resonance actually is possible with flying past neutrinos, which have a wavelength which amounts to an integer multiple (1,2,3,..) of twice the diameter of the sphere.
The arising resonant oscillation however concerns not only the electric and magnetic fields, but by means of electrostriction and magnetostriction also a mechanic oscillation of size. The oscillation of size in reverse causes again oscillating electric and magnetic field pointers, which are partly open along the spherical structure and can interact resonant with further neutrinos. In this repercussion field the actual secret of the functioning of a Patterson-cell is hidden.

The president of the German association of space energy, Prof. Dr. Dr. Josef Gruber on the occasion of his visit at the company CETI and of a conference about ,,cold fusion" in Vancouver has published a report<ii>:

<ii>: Gruber, J.: Kalte Fusion und Raumenergie, report concerning the 7th international conference about "cold fusion" of 19.-24.4.1998 in Vanvouver, B.C., Canada (Infinite Energy, Issue 19, 1998) and report concerning "International Symposium on New Energy" of 23.-26.5.1997 in Denver, Colorado, USA (Denver-report of the remote University Hagen)

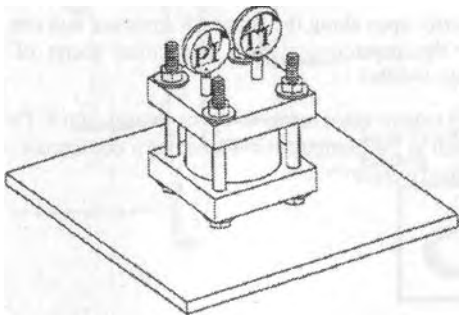

Fig. 17.5: _____ Low Energy Nuclear Transmutation Cell,[i] the kit for experiments LENT-1 (Showing Temperature and Pressure Gags)

<i>: taken from the NET-Journal, 10/11 1997, S. 7

17.5 Report concerning the cold fusion

"In the case of the Patterson transmutation cell it concerns a special electrolysis cell, in which the radio nuclides are charged. During the electrolysis the decay activity measured by means of a Geiger-Muller counter decreases drastically. Within a few hours reductions of up to 80% are obtained. In such an electrolysis system with electrodes consisting of specially coated beads low-energetic nuclear reactions can be observed. In this case elements are detected in the metallic layers of the beads, which before were not contained in these. Further are measured changed (unnatural) proportions of isotopes. From these transmutation can be inferred, which is used in the cell for the conversion of radioactive elements.
Until now natural uranium and thorium were used as radioactive material. The reproducibility already now is very good. The applicability for commercial purposes, for the reduction of the radioactivity of burnt up fuel elements and for the conversion of plutonium is easy to see".
At his visit in the laboratory of CETI in Sarasota 28.5.97 Prof. Gruber has witnessed an experiment to annihilate radioactivity with the Patterson transmutation cell. He reported about it: "In the presence of N. J. Olson from Pacific Northwest Laboratory (operated by Batelle for the U.S. Department of Energy) a team of the television station ABC conducted by the science journalist Dr. M. Guillen made recordings for a television program, which meanwhile has been broadcasted all over the country. The original tension voltage - among others a Geiger counter rattled - subsided as the expected success became apparent in the experiment: After one hour 50% of the radioactivity stemming of uranium nitrate were removed, in another half an hour further 13%. Doing so also a considerable lot of surplus heat was produced.

New techniques of this kind to reduce radioactivity have an important advantage: One brings the SET-device there where the radioactive material is situated and reduces the radioactivity on the spot. For the conventional technique, still being in research, in contrast to that the radioactive material first is wrapped in a complicated manner and then transported to a special factory, where radioactivity is reduced at great technological expenditure and use of energy - altogether a procedure which is relatively costly and politically only hard to carry through".

Patterson cells already can be obtained commercially for research purposes. The same goes for a demo-kit[<i>] of the company Trenergy, Inc. of Hal Fox, who has built up the biggest database of the world concerning the theme "Low Energy Fusion" in the "Fusion Information Center" at the university of Salt Lake City. He is editor-in-chief of the "Journal of New Energy".
If one believes the statements on their web-site[<ii>], then one is capable of converting 10 g of radioactive thorium in 900 mg titanium and some copper in less than an hour with the kit for experiments LENT-1. Under a pressure of 3200 psi sodium already is said to have fusioned to gold, something of which alchemists dream, as an unintentional side effect, as researchers in Cincinnati/Ohio say[<iii>].

<i>: NET-Journal, Jan. 1997, S. 24
<ii>: see Internet: http://www.hal-fox@slkc.uswest.net
<iii> : NET-Journal, 10/11 1997, S. 7

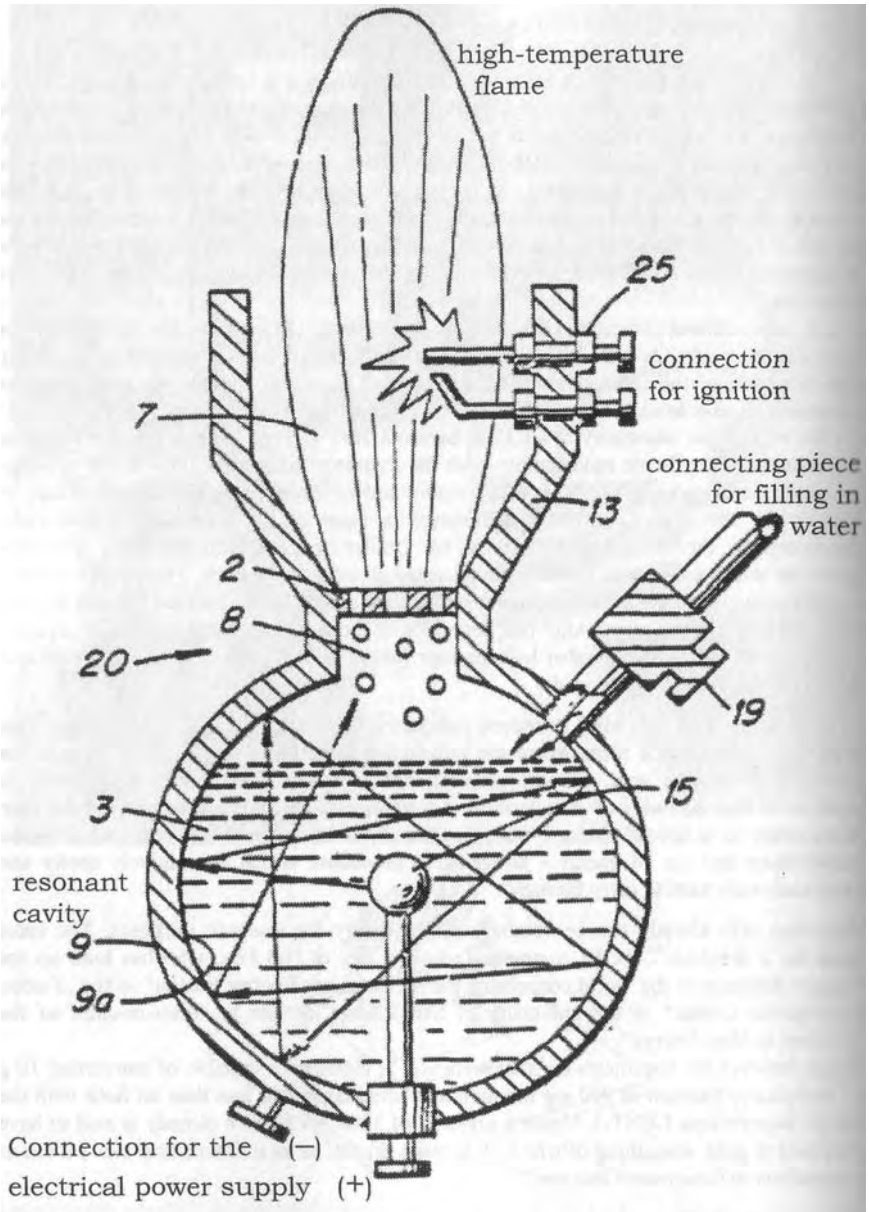

Fig. 17.6: The water-fuel-cell according to Stanley Meyer<i>

<i>: H.-J. Ehlers: Stan Meyers Wasser-Zellen-Technik, Raum & Zeit special 7, p. 201, taken from the Canadian patent specification 1234 773 of 5-4-1988

17.6 Water-Fuel-Cell technology

The United States are, just what concerns spectacular techniques like the removal of radioactivity or the transmutation of new materials, obviously still the land of unlimited possibilities. Nowhere the list of researchers of cold fusion is as long as in North America.
But there also in many places only is tried and tinkered without visible system or usable theory. Then in many cases unfortunately only a show-effect is to the fore, while construction plans and details concerning the way of functioning, as far as they actually exist, are kept secret. In total there, besides a lot of hot air and wrong hopes, is left behind little to be used and cited.
By the way, in my opinion cold fusion has to do very much more with space energy and neutrinos than with hot fusion. How much disaster a wrong referring to and an unusable theory can bring about, has become clear at the example of the "cold fusion researchers" Fleischmann and Pons. They have placed themselves into the scientific offside with their misinterpretation concerning cold fusion.
Moreover are both primarily scientists and theorists. Practice however is, according to general definition, "if in spite of all it functions!" The American Stanley Meyer is such a practical man and his water-cell-technology actually seems to function, although he in his 18 patent specifications gives theoretical explanations, which he just as well could have saved himself. With that his effect isn't explained.
An usable interpretation would be that this device, comparable to a cell of a plant during photosynthesis, splits water molecules into its parts by putting on neutrinos. Even without knowledge about space quanta the buggy of Stanley Meyer already runs with a air-cooled 1500 cc VW-engine, and it consumes no gasoline at all. The tank is filled with water; it even may be sea water. The consumption of water lies at 2.8 litres at 100 kilometres and thereby is formed predominantly hot steam again as a combustion product.
If thus cold water is converted into hot water and at the same time mechanical energy is available. then inevitably another source of energy must be involved. According to my interprelation it must concern the neutrino field. If the here presented details are correct then the over-unity effect lies at approx. 100, the degree of effectiveness thus at 10000 percent.

American companies, with which Stanley Meyer had concluded contracts, should make the "Water-Fuel-Cell technology" mature for series. Also the financing seemed secured. But then per internet the message came, he 21.3.1998 was having supper in a restaurant in Grove-City, as he suddenly jumped to his feet from the table and called out, he had been poisoned. He died on the spot[<i>].

Alarge number of inventors is known, who tap space energy with the help of water. It concerns an increase of the content of oxygen or of the content of colloids, thus an improvement of the water quality. Or it concerns formation of vortices as already in the case of Walter Schauberger, glowing phenomena or also the generation of free energy from the neutrino field. In this concert the concept of Stanley Meyer takes an outstanding place, as particularly efficient, instructive and clearly understandable for us, for which reason we cast our eyes over the design (fig. 17.6 and 17.7).

<i>: Zum Hinschied von Stanley Meyer", NET-Journal April/Mai 1998, S. 25; see: obituary in Infinite Energy Magazine

A. The pattern of the pulses of the excitation voltage:

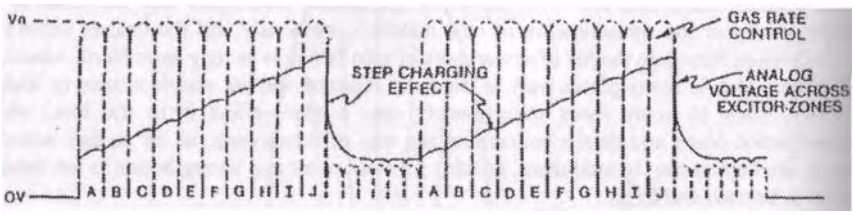

B. The wiring diagram:

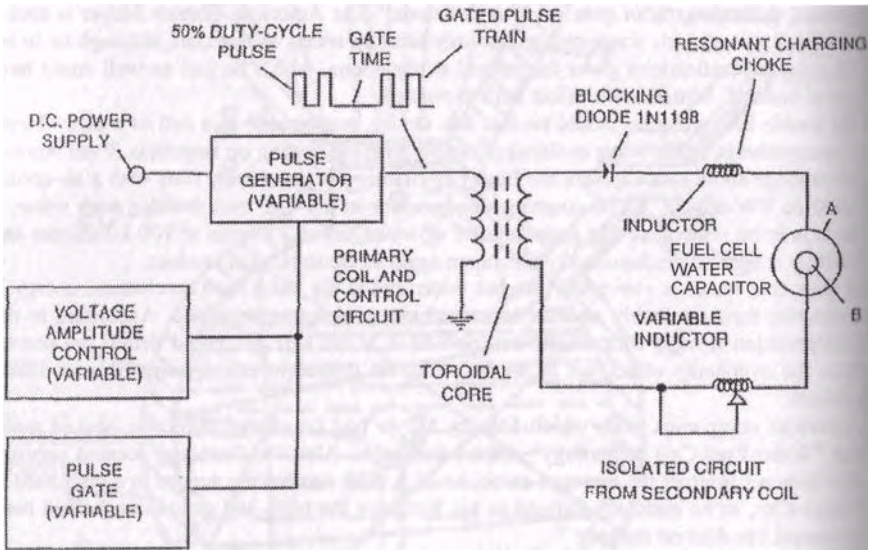

Fig. 17.7: Wiring diagram for the driving of the water-cell[i]

<i>: Stanley, A. Meyer: Process and Apparatus for the Production of Fuel Gas and the Enhanced Release of Thermal Energy from such Gas, 15.06.89, US-Pat. 207,730; International Publ. WO 89/12704; Int.Appl. PCT/US89/02622

17.7 Unconventional electrolysis

Numerous of the by Stanley Meyer used construction principles already have been treated, be it the excitation with pulses of electric tension voltage or the spherical structure of the resonant cavity (fig. 17.6). As a spherical capacitor with the positive pole in the centre and the negative pole at the outside edge it corresponds to the model of the electron and fulfils in an almost ideal way the conditions of an unipolar arrangement according to fig. 15.8 B. The use of certain patterns of the pulses and steep flanks of the pulses (large dU/dt) make possible effects of resonance at frequencies starting at ten kilohertz, in which neutrinos participate increasingly. First the series resonant circuit, consisting of the adjustable, external inductance and the spherical capacitor, is stimulated by means of the current rectifying wiring (fig. 17.7). In the case of resonance, which is carried out by comparison of the inductance, the excitation current drops, whereas the tension voltage at the same time teaches values of more than 1000 Volts. If in addition a neutrino resonance occurs, then the known avalanche effect will occur. The equipment then takes up virtually no current.

As a dielectric serves water, with which the container is filled permanently. The dimensions are oriented after the velocity of movement of the water molecules according to details of the inventor. Also the oscillating water molecules should go into resonance. Then they can help to materialize the neutrinos. Their rotational energy partly passes to the water molecules and as soon as the neutrinos have been converted to charge carriers, they will take the water molecule from the oppositely charged side and split it without further ado. The oxygen and hydrogen gases leave the capacitor through fine openings at the upper edge of the spherical chamber, which are so small, that no ignition back can occur, and in the simplest case reach a combustion chamber, where they burn again to water as a high-temperature flame (fig. 17.6).
The gases of course also can be guided into the cylinder of a Otto engine and be ignited there, as in the case of the experimental buggy. In the sectional drawing can be seen a filler by means of which, according to the consumption, water is refilled. The round resonant cavity not necessarily has to be spherical. Stanley Meyer more frequently differs from the ideal form and works with a cylindrical symmetry (fig. 17.8), with which obviously in spite of that the goal can be obtained, if perhaps not quite so good. To this compromise the explanations of fig. 15.8 C apply.
If we, to conclude, cast our eyes over the wiring diagram which Stanley Meyer discloses in his patent specification (fig. 17.7 and 17.8)[<1>]. In the centre is a transformer, which should produce an if possible high tension voltage. A rectifying diode, which takes care that only positive tension voltage pulses serve the excitation, is switched in series with the reaction capacitor, which is filled with water, a fixed and a variable inductance. In that way the positive pole is always situated in the centre of the reaction chamber. If both connections would be exchanged or the diode be turned over, then the neutrinos presumably would materialize in positrons and not in the wanted electrons. But if one leaves out the diode entirely and one has a tension voltage changing both in positive and in negative direction, then maybe electrons and positrons are equally generated, which annihilate each other under emission of gamma quanta. Doing so no gas is formed, but at most light, as long as the effect of collecting neutrinos isn't lost also. The concept should be worth to be examined more detailed already of pure scientific interest.

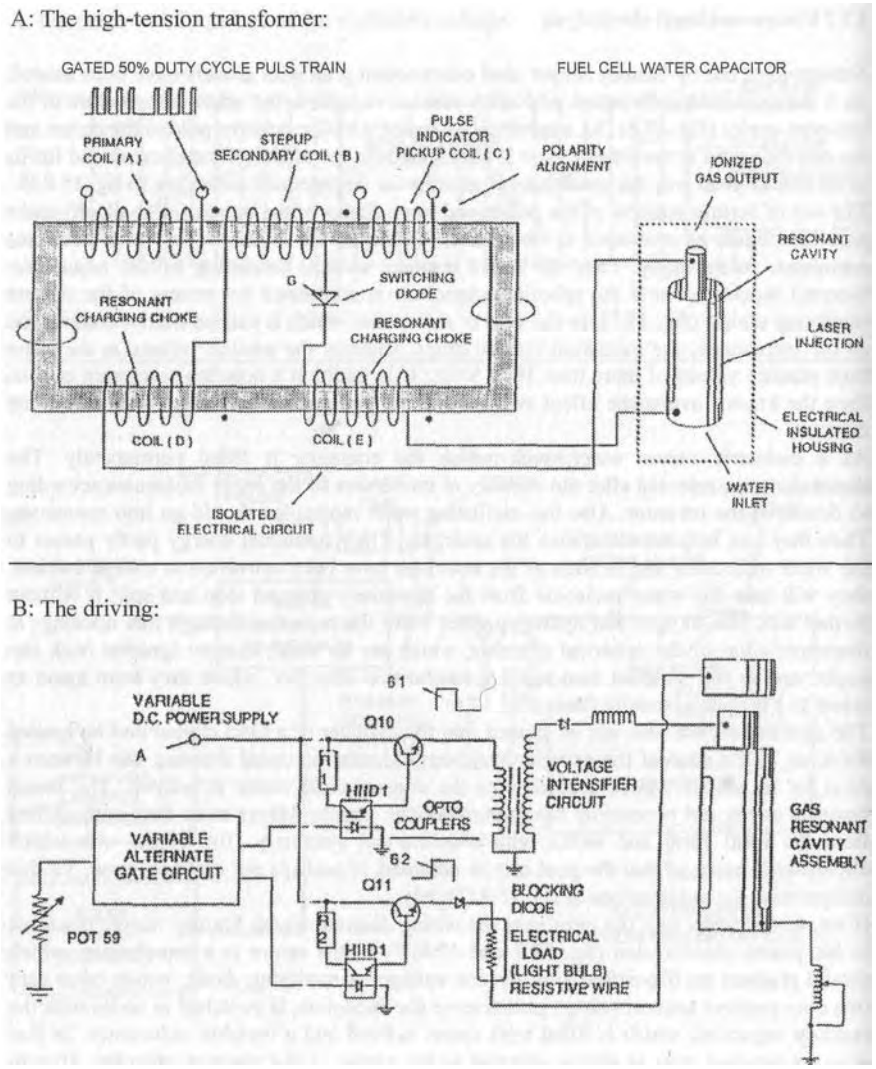

Fig. 17.8: High-tension transformer and driving of the cylindrical water-cell<i>

<i>: Stanley A. Meyer: Process and Apparatus for the Production of Fuel Gas and the Enhanced Release of Thermal Energy from such Gas, 15.06.89, US-Pat. 207,730; International Publ. WO 89/12704; Int.Appl. PCT/US89/02622

17.8 Materialization of neutrinos

In the centre of attention of the water-fuel-cell of Stanley Meyer is on the one hand the unipolar arrangement (according to fig. 15.5 B or C) to collect the neutrinos and on the other hand the water for slowing down and materializing. Over and above that a lot was tinkered and tried, as can be inferred from the patent specifications (fig. 17.8). That starts at the. coiling technique of the transformer and concerns the experiments with laser stimulation as well as the top part, which according to the inventor should extract the electrons (Electron Extractor Grid). The measures may bring an improvement, but are insignificant for our considerations.

At this place it primarily concerns the question of the materialization of neutrinos. But if such a materialization has to be made complete, if water molecules must be splitted, depends on how long the process lasts. If everything goes very fast, then perhaps it is sufficient that a neutrino for a short time is showing as an electron, before it again oscillates back. In this short time the splitting process already could have taken place. The used neutrinos for that had to be very low-frequent and very slow. They after that could again leave the reaction chamber and fly on as neutrino.

Possibly the fishes, which live in stagnant waters or in the deep sea, owe the slow neutrinos the content of oxygen in the water. Because here no bundling up takes place, the splitting of water takes place rather by chance. The volatile hydrogen atoms escape very swiftly, whereas the big oxygen atoms are left behind in the water.

Now we still don't know how charge carriers can be won. At the RQM unit resonant oscillations of size had been measured and that can be judged as an important clue. If namely a space quantum is slowed down then it becomes bigger. The inverse case we already had made us clear: If a particle is correspondingly fast then it is sufficient length contracted to fit through the tunnel (fig. 6.14).

To slow down neutrinos according to that the target area should carry out an oscillation of size with opposite phase. Organic material and biological systems are excellently suited for that. Every contraction of a muscle brings that to mind. Inorganic matter and our technology however normally don't know this phenomenon. Technical energy converters simply are built up fundamentally else than biological muscle machines.

In historical sources at certain places is pointed to the fact that priests had experimented with quartzes and miraculous phenomena were observed. Of course the question is asked, if such experiments today still can be reproduced. Because the density of the earth slowly increases due to the growth in volume, also the wavelength of these oscillation quartzes is changed. The same neutrino radiation therefore today can't be active anymore. It thus would be completely inappropriate wanting to reject a historical source only because a described effect today doesn't want to function anymore.

Magnetostrictive or electrostrictive material could be a solution. For instance a piezocrystal, which contracts under the influence of an outside field. As an ultrasound converter an applied alternating voltage leads to the emission of a sound wave. If we reverse the function, then a received longitudinal wave should lead to an electric tension voltage and then at last the materialized charge carriers could be taken off,!

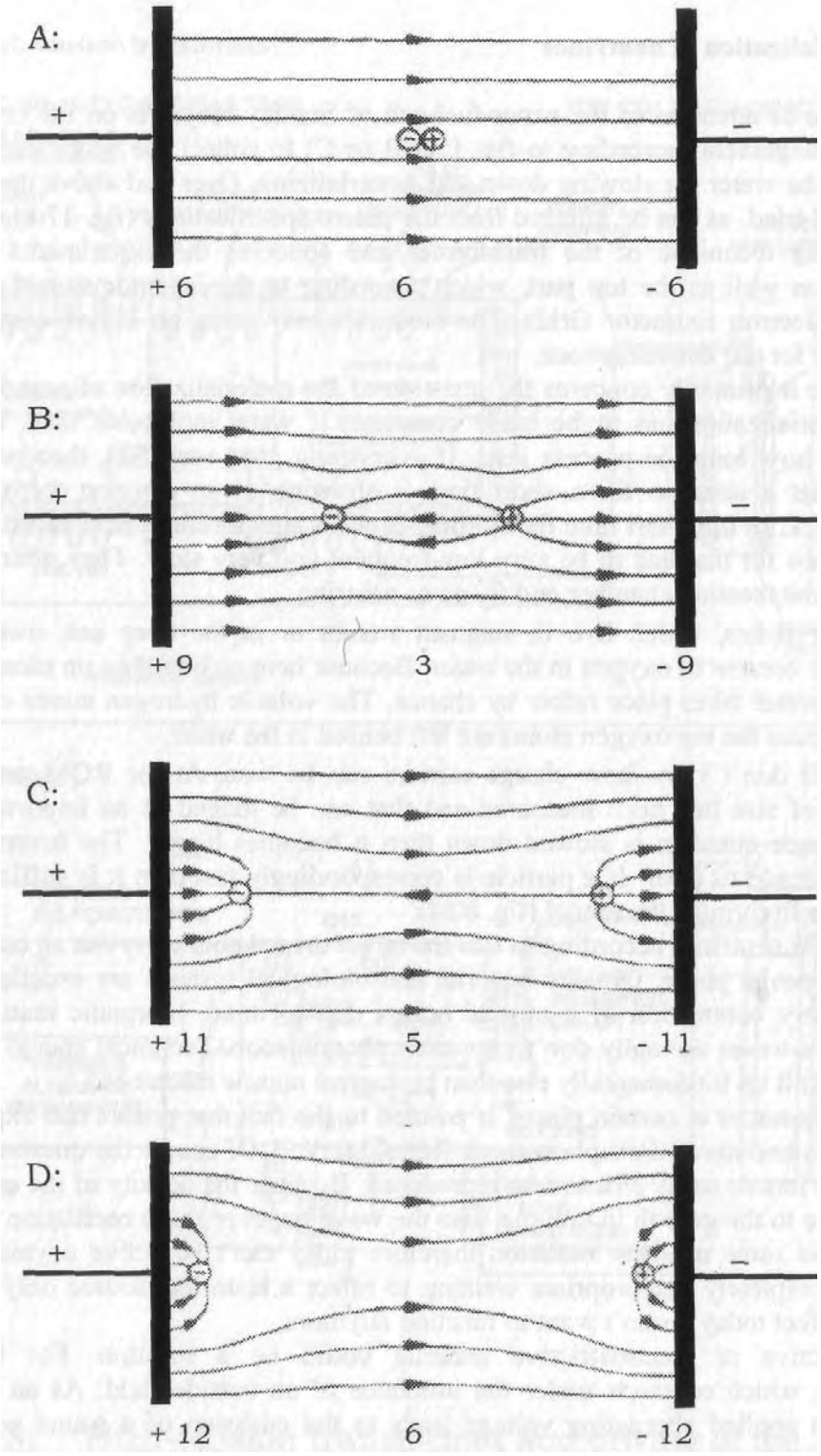

Fig. 17.9: The course of the field in the case of a glow-discharge<i>
(The numeric values indicate the active field lines, as they can be read from the representation).

<i>: K. Kupfmuller: Einfuhrung in die theoretische Elektrotechnik, 12. Aufl. Springer-Verlag (1988), S. 197

17.9 Oscillation of size and luminescence

There exist substances, which at high temperatures start to glow. In the sense of the theory of objectivity presented in the first part of the book in the case of temperature it actually concerns an oscillation of size of the involved elementary particles (fig. 8.3). If this oscillation of size lies in the visible frequency range, then we can directly perceive it and it can be used for instance in a light bulb for the purpose of lighting.
In the case of an arc. fluorescent tubes or glow-discharge lamps light is formed as well even without a thermal effect. These glowing phenomena are called luminescence. They can be caused by chemical processes, by friction, by crystallization or by electric fields. As can be shown speedily, in these cases it also concerns an oscillation of size.

If we for that consider the model on the left (fig. 17.9). Between two electrodes there is a non-conducting gas, e.g. air. If now a tension voltage is applied then, under the influence of the electric field, some gas atoms are splitted into positively charged ions and negative electrons (case A) and pulled apart (case B). This process of enlargement of the glow-discharge fast as lightning comes close to that of the thermal oscillation of size and obviously in the same way is perceived as light.
The ionised gas parts are attracted by the unlike poled electrodes and move towards these (case C, D). Whoever takes the effort to count the number of the field lines, will find out that between both electrodes the electric field drops, whereas it at the same time increases at the electrodes. The first thing causes that the process of ionisation is stabilized by itself and a state of equilibrium will result; the resulting current takes a constant value.
The increase of the tension voltage at the electrodes on their behalf causes that an arc remains standing or the glow-discharge lamp glows on, even if the feeding voltage is reduced. For this reason a fluorescent lamp needs a starter, since the network voltage is too small to start the effect of luminescence.

We indeed know, that the gain of light of a fluorescent lamp is at least three times better than that of a light bulb. As a rule a degree of effectiveness in spite of that can't be given, since it merely concerns a comparison measurement in the case of the measurement of the lighting intensity with a luxmeter. It hence can't be excluded, that we already are dealing with an over-unity effect in individual cases and neutrinos are involved in the effect of glowing.
A necessary oscillation of size would be present, as the perceivable noises of open spark gaps prove. Also in the case of lightning the thunder occurs as a consequence of a longitudinal oscillation of size and at the same time a glowing phenomenon occurs as a consequence of materialized neutrinos (fig. 14.11). It almost is obtruding a scientist that here the same principles are at work.

One however hardly can prove that neutrinos are involved in the luminescence, because the configuration is symmetrical with regard to the resonance of neutrinos and just as much particles materialize as anti-particles, which afterwards again annihilate completely as an impulse of light. They hence can't be measured directly. It gets interesting if an asymmetrical arrangement with unipolar character is chosen.

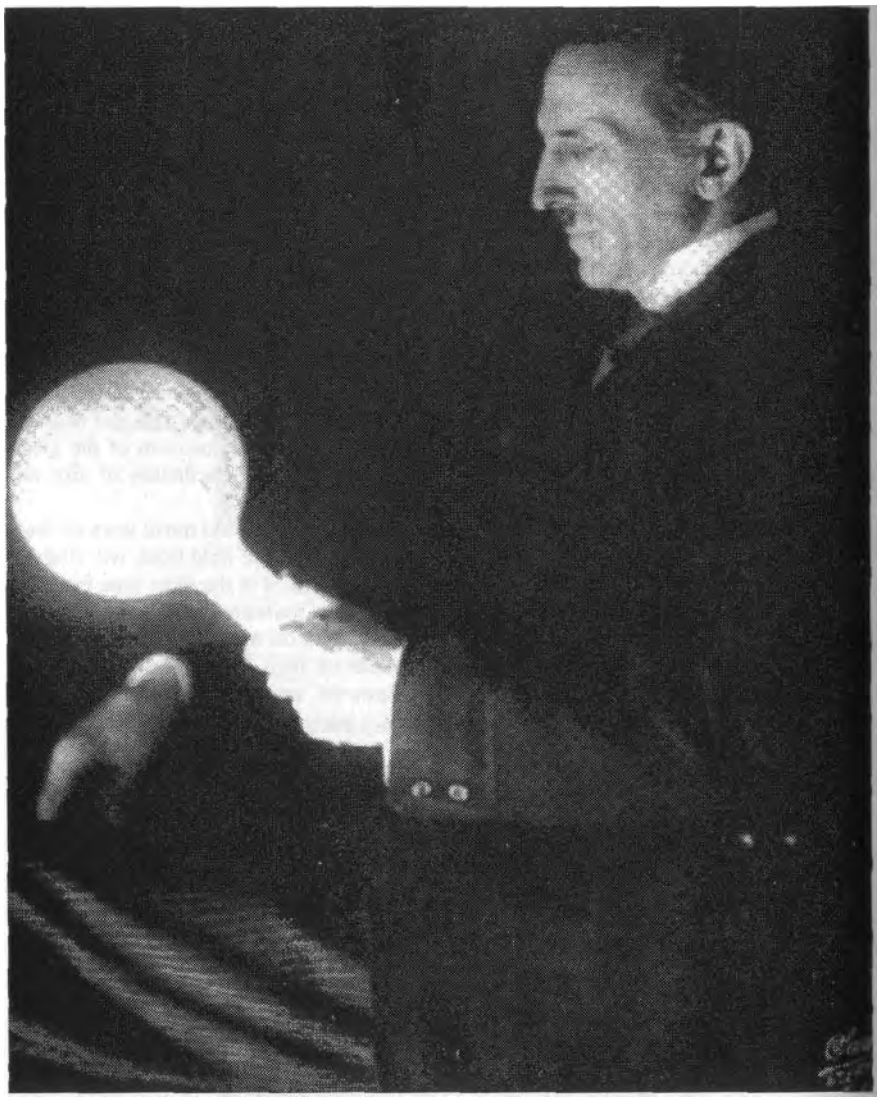

Fig. 17.10: Tesla with a wireless light bulb[i]

<i>: A Sarony-Portrait from 1894, Tesla-Museum, Belgrad

<ii>: R. Hiller, K. Weninger, S. J. Puttermann, B. P. Barber: Effect of Noble Gas Doping in Single-Bubble Sonoluminescence, University of California, Los Angeles, USA, Science, Vol. 266, 14.10.1994, P. 248-250

and: D. Lohse: Wenn sich der Schall in Licht verwandelt, Mechanismus liegt noch im dunkeln; (University of Twente, NL) Mitteilungen der DFG 4/98, S. 19-21

17.10 Phosphorescence and sonoluminescence

Let us first look at the observable after-glowing at fluorescent lamps or at a screen, the phosphorescence. It presupposes a storing effect, and that in accordance with prevailing textbook opinion can be traced back to the excited state of some atoms. Doing so electrons in the atomic hull change from one level of resonance, an instable state of energy, to another orbit, which represents the ground state. Doing so the difference in energy is emitted in the form of light. The process obviously not only takes place as luminescence during the switching on of the excitation voltage, but also as phosphorescence after the switchng off.

An enveloping electron now doesn't fly as a tiny planet around the nucleus, but occupies the entire orbit as an inflated spherical vortex (fig. 5.5). Seen from the outside it is a matter vortex. It however sees the enveloping electrons on the further on the outside lying orbit from the inside and there they are showing as anti-matter vortices. As long as the distance of respect is kept, nothing happens. If however an inner spherical vortex presses to the outside or the outside one to the inside, then the incompatibility of the vortices takes effect and both annihilate under emission of a photon. In this respect the explanations of the vortex model are very helpful.

But now, after this flash of light, two electrons are missing in the atomic hull. The positively charged atomic nucleus never would allow this loss. Replacement has to be fetched and that actually only can stem from the neutrino field. Therefore the enveloping electron doesn't change the orbit immediately, but instead has to wait, until a suitable neutrino passes by, with help of which the game of changing places can be executed. This explains the time delay and gives reasons for the observable after-glowing.

The form of the unipolarly charged sphere (according to fig. 15.8 B) forms almost ideal prerequisites for an interaction with neutrinos and the step-like change of size from one orbit to the next ideal prerequisites for their materialization. The longitudinal wave connected with the change of orbit without doubt can be called a high-frequency sound wave. It however can't be detected because of missing gauges for such high frequencies.

But if we take the frequency down into the range of the ultrasound, which can be handled technically, then effects arise which brilliantly prove this interpretation and the participation of neutrinos in the luminescence.

The not understood phenomenon is called sonoluminescence and at present is researched at numerous high schools primarily for academic interest. The structure is conceivably simple. One takes a ball of glass filled with water and positions at the edge one piezocrystal next to another. Then one with the piezo loudspeakers, operated with the same phase, sounds the whole with ultrasound and see there, the water glows mysteriously! The sound waves change the pressure. Inferring from the observations, during the phase of low pressure small bubbles are formed, which at the following rise of pressure collapse and emit a ultrashort flash of light. There thus takes place an oscillation of size, which leads to the luminescence phenomenon!

So far so good; but such a flash of light is much shorter than the collapsing of the gas bubble lasts. With less than 50 picoseconds it is faster than the otherwise usual atomic transitions of electrons. The whole thing obviously has nothing to do with this kind of luminescence. Also the spectrum doesn't fit and finally the over-unity effect lies at one trillion, the light energy thus is 10^{12} times larger than the energy part which is taken up from the sound wave by every atom<ii>!

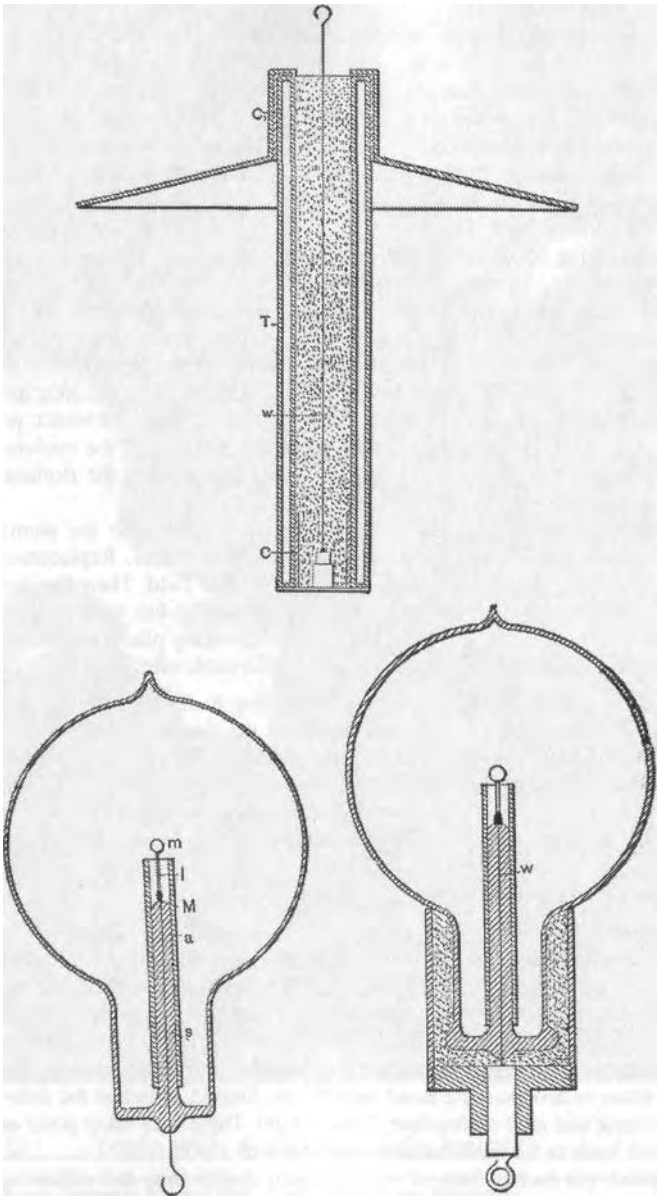

Fig. 17.11: Light bulbs according to plans of Tesla<i>

<i>: N. Tesla: Experiments with Alternate Currents of High Potential and High Frequency, Lindsay Publications Inc, ISBN 0-917914-39-2, Fig 18, P. 70+103

17.11 Discussion concerning the use of the weak interaction

In the case of the luminescence the conditions lie similar like those for lightning. The science of today it is true has some problems of explanation at detail aspects, but again and again manages to protect the ivory tower of physics from collapsing, with supporting auxiliary explanations. But at the latest in the case of an unipolar arrangement, in the case of a ball-lightning or the sonoluminescence, the participation of the neutrinos clearly comes to light, the auxiliary concepts prove to be unusable.

It surely is no accident that the discoverer of the neutrino radiation also was the first, who has experimentally investigated the luminescence. The lamps of Tesla (fig. 17.11) all were without wear and didn't have filaments like those of Edison. They however had to be operated with high tension voltage and relatively high frequency. Both a single-wire and a wireless transmission technique were possible (fig. 9.5 and 9.7). In his laboratory Tesla only needed to hang a fluorescent lamp without any return cable on a wire, then he had light. Famous also are the pictures on which he holds a lamp in his hand, which glows entirely without any connection, but only if he takes it in his hand! (fig. 17.10).

If we again turn through the chapter, then it is remarkable that in most cases, from the transmutation to the luminescence, neutrinos can be used for reason of their resonant interaction which in the proximity can be put equal to the weak interaction. A real materialization however poses an enormous difficulty. If namely the translatoric motion of the space quanta is slowed down, then the risk exists that for balance the rotation increases. But that as well has to be slowed down for a materialization! Only if both processes of slowing down take place, the goal can be reached. In that case the described cooling down effect occurs.

For a measurement technical check it therefore offers to record the slowing down of the translatoric motion and the collecting of the neutrinos by means of the measurement of the radioactive decay of a sample. And to read the materialization as the slowing down of the rotation from a measurement of temperature. In addition are helpful proofs about oscillations of size, glowing phenomena and deviations in the balance sheet of energy. With that it should be able to obtain a system for the exploration of these phenomena with the goal of a practical exploitation of the neutrino radiation for the benefit of humanity.

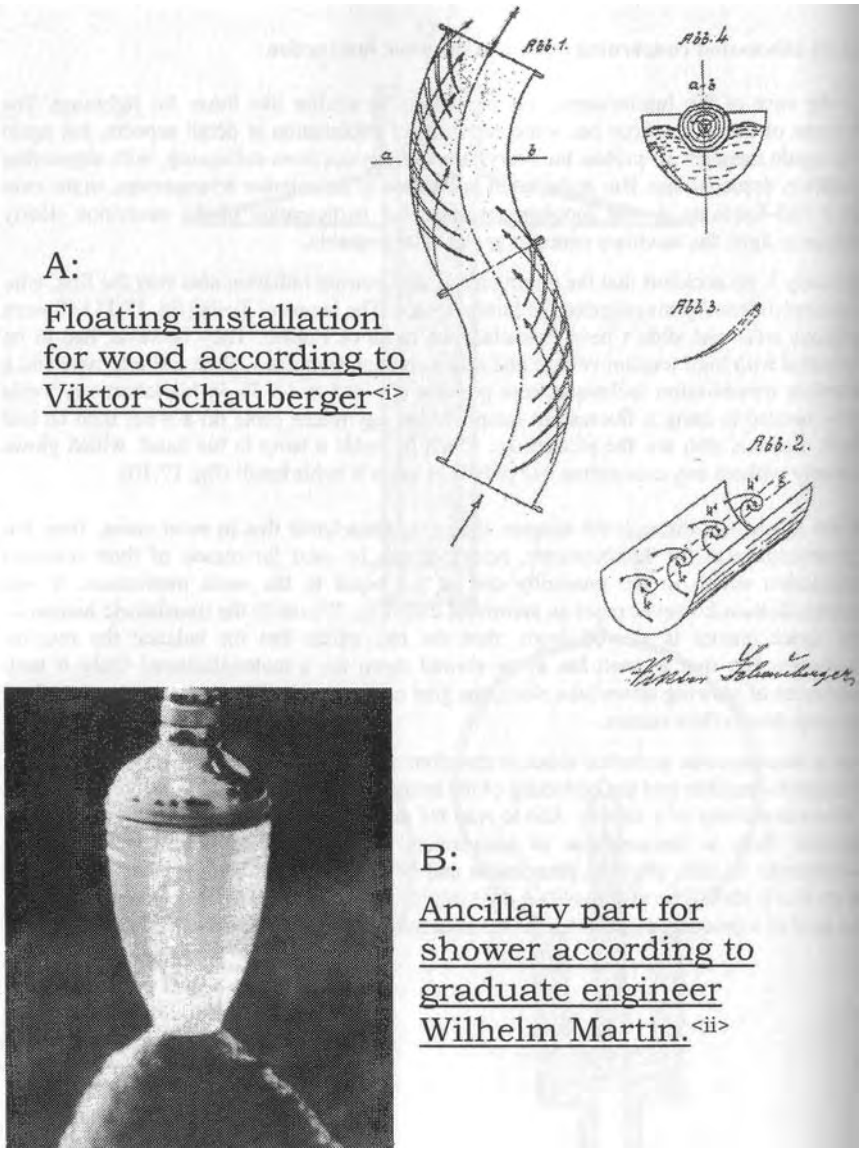

Fig. 18.1: Mechanical whirling of water

<i>: N. Harthun: Naturgemasse Stromungsfuhrung nach Viktor Schauberger Analyse einiger seiner Patente und Zitate; MuT Nr. 4, 1980; s.a. Kap. 9.2
<ii>: O.Alexandersson: Lebendes Wasser; W.Ennsthaler Verlag Steyr, 1993, S.156
<iii>: V. Schauberger: Die Entdeckung der Levitationskraft, Implosion 112, S. 39.
<i4>: Do we owe the taste of bubbling spring water to neutrinos?

18. Physical phenomena

In this chapter it on the one hand concerns indirect effects of the resonant interaction and on the other hand effects of gravitation and levitation.

18.1 Water as a catalytic converter for neutrinos

Already the Austrian forester Viktor Schauberger has pointed to glowing phenomena at whirled water. He first had observed such in nature at torrents and waterfalls in the Alps. Later he was capable, to produce and to demonstrate this effect even artificially[iii]. One could speak of hydroluminescence, where still the question would be left open, how it actually functions.

Already in chapters 4.10 and 4.11 has been talked about the special properties of water. It here at first concerned the property of transport of a vortex, which even is capable to bind particles in the vortex, which are heavier than the whirling medium itself. Schauberger had become famous by letting build floating installations, in which not only tree-trunks, but also gravel could be transported down to the valley, without the sides of the channel actually having been touched by the rubble. This phenomenon has been examined and confirmed on the scientific side [i].
Basing on this principle today different devices for processing water are offered and sold, which bind lime, mineral materials and suspended matter in the vortex and in this way prevent deposits in the pipes. The methods, to whirl the water, are however very different. Some whirl the water mechanical, others magnetically and again others electrically.
Here the dipole nature of the H_2O-molecules has an effect. If I turn a water molecule with its electric charge distribution, then from the moving charge a magnetic field results. If thus in the pipe a hydrodynamic flow vortex is produced, then an electric and a magnetic vortex, the potential vortex and the eddy current, are the result (see fig. 4.2). The wanted flow vortices vice versa also can be obtained, by guiding bubbling whirled water past permanent magnets, or by feeding in alternating magnetic fields with the help of coils, or finally by working with pulsed electric potentials. Each of these systems, operated passively or actively, has its specific advantages and disadvantages (fig. 18.1 B and C).

It can be assumed that with the vortices also the water quality is changed. As a rule the content of colloids increases, due to which the surface tension falls. In the colloids negative ions are bound, for which reason also the electric conductivity decreases. Finally the content of oxygen increases and that actually only can come from an electrolysis. The neutrinos thereby are suspected [i4].

As an extreme dielectric medium water favours the formation of potential vortices, which immediately after their formation contract swiftly. This oscillation of size of the electrically charged potential vortices makes possible actually an interaction with neutrinos, and that on the one hand has as a consequence the water splitting and the increase of the content of oxygen in the water and on the other hand the above depicted, observable glowing phenomenon, the hydroluminescence.

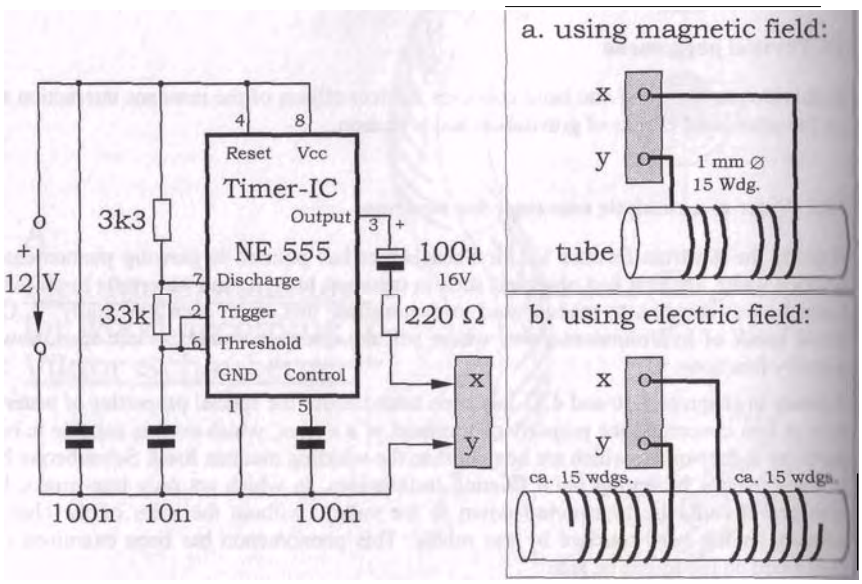

Fig. 18.1 C: Wiring diagram for a simple water processor
with pulsed field (2 kHz rectangular signal)
a: for magnetic field excitation
b: for electric field excitation

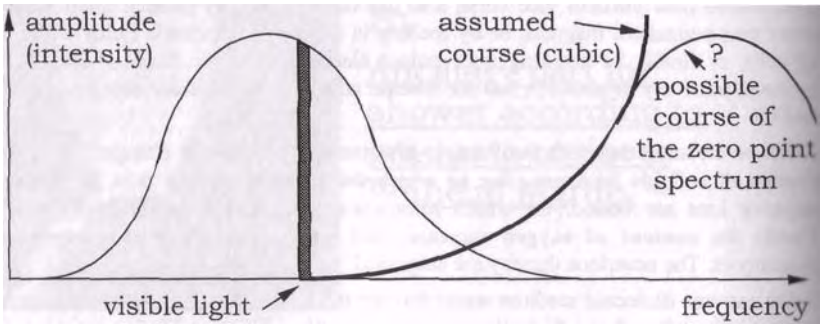

Fig. 18.2: The spectrum of frequencies of light and of the zero
point radiation.[i]

<i>: A. Waser: The Puzzling Nature, AWVerlag Luzern 1996, p. 88

To complete in fig. 18.1 C the wiring diagram of a simple water processor is shown, which works with pulsed electric (b) or magnetic (a) fields.

If we temporarily again leave the theme water and take along the notion, that it must be attributed a great importance in connexion with the interaction and the materialization of neutrinos

18.2 Background and zero point radiation

Whathappens really, if cold matter or interstellar gas molecules are hit or touched by the everywhere present neutrinos? Then it can be expected that oscillations are being stimulated and as a result the temperature slightly increases. If we thus at a space flight hold a thermometer out of the shuttle window, then we will measure everywhere such a remaining temperature of a few degrees Kelvin, which is called cosmic background radiation.

By popular scientific small talkers the background radiation is called remnant of a so-called Big Bang. It even is misinterpreted as evidence for the Big Bang. Even if a certain value of entertainment can't be denied, the Big Bang from a physical view until now only has raised questions and contradictions.

If we stay at the fact that oscillating neutrinos depending on their radiation density and velocity of propagation produce a thermal oscillation, which can be detected as a slightly increased lemperature. To measure that we don't need immediately to undertake a space flight. We also can install the thermometer in an artificially produced vacuum. In vacuum physics out of ignorance of the relations the neutrino radiation then is called zero point radiation.

In the case of the neutrinos it of course concerns an oscillation around a mean value, which for a symmetrical form of oscillation has the value zero. The term nevertheless is misleading and chosen very unfortunate. After all we don't speak of zero point current in the case of alternating current!

Since every supernova and every black hole emits neutrinos and correspondingly in physical experiments until now no preferred direction could be determined for the zero point radiation, it is taken as homogeneous and isotropic in space. From the Lorenz invariance again is inferred a cubic course of the zero point spectrum, an increase of the radiation intensity with the third power of the frequency. With this assumption the radiation density of the vacuum however strives with increasing frequency towards infinity. Here an error has to be present in the considerations!

I proceed from the assumption that in the case of the spectrum of the neutrino radiation it rather concerns a spectrum of resonance, the maximum value of which lies above the frequency range measurable with devices of today. It of course would be very important to find out, where the radiation maximum lies, but without being able to measure it that lies unfortunately in the range of pure speculations (fig. 18.2).

Half the wave length in any case should be tuned to the length of the antennas of the energy centres of the cells, the mitochondria and the chloroplasts which are capable of photosynthesis. In both cases the head diameter of the ATPhases amounts to approx. 5 nanometer. It would be obvious, if the resonance point would lie here. But it could as well lie at still smaller wave lengths in the domain of molecular dimensions.

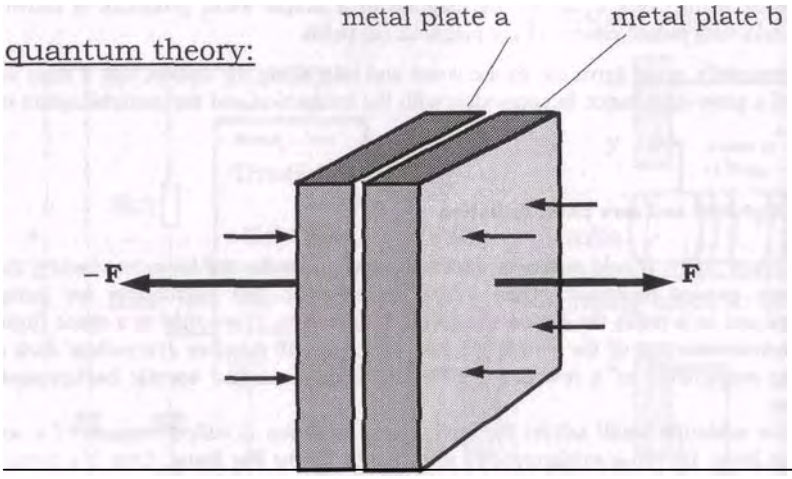

outside cause<i:>: pressure force by bombardment of quanta?

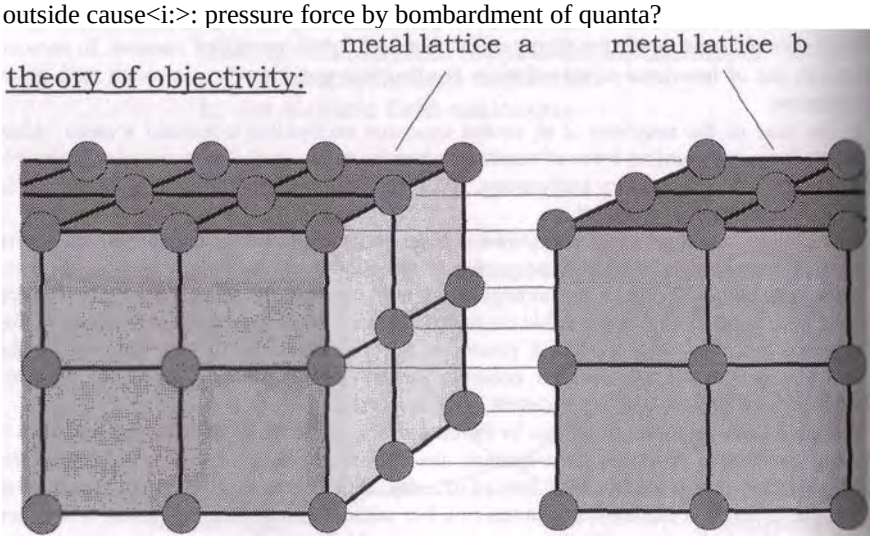

inside cause<i>: levitational force by resonance effects?

Fig. 18.3: The Casimir effect

18.3 The Casimir effect

If this zero point radiation actually would be the cause of the Casimir effect, which is generally assumed today, then neutrinos would have to be involved, if the zero point raditation would be to put equal to the neutrino radiation. The effect even is quoted as evidence, but I have my doubts.

The experiment is relatively simple and functions also in a vacuum. Two absolutely plane and smooth polished metal plates are placed very close to each other. Doing so the distance should only amount to one thousandth till one millionth of a millimetre. If the force, with which both plates are attracting mutually, is measured then it exceeds by far the gravitational force. We are dealing with an unknown force, neither electric nor magnetic.
Because the force of attraction still arises near the absolute zero of temperature, some make the zero point radiation responsible. In our translation that would be tantamount to the neutrinos exerting a pressure from the outside on the metal plates, if need be with their small rest mass, as far as this should not be based on an offset-error of the detecting devices. For that the plates would have to damp the neutrino radiation effectively and by mutual shielding reduce the radiation pressure from the split. The question is asked, if the from the outside hitting bombardment of quanta, as it is called, actually can exert a pressure which would be compatible with the nature of the neutrino radiation.

If we now try an entirely other interpretation, which does without the postulating and designing of new force effects. Now the from the unified theory won interactions according to table 15.1 form the basis. In the Casimir effect, as said, neither magnetic nor electric forces are involved, so that open field lines and the corresponding force effects (1 till 4) are ruled out. It has to be the work of closed field lines and that in the static case we know as gravitation (5). Now the mass of the metal plates is too small, as that an acceptable force of attraction of masses could result.
The measurable force is much larger, even if it according to its nature could be a gravitational force. Here oscillations, as they actually take place in the hull of the metal atoms, seem to play a role. If between the oscillations of the two plates standing opposite occurs resonance, then a levitation is possible (6), which describes an oscillating interaction, produced by closed magnetic field lines[<i>].
At extremely low-frequency signals this interaction is known as gravitational wave and object extravagant and costly physical experiments.

<i>: The question, which interpretation is correct and which one should be rejected, could be verified as follows: at first the force between two plates of a certain metal and afterwards that of another metal has to be measured. If in a third experiment a plate from the first and one from the second experiment are brought together and the force effect goes back measurably, then the quantum physical interpretation would be wrong clearly. With that would have been shown that here resonance effects are used, which presuppose an identical metal lattice structure of both plates.
If the force effect however doesn't go back, then both statements are possible, then one has to think up another experiment.

Fig. 18.4: The flying disc of Searl on a german title page.[i]

<i>: Special 7, Raum 8s Zeit Dokumentation aus dem EHLERS Verlag

18.4 Effects under high tension

It crackles in the laboratory of high-tension. The air smells electrically charged. Only in a corner someone sits and waits with much perseverance and patience, until something happens. Then he lets thunder down lightnings of several millions of Volts on a small sample. It flashes and crashes and still nothing happens.
No, it doesn't concern Tesla! Tesla has worked purposeful. In addition has Tesla only called himself inventor. But the man in the corner feels himself a discoverer and as it is proper for a discoverer, he has immediately named the effect after himself. As a real American he lets market himself and his discovery by the media and a video tape.
Doing so he obviously doesn't know at all, what he wants to have discovered, of what this Hutchison effect actually consists. It perhaps is an event of pure chance, for which he sometimes has to wait hours. If it very suddenly would occur, then it is a real potpourri of all already discussed effects: metal spoons are bending (fig. 14.13), massif steel rods are breaking, light effects are being observed (chapter 17.9 PP), water starts to dance and to cook (chapter 18.1), without getting hot and finally do some samples take off and fly crosswise through the room. He then speaks of anti-gravitation.
In the video tape can be seen, how he brings about a physical length contraction as a result of a locally produced field concentration with two as an interferometer configured Tesla coils. In a bottle for instance the air volume is changed. This confirms the correctness of the here presented theory of objectivity (chapter 6.6 PP).
In any case no-one is amazed more about the results of chance than John Hutchison himself. Overwhelmed by the magic, the charm of the effects and the feeling to be able to move freely outside the trodden out ways of physics, he still sits in his corner with the video camera and waits, until finally something happens again.

There is worked with tension voltages, which are considerably higher than 511 kV, the calculated tension voltage of their own of the charge carriers (fig. 7.1). One thus by no means has to be amazed, if under the influence of several millions of Volt electrons are taken apart and metallic objects are breaking or bending.
The extreme tension voltage and field change we owe an oscillation of length and of size, which spontaneously can lead to an interaction with neutrinos. Materialized neutrinos again are responsible for glowing phenomena and for the electrolysis of water, which under the impression of the rising gas bubbles seems to dance and to cook. For my readers and participants of the energy technical seminar therefore models of explanation are available.

One effect we still haven't discussed and analysed more in detail: the antigravitation resp. the levitation. As long as no reproducible field conditions are present and the chunks are accelerated in any arbitrary direction, it will be difficult to understand the physical course of a levitation.
In chapter 9.3 we already had become acquainted with and discussed a levitation device with the flying disc of John Searl. for which the field conditions are comprehensible. This time we should have a somewhat closer look at the flying device (fig. 18.4)[<i>].

<i>: Some reports can be found in Special 7 ,,Freie Energie", Raum & Zeit Dokumentation aus dem EHLERS Verlag, Seite: 141 bis 157 und 174 bis 185

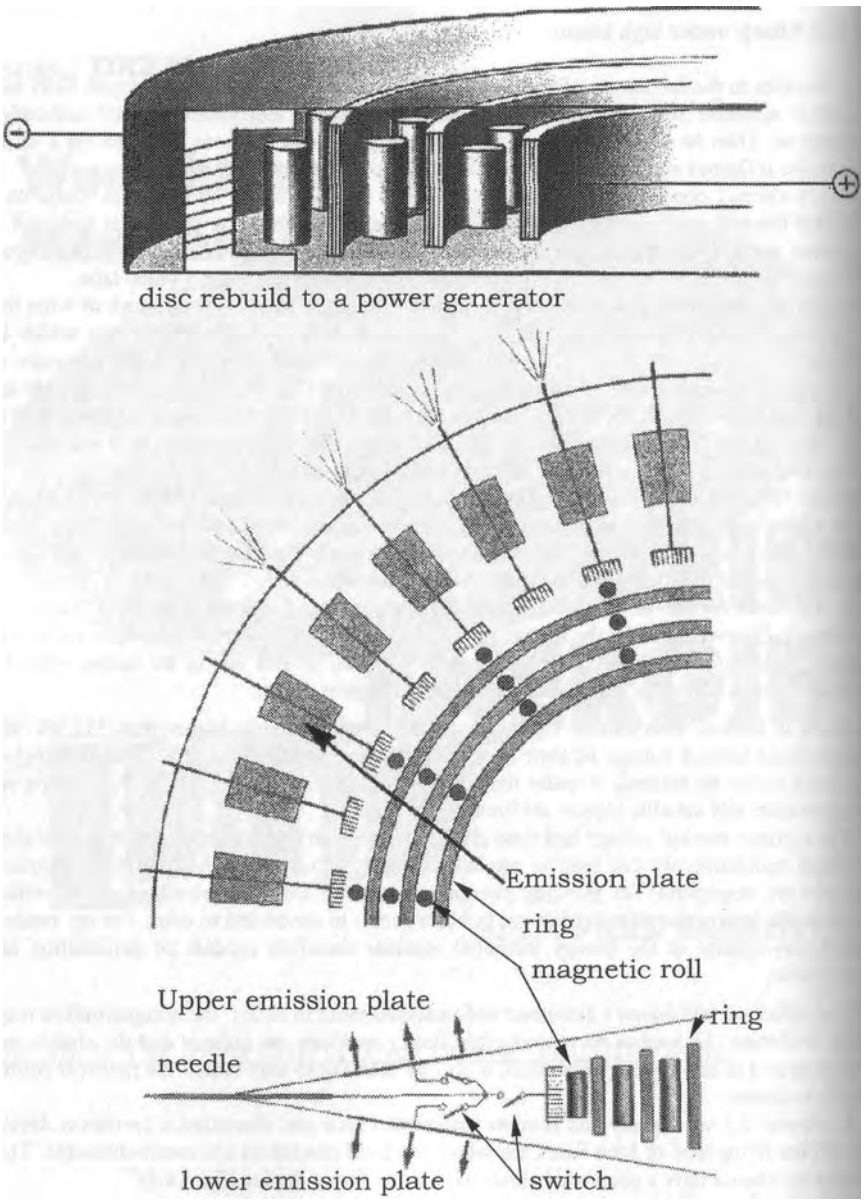

Fig. 18.5: Concerning the controlling of the flying discs according to Searl.[<i>]

<i>: H.Schneider, H.Watt: Dem Searl-Effekt auf der Spur, Special 7, Raum & Zeit Dokumentation aus dem EHLERS Verlag, Sauerlach, 1. Aufl. (1994), S. 183

18.5 Flying discs

The Searl-disc can be calculated relatively good with the Faraday equation concerning unipolar induction. To estimate the order of magnitude, we just suppose the roller magnets produce an induction of one Tesla and the radius is one meter, then between the centre of the flying disc and its edge 511 kV is applied, if the revolutions per minute has reached the value of 80000 revolutions per second. As soon as the revolutions per minute is reached, the neutrino conversion can start.
The at the edge of the disc arising corona, which consists of individual electrostatic discharge flashes, takes care for the necessary dU/dt, by every blow and every spark is drawing the potential for a short time towards ground. The tension voltage jumps in swift order between values of above 511 kV and zero Volt to and fro. In connection with the already discussed unipolar field configuration neutrinos are being collected in this way.

A technological challenge represents the layered construction of the roller magnets and the rings, which have to withstand extreme centrifugal forces (fig. 18.5). Friction however is not a theme, since on the one hand the air inside the disc ionises and a vacuum is formed and on the other hand the air split between rollers and discs increases by the field dependent contraction of the metal parts.

Actually one in this case by no means can speak of antigravitation, because the gravitation isn't really vanishing. The disc even in flight still is heavy tons. Here merely a resonant interaction is built up which is larger than the gravitational pull of the earth. The disc is attracted by the cosmic source of neutrinos, with which it has built up the resonance.
Exactly there it will fly!

The by Searl designed controlling[<i>] in my opinion actually can't have functioned satisfactorily. He uses emission plates, as he calls them, which alternatively are switched on by means of switches and are able to form electrostatic forces with some air charge carriers. In reality the drive probably is comparable to that of a sailing ship, for which the wind always blows from one direction. The ship isn't pushed by the wind, as one erroneously could think, but rather by the under pressure behind the sail pulled forward. Without steering facility the object always is driven in direction of the drain. The sailor would say, the ship without helmsman drifts towards lee.
Searl in this way has lost all flying discs which were started. By using solar neutrinos they presumably have fallen into the sun and burnt. The controlling should function analogous to a sail, then one would stand a chance, by "traversing" against the "wind", to sometime again come back to the starting-point.

<i>: H. Schneider, H. Watt: Dem Searl-Effekt auf der Spur, Special 7, Raum & Zeit Dokumentation aus dem EHLERS Verlag, 1. Aufl., Seite: 183

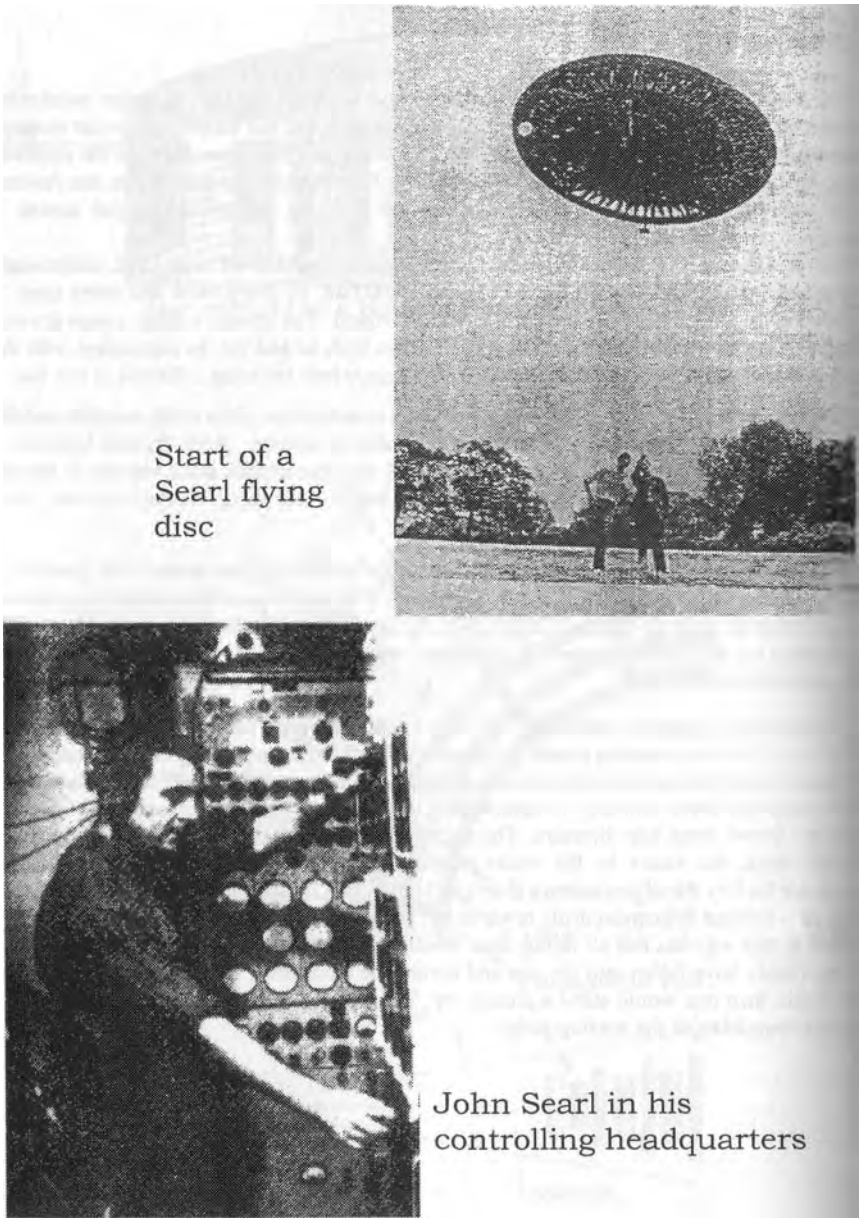

Fig. 18.6: The remote controlled flying discs of John Searl.[i]

[i]: Special 7, Raum & Zeit Dokumentation aus dem EHLERS Verlag, S. 152

18.6 Propulsion with neutrinos

In search for an ideal propulsion system for spacecrafts the flying discs of John Searl still have demonstrated a further possibility. After the start occasionally were left strange particles on the ground, which hadn't be there before. The flying device obviously had materialized them and dropped them at the start.

With this materialization of neutrinos the chance is showing of a very efficiently working recoil propulsion. If namely the neutrinos are converted into matter then they by that gain back their rest mass. If this takes place in flight then the materialized particles also bring along kinetic energy. It then works as ajet engine for which the direction of the jet can be directed and in that way the vehicle can be controlled comfortable.

In the case of the Searl-disc the materialization of neutrinos rather happens as a not understood side effect. In the case of a systematic use however the principle will show a characteristic property. Instead of a vapour trail a beam of light will shine out of the flying object in the direction of the emitted particles, but it will break off abruptly after a cartain distance.

To blame is the part, which has become anti-matter, which it is true as well contributes to the recoil, but simultaneously annihilates with incompatible particles of matter under emission of particles of light. If in some distance all antiparticles are used up then also the beam of light comes to an end.

It here concerns necessary properties of a corresponding propulsion technology for spacecrafts, which don't have to drag their propelling energy along with them. Our space technicians finally could handle another than the "hammer throwing method", in which case the "hammer" by means of terrible fuel consumption after a phase of acceleration only staggers uncontrollable through space under the influence of its inertia.

With a neutrino propulsion on the other hand one at any time can accelerate or brake. It will strongly influence the field around itself, so that can be reckoned that for every acceleration a field dependent change of size should be perceptible by an outside observer.

If therefore a corresponding flying device is accelerating then it will suddenly become smaller and that then looks so as if it would have moved away with a jump without temporal delay, but that isn't the case at all.

The jerky movements only would be a result of the perception with our eyes by means of the propagation of the light. Since the passengers are exposed to the same field, they change their body size along with that of the vehicle. They actually notice nothing of an apparently infinite acceleration, which only observers on the outside would observe and which indeed no living being could stand.

Nowhere the explanation crisis is larger than in space travel! The theory of objectivity represents a real help, because it perhaps as the only one puts us in a position to conceive and understand not understood observations as necessary technological consequences. Only by uncovering parascientific as purely physical phenomena man of today will be able to free himself from the constraints of magic and his own illusions.

Is the until now discussed cases resonant or other force effects are being used, whereas the gravitation remains unchanged. Closed field lines after all cannot be influenced, normally at least. Perhaps an indirect possibility exists to have an effect on the gravitation?

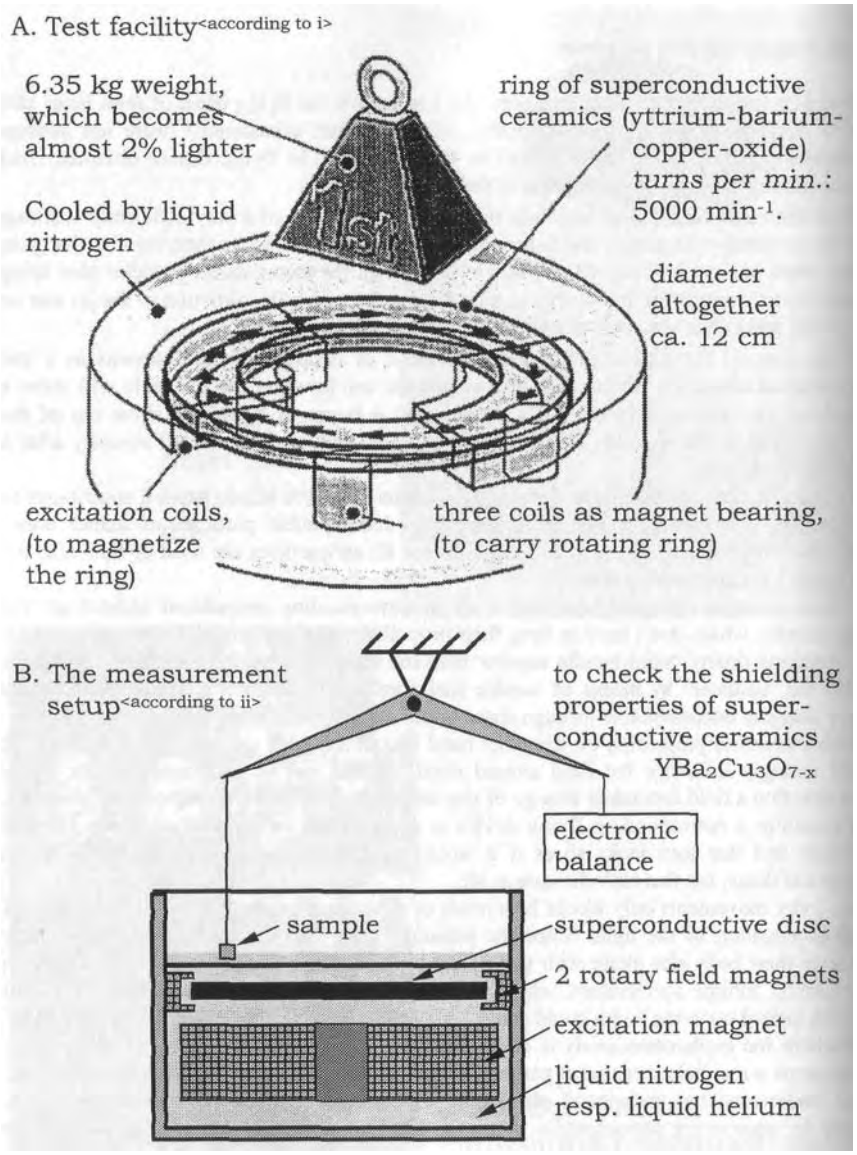

Fig. 18.7: Experiment for the manipulation of the gravitational pull of the earth.

<i>: Schneider: Anti-Gravitation im Labor nachgewiesen?, NET-Journal Januar 1997, S. 14,15; s.a. Internet: http://www.keelynet.com/gravity/fingrav.htm

<ii>: E. Podkletnov, R. Nieminen: A possibility of gravitational force shielding by bulk $YBa_2Cu_3O_7$-x Superconductor, Physika C 203 (1992), P. 441-444

<iii>: Force field Implications of Anti-Gravity, The Journal of Ideas, Art.191, 7.9.95

18.7 Antigravitation or levitation

The night already had fallen over Finland, but at the University of Tampere the light still was on. Then a scientist put his beardy head through laboratory door and with a "hello folks" blew the smoke of his pipe over the cryostat for the examination of superconductive materials. The scientists were speechless, because the smoke seemed to hit an invisible wall and was drawn upwards in direction ceiling almost at a right angle.
After having aroused the curiosity, Dr. Eugene Podkletnov also has held other materials above his rotating disc and had to discover that these as well lose weight, and that he actually influences the gravitation with his experiment. Even the air pressure at the corresponding place in a lying above floor was smaller[i].
With a superconductive disc of 30 cm diameter cooled by liquid nitrogen a reduction of gravity for 2% to 4% can be obtained, if the disc rotates with more than 5000 revolutions per minute. With the revolutions per minute also the effect increases, but it is independent from the excitating field[ii]. Finally the fields of the superconductive currents in the ring remain existing unchanged even after switching off the excitation and it only depends on these fields.

The shielding effect of the arrangement on electromagnetic fields already had been known before and should be examined closer in the laboratory. One only was surprised that the gravitation could be shielded as well, that obviously both interactions are related. According to the prediction of the theory of objectivity the closed magnetic field lines gravitate and the field components directed towards the centre of the earth cause the measurable force of weight. By the very strong superconductive fields obviously field overlaps and possibly a local driving out of field occurs, like one has long known for eddy currents (Meissner effect).
With that the earth gravitational field of course is not cancelled, but merely spatially moved, or it partly has changed its direction. If only a small part of field pointers turns out of their orientation towards the centre of the earth, then at that point the force of weight is reduced to a corresponding extent. The theory of objectivity requires that!

By the way reports exist, according to which even without rotation a weight reduction can occur for superconductive rings, and others, where is worked even entirely without superconduction. As core material for the ring ferrite or a strong permanent magnet is used. In that case depends on the circumstance that the ring-like coil is operated in self-resonance and always in the right moment again is excited anew by induction. The ring core then stores the fields up over time, exactly as the superconductor.
Stricktly speaking it are the atomic nuclei and in the end all elementary particles, which are aligning in the high field. Dr. Ning Li wants to artificially produce gravity, by directly influencing the quanta. With that she comes the phenomenon very close[iii]. The possibilities of this effect nevertheless are very limited, since two percent more or less are not exactly much, and the dream of the complete cancelling of gravity or even inertia possibly stays just a dream. It stricktly speaking just concerns influencing the gravitation and not antigravitation!

cause/ field lines	interaction F	= force effect *mediation:*	see chapter: effect/ *application*
5. closed **H**-field lines	gravitation (static)	F_{MG} = gravity *by particles with mass*	chapter 6.9 + 7 elementary particle mass
6. closed **H**-field lines	levitation (dynamic)	F_{ML} = reduced gravity	chapter 18.3 gravit. waves *Casimir effect*
7. closed **E**-field lines	gravitation (static)	F_{EG} (force hardly detectable)	chapter 18.7 *supercon-* ducting ring
8. closed **E**-field lines	levitation (dynamic)	F_{EL} (no longer detectable)	chap. 18.5 + 18.6 *Keely-/Searl-* *flying devices*

Table 18.8 A: The interactions of closed field lines.<i>

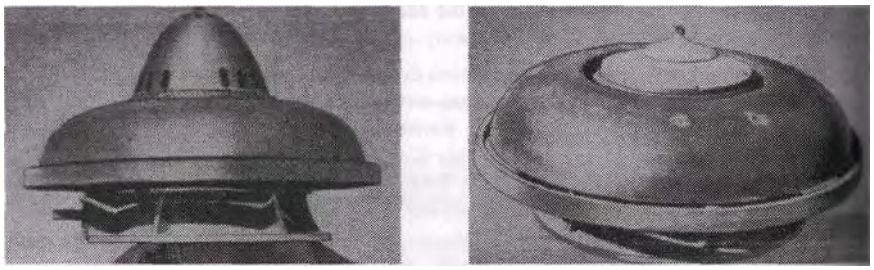

Fig. 18.8 B: Test models of the "flying saucer" according to Viktor Schauberger.<ii>

<i>: according to fig. 15.5, cases 5 to 8
<ii>: O.Alexandersson: Lebendes Wasser; W.Ennsthaler Verlag Steyr, 1993, S.103

18.8 Discussion concerning the effect of closed field lines

If we now direct our eyes exclusively to the lower half of fig. 15.5, in which the consequences of closed field lines are listed. Without the possibility of a direct focussing like for open field lines, the caused force effects turn out extremely small. With that they are less suitable for an use of free energy. The considerations in that context rather aim at technologies to reduce weight, like they would be worth striving for for flying devices.
If we allege that here in the same way the force effects of magnetic H-fields exceed those of electric E-fields for three to four powers of ten. Then it will hardly play a role for the force of weight of a body with or without additional electric charge, if its E-field lines are closed as well or are open. The increase in weight of an uncharged body only will have an effect in the third till fourth place after the decimal point. Seen so in the case of the gravitation it primarily concerns an effect of the magnetic field, more strictly speaking the effect of closed magnetic field lines (chapter 6.9).
If one succeeds in influencing these magnetic fields for instance by the influence of extremely strong fields of a superconductor, then also the gravitation will change, as has been shown (chapter 18.7). Let's imagine, in the case of a systematic procedure we would succeed in a perfect influencing, for which no component of the H-field lines points into the direction of the centre of the earth anymore, then an uncharged body would only have one tenthousandth of its original weight, whereas a charged body actually would weigh nothing anymore. This state of the weightlessness supposes that all E-field pointers point into the direction of the centre of the earth or diametrically in the opposite direction, since E- and H-field are standing perpendicular to each other. Unfortunately such a field distribution technically hardly can be realized and so the ,,flying carpet" furthermore remains reserved to the fairytales.
An effective reduction of weight of planes and other flying objects however seems by all means feasible, and so slowly the number of research facilities increases, which more or less officialy have a critical look at the cancelling of gravity and the levitation. The theories on which they are basing, however often sound very bizarre and moreover are completely unphysical. Maybe a look at the distribution of field lines, as proposed here, helps to get further.

In the case of the levitation, which occurs strictly speaking only in the case of oscillation for closed field lines, resonance again plays the crucial role for the coming about of the interaction. In connection with neutrinos the resonance can serve less the collecting; we rather need it for the materializing, for the production of mass, charge and energy.
For the artificial production of a levitation either a mechanical oscillation in the atomic or molecular domain is needed, like for instance is produced by a rotating water molecule, or a resonant oscillation of size takes place by use of electrostrictive or magnetostrictive materials, like piezocrystals or oscillating quartzes.
In this context surely is of great importance that also the temperature could be identified as a particle immanent oscillation of size (chapter 8.3). That's why besides a cold materialization or cold fusion also exists, at least theoretically, the possibility of a hot materializatin or hot fusion.

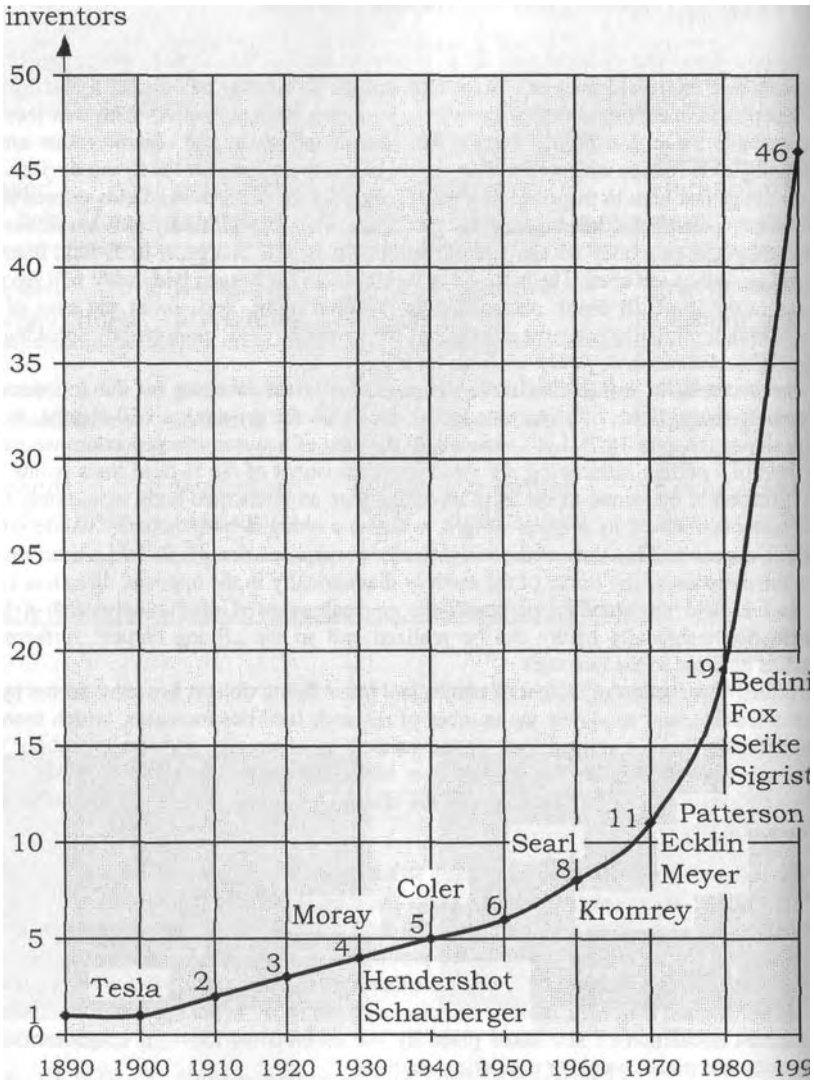

Fig. 18.9: The increasing number of free energy inventors.[<i>]

<i>: only the inventors mentioned in the text are entered. Literature for that: A. Schneider: Energien aus dem Kosmos, Jupiter-Verlag (1994), S. 77

18.9 Concerning the determination of the stand of today's energy technique

An analogy to the production of matter forms the production of light. At high temperatures as is well-known is formed thermal light and at low temperatures cold light, the discussed luminescence. An oscillation of size of the light source in all cases of the formation of light is the cause, be it as an electromagnetic wave or as photon vortex, be it in whirled water or as sonoluminescence. We at last see ourselves put in a position to understand the various light phenomena as something which is related.

The call for new energy carriers and an ecologically compatible energy technology can't be ignored anymore. The number of inventors at present increases fast (fig. 18.9). It is legitimate and worth recommending, to observe for this purpose first of all nature, how it solves its energy problem. Doing so we should realize that in contrast to the technology of today no combustion and no explosion takes place, but rather principles of a cold fusion and of an implosion as a result of contracting potential vortices are being used. Actually nature may point the way out of the energy technical dead end. We only have to accept the offer, be open and show being ready, to invest in the development of methods in accordance with nature.

Directed at the address of the distributors of supporting funds for energy research the claim in plain English reads: to grant no money anymore for ecologically harmful concepts, like nuclear fission or for not understood and not realizable developments like hot fusion. to immediately stop the fruitless works and to provide the money for an ecologically compatible energy research.

Immense saving potentials moreover are found in all domains of physics, where instead of costly experiments just as well the things could be calculated with an usable theory. To check the theory then only few experiments would be necessary. After all all important discoveries have come about in this manner. Nobody should think, he had understood a matter, once he has filled himself up with sufficiently much measurement data.

The root of the evil lies already in the education, where students of physics want to understand everything and therefore are trying hard to grasp with their view and hands for everything. Abstract thinking or mathematical derivations however are too uncomfortable for most; they have the erroneous opinion, understanding (German: begreifen) would have to do more with grasping (German: greifen), and for that the head after all can't be used.

One reason for this development can be seen in the relativistic point of view of Albert Einstein, who proceeds from the assumption of a subjective observability and has raised the relativity between a physical principle and the observation to the basis of physical thinking. The arrogant motto prevails: what I can't observe with my sense organs or register with corresponding gauges also isn't physics, but esoterics or parascience.

But if we want an ecologically compatible technology, then this can't be reached with this point of view. Then we only hinder ourselves with our own arrogance and intolerance. We have to leave the erroneous quantum physical way and again learn to think abstractly by taking up tried and tested principles of classical physics. An objective point of view forces us to register the phenomena, which lie outside the observable range, with mathematical MEANS (see chapter 13). Only if we have learned that, we will understand and realize the true relations in physics!

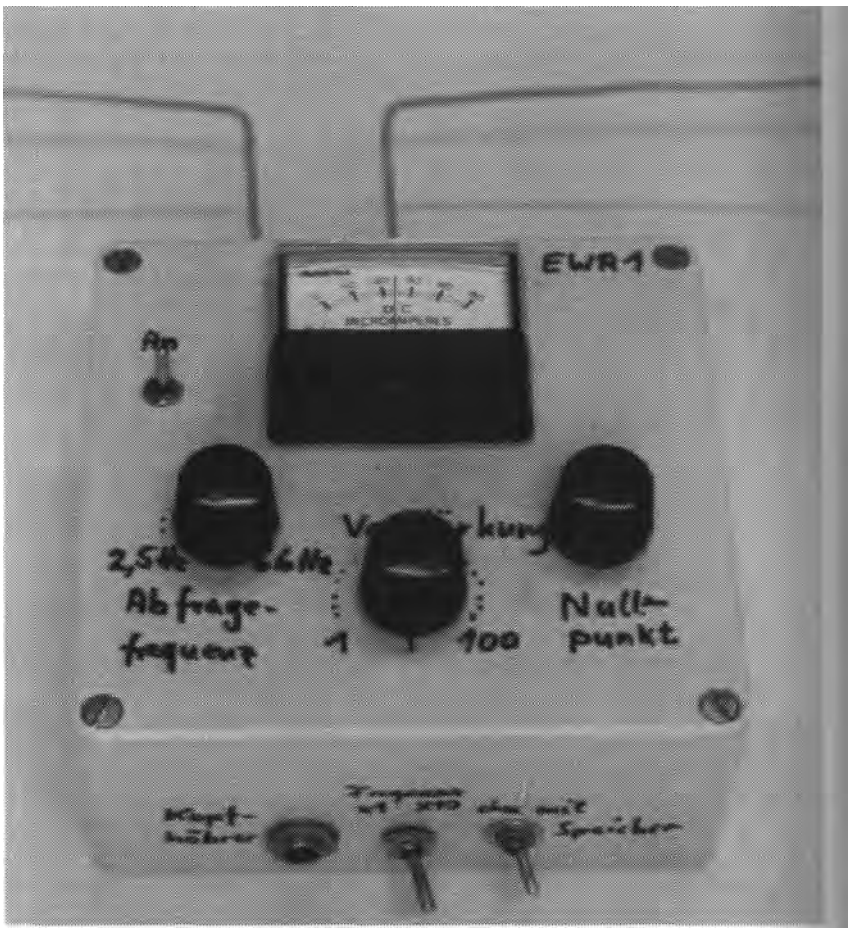

Fig. 19.1: A self-built charge amplifier.

19. Own experiments

The opposite of the theoretical considerations form practical experiments. If we want to register and understand physical and natural scientific phenomena, then we shouldn't entirely forget the aspect of handicraft. Doing so it can't be avoided that it goes on very personally, if about the laboratory work is being reported, not even then, if the experimenter is at pains to exclude every influencing of the carrying out of the experiment and the result. After all does anyone have to execute the experiments himself, since a good sceptic anyhow only believes, what he has observed with his own eyes.

19.1 Concerning the rating of experimental physics

There already have been scientists, who have requested to reject a measuring technical determined result for the case that textbook physics doesn't produce it. This attitude even today still is taken by an uncounted community of believers of science, entirely after the motto: "Nature kindly has to fit in with the dogmas of theoretical physics!"

This wrong thinking is reflected in the scientific journals, which reject to print discussions. Controlled by a tester board, which only has the task to prevent dissenters from the publication of their ideas, they are the sad proof, how widespread this erroneous attitude today is in the university scene.

Actually solely the scientific experiment shows us the physical reality! The theoretical models, like the here presented vortex model merely should help to understand nature and its laws. The representatives of theoretical physics are in the role of a helper and that requires modesty and openness.

For the case that a professor of theoretical physics imposes a pledge of secrecy on an experimenting colleague, if this one wants to report publicly about his amazing tunnelling experiments, then the public nevertheless should have the right to find out, if a tunnelling experiment reveals speeds faster than light, even if it doesn't suit the theorist and he in inappropriate arrogance only should consider the experimental physicist as his assistant.

If universities only are occupied with preservation of property and the industry only with the increase of its productivity, if future research consists of hiding public research funds internally in such a way that nobody realizes the fraud of support and in reality nobody thinks of the future anymore or wants to work for it, then we will be able to observe how discoveries and inventions migrate from the industry and the universities with their controlled central organs and increasingly will take place again in garage, cellar, solitary study room or in privately organized circles.

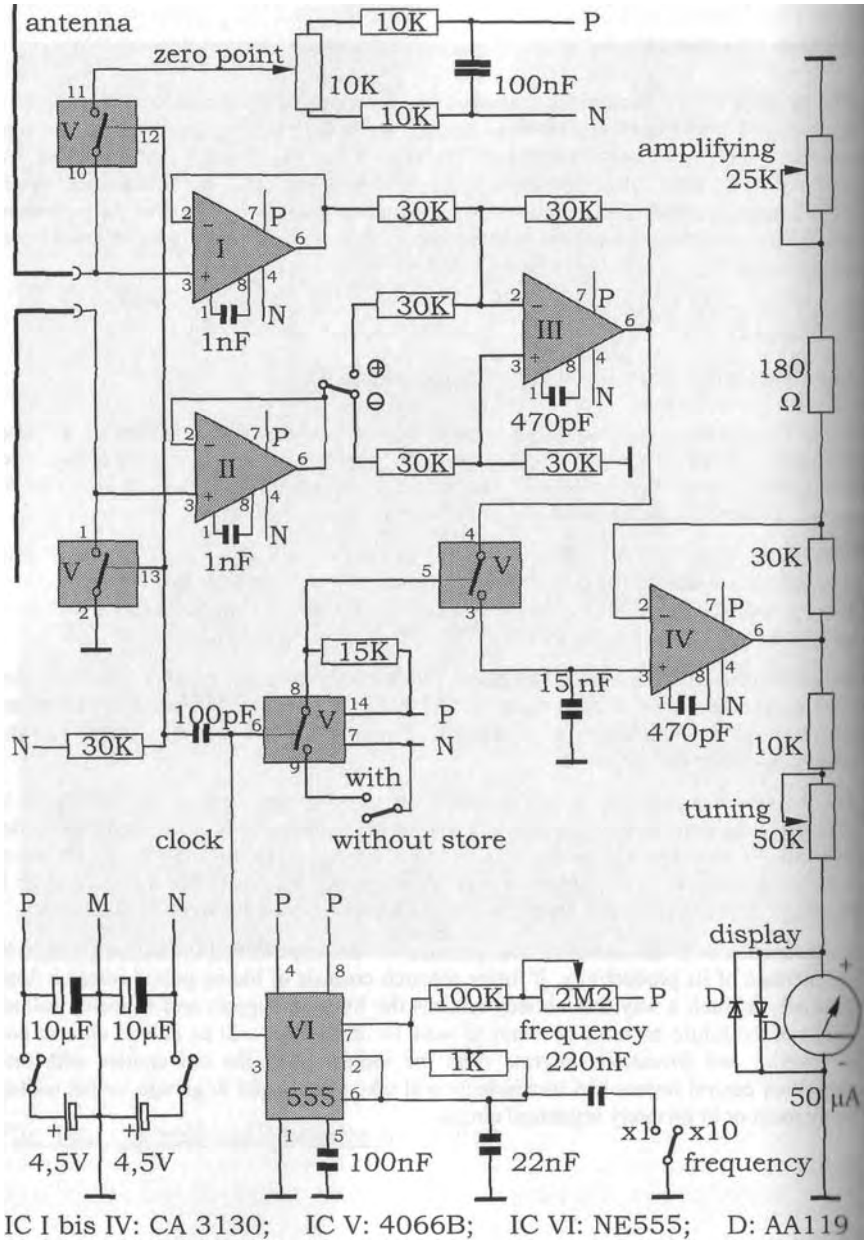

Fig. 19.2: Wiring diagram of the self-built charge amplifier

19.2 The charge amplifier from the workshop of handicrafts

Is connection with my vortex theory in this book time and again clues to experiments can be found. I am aware of their importance and I always, to verify my theoretical working out, have accompanied it with practical experiments. Doing so not the proof, which can be published and reproduced by anyone at any time, stood in the foreground. With the experiments in my workshop of handicrafts I only wanted to check for myself, if my derivations still can be verified.

Consequently was at first done without a publication in the first and second edition of the second part concerning the "electromagnetic environmental compatibility". For the addition of the here presented chapter about own experiments from the third edition there are several reasons: first; I have been asked for it by several readers, second; from every experiment is coming a piece of physical reality to meet one and third are here latent some useful ideas and approaches which get us somewhere.
Of course can't be read much from a handicrafts self experiment, but perhaps one or another reader, who has better laboratory technical possibilities at his disposal than me, is stimulated to carry out own experiments.

To chase after the potential vortices in the air, I 1989 at first have built together a charge amplifier. I connected differently formed antennas at the particularly high-ohmic difference input. Corresponding the in nature arising static electric field a tension voltage should arise between both antennas, which my gauge should amplify and indicate on a moving-coil instrument.
To be able to register local changes, a measurement cycle is gone through, which periodically is repeated: It starts with the measurement time, during which entirely by itself between both antenna a charge is building up. The value afterwards is stored analogue in a Sample-And-Hold link and displayed by means of a moving-coil instrument. Then the input clamps are short-circuited, the antennas again discharged and the game starts from the beginning.

Measurement time, zero and amplification can be adjusted at the device (fig. 19.1). Whoever has fun to rebuild it, finds the by me realized wiring diagram in fig. 19.2.

It is true I did realize other designs, but technically the here shown design proved to be the most useful solution.

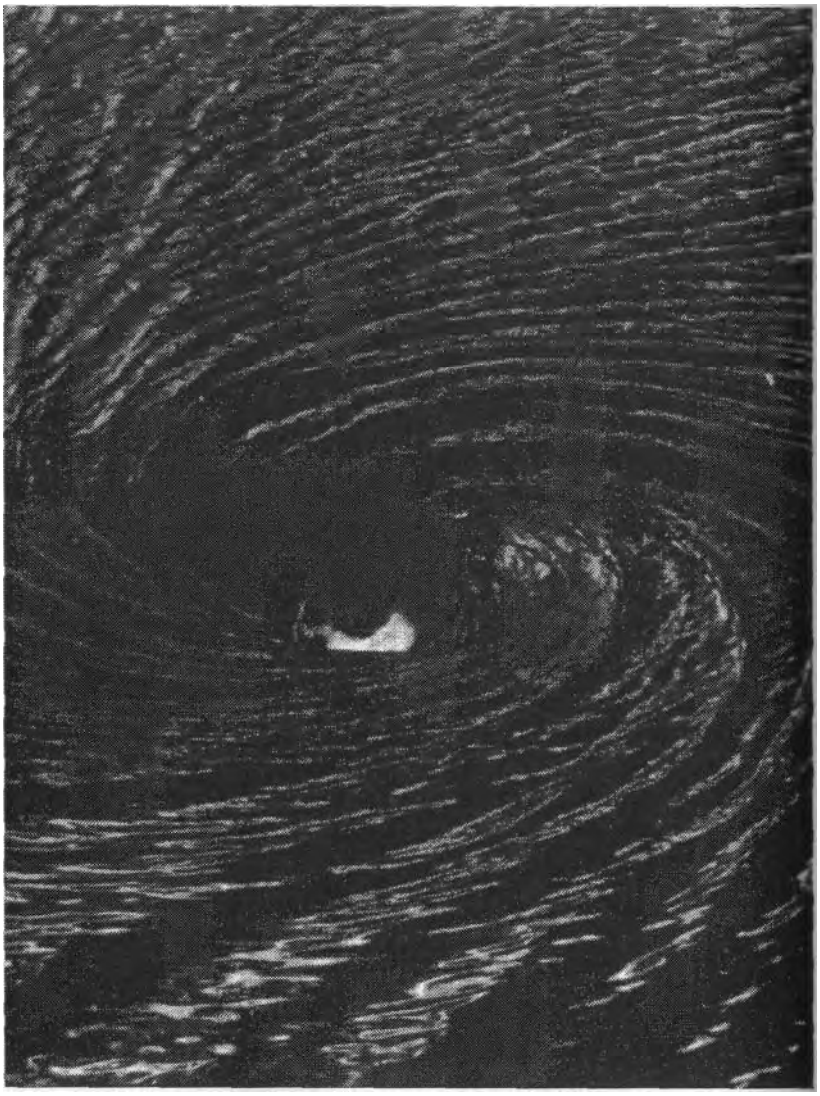

Fig. 19.3: _____The bath tub drain vortex;
shown is a tidal vortex near St. Malo.[<i>]

<i>: Photograph from the magazine ,,Life" of 4.7.1969, resp. from: H. J. Lugt: Wirbelstromung in Natur und Technik, Seite 371

19.3 Interpretation of the observations with the charge amplifier

The practical use of the device at first proved to be extremely difficult, because the pointer seemed to perform a wild dance. At a more close look I however could make exactly those observations, which I had sought-for as proof for the existence of potential vortices.

First I did find confirmed the known high field strength. We after all live between the ionosphere and earth's surface right in the middle of the dielectric of a "spherical capacitor". Because the values of the electric field reach very much closer to the maximum value, which is lethal for living beings, than the value of earth's magnetism, I did draw from that the conclusion that biological effects primarily can be expected from the E-field.

If the E-field, as Maxwell's field theory specifies, actually would be irrotational, then we would be dealing with a gradient field. My device would have to display everywhere to a large extent the same value. But that was not the case.

Maybe the building is responsible for the chaotic display and the wild swings of the pointer, so I thought. Doing so I had thought of the auxiliary explanations of the high-frequency engineer about so-called reflections in closed rooms. Therefore I stormed with the gauge, which had gone wild, into the open air and walked different ways, which should have been reflection free, but the picture stayed the same. In any case the E-field is not a gradient field. I had to find out.

Following I could, what required much patience, find certain places, at which for the same movement from the same direction could be seen a reproducibility of the swing of the pointer, it even could be arbitrarily often repeated. 1 marked the point exactly. Then I tried to move the device from another direction towards the marking and had to find out that the point had moved away.

If I sit in the bath tub in the evening and pull the plug, then I each time am enthusiastic about how sensitive the drain vortex reacts, how I can send it from one corner into the other by the snipping of a finger without it falling apart (fig. 19.3). Doing so one easily can imagine with a bit of phantasy how difficult, yes, almost impossible it would be to measuring technically register the vortex for the case that we could not see it. The gauge it is true would display violent wave movements. But a reproducibility we would not be able to obtain, exactly as for my self-built charge amplifier.

Now I knew that the by me at 2.1.1990 at first purely theoretical derived potential vortex actually exists as vortex of the electric field!

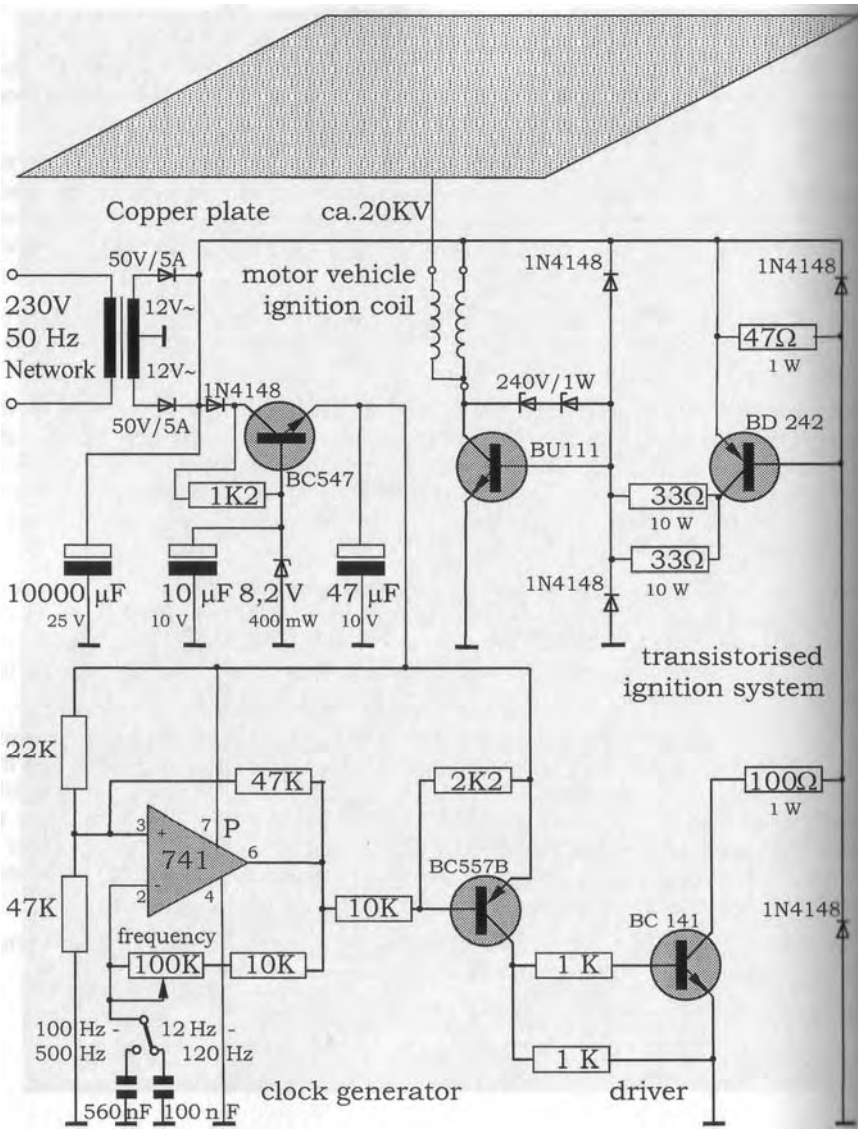

Fig. 19.4: Wiring diagram concerning the Kirlian device.<i>

<i>: Elektor, Fachzeitschrift fur Elektronik, Mai 1977, S. 22-25: KirlianfotogralV

19.4 High-tension experiments in the laboratory for performance electronics

At first the students of electronics, with which I had to do daily, were infected by my discovery. With true enthusiasm they soldered together one circuit after another. In my laboratory something like a mood of setting out could be felt. One student brought along and old ignition coil of a motor vehicle, then the control circuit for it was built, plexiglas organized, an aluminium plate glued under it and the whole box dragged into the photographical laboratory[<i>]. Three students made a detour along the outside grounds of the polytechnic and picked the necessary visual aids of trees and bushes.
Following the leafs were laid on photographical paper and by means of the self-built high-tension generator charged to 20000 Volt. Doing so at all edges and particularly at the tips of a leaf corona discharges arise, which expose the photographical paper. We then developed the photographs ourselves and discussed the results [<ii>].

The indication, for a second photograph the whole leaf would appear even if half the leaf is torn apart after the first experiment and only one half is put on, occupied us in particular. Eventually we didn't put on a leaf at all in the second experiment and found out that nevertheless the leaf put on last became apparent on the photograph. Now only one physical interpretation was possible: The potential vortices of the leaf stimulated by high-tension still were in the plexiglas disc in weakened form! Here they swirl further and under high-tension furthermore produce corona discharge impulses.

Now also the students were convinced of the existence of the potential vortices.

This experiment stimulated the brain cells of the entire team: If potential vortices under high-tension cause electric blows, since the corona discharge is nothing else, then in this way the local vortex distribution in space should be measurable? One student immediately got down to work and build from the horizontal diversion unit of an old television a high-tension generator with an adjustable spark gap. Following he walked with his flashing and crashing device all through my laboratory and others walked with him and dragged the gauges behind them. But to their big disappointment they were not able to see an influence dependent on place.

Then it suddenly was clear for me: It would have done the students well, if they before would have had a bath and observed the drain vortex, "it suffices the famous wing stroke of a butterfly", I explained my team, "and instead come up with this infernal machine and chase away all the vortices, which we actually want to register ". We had to realize that as a rule phase of disillusionment follows the euphoria.

<i>: Klektor, Fachzeitschrift fur Elektronik, Mai 1977, S. 22-25: Kirlianfotografie; fig. 19.4 shows the wiring diagram and fig. 19.5 A the self-built device.

<ii>: The Kirlian photographs from the darkroom of the polytechnic are shown in fig. 3.6.

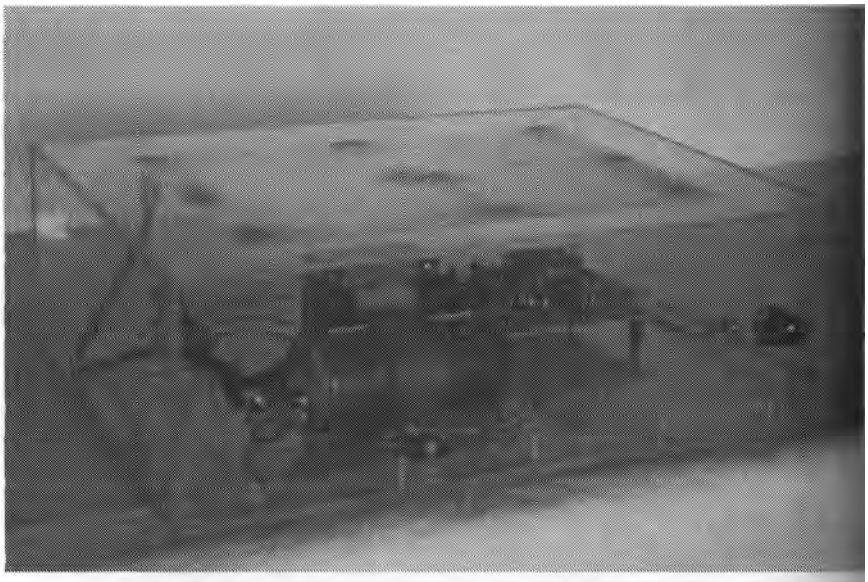

Fig. 19.5 A: A self-built high-tension device for Kirlian photography

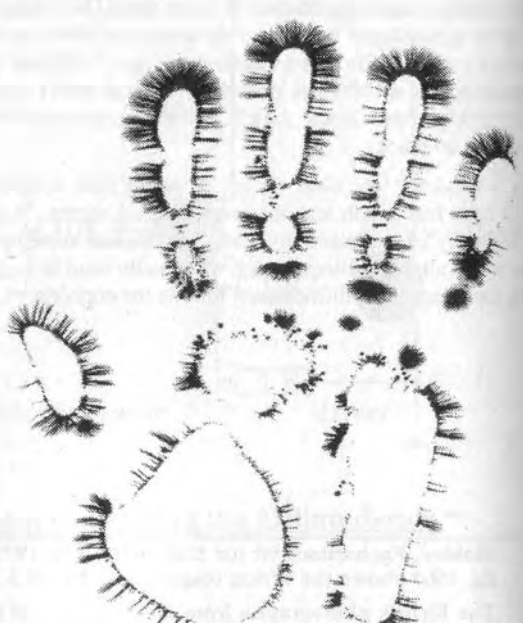

Fig. 19.5 B: Kirlian photograph of the right hand

19.5 Measurement of dielectric capacitor losses in the HF laboratory

My convincing work clearly was shaped more complicated with my professor colleagues. Most pretended to understand nothing about it and kept themselves out. But there also are exceptions. ,,something like that has never been there at our polytechnic, that a colleague puts forward an own field theory ",a physicist colleague remarked after my lecture public to the polytechnic<i> at 3.7.1990 and meant, that must be celebrated. He festively let me cast my eyes in his store room, got out a few bottles of wine, which then some of my colleagues of physics emptied with me in their official room. Doing so we small talked about the sense or nonsense to fix on the education of physics to the Coulomb charges.

The head of the high-frequency laboratory showed likewise impressed. At last he now knew, why capacitors at microwave frequencies can become so hot that they solder themselves out of the circuit by themselves and can fall out, why PVC-films can be welded with HF, etc. ,,We have to prove that not the dielectric is to blame, as stands in the textbooks" he came towards me.
At least following my idea potential vortices are the ones, as I expressed myself, which are behaving dual to the eddy currents. It concerns vortex losses, thus a physical phenomenon. Eddy currents now can be damped as is well-known, by for instance sheeting the iron circuit for engines and transformers. The insulation between the sheets prevents the formation of eddy currents in that direction and the degree of effectiveness increases.
"I would suggest", I told my colleagues, ,,to "sheet" a capacitor in a dual manner and to measure the losses". Because eddy current losses increase with the square of the frequancy, we picked microwave frequencies. In the HF-laboratory a card with an L-C resonant circuit was made, we should be able to quite precisely determine the losses by means of its quality. The inductance was formed as a microstrip line and for the capacitor a socket was planned.
The carrying out of the experiment consisted of using single layered ceramic capacitors, so called trapezium capacitors, with a vapour deposited silver coating on both sides as a package and to measure the quality of the resonant circuit as a measure for the dielectric losses. According to the rules of duality the dielectric (as nonconductor) thus corresponds to the permeable transformer sheet (conductor) and the silver coating (conductor) to the sheet insulation (nonconductor). In a second experiment the silver coating now was removed and the same capacitor material measured at identical conditions this time uncoated. Will the losses increase or isn't changing anything?
Tension and nervousness suddenly could be felt, even among the students, who followed the experiment from the second row. All looks were pointed at the monitor of the network analyser, on which slowly the bell-shaped curve of the measured resonant circuit quality became apparent. The result was surprisingly clear. I first looked at my colleagues and then at the students and had to realize that all eyes were pointed at me. The first measurement was a bull's eye! The vortex losses "uncoated" were considerably larger.

<i>: K. Meyl: Die mangelnde Dualitat der Maxwellschen Gleichungen with contributions concerning the theme of magnetic space poles, the mathematical calculation and the technical-physical interpretation of newly discovered potential vortices. Invited by the rector of the FH Furtwangen at 3.7.1990

- experiment 1: quality of resonant circuit with coated capacitors
  from a series of 5 separate experiments averaged: Q = 48
- experiment 2: silver coating removed with diluted nitric acid
  possibly the acid has damaged the dielectric: Q = 9
- experiment 3: silver coating polished off mechanically.

low quality means high dielectric losses! averaged: Q = 28

- resonance sharpness (quality number): $Q = \frac{f_0}{\Delta f} \quad \frac{\text{(Resonance frequency)}}{\text{(Resonance frequency rang}}$

at a resonance frequency f0 of approx. 400 MHz.

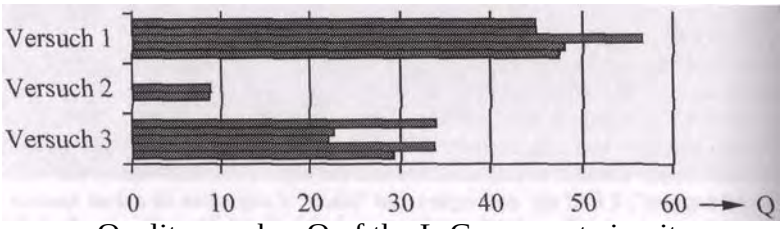

Quality number Q of the L-C resonant circuit
the dual ,,sheeted" capacitor has the lowest losses,
the resonant circuit with that the highest quality (experiment 1).

Fig. 19.6: Measurement of the dielectric capacitor losses over the quality of a resonant circuit in the HF laboratory at 11.06.1990.

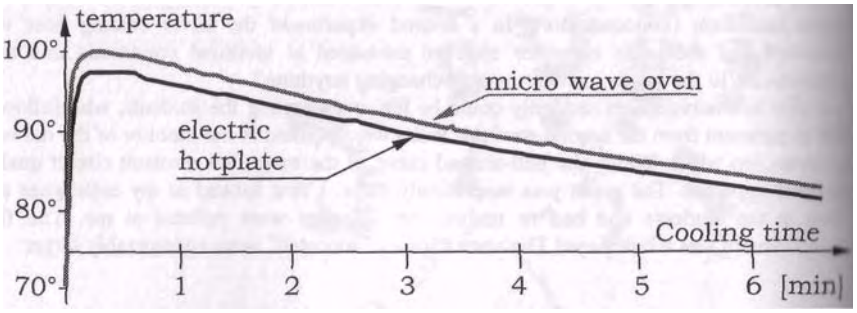

Fig. 19.7: Measurement curve of the water temperature over time
at 22.10.1996 in the electrical engineering training
Observation: for the microwave oven the container despite the "after cooking-effect"
remains colder than in the case of a hotplate. Sensor: PT 100.

19.6 Analysis of the measured capacitor losses

First of all the colleague spontaneously prompted a common publication.

But a certain disillusionment had to await us. For the next measurement hardly a differemce could be detected. We varied the contacting and removed the silver coating. once with hydrochloric acid, once with fine sandpaper. Every measurement we repeated umpteen times and in the end had to draw the conclusion that the results for our somewhat unprecise construction fluctuated extremely.

Averaged over all measurements and methods, indeed a reduction of the dielectric losses for alayered capacitor resulted, but at a critical consideration of the errors the results seemed to "drown" in the mean variation. In the opinion of my colleague the visible trend wasn't sufficient to convince dyed-in-the-wool sceptics, whereupon he withdrew with the indication, I should try at the people of microelectronics, they more likely would be capable to reproducibly gain control of a layered construction.

The experiment at least let a legitimate chance open that the vortices of the electric field actually exist, and in the case of the delectric losses of a capacitor it concerns vortex losses<i>.

19.7 Microwave oven for testing in the laboratory of electrical engineering

"Volunteers first" was said at 22.10.1996 in the electrical engineering practical training and two students got down to work. I had brought along from our kitchen the microwave oven, a portable immersion heater, a kitchen stove plate and different containers. In the laboratory of the polytechnic I in addition had got hold of a Bunsen burner. In the sense of the "Stiftung Warentest" (institution to protect consumers in Germany, note of the translator) it concerned the question for differences in heating water; or following the public discussion, is cooking with gas more healthy than cooking with the microwave oven?

We wanted to know. So we cooked water, filtered by inversion osmosis, once with the gas burner. once with the hotplate and finally with the microwave oven. Switched off always was at the same moment at the same temperature, and the cooling down curve was recorded with an x-t-time recorder (fig. 19.7).

Between gas and electric cooker virtually no difference could be detected, but the microwave oven at switching off still showed an odd temperature increase. I already had remarked this earlier. If one takes a water glass out of the microwave oven, then the water again really bubbled off, although the container itself had remained relatively cold. If one on the other hand takes a water pot off the gas cooker, the water suddenly stops cooking. From where comes this difference, which also the experiment could confirm?

<i>: A result of my dual way of looking at the vortex losses is the representation in fig. 4.7.

A: damped wave equation:

$$\Delta \mathbf{E}\, c^2 = \delta^2\mathbf{E}/\delta t^2 + (1/\tau)\cdot\delta\, \mathbf{E}/\delta t$$
$$\text{(wave)} + \text{(vortex)}$$

B: open chain of reasoning in the physics of electromagnetism:

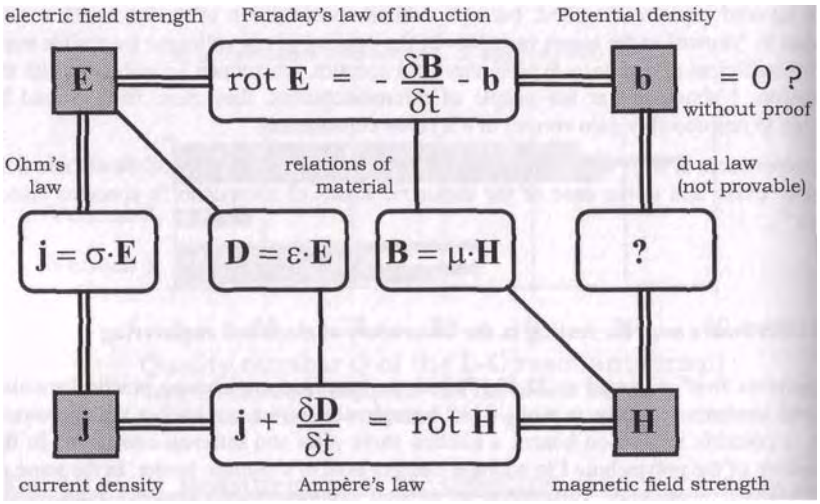

C: for the stationary case $(\delta/\delta t = 0)$ in general representation:

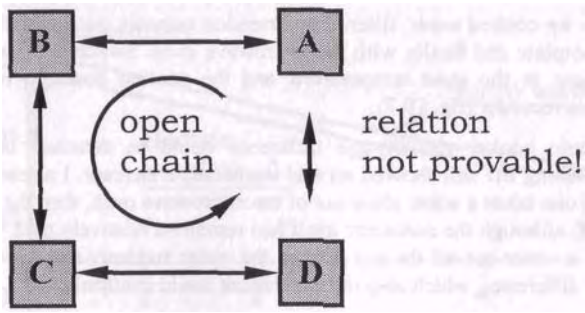

Fig. 19.8: _____ Contribution to the discussion about the impossibility, to prove, according to scientific methods, in a chain of reasoning (A-B-C-D) the last link (D-A), which closes the chain.

19.8 Microwave heating by decay of vortices

It has to concern a storing effect. In the case of an normal cooker the heat transfer takes place by convection. In the case of a microwave oven we however are dealing with an electromagnetic wave.
But in the wave equation nothing can be read about heat; here merely vortices can be found as a damping term (fig. 19.8 A)[i]! Therefore as the only possible interpretation is left that the microwaves roll up to vortices to fall apart themselves after a certain time.
Only at the vortex decay heat is formed.
The irradiated microwave power according to that is stored over a longer period of time as vortex in the water and the food. The vortex decay takes place according to an e-function with the calculated relaxation time constant tau[ii].

From the circumstance that particularly water is heated up in the microwave oven despite the small electric conductivity but with high dielectricity, I infer that it has to concern mainly potential vortices, from which a biological effectiveness can be expected. The question if this should be valued positively or negatively, I have to leave up to the doctors and therapists. At least physically seen a difference is measurable. Thus a vortex decay will occur for a meal prepared in the microwave oven even if we already have consumed it.

Conclusion: I wish all: your health!

But what do I write about vortex losses, if every sceptic knows half a dozen alternative interpretations. Inevitably I have to bear in mind that also the eddy current heating owes its acknowledgement only the circumstance of the discovery of the corresponding laws. If Othm hadn't discovered his law and formulated it in the known form and instead the dual formulation would have been discovered, then we today would attribute the dielectric losses in a capacitor and in the microwave oven to the potential vortices, in the case of the transformer however the material would be responsible for the heating and not eddy currents, for which there then also wouldn't be a theory (fig. 19.8 B).

It actually is pure coincidence that at first Ohm's law and not the dual formulation had been discovered and acknowledged. But because both are equivalent, we also have to assume the correctness of both, even if the last link of a chain of reasoning A-B-C-D back from D to A in principle can't be proven anymore, since it already is explained by the chain A-B-C-D (fig. 19.8 C).

There I thus had discovered a potential vortex, without a possibility for a direct proof of existence. For that the textbooks are full with auxiliary explanations, with which physics successfully cheats past this important field phenomenon. I was frustrated. There had to be a way to measuring technically register the vortex in some way.

<i>: Fundamental field equation 15 in fig. 5.1 or equation 21, fig. 5.3
<ii>: Relaxation time constant: see equation 10 in fig. 5.1 or fig. 8.1

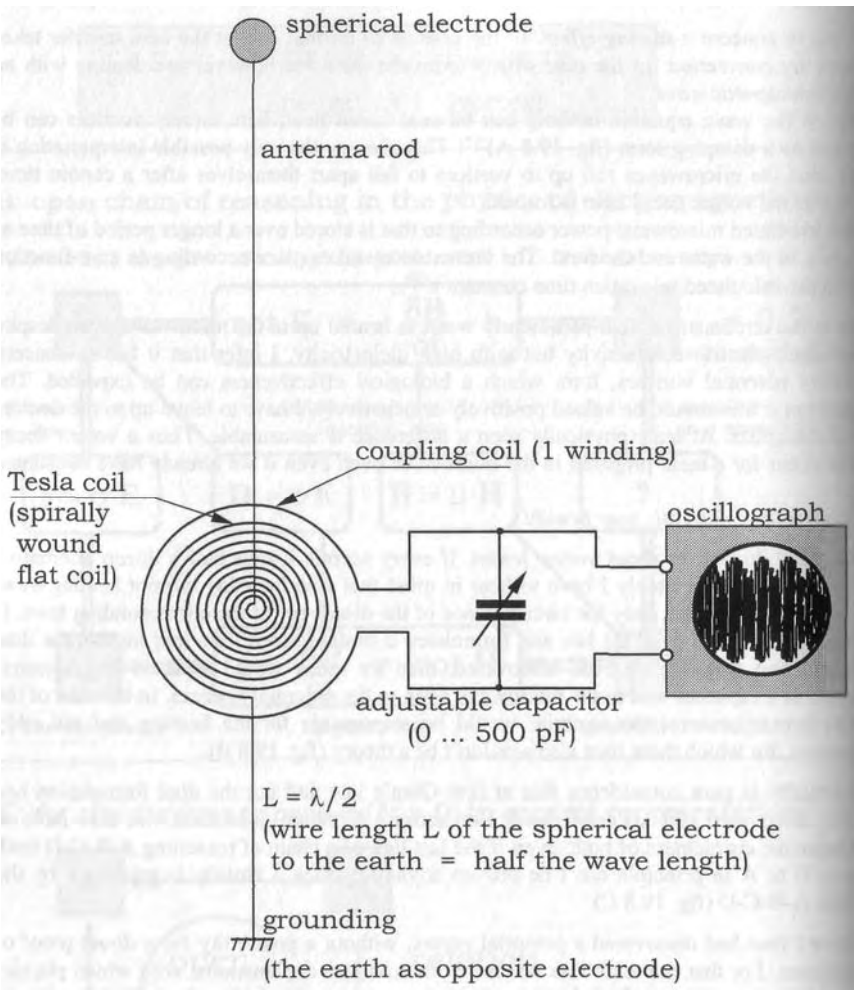

Fig. 19.9: Proof of scalar waves with the Tesla coil.[i]

<i>: The inverse use for a high-tension transmitter according to fig. 9.1

19.9 The Tesla coil from the workshop of handicrafts

I again retired in my workshop of handicrafts and wound flat coils or I pondered in my study over Tesla books. 1995 from several sides my attention had been drawn to the circumstance that the inventions of Nikola Tesla can be organized in three categories:

The first third has made him world-famous. It concerns the rotary field theory, the asynchronous engine and the today normally used alternating current technology, which we owe him.

The second third concerns technologies and inventions, which were rediscovered by other people partly only years later or even were only pinched and distributed as novelty under another name. Electron microscope, superconduction, electrolyte capacitor, fluorescent lamp, fuse. coaxial cable and a lot more count among that.

The last third however concerns inventions, which until the day of today still aren't understood and await their scientific explanation and technological use. Tesla himself called these achievements his most important inventions, but still owes us a scientific explanation. The scientific world also hasn't got a theory ready and doesn't know to do anything with it. Public research doesn't take place or is prevented by lobbyists.

What remains, are tinkerers of various educational background and qualification, who are trying hurd to comprehend the buried experiments of Nikola Tesla off their own bat in the garage or in the hobby cellar.

I felt like one of these, by winding one winding after the next from the inside to the outside. Then I soldered an antenna wire at the inner end of the flat coil, which I in Tesla manner connected electrically with a spherical electrode hung up under the ceiling. The opposite electrode should be connected to the outer end of the winding, it is said, and the distance between both should be as big as possible. If namely an electrode just is collecting, then the opposite electrode is repelling the same space quanta. According to Tesla's recommendation I did use the earth as opposite electrode and for that tapped the central heating or the grounding of the foundations.

To take signals only one to two windings as secondary winding were necessary. I connected them with an adjustable air capacitor from an old steam radio to a frequency determining parallel resonant circuit and looked at the taken tension voltage at the oscillograph (fig. 19.9),

I still had problems with the statement of Tesla, the coupling had to be made loose. Thus the question is asked, how loose? I after that organized two toilet paper rolls of different size, (after the toilet paper had been used, naturally) and pushed them into each other. The smaller toilet paper roll carried on the gable-end the flat coil as primary winding of the air transformer and the bigger one the coupling coil. Now by shifting any wanted degree of coupling could be adjusted to (fig. 19.10).

I was astonished myself. Tesla actually was right with his discovery of the scalar waves. With my arrangement they can be clearly distinguished from the Hertzian waves.

The following procedure is recommended:

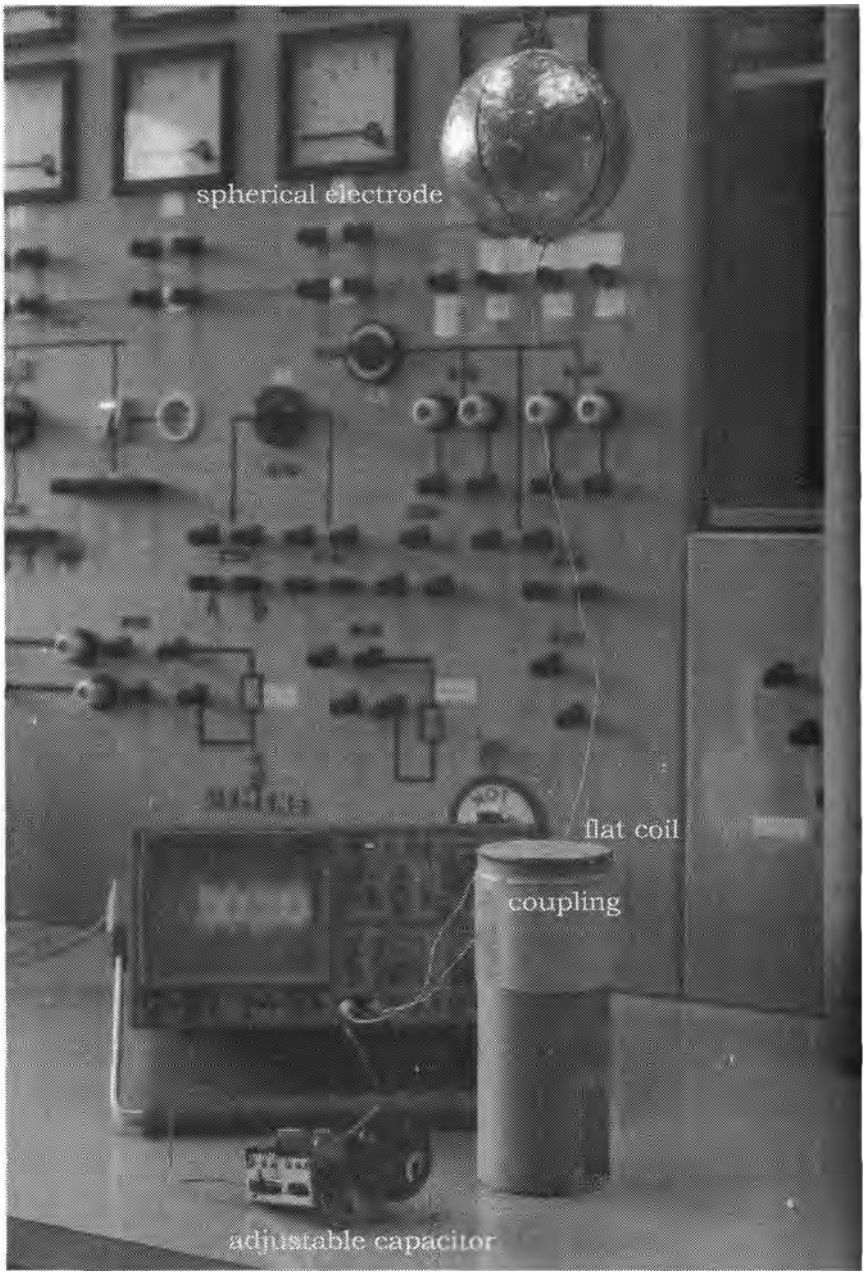

Fig. 19.10: The experimental configuration

First of all I seek a source of interference with the adjustable capacitor and tune to maximum amplitude. Then I change the coupling and further optimise in this way. If now the amplitude again decreases from a certain point while approaching the coupling coil, then it concerns the sought-for longitudinal waves. If namely the coupling is too tight, then the received vortices again are driven away by the effect back on the fiat coil. They make way.
At last I had found a method to catch the vortices in such a way that they not immediately "ran away" from me again. At once I presented them in the technology centre in St. Georgen. In the time following I improved the technology further and further, used bigger toilet paper rolls and eventually even turn up garbage cans, I varied wire length, wire diameter and the sense of winding (fig. 19.10).

I had very different success. Sometimes, if at the same time in my workshop of handicrafts the radio worked, it would look as if the received signal would synchronize with the sound waves. Both are longitudinal waves after all. With transverse waves something like that would be unthinkable.
One moreover could observe, how a resonance builds up: first slowly and then faster and faster, so that I sometimes got terribly afraid. Several times we had to repair our oscillograph, after the protective diode at the input amplifier had blown, and that for signals of 50 to 100 millivolt!
That was entirely impossible. Only individual spikes, which were too fast to be seen at the screen, could be to blame. In the case of distant thunderstorm activity I obtained maximum values of more than half a Volt. After that I undamped the grounding as fast as possible, so that no lightning would be caught, since I didn't have the intention to burn off my workshop.

19.10 Biological effectiveness of the Tesla coil

Also the biogical effectiveness of the Tesla radiation I could impressively prove with this device. 14.06.1997 a woman, who called herself extremely electrosensitive, participated in the weekend seminar about electrobiology, which I took over from Prof. H.K. Konig (TU Munich) after his death. That I wanted to test.
I hung up my device in the lecture auditorium and installed the oscillograph in such a way that all could see it. The voluntary test subject however could see neither the public nor the screen. One person every 5 seconds said "now" and the female candidate should say, if I had clamped or undamped the grounding, if therefore scalar waves were received or not. After a training round her proportion of hits was lying at 100 percent!

According to her statement she could feel it. A further test subject achieved even at the back of the room with a pendulum the correct answer. I myself was surprised by this and I already have repeated this experiment several times with different success. It without doubt depends on the sensitiveness of the test subjects. Every person after all reacts to other signals.

What however has astonished all participants and can't be emphasized enough at all, is the circumstance that it in this case concerns a receiver and not a transmitter!

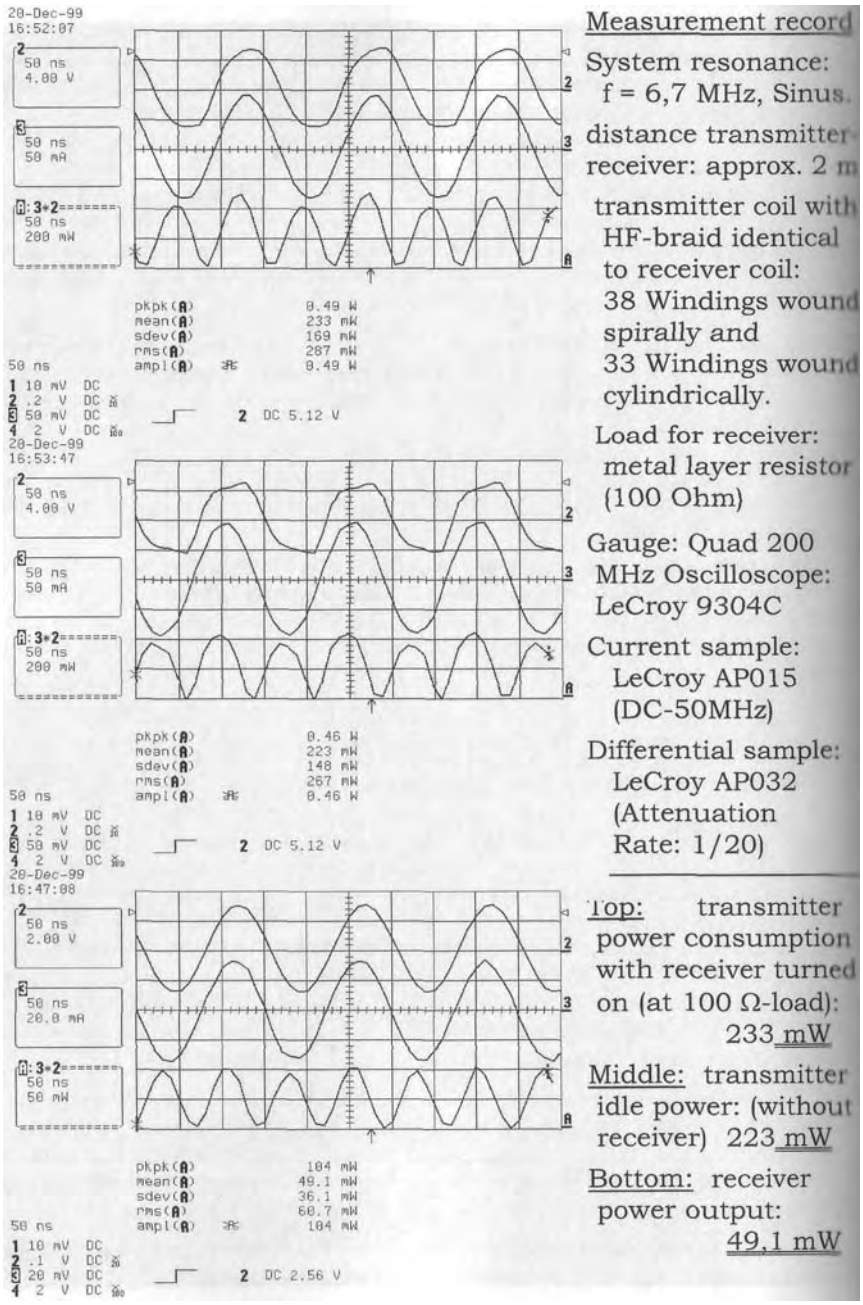

Measurement record

System resonance: f = 6,7 MHz, Sinus.

distance transmitter-receiver: approx. 2 m

transmitter coil with HF-braid identical to receiver coil: 38 Windings wound spirally and 33 Windings wound cylindrically.

Load for receiver: metal layer resistor (100 Ohm)

Gauge: Quad 200 MHz Oscilloscope: LeCroy 9304C

Current sample: LeCroy AP015 (DC-50MHz)

Differential sample: LeCroy AP032 (Attenuation Rate: 1/20)

Top: transmitter power consumption with receiver turned on (at 100 Ω-load): 233 mW

Middle: transmitter idle power: (without receiver) 223 mW

Bottom: receiver power output: 49,1 mW

Fig. 19.11 A: Measurement record for scalar wave transmission line

19.11 Wrestling for measuring technical insight in the Transfer centre

In the central question who should be believed more, the famous experimental physicist Nikola Tesla or his critics, my experiments with the Tesla coil were the visible proof that we have to take Tesla's statements seriously. Now not only at myself, but also at the students of the polytechnic and the colleagues of my Transfer centre a true Tesla euphoria broke out.
In every free minute the patents and original writings were studied, which I had myself send from the Tesla Society in Colorado Springs in the USA. In particular my trainees and diplomands developed a incredible ambition in making a historical Tesla concept work. They built a whole series of various high-tension generators. In the laboratory one could hear crashing and there was a smell of ozone.

22.1.1998 at a presentation of the works for a degree the candidate looked after by me very proudly held a fluorescent lamp in his hand, which in the field of his self-built high-tension generator glowed even without any wire connected, entirely according to the great mode (fig. 17.10). At all efforts we however laboratory technical weren't able to reach tension voltages of above 511 000 Volt. But at this tension voltage the actual Tesla effects actually start!

Perhaps it was tough luck, but possibly also a chance that we in the laboratories, which I had at my disposal, were forced to work with lower tension voltages and that meant that we gradually had to beak away from the Tesla designs.
Moreover we hadn't at our disposal the precisely controllable spark gaps, which Tesla had developed and used. If one wants to obtain an if possible high tension voltage change (du/dt) for an interaction with neutrinos, then according to today's technology considerably more favourable concepts are offered, for instance with hard switching Power-MOS-Transistors. 50 Kilovolt per microsecond were to meet.
Therefore we changed the technology and worked from now on with fast semiconductor switches. From the laboratory radio now only a hissing and crashing came out of the loudspeaker, if our experiments were running.

At 12.10.1999 we for the first time succeeded to build up a transmission line for Tesla radiation. Doing so the transmitter and receiver were situated in different rooms of my transfer centre. The transmitter coil was operated in self-resonance and fed only from a small function generator with 10 Volt. But if the diplomand held a fluorescent lamp near the spherical electrode, then it started to glow!
Following I observed at the oscillograph the signal of the receiver coil, which as well was operated in resonance. If the diplomand switched off the transmitter, also no receiver singnal was present anymore. But if it concerned radio waves according to Hertz or Tesla radiation, with that still wasn't answered.
Therefore I prompted still another experiment. This time the colleagues observed at the transmitter the signal at the function generator, while I undamped and again clamped the receiver. The shouting with joy from the adjoining room indicated that it had been observed, how the receiver reacted upon the transmitter and both are in resonance with each other. Such an effect characteristic for scalar waves, is a radio technical impossibility! In the case of radio with Hertzian waves an effect back from the receiver on the transmitter is unthinkable by principle.

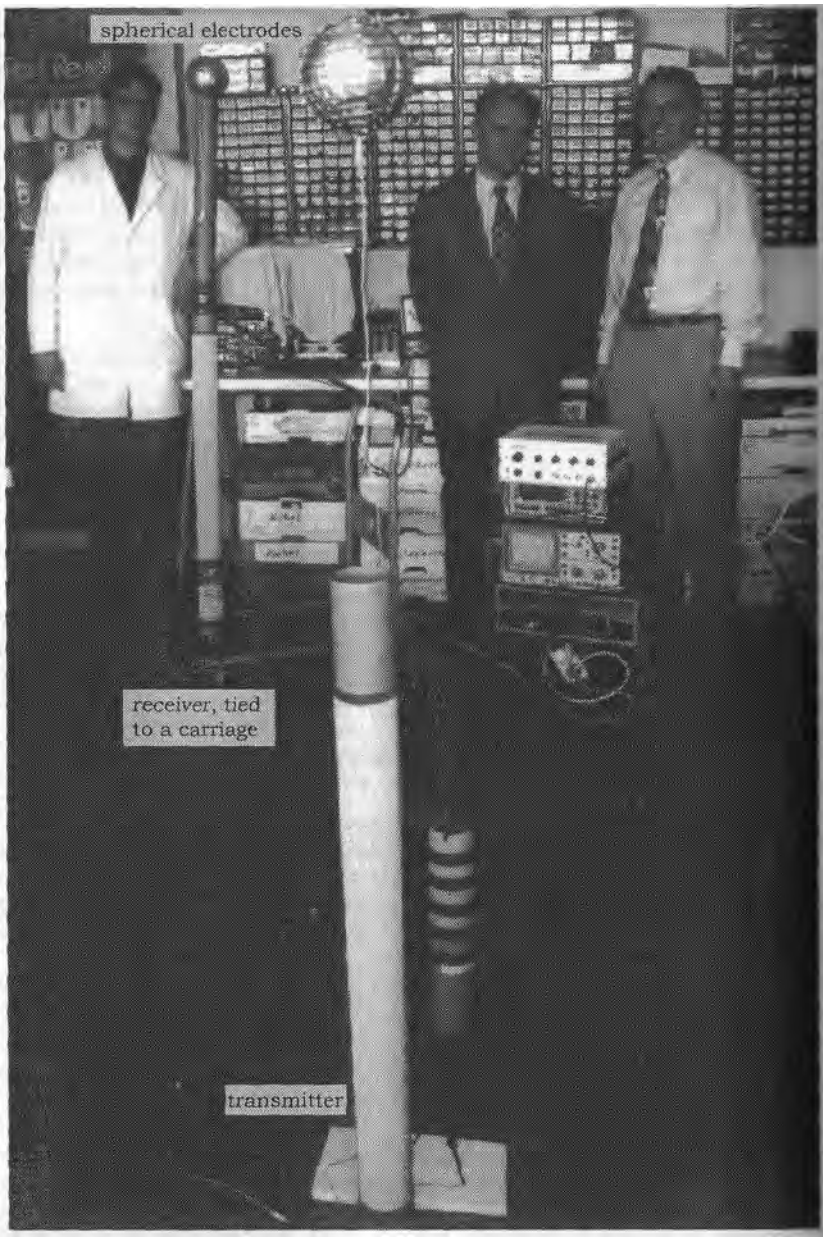

Fig. 19.11 B: Scalar wave transmission line according to Tesla
f.l.tr.: M.Andresen (diplomand), author (TZ-head), Dipl.Ing.M.Rehm (project leader)

In the next step we let glow the famous little lamp on the side of the receiver. As a consumer served a small light-emitting diode, of which the light intensity remained unchanged in the case of resonance. To prove this, we placed the receiver on a carriage and rolled the corridor in the TZ up and down with it. If the receiver was only slightly out of tune, then from the then arising fluctuation the standing wave nature could be observed perfectly.

With the setup it can be demonstrated well, how the law of the square of the distance, of the decrease of the field strength with the square of the distance, known from radio technology hasn't got validity anymore for scalar waves. Very clear also was the energy transmission of scalar waves out of a closed Faraday cage.
In the end we have determined the degree of effectiveness of the scalar wave transmission line. An output power of 49 mW resulted from the measurements of the current and tension voltage for a loading of the receiver with a 100 Ohm resistance. Simultaneously the power taken up by the transmitter amounted to 233 mW. If we however subtract the idle power consumed by the transmitter from this, and that was determined to be 223 mW for switched off receiver, then actually only 10 mW are available for the wireless energy transmission. The degree of effectiveness according to that would be 490%!
If we here really have obtained an over-unity of 4.9 then the receiver must have collected along free space energy, or did some parts evade our power measurement? The sceptics I recommend an own rebuild, since alone the proof of the scalar wave properties inevitably has to lead to every Maxwell burdened HF technician breaking with the old belief.

19.12 Neutrinolysis, the alternative splitting of water

Free after the plans of Stan Meyer we filled diverse containers with water and let it "crash". If then bubbles raised and it got exciting, we changed the frequency and exactly paid attention to the effect remaining the same or if it increased as well with increasing frequency, thus if we only watched a classical electrolysis, or already the wanted "neutrinolyse", as we were accustomed to term the splitting of water in its parts under the influence of neutrinos in the laboratory. Typical for that is a bubbling and "cooking" of the actually cold water produced by the rising gas bubbles (fig. 19.12).

We also have reversed the principle. Doing so we have switched the container as neutrino receiver and measured the forming charge carriers. The passive system proved to be really moody. On the one hand tension voltages of several hundred millivolts at a load resistance of 10 megaohm can be realized, on the other hand the charged gas particles and the as secondary reaction in the water set free ions continually change the electric conductivity, so that the cause to be measured, the neutrino radiation, hardly can be reproduced on the displayed result. The water hence has to be changed more often and also the developers found themselves between jubilation and disillusionment subject to continually changing feelings.

<i>: A. und I. Schneider: Neutrino-Power - Energie aus dem Kosmos, Bericht zu Vortrag und Demonstration des Autors am 25.11.99 in Villingen, NET-Journal 12/99, S. 4-6; Interview mit Prof. Dr.-Ing. Konstantin Meyl: Durchbruch in der Freien-Energie-Forschung, NET-Journal 12/99, S. 7-9

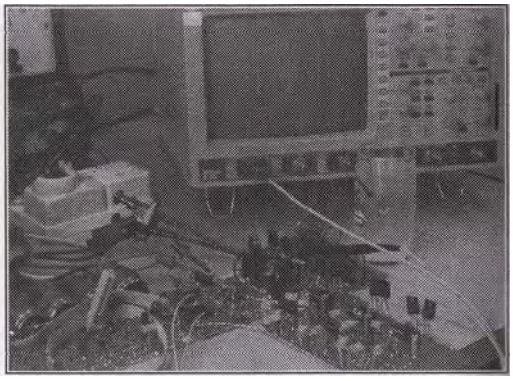

Fig. 19.12: Experimental constructions for the „neutrinolyse“.

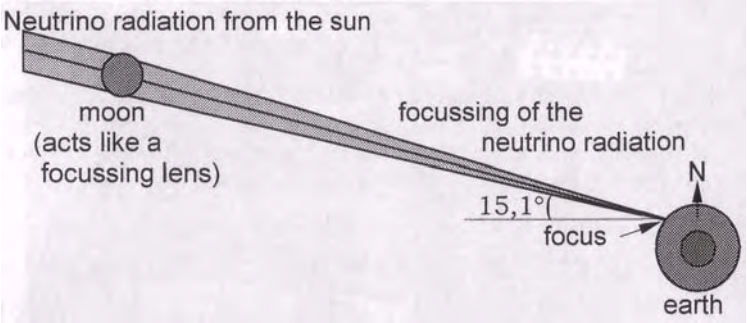

Fig. 20.1: Course of the neutrino radiation focussed by the moon
on the occasion of the eclipse of the sun at the 11th August 1999.<i>

concerning the calculation of the position of the sun at 11.8.99:

at 21.6. after 0 days is	$23.4° \cdot \cos 0° = 23.4°$	northern latitude
at 21.9. after 92 days is	$23.4° \cdot \cos 90° = 0°$	= equator
at 11.8. after 51 days is	$23.4° \cdot \cos \frac{51 \text{ days}}{92 \text{ days}} 90°$	$= 23.4° \cdot 0.644$ = 15.1° n. lat.

<i>: Konstantin Meyl: Zur Brennglaswirkung des Mondes bei einer Sonnen-

At 11.8.1999 the sun at noon stands above latitude 15.1.

20. Cosmic experiments

As long as no usable technical gauges are available, we should observe and study nature and all celestial phenomena. Here the scalar waves with all their properties are presented to us. That is valid in particular for the case that the cosmos makes an experiment with us and with the entire earth. Such a situation offered the eclipse of the sun of August 11 1999 as an unique "bulk experiment" to which travelled millions of spectators, to participate in the cosmic experiment as voluntary test subjects.
My warning for possible influences proved to be absolutely justified afterwards, even if only comparatively few took note<i>. In view of strong changes in the EEG of individual test subjects and a proven temporary acceleration of the rotation of the earth science once more stands before insoluble problems.
To answer the open questions I want to start with my indications, which 1 have published in anticipation of the cosmic event of August 11<i>. Afterwards a revision and the attempt of an interpretation from the scalar wave view follows. Perhaps this way leads to a reliable prediction of of earthquakes and other cosmic events. After that we perhaps know more about origin, availability and further important parameters of the sought-for space energy.

20.1 Millions of voluntary test subjects at 11 August 1999

Astronomically seen, it concerns a harmless natural spectacle as it already was observed more often, if the moon glides between sun and earth and its shadow in broad daylight immerses parts of the earth in a dark night. The special thing about the eclipse of the sun of August 11 1999 however was, that the sun activity just strived for its maximum value in its eleven year cycle, and the orbital distance to the moon simultaneously reached a minimum value. In addition we must pay attention to the special situation of the angles (fig. 20.1). Due to the extremely rare constellation the area of complete shadow at first was larger and darker than normal. On August 11 it had a width of 110 kilometres.

The sun besides the light also sends us solar neutrinos and for those the moon is transparent. It with regard to them acts like a glass ball, which lets the light it is true pass through, but in doing so refracts it. The glass ball acts like a convex focussing lens, which focuses the arriving rays behind the ball in a focus.
To slow down and collect neutrinos the moon it is true is too small, but it will be able to influence the flying direction. Very fast neutrinos, which run through the moon, hardly will be diverted. The slow and biologically active ones however will be bent stronger.

At this point it would be of utmost importance to know, in which distance from the moon the rays run together and combine into a focus.

<i>: Konstantin Meyl: Zur Brennglaswirkung des Mondes bei einer Sonnenfinsternis, NET-Journal, Jg. 4, Heft Juli/August 1999, Seite 13-17

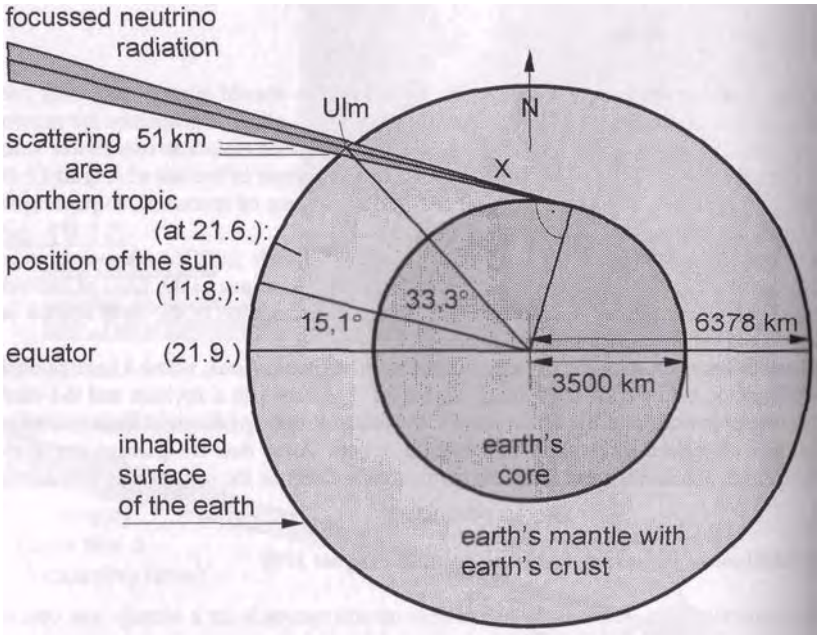

Fig. 20.2: The course of the focussed neutrino radiation at 11.08.1999 for 48.4° northern latitude. (this corresponds to the line Ulm-Augsburg-Freising)

calculation of the critical latitude:

$$\sin\alpha = \frac{3500\ \text{km}}{6378\ \text{km}} = 0.5488 \quad \text{resulting in the angle} \quad \alpha = 33.3° + 15.1° = 48.4°\ \text{n.lat.}$$

The neutrino rays touch the earth's core at:

minimum distance to the moon: $r_m^* = 358000$ km
radius of the moon: $R_m = 1738$ km
radius of the earth: $R = 6378$ km (at the equator)
length of the Tangente: $X = 3500\ \text{km}/\tan 33° = 5332$ km

$$\text{scattering radius: } r_x = X \cdot \frac{R_m}{r_m^* + X} = \underline{25.5\ \text{km}} \text{ around the centre line}$$

Focussing without scattering on earth's surface increase to
$R_m / r_x = 68$ times , resp. with scattering to
$68 * 0.5 * 0.8 = 27$ times the natural neutrino radiation!

For that we again bear in mind that neutrinos as particle radiation propagate in space in the sense of a plasma wave. Since the oscillation of such a longitudinal wave takes place in the direction of propagation, it neither knows a distinct velocity of propagation nor an upper limit.

The sea of neutrinos in which we swim, is a combination of differently fast particles. The slow ones are bent stronger by the moon, with the property of a convex focussing lens, so that the focus should be looked for near the moon, whereas the fast ones hardly are diverted. Their focus lies further distant from the moon than the earth, up to the extremely fast cosmic neutrinos, which experience almost no diversion, because they, as a result of the Lorentz contraktion, are small enough to tunnel through any kind of matter.

If neutrinos, depending on their velocity of propagation, have their focus partly before and partly behind the earth at an eclipse of the sun, then it comes up to a conclusive logic that there actually exist such, of which the focus lies exactly in the centre of the complete shadow on earth's surface. But thereby the question is asked, which biological effectiveness these neutrinos have or which damage they bring about.

20.2 Model of calculation for the cosmic experiment

More than a year ago the results of an international neutrino experiment have been made public. Thereby for the first time the order of magnitude of the natural radiation density was recorded. after the detector before having been calibrated at an artificial source of neutrinos. As the perhaps most important result at night only half as much solar neutrinos could be detected as during the day with the immense Super-Kamiokande detector in a Japanese mine. With that the here taken interpretation, that earth's core collects neutrinos, meanwhile even is proven experimentally! For that it has to interact with the particles and that means, it has to exert a force of attraction on them. Thus the earth's core during an eclipse of the sun will further amplify the effect of focussing if the konzentrierte neutrino ray is directed on earth's core. This critical point we have to calculate (fig. 20.2).

The proportion of the radii of earth's core (3500 km) and the entire earth (6378 km) results in the sine of the sought-for angle and that amounts to 33.3 degrees northern latitude. At August 11 moreover is added that at noon the sun with regard to the equator is standing at 15.1 degrees. so that a first extreme focussing should be expected, if the centre of the complete shadow intersects latitude 48.4. This would be the case for the latitude of Ulm in direction Augsburg and Freising.

Now we would like to know more about the amplitude of the focussed radiation, about the spatial extension and the period of time. Without concrete data material we have to proceed from several simplifying assumptions. If we therefore assume, 50% of the at earth arriving and biologically relevant neutrino radiation stems from the sun, which in the case of an eclipse of the sun is focussed to 80% and scattered to 20% by the moon. If we further assume the focus just touches earth's core, then between Ulm and Augsburg a sphere of action of 50 km can be expected, within which the neutrino radiation on the average reaches 28 times the value of the natural radiation. The intense irradiation under these assumptions will last one minute.

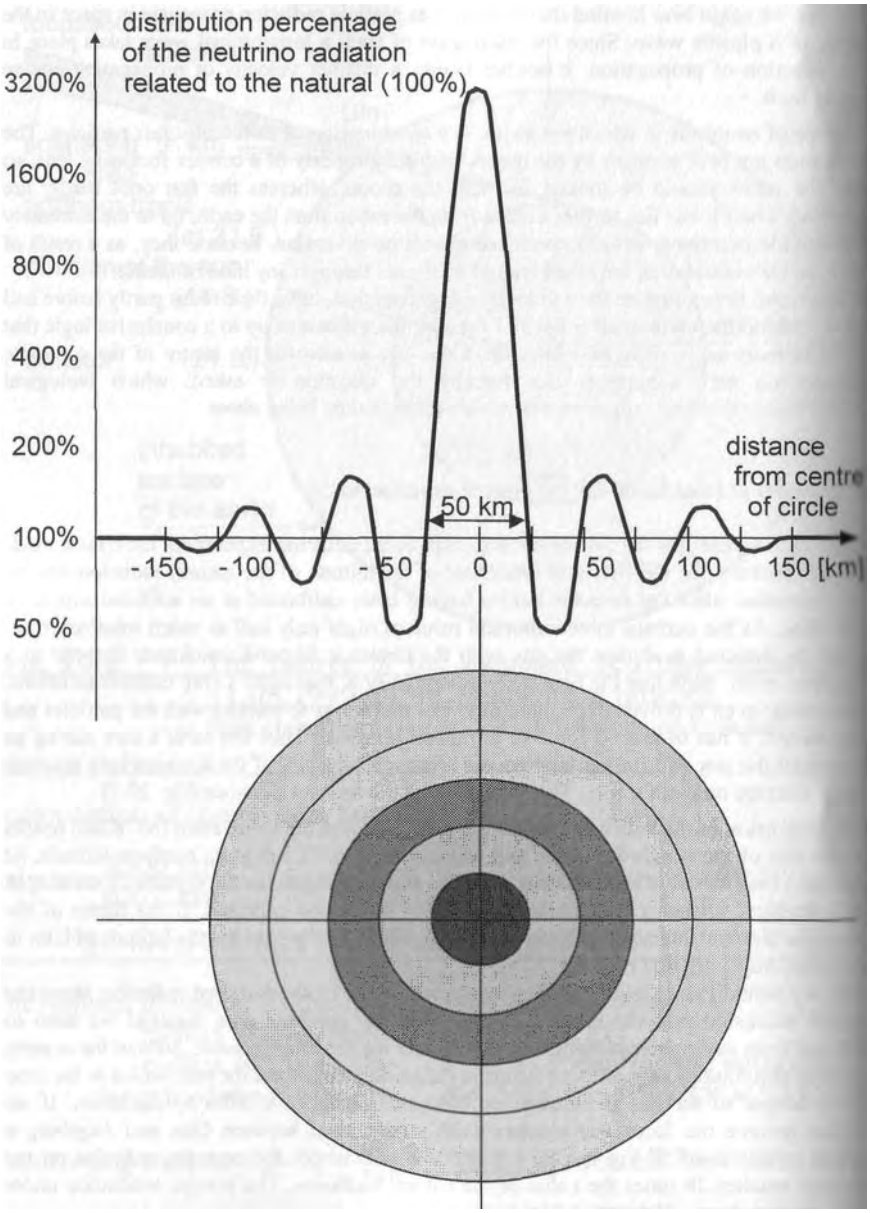

Fig. 20.3: _____ The spatial distribution in the case of focussing of the neutrino radiation by means of the burning glass effect of the moon on earth's surface.

Of course the calculated values only are valid to the extent, as also the assumed boundary values apply. After August 11 we know more about this cosmic experiment, about the spatial distribution and indirectly about the interaction with earth's core, about the physical properties and the biological effectiveness of the at present available neutrino radiation.

20.3 Physical technical consequences

The neutrino radiation is a scalar wave radiation which, as mentioned, can be perceived by sensitive people even without aids. Who hasn't at his disposal this sensitiveness, is recommended a simple setup.
For that one hangs up a fluorescent lamp, connects the one end with a piece of wire, as it were as antenna, and the other end is grounded. For a scalar wave radiation which increases fast, the lamp should start to glow by itself. Under big transmitting installations this method already has been successfully applied by many allotment gardeners thousandfold. I hence recommend all research scientists of eclipses to test themselves the possible field fluctuations in this simple way.

From a technical viewpoint first of all the atomic reactors and their nuclearly contaminated waste will be concerned by a fluctuation of the neutrino radiation. In view of present eclipses of the sun an accident can be expected less, since the neutrino radiation it is true for a short time reaches an extreme maximum, which averaged temporally and spatially over the whole event again is relativized somewhat. The relations shall be clarified with an example (fig. 20.3).
Whoever places himself in the centre line of the complete shadow on August 11, at first will detect a decrease of the neutrino radiation to 50 to 60 percent, then a steep increase to 2800 percent and from the summit again the whole backwards, while standing on the earth he turns by under the moving moon shadow. The ring with half the radiation, which reaches us first, doesn't pose a problem since, as said, we only have half the radiation in every night. Some animals and plants as aresult erroneously will set out for sleep.

The wave distribution one can imagine like that in the case of a pool, in which was thrown a stone. But we still don't know the resonance frequency, for which reason the length of the cycle depicted in fig. 20.3 is chosen arbitrary. The actual deviation from the distribution given by nature is the peak in the focussed ray centre. Living nature must stand large fluctuations of the solar radiation, since every supernova sends us a relatively short batch of fresh neutrinos. Where we have difficulties is the question, how much fluctuation still can be tolerated by mankind.
The question for possible biological consequences is due to be dealt with in view of the announcement of a complete shadow tourism causing concern, as it is awaited for August 11. At the incomplete state of knowledge about the properties of neutrinos, every trip to the complete shadow remains a journey into the unknown.

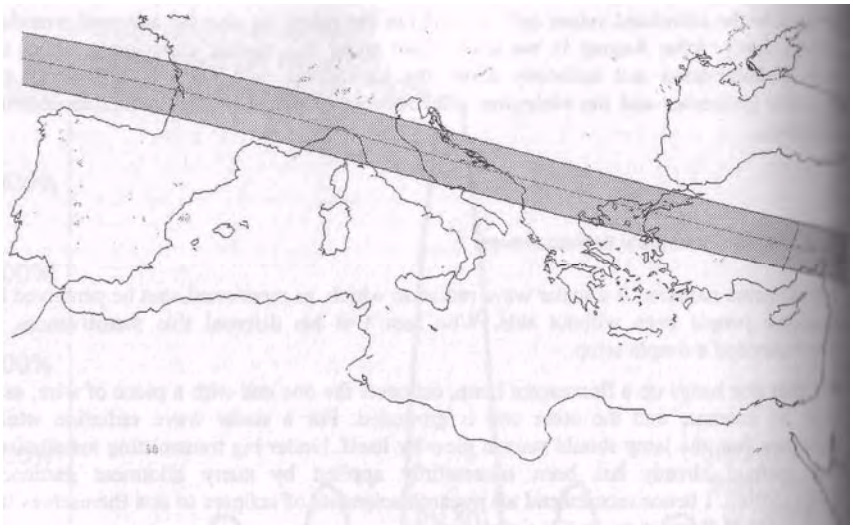

Fig. 20.4 A: The course of the complete shadow for the ancient
eclipse of the sun at 28.5.585 B.C.

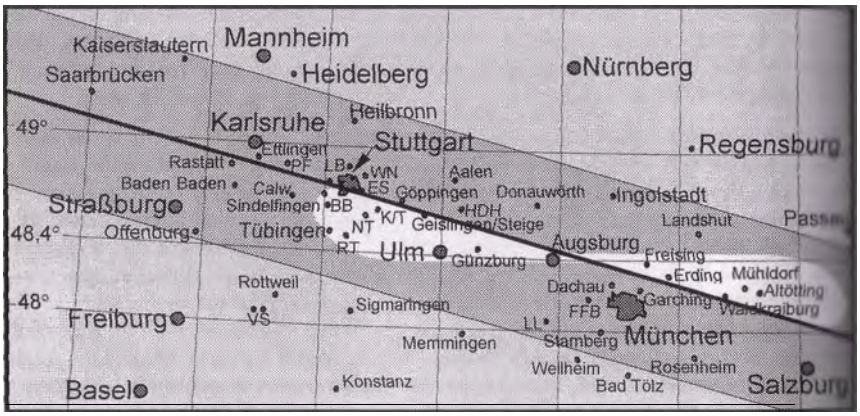

Fig. 20.4 B: The course of the complete shadow over south
Germany at August 11 1999 (grey) and the possible course of the focussed neutrino radiation (white).

20.4 Biological consequences

In the case of an eclipse of the sun effects on the biology, like problems with the heart among affected, at least can't be excluded. If the scalar wave density increases above the density which is normal, then this has a positive effect on the economy of energy, as long as the body is capable to regulate the amount taken up. If the regulatory process however should fail. then the risk of a self-inflammation exists. Also straw bales and other organic and inflammable materials could thus go up in flames.

But before that happens, first the information technical influence of the scalar waves will show. Here we have to expect a psychotronic influencing, which is showing in a limited ability of perception. History teaches us as an example[<i>] that a by Thales of Milet predicted total eclipse of the sun at 28.5.585 B.C. compulsorily has ended a battle in Asia Minor between the Medes and the Lydians, because the soldiers apparently most literally had gone out of their mind (fig. 20.4 A).

Actually all in connexion with the free energy addressed phenomena are conceivable. from the "neutrinolyse" up to the acceleration of the radioactive decay. It would be understandable, if in a water glass bubbles should rise, even if no carbonic acid is contained in the water at all. After man not having at his disposal a sense organ for his own energy source, the brave in the complete shadow of an eclipse of the sun are recommended smaller technical experiments and observations. The cautious however will avoid the area from the start.

As counter movement to the complete shadow tourists there will also be refugees, who believe in the predictions of Nostradamus, who in his quatrains has predicted a messenger of fright over Europe for 11.8.1999. He mentions Lyon, Ulm and Moskau, which actually lie on one line [<ii>].
The line of the complete shadow however will run under another angle from Plymouth in South England over Ulm to Bukarest and further into Turkey. Maybe Nostradamus wasn't a clairvoyant at all, but merely a good calculator, or he knew someone who could calculate excellently, after all he has indicated the time and even Ulm as the centre correctly. Apart from the small angle error, in addition the direction is correct (fig. 20.4 B).

Worth paying attention to also is, that he contrary to his habit here gives a concrete date which astronomically can be calculated unambiguously, that he simply skips the numerous eclipses of the sun of the past and only points to the one of 11.8.1999, which runs crossways through South Germany. Extremely sinister are his forecasts, which mustn't commented on further, since he speaks of "Mort et Tombe", of death and grave[<ii>].

<i>: Merodot: Historien, Kroners Taschenausgabe 224, S. 33 (cf. page 586 and the modern misinterpretation note 9 on page 754); further sources: dtv-Atlas zur Weltgeschichte S. 45; resp. Propylaen-Weltgeschichte I, S. 168.

<ii>: Michel de Notredame (1503 bis 1566), Mathematiker, Astrologe, Leibarzt von Konig Karl IX: Centuries (1558) X, Vers 72.

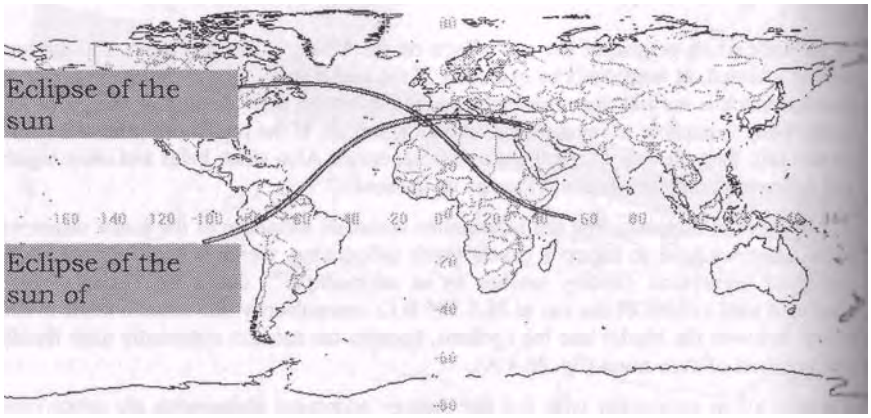

Fig. 20.5 A: The total eclipses of the sun of 18.4.1539 and
21.8.1560

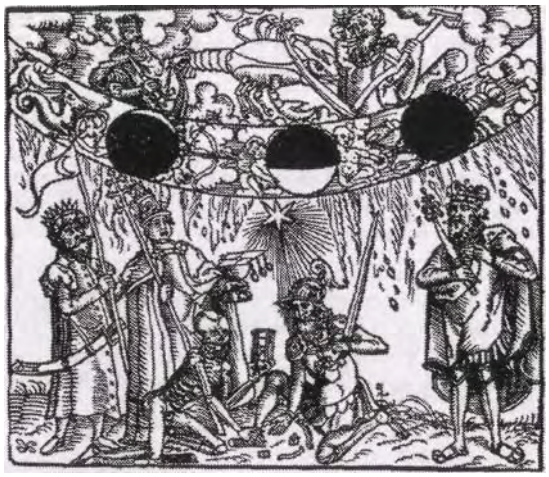

Fig. 20.5 B: Under the impression of the last two eclipses of the
sun over Europe death and war play dice about the fate of mankind during the eclipse of the sun of 1562.<i>

<i>: Werner Raffetseder: Sonnenfinsternis, Hugendubel Verlag, Munchen 1999, ISBN 3-89631-302-9, Seite 156.

20.5 Epilogue to August 11th 1999

My indications have been published two weeks before the cosmic event in the NET-Journal[<i>]. The public interest was immense. Now, after the spectacle is over, it is time for an analysis[<11>].

Besides numerous very subjective descriptions of eyewitnesses, which scientifically hardly can be analysed, at numerous polytechnics over the world has been observed, how Foucault pendulums suddenly and completely unexpected have deviated from their normal swinging direction. With this device 150 years ago the rotation of the earth had been detected in Paris.
Since according to prevailing textbook opinion an eclipse of the sun is a purely optical phenomenon, the scientists world-wide are having a big problem. Which force here has teared at our earth and caused relative accelerations of the kind that the pendulums could turn out of their usual plane and changed into an elliptic orbit, while the shadow of the moon ran over us? The gravitational force isn't even roughly capable to that. That merely has brought a 50 cm higher flood. The enormous force effect, which even puts the gravitation in the shade, actually only can come from the interaction of the neutrinos.

Different reports are present concerning the influencing of the radioactivity. In the cases, in which measurement samples have been used, almost no change could be observed. This is confirmed by a video tape, which northeast of Munich directly in the centre of the complete shadow documents an experiment, in which during the whole time the radioactivity of 1 kg crude granite is monitored with a professional dosimeter. The background might be that calibrating samples are chosen in principle under the aspect of being influenced the least by outside interference sources. It therefore would have been better, if we instead had put a lettuce as a biological and broadband sample in front of the device. Because there, where one anyway hadn't expected deviations and thus neither were measured calibrating samples nor unfortunately were made recordings, is said to temporarily have occurred a visible increase.
Even in the case that somewhere accidentily should exist recordings, the increase is too small, to help explain traditions from the Middle Ages, according to which is talked about "stinking log" and about "aggressive damps, which fall from the sky". Other sources speak of harmful radiations, which one regarded as the trigger of plagues.
It is said: "They poison the drinking water and the crops and make people sick"[<iii>]. Crops after an eclipse of the sun either should not be harvested at all or only after a violent shower. The warnings for a poisoning "without adding poison", which reach back into the 19th century, suggest the assumption that it concerns results of a radioactive contamination.

<i>: Konstantin Meyl: Zur Brennglaswirkung des Mondes bei einer Sonnenfinsternis, NET-Journal, Jg.4, Heft Juli/August 1999, Seite 13-17

<ii>: From the third and extended edition of this second part concerning Electromagnetic Environmental Compatibility the following chapters are completed.

<iii>: Mark Littmann/Ken Willcox: Totality - Eclipses of the Sun, Honolulu 1991, Kapitel 4: Eclipses in Mythology; nachzulesen bei Werner Raffetseder: Sonnenfinsternis, Hugendubel Verlag, Munchen 1999, Seite 130/131.

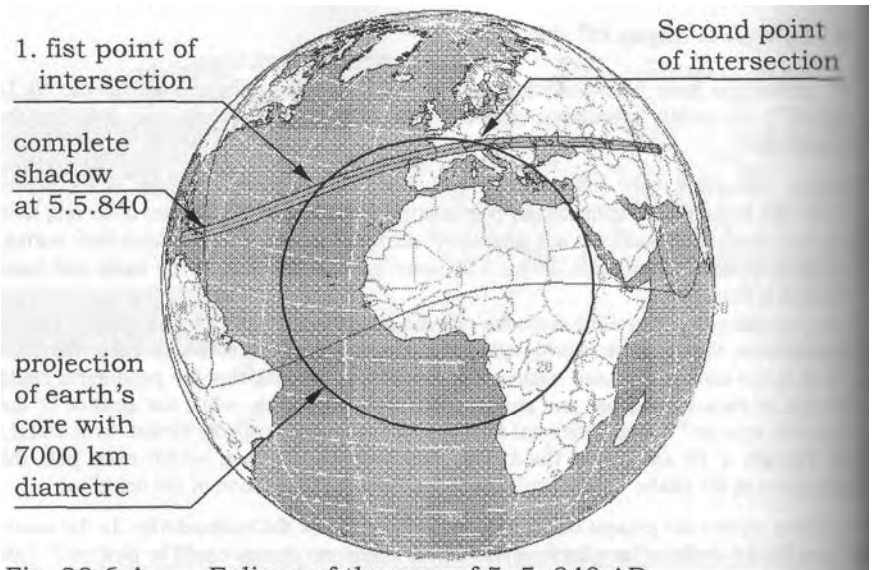

Fig. 20.6 A: Eclipse of the sun of 5. 5. 840 AD.

Fig. 20.6 B: Nostradamus announces catastrophes for 1999 in the Centuries of 1558.<i>

<i>: Bryan Brewer: Eclipse, Chapter 1: Eclipses Throughout the Ages, Seattle WA 1991, S. 20, cited in Werner Raffetseder: Sonnenfinsternis, Hugendubel Verlag, Munchen 1999, ISBN 3-89631-302-9, Seite 130, Bild Seite 159.

20.6 Dropping of the neutrino radiation

Plagues of that kind, which in the Middle Ages have claimed lives as a result of an eclipse of the sun, hardly are verifiable, unless a prominent victim was among them, like e.g. the son and successor of Charlemagne, emperor Ludwig I. He 5.5.840 witnessed an eclipse of the sun with a totality of five minutes. Further it is said: ,,The fright which this experience gave him, little later shall have torn him to death"<i>.

According to that there must have existed times, in which the radioactivity present in the countryside and stored in the body of a person during an eclipse of the sun could be set free and be the undoing of the affected. At the same time such a decontamination of radiation acts cleaning for nature.

In this case only the interpretation of Nikola Tesla provides us an explanation, which states that the neutrino radiation causes the radioactivity<ii>. Textbook physics however doesn't know this causality. For that the primeval fears of humanity are pure superstition. The prophesies of Nostradamus even are referred to as counter evidence.

But the question remains open, why his predictions concerning August 11 didn't happen, Obviously, so has shown us the cosmic experiment, the neutrino radiation relevant for the setting free of radioactive radiation drastically has decreased since the Middle Ages.

Nostradamus personally has occupied himself with the translation and interpretation of hieroglyphs and has written down his insights - surely out of fear of the inquisition - in the form of encoded quatrains. According to that he has based his considerations on considerably older sources, which presumably stemmed from a time, in which a considerably higher radiation prevailed.

We have to proceed from the assumption that the scientists of the Semitic- Aramean people of the Chaldeans, which ruled Babylon from 626 B.C., were just as capable as astronomers of today, to exactly calculate an eclipse of the sun even centuries and millenia in advance.

After all the Saros-cycle to determine eclipses of the sun is a discovery of the Chaldeans. What they however couldn't know and we ourselves still can't indicate today, is the prevailing density of the cosmic radiation at a future time. But that obviously has changed considerably.

The natural magnetic field strength for instance is recorded at the baking of earthenware jugs and vases, by strengthening along the parts containing magnetite. From the measurement of ancient earthenware goods we know that in antiquity a field strength must have prevailed which was 3 to 4 powers of ten higher.

According to the here presented theory the earth owes its magnetism its core and that again draws its energy from the neutrino field. According to that also the neutrino radiation should be subject to the same decrease.

If therefore the Babylonians out of the radiation situation at that time in the interpretation of Nostradamus and other fortune-tellers, who presumably all more or less have written each other off, have predicted a catastrophe for 11.8.99, then this scientifically is just as untenable, as the today widespread hubris, with which the knowledge and the reports of experience from ancient times are dismissed as superstition.

<ii>: cf. chapter 17.2 Nikola Tesla, the discoverer of the neutrino radiation, p. 133

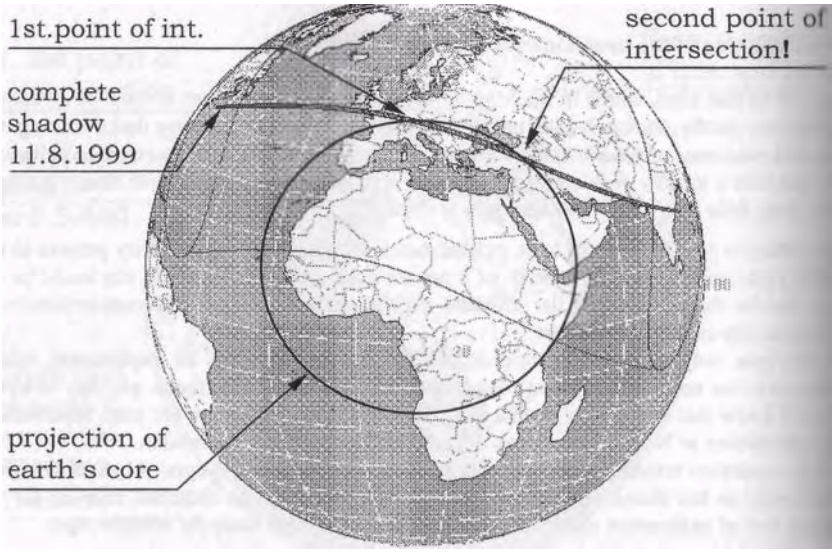

Fig. 20.7 A: Eclipse of the sun of 11.8.99 (declination: 15°)

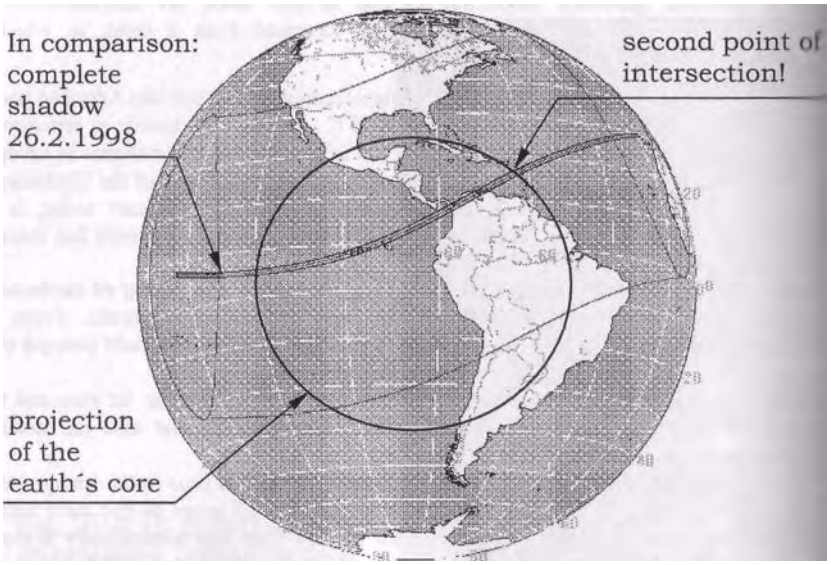

Fig. 20.7 B: Eclipse of the sun of 26.2.98 (declination: - 9°)

<ii>: Particularly violent earthquakes since 11.8.1999 (excerpt):
Turkey 17.8. (strength 7.8) till 19.8. (5,0), 31.8. (5.2), Greece 7.9. (5.8). Turkey 13.09. (5.8) and finally Taiwan 20.9.99 (strength 7.6) in a rythm of 6 to 7 days! Complete list in the internet under:
http://www-seismo.hannover.bgr.de/ermos_listing.html

This "superstition" mentions tremendous natural disasters like floods like the Flood or destructive earthquakes often as a direct result of an eclipse of the sun, and as the worst consequence the end of the world[i].

Almost all reporters and newsreaders in the evening of August 11 full of irony pointed at the non-occurrence of the end of the world and spread the conviction that according to prevailing physical ideas something like that isn't possible at all. They at that time couldn't know that the anatolic plate, which the complete shadow had crossed, had gotten into motion. The relatively weak earthquakes, which 11.8. shook Cyprus and at the same time Iran, only were spontaneous harbringers.

In the following weeks the staggering core of the earth made us clear that there had been done force to it. Severe earthquakes with thousands of aftershocks followed each other and one message of terror chased the next[ii]. Public authorities however take care not to of decline to make a reference to the eclipse of the sun.

20.7 Analysis and comparison of the occurrences

If we for comparison consult the total eclipse of the sun of 26.2.1998, for which the complete shadow of the moon coming from the Pacific Ocean had run over the Caribbean into the Atlantic Ocean. Exactly the moment it crossed the Caribbean island Montserrat, the volcano Soufriere erupted.

Pure coincidence says science, which hasn't got an explanation model at all for a relation with the supposedly purely optical phenomenon. But this argumentation is relativized, if according to fig. 20.2 the tangential collecting of solar neutrinos by earth's core is considered. This process best can be compared with photon radiation, which is tangentially collected and directed into an orbit by a black hole inside the radius of Schwarzschild.

Since the shadow of the moon always draws a straight line on the earth, two points of intersection are present with the circle of the projection of earth's core on earth's surface, for which the radiation focussed by the moon just touches earth's core and in that way experiences an additional concentration. The first point of intersection at that time was situated in the Pacific Ocean; but the second one was situated exactly at the Caribbean island Montserrat (fig. 20.7 B).

This time, at August 11 1999 the first point of intersection was situated in South Germany, the second in Iran, and again the focussing at the second point of intersection has shown a devastating effect. The entire continental plate has gotten in motion (fig. 20.7 A).

Another strange phenomenon has occurred in the USA at the same time as the eclipse of the sun. A tornado swept with its destructive force right through Salt Lake City. It is remarkable that no meteorologic indications were showing before and hence official observation authorities had no possibility of warning for the tornado. Had here part of the focussed neutrino radiation been redirected at earth's core and given a rotation, to again screw out into the sky on the other side of the earth at Salt Lake City?

<i>: Werner Raffetseder: Sonnenfinsternis, Hugendubel Verlag, Miinchen 1999, ISBN 3-89631-302-9, Seite 120.

<ii>: Collection of particular violent earthquakes since 11.8.1999: see fig. 20.7.

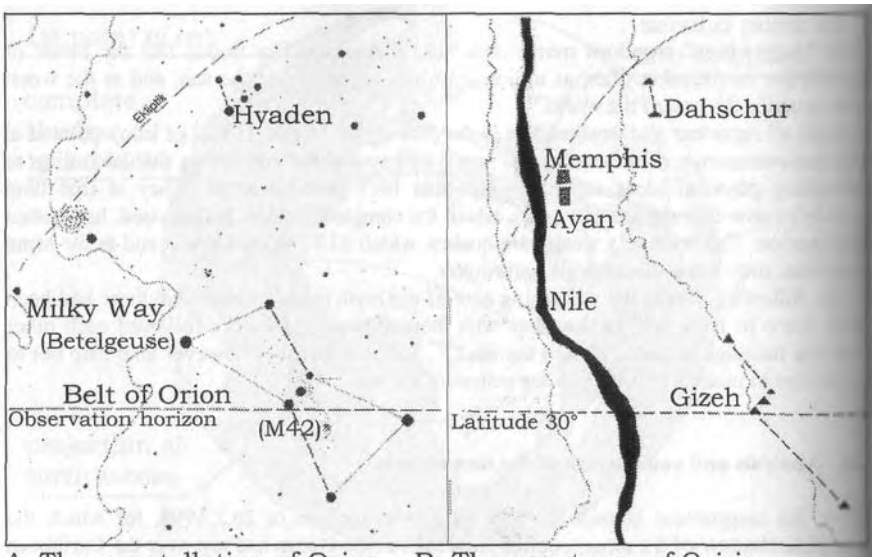

A: The constellation of Orion B: The sanctuary of Osiris

Fig. 20.8 A and B: The ancient Egypt pyramids, a terrestrial model and copy of the starry sky?<i>

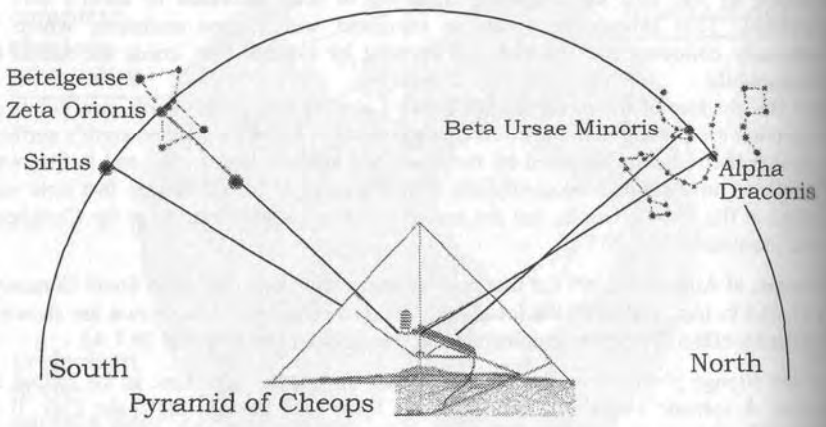

Fig. 20.8 C: The orientation of the four shafts of the Pyramid of Cheops to four different stars around the year 2500 B.C.<ii>

<i>: Robert Bauval, Graham Hancock: Der Schlussel zur Sphinx (Keeper of Genesis), List Verlag Munchen 1996, ISBN 3-471-77188-3, S. 286 und 287.
<ii>: dito page 86.

20.8 Radioactive decontamination with the help of a supernova

A mighty source of neutrinos forms the black hole in the centre of the Milky Way. For us, on an outer spiral arm of the galaxy, the distance to the centre is gigantic as well, so that a relatively equally distributed spectrum of differently fast neutrinos arrives at our world, which represents a kind of basic energy technical supply for the solar system and our world. For the fluctuations between day and night, or the focussing by the moon or other planets the "participants" in the solar system are responsible themselves.

In contrast to that a supernova, the explosion of a star, is a considerably smaller source of neutrinos, which however also is possible less distant to the earth. In addition it is a singular event, in which all neutrinos are set free simultaneously within a fraction of a second. They arrive at us one after another. First the fast and hard radiation reaches us as it were as harbringer. In the course of time the arriving neutrinos then become slower and shower, until they sometime become biologically relevant. If in the end everything is over, we can see the cause, only now the supernova is showing in the telescope.

If we assume such an event takes place, with perceptible might and in a distance of 500 light years. then this neutrino radiation overlaps with the general background radiation and a characteristic over-intensification of neutrinos of a certain velocity of propagation occurs. This problem then occupies us for 500 years, where the respective radiation situation permanently is changing depending on the time after the explosion.

If we in this way of looking dare a judgement of the cosmic events in historical time, so makes believe much the assumption that the radiation in the last hundred years has worn of completely. Edgar Cayce treats in the book "Our Ancestors" different cultural circles from the old Indian up to the Hopi, in which still is talked about an energy technical use of quartzes and other materials[<i>].

We indeed can theoretically comprehend that the neutrino radiation can let an oscillating quartz glow, if it is stimulated in its resonance frequency, but technically the technology foday can't be realized anymore. Possibly the chance for technological use only existed for a few years or decades.

Presumably also the pyramids originally have been built as resonators, to slow down fast neutrinos to a technically utilizable speed. But in the course of time the original function was unnecessary and the neutrinos had gotten so slow that in antiquity alternatively an use as electrostatic lightning generator or as Nekropolis took place. Today they only stand in the countryside as unusable monuments of a gone epoch.

Many ancient techniques, to which I will come to speak in the third part, in this way just as unexpected become plausible as the radioactive decontamination described in the Middle Ages.

<i>: Hermann Wild: Technologien von gestern, Chancen fur morgen; Jupiter-Verlag Bern 1996, ISBN 3-906571-13-0, (z.B. S. 77 und 145 bis 163).

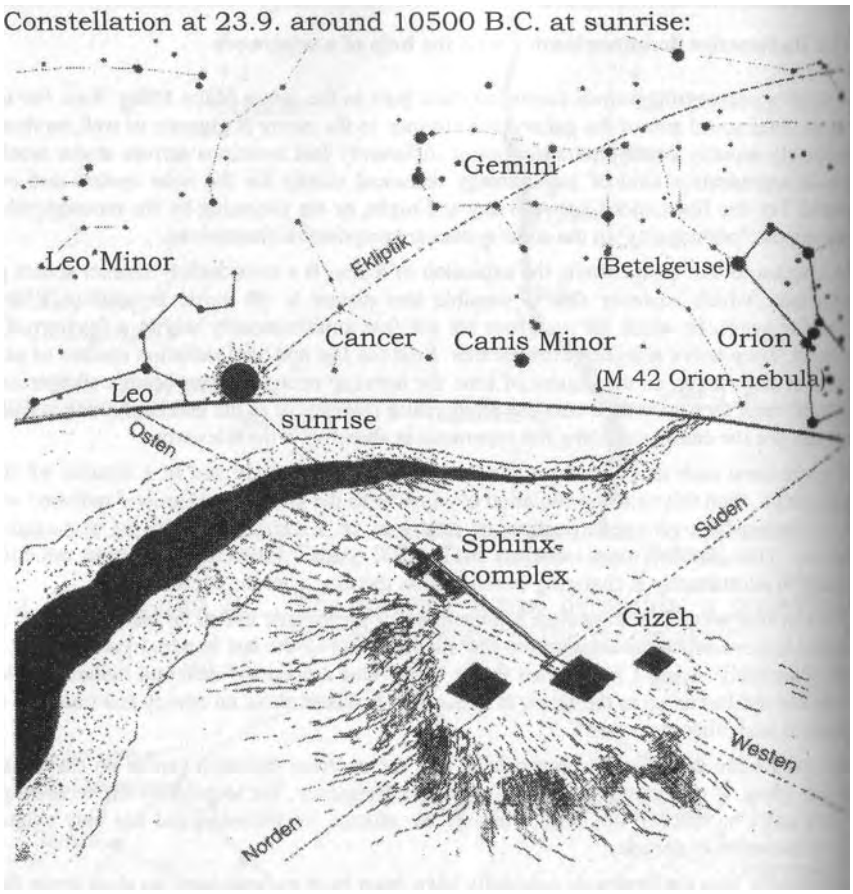

Fig. 20.9: The orientation of the pyramids of Giza makes believe
an operation of the installation around 10500 B.C.<i>

<i>: Robert Bauval, Graham Hancock: Der Schlussel zur Sphinx (Keeper of Genesis), List Verlag Munchen 1996, ISBN 3-471-77188-3, S. 324.

The two research scientists take the hypothesis of an orientation of the ancient Egypt pyramids after the starry sky around 10500 B.C. This however is not compatible with their thesis of the aligning of the shafts to individual stars around 2500 B.C. (fig. 20.8 C). How should the precise worked shafts later have been integrated? It would correspond a certain logic, if an orientation of the buildings to the energy source at that time would have taken place; but doing so it should be taken into consideration that the stars are exploded as supernovae and today hardly might be observable.

Despite several good ideas more questions are raised by the book, than are answered. Have the technicians 2500 B.C., after making restorations, experimented with the buildings and sought-for alternatives of use?

20.9 Fre energy from the Orion constellation

After all hundred years ago still the last unreliable rests of the wearing off neutrino radiation were available to Tesla, Moray, Keely and other inventors for the experimental proof of free energy, of which we today aren't able to rebuild and show in function one single model. And that, although the technical aids have gotten better for many times. But for the free energy inventors that isn't a reason, to immediately stop their efforts, because the next supernova already is announced by the actual swings of the Foucault pendulum. It could concern the explosion of the giant red star Betelgeuse in the constellation of Orion in a distance of 500 light years<i>. It well may be possible that it already shortly has exploded and that it will supply us with fresh and free energy for scarcely the next 500 years and at the same time will give the earth a good shake, thanks to its might and a not too great distance.
The reaction, which happened after August 11, of earth's core, which is the first to interact with the fast particles, should make every astrophysicist clear that here something is coming towards us!
It would be obvious, if the reactions of earth's core still increase. Every year particularly around 21.6., if the sun is standing in the Orion constellation, deviations can be expected. But then the supposed source of neutrinos, Betelgeuse, the sun and the earth don't exactly form a line, because the giant red star lies 7.4° below the ecliptic. Because of that the rays slowed down and focussed by the sun run away over the earth. At the earth then rather would be expected a dropping of the radiation.
If the phase of shakes of the earth sometime should be over, a decontamination due to an increased radioactive decay and various biological effects should be expected. Then, perhaps in 200 years, also many concepts concerning free energy, today still dismissed as hopeless, suddenly will function entirely by themselves.

The relatively free possibility of development of the human mind and the present sciences we possibly owe the special circumstance to be able to live in a time of minimized field strengths. Strong fields however can lead to psychotronic influencing of the consciousness and to an outside determining of mankind. This circumstance seems to have caused Tesla to compare man with a robot, and to call him an independent machine controlled from outside<ii>.

<i>: Freek Reijmerink: Sternenatlas Deutschland, Weltbild Verlag 1990, S.12 (ein sterbender Riese) und Illustrierte Wissenschaft, Nr. 9, 1999, S. 7, Brennen die grossen Sterne in den Sternbildern je aus? Die Entfernungsangaben schwanken zwischen 270 Lichtjahren (Meyers Lexikon), 310 (Sternenatlas), 500 (Ill.Wiss.) und 652 Lichtjahren (Cambridge Enzyklopadie d. Astronomie).

In the observable domain of the starry sky one statistically seen has the chance, to experience every second a supernova.

<ii>: Nikola Tesla: How cosmic forces shape our destinies, New York American, 7.2.1917, and Edition Tesla (1997), Bd. 6, ISBN 3-89539-245-6 der Mensch als machine, S. 65.

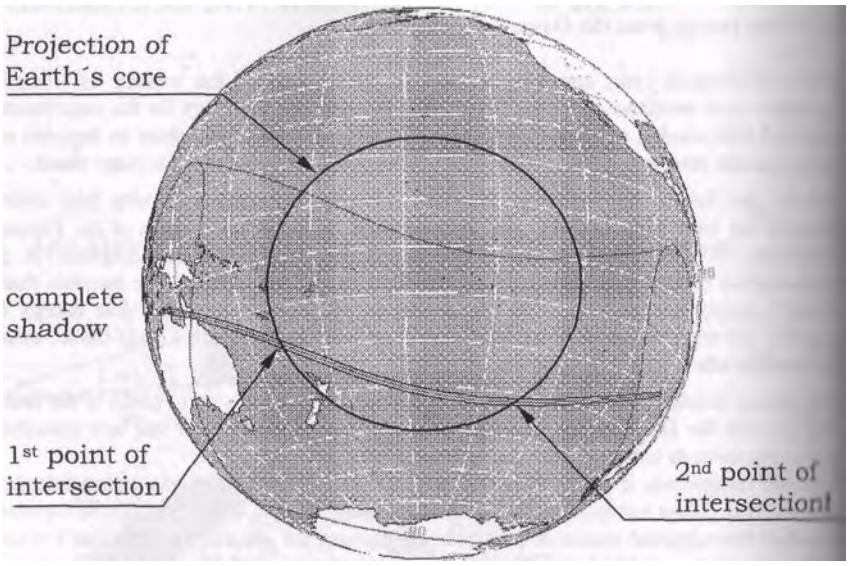

Fig. 20.10 A: Eclipse of the sun of 13.11.2012 (decl.: 18.1°)

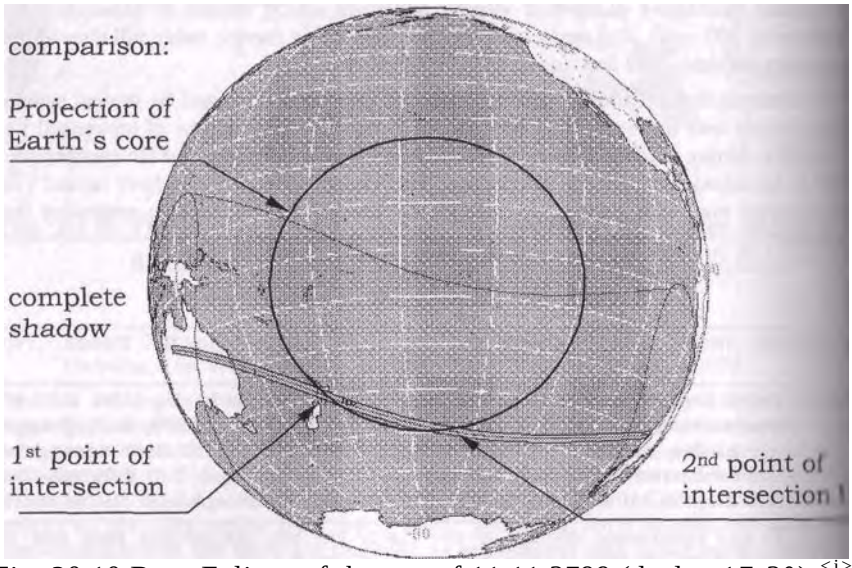

Fig. 20.10 B: Eclipse of the sun of 11.11.3799 (decl.: -17.3°). <i>

<i>: The eclipse of the sun of 7.7.3797 is harmless compared to that of 11.11.3799. Have they been mixed up or is a calculation error present?

20.10 Interaction of the neutrinos with earth's core

A strong neutrino field still doesn't make a catastrophe. Only in connection with one of the regularly happening eclipses of the sun should one be expected under certain circumstances. Only, which eclipses of the sun can get dangerous, we have to ask us, and why warns e.g. Nostradamus only for very particular dates?
The check of the respective eclipses of the sun results in a critical constellation every time for the cases, where the line of the complete shadow and the circle of the projection of earth's core intersect under a very flat angle and both points of intersection lie very close together. In the extreme case finally the lines only are touching and the points of intersection fuse to a line of intersection.
A corresponding constellation the next time is expected at 13.11.2012. For 7.7.3797, at similar conditions Nostradamus foretells the end of the world; but why?

From the interaction of the neutrinos arises as from every other interaction a force effect.
If the points of intersection lie far apart, then earth's core is pulled once to the East and a short time later again to the West by the focussed neutrino radiation. On the average this will hardly influence earth's mantle and earth's crust because of the immense moment of interia. The possible earthquakes will remain regionally restricted to the area around the two points of intersection.
But if a line of intersection forms, then no compensation of the force effects takes place anymore, then during the whole time one-sided is pulled at earth's core and that can have fatal results. It is the same as for a spinning top, which is given a blow from the side: it staggers several times, until the gyroscopic forces have stabilized it again.

But if earth's axis staggers, then the sun describes strange orbits in the sky, it goes backwards again, for a longer time doesn't set or it doesn't show for the same period of time for the people living on the other side of the globe.
Such an event already is described in the Bible<i>. For the twenty hours, in which in Europe the sun didn't set for a day, again describe the chroniclers of the inhabitants in the South American Andes, how at their place the sun didn't show for twenty hours<ii>.

As a further example from the Greek mythology is mentioned the description of the poet Apollodoros. according to whom Hercules for the solution of his 10th task let the chariot of the sun bring to a standstill. "He turned his vehicle round and raced the way back, dragging along the Pleiaden and all stars, so that the sun set in the East"<iii>. But if all stars take part in the same backwards motion, then this example proves the assumption of the staggering earth's axis.

<i>: Josua 10.13-14 and the in chapter 11.8 cited passages.

<ii>: nach Montesinos, zitiert in Zecharia Sitchin: The Lost Realms (Versunkene Reiche), Knaur Verlag Miinchen 1992, ISBN 3-426-04827-2, S. 203

<iii>: Werner Raffetseder: Sonnenfinsternis, Hugendubel Verlag, Milnchen 1999, ISBN 3-89631-302-9, Seite 18.

A: Map of the world

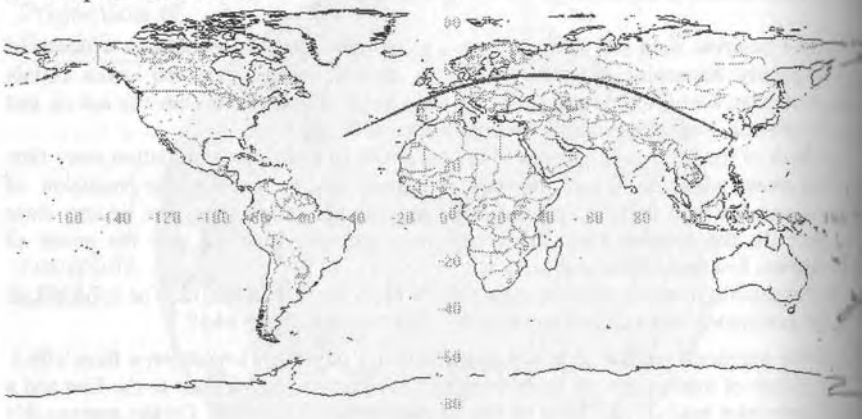

B: Globus

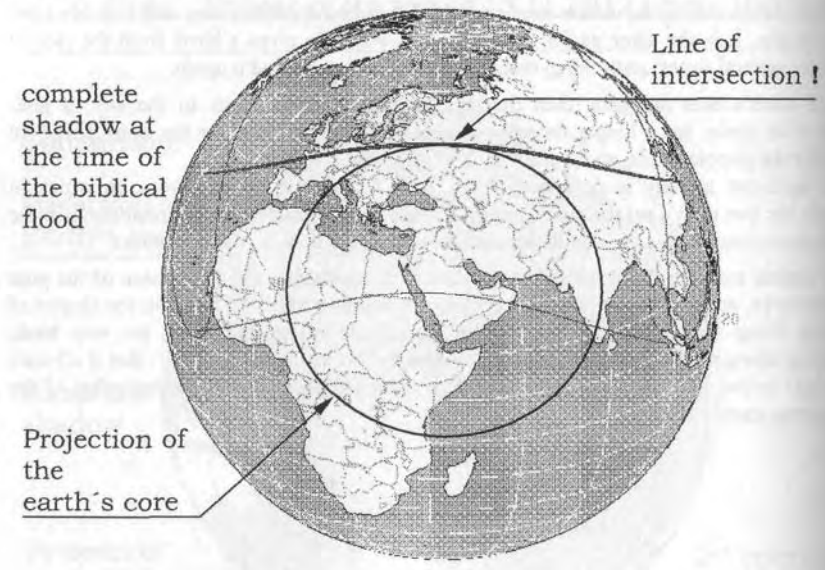

Fig. 20.11: Eclipse of the sun of 27.07.2281 B.C.
(angle of the sun = declination: 19.3°)
The trigger of the biblical Flood?

20.11 Changing of polarity and apocalypse

The pulling at earth's core, which shows as a wobbling of the magnetic axis and in damped form can lead to a tilting of the axis of rotation of the earth, still doesn't make an apocalypse, no end of the world. This only can be expected, if after a tilting of the axis of rotation of earth's core a change of polarity on the surface of the earth occurs. Doing so the new magnetic poles, like a compass needle in the field of the solar wind, again align in such a that the North Pole will be lying "up" in the ecliptic. Because earth's surface will keep it direction of rotation, the sun will, after the process having stabilized, as usual again rise in the East and set in the West. But the inhabitants of the earth, which before still were having midsummer, find themselves again in the midst of midwinter and vice versa.
Truly apocalyptic processes can be expected during the phase of a change of polarity of the earth. Thereby occur unusual relative accelerations and violent earthquakes. The largest destructive potential however is present in the waters of the oceans, which are set in motion.

As is well-known the earth at the equator is measuring a radius which is 21 kilometres larger than at its poles. If only a part of the waters temporarily flows in the direction of the poles of the earth, then the biggest part of the habitable land in Middle and North Europe sinks in the floods; then indeed also the statement of Noah makes sense, who as the first thing saw the mountain of Ararat rise from the floods, after the water again flowed back into its usual ocean basins. The mountain of Ararat after all measures a height of 5137 meters above sealevel!

At comparing historical events with details from the Bible the Flood should have taken place in the year 2245 B.C.[<i>]. According to the description of the position of the stars Dr. Wild calculates July 2281 B.C. as time for the Flood. The Arabic historical writer al-Makrizi again shifts the event into the year 3094 B.C.[<i>]. Who is right? We must verify the eclipses of the sun in this time and determine the position of the points of intersection, then we perhaps find the correct answer. Possibly earth's axis has wobbled more than once, have occurred several catastrophes in different regions. At 27.7.2281 B.C. in any case there actually has occurred an extremely critical constellation, whereas the other two years are ruled out. Here no total eclipse of the sun took place (fig. 20.11).

According to the calendar of the Ugha Mongulala 6110 years before this Flood a still much more devastating one should have occurred. That therefore would have been 8391 B.C., while Scott-Elliot dates the catastrophe in the year 9564 B.C.[<ii>]. According to Plato it would have been about 9500 B.C. For such long periods of time a check however isn't quite easy anymore, because the meantime changes of the earth sum up considerably.

<i>: Wild S. 231, 229 and 225.

<ii>: Wild S, 219, 218 and 210, among others cited from Scott-Elliot: Atlantis und das untergegangene Lemuria, Bauer Verlag Freiburg 1977.

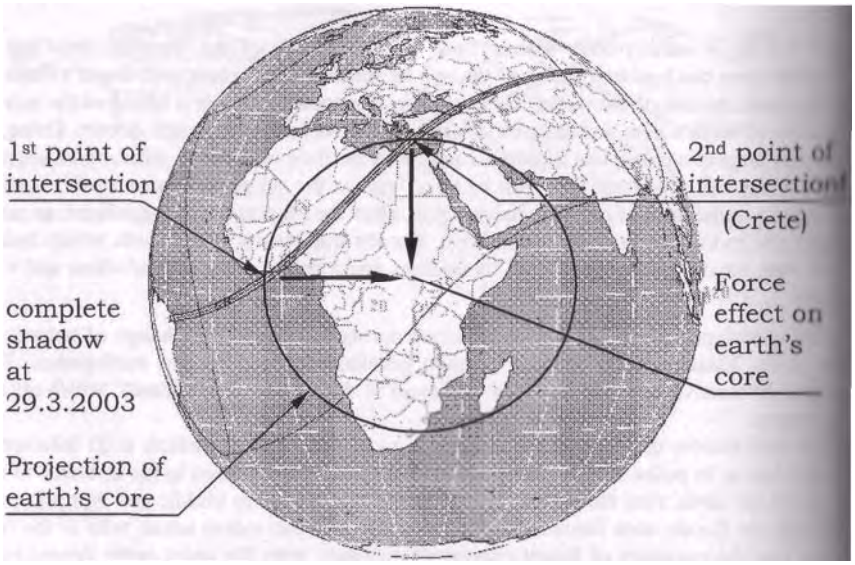

Fig. 20.12 A: Eclipse of the sun of 29.03.2006 (decl.: 3.2°)

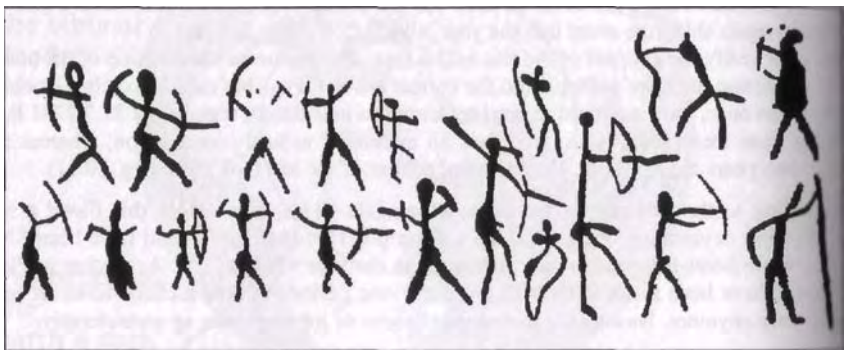

Fig. 20.12 B: Cave painting from Minateda (Spain).<i>

<i>: Laviosa-Zambotti: Origini e Diffusione della Civilta, Marzorati, Milano 1950,

Besides the constellation of sun and moon is crucial the occurring of a relevant neutrino radiation and the question if both is sufficient to tilt the earth and change its polarity. Some experts expect a change of polarity for the time coming, since it takes place with a certain regularity and measured in earth historical periods of time in addition fairly often!
This circumstance the earth presumably owes the river valleys cut deep in the countryside and other topographic phenomena. One presumably can only survive such a catastrophe in an ark (Noah), in the air bubbles of large caves (the walls of which painted children and artists out of pure boredom, see fig. 20.12 B) or in the highland, preferably in the area of the equator (Central Africa, highland of Mexico, Andes, Himalaya).

20.12 Scalar wave gauges for the prediction of earthquakes

We urgently need gauges, to be able to judge the neutrino situation. At first we with that pursue the same goal, as with the building of a free energy converter, however with the difference that the converter should maximize the collected amount of energy, whereas the gauge should minimize the taken up energy, to not too much load the source and not to change the local radiation situation.
In addition the neutrino radiation should be registered distinguishable in its velocity of propagation, what means that the building of a gauge will be very much more costly than that of an energy collector. That's why it can be expected that an usable measurement instrument might be available only many years later and we that long only can base on our own power of observation.

We for instance can statistically analyse, how the earth after an eclipse of the sun reacts to the neutrino radiation focussed by the moon. At August 11 the second focal point was situated in the East, and from that an acceleration of the rotation of earth's core can be predicted. Corresponding observations actually have been made on the surface of the earth with the help of the Foucault pendulum.
The relation the next time can be checked at the eclipse of the sun at 29.3.2006. This time the inverse case is present. A first focussing takes place in the West, so that pendelum swings in the reversed direction would be expected, which indicate a slowing down of the rotation (fig. 20.12 A).

But if the rotation of the earth should change, then the balance sheet of angular momentum of moon, earth's mantle and earth's core isn't correct anymore. As a result a force of difference occurs, which lets the spinning top stagger. But if earth's core staggers inside of earth's mantle, then it powerfully stirs the liquid magma, and in this way releases its surplus energy again. As a result earth's mantle is heated up somewhat. We, on our wafer-thin earth's crust, then time delayed feel the effects of the staggering of the core as an earthquake. The period seems to lie at approximately 6.5 days, as far as this can be read from reactions to the last two eclipses of the sun.

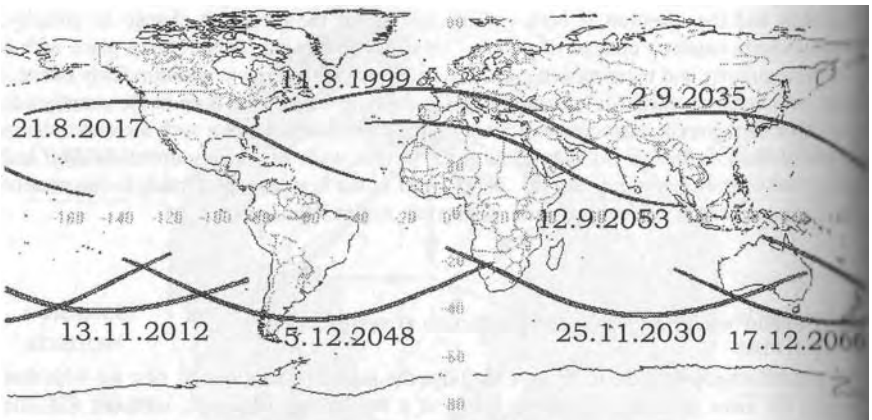

Tafel 20.13 A: Eclipses of the sun of 2 Saros cycles.

Fig. 20.13 B: The „Astronomicum Caesareum“ served around 1540 the determination of the positions of the moon nodes.<i>

<i>: Werner Raffetseder: Sonnenfinsternis, Hugendubel Verlag, Munchen 1999, ISBN 3-89631-302-9, Seite 134.

20.13 Calculation of future occurrences

From the analysis of past and present cosmic events with a strict scientific procedure can be predicted to a certain extent also future events. It thereby by no means concerns prediction, but exclusively the result of an analysis.

After the mentioned eclipse of the sun of 29.03.2006 there once more exists danger of earthquakes (approx. 4.4.2006) for the Island of Crete and Asia Minor. From the eclipse of the sun of 13.11.2012 as well no good can be expected, even if the points of intersection, situated close together, lie far away from populated land in the south-west Pacific basin. The Maya calendar by the way ends to this time. At 21.8.2017, 18 years or a Saros cycle after the eclipse of the sun at 11.8.1999 and correspondingly 120° further to the west, the corresponding complete shadow runs crossways through the USA. The thankless role of Turkey at the second point of intersection this time takes over South Carolina. One only can hope that the houses in Columbia are built more stable than in Izmit.
In fig. 2013 A the two eclipses of the sun of 11.8.1999 and of 13.11.2012 with their respective Saros cycles until 2066 are shown. The as critically to value tendency of the course of the complete shadow is visible, which wants to nestle against the circle of the projection of earth's core to form a line of intersection.

I here break off, since anyone with my indications and an eclipse of the sun-CD can analyse at home all further events personally. I value that if possible many analyses are made and controversially discussed, because possible cosmic catastrophes concern us all somewhat.

What good is the building of gigantic fusion ovens, if the runners by no means have understood the process of the fusion themselves? Why build ring accelerators for billions of dollars, if elementary particles can be calculated at the desk? How is the expenditure for gravitational wave detectors justified, if the actual music plays at entirely other velocities of propagation? Why is half the annual production of the world of Gallium used for an indirect proof of neutrinos, if every self-wound Tesla coil is able to collect more neutrinos?

Our scientists, for whom I as a colleague quite often must be ashamed, have the primary task to draw attention to cosmic and other risks and to calculate them in advance. In any case it is extremely unpardonable to leave this core duty up to some fortune-tellers and self-appointed prophets.
One should more often remind them that the Chinese Kaiser Tschung-Khang let sentence his court astronomers Hi and Ho to death, after the two not having predicted an eclipse of the sun. It thus certainly didn't concern a missed spectacle or a missed tourism business, but presumably the need for safety of the Kaiser and his subordinates, for which the two astrophysicists in ancient China had to take responsibility!

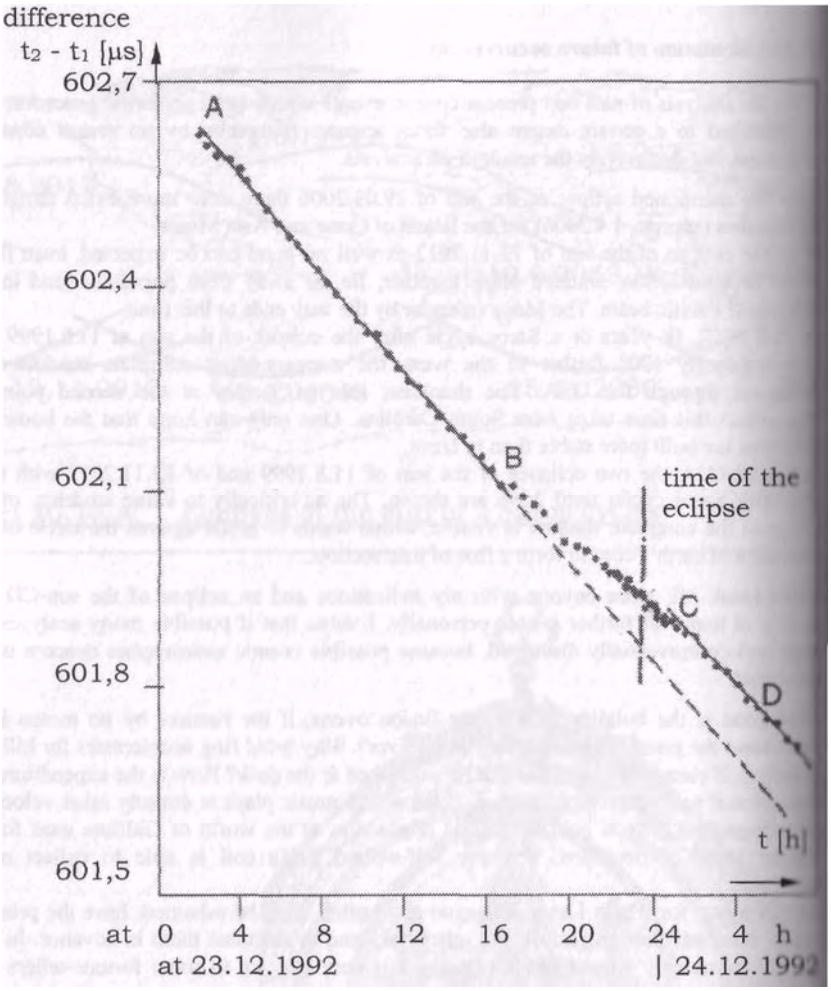

Fig. 20.14: The difference in going of two caesium atomic clocks
positioned in different directions, but in the same laboratory in Harbin, China, during the partial eclipse of the sun of 24.12.1992.<i>

<i>: Shu-wen Zhou: Abnormal Physical Phenomena Observed When the Sun, Moon, and Earth are Aligned, 21st Century Science & Technology, Fall 1999, Vol. 12, No. 3, pp. 54-61. Comments concerning Figure 9: Straight lines AB and CD show that the rate of change of the time difference between the two clocks is constant in non-eclipse periods, but becomes irregular around the time of the eclipse.

20.14 Epilogue to the energy technical seminar

Very slowly the word goes round that the energy source of the future has got a name: "Neutrinopower". Unfortunately fundamental physics, which is financed with public money, still does know almost nothing about the nature of the neutrino radiation. In addition hinder useless model concepts any progress in this direction and so the responsible fundamental research steps on the spot.

Considerably more extensive were already 100 years ago the insights of the experimental physicist Nikola Tesla, the discoverer of the neutrino radiation and father of the free energy. The space energy however is showing most clearly in nature, which only uses this advantageous form of energy. In particular during eclipses of the sun and other cosmic experiments it openly comes to light and can be detected by us for a short time.

The physicist Prof. Shu-wen Zhou of the University of Huazhong in Wuhan, China, systematically has investigated the effects, if sun, moon and earth are aligned[<i>]. Doing so he has proven inexplicable physical anomalies in experiments. Stimulated by the discoveries of Maurice Allais with the Foucault pendulum he built an arrangement specially flor proving horizontal forces of acceleration, and actually he with that could measure face effects during the total eclipse of the sun of 24.10.1995. He even speaks of an oscillating force!

Further he could determine changes in the spectral wave length of various elements, which under normal conditions go as constant and even as characteristic for the respective element. The relative change of size of the wave length during the ring-like eclipse of the sun over China of 23.9.1987 resulted in the 100-fold value compared to the difference in the spectrum analysis between surface of the earth and surface of the sun! This comparison reveals an immense discrepancy between theory and practice and puts us for a solid problem.
For that six different models of spectrometers were installed in several laboratories of different polytechnics and a photograph was taken of the emission spectra of H, D, Ca, CN, Ni, Ti, etc. Also other reasons than that of an eclipse of the sun could be excluded unambiguosly. In the results of these, at artificial light carried out conventional measurements, in any case abysses yawn. The from spectrum analyses won "insights" about the composition of strange celestial bodies now for sure can be done away with without knowledge about the respective prevailing neutrino radiation.

Spectacular also is the proof of differences in going of atomic clocks of various constructions. During the partial eclipse of the sun of 24.12.1992 seven caesium clocks in four cities of China and in three planes were used. The analysis of the differences in going resulted in, as is shown exemplary in fig. 20.14, changes of the gradient during the eclipse. The results for the atomic clocks in the planes and for two further time measurements turned out with similar clarity[<i>].

<i>: Shou-wen Zhou: Abnormal Physical Phenomena Observed When the Sun, Moon, and Earth are Aligned, 21st Century Science 6s Technology, Fall 1999, Vol. 12, No. 3, pp. 54 - 61.

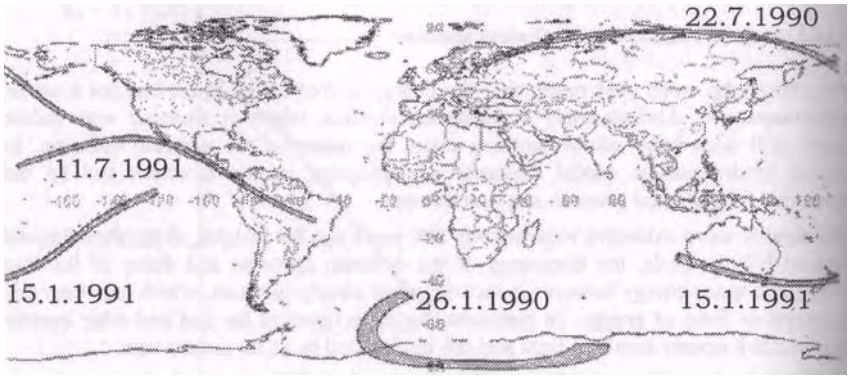

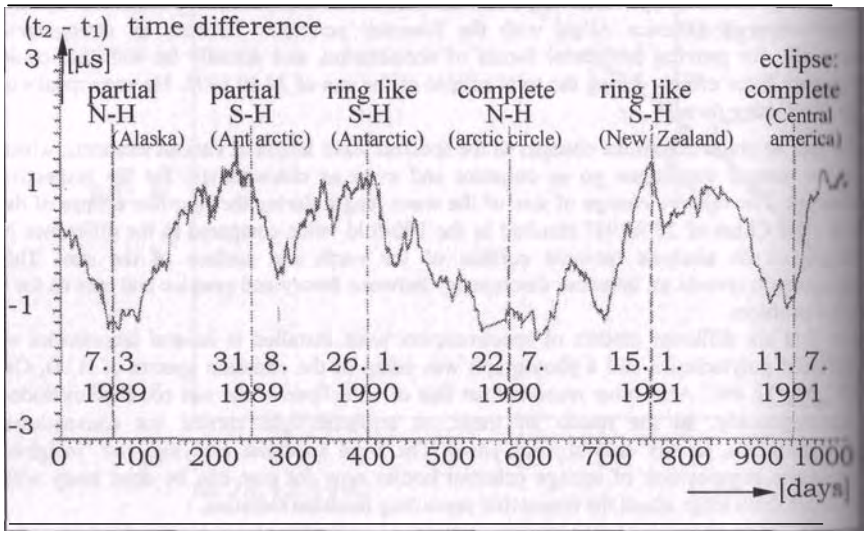

Fig. 20.15: Long-term measurement between 1989 and 991 of the difference in going of two atomic clocks at the U.S. Naval Astronomical Observatory.<i>

The in the 1000 days occurred eclipses of the sun have been entered later. In addition is recorded, if the northern hemisphere (N-H) or the southern hemisphere (S-H) of the earth was involved.

<i>:Shu-wen Zhou: Abnormal Physical Phenomena Observed When the Sun, Moon, and Earth are Aligned, 21st Century Science & Technology, Fall 1999, Vol. 12, No. 3, pp. 54 - 61. Figure 8.

A connection to the neutrino radiation Prof. Zhon doesn't draw, but it almost is obvious.

From the U.S. Naval Astronomical Observatory (LC/7970) long-term measurements over 1000 days between 1989 and 1991 are present (fig. 20.15). The difference in going between the two atomic clocks positioned at different places shows a permanent up and down. The reason goes as completely unknown.
But if the eclipses, which took place in this time, are entered then one immediately sees the assignment to a maximum or a minimum value. If an eclipse of the sun namely concerned the southern hemisphere of the earth, then the difference in going each time reached a maximum, but if the shadow of the moon run over the northern hemisphere, then each time a minimum occurred. Chance here probably is out of the question!

Let us record: The effect of an eclipse of the sun, to which for instance a Foucault pendulum reacts, can equally be traced back to the interaction of the neutrinos as the free energy. That's why the here presented book carries the title "Free energy and the interaction of the neutrinos". It has appeared in the series concerning the "Electromagnetic environmental compatibility", and also for that there are good reasons. Our energy technology must become more ecologically compatible and we come the goal closer, if we emulate nature, understand and copy it.

That it further concerns electromagnetism, likewise is explained from the interaction of the neutrinos, which concerns the oscillating and resonant case of the electromagnetic interaction. In this respect the reference to the series of books therefore would be given.

It only indirectly has to do with "electrosmog", or what otherwise is understood under environmental compatibility in general. It however could be shown that also the earth radiation is a form of neutrino radiation, and that it poses a biological effectiveness, after it turned out that it serves nature as an energy source. With that the conflict with space energy devices already is predetermined if the same scalar wave radiation should be used. Then one system takes away the other system the energy basis and the existence basis.
This environmental compatibility problem can be solved, if care is taken that both don't get in each others way with regard to the frequency and the wave length. We for that need a deep understanding concerning the topic of the space quanta and the neutrinos, their physical properties and the corresponding device technology. The book should make a contribution to that.

The other side of the medal is the information technical aspect of the scalar wave radiation and the environmental compatibility problem connected with that. The third and last part of the series of books is dedicated to this theme.

Part 2: Edition belonging to the energy technical seminar: "Electromagnetic Environmental Compatibility"

Prof. Dr.-Ing. Konstantin Meyl

Scalar waves

Abstract:

1. Auflage 1998, 4. Auflage and 1st English Edition

With regard to the environmental compatibility a decentralized electrical energy technology should be required, which manages without overhead power lines, without combustion and without radioactive waste. The liberalization of the energy markets won't on any account solve our energy problem, but only accelerate the way into the dead end. New, ecologically compatible concepts are collected and discussed in the book.

A useful energy source could be represented by space quanta, which hit upon the Earth from the sun or from space. They however only are revealed to the measurement technician, if they interact. It will be shown that the particles oscillate and an interaction or collection with the goal of the energy technical use only is possible in the case of resonance.

Since these space quanta as oscillating particles have almost no charge and mass averaged over time, they have the ability of penetration proven for neutrinos.
In the case of the particle radiation discovered 100 years ago by Tesla, it obviously concerns neutrinos. We proceed from the assumption that in the future decentral neutrino converters will solve the current energy problem. Numerous concepts from nature and engineering, like on the one hand lightning or photosynthesis and on the other hand the railgun or the Tesla converter are instanced and discussed.

Free energy and the interaction of the neutrino radiation

INDEL GmbH, Verlagsabteilung, Fax: +49-7721-51870
Tel: +49-7724-1770
Postal and ordering address:
l.TZS, Prof. Dr. K. Meyl, Leopoldstr. 1, D-78112 St. Georgen
www.k-meyl.de meyl@k-meyl.de

Scalar Waves

From an extended vortex and field theory to a technical, biological
and historical use of longitudinal waves.

Part 3

by

Professor Dr.-Ing. Konstantin Meyl

Edition belonging to the lecture and seminar "Electromagnetic environmental compatibility"

(Original title: "Elektromagnetische Umweltvertraglichkeit")

Translated out of the German language
by Ben Jansen
(2003)

* * *

Part 3: Edition belonging to the information technical seminar

Scalar waves and the technical use of longitudinal waves and vortices

* * *

INDEL GmbH, Verlagsabteilung

Villingen-Schwenningen 2003

ISBN 3-9802 542-4-0

Preface to the seminar, part 3

With the appearing in print of the 3rd part of the series of lecture notes of the electromagnetic environmental compatibility, the collection of material can be considered to be completed for the time being. By now almost all aspects concerning the theme of the potential vortices of the electromagnetic field and their propagation as a scalar wave should have been addressed or at least indicated.
And that's what it is about in the case of the editions belonging to the seminars: In the seminars, taking place inside and outside the university, questions about the phenomena and the biological effectiveness of the fields, which surround us, are discussed. The scientifically correct procedure asks as a preparation for the seminar a voluminous collection of material and a compilation of theses with the pros and contras to them. The argumentation, which is denoted as ,,textbook physics" and is generally accepted, the participant of the seminar can work out himself by means of the available journals and books. The potential vortex, which completed the field equations, however makes possible a counterstatement, which for most participants at first will be unusual. The old dispute between quantum and field physics rekindles. What is missing is a voluminous collection of material concerning the refined field physics, and this gap the editions belonging to the seminars should close.
In the case of this book the primary concern is to make sure, that all facets, properties and physical consequences of the new and unified field physics are addressed. The question, if all points can bear a strict verification, remains reserved to the seminar and its participants, of whom each should form its own judgement. The series of books should be understood as a stimulation, to make own thoughts about the various points. Who has no opportunity to participate in a seminar, by means of the lecture at least gets an idea of what is discussed here and how is struggled for scientific insights.
The herewith completed collection of material by no means may be compared or confused with a basic work about the theory of objectivity. That the editions cannot and want not afford at all. They together with the discussions at best form the basis for a scientifically basic work, at which I am working.

In the case of the collection of material concerning the electromagnetic environmental compatibility consisting of three parts, again and again new aspects have emerged, which found entrance into the book, at which I was working at that particular time, whereas the rough structure has been controlled precisely: part 1 with the chapters 1 to 9 treats the basics, part 2 with chapters 10 to 20 the energy technical aspect and part 3 with the chapters 21 to 30 the information technical aspect of scalar waves.
The here presented 3rd part starts with the wave equation and the two comprised parts of a transverse and a longitudinal wave. The historic dispute between Heinrich Hertz and Nikola Tesla with the experimental evidence of the each time used wave part is continued over the wave-particle uncertainty compromise up to the dispute about the right field description: that of Maxwell or the new dual and at the same time unified description, which builds upon Boscovich and Faraday. The aspects, which seem so irreconcilably thereby only are two parts of a single equation, which is much older and can be traced back to Laplace: the wave equation.
Until now no derivations of this equation, which contains both wave parts, are known This for the first time succeeds from the new and extended field approach in the summary from chapter 26. At first however is attempted to make the world of the scalar waves

plausible with models, calculations and observations. For that are used examples from high-frequency engineering, like the ground wave or the near-field area of an antenna, and from nature and medicine, which are granted two chapters. The comparison of the nerve conduction with Tesla's one wire technology is bringing it to light that scalar waves equally are used in both cases. In a frequency diagram the insights are entered concisely and is shown that considerably more unexplored domains occur than already is known, that in most cases not even gauges are available. With the design for building a scalar wave gauge the scientific verification of until now only empirically won results is stimulated, like for instance the results the radiesthesia wants to have determined with the help of the sensitivity of man as a biosensor.

Many relations will be revealed to the reader only, if he has worked through the summary, which follows. From Maxwell's field equations only the well-known (transverse) Hertzian waves can be derived. (Longitudinal) scalar waves however in the result are zero. This is a flaw of normally used field theory, since scalar waves exist for all particle waves, like e.g. as plasma wave, as photon- or neutrino radiation. Because the field pointer, in the direction of which longitudinal waves are propagating, is oscillating, the frequency will oscillate like the velocity of propagation, which again is measured as a noise signal. Any antenna noise proves the emission of scalar waves in space. But scalar waves, or whatever should be subsumed under the by mathematics minted generic term free of any value judgement, surely are more than only noise.

Starting from Faraday's discovery - instead of the formulation of the law of induction according to Maxwell - an extended field theory is derived, which goes beyond the Maxwell theory with the description of potential vortices (noise vortices) and their propagation as a scalar wave, but contains the Maxwell theory as a special case. The new field theory with that doesn't collide with the textbook opinion, but extends it in an essential point with the discovery and addition of the potential vortices.
Also the theory of objectivity, which follows from the discovery, is compared in the form of a summary with the subjective and the relativistic point of view and the consequences for variable velocity of propagation of the scalar waves, formed from potential vortices, are discussed. Like already in part 1 the unification of the electromagnetic interaction with the gravitation succeeds impressively.

Besides the mathematical calculations this book contains a voluminous material collection concerning the information technical use of scalar waves, if e.g. the useful signal and the usually interfering noise signal change their places, if a separate modulation of frequency and wavelength makes a parallel image transmission possible, if it concerns questions of the environmental compatibility for the sake of humanity (bioresonance, among others) or to harm humanity (electrosmog). With that the book again finds back to the starting point, to the open task, which made necessary an excursion through all domains of physics to answer it. I hope, the long march was worthwhile.

Villingen-Schwenningen december 2002

Preface to the 2nd edition of part 3

In favour of chapter 30 as a complement, an introduction into the ancient broadcasting technology of the gods, the 1st edition wasn't printed anymore in the year 2002 as originally planned. Instead the individual chapters have been prepublished in different places. The chapters 21 to 25 are found among others in the book "scalar wave technology", which has been published as an instruction for an experiment to demonstrate scalar waves in 2001. Excerpts from it, as also from the chapters 26 to 28 have appeared in form of individual essays in different journals.

Again experimental successes had been intervening, which caused a renewed deferring of the date of appearance of the 3rd part of the series of books. In my laboratory the bi-directional transmission of music and of data by scalar wave was successful. We thus also can transmit information backwards from a receiver to the transmitter or to a second receiver, whereby the receivers work purely passive, thus without own power supply. The operating energy is as well supplied to them by the transmitter by scalar wave. The demonstrated technology opens completely new possibilities of a technical application. Conceivable are telemetry installations where measurement signals have to be transmitted from rotating or otherwise inaccessible places of a machine. The energy for the measurement electronics can be transmitted wirelessly by scalar waves and the signal can be sent back along at the same time, by modulating it onto the energy carrier. In this way dozens of measurement stations can be connected wireless with a single central transmitter, which supplies them all with energy.

The question was asked: Is the technology really entirely new? The answer is amazing: No, it here concerns the oldest technology of humanity, which had developed to a peak in antiquity, to send receive engineering of the gods. For this claim even a mathematical proof is available. For that the authoritative transition, the unrolling of a vortex to a wave (the transition from the near-field to the far-field) or in the reversed case the rolling up at a receiver antenna (usually denoted as standing wave) is calculated with help of the extended field theory. The result is, that at this transition the velocities of propagation resp. the wavelengths of the transverse and the longitudinal wave stand to each other in the ratio of the Golden Proportion.
With regard to the optimization of a transmitter or receiver antenna the Golden Proportion has an effect on the construction resp. the architecture of corresponding buildings . Which ones, with that deals the complementing chapter 30. But it mustn't be missing either, since after all it concerns a grandiose practical information technical use of scalar waves, from which we technologically can learn a lot<i,ii>.

Villingen-Schwenningen march 2003

<i>: Note: chapter 30 provides an introduction into ancient broadcasting technology of the gods. The working off of history with respect to the use of scalar waves is so voluminous, that for that a book of its own is published with the title:

<ii>: K. Meyl: Sendetechnik der Gotter, historischer Sciencefictionroman (2003), Villingen-Schwenningen, INDEL Verlagsabteilung, ISBN 3-98O2 542-5 9

21. Derivation of the scalar wave

WilliamThomson, who called himself Lord Kelvin, after he had been knighted, already in his lifetime was a recognized and famous theoretical physicist. The airship seemed him too unsafe and so he went aboard a steam liner for a journey from England to America in the summer of 1897. He was on the way in a delicate mission.

Eight years before his German colleague Heinrich Hertz had detected the electromagnetic wave in experiments in Karlsruhe and scientists all over the world had rebuilt his antenna arrangements. They all not only found confirmed the wave as such, they even could show the characteristic properties.
It was a transverse wave, for which the electric and the magnetic field pointers oscillate perpendicular to the direction of propagation. This can be seen as the reason, that the velocity of propagation is showing itself field independent and constant. It is the speed of light c.

With that Hertz had experimentally proven the properties of this wave, previously calculated in a theoretical way by Maxwell, and at the same time proven the correctness of the Maxwellian field theory. The scientists in Europe were just saying to each other: "well done!" as completely other words came across from a private research laboratory in New York: "Heinrich Hertz is mistaken, it by no means is a transverse wave but a longitudinal wave!"

Such a screwball most said and did as if they hadn't heard the criticism at all. But then one couldn't ignore it completely, because on the one hand claimed the private research scientist to have experimental proof and on the other hand it wasn't just anybody, who here reported. It was nobody but Nikola Tesla, the Croat experimental physicist who emigrated to America
Him we owe the modern alternating current technology from the high-tension network for energy transmission over the alternating current transformer to the asynchronous machine.
With his magnificent inventions he had earned enough money, to be able to afford a private laboratory, in which he could research and invent uncensored and free. The key to his success was lying in his purposeful, concentrated and efficient working method.
He was fast! Whereas in Europe still was being discussed about properties and theoretical possibilities of application of the wave, Tesla already presented the armed forces a remote controlled scaled-down submarine in Madison Square Garden (fig. 21.1 A). To convince such a man, who only holds valid what his experiments reveal, from the opposite, should be a hopeless enterprise.
Lord Kelvin was aware of that, as he made the decision to go on the journey. He could not and did not want to put his head into the ground, as many of his colleagues, because on the one hand scientists are curious by principle and on the other hand he travelled as an official representative of science. He had been instructed to free, as Mr. Clean, the undamaged world of sciences from erroneous teachings. But it came completely different.

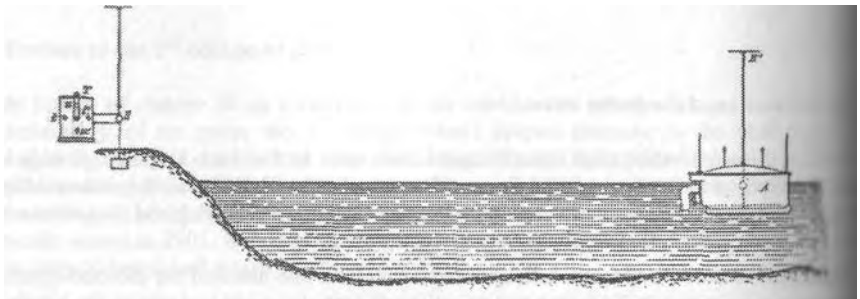

Fig. 21.1 A: The first radio remote control of the world.<i>

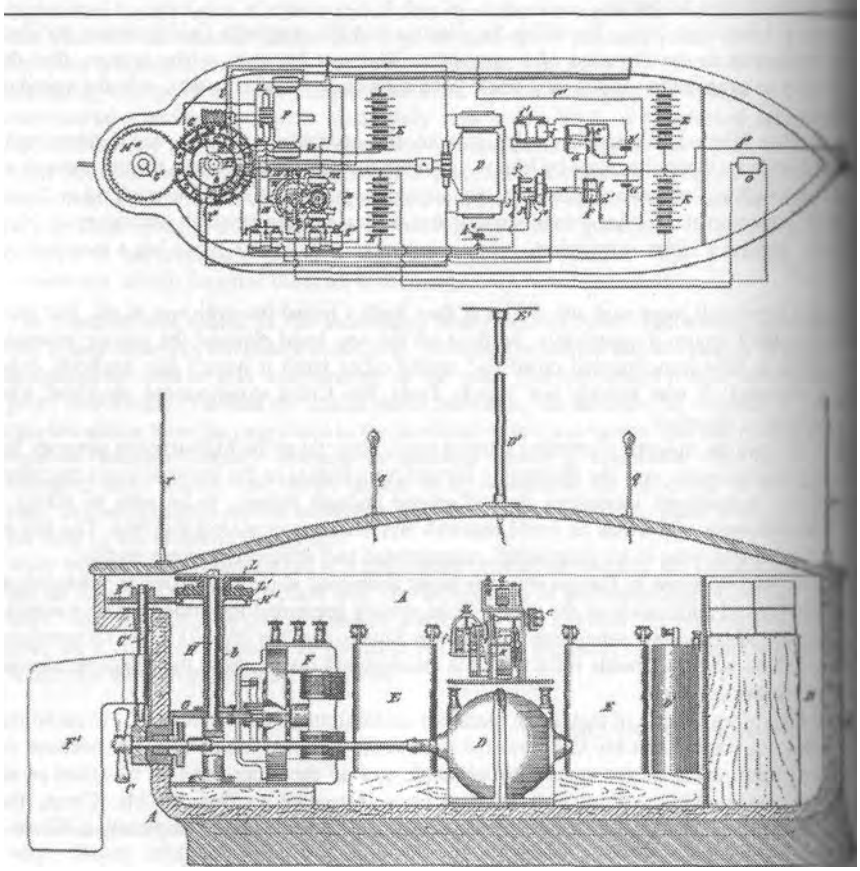

Fig. 21.1 B: Patent specification concerning the remote controlled submarine.<i>

<i>: Nikola Tesla: Method of and Apparatus for Controlling Mechanism of Moving Vessels or Vehicles, US-Pat. 1898, Nr. 613,809. Complete Patents: P. 351

21.1 Lord Kelvin in a delicate mission

The first day of his visit at Tesla Kelvin spoke the admonishing words he had been instructed to speak. He recommended Tesla warmly to publicly retract the remarks concerning the Hertzian mistake and to contribute himself to the settlement of the dispute. Seen from a specialist viewpoint they talked at cross-purposes.

But at night in his hotel room the Lord again thought about the experiments, which had been shown to him. The standing wave nature had been visible unambiguously: the oscillation nodes, the effect back on the transmitter, the high degree of effectiveness and many other things more. Such properties the Hertzian wave indeed doesn't know. Also Tesla didn't work with dipole antennas, but with flat coils, with spark gap oscillators and with a very unconventional switching technique, set up different in principle.

The next morning Lord Kelvin appeared in the laboratory again and greeted Tesla with the words: "Then you don't use Hertzian waves?" "Certainly not", Tesla answered," it are radiations. By waves no energy could be economically transmitted over a larger distance. My system works with true conduction, which theoretically seen can take place over a larger distance, without bigger losses occurring."
In the article of the "Electrical Experimenter" is noted further, that the doubting critic Kelvin suddenly turned into one of the biggest followers[<i>].

Kelvin deduced very fast: according to that there exist two different sorts of wave propagation. So Hertz with his transverse wave is just as right, as Tesla with the longitudinal wave.
As a represantative of theoretical physics he however could pull out Tesla a decayed tooth. Maxwell had based his field description on an aether concept, which at that time in the world of sciences triggered violent discussions. Since Tesla saw such an aether as a prerequisite for longitudinal waves, he thought he and not Hertz had proven the Maxwell wave in experiment for the first time. By stating this the magnificent experimental physicist however revealed weaknesses in the area of theory. Maybe he had not read exact enough or understood the books of Maxwell, which without doubt were formulated mathematically only arduously comprehensible in the original version.
In this point Tesla had to learn otherwise by Kelvin. Maxwell's field theory provides without exception a mathematical description for the Hertzian wave. For the Tesla radiation however no field description exists! This by the way is the circumstance, why this wave could disappear from the textbooks and again fall into oblivion. Tesla himself had problems to theoretically imagine, what happens at his wave. His models in some points perhaps were even better than the official textbook opinion, but not without contradiction to accepted regularities. That's why Tesla did without a publication of his ideas, although he in his lifetime had filed away at an own theory.

<i>: Nikola Tesla: Famous Scientific Illusions, III. The Singular Misconception of the Wireless, Electrical Experimenter, Feb. 1919, printed in Tesla Said, p. 197

Figure 21.2 A:

William Thomson, 1846 becoming Professor at Glasgow University with the age of 22 years. From 1892. on he was called Lord Kelvin.[<i>]

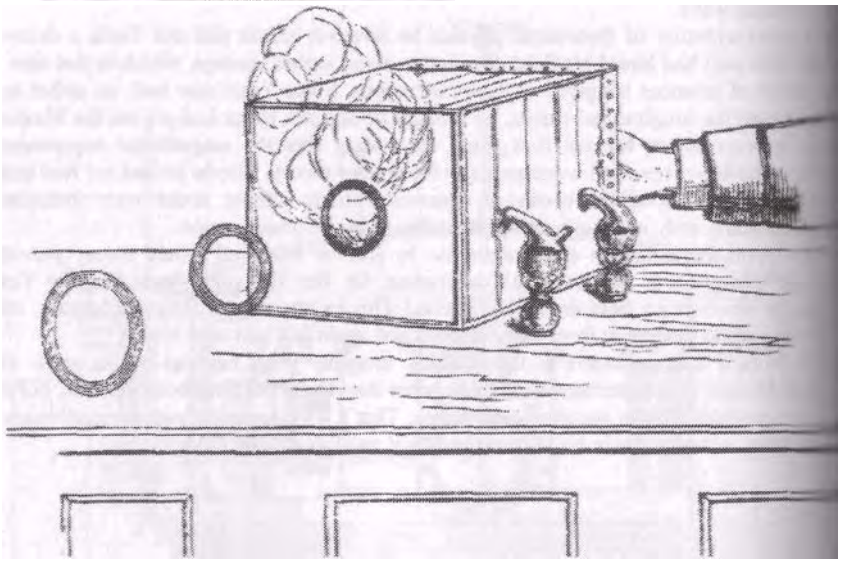

Fig. 21.2 B: Vortex rings from a smoke vortex gun.[<i>]

<i>: David Ash, Peter Hewitt: Science of the gods, Gateway Books, Bath, 1990

21.2 Helmholtzian ring-like vortices in the aether

Tesla told Kelvin at his visit from the meeting with the German Professor Hermann von Helmholtz on the occasion of the World's Fair in Chicago 1893. Kelvin knew him very well and had cooperated with him in the past. Now the vortex concept of his colleague and his model of stable vortex rings were very obliging.
In the case of a standing wave the impulse is passed on from one particle to the next. In the case of acoustics for instance we are dealing with a shock wave, where one air molecule knocks the next. In this way sound propagates as a longitudinal wave. Correspondingly the question is raised: What sort of quanta are the ones, which in the case of the Tesla radiation carry the impulse?

Lord Kelvin was already on the way back to Europe on the steamship and he deduced: The Tesla experiments prove the existence of longitudinal standing waves in space. In the question, what passes on the impulse, Kelvin comes to the conclusion: it are vortices in the aether! With that he had found an answer in experience. With his students he built boxes, with which he could produce smoke rings, to be able to study and demonstrate in experiments the special properties of ring-like vortices in their flow technical analogy (fig. 21.2[<i>]). But he didn't have ready a suitable field theory.

The from Germany to the Isles exported vortex physics for a short time could establish in England, before it was slaughtered and buried by the German quantum physicists. A main advocate has been James Clerk Maxwell, who held the vortex theory for the best and most convincing description of matter[<ii>]. As his successor at the Cavendish laboratory in Cambridge J. J. Thomson was appointed, who already as a young man had got a price for a mathematical treatise about vortices[<iii>]. He discovered the electron and imagined it, how could it be otherwise, as a field vortex.

The crucial weakness of vortex physics, the lacking of an usable field theory, was of benefit to the emerging quantum physics. This could change fundamentally with the discovery of the potential vortex, the vortex of the electric field[<i4>]!
In addition is the experimental proof of a vortex transmission as a longitudinal wave in air or in a vacuum, as it has been furnished by Tesla already 100 years ago, neither with Maxwell's theory nor with the today normally used quantum theory explicable or compatible. An urgent need is present for a new field theory!

<i>: David Ash, Peter Hewitt: Science of the gods, Gateway Books, Bath, England 1990.

<ii>: James Clerk Maxwell: "...the vortex rings of Helmholtz, which Thomson imagines as the true form of the atom, fulfil more conditions than any other previous concept of the atom."

<iii>: J.J. Thomson: "the vortex theory is of much more fundamental nature than the usual theory of solid particles."

<i4>: Konstantin Meyl: Potentialwirbel Band 1 (1990) and Band 2 (1992), INDEL-Verlag, Villingen-Schwenningen.

Scalar waves, a mathematical reasoning (I)

1. prerequisite: wave equation (textbook-formulation)

$$\Delta \mathbf{E} = \frac{1}{c^2} \cdot \frac{\delta^2 \mathbf{E}}{\delta t^2}$$

taking apart of the delta operator mathematically (Laplace operator) according to the rules of vector analysis (fig. 5.0):

$$\begin{array}{lcl} \Delta \mathbf{E} & = & \text{grad div } \mathbf{E} - \text{rot rot } \mathbf{E} \\ \text{wave} & = & \text{longitudinal} + \text{transverse} \end{array} \quad (21.1)$$

---

2. State of the art of technology: Hertzian wave = transverse wave
special case: = solution of Maxwell's field equations
no sources:

$$\text{div } \mathbf{E} = 0 \quad \text{and} \quad -\text{rot rot } \mathbf{E} = \frac{1}{c^2} \cdot \frac{\delta^2 \mathbf{E}}{\delta t^2} \quad (21.3)$$

transverse wave:
field pointers oscillate crosswise to the direction of propagation
The propagation occurs with the speed of light c.

---

3. claim: Tesla radiation = longitudinal wave
special case:
irrotationality:

$$\text{rot } \mathbf{E} = 0 \quad \text{and} \quad \text{grad div } \mathbf{E} = \frac{1}{c^2} \cdot \frac{\delta^2 \mathbf{E}}{\delta t^2} \quad (21.4)$$

longitudinal wave, shock wave, standing wave:
field pointer oscillates in the direction of propagation.
Velocity of propagation is variable!

Fig. 21.3: The special cases of the wave equation

21.3 Taking apart of the wave equation

Before one plunges into the adventure of an entirely new field theory, it first of all should be traced and analysed, what the latest textbooks say about scalar waves.

There some scalar or vector potentials are introduced; there the constant of dielectricity e is written down as a complex variable, although it physically seen concerns a material constant, only to be able to calculate with this trick artificially a loss angle, which should indicate the losses occurring in a dielectric, where in reality it concerns vortex losses. Of course one can explain the dielectric losses of a capacitor or the heating in a microwave oven entirely without vortex physics with such a label fraud, but it should be clear to anyone, that in a complex constant lies buried an inner contradiction, which is incompatible with physical concepts.
We are used to such auxiliary descriptions so much, that the majority of today's physicists tend to attribute physical reality to this mathematical nonsense. As pragmatists they put themselves on the standpoint if with that experimental results can be described, then such an auxiliary description can't be so wrong after all. Doing so the circumstance is forgotten that here the ground of pure science is abandoned and is replaced by creeds.

We find everything already in the wave equation, as it can be found in all textbooks.

$$\boxed{\Delta \mathbf{E} = \frac{1}{c^2} \cdot \frac{\delta^2 \mathbf{E}}{\delta t^2}} \quad (21.1)$$

Behind this formulation two completely different kinds of waves are hiding, because the used delta operator consists of two parts according to the rules of vector analysis:

$$\boxed{\begin{array}{lll} \text{grad div } \mathbf{E} & - \text{ rot rot } \mathbf{E} & = \Delta \mathbf{E} \\ \text{longitudinal} & / \text{ transverse} & \text{wave} \end{array}} \quad (21.2)$$

We want to discuss two special cases.
If we put the left part (in eq. 21.2) to zero (div E = 0) which is tantamount to no sources of the field then the well-known radio wave remains, which also is called Hertzian wave, after Heinrich Hertz, as said, had experimentally detected it in Karlsruhe 1888:

$$\text{div } E = 0 \quad \text{and} \quad \boxed{- \text{rot rot } \mathbf{E} = \frac{1}{c^2} \cdot \frac{\delta^2 \mathbf{E}}{\delta t^2}} \quad \text{(special case)} \qquad (21.3)$$

It concerns the transverse wave, described by Maxwell, for which the field pointers oscillate crosswise to the direction of propagation. The propagation again occurs with the speed of light c. So much concerning the state of the art of technology.
But as we see, in the mathematical formulation of the wave equation is hiding, yes, even more than only the generally known electromagnetic wave. The no sources approach is a neglect, which only is valid under certain prerequisites!

Scalar waves, a mathematical reasoning (II)

3. claim: Tesla radiation = longitudinal wave

$$\boxed{\text{rot}\,\mathbf{E} = 0} \quad \text{and} \quad \boxed{\text{grad div}\,\mathbf{E} = \frac{1}{c^2}\cdot\frac{\delta^2\mathbf{E}}{\delta t^2}} \qquad (21.4)$$

special case:
source field, because div E $\neq$ 0

=> sources = charge carriers (plasma waves)
=> sources = vortex structures

---

4. approach: (div E $\neq$ 0) is a scalar! => scalar wave
=> E-field vector can be derived from a scalar potential φ:

$$\boxed{\mathbf{E} = -\,\text{grad}\,\varphi} \qquad (21.5)$$

and $$\text{div}\,\mathbf{E} = -\,\text{div grad}\,\varphi \equiv -\Delta\varphi \qquad (21.6)$$

inserted in eq. 21.4: homogeneous scalar wave equation

$$\boxed{\Delta\varphi = \frac{1}{c^2}\cdot\frac{\delta^2\varphi}{\delta t^2}} \qquad (21.7)$$

---

5. proof: For the case of an additional space charge density ρ_{el} should be considered: div D $= \rho_{el}$
and div E $= \rho_{el}/\varepsilon$ (21.8)

inhomogeneous scalar wave equation = plasma wave!

$$\boxed{\Delta\varphi = \frac{1}{c^2}\cdot\frac{\delta^2\varphi}{\delta t^2} - \frac{\rho_{el}}{\varepsilon}} \qquad (21.9)$$

Fig. 21.4: Derivation of the plasma wave as an example of a scalar wave

21.4 Derivation of the scalar wave equation

Making neglects by all means is normal and legal in science. But it may not be carried out at will and untested. In any case an error consideration is necessary, the result of which should be, that the neglect indeed is sufficiently small.
In the here presented case of the wave equation I haven't found one single textbook, in which this error consideration has been carried out. As a result of this inexcusable negligence there is the danger that exactly the aspect is neglected, which it actually concerns. This could lead to catastrophical results, e.g. that the causes for electrosmog, for numerous EMC-problems, for biological and technical effects aren't seen and understood anymore, that pure science once more dilapidates to a creed!

In the case of the wave equation the assumption of no sources describes only one side of the medal. The other side, which for the electromagnetic wave occurs as an error term, we get if we this time put the right part in equation 21.2 to zero (rot E = 0).
In this case a divergence of the field is present, which requires a source field. As sources some charge carriers, quanta or at least particle structures, e.g. vortex structures have to exist. Their propagation occurs, as we know it from the sound propagation, as shock wave in longitudinal manner. The air molecules, the quanta or particle structures thereby oscillate in the direction of propagation. Also the field pointer has a component in this direction

rot E = 0 and $\boxed{\text{grad div } \mathbf{E} = \frac{1}{c^2} \cdot \frac{\delta^2 \mathbf{E}}{\delta t^2}}$ (special case) (21.4)

The occurring divergence of the field pointer (div E) is a scalar, for which reason this wave preferably is called scalar wave.

In the special case of a scalar wave (rot E = 0) the E-field vector can be derived from a scalar potential φ:

$$\boxed{\mathbf{E} = -\text{grad } \varphi} \quad (21.5)$$

On the one hand this term is used in the wave equation 21.4 on the right-hand side without forming the gradient on both sides of the equation. On the other hand the divergence of the approach 21.5:

$$\text{div } \mathbf{E} = -\text{div grad } \varphi \equiv -\Delta \varphi \quad (21.6)$$

is applied in equation 21.4. The result is the homogeneous scalar wave equation:

$$\boxed{\Delta \varphi = \frac{1}{c^2} \cdot \frac{\delta^2 \varphi}{\delta t^2}} \quad (21.7)$$

Scalar waves, a mathematical reasoning (III)

Proof: plasma wave =
inhomogeneous scalar wave equation

$$\Delta \varphi = \frac{1}{c^2} \cdot \frac{\delta^2 \varphi}{\delta t^2} - \frac{\rho_{el}}{\varepsilon} \quad (21.9)$$

one solution[i]: $\omega^2 = c^2 \cdot k^2 + \omega_p^2$ (= Langmuir waves).

Fig. 21.5 A: Derivation of the plasma wave as an example of
the existence of scalar waves in the wave equation

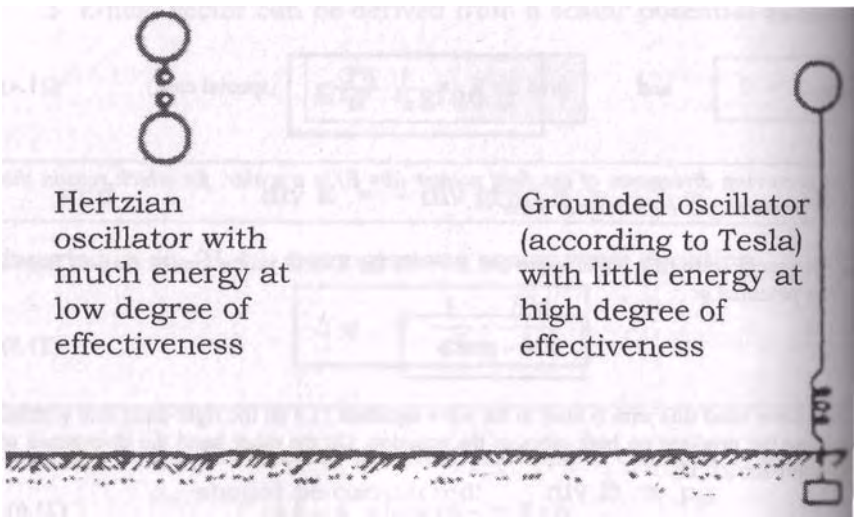

Fig. 21.5 B: Nikola Tesla explains the difference between his radiation and the Hertzian wave.[ii]

<i>: The solution describes dispersion relations of plasma waves; longitudinal wave movements + Langmuir oscillations of the electron density.

<ii>: Nikola Tesla: The Problem of Increasing Human Energy, The Century Monthly Magazine, June 1900, ISBN 1-882137-00-0, Page i-15

21.5 Derivation of a plasma wave

Doing without formation of the gradient for the derivation of the homogeneous wave equation is tantamount to an integration of the equation. We hence under certain conditions must expect the occurring of an integration constant.
This is the case, if in addition a space charge density ρ_{el} occurs as source of the field, which according to Maxwell equation 4 can be considered as the divergence of a dielectric displacement D (fig. 21.4):

$$\operatorname{div} \mathbf{D} = \rho_{el},$$

resp. with the relation of material $\mathbf{D} = \varepsilon \cdot \mathbf{E}$: $\operatorname{div} \mathbf{E} = \rho_{el}/\varepsilon \equiv -\Delta\varphi.$ (21.8)

If we complete this contribution with possible present field sources, then the inhomogeneous scalar wave equation results:

$$\boxed{\Delta\varphi = \frac{1}{c^2} \cdot \frac{\delta^2\varphi}{\delta t^2} - \frac{\rho_{el}}{\varepsilon}} \quad (21.9)$$

For these equations solutions have been published<i>. They have the same form, as the well-known dispersion relations of Langmuir waves. That is electron plasma waves, thus longitudinal wave movements associated with Langmuir oscillations of the electron density.

With that it has been proven that scalar waves and longitudinally propagating standing waves are described by the wave equation and are contained in it. This in any case is valid in general just as in the special case of a plasma wave, as mathematically could be derived here.

From the example of the derivation of plasma waves from the wave equation 21.1, we see that scalar waves by all means are known and their existence isn't casted doubt on at all. After all the mathematically won solution is secured by numerous experiments. Why do textbooks concerning high-frequency engineering then ignore the scalar wave parts in the wave equation?
Our specialists seem to concentrate so much on their branch, that they are losing the view on the Big Whole. They practice one-eyed physics, where the plasma physicist keeps one eye shut and the radio technician the other eye. What the other one does and researches, they don't understand anymore for ages. It is necessary to point them to their common root.

The perhaps most important statement of the wave equation is that every emitted wave contains both longitudinal and transverse parts! Both parts in addition occur jointly, so that for corresponding boundary conditions it can be expected that one part is transforming into the other part. The HF technician then suddenly measures less field strength and comes to the conclusion that his radio wave has been damped or partly absorbed. Doing so heat is created, he says, although the wave equation by no means contains a corresponding term for the necessary thermodynamic description. He simply hasn't understood the wave equation!
Absorption means nothing but transverse waves in the case of a disturbance rolling up to vortices, to become a scalar wave in this way (fig. 1.4 and 5.3). With that they are evading every field strength measurement and what can't be measured doesn't exist in one-eyed physics! Therefore can't exist, what shouldn't exist.

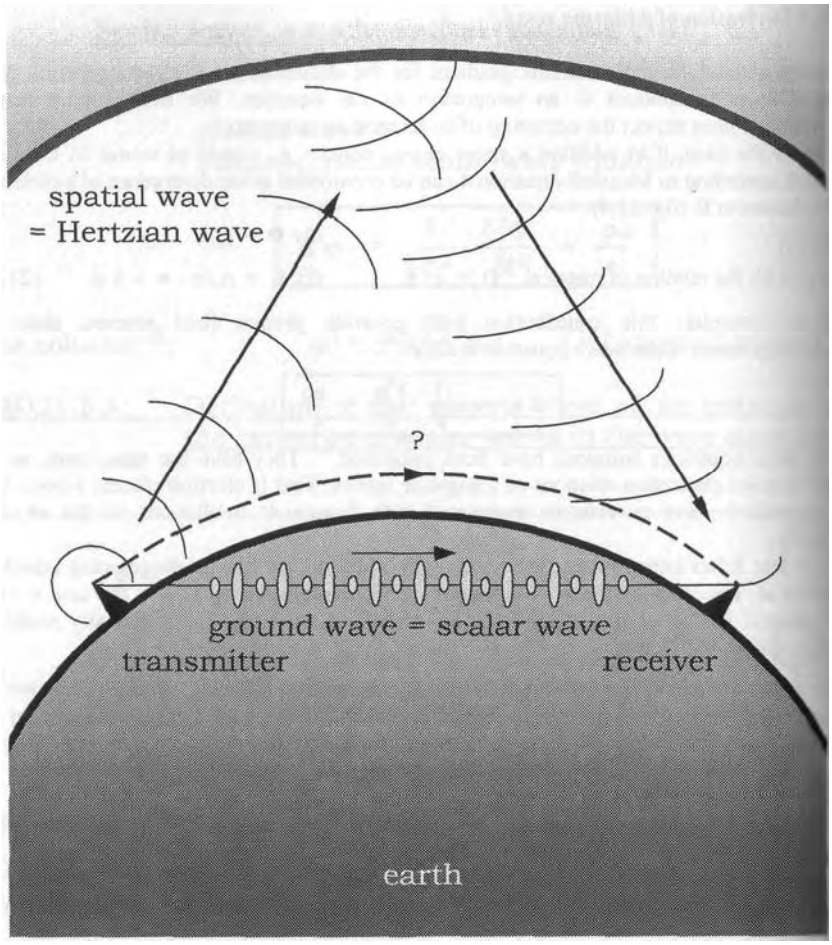

Fig. 21.6: Ground waves, which follow the curvature of the earth and radio waves reflected at the ionosphere.<i>

<i>: Meinke, Gundlach: Hochfrequenztechnik, 4.Aufl. Springer-Verlag Berlin 1986, Seite R 18: „Lang-, Mittel- and Kurzwelle breiten sich einerseits entlang der Erdoberflache als Bodenwellen, andererseits unter Mitwirkung der Ionosphare als Raumwellen aus."

21.6 Mistakes of the HF technology

The devastating judgement of Tesla, Hertz was mistaken, was rash. His claim of having detected the Maxwell wave himself, proved to be untenable. With this claim in particular Tesla hud the scientific world against him. If one opens encyclopedias or textbooks then one gets the impression, until the day of today science still hasn't forgiven Tesla, what once more shows how persistent prejudices are kept.

Just as little does a verdict of the American Supreme Court justice to the true circumstances, with the decision of the highest judges that Tesla and not Marconi is entitled the right to be the inventor of the radio. As we see, have both inventors in reality used completely other kinds of waves. The available transmitters of 100 years ago we would from today's viewpoint call ,,broadband dirt slingers". These spark flying monster have blown both parts of the wave equation, the transverse as well as the longitudinal part, into the air to ample extent. What distinguished the wave pioneers was their receiver technique, was eventually the question, which wave part they have filtered and utilized.

Marconi worked with dipole antennas, as already Heinrich Hertz. With that both could preferably track down and detect the radio wave. So they also should be entitled the right to be pioneers of radio technology. The verdict of the highest judges doesn't justice to this circumstance and should rather be judged as a nationalistically coloured political issue. Tesla however worked with two spherical electrodes, in which he preferably replaced one electrode by the globe, by grounding his devices. In this way he could receive the scalar wave parts. But that are not radio waves! Scalar waves have completely other properties, one even could be inclined to call them opposite properties.

To improve the degree of effectiveness of the transmission stretch one naturally was trying to also optimise the transmitting installation with regard to the respectively used wave part. Tesla optimised the scalar wave part and could record reactions of biological beings. His part represents a set of difficulties of the environmental compatibility, which should be taken serious. In the beginning the Marconists on the ships, as the radio operators were called, suffered from the so-called radio operator disease, which is unsolved until today. This phenomenon only disappeared after the radio devices on board had been optimised in favour of the used radio wave. The reached and measuring technically verifiable increase of the degree of effectiveness, primarily obtained by an improved antenna adjustment, simultaneously means a reduction of the scalar wave part, which endangers health.

But a received signal hides the receiver technician, if it has been on the way as a transverse or as a longitudinal wave. The coupling in one and the same equation leaves open both possibilities. Every radio amateur knows the so-called ground waves, which arrive faster at the receiver, than the Hertzian waves mirrored at the ionosphere, which propagate in a straight line. Allegedly the ground waves follow the curvature of the earth<1>, so it is written in expert books. This explanation hurts, since who can see along the curvature of the earth with a pair of field glasses. He would see the back of his head! No, the explanation the ground waves would run along the earth's surface is pure nonsense. The interference and the fading with which the radio amateur is fighting, are a result of the differently fast arriving wave parts, and doing so the scalar wave part tunnels as a straight line right through the earth (fig. 21.6)!

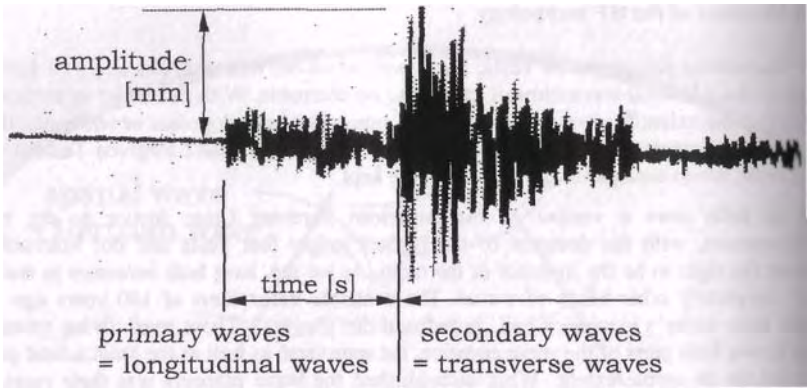

Fig. 21.7 A: Longitudinal and transverse earth quake waves.

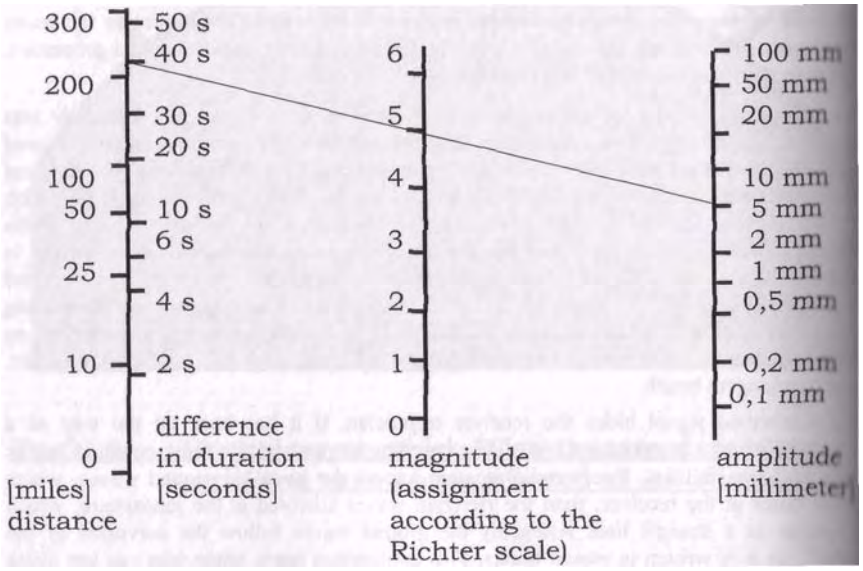

Fig. 21.7 B: Analysis according to the Richter scale.
(e.g.: 40 s duration between S- and P-waves for 5 mm amplitude means an earthquake of strength 5 in a distance of 220 miles.)

21.7 Coupling of the wave parts

The set of difficulties of ground waves makes clear the coupling of longitudinal and transverse waves as two aspects or parts of a wave. As the corresponding equation 21,1 mathematically taken apart into 21.2 dictates, does every transmitter emit both parts.

Exactly this circumstance the owners of allotments have used, which directly near a transmitter had illuminated their estate with freely hung up fluorescent lamps. The transmitter runners after that wanted to present them the power bill.and they could obtain, that this kind of illumination technique was prohibited.
Nowadays anyone may operate a high-frequency technical installation, even if he hasn't understood at all the wave equation used by that. Actually one should have been grateful to the allotment owners, if they withdraw the scalar wave radiation, which is incompatible with the environment and biologically harmful, with their fluorescent lamps. Taken exact it even is the task of the transmitting technician to pay attention to it. that only radio waves are sent into the air, since only those should be used. The time has come to reverse the burden of proof to protect the environment, nature, the consumer and the unasked and not involved persons, which are irradiated.

From other areas, for instance from flow dynamics or for body sound is generally known that both wave parts exist and in addition occur jointly. In the case of a propagation through the earth, like for an earthquake, both parts are received and utilized. Because their propagation is differently fast, the faster oscillations arrive first and that are the longitudinal ones. From the time delay with which the transverse waves arrive at the measurement station, the distance to the epicentre of the quake is determined by means of the different velocity of propagation. For geophysicists this tool is part of everyday knowledge (fig. 21.7).

Only who keeps one eye shut, could mean that the electromagnetic wave is purely transverse and sound purely longitudinal. It is true that a transverse sound wave doesn't get too far in air, for which reason sound as a rule is considered as a purely longitudinal wave by neglecting this part, but such a neglect may not be carried out in general, it must be checked if it is legitimate from case to case and an error consideration should be carried out.

Further examples for the coupling of the wave parts are furnished by the latest tunnel experiments. Here so-called pure transverse waves are sent into a tunnel, through which they don't fit through at all. The Maxwell-theory then dictates that behind the tunnel no signal should be measurable.
But a signal is being measured, which in the tunnel in addition was faster than allowed.

In conferences again is being discussed about the wave equation. The imagination of the specialists reaches from phase velocities of an electromagnetic wave, which isn't present at all up to instantaneous tunnelling, during which the clocks should stop[<i>].
The wave equation however supplies the only possible answer: The tunnel filters out the scalar wave parts and lets pass from them only those, which are sufficiently small and correspondingly fast!

<i>: see Part 1, Chapter 6.14

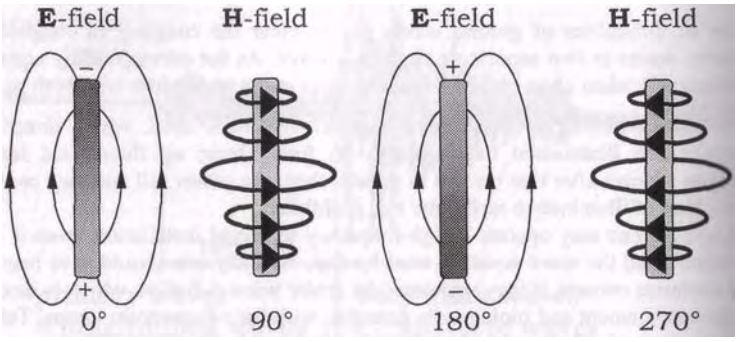

Fig. 21.8 A: The fields of the oscillating dipole antenna

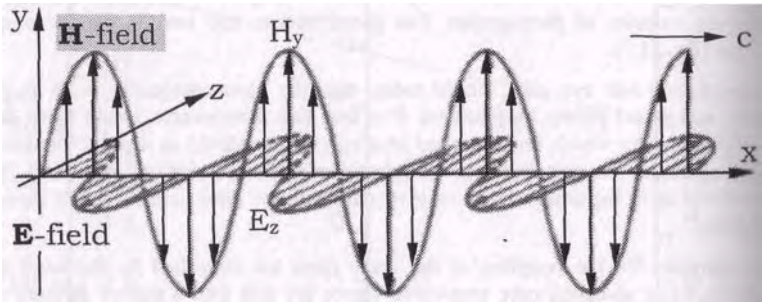

Fig. 21.8 B: The planar electromagnetic wave in the proximity

<i>: Zinke, Brunswig: Lehrbuch der Hochfrequenztechnik, 1. Bd., 3. Aufl. Springer-Verlag Berlin 1986, Seite 335

<ii>: dpa-message in the Sudkurier of 25.11.2000: „Gefahr furs Herz" (Translated:) Patients with a cardiac pacemaker produced in the Netherlands have been warned by the producer of the device (Vitatron) to be careful when passing anti-theft installations in stores. For devices, which were implanted between 1992 and 1998, there is the danger of the implant failing.

21.8 Set of difficulties of the near-field

In high-frequency technology is distinguished between the near-field and the far-field. Both have fundamentally other properties.

Heinrich Hertz did experiment in the short wave range at wavelengths of some meters. From today's viewpoint his work would rather be assigned the far-field. As a professor in Karlsruhe he had shown that his, the electromagnetic, wave propagates like a light wave and can be refracted and reflected in the same way. It is a transverse wave for which the field pointers of the electric and the magnetic field oscillate perpendicular to each other and both again perpendicular to the direction of propagation. It hence would be obvious, if in the case of the Hertzian wave it would concern the far-field. Besides the propagation with the speed of light also is characteristic that there occurs no phase shift between E-field and H-field.

In the proximity it looks completely different. The proximity concerns distances to the transmitter of less than the wavelength divided by 2*pi. Nikola Tesla has broadcasted in the range of long waves, around 100 Kilohertz, in which case the wavelength already is several metres. For the experiments concerning the resonance of the earth he has operated his transmitter in Colorado Springs at frequencies down to 6 Hertz. Doing so the whole earth moves into the proximity of his transmitter. We probably have to proceed from assumption that the Tesla radiation primarily concerns the proximity, which also is called the radiant range of the transmitting antenna.
For the approach of vortical and closed-loop field structures derivations for the near-field are known[<i>]. Doing so it must be emphasized that the structures don't follow from the field equations according to Maxwell, but the calculations are based on assumed rotation symmetrical structures. The Maxwell theory by no means is capable of such a structure shaping by principle. The calculation provides as an important result[<i>] that in the proximity of the emitting antenna a phase shift exists between the pointers of the E- and the H-field. The antenna current and the H-field coupled with it lag the E-field of the oscillating dipole charges for 90° (fig. 21.8). These charges form a longitudinal standing wave the antenna rod or antenna dipole. For this reason also the fields produced by high-frequency currents at first have the properties of a longitudinal wave in the proximity of the antenna.

The near-field already is used in practice in anti-theft devices, as they are installed in the entrance area of stores. The customer walks through the scalar wave transmitters. If the coupling coil has not been removed at the cash point, then a signal from the alarm system sounds. The coils work purely passive, i.e. they are supplied with electric energy per scalar wave and stimulated 'to oscillate for their part. Then the effect back on the transmitter is being utilized. Even if the principle is functioning, people still should be warned not to use a technology, which has not been understood completely. Then not explained catastrophes are inevitable [<ii>].

<i>: Zinke, Brunswig: Lehrbuch der Hochfrequenztechnik, 1. Bd., 3.Aufl. Springer-Verlag Berlin 1986, Seite 335

<ii>: dpa-message in the Sudkurier of 25.11.2000: ,,Gefahr furs Herz". (quoted at the left, fig. 21.8)

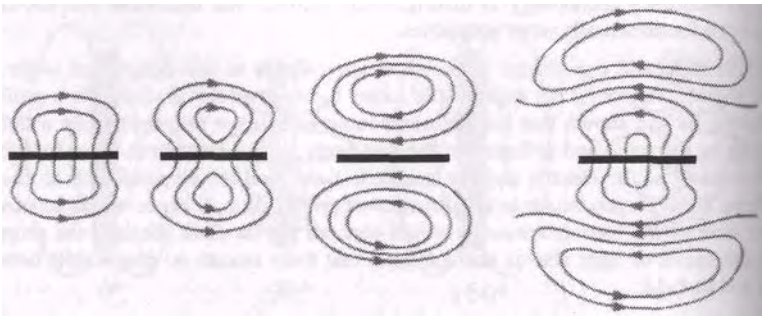

Fig. 21.9 A: The coming off of the electric field lines from a dipole
The forming vortex structures found a longitudinal electric wave carrying impulse!

electromagnetic wave (transverse)

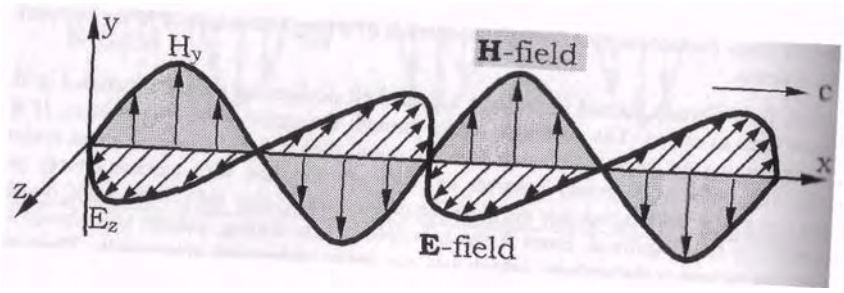

Fig. 21.9 B: The planar electromagnetic wave in the far zone

21.9 Transition to the far-field

In sufficient distance to the transmitting antenna as far-field the transverse electromagnetic wave results (fig. 21.9 B). It is distinguished by not occurring a phase shift between E- and H-field anymore. Every change of the electric alternating field is followed immediately and at the same time by a change of the magnetic alternating field and vice versa.
In the proximity however the phase shift amounts to 90°. Somewhere and somehow between the causing antenna current and the far-field a conversion from a longitudinal into a transverse wave occurs. How should one imagine the transition?

In the books the coming off of a wave from a dipole is represented according to fig. 21.9 A. The fields come off the antenna, the explanation reads. If we consider the structure of the fields coming off then we see field vortices, which run around a point, which we can call the vortex centre. Such field structures naturally are capable of forming standing waves and to carry an impulse. The scalar wave field in general and the near-field in special we only will understand with suitable vortex physics and with a field theory extended for corresponding vortices we also will be able to calculate it. Postulates cannot replace field physics!

Be that as it may, the vortex, after having left the antenna, for bigger getting distance at some time seems to unroll to propagate further as an electromagnetic wave. There takes place a transition from longitudinal to transverse, or spoken figuratively, from vortex to wave. How complete this conversion takes place, how big the respective wave parts are afterwards, on the one hand depends on the structure and the dimensions of the antenna. Information is given by the measurable degree of effectiveness of the antenna.
The vortex structures on the other hand are the stabler, the smaller and faster they are. If they are as fast as the light or even faster, then they become stable elementary particles, for instance neutrinos. Slower vortex structures however are predominantly instable. They preferably unwind to waves. Vortex and wave prove to be two possible and under certain conditions even stable field configurations.

Let's emphasize: A Hertzian dipole doesn't emit Hertzian waves! An antenna as near-field without exception emits vortices, which only at the transition to the far-field unwind to electromagnetic waves. A Hertzian wave just as little can be received with a dipole antenna! At the receiver the conditions are reversed. Here the wave is rolling up to a vortex, which usually is called and conceived as a ,.standing wave". Only this field vortex causes an antenna current in the rod, which the receiver afterwards amplifies and utilizes.
The mostly unknown or not understood near-field properties prove to be the key to the understanding of the wave equation and of the method of functioning of transmitting and receiving antenna. The question is asked, how one should imagine the rolling up of waves to vortices and vice versa the unrolling? How could an useful vortex mode) look like?

Circularly polarized wave (transverse)

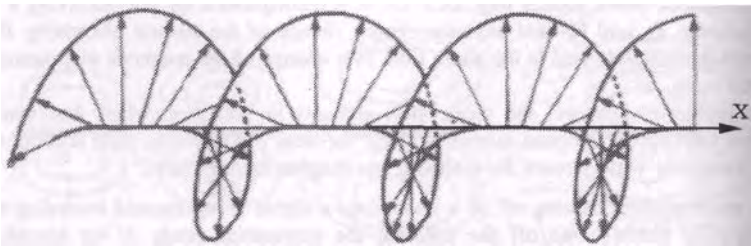

Fig. 21.10 A: Left-circular polarized wave
(as explanation for the transition to a vortex and to a scalar wave)

electric wave (longitudinal)

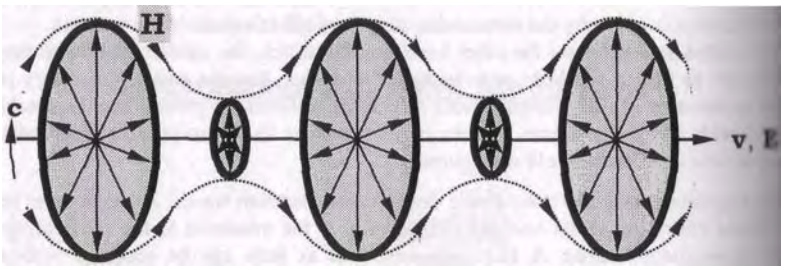

Fig. 21.10 B: Magnetic ring-vortices form an electric scalar wave.

vortex and wave = two stable field configurations
electromagnetic wave = transverse wave propagating in a straight line
ring-like vortex = transverse wave running in circles
vortex velocity = speed of light c
change of structure = if the field is disturbed without expense of energy

22.10 Scalar wave model

The light, as electromagnetic wave, in the presence of a heavy mass or of strong fields is bent towards the field source (fig. 6.10). The wave normally propagating in a straight line thus can be diverted. The square of the speed of light further is inversely proportional to the permeability and dielectricity, short, in presence of matter it is more or less strongly slowed down. If this slowing down of the wave occurs one-sidedly, then a bending of the path can be expected as well. At the end of the antenna a reflection and a going back of the wave can occur, which at the other end again hits itself. Now the wave has found a closed-loop structure, which can be called vortex. The figures 21.10 B and 21.11 A show the two possible structures.

In technical books this vortex with the properties of a „standing wave" is explained gistly. Near-field and standing wave are two examples, how the textbooks succeed in describing mathematically right a small part of the scalar wave properties, without having to have a good look at vortex physics. With such auxiliary descriptions however the end is reached fast, if for instance it concerns understanding a pure scalar wave transmission according to Nikola Tesla (fig. 19.11) and the special properties of this wave type. With the vortex concept of an extended field physics new horizons are opening.

If we direct our look again to the sketches (fig. 21.10 B and 21.11 A). In both cases electromagnetic waves are represented which propagate with the speed of light, only that the wave doesn't go forward in a straight line but instead runs around in circles. It also furthermore is transverse, because the field pointers of the E-field and the H-field oscillate perpendicular to c. By means of the orbit the speed of light c now has become the vortex velocity. Wave and vortex turn out to be two possible and stable field configurations. For the transition from one into the other no energy is used; it only is a question of structure. The vortex structure thus stabilizes itself by means of the field dependency of the speed of light.

By the circumstance that the vortex direction of the ring-like vortex is determined and the field pointers further are standing perpendicular to it, as well as perpendicular to each other, there result two theoretical formation forms for the scalar wave. In the first case (fig 21.10 B) the vector of the H-field points into the direction of the vortex centre and that of the E-field axially to the outside. The vortex however will propagate in this direction in space and appear as a scalar wave, so that the propagation of the wave takes place in the direction of the electric field. I call this an electric wave. In the second case the field vectors exchange their place. The direction of propagation this time coincides with the oscillating magnetic field pointer (fig. 21.11 A), for which reason I speak of a magnetic wave.

The vortex picture of the rolled up wave already fits very well, because the propagation of a wave direction of its field pointer characterizes a longitudinal wave, because all measurement results are perfectly covered by the vortex model. It even is clear that no energy has to be spended for the conversion, since merely the structure has changed. If it becomes a vortex the wave just doesn't run in a straight line anymore but in circles, to either wrap around the magnetic field vector (fig. 21.10 B). or the electric field vector (fig. 21.11 A).

magnetic wave (longitudinal)

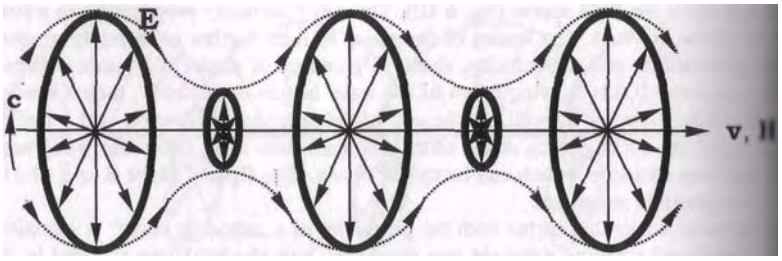

Fig. 21.11 A: The magnetic scalar wave

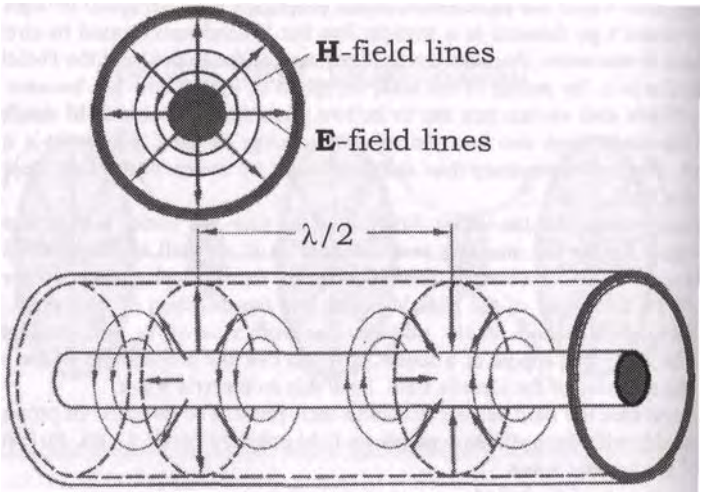

Figure 21.11 B: Wave propagation in a coaxial cable,
(Example for waveguide, horn radiator, etc.)<i>
Cross-section of coaxial conductor and field distribution in the direction of propagation.

<i>: H. Armbruster, G. Grunberger: Elektromagnetische Wellen im Hochfrequenz-

21.11 Double-frequent oscillation of size

Because a longitudinal wave propagates in the direction of the field, the field pointer also will oscillate with the velocity of propagation v. This hence isn't constant at all, it can significantly differ from that of the light and can take arbitrary values. According to the theory of objectivity the field oscillating with it determines its momentary size:

$$E, H \sim 1/v^2 \qquad (21.10).$$

The velocity of propagation v of the scalar wave thus oscillates double-frequently and with opposite phase to the corresponding field. A detailed description would mean, if the field strives for its maximum value, the velocity v of the wave reaches its smallest value. In the field minimum the scalar wave vice versa accelerates to its maximum value. For longitudinal waves therefore only an averaged velocity of propagation is given and measured, as this for instance is usual for the sound wave, and this can vary very strong as is well-known (body sound compared to air sound, etc.).
The two dual field vectors of E and H, the one in the direction of propagation and the one standing perpendicular to it, occur jointly. Both oscillate with the same frequency and both form the ring-like vortex in the respective direction. As a result the ring-like vortex also oscillates in its diameter double-frequently and with opposite phase to the corresponding field (fig. 21.10 Band 21.11 A).
This circumstance owes the ring-like vortex its property, to tunnel. No Faraday cage is able to stop it, as could be demonstrated in experiments[<i>]. Only therefore the ground wave runs through the earth and not along the curvature of the earth. A further example is the coaxial cable (fig. 21.11 B). Also this acts as a long tunnel and so it isn't further astonishing, that the electric field lines have the same orientation, as for a magnetic scalar wave. As a practical consequence in this place there should be warned of open cable ends, wave guides or horn radiators with regard to uncontrolled emitted scalar waves!

At present in the press is being discussed, if the cable network runners for some channels the mission to operate again should be withdrawn, because the airline radio traffic is being disturbed. The original opening for cable frequencies, which actually are reserved for the airline radio traffic, based on the erroneous assumption, that conflicts are unthinkable. But then the planes were disturbed in their communication. As the cause TV-cables made out, which hadn't been closed according to the rules with a resistor, as it by all means can occur on building sites and during renovation works. On the other hand is being argued with the small current, which flows through the coaxial cable, and the large distance to the planes also is cited. According to that it actually can't concern Hertzian waves. It presumably are scalar waves, which escape from the open cable ends and which are collected by a receiver in the plane. It indeed is very little field energy, but because it again is being collected and bundled, the scalar wave is able to exceed the part of the radio wave by far just at large distances and to cause problems. For such examples from practice the scalar wave theory is fully taking effect.

<i>: Adolf und Inge Schneider im Interview mit Prof. Dr.-Ing. Konstantin Meyl: Durchbruch in der Freien-Energie-Forschung, NET-Journal 12/1999, S. 7-9.

1. H. Hertz: electromagnetic wave (transverse)

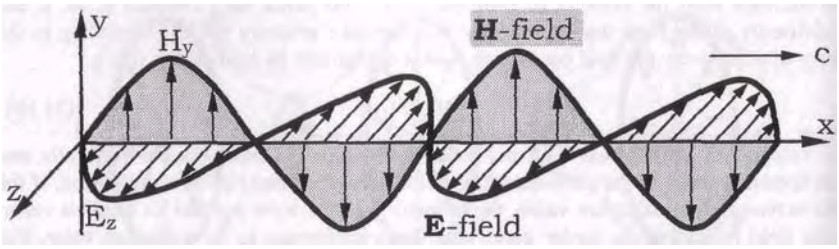

2. Nikola Tesla: electric wave (longitudinal)

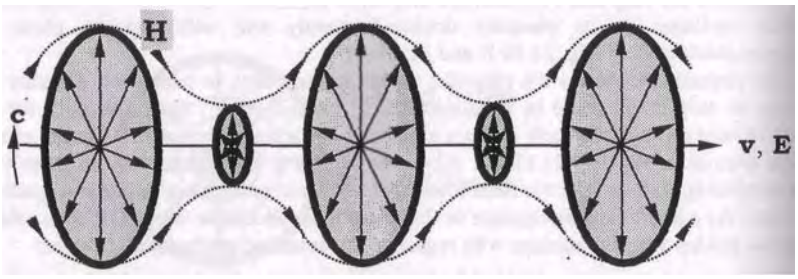

3. magnetic wave (longitudinal)

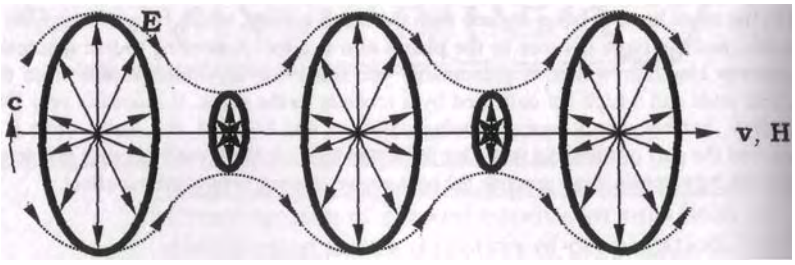

Fig. 21.12: The three basic types according to the wave equation
(21.1), (electric, magnetic and electromagnetic wave).

21.12 Electric and magnetic scalar wave

Let us record: For the wave propagation there thus are three possible and stable states (fig. 21.12): the transverse electromagnetic wave according to Heinrich Hertz (fig. 1), the longitudinal electric wave according to Nikola Tesla (fig. 2), and a longitudinal magnetic wave (fig. 3), which isn't connected yet with a name of a discoverer. The last one is a pure product of my theoretical derivation. The question is asked, which practical meaning the magnetic wave could have.
It is formed by individual electric field vortices, which I have discovered and called potential vortices 1990. I proceed from the assumption that the youngest of the three waves will play the by far biggest role in the future, because its properties are unattainable, both with regard to the energy technical and to the information technical use. One example for each should support this thesis.

The experiments concerning the electric wave according to Nikola Tesla, where is being worked with electrically charged spheres, don't show a particularly high power. Magnetic converters, so the experiences of my laboratory activities, are superior to an electrostatic converter as a collector for free energy by far. That even can be expected, because a magnetic engine is much smaller than an electrostatic engine of the same power as is well-known.

At a congress of medicines was given a talk on the basic regulation of the cells, on the communication of the cells with each other. Professor Heine in his decades of research work has found out that the cells for the purpose of communication build up channels for instance in the connective tissue, which after having conducted the information again collapse. Interestingly the channels have a hyperboloid structure, for which no conclusive explanation exists.
The structure of the data channels however is identical with the one of a magnetic scalar wave, as shown in fig. 3. Through a channel formed such, which functions like a tunnel or a dissimilarly formed waveguide, only one very particular scalar wave can run through. Waves with different frequencies or wavelengths don't fit through the hyperboloid formed tunnel at all in the first place. Through that the information transmission obtains an extremely high degree of safety for interference.
To the biologist here a completely new view at the function of a cell and the basic regulation of the whole organism is opening. The information tunnel temporarily forms more or less a vacuum, through which only potential vortices can be conducted, and that without any losses - simply perfect! From this example is becoming clear that nature is working with scalar waves namely with magnetic waves.

One other point should be recorded: The mentioned tunnel experiments, in which speed faster than light is being measured with most different devices, impressively confirm the presence of scalar waves. But if scalar waves exist which are faster than light and other ones, which are slower, then it almost is obvious that also such ones will exist, which propagate exactly with the speed of light. These then will have all the properties of the light and won't differ from the corresponding electromagnetic wave in the observable result. As scalar wave it however is formed by vortex configurations, which unambiguously have particle nature. Nothing would be more obvious than to equate these quantum structures with the photons.

Question: Is the light wave or particle?

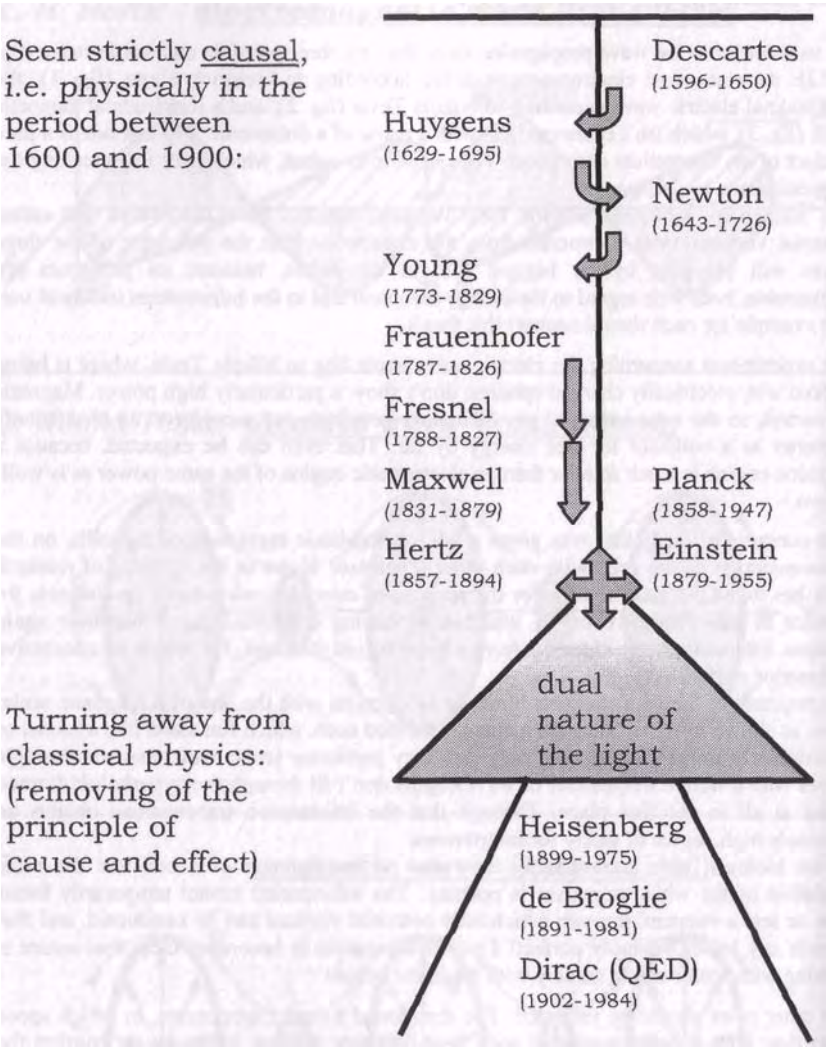

Fig. 22.1: The view of some physicists concerning the nature of the light as wave or as particle.

According to the wave equation the light is a mixture of wave and photon radiation!

22 Properties of scalar waves

For the light quanta hypothesis the Nobel Prize for physics was awarded 1921. But it only was a hypothesis, an idee fixe, which was honoured here. It is quite odd, if such an important prize is awarded to a research scientist, who hasn't got the slightest idea what light quanta are anyway, of what they consist and how they are built up. Albert Einstein cleverly used the embarrassing situation, by in his celebration speech on the occasion of the awarding of the Nobel Prize giving a talk on the theory of relativity. After the speech a member of the committee found it necessary, to point to it, that this wasn't object of the awarding of the prize and that the theory of relativity concerns a pure theory, which can't be proven by principle. A theory hence neither could be awarded the Nobel Prize.
Such words on the occasion of awarding a prize for a daredevil hypothesis give the whole event really grotesque characteristics. But it came still worse.

22.1 Wave-particle compromise

Physicists of name and rank had come together. It concerned the question if the light is wave, or particle or even both at the same time? For both variants experimental proof was present, the discussion became inflamed and the things boiled over. Finally they were as smart as before, as Werner Heisenberg presented his ideas concerning the uncertainty principle. This compromise, on which one eventually came to an agreement, with good cause may be called the worst in the history of physics. It dictates me, what I shell see and how exact I may look. With it the contradiction should be overcome that the light contrary to every causality should be wave and particle at the same time.

Such fixings not only have a funny, but also a tragic side. Since it were authorities, which have approved the compromise and the whole community of science has confidence in the statements of its authorities, which immediately and unfiltered is entered in all textbooks. At the meeting it simply and solely concerned the wave equation and only that could have supplied the correct and only possible answer: It falls apart into two parts and this explains, why the light one time appears as an electromagnetic wave and the next time as a vortex particle, which is called photon. The conversion can take place at any time spontaneously and without putting on energy, so that depending on the used measuring technique the particle appears as wave or as particle, but of course never as both at the same time!

Looking back one can say that the funny thing about the situation was that all discussed about the wave and its properties known at that time, that all should know the wave equation. An equation as is well-known says more than a thousand words and one look would have sufficed entirely, to answer the controversial question once and for all. It would have saved us a lot.

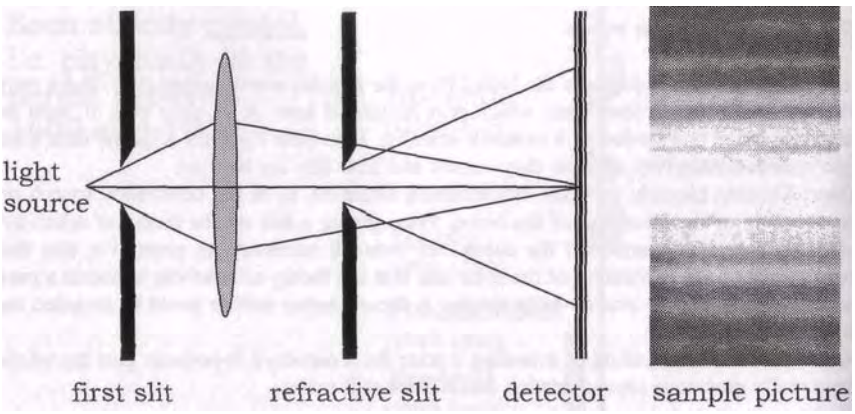

Fig. 22.2 A: Light forms interference patterns at the slit (light stripes are formed, where the waves oscillate in phase, dark stripes, where they oscillate out of phase).

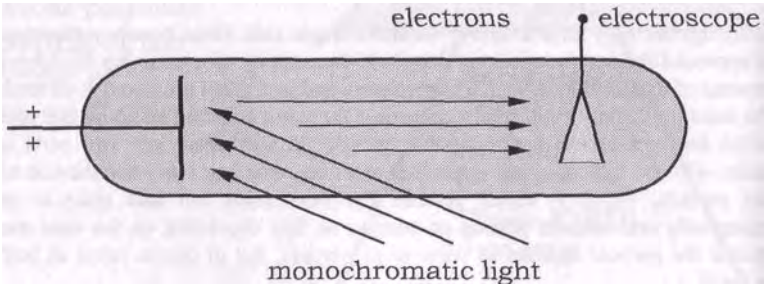

Fig. 22.2 B: The photo-electric effect

<i>: Atome als Energiewellen. Physiker wandelten einen Strom von Natrium atomen in Wellen um. III. Wissenschaft 7/1996, Seite 56 + 57

22.2 Concerning the measurement of light

The uncertainty principle with the interpretation of Heisenberg, the light is wave and particle at the same time, is incompatible with the wave equation. Heisenberg puts an equal sign, where in the wave equation in reality is present an addition of both wave parts. Fortunately in mathematics there is no need of speculating, there a derivation is right or wrong. Nothing is changed to that even if all physicists of the world should go in the wrong direction following the prevailing opinion. The wave equation exert an influence on the interpretation of the light experiments, on the one hand the ones concerning the interference and refraction of the light, where electromagnetic waves are becoming visible (fig. 22.2 A) and on the other hand the photo-electric effect, as proof of light quanta (fig. 22.2 B).

Already the wave theory of Huygens requires interference patterns of light rays, as they for instance are observed behind a slit, and demonstrates with that the wave nature. If on that occasion the particle nature is lost, if thus the photons present before the slit can't be detected behind the slit anymore, then plain and simple the measuring method, thus the slit is to blame for that. The vortices have unrolled themselves at the slit to waves. Corresponding experiments also have been carried out with matter. At the Massachusetts Institute of Technology whole sodium atoms were converted into waves. At the detector pure interference patterns were observed, which go as evidence for the successful dematerialization[<1>]. But the vortex physicist they show still more: they reveal, that atoms merely are waves rolled up to spherical vortices, which at any time and spontaneously can again unroll to waves at a lattice (chapter 5 and 7).
The common interpretation, the wave nature detectable behind a slit must have been present in the same form already before the slit, is untenable and in the end wrong, as makes clear the experiment with the sodium atoms.

The photo-electric effect, which on the other hand shows the quantum nature of the light, has been discovered by Heinrich Hertz, further investigated by Lenard and finally rendered more precisely by Millikan 1916 (fig. 22.2 B). It bases on the circumstance that light of higher frequency, thus blue light, has more energy than red light of lower frequency. But if electrons are knocked out a metal plate by light, then that occurs, by the waves rolling up to vortices. Now indeed photons are at work, which are detected with an electroscope indirectly.
In the same way a photon ray in a bubble chamber can be photographed. But also here the measuring method is responsible for what is being observed.

A good example is the human eye, the rods and cones of which merely can pick up potential vortices and pass them on to the nerves as so-called reaction potentials. Incident waves can only be detected, if they first have rolled up to vortices in the corpus vitreum of the eye. For us seeing, it doesn't play a role of how many percent vortices and waves the light is consisting.
Behind a sheet of glass for instance a larger vortex part can be expected and still the light has the same brightness as without sheet; the sheet of glass is perceived as transparent. We nevertheless must assume that light with a large wave part has another quality, than such light behind glass or artificial light with a large part of photons.

wave equation:

$$\Delta \mathbf{E} = \text{grad div } \mathbf{E} - \text{rot rot } \mathbf{E} = \frac{1}{c^2} \cdot \frac{\delta^2 \mathbf{E}}{\delta t^2}$$

Nikola Tesla:	*Heinrich Hertz:*
• **scalar wave** (electric or magnetic) =	**electromagnetic wave =**
• **longitudinal wave**	**transverse wave**
form (each time for velocity of propagation v):	form (each time for frequency):
• (v > c): neutrino radiation, morphogenetic fields,...	• cosmic radiation • X-rays, • UV radiation,
• (v = c): photons,	• light,
• (v < c): plasma wave, thermal vortices, biophotons, earth radiation,...	• infra-red radiation, • microwaves, • radio waves,
• (v = 0): noise,...	• VLF, ULF,...

Fig. 22.3:____ The two parts of the wave equation

22.3 Comparison of the parts of Tesla and Hertz

Light as a rule always is formed as photon radiation, even on the sun. If in the end only waves arrive on earth, then the vortices sometime on the way to us must have unrolled to waves. Photon radiation after all is a scalar wave radiation, which generally is predominant in the near-field of the source of radiation. There is no reason, why the light should act in another way than the wave radiated by a radio transmitter, which as well forms vortices in the near-field area, as we already have discussed. For different interpretations of wave properties of one and the same physical phenomenon there is no place in a unified theory.

If we stay at the comparison then it is not an individual case that an experimental setup is responsible for what is being measured and observed. A parallel case to the experiments concerning the nature of the light is the one concerning the wave propagation. Hertz has received and utilized the transverse part and Tesla the longitudinal part and either one claimed, only he is right. There doesn' t exist an other equation, which has been and is being ignored and misunderstood so thoroughly, as the wave equation.

Fig. 22.3 shows in a survey the two parts of the wave equation in the assignment to the terms and forms: Right hand side the electromagnetic wave according to Heinrich Hertz and left hand side the scalar wave according to Nikola Tesla. The terms, like on the one hand transverse wave and on the other hand longitudinal wave relate to the kind of wave propagation.

If the field pointers oscillate crossways to the direction of propagation, then as a consequence the velocity of propagation is decoupled from the oscillating fields. The result in all cases is the speed of light, and that in our observation is constant. It is usual to make a list for increasing frequency, starting at the longest waves (ELF and VLF) over the radio waves (LW, MW, SW, UHF), the TV channels (VHF, UHF), the microwaves, the infra-red radiation, the light, the X-rays up to the cosmic radiation.
It really is interesting that it concerns one and the same phenomenon despite the different forms! As long as Maxwell only had published a theory for the light, in the world of science 24 years long at first nothing at all happened. Only Heinrich Hertz with his short wave experiments opened the eyes. Now all suddenly started at the same time to research into various phenomena on the frequency scale, from Madame Curie over Konrad Rontgen up to Nikola Tesla, who primarily researched the area of long waves.

With regard to the scalar waves until now a corresponding booster detonation has failed to appear. The immense area is new ground scientifically, which is awaiting to be explored systematically. I try to make a contribution with my historic rebuild of a scalar wave transmission line according to the plans of Tesla[<i>].

<i>: Im Gesprach mit dem Fernsehmoderator und Buchautor Johannes von Buttlar weise ich auf die Chancen und technischen Moglichkeiten hin: Johannes von Buttlar im Gesprach mit Prof. Dr. Konstantin Meyl: Neutrinopower, Argo-Verlag Marktoberdorf, 1. Aufl. (2000).

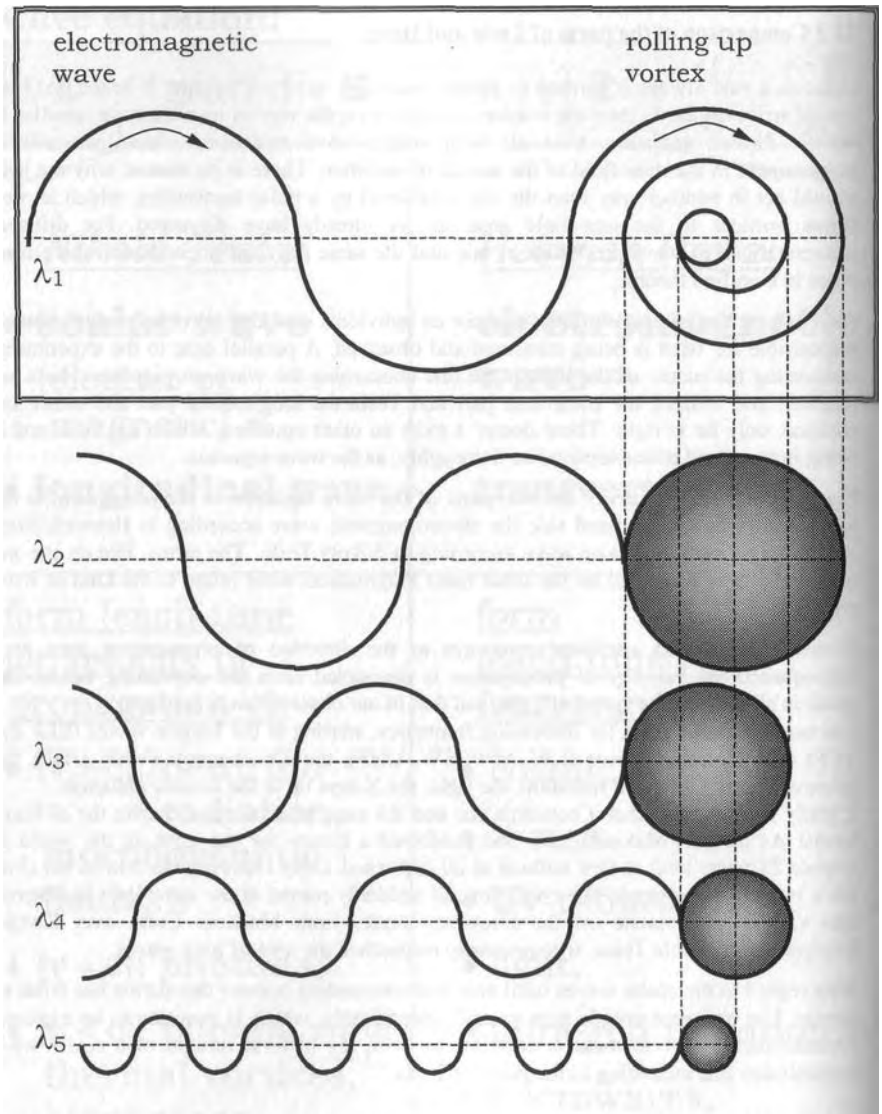

Fig. 22.4: The wave rolling up to a vortex.

wavelength of the wave: $\lambda_1 = c/f_1$

wavelength of the vortex: λ_n (n = 1,2,3,4,5) $\leq \lambda_1$

$f_5 > f_4 > f_3 > f_2 > f_1$ $\lambda_5 < \lambda_4 < \lambda_3 < \lambda_2 < \lambda_1$

22.4 Noise, a scalar wave phenomenon

Longitudinal waves can take arbitrary velocities between zero and infinity, because they propagate in the direction of an oscillating field pointer and as a consequence of that their velocity of propagation oscillates as well and by no means is constant. It does make sense to llist the forms of scalar waves according to their respective velocity of propagation (fig. 22.3, left column).
If we start with a localized vortex, a wave rolling up, which further is contracting. Doing so the wavelength gets smaller and smaller, whereas the frequency increases. An evenly frequency mixture distributed over a broad frequency band is observed. This phenomenon is called noise (fig. 1.4). But besides the localized noise, noise vortices can also be on the way with a certain velocity as a scalar wave, e.g. for the radio noise. In this case they show the typical properties of a standing wave with nodes and antinodes.

Also the earth radiation is said to have standing wave nature, which can be interpreted as slowed down neutrino radiation. If it is slowed down on the way through the earth, then the neutrino properties are changing, as this was measured in the Kamiokande detector in Japan recently. Unfortunately the proof occurs only indirect, because there still don't exist measuring devices for scalar waves. We'll talk about this problem area later and are content with the clue that already within living memory the standing wave property has been used to find water and deposits of ores and still is used today (fig. 22.4).

If we continue our considerations concerning the forms of scalar waves, as they are listed in fig. 22.3. The scalar waves, which are slower on the way than the light, are joined by the plasma waves. This is confirmed by measurements and calculations.
For thermal vortices, as they have been investigated by Max Planck and for biophotons, as they can be detected in living cells by colleague Popp, the velocity of propagation however is unknown. It was not and still is not measured at all, now more than ever. The research scientists have confidence in the assumption that all waves go with the speed of light, but that is a big mistake.
For all wave kinds there at least exists also one vortex variant, for radio waves for instance it is the radio noise, which propagates with a velocity different from c. The velocity is the product of frequency and wavelength:

$$v = f \cdot \lambda \quad (22.1)$$

From the three variables v, f and λ at least two must be measured, if one has a suspicion that it could concern scalar waves. At this place most errors are made in the laboratories. Countless experiments concerning the biological compatibility, concerning medical therapy methods and similar experiments must be repeated, because as a rule only the frequency is being measured and it has been omitted to at least check the wavelength or the velocity of the wave. Countless research scientists must put up with this accusation. Much too blind the scientists, who now again may start from the very beginning with their work, have had confidence in the predominance of the speed of light.

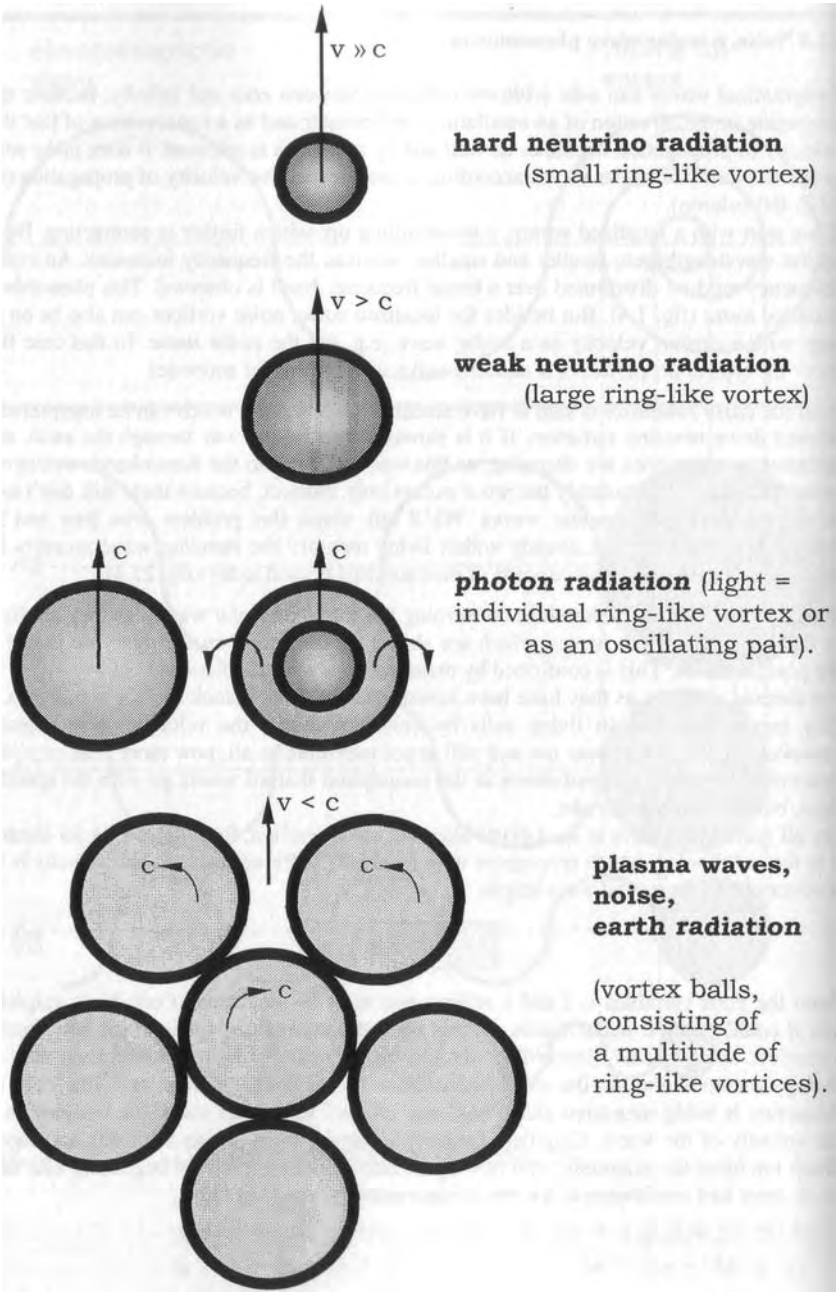

Fig. 22.5: ____ The ring-like vortex model of scalar waves.

22.5 Neutrino radiation

The neutrino physicists make the same error. They proceed from the assumption that their particles are on the way with a speed somewhat less than the speed of light c. This contradicts the observation according to which black holes should represent strong sources of neutrinos, which are black only for the reason that no particle radiation is able to escape them, which is on the way with c or even slower. If a black hole does hurl neutrino radiation into space, than that must be considerably faster than c, as normal neutrino physicists still by no means can imagine it today.
But the neutrino radiation only can be detected after it has been slowed down to a value, which is smaller than c. If the slowing down occurs slightly assymmetrical, then as a consequence a mean of the mass different from zero appears. The ,,measurement" of such a rest mass, as it at present is propagated and celebrated, is a classical measurement error! As long as a neutrino on the way to us still is faster than the light, the mean of its mass is generally zero. The effective value of the mass of a neutrino is however considerable. Only it is able to give account for the sought-for dark matter, as far as it must exist in the today supposed form anyway.

The Tesla radiation, that the discoverer Nikola Tesla already in own experiments had found out, is faster than light (chapter 9.7 and 17.2). Since this Tesla radiation according to the description is identical with the neutrino radiation, since it so to say forms a subset, I will call neutrino radiation all the scalar waves, which are faster than the light. This stretches from the weak radiation at low frequencies up to the hard neutrino radiation of cosmic origin. But the hardness of the radiation does not only increase with the frequency, it in particular increases with the velocity.

The neutrino radiation first of all is carrying energy. On top of this basic wave radiation in addition information can be modulated. Doing so extremely complex modulation variants are offering. Of this kind we must imagine thoughts, as being complex modulated vortices, which can propagate as scalar wave in space. Rupert Sheldrake calls this vortex field a morphogenetic field. At this place merely is pointed at his very interesting research results<i>.
Thoughts can be standing in space, in the form of localized noise, but they also can move with speeds faster than light. According to that a communication with intelligent beings from other star systems by all means wouldn't be an Utopia anymore.

Every fast neutrino forms an individual ring-like vortex (fig. 7.12). The slower the scalar wave is, the more dependent the vortices become. The photon already can consist of two ring-like vortices (fig. 4.6), whereas plasma waves and other slow scalar waves can form from a multitude of individual vortices, which are rotating around each other, to form vortex balls and vortex streets (chapter 4.9 - 4.11). From this circumstance already results very different scalar wave behaviour in the different areas of the velocity of propagation. This trend for small velocities can as well be observed towards lower frequencies. For a certain wavelength the frequency after all (according to eq. 22.1) is proportional to the velocity of propagation.

<i>: R. Sheldrake: Seven experiments that could change the world. New York: Riverhead 1995

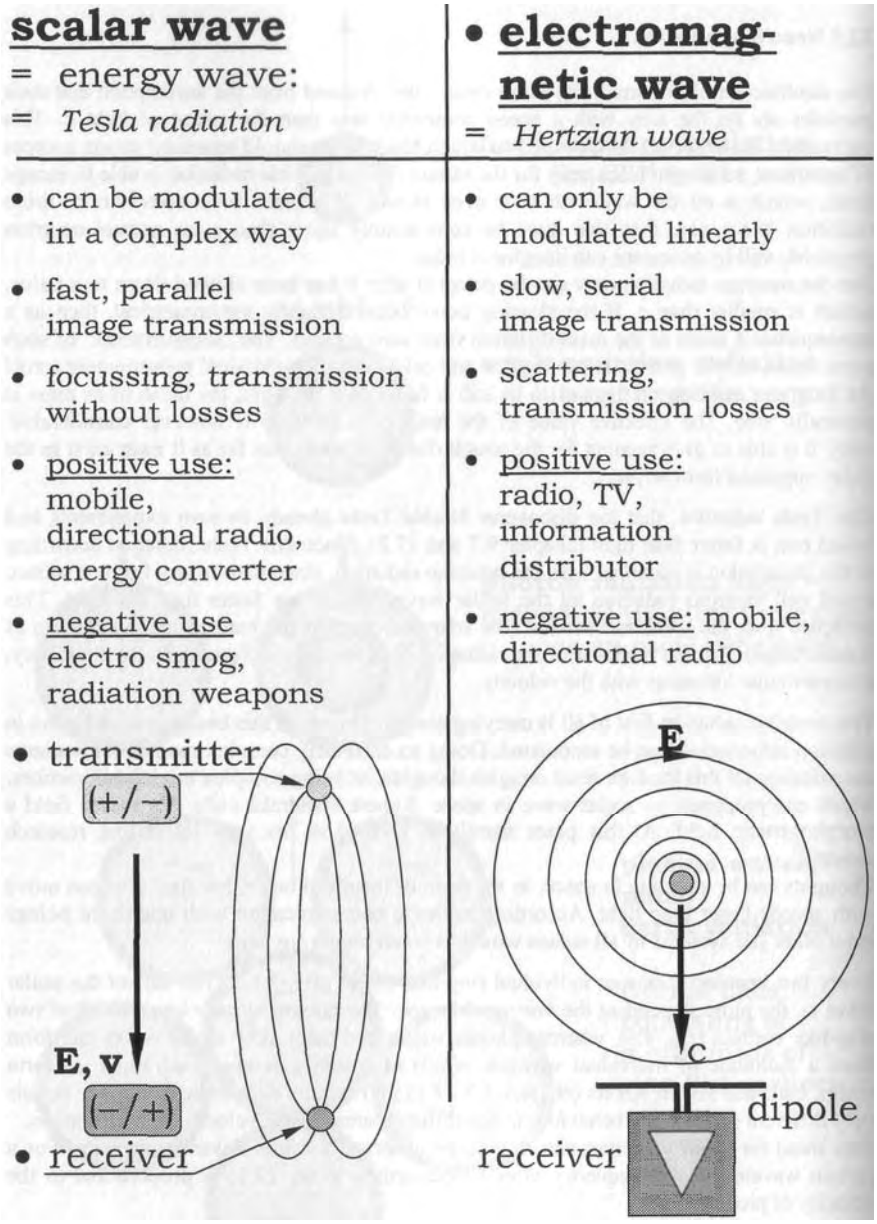

Fig. 22.6:_____ Scalar waves and radio waves, comparison of the properties.

22.6 Parallel instead of serial image transmission

We continue with our considerations concerning the special properties of scalar waves, represented in the left column, and compare these with the well-known behaviour of electromagnetic waves in the right column (fig. 22.3 is now followed by fig. 22.6). If we again take up the possibilities for modulation and the transmission of information, then it becomes very clear from the comparison that we today work with a technology, which we it is true master more or less, but which is everything else but optimum.
For the Hertzian wave the velocity of propagation is constant. With the frequency therefore at the same time also the wavelength is being modulated. But that strongly limits the information transmission. An image for instance must be transmitted serially point after point and line after line. The serial image transmission takes place very slowly, for which reason the velocity of the PCs permanently must be increased, so that the amount of data can be managed.
With the clock frequency on the other hand also the losses increase, so that in the end the CPU-cooler limits the efficiency of modern PCs. Something our engineers obviously do wrong, as a comparison with the human brain clarifies. Our brain works without a fan. For it a clock frequency of 10 Hertz is sufficient. It needs neither Megahertz nor Gigahertz Irequencies and despite that is considerably more efficient.

Nature only works with the best technology. The second best technology, as it is put to use in our machines, in the evolution wouldn't have had the slightest chance of surviving. The strategies to optimize of nature are merciless. In a free economy that goes completely different. There the ,,bunglers" are joining together to companies dominating the market, buying up the innovative ideas without further ado, to let them disappear in the drawer, so that they can bungle further in the way they did until now. It after all have been the lousy products, which have made them to the companies they are today. The ego of power is incompatible with the interests of nature.

Nature works with scalar waves and their velocity of propagation is arbitrary. Wavelength and frequency now can be modulated and information can be recorded separately. In this manner a whole dimension is gained to modulate, the image transmission can take place in parallel, which means considerably faster, safer and more reliable. As anyone of us knows by own experience, assembling the image takes place all at once, the memory of past images takes place ad hoc. Nature is indescribable more efficient than technology with the scalar wave technique.

If we again take the right-hand side of fig. 22.6 with the properties of the Hertzian wave. In the opinion of Nikola Tesla it is a gigantic waste of energy. The broadcasting power is scattered in all directions and the transmission losses are enormous. At the receiver virtually no power arrives anymore. To receive a radio signal the antenna power has to be amplified immensely. It is a wave, which actually only can be used as radio wave, thus as a wave with which arbitrary many participants should be reached.
This wave however is completely useless, if it concerns a point-to-point connection. If I want to call someone, to talk only with him, a radio wave is the entirely wrong method, because I with that bother hunderds and thousands of people that I don't want to call at all!

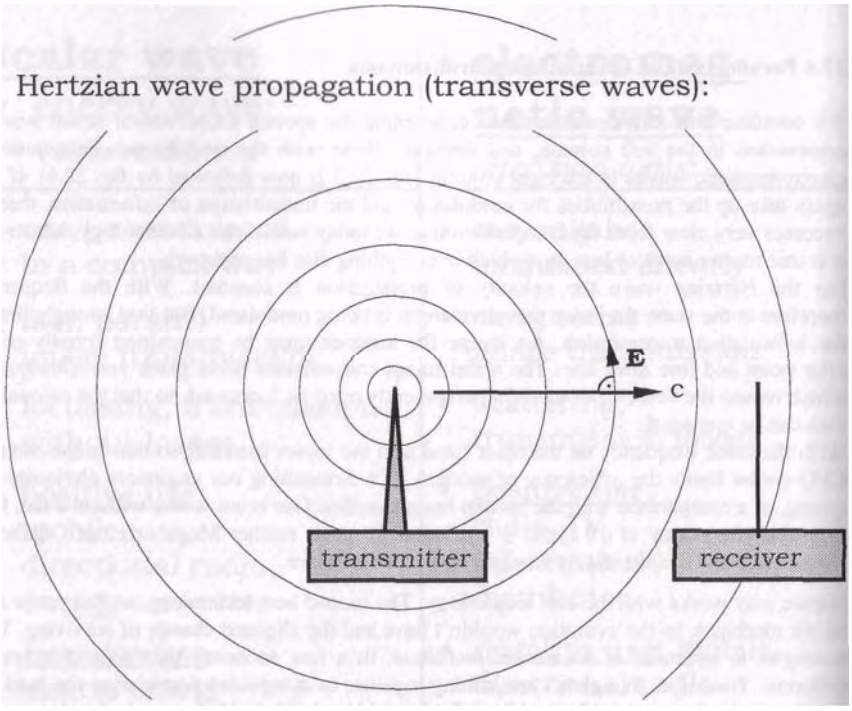

Tesla radiation (radiations) = scalar wave, longitudinal wave propagation:

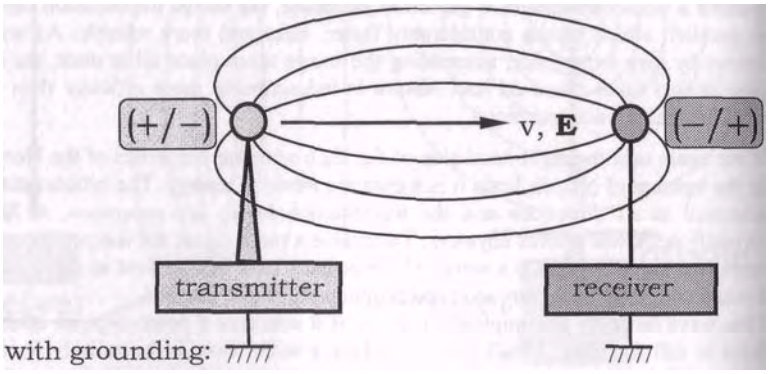

Fig. 22.7: ____Comparison of radio waves according to H. Hertz and electric scalar waves according to Nikola Tesla.

22.7 Comparison of the properties

The course of the field lines clarifies the difference. For the scalar wave all field lines going away from the transmitter run together again. As long as no scattering field occurs, there also won't be any transmission losses. It is an energy wave, for which the full broadcasting power is transmitted wirelessly and which arrives at the receiver, by that focussing the field lines again.

Here one at once numerous technical applications come to mind, if energy should be transmitted wirelessly. A TV, which supplies its remote control with energy itself, lelemetric installations, which are fixed at difficult accessible or rotating machine parts and which can't work without energy supply.

For a mobile with 3 Watts of broadcasting power only a few microwatt arrive at the ground station. If I would have a scalar wave mobile, which functions with resonance, then a broadcasting power of some microwatt will be completely sufficient, to carry out a telephone call right through the earth. This minimum broadcasting power suffices, because everything, what is being transmitted, arrives at the receiver - crucial is that the conditions of resonance are fulfilled. That means, both must have the same frequency and the opposite phase. In addition the modulation has to fit, so that on the one hand not several participants in the conversation are getting in each other's way. For a purely carrier wave transmission on the other hand there would be the risk of natural fields being collected also and the power at the receiver taking inadmissibly high values. This is prevented effectively by a correspondingly complex modulation. Nature solves the problem in exactly this manner.
Mobile phone technology with scalar waves of course still is a pie in the sky. A big challenge for the engineers poses the adjustment condition of opposite phase and the fitting modulation, which Tesla called .,individualisation"[<i>]. Entirely by the way the network runners and the telephone companies are getting quite superfluous.

Telephone charges, so one perhaps can read in the history books in a hunderd years, were the indication of a century of rigorous exploitation of man and nature. With scalar waves a direct, more dimensionally modulated information transmission directly with the partner of conversation is possible and sufficient energy is available to humanity any time and any place, without being dependent on any companies! This notion is not new, but it is inconvenient for the rules; already Nikola Tesla has written about it, but obviously no-one wanted to listen to him[<ii>].

Scalar waves are able, that is made clear by the properties, to revolutionize both the energy technology and the information technology fundamentally. It is more than only a technology for the new century. Scalar waves are a chance for the whole millennium!

<i>: N. Tesla: Transmission of electrical energy without wires, Electrical World and Engineer 7.1.1905; Edition Tesla Vol. 4, P. 131.

<ii>: N. Tesla, New York Times of 15.9.1908; Edition Tesla Vol. 6, P. 241.

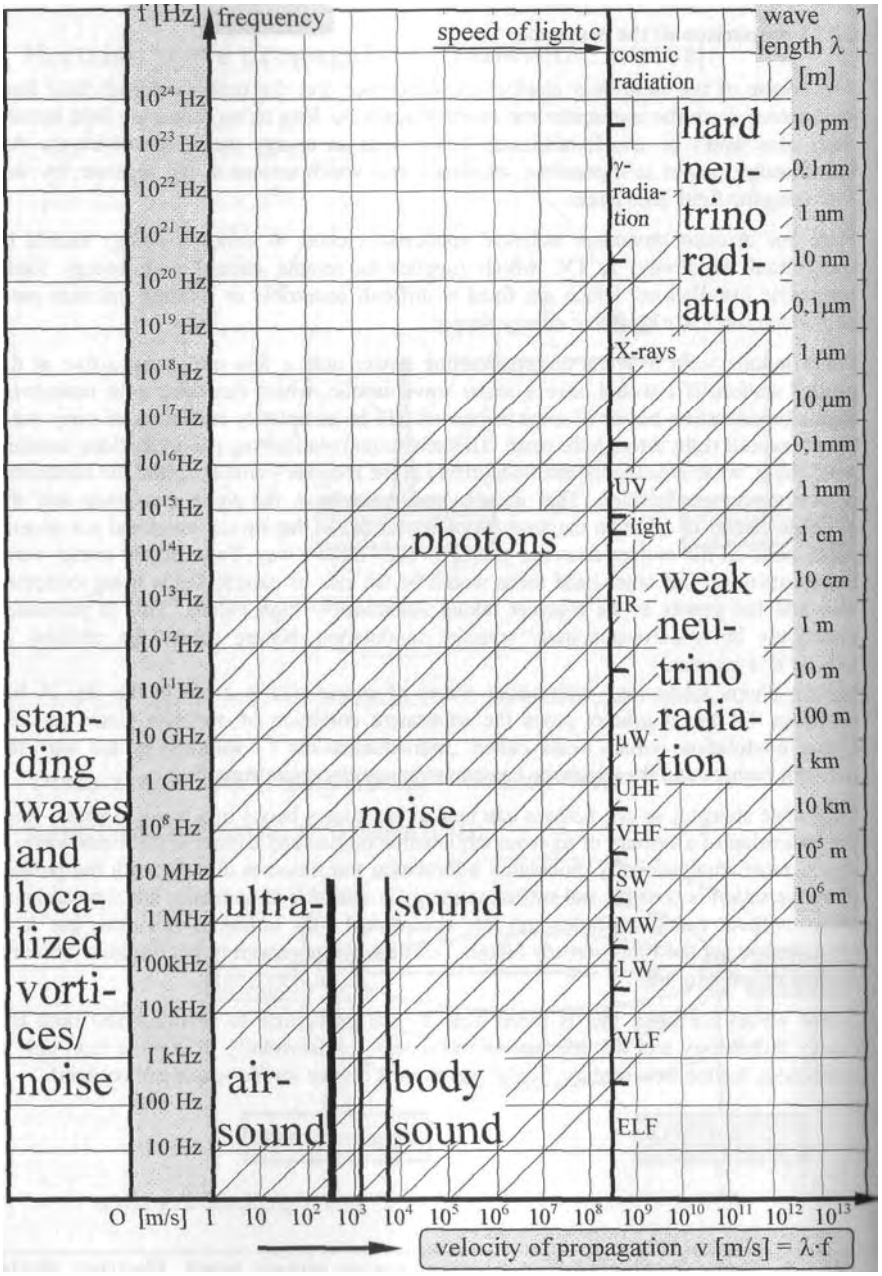

Fig. 23.1: Frequency diagram of longitudinal and transverse waves as they depend on the velocity v.

23. Research of scalar waves

Scalar waves are still unexplored area, scientific new ground as it were. Individual research scientists already have selectively ventured forward in this area and have described properties of the scalar wave investigated by them in their special research area mostly in measurement technical manner. But as a rule they lack the physical relation, as it is derived in this book for the first time. If we don't proceed from individual measurements, but from the wave equation and the mathematical physical derivation of scalar waves, then we have the great chance to understand as something belonging together on the one hand noise, photons, neutrinos and lots of other known phenomena as well as on the other hand still unknown phenomena, which are called parascientific. We should remember that we without theory of Maxwell and the representation in a frequency band today still wouldn't know that the radio waves (LW, MW, KW, UHF), the microwaves (μW), the infrared thermal radiation (IR), the light and the X-rays concern just the same phenomenon. The graphic representation of both waves in one diagram in this place is extremely helpful.

23.1 Frequency diagram

In fig. 23.1 the frequency f is shown against the velocity of propagation v with the wavelength λ as parameter. The broad line at $3*10^8$ m/s represents the speed of light c. Here the frequency band of the transverse waves can be found again in the well-known one-dimensional representation.
Crosswise to that, somewhat unusual, the longitudinal waves run. These start at the left at localized noise, over the sound as it propagates in air, in water and in metal, over a large, to a large extent still unexplored, range of the bio photons, the heat vortices and of the dowsing rod effects and end on the other side of the speed of light at the neutrinos. Between that the special case is settled that the particles, or said better vortices, propagating as a scalar wave have exactly the speed of light. It gives reasons for the circumstance, as already mentioned, that light can appear as wave or as photon radiation. It. according to the wave equation, after all always consists of a combination of both forms. At very high frequencies, e.g. the cosmic radiation, this combination is shifted in the direction of vortices and their distribution as a scalar wave, at low frequencies the tendency inversely goes in the direction of the normal wave.

If we assume that for the transverse wave over all frequencies a dozen of specialized gauges is necessary, each of them also can be switched over in range several times, then we can project that to record a scalar wave of a certain frequency over all velocities of propagation likewise 12 devices and for the whole field shown in fig. 23.1 approximately 12x12 = 144 devices will be necessary. Of these 144 gauges today just 12 are available. There thus still are missing 132 pieces, which should be developed. With these gauges, so I am convinced, the many white spots in the diagram can be tapped scientifically little by little if a systematic procedure is used. My vortex theory thus will be attached a central importance.

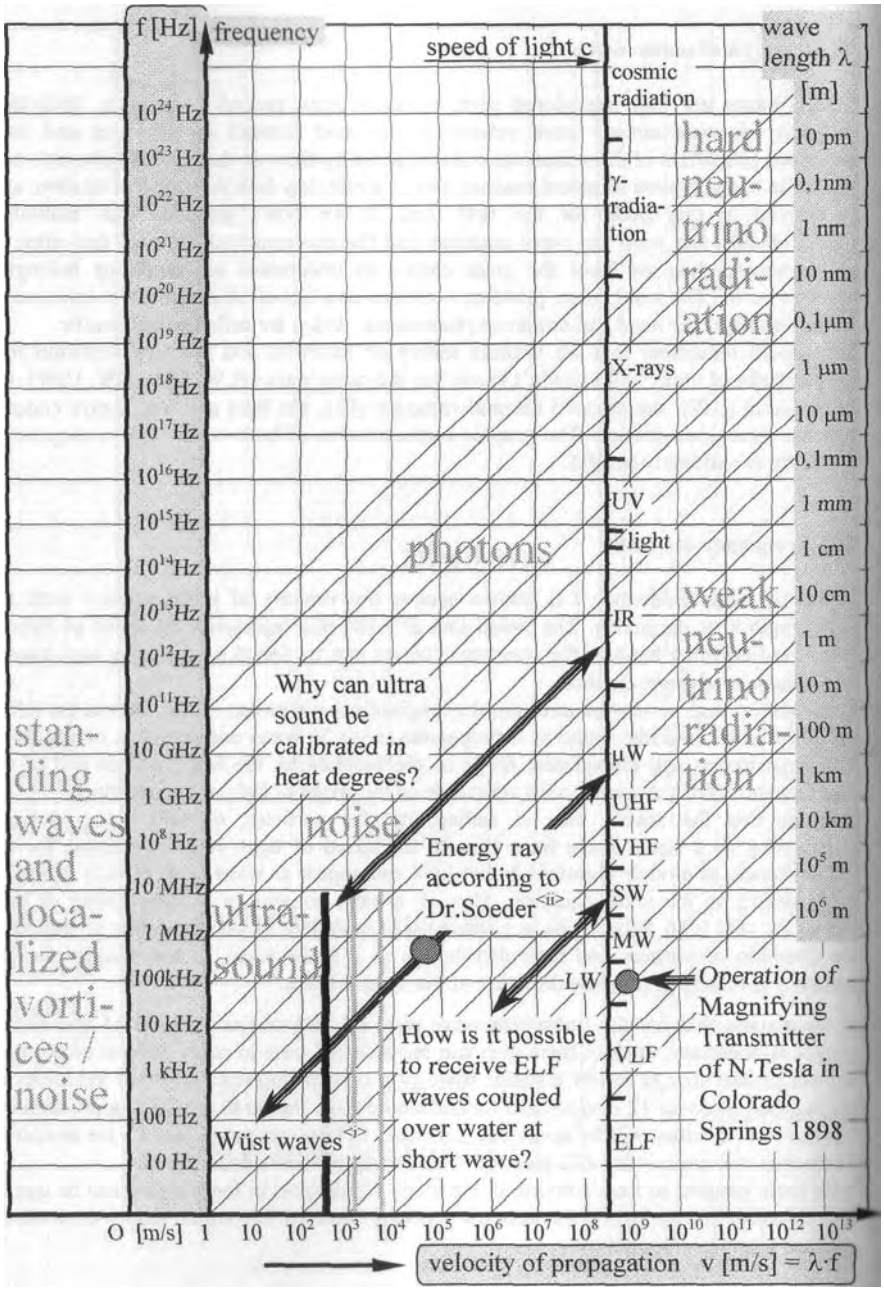

Fig.23.2: Frequency diagram with entries concerning Wust waves,
Tesla transmitter and various not understood effects.

23.2 The reverse of the HF medal

The diagram possibly may settle disputes, like the ones between the „Wustlingen" (note of the translator: the author here is playing with words, Wustlingen literally means lechers) and the „high-frequency engineers".
Professor Wust of Munich already 1934 had proven, that the Wust waves named after him in air have a velocity of propagation of approximately 10 m/s<i>. He investigated them in the frequency range between 16 Hz (λ= 60 cm) and 500 Hz (λ= 2 cm). The high-frequency technicians immediately have converted to the speed of light, since they don't know anything else, and on the spot have shifted the phenomenon into the range of the microwaves between 0.5 GHz (λ=60 cm) and 15 GHz (λ= 2 cm). In the diagram now can be found, at which place this phenomenon belongs actually. It presumably concerns the same „energy ray", which Dr. Soeder has observed and proven already at velocities of propagation of 55.2 km/s and wavelengths around 10 cm<ii>.

Furthermore follows from the diagram (23.2), why ultra sound can be calibrated in heat degrees, and why radio reception of signals from a completely other frequency range is possible by principle, if for identical wavelength a velocity of propagation different from c occurs. Further the range of operation used by Tesla at approx. 1.6 times the speed of light is depicted.

Also the noise is such a book with seven seals. It concerns, it is true, a fixed chapter of high-frequency engineering, but without visible connection to the other chapters. That might be based on the circumstance that the relation, as it is dictated by the wave equation, isn't recognized.
Every high-frequency signal is accompanied by a noise signal; every antenna produces more or less noise. HF engineering dictates the measures, how the noise can be suppressed resp. the signal-noise distance be increased. The goal is to make the electromagnetic wave stand out in such a way from the noise that it can be received. For that the measurement setup must be choosen correspondingly, are the measurement cables dictated, and must be paid attention to power adaptation and corresponding termination resistors. For measuring HF correctly all interference influences should more or less disappear.

But what are the interference influences, which the HF-technician suppresses? According to the wave equation it are the scalar wave parts, and to that also is counted the noise. Every HF-technician thus knows the scalar parts as interfering noise signal, but doing so he completely fails to notice the technical advantages and chances, which e.g. are present in the noise.
If by means of an autocorrelation function a noise signal is compared to itself then often a hidden message comes to light. According to that, informations can be hidden in the noise and of course transmitted wirelessly. This important circumstance is known, but it is hardly used. The noise vortices thus can be modulated in an extremely complex way. There can be transmitted a lot more information in the noise as scalar wave, than with the radio wave.

<i>: J. Wust: Physikalische und chemische Untersuchungen mit einem Rutenganger als Indikator. Further references in W-B-M 3/ 1991, S. 57.

ii>: A. Soeder: Ohne Strom lauft neuer Energiestrahl rund urn den Erdball. Raum & Zeit 59/92 Seite 62-67.

Fig. 23.3: ____ Dowsers dowse an ore vein.[i]
From: Speculum metallurgiae politissimum, Rossler, Dresden 1700.

<i>: Ludeling, Hartmut: Handbuch der Radiaesthesie, Verlag Eike Hensch 1994, S. 145, ISBN 3-927407-09-7.

The possibility of more dimensionally modulating and parallel image transmission make scalar waves superior to the radio waves in such a way that one should seriously think about the reversed procedure, in which the noise is conceived as useful signal and the radio wave as interference signal.

In the frequency diagram (23.1 and 23.2) can be read like in a diary, in which most pages it is true still are empty, but in which some very informative marginal notes can be found for different points of difficulty. It mostly are parascientific phenomena, which, not understood and excluded by textbook physics, are waiting to be taken up in the building of physics. As an example we'll pick out an extensive area of alternative research.

23.3 Radiesthesia

A particularly broad spectrum of scalar waves is provided by the already several times mentioned earth radiation. An ancient science of experience, which troubles the exploration of the earth radiation, is the geomancy. The Roman land surveyors, the Augures, used as an aid a flat coil like also Tesla did to receive scalar waves. The Lituus, as the device was called, resembles so much that of the Etrusks that we must proceed from the assumption that the method is much older (fig. 16.10).
This part of the scalar wave research, also called radiesthesia, is derived of ,,radiare", which can be translated with "send out rays" resp. ,,perceive". It describes the doctrine of the sensitivity to radiation of man. Doing so the radiation sensitive uses his own nerve framework as a biosensor.

The nerve conduction could be derived as a biological variant of the Tesla one wire transmission, for which ring-like potential vortices are passed on as action potentials in form of standing waves (fig. 9.6). Of this kind are also the control commands, which cause a muscle to contract. If now corresponding vortices are picked up by means of a dowsing rod or similar aids in our nerves, then the contract addressed muscles contract, because they can't distinguish, from where the command comes. This unconscious nerve twitch leads to a swing of the dowsing rod and to the well-known dowsing rod phenomenon. But man can't replace a technical gauge. Hence one speaks of dowsing and not of measuring. To this should be added the condition of resonance, which must be fulfilled. Since every person however builds up other resonances, dowsed results of others often can't be reproduced. But from this particular difficulty one cannot draw the conclusion that the phenomenon does not exist and radiesthesia is not a science. Series surveys and statistical analyses here in any case don't lead any further. It always only are individual talented dowsers, who have at their disposal really fantastic abilities and find with great certainty water, ores and even oil.
With the perception of a physical phenomenon it mostly starts. Cultural man looks after his discovery as cult, whereas modern man, guided by the wish for reproducibility and more objectivity, is troubled to design and to build a technical measurement work. With regard to the scalar wave in general and the radiesthesia in special we still are at the stage of the Stone Age.

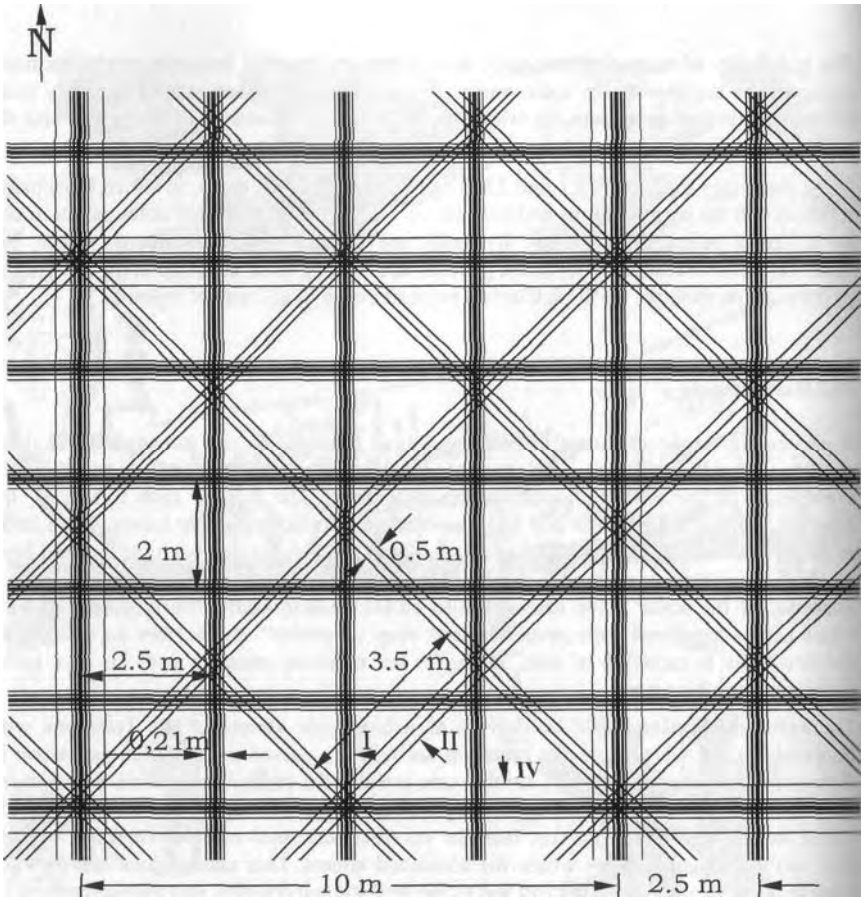

Fig. 23.4: Nets dowsed at latitude 49.[<i>]

I. net: ,,global net" according to Dr. E. Hartmann; orientation: N - S: 2 m distance and E - W: 2.5 m distance

II. net: ,,diagonal net" according to Dr. M. Curry; orientation: NE - SW and NW - SE: 3.54 m = 2.5 m * sqrt(2)

[III. ,,lightning net" according to R. Schneider; orientation like I.]

[IV. net acc. to Benker; like I. but: N - S: 10 m and E - W: 10 m]

[V. sun/planet net acc. to W. Auer; with 3.66 m orientation S./P.]

____ According to Prof. E.G.Hensch et al.:
<i>: Hensch: Radiaesthesie im landlichen Bauen und Siedeln, Arbeitskreis zuf Landentwicklung in Hessen, W4, Wiesbaden 1987; resp.: W. Auer: Erdstrahlen?... AWGEO 199, Eigenverlag 1998; resp.: Mayer/Winklbaur: Biostrahlen, 5. Aufl. ORAC Verlag, Wien 1989, Seite 168

23.4 Prediction of earthquakes with the help of scalar waves

The standing wave character of the earth radiation is a help. There are dowsed points and lines of maximum radiation intensity, which form nets, which encompass the whole world. On the one hand we are dealing with a net oriented in direction north-south and east-west (Hartmann net) and on the other hand with a net standing diagonally to that under 45° (Curry net). Because the angle of 45° can be derived as borderline angle from a vortex field calculation[<ii>], I already early have pointed to the circumstance that it here presumably concerns a vortex phenomenon[<iii>].
Because the nets in addition are dowsed in air, it must be vortices of the electric field, so-called potential vortices[<iii>], which here form regular structures. The formation of vortex lines and complete vortex streets (chapter 4.9), which consist of countless individual vortices, can be explained as follows:
Electric scalar waves propagate in the direction of the electric field strength and mediate field vortices, e.g. neutrinos. If at a certain moment the transmitter carries a positive and the receiver a negative charge, then all the particles which are positively charged are repelled by the transmitter and attracted by the receiver. All run at the same time towards the same goal, although all mediated particles carry the same charge and repel each other! This incompatibility can be compensated partly, by the vortices rotating around each other. In this circumstance can be seen the reason for the structure shaping, the formation of some lines in the countryside (fig. 23.3). The distances between the lines have characteristic values, which allow conclusions about the wavelength of the standing waves. We must assume that they dictate the structure shaping and that the spatial vortex distribution aligns with the nodes and antinodes of the respective standing wave. The distance between the lines, which corresponds to half the wavelength, becomes smaller and smaller towards the North Pole and the South Pole of the earth, the net thus narrower and narrower. Also is the net said to change strongly before an earthquake. This all are clues for the circumstance that the structure shaping radiation comes from the earth, that the cause must be sought in the earth radiation.
It should be noted marginally that with scalar wave detectors, which permanently scan the nets, a just as effective as inexpensive earthquake prediction should be possible. Such a facility would be an enormous relief and help for all earthquake warning services. It even should be possible to determine in advance the future epicentre, if there is measured at the same time at if possible many stations and the respective deviations are compared.

A further influential factor is the composition of the subsoil; e.g. ores and metals influence the earth radiation. Water shows a special affinity for the earth radiation. It does collect the radiation and after bundling it up releases it again. To blame is the high dielectricity of water ($\varepsilon \cong 80$), which again favours the formation of potential vortices .
A technical use of this effect would be the neutrinolyse (see fig. 17.6-17.8 and 18.1), the splitting of water molecules by neutrinos if these take the state of an electron, hydrogen escapes and the oxygen content in the water increases. If a neutrino however shows as a positron, then it annihilates and there is formed a light flash, which serves the „experts" in neutrino detectors as proof.

<ii>: Meyl, K.: Wirbelstrome, Dissertation Universitat Stuttgart 1984
<iii>: Meyl, K.: Potentialwirbel Band 1, INDEL Verlagsabt. 1990

Spectroid of the radiation field of a subterranean flowing water veign (according to P. Schweizer)[<i>]:

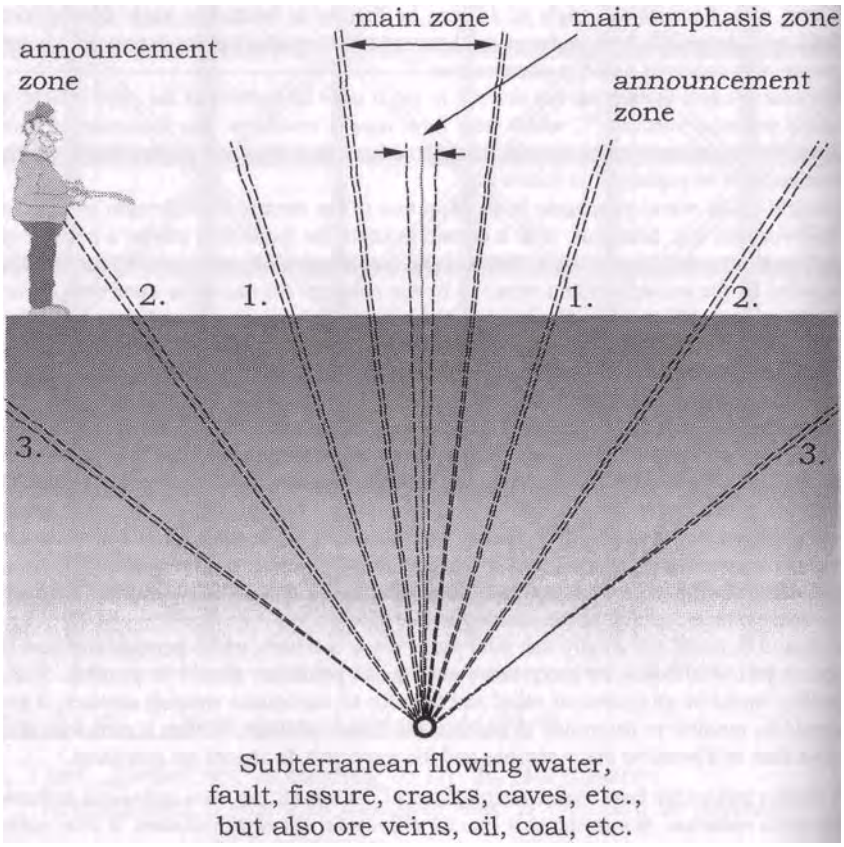

Fig. 23.5:____ Radiaesthetic search for water[<i>],
(dowsing of the earth radiation)

<i>: Ludeling, Hartmut: Handbuch der Radiaesthesie, Verlag Eike Hensch 1994 S. 145, ISBN 3-927407-09-7.

23.5 Searching water with the help of scalar waves

Faults of earth's crust lead to fissures and cracks in the rock, which often fill up with standing or flowing water. Potential vortices of the earth radiation are attracted by the high dielectricity of water and are radiated again in slowed down and focussed form. On the surface of the earth the mixture of various scalar waves arriving there can be dowsed as main emphasis zone. For reason of the broad radiation spectrum the results of proficient dowsers in the main emphasis zone more often coincide.
At both sides in addition spectroids are forming, which are dowsed as parallel running vortex lines. Because every harmonic wave produces other lines and every dowser reacts to other resonances, a profound ability is required, if from the distance of the so-called announcement zones the water depth should be inferred (fig. 23.5). Some specialists indicate besides the place and the depth also the amount of deposit and if need be the water quality. For that they analyse the radiation intensity, but unfortunately many all too often overrate their abilities.

Already the Augures, the land surveyors in the age of the Romans have aligned their streets and the castles with the nets and the lines in the countryside. Even today new evidence about the central importance of the standing wave character of scalar waves can be found at excavations (fig. 16.10). Since every scalar wave also occurs coupled with a radio wave by means of the wave equation, earth rays originally could be detected conventionally with field strength gauges. But the intensive use by radio stations has made it necessary to change from the short wave range to the VHF-range and further to the UHF-range. It were indirect measurements, which could be interfered easily. Today geologists work with ELF scanners in a range between 15 and 30 KHz if they search for water. They analyse the emitted signals of submarine transmitters, because these are attracted and amplified by water carrying layers.
Experiments also are carried out with noise receivers or unused broadband TV channels. Others analyse influences of the earth radiation on the magnetic field of the earth, but for this method the expressiveness is controversial.
Again others walk along a path with a scintillation counter measuring the inverse profile. At the places of maximum earth radiation a minimum of gamma radiation is measured. This stunning relation only can be interpreted as follows: the natural radioactive decay at these places takes place accelerated and that proves:
1.. that earth radiation sets radioactivity free and causes it in the first place (chap. 17.1 pp).
2. that in the case of earth radiation it actually concerns slowed down neutrino radiation.
But also this method works indirectly. It only functions in the open air and then only in the case of unspoiled nature, which sometime was covered with an even layer of radioactive dust. By cultivation or plantation the „radioactive layer" very often is changed and mixed up, whereupon the measurable profile hardly allows conclusions.
For indirect measurement methods of that kind, for which the measurement variable stands in a relation, which isn't known in more detail, to the scalar wave of interest, generally caaution is advisable. Too often a message is seen in a wonderful 3-D diagram of the magnetic field strength or the radioactivity distribution, which has much more mundane causes.

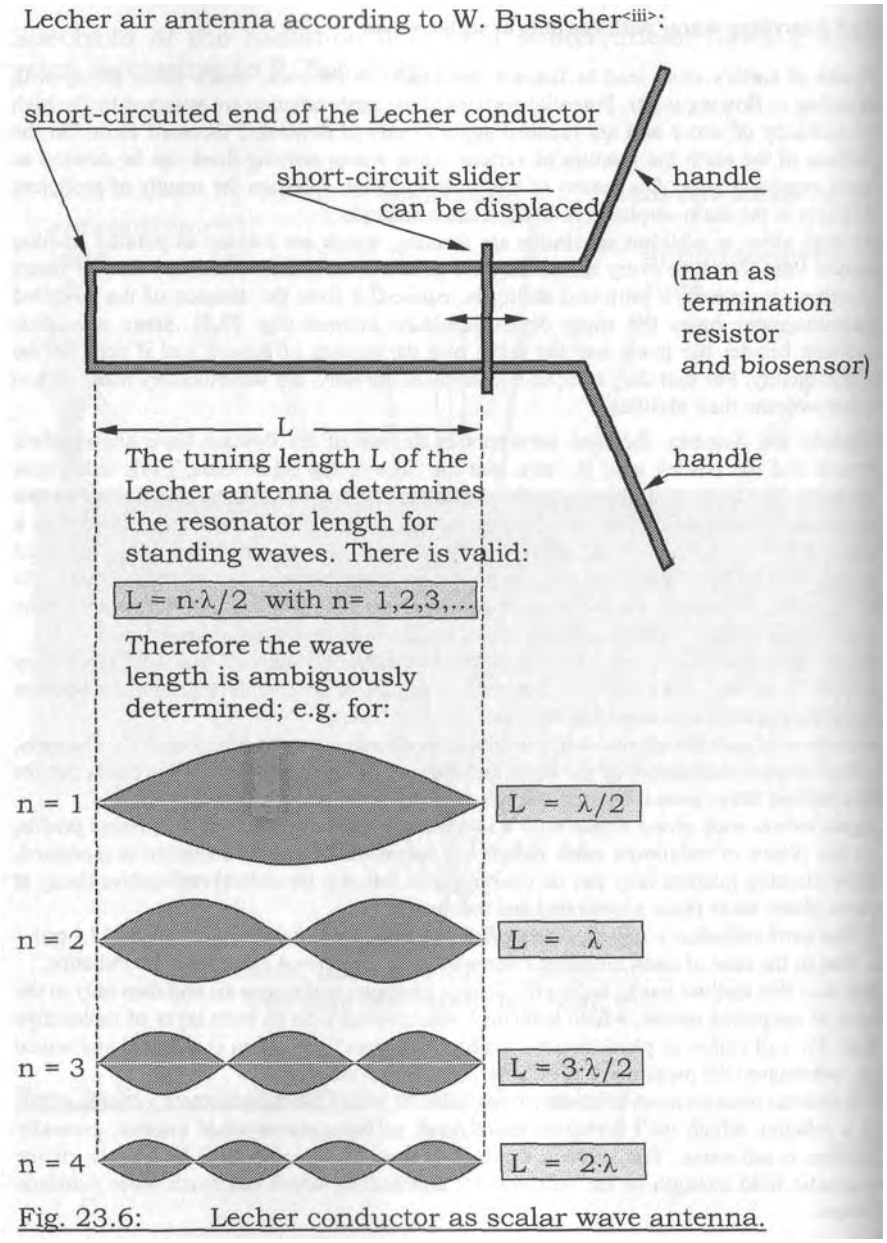

Fig. 23.6: Lecher conductor as scalar wave antenna.

Can be read at Prof. Dr. Ing. Christof Rohrbach:

<iii>: Rohrbach: Radiasthesie, Physikalische Grundlagen und Anwendung in Geobiologie und Medizin, Haug Verlag Heidelberg 1996, Seite 100.

23.6 Receiving scalar waves with the Lecher antenna

In the case of technical gauges it is normal to change the frequency tuning. For that the capacity of a capacitor is being varied, which is part of a resonant circuit. This method can simply be realized with the today available construction elements. Biological systems on the other hand, for instance a person, work primarily with a variation of the wavelength. In this case (according to eq. 22.1) the frequency is directly proportional to the velocity of propagation.
So provide for instance radiaesthetic dowsings clues for the wavelength. The frequency however can't be given, because that oscillates along with the velocity of propagation and at present the forming noise signal still can't be analysed. There can't be bought electronic construction elements, which like a body cell would be able of oscillations of length. Oscillation quartzes and piezo elements, on the basis of which scalar wave detectors could be constructed, form an exception.

Similar to the Lecher conductor different forms of tunable Lecher antennas have been developed. which are used for dowsing. Such a frame antenna, developed strictly according to the rules of high-frequency technology stems from W. Busscher (fig. 23.6)[<i>]. With the short-circuit slider a closed-loop antenna circuit in the upper part is tuned to half the wavelength or an integer multiple of it ($L = n \cdot \lambda/2$ with n = 1,2,3...). The person, who holds the Lecher antenna with both hands, forms the termination resistor for the attached antenna circuit. At the same time he prevents the occurring of an effect back on the tuned resonant circuit by means of damping of the Lecher conductor. The sense of this arrangement is lying in the circumstance that man as a ,,biosensor" should feel if standing waves, which I call vortices, are formed in the Lecher antenna.
A modification of the Lecher air antenna is the Lecher dowsing rod according to R. Schneider[<ii>]. It is produced as an etched board, which has a dielectricity of approx. 4. As a result the velocity of propagation and the wavelength are only half their normal value. In addition a shortening factor V is introduced, which depends on the construction of the Lecher dowsing rod[<iii>] ($L = V \cdot n \cdot \lambda/4$ with V = 0.952 and n = 1,2,3...).
In fig. 23.7 some published tuning values have been drawn up. The values for want of corresponding technical gauges it is true still haven't been confirmed, but they allow a certain insight into the world of the scalar waves, as they are influenced and radiated by water, by metals, by oil or even by other planets, the sun and the moon. Doing so some questions remain open: We for instance don't know, if the corresponding wavelength concerns the basic wave or only an mth harmonic wave. The details not only are unreliable, they moreover also are ambiguous. If however several tuning values L' are present for which resonance occurs, then if need be an integer divisor can be sought and the wavelength can be determined. But that doesn't function always.

<i>: Will Busscher: Die Luft-Lecher-Leitung als Wunschelrute. Eine Methode um die Wellenlangen zu bestimmen. Wetter-Boden-Mensch 3/ 1991, Seite 46-57.
<ii>: R. Schneider: Einfuhrung in die Radiasthesie Teil II: Leitfaden und Lehrkurs ..., Oktogon-Verlag, Wertheim, 2. Aufl. (1984) S. 136.
<iii>: Rohrbach: Radiasthesie, Physikalische Grundlagen und Anwendung in Geobiologie und Medizin, Haug Verlag Heidelberg 1996, Seite 100.

Supposed wavelength λ of the transmitted scalar wave radiation in [cm]

λ	of:	(with the different tuning values L´)
32	water	(L´ = 15.5 $_{n/m=2}$; 10.8 $_{4/3}$; 7.8 $_{n/m=1}$; 3.1 $_{2/5}$)
18	fault	(L´ = 12.9 $_{n/m=3}$; 8.65 $_{n/m=2}$; 4.3 $_{n/m=1}$)
13.6	net I	(L´ = 12.2 $_{n/m=4}$; 9.6 $_{n/m=3}$; 6.1 $_{n/m=2}$; 3.05 $_{n/m=1}$
	4 m = 16 x 25 cm	(N-S direction) 1.7 $_{n/m=1/2}$)
	5 m = 20 x 25 cm	(E-W direction)
14.7	net II	(L´ = 11.4 $_{n/m=3}$; 6.9 $_{n/m=2}$; 3.5 $_{n/m=1}$; 2.2 $_{n/m=2/3}$)
	7.08 m = 30 x 23.6 cm	(NE-SW + NW-SE direction)
13.2	net III	(12.6 $_{n/m\,4}$; 9.4 $_{n/m=3}$; 8.2 $_{5/2}$; 6.15 $_{2}$; 4.1 $_{4/3}$; 2 $_{2/3}$)
16.4	radon	(L´ = 7.8 $_{n/m=2}$)
28.6	oil	(L´ = 13.5 to 13.8 $_{n/m=2}$; 3.3 to 3.5 $_{1/2}$)
17.2	gold	(L´ = 8.2 $_{n/m=2}$; 4.1 $_{n/m=1}$; 2 $_{n/m=1/2}$)
13.9	silver	(L´ = 6.6 $_{n/m=2}$; 3.2-3.3 $_{n/m=1}$; 1.6 $_{n/m=1/2}$)
7.20	quartz	(6.9 $_{4}$; 4.1 $_{5/2}$; 3.85 $_{9/4}$; 2.9 $_{5/3}$; 2.5 $_{3/2}$; 2.2 $_{5/4}$)
4.35	sun	(L´ = 4.15 $_{n/m=4}$)
15.3	moon	(3.65 $_{n/m=1}$. thermal spectral lines: 11; 21 cm)
4.25	Mars	(4.05 $_{n/m=4}$, thermal spectral line at 3.14 cm)
4.90	Jupiter	(4.65 $_{n/m=4}$, ther. spectral lines: 3; 3.2; 3.3 cm)
5.36	Saturn	(5.1 $_{n/m=4}$, thermal spectral line at: 3.45 cm)

Fig. 23.7: Details of not confirmed wavelengths.<i>
(derived from tuning values of a Lecher antenna
$L' = . V \cdot \lambda \cdot n / 4 \cdot m$ with $V = 0.952$
and $n = 1,2,3...$ for $\lambda/4$, $\lambda/2$, $3\lambda/4$, λ, ...
and $m = 1,2,3...$ for 1 the basic wave
and the 2nd, 3rd, ... harmonic wave

____ according to: _____

<i>: Ludeling, Hartmut: Handbuch der Radiaesthesie, Verlag Eike Hensch 1994, S. 161 ff. The author gives the clue: ,,The values have been determined empirically by different persons and predominantly could be confirmed by the author and his co-workers. There however always can occur deviations caused by different dowsing methods. Every value therefore always should be checked with own measurements."

23.7 Assignment according to wavelength

As said, the methods to determine the wavelength by means of the Lecher antenna are ambiguous and unreliable. So water should have a wavelength twice as long as a fault. But since water often is collecting or subterranean flowing in faults, one is entitled the suspicion that here $\lambda/2$ was taken, where in reality the full wavelength λ acts. The rest of the table after that should be looked at with the same scepticism. The table nevertheless is not wholely uninteresting, because it points to certain trends and is able to furnish clues, which if need be can represent a help of orientation in the systematic research of scalar waves.
At the planets is remarkable that the Lecher conductor reacts to values, which correlate with the respective thermal spectral lines. If these spectral lines propagate with c and it actually should concern the same cause, the frequency thus should be identical, then the planets would emit scalar waves, which are faster than the light. In the case of Mars 1.35 times the speed of light c would be present, in the case of Saturn 1.55 times and in the case of Jupiter the values would lie between 1.46c and 1.63c. In the case of the moon two thermal spectral lines are being measured, which on the one hand have as a result 1.39c and on the other hand 0.73c. At this place still ample research tasks should be solved.

In the case of scalar waves the wavelength is the most important factor to refer to. The frequency however varies continually, which in electrical engineering is called noise. That again is connected to the circumstance that frequency and velocity of propagation oscillate, so that merely an average value can be given at a time. But that hardly can be measured, which again makes the assignment more difficult. We thus still aren't capable to enter the table values from fig. 23.7 into the frequency diagram of fig. 23.1.

A technical gauge for scalar waves is necessary. A practical solution could look as follows: A noise transmitter tunable in frequency and wavelength operates on top of a carried along noise receiver. The arrangement with that comes the Tesla transmission path for scalar waves very close. If the transmitted noise signal hits upon a likewise one in the surroundings then overlapping occurs, which at the receiver causes a change of the displayed value. If doing so a subtraction (extinction) or an addition (amplification) of the signals occurs is unimportant.
With this arrangement in any case statements are possible about frequency, wavelength, velocity of propagation and about the amplitude of the scanned signal, without withdrawing energy and strain the signal in doing so[<i>]. With such a gauge radiation conditions depending on location could be measured as well as technical devices checked lor the emitted scalar wave parts (fig. 24.1).
An important use over and above that would be given in medical diagnostics. Every living being ,,produces noise" the technician would say, it ,,emits scalar waves" I would say, whereas following general usage is talked about the ,,aura of man". The value of an aura diagnosis still is completely unknown to most doctors and therapists, especially as the scanning of the aura at present only is possible by dowsing. But the patient expects that a doctor works with a technical gauge and not with a dowsing rod!

<i>: First experiments, which I carried out with students in the laboratory, look very promising. Unfortunately the works at present rest for reason of lack of money.

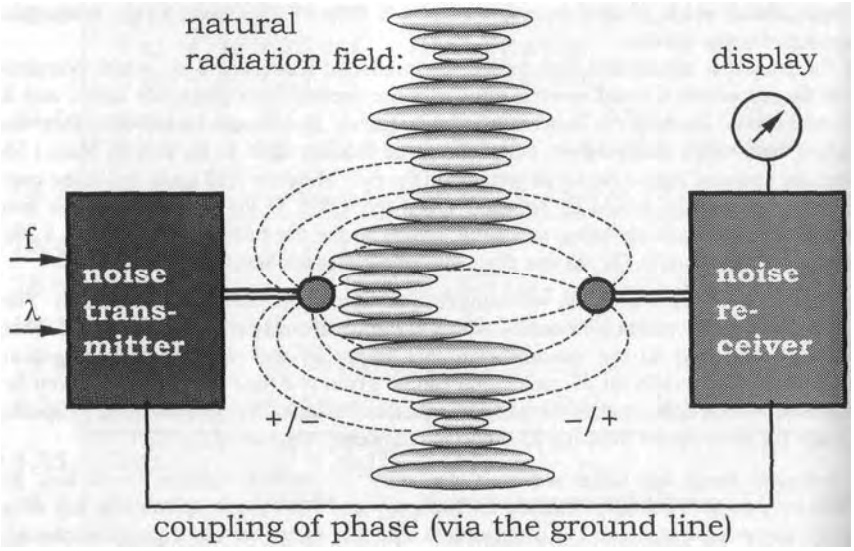

Fig. 24.1:____ Concept for a device to detect scalar waves

24. Medicine of oscillation

24.1 Mediation of information with the help of scalar waves

If for the discussed scalar wave gauge the transmitted comparison signal in addition deviates from the form of a sinus, if the signal is modulated in some way, then even the transmission of information by means of the noise as scalar wave can be realized. If we as an example again take the aura of man, which is more than only a radiation field, it carries information for instance about the state of health of man. Kirlian photography is one form of making it visible (Fig. 3.6).
Not only the nerve conduction and the brain work with scalar waves. Man in this way also corresponds with his fellow people, some more, others less. There are people who „beam" and that should be interpreted in the true meaning of the word. Others opposite to that are more „receiver characters", who pick up more scalar wave radiation than they give away. But because they not only pick up positive radiation energy, they are susceptible to information, which makes sick. That's why a healthy equilibrium in the exchange of thoughts, feelings and the different forms of scalar waves is very important. All that is reflected in the aura of man. If we technically are capable to scan the aura of man, than this can be a blessing for humanity and for the public health.

The possible abuse however must not be overlooked. Unbiased research results, which can be used for the benefit of humanity, in many cases just as well can be used to harm humanity.
A connector of both these worlds is the Russian psychologist Prof. Smirnov, who has shown publicly in television, how a spoken sentence can be transformed in a noise signal, which is taken up directly by the brain as information, with the help of a computer program [<i>]. He with that is capable to "sodden" individuals, as he says, he in this way can take the fear away from soldiers before a combat mission and can operate the disease out of drug addicts without bloodshed. In the television film such an „operation at the open subconscious"' is shown life. The patient hears the noise signal over headphones and is cured already after few minutes treatment time.

We here are getting in the domain of ethical and moral problems of scalar wave research, which aren't solved by us looking away and leaving the field up to others. According to the words of Prof. Smirnov the only thing, which can stop the research scientist, is his own moral. He doesn't say any more and that isn't exactly reassuring! One here is working with „signals resembling sound", is said in the report of the Zweite Deutsche Fernsehen[<i>], thus with longitudinal waves and that shows, that already more knowledge about scalar waves is present than is generally known by the masses.

Another way is leading over the bioresonance. Also here at first the possibility and chance to cure diseases is to the fore. The bioresonance is a central aid in the area of the medicine of oscillation, which is increasing in importance permanently.

<i>: Die Zombies der roten Zaren (Besta Film Warschau im Auftrag d. ZDF 1998)

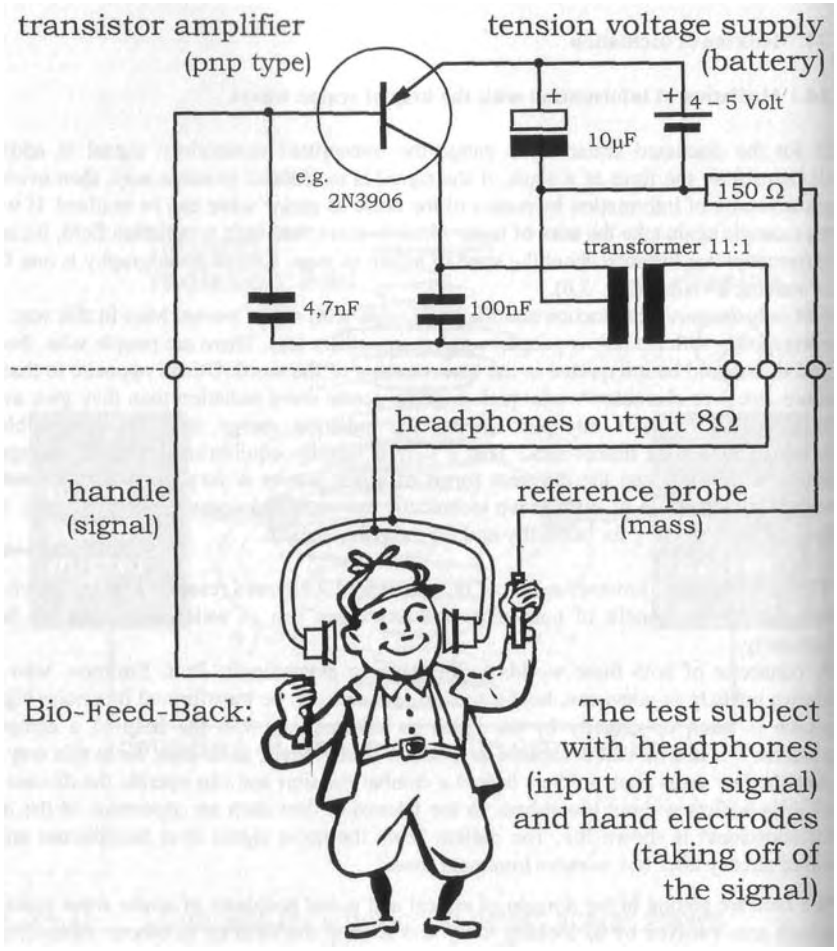

Fig. 24.2 A: Wiring diagram of the Syncrometer.[i]

<i>: Wiring diagram taken from: H. Clark: The Cure for All Cancers (1993) New Century Press, USA, Page 434

<ii>: Flanagan: Horen mit der Haut anstatt mit den Ohren, Sonnenwind 1/97, S.13-17.
s.a.: N.Begich: Towards A New Alchemy, The Millenium Science, Earthpulse Press 1996

<iii>: Dr. Bodo Kohler: Biophysikalische Informations-Therapie, Gustav Fischer Verlag (1997), Kap. 11.6 Der individuelle Grundton, S. 239 ff.
s.a.: Dr. Bodo Kohler: Die bipolare Farb-Ton-Therapie, CO'Med 2/2000, S.10 - 15

24.2 Systems with positive feedback

The field of oscillation of man easily can be influenced, because it concerns a vortex field. A technical measurement with the gauges available at present is almost impossible and highly inaccurate. There however exists the possibility, to apply electrodes to a person and to integrate him in the circuit of a technical device. The two of them form a feedback system with man in the return loop. The operation can take place in two different ways, depending on the sign of the feedback (Fig. 24.3):
For positive sign it concerns positive coupling. In this case the signals released by a person sum up, for which reason already minimum amplitudes are sufficient to produce violent reactions in the case of resonance. For resonance to occur, the system must either search independently the suitable frequency and phase, or the therapist searches the points of resonance.

24.2.1 The Syncrometer.

An independently working system is e.g. the Syncrometer. By means of two electrodes, which are held with the hands or are attached directly to the head, the noise signal emitted by a person is called off and supplied to a broadband amplifier. The test subject again hears the amplified signal via headphones, so that the circuit is closed.
Apparently unspecific and still reproducible during operation certain signals capable of resonance are emerging stronger by amplifying and swinging themselves up. The aura starts to extend or expressed in the words of a radiation sensitive, the so-called reaction distance is increasing, with which he means the distance in which he detects a dowsing rod reaction.
The test subject now increases his radiation, so this method can be valued. By strengthening his own radiation power, he works more as a transmitter and less as a receiver for scalar waves. In the last point the therapeutic use seems to iie, because by that the patient can get rid of resonances to any unpleasant persons or to technical transmitters, which are burdening him. The device consequently also is sold as aid or protection against electrosmog.
The amplified signal also can be picked up directly by the skin instead of by the headphones and still being ,,heard". The reports stretch from a harmonizing and balancing effect up to "electronic telepathy" and states similar to ecstasy of the test subject[i].

24.2.2 The sound therapy.

The controlled variant of this method for instance is the sound therapy. Now the sounds, which the patient picks up by means of headphones, do not stem from him but from a sound generator. The therapist goes through the scale and tries to find out at which sound the aura swings up. If the eigenfrequency is found, then the patient can therapize himself, by again and again playing or humming his eigentone[iii].
It concerns here only a physical statement on the used methods of alternative medicine and not therefore, whether healing successes are actually possible.

sound frequency equally tempered [Hz]		wavelength [cm]	colour	wavelength [run]
F sharp"	740	46,4	(purple)	-
F"	698	49,1	(crimson)	-
E"	659	52,0	(violet)	-
D sharp"	622	55,1	indigo	421
D"	587	58,4	bleu	446
C sharp"	554	61,9	turquoise	472
C"	523	65,6	green	500
H'	494	69,5	yellowgreen	530
A sharp'	466	73,6	yellow	562
A'	440	78,0	orange	595
G sharp'	415	82,6	orangered	630
G'	392	87,5	red	668

Table 24.2 B: Scale of the colour range.<i>

colour		chakra	sense organ	planet type
purple	7.	(crown chakra)	epiphysis	Jupiter
indigo	6.	(brow chakra)	hypophysis	Saturn
bleu	5.	(throat chakra)	hearing	Mars
green	4.	(heart chakra)	feeling	Sun
yellow	3.	(solar plexus)	seeing	
orange	2.	(sacral chakra)	taste	Venus
red	1.	(root chakra)	smell	Moon

Table 24.2 C: Assignment of colours to chakras and planets.<i>

colour		metals	gems (selection):
purple	7.	tin	amethyst, fluorite
indigo	6.	lead	indigo-sapphire, azurite
bleu	5.	iron	sapphire, lapis lazuli
green	4.	gold	emerald, malachite, jade, gr. tourmalin
yellow	3.		topaz, amber, citrine
orange	2.	copper	carnelian, fire opal
Rot	1.	silver	ruby, coral, garnet, red jasper

Table 24.2 D: Assignment to a selection of gems.<i>

<i>: Dr. Bodo Kohler: Biophysikalische Informations-Therapie, Gustav Fischer Verlag (1997), Kap. 11.6 Der individuelle Grundton, S. 190 - 194

24.2.3 The colour therapy.

Analogous to acoustics also colours each time can be assigned a wavelength and also here can be detected that every person responds to certain colours, thus wavelengths, in particular which can stimulate his aura to resonant oscillations. In practice sound and colour therapy often are used coupled[<i>], even succeeds more or less an assignment to each other. That in last consequence leads to a "scale of the colour range" (table 24.2 B)[<ii>]. According to statement of the treating doctors does a patient, who responds to a certain colour, also react to the corresponding sounds and vice versa.

24.2.4 The aroma therapy.

If according to that it depends less on the circumstance if sounds or colours are used, but the wavelength of an oscillation is crucial, then a stimulation also should be possible by means of the remaining sense organs, e.g. the nose, the tongue or the skin. The smell after all already could be identified as vortex information (fig. 9.0). Fragrances of natural essences can significantly influence the frame of mind. But as long, as we still haven't understood the physics behind it, we technically hardly are capable to generate equivalent vortex modulations artificially.

24.2.5 The gem therapy.

Already the holy Hildegard von Bingen (1098-1179) knew and used the beneficial effect of gems. Physical background of this at first purely empirical form of therapy is the characteristic eigenfrequencies of the gems, which are picked up as stimulation over the skin. Because gems represent a mixture of various molecules, the oscillations in the atomic hull will overlap, so that overlapping and beat frequencies can form with wavelengths in biological relevant areas. There even can form modulations, which are carrying information. The effectiveness again is linked with the resonance condition, which must be fulfilled between the gem and his carrier.

24.2.6 Meditation and self-therapy.

There even exist people, who don't need any technical aid at all to get rid of unpleasant resonances. Some meditate and go into resonance with themselves, whereas others prefer to love a person, to whom they feel ,,attracted" or with whom they are ,,on the same wavelength", which means as much that they go into resonance with this person. In the Catholic Church for instance the priests are not allowed to get married, because they should be in a resonance with the church and with God.

<i>:: Dr. Bodo Kohler: Die Coloroma-Therapie, Der aussergewohnliche Einsatz von Aromen, Co'Med 4/2000, S. 48-52

<ii>: Cousto: Die kosmische Oktave, Synthesis Verlag Essen 1984

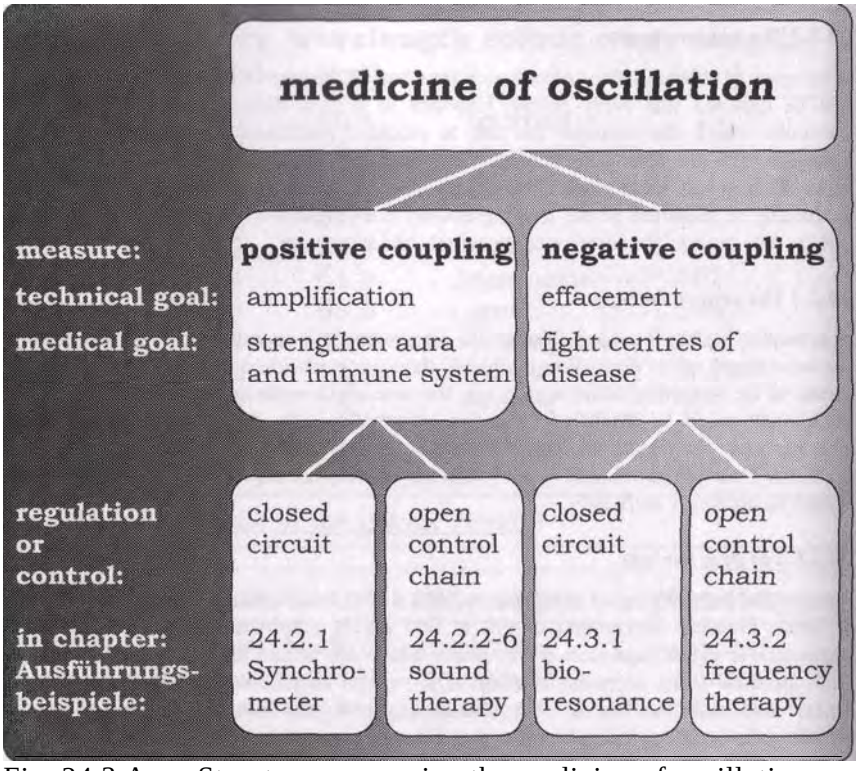

Fig. 24.3 A: Structure concerning the medicine of oscillation

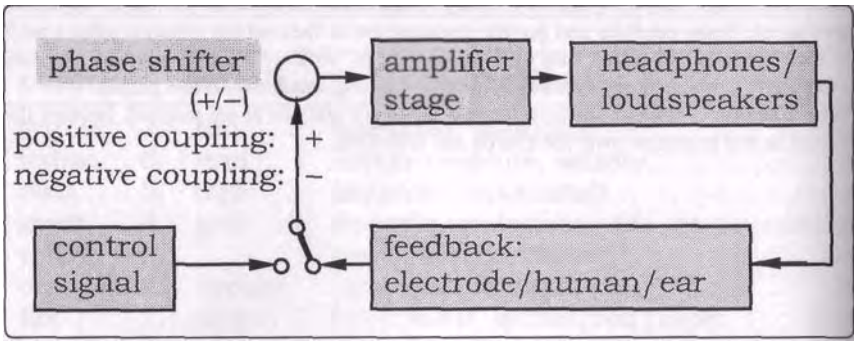

Fig. 24.3 B: Regulation or control?
Positive or negative coupling?

24.3 Systems with negative feedback

For negative sign it concerns negative coupling. In this case the signals are subtracted. The signals released by a person are played back to him with opposite phase. This method lies in the domain of the bioresonance.

24.3.1 The homeopathy

The concept, which is pursued by the medicine of oscillation in the case of the bioresonance, is that harmful or ill making oscillations should be effaced. Not the direct, but rather the indirect strengthening of the immune system is to the fore, which should be reached by relieving it. The approach with that pursues the same goal as the pill medicine, where oscillations, which should produce a wanted effect and which are bound by means of substances are supplied to the body.
The disadvantage of the administration of pills is the often toxic effect of the carrier substance. The German doctor Samuel Hahnemann (1755-1843) has demonstrated a way, in which to make the helpful and important information for the body to go over from the carrier substance to the water by diluting with water and by shaking. The water molecules now oscillate in time of the carrier molecules. Interestingly in doing so not even the information gets lost, the modulation thus is preserved. By constantly shaking there even occurs an amplification or a ,,potentiation", as Hahnemann expressed himself, because now every carrier molecule reaches and modulates countless water molecules. Thus the amount of water informed is bigger than the amount of the original chemical substrate. In the case of homeopathy like is treated with like. If for instance a poison causes certain complaints at a healthy person, then in "homeopathic" administration this information helps a sick person with similar complaints. There thus occurs a disturbance activation with opposite phase, as the engineer uses to express himself. Despite a widespread scepticism the method of homeopathy indeed seems to function, and it has stood the test in countless cases.

24.3.2 The bioresonance

A technical realization is represented by the bioresonance. For that endogenous oscillations are called off by means of an ECG (electrocardiogram), an EEG (electroencephalogram) or a MEG (magnetoencephalogram) at the surface of the skin. The technical device then shifts the phase for 180 degrees and amplifies the signal to the extent that pathological frequencies are extinguished for reversely directed input. This very reasonable theoretical concept in practice of course only is as efficient, as the empirical determined pathological frequencies are the cause of a disease and not only represent an unimportant symptom as side effect.
To that technical problems are joining. Prof. Heine blames the constantly changing reaction diversity and the thermal noise for the circumstance that the ,,frequency spectrum permanently is fluctuating", as he writes if*. That hardly can realize the necessary phase inversion. We meanwhile know that vortices have a fluctuating frequency spectrum, that in the case of biosignals it concerns such field vortices, which result in a noise signal unspecific in frequency.
With this knowledge we should be able to significantly improve bioresonance procedures, and even the inversion of phase shouldn't represent an insurmountable difficulty anymore.

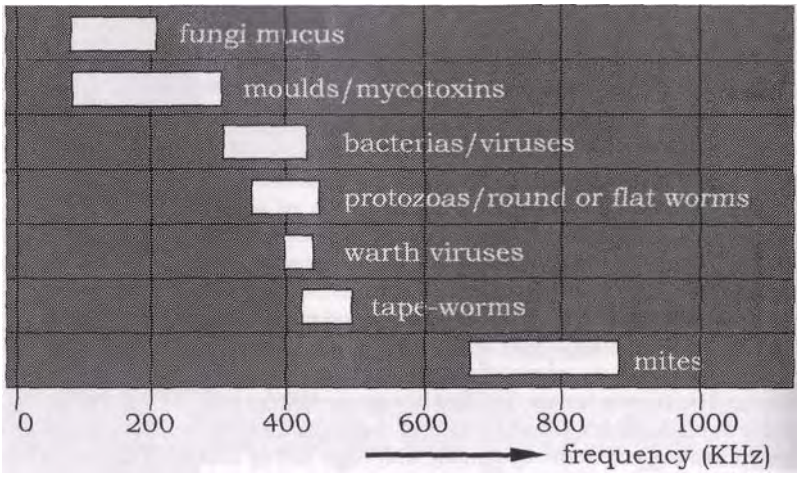

Fig. 24.3 B: Frequency spectrum of parasites according to Clark.[i]

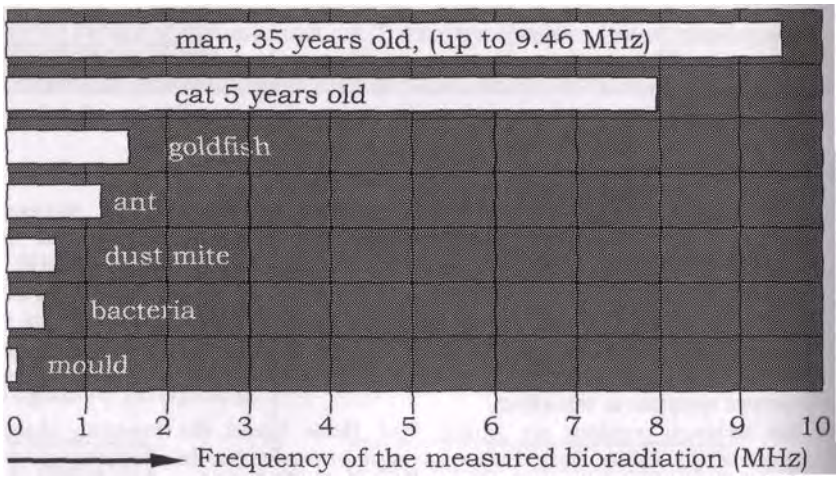

Fig. 24.3 C: Diagram of frequency ranges for some living beings.[i]

<i>: Dr. Hulda Clark: The Cure For All Diseases (1995), Page 604-643

A further problem, which Heine addresses, can't be denied[ii]: „For communicative molecule oscillations the microwave range of 1 GHz up to above 10000 GHz is crucial. A calling off of endogenous interference oscillations in this range with the help of normally used electrodes is not possible"[iii]. It thus could happen that essential frequencies, which are directly related to a disease, aren't recorded at all and as a consequence also not treated. There even is the risk of informations being brought in, which additionally stress the immune system instead of relieving it, that the patients after a treatment are worse off than before. The doctor or therapist is burdening himself with a big responsibility, when, how and at whom he applies methods of bioresonance or if he better does without them. For the mentioned reasons the method in the therapy only plays a secondary role. The bioresonance on the other hand is quite often and with great success used in the diagnosis (Nosoden), if it for instance concerns the determination of an incompatibility or an allergy - but that is a completely different theme. For the bioresonance the transition of diagnosis to therapy is however floating.

24.3.3 The frequency therapy

If using a frequency therapy the problems are standing similarly. If we separate the closed and negatively fed back circuit of a bioresonance and form an open control chain consisting of a technical control device and the patient, then we get the structure, as it is put to use in a frequency therapy. The goal still is the same: parasites or pathogenes, which stress and burden the immune system should be fought.
But a disadvantage of every open control chain is that the treatment at first occurs blind due to the missing feedback.

The natural healer Dr. Hulda Clark has examined as support various pathogenes and parasites under the microscope, while she has varied the frequency and at the same time applied a low-tension voltage. Doing so she could observe the dying of bacterias and parasites at certain frequencies. Correspondingly she publishes tables, in which the in each case „mortal" frequencies are listed[i].
Hut without being able to verify the success of a treatment in the living organism, she proceeds from the assumption that by applying a low tension voltage (5-10 Volt), as it is produced at the output of a commercially available frequency generator, if a sinusoidal signal is set with the appropriate frequency exactly the associated parasites and leeches will be destroyed. Doing so a fixed rhythm of pauses and treatment times must be adhered to (7 min on, 20 min off, 7 min on, 20 min off and 7 min on).

The doctors and therapists treating with this particularly inexpensive method report amazing results, inexplicable spontaneous cancer cures, like of HIV-positive patients, who after the treatment were tested HIV-negative. But also the inverse case already should have occurred, that a HIV-negative patient afterwards was HIV-positive! Here too clear the limits of this method appear, which in practice unfortunately turns out to be relatively unspecific.

<ii>: Prof. Dr. H. Heine: Grundregulation und Extrazellulare Matrix - Grundlagen und Systematik, Lehrbuch der biologischen Medizin, (1991) 2.Aufl. Hippokrates Verlag Stuttgart, Seite 63

<iii>: U. Warnke: Bioresonanztherapie - Wunsch und Wirklichkeit. Medizin transparent Nr.2 (1996) S. 36-37

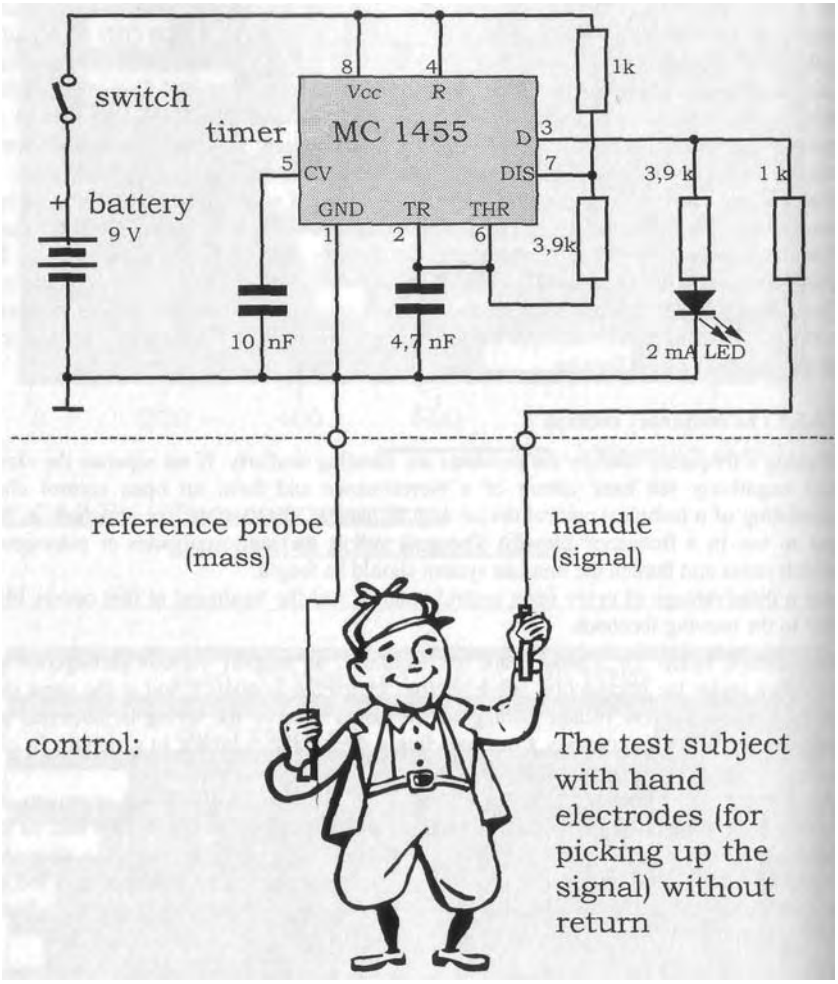

Fig. 24.4: Wiring diagram of the Zapper.<i>

Wiring diagram taken from:

<i>: H. Clark: The Cure for All Cancers (1993) New Century Press, USA, Page 507, resp.:

Dr. Hulda Clark: The Cure For All Diseases (1995), Page 48

24.4 The Zapper

From the point of view of physics of today the frequency therapy actually shouldn't be able to function at all. The electromagnetic waves penetrate only few millimeters into the skin at the used frequencies and wouldn't have the slightest chance, to reach a parasite, which is staying somewhere in the body. But it is said that it is possible to cure athlete's foot, by the patient taking the electrodes in his hands. How, we ask the question, does the signal of the function generator know where it should go?

It quite obviously concerns a resonance phenomenon. The likewise emitted scalar wave part tunnels undamped at those places in the body, with which it can build up a resonance and that for proper tuning are the unloved parasites. The scalar wave radiation is bundling up at the resonant receiver, so that despite the low transmission power as a consequence of the bundling up the energy density for the parasite becomes very high. It as a result is destroyed by its own ability to go into resonance. Once it is killed, the next one goes into resonance, logs off as well etc. In this way the parasites are destroyed one after another and not all at once. That's why the specified treatment cycle makes sense.

The copper electrodes should not be taken in the hands directly, Dr. Clark recommends, but before be wrapped with moist paper. By means of this insulating layer, so is my interpretation, the conventional wave part, for which the skin functions as a wave guide, is reduced whereas the desired scalar wave part is increased. Such measures crucially contribute to the success of a therapy method, even if they were determined purely empirical.

If one wants to address every possible parasite individually, then the treatment takes correspondingly long. If one on the other hand sends all relevant frequencies at once by overlapping them, then the treatment can be abbreviated to the duration of one session. If the therapist goes still further and replaces the sinusoidal signal by a rectangular signal, then infinitely much sinus functions are hidden in it, as a Fourier analysis shows. With a rectangular signal, as it is delivered by the Zapper, one as it were catches everything, Good as well as Bad. There the helpful intestine bacterias break exactly like the wrongdoers.

The treatment with the Zapper is simple, inexpensive and exactly as controversial. It is the shot with the shotgun in the forest. One always hits something. We nevertheless must ask the question, why one only hits parasites and bacterias and not the vital organs? Aren't those damaged also?

Now then, the signal of the function generator is not modulated; it doesn't carry information. That's why only monocellular parasites, which don't know information exchange, are capable of a resonance. Human cells and more than ever whole organs on the other hand work with complex modulations, which effectively prevent any formation of resonance with the technically generated basic wave, with which the question would be answered so far.

That however also means that immune reactions can be expected: If the first treatment with the frequency therapy still is successful and all simple parasites could be hit, then only further evolved parasites have been spared, which modulate their information. They now breed and can't be reached anymore in further sessions. The method suddenly doesn't function anymore, the therapist finds out, the body apparently has become immune.

scale:		diatonic	chromatic	spiral
sound:		•1/C =	equally tempered (medieval)	
octave	C´	2/1 = 2.0	2.00 →	2/1 = 2
	1.07 = 16/15		1.33 = 4/3	
seventh	H	15/8 = 1.88	1.89 →	3/2 = 1.5
	1.125 = 9/8		1.125 = 9/8	
sixth	A	5/3 = 1.67	1.68 →	4/3 = 1.33
	1.11 = 10/9		1.07 = 16/15	
fifth	G	3/2 = 1.5	1.5 →	5/4 = 1.25
	1.125 = 9/8		1.04 = 25/24	
fourth	F	4/3 = 1.33	1.33 →	6/5 = 1.2
	1.07 = 16/15		1.03 = 36/35	
third	E	5/4 = 1.25	1.26 →	7/6 = 1.17
	1.11 = 10/9			8/7 = 1.14
second	D	9/8 = 1.13	1.12 →	9/8 = 1.125
	1.125 = 9/8			10/9 = 1.11
first	C	1/1 = 1.0	1.00 →	11/10 = 1.1

goes towards 1!

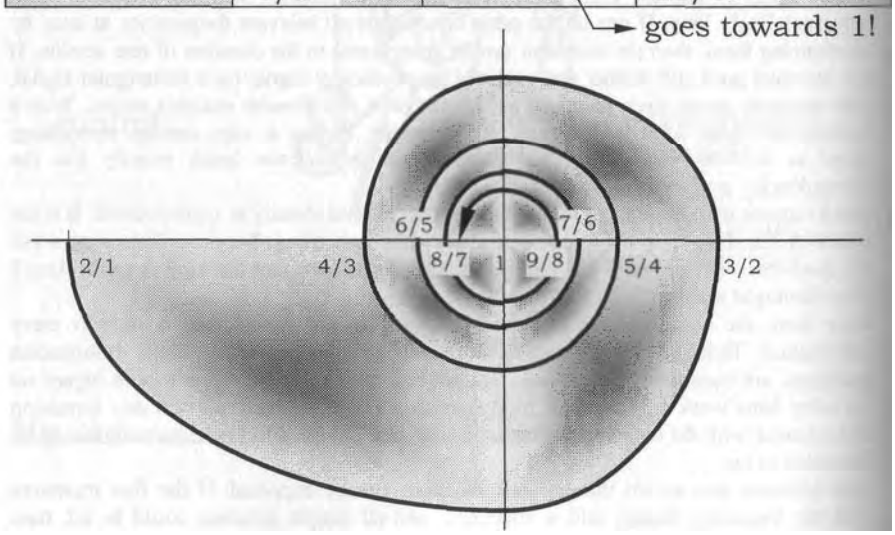

Fig. 24.5: Harmonic spiral built on the first Gregorian scale.[i]

[i]: Dr. Manfred Doepp: Naturgemasse Frequenztherapien, Die Harmonie der Snirale. CO'Med 10/2000. S. 46 - 49

24.5 Discussion concerning the medicine of oscillation

The textbook medicine in its explanations and treatment methods is basing on the models, which it can measure and analyse and which it understands. Doing so man and whole nature is reduced to a handful of chemical reaction formulas. The whole pharmaceutic industry lives on this misleading path, which long ago has revealed to be a dead end, medical as well as financial. This health service cannot be paid anymore and we should ask the question if it actually is worth the money, if with electric signals of minimum power can be obtained effects comparable to the effects of the pill medicine. We need a new medicine, a potential vortex medicine. First of all we should research how an organism covers its energy needs and how it communicates. There leads no way past the scalar waves and the newly discovered potential vortices. Chemical processes as they are being observed, occur by the way, that is beyond doubt, but they by no means are the cause. Hence of pills and other chemical means at most a treatment of symptoms and a case of side effects may be expected but not a cure of a disease. Once the potential vortex medicine will be systematically explored and be put to use in practice, healing successes can be expected, which we at present can't imagine at all.
The amazing results, which already today are obtained in the medicine of oscillation and of which some doctors can report[<i>], dictates the direction in which the textbook medicine should develop. In the question, which kind of oscillation or which „sequence of sounds" (Fig. 24.5) is the right one, still exists considerable need for research. Some doctors even already work with my new theory and cite whole passages from my publications until now about this theme[<ii>].

<i_a>: Dr. Bodo Kohler: BITsyn, der neue Weg in der Informations-Medizin, Jubilaums-Schrift der Internationalen Arzte-Gesellschaft fur Biophysikalische Informations-Therapie, Bad Nauheim den 6.-8.10.2000, Seite 48 - 56.

<i_b>: Bioenergetische Messverfahren in Theorie und Praxis, Vortragsband der Gesellschaft fur Energetische und Informationsmedizin e.V., Universitat Stuttgart am 17.7.1999.

<ii_a>: Dr. Johann Lechner: Storfelddiagnostik, Medikamenten- und Materialtest, Teil 2 aus der Reihe: Praxis der Ganzheitlichen Medizin und Zahnmedizin, Verlag Dr. E. Wuhr (2000), Kap. 2.4.2 Beruhrungslose skalarwellentragende Informationsubertragung S. 173 ff., bes. Kap. 2.4.2.3 Seite 175, 176.

<ii_b>: Dr. Reichwein, Peters: Zellulare Elektromagnetische Systemsteuerung, Der Freie Arzt 5 (2000) im Wissenschafts-Forum (Anhang, S. IV - XXIII).

<ii_c>: Dr. M. Doepp: Tesla-Wellen, Neue Studien, CO'Med 5/2000, S. 94 - 95

Frequency spectrum of the human organism:

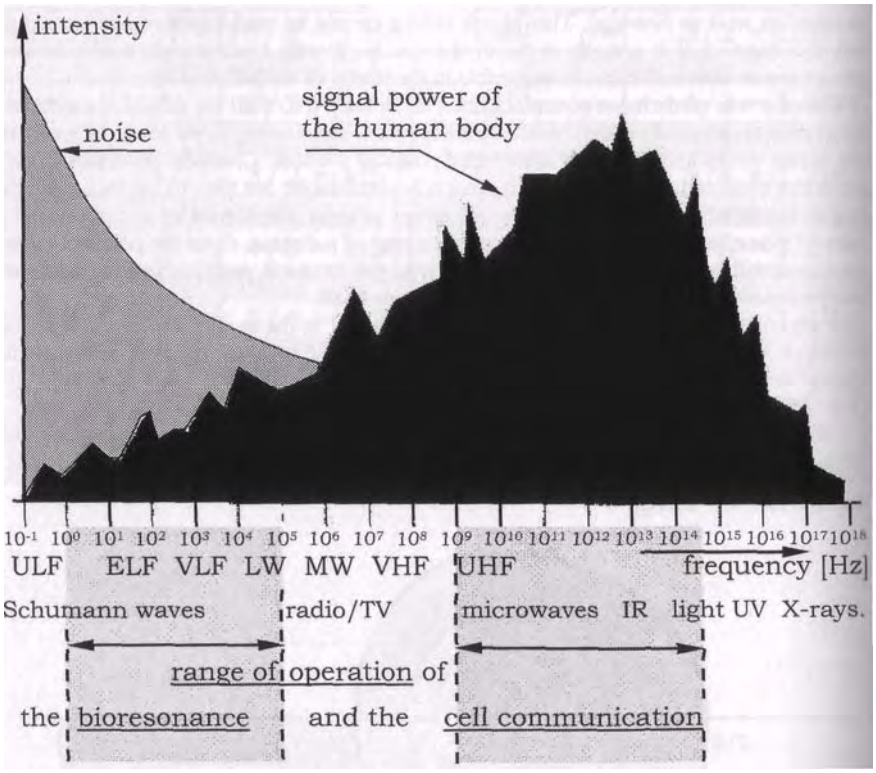

Fig. 25.1: The measured frequency spectrum of man.[i]

<i>: Dr. P. Bembenek: Akupunktur und (Bio-) Resonanz, CO'med 6/98, S. 50-58

25. Contributions to the discussion concerning the information technical use

The medical research predominantly takes place with statistical methods. This might be changed fundamentally, if only the physical relations have been realized and their causes found out. Only then a basic research will be possible also in the area of medicine, as it today already is usual in other disciplines.
In this chapter it concerns the question of the medical basis in general, and specifically the question of the use of the newly discovered potential vortices in biological systems. Doing so very aware is attempted to put the normally used medical view at the back and to derive the answers from the perspective of the engineer and the physicist. This approach is unfamiliar, so that some textbook physicians will have difficulties to follow. It however will prove to be very helpful. Medicine in addition needs new impulses and that justifies a new approach, like the unconventional one proposed by me.
In this connection gladly is fallen back upon the comparison of biological with technical systems, although here exist differences in principle and fundamental It can be expected that nature has developed very appropriate strategies to solve certain tasks, as it also is teached in engineering and used in practice. At this place not only medicine benefits from new insights, engineering vice versa also can learn of nature, because natures optimization strategies are much much older and correspondingly perfect.

25.1 Window of the sensuous perception

To clarify the inner processes in man we consider his sense organs, which function as interface to the outside world. Technically seen in the case of the sense organs it concerns measurement converters to record and process certain physical values in our environment and their adaptation to pass on the information by means of the nerves. The measurement converters thereby are built more or less complex, which is related to the circumstance that the measurement factors, which a living being needs to orient itself and to be able to survive, are quite different.

It concerns little windows within the frequency spectrum shown in fig. 23.1, which should be analysed. Man for instance chooses the visible frequency window and interpretes it with an assignment to the colours, because in this range the sunlight can reach the surface of the earth and the ionosphere doesn't exert an excessive damping (fig. 2.8).

The acoustic window depends on the sound propagation in air, whereas dolphins work with ultrasound, which carry considerably further in water. The associated measurement converters, the ear and the eye, have a very complex structure. From this can be inferred that here the received signal must be transformed into a different physical measurement signal, that the perceivable signals are of other nature than the signals, which our nerves are able to pass on.

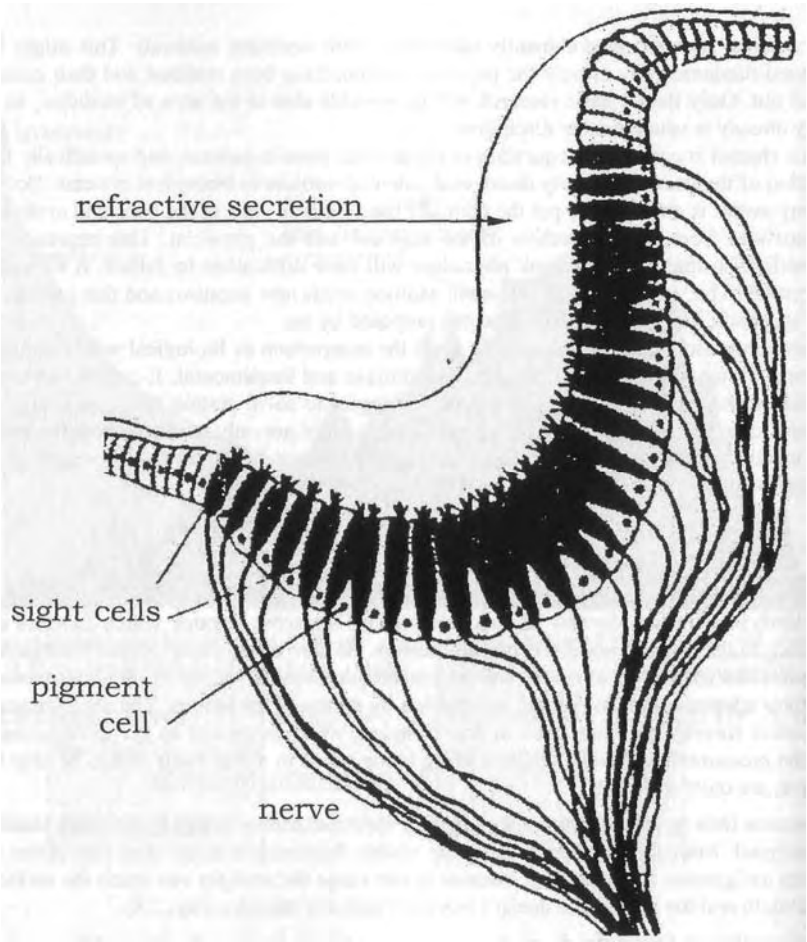

Fig. 25.2: ____ The hollow eye of the snail

25.2 The sense organs (nose, eye, tongue)

If we want to find out something about the nature of the nerve signals, then we should more detailed consider a sense organ, which is constructed if possible simple. In that case it is possible that no signal transformation is necessary at all anymore, because the perceivable variable is exactly of the kind the nerves can process.

The primary and perhaps most ancient sense organ of the living beings is the nose. It is constructed extremely simple. On the one hand according to encyclopaedias it is a chemical sense for the perception of smell materials. Man on the other hand can distinguish several thousands of scents. For that a huge analysis factory with correspondingly much receptors would be necessary, which one searches in vain in the nose between the nasal hairs and the nerves. We from that infer that scent should consist of particles, which are to a large extent identical with the reaction potentials. It thus will concern potential vortices. These ring-like vortices of the electric field again are modulated and carry information, which our brain is able to analyse.

According to the derivation in chapter 9.0 Plato already 2400 years ago knew such relations. The conclusion is obvious that smell is vortex information, which according to the explanation of Plato forms at the transition of waves in potential vortices and vice versa. At the natural philosophers in antiquity the circle of the insights is closed. Modern science just isn't that far.

The hollow eye of the snail functions both as nose and as eye (fig. 25.2). This very ancient combined organ points to a relatively close affinity between both measurement sensors. Possibly in the course of evolution both organs have developed from such a common original form.

In the case of man the smell rods occupied with the nasal hairs of roughly 2 micrometer in length, actually remember of the rods and cones in the eye, with which photons are collected. In both cases, so we can explain the mode of action in accordance with model, the ring-like vortices settle on the rods and run as reaction potentials along the nerve to the brain, which then analyses the modulation.

In the case of the highly developed human eye the light rays first have to traverse the vitreous body and afterwards a pigment layer, before they reach the rods and cones. In this way the electromagnetic wave parts must roll up to vortices, since our nerves can only pass on vortices. The photons can be interpreted as corresponding vortices.

If we compare the eye with a bubble chamber, in which the tracks of ionized particles can be observed and photographed as thin white fog stripes. Here in collision experiments it can be proven that it concerns particles carrying impulse and not waves. But the measurement setup by no means does answer the question if it already concerned particles before they entered the bubble chamber, or if these have formed spontaneously in the presence of the saturated vapour.

It would be obvious, if for our eye the chamber water being under the inner eye pressure would take over the function of the bubble chamber and would take care of the rolling up of the light waves to light quanta.

Example tongue:

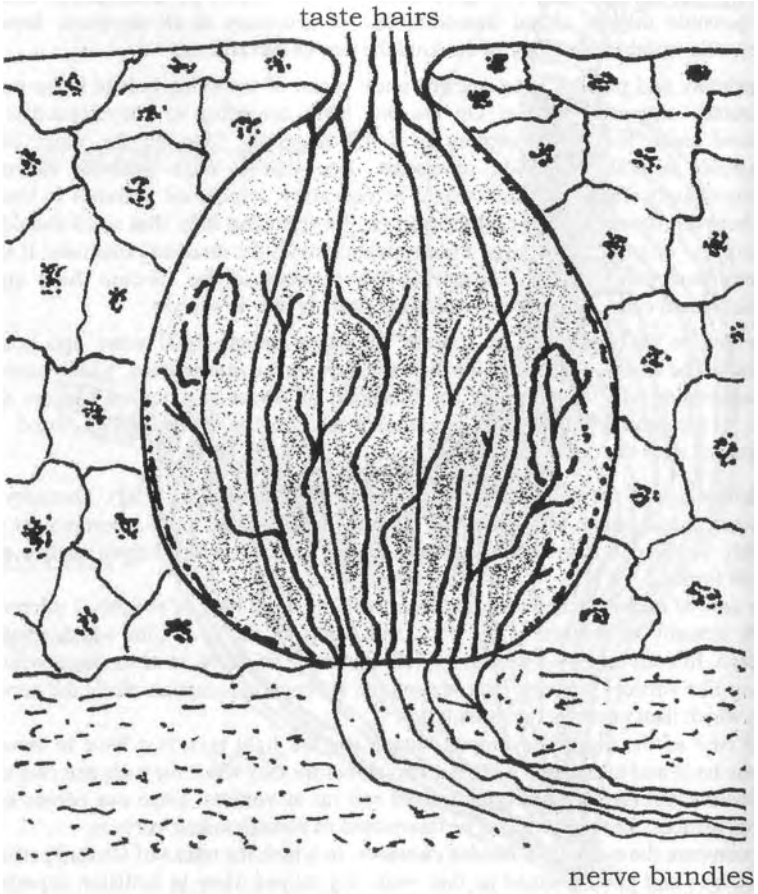

Fig. 25.3: Taste bud of the human tongue

We optically can't detect a difference, if the light while passing through a thick glass plate increases its part of photons. At the latest in the eye in any case all the light is transformed in photons and usable vortices, so that we mustn't detect a loss of brightness. The glass plate seems transparent to us, even if the sunlight should change its composition and its biological quality, if it passes the plate.

If the tongue while tasking responds to dissolved substances, then it not by all means needs to be a chemical excitation. Instead fine hairs, the taste hairs resp. sense pins, serve as receiver like in the case of the nose. The similar structure of the receptors and the circumstance that for most invertebrates sense of taste and sense of smell can't be distinguished of each other at all and consist of the same primary sense cells, suggest that the tongue doesn't analyse the chemistry as such, but only the molecular oscillation patterns, that also the taste is nothing else but vortex information!

25.3 The nerve conduction

For the collection of the potential vortices and the extraction of their information fine hairs in the sense cells obviously play a central role. They are connected more or less directly with the end of a nerve and pass on the information without big transformation. Even in the organs of equilibrium sense hairs work.

From the comparison with the technique developed by Nikola Tesla I could show that the nerve conduction concerns a single-wire transmission, a kind of waveguide, for which the transport of the excitation information takes place in the insulation layer and not in the conductor itself (fig. 9.6). As proof I quoted that the thickness of the insulation determines the velocity of propagation, that as is well-known the nerve conductors with thick fat layer pass on their action potentials faster than those with thin insulation. Particularly interesting is the observation, how the fat layer is constricted in fixed intervals, like for Wiener sausages (fig. 25.4 A). These nodes of Ranvier prove that only longitudinal waves are being transported, which are standing waves with nodes and antinodes, if the distance from node to node exactly corresponds to the distance from one node to the next. With that nature with the use of the potential vortices is far ahead of our power engineering. The nerve-cables determine with their structure, which signal will be transported and which not!

The technical cables on the other hand are stupid and conduct everything, the useful signal just as well as any arbitrary interference signal. Anyone, whom the computer crashes every few minutes, knows what I'm talking about.

Man isn't able to afford a crash of his think computer. It would be lethal for him. His nerve costume even tolerates short-circuits. The acupuncture is such a short-circuit technique by means of electrically conductive needles. There even is given a therapeutic benefit and a relaxing effect for the body.

Cut through nerve fibers even can partly regenerate again, even without a cut through nerve again growing together with its other end. The nerve conductors are so intelligent, that only the matching information arrives at the end by passing on informations from one fiber to the corresponding next with the same node interval.

A. Nerve conduction with nodes of Ranvier (to transmit standing waves):

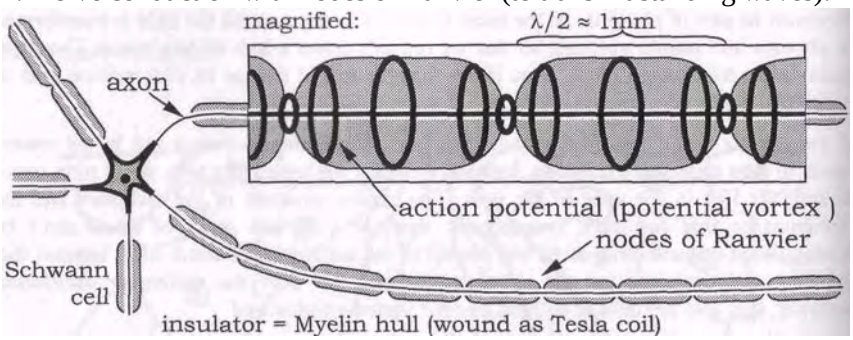

B. Single-wire transmission according to Nikola Tesla<i>:

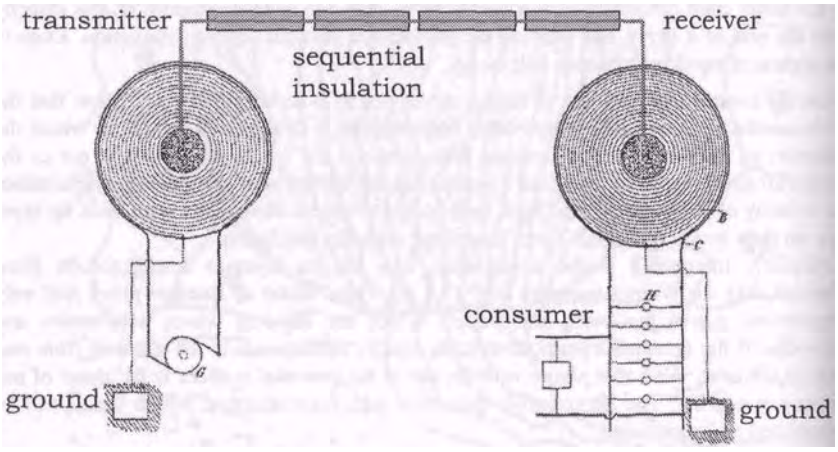

Fig. 25.4: ____ Selective scalar wave signal transmission

The brain works with scalar waves! Reasons are:

1. Lacking of a signal transformer between the nerves and the brain.
2. High performance density of the think apparatus.
3. The brain activity measurable from the outside with the EEC
4. Spark formation and corona discharges at open top of the skull.
5. Insulation defect occurring in the case of epileptics.

<i>: Original sketch of Tesla is situated in the Nikola Tesla Museum, Belgrade.

Nerves represent an intelligent and at the same time interference safe wiring, which is superior to any technical solution by far, or you can try to acupuncture a cable cord of your computer. You will have little pleasure of it.
Nikola Tesla also in this point was ahead of the times. He has experimented with a single conductor technology, for which the insulation layer is constructed like for a nerve fiber (fig. 25.4 B). We'll have to learn to handle such aids in the future, if we in engineering want to emulate nature and as well want to send informations as scalar wave. A normal power cable as said conducts everything, useful as well as interference signals. If however the signal should be accomodated in the noise, a selective cable is required, which should be constructed according to the example of the nerve conductors. Before a scalar wave technology can be introduced and successfully used according to that completely other cables, coupling elements, amplifiers and other components should be developed. The trouble should be worthwhile at the chances, which this genial technology offers us!

25.4 The brain, a scalar wave computer

The brain cells (neurons) are of the same kind as the nerve cells. Hence can be done without a signal transformer, can the informations transmitted by the nerves to the brain directly be processed further. From that follows that also the brain without exception works with potential vortices. There are several reasons for this hypothesis:

1. as said, the lacking of a signal transformer.
2. the high performance density of the think apparatus. (As a result of the concentration effect of the potential vortices the efficiency of the human brain is in such a way high concentrated compared to the much more space claiming computers functioning on the basis of currents).
3. the brain activity measurable from the outside with the EEC
4. spark formation and corona discharges at open top of the skull. (Brain surgeons can report of such observations).
5. The insulation defect occurring in the case of epileptics. (During a fit instable potential oscillations of the nerve cells occur, which lead to strong electric blows).

With the ,,exciting" and the inhibiting"' synapses as separation point between the neurons both a ,.high-active" and a ,,low-active"' method of operation is possible and with that a redundant, particularly interference safe signal transmission.
Safety for interference is very important not only in nature. In the operating instructions of a PC can be read: ,,operate only at room temperature, keep dry, don't throw or shock, take cure for sufficiently cooling air, ground apparatus, pay attention to mains voltage, etc". A comparison with the range of operation of man is like scorn.
Nevertheless the consequences if errors occur are quite similar: a garage door, which opens if a mobile is switched on, by all means can be compared with a light phenomenon, which we perceive after a blow on the eye at the biological level.

Concerning signal technology:

The **comparison** of	**man** and	**engineering**
signal line:	**nerves**	**cables**
transmission:	selective (nodes of Ranvier)	indiscriminate (with interferences)
of:	scalar waves	currents
by:	potential vortices	charge carriers
running of cables:	1-wire technology	2-wire technology
over:	wave guide	supply and return cable
signal transport:	in the insulator	in the conductor
signal form:	concentrated	expanded
the conductor:	stays cold	gets hot
result, transmission:	without losses	with losses
error signal:	muscle cramp	malfunctions
metal pins:	**acupuncture**	**short-circuit**
cause:	relaxation	destruction
directional signal	synapses	diodes/
by:		amplifier
redundancy by:	exciting and inhibiting synapses	high-active and low-active drivers
precaution:	skin resistance	shielding
by:	salt	metal case
strategy:	vortex decay	field displacement

Fig. 25.5: ____ Comparison of the signal technology

25.5 Concerning signal engineering

By means of a technical analysis of biological relations completely new interpretations result also for the occurring of a disease. We permanently and everywhere are surrounded by noise signals, but as a rule they can't touch us, because the body has developed perfect strategies for defence. The nodes of Ranvier on the nerve bundles here are just as helpful as the diode effect of the synapses. By means of the salt content and the skin resistance the body in addition controls the uptake of potential vortices from its surroundings, by using that the vortex decay is determined by the conductivity.

The specialties of the by humans used signal technology come to light particularly clear if compared with the cable technology used in the technical world (fig. 25.5). So is worked with only one wire instead of with supply and return cable, are mediated potential vortices instead of charge carriers, does the transmission take place in the insulator without losses and not in an electric conductor, which as a result gets hot and produces current heat losses. Nerves thanks to their ability of selection represent an intelligent form of signal transmission, by helping to filter the asked information from the noise. This surely is necessary since with cables, which indiscriminately transmit every signal, an use of scalar waves hasn't succeeded yet. We should try to learn of nature!

A special challenge is the protection against error signals. A passive shielding by a metal case however is not possible, because scalar waves can't be shielded by principle, so that the precaution should be taken actively by means of the conductivity. That's why we sweat salt if we strain us physically, whereby the vortex decay is determined by the conductivity, which depends on the salt content of the body liquids. In the case of a sweating activity the body reduces its conductivity, so that the needed potential vortex energy will reach the cells.

If the body sometime isn't able to defend itself against interference signals, then malfunctions or pathological reactions are a possible result. During having a bath for instance a muscle cramp can occur, if the body doesn't defend itself fast enough or sufficiently against the high potential vortex activity in the water. Now vortices can be picked up in the nerves, which are of the same kind as the ones emitted by the brain, only that both muscles, biceps and triceps at the same time get the signal to contract. The result is a cramping of both muscles.

Thus the brain has developed intelligent strategies to protect itself of interspersed misinformations. It weighs the incoming signals and forgets again all unimportant ones more or less fast. We speak of the ability to learn and that means that signals rise in the valuation scale and with that are stored longer, the more frequent repeated our brain receives them. This strategy assumes that interference signals only occur sporadic, for which reason they are rated unimportant and fast are again forgotten. A PC on the other hand doesn't have such a property. It notices everything indiscriminately and sometime will crash of overload, if not the user will constantly foster it and will administer the available memory. A PC is and stays stupid.

Concerning the stability against interference:

The **comparison** of	**man** and	**engineering**
in the	**brain**	**computer**
control technical interference signals:	light phenomena	miscontrol, program fault
precautions:	active, i.e. weighing of the Info by learning (repetition)	passive, i.e. shielding. (no evaluation of the input values)
unimportant (interference signal)	is forgotten	is stored
danger exists for signals	recurring interference patterns (see mobile telephony)	interference of all kinds (s.EMC-standardization)
remedy:	self-cure	restart (reset)

Concerning set of difficulties of wear and tear:

The **comparison** of	**man** and	**engineering**
repair	self-repair	in the workshop
by:	cell division permanently	exchange parts at maintenance resp. in the case of damage
required building materials:	nourishment	material / oil
waste:	compost	rubbish

Fig. 25.6: _____Strategies against interference signals, for damages linked with operation and for wear and tear.

25.6 Stability against interference and repair mechanisms

The interference signals present in our natural environment as a rule are distributed stochastic, but not so artificial interference signals like for instance transmitters emit. If for instance in the case of mobile telephony there occur time and again identical signal patterns and if a person perceives these, then because of the continual repetitions a high importance is pretended and precious storage space in the brain is allocated. This to a special extent applies for the permanent stand-by signals, which are emitted by mobiles and cordless phones even then, if we don't phone at all. Such misdevelopments thereby would be technically avoidable just like that!
If still no gauges are available and as a result there exist neither guidelines nor limits for the radiation exposure of scalar waves, then such devices must be developed and built. For the requested electromagnetic environmental compatibility not engineering, but man should be in the centre of attention!

Let us throw a short glance at the set of difficulties of wear and tear. Most technical devices find the way into the workshop only, if they already are defect. Some aren't repaired anymore in principle and immediately sent to the rubbish, because they are worn-out and a repair isn't worth the effort anymore one says, whereas other, mostly expensive systems are being serviced by exchanging all wearing parts.

Nature has brought to perfection the last principle. It allows the body a permanent maintenance; by permanently producing new cells and replacing consumed ones. It with that obtains a considerably longer operating time and even is capable to heal wounds. Just imagine dents in our cars would disappear from alone after a few weeks and the bodywork would look like new. Such an optimal maintenance is costly and it has its price. By means of the cell division the building plan for the spare parts is copied. The task on the other hand is transmitted to the new cells ,,by radio" by means of waveguide channels, as proves the matching structure of scalar wave and waveguide (chapter 21.12 and fig. 25.7). The cells hence have a kind of ,,decentral intelligence", which technical matter lacks completely. A comparison with engineering nevertheless makes sense, because wear and tear occurs for all systems in continuous operation. Thus strategies must be developed to provide the necessary material for operation, building-material and exchange parts.

By sizing of the hyperboloid structures of the matrix channels it should be possible to determine the wavelength of the scalar waves to enter them in the frequency diagram (23.1).

Tunnel structure of the basic substance according to Prof. Heine[i]:

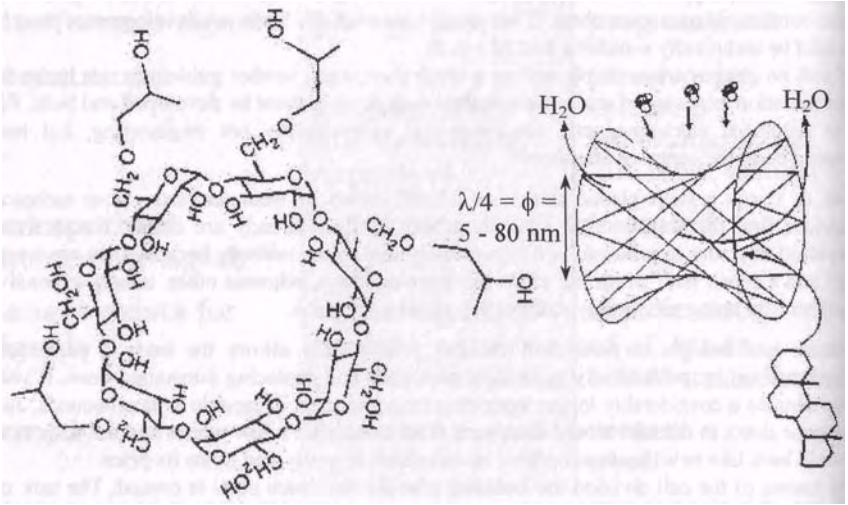

Fig. 25.7: ___ Information channels in the intercellular matrix.[i]

<i>: Hartmut, Heine: Lehrbuch der biologischen Medizin. Grundregulation und Extrazellulare Matrix, 2. Aufl. 1997, Hippokrates Verlag Stuttgart, S. 56

25.7 The microwave window

There still is lacking information about the frequency or the velocity of propagation to be able to specify and enter in figure 23.1 the cell information. Let's take to hand the book about "Biostrahlen"[<i>]. In there is explained how for individual cells the emission of electromagnetic signals already could be measured, which are interpreted as circularly polarized waves (fig. 21.10 A). It is said that thereby their polarization plane is rotating with the speed of light, whereas the wave itself is propagating in longitudinal way relatively slow and according to the authors with the speed of sound.
The occupation with the potential vortex theory in the explanation lets immediately recognize the vortex, for this is rotating with the speed of light in circles as rolled up wave (fig. 21.10). If it is bound to the surrounding matter with closed vortex centre, then it can be expected that the propagation actually takes place with the speed of body sound.
It could concern the same signals, which Prof. A. Popp calls biophotons and detects measuring technically in living organisms[<ii>]. He however considers the phenomenon for the same wavelength with the speed of light and lands at light frequencies, even then if nothing is glowing visibly! The question is asked: Does it concern the frequency of the light or only the corresponding wavelength or actually both, thus light, as is expressed in the name biophotons?
The photomultipliers, which Prof. Popp uses as ,,light amplifier", however can only be tuned to certain wavelengths and not to frequencies. Even if the detected biophotons have the wavelength of the light, then nevertheless nothing will glow if the velocity of propagation and as a result also the frequency differs from that of the light for several powers of ten. In the case of the immense number of cells also the number of photons should correspondingly sum up and the body as a whole should start to glow, which is not the case.

The waveguides in the intercellular matrix serving the cell communication, which Prof. H. Heine observes microscopically, have wavelengths between 20 and 300 nanometer, which corresponds to the range of the ultraviolet radiation[<iii>]. But if the propagation is slower than the light for 6 powers of ten, then also the frequency will only amount to one millionth and be situated into the range of the microwaves. Here a biological window seems to be present, to which we should turn our attention for reasons of the electromagnetic environmental compatibility!

The thermal radiation, which reaches the earth from the sun and the planets, lies in the microwave range between 2 and 20 cm. If the sun does well to us, if we need the radiation, then it could be because of the identical frequency. But that also means that the sun and the planets are capable to have an effect on the cell communication, that they for instance could function as clock for the heart.

<i>: H. Mayer, G. Winklbaur: Biostrahlen, Verlag ORAC, Wien 1989, 5. Auflage S. 97: Messung von der DNS eines Gurkenkeims abstrahlenden Photonen.

<ii>: A. Popp: Neue Horizonte in der Medizin, 2.Aufl. Haug Verlag Heidelberg 1987

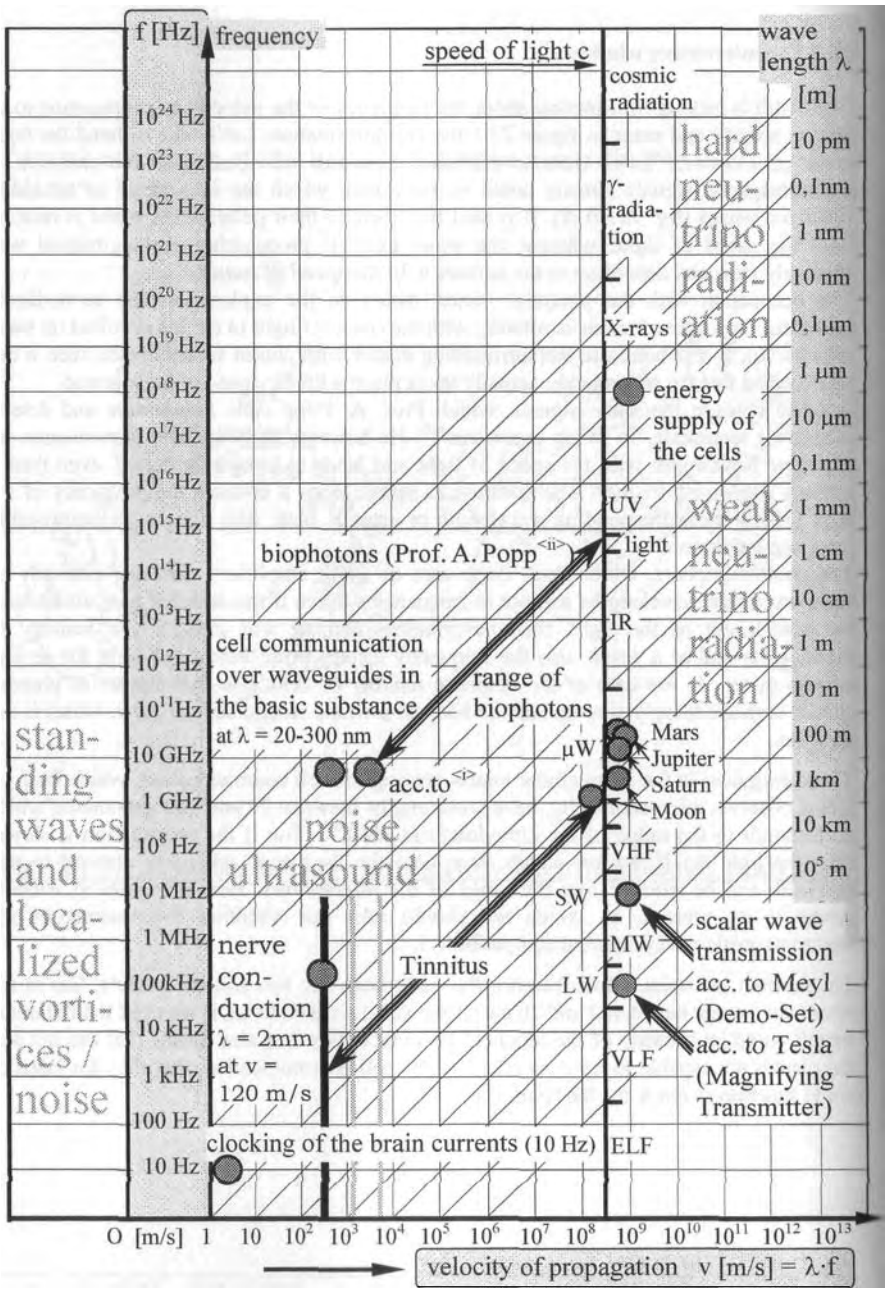

Fig. 25.8: Frequency diagram with entries concerning biologicallv relevant areas (Tinnitus, nerve conduction, etc.).

25.8 Discussion concerning scalar wave medicine

In the sensitive range of the supposed microwaves window however are also situated the mobile phones and their harmonic waves, which occupy a broad spectrum in particular for pulsed operation in digital nets. The D-net for instance has a wavelength of 32 cm, the E-net lies at half that wavelength. But to which frequency does this correspond at the speed of sound? Now, the frequency is 6 powers of ten smaller and now lies at 1 kHz resp. 2 kHz. To that are added the numerous harmonic waves, which form a noise signal and lie above that. With that these signals are situated completely in the audible range, there where our ears are most sensitive!
This cause we probably owe the disease of modern civilization „Tinnitus". Every charged particle will follow this electromagnetic oscillation and produce corresponding sound oscillations, which can hear not „sick ", but completely on the contrary „healthy" people, who as a result possibly get sick. The objection, in this range also cosmic radiation for instance from the planets is present, is legitimate. It however should be considered that planets also are going away from the earth again and in addition is present a fluctuation according to the time of day due to the rotation of the earth, while the mobile telephone masts in our vicinity radiate in continuous operation.

In this window in addition the clocking of the brain currents takes place at 10 Hz. I would recommend blocking the acoustic relevant range between 2 cm (16 kHz) and 3 m wavelength (100 Hz) for all technical use. Every operation of a transmitter in a biological window harms all people and cannot be answered for by any institution.

It further should be considered that the biological window of the plants and animals as a rule correspond to that of man, but sometimes are shifted significantly upward or downward in wavelength. We are not entitled to judge nature. The immune system of the animals now obviously has reached the breaking point and also that of man doesn't seem to be that anymore, which it originally was.
We must proceed from the assumption that many diseases on the one hand and therapy methods on the other hand partly direct and partly indirect have to do something with scalar waves. (E.g. the occurring of cancer[<4i>]).

<i>: H. Mayer, G. Winklbaur: Biostrahlen, Verlag ORAC, Wien 1989, 5. Auflage, S. 97: Messung von der DNS eines Gurkenkeims abstrahlenden Photonen.

<ii>: A. Popp: Neue Horizonte in der Medizin, 2.Aufl. Haug Verlag Heidelberg 1987

<iii>: Hartmut. Heine: Lehrbuch der biologischen Medizin. Grundregulation und Extrazellulare Matrix, 2. Aufl. 1997, Hippokrates Verlag Stuttgart, S. 56

<4i>: K. Meyl: Skalarwellenstrahlung. Welche Bedeutung haben Skalarwellen fur die Medizin? GNP-Vortrag am 29.04.2001, Rhein-Main-Halle Wiesbaden, see: Co'med Fachzeitschrift fur Komplementarmedizin, 6/2001, pp.55-60.

I. According to the Maxwell theory:

1. Faraday's law of induction:

$$\text{rot}\,\mathbf{E} = -\,\delta\mathbf{B}/\delta t \quad (26.1)$$

with E = E(r,t)

and H = H(r,t) : $\mathbf{B} = \mu \cdot \mathbf{H}$ (26.2)

$$-\,\text{rot rot}\,\mathbf{E} = \mu \cdot \delta(\text{rot}\,\mathbf{H})/\delta t \quad (26.3)$$

2. Ampere's law:

$$\text{rot}\,\mathbf{H} = \mathbf{j} + \delta\mathbf{D}/\delta t \quad (26.4)$$

with:

Ohm's law: $\mathbf{j} = \sigma \cdot \mathbf{E}$ (26.5)

dielectric displacement: $\mathbf{D} = \varepsilon \cdot \mathbf{E}$ (26.6)

relaxation time: $\tau = \varepsilon/\sigma$ (26.7)

$$\text{rot}\,\mathbf{H} = \varepsilon \cdot (\mathbf{E}/\tau + \delta\mathbf{E}/\delta t) \quad (26.8)$$

3. Inserting equation 26.8 into 26.3 yields:

$$-\,\text{rot rot}\,\mathbf{E} = \mu \cdot \varepsilon \cdot (1/\tau \cdot \delta\mathbf{E}/\delta t + \delta^2\mathbf{E}/\delta t^2) \quad (26.9)$$

with the abbreviation: $\mu \cdot \varepsilon = 1/c^2$ (26.10)

4. Field equation of a damped transverse wave:

$$\underbrace{-\,\text{rot rot}\,\mathbf{E} \cdot c^2}_{\text{transverse}} = \underbrace{\delta^2\mathbf{E}/\delta t^2}_{\text{wave}} + \underbrace{(1/\tau) \cdot \delta\mathbf{E}/\delta t}_{\text{vortex damping}} \quad (26.11)$$

Fig. 26.1: ____ Derivation of the wave damping by means of the formation of vortices![i]

[i]: see also EMC, part 1, chapter 5.3, 2.borderline case.

26. Recapitulation from the viewpoint of textbook physics

Now that we in the meantime have accumulated innumerable mosaic parts as inspiring contributions to the discussion for the information technical seminar, it is time to sort the ideas and to put the parts together to an overall picture.
Sceptics and orthodox scientists can only be convinced, if we start from textbook physics and completely do without postulates. Those demands will be fulfilled!

26.1 Common misinterpretation of the antenna losses

The mathematical description of physical relations leads to the well-known laws, which shouldn't be doubted anymore as soon as they are accepted to be correct. But what about the interpretation? Although a law dictates the interpretation and there is no choice, because laws must be adhered to, yet textbooks from time to time violate the mathematically dictated interpretation, a circumstance, which can't be accepted. I would like to illustrate this with an example.

Let us assume that the measured degree of effectiveness of a transmitting antenna amounts to 80 percent. There exist better antennas, but also distinctly worse antennas, but I'm not aiming at a certain construction. The statement simply says, that 80% of the fed in HF-power is transformed into Hertzian waves. Thus there arises a loss of power of 20 percent, and the question follows: of what do those 20% consist?

The answer, which is usual among experts and is supported by the textbooks, reads: the antenna wire gets hot and also the air around the antenna is heated by dielectric losses. In short, heat is formed.
But I have to point out and will furnish proof that this interpretation is predominantly wrong! It in any case isn't in accord with the laws of Maxwell. Who namely obeys the laws, comes to an entirely different result!

A short derivation brings it to light (fig. 26.1).
We start with the formulation of Faraday's law of induction according to the textbooks (26.1), apply the curl-operation to both sides of the equation (26.3) and insert in the place of rot H Ampere's law (26.4-26.8). The generally known result describes a damped electromagnetic wave (26.11)[◁▷].
It on the one hand is a transverse wave, which represents 80% of the antenna power for our example. On the other hand a damping term can be found in the equation, which obviously corresponds to the sought-for 20%. With that the answer would have been found. We realize that because of a damping of the wave 20% antenna losses arise. These losses can't concern heat at all, since the damping term in the equation has got nothing in common with thermodynamics. In the equation doesn't stand anything about heat! Such a mistake!

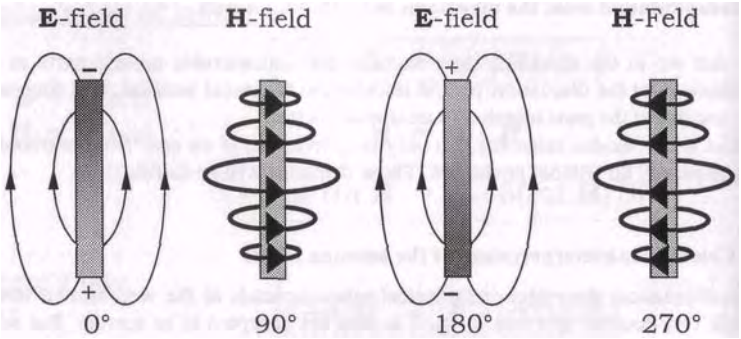

Fig. 21.8 A: The fields of the oscillating dipole antenna.[i]

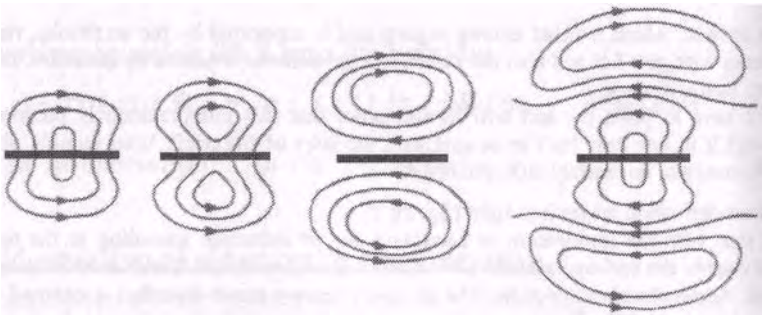

Fig. 21.9 A: The coming off of the electric field lines from the dipole.

<i>: Repetition belonging to chapter 21

26.2 Wave damping by field vortices

- Mathematically seen the damping term describes vortices of the electromagnetic field. This term for instance forms the basis of all eddy current calculations[ii].
- Physically seen some waves - in our example it is 20 percent - roll up to field vortices, with which the wave damping and the antenna losses would be explained.

In the course of time a substantial part of the generated vortices will fall apart. These thereby will produce eddy losses in form of heat. Thus eventually still heat is produced - agreed. The criticism of the textbooks consists of the circumstance that we by no means can proceed from the assumption that all vortices spontaneously fall apart and a total conversion into heat will take place. The process in addition takes place with a temporal delay. The time constant x gives information in this respect. Field energy is buffered in the vortex, where some vortices live very long and it can't be ruled out that a few even exist as long as you like.

To find out more about these field vortices and their behaviour, one has to get deep into vortex physics. Unfortunately nothing can be found about vortex physics in the textbooks. The mistake is systematic. The following short compendium should help close the gap:

- Mathematically seen a closed-loop electromagnetic field vortex will show as a scalar. Such field vortices, which are mediated by a scalar field, are propagating exactly as charged particles in longitudinal manner as a scalar wave.
- Physically seen a closed-loop field vortex has got particle nature. If one particle kicks off the next one then an impulse is mediated, then a shock wave is occurring, a longitudinal undulation of the particles.

From the vortex physical view the interpretation of the antenna example now sounds entirely different:
The charge carriers in an antenna wire oscillating with high-frequency form a longitudinal shock wave. Between current and tension voltage usually a phase shift of 90° is present. The fields produced by these charge carriers form a scalar wave field in the immediate vicinity of the antenna, the so-called near-field zone, which likewise contains longitudinal field components and shows a phase shift of 90° between electric and magnetic field (fig. 21.8 A). As in textbooks is clarified by field lines, the generated fields actually form vortices, where one structure kicks off the next one (fig. 21.9 A).

The vortices in the near-field zone of an antenna consist of standing waves, which obviously are transforming with increasing distance. In our example 80% of these are unrolling and turn into transverse waves, whereby the characteristic phase angle between E- and H-field at that occasion becomes zero.
Let's turn again to those 20 percent loss.

<ii>: s.a.: K. Meyl: Wirbelstrome, Diss. Uni. Stuttgart 1984, INDEL Verlagsabt.

I. According to the Maxwell theory:

The consistent application of textbook physics

- Longitudinal waves run in the direction of a field pointer.
- The field pointer oscillates, the vector of velocity oscillates along!
- At relativistic velocities field vortices are subject to the Lorentz contraction.
- The faster the oscillating vortex is on its way, the smaller it gets.
- The vortex permanently changes its diameter (see fig. 21.10 B).
- With the diameter the wavelength decreases (see fig. 22.4).
- The swirl velocity is constant (= speed of light c).
- The eigenfrequency of the vortex oscillates with opposite phase to the wavelength.
- The vortex acts as a frequency converter!
- The measurable mixture of frequencies is called noise.

leads to the statement:

- The antenna noise corresponds to the antenna losses!

II. Mathematical description of a wave by the inhomogeneous Laplace equation:

$$\underbrace{\Delta \mathbf{E} \cdot c^2}_{\text{Laplace operator}} = \underbrace{-\,\text{rot rot}\,\mathbf{E} \cdot c^2}_{\text{transverse (radio wave)}} + \underbrace{\text{grad div}\,\mathbf{E} \cdot c^2}_{\text{longitudinal (scalar wave)}} = \underbrace{\delta^2\mathbf{E}/\delta t^2}_{\text{wave}} \qquad (26.12)$$

Divergence E is a scalar!
The corresponding term founds a scalar wave.

Fig. 26.3: Mathematical description of a wave according to Laplace.

26.3 Laplace versus Maxwell

Longitudinal waves as is well-known don't know a fixed velocity of propagation at all. Since they run in the direction of an oscillating field pointer also the vector of velocity will oscillate. For so-called relativistic velocities in the range of the speed of light c the field vortices are subject to the Lorentz contraction. That means, the faster the oscillating vortex is on its way, the smaller it gets. The vortex, as a mediator of a scalar wave carrying impulse, permanently changes its diameter.
Since, in the case of the vortices, it should concern rolled up waves, the vortex velocity will continue to be c, with which the wave now runs around the vortex centre in a circle. From that follows that if the diameter gets smaller, the wavelength of the vortex as well will decrease, whereas the eigenfrequency of the vortex accordingly increases. If the next moment the vortex oscillates back, the frequency again decreases. The vortex acts as a frequency converter! The mixture of high-frequency signals distributed over a broad frequency band formed in this way, is called noise. A noise signal indeed is measured from the outside with the help of broadband receivers.. We also speak of antenna noise and with this knowledge we can further specify the 20% antenna losses: The antenna produces 20 % noise, which can be put equal to the generated vortices because of the wave damping.

At this point the Maxwell theory doesn't leave us room for interpretation at all. If in the textbooks the impression is aroused, as if the noise were an independent discipline, than that is not true at all. How much the noise is connected with the electromagnetic waves, proves a short look at the wave equation.

The wave equation found in most textbooks has the form of an inhomogeneous Laplace equation. The famous French mathematician Laplace considerably earlier than Maxwell did find a comprehensive formulation of waves and formulated it mathematically (eq. 26.12), which until today is still accepted as valid.

On the one side of the wave equation the Laplace operator stands, which describes the spatial field distribution, and which according to the rules of vector analysis can be decomposed into two parts. On the other side the description of the time dependency of the wave can be found as an inhomogeneous term.

If the wave equation according to Laplace (26.12) is compared to the one, which the Maxwell equations have brought us (26.11), then two differences clearly come forward:

1. In the Laplace equation the damping term is missing. It doesn't describe the formation of vortices, and that means vortices do not exist at all, or present vortices have been there from the beginning.
2. With divergence E a scalar factor appears in the wave equation, which founds a scalar wave.

At this point at once hot tempered discussions concerning the question of the existence of scalar waves blaze up. But this question has already been answered clearly with the vortex consideration. Since an accepted description of longitudinal and scalar waves exists with the plasma wave and the plasma wave can be derived directly without postulate from the term of the wave equation (chapter 21.4/21.5), which founds scalar waves, there are further arguments present for their existence.

I. According to Maxwell:

$$\underbrace{-\,\mathrm{rot\,rot}\,\mathbf{E}\cdot c^2}_{\text{transverse}} = \underbrace{\delta^2\mathbf{E}/\delta t^2}_{\text{wave}} + \underbrace{(1/\tau)\cdot\delta\mathbf{E}/\delta t}_{\text{vortex damping}} \qquad (26.11)$$

Description of electromagnetic waves with vortex damping
Example: sunlight and the damping in the ionosphere (bleu sky).

II. According to Laplace:

$$\underbrace{\Delta\mathbf{E}\cdot c^2}_{\text{Laplace operator}} = \underbrace{-\,\mathrm{rot\,rot}\,\mathbf{E}\cdot c^2}_{\text{transverse (Hertz)}} + \underbrace{\mathrm{grad\,div}\,\mathbf{E}\cdot c^2}_{\text{longitudinal (Tesla)}} = \underbrace{\delta^2\mathbf{E}/\delta t^2}_{\text{wave}} \qquad (26.12)$$

Description of transverse electromagnetic waves (Hertzian waves) and longitudinal scalar waves (Tesla radiation).
1st example: propagation of light as a wave or as a particle.
2nd example: useful signal or noise signal of an antenna.

III. Mathematically seen (comparison of coefficients):

$$\underbrace{(1/\tau)\cdot\delta\mathbf{E}/\delta t}_{\text{vortex}} + \underbrace{\mathrm{grad\,div}\,\mathbf{E}\cdot c^2}_{\text{scalar}} = 0 \qquad (26.13)$$

IV. Physically seen
(from the comparison of equation 26.12 with equation 26.11):

Vortices propagate longitudinally as a scalar wave!

Fig. 26.2: _____ Comparison of the two wave descriptions.

26.4 Error term in the wave equation

From the comparison of coefficients of both wave descriptions follows even more:

- Mathematically seen the damping - resp. vortex term according to Maxwell can be put equal to the scalar wave term according to Laplace.
- Physically seen the generated field vortices form and found a scalar wave.

Here also doesn't exist any room for interpretation, as long as we work with the wave equation according to Laplace and at the same time adhere to the Maxwell theory. If however the scalar wave part is put equal to zero, as is common practise in the textbooks, then as a consequence neither vortices nor noise may exist. But that contradicts all measuring technical experience! Since every antenna produces more or less noise, the textbooks obviously only show half the truth. Science however gropes for the whole truth and that should be fathomed.

If in the case of the antenna example the vortex part amounts to 20%, then that's tantamount to 20% scalar wave part, resp. 20% noise. The scalar wave part constitutes with regard to the Hertzian useful wave something like an error term in the wave equation. The part definitely is too big, as that it might be put equal to zero. Even so all error consideration in the textbooks is missing, if the scalar wave term is assumed to be zero. That violates all rules of physics and of taught scientific methodism.

In practice this shows by a useful signal going under in the noise and reception not being possible anymore as soon as the scalar wave part gets out of control. Even in this case, for which the degree of effectiveness tends towards zero, it still is common practise to put the error term, which is dominating everything, equal to zero. But who in this point follows the textbooks, disregards with that the wave equation and doing so by no means can refer to the circumstance that all colleagues make the same mistake.

The building of physics behaves like a house of cards, where the cards mutually support each other. Perhaps that is the deeper reason why those, who have discovered a marked card, don't pull it out immediately. In addition they are hindered by the self appointed guardians of the ,,pure doctrine", since everyone knows what happens with the house of cards if the marked card is pulled out. Only, do we want to and can we live with that in the long run? Is it a solution of the problem, if the so-called experts among the physicists and technicians look away and don't deal with the foundation of their branch anymore? If universities crash their basis education into the wall and choke off every contradiction?

Please allow me to pull out the marked card now and place it on the table!

It concerns the question: what is the nature of the field vortices, which form a scalar wave in space. Eddy currents in the iron parts of the antenna are explained with the field equations, but not the noise, which is measured especially in the air. If an antenna on the one hand produces field vortices and as a consequence eddy losses and on the other hand dielectric losses, then we can assume that besides the eddy currents in the conductor also vortices in the dielectric must exist. Let's search for them!

Interim result (comparison of arguments):

The Maxwell equations on the one hand dictate that as the reason for a wave damping only field vortices should be considered.	On the other hand the same laws merely describe eddy currents, which can only occur in the electrically conducting parts of the antenna.
On the one hand the field vortex interpretation makes it possible to explain the noise of an antenna perfectly.	On the other hand does the noise appear in the neighbourhood of the antenna, thus in the air and not in the iron parts!
The mathematical formulation reveals, how wave and vortex, resp. noise, co-operate and how one should imagine the conversion of one form into the other form.	In field physics on the other hand is missing a useful description of electric field vortices in a dielectric, which could found the noise signal.

Table 26.5: Arguments pro and contra.

26. 5 Interim result

It shouldn't be a disadvantage, to interprete physical laws more consistently than usual, even if in the present case orthodox science through that at first should fall into a deep crisis. If the way is worthwhile, only will show at the end.
Let us try to work out the contradictions in form of a comparison of arguments:

- The Maxwell equations on the one hand dictate that as the reason for a wave damping only field vortices should be considered.
  - On the other hand the same laws merely describe eddy currents, which can only occur in the electrically conducting parts of the antenna. .
- On the one hand the field vortex interpretation makes it possible to explain the noise of an antenna perfectly. .
  - On the other hand does the noise appear in the neighbourhood of the antenna, thus in the air and not in the iron parts!
- The mathematical formulation reveals, how wave and vortex, resp. noise, co-operate and how one should imagine the conversion of one form into the other form.
  - In field physics on the other hand is missing a useful description of electric field vortices in a dielectric, which could found the noise signal.

The most obvious among all conceivable solutions is the one that we have to assume the existence of dielectric field vortices, so-called potential vortices. We are challenged to search for a corresponding description. If the quest should be successful, then the contradictions would be overcome. In addition there is the promise of a whole number of simplifying explanations of various phenomena in the dielectric (see fig. 26.5 and fig. 26.7).

The phenomenon of noise becomes an aspect of wave physics, which is more than merely a field disturbance, which makes the reception of the useful wave more difficult. If the scalar wave nature is realized, then applications can be imagined, in which the noise is used as useful signal. In the way that the scalar part in the wave equation doesn't have to be put to zero anymore to obtain freedom of contradiction, even optimizations of antennas or of capacitors are possible with regard to the dielectric losses by means of the calculation of the scalar part.

New in any case is the idea that the dielectric losses of a capacitor are eddy losses and not a defect in material of the insulating material. With that the capacitor losses correspond to a generated noise power. We also can say, every capacitor more or less produces noise! The electric field lines point from one capacitor plate to the other plate. If one plate radiates as a transmitter and the other plate functions as a receiver, then the field propagation takes place in the direction of the electric field pointer and that again is the condition for a longitudinal wave. Here the circle closes in the conclusion, the capacitor field mediates dielectric field vortices, which following the field lines found a scalar wave because of their scalar nature. The heating of the capacitor results from the decay of vortices.

Potential vortices explain div. phenomena in the dielectric:

1. The **noise** no longer is factored out of the field theory.
2. The scalar (noise) part in the wave equation no longer has to be put to zero (div $\mathbf{E} \neq 0$).
3. The wave descriptions according to Maxwell (26.11) and according to Laplace (26.12) are consistent and free of contradiction.
4. The dielectric losses of an antenna can be found physically and even can be calculated with the wave equation.
5. **Also the dielectric losses** of a capacitor are **eddy losses** (and not a defect in material of the insulating material).
6. The **capacitor losses** correspond to a generated **noise power**.
7. The **dielectric constant** ε doesn't have to be written down complex as until now to give reasons for the occurring losses, and so the inner contradiction is solved, which is hidden in a complex constant. One should only remember the definition of the speed of light $c = 1/\sqrt{\varepsilon\mu}$ (eq. 26.10) and the insurmountable problems in the textbooks, which are brought by a complex ε!
8. The field lines point from one capacitor plate to the other plate. If one plate radiates as a transmitter and the other plate functions as a receiver, then the field propagation takes place in the direction of the electric field pointer and that again is the condition for a **longitudinal wave**.
9. The capacitor field mediates dielectric field vortices, which following the field lines found a **scalar wave** because of their scalar nature.
10. As an inhabitant of a dielectric between two capacitor plates (earth and ionosphere) also **man** is a product of these field vortices.
11. Scalar waves can be modulated moredimensionally and be used as **carrier of information**, as Prof. Sheldrake has proven with his proof of the existence of morphogenetic fields[<i>].

Fig. 26.6: ____ Advantages of a field description extended with potential vortices.

<i>: Rupert Sheldrake: Seven Experiments That Could Change the World. Riverhead Books, 1995

26.6 Failure of the Maxwell theory

If the capacitor losses or the antenna noise should concern dielectric losses in the sense of vortex decay of potential vortices, which don't occur in the Maxwell theory at all, then we are confronted with a massive contradiction:

- For the description of the losses the Maxwell; theory on the one hand only offers field vortices and those only in the conductive medium.
  - On the other hand do the dielectric losses occut in the nonconductor and in the air.

- In conductive materials vortex fields occur, in the insulator however the fields are irrotational. That isn't possible, since at the transition from the conductor to the insulator the laws of refraction are valid and these require continuity! Hence a failure of the Maxwell theory (Fig. 26.7) will occur in the dielectric.

  - As a consequence the existence of vortex fields in the dielectric, so-called potential vortices, should be required!

In electrodynamics as a help the approach of a vector potential A is used, which leads to a complex formulation of the dielectric constant ε and in this way makes it possible, to mathematically describe the dielectric losses of a capacitor by means of the load angle, which stretches in the complex plane. But which physical value does this approach have? How can now the inner contradiction be explained, which is hidden in a complex constant of material? One should only remember the definition of the speed of light $c = 1/\sqrt{\varepsilon\mu}$ (eq. 26.10) and its dependency of ε. For a complex ε here are resulting insurmountable problems in the textbooks.
From the viewpoint of mathematics the introduction of the vector potential at first may represent a help. The before mentioned contradictions however fast raise doubts to the model concept, which from a physical viewpoint eventually will lead to errors, if the speed of light isn't constant anymore and even should be complex.

These considerations should be sufficient as a motive to require potential vortices, even if for their description the field theory according to the textbooks has to be revised. As a supplement there is pointed to the following points:

- As an inhabitant of a dielectric between two capacitor plates also man is a product of these field vortices.

- Scalar waves can be modulated moredimensionally and be used as carrier of information, as Prof. Sheldrake has proven with his proof of morphogenetic fields[<i>].

The dielectric vortices moreover provide an explanation for natural events. They form the key to numerous disciplines of science, from physics over biology up to medicine.

<i>: Rupert Sheldrake: Seven Experiments That Could Change the World. Riverhead Books, 1995

Problem of continuity in the case of the coming off of vortices

Example: hightension cable

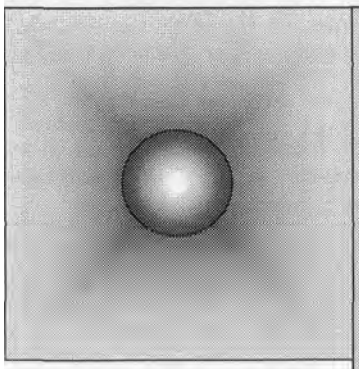

In ***conductive materials vortex fields*** *occur in the* ***insulator*** *however the fields are* ***irrotational****.*
That isn't possible, since at the transition from the conductor to the insulator the ***laws of refraction*** *are valid and these require* ***continuity!***
Hence a ***failure of the Maxwell theory*** *will occur in the dielectric!*

Conclusion: ♦ According to the Maxwell theory there exist no vortices of the electric field *(no potential vortices)* and therefore *no scalar waves.*

♦ Without theory it is impossible to design a usable *scalar wave gauge* and to furnish *evidence*. ⇒ **Classic closed loop conclusion:**

♦ The missing of scientific evidence again „proves" the assumption of the irrotationality and „confirms" the correctness of the Maxwell theory.

♦ Hence it cannot be, what shouldn't be!

Fie. 26.7: Concerning the failure of the Maxwell theory

26.7. Concerning the evidence situation

In the question, if a physical phenomenon should be acknowledged as such, experimental, mathematical and physical evidence should be shown. In the case of the potential vortices, the vortices of the electric field and their propagation as a scalar wave, the historical experiments of Nikola Tesla[<i>] and the modern clone of these can be judged as experimental evidence[<ii>].

With the well-known wave equation a mathematical description for this phenomenon has been specified and discussed[<iii>]. It will be shown that both transverse and longitudinal wave parts are contained alongside in the wave equation, i.e. both radio waves according to Hertz and scalar waves according to Tesla. Doing so the mathematically determined scalar wave properties are identical with the experimental results!
The wave equation is an inhomogeneous Laplace equation and the first and oldest description of scalar waves. It thereby is unimportant, if the famous mathematician Laplace himself already may have realized and discussed this circumstance or not. The description fits perfectly and that is what counts!

At this point the third point should be put on the agenda, the physical evidence. This is connected very closely with the question for a suitable field theory and that again is basing on a corresponding approach.

<i>: N. Tesla: Apparatus for Transmission of Electrical Energy, US-Patent-No.: 649,621, New York 1900, Dr. Nikola Tesla: Complete Patents pp318-321.

<ii>: Johannes von Buttlar im Gesprach mit Prof. Dr. Konstantin Meyl: Neutrinopower, Argo-Verlag, Marktoberdorf, l.Aufl. 2000.

<iii>: K. Meyl: Scalar Waves: Theory and Experiments, Journal of Scientific Exploration, Vol. 15, No. 2, pp. 199-205, 2001

(* * * Task Schedule * * *)

1. Neutrino radiation => energy radiation!
   (acc. to Pauli: ν cares for missing energy in the case of the ß-decay)
2. High neutrino density => high energy density!
   3. Neutrino = particle without charge or mass (mean), but because of oscillations: effective value of charge and mass $\neq$ zero!
   4. Interaction only in the case of resonance (e.g. weak interaction)!
   (same frequency, 180° phase shift)
   5. Neutrino radiation is an energy source which can be used (not a question of physics, only a question of technology!)
6. Particle radiation (neutrino) => shock wave (like sound)
   => longitudinal wave
   => scalar wave (mathem.)
7. Interaction/resonance of the v = scalar wave problem
8. Scalar waves are a problem of the field theory!
9. Maxwell theory neglects scalar waves.

- Search for a new approach (chap. 27.8)
- Derivation of the Maxwell equations as a
- Derivation of scalar waves (chap. 27.13)
- Derivation of the gravitation and more

Table 27.1: Task schedule belonging to chapter 27

27. Faraday versus Maxwell

Numerous phenomena of the electromagnetic field are described sufficiently accurate by the Maxwell equations, so that these as a rule are regarded as a universal field description. But if one looks more exact it turns out to be purely an approximation, which in addition leads to far reaching physical and technological consequences. We must ask ourselves:

- What is the Maxwell approximation?
- How could a new and extended approach look like?
  - Faraday instead of Maxwell, which is the more general law of induction?
- Can the Maxwell equations be derived as a special case?
- Can also scalar waves be derived from the new approach?
- Can the gravitation as well be derived and a lot else more?

On the one hand it concerns the big search for a unified physical theory and on the other hand the chances of new technologies, which are connected with an extended field theory. As a necessary consequence of the derivation, which roots strictly in textbook physics and manages without postulate, scalar waves occur, which could be used manifold. In information technology they are suited as a carrier wave, which can be modulated moredimensionally, and in power engineering the spectrum stretches from the wireless transmission up to the collection of energy out of the field.

27.1 Energy out of the field

Neutrinos for instance are such field configurations, which move through space as a scalar wave. They were introduced by Pauli as massless but energy carrying particles to be able to fulfil the balance sheet of energy for the beta decay. Nothing would be more obvious than to technically use the neutrino radiation as an energy source.
But for a technical exploitation a useful model description of the particles and their interaction is imperative. For the sake of simplicity we imagine the neutrino to be an oscillating particle, which permanently oscillates back and forth between the state of an electron and that of a positron. With that the polarity changes from positive to negative and back again and the charge averaged over time is zero. Because of the change from a state of matter to the state of an anti-particle also next to no mass can be measured anymore.
A technical oscillator operated in resonance, which oscillates with the same frequency but opposite charge, will interact with the particle and build up an oscillating electromagnetic interaction, with which we already are familiar as the weak interaction in the proximity of a neutrino.

Tubular vortices

• Examples: drain vortex (bathtub vortex)
whirlwind and waterspout, tornado (image).

Inside:	expanding vortex
Outside:	contracting anti-vortex
Condition	for coming off: equally powerful vortices
Criterion:	viscosity
Result:	tubular structure

Fig. 27.2: ____ Vortex and anti-vortex - a physical basic principle

<i>: Lugt: Wirbelstromung in Natur und Technik, G. Braun Verlag Karlsruhe 1979, Bild „Tornado" von Tafel 21, Seite 356

The propagation of particle radiation as a longitudinal shock wave however can't be described with the normally used field theory and the Maxwell equations, so that the field theory at this point must be reworked. Connected with this is the question of what is oscillating here, a question, which often is answered with an aether of whatever nature. I speak of field vortices and call the aether a property of the field. With that the set of difficulties is shifted into the domain of vortex physics.

27.2 Vortex and anti-vortex

In the eye of a tornado the same calm prevails as at great distance, because here a vortex and its anti-vortex work against each other. In the inside the expanding vortex is located and on the outside the contracting anti-vortex. One vortex is the condition for the existence of the other one and vice versa. Already Leonardo da Vinci knew both vortices and has described the dual manifestations (chapter 3.4).

In the case of flow vortices the viscosity determines the diameter of the vortex tube where the coming off will occur. If for instance a tornado soaks itself with water above the open ocean, then the contracting potential vortex is predominant and the energy density increases threateningly. If it however runs overland and rains out, it again becomes bigger and less dangerous.

The conditions for the bathtub vortex are similar. Here the expanding vortex consists of air, the contracting vortex however of water. In flow dynamics the relations are understood. They mostly can be seen well and observed without further aids.

In electrical engineering it's different: here field vortices remain invisible and not understood. Only so the Maxwell theory could find acceptance, although it only describes mathematically the expanding eddy current and ignores its anti-vortex. I call the contracting anti-vortex potential vortex" and point to the circumstance, that every eddy current entails the anti-vortex as a physical necessity.
Because the size of the forming structures is determined by the electric conductivity, in conducting materials the vortex rings, being composed of both vortices, are huge, whereas they can contract down to atomic dimensions in nonconductors. Only in semiconducting and resistive materials the structures occasionally can be observed directly (fig. 4.8).

Spherical vortices

Examples:	expanding vortex	contracting vortex
• quantum physics	collision processes (several quarks)	gluons (postulate!)
• nuclear physics	repulsion of like	strong interaction (postulate!)
• atomic physics	centrifugal force of the enveloping electrons	electrical attraction Schrodinger equation
• astro-physics	centrifugal force (inertia)	gravitation (can not be derived?!)

Example: elementary particles as electromagnetic field vortices

Inside:	expanding eddy current (skin effect)
Outside:	contracting anti-vortex (potential vortex)
Condition	for coming off: equally powerful vortices
Criterion:	electric conductivity (determines diameter)
Result:	spherical structure (consequence of the pressure of the vacuum)

Fig. 27.3: _____ Spherical structures as a result of contracting potential vortices.<i>

Demokrit (460-370 BC) equated the vortex concept with „law of nature"! = the first attempt to formulate a unified physics.

<i>: see Part 1, chapter 4.3

27.3 Vortices in the microcosm and macrocosm

The approximation, which is hidden in the Maxwell equations, thus consists of neglecting the anti-vortex dual to the eddy current. It is possible that this approximation is allowed, as long as it only concerns processes inside conducting materials. If we however get to insulating materials the Maxwell approximation will lead to considerable errors and it won't be able to keep it anymore.

If we take as an example the lightning and ask how the lightning channel is formed: Which mechanism is behind it, if the electrically insulating air for a short time is becoming a conductor? From the viewpoint of vortex physics the answer is obvious: The potential vortex, which in the air is dominating, contracts very strong and doing so squezes all air charge carriers and air ions, which are responsible for the conductivity, together at a very small space to form a current channel.

The contracting potential vortex thus exerts a pressure and with that forms the vortex tube. Besides the cylindrical structure another structure can be expected. It is the sphere, which is the only form, which can withstand a powerful pressure if that acts equally from all directions of space. Only think of ball lightning. Actually the spherical structure is mostly found in microcosm till macrocosm. Let's consider some examples and thereby search for the expanding and contracting forces (fig. 27.2).

- In quantum physics one imagines the elementary particles to be consisting of quarks. Irrespective of the question, which physical reality should be attributed to this model concept, one thing remains puzzling: The quarks should run apart, or you should try to keep together three globules, which are moving violently and permanently hitting each other. For this reason glue particles were postulated, the so-called gluons, which now should take care for the reaction force, but this reaction force is nothing but a postulate!

- In nuclear physics it concerns the force, which holds together the atomic nucleus, which is composed of many nucleons, and gives it the well-known great stability, although here like charged particles are close together. Particles, which usually repel each other. Between the theoretical model and practical reality there is an enormous gap, which should be overcome by introducing of a new reaction force. But also the nuclear force, called strong interaction, is nothing but a postulate!

- In atomic physics the electric force of attraction between the positive nuclear charge and the negatively charged enveloping electrons counteracts the centrifugal force. In this case the anti-vortex takes care for a certain structure of the atomic hull, which obey the Schrodinger equation as eigenvalue solutions. But also this equation irrespective of its efficiency until today purely is a mathematical postulate, as long as its origin is not clear.

- In astrophysics centrifugal force (expansion) as a result of the inertia and gravitation (contraction) as a result of the attraction of masses are balanced. But the "gravitation" puts itself in the way of every attempt to formulate a unified field theory. Also this time it is the contracting vortex, of which is said it can't be derived nor integrated.

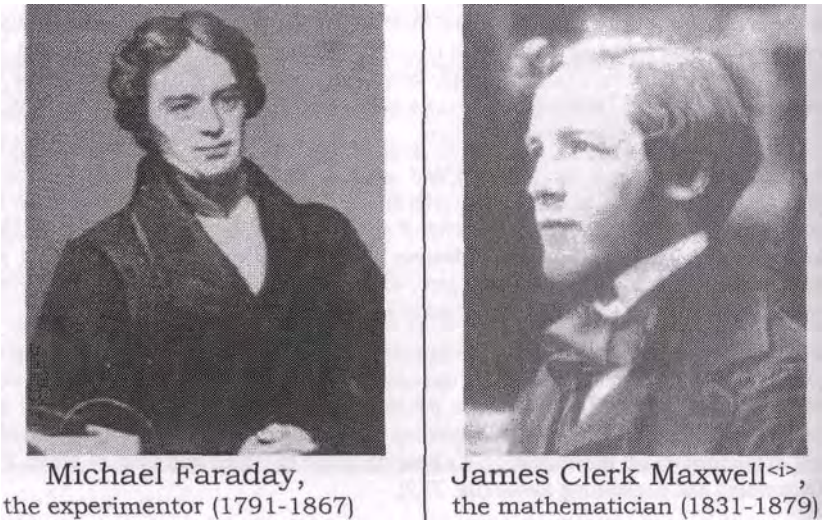

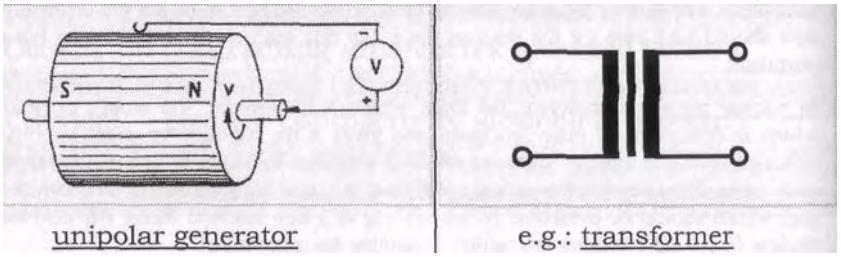

Fig. 27.4: ____ The fathers of the law of induction

<i>: J.C. Maxwell: A treatise on Electricity and Magnetism, Dover Publications

It is remarkable how in the domain of the contracting vortex the postulates are accumulating. But this hasn't always been the case. In ancient Greece already 2400 years ago Demokrit has undertaken an attempt to formulate a unified physics. He traced all visible and observable structures in nature back to vortices, each time formed of vortex and anti-vortex. This phenomenon appeared him to be so fundamental, that he put the term "vortex" equal to the term for „law of nature". The term „atom" stems from Demokrit (460-370 BC).

Seen this way the physicists in ancient times already had been further than today's physics, which with the Maxwell approximation neglects the contracting vortex and with that excludes fundamental phenomena from the field description or is forced to replace them by model descriptions and numerous postulates.
What we need is a new field approach, which removes this flaw and in this point reaches over and above the Maxwell theory.

27.4 Faraday's law and Maxwell's formulation

In the choice of the approach the physicist is free, as long as the approach is reasonable and well founded. In the case of Maxwell's field equations two experimentally determined regularities served as basis: on the one hand Ampere's law and on the other hand the law of induction of Faraday. The mathematician Maxwell thereby gave the finishing touches for the formulations of both laws. He introduced the displacement current D and completed Ampere's law accordingly, and that without a chance of already at his time being able to measure and prove the measure. Only after his death this was possible experimentally, what afterwards makes clear the format of this man.
In the formulation of the law of induction Maxwell was completely free, because the discoverer Michael Faraday had done without specifications. As a man of practice and of experiment the mathematical notation was less important for Faraday. For him the attempts with which he could show his discovery of the induction to everybody, e.g. his unipolar generator, stood in the foreground.
His 40 years younger friend and professor of mathematics Maxwell however had something completely different in mind. He wanted to describe the light as an electromagnetic wave and doing so certainly the wave description of Laplace went through his mind, which needs a second time derivation of the field factor. Because Maxwell for this purpose needed two equations with each time a first derivation, he had to introduce the displacement current in Ampere's law and had to choose an appropriate notation for the formulation of the law of induction to get to the wave equation. His light theory initially was very controversial. Maxwell faster found acknowledgement for bringing together the teachings of electricity and magnetism and the representation as something unified and belonging together<i> than for mathematically giving reasons for the principle discovered by Faraday.
Nevertheless the question should be asked, if Maxwell has found the suitable formulation, if he has understood 100 percent correct his friend Faraday and his discovery. If discovery (from 29.08.1831) and mathematical formulation (1862) stem from two different scientists, who in addition belong to different disciplines, misunderstandings are nothing unusual. It will be helpful to work out the differences.

Law of induction

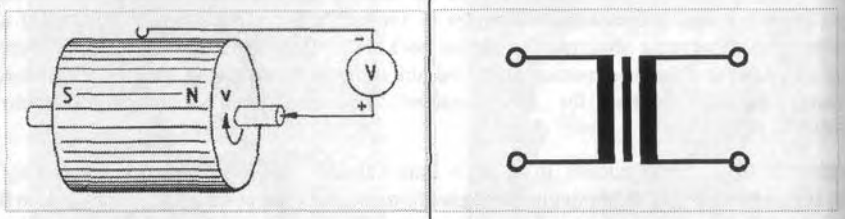

unipolar generator	e.g.: transformer
discovery of Faraday	2nd Maxwell equation
$\mathbf{E} = \mathbf{v} \times \mathbf{B}$ (27.1)	$\mathrm{rot}\,\mathbf{E} = -\,d\mathbf{B}/dt$ (27.1*)
unipolar induction	law of induction generally

Fig. 27.5: Two formulations for one law
As a mathematical relation between the vectors of the electric field strength **E** and the induction **B** (= magnetic flux density)

Consequences
(the physically mean of the „field concept"):

• The **Faraday approach** describes a field physical principle	• **Maxwell equations** describe the fields of charged particles
• field = experience: We experience the electric as a magnetic field and vice versa as a result of a relative velocity • Particles do not occur in the Faraday approach	• the electric (**E**-) field = static field of charges, • the magnetic (**H**-) field = field of moving charges. • The origin of the particles remains unsettled (postulate)
• Perfect duality between **E**- and **H**-field.	• No duality in the field description
• **v** leads to dual permutation of **E**- and **H**-field.	• Charge carriers=el. monopoles • No magnetic monopoles!

27.5 The discovery of Faraday

If one turns an axially polarized magnet or a copper disc situated in a magnetic field, then perpendicular to the direction of motion and perpendicular to the magnetic field pointer a pointer of the electric field will occur, which everywhere points axially to the outside. In the case of this by Faraday developed unipolar generator hence by means of a brush between the rotation axis and the circumference a tension voltage can be called off[<i>]. The mathematically correct relation E = v x B I call Faraday-law, even if it only appears in this form in the textbooks later in time[<ii>]. The formulation usually is attributed to the mathematician Hendrik Lorentz, since it appears in the Lorentz force in exactly this form. Much more important than the mathematical formalism however are the experimental results and the discovery by Michael Faraday, for which reason the law concerning unipolar induction is named after the discoverer.
Of course we must realize that the charge carriers at the time of the discovery hadn't been discovered yet and the field concept couldn't correspond to that of today. The field concept was an abstracter one, free of any quantization.

That of course also is valid for the field concept advocated by Maxwell, which we now contrast with the ,,Faraday-law" (fig. 27.4). The second Maxwell equation, the law of induction (27.1*), also is a mathematical description between the electric field strength E and the magnetic induction B. But this time the two aren't linked by a relative velocity v. In that place stands the time derivation of B, with which a change in flux is necessary for an electric field strength to occur. As a consequence the Maxwell equation doesn't provide a result in the static or quasi-stationary case, for which reason it in such cases is usual, to fall back upon the unipolar induction according to Faraday (e.g. in the case of the Hall-probe, the picture tube, etc.). The falling back should only remain restricted to such cases, so the normally used idea. But with which right the restriction of the Faraday-law to stationary processes is made?
The vectors E and B can be subject to both spatial and temporal fluctuations. In that way the two formulations suddenly are in competition with each other and we are asked, to explain the difference, as far as such a difference should be present.

<i>: Part 2, INDEL 1996, Chap. 16.1

<ii>: among others in R.W. Pohl: Einfuhrung in die Physik, Bd.2 Elektrizitatslehre, 21.Aufl. Springer-Verlag 1975, Seite 76 und 130

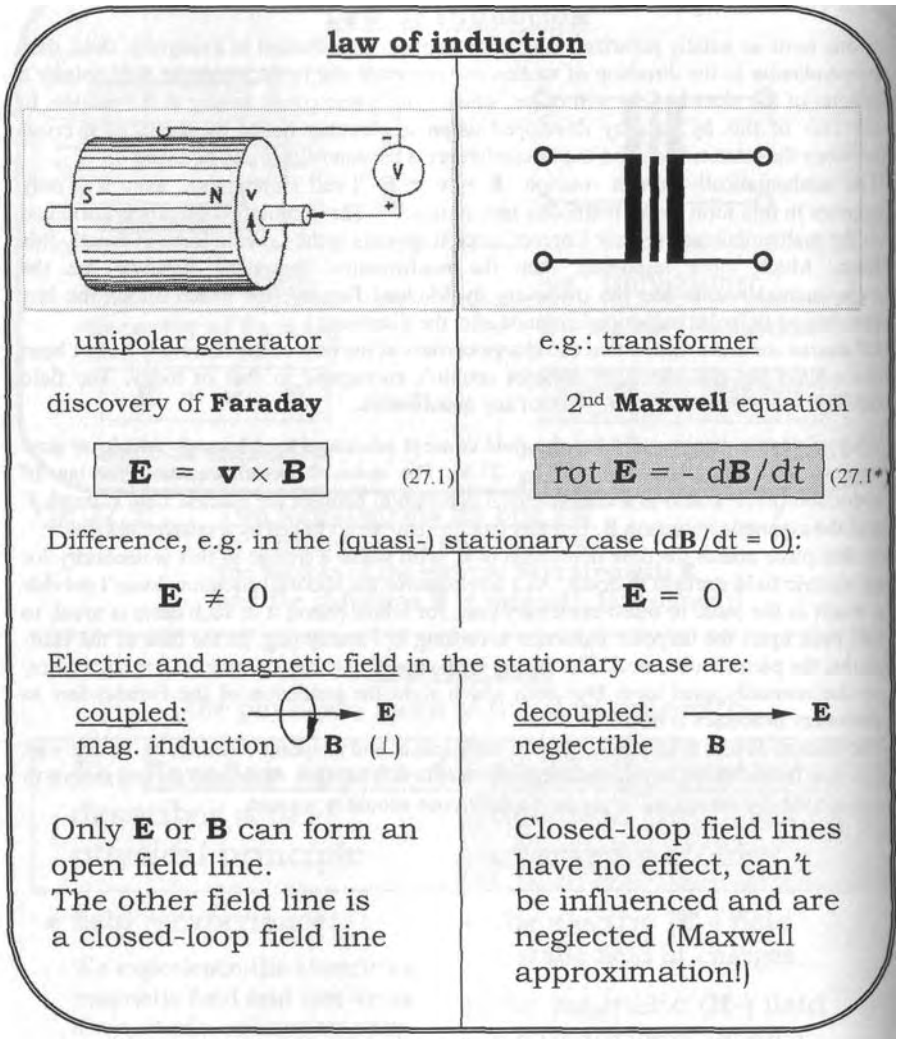

Fig. 27.6: ____Law of induction according to Faraday or Maxwell?

27.6 Different formulation of the law of induction

Such a difference for instance is, that it is common practice to neglect the coupling between the fields at low frequencies. While at high frequencies in the range of the electromagnetic field the E- and the H-field are mutually dependent, at lower frequency and small field change the process of induction drops correspondingly according to Maxwell, so that a neglect seems to be allowed. Now electric or magnetic field can be measured independently of each other. Usually is proceeded as if the other field is not present at all.

That is not correct. A look at the Faraday-law immediately shows that even down to frequency zero always both fields are present. The field pointers however stand perpendicular to each other, so that the magnetic field pointer wraps around the pointer of the electric field in the form of a vortex ring in the case that the electric field strength is being measured and vice versa. The closed-loop field lines are acting neutral to the outside; they hence need no attention, so the normally used idea. It should be examined more closely if this is sufficient as an explanation for the neglect of the not measurable closed-loop field lines, or if not after all an effect arises from fields, which are present in reality.

Another difference concerns the commutability of E- and H-field, as is shown by the Faraday-generator, how a magnetic becomes an electric field and vice versa as a result of a relative velocity v. This directly influences the physical-philosophic question: What is meant by the electromagnetic field?

The textbook opinion based on the Maxwell equations names the static field of the charge carriers as cause for the electric field, whereas moving ones cause the magnetic field. But that hardly can have been the idea of Faraday, to whom the existence of charge carriers was completely unknown. The for his contemporaries completely revolutionary abstract field concept based on the works of the Croatian Jesuit priest Boscovich (1711-1778). In the case of the field it should less concern a physical quantity in the usual sense, than rather the experimental experience"' of an interaction according to his field description. We should interprete the Faraday-law to the effect that we experience an electric field, if we are moving with regard to a magnetic field with a relative velocity and vice versa.

In the commutability of electric and magnetic field a duality between the two is expressed, which in the Maxwell formulation is lost, as soon as charge carriers are brought into play. Is thus the Maxwell field the special case of a particle free field? Much evidence points to it, because after all a light ray can run through a particle free vacuum. If however fields can exist without particles, particles without fields however are impossible, then the field should have been there first as the cause for the particles. Then the Faraday description should form the basis, from which all other regularities can be derived. What do the textbooks say to that?

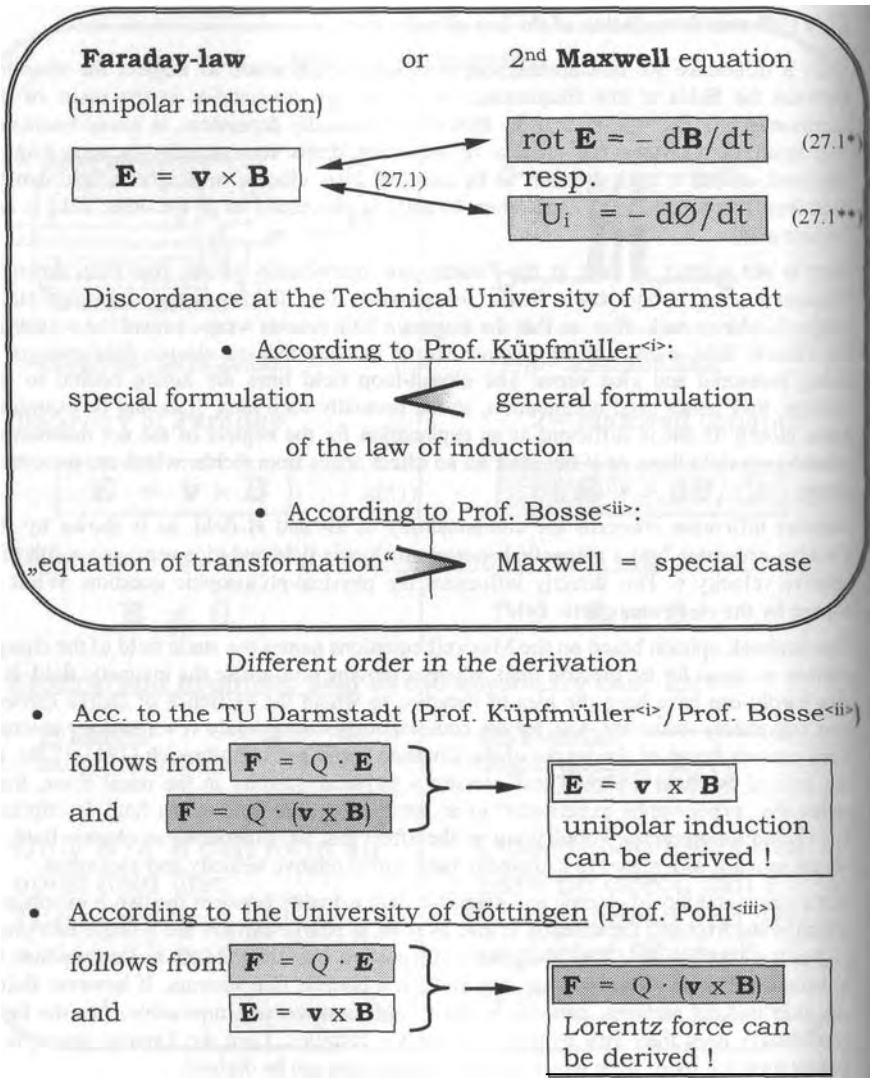

Fig. 27.7: Different opinions and derivations

<i>: K. Kupfmuller: Einfuhrung in die theoretische Elektrotechnik, 12. Auflage, Springer Verlag 1988, Seite 228, Gl. 22.

<ii>: G. Bosse: Grundlagen der Elektrotechnik II, BI-Hochschultaschenbucher Nr. 183, l.Aufl. 1967, Kap. 6.1 Induktion, Seite 58

<iii>: R. W. Pohl: Einfuhrung in die Physik, Band 2 Elektrizitatslehre, 21. Auflage, Springer-Verlag 1975, Seite 77

27.7 Contradictory opinions in textbooks

Obviously there exist two formulations for the law of induction (27.1 and 27.1*), which more or less have equal rights. Science stands for the question: which mathematical description is the more efficient one? If one case is a special case of the other case, which description then is the more universal one?

What Maxwell's field equations tell us is sufficiently known, so that derivations are unnecessary. Numerous textbooks are standing by, if results should be cited. Let us hence turn to the Faraday-law (27.1). Often one searches in vain for this law in schoolbooks. Only in more pretentious books one makes a find under the keyword "unipolar induction". If one however compares the number of pages, which are spent on the law of induction according to Maxwell with the few pages for the unipolar induction, then one gets the impression that the latter only is a unimportant special case for low frequencies. Kupfmuller speaks of a „special form of the law of induction"[<i>], and cites as practical examples the induction in a brake disc and the Hall-effect. Afterwards Kupfmiiller derives from the „special form" the „general form" of the law of induction according to Maxwell, a postulated generalization, which needs an explanation. But a reason is not given[<i>]. Bosse gives the same derivation, but for him the Maxwell-result is the special case and not his Faraday approach[<ii>]! In addition he addresses the Faraday-law as equation of transformation and points out the meaning and the special interpretation. On the other hand he derives the law from the Lorentz force, completely in the style of Kupfmuller[<i>] and with that again takes it part of its autonomy. Pohl looks at that different. He inversely derives the Lorentz force from the Faraday-law[<iii>].

By all means, the Faraday-law, which we want to base on instead of on the Maxwell equations, shows „strange effects[<i4>]" from the point of view of a Maxwell representative of today and thereby but one side of the medal (eq. 27.1). Only in very few distinguished textbooks the other side of the medal (eq. 27.2) is mentioned at all. In that way most textbooks mediate a lopsided and incomplete picture[<i,ii,i4>]. If there should be talk about equations of transformation, then the dual formulation belongs to it, then it concerns a pair of equations, which describes the relations between the electric and the magnetic field.

If the by Bosse[<ii>] prompted term „equation of transformation" is justified or not at first is unimportant. That is a matter of discussion.

<i>: K. Kupfmuller: Einfuhrung in die theoretische Elektrotechnik, 12.Aufl., Springer Verlag 1988, Seite 228, Gl. 22.

<ii>: G. Bosse: Grundlagen der Elektrotechnik II, BI-Hochschultaschenbucher Nr.183, l.Aufl. 1967, Kap. 6.1 Induktion, Seite 58

<iii>: R.W.Pohl: Einfuhrung in die Physik, Bd.2 Elektrizitatslehre, 2 l.Aufl. Springer-Verlag 1975, Seite 77

<i4>: G. Lehner: Elektromagnetische Feldtheorie, Springer-Lehrbuch 1990, 1. Aufl., Seite 31 Kommentar zur Lorentzkraft (1.65)

The new and dual field approach consists of equations of transformation

of the electric and of the magnetic field[i]

$\mathbf{E} = \mathbf{v} \times \mathbf{B}$ (27.1) and $\mathbf{H} = -\mathbf{v} \times \mathbf{D}$ (27.2)

unipolar induction equation of convection

- Formulation according to the rules of duality
  - Grimsehl[ii] speaks of the ,,equation of convection", according to which moving charges produce a magnetic field and so-called convection currents (referring to Rontgen 1885, Himstedt, Rowland 1876, Eichenwald and others)
- Pohl[iii] gives examples for the equations of transformation,
- he writes the equations beneath each other

$\mathbf{E} = \mu \cdot \mathbf{v} \times \mathbf{H}$ (27.3) and $\mathbf{H} = -\varepsilon \cdot \mathbf{v} \times \mathbf{E}$ (27.4)

- and points out that for $v = c = 1/\sqrt{\mu \cdot \varepsilon}$ one equation changes into the other one!

The new and dual approach roots in textbook physics!

Fig. 27.8: The new and dual field approach

<i>: see Part 1, chapter 6.5

<ii>: Grimsehl: Lehrbuch der Physik, 2.Bd., 17,Aufl. Teubner Verl. 1967, S. 130.

<iii>: R.W.Pohl: Einfuhrung in die Physik, Bd.2 Elektrizitatslehre, 21.Aufl. Springer-Verlag 1975, Seite 77

27.8 The field-theoretical approach

The duality between E- and H-field and the commutability asks for a corresponding dual formulation to the Faraday-law (27.1). Written down according to the rules of duality there results an equation (27.2), which occasionally is mentioned in some textbooks. While both equations in the books of Pohl[i] and of Simonyi[ii] are written down side by side having equal rights and are compared with each other, Grimsehl[iii] derives the dual regularity (27.2) with the help of the example of a thin, positively charged and rotating metal ring. He speaks of ,,equation of convection", according to which moving charges produce a magnetic field and so-called convection currents. Doing so he refers to workings of Rontgen 1885, Himstedt, Rowland 1876, Eichenwald and many others more, which today hardly are known.
In his textbook also Pohl gives practical examples for both equations of transformation. He points out that one equation changes into the other one, if as a relative velocity v the speed of light c should occur. This question will also occupy us.

We now have found a field-theoretical approach with the equations of transformation, which in its dual formulation is clearly distinguished from the Maxwell approach. The reassuring conclusion is added: The new field approach roots entirely in textbook physics, as are the results from the literature research. We can completely do without postulates.
Next thing to do is to test the approach strictly mathematical for freedom of contradictions. It in particular concerns the question, which known regularities can be derived under which conditions. Moreover the conditions and the scopes of the derived theories should result correctly, e.g. of what the Maxwell approximation consists and why the Maxwell equations describe only a special case.

27.9 Derivation of Maxwell's field equations

As a starting-point and as approach serve the equations of transformation of the electromagnetic field, the Faraday-law of unipolar induction and the according to the rules of duality formulated law (eq. 27.1, 2). If we apply the curl to both sides of the equations then according to known algorithms of vector analysis the curl of the cross product each time delivers the sum of four single terms. Two of these again are zero for a non-accelerated relative motion in the x-direction with v = dr/dt.
One term concerns the vector gradient (v grad)B, which can be represented as a tensor. By writing down and solving the accompanying derivative matrix giving consideration to the above determination of the v-vector, the vector gradient becomes the simple time derivation of the field vector B(r(t)) (eq. 27.10, according to the rule of eq. 27.11).

<i>: R.W.Pohl: Einfuhrung in die Physik, Bd.2 Elektrizitatslehre, 21.Aufl. Springer-Verlag 1975, Seite 76 und 130

<ii>: K. Simonyi: Theoretische Elektrotechnik, 7.Aufl. VEB Berlin 1979, Seite 924.

<iii>: Grimsehl: Lehrbuch der Physik, 2,Bd., 17.Aufl. Teubner Verl. 1967, S. 130.

As approach serve the equations of transformation (fig. 27.5) of the electric and of the magnetic field:

$$\mathbf{E} = \mathbf{v} \times \mathbf{B} \quad (27.1) \text{ and } \quad \mathbf{H} = -\mathbf{v} \times \mathbf{D} \quad (27.2)$$

If we apply the curl to the respective cross product:

$$\text{rot}\,\mathbf{E} = \text{rot}\,(\mathbf{v} \times \mathbf{B}) \quad (27.5) \text{ and } \quad \text{rot}\,\mathbf{H} = -\,\text{rot}\,(\mathbf{v} \times \mathbf{D}) \quad (27.6)$$

then according to the algorithms<i> four sum terms are delivered:

$$\text{rot}\,\mathbf{E} = (\mathbf{B}\,\text{grad})\mathbf{v} - (\mathbf{v}\,\text{grad})\mathbf{B} + \mathbf{v}\,\text{div}\,\mathbf{B} - \mathbf{B}\,\text{div}\,\mathbf{v} \quad (27.5)$$

$$\text{rot}\,\mathbf{H} = -\,[(\mathbf{D}\,\text{grad})\mathbf{v} - (\mathbf{v}\,\text{grad})\mathbf{D} + \mathbf{v}\,\text{div}\,\mathbf{D} - \mathbf{D}\,\text{div}\,\mathbf{v}] \quad (27.6)$$

where 2 of them are zero because of: $\mathbf{v}(t) = d\mathbf{r}/dt$ (27.7)

- the divergence of v(t) disappears: $\text{div}\,v = 0$, (27.8)
- and will be zero as well: $\partial\mathbf{v}(t)/\partial\mathbf{r} = \text{grad}\,\mathbf{v} = \mathbf{0}$. (27.9)
- there remain the vector gradients:

$$(\mathbf{v}\,\text{grad})\,\mathbf{B} = \frac{d\mathbf{B}}{dt} \text{ and } (\mathbf{v}\,\text{grad})\,\mathbf{D} = \frac{d\mathbf{D}}{dt} \quad ,(27.10)$$

- according to the rules<i> in general (with eq. 27.7):

$$\frac{d\mathbf{V}(\mathbf{r}(t))}{dt} = \frac{\partial\mathbf{V}(\mathbf{r}=\mathbf{r}(t))}{\partial\mathbf{r}} \cdot \frac{d\mathbf{r}(t)}{dt} = (\mathbf{v}\,\text{grad})\,\mathbf{V} \quad (27.11)$$

- A comparison of the coefficients of both field equations

$$\text{rot}\,\mathbf{E} = -\,d\mathbf{B}/dt + \mathbf{v}\,\text{div}\,\mathbf{B} = -\,d\mathbf{B}/dt - \mathbf{b} \quad (27.12)$$

$$\text{rot}\,\mathbf{H} = d\mathbf{D}/dt - \mathbf{v}\,\text{div}\,\mathbf{D} = d\mathbf{D}/dt + \mathbf{j} \quad (27.13)$$

with the Maxwell equations results in:

- for the potential density $b = -\,v\,\text{div}\,B = 0$, (27.14)
  (eq. 27.12 = law of induction, if b = 0 resp. div B = 0)

- for the current density $j = -\,v\,\text{div}\,D = -\,v_x \cdot \rho_{el}$, (27.1a
  (eq. 27.13 = Ampere's law, if j = with v moving negative charge carriers (ρ_{el}= electric space charge density).

Fig. 27.9: ____ Derivation of Maxwell's field equations as a special case of the equations of transformation

<i>: Bronstein u.a.: Taschenbuch der Mathematik, 4.Neuaufl. Thun 1999, S. 652

For the last not yet explained terms at first are written down the vectors b and j as abbreviation. With equation 27.13 we in this way immediately look at the well-known law of Ampere (1st Maxwell equation). The comparison of coefficients (27.15) in addition delivers a useful explanation to the question, what is meant by the current density j: it is a space charge density ρ_{el} consisting of negative charge carriers, which moves with the velocity v for instance through a conductor (in the x-direction).

The current density j and the to that dual potential density b mathematically seen at first are nothing but alternative vectors for an abbreviated notation. While for the current density j the physical meaning already could be clarified from the comparison with the law of Ampere, the interpretation of the potential density b still is due. From the comparison with the law of induction (eq. 27.1*) we merely infer, that according to the Maxwell theory this term is assumed to be zero. But that is exactly the Maxwell approximation and the restriction with regard to the new and dual field approach, which roots in Faraday.

In that way also the duality gets lost with the argument that magnetic monopoles (div B) in contrast to electric monopoles (div D) do not exist and until today could evade every proof. It thus is overlooked that div D at first describes only eddy currents and div B only the necessary anti-vortex, the potential vortex. Spherical particles, like e.g. charge carriers presuppose both vortices: on the inside the expanding (div D) and on the outside the contracting vortex (div B), which then necessarily has to be different from zero, even if there hasn't yet been searched for the vortices dual to eddy currents, which are expressed in the neglected term.

Assuming, a monopole concerns a special form of a field vortex, then immediately gets clear, why the search for magnetic poles has to be a dead end and their failure isn't good for a counterargument: The missing electric conductivity in vacuum prevents current densities, eddy currents and the formation of magnetic monopoles. Potential densities and potential vortices however can occur. As a result can without exception only electrically charged particles be found in the vacuum (derivation in chapter 4.2 till 4.4). Because vortices are more than monopole-like structures depending on some boundary conditions, only the vortex description will be pursued further consequently.

Let us record: Maxwell's field equations can directly be derived from the new dual field approach under a restrictive condition. Under this condition the two approaches are equivalent and with that also error free. Both follow the textbooks and can so to speak be the textbook opinion.

The restriction (b = 0) surely is meaningful and reasonable in all those cases in which the Maxwell theory is successful. It only has an effect in the domain of electrodynamics. Here usually a vector potential A is introduced and by means of the calculation of a complex dielectric constant a loss angle is determined. Mathematically the approach is correct and dielectric losses can be calculated. Physically however the result is extremely questionable, since as a consequence of a complex s a complex speed of light would result (according to the definition $c = 1/\sqrt{\varepsilon \cdot \mu}$). With that electrodynamics offends against all specifications of the textbooks, according to which c is constant and not variable and less then ever complex.

But if the result of the derivation physically is wrong, then something with the approach is wrong, then the fields in the dielectric perhaps have an entirely other nature, then dielectric losses perhaps are vortex losses of potential vortices falling apart?

- Maxwell's field equations:

$$\text{rot}\,\mathbf{E} = -\,d\mathbf{B}/dt \quad \text{(law of induction)} \qquad (27.1^*)$$
$$\text{rot}\,\mathbf{H} = d\mathbf{D}/dt + \mathbf{j} \quad \text{(Ampère's law)} \qquad (27.13)$$

- describe the special case for b = 0 resp. div B = 0

$$\text{rot}\,\mathbf{E} = -\,d\mathbf{B}/dt + \mathbf{v}\,\text{div}\,\mathbf{B} = -\,d\mathbf{B}/dt - \mathbf{b} \qquad (27.12)$$
$$\text{rot}\,\mathbf{H} = d\mathbf{D}/dt - \mathbf{v}\,\text{div}\,\mathbf{D} = d\mathbf{D}/dt + \mathbf{j} \qquad (27.13)$$

The physical meaning of the introduced abbreviations b and j is:

- the current density $\mathbf{j} = -\mathbf{v}\,\text{div}\,\mathbf{D} = -v_x \cdot \rho_{el}$, (27.15)
- with Ohm's law $\mathbf{j} = \sigma \cdot \mathbf{E} = \mathbf{D}/\tau_1$, and (27.16)
- the potential density $\mathbf{b} = -\mathbf{v}\,\text{div}\,\mathbf{B} = \mathbf{B}/\tau_2$,(27.17)
- with the eddy current time constant $\tau_1 = \varepsilon/\sigma$ (27.16*>
- and with the potential vortex time constant τ_2

The complete field equations (27.12 and 27.13) read, with the time constants (τ_1 and τ_2)of the respective field vortex:

- completely extended law of induction (with B =μ·H): (27.18)

$$\text{rot}\,\mathbf{E} = -\,d\mathbf{B}/dt - \mathbf{B}/\tau_2 = -\,\mu \cdot (d\mathbf{H}/dt + \mathbf{H}/\tau_2) \qquad (27.20)$$

- and the well-known law of Ampere (with D =ε·E): (27.19)

$$\text{rot}\,\mathbf{H} = d\mathbf{D}/dt + \mathbf{D}/\tau_1 = \varepsilon \cdot (d\mathbf{E}/dt + \mathbf{E}/\tau_1) \qquad (27.21)$$

Fig. 27.10: The extension of the law of induction for vortices of the electric field (potential vortices].<i>

<i>: see also fig. 5.1

27.10 Derivation of the potential vortices

Is the introduction of a vector potential A in electrodynamics a substitute of neglecting the potential density b? Do here two ways mathematically lead to the same result? And what about the physical relevance? After classic electrodynamics being dependent on working with a complex constant of material, in what is buried an unsurmountable inner contradiction, the question is asked for the freedom of contradictions of the new approach. At this point the decision will be made, if physics has to make a decision for the more efficient approach, as it always has done when a change of paradigm had to be dealt with. The abbreviations j and b are further transformed, at first the current density in Ampere's law $j = -v_x \cdot \rho_{el}$ (27.15), as the movement of negative electric charges. By means of Ohm's law $j=\sigma \cdot E$ and the relation of material $D=\varepsilon \cdot E$ the current density j also can be written down as dielectric displacement current with the characteristic relaxation time constant $\tau_1 = \varepsilon/\sigma$ (eq. 27.16) for the eddy currents. In this representation of the law of Ampere (eq. 27.21) clearly is brought to light, why the magnetic field is a vortex field, and how the eddy currents produce heat losses depending on the specific electric conductivity σ. As one sees we, with regard to the magnetic field description, move around completely in the framework of textbook physics.

Let us now consider the dual conditions. The comparison of coefficients (eq. 27.12 + 27.17) looked at purely formal, results in a potential density b in duality to the current density j, which with the help of an appropriate time constant τ_2 founds vortices of the electric field. I call these potential vortices (in eq. 27.20).

In contrast to that the Maxwell theory requires an irrotationality of the electric field, which is expressed by taking the potential density b and the divergence B equal to zero. The time constant τ_2 thereby tends towards infinity. This Maxwell approximation leads to the circumstance that with the potential vortices of the electric field also their propagation as a scalar wave gets lost, so that the Maxwell equations describe only transverse and no longitudinal waves. At this point there can occur contradictions for instance in the case of the near-field of an antenna, where longitudinal wave parts can be detected measuring technically, and such parts already are used technologically in transponder systems e.g. as installations warning of theft in big stores.

It is denominating, how they know how to help oneself in the textbooks of high-frequency technology in the case of the near-field zone[<i>]. Proceeding from the Maxwell equations the missing potential vortex is postulated without further ado, by means of the specification of a ,,standing wave" in the form of a vortex at a dipole antenna. With the help of the postulate now the longitudinal wave parts are ,,calculated", like they also are being measured, but also like they wouldn't occur without the postulate as a result of the Maxwell approximation.

There isn't a way past the potential vortices and the new dual approach, because no scientist is able to afford to exclude already in the approach a possibly authoritative phenomenon, which he wants to calculate physically correct!

<i>: Zinke, Brunswig: Lehrbuch der Hochfrequenztechnik, 1. Bd., 3. Auflage 1986 Springer-Verlag Berlin, Seite 335

- Under the assumption: E = E(r,t); H = H(r,t) ,
- using the relations of material:

  $\mathbf{B} = \mu \cdot \mathbf{H}$ and $\mathbf{D} = \varepsilon \cdot \mathbf{E}$:
- the complete and extended law of induction reads:

$$\text{rot}\,\mathbf{E} = -\,\partial\mathbf{B}/\partial t - \mathbf{B}/\tau_2 = -\,\mu\cdot(\partial\mathbf{H}/\partial t + \mathbf{H}/\tau_2) \quad (27.20)$$

- and the well-known law of Ampere:

$$\text{rot}\,\mathbf{H} = \partial\mathbf{D}/\partial t + \mathbf{D}/\tau_1 = \varepsilon\cdot(\partial\mathbf{E}/\partial t + \mathbf{E}/\tau_1) \quad (27.21)$$

---

if we again apply the curl operation to eq. 27.20 and insert eq. 27.21:

$$-\,\text{rot rot}\,\mathbf{E} = \mu\cdot\partial(\text{rot}\mathbf{H})/\partial t + (\mu/\tau_2)\cdot(\text{rot}\,\mathbf{H}) \quad (27.22)$$

$$= \mu\cdot\varepsilon\cdot[\partial^2\mathbf{E}/\partial t^2 + (1/\tau_1)\cdot\partial\mathbf{E}/\partial t + (1/\tau_2)\cdot\partial\mathbf{E}/\partial t + \mathbf{E}/\tau_1\tau_2] \quad (27.23)$$

$$= (1/c^2)\cdot[\partial^2\mathbf{E}/\partial t^2 + (1/\tau_1 + 1/\tau_2)\cdot\partial\mathbf{E}/\partial t + \mathbf{E}/\tau_1\tau_2] \quad (27.24)$$

with the definition for the speed of light c:

$$\varepsilon\cdot\mu = 1/c^2 \quad (27.25)$$

the fundamental field equation reads:

$$\underbrace{-\,c^2\cdot\text{rot rot}\,\mathbf{E}}_{a} = \underbrace{\partial^2\mathbf{E}/\partial t^2}_{b} + \text{(electromagnetic wave)} + \underbrace{(1/\tau_1)\cdot\partial\mathbf{E}/\partial t}_{c} + \underbrace{(1/\tau_2)\cdot\partial\mathbf{E}/\partial t}_{d} + \underbrace{\mathbf{E}/\tau_1\tau_2}_{e} + \text{eddy current} + \text{potential vortex} + \text{I/U} \quad (27.26)$$

Fig. 27.11: Derivation of the fundamental field equation
from the equations of transformation of the electromagnetic field.<i>

<i>: The fundamental field equation mathematically describes a wave damped with the vortices of the electric and the vortices of the magnetic field. It is formulated only in space and time. From it can be deduced numerous eigenvalue equations, (i.e. the equation of Schrodinger, fig. 5.1).

27.11 Derivation of the ,,fundamental field equation"

The two equations of transformation and also the from that derived field equations (27.20 and 27.21) show the two sides of a medal, by mutually describing the relation between the electric and magnetic field strength (between E and H). We get on the track of the meaning of the ,,medal" itself, by inserting the dually formulated equations into each other. If the calculated H-field from one equation is inserted into the other equation then as a result a determining equation for the E-field remains. The same vice versa also functions to determine the H-field. Since the result formally is identical and merely the H-field vector appears at the place of the E-field vector and since it equally remains valid for the B-, the D-field and all other known field factors, the determining equation is more than only a calculation instruction. It reveals a fundamental physical principle. I call it the "fundamental field equation".

The derivation always is the same: If we again apply the curl operation to rot E (law of induction 27.20) also the other side of the equation should be subjected to the curl. If for both terms rot H is expressed by Ampere's law 27.21, then in total four terms are formed (27.26): the wave equation (a-b) with the two damping terms, on the one hand the eddy currents (a-c) and on the other hand the potential vortices (a-d) and as the fourth term the Poisson equation (a-e), which is responsible for the spatial distribution of currents and potentials <i>.

Not in a single textbook a mathematical linking of the Poisson equation with the wave equation can be found, as we here succeed in for the first time. It however is the prerequisite to be able to describe the conversion of an antenna current into electromagnetic waves near a transmitter and equally the inverse process, as it takes place at a receiver. Numerous model concepts, like they have been developed by HF- and EMC-technicians as a help, can be described mathematically correct by the physically founded field equation.

In addition further equations can be derived, for which this until now was supposed to be impossible, like for instance the Schrodinger equation (chapter 5.6-5.9). This contrary to current opinion isn't a wave equation at all, since the term (b) with the second time derivation is missing. As diffusion equation it has the task to mathematically describe field vortices and their structures.
As a consequence of the Maxwell equations in general and specifically the eddy currents not being able to form structures, every attempt has to fail, which wants to derive the Schrodinger equation from the Maxwell equations.
The fundamental field equation however contains the newly discovered potential vortices, which owing to their concentration effect (in duality to the skin effect) form spherical structures, for which reason these occur as eigenvalues of the equation. For these eigenvalue-solutions numerous practical measurements are present, which confirm their correctness and with that have probative force with regard to the correctness of the new Held approach and the fundamental field equation. By means of the pure formulation in space and time and the interchangeability of the field pointers here a physical principle is described, which fulfills all requirements, which a world equation must meet.

<i>: see also fig. 5.1

Comparison:

• The **Faraday approach** is universal	• **Maxwell's field equations** can be derived!
• It reveals a **physical principle**	• The field equations describe only a **special case**!
• The field is the cause for the particles • (Principles of causality are preserved)	• Particle and field are cause and effect at the same time • (Violation of the rules of causality)
• Particles probably are **field configurations** • Quanta can be calculated as **field vortices** (without any hypothesis) • All **quantum properties** can be **calculated** likewise	• Particles consist of hypothetic subparticles • ***Quark-hypothesis*** must replace missing calculation • Sorting und systematizing of the properties in the **standard-model**
• **Potential vortices** form electric field vortices (the E-field is a source free vortex field)	• The electric field is **irrotational** (the E-field is an irrotational field of sources)
• Field vortices carry momentum and form a scalar wave • Longitudinal wave with arb. velocity of propagation v	• Electromagnetic wave is a transverse wave • Constant propagation with the speed of light c
⇒ **theory of objectivity**	⇒ **theory of relativity**

Fig. 27.12: Comparison of the field-theoretical approaches according to Faradav and according to Maxwell.

27.12 The Maxwell field as a derived special case

As the derivations show, nobody can claim there wouldn't exist potential vortices and no propagation as a scalar wave, since only the Maxwell equations are to blame that these already have been factored out in the approach. One has to know that the field equations, and may they be as famous as they are, are nothing but a special case, which can be derived.

The field-theoretical approach however, which among others bases on the Faraday-law, is universal and can't be derived on its part. It describes a physical basic principle, the alternating of two dual experience or observation factors, their overlapping and mixing by continually mixing up cause and effect. It is a philosophic approach, free of materialistic or quantum physical concepts of any particles.

Maxwell on the other hand describes without exception the fields of charged particles, the electric field of resting and the magnetic field as a result of moving charges. The charge carriers are postulated for this purpose, so that their origin and their inner structure remain unsettled and can't be derived. The subdivision e.g. in quarks stays in the domain of a hypothesis, which can't be proven. The sorting and systematizing of the properties of particles in the standard-model is nothing more than unsatisfying comfort for the missing calculability.

With the field-theoretical approach however the elementary particles with all quantum properties can be calculated as field vortices (chap. 7). With that the field is the cause for the particles and their measurable quantization. The electric vortex field, at first source free, is itself forming its field sources in form of potential vortex structures. The formation of charge carriers in this way can be explained and proven mathematically, physically, graphically and experimentally understandable according to the model.

Where in the past the Maxwell theory has been the approach, there in the future should be proceeded from the equations of transformation of the field-theoretical approach. If now potential vortex phenomena occur, then these also should be interpreted as such in the sense of the approach and the derivation, then the introduction and postulation of new and decoupled model descriptions isn't allowed anymore, like the near-field effects of an antenna, the noise, dielectric capacitor losses, the mode of the light and a lot else more.

The at present in theoretical physics normal scam of at first putting a phenomenon to zero, to afterwards postulate it anew with the help of a more or less suitable model, leads to a breaking up of physics into apparently not connected individual disciplines and an inefficient specialisthood. There must be an end to this now! The new approach shows the way towards a unified theory, in which the different areas of physics again fuse to one area. In this lies the big chance of this approach, even if many of the specialists at first should still revolt against it.

This new and unified view of physics shall be summarized with the term "theory of objectivity". As we shall derive, it will be possible to deduce the theory of relativity as a partial aspect of it (chapter 6 and 28).

Let us first cast our eyes over the wave propagation.

- Starting-point: the fundamental field equation

$$-c^2 \cdot \text{rot rot } \mathbf{B} = \frac{d^2\mathbf{B}}{dt^2} + \frac{1}{\tau_2}\frac{d\mathbf{B}}{dt} + \frac{1}{\tau_1}\frac{d\mathbf{B}}{dt} + \frac{\mathbf{B}}{\tau_1\tau_2} \quad (27.26^*)$$

- with a magnetic flux density B = B(r(t)).

1st condition for eq. 27.26*: the special case, if σ=0 and $\sigma/\varepsilon = (1/\tau_1) = 0$. (27.16*)

The remaining vortex term is transformed by applying already used relations (eq. 27.10 and eq. 27.17):

$$\frac{1}{\tau_2} \cdot \frac{d\mathbf{B}}{dt} = \mathbf{v} \cdot \text{grad} \frac{\mathbf{B}}{\tau_2} \quad (27.10) \qquad \frac{\mathbf{B}}{\tau_2} = -\mathbf{v} \cdot \text{div } \mathbf{B} \quad . (27.17)$$

If the velocity of propagation: $v = (v_x, v_y=0, v_z=0)$; $v = dx/dt$, then the simplified field equation (if the coordinates are orientated on the vector of velocity) results in the general wave equation (involved with the x-component) in the form:

$$\|\mathbf{v}\|^2 \text{ grad div } \mathbf{B} - c^2 \text{ rot rot } \mathbf{B} = d^2\mathbf{B}/dt^2 \quad (27.27)$$

longitudinal with v = arbitrary	transverse with c = const.	wave velocity of propagation

---

2nd condition for eq. 27.28: v = c .

The wave equation in the usual notation (= inhomogeneous Laplace equation, = purely a special case!) now reads:

$$\Delta\mathbf{B} = \text{grad div } \mathbf{B} - \text{rot rot } \mathbf{B} = (1/c^2) \cdot d^2\mathbf{B}/dt^2 \quad (27.28)$$

Fig. 27.13: Derivation of the wave equations (inhomogeneous Laplace equation) as a special case of the equations of transformation of the electromagnetic field.

27.13 Derivation of the wave equation

The first wave description, model for the light theory of Maxwell, was the inhomogeneous Laplace equation:

$$\Delta \mathbf{E} \cdot c^2 = d^2\mathbf{E}/dt^2 \quad \text{with} \quad \Delta \mathbf{E} = \text{grad div } \mathbf{E} - \text{rot rot } \mathbf{E} \qquad (27.28^*)$$

There are asked some questions:

- Can also this mathematical wave description be derived from the new approach?
- Is it only a special case and how do the boundary conditions read?
- In this case how should it be interpreted physically?
- Are new properties present, which can lead to new technologies?

Starting-point is the fundamental field equation (27.26). We thereby should remember the interchangeability of the field pointers, that the equation doesn't change its form, if it is derived for H, for B, for D or any other field factor instead of for the E-field pointer. This time we write it down for the magnetic induction B and consider the special case, that we are located in a badly conducting medium, as is usual for the wave propagation in air. But with the electric conductivity σ also $1/\tau_1 = \sigma/\varepsilon$ tends towards zero (eq. 27.16*). With that the eddy currents and their damping and other properties disappear from the field equation, what also makes sense. There remains the potential vortex term $(1/\tau_2)$*dB/dt , which using the already introduced relations (eq. 27.10 and 27.17) involved with an in x-direction propagating wave ($v = (v_x, v_y = 0, v_z = 0)$) can be transformed directly into:

$$-\|\mathbf{v}\|^2 \cdot \text{grad div } \mathbf{B}$$

The divergence of a field vector (here B) mathematically seen is a scalar, for which reason this term as part of the wave equation founds so-called „scalar waves" and that means that potential vortices, as far as they exist, will appear as a scalar wave. We at this point tacitly anticipate chapter 28, which provides the reason for the speed of light losing its vectorial nature, if it is correlated with itself. This insight however is valid in general for all velocities (v = dr/dt), so that in the same way a scalar descriptive factor can be used for the velocity (v = dx/dt) as for c.

From the simplified field equation (27.26*) the general wave equation (27.27) can be won in the shown way, divided into longitudinal and transverse wave parts, which however can propagate with different velocity.

Physically seen the vortices have particle nature as a consequence of their structure forming property. With that they carry momentum, which puts them in a position to form a longitudinal shock wave similar to a sound wave. If the propagation of the light one time takes place as a wave and another time as a particle, then this simply and solely is a consequence of the wave equation. Light quanta should be interpreted as evidence for the existence of scalar waves. Here however also occurs the restriction that light always propagates with the speed of light. It concerns the special case v = c. With that the derived wave equation (27.27) changes into the inhomogeneous Laplace equation (27.28). The electromagnetic wave in both cases is propagating with c. As a transverse wave the field vectors are standing perpendicular to the direction of propagation. The velocity of propagation therefore is decoupled and constant. Completely different is the case for the longitudinal wave. Here the propagation takes place in the direction of an oscillating field pointer, so that the phase velocity permanently is changing and merely an average group velocity can be given for the propagation. There exists no restriction for v and v = c only describes a special case.

• From the dual field-theoretical approach are derived:	From Maxwell's field equations can be derived:
=> Maxwell's field equations	=> 0
=> the wave equation (with transverse and longitudinal parts)	=> only transverse waves (no longitudinal waves)
=> scalar waves (Tesla-/neutrino radiation)	=> 0 (no scalar waves)
=> vortex and anti-vortex (current eddy and potential vortex)	=> only eddy currents
=> Schrodinger equation (basic equation of chemistry)	=>0
=> Klein-Gordon equation (basic eq. of nuclear physics)	=>0

Fig. 27.14: Comparison of the efficiency of both approaches.

(as an interim result, if it concerns the question, which approach of the two is the more efficient one and which one better should be discarded. The final balance is made in chapter 28).
It here concerns partial aspects of the following theories:

=> theory of objectivity	=> theory of relativity

27.14 The new field approach in synopsis

Proof could be furnished that an approximation is buried in Maxwell's field equations and that they merely represent the special case of a new, dually formulated and more universal approach. The mathematical derivations of the Maxwell field and the wave equation disclose, of what the Maxwell approximation consists. The anti-vortex dual to the expanding eddy current with its skin effect is neglected. This contracting anti-vortex is called potential vortex. It is capable of forming structures and propagates as a scalar wave in longitudinal manner in badly conducting media like air or vacuum.

At relativistic velocities the potential vortices are subject to the Lorentz contraction. Since for scalar waves the propagation occurs longitudinally in the direction of an oscillating field pointer, the potential vortices experience a constant oscillation of size as a result of the oscillating propagation. If one imagines the field vortex as a planar but rolled up transverse wave, then from the oscillation of size and with that of wavelength at constant swirl velocity with c follows a continual change in frequency, which is measured as a noise signal.

The noise proves to be the in the Maxwell equations neglected potential vortex term, which founds scalar waves. If at biological or technical systems, e.g. at antennas a noise signal is being measured, then that proves the existence of potential vortices, but it then also means that the scope of the Maxwell theory has been exceeded and erroneous concepts can be the result.

As an answer to the question about possible new technologies is pointed to two special properties.

1st potential vortices for reason of their particle nature carry momentum and energy. Since we are surrounded by noise vortices, an energy technical use of scalar waves would be feasible, where the noise power is withdrawn of the surroundings. There is evidence that biological systems in nature cover their need for energy in this way. But at least an energy transmission with scalar waves already would be a significant progress with regard to the alternating current technology of today.

2nd the wavelength multiplied with the frequency results in the velocity of propagation v of a wave $(\lambda \cdot f = v)$, and that for scalar waves by no means is constant. With that wavelength and frequency aren't coupled anymore; they can be modulated separately, for which reason for scalar waves a whole dimension can be modulated additionally compared to the Hertzian wave. In that the reason can be seen, why the human brain with just 10 Hz clock frequency is considerably more efficient than modern computers with more than 1 GHz clock frequency. Nature always works with the best technology, even if we haven't yet understood it.

If we would try to learn of nature and an energy technical or an information technical use of scalar waves would occur, then probably nobody wanted to have our today still highly praised technology anymore. In the course of the greenhouse gases and the electrosmog we have no other choice than to scientifically occupy us with scalar waves and their technical use.

Equations of transformation

of the electric and of the magnetic field[i]

$$\boxed{\mathbf{E} = \mathbf{v} \times \mathbf{B}} \quad (27.1) \text{ and } \quad \boxed{\mathbf{H} = -\mathbf{v} \times \mathbf{D}} \quad (27.2)$$

with: $\mathbf{B} = \mu \cdot \mathbf{H}$ (28.1) and $\mathbf{D} = \varepsilon \cdot \mathbf{E}$ (28.2)

$$\boxed{\mathbf{E} = \mu \cdot \mathbf{v} \times \mathbf{H}} \quad (27.3) \text{ and } \quad \boxed{\mathbf{H} = -\varepsilon \cdot \mathbf{v} \times \mathbf{E}} \quad (27.4)$$

Experience/observation is dependent on the relative velocity v !

Written down in general with field vectors:		Written down in components in Cartesian coordinates: (unit vectors $\mathbf{e}_x$, $\mathbf{e}_y$, $\mathbf{e}_z$)
	in $\mathbf{e}_x$-direction:	$\mathbf{v} = v_x(x(t)) = dx/dt$
$\mathbf{H} = -\varepsilon \cdot \mathbf{v} \times \mathbf{E}$	in $\mathbf{e}_y$-direction:	$\mathbf{H} = -H_y = -\varepsilon \cdot v_x \cdot E_z$
$\mathbf{E} = \mu \cdot \mathbf{v} \times \mathbf{H}$	in $\mathbf{e}_z$-direction:	$\mathbf{E} = E_z = \mu \cdot v_x \cdot H_y$
inserted into each other:		(28.3)
$\mathbf{E} = -\varepsilon \cdot \mu \cdot [\mathbf{v} \times (\mathbf{v} \times \mathbf{E})]$	in $\mathbf{e}_z$-direction:	$E_z = \varepsilon \cdot \mu \cdot v_x \cdot v_x \cdot E_z$
$\mathbf{E} = -(1/c^2) \cdot [\mathbf{v} \cdot \underbrace{(\mathbf{v} \cdot \mathbf{E})}_{= 0, \text{ since } \perp} - \mathbf{E} \cdot (\mathbf{v} \cdot \mathbf{v})]$		$E_z = (1/c^2) \cdot v_x^2 \cdot E_z$
$\mathbf{E} = +(\mathbf{v}^2/c^2) \cdot \mathbf{E}$	resp.:	$E_z = (v_x^2/c^2) \cdot E_z$ (28.4)
result:[ii]	$\boxed{v = c}$	(28.5)

Fig. 28.1: The equations of transformation,[i]

<i>: see part 1, chap. 6.5, eq. 60
<ii>: R. W. Pohl: Einfuhrung in die Physik, Bd. 2 Elektrizitatslehre, 21. Aufl. Springer-Verlag 1975, Seite 77, s.a. Kommentar auf Tafel 27.8
<iii>: chapter 28 is a repetition of chapter 6

28. Objectivity versus relativity

The new and field-theoretical approach contains the Maxwell-equations, but goes over and above these in one point. It describes potential vortices and their propagation in space as a scalar wave. With that can also a conclusive answer be given to the often-asked question for the medium and the mediated particles, which is a prerequisite for every longitudinal wave. Mediated are vortex structures with particle nature and the field itself functions as a medium. Is with that also answered the question concerning the aether?[iii]

28.1 The question concerning the aether

Do you know the Maxwell-experiment? No, you wouldn't be able to, since the intellectual father fast did make a backdown, after it didn't work out. Today one speaks of the Michelson-experiment and it may be connected with any other names (Morley, etc.). Remember: In his light theory Maxwell had determined a particular and constant value for the speed of light and for that there should be a physical reason, which should have its cause in the aether. By means of proving this aether Maxwell wanted to prove his theory, but this enterprise thoroughly went wrong.
The consideration was as follows: If the Earth is spinning and is moving through the cosmos, then one should be able to detect an aetherwind and different values for c in the different points of the compass. Maxwell found support for his project at the observatory, since with the aberration of the stars Bradley previously had described an observation, which could be considered as evidence for an aether. The director of the observatory charged his assistant Dr. Michelson with the task, to carry out a corresponding proof of an aether this time in a terrestrial experiment. But such an aether couldn't be proven, what Maxwell had to accept as a severe strike against his light theory. Seven years later Maxwell got the acknowledgement, however from a completely other corner by means of the experiments concerning the radio transmission of Heinrich Hertz.

Until today the question has remained open why astrophysics can prove the aether, whereas the detection in a terrestrial laboratory fails and it looks like there doesn't exist an aether. But as definition for the cause of c the aether can't be abolished as long as it is unsettled why the light is propagating with c of all possible velocities. The question is asked, what determines the propagation of light from today's point of view? Now, by means of outside fields the light can be slowed down. At present the world record lies at less than 65 kilometers per hour in a Bose-Einstein condensate. If electromagnetic fields determine the speed of light, if in addition field or gravitational lenses should confirm this, then the field takes over the task of the aether!

At this place the new field-theoretical approach shows its capabilities. The equations of transformation say nothing but that a moving H-field transforms to a resting E-field and vice versa, that thus in the place of a moving aether, the aetherwind, a resting aether is found. Doing so the dual field partners merely exchange their places. Therefore it is a wild-goose chase, wanting to measure an aetherwind with gauges, which underlie the same field (fig. 28.2).
Michelson had to fail.

The equations of transformation say:

$$\mathbf{E} = \mu \cdot \mathbf{v} \times \mathbf{H} \quad (27.3) \text{ and } \quad \mathbf{H} = -\varepsilon \cdot \mathbf{v} \times \mathbf{E} \quad (27.4)$$

- Experience/observation depends on the relative velocity v!
- The field takes over the function of the aether (determines c) and
- an aetherwind v x H is measured as a resting aether E and vice versa!

- for v = c the equations of transformation turn into each other and are identical [$v = v_x(x(t))$].
- for v < c a motion field E_v depending on v is resulting

$$E_v = E \cdot (v^2/c^2) \quad (28.6)$$

- for v = 0 also $E_v = 0$.
- the motion field overlaps the E-field
  - in the case of vortex fields the effect overlaps the cause and itself is the cause for a new effect.
- The overlap reaches to infinity, where each time is valid:

$$E_{n+1} = E_n \cdot (v^2/c^2) \quad (28.7)$$

- the field Eo overlaps the motion field E_v

$$E = E_0 + E_v = E_0 \cdot (1 + v^2/c^2) \quad (28.8)$$

- for infinite overlap:

$$E = E_0 + E_1 + E_2 + E_3 + E_4 + \ldots + E_n + E_{n+1} + \ldots \quad (28.9)$$

- results in the power series:

$$E = E_0 \cdot [1 + (v/c)^2 + (v/c)^4 + (v/c)^6 + \ldots + (v/c)^{2n} + (v/c)^{2(n+1)} + \ldots] \quad (28.10)$$

Fig. 28.2: Power series as a result of a vortex overlap.

<i>: Grimsehl: Lehrbuch der Physik, 2.Bd., 17.Aufl. Teubner Verl. 1967, S. 130.

<ii>: R.W.Pohl: Einfuhrung in die Physik, Bd.2 Elektrizitatslehre, 21.Aufl. Springer-Verlag 1975, Seite 72 und 76, bzw. 130.

<iii>: K. Simonyi: Theoretische Elektrotechnik, 7.Aufl. VEB Berlin 1979, Seite 924.

<i4>: E. Friebe: Die Vektorprodukte der Maxwell'schen Elektrodynamik, DPG-Didaktik-Tagungsband 1995, S.396

28.2 Vortices, an overlap of the overlap

Not with any approach until now the question concerning the aether could be solved. Only the new field-theoretical approach proves with the unambiguous and free of contradiction clarification of the question concerning the aether its unmatched superiority. We hence without exception work with this approach, which is anchored tightly in textbook physics. The two equations of transformation on the one hand are the law concerning the unipolar induction according to Faraday (27.1) and on the other hand the dual formulation (27.2), which Grimsehl[<i>] calls convection equation. Grimsehl goes around the question for the correct sign by means of forming a modulus. Pohl draws detailed distinctions of cases and dictates the each time relevant formulation of the dual law[<ii>]. The sign eventually should be chosen according to the definition of the orientation of the field pointers. Also Simonyi gives both equations and the each time appropriate experiments[<iii>].

If we assume the carrier of an electric field is moving with the not accelerated relative velocity v with regard to the reference system used by the observer, then a magnetic H-field is observed, which stands perpendicular both to the direction of the E-field and to the direction of v. If the motion takes place perpendicular to the area stretched by E- and H-field, then the H-field again is observed and measured as an E-field. There will occur an overlap of the fields.

In spite of that we first consider the theoretical case, that no overlap is present, and the observer as it were sees himself. The result is trivial: the relative velocity v must be the speed of light $v = c$. (28.5) If considered at the speed of light, the two equations of transformation turn into each other. They now are identical both mathematically and in their physical expressiveness. For this case it actually is possible, to derive the dual law straight from the Faraday law. For a wave propagating with the speed of light, to name an example, the field strength propagating along is always equal to the causing field strength, which depends on position.

If besides the evaluation of the values also the circumstance is considered that it concerns vectors, then at this place a problem as a matter of principle of the Maxwell theory gets visible, to which has been pointed occasionally, e.g. at the German Physical Society[<i4>]. The derivation of the speed of light from two vector equations requires, that c also has to be a vector. The question is: How the velocity vector v suddenly becomes the scalar and not pointing, in all directions of space constant factor c? Is therefore for mathematical and physical reasons "the Maxwell theory in essential parts erroneous", according to a statement of the German Patent Office[<i4>]?

Now, the constancy of the speed of light is a fact, which even can be derived. We at first will be content with the clue that for every observation with the speed of light, with the eyes or a gauge constructed corresponding to our perception, the vector in all its components each time is correlated to itself, by what actually the orientation of direction gets lost. Under these for c and with equal rights also for v relevant circumstances we are entitled to calculate further with the values.

An observer, who is moving with v slower than c, will besides the original E-field also observe a motion field E_v depending on the velocity v, which disappears, if v becomes zero. What he catches sight of and is able to register with gauges in the end is the overlap of both field components.

- concerning the development of the power series:

$$E = E_0 \cdot [1 + (v/c)^2 + (v/c)^4 + (v/c)^6 + \ldots + (v/c)^{2n} + (v/c)^{2(n+1)} + \ldots] \quad (28.10)$$

- for $q < 1$ the power series with $q = (v/c)^2$ will converge (28.11)

$$\sum_{n=0}^{\infty} q^n = \frac{1}{1-q} \quad (28.12)$$

- for $(v/c)^2 < 1$ resp. for $v < c$ therefore is valid:

$$E = E_0 \cdot [1/1 - (v/c)^2] \quad \text{resp.} \quad \boxed{E_0 = E \cdot [1 - (v/c)^2]} \quad (28.13)$$

The square root of Lorentz appears in squared form<i>:

$$\left(1 - \frac{v^2}{c^2}\right) = \frac{E_0}{E} \quad (28.14)$$

The derivation for the magnetic field strength analogous to that provides the identical result<i>:

$$\left(1 - \frac{v^2}{c^2}\right) = \frac{H_0}{H} \quad (28.15)$$

Fig. 28.3 The field dilatation depending on velocity

<i>: see part 1, chap. 6.6

<ii>: Prof. Dr. H.-J. Runckel, Abteilung fur Mathematik IV der Universitat Ulm

28.3 Field overlap

But it doesn't abide by this one overlap. In the case of vortex fields the effect overlaps the cause and itself becomes the cause for a new effect. The overlapped cause produces a further effect, which for its part is overlapping (see chap. 3).

Vortices thus arise, if overlaps for their part are overlapping and that theoretically reaches to infinity, to which I already repeatedly have pointed (fig. 3.0). In addition do vortices represent a fundamental physical principle. The Greek philosopher Demokrit has traced back the whole nature to vortex formation and that already 2500 years ago!

In the field-theoretical approach this interpretation seems to experience a mathematical confirmation, since also the fields are overlapping in vortex structures. According to that we owe our observations and our being the relative movements and the vortex formation. If reversed there wouldn't be any movement, then there also would not exist fields, light nor matter. If we observe the sky, then everything visible follows the movement of its own of the Earth, of the solar system and the whole galaxy, which is on its way with unknown galactic velocity, and all movements take place in vortex structures (fig. 10.2).

The field overlap dictated by the Faraday-approach as well reaches to infinity, what has stimulated my colleagues of mathematics to also mathematically put into practice this physical requirement[ii]. This leads to an infinite power series, which converges under the condition that $v < c$.

As a result of the power series development the well-known square root $\sqrt{1-(v^2/c^2)}$ of Lorentz occurs in squared form (see also fig. 6.6). It determines the relation of the observed and the causing field strength of the electric or the magnetic field. Physically the found relation describes a dilatation field depending on velocity. The field strength thus increases, if the relative velocity v increases, or inversely no difference is observable anymore, if v tends towards zero.

Whoever wants to compete with Albert Einstein (1879-1955), who has developed the theory of relativity from the length contraction, which depends on velocity, could be inclined to derive a new field physics from the field dilatation. But I must warn of such a step. The derivation of the length contraction by the mathematician Hendrik Lorentz (Lorentz contraction) assumes a number of limiting conditions. The relative velocity v for instance may not experience any acceleration. Actually however almost all motion takes place as circular vortex motion, so that due to the occurring centripetal acceleration the conditions for the theory of relativity aren't fulfilled anymore. Neglects or generalizations thereby can lead to considerable errors, of which I would like to warn. It in general is a delicate enterprise, if one wants to provide a physical interpretation for a purely mathematically won result.

This warning to the same extent also is valid for the here shown derivation of the field dilatation. The limiting conditions practically are the same as for Einstein and the problems with a provided physical interpretation won't be less. Also here lots of paradoxes will occur, which are nothing but errors of the theory. So we won't reach our destination.

There now only one further mathematical step is necessary, which links the theory of relativity with the new notion of a field dilatation depending on velocity.

Example:
Measurement of length by means of a measurement of propagation time (sound or light) with c = L/t in a vehicle moving with v.

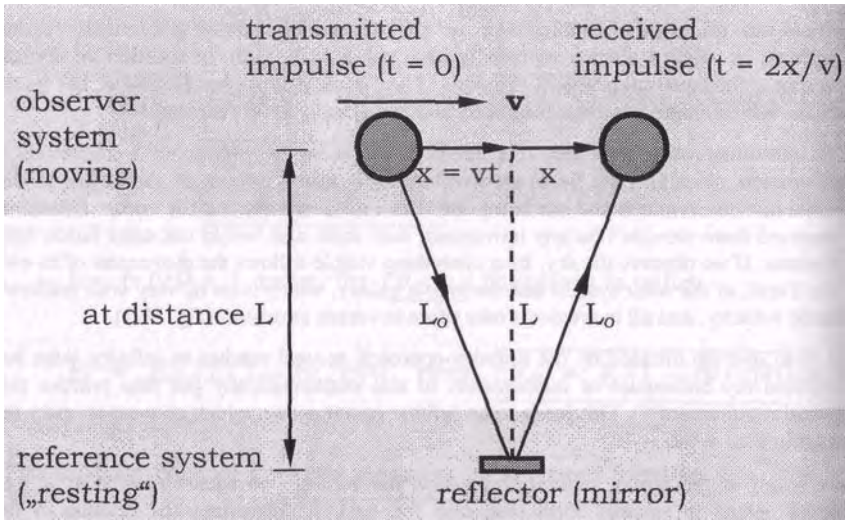

From driving time t:

$t = 2\frac{x}{v}$ = signal propagation time: $t = 2\frac{L_o}{c}$ follows $\frac{x}{v} = \frac{L_o}{c}$

According to Pythagoras: $L_o^2 = L^2 + x^2 = L^2 + L_o^2 \cdot (v^2/c^2)$

$$L_o^2 \cdot (1 - v^2/c^2) = L^2$$

the shortening of the rule results in:

$$\left(1 - \frac{v^2}{c^2}\right) = \left(\frac{L}{L_o}\right)^2 \quad (28.16)$$

Fig. 28,4: _____Derivation of the length contraction

Examples: contraction according to Lorentz transformation, measurable length shortening, curvature of space.

Counterexample: unsuccessful aether detection (Michelson experiment)

28.4 The derivation of the length contraction

The Lorentz transformation is the result of a purely mathematical problem. Stimulated by the surprisingly result of the Michelson experiment the Dutchman Hendrik A. Lorentz 1891 asked himself, how the equations of the Galilei-transformation would have to look like, if the propagation of light wouldn't be infinitely fast but finite and constant. He thereby proceeds from the assumption of two inertial systems moving against one another with a not accelerated velocity v, in which the laws of Newtonian physics are equally valid[<i>]. As a result of the relative motion a change of the length measures will occur.

This at first can be explained as a purely geometric effect in the context of nonrelativistic physics. We imagine a vehicle, which is on its way with constant velocity, and emits an optical or acoustical signal. Sideways in the countryside is standing in a perpendicularly measured distance L a reflector (mirror), which sends the signal back again. The velocity of the signal however isn't infinitely fast and from that follows that the vehicle during the propagation time of the signal as well has moved a bit further. The actual way, which the signal had to cover now amounts to L_o (> L). The distance measure thus is observed smaller as it is in reality, to be specific for the factor of the square root of Lorentz (fig. 28.4).

$L = L_o \cdot \sqrt{1-(v^2/c^2)}$ (28.16)

According to the principle of relativity it doesn't play a role, if the vehicle is driving or if it is standing still and the mirror is moving with a linear uniform velocity.

Initially Einstein also only spoke of an observable length contraction, which must not necessarily occur in reality, an optical deception so to speak. Lorentz however proceeded from the assumption of a physical length change, thus a length change existing in reality, what in practice at first makes no difference. If e.g. at relativistic velocities a rocket becomes smaller, then the pilot equally shrinks, so that it would not be possible to notice a present difference.

If however the observer stands outside the events and takes a „neutral standpoint", then he will be able to see, which interpretation is the right one. Today some examples are known. In accelerators particles at relativistic fast velocities actually get smaller for the factor of the square root of Lorentz. That has been proven and this result afterwards gives the Dutchman Lorentz right! The followers of the physical length contraction also are called Neo-Lorentzians.

In the vicinity of a gravitational mass the speed of light becomes so slow, that the shortening factor plays a role and space is curved towards the mass. To understand this shortening of scale, the influence of the field also should be considered.

<i>: Example: In a closed lift physical experiments are being carried out. Accelerations of the lift have an influence on the experiments. However no influence can be detected, if the lift is standing still or is moving with constant velocity. It with that fulfills the conditions of an inertial system. The question is: what do the experiments show someone standing outside, whom the lift passes by?

From the comparison of the Lorentz contraction (28.16)
with the field dilatation (28.14 and 28.15)

$$\left(1 - \frac{v^2}{c^2}\right) = \left(\frac{L}{L_o}\right)^2 \overset{!}{=} \left(1 - \frac{v^2}{c^2}\right) = \frac{E_o}{E} = \frac{H_o}{H}$$

follows

$$\left(1 - \frac{v^2}{c^2}\right) = \left(\frac{L}{L_o}\right)^2 = \frac{E_o}{E} = \frac{H_o}{H} \quad (28.17)$$

the proportionality (length measures depending on field):

$$E, H \sim 1/L^2 \quad \text{and} \quad Eo, Ho \sim l/L_0^2 \quad (28.18)$$

Experimental examples<i>:

- Electrostriction (piezo speaker)
- Magnetostriction
- Field or gravitational lenses
- Curvature of space, deflection of light

Conclusion<ii>:

- The field determines the length measures (what is 1 meter)
- The field determines the velocities v (in m/s)
- The field determines the speed of light c [m/s]
- Measurement of the speed of light is made with itself:

$$c \sim r \quad (28.19)$$

- Measured is a constant of measurement c = 300.000 km/s
- The speed of light c is not a constant of nature!

Fig. 28.5: The dependence of the Lorentz contraction on the field

<i>: see part 1, chap. 6.10
<ii>: see part 1, chap. 6.11

28.5 The dependence of the Lorentz contraction on the field

The two results of the field dilatation (28.14 and 28.15) and of the Lorentz contraction (28.16) must be brought together and compared (28.17). Doing so the mathematical expression of the square root of Lorentz is cancelled out. That is of utmost importance, since with that also all limits disappear and there remains a purely physical relation, a proportionality of utmost importance (28.18).

What was the sense of the limits associated with the introduction of so-called inertial systems, which are the basis of the Lorentz transformation and which were adopted for our derivation of the field dilatation? They now only are auxiliary considerations according to model. We have chosen a very simple model, which can be described mathematically, in which an observer holds in his hand gauges for distances and field strengths and with that gauges a system flying by with constant velocity. He on the one hand determines a length contraction and on the other hand a field dilatation. He compares both with each other and comes to the conclusion: The field determines the dimensions!

This statement is purely physical and it is generally valid. It is independent of the relative velocity and all other mathematical conditions. A centrally accelerated circular motion e.g. will falsify the length contraction to the same extent, as the at the same time occurring field dilatation. It can be expected, that in addition to the square root of Lorentz also other errors will mutually efface, so that a generalization in this case actually seems to be allowed.

The won proportionality is of most elementary importance. We use it in the case of the piezo speaker and know it from the curvature of space and deflection of light in presence of extreme fields. If we ourselves however are exposed to the field as an observer, in which also the object to be observed is situated, then we are in the dilemma, not being able to perceive the influence. If we, to stay with the example, would sit in a rocket and this would become smaller at faster velocity, then we would notice nothing, since we also would shrink along to the same extent.

That concerns every measurement of velocity in general and the speed of light c in particular, which as is well-known is measured in meters per second. But if the field determines c and in the same way the length measure, which is given in meters, then both stand in a direct proportionality to each other, then we won't have the slightest chance to measure the speed of light. If namely c is changed, then this concerns the measurement path in the same way. Now the variable is measured with itself and as a result appears c, a constant value. We neither can see the change, since our eyes scan all objects optically and that means with c.

It is the nightmare of each and every measurement engineer, if the gauge depends on the factor to be measured. No wonder, if the theorem of addition of the velocities apparently loses its validity and always the same c is being measured, independent of the direction in which the source of radiation is moving (chap. 6.11). The result is:

The speed of light is a constant of measurement and not a constant of nature!

If however the light is scanned with the speed of light, then also all components of the light vector correlated with themselves result in the same constant value c, then actually the vector of the speed of light loses its orientation in space and becomes a scalar factor. The Maxwell equations already anticipate this circumstance, but without providing an explanation why this is correct. Only the new field approach can answer the open question. With the derivation an axiom of physics - one also can say stumbling block - has been overcome.

The field strength determines the length measure:
(the distance L between the spheres)<i>

$$E, H \sim 1/L^2 \qquad (28.18)$$

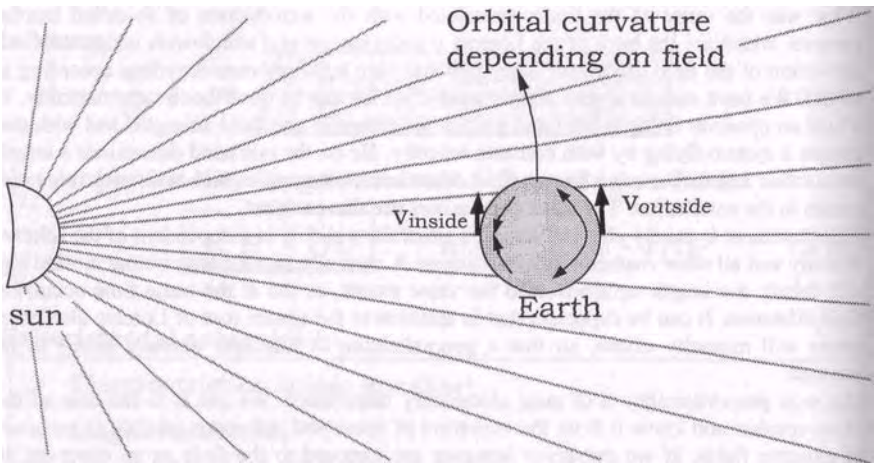

Fig. 28.6 A: The curvature of the Earth in the gravitational field of the sun

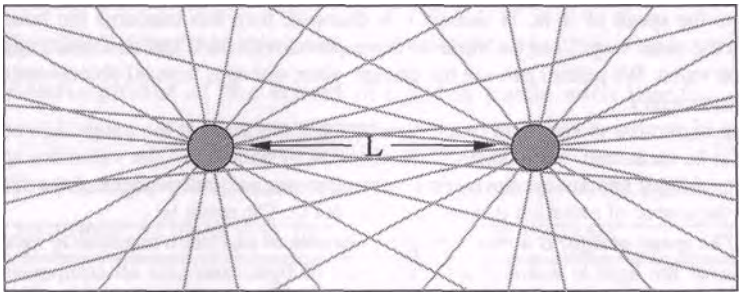

Fig. 28.6 B: Force of attraction and reduction of the distance L
as the mutual field influence of two masses.

<i>: Repetition of part 1, chapter 6.7

28.6 Boscovich and the respiration of the Earth

Who has got a good idea, fast will find that some other scientist had the same idea already before, and for his part possibly already had to make the same experience. If in spite of that the track fast loses in history, it as a rule is because of the insufficient citing and the vanity of the discoverers, who in reality only are rediscoverers of a much older knowledge.

The dependence of the length measures on the field (eq. 28.18) in the mathematical form of the derivation however should still be quite new. But the physical consequence already was described by the Jesuit priest Roger Joseph Boscovich from Dalmatia in 1755[<i>]. He was Professor for mathematics and theology in Rome and spoke about the world on the one hand being deformable, similar to rubber, but on the other hand we aren't able to perceive this, since our body is made of the same material and follows all changes. „We in an absolute way can recognize neither the place, nor distances or orders of magnitude", writes Boscovich in his book about space and time and writes how these are perceived by us[<ii>]. He suspects that the Earth unobservable for man „is respiring".

Actually a terrestrial observer at daytime is situated closer to the sun than in the night. He by day is exposed to a slightly stronger field and as a result correspondingly smaller. He himself and all objects in his neighbourhood are subject to an identical fluctuation of size, so that this „respiration" of the Earth cannot be detected. It can be detected neither with a tape measure nor with an optical measurement and still is present in reality. Only from a neutral standpoint we can succeed to recognize the actually existing curvature of space (fig. 28.6 A).
An example is the duration of the sunshine at the equator, which is longer than can be expected from the spherical form of the Earth. This reveals, how the Earth is bending towards the sun (see also chapter 6.7).
A further example is the influence of the field on the orbital velocity of the Earth measured in meters per second. Here also the meter at daytime is smaller than in the night, for which reason the Earth is moving slower on the side turned towards the sun, like a track vehicle, which drives a turn, if the chain at the inside runs slower than on the outside. If the Earth describes an orbit around the sun. then this circumstance has to do nothing at all with centrifugal force or with a force of attraction of the sun. The circular motion simply and solely is a result of the field influence of the sun[<iii>].

The force idea proves to be a pure auxiliary description. In the context of Newtonian mechanics the force plays a central role. Without question it is a very efficient and subjective perceptible description, which still isn't able to reproduce the physical reality in an objective manner. What keeps the planets into their orbit is only the field of the sun, which we call gravitational field and not some force! But of which kind is the gravitation and the field, which causes masses to come closer together and following our subjective observation attract each other (fig. 28.6 B)?

<i>: O. E. Rossler: Endophysics, the World as an Interface, World Scientific Publishing Co. 1998, Kap. 10, S. 87-112, mit Ubersetzungen aus <ii>:

<ii>: R. J. Boscovich: De spatio et tempore, ut a nobis cognoscuntur, 1755.

The length measure (the distance L between the spheres)[<i>] is determined by the field strength:

$$E, H \sim 1/L^2 \quad (28.18)$$

A. Charged mass points (electrons, positrons, ions,...):

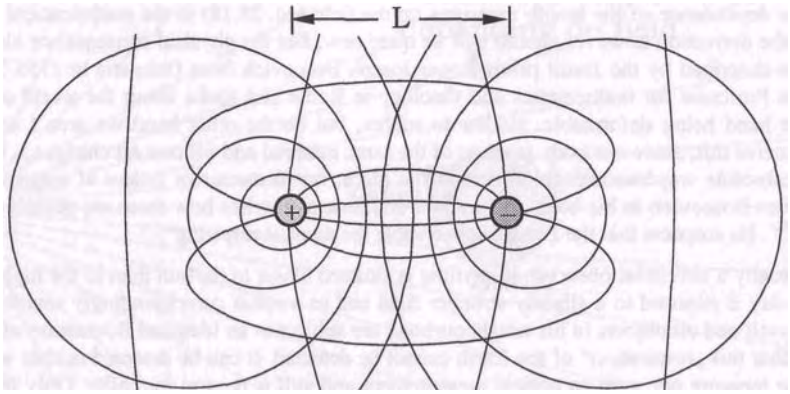

B. Uncharged mass points (neutrons, atoms, ...):

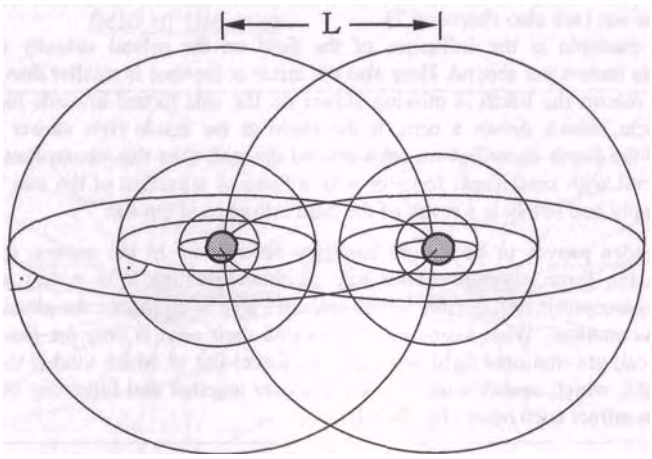

Fig. 28.7: Observation of a mutual force of attraction because of the effect of the fields on the distance measure.

<i>: Repetition of part 1, chapters 6.7 - 6.9 and part 2, chapters 10.4 and 15.2

28.7 Derivation of the gravitation

In fig. 28.6B the relation between the field influence and the observed force of attraction of two mass bodies is represented. If I in my mind for instance "switch on" the field lines of both bodies, which are placed at distance L, then the fields according to equation 28.18 reduce the measure L and optically come each other closer. With increasing proximity the field line density increases, so that L further decreases. We observe a mutual attraction, which lets both bodies move towards each other.

In fig. 28.7A the two bodies carry an electric charge. For different polarity the field lines as is well-known run from the positive pole to the negative pole, to bundle up there. As a matter of principle also here an attraction can be expected, which is called electromagnetic interaction. For the reason of the bundling up of the field lines this effect however will turn out to be considerably stronger. Hence the electromagnetic interaction is for many powers of ten more powerful than the gravitation.

Furthermore there also can occur repulsion, if in the case of like charge the field lines are bent aside and between the two bodies an area is formed, where the field tends towards zero and the distance measure L (according to eq. 28.18) as a result towards infinity. The electromagnetic interaction theoretically indeed reaches to infinity. Responsible are the open field lines arising from a charged body.

Now every charged body in addition has a mass, with which it takes part in the gravitation. Let's remember the comparison of the derivations. The Maxwell theory teaches us that in the static case E- and H-field are decoupled, because each time the other field disappears. Even if as a result of the unipolar induction for every open field line the other one is taken to be standing perpendicular to the open field line, then this other line just wraps around the open field line and forms a closed-loop field line. In that way it can't be influenced anymore from the outside and can be neglected, so goes the doctrine, which is drawn from the Maxwell theory (fig. 27.5).

This is a fatal error in reasoning! The equation 28.19 naturally is valid for open field lines in the same manner as for closed ones. These fields also lead to an observable force of attraction. If of course exactly those fields are neglected, which are responsible for the gravitation, then we need not wonder, if we don't understand the gravitation and the nature of this interaction!

The influence of the closed field lines responsible for the gravitation is due to the missing bundling up of the lines correspondingly weak. Secondly these can't exist a force of repulsion due to the missing ability to influence closed field lines from the outside and third it can be recorded that all charged bodies also have a mass. All three statements of the field lines model perfectly cover the physical reality.

Fig. 28.7 B shows uncharged bodies, for which both the field lines of the E-field and of the perpendicular to them arranged H-field are closed-loop. Such bodies, like e.g. neutrons or whole atoms without charge behave electrically neutral to the outside, but have a mass for the reason of the closed field lines, whereby the field lines of the H-field dominate those of the E-field[<i>].

<i>: Repetition of K. Meyl: EMEC part 1, chap. 6.8 + 6.9, part 2 chap. 15.1

Dual field approach	The Maxwell field
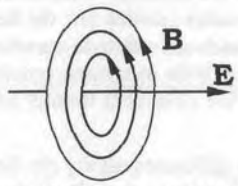	**E** = neglectible, **B** = constant.
E and **B** are coupled	decoupled (approximation)
The closed field lines by no means are without influence: They cause the **gravitation** !	If the Maxwell field neglects the field factor, which leads to the gravitation, it isn't astonishing, if the gravitation remains not understood!

• The following physical standpoints can be distinguished:		
subjectivity (laboratory physics, observable)	**relativity** (mediator role) (transformation)	**objectivity** (not observable)
• Exemplary theories and their representatives:		
Newton Maxwell	Poincaré Einstein	Boscovich *(dual approach)*
• With the associated transformation:		
Galilei-transf. for $c = \infty$	Lorentz-transf. c = constant	*(new transf.)* c = variable

Fig. 28.8: Physical standpoints

28.8 From subjectivity to objectivity

With the field lines interpretation, which by the way already preferably was used by Faraday, the gravitation proves to be an until now neglected influence of the electromagnetic field. With that for the first time also the grand unification of the interactions was successful. The long sought-for unified theory with that for the first time comes within reach.
The derivation has made it possible to mathematically secure the theoretical working model of Boscovich. Already 1755 Boscovich points out the optical deception, which our observation underlies, if absolute orders of magnitude in our neighbourhood should change and our perception would change along. Then also all metric and optical measurement results would underlie this change. Following the idea of Boscovich I distinguish between subjectivity and objectivity.

The relativity is a compromise lying between both points of view, where a neutral standpoint is strived for, which lies outside the events. And from this standpoint the objectively taking place events are being observed. The theory of relativity consequently is a pure observer theory with strongly restricted scope on the basis of the Lorentz-transformation.

Theories of classic physics, like e.g. Newtonian mechanics, fall in the domain of subjectivity. The results and regularities are won in a terrestrial laboratory if possible isolated from the environment, where they have absolute validity. Here the Galilei-transformation is valid.
But if these subjectively won laws are applied to the microcosm in quantum physics or to the calculation of cosmic observations, one fast hits limits. The better the resolution of the microscopes and telescopes gets, the clearer the „outside" observer realizes, how much the laws of classic physics lose their validity.

Astrophysics successfully reaches for the theory of relativity, which with the curvature of space in the vicinity of mass centres delivers useful explanations. Here the dependence of the spatial dimensions on the field already could be established. In contradiction to that this fundamental relation is said to play no role whatsoever in quantum physics, or in all terrestrial laboratory experiments. But with which right may physical regularities from one domain be ignored in others? There only can exist one physics and that should be sought for!

What we need is objectivity! Behind all the apparently disconnected phenomena of physics work quite simple laws, which can't be observed and are until now not recognized by us. Objective physics in the words of Goethe is the one, which holds the world together in the heart of hearts. I call this, already by Boscovich suggested point of view, theory of objectivity. The access to the model domain of objectivity must be made mathematically by means of a transformation, since it is blocked for us by means of measurements or observations (see chapters 6.15-6.19). The transformation back into the observation domain must be made according to the same mathematical relations (fig. 28.9). In this way the quantum properties of the elementary particles can be calculated with high accuracy and agreement with the values, which until now only could be measured (chapter 7).

Approach: $r = c \cdot t$ (determine distance by signal prop. time) (27.23)

$dr = c \cdot dt + t \cdot dc$ (total differential for a change) (27.24)

$$c = \frac{dr}{dt} - t \cdot \frac{dc}{dt} \quad \text{resp.} \quad t = \frac{dr}{dc} - c \cdot \frac{dt}{dc} \qquad (27.25)$$

$$c = \frac{dr}{dt} - t \cdot \frac{d^2r}{dt^2} + t^2 \cdot \frac{d^3r}{dt^3} - t^3 \cdot \frac{d^4r}{dt^4} + t^4 \cdot \frac{d^5r}{dt^5} - \ldots \qquad (27.26)$$

resp.

$$t = \frac{dr}{dc} - c \cdot \frac{d^2r}{dc^2} + c^2 \cdot \frac{d^3r}{dc^3} - c^3 \cdot \frac{d^4r}{dc^4} + c^4 \cdot \frac{d^5r}{dc^5} - \ldots \qquad (27.27)$$

The Taylor-series (27.26 and 27.27) breaks off after the first term, if

c = constant	resp.	t = constant	
$dr = c \cdot dt$	resp.:	$dr = t \cdot dc$	
$\Delta r = c \cdot \Delta t$	resp.:	$\Delta r = t \cdot \Delta c$	(27.28)
theory of relativity		theory of objectivity	
$\Delta r \sim \Delta t$	resp.:	$\Delta r \sim \Delta c$	means:
from: length contraction		variable speed of light	
follows: time dilatation		dependency of meter measure	
for absolute speed of the light		for absolute time	
observation domain (measurable)		model domain (can only be calculated)	

x(r) ○——● M{x(r)}

Model transformation of the length measures

Fig. 28.9:____ Theory of relativity and theory of objectivity and the model transformation between both physical standpoints

<i>: Repetition of part 1, fig. 6.16

28.9 The objective standpoint

The question is asked how one gets to an objective physical standpoint, which in addition evades every observation? The way leads over a transformation, to which all perceptible and measurable relations must be submitted.
If we for instance measure the distance r to a point light source, then the propagation of the light c and the propagation time t determine the distance measure $r = c*t$
If there occurs a little change of the distance, then two causes should be considered: Either the propagation time or the speed of light have changed somewhat. With that the two possible standpoints already would have been found.

The relativistic standpoint, which proceeds from the assumption of the speed of light being constant, says: the propagation time varies and we are dealing with a clock problem. If namely for relativistic velocities a length contraction occurs, then from that necessarily follows a time dilatation.
But actually no specific statement can be made about the constancy of the speed of light, besides that we look at, measure and scan everything with c and hence only observe the constancy. With that the theory of relativity remains a pure observer theory, exactly as Einstein originally called it into existence. This standpoint follows the motto: What can't be observed also doesn't need to interest the physicist.

The objective standpoint strives for more, for a description of the actually taking place processes. This time we proceed from the assumption of a universal and constant time with the argument: The time measure is an immutable definition and the physicist, who dictates this, himself determines what is simultaneousness. Then there also is no place for time travel and for clocks going wrong.
Therefore the speed of light can take all possible values always in strict proportionality to the length measures. Thus the measured length and distance measures should be transformed and that in the end is the unit ,,meter", which should be replaced by an objective measure.

With that the necessary transformation for variable c would be outlined. This transformation will be enqueued in the file of the big transformations. From it the Lorentz-transformation for c = constant emerges as a special case, like already from that transformation the Galilei-transformation follows for $c = \infty$. How now the relation of the subjective to the objective ,,meter" should be determined; by means of the relation of the relevant fields (eq. 28.17) or by means of the square root of Lorentz (eq. 28.16), over that should be worked and spoken. We already have successfully gone through it in a concrete example (chapter 7).

Every theory is judged according to its expressiveness. Ending this chapter the statements and derivations hence again are compared. On the one hand the Maxwell theory and from that the theory of relativity can be derived from the new approach, on the other hand a long list follows, which can't be connected with the Maxwell equations, like e.g. the gravitation. For instance the neutrino and all other elementary particles with all their specific quantum properties are derived (chapter 7), free and easy fundamental laws result, like the law of conservation of energy, and even the temperature spills its until now kept secret (chapter 8.3). Remains the conclusion: With no other approach according to the textbooks until now the efficiency of the new approach could be obtained.

• From the dual field-theoretical approach are derived:	• From Maxwell's field equations can be derived:
=> Maxwell's field equations	=>0
=> Quantum properties of the elementary particles	=>0
=> Neutrino (as an oscillating ring-like vortex)	=>0
=> Gravitation (as a result of closed field lines)	= > 0
=> Unified theory (grand unification of all interactions)	=>0
=> Temperature (as an oscillation of size depending on field)	=>0
=> Law of conservation of energy (and many other funda-mental laws of physics)	=>0
=> Theory of objectivity	=> Theory of relativity

Fig. 28.10: Comparison of the efficiency of the approaches (final balance)

29. Mathematical gleanings

If, proceeding from the new field-physical approach, well-known and accepted theories are derived as special cases, this on the one hand can be valued as evidence for the correctness of the approach. On the other hand the new approach in part significantly influences the interpretation of the derived theories. That can involve a rethinking, with which not insightful people have difficulties, if for instance quantum physics, thermodynamics or the gravitation become partial aspects of electromagnetism. Over and above that are hidden many new thing in the new approach, which are there to discover. To that are counting among others the potential vortices and the scalar waves. One can work out these phenomena physically or mathematically, where the latter way as a rule is the faster one. Hence the summary shall be concluded with a kind of mathematical gleanings.

29.1 General and special theory of relativity

Albert Einstein distinguishes between general and special theory of relativity. Whereas the special (SRT), still is linked tightly with the prerequisites of the Lorentz-transformation, the general (GRT), deals with an extension to arbitrary systems, which mustn't be inertial systems. I would like not to dwell upon the GRT, as Einstein designed it, and merely notice that every generalization represents a possible source of errors and has to be well founded.

In the case of our derivation, the general case as it were resulted of its own accord. Let's turn back: If the root of Lorentz still was a component of the derived field dilatation (28.15) and equally of the length contraction (28.16), then it fell out in the comparison of both results (28.17). With that the important result, the proportionality (28.18), which among others results in the gravitation, becomes independent of the speed of light and the relative velocity v. This last step is obvious and still completely new. It cannot be found at Einstein, who in another way finds his GRT and his description of the gravitation. Even if here is striven for the same goal, then deviations in the result cannot be excluded because of the differences in the derivation, for which reason I additionally mark the by me derived general relativity (GRT'), to avoid confusion.

Influence of the Lorentz-transformation in the:
SRT (special theory of relativity): one-dimensional,
GRT' (general theory of relativity): three-dimensional, to a large extent corresponding to the GRT of Albert Einstein,
GOT (general theory of objectivity)

Discussion of the root of Lorentz $\sqrt{1 - v^2/c^2} = \sqrt{1 - \beta^2}$ with $\beta = v/c$
resp. the γ-factor: $\gamma = 1/\sqrt{1 - v^2/c^2}$ (29.1)

Being transformed are:		SRT	GRT'	GOT
Length measures (length contraction eq. 28.16)	L [m]	$\sim 1/\gamma$	$\sim 1/\gamma$	$\sim 1/\gamma$
Areas (circular motion)	A [m²]	$\sim 1/\gamma$	$\sim 1/\gamma^2$	$\sim 1/\gamma^2$
Volumes (vortical motion)	V [m³]	$\sim 1/\gamma$	$\sim 1/\gamma^3$	$\sim 1/\gamma^3$
Time measures	t [s]	$\sim 1/\gamma$	$\sim 1/\gamma$	= const.
Velocities	v [m/s]	= const.	= const.	$\sim 1/\gamma$
($v = L/t$)	c [m/s]	= const.	= const.	$\sim 1/\gamma$
Constants of material	ε [As/Vm]	= const.	= const.	$\sim \gamma$
($\varepsilon \cdot \mu = 1/c^2$)	μ [Vs/Am]	= const.	= const.	$\sim \gamma$
Relativistic mass (increase in mass)	m [kg] [=VAs³/m²]	$\sim \gamma$	$\sim \gamma$	$\sim \gamma^2$
Energy	W [VAs]	$\sim \gamma$	$\sim \gamma$	= const.
Energy density ($w = W/V$)	w [VAs/m³]	$\sim \gamma^2$	$\sim \gamma^4$	$\sim \gamma^3$
E-, **H**-field strength	**E** [V/m]	$\sim \gamma$	$\sim \gamma^2$	$\sim \gamma$
($w = (\varepsilon \cdot E^2 + \mu \cdot H^2)/2$)	**H** [A/m]	$\sim \gamma$	$\sim \gamma^2$	$\sim \gamma$
Power density (Poynting vector $\mathbf{p} = \mathbf{E} \times \mathbf{H}$)	**p** [VA/m²]	$\sim \gamma^2$	$\sim \gamma^4$	$\sim \gamma^2$
D-field, **B**-field	**D** [As/m²]	$\sim \gamma$	$\sim \gamma^2$	$\sim \gamma^2$
($\mathbf{D} = \varepsilon \cdot \mathbf{E}$; $\mathbf{B} = \mu \cdot \mathbf{H}$)	**B** [Vs/m²]	$\sim \gamma$	$\sim \gamma^2$	$\sim \gamma^2$
Power	P [VA]	$\sim \gamma$	$\sim \gamma^2$	= const.

Fig. 29.2 Transformation table between SRT, GRT' and GOT

29.2 Transformation table

Let's speak again about the difference to the special relativity (SRT). This so to speak deals with the one-dimensional case of the uniform motion of a reference system in x-direction ($v = v_x$), as specified by the Lorentz-transformation, where only the x-components and not those in y- or z-direction are being transformed. As already mentioned this is a purely theoretical case, which in practice occurs next to never. Normal is circular and vortical and with that accelerated motion, where the velocity component permanently changes its direction.

The derived result of the general relativity (GRT') does justice to this circumstance. Even if this at first only has been derived for the x-direction it nevertheless is valid equally in y- and z-direction. It even remains valid for the case that we base on a path of arbitrary form of a spatial field vortex. In this case some components continually occur in all directions of space, so that the relative velocity v as already the speed of light c loses its vectorial nature. With that the transition of the SRT to the GRT is carried out. By means of the spatial swirling the electric and magnetic field pointers at the same time turn into scalar factors, by taking over the function of the aether. Let us remember that even Einstein in his GRT was forced to again introduce the aether, which in the SRT still was unnecessary.

It therefore makes a difference in the transformation of physical factors, if we base on a one-dimensional (SRT) or a three-dimensional spatial description (GRT). Length measures in x-direction in both cases must be converted using the root of Lorentz. Usually the relativistic γ-factor is introduced, which is inverse to the root of Lorentz

$\gamma = 1/\sqrt{1-v^2/c^2)}$ with $x_o/x = \gamma$ (29.2)

If thus individual length measures would be subject to a length contraction following the γ -factor, then a volume V according to the SRT must be transformed with γ, according to the GRT' however with γ^3.
As is well-known a relativistic increase in mass is converted with the γ-factor and in the same manner the to that proportional energy $E = m\ c^2$. If we however correlate the energy to the volume V and in that way determine an energy density w, then the difference between SRT $(w \sim \gamma^2)$ and GRT' $(w \sim \gamma^4)$ again has its maximum effect.
A relation to the field factors of E- and H-field is for instance provided by the energy density of a wave field
$w = (\varepsilon \cdot E^2 + \mu \cdot H^2)/2$ (29.3)

According to that the field strengths in the one-dimensional case of the SRT should be converted with the γ-factor, in the case of the GRT' however with γ^2, in accordance with the derivation in chapter 28. This circumstance willingly is overlooked, although it only concerns the textbooks and the today valid theory of relativity. I however point to the difference, since it does make a difference if we start with the SRT or the GRT when we change to the general theory of objectivity (GOT).

In the domain of the GOT all length measures should be transformed. The respective dimension gives information with which power the γ-factor occurs (fig. 29.2). The unit meter is responsible for that.

Discussing the root of Lorentz $\sqrt{1-\beta^2} = 1/\gamma = \sqrt{1-(v^2/c^2)}$				
mathematical consideration:	$v = 0$	$v < c$	$v = c$	$v > c$
Abbreviations: $\beta = v/c$	$0 <$	$\beta < 1$	$\beta = 1$	$\beta > 1$
and: $\gamma = 1/\sqrt{1-\beta^2}$	$1 <$	$\lvert\gamma\rvert < \infty$	$\gamma = \pm\infty$	imaginary
and: $\gamma^2 = 1/(1-\beta^2)$	1	positive	$\gamma = +\infty$	negative
and: $\gamma^4 = 1/(1-\beta^2)^2$	$1 <$	positive	$\gamma = +\infty$	positive
Examples: Increase in mass, energy $\sim \gamma$ for SRT and GRT	1	positive	$\pm\infty$	complex
Field strength in GRT': $\mathbf{E}, \mathbf{H} \sim \gamma^2$ and mass in GOT: $m \sim \gamma^2$	$1 <$	$\mathbf{E}, \mathbf{H} < \infty$ positive	$+\infty$	$\mathbf{E}, \mathbf{H} < 0$ negative
Energy-, power density $\sim \gamma^4$ (Poynting vector) in GRT:	$1 <$	$\mathbf{P} < \infty$ positive	$\mathbf{P} = +\infty$	$\mathbf{P} < \infty$ positive

Fig. 29.3 Discussion concerning the root of Lorentz

- The special theory of relativity SKT only is defined for $v < c$
- For $v \bullet c$ particles with a complex mass, but with a real energy density (according to GRT') would result.
- From the point of view of the theory of objectivity (GOT) the mass should be taken negative-real (neutrino?).

29.3 Discussion concerning the root of Lorentz

Fig. 29.2 forms the basis for the transformation in the domain of the GOT, the general theory of objectivity, where it plays a role, if a subjectively measured factor should be converted from the laboratory domain or a relativistic factor according to the SRT or the GRT'. The given proportionalities thereby should be put in the respective relation. In this way results the respective valid instruction for transformation on the basis of the root of Lorentz.

Let's take a critical look at the root of Lorentz. The velocity v occurring in it, of whatever this may consist, is depending on the field according to equation 28.14 + 28.15. It strictly speaking wouldn't be constant anymore and wouldn't belong in a general instruction for transformation at all. Only, what is valid for v, is valid to the same extent for c. Since only the proportion of v/c occurs in the root of Lorentz every influence depending on field or of other nature will have no effect on v/c and the value of the root of Lorentz. It in any case will retain its value. It fulfills for itself the condition of the Lorentz invariance. According to that in the case of the relative velocity v it doesn't depend on the absolute value, but only on the relation to the speed of light. In addition the restriction to values of $v < c$ is normal, if the speed of light is seen as an upper limit. Let's first purely mathematically draw a case distinction for different velocity domains of v. For $v = 0$ the root of Lorentz becomes one and the Lorentz transformation turns into the Galilei transformation.

Connected to this is the today well-known and technically used domain up to the limit of $v = c$. It virtually is impossible to accelerate a mass particle to the speed of light, since mass, field and energy would grow towards infinity, as is clear from the table (fig. 29.2). Particles as fast as light, like photons, hence cannot have a mass. At $v = c$ a singularity is present.

In a field theory, which also deserves this name, however an upper limit must not be present. Hence also the case for $v > c$ should be required theoretically. Only later we will be able to judge if this makes sense physically. We at first only want to examine the case mathematically. Mass, field and energy now again have a finite value, there however results a complex, purely imaginary mass, a negative field and doing so, as already before a positive energy and power density.

There sometime has been the textbook opinion that it is physically impossible to fly faster than sound. This erroneous statement even could be proven „scientifically", because such a supersonic airplane would fly off the observation space and with that wouldn't be real anymore, thus from a mathematical viewpoint would be complex. Anyone, who in New York gets off a Concorde, can confirm that everything at any moment of the flight was real. Only the observer is deceived, if the airplane flies somewhere else, than he perceives it. Is the speed of light also such a „sonic barrier", which by the majority of the scientists since Einstein until today still is thought to be insurmountable?

How should one physically imagine a complex mass? Let us remember the alternating current teachings, where it is normal to work with complex values, since the mean values of the oscillating alternating currents, tension voltages and fields are zero. Calculating with mean values would result in zero energy and power. Hence complex factors are introduced and the root mean square values are calculated and measured instead of the mean values. Could a complex mass analogously not concern an oscillating particle, a particle, which in addition is faster than the light?

- Physical example:

neutrino = mean of the oscillating mass≈zero
RMS value of the complex mass≠zero
E- and H-field with inverse sign
carrier of positive energy and power
ν -model: ring-like vortex oscillating from e^- to e^+ <i>

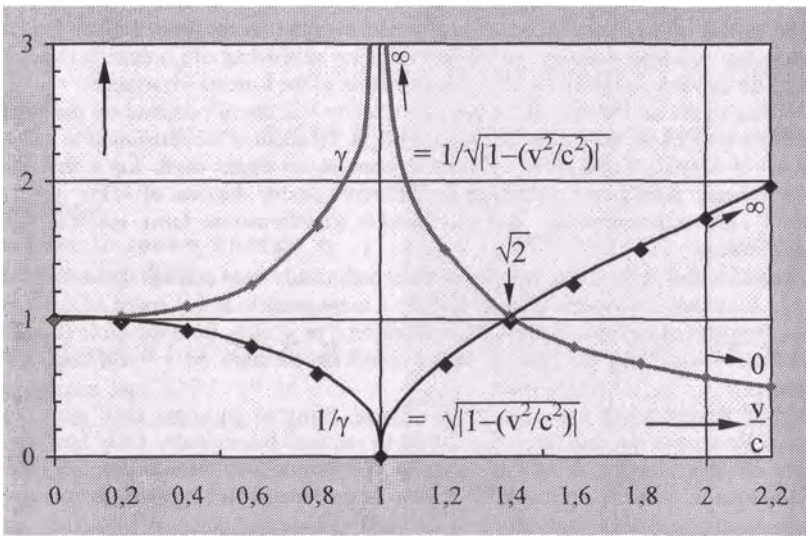

Examples from the general theory of relativity (GRT):

(28.16): length contraction $L \sim 1/\gamma = \sqrt{1-(v^2/c^2)}$

(6.19): increase in mass $m \sim \gamma = 1/\sqrt{1-(v^2/c^2)}$

(6.6,28.15) field dilatation $\mathbf{E} \sim \mathbf{H} \sim \gamma^2 = 1/(1-v^2/c^2)$

Fig. 29.4: Root of Lorentz for speeds faster than light (v > c)

29.4 Mathematical derivation of the neutrino

In the domain of speeds faster than light, for v > c, the power series (28.12) does not converge anymore and every observer theory and every observation (fig. 28.4) will fail, because particles faster than light run away of their own visible appearances. Every measurement and every observation inevitably is behind and hardly can be assigned to the actual cause. That way for instance measured neutrino events are being connected with celestial observations, with which they haven't got anything to do at all.
If we however describe the domain v > c in the complex plane, then astonishing results are found, which could be verified physically: a complex length dilatation with increasing velocity goes along with a loss of complex mass. The oscillating fields, energy and power density however would be real with negative sign.
Thus there would result particles carrying energy with an oppositely poled field, with an oscillating mass and if necessary also an oscillating charge. Without static mass and charge these particles hardly would interact with normal matter, which leads to an enormous ability of penetration. The only physical particles, which have such a property, are the neutrinos. With that a usable and an extremely efficient model description has been found for these particles. Also the energy of these particles can be calculated, which has considerable orders of magnitude and is available as an energy source everywhere and any time.

If for instance in a converter for space energy a neutrino should be converted into a resting charge carrier (with v = 0), then two steps are necessary (see part 2 of this series of books):

1. First the neutrino must be slowed down to 1.414 times the speed of light (fig. 28.9). Doing so energy is spent and not won! The converter for instance can cool down.

2. Afterwards the characteristic rotation of its own, with which the ring-like vortex spins around itself by permanently putting its inside to the outside and vice versa, has to be taken away from the neutrino. In that way the vortex centre is closed and the particle acquires localization. It becomes a charge carrier.

Even if the representation in the complex plane represents only an auxiliary description, the model nevertheless seems to be efficient, because despite its complex mass and charge the neutrino nevertheless carries a real energy. It in any case is represented in that way to an observer, who measures the relation with the speed of light, who in the relativistic scheme of things scans the relation.

Today, as already said, even the sonic barrier has become permeable and no scientist dares to physically deny this fact and even prove his mistake mathematically anymore. No, on the contrary, he always did know that as an expected consequence the sonic barrier runs after the supersonic plane. The once physically unthinkable and scientifically fought has become normality.
What should hinder an oscillating particle, like a neutrino, to be faster than the light? Some time one also will accustom to that.

- Starting-point:
  the fundamental field equation
  (derivation in chapter 27.10)

$$-c^2 \cdot \mathrm{rot\ rot}\ \mathbf{B} = \frac{\partial^2 \mathbf{B}}{\partial t^2} + \frac{1}{\tau_1}\frac{\partial \mathbf{B}}{\partial t} + \frac{1}{\tau_2}\frac{\partial \mathbf{B}}{\partial t} + \frac{\mathbf{B}}{\tau_1 \tau_2} \quad (27.26)$$

- Example:

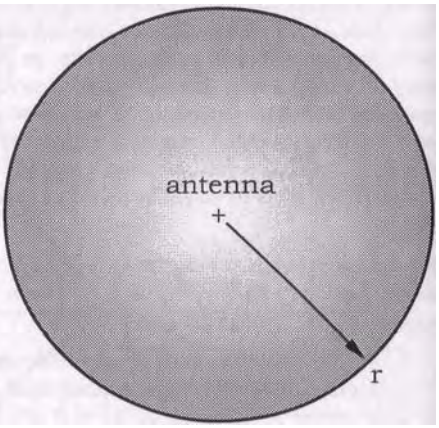

Spherical propagation of an electromagnetic wave in space

- The number π: $\pi = 3.14159$

straight	$\pi\cdot$	circular		spherical
r	$\cdot\ \pi\cdot 2 =$	$2r\cdot\pi$	$\cdot\ 2r =$	$\pi\cdot r^2\cdot 4$
line		**circum-ference**		**surface**
r	$\cdot\ \pi\cdot r =$	$r^2\cdot\pi$	$\cdot\ r\cdot 4/3 =$	$\pi\cdot r^3\cdot 4/3$
line		**area**		**volume**

(29.4)

Fig. 29.5: The number π

29.5 Universal constants and constants of nature

Strictly speaking fundamental or universal constants can't exist in pure field physics at all. For the example of the speed of light has been shown that it merely are measurement constants (fig. 6.11). The numerical size is a consequence of the definition. The speed of light for instance has the today well-known value as a consequence of the fixing of a length unit and a time unit. If we change a unit, if we take ,,feet" instead of ,.meters", then another value results. If however the velocity changes, then the reference measure of our gauge changes along and we get the identical reading. Electric and magnetic field constant depend directly on the speed of light c $(\varepsilon \cdot \mu = 1/c^2)$, which solely by the fixing of the electric units takes a certain value. The inner structure of the potential vortices leads from Planck's quantum of action, to the elementary charge and to the countless atomic ,,constants", which all objectively seen aren't constants at all. They virtually all can be derived (chapter 7).

Sooner or later even the last natural scientist will realize, that nature does not provide "constants" at all. If ,,constants of nature"' did exist, as listed in textbooks and encyclopaedias, then they aren't consistent with causality, since we don't know the cause, why the factor should have exactly this size and no other. Behind every so-called constant of nature unnoticed is hiding a physical closed loop conclusion.

Fundamental constants only exist in mathematics. This can be shown very nicely for the example of the ,,fundamental field equation" (eq. 27.26), which has been derived from the new field theoretical approach (fig. 27.10). It is the description of waves and vortices in space and time, which indeed carries features of a ,,world equation". If one searches this equation for fundamental constants, then one altogether can find three: the number π, the number e and the Golden Proportion Φ. The speed of light c however occurs only as the mathematical factor characterizing the wave as a result of the defined units. If one would choose the units different, c as well could be made 1. With the fundamental numbers that procedure won't work. They don't depend on the definition of the units!

Let's consider the number π. The number π occurs every time as a proportionality factor if we transition from a straight line to a circle or further to a sphere, from a line to the circumference or further to the surface of a sphere and exactly so from a line to the area of a circle or further to the volume of a sphere. Since for all the special cases, which are derived from the fundamental field equation (the structure of the elementary particles, the atomic structure and in the same way again in the universe), the spherical symmetry dominates, the mathematical solution is determined by a corresponding spatial configuration of the number π. It has its cause neither in a physical relation of interactions, nor in the choice of the units, but only in the geometry.

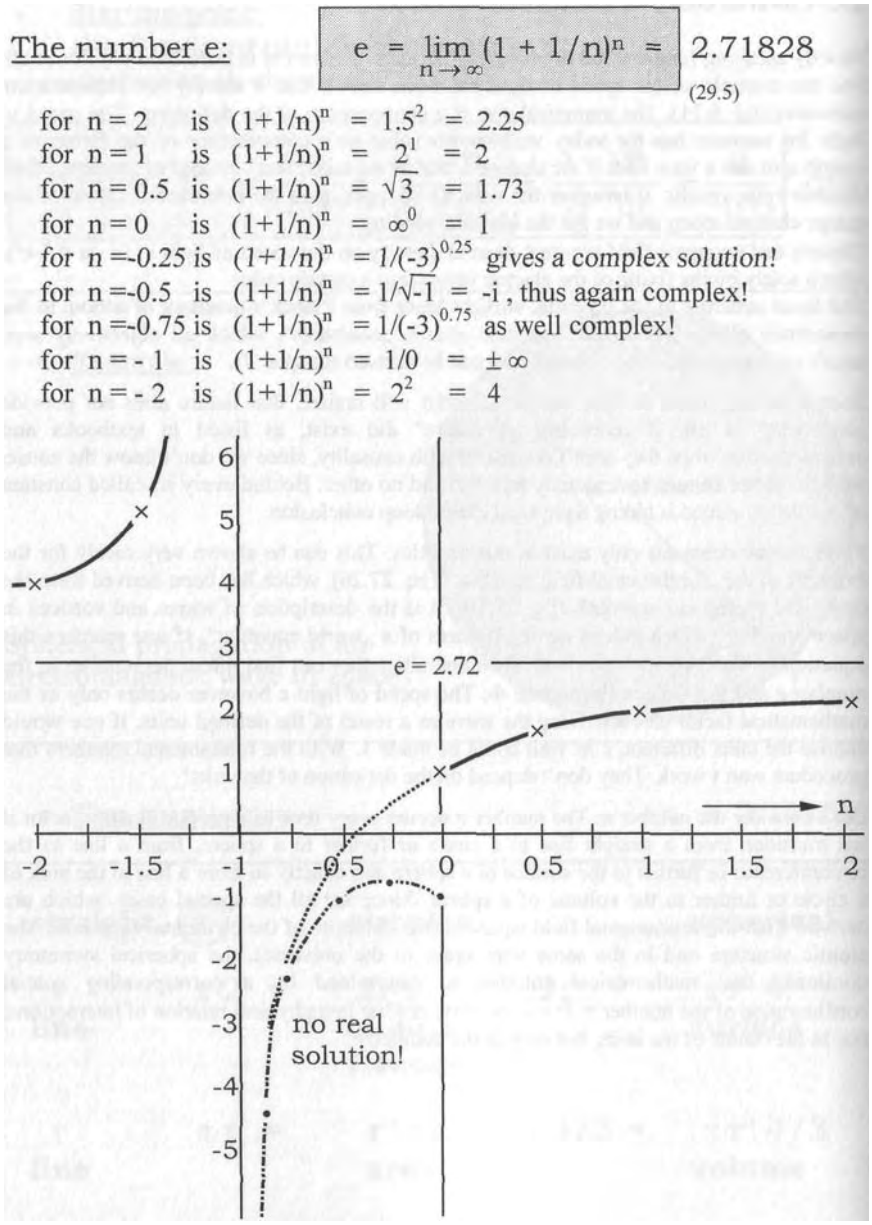

Fig. 29.6: Forming the limiting value of the number e

29.6 The fundamental number e

In the fundamental field equation (27.26) a further irrational number is concealed, the number e. Whereas the left side of the equation (a) gives the spatial distribution, the right side (b-e) describes the temporal course of events. Besides the term constant in time (e) also first time derivations (c and d) and a second time derivation (b) occur. For a solution of this differential equation a function should be found, the derivations of which are again the function itself. This condition strictly speaking is fulfilled only by one single function, the e-function.
We used this property of the e-function already for the derivation of the Schrodinger-equation in chapter 5.6 and 5.7. There with the help of the e-function an approach was chosen, which leads to the well-known solutions of the Schrodinger-equation, which are considered to be secured experimentally. With that the number e controls the temporal relations of the fundamental field equation.

It might be helpful to take a closer look at the origin of the number e. It results from a consideration of limiting values: _

$$e = \lim_{n \to \infty} (1 + 1/n)^n = 2.71828 \qquad (29.5)$$

If one varies n and allows different values between $-\infty$ and $+\infty$, then a strange behaviour is showing. One indeed more and more approaches the well-known value of e = 2.72, as dictated by the definition of limiting values according to equation (29.5), the larger n is chosen. But in the opposite direction it looks less tidied:

	for	$n = 1$	is	$(1+1/n)^n$	=	2^1	=	2	
	for	$n = 0{,}5$	is	$(1+1/n)^n$	=	$\sqrt{3}$	=	1.73	
	for	$n = 0$	is	$(1+1/n)^n$	=	∞^0	=	1	
	for	$n = -0{,}5$	is	$(1+1/n)^n$	=	$1/\sqrt{-1}$	=	$-i$, thus complex!	
and	for	$n = -1$	is	$(1+1/n)^n$	=	$1/0$	=	$\pm\infty$	(29.6)

Since the e-function inside the fundamental field equation is responsible for the temporal sequence, the interpretation of my colleague Prof. Dr. Preussker<i> gets a deeper sense. He says, it starts outside our imagination (at n = -1). Afterwards at first big chaos prevails. Mathematically seen some imaginary solutions arise. Finally the system is putting in order (from n = 0), to more and more approach the value e = 2.72 .

The number e is of fundamental importance and thereby holds unforeseen secrets. More mysterious and until now entirely misunderstood is the meaning of the Golden Proportion. Also this indivisible number can be found in the fundamental field equation. Since it is less known and more complicated to handle, it first shall be introduced.

<i>: H. Preussker: Der Wirbelring, Halstenbeck 2002

Graphical construction at a right-angled triangle (Pythagoras):

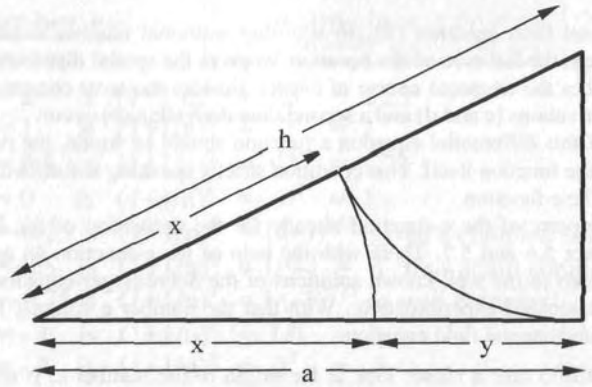

Golden Proportion of length $a = x + y$:

$$\frac{x}{a} = \frac{y}{x}$$

with the proportion:

$$\frac{x}{a} = \Phi = 0.618 \quad (29.9) \quad \text{and} \quad \frac{a}{x} = \frac{1}{\Phi} = \Phi + 1 = 1.618 \quad (29.10)$$

The pentacle

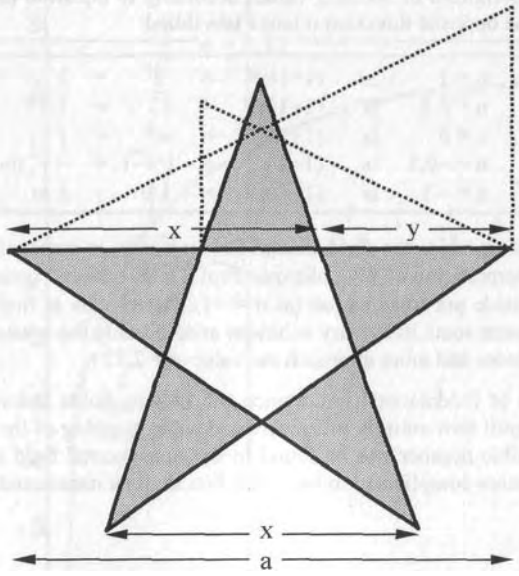

Fig. 29.7: Constructions for the Golden Proportion

29.7 The pentacle

During his visit of the Egyptian pyramids already two and a half thousand years ago the history writer Herodotus by his guide had been called attention to the circumstance that the Golden Proportion has been realized for the proportions of scale.
In the case of the pyramid of Cheops it even has been taken into account manifold, as we know today, but we hence still don't know why. There must be an intention behind it. Anyway a coincidental use can be eliminated, since the Golden Proportion cannot be handled in an easy way, neither graphically nor mathematically.
The Golden Proportion in addition plays an important role in the whole ancient architecture and not only there. It for instance occurs in the case of a very old symbol, the five edged star, which we can draw with one line without taking off. The well-known symbol also is called pentacle.

In the case of the Golden Proportion a straight line a is divided into two unequal halves. The larger half x thereby is 61.8 % of the straight line a. Already Pythagoras has researched and teached about this. Maybe he did know more about the purpose of this classification than all the mathematicians, archaeologists and art historians of today together.
For a graphical solution we assume a right-angled triangle. The task is to divide one leg of length a = x + y according to the Golden Proportion into two parts, the larger part x and the smaller part y. The second leg has the length a/2. According to the theorem of Pythagoras the length of the hypotenuse h is

$$h = \sqrt{a^2 + (a/2)^2} = (a/2)\cdot\sqrt{5} \quad (29.7)$$

If the length of the second leg (a/2) is subtracted from the hypotenuse, then this is the sought length x = h - a/2:

$$x = (a/2)(\sqrt{5} - 1) \quad (29.8)$$

The proportion of both length measures gives the constant Φ, which is characteristic for the Golden Proportion:

$$\Phi = x/a = (\sqrt{5} - 1)/2 = 0.618 \quad (29.9)$$

This proportional number has a special property. If one adds 1 to the number and forms the reciprocal value of that, then the same number comes out again, thus:
with $\Phi = x/a$: with a = x + y :

$$\Phi + 1 = \frac{1}{\Phi} \quad \text{and} \quad \frac{x}{a} + 1 = \frac{a}{x} \quad \text{resp.} \quad \frac{x}{a} = \frac{a - x}{x} = \frac{y}{x} \quad (29.10)$$

With that the ratio of the length a and the larger section x is the same as the ratio of x and the smaller section y.

- Starting-point: the fundamental field equation

$$\boxed{-c^2 \cdot \mathrm{rot\,rot}\,\mathbf{E} = \frac{\partial^2 \mathbf{E}}{\partial t^2} + \frac{1}{\tau_1}\frac{\partial \mathbf{E}}{\partial t} + \frac{1}{\tau_2}\frac{\partial \mathbf{E}}{\partial t} + \frac{\mathbf{E}}{\tau_1 \tau_2}} \quad (27.26)$$

- for the special case: because of missing conductivity ($\sigma = 0$)
  e.g. in air no eddy current damping: $\sigma/\varepsilon = \boxed{(1/\tau_1) = 0}$
- and no currents (eq. 27.15+27.16): $\mathbf{j} = \sigma \cdot \mathbf{E} = -\mathbf{v} \cdot \varepsilon \cdot \mathrm{div}\,\mathbf{E} = 0$
- resp. $\Delta \mathbf{E} = \mathrm{grad}\,\cancel{\mathrm{div}\,\mathbf{E}} - \mathrm{rot\,rot}\,\mathbf{E} = -\mathrm{rot\,rot}\,\mathbf{E}$

$$\Rightarrow \boxed{c^2 \cdot \Delta \mathbf{E} = \frac{\partial^2 \mathbf{E}}{\partial t^2} + \frac{1}{\tau_2}\frac{\partial \mathbf{E}}{\partial t}} \quad (29.11)$$

Standard case of a wave damped with potential vortices

In the case of a perturbation this wave rolls up to a vortex, with

- the vortex radius r
- the swirl velocity $c = \omega \cdot r$
- the angular velocity $\omega = 1/\tau_2 = c/r$

The vortex itself runs with the velocity $v(x(t)) = dx/dt$
as a longitudinal wave in direction of the **E**-field: $\Delta \mathbf{E} = \partial^2 \mathbf{E}/\partial x^2$

$\Rightarrow \partial \mathbf{E}/\partial t = (\partial \mathbf{E}/\partial x) \cdot (dx/dt) = v \cdot \partial \mathbf{E}/\partial x$ and
$\partial^2 \mathbf{E}/\partial t^2 = v^2 \cdot (\partial^2 \mathbf{E}/\partial x^2)$; ($\partial v/\partial t = 0$, since not accelerated)

$$\Rightarrow \boxed{c^2 \cdot \partial^2 \mathbf{E}/\partial x^2 = v^2 \cdot (\partial^2 \mathbf{E}/\partial x^2) + v \cdot (c/r) \cdot \partial \mathbf{E}/\partial x} \quad (29.12)$$

- with the exponential approach: $\mathbf{E} = \Psi \cdot e^{-x/r}$ are:

$\Rightarrow \partial \mathbf{E}/\partial x = -(1/r) \cdot \mathbf{E}$ and $\partial^2 \mathbf{E}/\partial x^2 = (1/r^2) \cdot \mathbf{E}$

$$\Rightarrow \boxed{(c^2/r^2) \cdot \mathbf{E} = (v^2/r^2) \cdot \mathbf{E} - (v \cdot c/r^2) \cdot \mathbf{E}} \quad (29.13)$$

- resp.: $\boxed{c^2 = v^2 - v \cdot c}$ (29.14)

Fig. 29.8:____ The calculation of an electromagnetic wave, which is rolling up to a potential vortex.

The big mystery concerning the harmony of the Golden Proportion gets a sober technical-physical dimension with the theory of objectivity. It determines within the fundamental field equation" (27.26) the rolling up of a wave into a vortex and vice versa. The Golden Proportion mathematically describes the process known as wave damping, as we can make ourselves clear.

29.8 The vortex, which is rolling up

For the case of a wave propagation in air or in vacuum, if no electric conductivity is present ($\sigma = 0$), the fundamental field equation is reduced to the two parts: the description of the electromagnetic wave and the potential vortex as a damping term. Now a solution of this partial differential equation (29.11) is sought. This only succeeds for a very particular course of spatial and temporal field.

If a wave for a field perturbation rolls up to a vortex, which we had worked out as a model concept, then the field oscillation continues to run with the speed of light, but this time in circles. With this consideration the relation between the angular velocity resp. the time constants and the radius of the circular vortex has been described ($\tau_2 = r/c$).

v(x(t)) = dx/dt is the not-accelerated velocity of propagation of a vortex. In that case v points in the x-direction radially to the outside. For the time derivation of the field vector E(x(t)) the chain rule should be applied. With that the field equation (29.11), defined in space and time, can be converted into an equation determined in v and x (29.12).

Finally we use the mentioned property of the e-function, which for first and second derivation again turns into itself, by choosing the approach of an exponential damping with $e^{-x/r}$ There remains a quadratic equation to determine the velocity v (29.14 and 29.15). From the two solutions of the quadratic equation only the one with positive velocity should be considered (29.17) and that would be 1.618 times the speed of light! (29.18).
If we subtract 1 from this value or form the reciprocal value, then in both cases the factor $\Phi = 0.618$ results, which is called the Golden Proportion (29.19).

Behind this clear, mathematically won result is hiding a deeper physical meaning. Obviously nothing can hinder a longitudinal wave and its vortices to be slower or faster than just with v = 1.618*c. Let us take the case that v = c, for which there even exist calculations in some textbooks<i>. Then as a result gets out that the longitudinal parts decrease very quickly and already can be neglected after $\lambda/2\pi$. I in any case interpret the
near-field zone of an antenna (fig. 29.9) such that within one sixth of the wavelength the vortices to a large extent have decayed.

<i>: Zinke, Brunswig: Lehrbuch der Hochfrequenztechnik, 1. Bd., 3.Aufl. Springer-Verlag Berlin 1986, Seite 335

- The quadratic equation 29.14: $v^2 - v \cdot c - c^2 = 0$ (29.15)
- has the solution: $v = c/2 \pm \sqrt{c^2/4 + c^2}$ (29.16)
- for the proportion v/c: $v/c = (1 + \sqrt{5})/2 = 1.618$ (29.17)
- The result $v/c = \underline{1.618}$ (29.18)
- resp.: $c/v = \Phi = \underline{0.618} =$,,Golden Proportion"(29.19)
- acc. to that is: $1 + \Phi = 1.618 = 1/\Phi = 1/0.618$(29.18*)

- Concerning the physical meaning of $v/c = 1.618$ (29.17)

In the domain:	vortex decay:	description:
$v = c$	within $\lambda/2\pi$	near-field zone
$v < 1.618 \cdot c$	only later	noise
$v = 1.618 \cdot c$	stability limit	direct conversion
$v > 1.618 \cdot c$	stable, no decay	neutrino radiation

=>In the ideal case at 1.618 times the speed of light at the stability limit, the natural and spontaneous conversion from vortex to wave and vice versa occurs.

=> Scalar wave antennas have their optimum degree of effectiveness in the Golden Proportion!

Fig. 29.9: ____ Derivation of the Golden Proportion from the fundamental field equation.

For larger velocities, as Tesla has produced already 100 years ago, the stability of the vortices, but also their biological effectiveness increases. From a high-frequency technical viewpoint this is the domain of the noise, the domain of instable oscillating noise vortices. From a biological and medical viewpoint especially here the answers should be sought to questions concerning the electromagnetic environmental compatibility.
This domain stretches from v = c to v = 1.618*c, the boundary case, where a spontaneous conversion of the wave into the vortex is possible. The Golden Proportion describes the stability limit, where the field vortices after they have been formed, don't decay anymore. From this velocity on the antenna resp. radiation source hasn't got a limited near-field zone anymore, since that now reaches to infinity. Only from this distinct velocity on I give the field vortices the name "neutrino".

29.9 The Golden Proportion

Whereas traditional antennas, which should emit electromagnetic waves, are optimized for signals with the speed of light, do scalar wave antennas have their optimum degree of effectiveness in the Golden Proportion. Thereby the goal of an emission of oscillating ring-like vortices is pursued. Vortices, which with a velocity of propagation of v = 1.618-c remain stable and make possible a spatially unlimited transmission of energy and information by scalar waves.

The velocity of propagation v is calculated from the product of wavelength times frequency. $v = \lambda \cdot f$. If the frequency of a transmitter is prescribed, then the geometry of the transmitting antenna decides on the degree of effectiveness of the antenna and on how many parts of transverse waves are emitted in relation to longitudinal waves. In the case of a broadcast antenna usually λ or $\lambda/2$ is chosen. For a scalar wave however the optimum is reached with

$$\boxed{\lambda_{vortex} = 1.618 \cdot \lambda_{wave} = 1.618 \cdot c/f.} \quad (29.20)$$

With that the electrotechnical problem becomes a geometrical one, if it concerns the use of scalar waves. Crucial is the antenna geometry, and the Golden Proportion provides the necessary constructional instruction. Were the buildings in antiquity, which were constructed according to the Golden Proportion, technical facilities for scalar waves<i>? Did the builders have physically explainable and mathematically provable guidelines? At this place, by the derivation of the Golden Proportion from the fundamental field equation, there arise completely new aspects for the judgement and interpretation of buildings especially from antiquity. If we have understood their way of functioning, then we will be able to learn much from that for our own future and for the future construction of scalar wave devices. Concluding the seminar we hence deal with antiquity.

ancient temple	=	short wave station
dedicated to one god	=	fixing of the frequency
supreme god Zeus, father of all gods	= =	range of the short wave, all SW wave bands
priest, representative of the god	=	amateur radio operator, with licence to transmit
high priest	=	chief intendant
Pontifex Maximus, ,,topmost bridge builder"	=	chairman of the authority and the telegraph offices
oracle<i>	=	telegraphy receiver
runes, cuneiform writing	=	telegraphy symbols
metre, hexameter	=	increase of redundancy
oracle priest	=	telegraphy interpreter
tripod<ii>	=	reception key, electro-acoustical converter
looking at intestines, rite of sacrificing	=	reading off convulsions, electro-optical converter
temple books	=	news-notes
seer, who looks into the god world	=	amateur radio operator, at telegraphy reception
Homer	=	ancient radio reporter

Fig. 30.1: ____Little dictionary for ancient radio engineering (1).

<i>: Lamer: Worterbuch der Antike, Kroner Verl. Bd.96 under "oracle" stands: ,,Lat. oraculum = site of speaking; particularly: site, where a god speaks; then: that, what the god says". According to the encyclopaedia oracle priests inspired by a god ,,simply were frauds, who lived of the ignorance of the public".

30. Scalar wave technology in antiquity

The end of the book about potential vortices and their propagation as a scalar wave shall form an impressive example, where as many of the derived wave aspects as possible have an effect. It shall be proven that already in antiquity radio engineering based on scalar waves has been used. The proof starts with a thesis.

30.1 Thesis:

The temples in antiquity all were short wave broadcasting stations. And energy from the field served as an energy source, so e.g. the earth radiation in the case of temples of terrestrial gods. In the case of the solar god the radiation of the sun was used, whereas for the temples, which were dedicated to the planetary gods, the neutrino radiation arriving from the planets served as an energy source.

If the temple was dedicated to a particular god, then the name of the god was representing the used frequency of the broadcasting company. The corresponding wavelength, resp. the respective god, understandably was "immortal".

Not so the broadcasting technicians on duty, who as human beings naturally were mortal, who took turns in the studio as members of the priest council and who merely had to impersonate the god Apollo, Poseidon etc. by the name of the broadcasting company, if they went on air. Only for the news editor Homer and for few of his colleagues we actually know the names of the persons behind the scenes.

In the temple books the texts have been recorded, which a god and its broadcasting company have received. The chosen metre served the easier detection and correction of transmission errors.

Here often a lot of fantasy was necessary, for which reason the reception facilities commonly were described as oracle[<i>]. The reception of the news as a rule took place on an altar. Thereby the direct effect of scalar waves on man e.g. in the case of the so-called temple sleep or the indirect influence on biological systems, e.g. on the intestines of slaughtered animals, was evaluated.

A further development of the telegraphy was the tripod technology[<ii>], in which case by turning of the polarization plane individual symbols and letters were transmitted up to the transmission of the spoken word with the help of a special wavelength modulation. That far the thesis reaches, which now should be proven.

<ii>: Lamer: Worterbuch der Antike, Kroner Verl. Bd.96 under "tripod" stands: „the tripod is a dedication gift to gods, a honorary gift for winners. That one pleased them with the gift of a cooking pot, is strange; one has tried to find the reason, but until now without success". In the encyclopaedia further is advised: „tripod as a means for spiritual insight?!"

godology	= high frequency technology
god name	= RDS, station identification
members of a family of gods	= broadcasting studios of a broadcasting company
Pantheon, temple of all gods	= extremely broadband FM broadcast station
crown	= antenna netting
gifts for sacrificing	= broadcasting fees
place of sacrificing	= place of a node of the standing wave
earth radiation	= power supply
homage of a weekday	= time restriction of the operation of the station
Zeus „forges" thunderbolts	= electrostatic blows, when a temple is oscillating
ritual act	= technical provision for transmission and reception
Pythia of Delphi<i>	= radio telephone operator, receptionist
Cella (marrow of temple)	= tuned cavity
obelisk<ii>	= antenna rod

Fig. 30.2: ____ Little dictionary for ancient radio engineering (2).

<i>: Lamer: Worterbuch der Antike, Kroner Verl. Bd.96, under „Pythia"(gr.=the asker): In the temple of Delphi was a chasm. A tripod was standing over it, on which the Pythia was seated, if she gave oracle. Comment: "It was flashy how odd the Pythia was sitting; inconveniently enough, on the cooking pot of the tripod. Ancient pictures, which show her that way, still weren't proven, that it was this way ..."

<ii>: Lamer: under „Obelisk" stands; „The obelisks probably were clocks".

30.2 Prerequisites

The argumentation has to be made on mathematical-physical foundation. The prerequisite for that are the 29 chapters of before. The following points could be demonstrated and derived:

1. The wave equation (inhomogeneous Laplace equation) describes the sum of two wave parts, where
2. every antenna emits both parts,
3. the transverse part, known as electromagnetic wave (Hertzian wave)
4. and the longitudinal part (Tesla radiation) termed scalar wave by the discoverer, better known as antenna noise.
5. The wave equation mathematically describes the connection of both wave parts in general and the conversion of one part into the other in particular, thus
6. the rolling up and unrolling of waves in field vortices (measurable as noise).
7. The transition takes place proportionally to the Golden Proportion, as resulted from the derivation (chapter 29.7 - 29.9)

With the last point the electrotechnical problem becomes a geometrical problem, if it concerns the use of scalar waves. The geometry of the antenna is crucial. Thereby the Golden Proportion provides the necessary direction for construction.
That justifies the assumption that the buildings in antiquity, which were built according to the Golden Proportion, were technical facilities for scalar waves. Maybe the builders had specifications that had physical reasons and could mathematically be proven.
At this place there result completely new aspects for judging and interpreting buildings especially from antiquity through the derivation of the Golden Proportion from the fundamental field equation. If we have understood their way of functioning, then we will be able to learn much from that for our own future and for the future construction of scalar wave devices.

As a further prerequisite for the ancient broadcasting technology enough field energy should be at disposal. We proceed from the assumption that

1. the earth magnetism and the cosmic neutrino radiation are tightly hanging together by the processes in earth's core,
2. the earth magnetism in antiquity verifiably was approx. thousandfold stronger than today (proven by gauging of pieces of broken pot),
3. as a consequence the neutrino radiation in antiquity as well must have been thousandfold stronger and
4. the cosmic neutrino radiation has served the transmitting plants of antiquity as an energy carrier,

any thought is absurd to reject the technical function of a temple only because it today can't be reproduced anymore. The artistic and aesthetical viewpoints, which are put into the foreground by art historians because of ignorance about the true function, rather are secondary.

The terms used to describe the broadcasting technology in antiquity in the last 2000 years have experienced a shift of meaning, so that a translation in our linguistic usage of today is necessary. The adjacent dictionary should help in that case.

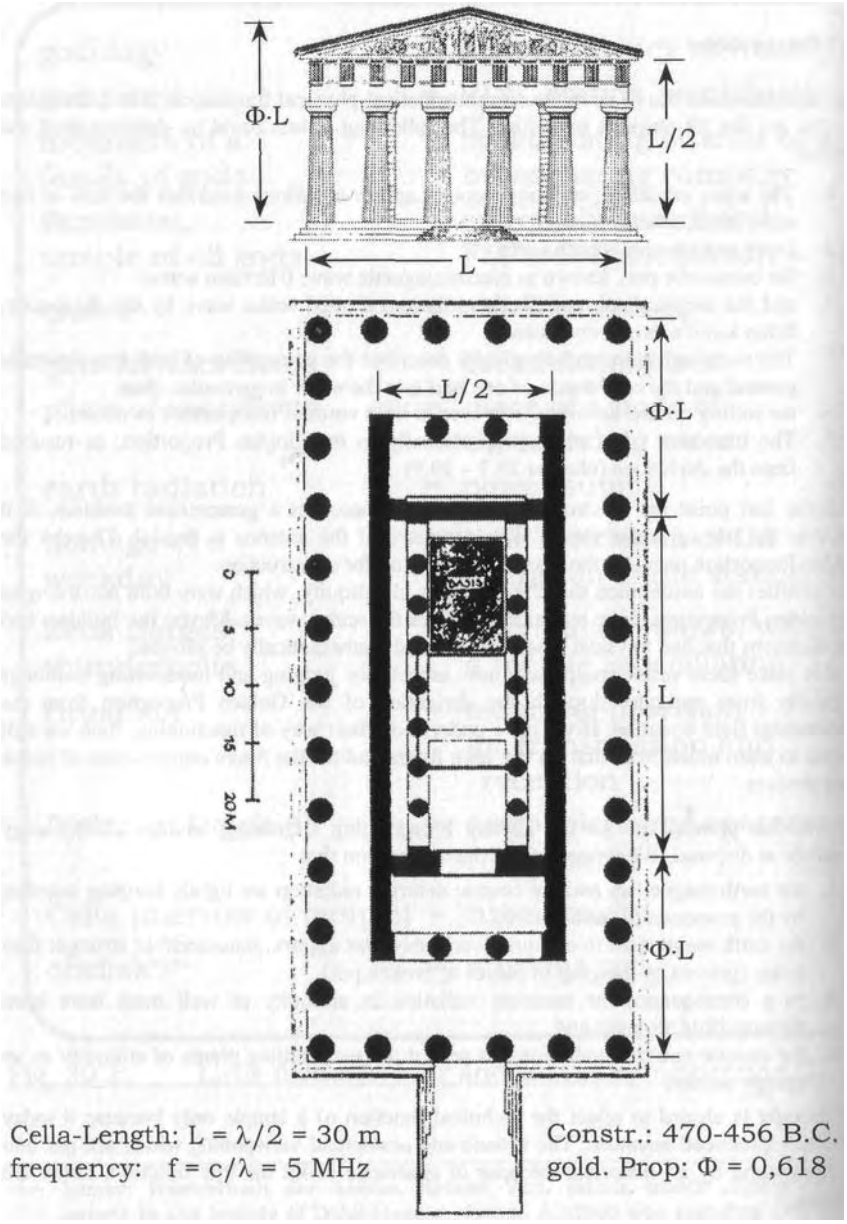

Fig. 30.3: The Golden Proportion of Zeus-temple in Olympia.<i>

<i>: K. Schefold: Die Griechen und ihre Nachbarn, Propylaen Kunstgeschichte Berlin Bd. 1, Abbildungen von Seite 249

30.3 Approach

Let's to some extent proceed from the knowledge of textbook physics currently present in high frequency engineering and give a well trained engineer the following task, which he should solve systematically and like an engineer: He should build a transmitter with maximum range at minimum transmitting power, thus a classic task of optimization. Doing so, the material expenditure doesn't play a role!

After mature deliberation the engineer will hit upon it that only one solution exists: He decides on a telegraphy transmitter at the long wave end of the short wave band, at f = 3 MHz, which corresponds to a wavelength of λ = 100 m. There less than 1 Watt transmitting power is enough for a radio communication once around the earth. That also has something to do with the conditions of reflection of the radio waves at the ionosphere. Our engineer learned:

the index of refraction $n = \sqrt{1 - K \cdot N/f^2}$ (30.1)

with: $K = 80.5 * 10^{-6}$ [cm^3/sec^2] (= constant)

N = electron concentration [$electrons/cm^3$]

f = frequency of the transmitter [MHz]

Put into words: the refraction of a radio wave in the range of the short waves is the larger, the smaller the frequency is. The end of the short wave range is reached at 3 MHz. That thus explains the choice of frequency.

And he optimises further. Next the engineer remembers that at high frequencies, e.g. for microwave radiators, not cables but waveguides are used, since these make possible a considerable better degree of effectiveness. In the case of the waveguide the stray fields are reduced by an alignment and concentration of the fields in the inside of the conductor. In the case of antennas however the fields scatter to the outside and cause considerable stray losses. He draws the conclusion that his transmitter should be built as a tuned cavity and not as an antenna!

As a result the engineer puts a building without windows in the countryside with the enormous dimensions of 50 m length (=λ/2) and 25 m (=λ/4) resp. 12.5 m (=λ/8) width. The height he calculates according to the Golden Proportion to increase the scalar wave part. Those approximately are the dimensions of the Cella without window of Greek temples.

For the operation of such a transmitter in antiquity apparently the noise power of the cosmic radiation was sufficient, which arrived at the earth starting from the sun and the planets. By increasing the floor space also the collected field energy and the transmitting power could be increased, so that also from the perspective of the power supply the temple with the largest possible wavelength at the same time promised the largest transmitting power, so at least in antiquity.

Our engineer further determines, that he will switch the carrier frequency on and off at a predetermined clock pulse. Thus he decides for radiotelegraphy. The advantage of this technique is a maximum increase of the reception range. For that the signals at the transmitter have to be coded and at the receiver again deciphered. By means of the encryption of the contents these are accessible only to the „insiders", who know the code; prerequisite for the emerging of hermetism and eventually a question of power!

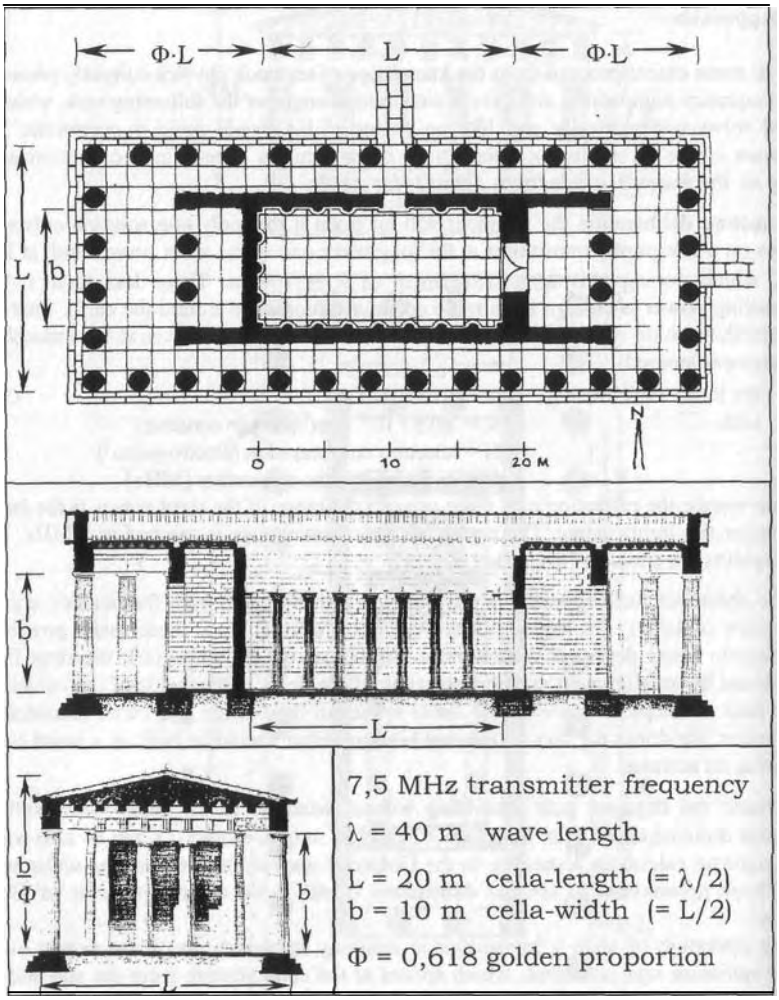

Fig. 30.4: Example Tegea, temple of Athena Alea.<i>
Built 350/340 B.C.

<i>: G. Gruben: Die Tempel der Griechen, Wissenschaftliche Buchgesellschaft Darmstadt 1986, 4. Aufl. Seite 130

<ii>: E. Horst: Konstantin der Grosse, Eine Biographie, Classen Verlag 1985 Dusseldorf, 2.Aufl., S. 89.

<iii>: E. Horst: Konstantin der Grosse, Eine Biographie, Classen Verlag 1985 Dusseldorf, 2,Aufl., S. 33.

30.4 Circumstantial evidence

Not everyone, somehow participating in send receive engineering, at the same time also was inaugurated in the entire secret knowledge. Most priests only knew as much as they necessarily needed to know to fulfill their tasks. Thus a temple priest, who was presented an enciphered text and who should bring this on the air, not necessarily at the same time needed to know the content of the text or the code. The same of course also was valid for the sacrificing priest acting in the receiving station. The Vestal virgins for instance had to present the received text to the Augures, by whom they were supervised and controlled.

But who wanted to introduce a new god in the gods heaven and perhaps even himself be worshipped as a god, should have complete command of both the broadcasting technique and the reception technique. In ancient Egypt the Pharao at least once a year had to prove, that he still was in command of the technique. Otherwise he was replaced. For a person with security clearance that at the same time was a death sentence.

In the historical facts numerous pieces of circumstantial evidence can be found, which can be considered to be evidence for the thesis of the operation of send receive engineering in antiquity. One now perhaps understands, why the rulers were put an antenna netting over their head, a so-called crown, or why the Augures could survey the land with a flat Tesla coil in their hands (fig. 16.10).

Direct evidence is present as well. It can be found in ancient texts. But it is questionable if historical texts concerning ancient radio engineering have been translated correctly. The talk is about oracles, mystery cult and earth prophesy if the receiver is meant. The predominantly technically uneducated historians attest the Romans a defective sense of time, because their couriers surely could not cover the long ways across the Roman empire so fast at all, if they read in the Latin texts: "They sent by courier to the emperor in Rome and got for answer...". The answer of the emperor namely already arrived at the squad at the latest in the following night. The correct translation should read: "they cabled" or "they broadcasted to the emperor in Rome and got for answer..."[ii].
Such a big empire as the Roman Empire actually only could be reined by means of an efficient communication. Cicero coined the word: "We have conquered the peoples of the earth owing to our broadcasting technology...[iii]"! The term broadcasting technology from ignorance is translated with piety. If engineers however rework the incorrect translations, then one will discover that numerous texts tell of the broadcasting technology, that thus correspondingly much direct evidence exists concerning the practical use of this technology.

For the Roman military transmitters, which formed the backbone of the administration of the empire, the reading off of the information from observations of nature like the bird flight or from felt signals of a geomanter was too unreliable. They read off the information from the rhythm of the convulsions of the intestines of freshly slaughtered animals. In the case of the dead animals on the altar every extrinsic influence was excluded. But the enormous need of slaughter cattle was a disadvantage. Who wanted to have information, first of all had to bring along an animal, which then was „sacrificed" the god, or better say, which was abused as a receiver for a particular transmitter. Thereby the innards served as a biosensor and as a receiver for the news.

Cellular phone.

- *Network:* All „telephone cabins“ are transmitter and receiver at the same time.
- *Advantage:* Anyone can communicate with every network participant.
- *Characteristic:* The stations are strikingly similar in form and size of building.
- *Power structure:* All stations as a rule have equal rights among each other.
- *Disadvantage:* Innovations hardly are possible. The system is inflexible.
- *Examples:* Temple towers (Iraq); cellular phone network.

Broadcasting.

- *Network:* Many receivers listen to the news of one powerful transmitter.
- *Advantage:* The system is very flexible and permanently experiences improvements.
- *Characteristic:* Monotheism. Big diversity among the receiver constructions.
- *Power structure:* Central power concentrated in the hands of the chief intendant.
- *Disadvantage:* Feedback from receiver to transmitter is not desired.
- *Examples:* God Ammun Re (Egypt); ABC daily news.

Dispatch service.

- *Network:* Network of broadcast stations supplies an agency (receiver) with information.
- *Advantage:* Optimal financing, since information is given away only for broadcasting fees in cash.
- *Characteristic:* Treasury stores have to be built because of the immense riches.
- *Power structure:* The power is concentrated in the hands of the receiver-agency.
- *Disadvantage:* In the case of overcharge or overload a system crash is impending.
- *Examples:* Pythia (Delphi); German Press Agency (dpa).

Fig. 30.5: _____ Three radio technical network structures, with an example from antiquity and from present time.

30.5 Radio technical concepts

In planning and constructing radio technical networks only a few possible concepts exist. It is interesting that at least one historical example can be specified for every concept. That shows that all possibilities were tried at least once. The three most important concepts are presented here:

A. Cellular phone.

Every bigger city between Euphrates and Tigris, which thought the world of itself, had at its disposal already in antiquity a temple tower. Such a temple tower was a ,,telephone cabin" in the form of a pyramid as a transmitter and a receiver temple at the top, to where the receptionist adjourned to the so-called temple sleep. Discipline was required, since all the time only one priest was allowed to broadcast. All others could listen to him doing so. If he was ready, he closed his contribution with a fixed symbol or term (,,over") and the next one could continue. This is a classic link-up, where anyone communicates with every network participant.

The stations all were strikingly similar in form and size of building, like one phone box resembles another. In that way a further development of the cellular phone system hardly was possible and that has a technical reason, as the building of a tower in Babylon has shown us. This tower namely had gotten the ambitious builders too big, so that the frequency of the Mesopotamian radio network had been left and instead a foreign network could be received, the code of which no-one could understand. The result was a confusion of language and the order to stop the building.

B. Broadcasting.

Millions of TV spectators every evening look in the ABC news or another daily journal of a TV Channel. In the case of broadcasting thus many receivers listen to the news of a powerful transmitter. With that the whole plenitude of power is concentrated in the hands of the chief intendant. In antiquity he called himself high priest. If he went on the air, he used the logo of the god that he had to represent. Today the logo of the broadcasting company is shown in a corner of the TV screen. Even this very day feedback from the receiver to the transmitter hardly is possible contingent on principle. The problems with nationally controlled broadcasting, with politics controlled by the media all are not new. The monotheism in ancient Egypt with the claim of lordship of the main god Ammun Re is an example from antiquity.

C. Dispatch service.

In ancient Greece the technical structures and with that also the power structures had been turned around. At that time a big network of broadcast stations, which continually was extended by a policy of settlement ordered by the gods, supplied a central and correspondingly powerful agency with information per radio.

Who wanted up to date news, could call for these in the agency with seat in Delphi, but he had to pay for it. To accommodate the broadcasting fees in form of gold and gifts whole treasury stores had to be built. Measured by the commercial success the ancient news network has remained unmatched, and can't be compared with pay-TV or todays dispatch services, like dpa. If the network however becomes too big, uncontrollable and it lacks discipline, then it sometime will crack and the system crashes.

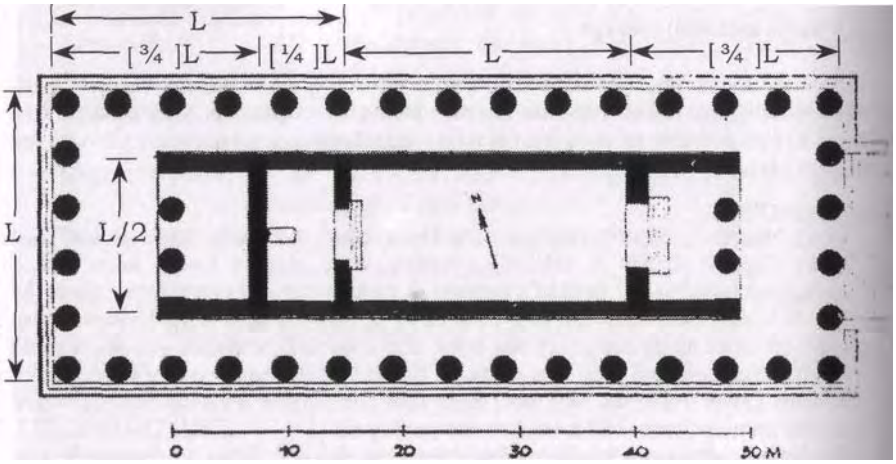

Fig. 30.6 A: Hera-temple of Selinunt 460-450 B.C.<i>
(Corresp. to the plans of the Roman architect Vitruvius)

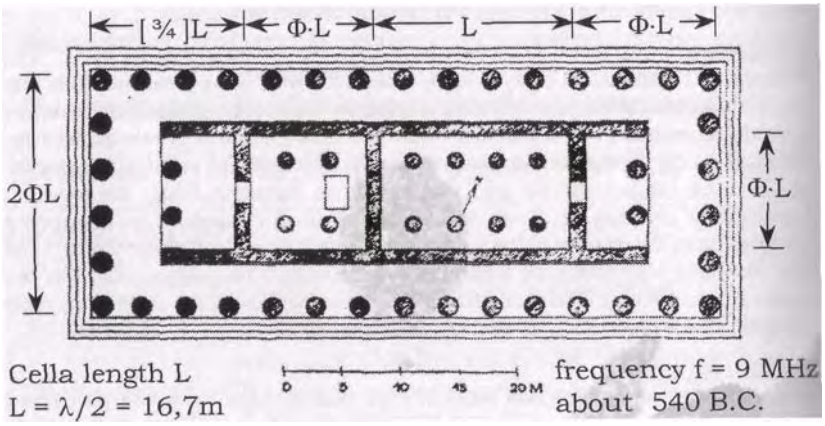

Fig. 30.6 B: Apollo-temple of Korinth<i>
(Alternative interpretation, use of the Golden Proportion Φ).

<i>: K.Schefold: Die Griechen und ihre Nachbarn, Propylaen Kunstgeschichte Berlin Bd. 1, Abbildungen von Seite 241, 250

<ii>: Vitruvius (Marcus Vitruvius Pollio): Zehn Bucher uber Architektur, Ubers. von Dr. K. Fensterbusch, Wissenschaftl. Buchges. Darmstadt 1987, 4. Aufl., 3. Buch, 1. Kap.: Von den Symmetrien der Tempel, Seite 137

<iii>: Vitruvius (dito), 4.book, 4.Chap.: Vom Tempelinnern und dem Pronaon, p. 187

30.6 Wireless telegraphy

Radio engineering 100 years ago also started with telegraphy. Thereby the high frequency carrier is switched on and off. With this technique Marconi succeeded in a radio transmission over the English Channel (1899) and over the Atlantic Ocean (1901).
As next step the amplitude modulation (AM) followed. Thereby the HF-carrier is overlapped with the low-frequency signal of a sound carrier in such a way, that the amplitude fluctuates on the beat of the LF-signal. As a disadvantageous effect, also noise signals will overlap, from which the quality of reception will suffer.
Only the frequency modulation (FM), where the LF-signal is transmitted as temporal fluctuation of the frequency, brings an improvement. The annoying amplitude noise hence has no effect in the case of FM.
It easily can be recognized, how the development of the modulation techniques follows the urge for technical improvement and optimization. That in antiquity hasn't been different, for which reason the progress of development took place in the same order.

The broadcasting technology of the ancient gods started with the wireless telegraphy. This is expressed in the architecture. Since electric resonant circuits or other frequency determining equipment weren't at the disposal of the engineers in antiquity, the determination and allocation of the broadcasting channels had to take place by means of the wavelength. The formation of a standing wave in the Cella, the innermost sanctuary of a temple, occurs if its length corresponds to half the wavelength of the HF-carrier. The Roman architect Vitruvius calls the wavelength the „basic measure", from which results "the system of the symmetries". He writes: „The design of the temples bases on symmetry, to which laws the architects should adhere meticulously. "[<ii>]. „The length of the temple is partitioned in such a way that the width is equal to half the length, the Cella itself including the wall, which contains the door, is one fourth longer than wide. The remaining three fourths, which form the Pronaon, should protrude until the antae of the wall and the antae should have the thickness of the pillars"[<iii>].
If we recalculate ourselves, then the partitioning in 3/4 to 5/4 produces a proportion, which conies quite close to the Golden Proportion. In building a temple nothing is left to chance, after all it concerns the construction of a tuned cavity, capable of self-resonant oscillations with favourable emission behaviour.
From the outside one can't see if a telegraphy transmitter has been changed over to speech transmission with AM. The HF-carrier merely isn't switched off anymore, i.e. the priests let the temple oscillate without interruption. Newly added for AM is an electroacoustic coupling. For that many temples were retrofitted with a mouthpiece. Newly built AM transmitter temples conclude the Cella with a round apse. Because of this acoustically conditioned construction the Cella length didn't have a fixed value anymore and the transmission frequency had become variable. Measured in the middle of the apse the wavelength was larger than at the sides, so that on the beat of the spoken word not only the amplitude of the field distribution in the interior of the temple, but in addition also the frequency of the selfresonant oscillation was changed.
A typical example of such an architectonic hybrid form of AM and FM is situated in Rome. Because due to the frequency variation more than only one wave band was occupied and the temple consistently carries the names of two deities. It is the temple of Venus and Roma.

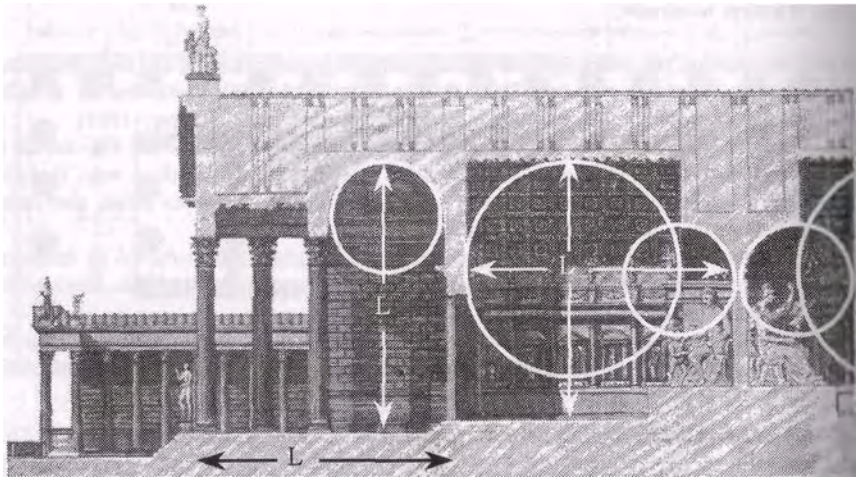

Diameter bigger circle D_1= 22 m (6,8 MHz),
small circle D_2 = 11 m; und L = D_1 + 1/2 D_2 = 27,5 m (5,5 MHz)

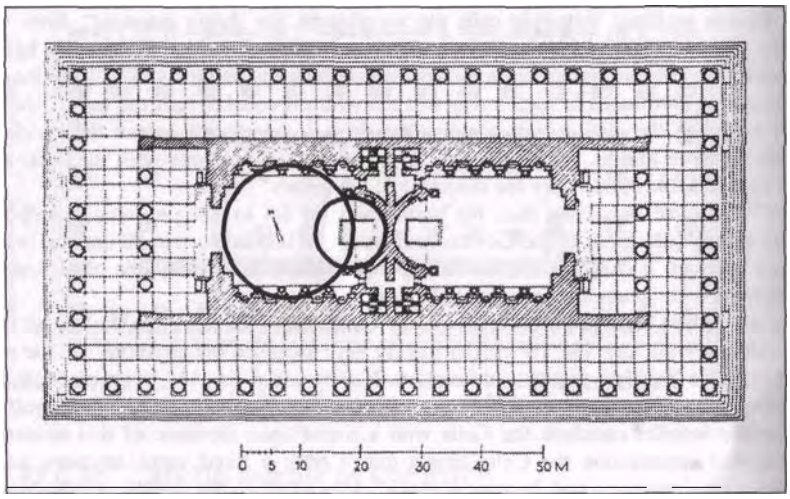

Fig, 30.7: Temple of Venus and Roma; Rome 136/37 A.D.[i,ii]

<i>: A. Springer: Das Altertum, A. Kroner Verl. Leipzig 1915, 10. Aufl., S. 518
<ii>: T. Kraus: Das romische Weltreich, Propylaen Kunstgesch. Berlin Bd. 2, S. 161
<iii>: Lamer: Worterbuch der Antike, Kroner Verl. Bd.96 unter "Tempel", Haufigkeit

30.7 AM temple technology

The low-frequency signal (LF), which should be transmitted by a transmitter with amplitude modulation, lies in the range between 16 Hz and 16 kHz. If it only concerns the transmission of speech information, then the bandwidth can be reduced to 300 to 3000 Hz. In the case of mixing the low-frequency useful signal with the HF-carrier, thus in the case of the modulation of the carrier in the rhythm of the LF, two side bands arise. These lie close to the carrier frequency and are formed from this once by the addition and once by the subtraction with the frequency of the LF-signal. Let's take the temple of Venus and Roma with a transmission frequency of 6.8 MHz. If sound of 3 kHz should be transmitted clearly understandable, then the dimensions of the Cella had to be varied for just 8 mm for a corresponding Cella length of $\lambda/2$ = 22 m. As a curiosity the niches in the side walls in the case of this temple however allow a considerably larger bandwidth of more than 10% instead of the necessary 0.04% in the case of AM.

In the case of the Greek originals, the Cella however has smooth walls, from which follows that the temples were designed ideally narrow band. The Greeks apparently operated predominantly telegraphy transmitters, for which the side bands coincide with the carrier.

The argumentation indeed has remained unchanged: The modulator being narrow band and simple to realize speak in favour of the telegraphy being the "original form" of all modulation techniques. Also the rediscovery of the broadcasting technology by Heinrich Hertz succeeded as telegraphy signal. In addition the range is bigger than for any signal modulated with sound frequency.

As the calculation example has shown, also pure AM transmitters work very narrow band, and this is particularly important for low transmission frequencies, if many transmitters want to use the favoured SW band between 3 and 10 MHz at the same time. With AM one thus accommodates the maximum number of broadcasting channels in a particular frequency range, for instance the 80-meter band, without these interfering with each other too much. But that also was badly needed. Conclusions about the everyday life of broadcasting in antiquity by all means are possible because of the enormous number of temple installations, which logically were permanently used. Only in Rome there existed up to 200 temples[iii]!

Who goes in search of broadcasting stations with a modern short wave receiver, for instance in the 80 m band between the countless telegraphy transmitters, fast gets an idea of what had been up in the air already 2000 years ago. No ancient city would build several temples on a single Acropolis, if only one single one could have been used. All temples broadcasted with each time another carrier frequency because of different dimensions. For this reason the temples, which stood side by side, as a rule were dedicated different gods. An acknowledgement, "the air just being free", in addition hardly was possible, because of the often-found spatial distance between the temple installations and the respective oracle. Between the transmitter of the god Apollo in Didyma and the receiver, the oracle of Milet, for example lie approx. 20 kilometres. The only possible conclusion is that in antiquity there was broadcasted on all channels simultaneously regardless of other gods and their transmission frequencies. As is well-known there rather prevailed a situation of competition between the gods, since like today a large number of listeners meant great importance, influence and power and eventually also worship, more gifts and more receipts from broadcasting fees.

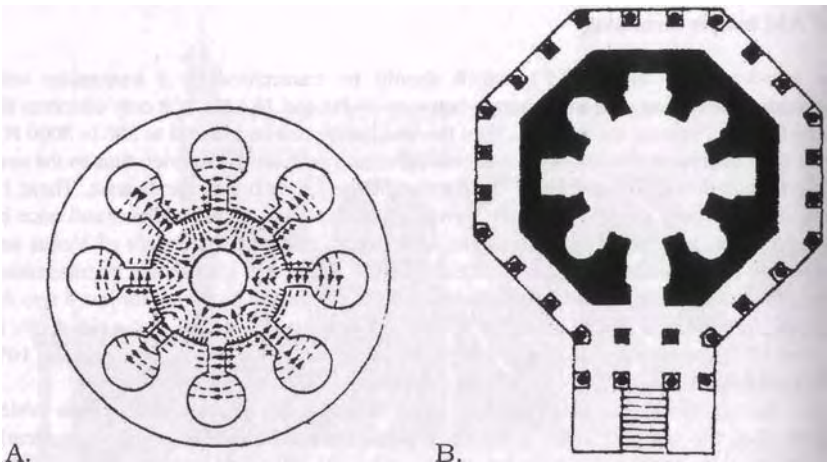

Fig. 30.8: ____ Comparison of a magnetron (A), a microwave radio tube[i] and the temple (B) in the palace of the emperor Diokletian, Split.[ii]

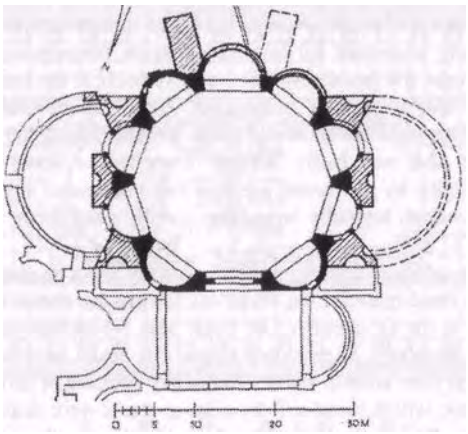

Fig. 30.8.C: Temple of Minerva Medica, Rome, 320 A.D.[ii]

<i>: K. Simonyi: Physikalische Elektronik, 8.4 Das Magnetron, S. 665

<ii>: T. Kraus: Das rom. Weltreich, Propylaen Kunstgesch. Bd. 2, S. 194, 196

<iii>: If one however wants to verify this, in antiquity already common manner of PM broadcasting technology, then we need a broadband short wave receiver with phase-demodulator. With such a receiver even today any time a conclusive argumentation should be possible that this sort of SW-PM technology actually works.

30.8 Modulation of acoustic signals

In the case of sound it in essence concerns longitudinal waves, which propagate in all directions in space with the velocity of sound. But this merely is an average velocity, since the air molecules strictly speaking oscillate with the sound frequency in the direction of propagation. In this way the velocity of sound one time is increased and the next moment to the corresponding extent reduced. If the molecules already carry out oscillations of themselves, e.g. thermal motion, then both oscillations overlap; i.e. the motion of itself is modulated with the sound frequency.

Following the here presented derivation potential vortices are formed in every dielectric, thus also in air, and these are modulated if overlapped with sound waves. Vortices however do not form a distinct frequency, but entirely on the contrary a uniform frequency mixture in the form of white noise.

The overlap thus also is noise unless certain noise frequencies are favoured. This can be effected by means of a spatial body tuned to a certain wavelength. To be considered are cuboid cavities, as in the case of Greek temples or waveguides and cylindrical objects as in the case of round temples or magnetrons. The building form causes the favouring of a certain frequency and the integer harmonic frequencies belonging to it.

If this frequency now lies in the high frequency range, then it is emitted by the spatial body as an electromagnetic wave, in the case of waveguides and resonant circuits for reason of the small dimensions as microwave radiation and in the case of the Greek temples as short wave radiation. If one in addition produces an acoustic signal in the frequency determining spatial body, then this signal automatically will modulate the high-frequency signal.

The result of the modulation is the overlapping of the sound wave with the high-frequency carrier wave. The change of the active length, thus the wavelength of the HF-carrier causes a change of frequency. Such a change on the beat of the sound frequency is called FM (frequency modulation). For that we imagine a spatial body being excited because of its length by potential vortices to a high-frequency oscillation at the self-resonant frequency.

From flow dynamics is known, how easy the distribution of vortices in space can be disturbed. Already words spoken in space are able to influence the potential vortices, which in the case of the temples were used as energy carrier. The longitudinal sound waves reflected at and thus returning from the Cella wall rigid for sound of a Greek temple will push these potential vortices back on the beat of the sound and with that shorten the active length. This means, that the carrier frequency is modulated with the sound frequency. The carrier oscillation thus permanently changes its phase on the beat of the sound signal, for which reason this particular kind of modulation is described as PM, as phase modulation.

Nowadays PM is used only seldom and in the SW-range not at all because of the big need of wave bandwidth. Merely at higher frequencies PM occasionally is used in radiotelephony. In the case of the frequency modulation usual in broadcasting (e.g. UHF), the change of frequency takes place on the beat of the sound amplitude and not of the sound frequency as with PM. Therefore it is not possible to receive phase modulated signals, which are produced by means of the acoustic coupling of appropriately formed spatial bodies<iii> with commercial FM receivers.

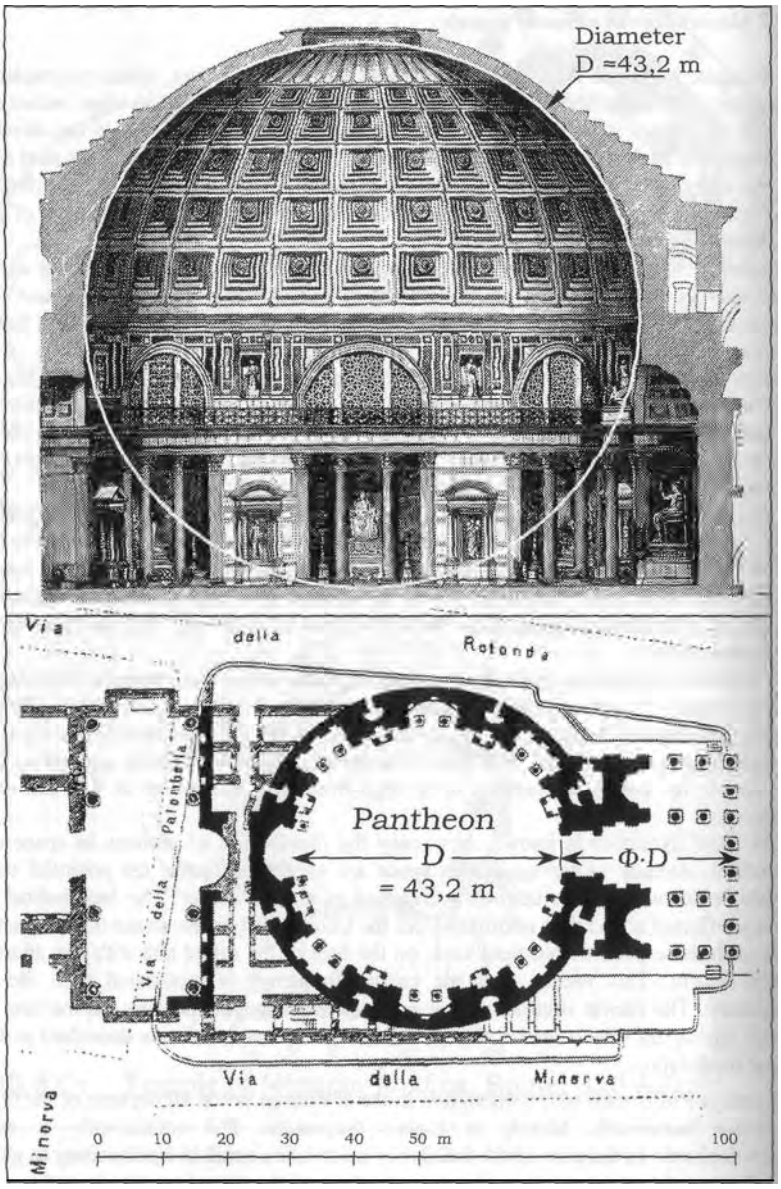

Fig. 30.9: The Pantheon in Rome, the „temple of all gods".<i>
Diameter D = 43,2 m, Golden Proportion: Φ= 0.618
Pronaon-(atrium-)length: Φ·D= 0.618 • 43.2 = 26.7 m
Built under emperor Hadrian 118/ 119-125/128 A.D.

30.9 Broadband FM broadcasting technology

If I speak against a flat wall, then every point on the wall has another distance to my mouth. The sound waves thus aren't reflected simultaneously, what leads to big modulation distortions. Therefore the sound wall should be curved in such a way, that all signal paths are the same length (barrel vault, apse, etc.). In the case of point sound sources there results as an optimum a hemisphere, for instance a dome. The building hence even today tells us, which frequency and which modulation method had been put to use. The architecture of sacral buildings, e.g. pointed arch or round arch, thus hardly has been a question of aesthetics.

For his temple of Venus and Roma designed by himself emperor Hadrian had to listen to severe criticism among others of Apollodor of Damascus. The temple was too broadband for an AM transmitter, however with a modulation depth of just 11 percent not broadband enough for a phase modulated FM transmitter.
Emperor Hadrian however also had the courage to build midst in Rome a temple calculated completely new and designed as a pure FM transmitter, the Pantheon, which means temple of all gods. In the language of the technician it is a transmitter for all frequencies.
This domed structure indeed doesn't leave out one single frequency. With a modulation depth of almost 100 percent it is designed for maximum loudness. With that the Pantheon uses all available frequencies, for which reason the name temple of all gods really is no exaggeration. Into the Pantheon exactly fits a sphere with a diameter of 43.2 meter. That corresponds to a minimum frequency of 3.47 MHz, situated in the range of the short waves. The floor however is not domed, but horizontal. That, up to the basis of the dome, results in exactly half the height and a maximum frequency of 6.94 MHz.
The construction ensures that between the simple and the double diameter any desired wavelength can be produced. Above the given maximum frequency of the basic oscillation the harmonic waves, which are produced as well and can't be avoided at all, are attached without a break. These occupy the wave bands up to the double, triple, quadruple frequency and so forth.
For this and only for this reason a maximum frequency was chosen, which corresponds to exactly the double value of the minimum frequency. The operation takes place to the limit, where the transmitter would interfere with itself, in the way that the used basic oscillation would overlap its own harmonic waves. That then sounds like two people talking at the same time. The voices would be distorted out of recognition, as can't be expected else in the range of the harmonic waves.
The Pantheon has been planned and built as a phase modulated basic wave transmitter according to purely academic rules of Hadrian. The temple impressively demonstrates the precise engineering detailed knowledge of the Pontifex Maximus and his broadcasting priests in ancient Rome<ii>.

<i>: A. Springer: Die Kunst des Altertums, A. Kroner Verl. Leipzig 1915, 10. Aufl., S. 517/518, daraus: die Zeichnungen ram Pantheon in Rom, 115-125 n.Chr.

<ii>: The collection of material concerning scalar wave technology here is aborted and continued in an own book in narrative and with that easier to read writing style. The title is: "Broadcasting Gods".

approach	derivation	result
b:= postulate [potential vortices Vol.1]	what if **b** $\neq$ *0* ?	**derivation** of the **Schrödinger eq.**
duality vortices replace quanta [potential vortices Vol.2]	from **H** $\Leftrightarrow$ **E** from **j** $\Leftrightarrow$ **b** [and chapter 3.3]	**calculation** of the **quantum properties** [potential vortices V.2]
causality [see chap. 3]	*gen.* $\Leftrightarrow$ *special case* **field** $\Leftrightarrow$ quanta cause $\Leftrightarrow$ consequence (instead of: quanta $\Leftrightarrow$ field)	*vortex field* free of quanta (instead of: irrotational field of quanta)
vortex physics analogous to flow dynamics [chap. 3.4 - 3.5]	**vortex + anti-vortex** (Demokrit/cosmology) [chap. 3.6 + 27.2]	coming off of vortices if $\tau_1 = \tau_2$ **model of atom** [chap. 5.5 + 5.8]
equations of transformation: **E** = **v** x **B** **H** = - **v** x **D** [chap.6.5 + 27.8]	for **E**(**r**(t)) and for **H**(**r**(t)): rot **E** = rot (**v** x **B**) rot **H** = rot (**D** x **v**) [chap. 27.9]	extended **field equations:** rot **E** = -**b** -∂**B**/∂t rot **H** = **j** + ∂**D**/∂t [chap. 27.10]
equations of transformation: **E** = **v** x **B** **H** = - **v** x **D** [s.a. chap. 16.1]	**wave equation** inhom. Laplace eq. Δ**E** = grad div **E** – rot rot **E** Δ**E** = $(1/c^2)\cdot\partial^2$**E**/∂t^2 [chap. 27.13] [chap.22.4]	transverse + longitudinal wave parts: **scalar waves,** noise, etc.
equations of transformation: [chap. 28]	vortex overlap **length measures depending on field**	**gravitation, temperature,** **theory of objectivity**

Fig. 30.10: (All) Many roads lead to Rome.

30.10 Epilogue

The preparation for a seminar or a lecture always starts with a collection of material. This should be considerably more detailed than the material to be communicated, since it doesn't get well at the students and also other participants, if the state of knowledge of the lecturer already is exhausted with the scope of his lecture. For this reason the collection of material must also include alternative derivations and areas of knowledge, which thematically rather are marginal, about which mustn't be reported, which possibly not even can bear criticism but still are in the public discussion. For a collection of material, which wants to be considered to be comprehensive and complete, it is important that no area and no theme has been overlooked.

The here presented collection of material with its 650 pages has become correspondingly voluminous. After all the material has been collected over an 8 year period and has been strung into the book in the order of working. That of course complicates reading the book, because individual aspects are repeated several times, but often also in a different context and each time lighted from another side. If the reader somewhere has the feeling, he only has turned in a circle, then has deceived himself. He indeed moves spirally in a circle, like in real life, but he doesn't come out there, where he started. After one turn he is richer with the experience of this spiral turn. In whole science the advancement takes place as a spiral movement and one can count oneself fortunate, as long as the spiral has an ascending slope! This notion should solace the reader, who has undertaken the torture to work through the complete collection of material.

Students also have reported, they had devoured my book like a thriller and a colleague, who had acquired it at a conference in Switzerland, was digging so much in the lecture that he forgot to get off the train timely.

It is a special concern to give reasons for the necessity of an extension of available field theory. To achieve this goal several derivations (fig. 30.10) can be found in my books: from a postulate, from causality, from duality, from vortex physics, from the equations of transformation, etc. added are at least a dozen derivations of other authors from various publications, who at most are cited. With that the goal is pursued that all approaches, which are conceivable and worth discussing, can be put side by side and tested for their efficiency.

Since it isn't the task of a collection of material to answer this question, this must be done by the hearer resp. the reader of the books. He is prompted to find the answer himself! That leads to an intense contention with the theme and that exactly is the reason for the otherwise rather unusual step to make a collection of material open to the public. Objections and criticism of the content of a relation of matters or also only of the representation of the context is wished explicitly. This also isn't valued as criticism of the author or of the superordinated set of difficulties, which in principle isn't possible at all for a collection of material.

Honorary functions of

Prof. Dr.-Ing. Konstantin Meyl

President
of the **Society for the Advantage of Physics** e.V.
(Gesellschaft zur Förderung der wissenschaftlichen
Physik, Köln)

Präsident
der **Europäischen Kommission interdisziplinärer Wissenschaften**, Hechingen,
Gesellschaft freier Wissenschaftler, Forscher und Praktiker
(Schirmherrin: Herzogin Margarete zu Mecklenburg,
Prinzessin von Hohenzollern).

Zweiter Vorsitzender im Vorstand
der Deutschen Gesellschaft für Energetische und
Informationsmedizin e.V.,
D.G.E.I.M, Stuttgart

Vice President
in „The **German Association for Space Energy**",
(**DVR**, Deutsche Vereinigung für Raumenergie,
Hannover)

Wissenschaftlicher Beirat
im **VDE** Schwarzwald-Baar-Heuberg
im Bezirksverein Südbaden, Freiburg

TZ-Leiter
vom 1. **Transferzentrum** für Skalarwellentechnik
im Technologiezentrum von 78112 St. Georgen
im Schwarzwald

Fig. 30.11: Honorary functions of the author (December 2003, selection).

There in principle is no necessity at all to discuss with everybody a collection of material, which I have compiled exclusively for own events. It is absolutely sufficient, if few, but then qualified experts have thoughts about the content and communicate them to me. They can feel certain that I don't hand down their judgement to other persons. For that I also have been blamed by ignorant colleagues, who in complete self-overestimation have the opinion, they should be informed about everything. Right is rather, that my private correspondence is of no concern to anybody, since I find it important that as much readers as possible express themselves frank, what only functions, if they can feel certain that they afterwards won't be involved in public mud-wrestling. Therefore I keep still as regards other persons however curious they might be.

Indeed over and over again pseudo scientists turn up, who have the erroneous opinion that scientific arguments would take place on some internet-forums, where one can descant at will and anonymous, hidden behind an alias, where the intellectual firebug can feel safe, not afterwards being blamed for his crimes.

No, science takes place entirely different. A new theory will be able to establish, if it is right and important and if it is used for practical uses. Losers are those authors of a theory, for the elaboratation of which nobody is interested. What does a publication in a journal, however renowned, mean, if nobody reads it and nobody needs it? Most new ideas and approaches go under without notice in today's flood of publications, for who has got the time to read all essays in full?

Desperate they turn to me hoping, at least I could understand their concern. I then invite these scientists to a congress of the „Society for the Advantage of Physics", of which I am the president and offer them a forum, where they are able to present their ideas to an expert public. Not all lectured ideas prove to be sound, but not seldom a physical concern, which should be taken very serious, is behind it.

For a long time the real scientific controversy doesn't take place anymore at the universities and their congresses, where hardly someone dares to lecture arguments against the convention. Too fast he would be expelled as outlaw from the honourable society. From time to time however also from these circles colleagues dare anonymously or privately, as they emphasize, into the alternative events of lobbies or clubs, to astonished find out that real science there still is practised and that there is discussed about ideas, which they have given up thinking or have forbidden themselves to think about. The employment activity, so they excuse their thinking prohibition, allegedly doesn't allow it.

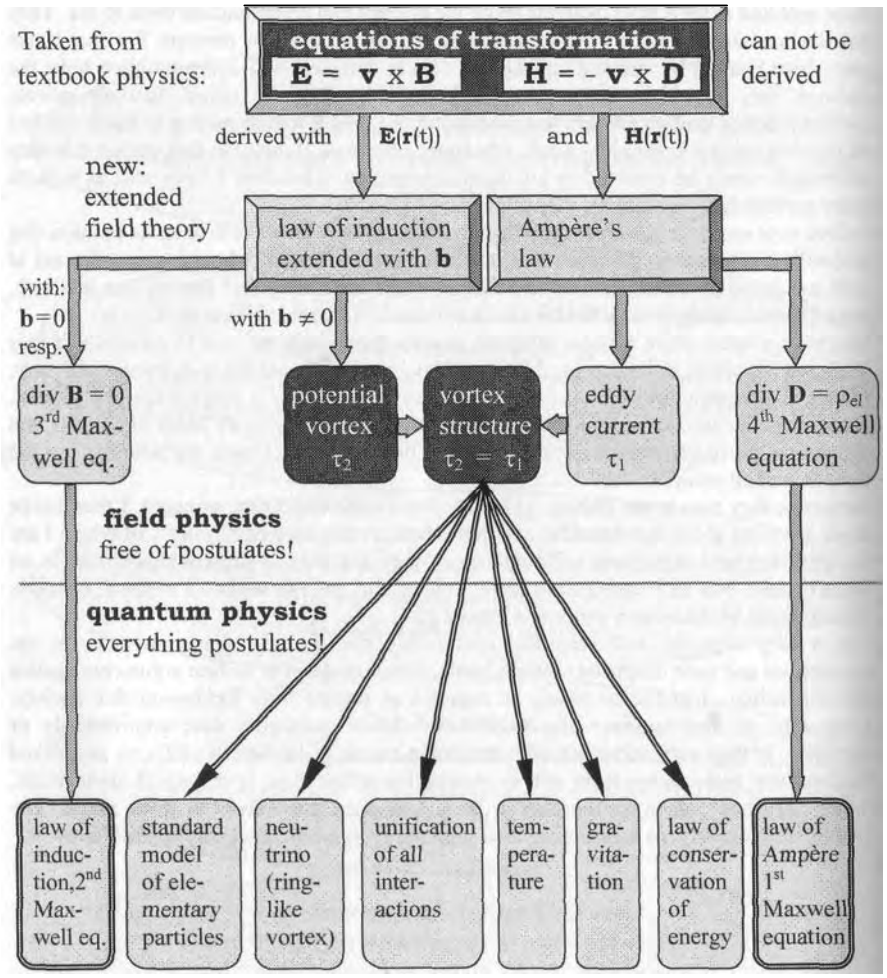

Fig. 30.12: Derivations of postulates and axioms (part 1).

Be that as it may, the approaches and derivations contained in my collection of material are considered to be controversial, and that is good that way! The public takes notice and professional circles are occupied with the ideas. With that half the way to success already is brought off! It now concerns to knock off all points for their soundness individually, because the next step will be to search a way to the goal as unassailable as possible, which is able to convince also the biggest sceptic. The final version, which then should appear in accredited peer-reviewed journals and in a scientific book concerning the theory of objectivity, goes in this direction. From the numerous approaches in the end only one will be used, and from the countless, in the collection of material listed aspects only the noncontentious ones will remain.
The dispute, which in the current stage can't be avoided, yes even is desired, however shouldn't deceive about the fact that it here doesn't concern persons, improper vanity or some image cultivation, but simply and solely concerns the matter!

In fig. 30.12 and 30.13 is represented, what it concerns. Field physics and quantum physics don't form, as in common practise, an insurmountable opposite, but even complement each other! Below the stripline a little selection of the today in current use quantum physical postulates can be found. The number of newly introduced ,,constants of nature" and postulates permanently is increasing, a circumstance, which hardly can be mediated to the common sense. The bracket is missing, which interlinks all postulates, or the common source from which they can be derived causally.
In the progress of the three-part edition in this question, essential for physics, already a satisfying and in addition real efficient answer has been found in the domain of field physics. The coupling marked by individual derivations can be found above the stripline and it is entirely new, apart from the dashed indicated derivation (fig. 30.13), as given by Prof. Bosse (TU Darmstadt) in his textbook.
An approach in principle can be chosen freely. In the case of the superordinated field theory two equations of transformation form the approach, which already is laid down in textbooks and secured experimentally. That's why the whole field theoretical derivation manages without one postulate! It is pointed to the fact that these equations on their part can't be derived and should be interpreted rather philosophically than physically. From this approach the extended field theory is derived directly, without a need to add or discard a term. The extended field theory consists of the well-known law of Ampere extended with the dielectric displacement D by Maxwell, and of Faraday's law of induction, which experiences an extension with the vector of potential density b by means of the derivation. Doing so we assume that the field pointers of the electric and the magnetic field strength depend on the spatial coordinate r and through this indirectly also on the time t: E(r(t)), H(r(t)).

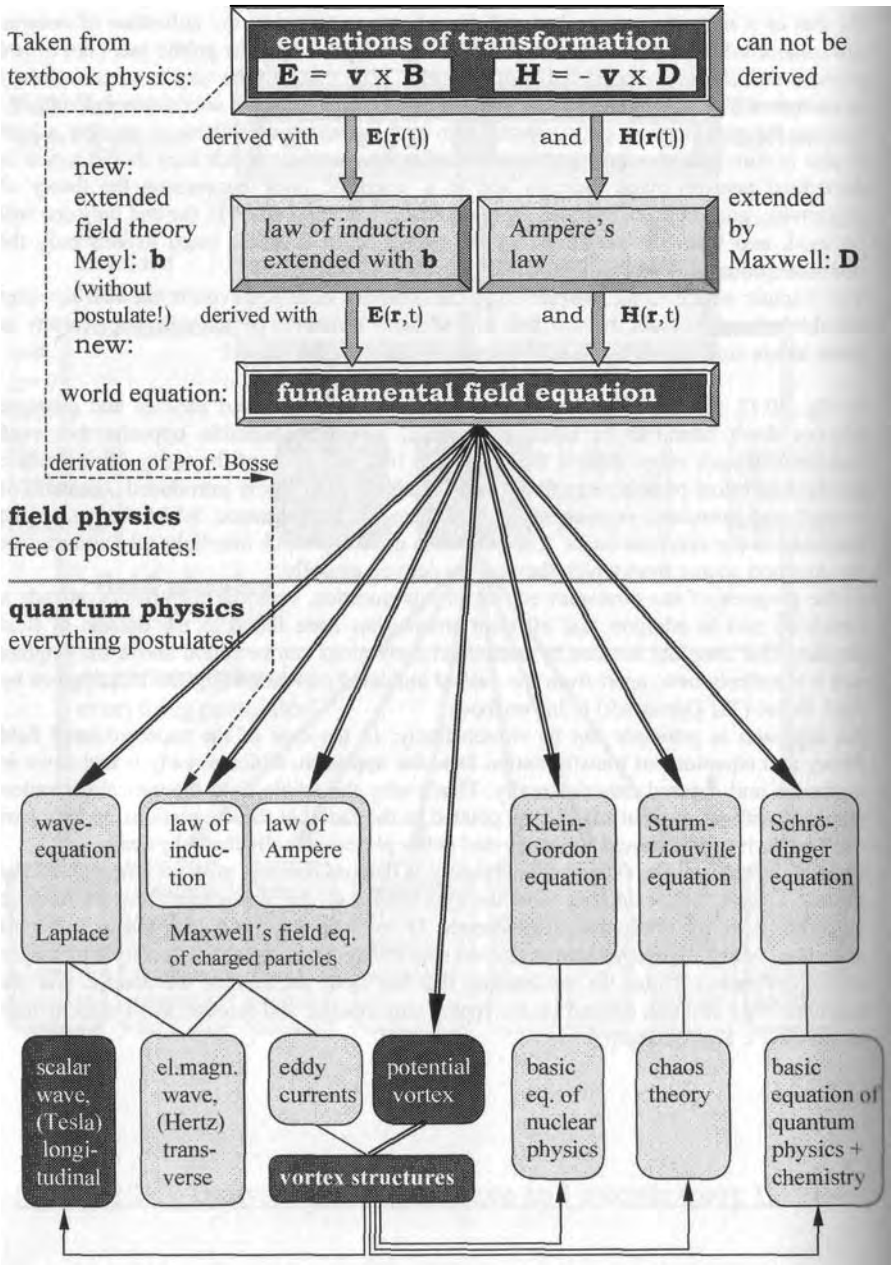

Fig. 30.13: Derivations of postulates and axioms (part 2).

If the somewhat more general case is counted up, in which case apart from the spatial a direct temporal dependency is present (E(r,t) and H(r,t)). then further additional terms appear in addition to the extended field equations, which need an explanation also for the case that they are zero. The physical interpretation would implicate a longer treatise, which however can be circumvented, as shown here, by constraining the field pointers, which absolutely is allowed according to the slogan: for the case E(r(t)) and H(r(t)) chosen from many possibilities the extended field equations come out exactly in the form, as they are required and suitable for the further calculations. Who has got to calculate other cases, can do that as he likes, but doing so he should not get lost. Maxwell's field equations are contained in the solution and with that also continue to be valid. Their disadvantage however is that without the extension b not a single quantum physical postulate can be derived. If we add this extension and insert the equations into each other without addition and without cuts also this time a central solution is the result, which is called fundamental field equation.

The derivation is known as well from the Maxwell theory, in which case it is common practise, to use the general approach (E(r,t) and H(r,t)), what we in accordance with the textbooks can do in the same manner. The extension however brings two additional and extremely significant terms. Since the fundamental field equation has eigenvalues under certain boundary conditions and describes structures, various quantum postulates come out from it, from the quantum properties of the elementary particles over the Schrodinger equation and the inhomogeneous Laplace equation up to the derivation of the Golden Proportion. That justifies the assumption that this possibly is the long sought-for world equation!

Even I, as the initiator, was totally surprised by the found derivation of the most important quantum physical postulates and axioms. One just is doing it the right way and already everything fits together! I am not aware of any theory, which would be able to achieve something roughly comparable. The since long sought-for „Theory of Everything", the big unification theory really falls into ones lap. The known interactions are the free and easy result of analysing the field lines of electric and magnetic field strength (fig. 30.12). Physical phenomena, which until now were considered to be incompatible, like e.g. waves, noise or the temperature with the utterly insufficient concepts of the mechanisms for the conversion of one form of energy into another, can be represented consistently with the fundamental field equation as the rolling up of a wavelike field oscillation to a vortex oscillation and as conversion of the noise vortices in the case of a vortex contraction down to atomic dimensions as thermal oscillation, which we treat as vortex losses. There exists no alternative to such unified schemes of things, as makes it possible in abundance the theory that I have founded, considering the two conditions, that on the one hand in the case of the derivation only known regularities are used, by completely doing without postulates and that on the other hand laws are applied and adhered to, also physical laws.

The new schemes of things, which sound unfamiliar, thus already were contained in the laws of physics. After this now having been realized, the tables turn. Now the explanations by postulates, as they at the moment still are being taught, should be replaced by the newly derived ones, if one doesn't want to become a breaker of the law! There doesn't lead a way past the overdue reform of physics anymore.

If you want to correspond with me or if you want to get one of my books from the bibliography, then please consult my Transfer Centre in the Technology Centre of St. Georgen (Black Forest, D).

Address: 1st Transfer Centre for Scalar wave Technology
Prof. Dr. Konstantin Meyl
Leopoldstralsse 1
D-78112 -St. Georgen /Germany

Fax.: +49-7721/51870

email: meyl@k-meyl.de or: meyl@fh-furtwangen. de

Internet: http://www.k-meyl.de or www.meyl.eu

The list of deliverable books (for ordering books over the above given address, Fax, Mail or postcard suffices):

* Wirbelstrome, Diss. University Stuttgart 1984, ISBN 3-9802 542-0-8, 14
* Potentialwirbel Band 1, 1990, ISBN 3-9802 542-1-6 (German), 14
* Potentialwirbel Band 2, 1992, ISBN 3-9802 542-2-4 (not available)
* Elektromagnetische Umweltvertraglichkeit, Teil 1, 2 and 3 (German), ISBN 3-9802 542-8-3, 3-9802 542-9-1 and 3-9802 542-7-5. Each 16
* Scalar wave technology, 2003, documentation and manual to the demonstration-kit and to the experimental-kit (translated and copied).
* Sendetechnik der Gotter, historischer Sciencefictionroman, (in German) 1 .Aufl. 2004, ISBN 3-98O2 542-5-9, 12
* Neutrinopower, Johannes von Buttlar im Gesprach mit Prof. Dr. Konstantin Meyl, (Discussion in German) Argo-Verlag 2000,

(A bill is enclosed in the delivery.)

Fig. 30.14: Contacting address and list of deliverable books

Table of formula symbols

Electric field

E	V/m	Electric field strength
D	As/m²	Electric displacement
U	V	Tension voltage
ε	As/Vm	Dielectricity: $\varepsilon = \varepsilon_r \cdot \varepsilon_o$
Q	As	Charge
e	As	Elementary charge
τ_2	s	Relaxation time constant of the potential vortices

Magnetic field

H	A/m	Magnetic field strength
B	Vs/m²	Magnetic induction
I	A	Current
μ	Vs/Am	Permeability: $\mu = \mu_r \cdot \mu_o$
φ	Vs	Magnetic flux
m	kg	Mass
τ_1	s	Relaxation time constant of the eddy currents: $\tau_1 = \varepsilon/\sigma$

other symbols:

A	m²	Area
a	m	Distance
b	m	Width
c	m/s	Speed of light
c_o	m/s	Speed of light in vacuum
C_e	As/V	Capacity of the electron
C_p	J/K	Heat capacity
d	m	Thickness
E,W	Nm	Energy
f	1/s	Frequency
F	N	Force
G	m³/kg·s²	Gravitational constant
g	m/s²	Gravitational acceleration of the earth
h	m	Height
h	Nms	Planck's quantum of action
ħ	Nms	Quantum of angular momentum: $\hbar = h/2\pi$
j	A/m²	Current density
J	kg·m²	Moment of inertia
J·ω²	kg·m²/s	Angular momentum
k	Nm/K	Boltzmann constant
l	m	Length
m	kg	Mass
M	kg	Mass of the earth
n,ν =	1,2,3..	Running parameters
N	-	Constant
O	m²	Surface area
p_m	Am²	Magnetic moment

Q	Nm = J	Heat energy
r, R	m	Radius, radius of the earth
r_e	m	Radius of the electron
s	Nms	Spin
t	s	Time, time to orbit
T	K	Temperature
U	Nm	Potential energy
U_e	V	Tension voltage of the electron
v	m/s	Velocity
V	m³	Volume
W	Nm	Energy
w	N/m²	Energy density
W_e	Nm	Energy of the electron
z_e	-	Number of the involved elementary vortices
λ	m	Wave length
ω	s⁻¹	Angular frequency, angular velocity
σ	Vm/A	Specific electric conductivity
ρ	kg/m³	Density $\rho = m/V$
ρ_{el}	As/m³	Electric space charge density
ψ (**r**,t)		Complex wave function
φ (**r**)		Function of space coordinates
Φ		Golden Proportion

Definitions:

Speed of light	c	$= 1/\sqrt{\varepsilon \cdot \mu}$	m/s
Speed of light in a vacuum	c_o	$= 1/\sqrt{\varepsilon_o \cdot \mu_o}$	m/s
Moment of inertia (orbit)	J	$= m \cdot r^2$	kg·m²
Mom. of i. (homogeneous sphere)	J	$= (2/5) m \cdot r^2$	kg·m²
Angular velocity	ω	$= v/r = 2 \cdot \pi/t$	1/s
Surface area of a sphere	O	$= 4 \cdot \pi \cdot r^2$	m²
Volume of a sphere	V	$= (4/3) \cdot \pi \cdot r^3$	m³

Concerning vector analysis:

Bold print = field pointer (vector); further information in fig. 5.0 in part 1

Prof. Dr.-Ing. Konstantin Meyl:

Scalar wave technology

for the transmission of electric scalar waves

Abstract: 1. Auflage 2000, 2. Auflage and 1st English edition 200

This book is recommended to people, who search the entry into the world of the by the author discovered potential vortices and their propagation as a scalar wave by experimental means. It starts with the instructions to six extraordinary experiments. Doing so an electric radiation is proven, which transmits energy, and that even faster than the light. Also more energy can arrive at the receiver then is put into the transmitter. Who entertains a doubt, will be able to understand the experiments with this book in his hand, to afterwards test the experiments with the gauge, which he is familiar with.

The 1st edition in English at first only includes the instructions for the experiments. In a subsequent edition it will be complemented with a collection of test protocols and progress reports. These are organized into three groups: one group is striving to explain the behaviour of the transmission line conventionally, a legitimate concern, which in a number of points also is able to convince. A second group only is interested in those phenomena of the experiment, which can't be explained conventionally and which prove the existence of scalar waves, whereas the third research group continually strives for new spectacular experiments and practical applications.

Documentation

Belonging to the experimentation and demonstration kit for the transmission of electric scalar waves

INDEL GmbH, Verlagsabteilung, Fax: +49-7721-51870
Tel.: +49-7724-1770
Postal and ordering address:
l.TZS, Prof. Dr. K. Meyl, Leopoldstr. 1, D-78112 St. Georgen/Schwarzwald
www.k-meyl.de mevl@k-meyl.de

Bibliography

A. Primary literature (Publications concerning the theory of objectivity):

[1] K. Meyl: Potentialwirbel, Band 1, INDEL Verlagsabt. Villingen 199O, ISBN 3-98O2542-1-6
[2] K. Meyl: Potentialwirbel, Band 2, INDEL Verlagsabt. Villingen 1992, ISBN 3-98O2542-2-4
[3] K. Meyl: Wirbelstrome, INDEL Verlagsabt. Villingen 1984, ISBN 3-98O2542-O-8 / Dreidimensionale nichtlineare Berechnung von Wirbelstromkupplungen, Diss. Uni. Stuttgart 1984
[4] K. Meyl: Einheitliche Theorie bei feldstarkeabhangiger Lichtgeschwindigkeit, Forschungsbericht der Fachhochschule Furtwangen 1992, l.Aufl. Seite 41-43
[5] K. Meyl: Wirbel des elektrischen Feldes, eine neue Storquelle? EMC Journal 1/95,6. J, S. 56
|6] K. Meyl: Gefahrdungspotential und Umwelrvertraglichkeit elektromagnetischer Felder am Beispiel der Funktelefone, Waerland 2/96 (1996), S. 21-23.
[7] K. Meyl: Wirbel des elektrischen Feldes, ein Beitrag zum Thema Uberlichtgeschwindigkeit; Wetter-Boden-Mensch 1/1997, ISSN 0940-5984, Seite: 79-89.
[8] K. Meyl: Physikalische Grundlagen einer Frequenztherapie, W.-B.-M. 6/1997, Seite: 8-15.
[9] K. Meyl: Die Wechselwirkung der Neutrinos, uber Massnahmen, die Halbwertszeit beim radioaktiven Zerfall herabzusetzen; intern.Tagung „Neue Energietechnologien aus USA", Zurich am 6.12.97, abgedruckt im NET-Journal (Neue Energietechniken), ISSN 1420-9292, Heft 1/2-1998, S. 14-20
[10] K. Meyl: Objektivitatstheorie, Ein Weg aus der quantenphysikalischen Sackgasse, 1. Beitrag: Der Ather und die Einsteinsche Fehlinterpretation, W.-B.-M. 3/1998, ISSN 0940-5984, Seite 39-44
[11] K. Meyl: Objektivitatstheorie, Ein Weg aus der quantenphysikalischen Sackgasse, 2. Beitrag: Die Vereinigungstheorie, Wetter-Boden-Mensch 4/1998, ISSN 0940-5984, Seite: 31-38
[12] K. Meyl: Longitudinale elektrische Wellen und Wirbel, Vortrag der „Internationalen Gesellschaft ftir interdisziplinare Wissenschaften" in Frankfurt am 21.3.1998, veroffentlicht im Vortragsband des "Bundesverbands gegen Elektrosmog e.V." ISBN 3-00-003124-3, Hohenstein, S.79-91
[13] K. Meyl: Biologische Wirksamkeit elektromagnetischer Wellen, Fluch (Elektrosmog) Oder Segen (Frequenztherapie)?, CO'MED, Fachmagazin fur Complementar-Medizin Nr. 10, Dez. 1998, S. 51-55
[14] K. Meyl: Elektrosmog, die physikalischen Grundlagen, Magazin 2000 plus Nr. 134,12/1998, S. 32-37
[15] K. Meyl: Freie Energie und die Wechselwirkung der Neutrinos, W.-B.-M. 3+4/1999, Seite: 21-29
[16] K. Meyl: Skalarwellen und ihre biologische Wirksamkeit, Vortragsband der Deutschen Gesellschaft fur Energetische und Informationsmedizin, Universitat Stuttgart am 17.07.1999, S. 47-52
[17] K. Meyl: Zur Brennglaswirkung des Mondes bei einer Sonnenfinsternis, NET-Journal (Neue Energie-techniken), ISSN 1420-9292, Heft 7/8-1999, S. 13-17, sowie INET-Kongress-Vortrag dazu: Freie Energie im nachsten Jahrtausend, am 9.10.1999, Holiday Inn Heidelberg (Walldorf)
[18] K. Meyl: Raum-Energie-Technologie, Wechselwirkung der Neutrinos und energietechnische Nutzung der Teslastrahlung, Teil 1, Magazin 2000 plus Nr. 144, Dezember 1999, S. 62-67
[19] K. Meyl: Raum-Energie-Technologie, Teil 2, Magazin 2000 plus Nr. 145, Jan./Feb. 2000, S. 60-65
[20] K. Meyl: Teslastrahlung, W.-B.-M. 4/2000, ISSN 0940-5984, S. 31-43
[21] K. Meyl: Skalarwellen, Hagia Chora 5/2000, ISSN 0940-5984, S. 31-43
[22] K. Meyl: Teslastrahlung - die drahtlose Ubertragung von Skalarwellen, Kongressband Bregenz vom 15./16.4.2000, S. 181-196, Jupiter-Verlag, ISBN 3-906571-18-1
[23] K. Meyl: Skalarwellentechnik, INDEL Verlagsabt. Villingen-S. 2000, 1. Aufl, ISBN 3-98O2542-6-7
[24] K. Meyl: Nichtoptische Sonnenfinstermsphanomene Teil 1, Magazin 2000 plus/148,6/2000, S. 10-13
[25] K. Meyl: Nichtoptische Sonnenfmsternisphanomene Teil 2, Magazin 2000 plus/150, 8/2000, S. 26-29
[26] K. Meyl: Nichtoptische Sonnenfmsternisphanomene Teil 3, Magazin 2000 plus/151,10/2000, S. 12-17
[27] K. Meyl: Longitudinalwellen-Experiment nach Nikola Tesla, Vortragsband der Deutschen Ges. fur Energetische und Informationsmedizin, Universitat Stuttgart am 6.+.7.10.2000, S. 4.1-4.9
[28] K. Meyl: Skalarwellen und ihre Bedeutung fur die Medizin, Kolloquium vom 6.-8.10.2000 Bad Nauheim der BIT-Arztegesellschaft Vortragsband, Seite 87-96.
[29] Johannes von Buttlar im Gesprach mit Prof. Dr. Konstantin Meyl: Neutrinopower, 1. Auflage 2000, Argo-Verlag Marktoberdorf, ISBN 3-98O6584-8-1
[30] K. Meyl: Skalarwellen-Ubertragung, NET-Journal, ISSN 1420-9292, Heft 12-2000, S. 31-34
[31] K. Meyl: Longitudinalwellen-Experiment, DVR-Info im NET-Journal, Heft 12-2000, S. 21-24
[32] K. Meyl: Erdbeben und Vulkanausbrtiche, GA-Magazin, Heft 6, 2000, S. 11-14
[33] K. Meyl: Atomuhren, die falsch gehen, GA-Magazin, Heft 8, 2001, S. 10-13
[34] K. Meyl: Umpolungsproblematik und Sintflut, GA-Magazin, Heft 10,2001, S. 10-14

The suitcase for experiments from Transfer Centre St. Georgen:

Scalar wave transmission according to Tesla

Bidirectional signal and energy transmission with longitudinal
waves faster than light in a resonant circuit

Get to know the Tesla radiation and its fantastic properties personally. Demonstrate, what no textbook of physics is able to explain!
The experiments, which 100 years ago still were extremely complicated, today fit into an aluminium suitcase, which can be acquired by purchase. Test yourself the historic statements and perform the following experiments:

- transmission of energy and information
- effect back from the receiver on the transmitter
- proof of free energy (1 to 3 times over-unity)
- scalar wave transmission with app. 1.5 times the speed of light
- tunnel effect or the lacking to shield the waves
- disproval of the near-field interpretation.

The kit is offered in two versions:

As a demonstration-kit for 800.- Euro (incl. VAT)
With this the 6 experiments can be carried out without further aids. (Target group are judges, doctors, architects, interested laymen, etc.)

and as an experimentation-kit for 1400.- Euro (incl. VAT) with three different Spulensatzen, Frequenzzahler and zusatzlichem material. (Target group are physicists, engineers, handicraft enthusiasts who like to experiment, etc.)

Weitere Informationen zum Set und zu den Biichern, zu deren Inhalt und zu Vortragsveranstaltungen im Internet unter: http: / /www.k-meyl.de and www.meyl.eu

INDEL GmbH, Verlagsabteilung, Fax: +49-/0- 7721-51870
Tel.: +49-/0- 7724-1770
Postal and ordering address:
l.TZS, Prof. Dr. K. Meyl, Leopoldstr. 1, D-78112 St. Georgen/Schwarzwald

[35] K. Meyl: HF-technische Hinweise zum Skalarwellen-Ubertragungs-Set, DVR-Mitgliederjournal Nr. 45, 1/2001, S. 20-22 und NET-Journal, ISSN 1420-9292, Heft 3/4-2001, S. 44-45
[36] K. Meyl: Stellungnahme zum Artikel im Spiegel, DVR-Mitgliederjouraal Nr. 46, 2/2001, S. 43-44
[37] K. Meyl: Stellungnahme zu dem Beitrag ,,Skalarwellenubertragung", W.-B.-M. 2/2001, Seite: 77-79
[38] K. Meyl: Scalar Waves: Theory and Experiments, Journal of Scientific Exploration, Vol. 15, No.2, June 2001, ISSN 0892-3310, pp.199-205.
[39] K. Meyl: Skalarwellenstrahlung. Welche Bedeutung haben Skalarwellen fur die Medizin? , CO" MED, Fachmagazin fur Complementar-Medizin Nr.6, Juni/2001, S. 55-60.
[40] K. Meyl: Advanced Conzepts for Wireless Energy Transfer, High efficient Power Engineering with Scalar Waves, International Congress-Publications, Weinfelden, 23/24.6. 01, Jupiter- Verl., pp. 41-49
[41] K. Meyl: Fortschrittliche Konzepte zur drahtlosen Energieubertragung, Hocheffiziente Energie-technologie mittels Skalarwellen, Kongress ,,Neue Wasserstofftechnologien und Raumantriebe" 23.-24. Juni 2001 CH-Weinfelden, Kongressband S. 25-40, Jupiter-Verlag, ISBN 3-906571-20-3
[42] K. Meyl: Schwingungsmedizin, Physikalisch-technische Aspekte komplementarmedizinischer Diagnose- und Therapieverfahren, G.E.I.M.-Vortrag am 6.10.2001 Universitat Kaiserslautern, GZM-Praxis und Wissenschaft, ISSN 1430-4554,7Jahrg. 1/2002, S. 50-55
[43] K. Meyl: Skalarwellen Teil 1: Grundlage einer erweiterten Feldtheorie und prakrische Konsequenzen der Maxwell-Naherung, NET-Journal, ISSN 1420-9292, Heft Juli/August 2002, S. 31-47
[44] K. Meyl: Skalarwellen Teil 2: Weltgleichung und Wellengleichung als Konsequenz der erweiterten Feldtheorie, NET-Journal, ISSN 1420-9292, Heft September/Oktober 2002, S. 44-47
[45] K. Meyl: Wirbelstrukturen als Element der Informationsubertragung in biologischen Systemen, Kolloquium vom 3.-5.10.2002 Bad Nauheim der BIT-Arztegesellschaft, Vortragsband, Seite 77-96.
[46] K. Meyl: Skalarwellen, Grundlage einer erweiterten Feldtheorie, Vortrag am VII.Kongress des IAG vom 18.-20.10.2002 in Mainz-Finthen, Kongressband ISBN 3-9804228-3-6 l.Aufl.2002, S. 118-135.
|47] K. Meyl: Nutzungsmoglichkeiten der Skalarwellentechnik, Neutrino-Power als Chance fur das neue Jahrtausend, Magazin 2000 plus I Nr.177, November/Dezember 2002, S. 60-63.
[48] K. Meyl: Schwingungsmedizin, Bioresonanz durch Skalarwellentechnik, Magazin 2000 plus I Nr. 178, Medizin Spezial 13,2002, S. 52-57
[49] K. Meyl: Die Wellengleichung, Grundlage der Skalarwellen-Physik, Magazin 2000 plus I Nr.179, Januar/Februar 2003, S. 6-12
[50] K. Meyl: Elektrische bzw. magnetische Skalarwellen im Kreuzfeuer der Kritik. Prof. Dr.-Ing. Konstantin Meyl nimmt Stellung zu kritischen Fragen, CO'MED, Nr. 1, Januar/2003, S. 52-54.
[51] K. Meyl: Freie Energie und Neutrinopower, Vortrag am 26.10.2002 in Bensheim auf dem Kongress: (Vom Band abgetippt von I.Schneider) Neue universale Energielosungen, Sammelband der Kongress-beitrage, Jupiter Verlag 2003, ISBN 3-906571-22-X, S.57-79
[52] K. Meyl (D.NeubronnerV. Die Rundfunkgotter, Teslawellen im Altertum, Matrix 3000 Band 16, 7/8-2003, ISSN 14394154, S.40-43
[53] K. Meyl: Erdwachstum durch Neutrinopower, Magazin 2000 plus Nr.188, Extra 3, 9/10-2003, S. 6-13
[54] K. Meyl: Faraday vs. Maxwell, Nikola Tesla Energy Science Conference, Washington DC 8.11.03, IRI
[55] K. Meyl: Physikalische Grundlagen fur die Informationsverarbeitung im Menschen, Kongressband zu den Festspieigesprachen 2002, (Hg. Simma Kletschka) Facultas Verlage Wien 2003, Band 27, Wiener Internationale Akademie fur Ganzheitsmedizin, ISBN 3-85076-648-9, Seite 38-59

by Prof. Dr.-Ing. Konstantin Meyl:

Sendetechnik der Gotter

Konstantin the Great is inaugurated in ancient send receive engineering by his teacher in the Roman emperor palace 304 A.D.

Abstract: l.Auflage 2004(in German)

- Has god Apollo in Delphi broadcasted at 5.4 MHz?
- Were the Greek temples telegraphy transmitters?
- Were the temple priests amateur radio operators?
- Was Homer radio reporter by order of the gods?
- Were the oracles receiving stations?
- Have oracle interpreters deciphered the transmission code?
- Which bridges did the Pontifex Maximus build?

All are questions, which are dealt with and explained in detail in 30 lessons. In the year 304 A.D. we witness, how the later Roman emperor Konstantin the Great is inaugurated in the secret broadcasting technique of the gods by his teacher. It is an exciting time of upheavel, because the old telegraphy is almost dead. The intestines of animals to sacrifice, from the convulsions of which the radio signals are read off, are scarce goods. Instead radiotelephony should be introduced, which had been tested successfully with the Pantheon in Rome by emperor Hadrian.
But new dispute is initiated: should broadcasting be introduced or rather cellular phone? But those, who tamper around without licence, are chased and fought as always.

When the book is available in English, you will be informed per internet:

www.k-meyl.de www.meyl.eu

INDEL GmbH, Verlagsabteilung, Fax: +49-7721-51870
Tel.: +49-7724-1770
Postal and ordering address:
l.TZS, Prof. Dr. K. Meyl, Leopoldstr. 1, D-78112 St. Georgen/Schwarzwald

B. Secondary literature (Publications about the theory of objectivity):

[1] P. Schellenberg: Buchbesprechung zu K. Meyl: Potentialwirbel, Bd. 1, Efodon News 6 (1992), S. 11
[2] Dr. R. Wohlleben: Buchbespr. zu K. Meyl: Potentialwirbel, Band 2, Frequenz 50 (1996) 1-2, S. 10
[3] Steinbeis-Stiftung fur WirtschaftsfOrderung: Technologiepreis fur STZ-Leiter, Transfer Zeitung 3/94 (1994), S.6
[4] A. Waser (Herausg.): Die ratselhafte Natur - The Puzzling Nature, AW Verlag, Luzern (1996), ISBN3-9521O59-O-2
[6] K. Lorek: Buchvorstellung in "Implosion", Biotechnische Nachrichten Nr. 116 (8/1996), S. 64
[7] Dr. H. Lumpe: Potentialwirbel, neues Weltbild; Raum & ZeitNr. 86, Marz/April 1997, S. 102-103
[8] Inge Schneider: Buchbesprechung zu K. Meyl: Elektromagnetische Umweltvertraglichkeit, Teil 1, NET-Journal, ISSN 1420-9292, Jg. Nr.2, Heft 3, Marz 1997, Seite 23
[9] W. Martin: Buchbesprechung zu Teil 1, Wetter-Boden-Mensch 2/1997, ISSN 0940-5984, S. 62-63.
[10] RTL: Prof Dr.-Ing.Meyl zu Gast bei der RTL-Talkshow von Ilona Christen am 30.5.97, abgedruckt im NET-Journal, ISSN 1420-9292, Jg. Nr.2, Heft 6/7 1997, Seite 30-31
[l1] Inge Schneider: zu ,,Prof. Dr.-Ing. Konstantin Meyls Buch Elektromagnetische Umweltvertraglichkeit", NET-Journal, ISSN 1420-9292, Jg. Nr.2, Heft 6/7 1997, Seite 32-33
[12] W. Heidrich: Geht die Expertentagung 1997 in die Geschichte ein? W.-B.-M. 6/1997, S. 3-4
[13] J. Heinzerling: Die Technik des dritten Jahrtausends, Magazin 2000 plus Nr.125, Marz 1998, S. 57/58
[14] Inge Schneider: Buchbesprechung zu K. Meyl: Elektromagnetische Umweltvertraglichkeit, Teil 2, NET-Journal, ISSN 1420-9292, Jg. Nr.4, Heft 3, Marz 1999, Seite 35
[15] W. Martin: Buchbesprechung zu Teil 2, Wetter-Boden-Mensch 2/1999, ISSN 0940-5984, S. 46+59.
[16] P.Rosch: Glanzend, Prof. Meyl zu Elektrosmog, Leserbrief, Magazin 2000 plus Nr.136, 2/1999, S. 77
[17] Portrait der Kongress-Referenten, zu Prof. Meyl: Energie aus dem Weltraum, 5. internationaler Kongress vom 26.-28.2.1999 in Dusseldorf, Magazin 2000 plus Nr. 136, 2/1999, S. 2 + 16 mit:
[18] P.Wiesner: Bericht zum 5. internationalen Kongress ,,Dialog mit dem Universum", zum Beitrag Prof. Meyl:,,fordert eine dezentrale elektr. Energietechnik", Magazin 2000 plus Nr.136, 2/1999, S. 38-41
[19] I. Schlotterbeck: Bucher, die wir empfehlen, Magazin 2000 plus Mr. 142, Sept./Oktober 1999, S. 96
[20] H.-J. Ehlers: Freie Energie, Meyls Neutrino-These; Raum & Zeit Nr. 101, Sept./Oktober 1999, S. 94
[21] I, Schneider: Bericht zum Kongress vom 9.+10.10.99, Heidelberg, zu K. Meyl: Freie Energie im nachsten Jahrtausend, NET-Journal, ISSN 1420-9292, Jg. Nr.4, Heft 10/11, Okt./Nov. 1999, S. 8 ff.
[22] Sabine Krummer: Weltpremiere, Magazin 2000 plus Nr.145, 1+2/2000, S. 59 und im Schwarzwalder Bote vom 19.11.99: TP-Forum eroffhet mit Weltpremiere, Prof. Meyl berichtet iiber Teslawellen.
[23] Diermar Schindler: Neutrinos - Energie aus dem Kosmos, Schwarzwalder Bote Nr. 275 vom 27.11.99
[24] Schneider: Neutrino-Power - Energie aus dem Kosmos, Bericht zu Vortrag und Demo von Prof. Dr. K. Meyl am 25.11.1999 in Villingen, NET-Journal, ISSN 1420-9292, Jg. Nr.4, Heft 12/1999, Seite 4-6
[25] Schneider: Durchbruch in der Freien-Energie-Forschung; Interview mit Prof. Dr.-Ing. Konstantin Meyl, NET-Journal, ISSN 1420-9292, Jg. Nr.4, Heft 12, Dezember 1999, Seite 7-9.
[26] Dulling: Professor Meyl und die Freie Energie, TZ-Journal 1999/2000, Seite 5.
[27] Ulrich Arndt: Das Phanomen der Wirbel, Buchbesprechung zu Elektromagnetische Umweltvertraglichkeit Teil 1 und Teil 2, Esotera 1/2000, Verlag Hermann Bauer, S. 50,51
[28] Rainer Borgmann: Energie aus dem Kosmos, Magazin 2000 plus Nr. 145, Januar/Feb. 2000, S. 58-59
[29] Sabine Krummer: Wissenschaftler sprechen von Sensation, Im Villinger Technologie-Forum fuhrte Konstantin Meyl seine Skalarwellen vor, Schwarzwalder Bote vom 7.2.2000
[30] Dr.B.Tausendfreund: Uber biologische und medizinische Auswirkungen von elektrischen Potentialwirbeln und elektromagnetischen Longitudinalwellen,, CO'MED, 2/2000, S. 92
[31] Dr. H.Hantsche: Neues aus Physik und Technik, Info-Blatt der Feien Akademie, Berlin 3/2000, S.3
[32] A.Milinkovic: Weiterer Nachweis der Skalarwellen, NET-Journal, Jg. Nr.5, Heft 3, Marz 2000, S. 26
[33] Vorstellung des Referenten Prof Dr.-Ing. Konstantin Meyl, Kongressband Bregenz vom 15/16.4.2000, S. 180, Jupiter-Verlag, ISBN 3-906571-18-1
[34] Dr. Kunze: Leserbrief zu K.Meyl: Raum-Energie-Technologie, Magazin 2000 plus 147, 4-2000, S. 93
[35] Schneider: Teslastrahlung, die drahtlose Ubertragung von Skalarwellen von Prof. Dr.-Ing. Konstantin Meyl, NET-Journal, ISSN 1420-9292, Jg. Nr.5, Heft 4/5- 2000, Seite 14-15.
[36] Dr. Reichwein, Peters: Zellulare Elektromagnetische Systemsteuerung, Der Freie Arzt 5 (2000) im Wissenschafts-Forum (Anhang, S. IV - XXIII)
[37] Ulrich Arndt: Die Energie aus dem Nichts, Esotera 7/2000, Verlag Hermann Bauer, S. 62-66
[38] Besprechung zum Video ,,EMUV" von Prof. Dr. Meyl, Esotera 7/2000, Verlag Hermann Bauer, S. 30
[39] A.Manthey: Bericht zur Berliner Tagung fur neue Energietechnologien (8.7.2000), zu Theoretische Ansatze (u.a. K. Meyl), NET-Journal, ISSN 1420-9292, Jg. Nr.5, Heft 7/8 2000, S. 14 ff.

[40] Schneider: Uber das Experimentier-Set zur Ubertragung von Skalarwellen von Prof. Dr.-lng. Konstantin Meyl, NET-Journal, ISSN 1420-9292, Jg. Nr.5, Heft 9, September 2000, Seite 4-7.
[41] Buchbesprechung zu Prof. Dr.-Ing. Konstantin Meyl: Elektromagnetische Umweltvertraglichkeit, Teil 1 und Teil 2, Schweizerische Zeitschrift fur RGS, ISSN 1420-4894, Nr.233, Heft 4-2000, Seite 54-56
[42] Adolf und Inge Schneider: Energie aus dem All, ll.Kap.: Drahtlose Ubertragung von Skalarwellen durch Prof.Dr.-Ing.Konstantin Meyl, S.312-324, Jupiter Verlag 9/2000, l.Aufl. ISBN 3-906571-17-3.
[43] Dr.J.Lechner. Starfelddiagnostik, Medikamenten- und Materialtest Teil2, Kap.2.4.2 Beruhrungslose skalarwellengetragene Informationsubertragung, S. 173-178, Verlag Wtlhr 2000, ISBN 3-927344-44-3
[44] Dr. B. KOhler: Nachlese zum Jubilaumskolloquium der BIT-AG vom 6.-8.10.2000 in Bad Nauheim: Einen weiteren Hohepunkt stellte das Referat von Prof. K. Meyl dar,... COMED, 12/2000, S. 104
[45] Schneider: Buchbesprechung zu ,,Neutrinopower", NET-Journal, Jg. 5, Heft 12, Dezember 2000, S. 39
[46] Fachhochschule Furtwangen: Vorlesungsangebot fur das SS 2001, S.8, Prof. Dr. K. Meyl: EMUV.
[47] Vill: Die elektrophysikalische Mauerwerksentfeuchtung, EV.Verl.2001, ISBN 3-934139-04-3, S.26-33
[48] Kraft: Eroberung von physikalischem Neuland, Buchbesprechung zu ,,Neutrinopower", und
[49] Rattcher: Sind morphische Felder Neutrinos?, Zeit Geist, Heft 3,2001, S. 29 und S. 9.
[50] Dr.R.Kra6nigg: Skalare Wellen, Regulations Medizin 6, Heft 3, 2001, S. 89-96.
[51] Dr.A.Rossaint: Physikalische Grundlagen und biologisch-medizinische Schlussfolgerungen fur den beruhrungslosen Resonanztest Teil 1, Zeitschrift Hier & Jetzt, 3/2001, S.22-27 +Teil2,4/2001, S.22-25
[52] GZM-Kongress Berlin, 13.5.2001, zu dem Vortragenden Prof.Dr.K.Meyl: Skalare-/Teslawellen zur zellularen Energie- und Info. , GZM-Praxis und Wissenschaft, ISSN 1430-4554, 6,Jahrg. 1/2001, S.36
[53] Dr.P.Reichert: Die Medizin der Zukunft - Schwingungen start Pillen, Berlin Nachlese zum 6. Europaischen Kongress fur Ganzheitliche Zahn-Medizin 10.-13.5.2001, GZM-Praxis und Wissenschaft, ISSN 1430-4554, 6.Jahrg. 1/2001, S.56 zuK.Meyl: Schwingungsmedizin und Zellkommunikation.
[54] M.Dworschak: Schwarzwalder Kopernikus, Spiegel-Artikel vom 21.5.01, S. 198-199, abgedruckt im DVR-Mitgliederjournal 2/2001, Seite 41-42
[55] F.Lutz: Bis jetzt unwiderlegt, Wissenschaftler nehmen Professor Meyl in Schutz, Sudkurier Nr. 136 vom 16.6.2001 und Badische Zeitung vom 19.6.2002, Seite 22.
[56] S.Scheurer: Kopemikus untersucht Skalarwellen, Schweizerisches Bodensee Tagblatt Turgau, 21.6.01
[57] Schneider: Introduction of the author Prof.Dr.K.Meyl: Advanced Conzepts for Wireless Energy Transfer, International Congress-Publications, Weinfelden, 23./24.6.2001, Jupiter-Verlag, pp. 23-24.
[58] R.Schmid: Neues aus der Homoopathie-Forschung, zur Tagung der Samuel-Hahnemann-Stiftung vom 6.-8.4.2001 in Simmerath-E., Globuli 11/2001, S.11-12.
[59] Ralph Netzker: Jurassic Quark, Holden, Wegener, Meyl, ein theoretischer Dreisprang, im Internet unter http://home.t-online.de/home/ralph.netzker/quark.htm vom 25.10.01
[60] H.-P. Studer: Neue Energien fur die Zukunft, Vita Sana Magazin fur Dialog und Ges., 9/2001, S. 6-9
[61] Harro Wilke: Leserbrief zu Schwarzwalder Kopernikus, Magazin 2000 plus Nr. 164,10/2001, S. 92
[62] Dr. R.Krafinigg: Skalare Wellen, Arztezeitschrift fur Naturheilverfahren, 43, 1/2002, S. 19-27.
[63] Dr.C.Bollkampen: Bewusstsein im EnergetischenKontinuum, 10/2002, ISBN 3-8311-4016-2.
[64] A. und I. Schneider: Bericht vom Kongress ,,Universale Energielosungen", 26727.10.2002 in Bensheim, zu dem Beitrag von Prof.Dr.K.Meyl: Freie Energie und Neutrinopower, NET-Journal, Jg. 7, Heft 11/12 November/Dezember 2002, S. 21-28.
[65] Dr. P. Rothdach, Dr. H. Boiler u.a.m: Leserbriefe zum Beitrag: Elektromagnetische Skalarwellen im Kreuzfeuer der Kritik. COMED, 1/2003, S. 4-5 und COMED, 11/2002, S. 4: "Facit (Rothdach); Die Meylsche Theorie ist weder mathematisch, noch theoretisch-physikalisch noch experimentell widerlegt"!
[66] D. Schindler: Kopemikus aus dem Schwarzwald, Professor Meyl stellt neue Erkenntnisse der Teslastrahlumg vor, Bericht im Schwarzwalder Bote Nr. 46 VS, vom 25.02.2003
[67] H.-H. Gimbel: Neue Energielo'sungen, Kongressbericht, Wohnung + Gesundheit 3/03 Nr. 106, S. 60
[68] C. Nack: Umstritten aber begehrt. Viele Akademiker kamen Zum Experimentalvortrag von K. Meyl am 14.03.2003 im Technologiepark von Villingen-Schwenningen, Sudkurier 63/TG v. 17.03.03, S.27
[69] G. Hauser: ,.Gebaude der Physik wankt", Meyl sieht seine Theorie durch neueste Berichte bestatigt, Siidkuner Nr. 93/V, 23.04.2003
[70] Prof. Dr. J. Gruber: Grosser experimenteller Erfolg von Prof. Meyl, Energie aus dem Feld nachgewiesen! DVR-Mitglieder-Journal 1/03 Nr. 51 vom 4.4.03, ISSN 1435-0815, S. 101-102
[71] Dr. H. Kersten uber K. Meyl's Forschung: Erdwachstum durch Neutrinoabsorbtion, Technische Universitat Berlin, Internationales Kolloquium: Erdexpansion - eine Theorie auf dem Prufstand, Schloss Theuern am 24.+25.05.2003, Umdruck der TU Berlin Sekr. BH4 Lagerstattenforschung, s.a. Amberger Zeitung vom 28.5.03 und Amberger Nachrichten vom 29.5.03

[72] Dr. P. Rothdach: ,,SkalarwelIen gibt es nicht und die Welt ist eine Scheibe", GeoForum 24, 6/2003, Seite 20-22
[73] Inge Schneider: zu Prof. Dr.-Ing. K. Meyls Forschung: Antiker Gotterfunk und futuristische Skalarwellenkommunikation, NET-Journal, Jg. Nr. 8, Heft 7/8 2003, Seite 31 (mit Ankundigungen zu Seminaren von Prof. Meyl in Munchen, an der Universitat Stuttgart und in Washington DC, Seite 42)
[74] J.K.Klasmann: Elektrosmog, Gefahrliche Felder? Gesundheit 9/2003, S.103-104.
[75] Gesundheitsrisiko Handy", Hauptreferent Professor Meyl..., Zollern-Alb-Kurier, 8.10.2003 und K.-H. Schlenker, Leserbrief vom 30.9.2003, s.a. Siidwest Presse: Kommission fordert Absenkung von Grenzwerten, Hohenzollerische Zeitung vom 7.10.2003.
[76] Dr. H.-J. Klose: Die Grundregulation des Menschen, Kongressband zu den Festspielgesprachen 2002, Simma-Kletschka (Herausgeber): Ganzheitliche Zahnheilkunde, Facultas Verlage Wien 2003, Band 27, Wiener Internationale Akademie fur Ganzheitsmedizin, ISBN 3-85076-648-9, Seite 95-98
[77] Dr. Valone, Integrity Research Institute: Nikola Tesla Energy Science Conference, Washington DC November 8th.+9th.2003, Conference publications, speakers biographies and abstracts.

C. Literature concerning the electromagnetic and biological compatibility

[1] R. O. Becker: Heilkraft und Gefahren der Elektrizitat (Cross Currents) 2. Aufl.Scherz Verlag (1994)
[2] P. Brodeur: Mikrowellen (The zapping of America) Augustus Verlag Augsburg (1989)
[3] EMVG: Gesetz uber die EMV von Geraten, Bundesgesetzblatt Teil I vom 9.11.1992
[4] Flanagan: Elixier der Jugendlichkeit, Waldthausen Verlag Ritterhude 1992, 1. Aufl.
[5] E. Habiger u. a.: Elektromagnetische Vertraglichkeit, 2. Aufl. Verlag Technik, Munchen 1992
[6] E. Habiger: EMV, Huthig Buch Verlag Heidelberg (1992), ISBN 3-7785-2O92-X
[7] E. Habiger: EMV-ubergreifende Aspekte zu benachbarten Problemfeldern, Elektrie 48 (1994), H. 5/6, S. 163-167
[8] N. Harthun: Naturgemasse Technik - Wege fur die Forschung nach Viktor Schauberger, Verlag Delta Design, Berlin 1996.
[9] H. L. KOnig: Unsichtbare Umwelt (Wetterfuhligk.), 5. Aufl., Verlag Moos & Partner Munchen
[10] Anton Kohling: Grundlagen der Funkentstorung in der Bundesrepublik Deutschland, etz Bd. 108 (1987), Heft 10.
[11] G. Nimtz: Mikrowellen, Einfiihrung in Theorie und Anwendung. 2. Aufl. Mannheim/Wien/Zurich: BI-Wissenschaftsverlag 199O, ISBN 3-411-O32O3-O
[12] Novitskii, Yu. I. : Effects of a magnetic field on the dry seeds of some cereals. Proceedings of Conference on the Effect of Magnetic Fields on Biological Objects, Moscow, p. 52, 1966.
[13] Plato: Samfliche Werke 5, Rowohlts Klassiker Nr. 47, S. 188,66e
[14] A. S. Presman: Electromagnetic Fields and Life. Plenum Press, New York - London, 197O
[15] V. Schauberger: Die Entdeckung der Levitationskraft, Implosion 1995 Nr. 112
[16] H. Schulz, W. Oppitz: Lokale Hyperthermie durch hochfrequente Wirbelstrome, Medizin Technik 1, 1987.
[17] G. A. Ulmer: Wellen- und Elektrosmog, Ulmer Verlag (1994) ISBN 3-924191-73-5
[18] Vitruvius Pollio, Marcus: Zehn Bucher uber Architektur, WBG 1987
[19] A. D. Watt and E. L. Maxwell: Characteristic of Atmospheric Noise from 1 to 1OO Kc/s. Symposium on the Propagation of VLF Waves, Boulder, Col., Paper 35, Jan. 1957.

D. Literature concerning physics in general (particle physics, etc.)

[1] H. Armbruster, G. Grunberger: Elektromagnetische Wellen im HF-Bereich, Huthig und Pflaum Verl.
[2] W. Bauer: Klassische Physik, Graphia Druck, Salzburg (1975), Eigenverlag.
[3] K. Bethge, U. E. Schroder: Elementarteilchen, Wissenschaftliche Buchgesellschaft Darmstadt (1986)
[4] G. Bosse, Grundlagen der Elektrotechnik II, BI 183, Hochschultaschenbuch-Verlag, Mannheim 1967
[5] Bronstein u.a.: Taschenbuch der Mathematik, 4.Neuaufl. Thun 1999
[6] A. Einstein: Grundztlge der Relativitatstheorie, S. 162, Anhang II; allg.Bemerkungen C, 5. Aufl., Vieweg + Sohn, Braunschweig 1973.
[7] A. P. French: Special Relativity, M.I.T. (1968) / Vieweg Verlag (1971) ISBN 3-528-O3546-3
[8] G. Galeczki, P. Marquardt: Requiem fur die Spezielle Relati vitat, Verlag Haag+Herchen (1997)
[9] U. Gradmann/H. Wolter: Grundlagen der Atomphysik, AVG, Frankfurt a.M. 1971.

[10] Grimsehl: Lehrbuch der Physik, 2.Bd, 17.Aufl. Teubner Verl. 1967
[11] J. D. Jackson, Classical Electrodynamics, 2nd. Ed., John Wiley, New York, 1975.
[12] Kleine Enzyklopadie Atom, Verlag Chemie GmbH, Weinheim 1970
[13] K. Kupfmuller: Einfilhrung in die theoretische Elektrotechnik, Springer-Verlag Berlin, 12. Aufl. 1988
[14] H. G. Kussner: Grundlagen einer einheitlichen Theorie der physikalischen Teilchen und Felder, Musterschmidt-Verlag, Gottingen 1976, ISBN 3-7881-6O35-7
[15] Kuchling: Physik, Gl. At4, VEB-Leipzig, 11. Aufl. 1974
[16] G. Lehner, Elektromagnetische Feldtheorie, Springer-Verlag Berlin, Heidelberg 1990.
[17] H.-J. Lugt: Vortex flow in nature und technology. Krieger publishing company 1995
[18] J. C. Maxwell: A Treatise on Electricity & Magnetism, vol.2, Chapter XX: Electromagnetic Theory of Light. Dover Publ. New York
[19] Meinke, Gundlach: Hochfrequenztechnik, 4.Aufl. Springer-Verlag Berlin 1986
[20] Mende, Simon: Physik, Gl. 10. 39, VEB-Leipzig, 4. Aufl. 1974
[21] G. Mierdel: Elektrophysik, Huthig Verlag Heidelberg (1972) ISBN 3-7785-O243-3
[22] O. Nachtmann: Phanomene und Konzepte der Elementarteilchenphysik, Vteweg, Braunschweig 1986, ISBN 3-528-O8926-1
[23] W. Pauli: Aufsatze und Vortrage uber Physik und Erkenntnistheorie, Vieweg + Sohn, Braunschw. 1961
[24] R.W. Pohl: Einfuhrung in die Physik, Bd.2 Elektrizitatslehre, 21.Aufl. Springer-Verlag 1975
[25] H. Preussker: Der Wirbelring, Halstenbeck 2002
[26] Shu-wen Zhou: Abnormal Physical Phenomena Observed When the Sun, Moon, and Earth are Aligned, 21st Century Science & Technology, Fall 1999, Vol. 12, No. 3, pp. 54-61.
[27] K. Simonyi, Theoretische Elektrotechnik. 7. Aufl. VEB Verlag Berlin 1979. S. 921 - 924.
[28] K. Simonyi: Physikalische Elektronik, Kap.: 8.4 Das Magnetron
[29] K. Stierstadt: Physik der Materie, VCH, Weinheim 1989.
[30] D. F. Taylor, On the Mechanism of Aluminium Corrosion in Metallized Film Capacitors, IEEE Transactions on EI-19, August 1984, No. 4, pp. 288-293.
[31] Jean-Pierre Vigier and the Stochastic Interpretation of Quantum Mechanics, selected and edited Stanley Jeffers, Bo Lehnert, Nils Abramson, and Leve Chebotarev. Montreal: Apeiron, 2000.
[32] A. Yializis, S. W. Cichanowski, D. G. Shaw: Electrode Corrosion in Metallized Polypropylene Capacitors, Proceedings of IEEE, Int. Symposium on Electrical Insulation, Bosten, Mass., June 1980;
[33] Zinke, Brunswig: Lehrbuch der Hochfrequenztechnik, 1. Bd., 3.Aufl. Springer-Verlag Berlin 1986

E. Literature concerning Tesla and criticism of textbook physics

[I] M. Cheney: Tesla, Man out of Time, Barnes & Noble Books, New York, 1993, ISBN O-88O29-419-1 und Omega-Verlag (1996) ISBN 3-93O243-O1-6
[2] D. H. Childress: The Fantastic Inventions of Nikola Tesla, Adventures Unlimited Press (1993)
[3] J. DeMeo: The Orgone Accumulator Handbook, ISBN O-9261855-O-7
[4] G. Galeczki, P. Marquardt: Requiem fur die Spezielle Relativitat, Haag+Herchen (1997),
[5] J. K. Kowalczynski: Critical Comments on the Discussion about Tachyonic Causal Paradoxes and the Concept of Superluminal Reference Frame, Intern. Journal to theoretical Physics, Vol. 23, No. 1, 1984
[6] J. Marinsek: Rationale Physik oder wissenschaftliche Science fiction? dbv-Verlag fur die Technische Universitat Graz (1989) ISBN 3-7O41-O176-1
[7] H. C. Montieth: The Unified Field Theorie, MUFON Symposium Proc, Seguin, Texas, 1980
[8] F. Moser: BewuBtsein in Raum und Zeit - Grundlagen einer holistischen Weltauffassung auf wissenschaftlicher Basis, Leykam Graz, 1989
[9] H. A. Nieper: Revolution in Technik, Medizin, Gesellschaft; MIT Verlag Oldenburg (1982)
[10] O. Oesterle: Ausweg aus der Sackgasse, Ein ganzheitliches naturwissenschaftliches Weltbild, 1. Aufl., Jupiter-Verlag, Bern 1996, ISBN 3-9O6571-16-5
[11] Rho Sigma (Dr. Rolf Schaffranke): Forschung in Fesseln, das Ratsel der Elektro-Gravitation. Ventla-Verlag, Wiesbaden (1972)
[12] N. Tesla: III. The Singular Misconception of the Wireless (Famos Scientific Illusions), Electrical Experimenter, Feb. 1919, p. 732.
[13] Tesla's verschollene Erfindungen, VAP, Wiesbaden (1994) ISBN 3-922367-93-3
[15] N. Tesla: Complete Patents, TeslaBook Company (1983) ISBN O-96O356-8-2, daraus:
[16] N. Tesla: Apparatus for Transmission of Electrical Energy, US-Patent-No.: 649,621, New York 1900, Dr. Nikola Tesla: Complete Patents pp318-321.

[17] Nikola Tesla: Method of and Apparatus for Controlling Mechanism of Moving Vessels or Vehicles, US-Pat. 1898, Nr. 613,809. Complete Patents: S. 351
[18] Nikola Tesla: Famous Scientific Illusions, III. The Singular Misconception of the Wireless, Electrical Experimenter, Feb. 1919, printed in Tesla Said, p. 197
[19] Nikola Tesla: The Problem of Increasing Human Energy, The Century Monthly Magazine, June 1900, ISBN 1-882137-00-0, Page i-15
[20] N. Tesla: Die Ubertragung elektrischer Energie ohne Drahte..., Electrical World and Engineer vom 7.1.1905; Edition TeslaBd. 4, S. 131.
[21] N. Tesla, New York Times vom 15.9.1908; Edition Tesla Bd. 6, S. 241.
[22] Tesla Said (J.T.Ratzlaff), Tesla Book Company, ISBN 0-914119-00-1
[23] N. Tesla: Experiments with Alternate Currents of High Potential and High Frequency, Lindsay Publications Inc, ISBN 0-917914-39-2
[24] W. Theimer: Die Relativitatstheorie, A.Francke AG Verlag Bern (1977) ISBN 3-772O-126O-4

F. Literature concerning geophysics, geology, geography and astronomy

[1]: Kendrick Frazier: Das Sonnensystem, Time-Life Bucher, Amsterdam (1991).
[2] Carey, S. W.: Theories of the Earth and Universe. University Press: 1-413, Stanford, California.
[3] Oesterle, O.: Goldene Mitte: Unser einziger Ausweg, Universal Experten Verlag, Rapperswil (1997)
[4] Hilgenberg, O. C: Vom wachsenden Erdball, Berlin 1933, Eigenverlag. und Neues Jahrb. Geol. Palaont. Abh. 116, 1, Berlin (1962).
[5] Jordan, P.: Die Expansion der Erde. Vieweg 1-180, Braunschweig (1966).
[6] Robert Bauval und Graham Hancock: Das Geheimnis der Pyramiden, Der Schlussel zur Sphinx, List Verlag (1996) und in S3 (Die grossen Ratsel VII) am 25.5.97
[7] Mitton, S. (Herausg.): Cambridge Enzyklopadie der Astronomie (The Cambridge Encyclopaedia of Astronomy), Orbis Verlag (1989).
[8] Miller, R.: Driftende Kontinente, Time-Life Bucher, Amsterdam (1991).
[9] Hermann Wild: Technologien von gestern, Chancen fur morgen, Jupiter-Verlag Bern 1996
[10] Zecharia Sitchin: The Lost Realms, Knaur Verlag Munchen 1992, ISBN 3-426-04827-2
[l1] Werner Raffetseder: Sonnenfinsternis, Hugendubel Verlag, Munchen 1999, ISBN 3-89631 -302-9

G. Literature concerning free energy

[1] R. L. Clark: Tesla Scalar Wave Systems, The Earth as a Capacitor, The Fantastic Inventions of Nikola Tesla, ISBN 0-932813-19-4
[2] H.-P. Thietz: Tatort Erde, VAP (1996), ISBN 3-922367-62-3
[3] Louis Kervran: Biological Transmutations, s.a.:
[4] J. Heinzerling: Energie aus dem Nichts, Bettendorf'sche Verlagsanstalt, 1. Aufl. 1996
[5] J. Manning: The Coming Energy Revolution - The Search For Free Energy, Avery Publishing Group, New York, USA, 1996 und Omega-Verlag, Dusseldorf 1997.
[6] G. Hilscher: Energie fur das 3. Jahrtausend, VAP-Verlag Wiesbaden 1996
[7] A. Schneider: Energien aus dem Kosmos, Jupiter-Verlag 1989
[8] I. Schneider: Neue Technologien zur Freien Energie, Jupiter-Verl. 1994, S. 14
[9] Dr. H. A. Nieper: Revolution in Technik, Medizin, Gesellschaft; MIT Verlag Oldenburg (1982)
[10] Prof. Shinchi Seike: The Principles of Ultra Relativity, Space Research Institute, 1990, ISBN 915517-1
[11] M. Cheney: Nikola Tesla, Man out of Time, Barnes & Noble Books, New York, 1993, ISBN O-88O29-419-1 und Omega-Verlag (1996) ISBN 3-93O243-O1-6
[12] Prof. J. Gruber: Kalte Fusion und Raumenergie, Bericht zur 7. Internationalen Konferenz uber "kalte Fusion" vom 19.-24.4.1998 in Vanvouver, B.C., Kanada (Infinite Energy, Issue 19, 1998) und Bericht zum "International Symposium on New Energy" vom 23.-26.5.1997 in Denver, Colorado, USA (Denver-Bericht der Fern Universitat Hagen)
[13] H.-J. Ehlers: Special 7, Raum & Zeit Dokumentation, EHLERS Verlag, Sauerlach, 1. Aufl. (1994)
[14] O. Alexandersson: Lebendes Wasser; W.Ennsthaler Verlag Steyr, 1993
[15] V. Schauberger: Die Entdeckung der Levitationskraft, Implosion 1995 Nr. 112
[16] A. Waser (Herausg.): Die ratselhafte Natur - The Puzzling Nature, AW Verlag, Luzern (1996), ISBN 3-9521O59-O-2

H. Literature concerning medicine, biology and chemistry

[1] U. Luttge, M. Kluge, G. Bauer: Botanik, 2. Aufl.- Weinheim, VCH (1994) ISBN 3-527-30031-7
[2] N.Begich: Towards A New Alchemy, The Millenium Science, Earthpulse Press 1996, dt. Ubers.: Auf den Spuren einer neuen Alchemie, Omega-Verlag 1997
[3] Couto: Die kosmische Oktave, Synthesis Verlag Essen 1984
[4] Prof. Dr. H. Heine: Grundregulation und Extrazellulare Matrix - Grundlagen und Systematik, Lehrbuch der biologischen Medizin, (1991) 2.Aufl. Hippokrates Verlag Stuttgart, Seite 63
[5] U. Warnke: Bioresonanztherapie - Wunsch und Wirklichkeit. Medizin transparent Nr.2/1996, S.36-37
[6] Dr. H. Clark: The Cure For All Diseases (1995), dt. Ubers.: Heilung ist moglich (1997) Knaur Verlag
[7] Dr. Hulda Clark: The Cure for All Cancers (1993) New Century Press, USA, dt.Ubers.: Heilverfahren aller Krebsarten
[8] Dr. Bodo Kohler: Biophysikalische Informations-Therapie, Gustav Fischer Verlag (1997)
[9] Dr. Bodo Kohler: BITsyn, der neue Weg in der Informations-Medizin, Jubilaums-Schrift der Intern. Arzte-Gesellschaft fur Biophysikalische Informations-Therapie, Bad Nauheim, 6.-8.10.2000.
[10] Bioenergetische Messverfahren in Theorie und Praxis, Vortragsband der Gesellschaft fur Energetische und Informationsmedizin e.V., Universitat Stuttgart am 17.7.1999 und am 7.10.2000
[11] Dr. Johann Lechner: Storfelddiagnostik, Medikamenten- und Materialtest, Teil 2 aus der Reihe: Praxis der Ganzheitlichen Medizin und Zahnmedizin, Verlag Dr. E. Wuhr (2000)
[12] M. Luscher: Der 4-Farben-Mensch, W. Goldmann, Munchen 1977
[13] M.Luscher: Das Harmoniegesetz in uns, Econ-Verlag 1993
[14] FA. Popp: Neue Horizonte in der Medizin, 2.Aufl. Haug Verlag Heidelberg 1987
[15] M.Bischoff: Biophotonen, das Licht in unseren Zellen, 2001

J. Literature concerning history and more peripheral subjects

[1] David Ash, Peter Hewitt: Science of the gods, Gateway Books, Bath, 1990.
[2] T.E.Bearden: Skalar Technologie, Michaels Verlag 2002, ISBN 3-89539-250-2.
[3] Thomas Valone: Das Unipolarhandbuch, Michaels Verlag 2001, ISBN 3-89539-295-2.
[4] R. Sheldrake: Sieben Experimente, die die Welt verandera konnten. Goldmann Verlag 1994
[5] R. Sheldrake: Das schopferische Universum. Meyster Verlag Munchen 1983.
[6] H.Ludeling: Handbuch der Radiaesthesie, Verlag Eike Hensch 1994, ISBN 3-927407-09-7.
[7] Hensch: Radiaesthesie im landlichen Bauen und Siedeln, Arbeitskreis zur Landentwicklung in Hessen, W4, Wiesbaden 1987
[8] H. Mayer, G. Winklbaur: Biostrahlen, Verlag ORAC, Wien 1989, 5. Auflage
[9] Rohrbach: Radiasthesie, Physikalische Grundlagen und Anwendung in Geobiologie und Medizin, Haug Verlag Heidelberg 1996.
[10] R. Schneider: Einfiihrung in die Radiasthesie Teil II: Leitfaden und Lehrkurs ..., Oktogon-Verlag, Wertheim, 2. Aufl. (1984).
[11] Lamer: Worterbuch der Antike, Kroner Verl. Bd.96
[12] K. Schefold: Die Griechen und ihre Nachbam, Propylaen Kunstgeschichte Berlin Bd. 1
[13] T. Kraus: Das romische Weltreich, Propylaen Kunstgeschichte Berlin Bd. 2
[14] G. Gruben: Die Tempel der Griechen, Wissenschaftliche Buchgesellschaft Darmstadt 1986
[15] E. Horst: Konstantin der Grosse, Eine Biographie, Classen Verlag 1985 Dusseldorf, 2.Aufl.
[16] Vitruv (Marcus Vitruvius Pollio): Zehn Bucher uber Architektur, Ubers. von Dr. K. Fensterbusch, Wissenschaftl. Buchges. Darmstadt 1987,4. Aufl.
[17] A. Springer: Das Altertum, A. Kroner Verl. Leipzig 1915, 10. Aufl.

Prof. Dr-Ing. Konstantin Meyl

SCALAR WAVE TECHNOLOGY

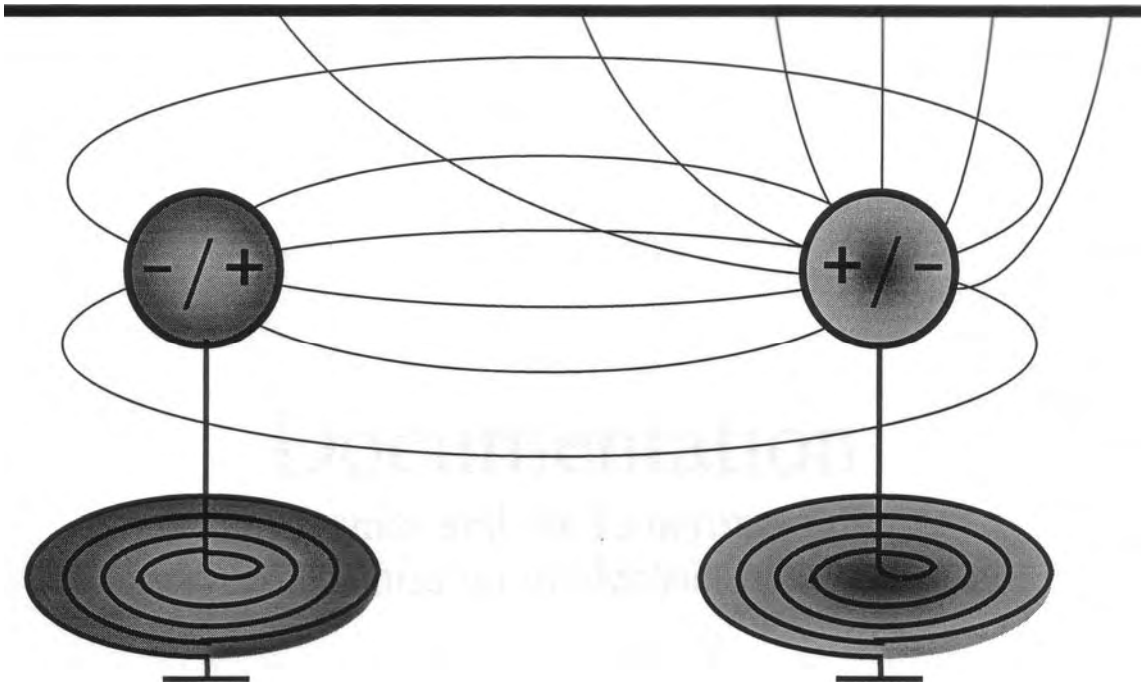

Documentation

for the Experimental-Kit
to the transmission of electrical scalar waves

Preface for the documentation

When the speech is about "free energy", if efficiencies over one hundred per cent are promised or inventors show up with perfect structural drawings for a Perpetuum mobile, then doubts are justified. All too often incorrect power measurements mislead or an energy resource is unnoticed along-used. Responsible scientists accept therefore appropriate statements only after own examination, and if they can reproduce the measurements at any time personally with their familiar measuring instruments. For this circumstance the Demo- and the Experimentation kit should make allowance.
All doubter can and should reproduce my experiments. They should not experience from the media of any results, but rather gain the experiences with the electrical scalar wave transmission by themselves. Tesla already accomplished the same experiments one hundred years before with very high voltages and with steered spark gaps. Since more energy at the receiver arrived than the transmitter had delivered already at that time, Tesla called the transmitter ,,Magnifying transmitter". Unfortunately his plant in Colorado Springs was too complex and too expensive, than that any university could afford it at that time. The results of the measurements remained unconfirmed as consequence.
No scientist in the world is entitled to doubt the results won by Tesla as if he has repeated them 1:1 and is able to prove the opposite. That was been omitted down to the present day. The negative proof will be not possible at all, and ignorance is not a recognized science methodology!

1. Notes to the demo kit

The experiment for scalar wave transmission can be purchased as demonstration kit or in an extended version as experimentation kit. The notes to the demo kit are applicable for both versions. With the kit all statements of Tesla can be examined. Owing to modern technical aids, the expenditure could have been reduced substantially. Today everything fits into a suitcase.
Numerous parameters determine function and periodic resonance of the scalar transmission, like wire length, wire thickness, isolation, direction of winding and diameter of the coils. Only with identically parameters a perfect reproducibility of the results can be ensured. Due to this insight I forbear from the publication of a tinkering guidance, since the reproducibility would be dependent on the skill of the respective home constructor. The reliability would suffer from it. Finally it concerns the discovery and proof of a new physical principle, and not extra tuition for physical laymen.
In the aluminium suit case all accessories in addition to the pancake coils are contained, which are necessary for operation. That does not only have a practical sense. If an operator wants to abandon the waveform generator for example, because he an appropriate waveform generator already in his laboratory, which works up to 20 MHz, it is not guaranteed that this one is able to supply a sufficient current The experiences of individuals are comprehensible, if all experimenters use the same generator.

Each buyer of a scalar wave transmission kit. who sends a test log to the publishing house, gets the protocols of other experimenters in return for his effort. Interested owner of a kit can order these protocols extra. To ensure that additional deliveries are possible, the delivery takes place in a binder.
To all, who want to deliver test logs. I have the request to arrange these as unitary as possible. They will be revised by publishing house, if the case may be. They are to be brief containing all essential facts, so that each reader is able to reconstruct the experiment with his kit. The number of possible experiments is almost unlimited. It concerns a new, still extensively unexplored kind of wave propagation, so that there is still much to discover. What worth is a discovery, from which only the discoverer knows something?
The publishing house has made it to its business, to spread each important discovery or experience with personal denomination of the experimenter in written form. Protocols are delivered in chronological order according to the time of the post office entrance by the publishing house. They can be rearranged thematically, e.g. by technical, physical or biologically relevant characteristics of the used scalar waves.

2. Notes to the experimentation kit

The experimentation kit contains additionally a frequency counter as well as four further pancake coils with double or half wire length. The waveform generator is besides in an extended range and in different wave forms adjustable. It is assumed, that primarily physicists, engineers and in the measuring technique experienced persons will be interested in the experimentation kit. They can reconstruct naturally with their kit all experiments of the demo set and receive also the same documentation. Furthermore the set offers all adjustment possibilities, which are familiar to them from other laboratory instruments. For instrumentation interferences, in order to be able to measure for example current and voltage, specially monitoring sockets are equipped.
The demo kit has no such measuring comfort. It is also suitable for operators, who are inexperienced in instrumentation. Among the buyers are physicians, lawyers, therapists, environmentalists, teachers, politicians and journalists. In short, it is meant for everyone, who wants to convince himself or others of the existence of electrical scalar waves. Therefore the waveform generator is limited in range of adjustment and a pure sine form is predetermined.
It is assumed, that the set is purchased primarily for own study and demonstration purposes. Nevertheless some experiments are conceivable, which go beyond the given repertoire to study biological reactions or medical influences for example. For customers, for whom the demo kit should not be sufficient any longer, the publishing house offers to extend the kit to an experimentation set. In this case the suit case with the complete kit must be sent back to the publishing house with all documents. The printed circuit boards are refitted by hand and the control panel of the waveform generator is extended, additionally to the frequency counter and the four decks, cables etc.. The coils with the spherical electrodes can be ordered individually, if necessary.

3. Aspects of the experimental research

Whom the fever of research has infected, will anyway continue to build and tinker own devices and wound coils, until he knows everything, what his spirit of research wants to know. My set will be able to give only the initial start-up to them. With them and with all experimenters 1 wish myself a constructional and close co-operation. Only if all forces, interested in progress, pull in one direction, the ignorance against one hundred years old historical facts and the arrogance of the established sciences will be overcome with the worthwhile goal of the entrance into an environmental compatible scalar wave technology.
A physical proof is only complete if the result of a theoretical derivation could experience its confirmation by the results of practical measurements. For the measured values in individual cases surely any auxiliary explanations would be possible, if each experiment is regarded individually, and some one is satisfied at that point already. The interpretation of the near field is such an auxiliary explanation for example, which is answered by the fact, that the experiment still operates with the tenfold near field distance.
The large coherence remains hidden when working with auxiliary explanations.
Therefore a theory is necessary, which includes all aspects of scalar waves and shows all characteristics correctly and completely.

Such a field theory did not exist, because I was forced to look for a suitable.

4. Aspects of an appropriate vortex physics

A most important new component of the field description is the vortex of the electrical field discovered by me 1990, which I, according to the fluid mechanic, called ,,potential vortex" [i]. These field vortexes are able to carry an impulse. They will spread in space as longitudinal shock wave and will possess all characteristics of a scalar wave. From the point of view of my books the available documentation forms an instrumentation addition. Reciprocal, my books can be surely a large assistance for the experimenter.
The fundamentals of vortex physics, as they are published in no textbook, are to be found in the 1. part of my book series ,,electromagnetic environmental compatibility". It deals with the ,,casuals, phenomena and scientific consequences" of potential vortexes of the electrical field[ii].

<i>: K. Meyl: Potentialwirbel Band 1, INDEL Verlagsabteilung Villingen-Schwenningen, 1. Auflage 1990, ISBN 3-9802 542-1-6

<ii>: K. Meyl: Elektromagnetische Umweltvertraglichkeit, Teil 1: Ursachen, Phanomene und natur-wissenschaftliche Konsequenzen, Vorlesungsumdruck.
INDEL Verlagsabteilung Villingen-Schwenningen. 1996. 3.Aufl. 1998,

The second part of the book series affiliate to this book and carries the subtitle: "free energy and the reciprocal effect of the neutrinos". It concerns with priority the energetic aspect of scalar waves, constructional details, as like as questions around a practical utilization[<i>]. The function mode of the pancake coil already addressed in the first part is went through with a fine-tooth comb in the second part. The field theory from the first part is developed further likewise and brought in relationship with existing constructions.

5. About the setting up of the documentation

The derivation of the scalar wave from the wave equation with the discussion of the characteristics and the consequences of information techniques, substantial to understand the experiment, is only in the third part of the book series ,,Electromagnetic Environmental Compatibility"[<ii>]. For the English-language area are the three volumes of ,,Electromagnetic Environmental Compatibility" published as a book with the title ,,Scalar waves" [<iii>].
Naturally the core of the documentation are the guidance's to the experiments, which are to be regarded at the same time as samples for further test logs.
For the execution of the experiments I may wish you still much success and a quite good degree of efficiency.

Villingen Schwenningen in June 2000

<i>: K. Meyl: Elektromagnetische Umweltvertraglichkeit, Teil 2: Freie Energie und die Wechselvirkung der Neutrinos. Umdruck zum energietechnischen Seminar. INDEL Verlagsabteilung 1998. 3. erweiterte Auflage 1999

<ii>: K. Meyl: Elektromagnetische Umweltvertraglichkeit, Teil 3: Skalanwellen und die informationstechnische Nutzung. Umdruck zum informationstechnischen Seminar. INDEL Verlagsabteilung 1. Auflage 2002, ISBN 3-9802542-7-5

<iii>: K. Meyl: Scalar Waves: From an extended vortex and field theory to a technical, biological and historical use of longitudinal waves. Edition belonging to the seminar (part 1 - 3) "Electromagnetic Environmental compatibility". INDEL publishing house department 1st edition (2003), 654 pages ISBN 3-9802 542-4-0

6. Table of Content

Chapter

V. Preface for the documentation..... _____ III
V.1 Notes to the demo kit ..... , ...III
V.2 Notes to the experimentation kit IV
V.3 Aspects of the experimental research ..... _____ IV
V.4 Aspects of an appropriate vortex physics V
V.5 About the setting up of the documentation VI
V.6 Table of Content VII

Experiments for scalar wave transmission 1
0.1 Introduction 1
0-2 Included in delivery: Demo-kit 1
0.3 Description of the pancake coils 2
0.4 Description of the waveform generator (Demo-kit) 4
0.5 Included in delivery: experimentation kit 5
0.6 Description of the waveform generator (experimentation kit version)..... 5
0.7 Description of the frequency counter (experimentation kit) 6
0.8 Safety instructions 6

1. Experiment: Transfer of energy 7
1.1 Experimentator 7
1.2 Place and date 7
1.3 To the status of physics of electromagnetic waves (according to Hertz)..... 7
1.4 Expectation according to the scalar wave theory by Konstantin Meyl 7
1.5 Experimental setup..... 7
1.6 Carrying out the experiment 8
1.7 Interpretation of the experimental results..... 9
1.8 Conclusion 10
1.9 Consequences..... 10
1.10 Utilities..... 10

2. Experiment: Feedback 11
2.1 Experimentator 11
2.2 Place and date 11
2.3 To the status of physics of electromagnetic waves (according to Hertz)..... 11
2.4 Expectation according to the scalar wave theory by Konstantin Meyl 11
2.5 Experimental setup 11
2.6 Carrying out the experiment 11
2.7 Interpretation of the experimental results.....11
2.8 Conclusion.....12
2.9 Consequences..... 12
2.10 Utilities..... 12

3. Experiment: Proof of free energy .....
3.1 Experimentator.....
3.2 Place and date 13
3.3 To the status of physics of electromagnetic waves (according to Hertz)..... 13
3.4 Expectation according to the scalar wave theory by Konstantin Meyl 13

3.5 Experimental setup and carrying out the experiment.....13
3.6 Interpretation of the experimental results.....13
3.7 High frequency measurements.....14
3.8 Interpretation of the high frequency' measurements.....14
3.9 Circuit analyzer measurements.....14
3.10 Interpretation of test results of the DC measurements.....15
3.11 Conclusion..... 15
3.12 Consequences 16
3.13 Utilities 16

4. Experiment: Superluminal velocity..... 17
4.1 Experimentator 17
4.2 Place and date 17
4.3 To the status of physics of electromagnetic waves (according to Hertz) 17
4.4 Expectation according to the scalar wave theory by Konstantin Meyl..... 17
4.5 Experimental setup 17
4.6 Carrying out the experiment.....17
4.7 Interpretation of the experimental results..... 18
4.8 Conclusion 18
4.9 Consequences 18
4.10 Utilities.....18

5. Experiment: Ineffective Faraday cage 19
5.1 Experimentator..... 19
5.2 Place and date 19
5.3 To the status of physics of electromagnetic waves (according to Hertz)..... 19
5.4 Expectation according to the scalar wave theory by Konstantin Meyl..... 19
5.5 Experimental setup 19
5.6 Carrying out the experiment.....21
5.7 Interpretation of the experimental results.....21
5.8 Conclusion 21
5.9 Consequences..... 21
5.10 Utilities..... 22

6. Experiment: Refutation of the near field interpretation 23
6.1 Experimentator 23
6.2 Place and date 23
6.3 To the status of physics of electromagnetic waves (according to Hertz)..... 23
6.4 Expectation according to the scalar wave theory by Konstantin Meyl 23
6.5 Experimental setup 23
6.6 Carrying out the experiment 23
6.7 Interpretation of the experimental results.....23
6.8 Conclusion.....23
6.9 Consequences..... 24
6.10 Utilities..... 24

7. Experiments with the experimentation kit..... 25

Experiments for scalar wave transmission

0.1 Introduction

The wireless transfer of energy as scalar wave radiation goes back on Nikola Tesla. From him originated the patent No. 649.621 on 15.5.1900: Apparatus for transmission of Electrical Energy. Unfortunately his equipment was extremely large and expensive, so that no copies had been provided and the ingenious technology could extract itself from the field of vision and the consciousness of the public. Many sceptics however are to be convinced only, if they have their own copy, at which they personally can make measurements and experiments. A new technology will only become public and can assert itself if it is carried beyond the scientific facilities and education centres into the public.
The lost believed technology is taken up again with the kit. By using a modern waveform generator in place of a spark gap generator, with an operating voltage of few volts in stead of 600 kilovolts a miniaturization of the device succeeded, at which all characteristics indicated by Tesla and still some more can be introduced and examined experimentally. Today, nearly 100 years later a scalar wave transmission device fits into a suitcase and is purchasable for everyone.
All assembly groups and component parts necessary for the experiments are included in delivery, as well as the aluminium suitcase, which is used as shielding cage. Thus a high degree of reproducibility is guaranteed. The demo kit is particularly suitable for non-technicians to open them the possibility of a successful execution of the experiment. For technicians and hobbyists a more extensive experimentation kit is offered. It is particularly important for comparison purposes that everyone does work with the same generator, because the empiric reports will be published in an anthology, which should encourage other experimentators to reproduce some of them.

0.2 Included in delivery: Demo-kit

1 waveform generator (preset)
2 Tesla-pancake coils
2 spherical electrodes with connecting lead and plastic columns
1 connecting cable with pin plugs on both sides
1 wall power supply (18V, 500mA) with connector plug
2 shorting plugs
1 documentation

0.3 Description of the pancake coils

The pancake coil which is spiral from the inside outward wound according to Tesla, is part of an air cored transformer. The couple coil consists of five turns and is on the lower surface of the plate. It can be modified, if necessary, whereby a abbreviation to 4 turns is possible, which can lead to a stronger accentuation of the scalar wave components (fig. 1).

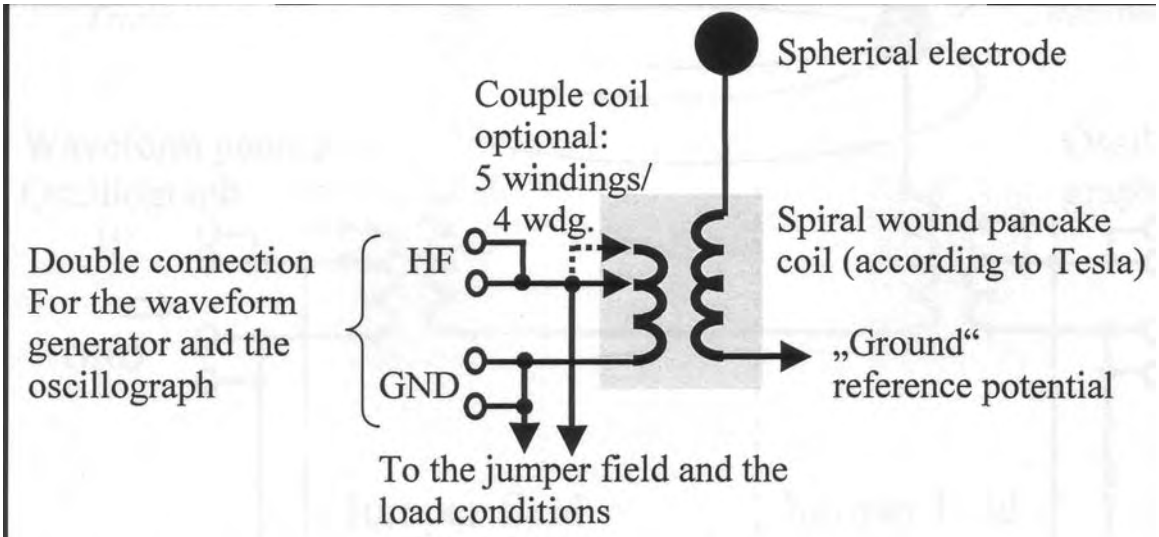

Fig. 1: Air cored transformer with couple coil and pancake coil

The two ends of the coil are connected with the sockets "Generator". On the transmitter side the signal is injected, while on the receiver side an unloaded no-load operation measurement can be made if no jumper is set.
Within the jumper field three different load conditions are selectable.
1. "LED" the two light emitting diodes are fed, which are antiparallelly switched, so that one shows the positive half wave and the other the negative half wave of the supply voltage.
2. "HF" the couple coil is loaded with a 100 ohm resistance. At the sockets "HF Messung" the potential gradient over the resistance can be looked at with an oscillograph.
3. "DC" the high frequency signal first becomes rectified in a bridge rectifier and abraded in two condensers (100 nF and 4.7 uF). The load resistance is here 100 ohms. The voltage signal exhibits no more ripple, therefore it is possible in this jumper position to measure conventional with a usual DC voltage circuit analyzer (in position DC). On the topside of the plate is the spiral wound pancake coil. The inner pin is connected with the spherical electrode, and the outside end ("grounding") serves as potential equalization between transmitter and receiver. It forms a common reference potential, which is usually called ground.

Scalar wave transmission with two identical pancake coils:

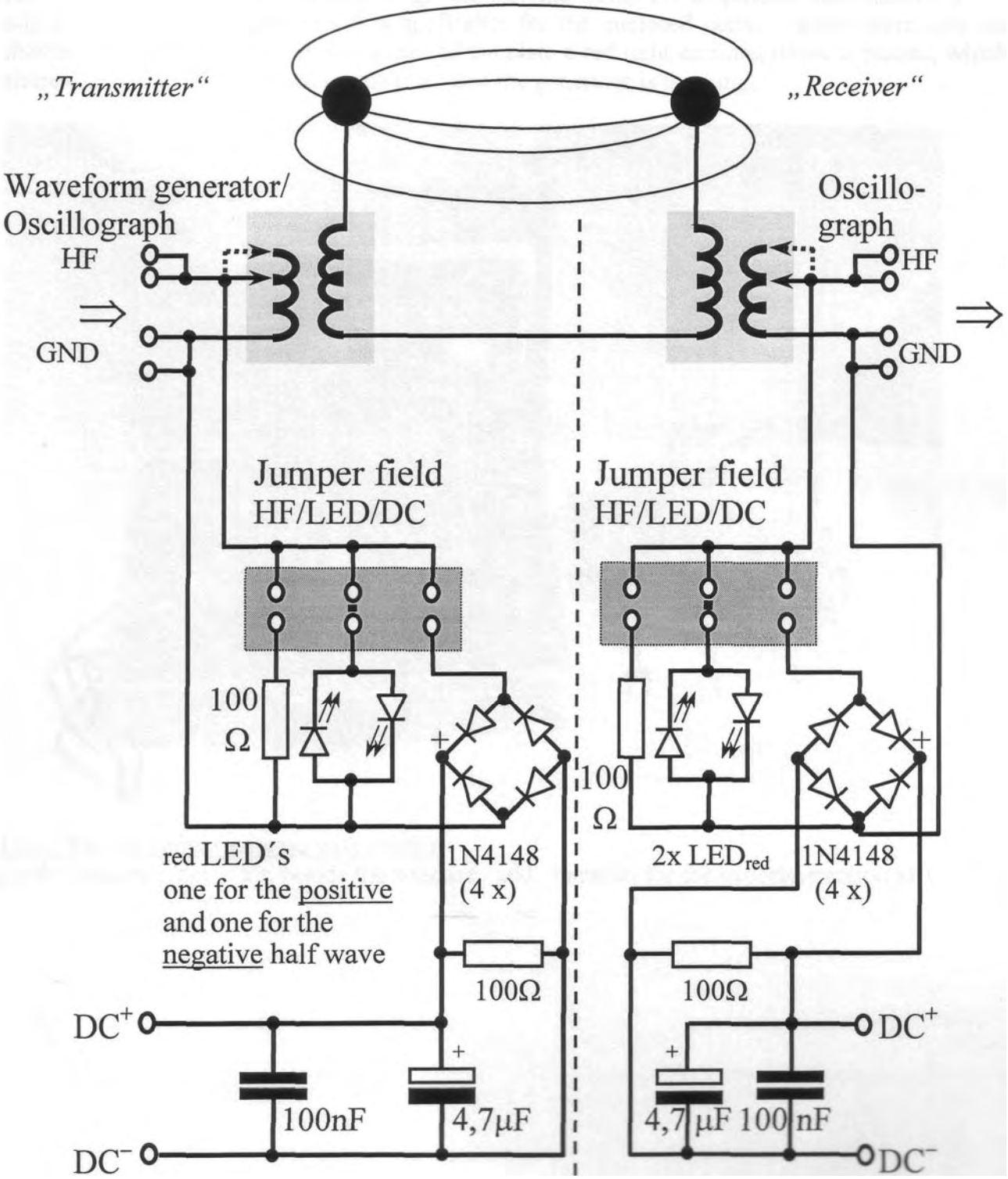

Circuit analyzer connection: Transmitter voltage and'or Receiver er voltage

Fig. 2: Connection diagram of the pancake coils - air cored transformers

0.4 Description of the waveform generator

The circuit board of the demo-kit is only partly equipped and the waveform generator preset. As wave form the sine function is given. In the demo-kit amplitude and frequency are adjustable within a range, which is applicable for the enclosed coils. Faulty operations are thereby nearly impossible. In the centre of the plate a red light emitting diode is placed, which shines, if voltage is impressed on the plate and the generator is working.

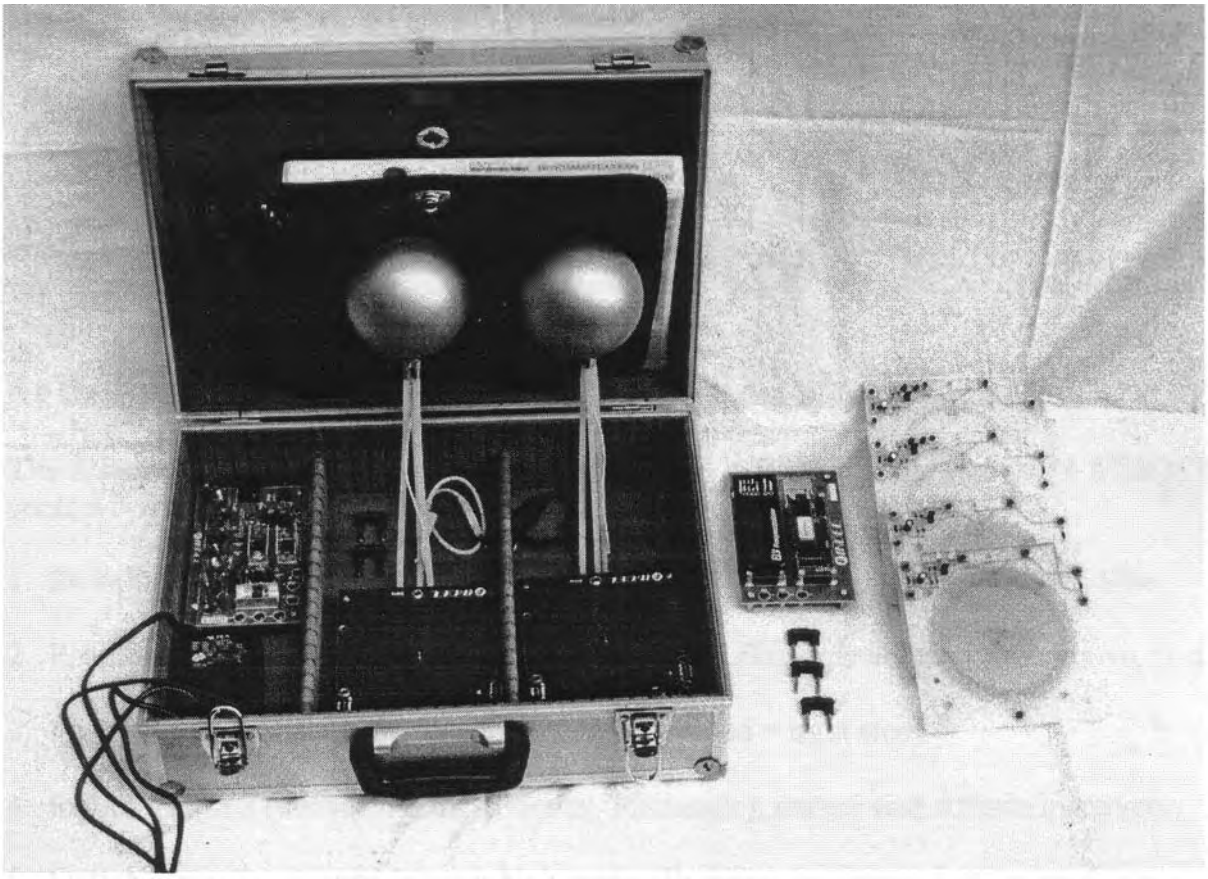

Fig.3: the aluminium suitcase with content
(in the suitcase: demo kit, beside the suitcase: add. material for the experimentation kit)

0.5 Included in delivery: experimentation kit (Fig.3)

Additional to the demo kit:
1 frequency counter
(1 waveform generator unlike to the demo kit freely adjustable)
(2 Tesla-pancake coils like in the demo kit)
2 Tesla-pancake coils with double wire-length
2 Tesla-pancake coils with half wire-length
(2 spherical electrodes with connecting lead and plastic columns)
4 connecting cables with pin plugs on both sides (instead of 1 cable)
(1 wall power supply (18V, 500mA) with connector plug)
1 Battery adapter
5 shorting plugs (instead of 2)
(1 documentation)
1 collecting file with empiric reports

0.6 Description of the waveform generator (experimentation kit version)

The full-equipped waveform generator is adjustable in a large range (0,2 to 14 MHz). On the control board 7 buttons lie side by side. These are from left to the right:

1. Switch: form 1 (above: Rectangle/Triangle - down: Sine); Normal attitude: Sine

2. Potentiometer: pulse-width is only in position Rect./Triangle active (forml above, f2 down)

3. Potentiometer: Amplitude (normally fully untwisted = right stop)

4. Switch: form 2 (above: Triangle; down: Rectangle); during sine attitude inactively

5. Switch: Frequency range (above: high range HI; down: low range LO); normal attitude: HI

6. Potentiometer: Frequency roughly adjustable

7. Potentiometer: Frequency finely adjustable (normally in central position)

The frequency range is preselected with a switch (HI / LO), and with two potentiometers "rough" and "fine" steplessly adjusted. Thereto the "fine" potentiometer is appropriately brought in central position, while with the "rough" potentiometer the correct point is searched and with the "fine" potentiometer readjusted. Also on the plate mounted is a high frequency power driver.

0.7 Description of the frequency counter (experimentation kit)

With the frequency counter also a period measurement or an event counting can be made apart from the frequency measurement. Thereto the jumper 1 and 2 must be set accordingly. The function-table is imprinted on the plate. Also the gate time is selectable with the jumpers 3 to 5.

0.8 Safety instructions

The entire arrangement is operated by the enclosed low-voltage wall power supply with test seal (respectively batteries) and thus with a low and harmless operating voltage. A danger of an electric shock is therefore impossible with the original kit (and the provided wall power supply). Nevertheless it is to be made certain that short-circuits (e.g. by metallic objects or lines) on the plates are avoided. This can entail the overheating of components or the destruction of the device. Besides no liability for damage of any kind is assumed, which was caused due to inappropriate treatment and/or use and/or the use of other respectively additional components, not contained in the kit and their combination with the kit!

Experiments with scalar wave transmission

1st experiment, subject: Energy transfer

1.1 Experimentator: Prof. Dr.-Ing. Konstantin Meyl

1.2 Place and date: D-78112 St. Georgen, 21st of June 2000

1.3 To the status of physics of electromagnetic waves (according to Heinrich Hertz)

It is a physical law, after which the field strength of waves according to Hertz (radio communication and radio waves) decreases with the square of the distance. If the distance between transmitters and receivers is doubled, then thereby the power of the receiver decreases to a quarter.

1.4 Expectation according to the scalar wave theory by Konstantin Meyl

The wave equation says that beside the wave according to Hertz still another further wave, the scalar wave, must exist. In contrast to the wave according to Hertz, the scalar wave spreads not with constant speed, and also not evenly in all directions. Only a middle velocity of propagation can be indicated, which can deviate from light speed substantially. A scalar wave aligns itself with the receiver, were the streamlines of the field bundles themselves again. Without dispersion the received power in case of resonance should correspond approximately to the sent power. Therefore it should be possible to transmit both: information and energy.

1.5 Experimental setup

For carrying out the experiment each spherical electrode is installed over a pancake coil, as the three legs are tucked into the three holes in the plate and the wire down hanging in the centre is connected with the centre of the pancake coil. (Fig. 2)

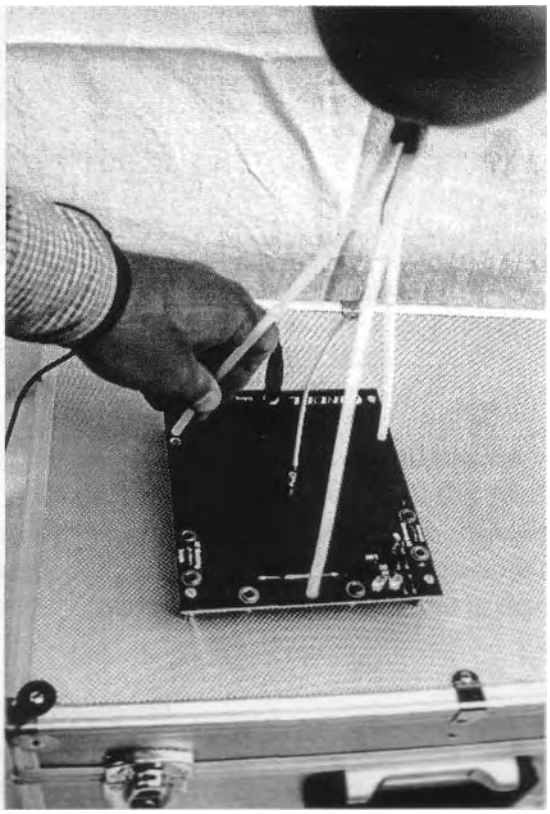

Fig.4: Installation of the spherical electrode above the pancake coil

Now the waveform generator must be attached with the help of two short circuiting plugs to the couple coil of the pancake coil. These coil works as transmitter in this system. Now the connection of the provided wall power supply is put into the socket designated for it on the waveform generator plate and connected with a 230V wall outlet. The red control lamp signals that voltage is impressed on the plate and that the generator is working.

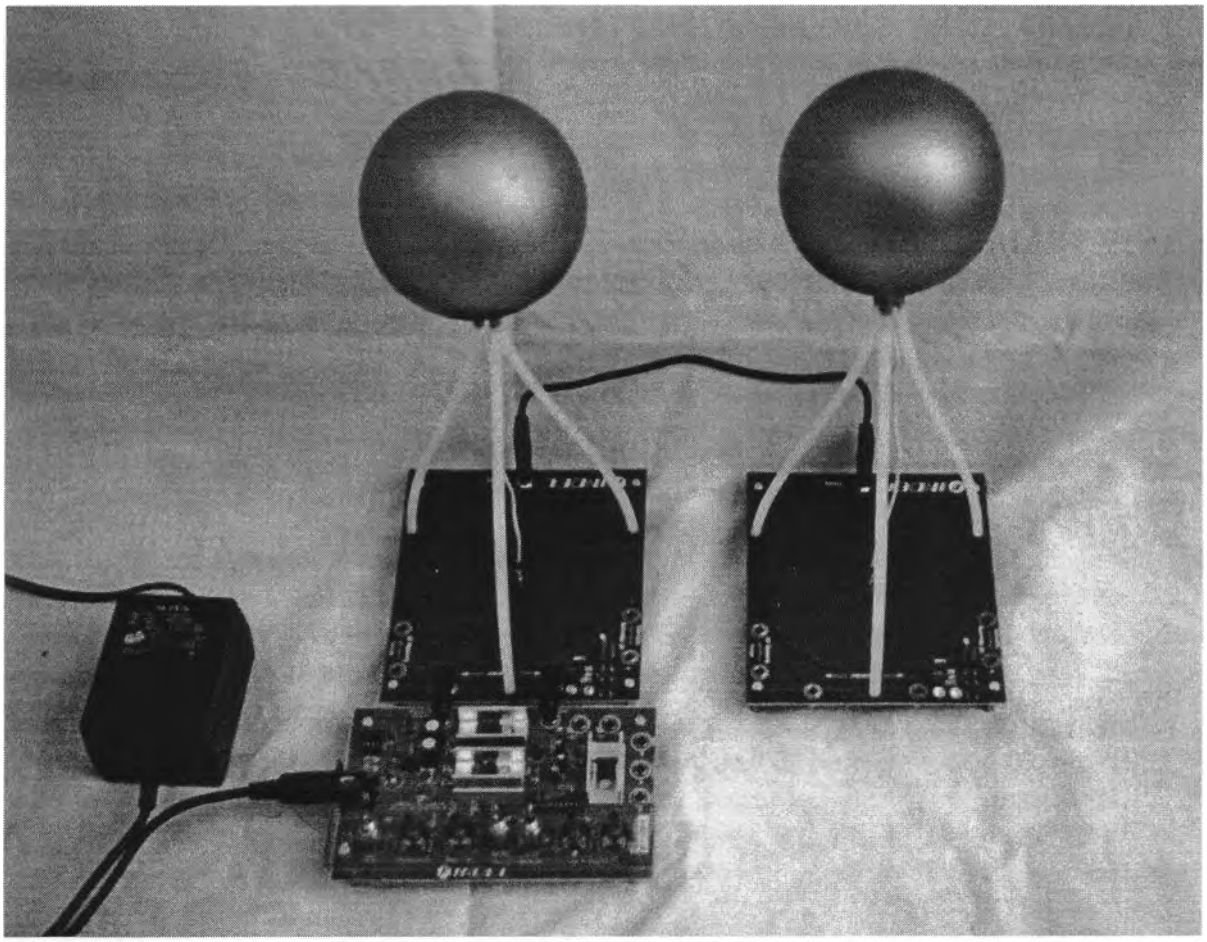

wall power supply waveform generator 2 pancake coils with attached electrodes

Fig. 5: Connection of the waveform generator to one of the two pancake coils.

The other pancake coil with mounted spherical electrode is used as receiver and loaded with the light emitting diodes. The jumper must be put both on the transmitter, and on the receiver on position LED. The distance between transmitter and receiver should be selected first consciously quite small (approx. 50 cm). The points of grounding, that are the outside ends of the pancake coils, are to be connected by a laboratory cable. 6 meters black cable is designated for it.

1.6 Carrying out the experiment

It can be assumed, that the frequency controller is not in the right position first and no self-resonance is reached. The amplitude controller is untwisted, until the threshold voltage of the light emitting diodes is crossed by 2 V and the LEDs on the transmitter plate brightly shine.

Now, the "rough" frequency controller ("fine" potentiometer in central position, sine form, amplitude fully untwisted, frequency range: HI) is adjusted, until the on the receiver mounted light emitting diodes begins to shine. The power maximum is set, when the light emitting diodes shine brightest. The shining of the receiver diodes proves that a energy transmission

takes place. If the one LED should shine somewhat more brightly as the other one, then this signals a little unbalance of the sinusoidal supply voltage, because the positive half wave is used by one - and the negative half wave by the other diode. This can be during an asymmetrical load.

The distance between transmitter and receiver can now be increased. The distance can be quadrupled for example, as the receiver is continually pulled away from the transmitter. It could be that now on the receiver side less or nothing at all can be recognized, which is a corollary of the changed resonance frequency of the system due to the larger distance. This has to be compensated by adjusting the controller, until an power maximum is to be observed. The small lamp will shine as brightly as in the experiment with the small distance, which contradicts the law of square declension of the received energy conditional on the larger distance.

1.7 Interpretation of the experimental results

According guidelines of Tesla transmitter and receiver are operated grounded. The better the grounding and the better the coupling over the grounding connection, the more simply it is to find the point of resonance. The grounding wire used within the experiment is therefore primarily an easement for the operator. This can be determined very fast, as a worse connection is tried out e.g. over the central heating, over the earthing contact of the power line or with a direct connection to earth outside. It can come to the fact that at such a grounding inadvertently still different more "receivers" (e.g. biological systems) hang, which go into resonance and withdraw the transmitter's energy.

This problem can be avoided by connecting the points of grounding by a cable directly. Even if the grounding connection should be understood as conductor, then, for a closed electric circuit, the other conductor is missed. That is formed in this experiment by the transmission line. The Shining of the small lamps proves that energy has been transmitted.

If it would have been waves according to Hertz, only the sixteenth part of the power might have arrived by the quadrupled distance. $(1/4)^2 = (1/16)$. Whereas it can be observed that the received power with increasing distance does not decrease. For very large distances it might happen that the resonance is missed and the oscillation fades out. If several receivers go into resonance, it comes to an allocation of the emitted power or more distant receivers receive less power respectively.

1.8 Conclusion

The experiment impressively proves that it cannot concern waves, according to Hertz. The power transmission shown is in principle not possible with the waves, according to Hertz. Whereas scalar waves are capable of a loss less transfer of energy, wherefore the experiment is to be regarded as proof for the existence of scalar waves.

1.9 Consequences

If a transmitter is operated openly, without a receiver that absorbs the energy, the danger exists that the transmitter "looks" for any receiver itself and that could be a biological system. Any humans, who go coincidentally into resonance, would now absorb the sent energy or a certain quantity of it. This is comparable with a positive pole, from which electrical flux lines emanate and which is searching for its negative pole. Here the electrical flux lines will end, as well if the distance is very large. As well known the range is theoretically infinite. In contrast to the example, the case of resonance concerns only swinging poles, which swing with the adjusted frequency constantly between plus and minus.
As long as the power consumption by humans is not measured, an acute danger of electromagnetic pollution exists. Apart from the employment for medical purposes, the operation of scalar wave transmitters is to be rejected, which abuses humans as a receiver. It is to be made certain that the sent power is completely received i. e. collected and applied to a consumer load.

If we reduce the amplitude of the waveform generator so far that the light emitting diodes on the transmitter side shine not more brightly as those on the receiver side we can be safe that no biological effect will arise. If more energy is transmitted, as the receiver can absorbe, further receivers should be switched in addition so that no vagabonding stray fields appear, which could be absorbed by biological systems. The optimal point is found, if during the reduction of the transmission amplitude, the receiver just begins to react with a reduction of the received energy.

1.10 Utilities:

Demo kit. (Fig. 6) Using the experimentation kit: pancake coil with middle wire length

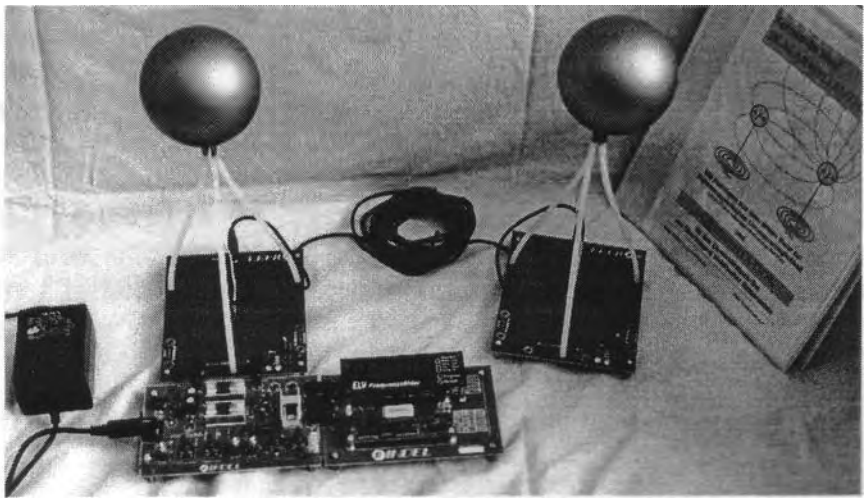

Fig.6: Basic set up of the wireless transfer of energy device
(here shown with attached frequency counter from the experimentation kit)

2nd experiment, subject: Feedback (from receiver to transmitter)

2.1 Experimentator: Prof. Dr.-Ing. Konstantin Meyl

2.2 Place and date: D-78112 St. Georgen, 21st of June 2000

2.3 To the status of physics of electromagnetic waves (according to Heinrich Hertz)

Terrestrial radio stations cannot determine on their transmitted power, how many listeners they have. There is no feedback from the receiver to the transmitter. If the effects in the experiment would be caused by radio waves (thus as the waves, according to Hertz), it might not be able to determine at the transmitter whether a receiver is attached or not.

2.4 Expectation according to the scalar wave theory by Konstantin Meyl

Scalar waves spread not evenly but are the result of a resonance between transmitter and receiver. And in such a way power is only deducted, if an appropriate receiver goes into resonance with the transmitter. That means, that there should have to be a direct feedback from the receiver to the transmitter.

2.5 Experimental setup

To be able to observe possible feedback, the point of resonance must be found again first. This is adjusted, if on the receiver the major peak can be observed and the LED's shine most brightly. The experimental setup is in the first instance the same (like 1.5: The waveform generator is attached on one side over two shorting plugs to the couple coil. This teslacoil functions as transmitter. The cable connection is plugged at the outside end of both teslacoils and the waveform generator is attached to the wall power supply). After this is done the amplitude controller has to be fully untwisted (in the clockwise direction up to the limit stop) and the frequency is slowly adjusted with the frequency controller and the light emitting diodes at the receiver are thereby observed. If the major peak should not be able to be determined clearly, it is recommended to reduce the voltage with the amplitude controller. Thus the major peak appears no longer so bright, but can be distinguished clearly from the auxiliary peaks.

2.6 Carrying out the experiment

After finding the major peak, the amplitude controller is turned back so far that the light emitting diodes on the transmitter side do not shine any longer, while the light emitting diodes on the receiver side still shine. If the cable connection is carefully unplugged, the light emitting diodes installed onto the transmitter side shine again. The LED's, installed on the receiver side, extinguish.

2.7 Interpretation of experiment results

The same effect arises, if the frequency at the waveform generator is adjusted. In this case the receivers LED's go out, while the LED's at the transmitter light up, because the resonance frequency is left and therefore no more power arrives at the receiver.

The light emitting diodes on the transmitter side give information about the power taken off from any receivers. If the brightness changes if the ground wire is connected from the transmitter to a heating element, it can be examined whether unwanted receivers possibly exist.

For example if the brightness decreases, if the experimenter touches the ground wire of the transmitter, he is now the receiver.

2.8 Conclusion

There is a feedback from the receiver to the transmitter, as can be observed here. With the transmission of radio waves no such feedback should be determined. Only with resonance between transmitter and receiver, scalar waves are developed. If the transmitter is unplugged or the generator frequency changes and leaves so the conditions of resonance, no more energy is transferred.

2.9 Consequences

Numerous interhuman effects are based on the principle shown in the feedback from the receiver to the transmitter. They are in this way for the first time physically modelled. At the same time it becomes clear that the as esoteric classified coherences are nothing else than scalar wave effects. These effects are wrongfully designated as para-science, because scalar waves are still unknown to the scientific world. The feedback shown in the experiment proves the existence of scalar waves!

2.10 Utilities:

Demo kit like in experiment 1.
Using the experimentation kit: pancake coil "A" with middle wire length

3rd experiment, subject: Proof of free energy

3.1 Experimentator: Prof. Dr.-Ing. Konstantin Meyl

3.2 Place and date: D-78112 St. Georgen, 21st of June 2000

3.3 To the status of physics of electromagnetic waves (according to Heinrich Hertz)

It is a physical law, after which the field strength decreases with the square of the distance. As consequence of the law received power is generally smaller than the transmitted. The field strength continues to decrease quadratically with the distance.

3.4 Expectation according to the scalar wave theory by Konstantin Meyl

The transmission with scalar waves has no power attrition during transmission (quod vide 1st experiment). The dielectric between the two spherical electrodes is open and therefore able to interrelate with scalar wave fields from the environment. If such fields with appropriate frequency and phase position are present, efficiencies from over 100 % are not to be excluded, even expectable. Finally, it concerns an open system!

3.5 Experimental setup and carrying out the experiment

The transmission circuit is adjusted as described in experiment 2. The LED's at the transmitter coil are to be out, while at the receiving coil they have to shine. Further look first for the resonant frequency please (receivers shines) and then the amplitude has to be accordingly reduced. Subsequently, with the frequency controller, check again whether it is the correct point. There is the possibility that the receiver lamps light up at several frequency values, but only at the correct value the feedback to the transmitter is so strong that the transmitter lamps fade out completely.

3.6 Interpretation of the experimental results

Both coils should be identical (same numbers of turns, same wire length, same couple coil). Thus makes sure that the inductively coupled voltage should be larger than the receiptable under normal conditions. As a matter of fact it is vice versa. On the receiver side values over the threshold voltage of the LED (2 V) are reached, while on the transmitter side they are not, because the LED's on the receiver side shine, whether on the transmitter side they do not. The load by the LED's is identical in both cases, so that the higher voltage leads compellingly to a higher current and a higher power. That is, it will more power be received than the transmitter delivers.

3.7 High frequency measurements

If the appropriate measuring technique is available, the into the transmission coil fed high frequency power and the received high frequency power can be measured directly. In addition a short laboratory cable replaces the shorting plug between waveform generator and the pancake coil and the current signal is measured with current measuring pliers (for high frequency measurements). The jumper is brought in central position. Thus the connector sockets on the left side are activated, where the voltage measurement can take place. Due to the fact that between current and voltage a phase angle arises, the instantaneous values must be multiplied with one another (the Scope must support this computation!). This results in a likewise sinusoidal output curve with double frequency, whose average value can be consulted as measure for the fed power.
The high frequency measurement on the receiver side takes place completely similarly. The jumper is put in central position and the voltage is measured. A resistor of 100 ohms is recommended as load. With the current-measuring pliers the current flowing through the load resistor is measured. By optimal impedance matching of the load resistance and with appropriate reduction of the amplitude the efficiency can be increased still further.

3.8 Interpretation of the high frequency measurements

Efficiencies of approximate 500% are measured. An appropriate measurement with a 200 MHz power measuring device is printed in the 2nd book from the book series "electromagnetic environmental compatibility" in chapter 19.11. A control survey took place at the technical university of Clausthal at the 6th of July 2000. In the Institut for electrical engineering an efficiency was measured with two Tektronix measuring devices, which averages 1000%. For the large astonishment of the research workers, the received Power at the middle pancake coil of the experimentation kit was ten times the power, which was transmitted.

3.9 Circuit analyzer measurements

Not each Institute has the necessary equipment, in order to be able to make high frequency power measurements. That applies especially to private researchers and schools. For this group, the third jumper position on the coil plates was designed (DC load). In this position the high frequency signal is applied to a bridge rectifier, and a condenser is loaded with the rectified voltage. On the right side of the plate are two sockets, at which DC voltage is impressed. It can be assumed that nearly everyone has a simple multimeter, which indicates the voltage level in DC position. The load resistor of 100 ohms is already on the plate, so that the converted power $U^2/100$ ohm can be made directly out off the voltage measurement.

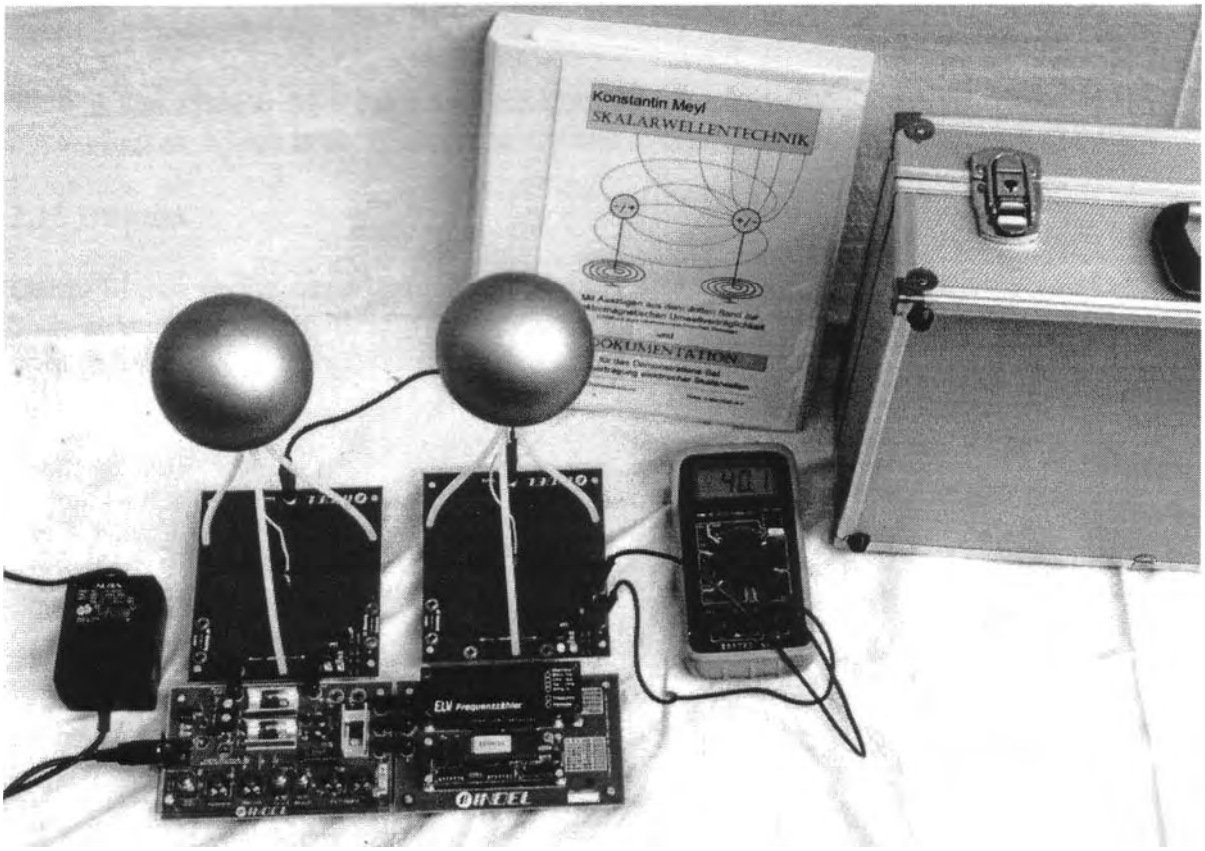

Fig.7: DC measurement with circuit analyzer (jumper position: DC load)

The measurement on the receiver plate is conducted in the same way. It is recommended to work with two circuit analyzers at the same time. Then the calibration of the favourable amplitude and finding the correct resonant frequency is more easily. Typical voltage levels are 400 mV on the receiver side, while the values are at the same time on the transmitter side are l00 mV's. (Fig. 7)

3.10 Interpretation of test results of the DC measurements

Naturally a simple DC measurement cannot replace a high frequency measurement, but for a tendency it is always good for. The current measurement is abandoned, but it can be assumed that a higher voltage at the same resistor will entail also a higher current (Ohm's law). If the DC voltage at the receiver is higher than the voltage at the transmitter, a so-called Over Unity effect must be present, and then the efficiency is over 100 %. An increase of the voltage around the factor 1.4 means already a duplication of power, since the percentage of the voltages is squarely responsible for the increase of power.

3.11 Conclusion

The transmitter modulates the surrounding field. The receiver absorbs beside the sent power scalar waves from the environment in the case of resonance. The transmission circuit proves the existence of free energy. Tesla possibly even measured that the received power continues to increase, if the distance to the transmitter is increased. Consistently and ambitiously he was. he planned a global power grid with scalar wave transmitters, which he called "Magnifying transmitters". For than reason Nikola Tesla is considered as the father of free energy.

3.12 Consequences

Here is the chance of a new and environmental compatible form of energy revealed to the experimenter, which is present constantly and everywhere and only waiting to be used.

3.13 Utilities

Demo kit, as in the experiment No. 1 with purely optical control, or two voltmeters (DC) or high frequency power measuring devices. Using the experimentation kit: Coil with middle wire length.

4th experiment, subject: Superluminal Velocity

4.1 Experimentator: Prof. Dr.-Ing. Konstantin Meyl

4.2 Place and date: D-78112 St. Georgen, 21st of June 2000

4.3 To the status of physics of electromagnetic waves (according to Heinrich Hertz)

From the equations of the field, the magnetomotive force and the induction law, Maxwell calculated 150 years ago a wave, which constantly spreads with the dimension "C" which is the speed of light. Albert Einstein postulated, after all measurements seemed to confirm this, C as the highest possible and permissible signal transmission speed. As long as only the wave, according to Hertz is considered, which is a lateral wave and swings transversal, this assumption is applicable. Since only this wave component is nowadays used, it is assumed that anywhere in the universe the light cannot be faster as 300,000 km/s. From the unproven experience set an imperative became, which is raised from some scientists in misjudging the connections into the rank of a law.

4.4 Expectation according to the scalar wave theory by Konstantin Meyl

The scalar wave, as longitudinal wave, only has a middle propagation speed, for which no limit exists. It can be faster, even substantially faster than the light. Antitype for this experiment is again Nikola Tesla, who had measured already more than 100 years ago superluminal velocity and over that, he made fun of Einstein, who was in his eyes an unrealistic theoretician. Tesla had sent from his experimental transmitter in Colorado Springs a scalar wave signal around the earth and had determined a standing wave resonance with 12 cycles per second. He wrote that he could regain the node of oscillation on the ground plate in his laboratory in case of resonance.
For the waves, according to Hertz, the Schumann-resonance is approx. 7.8 cycles per second. From the percentage of the resonance frequencies Tesla calculated the speed of the scalar wave emitted by him to 12/7.8 = 1,5. His wave, concludes Tesla, must therefore have spread with a factor 1,5 of the speed of light.

4.5 Experimental setup

The experimental setup is the same as in the last experiment. For a quantitative evaluation a frequency counter should be attached. The connection takes place at the waveform generator at the sockets "sync" for the synchronisation signal and at mass (GND = ground). The frequency counter included in delivery of the experimentation kit is via a third connection with 5 V operating voltage supplied. The display shows the frequency in MHz.

4.6 Carrying out the experiment

Possibly somebody has already noticed the fact that when tuning up at the frequency controller of the waveform generator the light emitting diodes on the receiver plate light up several times, albeit with different brightness. So far only the point with maximum brightness had been evaluated. The for scalar waves typical and in the first three experiments determined features arise here. It is particularly salient, that the transmission lamps fade out, while those on the receiver side light up, if resonance is adjusted.
If the frequency controller is further turned to the left (amplitude controller fully untwisted), another setting can be found, at which the receiver lamps shine. This time the transmitter is not

aware of that. The transmitter lamps continue to shine completely unaffected, what from the conclusion is to be drawn that this time no power is withdrawn. It has to be the wave, according to Hertz. For checking purposes the grounding on the transmitter coil is unplugged and plugged again. Whereas the receiver lamps fade out and shine, respectively. On the transmitter however no reaction can be recognized. The brightness of the lamps does not change at all.

4.7 Interpretation of the experiment

The missing feedback on the transmitter is an indication for radio waves, which only in close range can bring the receiver lamps to shine (law of the square-distance). Further indications are that at this point the receiver lamps do not shine more brightly than those of the transmitter and the degree of efficiency generally is below 100 %. If the distance to the transmitter is increased, the received power slowly fades out. Finally the transmitter can be put into a Faraday cage. The receiver lamps fade out immediately. Mostly it is sufficient to hold the hand before the receiver electrode in order to prevent the reception. Observations should be taken alternating at the two points of resonance, because particularly the direct comparison of the measured wave characteristics at the two points makes it clear, that with the low frequency (4-5 MHz) wave, according to Hertz is used, while with the high frequency (6-7 MHz) the scalar wave, according to Tesla is used.

4.8 Conclusion

The coil length and thus the wavelength were not changed, so that from a frequency change a change of the propagation speed follows directly. Both stand in direct proportionality to each other. If the frequency of the scalar wave is higher than those of radio waves, so that the frequency controller must be turned further toward the clockwise direction, then this wave is faster than light.
If a frequency counter is attached, it is recommended to note the two frequencies and compute afterwards the percentage of the larger (longitudinal) to the lower (transversal) frequency. The result is undoubtful: The scalar wave signal is approximately 1.4 to 1.6 times faster, than the electromagnetic radio wave. (typical values with the middle coil length are: Frequency of the scalar wave 6.7 MHz/radio wave 4.5 MHz =1.5 C/C the scalar wave has the factor 1.5 of light speed).

4.9 Consequences

Scalar waves are modulatable and can carry information. Therefore the acceptance, that light speed is the highest border for signal transmission, as Einstein insisted, is to be contradicted. It is still the correctly accomplished experiment that is able to show the physical reality and not any devious assumptions of a theoretical physicist.

4.10 Utilities

Demo kit, like in the experiment No. 1. Using the experimentation kit: first the coil with the middle wire length is used. With the other two coil sets the experiments can be repeated.

5th experiment, subject: Ineffective Faraday cage

5.1 Experimentator: Prof. Dr.-Ing. Konstantin Meyl

5.2 Place and date: D-78112 St. Georgen, 21st of June 2000

5.3 To the status of physics of electromagnetic waves (according to Heinrich Hertz)

The Faraday cage is based on the principle that the inside of an electroconductive body remains field-free. It is used, in order to shield radio waves. Provided that the electromagnetic wave only consists of waves, according to Hertz, nothing may penetrate a Faraday cage. If the transmitter is outside, the inside of the cage is allegedly field-free. Is the transmitter inside the cage, e.g. a microwave oven, no wave should be provable outside.

5.4 Expectation according to the scalar wave theory by Konstantin Meyl

The scalar wave has characteristics, which empower it to penetrate a Faraday cage. The scalar wave is able to tunnel. It must be only sufficiently fast. Furthermore a resonance between transmitter and receiver is required.

5.5 Experimental setup

For this experiment we need a Faraday's cage, into the transmitter is to be put. For that, the provided metal suitcase is suitable, which is opened and placed unfold on a side. The transmitter is put with the attached spherical electrode into the suitcase (fig. 6). The shorting plugs are replaced by short laboratory cables in this case, which connect the transmitter with the waveform generator through the gap. We connect the ground on the plate with the connection inside the suitcase. The ground wire to the receiver is plugged from outside into the intended metal socket.

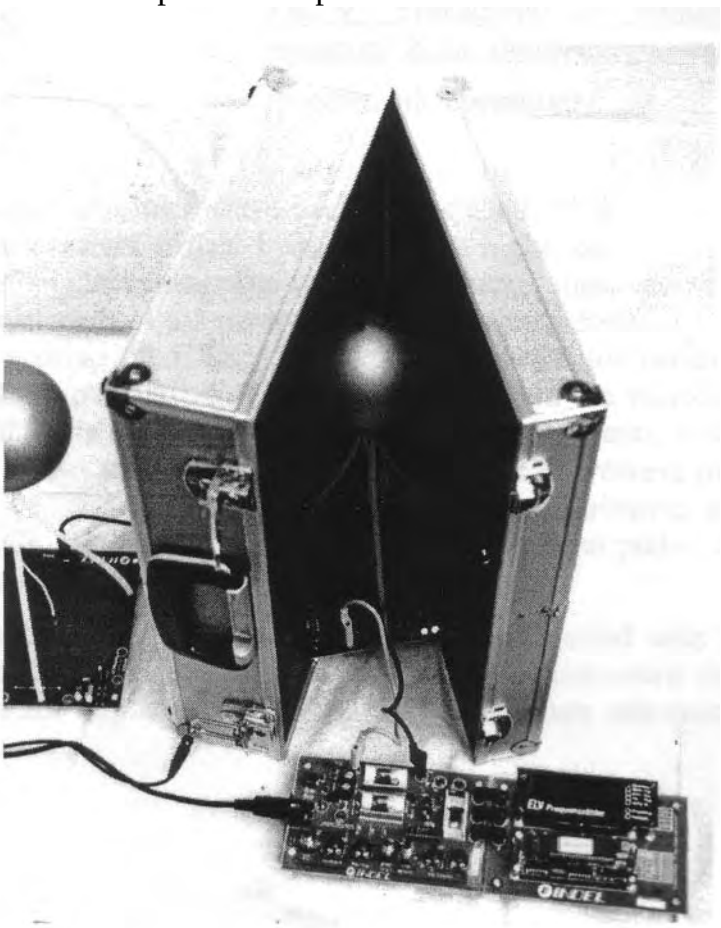

Fig. 8: The transmitter in the aluminium suitcases
(frequency generator and counter externally)

With another variant (fig. 9 and 10) the waveform generator is also put into the suitcase. Now the frequency must be adjusted through the opened gap, which demands some skill. If the hand is withdrawn and if the suitcase is closed, the point of resonance may not adjust itself in such a manner that the small lamps at the receiver fade out again. Therefore the above variant is preferred.

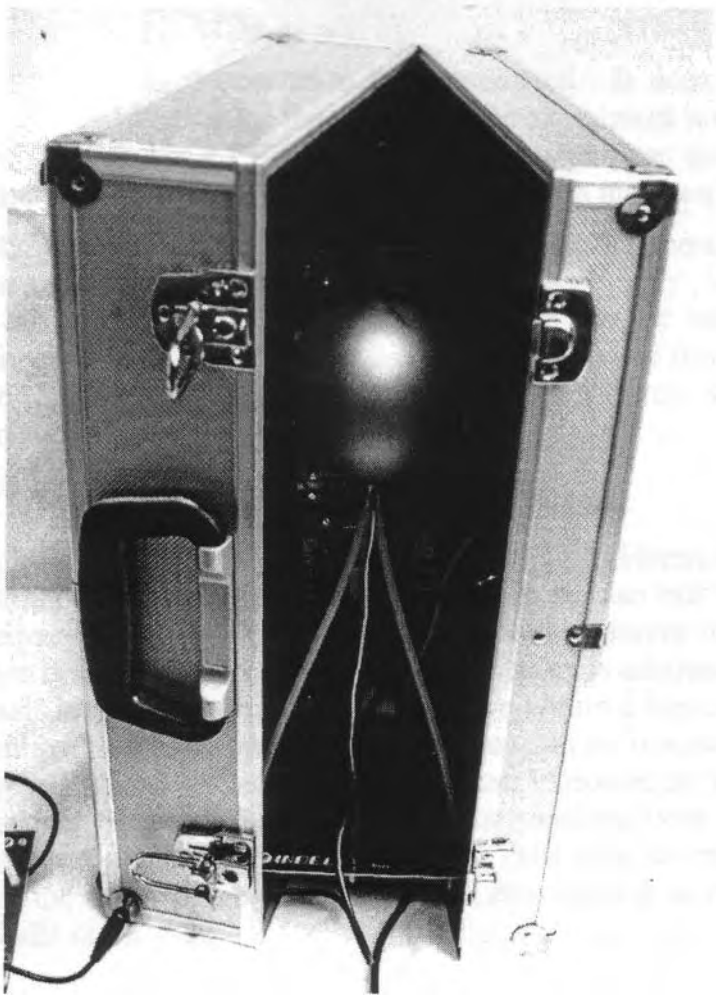

Fig. 9: Transmitter and frequency generator in the aluminum suit-case

(problematic operation!)

In addition, a hamster cage made of metal or a microwave oven can be used. It is advised to pay attention, that lattice cages possess a certain critical frequency. The higher the frequency and therefore shorter the wavelength of an electromagnetic wave is, the closer must the lattice bars of the cage lie together. The wavelength of microwaves is approximately 5 millimeters. That corresponds to a frequency of approx. 60 GHz. The waveform generator produces frequencies of 1-20 MHz. Thus at least a percentage of the wavelengths from the waveform generator to the microwave oven of 3000:1 is given. That means, for our experiments, a cage with 3000 times larger lattice spacings would actually be sufficient. Using the microwave oven as shielding cage, which is prooved for high frequency impermeability, our experiments with relatively low frequencies are on the safe side. The power plug should have been pulled and the oven must not be activated in any case.

The cable connection has to be plugged into the receiver and has to be connected with the transmitter, wich has to be electroconductive connected to the cage (using a microwave oven for example, with the help of an alligator clip at metal parts). The aluminium suit-case is equipped with sockets on both sides.

5.6 Carrying out the experiment

The amplitude controller is fully untwisted. It does not care whether the transmitter LED shines. Arbitrative for the success of the experiment is the fact alone whether a chance exists to bring the receiver LED to shine. For this purpose the frequency controller of the waveform generator is adjusted, till on the receiver side a maximum can be observed.

Who has doubts, the line cord to the waveform generator can radiate any high frequency, can use a 9-volt-battery in stead of the wall power supply , which is accommodated also in the cage. If the cage is closed, no more cable usher into the cage in this case. Only the cage itself is connected from outside with the receiving coil and from inside with the transmitter coil. Now the caged transmitter can swing as much as it wants. Outside of the cage nothing at all might arrive, according to educational books.

5.7 Interpretation of the experiment

If the lower frequency (the wave, according to Hertz) is adjusted, it is obviously recognizable that the smallest shielding leads already to the fact that the receiver lamps fade out. The higher frequency during a scalar wave transmission behaves substantially more resistant. A gap in the door or a cable, which leads out the suitcase, is adequate for a perfect coupling. In equally the small lamps on the receiver plate shine within a hamster cage or with a mouse lattice almost unimpressed. All previous experiments can be repeated and it is incidental that a transfer of energy, a feedback and even an increase in output are possible. Attention is payed to, that the resonant frequency between transmitters and receivers is affected by the cage, which makes a readjusting of the frequency necessary. The cage increases the surface and thus the capacity, so that the resonant frequency drops on substantially lower value (typical 4 to 5 MHz using the middle coil).

5.8 Conclusion

If the Faraday cage is not too close meshed, it does not represent a considerable barrier for the transfer of energy. Substantially at this result is the circumstance that a signal can escape from the cage. So somewhat is measurable, which may not be. This experiment reveals a completely substantial characteristic of the scalar wave.

5.9 Consequences

If the Faraday cage cannot affect scalar waves, no possibility is known to shield the scalar component of a wave. If during tunnel experiments the waves are confronted with a barrier, which should be actually insurmountable and if, albeit of this fact, signals behind the tunnel are measured, which are besides faster, as expected, then a scalar wave is received without doubt, (e.g. Professor Nimtz, 2nd physical Institute of the University of Cologne)

If architects sell their customers shielding mats against electromagnetic pollution, these mats shield only radio waves and no scalar waves. Which of both waves is biologically active and responsible for the electromagnetic pollution, has to be ascertained.

If somebody seeks shelter from scalar wave radiation, a scalar wave receiver is recommended, which is in resonance with the jammer and absorbs the sent energy. Whether such a device actually functions, can be recognized by the fact that a measurable output is perceivable: A small lamp shines or a component becomes hot.

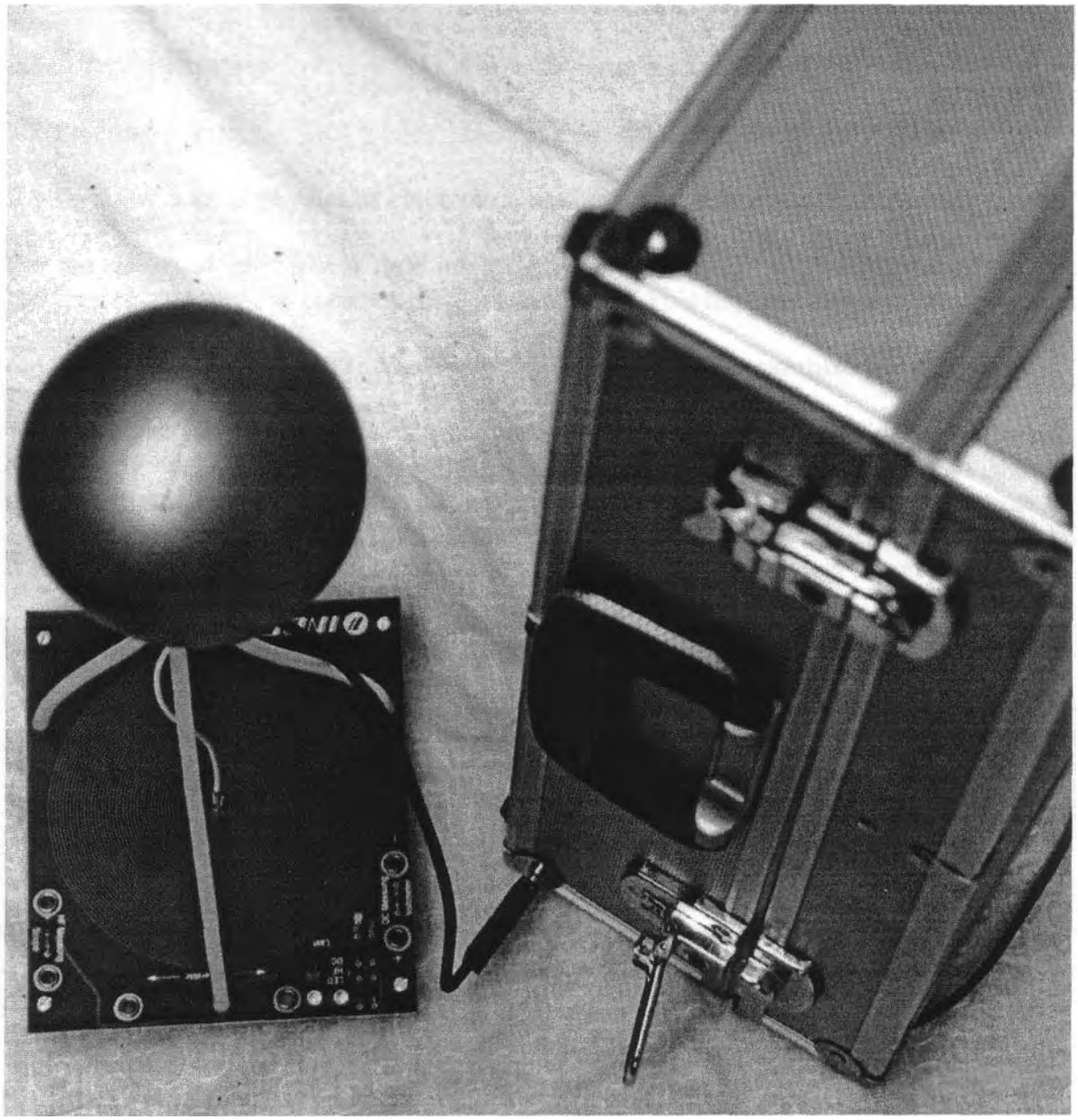

Fig. 10: The closed aluminium suit-case with externally connected receiver

5.10 Utilities

Demo kit, like in experiment 1, additional the aluminium suit case as Faraday cage.

Using the faraday cage, the experiments 1 to 4 are repeatable.

6th experiment, subject: Refutation of the near field interpretation

6.1 Experimentator: Prof. Dr.-Ing. Konstantin Meyl

6.2 Place and date: D-78112 St. Georgen, 1st of July 2000

6.3 To the status of physics of electromagnetic waves (according to Heinrich Hertz)

For the refutation of the near field interpretation, it has to be calculated first, at which distance between transmitter and receiver the near field ends. This happens at $\lambda/2\pi$.

6.4 Expectation according to the scalar wave theory by Konstantin Meyl

At 7 MHz it might therefore not be possible any longer, to bring a small lamp to shine, particularly because the near field is the scalar wave component. However, the computation of the near field and its range always takes place on the assumption of propagation with light speed. Scalar-wave can, against the doctrine, be faster. So that, according to the theory of Meyl, it can be expected that the transmission of energy is still possible over larger distance.

6.5 Experimental setup

The transmission circuit is set like in the experiments 1 to 3. The frequency is adjusted to the point of maximum luminosity of the receivers LED. The LED's on the transmitter side are unimportant for this experiment.

6.6 Carrying out the experiment

The connecting cable, which is designated by Tesla as "grounding", is lengthened to more than 6 meters by an extension cord. The frequency is tracked and the maximum value has to be checked.

6.7 Interpretation of the experiment

It was always possible so far and the measurements will confirm it, that with distances of more than 6 meters the light emitting diodes on the receiver can be brought to light. Thus it has been shown that still outside of the near field a transfer of energy is possible. The finding of the maximum becomes more difficult. The longer the connection cable or the more potential receivers are connected (for example the heating installation or a water pipe), the rather the oscillation breaks away or the resonance breaks down. Then, immediately, no receipt is possible any longer. After such a break the distance must to be shortened, till the resonance is present. After than, the distance between receiver and transmitter can be extended again. In the course of the lecture alternative electrical engineering", students increased the distance to 60 meters and made measurements.

6.8 Conclusion

As it is possible to receive the full transmitted power, even at the tenfold distance, a frequently mentioned argument of high frequency technology is disposed of once and for all.
The experiment can be expanded, if necessary, with the goal of showing the standing wave character as proof for the existence of longitudinal waves. As long as power is consumed, the

lines of flux are bundled at the receiver, whereby the standing wave character is lost. It is therefore recommended, that no jumper is set. Only measurement-devices with very high resistance, an oscillograph for example, should been used to control the voltage impressed at the coupling coil of the receiver. If the distance between the transmitter and the receiver is varied, the chance to proof the standing wave character exists by locating the nodal points.

6.9 Consequences

The near field of an antenna is the scalar component of a wave, whereas the scalar wave, vice versa, is more than the near field! It is an electrical longitudinal wave, which propagates towards the pointer of the electrical field.

6.10 Utilities

Demo kit, as in the experiment No. 1. Extension cords with different length. Using the experimentation kit: Coil with middle wire length.

7. Experiments with the experimentation kit

First only the coil with the middle wire length was used in the experimentation kit. But still two further coil sets are provided, on the one hand a coil with the double wire length, recognizable by the high number of turns, on the other hand a coil with the half wire length. Using these coils, the experiments 1 to 5 can be repeated. Additional harmonic wave experiments are possible by combining the different coils. In this case attention should be paid to the fact that with the number of windings also the transmission ratio of the air cored transformer changes. The couple coil is identical at all variants with 5 windings. It can be modified, if necessary, on the lower surface, whereby an abbreviation to 4 turns is possible.

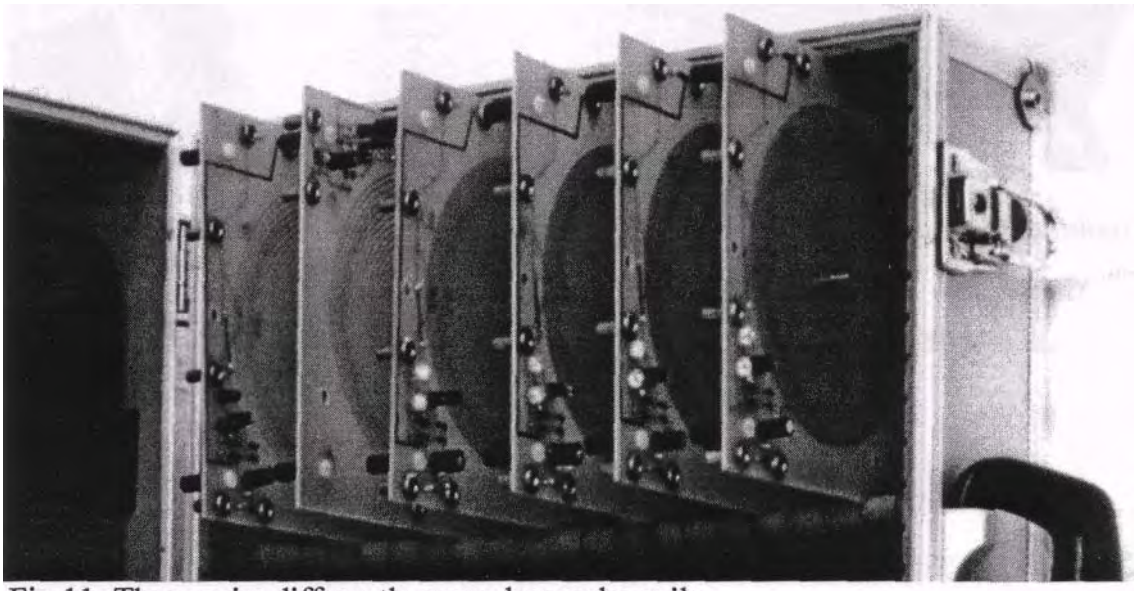

Fig.11: Three pairs differently wound pancake coils.

The waveform generator is only preset at the demo kit. The experimentation kit offers further adjustment possibilities. By turning-over the two switches form 1 and 2 to rectangle, the harmonic content can be significantly increased, which pulse-width is stepless adjustable. That can be helpful for experiments with mixed groups of coils, e.g. with a transmitter (high number of turns) and with two receivers (middle coil length).

Here is the fantasy of the experimenter in demand. Please write your own protocols and arrange them, given in the sample. We will try to reconstruct the experiment according to your description. We will, as the case may be with additions, collect your protocols together with others. We will send those protocols in a file to all buyers, who made own protocols. With this measure an incentive for own experiments is given and the feedback, which is important for us, has been motivated. For those, who do not deliver protocols, the collecting file and additional instructions are purchasable. Till the completion is finished, it can take some years. About stock availability, contents, extent and the price we will up-to-date inform on our homepage.

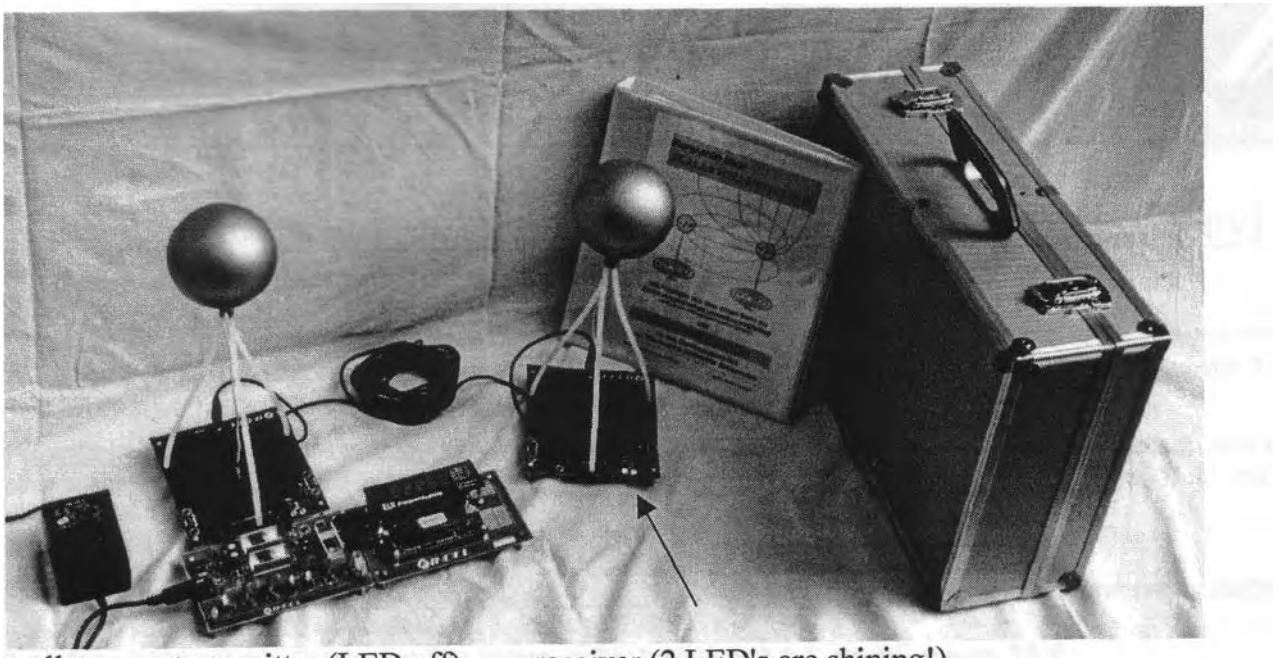

wall po- transmitter (LED off) receiver (2 LED's are shining!)
wer supply waveform generator + frequency counter documentation + aluminium suit- case

Fig. 12: The Receiver is draining visibly electrical power from the Transmitter.

First Transfer Center of Scalar Wave Technology

SCALARWAVEDEVICE

A further developing of the worlds first and very successful experimental-kit in a case with open work area above the Tesla-coil especially developed for biological-technical experiments.

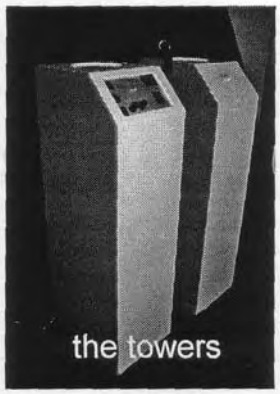

The demand of the scientific world for reproducibility of the experiments has been satisfied with the construction which is based on Tesla´s ideas and the disposal of the demo-kit (800€) and the experimental-kit (1400€). Inspired by six at any time reproducible main experiments of the special characteristics of scalar wave transmissions from the book „Scalar Wave Technology" several researchers did some further experimentation, mainly interested in the biological properties of the scalar wave. Especially these researchers demanded a specifically for their research projects improved type of construction, because they experienced some handling difficulties with the more open test arrangement.

So this was the reason for developing our scalar wave device (Skalarwellengerät) SWG-A (prize: 3950 €). Every device is handmade and consists of two columnar cases, which contain the antennas and electronic. The built-in timer is very functional and easy to use – as the rest of the device. You just have to connect the two towers with the connection cable and plug in the power supply unit in order to start your experiments.

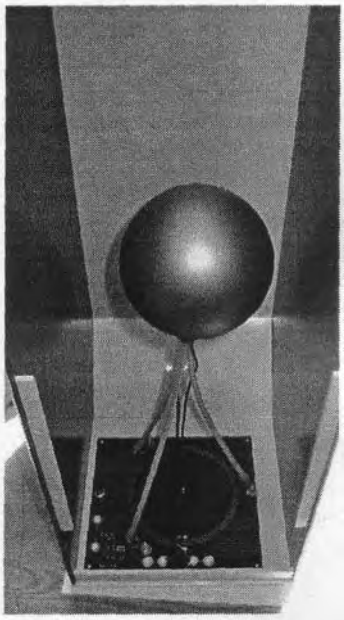

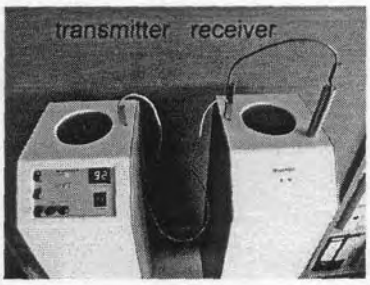

A very special ability of the scalar wave device is the circular and patent Teslacoil, which is accessible from above. Within this area you can place substances with biological information directly in the field of the pancake coil. So that were the required specifications of the scalarwave-researchers for further experiencing of the biological-technical properties and their desire to modulate „biological information" to the carrier wave.

We ask for understanding that we will not write own experimentation guide within the field of biology as electronics manufacturers. We are building these devices in terms of our customers and would like to wish all the researchers out there many successful experiences with this brand new 'Skalarwellengerät' "SWG-A" for the welfare of human and science.

control panel
- timer on
- always on
- frequency adjustment
- amplitude adjustment
- resonance indicator
- time pre-select

Your Team

Of the First Transfer Center of Scalar Wave Technology

To order:

www.etzs.de ; bestellung@etzs.de
Tel.:+49(0)7724-1770 ; Fax:+49(0)7724-9486720
(delivering time 1 month)

CHAPTER 1.4: SCALAR AND VECTOR

SCALAR AND VECTOR

Scalars

Scalars are quantities which have magnitude without direction

Examples of scalars

- temperature
- mass
- kinetic energy
- time
- amount
- density
- charge

Vector

A vector is a quantity that has both magnitude (size) and direction

it is represented by an arrow whereby

- the length of the arrow is the magnitude, and
- the arrow itself indicates the direction

The symbol for a vector is a letter with an arrow over it

$\vec{A}$

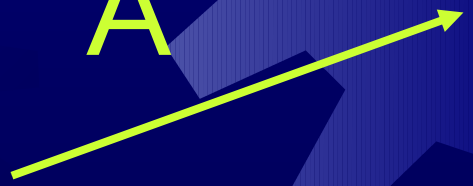

Two ways to specify a vector

It is either given by

- a magnitude A, and
- a direction **θ**

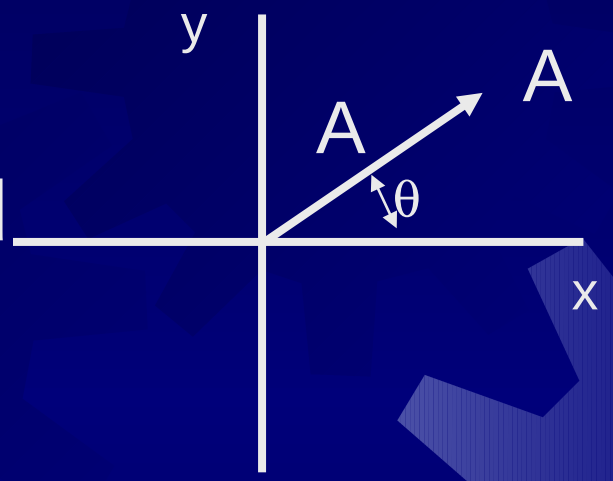

Or it is given in the x and y components as

- A_x
- A_y

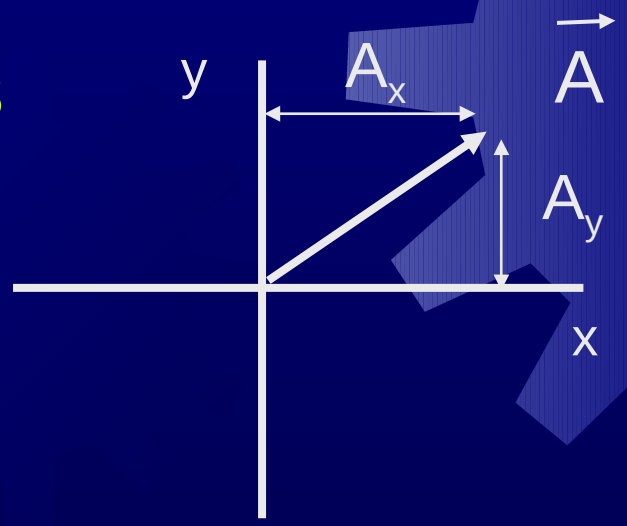

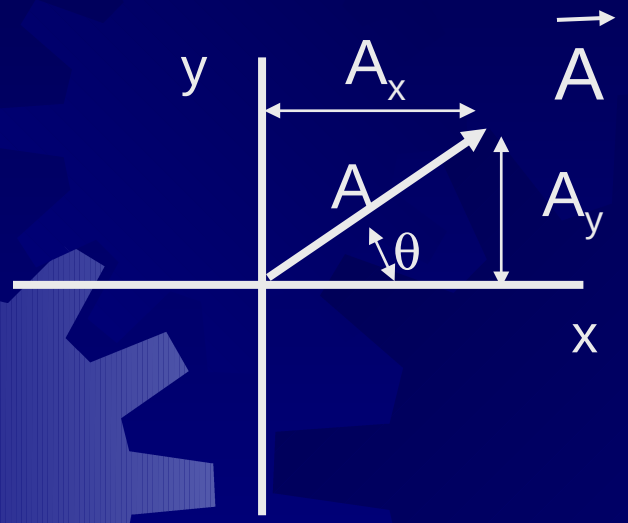

$$A_x = A\cos\theta$$

$$A_y = A\sin\theta$$

The magnitude (length) of A is found by using the Pythagorean Theorem

$$|A| = \sqrt{(A_x^2 + A_y^2)}$$

The length of a vector clearly does not

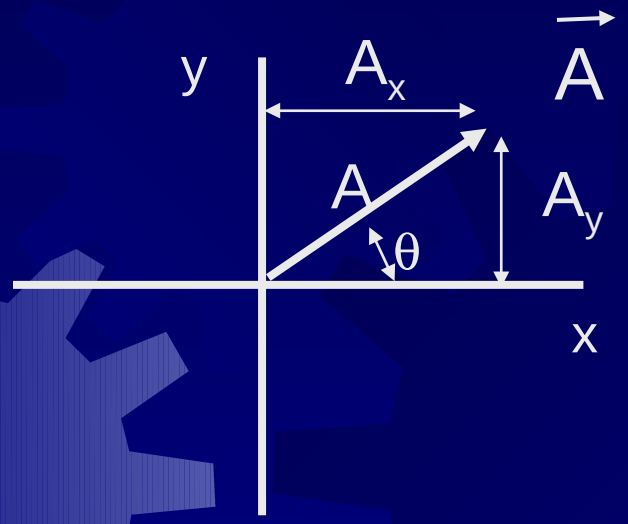

The direction of $\vec{A}$ can be stated as

$$\tan\theta = Ay / Ax$$

$$\theta = \tan^{-1}(Ay / Ax)$$

Some Properties of Vectors

Equality of Two Vectors

Two vectors $\vec{A}$ and $\vec{B}$ may be defined to be equal if they have the same magnitude and point in the same directions. i.e. $\vec{A} = \vec{B}$

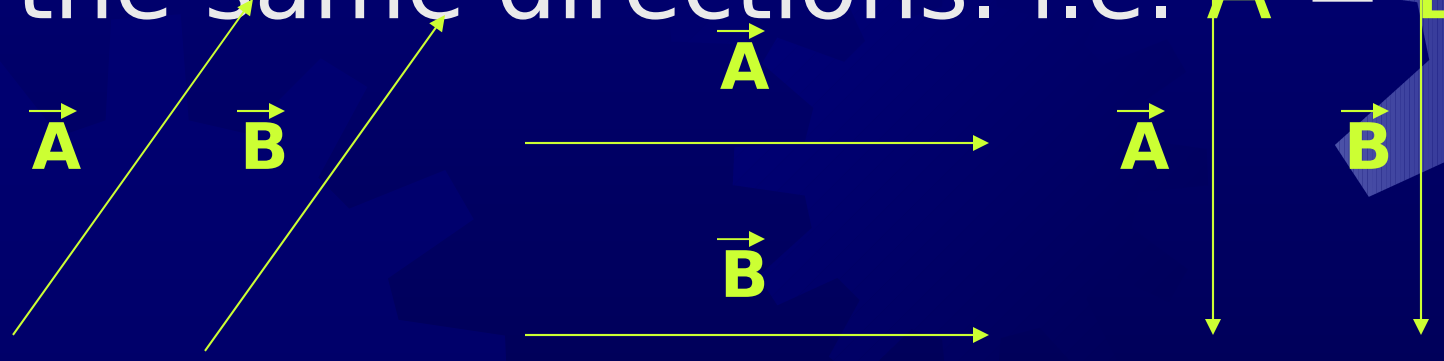

Negative of a Vector

The negative of vector $\vec{A}$ is defined as giving the vector sum of zero value when added to $\vec{A}$. That is, $\vec{A} + (-\vec{A}) = 0$. The vector $\vec{A}$ and $-\vec{A}$ have the same magnitude but are in opposite directions.

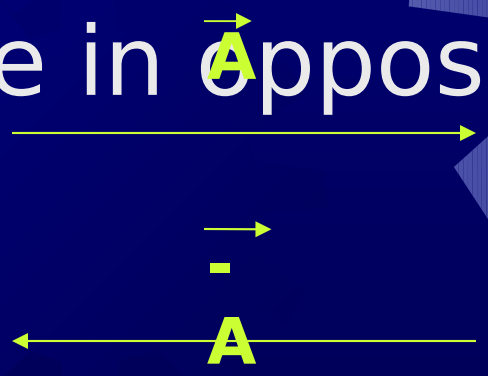

Scalar Multiplication

The multiplication of a vector A by a scalar α

- will result in a vector B

$$B = \alpha A$$

- whereby the magnitude is changed but not the direction

- Do flip the direction if α is negative

$B = \alpha A$

If $\alpha = 0$, therefore $B = \alpha A = 0$, which is also known as a zero vector

$\beta(\alpha A) = \alpha \beta A = \alpha(\beta A)$

$(\beta + \alpha)A = \alpha A + \beta A$

Example

Vector Addition

The addition of two vectors $\vec{A}$ and $\vec{B}$

- will result in a third vector $\vec{C}$ called the resultant

$$\vec{C} = \vec{A} + \vec{B}$$

Geometrically (triangle method of addition)

- put the tail-end of $\vec{B}$ at the top-end of $\vec{A}$
- $\vec{C}$ connects the tail-end of $\vec{A}$ to the top-end of $\vec{B}$

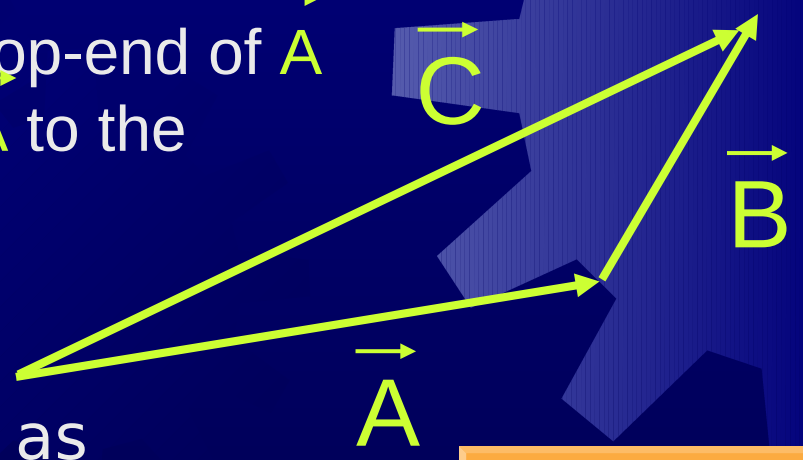

We can arrange the vectors as we like, as long as we maintain

Example

More than two vectors?

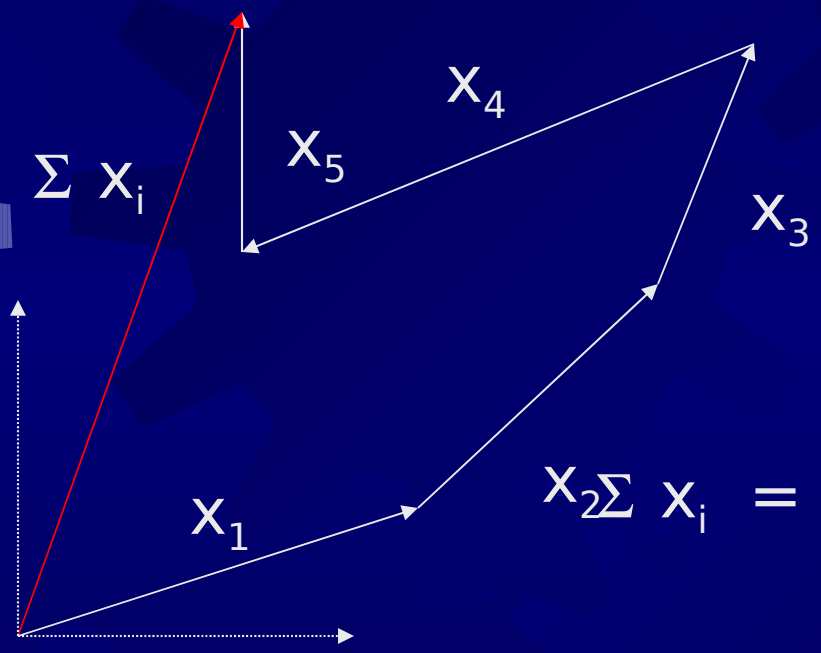

$$\Sigma\ x_i = x_1 + x_2 + x_3 + x_4 + x$$

Vector Subtraction

Equivalent to adding the negative vector

$$\vec{C} = \vec{A} - \vec{B} = \vec{A} + (-\vec{B})$$

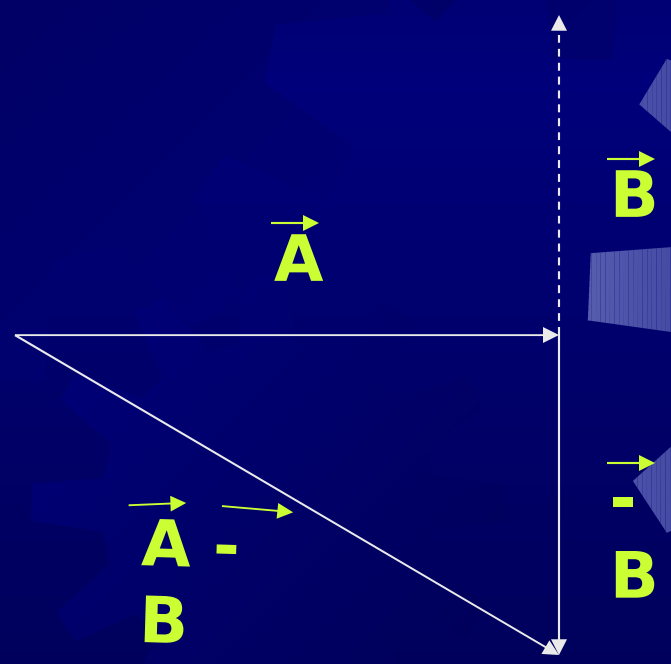

Example

Rules of Vector Addition

- commutative

$$\vec{A} + \vec{B} = \vec{B} + \vec{A}$$

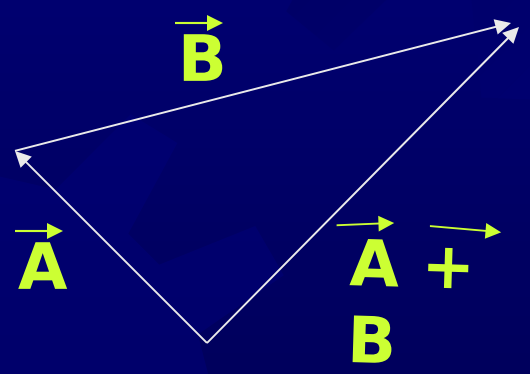

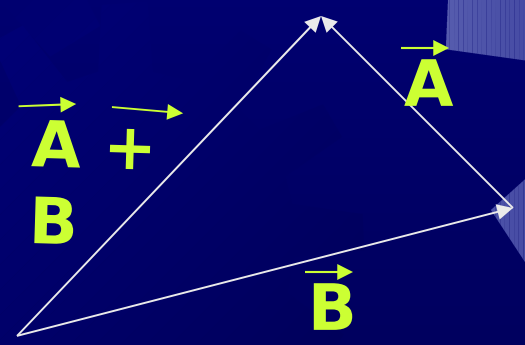

- associative

$$(\vec{A} + \vec{B}) + \vec{C} = \vec{A} + (\vec{B} + \vec{C})$$

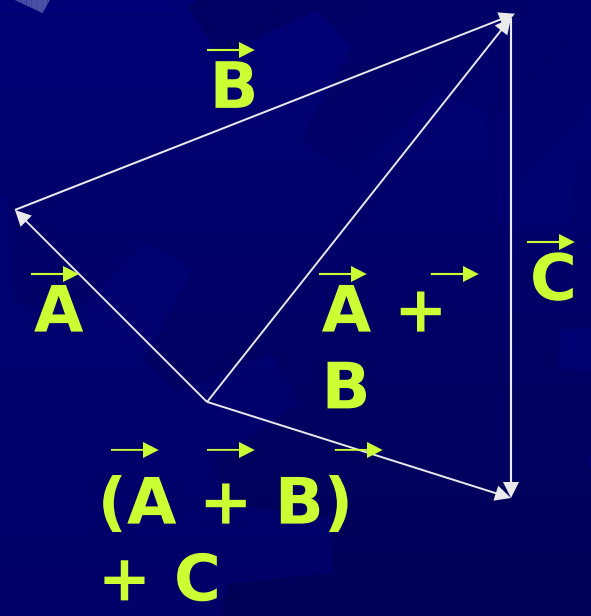

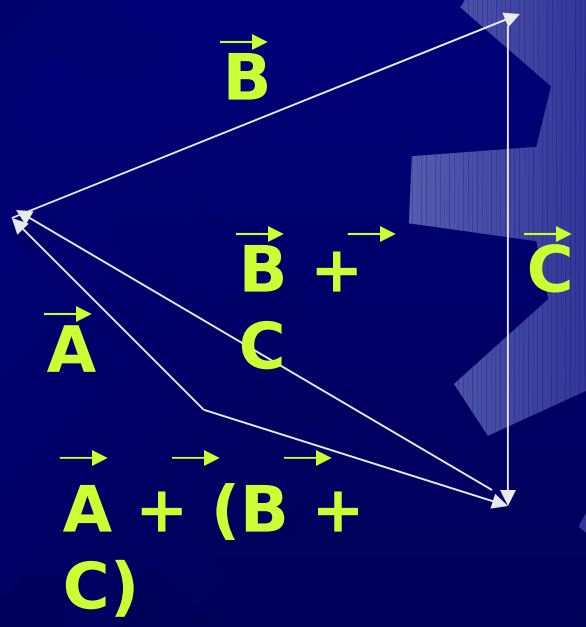

- distributive

$$m(\vec{A} + \vec{B}) = m\vec{A} + m\vec{B}$$

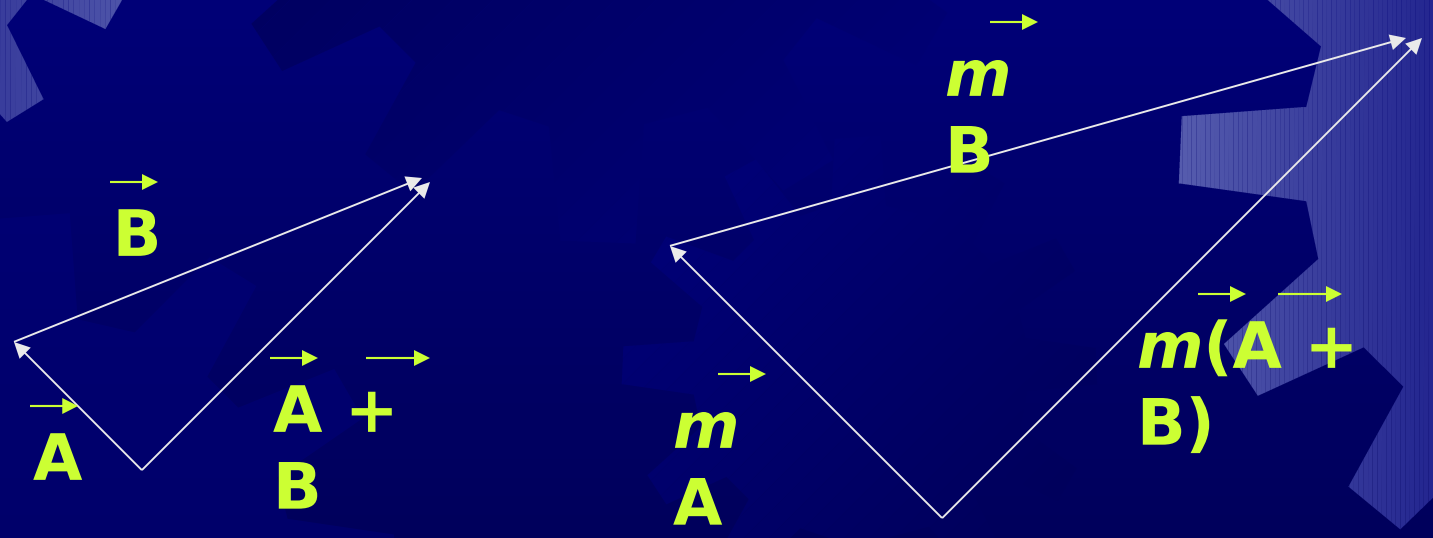

Parallelogram method of addition (tailtotail)

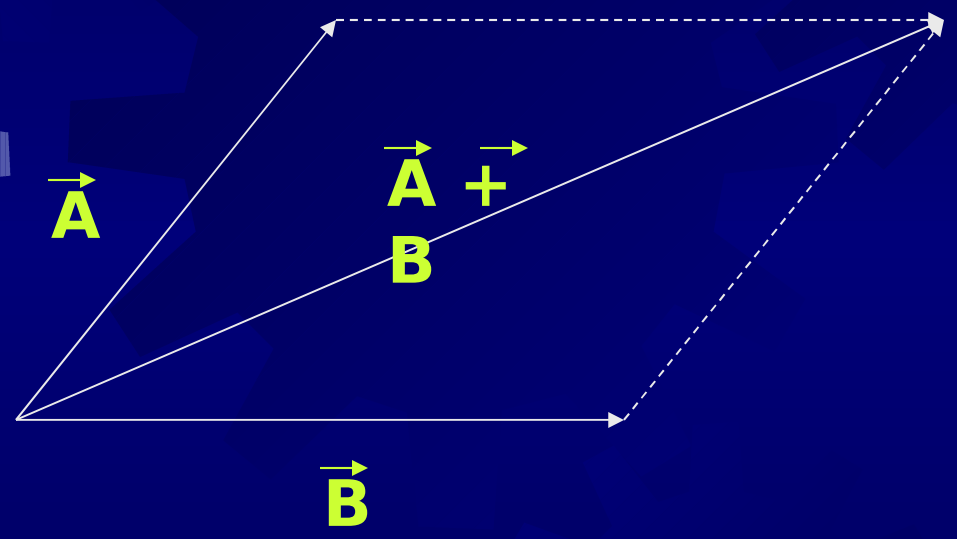

The magnitude of the resultant depends on the relative directions of the vectors

Unit Vectors

- a vector whose magnitude is 1 and dimensionless
- the magnitude of each unit vector equals a unity; that is, $|\hat{i}| = |\hat{j}| = |\hat{k}| = 1$

and defined as

$\hat{i}$ a unit vector pointing in the x direction

$\hat{j}$ a unit vector pointing in the y direction

$\hat{k}$ a unit vector pointing in the z direction

Useful examples for the Cartesian unit vectors [***i, j, k***]

- they point in the direction of the *x*, *y* and *z* axes respectively

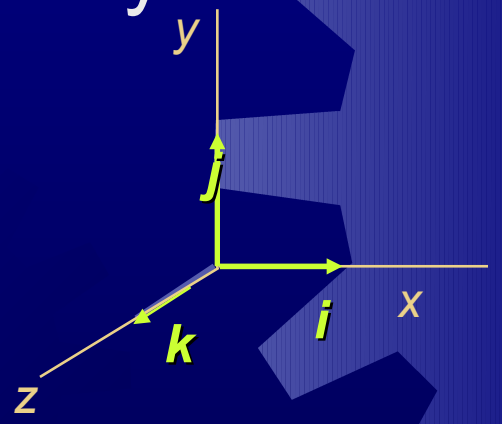

Component of a Vector in 2-D

- vector $\vec{A}$ can be resolved into two components $\vec{A}_x$ and $\vec{A}_y$

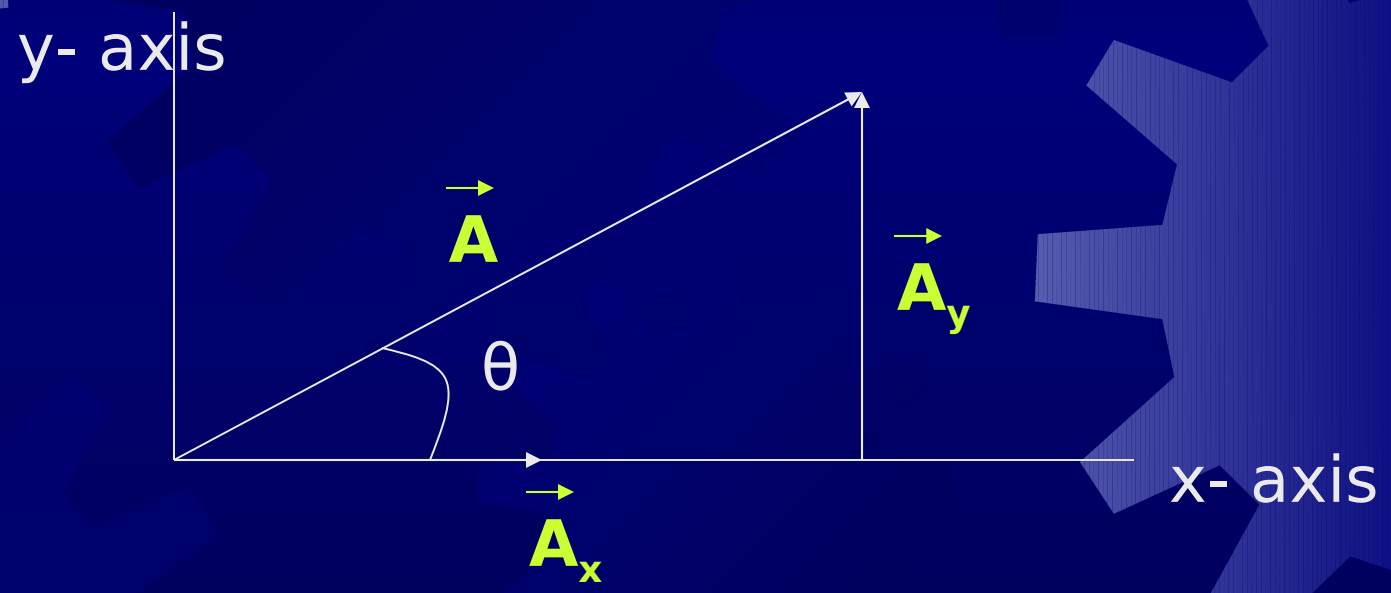

$$\vec{A} = \vec{A}_x + \vec{A}_y$$

The component of A are

$$|\vec{A}_x| = A_x = A \cos\theta$$

$$|\vec{A}_y| = A_y = A \sin\theta$$

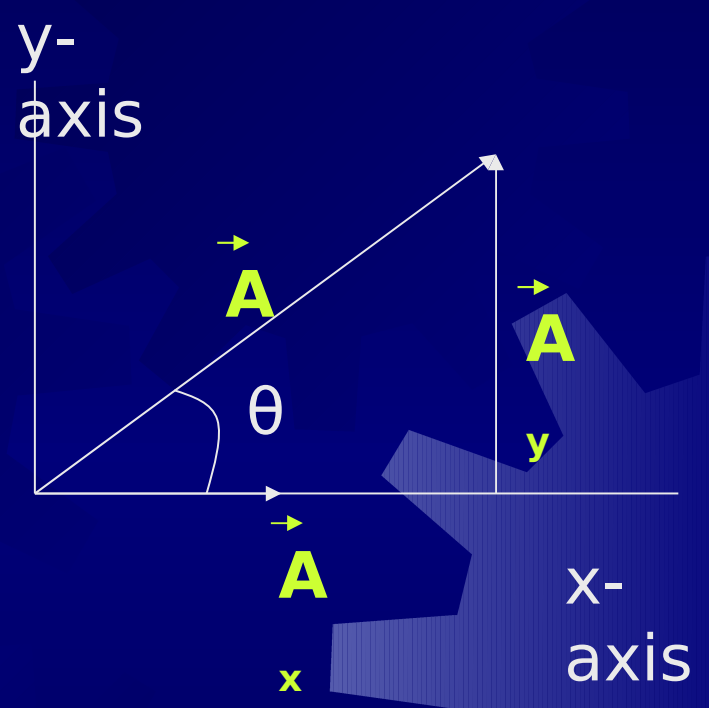

The magnitude of A

$$A = \sqrt{A_x^2 + A_y^2}$$

The direction of A

$$\tan\theta = Ay / Ax$$

$$\theta = \tan^{-1}(Ay / Ax)$$

The unit vector notation for the vector $\vec{A}$ is written

$$\vec{A} = A_x i + A_y j$$

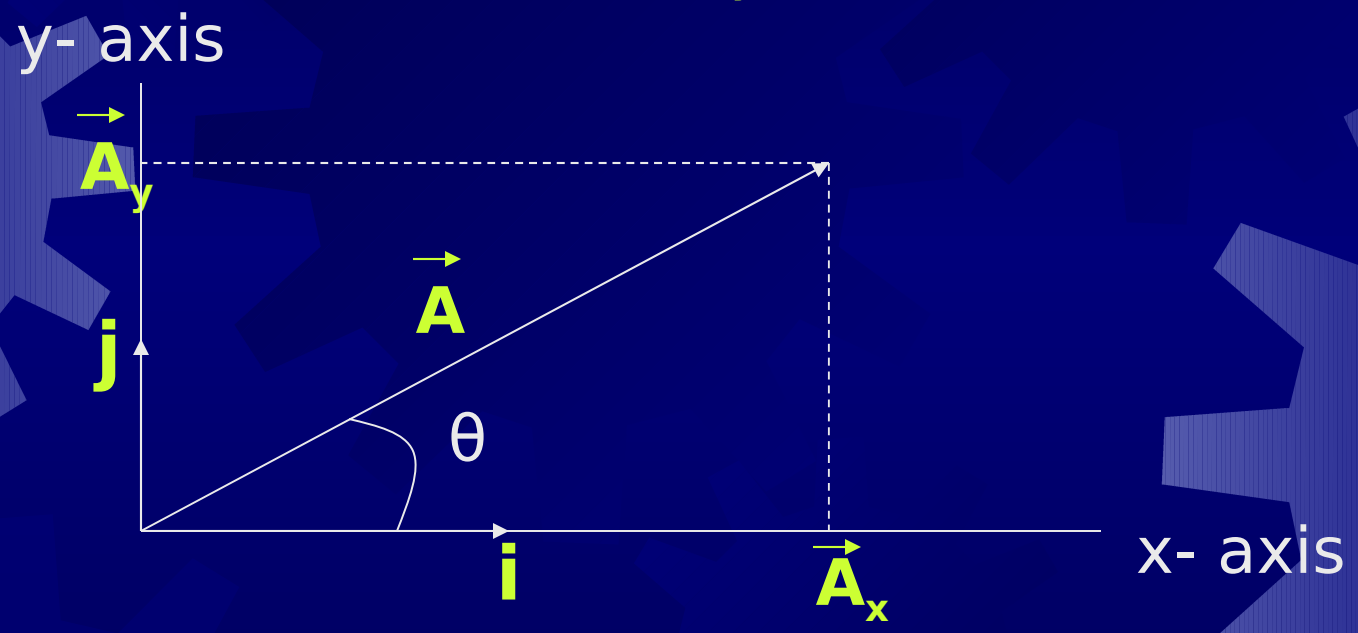

Component of a Vector in 3-D

- vector $\vec{A}$ can be resolved into three components $\vec{A}_x$, $\vec{A}_y$ and $\vec{A}_z$

$$\vec{A} = A_x i + A_y j + A_z k$$

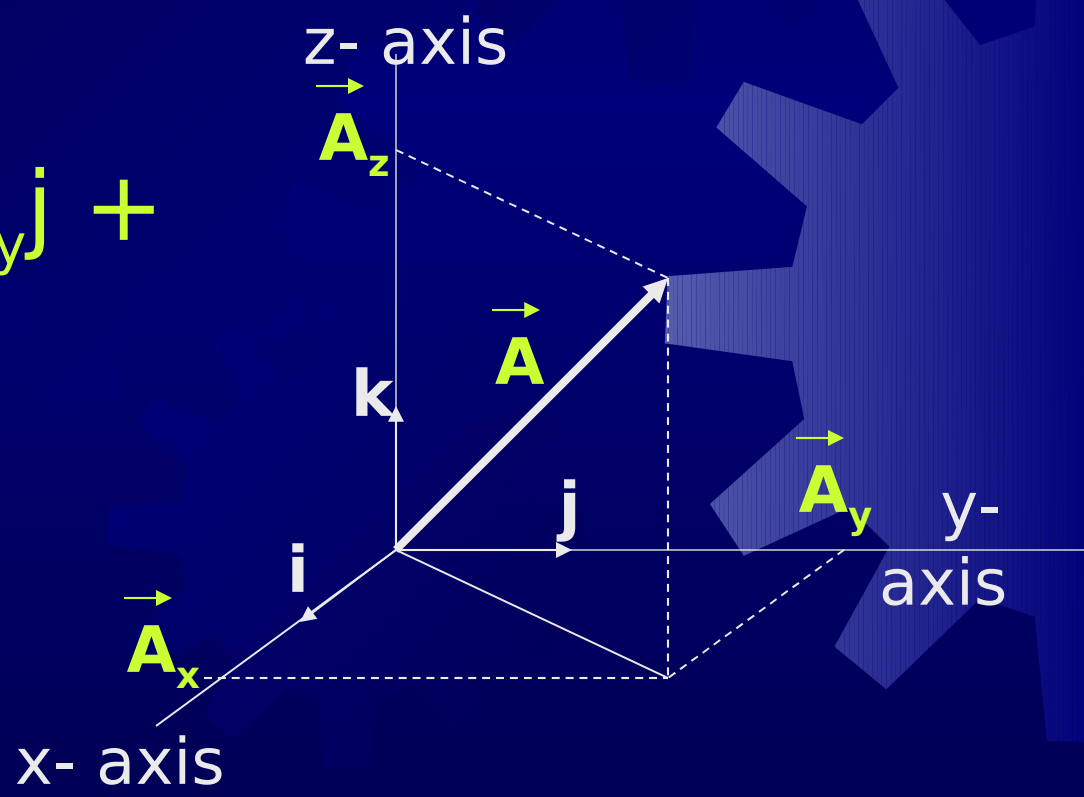

if

$\vec{A} = A_x i + A_y j + A_z k$

$\vec{B} = B_x i + B_y j + B_z k$

$\vec{A} + \vec{B} = \vec{C}$ sum of the vectors $\vec{A}$ and $\vec{B}$ can then be obtained as vector $\vec{C}$

$\vec{C} = (A_x i + A_y j + A_z k) + (B_x i + B_y j + B_z k)$

$= (A_x + B_x) i + (A_y + B_y) j$

Example

Dot product (scalar) of two vectors

The definition:

$$\vec{A} \cdot \vec{B} = |\vec{A}|\,|\vec{B}|\cos\theta$$

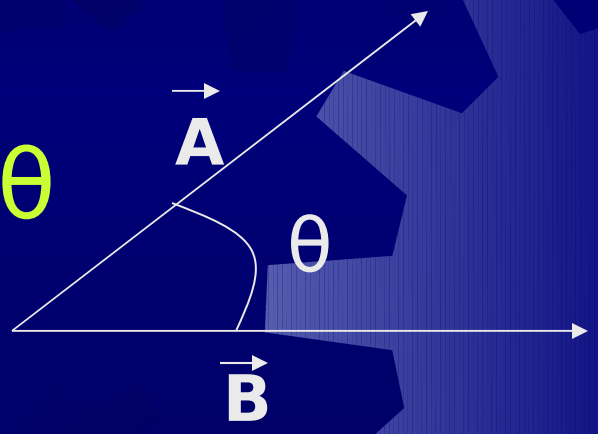

Dot product (scalar product) properties:

- if $\theta = 90^0$ (normal vectors) then the dot product is zero

$$|\vec{A} \cdot \vec{B}| = AB \cos 90 = 0 \quad \text{and} \quad i \cdot j = j \cdot k = i \cdot k = 0$$

- if $\theta = 0^0$ (parallel vectors) it gets its maximum value of 1

$$|\vec{A} \cdot \vec{B}| = AB \cos 0 = 1 \quad \text{and} \quad i \cdot j = j \cdot k = i \cdot k = 1$$

- the dot product is commutative

$$\vec{A} + \vec{B} = \vec{B} + \vec{A}$$

- Use the distributive law to evaluate the dot product if the components are known

$$\vec{A} \cdot \vec{B} = (A_x i + A_y j + A_z k) \cdot (B_x i + B_y j + B_z k)$$

$$= (A_x B_x)\, i.i + (A_y B_y)\, j.j + (A_z B_z)\, k.k$$

Cross product (vector) of two vectors

The magnitude of the cross product given by

$$|\vec{C}| = |\vec{A} \times \vec{B}| = |\vec{A}||\vec{B}|\sin\theta$$

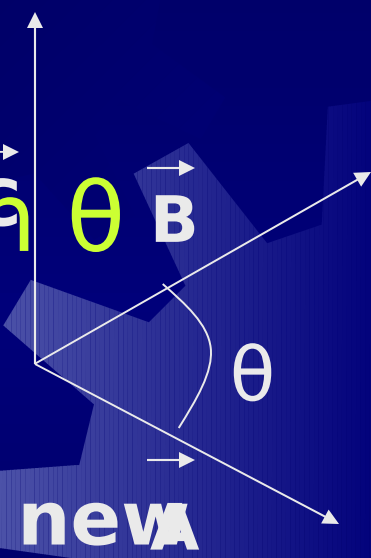

- **the vector product creates a new vector**
- **this vector is normal to the plane defined by the original vectors and its direction is**

Cross product (vector product) properties:

- if $\theta = 0^0$ (parallel vectors) then the cross product is zero

$$|\vec{A} \times \vec{B}| = AB \sin 0 = 0 \quad \text{and} \quad i \times i = j \times j = k \times k = 0$$

- if $\theta = 90^0$ (normal vectors) it gets its maximum value

$$|\vec{A} \times \vec{B}| = AB \sin 90 = 1 \quad \text{and} \quad i \times i = j \times j = k \times k = 1$$

- the relationship between vectors i , j and k can be described as

$$i \times j = -j \times i = k$$

$$j \times k = -k \times j = i$$

$$k \times i = -i \times k = j$$

Examples

Measurement and Error

THE END

Vectors are represented by an arrow

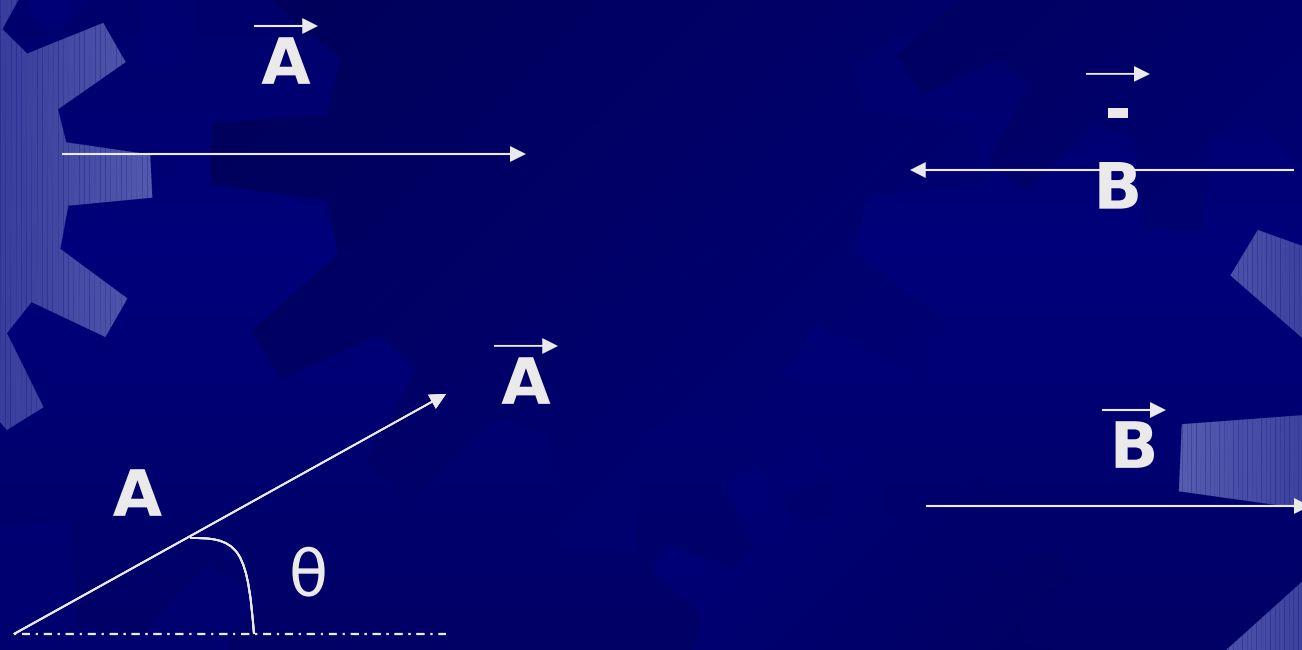

Conceptual Example

*

If B is added to A, under what condition does the resultant vector A + B have the magnitude equal to A + B ?

Under what conditions is the resultant vector equal to zero?

Example (1Dimension)

$x_1 + x_2$

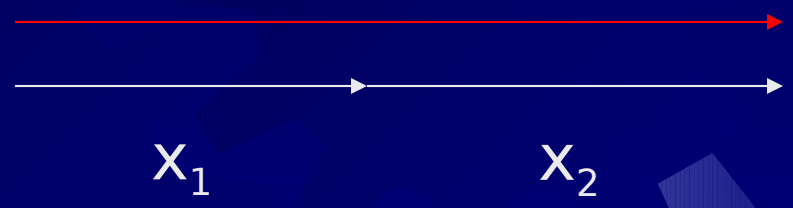

$x_1 + x_2 = 8$

$x_1 = 5$

$x_2 = 3$

$\Delta x = x_2 - x_1$

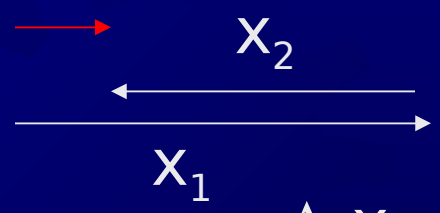

$\Delta x = x_2 - x_1 = 2$

MORE EXAMPLE

Example 1 (2 Dimension)

If the magnitude of vector A and B are equal to 2 cm and 3 cm respectively , determine the magnitude and direction of the resultant vector, C for

a) A + B

b) 2A + B

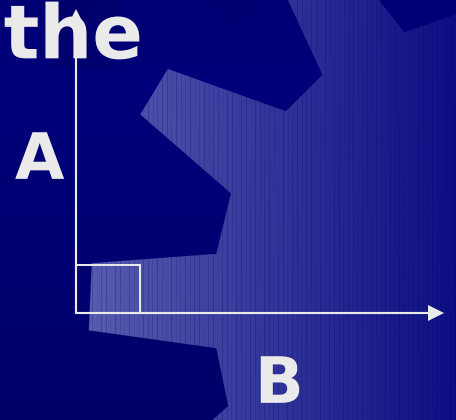

SOLUTION

Solution

a) $|A + B| = \sqrt{A^2 + B^2}$

$= \sqrt{2^2 + 3^2}$

$= 3.6$ cm

The vector direction

$\tan \theta = B / A$

$\theta = 56.3$

b) $|2A + B| = \sqrt{(2A)^2 + B^2}$

$= \sqrt{4^2 + 3^2}$

$= 5.0$ cm

The vector direction

$\tan \theta = B / 2A$

$\theta = 36.9$

MORE EXAMPLE

Example 2 (A Vacation Trip)

A car travels 20.0 km due north and then 35.0 km in a direction 60^0 west of north. Find the magnitude and direction of the car's resultant displacement.

SOLUTION

Solution

The magnitude of R can be obtained using the law of cosines as in figure

Since $\theta = 180^0 - 60^0 = 120^0$ and

$C^2 = A^2 + B^2 - 2AB \cos\theta$, we find that

$$C = \sqrt{A^2 + B^2 - 2AB \cos\theta}$$

$$C = \sqrt{20^2 + 35^2 - 2(20)(35) \cos 120^0}$$

$$C = 48.2 \text{ km}$$

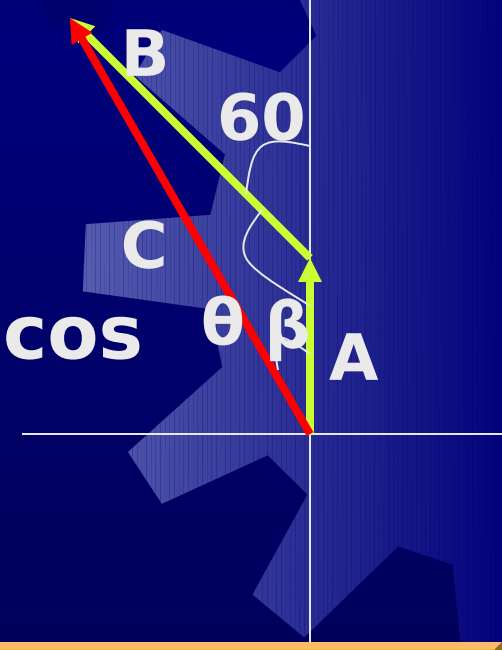

Continue

The direction of C measured from the northerly direction can be obtained from the sines law

$$\frac{\sin\beta}{B} = \frac{\sin\theta}{C}$$

$$\sin\beta = \frac{B}{C}\sin\theta = \frac{35.0}{48.2}\sin 120^0 = 0.629$$

$\beta = 38.9^0$

Therefore, the resultant displacement of the car is 48.2 km in direction 38.9^0 west of north

Conceptual Example

*

If one component of a vector is not zero, can its magnitude be zero? Explain.

MORE EXAMPLE

Conceptual Example

*

If A + B = 0, what can you say about the components of the two vectors?

Example 1

Find the sum of two vectors A and B lying in the xy plane and given by

$$A = 2.0i + 2.0j \text{ and } B = 2.0i - 4.0j$$

SOLUTION

Solution

*

Comparing the above expression for A with the general relation $A = A_x i + A_y j$, we see that $A_x = 2.0$ and $A_y = 2.0$.

Likewise, $B_x = 2.0$, and $B_y = -4.0$

Therefore, the resultant vector C is obtained by using Equation

$$C = A + B = (2.0 + 2.0)i + (2.0 - 4.0)j = 4.0i - 2.0j$$

or

$$C_x = 4.0 \qquad C_y = -2.0$$

The magnitude of C given by equation

$$C = \sqrt{C_x^2 + C_y^2} = \sqrt{20} = 4.5$$

Exercise

Find the angle θ that C makes with the positive x axis

Example

A particle undergoes three consecutive displacements $d_1 = (1.5i + 3.0j - 1.2k)$ cm,

$d_2 = (2.3i - 1.4j - 3.6k)$ cm $d_3 = (-1.3i + 1.5j)$ cm. Find the component and its magnitude.

Solution

$$\mathbf{R} = \mathbf{d}_1 + \mathbf{d}_2 + \mathbf{d}_3$$

$$= (1.5 + 2.3 - 1.3)\mathbf{i} + (3.0 - 1.4 + 1.5)\mathbf{j} + (-1.2 - 3.6 + 0)\mathbf{k}$$

$$= (2.5\mathbf{i} + 3.1\mathbf{j} - 4.8\mathbf{k})\ \text{cm}$$

That is, the resultant displacement has component

$R_x = 2.5$ cm $R_y = 3.1$ cm and $R_z = -4.8$ cm

Its magnitude is

$$R = \sqrt{R_x^2 + R_y^2 + R_z^2}$$

Example - 2D [headtotail]

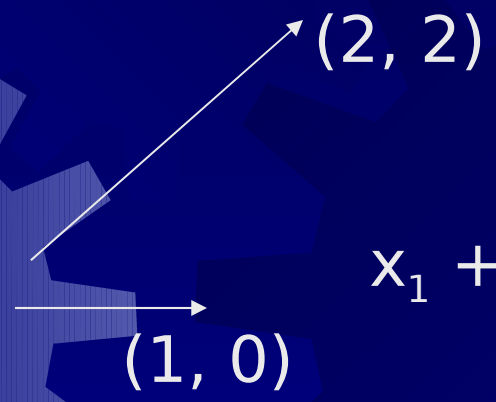

$$x_1 + x_2 = (1, 0) + (2, 2)$$
$$= (3, 2)$$

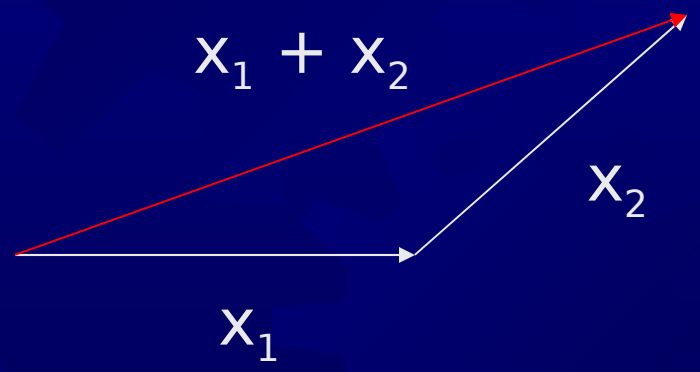

Example - 2D [tailtotail]

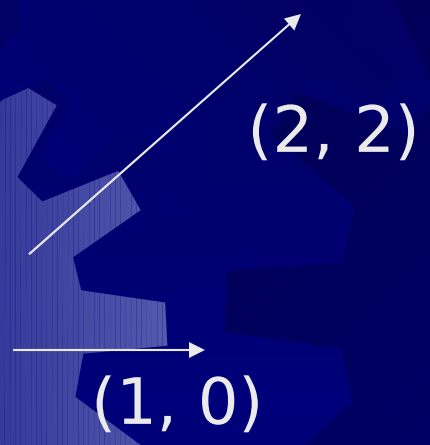

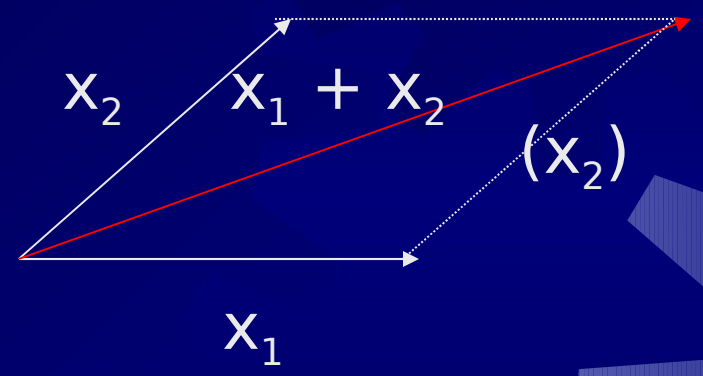

$$x_1 + x_2 = (1, 0) + (2, 2)$$
$$= (3, 2)$$

$x_1 - x_2$?

Example of 2D (subtraction)

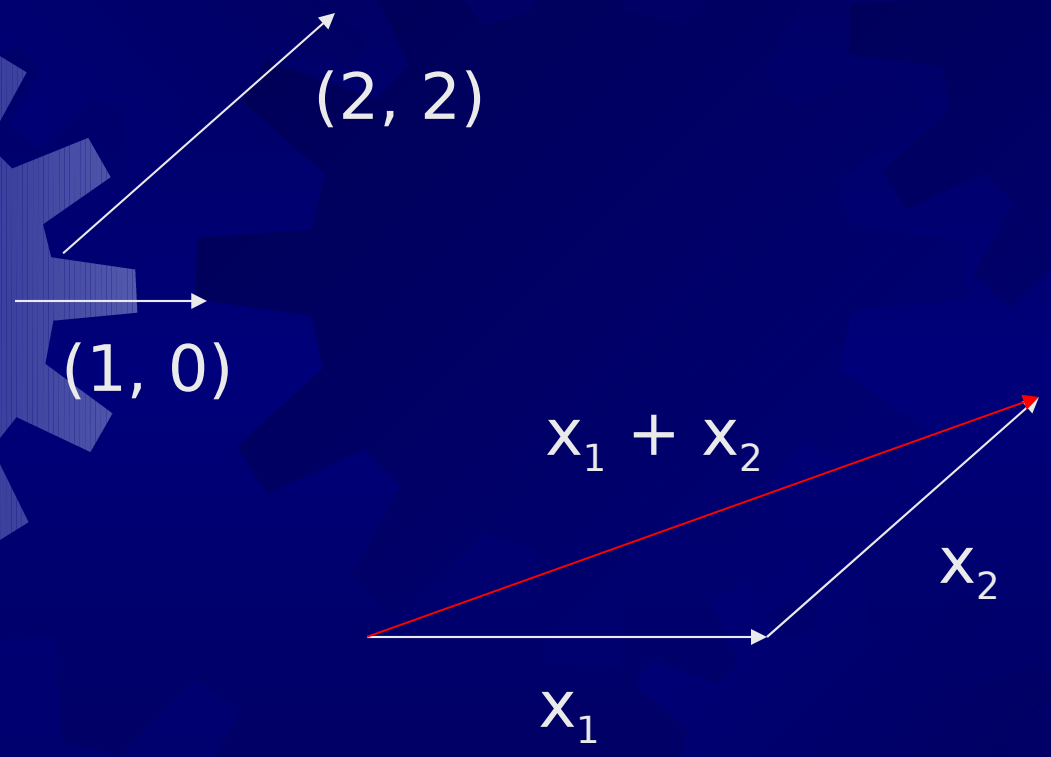

Example -2D for subtraction

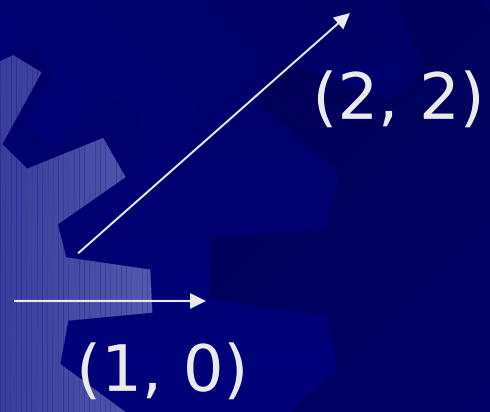

$$x_1 - x_2 = x_1 + (-x_2)$$

$$x_1 - x_2 = (1, 0) - (2, 2)$$
$$= (-1, -2)$$

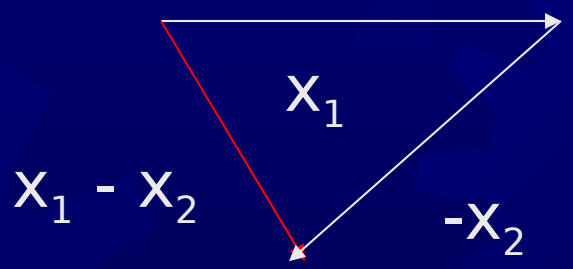

Not given the components?

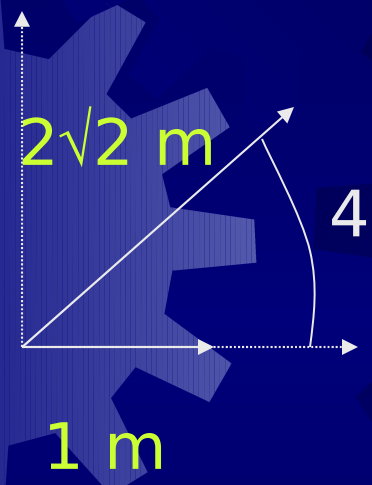

$X_1 = (1, 0)$

$X_2 = (x_{2E}, x_{2N})$

$= (2\sqrt{2}\cos(45^\circ), 2\sqrt{2}\sin(45^\circ))$

$= (2, 2)$

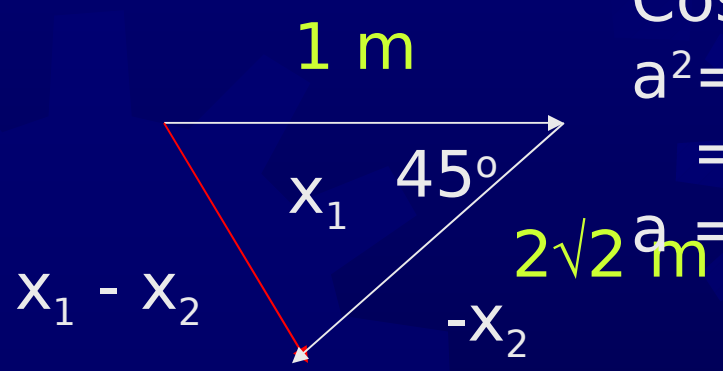

Cosine rule:

$a^2 = b^2 + c^2 - 2bc\cos A$

$= 1 + 8 - 2\sqrt{2}(1/\sqrt{2})$

$a = \sqrt{5}$ m

Scalar Wave Technology

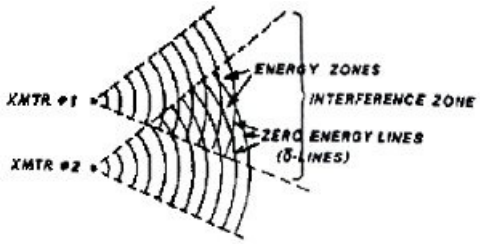

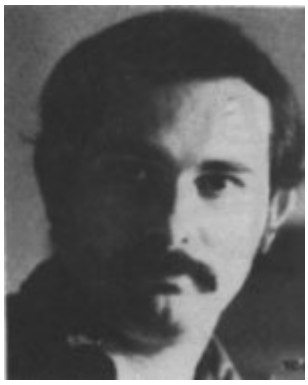

Scalar Wave Detection

Warren York
Scalar Wave Researcher

Originally published: **ExtraOrdinary Science (Volume 1, Issue 4; Oct/Nov/Dec 1989)**

WARNING: Do not attempt electrical construction on any of the equipment, coils or devices described here unless you are fully qualified. In some cases LETHAL voltages and charges are required. Also be advised that improper use, application and physical methods may cause psychological tramuma or permanent physical and neurological damage when near the vicinity of such equipment. This information is being provided as a point of interest to our readers... the publisher and author disclaim any responsibility in the use or misuse of this information.

Introduction

All of this talk so far on scalar waves and scalar technology has no purpose in the scientific community until something can be detected, observed and duplicated. The original seedlings and thoughts which led to Lt. Col. Bearden's scalar theories were developed out of observation. If not by Lt. Col. Bearden himself, then by others from many noncorrelated paths.

I already have given a small sample list of such observers from Nikola Tesla to the latest, Moray King. I have just read a newly released book by Moray entitled ***Tapping the Zero Point Energy***. I also recommend highly for others interested in scalar technology to obtain copies of Bearden's works and books from the new release of ***Excalibur Briefings*** to ***AIDS--Biological Warfare***. The two books and papers will fill in the much needed base work on understanding scalar technology and can be obtained through the High Energy Catalog.

I also understand that a new book is in the making which is a rebuttal entitled something along the lines of *Anti-Scalar*. All of this is healthy in any development process, for without pros and cons, the sorting of correct data to trash data cannot be accomplished. On the other hand, I would like to point out that any conclusions should be supported by actual tests and not just by armchair theory.

Anybody can debate from the armchair but to have any meaning to back up their statements, one must present tests where one gets his or her hands dirty. That is to say that until I had reactions and observed actual phenomena occurring, all the theories were no more than that--just theories. This is what I hope to accomplish here with these articles on scalar technology. I feel this is a true new technology and deserves some serious consideration.

If I had not gotten my hands dirty and followed through on others' experiments from other observers then I would never have been convinced that something extraordinary was taking place. Even though my senses told me I was wasting my time I set out on the monotonous task of duplicating others's work and notes of observation. This is what I hope some of you will do and start to help unfold and unleash this hidden knowledge called scalar -- zero point energy -- stress energy and even radionics. Itis true indeed that it has many names over the years, but now we can at least have hope of defining its true limits and abilities.

The detection methods I will present here are not confirmed by myself or corresponding researchers as of yet due to development is still in progress. In one method I can only accept the word of the researcher as to his results. Until I or others duplicate results it remains a possible process and approach in detection.

My own detection came in the form of two experiments which were reproductions of another author's work based on this technology. When I had reproducible results I knew there was more to scalar than just theory. The process is now underway in developing a reliable instrument or means of detection that others can use. Up to this point most of scalar observations have been uncertain and always with the person or operator being part of the circuit. Nobody could remove the person at this point to bring scalar under true observation conditions. Due to a simple observation in Mr. George Meek's work in electro-voice phenomena (EVP), where my first breakthrough was established, this now seems a possibility. The personal element was still included in the circuit but unlike radionics or Hieronymus devices, could be reproduced by anybody once special conditions were met. A co-researcher has hit upon a method which was initially observed by Nikola Tesla and shows promise of another breakthrough in removing the personal element.

I will now discuss my initial breakthrough to scalar detection which will help you follow my thinking on what is needed and just what we are looking for in scalar detection. Scalar properties are the dictating key elements in this approach. I will then describe a possible detection method of another researcher and finally what I feel will be a unique approach with an instrument currently under construction by Mr. Russell Clift, a co-researcher/inventor, and myself. Do not feel you have to adhere to these techniques for they are only a guideline and starting point to spring from in your own approach to this subject. They are not established yet and will most likely be altered many times before their completion.

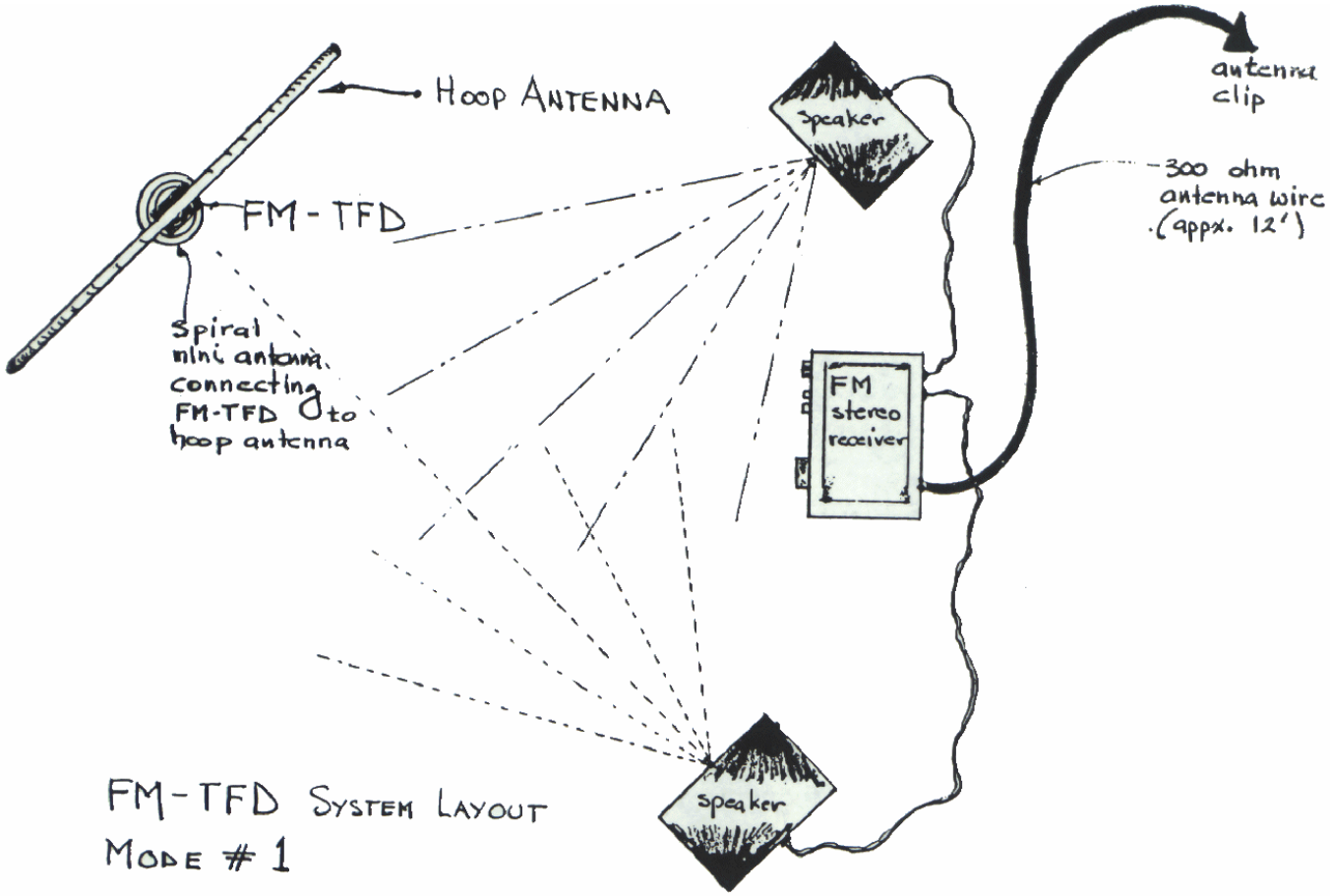

Figure 1. **System Layout for FM-TFD [Mode 1]**

As in all unknowns there are always unforeseen dangers involved and one should always use extreme caution and behave professionally in all approaches with any experimenting. Madame Curi and the XRay research is a good example. They paid dearly for their progress in X-Ray development with their lives. Scalar and its properties can be just as deadly as it is fascinating. I hope you read the seriousness in my tone for no matter how science fictionish scalar may sound to you now, I assure you the reality of actuallity can end up staring you in the face.

<u>Breakthrough Event</u>

Several years ago a Mr. George Meek presented me with construction planes and notes to a device he called Mark V. [Figure 1] Mr. Meek had been researching a phenomenon better known as EVP, or electro-voice phenomena. [Figure 2]

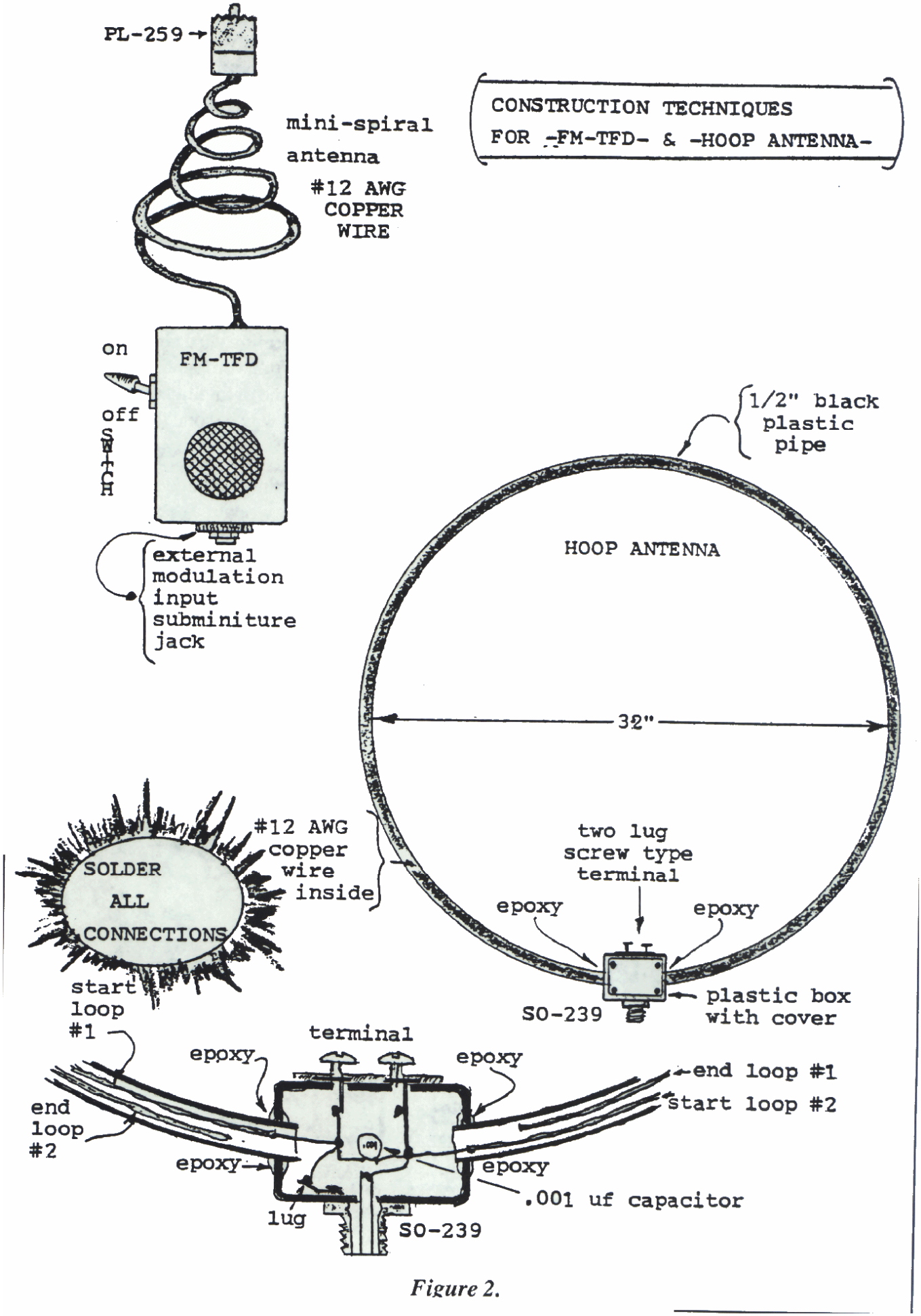

Figure 2.

Figure 2. **Construction Techniques for FM TFD & Hoop Antenna**

I would like to take a second here and answer a letter from one of **Extraordinary Science**'s subscribers printed in our last issue. Mr. Jeff King from New Zealand had written to the effect if perhaps I could cover what relationship scalar technology has in reference to EVP. [Figure 3] Well here it is, for this was the first reproducible effect dealing with scalar energy [interference pattems] [Figure 4] that I could verify really took place. My second breakthrough was also in the EVP area but I will not be able to go into it at this time due to available space to cover what must be covered now.

In short, Mr. Meek claimed to have a fantastic breakthrough of his own in the communications field of EVP. His claims were a recorded two-way conversation with another dimension. ***ZAP!*** Right here one would stop and feel that Mr. Meek and his researchers needed psychological help as I am sure some of you feel about me at this point. I contacted Mr. Meek and he flew down to El Paso so we could talk in person. He brought me two audio tapes of which one surely did have what appeared two-way communication in real time.

Up to this point all EVP claims were after the fact type of events. That is, the voices always appeared on blank tape after the operator had run the tape recorder for a period of time. No audible sounds were heard during the initial recording, only after playback of the tape--sort of the same thing being done now with channeling, but the person is still part of the circuit. Not all voices were understandable or clear enough to be real voice prints or just random white noise perhaps forming what almost sounds like words. In other cases, the words and even statements were definitely clear and of intelligent source. Well, Mr. Meek's tape went way beyond this to a two-way real time conversation.

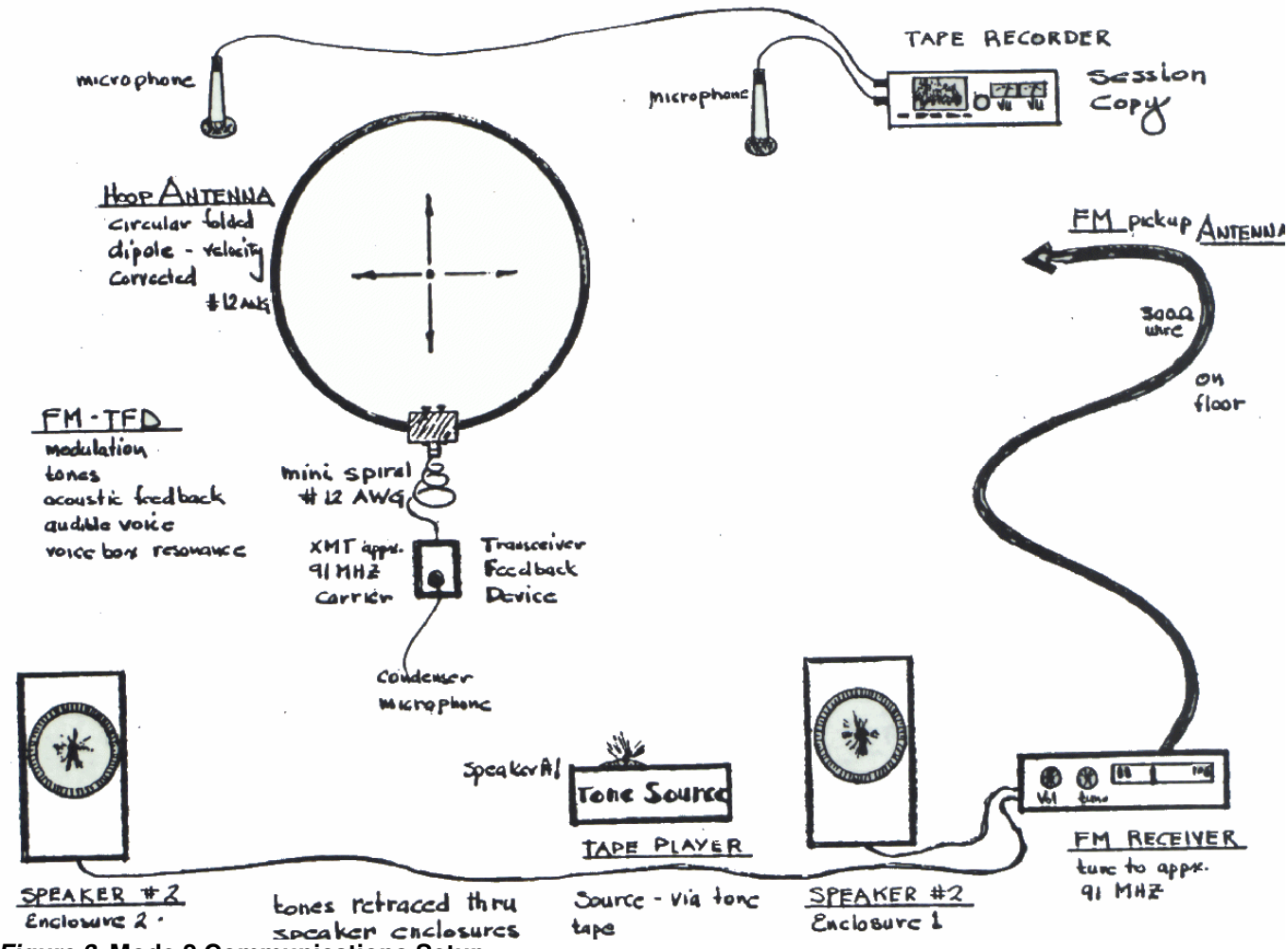

Figure 3. **Mode 2 Communications Setup**

Fascinated by these claims I wanted to know more on how such a process worked. This is where he presented me with the second tape. It consisted of thirteen mixed electronic tones. No, there is no magical number in why thirteen tones were used only that they were needed to create interference patterns. These tones with an acoustical feedback and RF transmission with a Smith coil produced a unique interference pattern [scalar-RF and acoustical stress field].

I followed the notes and set out to reproduce this fantastic claim. At one point in the notes was one observation statement:

The system seems capable of feeding back changes in emotional states.

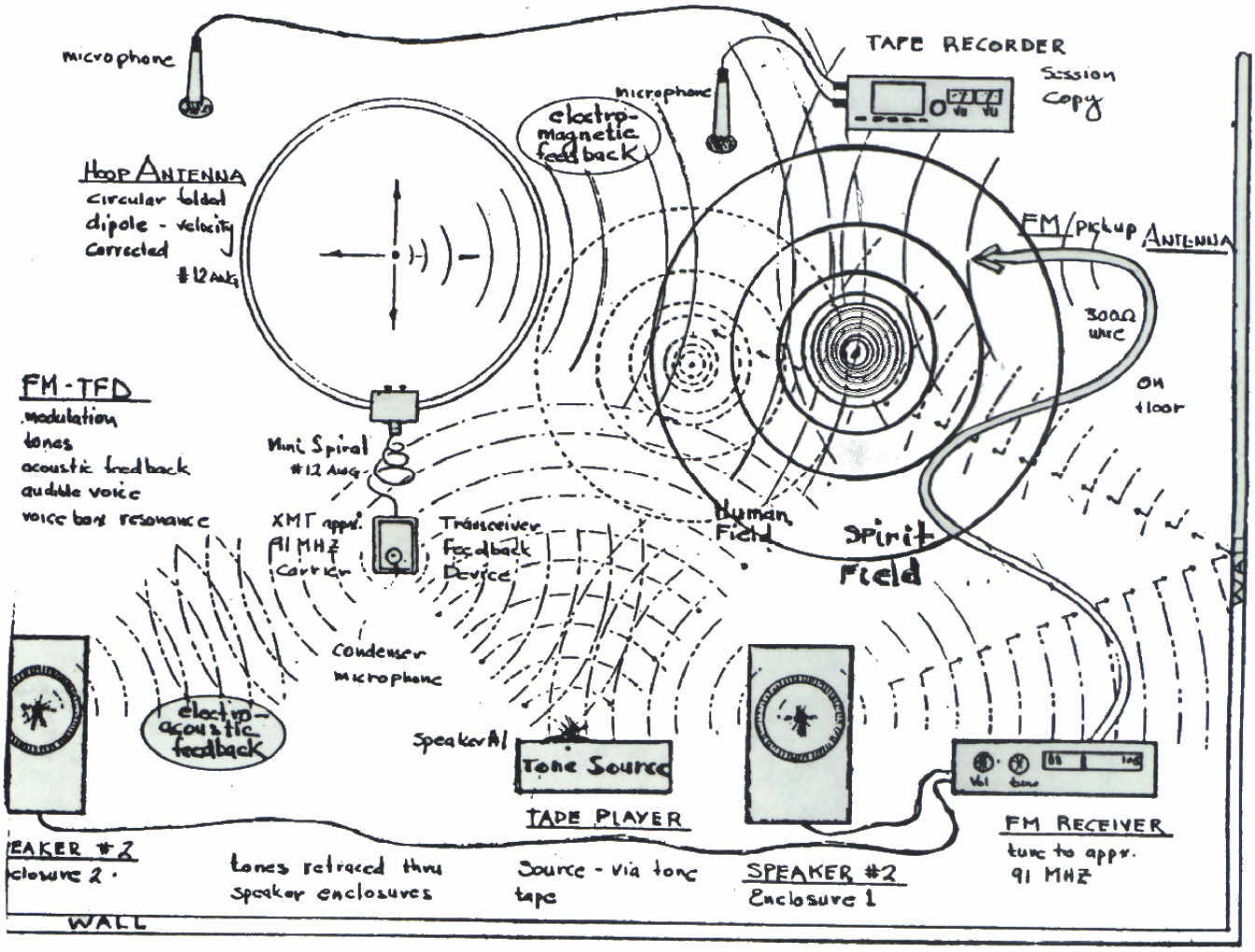

Figure 4. **Mode 2 Communications Interference Pattern**

I stopped there and to my amazement found the observation to be true. I was able to control an avalanche effect in a balanced tone of a set of acoustical and RF frequencies with only my own concentration -- no doppler effect or movement or contacts to my body in any way. I taped this effect and it is available to those who wish to observe the level of control of an electrical circuit with shear stress energy from a human.

This observation is equal to Nikola Tesla's observation of his plasma globe and tensing a fist. He found the plasma trail would rotate in relation with the tension or muscle pressure produced. I will cover this process in a moment for the plasma approach in construction a scalar indicator seems to be ideal due to its extreme sensitivity that up until now has been the human or personal element.

<u>Bedini Version ---- Dea/Faretto Scalar Detector</u>

In this version of an electromagnetic scalar detector you will see that a coil is suspended in a magnetic field within a shielded case. [Figure 5] It is not indicated but I am sure the coil should be wound as a scalar coil. See "Construction of a Scalar Coil," **ExtraOrdinary Science**, Vol.I, Issue 3, page 16. The shielding is so all that known EMF fields will be run to ground and not affect the sensor within the case. As you know, one of the properties of scalar energy is that it cannot be shielded. All known EMF will be stopped from entering the case except gravity fields and scalar energy.

I am not saying that gravity fields or scalar fields are EMF, but only that the formula to each have a basic root in the EMF part of the spectrum. A generated scalar pulse or field will cut past the case shielding and affect the atoms of the scalar coil within the magnetic field which in tum will be coupled to the op amp. Any change or effect will then be displayed on the scope indicating a pulse or field of some kind has gotten past the system's shielding and to the sensor. You should see a change in the display around 6AM when the sun comes up and there is a slight gravity shift. [1,2]

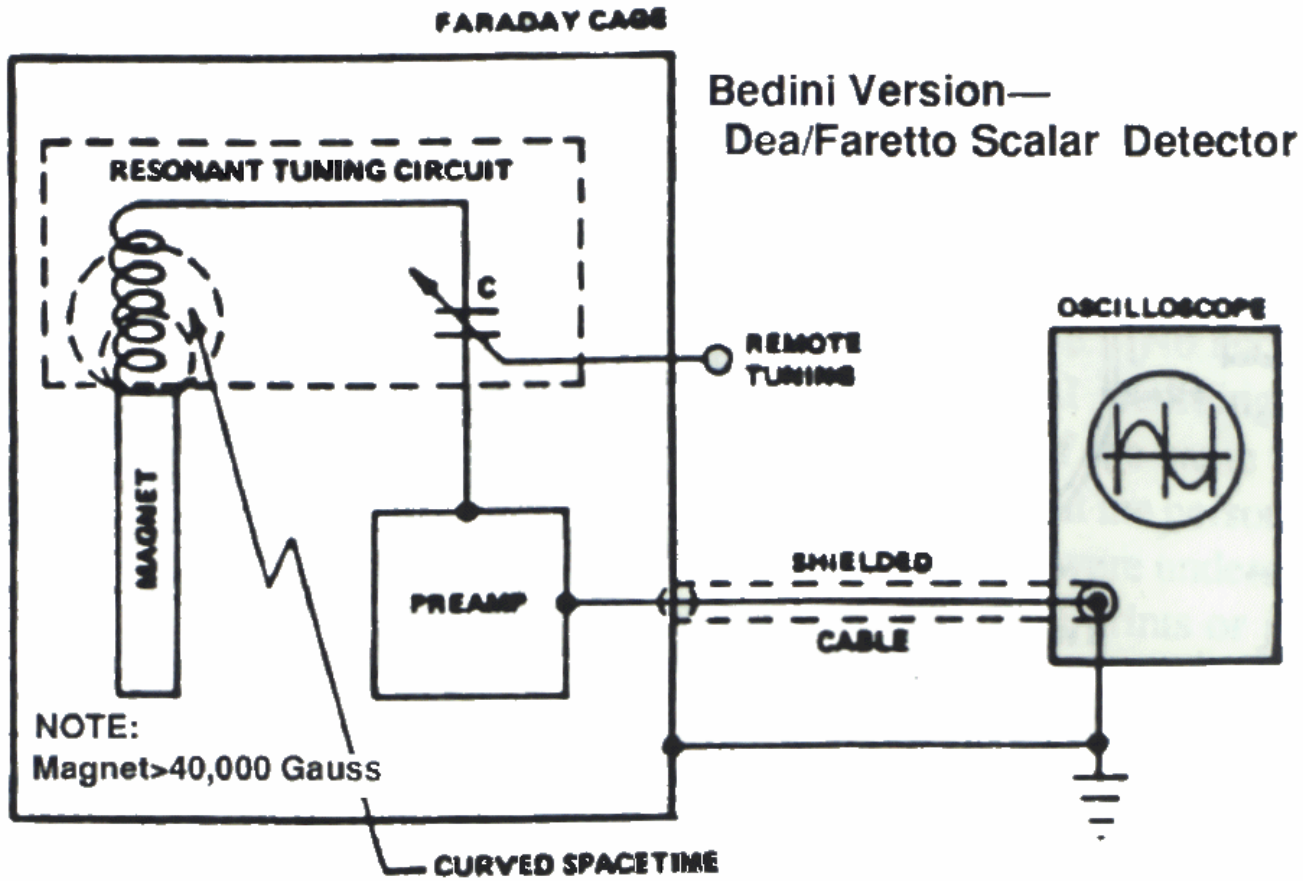

Figure 5. **Bedini Version of Dea/Faretto Detector**

<u>Plasma Scalar Detector</u>

This is the method which is under construction by Russell Clift and myself. At the time of this printing the construction is not far enough to give any details or results as to this approach. [See Figure 6] This is based on the same construction of Nikola Tesla's experiment.[3] Figure 7 is for experiments with various voltages and ion currents. Figure 8 is a simple multiplier for the AC supply shown in Figure 6.

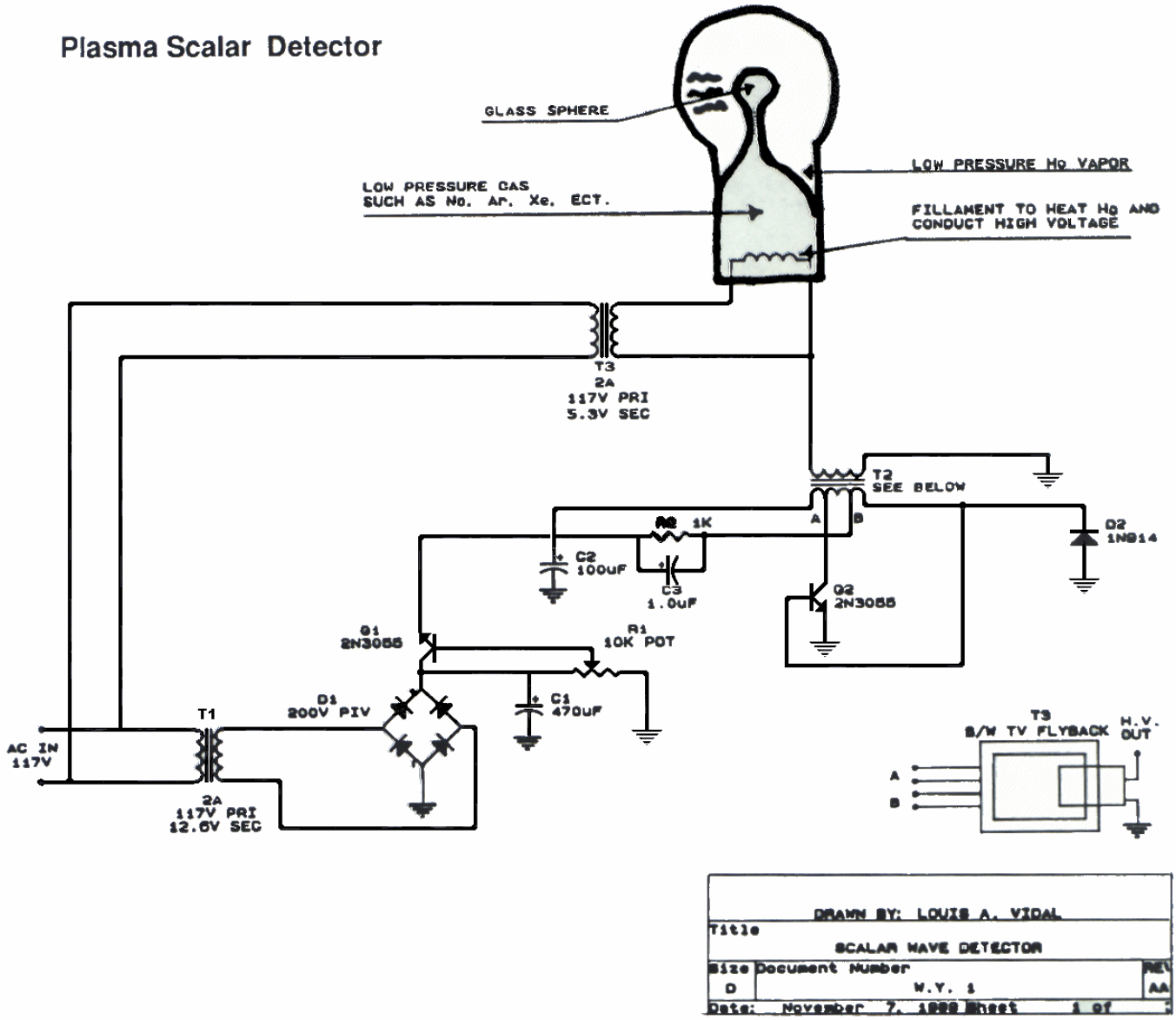

Figure 6. **Plasma Scalar Detector**

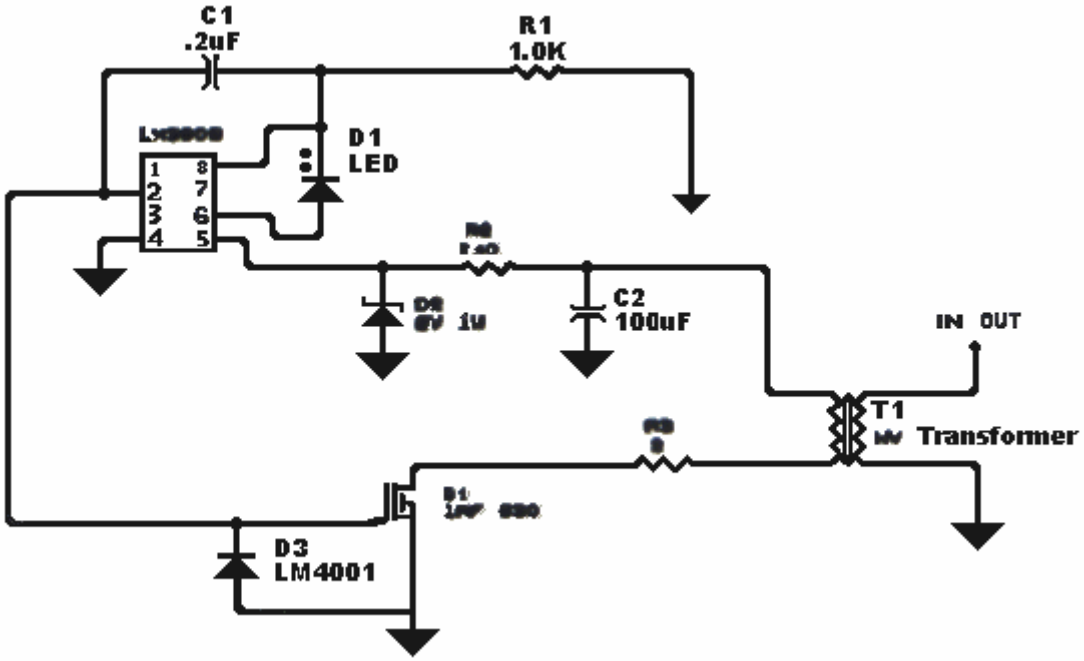

Figure 7. **Power Supply**

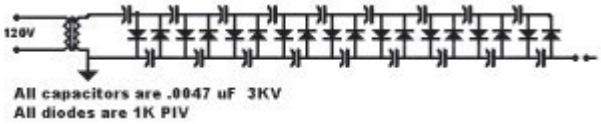

Figure 8. **Voltage Multiplier**

I know I have just touched upon this subject so far but I hope I have given some of you starting points in your own research and findings. I will welcome any and all papers or works you may do in the scalar field and submit your work for publication here for others to read and gain from. Will be looking forward to your replies in the new year. Thank you for your interest.___***WRY***

References

1. Michael Polonyi, "Electrodynamics, Inertia and Gravitation: A Unifying Approach," **Speculations in Science and Technology**, Vol. 10, No. 2, page 145, 1987.

2. Gregory Hodowanec, "Gravitational Impulses," **Electronics Experimenters Handbook**, January 1989, page 114.

Thomas Cummerford Martin, **Inventions. Researches and Writings of Nikola Tesla**, page 226 to page 228.

LONGITUDINAL DIELECTRIC WAVES IN A TESLA COIL AND QUATERNIONIC MAXWELL'S EQUATIONS.

Revised

Roberto Handwerker (Dr.Eng.)
2011 - DELTA Ingegneria® - Milan, Italy
deltaavalon.com

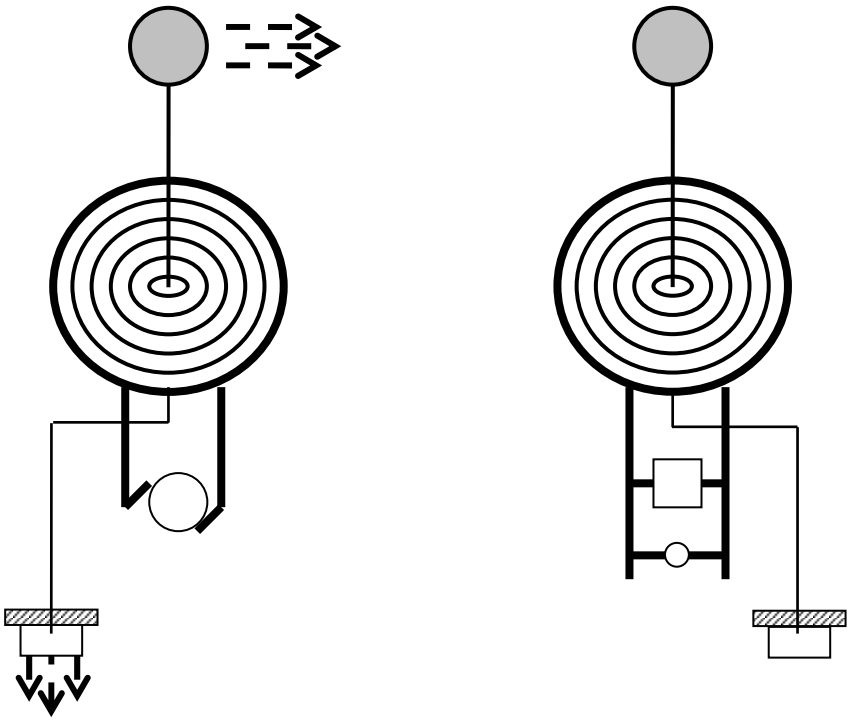

Longitudinal dielectric waves in a Tesla Coil and quaternionic Maxwell's equations.

Roberto Handwerker (Dr.Eng.)
2011 - DELTA Ingegneria® - Milan, Italy
deltaavalon.com

Abstract

The Academic World has always officially considered the transformer known as the "Tesla Coil" with its peculiar characteristics only as an electrotechnics device, a pure and simple "transformer", and only as an apparatus for producing sparks, lightning-like discharges and high voltages impressive electric effects. By closer scientific investigation of the device it is however possible to throw new light on some aspects of the coil invented by Nikola Tesla more than a century ago, in particular regarding the emission of longitudinal dielectric waves. An analysis supported by a physics/mathematics approach which recalls the original quaternionic notation of Maxwell's equations, involving the prediction of the existence of dielectric scalar fields and longitudinal waves and also supported from empirical experimentation and research on the device itself is made. This new point of view discloses some new and striking facts regarding the coil and the related energy field, which leads to a completely new and surprising realm.

However, it seems puzzling that the possibility of existence of scalar fields and of related longitudinal dielectric waves is still not accepted by the Academic World, which in turn gives neither sufficient justification nor proves to support its sceptical position which excludes the existence of said waves.

HIGH VOLTAGE HAZARD

DISCLAIMER: WARNING ! THE FOLLOWING EXPERIMENTS AND TESTS MAKE USE OF HIGH FREQUENCY RADIO WAVES AND HIGH VOLTAGE (POSSIBLE EMISSION OF X-RAYS, UV AND OTHER HARMFUL RAYS): PLEASE DON'T TRY TO REPLICATE THESE UNLESS YOU ARE WELL-EXPERIENCED AND SKILLED IN HIGH-TENSION ELECTROTECHNICS AND RADIO-TECHNOLOGY: DANGER OF SERIOUS AND EVEN FATAL INJURIES TO PERSONS,DAMAGE TO PROPERTY!

RADIO WAVES HAZARD

1. Introduction

It is well known that J.C. Maxwell issued in 1873 his *"A treatise on electricity & magnetism"*[1] where he presented in an elegant form the results of his studies, writing some 20 EM equations; in the beginning he thought to make use of quaternions[8], whose calculation was but not quite simple, later Heaviside and Gibbs introduced the vector notation, in order to "simplify" the equations. It will be useful to remember that quaternion numbers consist in four terms, whereas vectors consist only in three terms as in following example:

$$\tilde{\mathbf{A}} = a + b\mathbf{i} + c\mathbf{j} + d\mathbf{k}$$

$$\mathbf{V} = a\mathbf{x} + b\mathbf{y} + c\mathbf{z}$$

The two systems follow different calculation rules, for instance the former has anticommutative property, the latter on the contrary has commutative property.

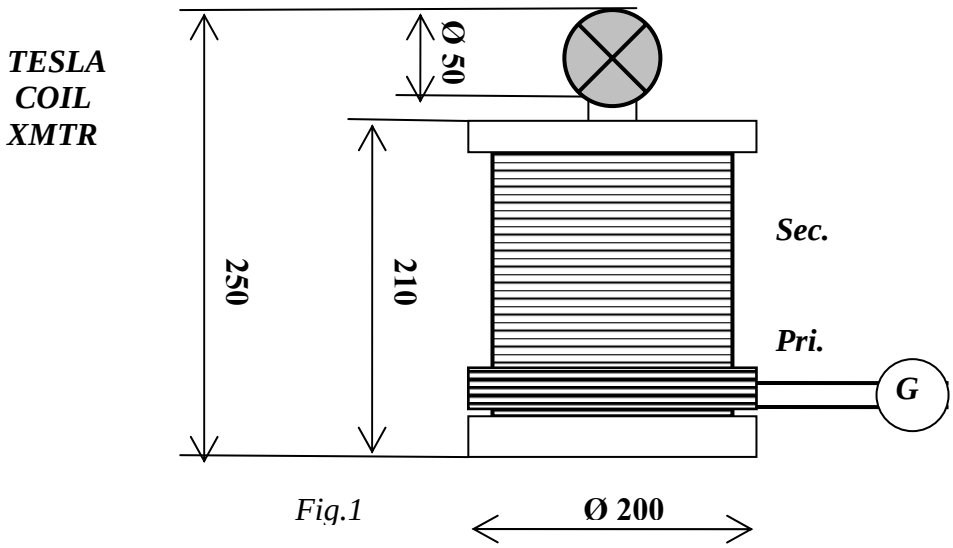

Fig.1: Tesla coil Transmitter (XMTR) used in laboratory during tests; the particular design utilized in the investigation is called "Extra Tesla Coil", having cylindrical form and being mainly constituted by a primary coil (Pri.), a secondary coil (Sec.), top capacitance (bulb) and a high frequency-high voltage generator (G). Measures are in [mm].

Regarding the existence of longitudinal dielectric waves, there are two possible explanations about why these do not appear in the well-known today's Maxwell's equations, which are the fundament of modern electromagnetism:

a) Today's vector notation was introduced, after the death of J.C. Maxwell, by Heaviside and Gibbs who "simplified" the original quaternionic[8] notation proposed by Maxwell; therefore the actual set of equations would be partially incomplete, excluding longitudinal waves.

b) J.C. Maxwell first issued his set of equations in 1865 including electromagnetism related phenomena which has been observed or at least which he reported, that he judged to be fundamental; but N. Tesla discovered new dielectric induction phenomena only later, in 1892. Anyway, the two above possibilities doesn't exclude each other.

2. Maxwell's equations

The (Heaviside's) commonly adopted vector notation of Maxwell's equation in differential form is following:

$$\nabla \cdot \mathbf{B} = 0 \qquad \text{(Magnetic flux theorem)}$$

$$\nabla \cdot \mathbf{E} = \rho/\varepsilon_o \qquad \text{(Gauss's Law-Dielectric flux)}$$

$$\nabla \times \mathbf{E} + \partial\mathbf{B}/\partial t = 0 \qquad \text{(Faraday's law)}$$

$$c^2 \nabla \times \mathbf{B} - \partial\mathbf{E}/\partial t = \mathbf{J}/\varepsilon_o \qquad \text{(Ampére's law)}$$

where: $\mathbf{E}$ = dielectric field; $\mathbf{B}$ = magnetic field;
ρ = charge density; ε_0 = dielectric constant in vacuum;
$\partial/\partial t$ = time partial derivative; J = current intensity.

Fig.2

Fig.2: Two flat spiral Tesla coils or "pancake" coils: a Transmitter (XMTR) and a Receiver (RCVR) both connected to the ground as described in Tesla's Patent n.649621 from May 1900.

The employ of quaternions by informatics increases computer calculation speed and allows memory space spare up to 55%, which is a great advantage for instance in aerospace navigation (typically in inertial platforms)[5]; their application to Maxwell's equations reveals some unexpected elements.

Starting from another point of view it would be possible to write the Maxwell set of equations by the quaternion notation, which even if it is more complicated on one hand, on the other hand it leads to some unexpected and striking results which in particular involve the prediction of the existence of longitudinal dielectric waves; this fact was already claimed by other Authors (for example Ignatiev G.F. & Leus V.A.)[10] and on the basis of some R.F. (= Radio Frequency) experiments by the employ of transmitting and receiving devices with ball-shaped "antennas" even from others. Besides this, if the claimed possibility by some physics (see appendix: Arbab A. & Satti Z.[6]) of deriving Maxwell's equations from only one *wave quaternion vector potential* or:

$$\tilde{\mathbf{A}} = (i\varphi/c \ , \ \mathbf{A})$$

where:

$$\tilde{\Box}^2 \tilde{\mathbf{A}} = \mu_o \mathbf{J} \quad , \quad \mathbf{J} = (ic\rho, \mathbf{J})$$

by respect of the Lorenz gauge will be considered as accepted, so it will be possible to take into account an extended result of today's Maxwell's vector form. This imply the existence, besides the well-known EM Transverse waves (T.E.M.= Transverse Electro-Magnetic), also of Longitudinal waves (L.M.D.= Longitudinal Magneto-Dielectric), whose scalar potential "φ" is related to its dielectric field "**E**" by following equation:

$$\mathbf{E} = \nabla \varphi$$

This theoretical result was also supported from experimental laboratory investigation which made use of "Tesla Coils" which are, as it will be readily seen, not only "transformers" for high frequency

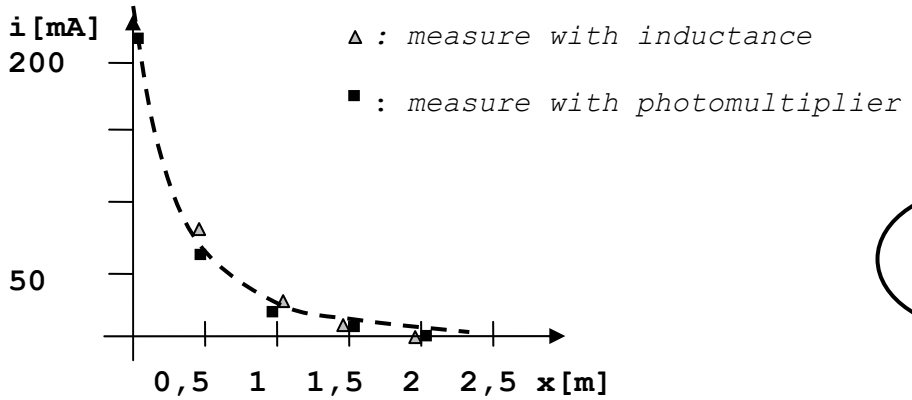

Fig.3

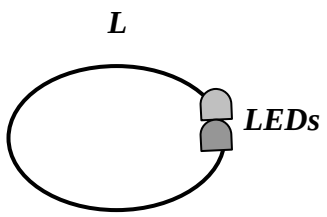

Fig.4

Fig.3: Diagram shows the relationship between energy field intensity and distance of the photomultiplier (type "931-A") from the XMTR Tesla coil as a function of current values read by quantitative measuring device (M); the dots shows normalised measured values whereas the dotted line shows the expected quadratic diminishing curve for waves by increasing distance (x) from the Transmitter.

Fig.4: Small wire loop (L) series connected with two LEDs of different colour and slightly different sensibility was used as a "detector" for resonance frequency and as an auxiliary qualitative measuring device of the Tesla coil field intensity for tuning purposes.

low voltage into high frequency (= HF) high voltage (= HV) or devices for creating spectacular lightning-like electric discharges, but are also a useful means to show the existence of the dielectric longitudinal field, which is generated by the peculiar design and construction of the coil itself. In fact, it will be shown the capability of this kind of field of transmitting electrical energy and not only weak signal in the surrounding medium, and to drive not only light bulbs and neon tubes as commonly thought, but even common DC electric motors under proper conditions. The investigation has been conducted by means of empirical observation, experiments and tests with the help of usual electrotechnics measuring devices as oscilloscope, analogic multimeter (having more "inertia" due to internal coil and indicator, so being less affected by fluctuations), small pocket AM radio receiver device, brass metal plates, copper wire loops with LEDs as detectors and other rather common devices to detect and analyse EM (= Electro-Magnetic) fields and waves: it was avoided the use of complicated systems according to the "keep it simple" philosophy also in order to make following experiments and tests fully replicable, which is of course the main requirement of scientific investigation and research. For the complete calculation reference is made to Arbab A. & Satti Z.[6], and it will be readily shown that according to their work, Maxwell's equations could be simply expressed in the quaternionic form by the following two equations:

$$1/c^2\ \partial^2\mathbf{E}/\partial t^2 - \nabla^2\mathbf{E} = -1/\varepsilon_o\ (\nabla\rho + 1/c^2\ \partial\mathbf{J}/\partial t) \qquad (1)$$

$$1/c^2\ \partial^2\mathbf{B}/\partial t^2 - \nabla^2\mathbf{B} = \mu_o\ (\nabla \times \mathbf{J}) \qquad (2)$$

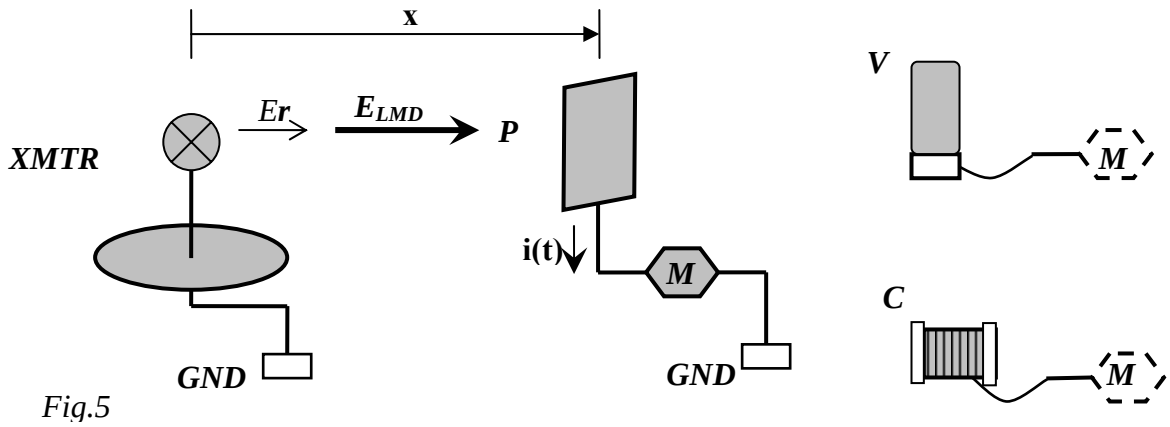

Fig.5: Suspended insulated metal plate (P) (dimension: 120x130mm) series connected to a quantitative measuring device (M) and to ground; the plate acts as a receiver of energy, which gives rise in the plate to a comparatively strong current that flows through the device into the ground; a vacuum tube device (V) type "931-A" was then connected to the measuring device (M) instead of the metal plate (P) in order to further analyse the electric field.

The generic scalar field "Σ" was introduced and consequently also the current density can be written as $\mathbf{J} = \nabla \Sigma$, the following new gauge transformation can be considered:

$$\rho' = \rho + 1/c^2\, \partial\Sigma/\partial t \quad \text{and} \quad \mathbf{J}' = \mathbf{J} - \nabla \Sigma \qquad (3) \text{ and } (4)$$

it is then noted that the scalar Σ satisfies the wave equation:

$$\boxed{1/c^2\, \partial^2\Sigma/\partial t^2 - \nabla^2 \Sigma = -(\nabla . \mathbf{J} + \partial\rho/\partial t)} \qquad (5)$$

Further, from the above mentioned work it would descend that the charge density ρ and the current intensity **J** would travel at the speed of light; so Maxwell's equations could be seen as a special case of equations (1) and (2). Then, this implies that the scalar wave Σ distribution would therefore induce a

charge density:

$$\boxed{\rho = -1/c^2\, \partial\Sigma/\partial t} \qquad (6)$$

and a current intensity:

$$\boxed{\mathbf{J} = \nabla \Sigma} \qquad (7)$$

even if charge ρ and current **J** were not present in a particular zone. This aspect could help explain for example the working principle of an electric condenser (capacitor), otherwise stated why metal plates which are separated by a dielectric non-conductive material, therefore not in direct contact between them, do conduct an electrical current: it is

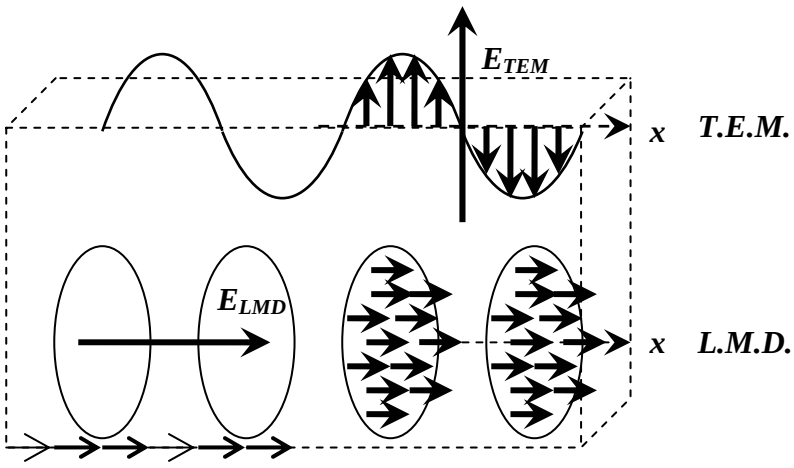

Fig.6

*Fig.6: The two wave components present in the energy field are the T.E.M. (= Transverse Electro-Magnetic, $\mathbf{E}_{TEM}$) and the L.M.D. (= Longitudinal Magneto-Dielectric, $\mathbf{E}_{LMD}$) by the same propagation direction (**x**). Keeping in mind the "hydrodynamic analogy" between electrotechnics and fluidics, sea waves are ideally an example of both T.E.M. (surface waves) and of L.M.D. (deep "tsunami" pressure waves).*

then noted that commonly alleged theories of "displacement currents" phenomena do not constitute a really convincing explanation, in particular it is not clear how an electron current could freely "pass" or "jump" through the dielectric according to common theories; an interesting hint to this is given by Steinmetz C.P.[7] if the possibility is considered, that by electrostatic (i.e. dielectric) fields charges are not only confined on the surface of the charged conductors, but are even present in the surrounding space, just in a similar way as it happens for magnetic fields.
This is a physical and mathematical approach and also a possible explanation to the question marked as "a)" in the introduction.

3. Dielectric induction phenomena and longitudinal dielectric waves

The second question set in the introduction and marked as "b)" departs from mere mathematical/physical calculation and is rather related to the researches and experiments of Dr. N. Tesla, which in 1892 observed what he often used to call "curious and striking phenomena" of electricity, which he described in his writings or during his academic lectures delivered before the Scientific Community[3],[4], and that made him practically abandon his studies on high frequency alternating currents and start exploring a new realm. The phenomena referred to have yet partially been observed for example in 1872 by Elihu Thomson[9] during a lesson at the Philadelphia High School, where he was a teacher. By doing a demonstration with a Ruhmkorff induction coil and willingly to better show the effects to the students sitting far from the device, he made some changes in the circuit obtaining, instead of the normally displayed purplish-blueish sparks, impressive big and white electric discharges, and metal objects in the room became strangely electrified and kept throwing sparks in the surrounding space as the device was turned on. This effect could have been due to a new and peculiar form of dielectric induction. Tesla realised a number of devices in order to better investigate the matter and at the end perfected his particular Coil, a seemingly simple device but hiding many peculiar characteristics as regards the transmission of energy and signal through the natural medium, which will not be discussed here, and last but not least, to

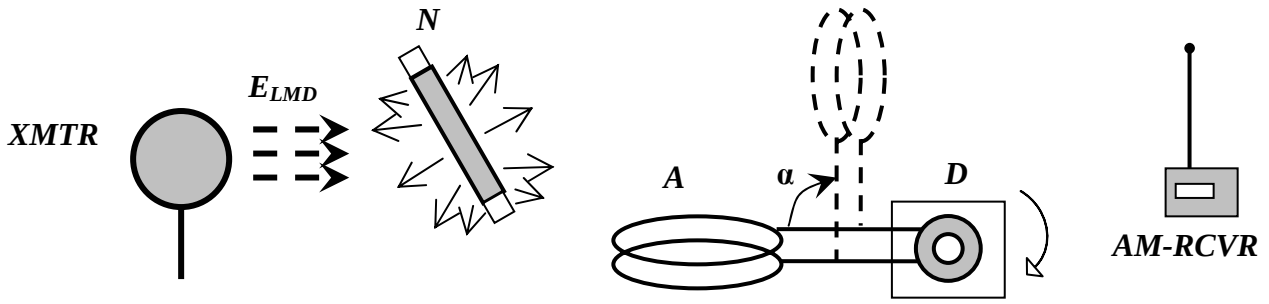

Fig.7

Fig.7: Neon tube (N) in the XMTR's energy field lit to its full brightness without any energizing wire connected to it nor other energy supply; a double copper wire loop (A) "antenna" series connected to a small DC electric motor (D) could be tilted up to an angle α= 90° with respect to a horizontal axis without affecting the energy transmission to the motor.

investigate the existence besides of a Transverse Electro-Magnetic, of a Longitudinal Magneto-Dielectric field in the medium around it. It is convenient at this point to shortly illustrate the construction of a typical "Tesla transformer" by its main components:

1- The generator (HV & HF)
2- The primary (coil) circuit
3- The secondary (coil) circuit
4- The top spherical inductance (lamp bulb / metal sphere)

The generator is designed to provide currents of high frequency and high voltage to the primary circuit, which is basically constituted by a coil and a capacitor (which will be called here a "condenser" as used by Tesla time) and a spark-gap forming an oscillator; the primary is coupled to another coil without any iron core, on the top of which is another condenser, this time of spherical form, together forming the secondary of the transformer. The secondary coil can be connected or not to the ground. The above described coils with the related suitable generator constitute the XMTR (= Transmitter), whereas a similar device also comprising a primary and a secondary, but without the generator, constitutes the RCVR (= Receiver). The connection between the two devices can be made by a single wire, by the ground or by water, however here will be only discussed the XMTR with respect to the generation of longitudinal dielectric waves; of course the device emits also usual T.E.M. waves because of the solenoid form of its coils. It is to be noted that the capacitance on the top of the secondary coil has a spherical form; when the generator energizes the oscillator in the primary, energy transfer occurs to the secondary of the "transformer" by dielectric induction without the presence of any iron core in the coils. The energy of the primary is inducted to the secondary where the voltage is greatly increased to huge values depending from the construction parameters of the device as material, components, dimensions, proportions etc., even if it can be stated that already a few turns of wire in the secondary coil could give rise to hundreds and even to millions of Volts without any difficulty as it should be for well-tuned Tesla Coils. The HF-HV is maximum on the top of secondary corresponding to the sphere capacitance/condenser (in this case an argon lamp bulb because of the small dimension of the

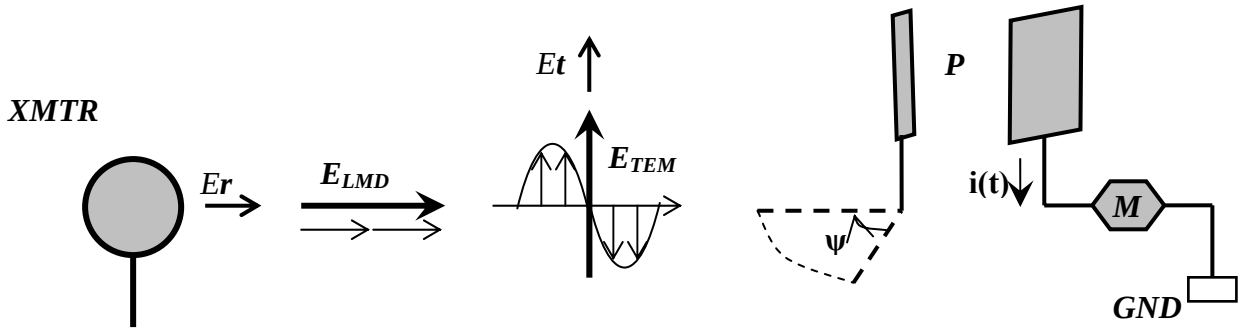

Fig.8

Fig.8: A brass metal plate (P) connected by only one wire to an analogic multimeter and then series to ground was used to analyse the field around the XMTR; by rotating the plate (P) around its vertical axis, the received energy varied as shown in diagram of Fig.9.

device) which together with the secondary acts as an "antenna"; it is useful to remember again that in Nature waves can exist in the transverse form, that is having direction perpendicular to the propagation direction, and in the longitudinal form, that is having direction parallel to the propagation direction. Transverse waves are, as is well known, typically generated by antennas such as conducting dipoles or even in general by AC electrified wires, but in the present case in addition to the cylindrical solenoid coils (the primary and the secondary) also a spherical "antenna" is present which cannot emit transverse waves because of its form which mathematically annuls the opposing components of the EM transverse waves, therefore only allowing the emission of longitudinal MD (Magneto-Dielectric) waves. As already stated, even if components of "usual" transverse EM waves are also present because of said cylindrical/solenoidal wire coils, however the latter are not the cause of the effects below described, which are not magnetic in their nature but dielectric. The term "electric field" comprises here both dielectric and magnetic fields, as referred to by Steinmetz[7]: so "dielectric" will not also encompass the magnetic part of the EM field. According to the "hydrodynamic analogy" between fluidics and electrotechnics, as in the sea both "surface waves" and "deep tsunami waves" (which are pressure or compression waves) do exist, for the analogy's completeness the same way should be for electric waves with transverse and longitudinal components, otherwise the "analogy" wouldn't valid because incomplete.

4. Transmission of energy through air and related measured values

Tests:

in the laboratory several test were performed to investigate the emission of L.M.D. waves from the Tesla coil transmitter, even if it was quite not a simple thing to do.

- ***Qualitative measurements:***

- First a simple and "crude" but clear test was readily made by keeping in the hand a common **neon** (fluorescence) tube without any

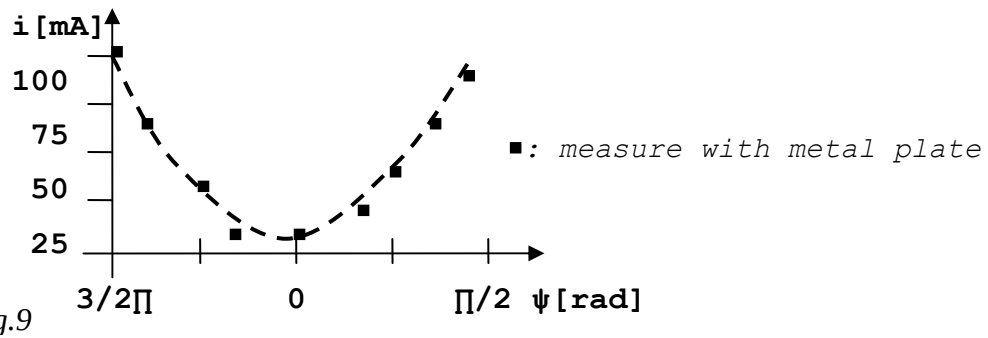

Fig.9

*Fig.9: Diagram shows the relationship between the ψ angle formed by the brass plate probe (P) and the propagation direction of the waves (versor **E**r): it is noted from the dotted line (a cosine function curve) that when ψ= 0 (0°) (or of course even when ψ= 2∏ (360°)) that is by versor **E**r parallel to plate, the measured value of current "i" or, in other words, the energy received from the brass plate (P) was at its minimum, while it was at its maximum by ψ= ∏/2 (90°) and ψ= 3/2∏ (180°)(by versor **E**r perpendicular to brass plate), showing that no transverse EM waves components play a relevant role but L.M.D. waves do. This shows that plate rotation around its axis in the vertical plane is indifferent to the vertical T.E.M. **E**t field, but not to L.M.D. **E**r field.*

connected energizing wires and by simply approaching it to the XMTR (see Fig.n.7): when the tube was moved to the Tesla coil i.e. it was set in its energy field, the neon tube amazingly lighted up, at first only faintly, until it came to its full brightness as it was moved closer to the coil (note that this result is very difficult if not impossible to achieve by magnetic fields, but not difficult at all by dielectric fields of well-tuned Tesla Coils).

- second, in order to exclude any relevant action due to the presence of magnetic fields, a normal **compass** has been moved in the energy field of the transmitter: the compass indicator stood still, never showing any kind of movement; on the contrary, when it was set on a normal small transformer its indicator immediately started to move (see Fig.n.10).

- and third, as a further qualitative **"detector"** of the field intensity of the XMTR was employed a common PVC insulated copper wire loop (square section: S=2,5mm^2, with wire loop diameter D= 100mm,inductance value L= 0,001mH) series connected with two oppositely paralleled LEDs, by different colours (yellow and blue), lighting up approximately at

$$U_{min} = 0,6 \div U_{max} = 2V$$

and having a slightly different sensibility; this detecting device was moved in the Tesla Coil field *in the horizontal plane* i.e. in an unfavourable position for T.E.M. waves so to detect mostly L.M.D. waves. It was also employed for tuning purposes as it readily and precisely detected the presence of resonance by voltage rise in the Tesla coil oscillator, therefore indicating when the intensity of the energy field was maximum as the LEDs were at maximum brightness.

Fig.10

Fig.10: A normal compass was set in the energy field of the Tesla Coil: its indicator (I) showed no movement, on the contrary when the compass was approached to a normal EM transformer the indicator immediately started to move, thus detecting a magnetic field.

The energy field of the transmitter had not only the effect of lighting up neon tubes and LEDs but was used, always within the "near field", for energizing a small DC electric motor (D) to drive an electric vehicle (model) in the close range of the XMTR, which was of small power. The receiving antenna was constituted by a double turn of two coarse copper wire loops, series connected with a small electronic rectifying circuit and with the DC electric motor in order to transform the HV and HF received power into DC (rectified) low voltage; to prove that in the energy transmission no T.E.M. waves were involved, the double loop antenna was tilted from the vertical plane to the horizontal: the result was the same, i.e. energy transmission within said range from XMTR occurred by L.M.D. induction, By T.E.M. waves as a matter of fact, a receiving antenna must, in order to achieve maximum efficiency, always stand with its axis perfectly vertical to the ground just like the direction of (T.E.M.) vector **E**t. In the present case however, the antenna loop could without any problem be tilted to the ground that is to the horizontal plane and still continued to receive energy from the XMTR, proving that T.E.M. waves were here not mainly involved in driving the DC motor, which requires of course "power" and not only weak "signal" to run.

- A common small pocket **AM/FM radio receiver** was used to detect R.F. emitted from the Tesla Coil by moving the device away from the coil axis to a distance, to investigate the field of the XMTR itself, which generated an audible signal to about the range reported in Fig.n.3., so not very far from the AM-RCVR itself.

- ***Quantitative measurements:***

- An iron cored **inductance** (C) (a cylindrical copper wire coil with a ferrite core and with its coil terminals connected by two wires to the multimeter instrument), was employed to detect the magnetic field: the measurements were taken by moving the inductance away from the Tesla coil, at first with the iron core inserted in the same coil (having thereby an inductance of L= 10mH), then without the iron core (thus having an inductance reduced to L= 6mH): the normalised results of the test are illustrated in diagram of Fig.3, thus showing that there was no difference between values measured with or without the iron core because relevant magnetic induction on the coil was absent, but evident dielectric induction was present and preponderant.

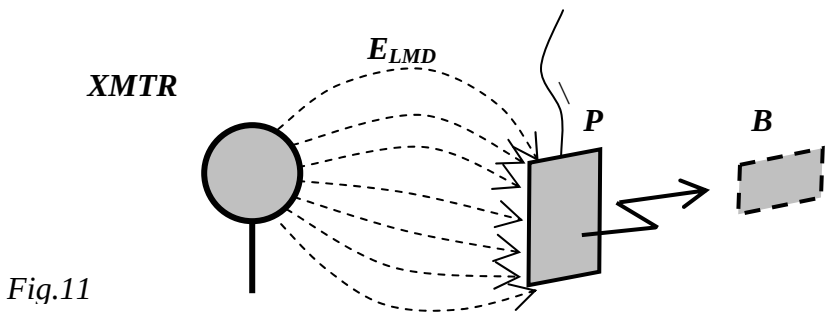

Fig.11: A suspended insulated brass metal plate (P) set in the energy field of the Tesla Coil became dielectrically charged and threw off sparks to approached objects, for instance to a small metal plate (B).

- Another test with related measurements was made by connecting by a single wire the analogic multimeter (used as a milliamperometer) to a **photomultiplier** vacuum tube (V) type "931-A" from "R.C.A.-U.S.A" (to its pin n.11 - cathode); then by moving the phototube away from the XMTR axis, the energy field was again measured giving similar results (normalised values) as regards to inverse square decrease with distance from the coil axis, once more showing that a dielectric field was involved (see Fig.n.3). In addition, the phototube device was rotated around its three axis in different positions but this didn't affect the results in a relevant way.

- Moreover, a further investigation of the energy field around the XMTR was made also by use of a suspended insulated **metal plate** made of brass, as well-known a non-magnetic material, which was connected in series by a single wire to a measuring device, in this case an analogic milliamperometer with a scale range of current i(t) = 0 ÷ 100 mA, which in turn was connected to ground. The comparison of this feature with the one described in Tesla's patent n.685957 of 1901, which illustrates an (apparent) puzzling use of a similar "insulated metal plate" for "utilizing radiant energy" also in association with other auxiliary devices, is remarkable. A measure of the (infinitesimal) absorbed power by the plate, i.e. received from the XMTR, could be made as follows with a plate dimension S = B x H (surface=width x height) and "ψ" the angle between plate and versor **E**r

$$dP= dV^2/dR$$

being R: ohmic resistance in a conductor, so

$$dR= dx/dS$$

where S= surface of brass plate conductor) and being:

$$dV= E_o \cos(\Psi)dx$$

the voltage in the infinitesimal part "dx" (being "dx" an infinitesimal "depht" element) of the receiving brass plate, so its infinitesimal absorbed dielectric power is then a function of cosine:

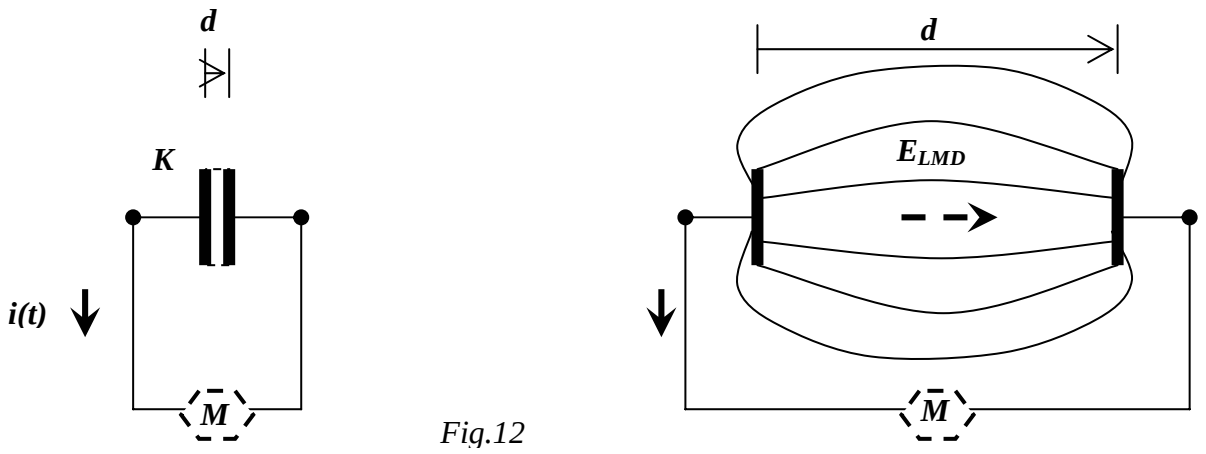

Fig.12: A common condenser (capacitor) (K): an electric current flows through opposite conducting plates even when separated from a dielectric; the plates could be separated and moved to a comparatively considerable distance, however a connected impedance-meter instrument (M) kept reading an impedance value: the plates "felt" one another.

and by mathematical integration it comes to the absorbed energy "A" from the plate itself:

$$dP= f((\cos^2(\Psi))dx$$

so it becomes:

$$A =f(\cos(\Psi))$$

- At the end of the investigation a last, but not least, test was performed: a suspended (by a non-conducting wire) insulated small (about 120x130mm as before) thin brass metal plate (P) which was set in the energy field of the Tesla Coil became strongly charged by dielectric induction from the coil: as a smaller (about 50x50mm) metal plate (B) was approached to the first plate (P), the (big) brass plate threw off sparks to the small one and even to an approached hand (see Fig.n.11).

These experiments and tests could be useful to better understand the working principle of a common condenser: how an electrical current can "pass" or "jump" through the dielectric non-conducting material between the opposite metal plates ? According to the accepted theory, this would be caused by "displacement currents" on the surfaces of the plates. Therefore, a simple tests would made by positioning two parallel opposite condenser plates (square dimension: 40x40mm of very thin brass) with air as dielectric, each connected to one terminal of an impedance-meter (type *"MK5540"* from *"Mitek"*). At first the plates were set at a distance of 1mm from one another, then these were moved apart to more than d= 1m but kept always connected to the impedance-meter: the instrument read a capacitance value of C=0,040mH for near plates and of C=0,012mH for far plates. Even if the distance between opposite condenser plates was increased up to >1000 times, or equal to >25 times the plate dimension, the instrument did anyway read a value, so despite of distance the plates "felt" one another; according to

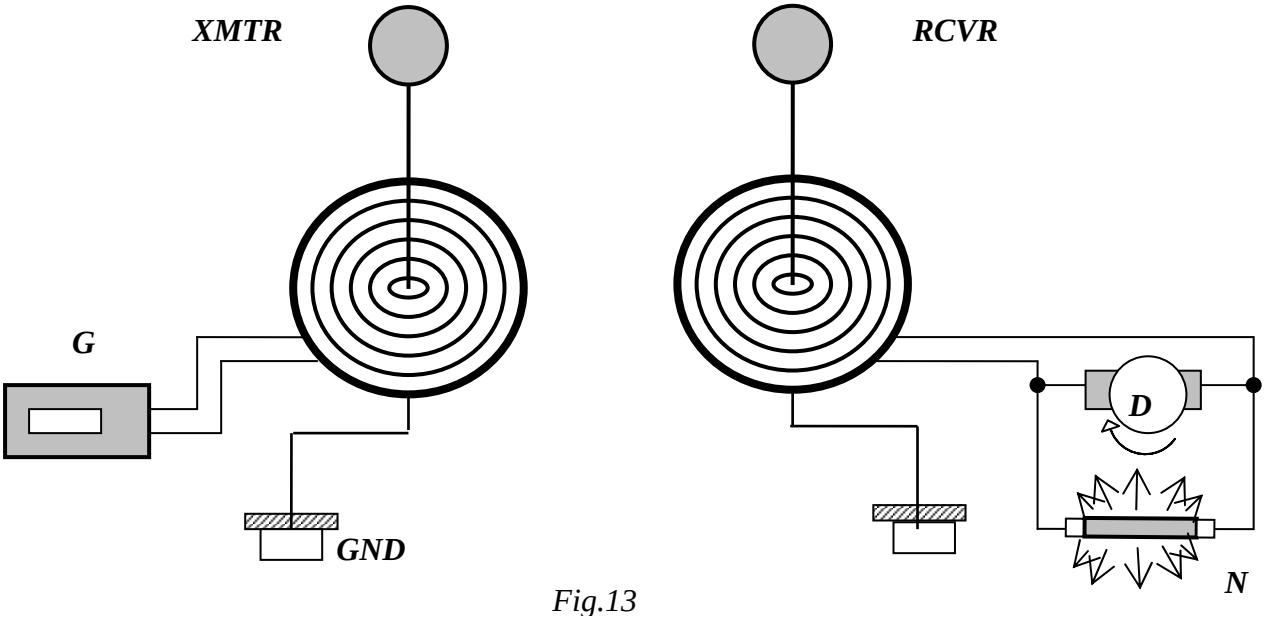

Fig.13: Two flat spiral "Tesla coils" or "pancake" coils connected through the ground; the XMTR with its (HV, HF) generator and the RCVR with its electric utilities: a neon tube and a DC motor.

Steinmetz[7] this phenomenon could be better explained as follows: the dielectric field is not only confined on the surfaces of the conductors but is also present in the surrounding space in a similar way as for the magnetic field. The dielectric field issues from the conductors and the related lines of force pass from one conductor to the other (see Fig.n.12). The commonly accepted theory of the "charge displacement" seems here to be a rather weak explanation with respect to the dielectric field and related lines of force.

5. Notes on Tesla Coil tuning

All these test were performed in order to investigate nature and intensity of the energy field around the Tesla coil, which was stronger when resonance in the device was present or, in other words, when the coil was "well-tuned".

To precisely detect the main frequency "f_o" of the Tesla coil XMTR, a digital oscilloscope *"GDS-820-S"* series from *"GW-Instek"* was used and the related wired "probe" was placed about d= 2m from the XMTR: the main resonance frequency was confirmed to be f_o= 2,755 MHz with another main frequency at f= 1,810 MHz; it is noted that the relationship between said main frequencies is: f_o / f= 1,527 MHz ≈ (∏/2)f. As it is:

$$\lambda_o = c / f_o \quad \text{(where c: speed of light in vacuum)}$$

said frequency corresponds to a wave length of λ_o= 113,64m or to $\lambda_o/4$= 28,41m (or "quarter wave-length"), this means that the tests were performed in the so-called "near field"; regarding this aspect it could be objected that it would invalidate the experiment but, on the contrary, just by keeping the distance "d" from the XMTR much smaller than a quarter wave-length "λ/4", the T.E.M. components of the wave had less possibility of influencing the test, thus allowing the L.M.D. components to mainly play.

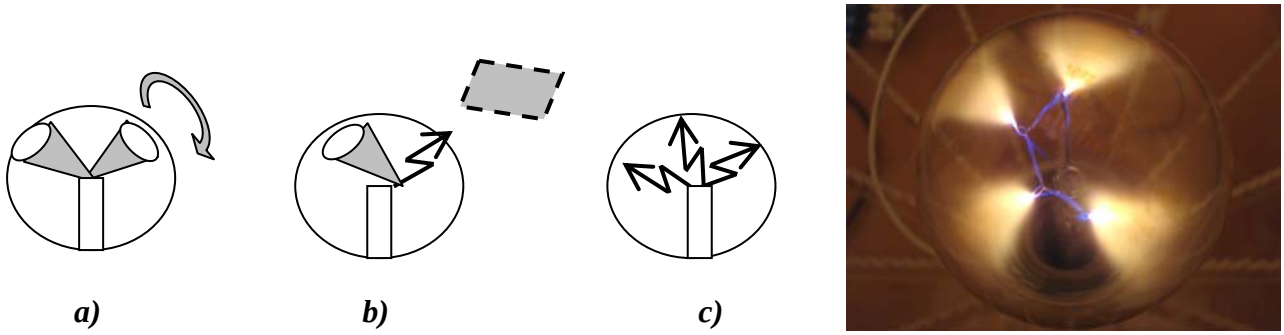

Fig.14

Fig.14: Light streams, brushes and discharge effects in Tesla coil's lamp bulbs (secondary top capacitance); picture shows streams as a).

6. Streams, brushes, discharges and effects in Tesla Coil's lamp bulbs

Beyond scientific investigation, well-tuned Tesla Coils shows curious effects: beautiful light "streams" or "brushes" are emitted when the secondary coil top capacitance is a lamp bulb instead of a metal sphere, for example an argon gas bulb[11]; when the coil is running, depending of the driving generator employed, strange light streams fill the bulb itself varying very much in the form with the coil design and also with voltage, frequency and a number of other parameters. For instance, the streams filling the bulb of the Extra Tesla Coils used by the present investigation looks more like "plasma" effects and have different colours among which mainly yellow, orange pink and violet. When the two Tesla Coils (XMTR and RCVR) are connected through only one wire or through the earth conductor (or even water) and they are well-tuned, they both show streams in their own bulbs. These coils really "communicate" with one another as it is fairly clear by just approaching a hand to the XMTR bulb: if its streams become weaker, on the contrary the streams in the RCVR bulb become stronger and vice-versa. It is not here a mere question of wave "transmission" from the XMTR to the RCVR as it happens for usual T.E.M. radio broadcasting, whereby the transmitter cannot be influenced in any way from the receiver, but a peculiar energy interaction between the two Tesla coils occurs, as true "conduction" phenomena were involved. Moreover, the movement of the streams is peculiar, as these sometimes even show at first a rotation around their axis, then they stop rotating and tend to establish a rather stable "flux" pattern issuing from the lamp filament to the glass bulb, depending of the adjusting of several parameters, and is also due to electrostatic or dielectric action according to the definition given by C.P.Steinmetz[7]; as before stated, the brushes or streams may change very much even in their "nature", from smooth and widening "plasma" flux spreading to the bulb (see Fig.n.14.a) to soon become a violent electric discharge (see Fig.n.14.b) when an object is moved close to the bulb. By higher pressures in the Tesla coil, the streams can turn into brushes of even strong discharge of blue, purple or of other colours (see Fig.n.14.c). These remarkable features should be closer investigated, as the sphere capacitance also emits L.M.D. waves, which as already stated are dielectric. Fig.n.15 shows two energized flat spiral "pancake" Tesla coils with streams in their top capacitance lamp bulbs; on left is the RCVR drives a small DC motor with a green LED connected to show it works by energy transmission[12].

Fig.15: Two energized flat spiral or "pancake" Tesla coil showing streams in the top spherical capacitance lamp bulbs.

By adjusting some parameters in the Tesla coil, curious effect of repulsion and attraction were then observed[11]: if a hand was approached to the lamp bulb, under certain conditions, a kind of "pressure" was felt by the hand; on the contrary, if a small suspended metal strip was approached to the same bulb, the conducting material was attracted to it. This effects are probably due to dielectric (electrostatic) action.

7. Conclusion

As expected, because of the comparatively moderated main resonance frequency of the Tesla coil (XMTR) itself, a limited aerial wave irradiation was obtained; the coil was in fact originally mainly designed for other purposes and not specifically to "transmit" energy through the air irradiating the surrounding medium with waves. Of course, a different design and construction with an eventual increase to higher levels of the main resonator's frequency would cause even a bigger amount of radiated energy in the air and a stronger energy field which however was not, as said, the aim of Nikola Tesla's project, whose ultimate target seemed rather to be the wireless transmission of energy through the earth/ground (see also his article[2]). In any case it is useful to remember that any scientific theory is valid as long as it will not be contradicted by empirical observation, experiment or research, and this must be true even for Tesla's "Wireless System".

The above experiments, tests and measurements performed with the "Extra Tesla Coil" XMTR together with other devices clearly showed that a number of "anomalous" EM phenomena did occur, indicating that a strong dielectric energy field was present around the coil itself, which could be ascribed to the action of L.M.D. waves rather than to T.E.M. waves. Not surprisingly these empirical results could, according to other Authors, be supported from a physics and mathematical point of view by the introduction, instead of today's (Heaviside) vector form, of the (original) quaternionic form of Maxwell's EM equations which, as could be clearly seen, do predict the possibility of the existence of scalar dielectric fields and of longitudinal dielectric waves besides the well-known transverse EM waves.

From the illustrated theory it descends that the scalar field "Σ" has the form of an electroscalar wave, which does no work to move free charges, and which has energy flow in the propagation direction, however without converting EM energy into neither mechanic nor heat, and having no magnetic component. A curious aspect is that said "Σ" wave has the dimension unit of a magnetic field intensity, or otherwise stated is a kind of "magnetic scalar".

Further scientific investigation and research is required and welcome, and the position of the Academic World who still excludes the existence of L.M.D. waves has to be supported by proves as it has, at the moment, neither theoretical nor experimental fundament.

* * * * *

Legenda:

U or V : tension [Volt]

I : current [A]

P : power [W]

F : force [N]

α : angle [rad]

ω : 2 $\prod$ f [rad/s]

λ : wave length [m]

x : distance [m]

c : $1/\sqrt{(\mu_o \varepsilon_o)}$ speed of light in vacuum [m/s]

v : speed [m/s]

φ : scalar potential [V/m^2]

A : vector potential [A/m^2]

Σ : scalar wave [H]

E : dielectric field [V/m]

B : magnetic field [A/m]

ρ : charge density [As/m^3]

J : current intensity [A/m^2]

ε_0 : dielectric constant in vacuum [As/Vm]

μ_o : magnetic permeability constant [Vs/Am]

ε : dielectric constant [As/Vm]

μ : magnetic permeability constant [Vs/Am]

$\partial/\partial t$: time partial derivative

d/dt : time derivative

d/dx : space derivative

∇ : Nabla operator

$\tilde{\mathbf{A}}$: quaternionic vector potential

$\tilde{\Box}$: quaternionic D'Alembertian operator

(The **bold** *notation represents a vector).*

References:

[1] J.C. Maxwell, *"A treatise on electricity & magnetism"*, N.Y., 1873.
[2] Nikola Tesla, *"The True Wireless"*, Electrical Experimenter, May 1919.
[3] Nikola Tesla, *"Experiments with alternate currents of very high frequency and their application to methods of artificial illumination"*, 1891.
[4] Nikola Tesla, *"On light and other high frequency phenomena"*, delivered before the Franklin Institute, Philadelphia, February 1893.
[5] Roberto Handwerker et al.,*"Rotazione di solidi mediante quaternioni"(*)*, for Elements of informatics-Faculty of Engineering of Milan Polytechnic, Milan, 1990 (*)
[6] Arbab I.A. & Satti Z.A. *"On the generalised Maxwell equations and their prediction of electroscalar waves"*, Omdurman University, April 2009.
[7] Steinmetz C.P., *"Electric waves, discharges etc.…"* , N.Y., 1914
[8] W.R. Hamilton, *"Elements of quaternions"*, Chelsea, 1866.
[9] Elihu Thomson, Article in *Scientific American*, 1872.
[10] G.F. Ignatiev & V.A. Leus, *"Instantaneous action at a distance in modern physics: pro and contra"*, Hauppage (N.Y.), 1990.
[11] Roberto Handwerker, "Tesla and cold electricity", videos on www.YouTube.com, Milan,2010.

(*) English translation: *"Rotation of solids by quaternions"*

This publication was realised in march 2011 by:

DELTA Ingegneria® - all rights reserved.

Dr. Eng. Roberto Handwerker

Milan, Italy

e-mail: info@deltaavalon.com
web: www.deltaavalon.com

New Hydrogen Technologies and Space Drives, Congress Center Thurgauerhof, CH-8570 Weinfelden, German Association for Space Energy

Scalar waves

Theory and Experiments

by:

Prof. Dr.-Ing. Konstantin Meyl

Introduction

It will be shown that scalar waves, normally remaining unnoticed, are very interesting in practical use for information and energy technology for reason of their special attributes. The mathematical and physical derivations are supported by practical experiments. The demonstration will show:

1. the wireless transmission of electrical energy,
2. the reaction of the receiver to the transmitter,
3. free energy with an over-unity-effect of about 3,
4. transmission of scalar waves with 1.5 times the speed of light,
5. the inefficiency of a Faraday cage to shield scalar waves.

Tesla radiation

Here is shown extraordinary science, five experiments, which are incompatible with textbook physics. Following my short lecture I will present you the transmission of longitudinal electric waves.

It is a historical experiment, because already 100 years ago the famous experimental physicist Nikola Tesla has measured the same wave properties, as me. From him stems a patent concerning the wireless transmission of energy (1900)[1]. Since he also had to find out that at the receiver arrives very much more energy, than the transmitter takes up, he spoke of a „Magnifying Transmitter“.
By the effect back on the transmitter Tesla sees, if he has found the resonance of the earth and that lies according to his measurement at 12 Hz. Since the Schumann resonance of a wave, which goes with the speed of light, however lies at 7.8 Hz, Tesla comes to the conclusion, that his wave has 1.5 times the speed of light[2].

As founder of the diathermy Tesla already has pointed to the biological effectiveness and to the possible use in medicine. The diathermy of today has nothing to do with the Tesla radiation; it uses the wrong wave and as a consequence hardly has a medical importance.

The discovery of the Tesla radiation is denied and isn't mentioned in the textbooks anymore. For that there are two reasons:
1. No highschool ever has rebuilt a „Magnifying Transmitter". The technology simply was too costly and too expensive. In that way the results have not been reproduced, as it is imperative for an acknowledgement. I have solved this problem by the use of modern electronics, by replacing the spark gap generator with a function generator and the operation with high-tension with 2-4 Volts low-tension. I sell the experiment as a demonstration-set so that it is reproduced as often as possible. It fits in a case and has been sold more than 100 times. Some universities already could confirm the effects. The measured degrees of effectiveness lie between 140 and 1000 percent.

2. The other reason, why this important discovery could fall into oblivion, is to be seen in the missing of a suitable field description. The Maxwell equations in any case only describe transverse waves, for which the field pointers oscillate perpendicular to the direction of propagation.

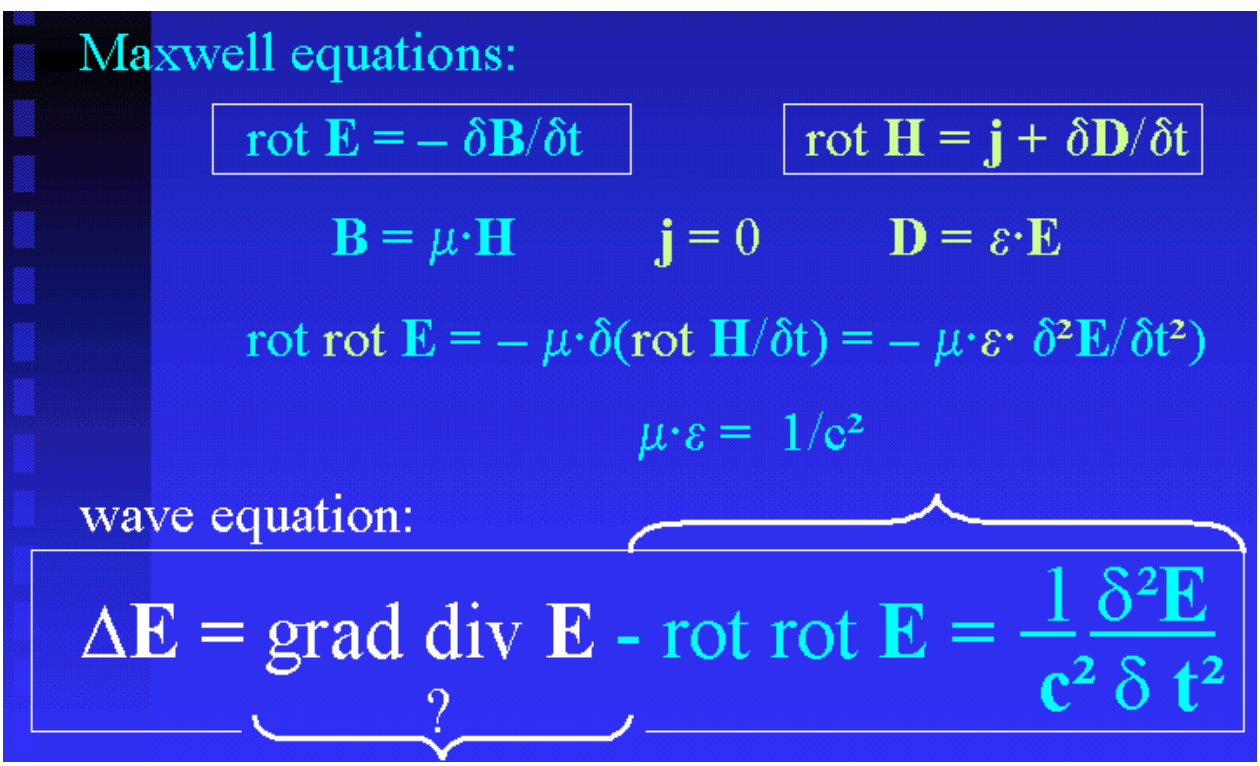

Figure 1: The vectorial part of the wave equation (derived from the Maxwell equations)

Wave equation

By using the Laplace operator the well-known wave equation, according to the rules of vector analysis, can be taken apart in two parts: in the vectorial part (rot rot **E**), which results from the Maxwell equations and in a scalar part (grad div **E**), according to which the divergence of a field pointer is a scalar. We have to ask ourselves, which properties has this wave part, which founds a scalar wave?

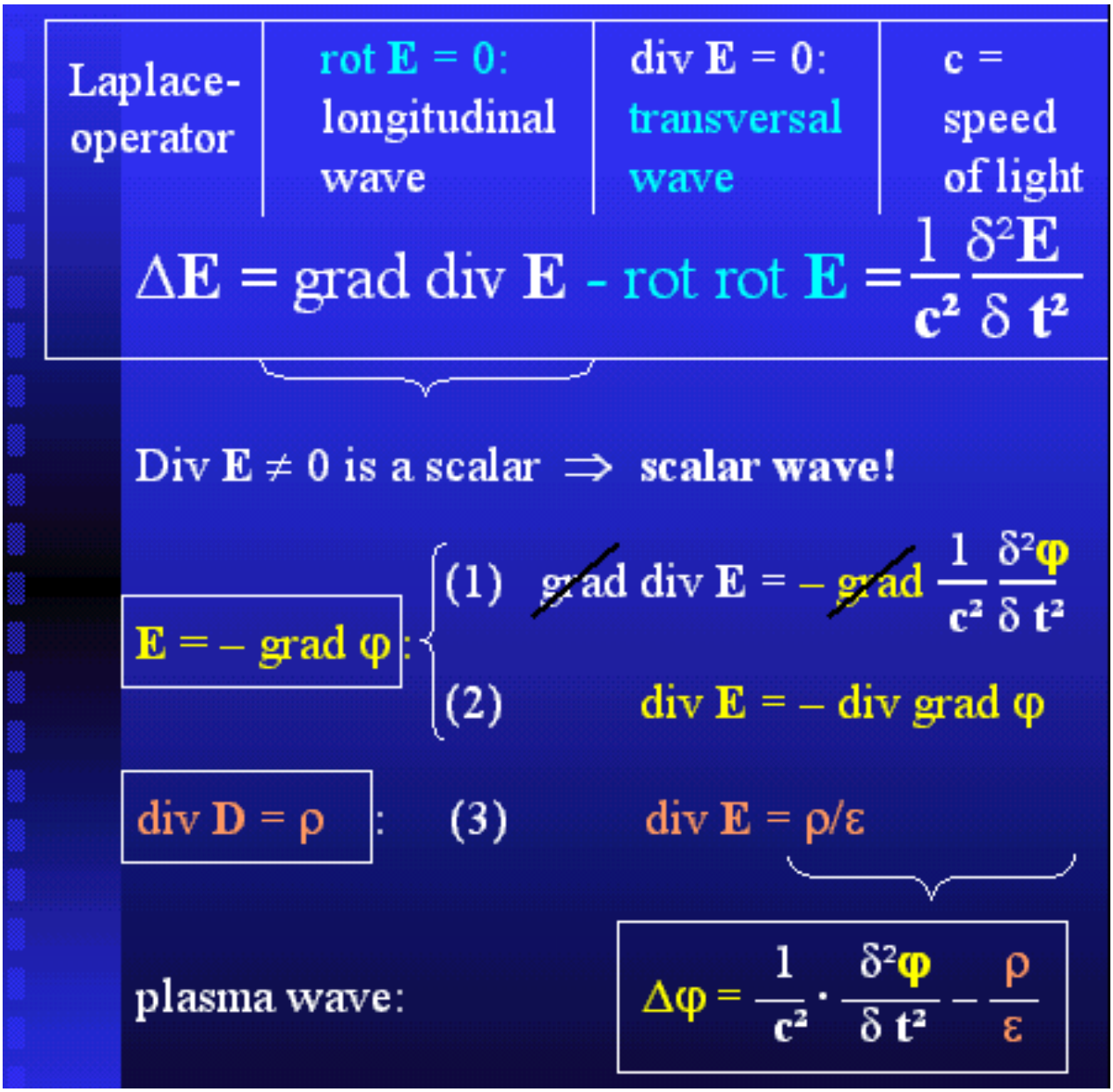

Figure 2: The scalar part of the wave equation describes longitudinal electric waves (derivation of plasma waves).

If we derive the field vector from a scalar potential φ, then this approach immediately leads to an inhomogeneous wave equation, which is called plasma wave. Solutions are known, like the electron plasma waves, which are longitudinal oscillations of the electron density (Langmuir waves).

Vortex model

The Tesla experiment and my historical rebuild however show more. Such longitudinal waves obviously exist even without plasma in the air and even in vacuum. The question thus is asked, what the divergence **E** describes in this case? How is the impulse passed on, so that a longitudinal standing wave can form? How should a shock wave come about, if there are no particles which can push each other?
I have solved this question, by extending Maxwell's field theory for vortices of the electric field. These so-called potential vortices are able to form structure and they propagate in space for reason of their particle nature as a longitudinal shock wave. The model concept bases on the ring vortex model of Hermann von Helmholtz, which Lord Kelvin did make popular. In my books[3] the mathematical and physical derivation is described.

In spite of the field theoretical set of difficulties every physicist at first will seek for a conventional explanation. He will try two approaches:

Resonant circuit interpretation

Tesla had presented his experiment among others to Lord Kelvin and he already 100 years ago has spoken of a vortex transmission. In the opinion of Kelvin it however by no means concerns a wave but radiation. He had recognized clearly, that every radio technical interpretation had to fail, because alone the course of the field lines is a completely different one.

It presents itself to assume a resonant circuit, consisting of a capacitor and an inductance.

1. ***closed resonant circuit***

resonance frequency:

$$f = \frac{1}{2\pi\sqrt{LC}}$$

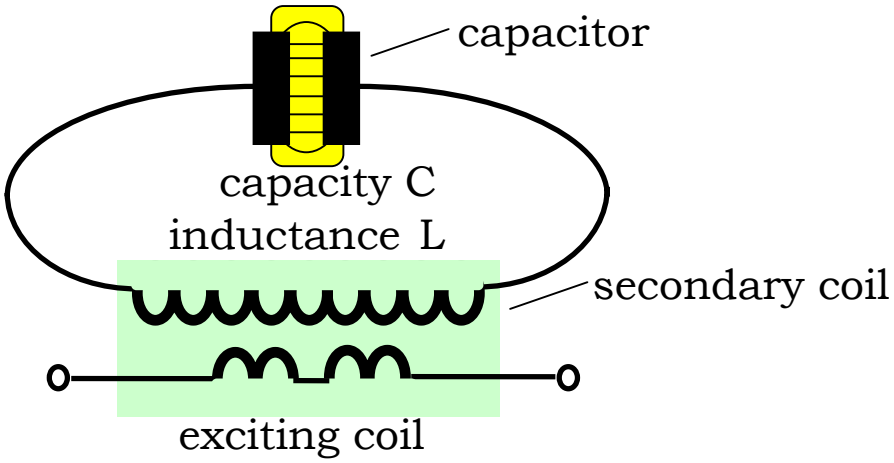

2. ***separating the resonant circuit***

Field lines of the electrical fieldstrength:

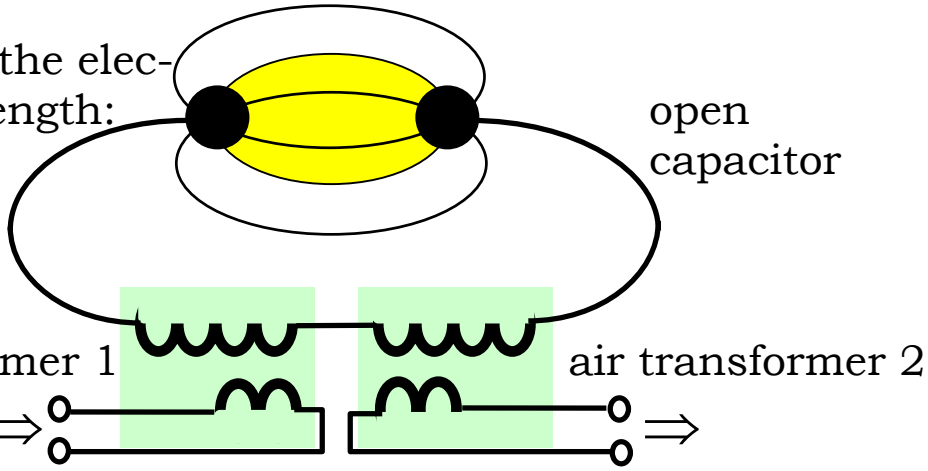

3. ***resonant circuit with open capacitor***

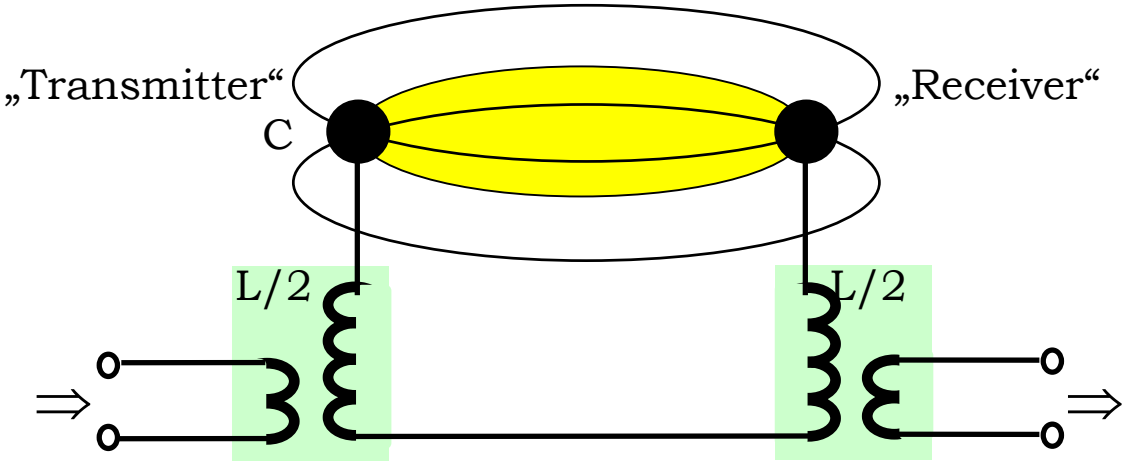

Figure 3: Interpretation as an open resonant circuit

If both electrodes of the capacitor are pulled apart, then between both is stretching an electric field. The field lines start at one sphere, the transmitter, and they bundle up again at the receiver. In that way a higher degree of effectiveness and a very tight coupling can be expected. In this manner without doubt some of the effects can be explained, but not all.

The inductance is split up in two air transformers, which are wound completely identical. If a fed in sinusoidal tension voltage is transformed up in the transmitter, then it is again transformed down at the receiver. The output voltage should be smaller or at maximum equal the input voltage – but it is substantially bigger!
There can be drawn and calculated an alternative wiring diagram, but in no case the measurable result comes out, that light-emitting diodes at the receiver glow brightly (U>2Volt), whereas at the same time the corresponding light-emitting diodes at the transmitter go out (U<2Volt)! To check this both coils are exchanged.

The measured degree of effectiveness lies despite the exchange at 1000 percent. If the law of conservation of energy should not be violated, then only one interpretation is left: The open capacitor withdraws field energy from its environment. Without consideration of this circumstance does the error deviation of every conventional model calculation lie at more than 90 percent. There one rather should do without the calculation.

It will concern oscillating fields, because the spherical electrodes are changing in polarity with a frequency of approx. 7 MHz. They are operated in resonance. The condition for resonance reads: identical frequency and opposite phase. The transmitter obviously modulates the field in its environment, while the receiver collects everything what fulfils the condition for resonance.

Also in the open question for the transmission velocity of the signal the resonant circuit interpretation fails. But the HF-technician still has another explanation at the tip of his tongue:

Near field interpretation

In the near field of an antenna effects are measured, which on the one hand go as inexplicable, because they evade the normally used field theory, which on the other hand come the by me shown scalar wave effects very close. Everyone knows a practical application: e.g. at the entrance of department stores, where the customer has to go through in between of scalar wave detectors.

In my experiment the transmitter is situated in the mysterious near zone. Also Tesla always worked in the near zone. But who asks for the reasons, will discover that the near field effect is nothing else but the scalar wave part of the wave equation. My explanation goes as follows:

The charge carriers which oscillate with high-frequency in an antenna rod form longitudinal standing waves. As a result also the fields in the near zone of a Hertzian dipole are longitudinal scalar wave fields. The picture shows clearly how vortices are forming and how they come off the dipole.

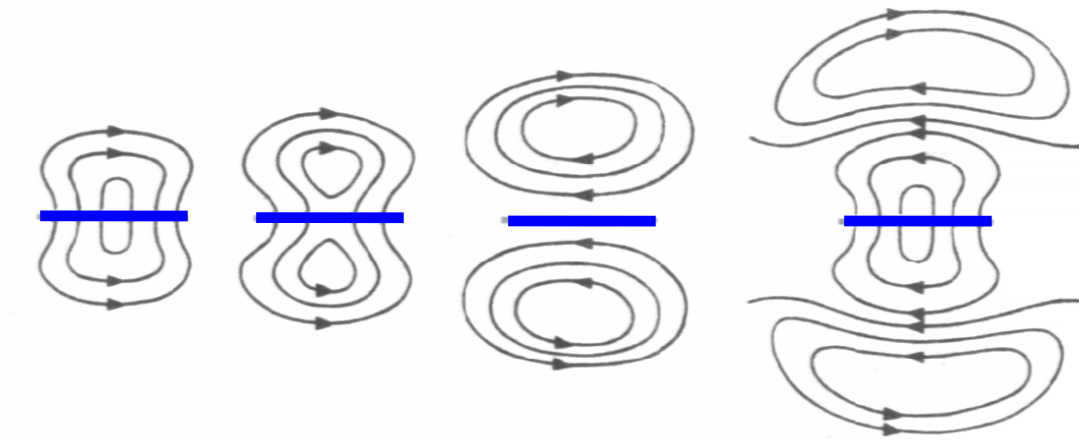

Figure 4: The coming off of the electric field lines of the dipole.

Like for the charge carriers in the antenna rod the phase angle between current and tension voltage amounts to 90 degrees, occur in the near field also the electric and the magnetic field phase shifted for 90 degrees. In the far field however the phase angle is zero. In my interpretation the vortices are breaking up, they decay, and transverse radio waves are formed.

Vortex interpretation

The vortex decay however depends on the velocity of propagation. Calculated at the speed of light the vortices already have decayed within half the wavelength. The faster the velocity, the more stable they get, to remain stable above 1.6 times the velocity. These very fast vortices contract in the dimensions. They now can tunnel. Therefore speed faster than light occurs at the tunnel effect. Therefore no Faraday cage is able to shield fast vortices.

Since these field vortices with particle nature following the high-frequency oscillation permanently change their polarity from positive to negative and back, they don´t have a charge on the average over time. As a result they almost unhindered penetrate solids. Particles with this property are called neutrinos in physics. The field energy which is collected in my experiment, according to that stems from the neutrino radiation which surrounds us. Because the source of this radiation, all the same if the origin is artificial or natural, is far away of my receiver, every attempt of a near field interpretation goes wrong. After all does the transmitter installed in the near field zone supply less than 10% of the received power. The 90% however, which it concerns here, cannot stem from the near field zone!

Experiment

At the function generator I adjust frequency and amplitude of the sinusoidal signal, with which the transmitter is operated. At the frequency regulator I turn so long, till the light-emitting diodes at the receiver glow brightly, whereas those at the transmitter go out. Now an energy transmission takes place.

If the amplitude is reduced so far, till it is guaranteed that no surplus energy is radiated, then in addition a gain of energy takes place by energy amplification.

If I take down the receiver by pulling out the earthing, then the lighting up of the LED´s signals the mentioned effect back on the transmitter. The transmitter thus feels, if its signal is received.

The self-resonance of the Tesla coils, according to the frequency counter, lies at 7 MHz. Now the frequency is ran down and see there, at approx. 4.7 MHz the receiver again glows, but less bright, easily shieldable and without discernible effect back on the transmitter. Now we unambiguously are dealing with the transmission of the Hertzian part and that goes with the speed of light. Since the wavelength was not changed, does the proportion of the frequencies determine the

proportion of the velocities of propagation. The scalar wave according to that goes with (7/4.7=) 1.5 times the speed of light!

If I put the transmitter into the aluminium case and close the door, then nothing should arrive at the receiver. Expert laboratories for electromagnetic compatibility in this case indeed cannot detect anything and that, although in spite of that the receiver lamps glow! By turning of the receiver coil it can be verified that an electric and not a magnetic coupling is present although the Faraday cage should shield electric fields. The scalar wave obviously overcomes the cage with a speed faster than light, by tunnelling!

Literature

1 Nikola Tesla: Apparatus for transmission of electrical energy.
US-Patent No. 645,576, N.Y. 20.3.1900.

2 Nikola Tesla: Art of transmitting electrical energy through the natural mediums, US-Patent No. 787,412, N.Y. 18.4.1905.

3 Konstantin Meyl: Elektromagnetische Umweltverträglichkeit,
Teil 1: Umdruck zur Vorlesung, Villingen-Schwenningen 1996, 3.Aufl. 1998
Teil 2: Energietechnisches Seminar 1998, 3. Auflage 1999,
Teil 3: Informationstechnisches Seminar 2002, auszugsweise enthalten in:
K. Meyl: Skalarwellentechnik, Dokumentation für das Demonstrations-Set,
INDEL-Verlag, Villingen-Schwenningen,

will be translated till 2002 :

3 Konstantin Meyl: Scalar Waves, INDEL-Verlag.
(see: http://www.k-meyl.de).

Address:

Prof. Dr.-Ing. Konstantin Meyl,
1.TZS (First Transfer Center of Scalar Wave Technology)
Leopoldstraße 1,
D-78112 St. Georgen/Schwarzwald (Germany)

Tel.: 0049-/0- 7724-1770, Fax.: 0049-/0- 7724-9486720
Email: meyl@k-meyl.de

- More information in the internet: http://www.k-meyl.de

Scalar and vectors

Scalar quantities are quantities with magnitude only.
Vector quantities are quantities with both magnitude and direction

Scalar quantity	**Vector quantity**
Distance (d)	Displacement (s)
Speed (v)	Velocity (v) , angular velocity (ω)
Time (t)	Acceleration (a)
Temperature (θ)	Force (F)
Energy (E)/work (W)	Momentum (p)
Power (P)	Weight (W)
Mass (m)	Moment or Torque (T)
Density (ρ)	Gravitational field strength (g)
Volume (V)	Electric field strength (E)
Pressure (p)	Magnetic field strength or flux density (B)
Electric charge (Q)	Electric current (I)

Parallelogram rule: The resultant R is the diagonal of the parallelogram drawn from the point at which the two vectors act.

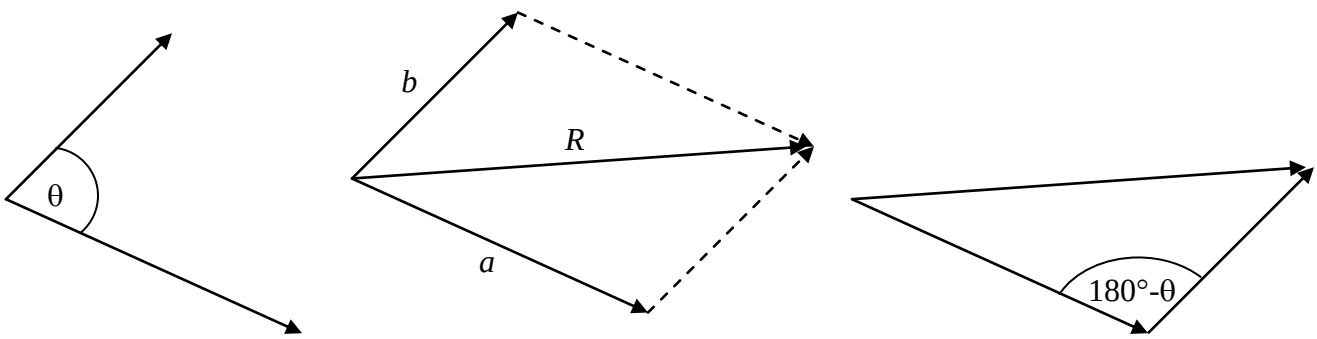

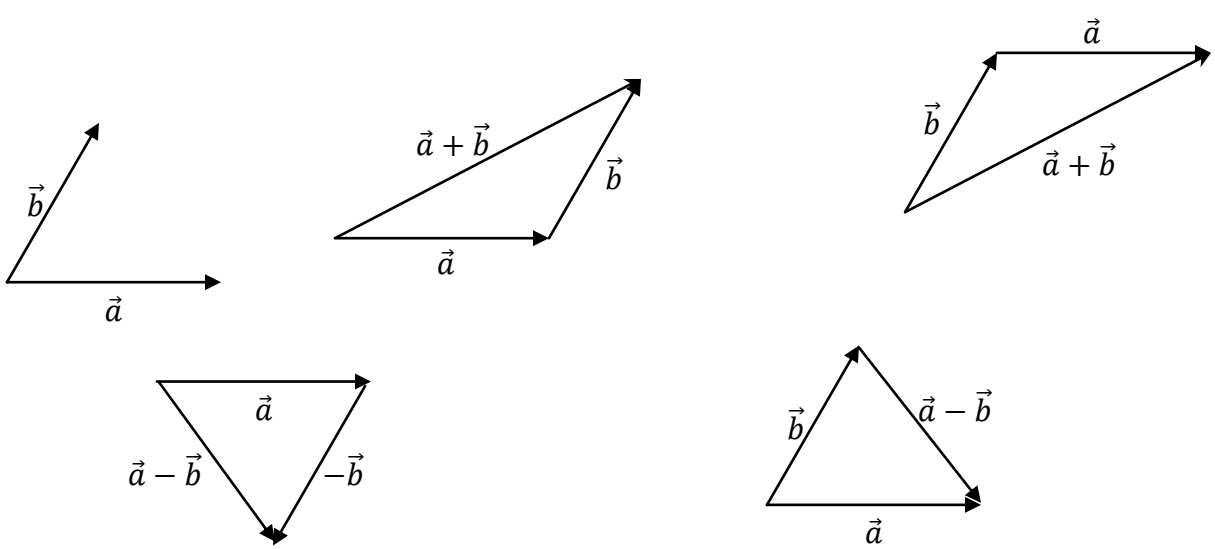

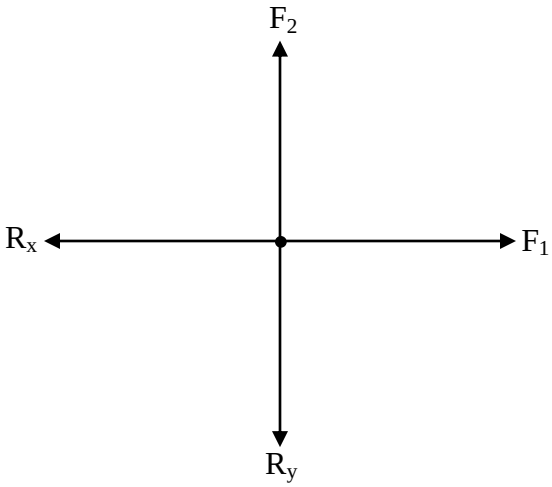
F_2
R_x
F_1
R_y

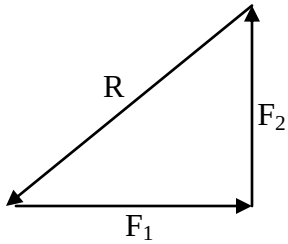
R
F_2
F_1

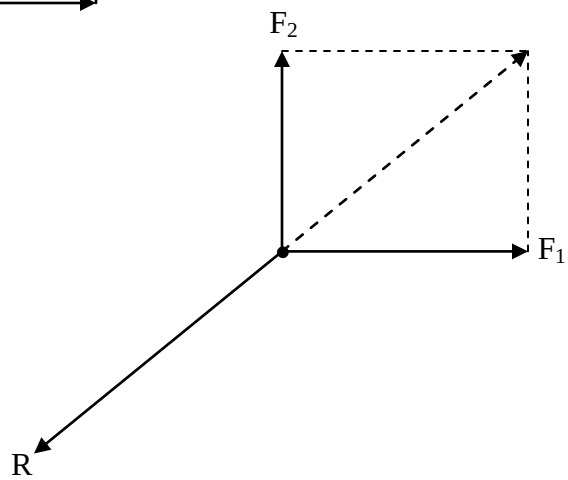
F_2
F_1
R

ResearchGate

See discussions, stats, and author profiles for this publication at: https://www.researchgate.net/publication/289815175

Cellular communication by magnetic scalar waves

Article · January 2012

CITATIONS
0

READS
2,674

1 author:

Konstantin Christian Meyl
Furtwangen University

21 PUBLICATIONS **81** CITATIONS

SEE PROFILE

Some of the authors of this publication are also working on these related projects:

Project water engine with ozone View project

Project CO2-free operation of machines View project

All content following this page was uploaded by Konstantin Christian Meyl on 31 July 2017.

The user has requested enhancement of the downloaded file.

Cellular Communication by Magnetic Scalar Waves

Konstantin Meyl
Faculty of Computer and Electrical Engineering, Furtwangen University, Germany

Abstract— The DNA generates a longitudinal wave which propagates within the magnetic field vector. Computed frequencies from DNA structure agree with bio photon radiation frequencies as predicted. Optimization of efficiency is done by minimizing the conduction losses which leads to the double helix structure of DNA. The vortex model of the magnetic scalar wave not only covers the many observed structures within the nucleus but also introduces the reader to the hyperboloid channels in the matrix as two cells are then found to communicate with each other. Physical results were revealed in 1990 which form the theoretical basis of the essential component of a potential vortex scalar wave. An extended field theory approach has been known since 2009 following the discovery of magnetic monopoles. For the first time magnetic scalar wave theory best explains the physical basis of life not only from the biological discipline of science understanding only. And for the first time this interdisciplinary theory and provides a new understanding of cellular functions that are explained such theory depicting the complex relationships of nature. The characteristics of the potential vortex are decisive. Now using the concentration effect, my theory provides a cellular miniaturization view down to a few nanometers. This theory for the first time allows a better understanding of the outrageously high information density in the nucleus. Magnetic scalar wave theory explains how the dual base pair-stored information of the genetic code is formed. The process of converting electrical modulation into "piggyback" information that transfers or is send from the cell nucleus to another cell is a revolutionary theory. Information transferred at the receiving end during the reverse process takes place involving a change in the physical and chemical cellular structure. The energy required to power the chemical process, is now understood by the extended field theory to come from the magnetic scalar wave itself.

1. INTRODUCTION

When two cells communicate with each other, one transmitting the read information and writing it to the other cell, we must ask how the read and write process works, and how genetic information is physically transported from cell to cell from a technical view point [4, 8, 14, 19]?

Hydrogen-bonds hold together through Coulomb forces electrically polarized base pairs in a DNA strand. To gain access to this polarization, the hydrogen-bonds must be separated, requiring radial outward electric field lines or, as I call it, a vortex field. Since the magnetic field vector is perpendicular to the electric vertical field, a resulting axial direction to the DNA strand is a logical consequence. The motion of the vortex field in the direction of the magnetic field results in a longitudinal wave forming a so-called magnetic scalar wave (Fig. 1).

"The superbly researched biochemistry of the cell nuclei describes the direction that must be investigated" [12]. "The coding regions in the DNA strand, the genes, make up only a fraction of the total amount of DNA. The stretches that flank the coding regions are called "introns" and consist of non-coding DNA. Introns were looked upon as junk in the early days. Today, biologists and geneticists believe that this non-coding DNA may be essential in order to expose the coding regions and to regulate how the genes are expressed" (taken from Fredholm, L., science 2003) [5]. Further research will reveal other important functions pertaining to introns.

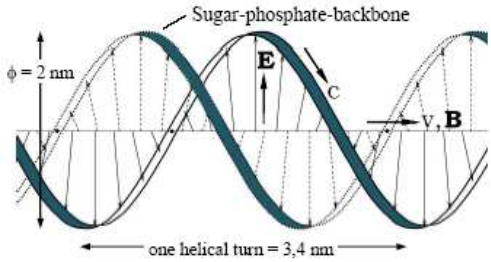

Figure 1: The distribution of the electric field (**E**) and of the magnetic flux density (**B**) in the double helix. v = speed of the DNA wave (140,000 km/s); c = speed of light (= 300, 000 km/s); (= speed of the vortex).

"The superbly researched biochemistry of the cell nuclei describes the direction that must be investigated" [12]. "The coding regions in the DNA strand, the genes, make up only a fraction of the total amount of DNA. The stretches that flank the coding regions are called "introns" and consist of non-coding DNA. Introns were looked upon as junk in the early days. Today, biologists and geneticists believe that this non-coding DNA may be essential in order to expose the coding regions and to regulate how the genes are expressed" (taken from Fredholm, L., science 2003) [5]. Further research will reveal other important functions pertaining to introns.

2. THE ELECTRIC FIELD OF THE FOUR BASES

As we know, the DNA is wound into a double helix with a right-handed rotation (type A or B). The two polynucleotide strands are of opposite polarity. Between the bases hydrogen-bonds are formed, whereas adenine always pairs with thymine and guanine always pairs with cytosine. (Karp, G. 2005) [9]. These represent the code or character set of the genetic information. A chemist distinguishes the four bases on the basis of their structure; however, a physicist on the basis of different charges. Although the electric charges are very low, the electric field strengths, measured in volts per meter, may be very high at such small distances.

While inactive the hydrogen-bonds follow the field strength and neutralize the electric charges of the base pairs. The DNA behaves outwardly neutral and conversely is not interfered with by external electric fields. Only during the writing process are the hydrogen-bonds temporarily removed and the base pairs separated, allowing the sequence of exposed charges to be read. This process requires a higher electric field strength. The magnetic scalar wave (Fig. 1) can, for example, provide the required voltage. Incidentally, this is the only type of wave in which the field vector of the electric field points radially outward as a prerequisite for interaction with the electric charge of the bases. As a result, a modulation occurs, which is carried by the wave.

3. THE CIRCULARLY POLARIZED DOUBLE HELIX

The referenced longitudinal wave propagate in the direction of the magnetic field vector. Magnetic forces are formed between the field vortices and are responsible for the emergence of wave nodes and also are responsible for the propagation of the wave. Because of the helical structure of the vortex field, the field lines are open and not closed. They wind the screw forward compared to a circularly polarized wave (Fig. 2).

The vortex velocity, which is at the speed of light c, screws along the outer line in a forward direction. Because the resulting path is more than twice as long, the propagation of this field formation in the x-axis direction and results in a longitudinal wave propagating at 140,000 km/s. This is a result of the geometric dimensions (Karp, G., 2005, p. 503 and Jaenicke, L., Eds. 1998) [7, 9] on the one hand and the diameter of the helix of 2 nm on the other as well as the path length of 3.4 nm measured in x-axis direction over a full helical turn (Fig. 1).

4. THE WAVELENGTH OF THE DNA-WAVE

The next step is to determine the frequency and wavelength in the current direction of the magnetic field vectors and with it the modulated wave. Valuable information can be observed by the tendency of the helix to form a coil with two turns of globular proteins called histones.

It becomes obvious that this corresponds to two turns of a half-period. Thus, the transition from one histone to the next always occurs in a wave node, corresponding to half of the wavelength. If a coil produces the positive half-wave, then the neighboring coil is responsible for the negative half-wave and vice versa. The **alternating winding direction** from one coil to the next confirms the correctness of this assumption.

The length of the DNA strand of both windings can be determined in two ways. For the nucleosome core particle, consisting of the coil body (histones) and the wrapped around DNA molecule, an average coil diameter of 10 nm is established (Karp, G. 2005) [9]. The molecular length of one turn in the middle of the DNA strand is therefore $(\pi \cdot 10)$ nm and the wavelength at 4 turns distributed to 2 histones is: $\lambda_{\mathrm{DNA}} = 126\,\mathrm{nm}$.

Quoted values in literature differ sometimes, which is explained by the relevant condensation degree of the molecule. An error analysis would help narrow down the possible fluctuation range. Using published data and observations using x-ray structure analysis valuable information (Lewin, B., p. 421, 1990) [10] can be obtained to estimate the range of the tolerance band. In the second calculation method the base pairs are simply counted.

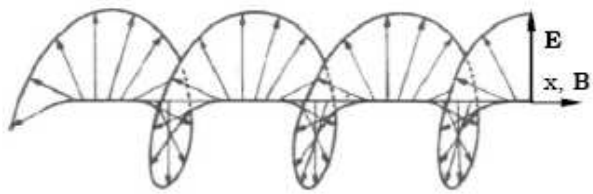

Figure 2: Left-circularly polarized wave.

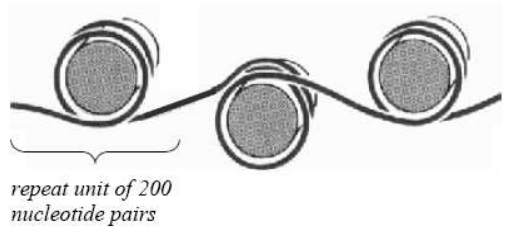

Figure 3: The open and "unpacked" structure of a DNA-strand with a given winding direction (Alberts, B. et al. The Cell, p. 343).

A nucleosome has 146 bp (base pairs) and takes slightly less than 1.8 turns, while one full turn has 83 bp, and two turns have 166 bp. Even more base pairs are required for the transition from a "bobbin" to the next, but sadly there is no reliable data. The high packing density within a condensed chromatin makes it difficult to count the fibers (Fig. 3). In an open and uncondensed fiber 200 bp's are counted (Alberts, B. et al., The Cell, p. 343) [2].

The assent of the helix along its central axis is 0.332 nm per base pair (Sinden, R. 1994) [18]. Multiplied by the number of base pairs, which depend on the degree of condensation a maximum and minimum wavelength is obtained:

$$\lambda_{\mathrm{DNA}}(\max) = 200\,\mathrm{bp} \cdot 2 \cdot 0.332 = 132.8\,\mathrm{nm} \quad \text{and} \quad \lambda_{\mathrm{DNA}}(\min) = 180\,\mathrm{bp} \cdot 2 \cdot 0.332 = 119.5\,\mathrm{nm}$$

or referencing as a range:

$$\lambda_{\mathrm{DNA}} = 126\,\mathrm{nm} \pm 6\,\mathrm{nm}$$

Propagation speed v_{DNA} and wavelength λ_{DNA} in turn determines the frequency of the DNA-wave:

$$\begin{aligned} f_{\mathrm{DNA}} &= v_{\mathrm{DNA}}/\lambda_{\mathrm{DNA}} = 140 \cdot 10^6/126 \cdot 10^{-9} \\ f_{\mathrm{DNA}} &= (1.11 \pm 0.06) \cdot 10^{15}\,\mathrm{Hz}\ (= \textit{UV-radiation}) \end{aligned}$$

at $c/2.14 = 140 \cdot 10^6$ m/s, as the average speed of the DNA-wave.

5. EVALUATION

The values determined here are primarily for the B-DNA. An especially important result in accordance with the metrological experience is shown in the table above. It describes the DNA-wave at frequencies around 10^{15} Hz of UV radiation as is therefore a UV radiation.

Prof. Popp speaks of bio-photons and demonstrates, using highly sensitive photo-multiplier tubes that cells do emit measurable extremely weak UV light. (Popp, A. F. 1987) [15–17]. Prof. Heine has measured tunnel structures inside the basic substance of the extracellular matrix and his results correlate with the above-calculated wavelength (Heine, H. 1997) [6]. Both scientists' similar results are in agreement but are argued differently. Popp has moved the cell radiation at 126 nm into the area of the speed of light, while Heine is showing that propagation velocity is equal to the sound wave. The latter view is probably closer to reality, and is in the nature of the magnetic scalar wave. Longitudinal waves know no fixed propagation speed and consequently no fixed frequency. To characterize them we must also incorporate their wavelength. This wavelength does not change when the wave is slowed down to lower speeds [11]. The propagation speed depends on the properties of the medium that carries the longitudinal wave.

In contrast to technical devices biological systems are using an "auto-focus" function; or in other words, in the presence of scalar waves cells show a tendency to go into resonance with each other. In this way, they draw energy and information from other cells and from the environment. Synchronization with external or internal biological stimulators occurs. It has not escaped my attention that this model can also help to explain observations of epigenetics [11–13].

REFERENCES

1. Adrian, L., U. Szewzyk, J. Wecke, and H. Görisch, "Bacterial dehalorespiration with chlorinanted benzenes," *Nature*, Vol. 408, 580–583, 2000.

View publication stats

2. Alberts, B., D. Bray, J. Lewis, M. Raff, K. Roberts, and J. D. Watson, *Molecular Biology of the Cell*, 3rd Edition, Garland Publishing, New York, 1994, ISBN 0-8153-1619-4.
3. Engels, J. W., "Distance measurements for DNA and RNA in vitro and in vivo," *Proceedings of the Second World DNA and Genome Day*, 64, China, 2011.
4. Fels, D., "Cellular communication through light," *PloS One*, Vol. 4, No. 4, 2009, doi:10.1371/journal.pone.0005086.
5. Fredholm, L., "The discovery of the molecular structure of DNA — The double helix," *Science*, Vol. 9, 2003.
6. Heine, H., *Lehrbuch der Biologischen Medizin. Grundregulation und Extrazelluläre Matrix*, 2nd Edition, 56, Hippokrates Verlag, Stuttgart, 1997.
7. Jaenicke, L., *Molekularbiologie der Zelle*, 109, VCH Verlag, Weinheim, 1998, ISBN 3-527-26350-0.
8. Jaffe, L. F., "Marine plants may polarize remote fucus eggs via luminescence," *Luminescence*, Vol. 20, 414–418, 2005.
9. Karp, G., *Cell and Molecular Biology*, Springer Verlag, New York, 2005, ISBN 3-540-23857-3.
10. Lewin, B., *Genes IV*, 421, Oxford University Press, Cambridge, 1990, ISBN 0-19-854268-2.
11. Meyl, K., *DNA and Cell Resonance, Communication of Cells Explained by Field Physics Including Magnetic Scalar Waves*, 2nd Edition, INDEL Publication, Villingen, 2011, www.etzs.de, ISBN 973-3-940 703-17-0.
12. Meyl, K., "DNA and cell resonance, magnetic waves enable cell communication," *DNA and Cell Biology*, Vol. 31, No. 4, 422–426, Liebertpub, Apr. 2012, DOI:1089/dna.2011.1415.
13. Meyl, K., "Task of the Introns, cell communication explained by field physics," *Journal of Cell Communication and Signaling*, Vol. 6, 53–58, Springerlink, Jan. 2012, DOI: 10.1007/s12079-011-0152-0.
14. Musumeci, F., A. Scordino, A. Triglia, G. Blandino, and I. Milazzo, "Intercellular communication during yeast cell growth," *Europhysics Letters*, Vol. 47, 736–742, 1999.
15. Popp, F. A. and J.-J. Chang, "Mechanism of interaction between electromagnetic fields and living organisms," *Science in China Series C*, Vol. 43, 507–518, 2000.
16. Popp, F. A., "Coupling of fröhlich-modes as a basis of biological regulation," *FRS: A Physicist Ahead of His Time*, G. J. Hyland, P. Rowlands, Eds., Herbert Fröhlich, University of Liverpool, Liverpool, 139–175, 2006.
17. Popp, F. A. and W. Klimek, "Photon sucking as an essential principle of biological regulation," *Biophotonics and Coherent Systems in Biology*, L. V. Beloussov, V. L. Voeikov, V. S. Martynyuk, Eds., 17–32, Springer, New York, 2007.
18. Sinden, R. R., *DNA Structure and Function*, 1st Edition, 398, Academic Press, 1994, ISBN 0-12-645750-6.
19. Van Wijk, R., M. Kobayashi, and E. P. A. Van Wijk, "Spatial characterization of human ultra-weak photon emission," *Biophotonics and Coherent Systems in Biology*, L. V. Beloussov, V. L. Voeikov, V. S. Martynyuk, Eds., 177–189, Springer, New York, 2007.

ResearchGate

See discussions, stats, and author profiles for this publication at: https://www.researchgate.net/publication/242200443

Scalar Waves: Theory and Experiments 1

Article · June 2001

CITATIONS
19

READS
37,701

1 author:

Konstantin Christian Meyl
Furtwangen University

21 PUBLICATIONS **81** CITATIONS

SEE PROFILE

Some of the authors of this publication are also working on these related projects:

Project water engine with ozone View project

Project CO2-free operation of machines View project

All content following this page was uploaded by Konstantin Christian Meyl on 23 October 2017.

The user has requested enhancement of the downloaded file.

Scalar waves

Theory and Experiments

by:

Prof. Dr.-Ing. Konstantin Meyl

Introduction

It will be shown that scalar waves, normally remaining unnoticed, are very interesting in practical use for information and energy technology for reason of their special attributes. The mathematical and physical derivations are supported by practical experiments. The demonstration will show:

1. the wireless transmission of electrical energy,
2. the reaction of the receiver to the transmitter,
3. free energy with an over-unity-effect of about 5,
4. transmission of scalar waves with 1.5 times the speed of light,
5. the inefficiency of a Faraday cage to shield scalar waves.

Tesla radiation

Here is shown extraordinary science, five experiments, which are incompatible with textbook physics. Following my short lecture I will present you the transmission of longitudinal electric waves.

It is a historical experiment, because already 100 years ago the famous experimental physicist Nikola Tesla has measured the same wave properties, as me. From him stems a patent concerning the wireless transmission of energy (1900)[1]. Since he also had to find out that at the receiver arrives very much more energy, than the transmitter takes up, he spoke of a „Magnifying Transmitter“.
By the effect back on the transmitter Tesla sees, if he has found the resonance of the earth and that lies according to his measurement at 12 Hz. Since the Schumann resonance of a wave, which goes with the speed of light, however lies at 7.8 Hz, Tesla comes to the conclusion, that his wave has 1.5 times the speed of light[2].

As founder of the diathermy Tesla already has pointed to the biological effectiveness and to the possible use in medicine. The diathermy of today has nothing to do with the Tesla radiation; it uses the wrong wave and as a consequence hardly has a medical importance.

The discovery of the Tesla radiation is denied and isn’t mentioned in the textbooks anymore. For that there are two reasons:

1. No highschool ever has rebuilt a „Magnifying Transmitter“. The technology simply was too costly and too expensive. In that way the results have not been reproduced, as it is imperative for an acknowledgement. I have solved this problem by the use of modern electronics, by replacing the spark gap generator with a function generator and the operation with high-tension with 2-4 Volts low-tension. I sell the experiment as a demonstration-set so that it is reproduced as often as possible. It fits in a case and has been sold 50 times in the last four weeks. Some universities already could confirm the effects. The measured degrees of effectiveness lie between 150 and 1000 percent.

2. The other reason, why this important discovery could fall into oblivion, is to be seen in the missing of a suitable field description. The Maxwell equations in any case only describe transverse waves, for which the field pointers oscillate perpendicular to the direction of propagation.

Maxwell equations (rot ≡ curl):

$$\boxed{\text{rot}\,\mathbf{E} = -\,\delta\mathbf{B}/\delta t} \qquad \boxed{\text{rot}\,\mathbf{H} = \mathbf{j} + \delta\mathbf{D}/\delta t}$$

$$\boxed{\mathbf{B} = \mu\cdot\mathbf{H}} \qquad \mathbf{j} = 0 \qquad \boxed{\mathbf{D} = \varepsilon\cdot\mathbf{E}}$$

$$\text{rot rot}\,\mathbf{E} = -\,\mu\cdot\delta(\text{rot}\mathbf{H})/\delta t = -\,\mu\cdot\varepsilon\cdot\delta^2\mathbf{E}/\delta t^2$$

$$\boxed{\mu\cdot\varepsilon = 1/c^2}$$

wave equation:

$$\boxed{\Delta\mathbf{E} = \underbrace{\text{grad div}\,\mathbf{E}}_{?} - \overbrace{\text{rot rot}\,\mathbf{E}} = \frac{1}{c^2}\frac{\delta^2\mathbf{E}}{\delta t^2}}$$

Figure 1: The vectorial part of the wave equation (derived from the Maxwell equations)

Wave equation

By using the Laplace operator the well-known wave equation, according to the rules of vector analysis, can be taken apart in two parts: in the vectorial part (rot rot **E**), which results from the Maxwell equations and in a scalar part (grad div **E**), according to which the divergence of a field pointer is a scalar. We have to ask ourselves, which properties has this wave part, which founds a scalar wave?

Wave equation:

Laplace-operator	rot **E** = 0 longitudinal wave	div **E** = 0 transverse wave	c = speed of light

$$\Delta \mathbf{E} = \underbrace{\text{grad div } \mathbf{E}} - \text{rot rot } \mathbf{E} = \frac{1}{c^2}\frac{\delta^2 \mathbf{E}}{\delta t^2}$$

Div **E** $\neq$ 0 is a scalar $\Rightarrow$ **scalar wave !**

$$\boxed{E = -\text{grad } \varphi} : \begin{cases} (1) & \cancel{\text{grad}} \text{ div } \mathbf{E} = -\cancel{\text{grad}} \dfrac{1}{c^2}\dfrac{\delta^2 \varphi}{\delta t^2} \\ (2) & \text{div } \mathbf{E} = -\text{div grad } \varphi \end{cases}$$

$$\boxed{\text{div } D = \rho} : \quad (3) \quad \text{div } \mathbf{E} = \rho/\varepsilon$$

plasma wave:

$$\boxed{\Delta \varphi = \frac{1}{c^2}\frac{\delta^2 \varphi}{\delta t^2} - \frac{\rho}{\varepsilon}}$$

i.e. = longitudinal Langmuir-wave
or: = longitudinal electric wave (vortex)

Figure 2: The scalar part of the wave equation describes longitudinal electric waves (derivation of plasma waves).

If we derive the field vector from a scalar potential φ, then this approach immediately leads to an inhomogeneous wave equation, which is called plasma wave. Solutions are known, like the electron plasma waves, which are longitudinal oscillations of the electron density (Langmuir waves).

Vortex model

The Tesla experiment and my historical rebuild however show more. Such longitudinal waves obviously exist even without plasma in the air and even in vacuum. The question thus is asked, what the divergence **E** describes in this case? How is the impulse passed on, so that a longitudinal standing wave can form? How should a shock wave come about, if there are no particles which can push each other?
I have solved this question, by extending Maxwell's field theory for vortices of the electric field. These so-called potential vortices are able to form structure and they propagate in space for reason of their particle nature as a longitudinal shock wave. The model concept bases on the ring vortex model of Hermann von Helmholtz, which Lord Kelvin did make popular. In my books[3] the mathematical and physical derivation is described.

In spite of the field theoretical set of difficulties every physicist at first will seek for a conventional explanation. He will try two approaches:

Resonant circuit interpretation

Tesla had presented his experiment among others to Lord Kelvin and he already 100 years ago has spoken of a vortex transmission. In the opinion of Kelvin it however by no means concerns a wave but radiation. He had recognized clearly, that every radio technical interpretation had to fail, because alone the course of the field lines is a completely different one.

It presents itself to assume a resonant circuit, consisting of a capacitor and an inductance.

1. ***closed resonant circuit***

resonance frequency:

$$f = \frac{1}{2\pi\sqrt{LC}}$$

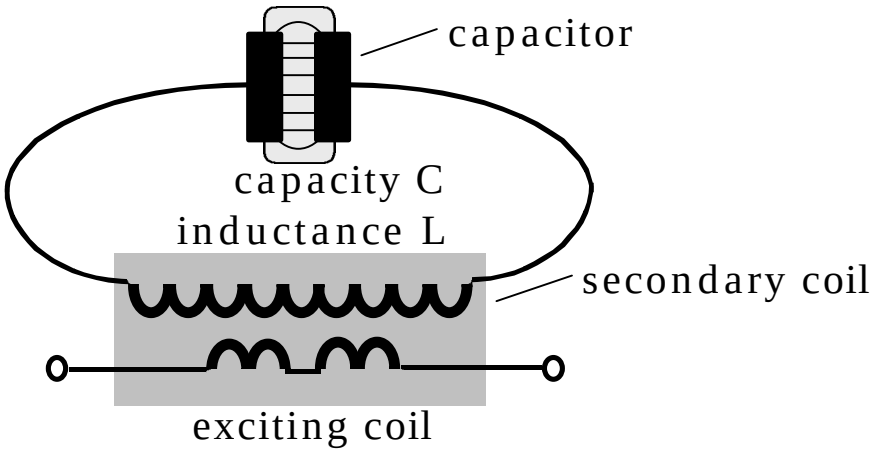

2. ***separating the resonant circuit***

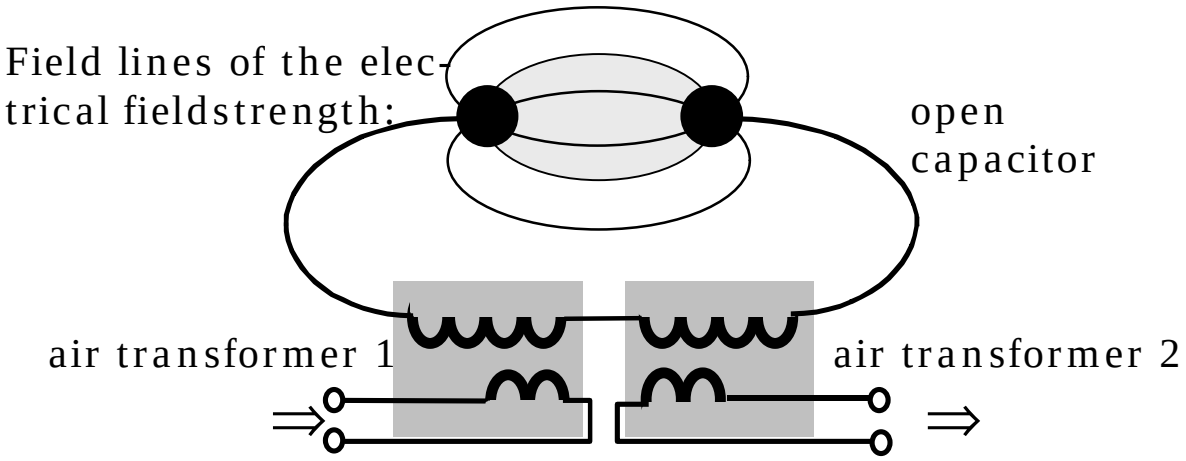

3. ***resonant circuit with open capacitor***

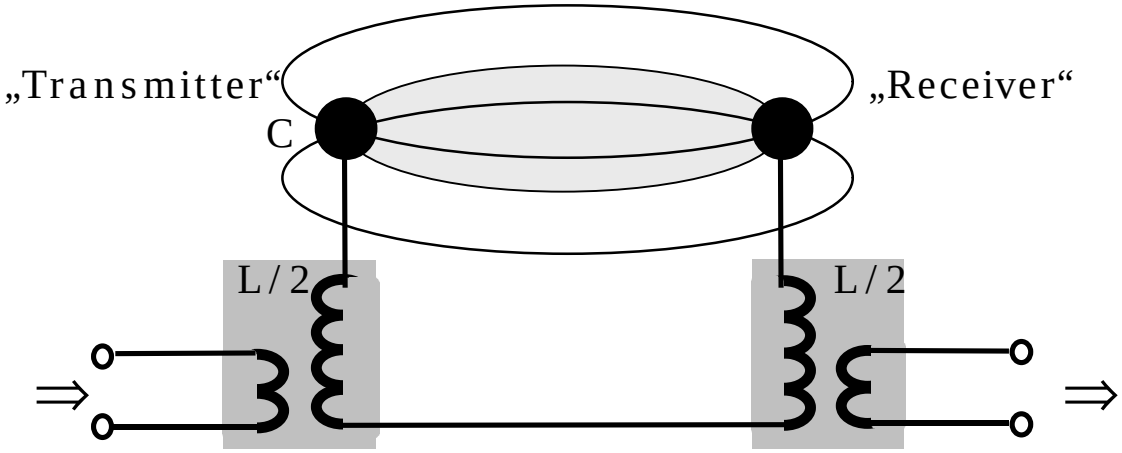

Figure 3: Interpretation as an open resonant circuit

If both electrodes of the capacitor are pulled apart, then between both is stretching an electric field. The field lines start at one sphere, the transmitter, and they bundle up again at the receiver. In that way a higher degree of effectiveness and a very tight coupling can be expected. In this manner without doubt some of the effects can be explained, but not all.

The inductance is split up in two air transformers, which are wound completely identical. If a fed in sinusoidal tension voltage is transformed up in the transmitter, then it is again transformed down at the receiver. The output voltage should be smaller or at maximum equal the input voltage– but it is substantially bigger!
There can be drawn and calculated an alternative wiring diagram, but in no case the measurable result comes out, that light-emitting diodes at the receiver glow brightly (U>2Volt), whereas at the same time the corresponding light-emitting diodes at the transmitter go out (U<2Volt)! To check this both coils are exchanged.

The measured degree of effectiveness lies despite the exchange at more than 100 percent. If the law of conservation of energy should not be violated, then only one interpretation is left: The open capacitor withdraws field energy from its environment. Without consideration of this circumstance does the error deviation of every conventional model calculation lie at more than 90 percent. There one rather should do without the calculation.

It will concern oscillating fields, because the spherical electrodes are changing in polarity with a frequency of approx. 7 MHz. They are operated in resonance. The condition for resonance reads: identical frequency and opposite phase. The transmitter obviously modulates the field in its environment, while the receiver collects everything what fulfils the condition for resonance.

Also in the open question for the transmission velocity of the signal the resonant circuit interpretation fails. But the HF-technician still has another explanation at the tip of his tongue:

Near field interpretation

In the near field of an antenna effects are measured, which on the one hand go as inexplicable, because they evade the normally used field theory, which on the other hand come the by me shown scalar wave effects very close. Everyone knows a practical application: e.g. at the entrance of department stores, where the customer has to go through in between of scalar wave detectors.

In my experiment the transmitter is situated in the mysterious near zone. Also Tesla always worked in the near zone. But who asks for the reasons, will discover that the

near field effect is nothing else but the scalar wave part of the wave equation. My explanation goes as follows:

The charge carriers which oscillate with high-frequency in an antenna rod form longitudinal standing waves. As a result also the fields in the near zone of a Hertzian dipole are longitudinal scalar wave fields. The picture shows clearly how vortices are forming and how they come off the dipole.

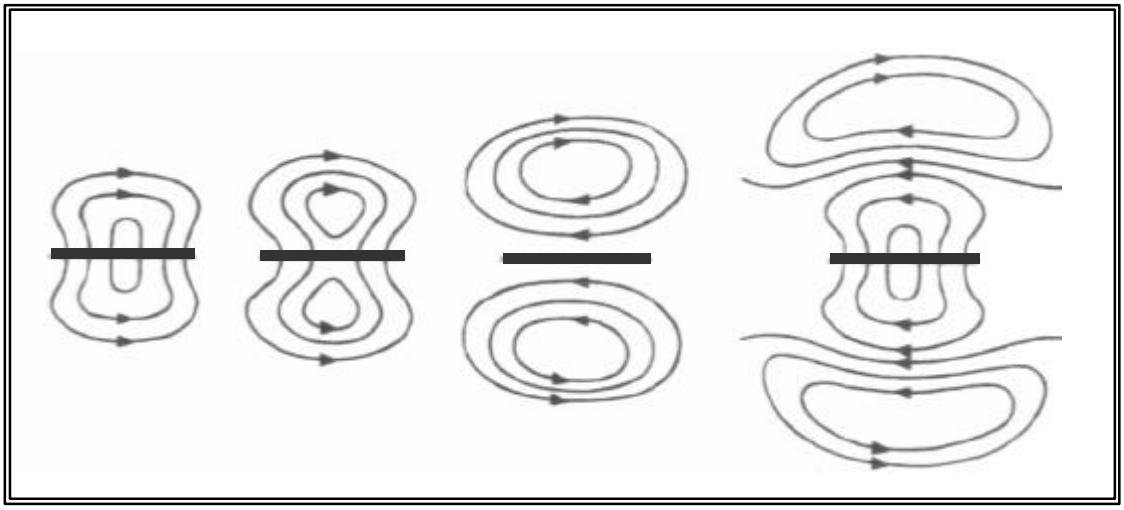

Figure 4: The coming off of the electric field lines of the dipole.

Like for the charge carriers in the antenna rod the phase angle between current and tension voltage amounts to 90 degrees, occur in the near field also the electric and the magnetic field phase shifted for 90 degrees. In the far field however the phase angle is zero. In my interpretation the vortices are breaking up, they decay, and transverse radio waves are formed.

Vortex interpretation

The vortex decay however depends on the velocity of propagation. Calculated at the speed of light the vortices already have decayed within half the wavelength. The faster the velocity, the more stable they get, to remain stable above 1.6 times the velocity. These very fast vortices contract in the dimensions. They now can tunnel. Therefore speed faster than light occurs at the tunnel effect. Therefore no Faraday cage is able to shield fast vortices.

Since these field vortices with particle nature following the high-frequency oscillation permanently change their polarity from positive to negative and back, they don´t have a charge on the average over time. As a result they almost unhindered penetrate solids. Particles with this property are called neutrinos in physics. The field energy which is collected in my experiment, according to that

stems from the neutrino radiation which surrounds us. Because the source of this radiation, all the same if the origin is artificial or natural, is far away of my receiver, every attempt of a near field interpretation goes wrong. After all does the transmitter installed in the near field zone supply less than 10% of the received power. The 90% however, which it concerns here, cannot stem from the near field zone!

Experiment

At the function generator I adjust frequency and amplitude of the sinusoidal signal, with which the transmitter is operated. At the frequency regulator I turn so long, till the light-emitting diodes at the receiver glow brightly, whereas those at the transmitter go out. Now an energy transmission takes place.

If the amplitude is reduced so far, till it is guaranteed that no surplus energy is radiated, then in addition a gain of energy takes place by energy amplification.

If I take down the receiver by pulling out the earthing, then the lighting up of the LED´s signals the mentioned effect back on the transmitter. The transmitter thus feels, if its signal is received.

The self-resonance of the Tesla coils, according to the frequency counter, lies at 7 MHz. Now the frequency is ran down and see there, at approx. 4.7 MHz the receiver again glows, but less bright, easily shieldable and without discernible effect back on the transmitter. Now we unambiguously are dealing with the transmission of the Hertzian part and that goes with the speed of light. Since the wavelength was not changed, does the proportion of the frequencies determine the proportion of the velocities of propagation. The scalar wave according to that goes with (7/4.7=) 1.5 times the speed of light!

If I put the transmitter into the aluminium case and close the door, then nothing should arrive at the receiver. Expert laboratories for electromagnetic compatibility in this case indeed cannot detect anything and that, although in spite of that the receiver lamps glow! By turning of the receiver coil it can be verified that an electric and not a magnetic coupling is present although the Faraday cage should shield electric fields. The scalar wave obviously overcomes the cage with a speed faster than light, by tunnelling!

Literature

1 Nikola Tesla: Apparatus for transmission of electrical energy.
US-Patent No. 645,576, N.Y. 20.3.1900.

2 Nikola Tesla: Art of transmitting electrical energy through the natural mediums, US-Patent No. 787,412, N.Y. 18.4.1905.

3 Konstantin Meyl: Elektromagnetische Umweltverträglichkeit,
Teil 1: Umdruck zur Vorlesung, Villingen-Schwenningen 1996, 3.Aufl. 1998
Teil 2: Energietechnisches Seminar 1998, 3. Auflage 1999,
Teil 3: Informationstechnisches Seminar 2002, auszugsweise enthalten in:
K. Meyl: Skalarwellentechnik, Dokumentation für das Demonstrations-Set, INDEL-Verlag, Villingen-Schwenningen, (the homesite will inform you about the translation of the books: http://www.k-meyl.de).

Address

Prof. Dr.-Ing. Konstantin Meyl, TZA
Leopoldstraße 1,
D-78112 St. Georgen/Schwarzwald (Germany)

Tel.: +49-7724-1770, Fax.: +49-7721-51870
Email: meyl@k-meyl.de
Homesite: http://www.k-meyl.de

View publication stats

Prof. Meyl detected DNA-Wave and Scalar Wave Biology

2012-05-07 23:23

I consider **Prof. Dr. Konstantin Meyl** to be the new Tesla of our time. In his **first interview for White TV** he gave an overview of all his huge research on potential vortexes, magnetic scalar waves, the unified field theory and the existence of the aether.

Jag anser att Prof. Dr. Konstantin Meyl är vår tids nye Tesla, supersnillet. I **Meyls första intervju för White TV** (på engelska) gav han en sammanfattning över hela hans gigantiska forskning som lät honom upptäcka att en virvel består alltid av två, varav den andra var okänd för vetenskapen. Han har döpt den till potentialvirvel. Meyl har återupptäckt skalärvågorna genom att visa hur Tesla upptäckte den elektriska skalärvågen. Meyl har sedan själv upptäckt den magnetiska skalärvågen och det är den som är biologisk relevant. Hela vår kropp arbetar med magnetiska skalärvågor. Meyl formulerade även den enade fältteorin (Einstein misslyckades) och beviset av etern.

Now he is explaining his research in biology. He detected that our whole body works with scalar waves, that the DNA transports information and energy with a magnetic scalar wave,

I den här intervjun beskriver Meyl sin biologiska forskning. DNA, som är byggt som en antenn, transporterar information och energi med hjälp av magnetiska skalärvågor,

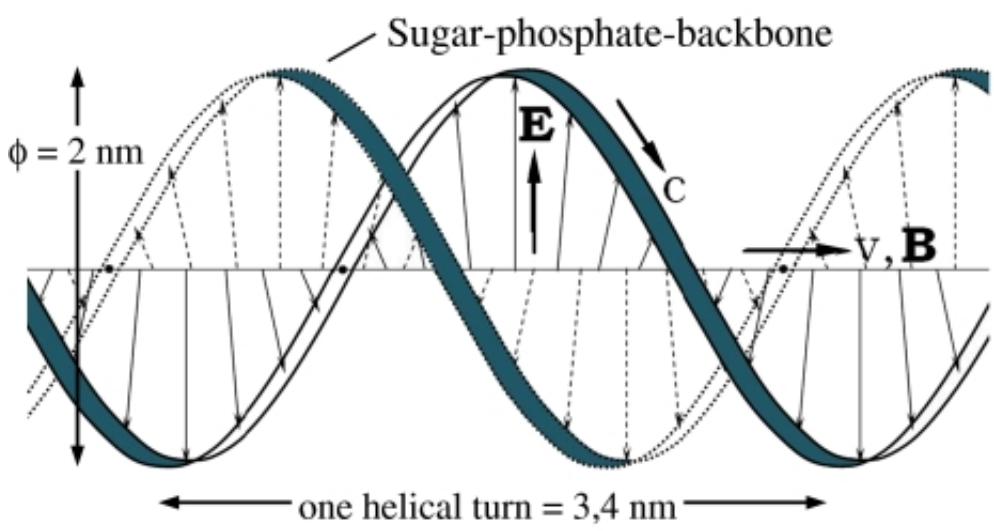

The distribution of the electric field (E) and of the magnetic flux density (B) in the double helix v=speed of the DNA wave (140,000 km/s) c=speed of light (= 300,000 km/s) (= speed of the vortex) (from **The International CCN Society 2011**)

that the nerves transport scalar waves, och nerverna transporterar skalärvågor,

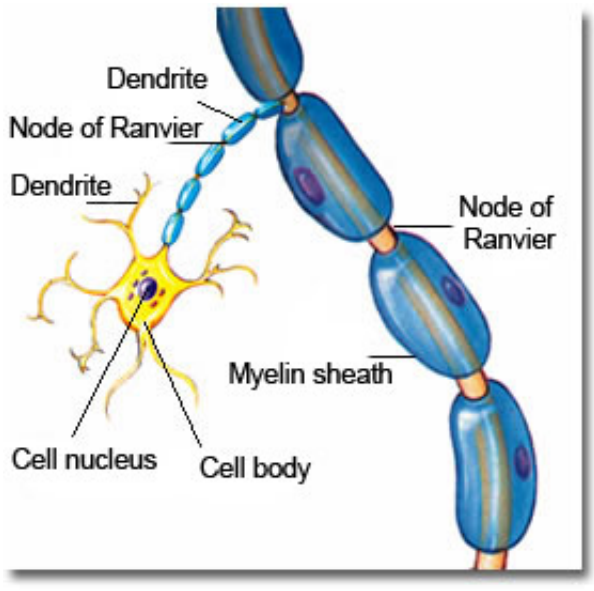

that the nodes **Ranvier** detected indicate a standing, longitudinal wave = scalar wave and that bio resonance medicine (**Bicom**) and homeopathy use scalar waves.

Ranviers noder indikerar en stående våg, en longitudinal våg = skalärvåg och att bioresonans medicinen (**Bicom** apparaten) och homeopati använder skalärvågor.

This interview is extremely important for doctors, because Meyl has found the missing links in how the human body is functioning. But it is also important for teachers to understand, why the kids have ADHD and difficulties to learn.

Intervjun är mycket viktig för läkare, då Meyl har hittat den felande länken hur vår kropp fungerar. Den är viktig för lärare att förstå varför elever har ADHD och svårigheter att lära sig något.

Electro smog is explained and how we can get rid of it. Victims of **tinnitus** and **mind control** can learn a lot, why they are suffering and how they could improve their situation.

Meyl förklarar vad elektrosmog är och hur vi kan bli av med det. Tinnitus och mind control (hjärnkontroll) offer kan lära sig mycket av den här intervjun. Meyl ger tips hur de kan förbättra sin situation.

Watch even these articles on scalar waves: **Prof. Meyl New Tesla**, **Neutrino Free Energy, 100 years Scalar Wave Conspiracy**, **Our Body works with Scalar Waves**, **Scalar Weapons on 9/11?**, **Table Top Defender from QuWave shelter for TI's**,

Diskussioner

Nov.08.11 23:10:09

krig mot Iran (1) by **ronin**

Apr.15.11 14:32:34

Centralbanken gör eg... (1) by **Stig**

Jan.23.11 17:34:26

Tyska säkerhetstjäns... (1) by **Henning**

by

Jul.16.10 15:44:08

Storkapitalet bakom ... (0) by **Henning**

rexresearch.com

Konstantin MEYL
Scalar Physics

https://www.youtube.com/watch?v=AFtU4FVpXVs
Neutrino power and the Existence of Scalar Waves (2004)

https://www.k-meyl.de/go/Primaerliteratur/About_Vortex_Physics_and_Vortex_Losses.pdf
Journal of Vortex Science and Technology, Ashdin Publishing, Vol. 1 (2012), Article ID 235563, 10 pages
doi:10.4303/jvst/235563
About Vortex Physics & Vortex Losses
[PDF]

https://www.k-meyl.de/go/Primaerliteratur/Faraday-or-Maxwell.pdf
Nikola Tesla Energy Science Conference, Washington DC 08.11.2003, IRI
Faraday or Maxwell? Do Scalar Waves Exist or Not?
[PDF]

Longitudinal Wave Experiment After Nikola Tesla
[PDF]

Documentation on Scalar Wave Medicine
[PDF]

Scalar Waves
[PDF]

---

https://www.k-meyl.de/go/Primaerliteratur/ABBE14_proceedings.pdf
SEEK Digital Library, Int. Journal of Environmental Engineering - IJEE, 2(1) 30.4.2015, 23-27,
doi: 10.15224
Biological Signals Transmitted by Longitudinal Waves Influencing the Growth of Plants
[PDF]

---

https://www.k-meyl.de/go/Primaerliteratur/Meyl-Micro-_to_Macrocosm.pdf
Conference Proceedings of the Technical University of Epirus, Arta, Greece, October 16, 2015, 3 pages

Microcosm to Macrocosm Calculated with One Equation
[PDF]

---

https://www.k-meyl.de/go/Primaerliteratur/PIERSDraft_SW-Theory.pdf
PIERS Draft Proceedings, Progress in electromagnetic research, Prague, Czech Republic, July 9, 2015, page 2436 - 2438.

Calculations Concerning the Variable Size of Protons and Other Nuclei
[PDF]

Scalaire Energie
[PDF]

---

https://www.k-meyl.de/go/Primaerliteratur/PIERS_Proceedings_WPT.pdf
PIERS Draft Proceedings, Moscow, Russia, August 19–23, 2012665
Wireless Power Transmission by Scalar Waves
[PDF]

---

https://www.k-meyl.de/go/Primaerliteratur/Proc_RFID_Eurasia.pdf
Proceedings of the 1st RFID Eurasia Conference Istanbul 2007
Far Range Transponder

[PDF]

---

http://vixra.org/pdf/1607.0130v1.pdf
https://www.k-meyl.de/go/Primaerliteratur/earth-expansion-by-neutrinopower-jgg-1000219.pdf
https://www.longdom.org/open-access/earth-expansion-by-neutrinopower-jgg-1000219.pdf
Journal of Geology & Geophysics 2015, 4:5, 5 pages, JGG, ISSN: 2329-6755

Earth Expansion by neutrino-Power

[PDF]

Attempts to detect the torsion field nature of scalar wave generated by dual Tesla coil system

Gao Peng

[PDF]

Abstract—
Scalar wave was found and used at first by NikolaTesla in his wireless energy transmission experiment. Prof.K.Meyl extended the Maxwell equation and found the lost scalar wave part. The scalar wave theory proposed by Prof.K. Meyl indicates that the torsion field is the nature of scalar wave. This work attempts to detect the torsion field nature of scalar wave generatedby the dual Tesla coil system, using the torsion balance consistingof a wooden frame. The result is positive and two kinds of torsion field including left-handed and right-handed are detected in dual Tesla coil...

---

https://www.meyl.eu/go/index.php?dir=50_Experimental&page=1&sublevel=2

Experimental- and Demo-Kit

Demo Kit **Experimental Kit**

As a result of common demand and frequently asked questions during the breaks and after the recitations of Prof. Dr. Meyl (e.g. how does an energy transmission line work? and what kind of single components have to be used? etc) we decided to develop a demonstration-kit and an experimentation-kit to allow interested practitioners to gain experience and to make experiments by themselves. So with these two kits you are able to research the characteristics of Tesla coils, dependency of the resonant frequency concerning position and size of the ball electrode and varieties of the systems resonance depending on changes of the distance between transmitter and receiver by yourself. The main goal is to achieve reproducible measurements, which cannot be done by a simple instruction guide but otherwise doubters often only believe in results of measurements acquired by their own devices. Therefore connection possibilities for external measuring devices are provided.

The Demo-Kit contains a simple waveform generator from 4 MHz up to 8 MHz, a pair of pancake coils with different resistance usable in various configurations as well as the required accessories. It allows to arrange a complete scalar transmission line without further equipment e.g. for demonstration purposes.

The Experimental-Kit contains an extended waveform generator from 135 kHz up to 10 MHz and an additional frequency counter and two additional pairs of pancake coils with half and twice of the wirelength. A specification of the set with theoretical explanations and practical instructions about the setup is also included in both kits. We are very interested in your measurements and conclusions and would be pleased, if you could send us your results. It would be helpful, if these are structured like the experiment descriptions in the book "Scalar Wave Technology". Both kits are available in our shop.

---

http://www.iiis.org/CDs2012/CD2012SCI/SCI_2012/PapersPdf/BA861JU.pdf
WMSCI 2012 Proceedings Vol.II, page 113 – 117, Chair of BMIC/ WMSCI 16th World

Conference Orlando, Florida, USA, July 18, 2012.

Cellular Communications, Signaling & Control
[PDF]

---

http://www.guns.connect.fi/innoplaza/energy/conference/Weinfelden/
International Congress-Publications, Weinfelden, 23.+24.06.2001, Jupiter-Verlag, Page 41-49
"Advanced Concepts for Wireless Energy Transfer "

Besides that Konstantin Meyl is a vivid lecturer that really caught listeners, his topic of scalar and plasma waves was really captivating. Hearing about longitudinal electromagnetic waves based on vortex particle model really gave one something to think about after the conference. Not without reason, Meyl is called "Schwartzwald Tesla".

By Meyl, the scalar waves or Tesla waves are able to travel right through Faraday cage type shielding that stop ordinary transverse radio waves. Tesla's magnifying transmitter has been calculated to produce scalar waves with a velocity of about 1,5 times that of light. Meyl told that scalar waves be described as one case of Maxwell's equations.

About how longitudinal waves obviously exist even without plasma in the air and even in vacuum Meyl declares: "I have solved this question, by extending Maxwell's field theory for vortices of the electric field. These so-called potential vortices are able to form structure and they propagate in space for reason of their particle nature as a longitudinal shock wave. The model concept bases on the ring vortex model of Herrman von Helmholtz, which Lord Kelvin did make popular." Meyl has published books describing the fomulas.

---

https://www.ncbi.nlm.niNA Cell Biol. 2012 Apr;31(4):422-6
JOURNAL OF CELL COMMUNICATION AND SIGNALING, Volume 6, Number 1 (2012), 53-58,
doi: 10.1089/dna.2011.1415
DOI: 10.1007/s12079-011-0152-0

DNA and cell resonance: magnetic waves enable cell communication.
Meyl K

Abstract
DNA generates a longitudinal wave that propagates in the direction of the magnetic field vector. Computed frequencies from the structure of DNA agree with those of the predicted biophoton radiation. The optimization of efficiency by minimizing the conduction losses leads to the double-helix structure of DNA. The vortex model of the magnetic scalar wave not only covers many observed structures within the nucleus perfectly, but also explains the hyperboloid channels in the matrix when two cells communicate with each other. Potential vortexes are an essential component of a scalar waves, as discovered in 1990. The basic approach for an extended field theory was confirmed in 2009 with the discovery of magnetic monopoles. For the first time, this provides the opportunity to explain the physical basis of life not only from the biological discipline. Nature covers the whole spectrum of known scientific fields of research, and interdisciplinary understanding is required to explain its complex relationships. The characteristics of the potential vortex are significant. With its concentration effect, it provides for miniaturization down to a few nanometers, which allows enormously high information density in the nucleus. With this first introduction of the magnetic scalar wave, it becomes clear that such a wave is suitable to use genetic code chemically stored in the base pairs of the genes and electrically modulate them, so as to "piggyback" information from the cell nucleus to another cell. At the receiving end, the reverse

process takes place and the transported information is converted back into a chemical structure. The necessary energy required to power the chemical process is provided by the magnetic scalar wave itself.

Retraction of: "DNA and cell resonance: magnetic waves enable cell communication," by Konstantin Meyl, DNA and Cell Biology (2012;31:422-426). [DNA Cell Biol. 2013]

---

https://www.meyl.eu/go/index.php?dir=10_Home&page=1&sublevel=0

Potential vortex, newly discovered properties of the electric field are fundamentally changing our view of the physical world

In his books, Prof. Dr.-Ing. Konstantin Meyl develops a self-consistent field theory which is used to derive at all known interactions of the potential vortex. Instead of the normally used Maxwell equation, Prof. Meyl chooses Faradays law of induction, as a hypothetical factor and proves that the electric vortex is a part thereof. This potential vortex propagates scalar-like through space and is a longitudinal electric wave whose properties have already been established a century ago by Nicola Tesla. This phenomenon can now be studied and examined thanks to a fully functional replica designed by Prof. Meyl.

Prof. Meyl's field theory is non speculative and enables new interpretations of several principles of electrical engineering and quantum physics. This leads to feasible interpretations of experimental observations which to this day have not been possible to explain via existing theories. For example, quantum particle characteristics can be calculated when interpreted as a vortex. The dielectric loss of a capacitor emerges as vortex loss. Likewise a number of neutrino experimental results can be explained when the neutrinos are regarded as a vortex. Neutrino power is available as an inexhaustible form of energy due to a remarkable overunity effect. In consideration of environmental sustainability, significant advances result by means of this revised theory regarding today's electromagnetic pollution.

The presented theory is based on an extension of the Maxwell theory and as such is a special case scenario that does not affect classic physical laws which remain in force.

In the enhanced view of potential vortex, the physical comprehension becomes more objective. Just as Einstein's theory, the Meyl theory explains not only interactions but temperature, to date inexplicable via conventional theories.

---

https://www.k-meyl.de/go/Primaerliteratur/BEM-3-156.pdf
doi: 10.15761/BEM.1000156
Longitudinal magnetic waves trigger higher ATP-levels and extend the aging process of plants
[PDF]

PATENTS

Vorrichtung und Verfahren zur Informationsübertragung mittels einer modulierten Trägerschwingung eines elektrischen, in der Eigenresonanz betriebenen Schwingkreises DE102014109660

Apparatus for receiving and measuring presence of neutrino particles
DE19614575

Data transmission device e.g. for telemetry, has data transmission mechanism for transmitter, and data receipt mechanism for base station with transmitter and data receipt effectively connected to base station
DE10348862

Method for reducing switching losses in current-injecting frequency converters
DE3625913

Regulated eddy current drive
DE3101323

Electrical adaptive control system - provides optimised regulator performance by comparison of regulator standard function with optimum transfer function
DE3005103

Other Publications :

Meyl, K.: Neutrino Power and the Existence of Scalar waves, 2004 Extra Ordinary Technology Conference, Salt Lake City, UT July 29-Aug.1, Conference Program, page 7

Meyl, K.:"Vortex Physics", Proceedings of the Natural Philosophy Alliance, Vol.9, page 380 – 387, keynote speaker at the 19th annual conference of the NPA, July 27, 2012, Albuquerque, New Mexico, USA

Meyl, K.: Scalar Waves: Theory and Experiments, Journal of Scientific Exploration, Vol. 15, No.2, June 2001, ISSN 0892-3310, pp.199-205

Meyl, K.: Self-consistent Electrodynamics, PIERS Proceedings, Progress in electromagnetic research, Technical University Moscow, Russia, August 20, 2012, page 172 – 177

K. Meyl: Wireless Power Transmission by Enlarging the Near Field, Part 2,
PIERS Draft Proceedings, Progress in electromagnetic research, Prague, Czech Republic, July 7, 2015, page 1562 - 1565.

K. Meyl: Scalar Wave Extension of Maxwell's Electrodynamics as theoretical framework for Tesla's wireless energy, (invited plenum Speech)
Proc. of the Int. Congress Nikola Tesla 2015, 24.4.2015, Dava Centar, Belgrad, Serbia, 8 pages.

Meyl, K.: Reproduction of the Scalar Wave Effects of Tesla's Wardenclyffe Tower,
Intern. Scientific and prof. Meeting June 28, 2006 Zagreb, Croatia, IEEE+Croatian Academy of Engineering, Zbornik Radova Proceedings, page 95

Meyl, K.: Wireless Tesla Transponder Field-physical basis for electrically coupled bidirectional far range transponders according to the invention of Nikola Tesla, SoftCOM 2006, 14th intern. Conference, 29.09.2006, IEEE and Univ. Split, Faculty of Electrical Engineering, ISBN 953-6114-89-5, page 67-78

Meyl, K.: Far Range Transponder, Field-physical basis for electrically coupled bidirectional far range transponders, Proceedings of the 1st RFID Eurasia Conference Istanbul 2007, ISBN 978-975-

01566-0-1, IEEE Catalog Number: 07EX1725, page 78-89

Meyl, K.: Wireless Power Transmission by Scalar Waves, PIERS Proceedings, Progress in electromagnetic research, Technical University Moscow, Russia, August 21, 2012, page 664 – 668

Meyl, K.: Wireless Power Transmission by Enlarging the Near Field, PIERS Proceedings, Progress in electromagnetic research, Stockholm, Sweden, August 15, 2013, page 1735 - 1739.

The transition from far to near field calculated by vortex physics
Meyl, K; Journal of Physics, Vol. 1, Issue 7, February 2018, 7 pages

K. Meyl, H.Schnabl: Biological Signals Transmitted by a Resonant L-C-oscillator, PIERS Draft Proceedings, Progress in electromagnetic research, Prague, Czech Republic, July 9, 2015, page 2601 - 2606.

Marwyn and John's home pages

... where you will find details of some of the things that we want to make available to friends and family.

Main menu

- Home
- Holidays
- Sailing
- Music
- Family History
- Computers
- Astronomy
- Amateur Radio
- Contacts

Links

- Lothians Radio Society

Navigation: Home > Amateur Radio > Homebrew > Directional coupler

John's homebrew pages

Microwave directional coupler - and an RF detector

More deviations from the main project.

I was concerned that, as I manage to generate a bit more power (hopefully!) at microwave frequencies, a simple RF probe would not be sufficient for power measurement, and the diode could be over-voltaged. A directional coupler allows a small amound of the forward signal to be sampled and measured. A very simple design is to use microstrip, as shown in the photo. A BAT85 Schottky diode is used as the detector, with 100pF and 10nF decoupling. The other end of the coupling loop is terminated with two 100 ohm resistors in parallel.

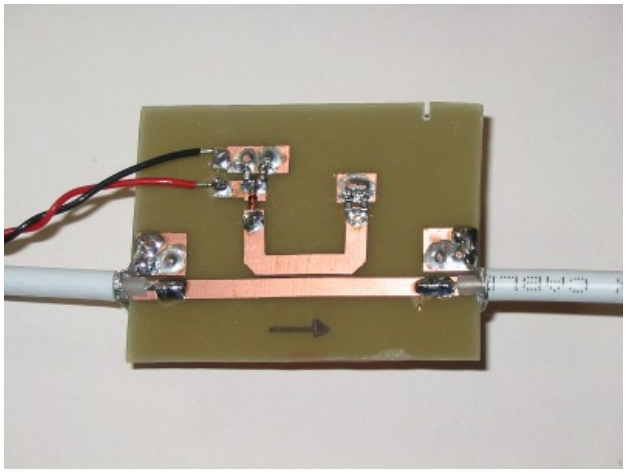

Here it is in use, with the signal being dissipated in the dummy load. A 100 microamp meter is used as the detector (100-0-100 microamps here since that's what I had available). It seems to work well, and is very directional indeed - very little signal is measured if it's connected the other way round. I don't know what the coupling is with any accuracy yet, but it will be fine for relative measurements for now.

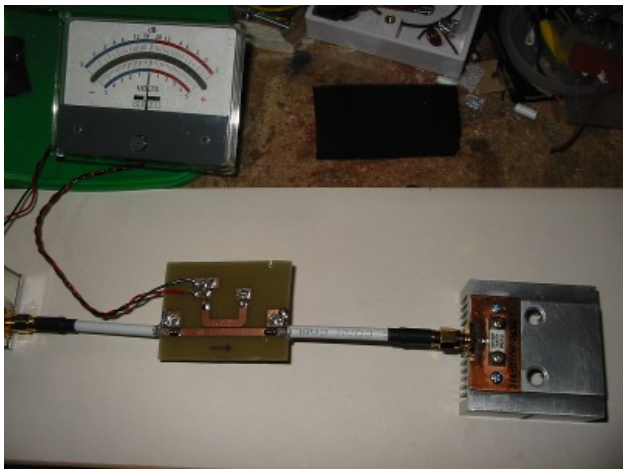

Having proved its success, I will probably make one with forward and reverse detectors that can be put in a box and used as a "through line" power meter for forward and reverse measurements.

I also wanted something a bit more reliable than my hand held RF probe for making measurements of power in test rigs. With that, since it really needs to be mounted in a screened tube, the signal can vary a bit depending on how the probe is set up. I thought that if I could put the RF detector into a BNC plug, then I might get rather more consistent measurements. Here are the components before assembly into a BNC compression plug. The BAT85 diode fits right

down near the probe; two SMD 1nF capacitors are soldered to a brass washer, and to the other end of the diode, to give the decoupling; and for good measure, the output is taken through a 2mm ferrite bead. When I get round to scanning some circuit diagrams I'll try to remember to add a sketch of the arrangement here.

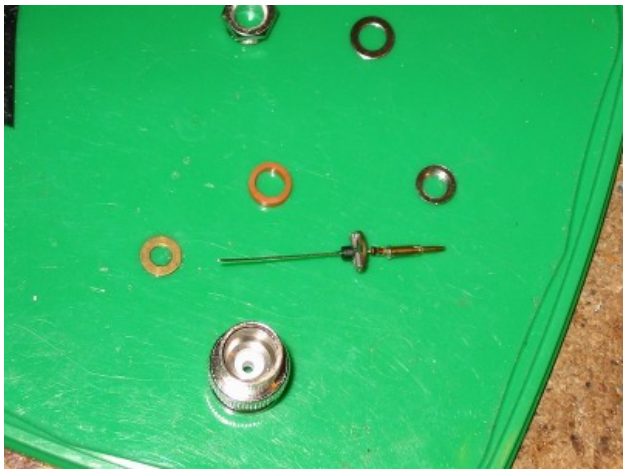

This new detector seems to be much more consistent than the RF probe, though I'm not yet happy that I can be sure of power measurements calculated from the detected DC voltage!

© Copyright Marwyn and John Cooke 2000-2015

US 20100039234A1

(19) United States

(12) Patent Application Publication

Soliven et al.

(10) Pub. No.: US 2010/0039234 A1

(43) Pub. Date: Feb. 18, 2010

(54) RF POWER CONVERSION CIRCUITS & METHODS, BOTH FOR USE IN MOBILE DEVICES

(75) Inventors: **Marcello Soliven**, Glendale, AZ (US); **Tamio Saito**, Cupertino, CA (US)

Correspondence Address:
TROUTMAN SANDERS LLP
BANK OF AMERICA PLAZA
600 PEACHTREE STREET, N.E., SUITE 5200
ATLANTA, GA 30308-2216 (US)

(73) Assignee: **IVI SMART TECHNOLOGIES, INC.**, New York, NY (US)

(21) Appl. No.: **12/542,522**

(22) Filed: **Aug. 17, 2009**

Related U.S. Application Data

(60) Provisional application No. 61/089,440, filed on Aug. 15, 2008.

Publication Classification

(51) **Int. Cl.**
H04Q 5/22 (2006.01)

(52) **U.S. Cl.** **340/10.1**

(57) **ABSTRACT**

This patent application teaches and describes radio frequency (RF) power conversion circuits and methods both for use in mobile devices (such as smart cards). Embodiments of the present invention include wireless personal ID cards or dongle including a fingerprint sensor. A fingerprint matching system can reside on cards. Power provided to the fingerprint sensor and on board processer(s) can be provided by a wireless signal provided to the card. The card can include an RF power conversion circuit configured to receive wireless RF energy and convert the wireless energy for powering electronics on the card. Other aspects, embodiments, and features of the present invention are also claimed and described.

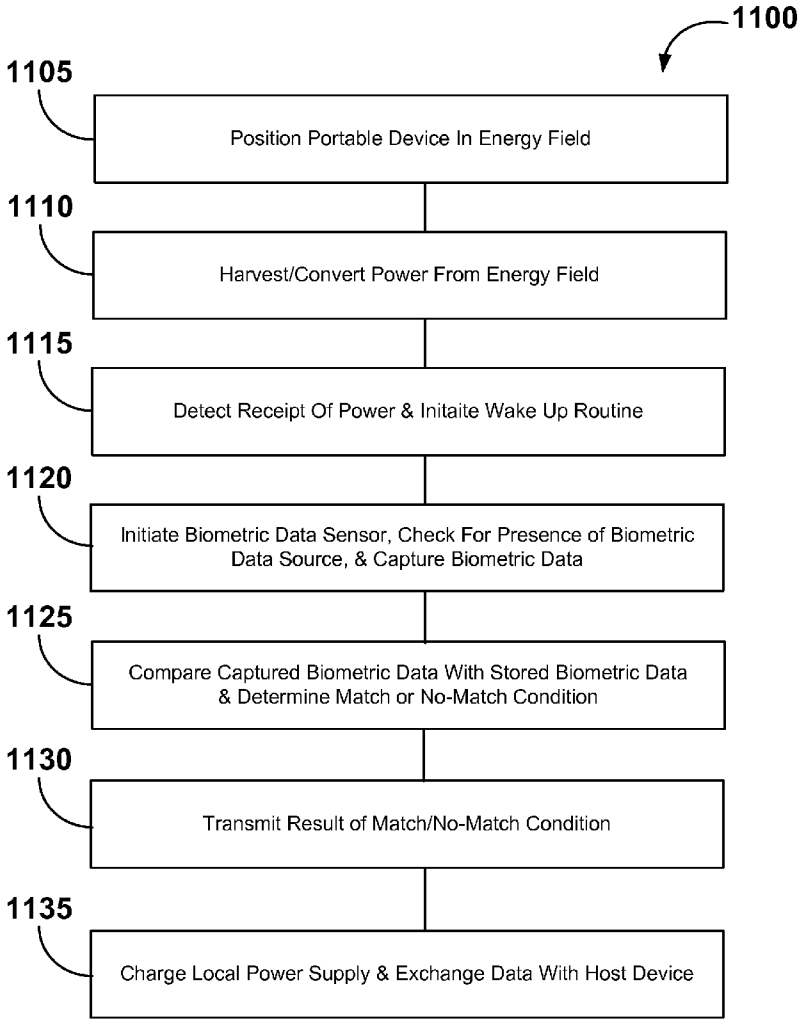

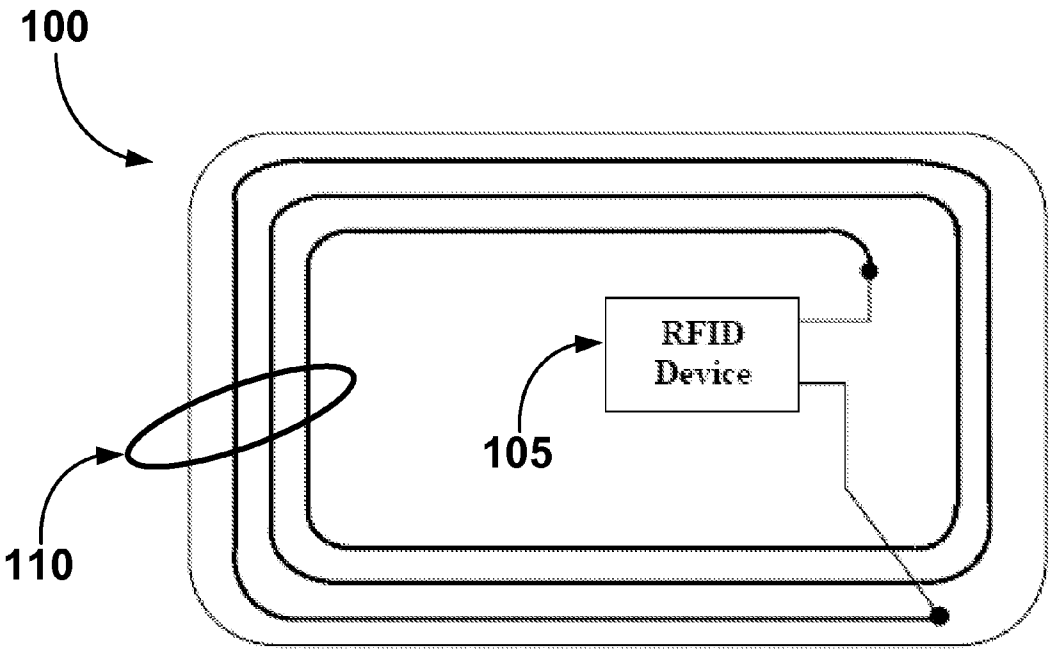

FIG. 1

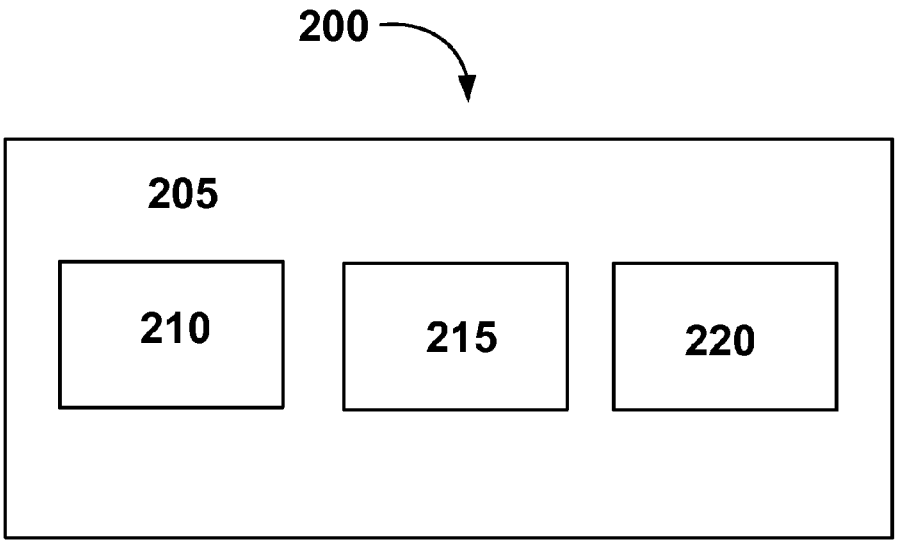

FIG. 2

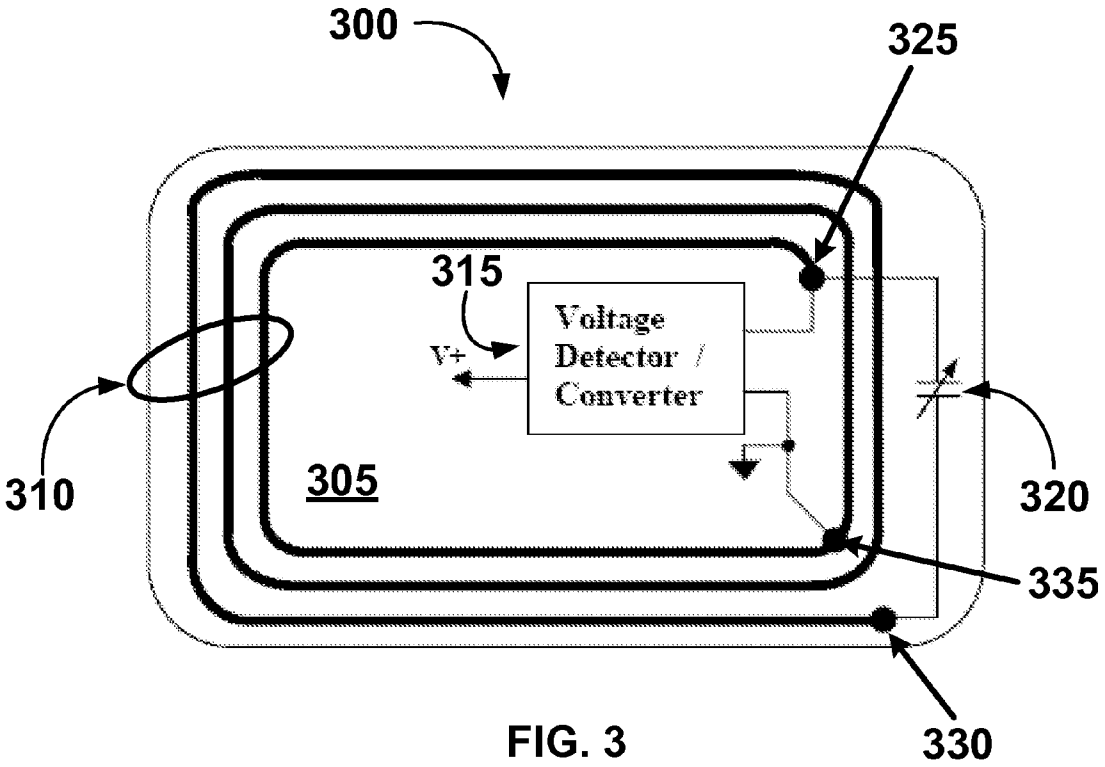
300
325
315
Voltage
Detector /
Converter
V+
310
305
320
335
330

FIG. 3

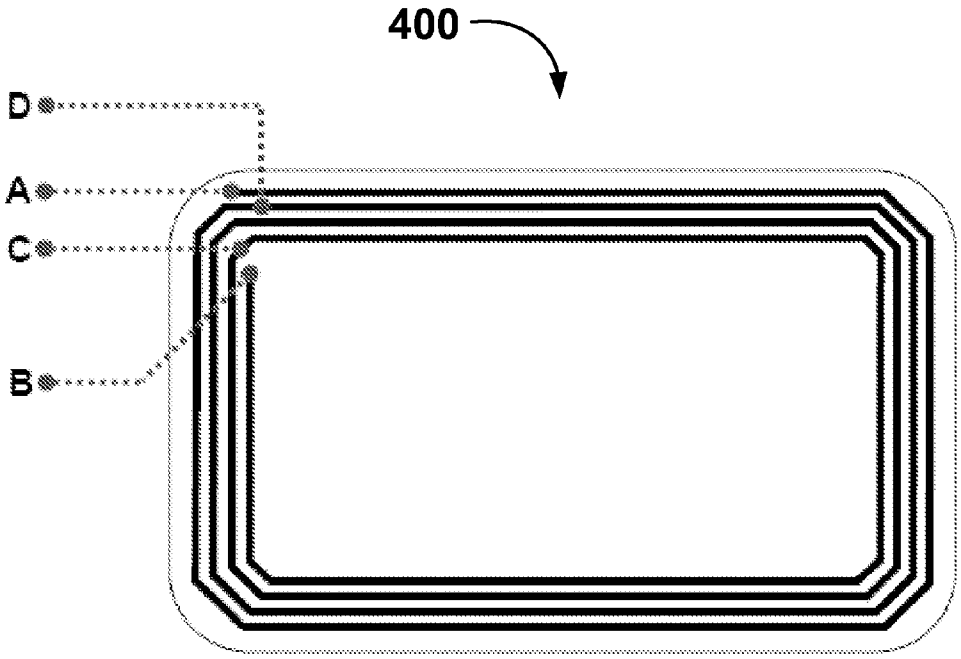
400
D
A
C
B

FIG. 4

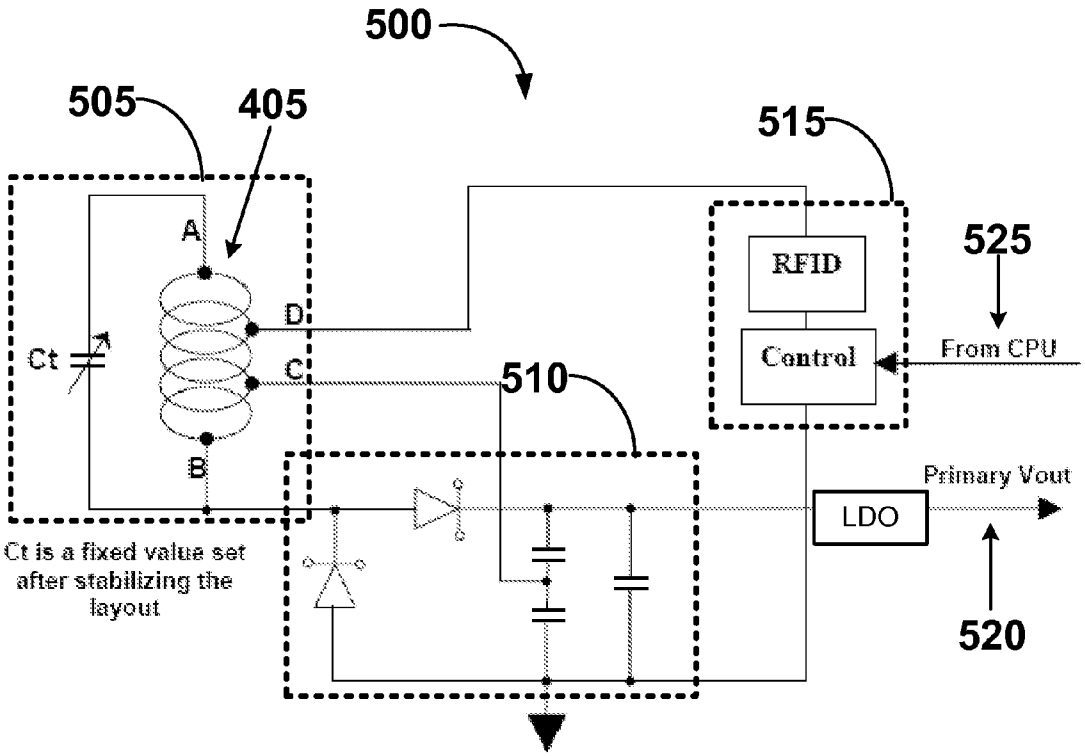
500
505
405
515
525
A
D
C
B
Ct
RFID
Control
From CPU
510
Primary Vout
LDO
520
Ct is a fixed value set after stabilizing the layout

FIG. 5

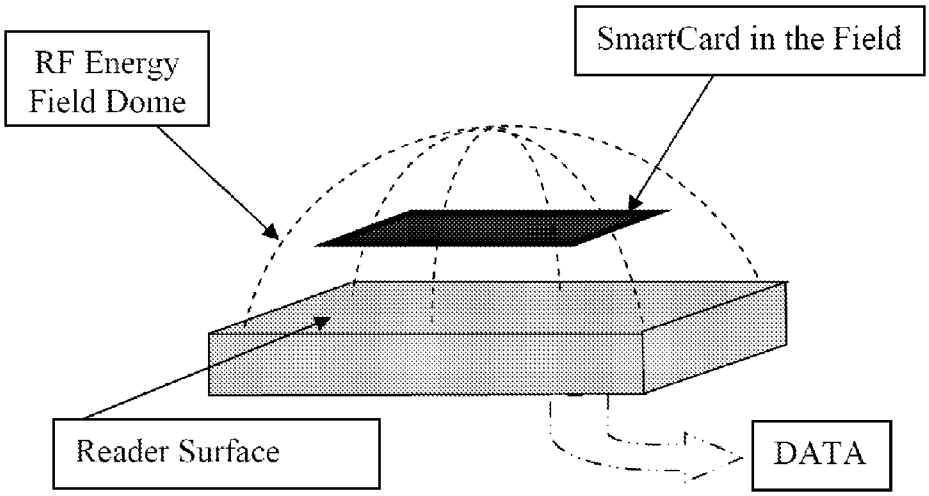
RF Energy Field Dome
SmartCard in the Field
Reader Surface
DATA

FIG. 6

FIG. 7

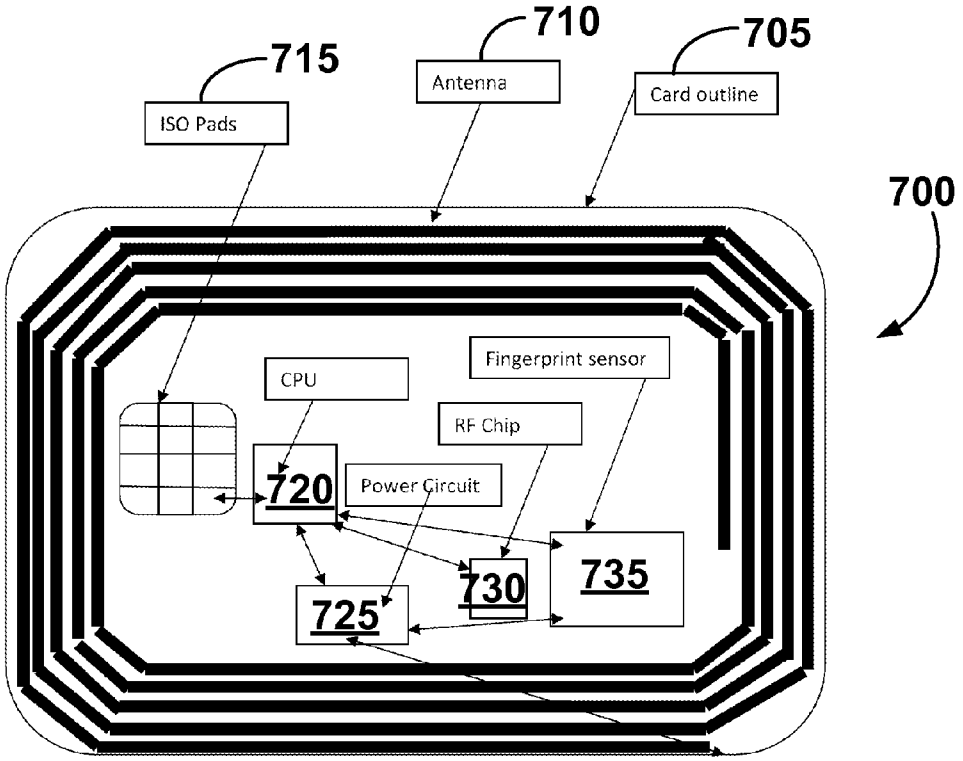
710
705
715
Antenna
Card outline
ISO Pads
700
Fingerprint sensor
CPU
RF Chip
720
Power Circuit
730
735
725

FIG. 8

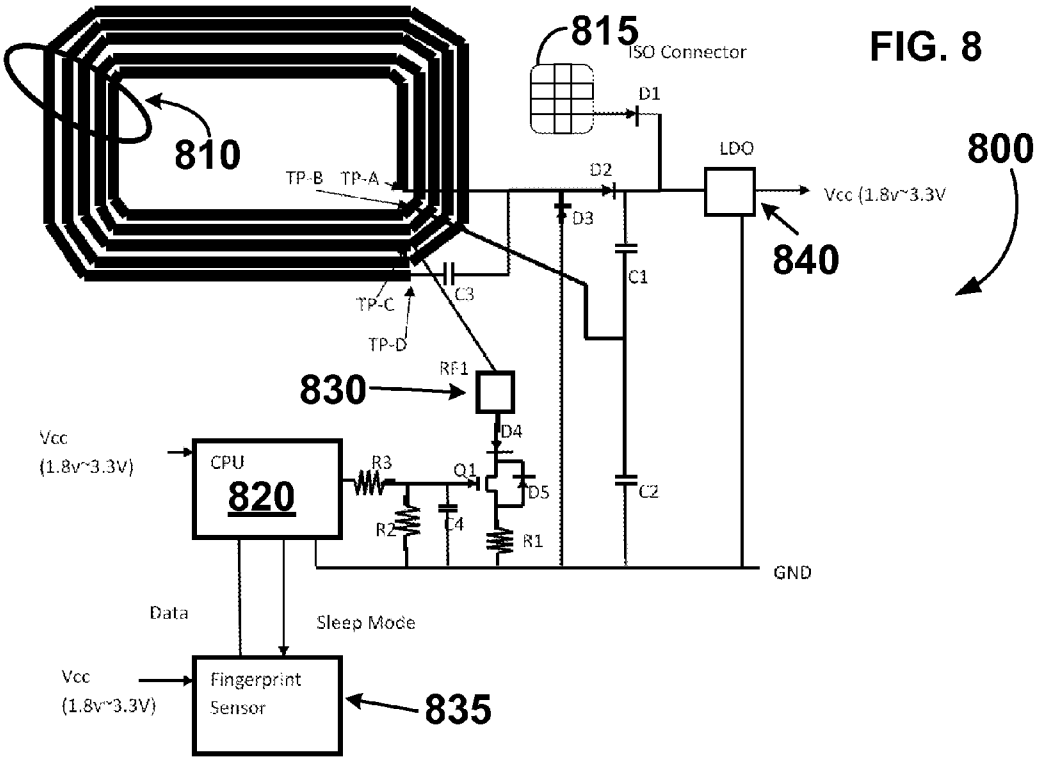
815
ISO Connector
D1
810
LDO
800
TP-B
TP-A
D2
Vcc (1.8v~3.3V
D3
840
C1
C3
TP-C
TP-D
RF1
830
D4
Vcc
(1.8v~3.3V)
CPU
820
R3
Q1
D5
C2
R2
C4
R1
GND
Data
Sleep Mode
Vcc
(1.8v~3.3V)
Fingerprint
Sensor
835

FIG. 9

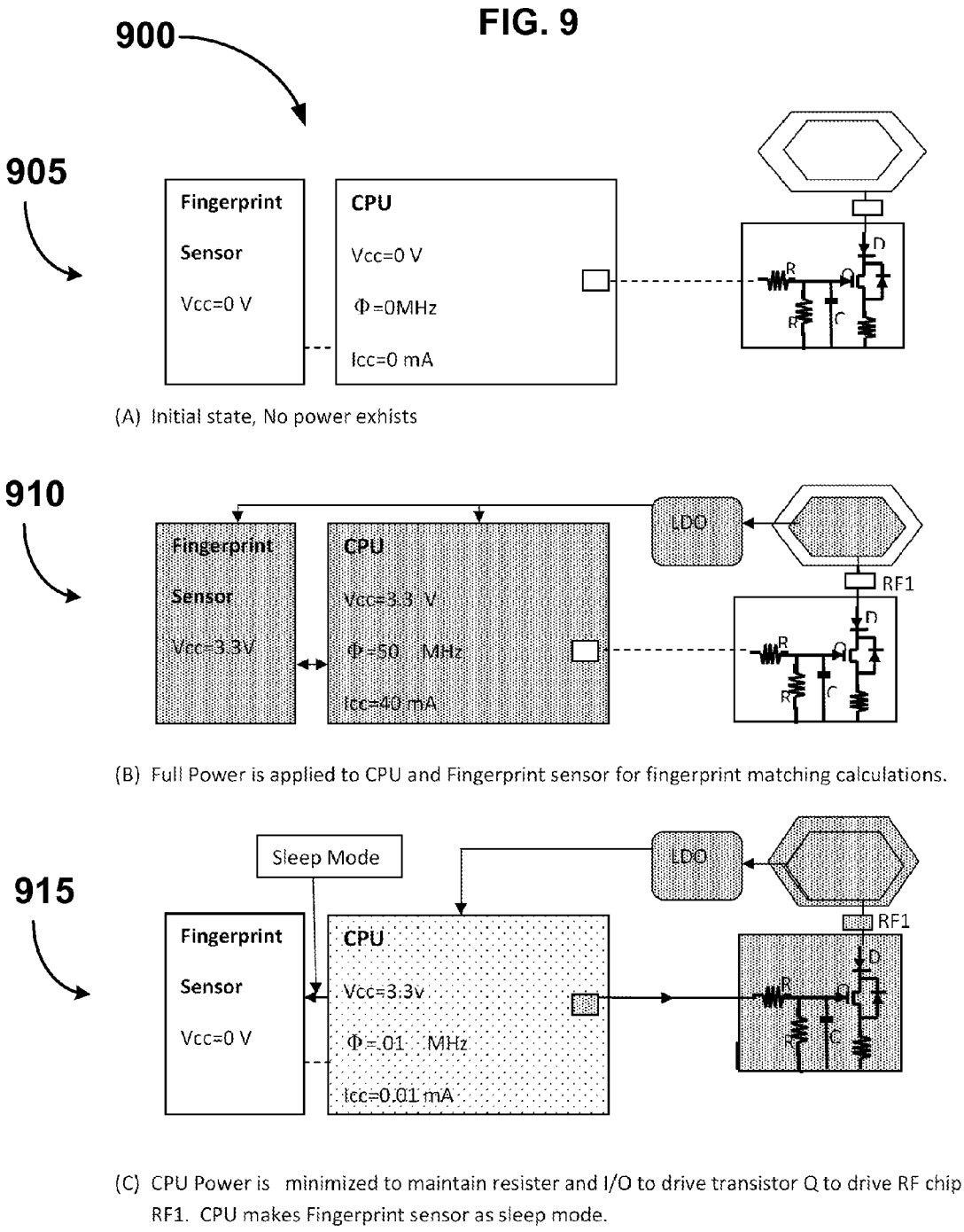

(A) Initial state, No power exhists

(B) Full Power is applied to CPU and Fingerprint sensor for fingerprint matching calculations.

(C) CPU Power is minimized to maintain resister and I/O to drive transistor Q to drive RF chip RF1. CPU makes Fingerprint sensor as sleep mode.

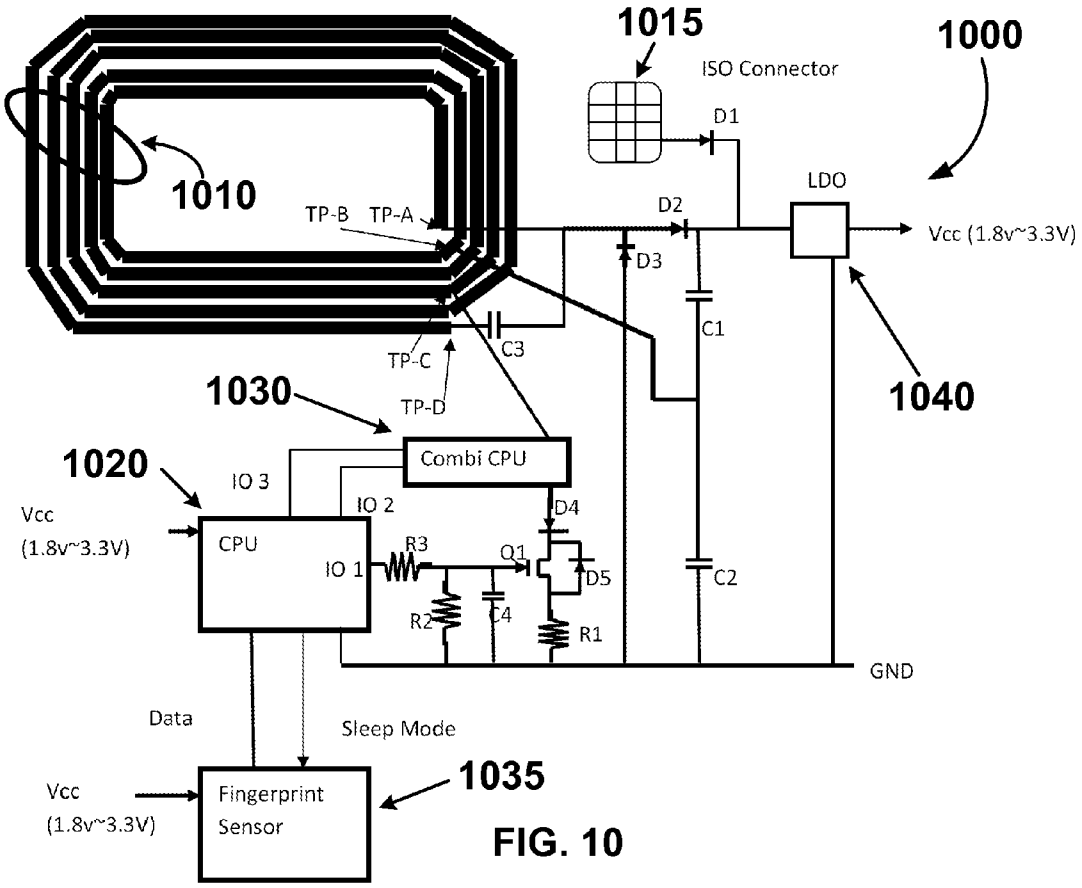
1015
ISO Connector
1000
D1
LDO
1010
TP-B
TP-A
D2
Vcc (1.8v~3.3V)
D3
C1
C3
TP-C
TP-D
1040
1030
Combi CPU
1020
IO 3
IO 2
D4
Vcc
(1.8v~3.3V)
CPU
IO 1
R3
Q1
D5
C2
R2
C4
R1
GND
Data
Sleep Mode
1035
Vcc
(1.8v~3.3V)
Fingerprint
Sensor

FIG. 10

FIG. 12

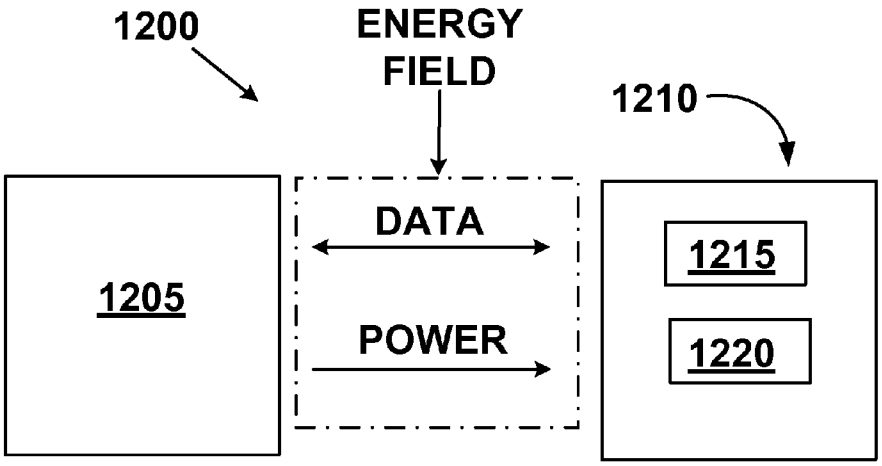
1200
ENERGY
FIELD
1210
1205
DATA
POWER
1215
1220

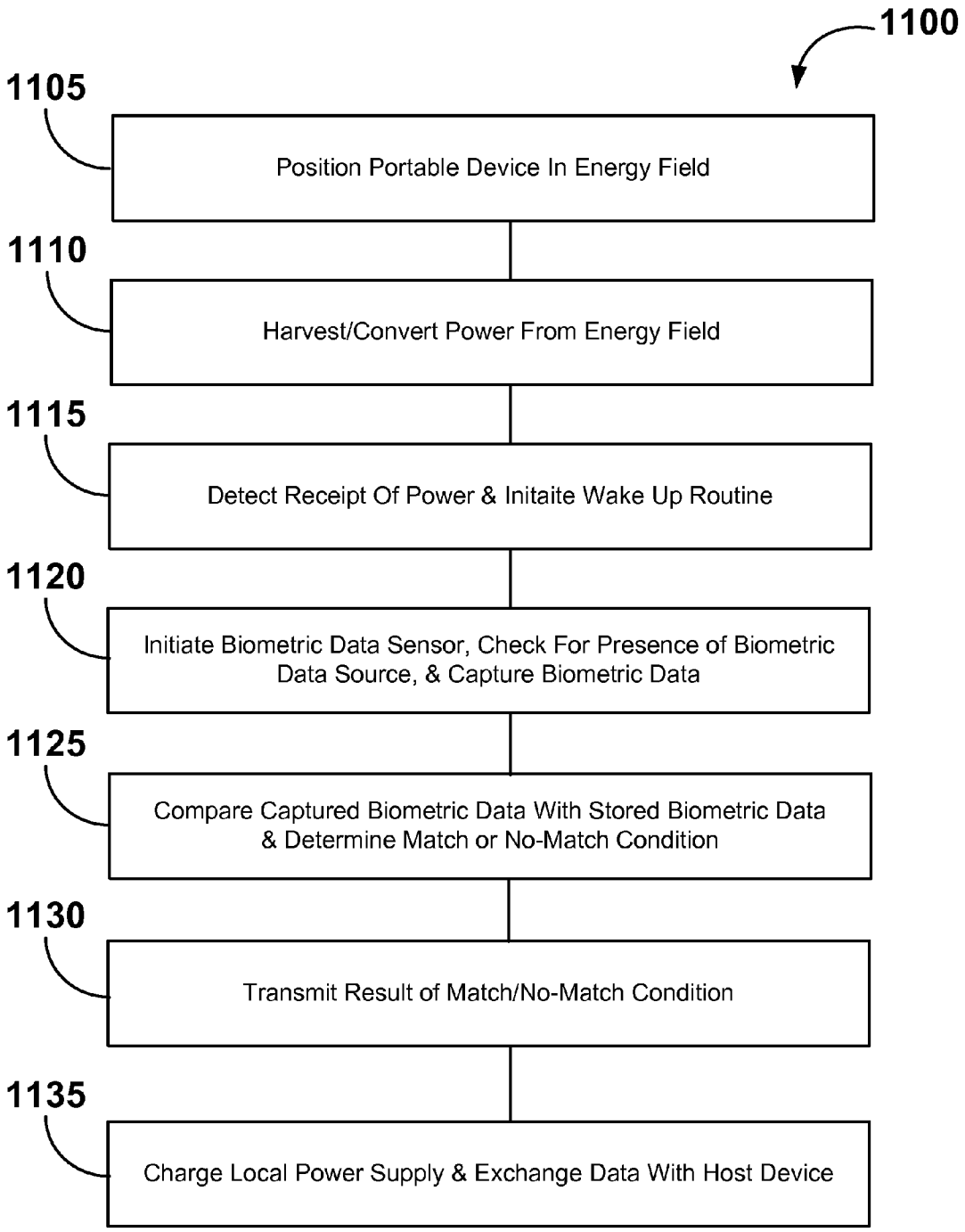
1100
1105
Position Portable Device In Energy Field
1110
Harvest/Convert Power From Energy Field
1115
Detect Receipt Of Power & Initaite Wake Up Routine
1120
Initiate Biometric Data Sensor, Check For Presence of Biometric Data Source, & Capture Biometric Data
1125
Compare Captured Biometric Data With Stored Biometric Data & Determine Match or No-Match Condition
1130
Transmit Result of Match/No-Match Condition
1135
Charge Local Power Supply & Exchange Data With Host Device

FIG. 11

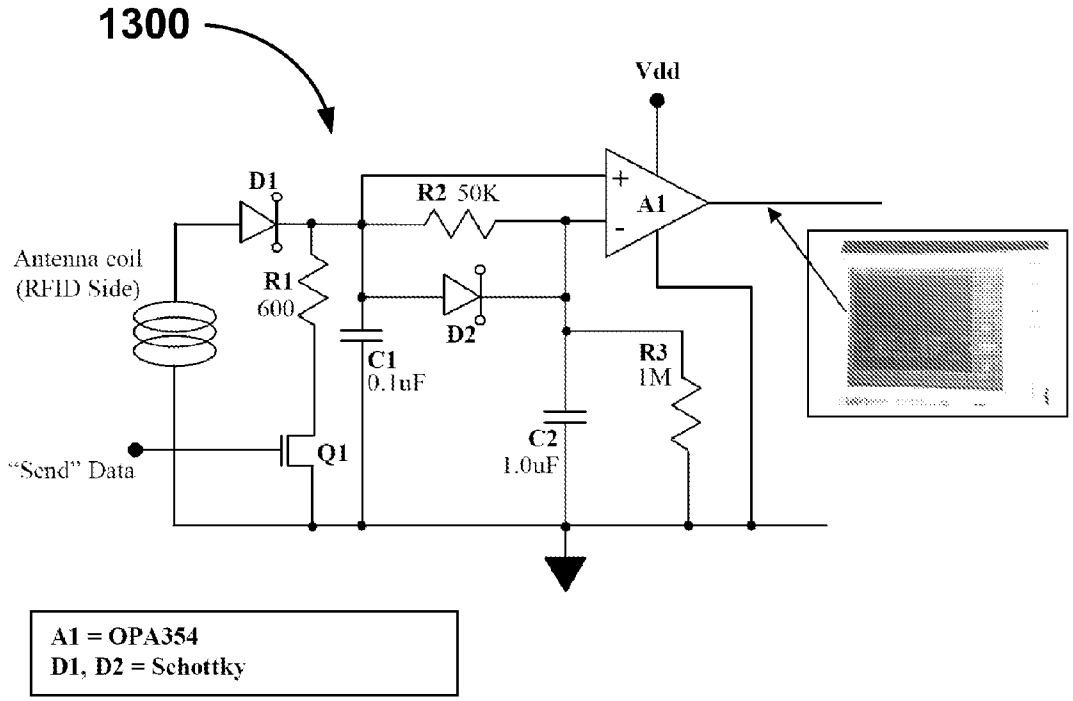
1300
Vdd
D1
R2 50K
A1
Antenna coil
(RFID Side)
R1
600
D2
C1
0.1uF
R3
1M
C2
1.0uF
"Send" Data
Q1
A1 = OPA354
D1, D2 = Schottky

FIG. 13

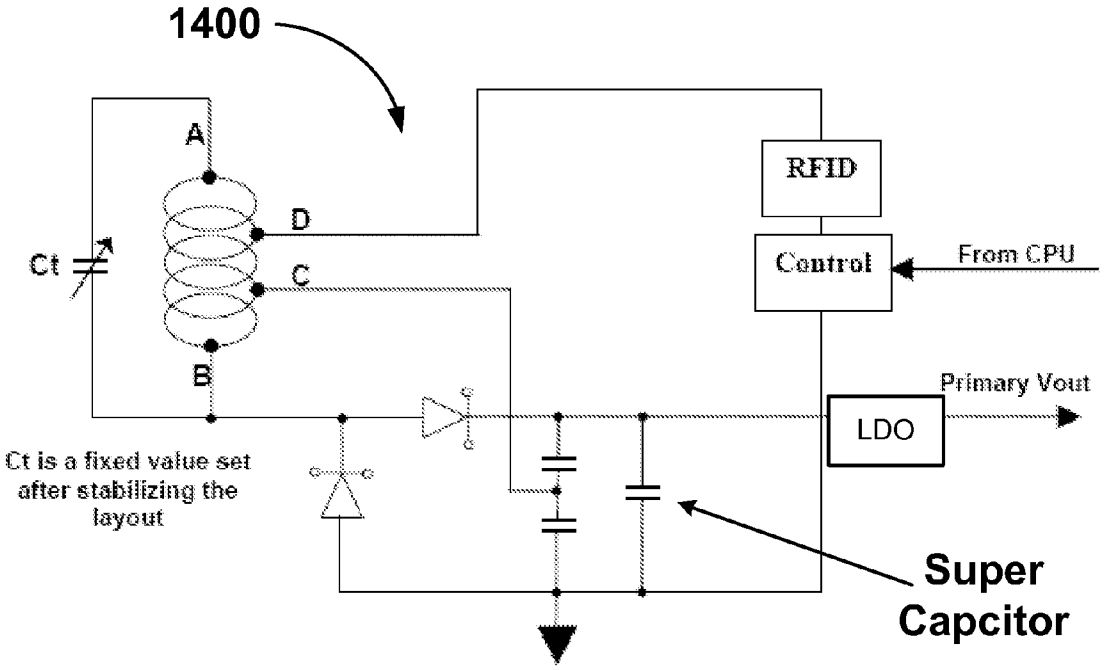
1400
A
D
C
B
Ct
RFID
Control
From CPU
Primary Vout
LDO
Ct is a fixed value set after stabilizing the layout
Super Capcitor

FIG. 14

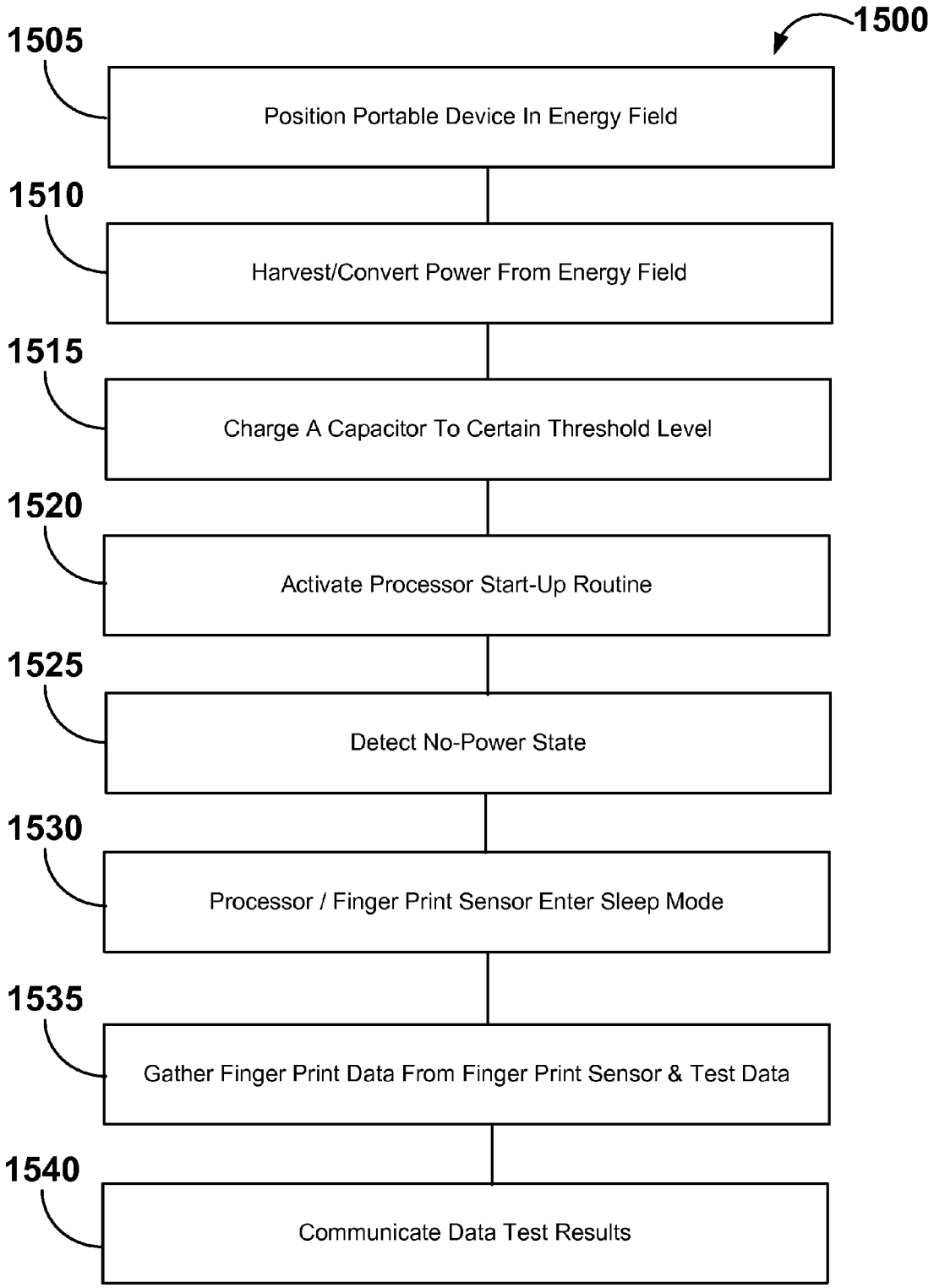
1500
1505
Position Portable Device In Energy Field
1510
Harvest/Convert Power From Energy Field
1515
Charge A Capacitor To Certain Threshold Level
1520
Activate Processor Start-Up Routine
1525
Detect No-Power State
1530
Processor / Finger Print Sensor Enter Sleep Mode
1535
Gather Finger Print Data From Finger Print Sensor & Test Data
1540
Communicate Data Test Results

FIG. 15

RF POWER CONVERSION CIRCUITS & METHODS, BOTH FOR USE IN MOBILE DEVICES

CROSS REFERENCE TO RELATED APPLICATIONS & PRIORITY CLAIM

[0001] This patent application claims the benefit of and priority to U.S. Provisional Patent Application No. 61/089,440, entitled RF POWER CONVERSION CIRCUIT, and filed 15 Aug. 2008, which is hereby incorporated herein by reference as if fully set forth below. Embodiments of the present invention may also utilize technology disclosed in U.S. Pat. No. 7,278,025 and PCT Application Publication Number WO 2005/104704; both of these publication disclosures are hereby incorporated herein by reference as if fully set forth below.

TECHNICAL FIELD

[0002] Embodiments of the present invention relate generally to portable verification devices, and more particularly, to a smart card having biometric data verification features and a dual purpose receiving antenna that can be used for wireless power transfer and data modulation.

BACKGROUND

[0003] RFID (Radio Frequency Identification) technology provides for near-field (short-range) wireless tracking of inventory as well as enabling users for near-secure access or transactions and other applications. The ISO-14443 specification defines near-field data communications between a reader device and one or more candidate devices. Candidate devices can include tags, badges, cards, or pocket devices commonly referred to as dongles, fobs, or smart cards.

[0004] When candidate devices are introduced into a reader devices' electromagnetic field, the candidate device detects the reader device's RF energy. A candidate device can then respond a data stream that modulates the energy field at the data rate. Candidate device(s) need not emit RF energy, but can provide a field load modulation that is detectable in the reader. A reader device can translate a candidate device's field load modulation into readable data (e.g., by using a microprocessor and supporting system).

[0005] Conventionally, a reader device emits RF energy at a frequency of 13.56 MHz. The energy field strength is specified at about 1.5 A/meter. Existing RFID systems are simple in that a candidate device's electronics may contain a secure code in the form of a sequence of up to 32 bytes. The candidate device responds to the entry of the RF field automatically with the data stream after introduction to the field in a process referred to as Answer to Reset (or ATR). The ATR data stream repeats while the candidate device is in the RF field. After the candidate device is removed from the field, the candidate device ceases to be active.

[0006] Traditional RFID candidate devices typically use a single track of coil windings to power the RFID-IC and respond with ATR data. This amounts to a current requirement that is typically on the order of about 5 to 10 mA during the ATR period which is less than two seconds. The design of conventional windings only delivers enough power to activate RFID transponder backscattering.

[0007] What is needed, therefore, are smart card systems enabling biometric data verification and using dual purpose antennas for wireless power transfer and data modulation. It is to the provision of such smart card devices, systems, and methods that the various embodiments of the present invention are directed.

SUMMARY OF EXEMPLARY EMBODIMENTS

[0008] Embodiments of the present invention provide a stand-alone, self-powered smart card without the use of a battery or a powered card-holding accessory. According to one embodiment, a receiving antenna is reformulated into a multi-purpose, multi-function component of the smart card. The receiving antenna is integrated with an efficient power detection and conversion circuit that produces a voltage and current suitable for powering the electronics of the smart card. As a result, the smart card operates without requiring power supplied by a battery or a powered card-holding accessory. In some embodiments, the present invention can be utilized to harness energy from a source of wireless energy for charging a local power supply. Antenna components used in embodiments of the present invention can be configured to have multiple segments. A segment can be used to increase rectified voltage, and another segment can be controlled to modulate antenna impedance. Taps or tap positions can be used to segment single antenna into multiple segments. Other embodiments of the present invention are summarized below.

[0009] In some embodiments, the present invention can be portable wireless devices used for event actuation. Generally, portable wireless device can generally comprise a wireless power harnessing module, a biometric data comparison module, and a communication module. The wireless power harnessing module can comprise an antenna tuned to a resonant frequency. The resonant frequency can be associated with a source of an energy field. The antenna can be tuned with a capacitor placed in parallel with the antenna. The antenna can comprise several windings. When the antenna is positioned proximate the energy field, the antenna can interact with the energy field to generate electrical energy. This enables the wireless power harnessing module to source power and provide power to other components.

[0010] The biometric data comparison module can be coupled to the wireless power harnessing module. This coupling enables the wireless power harnessing module to power the biometric data comparison module. The biometric data comparison can be configured to enter a powered state when receiving adequate power from the wireless power harnessing module. When in the powered-on state, the biometric data comparison module can be operatively configured to receive external biometric data. The external biometric data can be obtained from an external source. After obtaining the external biometric data, the comparison module can compare the external biometric date to stored biometric data. Stored biometric data can be stored in a flash memory. Results of the biometric data comparison can be communicated by the communication module. Communication can be done wirelessly with an RF chip in some embodiments. Based on the communicated results received at a host device, event actuation can take place.

[0011] Portable wireless devices of the present invention can also have additional features. For example, the wireless power harnessing module, the biometric data comparison module, and the communication module reside within an ISO-7816 defined card outline. The wireless power harnessing module can comprise a rectifier circuit. The rectifier can be coupled to a low impedance winding of the antenna and a common ground. The rectifier circuit can be configured to

convert AC voltage provided by the antenna to DC voltage. Embodiments of the present invention can also include a capacitor located in parallel with the antenna. The relationship between the capacitor and the antenna defines the resonant frequency of the antenna. In some embodiments, portable wireless devices have no local power source.

[0012] Portable wireless devices of the present invention can still yet have additional features. For example, antennas can be divided up into segments. The segments can be segmented by taps disposed at various tap positions. Antenna segments enable a single antenna winding to have multiple segments configured to carry out multiple functions. For example, the wireless power harness module can harness power from the energy field simultaneously to the communication module transmitting and receiving data from the energy field. To do this, the two modules can be connected to the antenna at different tap positions to use different antenna segments. The antenna can be shaped in an antenna coil pattern wound in a concentric fashion that comprises inner and outer windings. And some embodiments, the antenna coil pattern can be a continuous planar copper trace having tap positions located at various places along the coil pattern so the antenna has multiple segments configured to have different functions. In some implementations, the wireless power harnessing module comprises a rectifier circuit as a voltage doubling circuit that comprises two Schottky barrier diodes arranged in a full wave rectifying arrangement.

[0013] Other embodiments of the present invention can be implemented as wireless access control devices. The device can generally comprise a power circuit and a processor. The power circuit can be configured to have a default non-energized state and an energized state. The power circuit can be configured to receive energy from an energy field to enter the energized state so that the power circuit can source electrical power. Preferably, the power circuit is finely tuned to a carrier frequency of the energy field. The processor is coupled to the power circuit to receive to receive electrical power when the power circuit enters the energized state. The processor can be further configured to receive data from a sensor. In response to the received data, the processor can generate a signal corresponding to an access level.

[0014] Wireless access control devices of the present invention can also have additional features. For example, the processor can receive power only from the power circuit when energized and the processor is not configured to receive power from any other power source. This allows embodiments of the present to not have a required battery for operations. In some embodiments, the power circuit can comprise a power detection stage, a power conversion stage, and a receiving antenna. The receiving antenna can be integrated with the power detection stage. The antenna can be shaped and sized to produce electrical power when placed into an energy field. The antenna can also be used to receive and transmit wireless data signals. Also the antenna can be finely tuned to the carrier frequency of the energy field. Tuning can be accomplished using a tuning capacitor in a tank circuit format. In addition, the processor can be configured to control data communication between the wireless access control device and the source of the energy field during the energized state.

[0015] Still yet other embodiments of the present invention can be implemented as portable wireless devices capable of harnessing wireless energy. The devices can include an antenna and a rectifier circuit. The antenna and a tuning capacitor can be connected in parallel to form a tank circuit. The tank circuit can be finely tuned to a resonant frequency associated with a carrier base frequency of source of an energy field. The antenna can have several windings which when proximate the energy field, result in the antenna sourcing electrical current and voltage. The antenna can be divided into a plurality of segments. The segments can set off by a plurality of taps. The taps can be disposed at various places along the length of the antenna. One of the segments can be configured to receive and transmit data with the energy field simultaneously as the antenna receiving energy from the energy field. The rectifier circuit can be connected to a first tap and a second tap of the antenna. The first tap can be located on an inner antenna winding. The second tap of the antenna can be in electrical communication with a common ground. The rectifier circuit configured to convert the sourced electrical current and voltage to a DC energy source.

[0016] Portable wireless device embodiments of the present invention can also have additional features. For example, devices can have an antenna driving circuit. Antenna driving circuits can be configured to drive the antenna for data communication. The antenna driving circuit can be connected to a third antenna tap. The third tap can be located on an outer antenna winding. Device embodiments of the present invention can also include a voltage divider network. The network can be a capacitor network coupled to the rectifier. The rectifier can comprise a pair of diodes (e.g., Schottky diodes). The cathode of a first diode can be connected to the anode of a second diode. The anode of the first diode can be connected to ground. The cathode of the second diode can be connected to the voltage divider capacitor network. The voltage divider capacitor network can comprise a first capacitor connected in parallel to two series connected capacitors. The cathode of the second diode can be connected to a positive terminal of the first and second capacitors. The anode of the first diode can be connected to a negative terminal of the first and third capacitors. Capacitors in the voltage divider capacitor range in value from about 1 pF to about 100 pF, tuning capacitors can range in value from about 10 pF to 500 pF, antennas can have between 1 to 10 coil windings, and coil windings can have a width ranging between about 1 mm to about 10 mm. In some embodiments, the voltage divider capacitor network can comprise an energy storage capacitor configured to store energy. The energy storage capacitor having a value ranging from about 0.5 micro-farads to about 1000 farads.

[0017] Still yet other embodiments of the present invention can be implemented as a method of harnessing electrical energy from an energy field while simultaneously communicating data with the energy field. The method can generally comprise configuring and/or providing a portable device and a processor. The portable device can have a tank circuit tuned to a center frequency of an energy field. The inductor (or antenna) of the tank circuit can interact with the energy field to convert wireless energy into electrical energy. This enables the inductor can to source electrical power. A processor can be located on the portable device to receive electrical power sourced by the inductor. The processor can be configured to receive and provide data for communication with a device emitting the energy field. Data can be received and transmitted using coils of the inductor while the inductor is sourcing energy.

[0018] Method embodiments of the present invention can also include other features. For example, methods can include

configuring portable devices to receive external biometric data, to test the biometric data against a stored biometric set of data, and to communicate results of the test via the inductor. Methods can include configuring the processor to communicate data by modulating the field load of the energy field. Methods can also include providing a voltage conversion circuit on the portable device to convert the energy sourced by the inductor from AC to DC and to regulate the DC voltage relative to a predetermined threshold.

[0019] Still yet, embodiments of the present invention can be implemented as a computer program product embodied in a computer-readable medium for execution by a processor or engine. The computer program product can comprise one or more algorithms to manage actions carried out by a processor in managing power and testing biometric data. The method can generally comprise harvesting power, testing biometric data, and communications. More specifically, the method can detect an appropriate power level being sourced by an antenna that is finely tuned to resonate at a center carrier frequency of an energy field. The power level can be provided in electrical form after the antenna converts wireless energy to electrical energy. The method can also include communicating with a biometric sensor to determine if the sensor detects presence of biometric data and has captured external biometric data. The received biometric data can be tested against stored biometric data to determine if the captured external biometric data matches the stored biometric data. Methods can also include issuing communication signals for wireless transmission from the antenna to another component. The communication signals comprise data about results of the biometric data test.

[0020] Methods embodiments of the present invention can also include other features. For example, a method may include instructing one of the biometric sensor or a system processor to enter a sleep mode if a low power level state is detected or to preserve power. A method can also include testing received biometric data against stored biometric data includes by configuring a system processor to extract digital data from the captured external biometric data to place the external biometric data in the same format as the stored biometric data. Methods can also include testing received biometric data against stored biometric data by generating a score indicative of the data test and wherein the score can determine a positive or negative test result relative to a predetermined threshold. Still yet, methods can include testing received biometric data against stored biometric data by generating a false acceptance ratio and a false rejection ratio and wherein a match condition can be achieved with the false rejection rate is less than the false acceptance ratio.

[0021] Other aspects and features of embodiments of the present invention will become apparent to those of ordinary skill in the art, upon reviewing the following description of specific, exemplary embodiments of the present invention in conjunction with the accompanying figures. While features of the present invention may be discussed relative to certain embodiments and figures, all embodiments of the present invention can include one or more of the advantageous features discussed herein. In other words, while one or more embodiments may be discussed as having certain advantageous features, one or more of such features may also be used in accordance with the various embodiments of the invention discussed herein. In addition, while discussion contained herein may, at times, focus on insurance applications, embodiments of the present invention can also be used in other settings. In similar fashion, while exemplary embodiments may be discussed below as system or method embodiments it is to be understood that such exemplary embodiments can be implemented in various systems, and methods. It should be understood that use of the terms module, processor, or engine herein should be construed to mean singular or plural versions of these terms such that certain actions can be carried in separate fashion or integrated together in a single module, processor, or engine. Some embodiments of the present invention can be implemented with hardware and/or software.

BRIEF DESCRIPTION OF FIGURES

[0022] FIG. **1** illustrates a conventional RFID tag device with conventional tag circuitry.

[0023] FIG. **2** illustrates an RFID tag power circuit in accordance with some embodiments of the present invention.

[0024] FIG. **3** illustrates an RFID tag power circuit in accordance with some embodiments of the present invention.

[0025] FIG. **4** illustrates winding components of an RFID tag power circuit in accordance with some embodiments of the present invention.

[0026] FIG. **5** illustrates a schematic of an RFID tag power circuit in accordance with some embodiments of the present invention.

[0027] FIG. **6** graphically depicts an RF field in a proximate relationship with a smart card embodiment in accordance with some embodiments of the present invention.

[0028] FIG. **7** illustrates a block diagram of an RFID tag power circuit and biometric device in accordance with some embodiments of the present invention.

[0029] FIG. **8** illustrates a schematic of an RFID tag power circuit and biometric device in accordance with some embodiments of the present invention.

[0030] FIG. **9** illustrates a logical state diagram illustrating operational states of a biometric device in accordance with some embodiments of the present invention.

[0031] FIG. **10** illustrates a schematic of an alternative RFID tag power circuit and biometric device arrangement in accordance with some embodiments of the present invention.

[0032] FIG. **11** illustrates a functional block diagram of a power charging system in accordance with some embodiments of the present invention.

[0033] FIG. **12** illustrates a functional logic diagram showing a method of operating a power charging system in accordance with some embodiments of the present invention.

[0034] FIG. **13** illustrates a schematic diagram of a RFID transceiver module in accordance with some embodiments of the present invention.

[0035] FIG. **14** illustrates a schematic diagram of a RFID transceiver module circuit **1400** for use in charging applications in accordance with some embodiments of the present invention.

[0036] FIG. **15** illustrates a logical flow diagram **1500** of a method that can be used to implement embodiments of the present invention on a mobile device

DETAILED DESCRIPTION OF PREFERRED & ALTERNATIVE EMBODIMENTS

[0037] To facilitate an understanding of the principles and features of the various embodiments of the invention, various illustrative embodiments are explained below. Embodiments of the present invention may be described below with refer-

ence to RFID reader applications. The embodiments of the invention, however, are not so limited. Indeed, embodiments of the present invention can include any portable device having a default unenergized state that is capable of harnessing power from an energy field as discussed herein for use with biometric data verification. Other embodiments can be devices needing recharging of local power supply as such recharging can be accomplished by harnessing energy from a wireless energy field. Still yet, other embodiments can be used to harness energy from an energy field while enabling transceiving of data between a portable device and another device (which can be the source of the energy field).

[0038] Briefly described, in preferred form, an embodiment of present invention includes a portable device having a wireless power reception circuit capable of harnessing power from an energy field for supply to a biometric data verification stage. Upon receipt of power from the power reception circuit, the biometric data verification stage can receive biometric data and compare the received data to previously stored biometric data. The portable device can have a communication component to transmit a signal (or modulate an existing signal) that contains information about the results of the biometric data comparison. Advantageously, the portable device need not have an independent power supply since it can harness power from an energy field for use in conducting biometric data comparison.

[0039] Various words or phrases used herein at times have multiple meanings and should not be limited in certain instances unless expressly stated. For example, coupled can mean directly coupled or indirectly coupled. Also the phrase "in electrical communication" can mean that components are in the same electrical path or are electronically coupled together. In some instances, where specific advantages or features of an embodiment of the invention are discussed, it should be understood that such advantages or features can be applicable to the other various embodiments of the present invention.

[0040] Referring now to the figures, wherein like reference numerals in some instances represent like parts throughout the views, exemplary embodiments of the present invention are described in detail. FIG. **1** illustrates a conventional passive RFID tag device **100** with conventional tag circuitry **105** and an antenna **110**. The conventional RFID device **100** is tuned generally by design to receive energy from an RFID tag reader (not shown). The tuning is general in the sense that the antenna **110** is not tuned tightly to a specific frequency. For example, typically, RFID devices are tuned only by inductance, antenna features to about 17 MHz. The RFID tag device **100** is designed to only recover an RFID tag reader's magnetic field (H-Field) energy. Given the possibility that multiple RFID tag devices **100** can enter an RFID tag reader's energy field, the resonance of RFID tag devices is set to about 17 MHz (which is above the RFID tag reader's carrier frequency). This is purposefully done to enables the processing of multiple cards in close proximity within and RFID reader's RF field.

[0041] As pictured in FIG. **1**, the conventional passive RFID tag device **100** includes an antenna **110**. The antenna **110** is 3 turns of wire closely wound in a continuous, uninterrupted fashion. Electrically, this antenna **110** may be modeled as the secondary coil of an air core transformer. Energy is collected by the RFID tag device **100** and is used only for the short ART transmit period. General considerations for this antenna coil are for lower than optimum "Q" and loose tuning slightly above a 13.56 MHz frequency. As mentioned above, the loose tuning allows for multiple cards in an RFID's RF field and the detuning that occurs in that event. A typical RFID transponder (like the RFID device **105**) will use approximately 25 mW during the short transmit period. Because of the specific design of the conventional passive RFID tag device **100**, the device **100** is unable to harness sufficient amounts of RF energy for sourcing power (i.e., generating voltage and power) to adequately power electronics more complex than a simple RFID transponder (like the RFID device **105**).

[0042] FIG. **2** illustrates a functional block diagram of portable device **200** used for event actuation in accordance with some embodiments of the present invention. The device **200** can be formed in the shape of a card **205** in some embodiments. In other embodiments, the portable device **200** may be a fob, dongle, PDA, cell-phone, smart phone, computer, or many other portable devices. The device **200** may include a local power source (e.g., battery) in some embodiments, and in other embodiments, the device **200** may not include a local power source. In those embodiments without a local power source, the wireless power harnessing module **210** is configured to harness wireless energy sufficiently to power electronic circuitry more complex than a simple RFID transponder.

[0043] According to some embodiments, the device **200** can generally include a wireless power harnessing module **210**, a biometric data comparison module **215**, and a communication module **220**. In the embodiment pictured, the modules **210**, **215**, **220** can be coupled to each other to function and work together. In other embodiments, these modules **210**, **215**, **220** may be integrated together such that the functions of one or more modules can be combined in a single module. In smart card embodiments, it is currently preferred that the modules be sized and shape to fit within a card having sizes a defined in the ISO-7816 standard. Desired thicknesses range between about 0.7 mm to about 1 mm.

[0044] In embodiments with no local power source, the wireless power harnessing module **210** can be configured to recover energy from an energy field. The energy field can be, for example, an RF field emitted from a device (e.g., an RFID card reader). The wireless power harnessing module **210** can include an antenna having multiple coils windings of a conductor. Preferably the coil windings are planar in shape. As discussed further herein, the coil windings can be tapped at various places so that an antenna has multiple functions. Various tap points can be disposed on the antenna so that the antenna is a non-continuous, interrupted winding (as opposed to that shown in FIG. **1**). This configuration enables the antenna to dually function as for power recovery and data transmission. By virtue of being placed in an energy field, the antenna can generate a current thereby harnessing wireless energy for use by the biometric data comparison module **215** and communication module **220**.

[0045] The biometric data comparison module **215** can be configured to compare received external biometric data to stored biometric data. As such, the biometric data comparison module **215** can include a memory (e.g., flash memory) to store biometric data. In some embodiments, the stored biometric data can be a digital rendering of someone's fingerprint. The biometric data comparison module can also include a sensor (or other interface) to receive external biometric data. For example, the sensor can be a fingerprint sensor in some embodiments. When a finger is placed on the sensor, the

sensor can capture external fingerprint data. The biometric data comparison module can also include a processor to receive captured external fingerprint data. The processor can be configured to compare the captured fingerprint data to stored fingerprint information. The results of the comparison can be provided as a score. If the score is above a certain threshold, then a match can be determined, and if the score is below a certain threshold, then a non-match can be determined.

[0046] Based on results of the comparison, the processor can instruct the communication module **220** to communicate information to a reader. Information can be communicated via a load modulation (or backscattering) protocol. If it is determined that a match occurred, the communication module can send this information to another device, and in response the device can actuate an event. For example, in the case of an access card, if a fingerprint match has been determined, then an RFID reader can send a signal to allow access.

[0047] It should be understood that embodiments of the present invention are not limited to access cards or access devices. For example, the device **200** can a fob, cell phone, smart phone, computer, dongle, or many other portable devices that may need power for functionality. In addition, the device **200** can be used for multiple applications. For example, the device **200** may used to authenticate a user prior to event actuating, including use of electronic devices and starting of vehicles. In other embodiments, the device **200** can be used as a source of power since it can harness power from wireless RF. The source of power may be used to charge an electronic device according to some embodiments.

[0048] FIG. **3** illustrates a bio-verification card **300** in accordance with some embodiments of the present invention. As shown, the bio-verification card **300** generally comprises an antenna **310**, a voltage detector/converter **315**, and a variable capacitor **320**. The bio-verification card **300** can be finely tuned to an energy field's center frequency. The tuning can be accomplished using the variable capacitor **320** to tune the antenna **310**. In some embodiments, the variable capacitor **320** can be a fixed capacitor assuming a used center frequency is used. For example, if an energy field has a center frequency of 13.56 MHz, the variable capacitor **320** can have a fixed value ranging from between about 5 pico-farads to about 30 pico-farads. When implemented, the capacitor can have a fixed value to finely tune an antenna to a specific frequency to that the sensitivity of the antenna matches with the energy field to create a resonance event.

[0049] By virtue of finely tuning the antenna **310** to a specific frequency that substantially matches an energy field's center frequency, maximum energy from the energy can be recovered. In some embodiments, only one the bio-verification card **300** is placed in an energy field at any given time. In such a case, the antenna **310** coils' outer turns are resonant in the energy field's electrical field (aka E-field or energy field). Resonance is achieved by a parallel inductor/capacitor (L-C) combination (e.g., the antenna **310** and capacitor **320**) which emulates an end-fed, monopole element. The resonance frequency and appropriate L/C values can be obtained using the resonance equation: resonance frequency (f) is equal to the inverse of 2 times Pi times the square root of L times C—$f=1/(2\pi\times\sqrt{(L\times C)})$. The antenna **310** configuration shown in FIG. **3** provides a transition in the coil's structure from electrical to magnetic when moving from the antenna's **310** outer turns toward the antenna's **310** inner turns. The innermost winding is a single-low-impedance winding that is the voltage source for the voltage detector/converter **315**.

[0050] FIG. **3** also illustrate various tap positions **325**, **330**, **335** being disposed in the antenna configuration. Placement of multiple taps in this illustration (and as described in other illustrations herein) enables a single antenna structure to be multi-functional. The tap positions break the single antenna into multiple antenna segments. This enables space savings within a confined area when multiple antennas can not be utilized (e.g., in a smart card application). Tap position **325** is located at the end of the innermost antenna winding, tap position **335** is tied to a common ground, and tap position **330** is located at the end of the outermost winding. The voltage detector/converter **315** can be disposed between tap positions **325**, **330** and the variable capacitor can be disposed between tap positions **330**, **335**.

[0051] FIGS. **4** illustrates an antenna arrangement **400** used for harnessing power of an energy field in accordance with some embodiments of the present invention. As shown in arrangement **400**, an antenna winding **405** is wound close to the outer periphery of a confined space **410** (e.g., internal area of a smart card). The antenna winding **405** comprises four windings. In other embodiments the antenna windings **405** can have between 2 and 10 windings. Other winding values are also possible in accordance with the present invention.

[0052] Also as shown, the antenna winding **405** has a plurality of tap positions. The tap positions can be placed at various locations along the antenna winding **405** to interrupt the continuous flow of the antenna winding **405**. Various tap positions also enable access to the varying impedance of the winding **405**. As shown, tap A is located at the end of the outermost winding, tap B is located at the end of the innermost winding, tab C is located at a position on the second innermost winding, and tab D is located at a position on the winding closest to the outer winding. In this arrangement, the outermost winding is the high impedance winding with the innermost winding being a low impedance winding. Although taps A, B, C, and D are located in these positions in this embodiment, various other embodiments could have various tap positions along the antenna winding.

[0053] The windings **405** can have various characteristics in accordance with the various embodiments of the present invention. For example, the windings **405** can have a planar shape having a thickness ranging between about 10 microns to about 100 microns. In currently preferred embodiments, the thickness of the windings **405** can range between about 13 to about 60 microns. In addition, the windings **405** can be arranged so that no sharp turns are provided in the windings **405**. As shown in FIG. **4**, the windings **405** are configured to have smooth transition between segments. In currently preferred embodiments, angular transitions have angular turns about 45 degrees or less. Also, the windings can be made of various conductive metals or metal alloys. In some embodiments, the windings can be made with substantially pure copper traces. In other embodiments, the windings can be made with copper foil, stamped copper, etched conductors, copper plating, milled copper, pressed copper wire, silver, and aluminum.

[0054] Now turning to FIG. **5**, there is shown a schematic diagram of a power recovery/conversion circuit **500** in accordance with some embodiments of the present invention. The circuit **500** generally includes three modules: a power harnessing module **505**, a power conversion module **510**, and a control RFID module **515**. The circuit **500** can also be con-

figured to provide an output voltage (V_{OUT}) **520** and receive a control signal **525** from another component. The output voltage **520** can be provided from the interaction between the power harnessing module **505** and the power conversion module **510**.

[0055] As shown, the power harnessing module **505** includes a capacitor **530** and an antenna **535**. The capacitor **530** can be variable (as illustrated) or fixed at a certain value. The value of the capacitor **530** can be selected to tune the antenna **535** such that its winding can resonate at a certain frequency. The resonation frequency can be an energy field's center carrier frequency. Resonation enables maximum power transfer from an energy field to the antenna's **535** windings. As shown, the antenna's windings **535** can be tapped at various locations (similar those in FIG. **4**). Potential from the taps B, C, D can be provided as inputs to power conversion module **510** and the control/RFID module **515**.

[0056] When the antenna **535** encounters an energy field (e.g., an RF field) a current is generated thereby creating an AC voltage. This AC voltage can be accessed at tap B and provided to the power conversion module **510**. The power conversion module **510** includes a rectifier **540** to convert the AC voltage to a DC voltage. The rectifier **540** includes two diodes coupled in a full wave arrangement. In currently preferred embodiments, the diodes are Schottky diodes. This type of diode enables effective harnessing of power from high frequency energy fields.

[0057] The diodes can also be coupled to a capacitor network **545**. As shown, the capacitor network **545** can include two series capacitors in a parallel arrangement with a single capacitor. The capacitor network **545** can also be arranged in other configurations. The capacitor network **545** can filter the converted DC voltage. The capacitor network **545** can also include a super capacitor (ranging from 2 Farads to 10 Farads). In this arrangement, the circuit **500** can be used as fast charging device using only source energy provided from a wireless field.

[0058] The power recovery/conversion circuit **500** also includes a control/RFID module **515**. The module **515** can be used to communicate with a device that provides an energy field (such as an RFID reader). Communication can be done via load modulation (also known as backscattering). In this arrangement, embodiments of the present invention (e.g., the circuit **500**) can be used to advantageously simultaneously receive/convert power and transmit/receive data.

[0059] FIG. **6** graphically depicts an RF field in a proximate relationship with a portable device (e.g., smartcard) in accordance with some embodiments of the present invention. Projected at approximately 90 degrees from the reader surface, the RF energy field may be described as a "dome" of electromagnetic energy having a frequency of 13.56 MHz. Both electrical (E) and magnetic (H) fields are present; however the dominant field is magnetic. For ISO-14443, the typical field intensity is on the order of 1 Amp/meter. A typical RFID device uses 10 mA in the two second period (approximately) needed to detect and respond to reset conditions with the secured data stream. The dome of energy may extend for several inches from the reader surface. The reader's inductor or antenna is typically configured to permit a field height and radius of equal proportions. The typical dome provides useful energy within a dome of approximately 1 to 2 inches high. FIG. **4** depicts a model of the reader, the projected field, and a card in the field.

[0060] FIG. **7** illustrates a functional block diagram of a biometric device **700** in accordance with some embodiments of the present invention. As shown, the biometric device **700** can be sized and shaped as a card **705** (e.g., an access card or a smart card). In other embodiments, the biometric device **700** may be sized in shaped in other configurations. In some embodiments, the biometric device **700** may be integrated with other devices or a host device. These can include devices, such as fobs, dongles, cell phones, smart phones, computers, personal communication devices, and the like. When integrated with a host device, the biometric device **700** can be used to secure or enhance secure access to the host device.

[0061] As illustrated in FIG. **7**, the biometric device **700** can comprise various components. The components can include an antenna **710**, interface pads **715**, a processor or microcontroller **720** (CPU), a power circuit **725**, an RF chip **730**, and a biometric sensor **735** (e.g., a finger pint sensor). As illustrated, the biometric device **700** does not include a local power supply (in other embodiments, the biometric device may include a lower power supply, such as a battery or solar cell system). By not having a local power supply, the biometric device **700** can be arranged and confined to a small space.

[0062] Even though the biometric device **700** lacks a local power supply, the biometric device **700** is equipped with features capable of harnessing power from an RF energy field. The antenna **710** can be used to harness wireless energy for use as a power source. For example, the antenna can receive RF energy and convert the RF energy to AC power (i.e., and AC voltage and current). This AC voltage can be converted to DC using the power circuit **725**. The power circuit **725** can provide t his DC power (i.e., DC voltage and current) to the various other components. For example, the power circuit **725** can provide DC power to the CPU **720**, the RF chip **730**, and the fingerprint sensor **735**. As shown in FIG. **7**, the power circuit **725** can be electrically coupled to the CPU **720**, the RF chip **730**, and the fingerprint sensor **735**.

[0063] In operation, the biometric device **700** can be configured to authenticate a user's finger print to actuate an event (such as entry access). To implement the authentication ability, the CPU **720** can have a memory and biometric data (e.g., a finger print template) can be downloaded into this memory. This can be done via the interface pads **715** in some embodiments. The biometric data can be associated with one or more users. In currently preferred embodiments, the biometric data is a finger print for a unique user. The finger print data can be a digital representation of the finger print and can be stored as a fingerprint template.

[0064] Using the biometric device, the unique user can position the device close to a source of RF energy, such as an RFID reader. Typically, RFID readers are located near entryways to restrict access. When a user with the biometric device approaches the RFID reader, the antenna **710** harvests energy from the RF field, the power circuit **725** converts the harvested power to DC, and then the DC voltage is distributed for use.

[0065] When receiving power, the fingerprint sensor **735** activates and captures external finger print data. The external finger print data is provided to the CPU **720**. The CPU **720** compares the external finger print data to the stored fingerprint template. Based on the comparison, the CPU **720** can calculate a comparison score. The CPU **720** can then contrast the comparison score with a set threshold to determine if a match or no match condition has occurred. The threshold can

be adjusted to ensure sensory integrity. If the CPU **720** determines that the external fingerprint data matches to stored template, the CPU **720** can proceed to take steps to communicate this information. For example, the CPU **720** can signal the RF chip **730** to generate a signal for wireless transmission by the antenna **710**. The RF chip **730** may not necessarily send a signal; rather it may modify an RF reader's energy field (via load modulation/backscattering) with a certain data modulation pattern. Upon detecting the modulation of its energy field, the RF reader can then actuate an event. This event actuation can include such things as unlocking the door to an entry way or sending a start signal to another device.

[0066] All necessary power for capturing external fingerprint, calculation of matching, RF chip power, or an optional LED/display on the card is supplied from RF power through antenna. Exemplary standards for the RF energy field can include, but are not limited to, ISO 14443 A/B/C, ISO 15693, Mifare, and Felica. Depending on the communication protocol, an energy field can have a certain carrier frequency. In some instances, the carrier frequency can be 13.56 MHz. To achieve maximum power transfer, the antenna **710** can be fine tuned to resonate at an energy field's carrier frequency. For example, the antenna **710** can be tuned with a capacitor to resonate at 13.56 MHz so that the antenna **710** can maximize energy harvesting from the energy field.

[0067] The biometric device **700** can enhance and improve upon legacy access card systems. In certain security applications, many use wireless door access cards. Legacy cards and card systems, however, have no functions to authenticate card holders. This deficiency results in a weakness of legacy card situations: cards can be stolen, faked, or replicated by fraudsters. This activity can lead to unauthorized access which can result in criminal activity. Embodiments of the present invention address the weakness of legacy card systems. In particular, embodiments of the present invention authenticate card holders.

[0068] Embodiments of the present invention also enable non-battery card systems. If batteries are used in cards, there is always a risk of running out of battery power in the battery and thus at an important event losing battery power can cause serious problems. Power supply environment has to be always guaranteed as long as power on the reader is guaranteed. Embodiments of the present invention are designed to have a low dissipating power system and utilize efficient energy acquisition through a novel tuned antenna design (as discussed herein).

[0069] FIG. **8** illustrates a schematic of a biometric device **800** in accordance with some embodiments of the present invention. This figure illustrates details of a RFID tag power circuit **805** (such as power circuit **725**). This figure also shows how the RFID power circuit **805** connects with antenna **810** at various tap positions.

[0070] As discussed herein, embodiments of the present invention can utilized a single antenna having various taps position along a single wound conductor. The various tap positions enable a single antenna winding to be multi-purpose: power harnessing and data transmission. As shown in FIG. **8**, the antenna **810** has four taps: A, B, C, and D. Tap A is positioned at the terminal end of the innermost winding, tab B is located at a corner position of the second innermost winding, tap C is located at a corner position of the third innermost winding, and tap D is located at the terminal winding of the outermost winding. By virtue of placing taps B and C between taps A and D, the single antenna **810** is divided into segments. The segments enable the single antenna to have multiple functions.

[0071] Shown connected to the various taps in the drawings are various logical devices and circuit components. For example, the antenna coil is terminated with a ceramic capacitor C**3** at taps A and D. C**3** can be used to tune the antenna to a certain frequency (e.g., 13.56 MHz±1 Mhz). The certain frequency that antenna is tuned to can be the center frequency of an energy field's carrier wave. In currently preferred embodiments, C**3** has a value ranging from 10 pF to 30 pF. The value can be more precisely 15 pF in some embodiments.

[0072] Tap C can be connected to the RF chip **830** so that the RF chip **830** can use the antenna for communication. In this arrangement, the RF chip **830** can generate signals for transmission using the antenna **810**. In addition, the antenna can be used to receive data (e.g., see FIGS. **13-14**). As a result, the single antenna **810** can be used to harvest power and communicate (receive data and transmit data). Data transmissions can be carried out by emitting wireless signals or modification of an energy's field load.

[0073] Certain of the antenna's **810** taps can be connected to devices to aid in harnessing power from an RF energy field. For example, and in currently preferred embodiments, tap A can be coupled to a rectifier. The rectifier can include two diodes: Schottky diodes D**2** and D**3**. Tap B can be coupled to the interconnection of C**1** and C**2**, with C**2**'s other terminal being tied to ground. This configuration enables the rectified voltage to be regulated by a voltage regulator **840** (e.g., a Low Drop Out (LDO)). The voltage regulator **840** can be more than 6 volts. This rating is high enough to supply an output voltage of 3.3 VDC. This output voltage can be utilized by logical/digital devices, such as CPU **820**. In currently preferred embodiments, C**1** and C**2** can be in the range of 1 micro-farad to 100 micro-farads. In some embodiments, C**1**=C**2**. Using the illustrated antenna and rectifying circuit, the LDO **840** can supply about 3.3 volt/50 mA to CPU **820** and a fingerprint sensor **835**. Preferably, the CPU is rated to consume between 30-40 mA at 60 MHz clocking operation and the fingerprint sensor **835** consumes 7-10 mA during the finger print capturing process.

[0074] When the biometric device **800** is positioned proximate an energy source (e.g., an RFID card reader), the device will begin to operate (FIG. **9** explains additional operational state details). When operations initiate, the CPU **820** can signal the finger print sensor **835** to capture the fingerprint of a card holder. In response, the finger print sensor **835** captures finger print data. The captured finger print data can be sent to the CPU **820**.

[0075] Upon receiving the captured finger print data, the CPU **820** can act on the data. The CPU **820** may take a digital rendering of the data or extract a simplified image from the raw, scanned finger print data. After acting on the captured finger print data, the CPU **820** can compare the extracted image to previously stored finger print data. To enable effective comparison, the stored finger print data and the captured finger should be obtained by the same method (e.g., same digital rendering algorithm or same data extraction method). Other finger print data simplification methods include but are not limited to thinning, noise removing, rotations, extracting Minutiae, and FFT (Fast Fourier Transfer).

[0076] To implement the comparison of the two data sets, the CPU **820** can implement a matching algorithm. The

matching algorithm can retrieve the stored finger print data from memory and compare with the received external data. Results of the comparison may produce a comparison score. After obtaining the comparison score, the CPU **820** can determine if the score exceeds or falls below a predetermined threshold. In some embodiments, a comparison score that exceeds the threshold indicates a match condition and a comparison score that falls below the threshold indicates a no match condition.

[0077] After determining the existence of a match or no match condition, the CPU **820** can initiate control of the RF chip **830**. For example, upon confirming a match condition, the CPU **820** holds the register of an IO port to output a signal to enable Q**1** to drive the antenna **810** at tap C (tap C can be located at roughly the center of the whole antenna **810**). By controlling the output signal to Q**1**, the CPU can toggle Q**1**'s gate thereby turning Q**1** off and on. This off and on modulates antenna transmission. The toggling activity, thus, enables the RF chip **830** to modulate data transmitted by the antenna **810**.

[0078] While the CPU **820** is controlling Q**1**, the CPU **820** can hold its IO port. When doing this, the CPU **820** can reduce its clock cycle to induce a sleep mode or a low frequency clock mode. When entering a sleep mode, the CPU **820** can also instruct the finger print sensor **835** to enter a sleep mode. By entering a sleep mode, the CPU **820** and the finger print sensor consume less power thereby preserving power for other components.

[0079] By operating in this fashion, the biometric device **800** can obtain full power from a wireless energy source. This full power can be initially used by the CPU **820** and the finger print sensor **835** to focus on calculations. Then the device **800** can focus on sending signal data via RF chip **830**. In testing of a prototype device, using a normal reader for one-fingerprint sensor ISO 14443A wireless card reader, a communication distance of **30**mm has been confirmed. This distance is the same distance of normal ISO14443A card communication distance. So, even though there are many power hungry components on the biometric device **800**, the biometric device **800** can communicate with the same reader at the same distance allowance.

[0080] The biometric device **800** can have various physical characteristics. For example, the antenna **810** is preferably made on a flexible PCB. The antenna's windings can be fabricated with planer copper traces. The antenna **810** preferably shares the same flexible PCB sheet with various other components and includes copper couplings to these other components. The other components can include the CPU **820**, the RF Chip **830**, a fingerprint sensor **835**, and a voltage regulator **840**. The flexible PCB sheet can be fabricated with, but no limited to, polyimide, mylar, PET, and kapton. The antenna's **810** windings can be made of laminated copper, plated copper, printed silver, combinations thereof, and many other conductive materials.

[0081] The antenna **810** can also have various other characteristics. For example, the antenna **810** coil can be made in a wound coil pattern. The wound coil pattern can be done so that a coil has a plurality of individual windings. The individual windings can have a thickness between about 10 microns to about 100 microns. The individual windings can also have a width ranging from about 50 microns to about 200 microns. Currently preferred embodiments have a width of about 100 microns with a thickness ranging between about 25 microns to about 35 microns. Thickness values should be selected to provide antennas having desired resistivity values. Such pattern can be patterned on one side of FPCB or both side of FPCB. Currently preferred coil winding embodiments include five windings with five turns. The windings can be positioned proximate the outer periphery edges of an access card. This configuration advantageously enables acceptance of a maximum magnetic flux from an RFID reader's energy field. The antenna **810** can be coiled so that the antenna **810** has angular turns less than about 45 degrees to limit eddy currents.

[0082] FIG. **9** illustrates a logical state diagram **900** illustrating operational states of a biometric device in accordance with some embodiments of the present invention. Generally, the several states show various operational stages of a portable device. A first state **905** shows a portable device in an initial state with no power, a second state **910** shows a portable device in range of an energy field at full power, and a third state **915** shows a portable device in range of an energy field with reduced power use to focus on data communication. Each of the states is discussed below in more detail with reference to an access card application. It should be understood, however, that the dual power harnessing and data communication states could be used in various other applications, including but not limited to, cell phone charging/data updating, smart phone charging/data updating, computer charging/data updating, personal music player charging/data updating.

[0083] Turning now to state **905**, an access card is in an initial no-power state. In this state, the card is likely outside the range of an energy field. As a result, the access card's antenna can not harvest any wireless energy. Access cards in this state will likely remain in the initial, no-power state until brought in the range of an energy field source. A no-power state could occur when multiple, fine-tuned cards are placed in close proximity of an energy source. Typically, in this situation, the card closest to the energy source pulls power from the energy source while those cards further away receive little to no power due to the existence of the closer power. The status information shown in state **905** indicated the existence zero volts and amps in the initial state.

[0084] A next state is shown as state **910**. State **910** can result when an access card is brought within range of an energy field (e.g., see FIG. **6**). When this occurs an access card's antenna and power conversion circuit can recover and harvest power from the energy field. This power can then be provided to electronics within the card. The electronics can include a processor and a fingerprint sensor. The processor and the finger print sensor can be used to scan a user's finger print and compare the scanned finger print against a known finger print. This procedure can authenticate someone holding an access card. Advantageously, this enables embodiments of the present invention to authenticate a card holder to ensure the card holder is properly associated with an access card. Access cards may not need to remain in a full energized state (such as state **910**) to carry out its functions. Indeed, to preserve energy and efficiently use harvested power, a process can be configured to switch on and off other components. An example of this is shown in state **915**.

[0085] State **915** illustrates a feature of some embodiments of the present invention, where certain components are switched off or instructed to enter a sleep mode. By instructing components to enter a sleep mode, power usage is minimized and or focused for use by other components. As shown in state **915**, the processor provides a sleep mode signal to the finger print sensor. When the finger print sensor is in sleep mode, the CPU can then direct adequate power to an RF chip.

When powered, the RF chip can communicate with a card reader. State **915** also represents the ability to continuously receive and harvest power from an energy field and at the same time, communicate with an access card reader. In currently preferred embodiments, communication can be accomplished via field load modulation.

[0086] FIG. **10** illustrates a schematic of an alternative RFID tag power circuit and biometric system **1000** in accordance with some embodiments of the present invention. In this system (which is similar to that shown in FIG. **8**), multiple processors are used and an RF chip is not used. In addition to CPU **1020**, a combination security CPU (Combi CPU) **1030** is used. The combination security CPU **1030** can be used for smart card embodiments and is capable of handling ISO7816 and ISO14443 wireless interface protocols. Further employment of the combination security CPU **1030** enables data transmission from ISO 7816 section to ISO 14443 section. Normally the ISO 14443 section is activated automatically when voltage (Vcc) to Combi CPU is off

[0087] In operation, system **1000** functions similar to the biometric device **800** (FIG. **8**). Upon a finger print match, however, the CPU **1020** gives power Vcc to the Combi CPU **1030** through IO**3**. The power can be 3.3 V 5 mA. At the same time, CPU **120** can output voltage from IO**3** to to enable Q**1**. Enabling Q**1** allows data to be sent from from IO**2** (ISO7816 Protocol) to ISO7816 IO of Combi CPU **1030**. The data can be card holder name, matching result as the basic data and for security, send CPU ID, sensor ID and card UID or previous communication record, where all communication can be encrypted by such PKI.

[0088] Within Combi CPU, ISO7816 portion write the date in the shared memory of combi CPU, where shared memory can be read by ISO 14443 section and send such read data through antenna, when Vcc to Combi CPU is disconnected. Then upon all necessary data is transmitted from CPU to Combi CPU, then makes IO **3** to be floating. This enables Combi CPU to send data by reading the data in the shared memory written by ISO7816 portion trough antenna. At the same time, by reducing clock to CPU and making finger print sensor to be sleep mode, power consumption of the card is minimized as the ISO 14443 section of security CPU is only active. Regarding the power dissipations, this situation is almost same situation of normal ISO 14443 card and thus the invention can have the similar distance or normal ISO 14443 card, even though it contains intelligence and security.

[0089] FIG. **11** illustrates a functional logic diagram showing a method **1100** of a mobile (or portable) device being used in an energy field for energy harvesting and data exchange. At **1105**, a device is positioned in an energy field. The device can be a portable communication device or a portable access device. The energy field can be provided by any device capable of emitting or giving off an energy field. The energy field can be an RF energy field in some embodiments. In other embodiments, the energy field can higher or lower frequencies. In currently preferred embodiments, the device can be configured to interact with the energy field for multiple purposes.

[0090] As shown at **1110**, the method **1100** can also include harvesting and converting power from an energy field. This can be accomplished by configuring a portable device to convert wireless energy from the energy field into electrical power. For example, a portable device can include an antenna (as described herein) capable of interacting with an energy field to generate electrical current and voltage. The antenna can be sized and shaped to fit within a small area, like an access card. And in other embodiments, the antenna can be located within a portable communication device. When receiving power from an energy field, the power can be converted from AC to DC; DC power can be used to power both analog and digital devices. The AC can also be used to receive and transmit data.

[0091] When brought into an energy field and power transfer occurs, the method **1100** can also include at **1115** detecting receipt of power and an initialization procedure. In some embodiments, non-powered components can be in a sleep (or pause) mode until power detection occurs. Upon detection, for example, a processor can be configured to determine that adequate power is being provided and if so, enter an initialization procedure. The procedure can include ramping up of processor clocking speeds and signaling other components.

[0092] In some embodiments, a wake up routine can include a processor being configured to communicate with other components. For example, at **1120**, a processor can initiate operations of a biometric data sensor. The data sensor can check for presence of biometric data and capture biometric data. In currently preferred embodiments, biometric data sensors include finger print sensors. Other types of sensors can also be used.

[0093] After capturing biometric data with a sensor, the method can include testing of the captured data at **1125**. For example, the captured data can be compared with known data for authentication purposes. The comparison can result in a score which can be compared against a threshold. Results of the comparison against the threshold can result in a match or no-match condition.

[0094] The method **1100** can also include taking action on a determined match or no-match condition. For example, at **1130**, the method **1100** can include communicating the results of the data comparison. The communication can include an RF chip sending a wireless signal about the data comparison. The communication may also include modulating an existing energy field (e.g., field-load modulation). The communication can be in full duplex mode between a host/base device and a portable device.

[0095] Communication may occur simultaneously with other method actions. For example, at **1135**, while communication exchanges are occurring, power harvesting can be done in a manner to charge a local power supply. Harvesting wireless energy can result in doing away with physical cables/conductors normally required for power harvesting.

[0096] FIG. **12** illustrates a functional block diagram of a power harvesting/charging-data transmission system **1200** in accordance with some embodiments of the present invention. Generally, the system **1200** contains a host device **1205** and a portable wireless device **1210**. The host device **1205** can include many devices capable of sourcing an RF energy field and capable of receiving/detecting data modulations in an RF data field. The portable wireless device **1210** can include many portable devices capable of interacting with an RF energy field.

[0097] In some embodiments, the host device **1205** can be used to charge a power source (e.g., a battery) associated with the portable wireless device **1210**. For example, if the portable wireless device is a portable communication device, such as a cell phone or smart phone, having a battery, the portable communication device can include an RF power harnessing circuit as discussed herein. By harvesting the host's device RF energy field, the portable wireless device

1210 can charge its batteries. Since the charging can take place wirelessly, the need for charging devices or power cables does not exist. Charging times can range from fractions of seconds to multiple minutes.

[0098] In addition to enabling the charging of local power source, the portable wireless device **1210** can be equipped with circuitry to receive and transmit data from the host device's **1205** RF field. By being able to simultaneously transceive data and charge, the portable wireless data can share data with a network connected to the host device. Data exchanges can be accomplished at varying rates. For example, data exchange rates can include 106, 212, 424 and/or 848 kbit/s.

[0099] FIG. **13** illustrates a schematic diagram of a RFID transceiver module **1300** in accordance with some embodiments of the present invention. As shown, the module **1300** includes various analog and digital components. The antenna coil can interact with an energy field to generate AC power. The AC power can be fed to a rectifier (diode D**1**) for DC conversion. The converted DC can be provided to an op amp A**1** (e.g., Texas Instruments Op Amp OPA354 family) as an input source. The op amp can be configured as a comparator and use the converted DC as an input signal. The op amp also has as a reference input a floating reference. The floating reference is provided by a second diode (D**2**). The second diode D**2** allows current to pass so that it functions as a voltage disconnect. The output of the op amp A**1** can be data provided in a RF field, such as by an RFID card reader.

[0100] In addition to being able to receive data, the module **1300** can also simultaneously transmit data. Data transmission can be accomplished via transistor Q**1**. Toggling Q**1** on and off can result in voltage passing through diode D**1** to interact with the antenna coil. This interaction can result in load modulation. The load modulation can be detected/processed by a component to determine the toggling rate of Q**1**. The toggling rate of Q**1** can be used to encode data thereby transmitting data to another component. Using module **1300**, data handling can be simultaneous receipt and transmission all the while being powered by an RF energy field.

[0101] As discussed herein, the module **1300** can be used for wireless power configurations. For example, the module **1300** can be used in contact and wireless power mode applications (e.g., ISO 7816 and ISO 14443 A, B or Felica). An ISO pad can be used when a card is used as contact type IDO 7816. Voltage (5V or 3.3V) can be supplied through ISO pads. The voltage can be supplied to a voltage regulator, that regulates power to 3.3 V in this case. In case of contact mode, there is no wireless power in some embodiments. In wireless embodiments, there may be no power from ISO pads. The input to voltage regulator can be wired or from contact mode ISO 7816 via pads and Wireless Mode ISO 1443.

[0102] The voltage regulator can be used to supply power to a verification CPU and a finger print sensor. In either case, a finger is placed on to fingerprint sensor. Verification CPU supplies power to Dual mode CPU by logically control I/O Such as 10 mA supply able general IO of CPU. The verification CPU can enable or disables Dual mode CPU to send data through antenna or not. Verification CPU can send data from verification CPU to Dual SEC CPU through ISO 7816 IO, using URT IO of the verification CPU. The verification CPU can control the antenna directly so that at initial stage, while voltage is not strong enough. Antenna can not be activated by Dual SEC CPU at any moment, in another word, fail safe control.

[0103] FIG. **14** illustrates a schematic diagram of a RFID transceiver module circuit **1400** for use in charging applications in accordance with some embodiments of the present invention. The circuit **1400** is similar to that shown in FIG. **5** so for brevity, this discussion will not repeat identical details. The circuit **1400** can be used in power charging applications. For example, by using a super capacitor in parallel to a stacked pair of capacitors, the super capacitor can be used to charge a power source (e.g., a rechargeable battery). In some embodiments, the super capacitor can have a value ranging from several farads to many farads (e.g., 1 to 1000 farads). Preferably the super capacitor is sized and shaped to be small to fit within small, portable devices.

[0104] FIG. **15** illustrates a logical flow diagram **1500** of a method that can be used to implement embodiments of the present invention on a mobile device (e.g., an access card). Those skilled in the art will understand that method **1500** can be performed in various orders (including differently than illustrated in FIG. **15**), additional actions can be implemented as part of a method embodiment, and that some actions pictured in FIG. **15** or discussed below are not necessary. In addition, it should be understood that while certain actions illustrated in FIG. **15** may be discussed herein as including certain other actions, these certain other actions may be carried out in various orders and/or as parts of the other actions depicted in FIG. **15**. Method embodiments of the present invention, such as the one depicted in FIG. **15**, may be implemented with the devices and systems discussed herein. Method embodiments may also be coded in a programming language, stored in a memory, and implemented with a processor or microcontroller. Method embodiments can also include the use of component devices and a processor can be used to manage operation of component devices as desired.

[0105] The method **1500** can initiate in an initial setting. In an initial setting, there may be no power environment. And as a result, no action is made. When proximate an energy field at **1505**, energy can generated via a power circuit at **15 10**. The power circuit at **1515** can charge a capacitor. Charging a capacitor can increase voltage output from the capacitor.

[0106] If a harnessed voltage is over a CPU activation threshold, a CPU can initiate processing functions at **1520**. Or if a CPU does not have such functionality, a dedicated reset circuit can be used. This circuit can be made by RC charging voltage with Schmitt Trigger circuit. If necessary enabling time delay can be added to set up time. If a no-power state is detected at **1525**, then the CPU can go into sleep mode for saving energy at **1530**. If a no-power state is detected the CPU and biometric sensor can enter a sleep mode.

[0107] Sleep modes can also be implemented for power savings. For example, a CPU can enter sleep mode based on a finger print sensor's activity. A CPU can then monitor for a wake up trigger from a finger print sensor, if fingerprint sensor has finger detecting circuit. Such finger detecting circuit can be made by several lines of detection of finger out of whole cell activation. This can save more than 90% of energy of fingerprint sensor. Before detecting fingerprint, this is sleep mode of fingerprint sensor. By this sleep mode of fingerprint sensor and sleep mode of CPU, voltage across the voltage regulator ramps up at maximum speed.

[0108] Once a finger is placed in the field of energy where CPU and sensor can operate, the sensor can gather data at **1535**. For example, a fingerprint sensor can send wake up commands to CPU (verification CPU), and the CPU can start getting data from fingerprint sensor. As this occurs, only

CPU's interface, such as SPI interface and memory, is active to receive data from CPU. For example, a 128×256 bit cell has 8 bit gray scale (262 kb), 10 MHz reading speed takes 0.026 sec, and the power dissipation of sensor is between 0.1 mA to 7 mA depending on sensor type. The current of CPU can be 10 mA at 10 MHz. Total current at this phase is 17 mA.

[0109] Once data from fingerprint sensor is transferred to CPU memory, finger print sensor will be in sleep mode again even though finger is on the sensor. Then a taken image data can be processed as image processing to reduce data as convert gray scale data to skinny but continuous line data of fingerprint pattern. This process is done by filtering, such as two dimensional FFT. Then from skinned line data, crossing point, edge of line can be detected by Minutiae processing program. Through this process, minutiae vector can be obtained as personal ID vector data.

[0110] This data is compared to the stored reference data in CPU flash memory at **1535**. This comparison may not be 100% matching. Rather, the comparison can give a score of matching. Matching can be measured based on the numbers of minutiae to be compared. In the process of matching, angle is to be rotated by A'ffin transfer program. Also, a threshold like FAR (False Acceptance ratio) as 0.1%, as the card can be used only card holder. FRR (False Rejection Ratio as 0.01%) so that mismatch frustration. This threshold adjustment can be FRR<FAR.

[0111] After testing the finger print data, test results can be communicated at **1540** to another device. The data communication can include test result and other information. For example, when fingerprint is matched, the CPU can generate data comprising of the event of fingerprint match, Unique ID of CPU, Unique ID of sensor if available, assigned ID of card or along with card holder name, of if required picture of card holder, and or time stamp if useful.

[0112] Data transmission can be done in an encrypted fashion. The CPU can encrypt the data to increase security. Encryption protocols can include Triple DES, AREA, Camellio, AES, and RSA. Other encryption schemes can also be employed to meet whatever encryption required by users. PKI can be used as additional encryption and UID, time stamp, or part of Minutiae can be used as private key.

[0113] Those information can be generated in Verification CPU, but can be also generated by security CPU, such as dual mode CPU (SEC CPU hereafter), because SEC CPU has coprocessor of encryption. Wireless controller, which is for example, wireless portion of SEC CPU, start shaking hands with card reader. The communications can be wireless and sent through antenna by modulating load of antenna.

[0114] The embodiments of the present invention are not limited to the particular formulations, process steps, and materials disclosed herein as such formulations, process steps, and materials may vary somewhat. Moreover, the terminology employed herein is used for the purpose of describing exemplary embodiments only and the terminology is not intended to be limiting since the scope of the various embodiments of the present invention will be limited only by the appended claims and equivalents thereof.

[0115] Therefore, while embodiments of the invention are described with reference to exemplary embodiments, those skilled in the art will understand that variations and modifications can be effected within the scope of the invention as defined in the appended claims. Accordingly, the scope of the various embodiments of the present invention should not be limited to the above discussed embodiments, and should only be defined by the following claims and all equivalents.

We claim:

1. A portable wireless device used for event actuation, the portable wireless device comprising:

a wireless power harnessing module that comprises an antenna tuned to a resonant frequency associated with a source of an energy field, the antenna being tuned with a capacitor placed in parallel with the antenna;

the antenna comprising several windings which when proximate the energy field, result in the wireless power harnessing module sourcing power;

a biometric data comparison module coupled to the wireless power harnessing module, the biometric data comparison configured to enter a powered state when receiving adequate power from the wireless power harnessing module, wherein in the powered on state, the biometric data comparison module is operatively configured to receive external biometric data from an external source and compare the external biometric date to stored biometric data; and

a communication module configured to provide information responsive to the comparison of the external biometric date and stored biometric data.

2. The portable wireless device of claim **1**, wherein the wireless power harnessing module, the biometric data comparison module, and the communication module reside within an ISO-7816 defined card outline.

3. The portable wireless device of claim **1**, wherein the wireless power harnessing module comprises a rectifier circuit coupled to a low impedance winding of the antenna and a common ground, the rectifier circuit configured to convert AC voltage provided by the antenna to DC voltage.

4. The portable wireless device of claim **1**, further comprising a capacitor located in parallel with the antenna, wherein the relationship between the capacitor and the antenna defines the resonant frequency.

5. The portable wireless device of claim **1**, wherein the device has no local power source.

6. The portable wireless device of claim **1**, wherein the antenna is divided up into segments disposed at various tap positions such that antenna has multiple segments configured to carry out multiple functions.

7. The portable wireless device of claim **1**, wherein the wireless power harnessing module harness power from the energy field simultaneously to the communication module transmitting and receiving data from the energy field.

8. The portable wireless device of claim **1**, wherein the antenna comprises an antenna coil pattern wound in a concentric fashion that comprises inner and outer windings.

9. The portable wireless device of claim **8**, wherein the antenna coil pattern is a continuous planar copper trace having tap positions located at various places along the coil pattern so the antenna has multiple segments configured to have different functions.

10. The portable wireless device of claim **1**, wherein the wireless power harnessing module comprises a rectifier circuit is a voltage doubling circuits that comprises two Schottky barrier diodes arranged in a full wave rectifying arrangement.

11. A wireless access control device, the device comprising:

a power circuit configured to have a default non-energized state and an energized state, the power circuit configured to receive energy from an energy field to enter the ener-

gized state so that the power circuit can source electrical power, wherein the power circuit is finely tuned to a carrier frequency of the energy field; and

a processor coupled to the power circuit, the processor configured to receive electrical power when the power circuit enters the energized state, the processor further configured to receive data from a sensor, and in response to the received data, the processor further configured to generate a signal corresponding to an access level.

12. The wireless access control device of claim **11**, wherein the processor receives power only from the power circuit when energized and the processor is not configured to receive power from any other power source.

13. The wireless access control device of claim **11**, the power circuit comprising a power detection stage, a power conversion stage, and a receiving antenna, the receiving antenna being integrated with the power detection stage and being shaped and sized to produce electrical power when placed into an energy field.

14. The wireless access control device of claim **11**, the power circuit comprising an antenna finely tuned to the carrier frequency of the energy field.

15. The wireless access control device of claim **11**, wherein the processor is configured to control data communication between the wireless access control device and the source of the energy field during the energized state.

16. A portable wireless device capable of harnessing wireless energy comprising:

an antenna and a tuning capacitor connected in parallel to form a tank circuit, the tank circuit being finely tuned to a resonant frequency associated with a carrier base frequency of source of an energy field;

the antenna comprising several windings which when proximate the energy field, result in the antenna sourcing electrical current and voltage;

the antenna further comprising a plurality of segments set off by a plurality of taps disposed at various places along the length of the antenna, wherein one of the segments can be configured to receive and transmit data with the energy field simultaneously with receiving energy from the energy field; and

a rectifier circuit connected to a first tap and a second tap of the antenna, the first tap being located on an inner antenna winding and wherein the second tap of the antenna is in electrical communication with a common ground, the rectifier circuit configured to convert the sourced electrical current and voltage to a DC energy source.

17. The portable wireless device of claim **16**, further comprising an antenna driving circuit configured to drive the antenna for data communication, the antenna driving circuit being connected to a third tap, the third tap being located on an outer antenna winding.

18. The portable wireless device of claim **16**, further comprising a voltage divider capacitor network coupled to the rectifier, the rectifier comprising a pair of Schottky diodes with the cathode of a first diode connected to the anode of a second diode, anode of the first diode connected to ground, and the cathode of the second diode connected to the voltage divider capacitor network.

19. The portable wireless device of claim **18**, wherein the voltage divider capacitor network comprises first capacitor connected in parallel to two series connected capacitors, wherein the cathode of the second diode is connected to a positive terminal of the first and second capacitors, and the anode of the first diode is connected to a negative terminal of the first and third capacitors.

20. The portable wireless device of claim **18**, wherein capacitors in the voltage divider capacitor range in value from about 1 pF to about 100 pF, the tuning capacitor ranges in value from about 10 pF to 500 pF, the antenna has between 1 to 10 coil windings, and the coil windings have a width ranging between about 1 mm to about 10 mm.

21. The portable wireless device of claim **18**, wherein the voltage divider capacitor comprises an energy storage capacitor configured to store energy, the energy storage capacitor having a value ranging from about 0.5 micro-farads to about 1000 farads.

22. A method of harnessing electrical energy from an energy field while simultaneously communicating data with the energy field, the method comprising:

configuring a portable device with a tank circuit tuned to a center frequency of an energy field, wherein an inductor of the tank circuit can interact with the energy field to convert wireless energy into electrical energy so that the inductor can source electrical power; and

configuring a processor located on the portable device to receive electrical power sourced by the inductor and configuring the processor to receive and provide data for communication with a device emitting the energy field, wherein data can be received and transmitted using coils of the inductor while the inductor is sourcing energy.

23. The method of claim **22**, further comprising configuring the portable device to receive external biometric data, to test the biometric data against a stored biometric set of data, and to communicate results of the test via the inductor.

24. The method of claim **22**, further comprising configuring the processor to communicate data by modulating the field load of the energy field.

25. The method of claim **22**, further comprising providing a voltage conversion circuit on the portable device to convert the energy sourced by the inductor from AC to DC and to regulate the DC voltage relative to a predetermined threshold.

26. A computer program product embodied in a computer-readable medium for execution by a processor or engine, the computer program product comprising an algorithm to manage activated carried out by a processor in managing power and testing biometric data, the method comprising:

detecting an appropriate power level being sourced by an antenna that is finely tuned to resonate at a center carrier frequency of an energy field, wherein the power level is provided in electrical form after the antenna converts wireless energy to electrical energy;

communicating with a biometric sensor to determine if the sensor detects presence of biometric data and has captured external biometric data;

testing received biometric data against stored biometric data to determine if the captured external biometric data matches the stored biometric data; and

issuing communication signals for wireless transmission from the antenna to another component, the communication signals comprising data about results of the biometric data test.

27. The method of claim **26**, further comprising instructing one of the biometric sensor or a system processor to enter a sleep mode if a low power level state is detected or to preserve power.

28. The method of claim **26**, wherein testing received biometric data against stored biometric data includes configuring a system processor to extract digital data from the captured external biometric data to place the external biometric data in the same format as the stored biometric data.

29. The method of claim **26**, wherein testing received biometric data against stored biometric data includes generating a score indicative of the data test and wherein the score can determine a positive or negative test result relative to a predetermined threshold.

30. The method of claim **26**, wherein testing received biometric data against stored biometric data includes generating a false acceptance ratio and a false rejection ratio and wherein a match condition can be achieved with the false rejection rate is less than the false acceptance ratio.

* * * * *

US005159703A

United States Patent [19]

Lowery

[11] Patent Number: 5,159,703

[45] Date of Patent: Oct. 27, 1992

[54] SILENT SUBLIMINAL PRESENTATION SYSTEM

[76] Inventor: Oliver M. Lowery, 5188 Falconwood Ct., Norcross, Ga. 30071

[21] Appl. No.: 458,339

[22] Filed: Dec. 28, 1989

[51] Int. Cl.[5] H04B 7/00; H04R 25/00; H04R 3/02

[52] U.S. Cl. 455/42; 455/46; 455/66; 381/73.1; 128/420.5

[58] Field of Search 455/46, 47, 66, 109, 455/110, 42–43; 381/73.1, 105, 124; 358/141–143; 600/28; 128/420.5; 380/38

[56] References Cited

U.S. PATENT DOCUMENTS

3,060,795 10/1962 Corrigan et al. 352/131
3,278,676 10/1966 Becker 358/142
3,393,279 7/1968 Flanagan 128/420.5
3,712,292 1/1973 Zentmeyer, Jr. 600/28
4,141,344 2/1979 Barbara 600/28
4,395,600 7/1983 Lundy et al. 381/73.1
4,463,392 7/1984 Fischer et al. 360/30
4,777,529 10/1988 Schultz et al. 381/73.1
4,834,701 5/1989 Masaki 600/28
4,877,027 10/1989 Brunkan 128/420.5

Primary Examiner—Reinhard J. Eisenzopf
Assistant Examiner—Andrew Faile

[57] ABSTRACT

A silent communications system in which nonaural carriers, in the very low or very high audio frequency range or in the adjacent ultrasonic frequency spectrum, are amplitude or frequency modulated with the desired intelligence and propagated acoustically or vibrationally, for inducement into the brain, typically through the use of loudspeakers, earphones or piezoelectric transducers. The modulated carriers may be transmitted directly in real time or may be conveniently recorded and stored on mechanical, magnetic or optical media for delayed or repeated transmission to the listener.

3 Claims, 3 Drawing Sheets

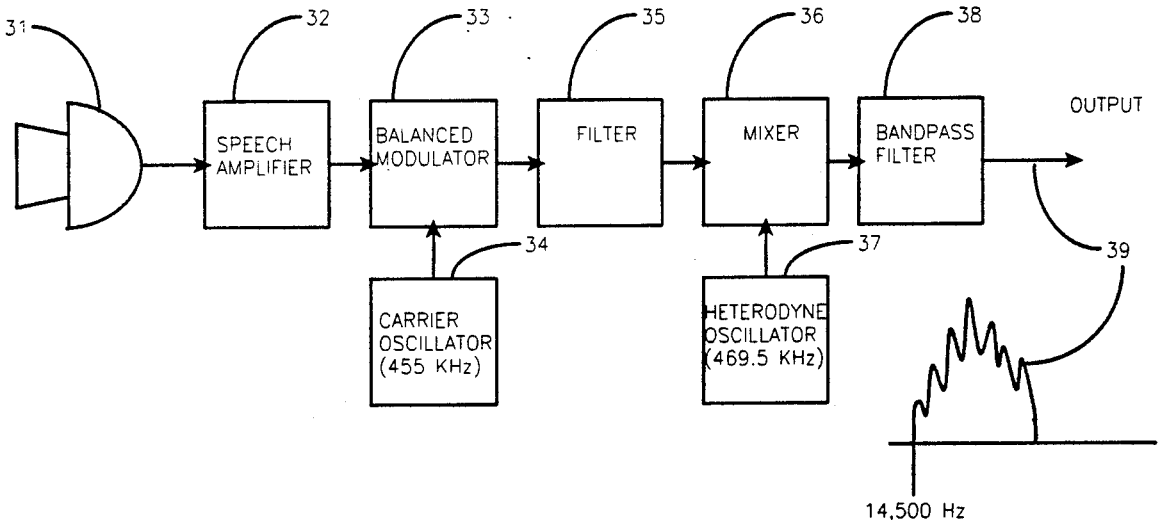

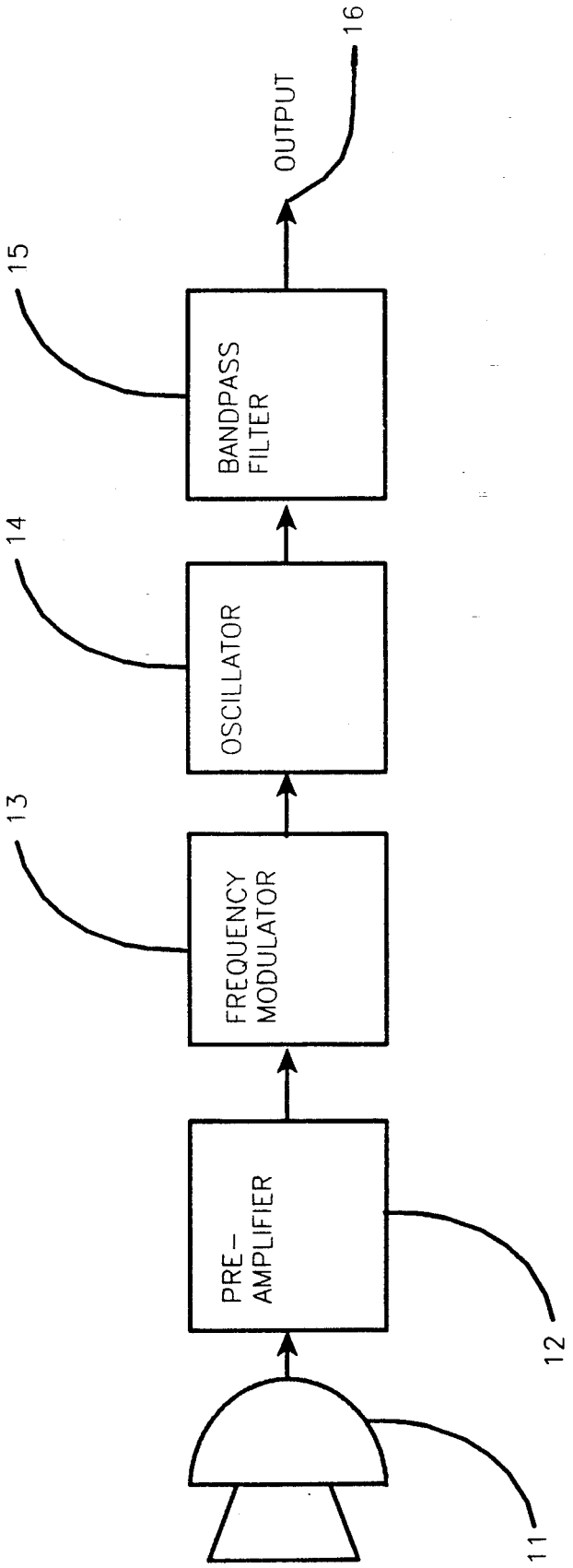
PRE-
AMPLIFIER
FREQUENCY
MODULATOR
OSCILLATOR
BANDPASS
FILTER
OUTPUT
11
12
13
14
15
16

FIG. 1

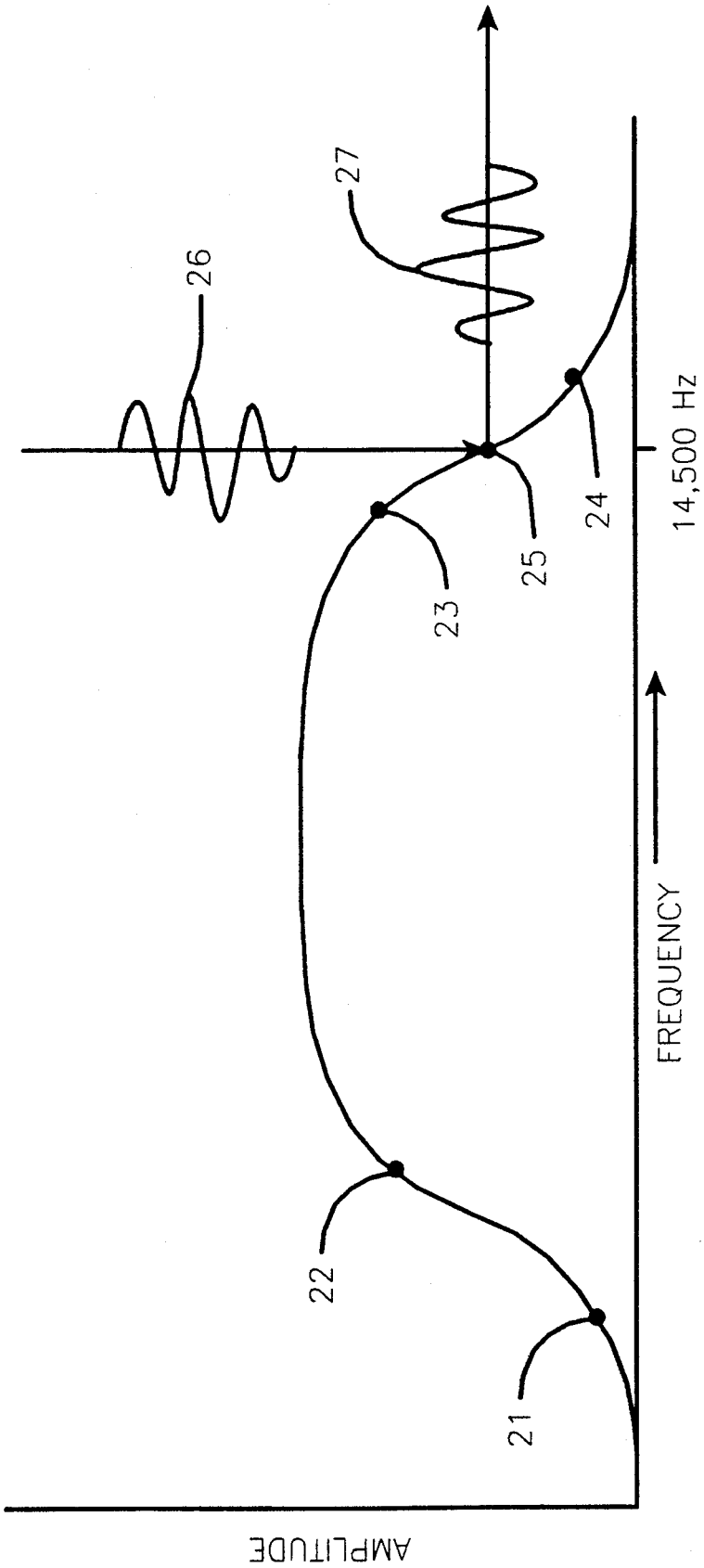

FIG. 2

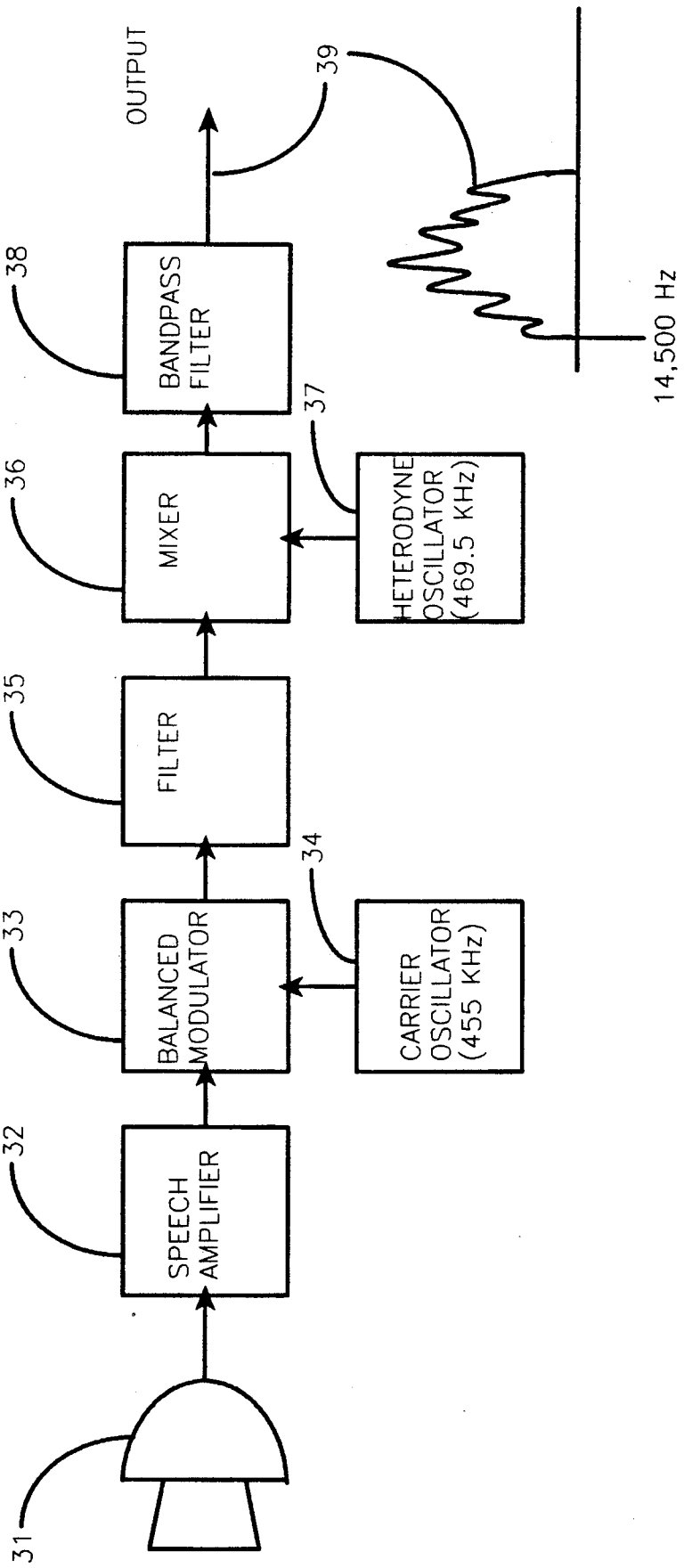
31
32
SPEECH AMPLIFIER
33
BALANCED MODULATOR
34
CARRIER OSCILLATOR (455 KHz)
35
FILTER
36
MIXER
37
HETERODYNE OSCILLATOR (469.5 KHz)
38
BANDPASS FILTER
OUTPUT
39
14,500 Hz

FIG. 3

SILENT SUBLIMINAL PRESENTATION SYSTEM

BACKGROUND—FIELD OF THE INVENTION

This invention relates in general to electronic audio signal processing and, in particular, to subliminal presentation techniques.

BACKGROUND—DESCRIPTION OF PRIOR ART

Subliminal learning enjoys wide use today and subliminal tapes are being manufactured by a number of companies in the United States alone. Several decades of scientific study indicate that subliminal messages can influence a human's attitudes and behavior. Subliminal, in these discussions, can be defined as "below the threshold of audibility to the conscious mind." To be effective however, the subliminally transmitted information (called affirmations by those in the profession) must be presented to the listener's ear in such a fashion that they can be perceived and "decoded" by the listener's subconscious mind. We are referring to audio information in this discussion, however, information could be inputted into the subject's subconscious mind through any of the body's sensors, such as touch, smell, sight or hearing. As an example, early development work in the subliminal field utilized motion pictures and slide projections as the medium. Early research into visual and auditory subliminal stimulation effects is exemplified by U.S. Pat. Nos. 3,060,795 of Corrigan, et al. and 3,278,676 of Becker. U.S. Pat. No. 4,395,600 of Lundy and Tyler is representative of later developments in today's subliminal message techniques.

The majority of the audio subliminal tapes available today are prepared using one basic technique. That is, the verbal affirmations are mixed with, and recorded at a lower level than, a "foreground" of music or sounds of ocean surf or a bubbling mountain brook or other similar "masking" sounds. The affirmations are generally recorded 5 decibels (db) or so below the "foreground" programming and regenerative automatic gain control is usually applied to permit the affirmations to change their recorded amplitude in direct proportion to the short term averaged amplitude of the continually varying "foreground" material. In other words, the volume of the affirmations will follow or track the volume changes of the "foreground" programming, but at a lower volume level. Circuit provisions are also usually included to "gate" the affirmations off when the music amplitude is low or zero. This insures that the affirmations cannot be heard during quiet program periods. Thus, today's subliminal affirmations can be characterized as being "masked" by music or other sounds, of constantly changing amplitude and of being reduced or cut off entirely during periods of low or quiet "foreground" programming.

One of the principal, and most widely objected to, deficiencies in available subliminal tape presentation techniques is that the presence of the "foreground" material is intrusive to both the listener and to anyone else in the immediate area. No matter what "foreground" material is chosen, the fact remains that this material can be heard by anyone within its range and presents a definite distraction to other activities such as conversation, thought, desire to listen to other programming such as radio or television, need to concentrate, etc. Additionally, and because the tapes are used repeatedly by the same listener, any "foreground" music or material eventually becomes monotonously tiring to that listener.

It is the purpose of the following described invention to eliminate or greatly reduce all of the above deficiencies. Although its application to the magnetic tape medium is described in the following discussion, the technique is equally applicable to most other desired transmission mediums, such as Compact Disc, videocassettes, digital tape recorders, Public Address (PA) systems, background music installations, computer software programs, random access memory (RAM), read only memory (ROM), "live", real time applications and other mediums now in existence or to be developed in the future.

Implemented on tape cassettes, for example, the subliminal presentation described here is inaudible i.e., high audio or ultrasonic frequencies, the affirmations are presented at a constant, high amplitude level, and they occupy their own "clear channel", non-masked frequency allocations. If desired, the previously described "foreground" music or other material can be added to the tape through use of an audio mixer. The "silent" recordings are inaudible to the user or by others present and are therefore very effective for use during periods of sleep or when in the presence of others. Additionally, the basic requirements of subliminal stimulation are met. That is, the affirmations are efficiently transmitted to the ear and, while undetected by the conscious mind, are perceived by and efficiently decoded by the subconscious mind.

OBJECTS OF THE INVENTION

Accordingly, several objects and advantages of my invention are:

(a) to provide a technique for producing a subliminal presentation which is inaudible to the listeners(s), yet is perceived and demodulated (decoded) by the ear for use by the subconscious mind.

(b) to provide a technique for transmitting inaudible subliminal information to the listener(s) at a constant, high level of signal strength and on a clear band of frequencies.

(c) to provide a technique for producing inaudible subliminal presentations to which music or other "foreground" programming may be added, if desired.

Still further objects and advantages will become apparent from a consideration of the ensuing description and drawings.

BRIEF DESCRIPTION OF THE DRAWINGS

In the drawings, the first digit of each component number also refers to the figure number where that component can be located.

FIG. 1 represents the block diagram of a suitable system which will generate a frequency modulated (FM) signal at 14,500 Hz.

FIG. 2 represents an approximation of the frequency response curve of the human ear and the signal decoding process.

FIG. 3 represents the block diagram of a suitable system which will generate a single sideband, suppressed carrier, amplitude modulated (AM) signal at 14,500 Hz.

REFERENCE NUMERALS IN DRAWINGS	
11 microphone or other	14 low distortion

-continued

REFERENCE NUMERALS IN DRAWINGS	
audio input signal	audio oscillator
12 audio preamplifier if required	15 high pass or band pass audio filter
13 frequency modulation circuit	16 output to tape recorder or other device
21 point on low freq end response curve	25 midpoint on curve between points 23 and 24
22 point on low freq end of ear response curve	26 speaker output of FIG. 1 to ear
23 point on high freq end of ear response curve	27 demodulated subliminal audio inputted to ear
24 point on high freq end of ear response curve	31 microphone
32 speech amplifier	33 balanced modulator
34 carrier oscillator (455 KHz)	35 filter
36 mixer	37 heterodyne oscillator (469.5 KHz)
38 bandpass filter	39 output signal

DETAILED DESCRIPTION OF A PREFERRED EMBODIMENT

Please refer now to FIG. **1** and FIG. **2**, which are drawings of a preferred implementation of the invention.

The principle of operation of the silent subliminal presentation system is as follows:

An audio signal in the upper frequency region of the audio spectrum (for example, 14,500 Hz) is modulated with the desired information. The type of modulation may be any type suitable for subliminal applications; frequency modulation (FM), phase modulation (PM), upper single sideband with suppressed carrier, amplitude modulation (AM), tone modulation, etc.

For broadest application, the high audio frequency selected as the carrier frequency must meet two basic criteria:

(1) be high enough in the audio spectrum that its presence to the human ear is essentially unnoticed or undetectable (without the listener being informed that the signal is actually present) and,

(2) be low enough in the audio spectrum that it (and its modulation content) can produce a useful output power from home entertainment type cassette or reel-to-reel magnetic recorders.

This would also include, of course, small portable and automobile tape decks.

Alternatively, the output of the system can be fed directly into an audio amplifier and its speaker/earphone system, Public Address system, etc.

FIG. **1** provides the block diagram of an example of a system capable of generating the desired silent frequency modulated carrier.

The modulation information is inputted into the microphone **11**. Other suitable input devices may be substituted for microphone **11**, such as a tape recorder or a radio. The microphone **11** is connected to the preamplifier **12** and should have provisions for adjusting its gain in order that the optimum modulation index can be set in the frequency modulator **13**. The frequency modulator **13** modulates the frequency of oscillator **14** which has been adjusted for an output of 14,500 Hz as described above. The output of oscillator **14** is fed through a suitable bandpass filter **15** into the tape recorder or directly into a suitable amplifier/speaker system. It is the purpose of the bandpass filter to remove or attenuate audible products of the modulation process in order to maintain as audibly silent an output as practical.

On the receiving end, FIG. **2** represents an approximate and idealized frequency response curve of the human ear. The frequency modulated carrier (centered at 14,500 Hz), as generated above and played through a tape recorder or amplifier/speaker system, is shown on FIG. **2** as speaker output **26**, impinging upon the upper slope of the ear's response curve at point **25**. The frequency modulated excursions of the speaker output **26** swing between points **23** and **24** on the ear's upper response curve. Because the response curve between points **23** and **25** is relatively linear, this action results in a relatively linear demodulation of the original modulation intelligence, which is passed on subliminally to the inner ear. The amplitude of the demodulated output is not high enough to be detected by the conscious mind but is sufficient in amplitude to be detected by the subconscious mind. In the field of communications engineering design, the above demodulation process in known as slope detection and was used in early FM receiver design. In those receivers, the response curve was formed by the action of a tuned (inductive/capacitance) circuit. In our case, the response curve is formed by the natural response curve of the human ear. The same slope detection technique can be performed at the low frequency end of the human ear response curve. This region is indicated on FIG. **2** as between points **21** and **22**. This region, however, has a much smaller available bandwidth and is therefore more restricted as to the amount of information that can be transmitted in an inaudible manner.

In practice, the listener adjusts the volume control of the tape recorder or amplifier to a level just below that at which the listener hears an audible sound or noise from the speaker of the tape recorder. If the recording process is properly done, a spectrum analyzer or a calibrated sound level meter will reveal a strong signal emanating from the tape recorder speaker. A calibrated sound level meter, at a distance of 1 meter (with C weighting and referenced to the standard of 0.0002 micro bar) will typically indicate a silent power output of from 60 to 70 decibels. This is equivalent to the audio power of a loud conversation, yet, in the described system, is inaudible or unnoticed by the listener.

FIG. **3** illustrates a system which generates a suitable amplitude modulated (AM) signal, instead of the frequency modulated (FM) system described above. The output is a modulated, single sideband (SSB), suppressed carrier (AM) signal at 14,500 Hz.

The block diagram represents a common scheme for generating an SSB signal and will be briefly described.

The desired subliminal information is spoken into microphone **31**. This signal is amplified by speech amplifier **32** and injected into one port of balanced modulator **33**. A continuous wave signal of **455** KHz is generated by carrier oscillator **34** and is injected into the second port of balanced modulator **33**. The output of balanced modulator **33** is a double sideband, suppressed carrier signal at 455 KHz. This signal is fed through filter **35**, causing one of the two sidebands to be removed. This signal is fed into one port of mixer **36**. A continuous wave signal at a frequency of 469.5 KHz from hetrodyne oscillator **37** is fed into the other port of mixer **36**, resulting in an output of the original subliminal audio information but translated 14,500 Hz higher in frequency. The bandpass filter **38** attenuates signals and noise outside of the frequencies of interest. The ampli-

tude modulated audio output signal is shown as output **39**.

Thus, as stated earlier, my invention provides a new system for subliminal presentations which is:

(a) silent,

(b) outputs a constant, high level modulated signal and,

(c) occupies a band of clear channel frequencies.

The foregoing description of the preferred embodiment of the invention has been presented for the purposes of illustration and description. It is not intended to be exhaustive or to limit the invention to the precise form disclosed. Many modifications and variations are possible in light of the above discussions. It is intended that the scope of the invention be limited not only by this detailed description, but rather by the claims appended hereto.

What is claimed:

1. A silent communications system, comprising:

(a) amplitude modulated carrier means for generating signals located in non-aural portions of the audio and in the lower portion of the ultrasonic frequency spectrum said signals modulated with information to be perceived by a listener's brain and,

(b) acoustic and ultrasonic transducer means for propagating said signals, for inducement into the brain, of the listener, and,

(c) recording means for storing said modulated signals on mechanical, magnetic and optical media for delayed or repeated transmissions to the listener.

2. A silent communications system, comprising:

(a) frequency modulated carrier means for generating signals located in non-aural portions of the audio and in the lower portion of the ultrasonic frequency spectrum, said signals modulated with information to be perceived by a listener's brain, and;

(b) acoustic and ultrasonic transducer means for propagating said signals, for inducement into the brain of the listener, and;

(c) recording means for storing said modulated signals on mechanical, magnetic and optical media for delayed or repeated transmissions to the listener.

3. A silent communications system, comprising:

(a) a combination of amplitude and frequency modulated carrier means for generating signals located in non-aural portions of the audio and in the lower portion of the ultrasonic frequency spectrum, said signals modulated with information to be perceived by a listener's brain, and

(b) acoustic and ultrasonic transducer means for propagating said signals, for inducement into the brain of the listener;

(c) recording means for storing said modulated signals on mechanical, magnetic and optical media for delayed or repeated transmissions to the listener.

* * * * *

US005356386A

United States Patent [19]

Goldberg et al.

[11] Patent Number: 5,356,386

[45] Date of Patent: * Oct. 18, 1994

[54] APPARATUS FOR LOCATING BODY CAVITIES

[75] Inventors: **Edward M. Goldberg**, Glencoe; **Lev Melinyshyn**, Mt. Prospect; **Michael Jaron**, Des Plaines; **Jeffrey M. Stupar**, Chicago, all of Ill.

[73] Assignee: **Uresil Corporation**, Skokie, Ill.

[*] Notice: The portion of the term of this patent subsequent to May 31, 2005 has been disclaimed.

[21] Appl. No.: **924,407**

[22] Filed: **Aug. 3, 1992**

Related U.S. Application Data

[60] Continuation of Ser. No. 559,757, Jul. 30, 1990, abandoned, which is a division of Ser. No. 310,366, Feb. 13, 1989, Pat. No. 4,944,724, which is a continuation of Ser. No. 58,400, Jun. 5, 1987, abandoned.

[51] **Int. Cl.**[5] **A61M 1/00**

[52] **U.S. Cl.** **604/118**; 604/323

[58] **Field of Search** 604/118, 318, 319, 320, 604/323

[56] **References Cited**

U.S. PATENT DOCUMENTS

4,015,603	4/1977	Kurtz et al.	604/318
4,063,556	12/1977	Thomas et al.	604/318
4,543,095	9/1985	Jensen	604/318
4,820,284	4/1989	Hauri	604/318
4,944,724	7/1990	Goldberg et al.	604/118

Primary Examiner—Paul J. Hirsch

Attorney, Agent, or Firm—Laff, Whitesel, Conte & Saret

[57] **ABSTRACT**

An apparatus for locating a body cavity having a fluctuating fluid pressure by signaling the fluctuating pressure when the cavity is entered and then transporting fluid either into or out of the cavity.

15 Claims, 2 Drawing Sheets

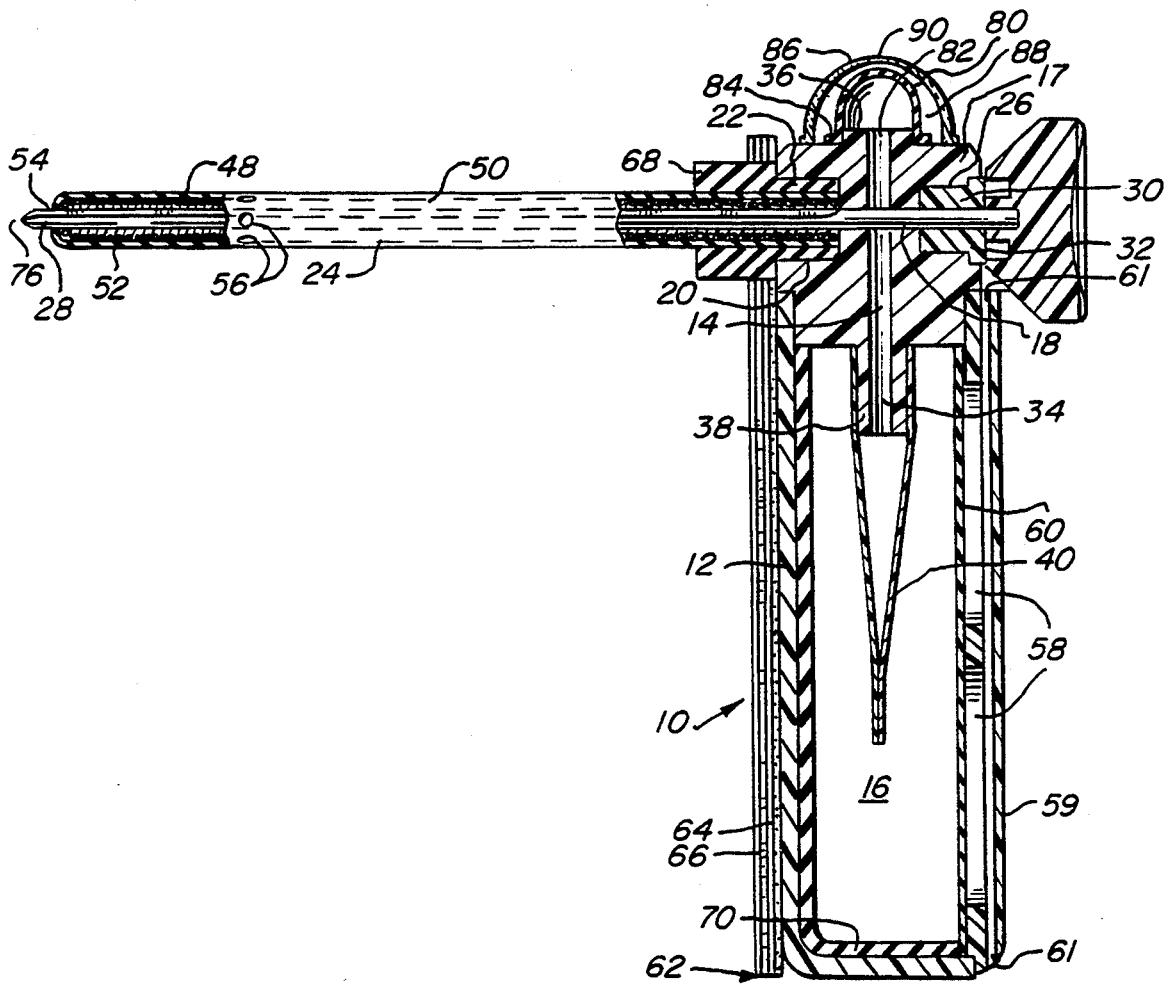

FIG. 1A

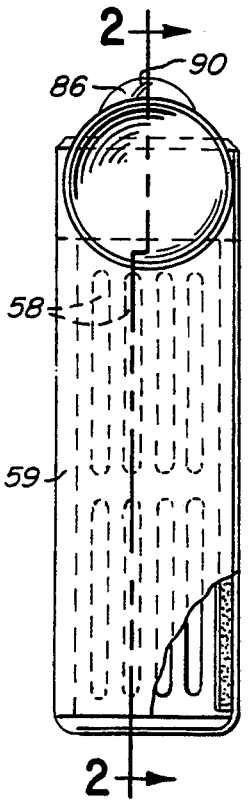

FIG. 1

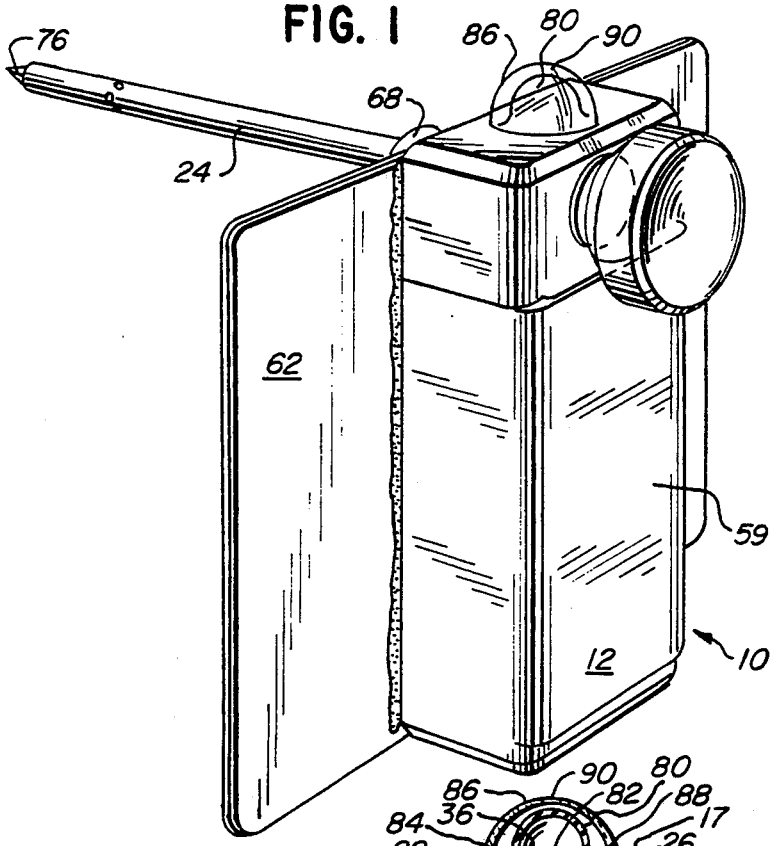

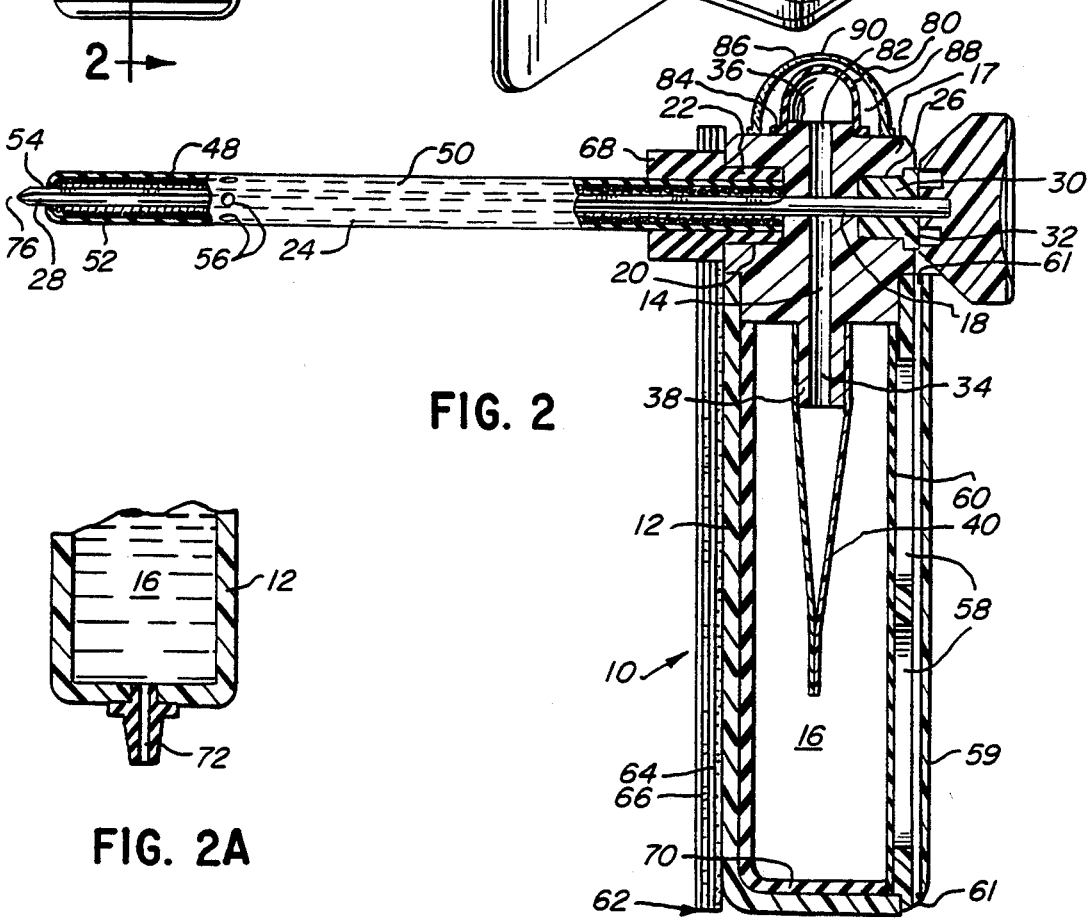

FIG. 2

FIG. 2A

FIG. 2B

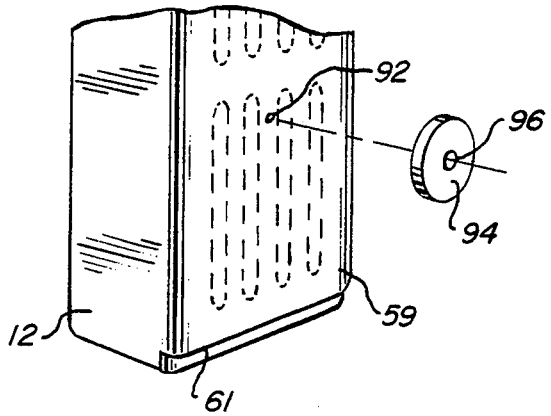

FIG. 3

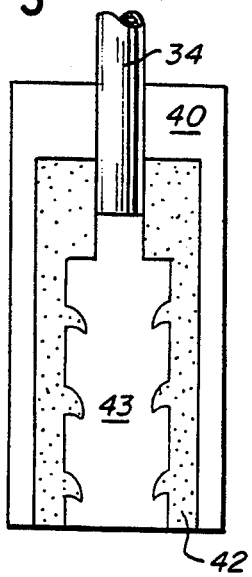

FIG. 4A

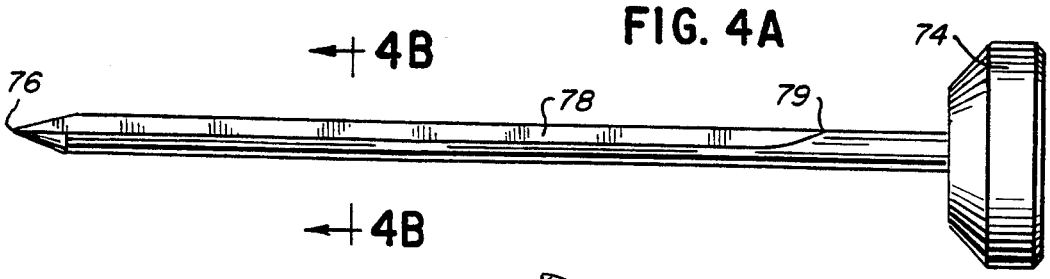

FIG. 4B

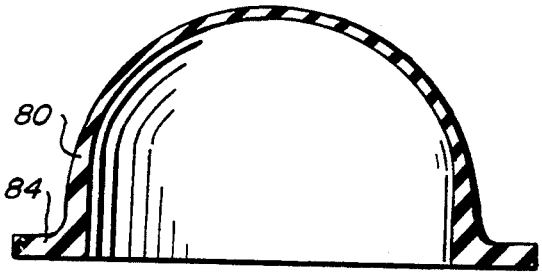

FIG. 5A

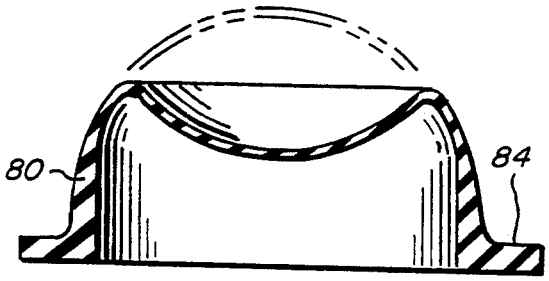

FIG. 5B

APPARATUS FOR LOCATING BODY CAVITIES

This is a continuation of application Ser. No. 559,757, now abandoned, filed Jul. 30, 1990 which is a divisional of copending application Ser. No. 310,366 now U.S. Pat. No. 4,944,724 filed on Feb. 13, 1989 which in turn is a continuation of application Ser. No. 07/058,400 filed on Jun. 5, 1987 and now abandoned.

BACKGROUND OF THE INVENTION

This invention relates generally to apparatus for draining fluids from body cavities and for introducing fluids into body cavities. More particularly, this invention relates to an improved apparatus for positively locating a body cavity having fluctuating fluid pressure and then either draining fluids from the cavity or introducing fluids into it.

An apparatus for draining fluids from body cavities, including particularly the pleural cavity, is described in U.S. Pat. No. 4,664,660. The apparatus described in that patent includes a vented housing having a fluid-receiving chamber, an anti-reflux valve mounted within the housing and a catheter, extending from the housing, in communication with the chamber through the anti-reflux valve.

The apparatus of U.S. Pat. No. 4,664,660 is used in the drainage of fluids from the pleural cavity by inserting a solid trocar into the end of the catheter. A skin incision is then prepared and the trocar/catheter assembly is introduced into the pleural space through the incision. When the trocar is removed from the catheter, fluid drains from the pleural cavity through the catheter and the vented housing.

While the above-described apparatus represents a very important contribution to the art, in using it one cannot ascertain whether the open distal end of the trocar/catheter assembly is properly located in the pleural cavity until the trocar is removed. Since drainage cannot begin until the trocar is removed, the proper positioning of the catheter in the pleural space cannot be determined with the trocar in place. In addition, damage to the lung, heart and surrounding tissue could occur if the trocar is not removed as soon as the tip of the trocar catheter assembly enters the pleural space.

Another apparatus for draining fluids from body cavities, particularly aspiration of liquids from the pleural cavity, is disclosed in U.S. Pat. No. 4,447,235. The apparatus described in this patent includes a catheter/-hollow needle assembly which is inserted into the pleural cavity. During the insertion procedure, a vacuum is maintained in the needle with a syringe so that liquid will enter the syringe for observation by the surgeon when the needle enters the pleural space. This device cannot function unless a vacuum is maintained. Also, it cannot signal subsequent dislocation of the catheter from the pleural space or completion of drainage since the syringe is disconnected (and cannot be reintroduced) after the initial insertion of the catheter in the pleural cavity.

A medical suction device with an indicator flag to signal the pressure being developed by the device is described in U.S. Pat. No. 4,404,924. The indicator flag is designed to stand upright when the pressure in the device is relatively high and to collapse when suction is developed. The flag, unfortunately, indicates the state of fill of the suction device, not the satisfactory location of a catheter in the body cavity being aspirated or the completion of the aspiration procedure. In addition, it has no application in a procedure conducted without vacuum assistance.

Finally, U.S. Pat. No. 4,164,938 describes a device for diagnosing the presence of a tension pneumothorax. This device includes a sleeve with a needle at one end for puncturing the chest wall and extending into the pleural cavity and a diaphragm at the other end which expands when the pressure in the pleural cavity is greater than atmospheric. Since this device does not vent fluid from the pleural cavity, the diaphragm does not provide any indication that venting is proceeding or that the pneumothorax has been resolved.

SUMMARY OF THE INVENTION

It is therefore an object of the present invention to provide an apparatus for draining fluids from a body cavity or introducing fluids into the cavity which positively locates the body cavity.

It is a further object of the present invention to provide a catheter apparatus in which a trocar is used to facilitate insertion of the catheter into the cavity, and in which a positive indication that the cavity has been located is provided without removing the trocar.

It is yet another object of the present invention to provide a catheter apparatus for draining fluids from a body cavity which permits the drainage to commence as soon as the apparatus enters the cavity.

These and other objects of the present invention will be apparent from the discussion below.

The present invention is therefore directed to an apparatus for transporting fluid either into or out of a body cavity having a fluctuating fluid pressure. The apparatus includes a conduit for entering the cavity, means for signaling the fluctuation of the fluid pressure in the cavity and means for transporting the fluid either into or out of the cavity. The signaling means provides a positive indication that the cavity has been located.

In one important embodiment, the means for entering the cavity comprises a catheter and a housing, having an inlet chamber and a discharge chamber, supporting the catheter in sealed fluid communication with the inlet chamber. An inlet port is provided in the housing having a seal for reversibly receiving a trocar and enabling at least a portion of the trocar to pass through the inlet chamber and the catheter. The inlet port seal is adapted for sealing the chamber both in the absence of the trocar and upon its insertion and withdrawal. In addition, an anti-reflux valve is mounted in the housing, coupling the inlet chamber to the discharge chamber. The anti-reflux valve permits fluid entering the inlet chamber to pass into the discharge chamber, but prevents any fluid from flowing back into the inlet chamber. Finally, and most importantly, this embodiment of the invention also includes means for signaling the fluctuating fluid pressure in the body cavity, to thereby positively signal that the body cavity has been located.

In another important embodiment of the invention an improvement in apparatus having a conduit with a removable trocar to aid body penetration is provided. The improvement comprises a furrow in the trocar which permits fluid flow through the conduit while the trocar is still in place in the conduit.

BRIEF DESCRIPTION OF THE DRAWINGS

The features of this invention which are believed to be novel are set forth with particularly in the appended claims. The invention, together with its objects and the

advantages thereof, may be best understood by reference to the following description, taken in conjunction with the accompanying drawings, in which like reference numerals identify like elements in the several figures and in which:

FIG. 1 is a perspective view of an apparatus in accordance with the present invention, showing a trocar inserted into the inlet chamber of the apparatus;

FIG. 1A is an elevation view of the rear of the apparatus of FIG. 1;

FIG. 2 is a sectional view of the apparatus of FIG. 1, taken along lines 2—2 of FIG. 1A;

FIG. 2A is a partial sectional view of a discharge chamber of an alternate embodiment of the apparatus of FIG. 1 in which a discharge port is provided for removing liquids from the discharge chamber;

FIG. 2B is a partial sectional view of an alternate embodiment of the apparatus of FIG. 1 in which an auditory signal indicative of the fluctuation of fluid pressure is produced;

FIG. 3 is a plan view of the film valve utilized in the apparatus of FIG. 1;

FIG. 4A is a front elevation view of a furrowed trocar used in the practice of the present invention;

FIG. 4B is an enlarged sectional a view of the trocar of FIG. 4, taken along lines 4B—4B. of FIG. 4; and

FIGS. 5A and 5B are enlarged sectional views of the domed signal utilized in the apparatus of FIG. 1.

DESCRIPTION OF THE PREFERRED EMBODIMENTS

The apparatus of the present invention is intended to have application in locating and in moving fluids either into or out of body cavities such as the pleural cavity, the signal epidural space, blood vessels, the gallbladder, the urinary bladder, the kidney pelvis, the brain ventricles and the brain subdural and epidural spaces. However, for purposes of illustration, the discussion below is directed primarily to an embodiment of the invention particularly suited for locating and draining fluids from the pleural cavity.

An apparatus **10** in accordance with the present invention is illustrated in FIGS. **1**, **1A** and **2**. The apparatus includes a housing **12** having an inlet chamber **14** and a discharge chamber **16**. Housing **12** is made of any rigid, impervious material, such as an acrylic, ABS, polystyrene or polyvinyl chloride plastic.

Apparatus **10** includes a manifold **17** having a first bore **18** extending through the manifold. Bore **18** is enlarged at its distal end to form a recess **20** to which a cannula **22** is affixed and sealed. A polyethylene are one preferred material. When this laminate is used, the plastic film is used with the polyethylene sides facing each other.

The edges of the two film members of the valve are heat sealed to each other with a tortuous profile **42** at the closed edges of the valve in order to prevent fluid leakage. The cracking resistance or threshold pressure at which the valve permits fluid to flow through it can be adjusted by varying the thickness of the plastic films and the length and width of the valve passage **43**.

Other anti-reflux valves which are sufficiently sensitive to reflux pressures to produce a discernible movement in the signaling means (described below) can be used. The "Heimlich valve" utilized in U.S. Pat. No. 4,664,660, described above in the Background of the Invention, for example, can be used in the present application but is less preferred than the film valve, because the Heimlich valve is far less sensitive to reflux pressures. The Heimlich valve is described in U.S. Pat. No. 3,463,159.

The space defined by bore **18** and bore **34** together comprise the inlet chamber **14** of the apparatus. The inlet chamber is separated from outlet chamber **16** by anti-reflux valve **40**.

Catheter **24** is formed of a stainless steel spring core **48** covered with an elastomer **50**, which preferably is present in the form of a silicone coating on the spring. The tip **52** of the catheter is preferably made of a resilient polymer, such as polyurethane or silicone rubber, and is bonded to the end of the spring core.

The tip of the catheter is open at **54** to permit trocar **28** to pass through. Elastomer covering **50** of the catheter may have a plurality of ports **56**, in addition to the opening at the tip, to facilitate draining between the exposed coils of spring **48**, and to insure that drainage proceeds in the event that opening **54** is blocked by expanding lung tissue.

Discharge chamber **16** has a series of elongated vent openings **58** (FIG. **1A**) located behind a protective cover **59**. Cover **59** is affixed to housing **12** along its sides and undercut to create a passages **61** at its top and bottom through which gaseous fluids vent to the atmosphere. A hydrophobic filter **60** is fixed in place behind the vent openings to prevent aqueous liquids from escaping the discharge chamber.

A self-adhesive strip **62** is attached to the exterior of the distal wall **64** of housing **12**. The adhesive strip is covered by a protective release sheet **66** which is removed prior to installation of the catheter, so that the strip can be applied to the patient's skin upon installation of the apparatus.

In addition, a seal cuff **68** is provided about catheter **24**, adjacent wall **64** of the apparatus which will abut the patient's body. Cuff **68**, which is preferably a sponge silicone or other resilient material, is intended to prevent tissue emphysema by sealing the perimeter of the catheter at the wound site where the catheter enters the body.

An absorbent pad **70** is positioned at the bottom and side of the discharge chamber to absorb small quantities of blood or other liquids which may pass through the apparatus when, as in the present embodiment, the principal fluid being drained is air. In an alternative embodiment, where significant amounts of liquid are to be drained, a collection port **72** (FIG. **2A**) is provided so that the fluid may be continuously withdrawn either under suction or by gravity.

Trocar **28**, which is illustrated in FIGS. **4A** and **4B**, includes a handle **74** molded or bonded to its proximal end. The trocar is sized so that its distal, pointed tip **76** protrudes beyond the tip **52** of catheter **24** when the trocar is fully inserted in the apparatus. Trocar **28** includes a furrow **78** which extends from trocar tip **76** through a point **79** near handle **74**. The furrow permits fluid communication between the tip **52** of the catheter and inlet chamber **34** while the trocar is inserted in the catheter. Furrow **78** thus permits fluids to be vented from the plural cavity immediately upon introduction of the catheter, without removal of the trocar. Furrow **78** also permits the signaling means (described below) to being functioning immediately upon entry of the catheter tip into the pleural cavity.

Means for signaling fluctuation of fluid pressure in the pleural cavity is provided in the form of a resilient signal dome **80** which is in fluid communication with

inlet chamber **14** by way of bore **82** in manifold **17**. Signal dome **80** has an annular lip **84** which is sealingly affixed to the top **36** of manifold **17** so that the dome caps and closes off bore **82**. A clear cover **86** is affixed to the top **36** of manifold **17**, to define a signal chamber **88**. A vent hole **90** is formed in the cap to permit the signal dome to freely expand and contract within it.

Signal dome **80** is made of a resilient material, preferably silicone, with a shape and resilience such that the dome will collapse (FIG. **5B**) and return to its normal configuration (FIG. **5A**) with the fluctuating pressures in the pleural cavity, producing a pulsating visual indication of the pleural cavity pressures. In the embodiment illustrated, the signal dome is molded of silicone and is wider than it is high. It has a wall thickness of about 0.012 to 0.015 inches at its base tapering to about 0.007 inches at its apex, as illustrated in FIGS. **5A–5B**. In other applications the signal dome sensitivity may be adjusted as necessary by varying, for example, the material from which the signal dome is fabricated, as well as the size and shape of the dome, and its wall thickness and taper.

The functioning of the signal means depends on: 1) changes in pressure (differential pressures) in the body cavity of interest; 2) cracking resistance of the anti-reflux valve, and 3) sensitivity of the signal dome. Since the differential pressures of the body cavity are not controllable, the anti-reflux valve cracking resistance and/or the signal dome sensitivity must be matched to the differential pressures of the particular body cavity in order to produce the desired pulsating movement in the signal dome. For example, in an application in the epidural space, where the pressures are generally lower than in the pleural cavity, a more sensitive dome and/or an anti-reflux valve with a higher cracking resistance will be needed.

Naturally, the signaling means include any resilient structures which pulsate with fluctuating pressure in the system. For example, a flat resilient membrane which expands with increasing pressure and collapses back to a generally flat position on decreasing pressure would provide a satisfactory alternative to the signal dome illustrated above.

In an alternate embodiment, an auditory signal is provided, either alone or in conjunction with the visual signal described above. Thus, there is illustrated in FIG. **2B** an embodiment in which a hole **92** is made in cover **59**, passages **61** are closed off and a low velocity whistle **94** is affixed to the cover so that the opening in the whistle **96** is aligned with the hole in cover **59**. Thus, the air passing though the discharge chamber will exit through the whistle, producing a rhythmic auditory signal indicative of the fluctuating pressure in the pleural cavity before the pneumothorax is resolved and either a continuous signal or silence when the pneumothorax is resolved. The loudness and sensitivity of the signal will be a function of the cracking resistance of the anti-reflux valve **40**, the resistance to air movement of filter **60**, and the sensitivity of the whistle.

In yet another alternative embodiment of the present invention, once the catheter is in place in the pleural cavity, a cannula sized to fit within the catheter **24** is passed through seal **30**, through bore **18** and into the catheter. A vacuum is then applied to the cannula to rapidly remove fluids from the pleural space.

In treating traumatic or idiopathic pneumothorax, or for evacuating air from the chest following thoracic surgery or percutaneous lung biopsy, the apparatus **10** may be used as follow:

1. If the apparatus is supplied in sterile kit form, the apparatus is removed from the kit under sterile conditions and the trocar is inserted through inlet port **26** so that its tip protrudes from the tip **52** of catheter **24**.

2. A site is selected, preferably in the second interspace at the midclavicular line.

3. The site is prepared with an antimicrobial agent and a drape is placed over the site.

4. Local anesthesia is applied at the site.

5. Using a scalpel, a small skin incision is made at the site.

6. The release sheet is removed from the adhesive strip.

7. With the thumb over the trocar handle, the device is positioned at the incision and the trocar/catheter assembly is passed into the pleural space immediately above the superior border of the rib. Catheter **24** is maintained in a straight condition by the trocar, so that the catheter will remain rigid and resist bending upon insertion into the body cavity. In addition, spring **48** prevents any significant compaction of the catheter on the trocar during the insertion process.

8. When the catheter tip enters the pleural space, signal dome **80** will begin to pulsate. When this occurs, the trocar is removed to increase the rate of fluid flow and prevent damage to the lung. The continuing pulsating movement of the signal dome is observed as the air is evacuated from the pleural cavity and the lung begins to reinflate.

9. When the pneumothorax is resolved and the lung is reinflated the signal dome stops pulsating and the apparatus can be removed.

While the present apparatus has been described in connection with the removal of fluids from the pleural cavity, the device may be used in a multitude of other applications, both for removing fluids and for introducing fluids. For example, it may be used in locating and in moving fluids either into or out of body cavities such as the pleural cavity, the signal epidural space, blood vessels, the gall bladder, the urinary bladder, the kidney pelvis, the brain ventricles, and the brain subdural and epidural spaces. In introducing fluids, the catheter is inserted in the cavity and then a cannula is introduced through seal **30** and into the catheter, whereby the fluids to be introduced are passed through the cannula by way of a syringe or other conventional injection device.

For example, in administering an epidural block, the anesthesiologist would position the trocar/catheter tip in the epidural space relying upon the pulsating signal dome to positively indicate that the epidural space has been located. He or she would then remove the trocar and insert a syringe containing an appropriate anesthetic and inject the anesthetic into the epidural space.

While particular embodiments of the invention have been shown and described, it will be obvious to those skilled in the art that various changes and modifications may be made therein without departing from the spirit and scope of the invention and, therefore, it is intended in the appended claims to cover all such changes and modifications which fall within the true spirit and scope of the invention.

What we claim is:

1. An apparatus for locating a body cavity having a fluctuating fluid pressure and transporting fluid either into or out of the cavity comprising:

a conduit comprising a flexible catheter having a spring covered by an elastomeric coating for entering the cavity;

means, in communication with said conduit, for producing a pulsating indication corresponding to the fluctuation of the fluid pressure in the cavity when said conduit enters the body cavity; and

means, in communication with said conduit, for transporting fluid either into or out of the cavity.

2. The apparatus of claim **1** wherein said conduit serves as said transporting means.

3. The apparatus of claim **1** wherein said signaling means comprises an elastomeric element which pulsates in response to the fluctuating fluid pressure in the body cavity.

4. An apparatus for locating a body cavity having a fluctuating fluid pressure and transporting fluid either in or out of the cavity comprising:

a conduit;

a housing having an inlet chamber and a discharge chamber, said housing supporting said conduit in sealed fluid communication with said inlet chamber;

an inlet port in said housing having inlet port sealing means for reversibly receiving a trocar and enabling at least a portion of a trocar to pass through said inlet chamber and said conduit, said inlet port sealing means being adapted for sealing said chamber both in the absence of a trocar and upon insertion and withdrawal of a trocar,

anti-reflux valve means mounted in said housing, coupling said inlet chamber with said discharge chamber, for permitting fluid entering said inlet chamber to pass into said discharge chamber while preventing fluid from flowing from said discharge chamber into said inlet chamber and

means for producing a pulsating visual indication corresponding to the fluctuating fluid pressure in the body cavity upon entry of the conduit into a body cavity.

5. The apparatus of claim **4** including a trocar positioned in said inlet port and passing through said inlet chamber and said conduit, said trocar having a furrow which permits fluid flow through said conduit and said inlet chamber.

6. The apparatus of claim **4** wherein said conduit is a flexible catheter comprising a spring covered by an elastomeric coating.

7. The apparatus of claim **4** wherein a resilient cuff is provided at the base of said conduit to seal against the body.

8. The apparatus of claim **4** wherein said anti-reflux valve is a film valve comprising two pieces of plastic film closed along their edges.

9. The apparatus of claim **8** wherein said closed edges of said film valve have a tortuous profile.

10. The apparatus of claim **8** wherein said plastic film pieces comprise a nylon/polyethylene laminate.

11. The apparatus of claim **4** wherein a collection port is provided in said discharge chamber for withdrawing liquids therefrom.

12. The apparatus of claim **4** wherein said signaling means comprises an elastomeric element which pulsates in response to the fluctuating fluid pressure in the body cavity.

13. The apparatus of claim **12** wherein said elastomeric element is dome-shaped and the thickness of the wall of said dome-shaped elastomeric element gradually tapers to its apex.

14. The apparatus of claim **4** wherein said signaling means comprises a whistle.

15. The apparatus of claim **4** including a cannula passing through said inlet port sealing means and said inlet chamber and into said conduit for transporting fluid either into or out of the cavity.

* * * * *

UNITED STATES PATENT AND TRADEMARK OFFICE

CERTIFICATE OF CORRECTION

PATENT NO. : 5,356,386

DATED : Oct. 18, 1994

INVENTOR(S) : Edward M. Goldberg, Glencoe; Lev Melinyshyn, Mt. Prospect; Michael Jaron, Des Plaines; Jeffrey M. Stupar, Chicago; all of Ill.

It is certified that error appears in the above-indentified patent and that said Letters Patent is hereby corrected as shown below:

In Col. 1, line 29, after the word "the", (1st occurrence) insert --catheter so that the sharp tip of the trocar extends beyond the distal--.

In Col. 2, line 67, substitute —particularity— for "particularly".

In Col. 3, line 35, substitute —spinal— for "signal".

Signed and Sealed this

Fourteenth Day of February, 1995

Bruce Lehman

Attest:

BRUCE LEHMAN

Attesting Officer

Commissioner of Patents and Trademarks

US006506148B2

(12) **United States Patent**
Loos

(10) **Patent No.: US 6,506,148 B2**
(45) **Date of Patent: Jan. 14, 2003**

(54) **NERVOUS SYSTEM MANIPULATION BY ELECTROMAGNETIC FIELDS FROM MONITORS**

(76) Inventor: **Hendricus G. Loos**, 3019 Cresta Way, Laguna Beach, CA (US) 92651

(*) Notice: Subject to any disclaimer, the term of this patent is extended or adjusted under 35 U.S.C. 154(b) by 8 days.

(21) Appl. No.: **09/872,528**

(22) Filed: **Jun. 1, 2001**

(65) **Prior Publication Data**

US 2002/0188164 A1 Dec. 12, 2002

(51) **Int. Cl.**[7] **A61N 2/00**; A61B 5/04; A61M 21/00

(52) **U.S. Cl.** **600/27**; 600/545

(58) **Field of Search** 600/9–27, 545; 313/419; 324/318; 378/901; 434/236

(56) **References Cited**

U.S. PATENT DOCUMENTS

3,592,965	A	*	7/1971	Diaz	313/419
4,800,893	A	*	1/1989	Ross et al.	600/545
5,169,380	A		12/1992	Brennan	600/26
5,304,112	A	*	4/1994	Mrklas et al.	434/236
5,400,383	A	*	3/1995	Yassa et al.	378/901
5,412,419	A	*	5/1995	Ziarati	324/318
5,450,859	A	*	9/1995	Litovitz	600/9
5,782,874	A		7/1998	Loos	607/2
5,800,481	A		9/1998	Loos	607/100
5,899,922	A		5/1999	Loos	607/2
5,935,054	A		8/1999	Loos	600/9
6,017,302	A		1/2000	Loos	600/28
6,081,744	A		6/2000	Loos	607/2
6,091,994	A		7/2000	Loos	607/100
6,167,304	A		12/2000	Loos	607/2
6,238,333	B1		5/2001	Loos	600/9

OTHER PUBLICATIONS

N.Wiener "Nonlinear problems in random theory" p.71–72 John Wiley New York 1958.

M.Hutchison "Megabrain" p.232–3 Ballantine Books New York 1991.

C.A.Terzuolo and T.H.Bullock "Measurement of imposed voltage gradient adequate to modulate neuronal firing" Proc. Nat. Acad. Sci, Physiology 42,687–94, 1956.

O.Kellogg"Foundations of Potential Theory"p. 191 Dover, 1953.

P.M.Morse and H.Feshbach"Methods of Theoretical Physics"p. 1267 McGraw–Hill New York, 1953.

* cited by examiner

Primary Examiner—Eric F. Winakur
Assistant Examiner—Nikita R Veniaminov

(57) **ABSTRACT**

Physiological effects have been observed in a human subject in response to stimulation of the skin with weak electromagnetic fields that are pulsed with certain frequencies near ½ Hz or 2.4 Hz, such as to excite a sensory resonance. Many computer monitors and TV tubes, when displaying pulsed images, emit pulsed electromagnetic fields of sufficient amplitudes to cause such excitation. It is therefore possible to manipulate the nervous system of a subject by pulsing images displayed on a nearby computer monitor or TV set. For the latter, the image pulsing may be imbedded in the program material, or it may be overlaid by modulating a video stream, either as an RF signal or as a video signal. The image displayed on a computer monitor may be pulsed effectively by a simple computer program. For certain monitors, pulsed electromagnetic fields capable of exciting sensory resonances in nearby subjects may be generated even as the displayed images are pulsed with subliminal intensity.

14 Claims, 9 Drawing Sheets

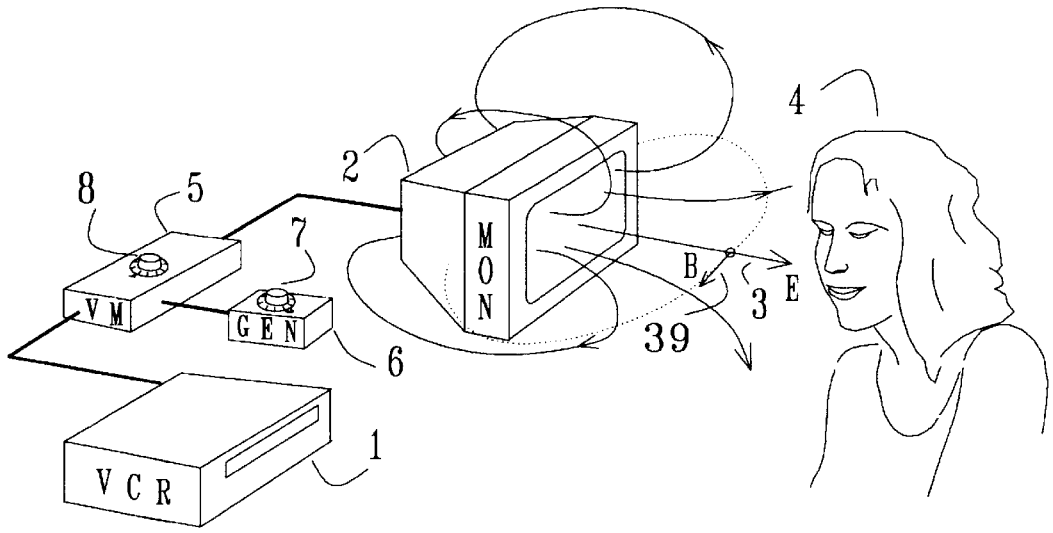

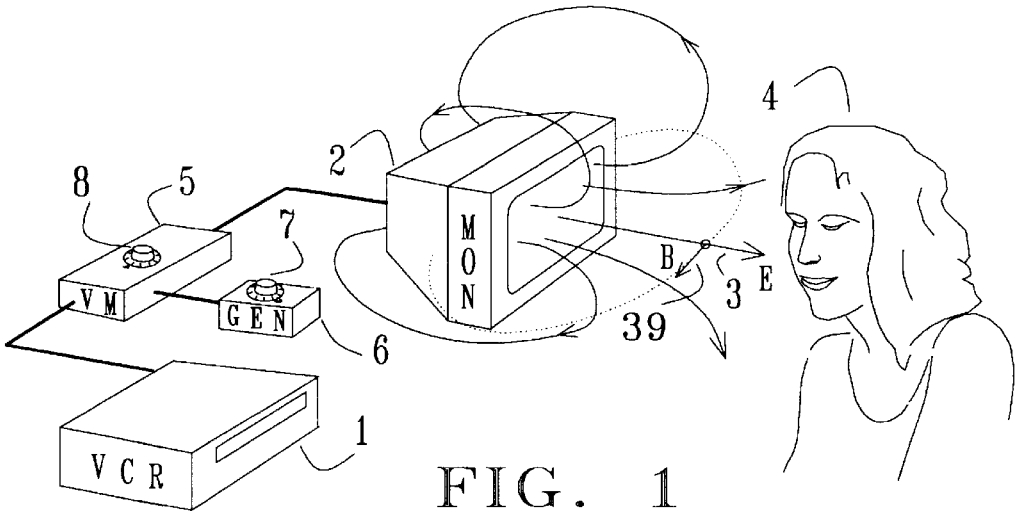

FIG. 1

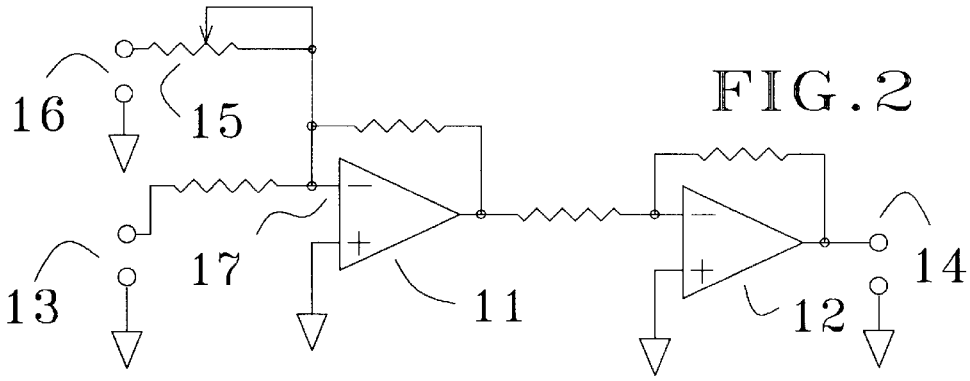

FIG.2

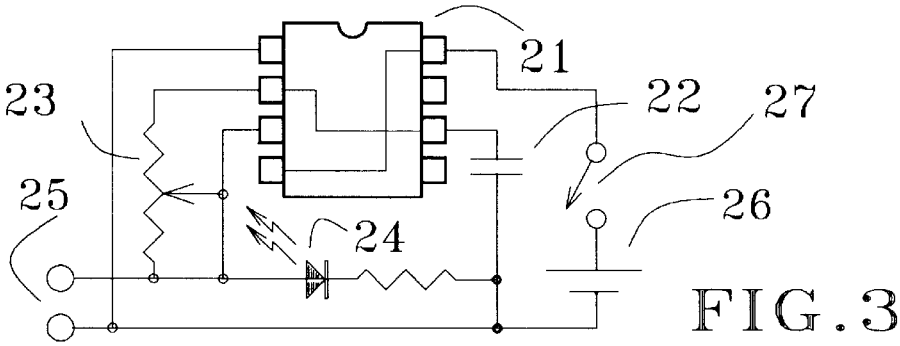

FIG.3

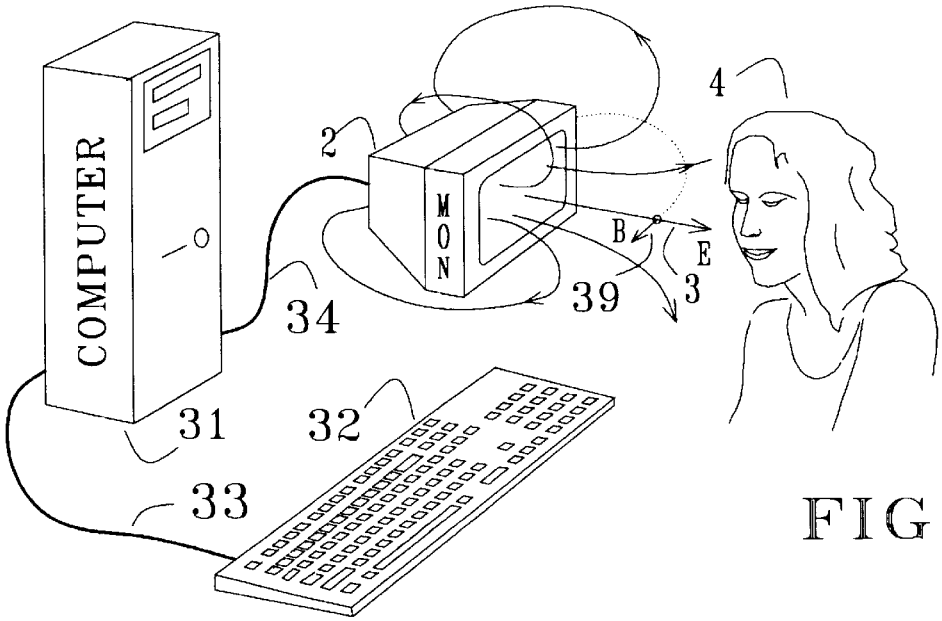
COMPUTER
MON
2
4
B
E
3
39
34
31
32
33

FIG.4

FIG.5

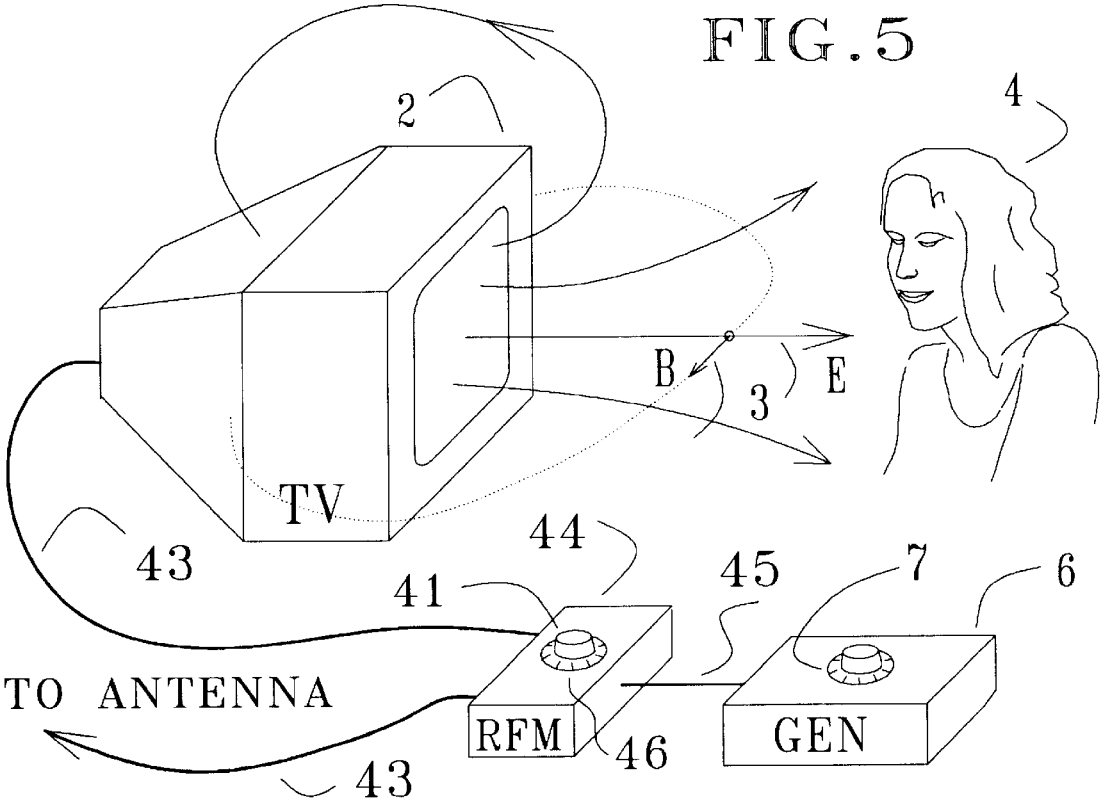
2
4
B
E
3
TV
43
44
41
45
7
6
TO ANTENNA
RFM
46
GEN
43

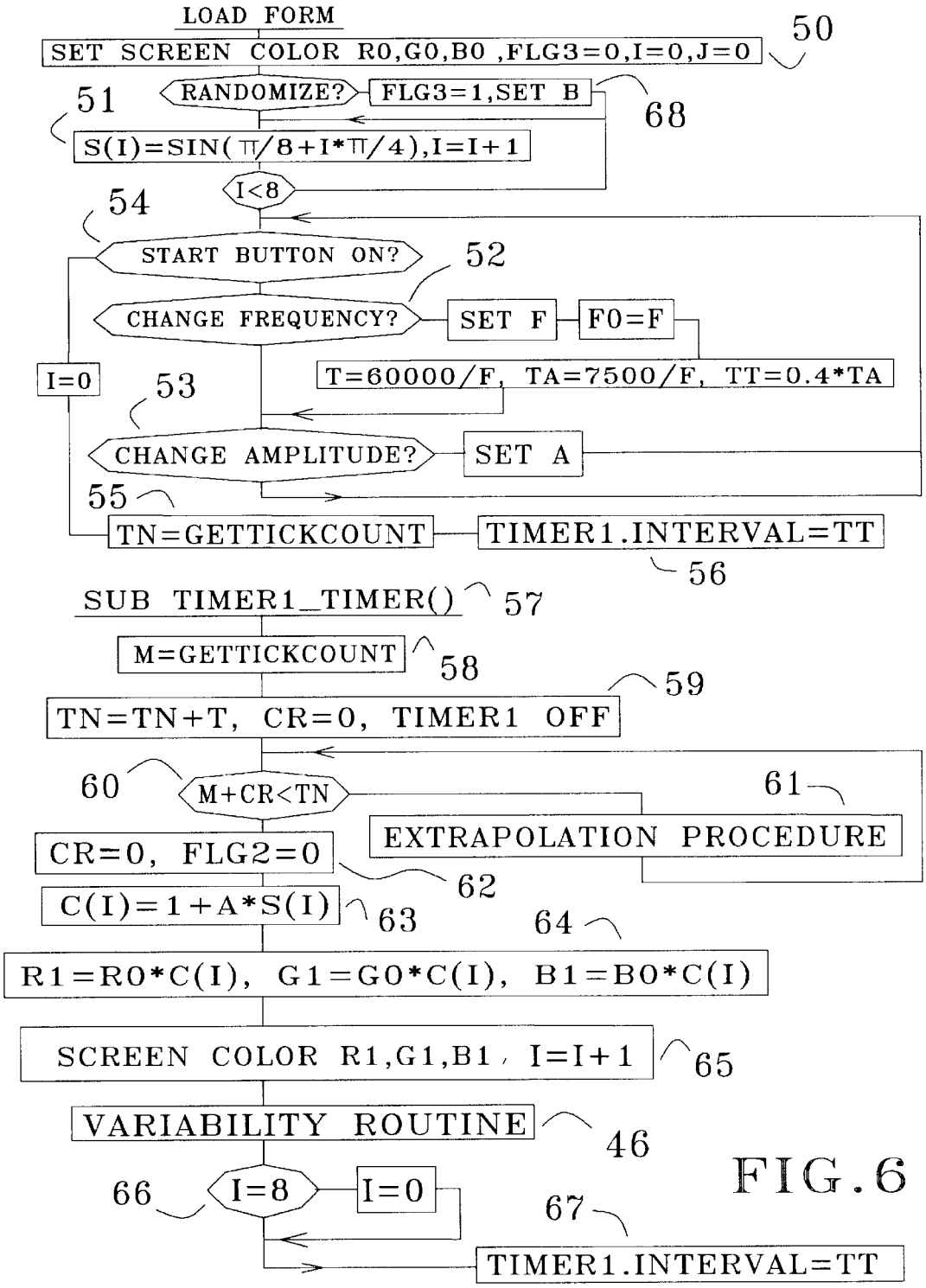
LOAD FORM
SET SCREEN COLOR R0,G0,B0 ,FLG3=0,I=0,J=0
50
RANDOMIZE?
FLG3=1,SET B
68
51
S(I)=SIN(π/8+I*π/4),I=I+1
I<8
54
START BUTTON ON?
52
CHANGE FREQUENCY?
SET F
F0=F
I=0
T=60000/F, TA=7500/F, TT=0.4*TA
53
CHANGE AMPLITUDE?
SET A
55
TN=GETTICKCOUNT
TIMER1.INTERVAL=TT
56
SUB TIMER1_TIMER()
57
M=GETTICKCOUNT
58
59
TN=TN+T, CR=0, TIMER1 OFF
60
M+CR<TN
61
EXTRAPOLATION PROCEDURE
CR=0, FLG2=0
62
C(I)=1+A*S(I)
63
64
R1=R0*C(I), G1=G0*C(I), B1=B0*C(I)
SCREEN COLOR R1,G1,B1, I=I+1
65
VARIABILITY ROUTINE
46
66
I=8
I=0
67
TIMER1.INTERVAL=TT

FIG. 6

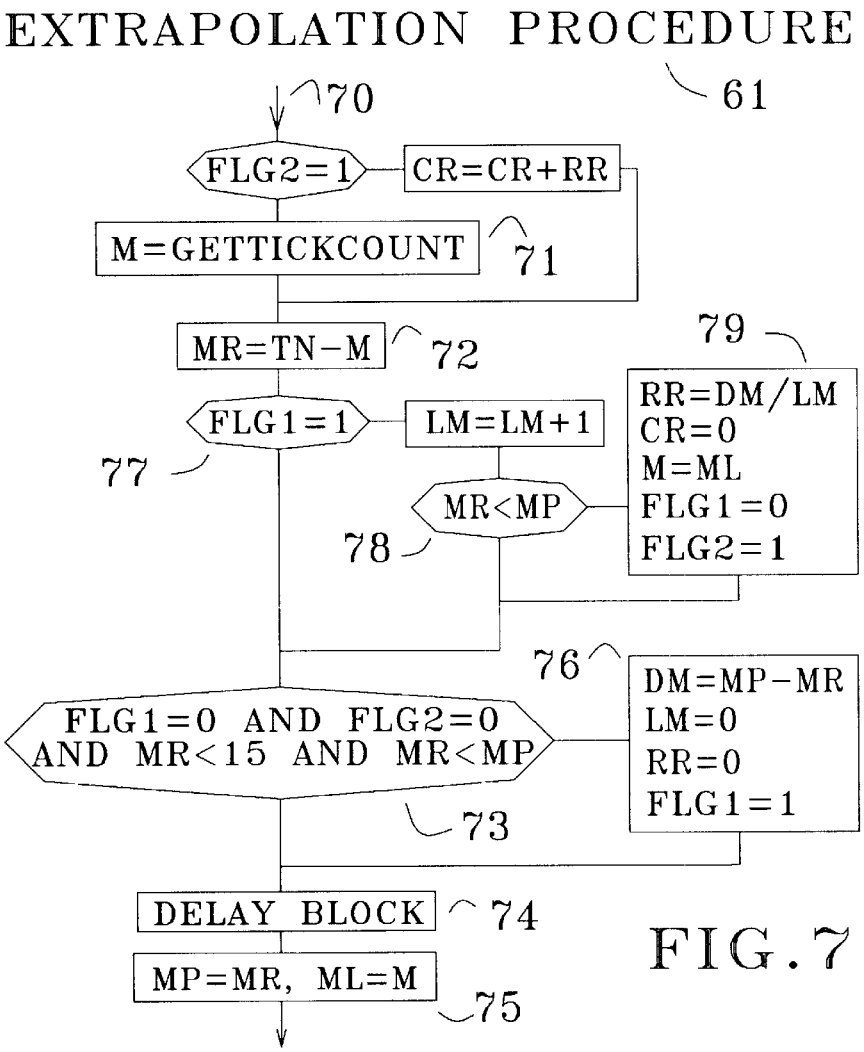
EXTRAPOLATION PROCEDURE
61
70
FLG2=1
CR=CR+RR
M=GETTICKCOUNT
71
MR=TN−M
72
79
RR=DM/LM
CR=0
M=ML
FLG1=0
FLG2=1
FLG1=1
LM=LM+1
77
MR<MP
78
76
DM=MP−MR
LM=0
RR=0
FLG1=1
FLG1=0 AND FLG2=0
AND MR<15 AND MR<MP
73
DELAY BLOCK
74
MP=MR, ML=M
75

FIG.7

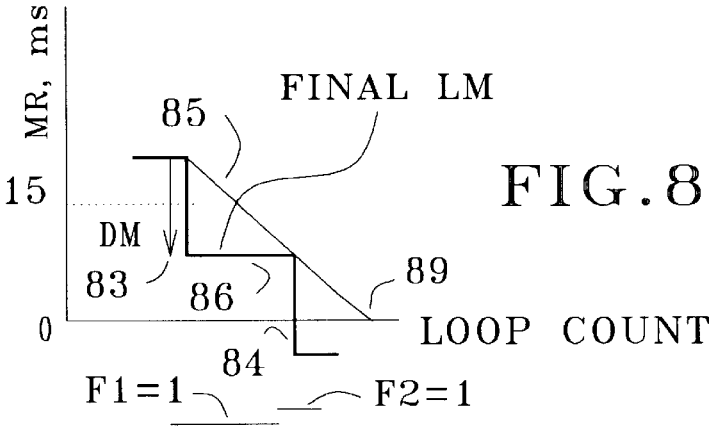
MR, ms
FINAL LM
85
15
DM
83
86
89
0
LOOP COUNT
84
F1=1
F2=1

FIG.8

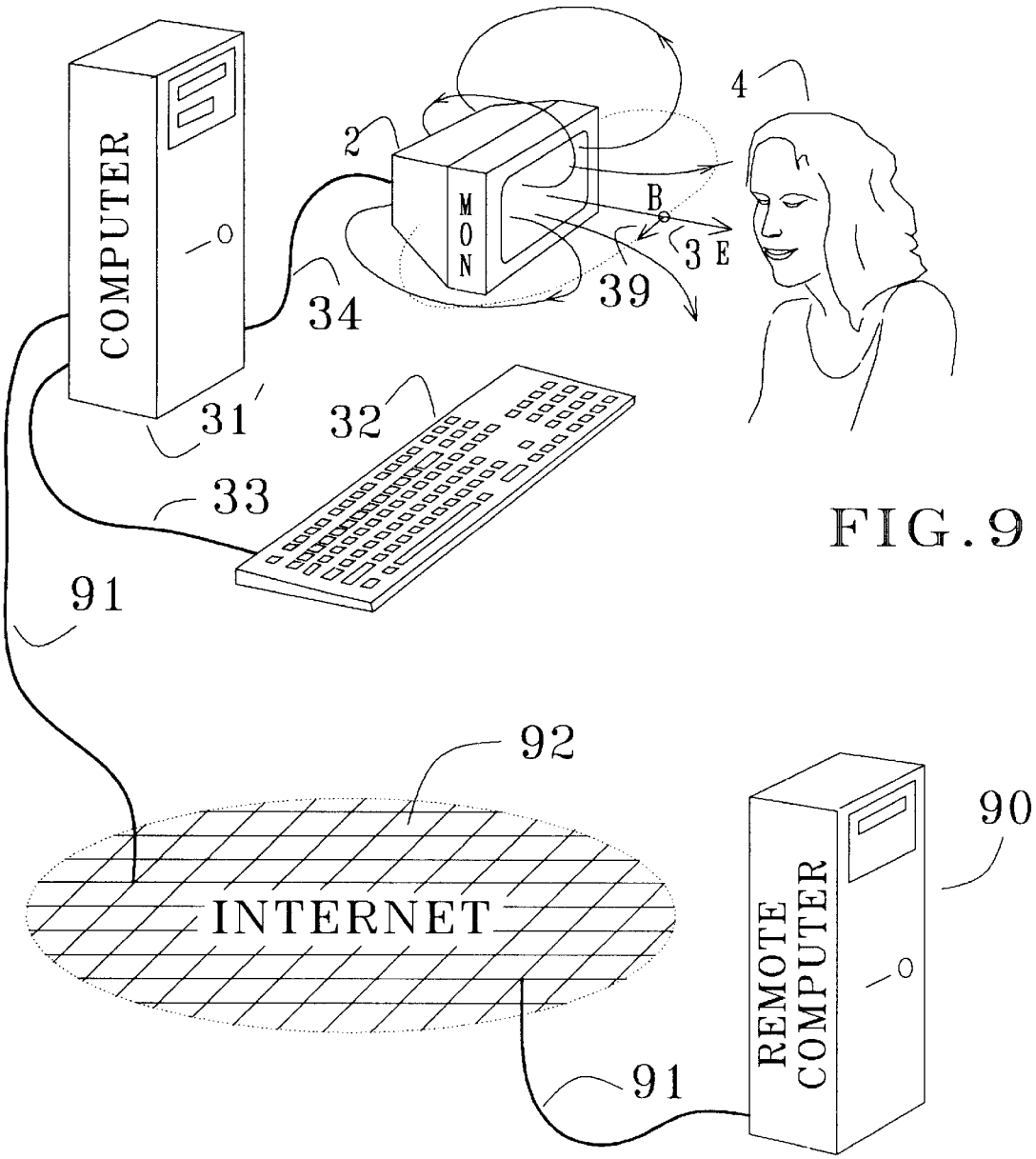
COMPUTER
MON
2
4
B
3
E
39
34
31
32
33
91
92
INTERNET
REMOTE COMPUTER
90
91

FIG. 9

FIG. 10

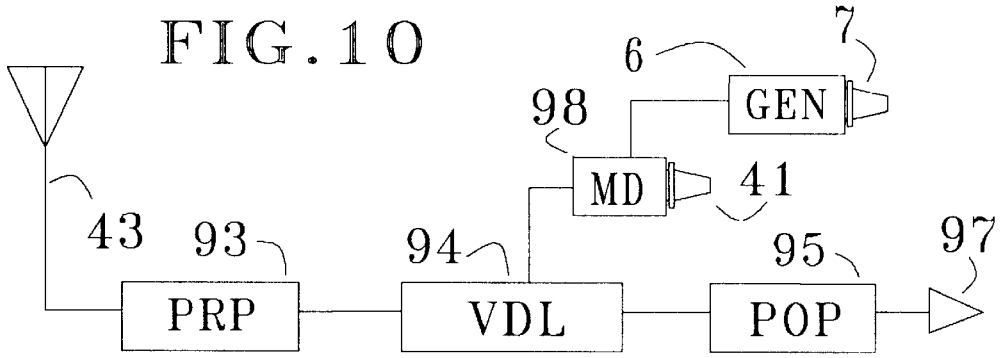
6
7
GEN
98
MD
41
43
93
94
95
97
PRP
VDL
POP

FIG. 11

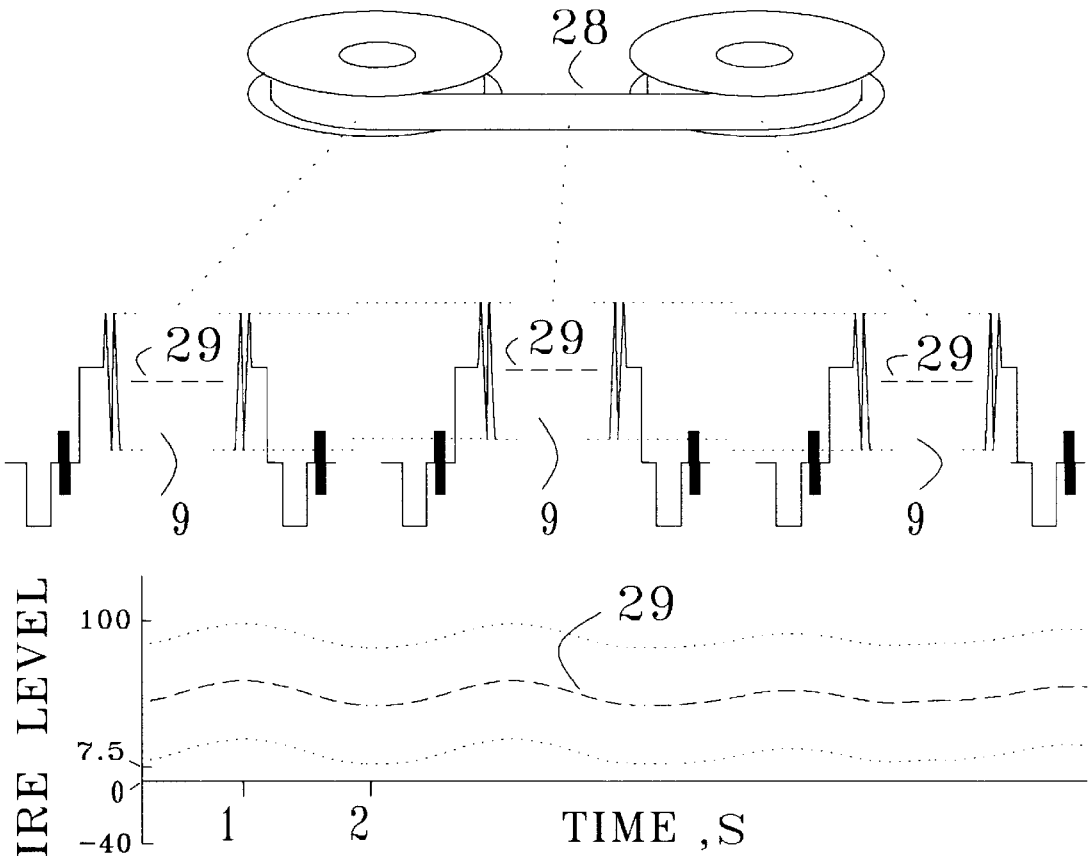
28
29
29
29
9
9
9
IRE LEVEL
100
7.5
0
-40
29
1
2
TIME ,S

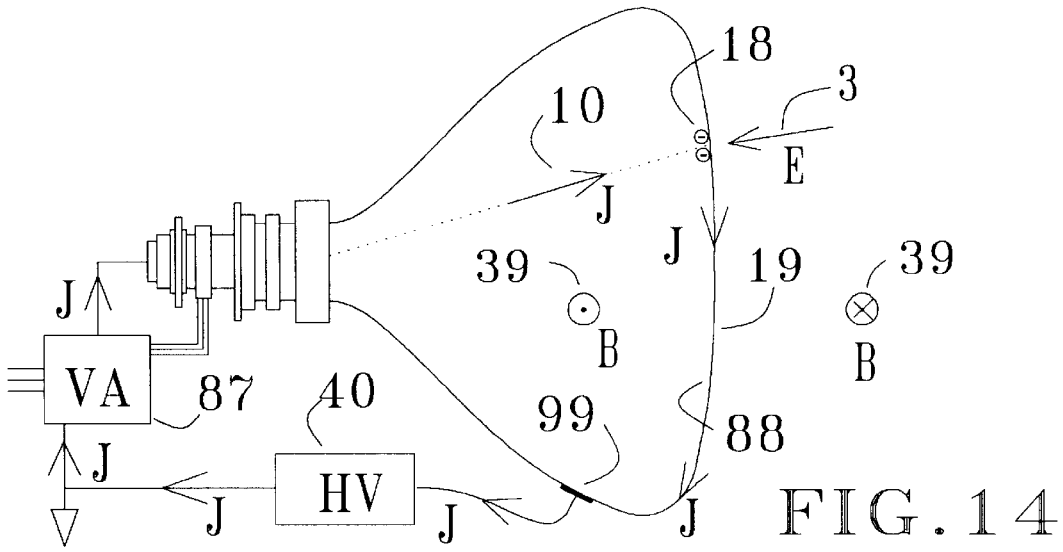
18
3
10
E
J
J
39
19
39
B
B
J
VA
87
40
99
88
J
HV
J
J
J

FIG. 14

FIG. 12

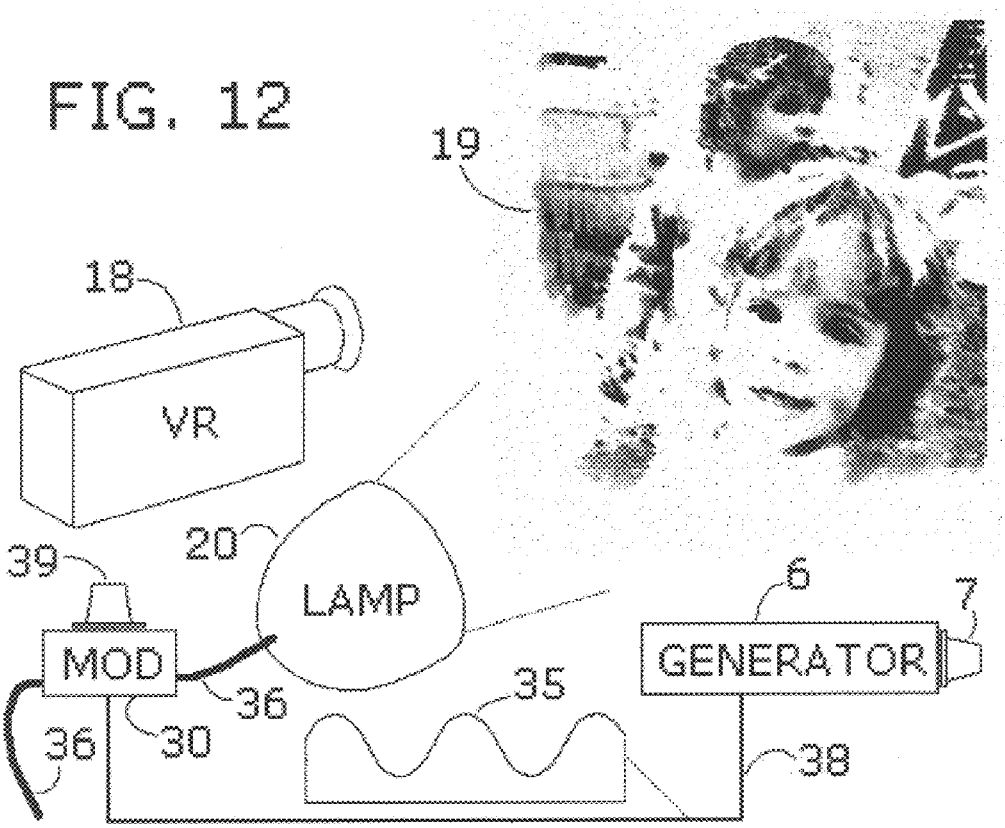

VARIABILITY ROUTINE

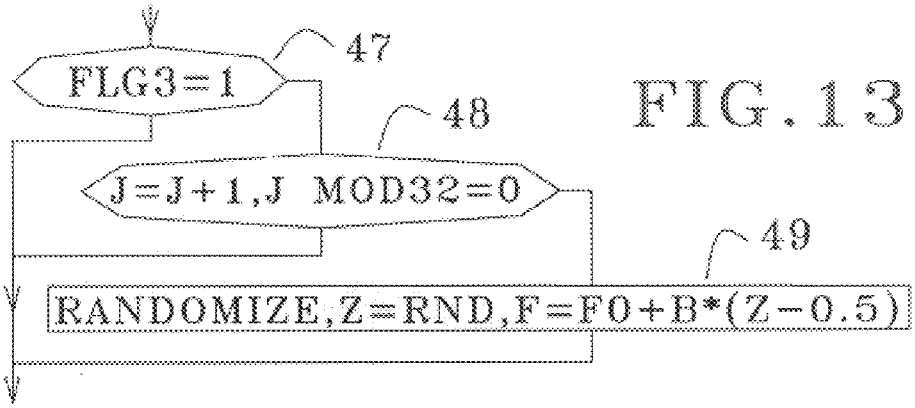

FIG. 13

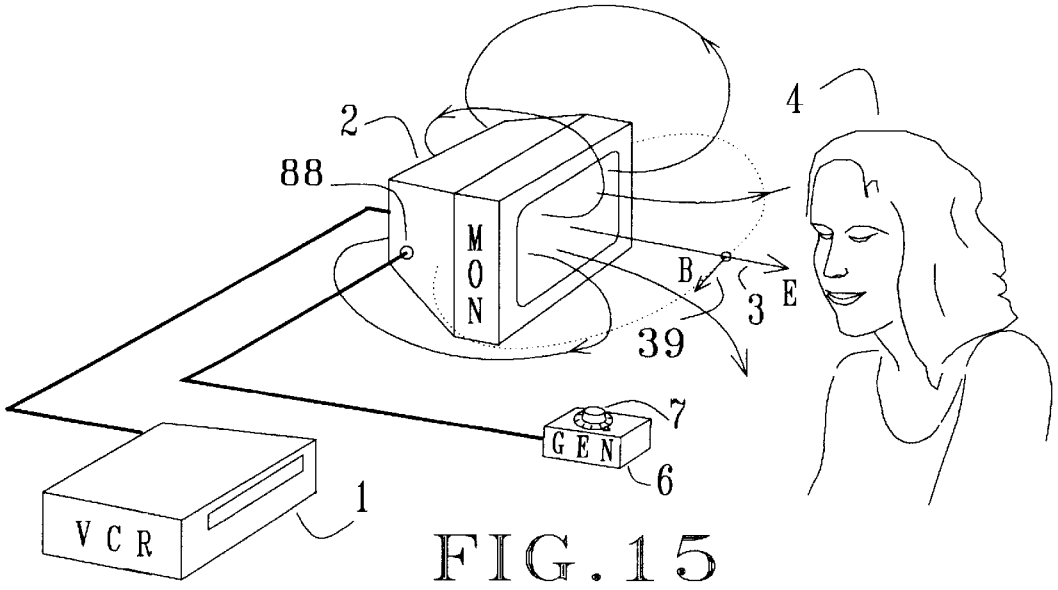

FIG. 15

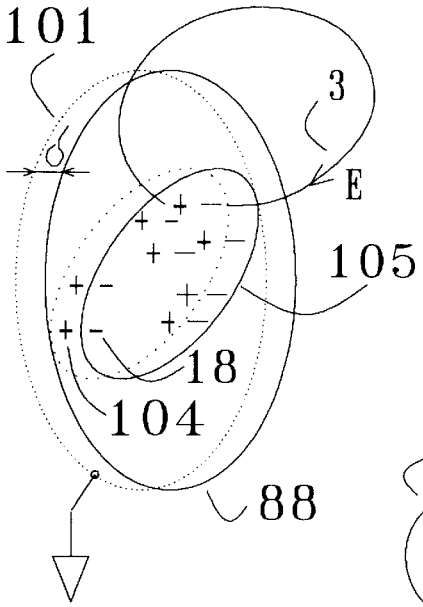

FIG. 16

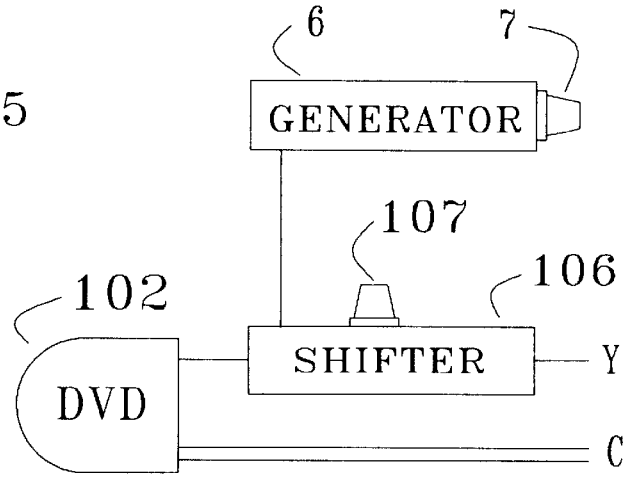

FIG. 17

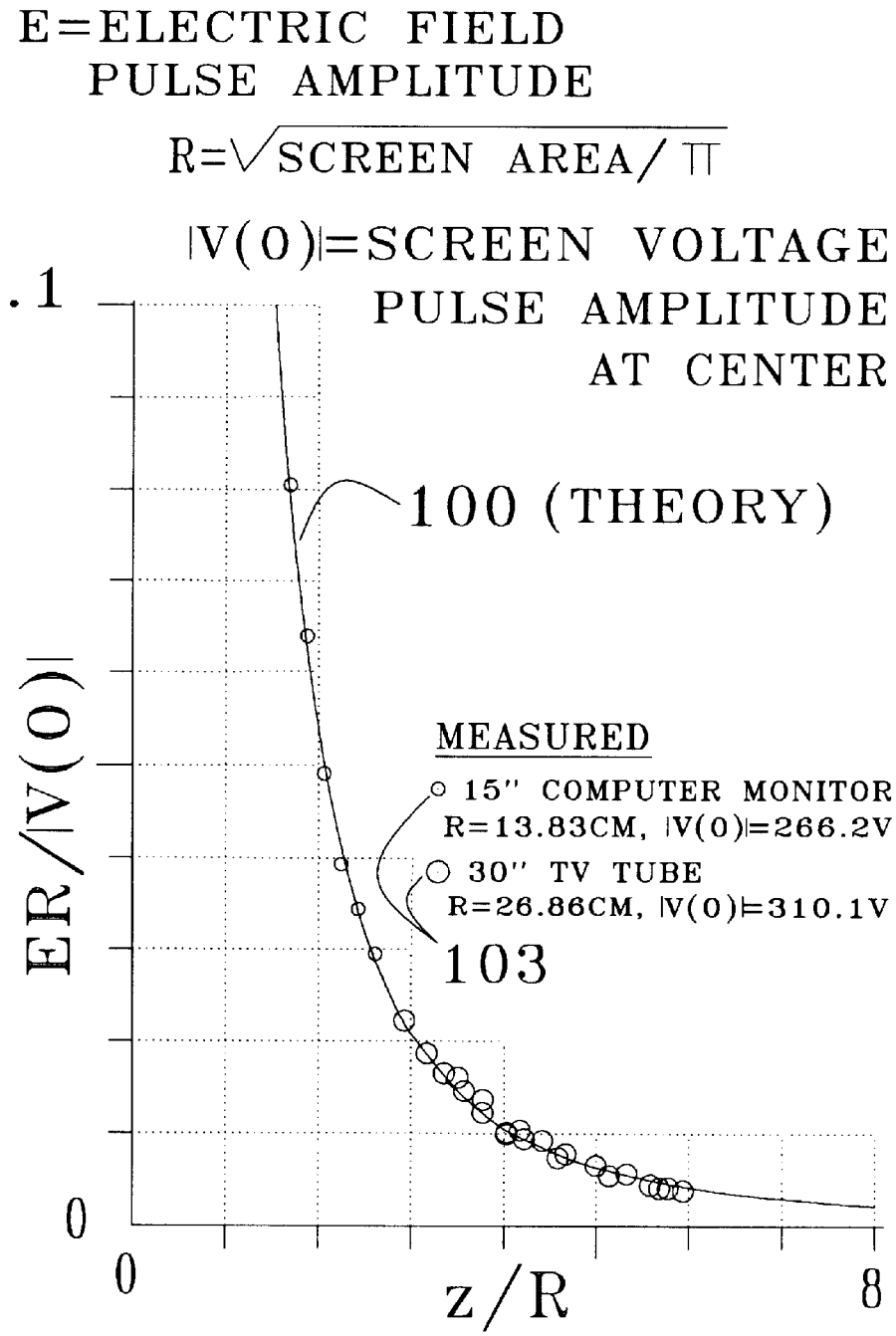

ELECTRIC FIELD AT A DISTANCE z FROM CRT SCREEN ON CENTER LINE

FIG. 18

NERVOUS SYSTEM MANIPULATION BY ELECTROMAGNETIC FIELDS FROM MONITORS

BACKGROUND OF THE INVENTION

The invention relates to the stimulation of the human nervous system by an electromagnetic field applied externally to the body. A neurological effect of external electric fields has been mentioned by Wiener (1958), in a discussion of the bunching of brain waves through nonlinear interactions. The electric field was arranged to provide "a direct electrical driving of the brain". Wiener describes the field as set up by a 10 Hz alternating voltage of 400 V applied in a room between ceiling and ground. Brennan (1992) describes in U.S. Pat. No. 5,169,380 an apparatus for alleviating disruptions in circadian rythms of a mammal, in which an alternating electric field is applied across the head of the subject by two electrodes placed a short distance from the skin.

A device involving a field electrode as well as a contact electrode is the "Graham Potentializer" mentioned by Hutchison (1991). This relaxation device uses motion, light and sound as well as an alternating electric field applied mainly to the head. The contact electrode is a metal bar in Ohmic contact with the bare feet of the subject, and the field electrode is a hemispherical metal headpiece placed several inches from the subject's head.

In these three electric stimulation methods the external electric field is applied predominantly to the head, so that electric currents are induced in the brain in the physical manner governed by electrodynamics. Such currents can be largely avoided by applying the field not to the head, but rather to skin areas away from the head. Certain cutaneous receptors may then be stimulated and they would provide a signal input into the brain along the natural pathways of afferent nerves. It has been found that, indeed, physiological effects can be induced in this manner by very weak electric fields, if they are pulsed with a frequency near ½ Hz. The observed effects include ptosis of the eyelids, relaxation, drowziness, the feeling of pressure at a centered spot on the lower edge of the brow, seeing moving patterns of dark purple and greenish yellow with the eyes closed, a tonic smile, a tense feeling in the stomach, sudden loose stool, and sexual excitement, depending on the precise frequency used, and the skin area to which the field is applied. The sharp frequency dependence suggests involvement of a resonance mechanism.

It has been found that the resonance can be excited not only by externally applied pulsed electric fields, as discussed in U.S. Pat. Nos. 5,782,874, 5,899,922, 6,081,744, and 6,167,304, but also by pulsed magnetic fields, as described in U.S. Pat. Nos. 5,935,054 and 6,238,333, by weak heat pulses applied to the skin, as discussed in U.S. Pat. Nos. 5,800,481 and 6,091,994, and by subliminal acoustic pulses, as described in U.S. Pat. No. 6,017,302. Since the resonance is excited through sensory pathways, it is called a sensory resonance. In addition to the resonance near ½ Hz, a sensory resonance has been found near 2.4 Hz. The latter is characterized by the slowing of certain cortical processes, as discussed in the '481, '922, '302, '744, '944, and '304 patents.

The excitation of sensory resonances through weak heat pulses applied to the skin provides a clue about what is going on neurologically. Cutaneous temperature-sensing receptors are known to fire spontaneously. These nerves spike somewhat randomly around an average rate that depends on skin temperature. Weak heat pulses delivered to the skin in periodic fashion will therefore cause a slight frequency modulation (fm) in the spike patterns generated by the nerves. Since stimulation through other sensory modalities results in similar physiological effects, it is believed that frequency modulation of spontaneous afferent neural spiking patterns occurs there as well.

It is instructive to apply this notion to the stimulation by weak electric field pulses administered to the skin. The externally generated fields induce electric current pulses in the underlying tissue, but the current density is much too small for firing an otherwise quiescent nerve. However, in experiments with adapting stretch receptors of the crayfish, Terzuolo and Bullock (1956) have observed that very small electric fields can suffice for modulating the firing of already active nerves. Such a modulation may occur in the electric field stimulation under discussion.

Further understanding may be gained by considering the electric charges that accumulate on the skin as a result of the induced tissue currents. Ignoring thermodynamics, one would expect the accumulated polarization charges to be confined strictly to the outer surface of the skin. But charge density is caused by a slight excess in positive or negative ions, and thermal motion distributes the ions through a thin layer. This implies that the externally applied electric field actually penetrates a short distance into the tissue, instead of stopping abruptly at the outer skin surface. In this manner a considerable fraction of the applied field may be brought to bear on some cutaneous nerve endings, so that a slight modulation of the type noted by Terzuolo and Bullock may indeed occur.

The mentioned physiological effects are observed only when the strength of the electric field on the skin lies in a certain range, called the effective intensity window. There also is a bulk effect, in that weaker fields suffice when the field is applied to a larger skin area. These effects are discussed in detail in the '922 patent.

Since the spontaneous spiking of the nerves is rather random and the frequency modulation induced by the pulsed field is very shallow, the signal to noise ratio (S/N) for the fm signal contained in the spike trains along the afferent nerves is so small as to make recovery of the fm signal from a single nerve fiber impossibile. But application of the field over a large skin area causes simultaneous stimulation of many cutaneous nerves, and the fm modulation is then coherent from nerve to nerve. Therefore, if the afferent signals are somehow summed in the brain, the fm modulations add while the spikes from different nerves mix and interlace. In this manner the S/N can be increased by appropriate neural processing. The matter is discussed in detail in the '874 patent. Another increase in sensitivity is due to involving a resonance mechanism, wherein considerable neural circuit oscillations can result from weak excitations.

An easily detectable physiological effect of an excited ½ Hz sensory resonance is ptosis of the eyelids. As discussed in the '922 patent, the ptosis test involves first closing the eyes about half way. Holding this eyelid position, the eyes are rolled upward, while giving up voluntary control of the eyelids. The eyelid position is then determined by the state of the autonomic nervous system. Furthermore, the pressure excerted on the eyeballs by the partially closed eyelids increases parasympathetic activity. The eyelid position thereby becomes somewhat labile, as manifested by a slight flutter. The labile state is sensitive to very small shifts in

autonomic state. The ptosis influences the extent to which the pupil is hooded by the eyelid, and thus how much light is admitted to the eye. Hence, the depth of the ptosis is seen by the subject, and can be graded on a scale from 0 to 10.

In the initial stages of the excitation of the ½ Hz sensory resonance, a downward drift is detected in the ptosis frequency, defined as the stimulation frequency for which maximum ptosis is obtained. This drift is believed to be caused by changes in the chemical milieu of the resonating neural circuits. It is thought that the resonance causes perturbations of chemical concentrations somewhere in the brain, and that these perturbations spread by diffusion to nearby resonating circuits. This effect, called "chemical detuning", can be so strong that ptosis is lost altogether when the stimulation frequency is kept constant in the initial stages of the excitation. Since the stimulation then falls somewhat out of tune, the resonance decreases in amplitude and chemical detuning eventually diminishes. This causes the ptosis frequency to shift back up, so that the stimulation is more in tune and the ptosis can develop again. As a result, for fixed stimulation frequencies in a certain range, the ptosis slowly cycles with a frequency of several minutes. The matter is discussed in the '302 patent.

The stimulation frequencies at which specific physiological effects occur depend somewhat on the autonomic nervous system state, and probably on the endocrine state as well.

Weak magnetic fields that are pulsed with a sensory resonance frequency can induce the same physiological effects as pulsed electric fields. Unlike the latter however, the magnetic fields penetrate biological tissue with nearly undiminished strength. Eddy currents in the tissue drive electric charges to the skin, where the charge distributions are subject to thermal smearing in much the same way as in electric field stimulation, so that the same physiological effects develop. Details are discussed in the '054 patent.

SUMMARY

Computer monotors and TV monitors can be made to emit weak low-frequency electromagnetic fields merely by pulsing the intensity of displayed images. Experiments have shown that the ½ Hz sensory resonance can be excited in this manner in a subject near the monitor. The 2.4 Hz sensory resonance can also be excited in this fashion. Hence, a TV monitor or computer monitor can be used to manipulate the nervous system of nearby people.

The implementations of the invention are adapted to the source of video stream that drives the monitor, be it a computer program, a TV broadcast, a video tape or a digital video disc (DVD).

For a computer monitor, the image pulses can be produced by a suitable computer program. The pulse frequency may be controlled through keyboard input, so that the subject can tune to an individual sensory resonance frequency. The pulse amplitude can be controlled as well in this manner. A program written in Visual Basic(R) is particularly suitable for use on computers that run the Windows 95(R) or Windows 98(R) operating system. The structure of such a program is described. Production of periodic pulses requires an accurate timing procedure. Such a procedure is constructed from the GetTimeCount function available in the Application Program Interface (API) of the Windows operating system, together with an extrapolation procedure that improves the timing accuracy.

Pulse variability can be introduced through software, for the purpose of thwarting habituation of the nervous system to the field stimulation, or when the precise resonance frequency is not known. The variability may be a pseudo-random variation within a narrow interval, or it can take the form of a frequency or amplitude sweep in time. The pulse variability may be under control of the subject.

The program that causes a monitor to display a pulsing image may be run on a remote computer that is connected to the user computer by a link; the latter may partly belong to a network, which may be the Internet.

For a TV monitor, the image pulsing may be inherent in the video stream as it flows from the video source, or else the stream may be modulated such as to overlay the pulsing. In the first case, a live TV broadcast can be arranged to have the feature imbedded simply by slightly pulsing the illumination of the scene that is being broadcast. This method can of course also be used in making movies and recording video tapes and DVDs.

Video tapes can be edited such as to overlay the pulsing by means of modulating hardware. A simple modulator is discussed wherein the luminance signal of composite video is pulsed without affecting the chroma signal. The same effect may be introduced at the consumer end, by modulating the video stream that is produced by the video source. A DVD can be edited through software, by introducing pulse-like variations in the digital RGB signals. Image intensity pulses can be overlaid onto the analog component video output of a DVD player by modulating the luminance signal component. Before entering the TV set, a television signal can be modulated such as to cause pulsing of the image intensity by means of a variable delay line that is connected to a pulse generator.

Certain monitors can emit electromagnetic field pulses that excite a sensory resonance in a nearby subject, through image pulses that are so weak as to be subliminal. This is unfortunate since it opens a way for mischievous application of the invention, whereby people are exposed unknowingly to manipulation of their nervous systems for someone else's purposes. Such application would be unethical and is of course not advocated. It is mentioned here in order to alert the public to the possibility of covert abuse that may occur while being online, or while watching TV, a video, or a DVD.

DESCRIPTION OF THE DRAWINGS

FIG. **1** illustrates the electromagnetic field that emanates from a monitor when the video signal is modulated such as to cause pulses in image intensity, and a nearby subject who is exposed to the field.

FIG. **2** shows a circuit for modulation of a composite video signal for the purpose of pulsing the image intensity.

FIG. **3** shows the circuit for a simple pulse generator.

FIG. **4** illustrates how a pulsed electromagnetic field can be generated with a computer monitor.

FIG. **5** shows a pulsed electromagnetic field that is generated by a television set through modulation of the RF signal input to the TV.

FIG. **6** outlines the structure of a computer program for producing a pulsed image.

FIG. **7** shows an extrapolation procedure introduced for improving timing accuracy of the program of FIG. **6**.

FIG. **8** illustrates the action of the extrapolation procedure of FIG. **7**.

FIG. **9** shows a subject exposed to a pulsed electromagnetic field emanating from a monitor which is responsive to a program running on a remote computer via a link that involves the Internet.

FIG. **10** shows the block diagram of a circuit for frequency wobbling of a TV signal for the purpose of pulsing the intensity of the image displayed on a TV monitor.

FIG. **11** depicts schematically a recording medium in the form of a video tape with recorded data, and the attribute of the signal that causes the intensity of the displayed image to be pulsed.

FIG. **12** illustrates how image pulsing can be embedded in a video signal by pulsing the illumination of the scene that is being recorded.

FIG. **13** shows a routine that introduces pulse variability into the computer program of FIG. **6**.

FIG. **14** shows schematically how a CRT emits an electromagnetic field when the displayed image is pulsed.

FIG. **15** shows how the intensity of the image displayed on a monitor can be pulsed through the brightness control terminal of the monitor.

FIG. **16** illustrates the action of the polarization disc that serves as a model for grounded conductors in the back of a CRT screen.

FIG. **17** shows the circuit for overlaying image intensity pulses on a DVD output.

FIG. **18** shows measured data for pulsed electric fields emitted by two different CRT type monitors, and a comparison with theory.

DETAILED DESCRIPTION

Computer monitors and TV monitors emit electromagnetic fields. Part of the emission occurs at the low frequencies at which displayed images are changing. For instance, a rythmic pulsing of the intensity of an image causes electromagnetic field emission at the pulse frequency, with a strength proportional to the pulse amplitude. The field is briefly referred to as "screen emission". In discussing this effect, any part or all what is displayed on the monitor screen is called an image. A monitor of the cathode ray tube (CRT) type has three electron beams, one for each of the basic colors red, green, and blue. The intensity of an image is here defined as

$$I=\int j\, dA, \tag{1}$$

where the integral extends over the image, and

$$j=jr+jg+jb, \tag{2}$$

jr, jg, and jb being the electric current densities in the red, green, and blue electron beams at the surface area dA of the image on the screen. The current densities are to be taken in the distributed electron beam model, where the discreteness of pixels and the raster motion of the beams are ignored, and the back of the monitor screen is thought to be irradiated by diffuse electron beams. The beam current densities are then functions of the coordinates x and y over the screen. The model is appropriate since we are interested in the electromagnetic field emision caused by image pulsing with the very low frequencies of sensory resonances, whereas the emissions with the much higher horizontal and vertical sweep frequencies are of no concern. For a CRT the intensity of an image is expressed in millamperes.

For a liquid crystal display (LCD), the current densities in the definition of image intensity are to be replaced by driving voltages, multiplied by the aperture ratio of the device. For an LCD, image intensities are thus expressed in volts.

It will be shown that for a CRT or LCD screen emissions are caused by fluctuations in image intensity. In composite video however, intensity as defined above is not a primary signal feature, but luminance Y is. For any pixel one has

$$Y=0.299R+0.587G+0.114B, \tag{3}$$

where R, G, and B are the intensities of the pixel respectively in red, green and blue, normalized such as to range from 0 to 1. The definition (3) was provided by the Commission Internationale de l'Eclairage (CIE), in order to account for brightness differences at different colors, as perceived by the human visual system. In composite video the hue of the pixel is determined by the chroma signal or chrominance, which has the components R-Y and B-Y It follows that pulsing pixel luminance while keeping the hue fixed is equivalent to pulsing the pixel intensity, up to an amplitude factor. This fact will be relied upon when modulating a video stream such as to overlay image intensity pulses.

It turns out that the screen emission has a multipole expansion wherein both monopole and dipole contributions are proportional to the rate of change of the intensity I of (1). The higher order multipole contributions are proportional to the rate of change of moments of the current density j over the image, but since these contributions fall off rapidly with distance, they are not of practical importance in the present context. Pulsing the intensity of an image may involve different pulse amplitudes, frequencies, or phases for different parts of the image. Any or all of these features may be under subject control.

The question arises whether the screen emission can be strong enough to excite sensory resonances in people located at normal viewing distances from the monitor. This turns out to be the case, as shown by sensory resonance experiments and independently by measuring the strength of the emitted electric field pulses and comparing the results with the effective intensity window as explored in earlier work.

One-half Hertz sensory resonance experiments have been conducted with the subject positioned at least at normal viewing distance from a 15" computer monitor that was driven by a computer program written in Visual Basic(R), version 6.0 (VB**6**). The program produces a pulsed image with uniform luminance and hue over the full screen, except for a few small control buttons and text boxes. In VB**6**, screen pixel colors are determined by integers R, G, and B, that range from 0 to 255, and set the contributions to the pixel color made by the basic colors red, green, and blue. For a CRT-type monitor, the pixel intensities for the primary colors may depend on the RGB values in a nonlinear manner that will be discussed. In the VB**6** program the RGB values are modulated by small pulses ΔR, ΔG, ΔB, with a frequency that can be chosen by the subject or is swept in a predetermined manner. In the sensory resonance experiments mentioned above, the ratios ΔR/R, ΔG/G, and ΔB/B were always smaller than 0.02, so that the image pulses are quite weak. For certain frequencies near ½ Hz, the subject experienced physiological effects that are known to accompany the excitation of the ½ Hz sensory resonance as mentioned in the Background Section. Moreover, the measured field pulse amplitudes fall within the effective intensity window for the ½ Hz resonance, as explored in earlier experiments and discussed in the '874, '744, '922, and '304 patents. Other experiments have shown that the 2.4 Hz sensory resonance can be exited as well by screen emissions from monitors that display pulsed images.

These results confirm that, indeed, the nervous system of a subject can be manipulated through electromagnetic field pulses emitted by a nearby CRT or LCD monitor which displays images with pulsed intensity.

The various implementations of the invention are adapted to the different sources of video stream, such as video tape, DVD, a computer program, or a TV broadcast through free space or cable. In all of these implementations, the subject is exposed to the pulsed electromagnetic field that is generated by the monitor as the result of image intensity pulsing. Certain cutaneous nerves of the subject exhibit spontaneous spiking in patterns which, although rather random, contain sensory information at least in the form of average frequency. Some of these nerves have receptors that respond to the field stimulation by changing their average spiking frequency, so that the spiking patterns of these nerves acquire a frequency modulation, which is conveyed to the brain. The modulation can be particularly effective if it has a frequency at or near a sensory resonance frequency. Such frequencies are expected to lie in the range from 0.1 to 15 Hz.

An embodiment of the invention adapted to a VCR is shown in FIG. **1**, where a subject **4** is exposed to a pulsed electric field **3** and a pulsed magnetic field **39** that are emitted by a monitor **2**, labeled "MON", as the result of pulsing the intensity of the displayed image. The image is here generated by a video casette recorder **1**, labeled "VCR", and the pulsing of the image intensity is obtained by modulating the composite video signal from the VCR output. This is done by a video modulator **5**, labeled "VM", which responds to the signal from the pulse generator **6**, labeled "GEN". The frequency and amplitude of the image pulses can be adjusted with the frequency control **7** and amplitude control **8**. Frequency and amplitude adjustments can be made by the subject.

The circuit of the video modulator **5** of FIG. **1** is shown in FIG. **2**, where the video amplifiers **11** and **12** process the composite video signal that enters at the input terminal **13**. The level of the video signal is modulated slowly by injecting a small bias current at the inverting input **17** of the first amplifier **11**. This current is caused by voltage pulses supplied at the modulation input **16**, and can be adjusted through the potentiometer **15**. Since the noninverting input of the amplifier is grounded, the inverting input **17** is kept essentially at ground potential, so that the bias current is is not influenced by the video signal. The inversion of the signal by the first amplifier **11** is undone by the second amplifier **12**. The gains of the amplifiers are chosen such as to give a unity overall gain. A slowly varying current injected at the inverting input **17** causes a slow shift in the "pseudo-dc" level of the composite video signal, here defined as the short-term average of the signal. Since the pseudo-dc level of the chroma signal section determines the luminance, the latter is modulated by the injected current pulses. The chroma signal is not affected by the slow modulation of the pseudodc level, since that signal is determined by the amplitude and phase with respect to the color carrier which is locked to the color burst. The effect on the sync pulses and color bursts is of no consequence either if the injected current pulses are very small, as they are in practice. The modulated composite video signal, available at the output **14** in FIG. **2**, will thus exhibit a modulated luminance, whereas the chroma signal is unchanged. In the light of the foregoing discussion about luminance and intensity, it follows that the modulator of FIG. **2** causes a pulsing of the image intensity I. It remains to give an example how the pulse signal at the modulation input **16** may be obtained. FIG. **3** shows a pulse generator that is suitable for this purpose, wherein the RC timer **21** (Intersil ICM7555) is hooked up for astable operation and produces a square wave voltage with a frequency that is determined by capacitor **22** and potentiometer **23**. The timer **21** is powered by a battery **26**, controlled by the switch **27**. The square wave voltage at output **25** drives the LED **24**, which may be used for monitoring of the pulse frequency, and also serves as power indicator. The pulse output may be rounded in ways that are well known in the art. In the setup of FIG. **1**, the output of VCR **1** is connected to the video input **13** of FIG. **2**, and the video output **14** is connected to the monitor **2** of FIG. **1**.

In the preferred embodiment of the invention, the image intensity pulsing is caused by a computer program. As shown in FIG. **4**, monitor **2**, labeled "MON", is connected to computer **31** labeled "COMPUTER", which runs a program that produces an image on the monitor and causes the image intensity to be pulsed. The subject **4** can provide input to the computer through the keyboard **32** that is connected to the computer by the connection **33**. This input may involve adjustments of the frequency or the amplitude or the variability of the image intensity pulses. In particular, the pulse frequency can be set to a sensory resonance frequency of the subject for the purpose of exciting the resonance.

The structure of a computer program for pulsing image intensity is shown in FIG. **6**. The program may be written in Visual Basic(R) version 6.0 (VB**6**), which involves the graphics interface familiar from the Windows(R) operating system. The images appear as forms equipped with user controls such as command buttons and scroll bars, together with data displays such as text boxes. A compiled VB**6** program is an executable file. When activated, the program declares variables and functions to be called from a dynamic link library (DLL) that is attached to the operating system; an initial form load is performed as well. The latter comprises setting the screen color as specified by integers R, G, and B in the range 0 to 255, as mentioned above. In FIG. **6**, the initial setting of the screen color is labeled as **50**. Another action of the form load routine is the computation **51** of the sine function at eight equally spaced points, I=0 to 7, around the unit circle. These values are needed when modulating the RGB numbers. Unfortunately, the sine function is distorted by the rounding to integer RGB values that occurs in the VB**6** program. The image is chosen to fill as much of the screen area as possible, and it has spatially uniform luminance and hue.

The form appearing on the monitor displays a command button for starting and stopping the image pulsing, together with scroll bars **52** and **53** respectively for adjustment of the pulse frequency F and the pulse amplitude A. These pulses could be initiated by a system timer which is activated upon the elapse of a preset time interval. However, timers in VB**6** are too inaccurate for the purpose of providing the eight RGB adjustment points in each pulse cycle. An improvement can be obtained by using the GetTickCount function that is available in the Application Program Interface (API) of Windows 95(R) and Windows 98(R). The GetTickCount function returns the system time that has elapsed since starting Windows, expressed in milliseconds. User activation of the start button **54** provides a tick count TN through request **55** and sets the timer interval to TT miliseconds, in step **56**. TT was previously calculated in the frequency routine that is activated by changing the frequency, denoted as step **52**.

Since VB**6** is an event-driven program, the flow chart for the program falls into disjoint pieces. Upon setting the timer interval to TT in step **56**, the timer runs in the background while the program may execute subroutines such as adjustment of pulse frequency or amplitude. Upon elapse of the timer interval TT, the timer subroutine **57** starts execution

with request **58** for a tick count, and in **59** an upgrade is computed of the time TN for the next point at which the RGB values are to be adjusted. In step **59** the timer is turned off, to be reactivated later in step **67**. Step **59** also resets the parameter CR which plays a role in the extrapolation procedure **61** and the condition **60**. For ease of understanding at this point, it is best to pretend that the action of **61** is simply to get a tick count, and to consider the loop controled by condition **60** while keeping CR equal to zero. The loop would terminate when the tick count M reaches or exceeds the time TN for the next phase point, at which time the program should adjust the image intensity through steps **63–65**. For now step **62** is to be ignored also, since it has to do with the actual extrapolation procedure **61**. The increments to the screen colors R**1**, G**1**, and B**1** at the new phase point are computed according to the sine function, applied with the amplitude A that was set by the user in step **53**. The number I that labels the phase point is incremented by unity in step **65**, but if this results in I=8 the value is reset to zero in **66**. Finally, the timer is reactivated in step **67**, initiating a new ⅛-cycle step in the periodic progression of RGB adjustments.

A program written in this way would exhibit a large jitter in the times at which the RGB values are changed. This is due to the lumpiness in the tick counts returned by the GetTickCount function. The lumpiness may be studied separately by running a simple loop with C=GetTickCount, followed by writing the result C to a file. Inspection shows that C has jumped every 14 or 15 milliseconds, between long stretches of constant values. Since for a ½ Hz image intensity modulation the ⅛-cycle phase points are 250 ms apart, the lumpiness of 14 or 15 ms in the tick count would cause considerable inaccuracy. The full extrapolation procedure **61** is introduced in order to diminish the jitter to acceptable levels. The procedure works by refining the heavy-line staircase function shown in FIG. **8**, using the slope RR of a recent staircase step to accurately determine the loop count **89** at which the loop controled by **60** needs to be exited. Details of the extrapolation procedure are shown in FIG. **7** and illustrated in FIG. **8**. The procedure starts at **70** with both flags off, and CR=0, because of the assignment in **59** or **62** in FIG. **6**. A tick count M is obtained at **71**, and the remaining time MR to the next phase point is computed in **72**. Conditions **77** and **73** are not satisfied and therefore passed vertically in the flow chart, so that only the delay block **74** and the assignments **75** are executed. Condition **60** of FIG. **6** is checked and found to be satisfied, so that the extrapolation procedure is reentered. The process is repeated until the condition **73** is met when the remaining time MR jumps down through the 15 ms level, shown in FIG. **8** as the transition **83**. The condition **73** then directs the logic flow to the assignments **76**, in which the number DM labeled by **83** is computed, and FLG**1** is set. The computation of DM is required for finding the slope RR of the straight-line element **85**. One also needs the "Final LM" **86**, which is the number of loops traversed from step **83** to the next downward step **84**, here shown to cross the MR=0 axis. The final LM is determined after repeatedly incrementing LM through the side loop entered from the FLG**1**=1 condition **77**, which is now satisfied since FLG**1** was set in step **76**. At the transition **84** the condition **78** is met, so that the assignments **79** are executed. This includes computation of the slope RR of the line element **85**, setting FLG**2**, and resetting FLG**1**. From here on, the extrapolation procedure increments CR in steps of RR while skipping tick counts until condition **60** of FIG. **6** is violated, the loop is exited, and the RGB values are adjusted.

A delay block **74** is used in order to stretch the time required for traversing the extrapolation procedure. The block can be any computation intensive subroutine such as repeated calculations of tangent and arc tangent functions.

As shown in step **56** of FIG. **6**, the timer interval TT is set to 4/10 of the time TA from one RGB adjustment point to the next. Since the timer runs in the background, this arrangement provides an opportunity for execution of other processes such as user adjustment of frequency or amplitude of the pulses.

The adjustment of the frequency and other pulse parameters of the image intensity modulation can be made internally, i.e., within the running program. Such internal control is to be distinguished from the external control provided, for instance, in screen savers. In the latter, the frequency of animation can be modified by the user, but only after having exited the screen saver program. Specifically, in Windows 95(R) or Windows 98(R), to change the animation frequency requires stopping the screen saver execution by moving the mouse, whereafter the frequency may be adjusted through the control panel. The requirement that the control be internal sets the present program apart from so-called banners as well.

The program may be run on a remote computer that is linked to the user computer, as illustrated in FIG. **9**. Although the monitor **2**, labeled "MON", is connected to the computer **31**', labeled "COMPUTER", the program that pulses the images on the monitor **2** runs on the remoter computer **90**, labeled "REMOTE COMPUTER", which is connected to computer **31**' through a link **91** which may in part belong to a network. The network may comprise the Internet **92**.

The monitor of a television set emits an electromagnetic field in much the same way as a computer monitor. Hence, a TV may be used to produce screen emissions for the purpose of nervous system manipulation. FIG. **5** shows such an arrangement, where the pulsing of the image intensity is achieved by inducing a small slowly pulsing shift in the frequency of the RF signal that enters from the antenna. This process is here called "frequency wobbling" of the RF signal. In FM TV, a slight slow frequency wobble of the RF signal produces a pseudo-dc signal level fluctuation in the composite video signal, which in turn causes a slight intensity fluctuation of the image displayed on the monitor in the same manner as discussed above for the modulator of FIG. **2**. The frequency wobbling is induced by the wobbler **44** of FIG. **5** labeled "RFM", which is placed in the antenna line **43**. The wobbler is driven by the pulse generator **6**, labeled "GEN". The subject can adjust the frequency and the amplitude of the wobble through the tuning control **7** and the amplitude control **41**. FIG. **10** shows a block diagram of the frequency wobbler circuit that employs a variable delay line **94**, labelled "VDL". The delay is determined by the signal from pulse generator **6**, labelled "GEN". The frequency of the pulses can be adjusted with the tuning control **7**. The amplitude of the pulses is determined by the unit **98**, labelled "MD", and can be adjusted with the amplitude control **41**. Optionally, the input to the delay line may be routed through a preprocessor **93**, labelled "PRP", which may comprise a selective RF amplifier and down converter; a complimentary up conversion should then be performed on the delay line output by a postprocessor **95**, labelled "POP". The output **97** is to be connected to the antenna terminal of the TV set.

The action of the variable delay line **94** may be understood as follows. Let periodic pulses with period L be presented at the input. For a fixed delay the pulses would emerge at the output with the same period L. Actually, the

time delay T is varied slowly, so that it increases approximately by LdT/dt between the emergence of consecutive pulses at the device output. The pulse period is thus increased approximately by

$$\Delta L = L dT/dt. \quad (4)$$

In terms of the frequency $\int$, Eq. (4) implies approximately

$$\Delta \int / \int = -dT/dt. \quad (5)$$

For sinusoidal delay T(t) with amplitude b and frequency g, one has

$$\Delta \int / \int = -2\pi g b \cos(2\pi g t), \quad (6)$$

which shows the frequency wobbling. The approximation is good for gb<<1, which is satisfied in practice. The relative frequency shift amplitude 2πgb that is required for effective image intensity pulses is very small compared to unity. For a pulse frequency g of the order of 1 Hz, the delay may have to be of the order of a millisecond. To accomodate such long delay values, the delay line may have to be implemented as a digital device. To do so is well within the present art. In that case it is natural to also choose digital implementations for the pulse generator **6** and the pulse amplitude controller **98**, either as hardware or as software.

Pulse variability may be introduced for alleviating the need for precise tuning to a resonance frequency. This may be important when sensory resonance frequencies are not precisely known, because of the variation among individuals, or in order to cope with the frequency drift that results from chemical detuning that is discussed in the '874 patent. A field with suitably chosen pulse variability can then be more effective than a fixed frequency field that is out of tune. One may also control tremors and seizures, by interfering with the pathological oscillatory activity of neural circuits that occurs in these disorders. Electromagnetic fields with a pulse variability that results in a narrow spectrum of frequencies around the frequency of the pathological oscillatory activity may then evoke nerve signals that cause phase shifts which diminish or quench the oscillatory activity.

Pulse variability can be introduced as hardware in the manner described in the '304 patent. The variability may also be introduced in the computer program of FIG. **6**, by setting FLG**3** in step **68**, and choosing the amplitude B of the frequency fluctuation. In the variability routine **46**, shown in some detail in FIG. **13**, FLG**3** is detected in step **47**, whereupon in steps **48** and **49** the pulse frequency F is modified pseudo randomly by a term proportional to B, every 4th cycle. Optionally, the amplitude of the image intensity pulsing may be modified as well, in similar fashion. Alternatively, the frequency and amplitude may be swept through an adjustable ramp, or according to any suitable schedule, in a manner known to those skilled in the art. The pulse variability may be applied to subliminal image intensity pulses.

When an image is displayed by a TV monitor in response to a TV broadcast, intensity pulses of the image may simply be imbedded in the program material. If the source of video signal is a recording medium, the means for pulsing the image intensity may comprise an attribute of recorded data. The pulsing may be subliminal. For the case of a video signal from a VCR, the pertinent data attribute is illustrated in FIG. **11**, which shows a video signal record on part of a video tape **28**. Depicted schematically are segments of the video signal in intervals belonging to lines in three image frames at different places along the tape. In each segment, the chroma signal **9** is shown, with its short-term average level **29** represented as a dashed line. The short-term average signal level, also called the pseudo-dc level, represents the luminance of the image pixels. Over each segment, the level is here constant because the image is for simplicity chosen as having a uniform luminance over the screen. However, the level is seen to vary from frame to frame, illustrating a luminance that pulses slowly over time. This is shown in the lower portion of the drawing, wherein the IRE level of the short-term chroma signal average is plotted versus time. The graph further shows a gradual decrease of pulse amplitude in time, illustrating that luminance pulse amplitude variations may also be an attribute of the recorded data on the video tape. As discussed, pulsing the luminance for fixed chrominance results in pulsing of the image intensity.

Data stream attributes that represent image intensity pulses on video tape or in TV signals may be created when producing a video rendition or making a moving picture of a scene, simply by pulsing the illumination of the scene. This is illustrated in FIG. **12**, which shows a scene **19** that is recorded with a video camera **18**, labelled "VR". The scene is illuminated with a lamp **20**, labelled "LAMP", energized by an electric current through a cable **36**. The current is modulated in pulsing fashion by a modulator **30**, labeled "MOD", which is driven by a pulse generator **6**, labelled "GENERATOR", that produces voltage pulses **35**. Again, pulsing the luminance but not the chrominance amounts to pulsing the image intensity.

The brightness of monitors can usually be adjusted by a control, which may be addressable through a brightness adjustment terminal. If the control is of the analog type, the displayed image intensity may be pulsed as shown in FIG. **15**, simply by a pulse generator **6**, labeled "GEN", that is connected to the brigthness adjustment terminal **88** of the monitor **2**, labeled "MON". Equivalent action can be provided for digital brightness controls, in ways that are well known in the art.

The analog component video signal from a DVD player may be modulated such as to overlay image intensity pulses in the manner illustrated in FIG. **17**. Shown are a DVD player **102**, labeled "DVD", with analog component video output comprised of the luminance Y and chrominance C. The overlay is accomplished simply by shifting the luminance with a voltage pulse from generator **6**, labeled "GENERATOR". The generator output is applied to modulator **106**, labeled "SHIFTER". Since the luminance Y is pulsed without changing the chrominance C, the image intensity is pulsed. The frequency and amplitude of the image intensity pulses can be adjusted respectively with the tuner **7** and amplitude control **107**. The modulator **105** has the same structure as the modulator of FIG. **2**, and the pulse amplitude control **107** operates the potentiometer **15** of FIG. **2**. The same procedure can be followed for editing a DVD such as to overlay image intensity pulses, by processing the modulated luminance signal through an analog-to-digital converter, and recording the resulting digital stream onto a DVD, after appropriate compression. Alternatively, the digital luminance data can be edited by electronic reading of the signal, decompression, altering the digital data by software, and recording the resulting digital signal after proper compression, all in a manner that is well known in the art.

The mechanism whereby a CRT-type monitor emits a pulsed electromagnetic field when pulsing the intensity of an image is illustrated in FIG. **14**. The image is produced by an electron beam **10** which impinges upon the backside **88** of the screen, where the collisions excite phosphors that subsequently emit light. In the process, the electron beam deposits electrons **18** on the screen, and these electrons

contribute to an electric field **3** labelled "E". The electrons flow along the conductive backside **88** of the screen to the terminal **99** which is hooked up to the high-voltage supply **40**, labelled "HV". The circuit is completed by the ground connection of the supply, the video amplifier **87**, labeled "VA", and its connection to the cathodes of the CRT. The electron beams of the three electron guns are collectively shown as **10**, and together the beams carry a current J. The electric current J flowing through the described circuit induces a magnetic field **39**, labeled "B". Actually, there are a multitude of circuits along which the electron beam current is returned to the CRT cathodes, since on a macroscopic scale the conductive back surface **88** of the screen provides a continuum of paths from the beam impact point to the high-voltage terminal **99**. The magnetic fields induced by the currents along these paths partially cancel each other, and the resulting field depends on the location of the pixel that is addressed. Since the beams sweep over the screen through a raster of horizontal lines, the spectrum of the induced magnetic field contains strong peaks at the horizontal and vertical frequencies. However, the interest here is not in fields at those frequencies, but rather in emissions that result from an image pulsing with the very low frequencies appropriate to sensory resonances. For this purpose a diffuse electron current model suffices, in which the pixel discreteness and the raster motion of the electron beams are ignored, so that the beam current becomes diffuse and fills the cone subtended by the displayed image. The resulting low-frequency magnetic field depends on the temporal changes in the intensity distribution over the displayed image. Order-of-magnitude estimates show that the low-frequency magnetic field, although quite small, may be sufficient for the excitation of sensory resonances in subjects located at a normal viewing distance from the monitor.

The monitor also emits a low-frequency electric field at the image pulsing frequency. This field is due in part to the electrons **18** that are deposited on the screen by the electron beams **10**. In the diffuse electron beam model, screen conditions are considered functions of the time t and of the Cartesian coordinates x and y over a flat CRT screen.

The screen electrons **18** that are dumped onto the back of the screen by the sum j(x,y,t) of the diffuse current distributions in the red, green, and blue electron beams cause a potential distribution V(x,y,t) which is influenced by the surface conductivity σ on the back of the screen and by capacitances. In the simple model where the screen has a capacitance distribution c(x,y) to ground and mutual capacitances between parts of the screen at different potentials are neglected, a potential distribution V(x,y,t) over the screen implies a surface charge density distribution

$$q=Vc(x,y), \tag{7}$$

and gives rise to a current density vector along the screen,

$$j_s=-\sigma \mathrm{grad}_s\, V, \tag{8}$$

where grad_s is the gradient along the screen surface. Conservation of electric charge implies

$$j=c\dot{V}-div_s\,(\sigma grad_s\, V), \tag{9}$$

where the dot over the voltage denotes the time derivative, and div_s is the divergence in the screen surface. The partial differential equation (9) requires a boundary condition for the solution V(x,y,t) to be unique. Such a condition is provided by setting the potential at the rim of the screen equal to the fixed anode voltage. This is a good approximation, since the resistance R_r between the screen rim and the anode terminal is chosen small in CRT design, in order to keep the voltage loss JR_r to a minimum, and also to limit low-frequency emissions.

Something useful can be learned from special cases with simple solutions. As such, consider a circular CRT screen of radius R with uniform conductivity, showered in the back by a diffuse electron beam with a spatially uniform beam current density that is a constant plus a sinusoidal part with frequency $\int$. Since the problem is linear, the voltage V due to the sinusoidal part of the beam current can be considered separately, with the boundary condition that V vanish at the rim of the circular screen. Eq. (9) then simplifies to

$$V''+V''/r-i2\pi\int cn\ V=-J\eta/A,\ r\leqq R, \tag{10}$$

where r is a radial coordinate along the screen with its derivative denoted by a prime, $\eta=1/\sigma$ is the screen resistivity, A the screen area, J the sinusoidal part of the total beam current, and $i=\sqrt{(-1)}$, the imaginary unit. Our interest is in very low pulse frequencies $\int$ that are suitable for excitation of sensory resonances. For those frequencies and for practical ranges for c and η, the dimensionless number $2\pi\int cA\eta$ is very much smaller than unity, so that it can be neglected in Eq. (10). The boundary value problem then has the simple solution

$$V(r)=\frac{J\eta}{4\pi}(1-(r/R)^2). \tag{11}$$

In deriving **(11)** we neglected the mutual capacitance between parts of the screen that are at different potentials. The resulting error in **(10)** is negligible for the same reason that the $i2\pi\int cA\eta$ term in **(10)** can be neglected.

The potential distribution V(r) of **(11)** along the screen is of course accompanied by electric charges. The field lines emanating from these charges run mainly to conductors behind the screen that belong to the CRT structure and that are either grounded or connected to circuitry with a low impedance path to ground. In either case the mentioned conductors must be considered grounded in the analysis of charges and fields that result from the pulsed component J of the total electron beam current. The described electric field lines end up in electric charges that may be called polarization charges since they are the result of the polarization of the conductors and circuitry by the screen emission. To estimate the pulsed electric field, a model is chosen where the mentioned conductors are represented together as a grounded perfectly conductive disc of radius R, positioned a short distance δ behind the screen, as depicted in FIG. **16**. Since the grounded conductive disc carries polarization charges, it is called the polarization disc. FIG. **16** shows the circular CRT screen **88** and the polarization disc **101**, briefly called "plates". For small distances δ, the capacitance density between the plates of opposite polarity is nearly equal to ϵ/δ, where ϵ is the permittivity of free space. The charge distributions on the screen and polarization disc are respectively $\epsilon V(r)/\delta+q_0$ and $-\epsilon V(r)/\delta+q_0$, where the $\epsilon V(r)/\delta$ terms denote opposing charge densities at the end of the dense field lines that run between the two plates. That the part q_0 is needed as well will become clear in the sequel.

The charge distributions $\epsilon V(r)/\delta+q_0$ and $-\epsilon V(r)/\delta+q_0$ on the two plates have a dipole moment with the density

$$D(r) = \epsilon V(r) = \frac{J\eta\epsilon}{4\pi}(1-(r/R)^2), \tag{12}$$

directed perpendicular to the screen. Note that the plate separation δ has dropped out. This means that the precise location of the polarization charges is not critical in the present model, and further that δ may be taken as small as desired. Taking δ to zero, one thus arrives at the mathematical model of pulsed dipoles distributed over the circular CRT screen. The field due to the charge distribution q_0 will be calculated later.

The electric field induced by the distributed dipoles (12) can be calculated easily for points on the centerline of the screen, with the result

$$E(z) = \frac{V(0)}{R}\{2\rho/R - R/\rho - 2|z|/R\}, \tag{13}$$

where V(**0**) is the pulse voltage (11) at the screen center, ρ the distance to the rim of the screen, and z the distance to the center of the screen. Note that V(**0**) pulses harmonically with frequency ∫, because in (11) the sinusoidal part J of the beam current varies in this manner.

The electric field (13) due to the dipole distribution causes a potential distribution V(r)/2 over the screen and a potential distribution of −V(r)/2 over the polarization disc, where V(r) is nonuniform as given by (11). But since the polarization disc is a perfect conductor it cannot support voltage gradients, and therefore cannot have the potential distribution −V(r)/2. Instead, the polarization disc is at ground potential. This is where the charge distribution $q_0(r)$ comes in; it must be such as to induce a potential distribution V(r)/2 over the polarization disc. Since the distance between polarization disc and screen vanishes in the mathematical model, the potential distribution V(r)/2 is induced over the screen as well. The total potential over the monitor screen thus becomes V(r) of (**11**), while the total potential distribution over the polarization disc becomes uniformly zero. Both these potential distributions are as physically required. The electric charges q_0 are moved into position by polarization and are partly drawn from the earth through the ground connection of the CRT.

In our model the charge distribution q_0 is located at the same place as the dipole distribution, viz., on the plane z=0 within the circle with radius R. At points on the center line of the screen, the electric field due to the monopole distribution q_0 is calculated in the following manner. As discussed, the monopoles must be such that they cause a potential ϕ_0 that is equal to V(r)/2 over the disc with radius R centered in the plane z=0. Although the charge distribution $q_0(r)$ is uniquely defined by this condition, it cannot be calculated easily in a straightforward manner. The difficulty is circumvented by using an intermediate result derived from Excercise 2 on page 191 of Kellogg (1953), where the charge distribution over a thin disc with uniform potential is given. By using this result one readily finds the potential $\phi^*(z)$ on the axis of this disc as

$$\phi^*(z) = \frac{2}{\pi}V^*\beta(R_1), \tag{14}$$

where $\beta(R_1)$ is the angle subtended by the disc radius R_1, as viewed from the point z on the disc axis, and V* is the disc potential. The result is used here in an attempt to construct the potential $\phi_0(z)$ for a disc with the nonuniform potential V(r)/2, by the ansatz of writing the field as due to a linear combination of abstract discs with various radii R_1 and potentials, all centered in the plane z=0. In the ansatz the potential on the symmetry axis is written

$$\phi_0(z) = a\beta(R) + b\int_0^R \beta(R_1)dW, \tag{15}$$

where W is chosen as the function $1-R_1^2/R^2$, and the constants a and b are to be determined such that the potential over the plane z=0 is V(r)/2 for radii r ranging from 0 to R, with V(r) given by (11). Carrying out the integration in (15) gives

$$\phi_0(z)=a\beta(R)-b\{(1+z^2/R^2)\beta(R)-|z|/R\}. \tag{16}$$

In order to find the potential over the disc r<R in the plane z=0, the function $\phi_0(z)$ is expanded in powers of z/R for 0<z<R, whereafter the powers z^n are replaced by $r^nP_n(\cos\theta)$, where the P_n are Legendre polynomials, and (r,θ) are symmetric spherical coordinates centered at the screen center. This procedure amounts to a continuation of the potential from the z-axis into the half ball r<R, z>0, in such a manner that the Laplace equation is satisfied. The method is discussed by Morse and Feshbach (1953). The "Laplace continuation" allows calculation of the potential ϕ_0 along the surface of the disc r<R centered in the plane z=0. The requirement that this potential be V(r)/2 with the function V(r) given by (11) allows solving for the constants a and b, with the result

$$a=-V(0)/\pi,\ b=-2V(0)/\pi. \tag{17}$$

Using (17) in (16) gives

$$\phi_0(z) = \frac{V(0)}{\pi}[(1+2z^2/R^2)\beta(R) - 2|z|/R], \tag{18}$$

and by differentiation with respect to z one finally finds

$$E_0(z) = \frac{V(0)}{\pi R}(z/|z|)[4-(R/\rho)^2 - 4\beta(R)|z|/R] \tag{19}$$

for the electric field on the center line of the screen brought about by the charge distribution $q_0(z)$.

The center-line electric field is the sum of the part (13) due to distributed pulsed dipoles and part (19) due to distributed pulsed monopoles. Although derived for circular screens, the results may serve as an approximation for other shapes, such as the familiar rounded rectangle, by taking R as the radius of a circle that has the same area as the screen.

For two CRT-type monitors the pulsed electric field due to image intensity pulsing has been measured at several points on the screen center line for pulse frequencies of ½ Hz. The monitors were the 15" computer monitor used in the sensory resonance experiments mentioned above, and a 30" TV tube. The experimental results need to be compared with the theory derived above. Since R is determined by the screen area, the electric fields given by (13) and (19) have as only free parameter the pulse voltage V(**0**) at the screen center. The amplitude of this voltage can therefore be determined for the tested monitors by fitting the experimental data to the theoretical results. Prior to fitting, the data were normalized to an image that occupies the entire screen and is pulsed uniformly with a 100% intensity amplitude. The results of the one-parameter fit are displayed in FIG. **18**, which shows the theoretical graph **100**, together with the normalized

experimental data points **103** for the 15– computer monitor and for the 30" TV tube. FIG. **18** shows that the developed theory agrees fairly well with the experimental results. From the best fit one can find the center-screen voltage pulse amplitudes. The results, normalized as discussed above, are $|V(0)|=266.2$ volt for the 15" computer monitor and $|V(0)|=310.1$ volt for the 30" TV tube. With these amplitudes in hand, the emitted pulsed electric field along the center line of the monitors can be calculated from the sum of the fields (13) and (19). For instance, for the 15" computer monitor with 1.8% RGB pulse modulation used in the ½ Hz sensory resonance experiments mentioned above, the pulsed electric field at the center of the subject, located at z=70 cm on the screen center line, is calculated as having an amplitude of 0.21 V/m. That such a pulsed electric field, applied to a large portion of the skin, is sufficient for exciting the ½ Hz sensory resonance is consistent with experimental results discussed in the '874 patent.

In deriving **(11)**, the dimensionless number $2\pi\int cA\eta$ was said to be much smaller than unity. Now that the values for $|V(0)|$ are known, the validity of this statement can be checked. Eq. (11) implies that $|V(0)|$ is equal to $\eta|J|/4\pi$. The sum of the beam currents in the red, green, and blue electron guns for 100% intensity modulation is estimated to have pulse amplitudes $|J|$ of 0.5 mA and 2.0 mA respectively for the 15" computer monitor and the 30" TV tube. Using the derived values for $|V(0)|$, one arrives at estimates for the screen resistivity η as 6.7 MΩ/square and 1.9 MΩ/square respectively for the 15" computer monitor and the 30" TV tube. Estimating the screen capacity cA as 7 pf and 13 pf, $2\pi\int cA\eta$ is found to be 148×10^{-6} and 78×10^{-6}, respectively for the 15" computer monitor and the 30" TV tube. These numbers are very small compared to unity, so that the step from (10) to (11) is valid.

The following procedures were followed in preparing pulsed images for the field measurements. For the 15" computer monitor the images were produced by running the VB**6** program discussed above. The pulsed image comprised the full screen with basic RGB values chosen uniformly as R=G=B=127, with the exception of an on/off button and a few data boxes which together take up 17% of the screen area. The image intensity was pulsed by modifying the R, G, and B values by integer-rounded sine functions $\Delta R(t)$, $\Delta G(t)$, and $\Delta B(t)$, uniformly over the image, except at the button and the data boxes. The measured electric field pulse amplitudes were normalized to a pulsed image that occupies all of the screen area and has 100% intensity modulation for which the image pulses between black and the maximum intensity, for the fixed RGB ratios used. The image intensity depends on the RGB values in a nonlinear manner that will be be discussed. For the measurements of the pulsed electric field emitted by 30" TV tube, a similar image was used as for the 15" computer monitor. This was done by playing back a camcorder recording of the computer monitor display when running the VB**6** program, with 40% pulse modulation of R, G, and B.

In front of the monitor, i.e., for z>0, the parts **(13)** and **(19)** contribute about equally to the electric field over a practical range of distances z. When going behind the monitor where z is negative the monopole field flips sign so that the two parts nearly cancel each other, and the resulting field is very small. Therefore, in the back of the CRT, errors due to imperfections in the theory are relatively large. Moreover our model, which pretends that the polarization charges are all located on the polarization disc, fails to account for the electric field flux that escapes from the outer regions of the back of the screen to the earth or whatever conductors happen to be present in the vincinity of the CRT. This flaw has relatively more serious consequences in the back than in front of the monitor.

Screen emissions in front of a CRT can be cut dramatically by using a grounded conductive transparent shield that is placed over the screen or applied as a coating. Along the lines of our model, the shield amounts to a polarization disc in front of the screen, so that the latter is now sandwiched between to grounded discs. The screen has the pulsed potential distribution V(r) of (11), but no electric flux can escape. The model may be modified by choosing the polarization disc in the back somewhat smaller than the screen disc, by a fraction that serves as a free parameter. The fraction may then be determined from a fit to measured fields, by minimizing the relative standard deviation between experiment and theory.

In each of the electron beams of a CRT, the beam current is a nonlinear function of the driving voltage, i.e., the voltage between cathode and control grid. Since this function is needed in the normalization procedure, it was measured for the 15" computer monitor that has been used in the ½ Hz sensory resonance experiments and the electric field measurements. Although the beam current density j can be determined, it is easier to measure the luminance, by reading a light meter that is brought right up to the monitor screen. With the RGB values in the VB**6** program taken as the same integer K, the luminance of a uniform image is proportional to the image intensity I. The luminance of a uniform image was measured for various values of K. The results were fitted with

$$I=c_1K^{\gamma}, \tag{20}$$

where c_1 is a constant. The best fit, with 6.18% relative standard deviation, was obtained for $\gamma=2.32$.

Screen emissions also occur for liquid crystal displays (LCD). The pulsed electric fields may have considerable amplitude for LCDs that have their driving electrodes on opposite sides of the liquid crystal cell, for passive matrix as well as for active matrix design, such as thin film technology (TFT). For arrangements with in-plane switching (IPS) however, the driving electrodes are positioned in a single plane, so that the screen emission is very small. For arrangements other than IPS, the electric field is closely approximated by the fringe field of a two-plate condenser, for the simple case that the image is uniform and extends over the full screen. For a circular LCD screen with radius R, the field on the center line can be readily calculated as due to pulsed dipoles that are uniformly distributed over the screen, with the result

$$E_d(z)=(½)VR^2/(z^2+R^2)^{3/2}, \tag{21}$$

where $E_d(z)$ is the amplitude of the pulsed electric field at a distance z from the screen and V is a voltage pulse amplitude, in which the aperture ratio of the LCD has been taken into account. Eq. (21) can be used as an approximation for screens of any shape, by taking R as the radius of a circle with the same area as the screen. The result applies to the case that the LCD does not have a ground connection, so that the top and bottom electrodes are at opposite potential, i.e., V/2 and −V/2.

If one set of LCD electrodes is grounded, monopoles are needed to keep these electrodes at zero potential, much as in the case of a CRT discussed above. The LCD situation is simpler however, as there is no charge injection by electron beams, so that the potentials on the top and bottom plates of the condenser in the model are spatially uniform. From **(14)**

it is seen that monopoles, distributed over the disc of radius R in the plane z=0 such as to provide on the disc a potential V/2, induce on the symmetry axis a potential

$$\phi(z) = \frac{1}{\pi} V \beta(R). \tag{22}$$

Differentiating with respect to z gives the electric field on the symmetry axis

$$E_m(z) = \frac{zVR}{|z|\pi(z^2 + R^2)}, \tag{23}$$

induced by the pulsed monopoles. For an LCD with one set of electrodes grounded, the pulsed electric field for screen voltage pulse amplitude V at a distance z from the screen on the center line has an amplitude that is the sum of the parts (21) and (23). The resultant electric field in the back is relatively small, due to the change in sign in the monopole field that is caused by the factor z/|z|. Therefore, screen emissions in front of an LCD can be kept small simply by having the grounded electrodes in front.

As a check on the theory, the pulsed electric field emitted by the 3" LCD-TFT color screen of the camcorder mentioned above has been measured at eleven points on the center line of the screen, ranging from 4.0 cm to 7.5 cm. The pulsed image was produced by playing back the video recording of the 15" computer monitor that was made while running the VB**6** program discussed above, for a image intensity pulse frequency of ½ Hz, R=G=B=K, modulated around K=127 with an amplitude ΔK=51. After normalization to a uniform full screen image with 100% intensity modulation by using the nonlinear relation (20), the experimental data were fitted to the theoretical curve that expresses the sum of the fields (21) and (23). The effective screen pulse voltage amplitude V was found to be 2.1 volt. The relative standard deviation in V for the fit is 5.1%, which shows that theory and experiment are in fairly good agreement.

Certain monitors can cause excitation of sensory resonances even when the pulsing of displayed images is subliminal, i.e., unnoticed by the average person. When checking this condition on a computer monitor, a problem arises because of the rounding of RGB values to integers, as occurs in the VB**6** program. For small pulse amplitude the sine wave is thereby distorted into a square wave, which is easier to spot. This problem is alleviated somewhat by choosing ΔR=0, ΔG=0, and ΔB=2, since then the 8 rounded sine functions around the unit circle, multiplied with the pulse amplitude ΔB=2 become the sequence 1, 2 11 2, 1, −1 −2, −2, −1, etc, which is smoother to the eye than a square wave. Using the VB**6** program and the 15" computer monitor mentioned above with R=71, G=71, and B=233, a ½ Hz pulse modulation with amplitudes ΔR=ΔG=0 and ΔB=2 could not be noticed by the subject, and is therefore considered subliminal. It is of interest to calculate the screen emission for this case, and conduct a sensory resonance experiment as well. A distance z=60 cm was chosen for the calculation and the experiment. Using Eq. (20), the image intensity pulse modulation for the case is found to be 1.0% of the maximum intensity modulation. Using R=13.83 cm together with |V(0)|=266.2 V for the 15" computer monitor, and the theoretical graph **100** of FIG. **18**, the pulsed electric field at z=60 cm was found to have an amplitude of 138 mV/m. In view of the experimental results discussed in the '874 and '922 patents, such a field, used at a pulse frequency chosen appropriately for the ½ Hz sensory resonance and applied predominantly to the face, is expected to be sufficient for exciting the ½ Hz sensory resonance. A confirmation experiment was done by running the VB**6** program with the discussed settings and the 15" monitor. The center of the subject's face was positioned on the screen center line, at a distance of 60 cm from the screen. A frequency sweep of −0.1% per ten cycles was chosen, with an initial pulse frequency of 34 ppm. Full ptosis was experienced by the subject at 20 minutes into the run, when the pulse frequency was f=31.76 ppm. At 27 minutes into the run, the frequency sweep was reversed to +0.1% per ten cycles. Full ptosis was experienced at f=31.66 ppm. At 40 minutes into the run, the frequency sweep was set to −0.1% per ten cycles. Full ptosis occurred at f=31.44 ppm. The small differences in ptosis frequency are attributed to chemical detuning, discussed in the Background Section. It is concluded that the ½ Hz sensory resonance was excited in this experiment by screen emissions from subliminal image pulsing on the 15" computer monitor at a distance of 60 cm. For each implementation and embodiment discussed, the image pulsing may be subliminal.

The human eye is less sensitive to changes in hue than to changes in brightness. In composite video this fact allows using a chrominance bandwidth that is smaller than the luminance bandwidth. But it also has the consequence that pulsing of the chrominance for fixed luminance allows larger pulse amplitudes while staying within the subliminal pulse regime. Eq. (3) shows how to pulse the chrominance components R-Y and B-Y while keeping Y fixed; for the change in pixel intensity one then has

$$\Delta I_h = 0.491\Delta(R\text{-}Y) + 0.806\Delta(B\text{-}Y). \tag{24}$$

Luminance pulses with fixed chrominance give a change in pixel intensity

$$\Delta I_1 = 3\Delta Y. \tag{25}$$

Of course, pure chrominance pulses may be combined with pure luminance pulses; an instance of such combination has been mentioned above.

The subliminal region in color space needs to be explored to determine how marginally subliminal pulses ΔR, ΔG, and ΔB depend on RGB values. Prior to this, the condition for image pulses to be subliminal should not be phrased solely in terms of the percentage of intensity pulse amplitude. The subliminal image pulsing case considered above, where the monitor is driven by a VB**6** computer program with R=G=71, B=233, and ΔR=ΔG=0, ΔB=2 for full-screen images will be referred to as "the standard subliminal image pulsing".

In the interest of the public we need to know the viewing distances at which a TV with subliminally pulsed images can cause excitation of sensory resonances. A rough exploration is reported here which may serve as starting point for further work. The exploration is limited to estimating the largest distance $z=z_{max}$ along the center line of the 30" TV at which screen emissions can excite the ½ Hz resonance, as determined by the ptosis test. The TV is to display an image which undergoes the standard subliminal pulsing as defined above. It would be best to perform this test with the 30" TV on which the subliminally pulsed images are produced by means of a video. Since such a video was not available, the ptosis test was conducted instead with a pulsed electric field source consisting of a small grounded doublet electrode of the type discussed in the '874 patent. The doublet was driven with a sinusoidal voltage of 10 V amplitude, and the center of mass of the subject was located on the center line of the doublet at a distance $z=z_d=323$ cm. The doublet electrodes are rectangles of 4.4 cm by 4.7 cm. At the large distance z_d there is whole-body exposure to the field, so that the bulk effect discussed in the '874 patent comes into play, as is expected to happen also at the distance z_{max} from the 30" TV monitor. The subject was facing the "hot" electrode of the doublet, so that at the subject center the electric field was the

sum of the parts (21) and (23), for positive values of z. It was thought important to use a sine wave, since that would be the "commercially" preferred pulse shape which allows larger pulse amplitudes without being noticed. The only readily available sine wave generator with the required voltage was an oscillator with a rather coarse frequency control that cannot be set accurately, although the frequency is quite stable and can be measured accurately. For the experiment a pulse frequency of 0.506 Hz was accepted, although it differs considerably from the steady ptosis frequency for this case. The subject experienced several ptosis cycles of moderate intensity, starting 8 minutes into the experiment run. It is concluded that the ½ Hz sensory resonance was excited, and that the stimulating field was close to the weakest field capable of excitation. From Eqs. (21) and (23), the electric field pulse amplitude at the center of mass of the subject was found to be 7.9 mV/m. That an electric field with such a small pulse amplitude, applied to the whole body, is capable of exciting the ½ Hz sensory resonance is consistent with experimental results reported in the '874 patent, although these were obtained for the 2.4 Hz resonance. Next, the distance z_{max} was determined at which the 30" TV tube with 1% image intensity pulse amplitude produces an electric field with a pulse amplitude of 7.9 mV/m, along the center line of the screen. From Eqs. (13) and (19) one finds z_{max}=362.9 cm. At more than 11 feet, this is a rather large distance for viewing a 30" TV. Yet, the experiment and theory discussed show that the ½ Hz sensory resonance can be excited at this large distance, by pulsing the image intensity subliminally. Of course, the excitation occurs as well for a range of smaller viewing distances. It is thus apparent that the human nervous system can be manipulated by screen emissions from subliminal TV image pulses.

Windows 95, Windows 98, and Visual Basic are registered trademarks of Microsoft Corporation.

The invention is not limited by the embodiments shown in the drawings and described in the specification, which are given by way of example and not of limitation, but only in accordance with the scope of the appended claims.

I claim:

1. A method for manipulating the nervous system of a subject located near a monitor, the monitor emitting an electromagnetic field when displaying an image by virtue of the physical display process, the subject having a sensory resonance frequency, the method comprising:

creating a video signal for displaying an image on the monitor, the image having an intensity;

modulating the video signal for pulsing the image intensity with a frequency in the range 0.1 Hz to 15 Hz; and

setting the pulse frequency to the resonance frequency.

2. A computer program for manipulating the nervous system of a subject located near a monitor, the monitor emitting an electromagnetic field when displaying an image by virtue of the physical display process, the subject having cutaneous nerves that fire spontaneously and have spiking patterns, the computer program comprising:

a display routine for displaying an image on the monitor, the image having an intensity;

a pulse routine for pulsing the image intensity with a frequency in the range 0.1 Hz to 15 Hz; and

a frequency routine that can be internally controlled by the subject, for setting the frequency;

whereby the emitted electromagnetic field is pulsed, the cutaneous nerves are exposed to the pulsed electromagnetic field, and the spiking patterns of the nerves acquire a frequency modulation.

3. The computer program of claim **2**, wherein the pulsing has an amplitude and the program further comprises an amplitude routine for control of the amplitude by the subject.

4. The computer program of claim **2**, wherein the pulse routine comprises:

a timing procedure for timing the pulsing; and

an extrapolation procedure for improving the accuracy of the timing procedure.

5. The computer program of claim **2**, further comprising a variability routine for introducing variability in the pulsing.

6. Hardware means for manipulating the nervous system of a subject located near a monitor, the monitor being responsive to a video stream and emitting an electromagnetic field when displaying an image by virtue of the physical display process, the image having an intensity, the subject having cutaneous nerves that fire spontaneously and have spiking patterns, the hardware means comprising:

pulse generator for generating voltage pulses;

means, responsive to the voltage pulses, for modulating the video stream to pulse the image intensity;

whereby the emitted electromagnetic field is pulsed, the cutaneous nerves are exposed to the pulsed electromagnetic field, and the spiking patterns of the nerves acquire a frequency modulation.

7. The hardware means of claim **6**, wherein the video stream is a composite video signal that has a pseudo-dc level, and the means for modulating the video stream comprise means for pulsing the pseudo-dc level.

8. The hardware means of claim **6**, wherein the video stream is a television broadcast signal, and the means for modulating the video stream comprise means for frequency wobbling of the television broadcast signal.

9. The hardware means of claim **6**, wherein the monitor has a brightness adjustment terminal, and the means for modulating the video stream comprise a connection from the pulse generator to the brightness adjustment terminal.

10. A source of video stream for manipulating the nervous system of a subject located near a monitor, the monitor emitting an electromagnetic field when displaying an image by virtue of the physical display process, the subject having cutaneous nerves that fire spontaneously and have spiking patterns, the source of video stream comprising:

means for defining an image on the monitor, the image having an intensity; and

means for subliminally pulsing the image intensity with a frequency in the range 0.1 Hz to 15 Hz;

whereby the emitted electromagnetic field is pulsed, the cutaneous nerves are exposed to the pulsed electromagnetic field, and the spiking patterns of the nerves acquire a frequency modulation.

11. The source of video stream of claim **10** wherein the source is a recording medium that has recorded data, and the means for subliminally pulsing the image intensity comprise an attribute of the recorded data.

12. The source of video stream of claim **10** wherein the source is a computer program, and the means for subliminally pulsing the image intensity comprise a pulse routine.

13. The source of video stream of claim **10** wherein the source is a recording of a physical scene, and the means for subliminally pulsing the image intensity comprise:

pulse generator for generating voltage pulses;

light source for illuminating the scene, the light source having a power level; and

modulation means, responsive to the voltage pulses, for pulsing the power level.

14. The source of video stream of claim **10**, wherein the source is a DVD, the video stream comprises a luminance signal and a chrominance signal, and the means for subliminal pulsing of the image intensity comprise means for pulsing the luminance signal.

* * * * *

United States Patent [19]

Rabichev et al.

[11] **3,773,049**

[45] **Nov. 20, 1973**

[54] **APPARATUS FOR THE TREATMENT OF NEUROPSYCHIC AND SOMATIC DISEASES WITH HEAT, LIGHT, SOUND AND VHF ELECTROMAGNETIC RADIATION**

[76] Inventors: **Lev Yakovlevich Rabichev,** ulitsa 25 Oktyabrya, 80, kv. 7; **Vladislav Fedorovich Vasiliev,** ulitsa 25 Oktyabrya, 46, kv. 3; **Alexandr Sergeevich Putilin,** 1 pereulok Panfilova, 9-B, kv. 25; **Tatyana Grigorievna Ilina,** ulitsa Iskry, 25, kv. 1; **Petr Vasilievich Raku,** ulitsa Roz, 13, korpusl, kv. 73; **Leopold Pavlovich Kernitsky,** ulitsa Zelinskogo, 12, korpus4, kv. 55, all of Kishinev, U.S.S.R.

[22] Filed: **Nov. 13, 1970**

[21] Appl. No.: **89,374**

[52] **U.S. Cl.** ..... **128/362,** 128/1 C
[51] **Int. Cl.** **A61n 1/40**
[58] **Field of Search** ..... 128/1 C, 1 R, 1.3, 128/24.1, 362, 380, 399, 404, 410, 419 P, 422

[56] **References Cited**

UNITED STATES PATENTS

3,103,219	9/1963	Chadner	128/1 C
3,576,185	4/1971	Schulz et al.	128/1 C
3,213,851	10/1965	Currea	128/1 R
2,859,731	11/1958	Sutton	128/1 C
3,470,870	10/1969	Schoffer	128/1 C

FOREIGN PATENTS OR APPLICATIONS

619,129	3/1961	Italy	128/1 C
1,183,607	12/1964	Germany	128/1 C
826,766	1/1960	Great Britain	128/419 P

Primary Examiner—William E. Kamm
Attorney—Holman & Stern

[57] **ABSTRACT**

An apparatus for the treatment of neuropsychic and somatic disorders wherein light-, sound-, VHF electromagnetic field-pulses and radiation from light-, sound-, VHF electromcagnetic field- and heat-sources, respectively, are simultaneously applied by means of a control unit to the patient's central nervous system with a predermined repetition rate. The light radiation and sound radiation sources are made so as to exert an adequate and monotonous influence of the light-and sound-radiation on the patient's visual analyzers and auditory analyzers, respectively.

8 Claims, 2 Drawing Figures

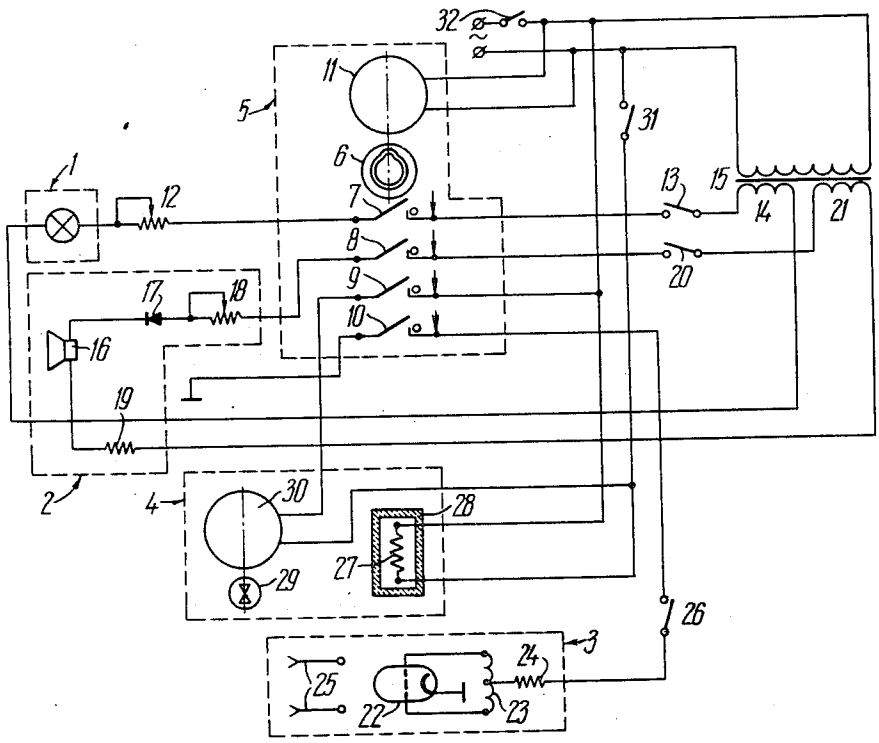

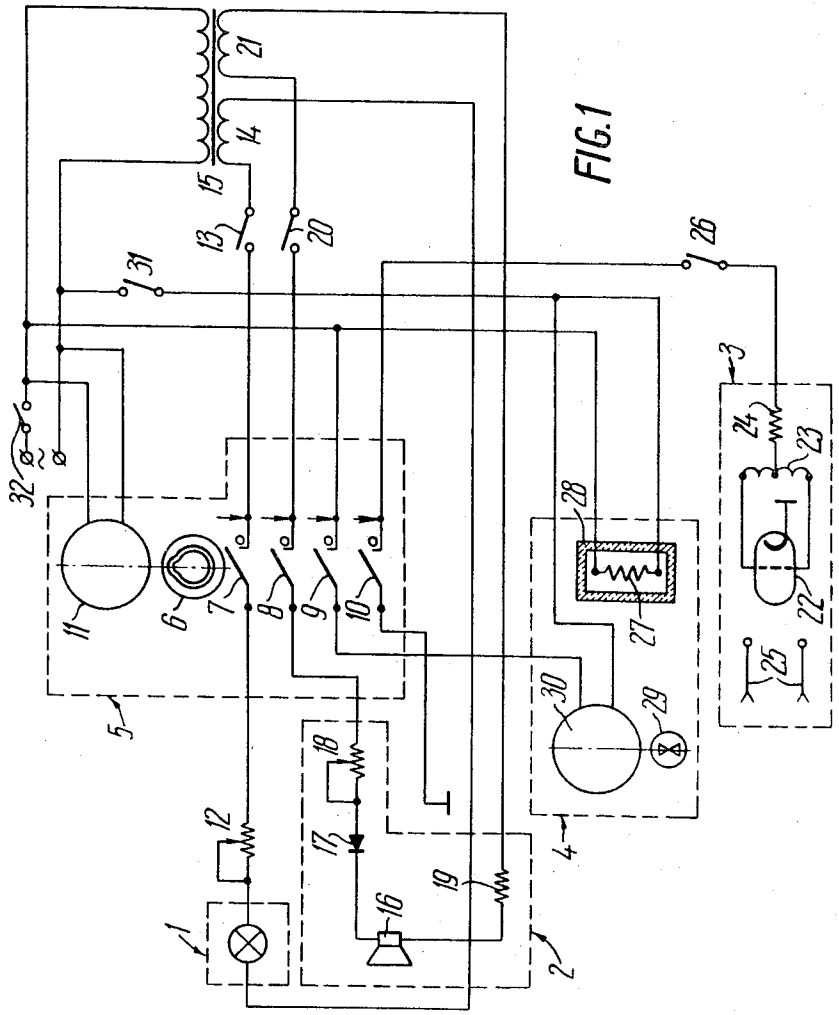
1
2
3
4
5
6
7
8
9
10
11
12
13
14
15
16
17
18
19
20
21
22
23
24
25
26
27
28
29
30
31
32

FIG. 1

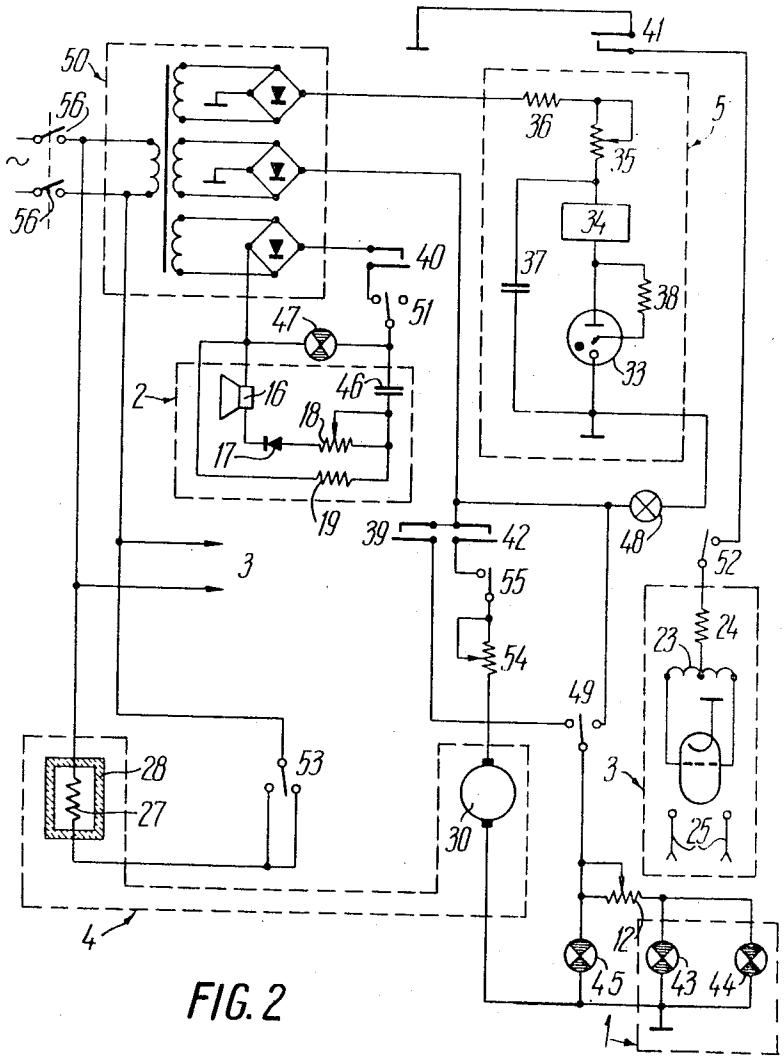
50
56
56
41
36
5
35
34
37
38
33
40
51
47
46
2
16
18
17
19
39
42
48
52
3
55
54
23
24
49
28
27
53
30
3
25
4
12
45
43
44
1

FIG. 2

APPARATUS FOR THE TREATMENT OF NEUROPSYCHIC AND SOMATIC DISEASES WITH HEAT, LIGHT, SOUND AND VHF ELECTROMAGNETIC RADIATION

The present invention relates to physiotherapeutic apparatus, and more particularly to apparatus for the treatment of inorganically caused neuropsychic and somatic disorders, such as neuroses, psychoses, insomnia, hypertension, tonic disease, ulcer, stammering, bronchial asthma, intestinal dyskinesia, cardioneurosis, vegeto-vascular neurosis, eczema, asthenic and reactive disturbances. The apparatus of the present invention may find successful application in sports- and military medicine, i.e., in such situations as:

the start of a crucial sports competition or a similar sports demonstration;

cases of extremely high neurotension, as observed in combatant unit soldiers and in patients of field military hospitals.

Known are apparatus for the treatment of neuropsychic and somatic disorders in which light and sound pulses are emitted by light radiation sources and sound radiation sources to act upon the patient's central nervous system.

In said apparatus use is made of light- and sound radiation sources. The sound emission includes speech sounds recorded on a magnetic tape, as well as ultrasound. Under the treatment conditions the patient's head and the upper portion of his body are enclosed in a chamber which is made in the form of a kind of sarcophagus.

Thus in the above-said apparatus, only one curative factor is employed, namely that of speech formulae of a hypnotic suggestion as recorded on a magnetic tape and designed to produce a suggestive effect via channels of the second signal system (intellect, mind, psyche). Whenever the patient is psychologically reluctant to admit suggestive formulae, such an apparatus is of no avail as far as that particular case is concerned. Light- and ultrasound emission, used in the apparatus of the prior art, do not, in fact, play an independent curative role, but are rather of an auxiliary nature, for their action on the patient's central nervous system is continuous and intended to inhibit the same so that an appropriate background could be prepared to facilitate the suggestive treatment itself. The background factors themselves are physiologically inadequate being beyond the ranges of aural and ocular perception and sometimes involving an adverse effect upon the patient's condition. It should be stressed that the chamber used in accomodating the patient's head and the upper portion of his body has an unfavourable effect upon the patient, because it is made, as said above in the form of a sarcophagus and may give rise to negative phychic responses.

The present invention is aimed at providing an apparatus for the treatment of neuropsychic and somatic diseases, which ensures a rhythmic and remotely controlled action of at least three physical factors upon the patient's nervous system.

With this and other objects in view, the invention resides in the apparatus for the treatment of neuropsychic and somatic diseases in which light pulses and sound pulses from light sources and sound sources, respectively, act upon the patient's central nervous system, wherein there is provided an VHF electromagnetic field source installed in the immediate proximity of the patient's ganglia, and a control unit which is electrically connected with the sources of light radiation, sound radiation and VHF electromagnetic field radiation and which effects control over these sources so as to enable said sources under control to send to the central nervous system simultaneous light pulses, sound pulses and VHF electromagnetic pulses at an assigned pulse repetition rate thereby causing a state of inhibition in the patient under treatment, the light radiation sources and sound radiation sources being embodied in such a way that an adequate and monotonous influence of the sound and light radiations is exerted upon the patient's visual analyser and auditory analyser.

In order to intensify the curative effect and to make for an accelerated transfer from vigilance to what is nearly normal physiological sleep it is reasonable that a source of heat radiation be added and installed in the immediate proximity to the patient's skin surface, said source being electrically connected with a control unit and controlled by the latter so that heat radiation is sent to the patient's skin surface simultaneously with the pulses from the VHF electromagnetic field source, light source and sound source, said puises following at an assigned repetition rate causing the inhibition to be irradiated.

The light radiation source may be made in the form of at least one lamp, blue or green in colour, which is installed at the patient's eye level.

When using an even number of lamps, said lamps are installed symmetrically in respect of the patient's saggital sinus plane.

The control unit may be embodied as a chopper in conjunction with a cam mechanism providing for generation of pulses at a certain repetition rate.

In order to extend the pulse repetition range it is reasonable that an electronic timer be provided including at least one thyratron.

With due regard to the patient's individual features said electronic timer should be equipped with a potentiometer to control the pulse repetition rate of VHF electromagnetic field radiation, light radiation and sound radiation, as well as heat radiation, said electronic timer being electrically connected with a potentiometer.

Due to such construction the present apparatus for the treatment of neuropsychic and somatic disorders allows improvement of the mobility and intensity of nervous processes, normalization of the affected functional derangements as apparent from the removal of pathological symptoms, decrease in manifestations of autonomic angioneurosis and neurotic symptoms, a longer and sounder sleep.

Other objects and advantages of the present invention will be made apparent upon a consideration of the specific illustrative embodiments as described herein with reference to the drawings, wherein:

FIG.I shows a schematic electrical circuit of one embodiment of an apparatus for the treatment of neuropsychic and somatic disorders;

FIG.2 is another embodiment of same.

The apparatus for the treatment of neuropsychic disorders comprises, in accordance with the present invention, source I through 4 (FIGS I and 2) of light radiation, sound radiation and VHF electromagnetic field radiation, heat radiation respectively, wherein light pulses, sound pulses, VHF electromagnetic pulses and

heat radiation act upon the central nervous system of a patient (not shown in the drawing). The apparatus also includes control unit 5 which is electrically connected with said sources I through 4 and controls the same so as to enable them to send to the central nervous system simultaneous light radiation pulses, sound radiation pulses, heat radiation pulses and VHF electromagnetic field radiation pulses at an assigned pulse repetition rate thereby causing a state of inhibition in the patient under treatment.

The sources I through 4 are oriented in respect of the patient as follows:

the light radiation source I is placed at the level of the patient's eyes at a distance of 40 to 50 cm therefrom;

the sound radiation source 2 is placed in the proximity of the patient under treatment at a distance of 40 to 50 cm him;

the VHF electromagnetic field radiation source 3 is placed in the immediate proximity of the patient's ganglia, preferably at the level of carotid sinuses, 3 to 4 cm away from the patient's skin surface, as is the case with the present apparatus;

the heat radiation source 4 is also placed close to the patient's skin surface, i.e., in the immediate proximity of the face skin surface.

The sources I and 2 of light radiation and sound radiation, respectively, provide for an adequate and monotonous action thereof upon the visual and auditory analyzers.

According to the first embodiment of the apparatus for the treatment of neuropsychic and somatic disorders (FIG.1) the control unit 5 is a chopper with a cam mechanism 6 and contacts 7 through 10. The cams of the cam mechanism 6 are rotated by an electric motor II fed from a power supply unit, which is mains supply in this specific case. The electric motor II makes 60 r.p.m. thereby providing for an assigned pulse repetion rate of sixty pulses per minute of light radiation pulses, sound radiation pulses, VHF electromagnetic field radiation pulses and heat radiation pulses.

Light radiation source I is an incandescent lamp, blue in colour, which is electrically connected with a secondary winding 14 of a transformer 15 through a resistor 12 which serves to control the intensity of light radiation, contacts 7 of the vibrator and a switch 13, the transformer 15 being in turn electrically connected with the a.c. mains.

Sound radiation source 2 is a small-size loudspeaker 16 which is electrically connected with another secondary winding 21 of the transformer 15 through a diode 17, variable resistor 18, constant resistor 19, contacts 8 of the vibrator and switch 20. The sound radiation source provides for an imitation of rain drop noise. Besides, it can be employed to imitate the noise of the surf.

The VHF electromagnetic field radiation sources 3 is a push-pull oscillator 22 with an inductance coil 23 and resistor 24. Electrodes 25 make the load of said oscillator 22. The VHF electromagnetic field source is fitted with a switch 26 and controlled by the contacts 10 of the chopper.

The heat radiation source 4 is a hot spiral wire 27 which is surrounded by a screen 28 made of thermal insulator. The heat flow from the hot wire is removed by means of a blower 29 rotated by an electric motor 30. The heat radiation 4 is controlled by a switch 31 via the contacts 9 of the vibrator.

The present device is equipped with a common mains switch 32. The sources I, 2 and 4 of light radiation, sound radiation and heat radiation, respectively, are mounted in the same casing (not shown in the drawing).

According to the second embodiment of the present apparatus the control unit 5 is an electronic timer made of cold cathode thyratron 33 with an electromagnetic relay 34, potentiometer 35 and resistor 36 in the plate circuit thereof. The electronic timer also includes a capacitor 37 and a resistor 38. The electronic timer has contacts 39 through 42. The potentiometer 35 controls the assigned pulses repetition rate of VHF electromagnetic field radiation, light radiation, sound radiation and heat radiation within the 10 to 100 pulses per second range, depending upon the patient's individual features.

The light radiation source I includes two incandescent lamps 43 and 44, green in colour, which are installed symmetrically in respect of the patient's sagittal sinus plane, at the eye level. This position provides for a better therapeutic effect because the patient is no longer subject to light beam convergence action whenever use is made of the Paurquignet effect. The light radiation intensity is controlled by the resistor 12. The light source I is equipped with a signal lamp 45.

The sound radiation source 2 is not substantially different from that in the first embodyment as described above. The difference between them consists in the presence of a capacitor 46. The sound radiation source 2 is equipped with a signal lamp 47.

The VHF electromagnetic field source is the same as that of the first embodiment, with a signal lamp 48 added.

The heat radiation source 4 is the same as that of the first embodiment but the blower is not shown in FIG.2.

The light radiation source I is electrically connected with a bridge-type d.c. power supply unit 50 through a resistor 12, switch 49 and contacts 39 of the electronic timer.

The sound radiation source 2 is electrically connected with the d.c. power supply unit 50 through a switch 51 and contacts 40 of the electronic timer.

The VHF electromagnetic field source 3 is equipped with a switch 52.

The hot spiral wire 27 of the heat radiation source 4 is fed from the mains through a switch 53, while the electric motor 30 of the blower 29 is fed from the d.c. power supply unit 50 via a variable resistor 54, switch 55 and contacts 42 of the electronic timer.

In accordance with the second embodiment of the present apparatus it can be switched on and off by means of the mains switch 56.

The principle of operation of the apparatus according to the first embodiments as follows.

The patient is either put to bed or seated in a deep arm-chair. The apparatus is moved to the head of said bed or chair. The electrodes 25 of the VHF electromagnetic field source are mounted at the level of carotid sinuses 3 to 4 centimetres away from the surfice of the neck skin.

The casing, with the sources I, 2 and 4 of light radiation, sound radiation and heat radiation mounted therein, is placed above the patient's head at a distance from 40 to 50 centimetres from his face. The apparatus is switched on by means of the mains switch 32. The switches 13, 20, 26 and 31 are used to turn on the

sources I through **4** of light radiation, sound radiation, VHF electromagnetic field radiation and heat radiation.

Due to this procedure the patient's receptors are simultaneously acted upon by 60 p/min pulses of blue light radiation, sound radiation which is made similar to the rain drop noise, VHF electromagnetic field radiation as well as by heat radiation, all these having an effect on the retina, on the auditory sensory endings, carotide sensory ganglia and thermal receptors in the face skin, respectively.

A simultaneous transmission of the pulses and heat radiation is due to contacts **7** through **10** of the vibrator. The length of the pulse effect added to that of heat radiation as obtained by means of the cam mechanism **6** amounts to 15×10^{-2} sec.

The nerve pulses due to the action by stimuli, such as pulses of light radiation, sound radiation, VHF electromagnetic pulse radiation, as well as heat radiation, are transmitted to the thalamus opticus (sensory collector) via sensory nerve filament and sympathetic nerve trunk.

The simultaneous arrival of brain wave impulses at the thalamus opticus provides for an intensified rhythmic activity of its neural formations due to the interference effect. The rhythm of superimposed stimuli as then synchronized with the activities of the thalamus opticus neural formations (external synchronization). The rhythm as assigned by the apparatus is adopted by the subcortical neural formations being transmitted from the thalamus opticus to the subcortical fields of the visual, auditory and cutaneous analyzers. In the appropriate cortical centres of visual, auditory, and cutaneous analyzers. In the appropriate cortical centres of visual analysers the mono-tonous pulses cause focuses of inhibition to be formed which would intensify in strength and irradiate in space in the course of the same treatment session as well as due to the successive sessions. The primary focus inhibition, once and whenever it occured, would spread all over the cortical field bringing about natural sleep. During the initial treatment sessions the extent of irradiation may be quite insignificant because of the patient's inhibition inertia due to this or that neuropsychic disorder in the patient under treatment. In the course of successive treatment session the trace responses as retained in above-said cortical centres would cause the stimuli to be accumulated so that the inhibition tends to be intensified.

Besides, in the course of successive treatment sessions new conditioned reflex associations are put into effect either because of the procedure itself or due to its specific time, or because of any other isolated factor, all contributing to the irradiation of inhibition phenomena throughout the cortical centres in the cerebral hemispheres.

The whole system of stimuli which is addressed to the patient's organism makes use of the first signal system channels, i.e., the receptor zones of the appropriate analyzers, so that the second signal system channels (mind, intellect, psyche) are avoided thereby providing for a curative effect, no matter the patient's psychic condition or his attitude towards the treatment procedure. Besides, the second signal system channels, once unblocked, affords some opportunities for a simultaneous suggestive and rhythm therapy action thereby increasing the treatment effect.

The present invention makes use of a plurality of sources which are distant stimuli of different physical nature being such oscillatory phenomena as act upon the receptors to the adequate physiologic extents giving rise to no alterations which would exceed the physiologic constants limits involved. That is why the action exerted upon the patient's organism is mild and humane. Besides, provision is made both for a separate control of every factor and for a joint application of a required combination thereof so that the electrohypnotic treatment could be quite individual.

The second embodiment of this apparatus is based on the same principles of operation as the first embodiment thereof. The difference can be described as follows.

By means of a potentiometer **35** in conjunction with the electronic timer the pulse repetition rate of light pulses, sound pulses, VHF electromagnetic field pulses, as well as heat radiation, can be made to vary with due regard to the patient's individual characteristics.

The possibility of alterations both in pulse repetition rate and in the operation made of the apparatus under consideration provides for a controlled variation of biorhythms in the appropriate range as suggested by the principle of rhythm assimilation named after A.A.Ukhtomsky.

In the second embodiment of the apparatus, the light radiation pulses are sent by incandescent lamps **43** and **44**, green in color, which are mounted at eye level and symmetrical with respect to sinus plane, so that the convergence effect is eliminated (the eyeball convergence would give birth to a stimulation focus thereby preventing the progress of somnolescent inhibition).

The application of green light permits utilization of Paurquignet's effect to achieve an optimum influence on the visual analyzers.

The following procedure is recommended for the treatment of neuropsychic and somatic disorders using the apparatus of the present invention.

At a first treatment session the duration of the VHF exposure should be 10 minutes, at a second one - 15 minutes, at a third one - 20 minutes, at a fourth one - 25 minutes, and at all succeeding sessions it should be 30 minutes. The other radiation sources may be operated for 30 to 60 minutes. On the average, 30 minutes is required for one treatment-session. The patient may lie with his face upwards and eyes open, though it would be better for him to close his eyes to be ready to fall asleep. At the first treatment-session, the intensities of sound-, light-, and heat-radiation are selected to suit the particular patient.

Using the second embodiment of the apparatus, during the first minutes of the treatment session, the pulse repetition rate should be 20 to 40 pulses per minute (instead of 50 to 60 pulses per minute which is the normal case).

During the successive treatment-sessions the intensity of the exposure may remain the same as that used at the first session. The pulse repetition rate, however, may be gradually decreased later on from session to session.

The development of inhibition processes at a treatment-session is characterized by a very gradual progress. This manifests itself in a somewhat slower pulse, lower integument temperature and arterial pressure, relaxation of sceletal muscles, onset of somnolescence.

With each successive session the onset of all these phenomena takes less time while the phenomena themselves become more pronounced, bringing about a general improvement of the patient's state of health accompanied with a better sleep at night.

During the treatment session, the patient experiences gentle, tranquilizing sensations, which result in psychical relaxation and, gradual transference from vigilance to sleep. An active reproduction of inhibition of processes, if regularly repeated, each treatment-session makes a sort of training the patient for a better neurodynamic performance.

Clinical applications of the proposed apparatus are as follows. The apparatus of the present invention may be used for the treatment of patients in the 4 to 70 years bracket. One hundred patients, 4 to 18 years old, and 200 patients over 18 years old underwent the appropriate treatment. Among these patients were the following cases: neurasthenia, neurosis involving delusion, insomnia, asthenic, depressive and reactive states, postinfections and traumatic cerebrasthenia, diencephalic syndrome, vegeto-vascular dystonia, hypertension, bronchial asthma, stammering, rheumatic Sydenham's chorea.

The treatment was effected with respect to ambulatory clinic- and hospital patients.

No side effects, complications or harmful actions were observed.

Contraindications: infectious diseases, cancer, schizophrenia in its advanced stage (e.g., involving delirious phenomena), and hyperthyreosis.

The apparatus of the present invention for treating neuropsychic and somatic diseases is a physical therapy apparatus to be used for treating insomnia, hypertension, infantile stammering, and other diseases arising from nervous exhaustion and prostration, nervous break-down.

This apparatus is reliable, convenient, safe and simple to control and use, portable, and if necessary, may be placed at the bed-head when dealing with a bed case.

The use of the apparatus is not confined to any age-bracket. Even infants were effectively treated. The apparatus may be used in hospitals as well as in outpatient clinics.

The operation of the apparatus is quite economical: its power consumption is very small. The treatment sessions are effected by para medical personnel. Not to disturb the patient a remote control from an adjacent room may be exercised.

For the first time in medical practice, thanks to the apparatus of the present invention, use is made of a complex of four physical factors acting simultaneously on the respective receptors, said factors operating with predetermined rhythm pattern, and the sources of respective radiation being placed at a predetermined distance from the patient's receptors, so that it could bring about such a state of the nervous system which is characteristic of rest and sleep.

The synergetic action of the factors used in the apparatus result not in a simple sum of respective effects produced by each of said factors, but creates quite a new qualitative phenomenon, wherein interference - and resonance-processes, associated with the radiation from the pertinent sources, cause the inhibition process to be irradiated within the brain centres, which is a distinguishing feature of the present type rhythm therapy.

What is claimed is:

1. An apparatus for the treatment of neuropsychic and somatic diseases, said apparatus comprising a control unit means for simultaneously periodically activating apparatus connected thereto in a pulsed manner at a selected repetition rate; a light-radiation source essentially comprising at least one electric bulb electrically connected with said control unit means, such that light pulses are generated by said light-radiation source influencing the central nervous system of the patient having one of said diseases who faces said source; a sound radiation source essentially comprising an electric generator of pulse oscillations, a small dynamic loud-speaker means for converting said oscillations into acoustic signals imitating the sound of falling drops of water, said electric generator being electrically connected with said control unit means for actuation thereby whereby sound pulses of said sound-radiation source influence the central nervous system of the patient; a VHF electromagnetic-field source essentially comprising a generator of sinusoidal electric oscillations of the waves metric range, electrically connected with said control unit means and disposed in proximity to the patient's ganglia, pulses from said VHF electromagnetic field source acting upon the nervous system of the patient; said light-radiation source producing an adequate and monotonous action of the light-radiation of the patient's visual analyzer; said sound radiation source producing an adequate and monotonous influence of the sound radiation on the patient's auditory analyzer; said control unit means controlling said light-radiation, sound-radiation and VHF electromagnetic-field source so as to provide for a simultaneous generation of said light, sound and VHF electromagnetic pulses and directing said pulses to act upon the patient's central nervous system, all said pulses following at a predetermined repetition rate and ensuring suppression of the patient's nervous activity; and a power supply means to supply said lightradiation, sound-radiation and VHF electromagnetic-field sources and said control unit.

2. An apparatus according to claim 9, further including a heat radiation source comprising an electrical coil surrounded by a heat-insulating shield and provided with an air-forcing motor, said heat source being disposed in the proximity of the patient's integument, said motor of said heat-radiation source being electrically connected with said control unit means and controlled thereby so as to ensure a heat irradiation flow onto the patient's integument at the same time as said VHF electromagnetic-field pulses and sound pulses are sent at an assigned repetition rate, so as to contribute to the inhibition of the patient's nervous activity.

3. An apparatus according to claim 1, wherein said light-radiation source comprises at least one blue-light lamp adapted to be placed at the level of the patient's eyes.

4. An apparatus according to claim 1, wherein said light-radiation source comprises at least one green-light lamp adapted to be placed at the level of the patient's eyes.

5. An apparatus according to claim 4, wherein an even number of said green-light lamps are provided and are adapted to be arranged symmetrically with respect to the saggital plane of the patient and at a minimal angle relative to the axis of the respective eye.

6. An apparatus according to claim 1, wherein said electromagnetic field source comprises an oscillator means having a control means, and wherein said control unit means is a chopper provided with a rotatable cam gear having electric contacts which periodically connect said power supply source with the circuit of the incandescent lamps, with the electric generator of pulse oscillations which are converted in a small dynamic loudspeaker into acoustic signals imitating the sound of falling drops of water, as well as grounding the control means of the oscillator means.

7. An apparatus according to claim 1, wherein said electromagnetic field source comprises an oscillator means having a control means, and wherein said control unit means comprises an electronic timer means having at least one thyratron and a resistor-capacitor delay trigger circuit means therefor, said thyratron including an anode circuit comprising a series connected electro-mechanical relay having contacts connecting the power supply source with the circuit of the incandescent lamps, with the electric generator of pulse oscillations converted in a small dynamic loudspeaker into acoustic signals imitating the sound of falling drops of water, as well as grounding the control means of the oscillator means.

8. An apparatus according to claim 7, further including a heat radiation source, and wherein said electronic timer having at least one thyratron with an anode circuit comprising a series connected electro-mechanical relay having contacts connecting the power supply source with the circuit of the incandescent lamps, with the electric generator of pulse oscillations converted in a small dynamic loudspeaker into acoustic signals imitating the sound of falling drops of water, as well as grounding the grid of the oscillator means, further connects the power supply with said heat radiation source, and has a potentiometer electrically connected with said timer to provide for a predetermined repetition rate of said VHF electromagnetic-field, light and sound pulses, and for the control of said heat radiation depending on the individual features of the patient.

* * * * *

United States Patent [19]

Malech

[11] **3,951,134**

[45] **Apr. 20, 1976**

[54] **APPARATUS AND METHOD FOR REMOTELY MONITORING AND ALTERING BRAIN WAVES**

[75] Inventor: **Robert G. Malech,** Plainview, N.Y.

[73] Assignee: **Dorne & Margolin Inc.,** Bohemia, N.Y.

[22] Filed: **Aug. 5, 1974**

[21] Appl. No.: **494,518**

[52] **U.S. Cl.** ..... **128/2.1 B**

[51] **Int. Cl.**[2] **A61B 5/04**

[58] **Field of Search** ..... 128/1 C, 1 R, 2.1 B, 128/2.1 R, 419 R, 422 R, 420, 404, 2 R, 2 S, 2.05 R, 2.05 V, 2.05 F, 2.06 R; 340/248 A, 258 A, 258 B, 258 D, 229

[56] **References Cited**

UNITED STATES PATENTS

2,860,627	11/1958	Harden et al.	128/2.1 B
3,096,768	7/1963	Griffith, Jr.	128/420
3,233,450	2/1966	Fry	128/2.1 R
3,483,860	12/1969	Namerow	128/2.05 F
3,495,596	2/1970	Condict	128/1 C
3,555,529	1/1971	Brown et al.	128/2.1 R
3,773,049	11/1973	Rabichev et al.	128/1 C
3,796,208	3/1974	Bloice	128/2 S

Primary Examiner—William E. Kamm
Attorney, Agent, or Firm—Darby & Darby

[57] **ABSTRACT**

Apparatus for and method of sensing brain waves at a position remote from a subject whereby electromagnetic signals of different frequencies are simultaneously transmitted to the brain of the subject in which the signals interfere with one another to yield a waveform which is modulated by the subject's brain waves. The interference waveform which is representative of the brain wave activity is re-transmitted by the brain to a receiver where it is demodulated and amplified. The demodulated waveform is then displayed for visual viewing and routed to a computer for further processing and analysis. The demodulated waveform also can be used to produce a compensating signal which is transmitted back to the brain to effect a desired change in electrical activity therein.

11 Claims, 2 Drawing Figures

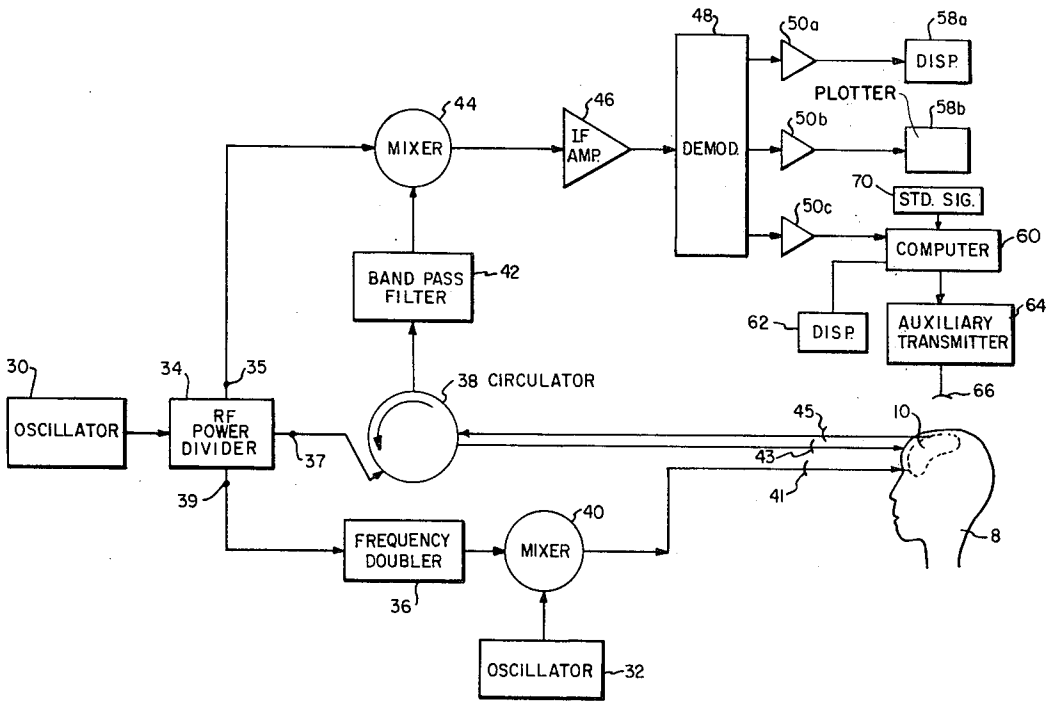

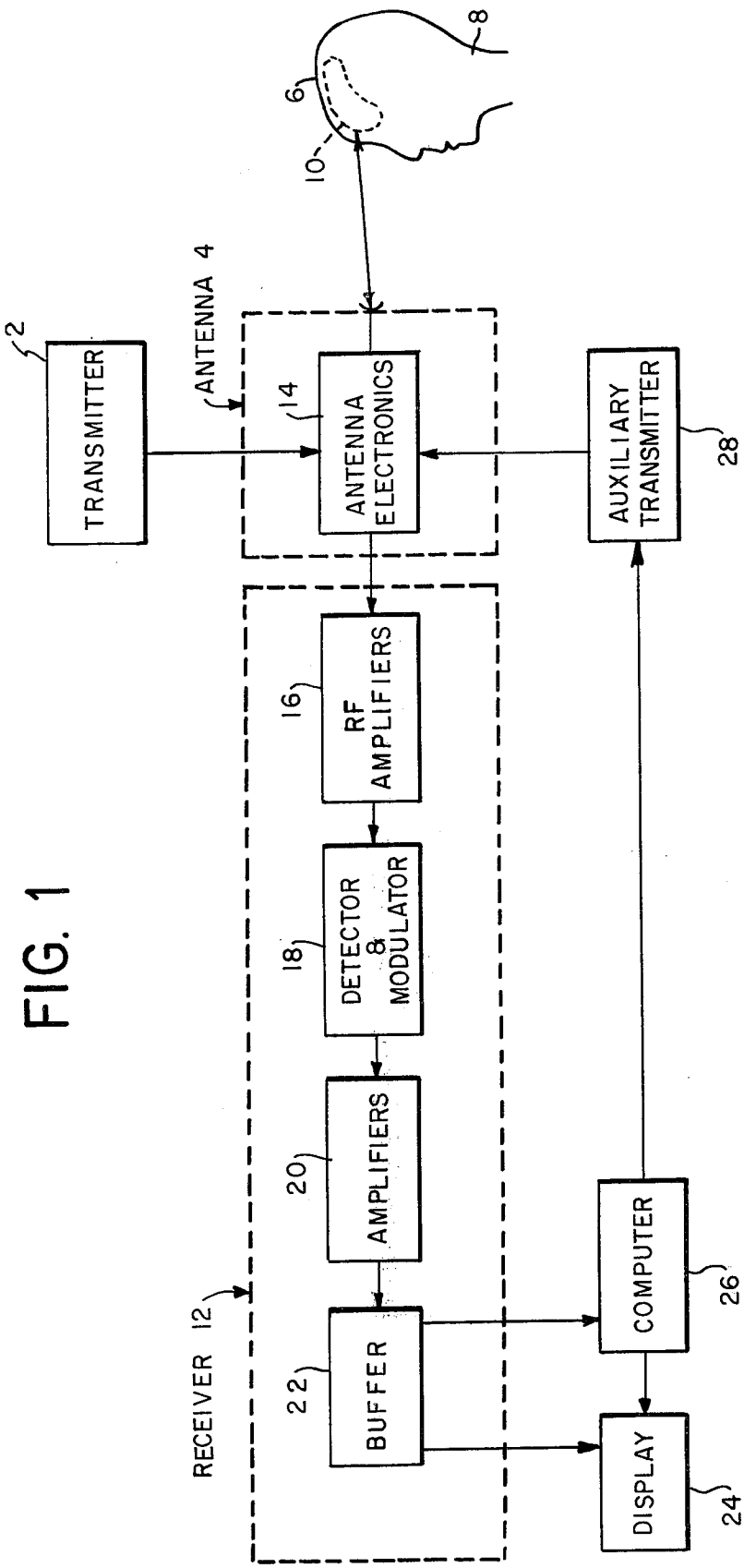
TRANSMITTER
2
ANTENNA 4
ANTENNA ELECTRONICS
14
AUXILIARY TRANSMITTER
28
8
6
10
RECEIVER 12
RF AMPLIFIERS
16
DETECTOR & MODULATOR
18
AMPLIFIERS
20
BUFFER
22
COMPUTER
26
DISPLAY
24

FIG. 1

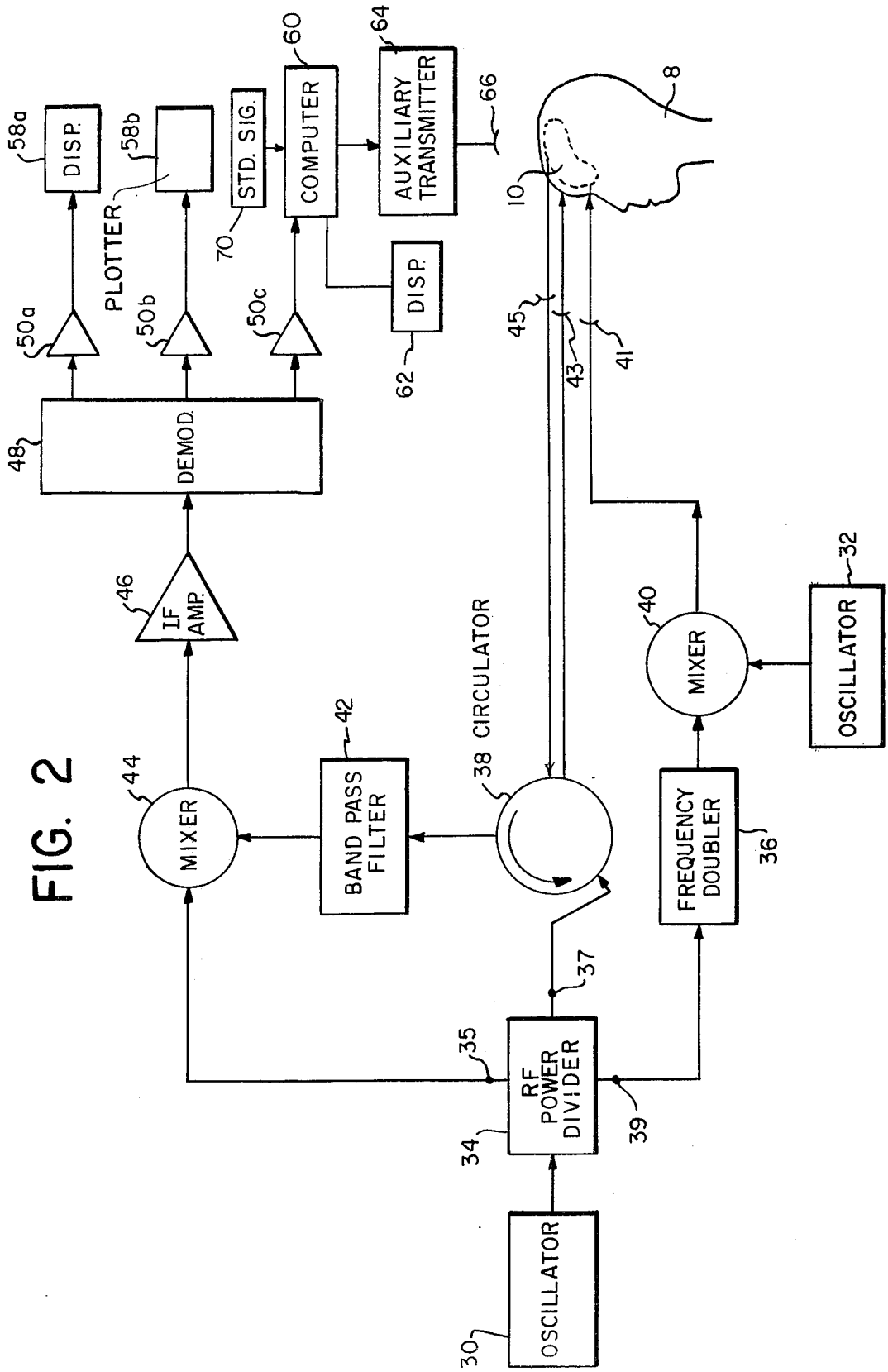
DISP.
58a
58b
PLOTTER
50a
50b
50c
STD. SIG.
70
COMPUTER
60
AUXILIARY TRANSMITTER
64
66
DISP.
62
8
10
45
43
41
48
DEMOD.
46
IF AMP.
44
MIXER
42
BAND PASS FILTER
38 CIRCULATOR
40
MIXER
32
OSCILLATOR
FREQUENCY DOUBLER
36
37
35
RF POWER DIVIDER
34
39
30
OSCILLATOR

FIG. 2

APPARATUS AND METHOD FOR REMOTELY MONITORING AND ALTERING BRAIN WAVES

BACKGROUND OF THE INVENTION

Medical science has found brain waves to be a useful barometer of organic functions. Measurements of electrical activity in the brain have been instrumental in detecting physical and psychic disorder, measuring stress, determining sleep patterns, and monitoring body metabolism.

The present art for measurement of brain waves employs electroencephalographs including probes with sensors which are attached to the skull of the subject under study at points proximate to the regions of the brain being monitored. Electrical contact between the sensors and apparatus employed to process the detected brain waves is maintained by a plurality of wires extending from the sensors to the apparatus. The necessity for physically attaching the measuring apparatus to the subject imposes several limitations on the measurement process. The subject may experience discomfort, particulary if the measurements are to be made over extended periods of time. His bodily movements are restricted and he is generally confined to the immediate vicinity of the measuring apparatus. Furthermore, measurements cannot be made while the subject is conscious without his awareness. The comprehensiveness of the measurements is also limited since the finite number of probes employed to monitor local regions of brain wave activity do not permit observation of the total brain wave profile in a single test.

SUMMARY OF THE INVENTION

The present invention relates to apparatus and a method for monitoring brain waves wherein all components of the apparatus employed are remote from the test subject. More specifically, high frequency transmitters are operated to radiate electromagnetic energy of different frequencies through antennas which are capable of scanning the entire brain of the test subject or any desired region thereof. The signals of different frequencies penetrate the skull of the subject and impinge upon the brain where they mix to yield an interference wave modulated by radiations from the brain's natural electrical activity. The modulated interference wave is re-transmitted by the brain and received by an antenna at a remote station where it is demodulated, and processed to provide a profile of the suject's brain waves. In addition to passively monitoring his brain waves, the subject's neurological processes may be affected by transmitting to his brain, through a transmitter, compensating signals. The latter signals can be derived from the received and processed brain waves.

OBJECTS OF THE INVENTION

It is therefore an object of the invention to remotely monitor electrical activity in the entire brain or selected local regions thereof with a single measurement.

Another object is the monitoring of a subject's brain wave activity through transmission and reception of electromagnetic waves.

Still another object is to monitor brain wave activity from a position remote from the subject.

A further object is to provide a method and apparatus for affecting brain wave activity by transmitting electromagnetic signals thereto.

DESCRIPTION OF THE DRAWINGS

Other and further objects of the invention will appear from the following description and the accompanying drawings, which form part of the instant specification and which are to be read in conjunction therewith, and in which like reference numerals are used to indicate like parts in the various views;

FIG. **1** is a block diagram showing the interconnection of the components of the apparatus of the invention;

FIG. **2** is a block diagram showing signal flow in one embodiment of the apparatus.

DESCRIPTION OF THE PREFERRED EMBODIMENT

Referring to the drawings, specifically FIG. **1**, a high frequency transmitter **2** produces and supplies two electromagnetic wave signals through suitable coupling means **14** to an antenna **4.** The signals are directed by the antenna **4** to the skull **6** of the subject **8** being examined. The two signals from the antenna **4,** which travel independently, penetrate the skull **6** and impinge upon the tissue of the brain **10.**

Within the tissue of the brain **10,** the signals combine, much in the manner of a conventional mixing process technique, with each section of the brain having a different modulating action. The resulting waveform of the two signals has its greatest amplitude when the two signals are in phase and thus reinforcing one another. When the signals are exactly 180° out of phase the combination produces a resultant waveform of minimum amplitude. If the amplitudes of the two signals transmitted to the subject are maintained at identical levels, the resultant interference waveform, absent influences of external radiation, may be expected to assume zero intensity when maximum interference occurs, the number of such points being equal to the difference in frequencies of the incident signals. However, interference by radiation from electrical activity within the brain **10** causes the waveform resulting from interference of the two transmitted signals to vary from the expected result, i.e., the interference waveform is modulated by the brain waves. It is believed that this is due to the fact that brain waves produce electric charges each of which has a component of electromagnetic radiation associated with it. The electromagnetic radiation produced by the brain waves in turn reacts with the signals transmitted to the brain from the external source.

The modulated interference waveform is re-transmitted from the brain **10,** back through the skull **6.** A quantity of energy is re-transmitted sufficient to enable it to be picked up by the antenna **4.** This can be controlled, within limits, by adjusting the absolute and relative intensities of the signals, originally transmitted to the brain. Of course, the level of the transmitted energy should be kept below that which may be harmful to the subject.

The antenna passes the received signal to a receiver **12** through the antenna electronics **14.** Within the receiver the wave is amplified by conventional RF amplifiers **16** and demodulated by conventional detector and modulator electronics **18.** The demodulated wave, representing the intra-brain electrical activity, is amplified by amplifiers **20** and the resulting information in electronic form is stored in buffer circuitry **22.** From the buffers **22** the information is fed to a suitable visual

display **24**, for example one employing a cathode ray tube, light emitting diodes, liquid crystals, or a mechanical plotter. The information may also be channeled to a computer **26** for further processing and analysis with the output of the computer displayed by heretofore mentioned suitable means.

In addition to channeling its information to display devices **24**, the computer **26** can also produce signals to control an auxiliary transmitter **28**. Transmitter **28** is used to produce a compensating signal which is transmitted to the brain **10** of the subject **8** by the antenna **4**. In a preferred embodiment of the invention, the compensating signal is derived as a function of the received brain wave signals, although it can be produced separately. The compensating signals affect electrical activity within the brain **10**.

Various configurations of suitable apparatus and electronic circuitry may be utilized to form the system generally shown in FIG. **1** and one of the many possible configurations is illustrated in FIG. **2**. In the example shown therein, two signals, one of 100 MHz and the other of 210 MHz are transmitted simultaneously and combine in the brain **10** to form a resultant wave of frequency equal to the difference in frequencies of the incident signals, i.e., 110 MHz. The sum of the two incident frequencies is also available, but is discarded in subsequent filtering. The 100 MHz signal is obtained at the output **37** of an RF power divider **34** into which a 100 MHz signal generated by an oscillator **30** is injected. The oscillator **30** is of a conventional type employing either crystals for fixed frequency circuits or a tunable circuit set to oscillate at 100 MHz. It can be a pulse generator, square wave generator or sinusoidal wave generator. The RF power divider can be any conventional VHF, UHF or SHF frequency range device constructed to provide, at each of three outputs, a signal identical in frequency to that applied to its input.

The 210 MHz signal is derived from the same 100 MHz oscillator **30** and RF power divider **34** as the 100 MHz signal, operating in concert with a frequency doubler **36** and 10 MHz oscillator **32**. The frequency doubler can be any conventional device which provides at its output a signal with frequency equal to twice the frequency of a signal applied at its input. The 10 MHz oscillator can also be of conventional type similar to the 100 MHz oscillator herebefore described. A 100 MHz signal from the output **39** of the RF power divider **34** is fed through the frequency doubler **36** and the resulting 200 MHz signal is applied to a mixer **40**. The mixer **40** can be any conventional VHF, UHF or SHF frequency range device capable of accepting two input signals of differing frequencies and providing two output signals with frequencies equal to the sum and difference in frequencies respectively of the input signals. A 10 MHz signal from the oscillator **32** is also applied to the mixer **40**. The 200 MHz signal from the doubler **36** and the 10 MHz signal from the oscillator **32** combine in the mixer **40** to form a signal with a frequency of 210 MHz equal to the sum of the frequencies of the 200 MHz and 10 MHz signals.

The 210 MHz signal is one of the signals transmitted to the brain **10** of the subject being monitored. In the arrangement shown in FIG. **2**, an antenna **41** is used to transmit the 210 MHz signal and another antenna **43** is used to transmit the 100 MHz signal. Of course, a single antenna capable of operating at 100 MHz and 210 MHz frequencies may be used to transmit both signals. The scan angle, direction and rate may be controlled mechanically, e.g., by a reversing motor, or electronically, e.g., by energizing elements in the antenna in proper synchronization. Thus, the antenna(s) can be of either fixed or rotary conventional types.

A second 100 MHz signal derived from output terminal **37** of the three-way power divider **34** is applied to a circulator **38** and emerges therefrom with a desired phase shift. The circulator **38** can be of any conventional type wherein a signal applied to an input port emerges from an output port with an appropriate phase shift. The 100 MHz signal is then transmitted to the brain **10** of the subject being monitored via the antenna **43** as the second component of the dual signal transmission. The antenna **43** can be of conventional type similar to antenna **41** herebefore described. As previously noted, these two antennas may be combined in a single unit.

The transmitted 100 and 210 MHz signal components mix within the tissue in the brain **10** and interfere with one another yielding a signal of a frequency of 110 MHz, the difference in frequencies of the two incident components, modulated by electromagnetic emissions from the brain, i.e., the brain wave activity being monitored. This modulated 110 MHz signal is radiated into space.

The 110 MHz signal, modulated by brain wave activity, is picked up by an antenna **45** and channeled back through the circulator **38** where it undergoes an appropriate phase shift. The circulator **38** isolates the transmitted signals from the received signal. Any suitable diplexer or duplexer can be used. The antenna **45** can be of conventional type similar to antennas **41** and **43**. It can be combined with them in a single unit or it can be separate. The received modulated 110 MHz signal is then applied to a band pass filter **42**, to eliminate undesirable harmonics and extraneous noise, and the filtered 110 MHz signal is inserted into a mixer **44** into which has also been introduced a component of the 100 MHz signal from the source **30** distributed by the RF power divider **34**. The filter **42** can be any conventional band pass filter. The mixer **44** may also be of conventional type similar to the mixer **40** herebefore described.

The 100 MHz and 110 MHz signals combine in the mixer **44** to yield a signal of frequency equal to the difference in frequencies of the two component signals, i.e., 10 MHz still modulated by the monitored brain wave activity. The 10 MHz signal is amplified in an IF amplifier **46** and channeled to a demodulator **48**. The IF amplifier and demodulator **48** can both be of conventional types. The type of demodulator selected will depend on the characteristics of the signals transmitted to and received from the brain, and the information desired to be obtained. The brain may modulate the amplitude, frequency and/or phase of the interference waveform. Certain of these parameters will be more sensitive to corresponding brain wave characteristics than others. Selection of amplitude, frequency or phase demodulation means is governed by the choice of brain wave characteristic to be monitored. If desired, several different types of demodulators can be provided and used alternately or at the same time.

The demodulated signal which is representative of the monitored brain wave activity is passed through audio amplifiers **50** *a*, *b*, *c* which may be of conventional type where it is amplified and routed to displays **58** *a*, *b*, *c* and a computer **60**. The displays **58** *a*, *b*, *c* present the raw brain wave signals from the amplifiers

50 *a*, *b*, *c*. The computer **60** processes the amplified brain wave signals to derive information suitable for viewing, e.g., by suppressing, compressing, or expanding elements thereof, or combining them with other information-bearing signals and presents that information on a display **62.** The displays can be conventional ones such as the types herebefore mentioned employing electronic visual displays or mechanical plotters **58***b*. The computer can also be of conventional type, either analog or digital, or a hybrid.

A profile of the entire brain wave emission pattern may be monitored or select areas of the brain may be observed in a single measurement simply by altering the scan angle and direction of the antennas. There is no physical contact between the subject and the monitoring apparatus. The computer **60** also can determine a compensating waveform for transmission to the brain **10** to alter the natural brain waves in a desired fashion. The closed loop compensating system permits instantaneous and continuous modification of the brain wave response pattern.

In performing the brain wave pattern modification function, the computer **60** can be furnished with an external standard signal from a source **70** representative of brain wave activity associated with a desired nuerological response. The region of the brain responsible for the response is monitored and the received signal, indicative of the brain wave activity therein, is compared with the standard signal. The computer **60** is programmed to determine a compensating signal, responsive to the difference between the standard signal and received signal. The compensating signal, when transmitted to the monitored region of the brain, modulates the natural brain wave activity therein toward a reproduction of the standard signal, thereby changing the neurological response of the subject.

The computer **60** controls an auxiliary transmitter **64** which transmits the compensating signal to the brain **10** of the subject via an antenna **66.** The transmitter **64** is of the high frequency type commonly used in radar applications. The antenna **66** can be similar to antennas **41, 43** and **45** and can be combined with them. Through these means, brain wave activity may be altered and deviations from a desired norm may be compensated. Brain waves may be monitored and control signals transmitted to the brain from a remote station.

It is to be noted that the configuration described is one of many possibilities which may be formulated without departing from the spirit of my invention. The transmitters can be monostratic or bistatic. They also can be single, dual, or multiple frequency devices. The transmitted signal can be continuous wave, pulse, FM, or any combination of these as well as other transmission forms. Typical operating frequencies for the transmitters range from 1 MHz to 40 GHz but may be altered to suit the particular function being monitored and the characteristics of the specific subject.

The individual components of the system for monitoring and controlling brain wave activity may be of conventional type commonly employed in radar systems.

Various subassemblies of the brain wave monitoring and control apparatus may be added, substituted or combined. Thus, separate antennas or a single multimode antenna may be used for transmission and reception. Additional displays and computers may be added to present and analyze select components of the monitored brain waves.

Modulation of the interference signal retransmitted by the brain may be of amplitude, frequency and/or phase. Appropriate demodulators may be used to decipher the subject's brain activity and select components of his brain waves may be analyzed by computer to determine his mental state and monitor his thought processes.

As will be appreciated by those familiar with the art, apparatus and method of the subject invention has numerous uses. Persons in critical positions such as drivers and pilots can be continuously monitored with provision for activation of an emergency device in the event of human failure. Seizures, sleepiness and dreaming can be detected. Bodily functions such as pulse rate, heartbeat reqularity and others also can be monitored and occurrences of hallucinations can be detected. The system also permits medical diagnoses of patients, inaccessible to physicians, from remote stations.

What is claimed is:

1. Brain wave monitoring apparatus comprising
means for producing a base frequency signal,
means for producing a first signal having a frequency related to that of the base frequency and at a predetermined phase related thereto,
means for transmitting both said base frequency and said first signals to the brain of the subject being monitored,
means for receiving a second signal transmitted by the brain of the subject being monitored in response to both said base frequency and said first signals,
mixing means for producing from said base frequency signal and said received second signal a response signal having a frequency related to that of the base frequency, and
means for interpreting said response signal.

2. Apparatus as in claim **1** where said receiving means comprises
means for isolating the transmitted signals from the received second signals.

3. Apparatus as in claim **2** further comprising a band pass filter with an input connected to said isolating means and an output connected to said mixing means.

4. Apparatus as in claim **1** further comprising means for amplifying said response signal.

5. Apparatus as in claim **4** further comprising means for demodulating said amplified response signal.

6. Apparatus as in claim **5** further comprising interpreting means connected to the output of said demodulator means.

7. Apparatus according to claim **1** further comprising
means for producing an electromagnetic wave control signal dependent on said response signal, and
means for transmitting said control signal to the brain of said subject.

8. Apparatus as in claim **7** wherein said transmitting means comprises means for directing the electromagnetic wave control signal to a predetermined part of the brain.

9. A process for monitoring brain wave activity of a subject comprising the steps of
transmitting at least two electromagnetic energy signals of different frequencies to the brain of the subject being monitored,
receiving an electromagnetic energy signal resulting from the mixing of said two signals in the brain modulated by the brain wave activity and retrans-

mitted by the brain in response to said transmitted energy signals, and,

interpreting said received signal.

10. A process as in claim **9** further comprising the step of transmitting a further electromagnetic wave signal to the brain to vary the brain wave activity.

11. A process as in claim **10** wherein the step of transmitting the further signals comprises

obtaining a standard signal,

comparing said received electromagnetic energy signals with said standard signal,

producing a compensating signal corresponding to the comparison between said received electrogagnetic energy signals and the standard signal, and

transmitting the compensating signals to the brain of the subject being monitored.

* * * * *

Mounting Your Own Crystals

These instructions will show you how to make nicely mounted crystals just like the ones in the old crystal radios. Materials needed are:
-Minerals to mount, such as galena or iron pyrite
-Solder or Woods metal
-Mold for the mounts
-Soldering iron

You can make the mold by drilling a 7/16 inch hold in a piece of any material that will withstand the head of the molten solder. Some mounts are 1/2 inch. I use 1/4 inch thick acrylic and Woods metal that melts at 158 degrees F. I drill the 7/16 inch hole and then smooth and slightly bevel the inside edges of hole with sandpaper so the crystal will push out the bottom smoothly.
Although some users don't agree, I think the high temperatures necessary to melt solder diminish the sensitivity of the crystal.
I use another piece of acrylic underneath as a base plate clamped together so that the 2 pieces can be separated and the crystal pushed out the bottom of the mold when cool.

Break off a piece of mineral the size you want. I use wire cutters. It is best to test the crystal and find the best surface to leave facing upwards.

Next, melt some of your mounting metal in the hole about 2/3 full. Remember, the crystal will take up some room so don't fill it up all the way or it will uverflow when you put the rock in.

Then while the metal is still liquid, drop the rock on to the surface, keeping the best surface pointing upwards.

The rock will tend to float up so you have to hold it down while the metal cools and hardens.
When it is cool, separate the mold from the base plate and push the mounted crystal out the bottom.
Be careful, it will be HOT at first, epsecially if you use solder.

Email to Scottswim@aol.com

Back to Scott's Crystal Radios

GET VISIBLE! Advertise Here. **Find Out More**

Genius Nathan Stubblefield - Electricity From The Ground

By John Bedini
From http://www.icehouse.net/john1/stubblefield.html
5-27-16

This may be the last hope when the power systems go down and there is no more fuel..... We will take the power from the ground and learn how to use the earth for the good of all. This work is based on the book "Lost Science" by Gerry Vassilatos. I have just pointed out the important parts in red, but I have hundreds of hours in the circuit designs. Peter Lindemann pointed out this work to me two years ago. Since then I have worked with the Stubblefield technology and many others.

"After the third tribulation, a new source of energy will be discovered that taps the Earth Magnetic field."

-Hopi Prophecy

Stubblefield

This is my research on Nathan Stubblefield.

"Hello, Rainy." - In 1892, ignorant of the wireless inventions of the past 60 years, Nathan creates an electromagnetic induction wireless telephone and demonstrates it to his friend Rainey Wells. A few years later, Nathan develops a superior wireless telephone that uses natural conduction through the earth and water.

Bob Lochte has done an enormous amount of work uncovering papers, notes and pictures, and quotes on Nathan Stubblefield. There is one puzzling thing to me about the Stubblefield device. It seems to me that Tesla is standing in one of the pictures. I have checked the references and, yes, Tesla is in the picture. Now that I understand this, it brings me to the conclusion that the waves Stubblefield used were longitudinal in nature.

Meucci hearing through wires

Even without Stubblefield, Marconi still wouldn't be the true inventor of radio - Nikola Tesla invented it before Marconi. Marconi, in fact, used Tesla's own patents as research materials. **Tesla, in turn, was among the curious onlookers in attendance at Stubblefield's 1902 wireless demonstration in Philadelphia.**

Nathan Stubblefield, far right, and a group of witnesses at Belmont Park, Phildelphia , May 30, 1902. Edwin Houston is just to the right of center, holding a telephone receiver to his ear. A. Frederick Collins is second from left.

Stubblefield also developed a battery to power this system and a motor, that we will get into later. Now around 1878 Amos Dolbear files a patent on what he called induction wireless telephone, demonstrated publicly in the us, Canada, and Europe in 1882 and 1883, patented in U.S.1886. What is amazing to me is that the patent uses an elevated capacitance. So this is not the same as a Hertizan wave transmitter. It is very clear that the capacitance acts as the antenna and the return is using the earth as ground. The induction coil is used as a high self-inductance only, creating a very high potential or stress in the aether.

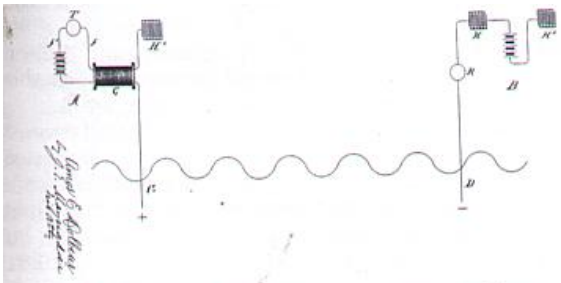

Induction Wireless Telephone, Amos Dolbear, demonstrated publicly in the US, Canada, and Europe in 1882 and 1883, patented in US, 1886

"Now," Tesla writes later on about the transmitter that he was developing, "I attacked vigorously the development of my magnifying transmitter, now however, not so much with the original intention of producing one of great power, as with the object of learning how to construct the best one. This is essentially, a circuit of high self-induction and small resistance (key words coming up) which in its arrangement, mode of excitation and section and action, may be said to be the diametrical opposite of a transmitting circuit typical of telegraphy by Hertzian or electromagnetic radiations."

What Stubblefield had discovered and what he do with his system.

Stubblefield was experimenting with ground radio since 1882, but did not patent his developments until much later. Credible witnesses saw his ground radio experiments in action during this time frame, establishing the historical priority of Stubblefield. While Marconi could barely send telegraphic "dots and dash" signals with great difficulty through a static-filled medium, Nathan Stubblefield had already transmitted the human voice with loud, velvet clarity. Others would adopt and implement the Collins system (Fessenden, DeForest, Bethenod, Braun), but none could duplicate the Stubblefield System.

Nikola Tesla performed double ground experiments with impulses as early as 1892, reporting these in lectures and patenting some embodiments in 1901. Not one of these later systems ever achieved the same results of clarity, tone, and volume of Stubblefield ground telephony. Tesla apparently never discovered the true powerpoints which powered Stubblefield's device. Priority in all these arts belongs to Nathan Stubblefield alone. In addition, his was the only system in which natural energies were

obtained, magnified, and entirely employed as the empowering source. All other inventors used "artificial" sources (batteries, alternators, dynamos).

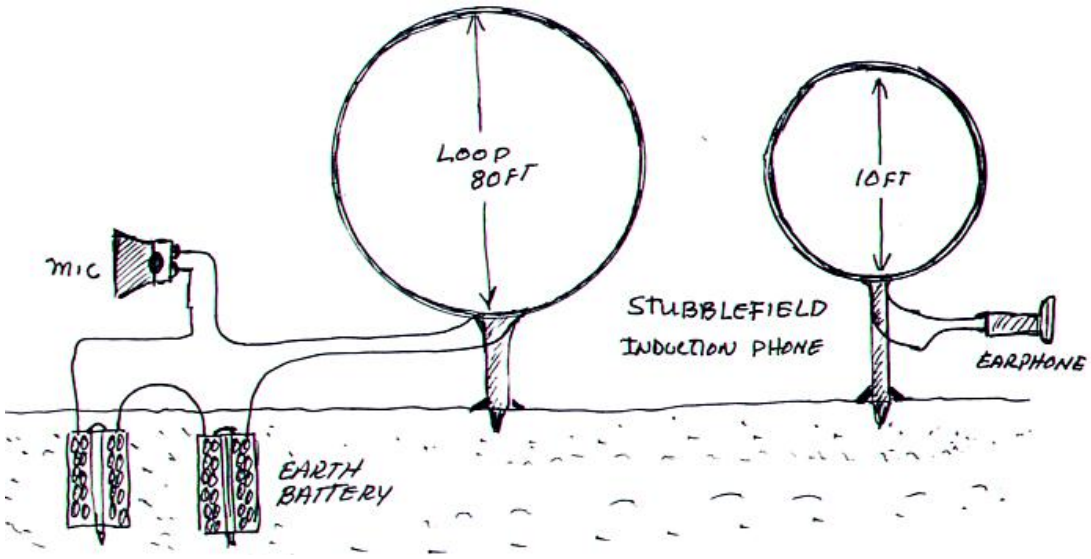

Following all these ground radio demonstrations, Stubblefield researched "Magnetic Waves" and developed several systems which did not use ground terminals for exchanging signals. Long distance wireless telephone communications were his aim. Many imagined this to be radio as we know it, but several features of Stubblefield aerial are distinctive and different.

First his transmitters and receivers were telephonic, not telegraphic. In his preliminary experiments, the earth battery was used to energize an apparatus to which was connected a long horizontal aerial line. Marconi later adopted this "bent L" symmetry in conjunction with a grounded copper conduction screen. There are no photographs of these arrays, but I have hand-written manuscript copies of certain diary notes in which a progressively greater telephonic distance is reported. Nathan Stubblefield made steady progress in this form of telephonic transmission , but used neither alternators nor spark discharge.

Mr. Stubblefield reasoned that, since electrical waves traverse the whole earth, it might be possible to send signals to distant places. These ground-permeating natural electrical waves might serve as carriers for the human voice. The ground would act as both power generator and signal conductor. Like a gale carrying messages downwind, these electrical waves could bring wireless communications instantly to any part of the world.

These transmissions were made through the ground itself and used the Stubblefield cell for power. In several photographs we see special loud speaking telephones outfitted with (1 foot) horns, designed to act as annunciators. Calls from these annunciators brought his son Bernard to the telephone transmitter. The system was never switched off. Power was limitless and did not diminish with time of the day or length of use.

Natural observations in systems led to unexpected, theory-busting discoveries. Such an effect demonstrates that an articulate quasi-intelligent energy permeates the natural environment.... an energy of which electricity is a minor part.

Two more mysteries have lingered from this latter period of invention in the Stubblefield biography. The nature of each reveals the extent to which he had developed and advanced his new earth power technology. Nathan continued to pursue his experiments, but little was seen of him for long time periods. Alone and tired, Nathan stopped working his farm completely.

Later, Investigators entered his land area and found heavy wires leading from the roots of trees. To these wires were attached small arc lamps, hung in the trees. These were extinguished. They imagined the arc lamps to be the explanation of his hillside sunlight. Their hasty analysis proved problematic from stories which witnesses report. The warm and diffused sunlight which came from the ground itself around his house was not localized in specific lamps. The light came

from the ground, not from the trees as before... a "whole hillside that would blossom with light"... "lit up like daytime". These observations indicate that Stubblefield had managed indeed the direct conversion of earth energy to light and warmth. This would acceptable, were Mr. Stubblefield simply working on a newer form of drawing electricity from the ground to light small arc-lamps; a feat which he had accomplished earlier. But these kind persons could never find any evidence of arc-lighting or any other form of known lighting anywhere near the area. In their own words "the light seemed to come out from the ground itself".

In addition to ground sunlight effects, many heard very loud and unfamiliar noises coming from the whole area surrounding his cabin. What could this be? Had he managed to directly transduce the natural impulses of the ground energy into audio?

His last claim two weeks before his death was made to a kind neighbor: "The past is nothing. I have perfected now the greatest invention the world has ever known..... I have taken light from the air and earth.... as I did sound."

Neighbors had not seen Nathan for several days. As they were worried about his health, they attempted to call on him. The lock was secured from the inside. It was a lonely, cold and rainy March day when old friends and neighbors broke the lock on Nathan's cabin and entered. He had passed away in his bed, the probable victim of malnutrition and fatigue. They all noticed that the interior of the cabin was "toasty warm", as if heated by a strong fire. Moved to locate the source of this heat, town officials found " two highly polished metal mirrors which faced each other, radiating a very great heat in rippling waves" This is a great discovery. It fulfills what Nathan reported in his last testimony.

This picture was sent in by Gandolf Gwynn.

He wanted to know who was hiding behind the tree?

The man behind the tree is Dr. Will Mason.

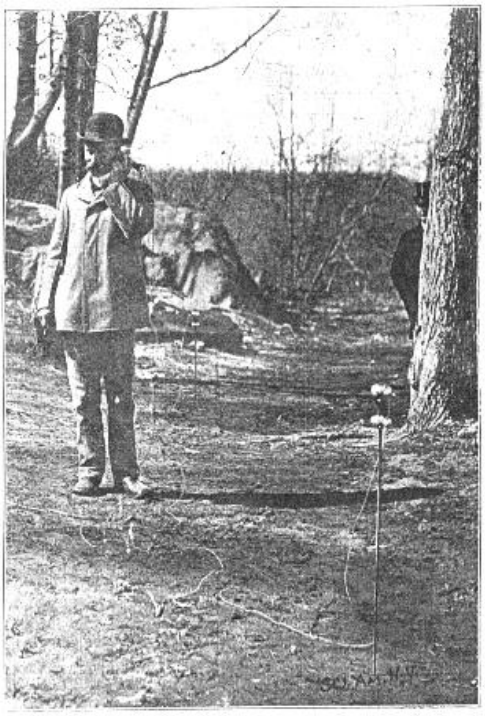

RECEIVING A MESSAGE.

The rods in the picture are about 20 feet apart in a straight line. Nathan Stubblefield receiving a message.

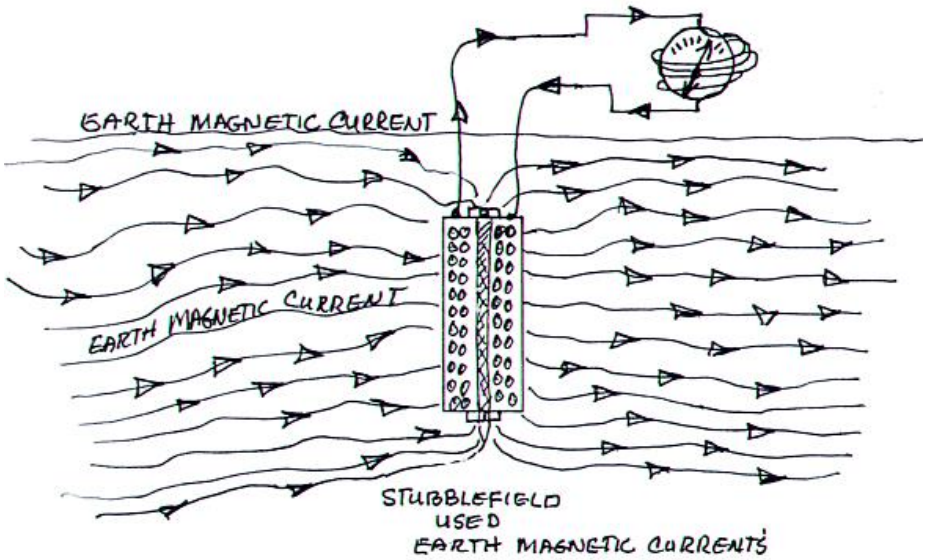

Nathan Stubblefield used earth magnetic currents. this is not current as we know it. Electricity is a wasted product of this magnetic current.

The Electrical Ocean.

If you are building an earth battery it is best to do it as the patent calls out. This means that you should not use anything that causes a forced voltage. It was not until later that people used sulfur cakes and other acids to get the voltage higher with bigger currents. That is a phony system and not Free Energy.

Alexander Bain

We found a good number of earth battery designs in the Patent Registry. The earliest designs appear in 1841 when Alexander Bain applied the phenomenon to telegraphy. While working a telegraph line, he chanced to discover that his leads had become immersed in water. This short-circuit through earthed water did not stop the actions which resounded through his system. Mr. Bain took the next step to greater distance, burying copper plates and zinc plates with a mile of ground between them. When connected to a telegraph line, these performed remarkably well without any other battery assistance. Bain obtained the patent for his earth battery years after his initial discovery (1841), using it to drive telegraph systems and clocks. (real free energy system using earth energy only)

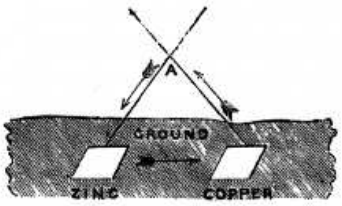

Stephen Vail (1837) observed the same effect, not knowing what caused it. The establishment of the first functional telegraph line seemed to require even fewer batteries with time. Vail began with some twelve large battery cups, reducing them gradually until only two were needed. There came a point during certain operative seasons where he found it possible to remove all the batteries!

J.W. Wilkins in England (1845) corroborated findings made by Bain, developing a similar earth battery for use in telegraphic service. An early English Patent appears in 1864 by John Haworth, the first true composite earth battery. This battery is drum-shaped , having numerous solid discs mounted on an insulative axis, end-braced, and buried. Their power was rated in terms of disc diameter and telegraph line distance: one foot diameter discs for seventy-five miles of line, two foot discs for up to four hundred and forty miles of line.

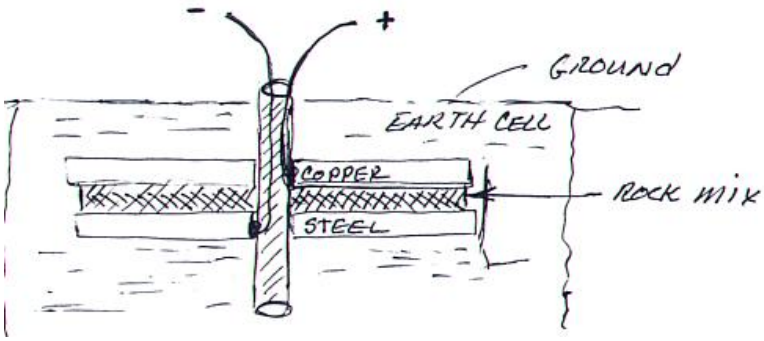

Composite earth battery

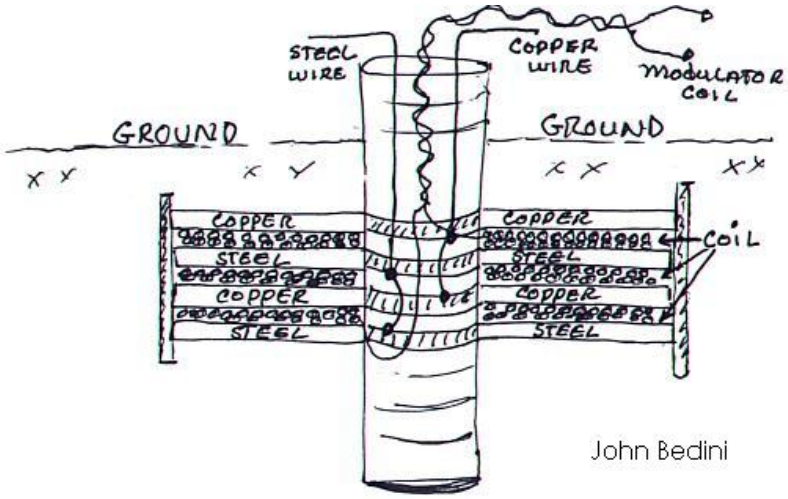

Experimental modulated earth battery

The experiment is to modulate the earth current. It works just like a modulated current source in a solid state amplifier, only this battery supplies the current. An example would be a strain gauge circuit.

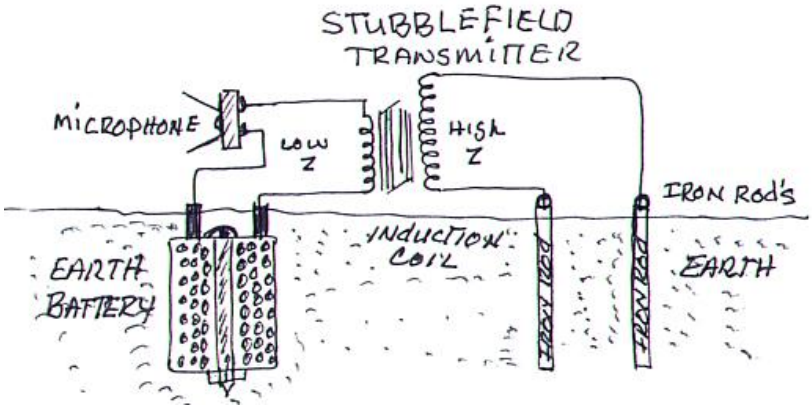

This mystery persisted for years. I have talked to some older engineers who report that local telegraph stations remained in operation despite the fact that their batteries had not been recharged for a great number of years. When the battery was examined it was actually dried out and physically corroded. Yet the signals continued.

In devices called "radionic" tuners by those who developed them, numerous investigations revealed the potentials of ground energy for social use. Agricultural applications of radionic tuners produced greater crop yields. Moreover, large ground-connected radionic tuners produced extraordinary effects on the mind and emotions.... relieving tensions and opening thought to new potentials. From this viewpoint, telegraph systems behaved as radionic tuners on a vast scale. We would therefore expect them to produce anomalous energetic effects in several parameters of human experience.

Cosmo-Electro Culture, The Cosmic Forces

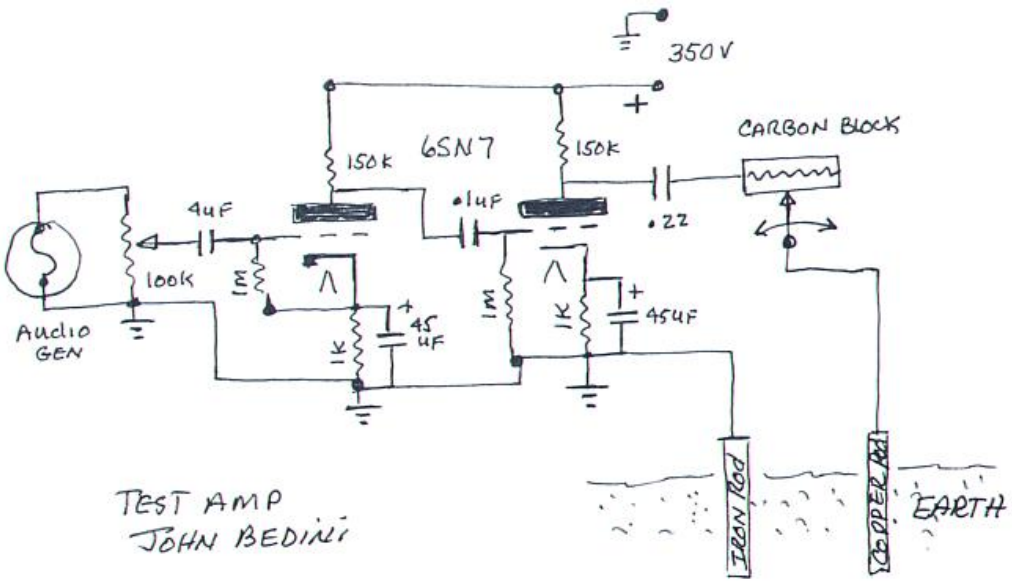

Test amplifier to transmit low power signals into the ground

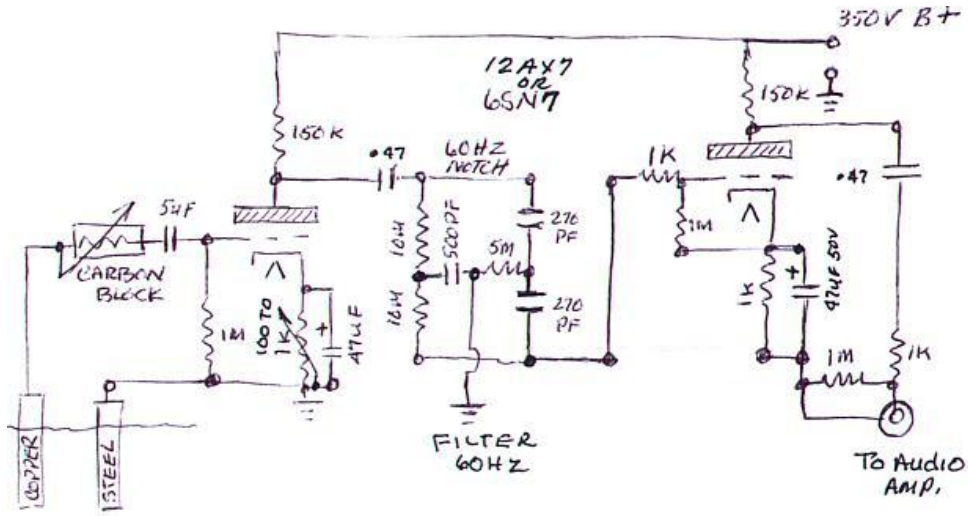

Receiver amplifier with 60Hz notch filter.

In my test of an "earth battery system using grounding rods", when transmitting audio frequencies the weeds grew wildly. The normal weeds were so big that it took a tractor to cut them down.... It was found that tubes work the best.

Let's try an experiment in earth energies.

Touching a well-grounded iron rod is a good first experiment to try in these regards. Try and find a place where power leakage into the ground is minimal..... such as in a park or wooded area. Take a yard-long solid iron rod whose surface is free of shellac or insulator coatings. Carefully drive the rod into the ground with a hammer. Wetted hands on the iron should produce a mild electrical sensation. These voltages may be measured. They "pin" sensitive galvanometers. The current does not cease after several weeks of activity, when the rods are properly placed.

Most recognized that electricity was simply a by-product or epiphenomenon of a more fundamental agency which entered the grounded lines. Rheostats somehow "tuned" the potential of this earth energy. It was found possible to "match and tune" these energies through the use of rheostats and capacitors. (medical connection) Persons who were weak and infirm actually experienced vitalizing elevations when connected to the ground energy through these special rheostatic tuners.

Disclaimer

Donate to Rense.com Support Free & Honest Journalism At Rense.com		Subscribe To RenseRadio! Enormous Online Archives, MP3s, Streaming Audio Files, Highest Quality Live Programs

(No Model.)

N. B. STUBBLEFIELD.

LIGHTING DEVICE.

No. 329,864. Patented Nov. 3, 1885.

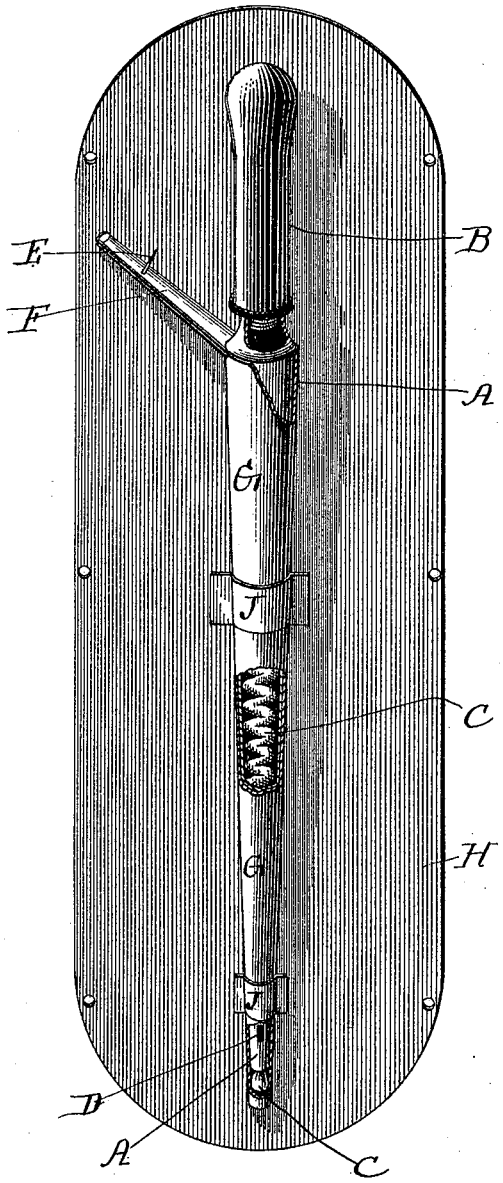

Witnesses:

W. F. Peterson
L C Linn

Inventor.

Nathan B. Stubblefield.

N. PETERS, Photo-Lithographer, Washington, D. C.

UNITED STATES PATENT OFFICE.

NATHAN B. STUBBLEFIELD, OF MURRAY, KENTUCKY.

LIGHTING DEVICE.

SPECIFICATION forming part of Letters Patent No. 329,864, dated November 3, 1885.

Application filed February 25, 1885. Serial No. 157,045. (No model.)

To all whom it may concern:

Be it known that I, NATHAN B. STUBBLEFIELD, a citizen of the United States, residing at Murray, in the county of Callaway and State of Kentucky, have invented a new and useful Improvement in Coal-Oil-Lamp Lighters, of which the following is a description.

The object of this invention is to light lamps which have glass chimneys without the removal of the latter.

To this end my invention consists in a tapering tube provided with a removable handle, a wick, a sheath fitting the tube, and a support for the sheath, constructed and combined as hereinafter described and claimed, reference being had to the accompanying drawing, which is a front view, in perspective, of my invention, about three-quarters full size and partly broken away to expose the interior.

A represents a tin tube tapering from its handle B to its point, which is open. The handle is fitted to screw air-tight into the tube.

C represents a common cotton wick, which should be long enough to nearly fill the tube when rammed or crowded in. This wick is to project from the point like a lamp-wick, and about a tea-spoonful of oil is to be placed in the tube with the wick. The air-tight fit of the handle prevents oil from escaping by leakage.

D represents a groove through which the wick may be picked. This being dirty work for scissors, &c., I have provided a pick in the form of a spur, E, projecting permanently from an arm or trough, F, which rises at one side of the tin sheath G.

The torch A B C is shown as inserted in the sheath, into which it fits closely, where it is kept when not in use, to prevent a disagreeable smell and for sake of neatness. This sheath is removably secured to a back, H, which may be tacked to the wall at any suitable place. That it may be removed for the purpose of being cleaned, it is held in bands J, which are permanently fixed to the back H.

When the wick is trimmed by the pick E, the charred ends, falling into the trough F, will slide down into the sheath, and there accumulate until it becomes necessary to clean the sheath. By removing the sheath from the bands it may be inverted and jarred over the fire, when its contents will be disposed of.

The torch may be lighted at a fire or with a match, and, being long enough to reach down into the chimney of a lamp, it will light the lamp without the necessity of removing the chimney. It may also be used for lighting gas and for other similar purposes.

What I claim as my invention, and desire to secure by Letters Patent, is—

1. The combination of the tapering tube A, the handle B, closely screwed therein, the back H, provided with bands J, and the sheath G, fitted to the said tapering tube and to the said bands, substantially as shown and described.

2. A sheath for lamp-lighters, having an open end and provided with a trough extended laterally from and opening into the sheath, and a spur or pick mounted on said trough, substantially as set forth.

3. A lighting device comprising a tube having an open end and a slot adjacent such end, and a sheath fitted to receive such tube, and provided with a lateral arm and a spur or pick mounted on said arm, substantially as set forth.

4. The lighting device herein described, consisting of the hollow tube having an open end and a slot adjacent such end, a sheath fitted to receive said tube, the latter being removable from the sheath, a trough extended from and opening into the sheath, and a spur or pick mounted on said trough, substantially as set forth.

NATHAN B. STUBBLEFIELD.

Attest:
S. L. HOLLAND,
L. C. LINN.

(No Model.)

N. B. STUBBLEFIELD.

ELECTRICAL BATTERY.

No. 600,457. Patented Mar. 8, 1898.

Fig. 1.

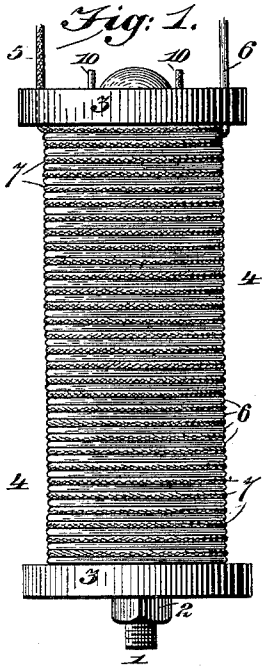

Fig. 2.

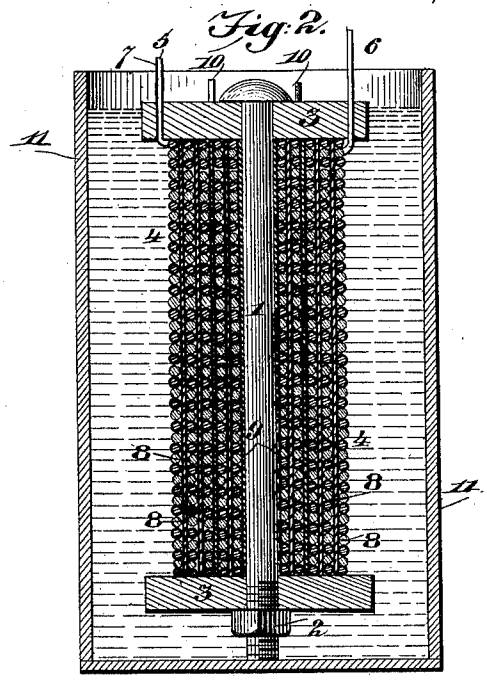

Fig. 3.

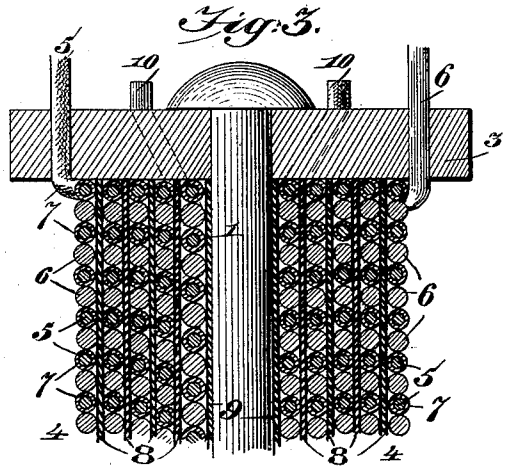

Fig. 4.

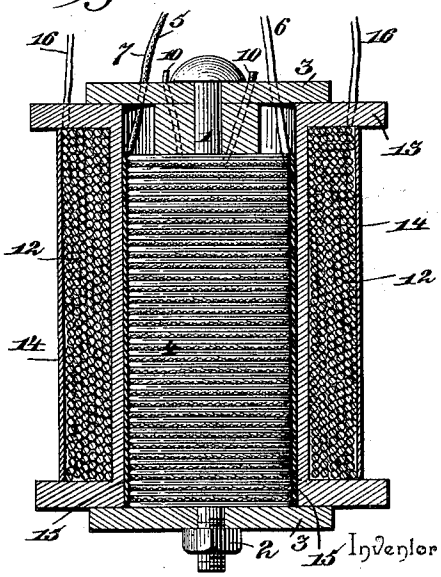

Inventor

Nathan B. Stubblefield

Witnesses

H. G. Dieterich

S. P. Schanstel

By his Attorneys,

C. A. Snow & Co.

THE NORRIS PETERS CO., PHOTO-LITHO., WASHINGTON, D. C.

UNITED STATES PATENT OFFICE.

NATHAN B. STUBBLEFIELD, OF MURRAY, KENTUCKY, ASSIGNOR OF ONE-HALF TO WILLIAM G. LOVE, OF SAME PLACE.

ELECTRICAL BATTERY.

SPECIFICATION forming part of Letters Patent No. 600,457, dated March 8, 1898.

Application filed October 24, 1896. Serial No. 609,969. (No model.)

To all whom it may concern:

Be it known that I, NATHAN B. STUBBLEFIELD, a citizen of the United States, residing at Murray, in the county of Calloway and State of Kentucky, have invented a new and useful Electrical Battery, of which the following is a specification.

This invention relates to electrical batteries; and it has for its object to provide a novel and practical battery for generating electrical currents of sufficient force for practical use, and also providing means for generating not only a constant primary current, but also an induced momentary secondary current.

It is well known that if any voltaic couple be immersed in water or placed in moist earth the positive element of the couple will undergo a galvanic action of sufficient intensity to produce a current when the terminals of the couple are brought in contact, and this form of battery is commonly known as the "water" battery, usually employed for charging electrometers, but not capable of giving any considerable current owing to their great internal resistance. Now the principle involved in this class of batteries is utilized to some extent in carrying out the present invention, but I contemplate, in connection with water or moisture as the electrolyte, the use of a novel voltaic couple constructed in such a manner as to greatly multiply or increase the electrical output of ordinary voltaic cells, while at the same time producing in operation a magnetic field having a sufficiently strong inductive effect to induce a current in a solenoid or secondary coil.

To this end the invention contemplates a form of voltaic battery having magnetic induction properties of sufficient intensity, so as to be capable of utilization for practical purposes, and in the accomplishment of the results sought for the invention further provides a construction of battery capable of producing a current of practically constant electromotive force and being practically free of the rapid polarization common in all galvanic or voltaic batteries.

With these and many other objects in view the invention consists in the novel construction, combination, and arrangement of parts hereinafter more fully described, illustrated, and claimed.

In the drawings, Figure 1 is a side elevation of an electrical battery constructed in accordance with this invention. Fig. 2 is a central longitudinal sectional view of the battery, showing the same immersed in water as the electrolyte. Fig. 3 is an enlarged sectional view of a portion of the battery, showing more clearly the manner of winding the voltaic couple or, in other words, the wires comprising the couple. Fig. 4 is a vertical sectional view of the battery, shown modified for use with an induction-coil.

Referring to the accompanying drawings, the numeral 1 designates a soft-iron core-piece extending longitudinally of the entire battery and preferably in the form of a bolt having at one end a nut 2, which permits of the parts of the battery being readily assembled together and also quite as readily taken apart for the purposes of repair, as will be readily understood. The central longitudinally-arranged core-piece 1 of the battery has removably fitted on the opposite ends thereof the oppositely-located end heads 3, confining therebetween the magnetic coil-body 4 of the battery, said heads 3 being of wood or equivalent material. The coil-body 4 of the battery is compactly formed by closely-wound coils of a copper and iron wire 5 and 6, respectively, which wires form the electrodes of the voltaic couple, and while necessarily insulated from each other, so as to have no metallic contact, are preferably wound in the manner clearly illustrated in Fig. 3 of the drawings.

In the preferred winding of the wires 5 and 6 the copper wire 5 is incased in an insulating-covering 7, while the iron wire 6 is a bare or naked wire, so as to be more exposed to the action of the electrolyte and at the same time to intensify the magnetic field that is created and maintained within and around the coil-body 4, when the battery is in operation and producing an electrical current. While the iron wire 6 is preferably bare or naked for the reasons stated, this wire may also be insulated without destroying the operativeness of the battery, and in order to secure the best results the wires 5 and 6 are wound side by side in each coil or layer of

the windings, as clearly shown in Fig. 3 of the drawings, so that in each coil or layer of the windings there will be alternate convolutions of the copper and iron wires forming the voltaic couple, and it will of course be understood that there may be any number of separate coils or layers of the wires according to the required size and capacity of the battery. Each coil or layer of the windings is separated from the adjacent coils or layers by an interposed layer of cloth or equivalent insulating material 8, and a similar layer of insulating material 9 also surrounds the longitudinal core-piece 1 to insulate from this core-piece the innermost coil or layer of the windings.

The terminals 10 of the copper and iron wires 5 and 6 are disconnected so as to preserve the character of the wires as the electrodes of the voltaic couple; but the other or remaining terminals of the wires are brought in contact through the interposition of any electrical instrument or device with which they may be connected to cause the electric currents generated in the coil-body 4 to flow through such instrument or device.

In the use of the battery constructed as described the same may be immersed in a cell or jar 11, containing water as the electrolyte; but it is simply necessary to have the coil-body 4 moist to excite the necessary action for the production of a current in the couple, and it is also the contemplation of the invention to place the battery in moist earth, which alone is sufficient to provide the necessary electrolytic influence for producing an electric current.

It has been found that by reason of winding the couple of copper and iron wires into a coil-body the current traversing the windings of this body will produce a magnetic field within and around the body of sufficiently strong inductive effect for practical utilization by means of a solenoid or secondary coil 12, as illustrated in Fig. 4 of the drawings.

The solenoid or secondary coil 12 is of an ordinary construction, comprising a wire closely wound into a coil of any desired size on an ordinary spool 13 and incased within a protective covering 14 of mica, celluloid, or equivalent material. The spool 13 of the solenoid or secondary coil may be conveniently secured directly on the exterior of the coil-body 4 between the heads 3 with a suitable layer or wrapping of insulating material 15, interposed between the spool and the body 4, and the terminals 16 of the solenoid or secondary coil may be connected up with any instrument usually operated by secondary currents—such, for instance, as a microphone-transmitter or telegraphic relay. The magnetic field produced by the current traversing the coil-body 4 induces a secondary current in the solenoid or secondary coil 12, when the ordinary make and break of the primary current produced within the coil 4 is made between the terminals of said coil 4. It will therefore be seen that the construction of the battery illustrated in Fig. 4 is practically a self-generating induction-coil, and it can be used for every purpose that a coil of this character is used, for as long as the coil-body 4 is wet or damp with moisture electric currents will be produced in the manner described. It will also be obvious that by reason of the magnetic inductive properties of the coil-body 4 the core-piece 1 will necessarily be magnetized while a current is going through the body 4, so that the battery may be used as a self-generating electromagnet, if so desired, it being observed that to secure this result is simply required connecting the extended terminals of the wires 5 and 6 together after wetting or dampening the coil-body.

Many other uses of the herein-described battery will suggest themselves to those skilled in the art, and I will have it understood that any changes in the form, proportion, and the minor details of construction may be resorted to without departing from the principle or sacrificing any of the advantages of this invention.

Having thus described the invention, what is claimed, and desired to be secured by Letters Patent, is—

1. A combined electrical battery and electromagnet, for use with water as an electrolyte, comprising a soft-iron core-piece, and a voltaic couple of copper and iron wires insulated from each other and closely and compactly wound together in separate insulated layers to produce a solid coil-body surrounding the soft-iron core-piece, substantially as set forth.

2. An electrical battery for use with water as an electrolyte comprising a voltaic couple of insulated copper wire and bare iron wire closely wound into a coil-body, substantially as described.

3. An electrical battery for use with water as an electrolyte comprising a voltaic couple of insulated copper and bare iron wire wound side by side in separate insulated layers to produce a coil-body, substantially as described.

4. An electrical battery, for use with water as an electrolyte, comprising a voltaic couple having its separate electrodes insulated from each other and closely wound into a compact coil-body forming a self-generating primary coil when moistened and a solenoid or secondary coil fitted on the coil-body of the couple, substantially as set forth.

In testimony that I claim the foregoing as my own I have hereto affixed my signature in the presence of two witnesses.

NATHAN B. STUBBLEFIELD.

Witnesses:

JOHN H. SIGGERS,

W. B. HUDSON.

No. 887,357. PATENTED MAY 12, 1908.

N. B. STUBBLEFIELD.

WIRELESS TELEPHONE.

APPLICATION FILED APR. 5, 1907.

3 SHEETS—SHEET 1.

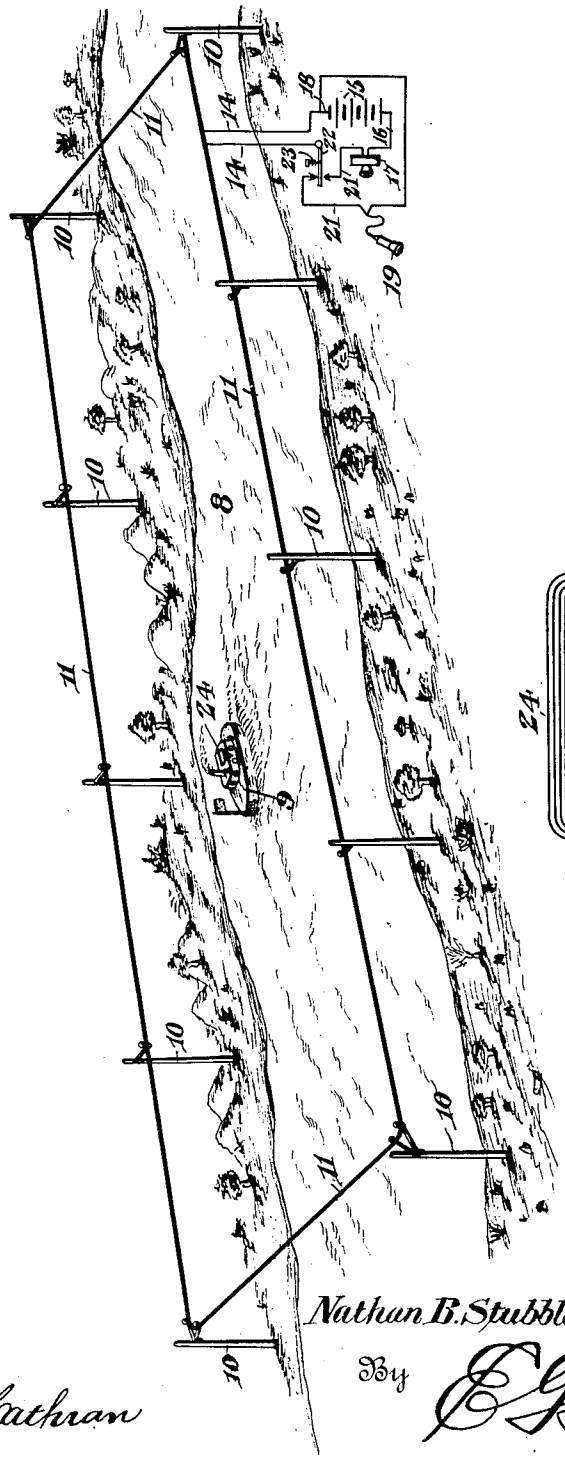

Fig. 1.

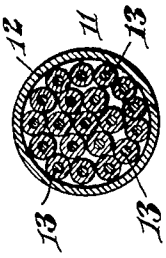

Fig. 3.

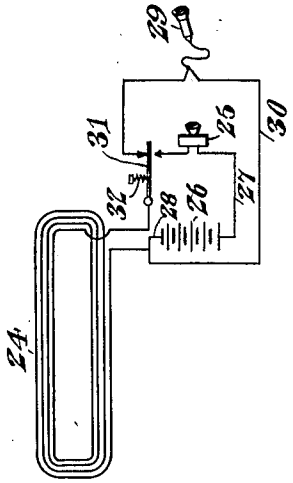

Fig. 2.

Witnesses

Jas. E. McCathran

B. G. Fretz

Nathan B. Stubblefield, Inventor

By E. G. Siggers

Attorney

No. 887,357. PATENTED MAY 12, 1908.

N. B. STUBBLEFIELD.

WIRELESS TELEPHONE.

APPLICATION FILED APR. 5, 1907.

3 SHEETS—SHEET 2.

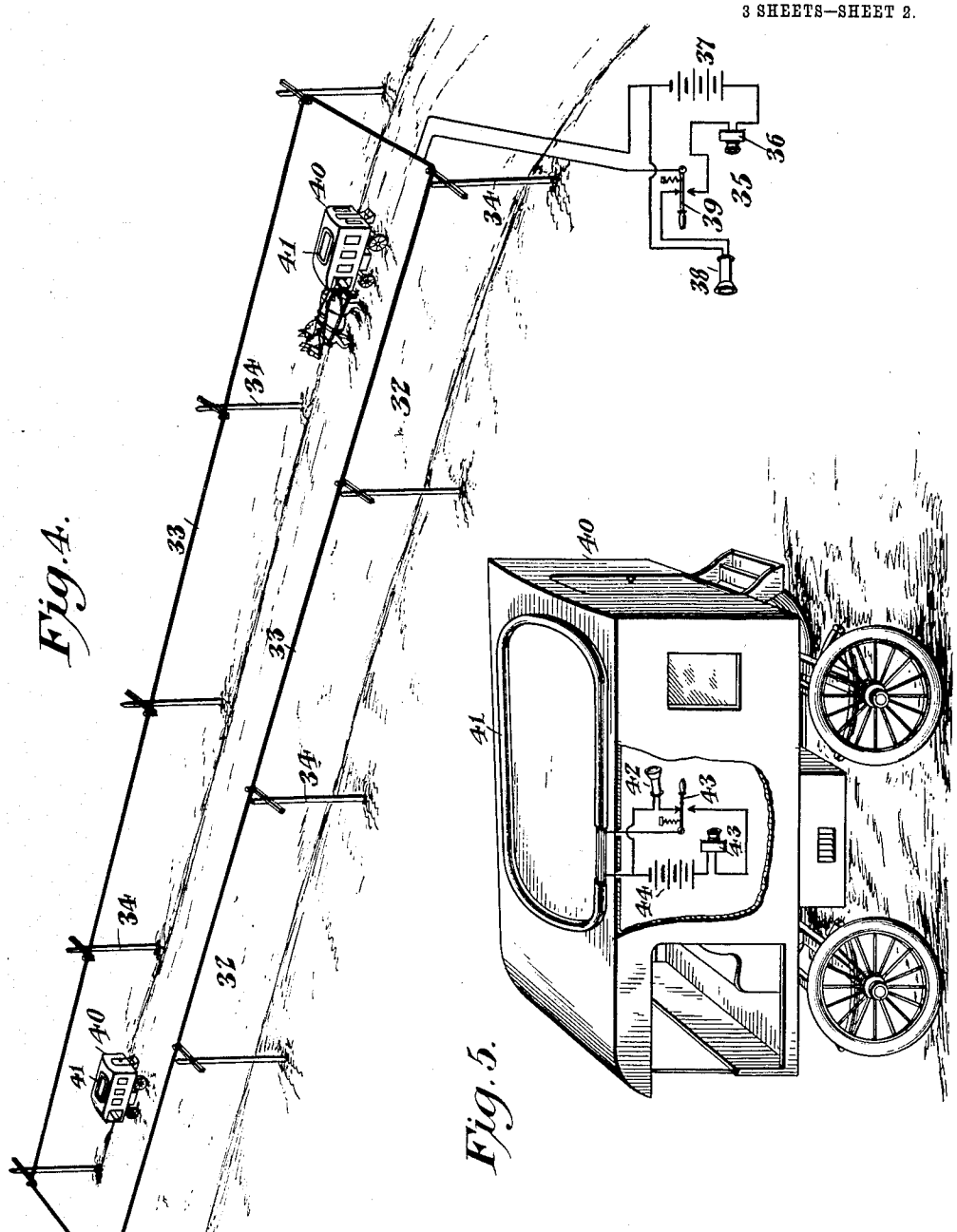

Witnesses

Jas. K. McCathran

B. G. Fretz

Nathan B. Stubblefield, Inventor

By E. G. Siggers

Attorney

No. 887,357. PATENTED MAY 12, 1908.

N. B. STUBBLEFIELD.

WIRELESS TELEPHONE.

APPLICATION FILED APR. 5, 1907.

3 SHEETS—SHEET 3.

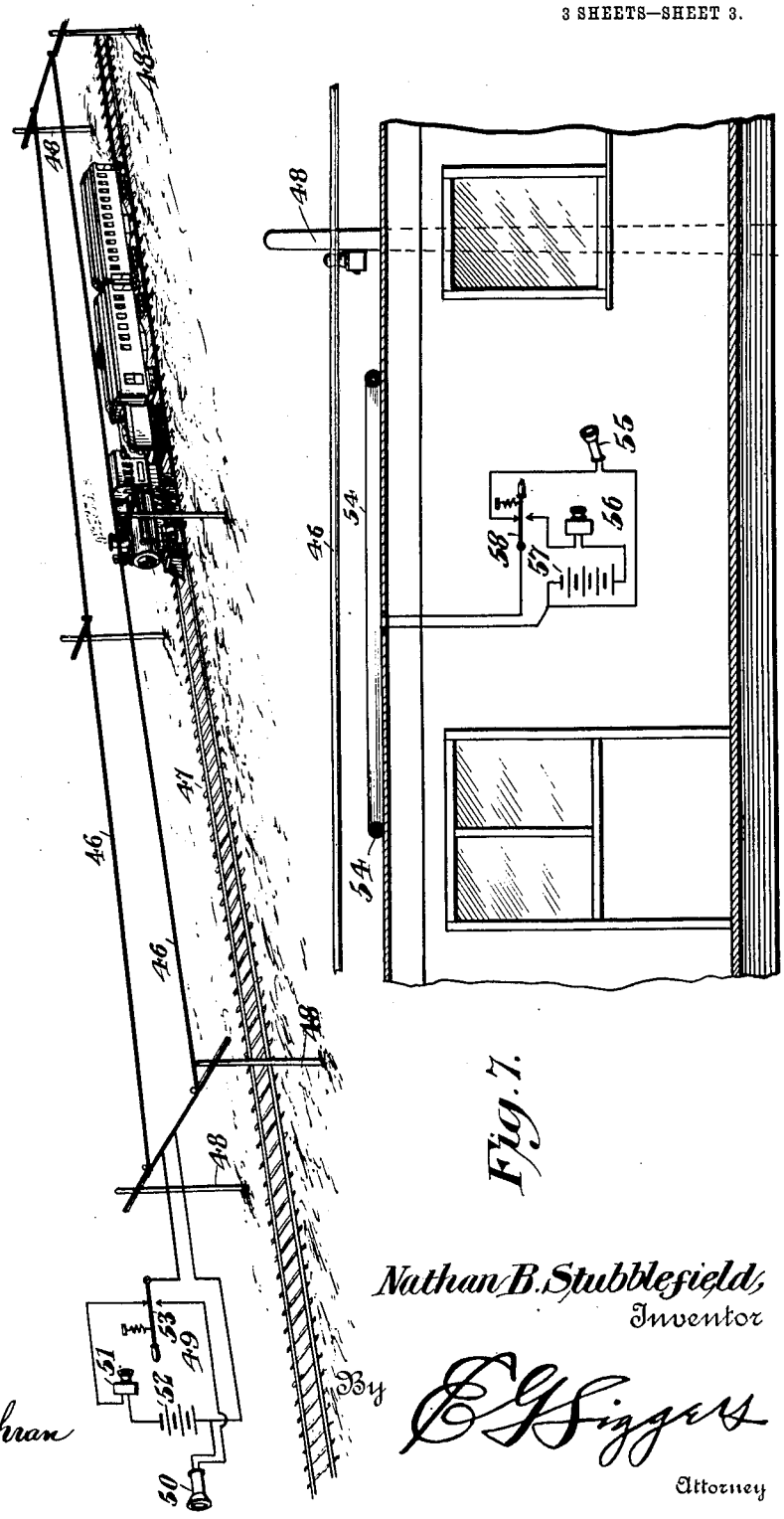

Fig. 6.

Fig. 7.

Witnesses

Jas. G. McCathran

B. G. Foster

Nathan B. Stubblefield,

Inventor

By E. G. Siggers

Attorney

UNITED STATES PATENT OFFICE.

NATHAN B. STUBBLEFIELD, OF MURRAY, KENTUCKY, ASSIGNOR OF TWELVE AND ONE-HALF ONE-HUNDREDTHS TO CONN LINN, FIVE ONE-HUNDREDTHS TO R. DOWNS, FIVE ONE-HUNDREDTHS TO B. F. SCHROADER, FIVE ONE-HUNDREDTHS TO GEORGE C. McLARIN, FIVE ONE-HUNDREDTHS TO JOHN P. McELRATH, TWO AND ONE-HALF ONE-HUNDREDTHS TO JEFF D. ROULETT, AND ONE-TWENTIETH TO SAMUEL E. BYNUM, ALL OF MURRAY, KENTUCKY.

WIRELESS TELEPHONE.

No. 887,357. Specification of Letters Patent. Patented May 12, 1908.

Application filed April 5, 1907. Serial No. 366,544.

To all whom it may concern:

Be it known that I, NATHAN B. STUBBLEFIELD, a citizen of the United States, residing at Murray, in the county of Calloway and State of Kentucky, have invented a new and useful Wireless Telephone, of which the following is a specification.

The present invention relates to means for electrically transmitting signals from one point to another without the use of connecting wires, and more particularly comprehending means for securing telephonic communication between moving vehicles and way stations.

The principal object of the invention is to provide simple and practical means of a novel nature whereby clear and audible communication can be established, said means being simple and of a character that will permit certain of the station mechanisms to be small and compact.

In the accompanying drawings:—Figure 1 is a perspective view, showing means for establishing communication between a vessel and a shore station. Fig. 2 is a diagrammatic view of the mechanism mounted on the boat. Fig. 3 is a cross sectional view on an enlarged scale of the shore coil. Fig. 4 is a perspective view of a road-way, showing a system for establishing communication between road vehicles and a way-station, the latter being illustrated diagrammatically. Fig. 5 is a detail view of a vehicle equipped with one of the instruments, which is shown diagrammatically. Fig. 6 is a perspective view showing the system applied to a railway for establishing communication between a moving train and a way-station. Fig. 7 is a sectional view through a car showing in diagram the car mechanism illustrated in Fig. 6.

Similar reference numerals designate corresponding parts in all the figures of the drawings.

Referring to the embodiment illustrated in Figs. 1, 2 and 3, a water-way 8 is disclosed, upon which a vessel 9 operates. Surrounding the path of travel of the vessel, and preferably elevated on poles 10, is a coil 11 of considerable magnitude. This coil, as shown in Fig. 3, consists of an outer casing 12, within which is placed a conducting wire comprising a plurality of convolutions 13, each of which is insulated from the other. The terminals 14 of this coil extend to a suitable way-station, and at the station is located a powerful source of electrical energy 15, to which is connected by a suitable wire 16 an electrically operated transmitter 17. The battery or other source of electricity has a connection 18 with one of the leads 14. A receiver 19 of the ordinary type has a connection with the same lead 14, to which the battery is connected, and both the receiver and transmitter have connections 21 with the contacts of a switch 22. This switch has suitable means, as for instance, a spring 23, which normally maintains the receiver in circuit with the coil 11, as will be evident by reference to Fig. 1, but if the switch is thrown to break the circuit, it will then cut in the source of electrical energy 15 and the transmitter 17.

An outfit similar to the above, is located on the vehicle or boat 9, but the coil 24 thereof, shown in Fig. 2, is much smaller. As further illustrated in said figure, the mechanism mounted on the boat, consists of a transmitter 25, and a battery or other source of electrical energy 26 electrically connected, as shown at 27 and having a connection 28 with one of the leads of the coil. The receiver 29 also has a connection 30 with said lead. A switch 31 is connected to the other lead, and is normally held in a position by a spring 32 to maintain a closed circuit through the receiver 29 and the coil, though it may be moved to cut out said receiver and close the circuit through the coil, the source of electrical energy and the transmitter.

In this system, if it is desired to transmit from one station, as for instance, the shore-station, the switch 22 is moved downwardly to cut out the receiver and throw in the transmitter and source of electrical energy, while the operator upon the boat or vehicle leaving the mechanism in the condition shown in Fig. 2, holds the receiver 29 to his ear. If therefore the operator at the shore-station uses the transmitter in the ordinary manner, a varying current corresponding to that passing through the coil of great magnitude 11,

will be induced in the coil 24, and the speech or other sounds will thus be transmitted to the operator on the boat. By reversing the arrangement, speech may be transmitted from the boat to the shore station.

The use of coils for both stations, each coil consisting of a plurality of convolutions has been found by experience to be of the utmost value, and furthermore experience has demonstrated that the employment of coils of different magnitudes is of great importance, for it has been found that while two small coils can be used to transmit but a short distance, if one large coil of the character set forth is employed, the other may be very small, and speech or sounds can be transmitted comparatively great distances from one to the other. These sounds are clearly audible.

The structure disclosed in Figs. 4 and 5 is of the same general character. A road-way 32 is disclosed surrounded by a coil 33 of great magnitude that is supported on suitable poles 34. The way-station 35 consists of a transmitter 36, a source of electrical energy 37 connected thereto, a receiver 38, and a switch 39, whereby the receiver or the transmitter and source of electrical energy can be thrown into circuit with the coil 33. The vehicles 40, which operate on the road-way, are provided with smaller coils 41 and instruments consisting of receivers 42, transmitters 43, sources of electrical energy 44 and switches 45 all arranged in the manner already described. In a system of this kind, it will be evident that the occupant of one vehicle may telephone to the home or way-station, and the message can be transmitted to another vehicle. Thus it will be evident that communication can be established between two moving vehicles or between a way-station and any vehicle desired which is within the range of the home- or way-station. The system is also capable of use in connection with railways, and in Figs. 6 and 7, such a system is disclosed in connection therewith. A comparatively great coil 46 is supported on opposite sides of the railway 47 by poles 48 and a station 49 has a receiver 50 and a transmitter 51, a source of electrical energy 52 and a switch 53, the last mentioned being employed for throwing either the receiver or the transmitter and source of electrical energy into closed circuit with the coil 46. One or more cars of a railway train is equipped with an outfit consisting of a coil 54, a receiver 55, a transmitter 56, a source of electrical energy 57, and a switch 58 for throwing either the receiver or the transmitter and source of electrical energy into circuit with the coil 54. It will be evident that the operation of these two last described systems are substantially the same as that first set forth, and no extended description thereof is believed to be necessary.

From the foregoing, it is thought that the construction, operation, and many advantages of the herein described invention will be apparent to those skilled in the art, without further description, and it will be understood that various changes in the size, shape, proportion, and minor details of construction, may be resorted to without departing from the spirit or sacrificing any of the advantages of the invention.

Having thus fully described my invention, what I claim as new, and desire to secure by Letters Patent, is:—

1. In a system of the character described, the combination with a vehicle, of a comparatively small coil of conducting material mounted thereon, electrical transmitting and receiving mechanism including a source of electrical energy connected to the small coil and carried by the vehicle, a stationary aerial coil of much greater magnitude than the small coil having its opposite stretches or sides extending along the opposite sides of the path of travel of the vehicle and elevated above the same and above the vehicle coil, and electrical transmitting and receiving mechanism connected to the greater coil and including a source of heavy electrical current.

2. In a system of the character described, the combination with a vehicle, of a coil of conducting material mounted thereon, electrical transmitting mechanism, a source of electrical energy connected thereto, receiving mechanism, means for connecting either the transmitting mechanism and source of electrical energy or the receiving mechanism to the coil, a stationary coil of greater magnitude surrounding the path of travel of the vehicle and comprising a plurality of convolutions of conducting material, the different convolutions being insulated one from the other, means for supporting the coil in an elevated position, electrical transmitting mechanism, a source of great electrical energy connected to said transmitting mechanism, electrical receiving mechanism, and means for electrically connecting either the transmitting mechanism and source of electrical energy or the receiving mechanism to the said coil of greater magnitude.

3. Means for communicating between a plurality of stations which consists of an aerial electrical coil of great magnitude, means for supporting the said coil, a station electrically connected to the great coil and comprising transmitting and receiving mechanism that includes a source of heavy electrical energy, and a plurality of other separate stations simultaneously in coacting relation with the aerial coil, each of said latter stations comprising a coil of conducting material spaced from but in coacting relation with said great coil and below the same, and transmitting and receiving mechanism connected to said other coil and including a source of electrical energy.

4. Means for communicating between a plurality of stations which consists of an aerial coil of conducting material of great magnitude, transmitting and receiving mechanism connected to said aerial coil and including a source of heavy electrical energy, a plurality of vehicles movable between the opposite sides or stretches of the great coil, coils carried by said vehicles and disposed within the field of action of the aerial coil, and transmitting and receiving mechanism mounted on each vehicle and including a source of electrical energy.

In testimony, that I claim the foregoing as my own, I have hereto affixed my signature in the presence of two witnesses.

NATHAN B. STUBBLEFIELD.

Witnesses:

J. P. McElrath,

J. H. Coleman.

New Energy Technologies

Published by Faraday Laboratories Ltd. Issue #3 (6) 2002

Research on advanced propulsion systems and new energy sources

Time Control experiments

Also in this issue:

* New experiments: magnet monopole beam cures cancer
* Electrogravity experiments
* High efficiency ceramic heater
* New aether experiments
* Instantaneous telecommunication

Editorial

Dr. Chernobrov and NET editor Olga Leontyeva.

The head of the Moscow research group "Kosmopoisk" Dr. Vadim A. Chernobrov (our readers certainly remember his articles on experiments with time) has recently visited the editorial office of New Energy Technologies in Saint-Petersburg, Russia. His visit was caused by discussion on the Time Machine project (investigation of active properties of time), started under agreement with Faraday Labs Ltd. Our magazine will inform readers on the topic in later issues.

Publisher Faraday Lab Ltd

Editor-in-Chief Alexander V. Frolov
Editor Olga O. Leontyeva
Designer Ekaterina F. Yakovleva
Translator Antonina V. Nikolaeva

Scientific Advisory Board
Kyrill P. Butusov
Ivan M. Shakhparonov

New Energy Technologies Magazine
is published by Faraday Lab Ltd
six times a year

Correspondence Address:
POBox 37, St.Petersburg,
193024, Russia
Phone/fax: 7-812-380-6564
net@faraday.ru
www.faraday.ru

Subscription: $90 any foreign
Air mail delivery included

PRINTED IN RUSSIA

Copyright © 2002 by Faraday Lab Ltd.
All rights reserved.

NEW ENERGY TECHNOLOGIES
New Book

Dear Reader!
All articles of the previous 6 NET issues will soon be published as a new book in English (400 pages, more than 100 photos, figures and drawings, format A4).
You can order by e-mail: book2001@faraday.ru
or fax 7-812-3806564
Price with airmail delivery is 83 USD.

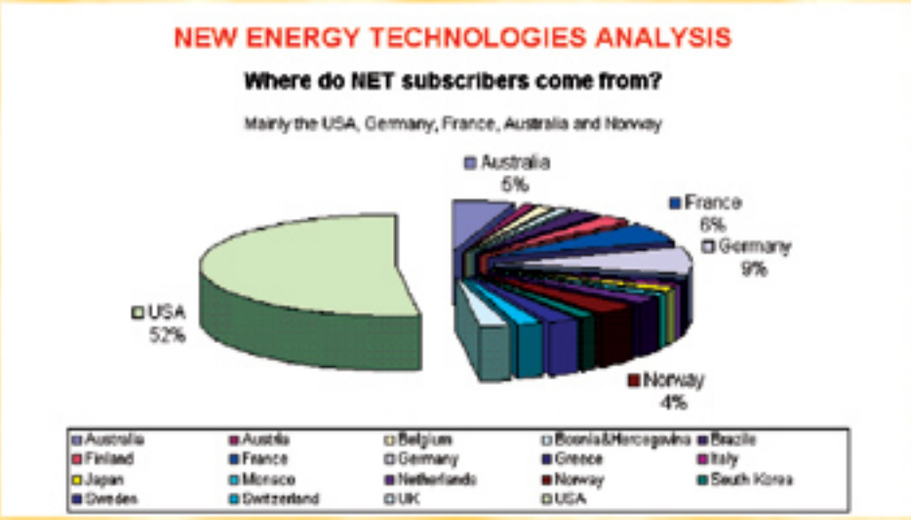

LUTEC 1000

News from Australia

Magnet motor-generator

www.lutec.com.au

"There are a couple of other major factors that we won't go into here, suffice it to say that our current prototype demonstrates 1500% more " out" than "in"... "

"The Lutec 1000 will be sold throughout Australia within three years. The majority of buyers are expected to be the home owners, although there is strong support for our product throughout the entire strata of society and business. Market leadership should be maintained for the next five years. The product is sold through commission only sales agents and our staff at the plant, mainly to anyone who needs or uses electricity."

John Christie (left) is the co-founder, CEO and chairman of Lutec (Aust.) Pty Ltd.

Ludwig (Lou) Brits (right, above) is the co-founder, managing director and head of development of Lutec (Aust.) Pty Ltd. He is Chairman and director of TTI Pty Ltd. TTI Pty Ltd is a state government recognised R.A.P. (remote area power) system provider.

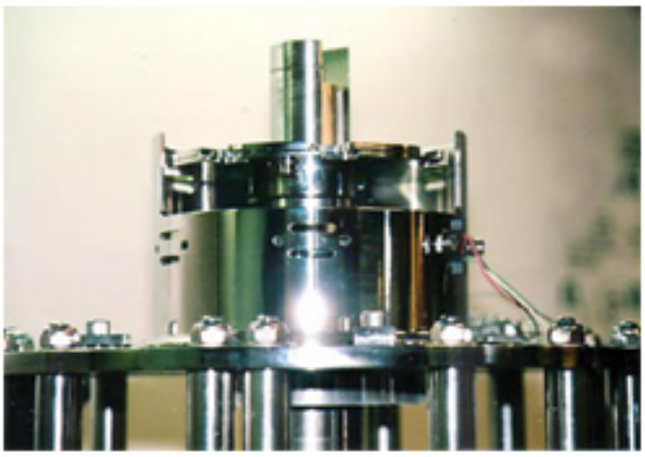

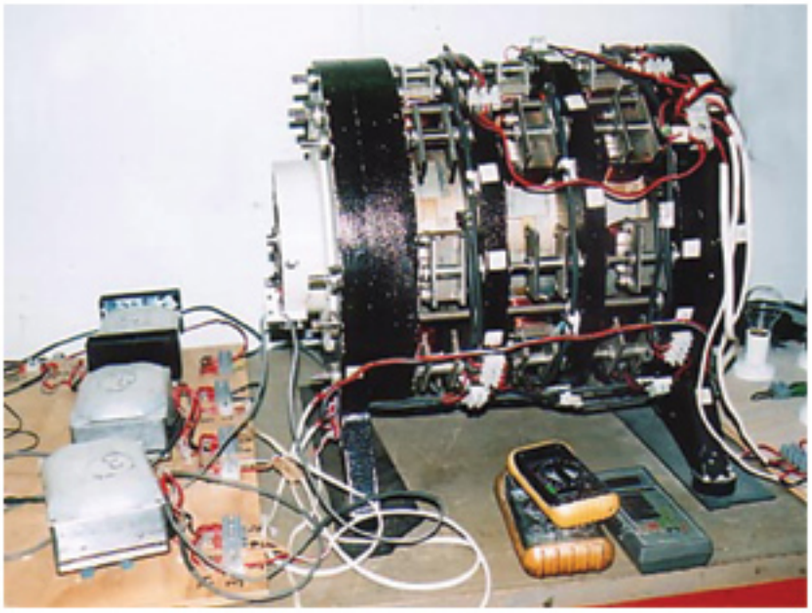

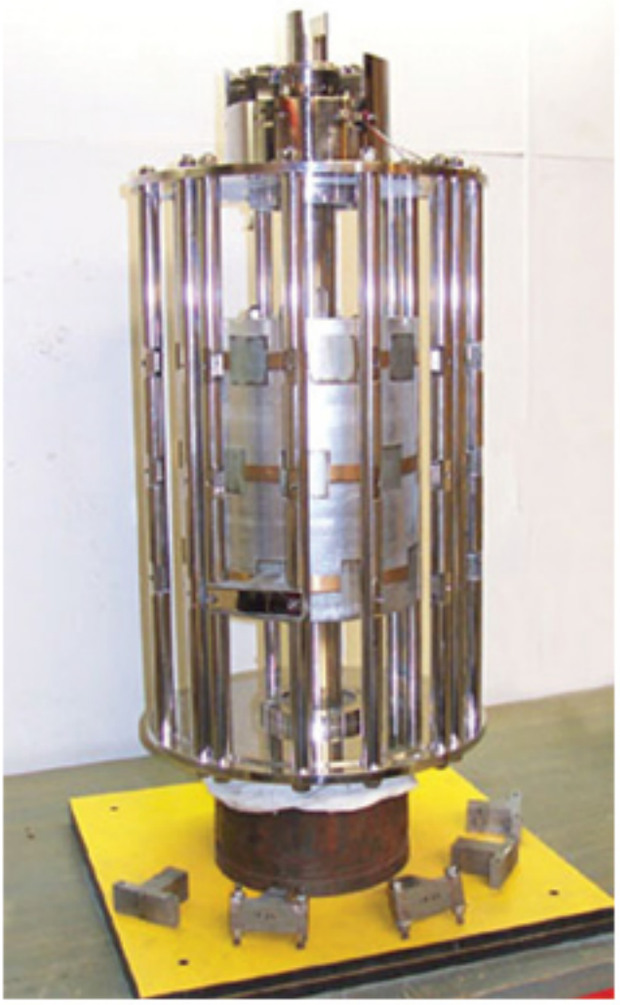

Electrogravity

by Tim Ventura
tventura@attbi.com

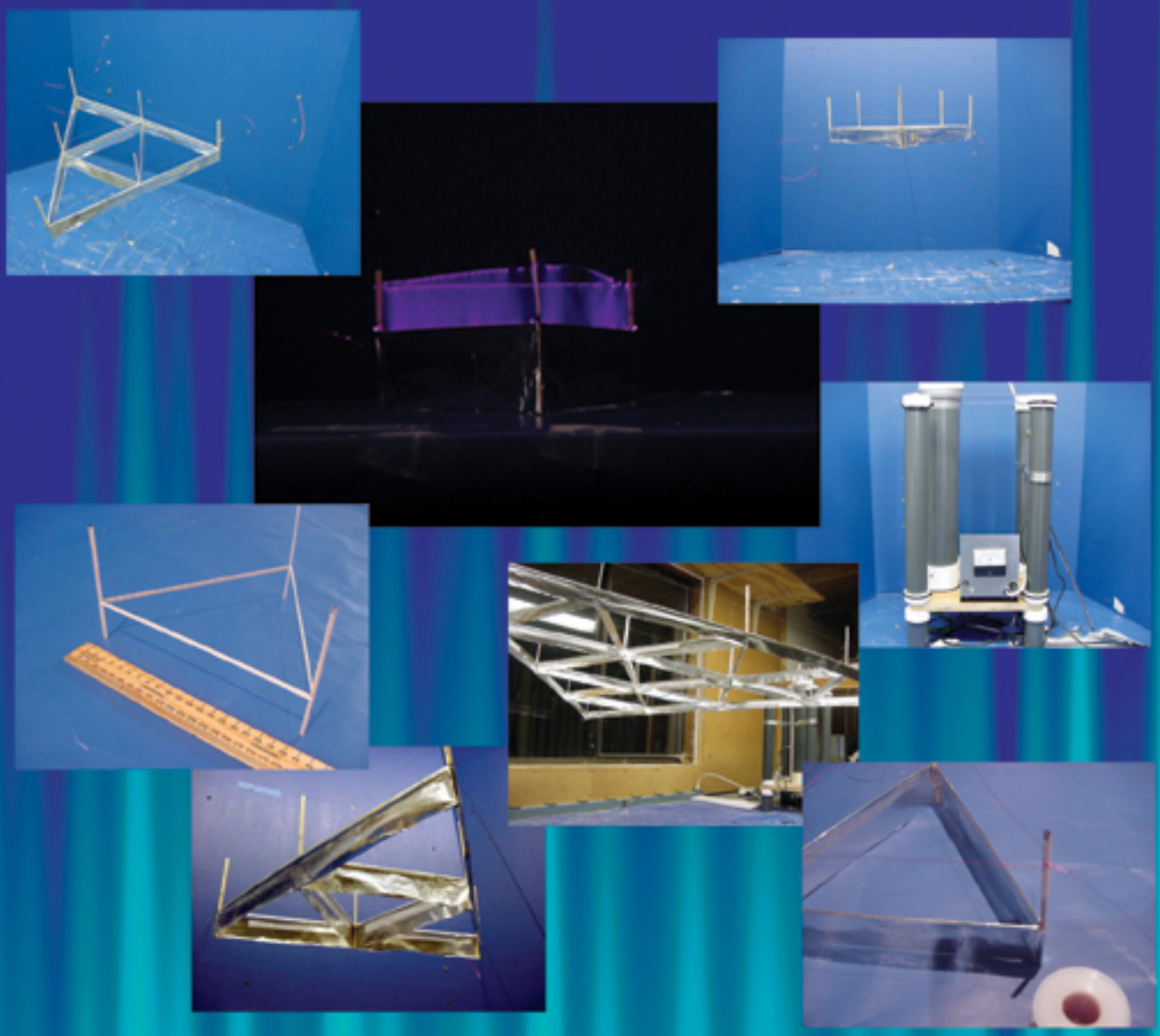

In this issue a report by Tim Ventura, USA on experimenting with asymmetrical capacitors.
www.americanantigravity.com

NEW ENERGY TECHNOLOGIES #6

1. Large-Scale Shakharov condition, **David Noever and Christopher Bremner**
2. Matter as a resonance longitudinal wave process, **Alexander V. Frolov**
3. Physical Principles of The Time Machine, **Alexander V. Frolov**
4. Time Machine Project by **Alexander V. Frolov**
5. Kozyrev-Dirak radiation, **Ivan M. Shakhparonov**
6. The Electrical Vortex Non-Solenoidal Fields**, S. Alemanov**
7. Physical Mechanism of Nuclear Reactions at Low Energies, **V.Oleinik, Yu. Arepjev**
8. The Evolution of Lifter Technology, **T. Ventura**
9. Reality and consciousness in education and activity, **A.Smirnov**
10. Old new energy, **Y. Andreev, A. Smirnov**
11. On the influence of time on matter, **A. Belyaeva**
12. Life without diseases and ageing-preventive electrical bio-heater features, **A. Belyaeva**
13. Technical report, on Belyaeva's high efficient ceramic heater, **Sh. Mavlyandekov**
14. Fundamental properties of aether, **A. Mishin**
15. Effect of Magnetic Blow Wave Field on Wine Systems, **I. Shakhparanov and others**
16. Nikola Tesla and Instantaneous Electric Communication, **V. Korobeynikov**
17. The Unitied Gravitation theory, **I. Kuldoshin**
18. New Sources of Energy from the Point of View of Unitary Quantum Theory, **L.G. Sapogin, Yu.A. Ryabov, V.V. Graboshnikov**
19. Antigravitation Force and antigravitation of matter. Methods of its creation, **A. K. Gaponov**
20. The capacitor, which has energy of atomic bomb (Review of A. Gaponov's research)

consequence of many commonly accepted concepts and dogmas of the modern "scientific perspective of natural phenomena". This crisis situation in modern physics is a direct consequence of many conservative scientific viewpoints, unfortunately supported and protected by modern official academic science. The evolution of our consciousness has been influenced by many undoubtedly well known experts and has been evolving for a long time in the environment of specific scientific vacuum and requires immediate revival. Even methods used for dissemination of new knowledge should be improved, if one actually wishes to accelerate the progress of Humankind.

The perspective for practical applications of new previously unknown scientific phenomena and effects looks very attractive, and they may be achieved by cooperative efforts of the human intellect. New breakthrough technologies of the 21st Century will require serious changes of many commonly accepted concepts and dogmas in fundamental physics. This process of progressive development cannot be stopped.

REFERENCES

1. Richard P. Feynman, Robert B. Leighton, Matthew Sands. The Feynman Lectures on Physics, Addison-Wesley, 1964, Vol. 2, Ch. 1. Paragraph 6 "Electromagnetism in Science and Technology" (the very end of paragraph)
2. J. Maxwell, Selected Works on the Electromagnetic Field Theory, Gostekhizdat, Moscow (1954).
3. G. V. Nikolaev, Non-contradictory Electrodynamics. Theories, Experiments, and Paradoxes, Publishing House of the Tomsk State University, Tomsk (1997).
4. A. S. Kompaniets, in: Theoretical Physics, State Technical and Theoretical Press, Moscow (1957), pp. 126-128.
5. R. T. Sigalov, T. I. Shapovalova, Kh. Kh. Karimov, and N. I. Samsonov, New Research of Forces of the Magnetic Field, FAN Press of the Uzbekskaia SSR, Tashkent (1975).
6. Ya. I. Frenkel, Electrodynamics. Vol. 1, United Scientific and Technical Presses, Leningrad/Moscow (1934).
7. G. V. Nikolaev and B. V. Okulov, Inertial Properties of Electrons, deposited at VINITI, No. 4399-77, Moscow (1978).
8. Observations of the Aharanov-Bohm Effect, Nature, No. 7, 106 (1983).
9. G. V. Nikolaev, Scientific Vacuum. Crisis in Basic Physics. Is There Any Way Out?! Publishing House Kursiv, Tomsk (1999).

Large-Scale Sakharov Condition

David Noever and Christopher Bremner

NASA Marshall Space Flight Center,
Space Sciences Laboratory
Mail Code: ES76, Huntsville AL 35812

Editor's note: This article was presented by the autors for publication in New Energy Technologies. For the first time it was published in 1999 by the American Institute of Aeronautics and Astronautics, Inc. All copyrights belong to the authors.

Abstract

Recent far reaching theoretical results have used the quantum vacuum noise as a fundamental electromagnetic radiation field to derive a frequency (ω) dependent version of Newton's gravitational coupling term, $G(\omega)$. This paper reconciles the cut-off frequency with the observed cosmological constant, and then briefly puts forward a realizable laboratory test case in the 10 - 100 MHz frequency range. One analogy is drawn between the classical vacuum energy experiments with attraction between two closely spaced plates (Casimir cavity) and the arbitrarily dense material boundaries possible in Bose condensates, such as irradiation at MHz frequencies of superfluid helium or superconductors.

Theoretical Background

Zel'dovich [1] first suggested that gravitational interactions could lead to a small disturbance in the (non zero) quantum fluctuations of the vacuum and thus give rise to a finite value of Einstein's cosmological constant in agreement with astrophysical data. Using dimensional analysis and the suggestion by Zel'dovich, Sakharov [2] derived a value for Newton's gravitational constant, G, in only one free parameter, frequency, ω:

$$G \sim c^5 \Big/ h\int \omega d\omega \sim 1 \Big/ \int \omega d\omega$$

where c is the speed of light and h is the Planck constant. The free parameter in frequency when integrated over all values from zero to high frequencies must contain the usual integration cutoff value (Planck frequency on observable electromagnetic phenomenon).

Puthoff [3] and others [4 5] have extended Sakharov's condition in a relativistically consistent model to determine constants of proportionality. His model derives an acceleration term in first order expansion (in flat space time), then equates inertial and gravitational mass (by the equivalence principle) to make contact with the gravitational constant, G, directly as:

$$G = \left(\pi c^5 / h\omega_c^2\right) \sim 1/\int \omega d\omega$$

which is the Sakharov condition [2,3]. This paper revisits the meaning of the cutoff frequency, ω_c ,for radiation interactions, of which the quantum vacuum [6-10] and

Planck frequency are only the leading terms, and for which linear combinations of forces can introduce other plausible frequencies. One purpose of this reexamination is whether the resulting gravitational coupling constant, G, can be reconciled with the anticipated energy density of the universe [11] without resorting to extreme space time curvature and thus yield enough critical density to contain the expansion of the universe. Finally we particularize the case to the high-density fluctuations possible in Bose condensates [12], a potential experimental test case for how the effects of vacuum noise might manifest observably.

One far-reaching consequence of the vacuum energy model is the attractive force of gravity becomes reducible to the radiative interaction between oscillating charges, e.g. the zero point field (ZPF) applied to subatomic charges. Mass and inertia arise from the fundamentally electromagnetic ZPF oscillations.

This random background gives the usual quantum mechanical energy spectrum from particle field effects:

$$\rho(\omega)d\omega \sim \omega^3 d\omega$$

a very important dimensional relationship, since the third power in frequency avoids anomalous Doppler shifts from velocity boosts, or stated alternatively is the correct spectra for a Lorentzian (non accelerated) invariant radiation field [13].
More specifically, the energy spectrum [3] can be written as:

$$\rho(\omega)d\omega = [\omega^2/\pi^2c^3][h\omega/2]d\omega =$$
$$= h\omega^3/2\pi^2c^3 d\omega \sim \omega^3 d\omega$$

which is an expression in the first parenthesis of the density of the normal modes and in the second parenthesis of the average energy per mode. When this energy density is integrated over all frequencies, the ω^3 divergence produces well known infinities in the integration limit of high frequencies, thus an assumed cutoff frequency (appropriate to experimental observation limits at the Planck frequency), is usually introduced:

$$\omega_\rho = \left(c^5/hG\right)^{1/2}$$

For mass, m, moving in an accelerated reference frame $g = -a = Gm/r^2$, the resulting energy spectrum includes a gravitational spectral shift [3],

$$\Delta\rho'(\omega)d\omega = h\omega/2\pi^2c^5[Gm/r^2]^2 d\omega \sim 1/r^4 d\omega$$

a kind of short range ($1/r^4$) gravitational energy shift, but electromagnetic in origin when zero point fluctuations are included. (N.B. To account for equal gravitational mass effects in neutrons and protons, the ZPF oscillations must involve subatomic charges, or 'parton' effects. The assumption derives from high frequency interactions of ZPF wherein these subatomic particles are asymptotically free to oscillate as independent or free particles as quantum noise).

A further far reaching consequence [3] is mass itself becomes interpretable as a dependent quantity derived from a damped (with decay constant Γ) oscillation driven by random ZPF:

$$m = \Gamma c^3/G = 2h\Gamma/\pi^2c^3 \int \omega d\omega$$

with the only two free parameters, the damping factor Γ, and again the frequency, ω. The internal kinetic energy of the system contributes to the effective mass.

This leads to an overall average spectral density, written in terms of mass as:

$$\Delta\rho'(\omega) = m^2c^5\omega/2h\omega_c^4 r^4$$

for the electromagnetic field distribution near ($1/r^4$) to the mass, m, which in detail is half electric and half magnetic.

One additionally attractive feature is the correspondence between this derivation and the view of gravity as a dynamical scaleinvariance breaking model (e.g. symmetry breaking near the Planck mass energy [14]). A final result includes the force calculation between two ZPF radiation oscillators of the correct form yielding Newton's average force law

$$< F >= -Gm^2/r^2$$

Thus, for a Newtonian force to first order in a flat space time, Sakharov [2] could be credited for proposing gravity as not a fundamentally separate force and Puthoff [3] and co workers [4-5] applied the vacuum electromagnetic field to equate gravity to a long-range radiation force (e.g. van der Waals like force). Higher order oscillatory gravity modes vary as $\left(\sin[\omega_o/\omega_c]\right)^2$.

To first order, a weak G coupling constant, $G = \left(\pi c^5/h\omega_c^2\right)$, appears for high frequency cutoff at the Planck scale. A corollary in analogy to electromagnetic shielding by ordinary matter can be rationalized as the problem of frequency mismatch at high Planck frequencies, e.g. ZPF cannot be fundamentally shielded. In other words, frequency mismatch precludes gravity shielding by matter.

The purpose here is to revisit the only free parameter, the frequency cutoff, more in the spirit of a mass resonant frequency. The motivation for this approach

can be summarized as: 1) the generality of other complementary radiation effects without relying on ZPF alone (e.g. other isotropic, homogeneous radiation sources); 2) the weak coupling constant, G, yields a vastly smaller than observed size of the universe (e.g. too small cosmological constant) when the Planck frequency is used as a cutoff value; and (3) the particle mass, $m = \Gamma c^3/G$, can be viewed as a renormalized or 'dressed' mass with a resonant interaction potential that is frequency dependent in its coupling constant, G, and with 'bare' mass that is large, $m_o \sim \left(m_\rho^2 / m\right)$, where the experimentally unobservable, $m_\rho = \left(hc / G\right)^{1/2}$ is the Planck mass.

In particular, why this large 'bare' mass does not generate a large gravitational field is not a unique anomaly in the Sakharov derivation, since similarly large vacuum point energies are common to field theories. The important point is that the derivation $G(\omega)$ is general however to any isotropic radiation field with the Lorentz invariant energy spectra $\left[\rho(\omega) \sim \omega^3\right]$, thus the candidates for the cutoff frequency of the particular radiation source can be interpreted as a Planck scale only if the rest mass, m_o, is not composed of many terms, rather than just the ZPF leading term. Since the ZPF is akin to a van der Waals force [3 5], polarizability (in charge and mass) must be considered, but without also excluding any number of linear combinations that might have alternative cutoff frequencies, ω_c, or damping terms, Γ, 'ala particle physics interpretations for resonant masses during renormalization. In other words, once a gravitational energy spectrum, $\rho(\omega)$ is postulated that is Lorentzian invariant, many fundamental sizes (or corresponding frequency values) are smeared (or dressed) by any number of characteristic frequencies between zero and the high frequency electromagnetic (Planck) cutoff ω_ρ. Quite simply, is the expression, $\omega_c = \omega_\rho$, a requirement for all radiation sources?

Many types of particle oscillations may satisfy the general requirements of a Sakharov condition, each having a characteristic mass (and energy) as in calculating the mass of any fundamental particle at its resonant frequency (including underlying partial charges or dense bosons). This brings the calculation to a consideration of the high density fluctuations characteristic of a Bose condensate [15 19]. While the high density variation may intrinsically be of interest, the exploration has more to do with reconciling the ZPF interpretation of the Sakharov condition with the observed cosmological constant [14].

A "top down" view of calculating the cutoff frequency imposes the self consistency test for the cosmological constant, Λ, from the outset. To calculate, the total frequency integrated energy density of the universe must be included:

$$\rho(E) = \int \rho(E) dE = h\omega_c^4 / 8\pi^2 c^3$$

which must have a mass equivalent, contribute to the universe's curvature, and thus have a fundamental relation to the critical density to contain the expansion of the universe [14 15]. The mass - equivalent ZPF to reach the universe's critical density [15], $\rho \sim 10^{-29}$ g cm^{-3} would necessarily limit the cutoff frequency for gravity to the value, $\omega_c < 7 \cdot 10^7 s^{-1}$, or between 10 -100 MHz.

A higher frequency greatly overshoots the cosmological constant, Λ, and induces extreme curvature in the universe. This problem has been cited frequently and stated most bluntly, as either ZPF or the cosmological constant requires revision. The relevance here arises from similarly large positive coupling terms in quantum gravity [15], which also generate a local gravitational Instability for typical upper limits on the cosmological constant, $\Lambda/8\pi G < 10^{12}$ cm^{-4}.

Rather than to dwell on the inconsistencies that plague attempts to reconcile quantum gravity, we particularize the problem to a case where the restriction to Planck scale becomes less clew, namely the high density fluctuations and universal scaling introduced in a Bose condensate. A Bose condensate, such as superfluid helium or superconductors [15 19], becomes of potential interest, mainly because of its arbitrarily dense boundaries and the classic Casimir experiment [20 22] which allows such dense material boundaries (two closely spaced conducting plates), if available, to modulate the background quantum fluctuation of ZPF. In other words, the matter-ZPF interaction becomes measurable by the observed attraction between two material boundaries. What dense boundaries might generate in Bose condensates remains a subject of great interest.

The significant case to investigate is whether Casimir-like interactions [20 22] will not only couple to ZPF radiation at a scale comparable to the quantum noise (or other radiation field), but also alter the value imposed by the Sakharov condition for G. It remains an open question whether this potential coupling interaction shares, as in ordinary critical phenomenon, the density correlation function, Φ, that is both independent of the coupling strength (or universal in renormalization) and consistent with the observed average energy density of the visible universe.

Thus the purpose here has bow to restate the Sakharov condition in the gravitational coupling constant, G, based on its only free parameter, a frequency cutoff, ω_c. Any potential relevance arises from similarly large values for the positive coupling term in quantum gravity, which generate conditions for a local gravitational instability for typical upper limits on the constant, $\Lambda/8\pi G < 10^{12}$ cm^{-4}.

To restate the Sakharov condition, matter in the vacuum provides boundaries for reduced 'Casimir like' modes available for otherwise isotropic radiation from quantum fluctuations (broad spectral noise). That this view reproduces Einstein gravity has been examined, including the full relativistic derivation [4-5]. The details of the appropriate mass, however, remain buried in the kinetic energy of general internal particle ('parton') motion [3]. Any appeal to a specific parton representation is limited only by essentially free particles with high frequency interactions, including underlying partial charges or dense bosons. The basis of considering arbitrarily high-density fluctuations in Bose condensate in analogy to the ZPF-Casimir experiment remains both an empirical and theoretical case to examine. There exist laboratory scale cases [15-19] where resonant radiation in the required 10-100 MHz range appear to produce anomalous effect for such Bose condensates as superconductors, but further work to confirm these results would be needed. In other contexts, these effects have been discussed as the Schiff-Barnhill effect for superconductors interacting with a gravitational field [23], but for the static rest moss rather than an effective mass in a conduction band.

Experimental Propositions

J. Weber [24,25] proposed the use of a superconducting Bose condensate for gravity wave detection, principally because of its potentially higher signal to noise ratio in carrying electrical signals upon length dilations in a relativistic framework for gravity waves travelling near the speed of light. W. Weber and Hickman [26] derived an experimentally testable relation based on torquing of a charged capacitor parallel to a gravity field, with

$$\tau = 2E_g / \pi[\alpha / (1-\alpha)^{1/2}]$$

where the capacitor will rotate relative to the gravity vector, for $\alpha = 2GM / rc^2$, is Schwarzschild radial coordinate [$dR = dr(1-\alpha)^{1/2}$] , E_g is dependent on the capacitor charge and geometry of the plates, $E_g = [Q^2 d/2\varepsilon WL(1-\alpha)^{1/2}]$, for a plate separation, and radial dimensions,W and L, charge Q, and ε the permittivity of free space. For plate separations of 2 mm on Earth, the maximum torque is approximately $\tau = 10^{-12}$ Nm, when charged to 2/3 dielectric breakdown. While not entirely promising for detection of such low torques, the large separation (2 mm) distance between capacitative plates naturally prompts generalization to the classic Casimir force [21] experiments only recently confirmed experimentally [20]. In particular, we rewrite the torque values to include the frequency terms derived with the Sakharov condition

$$[G = (\pi c^5 / h\omega_c^2)]:$$

$$\alpha = 2M\pi c^3 / h\omega_c^2 r$$

The appeal of this formulation is that a frequency dependent torque is derived, which further makes contact with proposals to modulate the Casimir capacitative plates for continuous extraction of energy [27]. This result requires further investigation experimentally, particularly to compare with previous reports for anomalies in AC- tuned electrical capacitors [28].

References

1. Ze1'dovich Ya. B. JETP Letters, 6, 345, 1967.
2. Sakharov A. Vacuum quantum fluctuations in Curved Space and the Theory of Gravitation, Sov. Phys. Reports, 12,1968,1040 1041.
3. Puthoff H. E. (1989) Gravity as a zero-point fluctuation force, Physical Review A, 39(5): 2333 2342, March 1, 1989.
4. Haisch B., Rueda A., Puthoff H.E., (1994) Inertia as a Zero Point Field Lorentz Force, Physical Review A, 49:678 694.
5. Haisch B., Rueda A., Puthoff H.E.,"Inertia as a Zero Point Field Force" Physical Review A 49, N 2, 678 (1994).
6. Ambjorn J. and Wolfram S. (1983) Properties of the Vacuum, 1. Mechanical and Thermodynamic, and Properties of the Vacuum, 2. Electrodynamics, Annals of Physics
7. Ambjorn J. and Wolfram S. (1983) Properties of the Vacuum. 1. Mechanical and Thermodynamic, Annals of Physics, 147:1 32.
8. Fulcher et al., "The Decay of the Vacuum," Sci. Am., vol. 241, p. 150, Dec. 1979
9. Puthoff, H.E. "Source of Vacuum Electromagnetic Zero Point Energy" Physical Review A 4 0, 4857 Nov 1 (1989); Errata and Comments, Physical Review A 4 1, March 1(1990); Physical Review A4 4, 3382, 3385 (1991)
10. Senitzky I.P., "Radiation Reaction and Vacuum Field Effects in Heisenberg Picture Quantum Electrodynamics", Phys. Rev. Lett. 31(15), 955 (1973). As pointed out by Puthoff [3] the relativistic results for the Sakharov condition have so far been encouraging, while the consequences for nuclear interactions in all coordinate frames have not been fully explored.
11. da Costa L. N., Freudling W., Wegner G., Giovanelli R., Haynes M. P., and Salzer J. J. (1996) The Mass Distribution in the Nearby Universe, Astrophysical Journal Letters, 468: LS L8 and Plate L 1
12. Modanese G. (1996) Theoretical analysis of a reported weak gravitational shielding effect, Europhy. Lett., 35(6):413 418.
13. Shupe M.A. The Lorentz invariant vacuum media, Am. J. Phys. 53, 122 (1985). A cautionary note is that lower frequency cutoffs can violate Lorentzian invariance, thus allowing a moving detector to reveal absolute motion by recording Doppler sifted frequencies. Standard methods might treat such effects like the cancellation of terms that remove anomalous ZPF infinities from field theories, but these topics remain to be explored.
14. Zee, A. Phys. Rev, Lett, 42,417 (1979); Phys. Rev. D. 23, 858, (1981).
15. Torr D. G. and Li. N. (1993) Gravitoelctric Electric Coupling vVia Superconductivity, Foundations of Physics Letters, 6(4): 371 383.
16. Unnikrishan C. S. (1996) Does a superconductor shield gravity? Physics C, 266:133 137.
17. Podkletnov E. and Nieminen R (1992) A Possibility of Gravitational Force Shielding by Bulk $YBa_2Cu_3O_{7-x}$ Superconductor, Physics pp.203: 441 444.
18. Li N, and Torr D. G. (1992) Gravitational effects on the magnetic attenuation of superconductors, Physical Review B, 46(9): 5489 5494. A simple consequence of the Sakharov condition $G = (\pi c^5 / h\omega_c^2) \sim 1/\int \omega d\omega$, can be written for the gravitomagnefic permeability as: $\mu_g = 4\pi G / c^2 = 4\pi^2 c^3 / \left(h\int_\circ^{\omega c} \omega d\omega\right) \sim 1/\int \omega d\omega$ which suggest that the same frequency resonance implied by the ZPF derivation will share similar consequences for vector gravity

effects. See also, DeWitt, B. S. Superconductors and Gravitational Drag, Phys. Rev. Lett. 16, 102(1966).

19. Li N., Noever D., Robertson T., Koczor R., and Brantley, W. (1997) Static Test for a Gravitational Force Coupled to Type II YBCO Superconductors, Physics p., 55, 287.

20. Lamoreaux S. K. (1997) Demonstration of the Casimir Force in the 0.6 to 6 mm Range, Phys. Rev. Letters, 78:5 8.

21. Milonni P.W. et al., "Radiation pressure from the vacuum: Physical interpretation of the Casimir force", Phys. Rev. A, Vol. 38, No. 3, 1621 August 1988.

22. Milonni P. W. (1994) The Quantum Vacuum, Academic Press, San Diego, CA.

23. Schiff L.I. and Barnhill M.V. Bull. Am. Phys. Soc. 11, 96, (1966) and refn. 18.

24. Weber J. (1960), Detection and Generation of Gravitational Waves, Physical Review, 117(1)306 313.

25. Weber J. (1966) Gravitational Shielding and Absorption, The Physical Review (The American Physical Society), 146(4): 935 937.

26. Weber W. and Hickman H. (1997) A possible interaction between gravity and the electric field, Spec. Science Tech. 20, 133 136

27. Forward R.L. "Extracting electrical energy from the vacuum by cohesion of charged foliated conductors" Phys. Rev. B, Vol. 30, No. 4,1700 August 1994

28. Woodward, J. F. (1992) A Stationary Apparent Weight Shift From a Transient Machian Mass Fluctuation, Foundations of Physics Letters, 5:425 442.

The Problem of Electron and Physical Properties of Time:

To the Electron Technologies of the 21st Century

V.P. Oleinik

*Department of General and Theoretical Physics, National Technical University of Ukraine "Kiev Polytechnic Institute", Prospect Pobedy 37, Kiev, 03056, Ukraine **Institute of Semiconductor Physics, National Academy of Sciences, Prospect Nauky 45, Kiev, 03028, Ukraine;
e-mail: yuri@arepjev.relc.com

"...it is necessary to periodically subject to the deepest revision the principles, which were recognized as final and were no longer discussed".
Louis de Broglie

Abstract

The results of an approach based on the synthesis of standard quantum electrodynamics and of the ideas of self-organization in physical systems are briefly outlined. The quantum model of electron as an open self-organizing system is constructed, with the physical mechanism of self-organization consisting in the back influence of the own field created by electron on the same electron. The own field is considered as a physical property of electron, intrinsically inherent in electrically charged matter, which is included in the definition of the particle from the very beginning. The own field of electron endows the particle with wave properties and represents a bearer of superluminal signals, which can be used for the creation of qualitatively new communication systems. Because of the inseparable link between space and time, the force in relativistic mechanics is the cause of change not only of the velocity of particle, but also of the course of time along the particle's trajectory. For this reason the flow of time in some area of space depends on the character of physical processes, occurring in it, and, therefore, time can be controlled by slowing down or accelerating its course with the help of material processes. The conclusions of the paper are not in conflict with the special theory of relativity (STR); they are a direct consequence of relativistic equations of motion and represent an essential development of the generally accepted notions about space and time. At present all the necessary prerequisites are available, both theoretical and technical, for the practical mastering of the own fields of particles and of the physical properties of time.

1. Introduction. The Problem of Electron and Future Outlook

Electrodynamics, what is this? What is its value for man? Electrodynamics is the theory of electromagnetic interaction, one of four interactions existing in nature. Its role in the life of society is seen from the fact that the most part of natural phenomena, which we encounter at every step, is of electromagnetic origin: it is due to the interaction of electromagnetic field with electrically charged particles entering into atoms and molecules. It is fair to say that electromagnetism plays a crucial role in the life of mankind as it determines the ways of technical advance of society [1].

The key problem of quantum electrodynamics is the problem of electron, which can be formulated as follows: to construct from the first principles a non-contradictory model of electron, which takes into account experimental facts, i.e. to find the dynamical equation capable of describing the unique physical properties of electron, its internal structure, its behaviour when it interacts with electromagnetic field.

Electron was discovered a little more than 100 years ago, in 1897. With discovering the electron the revolution in physics began, which has resulted in unprecedented technical advance of society. The summit of development was reached in the middle of the 1950s and then the long period of evolutional development followed, when new physical principles were used to describe various physical processes and phenomena. The violent development of physics became slower in the 1970s and was replaced by stagnation in the subsequent years. The stagnation in electrodynamics continuing already over a period of several decades is gradually giving place now to a new ascent. The new scientific revolution is starting, which is associated with electron again, much as it happened hundred years ago. The reason is that electron is the most unique particle storing in itself the deepest mysteries of nature and the degree, to which they are disclosed, determines the

wants to stay anonymous, until his patent application is done and university verification tests will be done). The claims are: 1200 Watts coil out with about 1076.4 Watts in into the driving motor at 3450 RPM. 8 amps 117volts at no load 9.2 amps 117 volts at full load. The output of about 1200 Watts is already a total overunity operation! As they just increase the input power by about 140 Watts only between idle and load state and they get 1200-Watts output it seems indeed a case, where Lenz law is violated! This generator also has NO motor effect! If you supply current to the coil, the permanent magnet in the center will not rotate; cause the flux just stays inside the toroid core! There you can see, that the back drag does not influence the mechanical rotation of the magnet!" Stefan used very good criterion to prove high efficiency of the design: **There is no back-torque effect! It is most important aspect of Gramm's generator.** You can contact directly Stefan Hartmann: Keplerstr. 11 B, 10589 Berlin, Germany. Tel: +49 30 345 00 497, FAX: +49 30 345 00 498 email: harti@harti.com info@ccard.net (Please, note: Dr. Harman referred to my old web site www.time-machine.spb.ru which is closed now).

So, basic principles of MEG and Φ-machines are the same. It was patented more than 100 years ago. Primary magnetic flux is topologically separated in two (or more) fluxes, which are mutually compensated in the ring core. Advantages of MEG are absence of moving parts since special input coils produce changes of primary flux. Also level of saturation in ferromagnetic material obviously should be corresponding to intensity of primary magnetic field, which is created by the permanent magnet, Fig.4.1.

Besides MEG the same principle can be (and already was!) realized in many other systems. So, there is no any news in the USA patent #6,362,718 granted for "The Motionless Magnetic Generator". What did they claim? You can find it in the patent: "The first input coil and the first output coil **extend around portions of the first magnetic path**, while the second input coil and the second output coil **extend around portions of the second magnetic path.**" Yes, it is the same bi-directional principle we discussed above: two parts of the magnetic flux and each coil produce effect to reduce flux due to this superposition.

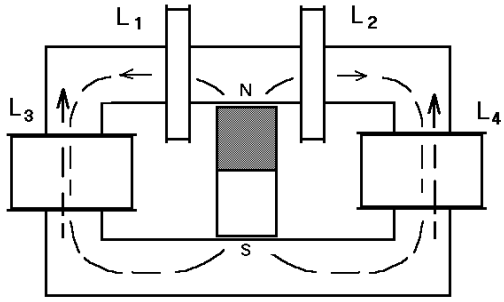

Fig.4.1

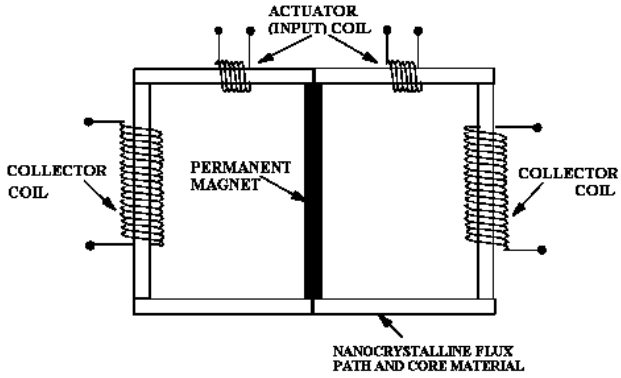

Fig.4.2
Diagram of prototype by Bearden.

In conclusion I'd like to confirm our sincere interest to develop joint work with all new energy research teams if they are not trying to obscure the issue of the technology by means of complex theoretical constructions and common words about zero point energy.

Matter as a Resonance Longitudinal Wave Process

Alexander V. Frolov

Abstracts

There is experimental data on gravitation anomalies for cases of resonance irradiation of the Bose condensates (superfluid helium or superconductor) at 10-100 MHz frequencies. It is developed by the author in frames of his aether theory that can be used for practical applications in aerospace and new energetics.

ZPF or aether fluctuations

The fundamental electromagnetic radiation field (Zero Point Field) ZPF or the quantum vacuum noise is a recently accepted physical notion. In the article [1] David Noever and Christopher Bremner used it to derive a frequency – dependent version of Newton's gravitational coupling term G. On the other hand we can consider the quantum vacuum noise as aether fluctuations. Dr. Alexander Mishin [2] described experiments on registration of these processes by means of special equipment. Both approaches (ZPF and aether fluctuation) allow to conclude that mass and inertia arise from these oscillations. However if we are considering the oscillation as some aether process then we can assume and describe some physical mechanism of this process.

One of consequence of the vacuum energy model, which is described in [1] is that "the attractive force of gravity becomes reducible to the radiative interaction between oscillating charges..." Let's clarify which kind of radiation can be created by oscillating electric charges.

There are many different sources to find the answer on this question and one of them is the article by Prof. Kirill P.Butusov [3] on symmetrization of Maxwell's equations and practical methods of generation of longitudinal waves in vacuum. So, ZPF model has a direct relation with the aether model since indirectly it leads to the question of longitudinal waves in vacuum. Physically they are waves of density of energy and in the aether model the waves are areas of more dense and more rarefied aether. Let's note that there are standing waves besides moving waves.

To consider the interaction of some mass particles and the fundamental field the notion of subatomic charges "partons" was introduced [1]. So, the mass itself "becomes interpretable as a dependent quantity derived from a damped oscillation driven by random ZPF" [1]. The authors wrote about "internal kinetic energy" of the mass particle and it can be considered as a function of ZPF oscillation frequency. In the aether theory of mass there is a similar notion of "aether vortex", which represents some cyclical process of some frequency and it is possible to calculate its kinetic energy. This aether vortex model of matter elements allows to assume real methods to change parameters of vortex and to get changes in parameters of existence of the matter. On the other hand we can discuss the possibility to change some physical parameters of aether in areas of the vortex to get the same result. This possibility follows from the well-known N.Kozyrev's experiments, which were named "investigation of active properties of time". N.Kozyrev used chronal (temporal) approach in his theory. We have to change his notion "the density of time" to "the density of aether" to get a direct link between his experiments and the aether theory of mass.

N.Kozyrev and others have [4,5,6] experimentally demonstrated that irreversible processes in matter produced changes of aether density in the area of the experiment. Detectors of different type can register this change. It is obviously that any matter element (i.e. the aether vortex) in this area of changed aether density should get more inner (kinetic) energy or slow the inner motion. From the chronal point of view these are changes of inner time of this matter element.

Gravity shield

One more interesting point that is discussed in the article by Noever and Bremner [1] is a problem of gravity shield. The authors show that resonance interaction with ZPF produces "the particle mass" and it can be viewed as "a renormalized or "dressed" mass with a resonant interaction potential. Similar resonance approach is used in the conception of de Broglie's matter waves. Also the authors [1] mentioned the existence of an experimentally unobservable mass. In this case ZPF cannot be fundamentally shielded by matter since "frequency mismatch precludes gravity shielding by matter" [1]. The only way to get screening of ZPF fluctuations seems to be very complex: it is necessary to provide frequency matching for whole wavelength band of the oscillations.

I think some specialization is necessary here to explain experimental gravity anomalies with Bose condensates experiments (superfluid helium or superconductors): **special process in matter can be used as the gravity screen and this approach does not involve the frequency-matching problem.**

We have concluded above that any matter element is a resonance process and its energy is derived from ZPF. It is useful to note that these are longitudinal wave oscillations of energy density in aether. In this case, the gravity shield problem can be solved in frames of the aether vortex conception of matter.

The longitudinal wave is a moving (or standing) areas of rarified and thickened aether. Let's consider the moving wave, which is responsible for gravitation attraction effect. How can we stop, re-direct or reflect longitudinal wave in aether by means of aether vortexes (matter elements)? **We can produce interaction with this wave only by means of other longitudinal waves.**

In macro-level this idea can be realized as longitudinal wave generator. Electromagnetic processes, which can be used as sources of directed longitudinal waves, are known and some of them are described in [3]. In other way the gravity shield can be produced as longitudinal waves generated by natural aether vortexes (i.e. by matter elements) if the matter exist in a special exited state, for example for cases of resonance irradiation of superfluid helium or superconductor at 10-100 MHz frequencies.

Matter element as resonance process

In [1] the authors wrote that it is possible to calculate "the mass of any fundamental particle at its resonant frequency." There is the question: what is the general basis of whole spectrum of stable elements masses?

In 1996 the author published the article "The concept of mass process" [7]. At first in this work physical sense and notion of 3-dimensional curvature was introduced. By analogy with known mathematical notion of linear curvature $\rho_1 = \frac{1}{r}$ (where r is radius) and uniform surface curvature $\rho_2 = \frac{2}{r}$ it was proposed to calculate curvature of a 3-dimensional space as

$$\rho_3 = \frac{3}{r} \qquad (1)$$

The radius r in this case means that in a 3-space there is some periodical process. In other words, 3-dimensional matter is a resonance process.

Further, de Broglie used formulations E=hf and E=pc (where p is momentum, h is Planck constant, f is frequency and c is velocity of light) to derive the following:

$$hf=pc \qquad (2)$$

that allows us to get the well-known formulation

$$\lambda = \frac{h}{p} \qquad (3)$$

There is another logical branch of this idea that leads to the understanding of the mass properties of matter as a resonance process. Instead of E=pc in [7] it was proposed to use $E=mc^2$. In strength of the wave-particle duality we can write the equation

$$mc^2 = hf \qquad (4)$$

and from this equation the mass can be presented as resonance electromagnetic oscillations

$$m = \frac{h}{c^2} f \qquad (5)$$

Let's note that f=1/T, where T is some period of oscillation. So, we can write the following

$$m = \frac{h}{c^2}\frac{1}{T} \qquad (6)$$

where $\frac{h}{c^2}$ is new constant between mass and period of time.

There is an important conclusion: any mass is a process and there is some period of time, which corresponds to this mass. In other words, there is no physical sense of time separate from some process of existence of mass. Product mass and period is a constant value, which was named as a chronal constant

$$mT = \frac{h}{c^2} = const \qquad (7)$$

The chronal constant is a parameter of some real space and it is equal to $0.73725 \cdot 10^{-50} [Js^2 / m^2]$

Also in this work [7] there was a demonstration of several examples of newly discovered physical law: spatial curvature of some natural objects (proton, planet, DNA molecule) is a whole number. There is some analogy with the nuclear physics notion of wave number. From this fact we can assume that main natural matter elements exist in main resonance states. For example, if Bohr radius is 0.52917 Angstrom, then we can find the wave-length $l = \pi d$ and the linear curvature is $\rho = 1/l = 3.0075 \cdot 10^9$ (m) and 3-dimensional curvature of this object is $\rho = 3/l = 1.0025 \cdot 10^9$ (m) that is unit of mater, corresponding to simplest atom, i.e. unit matter engine. Let's note that it is near the unit and some distortion of 0.0025 means non-ideal resonance state of the system.

Calculations for planet Earth in [7] were based on the known period of orbital rotation T=31557600 sec that corresponds to frequency of electromagnetic oscillations

$$f = 1/T = 3.168861 \cdot 10^{-8} (1/s) \qquad (8)$$

and wave-length

$$\lambda = c / f = 9.46... \cdot 10^{16} (m) \qquad (9)$$

The curvature (if this wave-length is considered as radius of the resonator) is following wave number

$$\rho = 1057.00 \cdot 10^{-20} (1/m) \qquad (10)$$

Also we can use other known data about the planet. Daily rotation period of our planet is known T=86400 sec and we can calculate its wavelength $\lambda = 3469{,}82(m)$ and corresponding curvature (wave-number). Sure, it is also a whole number with a good accuracy:

$$\rho = 2882 \cdot 10^{-7} (1/m) \qquad (11)$$

The laws of physics in macro cosmos and micro cosmos are similar. From these calculations it was assumed that whole formation of mass spectrum of stable chemical elements of matter is determined by similar physical mechanism.

Creation of mass

In short we can summarize that technology of longitudinal waves in aether is a real basis for creation of matter with mass and inertia properties. N. Tesla used this method to produce different objects: from ball lightning up to electrons. Velimir Abramovic says in his article [8]: "The principle of resonance and harmonic oscillation of aether seems to be so clear that all problems of modern physics, especially a problem of energy conversion, will be solved with its development. By means of his vacuum tube Tesla got protons, electrons and neutrons directly from aether and reproduced them at any distance. Instead of giving a possibility to the bundle of protons to move through space to some place, he created conditions for momentary appearance of arbitrary quantity of particles in the given place."

Any objects can be classified as aether vortex and parameters of this vortex determine its mass, electric charge and other properties of matter.

The "parton" as element of matter in [1] is a useful tool for description of physical properties of aether.

Longitudinal waves in Woodward's experiment

In [1] the authors state that resonant radiation in the required 10-100 MHz range appears to produce

anomalous effects for such Bose condensates as superconductors. In my opinion it is a particular case of discussed above technology of longitudinal waves in aether due to possibility of transformation of transverse electromagnetic waves in longitudinal waves in the superconductors. This transformation in plasma is a well known physical mechanism.

More facts to prove this idea: by Woodward [9] there is a special requirement, i.e. the frequency of mechanical vibrations should be twice the frequency of electrical oscillations in the capacitor, which demonstrates the weight anomalies. But from the other hand it is a common rule for creation of longitudinal weaves in plasma! Also it is a necessary condition for generation of parametrical oscillations! So, we can assume that basis of the effects in [1] and [9] is a generation of longitudinal wave in aether.

Conclusion

Any element of matter can be considered as resonance process of aether oscillations, which are longitudinal waves. There is an analogy with description of these longitudinal waves and well-known matter waves by de Broighl. Experimenting on the longitudinal waves generation and especially experiments on standing waves to get gradient of aether pressure allows to develop gravity control technology.

References

1. D. Noever and C. Bremner, NASA Marshall Space Flight Center, Large Scale Sakharov Condition, 35th AIAA/ASME/SAE/ASEE joint Propulsion Conference and Exhibit, 1999, Los Angeles, Ca, USA.

2. Alexander M. Mishin, The physical system of artificial biofield (experimental research of ether), New Energy Technologies, #1, 2001, p.45.

3. Kirill P.Butusov, Symmetrization of Maxwell-Lorenz equations, New energy Technologies, #2(5), 2002, p.14.

4. Kozyrev N.A. Selected Works, 1991, Leningrad, publ. by Leningrad State University.

5. L. Shikhobalov, N. Kozyrev's ideas today, New Energy Technologies #2 (5), 2002, p. 20.

6. Alexander V. Frolov, Kozyrev on possibility of decrease of mass and weight of the body, New Energy Technologies #2 (5), 2002, p. 35.

7. The Concept of Mass Process, Frolov A.V., Proceedings of the congress "New Ideas in Natural Sciences", 1996, St.Petersburg, published by PiK Co., p.123-134.

8. Tesla, Velimir Abramovic, New Energy technologies, #1(4) 2002, p.17.

9. Woodward, J.F. A Stationary Apparent Weight Shift From a Transient Machian Mass Fluctuation, Foundations of Physics Letters, 5, p.425-442, 1992.

Gerlovin's Theory of Activation

Alexander V. Frolov

It is a review of the famous book by Ilia L. Gerlovin "Basis of unified theory of all interactions in matter"published in 1990, St.Petersburg, Russia. We hope this article let you discover some new aspects of physical vacuum structure to develop more new experimental methods. Comments made by Alexander V. Frolov, Editor.

In [1] the author wrote about different methods to activate water solutions: mechanical, thermal, acoustic, magnetic and electrical. One of the known methods is an activation by means of electrohydraulic method. There is also some information about activation of other mediums, mainly liquids, but also some gases and solid bodies.

There are no theoretical explanations of these facts to explain all aspects of these phenomena. Furthermore, complexity of interpretation of these phenomena in frames of common physical notions induced some scientists to announce these phenomena as non-existing and "illegal".

Ilia L. Gerlovin formulated the physical principles of theory of activation of mediums on the basis of new physical theory, the Theory of Fundamental Field (TFF). These principles are based on his two important conclusions from the TFF:

a) "Space around us is not empty, physical vacuum consists of material physical objects, i.e. elementary particles of vacuum (EPV). These particles are responsible for main activation processes;
b) Force interactions between atoms in molecule, between molecules in crystals has not spherical symmetry in the crystals of solid bodies, but an axial symmetry and the interactions are changing in time with very high frequency of about 10^{18} Hz. This feature of force interactions also makes its own contribution to the activation of mediums." [1, p. 314]

So, it was assumed that the phenomenon of activation of mediums can be defined as anisotropy of force interactions, which leads to **"meta-stable state, which can be called *structurally activated state of the given structure".***

Here is some difference in principle between chemical term "activation", which characterizes a transformation of molecule or atom in some active state with an increased energy, which is sufficient to provide a chemical reaction. It is ***energy activation*. Gerlovin described new notion, a *structural activation:* "This phenomenon can be classified as some change of structure of activation object. With this, energy of molecule can have no changes, and *active properties***

Coupled with aetherodynamics time conception, which was suggested by Alexander V. Frolov, the works on the control of space-time parameters gain the possibility for development and commercial application. As a theoretical basis there are those N. Kozyrev works where his conception of "time density" are replaced by that of "aether density" according to Frolov.

In September 2002, Faraday Labs Ltd Company plans to complete testing of the first experimental system, and to start the patenting and research of applied aspects, first of all in medicine.

Physical Principles of the Time Machine

Alexander V. Frolov

Experimental success of research team headed by Dr. Vadim A. Chernobrov, Moscow was reported in [1]. The time course can be controlled as rate of any process in local space-time (inner space of the Time Machine). It can be decelerated or accelerated by means of special "converging electromagnetic waves". Ordinary waves move from the source whereas special "converging waves" move to some central point, i.e. into the focus of the system. In Chernobrov's design of the Time Machine this process is organized by means of several spherical envelops, which consist of several electromagnets. Electronic control unit controls the processes in this design. Dr. Chernobrov reported about 3% change of the time course in 4th version of the system, which was tested with a human inside. The goal of Dr. Chernobrov's work is to research the medical aspects and experimental investigation of the principles. Several important conclusions were obtained from the project: the time course can be controlled and character of the changes is different for acceleration and deceleration mode.

Other known publication and research projects on the same topic seem to be very far from any commercial and practically useful application. Obviously the topic is very new and fantastic for most of scientific community and at first we have to clarify the physical principles of the time control project, which is started by Faraday Labs Ltd.

In this project we believe that notion of time is one of possible description of real physical properties of our Universe. So, it is not mathematical abstraction but some aspect of physical reality and we can discover some physical properties of time. Russian astrophysicist N. A. Kozyrev [2] developed a theory of active properties of time and according to his point of view there are two properties: time course and time density. Prof. Kozyrev demonstrated experimentally that time density in area of some process (changes of matter) is dependent on entropy parameters of the processes. In [3] it was demonstrated that Kozyrev's experiments could be interpreted in aether theory and it has led to simple physical conclusions and clear experimental perspectives: **time course and its density can be explained and controlled as parameters of aether.** Directions of aether flow and density of aether are subjects of experimenting with non-reversible changes in matter, for example, in crystallization or melting processes. Also it is possible to use special electromagnetic processes, for example, Chernobrov's "converging waves" or other longitudinal waves as methods of aether compression or rarefaction. If we assume that process of existence of elements of matter physically can be explained as aether vortex processes then its rate is a parameter of **aether income/outcome balance** (aether inflow in element of matter and aether outflow from the element of matter). It was also described in Time Rate Control (TRC) theory [3]. To control this balance it is necessary to develop technology of longitudinal waves generation, its focusing and resonance effects. The previous research and experimenting on the topic has been made by N. Tesla.

Let's assume that we have some technology to change parameters of time course. How should we organize this local space-time (what is spatial topology of the design)? There is a very interesting experiment to get the answer: rotation of a heavy cone (for example, lead cone) entrains surrounding aether, so a vortex appears, which is a toroidal formation of aether (rings). The rings can exist in space for a long period. The further question is: Why does the beam of light (laser beam) directed to the cone by tangent create a luminous ring? We can assume that due to natural properties of photons (light propagates along the geodesic line in space) some autonomous closed toroidal space should be created in such experiment. The next thought is: since space and any matter exist in time then we can speak about some autonomous time. The general conclusion is to be the following: autonomous 4-dimensional space-time can be created as toroidal aether vortex.

Here is point to note some aspects of research project by Prof. Robert Mallett, Connecticut University, USA. In fact, sometime next year, he hopes to produce the first piece of technology that eventually will allow him to build a time machine. By Mallett it will be a device that employs lasers "to twist space". Why is he going to close the beam of light? His theoretical background is knowledge about black holes, i.e. understanding of the connection between gravity and curvature of space-time. In Einstein's theory both matter and energy can bend space and time. So Prof. Mallett assumes that curvature of space-time can be changed not only by mass (like a black hole) but it can be affected by energy of photons. This has led Prof. Mallett to consider the possibility of using a circulating beam of light to twist space and to create closed loops in time. It is predicted that a spinning neutral particle, when placed in the ring, is dragged around by the resulting gravitational field [4]. From the

first view it is the same approach we have considered above (experiment with aether toroidal rings). But proposals by Prof. Mallett differ in principle from the aether conception.

The main aspect of this technology is a creation of autonomous (self-closed) toroidal space-time. Autonomous geodesic world line of this space-time is self-closed. Any photon should be circulating in this system due to its properties: photon is always moving along the straight line of the space.

More deep understanding of this technology follows from the explanation of photon as oscillation of aether. Any photon can be considered as result of relative motion of the matter (observer) in absolute space (immovable aether). Usually a photon is considered as moving object in space. But we can assume that observer is in the motion and the photon is oscillations of the absolute space (immovable aether). Which approach is more real one? Sure, it is more easy to consider a photon as moving object but let's remember fact of our real motion in the Universe and fact of the Universe expansion.

So, ideas by Prof. Mallett are very far from the **aether nature of the time phenomenon.** He follows the black holes theory and general understanding of space-time distortion due to mass or energy presence. Also he knows that a light beam should be closed in a ring. However Prof. Mallett is very far from physical basis of the effects. **The key of time rate control is technology of artificial aether flow, creation of aether vortex systems (AVS), management on density and direction of aether flow.** There are several technical methods to produce it. Any light beam should be curved in self-closed "light ring" if it is placed in a toroidal aether vortex and we can say that this system has own space-time.

What does "some changes of time course" mean? We can measure it as some changes of standard rate of oscillation process, for example, some stable wavelength of laser beam or quartz oscillations. There is a well-known experiment with two atomic clocks (one of the clocks is placed on the roof of some building and another one is placed on surface of planet). Due to vertical component of gravity the time course should be different and it can be measured. How can we organize difference in these measurements if both atomic clocks are placed in the same altitude?

It is necessary to consider gravity nature in frames of the aether conception. Two atomic clocks demonstrate difference in measurements due to difference in aether flow density. Hence, by means of aetherodynamics methods it is possible to control the rate of oscillation processes in the atomic clocks and in any matter (i.e. time course itself).

The aetherodynamics methods have a clear analogy with electrodynamics: **motion of charge produce field and there is the induction law**. Really, classical electrodynamics can be considered as particular case of the aetherodynamics. So, physical sense of any field is stress or deformation (it is some static field) or oscillations of aether.

Let's introduce the notion of chronal (temporal) charge to consider some technical aspects. In electrodynamics we assume an electric charge as element of matter with positive or negative electric properties and we have to compare it with some reference (zero charge or test charge). Let's note that in any case we have to consider "charge of some particle" but not an "abstract charge". So, we can postulate that any element of matter has **zero chronal charge** if it is moving from Past in Future with standard (usual for measurements of surface of our planet) time course. If the time course (i.e. existence of some element of matter) is decelerated then it can be measured as decrease of standard oscillation frequency of the matter. Time course acceleration means some increase of standard oscillation frequency of the matter. Let's determine that in the first case it is negative chronal charge and in the second case it is some positive chronal charge. Atomic clock is one of possible methods to measure zero chronal charge or to find some relative positive or negative difference.

It is predicted here that motion of chronal charge should produce a chronal field. Some provisional data was received by Frolov from simple experiments on the rotation of a heat source. Accelerated motion of chronal charge (changes of density of chronal current) should produce aethero-induction effect that is an analogy (or more general case) of Faraday's induction effect. This effect can be detected as secondary (induced) deceleration of time course in nearest area of accelerated time matter. Another case is a secondary (induced) acceleration of time course in the nearest area of decelerated time matter.

Technical realization of aethero-induction method seems to be very close to idea, which is described in classical epic "Back to the Future". At first, it is necessary to create or to collect some chronal charge in a "flux condenser" and then to accelerate it in space up to some velocity. According to the aether conception, this creation of the chronal charge is a real technical process.

It is assumed that estimated chronal effects are demonstrated as some threshold field, i.e. space-time has some stable discrete energy levels and changes of its curvature should have discrete threshold mode. All new aspects disclosed in this paper are the subject of a patent process. Faraday Labs Ltd organizes experimental program on the topic. Practical application of this technology is new energy systems and propulsion methods.

References

1. Chernobrov V.A. Experiments with a man in the Time Machine, New Energy Technologies, #3 November-December 2001, p.6.
2. Kozyrev N.A. Selected works, Publ. by Leningrad State University, 1991.
3. Frolov A.V. Practical application of the Time Rate Control theory, New Energy Technologies, #3 November-December 2001, p. 15.
4. Mallett, R.L., Weak gravitational field of the electromagnetic radiation in a ring laser, Phys. Lett. A, 2000.

investigated completely yet. It was found also that harmful effect on biological systems is not related to the process of movement in Time itself but is a result of the difference of the Time rate value in various parts of a body (a biological system).

Inside of the laboratory setup it was also discovered that Time could be changed with some inertia. Areas of space having different Time rates have vague borders. With sufficient difference in Time rate the human can see an area with a different Time rate as some white mist. Higher the difference – the mist is denser, that can be used as an alarm signal for biological systems. It is possible to consider Time-travel as possible and (after experiments with mice) there are reasons to suppose it will be safe for travelers if they follow certain rules. It is especially necessary to emphasize: the trips through Time (due to new discovered properties of Time) can't affect the Past and they can't change our past history. All the so-called paradoxes for the traveler in Time (for example when "he meets himself in the Past" or "he kills his grandfather in his childhood" have clear solutions in 3-dimensional Time.

It is possible to consider as a proven fact that Time has more than one dimension, i.e. O. Bartini's theoretical calculations are confirmed by these experiments: Time has 3 dimensions. Hence our Earth world can be considered as a 6-dimensional object: length, width, height, age or date of Time, variant of a History or erosion of Time, density or rate of Time. The concept of "the Arrow of Time" as fourth dimension (moment of Time) is a particular case of the concept of sixth dimension (rate of Time) that leads to the physical concepts of gravitation and energy and they are simultaneously connected. Concepts of the " Einstein-Rosen bridges" known since 1916 or "worm-holes"

introduced into science by John Willer in the 50's, are travels in 5th and 6th dimensions, i.e. the "classical" Time travels, which were described by H. Wells.

Editor's: As the reader could note, the author does not disclosure the secrets of the TM design. From the photo you can see the electromagnets, which form the regular stereometrical construction as well as the cables from the TM to the control unit. Dr. Chernobrov mentioned the converging electromagnetic waves only. So, to understand how it works, it is necessary to get a clear notion of the converging electromagnetic waves. Let's imagine the ripple effect created by a stone in the water. The waves move from a central point to periphery. The converging waves are just an opposite process: the waves move from periphery to the central point. Is it possible in Nature? Yes, sure. Dr. Chernobrov wrote: "Let's throw a hoop on the water and inside of the hoop we'll see converging waves." The Time Machine technology by Dr. Chernobrov is based on the similar principle.

Time Machine Project

Alexander V. Frolov

Scientific Expert of the Russian Physical Society,
General Director, Faraday Lab Ltd
Tel/fax: 7-812-380-6564 Tel: 7-921-993-2501
Email: director@faraday.ru alex@frolov.spb.ru

May 29, 2002

Faraday Labs Ltd and Dr. Vadim Chernobrov have signed the agreement on scientific-research work on investigation of active properties of time.

In the course of the previous experimental works, carried out by Dr. Chernobrov's research team during the period from 1984-2002, four versions of Time Machine had been made and tested. At these devices (the biggest system is about 1 meter in diameter) the effects of deceleration and acceleration of time course were created and measured. The principles of control of time course velocity were based on the

Alexander V. Frolov, General Director Faraday Labs Ltd and Ph. Dr. Vadim A. Chernobrov have just signed the Contract

interconnection of electromagnetic processes and physical properties of space-time. Special electromagnets, operating in pulse mode, are placed at the spherical frame. They create the so-called "converging wave", which by Alexander Frolov is a longitudinal wave in nature.

Coupled with aetherodynamics time conception, which was suggested by Alexander V. Frolov, the works on the control of space-time parameters gain the possibility for development and commercial application. As a theoretical basis there are those N. Kozyrev works where his conception of "time density" are replaced by that of "aether density" according to Frolov.

In September 2002, Faraday Labs Ltd Company plans to complete testing of the first experimental system, and to start the patenting and research of applied aspects, first of all in medicine.

Physical Principles of the Time Machine

Alexander V. Frolov

Experimental success of research team headed by Dr. Vadim A. Chernobrov, Moscow was reported in [1]. The time course can be controlled as rate of any process in local space-time (inner space of the Time Machine). It can be decelerated or accelerated by means of special "converging electromagnetic waves". Ordinary waves move from the source whereas special "converging waves" move to some central point, i.e. into the focus of the system. In Chernobrov's design of the Time Machine this process is organized by means of several spherical envelops, which consist of several electromagnets. Electronic control unit controls the processes in this design. Dr. Chernobrov reported about 3% change of the time course in 4th version of the system, which was tested with a human inside. The goal of Dr. Chernobrov's work is to research the medical aspects and experimental investigation of the principles. Several important conclusions were obtained from the project: the time course can be controlled and character of the changes is different for acceleration and deceleration mode.

Other known publication and research projects on the same topic seem to be very far from any commercial and practically useful application. Obviously the topic is very new and fantastic for most of scientific community and at first we have to clarify the physical principles of the time control project, which is started by Faraday Labs Ltd.

In this project we believe that notion of time is one of possible description of real physical properties of our Universe. So, it is not mathematical abstraction but some aspect of physical reality and we can discover some physical properties of time. Russian astrophysicist N. A. Kozyrev [2] developed a theory of active properties of time and according to his point of view there are two properties: time course and time density. Prof. Kozyrev demonstrated experimentally that time density in area of some process (changes of matter) is dependent on entropy parameters of the processes. In [3] it was demonstrated that Kozyrev's experiments could be interpreted in aether theory and it has led to simple physical conclusions and clear experimental perspectives: **time course and its density can be explained and controlled as parameters of aether.** Directions of aether flow and density of aether are subjects of experimenting with non-reversible changes in matter, for example, in crystallization or melting processes. Also it is possible to use special electromagnetic processes, for example, Chernobrov's "converging waves" or other longitudinal waves as methods of aether compression or rarefaction. If we assume that process of existence of elements of matter physically can be explained as aether vortex processes then its rate is a parameter of **aether income/outcome balance** (aether inflow in element of matter and aether outflow from the element of matter). It was also described in Time Rate Control (TRC) theory [3]. To control this balance it is necessary to develop technology of longitudinal waves generation, its focusing and resonance effects. The previous research and experimenting on the topic has been made by N. Tesla.

Let's assume that we have some technology to change parameters of time course. How should we organize this local space-time (what is spatial topology of the design)? There is a very interesting experiment to get the answer: rotation of a heavy cone (for example, lead cone) entrains surrounding aether, so a vortex appears, which is a toroidal formation of aether (rings). The rings can exist in space for a long period. The further question is: Why does the beam of light (laser beam) directed to the cone by tangent create a luminous ring? We can assume that due to natural properties of photons (light propagates along the geodesic line in space) some autonomous closed toroidal space should be created in such experiment. The next thought is: since space and any matter exist in time then we can speak about some autonomous time. The general conclusion is to be the following: autonomous 4-dimensional space-time can be created as toroidal aether vortex.

Here is point to note some aspects of research project by Prof. Robert Mallett, Connecticut University, USA. In fact, sometime next year, he hopes to produce the first piece of technology that eventually will allow him to build a time machine. By Mallett it will be a device that employs lasers "to twist space". Why is he going to close the beam of light? His theoretical background is knowledge about black holes, i.e. understanding of the connection between gravity and curvature of space-time. In Einstein's theory both matter and energy can bend space and time. So Prof. Mallett assumes that curvature of space-time can be changed not only by mass (like a black hole) but it can be affected by energy of photons. This has led Prof. Mallett to consider the possibility of using a circulating beam of light to twist space and to create closed loops in time. It is predicted that a spinning neutral particle, when placed in the ring, is dragged around by the resulting gravitational field [4]. From the

Kozyrev-Dirak Radiation
Its influence on animals

Dr. Ivan M. Shakhparonov

International Academy of Energy-Informational Sciences

In the experiment with animals, that were made in the Center of Oncology Researches (COR) at the Russian Academy of Medical Sciences (RAMS), on the applying of Kozyrev-Dirak's Focused Radiation (KDFR), it has been found that KDFR decreases the quantity of glucose in the blood, reduces its tenacity, promotes the strengthening of immunity and the rise of the quantity of marrow cells.

Introduction

This time researchers in Russia and abroad experiment on ball lightnings by means of nonoriented circuits, which are similar to the electric analogues of Mobius band, also by means of Klein bottle and their combinations. Non-oriented fields are investigated very intensively now. Accordingly, organisms of the researchers, who observe the interactions of such fields with a matter, are also changed, thus they should take it into account on making such experiments. The aim of the article is to show in which way the fields of nonoriented circuits influence on animal and human organism. Besides the article has for its object the prevention of negative consequences, which can appear for experimenters through the research process.

Experiments with animals that were carried out in 1992-1993 in Russian Academy of Medical Sciences (RAMS) had not been published in proper time because there were no quantitative methods of radiation detection. Later, in 1996 they were developed [1] and KDFR parameters were measured in that geometry, which were applied in RAMS. In 1998 powerful and super-powerful KDRF sources were obtained. These sources were applied (and are applied now) in the researches at the controlled radioactive decay [2]. Kozyrev and Nasonov [3] and later also Lavrentyev with the collaborators [4,5] have proved experimentally that the Sun and some stars generate the radiation, which has early unknown properties. We suggest that the radiation, discovered by Kozyrev [3], and the radiation, which is researched by us and by other experimenters with nonoriented circuits, are of the same phenomenon. At first, it should be noted that on interaction between Kozyrev-Dirak radiation (KDR) and a matter made it colder. As it was demonstrated above [1], cooling effect can be explained by matter re-magnetization under the influence of KDFR beam (adiabatic demagnetization). According to the still unpublished data, KDFR bunch destroys matter lattice by the way of it's moving. However, after a couple of week matter reconstructs it to the almost tabulated points, without defects, blockness and other damages, which are peculiar to other natural crystal structures. **In the definite sense nature demonstrates the way to rejuvenate compound structures**. As it is well known, vital functions of biological systems on the Earth depend on the structure and composition of water. Therefore, we have a right to expect considerable changes in the vital functions of biological organisms under the influence of KDFR.

Experimental Devices

In experiments with animals there were applied the devices, which concentrated KDR (KDCR) and had 50 Wtt aggregate electrical power. The description is presented in [2].

KDFR indication was obtained by calorimetric method [1], along the way of movement of the main bunch (with 10 cm across diameter) and at angle of 45° from the geometrical axis of a device.

Researches of Bleeding Duration

Let us consider KDFR influence on the blood composition of animals. At the experiment 24-28 gram weighting, pelletized fed male mice were used. In the process of the experiment it was discovered that 3 and 4 hour processing of mice with KDFR at the distance 2.5 m and at the presence of animals in the sphere of maximum radiating power, caused some changes of fibrillation system. The bleeding duration was determined according to Duke method. Two groups of animals were used at the experiments: a group with 4-hour duration of KDRF processing and a group with 6-hour duration. Time of bleeding was considered in dynamics at 1, 2, 7, 14, 21, 28 and 35 day (Fig. 1). The bleeding duration of the intact animals was determined by the value 128±11 sec. After the applying of KDFR there was noticed some increase of bleeding duration to 261±15 sec and 223±21 sec on the first day after the stopping of the influence. In the subsequent periods bleeding duration gradually decreases up to the level of physiological norm. The whole normalization of the index is observed at the animals, which were processed by KDFR during 4 and 6 hours, on 28-35 day up to 115±12 and 133±18 sec correspondingly. In the process of observations at the animals, the correlation between time of fibrillation and periods of KDRF processing of the animals has not been revealed (Fig. 1).

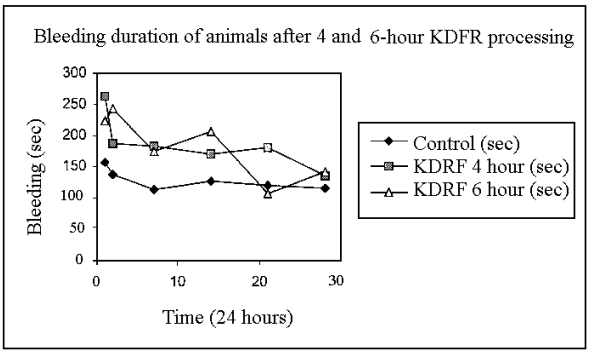

Fig.1

In the course of the experiment the strongly marked chronometric hypocoagulation was discovered due to the extension of the parameter "K" or, probably, because of the change of aggregation properties of platelets (Table 1).

For the determination of biochemical indexes serum was obtained from 5-8 ml of rats' venous blood. Beforehand (24 hours before the slaughter), forage was taken away from the animals. The determination of biochemical indexes was provided by means of biochemical analyzer HITACHI. As a result of the experiment it was determined that at the first day after influence of KDRF there was a tendency of decrease of the glucose content (Table 2). Other indexes varied in the limit of physiological norm.

Table 1 Parameters of thromboflexogramm after KDFR, 4 hours

Animal #	Parameters of thromboflexogramm			Fibrio gene	Fibrinal activity
	R (sec)	K (sec)	Ma (mm)		
1	72	∞	10	-	-
2	102	∞	18	-	-
1	90	∞	10	275	75
2	180	150	52	315	90
1	180	∞	5	-	100

Table 2 KDFR influence on the glucose content in blood of the rats

Time (days) after the experiment	KDFR 4 hours (mmole/l)	Test (mmole/l)	KDFR 6 hours (mmole/l)	Test (mmole/l)
1	3.14	6.12	6.39	7.27
10	7.59	9.35	8.90	6.69
30	6.05	6.69		

Research of haemopoiesis system

Several criteria were considered: the dependence of biological effect on the distance, on the power flux density, on the duration of processing. Besides, KDRF influence on mice survival was considered.

At the experiment 24-28 gram weighting, pelletized fed male mice were used. The marrow was examined in the dynamic at 1, 3 and 7 day after KDFR influence. Six animals were taken on each point. After the decapitation of the mouse their thighbones were taken out and after that the absolute number of myelokaryocytes was calculated by the standard method in Goryaev chamber.

Dependence of the biological effect on the distance

In all experiments the maximum flux density along the geometrical axis of KDCR device was a constant. There were used four temporal modes of the influence (1, 2, 3, 4 hours) and three points of long distance between KDSR and the biological object (0.5; 1.5; and 2.5 m). At 0.5 m distance there were no differences in the number of marrow cells in comparison with the control cells. With the increase of distance between KDCR and the object from 0.5 to 1.5 m some tendency to the increase of the number of marrow cells up to the 7th day was observed. Four-hour KDRF processing caused the increase of the number of karyocytes up to $29.99 \pm 1.25 \times 10^6$ ($P < 0{,}001$). Thus, any dependence of the biological effect on the exposition has not been revealed. For instance, at the 7th day after one hour of the exposition the number of karyocytes was equal to $28.45 \pm 1.87 \times 10^6$ at the same time after 3-hour processing it came to $27.65 \pm 0.74 \times 10^6$. Alongside with the change of the distance to the biological object from 1.5 to 2.5 m the tendency towards the increase of the number of marrow cells has kept within the same limits $28.27 \pm 1.32 \times 10^6$ and $29.57 \pm 0.88 \times 10^6$.

Dependence of the biological effect on the power flux density

The comparative investigation of KDFR influence on the biological object in the coverage of KDCR (along its geometric axis) and outside the coverage has demonstrated that alongside with the increase of the radiation intensity there was a tendency towards the decrease of stimulative influence of KDFR on haemopoiesis.

Dependence of the biological effect on the duration of processing

On processing the animals at distances up to 2.5 m from KDCR and on increase of exposition to 3-4 hours it is possible to obtain reliably significant difference in the number of marrow cells from the physiological norm to the 7th day.

KDRF influence on the survival of mice

The experiments, determining the survival reaction of animals, were made by means of gamma radiation. 30-day survival is the criterion of determination. Conditions for the experiments are the following: in the coverage of KDCR and aside the coverage, (the distance between the KDCR and the object is 2.5 m in the coverage of KDCR and 0.5m outside the coverage). Time of influence is 4 hours. Animals of both sex were used. Two groups of animals were used. The test group was put to the gamma radiation in the diapason of doses, which caused marrowy syndrome, i.e. from 7.5 to 8.5 Gr. The second group of animals after the irradiation in the same diapason of doses was repeatedly processed with KDFR. Time of the influence is 4 hours at 7.5 Gr gamma radiation on 15 mice in one bath and 8.5 Gr on 15 mice in another bath. Total gamma radiation of the animals was made by means of the source ^{137}Cs with the dosage rate of 5.2 Gr/min. Gamma radiation in this dose diapason causes death of the animals during the development of the marrowy syndrome, i.e. from the 6th to the 20th day along with the aplasia of haematogenic tissue. Combination of gamma radiation and KDFR sometimes leads to the slight increase of the number of survived animals. If the animals are irradiated by gamma rays at first and then by KDFR, the death control at 7.5 Gr radiation is equal to 5.5% from the total number of the animals and at the following KDFR processing 16% of the irradiated animals die. However, 67% of the animals in the tested group have died after KDFR processing and after the coming next gamma radiation with 8.5 Gr total dose. And in the group, which was processed with KDFR, only 46% of the animals died.

Immunity strengthening

For the investigation of KDFR influence the following tests were chosen: activity of natural killers and T-killers, which had been obtained by the immunization in vitro in the unidirectional mixed culture of lymphocytes and also in the reaction of blast transformation on the specific mitogen [6, 7]. All tests were made on the 7th day after a single KDFR influence. Unfortunately, data have been obtained with the applying of radioisotope preparations. Though the experiments of this kind were successful and though they have demonstrated the increase of some immune reactions' level, there is a certain doubt in the relevancy of radioisotopes application [2]. Thus the series of experiments was made. These experiments were aimed at the investigation of KDFR influence on the development of the swelling process. The aim of the experiment is the investigation of KDFR influence on the development of Ehrlich cancer and sarcoma-37, which were repeatedly inoculated to mice. At the first stage of the experiment there was a single KDFR influence on the mice repeatedly inoculated with sarcoma-37, on the 2nd day after the repeated inoculation of the swelling cells to the animals. The repeated inoculation was made intramuscularly in a right thigh, in a dose 10^6 of cells per a mouse. Time of KDFR influence for the first group of animals was equal to 1 hour; for the second one it came to 2 hours; and for the third one it came to 4 hours. Each group consisted of 6 animals. The test group consisted of six mice with repeatedly inoculated sarcoma-37 and which had not been processed with KDFR. As a result, the average lifetime of tested animals was equal to 9 days. The average lifetime of animals of KDFR groups came to 48 days (for 1-hour KDFR influenced group); to 12 days (for 2-hour group); and to 31 days (for 4-hour group). Thus, the average lifetime of the experimental group came to 29 days. Besides, in the group, which has been processing with KDFR during 1 hour, **the half of mice had survived (three of six mice).**

At the second stage of the experiment the repeated (5 times during 2 hours) KDFR influence on the mice was applied. These mice have been inoculated with sarcoma-37 at seven days before the beginning of the influence. As a result, the average lifetime of the animals was equal to 27 days, and for the mice, which were processed with fivefold KDFR influence, the average lifetime was equal to 76 days. The obtained results are the evidence of inhibition of swelling development for the animals, which were processed with KDFR influence. This leads to the increase of lifetime of such animals in comparison with the test. **Thereby, at a great extent the results of the previous experiments on the strengthening of immune status after KDFR influence were confirmed.**

Results and discussion

Let us make a conclusion. At the KDFR influence on animals' organism the following effects were observed: decrease of blood viscosity; strongly pronounced hypocoagulation; decrease of contents of glucose. Increase in the number of karyocytes and the extended lifetime of the animals, infected with Ehrlich cancer and sarcoma-37 were also observed.

As for human being, the researches in this area have not been carried out yet and they are still confined to the single observations. It is possible to give an example from the author's practice. In 1975 nonoriented circuit of 3kWtt power was examined. Field strength was measured. The author of the article had been working in the field for about 8 hours. And after five hours after the experiment I had felt bad. That time it was nothing known about the influence of the new radiation on human organism. The arrived ambulance has quickly diagnosed that I was close to hypoglycemic coma. On several hours after the intravenous glucose injection, my state has become normal. **Now we know that before the experiments with powerful KDFR bunches it is necessary to eat sugar.** Thus we believe that the data, which were obtained after the experiments with animals, can be applied to a human being. We can suggest that the manifestation of the symptoms of the KDFR influence on human organism depends on the power of the applied source, on the total mass of the organism and on the time of it in the coverage of the irradiation. From aforesaid it is clear that the experiment with powerful KDFR sources is far from being harmless

and it is better to make it distantly after exclusion of man presence near experimental stands and devices. At the same time it is quite obvious that on applying of small capacity and fixed time of irradiation it is possible to develop methods for curing of human diseases, which are considered now as incurable (for instance of diabetes, some diseases of haematogenic system, of cancer and possibly of AIDS.

References

1. Proceeding of the International Scientific Conference "New Ideas in Natural Sciences" Problems of Modern Physics, p. 176-187
2. Journal of new energy, Vol. 3, #4,1999, I.M. Shakhparonov "Interaction between Kozyrev – Dirak radiation and radionuclides", p. 85-89
3. Kozyrev N.A. Selected works, Leningrad State University, 1991, part 3
4. Lavrentyev M.M. Eganova I.A. Luzet M.L., Fominykh S.F./ / Reports by AS USSR. – 1990, Vol. 314, #2, p. 352-355
5. Lavrentyev M.M., Gusev V.A., Eganova I.A., Luzet M.L., Fominykh S.F.// Reports by AS USSR. – 1990, Vol. 315, #2, p. 368-370
6. Methodological materials on experimental pharmacological and clinical trials of immune modulating effect of pharmacological remedies. - Ministry of Health USSR, M., 1984
7. Talmadge J.E. and Chiragos M.A. Comparison of immunomodulatory and immunotherapeutic properties of biologic response modifiers. Springer Seminar Immunopathol., 1985, 8, 429-443

Effect of Magnetic Blow Wave Field on Wine Systems

I.M.Shakhparonov (Corresponding author), S.A.Grin, S.R.Tsimbalaev, L.N.Kreindel, V.N.Kocheshkova, A.I.Podlesny, S.Yu.Gelfand

AGD Firm, Peschanyi pereulok, House No.20P korpus No.1, Lfl. 33 125252, Moscow, A- 252, Russian Federation

Russian Institute of Canning Industry, Shkolnaya Street. 78. 142703 Vidnoe 3. Moscow Region, Russian Federation

Introduction

Authors communicate the data on influence of Magnetic Blow Wave (MBW) field on several wineproducts. It was found, that MBW did not lead to significant changes in the major components of the wineproduct (sugar, organic acids, minerals). At the same time the taste and aroma of treated wine become more pleasant; content of heavy alcohols and wine stone in the treated samples was less than in non treated ones. A mechanism of transformations was also discussed.

Keywords: *Magnetic Blow Wave (MBW), Wineproduct, GLC of aroma compounds and ethanol, HPLC of sugars, Atomic Absorption Spectrometry (AAS) of minerals, Heavy alcohols and aldehydes, Wine stone, Turbidity tendency, Organoleptic evaluation*

Magnetic Blow Wave (MBW) was obtained for the first time during the investigations on ball lighting generation under the laboratory conditions (Shakhparonov 1994). MBW as a physical object is interesting because of some facts, which suggest that MBW is a magnetic monopole. The MBW can also interact with the matter and transforms it in a definite way. Typical example is an elementary carbon in the form of graphite, which is transformed by such magnetic treatment into ferromagnetic substance (ibid). The graphite, which is initially diamagnetic, transforms to paramagnetic one with general radiation doze of about $7 \cdot 10^{19}$ neutrons/cm^2. Other types of radiations could not affect this way (Svoistva 1975). So one unit of MBW can be considered as $1 \cdot 10^5$ of neutron masses. This fact may be regarded as an indirect evidence for assuming that MBW and magnetic monopole are the same things. In the absence of excited radioactivity a slow MBW [$v/c < 1 \cdot 10^4$] occurs, which does not ionize atoms (Devons, 1963). Therefore, their interaction with the matter can be observed only indirectly. No data exist on the interaction of MBW with organic substances. The experiments and results reported in the present communication may be a starting point for development of technology and to formulate the methods for vintage wine and best quality spirit production.

Materials and Methods

Assuming that MBW and magnetic monopole are the same things, a number of conditions were selected for all experiments. The MBW source and the samples were placed in the same axis and the axis was oriented according to magnetic meridian direction. Such magnetic orientation is appropriate, as the energy of magnetic monopole theoretically increases in a magnetic field (Devons, 1963). All of samples were placed at 250 cm distance from MBW source, in hermetically closed glasses. It should be noticed that MBW could penetrate through many other barriers, for example into cast iron reservoir with wall thickness of 5 cm (Amaldi, 1970).

The quality investigations were made by using of standard equipment. HPLC, equipped with refractometric detector was used for sugars estimation. Separation of organic acids in forms of their ethyl esters and acid esters was carried out chromatographically using a column packed with polyethylenglycol succinate and the following temperature option: initial temperature is 120°C, final temperature is 220°C, temperature growth rate: 8°/min. GLC was also employed for determination of ethanol. Minerals content

conclusion: in order to obtain complete information about any system, it should be destroyed. However, destruction of tissues of the man in order to get information about their state is a too high price to pay for the information about his health.

However, the above Van Hoven's criterion can be satisfied with the minimum influence, when the cells are not destroyed and the atoms of these cells, being primary sources of torsion spectrums to be registered, are bring into the non-equilibrium state by means of outer disturbing influence.

In order to choose the frequency of the disturbing torsion influence correctly, it is necessary to take into account the role of water in physical and biochemical organization of tissues of the human organism.

At the same time, it is necessary to take into account the resonance torsion frequencies of various human organs. Finally, it turns out that the signal of torsion disturbance should be rather sophisticated considering both these factors. The TORDI system is a ready-to-use production device. Nevertheless, it is important to understand that the model is not the limit of scientific and technical potential incorporated in it and that enhanced variants of the system will appear with the course of time.

Summing up, I would like to draw your attention once more to the fact that work on torsion technologies is not limited by the directions that were discussed here. Actually, as it was pointed out in the beginning, on-going development includes all branches of economy, industry, agriculture and medicine, as well as all problems of everyday life. Technologies that we mentioned are the forerunner of the fact that the mankind is on the threshold of the age of torsion technologies, which, we believe, will change our life in the 21st century more than all the scientific and technical revolutions of the 20th century.

Reference

1. Cartan E. Compates Rendus. Akad.Sci., Paris, 1922, v.174.
2. V.Melnikov, P.Pronin. Problem of gravitation constant stability and additional interactions. Itogi Nauki I Tekniki, ser. Astronomy, v.41, Gravitation and Astronomy, Moscow, VINTI, 1991.
3. G.I.Shipov Theory of the Physical Vacuum. Nauka, Moscow 1997.
4. I.Ternov, V.Bordovitsin. On the modern interpretation of classical spin theory of Ya.Frenkel. UFN, 1980, v.132, No.2.
5. V.Bagrov, V.Bordovitsin. Classical spin theory. Izvestiya VUZ, Phys.Series, 1980, No.2.
6. F.I.Belinfante. On the spin augular momentum of mesons. Physica VI, 1939, v-6, No.9.
7. M.Markov. The very early universe. Proc of the Nuttfield Workshop, Eds. G.V.Gibbson, S.W.Hawking, S.T.Siklov, Cambridge, 1988.
8. Hideo Uchida.A method apparatus for detecting a fluid. Patent England, No 511662, May 24, 1978.
9. Anatoly Akimov. Heuristic discussion of the problem of finding long-range interactions. EGS-concepts. CISE VENT, preprint N7A, Moscow, 1992.
10. IITAP RANS, TORTECH USA, Horizonts of the Science and Technology XXI age Proc, Editor A.E.Akimov, Folium, Moscow, 2000, vol.1 (in Russian).
11. N.Kozyrev, Astronomical observations by means of the physical properties of time. In "Flarestarse" International Symposium in Byurakan, 1976,Armenian Academy of Sciences Publ., Yerevan, 1977 (in Russian)
12. Bouwmecster D. et.al. Nature, v.390, 11 dec, 1997.
13. G.I.Shipov. Theoretical and Experimental Research of Inertial Mass of Four-Dimensional Gyroscope. ITTAP RANS, preprint N10, Moscow, 2001, (in Russia).
14. The way of correction of metal alloy microstructure. Patent Russian, RU 2107105, 1998.
15. A.Dolgov, Yu.Zel'dovich, M.Sazshin. Cosmology of the Early Universe. MGU Publ., Moscow, 1988.
16. I.A.Wheeler. Einstein's vision. Springer Verlag, 1968.
17. Convegno Internazionale:Quale Fisica per 2000, Proc. Bologna, 1991. see: The Manual of Energy Devices and Systems.
Complied D.A.Kelly, D.A.K. WLFUB, Burband, California, 1986, Publ. N1269/F-289.
18. Daytlov V.L. Polarization Model of the Heterogeneous Physic Vacuum. Institute Mathematical, Sibirians Academic Science, 1998 (in Russian).

The Electrical Vortex Non-Solenoidal Fields

Sergey B. Alemanov
E-mail: alemanov@inbox.ru Phone 7 (095) 323-6848

A mistake was found in the electrodynamics: it is detected that all electrodynamics' postulates corresponds to the experimental facts, but vortex electric fields has unclosed inductive lines.

When the magnet is moving, then the current of magnetic induction is moving together with it. From known velocity of motion **v** and the value of magnetic induction **B**, it is possible to calculate the intensity **E** of appearing vortex field according to electrodynamics formula of transformation of fields **E=vB**.

If to change the E=vB on induction $D=\varepsilon_0 E$ in formula of fields' transformation, that will get $D=\varepsilon_0 Bv$, where D is electric induction, B is magnetic induction, v is velocity of motion, ε_0 is electric constant.

Herewith the appearing electric induction is always transverse to the direction of motion. It is possible to formulate the rule of origin for electric induction under the condition of rectilinear motion: if to dispose the right hand palm so four fingers shows the motion direction of the magnetic flow (the field), connected with moving magnet, and the vector B fells into palm, then the moved aside big finger will indicate the direction of vector D. The given rule is like the rule for Lorenz' force, but on the contrary (the difference is in frame). In the first case the charge moves, but the magnet rests. Here the magnet moves, but the charge, which points the direction for lines of force of electric induction, is immovable. So, there it is the rule for left hand, but here, on the contrary, it is the rule for right hand. Thereby, if the charge moves, but the magnet is immovable, then the rule of left hand uses for determination of the force. But if the magnet moves, but the charge rests, then the rule of right hand uses for determination of the force.

The origin of electric force is connected with that, the vortex electric field $D=\varepsilon_0 Bv$ appears around moving magnet (the magnetic field does not act on immovable charges).

In common literature on electrodynamics there is no any difference between electric vortex field and solenoidal field, but these are different notions. The sign of solenoidal field is the closed lines of electric induction (the flow of vector D through the closed surface is a zero), but for the vortex field the sign is following: the work of forces can be different from zero under the condition of motion along a closed line. That is to say, the vortex fields can agitate the rotational currents.

From the electrodynamics textbook: "The work of forces of vortex electric field can be different from zero, when the electric charge is moving along a closed line."

For instance, when the magnet moves, the vortex electric field appears and this field can be solenoidal or not, depending on magnet's orientation. Let's take such example: the magnet moves evenly, rectilinearly, and it's poles are oriented transversely to direction of motion. According to the rule of origin for electric induction ($D=\varepsilon_0 Bv$ that is the rule of right hand), the appearing vortex electric flow is not a solenoidal, since the lines of electric induction are not closed. Its begins in one conditional area of disturbance (+), accompanies the moving magnet, and it finish in another area of disturbance (-). For presentation it is enough to consider only two areas (+) and (-), represented on Fig.1. These dissimilar areas of disturbance appears because that flow of magnetic induction inside the magnet has the inverse direction, that outside the magnet.

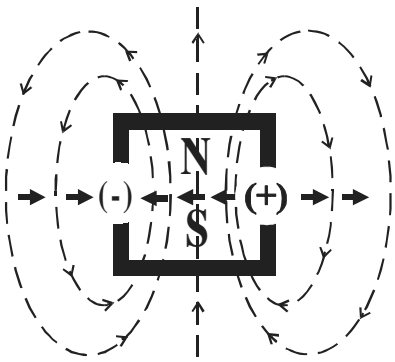

Fig.1

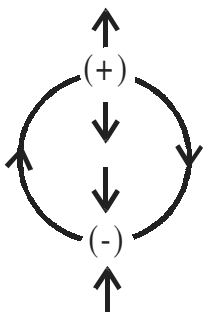

Fig.2

That moving disturbance of electric and magnetic fields presents itself as transverse electromagnetic disturbance. Also, it is necessary to notice, that under such magnet's motion, the appearing vortex electric field is not closed, but the current of electric displacement, connected with it, is closed (a currents are always closed). In given example, for clarity, it is possible to present a intensity of electric field through the Lorenz' force, if to take the frame, in which the magnet rests, and the test charge moves.

On the Fig.1 the moving magnet is conditionally represented (motion is toward to the text, magnet is moving away). N and S are poles of magnet. The direction of lines of electric induction, appearing when the magnet is moving, specified by arrows → and ←. Part of the lines begins in positive area (+) and finishes in negative area (-), the areas are placed on the ends of magnet. **The flow of electric induction through closed surface is not a zero; that is to say, these areas of disturbance are moving electric charges.**

From the electrodynamics textbook again: "The flow of vector D through any closed surface is equal to algebraic amount of external charges, covered by this surface. In the electrodynamics these postulates has the same role, as Newton' laws in classical mechanics."

Thereby, according to postulate, it is necessary to consider the appearing dissimilar areas of disturbance (+) and (-) to electric charges, or it is necessary to change the postulate.

It is interesting, that a part of lines of electric induction, which placed frontal and behind magnet, starts and finish at infinity, since the distribution of magnetic induction around magnet has not determined borders.

For clarity, it is possible to make following calculation. For instance, the coil (loop or turn) with current, as a magnet, moves evenly and rectilinearly, but its magnetic poles are oriented transversely on motion direction. Under such motion the lines of electric induction are not closed, and the dissimilar areas of electric field's disturbance appears in space on the edges of this coil.

On Fig.2 the moving coil with current is conditionally represented. It moves from left to right side of the page. The arrows on the coil indicate the direction of current. The appearing dissimilar areas of disturbance of electric field are marked by signs (+) and (-). Knowing, that in medium of the coil $B=\mu_0 I/2r$ and according to $D=\varepsilon_0 Bv$, it is possible to find the electric induction, appearing in the center, between two dissimilar areas $D=\varepsilon_0\mu_0 Iv/2r$, where I is current in the coil, r is radius of the coil, v is velocity of motion, ε_0 is electric constant, μ_0 is magnetic constant. The electromagnetic disturbances in transverse electromagnetic waves has the similar field construction, there also dissimilar areas of disturbance of electric field exists, that is to say the lines of electric inductance are not closed. Only the currents of electric displacement and magnetic induction are closed.

Let's consider another example: magnet moves rectilinearly, but its poles are oriented longitudinally to direction of motion. According to the rule for origin of electric induction ($D=\varepsilon_0 Bv$ is the rule of right hand), the appearing rotational electric flow is solenoidal, since in this case the inductive lines become closed lines. **Usually in books on the electrodynamics such moving magnet is considered, and the wrong conclusion is thereof done, that vortex electric field is always**

solenoidal, herewith it is forgotten, that poles of the magnet can be oriented not only along the direction of motion, but across also.

From the electrodynamics textbook: "The vortex electric field differs from electrostatic field that it is not related with any electric charges and its lines of intensity are closed lines."

From theory and from experiments it follows, that under transverse motion of magnet the lines of disturbance of vortex electric field can be unclosed and, accordingly, the flow of induction through the closed surface is not a zero. Then there is a direct discrepancy to facts in modern electrodynamics. It is strange, but for the whole history of researches in magnetism the transverse magnet's motion was not is considered. It leads to revising of electrodynamics' postulates, which plays such role in electrodynamics, as the Newton's laws plays in classical mechanics. The postulates, giving invalid belief about field processes, accordingly, do not allow to make some correct calculations. Fallaciousness of these postulates was one of the reasons, on which the electrodynamics could not to consider and to calculate the discrete electromagnetic waves (photons), where the magnetic field also is the transverse field (the field construction and calculation of photons are represented on the page http://www.comail.ru/~alemanov). **That is to say, not only particles has the charges, but areas of disturbance of field (without particles) are the charges also,** where the flow of electric induction through the closed surface is not a zero. Thereby, the vortex electric fields can be not only as closed flows of induction, but as well as inducted electric charges, accordingly, the laws for electric charges are valid for induced electric charges also. For instance, in the law of conservation of charge: if somewhere the area of disturbance with positive sign appears, that negative area appears also.

From the electrodynamics textbook: "The vortex electric field is generated by the variable magnetic field. Its force lines are always closed, like force lines of magnetic field."

But before this fundamental postulate, confirming, that force lines of vortex electric field are always closed, it was necessary to consider all variants of change for the magnetic field, including the variant of the transverse motion of the magnet. That is to say, the consideration of physical processes could not be unilateral. Faraday considered the longitudal motion of magnet and discovered the electromagnetic induction, but the transverse motion of magnet that have the principle importance for understanding of field processes in electrodynamics was not considered. Thereby, the longitudal motion of magnet brings to arising a vortex electric field with closed force lines, but transverse motion of magnet brings to arising a vortex electric field, where the lines of forces are not closed. In this case it lead to induced electric charges. It is necessary to notice, that this is first mistake, detected in electrodynamics postulates for all time of existence of electrodynamics.

From the electrodynamics textbooks: "…Gauss' theorem is valid not only for electrostatics, but also for electrodynamics, which using a variable in time electromagnetic fields. We are not sure if this hypothesis is valid or it is not valid… Only the experiment can give the answer on this question. The whole collection of experimental facts speaks in favor of this hypothesis." But, unfortunately, the experiment with transverse motion of magnet was not considered seriously in this textbook.

(Editor's note: Well-known Searl's experiments and Godin & Roshchin's experiments are based on such transverse motion of magnets (rollers). In Alemanov's article it was demonstrated that in this case the experiment should lead to induced electric charges. Really it was detected in experiments. Hence this missed aspect of electrodynamics is very important for development of the new energy technologies.)

Gravito-Inert Mass

J.A. Asanbaeva

720000, Kyrgyzstan, Bishkek, Kadyrov's Scientific Center
+996 (312) 47-25-40, +996 (312) 65-02-83

bondarenko@nazaraliev-centre.com

Nature of mass is one of the important problems of modern physics. It is accepted to consider that the mass of elementary particle is determined by fields, which are connected with it (electromagnetic, nuclear and others). However, we didn't create any quantitative theory of mass. There is no theory to explain why masses of elementary particles form a discrete spectrum of values and to allow determining this spectrum.

Mass (m) is a physical value, one of characteristics of matter, which defines its inert and gravitational properties. Accordingly, we distinguish inert mass (m_i) and gravitational mass (m_g).

Inert mass (m_i) characterizes dynamical properties of a body, its property to accelerate under the action of the force $(\vec{F}_i)$ and according to the second Newton's law is considered to be constant coefficient of proportionality for the given body between $\vec{F}$ and acceleration $\vec{a}$.

$$\vec{F}_i = m_i \vec{a} \qquad (1)$$

Gravitational mass (m_g) is a source of gravity field. Every body creates its gravity field, which is

18. Kozyrev N.A. *Selected Transactions* (Leningrad University Press, Leningrad, 1991) (in Russ.).

19. Lavrent'ev M.M., Eganova I.A., Medvedev V.G., Olejnik V.K., and Fominykh S.F. *On Scanning of Celestial Sphere by Kozyrev's Sensor.* Doklady AN SSSR, 323 (4), p.649-652 (1992) (in Russ.).

20. Akimov A.E., Kovaltchuk G.U., Medvedev B.P., Oleinik V.K., Pugatch A.F. *Preliminary Results of Astronomic Observations of the Sky by the Kozyrev Procedure.* Academy of Sciences of Ukraine, Central Astronomic Observatory. Preprint CAO-92-5P, 1992, p.16 (in Russ.).

21. *Oleinik V.P. Superluminal Transfer of Information in Electrodynamics.* SPIE Material Science and Material Properties for Infrared Optoelectronics. 3890 p. 321-328 (1998) (http://www.spie.org /).

22. Oleinik V.P. *Faster-than-Light Transfer of a Signal in Electrodynamics.* Instantaneous Action-at-a-Distance in Modern Physics (Nova Science Publishers, Inc., New York, 1999), p.261-281.

23. Eganova I.A. *The World of Events Reality: Instantaneous Action as a Connection of Events through Time.* Instantaneous Action-at-a-Distance in Modern Physics (Nova Science Publishers, Inc., New York, 1999).

24. Lavrent'ev M.M. and Eganova I.A. *Physical Phenomena Predicted and Revealed by N.A.Kozyrev, in the Light of Adequacy of Space-Time to Physical Reality.* Philosophy of Science, 1(3), p.34-43 (1997) (in Russ.).

25. Logunov A.A. *Lectures in the Theory of Relativity and Gravity.* A Present-Day Analysis of the Problem. (Nauka, Moscow, 1987) (in Russ.).

26. Oleinik V.P. *The Newest Development of Quantum Electrodynamics: Self-Organizing Electron, Superluminal Signals, Dynamical Inhomogeneity of Time.* Physical Vacuum and Nature. 4 p.3-17 (2000) (in Russ.).

27. Jefimenko O.D. *Electromagnetic Retardation and Theory of Relativity* (Electret Scientific Company, Star City, 1997).

28. Oleinik V.P., Borimsky Ju.C., Arepjev Ju.D. *Time, What is this? Dynamical Properties of Time.* Physical Vacuum and Nature. 5 p.65-82 (2001); *New Ideas in Electrodynamics: Physical Properties of Time.* Semiconductor Physics, Quantum Electronics and Optoelectronics. 3 N4 p.558-565 (2000). E-print: quant-ph/0010027.

29. Borimsky Ju.C., Oleinik V.P. *The Course of Time in Classical and Quantum Systems and Dynamical Principle.* Physical Vacuum and Nature. 6 (2001) (in print).

The Principle of Self-Organization, which can be formulated as follows: any material object represents an open self-organizing system whose internal structures are formed with the participation of the whole universe. Apparently, the Principle of Self-Organization, incorporated in nature as one of the integral properties of matter, is nothing more nor less than a spirit (or absolute idea, or creator) which operates the world and creates all its variety.

Physical Mechanism of Nuclear Reactions at Low Energies

V.P. Oleinik* and Yu.D. Arepjev

Tell me what the electron is,
and I shall explain to you everything else.
W. Thomson

Abstract

The physical mechanism of nuclear reactions at low energies caused by spatial extension of electron is considered. Nuclear reactions of this type represent intra-electronic processes, more precisely, the processes occurring inside the area of basic localization of electron. Distinctive characteristics of these processes are defined by interaction of the own field produced by electrically charged matter of electron with free nuclei. Heavy nucleus, appearing inside the area of basic localization of electron, is inevitably deformed because of interaction of protons with the adjoining layers of electronic cloud, which may cause nuclear fission. If two or more light nuclei occur "inside" electron, an attractive force will appear between the nuclei that may result in the fusion of nuclei. The intra-electronic mechanism of nuclear reactions is of a universal character. For its realization it is necessary to have merely a sufficiently intensive stream of free electrons, i.e. heavy electric current, and as long as sufficiently a great number of free nuclei. This mechanism may operate only at small energies of translational motion of the centers of mass of nuclei and electron. Because of the existence of simple mechanism of nuclear reactions at low energies, nuclear reactor turns out to be an atomic delayed-action bomb, which may blow up by virtue of casual reasons, as it has taken place, apparently, in Chernobyl. **The use of cold nuclear reactions for production of energy will provide mankind with cheap, practically inexhaustible, and non-polluting energy sources.**

Introduction

Nuclear reactions at low energies, occurring in physical and biological systems, and, in particular, the cold fusion (CF) of nuclei, attract ever increasing attention (see review articles [1,2]). This is explained by the fact that research on CF (in what follows, by cold fusion we shall understand any nuclear reactions at low energies) opens up the way to the solution of the problem which was set more than 50 years ago in the field of controlled thermonuclear reactions (CTR) and which has not been solved that is the problem to provide mankind with cheap fuel. An important point is that CF allows to create not only cheap, but also non-polluting energy sources, as nuclear reactions at low energies are not accompanied by radiations dangerous to health (γ-radiations, streams of fast neutrons and other particles). Note that the energetic problem facing mankind is presently of special interest in connection with the fact that, according to expert evaluations, the oil-and-gas resources in the world will suffice only for some decades. For this reason the study of CF is among the most important problems of physics.

It is necessary to note that, relying on the standard theory of nuclear reactions describing nuclear processes in vacuum, experts in the field of nuclear physics, engaged in CTR, reject the very possibility of existence of nuclear fusion at low energies. Two basic objections are raised against CF:

1. at low energies the penetrability of Coulomb barrier around nuclei is so small that the probability of nuclear fusion is practically equal to zero;
2. distinction between the atomic and nuclear energy scales is so great that the energy, which might be evolved as a result of nuclear fusion, could not be transferred directly to atomic lattice; therefore the energy above should be emitted in the form of streams of γ-quanta, fast neutrons and other particles. However, such streams of sufficient intensity have not been registered.

The answer to the first objection against existence of CF is that at the heart of CF are nuclear processes occurring in environment, and the basic role is played here, apparently, by collective effects caused by interaction of nuclei with particles of environment in which the nuclear reaction takes place. The laws governing the behavior of interacting nuclei in vacuum are inapplicable to the description of CF of nuclei [3]. Nuclear reactions occurring at low energies submit to completely different laws, which can be established only provided that collective effects mentioned above are taken into account. For this reason the standard theory of nuclear reactions in vacuum can by no means refute the existence of CF.

As to the impossibility of transferring the energy between levels of various scales, we can give an example of the phenomenon of sonoluminescence (luminescence of a liquid when a sound wave causing cavitation passes through it) [4], in which the energy transfer from an acoustic wave to electromagnetic field occurs with appreciable probability in spite of the fact that the distinction between energies of acoustic phonons and quanta of light reaches 11 orders.

As early as 10 years ago J. Schwinger, the Nobel winner and the known expert in the field of the theory of elementary particles and quantum electrodynamics, asserted that it is impossible to deny the reality of CF phenomenon [3,4]. Since then the CF phenomenon for nuclei was repeated hundreds times in laboratories all over the world, tens of patents on the ways of energy generation on the basis of CF were registered and enormous number of experimental works were published, which not only confirmed the existence of effect, but also contained its detailed analysis.

The most convincing evidence for the existence of nuclear reactions at low energies seems to give the mass-spectrometric research of reaction products [5] as well as research on biological systems [6]. Detailed study of electric explosion of foil made of especially pure materials in water, described in [5], suggests that at electric discharges transformation of chemical elements occurs. Study of optical spectrum of plasma arising at discharge and of the mass-spectrometric analysis of sediments, which remained after the discharge, shows that in plasma there is an appearance of a significant number of chemical elements which were not presented in the initial material of explosive foil and electrodes and also that the isotope structure of the foil material changes appreciably. The change of experimental conditions, for example, of energy contribution in foil, its mass and dimensions results only in redistribution of intensity of plasma spectral lines, i.e. in the change of statistical weight of chemical elements in plasma, but the composition of chemical elements remains unchanged and it essentially depends on the material of foil. As it is seen from the received results, nuclear reactions, which take place at electric discharge, are not accompanied by the occurrence of a neutrons stream and γ-radiation and proceed at low energies of atomic nuclei.

The research mentioned above as well as many others, carried out by different researchers in different laboratories, **allow to draw a conclusion that existence of nuclear reactions at low energies is reliably established.**

The development of research on CF is hampered by the absence of theory of the phenomenon. As noted by Schwinger [3,4], the situation in CF is closely parallel to that one in high-temperature superconductivity: reality of the last, as a result of careful experimental research, is completely established, though theory of the phenomenon is absent till now.

In [5], to account for the transformation of chemical elements, the hypothesis is put forward that at the electric explosion of foil in the plasma channel magnetic monopoles are formed which may overcome the Coulomb barrier even at insignificant kinetic energy due to the great magnitude of their magnetic charge. The monopole, appearing not far from a nucleus, causes its polarization: those nucleons of the nucleus, which are situated more close to the monopole, experience stronger influence of the last, than the nucleons situated on the opposite side of the nucleus. As a result, a deformation of the nucleus arises (the nucleus is lengthened), which may result in nuclear fission.

Obvious drawback of this mechanism of nuclear reactions is that magnetic monopoles have yet to be found out in nature.

Numerous attempts to construct a consistent theory of CF (see reviews [1,2]) have not been crowned with success. As it was noted above, for the CF to be described, the account of the collective effects may be important caused by interaction of nuclei with environment, in which nuclear reaction takes place. But does it suffice to take into account these effects in order that the theory of the phenomenon is constructed? The analysis of the experiments on transformation of chemical elements at low energies and on the CF of nuclei suggests that the discussed phenomenon does

not fall within the domains of exotic ones: it seems to occur in nature constantly, at every step, in both physical and biological systems. Therefore, it is natural to expect that nuclear reactions at low energies should have a simple physical explanation.

However such explanation, which is not beyond the scope of existing representations, is yet to be found. Does not it mean that we are facing here the situation similar to that which has arisen in physics at the end of the 19th century and which has been figuratively described in the words: on the light sky of physics there are only two small dark clouds – the radiation of absolutely black body and the Michelson experiments? Let us remind that in order for these clouds to be removed, it has taken the revision of physical notions about electromagnetic field as well as about space and time.

As is noted in [8], there is a simple physical mechanism of nuclear transformations at low energies which existence follows from the quantum theory of electron as an open self-organizing system [9]. If two or the greater number of light nuclei appear inside free electron, more precisely, inside the area of basic localization of the particle, because of interaction of nuclei with electrically charged matter of electronic cloud, a force of attraction appears between the nuclei which may result in fusion of nucleus. This means that **cold nuclear reaction represents an intra-electronic process** which character is defined by physical properties of the own field produced by electrically charged matter of electron. The purpose of this paper is more detailed consideration of the mechanism above stemming from the spatial extension of electron.

In section 2 physical ideas are formulated and basic results are schematically presented of quantum theory of electron as an open self-organizing system. The theory outlined is necessary to elucidate the origin of the mechanism resulting in the occurrence of nuclear reactions of fusion and fission at low energies. The essence of the developed approach consists in that **the own field created by electron is treated as a congenital, integral physical property of electron, intrinsically inherent in the particle by the very nature of things and for this reason the own field and self-action are included in the definition of the particle** at the initial stage of formulating the theory. As is seen from the received results, electron represents a quantum (elementary excitation) of the field of electrically charged matter. It is a solition, which physical and geometrical properties are described by the non-linear and non-local dynamical equation similar to the known Dirac equation.

In section 3 the application of quantum model of self-organizing electron to nuclear reactions at low energies is considered. It is noted that because of the presence of simple physical mechanism of nuclear reactions at low energies, which is of a universal character, nuclear reactors represent, in effect, nuclear delayed-action bombs, which from time to time may blow up by virtue of the casual reasons. Hence, though nuclear stations may provide mankind with energy, however atomic engineering is a very dangerous way of energy production. The only acceptable way of solving the energetic problem consists in the use of nuclear reactions at low energies.

Quantum model of electron as an open self-organizing system

The basis for the standard formulation of quantum electrodynamics (QED) is the hypothesis that electron is a structureless point particle which does not experience self-action. This assumption results in serious difficulties – the divergences of mass and charge of electron and the impossibility to explain stability of the particle (see, for example, [10-12]).

The difficulties mentioned above are very serious. According to Dirac, **the difficulties of QED "in view of their fundamental character can be eliminated only by radical change of the foundations of the theory, probably, radical to the same extent as transition from the Bohr orbits theory to modern quantum mechanics"** ([13], p. 403). "Correct conclusion", Dirac emphasizes, "is that the basic equations are incorrect. They should be changed in such a way that divergences do not appear at all".

The main reason of occurrence of difficulties is the assumption that electron is a point-like particle. Therefore, abandonment of this hypothesis is inevitable. As an analysis of the problem shows, the key to constructing a consistent quantum theory of electromagnetism lies in taking account of the Coulomb self-action of electron, i.e. the back action of the own field created by charged particle in environmental space upon the same particle. In the special case that the particle is at rest in an inertial reference frame, own field of the particle turns into static Coulomb field.

E.Schrödinger who suggested the historically first physical interpretation of quantum mechanics put one of the boldest ideas concerning the problem of electron forward. According to Schrödinger's hypothesis, the quantity $e\left|\Psi(\boldsymbol{r})\right|^2$ (e and $\Psi(\boldsymbol{r})$ are charge and wave function of electron, respectively) is the density of spatial distribution of electron's charge and, consequently, **the linear sizes of electron are the same as those of atom** [14,15]. However, they did not succeed in substantiating the interpretation and, for this reason, it was rejected by the majority of physicists [16].

An important step to the correct understanding of the physical nature of electron was made by A. Barut and by his collaborators [16-18] who formulated and developed quantum theory of electromagnetic processes on the basis of self-energy picture (the Self-Field QED). Using expression for the total own energy of electron, they managed to calculate the Lamb shift and other radiative corrections and to show that radiative phenomena may be described in terms of the

action function, without using the second quantization method. As is pointed out by Barut [17], "the correct quantum equation of motion for radiating electron is not the Dirac or the Schrödinger equation for bare electron, but an equation containing an additional non-linear self-energy term".

New lines of approach to the problem of electron are offered in [9, 19-24]. The formulation of electrodynamics is considered which represents a synthesis of standard quantum electrodynamics and ideas of the theory of self-organization [25]. The physical mechanism of self-organization of electron consists in self-action. Taking into account the self-action means that electron is treated as a feedback system.

Let us outline schematically the results of the formulation of quantum electrodynamics in which electron is an open self-organizing system.

Editor's note: The authors develop mathematics by using Lagrangian functions, 7 equations. You can contact the authors for more information about.

Thus, the negative result is received: we have tried to take into account self-action of electron in a natural way by supplementing the Lagrangian function with the self-energy term, but we came to an equation that has no reasonable physical solutions at all. This result seems to mean that the standard theoretical scheme reaches here the limits of its applicability and so, remaining in its framework, it is impossible to solve the problem of electron and elucidate the physical nature of electromagnetic interaction.

Essentially new point, which is introduced in [9] into quantum mechanics consists **in the replacement of the model of isolated system described by harmonic oscillator with the model of open system**. Let us advance the arguments indicating the inevitability of using the model of open system as a basis of the description of interaction between microparticles [26].

Note, first of all, that quantum particle theory based on the use of the models of isolated system is, strictly speaking, physically meaningless. Really, any observation conducted on a system represents a process of interaction of the system with the means of observation. But in case of microparticles (quantum particles) this interaction is not weak and consequently it is inadmissible to neglect it, i.e. microparticles should be necessarily considered as essentially non-isolated systems.

A starting point of the standard formulation of quantum mechanics is the physical idea that interaction between physical fields can be reduced to collision of the particles corresponding to these fields, the particles before and after collision being considered as free ones. According to these representations, quantum mechanics is based on the notions of "bare", non-interacting particles, with the interaction between them being considered as an additional factor which can only insignificantly alter the physical properties of non-interacting particles. However, such an approach to interaction between physical fields is obviously of an idealized character because particles constantly interact "with vacuum as with some kind of physical medium in which the particles move" [27]. Interaction of particles with vacuum fluctuations is not small and it cannot be removed.

It is well also to bear in mind that the necessary intermediary at studying micro-objects are the means of observations (the devices) with the classical field corresponding to them which should be taken into account in consistent quantum theory [28]. Inclusion in theoretical scheme of arbitrarily weak classical external field results in occurrence of non-zero width Γ of energy levels of "dressed" particles. The basic impossibility to isolate a real particle from vacuum fluctuations of the field and from the classical sources connected to the means of observation is indicative, thus, of necessity to take into account the non-zero width of energy levels of real particles [26].

The use of the harmonic oscillator model, when describing the interaction of electromagnetic radiation with substance, seems to be the main source of serious difficulties of the standard formulation of quantum theory, as such an approach means apparent neglect of those physical processes which, proceeding constantly, are responsible for inseparable coupling of real physical system to surrounding medium. Introducing artificial notion about switching on and switching out of interaction of oscillator with radiation field, we are able to calculate within the framework of existing theory the width of energy levels of oscillator, but we cannot assert with certainty that such an approach results in correct description of interaction.

From the reasoning given above it is seen that they are the models with energy levels of non-zero width that should form the basis for the description of interaction of radiation with substance. It is necessary to formulate such a quantum theory, which would take into account the energy levels of non-zero width Γ. The case in point is that one should introduce an infinitesimal damping Γ into the initial set of equations describing interaction of charged particles with electromagnetic field. Such an approach means the violation in infinitesimal of homogeneity of physical system relative to translations in time. Necessity of violating the homogeneity of time follows from that fact that in the usual approach (with $\Gamma = 0$) the states of the system of interacting fields have degeneracy of infinitely large multiplicity in relation to time translations. According to the fundamental Bogoliubov's concept of quasi-averages [29], when describing the behavior of degenerate systems, one should include into Hamiltonian an infinitesimal term removing degeneracy. In the theory presented here degeneracy of states of quantized fields relative translations in time is removed by introducing the infinitesimal damping Γ into Lagrangian. Thereby the degeneracy under study is removed already in the initial, zero-order approximation, which is of

fundamental importance for the approach based on perturbation theory.

Formulation of the physical idea that quantum friction arises at the very elementary level - at the level of one particle is given in monograph [26]. Impossibility to isolate real particle from the surrounding world is that property which should be taken into account already in the one-particle theory (for each kind of particles), even before switching on the interaction with other particles. Model of the particle as an open system ($\Gamma \neq 0$) is attractive owing to the fact that from the very beginning the degeneracy of states relative to time translations is absent in it, the degeneracy, which is removed in standard approach by taking into account the interaction of particle with vacuum field fluctuations and classical fields. The basis for the developed formulation is the fundamental concept of quasi-averages supplemented with the requirement that the equations of motion of the particle with $\Gamma \neq 0$ follow from the action principle. It should be emphasized that the non-zero damping Γ is introduced into electrodynamics with the aim to establish the structure of the Lagrangian function, which takes into account the property of openness of physical system. After establishing the structure, the limiting transition $\Gamma \to 0$ is fulfilled.

In our opinion, the development of quantum theory will be inevitably connected with the use of models of open system; as such models reflect more completely the physical essence of interrelations in the real world. It is necessary, thus, to define more exactly the concept of openness of physical system, which, on the one hand, would describe real system accurately enough and, on the other, would be simple enough to describe the particular physical processes.

As open system has the richer physical contents in comparison with isolated system, some essentially new mathematical ideas are needed for its description. First of all, it is necessary to increase the number of independent dynamical variables describing the particle as open system. In papers [9,19-24], as a basis for the description of self-acting electron, the simplest model of open system is used which can be described by the Morse-Feshbach-Bateman Lagrangian function [30,31] and which was successfully used for the description of dispersive medium (the review of articles, in which applications of the model of open system to electrodynamics of dispersive medium are considered, is given in monograph [26]). In this model the number of dynamical variables is doubled as compared with the isolated system, namely, to each dynamical variable of "bare" particle, Ψ, there correspond two dynamical variables, which are denoted by Ψ and $\tilde{\Psi}$. These quantities are considered as components of the wave function describing the quantum state of self-acting particle. One of them, say, Ψ, corresponds in a sense to the particle alone (to the "bare" particle) and the other, $\tilde{\Psi}$, to the surrounding medium, in which the particle moves.

Editor's note: You can contact the authors directly for more information (8-16 equations).

Equation (16) coincides in its appearance with the usual Dirac equation for charged particle in an external field described by 4-potential . However, in reality, it differs essentially from Dirac's equation. The distinction consists in that **equation** (16) **is non-linear and non-local**, with the non-locality being of both spatial and time character. Potential ($A_{||}$) and vortex ($A_{\perp}$) components of the 4-potential, entering equation (16), differ from each other by their physical nature: the former describes the Coulomb field and is expressed quadratically in terms of the wave function components of electron, and the latter describes transverse electromagnetic waves and is expressed in terms of vortex electromagnetic field. As a detailed analysis shows, solutions to the basic dynamical equation describe the clots of self-acting electrically charged matter, localized in space, i.e. the particle is a soliton.

The internal energy spectrum of electron is discrete with an indefinitely large number of levels, and to each value of internal energy E_k (k is the set of quantum numbers) there correspond certain linear dimensions and geometrical form of the region of localization of electron's charge. Dimensions and the number of extreme of wave function increase with increasing the value of energy E_k. The distribution of electric charge of atomic electron in the ground state consists of the range of basic localization with the linear dimensions of the order of Bohr radius a_0 ($a_0 \sim 10^{-10} m$) and of the tail stretching up to infinity. It is essential that because of non-linearity of the dynamical equation of electron, wave function does not obey the superposition principle. By virtue of this, electron acquires the properties of absolutely rigid body: the perturbation acting on electron at an instant of time in the range of basic localization becomes known at the next instant $t + 0$ at any distance from the particle.

In Fig. 1 the results of calculation are represented schematically, carried out on the basis of equation (13), of the distribution of electric charge in atomic and free electrons in the ground (a) and first excited (b) states.

According to [9,19], the atom represents a system of nuclear and electronic solitons interacting with each other, the internal energy spectrum of the hydrogen atom, due to electromagnetic interaction, being of a zoned character. The occurrence of zoned structure of energy spectrum of hydrogen atom is explained as follows. Free nucleus, because of existence of Coulomb self-action, has a discrete internal energy spectrum. As the interaction of nucleus with electron is small in comparison with the energy of Coulomb self-action of the nucleus, it can be taken into account by perturbation theory. From here it follows at once that each energy

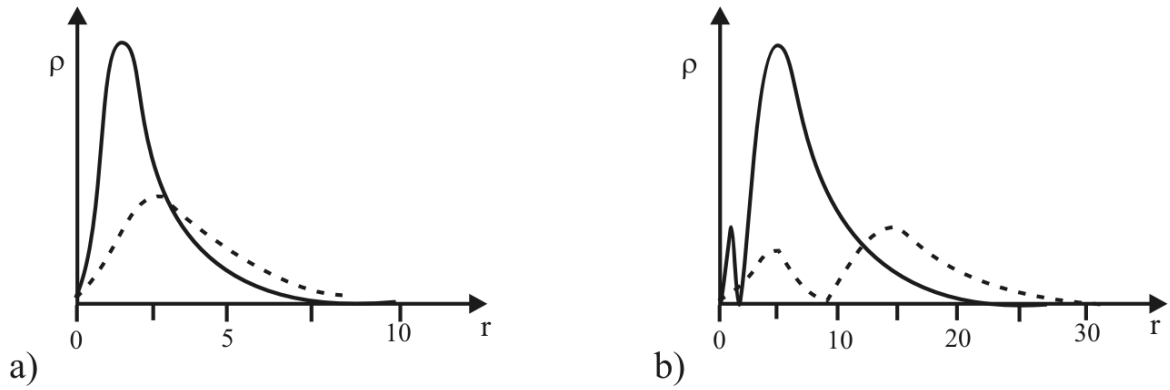

Fig. 1. Density of electric charge (ρ) of electron in the ground state (a) and in the first excited state (b): the continuous lines correspond to electron in the hydrogen atom, and the dotted ones to free electron, r is the distance from the center of mass of electron measured in Bohr radii.

level of free nucleus is split in a zone. There are indefinitely many zones (Balmer's replicas) and in each of them there are indefinitely many energy levels. The lowest zone coincides with the usual Balmer spectrum.

Physical mechanism of nuclear reactions at low energies

The quantum theory presented above schematically of electron as an open self-organizing system is indicative of the existence of the following mechanism of nuclear reactions at low energies [8].

If there occur in the region of basic localization of free electron, which linear sizes in the ground state of the particle are several times as large as those for hydrogen atom (see Fig. 1), two or the greater number of nuclei, each of them attracts on itself the adjoining areas of electronic cloud, resulting in compression of the electronic cloud as a whole. As a result, there appears automatically an attraction of the nuclei, which proved to be "inside" electron, on each other (see Fig. 2).

Calculation shows that the Coulomb barrier around nuclei is deformed, its height decreases and the probability of penetration through the barrier accordingly increases due to tunnel transition. Under certain conditions this process may result in fusion of nuclei. Obviously, the process in question can occur only at small energies of translational motion of the centers of mass of electron and nuclei: nuclei should be "inside" electron long enough for them to have time to come nearer to each other as a result of electron-nuclear interaction. This mechanism of nuclear fusion is of a universal character. In order for it to be realized, it is necessary to have only a stream of free electrons intensive enough, i.e. heavy electric current, and as long as sufficiently great number of free nuclei.

If heavy nuclei appear "inside" free electron, owing to their interaction with the electronic cloud there occurs polarization of nuclei. Because the own field of electron interacts with protons more strongly than with neutrons, nuclei are deformed (become extended), and this process may result in the decomposition of nuclei to fragments (in nuclear fission).

As is noted in [7], the official version of the reasons for Chernobyl accident contains serious contradictions, a number of facts concerning the accident has no convincing explanations, and this circumstance forces to search for the true reasons for the happening, since

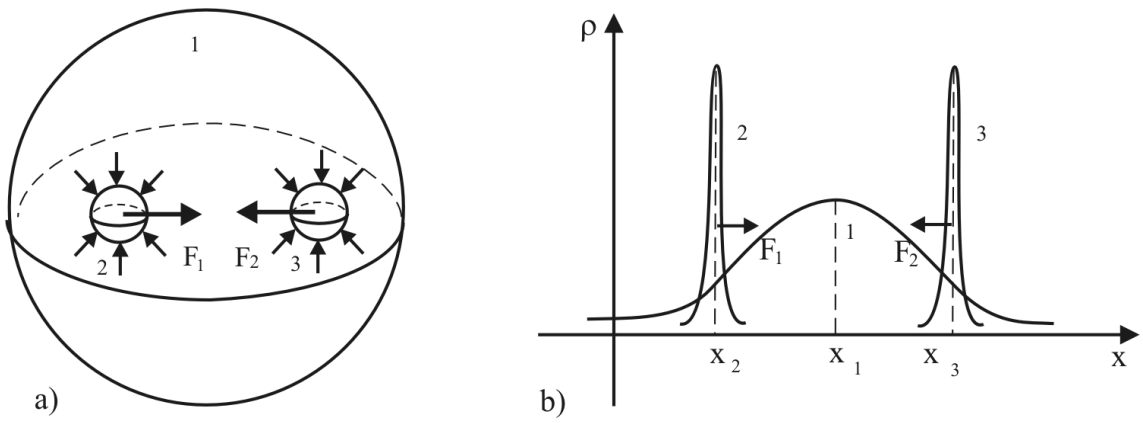

Fig. 2.
The schematic image of interaction of nuclei with electronic cloud: (a) 1 is the region of basic localization of electron, 2 and 3 are nuclei, F_1 and F_2 are the attractive forces between nuclei, which appear at the expense of electronic cloud compression induced by Coulomb forces; (b) ρ is the charge density, 1 is electronic soliton, 2 and 3 are nuclear solitons, X_n (n=1, 2,3) are coordinates of the centers of mass of particles.

"not having understood the mechanism of the one tragedy, we sooner or later shall become witnesses of the other". The authors hypothesize that the reason of the accident was penetration into the nuclear reactor of magnetic monopoles, which have caused the decay of nuclei ^{238}U, and this has resulted in production of delayed neutrons, growth of power output of the reactor and explosion. As an argument in favor of the assumption, the fact is presented that nucleus ^{238}U are disintegrated under the action of "strange" radiation appearing at explosion of foil.

In the opinion of the authors of [5,7], "strange" radiation is created by those magnetic monopoles, which form bound states with nuclei of atoms. These compound particles give the abnormally wide tracks similar to those of a creeping caterpillar, and also the tracks of complicated shape reminiscent of spirals and gratings. Character of tracks changes when imposing magnetic field, which, as the authors believe, is an argument in favor of the assumption above. There are also some special tracks very similar to scratches and ink spots. "Strange" radiation is of spherical form, it resembles a ball lightning, and its duration is more than ten times as great as that of the current pulse arising at electric discharge. With the course of time the luminous sphere (the ball-like plasma formation) is dividing into many small "balls".

It is our opinion that "strange" radiation is caused by free electrons in excited state arising in the area of electric discharge. According to [9, 19], linear sizes of the region of basic localization of such electrons can make many tens of sizes of atom. The heavy nucleus, for example, the nucleus ^{238}U, appearing inside the electronic cloud, is inevitably deformed because of interaction of protons with adjoining layers in the distribution of electric charge of electron, and this deformation can cause nuclear fission. If two or the greater number of light nuclei appears "inside" electron, then attractive forces arise between nuclei, which may result in fusion reaction. When electric discharge is strong enough, the areas of basic localization of some electrons can overlap, and if a nucleus lands in the area of overlap, because of Coulomb attraction of nucleus on the adjoining layers of electronic clouds, a bound state may be formed, of two electrons and the nucleus, characterized by the relative stability and significant spatial extension.

Obviously, if the concentration of free electrons is great enough, there may be formed some relatively stable bunch of plasma consisting of great number of free electrons and nuclei, which in virtue of chaotic movement of nuclei and because of the absence of preferred directions should have approximately spherical form. Let us note that atomic electrons, belonging to additional energy zones of atom (Balmer's replicas associated with nuclear self-action, see Section 2) can contribute to "strange" radiation.

As is seen from above, to account for the reasons for Chernobyl accident, there is no need to involve magnetic monopoles. The scenario of development of events during the accident, described in [7], seems to be quite plausible if only to understand by initiators of nuclear fission not hypothetical monopoles but free electrons, which powerful pulse might arise as a result of electric discharge in the region of turbo-generators.

The existence of simple physical mechanism of nuclear reactions at low energies, indicated in this paper, implies that nuclear reactors are, in effect, nuclear delayed-action bombs, which will blow up from time to time. Explosion of nuclear reactor may take place because of casual short circuit at an electric subcircuit, owing to which there appears an intensive stream of free electrons. This stream, having got for any reasons in nuclear reactor, may initiate explosion of the reactor. It follows from here that though nuclear stations may provide mankind with cheep energy, atomic energetics represents a very dangerous way of producing energy (as well as the energetics using controlled thermonuclear fusion). The only acceptable way of resolving the energetic problem consists in the use of nuclear reactions at low energies.

According to the results obtained, nuclear reactions at low temperatures occur "inside" electron under the action of own field of particle. Hence, to elucidate physical mechanism of CF, it is necessary to study in detail intra-electronic processes and physical properties of own fields of particles. Note that the own field, by its physical properties, essentially differs from the field of electromagnetic waves: this is the field of standing waves of matter, it is of purely classical character and may not be reduced to the set of photons. The own field of charged particle plays in nature a special role, consisting in that it transforms environmental space into the physical environment (physical vacuum) with the properties of absolutely rigid body [32].

As it was repeatedly noted in the literature [1,2], experiments on CF are badly reproduced, and this fact gives rise to doubt the very existence of the phenomenon. Bad reproducibility of results seems to be explained by the fact that CF depends upon great number of parameters: upon electric current density, concentration of free nucleus, concentration of impurities and dislocations in samples, sizes of samples etc. In order to obtain reproducibility of results, it is necessary that all these parameters, describing the environment in which nuclear reactions occur, be the same in various experiments, but to achieve this as a difficult task.

In conclusion we shall dwell upon the problem of linear dimensions of electron, which is of special interest in connection with the mechanism of nuclear reactions indicated here. The inference that the dimensions of electron in the ground state of atom are of the order of Bohr radius, i.e. of the order of atomic dimensions, following from dimension considerations [9,19] and confirmed by quantum model of electron, seems completely unexpected. At first sight, it is in conflict with both the theory of quarks and experimental data

on scattering of electrons. According to quark models, the radius of electron corresponding to its quark structure makes up the quantity of the order of 10^{-22} m [33]. It is necessary to emphasize, however, that the above-mentioned magnitude of linear dimensions of electron refers to the internal structure induced by Coulomb field. The last is long-distance and consequently the linear dimensions of internal structures produced by it (i.e. spatial inhomogeneities in the distribution of electric charge in various quantum states) should considerably exceed the dimensions of quark structures connected with electron. There seems to exist a hierarchy of internal structures of particle produced by Coulomb forces, nuclear forces, inter-quark interactions etc. characterized by the smaller and smaller linear sizes.

As to the experiments on scattering of high energy electrons, according to which the internal structure of electron is not manifested up to distances of the order of $10^{-16} \div 10^{-17}$ m, two arguments, at least, can be adduced in favor of that there is no contradiction here with the experiment. Firstly, in experiments on scattering, investigators were trying to register the details of internal structure of electron within intervals much smaller than Bohr radius, which is why it is not surprising that results of experiments proved to be negative: at high energies electrons behave like point particles, their internal structure has no time to be manifested. Secondly, the results of experiments were analyzed from the point of view of standard representations about electron, which refer to a point particle, but are obviously inapplicable to real, self-acting electron. According to the predictions of quantum theory of electron as an open self-organizing system, real electron is a special object - soliton, i.e. such a cloud of electrically charged substance which, when interacting with other particles, tends to keep its sizes and geometrical form.

At present there is as yet no scattering theory of this kind of particles and for this reason it is impossible to predict with certainty how can the internal structure of electron be manifested in experiments on scattering.

References

1. Storms E. A *Critical Review of the "Cold Fusion" Effect.* J. Sci. Explor., **10**, #2, p.185 (1996). See also: http://www.jse.com/storms/1.html
2. Storms E. *Cold Fusion Revisited.* Infinite Energy, 4, #21, p.16(1998).
3. Schwinger J. *Cold Fusion: A Hypothesis.* Z. Nat. Forsch. A 45, 756 (1990); *Cold Fusion: A Brief History of Mine.* Infinite Energy, 1, #1, p.10 (1995).
4. Schwinger J. *Nuclear Energy in an Atomic Lattice I.* Z. Phys. D15, 221 (1990); Prog. Theor. Phys. 85, 711 (1991); *Energy Transfer in Cold Fusion and Sonoluminescence.* http://www.geocities.com/CapeCanaveral/Lab/4520/theory.htm
5. Urutskoev L. I., Liksonov V. I., Tsinoev V. G. *Experimental Detection of "Strange" Radiation and Transformation of Chemical Elements.* Applied Physics, M., 2000, p.83-100. Urutskoev L.I., Liksonov V.I., Tsinoev V.G. *Observation of Transformation of Chemical Elements During Electric Discharge* http://arxiv.org/ftp/physics/papers/0101/0101089.pdf
6. Vysotskii, V. I., Kornilova A. A., and Samoylenko I. I. *Experimental Discovery of Phenomenon of Low-Energy Nuclear Transformation of Isotopes (Mn55=Fe57) in Growing Biological Cultures.* The Sixth International Conference on Cold Fusion, Progress in New Hydrogen Energy (Ed. M. Okamoto) Oct. 13-18, 1996, Hokkaido, Japan, Vol. 2, p. 687; Infinite Energy, 2, #10, p.63 (1996).
7. Urutskoev L.I., Geras'ko V.N. *On the Possible Mechanism of Chernobyl Accident.* http://www.recom.hotmail.ru/CHER_INC_1.doc
8. Oleinik V.P. *To Electronic Technologies of the 21st Century: on the Threshold of Revolution in Communication Systems. Collection of Reports*, Millenium 2002, International Conference "To Innovations in the 21st Century", Odessa, April 13, 2002, p.268-273.
9. Oleinik V.P. *The Problem of Electron and Superluminal Signals.* (Contemporary Fundamental Physics) (Nova Science Publishers, Inc., Huntington, New York, 2001).
10. Berestetsky V.B., Lifshits E.M., Pitaevsky L.P. *Relativistic Quantum Theory*, part 1. (Moscow, Nauka, 1968).
11. Medvedev B.V. *Foundations of Theoretical Physics.* (Moscow, Nauka, 1977).
12. Dirac P.A.M. *Relativistic Wave Equation of Electron.* Progress in Phys. Sciences, 129, #4, p.681–691 (1979).
13. Dirac P.A.M. *The Principles of Quantum Mechanics.* (Moscow, Nauka, 1979).
14. Schrödinger E. *Quantisierung als Eigenwertproblem.* Vierte Mitteilung. Ann. der Physik, Bd. 81, S.109–139 (1926).
15. Schrodinger E. *Selected Works on Quantum Mechanics*, Edited by Polak L.S. (Moscow, Nauka, 1976).
16. Barut A.O. *Schrodinger's Interpretation of as a Continuous Charge Distribution.* Ann. der Physik, Bd. 45, S.31-36 (1988).
17. Barut A.O., van Huele J.F. *Quantum Electrodynamics Based on Self-Energy: Lamb Shift and Spontaneous Emission without Field Quantization.* Phys.Rev., A32, #6, p.3187–3195 (1985).
18. Barut A.O., Dowling J.P. *Quantum Electrodynamics Based on Self-Energy*: Spontaneous Emission in Cavities. Phys.Rev., A36, #2, p.649–654 (1987).
19. Arepjev Yu.D., Buts A.Yu., Oleinik V.P. *To the Problem of Internal Structure of Electrically Charged Particles. Spectra of Internal Energy and Charge Distribution for the Free Electron and Hydrogen Atom.* Preprint of the Inst. of Semiconductors of Ukraine, N8-91 (Kiev, 1991) 36 p.(in Russ.).
20. Oleinik V.P. *Quantum Electrodynamics Describing the Internal Structure of Electron.* Quantum Electronics. #44, p.51-59 (1993) (in Russ.).
21. Oleinik V.P. T*o the Theory of the Internal Structure of Electron. Second Quantization and Energy Relations.* Quantum Electronics. #45, p.57-79 (1993) (in Russ.).
22. Oleinik V.P. *Quantum Theory of Self-Organizing Electrically Charged Particles. Soliton Model of Electron.* Proceedings of the NATO-ASI "Electron Theory and Quantum Electrodynamics. 100 Years Later." (Plenum Press, N.-Y., London, Washington, D.C., Boston, 1997), p.261-278.
23. Oleinik V.P. Nonlinear *Quantum Dynamical Equation for the Self-Acting Electron.* J. Nonlinear Math. Phys. 4, #1-2, p.180-189 (1997).
24. Oleinik V.P. *Quantum Equation for the Self-Organizing Electron.* Photon and Poincare Group (Nova Science Publishers, New York, Inc., 1999), p.188-200.
25. Nicolis G., Prigogine I. *Self-Organization in Non-Equilibrium Systems* (Wiley-Interscience, 1977).
26. Oleinik V.P., Belousov I.V. *The Problems of Quantum Electrodynamics of Vacuum, Dispersive Media and Intense Fields.* (Kishinev, Shtiintsa, 1983).
27. Bogoliubov N.N., Shirkov D.V. *Introduction to the Theory of Quantized Fields.* (Moscow, Nauka, 1976).
28. Bohr N. *Selected Scientific Works*, V.2. (Moscow, Nauka, 1971).
29. Bogoliubov N.N. *Quasi-Averages in the Problems of Statistical Mechanics.* In the Book: Statistical Physics and Quantum Field Theory. (Moscow, Nauka, 1973).
30. Morse P.M., Feshbach H. *Methods of Theoretical Physics*, V.1. (Moscow, Foreign Literature, 1958).
31. Dakker H. *Classical and Quantum Mechanics of the Damped Harmonic Oscillator.* Phys. Reports, 80, # 1, p.1-112 (1981).
32. Oleinik V.P. *Superluminal Signals, the Physical Properties of Time, and the Principle of Self-Organization.* Physics of Consciences and Life, Cosmology and Astrophysics, #1, p.68-76 (2001).
33. Dehmelt H. *Experiments with an Isolated Subatomic Particle at Rest.* Progress in Phys. Sciences, 160, #12, p.129–139 (1990).

The Evolution of Lifter Technology

Tim Ventura

tventura6@attbi.com

INTRODUCTION

Readers of the electric-spacecraft journal might know a little about the Lifter technology popularized recently be Jean-Louis Naudin, but they probably don't know the whole story. In the short amount of time that has transpired since the publication of that article, this technology has both literally and figuratively taken off – going from a "proof-of-concept" prototype by Naudin to an international group of researchers investigating how to give the lifter higher-performance and greater efficiency. With the first commercial products now on the horizon, if you haven't taken the time to read up on lifter technology, this is the perfect time to do so. . .
To give you a complete up-to-date overview of where this technology is, where it is going, and what I think it is capable of, let me start with the basics – an overview of how I became involved with Electrogravity research and what eventually led me to become involved with lifter technology.

MY BACKGROUND

I started college at 16 years old, back in 1992 – at the same time, I purchased a kit containing "hoverboard plans" from Hovertech, Inc. The moment that I received that $20 white-manilla envelope in October 1992 was the moment that I became involved with what has now been nearly 10 years of electrogravity research.

I worked with Bill Butler – the president and chief-scientist of Hovertech – on a variety of different antigravity, Electrogravity, and levitation ideas from approximately 1992 through 1996. While putting in my college time, I was also taking distinct advantage of the enormous college library at Western Washington University to read up on everything that might possibly relate to Electrogravity. I read books on standard electronics and physics theory alongside with books by the masters of this science, such as TT Brown and Nikola Tesla.

Bill and I played with several different ideas – many of them only peripherally related to Electrogravity. For instance, I published a manuscript initially in 1996 describing Tesla's theory on how to reliably produce Ball-Lightning using a standard Tesla coil – the information courtesy of WWU's excellent library. Bill also assisted me with obtaining video footage of a Searl-effect conference that he attended in Denver in the early 90's – this footage was an excellent overview of Searl's design and construction concepts for what he believes is the next major technological step in aviation and space travel.

Bill and I eventually found different paths, and in some ways drifted apart. Bill moved into Geomagnetic levitation research and started intense investigation on the patents of How Wachspress and the magnetic dipole levitator. I went to more traditional technologies – eventually becoming a UNIX system administrator for AT&T Wireless.

I hadn't heard from Bill Butler in about 6 months when he sent me a short email containing the words "hey, check this out" – and a link to Jean-Louis Naudin's "Lifter Experiments" home-page. I visited the site, watched all of the video clips, and then watched them again. This was the technology that I had been waiting for!

LIFTER TECHNOLOGY

I can say without a doubt that the lifter technology is completely revolutionary, but you might not realize how profoundly revolutionary it is until you've stopped to think about it for a bit. What is it about the lifter that makes it so unique, especially when so many inventions claim to produce more and better electromagnetic thrust? The answer is simple – the lifter works repeatedly.

Jean-Louis Naudin started a figurative bonfire when he decided to replicate a "proof-of-concept" experiment by a small Huntsville, AL aerospace contracting firm. The lifter initially came into being in the mind of Jeff Cameron – the chief scientist of Transdimensional Technologies – in the 1970's from experiments conducted with high-power military and research-grade lasers. A device in the lasers called a "pre-ionizer" was used to apply a high-voltage to the lasing-medium to facilitate better performance. Repeated operation of the pre-ionizer had a common side-effect of horribly twisting the wire and foil combination out of shape, which required a decent amount of work to repair.

Jeff Cameron realized that the torsional effect on the pre-ionizer was a side-effect of some unknown force acting on the pre-ionizer apparatus, and he began a long-term investigation into what was causing the apparatus to deform. His eventual results indicated that a force in the foil collector in the pre-ionizer was causing a net-thrust in the entire pre-ionizer apparatus that was making it twist and move on its mounts within the laser – the lifter came to him later as a three-dimensional device to demonstrate this force.

Naudin's genius became readily apparent not through a giant breakthrough in technology, but rather in a more subtle fashion – he replicated the lifter experiments of Transdimensional Technologies and published videos, articles, and complete construction plans on his website to allow others to do the same. In a manner similar to the open-source software movement, Naudin had taken an incredible scientific find that might have otherwise been overlooked and done and incredibly charitable and intelligent thing – he gave it away for others to play with. By following Naudin's instructions, inventors all over the globe began to slowly replicate the

Transdimensional Technologies experiments and thereby validate the proof of concept that Jeff Cameron had created to show that his "mystery force" was real after all. Naudin of course took advantage of these replications of the experiment by showcasing them on his own website – which in turn lends additional credibility to his research.

As far as technology goes, the lifter demonstrates that science and engineering have more than their share of humorous irony. For the years that I researched Electrogravity and antigravity claims, all of the devices that I had seen required something "magic" to make them work. For instance, Bob Lazar's UFO-claims could have been reverse-engineered except that they require 'element 115' to make them work – an element chemically related to Bismuth that is theorized to potentially have electrogravitic properties. I will come back to the possible electro-gravitational properties of Bismuth in a bit, as it turns out that this element may in fact provide some use for future lifter technology.

The Searl-effect disc is an even better example of the "magic" usually involved with building a working Electrogravity device. Searl's ideas seem valid enough, but although he supposedly demonstrated several working prototypes in the 1950's, he is currently pursuing millions of dollars in research funding in to replicate those experiments in a modern-day setting.

The irony involving lifter technology is that while inventors all over the world have been searching for the perfect electro-gravitational device for decades, the possible working proof of concept for many of these theories has been sitting in front of us the whole time – the lifter costs less than $10 in parts to build, and none of them are magic – in fact, for my experiments, all of them were at stores within 2 blocks of my house — balsa wood from the craft store, aluminum foil from the supermarket, 30-gauge magnet wire from the local Radio Shack, and an old computer monitor for the high-voltage power-supply.

LIFTER PHYSICS

Whether or not Jeff Cameron knew it at the time he constructed his lifter prototype, what he was actually building was a 3 dimensional representation of a drawing on a patent application by TT Brown in the 1950's. In the patent application, the drawing shows a positively charged wire suspended over a grounded foil body which was meant to demonstrate the most basic Biefeld-Brown effect generator. While Brown's drawing is a little different than Jeff's design, the resemblance is uncanny enough to indicate that both of these men had the same basic force in mind.

TT Brown's patent indicates that this Biefeld-Brown effect generator works due to a gradient electrostatic-field between the wire and the foil – in essence, these two elements compose a low-efficiency, high-voltage air-gap capacitor in which the difference in geometries between the two capacitive elements generates a net-directional force from the larger element towards the smaller element. Jeff Cameron seems to have a practical axiom that goes along with this scientific philosophy, which is that there must be both a leakage current and a capacitance between the wire and the foil in order for the lifter to function.

Conventional physics says that two capacitor elements of different sizes will not generate a net-directional force, so what gives? This is actually the thinking that convinced me to abandon my research into Biefeld-Brown effect technology in 1996 – physics says it doesn't work. What the books say will happen is that since the wire can only maintain a lower-capacitance than the foil, the overall capacitance between the two elements will be reduced to be equivalent to that on the smallest element (or plate) in the capacitor. This, of course, assumes a 2-element series-wired capacitor, such as the lifter.

I can give you the conventional physics answer to this small riddle by simply saying that the lifter uses a manifestation of ion-wind. This would state that the electrons crossing the air-gap cause a breeze that causes thrust – since the breeze would be traveling down from the wire to the foil, the thrust would be up, as demonstrated in testing. In the ion-wind explanation, the electrons are emitted from small-diameter of the positively charged wire in such great abundance that they move a significant airflow down to the foil where they are absorbed and transported electrically back to the HV power-supply's electrical ground.

Conventional physics would seem to have the theoretical answer to why the lifter causes lift, but in the experimental setting, which is what we now have an abundance of thanks to Jean-Louis Naudin, the conventional physics explanation doesn't suffice. Experimentally, there are several deviations from the ion-wind explanation that seem to invalidate it. For instance, if you completely contain the lifter in a plastic-enclosure, it will still generate lift – this would not be the case if a breeze was responsible for lifting the device. How could it be, if the breeze is limited to the inside of an enclosure which itself is levitating?

A more compelling proof that Biefeld-Brown is something other than ion-wind comes from Purdue University, where the lifter experiment was replicated inside a vacuum-enclosure with positive results. While ion-propulsion can work in space, it usually assumes that there is argon, krypton, or other noble gas to be used as the propellant – the vacuum enclosure showed that with no gas available for transport the lifter showed a moderate improvement in performance.

The vacuum enclosure tests are definitely compelling evidence that something else is going on other than ion-wind – at least compelling enough for NASA to file patent number 6,317,310 – "Apparatus and Method for Generating Thrust using a Two Dimensional, Asymmetrical Capacitor Module". The NASA patent description – which can be accessed from Naudin's lifter

website – is as vague is it is compelling in that NASA is basically requesting a patent on any technology that generates force using two geometrically dissimilar capacitive plates. Disregarding the fact that this patent was issued nearly 50 years after TT Brown's patent using nearly identical descriptions and pictures, and also disregarding the fact that NASA also doesn't understand why the lifter generates thrust, it seems apparent the this phenomena is gaining credibility in engineering circles while physicists seemingly continue to deny that anything is going on.

THE EVOLUTION OF LIFTER TECHNOLOGY

Every good movie always has a sequel, and in technology, if at first a major government agency 'liberates' your idea, it may seem that a sequel is in order. In the case of the lifter, it would appear that the NASA patent would cover this technology to at least some degree – at least until someone overturns this patent under the prior-art rule – which means that the next generation has to be considerably more advanced to escape having the research and development be forfeit to the government.

The pursuit of more advanced versions of the lifter technology is currently underway by several independent inventors, as well as Transdimensional Technologies themselves. Most of the private research by inventors has delved into improving the current lifter design to produce a greater force output and utilize less power to do so. Because the lifter is so simplistic in design, many of these enhancements have been of a very basic nature.

Jean-Louis Naudin was the first independent inventor to do serious work with improving the technology behind the lifter – and even so, the majority of his work has utilized similar materials in more complex arrangements. Naudin has demonstrated dramatically increased lifting forces by building a "lifter inside a lifter" for demonstration purposes. Naudin has also done a great deal of work in taking breaking up the concept of the single triangular lifter into a parallel series of lifting cells – which means that these cells, working in parallel, can contributed to greater stability and higher force output than any single lifting element.

Saviour – an independent inventor working with Jean-Louis Naudin – has done some of the most interesting improvements on lifter design since those by Naudin himself. Saviour's concerns have not focused around the "bigger is better" philosophy that many inventors have stuck by – he has done several experiments to determine the radiation output, remote-controlled applications development, and materials analysis and improvement on the lifter that others have not had the time or expertise to conduct.

A recent experiment by Saviour demonstrates just how this gentleman's foresight is helping other experimenters – Saviour substituted nichrome heating wire for the common lightweight wire used for the emitter, and demonstrated that the lifting force greatly increased when a higher potential 12-volt charge was used to heat the emitter wire in conjunction with the standard high-voltage charge coming off it.

Transdimensional Technologies – the developers of the initial lifter design – are taking the approach to optimizing lifter performance to another level. They are currently not-so-secretly working on a 2nd generation lifter, which will consist of a 1-piece layered material to replace the current wire and foil design.

The layered material approach to the lifter is an idea that Jeff Cameron may or may not have had after some lengthy discussions with Travis Taylor – the man responsible for testing some anomalous materials known as "Art's Parts".

Art's Parts were some pieces of material sent by an unknown person to the Art Bell radio talk-show with a note stating that the they were pieces of UFO wreckage taken from the often-cited "Roswell crash" in 1947. Whether or not the pieces of material actually came from that crash is unknown, but Art Bell did the honorable thing by sending them to an acquaintance in US Army research named Travis Taylor for a professional scientific investigation.

Taylor, who apparently tested the materials after-hours in a world-class research lab to avoid potential classification by his superiors, used an electron-microscope to determine that the layered materials were actually pieces of metal – containing several hundred microscopically thin layers of magnesium and bismuth. Taylor also tested the layered-metal with a high-voltage apparatus, which seemed to indicate that when a voltage was applied to the material, the layered metal would move – and in some cases levitate.

Taylor reported his findings to Art Bell and sent video clips of his high-voltage experiments, which eventually made it back to a permanent home on the Art Bell radio show website. In addition, Taylor conveyed his belief that the only manner in which the pieces of metal could properly be produced was through an advanced form of electron-deposition technology, due (apparently) to an absence of oxygen-molecules between the different layers of metals. Additionally, the layers of metal were too thin to have been mechanically produced.

Jeff Cameron indicated that Transdimensional Technologies maintained some contact at one point in time with Travis Taylor, apparently as professional colleagues in the defense community in Huntsville, AL. I am not an expert on this relationship, other than to say that to the best of my knowledge these two individuals knew and contacted each other, and that this is how Jeff Cameron might have come up with the 2nd generation lifter idea.

ADVANCED LIFTER TECHNOLOGY

As an inventor, I couldn't care less whether or not the idea for the technology came from a crashed UFO. To be perfectly honest, I'm not what you would call a "believer" anyways, although I have often wondered

about it. My point is not to attempt to lend any credibility to "Art's Parts", but rather to tie in the properties of the anomalous material's high-voltage movement with the underlying theory of lifter operation.

Even mentioning a UFO in a respected publication or article is the kiss of death in today's world – and I wouldn't do it if it wasn't an intricate part of the story. The other interesting thought is that the layered material is once again partially composed of Bismuth – which is thought to possibly have some of the same electro-gravitational properties as Bob Lazar's Area 51 "element 115". Is there a similarity, or merely a coincidence between a claim that hasn't gained credibility and a technology currently under development?

The lifter in its own right is essentially a layered material. One of those layers is the emitter wire, which is highly charged with about 30kV worth of electrons, another layer is the air-gap, which is approximately 3 cm in height, and the final layer is an electrically-grounded "skirt" of aluminum foil that surrounds the lifter. It is also reasonable to expect that there are only two possible forces at work in the lifter – one of which being a possible ion-wind effect moving down from the emitter to the foil, and the other being a possible Biefeld-Brown effect, moving up through the foil to the emitter.

There are a few shortcomings in the lifter as a design that might be overcome if we could transition the layered material from one containing an air-gap to one that does not. For instance, the lifter is currently a rather delicate object, in that having a wire under tension as the emitter makes construction difficult for future automated assembly. Additionally, because the air-gap requires struts to support the emitter wire, a trade off involving the weight versus the strength of the struts is additionally involved in any current implementation of lifter technology.

Some of the other changes that would be helpful to implement when transitioning lifter technology from one type of air-gap to another are changes in the materials used to increase the dielectric capacity. High-K dielectric materials may be used to increase the displacement of electrons in the material to enhance charge transport. And since increasing the dielectric potential of the layered materials also increases the breakdown resistance, it means that thinner materials can be used.

Designing a lifter without an air gap would accommodate lower voltage requirements between the foil and the emitter. The voltage would not have to create the large e-field gradient to create a leakage current across such a large void. Therefore the overall voltage across the device could be greatly reduced, without much cost in thrust. A lower operating voltage in turn means that a lower-output power-supply can be used for a given amount of current, which increases the overall efficiency.

Transdimensional Technologies recent research is utilizing the layered materials approach to eliminate the air-gap and substitute for it high-k dielectric materials that may allow higher overall performance. Although they have not yet released details about the exact composition or thickness of the materials that they are working with, they claim to currently have a 10% reduction in weight using a low-voltage current across the thickness of their newest device.

FUTURE LIFTER TECHNOLOGY

Thanks to the tremendous amount of research being done on lifter technology by Transdimensional Technologies and a loosely affiliated group of inventors around the world, the future of lifter technology seems very bright at this point.

Transdimensional hopes to release some breakthrough research to allow replication of their newest 2nd generation experiments in the very near future, and along with that stands the massive body of research and advancements being done by inventors and researchers such as Jean-Louis Naudin, Saviour, the Lifters-group, and myself.

My personal goals are to attempt to assist Transdimensional Technologies in popularizing this technology to increase awareness of it and help "spread the word" about what it is and how it can potentially help the world.

Imagine if instead of getting in your car and driving through the usual maze of thoroughfares and side streets you were able to simply type in your destination and have a flying vehicle take you there automatically. The lifter technology offers to potential to transform the current transportation market by offering point-to-point aerial transport without the need for roads or freeways.

Additionally, unlike the magnetic-levitation ("Maglev") technologies that are currently being promoted as the future of transportation, the lifter does not require a specially constructed and exorbitantly expensive track to operate – the greatly reduces the per-unit cost on the technology and opens the door for wider adoption by the general public for transportation solutions.

Other individuals are currently working to see if lifter technology may offer cost-effective methods of transport into space, which would reduce the cost greatly and allow a one-piece, reusable method of moving things into orbit.

LIFTER RESOURCES

All of the research involved with the lifter technology is available to the public on the internet. The list of resources below are some of the better and more common resources to obtain detailed lifter information.

American Antigravity
→ http://tventura.hypermart.net

→ The author's website that includes video clips, complete instructions, and other related lifter information.

Jean-Louis Naudin's "Lifter Experiments Website"
→http://jnaudin.free.fr
→ A very in-depth website containing video clips, complete instructions,

World-Wide Lifter Replications
→ http://jnaudin.free.fr/html/lftwrld.htm
→ An overview with photos and video from many of the independent inventors who have replicated the lifter experiments.

Transdimensional Technologies, Inc
→http://www.tdimension.com
→ The home page for Transdimensional Technologies, the developers of the lifter design.

Blaze Labs (Saviour's Research Website)
→http://bel.150m.com
→An excellent site on research into lifter enhancements, radiation testing, sealed devices, power supplies, and other topics relating to lifter technology.

Lifter Builders Group
→ http://groups.yahoo.com/group/Lifters
→ An email group for the exchange of research findings for those interested in building lifters or staying current on the state of the technology.

NASA Patent #6,317,310
→ The NASA patent regarding obtaining thrust from an asymmetrical two-dimensional capacitor, grant Nov 13, 2001.

Research on the Capacitance Converter of Environmental Heat to Electric Power

N.E. Zaev

143970, Moscow region, village Saltykovka,
Granitchnaya Str., 8 529-9664

Nickolay E. Zaev works on creation of the prototypes of converter energy, which do not require any fuel. The direct conversion of environmental heat to electric power is possible in the processes of "charge-discharge" in non-linear condensers or by means of "magnetization-demagnetization" of ferrites. Such converters of energy create cold and electric power without any fuel.

Theory of the converter, results of early experiments on the generation of microwatt power, methods and features of research are given in this article. The methods of generation of a few watts power are described in details. The possibilities and difficulties of creation of powerful capacitance converters are discussed in this article.

I. Grounds of research.

1.1. From positions of orthodox physics there is no subject of research. It is evident that the energy of charging (C) A_c condenser C_x is always equal or more than the energy of discharging (D) A_d, i. e. always $A_c \geq A_d$. Only the advanced analysis shows that it is not always true. Exactly, in C_x, where $\frac{\partial C}{\partial V} < 0$ an inequality $A_d > A_c$ is possible, and in C_x, where $\frac{\partial C}{\partial V} < 1$, then the work $A_c > A_d$. Therefore we should discuss the nonlinear capacitors (NC). In the end of 1969 I noticed a systematic inequality $A_d > A_c$ during the measurement of A_c and A_d of many capacitors with different dielectrics. Theoretical grounds and results of measurements of this phenomenon are given in the publications in 1984 [1], [2, page 73]. On the industrial standards NC (varicond), ceramic condensers VK2-ZSH, $4 \cdot 6{,}8 \cdot 10^{-9}$μF with an optimal voltage about 95 V it was stated that $\frac{A_d}{A_c} \sim 1{,}21$ with the power to about $98 \cdot 10^{-6}$ Wt and "generated" extra power is equal to $21 \cdot 10^{-6}$ Wt.

1.2. In [1] and [2] the strict theoretical proofs of realization of $A_d > A_c$ (there are four of them) are given. On 1m³ of dielectric $|A_d| - |A_c| = -\frac{1}{2} a \cdot \varepsilon_0 \cdot E_c^{\,3}$ (E_c is an intensity of the field, V/m; ε_0 is a dielectric constant of vacuum, a is a coefficient of nonlinearity of the capacitor). Below we state one more proof more connected with the parameters of circuit.

It is well known that with the charge of a linear capacity from the source of constant voltage V_0=const through the resistor R=const it gets an energy $A_c = \frac{C \cdot V_0^{\,2}}{2}$ exactly equal to the output energy in the time of charging t_c. The output energy irradiated from the load R is a Joule heat $\Theta = R \cdot \int_0^{t_c} i^2 \cdot dt$ [3, page 546]. If NC (nonlinear condenser) is charged, then there are no proofs of such equation. The NC are the variconds or other capacitors, which have $\frac{\partial C}{\partial V} > 0$ in the interval $V = 0 \div V_k$. For the variconds V_k is some voltage, which corresponds to the maximum C_v. If $V > V_k$, then $\frac{\partial C}{\partial V} < 0$. For some other capacitors V_k is a voltage breakdown.

For further consideration let's believe that in the operating area of the given sample of varicond a function

Reality and Consciousness in Education and Activity

A.P. Smirnov

Vice president of International Club of Scientists
190031, Saint Petersburg, Kazanskaya str., 36
Tel: +7 (812) 312-0508
E-mail: science@shaping.org

Relation of thought to existence is the main question of philosophy as science on general laws of Nature was formulated but it still did not interpreted and solved in the frames of generally accepted logic standards. The ways to solve it lead to futile discussions of materialists and idealists, to senseless disputes of determinists with eclectics and apologists of the "chance". This discussion lost its sense without a determination of terms under discussion and condemned debaters to have subjective "gustatory" senses, which were changing while aging and depended on the extent of received and conceived knowledge. Such is the situation in this link of World studying, which does not allow creating a logic chain of reasoning in the understanding of cognizable things.

A paradoxicality of all things that happen is connected with incorrect translations and interpretation of wisdom of ancient philosophers and scornful attitude both to the knowledge of distant past and classical heritage, which highlighted the elements of natural-science approach to Weltanschauung.

According to Plato, **an ideal thing** is a visual thing, which can be felt by our organs of sense. Therefore, the understanding of objective reality is mediated by the crowd of our feelings in such a way that perception of reality by means of these feelings gives us a notion of the World. Hence, **our notions about reality are the subject of research in science, but not the World itself, i.e. the World outside of our consciousness.** So, what should be studied in our notions about the World? Let us refer to the wisdom of ancient scientists again: " The World is given in motion and its laws are the laws of motion". Then, we should speak about laws, order, i.e. about relation and interrelation in the phenomena of motion. This is the distinctness in notions and actions (determinism) to predetermine further development of reality cognition logic, i.e. what has an influence on us and determines specific character of our perception. Further we can speak about formation of ideas about reality, which require some premises, principles to organize these ideas. These principles are given in classical heritage, in "Dialogues" by G. Galilee [1] and "Mathematical principles of natural philosophy" by I. Newton [2]. A notion of force as a measure for momentum was introduced, which manifests in action and disappears from the body after the action is over, and the body keeps its new state due to the inborn "inertia force". **But the force itself cannot do anything without its application with a certain speed.** Then we introduce a notion of action as a product of acting force F_A and the speed of action V_A.

We offer a law of interaction, which determines the interaction between action of the cause and the effect appeared during this action as a reaction, i.e. the product of the force of reaction F_R and the speed of reaction V_R. Thus, this interaction between the cause and the effect is determined by the transfer of action from one object to another in equal quantity, but with appearance of new quality, which is determined by specificity of interacting objects according to fundamental law of interaction:

$$\mathbf{F_A V_A = -F_R V_R}.$$

Unfortunately, an incorrect interpretation of interaction manifestation as an opposite counteraction became strong in our mind. This manifestation is perceived as a compensation of cause by action of the effect. Moreover, the incorrect way of writing of the mathematical form of Newton's third law manifestation established in textbooks and scientific literature due to the incorrect translation as $F_A = -F_C$. This very tragic situation for the science suppressed the development of logic in description of processes. Chance and statistic approach to the description of phenomena has taken place in our perception. This approach is based on the model of non-interacting elements, in which there is no order stipulated by the interrelation of elements. The science has developed this model and its properties, and this fact predetermined the evolution of notions about real World.

This ideology penetrated in mathematics, which for sake of physics began to study properties of objects, but not operations with them. Moreover, a possibility to reflect specific character of real physical processes in the interconnection of cause-effect relations by mathematical operations is not realized. It is essential, that fundamental law of interaction establishes manifestation and description of elementary act of cause and effect interrelation, **the law of manifestation of a Fact.** It means that order in the World is conceived through manifestation of concrete facts. The action of law of interaction lies in the basis of these facts.

So, there is a conclusion: the World is perceived through the discrete manifestation of motion forms evolution. Hence, the discrete mathematics of finite discrete aggregate can be applied to describe the World, but not the continual mathematics, which lies in the basis of traditional orthodox physics. All these circumstances lead to numerous problems and difficulties in description of our notions of reality, to the plenty of used principles, which are in contradiction to each other, as R. Feinmann noticed once [3].

And what we can get from determinism, which is based on fundamental law of interaction, law of cause and effect interrelation? **The change of force value in a reaction takes place, i.e. the change of value of the potential gradient, i.e. the change of energy**

concentration. This circumstance is visually demonstrated by the operation of Archimedean lever as well as in all phenomena of the real World. This is Archimedean lever, where the loss of speed takes place, but there is a gain in force. And the load raised on a lower height than the way, which was made by the applied force, will give a huge power during its free fall. This power is higher in so many times, in how many times the time of the load fall is less than the time of action spent on its raising! And this is the fact, which determines specific character of **creation in the real World**. We should attribute both quantitative and qualitative characteristics to energy. This is the side of energy manifestation, which is reflected in Plank's formula: energy is proportional to frequency.

Manifestation of fundamental law of interaction also lies in the basis of general universal regularity of evolution of real many-particle systems with the change in external conditions. This process develops in multistage way, and on the each stage the logarithm of the ratio between the event happened and the event to happen always is equal to the work of external forces. In other words, the relation of the event happened to the resource is in exponential dependence on the initial conditions and extent of external influence. Exponential character of development of processes is the evidence that Nature develops according to the law, which conserves itself during evolution. This regularity, which manifests everywhere, can be naturally called **the Principle of Order.**

Fundamental law of interactions and Principle of Order appeared to be enough to describe and understand phenomena in the observed World. And it is natural to expect that this principle of Nature manifest in finer World also. This World includes lower and higher frequencies, which are not available for us yet to watch this wide-range frequency-wave emanating Universe.

From all aforesaid we should make a conclusion that the logic, which exists in the traditional physical tool, appeals to the model and principles of the World of non-interacting elements using the range of regularities, which also reflect some features of the real World, but they do not include fundamental law of interaction and Principle of Order, which are necessary and sufficient to describe reality. Descriptions existing in traditional physics are phenomenological ones and concern only those aspects of the phenomena under investigation, which do not include possible qualitative changes during development of processes, because the main property of real processes of interactions (creation of new energy property) was excluded.

The current situation in physics had a strong influence on formation and development of other sciences, other fields of knowledge, since the logic of reflection of cause-effect links was initially excluded. These are the links to determine existence, i.e. existence of constant creation of the World. All these circumstances give grounds to fundamentally revise educational programs, first of all, in physics, philosophy, mathematics, chemistry and biology. A change to the offered logic of cognition, which is based on the Principle of Order and fundamental law of interaction, will fundamentally change our notions about the World as well as will open big opportunities for new technique and technology. A Man has got huge opportunities in cognition and existence, but due to his immorality and features of incorrect aims in the logic of cognition he cannot use these gifts of Nature. We present wider and deeper view on the World and a Man in it, which allow analyzing, watching and operating with those fields of reality, which manifest in finer World, World of higher-frequency energies and other structures of fields. Logic of cognition had not touched these structures yet.

References

1. Galilee Galileo. Selected works in 2 volumes. M.: Nauka, 1964.
2. Newton Isaac. Mathematical principles of natural philosophy. News of Nickolaevskaya Marine Academy, issue IV, V, Petrograd, 1915-1916. Volumes I, II and III, 620 p.
3. Feinmann Richard. Character of physical laws. M.: Nauka, 1967, 160 p.

Old New Energy

Y. I. Andreev, A.P. Smirnov

St.Petersburg, Russia
E-mail: science@shaping.org
Internet: http://www.physical-congress.spb.ru

Two kinds of energy, accumulated energy [1] and free energy [2], are considered as an inexhaustible source of natural energy created by Nature itself. It is ecologically clean and possible to be renewed in natural conditions.

The energy accumulated in substance is released as a result of partial decay of substance in elementary particles. At that, the acquired defect of mass is so small that it does not change chemical properties of substance and is compensated in natural conditions. Physical mechanism of energy-release lies in the fact that an electron in plasma layerwise takes sufficiently smaller elementary particles (electrino) from positively charged atoms or fragments of substance (ions). Electrino give their kinetic energy to plasma, heat it up and move beyond the bounds of reaction zone in the form of thermal and optical radiation. There is no substance, which could not take part in such process of energy-release, i.e. phase transfer of higher form (PTHF). The most appropriate, available and low-cost substances are air and water, which play the role of nuclear fuel in PTHF. It is turned out that usual combustion is also a process of PTHF, in which oxygen is a nuclear fuel and organic fuel is a donor of electrons. In the process of combustion oxygen atoms get the defect of mass equal

concentration. This circumstance is visually demonstrated by the operation of Archimedean lever as well as in all phenomena of the real World. This is Archimedean lever, where the loss of speed takes place, but there is a gain in force. And the load raised on a lower height than the way, which was made by the applied force, will give a huge power during its free fall. This power is higher in so many times, in how many times the time of the load fall is less than the time of action spent on its raising! And this is the fact, which determines specific character of **creation in the real World**. We should attribute both quantitative and qualitative characteristics to energy. This is the side of energy manifestation, which is reflected in Plank's formula: energy is proportional to frequency.

Manifestation of fundamental law of interaction also lies in the basis of general universal regularity of evolution of real many-particle systems with the change in external conditions. This process develops in multistage way, and on the each stage the logarithm of the ratio between the event happened and the event to happen always is equal to the work of external forces. In other words, the relation of the event happened to the resource is in exponential dependence on the initial conditions and extent of external influence. Exponential character of development of processes is the evidence that Nature develops according to the law, which conserves itself during evolution. This regularity, which manifests everywhere, can be naturally called **the Principle of Order.**

Fundamental law of interactions and Principle of Order appeared to be enough to describe and understand phenomena in the observed World. And it is natural to expect that this principle of Nature manifest in finer World also. This World includes lower and higher frequencies, which are not available for us yet to watch this wide-range frequency-wave emanating Universe.

From all aforesaid we should make a conclusion that the logic, which exists in the traditional physical tool, appeals to the model and principles of the World of non-interacting elements using the range of regularities, which also reflect some features of the real World, but they do not include fundamental law of interaction and Principle of Order, which are necessary and sufficient to describe reality. Descriptions existing in traditional physics are phenomenological ones and concern only those aspects of the phenomena under investigation, which do not include possible qualitative changes during development of processes, because the main property of real processes of interactions (creation of new energy property) was excluded.

The current situation in physics had a strong influence on formation and development of other sciences, other fields of knowledge, since the logic of reflection of cause-effect links was initially excluded. These are the links to determine existence, i.e. existence of constant creation of the World. All these circumstances give grounds to fundamentally revise educational programs, first of all, in physics, philosophy, mathematics, chemistry and biology. A change to the offered logic of cognition, which is based on the Principle of Order and fundamental law of interaction, will fundamentally change our notions about the World as well as will open big opportunities for new technique and technology. A Man has got huge opportunities in cognition and existence, but due to his immorality and features of incorrect aims in the logic of cognition he cannot use these gifts of Nature. We present wider and deeper view on the World and a Man in it, which allow analyzing, watching and operating with those fields of reality, which manifest in finer World, World of higher-frequency energies and other structures of fields. Logic of cognition had not touched these structures yet.

References

1. Galilee Galileo. Selected works in 2 volumes. M.: Nauka, 1964.
2. Newton Isaac. Mathematical principles of natural philosophy. News of Nickolaevskaya Marine Academy, issue IV, V, Petrograd, 1915-1916. Volumes I, II and III, 620 p.
3. Feinmann Richard. Character of physical laws. M.: Nauka, 1967, 160 p.

Old New Energy

Y. I. Andreev, A.P. Smirnov

St.Petersburg, Russia
E-mail: science@shaping.org
Internet: http://www.physical-congress.spb.ru

Two kinds of energy, accumulated energy [1] and free energy [2], are considered as an inexhaustible source of natural energy created by Nature itself. It is ecologically clean and possible to be renewed in natural conditions.

The energy accumulated in substance is released as a result of partial decay of substance in elementary particles. At that, the acquired defect of mass is so small that it does not change chemical properties of substance and is compensated in natural conditions. Physical mechanism of energy-release lies in the fact that an electron in plasma layerwise takes sufficiently smaller elementary particles (electrino) from positively charged atoms or fragments of substance (ions). Electrino give their kinetic energy to plasma, heat it up and move beyond the bounds of reaction zone in the form of thermal and optical radiation. There is no substance, which could not take part in such process of energy-release, i.e. phase transfer of higher form (PTHF). The most appropriate, available and low-cost substances are air and water, which play the role of nuclear fuel in PTHF. It is turned out that usual combustion is also a process of PTHF, in which oxygen is a nuclear fuel and organic fuel is a donor of electrons. In the process of combustion oxygen atoms get the defect of mass equal

to 10^{-6} %, which constitutes the so small value that it cannot change chemical properties of oxygen and does not call killing radioactive emanation.

There is a possibility to use energy properties both of oxygen and nitrogen of free air in the process of PTHF. To do this it is necessary to destroy nitrogen molecule at least in atoms or smaller fragments by some initiating influence. It is achieved by electrical discharge, magnetic flow, explosion and other means. These means consume much less energy than produced in PTHF. In particular, such processes were achieved in combustion engines. Such nitrogen mode of operation and combustion is accompanied by oxidation to H_2O, but not to CO_2, which is more effective in energy and ecological aspects. Accordingly, the power of engine increases and organic fuel is saved. Exhausts from this process mainly contain water vapor [3].

PTHF processes with excessive power release (more than consumed power) were also obtained in heat-generators operating with water.

Free energy diffused in the surrounding space could be transformed into mechanical, electrical or another kind of energy by means of vibration-resonance, electromagnetic and other energy systems. Classification of these systems as well as physical mechanism of energy transformation is given in [2]. The known Searl's engines can serve as an example of energy systems working with free energy.

The developed physical mechanisms of energy-release processes will allow to create industrial, stably operating, ecologically clean energy systems, which do not consume organic and nuclear kinds of fuel, harmful for humankind.

References

1. Andreev Ye.I., Smirnov A.P., Davydenko R.A., Klucherev O.A. Natural enegetics. – SPB, Nestor, 2000, 126 p.
2. Andreev Ye.I., Andreev S.Ye., Glazyrin Ye.S. Natural energetics –2. – SPb, Nevskaya Zhemchuzhina, 2002, 104 p.
3. Patent 2179649, Russia, 2000 / Andreev Ye.I., Smirnov A.P., Davydenko R.A.

On General Nature of Forces

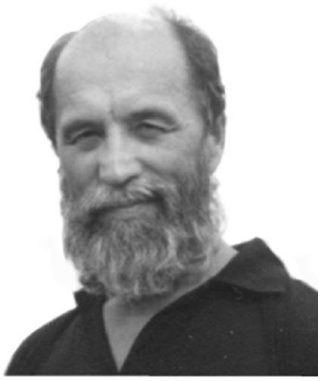

Dr. Evgueni D. Sorokodoum

Entrepreneur and General Director, Vortex Oscillation Technology Ltd, Volochaevskaya Street, 40-B, Flat 38, 109033, Moscow, Russia
Telephone: 7-095-362-8084
e40dum@dol.ru http://vortex.viptop.ru

Introduction

In techniques and in our life we got used to certain physical notions concerning force. We usually use these notions in creation of automobiles, airplanes, rockets and other techniques, but we don't think about **the origin of forces** in general. Usually appearance of force in continuum is connected with presence of momentum gradient.

A number of works, which describe various versions about origin of a force appeared [1, 2, 5, 8, 17, 21, 22, 23, 25, 30, 35, 36, 38, 39]. Different mechanisms of appearance of force are considered in these articles. Usually they consider origin of a force in one of the fields, which are: electromagnetic, gravitational and others. **There was a theoretical attempt to connect the force initiation with energy gradient [33]. Experimental proof of force initiation due to energy gradient was obtained in the works [7, 38].**

Below we made an attempt to show the general regularity of force initiation, which is connected with non-uniform distribution of energy in space. With this process, physical nature of any kind of energy and specific mechanism of force initiation does not play any role. These are only particular cases of general nature of force initiation.

General nature of forces

We are surrounded by space, which is full of energy. Here we mean the energy of any nature: mechanical, thermal, electromagnetic and others. Energy is related with material world and its value is connected with the volume.

Any particle (volume) of continuum has energy:

$$A = A(x, y, z, t) \qquad (1)$$

where *x, y, z* are Eighler's coordinates of the center of particle, *t* is time.

Transmission of energy from one point of space to another one can take place by various methods, both in connection with energy transmission by material particle itself (which is a "carrier" of energy in this case) and without such transmission (for example, with wave motion). For the volume degenerated in ideal point the energy will be zero. That's why it is more comfortable to operate with the energy density concluded in the

increasing constantly. We are the first who analytically got the law of gravity of the masses from the known equation of thermal conductivity. Appeared that on the relatively small distances (in the bounds of the Sun System) the law of gravity by Newton remains valid, but on the larger distances the sudden decrease goes on (Gauss integral), which naturally solves the famous Zelinger's paradox of gravity.

As a conclusion we should note that in the bounds of a stable galaxy of a spiral kind there is the circulation of ether. Ether moves from the periphery of the galaxy to its center (nucleus) by two spiral branches. This becomes apparent as a weak magnetic field (8-10 micro Gauss). In the nucleus of the galaxy there is the impact of two strings as well as there is formation of the spiral toroidal circles (protons). Then the protons form the adjoined vortexes around themselves (electron shells) and from the proton- hydrogen gas the stars are forming, which are moving to the periphery by the same branches. There they dissolve in ether at the periphery since the protons will loose their energy and stability due to the viscosity. Ether which have got the freedom will return to the nucleus of the galaxy and this process is going on in our galaxy for hundreds milliard years and it will keep going until the new center of vortex formation will begin to concentrate ether. Then the new galaxy will appear and our galaxy will disappear. But it will not happen soon and we have enough time to understand that we should return to the concept of ether in modern science.

Experimental Demonstration
of Cosmic Influence on the Earth Life in N.A. Kozyrev's Researches
("On the Influence of Time on Matter")

Alexandra L. Belyaeva

Bishkek, 720075, Russia 8th Location, 46, apt.80
Tel.: 7-996-31-41-25-79
E-mail: artem_belyaev@mail.ru
Internet: www.newphysics.h1.ru

Editor's note: this article represents a part of the big scientific conception "World models in the new scientific progress". On applying of this conception a great number of practical technical devices have been created (as an example of such device we offer the description of universal electrical bio-heater, which was created by the group of researchers from Bishkek, Kyrgyz Science Technical Center "Energy" during the *work on ceramic electroconvector).*

We have to note that the position of our editorial board concerning "time" and Kozyrev's work is not in a good correlation with the authors' one.

Nicolay Alexandrovich Kozyrev scientifically and experimentally discovered the action of relations' interconnection, which was falsely named as time. Time cannot cause action because it is absolute and does not have any physical sense (Samat Kadyrov. Monograph "Theory of unified field").

Author's note: relations' interconnection is an interaction of structurally similar objects. It is a nuclear resonant gain-frequency process: in a stationary electric field, which is modeled by systematic organization, there is a development of similar to structural one, in-focus rays of powerful regular coherent radiations. These coherent radiations are determined by properties of chemical components of interrelated substances.

According to N.A. Kozyrev, it is ought to expect not identical density of relations' interconnection in space. Some processes decrease density; others on the contrary increase density of relations' interconnection. Action of the increased density is weakened according to the law of reversed squared distances; it is shielded by a solid matter, at thickness about 5cm, and is reflected by a mirror, according to the familiar optics law. The action of the decreased density on a detector is shielded, but does not reflected by a mirror. Properties of a matter can be changed under the influence of relations' interconnection. In this sense there is a big advantage in changes of electric current conductivity of resistor, which is brought into Witson bridge and is located near some process. For instance, in order to increase density it is useful to realize the process of evaporation of a volatile liquid; and for density decrease the process of cooling of a warmed-up agent can be realized. Due to these processes, change of conductor resistance is actually realized with opposite signs. Increase of density of the conductor with positive temperature coefficient leads to decrease of its resistance. At negative temperature coefficient there is an effect of the opposite sign, in the direction of changes, caused by temperature changes. Such correspondence to fall in temperature should be observed at changes of other properties of a matter, **because disorder in a matter structure is reduced along with fall in temperature**. The researches have shown the following results at the resistor, which was situated near processes of acetone evaporation on cotton wool and of solution of sugar in water. The

relative resistance change of resistor was observed at the 6th or 5th digit after comma (or even at the 4th digit if resistors had especially high temperature coefficient).

There is now a possibility to study the Universal World not only by means of the investigated spectrum of electromagnetic oscillations, but also through physical properties of relations' interconnection.

At many researches the influence of relations' interconnection on resistor electroconductivity was investigated. Acetone evaporation (at 10-15 cm distance from the resistor) was applied there as the process, which controls sensitivity of a system. However, the process of evaporation can influence on the resistor not only with density increase, but also due to temperature increase that occurs at evaporation. In order to take into consideration this cooling effect, (in the area of evaporating acetone) temperature was measured by Beckman mercurial thermometer with 0.01°C multiplying factor. The first experiments (without thermal protection) have shown the fall in temperature by several hundredth of degree. This fall was enough to cause the changes of resistor electroconductivity. However, the thermometer had been keeping on the demonstration of practically the same fall in temperature at thermal insulation of the resistor. The thermometer reacted on the radiation of relations' interconnection at acetone evaporation.

The part of the thermometer with a placed in a pasteboard tube mercury tank was laid round with cotton wool and put into a glass retort. The experimental process was fulfilled near the retort, and the reading of mercury altitude in capillary was determined by the scale of the thermometer through the closed window in the next room. The mercury altitude was decreased at dissolution of sugar in water (with steady temperature) and it was increased at the release of the squeezed spring, which was placed near the thermometer.

The radiation of the relations' interconnection was observed from many stars. It is caused by the inner processes, which take place on these heavenly bodies. The Sun (with its turbulent processes) radiates the relations' interconnection besides the searched electromagnetic radiation. Actually, if sunlight is recovered with a thin screen, the significant influence on the resistor will be discovered. The influences of the Sun to the Earth through the relations' interconnection become doubtless. These influences of the Sun should have a particular significance in vital functions of organisms, because it brings the beginning for life support. The totality of the researches demonstrates the dependence of matter state from the changes of the general background of the relations' interconnection. The drift of the devices (that show daily changes) usually stops about at midnight and then changes its direction. As for the seasonal course, there is a density decrease of the relations' interconnection in spring and summer; and there is an increase of it in autumn and winter. It is connected with the absorption of the relations' interconnection by the vital functions of plants and with the return of it at their fading. There are indications at the seasonal changes of chemical processes. For instance, reaction of polymerization has more difficulties in its realization in springtime. V. Zhvirilis observations of minimum and maximum light admission by means of the crossed Nickolya prisms can be explained by the crystalline reconstruction of these prisms.

By Kozyrev, as being invisible, vital source is disseminated everywhere in Nature, thus possibility of its accumulation is the only necessary thing. Such a possibility is realized in vital organisms because all vital functions counteract to the usual course of systems' destruction. The ability of organisms to keep and accumulate this counteraction is the reason, which determines the great role of biosphere for the Earth life. But even if we assume, that spreading of life in Space is one of its peculiar properties, biosphere will not have a decisive significance.

Cosmic bodies (and first of all stars) can serve as the reservoir, which gathers vital source. Enormous stocks of energy flow out of stars in a very weak degree through the radiation of comparatively cold external layers. Inner stars energy is preserved so well, that even at the lack of supplement, matter of the Sun would become cold only at one third degree per year. For the Universe the creative source carries the relations' interconnection. Thus cosmic bodies are necessary for support of life.

Author's note: We apprehend relation's interconnection as natural radioactive background. In fact, it is a nuclear resonance gain-frequency interaction of inertial masses that depends on living systems, especially on its rituals and that regulates its survival. Cosmic bodies regulate this process. Humanity is able to control nature only obeying to natural laws. In-focus beams of powerful laser streams are formed in the electric field of living system organisms. The creation of proton-antiproton pair in the living cells, alongside with the process of the absolute release of energy serves as a creative vital force. The process of radiation, support, absorption of energy by the organization (assembly of particles) is realized through the relation's interconnection and regulates its total mass.

Humanity is able to control nature only obeying to natural laws.

Life without Diseases and Old Aging Preventive Electrical Heater with Programmed Features

Alexandra L. Belyaeva

Bishkek, 720075, Russia 8th Location, 46, apt.80
Tel.: 7-996-31-41-25-79
E-mail: artem_belyaev@mail.ru
Internet: www.newphysics.h1.ru

Universal electrical bio-heater is intended for heating of rooms and preventive clearing of an air atmosphere from disease-producing organisms at continuous exposition (continuous work). The principle of its work fundamentally differs from those of the existing analogues. Carbon crystals are in the basis of bio-heater, which makes it environmentally appropriate.

Bio-heater represents a range of ceramic cylinders, jointed with metal plates on top and underneath. These plates play the role of load-carrying structure. It is used in production areas and living rooms for heating alongside with destruction of pathogen microorganisms. One bio-heater with 0,2 kWtt power is oriented for heating of the area with volume 35-45m^3 (in the future production of modernized models powered from solar cells is planned).

As distinct from the usual oil heater, preventive electrical bio-heater destructs agents of infectious diseases, whereas, according to the researches, oil heater stimulates their reproduction.

Absolute ecological cleanness is obtained by release of the quarters from the effect of increased atmospheric dampness with the temperature, appropriate to sanitary code. Any type of mold or fungus disappears in the quarter and in the future these forms do not renew their existence (even after removal of bio-heater).

The absence of injurious radiations is attained by the following: features of raw material, which is used during the process of electrical bio-heater production; radiation is normal during bio-heater working. Pollution-free temperature influence is attained by favorable infrared radiation.

Among the other properties of electrical bio-heater there are following: fire-safety; explosion proof; chemical inertness; enormous effectiveness from the point of view of electric energy demand. Structural simplicity facilitates its durability; there is nothing in bio-heater to be broken.

Technical aspects (applied Know How): In the process of technologic production of ceramic cylinders, from which bio-heater is consisted, **diamond-like cellular ceramic structure** with superimposed combination of atoms of lattice elements is created. Rhythmic work of cells, which form ceramic mixture, leads to resonance and creates a kind of blow wave (at micro level). This blow wave physically destroys microorganisms that have no calcium framework. It is related only to those microorganisms that are agents of infectious diseases, such as: staphylococcus, enterococcus, enterobacterium, etc. Thus parameters of the evoked blow wave coincide with vibration frequency of the definite types of bacterium and elementals. These blow waves cause the similar effect in room near of bio-heater, e.g. colonies of microorganisms are noticeably decreased there (even at the absence of bio-heater in the nearest room).

Due to its self-organization, bio-heater works in the range of living systems, it is approached to them. There is a realization of active connection with living coaly forms of biological systems. Actually the work of bio-heater is adjusted to them. Bio-heater properties can be programmed at the process of its production.

Bio-heater is a patented product. Patent KR #464 MKI C 04 V 33/24 "Ceramic mixture, possessing heat-radiating properties". Application #20010075.1 at Patent KR #464 MKI C 04 V 33/24 "The way of creation of energy, renewable, programmed hard-phase ceramic-carbon mass structure". Application at Patent KR #464 MKI C 04 V 33/24 "Technology of producing of electrical heaters with anti-resonant air prophylactic effect".

Finale product (FP) purchase is not more expensive than those of existent models of electrical heaters. Cost value is noticeably brought down on organization of the scaled production. It is ought to take into consideration that from all existent types of heating, from the customer's point of view, this one is the most energy-efficient. Manufacturing of such bio-heaters can be organized on the base of acting industrial production of ceramic fabrics. It will require some expenses. Moreover production service is rather cheap because there is no need in maintenance staff.

Electrical bio-heater can be applied everywhere, where there is a need in: a) economical heating; b) decrease of air moisture; c) disinfections of rooms.

As for the life cycle of bio-heater it does not become obsolete morally and technically. It is produced from the materials, which are not liable to wear.

The invention has a certificate of KR Gosstandart. From the end of 1998 the first unimproved modification of bio-heater (with power 0,6 KWtt) were put into serial production in Bishkek (with small test production runs). This time bio-heaters are readily used as medical equipment in hospitals and maternity hospitals in Bishkek. **Inventor: Alexandra L. Belyaeva.**

Technical Report

The comparison of quantity of heat energy, required for heat of rooms, and of heat quantity, which is produced by Belyaeva's electroconvector.

Mavlyanbekov Sh.Yu.

Deputy Director KSTC "Energy"
Internet: www.newphysics.h1.ru

Editor's note: this calculatious demonstrates the advantages of the device, which at 340 Wtt energy consumption produces about 700 Wtt of heat power.

The calculation of heat output, coming from the ceramic electroconvector to a room, was based on the basis of research statement of EVNA-0.2/220 electroconvector's influence on air micro flora of industrial rooms at 23.10.01. - 06.11.01. period.

The researchers were carried out in the arbitrary room in a four-storied large-panel building. This room was on the 3rd floor, with facing east windows. The room was of 52.5 m^3 air-space, 3.5 m height and 15 m^2 area. The calculation of heat, was made on the basis of "Methods for calculation of the requirement in heat and electric energy of buildings". These methods were registered by Department of Justice of Kyrgyz Republic on 08.09.2000, #154. According to the normative data, temperature of inner air (t_{in}) in the room must be equal to +20° C. In Bishkek planned specified temperature of external air (t_{ex}) for heating is minus 23°C. The average temperature of heating period is t_{av}= -0.9°C, specific heat characteristic of the building is:
q=0.4 Kcal/m^3 h °C.

Medium quantity of heat energy, which is required for heating, is determined by the formula:

$$Q_{av}heating = q \cdot V \cdot (t_{in} - t_{ex}) \cdot 1.12 \cdot \cdot [(t_{in} - t_{av}) \div (t_{in} - t_{av})] \text{Kcal/h}$$

$$Q_{av}heating = 0.4 \cdot 52.5 \cdot (20+23) \cdot 1.12 \cdot \cdot [(20+0.9) \div (20+23)] = 492 \text{Kcal/h}$$

Thus at the average annual temperature of the heating period, which is: t_{av}= - 0.9°C, the quantity of heat energy required for this room, comes to 492 Kcal/h.

According to the research statement, the trials of the electroconvector with 200Wtt power were carried out at the following external air temperature: +10.2°C; +8.5°C; +10°C; +6.6°C. The calculation data and results of its examination are brought together in a table. The parameters of electroconvector with 340Wtt power are demonstrated in the same table.

Table 1
Table of determination of heat entry and heat consumption's correspondence in the experimental room

#	External air temperature, °C	Inner air temperature °C	Normative heat consumption KWtt (Gcal/h)	Experimentalheat consumption KWtt (Gcal/h)	Percentage depending on normative heat consumption %	Economy of heat energy kWtt (Gcal/h) comparing with power consumption of the device 0.2 kWtt (0.000172 Gcal/h)	Economy of heat energy kWtt (Gcal/h) comparing with power consumption of the device 0.34 kWtt (0.000292 Gcal/h)
1	- 0.9	+20	0.572 (0.000492)		100	-	
2	+10.2	+20	0.267 (0.00023)		100	-	
	+10.2	+16		0.158 (0.000136)	59	0.2-0.158=0.042	0.34-0.158= =0.182
3	+8.5	+20	0.314 (0.00027)		100		
	+8.5	+17		0.233 (0.000200)	74	0.2-0.233=-0.033	0.34-0.233= =0.107

4	+10	+20	0.273 (0.000235)		100		
	+10	+23		0.355 (0.000305)	130	0.2-0.355=-0.155	0.34-0.355= =-0.015
5	+6.6	+20	0.366 (0.000315)		100		
	+6.6	+19		0.338 (0.000291)	92	0.2-0.338=-0.138	0.34-0.338= =0.002

Calculation data demonstrate a considerable economy of heat energy at daily unevenness of external air temperature.

Heat productivity of the new structure of electric convector with 340Wtt power was calculated on the assumption on the suggestion that heating of the room is carried out by the irradiation at the process of heat exchange.

$$E = \varepsilon \cdot C_o \cdot T^4 \cdot 10^{-8} \quad \text{Wtt/m}^2$$

where: C_0 =5.67 Wtt/m^2 K^4 is a radiant emittance of blackbody, ε=0.93 is an emissivity factor of the surface of earthenware duct tube; T=70°C=343 K is the temperature of the surface of earthenware duct tube.

On substitution of the known values into the formula we get:

$$E = 0.93 \cdot 5.67 \cdot 343^4 \cdot 10^{-8} = 727 \text{ Wtt/m}^2$$

As the area of irradiation surface is equal to S=0.96 m^2, then quantity of heat, which is evolved by the convector, comes to:

$$E_k = S \cdot E = 0.96 \cdot 727 = 698 \text{ Wtt (or 600 Kcal/h)}$$

The quantity of heat, which is required for the heating of the room, is 492 Kcal/h (at the external air temperature equal to minus 0.90 and temperature in the room equal to plus 200).

Thus, electric convector with 340 Wtt power is able to heat totally the room with 60m3 area.

Editors note: 340 input and 700 output!!!

Longitudinal Waves in Vacuum: Creation and Research

Ph. Dr. Kirill P. Butusov

190121, Saint Petersburg, Angliysky prospect, 5-18
Tel: (812) 113-8511

The author presents a new elegant system, which is the symmetrized Maxwell's equations. In practice it gives a possibility to create the longitudinal waves in vacuum. This system is of great importance in telecommunications and aerospace technigue.

There is a stable paradigm in electrodynamics that the existence of the longitudinal waves in vacuum is impossible. This paradigm played its negative role preventing scientific minds from solving this problem. However, Maxwell was not as categorical in his opinion on this question as his following were.

Particularly he wrote: "Science of electromagnetism as well as optics is not able to confirm or deny the existence of longitudinal oscillations."

Maxwell's dynamic equations are usually considered as partial derivatives in time. However, the total derivative in time includes the so called substantial derivative, which was shown in the equations for the moving coordinate system. In particular, one of these equations was written by Maxwell himself to explain the phenomenon of electromagnetic induction discovered by Faraday. This induction takes place in the conductor moving across the field lines of electromagnetic field:

$$\vec{E} = \vec{V} \times \vec{B}\,; \qquad \text{(I)}$$

Other equations were obtained later by other scientists. In the table I below Maxwell's equations are given in a split form. Their static and dynamic parts are given separately as well as the equations for moving and fixed coordinate systems. Such matrix concept of Maxwell's equations allowed finding their incompleteness. Really, the analysis of the matrix shows its high symmetry. However, full symmetry of the system of equations is broken by the absence of the equation (X). It seems to be strange and calls a desire to remove this defect in such an elegant system of equations.

A new equation is introduced in the Table 1 for the full symmetry of the matrix:

$$\nabla \cdot \rho = -\frac{1}{c^2} \cdot \frac{\partial \vec{j}}{\partial t}\,; \qquad \text{(X)}$$

Fundamental Properties of Aether

Alexander M. Mishin

Author's note: In the article the principles determining major properties of aether are formulated on the basis of an empirical material.

Real aether [1-6], the primary and superfine essence of which is still a secret, has turned out to be absolutely non-standard superfluid three-dimensional material medium, which simultaneously is at solid, liquid and gas phases. The first master phase of aether is a specifically solid absolute space or an energetical "bottom" of the Universe ("celestial stronghold"). At that the solid phase is considered as mesomorphic vortical-wave structure, which has particular holographic properties. Classical matter represents to be one of the stable and energetic space-time levels of the Universe. Aether vortexes exceed all conceivable space scales, have quasi-material properties and create a great number of stereo-dynamic subspaces (parallel worlds).

The first basic principle, to which aether entirely follows, is the principle of the least disturbance (the least action). Many well-known and unknown physics laws are the subsequent of this principle. In particular, any motion in macroscopic aether happens in such a way to minimize the interaction with the matter of our world, with zero moment of the disturbance momentum. In the classical physics this principle has been reflected as Le Shatelye principle, as variation principle, laws of thermodynamics etc.

The second principle is the principle of fractality, which confirms the similarity of forms and properties of quantum aether vortex structures regardless of their space scale. This principle also determines the Universe as stereodynamically multivariate system in the form of hierarchy of vortical-wave structures of the unified aether (fractal matreshka). On the researching of the macroscopic objects of the Universe it is possible to make a conclusion about microcosm structure if taking into account the changes of frequencies and velocities of action transmission.

In the third place there is a principle of physical autonomy, which confirms that any solitary mass (for example a planet) creates aether system. The particular principle of relativity, which reflects one of the fractal properties of the Universe, can be applied to this system. Such autonomous mass becomes similar to the miniuniverse with its aether subspaces, which repeat the basic phases of the Universe spectrum in more narrow (which depends on the size of mass) frequency band of space-time frequencies. Thus, in the local system of the Earth solid aether reproduces the structure of gravitational field with energy "bottom" in the mass center. As the result such spherical body occurs to be an energy drain and warms up from within.

The fourth is the principle of interaction between matter and vortex-wave forms, which do not depend to the spectral part of the Universe, that is quasimatter. This is the principle of new interaction in nature. The value of energy interaction in each experiment diminishes in time according to exponential law that is explained by the forming of energy informational or adaptation barrier, which separates parallel worlds and reflects the properties of vortex tenacity of aether as superfluid medium. At that, time of interaction is proportional to the size of quasimatter and the barrier for the earthly conditions is lowered at the indefinite period, on the assumption of only thrice-repeated observation of forces (triad law).

According to this principle, aether dynamic experiments in the earth laboratory do not have classical repeatability that, from the one hand, gives occasion to doubts in the objectivity and scientific character of the non-traditional experiments and from another hand it is the most reliable test feature of macroscopic aether motions. Biosystems have special relations with this principle.

The fifth is the principle of many-dimensional autobalance of forces. All vortex and linear motions of macroscopic aether organize themselves in the way that in the band of space-time spectrum of the local system (usually with the aid of fluid and gas aether) occurs to be self-balanced, that is they have zero resulting impulse and the moment of impulse due to the existence of the proportionate antivortexes and antistreams of another spectral structure at the same space volume. The self-balanced vortex structures and streams are practically closed for the outer watch from the direction of our material world, at least with respect to the methods of classical physics. The principle of autobalance of forces reflects aether properties as unified synergetic system and has a significant applied meaning.

Let call the principle of viability of aether dynamic systems as the sixth principle. Only a stereodynamic multivariate system is a viable one, that is a system, which during a definite period of time has the opportunity, called as life cycle, to realize interconcerted self-oscillating processes of vortex-wave character simultaneously at different phase states (subspaces, layers) of aether. The most important features of such a system are its space-time quasimaterial (vortex-wave) broadbandness and finite time of existence, which is determined by the conditions of creation of the energy-informational barrier. Self-oscillation regime demands the presence of an energy source, oscillatory circuit (a pendulum) of any character, intensive process (of negative tenacity) and a channel of positive feedback (negative entropy).

In the sense, referred above, any material system is viable and occurs to be a big system in the form of coordinated community of multivariate subsystems. In its turn each big system as a part of the hierarchy is a

constituent of bigger system, until everything is embraced by the Biggest System, that is the Universe.

The seventh principle of the universal energy interchange is the physical realization of the law of unity and struggle of oppositions. This principle determines spontaneous creation of thermodynamic and antigravitation potentials. Any local matter mass (a body), situated in the open space, creates an exchange process with the surrounding aether volume in the way that more fine-structure fluid aether is absorbed by the body, and the less power-consuming gas aether is radiated. As the result the body as a heat engine gets energy due to the cooling of aether exteriors. At that, antigravitation forces acts between bodies and aether exteriors, which have different temperature.

This principle, which establishes the existence of antipodes of the second law of thermodynamics and Newtonian attraction, is realized mainly in cosmic scales and explains in which way the energy is created in the bowels of planets and stars and why the Universe is stable as regards to gravitation. Obviously, the most unexpected for the modern Physics is the discovery of non-traditional nuclear processes where conditional reactions of decay and fusion occur at the usage of quasimatter.

More deep research of new experimental results and of the stated above scientific principles lets to determine the priority-driven strategic tendencies in Physics, to open more entirely the laws of mechanics and thermodynamics of many-dimensional aether, including the theory of non-traditional waves and new types of electromagnetism. At that, the supreme aim is the research of differences in aetherodynamics laws on the Earth (in a laboratory) and in outer space, the unknowing of these differences has caused logical insularity, false all-sufficiency of classical physics, which had refused as "not wanted" the aether conception and fundamental Universal laws.

References

1. Mishin A.M. On the new properties of physical vacuum, gravitational field and mass. DD USSR, 1988, p. 44
2. Mishin A.M. Experimental results on the registration of aether wind // New ideas in Natural Sciences. Series: Problems of research of the Universe, issue 18. – SPb: RAS, 1995, p. 24-33
3. Mishin A.M. The Aether Model as Result of New Empirical Conception. New Ideas in Natural Sciences. (On materials of the International Conference). Part I – SPb: RAS, 1996, p.95-104
4. Mishin A.M. The physical system of artificial biofield // "New Energy Technologies" – SPb: Faraday Labs Ltd, 2001, issue #1, p. 45-50
5. Mishin A.M. Antigravitation and new energy processes // "New Energy Technologies" – SPb: Faraday Labs Ltd, 2001, issue #2, p. 37-41
6. Longitudinal thermomagnetic effect // New Energy Technologies – SPb: Faraday Labs Ltd, 2002, issue #2(5), p. 38-41

Irving Langmuir and Atomic Hydrogen

Nicholas Moller

PO Box 201
34008 Eretria
Greece

Editorial

In this paper Dr. Nicholas Moller describes the history of development of Atomic Hydrogen technologies in details. It is remarkable that this technology can be applied not only for welding processes but also as a clean free energy source. It is important to note that in this case the hydrogen process does not involve a consumption of hydrogen, which is not combusted in the process. Atomic hydrogen is not really a fuel but rather a medium, gateway or a super-conductor of ZPE form the vacuum of space, converting ZPE radiation and ultra-high frequency electrical energy into infrared (heat) radiation.

This is the story of Irving Langmuir who was the first to develop a theory on Atomic Hydrogen on the basis of empirical research and experimentation. His work in this field lasted from 1909 to 1927. During this period he was employed by the Research Laboratory of General

Irving Langmuir.

Electric Company. Patents and discoveries developed by Langmuir during his time with General Electric were to a considerable extent instrumental in laying the foundations for what is today one of the largest corporations in the world.

The question that gave birth to this article, is why his work and discoveries on Atomic Hydrogen were the only work that received hardly any attention at all and why his revolutionary breakthrough was deprived of world attention for almost 100 years? This question becomes even more relevant when taking into consideration the high standing he enjoyed with his contemporaries (including being awarded the Nobel Prize in Chemistry)

and it is better to make it distantly after exclusion of man presence near experimental stands and devices. At the same time it is quite obvious that on applying of small capacity and fixed time of irradiation it is possible to develop methods for curing of human diseases, which are considered now as incurable (for instance of diabetes, some diseases of haematogenic system, of cancer and possibly of AIDS.

References

1. Proceeding of the International Scientific Conference "New Ideas in Natural Sciences" Problems of Modern Physics, p. 176-187
2. Journal of new energy, Vol. 3, #4,1999, I.M. Shakhparonov "Interaction between Kozyrev – Dirak radiation and radionuclides", p. 85-89
3. Kozyrev N.A. Selected works, Leningrad State University, 1991, part 3
4. Lavrentyev M.M. Eganova I.A. Luzet M.L., Fominykh S.F./ / Reports by AS USSR. – 1990, Vol. 314, #2, p. 352-355
5. Lavrentyev M.M., Gusev V.A., Eganova I.A., Luzet M.L., Fominykh S.F.// Reports by AS USSR. – 1990, Vol. 315, #2, p. 368-370
6. Methodological materials on experimental pharmacological and clinical trials of immune modulating effect of pharmacological remedies. - Ministry of Health USSR, M., 1984
7. Talmadge J.E. and Chiragos M.A. Comparison of immunomodulatory and immunotherapeutic properties of biologic response modifiers. Springer Seminar Immunopathol., 1985, 8, 429-443

Effect of Magnetic Blow Wave Field on Wine Systems

I.M.Shakhparonov (Corresponding author), S.A.Grin, S.R.Tsimbalaev, L.N.Kreindel, V.N.Kocheshkova, A.I.Podlesny, S.Yu.Gelfand

AGD Firm, Peschanyi pereulok, House No.20P korpus No.1, Lfl. 33 125252, Moscow, A- 252, Russian Federation

Russian Institute of Canning Industry, Shkolnaya Street. 78. 142703 Vidnoe 3. Moscow Region, Russian Federation

Introduction

Authors communicate the data on influence of Magnetic Blow Wave (MBW) field on several wineproducts. It was found, that MBW did not lead to significant changes in the major components of the wineproduct (sugar, organic acids, minerals). At the same time the taste and aroma of treated wine become more pleasant; content of heavy alcohols and wine stone in the treated samples was less than in non treated ones. A mechanism of transformations was also discussed.

Keywords: *Magnetic Blow Wave (MBW), Wineproduct, GLC of aroma compounds and ethanol, HPLC of sugars, Atomic Absorption Spectrometry (AAS) of minerals, Heavy alcohols and aldehydes, Wine stone, Turbidity tendency, Organoleptic evaluation*

Magnetic Blow Wave (MBW) was obtained for the first time during the investigations on ball lighting generation under the laboratory conditions (Shakhparonov 1994). MBW as a physical object is interesting because of some facts, which suggest that MBW is a magnetic monopole. The MBW can also interact with the matter and transforms it in a definite way. Typical example is an elementary carbon in the form of graphite, which is transformed by such magnetic treatment into ferromagnetic substance (ibid). The graphite, which is initially diamagnetic, transforms to paramagnetic one with general radiation doze of about $7 \cdot 10^{19}$ neutrons/cm^2. Other types of radiations could not affect this way (Svoistva 1975). So one unit of MBW can be considered as $1 \cdot 10^5$ of neutron masses. This fact may be regarded as an indirect evidence for assuming that MBW and magnetic monopole are the same things. In the absence of excited radioactivity a slow MBW [$v/c < 1 \cdot 10^4$] occurs, which does not ionize atoms (Devons, 1963). Therefore, their interaction with the matter can be observed only indirectly. No data exist on the interaction of MBW with organic substances. The experiments and results reported in the present communication may be a starting point for development of technology and to formulate the methods for vintage wine and best quality spirit production.

Materials and Methods

Assuming that MBW and magnetic monopole are the same things, a number of conditions were selected for all experiments. The MBW source and the samples were placed in the same axis and the axis was oriented according to magnetic meridian direction. Such magnetic orientation is appropriate, as the energy of magnetic monopole theoretically increases in a magnetic field (Devons, 1963). All of samples were placed at 250 cm distance from MBW source, in hermetically closed glasses. It should be noticed that MBW could penetrate through many other barriers, for example into cast iron reservoir with wall thickness of 5 cm (Amaldi, 1970).

The quality investigations were made by using of standard equipment. HPLC, equipped with refractometric detector was used for sugars estimation. Separation of organic acids in forms of their ethyl esters and acid esters was carried out chromatographically using a column packed with polyethylenglycol succinate and the following temperature option: initial temperature is 120°C, final temperature is 220°C, temperature growth rate: 8°/min. GLC was also employed for determination of ethanol. Minerals content

was examined with Atomic Absorption Spectrometry (AAS). Electronic spectra of samples were obtained with double beams UV Vis spectrophotometer equipped with permanent wavelength scanning. Redox potential was measured with EV-74 potentiometer.

The aroma alterations in the wine samples were investigated by GLC method after preliminary concentration of aromas by solid phase adsorption. The concentration was carried out by barbotation of inert gas (nitrogen) through liquid and consecutive catching of volatiles with tube trap, filled by Polysorb 1 sorbent (Lur'e 1972). The well-known analogue of Polysorb 1 is Porapak Q. The tube may be regarded as a short chromatographic column, and volatiles go through it according to their retention times. The choice of sorbent was motivated by the fact, that retention times of water and ethanol was rather small (ibid). Thus, a concentration process can be ended at the moment, when water and ethanol have passed through the column, as the other volatiles remained bonded. The aroma desorption was made with ethyl ester. The analysis of the concentrates obtained was carried out with gas chromatograph equipped with flame ionisation detector (FID), column 3 m x 3 mm, packed by Carbovax M on the Supelcoport. Temperature for the analysis was programmed from 100 to 190°C with increase of 1°/min. Isothermal conditions in the borders had durations of 2 and 40 min respectively. The "mild" conditions of separation were also employed (initial oven temperature was 80°C with isothermal condition duration 5 min, temperature growth rate 1°/min, final temperature 150°C and isothermal condition duration 40 min).

Optical activity was tested with Spectropol at D line of Na (580 nm). The samples were evaluated organoleptically by a group (12 persons) of workers from Russian Institute of Canning Industry. Turbidity tests were made under the methods of Valuiko et al (1987). In some cases, qualitative tests were completed by MPL turbiditymetric measurements. Before testing samples were filtered. Determinations of heavy alcohols and aldehydes contents were carried out in accordance to National Standard (GOST, 5363-67) as follows below. Determination of the constituents of "heavy spirits"(i pentanol, i butanol) was based on reaction of the sample with salicylic aldehyde in a presence of H_2S0_4. Rose colour develops if sample contains the heavy alcohols. The density was measured with Vis-photometer and the quantative determination was carried out using standard graph made with mixture solution of i pentanol and i butanol. A method for determination of aldehydes content is based on a reaction of fuchsine sulphite. The developed colour was measured with Vis-photometer. Calibrating plot constructed basing on typed solutions was used for quantification.

Results and Discussion

Investigations of wine quality changes after MBW treatment were performed using two samples of portwine ("Zemfira") type wine. Sample 1 was a reference (non treated) and sample 2 was treated with MBW.

In both samples, the fructose and glucose levels were practically the same and amounted to 43.8 ± 3,32.22.5 g/*l* respectively. Sucrose and maltose were absent. Total sugar content was 76.0 g/1 though the level marked on the label was 80 g/*l*. It is thus apparent that the treatment of wine with MBW does not lead to noticeable changes of sugars content. Results of organic acids determinations are given in the Table 1.

Table 1
Main organic acids content, g/1

Acid	Treated wine	Initial wine
Lactic	0.0265	0.00187
Oxalic	0.010	0.0088
Succinic	0.209	0.18
Malic	4.56	4.22
Tartric	0.0805	0.0895
Citric	0.401	0.483

Standard deviation for the determination method was estimated as 7 %. This fact shows that differences in organic acids content are not significant. It should be noted that a tendency of slight increase in light acids (up to malic) in the treated wine was observed in contrast to noticeable change in more heavy acids. The ethanol content of both of samples was 181 and 184 g/*l* for non treated and treated samples, respectively, though the label on the bottle indicated 190 g/*l* concentration. Standard deviation was 5 %. Thus, MBW treatment does not lead to significant changes in alcohol content.

Atomic Absorption Spectrometry (AAS) data indicated that the samples were practically identical in terms of K, Na, Ca, Mg, Fe, Cu and Zn contents (data are not shown).

Similarly, spectra of treated and non treated wines, diluted 150 times before photometring, were practically identical, thereby pointed out that polyphenols are unchanged.

When wine is industrially treated with IR or microwave heating, ultrasonic, ultraviolet and g radiation, different reactions occur and there include redox reaction, esterification, condensation, hydrolysis, Maillard reactions, etc (Kishkovsky 1988). Most of reactions are accompanied by redox potential changing. Increase in Redox potential points out the increase in concentration of oxidants, i.e. oxygen, peroxides, and other compounds, which are electron acceptors. Redox decrease is a result of oxidation processes (ibid). Redox potential was practically constant ($\Delta E =$ 145 mV and 150 mV in samples # 1 and 2 respectively). Evidently, oxidation processes, like they occurred during heat treatment, were absent during the MBW treatment.

One of the important reactions to be considered is the Maillard reaction. Essentially it appears in form of browning, decrease in reducing sugars and amino acids, and new aromas formation. While our result evidences on absence of irrelevant aromas, alterations of wine colour, and sugar content, thereby indicating insignificant contribution of Maillard reaction on wine quality changes due to MBW treatment. Technological treatment often leads to esters accumulation that improves wine aroma. It's well known that the most important in this context are the esters of C_6-C_{14} fatty acids (Kishkovsky 1988). During heat treatment, storage and other physical influences, different kinds of acid esters accumulate. These have weaker aroma than esters of fatty acids. But their appearance proves the existence of esterification processes. A comparison of aromas chromatograms of the samples 1 and 2 proves occurrence of changes in concentrations of the individual substances (increasing of peaks length with retention times of 13.10, 100.9; decreasing of peaks length of 54.85 min). An order of peaks exit of different volatives is given in the Table 2.

Table 2

Exit order of different volatiles

Exit order, from published data for Carbovax 20 M	Retention time in our experiments, min	Exit order, from published data for Carbovax 20 M	Retention time in our experiments, min
Acet aldehyde	3.8	i-Pentanol	23.56
Ethyl acetate	4.71	i-Amyl butyrate	
Diacetyl	4.82	Acetone	
Methanol	4.91	n-Pentanol	27.92
Ethanol	6.01	i-Amyl valerate	
n-Propanol		Ethyl lactate	
i-Butanol	13.58	Ethyl caprilate	52.6
Butyl acetate	13.59	Acetic acid	
i-Butyl acetate		Diethyl succinate	
Ethyl valerate		Ethyl laurate	
n-Butanol	17.73	Phenyl ethanol	
Amyl acetate	20.70	Diethyl malate	

A comparison of retention times of components with peaks of standard substances of wine aroma indicates that butyl acetate and i-butanol are very close to peak 2. Data on chromatographic separation with mild condition showed that i butanol and butyl acetate peaks exited simultaneously. Organoleptic evaluation recorded a nice smell in the treated wine, thereby due to the formation of butyl acetate. Data indicated the presence of ethyl malate, ethyl tartrate and ethyl citrate in the samples, in addition to two peaks corresponding to ethyllactate and ethyl oxalate. The large experiment error does not allow any inference on changes of their height after magnetic treatment. Identification of peaks with retention time factor especially in such complex system is not unquestionable. However, the best way is to use the chromato mass spectrometer, which allows inference according to their individual mass-spectrum.

Organoleptic evaluation can depend on aliphatic alcohols content. Determination with GLC shows (Table 3), that their quantity in the both samples is rather small with respect to average values taken from literature for this type of wines. Thus such changes can not be recognized with such evaluation. For both of samples pH was equal to 4.0.

Table 3
Aliphatic alcohols content, mg/1

Alcohol	Sample #1	Sample # 2	Average literature values (Kishkovsky 1988)
Methanol			80-350
i-Propanol			0,3-3
n-Propanol	less than 20		5-50
i-butanol	less than 20	less than 20	20-100
n-Butanol	less than 10	less than 10	2-10
i-Pentanol	less than 20	less than 20	100-250

The results of optical activity measurements indicated, that both samples are not optical active. Filtration, clarification and dilution could not change the optical activity. Perhaps, there is a compensation of different forms of D- and L- compounds in the samples, thus total activity was very close to zero, and magnetic influences could not change equilibrium between the forms.

Organoleptic evaluation of more delicate taste and aroma of the treated sample with respect to non treated one, MBW treated sample as more complete, harmonic, noble, and natural in contrast untreated sample was recorded as excessively bitter and sour in spite of practically the same pH of samples.

It is interesting to test the tendency of wine to make a different kind of turbidity after the MBW treatment. Data showed that both samples were not positive for protein turbidity. In term of reversible colloid turbidity formation, after storage at 7.5°C for 1 day, the MBW treated sample was homogeneous, in contrast to the formation of different phases with different refractometric numbers in untreated sample. Both the phases in untreated sample were liquid, with a density very close to each other, but the borders of phases were like broken lines when crystallization begins in crystallization process. This alteration in untreated sample may be due to micelle state changes or of structurization of product.

The tendency test for polysaccharide turbidity based on the reaction with phenol in presence of H_2S0_4 and determination of the derivative formed by photometrically, indicated, that difference in concentrations of polysaccharide in the both samples are very small, the levels being 119 and 106 mg/*l* for untreated and treated samples respectively. These values are close to range of polysaccharide stability (150-200 mg/*l*), and thus do not allow any conclusion on changes of relative stability of the samples. A tendency for polyphenols turbidity, due to polyphenols associates precipitation upon addition of salt did not show differences. Turbidity, as determined in MPL apparatus, was 15 FEM as against value of 0.2 FEM before testing in untreated sample. These numbers were respectively 14 and 0.3 FEM for treated sample. Thus it indicates that both the samples are very stable with respect to polyphenols turbidity and that the magnetic treatment does not lead to alteration in the polyphenols stability.

The data on the colloid stability indicate, that both the samples showed rather high resistance against protein, polysaccharide and polyphenols turbidities. Besides, treated sample showed higher stability with respect to reversible colloid turbidities.

It is interesting to investigate as to how heavy alcohols and aldehydes, which are often produced, when low-grade technology is used, are affected by magnetic treatment. For these studies, a system of simple mixture, consisting only of spirit and water, was used. Commercial vodka bottled in standard 0.5 l bottles and artificial solutions, containing 40 % of food derived rectified spirit were used. Data showed, that MBW treatment significantly influenced the heavy alcohols content, as the reduction in heavy alcohol was more than two times. In addition, it reduced aldehydes by more than 3 times in vodka, and more than 30 % in rectified spirit. Data indicate that efficiency of aldehydes removal is higher when the sample contained higher level of aldehydes. Thus, the MBW treated vodka and rectified spirit will be better than untreated one. It is however stressed that untreated samples were also recorded as good by sensory panel. So, limits for aldehydes are usually present in high quality vodka established by National Standard (GOST 5363- 67) are 6 - 15 mg/*l*. Thus the organoleptic evaluation of samples does not allow to find difference in aldehyde levels in these samples.

Table 4

The main results of heavy alcohols and aldehydes determination (mg/1) in vodka and solution, contained 40 % of rectified spirit

Substance	Non-treated vodka	Treated vodka	Non-treated spirit	Treated spirit
Alcohols	8.7	2.55	3.38	1.5
Aldehydes	1.5	0.4	0.6	0.4

Sediments formation and its character were also evaluated. The sediment in treated grape juice was dense and more dark, the formless, non crystalline sort, and gel like form. The volume of the sediment occupied up to 30% of total volume. The sediment did not sink or float, nor it stick to the walls of glass. It was found that 100 ml of juice gave about 155 mg of dry sediment. Microscopic investigations showed an absence of any kind of bacteria or fungi in the sediments.

The effects of high energy of magnetic influences on sediment were also investigated. The experiments were carried out with "Portwine Erevanski, vol. 0.5 1, white, spirit content 19 vol %, sugar 10 %, prepared according to GOST (National Standard) 7208-84". Crystalline sediment appeared on the walls and especially on the bottom of the bottle after the BMW treatment. An amorphous precipitate was also presented, and it can be separated by decantation. Crystalline sediment, after washing with ethanol and drying to constant weight, weighted 69.2 mg, and was of bright brown colour. A tartrate content as a tartrate acid, of the sediment was 59% mass. If it is considered as a tartar (a wine stone) of potassium sodium tartrate, then tartar content in sediment works out to be 86%. If it is considered as a tartar of dipotassium tartrate, tartar content in sediment will be 93%.

Generalization of data shows the positive effect of magnetic treatment on the wine samples, leading to harmonic taste of treated wine and absence of non

pleasant tastes. Most of the changes were found to bein the flavour and taste components, which were minor substances in the product. For example esters concentration changes during the treatment. At the same time the content of major components, such as sugars, organic acids, particularly, heavy organic acids, and especially ethanol remain constant. It seems logical from kinetic point of view, when simple processes, like esterification, are preferable with respect to many stages reactions, and reactions with high activation energies, which can go at hard conditions. Also, it seems logical that magnetic treatment may influence on electrical state of colloid species. Thus magnetic treatment can be considered as mild, selective in the comparison with many other physical methods. Nevertheless, the changes lead to acceptable energetical and nutritious value of the product. Data show that difficult problems, such tartar removal, can be solved by MBW treatment.

References

1. Amaldi E. et al in: Preprint CERN, Report 63 13. Search of Dirak Magnetic Pole, 1970.
2. Devons S. Search for Magnetic Monopole, Sci., Progr. (No.204), 601 (1963).
3. GOST (National Standard) 5363 67. Vodka. Metody ispytaniy (Testing Methods).
4. Kishkovsky Z.N., Skurikhin I.M., Khimiyavina (Wine Chemistry), Moscow: VO "Agropromizdat", 1988, 253 p. (in Russian)
5. Lurle A.A. Sorbenty i khromatograficheskie nositely (Handbook on Sorbents and Chromatographic Supporters), Moscow, Khimiya, 1972, 320 p.(in Russian)
6. Shakhparonov I.M. in: Sharovaya molniya v laboratorii (Ball Lighting in the Laboratory) / Collection of Articles. Moscow: Khimiya, 1994, 400 p.
7. Svoistva konstrukzionnykh materialov na osnove ugleroda (The Properties of Constructional Materials Based on Carbon) / Handbook/ Nagorny V.G., Kotosonov A.S., Ostrovsky V.S., Dymov B.K., Lutkov A.I., Anufriev Yu.P., Barabanov V.N., Belgorodsky V.D., Kuteinikov A.F., Virgelev Yu.S., Sokker G.A. Moscow, Metallurgy, 1975, P. 73 77 (in Russian)
8. Valuiko G.G., Zinchenko V.I., Mekhuzla N.A. Stabilizatsiyavina (Wine Stabilization), Moscow: "Agropromizdat", 1987, 160 p. (in Russian).

The Fundamentals of the New Principle of Motion

By The Group Studying Inertialess Natural Processes (GSINP)
123430, Moscow, Mitinskaya Str., 40-1-244 Email: gibip@mail.ru

P. Sherbak

The concepts of active and passive interaction between the moving object and the space form the basis of the new principle of motion.

So as to be more understandable, let's consider what is the old principle of motion. For this we will use the concept of a moving object and the space in which the object is moving. Naturally, material objects and the space can't interact between each other directly, because the space is the philosophical category. In this case we can understand physical essence of natural phenomena easily. In our view, the material objects interact with some fundamental energy of space (FAM), which fills all space with a different density. Thus the energy (FAM) is inalienably connected with the space. One of the first names of this energy is "ether" in the early scientific works. So, for the simplicity we will accept that the object and the space interact between each other.

Thus, all existing methods of motion which have been invented by mankind till the present time are based on activity of the material object that means the one expends some energy to produce the motion, and at the same time space is passive, it means that space does not need to spent any energy to move the object. And so in common case space tries to keep the object in the former state interfering with accelerated movements of the object (in accordance with **the 1st , the 2nd and the 3rd Newton's laws**).

It should be noticed that such method of motion (for the speed, which is much less than the speed of light) takes place both in animate and inanimate natures. In this case the level of energy of motion and reaction of space (or an environment) are not very high. Incidentally, the energy of object can be of different types: electrical, chemical, biochemical, mechanical etc. The common consequence of this type of motion is existence of the ***inertia***. The classical physics can't answer the question: "what is inertia?» The same situation is applied to the concept of ***mass,*** which is closely connected with inertia. The classical physics says that ***the mass is a measure of inertia.***

There is the new principle of motion of material object: the object is passive and space is active. In this case it's more favorably for space in the energy aspect to move the passive object and to spent some power then to keep the object in the present place in the former state of immobility (in accordance with **the 1st, the 2nd and the 3rd Newton's laws**). And so we should introduce **the 4th law of** Newton's **mechanics**. It says that ***there are the systems of coordinates in which the body is moving not rectilinearly with acceleration when this body is in the state of immobility***.

The basic and the main differences of the offered principle of motion from the existing methods at the end of the XX century are the following:

1) The absence of inertia of motion;

2) There are no limits for the speed of motion;

3) The absence of "fuel reserves" "on board" of the moving material object.

Nikola Tesla and Instantaneous Electric Communication

Vladimir I. Korobeynikov

Russia
E-mail: elen@mail.infos.ru

Nikola Tesla (1856-1943), an outstanding inventor, was and still remains one of the most mysterious persons in the history of electrophysics. Whereas the most scientists were moving together in direction of microparticles investigations, as the basis of matter structure and of nature itself, he was going in opposite direction. He had a keen interest in the investigation of electric charge of the Earth as a whole. He was looking for the ways to influence on it, to control its state and methods of its regulation.

Therefore, exactly, the most of his searches, experiments, the purpose of constructions and buildings, created according to his conceptions, cause perplexity and misunderstanding of scientists even in nowadays.

The most mysterious of his main experiments were made in USA after 1904. After Nikola Tesla death in 1943, all his diaries and records over a period from 1904 year had mysteriously disappeared. Probably they were stolen (it was known, what to take). Lost records could "cast light" on one of the most "strange" of his buildings in the form of the enough tall tower, on the top of which a specially created toroidal transformer was placed. This transformer could create there a huge electric potential up to the billion volts.

Nikola Tesla switched on this tower-device, what caused the fright and even panic in mind of people from nearby settlements. Of course! Because of very high electric potential there began air ionization, which spread very high to the atmosphere accompanying by the effect of color play. Such luminous, color-playing sky caused even a horror of people, who knew nothing about the experiment made and its goals. They did not guess that Tesla by means of the electric charge, created of the tower, was influencing on the electric charge of the Earth as a whole (about 600000 Coulomb). There was a global scale in Nikola Tesla's investigations.

There is no point in detailed analysis of the fact that the potential of the tower top influenced on the Earth charge. Interaction of charges-balls with the distortion of field lines, distortion-distribution of charge on their surfaces, induced charge, is beautifully described even in school physics textbooks. In Nikola Tesla investigations the Earth had the role of one of the charged balls. It was possible by changing of charge on the tower to deform electric charge distribution on the whole Earth surface at once. This deformation (electric currents) could be fixed at once in every point of the Earth surface. It is alluring to use this effect for data transfer telecommunication, both on the Earth, and in space.

After such introduction the question "How does the system of instantaneous electric communication for any distance look like and work?" is still opened. First of all, the readers need to know, that such instantaneous communication is possible in principle. The proving it theoretical calculations, are rather difficult for popular interpretation. Some part of readers can take it on trust, and those who are most interested in can apply to works of Oleinik V.P. (quantum physics) the professor from Kiev Polytechnic University. At the minimum there are two necessary works: Oleinik V.P. "Faster-than-light transfer of a signal in electrodynamics. Instantaneous action-at-a-distance in modern physics" (Nova Science Publishers. Inc. New York. 1999) and Oleinik V.P. "Latest development of quantum electrodynamics: self-organizing electron, faster-than-light signals, dynamical heterogeneity of time." (Physical vacuum and nature. 4. 3-17. 2000).

"PC" magazine has devoted a rather significant article entitled "Computers and teleportation" to V.P. Oleinik works, concerning instantaneous electric communication ("PC" #6, 2000). Note, that the author of the given article has also found the possibility of instantaneous electric communication, but by means of materialistic methods, absolutely different from Oleinik's ones, what is most important – two different solutions point to the possibility of this communication. "PC" #6, 2000 in the article "Circles on fields" cited mathematical formulae of the structure of electron electro-magnetic field as an illustration (it refers to the Earth too) that the author of this article has got.

The most attentive readers of that article could notice, that one vector Hz absolutely "ignores" Special Theory of Relativity, since its mathematical expression does not include the velocity of light, whereas it presents in other vectors as a product of electric and magnetic conductivity. Magnetic line of this Hz vector goes to infinity and returns back from infinity. It surrounds the whole Universe. It is alluring to use exactly this (Hz) line for the **instantaneous** communication for any distance.

It is not so difficult to do it. In the Fig. 1 the easiest and most available for understanding line of the **instantaneous** electric communication is shown. A rotating charged dielectric ball (an "electron", isn't it?) is used as transmitter. The ball can be electrically charged up to the limit of charge flow-out into the ambient space. Around the charged rotating ball there appears electro-magnetic field, entirely analogous to the electro-magnetic field of the Earth (and of the electron too). The central magnetic line Hz goes to the infinity and returns

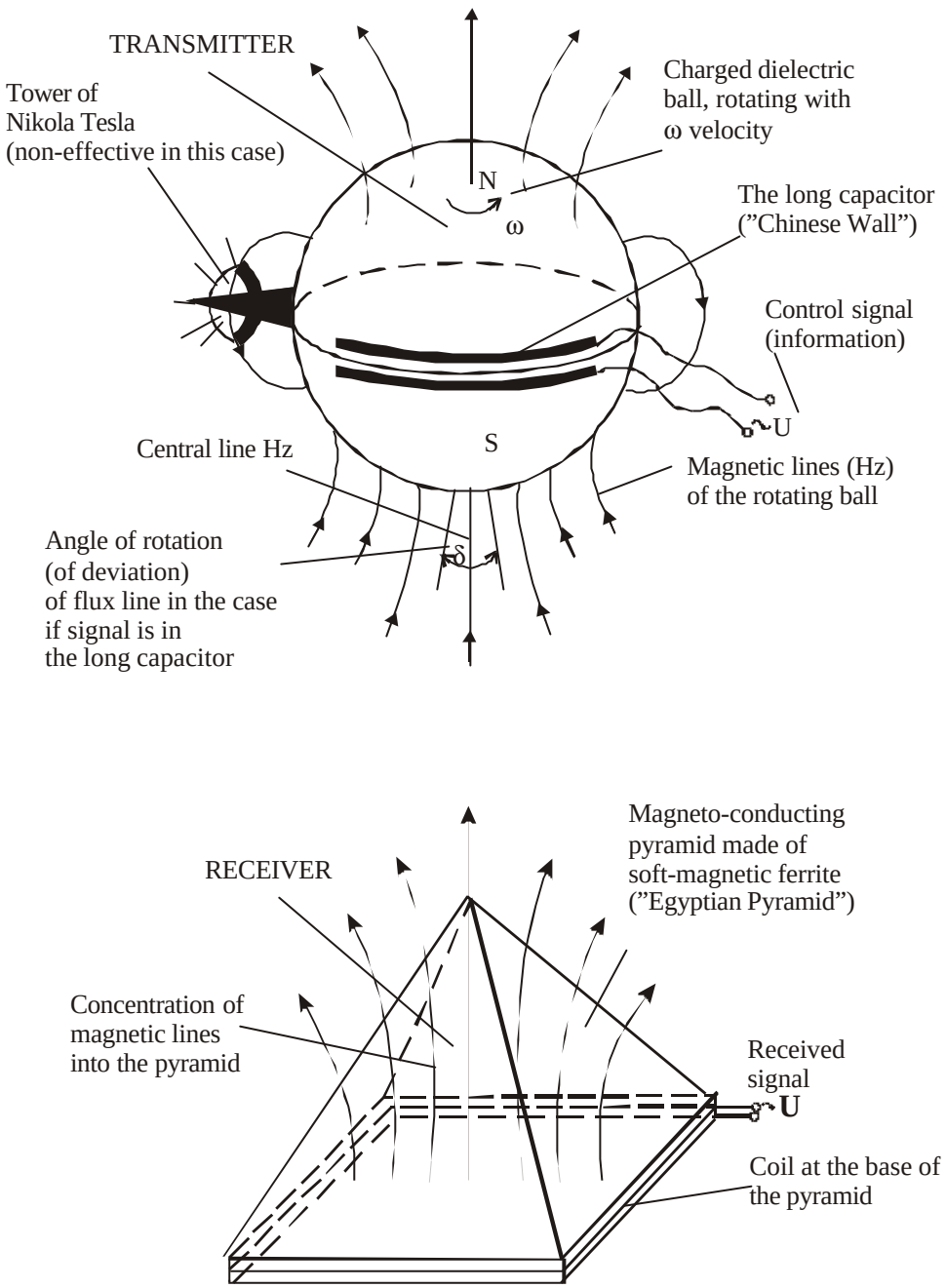

Fig.1

Line of the instantaneous electric communication on the basis of rotating charged ball and pyramid

back from it to the opposite side of the ball. In the same way the central magnetic line of the Earth (Hz) goes from one pole to the infinity through the whole Universe and returns from it to the center of the opposite pole.

If by the information to force the rotating ball (electron) to "wag by tail" (by Hz vector) which stretches through the whole Universe, then this "wagging" can be controlled instantly in every point of the Universe. While the rotating ball has a steady distribution of the surface charge, the line Hz does not change its dynamic position in the Universe.

If such distribution of the surface charge is broken, space position of the line Hz also will change. On mounting the Tower of Nikola Tesla on the surface of rotating ball and measuring the potential on this tower in time with an information it is possible to change the charge distribution on the ball, and, respectively, the space position of central magnetic line (Hz) in the whole Universe at once. Big disadvantage of the Tesla tower is that maximum influence on charge is executed in the point under the tower, and farther it began decreasing roughly (exponentially), according to physics laws.

Hence it is advisable to influence on the whole surface of charged ball, but not on some point of it. It is possible to influence at once on the very big part of surface by the long capacitor, placed on the perimeter (equator) of the charged rotating ball. Because of optimality reasons, this capacitor length should not exceed a quarter of the ball perimeter (equator) length. Charging and discharging this long capacitor on the ball equator by the data signal, only the position (angle 5) will be changed, not a value of the infinitely long magnetic line (Hz) in the Universe. It is a data transfer.

The natural question appears: "How to make on the Earth the most powerful transmitter for the **instantaneous** electric communication?" The answer suggests itself: "It is necessary to use the Earth itself as a rotating charged ball." It is not effective to use Nikola Tesla's Tower to deform the Earth electric charge. To place on the Earth very long (about thousands km) capacitor is quite easier. However, it must be placed not on the equator exactly, but moved a little bit because of the initial heterogeneity of the Earth surface charge distribution, caused by the presence of continents and oceans. It will be necessary to find the line of electric equator, where the amount of charge north and south of it is similar. This line will not be ideally straight and will be situated near the 30th parallel.

As a matter of fact, this grand capacitor is already built, but is half-broken. This capacitor is very well known – it is a Great Chinese Wall. The ancient, powerful Chinese Tzcin' Shi Huandi empire adapted and used it (capacitor) for the protection from nomads incursions. How unexpectedly and originally it is! In this case the electric iron would be the best tool for spiking. It is clear enough that the charged ball (as well as the Earth) will "wag by tail", which stretches through the whole Universe and does not change its energy, but only changes its position in space in time with information. Now we can go on to the question, concerning the way to control the Earth "wagging by tail" in the Universe, and thus to read information **instantaneously** in any point of the Universe.

In the Fig. 1 it is shown the input device of the electric communication receiver, made of the magnet sensitive material (it can be soft-magnetic ferrite) in the form of pyramid, with the proportions of well-known Egypt pyramids. Magnetic field lines of the far space pass through the pyramid from the top to the base and are concentrated by pyramid. If there is no signal (the "wagging by tail" of the far planet-transmitter is absent), then the magnetic flow, coming through the pyramid, does not change, and induced voltage in the coil, placed in the base of the pyramid, is absent (no information). If "wagging by tail" begins, then the magnetic flow, coming through the pyramid, will change, and it will cause the appearance of voltage on the coil in the base of the pyramid in time with the information.

Thus, the signal is received instantly. Here it is necessary to remind once again the difference between the instantaneous and usual radio transmission. The usual radio transmitter for the transmission of the information uses the **energy** distortion of space by the information. This energy change in space happens with the velocity of light and hence there is the loss of time for information passing. In the considered case there is no **energy** change in space, there is only a change of magnetic lines position (Hz).

This is exactly the vivid and fundamental difference between the usual electric communication and the instantaneous one. **In other words, in usual transmitter during the fixed time interval there is the change of signal energy (instantaneous value), whereas in instantaneous transmitter there is no this change (only information). This is exactly the fundamental difference.**

Evidently, to receive instantly the signal from the opposite part of our Galaxy, we need rather big pyramid, in order to concentrate a big amount of field lines into the oscillatory circuit under the pyramid. The question can appear: why the pyramid, why not a cone? The point is that lines of the Earth magnetic field (the very lines that compass needle reacts on) in the any place of the pyramid horizontal section have the same density of distribution and are directed strictly parallel to the pyramid base. The cone in its horizontal section cannot provide such uniformity of distribution that is why it is not advisable to use it. From the space magnetic field lines pass through and concentrate in the pyramid strictly at right angle to the pyramid base.

This is the riddle of pyramids wonderwork. Any person coming into a pyramid, at the same moment feels the change of mental and physical condition of organism; whish is very different from that it was before the entering into a pyramid. Of course! Visitors come inside, into concentrated magnetic field lines of the powerful and functioning magnetic core of the receiving electric circuit, what is absent outside the pyramid.

It is strange, but most of tourists are afraid of the ill effect, which can be produced by electrical systems on their health, but there they stand in a queue to feel this effect in pyramids. Concentration and division of magnetic field lines are the easy and effective way to reject a noise, created by the Earth magnetic field.

It is clear, pyramids should be oriented very thoroughly, so that lines of the Earth magnetic field would be strictly parallel to the base and to the opposite (East-West) sides of pyramid. To get such exactness of orientation in modern conditions is very problematically.

The most convenient place to build a pyramid (pyramids) is on the electric equator, in the place of its intersection with the electric meridian. Such place is located in Egypt, near its capital Cairo. And again we meet a paradox: such pyramids are already built on the Earth, but they are half-

broken. And Egypt was not less powerful than the ancient Chinese empire.

The Egyptian dynasty of Pharaohs has “completed” and adapted pyramids to burial-vaults, where mummies of dead Pharaohs were buried. Perhaps, it is even more incredible than in China. The impression is given that ancient powerful civilizations on the Earth had a competition between themselves, who will use radio-engineering constructions for instantaneous galactic communication in the most incredible way. Let’s give to a reader an opportunity to select a “winner”.

It must be noted that «PC» already published information that the Chinese Wall and Egyptian Pyramids are radio engineering constructions, intended for the instantaneous galactic communication (PC #114, 1997, etc).

There appears an interest in the possibility to produce very simple and manufacturable systems of instantaneous electric communication right now. Radio-electronic industry can produce them, but still does not guess about it.

Furthermore, such systems of instantaneous electric communication can be created at home, and even senior

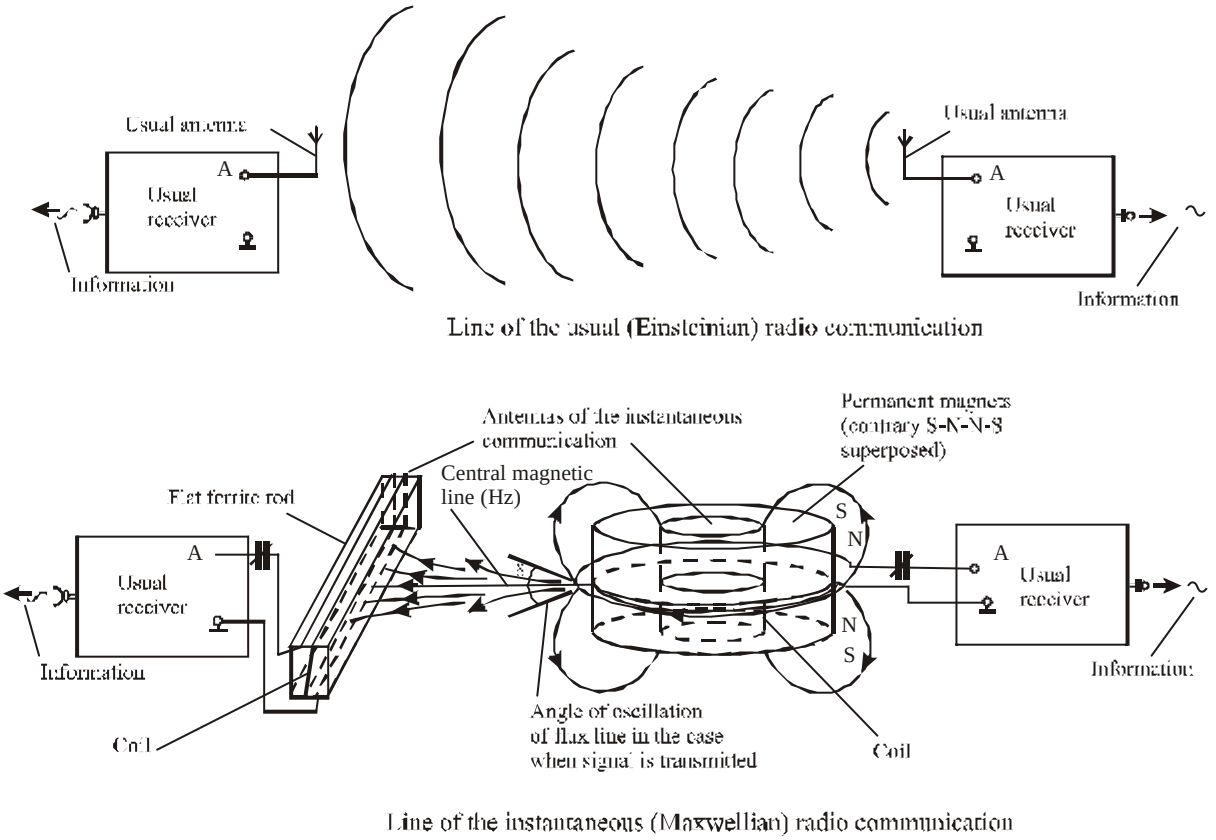

Fig. 2

Transformation of the usual line of communication of usual receiver-transmitter into the instantaneous one

pupils are capable to use them. In the Fig. 2 there is shown the construction of instantaneous electric communication line in comparison with the usual one. It can be produced even at home conditions. Two permanent magnets, connected between each other by analogous poles, are used as transmitting circuits.

Permanent magnets can be replaced by electromagnets. In the magnet connection point there is a coil, which while the signal passing through it will change its position (angle 5) in the space of the central magnetic line (Hz), coming out from the place of two magnets connection. Receiving circuit is available to be made of the flat ferrite, but coil must be winded along, through butt-ends of core, so that the whole internal part of the coil would be maximal (in area extent) filled by ferrite.

The obtained coil can be completely “winded” (screened) by flat ferrite of big size. For more clearness of the experiment the central magnet line of transmitting part must be directed strictly along the axis of the receiving coil.

Now, if we give the alternating voltage (information) from transmitter to the transmitting coil, fixed on the permanent magnet, then the receiver, connected to the circuit of the

transmitting coil, placed on the flat ferrite, will detect an alternating voltage (information). Maximum effect is achieved at the resonance (coincidence of transmitter and receiver frequencies).

It is checked. It works. The dullest experts in radio-electronic (after the reading above) can rejoin, without making an experiment, that it is an absolute nonsense that any communication is out of the question. Coils with absolutely perpendicular axes, besides one of them is screened, do not interact with each other.

And here the most interesting thing starts. In the Fig.2 as it was mentioned above, the usual communication line and the instantaneous one were compared. The usual transmitter cannot generate the vector Hz that is why systems of usual and instantaneous communication cannot see each other in strict sense. What does it mean? It means, that in the same city it is possible to transmit on the one-carrier frequency ("what a nightmare!") two absolutely different television channels without any noises of one to another.

Usually by frequency match of a transmitter to the working frequency of another one, the radio communication is broken, but here it does not happen. Here some additional explanation should be given. As the vector Hz, which "ignores" the theory of Einstein is received from Maxwell equations, it follows that the usual (Einsteinian) system and the instantaneous (Maxwellian) one work on mutually perpendicular electromagnetic field lines (vectors).

In the Fig. 2 such difference is shown clearly. These are just "jokes" of complex numbers, when one value is absolutely perpendicular to another and nevertheless together they form a single whole. In other words it means, that two greatest persons in science Einstein and Maxwell as a matter of fact are something like "Siamese twins", completely grown together at the angle of 90 degrees, even by heads. On the one hand every one is on his own, but nevertheless they are the common (complex) organisms.

Hence there are a lot of misunderstandings on happened phenomena. How many scientists tried to find some mistakes of Einstein? They produced very convincing proofs concerning instantaneous interactions in nature. These scientists did not suspect that time and still do not guess now that they already for a long time are "walking" in the complex physics, which still does not exist. Einstein and Maxwell ("Siamese twins"), each occupies his own part of the complex number (complex physics) and they cannot be already taken off from there.

The only third, free "vacancy" is left to throw on the both of them at once the common "collar" and "reins", i.e. to fasten them ("twins") together by module and argument as any complex number. In this case no matter how the one part of complex number "ignore" the other one, only its argument will change, and module always will be equal to the conditional unit. Only this single fact in principle changes the conception about "appearance" and "disappearance" of elementary particles! Even considered instantaneous and usual communications on the same receivers and transmitters in a complex conception (complex physics) eliminate appeared "misunderstandings" of all kinds.

Advantages of the instantaneous (Maxwellian) electric communication are especially evident during the connection with long-distance spacecraft. At present in the interval between sending of control signal to the station in region of Solar System peripheral planets and getting the reply it is possible to have a small break for dinner (it is very convenient).

In the case of the instantaneous electric communication use, duty operators will have "no dinner". Moreover, the system of instantaneous electric communication can realize two-way communication underwater and from underwater to overland. It is clear that input and output circuits of such system must be covered by slushing composite for the protection from aggressive effect of the salt sea-water. Such systems of instantaneous communication are very required to submarines.

Now, when readers know and understand the principle of operation of instantaneous (Maxwellian) electric communication systems and their advantages over usual ones (Einsteinian), we can only wait, when radio-electronic industry will start to produce these very required systems.

ELECTRIFYING TIMES

an online and published magazine about Electric, Hybrid, Fuel Cell Vehicles, advanced batteries, ultra capacitors, fuel cells, microturbines, free energy systems, events and exhibitions worldwide

63600 Deschutes Mkt Rd,
Bend Oregon, 97701
541-388-1908
fax 541-388-2750
etimes@teleport.com
www.electrifyingtimes.com
Subscription $13/3 issues

Institute for Planetary Synthesis

P.O. Box 128, CH-1211 Geneva 20, Switzerland
Tel. 41-022-733.88.76, Fax 41-022-733.66.49
E-mail: ipsbox@ipsgeneva.com
website: http://www.ipsgeneva.com

The Unified Gravitation Theory

(The unified super-principle, which controls the Universe)

I. P. Kuldoshin

Orenburg, Neftyanikov str., h. 2, apt. 9,
460019, Russia

(Editor's comments by Alexander V. Frolov)

A forum of the leading USA physicians took place in the White House in March 1998 in presence of President Clinton. There was only one question: "When will the nature of Gravitation be opened?"

The well-known USA physician-astrologer S. Hoking declared that it possibly would occur in twenty years and it would be **the Unified Theory of All.** So, the scientific world by default called it the greatest discovery of the future.

Some time later a new hypothesis pretending to this discovery has got its birth in Orenburg. Despite this fact this hypothesis would gain recognition and status of the **Greatest Discovery of Mankind** only by 2018 that was predicted by S. Hoking.

To present day there have been written a lot of hypotheses on this problem but they haven't been recognized. Many scientists consider our Universe as living and functioning according to the unified and rigid laws in Macro and Microworld, which provides automatic regulations of all its processes due to **circulation of radiant energy of the Universe life in cosmic space**. This energy is inexhaustible and environmentally clean, and Mankind may learn using it in the nearest time for the welfare and for prevention of **contradirectional irreversible ecological** catastrophe.

There is no alternative for humankind to escape and it will not appear in the future. Only cosmic energy will save us. From the book "Secret Doctrine" by E.P. Blavatskaya we can get complete information about the fact that a highly developed civilization of Atlases on the Earth had a "**General Theory of All**" yet 10-12 thousand years before our civilization. They had no automobiles, but instead they had flying objects (aircrafts) "Vimana" of various types as well as ships and submarines, on which they also used **Cosmic energy.**

While reading an abstract in General Soviet Encyclopedia, I got acquainted with the theory of "Aether wind", which was abolished in the beginning of the XX century, and then I understood that this theory contains a deposit to discover the nature of gravitation.

The nature of gravitation is the only one and there are no alternatives in theoretical as well as in physical sense. When scientific world of entire planet abolished the theory of "Aether wind", it lost the possibility to

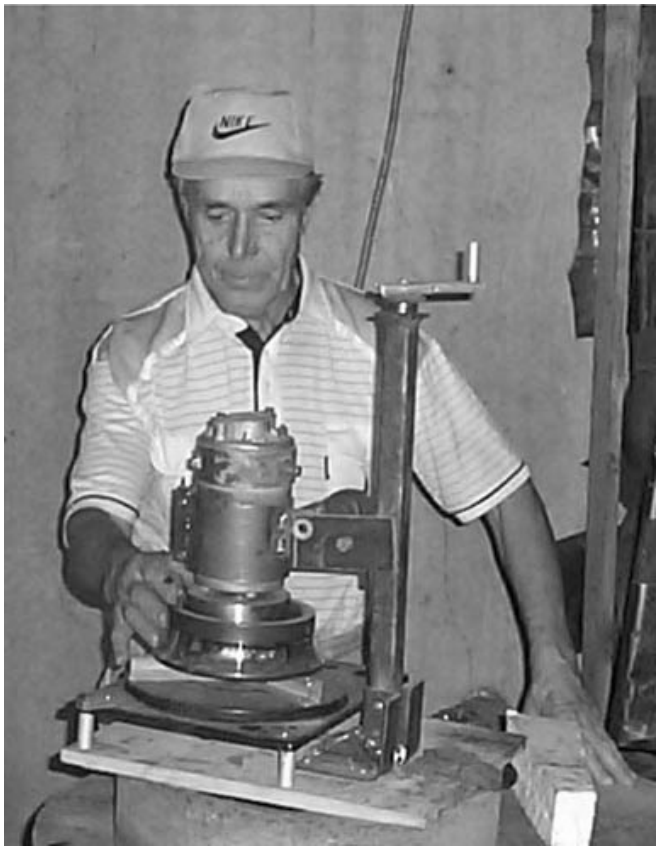

discover the nature of gravitation. The XX century was marked by a revolutionary development of scientific and technical progress, but there was an almost 100-year stagnation in cognition of the Universe elements.

The theory of "Aether wind" supposed that all Cosmos is filled with aether particles flying with the speed of light (these particles are "neutrino" according to modern understanding). **The role of gravitation, carrier of light and retarding medium in Cosmos** was attributed to this motion of particles.

But this theory allowed chaotic motion of particles, which is impossible in mechanism of the Universe, which is adjusted up to automatic mode. Besides, motion of these particles is not possible without an absolute buffer unit, which prevents their head-on collision at the speed of 600000 km/sec (it is thermonuclear explosion and death of matter, i.e. the Universe). E.P. Blavatskaya wrote that Cosmos is filled with radiant energy of the Universe life, luminophore, electromagnetic aether. Thereby she predicted a ready solution to make correction in the uncompleted theory of "aether wind". On the basis of above stated and due to the **un-assumed dawning up,** the theory of "aether wind" was completed. It was the ground to develop a hypothesis of radiant "aether wind". Particles of this wind (neutrino) are electromagnetic particles and move with the speed of light in all directions as **contradirectional paired single-stream flows** (like electrical current in twin-wire cable). Due to this, an absolutely stable concentration of these beams in cosmic space is provided according to the principle "what has come in, the same has gone out".

The hypothesis formulates new views on the problem of structure of elements of the Universe material world.

Some separate conclusions do not match the views of modern scientific thought on the problems of physical principles of material world structure and functioning of the Solar system.

List of topics of the hypothesis

1. The hypothesis disclosures the operating environment of a super-mechanism, which controls the Universe (it is a radiant "aether wind").

2. It disclosures the nature of retarding mechanism of flying objects in Cosmos (its name is Lorenz-Fitzgerald compression).

3. It proves the absence of Universal gravity and beams of light as we usually conceive it. (The beams of aether wind collide and compress matter. An alternative to the notion about beams of light is a temperature wave impulse on the beam of aether wind. It explains why the speed of light doesn't depend on the speed of the source of light. Light is a "passenger" on the beam of "aether wind").

4. This hypothesis disclosures the mechanism of stablization of rotary and orbital movement of the Universe matter in macro- and micro world due to retarding medium in Cosmos.

5. It disclosures the mechanism of reverse rotation of Venus due to the forces of autorotation.

6. It disclosures the mechanism of reverse orbital movement of planets and satellites of planets. (Such a planet had not been opened yet, but there are 6 satellites in the Solar system, which move counter to the others, and it is not an occasion, but **a particular case of the effect of aether wind beams**).

7. It disclosures a real nature of Tungusska catastrophe. (There were about 100 hypotheses, but **neither of them** was recognized to be true).

8. It disclosures **the nature of gravitation** and gives an explanation that gravitation can be:

- usual (vertical);
- horizontal;
- circular

It is important to note: not the entire matter takes part in gravitation, but 1/3, i.e. 33,3% of matter.

9. It disclosures the **nature of Levitation** and proves that 1 liter of water on the surface of the Earth can have the weight from 0 up to 3 kg.

10. It disclosures the role of gyroscope effect in life support of the Universe. The gyroscope effect allows transformation of translation energy of radiant "aether wind" to the rotational energy for practical needs of humankind.

11. This hypothesis gives scientific and technical recommendation for creation of cosmic energy converters.

12. It gives scientific and technical recommendation for producing of levitation effects for any technical systems.

13. It disclosures the possibility of cosmic flights with the super-light speed.
14. It explains experiments on metering of horizontal gravitation (The first experiment was made on February 27, 1999).

15. It disclosures the particle (neutrino) of original matter of the Universe and gives its characteristic. (Ancient thinkers called modern "neutrino" as "Aether", and it was not occasionally, because its diameter is in 10^{25} times smaller than atom's diameter.

All matter of the Universe consists of the same indivisible particles "neutrino" presented by three groups:
- "energy" group, which is in the beams of "aether wind";
- building group, which forms the part of any micro particle;
- free group (neutral-reserve) as a building material for new matter and operating environment of all electromagnetic processes.

All neutrino of three groups rotate with the speed of 3×10^{43} rps (equatorial speed of neutrino is equal to the speed of light).

Fields are formed in every particle as a result of rotation:
- strong field of a small volume doesn't allow particles to close up;
- weak field of a big volume is a general mechanism of gravitation.

As scientists write at the present time, the World is subdivided on a dense world (which we can see) and fine world (invisible). At that the density of such world is in 10^{15} times less than density of water.

It is known in science that all matter of the Universe both great and small rotates and is a gyroscope. Particles of matter get rotation with their birth, thus the fields are born in them simultaneously. **Matter cannot exist without rotation, which generates fields.**

All mechanism of interaction between three groups of particles is based on the mutual repulsion. This is the only mechanism, which always and automatically is able to create the necessary stable interval between the particles and only this mechanism provides the function of gravitation.

Many scientists of the late XX came close to the discovery of the nature of gravitation, but they didn't accept a thought to conceive **the motion of aether particles as a pair-counter flow**. And there are three necessary conditions to realize gravitation:

1. The particles should have the fields of repulsion.
2. The contradirectional flows should envelop the particle of matter from two sides.
3. While one beam is passing a matter mass then the force of fields should decrease and gravitation effect should appear.

Mechanism of gravitation

Gravitation appears due to the intersection *(Editor's note: interference)* of fields, produced by beams particles and fields of the visual matter. As it was mentioned above, the beams are paired and contradirectional. Usually the beams in cosmos are mutually balanced and they do not call gravitation effects.

But on the surface of the Earth the contradirectional beams are not similar in their power. The powerful beams come from above, i.e. they only penetrate the atmosphere, and the weakened beams come from below, i.e. they penetrated all the Earth. Thus, gravitation appears.

Gravitation is a unique property of "aether wind" beams to loose part of their power during penetrating of matter mass. **Gravitation** is the difference of forces of contradirectional beams. *(Editor's note: Really other authors reported this idea also. I cannot find who was the first in discussion about gradient of aether as nature of gravitation.)*

Horizontal gravitation

As a particular case, there is **horizontal** gravitation on the surface of the Earth. It appears on the boundary between lowland (of the sea) and plateau. In this case one beam goes above the surface of the Earth (water), and the counter beam penetrates mountain range and

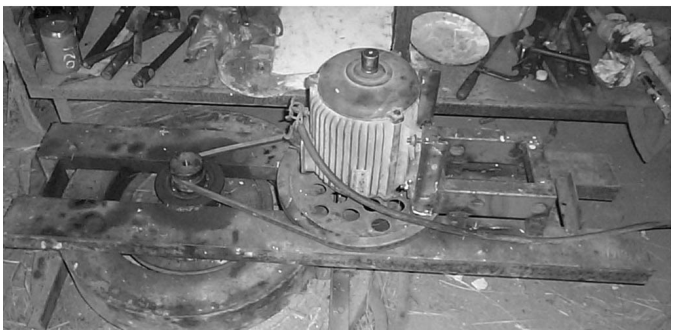

weakens. The first measurements of horizontal gravitation effect were made on February 27, 1999 on the route Orenburg – Samara at 49 km before Syrtinskiy slope.

A leaden load (0,5 kg) on the float (a piece of foam plastic) moved on the water surface (not in the sea but in basin) towards the mountain.

Horizontal gravitation is much more weaker than usual gravitation, but it can reach the value that makes water to flow at some angle upwards.

Circular gravitation

Only fast-rotating bodies can create circular gravitation.

All bodies rotate by their orbits around the Sun in the open space of Solar system **due to circular gravitation guided by rotating the Sun.** Furthermore; circular gravitation always is direct (co-directional to the Sun rotation) and reversed gravitation on the periphery of Solar system. A planet with reverse orbital movement had not been discovered until now, but 6 satellites of planets in the Solar system have reversed orbital movement.

Here is the proof of the fact that circular gravitation appears only around the fast-rotating bodies and **slow-rotating bodies, for example, the planets Venus and Mercury cannot form circular gravitation**, that's why they have no satellites.

Our Sun is a prototype of mechanism to transform translation energy of aether wind beams into rotary energy.

(Editor's note: According to Kozyrev, any star is a transformer of time (chronal type of energy) into heat energy. Really, the aether wind can be considered as the chronal type of energy in our understanding and for our usual three-dimensional measurement equipment. To my mind it is a clear link to notion of 4-dimensinal objects, i.e. the time. ***Time can be described by parameters of the aether wind, i.e. its velocity, direction and density. So, we can say that quantitatively time can be described by formulations for kinetic energy of the aether movement. From the other hand it is equivalent of heat energy, which can be measured by usual methods after transformation of the longitudinal waves of the aether in transverse electromagnetic waves).***

Therefore, any mechanical disk rotating very fast will create a circular gravitational field, which is able to rotate all bodies in the direction of the disk (for example, a rim mounted on its bearing co-axially with rotating gyroscope). I designed and tested a similar device in January 2000. A gyroscope (of 200 mm diameter and 3 mm thick) was over-speeded up to 18 thousand rpm. Rotation of gyroscope called slow (but with a good momentum) rotation of the rim of 15 kg weight.

The gyroscopes with the mass of 0,5 kg, 15 kg and 90 kg were tested during summer of 2001. All them called rotation of the rims.

(Editor's note: There are other experimental facts. Fast rotation of mass should produce rotation of some part of nearby aether. Self-closed aether forms vortex and if photon is trapped by this vortex, then

experimenters can see "ring of light" near rotating mass. The rings or self-closed photos can exist in the same place after the mass was stopped or removed away.)

Nowadays gyroscopes in military devices are over-speeded up to hundreds of thousands of rpm. The more rates the gyroscope has, the more energy the rim will produce if it is connected to some generator. But these research works led to single-valued conclusions that gyroscopes themselves cannot produce big quantity of additional cosmic energy not jointly with permanent electromagnets. The Sun as well as planets has natural electromagnetism and their circular gravitation increases in many times due to the presence of electromagnetic fields.

(Editor's note: I think it is obviously that a rotating magnet can involve into the rotation much more quantity of aether than any simple rotating mass. In some theories any magnetic field is considered as circulation of aether particles.)

Electromagnetic fields are the unique boosters of circular gravitation. So, the gyroscopes themselves cannot produce necessary quantity of cosmic energy per unit mass of gyroscope without using of electromagnetism.

In October 2001, I got a copy of 24 patents description. There were patents on "perpetual motion machines". But since such "perpetual motion machines" cannot exist in reality, then we can explain them as gyroscopical transformers of cosmic energy. Efficiency of these transformers varies from 150% up to 10^6 % and practically all of them work using gyroscope. But nowadays only the transformer (Bauman's machine) works in Switzerland, in Maethernitha theological community, Linden city. Some systems have been working from 1980 and producing total power of 750 kWtt, the gyroscopes of 2m diameters are provided with constant magnets.

Besides, there are ready transformers of cosmic energy in Russia. The Professor of Moscow State University, Academician of Russian Academy of Natural Science Leonid Leskov spoke about them in the first half of 2001. He actually said that Mr. Chubais does not allow innovation of energy transformers, which are ready for commercialization (see newspaper "Raduga", Samara, July 2001).

I assume that any kinds of such transformers work on the energy produced by "Aether wind" beams. Perhaps our earth ancestry (Atlases) used this energy to fly as well as extraterrestrials. I remember information about flying platforms, which were designed in Germany in 1943-1945. Nowadays there are publications that there are not less than 10 captured extraterrestrial's spacecrafts on the Earth, and some samples were tested in Russia and the USA.

On the basis of all above-mentioned it becomes extremely clear that the main secret of Nature was discovered, and let's representatives of conservative science don't pull the wool over people's eyes to prove that "it is impossible". It is possible! Physics is an experimental science in its main part, and there is no completed theory until now.

As a result, I'd like to make some conclusions: The secret of Gravitation nature was discovered not in connection with new scientific investigation, but due to dawning up and understanding of the fact that gravitation since earliest times was produced by "Aether winds", which fill all cosmic space. Instead of improvement of "Aether wind" theory, academician science abolished it and forgot it such as some scientists of nowadays don't have an idea of it. While abolishing of "Aether wind" theory, scientific world spent 100 years in vain to find an alternative to it. A real Cosmic scientific and technical progress was slowed down during this term. Without this progress all humankind will kill environment of the Earth in 30-40 years!

Rush hours for humankind to turn to cosmic energy came, we have not even an hour to wait, and otherwise we will loose a chance to survive. Today the scientific and technical level is such that taking into consideration the buildup made by inventors – enthusiasts, who created more than 50 types of Cosmic energy transformers, it is possible to begin repetition work in one year. Now there is the only barrier to do it, i.e. market relations in energetics developed during last 100 years.

Let's look into near Future. The process of energy resources (coal, oil, gas) formation in bowels of the Earth took hundreds million years. There was period of clean ecology in the World Ocean, on land and in the atmosphere. **And all it catastrophically had been diminishing during 2-nd half of the XX century**. **There are about 40 years for our civilization to reach the boundary of having no chance to support normal life on the Earth.** An irreversible process of struggle for survival using underground environment and protection from mortal ecology will begin. Our close posterity will not forgive us this betrayal.

Is there any solution? Yes, there is.

It is necessary to publish the descriptions of all "perpetual motion machines" models as well as unprofitable publication of short technical documentation in the Internet and magazines, which will give a chance to many companies, research groups and individuals to re-produce them. But at first we should choose the models, which are the most reasonable in technology and prime cost. Such a way of replication of the models will give people confidence, interest and reliable information on existence of inexhaustible salutary cosmic energy. And the victory will be the reward for courageous, enterprising and advanced people.

which generates electrical voltage $E_{\updownarrow} = \ell \frac{dB_{rot}}{dt}$ in the structure of vacuum. This voltage generates Gravitational Impulse itself $G = 4\pi E_{\sigma} S \cdot (\Delta r_g)^2$, where $\Delta r_g = e_0 \frac{E_{\updownarrow}}{b}$.

The supposed "Gravitational Impulse" in the experiment by Podkletnov is modeled by a quarter of cosine curve.

Duration of this curve is determined by the decrease of magnetic field "trapped" into the superconductor due to the partial heating of semi-conductor emitter after plasma passed the discharge of 2MV with the current strength of 10000 A. The formula of the model is the following:

$$X'' = Ae^{-2\pi f_0 D_0 t} \cos(2\pi f_0 \sqrt{1 - D_0^2}\, t) \qquad (1)$$

the calculation is made for the frequencies of 30, 3, 0,3 and 0,03 Hz and acceleration of 12 m/sec^2, which appears for the mass of the pendulum 30 g with the force horizontally to gravitation 0,03·12=0,36 N.

It can be supposed that it is necessary to make more careful solution of the problem to find the effect on the pendulum by its reaction, which is known from experiment. We should apply the more correct use of spectral method of solution of differential equation for the pendulum with setting of impulse effect. Further, having the recording of temporal function of magnetic field by Hall-effect devices and using Maxwell formulas, we should find electrical field acting in physical vacuum. This field will give us the force of gravitational impulse.

The experiment by V. Roshchin and S. Godin is simpler for physical modeling (Editor's note: the author assumes it is simpler than Podkletnov's effect). All input and output parameters are known to the authors, i.e. force of the magnets, frequency of variable magnetic field in the local place of space vacuum, change of gravity. Furthermore, there are known cylindrical formations of magnetic "loops" around the device and their approximate arrangement with the intervals divisible by the half of rotor radius. Effects of temperature decrease at 8° C in cylindrical atmospheric formations can be simply explained by adiabatic decrease of air pressure due to the decrease of gravitation between molecules of air. Formulas for estimation of decrease of gravitational and inertial forces are the same that for Podkletnov's experiment:

$$E_{\updownarrow} = \ell \frac{dB_{rot}}{dt}, \qquad (2)$$

$$G = 4\pi E_{\sigma} S \cdot (\Delta r_g)^2, \text{ where } \Delta r_g = e_0 \frac{E_{\updownarrow}}{b}. \qquad (3)$$

References

1. Podkletnov E., Giovanni M. Impulse Gravity Generator Based on Charged Superconductor with Composite Crystal Structure.
2. Roshchin V., Godin S. Experimental research on physical effects in dynamic magnetic system // Letters to the Journal of Theoretical Physics, 2000, vol. 26, issue 24.
3. Rykov A.V. Principles of full-scale physics. // Institute of Earth Physics RAS, M.: 2001, 58 p.

New Sources of Energy from the Point of View of Unitary Quantum Theory

L.G. Sapogin,

Department of Physics, Technical University (MADI)
Leningradsky pr. 64, A-319, 125829, Moscow, Russia
E-mail:sapogin@cnf.madi.ru, sapogin@cnf.madi.msk.su

Yu.A. Ryabov,

Department of Mathematics, Technical University (MADI)
Leningradsky pr. 64, A-319, 125829, Moscow, Russia
E-mail:ryabov@vmat.madi.ru

V.V. Graboshnikov

Representative in Moscow of Sceptre Electronics Ltd.
Millennium House Business Center
12, Troubnaya Street, Moscow 103045, Russian Federation.
E-mail: sceptre@orbita.ru

Abstract

The Unitary Quantum Theory (UQT) is a new version of the field quantum theory, which has been developed by the principal author (Prof. L.Sapogin) of this paper for over 25 years. The theory is directly related to the problem of new energy sources, and this paper can be of interest for Journal of New Energy for it is the UQT (and not the classical Newton mechanics or the modern standard quantum mechanics) that provides a theoretical basis for the development of new sources of energy and for the explanation of the operation principles of the existing and functioning over unity devices.

The fundamental provisions of the UQT and a number of results received on the basis of it were published in many scientific journals and reported at international conferences (see [1-6], etc.). Generally, the UQT as expressed by the language of formulae and equations represents a new mathematical model of interaction and movement of elementary particles in the form of a complicated system of non-linear integral-differential equations, an important property of this model principally defines the trajectories and velocities of the particle movement in space (unlike the standard quantum theory, which directly defines only the probabilities of the presence of the particles at a certain point in space). Another, and the most essential (for the problem of new energy sources) property of the UQT is the absence of the energy conservation laws and the

impulse for single particles in it. That is why the UQT makes theoretically possible processes of energy generation as if from nothing, if they are regarded from the classical mechanics point of view or the standard quantum theory (while the UQT is able to explain the phenomenon), as well as creation of a device with efficiency above 1. In other words, the UQT provides for a theoretic possibility of making a perpetual mobile!

In the 1970's, when the UQT started to be developed, there was nearly no data of the observed phenomena, or any experimental results confirming this unusual theory. Today, such data are abundant. For example, such processes can be named as generation of excessive heat energy during cavitation of very small water bubbles; generation of excessive electric energy in an anomalous gas discharge; excess generation of electric energy when electric current passes through proton-conducting ceramics, etc. Besides, and still more important, operating devices that have been created much more energy than it was necessary for these devices functioning: electric current generators "Testatica" (Switzerland); thermal cell CETI (J.Patterson, USA); heat generators (Yu.S. Potapov, Moldavia, J.Griggs, USA); electric current generators (P.Correa, A.Correa, Canada); electric engines on magnetic ceramics (Japan), and others. The said phenomena and operation principles of the above-mentioned devices can be explained with the help of the UQT.

In this paper we will also touch upon such an important problem as cold nuclear fusion. The feasibility of this nuclear process, which is categorically denied by the standard quantum theory and nuclear physics specialists, was predicted by the author of the UQT as far back as in 1983. This phenomenon was discovered in 1989 (electrochemical experiments, M.Fleischmann, S.Pons). Many subsequently received experimental data confirmed the existence of nuclear reactions under very small energies, of nuclear transmutations in plants and biological objects, very slightly connected with generation of energy [7-8]. From the point of view of the UQT, which provides an explanation of the cold nuclear fusion mechanism, this process can be applied in practice (after the relevant devices are designed) for generation of energy, for production of isotopes, and for nuclear waste liquidation.

Introduction

Inventors, as well as swindlers of all kinds, had long ago been trying to construct, or at least design, a *perpetual mobile*, i.e. an imaginary machine that produced work without any outside energy. Peter the Great even founded the Imperial Russian Academy of Sciences for such research, but the modern Russian Academy of Sciences does not like to recollect this circumstance. On the other hand, the French Immortals in 1755 decided not to consider any *perpetual mobile* projects at all, and, as we would see, were quite right as regards the Newton mechanics. The brilliant success of the classic mechanics has strengthened still more the sacred belief of the mankind in the Divine Infallibility of the Conservation Laws, and today it is nearly indecent to express any doubts about these laws.

Let us first of all find out the origin of the conservation laws in ordinary mechanics. Practically any textbook will tell you that the Energy Conservation Law (ECL) follows from the homogeneity of time, the Impulse Conservation Law from the homogeneity of space, and the Angular Momentum Conservation Law from the isotropy of space. That is why many people have an impression that the conservation laws themselves follow only from the quality of time and space, which is today an undoubtedly relativistic notion. But, for example, the angular momentum is not a relativistic notion. So, such a narrow approach is not altogether correct, and it is necessary to turn to the second Newton law, or the equation of relativistic dynamics and the system insularity. However, *the qualities of the time and space ensue exactly from the analysis of the Newton mechanics*, though they are often construed incorrectly. Let us remind you the correct interpretation.

Homogeneity of time suggests that *if at any two moments of time two similar experiments are made in similar closed loop systems, the results thereof will not differ.*

Homogeneity and isotropy of space mean that *if a closed loop system is moved from one part of space to another, or is oriented differently, nothing will change.*

The making of the fundamental energy and impulse conservation laws from the Newton equation is very simple. Let us put down the main equation of dynamics as

$$\mathbf{F} = \frac{d\mathbf{P}}{dt}$$

For closed loop system $\mathbf{F}=0$ (no external forces operating) and the equation integral will be $\mathbf{P} = Const$ the impulse conservation law.
Now let us take the main equation of dynamics as:

$$\mathbf{F} = m\mathbf{a} = m\frac{d\mathbf{v}}{dt}$$

and multiply it scalarwise by $\mathbf{v}$

$$\mathbf{F}\cdot\mathbf{v} = m\frac{d\mathbf{v}}{dt}\mathbf{v} = \sum_{i=1}^{3} m\frac{dv_i}{dt}v_i = \sum_{i=1}^{3} m\frac{d}{dt}\left(\frac{v_i}{2}\right) = \frac{d}{dt}\left(\frac{mv^2}{2}\right)$$

where v is the module of the velocity vector $\mathbf{v}$. For closed loop system $\mathbf{F}=0$, and the equation integral will be

$$\frac{mv^2}{2} = Const$$

one of the forms of the energy conservation law. From the definition of the angular momentum for a particle,

$$\mathbf{L} = [\mathbf{r} \times \mathbf{P}]$$

Differentiating both parts by *t*, we get

$$\frac{d\mathbf{L}}{dt} = \left[\frac{d\mathbf{r}}{dt} \times \mathbf{P}\right] + \left[\mathbf{r} \times \frac{d\mathbf{P}}{dt}\right]$$

Since the impulse vector is parallel to the velocity vector, the first bracket will equal to zero. On the basis of the resultant equation and the definition of central force as not creating any momentum, we get

$$[\mathbf{r} \times \mathbf{F}] = 0 \quad \text{or} \quad \mathbf{L} = Const.$$

In case of the central force in an unclosed system, the angular momentum is preserved by value and direction. The angular momentum conservation law for a closed loop system results in the same way as the impulse conservation law from the equation of the rotary motion dynamics:

$$\mathbf{M} = \frac{d\mathbf{L}}{dt}$$

For a closed loop system, the momentum of external forces **M**=0 and the integral of the equation will be the angular momentum conservation law

$$\mathbf{L} = Const$$

In relativistic dynamics the emergence of the energy and impulse conservation laws separately can be easily received from the relativistic ratio for energy and impulse

$$E^2 = P^2c^2 + m^2c^4$$

Term m^2c^4 is an invariant, i.e. the same in all reference systems. In other words, it is a certain constant. This equation can be represented in a slightly different form

$$E^2 - P^2c^2 = Const$$

For the equation to be valid, it is required that

$$E = Const \text{ and } P = Const$$

and this none the other but conservation laws for energy and impulse.

Strictly, relativistic mechanics has a conservation law for 4-impulse vector P^{μ}, but we will not dwell on these details, because small energies are what we are interested in.

In the classical theory, the energy conservation law states that the energy of a closed loop system remains unchanged, so, if the energy of such a system is designated at a moment *t=0* as E_0, and at the moment *t* as E_t, $E_0 = E_t$.

Conservation laws in ordinary quantum mechanics

The standard quantum theory formulates the energy conservation law in the same way. In quantum mechanics we have the same movement integrals as in classic mechanics. A certain value *L* will be a movement integral, if

$$\frac{d\hat{L}}{dt} = \frac{\partial \hat{L}}{\partial t} + \left[\hat{H}, \hat{L}\right] = 0 \qquad (1)$$

Since $\left[\hat{H}, \hat{L}\right]$ is defined by commutator of operator $\hat{L}$ and of Hamilton's operator, any value *L*, *not depending explicitly on time*, will be the movement integral, if its operator commutes with the Hamilton's operator. When value *L* does not explicitly depend on time, the first item in (1) turns to zero. There remains

$$\frac{d\hat{L}}{dt} = \left[\hat{H}, \hat{L}\right] = 0 \qquad (2)$$

and for the movement integrals not explicitly depending on time the Poisson quantum bracket equals zero. From (1) and (2) it follows that the average value of the movement integrals does not depend on time:

$$\frac{d}{dt}(L) = 0$$

All good papers on the quantum theory prove that probability $w(L_n, t)$ to find at any moment *t* any value of the movement integral, i.e. L_n, does not depend on time. Further, is constructed as the movement integrals not explicitly dependent on time. Since operators $\hat{\mathrm{L}}$ and $\hat{\mathrm{H}}$ commute, they have common proper functions, which are functions of stationary states. Let us note that the latter follows from solutions of the equation without time, which was received from the full equation with imposition of requirement

$$\Psi(\mathbf{r}, t) = \Psi_0(\mathbf{r}) \exp\left(i\frac{E}{t}\right)$$

equivalent to search of only periodic solutions. Further, quite naturally, *there appeared an equation without time with actually imposed conservation laws, because now nothing depends on time*. Expansion by such proper functions looks as follows:

$$\hat{L}\Psi_n = L_n\Psi_n \qquad \hat{H}\Psi_n = E_n\Psi_n$$

where

$$\Psi(x,t) = \sum_n c_n \Psi_n(x) \exp\left(-i\frac{E_n}{\hbar}t\right) = \sum_n c_n(t)\Psi_n(x) \qquad (3)$$

$$c_n(t) = c_n \exp\left(-i\frac{E_n}{\hbar}t\right) = c_n(0)\exp\left(-i\frac{E_n}{\hbar}t\right)$$

Since (3) is expansion into proper functions of operator L_n, probability does not depend on time:

$$w(L_n, t) = |c_n(t)|^2 = |c_n(0)|^2 = Const$$

Since energy is a movement integral and probability *w (E,t)* to find at a moment *t* an energy value equaling E, does not depend on time, then:

$$\frac{dw(E,t)}{dt} = 0$$

Let us note once again that it is *the probability to find a certain value that does not depend on time, but not the value itself, which for any separate event is accidental and can assume a wide range of values.*

The quantum energy conservation law in the above form suggests a possibility of defining energy at a given moment without subjecting it to uncontrolled change, which raised no doubts in classic mechanics. But in the quantum theory the energy, without changing its value, can only be measured to

$$\Delta E \geq \frac{\hbar}{\tau}$$

where r - is measurement duration. Formally, it does not present any difficulties for the energy conservation law, since energy is a movement integral, and we have much time to make long measurement. For example, let us make measurements during time r, then leave the system to itself for time *T*, and then define energy again. The classic quantum energy conservation law states that the result of the second measurement will coincide with the result of the first measurement to $\Delta \mathrm{E} \approx \frac{\hbar}{\tau}$.

But even in the ordinary quantum theory all this is not consistent enough. For the real vacuum fluctuations can interfere, that always influences the results of a single process, but their influence disappears after the passage to an ensemble of events. Here we have a violation of the conservation law due to vacuum fluctuations, though existence of movement integrals, unlike in the Unitary Quantum Theory (UQT).

The generally accepted quantum theory carefully avoids the question of conservation laws for individual events in the case of small energies. This question is either not discussed at all, or it is said that *the quantum theory does not describe individual events. Yes, it does describe individual events, but it can only predict a probability of this or that result.* It is clear that in this case there are no conservation laws for individual events (it is wrong to speak about it in case of an accidental result of an individual event), and they appear only after the averaging by large ensembles of events. Essentially, it can easily be proved that classic mechanics follows from quantum mechanics after summing up by a large number of particles, because for a sufficiently big mass, the length of the de Broglie wave becomes much less than the body dimensions, and no quantum-wave qualities can be talked about.

Conservation laws in Unitary Quantum Theory

In the UQT [1-14] any quantum particle is not a point, but a source of field like in the ordinary quantum mechanics, but it represents a bunched field (wave packet) of a certain unified field. The dispersion equation of such a nonlinear field turned out to be such that the wave packet (particle) during its movement periodically appears and disappears, and the envelope of this process coincides with the de Broglie wave. Numerous particles during their periodic disappearance (spreading in the Universe) are repeated appearance from vacuum fluctuations. A theory of quantum measurements has been built, and the probability interpretation follows from the mathematical formalism of the quantum theory [10,11], and it is not postulated as in conventional quantum mechanics. Unfortunately, the main UQT equation turned out very complicated, for it is a system of 32 nonlinear integral-differential equations, which could require for their solution some new mathematical methods. But from this the relativistically invariant Hamilton-Jacoby equation, and the Dirac equation system strictly follow.

Papers [13,14] give a solution of the simplified scalar integral-differential UQT equation, which gave a localized solution for the form of a wave packet representing a particle. It turned out that the integral from a bilinear combination of such a solution for the whole volume gives with the precision of 0.3% the value of a non-dimensional elementary electric charge [13,14], which was essentially its first theoretical calculation. Then, this solution in the form of a periodically appearing and disappearing wave packet (which square describes the density of a spatial charge) can be replaced by an oscillating charged particle [15-18], the movement whereof will be described by the conventional Newton equations:

$$m\frac{d^2\mathbf{r}}{dt^2} = -2Q\mathbf{GRAD}U(\mathbf{r})\cos^2\left(\frac{mt}{2\hbar}\left(\frac{d\mathbf{r}}{dt}\right)^2 - \frac{m\mathbf{r}}{\hbar}\frac{d\mathbf{r}}{dt} + \varphi_0\right) \quad (4)$$

$$m\frac{d^2\mathbf{r}}{dt^2} = -2Q\mathbf{GRAD}U(\mathbf{r})\cos^2\left(-\frac{m\mathbf{r}}{\hbar}\frac{d\mathbf{r}}{dt} + \varphi_0\right) \quad (5)$$

where *m, Q,* **r** - mass, charge, and radius-vector of the particle, *U*(**r**) – external potential, φ_0 - initial phase.

Since $\mathrm{E} = -\mathrm{GRAD}U$, and a magnetic field also exists, the Lorenz force should also be calculated for $\mathbf{F} = \frac{Q}{c}[\mathbf{v}\times\mathbf{H}]$, but in the electromagnetic wave **E** and **H** are equal, and for small energies value $\frac{v}{c} \to 0$, and

force **F** can be ignored. Both these equations produce qualitatively similar results for different problems, but the first non-autonomous equation evidently does not have any movement integrals at all, and any hope for analytical solutions is very unreal. But for the second autonomous equation such hope still exists. Let us note that these equations describe more accurately the experimental results of scattering on the coulomb potential than the classic Rutherford formula! Application of these equations for the tunnel effect and scattering on short potential also produces correct results, but in this case passage through a high barrier (tunnel effect) will be defined by the initial phase. Of greatest interest, however, is the harmonic oscillator problem.

It is possible that a change in the properties of a material point in the process of its movement is just another step in the material point movement theory. In conventional mechanics this idea is not altogether new. There are Meshchersky's equations for bodies with a changing mass, and Tsiolkovsky's equation for a rocket. But so far, in the conventional quantum theory, the particle has a permanent and stable in space and time set of properties, and in the UQT all the parameters of the particle are changed and oscillate during movement.

It should be noted that *Newton did not introduce the notion of a material point at all,* and it would be ridiculous to think that he was not able to have this natural and rather trivial idea. Most probably, and it is not by chance, for today many troubles of the field quantum theory are rooted in the approach to the particle, as to the point, the most vivid example being a large bouquet of divergences. Nevertheless, this approach is very convenient and should only be used correctly. Let us also remember, that in accordance with the Newton corpuscular theory, beams of light were to be regarded as a flow of certain particles. They are emitted by a shining body in all directions and move in an empty space or a homogeneous medium evenly and straight, i.e. in the same way as the ordinary material particles do in the absence of any external or interaction forces. Newton explained reflection and refraction of light beams on the surface of border between two homogeneous mediums by the effect of certain forces on this border, in the direction perpendicular to the surface. These forces changed the normal velocity component, but did not touch upon the tangential one, which allowed to derive the reflection and refraction laws. However, the inability of such a theory to account for the light partial reflection and passage phenomena, as well as the Newton rings (which he himself discovered), led him to bouts (or fits) theory, which is quite modern, although nearly forgotten. Newton believed that for full explanation of all the processes it was necessary to suggest that some light particles could experience reflection bouts, and others – passage bouts. Let us imagine light falling to a flat surface, which is partially, reflects and partially passes. With quantum description of this phenomenon, a particle connected to the falling wave at the time of hitting the surface has a certain probability of passing or being reflected, and Newton simply used the word "bouts" in place of the word "probability".

It is absolutely clear that all descriptions of processes by the equation with an oscillating charge will be an approximation, because it is evident that no movement equations for a material point can describe even the simplest interference processes on a semi-transparent mirror, during which a material particle should be divided in two parts which will later eliminate each other by destructive addition. It is surprising, but the numerical solution of the problem of scattering on a short potential (the Ramsauer effect) for equations (4) and (5) gives the correct diffraction picture! But if we want to describe an individual particle correctly in the conventional quantum mechanics, the picture becomes inexact and purely probabilistic. At every given moment of time a particle can exist in only one of the mutually incoherent states, because one particle cannot move in different directions simultaneously (it cannot have many impulses at the same time). Nevertheless, there seems to exist a whole class of processes, where description with the help of equations (4) and (5) have certain sense. It is well known that in all experiments the local energy and impulse conservation law in individual quantum processes are true only under high-energy values. But under small energy values it is not so, at least because of the ratio of uncertainties and the probabilistic character of all the quantum theory predictions, and the idea of a global, not local ECL, is invisibly present in the quantum mechanics, and is certainly far from new.

In the strict UQT and the quantum measurement theory, a great role belongs to unavoidable vacuum fluctuations. It is clear that these fluctuations are totally unpredictable and non-invariant in relation to space and time translations. The same can be said otherwise: there are no habitual properties of time and space in this theory. Space-time is now not homogeneous and not isotropic. For example, if the system is transferred to a new point in space, or a certain experiment is repeated at another time, at the point where particle parameters are studied, and it interacts with the macro-device, a new value of vacuum fluctuations (different from the previous one) can appear and produce a different result. Of course, all this is only true for small energies and individual events.

Still more destructive is the UQT for the notion of a closed system. For individual events under small energy values this notion is simply unacceptable for the following reason: vacuum fluctuation at the location of the particle (e.g. in a potential pit) can be sharply changed at any moment. It can be caused by different factors – the nature of vacuum fluctuations itself, or the tunnel effect of another random particle.

Sometimes it is stated that conservation laws follow from the Nether theorem, though these results are present in the works by D. Gilbert and F. Klein. For any physical system, the movement equations from which can be received from the variation principle, each one-parametric continuous transformation that leaves the

variation functional invariant, corresponds to one differential conservation law, and there exists a clearly conserved value. It is easy to see, however, that vacuum fluctuations imposed on the varied function (integral of Lagrangian) do not in sum remain unchanged during parametric transformations (at least today it seems so), and this consideration does not work without preliminary of ensemble.

And now we are in for a little philosophy. The local Energy Conservation Law (ECL) in individual processes follows from the Newton equations for closed systems. It would be naive to think that its local formulation will be preserved forever, and would be a bad mistake to transfer the ECL from the Newton mechanics to the quantum processes without any changes, because the latter are more fundamental.

References to the first principle of thermodynamics are, strictly speaking, groundless, because this principle is a postulate. For example, well-known Russian mathematician N. Luzin, in a letter to an inventor wrote that the first principle of thermodynamics is the result of unsuccessful attempts of the mankind at building a *perpetual mobile*, and strictly follows from nothing. *Today it may be said with a great degree of certainty that no sophisticated machine in the framework of the Newton mechanics can be a perpetual mobile,* and the decree of the French Academy of 1755 not to consider any *perpetual mobile* projects is still valid. We will only add that now it is valid only for those projects that are based exclusively on the Newton mechanics.

There is the tendency in modern physics to reduce ECL, especially in theory, to the rank of a secondary derivation from the movement equations (movement integrals). Some physicists restrict the ECL to the framework of the first principle of thermodynamics, others, like D. Blokhintsev [37], think it quite probable that with the development of a new theory the form of the ECL will undergo certain changes. F. Engels wrote in his "Dialectics of Nature": "…none of the physicists actually regard the ECL as an eternal and absolute law of nature, a law of spontaneous transformation of the movement forms of the matter and the quantitative constancy of this movement in all its transformations". But many people do not share this opinion. M. Bronstein in his book "Structure of Matter" wrote: "The ECL is one of the main laws of the Newton mechanics. Nevertheless, Newton did not ascribe to this law the general character that this law actually possesses. The reason for this *erroneous* (italicized by authors) opinion of Newton of the ECL is very interesting…". It is now clear that in view of the above, such an opinion was not at all erroneous. Let us remind you that Newton predicted many things, even the UQT, in his "bouts theory".

On the other hand, the authors of quantum mechanics realized that there was no conservation law for single quantum processes under small energies at all. The idea that the construction of ECL, together with the second law of thermodynamics, was a statistical law, true only on the average and inapplicable to individual processes with small energy, first occurred to Schroedinger, and later to Bohr, Kramers, Slater, and Gamov. In 1923 Bohr, Kramers and Slater made a desperate attempt to develop the theory, where the energy and impulse conservation laws in case of scattering would be true only statistically, on an average for long periods of time, but would be inapplicable to elementary events. Lev Landau even called it "Bohr's wonderful idea".

Later, however, the authors gave up this approach and, besides, this idea at that time did not follow from the quantum theory equations, and the authors, *to come out of the predicament, simply declared that quantum mechanics did not describe individual events at all*. Thus, the most vivid paradox of the quantum science was removed by a simple ban on thinking about it! But the ingenious idea that conservation laws do not apply to individual quantum processes and emerge only after the averaging by the ensemble of particles remains alive. This idea might have been a little premature, and, possibly, should be a little different.

The Unitary Quantum Theory (UQT), on the contrary, individual particles, and the difference in their behavior is accounted for by the initial phase of the wave function. In this case, local conservation laws do not exist for a single particle, and measuring the initial phase or some other parameters for an individual particle is quite a different matter. It is not true that the UQT has given up probabilistic description. Probabilistic interpretation remains, but the probability now is strongly dependent on the initial phase. Although the equations with an oscillating charge can determinately predict a particle's behavior, the measurements can be made only with the help of a macro device, which will give only a probabilistic result. Impossibility to determinate measurements does not change anything, for the UQT provides for a possibility of influencing the probability value, which was earlier unavailable. The existing Von Neumann theorem about hidden parameters does not effect our result, but the relevant discussion is too cumbersome, and we will leave it out.

*In other words, **all the requirements**, wherefrom the classical conservation laws follow, are now absent. We can hardly expect the conservation laws for individual particles to be preserved under small energies in such a situation.* Today we are convinced that the classical energy, impulse and angular momentum conservation laws for individual quantum objects are not valid under small energy values because of periodic appearances and disappearances of the particle. All direct experimental tests of the conservation laws were made for large energy values, and for small energies of an individual particle only probabilistic results can be received, and, in this case, it would be indecent even to recall the conservation law.

Energy generation and perpetual mobile

Let us make the following imaginary experiment. For simplification purposes we will use in our reasoning a

certain quantum ball-particle. When a classical ball approaches a wall (perpendicularly for simplification), the speed of the reflected ball is always equal to the initial speed (we ignore friction and regard the ball and the walls as absolutely elastic). In the case of a quantum ball, the speed of the reflected ball will acquire in different experiments with absolutely equal initial conditions a whole range of values: some balls will be reflected at a speed greater than the initial speed, others – at a speed equal or lower than the initial speed, and all this is described by quantum mechanics.

Let us ask the following question: what if a second wall is found, parallel to the first one, in order for the ball to increase its speed after each reflection from the wall? Then we will have increased ball energy without any special efforts on our part. Such phenomena appear in the problem of particle oscillations in a potential pit (not necessarily parabolic) on the basis of equations (8) and (9), when four types of solutions are possible, three of which are most important for us: stationary, "maternity home", and "crematorium". In the two latter solutions traditional conservation laws do not work. These solutions are presented in Fig. 1. Such oscillator behavior explains many experimental facts. From the physical point of view, it means that in stationary solutions with fixed discrete energies (conventional quantum mechanics) the speed of the particle reflected from the wall will be equal to the speed of the falling particle. If the speed of the particle is decreased after each reflection, it will mean the "crematorium" solution, and if it increases, the "maternity home". Scenarios for situations will depend on the initial phase of the wave function and the particle energy. In ordinary situations the "crematorium" and "maternity home" solutions always compensate each other, and we find conservation laws.

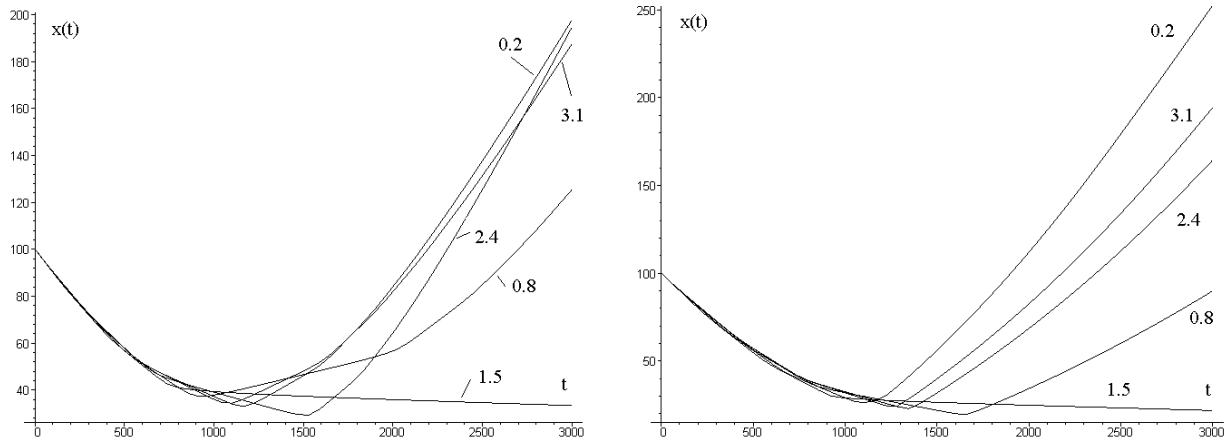

Fig. 1. Dependence of the distance between the moving charge and the nucleus on time for autonomous and non-autonomous equations.

The task of the future developers of new energy systems of the 21st century will consist in creating such initial conditions for a great number of particles making up a body that only the "maternity home" solution would be realized, and the "crematorium" solution would, if possible, be suppressed.

It follows from the above that if the unitary quantum theory ideas are applied correctly, there is no fundamental taboo for a perpetual mobile. Such a taboo, as it was shown, does not formally exist even in conventional quantum mechanics (no conservation laws for individual processes with small energies), and, in order to generate energy, they should be somehow accumulated (all random processes with excess energy should be grouped together). But conventional quantum mechanics refuses to describe individual events and is unable to offer any ways for such grouping. The unitary quantum theory seems to offer such an opportunity.

However, the great idea of free energy generation was distorted by effort of some research associations interested to keep their stability degree, that everyone who started speaking about it was considered to be a crazy man.

Modern experimental physics has verified the correctness of conservation laws either for very large energies in individual quantum events, or for big macroobjects, when automatic averaging by ensemble is made, but the area of very small energies for individual events today is a *terra incognita*.

In order to see how the conservation laws for reflection (repulsion) of an individual particle from the Coulomb heavy nucleus with different values of the initial phase are violated, we have solved numerically one-dimensional equations (8) and (9) under the different initial conditions:

$$\hbar = 1, m = 1,\ 2Zze^2 = 1,\ x_0 = 100,\ V_{x0} = -0.1$$

In the Fig. 2 the distances between the moving particle and repulsive nucleus are shown as a time function, for

different initial phases in cases of non-autonomous and autonomous equations.

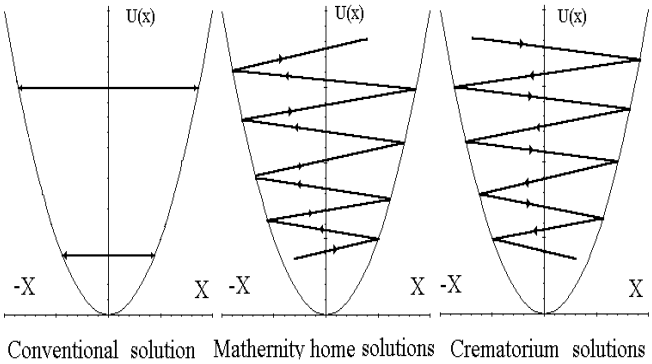

Fig.2 Three types of solutions for oscillator

It is evident from the calculations that the speed of a reflected particle can be equal, lower or higher than the speed of a falling particle. This situation seems to be true for all potentials.

Calculations were also made for other potentials: harmonic oscillator, Yukawa, Gauss, dipole, hyperbolic secant, and Wood-Saxon, and the quality results were nearly the same. If we sum up the impulse of all the particles falling with different phases and compare it with the summarized impulse of all the reflected particles, the summarized reflected impulse, for example, for the Coulomb potential, will be several percent higher than the summarized impulse of the falling particles. For other potentials such a small deviation can even be in the opposite direction. On the whole, this problem is very complicated and requires additional research, because all this is also dependent in quite a complex way on the initial conditions (initial speed, phase and distance).

Philosophically, any categorical taboos, like the impossibility of creating a *perpetual mobile*, are absolutely unacceptable. If everyone is convinced of it forever, the conservation laws and *perpetual mobile* taboos will remain unshakable as long as the human civilization exists. Of course, the funeral of the Conservation Laws can be very prolonged. Anyway, we are not going to do it, and our article might be just a cleanup for the future tomb, and the splendid funeral with all the necessary honors will be organized by future generations. *On the other hand, these laws will never die out completely and will surely be applied, but such spheres of science and technology will appear, though small at first, where these laws are not valid.*

The truth should be accepted irrespective of where it comes from. Words of F. Engels from the "Dialectics of Nature" will be quite appropriate here: "When the solar system ends its life circle and shares the fate of all the finite things, when it falls victim to death, what will happen next? Thus, we come to a conclusion that the heat emitted into the universe should have an opportunity, in a way yet to be established by the natural sciences, to turn into another form of movement, where it can be accumulated again and start functioning. And in this casethe main problem that prevented transformation of dead suns , back to red-hot nebulas will disappear".

The question of whether the conservation law exists in global form (we have already proved its not being local) remains open, because nothing leads to it except the inertia of the human mind. This inertia was based on the Newton laws, which were replaced by quantum laws. This mental inertia leads to a situation, when in case excessive energy is generated during solution of movement equations, a question arises how it can happen, and where it comes from. Of course, if a particle (e.g. a photon) falls on a semitransparent mirror, the packet is divided into two halves, which, due to imposition of vacuum fluctuations, will be recorded by photomultipliers as full-fledged photons [1-5]. The result is that energy is taken as if from vacuum: two photons appear in place of one. Another photon can be divided on the mirror into two halves, but they will not be recorded by the meters, and the energy will allegedly pass into vacuum. So, at one time we borrowed energy from vacuum, and then gave the same amount of energy back to vacuum at another place. You can think like that, and this process might take place. But if we consider the equation with an oscillating charge, the energy and impulse conservation laws are not valid there for solution of the movement problem, and vacuum fluctuations have nothing to do with it at all. As for the question of where the energy comes from, it is the result of our mental inertia, and is, essentially, an atavism imposed by the Newton mechanics. But the latter appears as a result of an extreme passage from quantum mechanics, which is more fundamental.

It is interesting to note that there is a bomb in the logical definition itself of the energy conservation law. If energy is something that cannot appear or disappear and always simply passes from one form to another, the only value satisfying this condition is zero. We are far from assuming that energy does not exist. But the problem of existence is solved differently in different philosophical systems, and the mathematical approach seems to be the most correct one: *an object exists if it is free from contradictions*. Energy has bad luck in this case, for under such an approach it should be zero.

Some cosmologists (for example, British prof. Fred Hoyle) are very willing to have a process, in accordance with which the Universe has certain places where energy appears from other certain places, in which it is eliminated. Besides, any philosopher at least a little bit familiar with astronomy, looking at the bright night sky, will see the birth of matter and its expansion into a still greater space. But for this purpose the Global Energy Conservation Law is superfluous and only denies what is observed. The head reels…

Cold Nuclear Fusion and Nuclear Transmutation.

Let us approach the epoch-making experiments made by Fleischmann and Pons in March 1989 [30] from the positions of the equation with an oscillating charge. One

of the authors predicted in 1983 [9] the possibility of such nuclear reactions under very small energies. Without going into well-known details, we will sum it up very briefly: cold nuclear fusion exists, and there are no people or theories capable of giving a clear explanation. The chain of various mechanisms meant to explain this intriguing phenomenon is growing, but few really believe in them. The reason is as follows.

When a charged particle interacts with the nucleus, the potential energy is like in Fig. 3, where the right top part of the curve is conditioned by mutual Coulomb repulsion between the nucleus and the charged particle.

The repulsion potential will be

$$U(r) = \frac{Zze^2}{r}$$

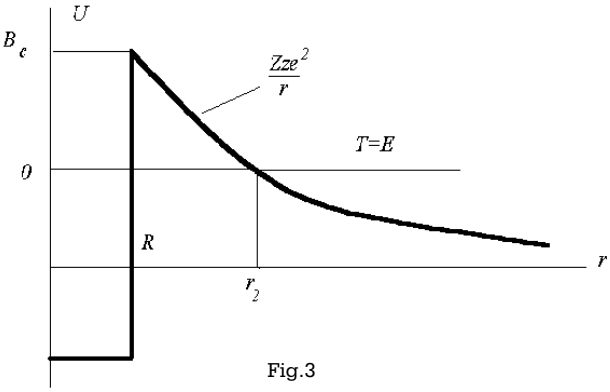

Fig.3

where Z – charge of the nucleus, and z – charge of the approaching particle, e – charge of the electron, r – distance between the particle and nucleus. When $r=R$ (critical distance), then the potential energy curve goes sharply down, which is due to the emergence of intense nuclear gravitation, the potential whereof today appears more complex than could be imagined mathematically. If the charged particle overcomes the Coulomb barrier with a height of

$$B_c = \frac{Zze^2}{R} \approx \frac{Zz}{\sqrt[3]{A}} MeV$$

it will further get into the nuclear gravitation area and a nuclear reaction will take place.

Let us look at the nuclear interaction of a charged particle with kinetic energy $T < B_c$. From the point of view of classical mechanics, there will be no nuclear reaction in this case, because the particle will approach the nucleus and at a certain distance $r < R$ from the top of the Coulomb barrier will turn back and be reflected from it. However, from the point of view of quantum mechanics, there exists a tunnel effect, and the probability of such a tunnel passage, or transparency of potential barrier D is described by a well-known formula:

$$D \approx \exp\left(-\frac{2}{\hbar} \int_{r_1}^{r_2} \sqrt{2\mu(U-T)}\,dr \right) \qquad (6)$$

where $\mu = \frac{Mm}{M+m}$ is reduced mass. The bottom integration limit r_1 coincides with the nucleus radius R, and the top limit r_2 can be found from the condition $T = \frac{Zze^2}{r_2}$. After integration we will get

$$D = \exp(-2g\gamma)$$

where $g = \frac{R}{\lambda_{B_c}}$; $\gamma = \sqrt{\frac{B_c}{T}} \arccos\left(\sqrt{\frac{T}{B_c}}\right) - \sqrt{1-\frac{T}{B_c}}$,

and value $\lambda_{B_c} = \frac{h}{\sqrt{2mB_c}}$, the de Broglie wavelength corresponding to the kinetic energy of the particle equal to the barrier height $T = B_c$. If $T << B_c$, expression (6) is easily transformed to look as

$$D = \exp\left(-\frac{2\pi R B_c}{\hbar v} \right) = \exp\left(-\frac{2\pi Zze^2}{\hbar v} \right) \qquad (7)$$

where v is velocity.

Let us now see what the shocking cold nuclear fusion will look like on the basis of the above considerations. The deuteron energy in an ordinary electrolytic Fleischmann-Pons cell will be about 0.025 eV, and the height of the Coulomb barrier for this case is $B_c = \frac{Zze^2}{\sqrt[3]{A}} = 0.8MeV$. In classical mechanics it would be just naive to talk about overcoming such a barrier with a height dozens times greater than the kinetic energy. Let us now see how the tunnel effect will improve the situation. Let us assess the value of g and γ for the case of collision between two deuterons with such energy:

$$g = \frac{R\sqrt{2mB_c}}{\hbar} = 1.9;$$

$\gamma = \sqrt{\frac{B_c}{T}} \arccos\left(\sqrt{\frac{T}{B_c}}\right) - \sqrt{1-\frac{T}{B_c}} \approx 8883$ and the probability of such a process will be $\exp(-2 \cdot 1.9 \cdot 8883) \approx 10^{-7328}$, i.e. practically pure zero. The fusion cross-section will be defined by the product of nuclear cross-section and the tunneling probability:

$$\sigma = \sigma_{nucl} D$$

and, in the case under review, is also a very small value. If the clash parameter of deuterons is not zero, the emergence of centrifugal potential

$$U = \frac{\hbar^2 l(l+1)}{2mr^2}$$

will still further lower the probability of such interaction.

It is these very circumstances that make the nuclear physics scientist think that there is no cold nuclear fusion as such. For example, such a serious and responsible edition as Encyclopedia Britannica 2001 found no place for the notion of cold nuclear fusion at all. Such an official position can be understandable only from the point of view that quantum mechanics is absolutely true and unshakable. Despite this, for the 12 years since the Fleischmann-Pons experimental discovery, nearly 30 international conferences have been devoted to this subject, there are lots of books and magazines on this subject, and the number of articles on the problem is nearing ten thousand. Today the situation is gradually developing in the positive direction, and the research in the field of hot nuclear fusion, which has already wasted over $90 billion for 45 years, is slowly coming to naught.

But today there exist well known experimental data on cold nuclear fusion. They are numerous and various. We will dwell only upon the most important and sufficiently reliable results. Thus, the classical view of electrolysis of a palladium cathode saturated with heavy hydrogen in heavy water identifies an anomalous quantity of heat energy up to 3 kWt/cm^3, or up to 200 Mj per small sample. Products of nuclear reaction have also been found: tritium (10^7 - 10^9t/s), neutrons with energy of 2.5 MeV (10-100n/s), and helium. Absence of He^3 among the reaction products shows that heat is not generated by reaction $d+p$. Besides, emission of charged particles ***(p, d, t, γ)*** is observed. Similar processes are observed in case of a gas discharge on a palladium cathode, of phase passage in different crystals saturated with heavy hydrogen, irradiation of deuterium mixture with a powerful sound or ultrasound flow, in cavitating microbubbles in heavy water, in a tube with palladium powder saturated with heavy hydrogen under a pressure of 10-15 atm., etc. In certain reactions (e.g. $d + t \rightarrow \alpha + p$) neutrons of 14 MeV are absent, and such a strange situation occurs in other cases too. Activity of Li^6 , Li^7 in reactions with heavy hydrogen and protons failed to be discovered, whereas reaction

$$K^{39} + p \rightarrow Ca^{40}$$

was well recorded even in biological objects. But the most intriguing fact of all these processes is the shortage of nuclear reaction products for explanation of the emerging heat effects. Thus, in certain cases the number of nuclear reaction products (tritium, helium, neutrons, quanta) should be millions of times greater in order to account in some way for the quantity of the generated heat. Generation of such a big amount of energy cannot be accounted for by either chemical or nuclear reactions, or by phase passages. The well-known interaction $d+d$ goes along three channels:

D + D —> T (1.01) + p (3.03) *(Channel 1)*
D + D —> He (0.82)+ n(2.45) *(Channel 2)*
D + D —> He + γ(5.5). *(Channel 3)*

All these reactions are exothermal. The third channel has a very small probability. It was experimentally discovered that they could occur under very small energies. In a molecule D_2 the equilibrium position between atoms is 0.74A and in accordance with the conventional quantum theory, these two deuterons could accidentally enter a nuclear fusion reaction. But the interaction value is very small $\lambda_{D_2} = 10^{-64} c^{-1}$. There is a known estimate that in the water of all seas and oceans there are 10^{43} deuterons, and in 10^{14} years there will be only one fusion.

It follows from the aforesaid that the main problem impeding the occurrence of the $d+d$ reaction lies in the existence of a very high Coulomb barrier. Our approach allows for this problem to be solved, and there is such an opportunity in the UQT. The UQT equation solutions show that the distance to which deuterons can approach each other is strongly dependent on the phase of the wave function (by the way, it is absolutely clear intuitively).

Let us consider the one-dimensional problem [15-18,31]. There is a stationary nucleus with charge *Ze* at the point of origin, and another nucleus is approaching it along axis x (charge *ze*, mass *m*) at a certain initial velocity. The non-autonomous and autonomous equations of such a problem will look as follows:

$$m\frac{d^2x}{dt^2} = -\frac{2Zze^2}{x^2}\cos^2\left(\frac{m}{2\hbar}\left(\frac{dx}{dt}\right)^2 t - \frac{m}{\hbar}\frac{dx}{dt}x + \varphi_0\right) \quad (8)$$

$$m\frac{d^2x}{dt^2} = -\frac{2Zze^2}{x^2}\cos^2\left(-\frac{m}{\hbar}\frac{dx}{dt}x + \varphi_0\right) \quad (9)$$

Since an analytical solution was not found for all the areas of initial phases , numerical methods were applied with the following initial values: $Z=z=1$, $e=1$, $m=1$, $x_0=-10$, $\hbar=1$ for different initial velocities and initial phase values. As had been expected, braking or acceleration of the particle happens only when the charge is large. But at the last stage, under certain initial phases close to $\frac{\pi}{2}$, a wonderful process occurs: velocity, charge and repulsing force are very small. Due to phase ratios, the small charge is not changed for a long time, which means that the particle (or rather what is left of it) is not influenced by any forces, and it is crawling at a permanent small speed for a very long time ("the snail effect") inside the field of another particle, and can come very close to the center. Such movement with a very small charge and a small speed can last for several hours, and disconnection of the external field will not effect this movement. This process reminds of quiet and

invisible scout penetration into the enemy territory. This phenomenon occurs only in certain phase areas, and can be conveniently called a phase hole, which is illustrated in Fig. 4 resulting from the solution of equation (8).

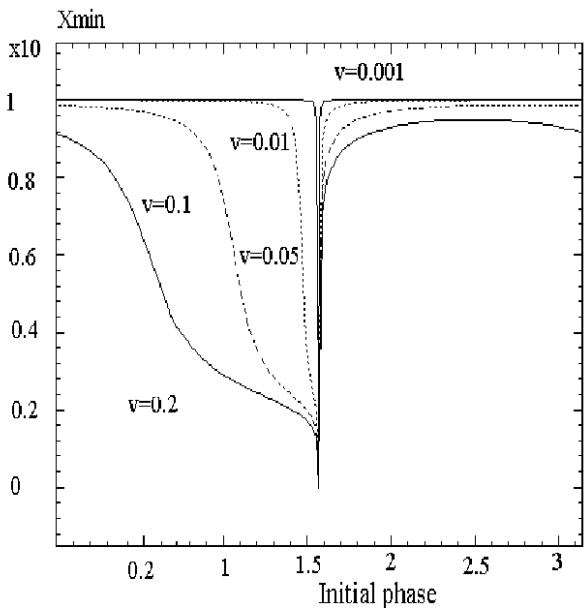

Fig.4. Distance to the turning point of the moving charge depending on the initial phase value for different initial velocities.

Let us note in passing that now we can account for one of the nuclear physics anomalies, which has a tendency to be totally ignored. Under a nucleon energy of 1 MeV, its velocity is 10^9 cm/s, nuclear radius is 10^{-12} cm, and the passage time of the nucleus is 10^{-21}s, but the time period in which the nucleon passes is usually anomalously long - 10^{-14} and even more, and it is absolutely unclear what the nucleon is doing in the nucleus so long. In our model it is easily explained by the "snail effect".

For the same equation, the minimum distance was calculated between the charges dependent on velocity (Fig. 5) for different initial phase values. For comparison, Fig. 5 also shows the result of the classical calculation based on the Coulomb law. It is obvious from Fig. 4 and 5 that the minimum distance to which charges can approach each other is nearly independent of kinetic energy, but with reduction of speed the initial phase area width is reduced as well. In other words, reduced energy brings also reduced probability of a nuclear reaction.

The same results are true for the autonomous equation (9). Under the conventional quantum theory, the ratio of the reaction speeds in the tritium and neutron channels should be close to unity: $\frac{t}{n}=1$. But in many experiments on cold nuclear fusion this value is very different from unity and equals $\frac{t}{n}=10^9$. In different

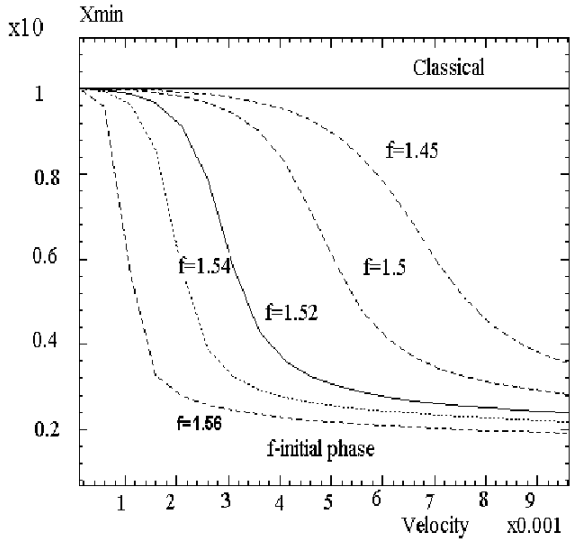

Fig.5 Minimum distance between charges depending on the initial velocity for different initial phase values.

experimental situations it is reproduced by different experimental groups with a very high accuracy. This very intriguing problem has so far received no simple explanation. Let us dwell on a possible cause for such aphenomenon. With a small velocity in the phase hole, neutrons are affected by nuclear gravitation forces, and protons are affected by electrostatic repulsion forces. Under the effect of this momentum, the deuteron will have enough time to turn in such a way that the neutron parts of the deuteron would faceeach other. After the neutron gravitation the nuclear forces will be saturated, which will weaken the proton connection, and one of the protons will leave the system. This reaction can be conditionally presented in the following form:

$$d+d \rightarrow p+(n+d) \rightarrow p+t$$

This reminds of the Oppenheimer-Phillips effect.

It is well known, however, that under big energies, the probabilities of the first and second reaction channels are the same, and this phenomenon should somehow be accounted for. Increased probability of the neutron channel with growing energy can be connected with the appearance of secondary neutrons in the reaction *T + D = He + n (14.1 MeV).* In a deuterium-rich environment, a big part of the resultant tritons will pass to neutrons in the process of this reaction, which has a cross-section of 5 barns under an energy value of 70 KeV. According to assessments in [32], the number of such secondary neutrons per one triton is $7.9\cdot10^{-12}, 1.7\cdot10^{-9}, 2.7\cdot10^{-6}$ for energy tritons 10, 20 and 100 KeV respectively. Thus, the prevalence of $\frac{t}{n}>10^6$ can be expected only in those reactions, where tritium is born with energies over 40 KeV.

It should not be assumed, however, that the phase hole phenomenon in its whole area leads to a nuclear reaction. It can be assumed that reduction of the Coulomb repulsion is followed by reduction of strong

interaction. But how? Today nobody knows the exact equation of the strong interaction potential. Besides, the particle approaches the turning point X_{min} is rather "thin". Will it be able to take part in a full-fledged nuclear reaction, or will it fly through, like it happens with the electron in the s – states of the atom? There are very narrow phase areas, when soon after the particle stops the charge grows quickly and is sharply accelerated. The charge can even be maximum in the nuclear force effect area. May be, it is this narrow phase area that is responsible for cold nuclear fusion, and in case of strong interactions the phase hole mechanism must be operating as well.

It was discovered long ago that nuclear transmutations have a mass character (especially in plants and biological objects), but they have little to do with energy generation. Examples of such reactions:

$$Mn^{55} + p \rightarrow Fe^{56} \ ; \ Al^{27} + p \rightarrow Si^{28} \ ;$$
$$P^{31} + p \rightarrow S^{32} \ ; K^{39} + p \rightarrow Ca^{40}$$

In reactions of this type, a very slow proton (with practically zero kinetic energy) penetrates the nucleus in the above-mentioned way and remains there. *No intranuclear energy is generated, because both before and after the reaction the nucleus remains a stable object.* In classical nuclear physics, the nucleus usually became unstable after it was penetrated by a charged nucleon with a large kinetic energy and always broke into parts, and the nuclear debris had an even greater kinetic energy. Reactions of the above type were considered impossible under small energies and for this reasons were not studied by classical nuclear physics. It seems to be *a completely new type of nuclear transmutations, not recognized by modern nuclear science, but experimentally discovered rather long ago.* Today there is a great deal of experimental material confirming mass nuclear transmutation phenomena. Moreover, there are many projects of neutralizing nuclear excess with the help of this technology. Journals *Infinite Energy, New Energy, Cold Fusion, Fusion Facts*, etc. and Internet are full of such projects.

Of course, a change in the nuclear charge will result in restructuring of electronic atom shells, but the energy related to this process will be about several electron-volts and is nothing in comparison with the energies of nuclear reactions from several to hundreds million electron-volts. By the way, nuclear engineers are accustomed to such energy ranges in nuclear reactions. It was this circumstance that made them deny *a priori* all nuclear processes in biology, because under such energy values of the debris dozens and hundreds thousand of complex biological molecules will be destroyed.

Quite a long time ago, Lois C. Kervran [33] wrote a book about nuclear transmutations in biology, and now, nearly 20 years later, its second edition was published! It gives, evidently for the first time, numerous *experimental* data of the above-mentioned phenomena. The reaction of the official science is very interesting. For example, well-known physicist Karl Sagan, after reading the book about such *experimental* data, advised Kervran to read elementary textbooks in nuclear physics!

Some time later a research was made by Panos T. Pappas [58], who studied one of the well-observed nuclear reactions in biological cells:

$$Na_{23}^{11} + O_{16}^{8} = K_{39}^{19}$$

Classical biology has long known about the existence of equilibrium, when the ratio between the number of K and Na ions is maintained with greatest accuracy despite the shortage or even absence of K ions in food. Later, in work [59] this nuclear reaction was even called the life equation, and the existence of such nuclear reactions in biological objects was proved by M.Sue Benford with the help of direct physical methods.

All thermonuclear fusion programs are based on blunt heating and compression of the reacting material. Despite the progress achieved, the head of the works in England, Dr. Alan Gibson [34], established several years ago that the model reactor design would be created not earlier than in 50 years. Today, this point of view is generally accepted. Even if the reactor is once made (although the authors have grave doubts about it), it will be very complicated, expensive, and harmful for the environment.

Classical approaches have so far not yielded any positive results, despite multi-billion investments and a great number of physicists, engineers, service personnel, and managers involved. It is only natural that this army of researchers is a potential impediment for all alternative projects of new power engineering. It has been noted that *"viability" of any idea is proportionate to the number of people involved and investments made.* For these reasons, the Fleischmann-Pons works were given a hostile reception in the USA and other countries.

All the controlled thermonuclear fusion programs are accompanied with the adjective "controlled", although there is no control whatever. It is simply that the initial quantity of the reacting substance is *prudently* made very small. For example, a ball of lithium deuteride during laser reduction has a diameter of several mm. So far no one has been seriously considering the question of utilizing the energy of an explosion of such a ball, which is approximately equal to the energy of an explosion of a box of antitank grenades.

The straightforward approach to fusion used by the modern science is very natural, because quantum mechanics has no methods of influencing this process. The future of really controlled nuclear fusion systems may be not on the way of primitive and blunt method of heating and compression of the material, but following UQT on the way of using collisions of nuclei having small

energy and corresponding fine adjustment of the wave function phase.

It is essentially possible in case of imposition of the external controlling electromagnetic field on the reacting system, which contains quasi-fixed ordered deuterium atoms and free deuterons. The same properties can be demonstrated by special atomic grid geometry. Diffraction scattering of a deuteron flow on such grids will lead to automatic deuteron selection by energies and phases.

It seems that in the Fleischmann-Pons electrochemical experiments such an ordered system existed in the *Pd-D* grid, and some phasing occurred, which accounts for the results of these experiments [30].

Today it appear to us that the cold nuclear fusion processes will be effectively used for nuclear waste liquidation and production of isotopes.

Many researchers [35,36] discovered that the quantity of heat generated in the process of electrolysis of ordinary water on nickel electrodes (there is no hope for nuclear reactions in such systems) is the same as in the electrolytic cell with heavy water. It confirms other measurements, which showed that the quantity of nuclear reaction products is millions times less than is required for such an amount of generated heat, and its origin remains a mystery.

Further we will give certain concrete data demonstrating the phase values of a deuteron with an oscillating charge, under which the deuteron can approach the nucleus to a critical distance of 10^{-12} cm or less, i.e. giving the data to estimate the value of the above-mentioned phase "hole" in the interval (0,π) of the phase change.

Assume that the stationary nucleus with the charge q is placed to the coordinate origin x=0 and the deuteron with the same charge q is placed at the initial moment t=0 to the point $x_0 < 0$on the x-axis, and the deuteron velocity equals $\dot{x}_0 = v_0 > 0$. The units of mass, length and time are chosen in such a way that $m = 1, \hbar = 1, c = 1$ (*m* - deuteron mass, *c* - light velocity). Charge *q* equals 0.085137266. Our units are connected (to 4 significant figures) with the system (kg, m, s) as follows:

1 mass unit = 3.345×10^{-27}kg,
1 length unit = $1.049\cdot 10^{-16}$ m,
1 time unit = $3.502\cdot 10^{-25}$ s.

The electron velocity corresponding to its energy of 1eV equals $5.931\cdot 10^{7}$ cm/s. The deuteron velocity corresponding to such energy will be assumed to be 3680 times less, and in our units it will be $5.372\cdot 10^{-7}$ (if $c = = 3\cdot 10^{10}$ cm/s). Then the deuteron movement towards the nucleus is described by the equation

$$\ddot{x} = -\frac{2q^2}{x^2}\cos^2(\frac{1}{2}(t+t_*)\dot{x}^2 + x\dot{x} + \varphi_0), \qquad (10)$$

where the parameter t_* is defined under the condition that the argument of cosine equals φ_0 for $t = 0, x = x_0, \dot{x} = \dot{x}_0$ (thus $t_* = -(2x_0)/\dot{x}_0$), and this parameter may be considered as the initial moment of so called local time.

In the interest for us are namely solutions of eq. (10) under very small deviation ε from phase φ_0 and so we put $\varphi_0 = \frac{\pi}{2} + \varepsilon$ and rewrite eq.(10) in the following form:

$$\ddot{x} = -\frac{a}{x^2}\sin^2(\frac{1}{2}(t+t_*)\dot{x}^2 + x\dot{x} + \varepsilon), \qquad (11)$$

where *a* = 0.0144967 Let the initial x_0 to be equal - 500000 of our length units (i.e. approximately $5\bullet 10^{-9}$ cm) and the initial deuteron velocity v_0 to be equal to the velocity v_{00} corresponding to the deuteron energy of 1 eV or less. But it turned out that the precision of numerical integration of this equation under such initial conditions and under values $|\varepsilon|$ = $10^{-15}$and less is small and besides the interval of the integration must be very large. That is why this equation also had to be transformed by passing to "slow" time $\tau = |\varepsilon| t$ to the equation relative to the variable $w = \left(\frac{dx}{d\tau}\right)^2$ as a function of *x:*

$$\frac{dw}{dx} = -\frac{2a}{x^2}\left\{\frac{1}{\varepsilon^2}\sin^2\left[|\varepsilon|(\frac{1}{2}(\tau+\tau_*)w + x\sqrt{w} \pm 1)\right]\right\}, \qquad (12)$$

where $\tau_* = -(2x_0)/\sqrt{w(x_0)}$ and +1 if ε >0, and -1 if ε < 0. It must be added also the equation for τ as a function of *x* :

$$\frac{d\tau}{dx} = \frac{1}{\sqrt{w}}. \qquad (13)$$

The system of equations (12, 13) is, so to say, a "model" system describing fairly accurately the deuteron movement under all values of |ε| from 10^{-24} to 10^{-6}. Numerical integration of this system was fulfilled under different values of e and under following initial conditions:

$$w(x_0) = 2.103, \tau(x_0) = 0, x_0 = -500000, \tau_* = 689573.18 \qquad (14)$$

It may be noted that the initial deuteron velocity v_0 equals 1.450172 (following the relation $\dot{x}_0 = |\varepsilon|\sqrt{w(x_0)}$) for given initial $w(x_0)$ and for |ε| = 10^{-7} , i.e. such velocity is approximately 3.7 times less than velocity v_{00} corresponding the deuteron

energy of 1eV. If $|\varepsilon| = 10^{-6}$ then the velocity v_0 is approximately 2.7 times greater than velocity v_{00} .

It turned out that the numerical tables for values of w, τ obtained under different values of $\varepsilon < 0$ in the interval (-10^{-24}, -10^{-6}) don't differ essentially from each other. The following table is true to three-four significant figures for τ and $\dot{x}/|\varepsilon| = \sqrt{w}$:

x	τ	$\dot{x}/\lvert\varepsilon\rvert$
-500 000	0	1.450
-50 000	$1.426 \cdot 10^6$	0.0493
-500	$1.002 \cdot 10^7$	0.000489
-200	$1.067 \cdot 10^7$	0.000440
-100	$1.090 \cdot 10^7$	0.000425
-80	$1.100 \cdot 10^7$	0.000423

If reducing the table values of x to centimeters, we obtain the following corresponding approximate values:

$$5 \cdot 10^{-9}, 5 \cdot 10^{-10}, 5 \cdot 10^{-12}, 10^{-12}, 0.8 \cdot 10^{-12}$$

The time interval ΔT , in which the deuteron reaches the critical distance 10^{-12} *cm* from the center, is $67350/|\varepsilon|$ of our time units or $(1.090 \cdot 10^7 / |\varepsilon|) \cdot 3.502 \cdot 10^{-25}$ seconds. If nuclear forces are not taking into account then the deuteron may approach the distance less 10^{-12} *cm* .

We present here the table, where are given the initial deuteron velocities v_0 in velocities shares v_{00} and the corresponding time intervals ΔT (in seconds) for different values of ε.

ε	$\frac{v_0}{v_{00}}$	ΔT (s)
-10^{-6}	2.7	$3.82 \cdot 10^{-12}$
-10^{-7}	0.27	$3.82 \cdot 10^{-11}$
-10^{-22}	$0.27 \cdot 10^{-15}$	$3.82 \cdot 10^{4}$ (≈ 10.6 hours)
-10^{-23}	$0.27 \cdot 10^{-16}$	$3.82 \cdot 10^{5}$ (≈ 10.6 hours)

Let us note that the given data change essentially under positive values of ε (10^{-6}, 10^{-7}, etc.). There is some asymmetry of solutions behavior under negative and positive values of ε. The calculations show the minimum distance $|x|_{\min}$ more than 500 of our lengths units even for relative big initial $w(x_0)$ = 10000. Thus, if we limit ourselves to the condition that the deuteron energy is not over $(0.27)^2$ eV at a distance of $5 \cdot 10^{-9}$ cm from the central nucleus, and the whole process of deuteron movement towards the nucleus does not exceeds approximately 10.5 hours, then the interval $(\frac{\pi}{2} - 10^{-7}, \frac{\pi}{2} - 10^{-23})$ is approximately the sought phase "hole" in the whole interval ($(0, \pi)$) of phase change φ_0 in eq. (10).

If many deuterons with the energy not more than $(0.27)^2$eV at the distance $5 \cdot 10^{-9}$ *cm* from the nucleus are equally distributed along their phases φ_0 , the ratio of the length of this "hole" to π, equaling approximately $0.3 \cdot 10^{-7}$, is equal to a share (or a relevant percentage of $0.3 \cdot 10^{-5}$) of deuterons overcoming the Coulomb barrier.

The above figures express at least the order of probability of the cold nuclear fusion occurrence, and this order is absolutely incompatible with the figures in the classical quantum mechanics mentioned above. Let us note once again that a one-dimensional problem was solved, and in case of an accurate analysis (not zero sighting distance will be taking into account) this probability will be lower. Let us also pay attention to the large time intervals ΔT calculated if $|\varepsilon|$ is very small. It explains well the effect (observed by many researchers) of continuation of cold nuclear fusion reactions during even many hours after the disconnection of the voltage in the electrolytic cell. This effect was named even "life after death".

As for the analysis of the deuteron movement with the help of the autonomous equation, the calculations lead to initial velocities v_0 , exceeding the above mentioned numbers, although the general motion picture is the same. But the autonomous equation is interesting, because in the area of those values $x, \dot{x}$, under which the product $x\dot{x}$ is modulo small, it is possible to replace $\sin(x\dot{x})$ with $x\dot{x}$, and the eq.(11) under ε=0 to replace with simplified equation (describing the deuteron motion from initial point $x_0 > 0$ to center)

$$\ddot{x} = a\frac{(x\dot{x})^2}{x^2} = a\dot{x}^2$$

This equation has a very simple analytical solution. Without giving very simple calculations, we will present the final formulas.
Let us take the following initial conditions:

$$x(0) = x_0 > 0, \quad \dot{x}(0) = -v_0 < 0$$

Then

$$\dot{x}(t) = -\frac{v_0}{1 + av_0 t}, x(t) = x_0 - \frac{1}{a}\ln(1 + av_0 t)$$

It follows from these formulas that the velocity of a particle moving in accordance with the initial equation never turns to zero, and under

$$t = t_* = \frac{\exp(ax_0) - 1}{av_0}$$

$x(t_*) = 0$, i.e. the particle reaches the center of the nucleus, its velocity at this moment being

$$\dot{x}(t_*) = \frac{-v_0}{1 + av_0 t_*} = -v_0 \exp(-ax_0) \ ,$$

so that it *passes through the nucleus and moves further..*

For example, let $a = 0.0144967$, $x_0 = 1000$ ($\approx 10^{-11}$ cm), $\dot{x}(0) = 5.37 \cdot 10^{-10}$ (≈ 16 cm/s).

Under such initial data, the product $x\dot{x} = -0.0000537$, so it is quite possible to replace $\sin(x\dot{x})$ with $x\dot{x}$. In this case,

$$t_* \approx 2.3 \cdot 10^7 \qquad (\approx 8 \cdot 10^{-18} \text{ s}),$$

$$\dot{x}(t_*) \approx -29.9 \cdot 10^{-17} \qquad (\approx 9 \cdot 10^{-6} \text{ cm/s})$$

These figures fit well into the reasonable framework, so the autonomous model can also be of use for the movement analysis in the problem under review. The phenomenon of particle passage through the Coulomb potential accounts very well for the existence of pendulum orbits in the Bohr-Sommerfeld model, when in states *1s,2s,3s* etc. the electron passes through the nucleus. Such states in the strict theory and experiment have no impulse, so in the Bohr-Sommerfeld model they were discarded as absurd. Now they have a right to existence. Further, the experimental data for angular distribution of non-elastic scattering by nuclear reactions (including reactions with heavy ions) reveal the big amplitude of the scattering forward. It is impossible to explain such effect by the formation of intermediate nuclei but it is may be explained from the viewpoint of our UQT.

General Principles of Creating New Energy Sources

In the ancient classical *perpetual mobile* idea it is supposed that energy is just created and not taken from outside (impossibility of *a perpetual mobile* is the first law of thermodynamics). There have appeared lately many articles and even books dwelling on the idea of energy generation from vacuum. We are not in complete agreement with many of these works, and we will dwell only on some of them, which, in our view, can be of interest. One of the main ideologists of this completely new sphere in science are Daniel C. Cole and Harold E. Puthoff, and their first serious work entitled «Extracting energy and heat from the vacuum» was published in Physical Review E, vol. 48, #2, (1993). In this work authors use the Casimir forces [60] making them produce useful work. The appearance of such forces in vacuum is understandable intuitively: if in a stormy sea we put vertically into the water two big parallel plates, on the outside part of these plates the waves will hit them at random, and between the plates there will be no waves. Then, the hitting of the waves outside the plates will produce a gravitation force between them (the Casimir force discovered experimentally long ago), which the authors of this interesting work are going to exploit. It is easily seen that in this idea energy is generated from vacuum fluctuations.

Our approach is altogether different. When the equation with an oscillating charge was solved for the quantum oscillator, 4 types of solutions were discovered. For us only two of them matter – "crematorium" and "maternity home". In one solution ("crematorium") the particle slowly falls to the bottom of the pit and finally turns into a "specter" (under the strict unitary quantum theory it disappears, spreads about the Universe and contributes to vacuum fluctuations everywhere). In the other solution ("maternity home") the particle can even be born of a very small fluctuation, or accumulate a sufficiently big energy. Let us underline once again that both these processes are not at all logically connected. In other words, there are such systems where energy will disappear completely (electrolytic baths), or increase unlimitedly (it might be our Universe).

It is the energy conservation law that presents the strongest impediment in all cosmological approaches. However, universes with birth of matter have long existed in scientific cosmology independently of us. There is known the theory of British astronomer Fred Hoyle based on the idea of continued creation of matter from nothing. The question of whether such an approach is realized in nature and whether the energy emitted by quasars is the result of work produced by a certain gigantic pit, is the most intriguing question of the future.

It is yet unclear whether the values of appearing and disappearing energy in these solutions are equal. But neither in the strict UQT nor in the equation with an oscillating charge vacuum (as a big set of random oscillations) is needed for energy generation. Of course, UQT admits of such an energy exchange with vacuum. For example, during split of a photon on a semitransparent mirror, at one time both halves of the photon will not be registered and will give their energy to the vacuum and disappear for the observers for good, at another time there will appear two photons out of one, and the lacking energy will be taken from vacuum. But *the movement equations (4) and (5) themselves know nothing about vacuum and can generate energy due to their nature* (they are noninvariant relative to the coordinate translations) and the conservation laws we are so accustomed to do not exist for them.

Let us remind you once again that the latter follow from the Newton equations, and the Newton equations result from averaging by a big number of events, while for individual events of small energies no conservation laws in quantum physics exist.

In other words, it can be said philosophically that a motion of a small wave packet, once started, will give birth to other movements (energy) and, consequently, to matter. Since most various and breath-taking speculations are possible, up to the creation of a universe, we will stop here.

Thus, the generated or disappearing energy in our approach can be manifest not only in the changes of the particle velocity during movement in a certain potential, but in the appearance or disappearance of the particles themselves as well. A change of the particle velocity in movement is most easily discoverable, and it is the velocity increase that can be used for generation of heat or electric current. There can be energy systems, which exploit the fact itself of charge oscillation and the consequence of it. It is very probable that these phenomena, contradicting the most fundamental laws of modern science, have been long discovered and even applied. But these are the very phenomena that are the easiest to be exploited at the first stage of development of such new energy technologies.

When an energy generation mechanism is used, crematorium-type solutions should be suppressed. But all the quantum processes are built on the basis of elementary acts, and each of them is impossible to be controlled separately. But if the probabilities of such processes are controlled, they, being multiplied by the great number of participants in the process, automatically become macroscopic variables of quantum kinetics, and the process itself becomes possible. It can easily be achieved, if process participants with correlated initial phases are selected.

Let us remind you that the Newton and relativistic classical mechanics follow from the strict UQT, while the Newton movement equations with the resultant energy and impulse conservation laws follow from the oscillating charge equation with averaging by the particle ensemble composing a classical body (material point). But these conservation laws are nonexistent for individual microparticles in our theory, and they appear only in case of averaging by the ensemble of particles. Thus, if the energy-generating processes are accumulated, and the processes where energy disappears are suppressed, a classical *perpetual mobile* can be created.

But the UQT and the oscillating charge equation have other differences not only from the equations of classical mechanics, but also from some equations of electrostatics and electrodynamics.

There is a fundamental theorem of circulation for the electric field. Let us dwell on it in more detail. Let us have a vector field **E,** which can be an electrostatic or a gravitation field.

$$\mathbf{E} = \mathrm{P}(\mathrm{x},\mathrm{y},\mathrm{z})\mathbf{i} + \mathrm{Q}(\mathrm{x},\mathrm{y},\mathrm{z})\mathbf{j} + \mathrm{R}(\mathrm{x},\mathrm{y},\mathrm{z})\mathbf{k}$$

Line integral

$$\Gamma = \oint_l \left(\mathrm{P}\,dx + \mathrm{Q}\,dy + \mathrm{R}\,dz\right) = \oint_l \mathbf{E}\mathbf{dl} \qquad (15)$$

is called circulation of vector field **E** by contour *l*. Of course, circulation depends not only on **E**, but also on the passage direction accepted in contour *l*; by changing the passage direction we will change the circulation sign. Form (15) is convenient for mathematicians, but for our purposes we will present equation (15) in a different way. If both parts of equation (15) are multiplied by electric charge *q,* on the right we will get the integral of force $q\mathbf{E}$ by way **dl,** i.e. work for moving the charge along a closed loop contour. It is well known that this value is zero.

$$\int_l q\mathbf{E}\mathbf{dl} = \mathbf{0} \qquad (16)$$

If this value were not zero, an energy source could be created. For this purpose a charge should be moved in electric field **E** from point *a*, located in the high voltage area of the field, to point *b,* located in low voltage area of the field, and then back, but along another route. The values of work from $a \to b$ and from $b \to a$ would be different, and we could extract work from the field without making any changes in the system. When the charge is constant, it is certainly true, so for a macroscopic constant charge this theorem is an analog of the energy conservation law. The authors have not come across such an interpretation of the energy conservation law in other works. If the charge is microscopic, then in the UQT it changes, depends on time, coordinate and velocity, so work from $a \to b$ and from $b \to a$ will be different, in this case work can in principle be extracted from the field without any changes made in the system.

Discussion of Experimental Results

Let us now get down to explaining some very unusual experimental results, which the authors have nothing to do with, and which they sometimes regard rather skeptically. The point is that the sphere of new energy sources is the headache of all the human civilization, and in this sphere, like nowhere else, the dividends can be exorbitantly high, and for this reason there are in this sphere a lot of swindlers (even among the theoreticians) and simply erring people. The official science of the world does not so far believe in such research, but the most suspicious fact is the great multiplicity of such works. The authors are not inclined to regard all these people as swindlers or erring, because the UQT can offer a beautiful and simple interpretation of certain phenomena.

There are strange plants with the efficiency over 100%. They are even manufactured in small quantities and are rated among energy-saving devices already termed over unities. Japanese researchers take these problems very seriously, and the leading role in studying this problem belongs not to the USA, but to Japan, which even finances many US institutes in this framework. The total Japanese expenditures for this research exceed $200.000.000 a year. It can be forecast that with the Japanese mentality and the state policy of exporting not natural resources, but superhigh technologies and intellect, Japan will find itself among the leading countries early in the 21st century. We think that our readers will not be surprised to hear that Russia has

not allocated a single cent for this program, and all research was made on pure enthusiasm.

In the USA such works do not get official governmental support either (like, for example, the dying out hot nuclear fusion problem), but a great number of private firms and individual businessmen are conducting large-scale research. The following US journals are devoted to the subject: *Journal of New Energy, Infinite Energy, Cold Fusion, New Energy News, Fusion Facts*, and *NET-Journal* (Switzerland).

Switzerland, Italy, Germany, and France are also among the countries where the new energy problems are seriously researched from the cold nuclear fusion point of view.

A very young sphere of power engineering has emerged and is quickly developing, which researches many new energy sources. In future those new energy-saving sources will first be used, which will considerably differ from the existing ordinary energy transformers in that they will generate additional energy that can be used in the interests of the mankind. The development of civilization will then be limited not by long-expected reduction of natural fuel resources, but by heat pollution of the environment.

Let us enumerate just a few of the new energy directions:
1. The Patterson fuel cell (CETI).
2. Supermagnet-superengines of Takahashi, Aspden and Adams
3. Swiss plant Testatika.
4. Engines operating on water.
5. Hypersound Griggs pump, the Potapov and Schaffer heat generators.
6. Schoulder and Fox cluster systems.
7. N – machines of Farade, Bruce de Palma, Newman, Searl, Tewari, etc.
8. PAGD reactor of Canadian researchers P. Correa and A. Correa.

This list can be complemented with the surprising experimental results received by physicists A. Samgin and A. Baraboshkin (Russia, Institute of High-Temperature Electrochemistry under the Russian Academy of Sciences, Ekaterinburg) [24,25] and T.Mizuno [26] (Japan). They appear to have used, totally independently of each other, special proton-conducting ceramics, which, when electric current runs through them, generate a thousand times more heat energy than the electric energy consumed. In some experiments by T.Mizuno this value even exceeded 70000(!). T. Mizuno in a personal talk with one of the authors of this report said that he feared very much the radiation sickness. But no α, β, γ radiation or nuclear debris was found, and the nuclear processes are not responsible for such energy generation. Such proton-conducting (or, to be more exact, deuteron-conducting) ceramics was made using the power metallurgy methods by agglomeration under high temperatures. In other words, all the chemical processes in it had long been over. The origin of such an amount of excessive energy is absolutely incomprehensible in the framework of conventional science, for they cannot be accounted for either by nuclear or chemical reactions, or by phase passages. At first the authors of this experiment supposed nuclear fusion reactions of the D+D type. At our request, A. Samgin replaced heavy hydrogen (deuterium) during ceramics production with ordinary hydrogen. If the effect of such huge energy generation was connected with the nuclear D-D reactions, all the anomalous heat effects would have disappeared, but they persisted. After such a large quantity of energy was generated, the tablet disintegrated into powder.

These effects can easily be explained by UQT from the harmonic oscillator theory point of view. When the tablet is agglomerated, there remain in it some caverns of a size of hundreds Angstrom units. When direct or alternating current flows through it, the protons and deuterons in their movement (there are few electrons in such ceramics) get into these caverns, and a process can start which is described by the "maternity home" solution. A particle accumulating energy, oscillates in such a pit, and finally the energy will be sufficient both for heating and for destruction of the pit walls (tablet turning into powder). The same processes seem to be taking place in a palladium electrolytic cell with heavy water, and in a nickel electrolytic cell with ordinary water, which accounts for anomalously large heat generation, not related to nuclear processes.

It would be good to verify experimentally the dependence of the tunnel effect on the initial phase. But it seems us that it is more important for our opponents, since both cold nuclear fusion (CNF) and discovery of nuclear transmutations *(which, from the point of view of modern science, are even more absurd than the existence of CNF*) evidently cannot be accounted for in any other way. Besides, such a direct experiment is of a fundamental value. There are today a lot of people and groups in the world, who pin great hope on exploiting the nuclear transmutation phenomenon for the purposes of processing and recycling of nuclear wastes, and the question of industrial generation of tritium for military purposes using CNF methods was under consideration in Los-Alamos. Internet magazines are full of such information. We are not giving Internet addresses here, because everything is constantly changing in this live system.

Let us analyze some of the above-mentioned devices. The first, the oldest and the most mysterious information was information about internal combustion engines operating on water.

Let us give just one example. When we were students, one of our teachers, the late Professor G.V. Dudko (1959) told us that in 1951 he had participated in the testing of an internal combustion engine [39,55-57]. The device represented a hybrid of a diesel and an ordinary carburetor engine, where a gas of petrol was needed to start it and then ignition was switched off, and an

ordinary fuel pump sprayed into the cylinder warmed up and strongly compressed water with special additives (which the inventor himself put into the tank in small quantities, and which, as we now understand, represented the principal secret). The engine was installed on a boat. The researchers were riding for two days in the Azov Sea, and only water vapor was the engine exhaust. Professor Dudko himself drew the water fuel overboard and poured it into the tank. They needed much water, several buckets a day, but there was no shortage of it… The question of why, if everything was so great, these engines are still not in use, can occur only to a person who has never lived in Russia.

From the point of view of the solutions of the harmonic oscillator problem, the following theoretical possibility exists [40,44,47,55-57]: if water with the necessary additives (which, evidently, represent the secret of many invented engines operating on water) is compressed and sprayed into the cylinder, each drop of water, when it gets into the cylinder after being compressed, will start dilating and will pass by inertia the equilibrium position. As a result, caverns (empty volumes) can be formed in it, with a size of several dozen of Angstrom units. If a free proton (or some other microparticle) gets into such a cavern in the required phase (it is supposed that the task of the additive is exactly this), the "maternity home" solution will be realized and some of the drops will explode… Later we heard and read many times about various Russian inventors, who had successfully created and tested engines operating on ordinary water with some mysterious additives.

Of course, the possibility of catalytic water decomposition with small energy consumption before spraying into the cylinder is not at all excluded. There are films and information in Internet about testing of cars operating on water, which is catalytically (with small energy consumption) decomposed into oxygen and hydrogen. Such power engineering would be ecologically absolutely clean, and the only restriction would lie in heat pollution of the environment.

An ideal solution for the motor transport could also lie in use of some new types of electric energy generators. The UQT even admits of the possibility, which was long observed in the experiments of Nicolas Tesla and in those made by Canadian physicists the Correas, who even received a patent for a system generating energy from vacuum fluctuations (as they believe) [45]. The readers could have got acquainted with our detailed theory of these processes in [46]. But the ideal system for the automobile would certainly be Testatika.

Any imagination will be amazed at the thermal cell CETI created by James Patterson, USA [27], in which takes place the electrolysis of specially made nickel balls in ordinary water. The US paper «Fortean Times» [1] 85, 1995, wrote about it: "December 4, 1995 will go down into history. On this day a group of independent experts from 5 US universities was testing a new source of energy with a stable output heat power of 1.3 kWt. The consumed electrical energy was 960 times smaller". All experts note that the generated heat is of mysterious origin and cannot be explained by chemical or nuclear reactions, as well as by phase passages. The US ABC TV showed on February 7 and 8 1996 in the «Nightline» and «Good Morning America» cycles of programs about the development by Patterson of a new energy source generating hundreds of times more energy than it consumes. The mysterious nature of the generated heat was again underlined. It is interesting [34] that Motorola tried to buy the CETI patent from its authors for $20.000.000, but met with a refusal. We are sure that Motorola had invested a certain amount of money into the study of this problem before making such a serious offer. All that happens within the Patterson element has nothing to do with nuclear reactions (although Patterson told one of the authors that he was of a different view), and, in our opinion, can be accounted for by exactly the same processes as were described above for proton-conducting ceramics.

The sonoluminescence phenomenon, when certain liquids start shining if weak ultrasound is run through them, also looks very mysterious. No satisfactory explanation has so far been found for this experimentally proved phenomenon, discovered by Moscow University Professor S.N. Rzhevkin in 1933. As Nobel Prize winner Professor Yulian Schvinger said, "it has no right to exist, but it does exist" [38]. This phenomenon can also be explained from the above-mentioned positions.

There are also heat generators (Yu. Potapov [21-23], Moldavia, James J.Griggs [28], and Huffman [29], Schaffer - USA). In them many cavitating bubbles are formed during circulation of ordinary water, in which excessive energy is generated, with the output to input energy ratio approaching 1.7. In these experiments and plants no chemical or nuclear reactions can take place, and thousands of Potapov's heat generators have been manufactured for heating homes. In such devices (they are very different in appearance) a great number of cavitating bubbles are created in a flow of water. This is achieved either with the help of interrupting the water flow with a special rotor (J.Griggs, Huffman, Schaffer), or the water flow is twirled by a special helix and then enters the zone of sharp dilation, where cavitating bubbles are formed (Yu. Potapov). In general, it should be said that cavitation remains a great puzzle for theoretical hydrodynamics and science. For example, forged multi-ton screw propellers of big nuclear submarines under certain operation modes and geometry of the surrounding forms can be destroyed by cavitation within only a few hours. It happens because of huge energy generated in cavitating bubbles.

Under certain values of phase and energy, a particle in the pit, each time reflecting from the walls, will have a greater velocity than that of a falling particle (this is within the uncertainty relation), and after many reflections will accumulate a fairly big energy which will be generated in the form of heat or bremsstrahlung when the pit is destroyed, and, finally, the energy of the oscillations of such a particle accumulated in the

pit will always be transformed into heat in an ordinary solid body or a liquid. This physical idea immediately accounts for both sonoluminescence (although for sonoluminescence in general this mechanism is less primitive), and energy generation in proton-conducting ceramics, nickel during electrolysis in ordinary water (CETI element), and water bubbles of commercial heat generators. The theory predicts that the samples should be fissure due to increased pressure on the walls of the potential pit with the growth of energy, which fact also takes place, since both ceramic samples and nickel balls in the CETI element finally disintegrate. It is evidently for these reasons that any metal containing much hydrogen in its grid becomes fragile and is quickly destroyed, which fact is well known to engineers.

The small number of experiments does not so far allow for making concrete conclusions as to what particles generate energy in pits (microbubbles). Besides, for at least an electron to disappear a pit of about 0.5 MeV is required, while in a solid body the pits are about several eV deep, and what seems to happen is only loss of kinetic energy, and not disappearance of particles. The fact that this process requires very deep potential pits, which do not exist in a solid body, does not change the essence of the matter.

Of course, under ordinary conditions, both competing solutions usually take place at once: "maternity home" and "crematorium", which compensate for each other and the energy is preserved. For energy generation, the "maternity home" solution should prevail. Both these processes take place simultaneously and compete with each other, but, formally, they are not connected in space and time. The complexity of the energy generation problem lies in suppressing the "crematorium" solution by a careful selection of different parameters and promoting the "maternity home" solutions. So far we cannot say for sure what the optimum dimensions of such cavitating bubbles are, or which object oscillates in them, because for this purpose special experiments are needed, which so far have not been staged.

Of course, the inexorable Robber in the form of the Carnot principle stands in the way of transformation of the heat generated in a heat generator or ceramics into electrical or mechanic energy. In accordance with this principle, all mechanic or electrical energy can be transformed into heat, but the reverse process is always connected with big losses.

If there are experiments and plants in which energy generation contradicting the conventional conservation laws is discovered, there should also exist opposite ones, where energy disappears completely, i.e. the "crematorium" solution prevails. It proved to be true. There are such modes during electrolysis in electrolytic baths, under which the temperature of the solution in the bath is strongly reduced for unaccountable reasons, and this fact has no explanation at all. This phenomenon long ago was noted by attentive industrial engineers, and it is called the "bath-freezing" mode [49,50]. Chinese physicist Swe-Kai Chen from Taiwan in his experiments [48] stably observed the same phenomena. It is quite easily explained: a particle with a velocity exceeding the most probable velocity in this distribution gets into caverns on electrodes and after some oscillations reduces its velocity, which becomes smaller than the most probable one, and then the particle leaves the cavern at a small speed, and the same process can happen to another energetic particle. This leads to the cooling of the cell in the case of such mass processes.

The problem of ferromagnet magnetization (the Easing model) can also be reduced to the orientation of a magnetic doublet by the external magnetic field, and then it is essentially the harmonic oscillator equation with a slightly different return force ($F = \frac{\mu}{r^3}$) and all the conclusions made earlier remain in effect. That is why magnetization should also produce energy generation effects. This proved to be true. For the general public everything began on May 17, 1996, when Frode Olsen from the research group "Free Energy" showed on the Norwegian TV (TV2) a surprising film about a "dynamic sculpture" made by artist and sculptor Reidar Finsrud from Skaarer, Norway. The author of this "dynamic sculpture" *had no idea about physics* and had been making it for 12 years. Einstein's idea of how discoveries are made conveniently comes to mind at this point: everyone knows that a certain thing cannot be done, but there is a man who does not know it, and it is he who makes the discovery.

This "dynamic sculpture" accompanied by an "explaining" poster «*perpetual mobile*» represents an iron well-polished ball with a diameter of 2.7 inches weighing about 2 pounds. The ball is rolling along a circle on close guides resembling two parallel skids with a diameter of 25 inches past the poles of three permanent magnets, where it is magnetized. In the area of three permanent magnets three more mobile magnets are installed on special mobile 5-inch long levers, and these magnets, when the ball passes them, are slightly inclined (due to the ball gravitation) and, after the ball passes them, are raised by the holding springs (sway like yokes). The ball makes a complete turn in 3 seconds. All this magic (***they say the ball had been rolling along the close contour for more than a year***) does not have any sources of energy and is installed for everyone to see in a Norwegian picture gallery on a special stand covered with a glass cover. The authors only saw a good TV film about this installation and were mostly surprised at the fact that the ball had not stopped during uninterrupted shooting (about 20 minutes).

We are well acquainted with circus tricks, but it is absolutely incomprehensible how such a trick could be staged using some secret methods. It is clearly seen that the ball in its movement always partially transfers its energy to the three long swaying pendulums, but there is no way to use them for pushing the ball and making up for friction, this being the only trick that could, in our view, be applied here. All the rest is clearly visible and contains nothing suspicious.

Let us estimate the generated energy. At an initial speed of about 1m/s the ball stops after 30 seconds, if all the magnets are removed. It means that the energy consumed in 30 seconds is about 0.5 joules, or 1/60 Watt. The total energy generated in a month is 43,200 joules, and this is huge energy, much greater than that of a good shell!

It is clear (if the word is relevant here at all) that when the ball is approaching the permanent magnet and the process of magnetization is going on, it is accelerated, but when it mechanically gets past the equilibrium position and, moving away from the magnets, becomes demagnetized, the gravitation (which now starts slowing the ball down) will be slightly less than it was at the moment of the ball's acceleration. This small difference in forces provides for small positive work to overcome friction. Energy generation and similar things during magnetization had been *predicted* by one of the authors in magazines *Infinite Energy* vol.1, No.2, p.38, (1995); *Proceedings of the ICCF*5, p.361, April 9-13, (1995), Monte-Carlo; *Cold Fusion*, No 11, p.10, (1995); *Chinese Journal of Nuclear Physics* (vol. 19, ¹2, 1997). The quantum-mechanic processes are very complicated, but some of them can be understood.

All keen physicists were quick to understand it, and J. Naudin in France made a similar, but much simpler experiment. A ball of a soft magnetic material is swaying along parallel U-formed skids in a system of four magnets. Near the bottom of the U-form there is a small smooth step. It may have been made to make the magnetization and demagnetization processes different in time, which is very important. If there are no magnets, nothing interesting happens and oscillations are quickly (in a few seconds) damped. If the magnets are present, oscillations go on up to 3 hours 27 minutes. It appears that in this case the author failed to find good material and parameters of the plant, so friction was not compensated completely. In all these experiments demagnetization of permanent magnets does not happen, because the experiment is repeated many times with the same results.

And now a few vague words about demagnetization processes. During magnetization of the ball, the magnetic moments of its atoms are oriented (like the hands of a compass) along the field lines. When the ball leaves the magnetic field area, the atom magnetic moments are disoriented under the influence of the heat motion, and it becomes demagnetized. In the unitary quantum theory the share of the oriented magnetic moments in the external field can be bigger than in the conventional quantum mechanics (the "maternity home" solution), and the ball gravitation can be stronger due to it. Disorientation of these moments happens similarly in both theories. It seems to be for this reason and due to the difference in magnetization and demagnetization time that a difference in magnetic forces occurs when the ball approaches the magnet or moves off from it.

The scientists of the older generation will remember that a similar toy was shown in the 30's to David Gilbert, who said it was the most interesting thing he had ever seen. A question arises as to why it has not yet been realized. We do not know a physical-mathematical answer to this question, and it is not our task to analyze the social reasons of this phenomenon. Japan has a different mentality, and there is a governmental program for generating energy from permanent magnets. Takahashi [51] even seems to have made an electric engine with an efficiency of up to 318%!

Still more mysterious is the long-known problem of energy shortage in many biochemical reactions with ferments (enzymes). For example, in the well-studied reaction of disintegration of polysaccharides in the presence of lysozyme the following happens: a polysaccharide molecule gets into a special cavern in a big lysozyme molecule, and some time later its debris are thrown out of it (Fig. 6). The broken binding energy of the polysaccharide is about 3 eV, while the energy of the heat movement is only 0.024 eV. From the standard science point of view, it is absolutely unclear where lysozyme takes the energy to break the polysaccharide. No satisfactory mechanism for explanation of such reactions (and they are very numerous) was found, and all this was "swept under the carpet", as physicists say. The UQT provides for a completely new look at the catalytic processes, which has an incomprehensible source of energy reducing the molecule activation energy. From our point of view, this process is a variant of the "maternity home" solution for oscillator.

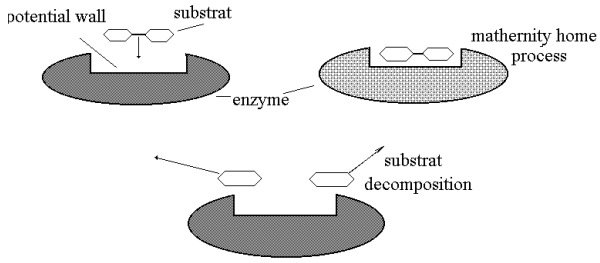

Fig.6. Break of polysaccharide molecule by lysozyme.

The most surprising thing is that in all the cases generation of excessive energy cannot be accounted for by chemical reactions or phase passages. If nuclear reactions do sometimes happen (which should not be according to modern science), they can account for only a hundredth or a thousandth share of the generated heat energy. There is no doubt that all these are effects of new physics, for in the framework of the old physics all this is simply unexplainable.

But the existence of a plant that produces *out of nothing* about 10 kilowatt of direct current electric energy with a voltage of 300 V seems nearly impossible. The story was described by one of the authors in three different magazines, and we will just give a brief resume [52-54].

In summer 1999, at the invitation of Swiss physicists (Director of the Institute of New Energy Sources in Egerkinhen Adolph Schneider), one of the authors

visited several research organizations. It is interesting that there is such an institute in small Switzerland, and there is none in big Russia. The purpose of the invitation was very simple: to explain the operation of a plant generating energy out of nothing, i.e. a *perpetual mobile*. In Switzerland such plants are called Testatik Machine M/L Converter from religious group «Methernitha» (Address: Methernitha, CH-3517 Linden, Switzerland, phone: ++41 31 97 11 24).

Such machines exist today in the Swiss town of Linden near Bern. Part of the town belongs to the Religious Christian Community, which is fenced and heavily guarded. There are about 250 members of the Community, many of them are physicists, graduates of the universities of Geneva, Lozanne, Bern. It is not only a research laboratory, they have their own TV center, a film studio, a small furniture plant, shops, garages, residential blocks, and support services. You will probably have guessed that this community does not consume any energy, and this is the most accurate fact in the whole story, for the inquisitive journalists have found out that no money from them comes to the accounts of the local power station, which provides power for all the town. In a cellar of one of the houses they have a power station that produces energy… out of nothing. The author of this inexhaustible source of free direct current energy is Swiss physicist Paul Baumann. Let us briefly describe these fantastic plants: they are of four types (sizes) with capacities of 0.1, 0.3, 3 and 10 kWt. Externally, the plant resembles very much the standard electrostatic machine with Leyden jars often used in physical demonstrations. There are two acryl disks with 36 pasted narrow sectors of thin aluminum, which rotate in different directions. In the first samples ordinary gramophone records were used for disks. The machine is started by pushing the disks in different directions by fingers. The rotation speed is 50-70 turns per minute. After the start disks rotate independently and can be easily stopped by hand, the direct current voltage is about 300-350 V, and the current is up to 30A. The mechanical energy used for rotation (only 100 mWt, according to measurements made by Austrian Professor S. Marinov) is hundreds of thousand times smaller than the generated electrical energy. The biggest plant for 10 kWt has plastic disks with a diameter of over 2 m, the smallest one – 20 cm, the weight of the plants is small enough, the 3-kWt machine weighing about 20 kg.

The charge separation process (which consumes energy!) practically does not slow down the disks. Connection of a load in the form of a 200-Wt bulb does not change the rotation speed either. No cooling or heating of the air or machine parts during long operation takes place, only a slight smell of ozone is felt. The system is noiseless, compact, environment-friendly, and can be installed anywhere.

The Community management thinks, and quite rightly, that wide spread of such systems in the world will lead to a heat explosion, because all the energy generated by the mankind finally finds itself in an energy dump (is transformed into heat), and all this can finally lead to overheating of the environment. They absolutely do not believe (and not without grounds) in the capability of the mankind as a whole to negotiate reasonable use of this invention, and they think that the harm caused by it will be greater than from nuclear, bacteriological, or conventional weapons. Their main idea for the mankind is to live in balance with the environment and to make full use of the energy of the wind, the sun, the water, etc. For this reason the Community is heavily guarded, and they are not going to donate their main discovery to the mankind.

Professor Stephan Marinov visited the Community twice (in July 1988 and in February-March 1989). He was even given such a plant with a capacity of 100 Wt (300 V, 0.3A), which he studied in his laboratory. As far as we now know, even the inventor of this machine does not fully understand its operation principle, so he contacted Marinov out of sheer curiosity of a scientist.

In 1989 Professor Marinov published a book "Thorny Path to Truth – Documents of Violation of Conservation Laws" in International Publishers East-West. The book contains a lot of photos, a measurement report, and a description of the plant. He also organized a research group called "Free Energy" within the Community (Methernitha Group Stephan Marinov Free Energy).

There are very interesting words in this book: "I can state without any doubts that this machine is a classical *perpetual mobile* in its pure form. After the initial push, it goes on rotatingby itself for an indefinitely long time, constantly producing electrical energy in the amount of 100 Watt… It is still unclear, however, how it all can happen…". As far as we know, nobody has managed to build a similar plant elsewhere.

We have an approximate idea of how the plant operates. The idea is as simple and ingenious as that of the wheel, which is absent from the surrounding nature, so the inventor could not borrow the idea. We will just show that the existence of such a plant is in full conformity with the UQT. It is natural that the plant operates on the basis of the charge separation principle. Let us have two metal spherical surfaces with a hole, isolated from the earth and from each other. If, with the help of an insulated stick, we transfer the first electron from Ball A to the internal surface of Ball B through the hole, a difference of potentials will occur, and if we transfer the second and the subsequent electrons, Ball A will attract the transferred charge, while Ball B will repulse it, and energy will have to be spent during the transfer of charges (Fig. 7).

Let us remind you that under the existing circulation theorem (16), the charge transfer work will consume the same amount of energy as will later be generated during the passage of electric current resulting from charge separation. But in the UQT the circulation theorem (16) for *an individual elementary charge* is not valid. Thus, we can select the time and route, along which the charge will be transferred in such a way, that

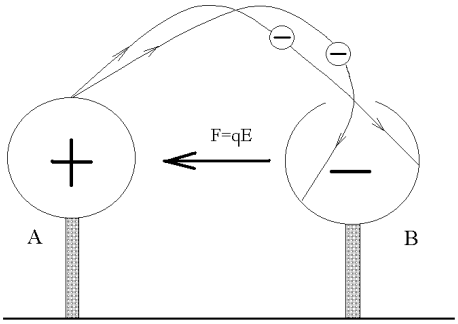

Fig.7. Work for moving the charge depends on method of movement and route.

the charge value during the transfer will be close to zero, and, consequently, the electrostatic force and the charge transfer and separation work will be close to zero too. For example, instead of selecting the route you can wait for the charge to be reduced to zero and then transfer it quickly, and when the charge increases, immediately stop the transfer and fix the charge. Or you can duly select the route and velocity. There are many options. This was evidently realized by Paul Baumann, who is *so far* practically unknown to the official science, and who can find consolation in the idea that the inventor of the wheel will never be known at all. The problem of simple arrangement of all this is just a matter of technique.

You cannot help, thinking that all these might be just tricks. The history of *perpetual mobile* abounds in evidence of downright swindling and frauds, and not a single positive result before, and who can guarantee that the information given above will not prove to be another swindle?

First of all, if all the people always piously believe in the unquestionable stability of the energy conservation law, there will never be any progress in this sphere, and it is then unexplainable how man got down from the palm at all. Secondly, to justify the proposed rebellious position, the following idea comes in mind: if 30 years ago somebody had told the authors (who were then already professors) that at the beginning of the next millennium they would deal in such research, it would have seemed not only a silly joke, but an absolutely impossible thing as well. But, as Voltaire said, "He is silly who does not change".

In conclusion we wish to express with certainty that the time of theoretical recognition and of practical universal using of overunity devices will come soon and become the epoch of new energetics. The people of our planet will regret that so much oil, coal and gas was burned causing terrible ecological losses.

The authors thank astronaut V.A. Dzhanibekov and Professor A.P. Buslaev.

References

1. Sapogin, L.G. Unitary Field and Quantum Mechanics. In: Investigation of Systems. Academy of Sciences of the USSR, Vladivostok, No 2, p. 54-84, 1973 (in Russian).
2. Sapogin L.G. On Unitary Quantum Mechanics. Nuovo Cimento, vol.53A, No 2, p.251, 1979.
3. Sapogin, L.G. A Unitary Quantum Field Theory. Annales de la Fondation Louis de Broglie, vol.5, No 4, p.285-300, 1980
4. Sapogin, L.G. A Statistical Theory of Measurements in Unitary Quantum Mechanics. Nuovo Cimento, vol.70B, No 1, p.80, 1982.
5. Sapogin, L.G. Statistical Theory of Detector in Unitary Quantum Mechanics. Nuovo Cimento, vol.71B, No 3, p.246, 1982.
6. Boichenko, V.A. and L.G. Sapogin On Equation of Unitary Quantum Theory. Annales de la Fondation Louis de Broglie, vol.9, No3, p.221, 1984.
7. Sapogin, L.G. and V.A. Boichenko On Solution of One Non-linear Equation. Nuovo Cimento, vol.102B, No 4, p.433, 1988.
8. Sapogin, L.G. and V.A. Boichenko On Charge and Mass of Particles in Unitary Quantum Theory. Nuovo Cimento, vol.104A, No 10, p.1483.
9. Sapogin, L.G. Clearcut Picture of Microworlds. "Journal Technique for the Young" (Tekhnika Molodezhi). Moscow, No 1, p.41, 1983 (in Russian).
10. Sapogin L.G., "Statistical Theory of Measurements in Unitary Quantum Mechanics," Nuovo Cimento, vol. 70B, No.1, p.80, 1982.
11. Sapogin L.G., "Statistical Theory of Detector in Unitary Quantum Mechanics," Nuovo Cimento, vol. 71B, No. 3, p. 24M, 1982.
12. Boichenko V.A., Sapogin L.G., "On Equation of Unitary Quantum Theory," Annales de la Fondation Louis de Broglie, vol. 9, No. 3, p.221, 1984.
13. Sapogin L.G., Boichenko V.A., "On Solution of One Non-linear Equation", Nuovo Cimento, vol. 102B, No.4, p.433, 1988.
14. Sapogin L.G., Boichenko V.A., "On Charge and Mass of Particles in Unitary Quantum Theory," Nuovo Cimento, vol. 104A, No.10, p.1483, 1991.
15. Sapogin L.G. "Deuteron Interaction in Unitary Quantum Theory", and "On Mechanisms of Cold Nuclear Fusion". In: Proceedings of the Forth International Conference on Cold Fusion, vol.4, Theory and Special Topics Papers TR-104188-V4, July 1994, p.171-178, Hawaii. 1994.
16. Sapogin L.G. "Deuterium Interaction in Unitary Quantum Theory", and "On Mechanisms of Cold Nuclear Fusion". In: Fusion Source Book. International Symposium on Cold Nuclear Fusion and Advanced Energy Sources, Belarussian State University, Minsk, May 24-26, p.91-98. 1994.
17.Sapogin, L.G. "Cold Nuclear Fusion and Energy Generation Processes in Terms of theEquation". Chinese Journal of Nuclear Physics vol.19,#2, p.115-120, 1996 .
18. Sapogin, L.G. «Cold Nuclear Fusion and Energy Generation Processes in Terms of the Schrödinger Equation». Infinite Energy [E.Mallove, editor], vol.1, No 5,6, p.75-76, 1996.
19. Sapogin, L.G. «Energy Generation Processes and Cold Nuclear Fusion in Terms of the Schrödinger Equation». In: Proceedings of the Sixth International Conference on Cold Fusion, Progress in New Hydrogen Energy, October 13-18, 1996, Japan, vol.2, p.595-600.
20. Sapogin, L.G. "Energy Generation Processes in Terms of the Schrödinger Equation."Proccedings îf the 2nd Russian Conference CNFNT (in Russian) p.18-24, Sochi, September 19-23,1994.
21. Potapov J.S. Patent of the Russian Federation No 2045715 Heat Generator and Device for Heating of Liquids. Registered on the 10-th of October 1995; priority from the 26-th of April 1993 (in Russian).
22. Potapov J.S. Water as a Source of Life and Energy. Enerjia-takarekossadi, Revu. p.25- 29, September 1998, Budapest.
23. Potapov J.S., MD, Patent No 649 Instalatie pentru obtiinerea enerjiei electrice si-temice. Buletin Oficial de Proprietate Industriala, No12, p.18-19, Chisinau (in Moldavian).
24. Samgin A., Baraboshkin A. et al. Influence of Conductivity on Neutron Generation Process in Proton-Conducting Solid Electrolytes. In: Proceedings of the 4th International Conference on Cold Fusion. Palo Alto, USA, v.3, p.51-57, 1994.
25. Samgin A. Cold Fusion and Anomalous Effects in Deuteron Conductors during Stationary High-Temperature Electrolysis. In: Proceedings of the 5th International Conference on Cold Fusion. April 9-13,1995, Monte-Carlo, p.201.
26. Mizuno T., Enio M., Akimoto T. and K. Azumi Anomalous Heat Evolution from $SrCeO_3$-type proton conductors during absorption/desorbtion of deuterium in alternate Electric Field. Proceedings of the 4th International Conference on Cold Fusion, December 6-9,1993, Hawaii, vol.2, p.14., EPRI, Palo Alto, USA, 1994.
27. Patterson J.A System for Electrolysis, U.S. patent No 5,494,559,27 Feb.1996; Miley G.H. and J.A. Patterson in: Proceedings of the 6th International Conference on Cold Fusion, Progress in New Hydrogen Energy, October 13-18,1996, Japan, vol.2, p.629-644.

28. Griggs J. Calorimetric Study of Excess Heat Production within Hydrosonic Pump System Using Light Water. Fusion Source Book. International Symposium on Cold Fusion and Advanced Energy Sources, Belarussian State University, Minsk, Belarus, May 24-26, p.248-253, 1994.
29. Huffman M.T. From a Sea of Water to a Sea of Energy, Infinite Energy, vol.1, No 1, p. 38-45, 1995.
30. Fleischmann M., Pons S. Electroanal. Chem., v.261, p.301, 1989.
31. Sapogin, L.G. and I.V.Kulikov "Cold Nuclear Fusion in Unitary Quantum Theory". Chinese Journal of Nuclear Physics, vol.17, No 4, p.360-370, 1995.
32. Cryz W.: Rivista Nuovo Cimento, 1, Special No, 42, 1969.
33.Kervran Lois C. Biological Transmutations. Swan House Pub. Co, NY, 11223, 1972.
34.Private Communication.
35. Notoya R., Noya Y., Ohnisi T. Fusion Technology. vol. 26, p. 179-183, 1993.
36.Swartz M. Journal of New Energy vol.1, #3, 1996.
37. Blokhintsev D.I. On Energy Conservation Law. In: Works on Methodological Problems of Physics, p.51, 1993, Print of Moscow State University. (In Russian).
38. Schwinger J. Casimir "Energy for Dielectric". In: Proceedings of the National Academy of Sciences, vol.87, p.8370-8372, 1990, "Cold Fusion: Does it Have a Future?" Journal "Cold Fusion", vol.1, #1, page 14-17,1994.
39. Sapogin L.G. «What Can Our Power Engineering Be Like in the Next Millennium», Journal Business-Match, 14, 1998 (In Russian).
40. Sapogin, L.G. On One of Energy Generation Mechanisms in Unitary Quantum Theory. Infinite Energy [E.Mallove, editor], vol.1, No 2, p.38-39, 1995.
41. Sapogin, L.G. On One of the Energy Generation Mechanisms in Unitary Quantum Theory. Proceedings of the ICCF5, p.361, April 9-13,1995, Monte Carlo.
42. Sapogin, L.G. Energy Generation Processes and Cold Nuclear Fusion in Terms of the Schrödinger Equation. In: Proceedings of the Sixth International Conference on Cold Fusion, Progress in New Hydrogen Energy, October 13-18, 1996, Japan, vol.2, p.595-600.
43. L.G. Sapogin, "On One of Energy Generation Mechanisms in Unitary Quantum Theory". Proceedings of the 2nd Russian Conference CNFNT (in Russian) p.18-24, Sochi, September 19-23, 1994; Cold Fusion, No 11, p.10, 1995.
44. L.G. Sapogin, "On One of Energy Generation Mechanisms in Unitary Quantum Theory". Cold Fusion, No 11, p.10, 1995.
45. Correa Paulo and Correa Alexandra XS NRG in Technology, Infinite Energy, vol.2, #7 p.18-38, Nr 8 p.10-15, #9 p.33-37, 1996. US Patents, numbers: 5.416.391, 5.502.354, 5.449.989.
46. Sapogin L.G. Theory of Excess Energy in PAGD Reactor (Correa reactor). In: Proceedings of ICCF-7, Vancouver, April 1998; Infinite Energy, No 20, 1998, p.49.
47. Sapogin L.G. "New Source of Energy?" Journal "Acknowledgement and Physical Reality", Moscow, vol. 2, #1, page 34-40,1997, (in Russian).
48. Swe-Kai Chen, Chu-Yung Liang «Observation of Cell Temperature Drops». In: Proceedings of ICCF-7, Vancouver, April 1998, p.68-72.
49. Jakimenko L.M. Electrolysis of Water. Chimia Press, Moscow, p.p. 33, 86, 90-114, (1970) (in Russian).
50. Pfleiderer N. Electrolysis of Water. pp. 12, 17-18, 1935, Leningrad (in Russian).
51. Rothwell J. Yasunori Takahashi´s Supermagnets, Infinite Energy, vol.1, No 5,6, p.33, 1996.
52. Sapogin L.G. "Is This Really True?", Infinity Energy, N 28, 2000.
53. Sapogin L.G. «Perpetual Mobiles Operating in Switzerland»,magazine «Chudesa I Prikluchenia» # 2, 2000.
54. Sapogin L.G. «They Say There are No Perpetual Mobiles. Then what is it?", magazine "Samolet", 4, 2000.
55. Sapogin L.G. XXI Century - New Sources of Energy? In: Chudesa i Prikliuchenia, Moscow, No 11, p.32-35 (In Russian) 1996, and No 3, 1998.
56. Sapogin L.G.,Kulikov I.V. "Neue Quantenfeldtheorie und prozesse zur electromagnetischer und thermisher energie mit overunity effekt", DVR-Mitglieder-Journal 2/2000.
57. Sapogin L.G. "The 21st Century: Will it Bring a New Quantum Picture of the Universe and New Energy Sources?", Journal of New Energy,vol.2, #3/4,1999.
58. Panos T. "Electrically Induced Nuclear Fusion in the Living Cell ", Journal of New Energy vol.3, #1, 1998.
59. M.Sue Benford, R.N. M.A. "Biological Nuclear Reactions: Empirical Data Describe Unexplained SHC Phenomenon" Journal of New Energy vol.3, #4, 1999.
60. Schwinger J. "Casimir Energy for Dielectric". In: Proceedings of the National Academy of Sciences, vol.87, p.8370-8372, 1990, "Cold Fusion: Does it Have a Future?" Journal "Cold Fusion", vol.1, #1, page 14-17,1994.

KOZYREV-DIRAC EMANATION.

INTERACTION WITH MATTER and METHODS OF DETECTING

Dr. Ivan M. Shakhparonov

125252, Russia, Moscow,Pestchanny Pas. 20-1-33
phone/fax 8·095-198-2012

In this paper the authors show the possibility of creation of a new kind of emanation. The magnetic monopole beam can be made in space as a result of focusing of some natural substance. Special devices based on the Moebius band elements make the given focusing. This emanation is able to magnetize graphite and organics, decrease the radioactivity, and influence the oncology diseases .The time reverse technology is realized in such devices.

Experimental data, which allow making a conclusion about existence of previously unknown emanation, are presented in this report. Here are descriptions of experiments and methods of measurement. The effects of interaction between new type of emanation and matter have been obtained.

Till the present moment theoretical physics didn't pay attention to the nonoriented configurations and spaces. The reason of this situation is the fact, that from the philosophic point of view it is not possible to determine and locate the area of the nonoriented topological structures in our world. We (eight scientific teams) joined our forces and we needed more than 30 years to solve this problem by an experimental approach.

The fundamental tenet of the casual mechanics developed by Kozyrev can be formulated as follows. There are two types of energy in the Universe. The positive or «right» energy acts as a factor of the entropy increase. The negative, or «left» energy tends to decrease the entropy, i.e. it acts as a factor, which regulates the entropy increase. The «right» energy is transformed to the «left» one and this fact may be interpreted as a course of time from the past to the future. When the energy is transformed from the «left» to the «right» form, time is reversed. Kozyrev supposed [1] that through revolving of a body together with a

6. Activation by nuclear magnetic resonance;
7. Activation by electronic paramagnetic resonance;
8. Activation by electrochemical force.

All these methods can be used as possible way to high efficient energy systems. Gerlovin wrote: "Usually 1, 6 and 7-th methods of structural activation are realized in catalysis simultaneously. Besides, catalysis differs from macroscopic methods because it has the most minimal distances from the sources of activator fields to the activated molecules. And finally, an active participation of force fields created by nuclei of atoms and significantly more active participation of disturbed EPV is possible in catalysis. That's why catalysis is the most effective method of structural activation. The detailed account of this method exceeds the limits of this article and we can only annotate it." [1, p.333]

Information stated above is only a small part of the questions appeared under consideration in Gerlovin's theory of fundamental field (TFF). Other important questions should be considered with a new experimental data.

References

1. Ilia L. Gerlovin, "Foundations of unified theory of all interactions in matter", published in 1990, St.Petersburg, Russia.
2. To the question of multipolarity, Alexander V. Frolov, New Energy Technologies, #1 (4) 2002, St.Petersburg, Russia.
3. N. A. Kozyrev, Selected works, St.Petersburg, LGU, 1991.
4. Practical application of time rate control (TRC) theory, Frolov A.V., New Energy Technologies, #3, 2001, p.15, St.Petersburg, Russia.

Antigravitation Force and Antigravitation of Matter. Methods of its Creation

Anatoly K. Gaponov

Sadovaya Str. 195, Novosibirsk, 630009, Russia

Part I

For a long time there is an opinion in physics about antimatter as a possible source of antigravitation, but the researches on this subject came into a dead end. The existent presentations and formulas forbade the conclusion about antigravitation, but our conducted investigations brought us to the possibility to get antigravitation of substance and to the paradoxical conclusions concerning the next:

1. Two types of space exist:
   a) The Absolute space
   b) The Relative space

2.a The Gravitation Field is the relative space, which has accelerated motion, directed to the center of a planet.

2.b The Antigravitation Field is the relative space, which has accelerated motion, directed from the center of a planet.

3. Gravity force does not depend on mass of a body! The mass can be presented in three versions:

a) m_k –mass as amount of atoms.

b) $W_{m_A^e}$ - electronic-atomic energy in mass.

c) $W_{m_G^m}$ – mechano-gravitational energy in mass.

On the basis of the stated notions we offer to revise the essence of force not only in Coulomb's formula, but in Newton's formula too.

$$F = K\frac{q_1 \cdot q_2}{R^2} \qquad F = P\frac{m_1 \cdot m_2}{R^2}$$

It is well known, that mechanical energy can be bringing in electrostatic charge, where mechanical energy runs (turns) into energy of electric field, where

(mechanical energy) $F \cdot R \rightarrow \frac{E_2 \cdot V_{m^3}}{2}$ (electrical energy)

Similarly it is also possible to insert mechanical energy into mass of a body. As the result, the mechanical energy will turn into energy of gravitational field, where

(mechanical energy) $V \cdot F \cdot t \rightarrow \frac{g^2 \cdot V_{m^3}}{2}$ (gravitational energy)

Since the volume of the Earth is constant, the acceleration of gravitational field will be increased.

It should be logical to expect, that when removing the mechanical energy from mass the inverse process will occur, that is to say acceleration reduction of gravitation field will occur.

In his works I. Newton affirmed about existence of two spaces:

The Absolute space - is an immovable non-rotatable space, which represents a limited cube, with our planet in the center.

The Relative space – is a movable space. It can move with acceleration in the absolute space.

Editor's note: In aether conception this means two parts of aether: some part is involved into the motion with the mass, but another part of aether is immovable.

The main mistake in search of aether consisted in the following: Maikelson's experiments were aimed on

search of relative velocity between bodies and space. However, it was the **relative acceleration** between bodies and space that was necessary to search for.

To quote the conclusions of I. Newton: "Body can keep the quiescent mode or mode of rectilinear uniform motion …" By this, he postulates, that the relative linear velocity between solids and space does not exist. But we know that for rotation it exists (the famous experiments with revolving pail of water).

The gravitational field is the accelerated "falling" relative space, which represents a spherical form. If relative space moves, thus the question appears: where does it move? There is only answer: it moves in the absolute cubic space.

In Einstein's theory there is notion of unified and curved space in gravitational field, but the contradictions appear here, and on concerning that N. Tesla writes: "Only by presence of force field it is possible to explain the observed motion of celestial bodies, but thus the hypothesis of curvature of space is not necessary. The whole scientific literature on this subject is futile and doomed on oblivion". [1]

The fact that gravitation is the accelerated moving relative space can be proved by observation of accelerated moving rocket, where the acceleration in rocket is equivalent to the acceleration in gravitational field. Accelerated movement of rocket is relatively, that allows speaking about either acceleration of rocket motion in immovable space, or accelerated motion of space in immovable rocket!

The anti-gravitational field is the relative space, which has accelerated motion from the center of a body (for example: rotating cylinder, Earth satellite and etc.) But it is possible to create the model of anti-gravitation without rotations. On the basis of analogy between mechanical and electric energy comes to conclusion that gravity between bodies does not depend on mass of the body, but on mechanical-gravitation energy, contained in this mass, which is possible to contribute or to extract from. **Therefore, this is the internal gravitation energy.**

Part II

The "Mass" can be considered as a measure of three different conditions of matter:

m_k - as a measure of amount of atoms, representing a "framework" or "container", in which two types of independent energies are concentrated.

$W_{m_A^e}$ - as a measure of electric energy, which can be either accumulated or extracted, and it have a "compressed" form.

An example of accumulation of electric energy in mass is a big cylinder, rotating with linear velocity, close to velocity of light, in this cylinder the mass of electric and magnetic fields of atoms increases. There are another possible ways to contribute and to extract the said energy from mass.

And finally $W_m M_G$ is the mass, which can be a measure of mechanical energy, or it can be either inserted or extracted from the matter (it can be identified as the gravitational mass). This gravitational mass is what we put our attention on, because it affects upon gravitation and it is able to create antigravitation.

"In his time N. Tesla worked on more general problem, which is the problem of matter and energy. And he has found, as he believed, the new physical principle, on the ground of which he brought forth his gravitational theory that was named dynamic gravitation. But he did not tell about it until almost the end of his life". [2] **Really, dynamic gravitation is the energy of motion.**

Let's take the following indications:

V – mechanical velocity
F – force
t – time.
In this case the product $W = V \cdot F \cdot t$ has the dimension of energy. Hereinafter, let's take

I – strength of electric current
U – difference of potentials
t – time.

Then $W' = I \cdot U \cdot T$ has the dimensional of energy. Thereby, *W* ~ *W'* that is to say, the following products are accepted as equivalent:

1. $V \cdot F \cdot t \sim I \cdot U \cdot T$

2. In previous materials it was reported about untraditional way for accumulation of energy, under the condition, in which at constant current I the product $q = U \cdot t$ will depend on amount of inserted energy in unchangeable circuit L = const, in which the energy can be accumulated by untraditional way not only in electric capacity, but also in inductance.

Similarly the energy can be accumulated by untraditional way in a moving body, under the condition V=const and m_k=const (the product $qr = F \cdot t$ will depend on inserted energy and have unlimited value). **Exactly this charge will create the powerful gravitational fields.**

3. Let's take: F is mechanical force, R is distance. Then the product $F \cdot R$ has the dimensionality of energy. For the uniform electric field the product $E_a \cdot \frac{E^2 \cdot V}{2}$ also has the dimensionality of energy. In this case E_a is constant, E is intensity of electric field, V is volume. Thereby, $F \cdot R \sim E^2 \cdot V$. Similarly, $V \cdot R \cdot t \sim g^2 \cdot V$

We have received the correlations of resemblance for heterogeneous physical values, on the ground of which the following physical experiments can be offered:

On the grounds of the above-mentioned analogies it can be assumed that the accumulation of "compressed" energy is possible in mechanics, as well as in electricity. Since the velocity is relative, that the mass can have zero velocity relatively a observer, who moves with this mass, but the force field will remain unchangeable, since it depends on already invected mechanical energy.

Let's note that:
When the "compressed" electric energy is accumulated, the power field does not change.

When the "compressed" mechanic energy is accumulated, the power field increases.

Now we have come to the amazing conclusion that the gravitational force does not depend on mass of matter, but it depends on mechanic energy, which is included in this mass. This energy is unstable and at contact with land it is disappearing, and at zero gravity it can be saved for a long time.

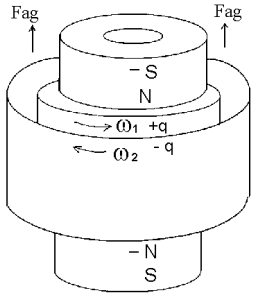

Fig. 1 The first way to obtain the antigravitational force.

1. The magnets are not revolved.
2. The cylinders of charged capacitor are revolving in different directions.

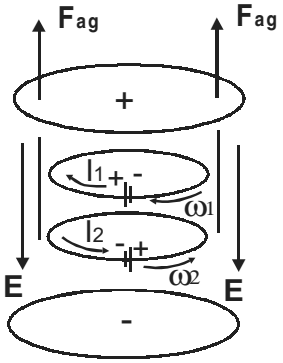

Fig. 2 The second way to obtain the antigravitational force.

1. The capacitor plates are charged and not revolving.
2. The current circuits are revolving in different directions.

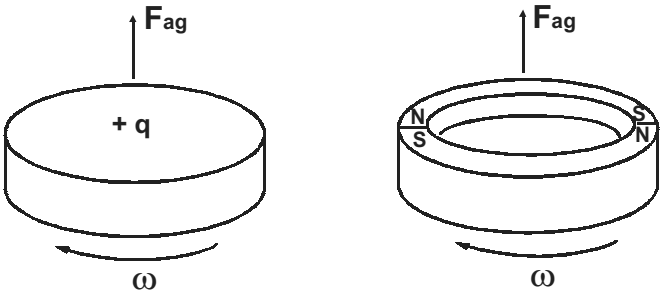

Fig. 3. The third way to obtain the antigravitational force

a) electric
b) magnetic

1. The disk and the ring are made from electrical current conductive material.

2. When these disks rotate, the currents, which emit the mechanic-antigravitational energy in the manner of heat, are formed there.

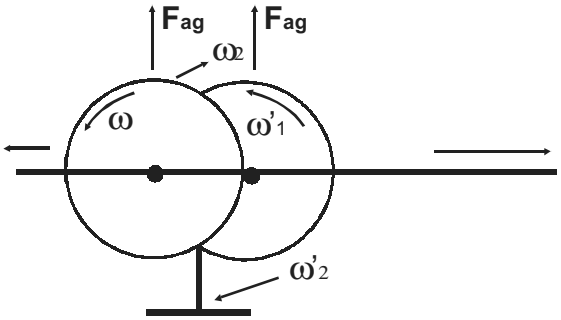

Fig. 4. The fourth way to obtain the antigravitational force. Mechanical method.

1. This is an extraction of energy from matter. It was reported in details on the 10 international symposium in Volgo-Donsk, Russia.

2. The difference with electric circuits is that it is possible not only to extract the mechanical energy, but also to insert additional energy in the system.

References

1. Magazine Inventor and Rationalizator, Russia, #9, 1979.

2. Magazine Inventor and Rationalizator, Russia, #9, 1979, p.28

The Capacitor, which has the Energy of an Atomic Bomb

(Review of Anatoly K. Gaponov's research by Eugenie and Marina Golomolzins)

Is it possible to place a pail of water into a one-liter jar? At the first look the answer is obvious: certainly not! However, the inventor from Novosibirsk, Anatoly Gaponov thinks differently. He does not "press" water, but electrical energy, placing an energy equivalent of atomic bomb into ordinary electrical capacitor.

Everybody using ordinary batteries knows its defect: they need frequent recharging. Gaponov's capacitor is slightly smaller than a matchbox. Just come home by electrical automobile, take out the capacitor from engine, and then put it into the pocket. For home needs you can just insert the capacitor into plughole to power the light, boiler, and TV system. In general, each electronic device can have its own capacitor, then an electrical wiring is not necessary. After one

On the grounds of the above-mentioned analogies it can be assumed that the accumulation of "compressed" energy is possible in mechanics, as well as in electricity. Since the velocity is relative, that the mass can have zero velocity relatively a observer, who moves with this mass, but the force field will remain unchangeable, since it depends on already invected mechanical energy.

Let's note that:
When the "compressed" electric energy is accumulated, the power field does not change.

When the "compressed" mechanic energy is accumulated, the power field increases.

Now we have come to the amazing conclusion that the gravitational force does not depend on mass of matter, but it depends on mechanic energy, which is included in this mass. This energy is unstable and at contact with land it is disappearing, and at zero gravity it can be saved for a long time.

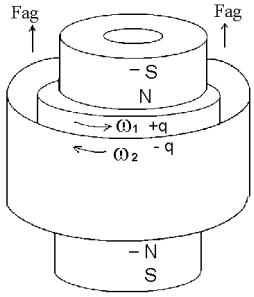

Fig. 1 The first way to obtain the antigravitational force.

1. The magnets are not revolved.
2. The cylinders of charged capacitor are revolving in different directions.

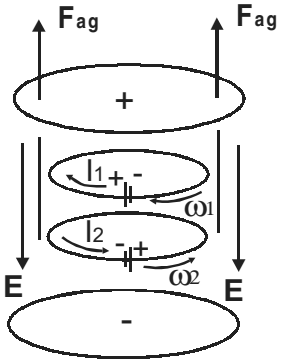

Fig. 2 The second way to obtain the antigravitational force.

1. The capacitor plates are charged and not revolving.
2. The current circuits are revolving in different directions.

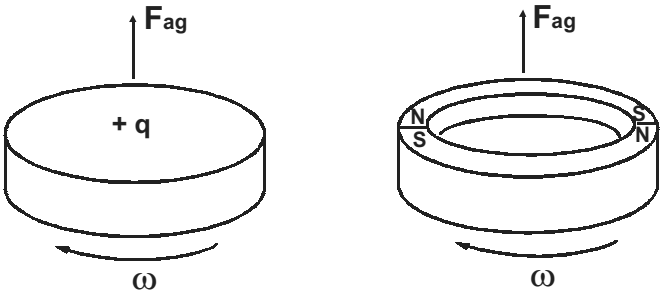

Fig. 3. The third way to obtain the antigravitational force

a) electric
b) magnetic

1. The disk and the ring are made from electrical current conductive material.

2. When these disks rotate, the currents, which emit the mechanic-antigravitational energy in the manner of heat, are formed there.

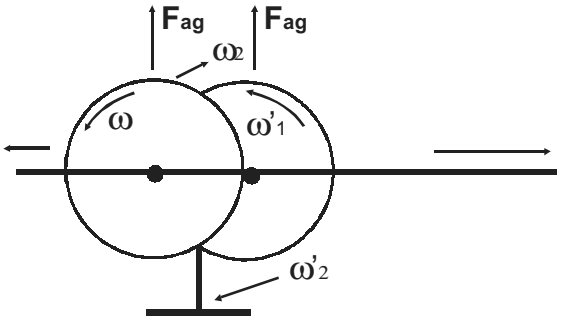

Fig. 4. The fourth way to obtain the antigravitational force. Mechanical method.

1. This is an extraction of energy from matter. It was reported in details on the 10 international symposium in Volgo-Donsk, Russia.

2. The difference with electric circuits is that it is possible not only to extract the mechanical energy, but also to insert additional energy in the system.

References

1. Magazine Inventor and Rationalizator, Russia, #9, 1979.

2. Magazine Inventor and Rationalizator, Russia, #9, 1979, p.28

The Capacitor, which has the Energy of an Atomic Bomb

(Review of Anatoly K. Gaponov's research by Eugenie and Marina Golomolzins)

Is it possible to place a pail of water into a one-liter jar? At the first look the answer is obvious: certainly not! However, the inventor from Novosibirsk, Anatoly Gaponov thinks differently. He does not "press" water, but electrical energy, placing an energy equivalent of atomic bomb into ordinary electrical capacitor.

Everybody using ordinary batteries knows its defect: they need frequent recharging. Gaponov's capacitor is slightly smaller than a matchbox. Just come home by electrical automobile, take out the capacitor from engine, and then put it into the pocket. For home needs you can just insert the capacitor into plughole to power the light, boiler, and TV system. In general, each electronic device can have its own capacitor, then an electrical wiring is not necessary. After one

or two years you will just have to come into electric service station and charge your magic capacitor like a gas balloon. Meantime, this research work began from hypnosis.

Anatoly Konstantinovich Gaponov (by birth from Kaluzhskaya region) is Ziolkovsky' countryman. In his youth Gaponov was brought by fate into Sakhalin, where he showed hypnotic abilities. As an inquisitive person Gaponov had organized a research group, started experiments and soon he understood that human brain had incredible possibilities.

A mental prick was made distantly to the hypnotized man, and he uttered a cry of pain. The ability to see people through, to define and to avoid organism's faults, was revealed in a hypnotic trance. It was possible to inspire pleasant emotions, to force "watching" a film on the given subject, as if on the screen. An uneducated person became an erudite, as if being connected to a certain global information database. Thus an idea to make an amazing experiment was appeared.

In one of the experiments Gaponov hypnotized the person with four classes education, and asked, if it was possible to transmit the electric current without wires? The hypnotized person gave the answer, that it was possible. For that it is required to convert the electric energy in x-ray radiation. And what afterwards? Afterwards it is required to focus that rays. By what? By the lens made from quartz glass, gold coated. It was a miracle! The person told about things that in usual condition he had no idea of! The information was received from somewhere outside.

Further quite an amazing thing has occurred. Gaponov asked the hypnotized person, if it was possible to intensify the abilities of hypnotist's brain?

He answered, that he could. "He turned me round and stared at the back of my head, - recalls Anatoly. - And suddenly the smile began to tear my mouth. I could not do anything with myself. When my mouth was sprawled literally from ear to ear, the hypnotized person in some inhuman voice declared that experience could not be continue since the cerebral hemorrhage would occur. I was hardly able to give the order to stop the experiment".

Thereby, the experiments with hypnosis gave the beginning to the thirty-years period of inventions in the field of accumulation and transmission of energy. After the return to native Kaluzhskaya region, Gaponov was occupied with physics, development of logical thinking and became the town champion in chess.

The necessary books fell into his hands by themselves: some time a certain acquaintance gave it to read; another time he found the last copy in a bookstore. As a majority of self-taught inventors, Anatoly preferred practical experimentation. In quest of laboratory for realization of his own ideas, he moved to Novosibirsk. **As a result, in 1980 Gaponov has made experimental system for compression of energy.**

From the school Physics we have known the notion of "electric arc" – it is a small blue lightning between two electrodes. Gaponov has tamed this lightning in such a way, that having drawn apart two wires, which executed the role of electrodes, by hands and got the arc by length up to half meter. Anatoly confirms that in principle, it is possible to create an arc of any desired length under any amperage.

One of the experiments found out one more enigmatic characteristic of electric discharge. During electric photography of arc a person happened to be between the camera and the system. On typing pictures, the researchers have found with surprise, that the electric arc was perfectly seen through the person. That is to say, it created the invisible field, for which material object was not an screening obstacle, and which was fixed on the film.

The further experiments with electric arc have allowed to get a new source of energy, as well as to open the possibility of setting light and sound on fire! Just imagine, you ring up a bell, it's sound waves spread at once in all directions, and then flash up with bright blaze.

(Editor's note: this experimental facts are rare modern evidences of possibility to create longitudinal electric waves. It is clear analogy here with sound waves in air since they are longitudinal waves also. Alexander V. Frolov)

When the problem of energy source was solved, Gaponov turned to the problem of energy accumulation. According to Gaponov, he has provedexperimentally the possibility of charging of an ordinary capacitor with any amount of energy. This statement sounds paradoxically: how it is possible to place the unlimited amount of contents in limited volume? However, this is not a simple way.

Gaponov believes that energy "placing" occurs not in space, but in time by means of his system! In what way? Imagine, that you fill one-liter jar with water. But already after an instant the water-filled jar is in past, and that present one is once again ready to be filled. And so ad infinitum. Water as if it fills a certain "time reservoir", and a jar is just a neck of this "time reservoir".

(Editor's note: This method is described in other articles also but usually it is pure mathematical discussion about Minkovsky space-time and theoretical proposals. Gaponov's experiments are realization of fantastical idea to take power from the time flow, i.e. from Past or from Future to get over-unity in Present space. Alexander V. Frolov)

"It is possible to demonstrate one more example, - Anatoly Gaponov adds. – Let's charge the capacitor with the expectation, that it will supply the light bulb

for one second. Thereby, on the Earth this light bulb will be on only for an instant. But if the same capacitor with light bulb is placed in rocket and dispersed around the Earth at the velocity, closed to velocity of light, time on the board of rocket will be so slowed that the light bulb on rocket will be glowing infinitely long for an observer from the Earth. It means, that in any case it is the same energy quantity, but in one case it's action is sprawling for a second, and in another one it is sprawling for eternity! It is possible to say, that in my system I have created the condition corresponding to this hypothetic rocket".

The system for accumulation of electric energy could be charged by ordinary wall plug 220 VAC. Time period of charging is different and depends on the certain scheme of the system. By the way, sea electric slopes are the certain natural analogues of such capacitor. Some elements of internal device of these sea creations reminds the "pump" elements for placing of electric energy into "temporal jar".

Finally, the third Gaponov's invention is the system for transmitting of energy without wires. As well as in two previous cases, there is an experimental device. Anatoly Gaponov speaks that he has succeeded in getting the essence of experiments for transmitting of energy, which were conducted by Tesla.

It is clear, that the main advantage of this method is an absence of wires and losses of electric energy. The electricity could be transmitted directly into any point, where receiving equipment placed, let say from Kaluga to Sahara. However, this is not so interesting for anybody, since for the present day Anatoly Gaponov's inventions don't have demand.

" The first system was created twenty years ago", - says Mr. Gaponov. – "Now I am fifty five, but things have not budged an inch". He adds dreamily: "Eh, if only I had a laboratory and some money...".

Gritskevitch's Hydro-Magnetic Dynamo

Oleg V. Gritskevitch

RUSSIA, 690002, VLADIVOSTOK,
Okeansky prospect, 99 - ap.112
phone/fax: (7-4232) 424-674 Email: ogri@mail.primorye.ru
Russian Academy of Energy and Information,
Russian Academy of Natural Sciences

Editorial: The article presents construction and operation of Oleg V. Gritskevitch's hydro-magnetic dynamo, which is an example of very powerful new energy system. The prototype in Armenia has been produced over 1500 KWtts power during several years.

The author was born on 14 August 1936 and grew up in Vladivostok, Russia. He is married and has a son Boris. Gritskevitch is a physicist by education. He worked in the Far - East branch of the USSR Academy of Sciences. Since 1985 he has been working independently as an inventor. He has more than 70 patents on inventions ranging from household engineering up to high technologies, which he has been trying to apply in our country and met big difficulties. After numerous attempts to receive the patents the author was convinced that outflow of the information occurred. Therefore he has received the state certificates as on know-how (on a French way of patenting), for all his inventions.

Introduction

During the Institute for New Energy 1999 Symposium, I lectured on my hydro-magnetic dynamo. This paper is my attempt to explain the construction and operation of my dynamo.

To fool investigators of my secrets, I have an occasion provided misleading information. For example, the drawing accompanying the Russian patent referenced below shows a cylinder across the toroid to fool readers. The real dynamo only has the toroid without the cylinder. Even its name "hydro-magnetic dynamo" is somewhat deliberately misleading.

I have some familiarity with the new energy field. Nearly all purported new energy devices are fairly small electrical generators. The dynamo may be the only new electrical generator which most nearly meets all the requirements of an ideal large-scaled electrical generator. My dynamo really is the single most valuable invention the world has ever known.

Alexander V. Frolov of St. Petersburg recommended me to contact with Dr. Patrick Bailey, Institute for New Energy since Pat has lots of contacts who could possibly help me with patenting my invention of a new source of energy in USA.

I conducted the work on the theory and creation of the electrostatic generator-converter «Hydro-magnetic dynamo» about 20 years. (See dynamo history below.) The first primitive equipment was created when I worked in Academy of Sciences. During that time various changes were introduced in the generator and in the theory of its work. It is now possible to manufacture, install, and apply it in industry.

For the first time I made the public report on this work in 1991 on a symposium in Volgodonsk city. The report received the positive replies and reviews of the experts of a nuclear industry in USSR. The same year I was accepted in International Nuclear Society. In these years I offered development of this technology to different state bodies and private enterprises. But there was the only answer: "It is very interesting and perspective project, but there is no money for it".

NEW ENERGY TECHNOLOGIES #7

1. Gravitonics is Electronics of the XXI Century, Spartak M. Poliakov, Oleg S. Poliakov
2. Experimental Research on Gravitational Propulsion System. Review
3. Beamship Technology: A Re-working of Early 20th century Discoveries, Russell Anderson
4. Commercial Antigravity, Tim Ventura
5. Action without Reaction. New Gravidynamic Paradox, Yuri N. Ivanov
6. New Possibilities of Vortex Electric Power Devices, Stanislav A. Lisnyak
7. Investigation of Electric Energy Transmission Processes in non-Metallic Conducting Channels, D.S. Strebkov, A.I. Nekrasov, S.V. Avraamenko
8. Microcosm – Universe - Life, Alexey G. Shlienov, Ernest L. Petrov
9. Hypothesis of a Theory of Everything, Jack P. Gibson
10. The Charge and Mass of a Photon, Dzabrail Kh. Baziev
11. The Homopolar Motor: A True Relativistic Engine, Jorge Guala-Valverde, Pedro Mazzoni, Ricardo Achilles
12. Weight Reductions Generated by Bucking-Field Permanent Magnets, William C. Simpson
13. Advanced Nuclear Waste Decontamination Technologies, Mark Porringa
14. Experimental Investigations of the Radioactive Isotope Half-Value Period Changing in the Local Volume ofCause-Effect Relations, Igor A. Melnik
15. Tilley Electric Vehicle
16. The Problem of Time: Force as the Cause of Change in the Course of Time, Valentin P. Oleinik
17. Time and its Physical Relationships, Andrew Michrowski
18. Time as Phenomenon of the Expanding Universe, Michael H. Shulman
19. The Experiments on Thermo-Gravitation. Review
20. Letters to the Editor from Hector D. Perez Torrez

New Energy Technologies

Published by Faraday Lab

Issue #4 (7) 2002

Research on advanced space propulsion methods and new energy systems

History of invention: Poliakov's vortex drive

Patented by Research Institute of Space Systems named by Krunichev, Russia

Also in this issue:

* New gravidynamic paradox
* Experiments on weight reduction
* New possibilities of vortex energetics
* Experiments on homopolar motor
* Physical relationships of time

Gravitonics is Electronics of the XXI Century

Hypothesizes, Conclusions, Speculations

Spartak M. Poliakov,
Oleg S. Poliakov

60-let SSSR str., 1-167, Friazino,
Moscow area, 141120, Russia
Tel: (096) 564-65-67

(This article was published in "ELECTRONICS: Science, Technology, Business" magazine 5/2000 p. 8-13)

Today we can easily insist that ways to solve main gravitonics problems are already defined, at that the practical realization of any of them will mean the break through in engineering. So, what successes has the Russian science already achieved in the area of gravitonics, and what priorities can we lose here in the nearest future?

Introduction to Gravitonics

The electronics of the "past century" uses electron as a ball, which has weight, radius, electric charge and magnetic moment. These very parameters define electron behavior in the electrostatic, magnetostatic and electromagnetic fields. But electron abilities are not limited by it; electron spin and internal microstructure features remain unaccounted and unclaimed. Evenly speaking, General Theory of Relativity (GTR) of Einstein was a power impulse for mathematical physics development and gave birth to many productive ideas. But the main problem, that is the secret of gravitation, remains undisclosed… In works of K.P. Stanjukovich [1] and A.Z. Petrov [2], who carefully followed GTR, it was shown that this theory described neither energy, nor impulse of gravitational radiation, i.e. it can not explain gravitation. About 20 years ago V.B. Braginsky, today's RAS Corresponding Member, came up with an idea: "if the propagation speed of gravitational signal is higher than the velocity of light, there will be already another theory, not GTR!" Maybe, the reason is the postulation of equality of gravitational and electromagnetic radiation velocities?…

Today the approximate theory of gravitational radiation sources can be built on the basis of the following simple considerations: if during annihilation of "electron-positron" pair there creates the pair of gamma-quantums with energy about 0.511 MeV, then the pair of back gamma-quantums with the energy about 0.511 MeV, could create "electron-positron" pair. Is it possible to assume, that electron, positron and gamma-quantum with the energy about 0.511 MeV are just three stages of one and the same object?! If it is possible, then for the rational description of the given object we will have to suppose the existence of subparticles, named by us uniquantums [3], or named by other authors microleptons [4].

On the basis of Heisenberg uncertainty relation conformably to the energy and duration of quantum of electromagnetic radiation, measured by laboratory means, it is possible to calculate the minimal "electrical length" of photon (i.e. quantum geometrical extension in free space in wave-length units), which is equal to 137λ, and in the uniquantum theory it is equal to 137 uniquantum-antiuniquantum pairs. On the basis of these conceptions it is possible to construct the spatial microstructure model of electron. So, what kind is it?

We think, that electron can be represented as thin-walled spheroid, walls of which are two light (C) barriers, separating the "internal" part of electron from the "external" one. From the traditional physics point of view "over-barrier" space is an "imaginary" one. This very space can contain the gravitational mass of electron. The radius of the gravitational spheroid is equal to the half of the classic electron radius, and its imaginary weight is 137 times more than the rest mass of electron. Being "cut" off by the double light C-barrier, uniquantums of the spheroid internal part are as if non-existent for the outer world, and the rest mass of electron is formed by magnetic energy of three uniquantums on the external orbit with the classic electron radius. This very spheroid, rotating with the tangential velocity C, let us get the precise value of the electron spin.

The study of presented model shows, that:

- The "electromagnetic" rest mass of electron is "magnetostatic";
- The gravitational mass of electron is an imaginary value and it is 137 times more than the rest mass of electron;
- The gravitational radius of electron is two times less than the "classical" one;
- The "internal" gravitational radius of electron is 45.7 times more than the external one, i.e. the internal space is compressed per 45.7 times (!);
- The spin is equal to the classical one, but this value is imaginary one (!);
- The value of the "effective" electron charge is three times more than the classical tabulated value;
- The native magnetic field of electron is equal to $8{,}9 \cdot 10^{13}$ Oersted;
- The gravitational constant is equal to 10^{33} cm^3/g.s^2, i.e. it is about 10^{40} more than the "world" gravitational constant of the Earth;
- The gravitational energy of electron is equal to 137·0.511 MeV, i.e. 137 times more than the equivalent energy of the rest mass of electron.

The model is paradoxical. But it can be tested experimentally! Comparing "electromagnetic" rest mass of electron with the relation of electromagnetic energy to gravitational one, it is possible to determine the connection between magnetostatic and gravitational energy of electron, and, therefore, with energy of the magnetized ferromagnetic.

Gravitational constants of the Earth and of the electron differ in about 10^{40} and can be described by the same simple equation:

$$\gamma_{loc} = 2k\gamma_0 \cdot \omega^{3/2},$$

where k - is a parameter of the gyroscope shape, γ_0 - is absolute universal constant, equal to 1/137 and ω - is native rotation frequency of the gyroscope.

Let us assume, that gravitational constants of all objects should be described by this equation. By substitution of the new gravitational constant into the known equation of the gravitational energy $W = \gamma m^2 / r$ we will get the equation of the gravitational energy of rotating gyroscope with any size (from electron up to the Galaxy!). Thus, the main point of the "non-Einsteinian" theory of gravitational energy sources comes to the thing that any rotating object and any magnetized ferromagnetic have their own gravitational energy, and the sources of gravitational radiation can be only nonlinearly moved objects, or objects which are in the state of change of phase (for example, permanent magnet during its demagnetization). It is the gravitational theory and explanation of "strong" and "weak" interactions!

Laboratory test of the equations

Magnetostriction

J.P. Joule found the effect of change of ferromagnetic linear sizes and volume during magnetization as early as 1842. Magnetostriction is widely used in modern technique, but in the physical encyclopedia of 1963 there is the following honest acknowledgement: "For the most ferrites both longitudinal and transverse magnetostriction is negative; the reason of it is still unclear."

In the scientific literature magnetostriction is usually defined as $\lambda = \Delta L/L$. However, during the change of external field to some arbitrary and enough small value ΔH, it is advisable to define magnetostriction as $\lambda = 1/L \cdot \Delta L/\Delta H$, since in magnetostriction experiments the value $\Delta L/\Delta H$ (or $\partial L / \partial H$) is changed. By means of the suggested equation $W = 137(BHV) = BHV/\alpha$, which connects magnetic energy with the gravitational one, it is possible to get enough simple equation for the magnetostriction:

$$\lambda = 1/L \cdot \partial L / \partial H = \alpha \cdot k / (B \cdot H)_s \cdot H^2 \cdot \partial \mu / \partial H$$

where $(B \cdot H)_s/\alpha$ - is the density of gravitational energy in the point of magnetic saturation, k – is the parameter of share of gravitational field in the magnetostriction effect, H - is magnetic bias, $\partial \mu / \partial H$ - is differential magnetic conductivity.

The new equation qualitatively corresponds to four known features of magnetostriction [5], namely:

- The magnetostriction sign is defined by the sign of $\partial \mu / \partial H$, i.e. by the course of the magnetization curve, measured in the direction of calculated component of the linear magnetostriction;
- Graphical sum of three linear components of magnetostriction, calculated by three main axes of the anisotropy form of the model, is always negative and numerically close to the value of the volume magnetostriction;
- Magnetostriction is an even effect, since the equation includes squared value of the external magnetic field;
- Dependence of magnetic conductivity μ from the filed H and hence dependence $\partial \mu / \partial H$ has a hysteresis nature. Therefore, the magnetostriction is a hysteresis phenomenon too.

So we have the right to "close" the question of physical encyclopedia on the cause of magnetostriction. **Magnetostriction is the secondary gravitational effect of ferromagnetic "self-constriction" in its own gravitational field.**

Gravitational-optic effects of GTR

Distortion of the light beam, passing near the Sun and the photon frequency bias in the field of terrestrial gravity (the Nobel experiment of Paunda and Rebki) are the main arguments in favor of GTR canonization. It is very attractive to repeat these experiments in laboratory conditions, basing on our conception of the origin of gravitational field.

The acceleration of gravity, used in experiments with ferromagnetic, reached the value $4.72 \cdot 10^{15}$cm/s^2, i.e. about $4.8 \cdot 10^{12}$g. At such values of acceleration there is no necessity to introduce a definition "space masses". In these experiments there was used the optically transparent ferromagnetic, which was the saturated solution of manganese chloride in water at room temperature. The experiment on the beam distortion was made in 1975 [7]. It was shown, that this effect is the result of two simultaneous processes. The first is an intense drift of magnetic ions, which forms the gradient of index coefficient that causes the light beam distortion. Another process is a relatively weak gravitational beam distortion, for which, nevertheless, the relation of deviation angle to the track length (the length of the dish is about 100 mm) is turned out to be about 10^{10} more than in "Einsteinian" gravitational-optic experiments.

The experiment on bias of the optic radiation frequency [8] was made in 1978-1980 and was repeated in 1983. With use of heterodyne and interferometrical methods of measurement we were succeeded to observe effects of "red" and "blue" frequency biases in the non-uniformly magnetized ferromagnetic by means of simple displacement of the working dish (with the length about 40 mm) from one side of the magnet gap to another. The maximum displacement is about 10^{-5}, that is about 10^{10} more than in the experiment of Paunda and Rebki.

Problem of the propagation speed of gravitational radiation

There are still only few publications about such fundamental parameter as the propagation speed of

gravitational radiation; it is able to speak only about pages, or even lines! Let us refer to major sources:

I. Newton: *"The propagation speed of gravitational interaction is equal to infinity."* It is an argument, because otherwise we would have to bring the "delay" parameter Δt into the Law of Gravity, what is not noticed in real conditions of star observations [9].

P.S. Laplace in 1787, taking into account observation errors of that time, showed, that gravitational interaction speed was about $50 \cdot 10^6$ times more than the light propagation speed, i.e. it was about $1{,}5 \cdot 10^{18}$ cm/s [10].

A. Einstein: *"The propagation speed (of gravitational interaction) is equal to the light velocity".* This statement is postulated.

Even during the change of propagation speed of gravitational radiation between the Earth and the Moon it is impossible to define the signal delay about 10^{-11} s, i.e. we cannot measure directly the propagation speed of gravitational radiation (supposing that we have both generators of the gravitational radiation and receivers of it). But this speed can be estimated by the reflection impulse, what exactly was made in 1987 [3]. And its value is about $9 \cdot 10^{20}$ cm/s!

On the basis of conservation law of impulse of unidirectional radiator with arbitrary energy type we can get a simple equation:

$$F/(dW/dt) \cong 10^4 \cdot V/C^2 \qquad \text{[g/Wt]}$$

where V – is the speed of radiation propagation, F – is tractive force in grams, $dW/d\,t$ – is power of radiation in Watts and C – is velocity of light.

For making the experiment there were constructed, produced and adjusted: sensible scales with one degree of freedom (sensitivity of balance is about 1g at the oscillator mass together with the moving element of scales which is about 50kg); the indication system of small mass changes (phase-meter receiver); gyroscopic system, changing the mass in the dynamic mode (there are 16 possible operating modes – from the rotation with steady and variable angular speed up to the forced precession with the variable angle of precession, with the "right" and "left" rotation of all load-bearings elements at option); power sources and commutation automated system. The period from idea up to its realization took about two years (1985-1987) [3]. Taking into account the real parameters of the system, the program of calculation was drawn and propulsive burns were calculated. The results of machine computation can be compared with real impulses, demonstrated on the screen of the oscilloscope.

If strange speed value 177 C^2 is discarded, then the middle speed value is close to C^2, i.e. to $9 \cdot 10^{20}$ cm/s! Of course, we would like to think that this is the second fundamental matter speed of our world, which we has approached experimentally …

Gravitational receiver

During the creation of gravitational antennas and receivers there appear almost insuperable difficulties from the modern fundamental science point of view. That is why it is advisable to look at this problem from another side. At first, it is necessary to consider gravitational radiation interaction not with the mass, which it goes through without losses, but with the gravitational field of independently gravitating mass, when the interaction must be the most effective because of the principle of physical processes reversibility. At second, it is necessary to choose some critical parameter of auto-gravitating receiver as a value, which is directly measurable by gravitational detector. For example, angular velocity of free rotation of thin disk with big diameter, the frequency of magnetization precession during NMR (nuclear-magnetic resonance) or NFMR (non-linear ferromagnetic resonance) etc. can be chosen as such a value.

In 1987 there was the first successful attempt to receive the gravitational impulse. The source of external signal was gyroscopic precessing system with the variable angle of precession (the propagation speed of gravitational radiation was measured by it). Double gyroscope, setting in motion by one electric motor, but with the opposite directions of rotation, was used as a detector. Between disks there was placed the source of light, impulses of which, passing through disks openings, were registered by photodiodes. Their signal came into differential circuit of data processing. The memory oscilloscope reproduced impulses of gravitational radiation. At that radiating system and memory oscilloscope was started up simultaneously. During the work process there appeared a problem of exciting of slow auto-oscillations of gyroscope-detector. This problem together with the low frequency of auto-oscillations of mechanical system led to a conclusion that this research direction is not very promising. However, the fact of detection was proved!

Gravitational engine of continuous action

Only about nine years passed since the appearance of the idea about engine up to its realization! In 1997 the engine was produced and tested. The engine with weight about 28 kg was made "weightless" on the magnetic hanger, and longitudinal draft, appearing in accordance with the impulse conservation law, was measured by micrometer detector of longitudinal shifts (sensitivity is about 50g/point). Such engine could be built still in the beginning of the last century… However, it has a secret **that is a gyroscope with the variable radius, working in the continuous mode.**

The engine power is defined by the formula

$$\frac{dW}{dt} = 5k\gamma_0\omega^{3/2}\left(\frac{m^2}{r^2}\right)\cdot\frac{dr}{dt}$$

In June of 2000 there were made experiments with the model of gravitational engine, which represents a

gyroscope with the variable radius (see photo on the 1st cover page). The mercury was used as rotating fluid. Tests were made in the Research Institute of Space Systems named by Krunichev. In three experiments, at a certain speed of rotating fluid there was fixed a decreasing of the engine weight (38,5 kg) up to 1.0-1.5 kg (2-3%). The specific impulse of the engine was equal to 2.5-3.0 kg per kilowatt of electric power. Analysis shows, that the increasing of propulsion force is possible at optimization of design and operating modes.

Some preliminary resume

In the magazine "Foreign Literature" #1, 1967 the article "For hundred years forward…" by Jack Marabini was published. There were made some conclusions about prognostic work of firm Rand Corp., including the area of gravitational technique. Namely:

- Development of communication facilities on gravitational waves in 2000;
- Creation of spaceships with antigravity engines in 2050;
- Transformation of gravitational energy into electric one in 2100.

In the article it was noted, that the most "fantastic" predictions of this firm, as a rule, come true passing ahead.

According to our crude estimations, the propagation speed of gravitational radiation is "C" times as much than the velocity of light, but we know neither laws of attenuation and propagation of gravitational waves, nor laws of their reflection and refraction, nor laws of their interaction with the substance… The large routine work is expected: making of measurements and investigations, tabulating of obtained data, publishing and society familiarization of the results, their "popularization". It is necessary to learn to use gravitational radiation and to protect oneself from its accidental influences, to design standards and dosimeters, etc., i.e. to repeat the way of radio engineering and nuclear physics comprehension.

For that we need generators and receivers of gravitational radiation. It means that the financial support is necessary. And engineers are sure to be ready to pay the highest price for the chance to give to the Mankind spaceships, systems of instanteneous communication with them and real perspectives for the very long history.

Conclusion

We have already passed the long way, if not in space, then in time. We have made:

- Gravitational engines of continuous action with the specific impulse about 2.5 kg/kWt [11];
- Transformers of gravitational energy into thermal and electrical ones [12];
- Communication system based on gravitational waves [13];
- Receivers of gravitational (microlepton) radiation of biological and mineral objects [5];
- Devices for control of "laboratory time" flow (time machine) [14].

The main goals of the authors were to attract readers' attention to the problems, which demand an urgent solution. Some questions were decided, and even seemed to be clear. It also seems to be clear what to do further. And what do you think about it?

References

1. Stanjukovich K.P. Dr. Phys.-Math. Sc. CTR and gravitation // Seminar of the Moscow nature investigators society. // M. – 1966.
2. Petrov A.Z. Some peculiarities of CTR // Seminar of gravitational chair of Kazansky SU. (Preprint / Ukraine Academy of Science) // Kiev – 1971.
3. Poliakov S.M., Poliakov O.S. Introduction into experimental gravitonics. // M.: Prometey – 1991.
4. Patent #2113000 RF. Method to search minerals by their own radiation, device for its realization and microlepton detector / / Ohatrin A.F., Ohatrin A.A., Sizov V.S. Priority from 21.07.1997.
5. Kirensky L.V. Magnetism. // M. Nauka – 1967, p.141.
6. Vonsovsky S.V. Magnetism // M. Nauka – 1971, p.404.
7. Poliakov S.M., Martynov V.F. Method of deflection and focusing of optic radiation. A.n. #2187534, 10.11.1975.
8. Poliakov S. M., Olihov I. M. Dorofeev V. A. and others. Displacement of optic radiation frequency in non-uniformly magnetized ferromagnetic // Proceedings of the Moldova Academy of Science. Series of Physicotechnical and mathematical sciences. // Kishinev – 1983, #2, p. 57-59.
9. Isaac Newton. Mathematical beginning of Natural Philosophy // Transl. Moscow-Leningrad – 1936.
10. Laplace P. S. Statement of the world system. // Leningrad, Nauka, vol. 4, p. 197-198.
11. Poliakov S.M., Poliakov O.S. The beginnings of experimental gravitonics // In: Proc. of Int. Conference "New Ideas in Natural Science" // S.P. – 1996, p. 529-536.
12. Potapov Ju.S., Fominsky L.P. Eddy energy // Cherkassy, Kishinev OKO-Plus – 2000, p. 387.
13. Akimov A.E, Shipov G.I. Torsion fields and their experimental manifestations // Proc. of Int. Conference "New Ideas in Natural Science" // S.P. – 1996, p.22-225.
14. Chernobrov V.A. Secrets of time // M., AST – 1999.

About the authors:

Spartak M. Poliakov. Graduated from Kishinev State University. Profession is physicist-experimenter. He works in electronic industry for about 47 years. S. M. Poliakov is the author of more than 50 scientific works. One of his latest books is "Introduction into experimental gravitonics". Interests: microwave engineering, gravitational electronics, faster-than-light communication transformation of gravitational energy into electric one.

Oleg S. Poliakov. Graduated from Moscow Institute of Electronics. Profession is "Semi-conductor electronics". Interests: computer engineering, industrial gravitonics. He is a co-author of "Introduction into experimental gravitonics" and "Self-tutorial of computer work".

BEAMSHIP TECHNOLOGY

by Russell Anderson
russanderson3@hotmail.com

Read in this issue a report by Russell Anderson, USA, on beamship Model Flying Craft

www.americanantigravity.com

Publisher Faraday Lab Ltd
Editor-in-Chief Alexander V. Frolov, Editor Olga O. Leontyeva,
Designer Ekaterina F. Yakovleva
Scientific Advisory Board Kyrill P. Butusov

New Energy Technologies Magazine, is published by Faraday Lab Ltd, six times a year. Correspondence Address:
POBox 37, St.Petersburg, 193024, Russia
Phone: 7-812-380-6564, net@faraday.ru, www.faraday.ru

Subscription: $90 any foreign. Air mail delivery included
PRINTED IN RUSSIA Copyright © 2002 by Faraday Lab Ltd.
All rights reserved.

Experimental Research on Gravitational Propulsion System

*Editor's: It is a review of the article by **V. A. Menchikov**, the Director of Research Institute of Space Systems, named by Krunichev, Russia. The article was published in"Polyet" magazine #10,2001, p.38-39, Russia. It scrutinizes the matters on development of propulsion systems based on the unconventional approach to the problem of gravity, i.e. gravitational engines. It also cites the results of the gravitational engine model research made by means of the experimental facility, created in the Khrunichev Research Institute of Space Systems.*

The device, transforming rotary motion into unidirectional motion, looks like S.M. Poliakov's one. It also operates with rotation of liquid, which causes the propulsive force. Truly speaking, Poliakov had an agreement with Research Institute of Space Systems named by Khrunichev in 2001. Some funds were assigned to develop the device, however the project, into which Poliakov had put a lot of work, still remains unrealized. Besides, the scientist's name is not even mentioned in the patent.

***

Scientific and technological advance opens to mankind more and more wide abilities to use space for the solution of global problems. In many respects the complete realization of these abilities will be defined by the developement of means used for delivery of payloads into the space. In the XXI century the dominating use of reactive chemical and electrical propulsion systems in rocket-space technique as well as low application level of engines with other physical principles can be the factor of an "inhibitory" influence for the development of such techniques. It is caused by the fact that created rockets practically do not correspond to noticeably increased standards of safety, operating costs, costs for transport operations execution and ecological influence on the environment.

Thus, there becomes to be urgent the problem of development of alternative approaches towards the creation of propulsion systems, made for the rocket-space technique on the base of unconventional ideas and engineering solutions. A rather old-established idea of creation of gravitational engine should be concerned as one of such ideas. It is based on the unconventional approach to the problem of gravity. Nowadays many countries take part in solution of the gravitational problem, namely Russia, USA, Japan, etc., and if till recently only some scientists and inventors showed the interest to this problem, then now it arouses interest of research-and-production majors. Unfortunately, now it is not possible to speak about sufficient theoretical or practical development of this idea. However, the interest is so considerable, that practically separate experiments on this subject were made earlier and they are still made nowadays. After all, stakes are very high and are defined by applied nature of the problem (the ability to create qualitatively new engines for the rocket-space technique), as well as by its scientific significance.

One of the directions to solve the problem of the creation of gravitational propulsion systems is the realization of associated theoretical and experimental methods of the search of physical processes, leading to the antigravity effects appearance, which cannot be adequately described by existed theoretical conceptions. V. Shauberger's patent, based on the postulate of gravitational energy radiation by "disturbed rotating mass" can be considered as an example of such practical realization. Taking into account a number of known experimental results, a model of gravitational engine and experimental system for estimation of this model parameters were made in Research Institute of Space Systems named by Khrunichev to provide the practical realization of Shauberger idea (Fig.1). It is the metal construction, which provides the model displacement in upward direction with the ability of its rotation around vertical axis.

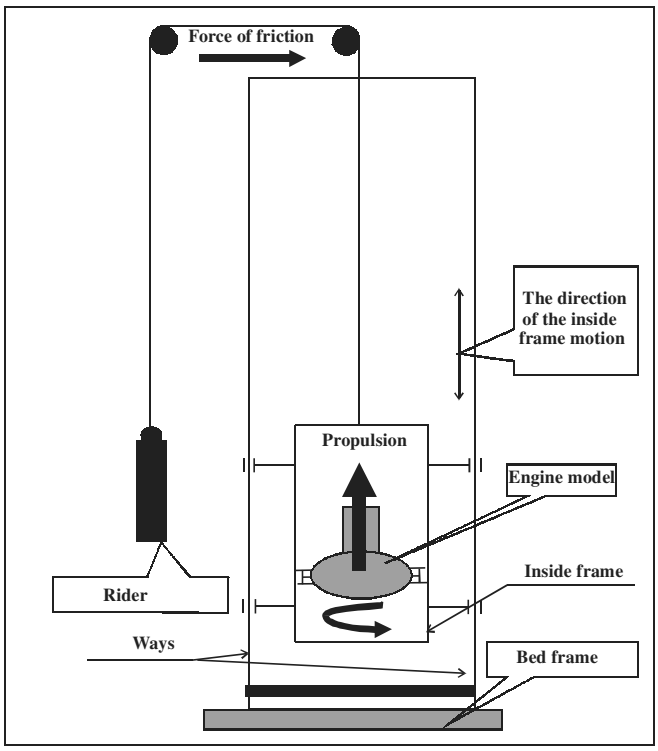

Fig.1
Schematic circuit of the experimental system

Later, to increase the system sensitivity it was improved and the block system of suspension was replaced by the lever frame.

Turning angle of the stand frame, where the model of gravitational engine is suspended, depends on the following: weight and geometry characteristics of the frame; weight characteristics of the engine (of counterweight); engine propulsion and frictional forces in bearings. Laser indicator of frame turning angle and vertical ruler let increase the gauge of lifting height of

the gravitational engine model proportionally to the arm of light beam.

On using this system there was made a wide cycle of tests, which qualitatively confirmed the presence of propulsion force. Tests were recorded by video. The analysis of experimental results shows, that acting time of propulsion was about 12 s at each switching. During repeated switching of the gravitational engine model in different conditions it is able to create the propulsion, the value of which at 40…50 s of operation can be about 3 standard units of propulsion force (1 standard unit of thrust is about 10gs), and while using the powerful electromotor it can be about 80 standard units of propulsion at the intervals up to 4 s.

Research Institute of Space Systems named by Khrunichev, works on automation of experimental researches and on development of laboratory resources for factor analysis of appearance of the propulsion vector with the usage of the described model of gravitational engine.

Patent

The patent was published in the Bulletin of Patent Information in 2001.
(11) 20946
(51) 7 F 16 H 27/00
(21) 2001121237/20
(24) 01.08.2001

Editorial: V.A. Menchikov together with A.F. Akimov, A.A. Kachegan and V.A. Svetlichnyi have got this patent. Dr. Spartak M. Poliakov, being the author of the principle, is not mentioned at all in the patent.

NEWS REVIEW

Boeing Tries to Defy Gravity

According to Jane's Defence Weekly (UK), http://www.janes.com, Boeing, the world's largest aircraft manufacturer, has admitted it is working on experimental antigravity projects. These projects are able to overturn a century of conventional aerospace propulsion technology and alter the entire aerospace business. Boeing uses researchers by Yevgeny Podkletnov, who claims to have developed a device, which can shield objects from the Earth's gravity. Many conventional scientists, who have not been able to reproduce Dr Podkletnov's results, view his project, named «GRASP» (Gravity Research for Advanced Space Propulsion) with suspicion.

Dr Podkletnov claims to have countered the effects of gravity in an experiment at the Tampere University of Technology in Finland in 1992. The scientist says he found that objects above a superconducting ceramic disc rotating over powerful electromagnets lost weight. The researches have shown that the reduction in gravity was small, about 2%, but the implications - for example, in terms of cutting the energy needed for a plane to fly - were immense.

His devise, named "impulse gravity generator" is capable to produce a beam of "gravity-like" energy that can exert an instantaneous force of 1,000g on any object – enough, in principle, to vaporize it, especially if the object is moving at high speed. Laboratory installation has already demonstrated the 4in (10cm) wide beam's ability to repel objects a kilometer away and that it exhibits negligible power loss at distances of up to 200km.

Applications of the device can include space launch systems, artificial gravity on spacecraft, aircraft propulsion and "fuel-less" electricity generation ("free energy"). However, observers say that Podkletnov's device could be engineered into a radical new weapon, for example, adapted for use as an anti-satellite weapon or a ballistic missile shield.

Documents, obtained by reliable sources, show that Boeing is taking Dr Podkletnov's research seriously. It is also possible, Boeing admits, that "classified activities in gravity modification may exist". The paper points out that Podkletnov is strongly antimilitary and will only provide assistance if the research is carried out in the "white world" of open development.

Boeing is the latest in a series of high-profile institutions trying to replicate Dr Podkletnov's experiment. The military wing of the UK hi-tech group BAE Systems is working on an anti-gravity programme, dubbed Project Greenglow. The US space agency, Nasa, is also attempting to reproduce Dr Podkletnov's findings, but a preliminary report indicates the effect does not exist.

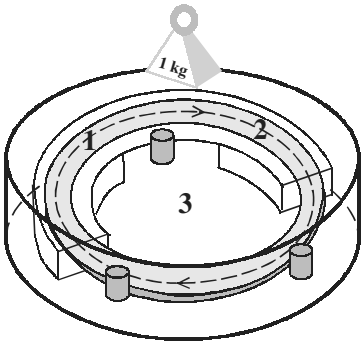

1. Solenoids create magnetic field
2. Spinning, super-conducting ceramic ring
3. Liquid Nitrogen acts as coolant

BEAMSHIP TECHNOLOGY

by Russell Anderson
russanderson3@hotmail.com

Read in this issue a report by Russell Anderson, USA, on beamship Model Flying Craft

www.americanantigravity.com

Publisher Faraday Lab Ltd
Editor-in-Chief Alexander V. Frolov, Editor Olga O. Leontyeva,
Designer Ekaterina F. Yakovleva
Scientific Advisory Board Kyrill P. Butusov

New Energy Technologies Magazine, is published by Faraday Lab Ltd, six times a year. Correspondence Address:
POBox 37, St.Petersburg, 193024, Russia
Phone: 7-812-380-6564, net@faraday.ru, www.faraday.ru

Subscription: $90 any foreign. Air mail delivery included
PRINTED IN RUSSIA Copyright © 2002 by Faraday Lab Ltd.
All rights reserved.

Beamship Technology: a Re-working of Early 20th century Discoveries

Russell Anderson

Applied Electrogravitics 377 Avon Rd., Ste. D-119
Devon, PA 19333 russanderson3@hotmail.com
484-255-1072

Some Basic Background

The concept of an electric aero-spacecraft with no moving parts was initiated by the Yugoslavian electrical wizard **Nikola Tesla**, who lit the entire world 100 years ago, at the turn of another century, with his revolutionary AC electric current. In 1916-17, Dr. Francis Niepher performed meticulous mass-deflection experiments under rigorous scientific conditions with lead spheres suspended by wires with shielded and unshielded containers. An accounting of this important series of experiments is in TRANSACTIONS OF THE ACADEMY OF SCIENCE OF ST. LOUIS VOL.23, 1916 and 1917. Related article is in THE ELECTRICAL EXPERIMENTER, March 1918.

Before 1905, **George S. Piggot** was routinely suspending small silver balls to water globules, corks, wood, using the electrostatic field from a specially designed Wimshurst machine in a glass container under several atmospheres of pressure to raise the current level. Output voltage was typically 500KV. The field was propagated by a charged sphere. A small curved conducting plate on the floor acted as a ground. He observed unusual patterns of blue dots with filaments over the suspended objects, sometimes with an anomalous 1/2 cm "dark band" on the suspended objects. Piggot states, "It is my firm conviction that that somewhere on the outer confines of our planet there exists a similar contracting belt thru which naught but the gravitational vibrations of the sun penetrate, and these vibrations absolutely annihilate or absorb all other less powerful ones". If the force was Coulombic in nature, objects would be first attracted, and then strongly repelled by the charged metal sphere. After the objects were suspended, Piggot found he could remove the conducting ground plate, and the objects still floated, suspended. The phenomenon of levitation was accompanied by "luminous halos".

In 1925-27, **Albert Einstein** released his scientific "gem", his "zur Einheitlichten Feldtherie", or the Unified Field Theory for Gravitation and Electricity, to the press and the scientific community. It combines electricity, magnetism, and gravitation into a single mathematical expression, showing how High-Voltage/Low Current electricity (Electrogravity) -and conversely Low-Voltage/High-current (magnetogravity) "acceleration-fields" (G-field) could be produced using then-available relatively LOW-technology. Indeed, a very simple technology. The unifying field is the electrical field (because it can produce gravitation and repulsion fields, as well as magnetism). His Crowning work was released with much press write-ups and fanfare, then it was quickly forgotten as if the scientific community and the world had suffered some kind of collective amnesia!

All of the readers of this magazine need no introduction to the pioneering work of American Scientist **Thomas Townsend Brown**, who was playing around with an X-ray tube around the same year as Einstein's Unified Field Theory was released. He filed his first patent for this newly and accidentally discovered "electrogravitational-effect" which causes motion in a high-voltage condensor or capacitor configuration. He was only 17 at that time. The discovery that high-voltage/low amperage electrostatic potentials applied to an object causes motion in the direction of the positive pole, and electrical charges naturally move to the OUTER surface of an enclosed charge-conductor, held strong prospects for what Brown would later name the "space-car", and wrote an article "HOW I CONTROL GRAVITATION". His pioneering work, and demonstration of devices in Hawaii during World War II, drew attention from the department of Naval Intelligence. He was invited to work on "Project-Rainbow" (the Philadelphia Experiment for Electromagnetic Stealth) because of his pioneering work on what was starting to be understood very covertly as a true WARP DRIVE. Experiments with certain new and classified arc-welding apparatus at the Philadelphia Navy Yards to weld armor-plate for battleships was (by use of banks of primitive but powerful avalanche-discharge capacitors) producing anomalous and unexplained effects, such as disappearing tools and other apparatus in the heavily shielded welding chamber. These strange effects were accompanied by a strange "blackout -zone" which, like Piggot's early work, was not optical in nature. TT Brown's devices in his AH Bahnson Labs home movies lift more than their own weight and move inside vacuum chambers in these films. TT Brown later founded NICAP in 1956, which became the most respected UFO data gathering and hard scientific organization in the world, besides the US department of Naval Intelligence itself, and the Foreign Technology Division at Wright-Patterson Air Force base in Ohio.

My background and work

I primarily have a background and degree in computer programming, electronics, most fields of science, Flying Saucer Technology research (almost 30 years worth), Radio/Control fixed and rotary-wing aircraft since 1972. I have been experimenting and working with high-energy and electrogravitic devices and systems since 1987. I built my first small High-Voltage generators starting around this time. I built kits from Information unlimited and elsewhere.

In late January 1990 I built my first working 2-foot flying discs, which were a direct replication of Thomas Townsend Brown's most important representation of his electrogravity-propelled scale-model vehicular concept, from US Patent #2,949,550. In January 1992, I built a 120KV high-voltage/low-current electrostatic generator from an Information Unlimited kit, primarily for force-field propulsion research.

In June 1999, I built a tower and rotor apparatus to complete the experiment, and I powered it with the output from a 100KV generator I built from an Information Unlimited Kit. The results were spectacular, and taught me a great deal about what was involved in producing and maximizing the Biefeld-Brown Electro-gravitational effect. **I suspected from my research, and my experiments, that the basic effect was not due to current-flow and resulting ion-wind. When there was current-flow, the effect is attenuated, power consumption goes up, and thrust goes DOWN.** In late June of 2000, I presented this working TT Brown Electrokinetic Apparatus with larger 1-meter discs at the 2nd Antigravity Conference in Reno, NV, hosted by Jim Cox. A VHS videotape of this working and spectacular presentation at the first part of the conference is available from
www.soundphotosynthesis.com

Now that I had mastered producing horizontal thrust, vertical thrust, or antigravity, was the next goal. About this same time, there was buzz all over the Internet about claims of two or three individuals who sounded credible at the time who had successfully replicated the many multi-layered "gravity-warp capacitor" or "electric rocket". Oddly, these claims could not be verified, and the individuals making the claims disappeared back into the woodwork. Such actions are bizarre and hinder the progress of true science, which is undergoing a shift in paradigms right now, if not a change in dogma.

I spent months die-cutting hundreds to thousands of tinfoil and aluminum-foil circular-notched conductor plates and wax paper and mylar rings. I did some initial testing with a Tin and wax-paper 400-layer gravity warp-capacitor heap, according to plans I had acquired from H & A Industries in 1992, and what was on Bill Beatty's amateur science site. No one else has come forward with positive results on this tedious and time-consuming device. So much work for so little effect! And, if you short out the stack with too much power, you must tediously and laboriously search thru hundreds of layers to find the dielectric layers with the telltale carbonized holes. The Electric rocket has been recently successfully replicated and tested in hard vacuum and patented recently by Hector Serrano. The Serrano effect is identical to the so-called Biefeld-Brown Electrogravitational effect. They are one in the same thing. I may dust off my completed 400-layer grav-cap, but I hardly find it worth the time and effort, because of my recent work starting in early October 2001.

The Lifter and The Evolution to Beamship Model Flying Craft

Although I had attempted a few small "Hagen" patent-type antigravity (VTOL) models in the early 90s, I found their performance poor at best and their power consumption high. In late summer, 2001, someone, I forget who, on the JLN's lab list of researchers and anomalous science-experiment and technology enthusiasts ran across a website owned by Transdimensional Technologies, of Huntsville, Alabama (famous for NASA research facilities, the late Dr. Rolf Schaffranke, author of the important ETHER TECHNOLOGY, under the pseudonym "Rho Sigma", and Dr. Tom Bearden) had produced a hovering device. From my previous work, I recognized it immediately as TT Brown's Electrokinetic Apparatus that I had successfully replicated and demonstrated before a live audience years earlier. I noticed the capacitors were made from Aluminum FOIL, not the thin-but-heavy Aluminum sheet stock from Home Depot that I had been using for years, (I had assumed that to make my 3-foot discs hover and ascend vertically, I would have to use voltages in the hundreds of kilovolt range, and generate high x-ray, UV, and possibly gamma-ray emissions as a by-product, in other words, a typical flying saucer with all the associated radiological effects that have been documented for over half a century) so they could lift their own weight. The result matches almost exactly the simplest graphical representations of TT Brown's patent from 1960, and De Seversky's Ionocraft patent from 1964, which was a thin foil cathode plate with a thin anode wire separated from the cathode by stand-off insulator posts. I was eager to reproduce these devices (I don't know how I overlooked this simple solution, it was all sitting in those old 1960s Brown and De Seversky patents I have studied for 15 years previously) and many people around the world, especially the webmaster of the JLN Lab's site French researcher Jean-Louis Naudin, who began replicating many different types of larger and more sophisticated devices, some of which resembled model spacecraft, and began amassing tables of very useful data, that researchers could use as basic guidelines to follow. I replicated the first hovering device, the "Lifter" (so-called by Transdimensional Technologies) as a 1-foot triangle, with 2-inch foil cathode and #42 enameled copper magnet wire. To energize it I used a commercial power supply from Gamma High-Voltage Research that I had acquired from Ebay some years ago. It was perfect

for antigravity research, having full metering, and variable voltage from 0 to 40KV, and current limiting from 0 to 1.5 milli Amperes of current. The heavy 1-meter discs of the Electrokinetic Apparatus were too heavy and the rotor-friction to great for this low-powered device (60 Watts, maximum), but for the lifter, it proved ideal.

My first "lifter" antigravity device worked, but its performance was less than ideal. It had to be stripped of its lower balsa-wood frame and some of its foil before it would degravitate (counterbary), and it "maxed-out" the current-limited power supply at 33KV I 1.5mA, for a stable hover (actually this is an upward flight configuration, because the device is tethered to the lab table with 3 sewing threads). That is 49 Watts. The concept of a hovering TT Brown Electrokinetic Apparatus had been proven to my satisfaction, however, and I initiated more research into past works and patents to raise efficiency to workable levels. The performance was slightly better than my early 1990s "wire-grid" type devices. I found this slightly encouraging.

After a couple months reading and research (why re-invent the wheel, its all been done before), I started to replicate larger models in February and March 2002, but kept coming up against a size-barrier with the Multi-cellular (grid) approach that many researchers had assumed would raise thrust, and efficiency. This approach obviously did neither, as no one seemed to be able to produce hovering devices above a certain size, the current consumed (adding to total wattage consumed) was prohibitive with the low-powered (still high-voltage, low-current) devices that most of the mostly amateur researchers were using. Researchers around the world started to replicate different versions of the basic lifter 1 (an 6 to 12-inch equilateral triangle). The lifters are always tethered to the testing surface with 3 strings to keep them from going dangerously unstable and possibly short-circuit when they reach the limit of the umbilical supplying power to the device.

From my previous Biefeld-Brown effect replications years earlier, and from carefully reading Brown's EK Apparatus patent, I knew that increasing the diameter of the wire would reduce leakage current created by coronal discharge, mostly coming from the forward electrode, which in the 2 and 3-foot saucers consisted of an arc of copper tubing in the front quadrant of the saucer, or disc. Corona robs power (amperage) from the disc that otherwise would be used to "propel" the disc. Increasing the diameter of the copper tubing, as per Brown's patent if the effect was due primarily to ion-wind, more current and current flow between the electrodes would be desired to effect more air movement. But this is not what I saw in the saucers. **There was apparently another, far more powerful but subtle force effecting silent propulsion of the saucers that had nothing to do with charge-transfer and ion-momentum.**

In February of this year, I undertook an effort to replicate and improve performance and reduce power consumption of the lifter device, based on data from my electrogravitic work of years past. I started by using thicker diameter enameled copper magnet wire, #35 to #30 diameters. I first built a 1-foot equilateral triangular basic "Lifter-1", weighing only 3.5 grams. On March 16th, I built a lifter with the thicker #35 enameled copper wire.

I made the three sides 1-foot long and exactly 2-inches high. After experimentation, I found the optimum spark gap for my High-Voltage power supply (Gamma High Voltage Research 40KV with current limiting to 1.5mA). The small silver-colored device leapt off the test table and pulled violently against its anchor strings to a distance of about a foot. This seemed like a great deal of force for such low power. The large discs of my TT Brown EK apparatus required a good deal higher voltage to initiate motion in the direction of the anode. The device consumed 26KV I 0.56mA DC, which calculates out to 14.56 Watts. I was getting more excited, because this was the best efficiency seen of any result yet posted.

On March 19th, I tested 2 lifters glued together in a "diamond" shaped configuration.

This 2-foot device weighed 6.0 grams, with the same #35 wire and a 2 and 5/8" air gap. It took 25KV to nullify the weight of the device, and it achieved a stable hover at 35KV I 0.8mA. That is 28 Watts. This is about what I had initially expected, double the power for double the Watts. Still, this was far less overall power going into the device to achieve a stable hover than my first primitive and radically shorn and trimmed device. After lift off to the extent of the anchors, I found I could reduce power slightly and maintain a stable hover. On march 22nd at 3:49 pm I got the diamond lifter to achieve a stable hover with a 2 and 5/8" air gap at 29.5 KV I 0.32mA. This was only 9 Watts! This was unheard-of efficiency. I was further encouraged to build and test larger hovering devices to see how large I could get them with my low-powered commercial power supply.

I then built a "lifter-2", which consists of three 1-foot triangular capacitor cells taped together. It weighs 11.4 grams. March 30th at 3:22 pm, the device achieved a stable hover at 38KV I 0.57mA for 19.76 Watts total power. The larger device was more energy efficient than a device 1/3 the size. I wanted to see how far this could go, so I added three more lifter cells to make a 6-cell device, 3 feet on each of its three sides. I was eager to check the performance of this fairly large device. This was the diameter of my horizontally propelled TT Brown Discs.

This device weighed 21.6 grams. I kept the spark gap the same distance on this device. However this device failed to achieve counterbary (lift). It just sat on the test table, filling the air with the smell of ozone and

making a sizzling sound (corona noise). I noticed that the current maxed-out on the power supply at a fairly low voltage and would not go any higher.

I concluded in my disappointment that all that wire from all the inter-connections to the cells was causing corona leakage and robbing current, which otherwise would be used by the device for propulsion.

The idea then hit me that perhaps I could make a device with the same outer diameter as the 3-foot device, but have greater efficiency because of a much shorter length of wire. I built basically a 3-foot (1-meter) version of the first 1-foot device. This device weighed 16 grams. It lifted off the table with amazing force and hovered stably with I 52mA 30KV which is 15.6 Watts. Not only had I achieved a larger-size device, but far better power efficiency for a much larger and heavier device. I was overjoyed! I saw that I had a great deal of lifting force to spare. I had not even come near the limit of my power supply. I added extra bracing at the corners and extra balsa and a triangular paper "payload -tray" in the center of the device, supported by three 1/16"x1/16-inch balsa stock. The extra bracing and payload area added approximately 2 more grams. With a 5 gram payload, the device consumed 39.9 KV I 0.99mA, for total power consumption of 39.5 Watts. I was really encouraged at that point, because I knew that these results were unheard-of, in terms of energy efficiency. I had solved the problem of decreasing efficiency by dispensing with a "grid-based" device. Increasing the area of the capacitor plate was one of the factors that increased performance and efficiency, lessening the input power requirements with increasing size. Now the Biefeld-Brown effect could be properly studied, now that most of the ion-flux had been eliminated, resulting conservation of energy by the device, and resulting in greatly increased propulsive force.

Since I now knew the limit of payload for the device at the power level I was using, I added a balsa framework that approximated a central cabin area, and three small styro-foam spheres on the center of the straight sides on short lengths of balsa. The device no longer looked like a test device, but now looked like a scale model spacecraft. I remembered the Edouard "Billy" Meier UFO contact case, and knew that all his original photographs and movie footage of extraterrestrial spaceships the extraterrestrials themselves called "beamships" (there are several styles and variations, all with different specific functions and capabilities, some manned, some remote-controlled "telemeter discs" that had a tri-hemispherical undercarriage that I knew from past research were propulsion condensors) and that the original un-tampered photos all passed rigorous analysis using the latest and most sophisticated computer and other equipment, case detractors not withstanding. Also the spiritual messages of these genetic brothers of Man and their accounting of humankind's history and origins from far across space rang true and struck a chord with me.

I decided to name this new 1-meter model spacecraft Beamship Variation I. The three sides of the device performed the same function on this device that the three spherical or hemispherical capacitors often seen on the underside of full-size "beamships" (Daylight-disc-type UFOs), which illustrates a similar if not identical propulsion methodology to full-size 3 to 7 meter and larger "off-Earth-built" aero-spacecraft. Clearly the propulsion methodologies were exactly the same in the model as in the full-size flight device.

I immediately built a 4-foot diameter model with a full cabin framework and internal payload area and achieved even greater performance and efficiency. I was ecstatic. This 4-foot device I dubbed Beamship Variation II. I received a suggestion from Mr. Tim Ventura of American Antigravity that performance could be increased by using small diameter stainless-steel wire. It seemed unlikely to me that smaller diameter wire would increase performance, it contradicted Brown's patent, and my own past research with large electrogravitic discs. But Stainless steel has a high number of free electrons in the outer valence atomic shells (electron orbits).

So I obtained some #40 stainless locally and the results confirmed Mr. Ventura's suggestion. Corona noise was heard at a much higher power level, and was greatly attenuated in volume. Leakage current was less, and the two Beamships now had more thrust with less power input. They even carried more payload at less power input. Variation II weighs 21 grams and loft a payload of 6 grams at 40KV I 1mA for 40 Watts total power. Again, this was unheard-of efficiency. The anode wires sang a strange harmony as the Beamships floated in the air, stably at any altitude, from floor to ceiling, without any fuel or visible means of support. This was very Beamship-like.

I thought that now since corona discharge on the anode wire was less, I could decrease the spark-gap distance without creating a spark (which kills lift). Thrust seemed initially to increase, but efficiency went down because there was current-flow now, and current consumption went way up. The supply would now max-out at 37KV I 1.5mA and would not increase because of the current limiting. The Beamships now were noisy, as the foils chattered loudly because of all the ion-wind that was now rushing downward along and past the foils. I used a concert fog machine to observe the ion-flux vector, and filmed it digitally with my Logitech web-cam, and with VHS analog video.

Analysis of the fog -tests showed a circular vortex of air surrounding the anode wire that flared out into a downwash of air below the Beamship. I was disappointed, because I thought then that the thrust action of the device was due to simple ion-transfer. A useful-enough effect, but of questionable use in the vacuum of space without an ionizing medium.

Beamship Variation III

I reasoned I had just about enough power in the supply to build and fly a 6-foot (2-meters) Beamship. Since the balsa came in 3-foot lengths, this was simple. As with all the lifter devices and the more evolved and efficient Beamship-series model aircraft, construction techniques are extremely simple and require little skill to assemble. Weight of the Beamship Variation III is 42 grams, with 6-feet of length on its 3 sides. Height of the foils was still 2". Full frame and cabin, with Searl "IGV"-type landing legs, to support the weight of this heavy and very large device. I set the spark gap at 2 and 1/2 inches. At 12:15pm EDT, May 12th, 2002 the Beamship was weightless at 32KV with current maxed-out at 1.5mA.

The device barely lifted off, and "hopped", across the floor once or twice at full power. It had the same loud rattling of the foils due to the terrific downwash of electrified air. I needed to raise the power level. I increased the distance of the spark gap to 2 and 3/4". Now the Beamship took off straight up with power to spare, as if it was one of the smaller craft. Beamship Variation III is weightless at 30KV I 0.85mA (25.5 Watts), and airborne into a stable hover at 35KV I 1.35mA. That is only 47.25 Watts. It can carry a payload of 5 grams, or 5 grams worth of additional framework and structure, to the limit of the power supply, which is 60 Watts (40KV I 1.5mA).

The 42-gram, six-foot model aero-spacecraft only consumes 47.25 Watts at hover, but my first small and trimmed device ate up 49 Watts! Clearly, using the single-cell Beamship methodology had a huge advantage over the "multi-cellular" design that other researchers had built and tested, seemingly reaching an impasse in terms of size and efficiency, which my large single-cell Beamship technique had seemingly solved. In early April my 1-meter Beamship, weighing 22 grams including 5-gram payload, consumed 39.6 Watts. So the 42-gram, 6-foot Beamship used only 7.65 Watts more total input power at stable hover that the 1-meter Beamship. Power-to-weight ratio for the 2-meter Beamship V. III works out to 1.125 Watts to lift 1 gram stably of scale model electric spacecraft. With little to no ion wind, the Beamship had plenty of upward force and achieved stable counterbary at greater efficiency than I had ever heard or read about. Also, I was not aware of any devices in scientific history that has achieved this type of counterbary for this little input power and this colossal size. I performed additional fog-tests with two red semiconductor-emitted laser beams in the plane of one side of the device, one above the wire, one below the foil. The Beamship without all the ion-wind was nearly silent again, except for "singing" and softly "thrumming" anode wires. These laser-beam tests further confirmed the marked absence of ion-wind with a larger spark gap.

At 1.125 Watts-per gram at 57KV I 1.4mA (78.8 Watts) would lift 89.775 grams worth of electric spacecraft. So not only is the larger size in a single cell far more efficient that the "grid" design, in thrust and power consumption, but the reduction in current from increasing the spark gap raised power level to the device, while dropping power consumption of the device. My initial suspicion of ion-wind producing most of the thrust in the Biefeld-Brown effect had been dis-proven also because of the great weight of the device. I never would have discovered this important fact if I had stayed with smaller devices, trying to raise their efficiency. And I never would have discovered the efficacy of the Biefeld-Brown effect if I had stayed with the multi-cellular "lifter" methodology. One of the factors that raises the level of propulsive force (if "propulsion" is the right word) is increasing the area of the plate, according to TT Brown's patents. So the larger size single-cell capacitor's ability to reduce power consumption and effect greater propulsive force and upward acceleration, was easily explained by the Biefeld-Brown Effect. Brown had been vindicated. My gut feeling had seemingly been confirmed: this was our first warp-drive (reaction-less drive).

My experiments had yielded greater efficiency, and greater size and weight of VTOL hovering models than any that I had ever heard or read about. I still am having difficulty taking in these facts; and it is very awe-inspiring to see such a large device de-gravitate and hover stably at any altitude, from floor to ceiling.

Next for me is a higher-powered supply (60KV), moving up to a three-meter Beamship Variation IV, improvements to the cathode such as a thin, symmetrical airfoil shape, as Brown suggests in his patents, tungsten wire, and then carbon-wire for the anode, and full heat-shrink coverings on the frames, running lights, onboard lasers, onboard digital/ proportional Radio/Control, and now that we know the power requirements, and have a good handle on efficiency, onboard power generation. I have already begun designing with my associates our own custom-made outboard and inboard battery-powered power supplies, and finally will cut the power umbilical to the model electric spacecraft permanently, and Beamship technology advances further. If the on/off duty cycle is pulsed at a low frequency, power input can be reduced by two-thirds, at least. Experiments conducted by Jean-Louis Naudin last fall (2001) confirm this phenomenon, suggested by Brown and De Seversky in their patents. Clearly, onboard power can easily be effected, using modern miniaturization and circuitry. Pitch and roll vector control can be achieved by electrically isolating the anode wires on the three sides of the ship, and varying pulses to these three wires. Yaw control can be achieved by simply installing a horizontal-double sided capacitor inside the ship near one corner. Simple full 4-channel flight control is thus achieved.

The Beamship series aircraft are fascinating research and entertainment devices (see cover page), and are the vanguard of a whole new generation of radio/ controlled antigravity model aircraft with no moving

parts and dead silent propulsion. But they are more than that. The Beamships, if allowed, could probably rise up at any speed thru the atmosphere, right up to near-Earth-orbit, and probably keep on going out into limitless space. No need to achieve ballistic escape velocities of miles-per-second. This is non-ballistic flight. They even have a certain amount of wind resistance outdoors and indoors because the electrical field causes air to flow AROUND the model flying craft, not into it. This is such a safer, environmentally cleaner, vibration and nearly silent and more pleasant method of aero- space travel than carrying tons of explosive reaction mass, which can and does explode. No more use of heat energy to effect transportation.

The 21st century has begun in earnest!

Beamship series aircraft are available for sale for research and hobby/entertainment use right now through the American Antigravity website: www.americanantigravity.com. Look for the Applied Electrogravitics antigravity technology website late spring, 2002. You can contact me, Russell Anderson for details on pricing, and new and improved variations, and power supplies for outboard and onboard drive, which are currently in design stages.

Editor's note: More ideas on development of T.T. Brown's patents are on our web site: http://www.faraday.ru. Read about T-capacitor!

Data Table 1

Antigravity device	Weight of device	Wire type	Voltage/current	Total Watts	Payload	Payload/power
1-foot "Flyer-1"	3.2 grams	#42 enameled copper	33KV I 1.5mA	49	None	————
1-foot "lifter-1"	3.5 grams	#35 enameled copper	26KV I 0.56mA	14.56	None	————
2-foot "diamond-lifter"	6.0 grams	#35 enameled copper	29.5KV I 0.32mA	9	None	————
2-foot, 3-cell "lifter-2"	11.4 grams	#35 enameled copper	38KV I 0.57mA	19.76	None	————
3-foot, single-cell "Beamship Variation I"	16 grams	#35 enameled copper	30KV I 0.52mA	15.6	None	————
Beamship Variation I-fully-rigged	18.5 grams	#35 enameled copper	————	39.5	5 grams	39.9KV I 0.99mA
4-foot "Beamship Variation II"	21 grams	#40 stainless-steel	————	40	6 grams	40KV I 1mA
6-foot "Beamship Variation III"	42 grams	#40 stainless-steel	35KV I 1.35mA	47.25	None	————

References

1. Ether Technology, by Rho Sigma,
2. Lost Science, by Gerry Vassilatos,
3. The Philadelphia Experiment, by William Moore,
4. High Energy Electrostatic Research Vol. 1, Antigravity and UFOs, by Raymond A. Nelli, Homemade Lightning, by R.A. Ford,
5. Antigravity – the Dream Made Reality, by John Searl, The Law of the Squares Book 4, by John Searl,
6. The Antigravity Handbook, compiled by D.H. Childress,
7. The Coming Energy Revolution, by Jeanne Manning,
8. Agnew H. Bahnson Labs home movies (1957-60), JLN labs website, Bill Beatty's "weird-science" website, American Antigravity website (www.amercanantigravity.com).

Patent references

1. A.H. Bahnson, Jr. Electrical Thrust Producing Device, USP # 2,958.790, filed May 12,1958, granted Nov. 1, 1960.
2. Marcel Jean-Joseph Pages (France), # 1,253,902 Petit-Viton, filed Jan 5, 1960, granted January 9th, 1961
3. G.E. Hagen, Flying Apparatus, #3,120,363, filed Sept. 11th, 1958, granted Feb. 4th, 1964
4. T.T. Brown, Electrokinetic Apparatus, #2,949,550, filed July 3rd, 1957, granted Aug. 16th, 1960
5. T.T. Brown, Electrokinetic Generator, #3,022,430, filed July 3rd, 1957, granted Feb. 20th, 1962
6. A.P. De Seversky, Ionocraft, # 3,130,945, filed Aug. 31st, 1959, granted April 28th, 1964
7. V. Gradecek, Electric Aerospace Propulsion System, # 3,177,654 filed Sept. 26th 1961, granted April 13th, 1965

SmartPAK Technology™

invention by William Alek

the world's first commercial all solid-state system that provides a "standard" platform for experimenters, researchers, and developers to do energy-related practical applications, experiments, and perform exploration of highly efficient alternate energy system

The theory of operation is based on the amount of energy that is required to magnetize and de-magnetize ferromagnetic materials utilizing a core/coil/magnet assembly. It has been discovered that it takes MORE energy to magnetize a suitable core assembly than to de-magnetize it. The SmartPAK system is designed to measure and collect the difference, and store the excess energy for later use.

The SmartPAK device is controlled by a 68HC908GP32 micrcontroller programmed to measure input/output voltages and currents, calculate COP, and contains software algorithms for a complete "turn-key" power management system. The device features a "standard" user interface, which allows the user to design their own custom core/coil/magnet "head assemblies", and immediately test and display in real-time its' performance.

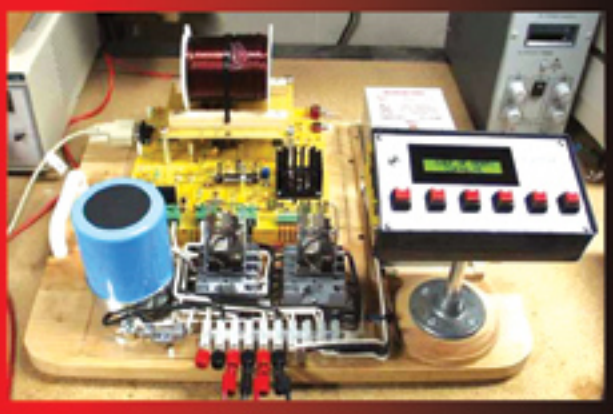

William Alek

President and CEO of INTALEK, INC

3506-43rd. Place
Highland, Indiana 46322-3129
e-mail: wsalek@intalek.com

Correspondence Address: POBox 37,
St.Petersburg, 193024, Russia
Phone: 7-812-380-6564,
net@faraday.ru, www.faraday.ru

Commercial Antigravity

Tim Ventura

tventura6@attbi.com

Introduction

Let me begin by posing a simple question that I would like the reader to keep in mind throughout this article: How far away is commercial antigravity? I'm not talking about a laboratory experiment where a giant magnet is used to levitate a frog, or secret UFO experiments that the government isn't sharing with the business world, but a real, viable antigravity solution to what I consider to be the most pressing issue facing the world today – transportation.

Who can answer a question like that? How far away is commercial antigravity? The author has read numerous scientific texts on the subject, and is familiar enough with contemporary theories of gravity, antigravity, and electromagnetism to suggest that most scientists believe that commercial antigravity is at least 100 years away from existence. But the author believes that most scientists are wrong.

Defining terms

Any article about antigravity would not be complete without properly defining the terms to be used. In this article, antigravity is not used in the strict sense of the word. The author's intent is to discuss a method of propulsion, which for all intents and purposes can be considered antigravity, and may include antigravity – but also may include several other forms of similar propulsion. The reasoning behind this is that experience has shown that the majority of people in the world don't care how something works – they care what it can do for them. This article is about the effect of Antigravity – not the cause.

Real Antigravity would consist of an apparatus used to either reduce the apparent mass of an object or reduce the effects of gravitational attraction between the Earth and an object. An example of an apparatus that may in fact do this is the Podkletnov superconductor apparatus currently being tested by NASA.

This Podkletnov device essentially consists of a spinning superconductor that self-levitates above a pool of liquid nitrogen and supposedly creates a "beam" or "shaft" of antigravity (or reduced gravity) directly above it as it operates. The levitation of the superconductor itself is not antigravity – it is a well-known side effect of ceramic-superconductors called the "Meissner Effect". The Meissner effect is simply a side effect of the superconductor's interaction with the Earth's magnetic field, and is easily explained by physics.

Podkletnov claims that when he worked with a team of researchers investigating superconductors in Russia around 1991, the smoke from the tobacco pipe of a fellow researcher began to climb steeply in a column directly above the superconductor. The researchers began to think that they were on to something, and Podkletnov subsequently performed several follow-up experiments that led him to the conclusion that the levitating superconductor produced a shielding effect between the Earth and anything positioned directly above the superconductor. He reasoned that gravitational shielding would provide a "column" of reduced gravity above the superconductor that should extend up and away from the Earth indefinitely. Podkletnov calculated that with a rapidly spinning levitating superconductor he had achieved a 2% loss in weight for anything directly over the superconductor.

Podkletnov's research is interesting and compelling, and it would fall into the category of "real" antigravity – but I am writing about Podklentov's type of research as well as enormous amount of research and theory available on electromagnetic propulsion systems. These can be considered "effective" antigravity.

The Harrier jet fighter can swivel its engine exhaust-nossels to create vertical lift, which resembles antigravity in that it is VTOL takeoff. However, the Harrier does not use effective antigravity because it has all of the functionality and side effects of an aircraft. A helium blimp would be a closer example to "effective" antigravity, but it too is not – because it works on basic aerodynamic principles.

Aerodynamics is not effectively antigravity – aerodynamics is instead expensive, difficult to manufacture, prone to explosive failure, and highly unreliable. This is not to suggest that a jet aircraft is unreliable, because it has a variety of backup systems, but that the technology itself is unreliable in that a jet is adversely effected by the medium that it uses to propel itself. Air pressure, humidity, temperature, and strong winds all cause a degree of unreliability. In addition, turbine engines stretch the limit of what mechanical engineering can achieve – which is why they are prone to break if even something as small as a bird gets sucked in during flight.

Antigravity is not about moving the air around — it is about a medium-agnostic means of air transportation that produces vertical and/or directional lift without relying on air-pressure like a wing or blimp. Antigravity is an electromagnetic or electrogravitic system for reducing the weight of an apparatus to allow it to lift more easily. Antigravity is pushing a button and having your vehicle take off without runways, noisy engines, minimum flight-speeds, propellers, or any of the other drawbacks that limit conventional aircraft from achieving popularity similar to what an automobile might have.

The author's definition of Antigravity for the purposes of this article is confined to electromagnetic or electrogravitic devices that reduce the weight of an

object to enable it to take off without conventional thrust-producing apparatus. This definition might also fit many of the classical characteristics known at one time as "the electric spacecraft".

1. Business Analysis versus Scientific Analysis

The author disagrees with the majority of scientists as to when commercial antigravity will become possible for some very basic and obvious reasons. To begin with, the majority of credentialed physics-related scientists come from a theoretical school of thought, which tends to limit their world-view to only contain those things that are currently or potentially explained by theory. The author, however, comes from an experimental school of thought that seeks to capitalize on existing observational data without the rigorous need to explain every last detail of its functionality. The author is an engineer, not a scientist – and engineers don't need to totally understand how something works in order to make it better.

This difference between the engineering point of view and the physicists is also different in the manner in which they seek out observational data. A physicist looks towards naturally observable data, and in the event that none exists they look towards current theories to explain potential future observations. The engineer is more open to ideas that are less rigorously tested from the perspective of scientific method, but are currently observed as potential solutions to real-world problems.

2. Potential Technologies Overivew

Phycists currently tend to dismiss the entire concept of Electrogravity, and the reasoning behind their logic is very sound. To begin with, Electrogravity is not observable in nature. In addition, many of the claims by those persons who submit Electrogravity and antigravity devices for public review are faked, exaggerated, or just plain wrong.

Physicists are responsible for maintaining a working body of theoretical knowledge, and if they were to admit results such as Schnurer's without skeptical scrutiny it would undermine the very fabric of technology itself. If the Podekletnov results were to be accepted as fact at face value without rigorous prrof, imagine the amount of money that would be wasted in attempts to build enormous Antigravity vehicles based on this theory.

In the middle of the spectrum lies the concept of Maglev, which is mentioned here only for the purpose of specifying that Maglev is not commercial antigravity. It has been mistakenly thought of as antigravity by many because it utilizes a magnetically-levitated train to improve the velocity of the train and reduce transit time between stops. In reality, Maglev is not really a vehicle at all.

The definition of a vehicle would be a device that transports itself as well as its passengers and cargo between two points. This is why an automobile is considered a vehicle but an escalator or elevator is not – the automobile transports its entire propulsive apparatus to another location, but an escalator or elevator does not move – it merely repositions its cargo between points. The Maglev train is not really a vehicle at all – it is actually a very long electromagnetic armature that transports people and cargo between its ends at high speed. While it may serve a commercial need, it is not to be confused with Antigravity.

On the opposite end of the spectrum is the author of this article – who has built and successfully tested over 30 electromagnetic "Lifters" at the time of this writing. The Lifter is a device based on research by Transdimensional Technologies and related to research by Thomas Townsend Brown that demonstrates an antigravity effect when a High-voltage DC current is applied to it.

Currently, the exact method of propulsion for the Lifter is being debated. It is thought to be one of two things – either an effective form of "ion-wind" propulsion, or else a form of field-effect propulsion based on an as-yet unknown force. While the debate about the exact nature of this propulsion is important with regard to future research, in reality it does not change the observational data that demonstrate that this technology works perfectly, consistently, and reliably.

The Lifter design was demonstrated by the author in a continuous mode of operation for over 7 hours straight on Sunday, April 21st, 2002, at the Seattle Center "EarthDay and Renewable Energy Exhibition". During this seven hour period of time, the author's Lifter hovered at a tethered height of 12 inches from the surface of the table, powered by a 30 watt load from a simple computer monitor.

This article is not meant to get into the details of methods of antigravity, only to suggest that it already exists in the form of electromagnetic propulsion systems if nothing else. The author is confident that in time physicists will find a theoretical reason for why the Lifter operates as it does, but for the time being the fact of its operation overshadows the method of its operation.

3. Market Needs

Commercial Antigravity doesn't require a 2% loss in weight to operate – it will require something akin to a 200% loss in weight. A commercial antigravity device will have to demonstrate exceptional performance to gain market acceptance, but not for the reasons that might immediately come to mind.

One might believe that skepticism from the scientific community would prevent antigravity technology from gaining the scientific acceptance needed to become a commercially accepted engineering discipline. The long term view, however, shows that this is not the case – engineering and market forces drive innovation, and formal science plays a supporting role in explaining and

quantifying the innovations that engineers have already commercially qualified as valid.

The real roadblock to success for commercial antigravity is market acceptance. The author's demonstration of the Lifter technology at the Renewable Energy Exhibition helped him to realize that the vast majority of consumers have no idea what antigravity technology could be used for, much less what they themselves could use it for. The same thinking was apparent at the dawn of the age of personal computing, when the idea of having a computer in the home was a completely foreign concept.

So in brief, a market does not exist for antigravity technology, which is why inventors working with this technology have been unable to find appreciable support for their work. Many inventors look at this technology and ask, "how could the public not understand how valuable a technology like this is?" – but that isn't the problem. The problem is that most innovators with an interest in antigravity are so closely tied to the science behind the technology that they fail to review and address the business needs that drive the market acceptance of a new technology. In other words, people don't buy antigravity – they buy solutions. People don't buy cars to simply have a car – they buy cars because people need transportation needs that they have to fulfill. People don't buy computers because they want to have a computer – they buy computers because they want to share and process information and communications.

Marketing Requirements

How will antigravity technology gain the market acceptance to become a commercially viable technology? There are a variety of ways in that antigravity technologies will become commercially viable, but only after antigravity is no longer sold as antigravity – it needs to be sold as a personal or business solution.

The solutions that antigravity technologies are best prepared to provide at the moment are in the realm of transportation technology. This includes moving people and cargo to destinations in a similar manner to conventional transportation technologies such as aircraft or automobiles.

With regard to providing transportation solutions, antigravity has the ability to incorporate the best features of both contemporary automotive and aerospace technologies into a single technology that will serve point-to-point transportation needs better than either of the two aforementioned technologies could by itself.

For a moment, assume that a person wants to travel from Los Angeles to New York in a short period of time. Currently, the most convenient method of transportation to accomplish this would require the person to take an automobile to the airport, and from there take an aircraft from the Los Angeles airport to the New York airport. After departing at the New York airport, the passenger must then take another vehicle to their intended destination.

Commercial antigravity technology could serve a dual-purpose short and long-range transportation role, taking on the aspects of both ground transport as well as air transport.

Product Delivery Requirements

In order to deliver commercial antigravity as a viable solution to business needs, a variety of work will need to be completed on the various component systems of this technology to turn it from what is currently a "proof of concept" into a commercial reality.

Let us assume for a moment that we have developed a working device based on Antigravity or some method of Field-Effect Propulsion. While this is the critical stepping stone to success, this is by no means the end al be all of the development cycle.

To begin with, the technology must be perfected to the point of being both economical and reliable. As it stands now, the market already has technologies in place that fulfill some or all of the requirements for the technology that Antigravity is being developed to replace. In order to serve as an effective replacement for these technologies, antigravity technology must then demonstrate that it both costs less in terms of operation and manufacture, as well as being more reliable than conventional air-transportation solutions.

I mention reliability in light of the recent negative media attention surrounding several recent commercial airline crashes. From a marketing perspective, air-travel disasters provide a great deal of negative publicity for the airline industry. Since the airline industry has a mostly successful track record of delivering passengers and cargo, people are for the most part willing to forgive the occasional air-disaster. However, with a new technology such as antigravity-based air-transport, there is not a long enough track record to permit public acceptance of air-disasters. One substantial disaster in the early days of antigravity could serve to forever damage the credibility of this new technology.

With regard to being economical, any type of antigravity system that intends to surpass existing methods of air-transport must be able to do so at a less-expensive rate to own and operate, and must have a vehicular lifespan at the very least similar to conventional air-transport devices. This would allow the total cost of ownership (TCO) to be less for an antigravity vehicle than it would otherwise be for a conventional craft.

There is one caveat to acceptance of antigravity technology as compared to conventional aircraft, which is simply that if antigravity vehicles are able to operate in an environment or manner that precludes conventional aircraft, then they should be able to gain a market niche without immediately having to surpass conventional aircraft in the area of TCO.

Assuming that we can develop a propulsion system that is both more reliable and less expensive to operate for the transportation of passengers and cargo, we then have to build up the skeleton of a vehicle compatible with this form of propulsion around the actual propulsion system.

For instance, a conventional aircraft has pitch, yaw, and several other flight controls, but for an antigravity vehicle there is a high likelihood that some or all of these controls will not be required, thereby changing the dynamic of flight associated with the craft. This will require new methods of pilot certification and flight-qualification, as well as requiring a control-philosophy to be created surrounding how the craft will operate.

I use the phrase "control-philosophy" instead of simply "control layout" because one of my assumptions about antigravity propulsion systems is that they will allow more flexibility in the design process for engineers to determine how the craft "should" fly, as opposed to an aircraft or helicopter, in which the components determining speed and handling are based primarily on an interaction between the design of the craft and the atmosphere.

In brief, an antigravity cargo-transport may have very different needs for flight than perhaps a lightweight passenger vehicle would, although there would also need to be a consistency between the control-systems of these devices to reduce the need for extra pilot training and competency testing.

Therefore, it should be apparent from the last few paragraphs that not only are there several propulsion-system related challenges involved with developing a commercial antigravity device, but there are also several challenges in the design, training, support aspects of this technology that also factor into the requirements to be complete before a complete product can be delivered.

Conclusion

At the beginning of this treatise, I posed the simple question of **"how far away is commercial antigravity"**. The reader, I expect, probably interpreted that question in terms of time, which is the usual measurement of questioning when new technologies will become part of our lives.

However, as I have attempted to demonstrate throughout this article, **the time component is much less important to the development process than is the distance component – that is, how far away from commercial antigravity we are.** When I use the word distance, I mean specifically what tasks must be completed in order for antigravity to go from being a proof-of-concept approach to a new form of propulsion-system to being a completed vehicle ready for manufacture.

I have attempted not to address the legal implications of antigravity technology with regard to certification for general or specific use – my thought on this is that the discussion of legal ramifications of antigravity is best left for another time. This is due primarily to the size and scope of that discussion, which is beyond what I am attempting to analyze in this article.

So, in finale, how far away from commercial antigravity we are depends not so much on time as on the rate at which we can perform the work required to provide the underpinnings on top of which the technology can be built. This seems important to me, as it underscores how close we appear to be to a working method of antigravity propulsion, and how we might consider focusing resources and goals to achieve the realization of this common dream that we share.

EDITORIAL: PERPETUAL MOBILE OF 1902

There is one more interesting example of perpetual mobile, which was described in the collected articles [1]. The motor shown in Fig.1 was invented in 1902. The vessels *b, c, d* and *e* are mounted on a shaft *a*, and have one side *f* tangential to the shaft, and the other side radial. Compressed air is forced into each vessel through the valves *p*. It is stated that under "the action of the internal pressure of the vessels, and after a slight impulse has been given to same, in the direction of the arrow, the whole apparatus will begin to move and continue to do so without ever stopping, the velocity corresponding to the pressure established within the vessels".

Really simple... Let's try to examine it.

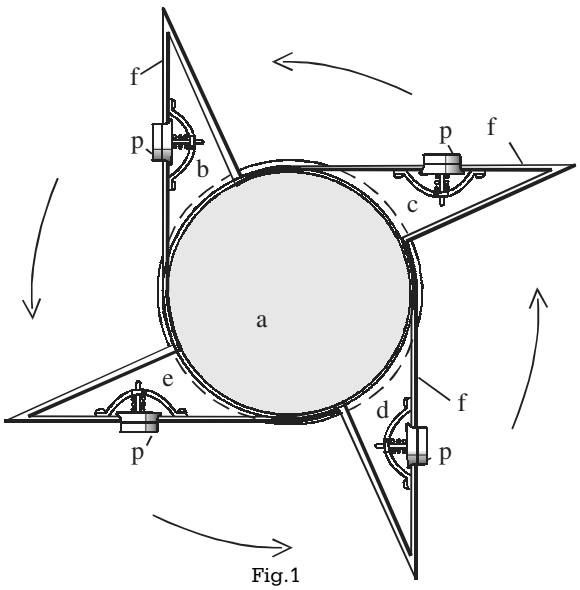

Fig.1

Reference

R.A. Ford. The Perpetual Motion Mystery. A Continuing Quest, 1987
Lindsay Publications, Inc., Bradley, IL 60915

Action without Reaction

New Gravidynamic Paradox

Yu. N. Ivanov
Academician of Russian Academy of Natural Sciences

Saikina, 11/2, app.4, Moscow, Russia
Tel: (095) 277-33-76/276-50-39
mirit@narod.ru
http://www.mirit.org

Editorial: Yu.N. Ivanov discovered a new unusual physical phenomenon that is a gravidynamic paradox. The sense of the paradox is the existence of the situation, which is not forbidden by physical laws and which allows any man (even a child) easily hold suspended or carry things with 100kg or more weight by means of some simple device. This phenomenon is just a part of the significant applied topic and a demonstration of the possibility to cancel weight characteristics of any material object. Per se it is a work on the obtaining of the methods to eliminate aircrafts weight.

We can use only resistant things as a support!

Galilee-Newton's Laws are in the basis of classical mechanics. Thought concerned fundamental, these laws do not explain the main thing, i.e. the internal processual essence of the phenomena, described by them. There is another scientific line – the quantum mechanics, which tries to discover the essence of deep processes. There is no connection between these lines, therefore they as if exist independently. There are also long-time conversations about necessity to combine the quantum and the classical approaches. We suppose, that practically the combining has already happened, since thanks to rhythmodynamics, there appeared phase, frequency and velocity of light in formulae of classical mechanics (without these attributes the quantum mechanics is impossible). It was revealed, that phase-frequency method of late mechanics formulae presentation gives a real physical sense both to formulae themselves, and to concepts which seemed vague before *(namely: cause of motion, force, velocity, inertiality, gravitation)*. In this sense, the upcoming rhythmodynamics fills up the gap between the main physical lines and draws them together. But let's change the vector, since **the subject of the given article is to concern cases in which the third Newton law is not directly valid.**

Newton formulated the third law in the following way:

"Action always has equal and opposite interaction, in other words, actions of two bodies on each other are equal and directed in opposite sides".

This law represents the fact that one-way action of one body to another cannot exist in nature, but there is only an interaction between them, i.e. there is no action without reaction [1].

We must note, that the third Newton law is valid only for systems with 100% feedback, appeared in the interaction period. For example, during the magnet influence on the iron object it is revealed, that this object also starts to influence upon the magnet, i.e. to attract it with the same force. It happens because in the period of action of magnetic field the iron object itself becomes the source of magnetic field (Fig.1). Here the magnetic field, as an especial environmental condition, acts as a mediator, i.e. exists by itself in the interval between object and magnet .

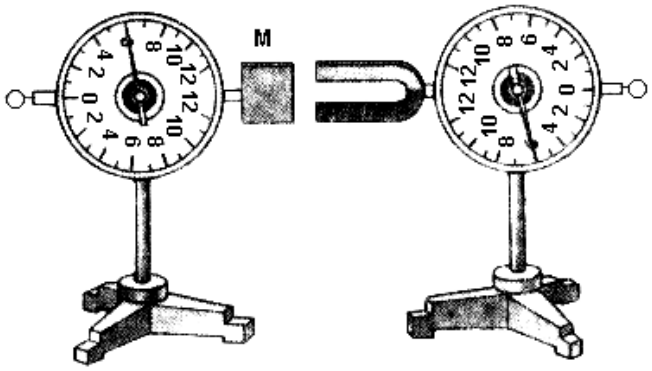

Fig. 1

Interaction of magnet and metal body M. Here the action is equal to reaction, i.e. the third Newton law is valid.

It is considered to be that magnetic field, created by electric current, spreads with the velocity of light. If current impulse is short, then the magnetic field spreads independently from the conductor and no matter if there is current in the conductor at present, or not. If the distance up to the object is big, then the magnetic field remains between source and object for some time, and has no influence upon the object. In this sense the portion of magnetic field, placed on the path between source and body, can be considered as moving independent "entity", i.e. the space by means of itself carries its changed state (magnetic properties) from one place to another. In this period magnetic properties in the form of quantum can influence neither on the source, from which the magnetic quantum is already detached, nor on the object, which the magnetic quantum still does not reach.

But having reached the object, magnetic field changes the state of this object. If as the result of influence the object becomes a source of magnetic field, then the part of the field is reradiated in the direction of source, i.e. the object itself becomes the source for some time, and by this it is able to influence on the first primary source. In this situation the principle of action and reaction works, because the feedback takes place.

If the feedback does not appear during the period of influence of one body to another, then the action and reaction law is not valid in the system. Let's demonstrate it by the example of the mechanical experiments, in which there is a feedback between objects.

Let there is a device (Fig. 2), which throws off two water (air) streams in the opposite directions in such a way, that reactive forces completely compensate each other. At that the thrown down stream compensates the gravity too. In this case the device will fly without falling, i.e. it will have zero weight.

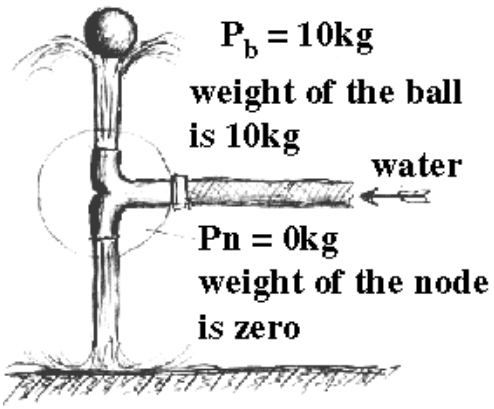

Fig. 2

The ball, suspended in the water stream, does not put pressure on the source. It happens because there is no feedback between the ball and the source. If you have such a device, then, lifting the ball by means of it, you will not feel the weight of the ball. The reason: the ball hangs due to the kinetic energy, which the stream passes to it and and this ball can not influence on the source through the water stream.

The appearance of the ball with the weight P_b does not influence on the weight P_n of the device. And even in the case if we press the ball down, i.e. essentially displace its location in the stream, the device will feel nothing.

The absence of device weight is evident for us; therefore we can easily move the device if its original (vertical) orientation remains unchanged.

Let's change the situation and place the ball (body with the shape, which is steady for hanging) in the upper stream. This ball with the weight about 10 kg is placed in a way to be kept by this stream at some distance, for example at 0.5 m. Will the device react on the changed situation, i.e. on the ball appearance? Will the weight of the ball, hanging in the stream, be added to zero weight of the device (0 + 10 kg)?

The calculation shows that it will not: $\Sigma P = 0 + 10 = 0$ [kg]. There is only an illusion that the ball is supported by the stream and that it is a part of the system. As a matter of fact, the ball is detached from the system and hangs due to the water kinetic energy. It is easy to check it by making an experiment in a bathroom: "Remove the douche sprayer, then direct the stream up and holding it by the one hand with the aim of weighting, try to influence on the source by the other hand through the stream. You will be surprised to feel that the hand, which is supported by the stream or any object, which is hanged in the stream, does not influence on the source".

At first sight the situation seems to be a paradox, however it very illustrates the possibility of the force action without reaction. So, the action can be one-way, i.e. calling no reply reaction in the form of pressure on the action source.

In such an unusual way it is possible to keep the ball of bigger weight (100 kg and more), at that to move it easily by means of the device and at the same time not to feel the presence of additional weight in the stream. **It is possible only in the case when there is no feedback between body and source,** i.e. the body, hanged in the stream, has no ability to act on the force source. Thus, we can both hold and move the heavy ball without additional efforts, and also lift it up to any height (for example, 100 m). As a matter of fact, we deal with the **new gravidynamic paradox**.

It is interesting then, how to solve the task of the following type: "Let the body with 100 kg weight is hanged in the water (air) stream in such a way, that it does not change the velocity and direction of liquid outflow from the source nozzle. How much energy the operator must spend to lift this body to the height about 10 m?" (Here it means that the operator must take the device, which supports the ball, and, moving upstairs, lift the body, which hangs in the stream, by means of this device to the height about 10 m). If to solve this problem correctly (the condition is that the operator lifts himself together with the device and the ball), we will find out, that operator's energy is spent only for lifting of the device, which creates water streams. The operator, lifting together with the device, will not even notice that in the stream there is a body with about 100 kg weight **(this is the sense of the paradox).**

The situation only seems to be absurd, and even paradoxical for theorists, but it is not a hopeless one.

We can also observe the effect of action without reaction in ultrasonic field of the source. If the source is fixed on scales (Fig.3) and body is hanged, as it was made in the stream, the scales will show only the precise weight of the source and will not react on the weight of the hanged body, no matter how heavy it is.

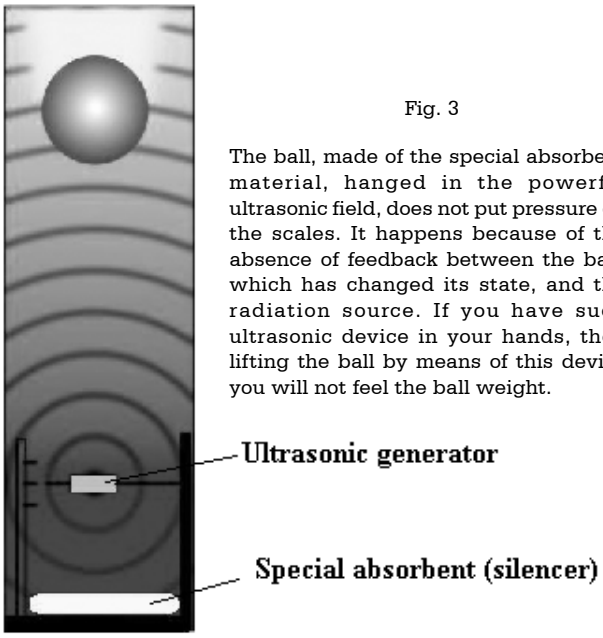

Fig. 3

The ball, made of the special absorbent material, hanged in the powerful ultrasonic field, does not put pressure on the scales. It happens because of the absence of feedback between the ball, which has changed its state, and the radiation source. If you have such ultrasonic device in your hands, then lifting the ball by means of this device you will not feel the ball weight.

The experiment of such type was made in one of the secret institutes. Water was used as an acoustic environment. The heavy ball easily floated up from the vessel bottom i.e. it behaved as if it had no weight.

The similar phenomena but such of the other organizational level, sometimes become apparent in nature. The phenomenon has its very name because the event happens unexpectedly and is not analyzable through laboratory research [3].

"A spherical ball lightning about the size of a football ball flew over a village Galtsovka of Altaisky Krai at a height of twenty to thirty meters. The first shed in its way, with ferroconcrete poles, was crushed and collapsed. Flying over a slated house, the ball lightning tore away the roofing slate together with nails, raised it into air and pulled it along, scattering its parts all over the village. Flying over a tractor station, the ball lightning crushed a frame, welded of metal angles and covered with tarpaulin. On the approaching of the ball lightning to another frame, it was at first dragged along the ground, and after the ball lightning had passed it, the frame was lifted and carried at a distance of 300 meters. The weight of the frame was no less than 100 kg".

Further the author analyzes the situation from point of view of the known physical laws: "The frame of hundreds kilograms weight was carried by fields of the flying ball lightning. However, for some reason the ball lightning kept on flying straight and did not note that some metal frame was caught to it. If the ball lightning, as it is usually considered, has a density of air and it is a weightless formation, then why the frame with the weight not less than 100 kg could not change its flight trajectory even in some extent?"

It draws attention that in some cases the ball lightning field pushed objects away, and in other cases it attracted them. It can be explained only by fact that in each case the ball lightning field specifically influenced on internal properties of objects, and then objects themselves somehow reacted on their new state (they changed their motion) . The feedback absence (in other way it happens between magnet and iron object) allows the ball lightning not react upon the things, which take place in its field. If these objects themselves became sources of similar field, i.e. reradiated it, they would influence on the ball lightning trajectory. **Most likely, in the given case, there was realized the situation when action caused no reaction.**

Conclusions

In the context of known physical laws the particular problem of direct action without feedback was formulated and solved. The solution of this problem provides deep understanding of how to control weight characteristics of material objects in open systems. As it was shown by the example with water (which is only an illustration of more fundamental processes) we can "deceive" the nature, but only through the deep understanding of the processual character of the concerned events.

By the example of ultrasound we show, that in principle there can exist such field flows, which are able to influence on bodies without the feedback effect. There were defined some conditions and criteria of bodies and methods of influence, at which the third Newton law is not directly valid (it is not published in this article).

The described type of influence can be called as pressure. But during consideration of processes at atomic or deeper level, i.e. from the position of rhythmodynamics, we find out something of another kind, that is phase-frequency one. It prompts to us, what kind of technologies will exist and how our aircrafts will look in nearest future. But not everyone is able to understand it at once.

Moscow 15.05.2002

For sponsors: mirit@yandex.ru
Our website: http://www.mirit.org

References

1. Physics textbook for the 9th class of secondary school // M., Prosveschenie, 1982
2. Ju.N. Ivanov, Rhythmodynamics // M., Noviy Tcentr, 1997
3. G.V. Nikolaev, Scientific vacuum // Tomsk, Kursiv, 1999

Comment

In the gravitation field we have a balanced open system, in which appearance of the new body at first sight must cause this system reaction such as weight increase. However, this is not the case.

The given problem is solved in two independent steps:

1) examination of interaction between water source and water (reactive effect, which is compensated by counter flow);

2) examination of interaction between water, detached from the source, and the body (unit time impulse per unit area).

It is impossible to examine the interaction between the source and the body because water has no rigidity. There are no means to influence on the source through the intermediate stream, therefore the principle of action and reaction is valid for each step individually, but not for both! But in this case the third Newton law must be developed as following: "If there is a 100% feedback between two bodies, their interactions are equal and inversely directed. And if there is no feedback, the action of one body to another causes no reaction, i.e. the action is not equal to reaction". And this is already another law!

New Possibilities of Vortex Electric Power Devices

Stanislav A. Lisnyak

Prospect Stoletiya Vladivostoka, 112-37
690069, Vladivostok, Russia
Tel/Fax: (7-4232)310-554
Email: Stasvladcomru@mail.ru

The earlier published article [1] was devoted to the explanation of the excess energy output at the rotation of flow medium in vortex tube (VT). The researches on VT demonstrated by the real examples that the excess energy output is a real fact, which is determined by natural physical processes. These processes take place in the fluid at its vortex (rotational) motion in the closed volume by means of phase transformations (skips) of the fluid state. However, the practice shows that for obtaining of patents and benefits for the real vortex devices, which are made for heat generation, it is necessary to write a little about their real technical characteristics, though technical and constructive possibilities of vortex devices can be much better. Temperature of water of these devices could not be higher than 120°C, and value of fluid pressure is confined within 5…6 kg/cm^2. Circulation pumps of pressure over 6 kg/cm^2 are used to increase thermal power output of vortex heat generators (VHG). It causes the discredit of VHG since at such a method their generative possibilities reduces to 100% value and less! We set a problem to discover the ways and engineering solutions for the essential increase of the coefficient of VHG energy conversion to not less than 200% value.

Our experience in development and exploitation of deep-sea physical devices has given some engineering solutions in this way. Actually, we have the opportunity to use the generally applicable circulation pumps, which have pressure not more than 4.0 kg/sm^2. At the same time we can raise the temperature of the heat carrier to 300°C and higher! and the pressure can be increased to 1000kg/sm^2! Such fluid parameters allow to use this fluid as a heat carrier in powerful hot-water generators of steam engines, turbines etc. By the way, this method allows to make the value of temperature of water enough to supply its PYROLESIS! The main point of the method is the following: all the closed system of water-filled VHG works at pressure with the value under 1000kg/sm^2. It is provided by means of the special device, the so-called automatic pneumohydraulic block (APHB). This lets to raise the temperature of working fluid to 1000°C with no change in its aggregative state. The practical functional scheme of such a device is shown in Fig.1.

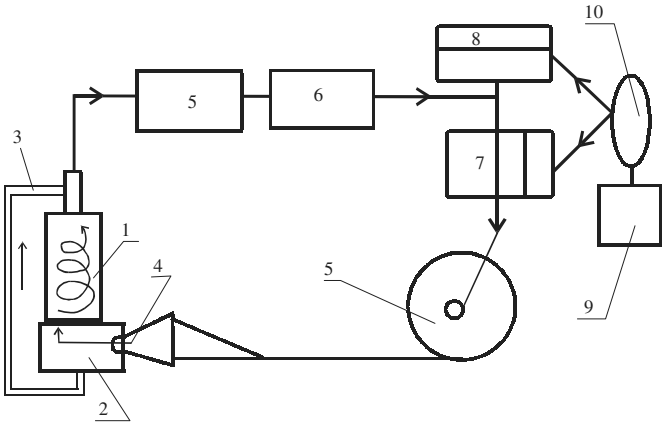

Fig. 1

1 – vortex tube; 2 – entry vortex chamber; 3 – by-pass; 4 – upstream end; 5 – circulation pump; 6 – heat-exchangers; 7 – APHB; 8 – volume of fluid leakage compensation; 9 - compressed-air flask; 10 - gas pressure regulator

The device works in the following way. The whole device is filled with working fluid without entrapped gas. At the operation of the circulation pump (5), fluid through the upstream end (4), placing in the entry vortex chamber (2), swirls, accelerates and gets into the vortex tube (1), where its "energy saturation" is realized. Then heated fluid gets into the heat-exchangers (6) for heating or for other purposes. After passing through the heat-exchangers, fluid gets into the pneumohydraulic device (7), where there is kept up the proper level of fluid pressure in the whole system. To prevent the system breakdown at the accidental fluid leakage, there is a device (8), which compensates such leakages. Compressed-air flask (9), with the volume under 1000kg/cm^2, and gas pressure regulator (10) keep up the selected level of the pressure in the system. The use of blocks (7,8,9,10) excludes evaporation in the system and prevents the breakdown of the circulation pump (5).

This VHG scheme allows to double the effectiveness of YUSMAR devices [2] only at the expense of rise in working fluid temperature in 2…3 times.

Observation of any fluid swirls and film documents of windspouts arrive to conclusion that all vortex structures are rotation bodies, created by the lines of the second order: $Y=aX^2$. In other words, as a result of the rotation in the swirl, air or fluid mass gets the acceleration of the second order. Taking into account the aforesaid, it is evident that in order to form the classical swirl in the VT, the very VT should be a tubular body of rotation. This body is created by the curve (see below Fig.2).

In YUSMAR and similar devices the vortex fluid motion take place in straight cylinder and 1/3 of this area is used for fluid deceleration that causes vortex flew

disruption. This results in the impossibility to increase additional heat in the straight tube in more than 1.54 times. It is caused by the fact that the main vortex formation takes place only in the vortex chamber and the flows separation does in the tube itself. Then, this vortex formation is right away disrupted by different plate brakes! It suggests itself that output part of VT should be made in the spiral form, expanding at the flow passage.

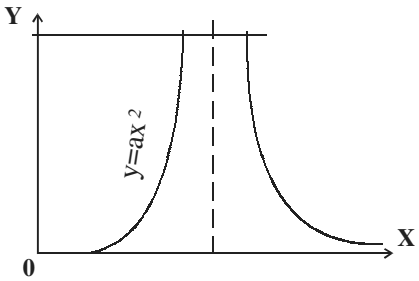

Fig. 2
Generatrix of the wall of vortex tube

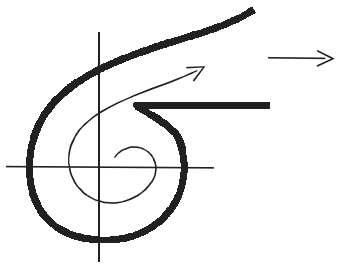

Fig. 3
Upper part of the tube

Such section, made on the outlet of the vortex tube, helps to slow down the flow avoiding its disruption, since axial-cold flow, placed along the tube axis, should stay intact. Two of such engineering solutions allow raising the level of the additional VHG energy up to 180…200%.

YSMAR devices are designed for one tube with the assigned heat output. However, if to take into consideration and to use the aforesaid conclusions, then we can raise energy conversion coefficient (ECC) above 200% at the series connection of two and more VT. The scheme of such a device is shown in Fig. 4.

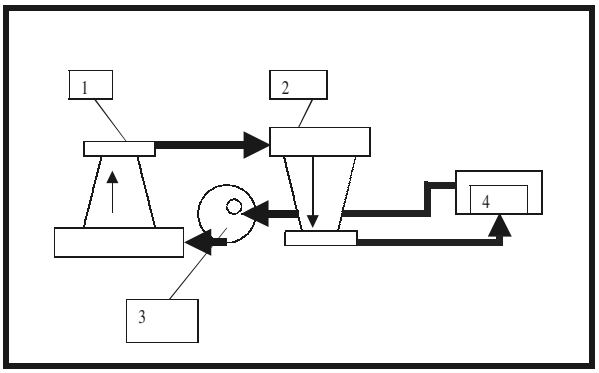

Fig. 4

Where: 1 – the first VT; 2 – the second VT; 3 – circulation pump; 4 – heat exchanger

According to Fig.4, the total energy output of the presented device is:

$$Q=K^2$$

Where: *Q* is the total output of the device; *K* is energy conversion coefficient of one VT; 2 – quantity of serially connected VT; *P* – the assigned power of the circulation pump.

In our earlier article [1], concerning VT application, we supposed that there is a straight transformation of vortex motion of ionized fluid into electric current. Under studying of many articles, devoted to the methods of water ionization, we discovered a significant one. It demonstrates that at the determined temperature, pure water increases its ionization capacity up to 3 orders without changing in the aggregative state [3]. The diagram in Fig.5 shows such dependence.

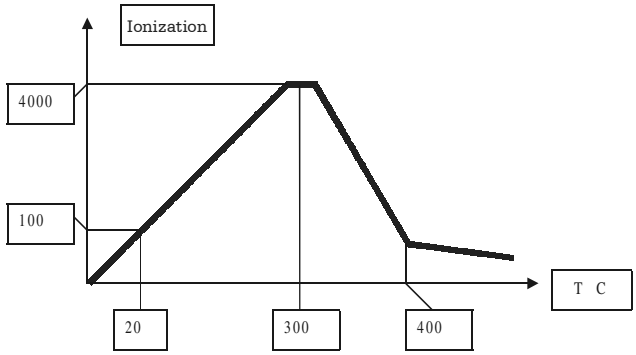

Fig.5
Diagram of the dependence of pure water ionization from temperature

The diagram demonstrates that water at 300°C temperature increase the quantity of ions in 4000 times as compared to 0°C and in 40 times as compared to 20°C. If to take into consideration that first experiments on VHG modernization help us to find the ways of fluid heating up to the practically any temperature without changing of its phase state, then on using the dependences (see Fig.5) it seems possible to create vortex fluid electric generators of the forward transformation. The aforesaid pneumohydraulic block, which is used for VHG functioning, allows to keep up water temperature at 300°C and pressure at about 90kg/cm^2 without threat of water evaporation! Presence of any rotation of fluid medium always causes appearance of two vortex flows. **These flows always move and rotate in opposite directions and if we do not put obstacles for their motion then they transform into each other and can exist without energy supply for an indefinite period of time.**

The presented VT form (see Fig.6) provides the producing of two fluid flows in the tube. These flows do not influence to each other and there is only their reciprocal overflow without disruption of the flows in the central part of VT. The tube presents a tubular body of rotation, which is created by hyperbola. There is positive angular acceleration of fluid in the lower part

of the tube; maximum speed of rotation of the axial and peripheral flows is in the middle part and negative angular acceleration, i.e. deceleration and transfer of kinetic energy into heat energy, is in the upper part of VT.

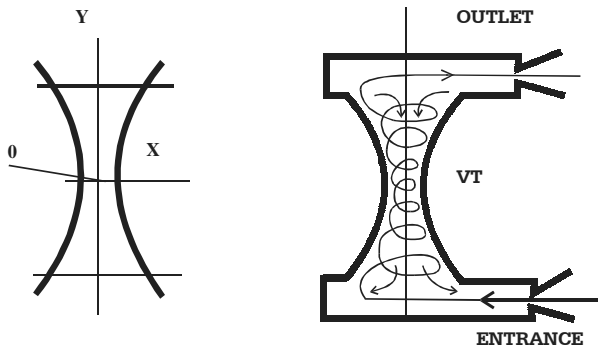

Fig.6

The maximum heating of fluid and its polarization is in the point Y=0. The polarization potential in the point can reach 10.000 V at 5m/sec flow speed for 10 cm diameter in the point. The cold flow, which comes along VT axis, is opposite to the peripheral hot flow. These flows close into one system in lower and upper chambers of VT. Thus, the presented VT classically modeled "rolling" and "unrolling" of water area.

There are no single vortexes in nature. Two vortexes, rotating in opposite directions, always appear while fluid mediums rotation! Science is not still able to describe energy overflows from one vortex center to the center of another one by means of mathematics. However we believe that this moment is close. There are maximum energy transformations of rotating water in the point Y=0.

The potential of the inner flow is equal to the outer flow by its value but is opposite by its sign. Potential difference is maximum in the point Y=0, in which removal of electric charges is the most effective.

It is appropriate mention here the name of Romanian engineer and researcher Henry Koanda, who in 20th of the last century discovered the so-called "Koanda effect" (attachment of fluid jet to the surface of usual kettle at pouring of it out the cups). Basing on this effect he suggested to make new type of aircrafts, which could have advanced bearing capacity and maneuverability. Unfortunately, money and conservatism of aircraft-industrialists did not allow realization of these engineering solutions.

At the same time, Koanda charged his disciple Patrick Flanagan with the job to research all **water properties**. The result was amazing! It was turned out that water actually has infinitely many phase states and when it is moving, then it can trap energy from the environment by some way. The publications on the point appeared in our press in the early eighties, late nineties of the last century. Most likely, they had become the basis of the invention, made by Potapov, i.e. vortex tubes for water!

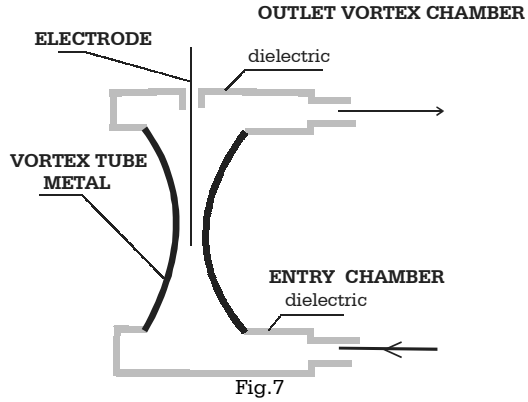

Fig.7
Scheme of vortex electric generator

In the presented scheme of electric generator the entry and outlet vortex chambers are made of dielectric material in the spiral form. This material certainly should withstand not less then 300°C of fluid temperature and about 100kg/sm^2 of pressure. Fluoroplastic or ceramic can be used as such a material.

From aforesaid it seems to be possible to submit the new scheme of electric generator for readers' consideration (see Fig.8).

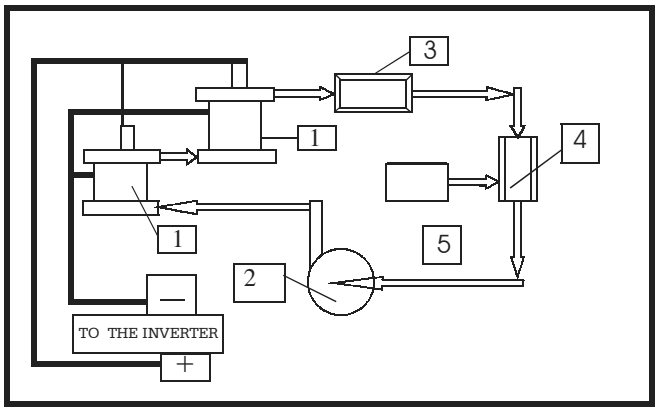

Fig.8
Generalized scheme of vortex electric generator
1 – vortex tubes; 2 – circulation pump; 3 – heat exchanger; 4 – automatic pneumohydraulic block; 5 - compressed-air flask

Actually we could finish the article if it were no disputes about excess energy, which is released at vortex motion of fluid in tubes. Having used a simple experiment, which any inquisitive person can repeat, we found the positive solution (see the scheme of the experiment in Fig. 9).

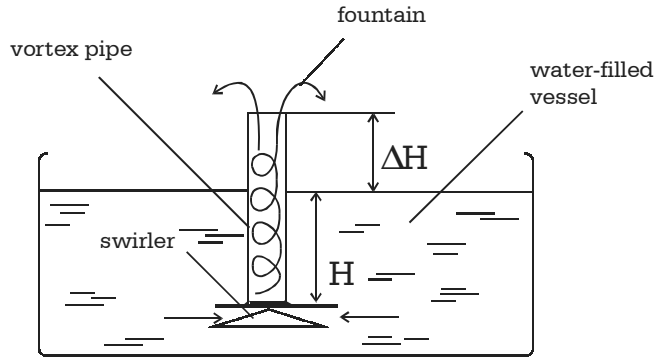

Fig.9
Demonstration of energy increase of fluid, rotating in vortex tube

A pipe with not less than 60 cm length and about 1-inch diameter is placed in a reservoir with not less than 50 cm depth. The lower part of the pipe is formed as an arm circular generator with about 15...17cm diameter. The gap width is about 2 cm. If we place the pipe with closed top end, which then will be open, into the reservoir, then water is splashed out above 20 cm of the reservoir level. Thus at the least 20% energy increase of energy mgH is observed.

By the way, we suggest orthodoxies of physics and other who have doubts to make one more simple experiment. Try to boil water in a can. When water starts to boil, swirl it with a spoon to the right or to the left. Then you will suddenly discover that all water surface is calm and only in the center of the can there is a water-steam mixture, which is about 20% higher than the level of water surface. You will also see that water is absolutely calm at walls of the can. This experiment can be reproduced anytime and anywhere, even in space, since it is a demonstration of **vortex** fluid motion and its actual influence on everything, which is around!

All presented engineering solutions are practically reproducible in any laboratory. The authors of the article would welcome the opportunity to co-operate with science and industry representatives for realization of the ideas in real serial production devices.

References

1. O.V. Gritskevitch, S.A. Lisnyak, On possibilities of vortex energetics //New Energy Technologies. 2002, #1(4), p.2-3
2. Patent RF #2045715, 1993
3. Chemical and Engineering News. 2000 #1, p.26

Investigation of Electric Energy Transmission Processes in non-Metallic Conducting Channels

D.S. Strebkov, A.I. Nekrasov, S.V. Avraamenko

All-Russian scientific Research Institute of Electrification of Agricultural Economy
2 Vishnyakovsky passage, 1 Moscow, 109456, Russia,
energy@viesh.msk.su

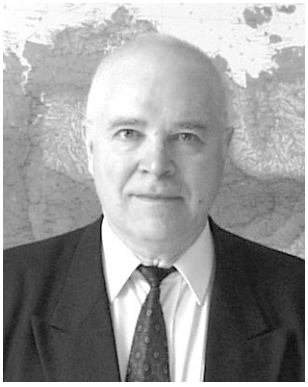

D.S. Strebkov

(Editor's notes by Alexander V. Frolov)

It has been found that at low frequency (1-25 kHz and higher) electric power can be transmitted with low losses from generator to receiver along single channel made of non-metallic conductive media such as water in plastic tube carbon thread, layer of damp soil, ITO films on glass substrate, laser and electronic beams. Transmitted power, as well as for traditional three phase lines, is limited by natural power of the transmission line and line capacity may reach at high voltage and pulse and operation modes the value 10^9 Wtt.

Introduction

The well-known methods of electric power transmission are based on transmission of active energy by means of conductivity currents in closed circuit. Electromagnetic energy spreads along power transmission lines (PTL) as progressing waves of electromagnetic field or field of charge [1]. Line wires made of aluminum or copper are conductive (guide) channels. Electromagnetic energy stream moves along these channels from generator to energy receiver and backwards to the generator. Maximum transmission possibility of 3-phase PTLs is limited by losses on the line resistance, by peak voltage (which is determined by electric strength of the insulation) and by electromagnetic stability of the line.

The modern approach to provide the electromagnetic stability consists in rigid regulation of line parameters by means of high-speed shunt reactor and consequence capacitive compensation for the purpose to except changes of electromagnetic power flows and to suppress resonant properties of a line [2].

In Tesla works [3] and in the researches of Russian scientists [4] a method of active power transfer was offered. This method supposes to transfer active power by means of electromagnetic capacitive current assisting with resonant properties of a single-wire line (SWL), made of a metal conductor. The purpose of the present work is a research of an opportunity to use non-metal conducting mediums for transmission of electric energy.

A pipe with not less than 60 cm length and about 1-inch diameter is placed in a reservoir with not less than 50 cm depth. The lower part of the pipe is formed as an arm circular generator with about 15...17cm diameter. The gap width is about 2 cm. If we place the pipe with closed top end, which then will be open, into the reservoir, then water is splashed out above 20 cm of the reservoir level. Thus at the least 20% energy increase of energy mgH is observed.

By the way, we suggest orthodoxies of physics and other who have doubts to make one more simple experiment. Try to boil water in a can. When water starts to boil, swirl it with a spoon to the right or to the left. Then you will suddenly discover that all water surface is calm and only in the center of the can there is a water-steam mixture, which is about 20% higher than the level of water surface. You will also see that water is absolutely calm at walls of the can. This experiment can be reproduced anytime and anywhere, even in space, since it is a demonstration of **vortex** fluid motion and its actual influence on everything, which is around!

All presented engineering solutions are practically reproducible in any laboratory. The authors of the article would welcome the opportunity to co-operate with science and industry representatives for realization of the ideas in real serial production devices.

References

1. O.V. Gritskevitch, S.A. Lisnyak, On possibilities of vortex energetics //New Energy Technologies. 2002, #1(4), p.2-3
2. Patent RF #2045715, 1993
3. Chemical and Engineering News. 2000 #1, p.26

Investigation of Electric Energy Transmission Processes in non-Metallic Conducting Channels

D.S. Strebkov, A.I. Nekrasov, S.V. Avraamenko

All-Russian scientific Research Institute of Electrification of Agricultural Economy
2 Vishnyakovsky passage, 1 Moscow, 109456, Russia,
energy@viesh.msk.su

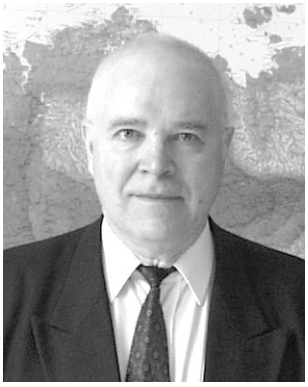

D.S. Strebkov

(Editor's notes by Alexander V. Frolov)

It has been found that at low frequency (1-25 kHz and higher) electric power can be transmitted with low losses from generator to receiver along single channel made of non-metallic conductive media such as water in plastic tube carbon thread, layer of damp soil, ITO films on glass substrate, laser and electronic beams. Transmitted power, as well as for traditional three phase lines, is limited by natural power of the transmission line and line capacity may reach at high voltage and pulse and operation modes the value 10^9 Wtt.

Introduction

The well-known methods of electric power transmission are based on transmission of active energy by means of conductivity currents in closed circuit. Electromagnetic energy spreads along power transmission lines (PTL) as progressing waves of electromagnetic field or field of charge [1]. Line wires made of aluminum or copper are conductive (guide) channels. Electromagnetic energy stream moves along these channels from generator to energy receiver and backwards to the generator. Maximum transmission possibility of 3-phase PTLs is limited by losses on the line resistance, by peak voltage (which is determined by electric strength of the insulation) and by electromagnetic stability of the line.

The modern approach to provide the electromagnetic stability consists in rigid regulation of line parameters by means of high-speed shunt reactor and consequence capacitive compensation for the purpose to except changes of electromagnetic power flows and to suppress resonant properties of a line [2].

In Tesla works [3] and in the researches of Russian scientists [4] a method of active power transfer was offered. This method supposes to transfer active power by means of electromagnetic capacitive current assisting with resonant properties of a single-wire line (SWL), made of a metal conductor. The purpose of the present work is a research of an opportunity to use non-metal conducting mediums for transmission of electric energy.

Methods

For realization of the experiments a single-wire energy system (SWES) was used. Its electric circuit is shown in Fig. 1 a,b. SWES consists of the following parts: high-frequency generator (1) of 28V voltage AC and 1 kWtt power; transmitting (2) and receiving (3) Tesla transformer with conductive channel (4) between them; rectifier (5) and electric load (7) as an incandescent lamp or electric motor (220V, 1 kWtt power). High-voltage winding of Tesla transformer is made in the form of cylindrical winding on the ferrite core with 50-100mm in diameter, 4000-6000 turns. The internal end of a high-voltage winding is connected to the conducting channel, and the external end is not connected at all (free end). A low-voltage winding that consists of 40-60 turns provides power supply of Tesla transformer. At the submission of electric power from the high-frequency generator to the winding of power supply zero potential appears on the free end of the high-voltage winding, and voltage with corresponding to the generator 1-25 kHz frequency is formed on the conducting channel. Besides, Tesla transformer as the spiral antenna generates electromagnetic waves of 5-10 cm length , which corresponds to the turn length of a high-voltage winding. Current resonance mode is formed in a supply circuit of Tesla transformer. At the same time, voltage resonance mode (of frequency equal to the generator frequency) is formed both in the reception and transmitting circuit of high-voltage windings and in the conducting channel (1).

The following materials were used as the conducting channels: filled with water or sea water polythene tubes with 10 mm diameter and 1,5 m long; plastic tray with soil layer of 150×10×400mm; film of tin dioxide – indium oxide (ITO) on 0,3 micrometer thick and 300 Ohm resistant glass substrate; graphite thread of 0,1 mm diameter, 500 mm long and with 100 Ohm resistance. For comparison steel and copper wire of 0,1 mm diameter and 5 m long was used also.

The voltage on the conducting channel changed in limits 1-10 kV, generator frequency changed from 1 up to 25 kHz. Voltage, current and capacity were measured on SWES output and on the load by standard electric measurement equipment.

Results and discussion

The replacement of the metal conductive channel to the channel made of non-metallic conductive materials does not effect to any reduction of possibilities of transmitting SWES or heating of a material of conducting channels. The consecutive connection of the channels did not resulted in reduction of transmitted power. Circuits break in the conducting water channel by the creation of an air gap led to the occurrence of arc discharge of reactive capacitor current. However this discharge did not cause increase of water temperature at transmitted power 300 Wtt and voltage 4,5 kV within 1 hour, that confirms the absence of energy losses in the conducting channel. The increase of water temperature did not result in decrease of transmitted power. Water PH reduction from neutral value up to 4 was detected.

The increase of sea salt concentration in water up to the level of 5-7 g/l did not increase transmitted power in comparison with tap water. However the replacement of tap water to dionized water with 16 MOhm resistances resulted in 100 % decrease of transmitted power.

Thus, it is experimentally shown, that conducting channels, produced from non-metal materials, have quasisuper-conductive properties in SWES at resonant mode. Possible explanation of this effect is the absence of active conduction current in the channel and the dominant role in the process of energy transfer belongs to displacement current, for which Joule Lentz law is not valid [11]. In the supply circuit of Tesla transformer current is practically reactive, and in resonance conditions active values of inductive and capacitive currents are equal. Vectors of these currents are opposite in their phases. Current of the high-frequency converter is spent for losses (component less than 2 %) in supply circuit wires and in the core of Tesla transformer and also for creation of reactive current in the conducting channel. In the mode of voltage resonance we have measured voltage active values of high-voltage inductance windings and conducting channel, interturn capacitance of windings and the capacities of the conducting channel. **We have discovered that they were equal and their phases were opposite to each other.** Losses from transmission of capacitive current through active resistance of the conducting channel are insignificantly small. Corona discharged losses and leakage current could be decreased by isolation of conducting channel. In this case active current and magnetic field of the line are equal to zero. Electric field of the line has maximum value. As well as in usual PTLs, maximum transferred power is limited by charge power of the line. Angle between vectors of voltage is equal to zero in the beginning and at the end of a line. Quality factor of SWES at frequency 5 kHz is in 100 times above than usual PTLs at frequency 50 kHz. In the conditions of resonance it leads to the significant increase of voltage along the conducting channel and it also leads to transmission power.

In usual PTLs voltage changes along the line are insignificant. The angle between vectors of voltage in the beginning and in the end of PTL constitutes the value, which is proportional to the wavelength of line.

On the basis of the researches the methods and devices are offered for transmission of electrical energy through plastic water guide, electro-insulated from ground, through irrigational channels and through isolated pipelines, which are used for gas, oil, hot and cold water transportation. Also the energy can be transferred through fiber-optic cable with conducting film on the surface, through all-carbon composite cable and

through electro-insulated part of a ground and water surface, including highway parts. There are also methods and devices, designed for the following transmissions. These methods can be applied for transfer of power to stationary and mobile units. There are also generated requirements to electrical safety and to restriction of use of drinking and hot water from pipelines, which are under electrical voltage. These requirements and restrictions are generally the grounding of pipeline parts, which are located on certain distance from the generator. This distance is equal to the whole number of half-waves and for it SWES voltage is equal to zero. In the case of a side pipeline it is necessary to ground the parts of the pipeline that are placed on the distance of odd number of quarter-wavelength from the main pipeline. For 5kHz frequency the quarter-wavelength is equal to 15000 m.

N. Tesla grounded one end of high-voltage windings of his transformer on the receiving and on the transmitting end of SWES. Tesla considered this condition as the necessary one for the transfer of power along the Earth. The results of our researchers demonstrate that it is not necessary to use metal self-closed conductor (and current lines in the Earth) for transmission of electric energy on low frequency (1-25 kHz).

For this frequency energy could be transferred from the generator to the receiver if we have single-wire guide system created as non-metal conducting channel. By the similar way electromagnetic energy is transferred by laser beam or microwave-beam. But in our case we can obtain high degree of efficiency that is caused by slight losses on energy absorption and energy emanation. Thus one of the ends of high-voltage winding at the energy generator will have zero potential and remain free. The symmetric end of a high-voltage winding on the reception end should be connected to some natural capacity 6 (Fig. a), which can represent the case of a balloon or frame of a tractor. In our experiments we used metallic safe-box as such natural capacity.

Editor's note: In 1887, October 11, the famous Russian scientist Pavel Yablotchkov got the France Patent #120684, which described the method to increase efficiency of electrical circuit by means of "atmosphere electricity". It was confirmed in many experiments that output power can be twice more than power provided for the circuit from primary electric generator. For that it is necessary to use a single-plate capacitor. The special feature by Yablotchkov, that provides maximum efficiency, is the high degree of air ionization. For this Yablotchkov proposed to use the special capacitor, which consists of a big number of metallic needles. By its view this construction reminds of a hedgehog. Thus we can assumed; that above described natural capacity (balloon or frame of a tractor) serves as a collector of free electrons. By Yablotchkov the efficiency of such systems can be increased by means of maximization of ionization process. It will not lead to the increase of losses if the second end of the high-voltage winding is not grounded.

In the other method of energy transfer, a condenser-diode block 8 was connected to the conducting channel on the receiver end. This block is one of the known circuit of voltage doubling, Fig.1 (b). On the condenser 8 electric energy is transferred through electronic switch 9 to load 7. In this case the entire length of conducting channel 4 and Tesla transformer winding 2 at generator must be equal to odd number of quarter wave-lengths.

Non-metal conducting channel (for instance, fiber-optic or coal-plastic cable) can be used for transfer of electric energy not only along but also as perpendicular to the Earth (for example, to relay aerostat or sounding balloon).

SWES conducting channel can be also created by ionization of air ions with laser beam [13]. Neodymium laser with double frequency and with energy 1 Joule in impulse is able to create 10^{15} cm^{-3} ion concentration in air. This concentration is sufficient for streamer initiation and for transfer of electric energy through the conducting channel. Ionization potential, time of ion existence and of excited molecule state, coefficient of multiquantum absorption, all these determine the limiting length of conducting channel in atmosphere that is equal to 300 km and its wave resistance at 200-400 Ohm. Voltage which is necessary for SWES comes to the quantity 0,5 MV – 15 MV, that depends on the length of a channel.

We suggest to use relativistic electron bunches of high energy as the conducting channel out of the atmosphere. As distinct from laser bunches they do not have divergency. In this connection the Moon or artificial conducting body, where the energy receiver is placed, can be used as natural capacity 6. Whereas energy generator can be installed on the Earth or on its satellite. Transmission range of electric energy is determined by the length of the generated conducting channel. The entire length of the conducting channel in the beginning and in the end must be equal to the whole number of half-waves. Here the length of high-voltage windings of two Tesla transformers must be taken in considerations. Electric energy, transmitting through the conducting channel, can exceed the energy of electron and laser beams generators in 10-100 thousand times. These generators play the role of a directing system (of usual SWEG wires), along which the transfer of electric energy proceeds.

It was offered to use colliding and crossing electron and laser beams with conducting transitional bodies as conducting channels for transfer of energy from the Space to the Earth and back. On the heights up to 30 km compositional coaly and fiber-optic cables can be used. To create the global energy system of the Earth it was also suggested to apply single-wire energy system and conducting layers of the Earth ionosphere as the conducting spherical channel [14].

Thus for electric energy transfer at the frequency 1-25 kHz and higher in the resonance mode a single-wire channel from the following non-metal conducting

mediums can be used: water, damp soil, coal-plastic, oxide film, ionized air channels, that are created by laser beams in the atmosphere, ionosphere conducting layers, and also beams of relativistic electrons out of the atmosphere. These non-metal conducting channels in the resonance mode have negligibly small resistance losses especially if to be compared with metal conductors, which are used in the known non-resonance methods of energy transfer by means of active conduction currents in the closed circuit. Electric energy in the resonance mode can be transferred with small losses from the generator to the receiver along the single-wire channel, made of non-metal conducting materials. The transfer can be realized at the frequency 1-25 kHz and higher, to any distance and to any direction relatively to the Earth. The transmission capacity is limited by charge power of a line as well as in the usual PTL. At high voltage the transmission capacity can reach the quantity from 10 Wtt to 10^9 Wtt in the pulse and streaming modes.

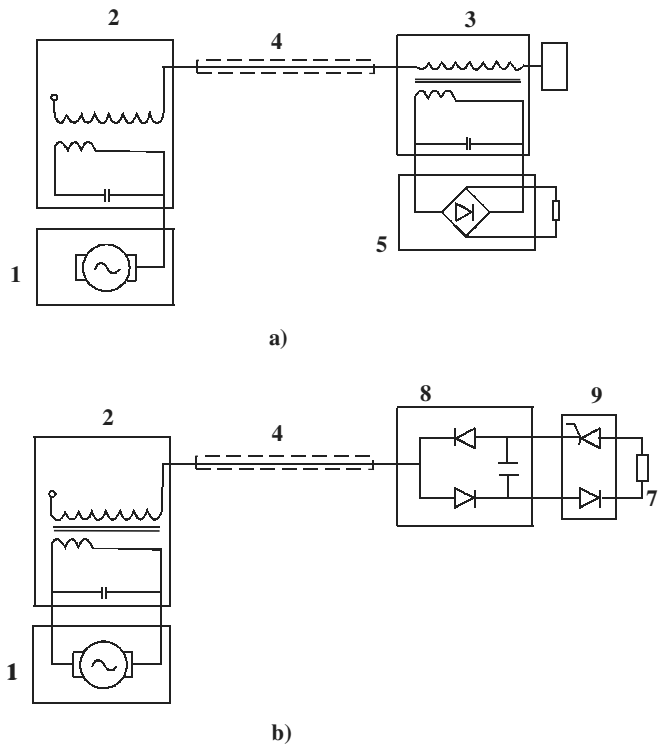

Fig. 1
Electric circuit of single-wire energetic system with non-metal conducting channel
a) SWES with symmetric array of Tesla generators

b) SWES with diode-capacitor block in the end of conducting channel

References

1. A.M.Kalashnikov, Ya.V Stepuk. Bases of radio engineering and radiolocation. Oscillating systems. M: Department of USSR Defense 1965, - p.127-158.
2. G.N.Alexandrov, S.V. Smolovic, Flexible lines for electric energy transmission over long distances. V Symposium "Electrical Engineering-2010", October 12-22, 1999, Moscow Region P., 35-42.
3. N.Tesla Apparatus for transmission of electrical energy. US Pat #349621, 15.05.1900.
4. S.V. Avraamenko Mode of electric devices supply and device for its realization. Pat. RF #210649 11.04.1995. Publ. 10.04.1998. Bulletin #10.
5. D.S.Strebkov, S.V.Avraamenko, A.I. Nekrasov Device for power supply of mobile electrical aggregation. Pat. RF #2158206, 15.04.1999. Publ. 27.10.2000. Bulletin #30.
6. D.S.Strebkov, S.V.Avraamenko, A.I. Nekrasov Mode of supply of electric transport devices and device for its realization. Pat. RF #2136515, 26.08.1998. Publ. 10.09.1999. Bulletin #25.
7. D.S.Strebkov, S.V.Avraamenko, A.I. Nekrasov One-trolley system of power supply of mobile electrical aggregations. Materials of the international scientific and technical conference on automation of agricultural manufacture. Minsk 6-8 July 2000, - p. 65-66.
8. D.S.Strebkov, S.V.Avraamenko, A.I. Nekrasov Research on single-wire system of electric energy transmission. International conference Ecology and agriculture. Technique. – Saint-Petersburg, 2000, - p.50-55.
9. D.S. Strebkov, S.V. Avraamenko, A.I. Nekrasov. Single-wire electric system for renewable-based electric grid. Third European Solar Congress "Eurosun 2000", June 19-22, 2000, Copenhagen, Denmark p., 10.
10. D.S. Strebkov, S.V. Avraamenko, A.I. Nekrasov. SWEPS – a novel electric power transmission technology. Planetary Association for Clean Energy Newsletter, 2001. – vol. 11, - 3, - p. 7-11.
11. I.E. Tamm. Bases of electricity theory. – M.Science, 1976. – p. 133, 397-400.
12. D.S. Strebkov, S.V. Avraamenko, A.I. Nekrasov. Mode and device for electric power transmission. Pat. RF #2172546, 24.01.2000. Publ. 20.08.2001. Bulletin #23.
13. D.S. Strebkov, S.V. Avraamenko, A.I. Nekrasov. Mode and device for electric power transmission. Pat. RF #2143775, 25.03.1999. Publ. 27.12.1999. Bulletin #36.
14. D.S. Strebkov, S.V. Avraamenko, A.I. Nekrasov. Mode and device for electric power transmission. Pat. RF #2161850, 14.07.1999. Publ. 10.01.2001. Bulletin #1.

Microcosm, Universe, Life

Alexey G. Shlienov
Budapeshtskaya, 66-1-77,Saint Petersburg, 192286 Russia

Ernest L. Petrov
Marshala Zaharova, 50-809, Saint Petersburg, 198330 Russia,
Fax.: (812) 587-9349

The authors of this article have prepared the 3rd edition of the book "Microcosm, Universe, Life" and now they are looking for a publisher to edit Russian and English version. In particular, the mechanism of energy transformation in the Universe (Fig.1) is described in the book. Matter radiates energy in the form of photons (as well as neutrinos). In general this energy is observed in the form of Cosmic Microwave Background Radiation (CMBR). Photons and neutrinos transfer the most of energy to de Broglie longitudinal photons. Matter absorbs energy mainly in the form of longitudinal photons. Thus, a cycling process of energy transformation (as well as matter transformation) occurs in the Stable Universe.

The 3rd edition is devoted to the description of 6 World Systems (Table 1), at that the 6th System is based on Unified Field Theory, which is developed by the authors, and proceeds from the following:

(Editor's: The understanding of the energy transformation mechanism allows to develop new fuel-less energy sources based of mutual transformations: longitudinal photons $\longleftrightarrow$ transverse photons).

Table 1

System	Principal Ideas
The 1st – Geocentric (Ptolemaic system)	Geocentrism and Anthropocentrism
The 2nd – Classic (Copernicus – Newton's system)	Description of the Universe on basis of Newton's Law of Gravity
The 3rd – Compromise (Tycho Brahe's system)	The compromises between two first systems
The 4th – Fractal (Charlie's system)	Non-heterogeneity of Large-Scale distribution of matter in the Universe
The 5th – Relativistic (Einsteinian system)	Description of the Universe on basis of gravitational field equations. Anthrop principle
The 6th – based on Unified Field Theory	Electromagnetic nature of all physical interactions. Irreversibility of all elementary micro-processes in combination with circular character of transformations in Large Scale of space ($c/H=R$ order) and time ($t_H=I/H$ order).

1. For theoretical results, which agree with the facts, it is necessary to use assigned inertial system (as Lorentz did), which, as we have known, is connected with CMBR. Obtained by this way decisions can be applied to the other systems, in particular, with use of Lorentz transformation for mass, energy, momentum, time and length.

2. Theory must agree with the whole known collection of facts, starting with such established empirical generalizations as basic principles of Natural science (Giordano Bruno, Lyell) and conservation laws (Mayer, Joule, Helmholtz, Faraday, Newton, Huygens, Vernadsky).

3. All physical objects could be presented as the systems, consisting of quanta of positive electric charge (protons), quanta of negative electric charge (electrons in fermions or boson states, which are part of neutrons

and atomic nuclei) and quanta of energy, impulse, moment of momentum (apeirons).

4. The leading role in the Universe energetic belongs to de Broglie longitudinal photons (of the first class, i.e. with the spin I=0), energy of which is twice as much as apeiron energy and is equal to $h\,H$, where h – is Plank's constant, H – is Hubble's constant.

5. Longitudinal photons, polarizable and depolarizable by matter particles, are the carriers of gravitational, magnetostatic and strong interaction. Electromagnetic interaction is carried by photons with spin I=±1 and weak interaction is carried by neutrinos and apeirons with spin I=±0.5.

6. All elementary microprocesses are irreversible, that correlates with circular character of transformations in Large Scale of space and time.

7. In particular, there is an irreversibility of the process of photons and neutrinos motion. At each segment, equal to the length of de Broglie wave, photons and neutrinos lose energy $h\,H$, which is equal to longitudinal photon energy. In such a way, Hubble's law can be presented as the following:

$$\lambda = \lambda_1 \exp\left(\frac{r}{R}\right) = \lambda_1 \exp(Ht),$$

$$Z = \frac{\lambda}{\lambda_1} - 1 = \exp\left(\frac{r}{R}\right) - 1 = \exp(Ht) - 1,$$

where λ, λ_1 – are observable and laboratory wave lengths, r – is distance, R – is radius of gravitation interaction, which is equal to the radius of Metagalaxy, t – is time, Z – is cosmological red shift.

8. As resulted upon this process, the excess of longitudinal photons is absorbed by matter. At that, mass is considered as measure of capacity, which is absorbed by matter in form of longitudinal photons. Thus, energy of the matter should be increased according to the law:

$$E(t) = m_\circ c^2 \exp\left(\frac{\varepsilon'}{c^2} t\right) \approx m_\circ c^2 + m_\circ \varepsilon' t,$$

at that,

$$\frac{\varepsilon'}{c^2} = \frac{H}{137^2},$$

where ε'- is the capacity, which is absorbed by unit mass in form of longitudinal photons, c – is velocity of light. In particular, electron of the 1st Bohr orbit in hydrogen atom (i.e. in this case at de Broglie wave length) absorbs energy $h\,H$ at 1 period.

9. Being in ionization state, intergalactic matter is the general portion of average density of matter in the Universe ρ_{av}, besides, the average value of absolute velocity of baryon component is close to c/137. Let's consider this correlation to be exactly executed.

CMBR is the most powerful cosmic radiation. Its specter is close to that one of black body at temperature T_F=2.726K, i.e. its spectral density is maximal at frequency ν=160GHz. Cosmological red shift causes the increase of spectral density in radio-region (ν<160GHz) and the decrease of it in microwave region (ν>160GHz). Each of these processes is compensated by the inverse Compton effect, i.e. by the dispersion of radio-photons at matter corpuscle, first of all at protons. Calculations demonstrate, that average energy of absorbent radio-photons is equal to $0.45\cdot10^{-15}$erg (ν=68GHz) and average energy of radiated microwave photons is equal to $2.17\cdot10^{-15}$erg (ν=330GHz). There is one re-radiated microwave photon per one absorbed radio-photon. At that, the concentration of photons and CMBR spectrum remain unchangeable. Syunyaev and Zeldovich concerned the close inverse Compton-effect of CMBR dispersion on electrons in clusters of galaxies. Actually such an effect was discovered in 2 clusters of galaxies.

Thus, on transferring of energy to photons, matter corpuscles must fill the deficiency of energy by receiving it from longitudinal photons. In fact, there are observed demonstrations of longitudinal photons, they are "static fields". In this case it is a cosmic magnetic field, which accelerates charged particles of matter (Alfven). More detailed consideration let us to find a virial correlation between 4 main components of energy density:

$$\frac{\rho_{av} c^2}{137^2} = E_F = 2E_M = 2E_{kin},$$

where $r_{av}c^2$- is an energy equivalent of mass density of matter; E_F- is energy density of CMBR; E_M - is average energy density of magnetic field; E_{kin} - is average density of kinetic energy. Thus, some kinds of energy circularly transfer to another, which are interrelated (Fig. 1).

$$\frac{\varepsilon_{av}\rho_{av}V}{1.26} = E_F HV = 2E_M HV = 2E_{kin} HV = \frac{(\varepsilon_{av} - \varepsilon')\rho_{av}V}{0.26} = \varepsilon'\rho_{av}V,$$

where ε_{av} - is average capacity, radiated by unit mass in form of photons; V – is volume of 10^{81} cm^3 order, according to which the averaging is made.

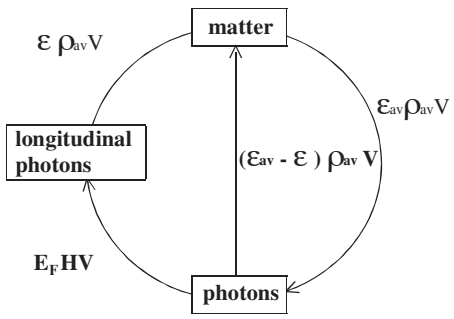

Fig.1
Energy transformation in Large Scale ε_{av}=0.0942 erg gr^{-1}sec^{-1} – is average energy, which matter unit radiates in unit time; ε'=0.07476 erg gr^{-1}sec^{-1} – is energy, which matter unit absorbs in form of de Broglie longitudinal photons in unit time; ρ_{av}=$0.8730\cdot10^{-29}$ gr cm^{-3} – is average matter density in the Universe; E_F=$4.18\cdot10^{-13}$ erg cm^{-3} – is energy density of cosmic microwave background radiation (CMBR); $V\approx10^{81}$cm^{-3} –is volume at which the averaging is made; H=$1.562\cdot10^{-18}$ Hertz.

10. These correlations include pressures, densities and temperature T_F, i.e. we have the equation of the state of intergalactic matter, and thus of Metagalaxy and the Universe. Let us present this equation in simple form:

$$E_F = \frac{\varepsilon' \rho_{av} R}{c} \approx \frac{\varepsilon_{av} \rho_{av} R}{c}$$

and let us compare it with correlation for density of radiant energy on surface of a star * or of star system

$$E_* = \frac{\varepsilon_* \rho_* R_*}{3c} \approx \frac{\varepsilon_* \rho_* R_*}{c}.$$

It is an especially amazing analogy between Metagalaxy (and the Universe) and large-scale cosmic system *g,* for which

$$E_g \approx \frac{\varepsilon_g \rho_g R_g}{c},$$

at that $E_g \approx E_F$, $\varepsilon_g \approx \varepsilon_{av} \approx \varepsilon'$.

This equation agrees with the whole observed data of globular clusters, galaxies, groups and clusters of galaxies, in particular, with empirical correlations, which are magnitude - angular diameter.

11. The stated approach lets to determine the values of many fundamental constants by different ways. As a case in point, the results of definite values ε_{av} and ε', erg g^{-1} c^{-1} are presented in the Table 2.

Table 2

#	Data	ε_{av}	ε'
1.	The boarder between two parts of the Main Sequence of stars	of 0.1 order	of 0.1 order
2.	The results of recalculation of observed star characteristics as respects to their centers	of 0.1 order	of 0.1 order
3.	The local minimum of star luminosity function near the Sun (according to G.A. Starikova's data)	of 0.1 order	of 0.1 order
4.	The correlation: mass - luminosity of white dwarf stars	of 0.1 order	of 0.1 order
5.	The correlation: mass - luminosity of neutron stars	of 0.1 order	of 0.1 order
6.	The correlation: mass - luminosity of globular clusters	less than 0.5	less than 0.5
7.	The correlation: mass - lumonosity of elliptic galaxies	more than 0.06	more than 0.06
8.	The correlation: mass - luminosity of spiral galaxies and irregular galaxies *Ir I*	less than 0.5	less than 0.5
9.	The correlation: mass - luminosity of galaxies as a whole	of 0.1 order	of 0.1 order
10.	The correlation: mass – luminosity of clusters of galaxies	of 0.1 order	of 0.1 order
11.	Empiric values of H, ρ_{av}, E_F constants	of 0.1 order	of 0.1 order
12.	The most exact values of h, e, G, E_F constants	0.0942	0.07476

12. Uncontradictory description of Microcosm and the Universe promotes the better understanding of Life, which is inseparably unified with them. The statistical data manipulation of more than 100 catalogues of microphysics and cosmic objects let us to get more than 1000 empirical correlations and diagrams, and to determine, that they agree with theoretical correlations, which were received according to the ideas on circular character of energy transformations (Fig. 1) and of matter in the Universe.

The Russian edition of the book is mailed out: the 1st edition (1995) at the cost of $3; the 2nd edition (1998) at the cost of $6.

The authors are thankful for valuable discussions to Yaroslav G. Klyushin and to Alexander V. Frolov.

HYPOTHESIS OF A THEORY OF EVERYTHING

Jack P. Gibson

www.crikcritter@infoave.net

This work grew out of an interest in curious occurrences, physical, mathematical and metaphysical. Many things just do not fit normal knowledge or are of unknown origin. Items such as gravity, time, mathematical equations of higher order, ghosts, e.s.p., etc. After a number of years, the problem began to appear to be not of this physical dimension but of a grander scale. A multi-dimensional space-time format seems to offer solutions to understanding most of the problems. In the following hypothesis all known physics and mathematics are considered to be valid. Metaphysical aspects, while not accounted for by physics and mathematics, are considered to be present in nature, either real or as a defect in physical processes, simply because they are experienced by so many people. The hypothesis will be kept simple because the details require the work of many specialists beyond my abilities and there is an endless list of speculative problems to which the hypothesis could be applied. To save time and distractions to the reader the following is stated as fact, knowing full well it may not be so, in order to present the most concise statement of the hypothesis.

The Universe, from the smallest to largest unit, is a quantum probability based fractal illusion. All matter exists in three-dimensional space, both internal and external. Any grouping can be considered a fractal space. It is both real and imaginary at the same time acting according to Eulers equation:

$$(e \wedge (i*Pi))+1=0$$

more useful in this instance is the general form:

$$e \wedge ix = -1=\cos x + i \sin x = -\tan 45 \text{ deg}$$

which allows use of a variable where Pi , a constant, is used in the original. The key to understanding of multi-dimensional space time is the realization that Pi is a variable! As we know Pi is the lock on three-dimensional space. Because of its mathematical nature it can neither grow nor diminish, thereby locking in the three dimensional form of the fractal unit under consideration. Such a fractal unit is considered to be at rest. But Einstein's equation $E=mc^2$ includes speed or movement. When objects are moving relative to a fixed point, the moving object is foreshortened in the direction of movement. A circle becomes an ellipse and Pi becomes indeterminate letting the circumference fluctuate, according to its relative speed, between two and Pi in a circle of unit diameter. If one goes beyond the value Pi the Universe grows out of bounds without limit becoming unstable. If the value goes below two then the Universe blinks out. I.e., one has exceeded the value of the constant c. Since all matter moves relative to a fixed fractal point and there are infinitely many points in the Universe of constantly changing velocities, the Universe is constantly adjusting its reality to the relative speeds of its components. Thus you get at times some weird things. Since not only time changes but the structure and observable mass also, one finds such things a matter appearing and disappearing as the small units of chaos move through the Universe. Changes in the local probability structure cause matter or reality to change in the image structure of the Universe.

To delve further into the aspects of what is happening, let us consider the following. Einstein's familiar formula gives the relationships for our three-dimensional fractal space. The inverse of the formula gives the speed with which any fractal space can change, including the Universe. There is both a positive and negative component to the change. If we consider our fractal space to be positive then we may consider any other point to be negative. There are an infinite number of such points and while the effect on our space may be small from any one point; the effect adds up. Any moving or changing of mass must effect the entire Universe. Mass and inertia are tied together in such a system. Measured mass is the attempt of the mass to return to zero relative speed in its associated fractal space according to the laws of physics, i.e. return to its lowest energy state. Inertia is the same effect of the changing state of the mass from one-dimensional state to another. Both are the result of efforts to change the dimensional state of mass. The positive aspect of the square root of the ratio of energy/mass is the view we behold from our position in space while the negative is the view from the opposite position.

In addition to the view of the Universe as being made up as fractal space, all moving at different relative speeds to any other fractal space, one must consider the make up of space having at the same time dimensional space, according to Euler's formula given above. There are at any moment an infinite number of spatial dimensions, defined by the relative speed of the fractal units involved, extending throughout the Universe. Each fractal unit is constantly changing its position in dimensional space. There are thus constantly changing energy states throughout the Universe both in relative position in real space and in dimensional space. While on one hand the distances across the Universe are immense in relative space, many points across the Universe are present in the same dimension at the same moment, possibly allowing for instance travel across space without the time penalty. This results in what might be considered a tuned circuit for the Universe or its components.

If we consider the structure of the relative Universe to be stored energy analogous to magnetic fields and the dimensional fields to be capacitive, then we can plot the results on a conventional two-dimensional chart

where x is the horizontal axis and the vertical is the imaginary axis. A well-known construction in electrical physics and which is known to very often follow relativity closely. That throws the negative side of i into the second quadrant and the positive into the fourth quadrant, if we consider the Universe to be reflective and x to be negative when i is positive. Euler's equation does not reflect a totally positive or negative result. One wonders at this point as to other equations where unity is set to one or higher dimensional equations where the three dimensional components are factored out leaving another component. The fourth is considered to be time but how do the remaining fit into a Universe as this hypothesis describes? The line of thought can be followed further into electrical analogy, which I leave to the reader. The important result is that there should be a resultant *Q*, figure of merit, of the Universe resulting in nodes, or peaks, of probability. The resultant tuned frequencies of the Universe can be calculated from known factors of the Universe. Such an effect should show nodes of reality where matter occurs.

Properly applied the above hypothesis gives speculative answers to most of the problems facing science today. Questions such as:

Is the Universe open or closed?

Both. At each fractal component of the Universe there is a separate universe each reaching limits beyond which it cannot exist. At the same time there is somewhere a top Universe that must ever remain open.

What is the structure of time?

Time results from the ever changing fractal Universe and goes forward because all justification of the Universe causes a corresponding change in reality. Time moves slower at higher relative speeds and as all time is perceived to be slower in other fractal units, changes in our time are perceived to always go forward.

What are such phenomena as ghosts, spirits, apparitions, etc?

Events such as these are fragments of probability left behind due to sudden changes in the probability of the illusion we perceive to be reality. Having little energy they are perceived but are not able to interact with the more forceful real reality. They float free in probability space interacting at random intervals with the more forceful realities of the real world.

Where is the missing matter of the Universe?

There may be clouds of matter floating about in deep space, however, most of the approximately 90% of matter missing will be found in the layers of dimensions making up space and which, though interacting, do not appear in our reality. Calculations show only about ten dimensions are active in any one reality. The rest curl up in a ball or knot. While an essential part of space or reality they are not perceivable from the fractal Universe of which they are a part.

Parapsychology?

Events of this type can be attributed to interconnections on the dimensional, or imaginary, level where there can be interactions between fractal units though not directly associated with each other in relative space. The manifestation varies or is temporary due to the constantly changing and adjusting due to interactions of the probabilities of the Universe. Due to the innate probabilities of each individual, one may be more susceptible or sensitive than other individuals.

Bible, prophesies, angels, demons, aliens, etc.

If one takes the Bible at face value, with some leeway for it's age and many translations, it pretty well describes what it purports to describe. Historic predictions and conditions of today. If we assume this hypothesis has any value then the passage in which God says "Let us make man in our image." takes on new meaning. If we assume the probability basis of the Universe and the constant changing due to justification of reality and time then the miracles listed do not seem so in violation of the physical world. The miracles only require some ability to control reality. Certainly well within the providence of a creator. It speaks of heavenly beings capable of traveling through the Universe in real time and some who interfered with mankind on the Earth and that they are still doing so today. If this hypothesis is correct then it is readily seen how such events could occur. Creation events closely compare with the way todays computers are made and organized. If man can do it, why could not the original creator? If one ignores a creator, then one is hard pressed for an answer as to how the Universe was created.

UFOs

If one accepts any part of the above then the functioning of UFOs begins to be understandable. They move through space by making spatial jumps through fractal nodes. Their appearing around magnetic and electrical sources maybe due to some, on our part unrealized, easy entry and exit to other space at those points. They are able to make right angle turns at high speeds because the speed is only from our viewpoint. From the viewpoint of the craft it is simply changing locations in space. The turning on edge may be only a different orientation of space at that point.

Particles "Out of the Vacuum"

As we shoot atomic matter at higher and higher speeds into nuclei we are able to fracture the construction of the building blocks of matter. The high speed fractal construction of probabilities of the unit used smashes into the target with enough speed to mix the probabilities resulting in new nodes from the total probabilities present. Various probabilities are ejected resulting in short lived particles in unstable nodes. At times fragments of probabilities appear out of nowhere as they form up to combine into larger nodes. Travel distance and speed observed may give a clue to the basic frequency of the Universe.

Black Holes

The midpoint of the tuned circuit of the relative structure and dimensional structure of the Universe. As matter spirals in, from the relative structure, to be torn apart into its basic probabilities it passes through to the dimensional structure of space which holds 90% of the matter. There it is available for recollection and use by the relative space.

Probability. Basic structure of the energy of space.

Everything operates at random but within preferred patterns set by the frequencies involved. If you look long enough anything can be found. As a result we find odd bones of prehistoric creatures that may have never existed. Weird things can happen. Odd pieces of structure can occur such as metaphysical events. The Q of space is sometimes sharp and sometimes rounded, spreading out to include things not really meant to be in the overall scheme of the Universe. Christ said "If you had the faith of a mustard seed, you could say to the mountain move and the mountain would move". (For those not of the Christian faith, this may be considered not as any proof but as a representative statement of the meaning of this paragraph.) That is in keeping with the quantum statements that nothing exists until it is seen and that we have some control over the probabilities. If the structure of space is based on probability then the next important question is 'What is a probability'. We look to probability as a simple mathematical work. But, what makes probability work?

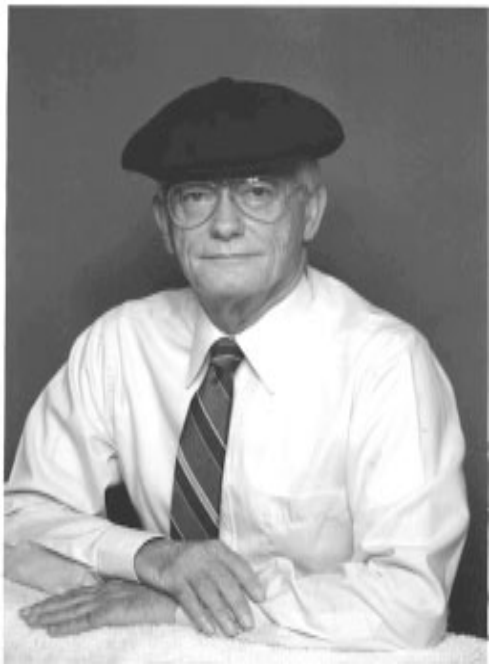

JACK P. GIBSON

About the Author:

EDUCATION: University of North Carolina at Raleigh (Nuclear & Electrical Engineering), Air University, Gunter Air Force Base (Radio Fundamentals, Motorized Equipment) Western Electric Co Engineering Center

The entire Universe is based on mathematics but we have no idea what is underneath the mathematics. Are dimensional planes perhaps better represented by other number bases? Are some of the unsolvable mathematical problems solvable in other number bases?

Gravity

All forces in the Universe are the same. Gravity happens to be the one that works on our fractal space. Others, molecular, atomic, and nuclear are the same but work in different fractal space. All are the result of matter trying to reach its lowest potential.

The above are only random questions chosen without any order. Most other problems can in some way be answered in line with the hypothesis, if not in detail. Too many questions can be fitted to the hypothesis not to take a serious look at it even though it may seem a little far out. The number of answers from one simple statement of the structure of the Universe defends the idea better than details.

One possible proof, and a relatively simple one, occurs to mind. Einstein's theory of relativity was proved when NASA flew a clock in space and then determined that time did slow down. To test the above hypothesis I would like to see four clocks used in the following manner.

Four atomic clocks in sets of two each. Two to be left on the Earth and two to be placed in space for an appropriate time. At the end of that time one of the clocks on the Earth to be taken into space and compared to the two already in space. Bring one of the clocks in space down to the Earth and compare to the clock left on the Earth.

The clock taken to space should read slower compared to the clocks in space because the ones in space were at rest compared to the one on the Earth.

The clock brought back from space should read slower, the same as the first one flown by NASA, because the clock on the Earth was at rest compared with the one in space.

The two clocks left in space should be returned after an appropriate time and compared to the ones on the Earth. The original in space should now be slower than the original on the Earth and its mate from space. The fourth clock is unpredictable.

The author apologizes for any errors in theory, mathematics, etc. There was no one to consult on the hypothesis which is an original work of my own and drawn on many references of others from the past If it has any value I am indebted to the work of all the others whose work I relied on. Any errors are entirely my own and not attributable to others. This work is freely published in the public domain to be used by any and all who wish to do so. It is not to be copyrighted or patented in any manner so as to restrict others rights to the hypothesis or it's use.

The Charge and Mass of a Photon

Dzabrail Kh. Baziev

Sirenevy blv., 65 building 4, apt.55
105484, Moscow, Russia
(095) 461-9398, (866-22)-5-10-11

Abstract

The discovery of true elementary particle named **electrino**, which has a constant mass and constant positive charge and which is a material carrier of magnetic field, electric current and all kinds of emanation, was firstly practically applied at the modernization of wireless telephone. In the review V. Anpilogov writes: "The question on the influence of low intensity microwave radiation on human health still remains open for discussion for more than 50 years" [3]. Discussion on this question has been already inappropriate still it was definitely proved in the patent application "Device, which is made to put away the charged particles flux from the head of the user of mobile wireless phone". During the talk on mobile wirelessphone $2{,}6\cdot10^{22}$ particle/sec pass through user's brain, whereas their energy is $7{,}65\cdot10^{-19}$ Joule, and the energy of binding of molecules in protein polymers ranges at $4{,}3\text{-}7{,}6\cdot10^{-19}$ Joule according to L. Poling. From that we can conclude that microwave radiation of the radiotelephone with top antenna leads to the destruction of user's brain tissue. The author of the patent application D. Baziev (#2001105456, 28.02.01. in Russia and #PCT/RU02/00054 of the international application) offers to fix the antenna on the low part of the radiotelephone and to produce radiotelephones with minimal length within 10 cm. In this case the diagram of the directional radiation pattern is on the level of the user's chin and the brain is out of the direct exposure area. This harmless of the microwave radiation could not be proved before the discovery of "electrino".

Introduction

A systems analysis of all experimental and observation material gathered in physics, astronomy, and astrophysics from the times of Galileo let us reveal the following:

1. Experimental materials do not agree with the existing physical theory.
2. There is a certain fundamental disadvantage of the experimental material, which prevents to build a consistent theory.
3. This fundamental disadvantage consists in the absence of a charge antipode of electron, which is in the form of a true elementary particle with a positive charge and finite mass.
4. The proton and positron are not true elementary particles and neither of them can be a charge antipode of the electron because they are subjected to splitting.
5. Discovery of the second true elementary particle with a positive charge could restore the charge symmetry in physics, thus leading to a radical revision of the existing theoretical physics and resolving its current crisis state.

Searching for this particle required to ascertain physical nature of Planck's constant. This became possible only after the structure of a light beam had been understood. Namely, it was the photon sector velocity, known as Millikan constant μ, rather than the speed of light *c*, that proved to be a constant, viz.:

$$\mu = \lambda_i^2 \nu_i = 119.916984 \text{ m}^2/\text{s} = \text{constant}, \qquad (1)$$

where λ_i and ν_i are the wavelength and frequency of the *ion* monochromatic beam in the light beam.

This new quantity elucidated the physical nature of Planck's constant:

$$h = m_\varepsilon \mu \frac{\sqrt[3]{4\pi/3}}{2} = \\ = 6.6262681\cdot10^{-34} \text{ kg m}^2/\text{s} = \text{constant}, \qquad (2)$$

where m_ε is the mass of the second (after electron) true elementary particle to be called "electrino". From this expression we have

$$m_\varepsilon = \frac{2h}{\mu\sqrt[3]{4\pi/3}} = \\ = 6.85575729963\cdot10^{-36} \text{ kg} = \text{constant}. \qquad (3)$$

The electrino has a positive charge ε determined by

$$\varepsilon = \frac{m_\varepsilon n_\varepsilon e}{m_u - n_e m_e} = \frac{-3.229526609098\cdot10^{-54}}{1.6578584539\cdot10^{-27}} = \\ = 1.98764431671\cdot10^{-27} \text{ C}, \qquad (4)$$

where $m_u = 1.66057 \times 10^{-27}$ kg is the mass of an elementary atom accepted as a mass equivalent of one atomic unit; $n_e = 3$ is the number of electrons in one elementary atom; $e = 1.6021892 \times 10^{-19}$ C is the charge of an electron; $m_e = 9.038487 \times 10^{-31}$ kg is an improved value of electron mass; $n_\varepsilon = 2.418198867 \times 10^8$ is the number of electrinos in an elementary atom.

Thus, it is obvious that Planck's constant is the angular momentum of the electrino. Moreover, it was Planck's constant that concealed the second true elementary particle, which is the charge antipode of the electron discovered by J.J. Thompson as far back as in 1897.

The solution of Planck's constant has become a basis for the synthesis of the new theory of physics [1]. This theory in particular shows that the electrino is the carrier of the magnetic field and electrical current. It is a photon of radiation of all ranges, and serves as a universal carrier of energy and information. The electrino plays the role of a neutrino in moving along the first order trajectories.

The first experiment

An extraordinary importance and novelty of the new theory required **an experimental proof of the electrino**. For that several experiments were made in the Institute of General and Inorganic Chemistry, Moscow. The experiment was based on the following effects predicted by the theory.

1. If assume that electrino exists and that light beam is a flux of particles having positive charge and finite mass [1] we can conclude the following. At the discharge of the dc source through an incandescent lamp in which the current is converted to light and irreversibly emitted, the source weight in charged state must differ from its weight in discharged state. If we prove this difference experimentally we may say that light does consist of material particles of finite mass and a dc charge carried away by light is positive because an incandescent lamp (W=15 Wtt) does not emit electrons, which are the carriers of negative charge.

2. The second effect to prove was that the weight of a discharging dc source is *increasing* whereas its weight when charged is *decreasing*.

To prove the validity of these predictions, several sealed containers with different dc sources inside were fabricated. The electrodes were brought out through glass insulators. The batteries were discharged through an electric lamp radiating in the visual and infrared ranges. The weight of containers was measured before and after discharge process with accuracy $\Delta W = \pm 0{,}02$ mg; balance error was equal to $\Delta = \pm 0{,}05$ mg the standard deviation of the measurements was within $\sigma = \pm 0{,}03$ mg; the buoyancy was calculated for each measurement of weight. In this paper, we present test results of only one container with four generally marketed GP rechargeable cells connected in series. The total battery voltage reached 5400 mV at 6000 mA/h charge capacity. The discharge was interrupted when the voltage dropped to 4000 mV, the duration of the discharge was measured accurate to one second. Two series of experiments were run: one in air, the other, under argon. Each series had ten charge-discharge cycles (Table 1 and Fig. 1). The total amount of the experiments and detailed discussion of results have been summarized in a recently published brochure [2].

The results of the above tests allow us to make the following conclusions:

1. Both galvanic and rechargeable cells during a discharge through an electric lamp show sufficient changes in their weight and charge thus proving that photons have a finite mass and a positive electric charge.

2. A new elementary particle, named electrino, derived from Planck's constant in August 1982, and published in May 1994, thus gets a complete and absolute experimental confirmation.

The second experiment

One of the concepts of the new theory is that the speed of light in vacuum is a function of photon frequency along the beam axis, according to the proportions:

$$c_i = \sqrt{\mu \nu_i} \quad [\mathrm{m/s}], \qquad (5)$$

$$\nu_i = \mu / \lambda_i^2 \quad [\mathrm{s}^{-1}]. \qquad (6)$$

According to the new theory, for the velocity of monochromatic light (solar light or mercury-discharge lamp, but not a laser) with a wavelength of $\lambda_r = 6.8 \times 10^{-7}$ m (mid-point of the red spectral line), we have

$$\nu_r = \mu / \lambda_r^2 = 2.59336038 \cdot 10^{14}\ \mathrm{s}^{-1}, \qquad (7)$$

$$c_r = \sqrt{\mu \nu_r} = 1.76348505882 \cdot 10^{8}\ \mathrm{m/s}, \qquad (8)$$

which is 58.823% of the speed $c_v = 2.9979246 \times 10^8$ m/s of a violet beam with a wavelength of 4×10^{-7} m.

We have to account that, according to this theory, the laser beam is not a true light beam though it is created of electrinos. The speed of laser beam is equal to the speed of beam plus the speed of current in the conductor, viz.,

$$\nu_0 = 2.8992629 \cdot 10^8\ \mathrm{m/s} = \mathrm{const} \qquad (9)$$

If we select a monochromatic beam of ultra-violet light with a wavelength of $\lambda_1 = 4 \cdot 10^{-8}$ m then its velocity will be $c_1 = 10$ C:

$$c_1 = \mu / \lambda_1 = \frac{119{,}916984 m^2/\sec}{4 \cdot 10^{-8} m} = $$
$$= 2{,}9979246 \cdot 10^9\ m/\sec$$

$$\nu_1 = \mu / \lambda_1^2 = \mu / 16 \cdot 10^{-16} m^2 = 7{,}4948115 \cdot 10^{16}\ \sec^{-1}$$

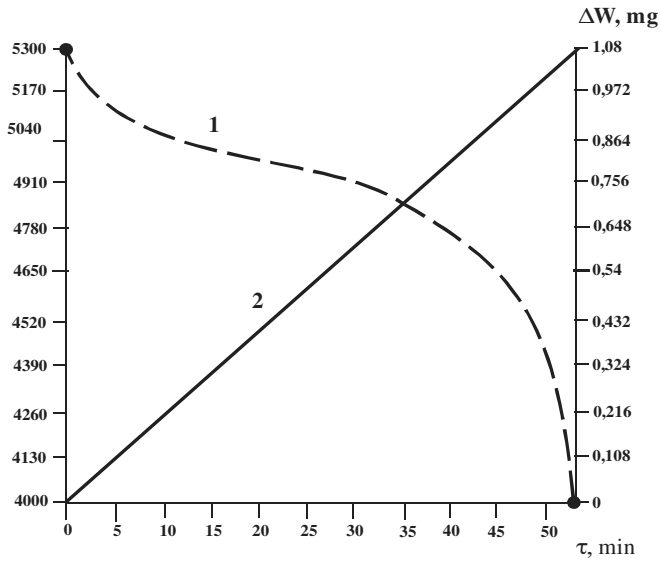

Fig. 1
Voltage drop [mV] of a battery and (2) weight increment [mg] of container #6 in an argon atmosphere during the second discharge cycle [minutes]. X-direction – is spark duration in minutes; Y-direction – is voltage of a battery; auxiliary Y-direction – is weight incensement (mg).

$$c_1 = \sqrt{\mu \cdot \nu_1} = \sqrt{8{,}987551907 \cdot 10^{18} m^2 / c^2} = 2{,}9979246 \cdot 10^9 m / \sec$$

This experiment has been run yet, and it is offered for experimental verification with further publication of experimental results.

Table 1

Weight of container #6 (under argon) in charge-discharge experiments

Run	Measured value $W \pm \sigma$, mg	Charged battery		Discharged battery			Charge weight $\Delta W_z = W_1 - W_0$, mg
		Buoyancy Gmg	Real weight $W_0 = W + G$	Measured value $W \pm \sigma$, mg	Buoyancy Gmg	Real weight $W_1 = W + G$	
1	126825.13±0,02	85.031	126910.166 ±.0.02	126825.901 ±0.01	85.002	12691.903 ±0.01	0.737
2	126825.107±0.02	86.572	126911.679 ±0.02	126826.221 ±0.01	86.538	126912.759 ±0.01	1.080
3	126825.21±0.01	86.782	126911.992 ±0.01	126826.279 ±0.01	86.560	126912.839 ±0.01	0.847
4	126825.187±0.01	86.563	126911.749 ±0.01	126826.493 ±0.02	86.385	126912.878 ±0.02	1.128
5	126825. 65±0,04	86.290	126911.941 ±0.04	126826.65 ±0.01	85.836	126912.941 ±0.04	0.770
6	126827.28±0.00	85.187	126912.467 ±0.00	126827.990 ±0.01	85.204	126913.194 ±0.01	0.727
7	---	---	---	---	---	---	---
8	126826.98±0.00	86.182	126913.162 ±0.00	12682 7.897 ±0.02	86.308	126914.205 ±0.02	1.042
9	126826.95±0.00	86.307	126913.257 ±0.00	126827.757 ±0.01	86.402	126914.159 ±0.01	0.902
10	126827.25±0.00	86.294	126913.544 ±0.00	126828.35 ±0.00	85.729	126914.079 ±0.00	0.535

References

1. D.K. Basiev, Osnovy obyedinyonnoy teorii fiziki (Foundations of Unified Theory of Physics), Pedagogika, Moscow, 1994
2. D.K. Basiev, Zaryad i massa fotona (The charge and mass of a photon), Pedagogika, Moscow, 2001
3. V.P. Anpilogov, "The century of quality", #3, 2001, p.60

About the Author

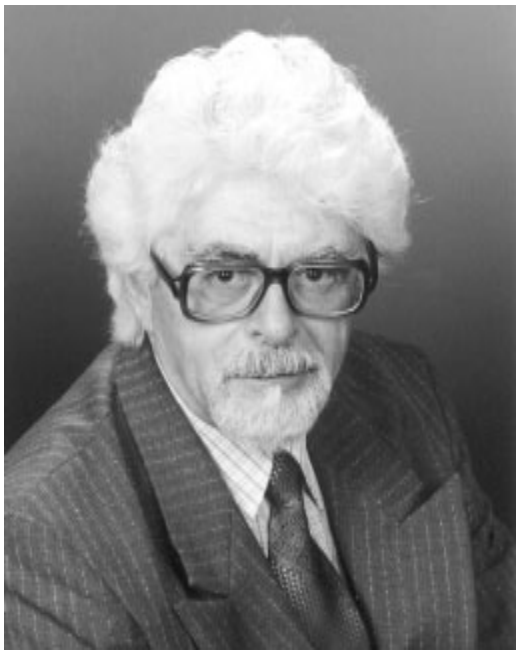

When a child Dzabrail Kh. Baziev became a political exile along with all Balkarian people; in 1956 he was rehabilitated and in 1957 graduated from the secondary school with steady purpose to become an outstanding chemist. His first higher education is biological and chemical (two-profile department of Kabardino-Balkarian State University). In 1965 Baziev also completed his post-graduate study in Biological Department of Moscow State University.

At 1979 Dz.Kh. Baziev had published 25 scientific articles on ornithology and ecology, however, this period became a sudden turn in his scientific work. In order to elaborate the basis of theoretical biology, he came to the conclusion that biological process could not be described without understanding of its physical essence. On the other hand, it had become evident that there was no any solution for physical phenomenon, which is the basis of biological process.

In 1983 the scientist gave descriptions of his first fundamental discoveries. He found the solution of the physical essence of Plank's constant and pioneered the use of it in gases analysis. It was a revolutionary step in science since the synthesis of science was realized at the fundamental level for the first time.

As the result of this considerable work there was a new interdisciplinary theory of physics. The author created new thermodynamics of real gases and new electrodynamics, which differs from maxwellian one and it considers *electrino* as the carrier of magnetic field and electric current.

Dzabrail Kh. Baziev has succeeded in the systematic analysis of the vast experimental material and discovered that ***electrino,* as the true elementary particle with positive charge, is able to provide the connection of physics with biology, chemistry and other parts of the fundamental science. Thus it leads us to the radical reconsideration of all conceptions, existing in natural science.**

The Homopolar Motor: A True Relativistic Engine

Jorge Guala-Valverde

Norpatagonica-R&D Dept. S.Fe 449 Neuquen, Argentina
Q8300BG1, Confluencia Tech University Neuquen, Argentina
gual@ieee.org

Pedro Mazzoni

Fundación Julio Palacios Neuquen, Argentina
fundacionjuliopalacios@usa.net

Ricardo Achilles

Confluencia Tech University Neuquen,Argentina,
RA Biosystems Neuquen, Argentina
achilles@ieee.org

This article discusses experiments, which enable the identification of the seat of mechanical forces in homopolar-machines. Authors provide a suitable variation on a recent work "The Unipolar Dynamotor: A Genuine Relational Engine" [3], where "relational" implies "absolutely relativistic". The authors' view agrees with both Weber's recognition in the 19th century of the importance of relative motion in electromagnetic phenomena [4] and Einstein's 1905 statement concerning electromagnetism [5].

The Faraday disk: a reversible engine

The essential components of the homopolar machine, first conceived by Faraday in 1832, are shown in Figure 1. A conducting disk, free to rotate in the neighborhood of a permanent magnet, is attached to the end of a shaft. A closing wire provides a conducting path between two arbitrary points of the disk. Such a device exhibits *reversible* behavior.

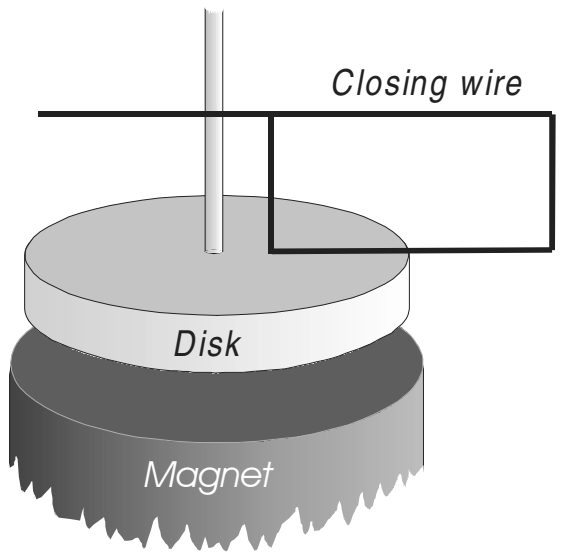

Fig.1
Faraday's setup magnet, disk and closing wire

A radial current path of length L takes place in a region of the disk when direct current (*dc*) from an external source is injected into the closing wire. The interaction of the current with the magnetic field produces a Laplace force [6]

$\boldsymbol{F} = \int_{a}^{a+L} I(d\boldsymbol{r}x\boldsymbol{B})$ causing the rotation of the disk. This set-up is the *motor configuration.*

When the disk is spun by an external source of mechanical energy, an *emf* appears in it. The displacement of free charges is produced in this case by the Lorentz force $\boldsymbol{f} = q(\boldsymbol{v}x\boldsymbol{B})$, converting the conducting disk into an *emf* source able to drive *dc* through the whole disk plus closing-wire circuit. This set-up is the *generator configuration*.

A seemingly curious fact occurs in the motor configuration, when *dc* is injected into the circuit with the disk attached to the magnet. Both disk and magnet turn together.

Two rival theories, a relativistic and an absolutistic one, have been applied to understand the observed facts:

In relativistic view, generator configuration makes sense only when there is relative motion of the magnet with respect to either the disk or the closing wire. Also, a motor configuration will only take place if the *possibility of relative motion* between magnet and either disk or closing wire is enabled.

Thus, in the relativistic framework, with the magnet attached to the disk, the closing wire becomes the "active" part for the production of mechanical forces or *emf*. In this case the disk itself behaves as a "passive" element providing a closing-circuit current path.

Conversely, in the eyes of an absolutist, a generator configuration is enabled only because of the disk or closing-wire *absolute* motion. Here, absolute means "relative to a frame where the preponderance of the mass of the universe is at rest" [7,8]. In our case, the lab frame acts as an acceptable absolute-motion reference. Thus, from an absolutistic view, the magnet's rotation with $\partial B/t = 0$ in each point of the surrounding space is unable to produce an *emf* on nearby conductors. When in a motor configuration, *dc* is injected in the circuit, and the absolutist assigns the observed rotation to the magnet "dragging" by the conductor. Here, the closing wire acts as a "passive" circuit element.

New experimental work, complementary to that currently known on the subject, introduces arguments in favour of the relativistic viewpoint. The related experiments, whose underlying physics rests upon a modified version of the original Faraday setup, are described in the following sections.

The asymmetrical rotor

Figure 2 shows the disk-shaped ceramic permanent magnet creating the axial magnetic field ***B***. The removal of a 12° sector introduces a field-reversion region. Outgoing and ingoing ***B*** field lines are represented by the and symbols, respectively.

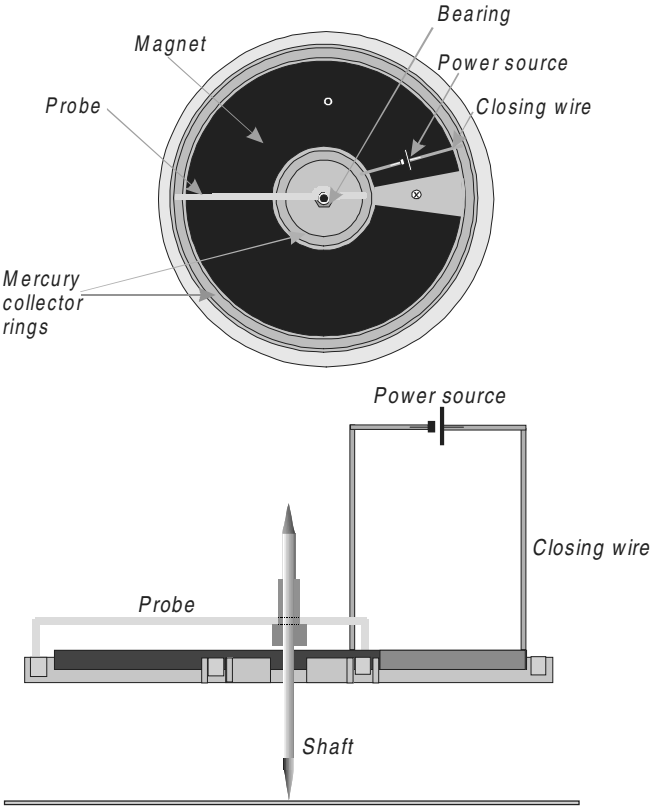

Fig.2
Layout of the Asymmetrical Rotor applied to the experiments

Two mercury collector rings are embedded in a wood cylinder. One is located close to the hollow-disk magnet inner rim and the other in the proximity of the outer rim. The magnet's inner and outer radii are 25 and 75 mm, respectively, and its height 25 mm. Its average flux density 2 mm above the magnet has been estimated to be 0.05 T based on a generator experiment with a rotating copper disk. The magnet-and-wood-cylinder body (the asymmetrical rotor from here on) is firmly anchored to a vertical shaft terminated in sharp points at both ends. While the lower one lays on a hard-polished surface, a conical bearing, enabling its almost frictionless rotation, centers the upper one.

Unlike the series-connected conductors diametrically anchored to the shaft in the Guala-Valverde case [3], only one radial conductor wire, a probe located 2 mm above the magnet's face, was considered. By mounting it on a bearing, its free rotation is permitted with its ends remaining in contact with both collector rings. A 12V lead-acid battery applied to the closing wire feeds the probe through the collector rings. In the first four experimental cases presented the closing wire remains firmly anchored to the lab. In two complementary experiments, rotation of the closing wire mounted on two shaft-centered bearings is allowed. Its behavior as a probe occurs by the injection of *dc* from an additional closing-circuit wire anchored to the lab.

Experimental

Six experiments performed are described below:

1. Rotor anchored to the lab, probe free to rotate above the magnet's upward magnetic-field region: A radially-ingoing injected *dc* in the 0.2 A range was enough to overcome conductor-bearing and mercury-wire contact friction. A net *counterclockwise rotation* of the probe took place.

2. Probe anchored to the rotor above the magnet's upward magnetic-field region, with both free to rotate: A radially-ingoing injected *dc* in the 5 A range was enough to overcome conductor-plus-rotor inertia and friction. A net *counterclockwise rotation* of the probe took place.

3. Rotor anchored to the lab, probe free to rotate above the magnet's downward magnetic-field region: A radially-ingoing injected *dc* in the 0.2 A range was enough to overcome conductor-bearing and mercury-wire contacts friction. A net *clockwise rotation* of the probe took place.

4. Probe anchored to the rotor above the magnet's downward magnetic-field region, both free to rotate: A radially-ingoing injected *dc* in the 5 A range was enough to overcome conductor-plus-rotor inertia and friction. A net *counterclockwise rotation* of the probe took place.

5. Rotor anchored to the lab, closing wire free to rotate above the magnet's upward magnetic-field region: A 0.4 A *dc* injected in the inner collector ring was enough to overcome conductor-bearing and mercury-wire contacts friction. A net *clockwise rotation* of the closing-wire took place.

6. Rotor anchored to the lab, closing wire free to rotate above the magnet's downward magnetic-field region: A 0.4 A *dc* injected in the inner collector ring was enough to overcome conductor-bearing and mercury-wire contacts friction. A net *clockwise rotation* of the closing-wire took place.

Discussion of results

Experiments (1) and (3) can be explained using either absolutist or relativistic viewpoints because of the coincidence of the probe motion relative to the lab with the probe motion relative to the magnet.

Experiment (2) can be explained by a trivial absolutist argument founded on a hypothetic probe "dragging effect" on the magnet. A relativistic viewpoint recognizes the "active" rotational torque on the closing wire rather than on the probe where, hinging on Newton's third law, the whole action may be split in two:

Magnet-probe. The magnet produces a counterclockwise torque on the probe, and the probe exerts an equal but opposite torque on the magnet.

Magnet-closing wire. The magnet exerts a clockwise torque on the closing wire, and the wire an equal but opposite torque on the magnet.

With the probe attached to the magnet, there is no chance for relative motion between them. Consequently, due to the action-reaction cancellation, rotation is forbidden. Conversely, with the closing wire mechanically decoupled from the magnet, relative motion of the latter is permitted. The torque exerted by the closing wire on the magnet is responsible for the observed rotation.

Experiment (4): Due to its similarity with (2) a trivial relativistic explanation is applicable to the counterclockwise torque exerted by the closing wire on the magnet. There is no known plausible absolutistic explanation for it. As quoted above, the hypothetical dragging effect would produce a clockwise rotation in this case. The consideration of the experiments (2) and (4) suffices to reject the dragging hypothesis.

Complementary experiments (5) and (6) confirm the short-range extension of the field-reversion region founded on the closing-wire *clockwise* rotation (6). Briefly speaking, the closing wire is not sensitive to the field reversion and the magnet's *counterclockwise* reaction explains at once the outcome of (4). Clearly, experiments (5) and (6) show that the torque on the closing wire is independent of its location on the magnet.

Figure 3 depicts the two rotational torques involved in (2) and (4).

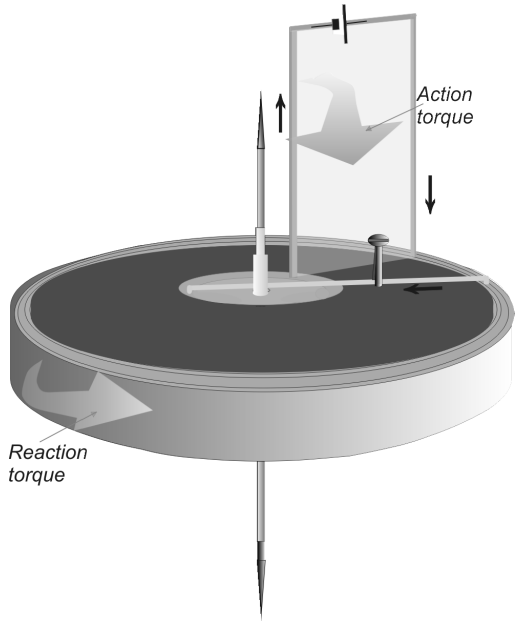

Fig.3
Rotational torques acting on the magnet and on the closing wire

Topological and miscellaneous considerations

One of the keys to the success of the above described experiments lies in the dynamotor's magnet design (see Fig.4). The short-range field reversion region allows the inversion of the Laplace force on the probe, making the force on the closing wire insensitive to that ***B**-field* reversion.

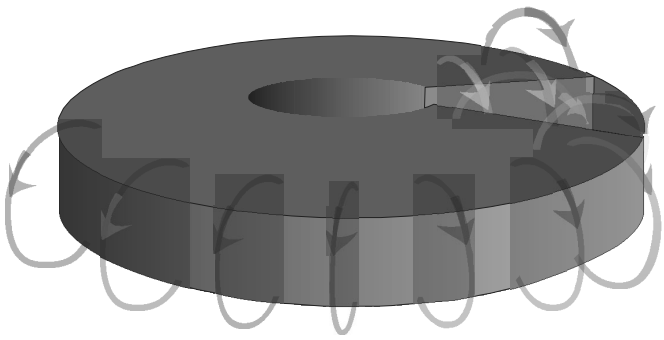

Fig. 4
The magnet's field-revision region

In all the above cases the electromagnetic forces between probe and closing wire were neglected because of its small magnitude compared to the predominant magnet-wire interaction forces.

The observed torques became, in all the experiments, independent of the location of the contact points between closing wire and collector rings. Also, the closing wire shape exhibited no noticeable influence on torques. These observations can be easily explained using the $div\boldsymbol{B} = 0$ fundamental law, Laplace force, and some elementary topological considerations.

Kennard [1], Bartlett [1], Panosky [7,8], Muller [9], Wesley [10] and some of this article's authors took absolutistic viewpoints when dealing with homopolar phenomena [11,12]. On the contrary, Weber [4], Assis [13], and Kelly [14] adopted a relativistic framework on the issue from the beginning.

By attaching the magnet to the disk in the original Faraday setup, the relative rotation between disk and closing wire remains unchanged. Therefore, in a generator configuration, the disk plus magnet rotation at with the closing wire at rest in the lab is entirely equivalent to the closing-wire rotation at – with the disk plus magnet at rest. This fact introduced a correct but physically "colorless" weak relativism to the homopolar generator description: the "unipolar generator really has three components, the magnet, the cylinder and the meter (including the contacts). A relative motion of the last two, not the first two, is required" [1].

A growing interest in basic electromagnetism [15,27] can not be ignored, and from time to time some authors, attempting to catch "free energy" from the space, have

claimed the design of homopolar engines with efficiency greater than unity, as can be checked by searching for *homopolar motor* on the Internet. The strict application of Newton's third law precludes the above non-physical possibility.

It is worthwhile to stress that the homopolar machine is a famous example where Faraday's flux rule fails. This fact worried Faraday himself and is clearly discussed by Feynman [28] who emphasized that the correct physics is always given by the Lorentz force law and the Maxwell fundamental equation *curl E = -B/t*. Homopolar induction is fully understood using only the Lorentz force. Our experiments enhance the relativistic structure of the Lorentz force because the only relevant velocity is the velocity of the conductor relative to the magnet.

Acknowledgments: To Profs. C.N. Gagliardo and A. Ipohorski-Lenkiewicz for the conceptual comments on this development.

References

1. J. Guala-Valverde and P. Mazzoni, "The principle of relativity as applied to motional electromagnetic induction". Am. J. Phys 63, 228-229 (1995).

2. J. Guala - Valverde, P. Mazzoni and Ro Blas, The quasilinear generator and = 0". Am. J. Phys. 65, 147-148 (1997).

3. J. Guala-Valverde and P. Mazzoni, "The unipolar dynamotor: a genuine relational engine". Apeiron 8, 41-52 (2001).

4. A.K.T. Assis, Weber Electrodynamics (Kluwer, Dordrecht, 1994).

5. A. Einstein, "Zur elektrodynamik bewegter körper". Annalen der Physik 17, 891-921 (1905). See also The Principle of Relativity. A.Einstein, H.A. Lorentz, H. Weil and H. Minkowsky, pp. 35-65 (Dover, New York, 1952).

6. G. Cavalleri et al. "Experimental proof of standard electrodynamics by measuring the self-force on a part of a current loop". Phys. Rev. E 58, 2505-2517 (1998).

7. W. K. H. Panofsky. Private communication (letter to J.Guala-Valverde, dated Jan 30, 1995).

8. W. K. H. Panofsky and M. Phillips, Classical Electricity and Magnetism. (Addisson Wesley, NY, 1955).

9. F. Müller, "Unipolar induction experiments and relativistic electrodynamics". Galilean Electrodynamics 1, N°3, 27-31 (1990).

10. J.P. Wesley. Private communication (letter to J.Guala Valverde dated Nov 01, 2001). See also "Progress in Space-Time Physics", Benjamin Wesley, Blumberg (1987).

11. J.Guala-Valverde and P. Mazzoni, "The motional electromagnetic induction revisited". Russian Academy of Sciences, 3rd Conference, pp.186-188. St. Petersburg (1995).

12. J. Guala-Valverde and P. Mazzoni, "The unipolar Faraday generator revisited". Galilean Electrodynamics, 4, 107-108 (1993).

13. A.K.T. Assis and D.S. Thober, "Unipolar induction and Weber's electrodynamics". Frontiers of Fundamental Physics, Plenum Press, NY, pp. 409-414 (1994).

14. A.G. Kelly, "Experiments on unipolar induction". Physics Essays 12, 372-382 (1999).

15. A.E. Robson and J.D. Sethian, "Railgun recoil, Ampere tension, and the laws of electrodynamics". Am. J. Phys. 60, 1111-1117 (1992).

16. A.K.T. Assis, Relational Mechanics (Apeiron, Montreal, 1999).

17. P. Graneau, "Electromagnetic jet-propulsion in the direction of current flow". Nature 295, 311-312 (1992).

18. T. E. Phipps and T.E. Phipps Jr., "Observation of Ampere forces in mercury". Phys. Lett. A 146, 6-14 (1990).

19. P.Graneau and N. Graneau, Newtonian Electrodynamics (World Scientific, Singapore, 1996).

20. V.F. Mikhailov, "The action of an electrostatic potential on the electron mass". Annales de la Fondation Louis de Broglie 24, 161-169 (1999); 26, 33-38 (2001).

21. A.K.T. Assis, "Comment on experimental proof of standard electrodynamics by measuring the self-force on a part of a current loop". Phys. Rev. E 62, 7544 (2000).

22. P. Graneau and N. Graneau, "Electrodynamic force law controversy". Phys. Rev.E 63, 058601-2 (2001).

23. T.E.Phipps and J. Guala-Valverde, "Simulation of amperian current elements by magnetic toroids". 21st Century Science & Technology 11, 55-65 (1998).

24. M. Bueno and A.K.T. Assis, Inductance and Force Calculations in Electrical Circuits (Nova Science Publishers, Huntington, N.Y. 2001).

25. H. Aspden, "Anomalous electrodynamic explosions in liquids". IEEE Trans. on Plasma. Sc. 14, 282-285 (1986).

26. G.M. Graham & D.G. Lahoz, "Observation of static electromagnetic angular momentum in vacuo". Nature 285, 154-155.

27. V. Dvoeglazov, "Essay on the nonmaxwellian theories of electromagne-Tism". Hadronic Journal Suppl. 12, 241-245 (1997).

28. R. Feynman, The Feynman Lectures on Physics, II. (Addisson Wesley,NY, 1964).

Weight Reductions Generated by Bucking-Field Permanent Magnets

LAB REPORT ON SmCo RING MAGNET EXPERIMENTS

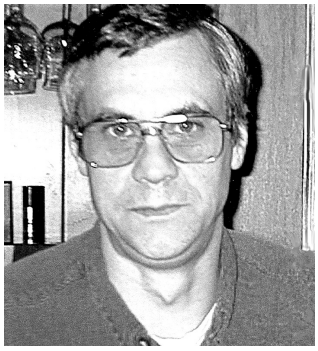

Experiments conducted by:
William C. Simpson

New Horizons Research 600 Meridian Street Extension,
#302 Groton, CT 06340
Tel. (860) 405-1157

The following experiments were conducted at the *Coastal Environmental Laboratory* (CEL) at Avery Point, Groton, Connecticut. (41° 19' 0.17" N. latitude x 72° 3' 50.27" W. longitude x 35 feet elevation above mean sea level) I wish to thank the personnelat the CEL for their generosity for providing the use of their *Mettler Toledo*® Model AG104 electronic scale for the measurements taken in the proceeding experiments. The AG104 electronic scale is an enclosed pan unit with a maximum mass range of 101-grams with 0.0001-gram readability.

The purpose of these experiments was to see if there is any detectable weight change when permanent magnets are forced together with their like-poles facing each other. The magnets were weighed individually, in both directions, with their field poles oriented vertically. The sums of the two individual magnet weights (magnet #1 and magnet #2) in each vertical orientation were compared to the weight measurements taken when they were assembled using the nylon bolt and wing nut depicted in **DIAGRAM 1**. The specifications for the two Samarium Cobalt magnets used in the following experiments are shown in **DIAGRAM 1**.

The first set of experiments with the SmCo Ring magnets were conducted January 14, 2002. An inverted paper cup was used to raise the test sample magnets 2.75" above the AG104 electronic scale pan in order to minimize possible magnetic interaction with the scale-sensing element, as depicted in **DIAGRAM 2**. The tare adjustment was used to set the scale readout to 0.0000-gram with the cup in place. The magnets were weighed individually. Magnet #1 weighed 9.9450-gram with the N pole facing up and 9.9397-gram with the S pole facing up. Magnet #2 weighed 9.9520-gram with the N pole facing up and 9.9443-gram with the S pole facing up.

The second set of experiments with the SmCo Ring magnets were conducted February 4, 2002. These experiments were shielded with Mu 80 magnetic

Editorial: This article is one more link between magnetizm and theory of aether, to my mind. It is possible to assume that in his experiments the author creates small but detectable changes in density of aether, that demonstrates itself as the weight changes.
Alexander V. Frolov.

DIAGRAM 1

RARE EARTH MAGNET SPECIFICATIONS:

Samarium Cobalt (SmCo mixed) ~ SCIENTIFICS Cat. #B30307-30
Ring type. OD = 0.75", ID = 0.43", Thickness = 0.25"
Gauss = 8,000
density = 8.7-gram/cc

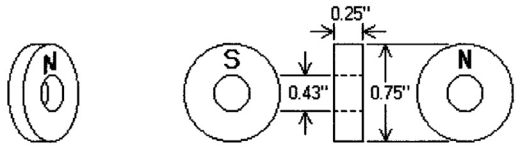

NYLON RETAINER BOLT AND WING NUT:

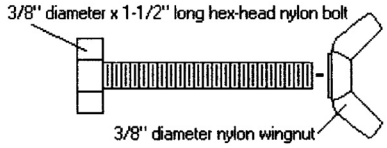

mass of nylon bolt plus nylon wing nut = 5.1610-grams

shielding material as depicted in **DIAGRAM 3**. The scale was tare adjusted to 0.0000-gram with the entire set of Mu 80 shield pieces in place. Then the magnets were weighed individually. Magnet #1 weighed 9.9483-gram with the N pole facing up and 9.9486-gram with the S pole facing up. Magnet #2 weighed 9.9527-gram with the N pole facing up and 9.9542-gram with the S pole facing up. The Nylon bolt and wing nut were placed in the Mu 80 shield can (without the magnets) and the scale was tare adjusted to 0.0000-gram. Therefore, the readouts would only be reading the weight of the bucking magnets.

The first column in **TABLE 1**, the vertical measurements, is the distance of separation d, or air gap, of the magnets. The second column shows the January 14, 2002 weight measurements of the two magnets, as shown in **DIAGRAM A**. The third column shows the January 14, 2002 weight measurements of the two magnets, as shown in **DIAGRAM B**. The fourth column shows the February 4, 2002 weight measurements of the two magnets, as shown in **DIAGRAM C**. The fifth column shows the February 4, 2002 weight measurements of the two magnets, as shown in **DIAGRAM D**.

The horizontal measurement, as depicted in **TABLE 2**, **TABLE 3**, **TABLE 4** and **TABLE 5**, are through the four basic magnetic compass headings; North, East, South, and West respectively. They are referenced to **DIAGRAM E** and **DIAGRAM F** for the January 14, 2002 experiments and **DIAGRAM G** and **DIAGRAM H** for the February 4, 2002 experiments. The corresponding graphs of the force change plots, **GRAPH 1**, **GRAPH 2**, **GRAPH 3**, **GRAPH 4**, and **GRAPH 5** accompany each table. The forces were converted from the mass readings, which are a scalar measurement, to dynes. The convention used for the force vector was chosen as plus (+) for up, or a weight reduction, and minus (-) for a weight increase.

DIAGRAM 2

01/14/2002 EXPERIMENNTS

CUP HEIGHT: 2.75" above scale pan. 1.75" upper diameter, 2.5" lower diameter

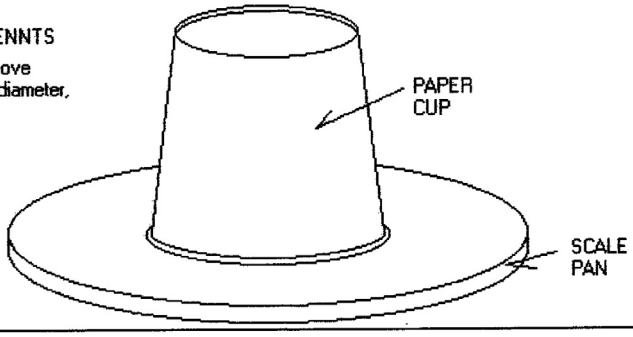

DIAGRAM 3

02/04/2002 EXPERIMENTS

MU METAL SPECIFICATIONS:

Source: NATIONAL ELECTRICAL ALLOYS
Oakland, NJ
SPECIFICATION: MIL N 14411C COMP 1
GRADE: HY MU 80 SHIELDING ALLOY
COLD ROLLED BRIGHT
DESCRIPTION: COIL
HEAT # 982011207
CHEMICAL ANALYSIS:
Ni: 80.16%
Mo: 4.6%
S: 0.0007%
C: 0.010%
P: 0.004%
Mn: 0.486%
Si: < 0.010%
Fe: BALANCE
MECHANICAL PROPERTIES:
HARDNESS: HV1 = 159
GRAIN SIZE: 8.5
COERCIVE STRENGTH:
HC = 0.0080 Oe
PERMEABILITY: MUMAX = 355000
SATURATION: 7900 Gauss
THICKNESS: 0.010"
DENSITY: 8.747-gram/cc

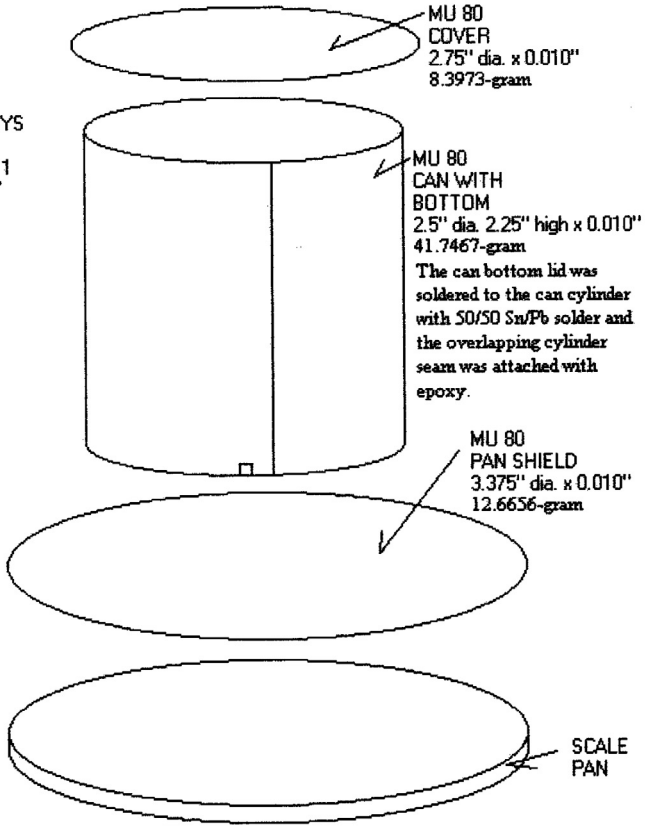

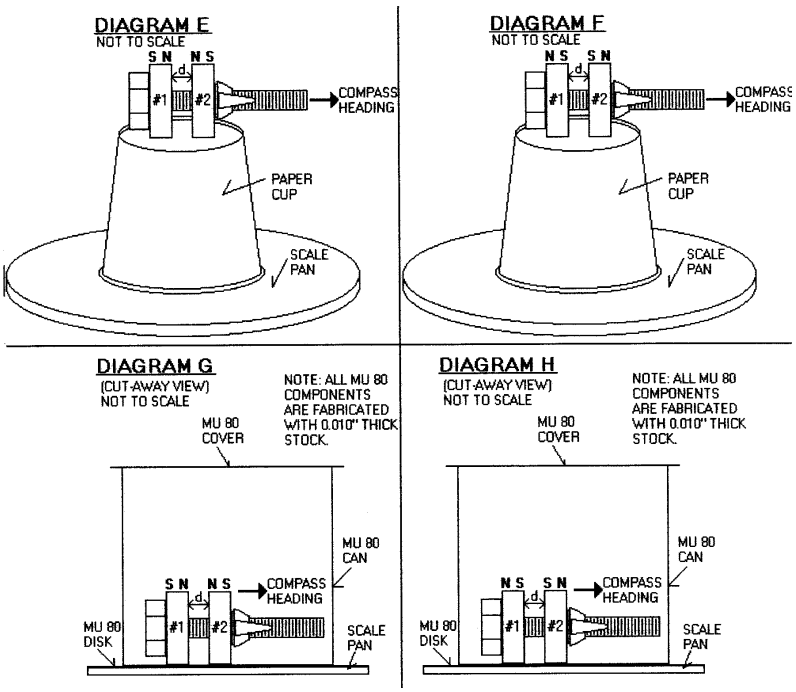

ELEVATION VIEW OF THE VERTICAL EXPERIMENTS

NOTE:

January 14, 2002 Experiments: Start time: 13:27 hours EST, End time: 15:40 hours EST.

February 4, 2002 Experiments: Start time: 13:18 hours EST, End time: 14:50 hours EST.

TABLE 1:

	01/14/2002 EXPERIMENTS OPEN, WITH PAPER CUP		02/04/2002 EXPERIMENTS WITH MU 80 SHIELDING	
Air gap d	**Diagram A** N to N vertical 19.8893-gram (Sum of 1 & 2)*	**Diagram B** S to S vertical 19.8917-gram (Sum of 1 & 2)*	**Diagram C** N to N vertical 19.9025-gram (Sum of 1 & 2)*	**Diagram D** S to S vertical 19.9013-gram (Sum of 1 & 2)*
0.0 Inch	19.8759-gram 0.0134-gram weight reduction (0.06737%)	19.8757-gram 0.0160-gram weight reduction(0.08045%)	19.8760-gram 0.0265-gram weight reduction(0.13324%)	19.8758-gram 0.0255-gram weight reduction(0.12821%)
1/8 Inch	19.8761-gram 0.0132-gram weight reduction(0.06637%)	19.8751-gram 0.0166-gram weight reduction(0.08346%)	19.8760-gram 0.0265-gram weight reduction(0.13324%)	19.8763-gram 0.0250-gram weight reduction(0.12570%)
1/4 Inch	19.8763-gram 0.0130-gram weight reduction(0.06536%)	19.8748-gram 0.0169-gram weight reduction(0.08497%)	19.8760-gram 0.0265-gram weight reduction(0.13324%)	19.8768-gram 0.0245-gram weight reduction(0.12318%)
3/8 Inch	19.8765-gram 0.0128-gram weight reduction(0.06436%)	19.8753-gram 0.0164-gram weight reduction(0.08246%)	19.8760-gram 0.0265-gram weight reduction(0.13324%)	19.8777-gram 0.0236-gram weight reduction(0.11866%)
1/2 Inch	19.8774-gram 0.0119-gram weight reduction(0.05983%)	19.8753-gram 0.0164-gram weight reduction(0.08246%)	19.8757-gram 0.0268-gram weight reduction(0.13475%)	19.8809-gram 0.0204-gram weight reduction(0.10257%)
5/8 Inch	19.8776-gram 0.0117-gram weight reduction(0.05883%)	19.8754-gram 0.0163-gram weight reduction(0.08195%)	19.8779-gram 0.0246-gram weight reduction(0.12368%)	19.8806-gram 0.0207-gram weight reduction(0.10408%)
11/16 Inch	19.8777-gram 0.0116-gram weight reduction(0.05832%)	19.8748-gram 0.0169-gram weight reduction(0.08497%)	19.8773-gram 0.0252-gram weight reduction(0.12670%)	19.8832-gram 0.0181-gram weight reduction(0.09100%)

* Magnets #1 and #2 were individually weighed in the orientation used in each experiment and their separate weights were added together.

The following equation was used to calculate the weight changes, in dynes, in the proceeding graphs.

$$\vec{\Delta F} = k \cdot \Delta mass \cdot g$$

where

$$k = 980.665 \times dyne \times gm^{-1}$$

and

$$g = 9.80665\ m \times sec^{-2}$$

which is the local rate of gravitational acceleration.

The product of the measured changes in mass, Δmass, and g is denoted as follows on the graphs:

$$NNopen_{n,1} = \Delta mass \times g$$

for N-to-N pole facings in the open (or unshielded).

$$SSopen_{n,1} = \Delta mass \times g$$

for S-to-S pole facings in the open (or unshielded).

$$NNshield_{p,1} = \Delta mass \times g$$

for N-to-N pole facings shielded with Mu 80 shielding.

$$SSshield_{p,1} = \Delta mass \times g$$

for S-to-S pole facings shielded with Mu 80 shielding. In the subscripts, $_n$ and $_p$ refers to the respective number of data points per plot. The subscript $_1$ refers to the vertical change in force (weight change) axis and $_0$ refers to the horizontal distance d axis. In **GRAPH 1**, $_n = {}_p$.

GRAPH 1:

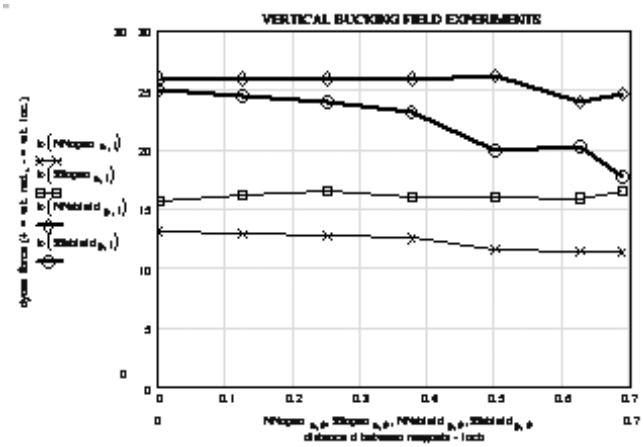

ISOMETRIC AND ELEVATION VIEW OF THE HORIZONTAL EXPERIMENTS

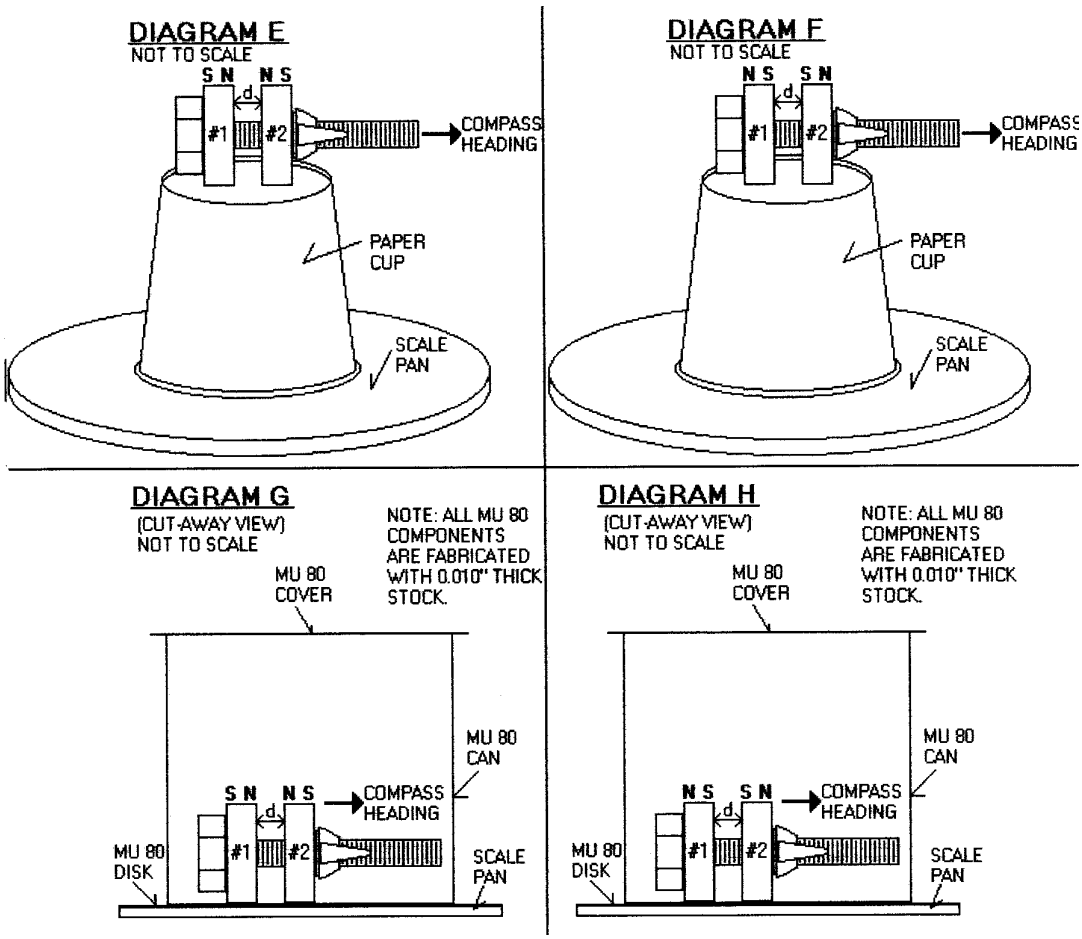

MAGNETIC DECLINATION FROM THE LOCAL TOPOLOGICAL MAP:

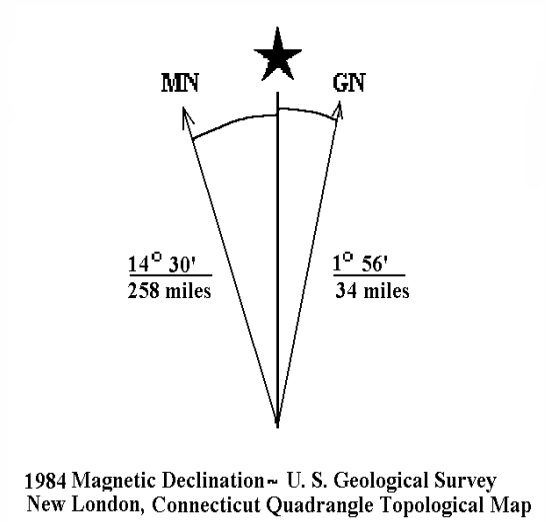

TABLE 2

North # **Heading**	01/14/2002 EXPERIMENTS OPEN, WITH PAPER CUP		02/04/2002 EXPERIMENTS WITH MU 80 SHIELDING	
Air gap d	**Diagram E** N to N horizontal 19.8905-gram (Sum of 1 & 2)*	**Diagram F** S to S horizontal 19.8905-gram (Sum of 1 & 2)*	**Diagram G** N to N horizontal 19.9019-gram (Sum of 1 & 2)*	**Diagram H** S to S horizontal 19.9019-gram (Sum of 1 & 2)*
0.0 Inch	19.8735-gram 0.0170-gram weight reduction (0.08547%)	19.8778-gram 0.0127-gram weight reduction(0.06385%)	19.8890-gram 0.0129-gram weight reduction(0.06479%)	19.8810-gram 0.0209-gram weight reduction(0.10497%)
1/8 Inch	19.8728-gram 0.0177-gram weight reduction(0.08899%)	19.8790-gram 0.0115-gram weight reduction(0.05782%)	N/A **	N/A **
1/4 Inch	19.8721-gram 0.0184-gram weight reduction(0.09251%)	19.8798-gram 0.0107-gram weight reduction(0.05379%)	N/A **	N/A **
3/8 Inch	19.8705-gram 0.0200-gram weight reduction(0.10055%)	19.8800-gram 0.0105-gram weight reduction(0.05279%)	N/A **	N/A **
1/2 Inch	19.8698-gram 0.0207-gram weight reduction(0.10407%)	19.8811-gram 0.0094-gram weight reduction(0.04726%)	N/A **	N/A **
5/8 Inch	19.8693-gram 0.0212-gram weight reduction(0.10658%)	19.8818-gram 0.0087-gram weigh t reduction(0.04374%)	N/A **	N/A **
11/16 Inch	19.8696-gram 0.0209-gram weight reduction(0.10508%)	19.8827-gram 0.0078-gram weight reduction(0.03921%)	19.9190-gram 0.0171-gram weight increase(0.08588%)	19.9029-gram 0.0010-gram weight increase(0.00502%)

Compass Heading is approximate
* Magnets #1 and #2 were individually weighed with pole faces oriented vertically, with N up then with S up, and the results were averaged and added.
** Due to time constraints, these measurements were not taken.

GRAPH 2:

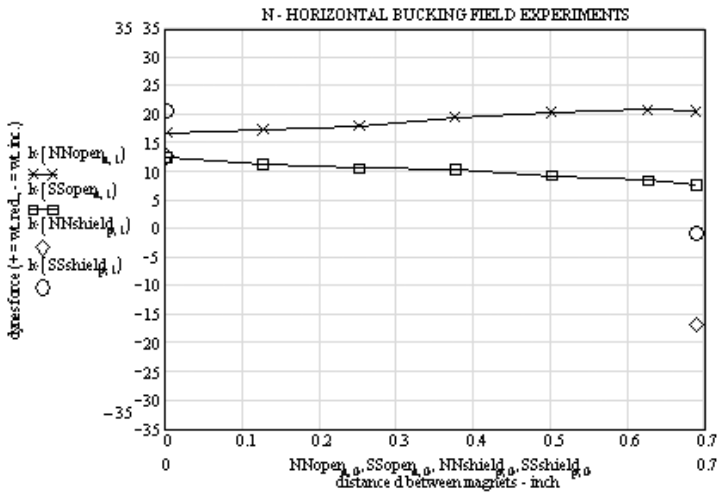

$$volume := \pi \cdot \left[\left(\frac{0.75 \cdot in}{2} \right)^2 - \left(\frac{0.43 \cdot in}{2} \right)^2 \right] \cdot \left(\frac{1}{4} \right) \cdot in$$

volume = 1.214963 cm^3

density = $8.7 \cdot gm \cdot cm^{-3}$

mass = density·volume

mass = 10.570177 gm.

This is higher than the magnetized mass of each magnet.

However, some tables give a lower density for the SmCo magnet, 0.300lb/in^3, which equals:

density = $8.303971 \cdot gm \cdot cm^{-3}$

mass = 10.089017 gm. .

This is still higher than the magnetized mass of each magnet. Does the SmCo material become slightly lighter in weight when it is magnetized?

NOTE:
The calculated mass of each magnet was determined by the following formula based upon the manufacturer's dimensions and density value.

TABLE 3

East # **Heading**	01/14/2002 EXPERIMENTS OPEN, WITH PAPER CUP		02/04/2002 EXPERIMENTS WITH MU 80 SHIELDING	
Air gap D	**Diagram E** N to N horizontal 19.8905-gram (Sum of 1 & 2)*	**Diagram F** S to S horizontal 19.8905-gram (Sum of 1 & 2)*	**Diagram G** N to N horizontal 19.9019-gram (Sum of 1 & 2)*	**Diagram H** S to S horizontal 19.9019-gram (Sum of 1 & 2)*
0.0 Inch	19.8763-gram 0.0142-gram weight reduction (0.07139%)	19.8755-gram 0.0150-gram weight reduction(0.07541%)	19.8928-gram 0.0091-gram weight reduction(0.04570%)	19.8731-gram 0.0288-gram weight reduction(0.14464%)
1/8 Inch	19.8777-gram 0.0128-gram weight reduction(0.06435%)	19.8750-gram 0.0155-gram weight reduction(0.07793%)	N/A **	N/A **
1/4 Inch	19.8782-gram 0.0123-gram weight reduction(0.06184%)	19.8743-gram 0.0162-gram weight reduction(0.08145%)	N/A **	N/A **
3/8 Inch	19.8779-gram 0.0126-gram weight reduction(0.06335%)	19.8722-gram 0.0183-gram weight reduction(0.09200%)	N/A **	N/A **
1/2 Inch	19.8792-gram 0.0113-gram weight reduction(0.05681%)	19.8715-gram 0.0190-gram weight reduction(0.09552%)	N/A **	N/A **
5/8 Inch	19.8814-gram 0.0091-gram weight reduction(0.04575%)	19.8712-gram 0.0193-gram weight reduction(0.09703%)	N/A **	N/A **
11/16 Inch	19.8815-gram 0.0090-gram weight reduction(0.04525%)	19.8720-gram 0.0185-gram weight reduction(0.09301%)	19.9338-gram 0.0319-gram weight increase(0.16021%)	19.9030-gram 0.0011-gram weight increase(0.00552%)

Compass Heading is approximate
* Magnets #1 and #2 were individually weighed with pole faces oriented vertically, with N up then with S up, and the results were averaged and added.
** Due to time constraints, these measurements were not taken.

GRAPH 3:

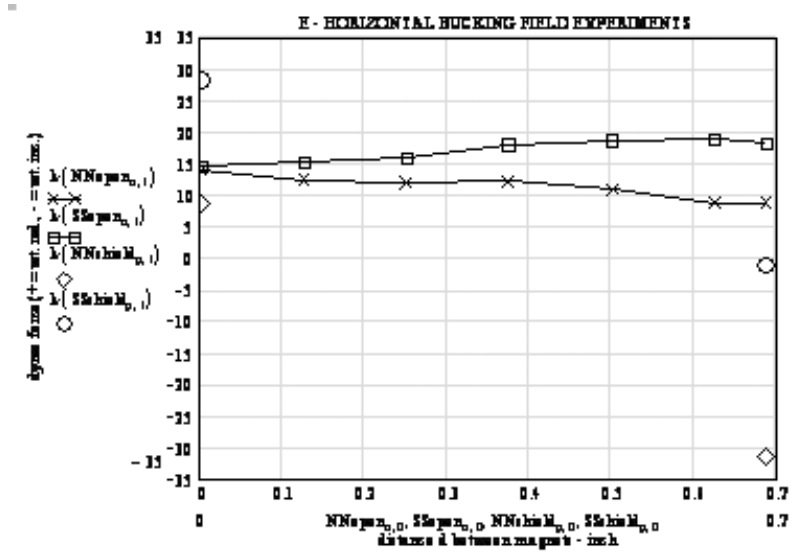

TABLE 4

East # **Heading**	01/14/2002 EXPERIMENTS OPEN, WITH PAPER CUP		02/04/2002 EXPERIMENTS WITH MU 80 SHIELDING	
Air gap D	**Diagram E** N to N horizontal 19.8905-gram (Sum of 1 & 2)*	**Diagram F** S to S horizontal 19.8905-gram (Sum of 1 & 2)*	**Diagram G** N to N horizontal 19.9019-gram (Sum of 1 & 2)*	**Diagram H** S to S horizontal 19.9019-gram (Sum of 1 & 2)*
0.0 Inch	19.8746-gram 0.0159-gram weight reduction (0.07994%)	19.8769-gram 0.0136-gram weight reduction(0.06837%)	19.8896-gram 0.0123-gram weight reduction(0.06178%)	19.8660-gram 0.0359-gram weight reduction(0.18030%)
1/8 Inch	19.8720-gram 0.0185-gram weight reduction(0.09301%)	19.8788-gram 0.0117-gram weight reduction(0.05882%)	N/A **	N/A **
1/4 Inch	19.8709-gram 0.0196-gram weight reduction(0.09854%)	19.8797-gram 0.0108-gram weight reduction(0.05430%)	N/A **	N/A **
3/8 Inch	19.8704-gram 0.0201-gram weight reduction(0.10105%)	19.8803-gram 0.0102-gram weight reduction(0.05128%)	N/A **	N/A **
1/2 Inch	19.8711-gram 0.0194-gram weight reduction(0.09753%)	19.8814-gram 0.0091-gram weight reduction(0.04575%)	N/A **	N/A **
5/8 Inch	19.8698-gram 0.0207-gram weight reduction(0.10407%)	19.8825-gram 0.0080-gram weight reduction(0.04022%)	N/A **	N/A **
11/16 Inch	19.8703-gram 0.0202-gram weight reduction(0.10156%)	19.8817-gram 0.0088-gram weight reduction(0.04424%)	19.9423-gram 0.0404-gram weight increase(0.20290%)	19.8810-gram 0.0209-gram weight reduction(0.10497%)

Compass Heading is approximate
* Magnets #1 and #2 were individually weighed with pole faces oriented vertically, with N up then with S up, and the results were averaged and added.
** Due to time constraints, these measurements were not taken.

GRAPH 4:

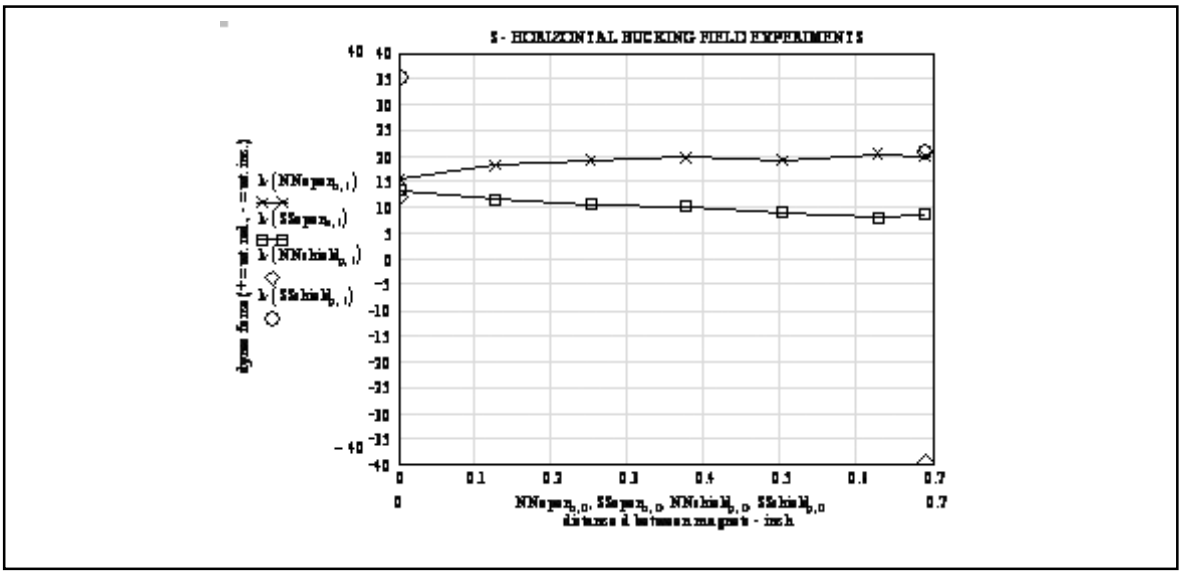

TABLE 5

West # **Heading**	01/14/2002 EXPERIMENTS OPEN, WITH PAPER CUP		02/04/2002 EXPERIMENTS WITH MU 80 SHIELDING	
Air gap D	**Diagram E** N to N horizontal 19.8905-gram (Sum of 1 & 2)*	**Diagram F** S to S horizontal 19.8905-gram (Sum of 1 & 2)*	**Diagram G** N to N horizontal 19.9019-gram (Sum of 1 & 2)*	**Diagram H** S to S horizontal 19.9019-gram (Sum of 1 & 2)*
0.0 Inch	19.8777-gram 0.0128-gram weight reduction (0.06787%)	19.8748-gram 0.0157-gram weight reduction(0.07893%)	19.8933-gram 0.0086-gram weight reduction(0.04319%)	19.8724-gram 0.0295-gram weight reduction(0.14816%)
1/8 Inch	19.8767-gram 0.0138-gram weight reduction(0.06938%)	19.8737-gram 0.0168-gram weight reduction(0.08446%)	N/A **	N/A **
1/4 Inch	19.8777-gram 0.0128-gram weight reduction(0.06435%)	19.8733-gram 0.0172-gram weight reduction(0.08647%)	N/A **	N/A **
3/8 Inch	19.8783-gram 0.0122-gram weight reduction(0.06134%)	19.8727-gram 0.0178-gram weight reduction(0.08949%)	N/A **	N/A **
1/2 Inch	19.8806-gram 0.0099-gram weight reduction(0.04977%)	19.8722-gram 0.0183-gram weight reduction(0.09200%)	N/A **	N/A **
5/8 Inch	19.8811-gram 0.0094-gram weight reduction(0.04726%)	19.8715-gram 0.0190-gram weight reduction(0.09552%)	N/A **	N/A **
11/16 Inch	19.8803-gram 0.0102-gram weight reduction(0.05128%)	19.8723-gram 0.0182-gram weight reduction(0.09150%)	19.9427-gram 0.0408-gram weight increase(0.20491%)	19.8976-gram 0.0043-gram weight reduction(0.02160%)

Compass Heading is approximate
* Magnets #1 and #2 were individually weighed with pole faces oriented vertically, with N up then with S up, and the results were averaged and added.
** Due to time constraints, these measurements were not taken.

GRAPH 5:

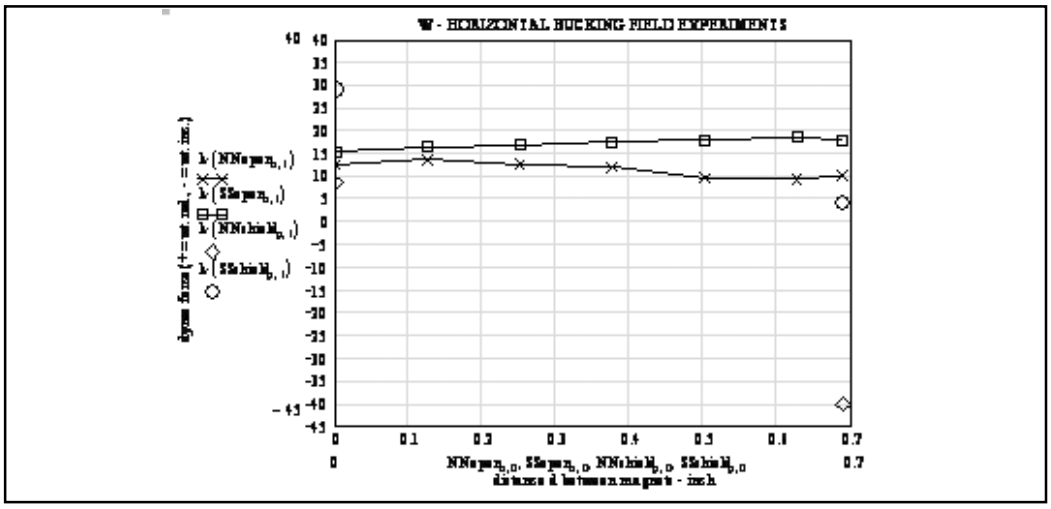

RING MAGNET #1, N UP: 9.9483-grams
RING MAGNET #2, N UP: +9.9527-grams
TOTAL WEIGHT: 19.9010-grams
WEIGHT INCREASE WITH OPPOSITE POLES ATTRACTING, AS DEPICTED IN **DIAGRAM I**, IN MU 80 SHIELD where 19.9861-grams was the measured value:
19.9861-grams – 19.9010-grams = 0.0851-gram weight increase.

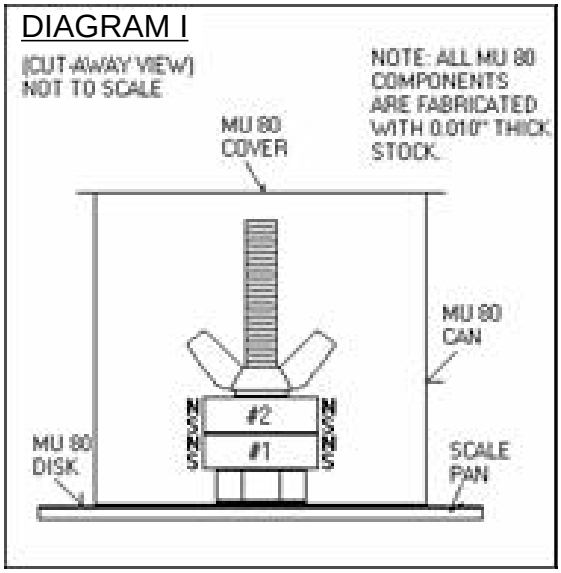

THREE RIVERS COMMUNITY COLLEGE, THAMES VALLEY CAMPUS LAB REPORT ON SmCo RING MAGNET EXPERIMENTS

The following experiments were conducted at the *Thames Valley Campus* (TVC) of the *Three Rivers Community College*, Room #207 Chemistry Laboratory, in Norwich, Connecticut on March 8, 2002. (41° 30' 34.62" N. latitude x 72° 6' 13.63" W. longitude x 115 feet elevation above mean sea level) I wish to thank the instructors at *Three Rivers* for their generosity for providing the use of their *Sartorius*® Model # 2442 analytical balance for the measurements taken in the proceeding experiments. The *Sartorius* Model # 2442 analytical balance is an enclosed pan unit with a maximum mass range of 200-grams with 0.0001-gram micrometer readability and a precision of 0.05-mg standard deviation.

The purpose of these experiments was to compare the Avery Point vertical measurements conducted on the *Mettler Toledo*® Model AG104 electronic scale, in **TABLE 1**, with the *Sartorius* Model # 2442 analytical balance measurements recorded in **TABLE 6**. The same two Samarium Cobalt magnets (magnet #1 and magnet #2) weighed individually in each vertical orientation were compared to the weight measurements taken when they were assembled using the nylon bolt and wing nut depicted in **DIAGRAM 1**. The specifications for the two Samarium Cobalt magnets used in the following experiments are shown in **DIAGRAM 1**.

The first column in **TABLE 6**, the vertical measurements, is the distance of separation d, or air gap, of the magnets. The second column shows the weight measurements of the two magnets, as shown in **DIAGRAM A**. The third column shows the weight measurements of the two magnets, as shown in **DIAGRAM B**. An inverted paper cup was used to raise the test sample magnets 2.75" above the *Sartorius* Model # 2442 balance scale pan in order to minimize possible magnetic interaction with the balance, as depicted in **DIAGRAM 2**. The fourth column shows the weight measurements of the two magnets, as shown in **DIAGRAM C**. The fifth column shows the weight measurements of the two magnets, as shown in **DIAGRAM D**. These experiments were shielded with

Mu 80 magnetic shielding material as depicted in **DIAGRAM 3**. The resultant data of **TABLE 6** is plotted on **GRAPH 6**. The results of the previous experiments at *Avery Point*, from **GRAPH 1**, and the recent *Thames Valley* experiments, from **GRAPH 6**, are plotted on **GRAPH 7** for comparison. The Mu 80 magnetically shielded experiments on the *Sartorius* Model # 2442 analytical balance at *Thames Valley* are in close agreement with the data collected with the AG104 electronic scale at Avery Point. However, the *Thames Valley* data collected for the unshielded experiments is somewhat smaller in weight reduction. I attribute this to external interference. The *Thames Valley* setup included a nonferrous tabletop, as did the Avery Point setup. However, the *Thames Valley* balance table consisted of a steel frame and legs, which may have altered the readings. The Mu 80 shielding provided a more intrinsic method for accurate data collection.

The horizontal measurements were not taken in this set of experiments due to time constraints. A final experiment was attempted to replicate the relative weight increase with the opposite poles of the ring magnets "stuck" together, as depicted in **DIAGRAM I**; however, the magnets shattered during assembly!

TABLE 6

	03/08/2002 TRCC EXPERIMENTS, @ TVC: OPEN, WITH PAPER CUP		03/08/2002 TRCC EXPERIMENTS, @ TVC: WITH MU 80 SHIELDING	
Air gap d	**Diagram A** N to N vertical 19.8734-gram (Sum of 1 & 2)*	**Diagram B** S to S vertical 19.8726-gram (Sum of 1 & 2)*	**Diagram C** N to N vertical 19.8912-gram (Sum of 1 & 2)*	**Diagram D** S to S vertical 19.8929-gram (Sum of 1 & 2)*
0.0 Inch	19.8699-gram 0.0035-gram weight reduction (0.01761%)	19.8696-gram 0.0030-gram weight reduction(0.01510%)	19.8691-gram 0.0221-gram weight reduction(0.11110%)	19.8706-gram 0.0223-gram weight reduction(0.11210%)
1/8 Inch	19.8699-gram 0.0035-gram weight reduction(0.01761%)	19.8699-gram 0.0027-gram weight reduction(0.01359%)	19.8688-gram 0.0224-gram weight reduction(0.11261%)	19.8707-gram 0.0222-gram weight reduction(0.11160%)
1/4 Inch	19.8695-gram 0.0039-gram weight reduction(0.01962%)	19.8695-gram 0.0031-gram weight reduction(0.01560%)	19.8687-gram 0.0225-gram weight reduction(0.11312%)	19.8712-gram 0.0217-gram weight reduction(0.10908%)
3/8 Inch	19.8695-gram 0.0039-gram weight reduction(0.01962%)	19.8699-gram 0.0027-gram weight reduction(0.01359%)	19.8692-gram 0.0220-gram weight reduction(0.11060%)	19.8730-gram 0.0199-gram weight reduction(0.10004%)
1/2 Inch	19.8689-gram 0.0045-gram weight reduction(0.02264%)	19.8699-gram 0.0027-gram weight reduction(0.01359%)	19.8695-gram 0.0217-gram weight reduction(0.10909%)	19.8738-gram 0.0191-gram weight reduction(0.09601%)
5/8 Inch	19.8686-gram 0.0048-gram weight reduction(0.02415%)	19.8699-gram 0.0027-gram weight reduction(0.01359%)	19.8702-gram 0.0210-gram weight reduction(0.10557%)	19.8746-gram 0.0183-gram weight reduction(0.09199%)
11/16 Inch	19.8680-gram 0.0054-gram weight reduction(0.02717%)	19.8699-gram 0.0027-gram weight reduction(0.01359%)	19.8707-gram 0.0205-gram weight reduction(0.10306%)	19.8756-gram 0.0173-gram weight reduction(0.08697%)

* Magnets #1 and #2 were individually weighed in the orientation used in each experiment and their separate weights were added together.

NOTE:
March 8, 2002 Experiments: Start time: 12:12 hours EST, End time: 13:47 hours EST.

GRAPH 6:

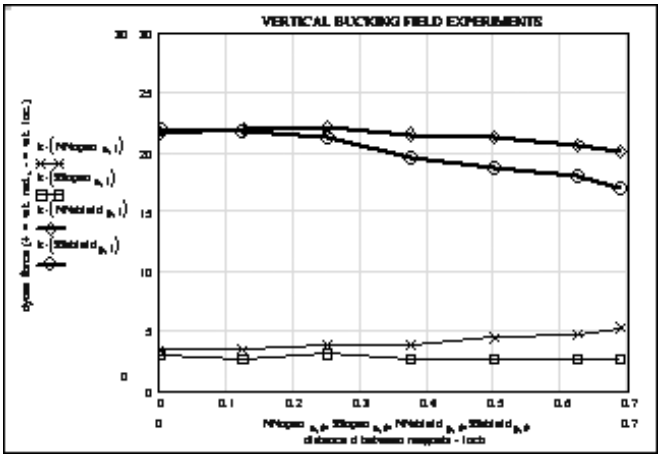

MAGNETIC DECLINATION FROM THE LOCAL TOPOLOGICAL MAP

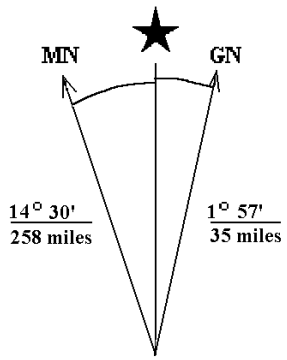

1983 Magnetic Declination ~ U. S. Geological Survey
Norwich, Connecticut Quadrangle Topological Map

GRAPH 7:

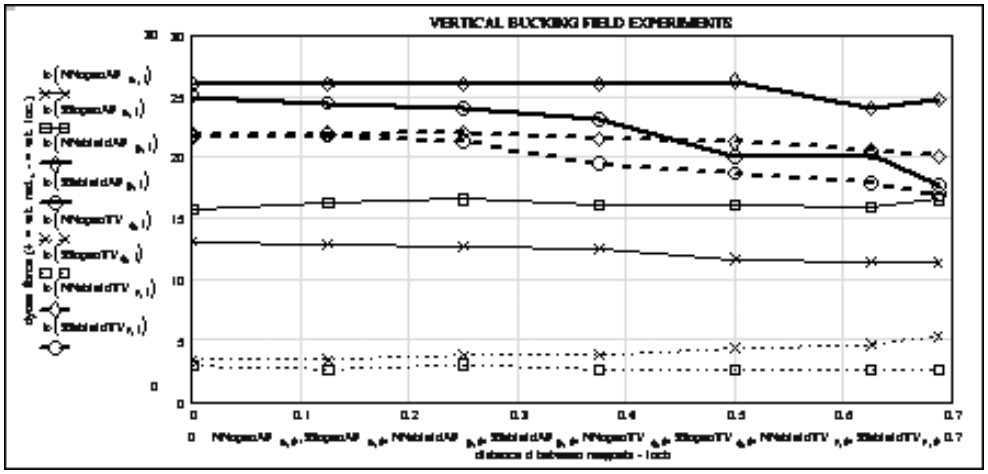

KEY TO **GRAPH 7**:

For N-to-N pole facings in the open (or unshielded) at Avery Point (AP):
NNopenAP
For S-to-S pole facings in the open (or unshielded) at Avery Point (AP):
SSopenAP
For N-to-N pole facings shielded with Mu 80 shielding at Avery Point (AP):
NNshieldAP
For S-to-S pole facings shielded with Mu 80 shielding at Avery Point (AP):
SSshieldAP
For N-to-N pole facings in the open (or unshielded) at Thames Valley (TV):
NNopenTV
For S-to-S pole facings in the open (or unshielded) at Thames Valley (TV):
SSopenTV
For N-to-N pole facings shielded with Mu 80 shielding at Thames Valley (TV):
NNshieldTV
For S-to-S pole facings shielded with Mu 80 shielding at Thames Valley (TV):
SSshieldTV

The subscripts for the data points $_n = _p = _q = _r = 7$ are all the same value in **GRAPH 7**.

Advanced Nuclear Waste Decontamination Technologies

Mark Porringa

Zeropoint Techtonix Inc, 430 Bass Lake Road, R R # 1,
Deep River, Ontario K0J 1P0, Canada
(613) 584-2960 fax: (613) 584-4616 porringam@aecl.ca

It is a review of nine alternative, peer-reviewed techniques as candidates for the global clean-up of nuclear waste.

The following is a reasonably comprehensive list of potentially effective nuclear waste treatment methods that might be employed to treat the entire range of radioactive wastes that have proven to be such a daunting and horrendously expensive problem for the nuclear industry (in all its forms) with major, long term implications for the environment.

A wide variety of methods will probably be required to accommodate the many different radioactive waste sources including high and low level, solids, liquids and gases. Process names used here are in some cases just convenient labels used to categorize and set them apart from each other.

Theories on several of these processes are still quite speculative and solid evidence that would pass conventional peer review is still lacking. This is after all a very new field of science.

Some of these technologies are already well protected by international or national patents, with additional US and international patents pending, and further patents may be obtained on new developments as they are made.

The Brown's Gas-Metal Matrix Process:

The BG-MMX process utilizes a patented electrolysis cell of the Australian Prof. **Yull Brown**'s design that is said to produce a stoichiometric mixture of monatomic hydrogen and oxygen or possibly a quasi-stable water molecule raised to a high-energy state. This gas has some very peculiar properties including the ability to sublimate tungsten (6000°C) with an implosive flame that burns cool in air with a temperature of only 130°C.

The gas is used to heat a proprietary mixture of metals and/or metal oxides including the radwaste to be neutralized. A highly exothermic radiant reaction appears to result in the immediate reduction of radioactivity approaching 95% of the original levels judging from preliminary tests, within seconds of treatment. The process is conjectured to be effective with high level solid wastes and possibly gasses, but probably not liquids. The high temperatures involved may also preclude the processing of more volatile wastes.

Since 1991, this technology has been successfully demonstrated, on a small scale, at least 50 times to US, Chinese, Japanese and United Kingdom officials on a variety of nuclear waste products including Americium, Cobalt, Uranium, and Plutonium. The technique can be applied for the immediate decontamination of stockpiles of nuclear waste materials being held near nuclear power plants. The process is very simple, safe, and inexpensive to develop further into robotics application for on-site treatment with no foreseen environmental effects.

Photoremediation

The *Photoremediation* process of the American Dr. **Paul Brown** is essentially conventional physics, *albeit* applied in a new and novel way. The process involves the use of a high-energy electron beam impinged on a target, which in turn produces a monochromatic gamma radiation that is tuned to induce *Photofission* and *Photoneutron* reactions in the target material causing rapid neutralization of radioactive isotopes. The efficiency claimed exceeds 500% due to the high cross-section reactions in the Giant Dipole Resonance region. The 10 MeV electron beam produces typical fission reactions in the 200MeV range effectively turning high level solid wastes such as spent fuel into an energy source. The process is apparently intended for on-site treatment with some waste-partitioning required, an aspect which may not be desirable in certain countries.

While this idea is similar in topology to a system being developed by **Los Alamos National Labs**, Dr. Paul Brown's approach offers several advantages: no need for extensive chemical pre-processing and the energy required to effect transmutation is greatly reduced. No new technology needs to be developed, yet the engineering of such a photon reactor must be completed and it could itself become a practical method for generating power.

ZIPP Fusion

The ZIPP fusion process, identified by **Mark Porringa**, induces a wide variety of fusion reactions, resulting from the radial compression of individual diatomic and other simple molecules dissolved or suspended in a light

water, carbon arc electrolysis cell. A variety of other cell configurations are envisioned.

The process appears to produce only stable isotopes, which should therefore make it capable of stabilizing a wide variety of radioactive waste materials. The theory on the process draws from Condensed Charge phenomena, Brown's Gas implosion, cavitation bubble collapse and sonoluminesence - all variations of the Casimir effect - which is believed to cohere the Zero-point energy of Quantum Vacuum Fluctuations. Transmutations using variations of this basic process may be applicable to a wide variety of nuclear wastes and appears capable of operating with an efficiency exceeding 100%.

A major implication of this process is that the Strong force of the nucleus is understood as an ultra close range Casimir effect. **Oakridge** Nuclear Laboratories in the US in conjunction with several international collaborators have just (this month, in fact) announced a deuterium cold fusion process based on the essential elements of the ZIPP Fusion process first reported in 1998. The process is very simple and inexpensive to develop.

RIPPLE Fission

The RIPPLE Fission process is an adaptation of existing potential technology utilizing a supersonic ionized gas to aerosol a counter flow heat exchanger that envelopes the radioactive waste aerosol in a vacuum induced plasma vortex which appears to disrupt the matter stabilizing influence of the Quantum Vacuum fluctuations resulting in "gentle" low recoil fission reactions which produce only stable fission products, with excess neutrons being prompt converted to protons via quenched Beta emissions. The process is apparently proven with conventional non-radioactive wastes and is believed applicable to the entire spectrum of radwaste without the need for waste partitioning. This process is also conjectured to operate with over-unity efficiency.

The LENTEC Processes

The Low Energy Nuclear Transmutation Electrolytic Cells of the Cincinnati group produce a variety of transmutation reactions using a variety of exotic electrolysis cell designs that generally produce condensed charge clusters composed primarily of up to 10^{11} electrons each. These electron charge clusters produced with the use of special electrodes can penetrate the nuclei of larger atoms in solution and transmute these atoms into stable elements.

The range of design and operating protocols and potential applications are essentially limitless provided for the waste that is dispersed in the electrolyte. The reported transmutation of thorium to stable titanium and copper by the Cincinnati Group and by the Salt Lake City group is one of the most dramatic examples of this type of treatment process. Application to other high-level liquid transuranic fissionable wastes such as surplus Plutonium seems likely. The glaring absence of normal fission yield energies is perplexing but probably explicable as another form of low recoil fission reaction, similar to RIPPLE fission.

The Plasma Induced/Injected Transmutation - PIT Processes (also known as HDCC)

Plasma Induced/Injected Transmutation processes run include a gamut from recent achievements dating back to the **Oshawa-Kushi** cold plasma transmutations reported in 1964. The patented high-density charge cluster process (HDCC) was first discovered by **Kenneth Shoulders** and added on to by **Harold E. Puthoff**. Later, the late **Stan Gleeson** discovered HDCC in properly processed solutions. Still later, **Alexander Ilyanok** of Belarus discovered HDCC, followed by **Vasiliy Baraboskin** in Russia.

The production of Condensed Charge Clusters and various plasma glow discharge phenomena in a variety of gaseous atmospheres is again implicated as the underlying cause with what should be by now an obvious connection with the coherence of Zero-point energy from the Quantum or Stochastic vacuum.

Desk-top high energy particle accelerators have also been envisioned, based on the "piggy back" principle, in which the clusters permit acceleration of "piggy-backed" heaver +ions to extremely high energies capable of causing fusion and transmutations in target materials including those in solution and the materials of which the electrodes are composed. Brown's Gas implosion and cavitation bubble collapse reactions are also believed to be prevalent in these types of cells due to the prevalence of electrolysis.

A high-density charge cluster technology was discovered and used by Stan Gleeson to stabilize radioactive liquid wastes and has been developed further in the last 4 years by a group led by **S-X Jin** and **Hal Fox**. Best results for radioactive liquids have been demonstrated in the processing of thorium for a 30-minute period and achieving a reduction of radioactivity of about 90% from a liquid sample.

Kervran Reactions

The very compelling evidence compiled by French Nobel Candidate Dr. **Louis Kervran** has identified a wide range of nuclear transmutations in biological systems that have not been adequately explained. Coherence of Zero-point energy via Casimir effects within the *Somatid* particles identified by the Canadian **Gaston Naessens** is implicated as a possible cause. A wide variety of *in vitro* and *in vivo* reactions are believed to be possible as proven in nature and numerous experiments typically involving a reaction medium composed of a dielectric fluid such as water. Highly radiation resistant microorganisms have been found

thriving in the core of nuclear reactors indicating the possibility of microorganisms being capable of transmuting some bioactive nuclear wastes in the course of the normal metabolism of such organisms.

The Monti Process

The Italian **Roberto A. Monti's** process involves confined explosions involving proprietary mixtures of materials that include radioactive waste. Ignition of such mixtures causes nuclear transmutations resulting in reduced radioactivity (to near-background levels) following combustion, gradually over 1 to 4 days.

This technique has been confirmed by the Italian **ENEA** and is supported by the French CEA scientists as a serious candidate for treatment of waste stockpiles. The system, as currently designed, required waste to be inserted into a chamber.

Higher group symmetry electrodynamics

Extremely weak, non-classical, higher group symmetry electromagnetic fields were found during a 1991 experiment made by **Glen Rein** to alter significantly the level of radioactivity in materials, even those in the environment. The experiments suggest that higher group symmetry electrodynamics modulate the quantitative and /or qualitative properties of radioactive species. If the non-classical fields directly affect the radioactive species, it is likely that the appropriate field parameters will be discovered to neutralize radioactive emissions. In 1999, a theoretical basis for the phenomenon was developed by the Welsh physicist, **M. W. Evans**, with the participation of Lt. Col. (retired) **Thomas E. Bearden**.

The technology is extremely simple and could be applied with minimum logistics for treating massive structures, *in-to* outdoors, such as the Chernobyl disaster site.

Psitronics Group Systems, International

Robert "Paul" LeBreton, 2901 Hwy. 6, HC 77 Box 42, Laguna, NM 87026 USA

E-mail: wizzard9@earthlink.net Phone:1-(505)-836-7534

Psi/Group's Magnetic Motor - Funding for New Prototype Sought:

As the engineer who designed the self-sustaining magnetic motor being advertised by Psitronics Group Systems, International. It perhaps falls upon me to explain (as well as I am able) the methods used by me in this motor's design:

The actual "picture" description is totally Intellectual Property; Protected as a Trade Secret.

However: This magnetic motor is a "perpetually imbalanced configuration" of permanent magnets; an unequal number of magnets on the rotor & stator; that revolves in a "self-sustaining" manner as the magnets seek balance... There are no electrical components in the design unless one wished to insert alternator windings in the stator to provide an electrical output...

We have discovered: through a prior unsuccessful prototype that using a para-magnetic material (we used aluminum) for the rotor & stator was self-defeating; as with the powerful rare earth magnets used in the design aluminum destroyed the magnetic fields... On further analysis of the failed prototype it was deduced that a "latch up" condition would occur between rotor & stator magnets; unless the rotor magnets were canted or skewed at an angle from the stator magnets... The plastic prototype contemplated corrects both of these problems....

We are seeking an investor willing to put up $4000 (DUS) for the prototype and who can offer $40,000 return on investment "if it proves successful" ...We have a Global Distribution 'ready to go" as well as a pledge of $ Millions towards Manufacturing & Marketing from EarthTech, International on submission of a running motor...

Very Respectfully Yours,
Paul LeBreton

http://home.earthlink.net/~wizzard9
(Psi/Group Website)

Inquiries should be emailed to:
wizzard9@earthlink.net

Experimental Investigations of the Radioactive Isotope Half-Value Period Changing in the Local Volume of Cause-Effect Relations

Igor A. Melnik

Pr.Frunze 232, Tomsk, 634021, Russia, Ph. (3822) 244555
breg@mail.ru

Nuclear-design methods of the elemental analysis are based on the property of the radioactive isotope decay rate constant. Half period as a constant quantity is defined by the time feature (the time flow is uniform in the every space point). The given postulate is confirmed by the long-term results and raised no doubts. But in last years some researches, investigating enough fine effects by change of the registered radiation intensivity, came to the conclusion about influence of space cycles on the time flow [1]. In his turn, N. A. Kozyrev during the investigation of active physical properties of time came to the conclusion about violation of its uniform flow in the local volume of the cause-effect relations, created by the cyclic motion (rotation, oscillation) of bodies [2,3,4].

Thus, the author get an idea to use a radioactive isotope cezium-137 as a "sensor", measuring the changes of time flow uniformity in the certain local volume of cause-effect relations. In basis there are following arguments: owing to a conception of time uniformity and considerable cezium-137 half-value period, the source activity must be permanent during the experiment time. By the time flow (period) change, i.e. changes of uniformity in the local volume of cause-effect relations, the half-value period – T is changing in the direct proportion. Source activity, respectively, is changing in the inverse proportion according to the law exp (1/T) in relation to the external space volume. Hence, registered gamma-quantum intension (amplitude impulse distribution) in the absence of the cause-effect relations is proportional to the function $N_0 \sim \exp(\ln 2/T_0)$. Then the proportion $N_0/\Delta N$, where $\Delta N = N_0 - N$ is made, and by means of it a half-value period difference is defined by the formula

$$1/\Delta T = |1/T_0 + \ln(\Delta N/N_0)/\ln 2| \qquad (1)$$

N_0 – selective average amplitudes of impulses at the case of static liquid (in the absence of the cause-effect relations);
N - selective average amplitudes of impulses at the case of rotation of liquid.

In this case, there were investigations of the determination of the gamma-quantum intension change (i.e. change of a half-value period) dependence on the angular velocity of the activator rotation, and also on the coordinates location and amount of cause-effect relations (Fig. 1).

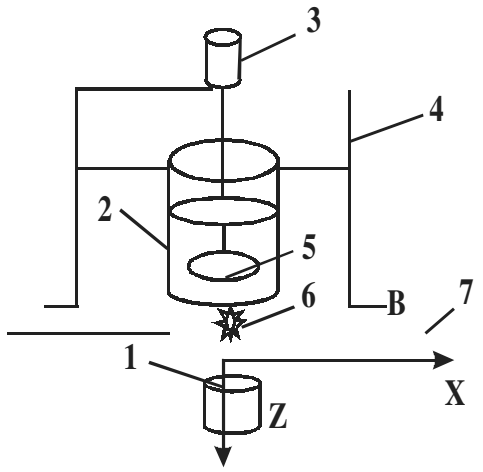

Fig.1

The following devices were used as measurement equipment: semi-conducting detector (SCD-63V) (1), preamplifier (PAG-2K), amplifier (BAI-3K) and analyzer (AMA-02F1). Energy gamma-line of 662 KeV was measured with the resolution 4 KeV. The gamma-quantum source was glued to the detector housing at the distance of 100 mm from its surface; so, any spatial change through coordinate axes was executed together with the detector to avoid even a tiny change of the source-detector geometry.

The vessel with a liquid (2) was placed above the source (6), vortex fluid motion was created by an activator (5), placed on the rod of electric motor (3). The glass with a liquid, connected with the motor and frame (4), was displaced regarding to the center of the revolved activator, what was the reason of the glass vibration in horizontal line, and, hence, one of frame sides vibration in vertical line (v). In its base, the frame was a square with the side of 200 mm. To assign the direction of the space cause-effect relations, one of frame sides was vibrating, and the opposite one (on the X axis) was fixed on the table (7). An experiment was made in such a way, that vibrating parts did not adjoin with the detector. The radius of glass is 50 mm, the distance from central axis up to the vibrating frame part is 100 mm. N-selection of the every value on the diagram (Fig. 2) corresponded to twenty measurements, roots from the average variance of numbers distribution $D \approx 160$ impulses.

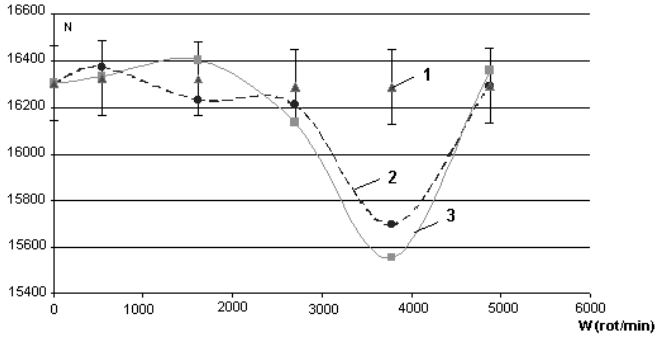

Fig. 2
Dependence of photopeak-N area from the angular velocity of rotation – W, where 1 – is photopeak area at static liquid, 2 – is photopeak area at clockwise rotation, 3 – is photopeak area at anticlockwise rotation

During two months eighteen experiments were made (at the one geometry) of the given effect fluctuation study, and there were no considerable deviation. An effect of the time deceleration always appeared at the angular speed of the activator rotation W=3780 r/min (during the vibration of the whole perimeter of the frame base). If there was a vibration on the only one side of the frame base (on the X axis), then this effect appeared at the higher speed of rotation. Unfortunately, the maximum motor speed of rotation W_{max}=4880 r/min did not let to define the precise position for the next rotation point. During the experimental results extrapolation $W_2 \approx 5930$ r/min ($W_2 \approx \pi W/2$) was obtained.

In the table there are selective middle amplitudes of impulses $-N=\sum N_n/n$ roots from the numbers distribution average variance D, dispersion of the simple average G at the different directions of the liquid rotation (for the rotation point W=3780 r/min). The half period is estimated by the equation (1) and formula $T=T_0+\Delta T$ where T_0=30.2 year (the cezium-137 half-value period).

Liquid motion	N, imp.	D	G	T, year
Static liquid	16304.0	160.7	35.9	30.200
Clockwise	15696.0	162.0	36.2	30.412
Anticlockwise	15553.0	165.0	36.9	30.423

During the investigation of the activator angular speed of rotation dependence on the registered gamma-quantum intension, **there was discovered the time deceleration effect in the fixed point of ambient space of the glass with the liquid.** The effect was versatile, during the further study of the reasons of the effect disappearance, the following regularities were found:

1. Intension change appeared only at the case of asymmetrically fixed glass, when there appeared horizontal oscillations, transmitted to the vertical oscillations of the frame;

2. An effect disappeared, if the gamma-quantum source was placed in the glass center (~ 2 ÷ 3 mm down from the glass bottom);

3. At the same speed of rotation but without liquid, with an eccentric activator, the time deceleration effect disappeared.

Will consider the system with liquid, its internal chain consisted of three cause-effect relations:

1. Activator-liquid;
2. Liquid-glass (frame);
3. Frame-table.

Glass oscillations were transmitted to the frame through the hard cohesion. There was only one cause-effect relation – an activator (a frame) – a table. Thus, amplitude of the time flow changing was, most likely, influenced on by the amount of cause-effect relation, and also, there was observed a quantum effect, dependent on the activator and liquid rotation frequency.

The time deceleration maximum amplitude appeared during the source displacement from the central axis of glass along the X coordinate to the distance ~ 5 mm. There appeared the necessity to check the given effect on space points along the all coordinate axes in the radius R ≈ 100 mm from the central point of the glass bottom (an extreme vibration point along the X axis was placed on this distance).

On this purpose there were made some experiments, results of which are shown on the (Fig. 3), (Fig. 4).

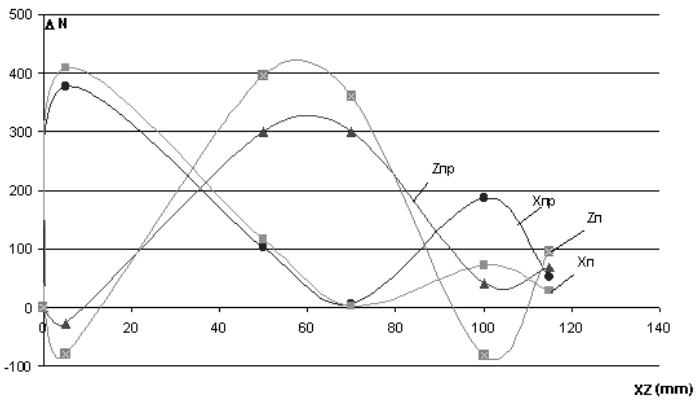

Fig. 3
Dependence of the increase of photopeak -ΔN area from the spatial interval in Cause-Effect Relations by X and Z coordinates, where X_cZ_c – is clockwise rotation, $X_{ac}Z_{ac}$ – is anticlockwise rotation

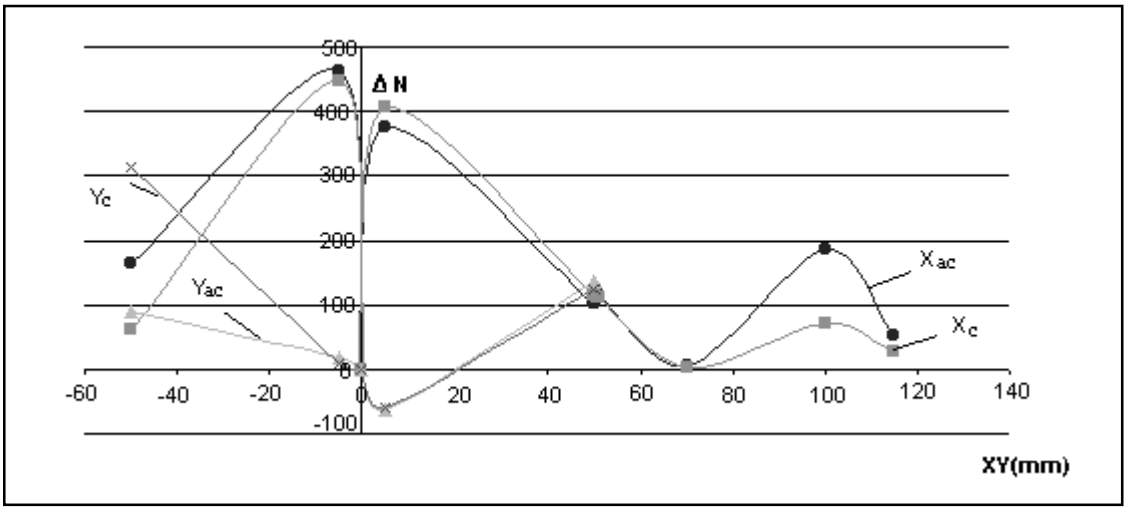

Fig. 4
Dependence of the increase of photopeak -ΔN area from the spatial interval in Cause-Effect Relations by X and Y coordinates, where X_cY_c – is clockwise rotation, $X_{ac}Y_{ac}$ – is anticlockwise rotation

Let us suppose that positive axis Z is directed from the glass bottom center to the ground and axis X – from the central axis of glass to the vibrated part of the frame (North-West), in this case Y is directed to the North-East. Along the all coordinates, in every adjusted space points on the distance R_i from the glass bottom center (R_i = 5; 50; 70; 100; 115 mm), there were forty measurements. At that in every point after ten measurements connected with the rotation there were measurements at the static liquid. It was made to avoid any systematic errors. The amplitude of the sample average impulses at the static liquid - N_0=10550 imp. In this case the root from the dispersion Δ=120, dispersion of the simple average G=19. Amplitude increment was calculated by the formula $\Delta N=|N_0-N|$. Following regularities were found:

1. If considering the difference of impulse amplitude (in the positive coordinate space) in the first cause-effect relation evidence (activator-liquid), i.e., to put the difference between the initial (5 mm) and final (50 mm) points of amplitude registration (their middle evidence between "clockwise" and "anticlockwise") $\Delta N_5^{50}=|N_5-N_{50}|$ into the formula (1), then relations $\Delta T_Z/\Delta T_X=\Delta T_X/\Delta T_Y\approx 1.11$ ($\pi/2\sqrt{2}\approx 1.11$)

2. Change of impulse amplitude difference along X is the antiphase of changes along Z and Y;

3. At the rotation clockwise and anticlockwise there takes place a periodical inversion of amplitudes difference relation;

4. At the liquid rotation clockwise and anticlockwise, there appears an obvious distinction in evidences of the increment ΔN in negative region of coordinate axes;

5. Along Y and Z-axes in points (5; 100 mm) there is observed insignificant time acceleration.

The whole cause-effect relation system was defined as an internal (activator-table), as an external one (ground - system center of gravity). **In the internal space volume time at the certain conditions breaks its own uniformity, at that the time period change is nonlinear and is defined by its quantum nature.** Therefore, standard clocks in causal relations must be considered regarding to the center of gravity and location of the measurement point in the internal system space.

References

1. Shnol S.E., Zenchenko T.A., Zenchenko K.I., PozharskyE.V., Kolombet V.A., Konradov A.A. Regular change of the statistical distributions thin structure as a result of cosmophysical causes. Kushnirenko E.A., Pogozhev I.B. Comment to the article of Shnol S.E. and Co. Progress of physical sciences. Vol. 170, #2, p.213-218, 2000.

2. Kozyrev N.A. Causal or asymmetric mechanics in the linear approximation. Pulkovo, 1958, p. 90.

3. Kozyrev N. A. Astronomic observations by means of time physical properties. Symposium transactions, Erevan, 1977, p. 209-227.

4. Kozyrev N.A. About possibility of bodies mass and weight under the influence of time active properties. Eganova I.A. Analytical survey of modern time-keeping ideas and experiments. Novosibirsk, 1984, p. 92-98.

5. Melnik I.A. Experimental researches of the time flow local deceleration. VINITI 5.02.92, N1032-mg92, #4, p.70.

TILLEY ELECTRIC VEHICLE

Tilley Foundation, Inc.
131 Hiwassee Road
Lebanon, TN 37087, USA
615-443-5315
E-mail: cktilley@bellsouth.net

Nowadays there stays urgent the development of technologies, which could possibly be combined into a reliable, commercially successful advanced self powered vehicle with additional desirable but currently commercially unavailable features.

The advantages of electric vehicles seem to be evident – they are clean, quiet, powerful, require much less maintenance than gasoline or diesel-fueled vehicles, and are inherently much simpler and easier to manufacture. Their drawbacks have been a short range, long battery recharging time, and a heavy, bulky battery pack.

After several years of personal accomplishments in the alternative energy industry, **Carl B. Tilley, the inventor from USA,** was convinced that it was possible to build an electric car that could be powered without the help of external power to keep the battery charged.

The concept to produce a useful electric performance car that would last more than a few hours and would be economical to run, safe to drive around town or across the United States and never use a drop of fuel challenges the future of transportation as we know it today.

With the establishment of the **Tilley Foundation, Inc.**, in the year 2001, Carl Tilley set out to prove it could be done. It was an ambitious project and it broke ground on the facility in Tennessee that would build the first self-generating electric car.

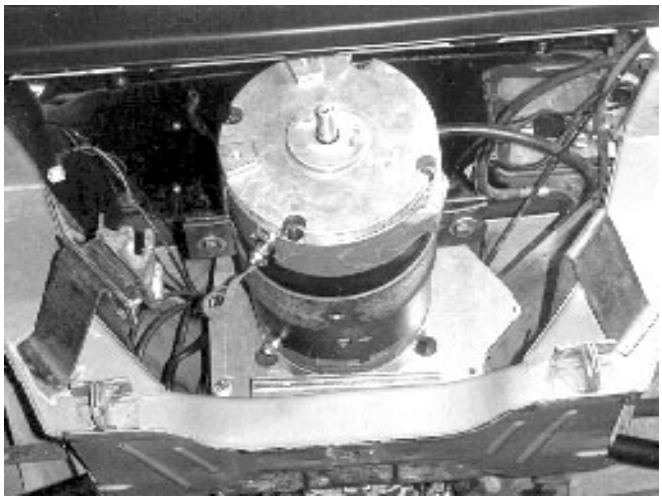

Construction of a 1,800 square foot building, that was powered with another recently developed electric device, began in the year 2002. Electricity for this car is provided from a different energy invention, which was void of any outside power supply. It is ironic that one alternative energy device actually built the invention to power and build the electric car.

The **Tilley Electric Vehicle** (**TEV**), converted from a 1981 DeLorean, energizes the imagination and defies what has been accepted as a standard in the area of transportation for years.

From the selection of the proper car to be converted, to the advanced technology, which is on board, the **TEV** performs comparably to gasoline-powered vehicles.The difference is you have no need for fuel and you do not have to stop the vehicle to charge it after driving. There is no pollution and you can cruise the highways at the same speed as any other vehicle.

There is a new car on the road today. A car built with technology that defies the concept of fossil fuel powered cars, and can run coast to coast without ever relying on the battery being charged from an outside source.

The long awaited transportation revolution and the end of our reliance on fossil fuel has now begun **....the Tilley Electric Vehicle.**

The demonstration of a DeLorean powered by an electric motor and 12-volt standard car batteries is supposed to be on September 7, 2002, at the Nashville Superspeedway, USA. The battery bank is kept in a charged condition by the "on board" charger which is the device invented by Carl B. Tilley. Racing legend Bobby Allison is one of the guest drivers for this demonstration.

Details and results of the demonstration read in our next issue

The Problem of Time: Force as the Cause of Change of the Course of Time

Valentin P. Oleinik

Department of General and Theoretical Physics,
National Technical University of Ukraine "Kiev Polytechnic Institute", Prospect Pobedy 37, Kiev, 03056, Ukraine;
e-mail: yuri@arepjev.relc.com
Internet: http://temporology.bio.msu.ru/OLEINIK/oleinik.htm.

Abstract

Material processes occurring in a physical system under the action of a force field necessarily influence the course of time along the trajectory of motion of particle. A general relationship is obtained which relates the course of time on one path section of a particle when moving in a force field to that on the other path section in the same inertial reference frame. According to the results obtained, the force in relativistic mechanics is not only the cause of acceleration of particle relative to an inertial frame of reference, but also the cause of change in the course of time along the particle's trajectory. ***Therein lies the physical content of the dynamical principle underlying the special theory of relativity (relativistic mechanics).*** *The applications of the theory developed to homogeneous fields - to the field of gravity and electromagnetic field, and to the gravitational field produced by a point mass particle are considered. Physical properties of the state of imponderability of particle in an external force field are investigated. It is noted that the change in the course of time in a force field is in no way connected with the change in space-time metric and is a direct consequence of the causality principle of relativistic mechanics.* ***The existence of dependence of the course of time on the state of motion of particle in a force field points to the feasibility of controlling the course of time using force fields.***

Time is among the most common concepts, which are used constantly both in everyday life and in science. This is because all the events and material processes in the world happen in space and develop in time and, hence, the laws that govern space-time connections are the most general and hold for all the forms of matter. Nevertheless, time remains one of the most mysterious concepts of physics; its physical essence is not adequately revealed up till now [1-4]. The concept of time with difficulty yields to logical analysis.

From the point of view of common sense the essence of time is that time characterizes the duration of events and processes, indicates their natural sequence, at which the present, going away to the past, gives place to the future.

Isaac Newton gave a clear-cut characteristic of the concept of time, to which the majority of physicists adheres: "The absolute, true, and mathematical time in itself and by virtue of its nature flows uniformly and regardless to any other object". Though, according to Newton, time flows equally and uniformly and does not depend on the processes, occurring in the world, the daily experience speaks in favour of the fact that the course of time is not uniform. Depending on circumstances in our history, it seems to us that time either flies swiftly or hangs heavy on our hands; sometimes it even changes suddenly, by leaps. In connection with these speculations the question arises of whether the subjective sensations of non-uniformity in the course of time familiar to everyone have an objective basis.

In Newtonian mechanics time is of an absolute character, it does not change as one passes from one inertial reference frame to another and represents merely a parameter, whose change at the will of explorer results in the change of state of a mechanical system in accordance with the equation of motion.

In relativistic mechanics time remains a parameter describing the development of system. But now time and space are intimately linked with each other to form a single system, i.e. the 4-dimensional space-time. In going from one inertial frame of reference to another time gets entangled with spatial coordinates, so that time in one reference frame represents a "mixture" of time and coordinates in the other. Time ceases to be universal, the same in all inertial reference frames; it takes on a relative character.

The indissoluble association of time and space takes on special importance in the light of the concept of physical field, which was called by Einstein the most important discovery in physics after Newton. According to this concept, the occurrence in space of a force field means that space turns into a physical environment, which is capable to interact directly with other bodies and gains, thus, physical properties, becoming an active participant of physical processes. In view of the fact that **space and time are indissolubly related to each other, the presence of a force field in some area of space must necessarily result in the appearance of physical properties of time caused by the motion of body in this area.**

Thus, from the synthesis of the notion of space-time and of the idea of physical field it follows with necessity that **the course of time in a given region of space should depend on physical processes in this region, i.e. time, as well as space, should have physical properties [5-8].**

It should be emphasized that in special theory of relativity (STR) time and spatial coordinates are independent and formally equal in rights quantities, which determine the position of elementary events in space-time. On the other hand, time stands out in relation to spatial coordinates. The special role of time is due, from the viewpoint of geometry, to the

pseudoeuclidity of geometry of the 4-dimensional space. From the physical point of view, it is associated with the dynamical principle (causality principle), according to which the state of motion of a physical system at an instant of time t uniquely defines its behaviour at the next instant of time $t + 0$. The significance of dynamical principle lies in the fact that it relates the temporal evolution of system to the physical processes caused by force fields and in doing so it allows one to determine the course of time in the system, its possible dependence upon the character of physical processes, and not just the sequence of events and their duration.

The idea about the existence of the physical properties of time belongs to N. Kozyrev [9]. By introducing into mechanics an additional parameter taking into account the directivity of the course of time, Kozyrev has formulated causal (asymmetrical) mechanics from which it follows that time has physical properties. According to the results of theoretical and experimental investigations conducted by Kozyrev and his followers [9-13], events can proceed not only in time, but also with the help of time, **information being transmitted not through force fields, but via a temporal channel, and the transfer of information happens instantaneously. The appearance of additional forces, associated with the physical properties of time and capable to fulfill work, testifies that time can serve as a power source.**

In the papers by I. Eganova [12] and M. Lavrent'ev and I. Eganova [13] it is stated the problem of direct experimental research of the physical properties of time to ascertain the relations of a new type between phenomena and to discover new methods to change the state of substance. In [14] O. Jefimenko investigated the dynamical effect of the slowing-down of time.

According to [6-8], the conclusion that physical properties of time exist follows strictly from relativistic mechanics, without introducing any additional hypotheses. The physical properties of time are of purely dynamical nature: their existence results from dynamical principle. **The availability of physical properties of time is manifested in that time has a local inhomogeneity: its course along the trajectory of motion of a point particle in a force field is continuously changed, and this change in the course of time is a result of the action upon the particle of a force field in the inertial reference frame, in which the motion is considered.**

Editor's note: The author gives a detailed consideration of the physical content of the local dynamical inhomogeneity of time. Considering the motion of a classical point particle under the action of a force field in the inertial reference frames, that moves relatively to each other, Valentin P. Oleinik derives 73 equations, that help him to obtain the following conclusion (mathematical details and physical reasoning may be found in
http://temporology.bio.msu.ru/OLEINIK/oleinik.htm*)*

The elucidation of the physical nature of time is one of the most important problems of theoretical physics. The purpose of research on the problem of time is to study the physical properties of time, i.e. to ascertain the possible interrelation between time and material processes. In particular, it is of interest to find out

- whether the flow of time depends upon physical processes and whether the back influence exists (i.e influence of the change of the time course on physical processes);
- what mechanisms of the change of the course of time are available;
- what factors are capable to speed up or to slow down the flow of time.

In papers [5-8] on the basis of Lorentz transformations relating to coordinates of points, lying on the trajectory of motion of particle in a force field, the phenomenon of local dynamical inhomogeneity of time is predicted. The main result consists in the proof that material processes occurring in a physical system under the action of a force field necessarily influence the course of time along the trajectory of motion of particle. The case in point is the change of the course of time along particle's trajectory in one inertial reference frame as compared with that in the other.

In this paper the next step is made: the relationship is obtained which relates the course of time on one path section of a particle when moving in a force field to that on the other path section in the same inertial reference frame. The main idea underlying the approach developed results from the analysis of Lorentz transformations and consists in that **the course of time of a particle moving by inertia, i.e. of a particle being not exposed to force, should be uniform.**

As is well known [17,18], the existence of dependence of the course of time upon the gravitational field potential is predicted with the general theory of relativity (GTR). According to GTR ([17], p.303), time flows differently at the different points of space in one and the same reference frame. Since "gravitational field is nothing more nor less than a change of the space-time metric" ([17], p.313), one can assert, apparently, that the change in the course of time is due, in the view of GTR, to the change of the 4-space metric. It should be emphasized that in the present paper gravitational field is considered as an ordinary force field, and the particle motion is supposed to occur in pseudo-Euclidian space-time. The main formulas of the article, (22) and (25), describe the change in the course of time in an arbitrary force field at different spatial points in one and the same inertial reference frame. As is seen from the results received, the change in the course of time in a force field is in no way connected with the change of space-time metric. It is conditioned by the force field action on particle in inertial reference frame and is a direct consequence of the dynamical principle underlying relativistic mechanics.

It should be emphasized that the existence of dependence of the course of time on the state of motion of particle in a force field points to the feasibility of controlling the course of time using force fields.

Note an important peculiarity of the non-inertial reference frame, in which the imponderability state of a particle is attained: **there is such a space-time region in which the reference frame at hand can be approximately considered as inertial.** In connection with the fact that such reference frames (it is natural to call them **quasiinertial** in contradistinction to the **true inertial** reference frames) are, generally speaking, not equivalent to each other (see previous section), the derivation of a rigorous criterion for inertial reference frame acquires especial significance. The dynamical criteria for defining the inertial and non-inertial states are considered in the papers by B. I. Peschevitsky [19]. The heliocentric reference frame seems to be among the quasiinertial reference frames, being inertial with adequate accuracy only in a restricted region of space (for example, within the limits of our Galaxy) [16].

The author is grateful to Yu.D. Arepjev for his interest to the paper and stimulating discussions.

References

1. Blokhintsev D.I. Space and Time in the Microworld (Nauka, M., 1970) (in Russian).
2. Prigogine I. From Being to Becoming: Time and Complexity in the Physical Sciences (W. H. Freeman & Co., San Francisco, 1980).
3. Prigogine I. and Stengers I. Order Out of Chaos (Bantam Books, New York, 1983).
4. Logunov A.A. Lectures on the Theory of Relativity and Gravitation: Modern Analysis of the Problem (Nauka, M., 1987) (in Russian).
5. Oleinik V.P. The Newest Development of Quantum Electrodynamics: Self-Organizing Electron, Superluminal Signals, Dynamical Inhomogeneity of Time, Physical Vacuum and Nature, 4, 3-17 (2000).
6. Oleinik V.P., Borimsky Ju.C., Arepjev Ju.D. New Ideas in Electrodynamics: Physical Properties of Time. Semiconductor Physics, Quantum Electronics & Optoelectronics, 3, #4, 558-565 (2000). E-print: quant-ph/0010027.
7. Oleinik V.P. Superluminal Signals, Physical Properties of Time, and Principle of Self-Organization, Physics of Consciousness and Life, Cosmology and Astrophysics, 1, 68-76, (2001); Borimsky Yu.C., Oleinik V.P. The Course of Time in Classical and Quantum Systems and Dynamical Principle, Physical Vacuum and Nature, 6, (2001) (in print).
8. Oleinik V.P. The Problem of Electron and Superluminal Signals. (Contemporary Fundamental Physics) (Nova Science Publishers, Inc., Huntington, New York, 2001).
9. Kozyrev N.A. Selected Transactions (Leningrad University Press, Leningrad, 1991) (in Russian).
10. Lavrent'ev M.M., Eganova I.A., Medvedev V.G., Olejnik V.K., and Fominykh S.F. On Scanning of Celestial Sphere by Kozyrev's Sensor, Doklady AN SSSR, 323(4), 649-652 (1992) (in Russian).
11. Akimov A.E., Kovaltchuk G.U., Medvedev B.P., Oleinik V.K., Pugatch A.F. Preliminary Results of As-tronomic Observations of Sky by the Kozyrev Procedure. Academy of Sciences of Ukraine, Central Astronomic Observatory. Preprint CAO-92-5P, 1992, p.16 (in Russian.).
12. Eganova I.A. The World of Events Reality: Instantaneous Action as a Connection of Events through Time, Instantaneous Action-at-a-Distance in Modern Physics (Nova Science Publishers, Inc., New York, 1999).
13. Lavrent'ev M.M. and Eganova I.A. Physical Phenomena Predicted and Revealed by N.A.Kozyrev, in the Light of Adequacy of Space-Time to Physical Reality, Phylosophy of Science, 1(3), 34-43 (1997) (in Russian).
14. Jefimenko O.D. Electromagnetic Retardation and Theory of Relativity (Electret Scientific Company, Star City, 1997).
15. Khaikin S.E. Forces of Inertia and Imponderability (Nauka, M., 1967).
16. Sivukhin D.V. The General Course of Physics. Mechanics (Nauka, M., 1979).
17. Landau L.D. and Lifshits E.M. The Classical Theory of Field (Pergamon Press, Oxford. 1985).
18. Pauli W. Theory of Relativity (Nauka, M., 1983).
19. Peschevitsky B.I. Dynamical Criteria for Inertial and Noninertial States, p.1 and 2. Phylosophy of Science, 1(7), 79-84 (2000); 1(9), 99-109 (2001) (in Russian).

EAGLE-RESEARCH

Energy Solutions since 1984

A Research Organization that Develops & Distributes Practical Energy-Saving Methods & Devices

4 Energy Way, P.O. Box 118
Porthill, Idaho 83853
FAX: 250/492-7480

Technical questions to:
wiseman@eagle-research.com

Raum&Zeit

EhlersVerlag GmbH, Geltinger Str. 14e, 82515 Wolfratshausen
Telefon: 08171/41 84-76, 08171/41 84-66
Internet: http://www.raum-und-zeit.com

Institut für Raum-Energie-Forschung (IREF) i.m. Leonard Euler

Global Scaling Theory
Gravitation theory
Mathematic Biology
Gravitation energetics
Hydrogen-Helium Energetic
Information technologies
Telecommunication technologies
Transport technologies

Time and its Physical Relationships

Andrew Michrowski

President, The Planetary Association for Clean Energy, Inc., 100 Bronson Avenue, # 1001, Ottawa, Ontario K1R 6G8 Canada.
(613) 236-6265; fax: (613) 235-5876
pacenet@canada.com

Time cannot be absolutely defined, and there is no inseparable relation between time and signal velocity.
Albert Einstein [1]

Time does not exist by itself

The phenomenon of time emerges in relationships – as an expression of properties of physical bodies and changes that occur to them.

Time is a factor of energy. Time has to do with the *increase* and *decrease* of energy. For example, as energy is brought down to a "zero level", time is "eliminated", so in a sense, time cannot be "compressed" - only eliminated. In the zero-energy level, electrons occupying this level in unlimited numbers are available through state transitions for the building of matter and the vacuum [2]. So it is the extent and the nature of energy flow that determines the characteristics of time.

How do we know all this?

In his seminal foundations of physics work of the early 1900s, **Sir Edmund T. Whittaker** demonstrated by canonical quantization that there exist physical, time-like and longitudinal photons *in vacuo* [3,4,5]. The 2 scalar potential functions, *F* and *G* which completely characterize an electrodynamic field due to electrons in the ether are:

$$F(x, y, z, t) = \sum \frac{e}{4\pi} \sinh^{-1} \frac{\bar{z}'-z}{\left\{(\bar{x}'-x)^2 + (\bar{y}'-y)^2\right\}^{1/2}}$$

$$G(x, y, z, t) = \sum \frac{e}{4\pi} \tan^{-1} \frac{\bar{y}'-y}{\bar{x}'-x}$$

In these equations, for the fundamental case in which a field is due to any number of electrons moving in any way, we observe that time emerges only through the displacement of energy. Another way of putting it would be that time emerges through change in energy.

These photons have an independent physical existence. Whittaker himself observed, after computation that the "total disturbance at any point, due to this system of waves, is independent of the time, and is everywhere proportional to the gravitational potential due to the particle at the point" [6]. **A. D. Sakarov** admitted that the gravitational field is a "conglomerate of loose things and not a fundamental field of nature at all [7].

Everything electromagnetic, and probably gravitational, starts from these potentials, not fields, and under certain circumstances, there may exist photons without fields being present at all. In the *vacuo*, the longitudinal light photon travels in the direction of the beam, like an energy capsule, as a scalar four-potential-function energy standing-wave field, with many different frequencies, with an internal symmetry based on circular polarization [8,9], an energy field or nexus that "has an end, but no beginning". The time-like and space-like parts of the four potential are photons with spin –1, 0 and +1 that are longitudinally directed, and which are observed in the ***Compton*** and the photoelectric effect [10].

Movement of light affects time

Philip S. Callahan designed an elegant experiment that shows how variations in the movement of light affect time [11]. Changes in exposure settings of photographs of same objects, including coherent light laser spots results in shift of position of images. The more coherent the light, the less apparent is a shift in time. He suggested that time is neither absolute nor independent of photon activity of space.

We can also state, as a corollary, that the *movement* of light generates time. After all, the electrodynamics is associated with photons. This is particularly significant in time engineering, as will be seen later.

Time and life

Now, it is well known that the ability of cells to sense the presence of light is a primary function of life itself. If a cell can sense light, it is alive; if it cannot, it is dead [12]. Callahan was able to observe that time increments were detected on light-detecting surfaces of living organisms such as the cuticles of leaves.

The Russian time researcher, **Nikolay A. Kozyrev** considered that living systems "consume" time for their life-energy [13]. **Velimir Abramovich** suggests that living organisms are naturally-driven "time machines". They each have an inbuilt time that serves as a "code" to structure their own physical totality and to regulate their own functioning. Thus their "local time" acts as a "time operator" ("time condition") frequency [14]. The nature and level of electromagnetic fields in living systems could therefore be considered as indicators of their "energy level" and how it affects and adjusts the inherent rate of time-flow.

Time and consciousness

We append to these statements the notion that, yes, time is "consumed" by living organisms – but only if they are conscious. Essentially, time can be perceived by measurement, which always requires a conscious observer.

When we measure, we observe the differentials of energy flow. It is the measurement of these differentials - as we note from the Whittaker equations of scalar fluxes - that allows us to the measure the equivalence of time. When we measure differentials, we are effectively creating our notion of time.

It is difficult for humans to conceive that time does not exist when humans think about it. **Saint Augustine** speaks for all humans with his observation:

While I do not think about time, I know that time exists. When I begin to think about it, I stop understanding what it is.

With such conditioning, humans cannot come to grips with the notion that the Universe has no beginning and no end. It is like the paradigm of absolute nothingness – people cannot deal with the concept of no time because, effectively, consciousness, like life, consumes time. One could advance the notion that thought itself is time in motion. When we think, we are creating time. Life is movement – and the brain registers energy differentials and their associated fluxes of scalar potentials.

Time and causal mechanics

Since time is the result of movement of energy (and accordingly, light), then time is associated with the cause-effect processes linked to a first position of energy to the next. In other words, time is innate to causal mechanics.

Variations in energy flow, logically, lead to variations in the characteristics of time. They also permit variations in causality.

Conversely, changes in time lead to changes in physical structure [15]. This phenomenon was proven by Kozyrev and has been labelled as the ***Kozyrev effect*** [16]. He demonstrated that changes in the course of time affect the performance of electronic components. Figuratively speaking, a transistor is like a corral in which light behaves in a certain way. By changing the way that light behaves, a transistor becomes valueless.

To create an extra-temporal causality (with linkages to another level/dimension) one must change the light movement. Changing the light patterns means changing the behaviour of a wave, and its concordant photonic reality. By altering the photons, we make them go to another dimension.

Changes in time can effect change in living systems [17]. The engineering of "time-polarized" waves has the promise to target and amplify natural healing procession in living organisms. It is these natural activities that would restore diseased cells to their original and healthy condition [18]. Such time engineering may also include the reversal of the effects of AIDS, smallpox, anthrax, and most bio warfare agents, with treatment times of only a few minutes per week, with no more than 3 treatments required in all. Eventually it may also be possible to reverse the effects of genetic disorders, effect limb regeneration, and cure spinal cord injuries [19].

Engineering causality

Variation in the density of energy determines variation in the "the course of time". By the "speed of course of time" is meant the rate of causal transformation and the input of additional forces into systems (including mechanical tensions). According to Russian scientists [20, 21,22] there are interesting possibilities in deploying engineering for causal mechanics.

In preventive time engineering, one could delay the approach of a known cause and to artificially close the consequence loop, and thereby annulling it from ever achieving an effect. In other words, one can make the effect "happen" before its normal time, disrupting space structure with its related "speed of the course of time". One can also make it "happen" after its expected deadline. This technology could have interesting implication in strategic situations (preventing a extra-planetary body from attaining a collision course).

According to the Russian experience, when the spatial structure is disrupted by time-engineered causal mechanics, the affected region undergoes relative greater entropy (or, less order). The volume of space is forced out to somewhere else, generating torsion fields, much like a balloon will drift away from denser air. A similar phenomenon occurs when the velocity of a mass increases, the force emerges against it, called "inertia" [23]. Now, to increase velocity, the energy of the mass increases. In the case of time, as the movement of energy increases, interaction or reaction with another dimension ensues to compensate for that primary change [24].

The boundary layer between the two states of space can then act as a mirror and the approaching agent may be reflected back to its source. For example, a light beam may be reflected back to its emitter, in full, or in part, depending on the engineering.

With space-time engineering, we could develop teleportation systems [25]. The course of time goes from the past to the future, in the direction of greater disorder. Going back to the past represents deceleration. The etheric continuum is perceived by Kozyrev is containing variations of "density" of structural elements. The "denser" the etheric region, the slower is the course of time. A zone of accelerated time course would be forced out into "rarefied" ether. A zone of slowed time would be forced into denser ether, hence the basis for a teleportation technique.

***In vivo* experiments with a Time Machine**

For over 15 years, a Russian association of scientists has conducted experiments with acceleration and deceleration of time with 4 prototypes of time machines

[26]. Light-heartedly, the units are called "muskrat traps" since the experiments conducted in remote forest were disguised as a high-tech electromagnetic technology for trapping muskrats. The time machine units are spheres ranging in diameters of 30cm, 1 meter and 2.1-meter. The shells are encased with coils designed to produce convergent waves.

Team leader **Vadim A. Chernobrov** describes converging electromagnetic waves as moving from a periphery to a central point. They are observed when a hoop is thrown into the water and inside the hoop the waves converge. If a potential is applied to do work and to initiate the energy differential process, the other reverse direction scalar (the reverse-time energy flow) must react. Thus, compensation of time - in the form of the deceleration or acceleration of the rate of time - can take place [27].

The first trials involved mice, in which most (25 out of 31) died. Eventually, there were successful 2-hours runs of time travel. An experiment with a dog that was clearly frightened also showed no ill effects. This led to experiment with humans, the first being **Ivan Konov** who, on August 26, 2001 decelerated into the past by 3% of planetary time during a half-hour trial. Dozens of others have experienced the phenomenon and report such sensations as: quicker pulse, giddiness, itching skin, body twisting, numbness at extremities and a case of an out-of-body experience. Harmful effects on living systems do not appear to be linked to the change of the rate of time, but rather to the variations of the time rate value among regions of a living organism.

Some individuals reported visual experiences such as "starry sky", "luminous vortices" and colour spots. Individuals observing outside of the time travel machine noted headaches. The most interesting phenomena occurred just before the start-up: significant presence of ozone for several hundreds of meters around the machine, which was located in a forest. Also noted were strange lighting effects in the sky above the apparatus, accompanied by sounds that inexplicably appeared to generated from inside.

Factors affecting the rate of time

The experiments yielded interesting observations: the phenomenon of the rate of change of time varies according to the hour of the day and according to the lunar phase. The rate can be influenced by a variety of external inputs, including mechanical vibration.

The transition into the future differs from than into the past. It is like movement from any point in a tree – where downwards represents past time. There are many paths possible towards the future – upwards, along the branches, but only one towards the past – downwards to the trunk. The return from the past time is possible only if the time traveler does not interfere with occurring events – or the possibility of returning to another branch of the tree. However, a return move from any variant of future time is possible regardless of the behaviour of the traveller.

The Russian time-travel experiments point to a relationship between inertia and time. In changes of rates of time, the region adjacent to the spheres develops a boundary layer effect, appearing as an aura of "white mist". The greater the time differential, the denser is the mist.

A similar phenomenon has been observed, and captured on film, with some experiments conducted by **John Hutchison** involving remote-controlled lifting and disruption of objects [28,29]. It may be that the ***Hutchison effect*** involves causal mechanics.

Time and frequency

Time may be viewed as a process – or "change-of-space" in any direction that does not exist in our dimension [30,31,32]. In physics, new properties are commonly acquired as the result of change in some property: charge, current, induced magnetic field, etc. Here, the new property becomes a new dimension. For the frequency of oscillations, the formula is $f = 3/\lambda$ [l/s], where λ is wavelength in [m]. Here, the velocity of light is equal to 3 (the 10^8 mathematical degree is omitted since it is a question of scale of measurement only).

Therefore, the analogy between our dimension and frequency gives us a new notion, which is curvature ρ: $\rho=3/r$ [l/m] and $f = 3/\lambda$ [l/s]. The 3-dimensional radius is represented by $R=\lambda/\rho= r/3$ [m] and time as a period of oscillation has the relationship: $T = \lambda/f$ [s]. **Time can be considered to be equivalent to the radius of curvature ρ if the linear radius r and the wavelength λ are the same. This is a condition for the spatial resonance effect.** Note that in this analysis, *"m"* and *"s"* are unlike when length is measured in meters in our dimension. However, for a new dimension it is possible to use equal units for (m) of 4th dimension and conventional "second". Furthermore, light (photons) is possible in our dimension only as a process in such a spatial resonator.

Experiencing time dilation

Based on the above discussion, it is proposed that we experience changes in rate of time in our daily life. During sleep, as our energy level decreases, so it can be argued that time decreases and we "go" into another dimension. Aspects of what is observed during the dream-state do not obey the rules of our familiarity of physical existence, and conventional causality - because the rate of time is different. As we start our dreaming, and as we emerge from dreaming, the recalled experiences resemble more our regular experiences. Before and after sleep, our brain frequency tends to resemble the daytime's. In effect, understanding our dream state's sense of time may be a reference key to comprehending the physics and causality mechanics of time engineering.

Time and planetary gravity

The Earth's mass appears to be in continual growth. 250 to 350 million years ago, our globe may have been half size - with all of the continents as one landmass [33]. In ancient sediments, the natural angles of slope in sand beaches greatly exceeded those of today, indicating that gravity has on our planetary surface has increased 8-fold, several times, during the last 1.5 billion years. Yet the planet's average density may not have changed – only the acceleration of free fall [34,35].

There could also be another explanation possible for the change of slope of beaches. The pull of the moon may have been different in the past.

Also, the planetary magnetic fields could have increased over the millions of years, through interactions with the solar flux of hydrogen atoms. The sun is in constant explosion – production of energy differential. Earth and other planets could be responding with harmonics to compensate for the solar activity, leading to an overall increase in magnetic fields. Such a phenomenon may give the illusion that the physical body is growing larger. In other words, with time, the force of gravity would alter planetary mass and energy.

Assuming that the Earth's density has not increased, it is possible account for, mathematically, the relative increase – growth processes - of the nuclei of terrestrial atoms, including the doubling of mass of nucleons and of electrons [36]. Such calculation also accounts for the emission of 2 different photons by hydrogen atoms (also known as the "red shift" described by **E. Hubble**).

The phenomenon can be explained with the time-like and longitudinal photons described by the bi-directional 2 scalar potential functions [37,38]. Could it be suggested that matter is gravity minus time? In other words, gravity is related to accumulation of energy differential (time) in mass.

The value of gravity varies throughout the planet, in part because of the poles and in part due to local density of matter. **Kirill P. Butusov** has noted a correlation between places of civilization and regions of greater gravity. A faster rate of evolution may be associated with such gravity zones. In these zones there would be a greater influx of scalar potentials. Time would be more "authenticated" by these energy flows into conscious beings. Butusov reminds us that time has a "positive energy" and flowing into nuclei of atoms or a "negative energy" flowing out of the nuclei of atoms [39].

The outflow would be representative of gravitational energy. Longitudinal waves are known to be able to enter and to leave nuclei. Such flows of time must come from other dimensions. After all, the surface of any elementary particle separates our dimension from another. This leads to an interesting possibility in which all time-associated processes between dimensions are synchronized.

Time reconsidered

Arguments have been laid that suggest that time is equal to energy differential (including movement of light). Living systems "consume" time as part of their consciousness and measuring processes.

It is possible to engineer causality. An understanding of higher-order electrodynamics is required. Techniques exist for the generation of scalar potentials. Causality technology has many applications. They include: therapeutics, energy generation, consciousness technology, inter-dimensionality, defence systems, teleportation, and of course, "time travel".

Appreciation is expressed for guidance in this discussion by Thomas E. Bearden and Bernard de Montréal.

References

1. Einstein, Albert. How I created the theory of relativity. [Translation by Yoshimara A. Ono.] /Physics Today. Volume 35 (8), August, 1982. p. 45-7. [Lecture given by Einstein in Japan, on learning of his Nobel Prize.]
2. Phipps, Jr. Thomas E. Heretical Verities: mathematical themes in physical description. /Classic Non-Fiction Library, Urbana, 1986. p. 397-405
3. Whittaker, Edmund T. On the partial differential equations of mathematical physics. /Mathematische Annalen. Volume 57, 1903. p. 333-355.
4. Whittaker, Edmund T. On an expression of the electromagnetic field due to electrons by means of two scalar potential functions./ Proceedings of the London Mathematical Society. Volume 1, 1904. p. 362-372.
5. Whittaker, Edmund T. A history of the theories of aether and electricity. Volume 1 and 2. London: Thomas Nelson & Sons, 1953.
6. Whittaker, Edmund T. On the partial differential equations of mathematical physics. /Mathematische Annalen. Volume 57, 1903. p. 354.
7. Sakarov, A. D., Vacuum fluctuations in curved space and the theory of gravitation. /Soviet Physics Doklady. Vol. 12, 1968. p. 1040-1. [English translation.] Original in: Doklady Akad. Nauk. USSR, Vol. 177, 1967. p. 70-1.
8. Evans, Myron W., Physica B. Volume 182, 1992. p. 227
9. Evans, Myron W., and S. Kielich (editors). Modern nonlinear optics. [Special topical issue of Ilya Prigogine and Stuart A. Rice: Advances in Chemical Physics. Wiley, New York 1992, 1993, 1997, and 2001] Volume 85 (2).
10. Institute for Advanced Study (Budapest). On Whittaker's F and G fluxes, Part III: the existence of physical longitudinal and time-like photons. // Higher symmetry electrodynamics: a collection of AIAS papers. [Special Issue. Journal of New Energy.] 2000. p. 7-1 – 7-5.
11. Callahan, Philip S. and Kevin. Sinewaves of spacetime. / Newsletter of the Planetary Association for Clean Energy. Volume 9(2&3), April 1997. p. 8-9.
12. Jibu, et al. Evanesecent (tunnelling) photon and cellular "vision". /Biosystems. Vol. 43, 1997. p. 65-73.
13. Kozyrev, Nikolay. A. Selected works. University of St. Petersburg. 1991. [In Russian]. Also: On the way to understanding the time phenomenon: Construction of time. A. P. Levich, editor. World Scientific Press. 1995.
14. Abramovich, Velimir. Experimenting with Time. /New Energy Technologies. Volume 3, November-December, 2001. p. 13-5
15. Frolov, Alexander V. Practical application of time rate control (TRC) theory. /New Energy Technologies. Volume 3, November-December, 2001. p. 15-18.
16. Kozyrev, Nikolay A. The possibility of experimental study of the properties of time. /National Technical Service, US

Department of Commerce, Springfield, Virginia. (JPRS 45238). [Undated.]
17. Bearden, Thomas E. Renaissance healing, a concept whose time has come. /Proceedings of the United States Psychotronics Association. Volume 9, 2000. p. 1-2.
18. Bearden, Thomas E. Vacuum engines and Prioré's methodology: the true science of energy-medicine. I and II, /Explore! For the Professional. Volumes 6 (1), and (2) 1995.
19. Bearden, Thomas E. Private communication. February 2002.
20. Frolov, Alexander V. Practical application of time rate control (TRC) theory. /New Energy Technologies. Volume 3, November-December, 2001 p 15-8.
21. Kozyrev, Nikolay. A. Selected works. University of St. Petersburg. 1991. [In Russian]. Also: On the way to understanding the time phenomenon: construction of time. A. P. Levich, editor. World Scientific Press. 1995.
22. Kozyrev, Nikolay A. and V. V. Nasonov. On some properties of time found by means of astronomical observations. / Collection: Problems of research of the universe. Volume IX, M-L, 1980.
23. Puthoff, Harold E. The energetic vacuum: implications for energy research. /Speculation in science and technology. Volume 13 (3). p. 247.
24. Frolov, Alexander V. Trilateral spacetime effect. / Newsletter of the Planetary Association for Clean Energy. Volume 9(2&3), April 1997. p. 10-13.
25. Frolov, Alexander V. Practical application of time rate control (TRC) theory. /New Energy Technologies. Volume 3, November-December, 2001 p 15-8.
26. Chernobrov, Vadim. Experiments with a man in the Time Machine. /New Energy Technologies. Volume 3, November-December, 2001 p. 6-8.
27. Frolov, Alexander V. Trilateral spacetime effect. / Newsletter of the Planetary Association for Clean Energy. Volume 9(2&3), April 1997. p. 10-13.
28. Calante, Pelayo and Andrew Michrowski (compilers). The Hutchison File. The Planetary Association for Clean Energy, 1996. p. 16-7.
29. Hathaway, George D. The Hutchison effect – a lift and disruption system. /New Energy Technology. The Planetary Association for Clean Energy, 1990. p. 77-103.
30. Frolov, Alexander V. Trilateral spacetime effect. / Newsletter of the Planetary Association for Clean Energy. Volume 9(2&3), April 1997. p. 10-13.
31. Ouspensky, Pavel D. A new model of the universe. New York, 1971.
32. Frolov, Alexander V. The application of potential energy for the creation of power./ New Energy News. Volume 2(1), May, 1994.
33. Kirilov, I. V. Increase in volume of rocks is one of the reasons of tectonic deformations. /Academy of Science of the USSR Geologist. Volume 1, 1963.
34. Smirnov, L. S. and Ju. N. Lubina. On the possibility of studying the change in gravity together with geological time. /Reports of the USSR Academy of Science. Volume 187, Number 4. 1964.
35. Maxlow, James. Earth expansion – the definitive proof. / Nexus. Volume 8 (3), May 2001. p. 47-51.
36. Butusov, Kirill P. Time is a physical substance. /New Energy Technologies. Volume 3, November-December, 2001. p. 8-13.
37. Bjerknes, K. A. Vorlesungen ueber hydrodinamische fernkraefte. Leipzig, 1900-2.
38. Yarkovsky, I. O. Universal gravitation as a result of formation of ponderable matter inside heavenly bodies. Moscow, 1889.
39. Butusov, Kirill P. Time is a physical substance. /New Energy Technologies. Volume 3, November-December, 2001. p. 8-13.

New Energy Technologies

PRINT EDITION ADVERTIZING RATES

Full Page Ad

B/W - $400

Color - $800

Half Page Ad

B/W - $200
Color - $400

Quarter Page Ad

B/W -$100
Color- $200

Ask about discounts for multiple ads

New Energy Technologies is distributed to scientific laboratories in 20 countries around the world.

To advertise contact us:
Faraday Labs Ltd, Phone/fax 7-812-3806564,
http://www.faraday.ru, office@faraday.ru

Time as Phenomenon of the Expanding Universe

Michael H. Shulman

7 (095) 357-80-33, 7 (095) 421-11-31
E-mail: shulman@dol.ru

Preface

In 1992 the author of this words, having been stimulated by Kozyrev's book [1], started to reflect on Time meaning and Time and Space asymmetric roles during the Universe Expanding. The development of these ideas has led to the work [2], it is available now (the Russian version only) on the website of the Institute of time nature explorations (grant #00-07-90211 of the Russian fund of basic research).

I would like to thank the Chairman of the Russian Interdisciplinary Temporology Seminar Dr. A. Levich from Moscow State University for his constant support and friendly interest. Also I would like to thank A. Moskowsky for the 20-year discussion of the physics history and philosophy.

The said work [2] pretends to revise radically a number of basic physical concepts of the Space - Time, Motion and Energy nature. It includes a detail analysis and mathematical calculations. Only a brief account of the main part of this work is presented below.

Introduction

The nature of time is not yet enough clear for natural science. In Newton mechanics time was presented as some universal formal parameter. Its value rises steadily at every point of the Universe by unknown for us reason. Each physical process occurs in space in correspondence with the time course.

In the Special Relativity (SR) time and space are integrated to the common 4D-continuum. However, in this theory the time component having imaginary factor seems also to be "exotic". In this concept the increase of time is also implied in each reference frame.

The General Relativity (GR) allowed linking the time properties with gravitational fields and the space geometry. The time currency started to be associated with a spatial expansion of the Universe.

The theoretical physics traditional approach to the process description is based upon the considering of time course as primary (original) one. There are also in the modern physics [3] several attempts to deduce the time concept as secondary one from different fundamental (microscopic) concepts.

However, the third way (inverse to the first one) is possible and forms the basis of this paper. A starting point of this way is the following question: "Does any universal process exist which could *generate* physical time?"

(Editor's note: The same question was formulated and the answer was proposed by Alexander V. Frolov in 1996, report "Matter as process", Scientific congress "New Ideas in Natural Sciences". It was assumed that similar process can be produced by special technical methods also.)

Such fundamental cosmic process really exists and it is well known in the modern science. **It presents the Universe expansion** and was opened at the first third of the 20th Century by the American astrophysicist E. Hubble and others [4]. It means the general increase of distances between all 3D-bodies. The same scattering of two-dimensional-figures happens on the surface of some spherical balloon during air incoming. The centre of this sphere does not belong to the surface; all points of the sphere (the Universe) are equivalent.

Some time earlier the theoretical physics had come to the same results. As it is well known, the Einstein's GR was published in the 1916. After that Friedmann (1922) proposed the concept of the expanding Universe. For example, in the book [5] a description of the basic cosmic model is given. Hereinafter this model is called "Einstein-Friedman model", or "EF-model". In this model the Universe is presented as 3D- hyper surface of a 4D- sphere with increasing radius. Of course, the curvature of the 3D-hyper surface increases with time too.

Basic hypothesis relative to time nature

Some simple and pictorial views consist a basis of the new concept. Hereinafter it is called briefly as "The Spherical Expanding Universe Theory (SEUT)".

In the SEUT, as well as in the EF-model, in every time the Universe represents the 3D-hyper surface of a 4D-sphere. However, there is one very important difference. In the Einstein's theory the spatial components of the metric tensor are opposite in sign to the time's one. For example, we may consider time as imaginary quantity, then spatial coordinate as a real one. On the contrary, in the SEUT the 4D-continuum is considered as purely

Euclidean, all the four coordinates are real quantities. The usual spherical geometry can be used on a surface of the 4D-sphere.

As it is well known, in the GR the Age of the Universe can be *calculated* using the EF-model or a similar one. Usually, the radius-age dependence is not a direct proportionality in such GR models. However this result may be deduced if to neglect the global pressure of matter that fills the Universe. In [2] it is demonstrated, that an account of the static pressure of matter follows to the Universe radius linear dependence on its age (see below).

On the contrary, in the SEUT the time universal course is *manifested*. The Universe age is *identified* with a current Universe radius divided by the velocity of light. Numerous important consequences may be deduced from this statement. On the other hand, it allows avoiding many other arbitrary postulates in the model.

Mechanical motion and maximum velocity in the SEUT

The SEUT states, there is no unlimited set of independent mechanical motions. Only world lines of moving bodies exist. Each of them has some inclination relative to the time line, which presents a normal to the hypersurface of the 4D-sphere. It is *an inclination angle that defines the spatial motion velocity*. At the increase of sphere radius the intersection point of word line and current hypersurface "moves" with exact correspondance with a modern physics prediction.

In particular, immovable objects (stars) have zero inclination, their world line are normal to the hypersurface. Hence they "scatter" according to the Hubble law, their mutual velocity is proportional to mutual distance. If a body world line has some inclination relative to normal, the angle is more than zero. But it can't exceed 90°, therefore *maximum* mechanical motion *velocity* appears *naturally*, it is equal to the velocity of light.

Let us consider three variants of motion (see Fig.1).

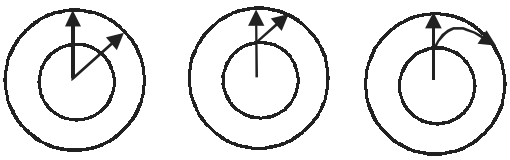

Fig. 1
Phenomenon of a "motion" of point on a sphere surface for immovable (at the left), uniformly moving (at the centre) and non-uniformly moving (at the right)

The left picture illustrates the Hubble effect. The right picture presents a general case of motion with acceleration. The central picture corresponds with an inertial motion; its world line is direct. In this case the moving body displacement increases proportionally to the Universe radius increment. So, *inertial* motion is not postulated in the SEUT, it appears as natural model consequence.

At a large 4-sphere radius values all the relationships of SR and usual mechanics laws are applicable approximately in the SEUT. A Special Relativity light cone transforms to all the hyper surface of the 4D-sphere. But the analogy is not complete, because an absolute remote SR area degenerates to this 3D- hyper surface in the SEUT (see Fig. 2).

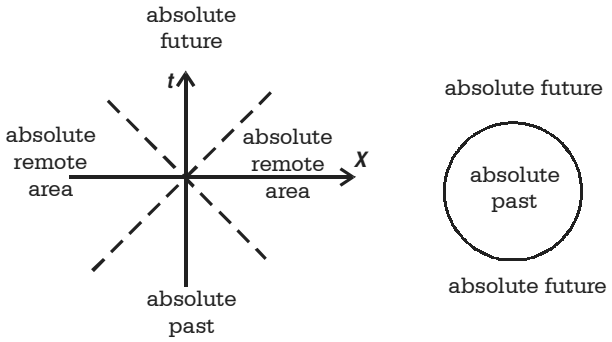

Fig. 2.
4D- continuum areas in the SR (at the left) and in the SEUT (at the right)

SEUT and Minkowski geometry

Let us consider small increments of time and space coordinates along body world lines during the Universe expanding. It is enough to consider a small area of the Universe, so we can neglect its curvature. Then it is acceptably to replace approximately concentric hyper surfaces ("isochrones") by parallel hyper planes. The space-hold corresponds with a representative point "drift" perpendicularly to isochrones, an inertial motion corresponds with displacement along inclined direct lines between isochrones.

At each time the Universe is represented by a certain isochrone that contains all the real spatial points. Let us accept that 4D-sphere radius increment divided by velocity of light presents invariant measure of (absolute) time increment. We will also state that this quantity has the same value in each *inertial* reference frame, i.e. at a motion along each *direct* world line.

Let the angles of world line inclinations from normal direction are enough *small*. Then metric relationships like Minkowski geometry ones appears in our purely Euclidean 4D-continuum. In particular, well known relationship

$$c^2\, ds^2 = c^2\, dt^2 - dr^2$$

can be deduced from the Pythagorean theorem. It connects a spatial component *dr* with a time component *dt* (at moving reference frame) through velocity of light *c*. Here *ds* is an absolute time interval (between two 4D-events at a immovable reference frame). **Hence, if velocities aren't very high, the Lorentz transform is correct in different inertial reference frames.**

On the Einstein's relativity principle

If the world lines inclinations from exact normal direction cannot be accepted as small, then Minkowski geometry relationships are correct approximately only. It means that Einstein's relativity principle is correct (in the SEUT) only for reference frames that move with velocities enough small relative to *selected* reference frame. Such reference frame is linked hardly with a body at (absolute) rest, i.e. drifting along radial world line.

The selected reference frame existing reminds of old ether theories that contradict to the Special Relativitiy views. It seems, these theories became a thing of the past irretrievably. In fact, the velocity of light in vacuum is constant everywhere and everywhen. However, the reference frame existing can be detected in principle as a light signal frequency bias, i.e. with the help of Doppler effect. Well, this phenomenon is really detected by the modern astrophysics!

The temperature diagram of the Cosmic Microwave Background Radiation (CMBR) coming to the Solar system from all the sides of the Universe is presented on Fig.3. The data was registrated during 4 years by the Cosmic Background Explorer (COBE) satellite (NASA Goddard Flight Centre, COBE Science Working Group).

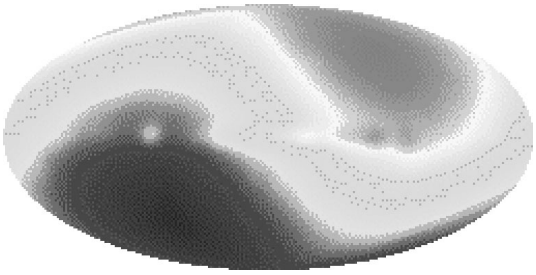

Fig. 3
The anisotropy of the Cosmic Microwave Background Radiation (CMBR)

The well-known Russian scientist J.B. Zeldovitch in the Editorial Addition to [6] in connection with earlier experiments notes that careful measurements **allowed to find out some anisotropy of CMBR.** An antenna oriented to the Lion constellation detects that the radiation temperature is 0.013% more, than mean temperature. The radiation temperature in the opposite direction is 0.013% less, than mean. **Generally, a temperature varies continuously between these two values.** The isotropy presents only for some imaginary observer. ***The Solar system, Earth move to the Lion constellation relative to this observer having velocity 390 ± 60 km/s.*** Hence, as a result of the Doppler effect, a incoming radiation seems to be more hot, and an overtaking radiation seems to be more cold. This example shows that for observer of any point of the Universe this CMBR is isotropic. We may consider this observer and the connected reference frame as selected one. The selected reference frame existence at the Universe every point looks like the physicists commonly held view preceding to Relativity. They thought that the light presented ether oscillations occupying whole the Universe. They thought also that a reference frame connected with ether was preferable, or selected. They tried to detect the Earth motion relative to ether. We know that these experiments gave the negative result: any ether doesn't exist. But the Universe evolution follows that when CMBR is observed (and only in this case!), the selected reference frame (called sometime "new ether") appears. ***The new ether or CMBR just realises the motion according to Hubble's law.***

The modern NASA's data allows to put the relation of the Solar system velocity to the velocity of light equal to 0,15%. It is enough small value justified Special Relativity and Minkowski geometry relationships application. But can we believe this phenomenon to be an exhaustive proof of the SEUT accuracy?

To test it we propose a not complicated observational experiment. If the CMBR anisotropy is due to the real selected frame existence, then it may be detected for any electromagnetic radiation. In particular, an anisotropy of solar radiation has to exist at the different year periods. It has to be detectable in August, when the both solar radiation and CMBR come to the Earth from the Lion costellation side (see Fig. 4). In February these sourses are opposite in disposition relative to the Earth, therefore the solar radiation anisotropy direction has to be opposite. The expected effect value (with account of the Lion constellation straight ascendancy and obliquity of the ecliptic) is approximately equal to 300 km/s, i.e. nearly 0,1% of the velocity of light. In November and May the anysotropy has to be practically absent.

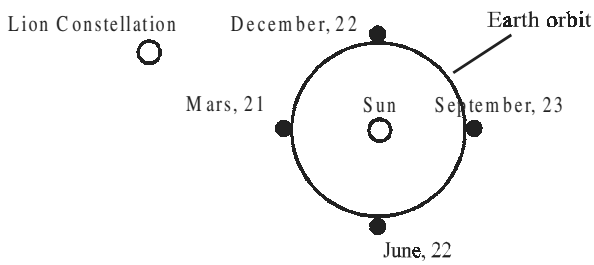

Fig. 4
The Sun and Lion constellation disposition relative to the Earth

Probably, an analogous SEUT test in a laboratry is realizable with help of artificial radiation sources.

Particle mass, energy and impulse

So, we consider the Universe as expanding 3D-hypersurface of a 4D-sphere. Mass localisation places in the Universe present the points of the hypersurface intersection by world lines. So, **these world lines have a real physical meaning, not abstract illustrative** this one. We may expect this physical meaning to be more essential than simple word expression.

Particularly, while the Universe global analysis is making, we may suppose that such fundamental

particle feature as its mass at rest presents some *relative* value. Such relation (some kind of a quantum number) may include, for example, 4D-sphere (the Universe) diameter and some characteristic size like de Broglie wave period that is inversely proportional to the mass. This hypothesis may make clear *inertia* nature as two characteristic times *relation*. It may also explain the *rest-energy* notion.

Meanwhile, the Universe radius increases with time. Well, what happens to mass? If a de Broglie wave period increased proportionally to time, we couldn't generally detect the Universe expansion, including famous "red shift". But if particle wave periods are constant, then *matter mass has to rise proportionally to the Universe age and size*.

In the Relativity (like Minkowski geometry) we use vectors having imaginary projection to time axis and real projections to space ones. Particularly, it is true for velocity, acceleration, and energy-impulse 4-vectors. As against, vectors having all the real components are only used in the SEUT. At that, a 4-interval value (length in pseudo-Euclidean space) of some relativistic vector answers the absolute time axis projection of a corresponding SEUT-vector, and imaginary component of a relativistic vector (time of motion) answers the corresponding vector length in purely Euclidean continuum of the SEUT. For example, the energy-impulse vector module presents such quantity. Its projection to absolute time axis is energy at rest divided by velocity of light, and its projections to spatial axis are impulse components. This quantity is *constant* while the particle movement is *inertial* one.

A jump to *non-inertial* motion in the SEUT is connected with a corresponding state vector *changement* law. So, if particle motion velocity changes, its *energy at rest* doesn't change, therefore full acceleration at a time interval can be calculated using the difference between new and old impulse values. Thus, the non-uniform motion equation in the SEUT can be found like SR as time derivative of an impulse expression.

The force-acceleration relation depends on a mutual orientation of force and velocity vectors in the both SR and SEUT. But in Relativity a reference frame velocity can be choised arbitrary, for example it can be zero, then the relation will be equal to one.

On the contrary, in the SEUT an *absolute* velocity is presented, it is defined by the world line inclination relative to the normal. Let the Earth move with any velocity relative to the immovable (selected) reference frame. Then we will be able to detect the absolute velocity using two measurements, the first one along the world line, and the second one in a perpendicular direction.

If this absolute velocity is really defined by direction and value following from CMBR anisotropy effect, then we can expect a relative difference near $2{,}25 \cdot 10^{-6}$ between longitudinal acceleration and transversal one.

Local gravitational fields of particles

What does the SEUT talk about body gravitational fields? Let us imagine all the bodies as immovable and drifting exactly along the *radial* world lines. If there is a mutual gravity attraction effect between two bodies in such Universe, an observer will detect some curvature of their world lines. They will seem to be bending one to another instead of a radial divergence. In essence, in this case we may replace a world line by a gravitational field line. Then the analogy allows us to identify an Universe isochronous intersection with an equal potential surface that these field lines have to be *normal* to this surface. So, we arrive to a presentation that a Universe isochronous intersection is not strictly concentric hypersurface. It is perturbed by some kind of craters (see Fig.5), that centres correspond with gravitating bodies.

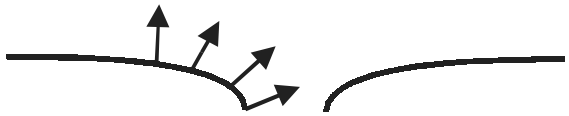

Fig. 5
Local body gravitation field

The inclination angle of a crater profile relative to non-perturbed sphere hypersurface is equal exactly to the inclination angle of a normal relative to strict radial direction. Hence, a local gravitation field intencity measure agrees practically in each point with body velocity measure that we used earlier. It authorizes energy concept using for both mechanical motion and gravitation phenomenon.

SEUT and General Relativity

Let us discuss some GR's aspects. Is it acceptable to neglect pressure of matter? When Einstein searched for his early cosmological static model solution, he had to introduce a cosmic constant in his equation. This constant answered a ***negative matter pressure***, that Einstein could not determine a meaning. In a non-stationary model a solution exists independently on cosmic constant presence, therefore it may be put often as zero. As rule, bodies' velocities may be put as zero too; therefore (*dynamic*) pressure is usually neglected.

However, we insist on necessity to account a *static* pressure of gravitating matter. Really, it can be ignored in the case when Einstein's relativity principle is applicable. Accordingly with it a gravitation field can be *always* replaced by reference accelerated frame. In this case a purely kinematical side is only accounted. However, *not every* field may be considered (even locally) as uniform one (see Fig. 6). Let the radius of a field source (or a *probe particle*) have the same order that the mutual distance. Then the Einstein's equation connecting space geometry with matter physical features seems to be incomplete. More precisely, it is incorrect to put exactly equal to zero a static pressure

in the matter density tensor, it is necessary to introduce its (unknown, calculable) value accounting **the *continuum deformation energy*.**

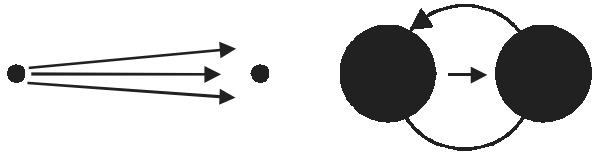

Fig. 6
At the left a locally uniform gravitation field is presented, the right field can't be considered as uniform one even locally

Are the proposed amendments important? Specialists know, that the Metagalaxy gravitation radius is *in fact* comparable with its real size. **In [2] we have showed that the Universe radius was *less* than its gravitation radius.**

It is shown also in the same work [2], that a resulting gravitational pressure in the Universe is *negative* and it is responsible for the Einstein's cosmic constant. This fact seems to be evident because a gravitation force aims to *gripe* any matter accumulation. **But it is possible to conclude it by a non-trivial way.** Let us consider a matter pressure as a reactive force operating within a uniform sphere of incompressible liquid. A pressure dependence on internal density is presented in [7]. We can see [2], **that if the sphere gravitation radius exceeds its geometric radius not more than approximately 1% (or it is still less), then a sudden negative change of the pressure appears at the internal abroad. This phenomenon may be explained as a volume "expansion" due to a metrics perturbation.**

The consideration of static pressure allows not only to find out a *new* (linear in time) cosmologic solution, but also to calculate a dependence of the Universe gravitational pressure on the radius of the Universe. This *negative* value has the representation like that one for a non-relativistic sphere (a star or a planet, for example). Also we would like to note, the formulation of density-Universe radius in the SEUT is exactly the same that the formulation of so-called *critical* density in the EF-model.

Two very important circumstances are clarified for all that. First, the **Universe mass was turned out as *linearly increasing* function of the 4D-sphere radius, and it is not a constant. A famous Einstein's programme is realized unexpectedly in the SEUT: a matter features (density) are reduced to a space features (curvature).** In other words, a necessity to introduce a mass distribution in the equations externally ("by hands") is eliminated in the SEUT. This operation is need in the GR to find out a spatial metrics changement law.

Secondly, the seeming paradoxicality of University mass (and energy!) non-conservation make us to reflect on conditions that the *accomplishment* allows to the energy conservation law correctness (see Fig.7).

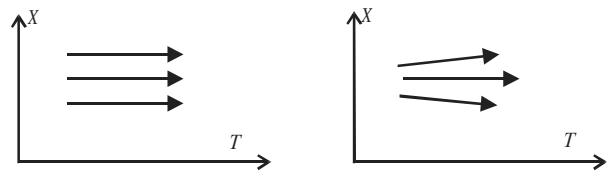

Fig. 7
If space features *do not depend* on time, then the closed system energy is *constant* (at the left). But if space features *evolve* in time, then the isolated system energy *have not to be constant*.

It is evident, we believe, that the energy can be exactly constant only in such physical system (or in whole the Universe) for which space features (in particular, a curvature) are strictly constant in time also. However, the both modern physics and SEUT issue from the opposite concept. Hence, this state can only be accomplished approximately, moderately of a bit of the modern rate of a relative space curvature evolution. This rate has order 10^{-10} per year for the modern Universe.

N.A.Kozyrev [1] basing on astrophysical observations stated the common star radiation origin that has to be due to the time-energy transformation. Accordinly with the SEUT, the relative increment of star mass (and its rest energy) is equal to the Universe age relative increment. It is interesting that the Sun mass relative lost due to the radiation consists in 10^{-15} per year, i.e. five orders less than mentioned above energy increment.

Universe origin and closed geometry

The cosmological EF-model could not say anything on the Universe origin. On the contrary, the work [2] approach allows an obvious way to study the problem.

As it is noted in [7], the metrics of any sphere area having a non-zero density is perturbed relative to Euclidean one, its geometry agrees with 4D-sphere hypersurface geometry. For non-collapsing sphere its gravitation potential relief is like a very small *"pit"* that gravitation radius is much less than its geometric size. However, when the density rises, the metrics perturbs more and more, and the pit transforms to some kind of *"crater"*. The crater is connected with the external surface by a narrow neck. Only this neck or its part is visible for an external observer, and the gravitation insurmountable barrier transmutes an object central area into "a lost world".

From the point of view of the external world, the central area presents a "black hole" absorbing irreversibly all the matter and radiation. On the other hand, for our Universe inhabitant the "navel-string" connecting with the external world has to seem a spherical "white hole", to which a matter and radiation are coming continuously (and, may be, carry out an information on the external world features). There is an old Russian fiction science book called "Sannikov Land", where an internal gigantic

trench concerning central small star is described. Our model seems to be like this picture.

Is it possible that we live in such a black hole? The present hypothesis answers affirmatively this question. The negative sign of the matter pressure due to continuously increasing of our world size allows to such conclusion. And the University self-closing can be physically explained by the way.

On the other hand, as it is shown in [2], in spite of matter average density negligibly small, the Universe gravitation radius is more than its geometrical radius; hence, it presents a black hole. This condition accomplishment agrees the Universe self-closing, the boundary absence in spite of its finite volume. Also, this fact confirms our assumption that the Universe rest energy localisation area does not exceed the gravity operation area.

A specific model of star collapse is created in the modern General Relativity. In general, it can study in *three* different reference frames. As a rule, the "point mass" models are used. *The first* model is linked with an external observer; the *second* one accompanies a matter falling to the black hole. *The third* model presents an internal reference frame, i.e. an observer within collapsing object.

From an external observer's point of view the matter falling time to the black hole is infinitely large. However, in an accompanying reference frame it is finite. Since in the accompanying reference frame time and space coordinates are expressed through the both types of external reference frame coordinates. What is more, in the internal reference frame the time and space coordinates quite trade places, the metrics tensor components are depending on time. Further, any matter point history in this accompanying reference frame starts at the zero moment and finishes after same universal time period in a special (singular) point, after which nothing exists ("time barrier").

As we believe, another lacing between internal and external collapse pictures will be possible, if we consider a non-point collapsing object. Nobody wonders now at a situation, when a time period can be finite in one reference frame and infinite in another one. **Therefore, we can believe, unlimited black hole *collapse* in the external Super-Universe may seem to present unlimited *expansion* of our Universe observing inside.** This expansion seems to *start* from a singular point, and the same point is the history end of all the matter of the external Super-Universe that fall to the black hole. I would like to note especially, it does not mean that internal time pass in opposite to external one. **Rather, it is possible to state, time within a black hole passes ortogonally to external one.**

References

1. Kozyrev N.A. Selected works. - Leningrad University, 1991.
2. Shulman N.H. Site of the Institute of time nature exploration (Russian-language version): www.chronos.msu.ru , Project of Chair-laboratory of time as phenomenon of expansion, 2001.
3. Vladimirov Yu. S. Relational theory of space-time and interactions. Part 2. Theory of physical ineractions. Moscow university, 1998.
4. Sharov A.S., Novikov I.D. A man, who discovered the Univerce explosion. Edvin Hubbl's life and work. Moscow, Science, 1989.
5. Einstein A. The essence of Relativity. Moscow, IL, 1955.
6. Wineberg S. First three minutes. The modern approach to the Univerce origin. Moscow, Energoizdat, 1981.
7. Tholmen R. Relativity, thermodynamics and cosmology. Moscow, Science, 1974.

INFINITE ENERGY
Cold Fusion and New Energy Technology
Including Conventional and Renewable Energy

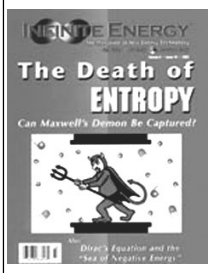

Infinite Energy Magazine
✳ Cold Fusion ✳ New Energy
✳ New Science
✳ New Technology

Subscriptions, 6 Issues Per Year
$29.95 North America
$49.95 Foreign

Single Sample Copy
$5.95 North America, $10.00 Foreign

Infinite Energy Magazine
P.O. Box 2816-FV
Concord, NH 03302-2816
Phone: 603-228-4516 Fax: 603-224-5975
http://www.infinite-energy.com

ELECTRIFYING TIMES

an online and published magazine about Electric, Hybrid, Fuel Cell Vehicles, advanced batteries, ultra capacitors, fuel cells, microturbines, free energy systems, events and exhibitions worldwide

63600 Deschutes Mkt Rd, Bend Oregon, 97701
541-388-1908, fax 541-388-2750
etimes@teleport.com
www.electrifyingtimes.com
Subscription $13/3 issues

Institute for Planetary Synthesis

P.O. Box 128, CH-1211 Geneva 20, Switzerland
Tel. 41-022-733.88.76, Fax 41-022-733.66.49
E-mail: ipsbox@ipsgeneva.com

website: http://www.ipsgeneva.com

The Experiments on Thermo-Gravitation

This review of the article by Alexander P. Schegolev, the scientist from Saint Petersburg, was received by NET editors from our reader vladrim@mail.ru and presents his own view about Schegolev's experiment [1]. The opinion of our editorial board is not fully in agreement with the author's conclusion. Also we have no information who is vladrim@mail.ru.

It is known from the science history that the very experiment gives a push to revising of old knowledge; it also checks the new designs and conclusions. The knowledge of physical theories is based on the experiment; the experiment confirms hypothesizes or refuses them. Making experiments, we ask questions to the nature. And it always answers us on the clear pointed question. However…

Michael Faraday was trying in vain to find out the relationship between gravitation and electricity. These experiments were repeated on the modern level. Further, there was made an attempt to screen gravity force, the influence of environment on gravity was also trying to be researched. Many efforts were spent on finding out of the gravitational radiation falling to the Earth from depths of the Universe, as well as artificial generation of gravitational waves.

The experimental studies of weight change must be under attention. In particular, the attempt to find the differences in weight after sharp turning of body from the quiescent state into the state of rotation around its own axis was undertaken. The experiments of the influence of strong magnetic field and temperature on the weight of a body were made.

But alas! No changes of weight were discovered in previous experiment *(Editorial: Perhaps, the author has no information about sucessful results. We reported about such results in our magazine)*. Analyzing these experiments and theoretical premises, the author of the given article has made an unusual experiment imitating the heat motion in the Earth from core to peripheries. For that experiment there was used the steel ball with 100 mm diameter. The cone hole was made in the ball up to its center. The ball was installed by the hole upwards on laboratory scales with 50 mg scale factor and laser beam was directed inside (into the hole). The directed heat flow outgoing from the center of the ball was created by this way. While the surface temperature increasing, the arrow of scales became to be rejected aside weight decrease. The temperature was measured by the contact thermocouple. After an hour and half, approximately, when the temperature was 300 degrees Celsius the laser was switched off. The difference (the decrease) in weight against initial value (in the cold state) was four grams per 4200 grams of the test body.

Further, the ball was getting cold slowly on the scales and its arrow was creeping to the initial position. For acceleration of this process, the ball was periodically

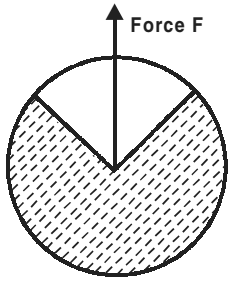

Fig. 1
The ball with cone hollow

blown on by pressure air. It was the check, if the air (heated by the ball) influences on scales or not. The stability of its data independently on actions of pressure air stream excludes such suggestion. When the temperature of the ball became the same with room temperature, its weight return to the value nearly initial. However it is necessary to add, that this "nearly" is about 200 mg. This confirms that the change of the weight was not occurred because of the evaporations of metal from action of laser beam, and we were the witnesses of absolutely unusual phenomenon. *(Editorial: Perhaps, it is necessary to take into account the deformation).*

That is all concerning the question, which was given to nature by the author of the given article. However, one more doubt remains: did the heat radiation (coming from the ball) affect on mechanism of scales? To check this, the control experiment was made, under which the same ball was heated by usual way in the electrical furnace. In spite of its temperature was about 600 degrees Celsius and the ball was placed on scales for a long time (until full cooling down), the arrow did not move from the initial position. Thus, we have really turned out face to face with a phenomenon requiring an explanation.

If the weight change in this experiment has happened in consequence of gravitational interaction, then, therefore we must revise some fundamental concepts. Today it is difficult even to assume the consequences. The only thing, which is possible to say certainly, is **that divergent on radius uni-directional (single-vector) heat flow** is the object for observation, absolutely unknown to us or unnoticed before, which holds the ensemble of surprises. Up to now, we have dealt only with **chaotic** heat motion, which was researched by the thermodynamics and heat transmission.

For analogy, it is possible to give the example **of the electric current arising, which is possible to get only under directed electrons moving.** In general, more than ten experiments were made, and all of them have given the same result: the weight of the body was decreased. Who will solve this enigma?

Editor's note: The question is presented above. The answer is the aetherodynamics theory. Any directed (unidirectional) heat flow is also a flow of aether. The mass changes are the demonstration of natural mechanism of existence of this mass as aether vortex (Alexander V. Frolov).

References

1. Collected reports "Untraditional scientific ideas about nature and its phenomena", #1, club FENID, Gomel, 1991.

The RotoVerter from arkresearch

Editor's: The description of this invention was received from Hector D. Perez Torrez, designer of the "RV" Rotoverter and TV transverter OU "transformation" devices.

Here is the first prototype, used to test a 3PH generator. Light bulb was a 100W 120V, AC generator required 380W for excitation to 120VAC plus the light bulb load for a total of 480W. Input to rotoverter was 240W for a total of 200% efficiency from the prime mover. Friction loss and prime mover loss was not calculated, PF unity, 120VAC unto a purely resistive load excitation pure DC120VDC3.1666667A (380W) + 100W = 480W. - 240W=240 excess.

It is a common 3PH dual winding 230/460V motor wired to 480V run at 120v as a ROTOPHASE converter. That's the beauty of it, OFF the shelve components preferably totally enclosed motors (so fan can be removed) low friction bearings, from 3HP to 7.5HP. Re-rating hp can be from 1/7 to 1/3 the original HP (some motors can run up to 1/2 HP capacity but will require extreme care and cooling.... and exact tuning to load).

System requires starting and running capacitance; the perfect starting capacitance is the one that gives same plate current value as 480V but running at 120V. The best running capacitance is the one that gives the lowest Amperage reading at programmed load. (ALL capacitors are AC 370V OIL "no electrolytic").

Some motors are better than others; also for generator use you must choose the over-unity generator and motor combination to obtain OU. It looks easy to gain it, but requires quite a good choice of items and common sense. In this Research we have found even a few turns or a run weld in stator can change drastically the results. Up to date best performance has being obtained from US (motors 7.5 HP, BALDOR 3,5, HP, GE 3HP totally enclosed, dual winding 230/460V). Higher HP will require professional expertise in industrial electricity and power eng. (not recommended for amateur experimenter). Anyone engaged in this experiments must be familiar with safety procedures and basic electric and mechanic knowledge. Voltages and rotating machinery must be handled with great care. SEE basic diagram and connection.

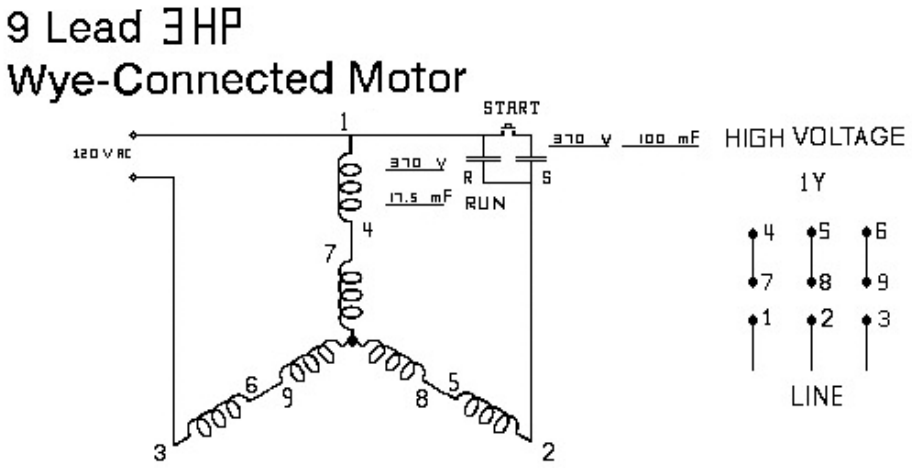

Fig. 1

Latest UPDATE BELOW 7-01-02

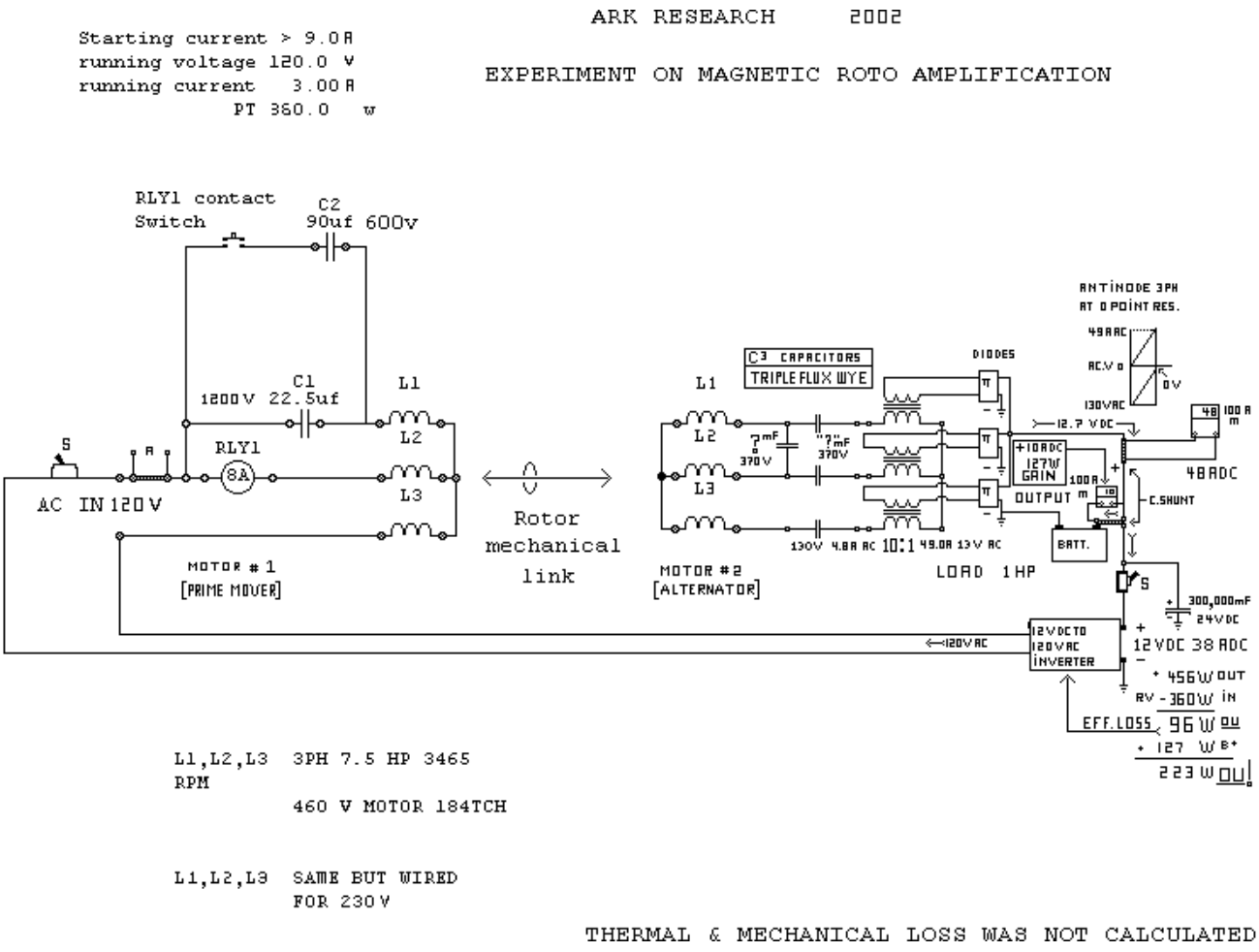

Fig.2

Subject: RV Basic level 1 Full MODEL Disclosure (Public domain)

This is the RV (Level 1) plan of a full looped RV system:

Battery provides primary power for 12VDC to 120VAC. As to run prime mover (Roto-converter), second motor acts as ansquirrel cage self-exited generator, a triple flux-capacitor LC tank tuned to best Standing wave condition as to create standing wave current node internally in battery at 0 voltage to battery "negative resistor". At 0 volts "voltage" a negative current is created as to maintain a reverse flow (charge) to battery exceeding the forward drain of the inverter demand, detuning system with a forward charge at 10 amperes with a voltage rise of approximately 0.83333 V over the battery. Voltage charge produces OU transform from the 0 point standing wave component. System gains energy from stochastic resonance within the LC tank components draining energy from "thermal" signature of the Aether and K thermodynamic-thermoelectric ambient heat (Electron spin). This is a full disclosure of an operational and tested device. System is made of standard off shelve items. Tuning is made by changing capacitor values and the proper selection of standard items for its construction, 3PH motors, 10:1 12V or 5:1 24V transformers with the proper core and winding values (standard) off shelve, diode bridges capacitor (all standard).

Warning: System opens (NON standard) space-time anomaly as time is reversed due to aether energy transform....
Extreme warning: Do not exceed 10KW Nor use of trans-uranic elements near unit as they may reach critical mass by regressive "inversed" decay. PB 206, U235, U238 must be maintained as far as possible from unit.
Extreme Warning: Dangerous Toy, Eldridge, Event horizon and hell raiser effects may be created by protoplasmic fields at extreme potentials PK.
Use wisely. You Can create Paradise or open the gates to Armageddon.

The choice is yours now....

Hector D Perez Torrez

Lifter Project

by Jean-Louis Naudin

http://www.jlnlabs.org

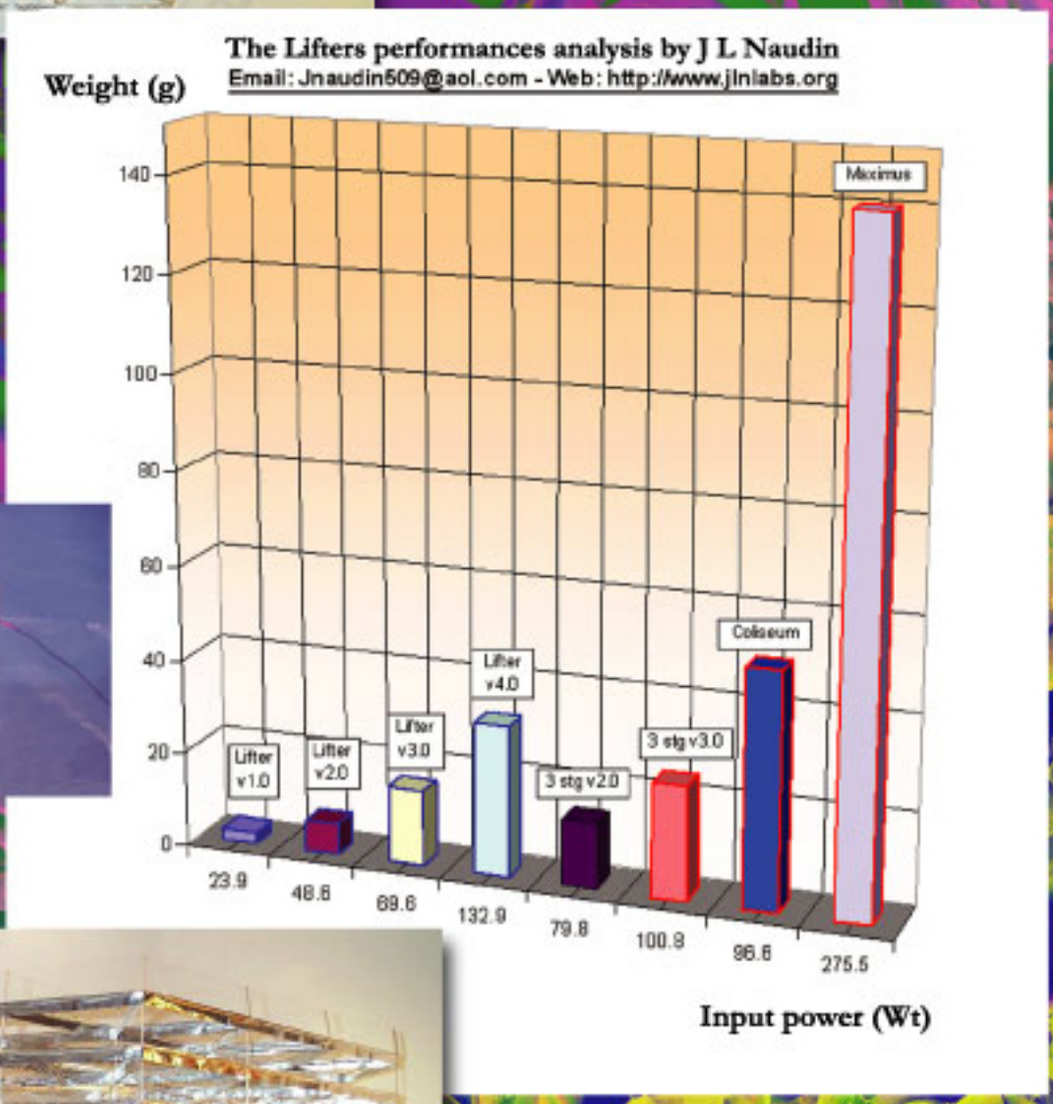

The 1st Worldwide
Electronaut Lifter Project

ISSN 1684-7288

New Energy Technologies

Printed version ISSN 1684-7288
Online version ISSN 1684-9698

Published by Faraday Laboratories Ltd. *Issue #1 (10), 2003*

Research on advanced aerospace systems and new energy sources

Single-Wire Electric Power Transmission 20 kWt!

News from France

Electrostatic propulsion: 60g payload

Also in this issue:

- Cold Fusion by Plasma Electrolysis of Water
- News of Hydrogen Energetics
- Unusual Permanent Magnet Motors
- New Energy and Propulsion Systems

New Energy Technologies magazine
Back issues 2001-2002

Julia V. Sukhova
Translator

Kate M. Pomerantseva
Designer

Olga O. Leontyeva
Editor

Kirill P. Butusov
Scientific Advisor

Alexander V. Frolov
General Director
"Faraday Laboratory" Ltd

Searl Effect Technology

http://www.sisrc.com

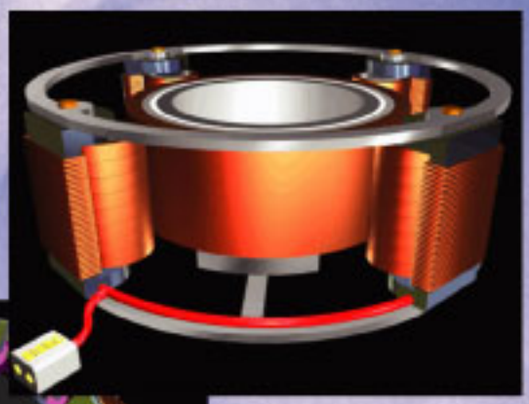

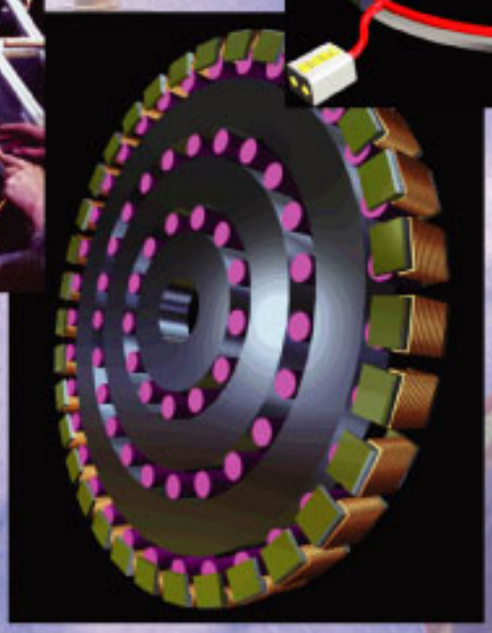

Experimental craft construction (self-rotating permanent magnet system)

15 kWt Searl Effect Generator

LENR Experiments

(Low Energy Nuclear Reactions) "Cold Fusion"

http://www.lenr-canr.org

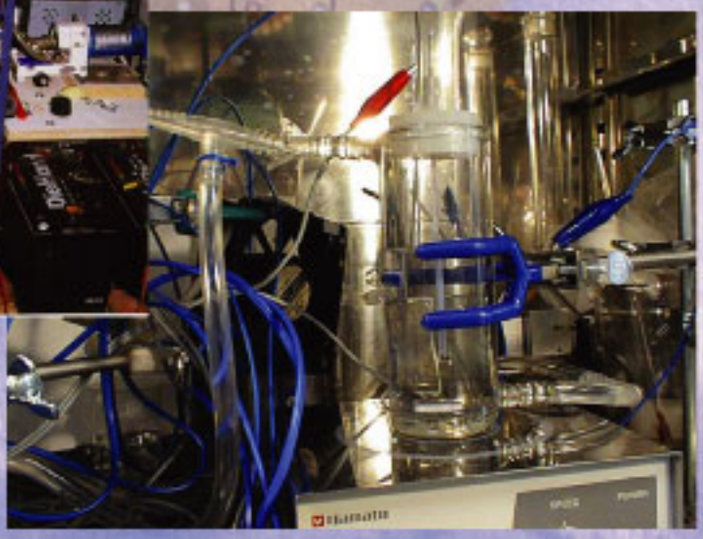

Read in this issue!

NEW ENERGY TECHNOLOGIES #10

1. Testatika. Review of well-known electrostatic system.
2. Cold Fusion by Plasma Electrolysis of Water. Ph.M. Kanarev, T. Mizuno
3. Cold Fusion: What is it and what does it mean to science and society? E. Storms
4. Technical Introduction to LENR-CANR (Low Energy Nuclear Reactions). E. Storms
5. It started in 1989… (History of Cold Fusion Development). P. Hagelstein
6. A Science Tutorial (Cold fusion). T. Chubb
7. LENR (Low Energy Nuclear Reactions) Experiments.
8. On Electrogravitation. A.V. Lemeshko
9. Avalanchedrive Propulsion Device. M.L. Filho
10. Hydrogen-Powered Vehicles. P. Behr, G. Schneider
11. Unusual Permanent Magnet Motors. T. Valone
12. Hydrogen Energetics. A. Pashova
13. On the Longitudinal Electromagnetic Waves. A.V. Frolov
14. Space and Terrestrial Transportation and Energy Technologies. T.C. Loder
15. Commercialising the “Searl Effect”.
16. Interesting Publications of the Last Year.
17. “Lifter” Project
18. New Electric Fire Technology. V.D. Dudyshev
19. New Effect of “Cold” Evaporation. V.D. Dudyshev
20. Conceptual Hurdles to New Millennium Physics. D. Reed
21. Resonant Phenomena Occurring in Alternating Current Circuit. A.V. Frolov
22. Books Review

TESTATIKA

Review of well-known electrostatic system

Editor comments by Alexander V. Frolov
General Director, Faraday Lab Ltd

A running "free energy" machine coming from Switzerland, Europe. It was developed over a 20 years Research period by a religious group called Methernitha. This group lives in Linden, Switzerland. The head engineer of this superb machine, Mr. Paul Baumann discovered its principles while observing nature. He claims its running principle was found by studying the lightning effects from nature. The documents being offered here shed light on this energy marvel.

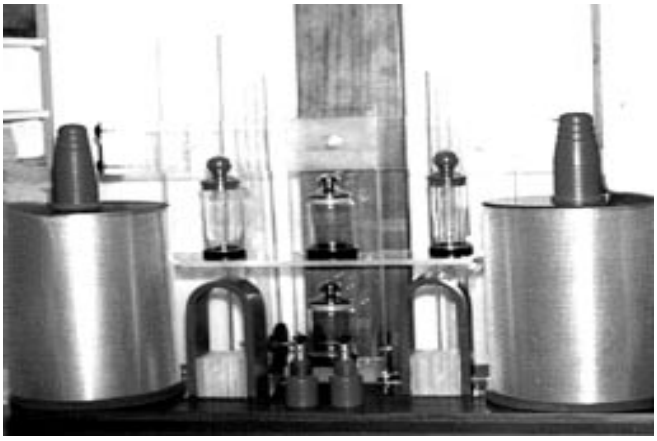

These documents are the result of work of people who have witnessed this wonder machine over the years... And here are the facts:

- The Testatika is a rotary-type machine that runs on it's own, once started by revolving it's two discs by hand!
- The machine not only runs on it's own energy, but produces also a huge amount of excess power, at least 3 KWtt of power! This is almost enough to supply a small house with one machine!
- The machine is about 70cm wide, by 40cm deep and is about 60cm in height!
- It delivers from 250 volts to about 320 volts direct current, depending on the humidity in the air! At this voltage it can supply at least 10 Amperes of pulsating direct current!
- Testatika is not a perpetual motion device, but an energy machine that collects it's huge amount of energy from the ions contained in air. However, there are some technological secrets implemented to overcome the normal drag-resistance of conventional generators. This is but one of it's secrets held by the Methernitha group.

There are many different sized Testatika machines, some of the smaller units deliver only about 200 to 300 watts, none of which are mass-produced. These devices are still laboratory prototype units.

Methernitha is a spiritual community (Christian Alliance) http://www.methernitha.com. They wrote: "We are fortunate in gaining the experience that paradoxically the most beautiful and useful results can be achieved by just using the most simple means. Never did we use any borrowed capital because we want to stay free Swiss citizens and do not want to be hindered or even bound in any way in the pursuance of our aims."

The two contrary-rotating discs generate an electrostatic charge. One disc represents the earth, the other the cloud. Using grid electrodes the charges are bound. After that they are collected by non-contacting so-called antenna keys and then sorted.

After being initially turned on by hand, the discs rotate by themselves according to the electrostatic laws about attraction and repulsion. A rectifying diode keeps the cycles in steady state. Otherwise the impulses of attraction and repulsion would accumulate and cause the discs to run faster and faster. The correct speed is of great importance and for optimal power generation the discs have to run quite steady and slow.

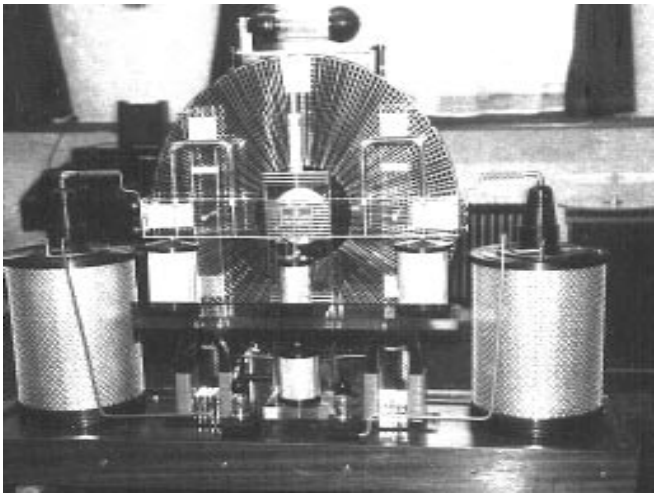

By means of grid condensers the energy is stored and then uniformly discharged, at the same time reducing the high voltage and building up power with additional devices. Finally the machine supplies a uniform direct current, which varies according to the size of the model. The machine furnishes about 3-4 kWt permanent output, depending on humidity, whereby the electric potential ranges from 270 to 320 Volt. High humidity of the atmosphere prevents the build-up of electric potential. The drier the air is, the better.

(Editor: It is necessary to note that the analogues method was used by Russian inventor Pavel N. Yablochkov who in 1877 take out a patent #120684 "The system of distribution and amplification of electrical currents by means of atmosphere electricity..." As it was shown by Yablochkov devices, power doubled in lamps, though current of consumption did not increse.)

No doubt, through the so far achieved results one main objective has been reached, namely to prove that it is possible to use Free Energy. Nevertheless the research work is not yet completed.

To the educated physicist many things of this machine may seem impossible, maybe even crazy. Maybe he is also offended by the conceptions used to explain the whole. Only partly we could use the concepts of conventional physical terminology to explain and define only approximately the functions and properties of the various parts of the machine.

After all it will be necessary to create some more new concepts like the one we have already used before, when we termed the non-contacting collectors of electric charges as antenna keys.

This machine puts experts, which are just trained in conventional physics to a very hard test, because its mode of action is not explainable with the state of the art of officially accepted physical knowledge, or at the most only partially explainable. However also a trained specialist should remain free and independent in his thinking, and should avoid to be limited by the temporal framework of publicly admitted knowledge in any science.

It has to be noted that the established science was already many times forced to change or give up some of its very fundamental concepts. Think about Galilee, to name only one example. Our human society almost condemned this man as a sorcerer and magician, just because he investigated and discovered a truth that seemed unacceptable by the established science of the days.

The book knowledge of any times is not wrong, but it is incomplete, and therefore allows to draw wrong conclusions.

There was used information from the official web site: http://www.methernitha.com

Official adress of Methernitha: Methernitha Genossenschaft Administration, Moosbuehlweg 2, 3517, Linden, SWITZERLAND

Official E-mail of Methernitha: info@methernitha.com

New Energy Technologies

PRINT EDITION ADVERTIZING RATES

Full Page Ad

B/W - $400

Color - $800

Half Page Ad

B/W - $200
Color - $400

Quarter Page Ad

B/W -$100
Color- $200

Ask about discounts for multiple ads

New Energy Technologies is distributed in the leading Scientific Laboratories in Russia and has subscribers in more than 20 countries all over the world

To advertise contact us:
Faraday Labs Ltd, Phone/fax: 7-812-380-3844
http://www.faraday.ru, office@faraday.ru

COLD FUSION BY PLASMA ELECTROLYSIS OF WATER

Ph.M. Kanarev
The Kuban State Agrarian University,
Department of Theoretical Mechanics
13, Kalinin Street, 350044 Krasnodar, Russia
E-mail: kanphil@mail.kuban.ru

Tadahiko Mizuno
Faculty of Engineering, Hokkaido University,
Kita-ku, North 13, West-8 Sapporo 060-8628, Japan

Abstract: It has been disclosed that transmutation of the atomic nuclei of alkaline metals and the atomic nuclei of the cathode material takes place during plasma electrolysis of water.

Key words: atom, nucleus, proton, neutron, electron, cathode, low-current.

INTRODUCTION

Cold nuclear fusion is the first hypothesis of a source of additional energy in heavy water electrolysis. Fleischmann and Pons, the American electrochemists, are the authors of this hypothesis [1]. They reported about it in 1989. Since that time a large number of experiments has been carried out in order to obtain additional energy from water [2], [3], [4], [5], [7], [8], [9], [10], [11], [12]. We continue to discuss this problem.

THE FIRST EXPERIMENTAL PART

In order to check this hypothesis, the following experiments were performed. Two cathodes were made of iron with mass of 18.10 g and 18.15 g. The first cathode operated during 10 hours in KOH solution; the second cathode operated during the same period in NaOH solution. Mass of the first cathode remained unchanged; mass of the second one was reduced by 0.02 g. The voltage by plasmaelectrolysis process was 220 V and the current (0.5-1.0) A (Fig.1). The indices of the consumption of the solution and the gases being generated were as follows (Table 1).

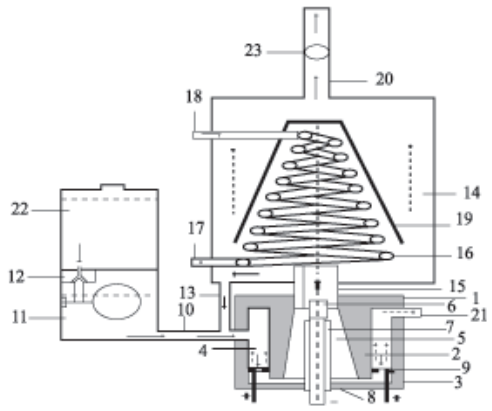

Fig. 1.
Diagram of gas generator. Patent # 2175027:
1 - lid of the reactor; 3 - body of the reactor; 6 - the cathode; 9 - the anode; 11 - solution dosing unit; 16 - cooler; 20 - pipe for gas release; 23 – anemometer

Table 1
Experimental results

Indices	Water consumption, kg	Volume of gases, m^3	Energy expenses, kWh/m^3
KOH	0.272	8.75	0.28
NaOH	0.445	12.66	0.21

In order to increase safety of experimental results, the volume of the gases introduced with the help of anemometer is reduced twofold.

It is known that from one litre of water it is possible to produce 1220 litres of hydrogen and 622 litres of oxygen. Quantity of the gases generated by the plasma electrolytic process is much greater than it is possible to get from consumed water (Table 1) [6]. It gives the reason to think that not only water molecules, but also the nuclei of alkaline metals and the atomic nuclei of the cathode material serve as a source of these gases. The analysing experiment has been performed in order to check this fact.

Tadahiko Mizuno, the famous Japanese scientist (the co-author of this article), who works at the Division of Quantum Energy Engineering Research group of Nuclear System Engineering, laboratory of Nuclear Material System, Faculty of Engineering, Hokkaido University, Japan, kindly agreed to perform chemical analysis of the cathode samples with the help of the nuclear spectroscopy method (EDX). Here are the results of his analysis. The content of chemical elements on the surface of non-operating cathode is as follows (Table 2).

Table 2
Chemical composition of the cathode surface prior its operation in the solution

Element	Fe
%	99.90

The new chemical elements have appeared on the working surface of the cathode, which works in KOH solution (Table 3).

Table 3
Chemical composition of the surface of the cathode, which operates in KOH solution

Element	Si	K	Cr	Fe	Cu
%	0.94	4.50	1.90	93.00	0.45

The chemical composition of the surface of the cathode, which operates in NaOH has proved to be different (Table 4).

Table 4
Chemical composition of the surface of the cathode, which operates in NaOH solution

Element	Al	Si	Cl	K	Ca	Cr	Fe	Cu
%	1.10	0.55	0.20	0.60	0.40	1.60	94.00	0.65

Thus, the hypothesis concerning the participation of the nuclei of alkaline metals and the atomic nuclei of the cathode material in the formation of gases during plasma electrolysis of water has experimental confirmation. Let us carry out the preliminary analysis of the data being obtained (Tables 2, 3, 4).

THE FIRST THEORETICAL PART

In any of these cases, the atoms and the molecules of hydrogen are formed. The part of it is burned and the other goes out with the steam. We have already shown that the processes of fusion of the atoms and the molecules of hydrogen and its isotopes result in occurrence of additional thermal energy [6]. Numerous experiments show that up to 50% of additional thermal energy are generated during the plasma electrolysis of water, it is less than the results of the calculations originating from the existing cold fusion theories [6]. That's why it is necessary to analyse energetics of the particle creation process during the atomic nucleus transmutation.

Having considered the model of the electron we have found out that it can exist in a free state only when it has a definite electromagnetic mass [6]. Being combined with the atomic nucleus it emits a part of energy in the form of the photons, and its electromagnetic mass is reduced. But stability of its condition does not become worse, because the energy carried away by the photons is compensated by binding energy of the electron in the atomic nucleus [6].

If the ambient temperature is increased, the electron begins to absorb the thermal photons and to pass to higher energy levels of the atom reducing binding with it. When the electron becomes free, it interacts with the atom only if the ambient temperature is reduced. As this temperature is reduced, it will emit the photons and sink to lower energy levels [6].

If the electron is in a free state due to an accidental external influence on the atom and the environment has no photons, which are necessary for it to restore its mass, **it begins to absorb the ether from the environment and to restore its constants in such a way**: mass, charge, magnetic moment, spin and radius of rotation. The electron acquires the stable free state only after it has restored its all constants [6].

Thus, if an interchange of the free state and binding state with the atom takes place due to the accidental influences on the atom, **the electron restores its electromagnetic mass every time due to absorbing the ether. It means that actually it plays the role of a converter of the ether energy into the thermal photon energy.**

The Japanese investigators Ohmori and Mizuno [4] registered neutron radiation during plasma electrolysis of water and reported that not only the nuclear process, but also the process of the electron capture by the free protons can be the source of this radiation.

As hydrogen plasma is generated during the plasma electrolytic process of water electrolysis, there exists a tendency of the capture of the free electrons by them.

It is known that rest mass of the electron is $m_e = 9.109534 \times 10^{-31}$ *kg*, rest mass of the proton is $m_p = 1.6726485 \times 10^{-27}$ *kg*, and rest mass of the neutron is $m_n = 1.6749543 \times 10^{-27}$ *kg*. The difference between the mass of the neutron and the mass of the proton is equal to $\Delta m_{np} = 23.058 \times 10^{-31}$ *kg*. It is $23.058 \times 10^{-31} / 9.109 \times 10^{-31} = 2.531$ of the mass of the electron. Thus, the proton should capture 2.531 electrons in order to become the neutron. The question arises at once: what will happen to the remained of electron mass $(3.0-2.531)m_e = 0.469m_e$? The disturbed balance of masses in this process is explained by modern physics in a simple way: a neutrino is created [6].

As the neutrino has no charge, it is very difficult to register it. If the neutrino takes the excess mass away or replenish the lacking one, can the elementary particles execute this process by themselves?

As the photons are emitted and absorbed only by the electrons, the proton, which absorbs the electrons, cannot convert the remainder of mass of the third electron into the photon. If the electron is absorbed by the third one and gives more than a half of its mass to the proton in order to convert it into the neutron, the remaining part of mass ($0.469m_e$) of the electron, which has no possibility to become the photon, is converted into a portion of the ether, which "is dissolved" and mixed with the ether in the space. The fact that plasma has no photons with the mass corresponding to the part of mass of the third electron, which has not been absorbed by the proton during its conversion into the neutron, can serve as a proof of such affirmation. Let us calculate energy of such photon [6].

The difference the mass of the neutron and the proton is equal to $\Delta m_{np} = 23.058 \times 10^{-31}$ *kg*. If we subtract this value from the mass of three electrons, we'll get mass m_F, from which the photon should be formed [6]

$$m_F = 3m_e - \Delta m_{np} = 3 \times 9.109534 \times 10^{-31} - 23.05810^{-31} = 4.270602 \times 10^{-31} \text{ kg} \quad (1)$$

If the photon is formed from this remainder of mass m_F, its energy will be [6]:

$$E_{ph} = m_F \times C^2 = \frac{4.270602 \times 10^{-31} \times (2.997924 \times 10^8)^2}{1.602189 \times 10^{-19}} = 23.956126 \times 10^4 eV \quad (2)$$

This value of energy corresponds to roentgen spectrum, that's why the creation of each free neutron should be accompanied by the creation of one roentgen photon. If it does not take place, we have two opportunities: the first one – we should think that in the case when the neutron is created, the neutrino was formed from mass m_F=4.270602 × 10_{-31} *kg* and flew away in the unknown direction; the second one – there were no conditions for the formation of the photons in the process being considered, and mass, which failed to be formed as a particle, "was dissolved" in the ether. Which variant is closer to the truth [6]? There is no exact answer, but it is known that the Japanese scientists registered only neutron radiation with intensity of 50,000 neutrons per second, and they failed to register roentgen radiation [4].

If in this process the roentgen photons were created, they would not exceed heat efficacy of the plasma electrolytic process, because they would not be the thermal photons. The thermal photons are radiated and absorbed when the electrons make the energy transitions to the energy levels, which are the most remote from the atomic nuclei, where the infrared photons and neighbouring ones from the optical range of the spectrum with energies of ≈(0.001-3.3) eV are generated (Table 5) [6].

Table 5
Electromagnetic spectrum bands

Bands	Wave-length, m	Energy, eV
1. Low- frequency band	$\lambda \approx (10^{7}...10^{4})$	$E \approx 10^{-15}...10^{-11}$
2. Broadcast band	$\lambda \approx (10^{4}...10^{-1})$	$E \approx 10^{-11}...10^{-6}$
3. Microwave band	$\lambda \approx (10^{-1}...10^{-4})$	$E \approx 10^{-6}...10^{-3}$
4. Relic band (maximum)	$\lambda \approx 1 \times 10^{-3}$	$E \approx 1.2 \times 10^{-3}$
5. Infrared band	$\lambda \approx (10^{-4}...7.7 \times 10^{-7})$	$E \approx 10^{-3}...1.6 \times 10^{-2}$
6. Light band	$\lambda \approx (7.7 \times 10^{-7}...3.8 \times 10^{-7})$	$E \approx 1.6 \times 10^{-2}...3.27$
7. Ultraviolet band	$\lambda \approx (3.8 \times 10^{-7}...10^{-9})$	$E \approx 3.27...1 \times 10^{2}$
8. Roentgen band	$\lambda \approx (10^{-9}...10^{-12})$	$E \approx 10^{2}...10^{5}$
9. Gamma band	$\lambda \approx (10^{-12}...10^{-18})$	$E \approx 10^{5}...10^{9}$

Thus, the neutron fusion processes in plasma electrolysis of water will not generate additional thermal energy. But the appearance of the neutrons in plasma will promote the formation of the nuclei of deuterium and, possibly, of tritium. As the balance of masses remains almost unchanged, we have no reason to expect that **additional energy will take place** when deuterium and tritium are formed. But it is sure to appear during **fusion of the atoms of deuterium and tritium, i.e. the hydrogen atoms [6].**

In order to become a proton, the neutron should radiate something, which mass is Δm_{np}=23.058 × 10^{-31} *kg*. Let us convert this mass into energy [6].

$$E_{ph} = \Delta m_{np} \times C^2 = \frac{23.058 \times 10^{-31} \times (2.998 \times 10^{8})^2}{1.602 \times 10^{-19}} = 1.294 \times 10^{6}\ eV \qquad (3)$$

This energy corresponds to the gamma range photons, i.e. not to the thermal photons, and this process does not give additional energy. Thus, if the process of the formation of the helium atoms takes place during plasma electrolysis of water, it should be accompanied by gamma radiation. If there is no such radiation, but the helium atoms are formed, the neutrino takes away the above-mentioned portion of mass Δm_{np} or this mass, which has no opportunity to be formed as the photon, "is dissolved" in the environment, i.e. it is transferred into the state of the ether [6]. As the roentgen photons and the gamma photons are not the thermal ones, this process gives no excessive thermal energy [6].

Another variant is possible. When the atoms of alkali metal bombard the cathode atoms, they are destroyed completely and destroy the atoms of the cathode materials. Under the notion "completely" we'll understand such state when both the atom and the nucleus are destroyed. In this case, the protons of the destroyed nuclei begin to form the hydrogen atoms. The process of fusion of the atoms and the molecules of hydrogen generate additional thermal energy [6]. But one should bear in mind that if plasma disintegrates water molecule into hydrogen and oxygen and if these gases contact plasma, hydrogen is combined with oxygen, and water is formed. Noise generated by plasma is hydrogen microexplosions. Taking into consideration the above-mentioned fact the larger the volume of hydrogen burnt in plasma, the smaller its volume in the gas-vapour mixture. It means that such reactor operation modes are required when quantity of burnt hydrogen is minimal one. Our theory allows us to have such results.

As iron is the cathode material, the nuclei of its atoms are the targets of the atomic nuclei of potassium, alkaline metal. During the transmutation of the iron nuclei (Fig. 2 b), the atomic nuclei of chromium (Fig. 2 a) and the atomic nuclei of copper (Fig. 2 c) are formed [6].

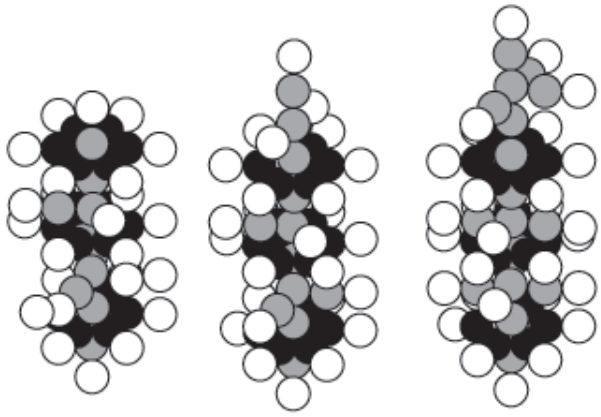

a) Cr (24,28) b) Fe (26,28) c) Cu (29,34)

Fig. 2.
Diagrams of the atomic nuclei of: a) chromium, b) iron, c) copper

When the atomic nucleus of iron (Fig. 2 b) pass into the atomic nucleus of chromium (Fig. 2 a), two protons and two neutrons are released; two atoms of deuterium or one atom of helium can be formed from them. If the neutrons pass into the protons, four atoms of hydrogen are formed.

It is easy to see (Fig. 2) that the atomic nucleus of iron (Fig. 2 b) should lose two upper protons and two neutrons in order to pass into the atomic nucleus of chromium (Fig. 2 a).

Three additional protons and six neutrons (total 9 nucleons) are required for the formation of the atomic nucleus of copper (Fig. 2 c) from the atomic nucleus of iron. As on the cathode surface (Table 3) the number of chromium atoms, which probably are formed from the atomic nuclei of iron, four times more than the number of atoms of copper, then the solution is sure to have superfluous protons and neutrons of the destroyed atomic nuclei of iron, and we can determined their approximate relative quantity.

Let us suppose that four nuclei of the iron atoms pass into the nuclei of the chromium atom. The total quantity of free protons and neutrons (nucleons) is equal to 16. As one atom of copper falls on each four atoms of chromium, 9 nucleons are spent for the formation of one nucleus of the copper atom, and 7 nucleons remain free.

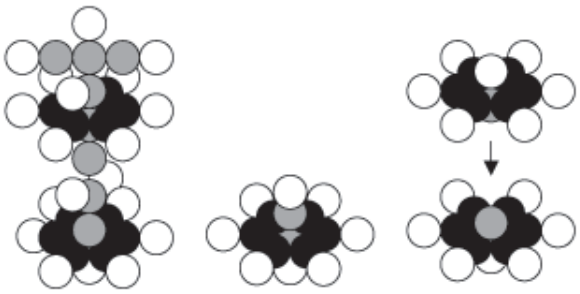

a) K (19,20) b) O (8,8) c) Si (14,14)

Fig. 3.
Diagrams of the atomic nuclei of:
a) potassium, b) oxygen, c) silicon

Let us see what is formed when the nucleus of the potassium atom is destroyed. Potassium is situated in the first group of the fourth period of the periodic law. Its nucleus contains 19 protons and 20 neutrons (Fig. 3 a) [6].

In Fig. 3 a, we can see a weak link of the nucleus of the potassium atom [6]. It is situated in the middle of its axis neutrons. When the transmutation of the nuclei of the potassium atoms takes place, the nuclei of the oxygen atoms can be formed (Fig. 3 b) as well as its isotopes and the nuclei of the silicon atoms (Fig. 3 c).

The analysis of the structure of the nuclei of the potassium atom (Fig. 3 a) shows that it is the most probable source of the nucleus of the silicon atom (Fig. 3 c), which atoms appear on the cathode (Table 3).

It is easy to count that during the destruction of one nucleus of the potassium atom and the creation of one nucleus of the silicon atom 5 free protons and 6 free neutrons, i.e. 11 nucleons, are formed.

Thus, the transmutation of the nuclei of the iron atoms and the potassium atoms results in the formation of free protons and neutrons. As the protons cannot exist in free state, the hydrogen atoms are created from them. If the protons are connected with the neutrons after the destruction of the nuclei of the iron atoms and the potassium atoms, the formation of deuterium, tritium and helium is possible.

Let us pay attention to the main fact – absence of the sodium atoms in the cathode material. It is natural that the potassium atoms have appeared on the cathode, which operated in KOH solution (Table 3). Why are no sodium atoms on the cathode, which operated in NaOH solution? The answer is as follows: the nuclei of the sodium (Fig. 4,a) atoms are completely destroyed during the plasma electrolytic process. The presence of potassium on the surface of the cathode, which operated in NaOH solution (Table 4), can be explained by insufficient ablution of the reactor after the operation with KOH solution.

As free protons and neutrons appear during the destruction of the nucleus of the sodium atom (Fig. 4,a), some nuclei of this element begin to form the atomic nuclei of aluminium (Fig. 4, b), chlorine (Fig. 4, c) and calcium (Fig. 5).

But not all free protons and neutrons are spent for the construction of the atomic nuclei of aluminium, chlorine and calcium. A part of them is spent for the hydrogen atom formation.

If we knew the total quantity of transmutating atomic nuclei of iron, potassium and sodium as well as the exact composition of the gases generated during the plasma electrolytic process, it would be possible to determine the atomic nuclei being formed from additional nucleons. Now we can only suppose that the majority of new nuclei are the protons, i.e. the nuclei of the hydrogen atoms. The increased volume of the gases generated during the plasma electrolytic process is explained by it [6].

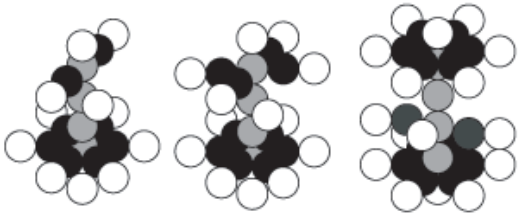

a) Na (11,12) b) Al (13,14) c) Cl (17,18)

Fig. 4.
Diagrams of the atomic nuclei of:
a) sodium, b) aluminium, c) chlorine

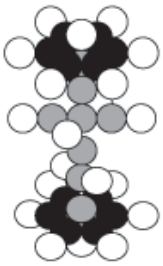

Ca (20,20)

Fig. 5.
Diagram of the nucleus of the calcium atom

The analysis of these Tables shows that transmutation of the nuclei of iron, of which the cathodes are made, results in the formation of chromium and copper in both cases. Apparently, aluminium, chlorine and calcium are formed from the destroyed sodium nuclei. In any case, free protons and neutrons are formed.

But not all free protons and neutrons are spent for the formation of the atomic nuclei of copper, aluminium, chlorine and calcium. A part of them is spent for the formation of the hydrogen atoms. In any case, the atoms and the molecules of hydrogen are formed. The analysis has shown that plasma electrolytic process extracts not more than 0.005 kg of alkaline metal from one litre of the solution. It appears from this that if all neutrons of the atomic nuclei of the molecules of water and alkali metals are transferred into the protons and the atoms and the molecules of hydrogen are formed, the formed volume of gas will be considerably less than the one registered during the experiment (Table 1). A question arises: where do additional gases come from? In order to get the answer on this question we made the next experiment.

THE SECOND EXPERIMENTAL PART

First of all we take into account, that high temperature of plasma forms the conditions when a set of various processes takes place at the cathode. First of all, water is boiled and evaporated. At the same time, one part of water molecules is disintegrated with a release of the atomic hydrogen; another part of the molecules forms the orthohydrogen molecules. A part of water molecules is disintegrated completely and is released at the cathode together with hydrogen and oxygen. A part of hydrogen is combined with oxygen again generating microexplosions (noise) and forming water.

During plasma electrolysis of water, water vapor, hydrogen and oxygen are released simultaneously. If vapor is condensed, gas mixture is released. In order to measure gas flow rate the electronic anemometer have been used. Diameter of the electronic anemometer was equal to internal diameter of the gas make tube (23, Fig. 1). Its readings were registered and processed by the computer. The experiment was performed dozen times, and each time its readings were reproduced with small deviations [11]. But we had no hydrogen analyzer, that's why the results being obtained cannot be considered as final ones. We admonished it in all editions of the book Water is a New Source of Energy with such a phrase: "We abstain from lending an official status to these results with the hope to get necessary financing and to repeat them with a complete set of the necessary devices" [12, page 176].

In the middle of the year of 2002 we received small financing, which allowed us to make a new reactor and to buy some measuring instruments, in particular the scales with the measurement limit up to 600 g and accuracy of 0.02 g. Careful preparation allowed us to increase duration of continuous operation of the reactor (to 10 and more hours) and to register solution consumption for gas production.

The main difficulty of operation with the hydrogen is in the fact that its mixture with air (4-74)% or oxygen (4-94)% is combustible, and the fact was emphasized more than once during the experiments that made the researches be very careful. The second difficulty during hydrogen quantity measurements generated by the plasma electrolytic reactor is in the fact that its molecule has the smallest dimensions, that's why it penetrates easily to the places where the molecules of other substances do not penetrate. Molecular hydrogen diffuses easily even into metals. For example, one volume of palladium absorbs up to 800 volumes of hydrogen.

Gas flow speed was measured with the help of various anemometers, its readings being registered with the help of the computer. Numerous measurements and numerous analysis of gas flow speed measurement accuracy with the help of the anemometers showed that error of a conventional anemometer can be 100%.

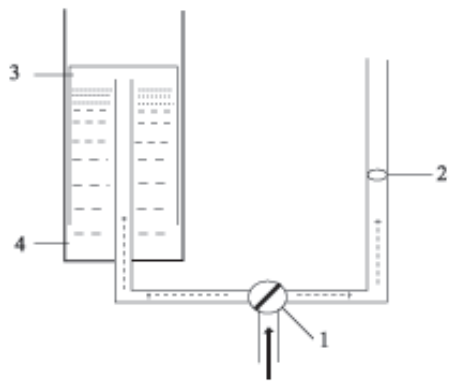

Fig. 6.
Diagram of measurement of flow rate of the gas and its volume:
1 - tap for gas flow movement direction switching,
2 – anemometer, 3 – graduated tank, 4 – water tank

It is known that it is possible to produce 1220 litres of hydrogen and 622 litres of oxygen from one litre of water. Quantity of the gases generated by the plasma electrolytic process is much greater than it is possible to get from consumed water (Table 1). It was a strong reason for a search of the measurement error. For this purpose, the diagram of measurement of flow rate of the gases and their quantity was used (Fig. 6).

The results of the measurements were as follows. The anemometer showed that 200 litres of gas mixture penetrated through it during 10 minutes. Nearly one litre of gases was in the graduated tank during this period.

Thus, the measurement of gas flow with the help of the anemometers distorted the result 200 fold. It should be mentioned that the reactor operated in the production mode of hydrogen and oxygen in the cathode zone. As a result, their mixture burst. The pulses of these explosions increased the readings of the anemometer.

It has become necessary to return to the reactor operation modes when no oxygen is released in the cathode zone. Our theory allows us to do this easy.

PROTOCOL
of tests of the first model of low-current Electrolyzers

It is known that it is possible to produce 1.22 l of H_2+ 0.622 O_2= 1.843 (H_2+O_2) from 1 ml of H_2O

Table 6
Experimental results

Indices	1	2	3	Average
1-duration of experiment, hour	1	1	1	1
2-voltage, V	70	70	70	70
3-current, A	0.038	0.080	0.098	0.072
4 – power, W	2.7	5.60	6.44	4.91
4-volume of consumed solution, ml	1.67	3.98	4.32	3.32
5-density of the solution, kg/l	1.04	1.04	1.04	1.04
6-volume of consumed water, ml	1.60	3.83	4.15	3.19
7-volume of the gas mixture being produced, l	2.95	7.06	7.85	5.95
6-volume of hydrogen being produced, l	1.95	4.67	5.07	3.80
7-energy consumption per 1 l of hydrogen, W·h/l	1.38	1.20	1.27	1.28
8-energy consumption per 1m^3 of hydrogen, kWh/m^3	1.38	1.20	1.27	1.28
9-existing energy consumption for production of 1 m^3 of hydrogen from water, kWh/m^3	4.00	4.00	4.00	4.00

CONCLUSION

Transmutation of the atomic nuclei of alkaline metals and the atomic nuclei of the cathode material during plasma electrolysis of water existed. Plasma electrolytic process opens new prospects in study of matter on the nuclear, atomic and molecular levels. The low-current electrolysis allows us to get the inexpensive hydrogen from water.

REFERENCES

1. M. Fleischmann, S. Pons and M. Hawkins. Electrochemically Induced Nuclear Fusion of Deuterium. J. Electroanal. Chem. 261, 301 (1989),
2. ICCF-7 ACCEPTED ABSTRACTS. Infinite Energy. V. 4, Issue 20, p. 59…69.
3. Harold L. Fox. Cold nuclear fusion: essence, problems, influence on the world. View from USA. Production group SVITAX. M.: 1993, 180 pages.
4. T. Ohmori, T. Mizuno. Strong Excess Energy Evolution, New Element Production, and Electromagnetic Wave and/or Neutron Emission in Light Water Electrolysis with a Tungsten Cathode. Infinite Energy. Issue 20, 1998. Pages 14-17.
5. T. Mizuno. Nuclear Transmutation: The Reality of Cold Fusion. Infinite Energy Press. 1998. 151 pages.
6. Ph. Kanarev. Foundations of Physchemistry of Microworld. Krasnodar, 2002. 330 pages.
7. Kenneth R. Shoulders, "Method of and Apparatus for Production and Manipulations of High Density Charge", U.S. Patent 5,054,046, issued Oct 1, 1991.
8. Ken Shoulders & Steve Shoulders, "Observations on the Role of Charge Clusters in Nuclear Cluster Reactions", J.of New Energy, vol. 1, no 3, pp 111-121, Fall 1996, 7 refs, 22 figs.
9. Hal Fox, Robert W. Bass, & Shang-Xian Jin, "Plasma-Injected Transmutation", J. of New Energy, vol. 1, no 3, Fall 1996, pp 222-230, 23 refs, 4 figs.
10. Shang-Xian Jin & Hal Fox, "High Density Charge Cluster Collective Ion Accelerator", J. of New Energy, vol. 4, no 2, Fall 1999, pp 96-104, 47 refs, 4 figs., 3 tables.
11. Ph.M. Kanarev. Water is the Main Power Carrier of Future Power Engineering. Journal of New Energy. An International Journal of New Energy Systems. Vol. 6, No.2. Pag. 101-121.
12. Ph.M. Kanarev. Water is New Source of Energy. The Third Edition. Krasnodar 2002. 194p. (In English).

LENR
(Low Energy Nuclear Reactions)

http://www.lenr-canr.org

Editorial: There is a collection of some papers on LENR (Low Energy Nuclear Reactions), also known as Cold Fusion. CANR, Chemically Assisted Nuclear Reactions, is another term for this phenomenon. These original scientific papers are reprinted with permission from the authors and publishers.

Website http://www.lenr-canr.org features a growing library of scientific papers about LENR and an extensive bibliography of journal papers, news articles and books about LENR.

COLD FUSION: What is it and what does it mean to science and society?

Edmund Storms

Cold fusion is important because it promises to be a new source of pollution-free, inexhaustible energy. In addition, it is important because it reveals the existence of a new way nuclei can interact that conventional scientific theory predicts is impossible. What then is this phenomenon that suffers such promise and rejection?

Energy can be obtained from the nucleus in two different ways. On the one hand, a large nucleus can be broken into smaller pieces, such as is experienced by uranium in a conventional nuclear reactor and by the material in an atom bomb. This is called fission. On the other hand, two very small nuclei can be joined together, such as occurs during fusion of deuterium and tritium in a Hot Fusion reactor and in a hydrogen bomb. This process, called fusion, also takes place in stars to produce much of the light we see.

The fission reaction is caused to happen by adding neutrons to the nucleus of uranium or plutonium to make it unstable. The unstable nucleus splits into two nearly equal pieces, thereby releasing more neutrons, which continue the process. As every one now knows, this process produces considerable waste that is highly radioactive. The uranium used as fuel also occurs in limited amounts in the earth's crust. As a result, this source of energy is not ideal, although widely used at the present time.

The normal hot fusion reaction requires two deuterium or tritium nuclei to be smashed together with great energy. This is accomplished by raising their temperature. However, this temperature is so high that the reactants cannot be held in a solid container, but must be retained by a magnetic field. This process has proven to be very difficult to accomplish for a time sufficient to generate useable energy. In spite of this difficulty, attempts have been under way for the last 40 years and with the expenditure of many billions of dollars. Success continues to be elusive while the effort continues.

Cold fusion, on the other hand, attempts to cause the same process, but by using solid materials as the container held at normal temperatures. The container consists of various metals, including palladium, with which the deuterium is reacted to form a chemical compound. While in this environment, the barrier between the deuterium nuclei is reduced so that two nuclei can fuse without having to be forced together. Because the process causing this to happen is not well understood, the possibility is rejected by many conventional scientists. Difficulty in producing the process on command has intensified the rejection. While this difficulty is real, it has not, as many skeptics have claimed, prevented the process from being reproduced hundreds of times in laboratories all over the world for the past 13 years. As you will see by reading the reviews and papers in our Library (see http://www.lenr-canr.org/LibFrame1.html), the process continues to be reproduced with increasing ease using a variety of methods and materials.

What is the nature of this process and why has it been so hard to understand? To answer this question, a person needs to understand the nature of the barrier that exists between all nuclei. Because all nuclei have a positive charge in proportion to their atomic number, all nuclei repeal each other. It is only the surrounding electrons that hold normal matter together, with the nuclei being at considerable distance from each other, at least on the scale of an atom. When attempts are made to push the nuclei closer, the required energy increases as the nuclei approach one another. However, when deuterium dissolves in a metal, it experiences several unique

conditions. The surrounding metal atoms produce a regular array that is able to support waves of various kinds. These waves can be based on vibration of the atoms (phonons), vibration of the electrons, standing waves of electromagnetic energy, or a wave resulting from conversion of the deuterium nuclei to a wave. In addition, the high density of electrons can neutralize some of the positive charge on the deuterium nuclei allowing a process called tunneling, i.e.. allowing passage through the barrier rather than over it. The mechanism of this neutralization process is proposed to involve a novel coherent wave structure that can occur between electrons under certain conditions. All of these wave processes have been observed in the past under various conventional conditions, but applying them to the cold fusion phenomenon has been a subject of debate and general rejection.

While the debate based on wave action has been underway, people have proposed other mechanisms. These include the presence of neutrons within the lattice. Normally, neutrons are unstable outside of the nucleus, decomposing into a proton, an electron, and a neutrino. Presumably, this reaction can be reversed so that neutrons might be created in a lattice containing many free electrons and protons. Having no charge, the neutron could then interact with various atoms in the lattice to produce energy. These neutrons might also be hidden in the lattice by being attached to other nuclei in a stabilized form, to be released when conditions were right. Several particles normally not detected in nature also have been proposed to trigger fusion and other nuclear reactions.

While search for a suitable mechanism has been underway, an understanding of the environment that triggers the mechanism has been sought, the so-called nuclear-active-environment. Initially, this environment was thought to exist in the bulk of the palladium cathode used in the Pons-Fleischmann method to produce cold fusion. It is now agreed that the nuclear reactions only occur in the surface region. Recent arguments suggest that this surface layer does not even require palladium for it to be nuclear-active. Nuclear reactions have now been produced in a variety of materials using many methods. The only common feature found in all of these methods is the presence of nano-sized particles of material on the active surface. If this observation is correct, four conditions seem required to produce the nuclear reactions. First, the particle must have a critical small size; second, it must contain a critical concentration of deuterium or hydrogen; third, it must be constructed of certain atoms; and fourth, it must be exposed to a source of energy. This energy can take the form of a sufficiently high temperature, a significant high flux of hydrogen through the particle, application of energetic electrons or charged particles, or application of laser light of the proper frequency. Until, the importance of these factors is understood, the effect will continue to be difficult to replicate.

Technical Introduction to LENR-CANR

Edmund Storms

At low energies, the Coulomb barrier prevents nuclei from coming together and fusing to form a single nucleus. To initiate a nuclear reaction, several methods are used. Nuclear reactions are normally initiated by pushing two atoms together with enough force to overcome the Coulomb barrier by brute force, or by using neutrons which penetrate the nuclei without seeing a barrier. (Neutrons have no electrical charge, so the Coulomb barrier does not stop them.) These forces are normally provided by high-temperature plasma or by accelerating ions to high energies. In contrast, LENR describes the mechanism and conditions that cause a variety of nuclear reactions to take place with relatively low activation energy. These unique conditions reduce the need for excessive energy. The normal method forces the nuclei together, while the new method encourages them to come together. The challenge has been to understand the unique characteristics of the necessary solid structure such that this structure could be generated at will.

Because the proposed method is unique, at odds with current nuclear theory, and is still difficult to reproduce, support for studies in many countries, but not all, has been very limited. Nevertheless, considerable information has accumulated over the last 13 years since Profs. Stanley Pons and Martin Fleischmann showed the world the possibilities inherent in this phenomenon. Much understanding is buried in conference proceedings and reports that are not available to a serious student. This information will, as time permits, be made available on this site. Students of the subject are also encouraged to use this site to interact with other people in the field and provide objective critiques of the work published here.

PHENOMENA DISCUSSED IN SOME OF THE PAPERS

At least 10 ways have been demonstrated to produce anomalous heat and/or anomalous elemental synthesis. A few of these methods will be described here. For course, not all of the claims are worthy of belief nor are they accepted by many people. Nevertheless, the claims will be described without qualifications in order to provide the reader with the latest understanding.

conditions. The surrounding metal atoms produce a regular array that is able to support waves of various kinds. These waves can be based on vibration of the atoms (phonons), vibration of the electrons, standing waves of electromagnetic energy, or a wave resulting from conversion of the deuterium nuclei to a wave. In addition, the high density of electrons can neutralize some of the positive charge on the deuterium nuclei allowing a process called tunneling, i.e.. allowing passage through the barrier rather than over it. The mechanism of this neutralization process is proposed to involve a novel coherent wave structure that can occur between electrons under certain conditions. All of these wave processes have been observed in the past under various conventional conditions, but applying them to the cold fusion phenomenon has been a subject of debate and general rejection.

While the debate based on wave action has been underway, people have proposed other mechanisms. These include the presence of neutrons within the lattice. Normally, neutrons are unstable outside of the nucleus, decomposing into a proton, an electron, and a neutrino. Presumably, this reaction can be reversed so that neutrons might be created in a lattice containing many free electrons and protons. Having no charge, the neutron could then interact with various atoms in the lattice to produce energy. These neutrons might also be hidden in the lattice by being attached to other nuclei in a stabilized form, to be released when conditions were right. Several particles normally not detected in nature also have been proposed to trigger fusion and other nuclear reactions.

While search for a suitable mechanism has been underway, an understanding of the environment that triggers the mechanism has been sought, the so-called nuclear-active-environment. Initially, this environment was thought to exist in the bulk of the palladium cathode used in the Pons-Fleischmann method to produce cold fusion. It is now agreed that the nuclear reactions only occur in the surface region. Recent arguments suggest that this surface layer does not even require palladium for it to be nuclear-active. Nuclear reactions have now been produced in a variety of materials using many methods. The only common feature found in all of these methods is the presence of nano-sized particles of material on the active surface. If this observation is correct, four conditions seem required to produce the nuclear reactions. First, the particle must have a critical small size; second, it must contain a critical concentration of deuterium or hydrogen; third, it must be constructed of certain atoms; and fourth, it must be exposed to a source of energy. This energy can take the form of a sufficiently high temperature, a significant high flux of hydrogen through the particle, application of energetic electrons or charged particles, or application of laser light of the proper frequency. Until, the importance of these factors is understood, the effect will continue to be difficult to replicate.

Technical Introduction to LENR-CANR

Edmund Storms

At low energies, the Coulomb barrier prevents nuclei from coming together and fusing to form a single nucleus. To initiate a nuclear reaction, several methods are used. Nuclear reactions are normally initiated by pushing two atoms together with enough force to overcome the Coulomb barrier by brute force, or by using neutrons which penetrate the nuclei without seeing a barrier. (Neutrons have no electrical charge, so the Coulomb barrier does not stop them.) These forces are normally provided by high-temperature plasma or by accelerating ions to high energies. In contrast, LENR describes the mechanism and conditions that cause a variety of nuclear reactions to take place with relatively low activation energy. These unique conditions reduce the need for excessive energy. The normal method forces the nuclei together, while the new method encourages them to come together. The challenge has been to understand the unique characteristics of the necessary solid structure such that this structure could be generated at will.

Because the proposed method is unique, at odds with current nuclear theory, and is still difficult to reproduce, support for studies in many countries, but not all, has been very limited. Nevertheless, considerable information has accumulated over the last 13 years since Profs. Stanley Pons and Martin Fleischmann showed the world the possibilities inherent in this phenomenon. Much understanding is buried in conference proceedings and reports that are not available to a serious student. This information will, as time permits, be made available on this site. Students of the subject are also encouraged to use this site to interact with other people in the field and provide objective critiques of the work published here.

PHENOMENA DISCUSSED IN SOME OF THE PAPERS

At least 10 ways have been demonstrated to produce anomalous heat and/or anomalous elemental synthesis. A few of these methods will be described here. For course, not all of the claims are worthy of belief nor are they accepted by many people. Nevertheless, the claims will be described without qualifications in order to provide the reader with the latest understanding.

The most studied method involves the use of an electrolytic cell containing a LiOD electrolyte and a palladium cathode. Current passing through such a cell generates D+ ions at the cathode, with a very high effective pressure. These ions enter the palladium and, if all conditions are correct, join in a fusion reaction that produces He-4. Initially palladium wire and plate were used, but these were found to form microcracks, which allowed the required high concentration of deuterium to escape. Later work shows that the actual nuclear reaction occurs on the surface within a very thin layer of deposited impurities. Therefore, control of this impurity layer is very important, but rather difficult. The use of palladium is also not important because gold and platinum appear to be better metals on which to deposit the impurity layer. This method is found, on rare occasions, to generate tritium within the electrolyte and transmutation products on the cathode surface. Different nuclear reactions are seen when light water (H_2O) is used instead of D_2O, although the amount of anomalous energy is less when H_2O is used. These observations have been duplicated hundreds of times in dozens of laboratories.

Application of deuterium gas to finely divided palladium, and perhaps other metals, has been found to generate anomalous energy along with helium-4. Both palladium-black as well as palladium deposited as nanocrystals on carbon have shown similar anomalous behavior. In both cases the material must be suitably purified. Palladium deposited on carbon can and must be heated to above 200/260°C for the effect to be seen. When deuterium is caused to diffuse through a palladium membrane on which is deposited a thin layer of various compounds, isotopes that were not previously present are generated with isotopic ratios unlike those occurring naturally.

A plasma discharge under H_2O or D_2O between various materials generates many elements that were not previously present. When the electrodes are carbon and the plasma is formed in H_2O, the main anomalous element is iron. This experiment is relatively easy to duplicate.

Several complex oxides, including several superconductors, can dissolve D_2 when heated. When a potential is applied across a sheet of such material, the D+ ions are caused to move and anomalous heat is generated.

If deuterium ions, having a modest energy, are caused to bombard various metals, tritium as well as other elements not previously present are generated. These ions can be generated in a pulsed plasma or as a beam.

When water, either light or heavy, is subjected to intense acoustic waves, collapse of the generated bubbles on the surrounding solid walls can generate nuclear reactions. This process is different from the fusion reaction claimed to occur within a bubble just before it disappears within the liquid because neutrons are not produced in the former case, but are produced in the latter case. This method has been applied to various metals in heavy water using an acoustic transducer and in light water using a rotating vane which generates similar acoustic waves...

HOW TO EXPLAIN THE CLAIMS

A major problem in deciding which model might be correct is the absence of any direct information about the nature of the nuclear-active-environment. At this time, two important features seem to be important, the size of the nanodomain in which the reactions occur and the presence of a deuterium flux through this domain. The domain can apparently be made of any material in which hydrogen or deuterium can dissolve. Until the nature of the nuclear-active-state (NAS) is known, no theory will properly explain the effect and replication of the claims will remain difficult.

When fusion is initiated using conventional methods, significant tritium and neutrons are produced. In addition, when other elements are generated, they tend to be radioactive. This is in direct contrast to the experience using low energy methods. These products are almost completely absent and, instead, helium-4 is produced. When radiation is detected, it has a very low energy. This contrasting behavior, as well as the amount of anomalous energy, has made the claims hard to explain using conventional models. This difficulty has been amplified by a failure of many skeptics to recognize the contrasting effect of the environment, a plasma being used in the older studies and a solid lattice of periodic atoms being present as the new environment.

Over 500 models and their variations have been proposed, some of which are very novel and some are variations on conventional ideas. Most models attempt to explain the nuclear reaction once the required environment has been created, without addressing what that unique environment might be like. These models involve conversion of a proton (deuteron) to a neutron (dineutron), creation of an electron structure that is able to neutralize the barrier, conversion of deuterium to a wave which interacts without charge, and the presence of otherwise overlooked neutrons and/or novel particles. Many of the models will have to be abandoned or seriously modified once the nature of the nuclear active environment is understood.

It Started in 1989 . . .

Peter Hagelstein

Many of us recall the controversy surrounding the announcement of claims of observations of fusion reactions in a test tube that were made in 1989. At the time, these claims were greeted with considerable skepticism on the part of the physics community and the scientific community in general.

The principal claim of Pons and Fleischmann

The principal claim of Pons and Fleischmann in 1989 was that power was produced in palladium cathodes that were loaded electrochemically in a heavy water electrolyte. The evidence in support of this was a measured increase in the temperature in the electrochemical cell. There was no obvious evidence for nuclear reaction products commensurate with the claimed heat production. Fleischmann speculated that perhaps two deuterons were somehow fusing to He-4 through some kind of new mechanism.

Rejection by the physics community

This claim was not accepted by the physics community on theoretical grounds for several reasons:

First, there was no mechanism known by which two deuterons might approach one another close enough to fuse, since the Coulomb barrier prevents them from approaching at room temperature.

Second, if they did approach close enough to fuse, one would expect the conventional dd-fusion reaction products to be observed, since these happen very fast. Essentially, once two deuterons get close enough to touch, reactions occur with near unity probability, and the reaction products (p+t and n+He-3) leave immediately at high relative velocity consistent with the reaction energy released. To account for Fleischmann's claim, the proposed new reaction would seemingly somehow have to make He-4 quietly and cleanly, without any of the conventional reaction products showing up, and would somehow have to arrange for this to happen a billion times faster than the conventional reaction pathway. Most physicists bet against the existence of such a magical new effect.

Third, the normal pathway by which two deuterons fuse to make He-4 normally occurs with the emission of a gamma ray near 24 MeV. There was no evidence for the presence of any such high energy gamma emission from the sample, hence no reason to believe that any helium had been made.

Finally, if one rejects the possibility that any new mechanisms might be operative, then the claim that power was being produced by fusion must be supported by the detection of a commensurate amount of fusion reaction products. Pons and Fleischmann found no significant reaction products, which, given the rejection of new mechanisms, implied an absence of fusion reactions.

An alternate explanation is proposed

The physicists decided in 1989 that the most likely reason that Pons and Fleischmann observed a temperature increase was that they had made an error of some sort in their measurements. When many groups tried to observe the effect and failed, this led most of the physics community to conclude that there was nothing to it whatsoever other than some bad experiments.

The claim of Jones

A second very different claim was made at the same time in 1989 by Steve Jones. This work also involved electrochemistry in heavy water and the observation of reaction products corresponding to the conventional dd-fusion reactions. The initial publication showed a spectrum of neutron emission that Jones had detected from a titanium deuteride cathode loaded electrochemically. The response of the physics community was skeptical, as the signal to noise ratio was not particularly impressive. Given the polarization of the physics community in opposition to the claims of Pons and Fleischmann (which were announced essentially simultaneously), the physicists were not of a mood to accept much of any claims that fusion could happen in an electrochemical experiment at all. Jones went to great lengths to assure fellow scientists that his effect was completely unrelated to the claims of Pons and Fleischmann, and was much more reasonable.

Also rejected

Physicists had reason to be skeptical. Theoretical considerations indicated that the screening effects that Jones was relying on were not expected to be as strong as needed to account for the fusion rates claimed. As this experiment could not seem to be replicated by others at the time, it was easy for the physics community to reject this claim as well.

Cold fusion, weighed and rejected with prejudice

Cold fusion, as the two different claims were termed, was dismissed with prejudice in 1989. The initial claims were made near the end of March in Utah, and the public refutation of the claims was made at the

beginning of May. It only took about 40 days for the physics community to consider the new claims, test them experimentally, and then announce loudly to the world that they had been carefully weighed and rejected.

Following this rejection, physicists have treated cold fusion rather badly. For example, Professor John Huizenga of Rochester University was selected to be co-chair of the DOE ERAB committee that met to review cold fusion and issue a report. Shortly afterward, he wrote a book entitled Cold Fusion, The Scientific Fiasco of the Century, in which he discusses the claims, the experiments, and the extreme skepticism with which the new claims were greeted. Robert Park discusses the subject in his book entitled Voodoo Science. You can find many places where physicists and other scientists happily place the cold fusion claims together with claims of psychic phenomena.

A Science Tutorial

Talbot Chubb

First it is important to recognize that there are four distinct types of energy production:
1) chemical energy, that powers our cars and most of our civilization;
2) nuclear fission energy, as used to generate about 15% or our electricity;
3) hot fusion nuclear energy, which powers the sun and most stars;
4) cold fusion nuclear energy, which appears as unexplained heat in a few experimenter's laboratory studies and which most scientists believe is impossible.

The three types of nuclear energy produce 10 million times as much heat per pound of fuel than occurs with chemical energy. How do these types of energy differ? To understand this question you need to know some chemistry and physics.

Lesson 1

Nature has provided us with two types of stable charged particles, the proton and the electron. The proton is heavy, normally tiny, and has a positive charge. The electron is light, normally large and fuzzy, and has a negative charge. The positive charge and the negative charge attract each other, just like the north pole of a magnet attracts the south pole of a magnet. When you bring two magnets together with the north pole of one facing the south pole of the other, they pull together, bang! When they bang into each other they release a little bit of energy in the form of heat, but it is too small an amount to easily measure. To pull the magnets apart you have to do work, which is another way of saying you have to use up energy. It's almost like pulling a rock back up a hill. Rolling the rock down a hill actually creates a little heat, and pulling the rock back up the hill takes energy. In the same way the positive charge of the proton pulls on the negative charge of the electron and they stick together releasing energy in the process. The result is a hydrogen atom, designated H. A hydrogen atom is nothing but a fuzzy electron hugging a compact proton. The proton is the nucleus of the hydrogen atom. If you knock the electron off the hydrogen atom you get a positive ion H+, which is nothing more than the original proton. An ion is the name applied to an atom or molecule that has lost or gained one or more electrons, hence is no longer electrically neutral.

Lesson 2

As you know, nature has provided us with more than one type of atom. We have oxygen atoms, nitrogen atoms, iron atoms, helium atoms, etc.. How do these atoms differ? The answer is that they all have different types of nuclei (plural of nucleus, from the Latin). And these different nuclei all have different numbers of protons inside them, which means they all have different plus charges. The nucleus of the helium atom has 2 protons inside it, hence has plus 2 charge, and requires 2 electrons to neutralize its charge. When 2 electrons stick to it, it becomes a helium atom. The oxygen nucleus has 8 protons and has charge 8. When 8 electrons stick to it, it becomes an oxygen atom. The nitrogen atom has 7 electrons, and the iron atoms something like 26. But all the atoms are built more or less the same way, with a compact positively charged nucleus embedded in a cloud of fuzzy electrons. The difference in size between the compact nucleus and the fuzzy electrons is enormous. The sun has a diameter only about 100 times that of the earth. The electron cloud on an atom has a diameter which is about 100,000 times that of the nucleus. Cube these numbers to get the difference in volumes.

Lesson 3

We now are in a position to understand what chemical energy is. The atoms, all electrically neutral, can actually join with each other and release more energy. This is another way of saying that they can join into more stable configurations. The electrons in an atom try to configure themselves so as to get as close as possible to their nucleus, but their fuzzy nature requires that they take up a certain volume of space. However, if they join together with the electrons of another atom they can usually find a tighter configuration that leaves them closer to their beloved

beginning of May. It only took about 40 days for the physics community to consider the new claims, test them experimentally, and then announce loudly to the world that they had been carefully weighed and rejected.

Following this rejection, physicists have treated cold fusion rather badly. For example, Professor John Huizenga of Rochester University was selected to be co-chair of the DOE ERAB committee that met to review cold fusion and issue a report. Shortly afterward, he wrote a book entitled Cold Fusion, The Scientific Fiasco of the Century, in which he discusses the claims, the experiments, and the extreme skepticism with which the new claims were greeted. Robert Park discusses the subject in his book entitled Voodoo Science. You can find many places where physicists and other scientists happily place the cold fusion claims together with claims of psychic phenomena.

A Science Tutorial

Talbot Chubb

First it is important to recognize that there are four distinct types of energy production:
1) chemical energy, that powers our cars and most of our civilization;
2) nuclear fission energy, as used to generate about 15% or our electricity;
3) hot fusion nuclear energy, which powers the sun and most stars;
4) cold fusion nuclear energy, which appears as unexplained heat in a few experimenter's laboratory studies and which most scientists believe is impossible.

The three types of nuclear energy produce 10 million times as much heat per pound of fuel than occurs with chemical energy. How do these types of energy differ? To understand this question you need to know some chemistry and physics.

Lesson 1

Nature has provided us with two types of stable charged particles, the proton and the electron. The proton is heavy, normally tiny, and has a positive charge. The electron is light, normally large and fuzzy, and has a negative charge. The positive charge and the negative charge attract each other, just like the north pole of a magnet attracts the south pole of a magnet. When you bring two magnets together with the north pole of one facing the south pole of the other, they pull together, bang! When they bang into each other they release a little bit of energy in the form of heat, but it is too small an amount to easily measure. To pull the magnets apart you have to do work, which is another way of saying you have to use up energy. It's almost like pulling a rock back up a hill. Rolling the rock down a hill actually creates a little heat, and pulling the rock back up the hill takes energy. In the same way the positive charge of the proton pulls on the negative charge of the electron and they stick together releasing energy in the process. The result is a hydrogen atom, designated H. A hydrogen atom is nothing but a fuzzy electron hugging a compact proton. The proton is the nucleus of the hydrogen atom. If you knock the electron off the hydrogen atom you get a positive ion H+, which is nothing more than the original proton. An ion is the name applied to an atom or molecule that has lost or gained one or more electrons, hence is no longer electrically neutral.

Lesson 2

As you know, nature has provided us with more than one type of atom. We have oxygen atoms, nitrogen atoms, iron atoms, helium atoms, etc.. How do these atoms differ? The answer is that they all have different types of nuclei (plural of nucleus, from the Latin). And these different nuclei all have different numbers of protons inside them, which means they all have different plus charges. The nucleus of the helium atom has 2 protons inside it, hence has plus 2 charge, and requires 2 electrons to neutralize its charge. When 2 electrons stick to it, it becomes a helium atom. The oxygen nucleus has 8 protons and has charge 8. When 8 electrons stick to it, it becomes an oxygen atom. The nitrogen atom has 7 electrons, and the iron atoms something like 26. But all the atoms are built more or less the same way, with a compact positively charged nucleus embedded in a cloud of fuzzy electrons. The difference in size between the compact nucleus and the fuzzy electrons is enormous. The sun has a diameter only about 100 times that of the earth. The electron cloud on an atom has a diameter which is about 100,000 times that of the nucleus. Cube these numbers to get the difference in volumes.

Lesson 3

We now are in a position to understand what chemical energy is. The atoms, all electrically neutral, can actually join with each other and release more energy. This is another way of saying that they can join into more stable configurations. The electrons in an atom try to configure themselves so as to get as close as possible to their nucleus, but their fuzzy nature requires that they take up a certain volume of space. However, if they join together with the electrons of another atom they can usually find a tighter configuration that leaves them closer to their beloved

nuclei. For example, 2 hydrogen atoms can join together into a more compact configuration if each hydrogen atom contributes its electron to a 2-electron cloud, which the separate protons share. In this manner they form a grouping of the 2 electrons in a single cloud, together with the 2 isolated protons spaced apart from each other but still within the electron cloud. The result is a heat-producing chemical reaction H + H => H_2. (The => means "goes to" or "becomes".) The H_2 configuration is the hydrogen molecule, and when you buy a tank of hydrogen gas, H_2 molecules is what you get. Furthermore, the 2 electrons of the H_2 molecule and the 8 electrons of the O atom can find a still more compact configuration by combining their electrons to create the water molecule H_2O, plus heat. The water molecule is really a single cloud of electrons in which are embedded the three point-like nuclei to form a minimum energy configuration. So when we burn oil or coal we reconfigure the electrons to produce more stable configurations of point-like nuclei embedded in electron clouds, liberating heat. So much for chemical energy.

Lesson 4

We have slid over one point in the above discussion. How does Nature make a nucleus containing two or more protons in the first place. After all, each of the protons has a positive charge, and the positive charges repel each other very strongly when they are separated by a tiny distance, equal to the distance across a nucleus. The repulsion of like charges is just like the repulsion between the north poles of two magnets when they are pushed together the wrong way. Something must overcome this repulsion, or else the only kind of atoms we would have would be those of hydrogen. Fortunately, this is not what we observe. The answer is that there is a second kind of force which acts on protons. This is the nuclear force. The nuclear force is very strong but requires particles to almost sit on each other to have any effect. Also, there is a second kind of heavy particle, which is just like a proton, except that it has no positive or negative charge. It is not pushed away by the proton's plus charge. This other kind of particle is called the neutron, since it is electrically neutral. A peculiar fact of life is that it exists in stable form only inside a nucleus. When not in the nucleus it changes into a proton, an electron and a very light anti-neutrino in about 10 minutes. But it lasts forever inside a nucleus. Anyway, the neutron and the proton very strongly attract each other once they get close enough together, and then they combine to form a highly stable pair called a deuteron, which we designate D+. The single deuteron, when it combines with a single electron, forms the heavy hydrogen atom called deuterium, designated D. A second nuclear reaction occurs when two deuterons make contact. When they can be forced together so as to make contact, the 2 deuterons fuse, making a doubly charged particle. The grouping of 2 protons and 2 neutrons is even tighter than the proton-neutron grouping in the deuteron. The new particle, when neutralized by 2 electrons, is the nucleus of the helium atom, designated He. Larger groupings of neutrons and protons exist in nature and serve as the nuclei of carbon, nitrogen, oxygen, and iron, etc. atoms. All of these groupings are made possible by the very strong nuclear force, which is felt between particles only when they are in contact or share the same nucleus-size volume of space.

Lesson 5

We can now understand normal nuclear energy, which is really nuclear fission energy. During the early history of the universe massive stars were formed. In the explosion of these massive stars, lots of different types of nuclei were formed and exploded back into space. Second and later generation stars and planets were formed from this mix, including the sun. In the explosion process probably every possible stable configuration of protons and neutrons was produced, plus some almost-stable groupings, such as the nucleus of the uranium atom. There are actually 3 different types of uranium atom nuclei, called uranium-234, uranium-235, and uranium-238. These "isotopes" differ in their number of neutrons, but they all have 92 protons. The nuclei of all uranium atoms can go to a lower energy configuration by ejecting a helium nucleus, but this process occurs so rarely that the Earth's uranium has already lasted over 4 billion years. But the uranium nuclei are unstable in another way. In general, groupings of protons and neutrons are happiest if they have about 60 protons-plus-neutrons. The uranium nuclei contain more than three times this number. So they would like to split in two, which would release a lot of heat. But nature doesn't provide a way for them to split apart. They have to first go to a higher energy configuration before splitting in two. However, one of the three forms of uranium nucleus found in nature called uranium-235 and designated ^{235}U, gains the needed energy if it captures a neutron. The energized nucleus that results from neutron capture then splits apart with the release of an enormous amount of energy, and incidentally with release of additional neutrons. The additional neutrons can then split more uranium-235 nuclei, keeping the reaction going. This is what happens in nuclear power plants, where the heat, which is the end product of the nuclear splitting process, is used to boil water, generate steam, and turn electrical generators. (One also gets lots of radioactive products, which are a nuisance to dispose of safely.)

Lesson 6

We are now also in a position to understand hot fusion nuclear energy. As mentioned in lesson 5, the groupings of protons plus neutrons is most stable when the numbers of neutrons and protons approximate those

found in the nucleus of an iron atom. Just as uranium has too many neutrons plus protons to be comfortable, so the light elements like hydrogen, helium, carbon, nitrogen and oxygen have too few. If the nuclei can be made to make contact under proper conditions, they can combine to create more stable groupings, plus heat. This is the process of fusion. Nature has found a way of doing this in stars like the sun. All Nature has to do is heat compressed hydrogen hot enough and wait long enough and hot fusion will occur. If Nature were to start with deuterium, which already has a paired proton and neutron, the task would be relatively easy in a star. Temperature is a measure of how much speed an atom of a given type has as it bangs around inside a cloud of such atoms. The higher the temperature, the higher the speed and the closer the atoms get to each other momentarily during a collision. In a star the temperatures are high enough that all the electrons quickly get knocked off the atoms, so one is really dealing with a mixed cloud of electrons and nuclei. At very high temperature the nuclei occasionally get close enough during collisions for the pulling-together short range nuclear force to turn on. Then the nuclei can stick together and go to a lower energy grouping of protons plus neutrons, releasing heat. Hot fusion nuclear energy is an attempt to carry out this process in the lab, using deuterium and mass-3 hydrogen (whose nucleus is a compact grouping of 1 proton and 2 neutrons) as the gas. Hot fusion requires that the gas be contained at temperatures of hundreds of millions of degrees, which can be done with the help of magnetic fields, but only for 1 or 2 seconds. The hope is to contain the gas for longer times. During the period of high temperature containment nuclear reactions occur during collisions. The main form of energy release is ejection of high energy neutrons and protons. The proton energy quickly converts to heat. The neutron energy can also be converted to heat but makes the equipment highly radioactive. It then becomes difficult to repair the equipment, which could make hot fusion a poor candidate for commercial power production. In any case hot fusion power is a dream that is still probably at least 50 years away. But most scientists view hot fusion as the only way to achieve fusion power. Hot fusion produces less radioactivity than fission power, is environmentally benign, and has a virtually limitless fuel supply on earth (many millions of years at present energy usage rates).

Lesson 7

So now we come to cold fusion. Cold fusion may provide an easier and non-radioactive way of releasing nuclear fusion energy. Cold fusion relies on a different way of letting the protons and neutrons in one nucleus make contact with those in another nucleus, so that the nuclear force can bring them into a more stable configuration. The requirement for any nuclear reaction to occur is that the reacting nuclei occupy the same volume of space. This condition is called particle overlap. In hot fusion particle overlap is brought about briefly by banging the nuclei together so as to overcome momentarily the repulsion of the two positive charges which try to keep the particles apart. In cold fusion particle overlap conditions are achieved by making deuterium nuclei act as fuzzy objects like electrons in atoms, instead of like tiny points. When either light or heavy hydrogen is added to a heavy metal, each hydrogen "atom" occupies a position inside the metal where it is surrounded by heavy metal atoms. This form of hydrogen is called interstitial hydrogen. With interstitial hydrogen the electrons of the hydrogen atom become part of the pool of electrons of the metal. Each hydrogen nucleus oscillates back and forth through a negatively charged electron cloud provided by the electrons of the metal. They can be thought of as moving back and forth like the pendulum in a grandfather clock. This vibration exists even at very low temperature, due to a peculiarity of a branch of physics called quantum mechanics. The vibration is called zero point motion. The nucleus then becomes a fuzzy object, like the electrons in an atom. But this amount of fuzziness is not enough to permit a hydrogen nucleus to make contact with another hydrogen nucleus. To get two or more hydrogen nuclei to share the same volume one must go one step further. In a metal electrical current is carried by electrons that act more like vibrating matter waves than like point particles. If electrons did not become wave-like inside solids, there would be no transistors and no present day computers. This wave-like kind of electron is called a Bloch function electron. The secret of cold fusion is that one needs Bloch function deuterons. One needs wave-like deuterons inside or on the surface of a solid in order that two or more deuterons share the same volume of space. But once the Bloch function deuterons are created, the nuclear force comes into play and the protons and neutrons making up the deuterons can rearrange themselves into the more nuclearly stable Bloch function helium configuration, with release of heat. To study cold fusion the experimenter has to force deuterons to assume the wave-like form and keep them in the wave-like state. Cold fusion experiments demonstrating release of excess heat show that this can be done. But at present no one knows how to do it reliably. Since cold fusion promises millions of years of energy without the problems of global warming or radioactivity, a real effort should be made to learn how.

For more tutorials go to www.hometown.aol.com/cffuture1 and www.hometown.aol.com/cffuture2

LENR (Low Energy Nuclear Reactions) Experiments

Review from
http://www.lenr-canr.org

Have you ever wondered what a physics laboratory looks like? They are seldom spacious or organized the way they are shown in movies. Most LENR researchers work at universities or home laboratories, with tight budgets in a crowded space. They keep old, broken equipment on shelves to scavenge parts for new experiments. In this section we present some photographs of equipment provided by researchers, and close up pictures of equipment. The actual cells, cathodes and other equipment used in electrolysis experiments often have an ad-hoc, home-made appearance, because they are made by hand. They have to be; they are unique, one-of-a kind prototypes. Nothing quite like them has ever been made before.

A visitor seeing a LENR experiment the first time may feel disappointed. It looks like any other electrochemical experiment. The heat or neutron flux produced by the experiment are so small they can only be detected with sensitive instruments. A null cathode that produces no effect looks exactly like an active cathode. The difference between one cathode and another is in the microscopic structure, or the traces of elements mixed in with the palladium. Only one kind of cold fusion looks dramatic i. e. the glow discharge reaction.

Here are a few photographs of cold fusion cells and devices (also see the cover page).

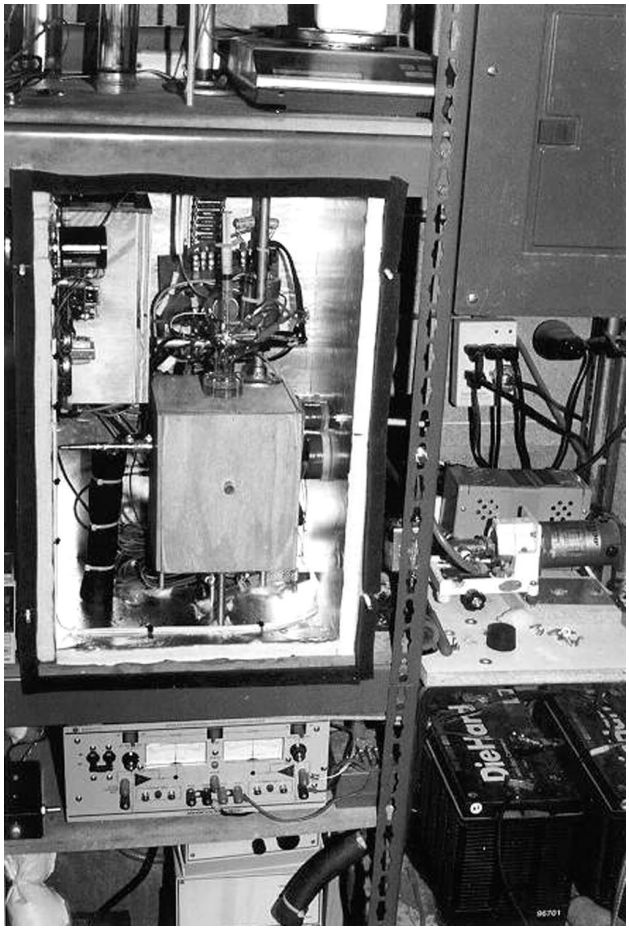

Fig.1
Box Calormeter

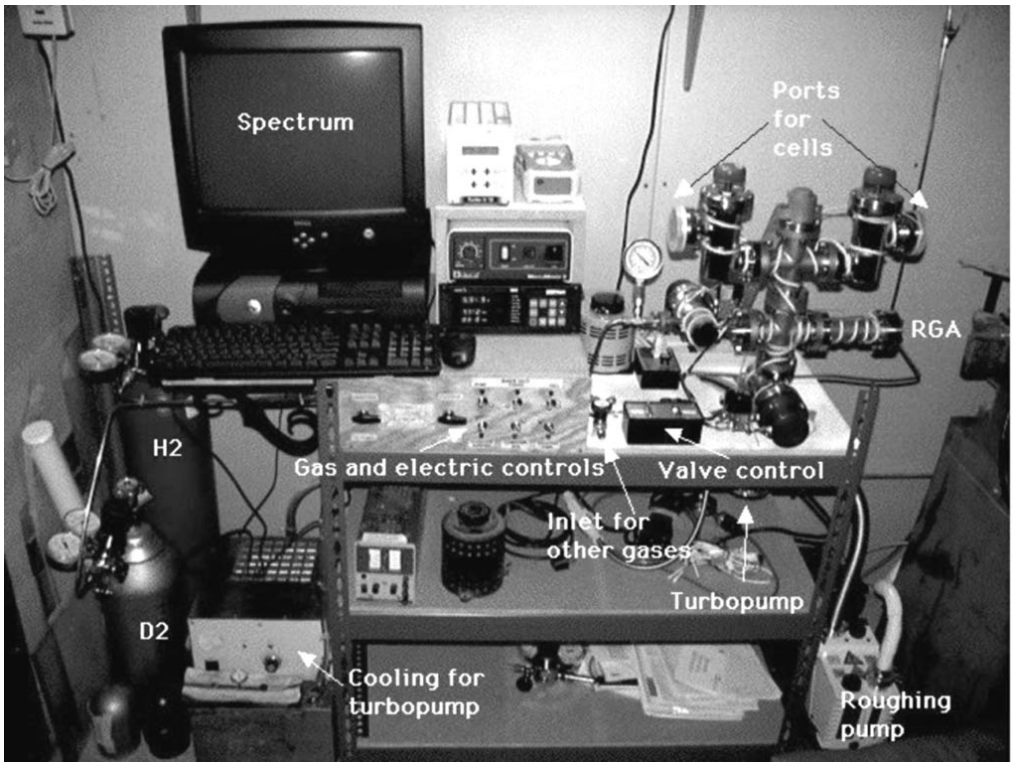

On Fig. 1 there is a calorimeter constructed by Edmund Storms. Note the DieHard® battery, lower right, that serves as an unninterruptable power supply. A power failure can ruin an experiment. Whenever possible, inexpensive, ordinary materials and instruments are used. However, experiments are never cheap, and they cannot be done on a shoestring. The equipment, arranged for another experiment (see Fig. 2), costs about $40,000.

Fig.2 (On the left)
Vacuum system to prepare particles for gas loaded cold fusion cells, courtesy E. Storms.

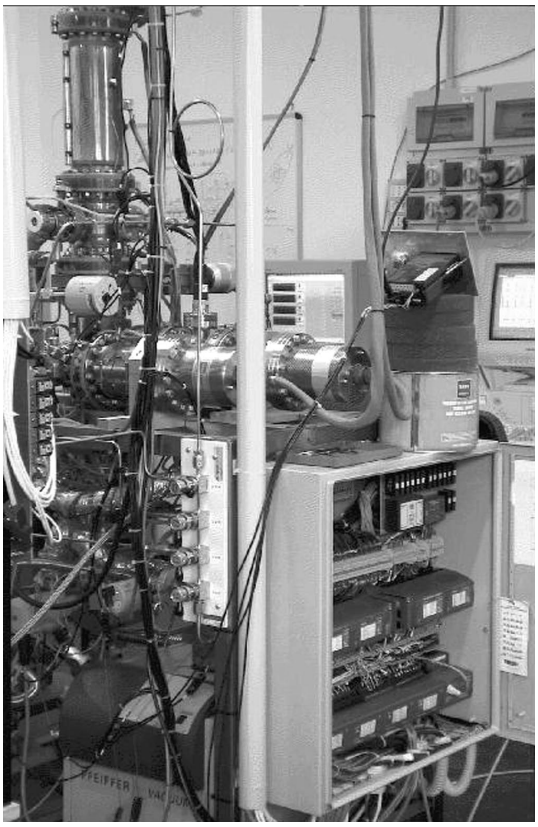

Fig.3
A high resolution mass spectrometer used for on-line helium detection during a cold fusion experiment at C. R. ENEA Frascati. (http://www.frascati.enea.it/nhe/)

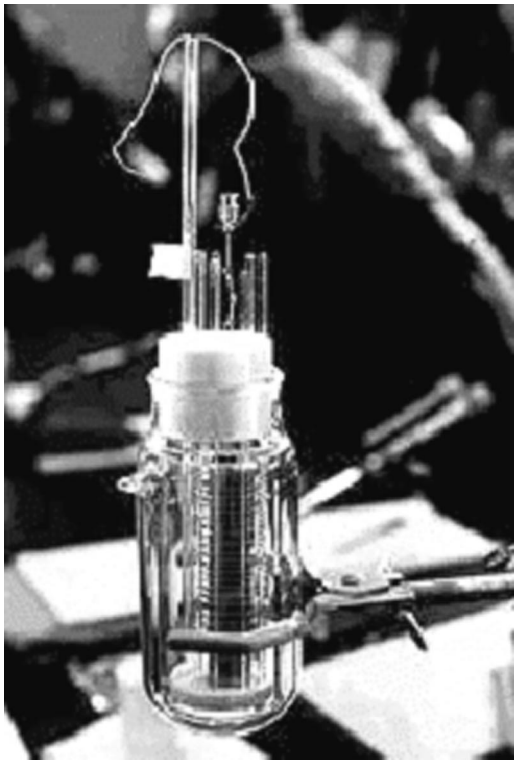

Fig.4
A cell at ENEA Frascati

Fig.5
A flow-type cell, courtesy E. Storms

Fig.6
Close up of a Miley-style cell, courtesy E. Storms

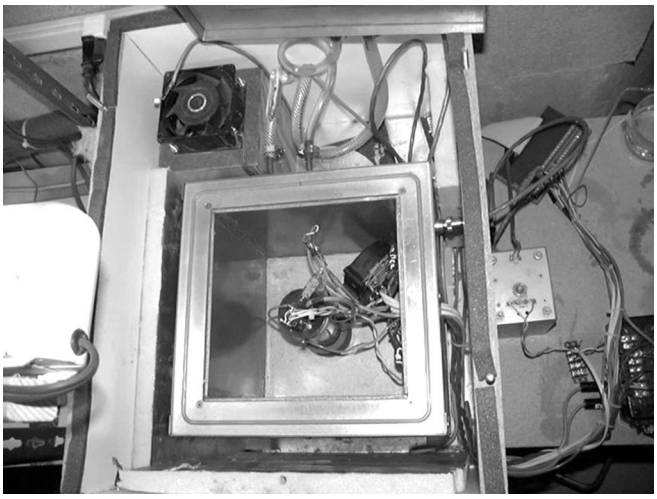

Fig.7
A cell installed inside a Thermonetics Seebeck calorimeter with the lid removed, courtesy E. Storms

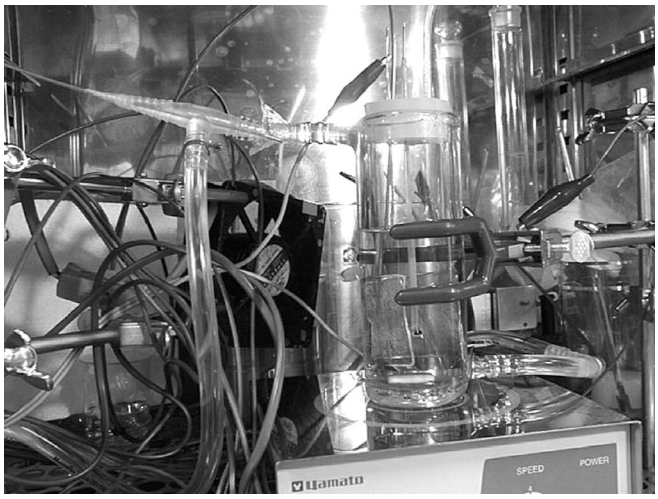

Fig.8

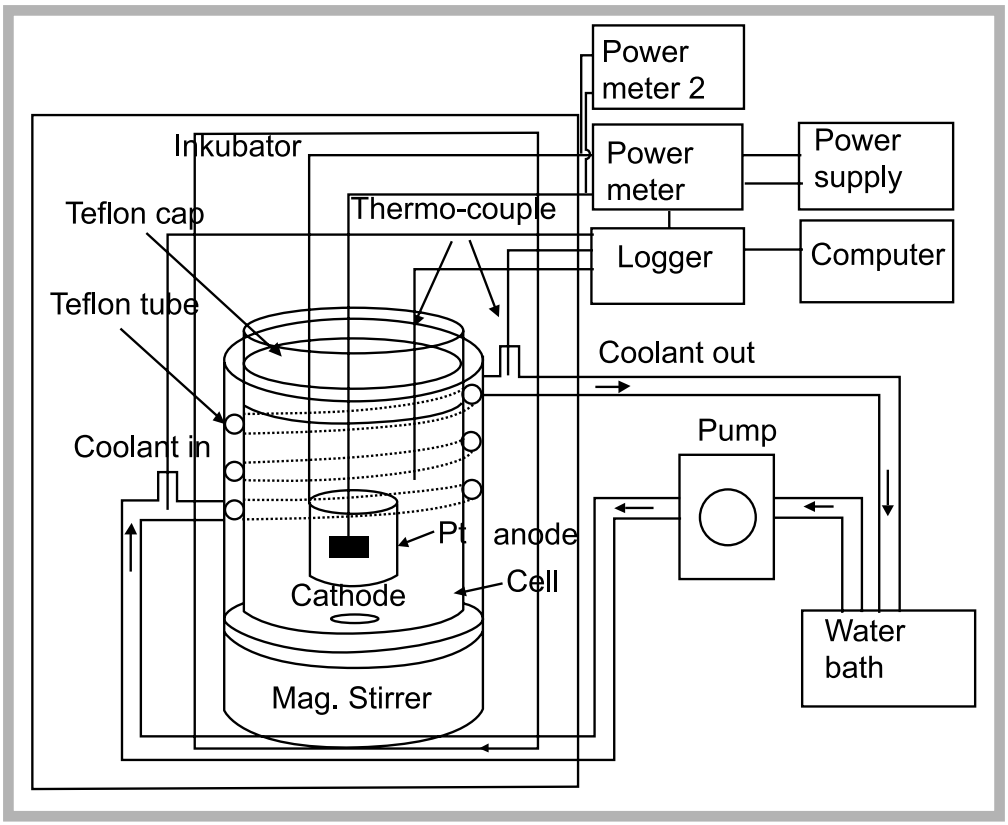

On the Fig. 8 you can see a glow discharge electrochemical cell at Hokkaido University, courtesy T. Mizuno. The cell is installed inside a crowded constant temperature air-cooled chamber. It placed on a magnetic mixer. Cooling water is pumped through the plastic tubes attached to the top and bottom. The muffin fan at the back circulates the air in the chamber

Fig.9

A schematic of the calorimeter shown above.

Hydrogen power engineering

Faraday Laboratories Ltd, Moscow, and Spectrum Investments Ltd, London, started joint R&D project on hydrogen power engineering. Photo: Alexander V. Frolov, Faraday Laboratories Ltd and Nicholas Moller, Spectrum Investments Ltd. The project includes designing and building of prototype to use hydrogen recombination process for heat generation.

On Electrogravitation

Andrey V. Lemeshko

Krasnogvardeyskaya st., 14, apt.11
02094, Kiev, Ukraine
E-mail: jnet@ukr.net

Part I

"let's go to the Mars!"

Nowadays it becomes evident that exploration of deep space by means of rocket equipment is impossible. Aircrafts, which run on jet thrust, are too expensive and unreliable. Besides, they are too slow-speed if were considered on a scale of solar system. For example, the flight to the remote areas of our planetary system can drag on tens years. But the main disadvantage of rockets is their low load-carrying capacity. Thus, the most powerful transport system "Progress" can deliver less than 100 ton of load to the orbit of the Earth, and only 1 ton to the orbit of the Mars. Rather natural question arises as to whether any alternative ways of space exploration exist? Are there any transport systems, which can compete with rocket equipment on the interplanetary routs of future? Actually, at present there is only one technology, which is alternative to rocket ones – it is the so-called light sailers, using light pressure for acceleration. Laser and maser can be also used for their acceleration from satellites. However, there are also some disadvantages here.

There is also one more transport system, which is undeservedly consigned to oblivion. It uses electricity in acceleration aggregate. This transport system or the electric propulsion system is a result of researches and investigations of two little-known, but extremely talented American physicians and inventors, Thomas Townsend Brown and Paul Alfred Biefeld (the last one was also a professor of Astronomy).

Thomas T. Brown was the first who discovered electric principle of this propulsion system. Thus, in twenties of the XX century Thomas T. Brown, being the student of secondary school, became interested in X-rays. He wanted to reveal if the rays, outgoing the X-ray unit, could take positive effect. For his researches the inventor had got Coolidge Tube, the device, which radiates X-rays and consists of a glass tube. Deep vacuum is created in this glass tube. Anode and cathode are placed in the tube. Cathode radiates electrons and anode brakes them. X-rays are created at striking of electrons against anode. Brown used Coolidge Tube in the way nobody had done before. For ease of handling the researcher suspended the device on wires, which run to anode and cathode parallel to the Earth. During the operation of the device he noticed that every time when current fed to the tube, the tube was moved aside and tended to make slight progressive motion. Subsequent experiments demonstrated that the deviation value depended only on the value of voltage, which is between anode and cathode. The higher voltage is, the more deviation. X-rays were neither here not there. Much later at participation of Paul A. Biefeld, the same tendency to move was revealed at plane disc capacitors. The reason, which causes this motion, is the same, i.e. voltage, which exists between plates and not between anode and cathode as in Coolidge Tube.

Having run series of experiments, the researchers proved that electric energy could be directly transformed to mechanical. They also devised the physical principle, which were included in the scientific annals as Biefeld-Brown effect.

Editor's: Let us note that earlier Ampere and Faraday have been working on Electrokinetic effects which are easily detected at strong current. Modern researches on this point are known as "Sigalov's effect" (force appears in electric conductor which is bent at angle and at current impulse).

The essence of this effect lied in the fact that charged disc electric capacitors tend to move in the direction of their positive pole. At formulating of the essence of this effect the scientists consciously did not mention Coolidge Tube in order to demonstrate that according to their experimental observations, electron streams were not involved in generation of electromotive force. This effect of the direct transfer of electric energy to mechanic one (Biefeld-Brown effect) is observed, when current is fed to the Coolidge Tube or to the plane disc capacitor.

However, all this was realized much later, when in 1923 Brown became a student of Dennis University in Greenville, Ohio, where he met his teacher and later on a coauthor, Paul A. Biefeld. In school time the inventor came to the conclusion that the reopened by him phenomenon has nothing in common with X-rays and that high voltage, used for rays generation, is the basis of this phenomenon. Besides, Brown designed a device named "Gravitor". It looked like a usual bakelite box and was made as a simple construction, which consisted of several flat aluminum plates. The plates were placed as coins in a rouleau and separated with dielectric. It had only to place the box on the scale and connect it to some energy source with 100 kV voltage as the device either lost or put on about one percent of its weight that depended on polarity. An outside observer, who was not familiar with the essence of this effect, could think that mass was really changed. *(Editor's: Weight but not the mass is changed here. Weight is the force. There is a possibility of partial compensation of the weight by another force.)* But this was not the case. For better understanding of the processes, which take place at gravitor operating, let us make a mental experiment. Let us take a weight, put it on the scale and then raise it a little. The scale will certainly show that the weight has become lighter. After that let us press the weight then the scale will show that it has become heavier. However, in fact mass does not change. In the same way motive force, caused by high voltage, slightly raises the gravitor and at changing of polarity presses it. At that it seems that there is some change in weight. Thus, as if by chance, the scientist has discovered effect of direct transition of electric energy into mechanical one. *(Editor's: Let us specify the author's terminology. In T.T. Brown's Patent of 1927 it was mentioned that there*

was generated a force which partially compensated weight. The matter was always about the generation of x-force while gravitational field remained unchangeable).

Having graduated from the University, from 1926 up to 1952 Brown already by himself was being occupied with development of his electrical propulsion system. At the same time whether in chase of fame or in hope to obtain money for his researches, T.T. Brown began asserting that he had discovered something new in physics, viz "electrogravitation", i.e. some connecting effect between gravitation and electricity. *(Editor's: In my opinion, T.T. Brown has never posed a problem in such a way. The matter always concerned the fact that X-force appears while gravitational field does not change.)* As for the development of the invention, it came to the decrease of weight of the device and increase of DC voltage, which fed the plates of the "gravitor". As a result the devices could fly and lift weight which greatly exceeded their own. Thus in 1953 in his laboratory Brown demonstrated the flight of aircraft which had a disk form. The device made 51 m/c (180 km/h), flying at circular course of 6 m diameter. This device was nothing but very lightweight capacitor in which by means of the special construction electromotive force was redirected in two planes upward and sideward. It made the device rise in air and fly around the mast. Current of 50kWtt voltage was supplied to the central mast by the wire. Then speed of "flying disks" became higher, the payload capacity was increased but that was again resulted by decrease of weight and increase of the supplied voltage. T.T. Brown so succeeded in decreasing of the thickness of capacitor plates and in making his devices superlight, that the witnesses of these demonstrations called these devices as "air films".

Later on all works in this area were placed on secret list and then closed because of lack of prospects. Thus, accounts and experiments demonstrated that it was impossible to overcome terrestrial attraction entirely and go to outer space by means of the gravitor because there are no such natural materials which could take huge electric and heat loads. Besides, sufficiently massive electric power station would be needed to produce required currents. *(Editor's: Thereupon the following question appears: why the author looks for "currents" while the essence of the technology is in applying of high voltage but not of the currents?!)* Moreover some alternative was made, i.e. jet engines. Gravitor could not compete with them by above-mentioned and quite objective reasons. In time, since the mechanism of transition of electric energy into mechanical one was not disclosed and Brown's populist idea has received some publicity, this effect became surrounded with idle talks and guess-works. However the scientists who researched this very effect, has developed only three theory wh ich could explain its existence.

The first theory was suggested by T.T. Brown, the discoverer of this effect. To his dying day Brown asserted that he had discovered the effect which could connect gravitation and electricity, i.e. "electrogravitation". But this theory can be easily refuted by practice. It is enough to put Brown's bakelite box to the scale in such a way as to place the plates of the "gravitor" at right angle to the surface of the scales. Then poles of the "gravitor" will be placed at the same level and parallel to ground and as a consequence electromotive force will influence in no way on the scale, since this force is directed sideward but not upward or downward. The scale will accurately show that there are no changes in weight and hence there is no **electrogravitation**. *(Editor's: The author will obtain propulsive force and it is directed not upward and downward but sideward. However the effect exists in any case. The changing of weight appears only when propulsive force generated by the device is directed against the weight force, i.e. upright.)*

The second theory was suggested by T. Brown's opponents. They asserted that electromotive force appears as a result of the so called "electron wind", i.e. electron streams which exist between the plates of the "gravitor". In their argumentations Brown's opponents rest upon the following facts which are well-known to every physicist. Fast electrons, as well as photons, have dual properties, i.e. interacting with matter and environment, they behave both as a wave and as a material particle. Since light or photons carry energy, then they heat bodies which are in their way and put pressure on the illuminated surface etc. Similarly electron streams carry heat or kinetic energy and hence they can put pressure on the anode of Coolidge Tube and get it moving forward. This theory seems to be interesting, however it explains appearance of electromotive force only in Coolidge Tube, but there is no explanation why discoid capacitors tend to move. Point is that there are no free electron streams in the capacitors. Usually between the plates of capacitors there is a dielectric which brings electron streams to nothing. If there is no electron wind, then what makes capacitors move?

Editor's: There is always a surface charge and reactive outflows of ions. But it is just a partial explanation of Biefeld-Brown's effect.

The third theory is based on the following fact. It is well known that electrons can have heat or Brownian chaotic motion. Free electrons, placed in a conductor, are in the similar chaotic heat motion before voltage is applied to this conductor. The higher temperature of the environment is the higher speed of this heat motion. According to school course of physics, heat energy or energy of chaotic motion of molecules (electrons) can be entirely transferred into mechanical one. If all molecules (electrons) start to move simultaneously and in the same direction, and if they push some piston toward this direction then heat energy of molecules (electrons) will be entirely transferred into mechanical work. In other ways, this piston will move until molecules (electrons) calm down. It is considered that this process is unrealizable in practice.

However, it seems that this is not quite the case, i.e. it is possible to regulate chaotic heat motion of electrons. Obviously this process takes place in the capacitor and in Coolidge Tube. It is no secret that when negative electrons try to move to the neighbor positive charged electrode, then dielectric layer which is placed between the plates of the capacitor prevents it. Electrons rest upon this layer and start to heat. Their internal energy is also increasing. The higher voltage is the higher heating of electrons, i.e. their capacity to have chaotic heat motion increases. However, chaotic motion of

electrons is not observed on the capacitor plates, since the directed force (voltage) influences electrons. Electrons tend to move upward, downward, to the right and to the left, but voltage prevents it. Thus they just are forced to move in space in one direction and with the same speed. Capacitor or gravitor has to move alongside with electrons because plates of the capacitor (gravitor) become a piston which is pushed by heated electrons. This piston is in progressive motion. It starts to move under the influence of electrons, or rather together with electrons. The higher voltage is, the higher temperature of electrons and hence the higher their speed. Therefore speed of capacitor (gravitor) increases at voltage increase. There is a usual chain, i.e. electric energy transfers into heat energy and heat energy transfers into mechanical one. Approximately the similar process takes place in Coolidge Tube, but there the heat of electrons is caused by thermoelectric emission on the cathode. Electrons evaporate from the cathode surface. Voltage, existing between anode and cathode, makes electrons move in one and the same direction. They move towards anode, which serves as piston and takes heat push upon itself, i.e. it transfers heat energy of electrons into mechanical work. It is clear that the higher voltage is the more intensively electrons are heated. Therefore electrons more intensively influence anode and the suspended tube is deviated to a greater extent. (*Editor's: Nowadays this very explanation is the most admitted one.)*

Resting upon Biefeld-Brown's theory and experimental results and at sufficient financing, already within the next few years it would be possible to create a unique electric engine which can operate on hot or quick electrons. Besides there will appear a possibility to orbit the first spaceship equipped with a propulsion system similar to gravitor one's. In near future scheduled cargo-and-passenger service could be organized within planetary system. First of all such transportations can be organized between the Mars, Moon and Venus orbits that will let to start active colonization of these planets.

Thus, more than 200 flights to the Moon and back and about 70 flights to the Mars are possible by means of the gravitor which is made of modern fusions and dielectric materials and which is placed on the Earth orbit. At that there is a minimum risk for its breakdown during the flight, because gravitor has no movable parts and no explosives are used. Negative consequences for the crew in an improbable emergency are insignificant. Even if high voltage causes disruption of dielectric layer between the electrodes and voltaic arc appears then the spaceship, equipped with such a propulsion system, will mechanically arrive its destination. The source of energy will be its only trouble spot and it will happen only if nuclear reactor instead of solar batteries is used. There is also an idea to attach dwelling capsules and cargo bays, equipped with such electric engine, one after another, like carriages are attached to a locomotive. It will let to equip this interplanetary vehicle in several stages by compactly packed modules which are delivered from the Earth. Unfortunately, this project exists only on paper and support of government or financial institutions is not expected in the near future. Faint hope is rested upon enthusiasts but there are too few of such people, besides almost all of them are rather hardly related to space flights and science. Most of scientists even hear nothing about Biefeld-Brown Effect, because it has never become widely known, since all works of this field, except the very first experiments from the USA, were run and then closed in secrecy.

Part II

"...it's time to go to the stars"

Due to the theory of relativity there is an ingrained belief of several generations that it is impossible to move with more than 300 000 m/c speed, i.e. to move faster than light, since the postulates of this theory read that mass is directly depended on speed. Calculations demonstrate that while speed of some accelerated body verges towards light speed its mass will increase and in the point of equilibrium (V=c) it will unrestrictedly increase. Hence acceleration will tend to zero and speed will not virtually increase, no matter how long acceleration speed acts on the object. In other words, the accelerating mass dissipates speed. In principle it is correct but another conclusion can be also drawn from the dependence of mass and speed, for example, the following one: to accelerate an object to the speed which exceeds light speed, mass of the accelerated body should decrease and its speed should increase. Any physicist will say that this statement is correct. At first sight it is practically impossible to realize this idea therefore it was wrongly give to writers of science fiction. They added this idea to their armory and the hypothetical device, which realizes it, was named as gravitational engine. Let us realize this idea from the practical point of view and basing only on facts and logic.

Thus let us apply to the facts and give the description of one experiment. Professor of Pulkovo Observatory N.A. Kozyrev is the author of this experiment, he was also the first to discover the phenomenon of lunar volcanism. Kozyrev used a gyroscope, i.e. the device consisting of two rings of different diameter. These rings are placed athwart one in another and movably jointed. Top is attached to the inner ring through the cardan. The scientist put usual thermos filled with hot water near the beam scale. The top of the gyroscope was preliminarily spun up counterclockwise. At that balance indicator showed that gyroscope top at 90 gram weight became 4 milligram lighter in weight. Then Kozyrev started to pour water of room temperature inside the device through the vinyl chloride tube fixed into the hole, which was made in the plug of the thermos. Seemingly it is impossible to influence upon the gyroscope operating and its weight by a balloon filled with hot water, which is being cooled. Besides the thermos consists of a double-walled container which practically entirely excludes heat exchange with the environment. However balance indicator moved at one or two points, i.e. such connection existed.

This experiment can be divided into two steps. At the first stage the thermos filled with hot water is placed near the gyroscope and we can register the decrease of the top weight. At the second stage water of room temperature is poured into the thermos and the scale again shows that the weight has been changed. Somehow Kozyrev explained the second stage of this

experiment. He assumed that when we pour cold water in the thermos, then the equilibrium of the system is broken because some irreversible processes take place there. Cold water can not cause temperature increase of water in the thermos. Until the system come to equilibrium at a new level, i.e. until the same temperature is set in the whole volume of the thermos, this process will cause the condensation of time which "additionally" influences the top. However the scientist missed that the weight of the top had decreased long before the moment when cold water was poured into the thermos, i.e. before irreversible processes appeared there. *(Editor's: Evidently, the author of the article is not well familiar with Kozyrev's researches and with works of other experimenters who investigated this problem.)* In other words, at the first stage of the experiment there is nothing to condense time and that insignificant weight condensation, which was equal to 4 milligram, absolutely does not fallen into his theory. Some other process is presented there.

It is quite possible that at the first stage of the experiment we deal with nullification of the top weight, i.e. mass of the top tends to zero. Some conclusion arises from this assumption, i.e. hot water can influence the mass of the top in some still incomprehensible way. *(Editor's: The point is not in water temperature but in the process of changing of the entropy.)* Thus there is a simplest and primitive model of the gravitational engine, viz there are hot water along with gyroscope and the required decrease of mass at the "outlet". Certainly, it is very bold assumption but it can be easily checked. Near the gyroscope there should be placed thermos filled with not boiling water (of 100°C temperature) but with water of 50°C temperature. If the weight of the top decreased by one half (for example, by 2 milligram instead of 4 milligram), then we can surely ascertain that the hotter water in the thermos is the more decrease of mass. Besides, each 100°C of water heating will decrease mass of the top by 4 milligram. It is not very difficult to calculate the temperature at which mass of the top will verge toward zero and the top will start accumulating negative mass.

Let us now assume that our experiment was successful then water as well as any other matter cannot be heated to such high temperature. However it is possible to heat electrons. They are very compact and have insignificant mass and can be heated to very high temperature. It is necessary to take several plates then to place a dielectric between them and to apply voltage. Electrons rest on the dielectric and start heating. The top can be rotated anti-clockwise by means of electric engines, i.e. capacitor and gyroscope should be combined in one system with common center of gravity. It is not very difficult, as the saying goes, it is just an engineering problem. The higher temperature of electrons is the more decrease of the top mass. Finally there is a moment when mass of the capacitor-gyroscope system will reach zero and this electric machine will rise to the surface of the gravitational field of the Earth or any other planet. It will be Biefeld-Brown's force that will make our apparatus taking off the gravitational field of the Earth. This very force will start to accelerate our apparatus in the space vacuum and top of the gyroscope will lose its mass which appears at acceleration. Thus it is quite possible to reach speed, which is close to the light one, or even to overcome the threshold of light speed.

Part III

"...what is new?"

What is implied by gravitational waves? This question has been exciting the scientists from the half of the XX century. But still nowadays, in spite of all attempts of the scientists to dissolve the problem, these waves were not discovered. There is a standard way to discover them, which is based on general relativity. Basing on this theory, scientists assume that gravitational waves should change in some way the weight of material objects. According to this assumption the scientists suspend very heavy balls to very precision scale and then try to trace changes of their weight. There were only negative results. It seems that mass changes so quickly and to such short period of time that scale fails to react upon these changes. However there is another way which seems to be very promising.

Dependence of time and gravitation is a well-known fact. Thus speed of time course depends on force of the gravitational field of an object. Stars and planets can be considered as an example. The more intense attraction near them the more slowly time passes there. In other words, the greater mass of the planet the more slowly time passes near it. It is possible that oscillations of masses, which generate gravitational waves, in some way change speed of the time course along the whole way of the propagation of gravitational waves. In other words, gravitational waves are always attended with slight time fluctuations. Time starts to pass a little faster or a little more slowly as compared with its usual course. These changes can be traced by means of usual quartz plates. Let me remind of the fact that quartz plates are used at some models of clocks to keep time. Thus, oscillations of gravitational masses produce in space both gravitational waves and time fluctuations (chronowaves), which can be easily detected. Possibly these chronowaves are the part of gravitational waves. This assumption is already a scientific fact which is unfortunately ignored by more than one generation of researchers.

Professor N.A. Kozyrev was the first who surmised about the existence of time ways (chronowaves). He called them as "time flows". The scientist worked out and run a simple experiment to confirm his hypothesis. Telescope and quartz plates were used. Quartz plates were placed in focus of the telescope, which was pointed to some bright star. Its objective lens was covered with black paper or tin plate in order to exclude the influence of light beams. At that quartz plates reacted upon the presence of chronowaves. Thus there was changed the frequency of oscillations of plates which were placed in focus of the telescope.

Besides the scientist discovered that in focus of the telescope there were changed electroconductivity and volume of some matters. It is explainable since some parameters of space as well as speed of passing of some physical processes and phenomena depend on the speed of time course. Outwardly it appears in change of electroconductivity and volume. In spite of the fact that during the experiments tin plate (thick metal cover) was used some skeptics insisting that the point is in infrared radiation which is produced by the heated cover. However they was silenced by Kozyrev's researches. Basing on the fact that we usually see stars not where they really are, but at the place they were at the moment

of emanation of light signal, the scientist calculated the location of Procyon star, which is the nearest to the Earth. Kozyrev pointed the telescope to this "clear" part of the sky zone that allowed to avoid the influence of infrared radiation and to fix the location of the star. Thus it is nothing but chronowaves generated by the star that can change oscillation frequency of quartz plates.

After Kozyrev's death this field of research is not considered by official science and the very existence of chronowaves is denied. Only some theorists warily impute the above-listed effects to the action of some torsion fields and waves the existence of which is rather questionable. However chronowaves exist and they can be used in practice, for example, to get information from any point of our galaxy in several seconds. **It is quite possible since chronowaves have no mass and thus they are propagated more quickly than light waves.** However it is still a question what will transmit this information to us because the transmitter of these waves yet has not been invented. *(Editor's: It is interesting what mass of light waves the author means. It is a pity that the author of the article did not read 9 previous issues of NET magazine! There was a detailed demonstration of the connection of Kozyrev's theory and experiments with the theory of longitudinal waves in aether. If to replace Kozyrev's notion of "waves of time density" by the notion of "waves of aether density" then we will get a real experimental approach which can help to solve the problem of antigravitation and time control.)*

Of course theoretically chronowaves can be also generated without participation of great gravitational waves (it seems that heat processes can also generate them). However no particular success was achieved in this field. Thus by means of chronowave transmitter it is possible just to "listen" to remote stars the light of which will reach the Earth in many years. This receiver is very simple and it can be made by anyone who knows a little about radio engineering. *Under home conditions it is better to use a miniature incandescent bulb (lamp with filament tungsten) as a receiver and usual ohmmeter as measuring instrument.*

If in usual receivers radio waves are excited by weak electric currents existing in antenna then chronowave antenna is constantly under tension. Chronowaves do not excite current there but change some characteristics of it, influencing on electroconductivity of the matter which was used for the antenna (let us remember Kozyrev's experiments). Later on these insignificant changes are transferred in audio signal or fixed by any other means. That is the principle of operation of the device.

Editor's: These experiments on the registration of flicker effect in more detail are described in A.M. Mishin works which were published in previous issues of our magazine. As the reader could notice, the editors' opinion in many respects does not coincide with the author's point of view. (Alexander V. Frolov)

References

1. *G.Ya. Myakishev, B.B. Buhovtsev,* Physics, *M.: Prosveschenie, 1991*
2. *A.S. Kuzovkin, N.N. Nepomnyaschy,* What happened to torpedo-boat "Eldridge"? *M.: Znanie, 1991, Series "Znak voprosa" #3, p.37*
3. *S.N. Zigunenko,* How the time machine is made? *M.: Znanie, 1991, Series "Znak voprosa" #5, p.35*
4. A. Einstein and gravics, *Collection of articles, M.: Mir, 1979*
5. *A.D. Chernin* Physics of time, *M.: Nauka, 1978*
6. *A.I. Veinik* Thermodinamics of natural processes

Time Machine

Alexander V. Frolov gave this interview to the Spain magazine "Mas Alla de la Ciencia" ("Science"). The interview concerns some questions about scientific-research work on investigation of active properties of time. Let us remind that in 2002 Faraday Lab Ltd and Vadim A. Chernobrov (Moscow) started the join Time Machine Project.

Miguel Segui: How does it value the results obtained by the prototype of time machine?
Alexander V. Frolov: Usually it is about 3% changes, i.e. 3 sec per 100 sec of experiments.

M.S.: How other devices are preparing inside the project Time Machine?
A.F.: Now we have project with special electromagnets, which are emitters of the longitudinal waves. So, other devices are electronics parts to provide impulse current. But it is not the only one version of the system. If the emitters of the longitudinal waves are based on other principles so all device has other design.

M.S.: Do you believe that some day the time trips will be possible?
A.F.: Yes, sure. We have the clear theory for it and it is based on understanding of physical sense of the aether,

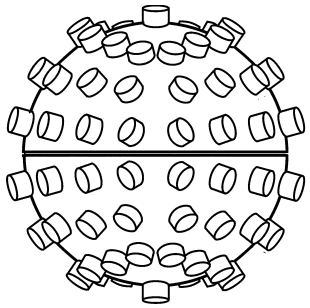

its relation with notion of time and with concept about existence of elements of matter in space-time. According to aether-vortex theory any element of matter is created from aether and its temporal parameters depend on density of aether.

M.S.: What practical applications can have the prototypes that are developing?
A.F.: Any change in the time course is the method of influence onto biological systems and the medical aspect is the main application. Also any physicist know relation between G (the gravity constant) and time course (rate of time). For example, time is slower on the surface of Earth than in space. So, local time changes (which are changes in density of aether or direction of aether wind) can be used to get propulsion force without reactive mass

flow. Also we can hope that some new materials can be produced in special area of slowed or accelerated time course.

M.S.: Which are the main difficulties of developing of these devices at the moment?
A.F.: For us now it is a part of the work that is related with designing of the powerful current electronics circuits. Also there are no known analogies for patent work, but we hope to complete our patent claim in March of 2003.

M.S.: Is it foreseen that they carry out experiments with human beings and the machine of modification of the time, just as V. Chernobrov carried out?
A.F.: We, i.e. Faraday Laboratories Ltd, are developing small unit for testing of the principles. In future we'll work with other design and with participation of the pilot (human passengers). But it will be the system of other kind. Let me explain: now we are working to get small local change of the aether density, so called "chronal charge". It is analogy with electric charge, which produces electric field in space. If the electric charge is moving then it will produce magnetic field. According to our plans after confirmation of the principles we are going to create design with moving "chronal charge" to generate "chronal field". There are suppositions that this field can be used practically for antigravitation propulsion transport.

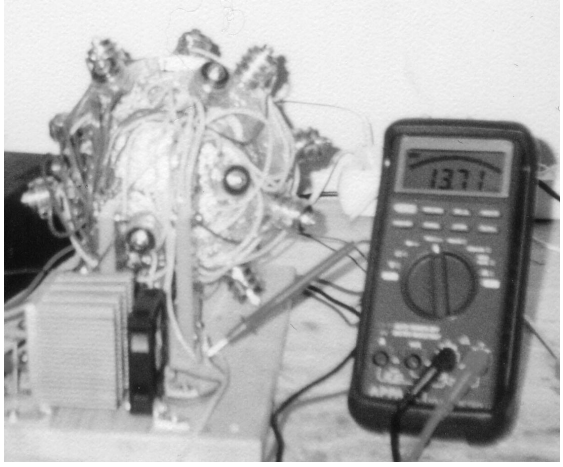

"FRCM" – Avalanchedrive
Fractioning and Replacement of a Constant Mass

Murilo Luciano Filho, Brazil

murilo@intrumenti.com.br, avalanchedrive@hotmail.com

For the while, this project has only these two names, as above. There is still a lot to do upon this development that involves free energy and / or "over-unity". It is designated to be of free use and application by everybody and everywhere, without any royalties just like it was a very old idea, which is now opened for entire community use. The inventor has enough strong reasons for this will.

This is a kind of donation, a personal donation, for the very best future of the Earth. Pioneers are needed (late pioneers?) Any person may be involved in this development to make money since there are no barriers for that. This means that this is an open idea and in this way it must stay. The principles are new and original and the energy involved is quite huge. In the inventor's mind there is realized the possibility to create an expert hands-on group to finish the project. In this article there is a rough draw which seems to be enigmatic but in fact it can clear the understanding of the principle and show the situation at which body may offer controlled spatial variation of length for the same weight.

The short text and a schematic draw (see Fig.1) are the way to show the principles and a few possible construction solutions. The photo shows a part of the device which can clear the so called weight localized rarefaction. Possibly the understanding of capacity for an observer will be a little forced. If necessary author can send the full patent requirement text, which contains 54 pages and 32 figures, not in English but in Portuguese.

FRCM – "AVALANCHEDRIVE"

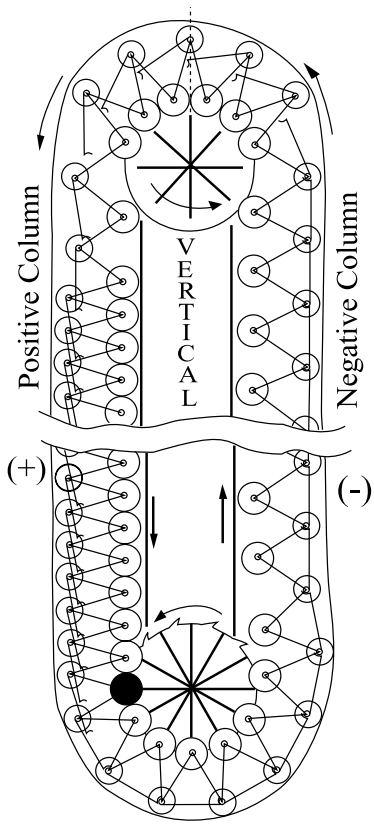

Fig. 1

Understanding of **FRCM / avalanchedrive** is a challenge in itself. When you start to learn about FRCM you will find complete original problems to deal. **Free your mind basing on some mechanical and physics knowledge and then avalanchedrive will come to make a part of your life. Feel free to work.**

PATENT REQUIREMENT RELEASE

This patent requirement is basically the application of a new physical principle which could be defined and found at least 400 years ago, so simple it is. Surely it is one of such things which was let behind by human mind and concern. FRCM is odd and amazing. The key for this project is a special body that can behave like a solid and like a fluid, at the same time, with combined characteristics just as designed and required.

The mass potential of a specially designed segmented body is hold and managed, and throughout proper means is sequentially fractured while suspension balance is kept. This causes, after start, a constant and cyclic movement, since arrangement goes, and the conducting and forcing form of the mass is not interrupted.

Also called "avalanchedrive", this principle work is based on just three main parts or components: 1st is the special segmented body – a chain; 2nd is the stationary and external assembling to hold and conduce the chain; 3rd is the straight vertical, in order to achieve the maximal weight storage position in the arrangement.

The chain is an endless repetitive zigzag construction with weights and defined angles that looks like an entire and elongated ellipse. Its design makes easy the change of its profile and form (mutant profile) that will be contracted or elongated, according to the way it is organized, supported and driven. When contracted or expanded, the chain assumes its maximal or minimal weight, in comparatively the same heights and level, but at different cross sections (tunneling?).

For distribution of the chain track the external assembling forms a kind of duct or rail, which is also elliptical. It allows to the chain to be contracted and expanded, to change direction, move, and pass away, as desired. The chain follows the way that the rail allows, in four different zones: mass-united zone, or positive column, or weight capacitor; the lower reversion input zone; the liberation zone, or negative column, with same height of the positive one; and the upper reversion zone, and its "zero point", or non-resistance top.

Both reversion zones are composed mainly of wheels. However, while the lower zone has to hang, open and bolt the chain, in order to change its profile and natural falling-down trajectory, the upper has a very passive function, that is just to let the chain cross over, and avoid any turn back possibility.

Fact is that in all circuit the chain follows with passivity the "voids" of trails, but assumes a very strong positive and pressure action in mass-united zone, especially in the button, where to the wheel there is applied all the active potential weight of the device, formed by the entire stack of the full contracted state, forcing movement.

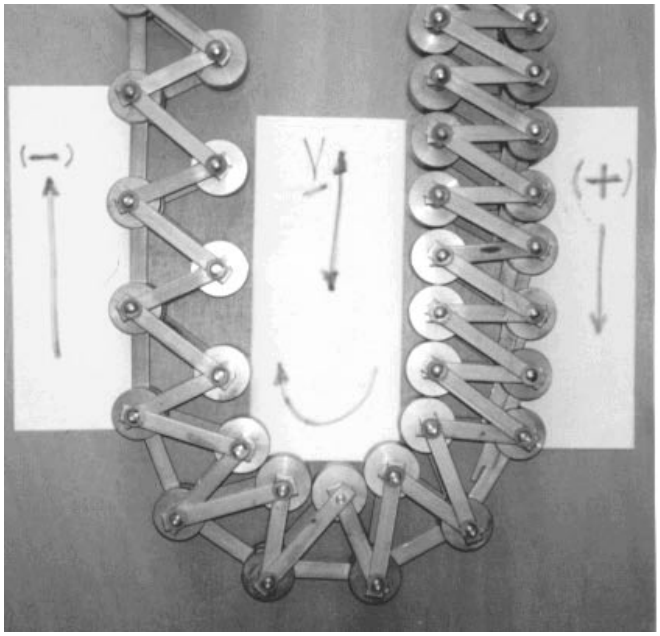

Photo of FRCM (Avalanchedrive)

It is easy to understand how and why FRCM works. Weight of the positive column is directly connected – as a compressed spring – against the relatively lighter negative column, through lower reversion wheel, where happens a kind of flux (the "solid flux") of the chain, that never can find a state of rest. Cycles of "breaking" of the chain can beconsidered as the instant of touch of each corner of the chain to the lower step wheel. To complete the circuitry, the chain excess, which is much lighter, passes over the upper wheel and turns back to the positive column top. It is impossible to turn the full subtracted potential to its source but mechanically the easier job to be done in FRCM.

FRCM manages and converts mass in energy...

The chain flows from the positive column, naturally finds changed profile and reverses to opposite way, and then it is pushed up to the negative column and to top. Finally it is collected, friendly, to restore the potential, at non-stop run! The only alternative to the chain is to move and move, and apply the positive surplus of weight to wrench under axle of the wheel.

This FRCM principle allows develop the equipment which is going to be able to take energy, work and force from gravity potential, so as it happens from wind and water at electrical generator machines, today. The potential is kept in such critical situation, that the only way for it is to escape and move. Besides in consequence of the suspending mass state the linear constant repetition of event will suffer. Water and other fluids do not offer "mutant profile" with fixed value of pressure, just as solid materials. There are many arguments for this view.

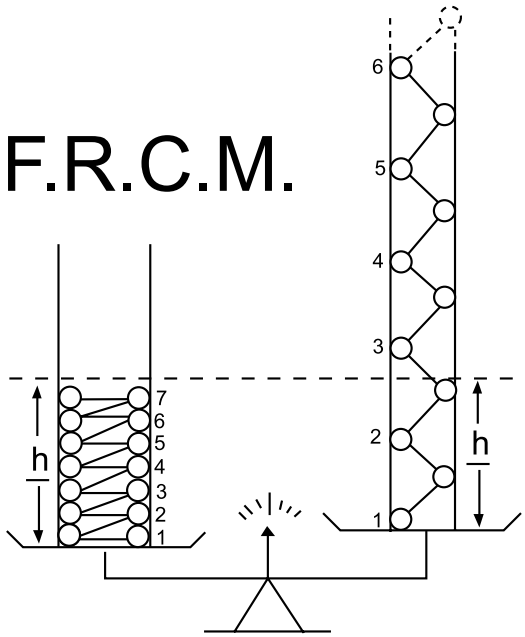

Fig. 2
Segment of a chain

Considering all mechanical losses, a part of the mass will be very active and applied in eccentric, or radial position to the wheel, even with the risk to cause too high speed. FRCM manages and converts mass in energy.

See a non-scale schematic draw (Fig. 2) and photo of a chain segment to compare densities between columns at right and at left.

A theoretical case can be calculated: at total chain weight - 100, general losses - 20, total negative resistance - 30, active or positive surplus is 50 – 30 = 20. This surplus that may be of 2kg, 200kg or 2,000kg, depending on scale, will force and free edge of the wheel, while the total weight keeps confined in the device. In the above case the difference of balance is 1.66. This means that the flowing velocity of the negative pile is 1.66 times higher than the falling of opposite positive pile. Just like a "solid venture", this change and relation is fixed, and in other cases may be varied or calculated to 3, 4 or even more! In all cases the speed must be hold that is not very easy job while one faces gravity acceleration.

The author of FRCM conceptions feels like these ideas have been around for many centuries, and that they are now discovered just like old draws. And this can be the bigger and the best moment to release this. Many thousands of different designs and solutions are coming in the future at looking for the better performance, costs and durability. Author thinks it to be strange that previous guesses could not reach this macro-physical concept. To build FRCM circuits, even re-applied or used old pieces, for example from ships and trains, will be useful.

This is only a start to a "new-old" development and clue to the sources of the modern mechanical engineering. Certainly some oppositions should be overcome. It is expected that other names are also going to be created and proposed to FRCM, but "avalanchedrive" seems to be a good one.

Author expects to get the invention and concept credits but not royalties and would also be glad to keep working on this concern. So, this message is a kind of invitation...

Editor: Unfortunately we have no photo or video documents of the operative device. We wait for readers' comments on this invention.

Complete text of the patent is avaible in Pourtuguese only.

ELECTRIFY
an online and published magazine about Electric, Hybrid, Fuel Cell Vehicles, advanced batteries, ultra capacitors, fuel cells, microturbines, free energy systems, EVents and exhibitions worldwide

63600 Deschutes Mkt Rd,
Bend Oregon, 97701
541-388-1908 fax 541-388-2750
etimes@teleport.com
www.electrifyingtimes.com
Subscription $13/3 issues

Institute for Planetary Synthesis

P.O. Box 128, CH-1211 Geneva 20, Switzerland
Tel. 41-022-733.88.76, Fax 41-022-733.66.49
E-mail: ipsbox@ipsgeneva.com
website: http://www.ipsgeneva.com

Hydrogen-Powered Vehicles at Least a Decade Away

Peter Behr
Greg Schneider

Washington Post
http://www.washingtonpost.com/wp-dyn/articles A635122003Jan29.html
Thursday, January 30, 2003; Page A09

This information is forwarded as a courtesy from:
http://www.integrityresearchinstitute.org

President Bush's vision of a hydrogen-powered, non-polluting "Freedom" car for the next generation of American motorists pulled out silently from a Newport Beach, Calif., garage with Gregg Kelly at the wheel, bound for his office 10 miles away.

Kelly, president of a California robotics company, happens to drive a Toyota prototype of a hydrogen-fueled car, one of a handful in the United States today.

It will take at least a decade before a host of technological, economic and political barriers are overcome, permitting a fleet of these revolutionary vehicles to appear on U.S. highways, industry experts said. But by including the goal of hydrogen fuels in his State of the Union message Tuesday, Bush has opened the door to a fledgling movement that has already attracted a surprising coalition of supporters.

Environmentalists, automakers, oil companies and coal producers, engineering labs and strategists have seized on hydrogen as an almost too-good-to-be-true power source. It is abundant in water and air, it burns cleanly and it could free the nation from its dependence on Middle Eastern oil.

"For President Bush to frame the goal as he did is significant," said Jeremy Rifkin, consultant and author of a book advocating a transition from oil and gas to hydrogen. "How much is made of this, time will tell."

The president said he hoped that Americans born today would learn to drive in hydrogen-powered cars, a schedule that auto experts said could technically be met. But whether these vehicles will be commercially available depends on a huge array of variables.

First, the technology is still incomplete and unaffordably expensive. The specially equipped Toyota Highlander that Kelly drives has no price tag. The Japanese manufacturer, after investing millions of dollars in research, lent the vehicle to a University of California research project that Kelly's company supports. "My checkbook isn't fat enough," Kelly said.

The car is powered by electricity generated in a fuel cell by chemically combining hydrogen and oxygen. The engine spits out water drops instead of the carbon dioxide and other pollutants generated by burning gasoline.

With foreign manufacturers committed to press ahead, Detroit's carmakers have had to accelerate their research programs. In June, Ford Motor Co. will unveil a prototype car that uses hydrogen to power an internal combustion engine – part of a "bridging strategy" to help ease hydrogen into the marketplace until fuel cells are fully developed.

General Motors Corp. has developed a fuel cell-powered, car-sized "skateboard" – four wheels attached to a platform less than a foot thick, to which any kind of car body could be buckled.

Rather than use fuel cells, BMW has refitted 10 of its $70,000 Model 745 sedans with hybrid engines that burn either gasoline or liquid hydrogen directly. It could be mass producing them by the end of the decade at a "reasonable" cost for its customers if there were enough hydrogen fueling stations to power them, said spokesman Gordon Keil. "We're trying to get [fuel suppliers] interested in hydrogen. We've not met with a lot of enthusiasm."

As daunting as the engineering challenge is the need for a national hydrogen fuel infrastructure – factories to produce the fuel, pipelines and trucks to distribute it and stations to store and sell it. Environmentalists dream of a totally "green" strategy in which solar or wind power is used to separate hydrogen from water – an approach whose costs now would be prohibitive. A nearer prospect is producing hydrogen from natural gas or coal, however in either case, the carbon dioxide byproduct would have to be injected underground to avoid a huge increase in greenhouse-gas emissions, experts say.

Rifkin argues that an eventual scarcity of oil and gas, decades ahead, will push prices of these fuels up to a point where hydrogen becomes cost-competitive. "It isn't a problem that will yield to technology alone," agreed David M. Nemtzow, president of the Alliance to Save Energy.

While all the major automakers are developing fuel-cell technology, most are cautious about hyping it. "We don't want to get too exuberant about it in that sense, overselling it," said Greg Dana, vice president for environmental affairs at the Alliance of Automobile Manufacturers.

Fresh in some minds is the experience of the Clinton administration, which launched a high-profile, $1.5 billion research venture with the

Detroit automakers a decade ago to produce an 80 miles-per-gallon family car. No cars emerged, and the Bush administration halted the venture in favor of its hydrogen strategy.

Some of the president's political opponents contend the hydrogen option is a way of deflecting criticism over administration policies favoring energy production over conservation. "The president seems content with the auto industry's approach: 'Don't make us do anything today'," said the Sierra Club's Daniel Becker. Others say it does not go nearly far enough. Sen. Byron L. Dorgan (D-N.D), chairman of the Democratic Policy Committee, said recently, "It's moving in the right direction. But his proposal is rather timid. I think we need a bolder plan."

Bush's spending plan for the hydrogen project, $1.5 billion over five years, represents a $500 million increase over his current budget. The administration proposes to earmark $273 million for the 2004 fiscal year, but did not offer many specifics yesterday. The funding would support research on fuel cells, vehicle technology and distribution issues.

The magnitude of the goal demands an effort on the scale of the Apollo Moon project, Dorgan said yesterday. "You have to set benchmarks for five, 10 years out."

UNUSUAL PERMANENT MAGNET MOTORS

Thomas Valone

Integrity Research Institute,
www.integrityresearchinstitute.org
1220 L St. NW, Suite 100-232, Washington, DC 20005
Email: iri@erols.com

Abstract

Permanent magnet motors that try to achieve unusual overunity efficiencies with changes in wiring geometry, electronic switching schemes and magnetic configurations often are not successful. There are some designs that should be regarded as conventional and others as promising. Hopefully this article will help the reader to tell the difference before investing or accepting investment. Note: patents can be viewed for free at www.uspto.gov and also http://gb.espacenet.com/espacenet.

Introduction

An article about permanent magnet (PM) motors would not be complete without first reviewing the basic configurations that are present on the market today. Commercial PM motors are necessarily DC motors since their magnets are permanently polarized before assembly. Many PM motors which use brushes are switching to brushless motors that promise less friction and wear. Brushless motors include electronic commutation or step motors. A step motor, often used in the automotive industry, offers more continuous duty torque per unit of volume than any other electric motor but it is often a lower speed motor. The electronic commutation design is applicable to the switched reluctance (SR) motor. The SR motor substitutes soft iron in the place of higher cost permanent magnets for the outer stator and instead has an inner PM rotor.

Brushless motors in general produce torque from current in the armature by the application of Faraday's Law. The ideal PM motor has a linear torque vs. speed curve. There are both outer rotor and inner rotor designs that are standard in PM motors.

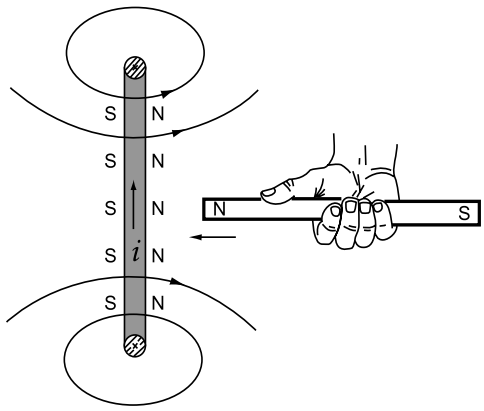

Fig.1

Lenz's Law
Induced B-field opposes motion.

To point out the focus of many of the problems with analyzing motors, the *Motion Control Handbook* (Designfax, May, 1989, p. 33) says that there is a "very important relationship between torque and back emf that is sometimes not understood." This relates to the electromotive force (emf) that is produced by the application of a changing magnetic field (dB/dt). In engineering terms, the "torque constant" (N-m/amp) equals the "back emf constant" (V/radian/sec). In physics, the motor terminal voltage

Detroit automakers a decade ago to produce an 80 miles-per-gallon family car. No cars emerged, and the Bush administration halted the venture in favor of its hydrogen strategy.

Some of the president's political opponents contend the hydrogen option is a way of deflecting criticism over administration policies favoring energy production over conservation. "The president seems content with the auto industry's approach: 'Don't make us do anything today'," said the Sierra Club's Daniel Becker. Others say it does not go nearly far enough. Sen. Byron L. Dorgan (D-N.D), chairman of the Democratic Policy Committee, said recently, "It's moving in the right direction. But his proposal is rather timid. I think we need a bolder plan."

Bush's spending plan for the hydrogen project, $1.5 billion over five years, represents a $500 million increase over his current budget. The administration proposes to earmark $273 million for the 2004 fiscal year, but did not offer many specifics yesterday. The funding would support research on fuel cells, vehicle technology and distribution issues.

The magnitude of the goal demands an effort on the scale of the Apollo Moon project, Dorgan said yesterday. "You have to set benchmarks for five, 10 years out."

UNUSUAL PERMANENT MAGNET MOTORS

Thomas Valone

Integrity Research Institute,
www.integrityresearchinstitute.org
1220 L St. NW, Suite 100-232, Washington, DC 20005
Email: iri@erols.com

Abstract

Permanent magnet motors that try to achieve unusual overunity efficiencies with changes in wiring geometry, electronic switching schemes and magnetic configurations often are not successful. There are some designs that should be regarded as conventional and others as promising. Hopefully this article will help the reader to tell the difference before investing or accepting investment. Note: patents can be viewed for free at www.uspto.gov and also http://gb.espacenet.com/espacenet.

Introduction

An article about permanent magnet (PM) motors would not be complete without first reviewing the basic configurations that are present on the market today. Commercial PM motors are necessarily DC motors since their magnets are permanently polarized before assembly. Many PM motors which use brushes are switching to brushless motors that promise less friction and wear. Brushless motors include electronic commutation or step motors. A step motor, often used in the automotive industry, offers more continuous duty torque per unit of volume than any other electric motor but it is often a lower speed motor. The electronic commutation design is applicable to the switched reluctance (SR) motor. The SR motor substitutes soft iron in the place of higher cost permanent magnets for the outer stator and instead has an inner PM rotor.

Brushless motors in general produce torque from current in the armature by the application of Faraday's Law. The ideal PM motor has a linear torque vs. speed curve. There are both outer rotor and inner rotor designs that are standard in PM motors.

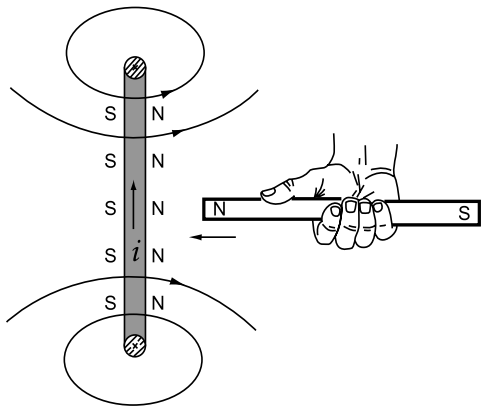

Fig.1

Lenz's Law
Induced B-field opposes motion.

To point out the focus of many of the problems with analyzing motors, the *Motion Control Handbook* (Designfax, May, 1989, p. 33) says that there is a "very important relationship between torque and back emf that is sometimes not understood." This relates to the electromotive force (emf) that is produced by the application of a changing magnetic field (dB/dt). In engineering terms, the "torque constant" (N-m/amp) equals the "back emf constant" (V/radian/sec). In physics, the motor terminal voltage

is equal to the back emf minus the IR drop due to internal resistance. (Example: V = 8.3 v, back emf = 7.5 v, IR drop = 0.8 v.) This physics principle, also referred to as **Lenz's Law**, was discovered by Friedrich Lenz in 1834, three years after Faraday invented the homopolar generator. The oppositional nature of Lenz's Law, and its back emf, is built into a physical law called **Faraday's Law**, which is at the root of motor drive. The back emf is the reaction of the changing current in the coil. In other words, the changing magnetic field naturally creates a back emf because they are equivalent.

Therefore, it is recommended that Faraday's Law be carefully reviewed first before proceeding. An article such as "Faraday's Law—Quantitative Experiments" (*Amer. Jour. Phys.*, V. 54, N. 5, May, 1986, p.422) will help convince the valiant new energy experimenter that the change in flux which causes a back electromotive force (emf) is INHERENTLY equal to the back emf. It cannot be avoided or circumvented for excess energy benefit, unless the amount of magnetic flux change per time is also altered. They are two sides of the same coin. The energy into an inductive coil style of motor will naturally equal the energy out. Also referred to as "electrical induction," the changing flux "induces" a back emf.

Switched Reluctance & Field Switching Motors

To explore an alternative method for inducing motion, the "Permanent Magnet Motion Conversion Device" by Ecklin, patent #3,879,622, uses rotatable shutters for alternately shielding the poles of a horseshoe magnet. Repeated again in the Ecklin #4,567,407 "Biased Unitized Motor Alternator with Stationary Armature and Field," the idea of switching the magnetic field with a "flux switch" is common to these types of motors. To illustrate the underlying principle, Ecklin states, "The rotors of most of today's generators are repelled as they approach a stator and are attracted back by the stator as soon as the rotor passes the stator in accordance with Lenz's law. Thus, most rotors face constant nonconservative work forces and therefore, present generators require constant input torque." However, "the steel rotor of the unitized flux switch alternator actually aids the input torque for half of each rotation as the rotor is always attracted and never repelled. This construction makes it possible for some of the current or power fed to the motor windings to magnetically feed through a solid magnetic path to the AC output windings ..." Unfortunately, Ecklin still to this day has not achieved a self-running machine.

Also related is the Richardson patent #4,077,001 which discloses a low-reluctance keeper physically moving in and out of engagement with the ends of a magnet (p.8, line 35). Lastly, the Monroe patent #3,670,189 uses a related principle but accomplishes gating with the passing of rotor poles between permanent magnet stator poles. Monroe's claim 1, seems by its length and detail, to have almost guaranteed its patentability but of course its utility remains questionable.

It seems unlikely that as a closed system the Field Switching Motor can become self-running. In many examples, a small electromagnet will be necessary to help push the keeper into a synchronized rhythm. The Magnetic Wankel from Popular Science (June, 1979) can be compared in a basic manner to this type of invention. Also, the Jaffe patent #3,567,979 can also be compared (see abstract). The Minato patent #5,594,289 is also of a similar type as the Magnetic Wankel and quite intriguing to many people.

It has been found with inventions such as the Newman motor (U.S. Patent Application Serial No. 06/179,474), a nonlinear effect such as an impulse voltage is advantageous for overcoming the Lorentz force conservation effect of Lenz's Law. Also similar is the mechanical analog of the Thornson inertial propulsion device which uses nonlinear impact to transfer momentum along an axis perpendicular to the plane of rotation. A magnetic field contains angular momentum which only becomes apparent under certain circumstances such as Feynman's Disk Paradox, where it is still conserved. The impulse technique may possibly be used to advantage in this Field Switching Motor if the field switching can be done fast enough, with a rapid rise time, but more research is needed.

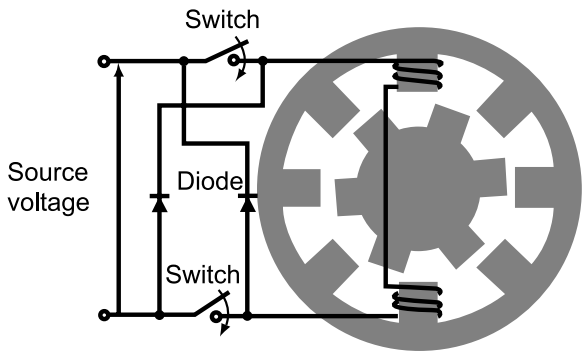

Fig. 2
Switched Reluctance Motor (*IEEE Spectrum* 1/97)

The best Switched Reluctance Motor that also has full accommutation is the Dr. Harold Aspden patent #4,975,608 which optimizes the performance of the coil input and operating above the knee of the B-H curve. Switched reluctance motors are also explained and praised in *IEEE Spectrum* (1/97).

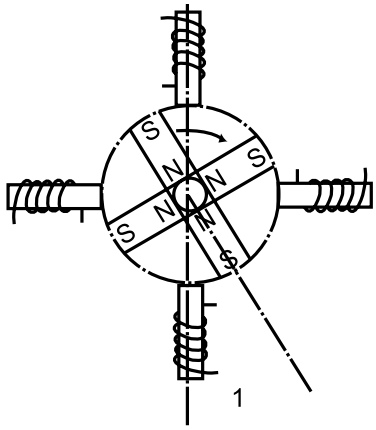

Fig. 3

Adams Motor

The Adams motor has attracted many followers including an endorsement from *Nexus* magazine as the best free energy motor they have seen. The performance of the machine, however, can be fully explained by Faraday's Law. The pulsing of adjacent coils which moves a magnetized rotor is actually following the same configuration as a standard switched reluctance motor. The delay that Adams speaks of in an Internet posting of his motor can be understood from the exponential voltage (L di/dt) of the back emf. The latest addition to this category, which gives credit to the Adams motor, comes from down under with PCT WO 00/28656 awarded to Brits and Christie in May, 2000. The simplicity of this motor is immediately obvious with the switchable coils and permanent magnet on the rotor. The patent also makes it clear that the "input DC current as supplied to the stator coil produces the magnetic repulsion force and is the only outside input to the overall system for total movement...." It is a well-known fact that all motors work on this principle. The key to their design is on p.21 of their patent where the inventors want to "maximize the influence of back EMF which tends to maintain rotation of the rotor/armature in a single direction." All of the motors in this field-switching category try to achieve this effect. Figure 4A of Brits and Christie disclose the voltage sources "VA, VB, and VC." Then, on page 10 it is stated, "At this time current is applied from the power source VA and continues to be applied until the brush 18 is no longer in contact with one of the contacts 14 to 17." There is nothing unusual about this design compared with the more sophisticated attempts listed previously in this section. All of these motors require an electrical power source and none of them are self-running.

When pulsing a coil with the passing of a permanent magnet, a suggestion that would help prove the claim for free energy is not to use battery power for the coil current. Instead, the amazing Weigand wires are recommended (*Pop. Sci.*, May, 1979) that exhibit a huge Barkhausen jump of magnetic domain alignment and a very well-defined pulse shape. Having a coil wrapped around a Weigand wire produces a substantial pulse of several volts with a changing external magnetic field passing a certain threshold. No electrical input power is required for this pulse generator.

Toroidal Motor

As compared to motors on the market today, the unusual design of the toroidal motor is similar to the Langley patent #4,547,713 with a two-pole armature in the center of the toroid. If a single-pole design is chosen, with for example North poles at each end of the armature, this would resemble the radial magnetic field for the armature which the VanGeel patent #5,600,189 uses. The Brown patent #4,438,362 assigned to the Rotron company, utilizes varying magnetization segments for a rotor in a toroidal air gap. The best example of a carousel toroidal motor is the Ewing patent #5,625,241, which also resembles the Langley patent mentioned above. Based upon magnetic repulsion, the Ewing invention uses a microprocessor-controlled carousel, basically to try and take advantage of Lenz's law and get a jump ahead of the back emf. The Ewing invention may be seen in operation, with co-inventor David Porter, in the commercial video, "Free Energy: The Race to Zero Point." Whether it may be more highly efficient than other motors on the market remains an open question. As the patent states, "it is also possible to operate the device as a motor using a pulsed direct-current power source" (col. 7, par. 30). It also contains a programmable logic controller and power control circuit which the inventors thought would send it over the top of 100% efficiency.

Unless a prototype proves to be successful in achieving a torque or force conversion linkage, the internally propelled magnet may be left without a practical application. Commercialization of these types of motors may not be favorable, since many competing designs are currently available on the market, with high flux linkage.

Linear Motors

The area of linear induction motors is well known in the literature. Schaum's Outline Series, *Theory and Problems of Electric Machines and Electromechanics* (McGraw Hill, 1981), explains that these are the same as cutting the rotor and stator of a standard induction motor and laying them out flat. The late Dr. Laithwaite, author of

Motion Without Wheels, was famous for monorail designs for trains in England based on linear induction motors.

The Hartman patent #4,215,330 is an example of one that achieves a linear motor transportation of a steel ball up a magnetized incline of approximately 10 degrees. Another invention in this category is the Johnson patent #5,402,021, which uses permanent arc magnets on a four-wheel cart, exposed to a parallel track of alternating permanent magnets which are in a fixed position. An even more amazing permanent magnet patent is the Johnson #4,877,983 which an eye witness has seen operating at the Johnson home in a closed loop for hours. It is reasonable to assume that a pickup coil could be positioned nearby so that each trip would result in a pulse of electricity to charge a battery. The Hartman patent could also be arranged in such a circular track so that perpetual motion of the first kind can finally be demonstrated.

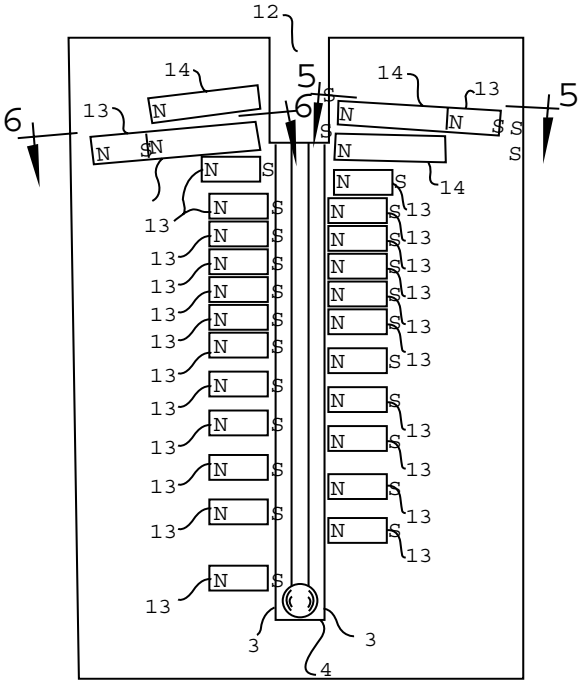

Fig. 4

Hartman patent #4,215,330

The Hartman patent is based upon the same principle as the famous electron spin experiment in physics called the Stern-Gerlach experiment. With an inhomogeneous magnetic field (one that is non-uniform) the force on an object with a magnetic moment is the gradient of the potential energy. Every physics textbook points out that this type of field, that is strong at one end and weak at the other end, will result in a unidirectional force on the magnetic object equal to dB/dx. That is exactly what the Hartman patent possesses (note spacing of magnets). Therefore, the resulting force propelling the ball up a ten degree incline, in the x direction, is in keeping with the laws of physics.

With state-of-the-art magnets, including ambient temperature superconducting magnets which are now finishing the development stage, a demonstration of impressive cargo weight will be shown to be transportable without maintenance electricity costs. Superconducting magnets have the unusual property of retaining the initial magnetized field for years, without the need for periodic energization to restore the initial field strength. Examples of the state of development of the superconducting magnet market can be found in the Ohnishi patent #5,350,958 (lack of cryogenics and lighting system output) as well as the reprinted article from *IEEE Spectrum*, July, 1997 on magnetic levitation.

Static Electromagnetic Angular Momentum

In a provocative experiment with a cylindrical capacitor, Graham and Lahoz (*Nature*, V.285, No.15, May, 1980) have expanded upon the proof published by Einstein and Laub in 1908 that the Lorentz force needs an additional term to preserve action and reaction. The article they cite has been translated and published in my book, *The Homopolar Handbook* (described below). Graham and Lahoz emphasize that there is a "real angular momentum density to r x (E x H)/c^2" and suggest how to see this energy effect in permanent magnets and electrets.

This is encouraging work, with an impressive source of Einstein and also Minkowski for its information. It is possible that it may have a direct application for the homopolar generator as well as the magnetic energy converter mentioned below since both have an axial magnetic field and a radial electric field like the cylindrical capacitor experiment of Graham and Lahoz.

Homopolar Motor

My book, *The Homopolar Handbook* (HH), covers experimental tests and history of the Faraday discovery, including Tesla's contribution to it. Recently however, there have been new developments into a multi-rotor design of a homopolar generator, similar to the invention of John R. R. Searl.

Recurring interest in the Searl device, as pictured on the cover of *Antigravity*, the biography of Searl by John Thomas, should also center on the

homopolar generator (HG). Preliminary analysis reveals that there are actually two separate HG phenomena occurring simultaneously, one which can be called the "revolution" effect (#1) and the second that could be called the "rolling" effect (#2). The first effect can be visualized as magnetized segments of an imaginary solid ring revolving around a common center. As suggested by drawings in HH, p.141-2, there are precedent designs that allow for segmenting an HG rotor.

With this model in mind, the #1 effect can be calculated, for 1 Tesla strength magnets, magnetized axially, adjacent to a single ring 1 meter in diameter, to produce more than 2 volts emf across each roller, (E-field directed radially from outer diameter of rollers to outer diameter of the adjacent ring) with say, 500 RPM. Note that this #1 effect is independent of any rolling of the magnet. The magnetic field in an HPG is tied to space and not to the magnet so rolling will not affect this large scale homopolar generator's Lorentz force effect (HH, p.10).

The #2 effect, located within each roller magnet, is the one noted in *Electric Spacecraft Journal*, Issue 12, 1994, (HH, p.160) where each roller, is a small homopolar generator. This effect is found to be somewhat weaker as it generates electricity from the center of each roller to its periphery. This design is like Tesla's HG (HH, p.81) where a rolling belt is contacting the outer edge of a circular magnet. With rollers in the vicinity of a tenth of a meter in diameter rolling, without slipping, around a 1 meter ring, approximately a half of a volt will be generated. The Searl design of ring magnetic material will normally strengthen the roller's B field.

It is important to realize at this point that the principle of superposition applies to these two effects. The #1 effect is a uniform E field across the diameter of the roller. The #2 effect is a radial effect as stated above (see HH, p.6-8). However, only the emf in the section of a roller between the two contacts, say at the center of the roller and its edge which contacts the ring, will actually cause current flow in any external circuit. This realization means that the effective voltage from the #1 effect will be half of the available emf, or a little more than 1 volt, which is still about double of the #2 effect. Upon applying superposition in the limited region indicated, we also find that the two effects oppose each other and the two emfs must be subtracted. The result of this analysis is that approximately one half of a volt of regulated emf will be present to generate electricity from a single set of rollers and one ring about 1 meter in diameter. As current is drawn, a Ball Bearing Motor effect will also take place (HH, p.54) that actually pushes the rollers along, assuming the roller magnets have a reasonable conductivity *(Thanks to Dr. Paul La Violette for this reminder)*.

In a related work, (*Tech. Phys. Lett.*, V. 26, #12, 2000, p.1105-07), Roshchin and Godin have published experimental results of their one-ring device, called a "Magnetic Energy Converter," with rolling magnets on bearings. It was designed as an improvement to the Searl device. Though my above analysis does not depend upon the ring being made of magnetic material, Roshchin and Godin did so. Their findings are encouraging and detailed enough for researchers to find renewed interest in this type of magnetic motor.

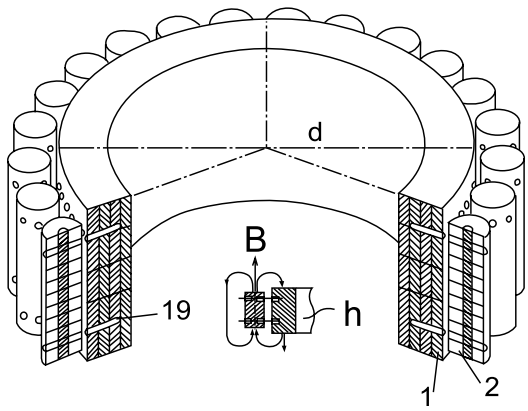

Fig.5

Magnetic Energy Converter in the experiment by Roshchin and Godin (Russia)

Conclusion

So far, a couple of permanent magnet motors may have achieved perpetual motion, which exceeds 100% efficiency. Of course, conservation of energy concepts have to be considered and the source of the alleged extra energy examined. If permanent magnet field gradients do offer a unidirectional force, as the textbooks predict, then it is about time for its conversion toward useful work. The roller magnet geometry, now called a "magnetic energy converter" is also a unique style of magnetic motor. Exemplified in the Russian patent #2155435 by Roshchin and Godin, it is a magnetic motor-generator that shows potential for excess energy output. Since it relies upon the circulating cylindrical magnet rolling around a ring, the design is actually a generator rather than a motor. However, as they utilize the torque produced by the self-sustained motion of the magnets to run a separate electrical generator, it is working as a motor.

Reprint from Proceedings of Institute for New Energy Conference, 2001

Hydrogen Energetics

Review by Alla Pashova

A Russian writer Ludmila Ulitskaya, who is rather far from energy problems, says: "I'm quite sure that cheap electric energy sources have been already worked out and are hidden in oil king's safes. However such projects won't be taken out of the safes until the last oil drop is combusted. They don't want redistribution of money, world, power, and soon". Experts are sure to agree with the writer.

Now only ideas which can coexist together with the traditional oil power engineering and with a system of world oil distribution can escape the safes. Some expensive scientific toys promising future universal welfare are created to reassure ecologists, viz automobiles equipped with hydrogen engine. According to estimation of Japan representatives of motor car industry, installation of the hydrogen engine into such a car as a classical Sedan now comes to about $700 000. Approximate cost of a hydrogen bus named Kitaro achieves the astronomic amount of $1.25 million.

The hydrogen engine consists of several fuel elements, which are known as fuel cells. Hydrogen under pressure of 1.5-2.7 atmospheres comes to an anode. A cavernous catalyst splits the molecules into electrons and protons. The electrons set the electric engine in motion, and the protons come through a membrane acting to a cathode as an electrolyte. Here the catalyst combines them with the working electrons and with atmosphere oxygen into water molecules. It should be noted that the Europeans and the Americans are extremely charmed by this water streamlet which is exhausted instead of poisoning gases. Moreover, output of the fuel cell is 3-5 times more than output of the petrol engine.

The first hydrogen power station inaugurated in Las Vegas, Nevada, in 2002, (see Fig.1, 2) represents a system of the fuel cells with the proton penetrable membrane as an electrolyte (they are designed and produced by experts of Plug Power Inc.). The station produces hydrogen transforming and cleaning natural gas and generates electric power combining hydrogen stored in reservoirs with atmosphere oxygen. The USA Energy Department and Air Products Inc. together paid $ 10.8 million for this project.

It is necessary to note that the priority branch of the hydrogen engineering is providing new means of transport with fuel, and electric power production is just the second aim. The mentioned station produces electric power in addition to its main function. Nevertheless, if fuel market begins to decrease then the electric power payments will provide the "hydrogen magnates" with stable profit.

Fig. 1
Hydrogen power station

Nowadays the hydrogen automobiles allow oil kings keep the system of centralized fuel distribution and the infrastructure of service stations which will provide the means of transport with methanol, natural gas with hydrogen blend, and liquefied or gaseous hydrogen. Thus interested companies control the hydrogen engineering and scientific thought.

Moreover, oil can be applied as it is useful for board reforming (conversion), i.e. it can be used as a hydrogen source. The systems based on conversion have been known for a long time but there was need to work at them.

Russian experts improved the conversion system by replacement of the catalyst by plasma. Thus the conversion occurs in gas discharge of HVF appearing in the blend which needs to be converted. According to experts' opinion the Russian system is portable and has high output. In 2001 a group of experts of Russian Centre of Automobile Engine represented experimental prototype basing on Chevrolet Pickup S 10.

The ideal of modern hydrogen engineering is the following: "There should be minimal changes in the system of fuel distribution, non-polluted air, and thin streamlet of distil exhausted". However, evidently, the exhausted water is an ideal source for hydrogen fuel reproduction by means of high effective electrolyzing. If the closed system is worked out we would obtain an energy source powered by continuous chain of electrolyzing and recombination whose efficiency would be more than 100 %.

What are the known ways of hydrogen production? The greatest amount of the gas is produced on the base of catalytic conversion of hydrocarbon with water vapor. Temperature of the process depends on the catalyst composition. It is known that temperature of propane reaction can be decreased to 370° using bauxite as a catalyst. Approximately 95% of by-product carbon monoxide is further used in the reaction with water vapor.

A significant part of the total hydrogen production is given by a method of water gas. The essence of the method lies in reaction of water vapor with coke that is followed by the producing of carbon monoxide with hydrogen mix. The reaction is endothermal, it occurs at 1000°C. The heated coke is processed by the vapor; extracted purified mix of gases contains some hydrogen, some carbon dioxide, and great share of carbon monoxide. Further vapor processing of the carbon monoxide at 370°C increases the hydrogen extraction. The amount of carbon dioxide increases as well however it is easy to be removed by passing the gases mix through a scrubber sprayed by a water contraflow.

Fig. 2

There is a well-known iron-vapor method according to which vapor is passed above iron at 500-1000°C. Hydrogen obtained by this method is usually applied to hydrogenise fats and oils. Composition of the iron oxide depends on the process temperature. Iron-3 oxide (Fe_3O_4) prevails at the temperature below 560° C. If the vapor is passed above the iron at the temperature above 560° C then iron-2 oxide (*FeO*) share increases. A slight admixture of carbon monoxide is removed when the heated mix passes above a catalyst. At this time the carbon monoxide is transformed into methane.

In the processes of oxidation and thermal cracking of hydrocarbons at soot production hydrogen is produced as a by-product.

The next effective method is methanol-vapor one. It is an endothermal reaction which is proceeds in common iron reactors at 260° C temperature and at 20 atmospheres pressure.

There should be also mentioned a catalytic reaction of ammonia decomposition at which nitrogen and hydrogen is produced. The reaction can be profitable if it is necessary to produce great amount of hydrogen. The method is useful if the obtained hydrogen is directly applied.

Electrolysis is the oldest method to produce hydrogen. Direct current comes to electrodes, the cathode collects hydrogen, and the anode accumulates oxygen. The technology makes hydrogen to be too expensive energy carrier. There is often used a technology of hot processing of water vapor at 700-900° C accompanied with light petrol and heavy liquid fuel which bleeds oxygen. This method is quite expensive as well.

As it is known, **wasteful power consumption of classical electrolysis** is caused by the fact that it is used to overcome forces of hydrate bound of ions with water molecules and to compensate endothermal effect of water decomposition. Therefore, ions reduction at corresponding electrodes requires more current intensity than in the case of absence of this physical phenomena. Hence production of 1 cubic meter of hydrogen requires 18-21.6 MJ, and total power consumption exceeds 50 MJ (taking into account the electric power production). Therefore hydrogen becomes too expensive.

In 1888 D.A. Lachinov patented a method of non-contact electrolysis. Improvement of this method promises huge amount of cheap hydrogen and appearance of high effective energy source operating as a closed cycle. The main problem of Lachinov's method is a gas layer covering the electrode in some time and impeding the reaction. It was proposed by I. A. Goryachev to prevent the gas layer using pulsating electric field. A.V. Frolov has proposed to increase electrolysis efficiency by means of rotation. Centrifugal force causes more swift detach of gas blebs from electrodes surfaces. Power consumption to overcome frictional force in the construction and to generate potential electric field is insignificant as compared with output. Hence efficiency of the system may exceed 100%.

There is also described the experimental device for production of hydrogen and oxygen from water where modulated voltage (not dc voltage) is applied to the electrodes. Modulation frequency is in connection with proper oscillation frequency of water molecules as well as with spatial structure. Possible efficiency of water electrolysis in spark discharge which removes oxygen admixture should be investigated . Water electrolysis at the radiation

by electromagnetic waves of light range needs to be investigated as well.

Ikar Research Centre informs that plasma electrolysis can be the most probable source of cheap hydrogen. In 1987 a group of Russian scientists patented the first plasma-electrolytic reactor. Since the reactor had been worked out at a defense establishment then the patent was restricted and not covered by press. The patent contains a structural scheme of the reactor and some results of cleaning and disinfection of water by plasma. The patent does not represent any information of additional energy generated by plasma or hydrogen production.

In April of 1989 American scientists Pons and Fleishman published their experimental results on additional energy production at common water electrolysis. They claimed cold fusion to be source of this energy. However there is no reliable proof for this phenomenon.

In 1996 Yu. Beklyamishev, one of the co-authors of the first plasma-electrolytic reactor, published his experimental results. They demonstrated that there was additional energy in the plasma-electrolytic process. However he did not explain the energy source.

In 1998 there were published new experimental issues of appearance of additional energy in the plasma-electrolytic process. A group of Russian scientists tested one of the plasma-electrolytic reactors and officially fixed the additional energy. A report of the testing session was published in issue #22 of "Infinite Energy" magazine. In May of 1998 the third edition of a book named "Crisis of Theoretical Physics" was published by Prof. F. M. Kanarev. It contains data of additional energy production at plasma electrolysis of water defining the energy source. Soon Ohmori and Mizuno (Japan) published their results in works of Vancou ver conference on cold fusion and in issue #20 of "Infinite Energy". Ohmori and Mizuno observed neutron radiation occurring at a plasma process as well as iron, chrome, nickel, and carbon appearance on a wolfram cathode. That seemed to be a strong evidence of cold nuclear fusion at plasma electrolysis of water. Ohmori and Mizuno have explained neutron radiation as a result of electrons captured by protons. Nevertheless their conclusions raise doubts as cold fusion would have produced much more additional energy than it was fixed.

In 1996 there appeared the first publications where hydrogen atoms fusion instead of nuclear fusion was supposed as the additional energy source at usual electrolysis as well as at plasma source. In Russia first experimental results demonstrating energy consumption decrease for hydrogen production at plasma electrolysis of water were published in 1999 by Prof. F.M. Kanarev. (See F.M. Kanarev's article in this issue of NET).

Fig. 3

Honda FCX-V3 uses hydrogen as a fuel. Hydrogen is fed under high pressure in the engine.

Nevertheless we have to note that high efficiency electrolysis is possible! O. Hvolson in his "Physics" (Berlin, 1923) explains a method of designing of a machine which can produce heat due to positive difference between energy of hydrogen combustion and energy consumed to hydrogen production by means of water electrolysis. In this case we do not consume energy to split the atoms. It occurs due to intermolecular forces at water dissociation by sulphuric acid ions. Energy is consumed only to neutralize charges of existent hydrogen ions and acid residue ions. Hydrogen combustion produces the energy which would have been consumed to split the atoms in the air. **Hence 67.54 Kcal of energy can be produced at 5 Kcal consumed. (F. Lepehin)**

High effective electrolysis application is clear future of energetics. Nowadays Stuart Energy Inc applies water electrolysis as a hydrogen source in a frame of hydrogen-fuel project. Experts of Stuart Energy Inc have designed a refueling unit which produces hydrogen and stores it in a 104-pound reservoir. Thus several auto are provided with fuel and it takes a couple of minutes to refuel.

It is quite simple to predict social and economical consequences of innovation of high effective energy source operating as a closed cycle energy system. Economic activity and private life of people will be independent of cities, of their industry and power engineering. People will move out of the cities and they will use compact and powerful energy sources there. Hence, decentralization of world economics will happen.

Regions of any country become more free from the central authority, the power of which nowadays is based on centralized fuel energetics.

On the Longitudinal Electromagnetic Waves

Alexander V. Frolov

General Director, Faraday Lab Ltd
Phone/fax: 7-812-380-3844
Email: office@faraday.ru

Concerning acoustic waves, we deal with longitudinal oscillations of the medium, since degree of air (medium) compression and rarefication changes along the direction of the wave spreading. Notion of the medium of electromagnetic waves propagation, i.e. notion of "aether", as well as the very possibility of the existence of longitudinal electromagnetic waves is disputable for some scientists. Let's clarify the situation and demonstrate that usual photon is longitudinal wave of energy density, which can be described as Umov-Poynting vector.

The transverse character of electromagnetic waves means that vector of electric field and vector of magnetic field are directed across the wave line. However, these vectors are just our subjective way to describe the process. Notions of electric and magnetic fields can be replaced by the notion of **unified helical field**, since to describe the motion of the point along the helical line there should be concerned the linear transfer (it is detected as electric field) and the process of rotation (it is described with the magnetic field). Thus notions of electrodynamics are just one of the ways to describe reality. Energy density of the given point of space is the real (objective) parameter of the wave. This energy density is described by the known Umov-Poynting vector $\overline{S} = \overline{E} \times \overline{H}$.

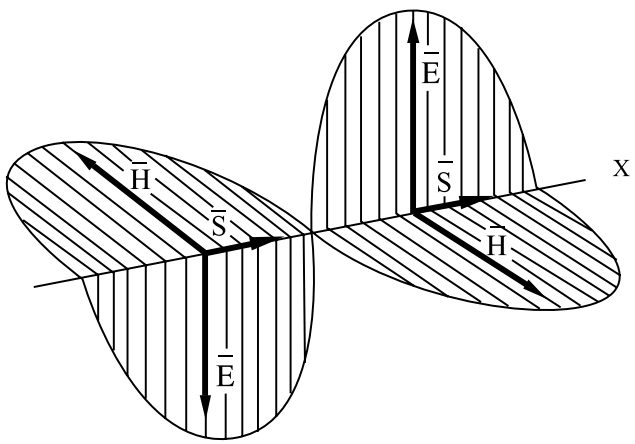

Fig.1

Let us consider electromagnetic wave in classical representation (Fig.1). Then we discover that direction of Umov- Poynting vector coincides with the wave line. The vector is unidirectional and "pulsating", because its quantity changes from zero to some maximal value and then it is reduced to zero, besides it takes place at half of the period of transverse wave. So, it is the explanation of the fact that frequency of longitudinal oscillations is twice as much than frequency of transverse oscillations (Fig. 2). **Previously it was known from the mechanism of energy interchange between longitudinal and transverse plasma oscillations and from the phenomenon of parametrical resonance. However the physical meaning of this phenomenon was not disclosed.**

From the presented here conception it follows that from the physical point of view, electromagnetic waves are **longitudinal oscillations of energy density**. In usual case these oscillations are unidirectional pulsations that determines the ability of the photon to be moving unidirectionally. Practically it is possible to create other types of photons, i.e. types of oscillations of energy density with qualitative new physical properties. It can be achieved by setting of definite functions and superposition of $\overline{E}$ and $\overline{H}$ vectors.

For example, in 1996 a conference "New Ideas in Natural Science" was organized by us in Saint-Petersburg, with the participation of 30 foreign guests and more than 100 Russian scientists. The report made by Academician Ignatyev, Krasnoyarsk, aroused great interest. During the experiments with rotating of crossed vectors $\overline{E}$ and $\overline{H}$ (see Fig. 3) there was created Poiting's vector, which corresponds to propulsion force of 60 N (about 6 kg).

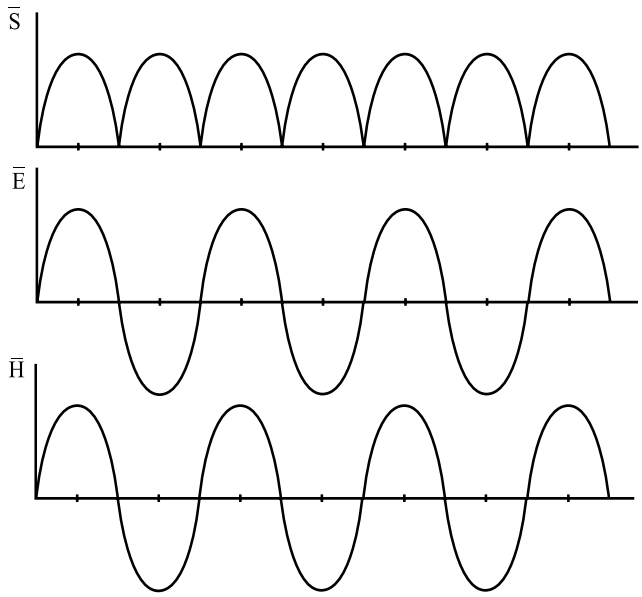

Fig. 2

The experiment is demonstrated on the photo (see Fig. 4), where the diameter of the device is equal to 4 meters and ends of the coils are to toroidal capacitors. This experiment was made in Krasnoyarsk.

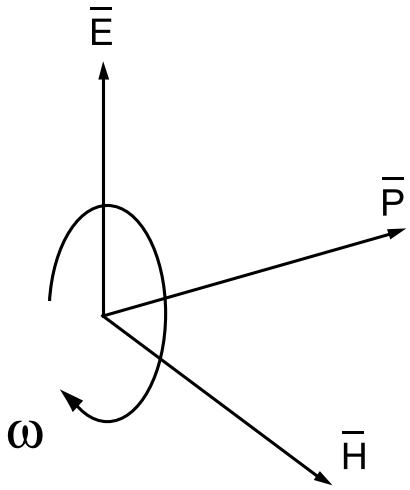

Fig. 3

Since it is impossible to consider vacuum, where some form of energy can exist, as "emptiness" then we can speak about vacuum as about some medium. Faraday and Maxwell, classics of electromagnetic theory, wrote exactly about deformations, stresses and expansion of aether. From this point of view electromagnetic waves are analogues of the waves of longitudinal deformation of elastic medium. More than 60 years ago Nicola Tesla wrote: "I showed that the universal medium is a gaseous body in which only longitudinal pulses can be propagated, involving alternating compressions and expansions similar to those produced by sound waves in the air. Thus, a wireless transmitter does not emit Hertz waves which are a myth, but sound waves in the ether, behaving in every respect like those in the air, except that, owing to the great elastic force and extremely small density of the medium, their speed is that of light." [1]

Nowadays, the development of engineering and the new views upon the phenomena of electromagnetism, impel us to consider physical **vacuum as material medium of the special type**, which has the well-known properties, in particular electrical and magnetic properties. Moreover, this medium has energy, and energy density can be changed in case of propagation of any photon. Thus, as Tesla stated in his article "The True Wireless": "The Hertz wave theory of wireless transmission may be kept up for a while, but I do not hesitate to say that in a short time it will be recognized as one of the most remarkable and inexplicable aberrations of the scientific mind which has ever been recorded in history".

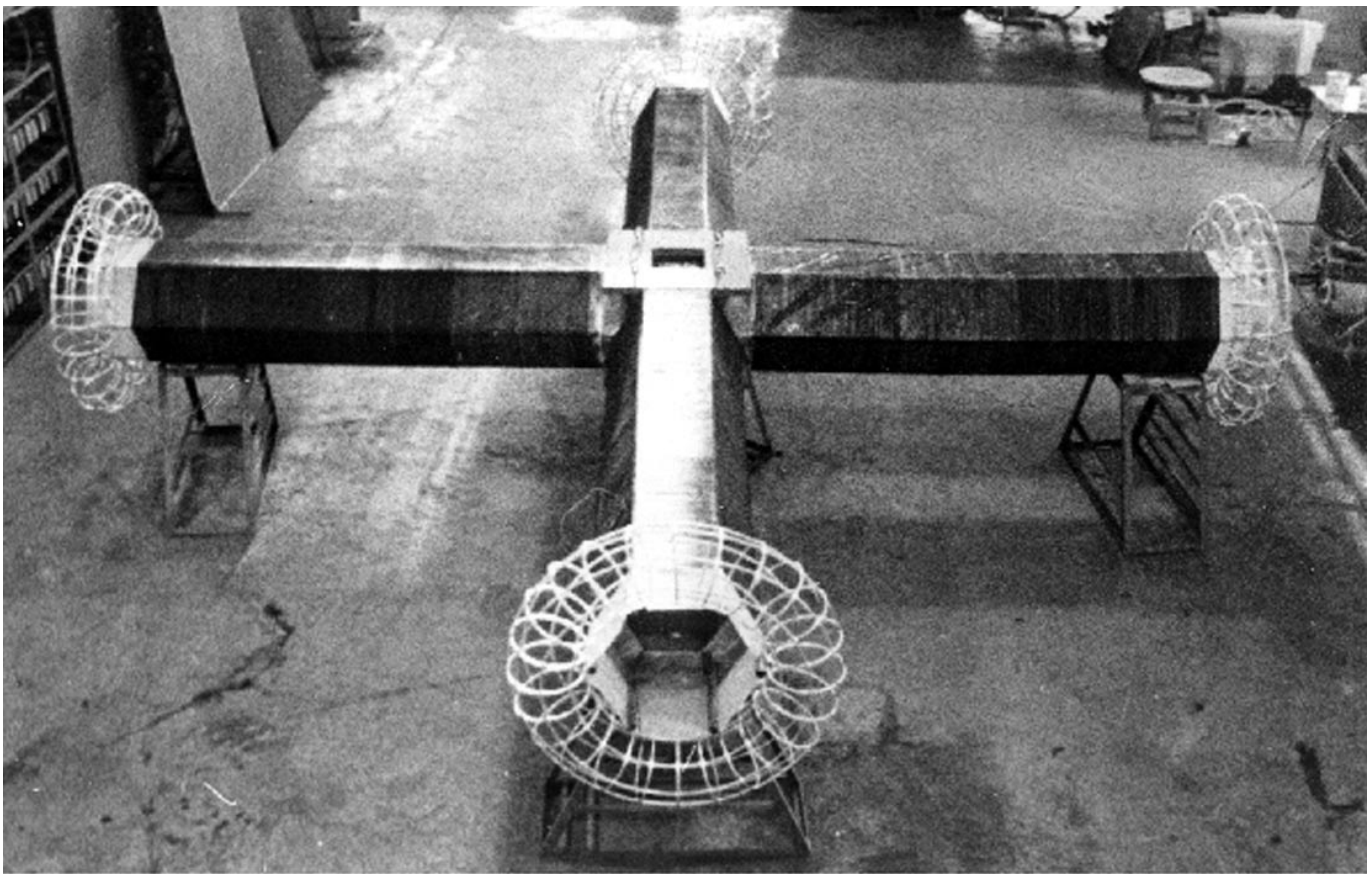

Fig. 4

References

1. "Pioneer Radio Engineer Gives Views on Power", New York Herald Tribune, Sept. 11, 1932.

"OUTSIDE THE BOX" SPACE AND TERRESTRIAL TRANSPORTATION AND ENERGY TECHNOLOGIES FOR THE 21ST CENTURY

Theodore C. Loder

tedloder@aol.com

Institute for the Study of Earth, Oceans and Space
University of New Hampshire
Durham, NH 03824

Abstract

This paper reviews the development of antigravity research in the US and notes how research activity seemed to disappear by the mid 1950s. It then addresses recently reported scientific findings and witness testimonies - that show us that this research and technology is alive and well and very advanced. The revelations of findings in this area will alter dramatically our 20th century view of physics and technology and must be considered in planning for both energy and transportation needs in the 21st century.

Historical Background

Townsend Brown's Technology of Electrogravitics [1]

In the mid 1920's Townsend Brown [2] discovered that electric charge and gravitational mass are coupled. He found that when a capacitor is charged to a high voltage, it has a tendency to move toward the positive pole. His findings, which became known as the Biefeld-Brown effect, were opposed by conventional minded physicists of his time.

The Pearl Harbor Demonstration. Around 1953, Brown conducted a demonstration for military top brass. He flew a pair of 3-foot diameter discs around a 50-foot course tethered to a central pole. Energized with 150,000 volts and emitting ions from their leading edge, they attained speeds of several hundred miles per hour. The subject was thereafter classified.

Project Winterhaven. Brown submitted a proposal to the Pentagon for the development of a Mach 3 disc shaped electrogravitic fighter craft. Drawings of its basic design are shown in one of his patents. They are essentially large-scale versions of his tethered test discs.

Review of Issues from the 1950s

In 1956, a British research company, Aviation Studies (International) Ltd. published a classified report on Electrogravitics Systems examining various aspects of gravity control. They summarized the pioneering work of Townsend Brown and then described the use of electrogravitic thrust as follows:

"The essence of electrogravitics thrust is the use of a very strong positive charge on one side of the vehicle and a negative on the other. The core of the motor is a condenser and the ability of the condenser to hold its charge (the K-number) is the yardstick of performance " [3].

In one of their conclusions, based on Brown's work, they suggested that: "Electrostatic energy sufficient to produce a Mach 3 fighter is possible with megavolt energies " [4].

In spite of Brown's solid research, they later stated that, "One of the difficulties in 1954 and 1955 was to get aviation to take electrogravitics seriously. The name alone was enough to put people off" [5]. It seems that is as true today as it was in the 1950s.

A report by another British company, Gravity Rand, Ltd. in 1956, agrees with this assessment and states: "To assert electrogravitics is nonsense is as unreal as to say it is practically extant. Management should be careful of men in their employ with a closed mind or even partially closed mind on the subject." [6]

However, a trade press magazine, The Aviation Report, made numerous references to antigravity projects and listed many of the companies pursuing research in this area. Quotes from The Aviation Report listed in the Aviation Studies (International) Ltd. Report [7] are suggestive of what was going on behind the scenes.

In 1954 they predicted that: "... progress has been slow. But indications are now that the Pentagon is ready to sponsor a range of devices to help further knowledge."... "Tentative targets now being set anticipate that the first disk should be complete before

1960 and it would take the whole of the 'sixties to develop it properly, even though some combat things might be available ten years from now." (Aviation Report, 12 October 1954) [8].

During this time period many of the major defense and technology companies were cited as either having research projects or activities in this new field. For example: "Companies studying the implications of gravitics are said, in a new statement, to include Glenn Martin, Convair, Sperry-Rand, and Sikorsky, Bell, Lear Inc. and Clark Electronics. Other companies who have previously evinced interest include Lockheed, Douglas and Hiller." (Aviation Report, 9 December 1955) [9].

Others of these reports mention: AT&T, General Electric, as well as Curtiss-Wright, Boeing and North American as having groups studying electrogravitics.

During the same time period, the Gravity Rand report notes that: "Already companies are specializing in evolution of particular components of an electogravitics disk." [10]

However, in the area of predictions, the Aviation Report stated the following based on an extrapolation of technology development: "Thus this century will be divided into two parts – almost to the day. The first half belonged to the Wright Brothers who foresaw nearly all the basic issues in which gravity was the bitter foe. In part of the second half, gravity will be the great provider. Electrical energy, rather irrelevant for propulsion in the first half becomes a kind of catalyst to motion in the second half of the century." (Aviation Report, 7 September 1954) [11].

Looking back it is easy to say that they missed the mark. Did they really miss it by a half a century? Reading through these reports it is quite obvious that there was much interest in antigravity among a number of very high profile companies, as well as in the Department of Defense. What happened to this interest and why was it all downplayed during the following four plus decades? After all, T. Brown had shown that there is a demonstrable connection between high voltage fields and gravity. Why has it taken until the 1990s for more than just a few scientists to look at these results and publish on them in the open literature? A review of recent statements by former military personnel and civilians connected to covert projects begins to shed light on research activity in these areas over the last half century. **And it appears that there had been significant breakthroughs during this time period, well shielded from both the scientific and public eye.**

Recent Scientific Developments

In this section we consider developments in the antigravity field since the late 1980s and why the confluence of scientific findings and the testimony of witnesses associated with the military and covert groups indicates that a gravity solution with technological implications has been found.

Although general relativity has not been able to explain Brown's electrogravitic observations, or any other antigravity phenomenon, the recent physics methodology of quantum electrodynamics (QED), appears to offer the theoretical framework to explain electrogravitic coupling. Recent papers by members of the Institute for Advanced Study Alpha Foundation are putting a solid theoretical foundation onto the antigravity effects within the theory of electrodynamics and include papers by Evans [12] and Anastasozki et al [13].

Earlier in a 1994 breakthrough paper, Alcubierre showed that superluminal space travel is, in principle, physically possible and will not violate the tenants of the theory of relativity [14]. Puthoff [15] later analyzed these findings in light of the present SETI (Search for Extraterrestrial Intelligence) paradigms that insist that we could not be visited by extraterrestrial civilizations because of the speed-of-light limitations dictated by the general relativity theory. He suggests that super-luminal travel is indeed possible. This leads to reduced-time interstellar travel and the possibility of extraterrestrial visitation, which our limited under-standing of physics and scientific arrogance has "forbidden" in some sectors for most of the 20th century.

The second aspect of these physics findings deals with the zero point or vacuum state energy shown by the Casimir effect [16], which predicts that two metal plates close together attract each other due to imbalance in the quantum fluctuations. The implications of this zero point or vacuum state energy are tremendous and are described in several papers by Puthoff [17] starting during the late 1980s. Bearden [18] and colleagues have also written extensively on the theoretical physics of zero point energy and additionally have described various technological means of extracting this energy (for example see the recent paper by Anastasozki et al [19].). A theoretical book on zero point energy (and antigravity) was published by Bearden in 2002 [20]. There is significant evidence that scientists since Tesla have known about this energy, but that its existence and potential use has been discouraged and indeed suppressed over the past half century or more [21].

The coupling of the electrogravitic phenomena observations and the zero point energy findings are leading to a new understanding of both the nature of matter and of gravity. This is just now being discussed in scientific journals (though some evidence suggests that it has been understood for decades within the black project covert community). The question that is being addressed is: what keeps

the universe running? Or more specifically, where do electrons get their energy to keep spinning around atoms? As electrons change state they absorb or release energy, and where does it come from? The simplistic answer is that it is coming from the vacuum state. Puthoff [22] describes the process as follows: "I discovered that you can consider the electron as continually radiating away its energy as predicted by classical theory, but **simultaneously absorbing a compensating amount** of energy from the ever-present sea of zero-point energy in which the atom is immersed. An equilibrium between these two processes leads to the correct values for the parameters that define the lowest energy, or ground-state orbit (see "Why atoms don't collapse," NEW SCIENTIST, July 1987). Thus there is a DYNAMIC EQUILIBRIUM in which the zero-point energy stabilizes the electron in a set ground-state orbit. It seems that the very stability of matter itself appears to depend on an underlying sea of electromagnetic zero-point energy."

Furthermore, it appears that it is the spinning of electrons that provides inertia and mass to atoms. These theories, linking electron spin, zero point energy, mass, and inertia have been presented in a number of recent papers, such as those by Haisch [23] and colleagues and provide us with a possible explanation of the Biefield-Brown effect. It appears that an intense voltage field creates an electromagnetic barrier that blocks the atomic structure of an atom from interacting with the zero point field. This slows down the electrons, reducing their gyroscopic effect, and thus reducing atomic mass and inertia, making them easier to move around.

Evidence of Extensive Antigravity Technology

The B-2 Advanced Technology Bomber

In 1993, LaViolette wrote a paper [24] discussing the B-2 bomber and speculating on its probable antigravity propulsion system, based on a solid understanding of electrogravitics, [25] the aircraft's design and the materials used in its manufacture. It appears that the craft is using a sophisticated form of the antigravity principles first described by T. Brown. Support for this thesis came from the Aviation Week and Space Technology (March 9, 1992), which reported that the B-2 bomber electrostatically charges its leading edge and its exhaust stream. Their information had come from a small group of former black project research scientists and engineers suggesting the B-2 utilizes antigravity technology. This information was supported by Bob Oechsler, an ex-NASA mission specialist who had publicly made a similar claim in 1990. These findings support the contention that there have been major developments in the area of antigravity propulsion which are presently being applied in advanced aircraft.

LaViolette later states the obvious that "the commercial airline industry could dramatically benefit with this technology which would not only substantially increase the miles per gallon fuel efficiency of jet airliners, but would also permit high-speed flight that would dramatically cut flight time." [26]

The Hunt for Zero Point [27]

This recent book contains some of the strongest evidence yet for major efforts and success in the field of antigravity technology. The author, Nick Cook, who for the past 15 years has been the Aviation Editor and Aerospace Consultant for Jane's Defense Weekly, spent the last 10 years collecting information for the book. This included archival research on Nazi Germany's antigravity technology and interviews with top officials at NASA, the Pentagon and secret defense installations. He shows that America has cracked the gravity code and classified the information at the highest security levels. **Because antigravity and its allied zero point energy technologies potentially offer the world a future of unlimited, non-polluting energy it has been suppressed because of the "huge economic threat".** His findings support those reported by many of the Disclosure Project witnesses cited above.

Antigravity Technology Demonstrations

Although T. Brown reported many of his findings nearly a half century ago, other experimenters have just recently begun to reproduce his work and report on it in the open literature and on the WWWeb. For example, Davenport [28] published the results of his work in 1995 supporting the findings of T. Brown, while Bahder and Fazi [29] in 2002 described their assessment of the forces associated with an asymmetric capacitor. Transdimensional Technologies [30] in the USA and J. Naudin [31] labs in France have posted on the WWWeb: diagrams, web videos, and data on their versions of antigravity "Lifters" based on an extension of Brown's work. It is a sad commentary on this whole area of research to see that public science is requiring us to demonstrate principles that were demonstrated nearly fifty years ago.

There have also been a number of other demonstrations of "antigravity" phenomena by researchers throughout the world. This includes the work of Brazilian physics professor, Fran De Aquino, and such devices as: the Searl Electrogravity Disc, the Podkletnov Gravity Shield and Project Greenglow, the Zinsser Kineto-baric Field Propulsion and the Woodward Field Thrust Experiments on Piezoelectrics. All of these are described in more detail by Greer and Loder. [32]

Implications of This Research

Antigravity and zero point energy research and their applications are finally being addressed by some of the open scientific community. This means there will have to be a rewriting of textbooks in this area so our new generation of students can apply this "new knowledge." Its application will lead to major breakthroughs in transportation technologies both earthside and in outer space. The implications are that we have the potential for human exploration of our solar system and beyond, if we have the will, within our lifetimes. It also means that the majority of 20th century space technology will be obsolete and in fact may already be so.

The zero point or vacuum state energy source is seen as a totally non-polluting energy source, which has the potential to replace all the fossil fuels on this planet. It also will provide the energy needed for long range space flights. This means that fuel cells and solar cells in common use today for space flight energy applications will only be needed until we transition to these new energy technologies.

Based on an analysis of trends in antigravity research over the last half-century and the information provided by numerous witnesses, it appears that there is both good and bad news. The good news is that it appears that we (at least covert projects) have already developed the theories of antigravity, and additionally have developed working spacecraft based on these principles. The bad news is that these technologies have been developed for at least several decades, at the public's expense and that human kind has been deprived of these technologies, while continuing to waste energy using less efficient and pollution enhancing technologies.

Supporting this contention is the following quote from Ben Rich, former head of the Lockheed Skunkworks. Just prior to his death, he stated to a small group after a lecture [33] that: "We already have the means to travel among the stars, but these technologies are locked up in black projects and it would take an act of God to ever get them out to benefit humanity…" He further went on to say that, 'anything you can imagine we already know how to do.' Strong words from a knowledgeable deep insider and words that support what a number of the witnesses stated as well.

As the reality of this knowledge begins to be understood, there will be an outcry among space scientists not on the inside for release of these technologies to allow all of us to explore space. There will be major changes in the way that NASA does its business, though predicting these changes is difficult.

Not only has space exploration in the public sector suffered, but our planet's environment has suffered as well. Thus as this knowledge begins to sink in there will be an outcry among all concerned citizens on this planet for release of these technologies to allow all of us to reduce and ultimately eliminate global warming and environmental pollution that so threatens our way of life. These technologies will not only affect space travel technologies, but will also have a profound effect on transportation and energy production on the earth's surface.

In conclusion, we might consider the observation made by Halton Arp [34]: "We are certainly not at the end of science. Most probably we are just at the beginning!"

Acknowledgements

I thank the following people for many discussions while preparing and writing this paper including: S. Greer, A. Craddock, T. Bearden, P. LaViolette, M. McCandlish, D. Hamilton, T. Valone, E. Mallove, T. Loder, C. Loder, S. Patel and many of the courageous Disclosure Project witnesses.

References Cited

1. Quoted from: LaViolette, P. A. 2000. Moving Beyond the First Law and Advanced Field Propulsion Technologies. In T. Loder (ed.), "Outside-the-Box" Technologies, Their Critical Role Concerning Environ-mental Trends, and the Unnecessary Energy Crisis. Report prepared for The U.S. Senate Environment and Public Works Comm. www.senate.gov/~epw/loder.htm.
2. Brown, T. T. 1929. How I control gravity. Science and Information Magazine, Aug. 1929. Reprinted in Psychic Observer 37 (1): 66-67.
3. Aviation Studies (International) Ltd. 1956. Electro-gravitics Systems: An examination of electrostatic motion, dynamic counterbary and barycentric control. p. 14. In Valone, T. (ed.), 1994. Electrogravitics Systems: Reports on a new propulsion methodology. Integrity Research Institute, Washington, DC 20005.
4. Ibid. p. 27.
5. Ibid. p. 19.
6. Gravity Rand Ltd. 1956. The Gravitics Situation. p. 54. In Valone, T. (ed.), 1994. Electrogravitics Systems: Reports on a new propulsion methodology. Integrity Research Institute, Washington, DC 20005.
7. Aviation Studies (International) Ltd. 1956. Electrogravitics Systems: An examination of electrostatic motion, dynamic counterbary and barycentric control. p. 11. In Valone, T. (ed.), 1994. Electrogravitics Systems: Reports on a new propulsion methodology. Integrity Research Institute, Washington, DC 20005.
8. Ibid. p. 34.
9. Ibid p. 41.
10. Gravity Rand Ltd. 1956. The Gravitics Situation. p. 47. In Valone, T. (ed.), 1994. Electrogravitics Systems: Reports on a new propulsion methodology. Integrity Research Institute, Washington, DC 20005.
11. Aviation Studies (International) Ltd. 1956. Electrogravitics Systems: An examination of electrostatic motion, dynamic counterbary and barycentric control. p. 32. In Valone, T. (ed.), 1994. Electrogravitics Systems: Reports on a new propulsion methodology. Integrity Research Institute, Washington, DC 20005.
12. Evans, M. W. 2002. The link between the Sachs and O(3) theories of electrodynamics. In Evans, M.W. (ed.), Modern Nonlinear Physics, Pun 2. 2nd ed., Advances in Chemical

Physics 19:469-494.
13. Anastasovski, P.K., T.E. Bearden, C. Ciubotariu, W.T. Coffey, L.B. Crowell, G.J. Evans, M.W. Evans, R. Flower, A. Labounsky, B. Lehnert, M. Mészáros, P.R. Molnár, S. Roy, and J.-P. Vigier. 2001. Anti gravity effects in the Sachs theory of electrodynamics Foundations of Physics Letters. 14(6):601-605
14. Alcubierre, M. 1994. The Warp Drive: Hyper-fast travel within general relativity. Classical and Quantum Gravity, 11, L73.
15. Puthoff, H. E. 1996. SETI, The Velocity-of-Light Limitation, and the Alcubierre Warp Drive: An Integrating Overview, Physics Essays 9:156.
16. Lamoreaux, S.K. 1997. Demonstration of the Casmir force in the 0.6 to 6 μm range. Physics Review Letters. 78:5.
17. Puthoff, H. 1989. Gravity as a Zero-Point Fluctuation Force." Phys. Rev A., 39(5):2333-2342. Puthoff, H. 1989. Source of Electromagnetic Zero-Point Energy." Phys. Rev A, 40(9):4597-4862.
18. See the Tom Bearden web site for an extensive listing and copies of his papers at: www.cheniere.org.
19. Anastasovski, P.K., T.E. Bearden, C. Ciubotariu, W.T. Coffey, L.B. Crowell, G.J. Evans, M.W. Evans, R. Flower, A. Labounsky, B. Lehnert, M. Mészáros, P.R. Molnár, J.K. Moscicki, S. Roy, and J.P. Vigier. 2001. Explanation of the motionless electromagnetic generator with 0(3) Electrodynamics. Foundations of Physics Letters, 14(1):87-93.
20. Bearden, T. 2002. Energy from the Vacuum: Concepts and Principles. Cheniere Press, Santa Barbara, CA.
21. Valone, T. 2000. The Right Time to Develop Future Energy Technologies. in T. Loder (ed.). "Outside-the-Box" Technologies, Their Critical Role Concerning Environmental Trends, and the Unnecessary Energy Crisis. Report prepared for The U.S. Senate Environment and Public Works Comm. www.senate.gov/~epw/loder.htm.
22. Puthoff, H. 1990. Everything for Nothing. New Scientist, 28 July 1990, pp. 52-55.
23. Haisch, B., Rueda, A. and Puthoff, H. 1994. Beyond E =mc2; A First Glimpse of a Postmodern Physics, in which Mass, Inertia and Gravity Arise from Underlying Electromagnetic Processes. The Sciences, 34:26. Haisch, B., Rueda, A., and Puthoff, H. 1997. Physics of the Zero-Point Field: Implications for Inertia, Gravitation and Mass. Speculations in Science and Technology, 20:9. Haisch, B. and Rueda, A. 1998. An Electromagnetic Basis for Inertia and Gravitation: What Are the Implications for 21st Century Physics and Technology? in El-Genk, M.S. (ed.), Space Technology and Applications International Forum-1998, DOE CNF-980103, CP420, p. 1443. Haisch, B. and Rueda, A. 1999. The Zero-Point Field and the NASA Challenge to Create the Space Drive. Proc. NASA Breakthrough Propulsion Physics Workshop, NASA/CP-1999-208694, p. 55.
24. LaViolette, P. 1993. The U.S. Antigravity Squadron. p. 82-101. In Valone, T. (ed.), 1994. Electrogravitics Systems: Reports on a new propulsion methodology. Integrity Research Institute, Washington, DC 20005.p.82-101.
25. LaViolette, P. A. 1992. Electrogravitics: Back to the future. Electric Spacecraft, Issue 4, pp. 23-28. LaViolette, P. A. 1993. A theory of electrogravitics. Electric Spacecraft, Issue 8, pp. 33-36
26. LaViolette, P. A. 2000. Moving Beyond the First Law and Advanced Field Propulsion Technologies. in T. Loder (ed.). "Outside-the-Box" Technologies, Their Critical Role Concerning Environmental Trends, and the Unnecessary Energy Crisis. Report prepared for The U.S. Senate Environment and Public Works Comm. www.senate.gov/~epw/loder.htm.
27. Cook, N. 2001. The Hunt for Zero Point: Inside the World of Antigravity. Broadway Books, NY. 256pp.
28. Deavenport, L. 1995. "T.T. Brown Experiment replicated. Electric Spacecraft Journal. Issue 16. Oct. 1995. (Reprinted in: Valone, T. (ed.), 1994. Electro-gravitics Systems: Reports on a new propulsion methodology. Integrity Research Institute, Washington, DC 20005)
29. Bahder, T.B. and Fazi, C., "Force on an Asymmetric Capacitor," Army Research Laboratory, v51 ARL-TR.nb. Avail. at: http://xxx.lanl.gov/abs/physics/02110. 2002.
30. Transdimensional Technologies, 906-E Bob Wallace Ave., Huntsville, AL 35801.
31. http://jnaudin.free.fr
32. Greer, S.M. and T.C. Loder III. 2001. Disclosure Project Briefing Document, 492 pp. Available on CD from: The Disclosure Project, P.O. Box 2365, Charlottesville, VA 22902. Also available from: www.disclosureproject.org.
33. Lecture given at UCLA Engineering Department on March 23, 1993
34. Arp, H. 1998. Seeing Red: Redshifts, Cosmology and Academic Science. Montreal, Aperion. (p. 249).

Congress "The Time Machine"

Faraday Labs Ltd invites to participate in scientific congress devoted to experiments on changing of space-time properties. It is planned April 12, 2003, Moscow. Main topics of the congress are time and gravitation in the context of eatherodynamics, experiments and applied aspects of these technologies. The main report is "Method to Control Temporal Parameters of Physical Processes" by Alexander V. Frolov.

Organizing committee: Vadim A. Chernobrov (KOSMOPOISK research center) and Alexander V. Frolov (Faraday Labs Ltd). The registration fees are not required.

Please, contact us http://www.faraday.ru or **email** congress@faraday.ru **Phone/fax 7-812-380-3844**

Please send this pre-registration form by post: P.O. Box 37, St. Petersburg, Russia 193024 **or e-mail:** congress@faraday.ru

***PRE-REGISTRATION FORM* for participation in the congress "The Time Machine"**

Last name:
First name:
Title/ Function:
Company/ Organization:
Address:
Postcode:
City:
Country:
Tel.:
Fax:
e-mail:

☐ I would like to submit an oral presentation (report). (Please, enclose one-page abstract).

☐ I intend to participate as a guest

☐ I'm interested in further information.

Date Signature

COMMERCIALISING the "SEARL EFFECT" for ENERGY and PROPULSION SYSTEMS

Review from web site http://www.sisrc.com/
Email address: admin@sisrc.com

The "Searl Effect", discovered by J.J.R. Searl, is a method of extracting energy. Some current expressions for the source of this energy being The Space Fabric, Quantum Space Field, and Zero Point Energy.

SISRC Ltd has been formed to develop and license Searl Effect Technology (SET) on a global basis.

THE COMPANY

SISRC Ltd is the company formed to administer the implementation of the Searl Effect Technology, (SET) invented by J. R. R. Searl. SISRC Ltd designs, develops and implements Searl Effect Technology as it is initiated in various applications and territories. SISRC Ltd is the administrative hub of the group and will continue to be based in the UK. SISRC Ltd will grant production and marketing licenses for Searl Effect Technology applications to different companies in specific territories. Currently proposed related companies include:

* SISRC -Germany, SISRC -Iberia, SISRC - Sweden, SISRC - Australia, SISRC New Zealand.
* SISRC -AV (Audio Visual) provides computer graphics presentations of the SET.

BACKGROUND

The Searl Effect Generator (SEG) technology, as applied to the commercial market, had been previously developed to the point where a few prototype SEG generators were made, and used for electricity generation and motion. Commercial interest at that time focused on the SEG's transport potential and, under commercial pressure to deliver a fully functioning system, the original generators were used and lost in a series of vehicular propulsion experiments and demonstrations. Funding was insufficient to continue with the manufacture of the required larger-scale pressurized cabin machines - resulting in the termination of the project at that time.

Although all the operating principles, precise proportions and weights of the required materials are known for three of the four required operating materials, the precise data of the original magnetic layer is uncertain. The objective of the current R&D programme is to re-establish the original magnetic layer using modern and more efficient materials.

Originally, the layered materials were constructed and magnetized by the now-defunct Midlands Electricity Board under the direction of John Searl (see colored photo of the experimental craft construction on the cover page).

Modern magnetic materials have advanced considerably, and old ones discontinued, so a series of tests need to be conducted to establish the optimum materials and processes. These tests need to comply with the working criteria required and must lead to a cost-effective manufacturing process.

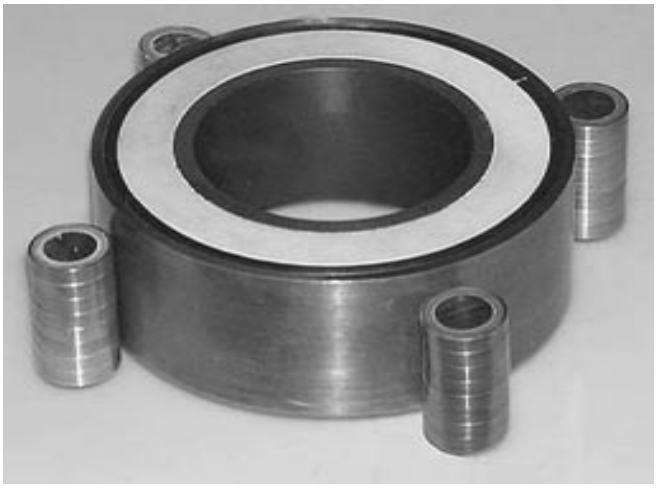

Fig.1
Experimental ring and rollers

In recent times SISRC has been re-establishing the original research. Due to the very limited funding that has been available, only a partially functioning demonstration prototype of the SEG principles has been possible. This prototype consists of the innermost of the three composite rings required and several rollers.

We would like to hear from anyone who worked on or was involved with Searl Technology prior to 1983. Also anyone who has any old technical data, photographs or films relating to the technology. Such information could greatly assist this technology to reach the marketplace for the benefit of all and would be dealt with in the strictest of confidence.

TECHNICAL DESCRIPTION

Physically the Searl Effect Generator (SEG) consists of three concentric rings each made of a composite of four different materials which are also concentrically attached to each other. The three rings are fixed to a base. Surrounding each of the rings, and free to rotate around them, are rollers - typically 10 on the first ring, 25 on the next and 35 on the outer ring. Surrounding the rollers on the outer ring are coils which are connected in various configurations to supply either AC or DC current at a variety of voltages.

Multiple magnetic poles are imprinted on the rings and rollers to form frictionless magnetic bearings. These also arrange the static charge into opposing charge clusters which cause the rollers to rotate around the circumference of the ring (as shown in Fig. 2).

Some expressions currently in use to describe the source of the energy for the SEG are The Space Fabric, Quantum Energy field of Space or Zero Point Energy. This is an unlimited and constant source of energy which can be made to flow when the correctly proportioned masses concerned are stimulated by the correct frequencies creating an 'open system'.

The idea of utilising this source of energy is currently the subject of various devices and experiments such as the 'Lamb shift', 'Casimir Effect' and the work of the Russian Nobel Prize winner Ilya Prigogine. However these devices and experiments tend to only prove the existence of the energy and not a method to create a coherent, ordered flow to produce useful power.

Fig. 2
15 KWt Searl Effect Generator (SEG)

In contrast, John Searl has discovered that, in order to create a steady and stable flow, all the masses of the device (and the stimulating frequencies) must conform to precise values determined mathematically by the 'Law of the Squares'. A machine constructed to these principles produces a stable and useful power output.

DEFINITION OF A SURFACE OPERATING S.E.G. (J. Searl) 15.09.00

A Linear motor operating on a magnetic bearing with the characteristics of an auto-transformer. The S.E.G. is defined as a device, which is constructed from 2,124 component parts, which make up 3 plates and 66 roller sets (see figures on the cover page). 12 of the 2,124 components create the 3 plates, which act as reaction components. 2,112 components are employed to create 66 roller sets, which act as active components. Each roller set consists of 8 segments constructed from 32 components. Each segment cannot be less than 34 grams in weight, as the law of the squares defines that value as the lowest value suitable for the reasonable generation of electricity. Therefore the smallest roller set must weigh 272 grams, making a grand total of 2,244 grams per roller set for the smallest surface bound SEG.

Tolerance should be about 0.05 gram per roller set. The larger the error the greater is the loss of power within the unit. Therefore the total tolerance for the smallest SEG roller set must not be greater than 3.30 grams - above this factor the SEG will not function. **For the best results, the tolerance across the total 66 roller sets should not exceed 0.05 grams!**

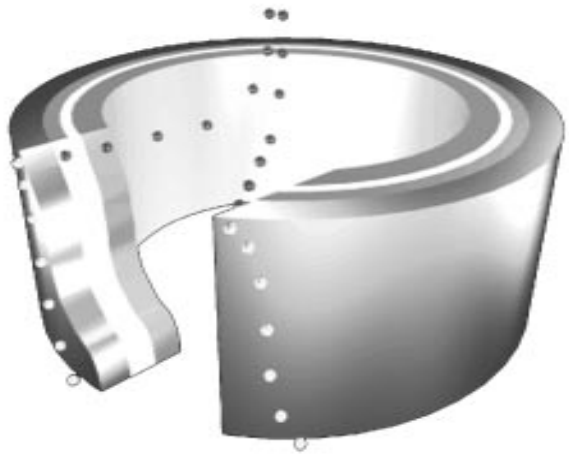

Fig.3

The S.E.G. is a step up rotary transformer. In fact it's a 'three rotary transformers' operational system, within a unit. The inner transformer output is fed in to the input of the second plate which increases the output of the second unit, which output feeds as an input to the final unit, thereby increasing its finaloutput to a very high voltage. Therefore the S.E.G. is just a prime mover for the production of clean electrical energy. The output windings must be designed to step down this output to 240 volts at 15KWt's.

During 1968 it being upon this issue, as development progress both here and in the USA, new findings are being created, and updates will be added to this page, as they are certified. When the SEG rollers are brought into close proximity to the SEG Ring, the Searl Effect resonant magnetic field causes negative ions and electrons to be drawn into and accelerated through the machine. This process is assisted by the highly electron-attracting rare earth metal Neodymium.

The unique mechanical and material arrangement of the SEG pulses the neodymium to continually release and replace the surplus electrons to provide electrical or mechanical power, or both.

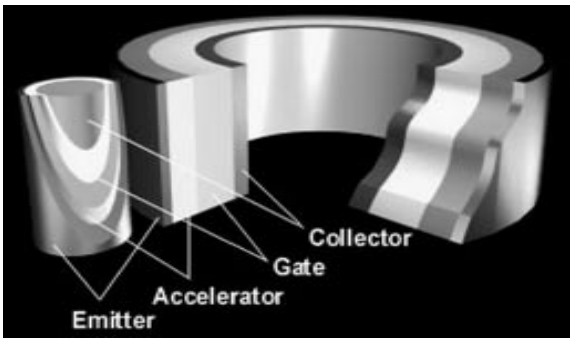

Fig.4

DEVELOPMENT

Prior to the production of complete 15KWt Searl Effect Generators (SEGs), a minimum of two demonstration Ring & Roller prototypes are to be produced.

The "Ring" is typical of the innermost of the three rings required to make a complete SEG. The 69-roller sets in a complete three ring SEG are identical. Six roller sets will be made for the prototype inner rings so that the Searl Effect can be demonstrated.

The production of a self-running Ring & Roller prototype will establish the precise sequence and parameters of electrical, magnetising and material processes required for the SEG and will demonstrate electrical power generation. An operating single inner ring with 1-8 rollers will also determine if a particular material will function correctly and at what level of power output.

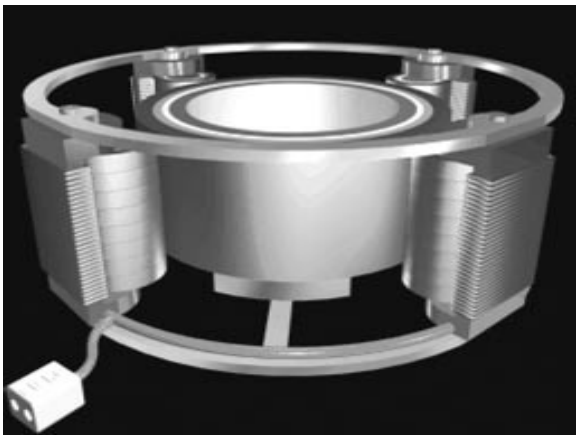

Fig. 5
Demonstration ring and rollers

The five phases of the development programme that commenced in October 1999 have been completed and the rollers successfully magnetised with 'Searl Effect' magnetic fields. A sixth phase is now required to apply the technology developed in Phase five to the "Ring". This sixth Phase resulting in a demonstration Ring & Roller prototype has duration of 6 months.

NEWS REVIEW

Scientific Breakthrough Liberates Energy Users from Fossil Fuel Dependence

Information from
http://www.genesisworldenergy.org/genesis_world_energy.htm

Story originally published by Diana Echeverria, USA

Director of Public Relations
Guy Rome & Associates, Inc.
208-345-4143 208-602-0325 (cell)

Technology breakthrough harnesses energy from the molecular structure of water

BOISE, ID - Dec. 5, 2002 - Genesis World Energy, a privately funded consortium created by a group of military and space program research and development specialists, today unveiled a scientific breakthrough that allows consumers to easily access the energy contained within the hydrogen and oxygen molecular structure of ordinary water. This scientific breakthrough provides a limitless, low cost and environmentally clean source of energy that can be implemented with minimal cost and effort. The viability of using water as an energy source, previously a theoretical concept, is now a reality. "Water has always been the source of life on this planet, now it will also transform the way we create energy" said Charles Shaw, corporate counsel and spokesperson for Genesis World Energy. "The implications for worldwide energy generation and consumption are nothing less than staggering."

The Edison Device

The first application of this technology is represented in the "Edison Device", a self-contained, self-sustaining energy generation unit. Roughly the size of an outdoor air conditioning system, the power source can be quickly and easily installed in any home or business to provide virtually unlimited energy from any available water source. The Edison Device utilizes the existing electrical wiring and natural gas plumbing in a home or business to replace the energy provided by utility companies. The home version of the Edison Device produces approximately 30 kWtt of combined gas and electrical energy per day. By comparison, the typical home uses between five to six kilowatts per day. The commercial model is capable of producing 100 kilowatts of energy per day. The energy generation portion of the devices has no moving parts. In fact, the only "mechanical" aspects of the equipment are small circulation pumps and micro-valves, making the Edison Device both silent and virtually maintenance-free. A minimum amount of water is used over an estimated 20+ years of service life.

Interesting Publications of the Last Year

Discovery by a Group of Scientists Headed by Valerian Sobolev

Some time ago mass media announced that a sensational discovery was made by a group of Russian scientists headed by Valerian Sobolev. This discovery aroused ambiguous attitude of physic community. We have written about this fundamental and, to a certain extent, revolution discovery. Let us revise the fact that Sobolev claimed 7 scientific discoveries which were made, i.e. the process of depletion (a special electrochemical process), magnetic discharge, a new energy source, a method of low temperature plasma generation and superconductor. A laboratory system of the experimentally disclosed process as well as its industrial prototype is easy to be realized in practice for creation of new energy sources and wide-ranging production of ultrastrong materials. In many cases these materials can replace existing constructional materials.

The materials produced as a result of the process are multielement chemical compounds which are new states of matter. This new state of matter has **a time-changing magnetic field that can be EMF source in a coil of a generator.** Ordered structures of matters which are in the new modified state are nothing but a magnet charge. Materials containing the magnet charge and representing a continuous matters are **new energy sources.** Due to the new state matters become able to produce electric power as well as to generate low temperature plasma. It is easy to be realized in the process of common technological procedures. That promises designing of propulsors for "unsupported" transportation systems in near future.

Basing on realization of the disclosed process and using new materials the group of Russian Scientists headed by Sobolev together with American businessmen has created superfine and flexible glass for packing. The glass was called as "strong glass". It seems to demonstrate higher pressure stability than steel. A method of production of these materials was patented in 1999. In the patent the scientists of Valerian Sobolev's group are represented as authors of this new method, and the owner of the patent is Dynelec Corp (Columbus, Ohio, USA). You can read about the patent at the Web-site of http://patft.uspto.gov/netahtml/srchnum.htm (patent #5,964,913, October 12, 1999).

Sobolev's group has appeal to the Russian government for sponsorship; however only foreign investors have provided funds for new energy sources developing. According to Russian Information Agency "News", Sobolev's group has signed a $168 million contract with one of Canadian companies for developing industrial production of energy sources. Manufacturing of such energy sources **can change energy supply system all over the world**. According to the contract the Canadian company is going to finance building of at least two plants. One of the plants is going to be built in Russia, and the other one is planning to be established in Canada. Each plant is supposed to produce 70 thousand of the self-running energy sources a year. Power output of the sources will come to 3-10 kWt. In other words, in the nearest future every person will be able to buy such an energy source and to apply it in household.

Single-Wire Electric Power System

(see photo on the cover page)

Experimental Results of Russian Scientists

Scientists of the All-Russia scientific research institute of electrification of agriculture (VIESH) academician D.S. Strebkov, engineer S.V. Avramenko, dr., A.I. Nekrasov, post-graduate student O.A. Roshchin developed a new method and the equipment for transmission of electric energy on a single-wire line using resonant idle operation mode and reactive capacitive currents for transmission of active electric power. Tesla transformers and frequency converter were used at the experiments.

First there was created the experimental sample of single-wire electric power system (SWEPS) with **10 kW** electric capacity and 3000 V voltage. As a result, obtained SWEPS electric parameters a hundred times exceeded parameters of a usual two-wire or three-wire alternative and direct current line.

In the end of 2002 there was made an attempt to increase transmitted capacity by using of more powerful condensers, which were installed in resonant circuit. There was developed the electric technique of **20kW** single-wire electric power system (SWEPS) with two Tesla transformers. As a result parameters of a low-voltage winding of the step-down transformer were changed. They **exceeded parameters of a usual two-phase or three-phase ac line or dc line in two hundred times.** At room temperature effective specific transmitted electric power was 4 MW/mm^2 and specific current density was 600 A/mm^2. These parameters could be achieved for existing methods of electric energy only at use of special materials in a mode of low temperature superconductivity. The measurements which were made at wire with diameter of 1mm, 100 microns and 80 microns, demonstrated that parameters did not depend on diameter of a wire. There was also experimentally confirmed the property of a single-wire line to transfer active power without essential losses on line resistance. Irradiation losses at low frequency 3,4 kHz were small. In single-wire power system the 80 microns wire plays a role of directing system for an electromagnetic energy flow, which runs from the generator to the load.

We present update information on the experiments with Lifters or asymmetrical capacitors, which use High Voltage to produce a thrust. ***By Jean-Louis Naudin it was demonstrated with "Maximus" experiment, that a Lifter can be scaled up and also that such a device is able to lift up to 60 g of payload (total weight: 194 g). According to Naudin, it is now possible to build a craft which will use the Biefeld-Brown effect to fly silently and without moving parts only powered by electrical energy.*** *It was also declared that on January 8th, 2003, there was successfully done two historical flights with a mouse as a test pilot of the Lifter "Maximus"* ***(propellantless electrokinetic craft)****. Below there is an analysis of electrogravitation experiments made by Jean-Louis Naudin and Tim Ventura. (See color photos on the cover page).*

Review of Electrogravitation Experiments made by Jean-Louis Naudin and Tim Ventura

Tim Ventura

Tim Ventura Website: http://www.americanantigravity.com
Email: TVentura@seattle.telecomsys.com, tventura6@atbi.com

There is a spreadsheet containing a jpeg-snapshot of data that I have assembled based upon Jean-Louis Naudin's published results (JLN Labs Website: http://jnaudin.free.fr. and http://www.jlnlabs.org). In the graphs that I've created, it seems to indicate that current plays more of a role in propulsion than voltage does — i.e.: for a given amount of power in watts, raising the current and decreasing the voltage seems to create a higher level of thrust.

In light of this, I have been increasing the thrust of my own Lifters by creating an electrical-bypass of the "load-resistor" on my power-supply's high-voltage output. This has an interesting result:

I use a current-driven power-supply, which means that if no load is connected to it the voltage will build up on the high-voltage output until arcing occurs. In my case the voltage will build up to around 65kV, at which point the power-supply will automatically shut down. Conversely, if a very light load (such as a short circuit) occurs, the opposite effect happens and the power-supply will deliver much higher current at a much lower voltage until the supply is overdrawn and once again shuts down.

Normally the output load-resistor constrains the current, and in doing so it maintains the voltage on the high-voltage output at the nominal 50kV output level. However, bypassing the output load-resistor allows the power-supply to deliver voltage and current that are based almost entirely on the type of load connected to it.

When I connect a normal Lifter to the bypassed power-supply, the voltage will build across the air-gap until ions begin to flow in a conduction-current across the air-gap. Although this begins to happen at approximately 15kV, it seems to have some type of "peak efficiency' at approximately 22.5 kV. The amount of current climbs to approximately 11mA at this voltage.

This method of experimental setup seems to allow the Lifter to "find its own sweet-spot" for operation, instead of using the output-resistor to "force" a specific voltage on it for operation. This appears to maximize the thrust output during operation.

Lifter Efficiency Spreadsheet

Description	Lift capacity (grams)	Length (cm)	Efficiency (g/m)	Lifter Weight (grams)	Voltage (kilovolts)	Corona Air-Gap (centimeters)	Current (mA)	Power (watts)
Lifter 1	3.3	60	5.5	2.3	41.9	3	0.57	23.9
Lifter 2	9.6	180	5.3	6.6	43.35	3	1.12	48.5
Lifter 3	20	360	5.6	16	27.5	3	2.53	69.5
Lifter 4	36	720	5	32	44	3	2.01	132.9
3-Stage Lifter 3	54	1080	5	24	30	4.5	8.06	240
Coliseum Lifter	90	2160	4.16	50	31.769	4.5	8.06	254.15

New Electric Fire Technology

Valery D. Dudyshev

Doctor of Technical Science, Professor,
Corresponding Member of Russian Ecological Academy
ecolog@samaramail.ru
http://www.intrasoft.ru/nizot

Abstract

The article proves importance and prospects of development of combustion technologies. In particular there is considered application of a new electric fire technology for environmentally appropriate combustion of any matters and gases. The technology uses electric fields as combustion catalyst. There is observed application of technology in heat-and-power engineering, transport heat engines, disposal units etc. [1, 2]. It is demonstrated that the new technology allows intensify combustion processes and increase their controllability (i.e. the control of temperature, gases pressure, gradient of heat conductivity, and so on). There is made a conclusion about availability of the technology to solve critical energetic and ecological problems of the civilization.

We hope that this article will excite interest of a wide circle of readers, i.e. of professionals in the area of combustion and heat technologies, physicists, ecologists, and those people who are interested in new scientific ideas.

Global Ecological Problems are the Problems of Ineffective Combustion of Hydrocarbon Fuel

The ecological problems become more and more serious and threaten to grow into world ecological catastrophe. The main cause of the atmosphere pollution in megapolises is imperfection of combustion technologies (of heat-and-power engineering, heat machines, transport engines, waste combustion…). It has been proved that their share of pollution of the planet atmosphere comes to 70-80%. The combustion technologies mean any technologies of combustion of fuel, matters and gases. The combustion technologies are the most popular technologies in the world. The modern civilization without the combustion technologies is impossible. There are many industries, which apply these technologies, such as heat-and-power engineering, transport, metallurgy, food industry, oil-and-gas refining industry, chemical industry, waste combustion neutralization.

Therefore the global ecological problems will not be solved until the mankind develops the combustion technologies. The article describes and discloses the essence of the new technology of ecologically appropriate and effective combustion of fuel and wastes of any type.

Why is it difficult for ecologists to conserve nature?

Modern methods and technology used for solving of the ecological problems consist in **analysis** of extent and sources of the environment pollution (ecological monitoring), and, moreover, in **refinement of atmosphere, water and soil, which are used in different technologies or have been polluted due to the imperfection of the technologies** (it is refinement from such toxic components as drinking and run-off water, exhaust and waste gases etc.).

Unfortunately, methods of measuring of the huge spectrum of toxic matters, which are thrown into the atmosphere at matters combustion, as well as the methods of their utilization are impartially difficult, expensive and imperfect. Even using of an ideal technics for measuring of the atmosphere pollution is not effective since it is a struggle with **consequences** of the combustion and other technologies imperfection but not with **causes** of the atmosphere pollution.

Ecological and energetic effectiveness of the known combustion technologies

It is known that real effectiveness of transformation of chemical energy of fuel in the combustion process is low. For example, in heat engines it comes to 25%, effectiveness of transformation of heat energy into electric energy in thermoelectric power stations does not exceed 40%. If energy consumptions of mining, processing and delivery of the fuel to consumers are taken into account then the summary efficiency of the existent combustion technologies (of heat machines and devices) comes to no more than 10 – 15%! It means that more than the half of chemical energy of the fuel is transformed into heat and different toxic matters and waste gases, which pollute the planet atmosphere. They cause acid precipitation, a global "greenhouse" effect, which threaten to cause the climate warming, the world flood, and final poisoning of the living nature. Thus the share of imperfect power engineering in the nature pollution comes to 70 – 80%! How is it possible to cleanse the planet atmosphere, especially the environment of world megapolises, in the situation when the amount of toxic matters produced by transport and industries is comparable with the amount of rest pure air?

Until the mankind learns burn matters and gases by effective and ecologically appropriate way the planet atmosphere will remain polluted and in near future it can become uninhabitable. Thus we will not solve the ecological problems until we gain the understanding of the combustion processes and processes of combustion transformation of matter chemical energy into heat energy, and then into other useful types of energy (i.e. electric energy, mechanical energy, light energy).

Physical Essence and Problem of Classical Combustion of Matters

Combustion is one of the most difficult phenomena, which are known by the humankind. From the scientific point this phenomenon is a chain reaction of sequential fragmentation of fuel particles into smaller charged radicals; it is physical chemical processes of transformation of chemical energy of intermolecular connections as well as combustion also includes physical processes of transformation of energy into heat and light on molecular and atomic levels. Many other processes, which proceed simultaneously, are involved.

From school years we know that combustion is a process of interaction of fuel with an oxidant that is accompanied by heat and light energy generation. In higher school the words of "as well as by cryptic energy of chemical connection of waste gases" are added to the school definition. The combustion processes are studied and improved by scientists and experts of different areas (chemists, physicists, heat-and-power engineering specialists, thermalphysicists etc.). There are known fundamental investigations of combustion chain reactions made by such Russian scientists as N.N. Semenov, Ya.B. Zeldovich and their followers.

Until now intensiveness of fuel combustion is increased by air blowing into the combustion zone that increases the amount of waste toxic gases thrown into the atmosphere. **Let us arouse several questions, which seem naive at first sight. Why is an oxidant (air or oxygen) needed for matter combustion? Is it possible to do it without any oxidant?** How does the combustion process begin and proceed? There are a lot of vague questions in physics of combustion. For example, how can the temperature and the intensiveness of the combustion be regulated? Can the heat conductivity of the flame be controlled? How can heat motion of particles be regulated in the flame and in the waste gases, and what can it cause? There is another problem of combustion. It is the very hydrocarbon fuels, which are applied at modern heat processes. The great Russian scientist, D.I. Mendeleev stated that to use oil is the same thing as to stoke a stove with banknotes.

Since the hydrocarbon fuels are complicated chemical matters and the combustion processes are imperfect then in the process of their combustion a great amount of different by-product matters and toxic gases are produced. They waste unused self-energy of fuel into the atmosphere and pollute our planet.

Physical essence of the new electric combustion technology

How is it possible to burn the hydrocarbon fuel by environmentally appropriate way? How can this environmentally appropriate technology be realized in practice? A brief answer is following**: it is necessary to make such conditions of combustion of organic fuel, and to introduce such a combustion catalyst that the energy of intermolecular and intramolecular connections of the organic fuel becomes absolutely free. At that the chemical energy can be transformed into energy of electromagnetic radiation, for example, into light energy and heat energy without generation of by-product polluting matters and gases. Then a working body (for example, water) is effectively heated by this directed concentrated electromagnetic radiation. In this process effects of electromagnetic waves reflection and concentration are used, or the electromagnetic radiation is directly transformed into electric energy.** In this case there is a new opportunity to regulate flame temperature and to extremely decrease quantity of the oxidant, i.e. to create organics combustion with minimal quantity of waste gases.

Is it principally possible to burn organic matters and gases without the atmosphere pollution using electric field as a catalyst? It is possible if parameters of this field are correctly chosen. More precisely it is possible if huge Coulomb forces of the electric field are correctly regulated by interaction of electrically charged particles of the fuel and the oxidant with force lines of the electric field.

One variant of an experimental device is represented in Fig. 1.

Devices for approbation of the new electric combustion technology

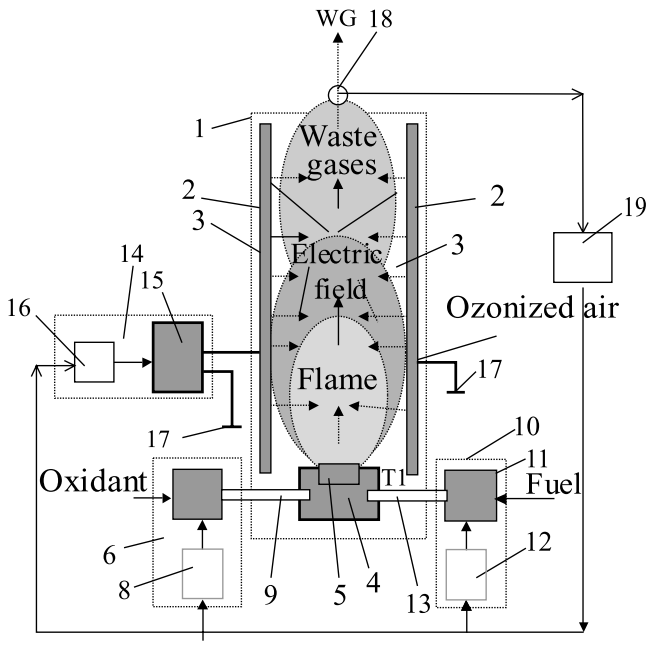

Fig.1 a
Plan of the experimental device

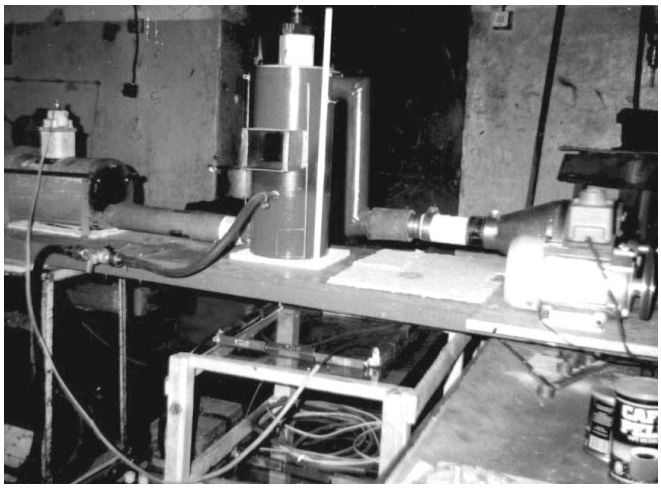

Fig. 1 b
Photo of the experimental system

A structure chart of the experimental device, which was designed to investigate the new electric combustion technology, is demonstrated in Fig.1a. The device contains a body (1) equipped with flat electrodes, which are insulated from the body (2), (they can be placed in either horizontal flat or vertical flat). The electrodes (2) are located on opposite inner walls of a combustion chamber (3). The device is equipped with a mixer (4) with a device for supplying of blended fuel to the zone of combustion. At the same time the device (5) is used for electrical combustion of the blend. The described device is equipped with an air track (6), which contains an oxidant activator (7) joined with a regulator (8) by a control circuit and with the mixer (4) by an air pipe (9). The regulator (8) serves for regulation of the oxidant activation extent. At the end of the air pipe it is possible to place a vortex device (it is not shown in the figure). Also the device is equipped with a fuel track (10) containing a fuel activator (11) and a regulator (12) of the activator and consumption of fuel. The block (11) is joined with the mixer (4) by a fuel pipe. The device is equipped with an electric combustion activator (14) containing a high-voltage transformer (15) of intensity and frequency joined to its regulator (16) by a control circuit. An electric outlet of the block (15) is joined to one of the electrodes (2), and the second outlet is safely electrically grounded by a grounding mat (17). The high-voltage wire of the outlet of the block (15) is connected with the electrode (2) through a bushing insulator (it is not demonstrated in Fig.1a). The device is equipped with a gas toxicity calculator (18) joined to the inlet of a mode optimizer (19), which is a control system for interacted regulating of all the parameters of combustion. For that the outlet of the mode optimizer (19) is joined to the inlets of control of the regulators (8), (12), (16).

The device operates in the following way. At first an activated oxidant of O1 is applied through the air track (6), activator (7) and air pipe (9) to the mixer (4). Then an activated fuel of F1 is applied through the fuel track (10) and the activator (11) to the same mixer (4). A blended fuel is prepared in the mixer (4) and then is atomized and combusted by a sparkle of the block (5). In the combustion chamber (3) flame and waste gases are processed by strong alternating electric field, which is generated by the block (14) in a gap between the electrodes (2). In the process of combustion waste gases toxicity is measured by the special toxicity sensor (18). Depending on current toxicity the parameters of flame combustion are regulated by the mode optimizer (19). More precisely the oxidant consumption and the extent of its activation are changed by the regulator (6), the fuel consumption and the extent of its activation are changed by the regulator (12), the intensity and frequency of the alternating electric field generated by the block (14) in the combustion chamber (3) is changed by the regulator (16). Let us note that the electric field in the combustion chamber (3), viz in the gap between the electrodes (2), catalytically influences on both the flame and the waste gases. The essence of the process lies in the fact that the processes of fragmentation and oxidation of fuel radicals and of toxic oxide molecules are accelerated. Intensiveness of combustion and of toxic gases refinement increases as well as the intensity of this field and its frequency do. As a result of the interconnected regulation of all the listed parameters fuel of any kind can be fully, intensively, "cleanly" combusted.

In Fig.1b there is a photo of the operating experimental device designed to investigate the processes of influence of electric field on the process of matters combustion and of cleaning of waste gases. The photo represents following things.

1. In the left side there is a furnace with a high-voltage electrode in a higher part of its body.
2. In the centre there is a vertical column of the electric combustion cleaning (after-burning) of toxic gases in the electric field; on the top of the column a high-voltage electrode can be seen. Gas pipes designed for toxic gases supply–withdrawal are connected with the column and located to the right and to the left from it.
3. A regulable blower is represented in the upper right side of the picture. It is designed for toxic gases withdrawal and connected with the gas pipe by the column.
4. At the foot of the picture there is a regulable high-voltage tension source (the electric field source), which is connected with the furnace and the column of toxic gases cleaning by high-voltage wires.

It is experimentally proved that combination of two stages of the combustion activation (i.e. in the furnace and the column) ensures ideal cleaning of toxic gases at combustion of any toxic matters.

Some Results of Experiments

Our experiments and investigations of many-sided influence of electric and high-voltage electromagnetic fields on the combustion process have proved that such practically ideal condition of fuel and matters combustion is possible to be realized in practice [1].

Low-powered static and alternating electric fields (i.e. the fields of constant sign and of variable sign) of more than 1kV/cm intensity were used as combustion catalysts as well as high-frequency electromagnetic fields of low power with some frequency of oscillations of molecules in the flame (flame power is 0.1 – 1% of heat power of the flame of the combusted organic fuel).

Peculiarities of Oxidants Application in the New Technology

It is known from the thermodynamics and combustion theory that optimal ratio of the oxidant mass, for example air, and the fuel is approximately 1:16 in an average combustion process. In our experiments with the electro-field catalyst the ecologically appropriate combustion of the hydrocarbon fuel (mazut, straw oil) was achieved at oxidant deficiency (for example, at the ratio of oxidant mass and the fuel of 1:1). For experts it means that there is a real possibility for 10 – 15 times decrease of amount of waste gases of any heat machines and to while their former power is the same. As the experiments demonstrate carbon and hydrocarbon are absolutely removed from the waste gases. In the experiments oxides of hydrogen and nitrogen were 4 – 8 times decreased and flame existence was 5 – 10 times increased.

The issues of the experiments prove the hypothesis about possibility of effective environmentally appropriate combustion as a process of direct transformation of chemical energy of organic fuel into electromagnetic radiation energy of the flame (including heat and optic diapasons). The transformation is accompanied by removal of polluting toxic components from the waste gases that occurs due to many times intensification of the combustion process under action of electromagnetic catalysts.

Operations of regulable activation of fuel oxidants (simultaneous or separate), which are introduced into the combustion technology, ensure additional improving of the combustion process. Especially it occurs at heavy oil fuel combustion and water-fuel emulsion combustion that was experimentally tested by us. The process becomes especially effective if the flame of the combusted activated blended fuel is additionally processed by alternating electric field. Due to introduction of the operation of all the combustion parameters regulation (of consumption of fuel, oxidant, of their activation extent, and of their combustion intensiveness extent), according to the information of the waste gases toxicity, it is possible to achieve effective combustion of fuel and waste products of practically all kinds.

Our experiments demonstrate that combination of the very flame procession with procession of the waste gases and air (i.e. an oxidant) by electric field is very effective for the waste gases cleaning. The essence of this additional cleaning of the waste gases lies in fragmentation of carbon particles and exhaust opacity by electric forces of an alternating field as well as in after-oxidation of some toxic oxides in the medium of an ozonized oxidant. Energy consumption for activation of the flame combustion by strong electric fields is small and does not exceed 1–3% of heat energy of the flame. Advantage of this invention is universality of the application for combustion of any inflammables. It is possible due to widening of the diapason of the electric field parameters regulation (of intensity and frequency), especially in the mode of their interconnected regulation.

The essence of catalytic action of the alternating electric field on the flame combustion process consists in effective breaking of dipole radicals of fuel by an activated (dipole) oxidant. Moreover, the essence lies in better mixing of layers of combusting flame with the oxidant that occurs due to removal of a doubled electric layer from the limit line of the flame. Thus this technical solution allows achieve new positive effects due to its significant peculiarities, i.e. extending of application area of the known electric combustion method over the combustion process of any inflammables as well as it allows significantly increase controllability of the flame combustion process.

Let us note that in the experiments on the combustion of organic fuel in strong electric fields the regulation of the flame temperature and of its existence was achieved at unchanged consumption of fuel and of oxidant. That was achieved by changing of the parameters of the combustion electric-field catalyst (intensity and frequency) of a longitudinal electric (electromagnetic) field. Rotation and stabilization of the flame was achieved by a rotating transversal electric field. Changing of the flame height was realized by the longitudinal electric field.

The investigation, which has been performed by us, proves that directly acting on the flame the very electric field which directly influences on the flame and emission of electrons flow (ideal type of oxidation) into the flame can most effectively intensify the combustion process and make it harmless for the humankind and for the environment!

It has already been experimentally proved that energy consumption required for generation and regulation of this electric field and of the electrons flow for intensification and environmental

appropriateness of the combustion is quite small relatively the combustion energy and comes to fractions of a percent of the flame energy. Thus our experiments prove that the best **"oxidants" and combustion catalysts are** not superfluous air but **the electron and the electric field!**

Regulation of Heat Conductance of the Flame and the Heat Flow

As our experiments have demonstrated, the electric field can act as an effective combustion catalyst as well as a regulator of its intensiveness; moreover, it can control even a vector of heat conductance. It is proved by the experiments that the parameters of this field can be regulated as well as temperature of the flame and gradient of the flame heat conductance. Interesting experimental results were obtained measuring full heat of combustion of the same quantity of fuel at the usual method of fuel combustion and at the method, which uses combustion electric catalysts, even in the case of oxidant deficiency. In the last case the energy of fuel combustion almost 1.5 times increases that can be explained by fuller transformation of fuel chemical energy into electromagnetic radiation. At the usual combustion methods the chemical energy of the organic fuel was not completely used and remained as a cryptic summary chemical energy of intermolecular connections of many toxic waste gases, which were exhausted into the atmosphere by heat devices. Basing on the performed experiments it may be supposed that, evidently, specific heats of matters are 20-50% higher at this method than at their usual combustion method. The essence of the new electric combustion technologies consists in this new physics of combustion.

The author has already got patents for invention of Russian Federation [3 – 12] for the methods of regulation and intensification of matters combustion processes.

Some peculiarities of atomization, inflammation and combustion of organic fuel in electric fields

We have not discussed all the potential capabilities and advantages of the new electric combustion technology for different areas of technics. Let us demonstrate them in more details.

One of characters of the new electric combustion technology is **effects of oxidant ozonization, of electrostatic atomization and electrostatic injection of electrically charged particles of fuel and the oxidant that is followed by generation of the finest aerofuel opacity on a molecular level in a combustion chamber**. Naturally, such fine atomization of the fuel causes its easier evaporation, inflammation and combustion especially in the medium of the ozonized oxidant. **The mechanism of fuel electrostatic fragmentation is physically explained by Coulomb interaction of repulsion from each other of electrically likely charged fuel drops (particles) that is accompanied by their progressing fragmentation and corresponding decrease of their mass and electric charge**. As the experiments have shown the extent of the fuel drops (particles) fragmentation depends on initial electric potential of fuel charging and initial size of injected fuel drops (particles), which for their part depend on configuration and size of a fuel-injection nozzle as well as on pressure occurring in a fuel line of the heat machine.

Generated by dipolar high-voltage potentials catalyzing electric field can be introduced into the atomization zone or (and) the combustion zone of the combustion chamber of an engine. Its Coulomb forces accelerate motion of electrically charged particles of fuel and oxidant to an opposite electric potential, which is connected with, for example, a piston of an engine. Thus electric field acts as an electrostatic pump that allows decrease pressure in a fuel line as well as allows practically ideally atomize the fuel and mix it with the oxidant. Moreover, it lets simplify and improve the systems of injection and inflammation of the blended fuel in heat machines and devices, for example, in internal combustion engines or in boiler plants. Their application can cause additional improving of energetic and ecological characters of the combustion technologies. According to our information, such high-performance fuel-injection nozzles have yet been unknown in technics therefore they have not been applied in heat machines (injector internal combustion engine).

Is it possible to combust water? Water as a fuel!

More amazing experimental results were obtained at 40-80% dilution (emulsification) of liquid organic **fuel**, for example diesel oil, with **habitual water**. Summary energy as heat and light, which is generated in the process of such blend combustion, was not practically changed that can be explained by liberation of energy of chemical connections of water as well as of fuel. In the process of the experiments on combustion of the emulsion at first **it was transformed into the finest water vapor on the molecular level by means of capillary electroosmosis and of electrostatic atomization. Then dipolar water molecules, which had been electrified by field, were fragmented into hydrogen and oxygen, and then the hydrogen was effectively combusted in the medium of the ozonized oxygen.** Let us note that at this mechanism of water "evaporation" and of following splitting of water molecules into hydrogen and oxygen the electric field expends energy, and heat of organic fuel combustion just accelerates (catalyze) this process.

Editor: It is necessary to note that electric field can not expend energy. If there are no conduction currents then the field source does not decrease difference of potentials. Hence it can be concluded that effectiveness of such power systems is possible to be UNRESTRICTEDLY HIGH. The author writes about it below as about an "incomprehensible phenomenon".

The most amazing and incomprehensible fact is that the electric field transforms water into "vapor" and breaks the water molecule into hydrogen and oxygen practically **without any expenditure at minimum of energy consumption**. Electric power of the intensity high-voltage transformer, which is necessary for strong field generation, lies in the interval from several watts to tens of watts. As the experiments have demonstrated electric consumption of the high-voltage source practically is not changed at correct shunting of the flame by the electric field (i.e. through an air gap). Current consumption practically did not increase depending on mode of fuel atomization and its combustion (of flame height, of combustion intensiveness…).

There are only two conditions of effective work of static electric field as an electrostatic pump-atomizer of fuel and as a catalyst of blended fuel combustion. The first one is intensity of the field in the zone of fuel atomization and in the zone of flame combustion. The second one is enough emission of electrons into the blended fuel flow. In this mode Coulomb forces make work of electrostatic pressure generation and of electrostatic fragmentation of particles and molecules of fuel and water. The forces repulse likely charged drops of water. Heat motion of fuel radicals, which are combusted and fragmentized in the flame, impedes their chemical recompounding into water molecules in the zone of combustion. Moreover, it causes proceeding of a very physical chain reaction of hydrogen combustion in the flame.

Therefore additional light and heat energy, which is generated in the flame by combustion of hydrogen generated from water molecules that occurs in the ozonized oxygen, does not decrease summary energy of combustion of blend of fuel with water but increases it.

Thus using of electric and electromagnetic fields as the strongest catalysts of combustion of organic fuels and any matters clears great **prospects** of combustion technologies improving. Moreover it allows create ecologically appropriate heat machines and devices and 20-50% increase their effectiveness due to fuller transformation of chemical energy of inflammables into heat or light energy.

Ways of radical improvement of heat machines or about a new mechanism of transformation of heat energy into mechanical energy and into kinetic one

For clear realization of causes of extremely low output of modern heat machines that has generally lead the civilization to the ecological catastrophe it is necessary to understand their common principle of operation as well as a cause of heat energy non-effective using in them.

A mechanism of transformation of heat energy, which is generated by fuel combustion, is the same for all known heat machines. It consists in generation and transformation of superfluous pressure of a heated working body (i.e. gas, vapor etc.) into kinetic energy of a working element of the heat machine (i.e. a piston of an internal combustion engine, a turbine of an aviation engine, a reaction jet flowing out a rocket nozzle etc.) in special chambers of the machines.

It is also known that the higher the temperature of the heated working body, for example of a gas, the higher initial pressure in the working chamber of a heat machine. **Why output of heat machines is so low?** Any expert of thermal physics, thermodynamics, and heat machines can answer that efficiency (output) of heat energy transformation into mechanical one is defined by the second law of thermodynamics and is clearly illustrated by Carno heat cycle. According to these postulates, **output** of an ideal heat engine does not depend on a working matter and on the engine construction but is defined by temperatures of the working body in the starting point and in the final point of the cycle, i.e. by the temperatures of the heater and of the refrigerator of the **heat machine**. Real output of the heat machines is limited by heat stability of materials and by imperfection of engine constructions.

Nevertheless known thermodynamic processes and lows of heat motion of particles and molecules are significantly changed in strong electric fields and demonstrate new prospects for improving of heat machines.

A solution of the problem can be briefly formulated as: to increase output of heat machines it is necessary to use a new mechanism of redistribution of heat energy into energy of directed pressure of a compressed working body (i.e. gas, vapor, etc.) on the working element of the heat machine. At the minimal pressure it should be redistributed on sidewalls of the working chamber.

Can it be realized in practice? On the face of it the technical solution is unrealizable nevertheless it exists. It is possible to redistribute and to regulate heat motion

(pressure) of heated gas inside a closed reservoir and, hence, its temperature in a certain direction. To achieve this aim **it is necessary to introduce static electric field into the combustion chamber of a heat machine and to orient heat motion of electrically charged and dipolar molecules of expanding working bodies (i.e. gas, vapor) along force lines of the electric field by electric Coulomb forces**. Something similar occurs, for example, in liquid crystal cells of electronic timer, in Kerr cells (electric optic effect) at periodical application of electric field to them that causes dipolar molecules turn along a field vector as well as change of light penetrability of these matters.

There is a difference between this known in electrooptics phenomenon and our case. The difference lies in the fact that polarized gas molecules remain movable along force lines of the electric field in contrast to liquid crystals, which do not. This fact causes redistribution of parameters of heat energy (i.e. pressure, temperature, and heat penetrability) of dipolar molecules of heated gas just along force lines of the field. The more the intensity of the field at the initial temperature of the working body is the more the difference of pressures on the sidewalls of the chamber and on the working element, for example, on an engine piston.

Heat motion of polarized particles of heated gas can be decelerated by combination of three electric fields of constant sign in accordance with all three coordinate axes; hence it is possible to significantly and quickly decrease temperature and pressure of the gas. In this case the heat energy of the heated gas makes jump transformation into electromagnetic radiation.

Editor: Historically this method, i.e. plasma retention by electric field, was proposed by Oleg Lavrentiev in 1948. He had 7-grade education and served as a sergeant in Armed Forces in Sakhalin. After he sent Stalin a letter containing a phrase, as "I know a secret of hydrogen bomb creation" he was invited to Moscow to set his ideas out to academicians. His ideas were not lost nevertheless the scheme of plasma electrostatic retention was not applied ("Expert" magazine #23, 18 of July of 2001). In 1950 Sakharov and Tamm proposed a scheme of a toroidal magnetic thermonuclear reactor which has been developed until now. Why is it so? It is difficult, expansive and practically unreal…

Thus introduction of strong electric fields into heat machines allows significantly increase effectiveness of transformation of heat energy of a working body into mechanical and kinetic energy of working elements of the machines by means of directed regulation of temperature and pressure of heated gas, for example, in the starting point and in the final point of a working stroke of a piston. In other words it allows increase output of the machines.

APPLICATION AREA OF NEW ELECTRIC COMBUSTION TECHNOLOGY

Practical application of the new combustion and thermal technologies

The new technology is universal and applicable in practically all spheres of technics. Therefore we believe that further development and application of this new technology of fuel and waste products combustion is very important for radical improving of all the heat machines and of all thermal technologies. As the civilization uses hydrocarbon fuel and matters in its life circle then just this new technology can solve critical ecological and energetic problems of the civilization.

It is impossible to view in details all proposed perspective technical solutions based on this technology [1-25] within one article. Therefore we give only one striking example.

Environmentally appropriate engine for motor transport

Since the transport, which uses thermal internal combustion engine (ICE), is most harmful for the environment then let us discuss ways of their ecological and energy improving. Several years ago the author patented "method of intensification of ICE operation" [7]. The essence of the invention consists in introduction of controllable electric field into combustion chambers during the whole operation period of an engine by special monoelectrode spark-plugs (Fig.2).

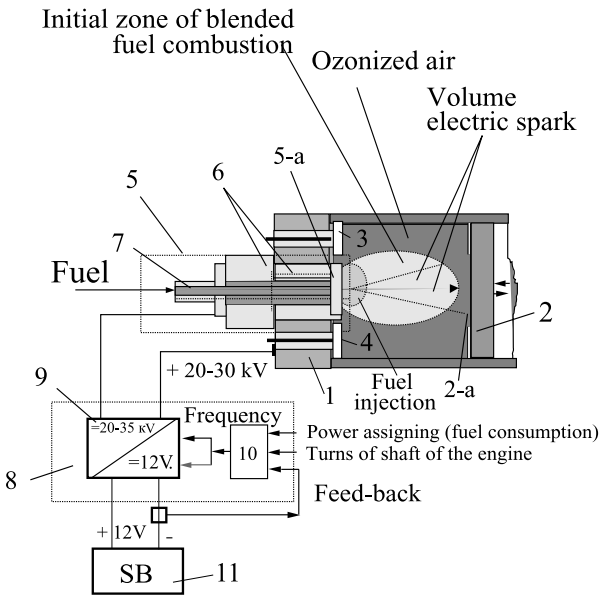

Fig.2a
Plan of an environmentally appropriate ICE (for transport)

1. – combustion chamber;
2. – piston, 2a –heat-resistant surface of the piston (zone of electric-spark discharge)
3. – admission valve (its canal is not indicated)
4. – exhaust valve (its canal is not indicated)
5. – combined mono-electrode spark-plug; 5a – fuel nozzle with hollow central electrode and end disk electrode
6. – electric insulator of the spark-plug – fuel nozzle
7. – fuel pump (for example, an electrostatic one)
8. – high-voltage regulable transformer (electric field source)
9. – force block of tension high-voltage transformer (=12V/25kV)
10. – system of regulation of electric field source (9)
11. – board current network =12V (SB is a storage battery of an automobile).

This structure chart briefly demonstrates basic components of a new ICE, where there is directed pressure of gases on a piston. In particular, many inventions of the author are realized in practice here, i.e. semi-digital spark-plug, electrostatic fuel nozzle (5), electrostatic fuel pump (7). A new mode of volume inflammation of blended fuel has been realized in practice, i.e. "a spark coming from a disk electrode (5-a) to a piston (2-a)". Since it is possible to regulate the electric field intensity generated by a high-voltage source of tension then an advance angle of blended fuel inflammation can be regulated, gases pressure on the piston at explosion stroke of ICE operation can be regulated as well.

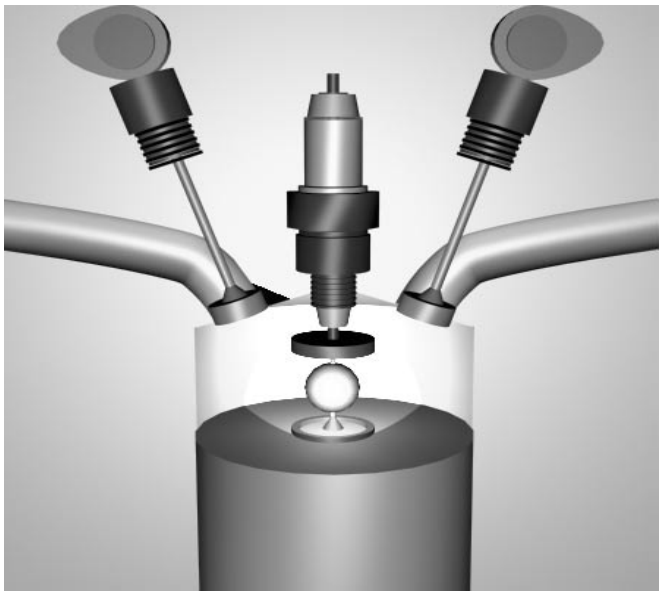

Fig.2b
Photo of a simplified construction of the new ICE

Fig.2b demonstrates simplified three-dimensional construction of the proposed energetically and ecologically perfect ICE. There are observable elements such as a combustion chamber, a piston, valves, a monoelectrode spark-plug, and an electrostatic fuel nozzle (in the centre on top), which is connected with the spark-plug. In the centre of the combustion chamber it can be seen volume inflammation of the blended fuel at spark appearance from end electrode to the piston.

As a result a summary positive effect of ecological, construction and energetic improving of ICE is achieved, i.e. effective cleaning of exhausted gases directly in the combustion chambers of the engine, significant simplification and perfection of a fuel injection system, improvement of system of distribution and electric inflammation of the blended fuel. In this engine a distributor (as well as its analogues) is removed at all since sparking and intensive inflammation of the blended fuel automatically appears between central electrode of the spark-plug and the piston which comes to the upper "dead" point. The central electrode of the spark-plug is constantly under high tension. The advance angle of ignition is regulated by change of the electric field intensity. Powerful multipoint ignition causes simultaneous intensive inflammation of the blended fuel that occurs throughout the whole chamber. The electric field as a powerful combustion catalyst intensifies the process of the blend combustion at the explosion stroke of the engine and at after-burning of waste gases directly in the combustion chambers at the following output stroke of the engine operation. Directed along the axis of the piston in the combustion chambers this electric field serves as a transformer of gases heat energy into mechanical energy of the thermal engine pistons. That is caused by the fact that the field orients heat motion of the expanding gases along the axis of the pistons in combustion chambers of the engine at explosion stroke of ICE just. It causes redistribution of heat energy and increase of the gases pressure on the very pistons that significantly improves effectiveness of transformation of heat energy of the fuel combustion into mechanical energy of the piston motion (theoretically the improvement is by two-three times), i.e. it two-three times increases output of a classical thermal engine making it come to 70-80%.

The electric field, which is introduced into the combustion chambers of an internal combustion engine, ensures significant economy of fuel (up to 30-40%) at saving of its working characteristics. It occurs due to fog electrostatic spray of fuel and to the fuel electrization as well as due to oxide ozonization. Moreover it occurs as a result of deep after-burning of hydrocarbon components of fuel, combusting blend and waste exhaust gases. This method allows effectively regulate temperature of the blend combustion in the chambers while required compression in cylinders is the same, for example, to minimize nitric oxide generation in the exhaust gases. As a result there is no necessity in external devices for cleaning of exhaust gases of internal combustion engines; ecological appropriateness improvement can be simultaneously achieved. Additional aerosol hydro-alkaline processing of these gases can allow totally clean **exhaust gases** of the transport, which operates on thermal engines.

Workability of such an environmentally appropriate engine in two-stroke and four-stroke variants is experimentally demonstrated. There are also experimentally shown decrease of all toxic components in exhaust gases, 20-30% increase of useful power of the engine, and simultaneous decrease of fuel consumption.

Thus practical application of the new electric combustion technology can exert revolutionary influence upon propulsion engineering development and upon increasing of ecological compatibility and effectiveness of the transport, which operates on thermal engines.

Diagram of operations of technology of effective using of refinery wastes in heat-and-power engineering

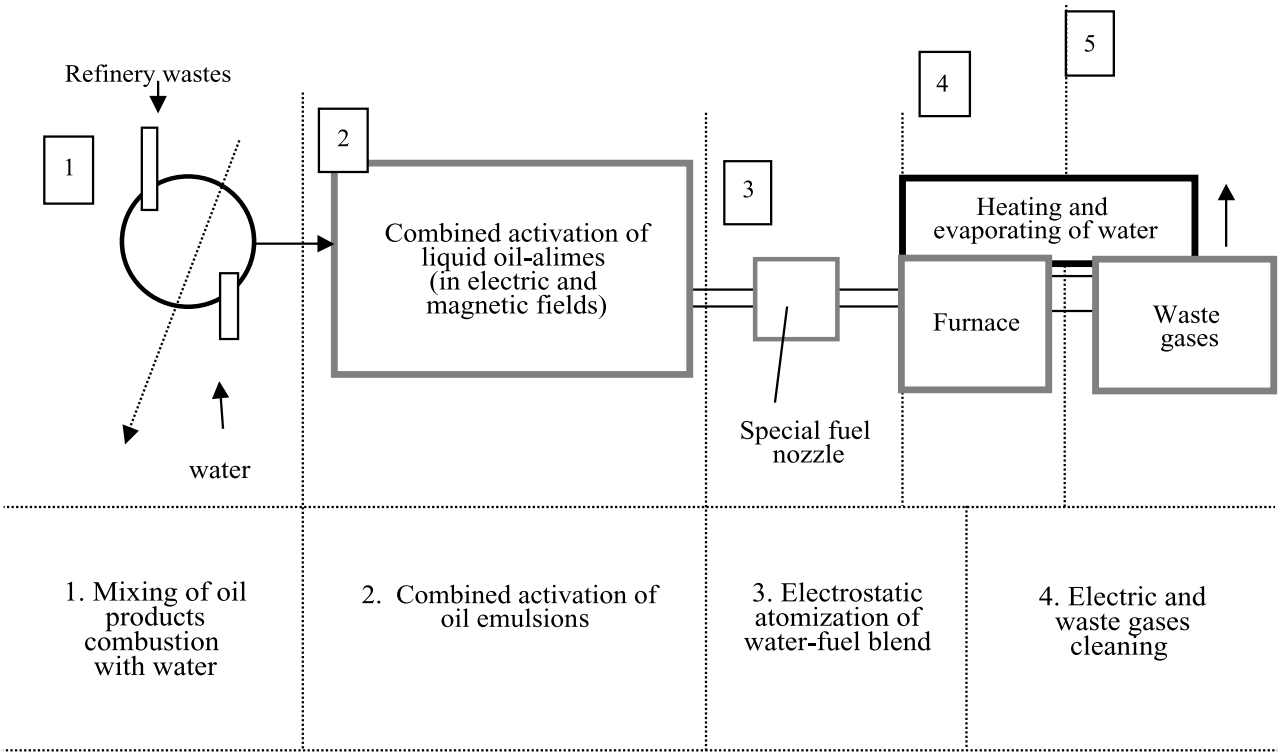

Fig.3

Technology of environmentally appropriate combustion of refinery wastes as fuel for boiler plants

The author has patented other technical solutions of improvement of different devices, which are based on these technologies. These solutions concerning boiler plants, gas turbine engines and jet engines and many other heat machines and devices allow increase their effectiveness and simultaneously significantly improve their ecological factors. As an example of application of this technology in heat-and-power engineering there is a diagram of operations of the technology of the environmentally appropriate combustion of refinery waste as a fuel for boiler plants (Fig.3). Unfortunately the limits of one article do not allow discuss these inventions in details nevertheless the author will realize it in practice in future works.

Conclusions:

1. The existent methods of solving of the ecological problems are ineffective as well as work of organizations, which deal with ecological and nature conservation activity. It is caused by the fact that they are oriented to search and remove consequences of ecological pollution of the nature instead of their causes.
2. The article demonstrates real causes of global ecological problems, which consist in imperfection of technologies of generation and transformation of energy.
3. Using of strong electric and electromagnetic fields of low power as combustion catalysts allow significantly improve ecological factors of combustion technologies and of devices, which realize the technologies in practice. In other words it allows realize in practice "clean combustion of fuels and wastes and possible existence of "clean" heat technics".
4. Application of electric and electromagnetic fields in the combustion technologies allows significantly increase effectiveness of transformation of chemical and heat energies of fuel into mechanical and electric energies.
5. The electric combustion technology allows realize in practice principally new ways to control combustion process as well as to control many thermal and kinetic processes (i.e. processes of pressure, heat conductance, temperature, etc.), i.e. allows increase output of heat machines.

6. The new electric combustion technology is a universal method of solving of ecological and energetic problems of the civilization and a universal way of radical improvement of technics (i.e. of the transport, boiler plants, oil-and-gas processing plants, combustion wastes recycling plants, etc.).

References

1. V.D. Dudyshev Electric combustion technology is an effective way to solve energetic and ecological problems //"Ecology and Industry of Russia" ("Ekologia I Promyshlennost Rossii") magazine, #3 1997;
2. V.D. Dudyshev How is it possible to save the civilization and the nature from global ecology pollution? //"Ecology and Industry of Russia" ("Ekologia I Promyshlennost Rossii") magazine, #11 1997;
3. V.D. Dudyshev Method of combustion control. Patent of Russian Federation #2071219 of 19.04.1994;
4. V.D. Dudyshev Method of intensification and regulation of combustion. Patent of Russian Federation #2125682 of 06.06.1995;
5. V.D. Dudyshev Method of electric combustion of refuse and wastes. Patent of Russian Federation #2117870 of 06.06.1995;
6. V.D. Dudyshev Method of electric combustion cleaning of waste gases. Patent of Russian Federation #2125168 of 15.11.1995;
7. V.D. Dudyshev Method of combustion intensification in a fire-chamber of a boiler plant. Patent of Russian Federation #2079766 of 14.06.1995;
8. V.D. Dudyshev Method of flame extinguishing, Copyright of USSR #1621234 of 12.03.1988;
9. V.D. Dudyshev Method of decrease of toxicity of exhaust gases of motor transport. Patent of Russian Federation #2117179 of 20.02.1996;
10. V.D. Dudyshev New method of environmentally appropriate matter combustion as a radical way of solving of global ecological problems. // Collected reports of II international congress of "Environment for us and future generations: ecology, business and human rights in new conditions", Russia, Samara, 1997;
11. V.D. Dudyshev New method of refuse electric combustion // Collected reports of III international congress of "Environment for us and future generations: ecology, business and human rights in new conditions", Russia, Samara, 1998;
12. V.D. Dudyshev Problems of ecological education and upbringing of the youth // Collected reports of II international practical conference of "Pedagogical activity as a cultural activity", Russia, Samara, 1999;
13. V.D. Dudyshev Environmental safety of motor transport //"Ecology and Industry of Russia" ("Ekologia I Promyshlennost Rossii") magazine, #5 1997;
14. V.D. Dudyshev Perspective technical works out and inventions of ecological improvement of motor transport. //"Ecology and Industry of Russia" ("Ekologia I Promyshlennost Rossii") magazine, #12 1998;
15. V.D. Dudyshev Method of ICE exhaust gases cleaning, i.e. electric combustion cleaning and electric filter at ICE output. Patent of Russian Federation #1404664;
16. V.D. Dudyshev Problems and ways of ecological improving of native motor transport. //"Ecology and Industry of Russia" ("Ekologia I Promyshlennost Rossii") magazine, #11 1998;
17. V.D. Dudyshev Method of internal cleaning of exhaust gases of ICE. Patent of Russian Federation #2165031;
18. V.D. Dudyshev Method of intensification of ICE operation. Patent of Russian Federation #2135814;
19. V.D. Dudyshev Method of decreasing of toxicity of ICE exhaust gases and a device of its application. Patent of Russian Federation #2135814;
20. V.D. Dudyshev Method of intensification and regulation of combustion. Patent of Russian Federation #2125682;
21. V.D. Dudyshev Method of heat machine control. Patent of Russian Federation #2134354;
22. V.D. Dudyshev Environmentally appropriate ICE. // "New technologies" ("Novye tekhnologii") magazine #2 2001 Samara;
23. V.D. Dudyshev New electric combustion technologies. // "New technologies" ("Novye tekhnologii") magazine #3 2001 Samara;
24. V.D. Dudyshev New electric combustion technologies. // "New technologies" ("Novye tekhnologii") magazine #4 2001 Samara;
25. V.D. Dudyshev New electric technology of fire non-contact extinguishing and ignition prevention. // "New technologies" ("Novye tekhnologii") magazine #9 2002 Samara;

Infinite Energy Magazine

* Cold Fusion * New Energy
* New Science * New Technology

Subscriptions, 6 Issues Per Year
$29.95 North America
$49.95 Foreign
Single Sample Copy
$5.95 North America, $10.00 Foreign

Infinite Energy Magazine
P.O. Box 2816-FV
Concord, NH 03302-2816
Phone: 603-228-4516 Fax: 603-224-5975
http://www.infinite-energy.com

EAGLE-RESEARCH
Energy Solutions
since 1984

A Research Organization that Develops & Distributes Practical Energy-Saving Methods & Devices

4 Energy Way, P.O. Box 118
Porthill, Idaho 83853
FAX: 250/492-7480

Technical questions to:
wiseman@eagle-research.com

New Effect of "Cold" Evaporation and Dissociation of Liquids Based on Capillar Electroosmosis

Valery D. Dudyshev
Doctor of Technical Science, Professor,
Corresponding Member of Russian Ecological Academy

ecolog@samaramail.ru
http://www.intrasoft.ru/nizot

There is discovered new electric physical effect of intensive "cold" evaporation and dissociation of liquids and aqueous solutions into fuel gases **without any energy consumption** due to high-voltage capillar electroosmosis [1].

Prospects and problems of hydrogen engineering

Effective obtaining of hydrogen from water is a long-standing tempting dream of the civilization. That is connected with the fact that there is a huge amount of water on the planet, and hydrogen engineering promises the possibility to obtain unlimited quantity of "free" energy obtained from water. All the more, the very process of hydrogen combustion in oxygen medium, which is obtained from water as well, ensures ideal high-calorie and environmentally appropriate combustion.

Ecological and energetic problems are very actual nevertheless they have not been effectively solved. All known methods and devices of production of hydrogen and other fuel gases are ineffective since there is no a real high-performance technology of evaporation and splitting of liquid molecules. The main cause of ineffectiveness of the analogous consists in their difficulty and in energy consumption for breaking of intermolecular connections at dissociation of water liquid fractions.

Physical-chemical structure of even habitual tap water is quite complicated since there are numerous intermolecular connections, chains and other molecular structures in water. In particular, in habitual tap water there are different chains of oriented water molecules, which are peculiarly connected with admixture ions (cluster formations), its various colloidal compounds and isotopes, mineral matters as well as various dissolved gases and admixtures.

It is a paradox but in the living nature there is a long-standing effective way of electric capillar delivery and "cold" evaporation of liquid, which allows transform it into gaseous state without heat energy and electric energy supply line. This natural effect is realized in practice by plants, which deliver aqueous solution and make its "cold" evaporation by capillar electroosmosis. It is quite comprehensible that this natural energetically perfect technology is applicable in methods of liquids transformation into fuel gases. The author of this article has designed such experimental devices of cold electric capillar evaporation of liquids according to electric pumps of trees (Fig.1-3).

The simplest operating device, which experimentally realizes in practice the effect of high-voltage capillar electroosmosis of the "cold" evaporation and dissociation of water molecules, is demonstrated in Fig.1.

New Electroosmotic Capillar Method of Obtaining of Fuel Gas from Water

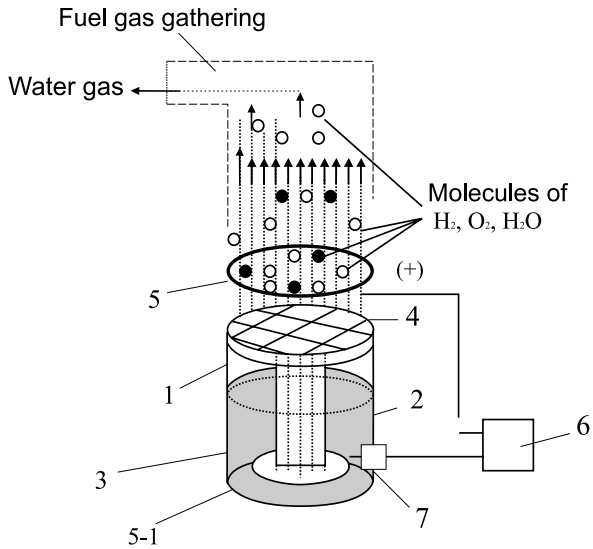

Fig.1
Simplest device of capillar electroosmosis of liquids

First experiments on the electric capillar dissociation of liquids were made with using of habitual water as well as its solutions and water-fuel emulsions of various concentrations as liquids. In all these cases fuel gases were successfully obtained in spite of the fact that these gases greatly varied due to their composition and heat capacity. The experiments on the electroosmotic evaporation and dissociation of liquids are realized in practice by the following way. First a wick (3) and a porous evaporator (4) are moisten with a water-fuel blend (emulsion) (2) then the blend (2) is poured into a reservoir (1). Then a high-voltage source of tension (6) is switched on and high-voltage difference of potentials (about 20 kV) is supplied to the liquid at some distance from the capillaries (i.e. from the wick (3) and the evaporator (4)). The source of electric field is joined to the device by electrodes (5-1) and (5). A plate perforated electrode (5) is placed above the evaporator (4) surface at a distance, which is enough to prevent an electric breakdown between the electrodes (5) and (5-1). Electrostatic forces of longitudinal electric field acts on the liquid. As a result dipolar polarized molecules of the liquid move along capillaries of the wick (3) and evaporator (4) from the reservoir to an opposite electric potential of the electrode (5) (i.e. electroosmosis occurred). Liquid molecules are detached from the evaporator (4) surface by these forces and transformed into a visual fog, i.e. the liquid is transformed into another aggregative state at minimal energy consumption of the electric field source (6). After that they provide electroosmotic elevation of this liquid. In the process of detaching and collision of evaporated liquid molecules with molecules of air and ozone as well as with electrons there is occurring partial dissociation between the evaporator (4) and the upper electrode (5) in an ionization zone. At the process a fuel gas is produced, which can come thorough a gas collector (7), for example, into combustion chambers of motor transport engine.

It has been experimentally shown that change of intensiveness of process of evaporation and dissociation of vapor molecules depends on change of distance from the electrode (5) to the evaporator (4). Moreover, this dependence is conditioned by the following factors, viz by changing of the evaporator area, kind of the liquid,

quality of capillar material of the wick (3) and the evaporator (4), parameters of the electric field as well as the source of intensity (of power) (6).

The author's first experiments on this simplest device, which were organized in 1986, demonstrated that "cold" water fog (i.e. gas) appears in capillaries from liquid (i.e. water) at high-voltage electroosmosis without any observable energy consumption but just using potential energy of the electric field. This conclusion is evident since in the process of experimenting consumed electric current of the field source was the same and equal to the consumed current of the source idling. This current was not changed depending on the appearance of the liquid evaporation.

The experiments demonstrated that capillar electroosmosis evaporated quite significant quantity of water (1 liter) without any energy consumption for 10 minutes at a 10-centimeter-diameter capillar cylinder. That is to say that the consumed electric power (10 Watts) of the electric current source, i.e. of the tension high-voltage transformer (20 kV), was unchangeable and did not depend on mode of its operation. It has been experimentally stated that the whole consumed energy supplied by the current network is insignificantly small comparably with the energy of liquid evaporation. It can be explained by the fact that power was consumed only to generate the electric field and did not increase at liquid capillar evaporation that occurred due to work of an ionic pump and of a polarized pump. Hence the effect of cold electric-capillar evaporation of liquid is very economical in respect to the process energy consumption.

In spite of the fact that energetic essence of this process has not been disclosed it is evident that both "cold evaporation" and water dissociation are realized in practice by potential energy of the electric field. More precisely, the visual process of evaporation and water splitting into H_2 and O_2 at the capillar electroosmosis is realized by powerful Coulomb forces of this strong electric field.

Editor: It is not the most surprising fact. The most astonishment is aroused by school-day stereotypes that work of a field at a closed cycle is equal to zero. These stereotypes have been kept in mind of people for a long period of time. Everybody understands that a field can do work but if a body falling from some height is accelerated in a potential field and its kinetic energy increases then it requires energy consumption to relevate the body up to this height. Nevertheless, the analogy of a gravitation field with an electric one is not one-valued since the electric field may be generated only at a part of trajectory of the accelerated body motion. An electric field can be pulsating, it can be screened or it is possible to change its direction at the reverse part of the trajectory in such a way that the field constantly accelerates the body. Hence a principal conclusion can be made: summary work of a potential field may not be equal to zero. This conclusion has earlier been proposed by A.V. Frolov in his article published in the USA (Newsletter of the Institute for New Energy. May 1994. p. 1-4).

In principle this uncommon electroosmotic pump-evaporator-splitter is an example of the perpetual motion machine of the second type. Thus the high-voltage capillar electroosmosis of aqueous liquid provides really intensive and energetically free evaporation and splitting of water molecules into the fuel gas (H_2, O_2, H_2O) by means of using of potential energy of the electric field.

To produce more complete dissociation of water molecules into the fuel gas it is necessary to make the whole water molecules collide each other and be split into molecules of H_2 and O_2 in an additional transversal alternating field (Fig.2).

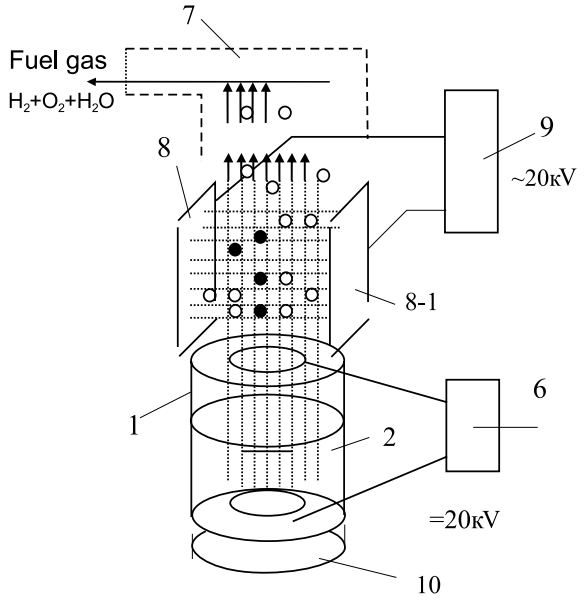

Fig.2

Device for production of fuel gas by electroosmosis. The device is equipped with an additional high - voltage splitting center of liquid molecules by electric alternating field.

At the second stage of water dissociation the energy of the second electric field is used, more precisely, powerful electrostatic forces are used to intensify oscillation resonant process of "collision-repulsion" of electrified water molecules represented as water gas. The result of this process is complete breaking of liquid molecules and generation of fuel gas molecules.

Conditions of optimal dissociation vary due to a kind of the liquid, to capillaries properties, and to the field parameters. These conditions are caused by required productivity of the process of dissociation of concrete liquid. Fig.2 demonstrates in details functional structure and composition of the device equipped with two sources of the electric field.

In the case of preliminary division of initially chemically neutral water into chemically active fractions (i.e. acid fraction and alkaline fraction) realization of the technology of production of fuel gas from water becomes possible at temperature below zero (up to –30°C). In winter it is quite important and useful for motor transport. This "fractional" electrically activated water does not freeze at degree of frost; hence the device designed for hydrogen production from such activated water can operate at environment temperature below zero and at degree of frost.

This principle of additional chemical activation of water (or liquid) is realized in practice in the device

(Fig.3). In contrast to the devices mentioned above (see Fig.1, 2) this device is supplied with an electrochemical activator of liquid (3) with evaporators (4).

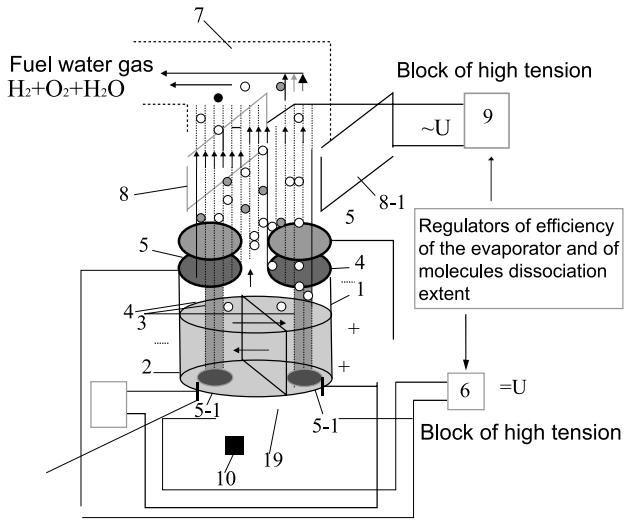

Fig.3

Hybrid device equipped with two sources of electric field and liquid electric activator

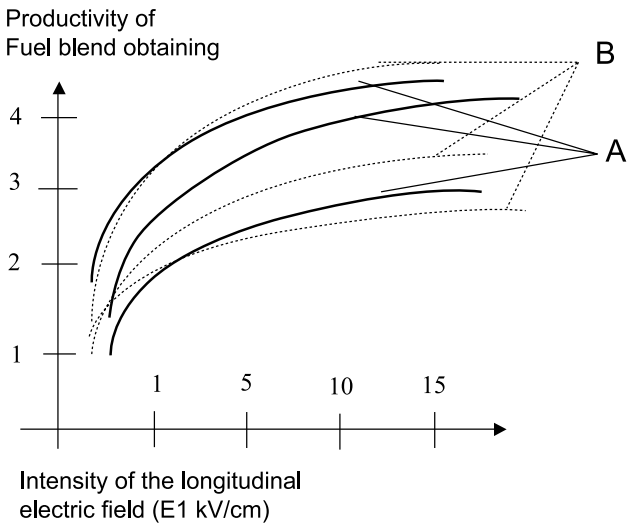

Fig.4

Productivity of the method increases as well as oscillation frequency of the second transversal electric field (A) and evaporating area (B) increase.

There is a known and low-expenditure progressive electric technology by Stanly Mayer, which has been worked out to obtain fuel gas from water (Mayer cells). Our technology is more progressive and ensures higher productivity than Stanly Mayer's technology does [3]. It can be explained by the fact that this electroosmotic effect of evaporation and liquid dissociation combined with a mechanism of the electrostatic pump and the ionic pump ensures intensive evaporation and dissociation of liquid as well as effective detachment of gas molecules from the dissociation zone. The process of gas molecules detachment is accompanied by acceleration from the upper end of the capillaries. Therefore in our case the effect of screening of the working zone of molecules electric dissociation is not produced. All these processes proceed at minimal energy consumption, which is similar to analogous energy consumption. Moreover, the process of fuel gas production does not slow down as the process in Mayer's technology does therefore gas productivity of our method is significantly higher than that of this progressive analogue at similar minimal energy consumption.

Some technical and economical aspects of the new technology realization

In the near future production run of these high-effective electroosmotic generators of fuel gas from practically any liquids (including tap water), which are based on the proposed new technology, can be established. At the first familiarization level it is especially easy and economically appropriate to realize in practice a variant of the device of transformation of water-fuel emulsion into fuel gas. A prime cost of the production-run device for generation of fuel gas from water of 1000 m^3/hour productivity comes to approximately 1 thousand of US dollars. Consumed power of such an electric generator should come to no more than 50-100 Watts. Therefore such compact and effective fuel electrolyzers can operate practically in any motor car. As a result heat engines can work on any hydrocarbon liquid or even on habitual water. Mass application of these devices for the motor transport can cause immediate energetic and ecological perfection of the motor transport as well as designing of an environmentally appropriate and economical heat engine. Approximate financial expenditures for working out and designing of the device for fuel gas obtaining from water, and for bringing the investigation of the first testing device of 100 m^3/sec productivity to an experimental-industrial model come to about 450-500 thousands of US dollars. That contains the expenditures for projecting and investigation, for designing of the very experimental device and of a testing bed, which is necessary for approbation and engineering development of the device. The author is interested in business and creative cooperation with those companies, which can provide this project with investments to bring the device to the experimental-industrial model and introduce the perspective technology into practice.

Conclusion

Electroosmotic "cold" evaporation and dissociation of water and aqueous solutions through capillaries is a perspective way of highly productive fuel gas production at minimum of energy consumption.

References

1. V.D. Dudyshev New electric combustion technology is an effective way of solving of energetic and ecological problems // "Ecology and Industry of Russia" ("Ekologia I Promyshlennost Rossii") magazine #3 1997;
2. "New Energy News" magazine, May 1994. P. 1 – 5;
3. Stanly Mayer Method of production of fuel gas. Patent of the USA #4.936,961;

Conceptual Hurdles to New Millennium Physics

Donald Reed

E-mail: torsionpower@yahoo.com

Abstract

Time, space, energy and mass form the four-fold conceptual basis for gauging physical reality. The following paper, as a follow-up to a previous exposition [1] which focused on the necessity to change the current paradigm for time, continues in this same vein, but will also consider in greater depth the interrelations of this phenomenon with the other three yardsticks cited above. Again, information garnered from a wide variety of sources will be considered. We hope to provide, through just such a unique eclectic format, the beginnings of a possible fresh understanding of the workings of nature and perhaps ultimately furnish a conceptual basis for extending the structure of current physical theory to compatibly encompass the elements of a unified framework of physics and metaphysics.

Introduction

In the former article cited above, by investigating the following varied sources and research [2-17], we came to the inescapable conclusion that the phenomena of time and space are considerably more intimately related than is currently suspected by modern science, and will require a drastic re-working to fit the conclusions of the various evidence cited. Towards this end, the adoption of a more expansive paradigm for these yardsticks was suggested, which incorporates a fluid-field nature for time and space where both are derivatives of the fundamental ground-form of energy in flux or oscillation. These new approaches involve the inclusion of a Kozyrev-type of "substantial"(active) time-flow as opposed to the conventional "relational"(passive) concept of time, where it is used as a static parameter signifying duration. The substantial aspect of time pre-supposes that it is an essence which can and does affect physical processes, and that those same physical systems can cause a reverse action on time [8]. Such active fluctuating (deformable) types of time or space, implies the establishment of a revolutionary notion: positing completely *non-scalable* metrics for both time and space. This is in direct contrast to all contemporary orthodox models for physical reality, either in Einsteinean relativity (Special or General theory), quantum field theory, or even superstring/supersymmetric theory, all of which continue to consider both of these yardsticks from their relational (length or durational) standpoints. Consequently, all these formalisms require scalable metrics of some sort for their proper description (for refreshing viewpoints on this matter, see [7]). For instance, in the standard equations of quantum theory, time is regarded merely as an unchangeable static parameter. When we later consider applying these novel substantial aspects of time to the edifice of quantum theory, we will see that time must then become a "hidden variable". It will be seen that by considering time in this manner, a clearer and more tractable explanation of the inevitable probabilistic aspects of quantum theory, evidenced in the signature Uncertainty Principle, complementarity and non-locality will arise, without having to invoke the counter-productive and ill-conceived Copenhagen Interpretation.

Oscillatory Models for Time and Space

Upon accepting non-scalable metrics for time and space, we observe that a similar field nature for **energy** and **mass** must in turn also be postulated. Moreover, from the Killick description of how (sub-atomic) tachion-pairs operate [6], shuttling their energy back-and-forth in a free-wheeling but purposeful manner and creating oscillatory features of time and space by their action, we should consider the possibility of another unprecedented concept: a "value-motivated" energy might be at the foundation of the structural integrity of physical matter. This is conceivable when considering Killick's description of the tachion-pair dynamic/evolutionary cycle as necessarily including the 3-step process of observation – reflection – action (**trinitivity** of motion). Along the same lines, from the Smith book **The New Science** [5], we learn that a so-called "tempic field" energy exists, which could be described as the parent structure out of which our standard conception of "clock-time" (entropy changes) results. The tempic field is essentially a scalar (but not static) function which has vectorial nature only in terms of its distribution or *gradient* in space. Because of the nature of the tempic field, its derivatives – the electric and magnetic fields can operate on each other in a specific geometric/topological manner, to produce a local change in the *time-frame* of matter, to use a term coined by the entity Kryon [4]. This theoretical description of the alteration of inertial/gravitational mass and time-frame has possibly seen recent actual demonstration in the dramatic experiments of John Hutchison [10] and Rudolf Zinsser's "kinetobaric" effect [11], as well as unpublished research of both Wilbert Smith and Ken Killick with electric caduceus-wound coils [5,6].

New Models for Relativistic-Fluidic Vacuum-Structure and Possibility of its Manipulation

All of this evidence allows us to conclude that measurable changes in relativistic parameters of time, space, mass and energy might not only be a feature accompanying rapid uniform movement of physical objects (Special Relativity), or representative of large gravitating astrophysical objects (General Relativity). Indeed, by relying on current limited paradigms, contemporary physics may have missed ascertaining the possibility of being able to alter these same relativistic parameters by the artificial technological manipulation of the tempic (vacuum) fields of sub-atomic particles in stationary matter, by use of specific electromagnetic fields. Tom Bearden, for one, has articulated on these various "futuristic"-type technologies in his many writings over the years [15]. We have recently seen that some of the novel theoretical conceptions of the more visionary physicists such as David Hestenes on the zitterbewegung (vacuum "jitter") phenomenon exhibited by the electron [12-14], has finally caught up with some of these advanced ideas by presenting new mathematical demonstrations (using geometric Clifford-algebraic) manipulations of the Dirac equation. In summary, the Hestenes' study concludes that the Dirac wave function and its properties, including

the Dirac equation and relations to physical observables such as energy-momentum, spin and position probability current, all possess heretofore obscured important geometric relations. These results imply that probabilistic features of the quantum theory of the electron/positron arise principally from the electromagnetic interaction of the accompanying zitterbewegung-spin field of these particles with the ambient dynamic vacuum. This is, of course, in direct contrast to the conventional received view that ascribes wave-particle duality as a property of matter that is completely independent of the nature of its interactions. This revolutionary geometric interpretation of electron dynamics incorporates in its model an electron spin which arises from a helical or spiral world-line in space-time. The essential unprecedented feature of the Hestenes' zitterbewegung idea is the association of the spin with the local circulatory-helical motion characterized by the *phase* of the electron wave function. Thus, we reach the conclusion that the complex phase factor of the electron wave function can be directly associated with an objective helical motion of the electron which is, in turn, a derivative of the zitterbewegung. One intriguing feature of this structure is a frequency of oscillation that is inversely proportional to the scalar radius of curvature of the particles' helical world-line. Moreover, the Clifford-algebraic analysis reveals that this oscillation frequency is identical to electron/positron *mass*, revealing a possible key variable particle mass-energy (*frequency measure*), which is in inverse relationship to particle size. It is clear that this new model has important classical implications not yet considered by established physics which nevertheless directly correspond to some of the key features of sub-atomic behavior enumerated above and previously. Here, we refer to the tachion-pair dynamics [1,6], and also to the microscopic dynamics of elementary particles revealed by the selected esoteric sources previously considered [1-5].

Another researcher who echoes many of these conclusions is C. Sano [21]. Sano built on the work of A.P. Smirnov [22] who postulated that Newton's Third Law of action/reaction actually modeled "screw" structures, implying that elementary particles (specifically electrons/positrons) possess chiral-spiral field configurations. Accordingly, Sano posited that all actions/reactions are transmitted between actors and reactors by parallel or perpendicular clutching of the rotating chains of electromagnetic spirals of the hidden electrons and positron-pairs of the vacuum. Also, similar to the Hestenes' development cited above, Sano postulated that the radius of the outer electromagnetic spiral surrounding the electron/positron pair can change, oscillating in size around either particle, and thus producing the particles' electric or magnetic character. Supporting his theory, Sano cites the key research of I.M. Shakhporanov [23] whose experiments claimed that magnetic monopoles were generated, by employing an electrical circuit based upon Moebius band topology. Some of the unusual phenomena demonstrated by this apparatus, tending to support the magnetic monopole hypothesis, was transformation of diamagnetic substances into paramagnetic, the ferromagnetization of normally non-magnetizable materials (graphite, etc.), acceleration of chemical reactions, acceleration or deceleration of the decay of radioactive materials, etc. Sano also claimed that extraction of energy from the vacuum was possible using rotational action/reaction using magnetic monopoles.

Referencing this research to the current exposition, we recall that the key element of Killick's hypothetical tachion-pair operation was the similar non-linear/non-orientable Moebius-type dynamic cycle which results in the corresponding deformation (compression or rarefaction) of time/space/energy parameters [1,6]. In this regard, the remarkable similarity of this model to the research of Sano and Shakhporanov may be much more than mere coincidence. In fact, later we shall examine new research outlining an apparatus (yet untested), which claims to overcome the Coulomb barrier in low energy nuclear reactions (LENR), and achieves nuclear fusion by producing local time-dilation of soft photons in proximity of the deuteron reactants.

Additional Key Russian Research

To motivate the reader's sensibilities towards consideration of some of these unorthodox ideas, we defer to the previous article [1] in which many of these notions and mentioned research are explored in greater depth, as well as consider the following corroborative research.

One intriguing example of such experiments is the work of V. Chernobrov, from which he has claimed to demonstrate both acceleration and deceleration of local time-rate, within a small spherical enclosed volume conducted since 1988 [18]. The experimental system to produce these effects, was a set of electromagnets, connected in series and parallel and installed inside the globe-shaped surface in several layers. In various arrangements including up to 3 to 5 of such layers, these electromagnetic working surfaces (EWS) of various diameters were installed inside each other (similar to the Russian toy doll "matrioshka") with the maximum EWS diameter was about 1 meter, and the minimum (internal) diameter of 115 mm. With this configuration, Chernobrov claimed to measure small but detectable deceleration (-30 sec/hr.) and acceleration (+30 sec/hr.) of time within the sphere to time monitored outside its field of influence. One interesting difference was noted between the slowing down vs. the speeding up of time. The deceleration occurred considerably more smoothly and steadily whereas with acceleration, sharp discontinuous jumps were observed. These instabilities accompanying time-acceleration was observed in connection with cycles of the moon, diurnal fluctuations, and also operator presence. Chernobrov also noticed another phenomenon that also was reported in connection with the alleged legendary Philadelphia experiment, where matter in different time-frames apparently exhibited strange relative optical phenomena [see 1,4]. Specifically, the human eye in the time-frame exterior to the experiment perceives matter within the time-frame created by the apparatus as either transparent or surrounded by a vague white mist. We note with interest that transparent "shimmering" effects of substances in the target area were also occasionally a feature of Hutchison effect [10].

Academician A. Chernetsky produced what he termed a self-generating discharge (SGD) in a plasma that exhibited longitudinal energy density waves from a

structured vacuum. Some unusual effects noted were over-unity energy generation (C.O.P. > 1), as well as change of the electrical conductivity of matter (reduction of the resistance of resistor) placed between the capacitor plates of the SGD. A local structured vacuum was definitely produced since the resistance value remained unchanged even when the generator was turned off. Here reference must be made to the Kozyrev experiments [1,8], in which a type of similar *memory* process was activated ostensibly within the vacuum. Specifically, it turned out that in experiments with a vibrating torsion balance (or pendulum), at points of support the emerging additional forces did not disappear when the irreversible process (vibration) was stopped, but remained in the system for an appreciable time. The SGD plasma device may have also produced a detectable change in local time-flow rate as evidenced by decrease in frequency of a quartz oscillator placed in the discharge of the generator. The Chernetsky generator thus possibly caused anomalies in time-rate at a local space position. There were also basically anecdotal phenomena where psychic ability of personnel in proximity to the SGD was apparently enhanced [19]. The latter effects are not inconceivable once the intimate connection of consciousness to space and time is ascertained, from consideration of not only hypothetical "value-motivated" tachion-pair dynamics, but from the more prosaic studies as we shall see next.

Pathological Studies in Time-Perception

We can motivate further understanding for the claimed intimate connection of time to space by considering the results of a recent study of patients possessing a disjointed sense of time by Metod Saniga of the Slovak Academy of Sciences [20]. Saniga discovered the brain is hard-wired to perceive space and time as interconnected. Specifically, time pathology is apparently always accompanied by space pathology, in a sense that space either loses dimensions or acquires other dimensions. To quote Saniga "When time seems to stop, people often feel as if space becomes 2-dimensional. On the other hand, when the subject feels they perceive the past, present and future all at once, they simultaneously have the impression that space has infinite dimensions". This phenomenon is apparently not culturally endemic since Saniga illustrates that both pathologies cross cultural lines, evidencing similar studies cited from Italian, German and English psychological journals. In his report, Saniga combined mathematical models ("pencil-conics") and pathology reports of schizophrenic, drug-induced and other abnormal perceptions of time. His current work also encompasses studies of near-death experiences. He found that most of those who claim to have allegedly crossed over to the "other side" and back, tell similar tales. For that brief moment of near-death, the universal subjective experience of all individuals in this state of consciousness is that time loses its meaning. Although such evidence can at best be considered as anecdotal, since subjective conscious experience transcends the possibility of scientific proof, nevertheless perhaps these results from pathological and near-death studies also give us a hint towards new conceptions of time and space that necessitate both phenomena to be inextricably linked.

Investigation of the Possible Internal Properties of Time

One inescapable conclusion that results from all the above varied studies, either scientifically or psychologically based, and which cries out for future experimental verification, is the possible existence of an internal structure for time. Such a structure also implies the necessity for constructing a new edifice for physical reality that incorporates non-scalable metrics for the four fundamental yardsticks. We shall first investigate supporting evidence for internal time structure and subsequently the various implications of space, time, energy or mass that is non-scalable.

First, accepting an internal time structure, we are led to conclude that in quantum theory, time must then attain "hidden variable" status. One recent study that brilliantly articulates this notion, is the thought-provoking paper by X. Chen [24]. By positing 3 time variables as quantum hidden variables, Chen derives the Dirac equation classically. Moreover, he demonstrates that the non-intuitive property of "spin" of an electron or positron , arises naturally as a topological property of 3-dimensional time + 3-dimensional space. By extrapolating from this model, Chen then concludes that the inherent probabilistic aspects of quantum theory itself, as evidenced in wave-particle duality, Uncertainty Principle, quantum non-locality ("entangled" particles), etc., can be interpreted as the behavior of a single particle in 3 + 3 time-space. Chen postulates that the three dimensions of time geometrically form a "time sphere", with a generic point on the sphere possessing the following 3 coordinates: time radius, and two "time angles". The mathematical formalism arising from the process of stereographic projection from the north pole of this sphere, having radius of one-half, to any point on the spherical surface, incorporates both the positive-energy (north hemisphere) and negative-energy (south hemisphere) solutions to the Dirac equation (see Fig. 1 for clarification; note Z is a four-component spinor wave function). Also, by considering the evolution of a single particle, from the standpoint of this model of internal time-space, we can derive a picture of different paths on the time sphere of different weights, and on each path causality is satisfied. Through this process, Chen derives a purely classical explanation of the originally quantum-mechanically canonized Feynman Path Integral concept. This result emerges since each path from the time-sphere center to the surface corresponds to each Feynman path, and the surface of the sphere corresponds to the "surface" of the wave function. Chen also classically explains the processes inherent to Bose-Einstein-condensation (BEC) and superconductivity with this model. In such phenomena, two particles with the same spatial coordinates, cannot possess the same time angle, and thus will not have any interaction with each other and occupy the same quantum state as evidenced in BEC and superconductivity. Finally, Chen's solutions of the Dirac equation for a free particle correspond to Hopf bundles in monopole theory, and each Hopf fiber corresponds to each plane wave with different momentum states. This picture corresponds to wave packet diffusion in quantum theory. When a particle is in a fixed momentum state, each space point can contain only one Hopf bundle (one time angle), and various different time angles will be distributed in the whole

space but with the same Hopf bundle. Consequently, that particle can be found everywhere. This picture appears to describe the Uncertainty Principle classically using 3 + 3 dimensional time-space. Along similar lines R. Kiehn [25] has also recently underscored the important but overlooked classical connection between spinors, minimal surfaces and the Hopf map.

Recently, Chen's work has been further developed by H. Kitada [26] who, by introducing both 3-dimensional time and energy operators, sheds new classical light on the uncertainty relation that holds between these two parameters as well. Moreover, Chen is not the only reseracher to derive the Dirac equation classically. R.A. Close has published a paper which presents a classical mathematical description of circularly-polarized waves in 3-dimensions [27]. It turns out that these chiral space waves are satisfied by a four-component wave function which satisfies a Dirac equation. Furthermore, much like the Hestenes' zitterbewegung interpretation of quantum theory, the term normally associated with electron mass in the Close equation, introduces a rotation or oscillation frequency of the propagation direction.

Classical models for nuclear processes have also recently been proposed which incidentally also imply internal time structure. Notable among these, C. Cagle claims to have developed a fusion energy device employing LENR based upon such a classical theory [28]. Normally, Deuterium nuclei are diffuse in momentum space (having high relative velocities). The process Cagle outlines produces a compactification of their momentum space (low relative velocities), so that the deuterons develop a common de Broglie wavelength that is greater than or equal to the inter-particle distance. This is claimed to be accomplished by passing soft x-ray photons near the region of two deuterons in a lattice structure of Lithium Deuteride. **The soft x-ray, when absorbed , produces a region of total *time-dilation*, causing two effects: first, ionization of atoms by strongly repelling any associated electrons in the area, and secondly and most importantly, the physical extent of the time-dilation causes two adjacent normally repelling Deuterium nuclei to overlap in a common momentum space; that is, their relative velocities achieve very low values.** Consequently, due to the time dilation, for a very short time their common de Broglie wavelength exceeds their inter-particle distance. Thus, they become strongly attractive and undergo nuclear fusion.

Cagle also claims to clarify misconceptions about the fusion process in a thermonuclear bomb. He maintains that it is not due to extreme kinetic energies (high temperatures) of particles as supposed in current paradigms, but due to nuclear processes caused by absorption of a time-dilated soft photon flux, produced by Compton scattering of hard x-rays from a fission igniter, passing through a foil of depleted Uranium. Again, just like the controlled nuclear fusion process, this causes overlapping of deuterons in momentum space (low kinetic energies) for a few pico seconds, and subsequent fusion with normal exothermal processes ensuing.

Furthermore, as a fundamental component of his LENR fusion device, which ostensibly produces time dilation and controls energy production from the fusion process, Cagle incorporates a topological field structure termed an electromagnetotoroid. The toroidal field current oscillates between toroidal and poloidal modes in a dynamic cycle which is amazingly virtually identical to Killick's description of the oscillation dynamics of a single unit toroidal tachion [1,6](also see Cagle's website for animated simulation).

Regarding dynamics of astrophysical structures, Cagle further claims that the stellar jet core star of HH30 is also a gigantic electromagnetotoroid. During the poloidal current mode, vast quantities of matter are produced and ejected along the poloidal axis when the mode changes from poloidal to toroidal. This leads one to consider the possibility that the source of superluminal gamma ray bursters, which have heretofore mystified astrophysicists and defied explanation in terms of current paradigms, might be the result of large- scale abrupt changes in the time-frame of celestial vacuum regions, subsequently causing a boost in light velocity.

Implications of Non-scalable Metrics

When postulating fluid-field natures for the four yardsticks of physical reality: time, space, energy and mass, we must assume the existence of a *non-scalable* metric for our vacuum structure. Such a non-scalable vacuum, absent of a defined reference frame, must of necessity possess a *dual* nature. That is, the primary feature of a dual vacuum structure implies that infinitely small quantities must be treated on an equal footing with those that are infinitely large. In other words, information encoded into infinitesimal elements, is also instantly present in the unbounded infinite extents as well. This is tantamount to the existence of a holographic information encoding and transmitting vacuum field, which would structure events in space and time as a non-Markovian chain. In a non-Markovian chain of events, the prediction about the next link in the chain, requires a knowledge of **all** links, not just the one preceding it.

Metod Saniga's research into mystical perceptions of superconscious reality appears to support such a primordial non-Markovian holographic mapping of time and space. To quote from a transcript of such a vision: "I wake up in a whole different world…a different space…This space was distinct from the one we all know. It had different dimensions, everything contained everything else. One was situated in a state of being in which the 'will be' (future) and the 'vanishing' (past) were already included, and this being was my consciousness. It contained it all. The 'being contained' was present very vividly in a geometric way in the form of circles of different sizes which again were all part of a unity since all of the circles formed exactly one circle. The biggest circle was a part of the smallest and vice versa."[20].

Such a structure of time and space can best be topologically encoded in a non-orientable structure such as the Moebius band or Klein bottle. Similar to the data presented in the above mystical revelations and in the previously treated Killick tachion-pair dynamics [1,5], in such configurations "inside" and "outside" lose their meanings and meld into one another; ordinary dichotomic relations distinguishing thesis from antithesis are sublated and supplanted by a higher unity defining the evolutionary process of the system. In the

mathematical edifice abstracted from such a vacuum structure, duality rather than exclusivity of field structures holds sway. This in turn, presupposes a static-dynamic triality of fundamental field structures, characterized by the three magnitudes: zero, infinity and the mediating factor of unity, the latter being an indication that each of the other two field extremes are in perfect balance. Accordingly, we will assume that the stability (coherency) of non-scalable fields results whenever more than half their reality is in common.

Further development pertaining to a specific algebraic-geometric structure that would inherently incorporate this field model, will be carried out in a future paper. Nevertheless, the interested reader can skirmish on this frontier by consulting the relevant recent references to a Clifford-algebraic structure which encodes the projective duality of "space" and "counterspace" into a model for mechanics on the quantum level [29]. This promising model accounts classically for the phenomenon of quantum non-locality. It also heralds a new version of quantum field theory which, by treating electron-positron pairs as topologically non-orientable, is free of the detrimental divergences in self energy and charge, thus obviating the necessity for the ad hoc prescription of renormalization so endemic to current theory [30].

However, due to the limited scope of the current treatment, here we shall only make general comments on the significance of the above-mentioned concept of field triality. Although this model may appear foreign to current physical theory, we underscore that exactly such a system was delineated by W. Smith in the book, The New Science [5]. Observing, as we have [1], that this book in some parts of its exposition can cause confusion, we carefully choose the following selected passages that are most instructive in clarifying the notion of non-scalable metrics and in pointing the way to new paradigms (my comments in parentheses). General comment on non-scalable metrics: "Unity is half way between zero and infinity and always remains the fulcrum about which all other values regardless of scale pivot". On the electric field: "Between the two limits of zero and infinity and through unity there is divergence which we recognize as the electric field, but with the exception that there is no point charge at zero. Our awareness establishes the charge at radius unity with exactly half of it being 'inside' and the other half being 'outside'". On tempic field dynamics: "The tempic field being purely scalar in nature merely contributes to the manner in which changes can occur in the system. If, however, through some characteristic of configuration, the tempic field within a composite particle displays some irregularity, this will manifest as a 'vibration', and if the magnitude of the vibration is sufficient as to cause the interpenetrating fields to exceed the half-and-half point , the whole system will come apart: radioactivity. When a system does come apart, those field which were coherent and interpenetrating in the correct proportion will remain so and take off down the tempic field gradient and become radiated energy". On velocity of light/Planck's constant: "Within the universe we perceive, we are reasonably satisfied that the maximum value of all the coherent fields involved in our particles and radiated energy have the same value. Planck's constant is the numerical expression of this value, and the velocity of light is the expression of the numerical value of the (local) tempic field intensity". On nuclear fusion: "If a region is selected in which there are two fields of the same kind, same magnitude, same direction, such that very nearly half the reality of each is within the region, then the two fields are just on the verge of becoming coherent. If the fields are not coherent, the total energy in the region is the sum of the energies of the two fields; i.e., twice the square of the field intensity of each integrated over the region, or twice the energy of the two fields incoherent. This represents the 'packing energy' of bits and pieces of atomic nuclei, and also points the way to the precipitation of energy out of the cosmic background (vacuum engineering)". Notice how this description, written 45 years ago, of how a tempic field gradient (time-stress) operates between atomic nuclei to produce coherency (half-in half-out condition), perfectly parallels the recent Cagle view, which claims the fusion process takes place only as a function of time-dilation [28]. Finally, on gravitation: "With the exception of skew electric fields (electric field possessing tempic field gradient) all the other fields of an aggregate mass may be considered as static because they have no component of the tempic field at right angles to them. The skew fields (spiral-helical?) on the other hand, are dynamic because they do have a quadrature tempic field component. Furthermore, skew fields are largely incoherent (gravitation cannot normally be shielded) simply because the usual almost random orientation precludes their meeting the half-in requirement of form to become coherent. Since the gravitational field is due to the skew electric field, or stated differently, to the induction from the 'motional magnetic field' (longitudinally moved magnetic field), this is the logical region to explore for the mechanism by which fields may be produced to combine with the gravitational field (of Earth) to produce a resultant more to our liking (alteration of local gravitational potential)".

This last quote describes the gravitational field of a mass as a residual field phenomenon, similarly to the Sakharov and Puthoff conclusions which attribute gravitational and inertial mass to the interaction of accelerated or gravitating matter with the zero-point-vacuum-fluctuations (ZPF) causing a vacuum reaction force [31]. Moreover, similar to the Hestenes' claims, in their recent papers [32], Haisch/Rueda/Dobyns propose that, via this new interpretation of inertial mass as an acceleration-dependent electromagnetic (Lorentz) force, that a former postulate of quantum mechanics appears to be derivable classically via the interpretation of rest mass as the energy of the ZPF driven zitterbewegung; that is, the de Broglie wavelength of a moving particle, may be derived from Doppler shifts of the Compton frequency oscillations associated with zitterbewegung that occurs when a particle is placed in motion.

For further studies of physical theories with non-scalable metrics, the reader is directed to the excellent work of A.A. Nassikas [16]. Like few theories hitherto postulated, Nassikas posits a fundamental probability density function for vacuum energy, out of which oscillatory-deformable sub-atomic level physical aspects of time and space then emerge. This is the reverse to most contemporary paradigms, which view energy as a derivative of matter, time and space, even at the quantum level. Finally, A. Frolov has used Nassikas' theory to explain over-unity energy generation that has been demonstrated in some LENR electrolytic cells of the Pons-Fleischmann variety [17].

Editor: Actually Prof. Nassikas wrote in this patent that the idea which is described in the patent was proposed by Alexander Frolov. In 1996 these questions were discussed by us in Saint-Petersburg. Specifically, a Palladium cathode over-saturated with protons produces an imbalance of the vacuum engine in this area, with an accompanying change in the local time-rate and subsequent breakdown in the Coulomb barrier of the nuclei as per schemes articulated by C. Cagle [28] and T. Bearden [15].

Conclusions

In this journey through the latest research and speculations involving new interpretations of the four physical yardsticks: time, space, energy and mass, we hope the reader and technical specialists/theorists have been inspired to continue research along the lines suggested in the above dissertation. In this regard, certain open-ended questions present themselves that focus squarely on the viability of technological future developments in the new energy field. First, could the missing element in our eventual understanding of all devices featuring documented over-unity energy generation, change in mass (gravitational potential), LENR-based transmutation of elements and the amelioration of radioactivity, etc., be due the alteration of local time-flow in sub-atomic vacuum fields within the apparatus? Secondly, could the frustrating feature of the capriciousness of over-unity power and the like to yield to testable replication in many cases, be due to currently unperceived uncontrollable aspects of time and the vacuum which must be addressed in order to solve these problems? Thirdly, could incorporation of non-orientable topological structures such as the Moebius band, Klein bottle, etc. in new models of electrodynamic field structure, be instrumental in finding the answers to both of the previous questions? With sufficient probing for possible answers to such questions, the present author has the firm belief that new paradigms are certain to soon result that will crystallize these thoughts into viable scientific hypotheses subject to experimental testable verification. As an offshoot and definite bonus of this process, possibly a new more expansive understanding of the role of the vacuum in both nature and consciousness will be in the offing.

References

1. D. Reed, "A New Paradigm for Time: Evidence from Empirical and Esoteric Sources", Explore!-for the Professional, vol. 4/5 July/Sept., 2002.
2. J. Roberts, unpublished remarks as transcribed by W.H. Kautz.
3. J. Roberts, The Seth Material, Prentice-Hall, Inc., 1970, pp. 292-298.
J. Roberts, The "Unknown" Reality, Prentice-Hall, Inc., 1986.
4. L. Carroll, Alchemy of the Human Spirit (Kryon Book III), The Kryon Writings, 1995.
L. Carroll, Letters From Home (Kryon Book VI), The Kryon Writings, 1998.
L. Carroll, Passing the Marker (Kryon Book VIII), The Kryon Writings, 2000.
5. W. Smith, The New Science, Fern-Graphic Pub., 1964.
6. D. Reed & K. Killick, "Tachion Energy Theory", Energy Unlimited, 1978-1983.
7. A. Correa & P. Correa, "Consequences of the Null Result of the Michelson-Morley Experiment: The Demise of the Stationary Aether, the Rise of Special Relativity and the Heuristic Concept of the Photon", Infinite Energy, no. 38, July-Aug. 2001, pp. 47-64. A. Correa & P. Correa, "The Sagnac and Michelson-Gale Experiments", Infinite Energy, no. 39, Sept.-Oct. 2001, pp. 32-49.
8. N. Kozyrev, "On the Possibility for the Experimental Investigation of the Properties of Time", Time in Science and Philosophy, Prague, 1971, pp. 111-132.
N. Kozyrev, "An Unexplored World", Soviet Life, 1965.
A.P. Levich, On the Way to Understanding the Time Phenomenon (Part II: The Active Properties of Time According to N. A. Kozyrev), World Scientific, Singapore, 1996.
9. D. Reed, "Torsion Field Research and Implications for New Physics and Energy Technologies", Jour. New Energy, vol. 4, no. 2, Fall, 1999, pp. 151-164.
10. J. Hutchison, "The Hutchison Effect Apparatus", Proc. of the 1st Symp. On New Energy, Denver, May, 1994, p. 199.
J. Hutchison, "Inside the Hutchison Effect", Extraordinary Science, vol. III, issue 4, Oct-Dec. 1991, pp. 23-26.
11. T. Valone (ed), Mechanical Energy from Gravitational Anisotropy, Integrity Research Institute, Washington, DC, 1996.
W. Peschka, "Kinetobaric Effect as Basis For a New Propulsion Principle", Raumfahrt-Forschung, Feb, 1974 (in German); trans. By D. Reed, Infinite Energy, vol. 4, issue no. 22, 1998, pp. 52-56.
D. Reed, "Translator's Analysis and Comments on the Zinsser Effect Device, Infinite Energy, vol. 4, issue no. 22, 1998, pp. 57-59.
12. D. Hestenes, "Quantum Mechanics from Self-Interaction", Found. Phys., vol. 15, no. 1, 1985, pp. 63-87.
13. D. Hestenes, "The Zitterbewegung Interpretation of Quantum Mechanics", Found. Phys., vol. 20, no. 10, 1990, pp. 1213-1232.
14. D. Hestenes, "Zitterbewegung Modeling", Found. Phys., vol. 23, no. 3, 1992, pp. 365-387.
15. T. Bearden, Extracting and Using Electromagnetic Energy from the Active Vacuum, Association of Distinguished American Scientists, Huntsville, Alabama, 2000.
T. Bearden, "Giant Negentropy in the Common Dipole", Proc IC-2000, St. Petersburg, Russia, 2000(in Press)
16. A.A. Nassikas, " The Hypothesis of the Unified Field and the Principle of Its Dual Interpretation", Proc. Of III Int. Conf. On Problems of Space Time and Gravitation, Russian Academy of Sciences, St. Petersburg, Russia, 1996.
17. A. Frolov, "The Work Created by Means of a Potential Field", Proc of III Int. Conf. On Problems of Space Time and Gravitation, Russian Academy of Sciences, St. Petersburg, Russia, 1996.
18. V. Chernobrov, "Experiments on the Change of the Direction and Rate of Time Motion", Proc. Of III Int. Conf. On Problems of Space Time and Gravitation, Russian Academy of Sciences, St. Petersburg, Russia, 1996.
19. A.V. Chernetsky, "Processes in Plasma Systems with Electric Charge Division", Deutsche Vereinigung fur Schwerkraft-Feld Energie e. V. no. 25, Mar. 1991, no. 27, Feb. 1992.
20. M. Saniga,"Unveiling the Nature of Time-Altered States of Consciousness and Pencil-Generated Space-Times", Int. Jour. Of Transdisciplinary Studies, vol. 2, no. 2, pp. 8-17.
21. C. Sano, "Twisting and Untwisting of Spirals of Aether and Fractal Vortices Connecting Dynamic Aethers", Jour. New Energy, vol. 6, no. 2, Fall 2001, pp. 178-184.
22. A.P. Smirnov, "Hyper-Physics - Physics of Reality", Kneeling Before the Truth, pp. 62-100, Materials of the 2nd Int. Scientific Clarification Conf.-2000, St. Petersburg, Russia,(2000).
23. I.M. Shakhparonov, "Interaction of Kozyrev-Dirac Emanation Methods of Detection and Interaction with Matter", Proc. Of III Int. Conf. On Problems of Space Time and Gravitation, Russian Academy of Sciences, St. Petersburg, Russia, 1996, pp. 175-187.
24. X. Chen, A New Interpretation of Quantum Theory – Time as a Hidden Variable, Apr. 2001, xxx.lanl.gov/abs/quant-ph/9902037.
25. R.Kiehn, Spinors, Minimal Surfaces, Torsion, Helicity, Chirality, Spin, Twistors, Orientation, Continuity, fractals, Point Particles, Polarization, the Light Cone and the Hopf Map, www.uh.edu/~rkiehn.
26. H. Kitada, Three Dimensional Time and Energy Operators and an Uncertainty Relation, July 200, xxx.lanl.gov/abs/quant-ph/0007028.
27. R.A. Close, "Torsion Waves in Three Dimensions: Quantum Mechanics with a Twist", Found. Phys. Lett., vol. 15, no. 1, Feb. 2002, pp. 71-83.
28. C. Cagle, (2001), www.singtech.com/.
29. O. Conradt," Mechanics in Space and Counterspace", Jour. Math Phys., vol. 41, no. 10, 2000, pp. 6995-7028.
30. B. Fauser "Projective Relativity- Present Status and Outlook", Gen. Rel. Grav, vol. 33, 2001, pp. 875-887.
31. H.E. Puthoff, Phys. Rev. A, vol. 39,(1989), p. 2333. B. Haisch , A. Rueda & H.E. Puthoff, Phys. Rev. A, vol 49,(1994), p.678.
32. B. Haisch, A. Rueda & Y. Dobyns, "Inertial Mass and Quantum Vacuum Fields", Annalen der Physik, (Sept. 2000). B. Haisch & A. Rueda, "On the Relation Between a Zero-Point-Field-Induced Inertial Effect and the Einstein-de Broglie Formula", Phys. Lett. A, vol. 268, (Apr. 2000), pp. 224-227.

Resonant Phenomena Occurring in Alternating Current Circuit

Alexander V. Frolov

Tel/fax: 7-(812)-380-38-44
E-mail: office@faraday.ru

There is a classical (according to manuals) notion that resonant phenomena can not influence on efficiency of a transformer or a motor as in a capacitive circuit or in an inductive circuit power produced at minimal power at the input of an oscillation circuit is reactive (let us remind that active power is measured at active resistance).

At the beginning of the last century this aspect was viewed differently. Advantages of a resonant case in alternating current circuits were used in practice. Let us appeal to a rare book by J. Claude-V. Ostwald named "Electricity and its applications by popular language" (I.N. Kushnerev Press, Moscow, 1914, p. 463).

"The phenomenon proceeds in a corresponding electric circuit as well as it occurs in hydraulic model: if self-induction and capacity parallel connected with each other are under influence of an alternating electric propulsion force then the total current coming through the system is equal to the difference of currents which pass two certain paths.

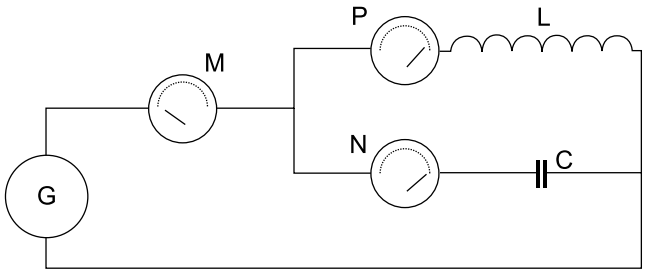

Fig.1

… join ammeters to the general circuit (M) and to either path (P and N). If P demonstrates 100 Amperes and N demonstrates 80 Amperes then the total current will be equal to 20 Amperes instead of 180 Amperes. Thus alternating current has its own "summary" so we should consider its condition. …capacity introduction compensates self-induction action in some way… let us begin to change the self-induction by moving a core into. What will happen if the current coming through the coil achieves 80 Amperes, i.e. is equal to the current observed in the path with a capacitor?

As you guess, since the total current is equal to difference between currents passing the paths then now it will be equal zero. It is an incredible case:the device produces zero current dividing into two paths and in each of these paths current is equal to 80 Amperes. It is a good example for the first acquaintance with alternating current, isn't it?"

Andrey A. Melnichenko (Moscow) is one of modern investigators who research this phenomenon. Any motor of alternating current can be considered as inductance. A circuit consists of motor coils and some capacitor connected in series with the motor winding. Thus if we take the circuit, consisting of motor coils and a capacitor which is connected in series to motor winding and adjust it in resonance, then mechanical power occurring on the motor shaft is produced at zero (minimal) power consumption of an alternating current source.

Melnichenko applied a simple method of voltage increase by meanse of resonance: he succeeded in obtaining of normal voltage for operation of standard motors of 50 Hz 220 V from a source of 50 Hz 110 V and 70 V. The circuit consumption for overcoming of its active resistance (of coils) can be considered as insignificant. Low frequency currents require a large capacitor. Nevertheless even at higher frequency, for example at 400 Hz, the system can be compact and effective. This method is worth to be applied in a scheme consisting of an alternating current motor in resonance mode and an electric generator which has a stable load. Change of load causes change of rotation speed therefore the system requires to be readjusted for resonance.

Experiments with powerful alternating current motors (about 100 Amperes as J.C. Ostwald wrote) working in resonance mode should demonstrate all advantages of the resonance mode application.

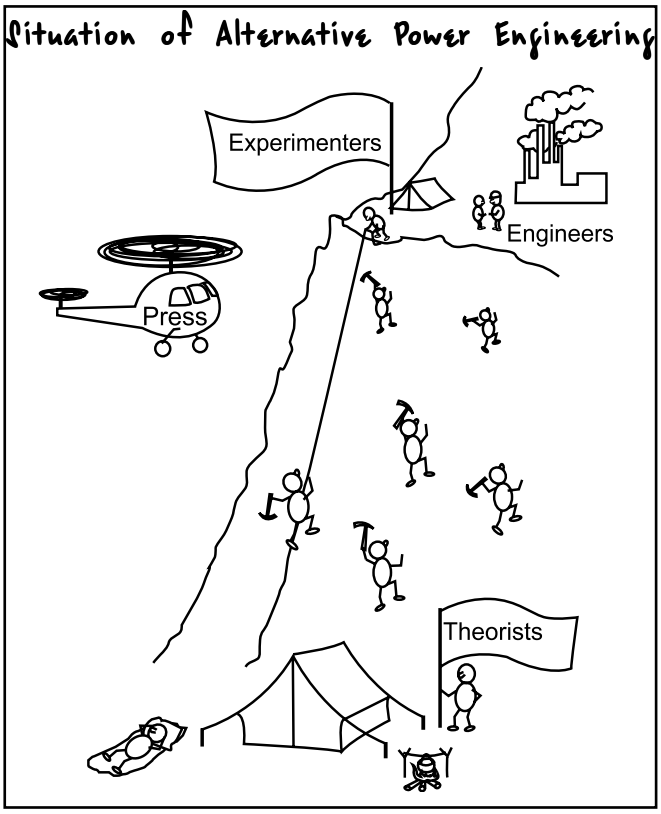

Space Power Generator and Paramahamsa Tewari Update

Submitted by Toby Grotz, USA

http://www.tewari.org

A new generation of Space Power Generators is being built by Paramahamsa Tewari. The new design is expected to achieve substantial gains over previous models which has been measured over unity by experts in the utility industry as well as by independent consultants. Details are presented on the web site http://www.tewari.org.

From the Electron to a Perpetual System of Motion

Paramahamsa Tewari, B.Sc. Engg

As is well known, an electron, despite high-speed interactions with electric and magnetic fields and other particles of matter, remains unaffected structurally—maintaining its mass, charge, inertia, and locality after the interactions. This single fact itself is sufficient to postulate on the existence of some unique universal entity constituting the electron, such that the structure explains the known properties and behavior of the electron – as to how it sustains the collisions with the other particles and, yet, remains permanently indestructible without any reduction in the quantities of its basic properties. A theory that explains this enigmatic fact is framed and described in detail elsewhere. It reveals that the electron is a perpetually rotating system, a space-vortex (vortex of absolute vacuum) that through the process of motion in electric current, and interaction with external magnetic field can also lead to the development of a system partially violating Lenz's law and, thereby, capable of achieving perpetual motion in a machine. Such a conclusion has a new theoretical basis, as well as experimental confirmation – briefly outlined in this paper.

The basic understanding of the interaction of electric current with magnetic fields requires deeper knowledge of the fundamental nature of the electric current as well the magnetic field; this, in turn, leads to an inquiry on the nature of "electric charge" and its distribution in the electron structure. The origin of electron mass and charge, electrostatic and electrodynamic forces are described below with the vortex structure of electron, which further facilitates explanation of atomic structure and, thereafter, an over-unity efficiency generator. Due to brevity, predominantly qualitative-descriptions of the physical processes involved have been presented.

The full theory and diagrams are presented in From the Electron to a Perpetual System of Motion at http://www.tewari.org.

Universal Principles of Space and Matter (A Call for Conceptual Reorientation)

A new book, *Universal Principles of Space and Matter* has just been published by Paramahamsa Tewari. Arangements are being made with the publisher to provide these books outside of India. The price is expected to be about $30 depending on shipping costs from India.

A new theory of matter, that confronts with the existing concepts of space in the contemporary physics.

The basic phenomena dealt with are:

* Structural interrelationship between space and matter
* Origin of mass, inertia, and electric charge
* Creation of the electron from space

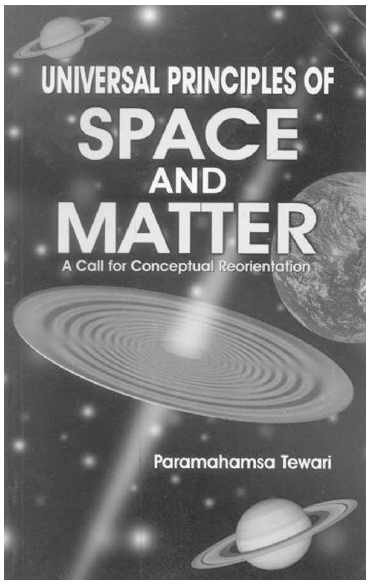

* Discovery of new fundamental equations on mass and charge
* Derivation of the presently known universal constants (gravitational, Coulomb's constant, dielectric, magnetic permeability, electron charge, electron mass, Planck's constant etc.) with the postulate of a single universal costant – the speed of light in the absolute vacuum
* Discovery of an inward force in nuclear structure against the Coulomb repulsive forces, hitherto unknown
* Relationship between light and gravity
* Theoretical derivation of the surface gravity of the Earth, Sun and the planets
* Discovery of electrical repulsive forces between the Sun and the planets, unknown in celestial mechanics
* Derivation of the planetary orbits
* Prediction of the continuous creation of universal matter at glactic centers and existence of electrical forces of interaction btween the stars and galaxies, so far least suspected
* Identifying the fundamental particle of matter
* Revelation of conceptual errors in the modern understanding of the basic nature of light
* Vindication of Einstein's conclusion of the speed of light as the limiting speed
* Vindication of Descartes' principle of property-less ether.

New Reviews of P. Tewari's work

New reviews of P. Tewari's work have been received from Dr. John A. Wheeler and Prof. Umberto Bartocci. A copy of Universal Principles of Space and Matter was forwarded this summer to Dr. John A. Wheeler at his summer residence in Maine.

Dr. Wheeler saw the development of modern physics while working with Neils Bhor at age 27 and was a colleague of Albert Einstein's at Princeton. Credited with being the "father of the Black Hole Theory", Dr. Wheeler is well schooled in quantum mechanics and relativity.

After receiving his copy of Universal Principle of Space and Matter Dr. Wheeler called the book "a unique gift". Further reviews of P. Tewari's work by Dr. Wheeler can be found at: http://www.tewari.org/Critical_Reviews/critical_reviews.html.

Prof. Umberto Bartocci

Universita' di Perugia
Dipartimento di Matematica e Informatica Via Vanvitelli
06100 PERUGIA - ITALY
Tel.: (39)-075-5002494
E-mail: bartocci@dipmat.unipg.it

This is a very singular book, in front of the current paradigm of contemporary Physics, a "cartesian-inspired" work which calls for reorientation in the foundations, by wisely warning that:

The conclusion of the modern physics that absolute space, time, simultaneity, and space filling media are discredited ideas is certainly premature (p. 178).

The books deals with arguments such as: Discovery of Charge and Mass Equations; Fundamental States of Cosmic Energy, Fields and Forces; Gravitation; Universal Constants; Motion of Electron; Atomic Structure; Light; Creation of Cosmic Matter (about Tewari's physical conceptions see also the second section of this Episteme's special issue http://www.dipmat.unipg.it/~bartocci).

JNET

New Energy Technologies collection of articles Japanese Version

Collection of articles from New Energy Technologies magazine, 2001-2002 is published in Japan.

On purchasing of the book, please, contact

Eiichi Yamamoto,
President Yama Trans Co. Ltd.

Email: admin@yamatrans.co.jp or eyama@yamatrans.co.jp

Raum&Zeit

EhlersVerlag GmbH,
Geltinger Str.14e,
82515 Wolfratshausen
Telephon: 08171/41 84-76,
Telefax: 08171/41 84-66
Internet:
http://www.raum-und-zeit.com

Institut fur Raum-Energie-Forschung (IREF) i.m. Leonard Euler

- Global Scaling Theory - Hydrogen-Helium Energetic
- Gravitation theory - Information technologies
- Mathematic Biology - Telecommunication technologies
- Gravitation energetics- Transport technologies

Rotating device powered by permanent magnets

Minato Wheel

http://fdp.hemsida.net

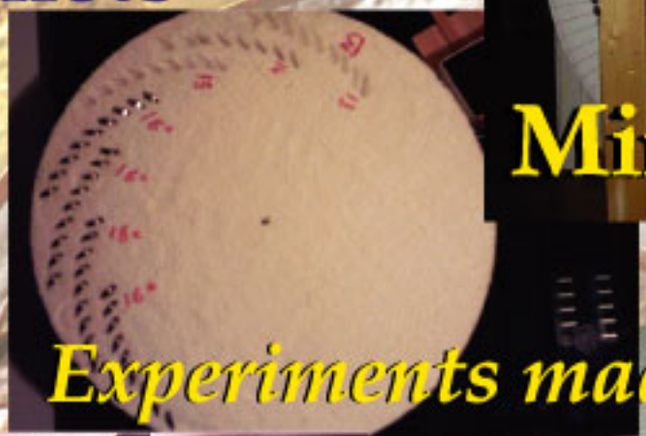

Experiments made in Sweden

by Eric Vogels

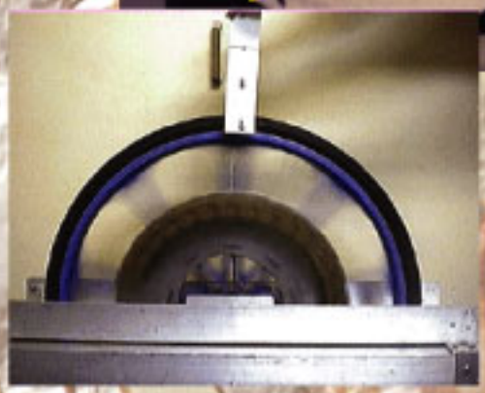

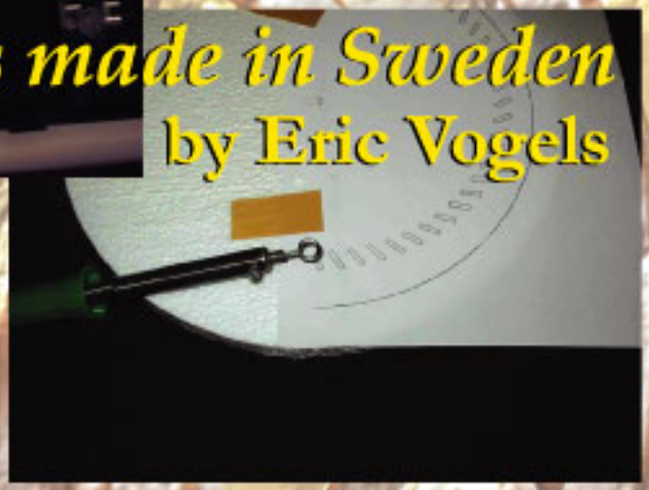

Read about launch vehicle "Lightcraft" in the review "Commercial exploration of space"

http://www.lightcrafttechnologies.com

"Lightcraft" is made for space flights by means of megawatt laser beam

Lightcraft Technologies, Inc.

Ball Lightning control

Experiments by Russian scientists

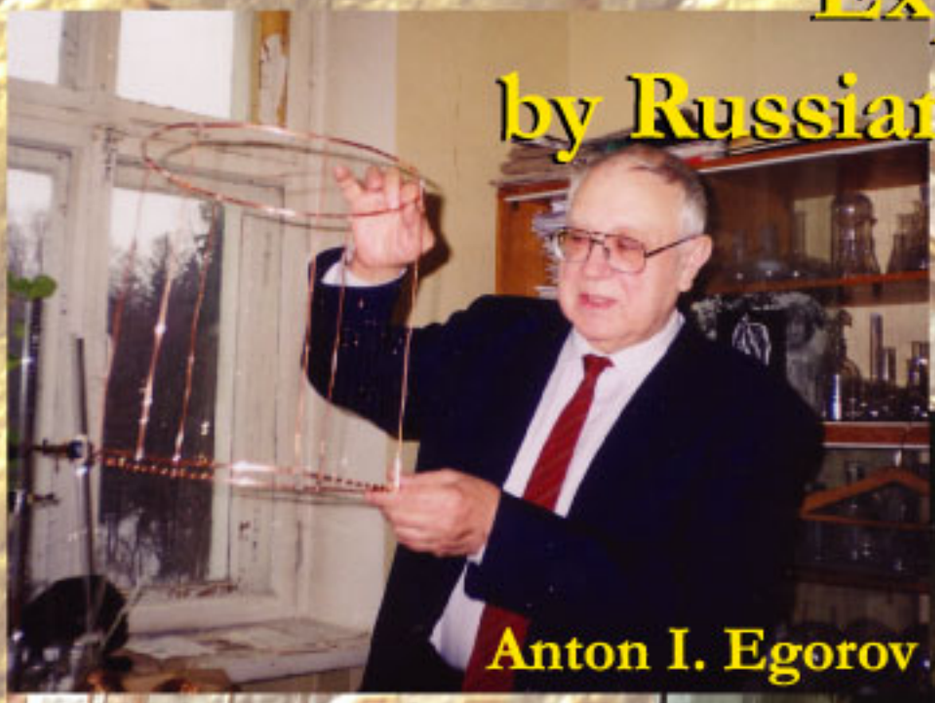

Anton I. Egorov

The standard ball formation

Read in this issue!

Tilley Foundation, Inc.

http://www.tilleyfoundation.com

K. Tilley Electric Vehicle (TEV) - automobile of the future generation

ISSN 1684-7288

New Energy Technologies

Printed version ISSN 1684-7288
Online version ISSN 1684-9698

Published by Faraday Laboratories Ltd. *Issue #2 (11), 2003*

Research on advanced aerospace systems and new energy sources

Commercial exploration of space

Also in this issue:

- New experiments on magnetic motors
- Ball lightning in laboratory environment
- Alternative aircrafts and space propulsion systems

NEW ENERGY TECHNOLOGIES #11

1. Minato Wheel. E. Vogels (Sweden)
2. Mechanism of Drive-Free motion. S.A. Gerasimov (Russia)
3. Production of Ball Lightning in Laboratory Environment. Report by A. Pashova (Russia)
4. Electric Discharge Produced into Air Half-Space. G.D. Shabanov, O.M. Zherebtsov (Russia)
5. Free Energy. A.V. Frolov (Russia)
6. Some General Properties of Matter and Energy Sources. E.D. Sorokodum (Russia)
7. Commercial Exploration of Space. Review by O. Leontyeva (Russia).
8. Prospects of Hydrogen Energetics. Ph.M. Kanarev (Russia)
9. Heater Producing Healthy Effect. A.L. Belyaeva and others (Kirghizia)
10. Inertial Propulsion Device. V.E. Senkevich (Russia)
11. Unlimited Accelerated Nonreactive Motion. Review.
12. Revolutionary Current. S.K. Baliyan (India)
13. Tilley Electric Vehicle. Review.
14. Trends in the Application of Motor-Generators. A. Akau (USA)
15. Electric Vehicle in Russia. Review by A. Pashova (Russia)
16. The Richard Clem Motor and the Conical Pump. R. Koontz (USA)
17. Spontaneous Flow Heat Pump. J.-L. Brochet (France)
18. Registration of Gravitational Waves. V.N. Petrov (Russia)
19. High-Energy Hyper-Low-Frequency Electric Field. Yu.V. Ivanko (Ukraine)
20. To the Question of Work Made by Electrostatic Field. A.V. Frolov (Russia)
21. Comments to Electro-Reactive LIFTER News.
22. Letters from Readers.
23. Advertisements (books)

Perfect Energy Source

Minato wheel. Experiments in Sweden

Eric Vogels, Sweden

E-mail: fdp@hemsida.net
http://fdp.hemsida.net

The self-running bicycle wheel was shown to the public at the First International New Science Symposium in 1997, held in Korea. The inventor of the wheel, Mr. Kohei Minato, was a speaker during the symposium. On www.keelynet.com you can find the quote of an eye-witness:

"The motor is actuated by moving the N pole of a large permanent magnet (the drive magnet) toward the wheel. As this magnet is moved toward the wheel, the wheel starts to spin. As the magnet is moved closer to the wheel it spins faster.

The acceleration of the wheel is rapid. So rapid in fact, as to be startling. To put it another way I was very impressed. The motor works. And it works very well. In the film clip (see http://fdp.hemsida.net) a slight pumping action of Minato's hand holding the magnet is apparent. When I braced my hand so that there was no pumping action, the motor still ran. In fact it seemed to run better.

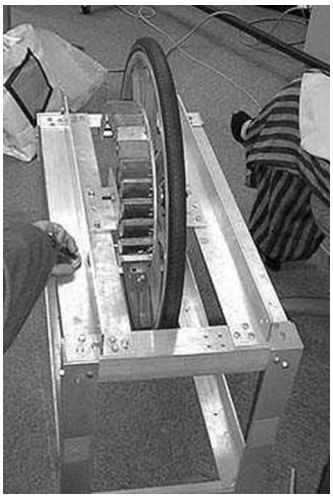

Fig. 1

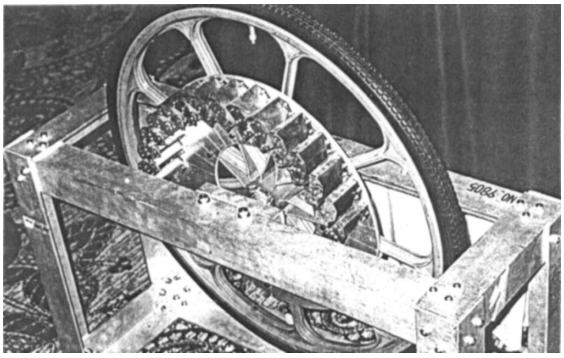

Fig. 2

Pumping action by the hand held magnet **is not** the power that drives the motor. When the drive magnet is moved away from the wheel it coasts rather quickly to a stop and comes to rest in a manner typical of any spinning bicycle wheel. Again when the wheel is at rest and a large magnet is moved up to the wheel it starts to spin. At no time it is necessary to touch the wheel to get it rotating."

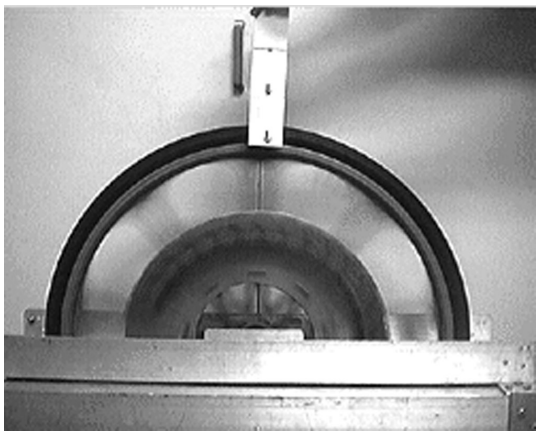

Fig. 3

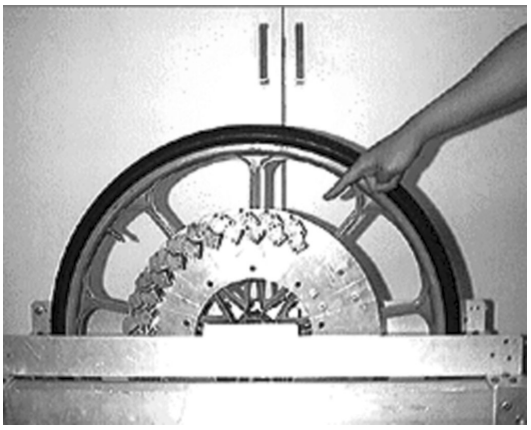

Fig. 4

Since the symposium in 1997 and the first publications in the Internet several people have tried to replicate the wheel, as it seemed to be a **perfect energy source for the future**. Some claims are made that replication was successful but no proof in the form of pictures or video clips are given.

Because I have a great interest in magnets and free energy and the fact that I did a lot of experiments to find a device that could be rotated only by means of permanent magnets, I decided to try to replicate the wheel by myself.

This journey started by searching on the Internet and collecting all the material that was available. A good way to sort all the found material was building my own website at http://fdp.hemsida.net where all my findings are presented.

One of the devices I build was made from a 'how to build a Minato wheel'-manual that I found on the Internet.

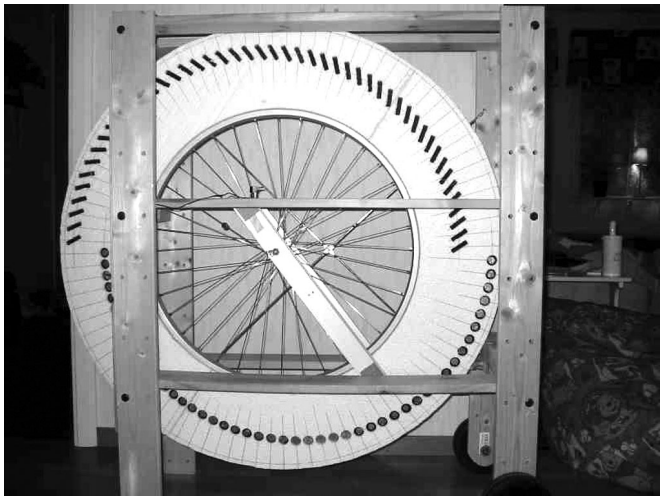

Fig. 5

Unfortunately this wheel did not show any movement at all. I mounted the magnets at several angles and distances from the rim without achieving any positive results. Since the size of the wheel (1 meter diameter) was not very practical to handle and since the results were negative I searched for an easier way for testing. I found that the use of Styrofoam, an old turntable and Neodymium disc magnets kept the whole project within the edges of my kitchen table. I developed a computer program to help me design wheels, since I want to be able to replicate my own wheel, in case I find a model that works. I do not believe in an engine that works after several weeks of tuning and that fails to function as soon as one magnet is replaced. Individual tuning is okay to optimise a working design but if a design does not show the potential to rotate by itself it's a flawed design.

After optimising the way to build the small wheels, I could design and make a wheel in 30 minutes. I made a test scenario and the results for every test were posted on the web site.

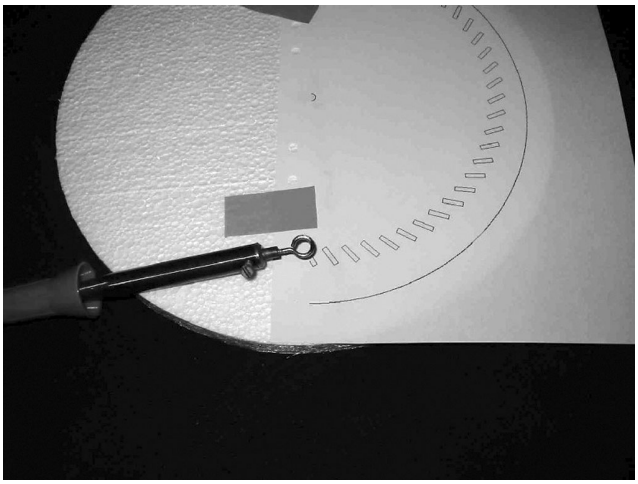

Fig. 6

I searched for the 'perfect' angle, number of magnets and position. The set-up with the strongest thrust was used as the base for the other experiment. By this time I realized that I was not really trying to rebuild the Minato wheel but that I wanted **a rotating device, powered by permanent magnets.**

When for the first time I decided to split a track of magnets that covered 180 degrees of the wheel in a number of smaller tracks, **the results became much better**.

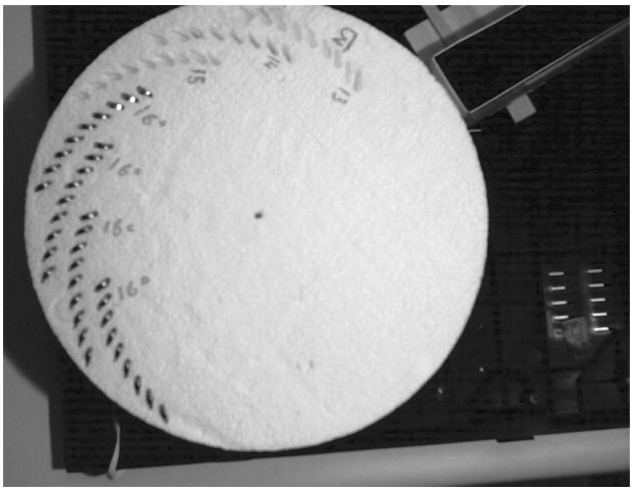

Fig. 7

By using this way of placing the magnets, every track differs a little bit from the next track, depending on its place on the wheel. The angle of the magnets influences on the thrust that is given by the stator magnet, depending on the speed that the track is entering the magnetic field of the stator. In other words: the track at the beginning of the wheel, with magnets covered side of the wheel, gives less thrust than the track at the end. This is important since a track with a lot of thrust has a big 'sticky spot' that should pass the stator. This 'sticky spot' stops the wheel during its rotation just before the first track enters the magnetic field of the stator.

During the last experiments the stator magnet changed place and pushed against the magnetic fields of the tracks from above. Simply because more thrust was developed by this way. The next wheel will have the tracks mounted on a different level. It means that the first track will have a bigger distance to the stator magnet than the last track. This should make the sticky spot weaker and the final 'kick off' stronger. The final wheel will be mounted vertically, like the Minato Wheel.

Thanks to the invention of the Neodymium magnet in 1983, magnets became much more powerful while the size and length decreased. Before 1983 a lot of the experiments could not be done since the size of the magnets made the positioning of several magnets in tracks like this was impossible. It is my personal believes that the strength of these magnets will lead to results that are impossible according to the physical law books, because these magnets did not exist when those books were written.

Until the moment I write this I have not found the perfect energy source yet but by exploitation all the material and findings on my web site I hope that more people get interested and will help searching for a great energy device that will not pollute the air which our children and grand children have to breath.

Mechanism of Drive-Free Motion

Sergey A. Gerasimov, Russia

Physics Department, Rostov State University, Rostov-on-Don, 344090
Email: GSIM1953@mail.ru

The article presents results of the experimental study of the motion created by vibrations of an internal mass of the system of bodies accompanied by impacts of the unbalanced load with the external body. This type of propulsion drive is known by a number of names. Among these are the ***vibrational propulsion device*** *and* ***reactionless machine****. Sometimes it is called the* ***inertioid*** *[1, 2]. The vibrational transposition is proved to go on by means of internal forces of a system of bodies [3-5]. The Tolchin's inertioid [6] is considered to be the first device that used the forces of inertia to create the reactionless infinite motion in space. We are not in a position to be a judge of this. There exist a number of projects of such machines but experimental results concerning such kind of motion are very limited. Below there are the experimental results on average velocities of such a motion and the description of a propulsion device a main particularity of which is absence of wheel-drive.*

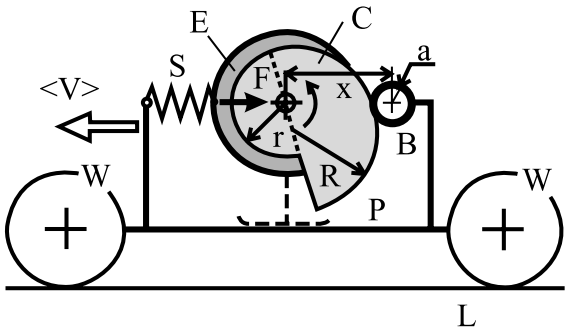

Fig. 1

Scematic representation of a vibratory-impact self-transposition

The unbalanced load in this device is an electric motor E of mass m that executes undumped vibrations relative to a platform P of mass M with four wheels W which can roll on a horizontal surface L with rolling friction the coefficient of which is k. The frictional force is determined to be a force which adjusts to keep the cart from motion across a surface. A disk cam C at one end of the axle of the motor ensures a prescribed character of the vibrations and elastic impacts between the load m and the follower B of radius a. In present experimental device, the cam C consists of two semicircles of different radii r and R as it is shown in Fig.1. In this experiment r=0.03m, R=0.05m and a=0.01m. The electric motor and the platform are coupled by a connecting spring S. The force F by means of which the electric motor is pressed to the follower varies linearly from F=4N at x=0.04m to F=4.8N at x=0.08m. The compressed spring S is necessary not only for creating close contact between the cam and the follower. The restoring force of the spring produces the transposition of the cart in a direction opposite to **F** when the follower moves without contact from x=2R-r+a up to an impact at $x=r+a$. The impact suppresses the transposition. Another mode of transposition is also possible when the impact of the cam on the follower is a reason of the transposition of the cart in the direction of the force **F**. In this case the frictional force extinguishes the transposition of the cart.

Friction between the load of mass m and the cart is negligible since the corresponding effective coefficient is less than 0.001. The same is for the friction between the cam and the follower. The mass of the spring is m_S=0.007 kg , and the mass of the cam is m_C=0.019 kg. The total mass of the wheels is m_W=0.082 kg. This value can be useful for a theoretical

During the last experiments the stator magnet changed place and pushed against the magnetic fields of the tracks from above. Simply because more thrust was developed by this way. The next wheel will have the tracks mounted on a different level. It means that the first track will have a bigger distance to the stator magnet than the last track. This should make the sticky spot weaker and the final 'kick off' stronger. The final wheel will be mounted vertically, like the Minato Wheel.

Thanks to the invention of the Neodymium magnet in 1983, magnets became much more powerful while the size and length decreased. Before 1983 a lot of the experiments could not be done since the size of the magnets made the positioning of several magnets in tracks like this was impossible. It is my personal believes that the strength of these magnets will lead to results that are impossible according to the physical law books, because these magnets did not exist when those books were written.

Until the moment I write this I have not found the perfect energy source yet but by exploitation all the material and findings on my web site I hope that more people get interested and will help searching for a great energy device that will not pollute the air which our children and grand children have to breath.

Mechanism of Drive-Free Motion

Sergey A. Gerasimov, Russia

Physics Department, Rostov State University, Rostov-on-Don, 344090
Email: GSIM1953@mail.ru

The article presents results of the experimental study of the motion created by vibrations of an internal mass of the system of bodies accompanied by impacts of the unbalanced load with the external body. This type of propulsion drive is known by a number of names. Among these are the ***vibrational propulsion device*** *and* ***reactionless machine****. Sometimes it is called the* ***inertioid*** *[1, 2]. The vibrational transposition is proved to go on by means of internal forces of a system of bodies [3-5]. The Tolchin's inertioid [6] is considered to be the first device that used the forces of inertia to create the reactionless infinite motion in space. We are not in a position to be a judge of this. There exist a number of projects of such machines but experimental results concerning such kind of motion are very limited. Below there are the experimental results on average velocities of such a motion and the description of a propulsion device a main particularity of which is absence of wheel-drive.*

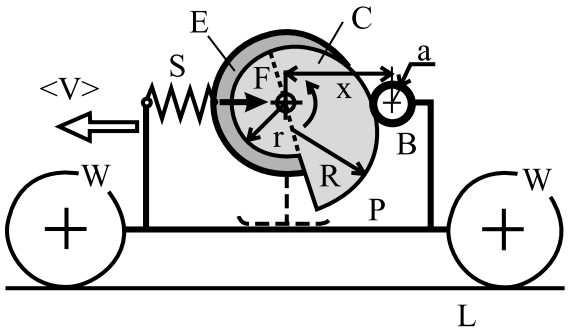

Fig. 1

Scematic representation of a vibratory-impact self-transposition

The unbalanced load in this device is an electric motor E of mass m that executes undumped vibrations relative to a platform P of mass M with four wheels W which can roll on a horizontal surface L with rolling friction the coefficient of which is k. The frictional force is determined to be a force which adjusts to keep the cart from motion across a surface. A disk cam C at one end of the axle of the motor ensures a prescribed character of the vibrations and elastic impacts between the load m and the follower B of radius a. In present experimental device, the cam C consists of two semicircles of different radii r and R as it is shown in Fig.1. In this experiment r=0.03m, R=0.05m and a=0.01m. The electric motor and the platform are coupled by a connecting spring S. The force F by means of which the electric motor is pressed to the follower varies linearly from F=4N at x=0.04m to F=4.8N at x=0.08m. The compressed spring S is necessary not only for creating close contact between the cam and the follower. The restoring force of the spring produces the transposition of the cart in a direction opposite to **F** when the follower moves without contact from x=2R-r+a up to an impact at $x=r+a$. The impact suppresses the transposition. Another mode of transposition is also possible when the impact of the cam on the follower is a reason of the transposition of the cart in the direction of the force **F**. In this case the frictional force extinguishes the transposition of the cart.

Friction between the load of mass m and the cart is negligible since the corresponding effective coefficient is less than 0.001. The same is for the friction between the cam and the follower. The mass of the spring is m_S=0.007 kg , and the mass of the cam is m_C=0.019 kg. The total mass of the wheels is m_W=0.082 kg. This value can be useful for a theoretical

analysis. Thus, the total mass of the unbalanced body is chosen to be much larger than the mass of the cam or the spring: $m = m_E + m_C + m_S \approx m_E$.

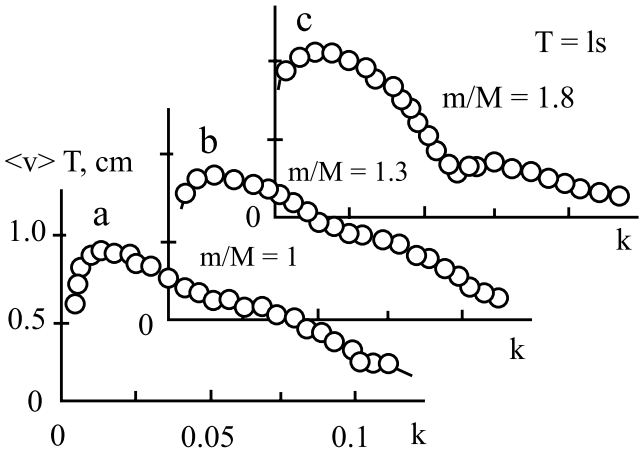

Fig. 2
Frictional coefficient dependence of average velocity of the platform at the period of vibrations T=1s for various mass ratios m/M:
(*a*) M=0.9 kg , (*b*) m=1.2 kg , (*c*) m=1.6 kg

At least in the case of irreversible mode, one could expect that the value of average velocity of transposition $<v>$ must be proportional to the number of impacts per unit of time. In the other words the path traveled by the cart per one impact must not depend on frequency of vibrations. This is a reason why the dependence of the product $<v>T$ versus the value of the friction coefficient k and ratio of masses d = m/M is investigated in this work. Measurements were carried out for two magnitudes of rotation period T= 1s and T=6s of the cam. The obtained results are presented in Fig. 2 and Fig. 3. First of all, the assumption mentioned above is not confirmed.

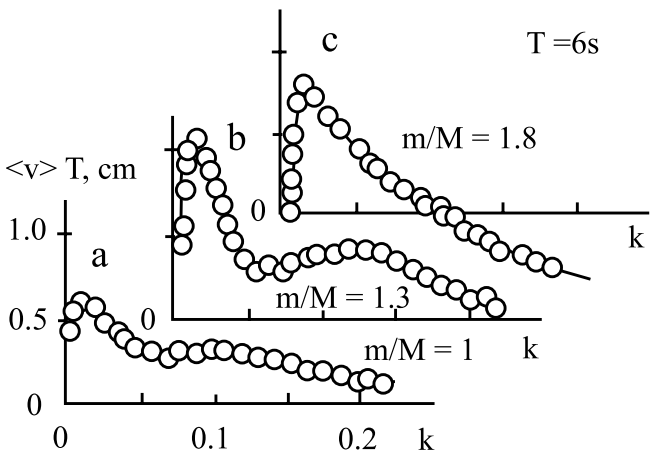

Fig. 3
Average velocity of the platform $<v>$ as a function of frictional coefficient k at T=6s for various mass ratios m/M: (*a*) M=0.9 kg , (*b*) m=1.2 kg , (*c*) m=1.6 kg

The value $<v>T$ for the period of the rotation T=1s sufficiently differs from that for T=6s measured at the same conditions. Besides, when the mass ratio is large the cart can change its direction of transposition. The reason of these results is not clear but this device provides a challenge to explain and investigate this kind of motion that enables us to discover the reactionless motion if it is probable. One should pay attention to a fact that the infinite transposition of the platform takes place even if the friction coefficient k is small.

References

1. Gulia N.V. *Inertia.* // Moscow: Nauka. 1982.
2. Aspden H. Anti-gravity Electronics. // *Electron and Wireless World.* 1989. V. 95. No 1635. P. 29-31.
3. Nappo F. Sulla Influenza Indiretta Delle Forze Inertne sul Moto del Baricentro. // *La Ricerca Scientifica (Rendiconti).* 1965. V. 8. No 1. P. 3-14.
4. Gerasimov S.A. Anisotropy of Frictional Force and Vibrational Transposition. // *Problems of Applied Physics.* 2001. V 7. P. 85-88.
5. Gerasimov S.A. Self-Similarity of Vibrational Motion in a Resistant Medium. // *Journal of Applied Mechanics and Technical Physics.* 2002. V. 43. No 1. P. 90-92.
6. Tolchin V.N. *Inertioid.* // Perm: Perm Book Publisher. 1977.

About the Author

Sergey A. Gerasimov graduated from Faculty of Experimental and Theoretical Physics of Moscow Physical Engineering Institute in 1976. Received Degree of PhD in Physics and Mathematics in 1987. Author of about 70 articles on Astrophysics, Atomic and Radiation Physics, Classical Electrodynamics and Mechanics. In present - Associate Professor of Department of General Physics of Rostov-on-Don State University. The fields of scientific interests are questionable problems in physics: self-interaction, self-transposition, unipolar induction.

ELECTRIFYING TIMES
an online and published magazine about Electric, Hybrid, Fuel Cell Vehicles, advanced batteries, ultra capacitors, fuel cells, microturbines, free energy systems, events and exhibitions worldwide

63600 Deschutes Mkt Rd,
Bend Oregon, 97701
541-388-1908 fax 541-388-2750
etimes@teleport.com
www.electrifyingtimes.com
Subscription $13/3 issues

Production of Ball Lightning in Laboratory Environment

Report by our correspondent Alla Pashova

Three years ago a working device producing a ball lightning in laboratory environment was designed in Saint-Petersburg Institute for Nuclear Physics (SPINP). The produced ball lightning is accessible for detail investigation and quite stable. The lifetime of the ball lightning comes to about one second that is rather significant for alike artificial formations. The experiments on the device made by scientists of SPINP, i.e. A. E. Egorov, G. D. Shabanov, S. Stepanov, are not supported or financed. Let us note that every scientist of the group searches proofs for his own hypothesis of nature and structure of the ball lightning at all.

A leading expert of SPINP, Anton I. Egorov, pays attention to dethronement of scientific myths:

— There is a myth of ball lightning that is created by mass media. The mythical ball lightning is a concentrate of mysterious energy which is extremely dangerous for a human. It destroys houses, kills animals, pursues people. After meeting it a human can lose his hair or teeth and different misfortunes begin to happen. Supposing a simple story of a farmer-eyewitness: "It thundered, and a fist-sized fire ball rolled down along a drainpipe. It fell into a barrel of water, the water gurgled. I came up to it and put my hand into the water. The water seemed to become warmer…". After republishing of the story by several newspapers a dramatic story about a ball lightning which has evaporated a barrel of water appears. No wonder that such familiar attitude to facts causes hundreds of hypotheses of ball lightning nature.

— **What is your hypothesis about ball lightning structure?**

— At the beginning of 90th I. D. Stakhanov, a member of Institute of Magnetism (IZMIRAN), developed a special method to interview eye-witnesses that resulted a right notion on ball lightning phenomenon. According to Stakhanov, ball lightning is a clot of hydrated plasma which is generated in wet air at electrical discharge.

Water as a chemical compound is remarkable for its anomalous properties: combining of two lightest elements does not generate gas but produces a high-boiling liquid. This is caused by extremely irregular distribution of electrons in a water molecule. Due to this property it acquires properties of an electric dipole. Water molecules interact with charged ions, aerosol particles, and with each other in a special way.

If a positive ion and a negative ion are introduced simultaneously into a puff of warm wet air then water dipoles immediately produce hydrate shells around the ions. When the hydrated positive ion approaches the hydrated negative ion additional water molecules are drown into gaps between them. As a result, there is a stable cluster in which the charged ions are conserved. The cluster consists of two ions of opposite charges and the hydrate shell. Water molecules prevent the ions' approaching and recombination, hence, lifetime of the ions in the cluster increases up to tens of minutes, i.e. in 12-13 orders. Interaction of clusters causes open-chain structures followed by space structures. That is to say, there is appeared a clot of cold hydrated plasma that accumulates great energy (up to 1 kylojoule per liter). The clot of plasma loses this energy at recombination of ions.

— **Could you, please, tell about the design of the device? What processes proceed when the device is operating?**

— Our task is to introduce an abundant population of ions into a puff of warm air saturated with water vapors. A base of the device for laboratory reproduction of ball lightning is a capacitor bank which is able to be charged up to 5.5 kV. The positive pole of the capacitor bank is connected to a ring electrode by means of a copper bar. The ring electrode is placed on a bottom of a polyethylene reservoir filled with water. The negative pole of the capacitor bank is connected to a carbonic electrode which is placed in the centre of the reservoir near water surface. A quartz pipe encloses the electrode in such a way that it is possible to drop water or to put some natural matter on it.

To generate a ball lightning 2-3 drops of water are put on the electrode. When impulse discharge occurs a bright plasma spout escapes the centre of the electrode that is accompanied by a quiet plop. A glowing plasmoid which is an artificial ball lightning parts from the plasma spout. It comes up slowly in the air and then disappears falling to pieces in 0.2-0.3 seconds.

We have made thousands of experiments for investigation of ball lightning properties, i.e. defining size, lifetime, colour, average temperature, excessive charge, content of a dust component.

It was ascertained that the artificial ball lightning is generated in a narrow interval of breakdown tensions. The average size of such a ball lightning is 12-20 cm,

and its lifetime comes to 1 second. Temperature of the ball lightning is not very high, i.e. 50° C. This can be defined if to take into account speed of rising of the ball lightning. If the plasmoid is accepted as a puff of warm wet air of 14-centimeter diameter which in atmosphere comes up at 293 K at speed of 1-1.2 m/sec then, consequently, its temperature should not exceed 330 K.

Colour of the lightning varies greatly and depends on presence of aerosol of matter trapped in the moment of discharge. Usually the lilac central part of the plasmoid is surrounded by a diffusive yellowish layer. Some admixture of natrium salt and calcium makes the core of the plasmoid yellow or orange.

If the central carbonic electrode is replaced by an iron or copper or aluminum one then the fundamental character of the phenomenon does not change. However, colour of the plasmoid depends on a radiation spectrum of excited atoms of the electrode, i.e. iron plasmoids are whitish, copper plasmoids are greenish, aluminum ones are white with reddish shimmer.

— **A generated ball lightning exists for about 1 second. How can it be made more stable?**

— Lifetime of an artificial ball lightning depends on many conditions, i.e. size and geometrical form of the central electrode, voltage between the electrodes, value and duration of a current impulse, temperature and electroconductivity of water which is put on the central electrode. Besides, lifetime of the plasmoid can be changed by introducing an additional dispersive phase into it. We have tested tens of matters and begun to investigate suspensions of colloidal graphite and fine-dyspersated ferric oxide.

A suspension of 3 g of colloidal graphite, 8-10 ml of acetone (which played role of penetrating agent), and 90 ml of water is put on the central carbonic electrode. When an electrical discharge occurs a layer of the suspension forms a flying spherical plasmoid. It comes up slowly and disappears in 0.3-0.8 seconds. The core of the plasmoid has a colour of flame, i.e. colour of burning carbon.

To prolong the existence of the generated ball lightning without application of aerosols it will be possible to use the so-called "Faraday's cylinder" whose production has been already begun. For the same purpose G.D. Shabanov proposes to put a stopping potential on a probe of detention.

— **There is an opinion that physical nature of ball lightning is similar to the process of controlled thermonuclear fusion. In this case, if your work on generation of a stable ball lightning is successful then you will be a competitor of the expensive project of controlled thermonuclear fusion**.

— I think that it is totally incorrect. Hydrated plasma is the first enemy of the thermo-nuclear fusion as water molecules do not allow neutrons approach each other. Effective cold fusion should be realized in organic liquids, for example, in heavy acetone or in a water-free medium. Somehow, it should be an absolutely "dry" process. No experiments on real "dry" cold fusion have been realized in practice. It has not been also examined the surfaces on which the combination of heavy hydrogen atoms produces maximal heating.

Scientists should pay attention to two most effective cold fusion processes. The first one expects association of two atoms of deuterium occurring on a totally dry deuterated surface which consists of, for example, zirconium deuteride. In the moment of fusion of a deuterium molecule local heating appears, and neutrons depart. The other perspective method of realization of the cold fusion process requires an absolutely "dry" organic liquid, i.e. liquid acetone in which hydrogen atoms are replaced by deuterium atoms (C_3D_6O) or by atoms of cyclic compound of $C_6(D_2)_6$. A tellurium or zirconium tip of an ultra-sonic dispersant is placed into a reservoir of this liquid. Cavitation blebs are formed on the surface of the dispersant. Neutron output comes to 10^4 particles. Maximal neutron output, which was achieved by Lipson, an American experimenter, consists of 10^8 neutrons at a desired result of 10^{13}. Certain quantity of neutrons can be obtained during ultrasonic cavitation which is accompanied by a phenomenon of sonoluminescence. Due to sound resonance the only cavitation bleb is generated in acetone. When the bleb collapses weak glowing is observed. The cause of this phenomenon consists in gas heating occurring in the bleb that is the result of high pressure produced by its collapse. The burst can last from 1/20 up to 1/1000 sec. Light intensiveness depends on quantity of gas in the bleb. If gas is absent in the bleb then the glowing does not occur. Light emission of the bleb is very weak, it becomes visible if it is strengthen or in absolute darkness.

— **Is it rightful that cold fusion is the future of world power engineering?**

To my mind another direction seems to be more perspective, i.e. extraction of uranium from sea water and then its burning in heavy hydrogen reactors like one which exists in Canada. Photo voltaic accumulators can also become a successful approach of the alternative traditional fuel engineering. By the way, a working model of such a device to utilize free solar energy has recently been created in our Institute (official web site: http://www.pnpi.spb.ru).

Editor: Read the publications on this theme in following issues of our magazine. Below there is a description of other attempts to generate a ball lightning in laboratory environment or at home. Besides, we publish an article dedicated to the problem of laser control of ball lightning. In the article there are photos (also see the cover page) and a scheme of the working device designed by this scientific group.

Ball Lightning Experiments

Information from
http://www-personal.umich.edu/~reginald/ball_l.html

Ball Lightning in the Microwave

This is a great experiment to try at home. It requires a microwave oven, a candle, a toothpick and a lighter. First you put the candle (~1-2 inches in height) in the microwave (remove glass plate from bottom so candle sits on metal). Put the toothpick in the candle sticking straight up. Light the toothpick on fire so that flames are leaping off the tip. Shut the door quickly and turn on oven full blast. There will be loud popping noises and then balls of fire will leap from the toothpick and fly around inside the microwave while making a buzzing sound like a bee. If it doesn't work at first try to move the position of the candle in order to find the "hot spot" in the oven for it to work.

Real Ball Lightning Generated by Pulsed Power Inductor

This experiment is very DANGEROUS. The author did this one a few years ago. The Idea was got from an article about a guy generating ball lightning using a high current transformer (TBA). The author had an idea of using an inductor to store large amounts of electrical energy. The conductor on the end of the stick touches the metal ring. This completes the circuit, and start the inductor. Then there was used the air compressor nozzle to blow out the arc as the wire was pulled away. The copper wire explodes and creates rapidly rotating and burning molten balls of copper. These 'Balls of Fire' exhibit many of the properties of real ball lightning.

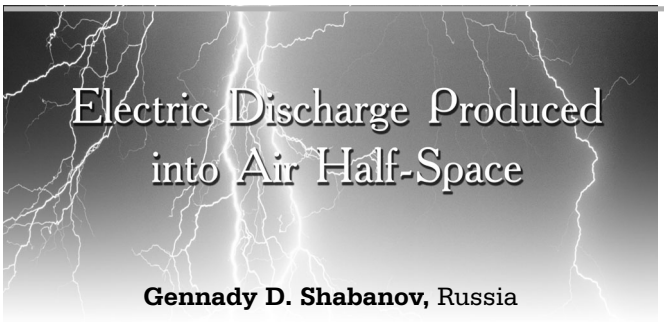

Gennady D. Shabanov, Russia

Tel. +7(271)46477
E-mail: discharge@gtn.ru

Oleg M. Zherebtsov, Russia

Tel. +7(271)46272
E-mail: omzher@mail.ru

In the article a possibility of streak lightning control by means of low intensive laser emission is observed.

During investigation of an electric discharge into air half-space [1] it was noticed that this discharge can be controlled by a low intensive laser beam. Now there is a problem of laser control of lightning discharge [2]. However, numerous works on this approach demonstrate that "the hope to get a quick solution of the problem of lightning control by laser emission has not been confirmed" [3].

Careful observation of this problem in [2] has shown ways out the situation. The authors of [2] consider plasma channel produced (by means of laser) in free atmosphere at a possible greatest height to be of doubtless interest of the science of lightning. Finally, creation of the plasma channel should be of benefit for lightning protection. The authors of [2] give notice that "there are many difficulties of fundamental and practical importance on this path".

Weak theoretical understanding of lightning generation causes pessimistic estimations of solution of the problem. The article [2] notes particularly that "there are neither adequate theory, nor numerical calculations and qualitative understanding of the phenomena defining the speed of a leader… The situation of a theory of the leader channel is little better (from quantitative point of view)…".

Realistically the following statement can refer to the lightning discharge: "The electric discharge appeared to be very "unhandy" for theoretical description but the most interesting phenomenon in the experimental aspect" [4].

Experimental Part

In this work a capacitor bank with 0.6 mF capacity, which can be fed up to ~5 kV, was used to produce impulse discharge into air half-space. A scheme of the device is presented in Fig.1. At connection/disconnection of a discharger 5 a "spout" is let out of an electrode 3. The spout carries the potential of the cathode (virtual cathode) at a significant height into air half-space. A probe placed at the height of ~15 cm fixes a potential which is similar to the potential occurring at the cathode. The researches have demonstrated that the produced formation continues to glow for several hundreds of milliseconds (the glow is fixed from a zone located at 15-45 cm above the cathode). Typical time of the discharge comes to 100±20 msec and depends on the cathode material. Electric field generated in the spout comes to less than 8 V cm^{-1}.

Ball Lightning Experiments

Information from
http://www-personal.umich.edu/~reginald/ball_l.html

Ball Lightning in the Microwave

This is a great experiment to try at home. It requires a microwave oven, a candle, a toothpick and a lighter. First you put the candle (~1-2 inches in height) in the microwave (remove glass plate from bottom so candle sits on metal). Put the toothpick in the candle sticking straight up. Light the toothpick on fire so that flames are leaping off the tip. Shut the door quickly and turn on oven full blast. There will be loud popping noises and then balls of fire will leap from the toothpick and fly around inside the microwave while making a buzzing sound like a bee. If it doesn't work at first try to move the position of the candle in order to find the "hot spot" in the oven for it to work.

Real Ball Lightning Generated by Pulsed Power Inductor

This experiment is very DANGEROUS. The author did this one a few years ago. The Idea was got from an article about a guy generating ball lightning using a high current transformer (TBA). The author had an idea of using an inductor to store large amounts of electrical energy. The conductor on the end of the stick touches the metal ring. This completes the circuit, and start the inductor. Then there was used the air compressor nozzle to blow out the arc as the wire was pulled away. The copper wire explodes and creates rapidly rotating and burning molten balls of copper. These 'Balls of Fire' exhibit many of the properties of real ball lightning.

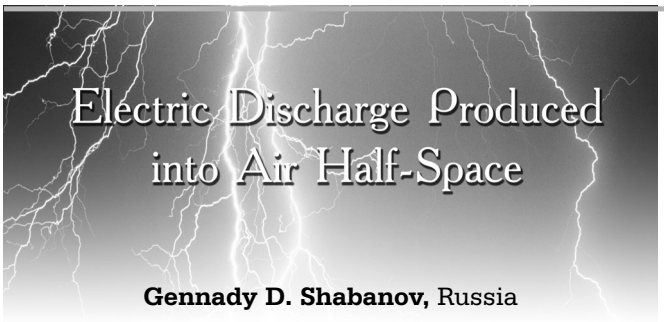

Gennady D. Shabanov, Russia

Tel. +7(271)46477
E-mail: discharge@gtn.ru

Oleg M. Zherebtsov, Russia

Tel. +7(271)46272
E-mail: omzher@mail.ru

In the article a possibility of streak lightning control by means of low intensive laser emission is observed.

During investigation of an electric discharge into air half-space [1] it was noticed that this discharge can be controlled by a low intensive laser beam. Now there is a problem of laser control of lightning discharge [2]. However, numerous works on this approach demonstrate that "the hope to get a quick solution of the problem of lightning control by laser emission has not been confirmed" [3].

Careful observation of this problem in [2] has shown ways out the situation. The authors of [2] consider plasma channel produced (by means of laser) in free atmosphere at a possible greatest height to be of doubtless interest of the science of lightning. Finally, creation of the plasma channel should be of benefit for lightning protection. The authors of [2] give notice that "there are many difficulties of fundamental and practical importance on this path".

Weak theoretical understanding of lightning generation causes pessimistic estimations of solution of the problem. The article [2] notes particularly that "there are neither adequate theory, nor numerical calculations and qualitative understanding of the phenomena defining the speed of a leader… The situation of a theory of the leader channel is little better (from quantitative point of view)…".

Realistically the following statement can refer to the lightning discharge: "The electric discharge appeared to be very "unhandy" for theoretical description but the most interesting phenomenon in the experimental aspect" [4].

Experimental Part

In this work a capacitor bank with 0.6 mF capacity, which can be fed up to ~5 kV, was used to produce impulse discharge into air half-space. A scheme of the device is presented in Fig.1. At connection/disconnection of a discharger 5 a "spout" is let out of an electrode 3. The spout carries the potential of the cathode (virtual cathode) at a significant height into air half-space. A probe placed at the height of ~15 cm fixes a potential which is similar to the potential occurring at the cathode. The researches have demonstrated that the produced formation continues to glow for several hundreds of milliseconds (the glow is fixed from a zone located at 15-45 cm above the cathode). Typical time of the discharge comes to 100±20 msec and depends on the cathode material. Electric field generated in the spout comes to less than 8 V cm^{-1}.

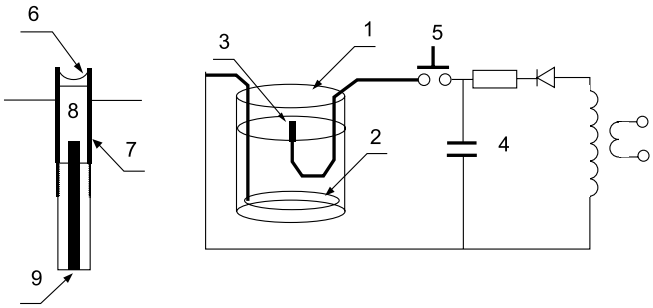

Fig 1
A scheme of a device made for producing of long-living plasmoids

1 – a polyethylene reservoir, 2 – a ring electrode, 3 – a central electrode, 4 – a capacitor bank of 0.6 mF capacity, 5 – a discharger, 6 –water or aqueous suspension drop, 7 – a quartz pipe, 8 – a carbonic or metal electrode, 9 – a copper bar.

The spout was acted by weak laser emission of less than 1 mW at 22-centimeter height. The laser beam was directed perpendicular to the discharge axis, the spout achieving the laser beam moved along the beam towards the laser.

In Fig.2 the spout has moved ~8.5 cm along the laser beam, and a usual sphere formation was generated. Due to the horizontal motion it was distorted if to be compared with usual sphere formation. The usual sphere formation is represented in Fig.3 (also see the cover).

Fig. 2
Motion of the leader channel (spout) along the laser accompanied with the sphere formation

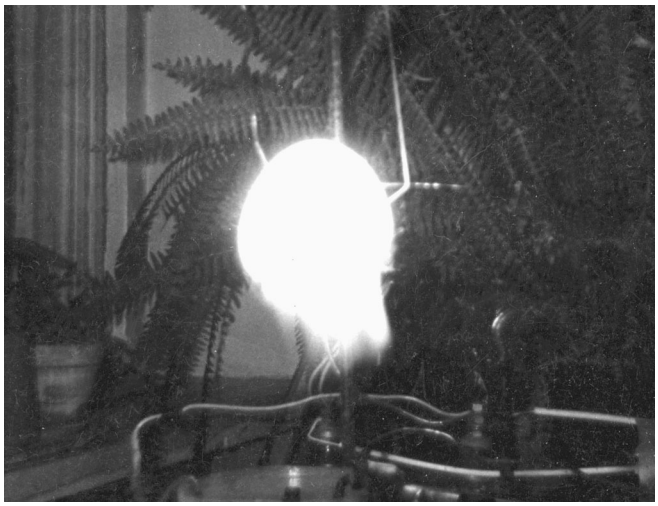

Fig.3
The standard ball formation

Discussion

As it is evenly mentioned in [5], results of model experiments are difficult to be applied directly to laser control of lightning because in short intervals characteristics of the discharge differ from characteristics of lightning discharges. Actually, at comparing considered current and the field existing in a lightning (i~100 A, ~3 V cm^{-1}) with these phenomena occurring in a laboratory spark (~1 A, ~300 V cm^{-1}) incorrectness of modeling of this process becomes obvious. From the other hand the authors of [2] note that "the leader channel is like a channel of electric arc… At current strength of ~100 A plasma of the channel of the arc is supported by fields the densities of which come to several volts by a centimeter. The lightning has such leader currents".

Even an air arc of atmosphere pressure has a field of about 100 V cm^{-1} at currents of about 1 A. The generated discharges (spout) accompanied by the field of less than 8 V cm^{-1} (maximal current appearing in the discharge gap is 50-60 A) are more appropriate for modeling the leader channel of the streak lightning than typical discharges used for investigation of these processes, for example, like [6].

At first approximation the leader channel is considered as an ideal conductor in the article [2]. We make research to define the field in the discharge (spout) more exactly. The article [2] makes the following consideration about a cause of occasional generation of new leader heads: "the surface of *equipotential* plasma conductor (channel) *has* a property of *instability*. There is an occasionally generated sharp jut. An intensified field appears at the jut along the edge. Under the influence of the field the jut becomes to grow in any direction including at the significant angle to the weak outer field". The aforesaid seems to explain why our leader channel changes its direction and runs at right angle to its initial motion. (Fig.2). Weak harmonic action of the laser beam to the leader channel causes generation of a new head which continues motion "on the significant angle".

The effect of plasma motion towards a light beam is a demonstration of a general tendency of propagation of the discharges to an incident electromagnetic field [7]. "Area occupied by plasma usually increases towards the laser emission" [8]. Leading character of motion of this formation is confirmed in [9] as well as the interaction with the laser beam is confirmed in [10]. It should be taken into account that in the works [9-10] experiments were performed at devices which generated such a discharge. However, that discharge was by 2 orders weaker than the discharge generated by the device represented in this work. Naturally, the results were less defined. Comparison of the discharges is presented in [11].

According to our data, the leader channel (spout) has a very abrupt bound (less than 1 mm). In this layer the field can come to ~30 kV cm^{-1} (at height of 15 cm).

Conclusions

Due to the assumption [2] about *instability* of the surface of the *equipotential* leader channel there has been successfully performed the "control" action on an electric discharge which models a streak lightning. It has been achieved by means of weak harmonic oscillations made by the laser. This mechanism is supposed to be applied for streak lightning control.

References

1. G. D. Shabanov. Optical properties of glowing formations // Letters in the Magazine of Technical Physics. 2002, V.28, I.4, P. 81-86;
2. E. M. Bazelyan, Yu. P. Rizer. Mechanism of attraction of lightning and problem of lightning laser control (Nowadays Physics) // the UPS. 2000. V. 170, #7, P.753-769;
3. A.D. Starikov, Yu. A. Rezunkov. Lightning discharge control by laser emission. // the Optic Magazine. 1999, V. 66, #3, P. 15-16;
4. B. E. Meyerovich on the path to realization of electromagnetic collapse // the UPS. 1986. V. 149, #2, P.221-257;
5. Miki Megumu, Uada Acushi, Shindo Takatoshi. Characteristics of laser controlled discharges occurring in long air gaps // the Optic Magazine, 1999, V. 66, #3, P. 25-29;
6. P. Rembo, J. Biggert, V. Kubechek, J. Schwartz, A. Berstein, J. Dilet, R. Bernstein, K. Shtalkopff. Laboratory investigations of lightning discharge initiated by laser // the Optic Magazine, 1999, V. 66, #3, P. 30-35;
7. Yu. P. Rizer Laser spark and distribution of discharges. Moscow: Science (Nauka), 1974. P.308
8. A. A Mak, N. A. Solovyev. Introduction into physics of high temperature laser plasma. Leningrad: Publishing House of Leningrad University. 1991. P. 152;
9. S. E. Yemelin, A. L. Priozersky, V.S. Semenov, G. E. Skvortsov Characteristics of dynamic state propagation in stream of capillary discharge. // Letters in the Magazine of Technical Physics. 1997, V.23, I.19, P. 54-59;
10. R. F. Avramenko, A. Yu. Gridin, A. I. Klimov, V. I. Nikolaeva. Experimental investigation of power-consuming compact plasma formations. // Collected articles Ball lightning in laboratory. Moscow: Chemistry. 1994;
11. G. D. Shabanov, O. M. Zherebtsov, Experimental modeling of ball lightning analogue. // Theses of 10th Russian conference on ball lightning. Moscow (Dagomys). 2002. P. 17-20.

New Energy Technologies

PRINT EDITION ADVERTIZING RATES

Full Page Ad

B/W - $400

Color - $800

Half Page Ad

B/W - $200

Color - $400

Quarter Page Ad

B/W -$100

Color- $200

New Energy Technologies is distributed in the leading Scientific Laboratories in Russia and has subscribers in more than 20 countries all over the world

To advertise contact us:
Faraday Labs Ltd, Phone/fax: 7-812-380-3844
http://www.faraday.ru, office@faraday.ru

Free Energy

Alexander V. Frolov, Russia
Faraday Laboratories Ltd
http://www.faraday.ru, tel/fax 7-812-3803844

In general the conception was formulated in 1995 and today we can say that the concept of physical vacuum, which is a new source of energy, finds more and more supporters. The fundamental works about nature of "zero point energy" are published, for example, Andrew D. Sakharov [1], Hal T. Puthoff [2] and many other interesting works. It is clear now that space or "physical vacuum" has its internal structure, therefore it can be used as a new source of energy if we organize the process of changing of this structure. Moreover, according to some theories, the existence of reality (i.e. the World of some certain parameters of space and time) is defined by the function of probability of energy density. For example, Dr. Nassikas, Greece [3], proves that it is not possible to consider the space without its energy, and there is no space without energy. The internal structure of reality is coexistence of two forms: gravitational energy and electromagnetic energy. Any local increase of the first one should produce decrease of the second one, so the sum amount of the change is zero.

In some other articles about energy transformation processes (gravitational form of energy into electromagnetic heat radiation of mass, for example) we can find that both increase of entropy and the inverse processes (decrease of entropy) are possible and in this case the electromagnetic energy can be converted into the gravitational form, that is shown in details in the works of Nobel laureate I. Prigozhin, Order and Haos. Man's new dialog with Nature, London, 1984. Since **the direction of time** (the time course) **and direction of the entropy change** (increase or decrease) are related notions then free energy technologies are considered by Kozyrev as methods of practical application of natural time course [4] that is presented in aether-dynamics by Frolov as aether flow of some density and this aether density determines the time rate as hardness of cause-effect connections for any process, and also for the process of existence of matter in space-time of this aether density.

According to this theory, in any point of space it is possible to get power by means of energy transformations without any consumption of mass-fuel. We can say also that in this case some change of the energy density of space should be detected.

Let's clarify some determinations:

1. The Potential (lat. Potentia that means "force"). In physics this is scalar parameter, it's gradient expresses the intensity of field of a certain force. In common sense, the potential is possibilities, which exist for execution of some task, for completion of some work.
2. The Work is a quantitative parameter of energy transformations. The transformation means here change of form.
3. The Energy (Greek "Energie" means "action, activity") is a quantitative characteristic for different forms of motion.
4. The Power is amount of work per unit of time.

According to the given determinations by The Soviet Encyclopedic Dictionary, edition of 1988, Moscow, **the fact of presence of potential (scalar) field, for example, electrical or gravitational filed, is real possibility to produce some work if we can organize change of energy forms. Let's note that power source is not required to keep the potential field in force. It is free.**

...the potential (scalar) field can produce real work!

The example of this work, which is produced by the field: body falls in gravitational field and when it strikes on the ground then some part of its potential energy is transformed to heat, that is the work as transformation of energy forms. So, there is a conclusion: the potential (scalar) field can produce real work! But we have considered only a half of cycle and in classical case in the second half of the cycle it will be necessary to produce the same work against the field to raise the body to the initial point.

Let's formulate the task to produce the work periodically and to get the power in load from this process. Usual mistake is to accept the particular case (the same body returns back in the same field) as a single possible case. But in special case changes of the system are possible, for example, the field intensity is not a constant but some variable value (alternating or pulsing), or the body changes its own parameters. In this case in each of half-cycle of the process the field can produce real positive work to accelerate the body.

The main technological solutions are obvious: **it is necessary to create gradient of field in space** (full or partial screening of trajectory of the body, which is moving in the field) **or gradient of field in time** (pulsing mode of field). This is quite easy for electric and magnetic fields, but for system, which uses gravitational field to produce the work, we can assume changes of parameters of the body only.

It is possible to understand why professional physicists dislike the question about possibility to use scalar (potential) fields to produce useful work in a load since they think about The Law of Energy Conservation. To find mutual understanding it is necessary "to upgrade" this Law for 4-dimentsional case of real physical system. It is necessary to introduce **the notion of the structure of space-time** where the considered process is created. In other words, for real practical engineering tasks it is necessary to consider **space-time of the real process** but not an abstract space-time. Usually the energy density of technical processes is small in comparison with natural energy density of space (aether density), which is a result of real astrophysical processes, i.e. motion of planet, star, galaxy. If we discover structure of this real rhythm of the space-time of our planet then we'll be able to design it in our technical devices to use aether-dynamics as theoretical basis.

So, in orthodox physics there is the unchallengeable formulation: the work of potential field on closed trajectory of motion is equal to zero. Yes, it is right for only case: if one part of work is positive (the acceleration) and another part is negative (the deceleration). But one part of the trajectory or a part of periodic process with the negative work can be excluded by different methods: by means of spatial superposition, pulsing mode and change of interaction polarity or by the screening of electromagnetic interaction.

For example, minor changes in vacuum tube design (the grid is located under cathode) allows increasing the kinetic energy of electrons and to increase emission current by means of the potential on the grid only. Also vector potential of magnetic field or gravitational potential can be used by similar way.

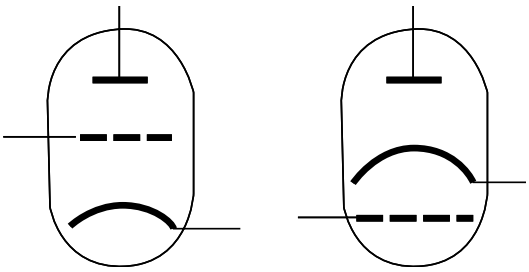

Fig. 1

Besides this way it is possible to use pulsed mode and switch-off the primary energy source before the emission electrons will reach the anode, Fig.2. In this case there is not the conductivity current between anode and cathode and the primary source is not discharging during its work.

Therefore, it is not a news that potential field can produce real work. In any textbook there are examples of positive and negative half-cycles that result to zero net work. But for the case of consequent execution of two processes the parameters of one of the processes can be changed, that **the work, which is produced on the closed trajectory can be formed as two or more parts of positive work.** Important aspect is following: it is necessary to determine the point (moment) of change the sign of the interaction and at that point (moment) to change the parameters of the process accordingly.

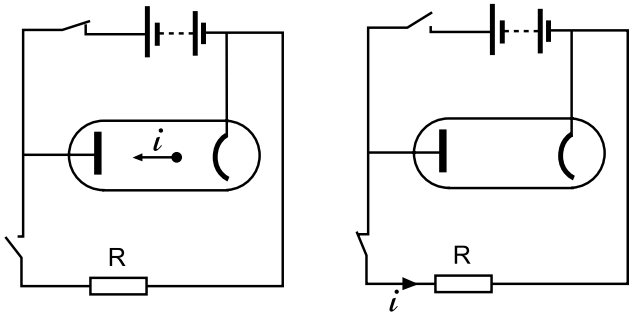

Fig. 2

The good sense requires the answer: what is the source of the power to produce this work if this proposed concept is right? Let's notice that before the considered examples, the existence **of power interactions of potential fields** must make the same question. For example, how the ordinary permanent magnet (i.e. its vector potential) holds a piece of metal making work against force of gravity without any fuel? How the potential field can move and accelerate ions, i.e. kinetic energy of ions can be increased without any fuel? What provides the forces of elasticity? Let's try to find answers from consideration of inner structure of electric and magnetic field, especially let's develop **our understanding of the notion of gradient, which describe properties of space-time design in area of this field.**

The concept of potential as bi-directional flow of photons and anti-photons was proposed by English mathematician E. Whittaker, and then it was developed by Dr. Thomas E. Bearden [5]. In this concept, the generalization of the Third Newton's law looks as the requirement of complementary pair to the process of the electromagnetic radiation. Since "process" means a change of information in time, this paired anti-process is reversed in time. Of course, it is development of process to its own future, but from our point of view, it goes from future to past. According to generalized Third Newton's law the radiation of photon is paired with anti-photon. In this case, the internal space-time structure of electric potential field is formed by two contrary flows of energy: photons spread from charge source and the anti-photons "inflow" into the charged mass. Let's notice that this concept defines the relationship of charge and mass. The charge without mass does not have any sense.

The flow of energy outgoing from charged mass is responsible for all phenomena of radiation. Incoming flow of energy is responsible for the gravitational interaction. Therefore, the notions "radiation" and

"gravitation" can be considered as complementary pair; that is considered in details in concept of Josef Hasslberger [6].

...it is impossible to get "something" from "nothing"

There is a quite correct question: since "something" can not be created from "nothing" then what and where will be changing if we create the process of free power dissipations in local area of our space-time by means of asymmetrical potential interaction?

Let's try to present a "process" as some change of "information" in time and from this point we'll get the conclusion about results of this energy disbalance of the natural internal structure of potential field: in this case the entropy process in direct time (heat dissipation in load) should be balanced with equal anti-entropy process in reversed time. In other words, the disbalance is change of the space-time curvature and changes in the time rate.

So, it is impossible to get "something" from "nothing" but if we have understanding of the balance (process in time and anti-process in reversed time) then in the Universe the 4-dimentsional balance is not violated. It is assumed here that it is impossible to create one process but it is possible to create two opposite balanced processes, and each of them produce real work in the load. In astrophysical consideration it was stated in 1964 by Academician Gustav Naan, Estonia, Tartu. He wrote [7]:

"In our real world we could extract any amount of energy from vacuum if some technology provides at the same time the extracting of the same amount of energy for anti-world. Total sum value of energy is equal to zero."

Let's note also that similar conception of "dynamical zero" was applied in ancient India mathematics, i.e. "zero" is not "nothing" but it is hidden possibilities (balance of forces).

One more interesting question appears: what is about reality of the particle of matter after we have claimed that its mass-parameters are parameters of certain process? With this idea the material world as a whole is certain process and "stability" is not a property of some object but a parameter of its existence, which is a process in space-time of some certain energy density and some certain structure. By analogy the vortex in liquid is a process but it is not a liquid.

Thereafter, as electron was presented by Shredinger as wave packet and by Whittaker as function of two scalar potentials, the old idea of instability or **dynamic structure of matter** has the possibility of experimental testing and development as a teleportation technology. This idea is technology of space-time engineering, i.e. creation of the space-time with some certain parameters where curvature (or rate of time) determined rate of existence of the matter in space. It is related with some energy density, which can be increased or decreased. Since by this way it is possible to consider any material particle of substance as certain process, which is balanced by corresponding time-reversed process, so there is no theoretical difficulties to develop technologies of chemical transmutation, materialization, dematerialization, teleportation etc.

So, the using of potential energy to create a process of dissipation of power in load does not violates the Law of Conservation, and this Law can be generalized: the total energy of four dimensional system is amount of energy of processes in time and energy of processes in reversed time, it is constant and it is equal to zero.

Now let's try to review some free energy projects (the systems to produce work without consumption of fuel). Russian Peter the Great had intention to visit Germany in 1725 to test the Orferius' device. There is a very old description of "perpetually rotating wheel", which was made in India by inventor Bhaskar in 1150! From that times the mind of inventors is developed to other modern systems but due to the efforts of scientific groups, which are interested to keep in force the ideas of primitive materialism, the great idea of free energy transformation is distorted to such extent that any person, who began to speak about free energy, had a chance to get the name of "mad". Why? The reason is common understanding of the "power", which is "some work per unit of time" and generally it can be presented only as result of some transformation of matter structure, i.e. disintegration, chemical reaction, nuclear decay, nuclear synthesis or any change of structure of a matter. In any case, a material (the firewood, oil products or nuclear fuel) is considered as the fuel, regardless of its transformation method.

Some concepts did not consider the fields (electromagnetic, gravitational and others) as a kind of matter. So hypotheses, and even successful experiments on transformation of "non-material" type of energy in energy of material object (into the work) were not taken into consideration. The physics is a study about measurable and tangible quantities. New measurement methods let us work with a new physical phenomenon. So, we can see that **real situation in alternative energy is changing due to experimenters efforts** but not from the great theoretical team.

Some time ago the electric energy was not considered as a material object, but gradually people have been able to refuse the gas pipes, which were real material source of power for the gas light lamp, in favor of electric wires for electrical illumination. In a short time, I think, it will be possible to refuse the wires and we'll

consider the aether (physical vacuum) as unlimited energy source if we organize **the process of transformation of space-time parameters.** It will be necessary to drop the old conception of "primary source of power", which should be connected with the consumer by some method and to develop conception of free energy source in any place "on-demand".

Let's consider, what the term "free energy" means today. The energy in general sense means the "ability of body to produce some work". The energy of closed system is constant. Certain device can look like "perpetual mobile", but nobody will be shocked because the way of energy "inflow" is known. For example, solar panel battery is obtaining its power from external source of light. But in general case, 3-dimensional observer can see nothing similar to the inflow of energy into the system if multi-dimensional energy balance is not analyzed. In other words, "perpetual mobile" is a right name since for its description it is necessary to use notions of "Time", "Eternity", "Causality" and other categories, which are more related with philosophy and religion but not with modern physics.

The "perpetual mobile idea" is really value to be the purpose of serious scientific work. In the book "Great experiments in physics" published by "World", 1973, Professor G. Lipson wrote: "Joule was the person of a very practical kind of mind and he was enthusiast of the perpetual mobile idea". I hope that it is not necessary to explain here who was Joule. However, "practicality" of free energy generators is obvious only for energy customers, but not for energy producers, who created the centralized system of energy distribution. This is the main reason of absence of alternative fuel-less energy systems in the modern market.

Let's consider the existing classification of "perpetual mobiles":

1. "Perpetual mobile" of the first kind is a design, which can "create energy". It is disputable aspect and all patent offices refuse to consider the patent claim of such type. They answer that "energy can not be created or destroyed" but energy can be transformed from one type into another type.

2. "Perpetual mobile" of the second kind is the collector of environmental heat. It is not a "thermo-pair" which uses temperature difference to produce electricity, but it is the "heat pump". This type of devices works with negative entropy, or more exactly, with sintropy. The terminology still is not defined but we can say that in entropy systems the produced work is equivalent to the dissipated heat and the work, which is produced by sintropy systems is equivalent to some absorbed environment heat.

3. The "perpetual mobile" of the third kind is a demonstration of perpetual motion without friction. The analogue is electric current in superconductors. Development of this idea is creation of systems with negative friction. In electromagnetic systems it corresponds to the known cases of the "negative conductivity", i.e. some electrical circuits in this mode can generate output power.

Additionally, let's show that "creation of energy" is possible in theory, for example: two processes of equal power compensate each other $A + B = 0$. Let's assume that some technology creates another (inverse) process as: $0 = A + B$ i.e. two processes of some power in sum create zero result. In general principle, also there is possibility to use many processes balanced situation as $A + B + C + \ldots = 0$ and this interesting conception is known as theory of multipolarity.

Let's consider some quite real (to my mind) examples from the history of development of free energy technologies. Nikola Tesla's investigations are not well known to modern scientists and engineers. In his works on development of wire-less telecommunication Tesla used flat spiral coils as a secondary winding of transformer. The magnetic field of such coil is radial and it is placed in the plane of the coil. In 1995 the author of this article experimented with similar flat spiral coils. I have to claim that when such coil is operating as secondary winding and the solenoid is the primary winding of the transformer then we can measure asymmetrical mutual induction, i.e. connection of active load (lamp) to output circuit of the transformer is free from input power in the primary winding. It is the simplest example of technical realization of the asymmetrical cause-effect connection, described by Kozyrev in his theory of active properties of time.

... "creation of energy" is possible in theory...

Another Tesla's invention is his resonance transformer. Modern electrical engineering describes transformer with forced electrical oscillations and radio engineering considers operation of resonance systems mainly. Tesla put the question on transformation of power in resonance transformer and by this way the efficiency can be more than 100%. With high frequency currents and high power level Tesla used single-wire terminals as loads, i.e. the lamps and other single-wire receivers of power (motors) were powered from high frequency changing electric field. Such single-wire terminal does not consume any power from primary source because it uses the change of potential in point of connection to conductor (let's note also that for maximum efficiency this point of connection should be one of the maximums of standing wave).

The notion about "free vibrations" belongs to Tesla and this term describes sinusoidal oscillations in electric circuit that is created after short non-sinusoidal impulse due to real vibrations of the free electrons. Resonance mode of the free vibrations can be the real way to excess power output.

Original Tesla's approach to electrodynamics allowed him to build in 1934 fuel-less car with electromotor, which was powered from some 12 vacuum tubes generator of unknown design.

The standing waves of electric field that were observed by Tesla during thunderstorm brought him to conclusion about possibility of the system to power remote energy consumers from energy generator without any transmission lines and without radiation methods. He assumed that it is necessary to create special standing wave of electric potential (or variable in time electric potential field) around the generator, then the unlimited number of loads (lamps, motors) in area of this potential field can be powered if they are tuned in resonance with oscillations of the generator. Let's notice that in each receiver the power can't be more than power of this generator but it is possible to install many independent "receivers" without mutual interference.

The modern investigations on these problems sound as sensation, because Tesla's works are unknown for the modern generation of scientists. Of course, modern electronics components and the tools facilities allow to create real "miracles" in comparison with the past age experiments. For example, engineer Avramenko described his work on single-wire power transmission in Journal of Russian Physical Ideas, 1991, No.2, and in journal "Inventor and rationalizator" 1992, No. 5, 6. The light bulb (or ventilator) was used as load of the single-wire power transmission line. This line can be made of high resistance material, for example, tungsten, but the power can be transmitted without heating of wire! It is possible to say that in this experiment a wire does not transmit power from the generator to the load, but the wire is the conductor of information signal, which is created by polarizational current opened and described by M. Faraday.

It is not difficult to repeat the experiments with single-wire line: it is necessary to place two diodes on the end of a line, which is connected to secondary windings of high voltage transformer (I used television set high voltage unit) by such a way that different poles of the diodes are connected to the line, Fig.3.

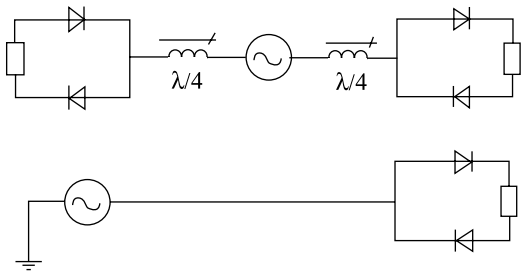

Fig.3

Two other poles of diodes create the source of potential difference (voltage), from what it is possible to charge the capacitor or to power the load (luminescent bulb). This diodes scheme is named as "Avramenko's diodes plug". In my experiments it was determined that high efficiency mode is resonance mode in real line and in this case the maximum change of potential is created in the point of connection of the "Avramenko's diodes plug". There is well known formulas to calculate this resonance as quarter-wave antenna vibrator system. Of course, high frequency and high potential allow creating high power in the load. In 2001-2003 New Energy Technologies magazine have published new experimental results on single-wire power transmission reported by research team from Moscow (Prof. Strebkov, Avramenko, Nekrasov and others). For example, they built and tested lines from 20 to 100 Kwtt power level!

... the electric potential field can create non-compensated force in the system and to produce a work without any power input.

One more well known researcher on the subject of free energy was Thomas Townsend Brown. He considered creation of reactionless propulsion force by means of electric forces only. Ionization is not considered here! According to his works, the electric potential field can create non-compensated force in the system and to produce a work without any power input. English patent by T. T. Brown #300,311 of August 15, 1927 describes the method to create propulsion force and power from electric energy source only. In this first patent it was claimed that in ordinary flat electric capacitor (two flat plates and dielectric between them), which is charged up to 50 kilovolts and more, Brown discovered propulsion force. This force moves the capacitor to positively charged plate direction. It is only one of his ideas and in his other patents of 1930 - 1965 Brown has described many new methods to create propulsion force and free power in load by means of electric field only (scalar potential field as a source!).

... the efficiency of "electric system can be million to one"

We have to exclude ideas on electrokinetic apparatus since it is just a reactive method and propulsion force is result of ionization flow. Especial case is Brown's **idea to create the asymmetry of electrostatic forces** by means of some special form of surface, USA patent #3187206 of June 1, 1965, application of May 9, 1956 (Fig 4).

The schemes and descriptions by the Brown's patents are undoubtedly the work of great practical value. As was mentioned by Brown, the efficiency of "electric system can be million to one" because the potential field can produce real work, for example, rotate some electro generator, but it does not change the primary source of field.

In 1927 T. Brown demonstrated the devices in Ohio, later he worked in France. His works in France were

stopped and he returned in the USA. Detailed information on his works can be received from descriptions of patents http://www.soteria.com/brown and from the book “Electrograviticis Systems” by Thomas Valone, Integrity Research Institute, USA.

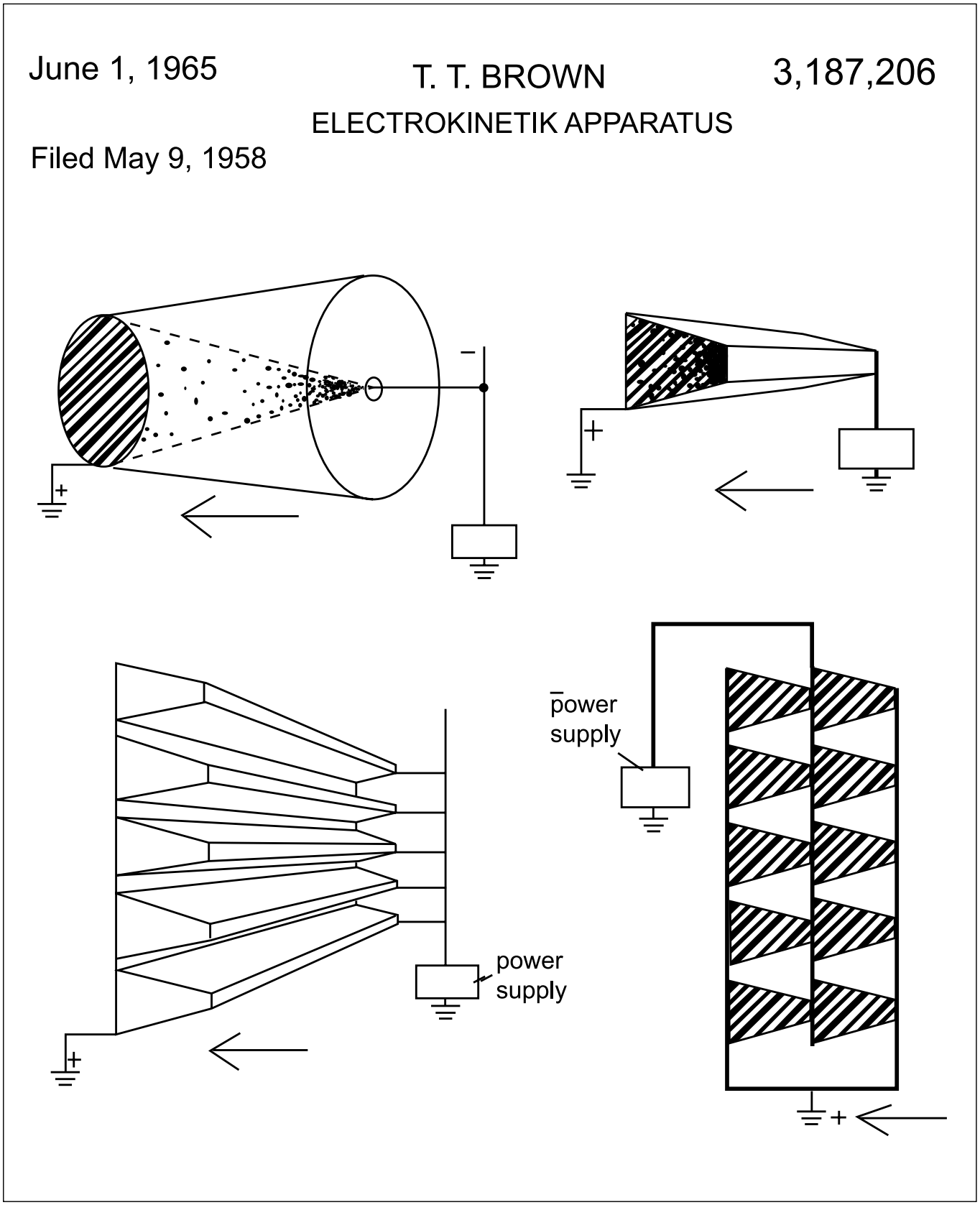

Fig. 4

Electrokinetic apparatus by T.T. Brown

Besides, there is the simplest example of creation of real work by means of potential field that is also resulting from the Brown's works. Usually two plates of electric capacitor are equal to each other. However, if one of the plates is small and another one is large then the electric field between them is not isotropy field and in this case there is some **gradient of intensity of the field**. In such field any dielectrical object, for example a ball, will be polarized unevenly and due to this fact some force should make it to be moving aside, where the field has the greater intensity. I have to note for mathematicians that since the intensity is "gradient of potential" then gradient of intensity is the **gradient of the gradient**, i.e. it is the second derivative of potential. This idea is an example of the well-known rule: the change gives the new quality.

The example of creation of the propulsion force by means of potential field is also connected with "perpetuum mobile" task, since conductivity currents in the capacitor are very small and it almost does not require power consumption (after being charged once time) and the system can produce mechanical work permanently, in this case it is the work against the gravity force. In general case, if the design allows asymmetrical energy transformations, then the surplus output power and reactionless propulsion force can be created in this system.

Most likely future aerospace systems, which are based on the electrogravity, are the most perspective direction of free energy technologies. Why not for the power engineering? It is clear that now there are some existing fuel heating systems, heat stations and power industry to provide by some traditional way all current needs of the society and due to this fact the innovation of any free energy technology is related with hard competition. However, for commercial programs for cosmos the reactive rockets principles are not acceptable more. Each satellite during its operation should produce profit to compensate large expenses for the rocket-carrier. Only fuel-less propulsion systems can allow developing space commercial programs that are new infinite market. Let's note that the gravitational (reactionless propulsion) technologies are not related with cosmodrome and their cost can be quite acceptable to realize the project with private funds.

... future aerospace systems, which are based on the electrogravity, are the most perspective direction of free energy technologies.

There are some known examples of free energy systems.

In 1921 The Seattle Times, as well as Denver Post of August 8, 1921 published the articles about inventions of Alfred Earl Hubbard. His device included the central core with coil and eight remote coils placed around the central core. After primary impulse, the impulses in all coils were powered and rotating magnetic field was created in central coil. The power produced in the central coil was quite sufficient for self-excitation of the system and for producing of useful work in the load (motor). The boat and the car with electromotor, which was powered from the Hubbard's generator, were demonstrated.

In 1928, Lester Hendershot invented the electric generator of 300-Watts power. This device was designed of details used in radio-receiver to get oscillator (500 kilohertz) and non-inductive coil. Later, in 1970, William Cooper experimented with non-inductive bifilar coils. He used induction phenomenon in the case of zero magnetic component (two-wire winding or flat spire coil).

The Cooper's USA patent 3610971 of 1971 describes **the principle and the device to create power in secondary circuit without reaction on primary circuit**, as well as method to get reactionless propulsion force for aerospace application. Cooper also has found that specially designed coils can produce the field, which can not be screened and this field has some common parameters with the gravitational field.

The gravitation is considered by Cooper as a polarization of atoms in gravity field of planet. So he declares in description of his patent: "the electronic generator... of super high frequency creating the pulsing electric field of single polarity... acting in opposite direction to the Earth gravitational field... that to depolarized the atoms and to release them from the gravitation".

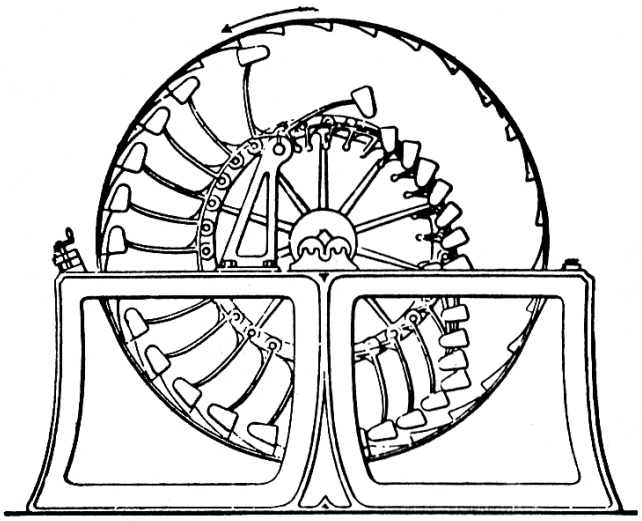

Fig.5

By the way, the gravitational field itself can be used to get a power. "Unbalanced wheel" is a well known design. The weights on the one side of the wheel, which is rotating in vertical plane, can be organized to be moving to axis, but on the another side the same weights can be organized to be shifted from the axis to the periphery of the wheel. By this way there is some

constant shifted center of gravity in the system and it can be permanently rotating system. One of the inventors who built such wheel is Hugo R. Fraga, Havana, Cuba (The Perpetual Motion Mystery. R.A. Ford, Lindsay Publications Inc., Bradley, IL 60915, USA, 1987, see Fig. 5).

The earliest information about such systems is dated of 1150 and the name of inventor is Bhaskar, India. He used the tangential disposed pipes, which were half-filled with water. In France (1235-1240) William de Onnecure demonstrated self-rotation wheel with seven weights. In Italy (1438) Mariano de Jacopo has built the system made of eight bars disposed in the plane of rotation, and the bar can be fold up in the middle like elbow joint to provide rotation. One of the well-known and documented events of real demonstration of perpetual rotation wheel was mentioned in 1620. Edward Somerset (Second Marquis of Worcester), author of the book "Century of Inventions", 1963, has built and tested the wheel of about 4 meters in diameter, 14 weights of 25 kilograms each. The test of this machine was organized in London, in witness of King Karl, Grand Duke Hamilton and Grand Duke Richmond, and there are files in royal archives about this test. The descriptions of these and other systems are published in the book "Perpetual mobiles: past and present time" by Brodiansky, Moscow, Energoatomisdat, 1989.

Fig.6

In different idea, which is known from Leonardo Da Vinchi drawings, lifting of water is produced by the helical "Archimedes' screw" of small diameter with large centrifugal acceleration, which reduces weight, but lowering of water was organized with the screw of other (large) diameter, so the force of weight is working to rotate this screw by the weight of the falling water. The paradox of these systems will be removed if to consider them as systems of variable topology, as it was done at the beginning of the present article. Practically, the **cycle is separated here into two processes** (the lifting and falling of mass) in the system with different parameters (the topology) for the first stage and the second stage of the cycle, but herewith **it is necessary to consider two different physical systems, not one and the same.** In that case, the classical theory can explain the work created by potential gravitational field of our planet as energy exchange between two different systems.

Other well known topic is research projects by John Searle, i.e. the "Searle's disks" (Fig. 6). It is necessary to note that the inventor mentioned in his articles anti-gravitational effect and free energy output also. The address is: John Searle, 13 Blackburn Lower Strand, Graham Park Estate, London MW9 5 NG, United Kingdom.

In several words we can say that rotor makes free electrons to be displaced to the peripheries of the system. With sufficient velocity it was mentioned that there is phosphorescence and ionization around the disk. It is possible to assume that main effect is based on well known Lorenz forces and understanding of the Poynting vector, which is circulating in this system. The ionization currents are closed through the space from periphery to the center, and self-rotation of the disk is provided by the classical Lorenz force, since the current interacts with magnetic field of the rollers.

In Russian experiments of 1992 Roshin and Godin built similar system of 7KWtt power output and they claimed that 100 kg axial force and areas of decreased temperature in environmental also were detected. Fig.7 demonstrates main parts of the system by Godin and Roshin.

It is necessary to note that similar anti-gravitational effects appearing for the case of over-unity operation were observed by different inventors independently. For example, in 1990 Floyd Sweet demonstrated his invention named as "vacuum triode amplifier" VTA. The barium magnets were pre-conditioned by special method to be used in special "trigger mode". This "bi-stable condition of magnet" provides possibility of transition from one direction of field to another direction due to the weak control signal, which was provided from external generator. It is known that if the material was pre-conditioned by the magnetic switching of 60 Hz frequency then its control signal must have the same 60 Hz frequency. A part of output power was closed to provide feedback and additionally some power can be used in output coil for the load. Tom Bearden studied the scheme of vacuum triode amplifier and confirmed that it demonstrates the work with negative energy. It means that the work in the load is connected with use of negative time. In this negative time, according to Bearden, the gravity is repulsing force. The experiments on VTA demonstrated that VTA decreased its weight according to level of the power, which is extracted from vacuum. Additionally we can

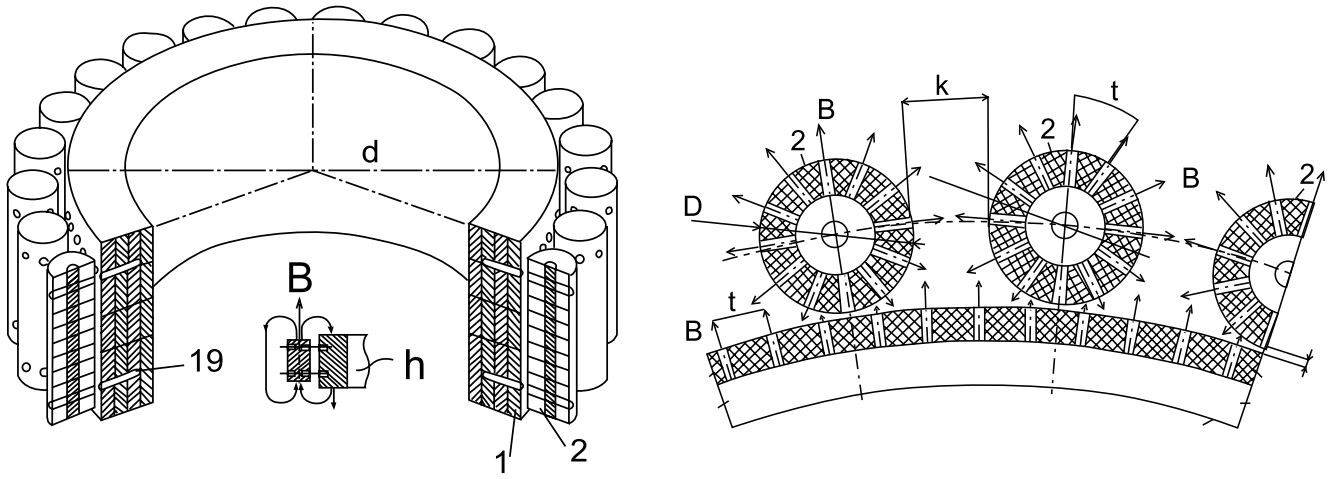

Fig.7

say that permanent magnets and coils of VTA were self-cooling during operation and the temperature difference was about 20 degrees in contrast with the environmental temperature.

One of VTA schemes includes two sets of magnets 4 x 6 x 1 inch, placed on two walls of frame. The attraction is created between them. Output and controlling coils are located between them. The axes of output coils are parallel to the magnetic field lines, but the axis of control coils are placed under 90 degrees angle. The secret of system is the "conditioning process", which "brings the magnets to the special condition". It is necessary to create great number of micro-cracks in the magnet due to re-orientations of magnetic domains. In such "half-magnet" the domains get the ability to be orientated in the same direction in a weak "control" magnetic field. In fact, they are not domains but large parts of magnet's material, separated by micro-cracks, that is to say acoustic domains. Many researchers repeat Floyd's works. Let's note that arc discharge of alternating current through magnet barium ceramics directly can provide the best results of the "conditioning" process. The coil of "conditioning" is not necessary in this case. The frequency of alternating current must be corresponded to the frequency of the control signal. Thereby, Sweet was creating **the bi-stable solid-state condition of magnetic substance.** The acoustic resonance is the reason of oscillations with the frequency according to the control weak magnetic field. Floyd Sweet died on July 5, 1995 at age of 83 years old. It is known, that his widow sent the archives to some great Automobile Corporation.

... the extraction of space energy is result of transformation of vacuum energy but from the other hand the energy density in this case determines so called "time rate"

It is interesting to note again that the magnets of VTA demonstrated self-cooling during operation, up to 20 degrees difference in comparison with the environmental temperature. It is one more example of relation between notion "density of time" and "energy". We can say that the extraction of space energy is result of transformation of vacuum energy but from the other hand the energy density in this case determines so called "time rate".

Kozyrev's articles [4] on causal mechanics theory and experiments describe possibility to use "time course for producing of useful work". Kozyrev introduced notion "density of time" and he demonstrated experimentally several methods how to change the density of time, which depends on irreversible processes intensity. Powerful "generator" of such processes is biosphere of our plane and it creates **season and daily changes of the density of time**. It is known that VTA power output also was variable in different time of day and night. It can be explained by Kozyrev. Next step in logical development of this idea is **to change notions from the "density of time" to "density of aether"** [10].

Relation between magnet phenomena and aether circulations was known from the beginning of the electrodynamics and now we can assume that VTA was real example of asymmetrical cause-effect connection, where the hardness of this connection depends on the density of aether. In this case the season and daily variation of the aether density are reason of VTA output power variations. So, we can make a conclusion: conception of **asymmetrical cause-effect connections** should be used as theoretical basis of all over-unity systems.

Generation of extra power in nonlinear materials (ferrites and dielectrics) was considered by Nikolay E. Zayev, Journal of Russian Physical Ideas, #1, 1991. Discovery was claimed as "Cooling of some dielectrics by changing electric field with generation of energy", Russia discovery #32-OT-10159, November 14, 1979; the inventions were also claimed as "Method of transformation of heat energy of dielectrics into electric

energy", Russian patent claim #3601725/07 (084905), of June 4, 1983 and "Method of transformation of heat energy of ferrites into electric energy", Russian patent claim #3601726/25 (084904), of April 3, 1983. This theory is not about some transformation of space-time structure but in any case the practical application of conversion of environmental heat is very important because this work is real basis of free energy systems.

In one of Zaev's articles, which were published in Journal of Russian Physical Ideas, he quoted from K. Zialkovsky: "If the heat can be transmitted from cold body to hot body, then it must have enormous importance, and not only philosophical or scientific, but also practical importance. The Clausius postulate is not confirmed in this case. The gravitational force, as well as other reasons (number of the reasons is unknown) break this postulate... heat can be transmitted from cold body to hot body but only as the result of some exclusive conditions", published in Russian, "The Second beginning of thermodynamics", Kaluga, Russia, 1914. So, the inventor of free energy system should provide this "exclusive conditions" to organize collection and transformation of environmental heat in his free energy system.

Another well-known free energy system is Swiss electrostatic machine. In spiritual commune Methernitha, Linden in Switzerland, since 1980 several free energy devices have been generating total power of 750 kilowatts. From the technical point of view, these devices are modernized electrophore generator. Permanent magnets also included into design of these devices. The machine of 20 cm diameter produces about 200 watts, and a big machine has the disk of 3 meters and it produces about 30 kilowatts, Fig. 8.

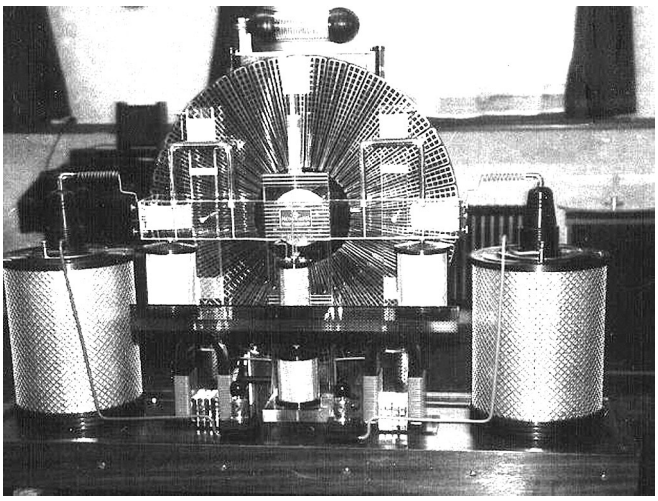

Fig.8

One of the modern technical decisions, which are very close to this Swiss machine is patent USA No. 4897592 by William Hide, January 30, 1990. This device is "system to generate power from electric field". It is one more example of work, which can be produced by potential field, in particularly by means of electric field that can be used as free source of power. The energy (the potential energy) is the possibility to produce work and the power is a work per unit of time, i.e. it is a process. The properly organized process, for example acceleration of rotor in Hide's machine, uses the potential field on the part of positive work (acceleration) and the author of the patent provides meta screen on the part of the trajectory, where the field decelerates the rotor.

... it is "perpetuum mobile" and it can not be patented even if it really works!

One more example is Reed's motor, which uses energy of permanent magnets. By the description of 1991 it is made of four disks (two immovable discs and two rotating discs), and eight magnets are placed on them. Howard Johnson used similar method, USA patent #4151431, Fig.9

U. S. Patent Apr. 24, 1979 Sheet 1 of 2 4, 151,431

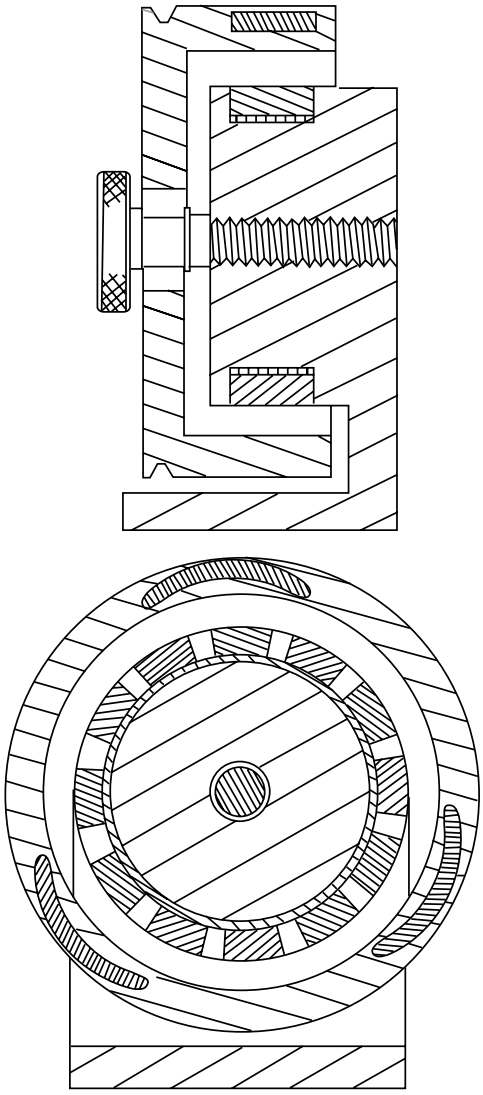

Fig.9

Journal "Science & Mechanics" of 1980 describes this invention. Hovard filled the application in 1973 but he has got the confirmation only in 1979! The reason of delay is very clear: it is "perpetuum mobile" and it can not be patented even if it really works! Johnson found clear and simple description of generation of power in his device and explained it as "extraction of power from inner energy of electron spin in ferromagnetic material".

From text of his description it follows that USA patent #4,151,431 of April 24, 1979, "Permanent magnet motor", author Howard R. Johnson, application #422,306 December 6, 1973 was developed from the prototype that is USA patent #4,074,153 of 1978, class of international classification H02K 41/00E:

"The invention is directed to the method of utilizing the unpaired electron spins in ferromagnetic and other materials as a source of magnetic fields for producing power without any electron flow as occurs in normal conductors, and to permanent magnet motors for utilizing this method to produce a power source. In the practice of the invention the unpaired electron spins occurring within permanent magnets are utilized to produce a motive power source solely through the superconducting characteristics of a permanent magnet and the magnetic flux created by the magnets are controlled and concentrated to orient the magnetic forces generated in such a manner to useful continuous work, such as the displacement of a rotor with respect to a stator. The timing and orientation of magnetic forces at the rotor and stator components produced by the permanent magnets to produce a motor is accomplished with the proper geometrical relationship of these components."

...conception of asymmetrical cause-effect connections should be used as theoretical basis of all over-unity systems.

It is reported that functioning Johnson's model produced about 5 kilowatts power free of any primary source of energy. Let's note that Johnson writes in his patent about permanent magnet as about system with "super conductive parameters". The currents of electrons in permanent magnet are manifestation of real superconductivity and for this case it is not necessary to provide the cooling for zero ohmic resistance. Moreover, the "resistance" must be negative since the magnet could save and renew its magnetized condition. Thereby, any permanent magnet is the example of perpetuum mobile of the third kind on the micro level. Also we can say the same about each atom.

Also, let's note that in general case motion (rotation) can be created due to the discussed above gradient of field, which in Johnson's device is result of asymmetry in "rotor-stator" system. By the similar way the gradient of velocity of airflow above and below wing creates the gradient of pressure and this fact produces great lifting power in airplanes.

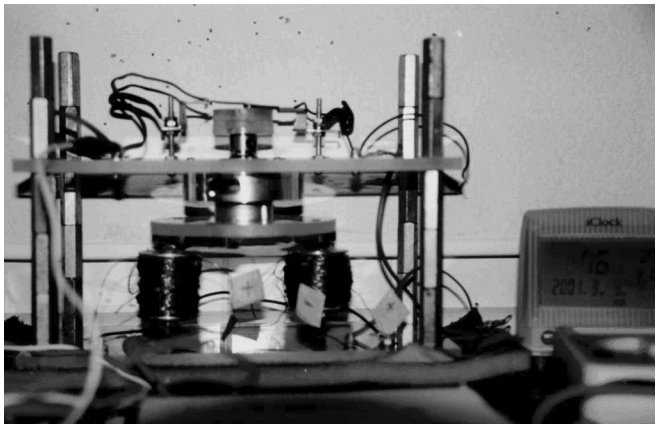

Fig.10

Well-known variant of permanent motor-generator is Adams motor, Fig.10. The rotor with radial orientated (the same pole outward) permanent magnets is rotating and creating inducted currents in stator coils, which are placed around rotor in the plane of rotation. From the point of traditional electrical engineering, any motor-generator without closed magnet flux is not high efficient device. However, exactly open magnetic flux of the Adams motor allows to take off power without deceleration of the rotor. We can assume that in this case phenomenon of electromagnetic induction is not important but in this design there is magnetic induction only, i.e. magnetization and demagnetization of cores in the field of the moving magnet. It is a perfect analogy with phenomena of electric induction that is "electrization by influence". Similar "magnetization by influence" differs from electromagnetic induction and secondary magnetic field in winding of generator is not related with deceleration of the rotor. Robert Adams works with Harold Aspden under patenting of their system. Adams is more than 70 years old but from our correspondence with him we can say that he is going to build demonstration version of 10 Kwtt generator.

...any permanent magnet is the example of perpetuum mobile of the third kind on the micro level.

There is also special name "alternators" for this class of devices, which use interruption of magnetic flux, for example it is the device by USA patent of John Echlin #4567407.

The experiments to investigate the alternator principles were organized also by the author of this article and it was demonstrated that ferrite core of the generator coil is self-cooling. The simplest experiment is based on electro motor, which rotates iron plate and it periodically appears in the gap between magnet and coil. But it is necessary to note that change of the flux in the coil area should be organized by such a way to decrease the flux of the field in the rapprochement half-cycle and to increase the flux for the moving off half-cycle. In this case the

rotor is accelerated by the secondary field (back-EMF). From 1994 to 2003 several experiments were produced and main principles were claimed in the patent description, Fig.11.

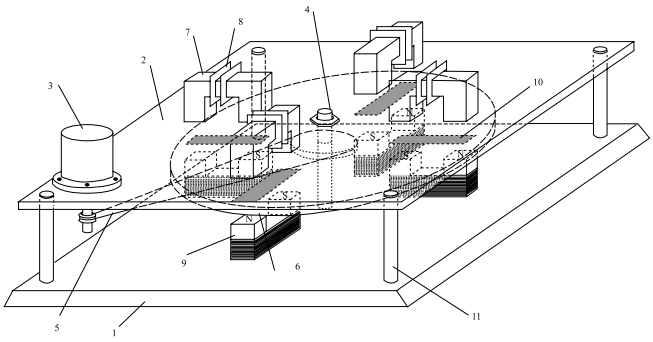

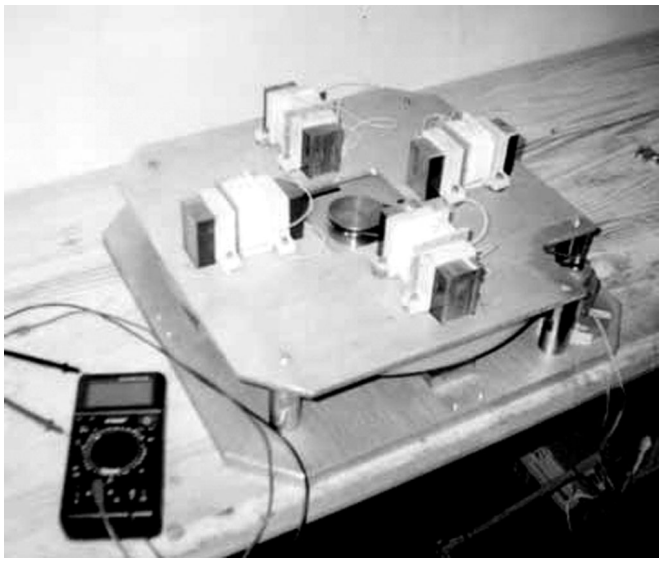

Fig.11

One more topic is "extraction of power from air" and Josef Swenson has conducted the series of simple experiments to develop it. The frequency of natural pulsations of electric field of planet is about 7.5 Hz and it is well known from Tesla's age. Swenson works with frequency 375 kilohertz and antenna of 10 meters. Please, contact for more details: Josef Swenson 423 North 15th Street, Moorhead, Minnesota 56560, USA. However, everybody remembers from the school story about simplest electrical experiments by Lomonosov and Rihman, who investigated arc discharge in gap between iron wire from a roof ("antenna") and ground wire. Let's include the resonance circuit "inductance-capacity" and diode rectifier to get some useful work in the load "from atmospheric electricity", Fig.12.

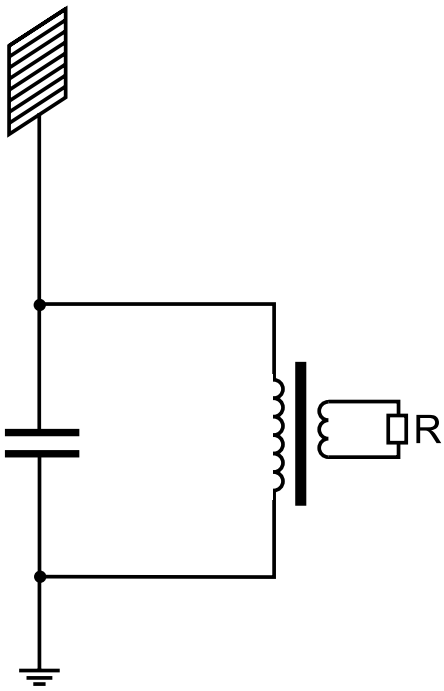

Fig.12

In 1900-1930 a lot of articles were published in technical press about Henry Moray. His demonstration systems produced more than 50 kilowatts free power output. It is known that Mr. Yakovlev (from USSR Foreign Department headed by Mr. Molotov) visited Morey in November of 1929 in New York to test his devices. The devices consist of capacitors, coils and special electronic-vacuum lamps.

In 1990 journal "Magnets", 2 (3) published article, which describe analogy between Moray's devices and Hubbard's coils, which can extract power by means of inner energy of nucleuses of materials if special resonance is created. In 1978 Cospray Research Institute has published the well-known book "The Sea of Energy" by T. N. Moray, in which theory of Moray is presented most completely.

RQM Raum-Quanten-Motoren Corporation (Schmiedgasse 48, CH-8640 Rapperswil, Switzerland, fax 41-55-2125209) offers for free energy devices of different power level: RQM 25 kilowatt and RQM 200 kilowatt. The principle of work is based on an invention by Oliver Crane and his theory. Web site http://www.rqm.ch. But I have to note that in present time they are developing capitalization of the company

mainly (actives are above 650 million dollars) than innovation of the new technology.

One more historical example: in 1925-1945, Hans Koler demonstrated his free energy devices. The system was built in Germany and it produced 60 kilowatts of free power. The description includes six permanent magnets and coils, which were superposed in plane of hexagon form. Each magnet is core of the coil.

Another interesting topic is unipolar induction effect, which is well-known from Faraday. This effect creates electro motive force (EMF) in rotating disk if axial magnetic field is applied to the disk. One of the well-known practical developments in this area is device by Bruce de Palma. In 1991 he has published the results of his tests, from which it follows that deceleration of the rotor due to back EMF in the case of unipolar induction is less than in traditional electro generators. So output power of system can exceed the power, which is necessary to rotate the rotor.

Really, motion of electrons in magnetic field, which is perpendicular to plane of rotation, is the reason of the Lorenz force and this force acts in radial direction that can not be the reason of deceleration. Indian research on this topic is developing by P. Tewari. In New Zealand there is research group headed by Dr. Ashley Gray. In 1994 the leader of Japanese market MITI published report about progress in 40 KWtt unipolar generator, which uses superconductors for its electromagnets. The interest of Japan to alternative energy projects can be explained by the position of Japan on fuel market.

There is a well known rule: Demand is related with Proposals. It is easy to imagine the prospects of local introducing of free energy systems in one or several countries, if some producers of product will be able to exclude expenses on electricity and fuel from cost sales. Other countries of their own rich natural resources (for example, oil) will be in problematic position on the new international market, mainly due to the fact that their industry and transport are oriented to conversion and consumption of oil fuel that increase the cost of all products.

... increase of the spark gap produces more surplus power in the load of the circuit.

One more modern free device was invented by Wingate Lambertson, USA. In his device free electrons get the additional energy passing through the number of thin metal-ceramic composed layers. The units were designed by the authors and each unit can generate 1600 watts, and it is possible to connect them in parallel. The address of author: Dr. Wingate Lambertson, 216 83rd Street, Holmes Beach, Florida 34217, USA.

Especially the researches on free energy with plasma processes should be noted here. In 1980-1990 Alexander Chernetsky, Yury Galkin and others have published the results of experiments on creation of "self generated discharge" SGD. The electric arc was placed consecutively into secondary circuit of electromagnetic transformer and it produces real increase of power in load and reduction of consumption power in primary circuit of transformer. The author of the present article produced simplest experiments to investigate the arc (electric discharge) in electric circuits and possibility to create the mode of "negative resistance" in this circuit was confirmed. One of the effects was demonstrated in 1996 during the conferences "New Ideas in Natural Science", St.-Petersburg.

Adjusting parameters of arc (distance between two electrodes) it is possible to see that consumption current is decreasing until zero and then it can change its direction i.e. this system begins to generate the power. During similar experiment of 1971 by Dr. Chernetsky substation transformer in Moscow Aviation Institute was destroyed in result of strong "reversed current" impulse, which exceeded consumed power in 10 times more. According to Chernetsky's concept, the reason of this mode is well known phenomenon of plasma instability and **pinch-effect for great currents.** However, the author of this article tested device, which demonstrated similar effect (switching on the load in secondary circuit of transformer and in the presence of arc in this circuit, consumption power does not increase, but reduces) for small currents about 300 mA.

Since for pinch-effect it is necessary hundreds Amperes then it was offered another explanation: the surplus power in this circuit appears due to the acceleration of electrons in the gap between electrodes, i.e. particles of plasma are **accelerated by means of electric potential field between two electrodes**. It is noted during the experiments that increase of the spark gap produces more **surplus power in the load of the circuit.** To avoid mistakes the measurements of the consumed power were organized in DC (direct current) battery circuit and therefore there is no any reason to speak of phase shifts mistakes to try to explain skeptically this effect.

... waves of density of time are used by organisms for their vital activity.

Today theory and experiments on self-generating discharge are quite well developed to build free energy systems of any power scale. The reason of delay in its practical development is a complex problem: this work leaves the frames of classical physics. In his book "About physical nature of bio-energy and its simulation", Moscow, Publ. VZPI, 1989, Dr. Chernetsky considered the structure of biological fields and bio-energy processes in living organisms from the point of **longitudinal waves conception.** Self-generating discharge in the mode of negative resistance produces such longitudinal waves and they are self-sustaining (self-powered energetically) and it is considered as field of living object.

Really experimentators of the Chernetsky's group, who worked with SGD device detected influence of biologically active radiations and fields, which can be not screened by usual methods. It was reported by Chernetsky that parameters of this radiation can be selected to accelerate the development of plants and biomass or to suppress it. So, we should speak about artificial living biological system or biological form of energy for this class of free energy devices. Perhaps by the same plasma oscillation way all living organisms provide its vital activity, since long time ago it was known that metabolism and food can not provide enough energy for vital processes.

Nikolay A. Kozyrev also wrote about "reason of life" and he confirmed that waves of density of time are used by organisms for their vital activity. Between "waves of density of time" and "waves with longitudal component" there is a clear analogy. Kozyrev and Chernetsky experimentally demonstrated methods of creation of such waves.

...any free energy system should change the causality in surrounding space-time.

New Energy News magazine, March 1996, wrote about attempts to innovate for American aerospace stations special power source, which uses similar plasma technology: anomalous electric discharge. The USA patents #5416391 and #5449989 belong to Dr. Paulo Correa and Dr. Alexandra Correa, Canada. In their report on free energy Denver conference it was claimed that efficiency is about 483% .

Let's note one more free energy topic: high efficient electrolysis. Classical electrolysis as decomposition of electrolyte in electric field is a wonderful example of work, which is produced by field and it can be organized by such a way to be free from the primary energy source (battery). The traditional scheme uses closed circuit of current through electrolyte and the battery, so the battery is discharged during the operation with electrolytic cell. However any physics textbook confirms that **ions in electrolyte are moving due to electric field only, i.e. work to organize the displacement of ions and heat power, which is connected with this work, are produced by the potential field and expenses of the primary power are not required.**

The current through the battery, which is created in usual closed electric circuit destroys the primary difference of potentials in the battery but it is not some necessary condition. For correct organization of the experiment the products of electrolysis (gases) can be created almost free and their utilization (burning) can provide more heat power than input electric power.

Prof. Latchinov, the real member of Russian Physic-Chemical Society, who patented his method of electrolysis in 1888, mentioned that in some cases the electrolytic cell is freezing during its operation. This is an effect of the law of Conservation, which forces to return the surplus power by means of heat environmental energy. In the experiment by Latchinov the electrolytic cell can create gases of high pressure and consumed power is the same as for the case of low pressure gases. However, it is clear that high pressure gases can produce more work than low pressure gases do. This question was sensational problem in scientific societies of 1888 and it is not solved yet completely.

One of other variants of high efficient electrolysis was investigated by Igor Goriatchev, Russia. Instead of usual 3 Volts level of electrolysis, Goriatchev uses 0.2 Volt pulsing mode. He claimed ratio output/input as 1500% efficiency and he hopes to increase this value twice in more perfect design.

Professor Kanarev from Krasnodar wrote about his experiments on plasma electrolysis and has proved that in electrolysis of water output power can be more than input power.

Real example of "perpetuum mobile of the second kind" is invention by Russian engineer Albert Serogodsky (Moscow) and German engineer Bernard Sheffer (Berlin). They have patented new system for direct transformation of environmental heat into electricity, Germany patent #4244016. Retro-condensation of mixture of benzine and water is organized in closed system under temperature of 154 ^{0}C degrees. You can try to get more info from: Werkstatt fur Dezentrale Energleforschung, Pasewaldtstrasse 7, 14169 Berlin, Germany.

The fundamental theoretical researches on direct transformation of environmental heat to useful work were provided by Real Member of The Russian Physical Society Mr. Gennady N. Buynov, St.-Petersburg. The description of his project on "The Mono-thermal device" was published in journal "Russian Ideas" #2, 1992.

In 1995 the scientific journal of Russian Physical Society #1-6 published article "Perpetuum mobile of the second kind (paired gas-chemical cycle)". The author Gennady N. Buynov proposed to consider that **entropy function can be abortive**, i.e. it can be undetermined in some place if reversible chemical reactions are presented in the system.

Herewith, the circular integral of entropy is not a zero and in this case the heat function but not entropy function (according to the Gess law) becomes the function of condition.

Buynov offers to use four–oxide of nitrogen as working matter for this cycle. His works are excellent example of scientific enthusiasm, which (in combination with financial interest of the customers) could produce real results for Russia many years ago. Let's note that

priority of this discovery belongs to Russia in spite of attempts of other scientists to claim and develop this idea now as their own work.

We can make a very interesting conclusion if we analyze history of so called "cold fusion" discovery. According to de-classified materials of 1960, priorities of Russia in this topic are obvious. In 1989 Pons and Fleshman have reported about results of their experiment. In 1995 Russian Journal "Inventor and Rationalizator", #1 has published article about invention made by Ivan S. Filimonenko that was named in 1957 as "warm nuclear syntheses". In 1957 he detected **extra power output in process of heavy water electrolysis** and he mentioned several applied aspects, for example, propulsion force and possibility to reduce radioactivity by means of this process. In 1960 Kurchatov, Korolev and Zhukov have supported the ideas of the author. Russian Government adopted secret resolution on this work:

1. Investigation of energy generation.
2. Development of propulsion without reactive mass flow.
3. Research on protection from radioactivity.

But in next several years this work was suppressed by people of nuclear power plant team. The only system of such type named as TOPAZ was innovated for Russian aerospace systems. World-wide innovation of this technology is a real way to introduce "warm reactors of syntheses" and it is not necessary to wait for results of high-cost "Tokomak" project and other thermonuclear researches. Let's note that secondary effects (propulsion force and influence on radioactivity) are possible due to using of "free energy" aspect if output power is result of change of space-time parameters.

In 1994 Journal "Russian Ideas", #1-6, it was published an interesting document "Conclusion of The Moscow City Council Commission on the question about Ivan Filimonenko's discovery and its development". In this document it was recognized that it is vitally necessary to renew this works. But in 2003 we still have nothing new on this topic. Why? It can be assumed that the Problem of innovation for this technology is possible military application of the methods since influence on radioactivity (for example, remote reduction of radioactivity of some object) is area of interests of the Defense Department. The fact that energy generators by Filimonenko can be used for quick restoration of the present ecological balance is not so important in this case. The same conclusion is about propulsion method, which was proposed by Filimonenko. Mr. Korolev knew about this method; however present space programs are still based on rockets and reactive principles, and anti-gravity flying machines we can see only in fantastic movies.

At the same time, development of commercial cold fusion projects was started in some countries, for example: Patterson Power Cell is introduced in Texas, USA (Clean Energy Technologies Inc., Dallas, Texas, fax 214-458-7690). More than thirty patents were owned by ENECO Corporation, which is collecting the main technological solutions in this area. The production of electrolytic thermal cells was started by Nova Resources Group., Inc., Colorado.

In August of 1995 Atomic Energy of Canada, Ltd. Company, which is member of The Planetary Association for Clean Energy, has published the review on modern methods of conversion of nucleus wastes and deactivation. Two new technologies were offered for introduction: contact processing by "Brown's gas" and remote processing by scalar (torsion) fields. Let's note that the technology proposed by Canadians and Filimonenko's technology demonstrate the effect of influence on the rates of radioactive decay.

These examples are only small part of real situation. Main references on publications are foreign and it can lead to wrong conclusion that Russia is delayed in this direction of new technologies development. In fact, Russia has more talented inventors and researchers than any other country. However, condition for work, patenting and publications of ideas are not the same, and usually Russian technologies cannot reach the level of international market. This problem depends only on real and official state policy with respect to inventors and scientists. In real life financial support of scientific institutes is mainly subsidy for management of the institutes, but not for science. The inventions and discoveries always were made by a certain real person, but not by Institute or some scientific team.

In Russia of last age and in the other world on the whole the institutes and laboratories have been creating for a new scientific problems, discoveries or new directions in science. It was necessary to claim about discovery and provide priority for own country to get official support. Main schools of thought appear by this natural way. By the same natural way the necessary in existing of some scientific institute can be removed when the idea grows up to serial production stage. If there are no any fresh ideas in this school then the institute should be transformed in design office of the production plant on this topic. It is almost impossible to create a new research institute in modern Russia, so really new ideas (if they are not ranged in frames of some existing scientific directions) can not be developed and they can not create a new school of thought in Russia.

... it is possible to make a conclusion about grandiose misinformation of society...

People (carriers of the new ideas) have to leave Russia to realize their sensational ideas on free energy and antigravitation topics. Why they do not work with Russian Academy of Sciences? It is the

rhetorical question. Usually after many years of correspondence with patent office or with official science bodies the authors can find that their ideas are published in "serious scientific magazines" but without any respect to their names...

Attachment 1 presents some information about patented technologies. When we study old and modern patent documents, it is possible to make a conclusion about **grandiose misinformation of society**, which leads to appearance of two different Worlds, separated by the level of knowledge: evident and hidden knowledge. The achievements of the second hidden world could change our planet, give a chance to remove all energy and ecological problems. Besides, we have discussed that some free energy systems (for example, self generated plasma discharge) have also the medical-biological aspects. This "influence" from free energy system is related with negative entropy processes in area of the operation of the system so some components of biological systems can be changed to less entropy. The design of free energy system defines the type of this influence. It was noted before that operation of any free energy system should be considered in high topology space-time as multidimensional system to see what the reason of the effect is.

So, since the rate of time course is determined by Nikolay A. Kozyrev as rate of cause-effect transformations, then any free energy system should change the causality in surrounding space-time. In this case we can assume that it creates quantum physics effects on the macro level. It is interesting to assume Heisenberg's uncertainty, tunnel effect and manifestation of wave characteristics (up to diffraction of objects) for macro level.

Some experimental data by Kozyrev is related with quantum effects, which were detected in his experiments with rotating and vibrating gyroscopes. This technology is the basis to design real teleportation systems, which will change parameters of space-time to allow changes of position of some material object from one point of space to another point of space (without transference on the distance between these points) by means of combining these points in the same place of space for some time.

The process of study of new technologies in alternative power industry and gravitation is developing actively in the world. Besides secret programs and institutes, it is possible to make a conclusion that activity of this work in countries of limited fuel resources is more efficient. Now Russia has rich **natural materials and oil resources but in the short time this advantage will not play any role in development of economy.**

Industrial and defense power of any country will depend on free energy technologies, knowledge on the biologically active energy and reactionless propulsion methods.

The new technology creates not only a new technical systems but also **new economical systems**. It is not physics but policy… Development of great Russian territories with industry of free energy technologies for home and commercial application is the way to change world economical balance in favor of Russia. It is difficult to say now what financial-economical group of modern Russia is most interested in development of this direction of science. The purpose of any financial-economical group is power on the market of energy resources, but when the free energy technologies are developing, then people and industrial or agricultural producers will be more independent from centralized system of energy and oil distribution, therefore, they will be more independent from influences of central authorities.

From the point of view of serious business, there is only one real argument in favor of developments of any really new technology: it should lead to increase of profit and expansion of the market. In this sense, it is possible to compare the new energy technologies with beginning of the steam machine age or with appearance of electric machines and illumination. This means the super profits and serious fight with competitors. To develop this way any efforts of scientists are not sufficient work. It is necessary to join them with the efforts of large business structures, which are interested to create new market of energy and power engineering in parallel to present monopoly fuel-energy market or to develop commercial exploration of space by means of new propulsion principles. In particular, telecommunication space satellites and projects on colonization of space could be the nearest commercial directions of the new market.

References

1. Sakharov A.D. "Quantum Fluctuations of Vacuum in Curved Space and Theory of Gravitation", Reports of Academy of Sciences USSR, vol. 12, 1968, page 1040.
2. Puthoff H.T., Ph. Review E, vol.48, num.2, p.1562-1565, "Extracting energy and heart from the vacuum"; Physical Review A, vol. 39, num. 5, "Gravity as a zero-point-fluctuation force".
3. Nassikas A.A., The Hypothesis of the Unified Field and the Principle of its Dual Interpretation, III International Conference "Problems of Space, Time, Gravitation", St.-Petersburg, 1994.
4. N.A. Kozyrev, Selected works, published by Leningrad State University, 1991, p.202, in Russian.
5. Gravitobiology, by T.E. Bearden, 1991, Tesla Book Company, P.O. Box 121873 Chula Vista, CA 91912, USA. Library of Congress Catalog Card Number 86-50553.
6. Hasselberg Josef, New Beginning of Thermodynamics, http://hasslberger.com, Hasslberger, Josef "The inventor and society" in Raum&Zeit #4, October 1989, Hasslberger, Josef "Vortex, the natural movement" in EXPLORE, No.5, Vol.3, 1992.

7. Gustav Naan, Symmetrcial Universe, Tarty Astronomical Observatory, Vol. XXXIV, 1964.
8. New Results of Development and Testing of Single-Wire Electric Power System, Prof. Dmitry S. Strebkov, Eng. Stanislav V. Avramenko, Dr. Aleksey I. Nekrasov, Eng. Oleg A. Roschin, New Energy Technologies, #5(8), 2002.
9. An Experimental investigation of the Physical Effects In a Dynamic Magnetic System. V.V. Roschin and S.M. Godin, New Energy Technologies, #1, 2001.
10. Practical application of time rate control theory. Alexander V. Frolov, New Energy Technologies, #3, 2001.

Attachment 1

Methods and devices to create power without external sources and reactionless motion systems

3913004 October 14, 1975, Method and equipment to increase electric power, Robert Aleksander.
4975608 December 4, 1990, Motor with switchable magnetic resistance, Harold Aspden.
5288336 Converters of heat into electricity, Harold Aspden, see also patents 5,065,085 and 5,101,632
4622510 November 11, 1986, Parametric electric machine, Ferdinand Kap.
2912244 1959, Gravitational System, Ottis Karr.
4006401 February 1, 1977, Electromagnetic generator, V. Rivas
3811058, 3879622 Motors with permanent magnets.
1835721 December 8, 1931, Motor with permanent magnets, A. Povel.
1963213 June 19, 1934, Magnetic motor, G. Pose.
1859643 May 24, 1932, Motor with permanent magnets, G.L. Worsington.
1859764 May 24, 1932, Magnetic device, G. Baugon.
2982261 Mac Klintok's Air motor.
4595843 June 17, 1986, Transformer of rotation magnetic flux, Robert Del Vechio.
4567407 January 28, 1986, Motor - alternator, John Eklin.
3368141 January 6, 1968, Transformer in combination with permanent magnets, K. Garon.
3890548 June 17, 1975, Motor with pulsing capacitor discharge, Edwin Gray.
4595852 June 17, 1986, Electrostatic generator, Robert Gandlach.
4831299 May 16, 1989, Homopolar generator of alternating current, Enakishy Khasaka.
4249096 February 3, 1981, Electric dynamo, Barbara Nikoks.
3610971 October 5, 1971, Electromotive generator of electric field, Williams Couper.
4897592 January 30, 1990, System producing power from energy of electrostatic field, Williams Hyde.
4151431 April 24, 1979, Motor with permanent magnets, Hovard Johnson.
4806834 February 21, 1989, Electric circuit of inductive conductors, transformers and motors, Erl Kening.
3374376 March 19, 1968, Electric generator, Raymond Kromry.
3977191 August 31, 1976, Power source, Robert Brett.
3670494, Method of converting of atomic energy in kinetic energy.
4709323 November 24, 1987, Converter of parallel resonance, Charles Lien.
5146395 September 8, 1992, Power source using two accumulating circuits, Richard Mac Kee.
4210859 June 1, 1980, Inductive device with two orthogonal windings, Paul Meretsky.
4500827 February 19, 1985, Linear electric generator, Thomas Merit.
4904926 February 27, 1990, Electric generator of magnetic motion, Mario Patsishinsky.
4945273 July 1990, High effective electric machine, Josef Pinkertone.
4883977 November 28, 1989, Converter of magnetic power, Dennis Regan.
4077001 Electromagnetic converter, Frank Richardson.
5018180 May 21, 1991, Conversion of energy, Kennet Shoulders.
4652771 March 24, 1987, Transformer, Theodore Speach.
477 2816 September 20, 1988, Conversion of energy, Jefry Spens.
4748311 May 31, 1988, Inverter, Fridrikh-Verner Thomas.
International patent H02K 31/00, 39/00 dated June 24 1982, Closed part of unipolar machine, Adam Trombly.
4687947 August 18, 1987, Electric circuit for conserving of power, Melvin Kobb.
4772775 September 20, 1988, Generation of plasma flux in electric arc, Sam Lich.
The USA patents 5416391 and 5449989, Paulo Correa.
4432098 and 4429280, Transmission of information by means of magnetic vector potential, Raynolds Gelinas.
Great Britain, #547668, January 30 (September 7) 1942, Motor with permanent magnets, Stenly Hichkok.
Great Britain, application # 2282708A, Motor with permanent magnets, Robert Adams, Harold Aspden.
4394230 USA patent, July 19, 1983, Henry K. Pukharich.
2251775 Great Britain patent, April 20, 1994, Thermoelectric conversion, Harold Aspden.
5288336 USA patent, Thermoelectric conversion, Harold Aspden.

The USA patents on electrogravitation

1363037 Goddard, December 21, 1920;
2004352 Simon, June 11, 1935;

2210918 Karlovitz, August 13, 1940;
2588427 Stringfield, March 11, 1952;
2231877 Bennet, 18 February, 1941;
2279586 Bennet, 14 April, 1942;
2305500 Slayter, December 15, 1942.
English patent 300,311 August 15, 1927, Townsend Braun.
French patent 1003484 November 1951, Electrogravitation;
3187206 June 1, 1965, Electrokinetic equipment, Townsend Brown.
3022430 February 20, 1962, Electrokinetic generator, Townsend Brown.
3018394 January 23, 1962, Electrokinetic converter, Townsend Brown.
2949550 August 16, 1960, Electrokinetic equipment, Townsend Brown.
1974483 September 25, 1934, Electrostatic motor, Townsend Brown.

Attachment 2

Organizations

· Faraday Lab Ltd, Lev Tolstoy Str. 7, St. Petersburg, 197376, Russia.
· The Russian Physics Society, 141002, Moscow reg., Mytishy, B. Sharapovskaya str. 3. Fax 095-2926511
· Academy for Future Sciences, P.O. Box FE, Los Gatos, CA 95031, USA.
· AERI, Advanced Energy Research Institute, 14 Devonshire Mews West, London W1N 1Fp, Great Britain.
· ADAS, Association of Distinguished American Scientists, P.O. Box 1472, Huntsville, AL 35807, USA.
· Borderland Sciences Research Foundation, P.O. Box 429, Garberville, CA 95440-0429, USA.
· Center for Action, P.O. Box 472, HCR 31, Sandy Valley, NT 89019, USA.
· Electrodynamics Gravity, Inc., 35 W. Tallmadge Ave., Akron, Ohio 44310, USA.
· Fusion Information Center, P.O. Box 58639, Salt Lake City, Utah 84158-0369, USA
· Gravity Power Research Association, 36 Mountain Road, Burlington, MA 01803, USA.
· GRI, Group Research Institute, P.O. Box 438, Nelson, New Zealand. Dr. Ashley Gray.
· High Energy Enterprises, P.O. Box 5636, Security, CO 80931, USA. Fax 719-4750582.
· Institute for Advanced Studies at Austin, 4030 Braker Lane W., Suite 300, Austin, TX 78759, USA.
· INE, Institute for New Energy, 1304 South College Avenue, Fort Collins, CO 80524, USA.
· Integrity Institute, 1377 K Street, NW, Suite 16, Washington DC, USA. Fax 202-543-3069.
· Orgone Biophysical Research Laboratory, Inc., P.O. Box 1395, E1 Cerrito, CA 94530, USA.
· Quantum Biology Research Laboratory, P.O. Box 60653, Palo Alto, CA 94306, USA.
· SEA, Space Energy Association, P.O. Box 11422, Clearwater, FL 34616, USA.
· Tesla Book Company, P.O. Box 121873, Chula Vista, CA 91912, USA.
· Tesla Incorporated, 760 Prairie Av., Craig, CO 81625, USA. Fax 303-824-7864.
· Journal Explore, P.O. Box 1508, Mount Vernon, Washington 98273, USA.
· Electric Spacecraft Journal, P.O. Box 18387, Asheville, NC 28814, USA. Fax 704-683-3511.
· Nexus New Times Magazine, P.O. Box 30, Maplepton Old, 4560, Australia. Fax 074-429381.
· Journal Cold Fusion Times, P.O. Box 81135, Wellesley Hills MA 02181, USA.
· Journal Infinite Energy, P.O. Box 2816, Concord, NH 03302-2816, USA.
· Journal 21st Century Science & Technology, P.O. Box 16285, Washington, DC, 20041, USA.
· Journal Cold Fusion, 70b Route 202N, Petersborough, NH 03458, USA.
· Brown's Gas International, 5063 Densmore Av., ENCINO, California 91436 USA.
· ENECO Inc., 391-B Chipeta Way, Salt Lake City, Utah 84108, USA. Fax 801-5836245.
· "Robert Adams and Company" 46 Landing Road, Whakatane, Bay of Plenty, New Zealand. Robert Adams,
· Methernitha, 3517 Linden, Switzeland. Manager Francis Bosshard.
· Swiss Association for Free Energy, P.O. Box 10, 5704, Egliswilli, Switzeland.
· Space Research Institute, Box 33, Uwajima, Ehime 79, Japan. Dr. Shinichi Seike. Fax 895-24-7325.
· Nuclear Power Corporation, 581 400 Karnataka, India. Project Director Dr. Paramahamsa Tewari.
· Cosmic Energy Foundation, Neptunuslaan 11, 3318 E1 Dordrecht, Netherlands. Dr. Martin Holwerda
· Sabberton Research, P.O. Box 35, Southampton S097BU, England, Dr. Harold Aspden.
· Labofex, Experimental and Applied Plasma Physics, Ontario, Canada, Dr. Paulo N. Correa.

Raum&Zeit

EhlersVerlag GmbH,
Geltinger Str.14e,
82515 Wolfratshausen
Telephon: 08171/41 84-76,
Telefax: 08171/41 84-66
Internet:
http://www.raum-und-zeit.com

Institut fur Raum-Energie-Forschung (IREF) i.m. Leonard Euler

- Global Scaling Theory
- Gravitation theory
- Mathematic Biology
- Gravitation energetics
- Hydrogen-Helium Energetic
- Information technologies
- Telecommunication technologies
- Transport technologies

Some General Properties of Matter and Energy Sources

Devoted to memory of Academician A.A. Harkevich

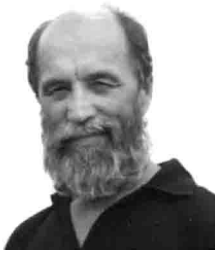

Dr. Eugene D. Sorokodum

Volochaevskaya Street, 40-b, Flat 38,
111033, Moscow, Russia
Telephone: (7) - (095) -362 80 84
Email: e40dum@dol.ru http://vortex.viptop.ru

Introduction

Nowadays there are appear more and more attempts to disclose new methods of obtaining energy from the ambient space, i.e. from heat, electromagnetic, gravitational fields, physical vacuum, aether, etc. (See, for example, publications in New Energy Technologies [1-3]). The publications demonstrate that researchers meet various incompletely investigated physical processes. These scientific areas are difficult to be investigated. All this makes obstacles for development of works on creation of new energy sources. **In this work there is made an attempt to demonstrate general properties of energy sources of any physical nature. This attempt is based on a general analysis of properties of matter.** A theory of transformers is used to investigate general properties of matter.

Action of all physical, technical and biological systems is expressed in energy transformation. Numerous theories based on particular (specific for some system) methods are applied for description of these systems. However, if the number of degrees of freedom and of elements inside a system increases then many theories are not able to describe operation of the systems. First these problems appeared in electrical engineering, radio engineering, automation and acoustics. The theory of transformers is applied to these fields of science. The theory represents a complicated system as a "black box" having several inputs and outputs. Operation of the numerous elements occurring inside the box is represented as some equivalent functions reduced to the inputs and outputs.

In the last decades methods of solution of mechanical dynamic tasks by the method of complex resistances are developed as well as representation of elements as linear transformers [11] and finite elements in liquid [14]. This tendency can be applied to the mechanics of liquids and gases. Now there are successfully developed those concepts which assume observation of models having very few degrees of freedom to be enough for analyzing processes in hydrodynamic systems [10]. However, a mathematical apparatus for description of transformers operation which is well-developed in these areas of science and engineering has a special view and is applicable only for these scientific areas.

Academician A.A. Harkevich developed a theory of a linear transformer up to the level of the general theory of transformers which is applicable for transformation of any types of energy [24]. The general theory of transformers proposed by A. A. Harkevich is applicable for description of various energy sources, flying and swimming objects, functioning of different animals' organs, and technological processes. In this work some general properties of matter and energy sources are investigated, according to the general theory of transformers.

General theory of energy transformer

The whole ambient space, from the microworld to the macroworld, is filled with energy. According to different theories, space is represented as a compact medium (i.e. having distributed parameters) or a medium consisting of a limited number of discrete elements (i.e. having concentrated parameters). On the analogy of hydrodynamics [10, 14] the compact medium can be represented as an equivalent system with a limited number of degrees of freedom. Hence, the whole space can be represented as some system consisting of elements and communications between the elements with a limited number of degrees of freedom. Energy exchange occurs due to the degrees of freedom. Energy transmission occurs if energy gradient is presented in the ambient space. Due to the energy gradient a force tends to realize transmission in the space [4]. The elements can be systems as well.

Hence, the more we observe dividing the elements on the systems and the systems on the elements the more we will penetrate into the microworld (i.e. atoms, elementary particles, physical vacuum, aether, etc.). The more we combine the elements in the systems, and the systems in the new larger systems the more we observe the macroworld (the Solar System, galaxies etc.). All the systems and the elements are interconnected. The systems and their elements are

transformers of energy. Energy motion occurs in the smallest part of space. Consequently, the whole space can be represented as a system consisting of the energy transformers. In the general case due to every type of energy limits of a transformer consist of outer limits (i.e. communications with the macroworld) and inner limits (i.e. communications with the microworld). Dividing into the macroworld and the microworld occurs in relation to the size of a transformer for every type of energy. Types of energy coming through communications of a transformer and inside it may differ, i.e. mechanical, heating, electromagnetic, chemical and other known and unknown types of energy.

The processes in which a great number of interacting elements and different types of energy participate are very complicated and do not allow describe the processes accurately by modern mathematical methods. Hence, there is a problem to find such methods of solution of the tasks which without disclosing all the communications inside the element can give the understanding of the way an element moves in the system. The following premises can be made for the method of solution of the task of a system and its elements' motion:

1. Motion of all the elements in the space is characterized by energy exchange occurring among them;
2. We are interested in a certain limited area for every individual type of energy. The chosen limited area will be called as **a transformer**;
3. The transformer has degrees of freedom both on its limits (sides) and inside it (inner degrees of freedom);
4. Further this limited area (the transformer) which has or is able to have a limited number of degrees of freedom (sides) at its limit will be observed;
5. Interaction between this transformer and the ambient space occurs only through these degrees of freedom (sides) by means of energy exchange;
6. Motion of energy between the elements of the transformer occurs according to its degrees of freedom inside the transformer. There can be a limited or unlimited number of degrees of freedom.
7. All the space is full of the transformers. All the transformers adjoin each other without gaps. Energy exchange between the transformers occurs through their sides which do not have a size but reflect general kinematical and dynamic characteristics of the energy transferred through these sides.

Editor: The full variant of the article includes mathematical description of operation of energy transformers which is followed by these conclusions:

- There can be any number of different types of elements having a corresponding number of degrees of freedom and any type of energy inside the transformer. However, on every side of the transformer a generalized force has the same value and depends only on change of energy according to this degree of freedom. Therefore, two transformers are considered to be equal if the generalized forces (energy changes) on all the sides are equal. In this case it is not necessary for the inner structure of the transformer, number of inner degrees of freedom, and energy types of these two transformers to be equal. This is **a principle of equivalency of transformers at the equivalency of the forces acting at the sides of transformers**.

- In the general case the generalized force at any side depends not only on energy exchange occurring at this side but on energy exchange occurring among the sides or at other sides of the transformer. The generalized forces are produced by energy distribution in the space.
- A transformer is characterized by the fact that there are different types of energy at its different input sides (or the energy can be of the same type but having other characteristics of motion).

Resistances of the interaction provide information about physical properties of the transformer, in particular, about physical interaction between the sides. At that a number of inner degrees of freedom in this transformer as well as the reactions at the other sides do not play any role. Proper resistances of the sides and resistances of the interaction provide information about inner physical characteristics of the transformer reduced to equivalent values at the sides. Hence, it is possible to have two transformers having equal equivalent resistances of interaction for all the sides. However, according to their geometrical and constructional characteristics and types of energy, the transformers will be different. The resistances may be a function of kinematical characteristics **(a nonlinear transformer)** or of time **(a parametrical transformer)**. Moreover, it can have constant values **(a linear transformer)**.

It is appropriate to consider physical properties of matter included in the volume of a transformer only due to resistances at the sides of the transformer.

Structure of the transformer

Every inner degree of freedom can be represented as a series circuit. By analogy with electric circuits [6, 7, 11, 16-18] the transformer can consist of various circuits. An unlimited number of degrees of freedom allows represent a transformer consisting of an unlimited number of chains. The circuits have series, parallel, or mixed junctions. A part of a circuit whose elements have the same generalized displacement is called as a branch. The branch can consist of one or several elements. A place where three or more branches are joined is called as a multiple junction. A circuit is considered to be a closed path including several branches and multiple junctions. All the elements of a chain connected in series have equal generalized displacement (as well as equal speed and acceleration). The generalized force acting on the

whole circuit is equal to the sum of forces acting on the elements of the series circuit.

The elements connected in series can be replaced by one element in such a way that the generalized displacement and the summary generalized force would not change. In the case of a parallel connection all the branches of the circuit are joined to the same pare of multiple junctions and are under influence of the same generalized force. Parallel circuits can be replaced by series equivalent circuit and vice versa [6, 7, 11, 17, 18]. Hence, a number of inner degrees of freedom and a quantity of chains may be decreased as well as increased. In this case resistances occurring on all the sides will be constant.

Structure of the linear transformer

The simplest transformer is a one-side transformer having one inner degree of freedom…

If to the input of the transformer we deliver generalized displacement (or force) which depends on time as a pure sinusoidal signal then the linear transformer will have sinusoidal reaction of the same frequency. For the sinusoidal signal with fixed frequency the linear transformer (including a transformer having an unlimited number of inner degrees of freedom) can be represented as an equivalent transformer reduced to this input as one chain. An equivalent transformer placing at this input at other fixed frequency of sinusoidal disturbance will be represented as a chain having one degree of freedom but different values of chain elements.

If the signal at the input of the transformer is of complicated time-periodical form then it can be decomposed to Fourier series. Every harmonics of the Fourier series will produce its own chain. The general complicated signal will produce the complex chain consisting of compound sum of elementary series chains. This complicated chain consists of elementary chains interconnected in series or in parallel and combined in multiple junctions and circuits. The construction principles of this complicated chain can be based on methods of identification and synthesis which are well developed in electrical engineering, automation for linear and non-linear transformers [9, 12, 13]. These principles are formally useful for transformers which transform energy of any physical nature. Identification produces so much elementary chains as the number of inner degrees of freedom. Every elementary chain reflects motion by one inner degree of freedom. Physical analogy occurring among motions of different nature is actual here [11, 16, 18]. Values of the generalized masses, elasticities, dissipative and active elements can depend on kinematical variables (non-linear chains), on time (parametrical chains), or they can be constant (linear chains).

If a series circuit includes mass and elasticity then it will have resonant frequency. At this frequency reaction of mass and elasticity will be absent in the summary reaction. It is equal to the fact that we will know nothing about the value of mass (and elasticity) and, moreover, about its presence at all. The mass can have huge value, but it will be absent for us. Hence, if we assume a transformer as an atom then the atom may include elementary chains having huge masses (much more than the mass of the Earth), but we will not know about it until we apply such frequency to the input which explicates this mass.

Any energy transformer including a transformer with distributed parameters can be represented as a system of elementary series and parallel chains connected in a certain way. A concrete transformer can have various types of these connections. All of them can be included into another combination of connections that is accompanied by change of values of masses, elasticities, dissipative and active elements. However, in this case equivalency of reaction should be fulfilled at a certain diapason of frequencies on all the sides of the transformer.

There is a special spectrum of resonant frequencies for every combination of connections of the transformer. There will be an unlimited number of degrees of freedom and, hence, an unlimited number of resonances for the transformer with distributed parameters (for example, an elastic nail, a compressible fluid having a limited size). Our influence on the transformer usually has a certain diapason of frequencies. As the result of a limited diapason of excitation frequency the transformer will represent a system having a limited number of inner freedom, even if the transformer has distributed parameters.

Values of equivalent elements depend on oscillation frequency. Moreover, according to known laws, several parallel circuits can be transformed into a series one and vice versa. Taking it into account the following conclusions can be made:

1. The generalized mass, elasticity and dissipative elements do not have constant values in nature. Their value depends on frequency of the process, i.e. they depend on the character of time-change of the disturbance acting on the transformer.
2. The generalized mass, elasticity and dissipative elements are products of time-space change of energy.

Types of energy transformers

Transformers can be nonlinear, parametrical and linear. The transformer can be **active** (having an internal source) and **passive** (having an external source). The passive transformer can never be an energy source (by definition). A transformer can accept or transform one type of energy (monoenergetic transformers) or several types of energy (polyenergetic transformers). The polyenergetic transformer includes a mechanism and

corresponding elements and chains which allow transform one type of energy into another one. Fundamentally, all the transformers are polyenergetic transformers of energy, however many of them can be represented as monoenergetic ones since other types of energy participate weakly in them. Designing a transformer it is more convenient to put the energy source out the transformer. Let us further classify the passive transformers.

The passive transformers can belong to the following types:

1. Simple transformers

In this case energy is produced at the output due to transformation of energy coming to the inputs into energy of another type or having other characteristics. The following transformation can serve as the example.

An electric transformer: resistance of one value comes to the input, and the resistance of another value comes from the output (a type of energy is the same).

A furnace for combustion of fuel: energy of chemical connections comes to the input and heating energy comes from the output (energy of radiation may be neglected).

A Wind Generator, Hydroelectric Power Station: kinetic energy of moving air or water comes to the input, and electric energy comes from the output.

2. Energy intensifiers

In this case a transformer intensifies energy coming to one of the inputs due to energy coming to the other inputs (or to the other input). Below there is an example for a *monoenergetic transformer*. Energy (an electric signal having certain parameters) comes to the input of a transformer, and the output energy has the same characteristics but it is more intensive. It can occur due to electric energy coming to the other input of the transformer.

A heat pump represents an example for a *polyenergetic transformer*. Low potential heat energy of the ambient space (air, water, ground) comes to the input of the heat pump, and electric energy from a power network comes to the other input. The output heat energy has value which is equal to the sum of the coming heat energy of the ambient space and electric energy coming from the power network through the electric engine of the compressor. The output heat energy excesses energy coming from the power network by several times. The output energy is always lower than the sum of the low potential heat energy and the electric energy coming to the input. Hence, the output of a heat pump is always less than unit.

Efficiency of the heat pump consists in the fact that a consumer pays for electric power produced by power network only (use of the low potential heat of the ambient space is free). However, the output heat energy is several times more than the energy which can be produced by the electric power coming to the input.

3. Active oscillator

An active oscillator is a device of a certain type. Energy of time-constant characteristics comes to its input, and at output there is energy of time-periodical characteristics. Energy with time-periodical characteristics can come to the input as well since these characteristics are not connected with the time-periodical characteristics of the output energy. The transformer can operate in a mode of an active oscillator if it has the following features:

1. Indirect connection as a series circuit: one of the outputs is connected to an additional transformer whose output is connected to one of the inputs of the transformer. The additional transformer provides certain changes of the input signal (time delay).
2. Energy comes to the input (it can be time-constant or time-periodical).
3. The transformer must have a certain type of non-linearity.

Examples of the active oscillator

Internal combustion engine: the indirect connection is the system of combustion, the non-linear element is the system of admission and exhaust valves, and the energy source is energy of chemical connections of fuel.

Various electric generators: all of them have the indirect connection, the non-linear element, and the energy source.

The active oscillators differ from the electrical intensifiers qualitatively. The difference consists in the fact that the active oscillator can operate and receive energy from the ambient space without additional energy coming to it (from a power network, for example).

Theorists and experimenters try to create a self-supporting self-organizing system in their works on creation of alternative sources. This fundamentally correct tendency requires using theory of active oscillators. There is the developed theory in electrical engineering, automation, and other scientific fields [25]. To simplify application of these theories it is necessary to use analogy between equal processes which take place in different physical fields.

4. Rectifiers

Time-periodical energy comes to the input of the transformer. The output energy has time-constant or practically time-constant characteristics. If the transformer has a non-linear element or elements of a certain type (a diode or a one-sided valve) then it can

operate in the mode of a rectifier. The examples are electrical rectifiers and pumps of a valve type.

Properties of energy transformers

General properties:

1. A transformer can transform energy of one type as well as transform one type of energy into another type.
2. The generalized kinetic, potential and dissipative energies are specific peculiarities of energy change in the space and time.
3. The generalized masses, elasticities and dissipative elements are products of energy change in space and time.
4. Values of the generalized masses, elasticities and dissipative elements (existing inside the transformer as well as reduced to the equivalent values on the sides of it) depend on a temporal character of changes of kinematical or dynamic disturbances. Values of the generalized masses and elasticities at the sides of the transformer are lower than the corresponding values inside the transformer.
5. Energy interchange between macrostructures and microstructures can occur through a transformer.
6. One area of space can "know" about another area of space through energy exchange only, i.e. through generalized dynamic and kinematical interactions. In the light of the fact that chains of different transformers can have similar physical properties (for example, an equal resonant structure) interference of these transformers seems to be possible including interference occurring at a great distance.

Properties of the passive monoenergetic transformer:

1. Transformation of characteristics of the same energy type.
2. The output energy can be both equal or lower than the sum of energies coming to all the inputs. The sum of the output energies decreases due to dissipative losses occurring inside the transformer.

Properties of the passive polyenergetic transformer:

1. One energy type coming to an input can be transformed into another energy type coming from the output.
2. The sum of energies of all the outputs can be equal to the sum of energies of all the inputs or less than it. The sum of the output energies decreases due to dissipative losses occurring inside the transformer. The output will always be lower than unit. If the energy coming from certain of the outputs (within the limits of one output) is considered as a positive effect then the output will be less than the mentioned value.
3. Energy of one and the same type comes to the input and from the output while other energy types can come from other outputs. This property can allow increase one type of energy coming from an output at the expense of the other types of energy coming to the inputs.

Analysis

This article is aimed to provide general properties of the energy transformers and to analyze some problems of creation of renewed energy sources, according to these properties. There are made various attempts to design a renewed energy source which would produce energy without fuel consumption. In the light of the above mentioned results, the researches on creation of the renewed energy source may be represented by the following way. Energy can be produced from the macrostructures and the microstructures.

In the case of the macrostructure, energy can be produced by a simple transformer, an electric intensifier or an active oscillator. Methods of production of energy from the ambient space by means of simple transformers (thermoelectric and hydroelectric power stations, wind generators, etc.) are developed sufficiently by the humankind. Works on producing energy from the ambient space by means of energy intensifiers are on its initial stage. Heat pumps, which utilize low potential heat energy by means of Freon-compressor heat pumps, are successfully introduced. One of the perspective approaches is replacing such a heat pump by a vortex oscillating heat pump which does not contain Freon and a compressor [3, 5, 19, 22]. In future it will be possible to replace the energetic pump by a new energy transformer of the type of an active oscillator. In this case the energy source will always obtain energy from the ambient space without using additional energy from a power network. Energy sources of the type of the active oscillator are internal and external combustion engines, stream engines, etc.

In the general case a transformer can contain different energy types and has communications with **outer microstructures**. It should be noted that the outer microstructures can be included in the geometrical size of the transformer. Energy of this microstructure can be huge; hence, this energy can be obtained from them for a very long period of time. Atomic reactors can serve as an example for this fact. The types of energy in these microstructures can be represented by known types (electromagnetic energy, nuclear energy) and unknown types (whose numerous quantity can be considered). These energy types exist in the ambient space. However, almost all the transformers of energy produced by a human (except the nuclear reactors) do not interact with the energies, and we do not obtain energy from these microstructures.

The task of creation of a new energy source consists in designing such an energy transformer which could obtain energy from the microstructures and transform it into the type of energy which is needed to a consumer. In this case all the designed transformers will not have over unit output. Efficiency of these transformers will be defined by the cost of the energy produced by them. This energy depends on a ratio of

energy coming to one of the inputs (electric power) (for example, in heat pumps) to the output energy. If the output energy is much more than the artificial energy which comes to one of the inputs then this transformer can be very useful for a consumer.

New high effective energy sources are often claimed to be created. According to the observed facts, existence of such sources is practically possible. Nevertheless, realization of this source will depend on our knowledge of physics of the microstructures and methods of transformation of energy of the microstructures into such type of energy which can be used by a consumer. Physics of microstructures is investigated badly, and many types of energy are totally unknown. Therefore, modern scientists try to create the new energy sources at random. In this case the following results can be achieved:

1. The high effectiveness of an energy source (over unit output) does not correspond to reality.
2. The output energy of the energy source is actually higher than the input energy (the source of the energy intensifier type).
3. The energy source actually produces energy without artificial input energy (the source of the active oscillator type). It can occur if an inventor failed to recognize the source of energy coming from the microstructures. It can be connected with particular or total lack of exploration of physics of the microstructures. Moreover, the fact is caused by transcendent difficulty of disclosing energy sources from the macrostructures.

Conclusions

It is principally possible to create an energy source whose output energy would be higher than its input energy (an energy intensifier) or an energy source which would produce energy without additional input energy (an active oscillator).

1. Various energy sources or transformers of energy of the macrostructures and microstructures can be designed.
2. Practical value of the energy source is defined according to cost of its output energy instead of the output value.
3. Designing new energy sources it is useful to consider them from the point of view of transformers. It is worth to define all the communications of the transformer and to state experimentally energy at all the accessible communications of the transformer.
4. Developing theories of sources it is expedient to use physical analogy and to take into account ready results of works on theories of transformers, chains, etc. of electrical engineering, radio engineering, automation and other scientific fields.
5. In the light of the fact that it is planned to obtain energy from the microstructures it is necessary to pay attention to new probable types of radiation and to their influence on a human.

References

1. Frolov A.V. The work Advanced Energy and Propulsion Systems based on Chronal Reaction Method // New Energy Technologies. - 2001, 2. p.51-55.
2. Frolov A.V. Reactionless Propulsion and Active Force // New Energy Technologies. - 2001, 2. p.56-58.
3. Sorokodum E. Recycling of energy of the atmosphere by means of vortex // Russian technologies for industry "Renewable Energy" IWRFRI'2001,may 28-30, 2001, Saint-Petersburg. Abstracts. - 2001, p. 92-93.
4. Sorokodum E. On general nature of forces. New Energy Technologies. 1(4), 2002, p.30-36.
5. Sorokodum E. D. Vortex heat-generators. New Energy Technologies Issue. Vol.2(5), 2002, p.17-76.
6. Andreev V.S. Theory of nonlinear electric circuits. M.: Radio and Communication. 1982, p.280
7. Atabekov G.I. Theory of linear electric circuits. M.: Soviet Radio. 1960, p. 712
8. Berezkin E.N. Lectures on theoretic mechanics. Part 11. Dynamics of the system, dynamics of solid body, analytical dynamics. M.: MSU - 1968, p.314
9. Blakyer O. Analysis of nonlinear systems. Transl. from English. Edited by Hohlov R.V. M.: Mir. – 1969, p. 400
10. Gledzer E.B., Dolzansky F.V., Obuhov A.M. Systems of hydrodynamic type and their application. M.: Nauka – 1981, p. 366
11. Druzinsky I.A. Mechanical circuits //L.: Mashinostroenie. – 1977, p. 240
12. Kononenko V.O., Plahtienko N.P. Methods of identification of nonlinear mechanical oscillating systems
13. Zakrzhevsky M.V. Oscillations of essentially-nonlinear mechanical systems. Riga, "Zinatne". – 1980, p.190
14. Ladikov Yu.P. Stabilization of the processes in continuums. M.: Nauka. – 1978, p. 432
15. Merkin D.R. To the question on forces' structure // Applied mathematics and mechanics. - 1975, 39, 35. p. 929-932
16. Oltson G. Dynamic analogies. M.: State Edition. Foreign Literature. - 1947, p.223
17. Popov E.P. Theory of linear systems of automatic regulation and control. M.: Nauka. – 1989, p.302
18. Puhov G.E., Vasilyev V.V., Stepanov A.E., Tokareva O.N. Electrical modeling of the tasks of structural mechanics. Edition of Academy of Science of Ukrainian SSR. - 1963
19. Rodionov B.N., Sorokodum E.D. Vortex energetic. Constructional materials, equipment, technologies of the XX century. 3 (26). 2001, p. 28, 29
20. Sorokodum E.D. Theory of transformers for nonlinear biomechanical oscillating systems. Taganrog institute of radio engineering. – Dep. in VINITI, 7.05.1980, #1948-80 Dep. – 1980, p. 38
21. Sorokodum E.D. On the application of theory of nonlinear transformers for the calculation of complex mechanical oscillating systems. Reports at the scientific conference "Problems of nonlinear oscillations of mechanical systems". Kiev. - 1978
22. Sorokodum E.D. Vortex source of energy. International scientific and social conference. Prospects of preservation and developing of the united civilization of the planet. Culture. Ecology. Space. 26-31 of May, 2002
23. Strelkov S.P. Introduction to the theory of oscillations. M.: Nauka. – 1964, p. 440
24. Harkevich A.A. Theory of transformers. State Energetic edition, M.-L.: 1948, p. 191
25. Harkevich A.A. Auto-oscillations. / Harkevich A.A. Selected works in 3 volumes, V. 2, M.: Nauka – 1948, pp. 253-379.

Commercial Exploration of Space

Review
by Olga Leontyeva, Editor
http://www.faraday.ru

Of late years the mankind has greatly advanced in space exploration. New spaceships are created, automatic apparatus are launched to the planets of solar system, space stations are orbited. A man has passed to outer space and begun exploring the planets of solar system. More and more specialists and people of different professions are involved in the development of space industry. However to present day only a few of them has succeeded flying into space.

At the present state of affairs space flight is very expensive and a serious reason should exist to forward a man into space if he or she does not relate to the aims of professional cosmonautics. However in last years there has appeared a certain breakthrough in the solving of the problem. Nowadays space technologies gradually turn from the sphere of experimental and scientific researches to the area of practical application. The time has come for a man to realize the real space flight without being the professional cosmonaut.

What are the ways to solve the problem? No doubt that special attention should be paid to the development of new space technologies, search of new types of fuel and attraction of investments to the sphere of space tourism.

April 28, 2001 can be considered as official date of birth of space tourism, when there was launched the space ship "Soyuz TM-32" with the first space tourist aboard. Almost in a year, on April 25, 2002 the space tourist #2 South African Republic person Mark Shattlword started on his space journey.

Today many companies give the opportunity to make a real space flight for all comers who have enough money and health. It is promised the providing of the most modern space technologies and the most perfect space equipment. It can be created a furor by the "Minimum program" of the Russian company "Atlas Aerospace" which is made by the members of Yu.A. Gagarin Center of training of cosmonauts.

In recent years at the international market there appear more and more companies which deal with search and encouragement of inventors who work on creation of alternative propulsion systems. Activity of "X Prize Foundation" company can be considered as an example.

The X PRIZE Foundation

722-A Spirit of St. Louis Blvd
St. Louis, Mo. 63005
Tel: 636-519-9449, Fax: 314-533-6502
http://www.xprize.org
E-mail: press@xprize.org

The X PRIZE is a $10,000,000 prize to jumpstart the space tourism industry through competition between the most talented entrepreneurs and rocket experts in the world. The $10 Million cash prize will be awarded to the first team that:

- Privately finances, builds & launches a spaceship, able to carry three people to 100 kilometers (62.5 miles)
- Returns safely to Earth
- Repeats the launch with the same ship within 2 weeks

The X PRIZE competition follows in the footsteps of more than 100 aviation incentive prizes offered between 1905 and 1935 which created today's multibillion dollar air transport industry.

For more than 30 years, the general public has waited for an opportunity to enjoy the space frontier on a first-hand basis. The X PRIZE Foundation is working to make space travel possible for all. The spaceships that compete for the X PRIZE are designed to carry passengers.

Since its inception in May 1996, the X PRIZE Foundation has registered more than 20 teams from seven countries to compete for the prize. The X PRIZE is fully funded through January 1, 2005, through private donations and backed by an insurance policy to guarantee that the $10 million is in place on the day that the prize is won. Additional funds are still being raised by the X PRIZE Foundation to implement the competition (judging, media, event management, etc.) and continue the Foundation's education mission.

The X PRIZE was inspired by the early aviation prizes of the 20th Century, primarily the spectacular trans-Atlantic flight of Charles Lindbergh in The Spirit of St. Louis which captured the US $25,000 (US$) Orteig

prize in 1927. Through a smaller, faster, better approach to aviation, Lindbergh and his financial supporters, The Spirit of St. Louis Organization, demonstrated that a small professional team could outperform a large, government-style effort.

The Societal Benefits of the X PRIZE include:

* Creation of a new generation of heroes
* Inspiring and educating students
* Focusing public attention and investment capital on this new business frontier
* Challenging explorers and rocket scientists around the world; and,
* Vehicles built for the X PRIZE will eventually serve four different industries:
- Space Tourism
- Low-cost satellite launching
- Same-day package delivery
- Rapid point-to-point passenger travel.

In Fig. 1 it is demonstrated the typical X Prize trajectory.

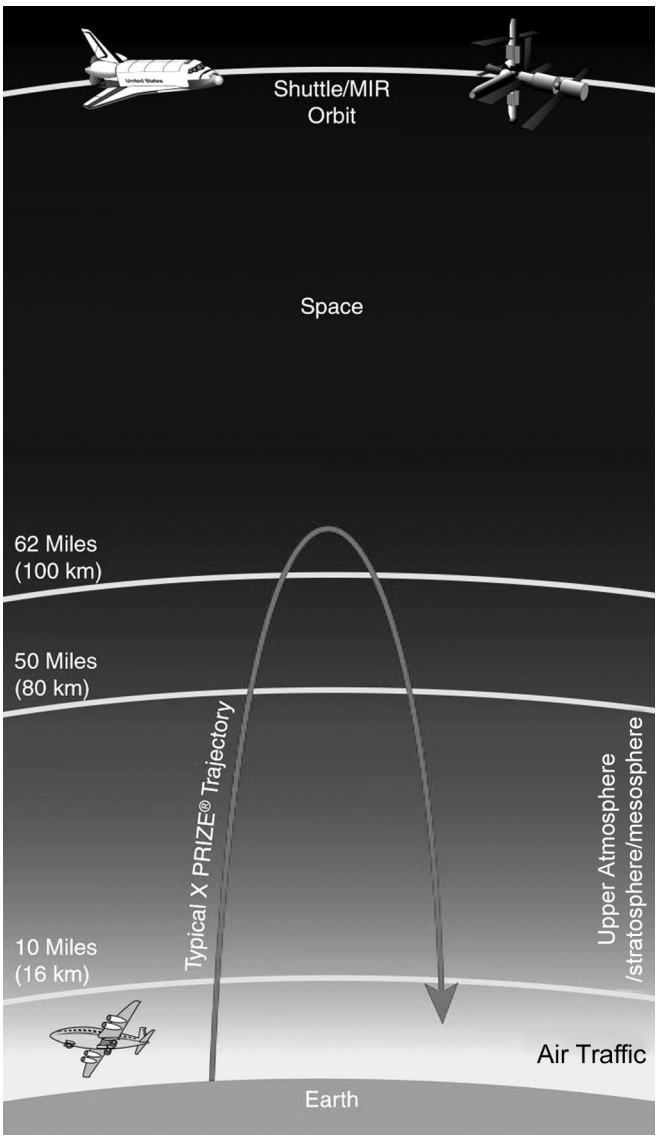

Fig. 1

Editor: Below we publish photos and brief comments about some official X PRIZE registrant teams. More detailed information you can find at http://www.xprize.org/imagefacts/photo1.html.

The Da Vinci Progect

http://www.davinciproject.com

Fig. 2
"Wild fire"

The **da Vinci Project** will launch its spacecraft ("Wild Fire") from the world's largest helium balloon. The 3,270 kg (7,200 pound) rocket will be tethered 720 meters (2,400 feet) below the balloon and lifted over the course of an hour to an altitude of 80,000 feet. The 10,000 pound thrust, liquid oxygen, kerosene engines will fire the first stage and the rocket will fly an initial angular trajectory to clear the balloon. The spacecraft then will transition to vertical flight to its apogee of 120 km in space. The rocket will reach a maximum speed on both its ascent and re-entry of Mach 4, or 4,250 kph (2,650 mph).

An innovative ballute will protect and stabilize the rocket on re-entry. A flyable parachute will be deployed at 25,000 feet and the rocket will descend under control, guided by GPS, to a predetermined landing zone. The da Vinci Project has already successfully conducted full-scale rocket motor test and has built a full-scale mockup of their vehicle.

"Discraft" corporation

http://www.xprize.org/teams/teams.html

John Bloomer, the team leader, is an aerospace engineer and he has worked on many aerospace progects, including Apollo and holds more than 60 patents on a disc plattorm aircraft. Bloomer's ship utilizes "Blastwave" Pulsejets.

Flight Sequence

Fixed, 7850-ft^2-area, laminar-flow wing take-off at about 60 mph within about 150 ft, featuring climb with gradual air-breathing acceleration (according to a fixed program) at fixed angles, to exit the atmosphere at Mach 10 on an unpowered ballistic arc to reach 75-mi. altitude: return on down-leg of same unpowered arc to gradual power-on flare-out re-entry of the atmosphere in simple reverse sequence of the take-off velocity profile. Range above 100,000 ft is about 480 mi. which is covered in about 5 minutes.

"Kelly Space & Technology"

http://www.kellyspace.com

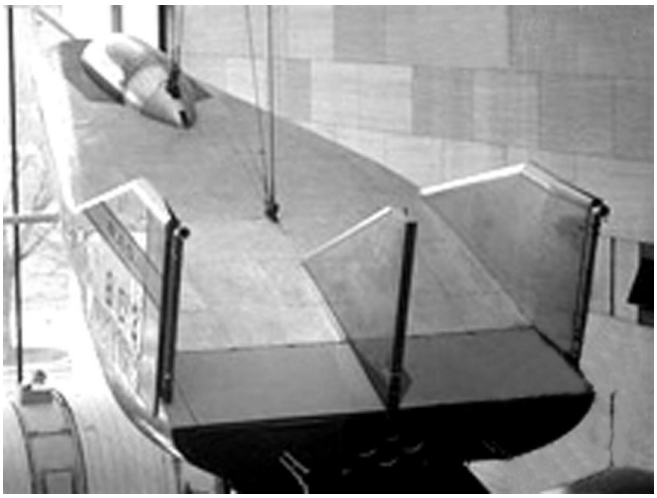

Fig. 3
"LB-X"

The vehicle is a rocket-powered delta wing glider with a liquid oxygen and kerosene liquid rocket engine. The spacecraft is prepared and fueled at the takeoff airport. The spacecraft is towed to release altitude behind a conventional jet powered aircraft such as Boeing 747 aircraft. Upon release from the tow aircraft, the main engine is throttled up for boost phase. The vehicle nominally coasts to an apogee altitude of 100 kilometers. The vehicle then glides to a landing at the takeoff airport for checkout and refueling prior to the next flight.

Flight Sequence

The lifting body will be towed to launch altitude behind another aircraft, and the rockets will be ignited. The craft will return to the landing site and make an unpowered, horizontal landing.

"Lone Star Space Access"

http://www.dynamicar.com

The Cosmos Mariner employs air-breathing jet propulsion for take-off and landing from conventional airports and rocket propulsion for ascent from cruise flight in the stratosphere to 30 or 40 nautical miles altitude. From there, the vehicle coasts to a target altitude of around 65 nautical miles. The air frame is designed to interface with two jet engines (turbofan or turbojet) each with 20,000-lbs static thrust or less. For rocket propulsion, the Cosmos Mariner will use the Aerojet AJ26-NK31A, a staged-combustion kerosene engine. The vehicle is designed to take off and land from conventional runways.

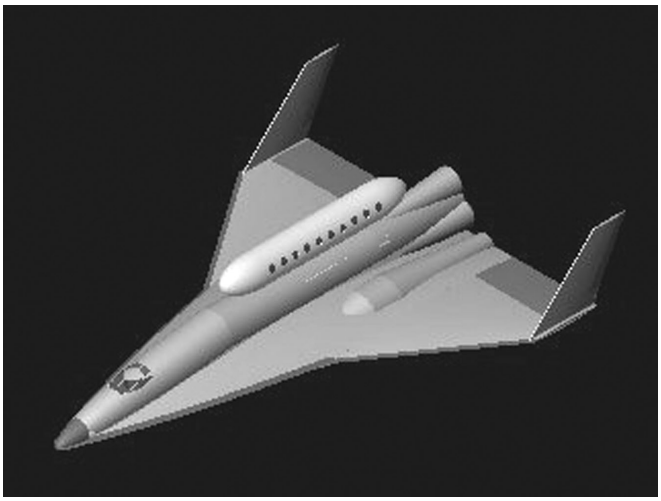

Fig. 4
"Cosmos Mariner"

*Along with X Prize Foundation it should be mentioned **ALLTRA** Company (Germany). ALLTRA consists of a small group of space experts. The main objective of ALLTRA is to 'sell' the space idea to a broad public and to identify future commercial opportunities in the space sector.*

On the official ALLTRA website http://www.alltra.de you can find collection of artist's views of the projects which are aimed at decrease in space ships value by means of using of new types of engines. Besides the Company deals with the development of space hotel projects.

JNET

New Energy Technologies collection of articles Japanese Version

Collection of articles from New Energy Technologies magazine, 2001-2002 is published in Japan.

On purchasing of the book, please, contact

Eiichi Yamamoto,
President Yama Trans Co. Ltd.

Email: admin@yamatrans.co.jp or eyama@yamatrans.co.jp

Alternative Aircrafts and Space Propulsion Systems

Editor: Nowadays all over the world there are made numerous attempts to create new types of aircrafts and alternative space propulsion systems. Below we publish the review of some interesting devices which are presented in the modern market.

"Arbortech Pty.Ltd"

http://www.airboard.com.au

Fig. 1
Airboard 2000

General Technical Specifications

Total payload, including rider — 100 kg (220 lb)
Operating time — 1 hour on full tank of fuel
Construction — Fiber glass/High-impact plastic shell, Aluminum frame, Rubber skirt
Starting — Electric key-start, Battery included
Engine — Briggs & Stratton 4-stroke
Fuel tank capacity — 5 litre (1.3 US gal)
Fuel type — 85 Octane unleaded

How does it work?

Airboard uses Hovercraft air cushion principles to glide just above the ground. The air cushion is generated from a purpose designed engine and fan which are suspended below the Airboard shell. In addition to providing an air cushion for the Airboard to ride on the fan also provides a fast stream of air exiting from the rear of the craft to provide forward thrust – just like a hovercraft. To help provide better acceleration the Airboard also includes a unique friction drive wheel at the rear. When the rider wishes to accelerate forward, weight transfer is used to bring the friction drive into contact with the ground. By engaging the friction drive clutch the Airboard can be accelerated forward without losing the feel of hovering above the ground. The control of the Airboard is provided by weight transfer of the rider, similar to surfboards, skate boards and snow boards. In operation the Airboard can be started, stopped and steered in a controlled manner and this means that riders can perform stunts, trick maneuvers and race around tight tracks against each other. In this unique way the Airboard is the first ever vehicle to deliver the advantages of hovercraft vehicle without the disadvantages of proof acceleration and handling.

"Trek Aerospace, Inc."

http://www.solotrek.com

Fig. 2

Trek Aerospace

Preliminary Specifications and Predicted Performance

Normal Gross Take Off Weight	800 Lbs.
Fuel (15 U.S. Gallons)	98 Lbs.
Mission Payload, net of fuel	352 Lbs.
Takeoff/Landing Distance	0 (VTOL)
Maximum Speed	70 Mph
Range	120+ Miles
Hover/Loiter Endurance	2+ Hours
Engine Type	Advanced Int. Combustion
Fuel Requirements	Heavy-Fuel or Gasoline

Special Features: 100% fly-by-wire control system with electronic stability augmentation; Intuitive, easy to fly safely; Minimal field service requirements; Rugged, efficient power train.

DM AeroSafe

http://dmaerosafe.freeservers.com

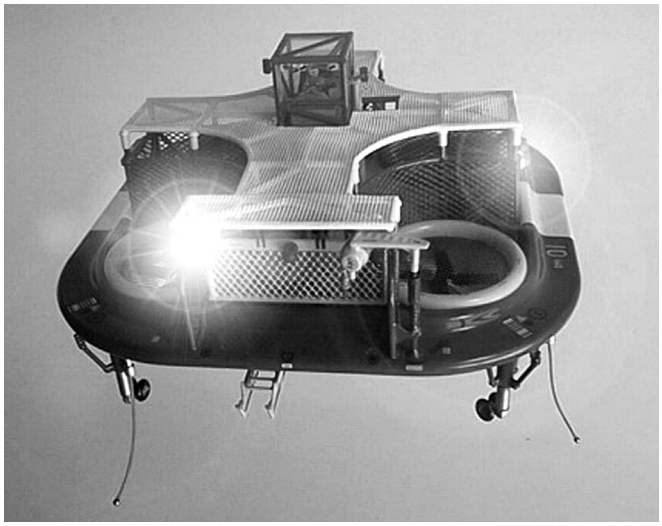

Fig. 3

EAGLE vertical take-off and landing aerial rescue platform

DM AeroSafe is a small research and development team, which has developed a totally new high-rise rescue technology to retrieve trapped people from areas which cannot be reached by conventional aerial ladder, conventional helicopter or a helicopter equipped with a Heli-Basket.

This technology could give rise to a new class of air transportation means, used for safe close-in maneuvering around tall structures, even inside the highly populated areas.

Eagle Aerial Rescue Platform's Performance Summary

Dimensions:

Length - 42 feet (12.8 m)
Width - 42 feet (12.8 m)
Height - 16 feet (4.8 m)

Weights:

Max. Gross weight - 5000 pounds (2268 kg)
Payload (Crew of two plus 10 rescued people) - about 2000 pounds (about 900 kg).

Propulsion System:

Four (4) variable collective pitch Ducted Propellers
Propeller Diameter - 7.8 feet (2.4 m)
Engines - four (4) four-cylinder radial piston aero engines with forced air cooling system 250 hp each (1000 hp total)

Performance:

Max. Duration - about 5 hours without refueling
Max. Airspeed - 40 knots (75 km/h)
Max. operating altitude - about 7000 feet (about 2200 m).

"LTAS/CAMBOT, Inc."

http://www.lvcm.com

Passenger Craft "Ltas 30-Xb"

The ships have rigid monocoque hulls, hybrid powered vectored thrust control and full active buoyancy control. (LTAS US Patent Pending).

This small 2-3 person craft at 70 to 80 feet in diameter will demonstrate ALL production systems and is designed for the LTAS FAA Type Certification program.

NASA's Langley Research Center

http://science.nasa.gov

NASA researchers are studying insects and birds, and using "smart" materials with uncanny properties to develop new and mind-boggling aircraft designs.

The "personal aircraft" that replaces the beloved automobile in people's garages may still lie in the realm of science fiction or Saturday-morning cartoons, but researchers at NASA's Langley Research Center (LaRC) are developing exotic technologies that could bring a personal "air-car" closer to reality.

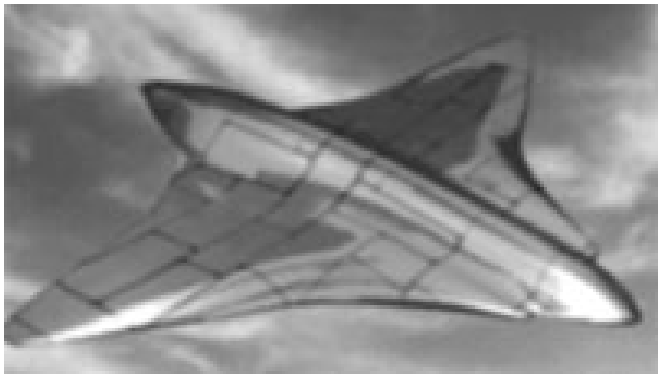

Fig. 4

And air-cars are just the beginning! Self-healing wings that flex and react like living organisms, versatile bombers that double as agile jet fighters, and swarms of tiny unmanned aircraft are just a few of the science-fiction-like possibilities that these next-generation technologies could make feasible in the decades ahead.

Laser Beam Flight

Lightcraft Technologies, Inc. (LTI)

http://www.lightcrafttechnologies.com

Lightcraft Technologies, Inc. is a new company committed to providing low-cost access to space through the use of beamed energy propulsion. (See color photos on the cover page).

Fig. 1

In 2000 at the High Energy Laser Systems Test Facility (HELSTF), Lightcraft Technologies, Inc. (LTI) set a new world's altitude record of 233 feet (71 meters) for its 4.8 inch (12.2 cm) diameter laser boosted rocket - in a flight lasting 12.7 seconds.

Although much of the flight was spent hovering at 230+ feet, the Lightcraft sustained no damage and will fly again. Besides setting the new altitude record, the craft demonstrated the longest ever laser-powered free flight and the greatest "air time" (i.e., launch-to-landing/recovery). LTI launched a total of seven vertical flights between 8:30 am and 11:30 am with three Lightcraft weighing less than 1.8 ounces (51 grams). Two of the flights by Lightcraft #3 reached 159 and 184 feet with the same propellant load!

...set a new world's altitude record of 233 feet!

The record flights were powered by the 10 kW pulsed carbon dioxide laser named "PLVTS" by the organization that owns it: the Directorate for Applied Technology, Test and Simulation (DATTS). Even though PLVTS was suffering from an arcing or grounding problem that caused it to run erratically, the laser power was still adequate to propel the craft to record altitudes.

What is a Lightcraft?

A Lightcraft is a 1kg launch vehicle, made from high temperature ceramic materials, that flies into space on a megawatt laser beam.

Fig. 2

The Lightcraft is both a single-stage-to-orbit launch vehicle and a satellite. If you have any further questions or comments, write or call LTI headquarters in Bennington,VT. The company representatives would be delighted to send you more information, or answer any inquiries over the phone.

How does it work?

A ground based laser is the power source that propels the Lightcraft into orbit. Lightcraft can deliver payloads into space for a fraction of the cost of traditional rockets because most of the engine stays on the ground, thereby unburdening the craft from having to lift the energy source for its propulsion system.

Fig. 3

The back side of the craft is a large, highly polished parabolic mirror that is designed to capture the laser beam projected at it from the ground. The mirror focuses the beam, rapidly heating the air to 5 TIMES the temperature of the sun, creating a blast wave out the back that pushes the vehicle upward. As the beam is rapidly pulsed, the vehicle is continuously propelled forward, on its way to orbit.

History of Lightcraft

1987 — Prof. Leik Myrabo invents Lightcraft for SDIO.

1997 — First successful wire-guided tests at WSMR. Solved flight stability difficulties, much like the Wright brothers did with the airplane.

1997 — Lightcraft broke Goddard's 41 ft., 1926 first successful rocket flight - but this time with no on-board fuel.

1998 — Record flight of 99 ft. with air breathing Lightcraft engine.

1999 — Record flight of 128 ft. with first rocket Lightcraft engine.

2000 — LTI sets new world record for highest flight (233 ft), longest flight time, and heaviest vehicle.

How can LTI reduce launch costs?

Conventional Launch — $175,000,000
The Lightcraft — $46,000

Chemical Rockets:

- carry massive propulsion source on board
- are expendable
- extremely costly
- prone to explosion due to fuel on board

Laser Propulsion:

- propulsion energy source remains on the ground!
- Lightcraft are inexpensive to manufacture and extremely light weight
- highly reusable power source is never subjected to the risks of flight

Lightcraft Technologies, Inc.

1914 Walloomsac Rd.
Bennington, VT 05201
Office: 802-447-6275
FAX: 802-447-8216
E-mail: tmyrabo@lightcrafttechnologies.com

Alternative space propulsion systems Star Drive

Mark R. Tomion, USA
http://www.stardrivedevice.com

Re: U.S. Patent **6,404,089** for the **Electrodynamic Field Generator**, **(EDF),**
issued June 11, 2002 to Mark R. Tomion.

The 'official' name of the "StarDrive device", per the U.S. Patent and international PCT Applications, is **Electrodynamic Field Generator.** The EDF Generator uses banks of permanent magnets and rotating Field Coils to produce a very-high DC rotor voltage, and plane-parallel ring electrode arrays to electrostatically expand and control that voltage *as applied to the hull*, so that huge quantities of external Field electrons may be accelerated to energy levels that are usually reached only with a particle accelerator! It's somewhat like a glorified arc welder whose output is deliberately shorted to its own housing, and the DC voltage and current across the emitter and collector housing sections can be thermionically increased to values that are generally observed only in lightning**:** but the Field's *current density* is limited to a value which falls short of damaging the hull!

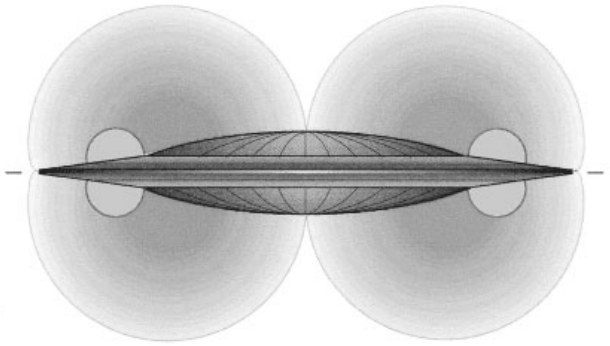

Fig. 1
StarDrive device hull & electrodynamic Field configuration

As depicted above (Fig. 1), electrons circulating in the external Field envelope can achieve an impact velocity at the central collector sections which is very nearly that of light, and applied magnetic fields allow broad modulation of the Drive Field current's properties. The *Primary Arrays* shown in the generalized schematic diagram below (Fig. 2) have control grids which allow an arc resistance imbalance to be imparted to the otherwise symmetrical Field current, so that they *render the two relativistic current impulses variably non-isometric:* thereby yielding thrust that is essentially **reactionless**! And the simple DC *Primary Power System*, like the early Faraday disk dynamo, *is wholly rotor-based* **. . .**

Note: It can be seen that the propulsive thrust developed by a StarDrive vessel is essentially brute-force in nature – it's produced simply by means of a controlled variable imbalance in the continuous *physical impact* of the two external hemitoroidal electron current streams with the collectors! If these two Field currents were of equal magnitude, no net force would be developed. However, if the "lower" current stream is stronger than the "upper", the vessel will be propelled away from the stronger current – in the "upward" direction. Since there's no 'backward' exhaust produced in the process, this type of thrust is truly and demonstrably reactionless in nature.

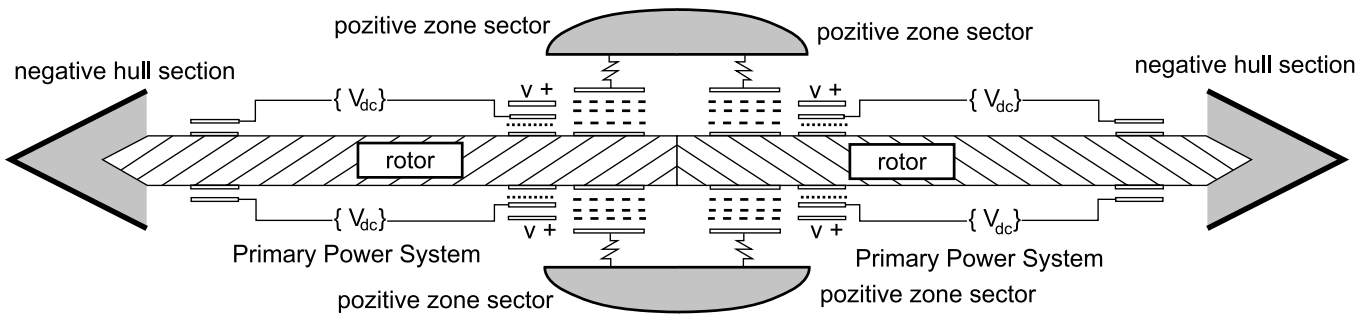

Fig. 2
Generalized schematic of rotor & dual induction ring assemblies

Needless to say, tremendous quantities of heat are produced in the StarDrive device's electron "targets" or collector housing sections, and liquid sodium must be pumped through each Primary Array's ceramic resistor network as a coolant. However, this excess heat in ground-based units may be used in the *commercial generation of electric power and desalinization of seawater*.

In fact, because an intense arc discharge field has the unique capacity to absorb vast quantities of quantum background energy, the EDF Generator is so efficient that the latter task may become truly cost-effective for the first time! And not only will large ***over-unity*** StarDrive Dynamo units be able to produce electric power at 60 to 720 MW output levels, they'll be able to do so for many years before the permanent magnet banks must be remagnetized!! *The only truly external input energy required* in the interim *is that necessary to initially bring the rotor up to speed . . .*

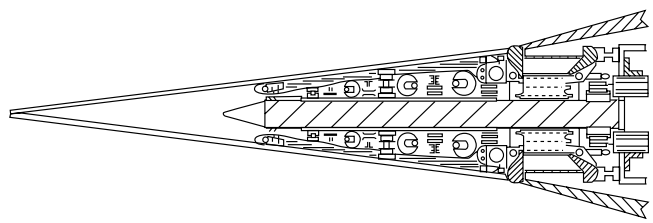

Fig. 3
A denumbered version of Fig. 1 from the EDF Generator Patent

Those of you who find this advanced technological prospect for the 21st century as exciting and fascinating as we do should consider making the

inventor's book *StarDrive Engineering* a valuable addition to your personal or reference library.

A Layman's Description of the StarDrive Device

Nearly anyone who endeavors to gain an initial understanding of the *Electrodynamic Field Generator*, even a scientist or engineer, is likely to ask for a concise layman's explanation of "how it works". This isn't easily accomplished, for this device represents an unorthodox and multidisciplinary technology. However, the overview provided below will discuss the operative characteristics of the machine's simplified *electric power generation variant* in what is hoped to be the most direct manner possible. In this case, when people ask the question above, what they generally mean is: "By what means is *over-unity* operation achieved in a 'StarDrive' Dynamo?". It is assumed here that the reader has not only already become acquainted with certain basic aspects of the design, but also understands that over-unity operation is an absolute prerequisite for any viable system of light-speed interstellar propulsion.

By way of further background, the formative mechanical design basis of the EDF Generator is of course the original Faraday disk dynamo. For whatever reason, no one seems to have bothered trying to develop this simple machine into a more sophisticated *and patentable* form before now. The principal limitation of Faraday's disk dynamo in its original form was that, when one or more permanent magnets were used to pass flux directly through the plane of a solid conductive rotor, a rather high-loss heavy current at very low voltage was produced. The first design improvement was therefore to use rotor-mounted toroid field coils in order to generate a much higher-voltage primary current, and to segment the rotor to reduce "eddy current" losses. Also, the toroid coil configuration absolutely minimizes Lenz losses, or the magnetic "drag" that is experienced by any conventional generator's rotor.

To eliminate the use of brushes, it was necessary to apply traditional vacuum tube design and operating principles. Fortunately, most of the original patent work in this field has passed into the public domain, so incorporating certain aspects of that work into the EDF Generator presented no impediment to its patentability. By using plane-parallel electrode arrays instead of brushes to charge the rotor, it is possible to limit that portion of the induced rotor current which passes through the field coils to a very low level – effectively isolating them from the actual output circuit. More importantly, however, it then becomes possible to thermoelectrically charge the Generator's housing itself in such a way that *it* carries the device's full output circuit current instead!

The reason for this unorthodox design parameter is that it was desired to actually incorporate a standing electric arc field into the output circuit, to take advantage of the electron's inherent ability to absorb quantum background energy [including *zero point energy*, if and as necessary]. As a result of a thorough study of lightning, the inventor of the StarDrive device reasoned that the electrons comprising any naturally-occurring bolt of lightning had to *recover* (or absorb) an amount of ambient photonic energy equal to that which they expended in transit – in order to satisfy the conservation of energy principle. In such a case, it is not necessary that "we" do the *work* of moving charge *against* a potential gradient; the work may be done by the charge itself in being attracted *along* the potential gradient (or voltage level).

And since it is known from the field of welding that it takes less energy to sustain an arc than it does to initiate it, it therefore becomes possible to create an electrical circuit that outputs more energy than it requires as input. This is exactly what the EDF Generator does – by incorporating a standing arc field in its output circuit. Using the StarDrive device as our mechanism, "we" only provide the work-energy required to establish and maintain the external field's potential gradient, by initiating rotor rotation and bringing the thermoelectric elements up to temperature. The electrons in the electrodynamic field do all the rest . . .

Further Notes from the Inventor

In conjunction with one of our *StarDrive Generator* prototype project funding proposals, we are presently working on an interim proof-of-concept experiment for our proposed 24 kW air-cooled EDF Generator prototype. This full-scale mock-up of the 30"-dia. Generator's rotor and dual induction ring assemblies is intended to demonstrate the fundamental design principal discussed at the close of the Technical Overview (linked to our website's Method of Operation Summary page), whereby the voltage electrostatically induced on the rotor anode rings which power each Primary Array should be roughly one-third (1/3) of the Field Coil voltage (because of the capacitive dual induction ring geometry of the Primary Power System). For safety reasons, the Field voltage in all *air-cooled* StarDrive *Generators* will be limited by design to 850 VDC, and to 1,400 VDC in the larger *liquid-cooled* StarDrive *Dynamos*.

The experiment will also assist greatly in the derivation of remaining production model specifications, and will in fact incorporate production-quality rotor segments and electrode rings. Should this proof-of-concept experiment be successful, not only will the ability of our over-unity 24 kW Generator prototype to deliver large-scale DC output that's compatible with standard AC inverters (for utility grid distribution or off-grid conventional use) be virtually assured, but a major milestone incentive in our existing funding proposals will have been fulfilled as well. Further

updates like those below will be forthcoming on the *News* page of http://www.stardrivedevice.com.

01/28/03 - International Patent Filings Secured!: We are very pleased to report that we were successful in our efforts to secure numerous international (PCT) Patent Application filings for the *Electrodynamic Field Generator* by the final deadline of January 21, 2003! These important filings were effected in Australia, Canada, the People's Republic of China, the European Union (including France, Germany, Italy, Spain, and the United Kingdom), India, Japan, Mexico, the Russian Federation, and South Africa.

The securing of these key Patent Application filings adds immeasurable value to our StarDrive Engineering Project overall, as it will greatly protect and enhance our investors' upside global market potential (assuming, of course, that our *24 kW StarDrive Generator prototype* is successful)! Be sure to check back from time to time for further updates as we proceed into the development phase of the Project.

11/07/02 - Academic Reference: Those of you kind visitors to our website who would like to have the benefit of an informed and unbiased academic opinion regarding the Electrodynamic Field Generator are welcome to contact John J. Tulip, Ph.D., Exec. Vice-Pres. of *American International University*. This consideration also applies of course to those parties who may be interested in securing a direct participation in our forthcoming EDF Generator Prototype Project. Dr. Tulip has not only expressed much-appreciated support of our efforts to introduce this important new technology, but has also had the opportunity to review our technical manual *StarDrive Engineering*. You may contact Dr. Tulip via e-mail at TulipJJ@aiuniversity.edu although we ask that you expect him to field serious and respectful inquiries only. Should you desire to speak with him by telephone, please be assured that he will endeavor to return your call whenever circumstances permit if you provide him with the proper phone number.

10/07/02 - Joint Venture Agreement Announced!: Mark Tomion, founder and president of Archer Enterprises and inventor of the recently-patented *Electrodynamic Field Generator*, is very pleased to announce that he has signed a Joint Venture Agreement with Affirm Technology Partners of Carlsbad, California to build a working prototype of his over-unity 'StarDrive' device's electric power output variant. The co-developers are planning to commence construction of a small air-cooled **StarDrive Generator** unit with a projected output rating of 24 kW and a housing diameter of only 30 inches, at a total weight of under 50 lbs., before the end of November 2002.

Should this exciting project be successful, it would represent an historic milestone in the development of over-unity electric power generation technology. Not only is this small prototype EDF Generator expected to demonstrate *a minimum Coefficient of Performance in excess of 20:1*, but the design employed is completely linearly-scalable in a very broad range of sizes that would include liquid-cooled ***StarDrive Dynamo*** units with output ratings of up to 1 gigawatt! The most remarkable feature of these large Dynamo units is that an amount of recoverable thermal energy comparable to their respective electrical outputs will be made available for desalinating seawater, or for use in centralized municipal and industrial hydronic heating systems. And this capability would make the large-scale desalinization or distillation of water truly cost-effective for perhaps the first time ever.

Interested parties are welcome to contact Mr. Tomion at office@stardrivedevice.com (585-526-6817) for further information.

INFINITE ENERGY
Cold Fusion and New Energy Technology
Including Conventional and Renewable Energy

Infinite Energy Magazine

* Cold Fusion * New Energy
* New Science
* New Technology

Subscriptions, 6 Issues Per Year
$29.95 North America
$49.95 Foreign
Single Sample Copy
$5.95 North America, $10.00 Foreign

Infinite Energy Magazine
P.O. Box 2816-FV
Concord, NH 03302-2816
Phone: 603-228-4516 Fax: 603-224-5975
http://www.infinite-energy.com

Institute for Planetary Synthesis

P.O. Box 128, CH-1211 Geneva 20, Switzerland

Tel. 41-022-733.88.76,
Fax 41-022-733.66.49
E-mail: ipsbox@ipsgeneva.com

website: http://www.ipsgeneva.com

Prospects of Hydrogen Energetics

Ph.M. Kanarev, Russia

E-mail: kanphil@mail.kuban.ru

Hydrogen is the only pollution free and inexhaustible energy carrier. But the implementation of such attractive properties of hydrogen is restrained by large expenses of energy for its production from water. Modern level of knowledge gives the opportunity to reduce these expenses [1], [2], [3].

It is known that a gram-atom is equal numerically to atomic mass of the substance, and a gram-molecule is equal numerically to molecular mass of the substance. For example, the hydrogen gram-molecule in the water molecule is equal to 2 grams, and the oxygen gram-atom is equal to 16 grams. The gram-molecule of water is equal to 18 grams. As the mass of hydrogen in the water molecule is 2x100/18=11.11% and the mass of oxygen atom is 16x100/18=88.89%, the ratio between quantity of hydrogen and oxygen is preserved in one litre of water as well. It means that 1000 grams of one litre of water contain 111.11 grams of hydrogen and 888.89 grams of oxygen.

One litre of hydrogen has mass of 0.09 grams, one litre of molecular oxygen has mass of 1.47 grams. It means that from one litre of water it possible to produce 111.11/0.09=1234.44 litres of hydrogen and 888.89/1.47=604.69 litres of oxygen. Thus, one gram of water contains 1.23 litres of hydrogen [1].

Now energy consumption for production of 1000 litres of hydrogen from water is 4 kWh and of one litre – 4 Wh. As it is possible to produce 1.234 litres of hydrogen, then 1.234x4=4.94 Wh are spent for production of one gram of water now.

Instruments and Equipment Used for the Experiment

A special experimental low current electrolyzer, a voltmeter of the highest accuracy (accuracy class 0.2, GOST 8711-78), an ammeter of the highest class of accuracy (accuracy class 0.2, GOST 871160), a balance with value of a division of 0.10 grams and 0.010 grams, and a stopwatch with value of a division of 0.1s.

Experimental Results

Indices	**Sum**
1 – duration of electrolyzer operation connected to the supply line, in 6 cycles t, min	6x5=30.0
2 – readings of voltmeter V, volts	13.6
3 – ammeter readings I, amperes	0.02
4 – power consumption (P=VxIxτ/60), Wh	0.136
5 – duration of electrolyzer operation disconnected from the supply line, in 6 cycles t, min	6x55=330.0
6 – solution mass change m, grams	0.44
7 – mass of evaporated water m', grams	0.02x6=0.12
8 – mass of water converted into gases m''=m-m', gram	0.320
9 – power consumption per gram of water converted into gases P'=P/m", Wh/grams of water	0.425
10 – existing power consumption per gram of water converted into gases P", Wh/grams of water	4.94
11 – reduction of power consumption for hydrogen production from water, K=P''/P', times	11.62
12– quantity of released hydrogen, ΔM =0.320x1.23x0.09=0.035, grams	0.035
13 – power content of hydrogen being produced (E=0.035x142/3,6)=1.397, Wh	1.397
14 – energy efficacy of water electrolysis process (Ex100/P), %	**1027**

Note: Gas output is clearly observed during many hours after the electrolyzer is disconnected from the electricity supply.

Conclusion

Low ampere water electrolysis is a way for production of inexpensive hydrogen from water and hydrogen energetics.

References

1. Ph.M. Kanarev. The Foundation of Physchemistry of the Micro World. Krasnodar, 2002. 320 pages
2. http://book.Kanarev.innoplaza.net
3. hppt://www.n-t.org/tp/ns/if.htm.

Heater Producing Healthy Effect

The First Device of Healthy Life Support in Fuel-Energy Industry

A. Belyaeva, L. Savelyeva, O. Bondarenko, Kirghizia

http://www.leteco.h1.ru
Email: leteco@mail.ru

Nowadays problems of rational use of resources including energy resources are very important. Lack of energy-efficient technologies causes consumption of great amount of electric power, coal, and mineral oil. From another hand, in the XXI century one of the main approaches of human society development is turned to healthy life-style and development of ecologically appropriate technologies. Hence, basic direction of heating systems development should correspond to, at the least, two requirements, i.e. effectiveness (energy-saving) and ecological appropriation (ecological functioning). Moreover, it is necessary to take into account additional requirements for modern works:

- Relatively low prime cost of the systems;
- Minimal operating costs;
- Availability of a system of temperature mode control;
- Use of domestically produced materials for the systems.

The aim of the work is creation of a universal electric device of natural ecologically appropriate materials. The device should maintain relative air humidity of natural atmosphere in a quarter, make its ecology healthier, meet all the listed requirements, and represent new generation energy-saving system designed for heating of industrial and domestic areas according to features of technical solution.

A.L. Belyaeva is the author of this work. The invention of this heating device was acknowledged as the best invention of Kirghiz Republic of the last two years. A.L. Belyaeva was called as a laureate of a competition of "The Best Inventing in Kirghiz Republic in 2001-2002".

Solving this problem the author based on work experience existing in the area of semi-conductors production. Actually, the model was worked out in the common area of electric engineering and industrial crystals growing. Using of knowledge and skills of the both areas made creation of this device possible.

It should be noted that initially the invention of the heating device, which is discussed here, was connected with necessity to improve microclimate and air atmosphere in a semi-conductor shop since the industrial process required optimal conditions. Hence, the device was observed as an element of the industrial process. However, soon other positive characteristics of the device were disclosed, i.e. when it was installed in a quarter all visible mould disappeared. Laboratory investigations stated that the operating device annihilated all pathogenic microflora. This rediscovered feature allowed using the device both in domestic and industrial area. After series of following laboratory investigations and bench tests construction of the device was changed and improved that allowed prepare it for line production.

Ceramic electroconvector: general characteristics

The working name of the final version of the model is *Ceramic Electroconvector TY 2971-006-22997241-2002.* Ceramic Electroconvector is an industrial and domestic electric heater of direct stationary action. It has high effective heat emission and satisfies ecological, sanitary, medical, and fire-prevention requirements.

At the same time it should be mentioned that by several characteristics this electroconvector differs from other known models of electroconvectors as well as from other existent heaters. It may be observed as a representative of an independent, specially created group of heating devices.

One of the main characteristics of the electroconvector is presence of constructive heating carbonic elements made of ecologically appropriate natural *non-metal* materials. Essentially, the electroconvector construction does not contain metal (the only metal part of the device is its supporting construction).

Production of heat of physiologically comfort zone requires 0.3 kW/h energy consumption which is 3-10 times less than energy consumption of known models of heating engineering. The Ceramic Electroconvector influences positively on ecology of a room. Room heating occurs better and more softly

as conducting carbonic elements can be heated maximally up to 100° C. As a result oxygen is not burnt, and air is not overdried in a room. Achieved minimization of metal content in the constructive elements of the device increases the level of ecological compatibility both of electroconvector constructions and operation.

The device accumulates no static electricity, neutralizes harmful magnetic field generated by alternating current in the conducting element (it is typical for all the other electrical household appliances). Therefore, **the additional positive effect** is produced and higher ecological characteristics of functioning of this electroconvector are confirmed.

Insulating strength of ceramics prevents electrical shock accidents. Ecological compatibility of the electroconvector is provided by materials of the construction. The base of the device is a studied natural silicate fiber which has quantitative and qualitative content of useful chemical elements which are the closest ones to the group of medical adsorbents listed in a medical encyclopedia. The ceramics is adjusted to emit electromagnetic waves only in infra-red spectrum.

The electroconvector produces heat waves in the average IR spectrum (8.4-8.6 mkm) which is maximally approximated to the diapason of heat waves generated by a human (9.37 mkm). It annihilates humidity of buildings independently of outer space humidity. At the same time it neither burns oxygen nor overdries air.

Healthy effect is produced by all the constructive elements made of ecologically appropriate natural materials. Electric power is transformed into heat emission by conducting elements. This process causes a mode of generation of a continuous heat spectrum of radiation. The heat radiation is similar to heat spectrum of radiation generated by a human. At the same time, this feature together with resonant oscillations of the crystal lattice of the ceramic cylinders produces a destroying effect on pathogenic and conditionally pathogenic microorganisms.

From the point of view of room ecology the proved healthy effect of the operating electroconvector becomes very significant. The effect considers continuous presence of a human in the room, i.e. risk of pathogen infection through respiration objectively decreases.

Application of the ceramic electroconvector is especially actual in patient care institutions and children's institutions, in special precision industries and space technologies. It can also be used in saunas with dry vapor.

The ceramic electroconvector is designed for unsupervised continuous work.

Structure of the electroconvector producing the healthy effect

Shortcomings of known electric heaters are: great electric power consumption (0.75-3.0 kW/h), big number of metal details, complex technical performance, and use of a necessary additional blower as a ventilator. Big number of metal details decreases ecological compatibility and productivity of the heaters. The listed devices have to use high temperatures on heat-release surfaces for warming up rooms up to the level of physiological comfort. This causes increase of energy consumption. Moreover, using of metal heating elements influences on air and relative humidity in the room. According to available data, no existent electroconvectors have healthy influence on ecology of a room.

The represented ceramic electroconvector contains a carrying frame with horizontal boards which have convective gaps. The carrying frame has heat-release monolithic hollow ceramic cylinders whose walls contain longitudinal through holes. Heating carbonic conducting elements and de-energized carbonic rods are built in the through holes. The heating conducting elements are connected in parallel-series circuit at the output of the cylinders with it's ends placed into insulating supports of the carrying frame.

Constructive heating elements are the main differences of the device. All the heat generating constructive elements, i.e. conducting and de-energized heating elements, as well as heat-release surfaces of ceramic cylinders have contiguous spectra of infra-red radiation.

Energy-efficient effect

The electric scheme of connection of the conducting elements provides different modes of work of the device. According to these modes, energy consumption is in the interval of 0.05-0.3 kW/h. The mode of 0.05 kW/h is calculated on a supporting level of warming-up of a room. Maximal energy consumption (0.3 kW/h) corresponds to the superior limit of the temperature mode of heating of working heat-release surfaces of the ceramic cylinders. In this case temperature of the heat generating elements, i.e. de-energized carbonic rods and conducting carbonic elements) lies in the limit of max 100°C. This produces a significant potential resource of electric strength and of durability of the used elements. The de-energized carbonic rods function as heat accumulators at switching on and switching off the device. Heating the conductors the de-energized rods accumulate heat through the ceramic walls of the cylinder till their temperature becomes equal to the temperature of the conducting elements. Appearing electromagnetic resonance between the conductors and the de-energized carbonic rods

intensifies infra-red radiation of the ceramic wall. Accumulative heat potential of the de-energized carbonic rods allows maintain uniform radial heating of the heat-release ceramic surface of the cylinder without decreasing energy consumption. In this case additional conducting elements of infra-red radiation become unnecessary.

The heating efficiency of the ceramic electroconvector was estimated by independent experts. Surface density of the radiation flow was calculated by formula of Stefan-Boizmann distribution law. Taking into account heating of the cylinders' surfaces up to 70° C this value came to 727 W/m^2. **Total heat generated by the electroconvector per hour comes to 600 kcal or 698 W** at the total area of the radiation surfaces of 0.96 m^2 (on the basis of 1 kcal=1.163 W/h according to [1]). The electroconvector consumes 300 W/h and produces 698 W/h. That is to say that it effectively transforms electric energy into heat energy. Operational modes of the electroconvector are based on analysis of the heating effect produced by different devices, i.e. a tube metal heater (TMH) having a conducting metal element of Nichrom, a ceramic cylinder having a Nichrom conducting element, and a ceramic cylinder having a conducting element of carbonic ribbon. The carbonic ribbon produces high heating efficiency. Temperature on the surface of the ceramic frame is up to 80° C and temperature on the conducting element is 100° C. Hence, the device equipped with the conducting element of the carbonic ribbon does not produce excessive heat radiation.

The electroconvector consumes 300 W/h and produces 698 W/h.

After one-year operation of the preproduction models in a private school it was noticed that number of respiratory illnesses and influenza among the pupils slumped, condition of skin became better, attacks of bronchial asthma among the teachers stopped, and allergic itch left the patients who suffered from allergy. A side effect was that flowers began to grow better, and those which had not blossomed began to blossom at least. Obviously, a combination takes place there: air cleaning of microorganisms, humidity normalization, warming comfort, and influence of pyramidal ceramic structures on water vapors which are transported by warm blasts.

Applied Know How

Ambient air in rooms is a complex substance including various chemical compounds, ions, dust parts, water vapors, infectious and potentially infectious microflora, etc. The electroconvector is represented by a ceramic hardphase crystal structure. Cold air blast moves close to the ceramic surface. It meets combined oscillation of crystal microlevel structures of ceramics. *Filtering electromagnetic screen* appears that breaks shell of pathogens and potential pathogens. It is a performance of **sanitation properties**. Atmospheric water contacts with structures of ceramics, then it is cleaned and structured. After that water cleans air which is breathed in by a human. Hence, the organism becomes healthier. It is a performance of the **healthy effect**. A clean room warmed uniformly improves human's health.

Main Performance Attributes of the Ceramic Electroconvector Producing Healthy Effect

Nominal required power	0.05-0.3 kWt/h
Voltage of the feeding network	220 ± 22 V
Frequency of alternating current	50 Hz
Temperature of the conducting element in operation mode	50…110° C
Temperature of the heat-release surface of the cylinder	39…90° C
Surface density of radiation flow	727 Wt/m^2
Quantity of radiated heat	600 kcal/h
Class of protection	1
General area of heat-release surfaces of the cylinders	9600 cm^2
Sizes	410 x 400 x 75 mm
Weight	18-21 kg
Durability	30 years

The ceramic electroconvector is designed as a floor construction for repetition work.

References

1. Heat Engineering Reference-book, Moscow, Energy (Energia), 1975, V. 1, p. 12.

About the author

After graduating from Polytechnic University of Frunze city Alexandra L. Belyaeva (1953) participated in launching of semiconductor production. She was given a rank of Perfect Inventor and Rationalyzer for invention and rationalization action. In 1987 her invention named Method of Production of Monosilicon Seed Crystals was introduced into manufacture, according to close copyright of USSR. Since that year this introduction has allowed grow monosilicon having better semiconductor properties. She was given a rank of Inventor of USSR for the invention.

Alexandra L. Belyaeva has acknowledged and given a rank of Inventor of Kirghiz Republic. Since 1994 in collaboration with Russian specialists of ceramics she has been dealing with organization of ceramic productions in Kirghizstan. Here are the inventions by Belyaeva: Method of Production of Seed Crystals and Its Variants (Patent #42 KG), Ceramic Mass for Insulators' Production (Patent #43 KG), Ceramic Mass Having Heat-Radiating Properties (Patent #464 KG).

In 1992 Belyaeva was rewarded with a Silver medal of VDNH (Exhibition of Achievements of National Economy, Moscow) for development of technologies for production of constructive nitride-cadmium items of semiconductor wastes.

Her Method of Production of Nonexpendable Seed Crystals is at introduction stage. The seed monocrystals produced by the new method will allow grow ribbon monocrystals having certain properties. It will be possible to produce items made of the monocrystals which will meet requirements of energy-saving and ecological appropriation. These devices represent non-aging powerful energy sources, various semiconductive devices with no inner microdeffects and with unlimited durability, structural water filters.

Since 2002 she has been dealing with organization of production of ecologically appropriate industrial-domestic appliances causing healthy effect. The invention of Ceramic Electroconvector Producing Healthy Effect is now introduced. Energy-saving of the new ecologically appropriate electroconvector exceeds energy-saving of all the existent heating systems.

Belyaeva is a laureate of competition of The Best Inventing in Kirghiz Republic in 2001-2002.

Inertial Propulsion Device

Vitaly E. Senkevich, Russia

E-mail: hhhhha@mail.ru

A body is at rest or moves linearly and uniformly until it is not influenced by an external force.
(School course of physics)

Forget everything that you were taught at school.
(Arkady Raykin)

This propulsion device consists of an engine and a body. The engine (see Fig.1) is remarkable for its movable stator (S) which can make free rotation as well as a rotor (R). When the engine starts the stator and the rotor begin to rotate in opposite directions. Thus the engine has two ends and one of them is connected to a flywheel (F). This flywheel begins accelerated rotation.

A cross-beam (CB) is connected to the second end of the engine where a rotating momentum appears. Under the influence of this momentum the cross-beam presses down one of the supports placed on the body (for example, Sup.1). As a result a force which is compensated by acceleration of the flywheel (F) appears on the support. When the flywheel is accelerated up to certain speed a control system (CS) switches the windings of the engine to change the direction into the opposite one (reverse). At that the cross-beam also tends to turn to the other side and presses down the second support (Sup.2). Thus the cycle repeats. It should be noted that forces acting at the supports are **codirected** and they move the whole device.

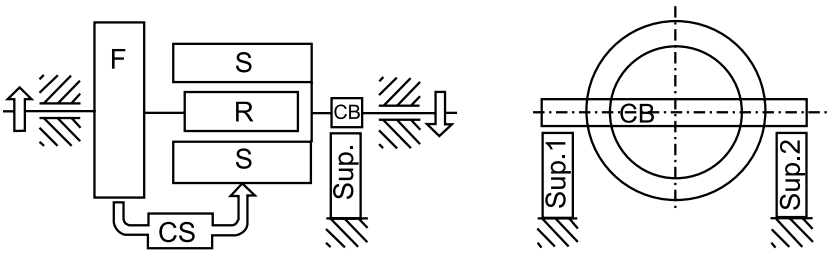

Fig.1

About the author

After graduating from Polytechnic University of Frunze city Alexandra L. Belyaeva (1953) participated in launching of semiconductor production. She was given a rank of Perfect Inventor and Rationalyzer for invention and rationalization action. In 1987 her invention named Method of Production of Monosilicon Seed Crystals was introduced into manufacture, according to close copyright of USSR. Since that year this introduction has allowed grow monosilicon having better semiconductor properties. She was given a rank of Inventor of USSR for the invention.

Alexandra L. Belyaeva has acknowledged and given a rank of Inventor of Kirghiz Republic. Since 1994 in collaboration with Russian specialists of ceramics she has been dealing with organization of ceramic productions in Kirghizstan. Here are the inventions by Belyaeva: Method of Production of Seed Crystals and Its Variants (Patent #42 KG), Ceramic Mass for Insulators' Production (Patent #43 KG), Ceramic Mass Having Heat-Radiating Properties (Patent #464 KG).

In 1992 Belyaeva was rewarded with a Silver medal of VDNH (Exhibition of Achievements of National Economy, Moscow) for development of technologies for production of constructive nitride-cadmium items of semiconductor wastes.

Her Method of Production of Nonexpendable Seed Crystals is at introduction stage. The seed monocrystals produced by the new method will allow grow ribbon monocrystals having certain properties. It will be possible to produce items made of the monocrystals which will meet requirements of energy-saving and ecological appropriation. These devices represent non-aging powerful energy sources, various semiconductive devices with no inner microdeffects and with unlimited durability, structural water filters.

Since 2002 she has been dealing with organization of production of ecologically appropriate industrial-domestic appliances causing healthy effect. The invention of Ceramic Electroconvector Producing Healthy Effect is now introduced. Energy-saving of the new ecologically appropriate electroconvector exceeds energy-saving of all the existent heating systems.

Belyaeva is a laureate of competition of The Best Inventing in Kirghiz Republic in 2001-2002.

Inertial Propulsion Device

Vitaly E. Senkevich, Russia

E-mail: hhhhha@mail.ru

A body is at rest or moves linearly and uniformly until it is not influenced by an external force.
(School course of physics)

Forget everything that you were taught at school.
(Arkady Raykin)

This propulsion device consists of an engine and a body. The engine (see Fig.1) is remarkable for its movable stator (S) which can make free rotation as well as a rotor (R). When the engine starts the stator and the rotor begin to rotate in opposite directions. Thus the engine has two ends and one of them is connected to a flywheel (F). This flywheel begins accelerated rotation.

A cross-beam (CB) is connected to the second end of the engine where a rotating momentum appears. Under the influence of this momentum the cross-beam presses down one of the supports placed on the body (for example, Sup.1). As a result a force which is compensated by acceleration of the flywheel (F) appears on the support. When the flywheel is accelerated up to certain speed a control system (CS) switches the windings of the engine to change the direction into the opposite one (reverse). At that the cross-beam also tends to turn to the other side and presses down the second support (Sup.2). Thus the cycle repeats. It should be noted that forces acting at the supports are **codirected** and they move the whole device.

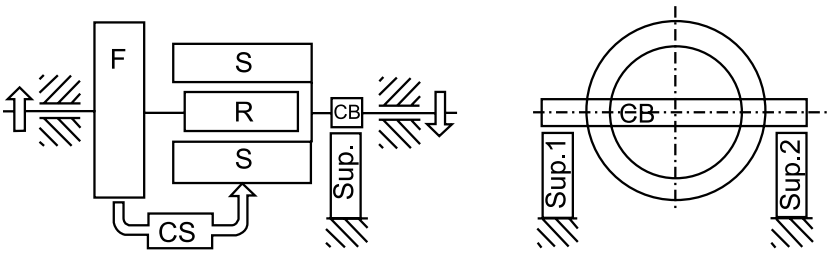

Fig.1

Unlimited Accelerated Nonreactive Motion

by G.P. Ivanov

Information from http://tts.lt/~nara/ruspopul.htm

Bias of centre of inertia of the closed system is a phenomenon exceeding the bounds of modern scientific conceptions. At the same time it is a way to the new marvelous world of earlier unknown laws and phenomena of nature. Researches made by G.P. Ivanov, Russia, have allowed him come to the following conclusion: it is a quite realizable task to create technical devices which can move under the action of nonreactive forces. However a purposeful scientific-research spade-work is required for the reliable registration of them by modern experimental facilities. According to the author during the whole XX century the known idea of latent impulse were misleading the scientists from the serious research of impulse-energy processes existing in systems at the presence of quasi-stationary electric and magnetic fields. According to G.P. Ivanov, it is related with the fact that the notion of "latent impulse" has nothing in common with the real momentum, since the very existence of "latent impulse" and "latent energy" which attends it, would make it impossible, for example, to adjust radio equipment since all effective capacitances change their value a hundred and thousand times as much (it depends on their orientation with respect to the magnetic field of the Earth).

Fig. 1, 2 demonstrate the patented by G.P. Ivanov method of realization of nonreactive motion (G.P. Ivanov, Yu.G. Ivanov. Method for production of propulsion. Patent #2172865, M., 2001). Fig. 1 demonstrates a device which consists of magnetized core with the attached metal electrodes.

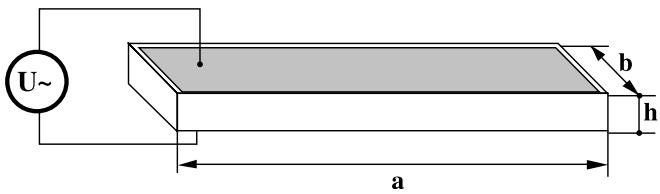

Fig. 1
The simplest "nonreactive" element

When alternating voltage is applied the device together with the center of inertia of the whole system (including power source and lead) will oscillate under the action of nonreactive force. It will move along the direction which is perpendicular to the vectors of electric and magnetic fields inside the core.

On Fig. 2 there is an analogous device supplied with a cylinder core. Magnetization of the core is defined by current of the coil which is wound around it (see Fig.2).

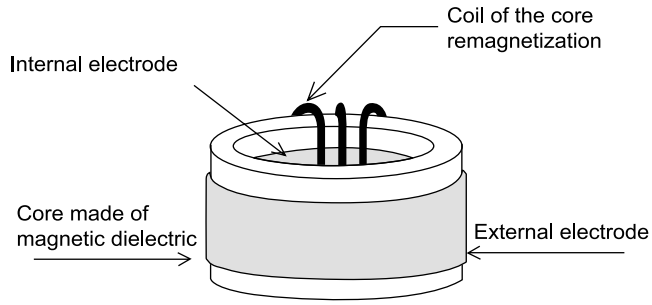

Fig. 2
Diagram of the device which can be in unlimited accelerated nonreactive motion

Let us supply the electrodes of the device with such voltage which is enough to change field density in the core (for example, according to the law $E = E_0 \sin\omega t$), and the coil with voltage enough to change the magnetization (according to the law $M = M_0 \cos\omega t$). Then nonreactive force which is constant in its direction will act on the device along the axis of the cylinder. The average of the force is $F_{cp} = \pi f E_0 M_0 V/c^2$, where E_0, M_0 are the amplitudes of density values of the electric field and amplitudes of the core magnetization, **f** is frequency, **V** is core capacity. As a result the device can either move with acceleration or act against external forces. The researches allow the author to prove the validity of the following theorem: **At motion of the open-loop system (device) the work made by nonreactive force could not be realized by means of decrease of energy of the proper (appurtenant to the system) power source.** Where this energy comes from if there are no artificial power sources outside the device? However everywhere there is such form of matter as electrovacuum. It allows us come to a conclusion that nonreactive forces make work by means of decrease of electrovacuum energy.

Existence of electrovacuum does not contradict to the modern physical picture of the world. On the contrary providing the realization of laws of momentum and energy conservation, this idea originates from and organically supplements it. The theory of electrovacuum opens quite realizable prospects in different fields of human activity which seem to be fantastic and impossible. It also proposes unusual ways to solve many problems which are considered as insoluble. For example, it becomes possible to create nonreactive cosmonautics and private aircrafts. Energetics will be changed beyond recognition since power sources which require no material fuel will occupy the place of big and small modern electric power stations. The analogous list could be continued. There are presented quite realizable prospects related to inexhaustible reserves which are hidden in the ambient space.

Revolutionary Current

Suresh Kumar Baliyan, India

E-mail: suresh_baliyan@rediffmail.com
suresh_baliyan@yahoo.com

Electricity is one of the most wonderful inventions of the 18th century. It can be produced by various methods in which different types of energy are used such as mechanical or chemical energy. In this article we discuss a new type of methods in which ***electrostatic energy*** *is used.*

In this method we use **electrets** as an energy source. Electrets are permanent polarized dielectric material which is made by cooling dielectric material in a high intensity electric field. When we place an electron in the electric field of a point charge, it is influenced by a force. If the direction of the force is such that the electron moves in a closed path then it represents a current in the opposite direction along the closed path. Here closed path means a metal wire loop in which the electron movement is responsible for the current.

The charge of the electrets remains constant for many years (100) and there is no loss of energy because we use only the property of electrets that they apply force when a charge is placed in its electric field. Since here we create energy in the form of electric current then it violates the Law of conservation of energy.

Let us discuss the method in three steps:

1) Fundamental
2) Equivalent circuit
3) How we can use it as a potential source of electricity.

1. When we put a metal rod in the electric field of a point negative charge then the electron is influenced by repulsion force which moves in arrow direction and the electric field is cut by putting an earthed metal plate from any direction. When we place four charges on the corner of the metal frame and shield the electric field in particular direction as shown in Fig.1 then the force on the electron which is placed in metal frame will be in the direction of arrow and this makes a loop. The force influencing on the electron will be continuous, so the current which moves in direction opposite to the electron movement will induced in the metal frame.

2. The equivalent circuit of Fig.1 is shown in Fig2. It demonstrates that a 'V' volt battery and a resistance 'R' can be replaced by an arm of the metal frame. The polarity of the battery is shown in Fig. 1. A current of magnitude (V/R) will be induced in the circuit by this method.

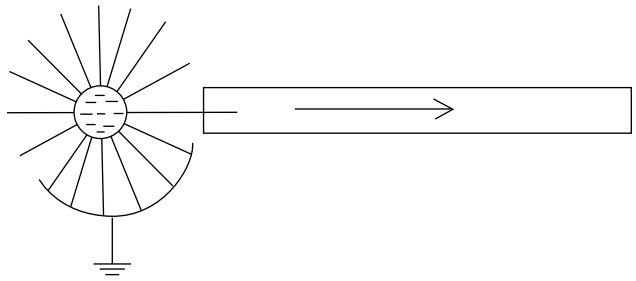

Fig. 1a

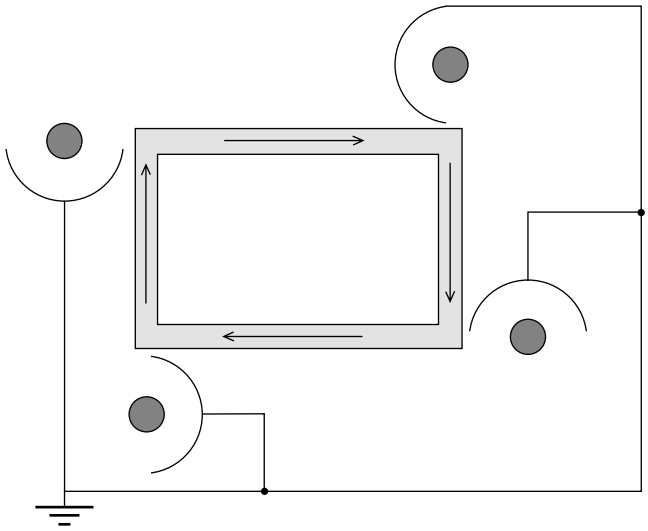

Fig. 1b

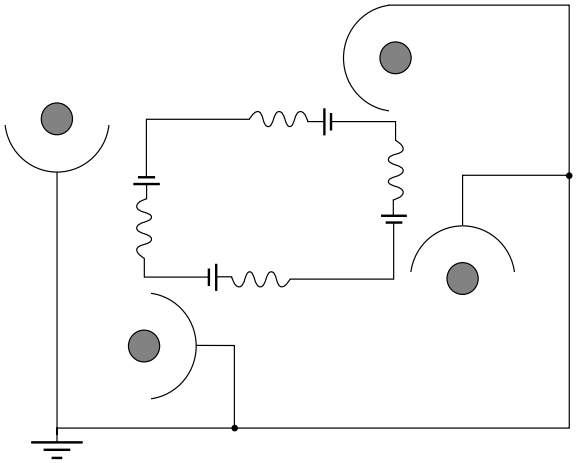

Fig. 2

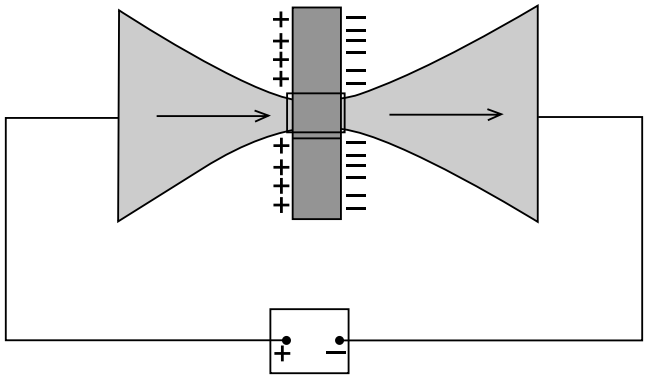

Fig. 3

3. We can use another device as a potential source (see Fig3.). Let us take an electret and make a hole at the centre. A hollow thin walled metal cylinder is fitted in the hole and a metal frame is taken as shown in the Fig. 3. We can use this metal cylinder as an electric field shield which may affect the direction of the force influencing on the electron. We may use this device as a potential source of electricity which will give electricity until the charges on the electrets vanish. The charge on the electrets remains constant for many years. Thus we can create energy and the problem of energy shortage can be solved by this method forever. We are trying to make a prototype of this but due to lack of equipment facility we are not able to demonstrate a working model. However we are trying to modify it.

NEWS REVIEW

Russian scientists are preparing new application of energy of geothermal waters

http://www.sciteclibrary.ru

A way for economical use and utilization of energy of geothermal waters was found in the Institute of Geothermal Problems (Russian Academy of Sciences). The new technology can be applied for heating in different purposes, and can compete with the power engineering, which uses the conventional energy carriers.

Geothermal springs are ideal for generating electricity by means of using of their permanent heat. This is especially important for Kamchatka, which is rich in these springs; however they are almost never used in mass power engineering, but only serve as an attraction for tourists, who admire beauty of Kamchatka geysers. At the same time the region itself freezes every year because of shortage of fuel for electric power stations.

What prevents us from using the geothermal springs?

The problem is that the storages of most of geothermal water fields have low and medium temperatures. This does not allow providing their competitiveness as regards conventional energy carriers. During tens of years this fact was an obstacle to the development of geothermal energy.

A solution was found in the Institute of Geothermal Problems. It was brought out that at many exploited geothermal fields wellhead overpressure exceeds 5-10 MPa and more. These waters contain fair quantity of dissolved organic gases. The scientists have found out that methane content of these waters exceeds 90 %. And until now at exploitation of the fields these types of energy have not been properly utilized.

The scientists of the Institute of Geothermal Problems have developed a technology of the optimum utilization of energy of geothermal waters and have increased the thermodynamic effect of the process.

This aim was fulfilled by means of transmission of thermal energy of geothermal water through the intermediate heat exchangers to the secondary heat carrier. Chemical energy of dissolved gases was used as an additional source of energy. The transmission was held by the use of primary and secondary separators. The distinctive feature of their technology is that associated potential energy of geothermal water is used as an additional source of energy. Expander and compressor placed on the same shaft are used as potential energy converters. Gas-holder and gas control point are used for utilization of energy of dissolved gases.

Thus on the bases of this technology geothermal energy can be effectively developed that will be competitive with fuel hydrocarbon energy.

Tilley Foundation, Inc.

131 Hiwassee Road
Lebanon, TN 37087
http://www.tilleyfoundation.com
E-mail: cktilley@bellsouth.net

Editor: The advantages of electric vehicles were proved more than once. No fuel is required to set them in motion. Along with evident advantages of electric vehicles, such as their powerful characteristics and harmlessness for environment there is a side benefit, i.e. much less maintenance as compared with gasoline or diesel-fueled vehicles is required. Moreover it is easier to manufacture such vehicles.

In the previous issues of New Energy Technologies magazine we have already acquainted our readers with Tilley Electric Vehicle designed by Carl B. Tilley (USA). Below there is some up-to-date information and photos from the inventor. Besides we also publish an article devoted to the similar types of fuel-less motors.

After several years of personal accomplishments in the alternative energy industry, Carl B. Tilley was convinced that it was possible to build an electric car that could be powered without the help of external power to keep the battery charged.

The concept to produce a useful electric performance car that would last more than a few hours and would be economical to run, safe to drive around town or across the United States and never use a drop of fuel challenges the future of transportation as we know it today.

With the establishment of the Tilley Foundation, Inc., in the year 2001, Carl Tilley set out to prove it could be done. It was an ambitious project and it broke ground on the facility in Tennessee that would build the first self generating electric car.

...you have no need for fuel and you do not have to stop the vehicle to charge it after driving.

Construction of a 1,800 square foot building, that was powered with another recently developed electric device, began in the year 2002. Electricity from the building built the car from a different energy invention, that was void of any outside power supply. It is ironic that one alternative energy device actually built the invention to power and build the electric car.

From the selection of the proper car to be converted, to the advanced technology which is on board , the **Tilley Electric Vehicle TEV** performs comparably to gasoline powered vehicles. The difference is you have no need for fuel and you do not have to stop the vehicle to charge it after driving. There is no pollution and you can cruise the highways at the same speed as any other vehicle.

The rear mounted electric motor provides over 130 SAE net horsepower at 5,500 rpm. It offers a 3 speed automatic transmission that is smooth shifting and totally silent running. All this is combined with rack and pinion steering and a 35/65 rear weight bias that enables fast, sensitive handling and needs no power assistance.

...battery system will be fully charged at all times while in use.

It has 4 wheel disc braking for fast progressive, fade-free stopping. Counterbalanced gull-wing doors need only 14 inches of clearance. The rear sporty louvers are aerodynamic designed so that it almost eliminates any drag effect. All this with a stainless steel body makes for a great car.

Control center for the battery bank only allows what is needed to keep the batteries charged while in operation no matter what the speed or discharge from the battery bank. Your battery system will be fully charged at all times while in use. Simply get in, start the car and drive like any other vehicle.

A 1981 DeLorean was converted as the Tilley Electric Vehicle.Conversion of the car began in late June of 2002. State of the art metal fabrication to construct support for the electric motor, battery bank, control center and the TEV device was completed in July of 2002.

Several tests were made to validate the TEV technology. One of the last tests was made on September 7th, 2002. It has been demonstrated that after 17.3 miles driven on the Superspeedway at speeds ranging from 80MPH to 96MPH independent engineer certified batteries were full.

Assembly Pictures (see also the cover page)

Photos by Robert Gaither

Fig. 1
Removing Gas Motor

Fig. 4
Fitting Parts

Fig. 2
Fabrication

Fig. 5
Transmission Work

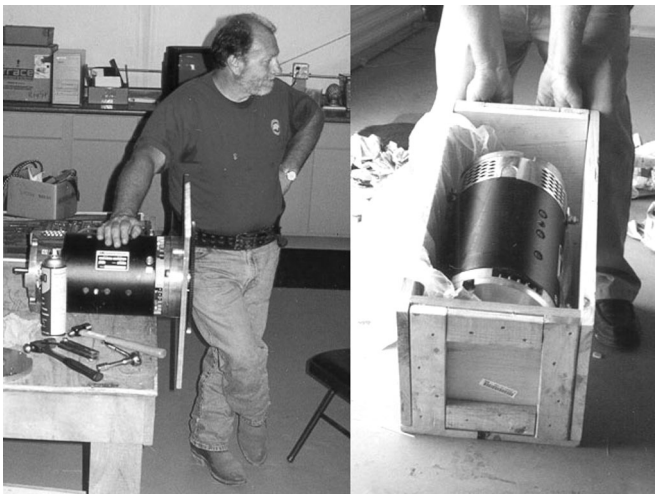

Fig. 3
Drive Motor

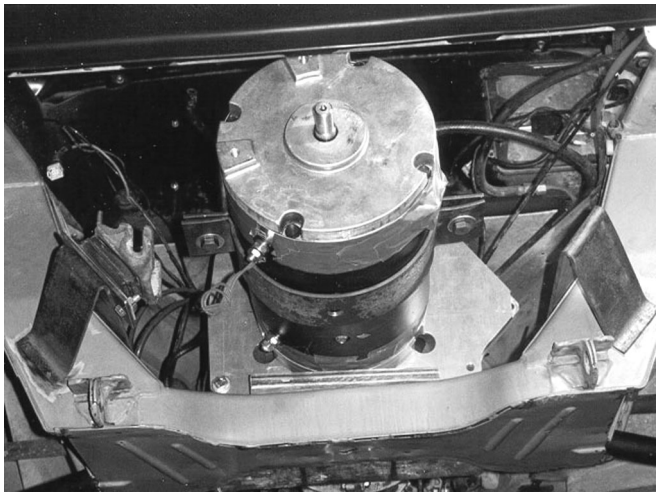

Fig. 6
Motor Mounted

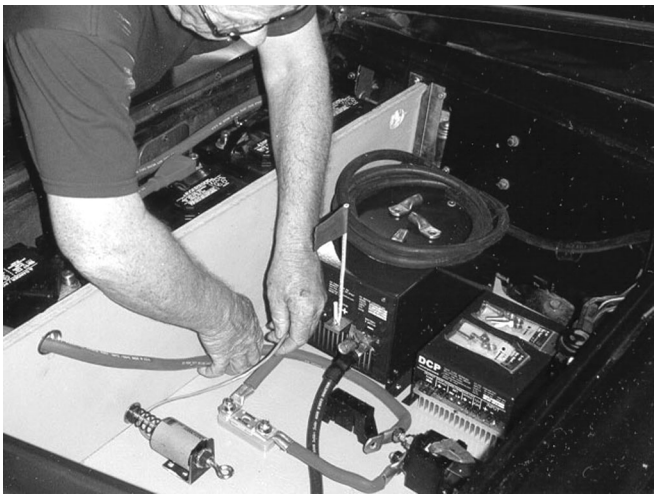

Fig. 7
Making Connections

Fig. 9
Special Wiring &Guages

Fig. 8
About Ready

Fig. 10
Car Unveiling

Trends in the Application of Motor-Generators

Adrian Akau, USA

E-mail: adrianakau@aol.com

If the Tilley generator-motor should enter into the world market, some curious consequences may result, the most important being the transition of the Honda and Toyota hybrid cars into full fledged electrics.

First of all, a comparison should be drawn between the Tilley and the two hybrid cars presently being sold, the Honda Civic and the Toyota Pirus should be made.

The Honda Civic and the Toyota Pirus both use charging systems with a gasoline motor for better milage. The Tilley motor-generator is a stand-alone electric vehicle. The Honda motor-generator is just 60mm thick and provides (10kW or 13hp). The Toyota Pirus has a 44hp unit (American Version) which feeds power into electric motors at the wheels. Both Honda and Toyota gasoline motors are off at 0 mph. Only the electric system is used until the power demand reaches 10 kW; then the gasoline motor automatically kicks in. The Pirus is able to get higher milage in city driving than in country driving from the fact that the ratio of the power from the electric part to power to the gasoline part of the motor is greater at lower than at higher speeds, that is, less power is needed to run the car in city driving than in country driving because of the lower speeds and air resistance.

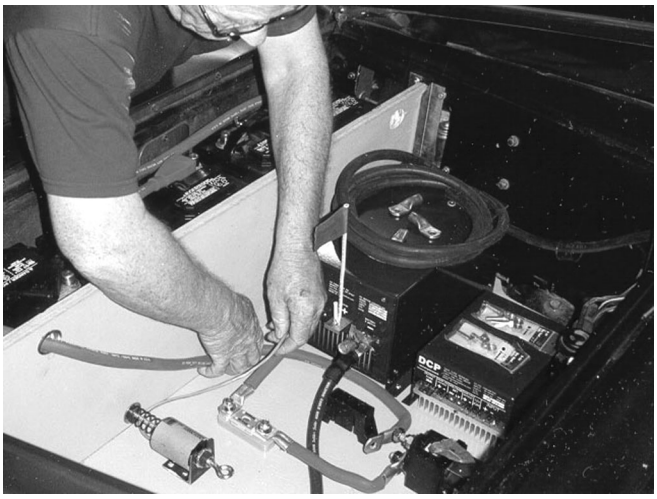

Fig. 7
Making Connections

Fig. 9
Special Wiring &Guages

Fig. 8
About Ready

Fig. 10
Car Unveiling

Trends in the Application of Motor-Generators

Adrian Akau, USA

E-mail: adrianakau@aol.com

If the Tilley generator-motor should enter into the world market, some curious consequences may result, the most important being the transition of the Honda and Toyota hybrid cars into full fledged electrics.

First of all, a comparison should be drawn between the Tilley and the two hybrid cars presently being sold, the Honda Civic and the Toyota Pirus should be made.

The Honda Civic and the Toyota Pirus both use charging systems with a gasoline motor for better milage. The Tilley motor-generator is a stand-alone electric vehicle. The Honda motor-generator is just 60mm thick and provides (10kW or 13hp). The Toyota Pirus has a 44hp unit (American Version) which feeds power into electric motors at the wheels. Both Honda and Toyota gasoline motors are off at 0 mph. Only the electric system is used until the power demand reaches 10 kW; then the gasoline motor automatically kicks in. The Pirus is able to get higher milage in city driving than in country driving from the fact that the ratio of the power from the electric part to power to the gasoline part of the motor is greater at lower than at higher speeds, that is, less power is needed to run the car in city driving than in country driving because of the lower speeds and air resistance.

American car companies are beginning to develop their own starter-generators to "save an extra 10% on the gas milage". Are they doing this because they don't want to be left behind in the milage competition or because they really understand the nature of the starter-generator motors used by the companies producing the hybrids?

With the advent of the Tilley motor-generator, a new factor enters into the situation. If the system proves valid, does this mean that Honda and Toyota are out of the running? Hardly not! It is likely that these companies have allowed or even planned for this contingency with larger capacity motor generators which would do a similar job. With their fine cars and superb engineering, the transition from a hybrid to a pure electric might be costly but not too difficult to engineer. Each of the two hybrid companies may already have been built, tested vehicles of this nature. However, since the primary purpose of the car companies is to make money it is doubtful if this full-fledged fossil fuel-less type will be placed on the market unless competition so requires. A car using the Tilley motor-generator might certainly push them in this direction.

Should the Tilley remains undeveloped, one might expect the second level hybrid car to arrive in a few years from Honda and Toyota. These cars should have greater electric generator-motor capacities and smaller gasoline engines. These systems could give small cars much higher gas milage and could also be placed in larger, more elegant vehicles such as the Honda Accord and the Toyota Camrey.

The transition to fuel-less motors should hopefully be slow and painless for both the pocket book as well as the human psych. If scientists cannot be convinced by studying conventional scientific laws on how these motors work, perhaps they will better see the need for the promulgation of new laws in this area.

We know that at the present time, both Honda and Toyota motor generators (M.G.) have a powers assist function while the Tilley stands alone. Let us look at the present situation (we will use the Toyota U.S. M.G. because it is the more powerful version):

Honda and Toyota classify their M.G.'s as permanent magnet types; Carl Tilley says his is and advanced D.C. motor.

Power output:

Honda is given at 10 kW at 3,000 rpm or 13 hp
Toyota is 33 kW at 1,040-5,600 rpm or 44 hp
Tilley is up to 135 hp depending on rpm's

Voltage/Battery (Ni-MH=Nickle Metal Hydride, AH=amp hours)

Honda: 144V, 120 Ni-MH cells@1.2V ea., 6.5 AH
Toyota: 274V, 228 Ni-MH cells@1.2V ea.
Tilley: 144V,12-12V lead acid (Wal-mart), 1200AH

Physical Characteristics of each M.G.

Honda: 60 mm wide
Toyota: unknown
Tilley: 9" dia., 146 pounds

The main effort should be to implement the transition away from the use of fossil fuels. We know this can be done but it takes proper attitude. Proper attitude takes knowledge and knowledge takes willingness to learn. Willingness to learn takes desire to learn and desire to learn takes humility. Unfortunately, humility is a characteristic that many people, especially learned ones lack. *Editor's: Carl Tilley's comments are also given below.*

Very Good...you seem to know what we already were aware of...before we could mass produce our Tilley car I am sure some auto company would come out with basically the same thing...I do believe they already have it and they are just waiting for the right time. The good news is that at least the Tilley car lighted their fire to get them started.

Carl Tilley

Read in the next issue!

In April 12 of 2003 scientific conference "The Time Machine" was organized by Faraday Laboratories Ltd in Moscow. There were presented the reports by V.A. Chernobrov, A.V. Frolov, A.V. Rykov, E.D. Sorokodum, V.J. Kosyev, A.N. Solonyi, V.A. Atsukovsky. There was discussed design of the device made by Faraday Laboratories Ltd. as well as main principles of control on temporal characteristics of physical processes by changing of density of space energy, i.e. aether density according to patent claim.

Details are in the next issue!

Electric Vehicle in Russia

Review by Correspondent Alla Pashova, Russia

The director of *EV* (*Electric Vehicles*) company located in Tolyatti (Russia), Alexander Mukhanov states: "If during 2 centuries intellectual efforts of a scientific thought were concentrated on an electric engine instead of the internal combustion engine then now we would have driven electric vehicles, and the greenhouse effect would not have exist".

The electric vehicle has driving-wheels which are set in motion by an electric engine, and it is powered by an electric battery. The electric vehicle appeared in Great Britain and France in 1880 and it is significantly older than the automobile equipped with the internal combustion engine.

At the beginning the speed and the fuel distance of the electric and gasoline vehicles were approximately the same. The main disadvantage of electric vehicles was a complicated system of recharge since there were no usual transformers of alternating current into direct one. Hence, the electric vehicle was recharged in a quite difficult way. An electric engine operated on alternating current was used to recharge it. The electric motor rotated a shaft of the generator which was connected to batteries of the electric vehicle. However in 1906 a rectifier which was simple to operate was invented. Despite its principle of operation was quite complicated (mercury vapor was used for transformation of alternating current into direct one) it has given a great stimulus for development of automobile industry.

There were no essential proves of advantage of gasoline vehicles as compared with electric vehicles. Nevertheless, even at that time there was an opinion that electric vehicles run more slowly and to shorter distances. However "gasoline" records were also insignificant and comparable with results produced by the electric vehicles. At the same time producers of electric vehicles did their best to demonstrate the advantages of these vehicles. If you remember, Walter Baker, one of the most famous American constructors and producer of the electric vehicles, achieved the speed of 130 km/h driving his car. An electric vehicle produced by Borland Electric company run from Chicago to Milwaukee (the distance of 167 km/h along non-asphalted road) without recharge. Next day after recharging the electric vehicle returned to Chicago by its own power without meeting any incidents. During the journey its speed came to 55 km/h.

In 1899-1900 a hereditary Russian nobleman Ippolit Romanov made an experiment on designing of the first Russian electric vehicle. Since these vehicles had been designed to run in Saint Petersburg then the city council required to produce them in the same place. In 1899 Romanov's first electric vehicle was made. Its general design was borrowed from English cabs in which a cabman sat on a high dickey placed behind passengers. Romanov's electric cab had two passenger seats situated in front of the dickey in a half-cabin having side and back windows. The cabin was equipped with a hood. The seat of a driver was placed behind and above the cabin; a box containing an accumulator was located under the driver's seat. The vehicle was four-wheeled. Diameter of the front wheels was smaller than those of the rear wheels. The front wheels were fixed by elliptical springs and were driving ones. They were connected to two independent electric motors by a roller chain drive. The regulated rear wheels had a smaller diameter and were fixed by spiral springs.

This first electric vehicle was equipped with lead accumulator which had 36 banks. It required recharging every 60 versts (1 verst – 3500 feet). The total power of both the electric motors was equal to 4 hp. Design of the vehicular part of Romanov's electric vehicle was borrowed from the models produced by an American company named *Morris-Salom*. This company had produced electric vehicles since 1898; however those models had wheels of greater diameter as they were equipped with pneumatic tires, while Romanov's vehicle had wheels with light rubber rims. Both the electric vehicles had two electric motors, but the distinction of Romanov's electric vehicle consisted in the presence of 6-row ball bearings in the wheels.

Romanov's second cab was built in 1900. This model had entirely closed and glazed cabin for passengers. The chain drive was replaced by a gear; however the basic sizes remained the same. This model was equipped with an accumulator designed by Romanov. The general weight of the electric vehicle was 45 poods (750 kg), and the weight of the accumulator came to 22 poods (362 kg). It should be noted that weight of American and French electric vehicles exceeded these figures. The speed of both Romanov's models of the electric vehicles came to 15 km/h.

Romanov's first electric bus was built in the same 1900. The electric bus weighted 100 poods (1600 kg) could make speed up to 10 km/h. For reasons beyond Romanov's control, traffic of the electric vehicles in Saint Petersburg was not organized.

A vehicular company named *"Frezer and Co."* participated directly in production of Romanov's

electric vehicles, i.e. a running gear of these vehicles was created by this company. In January 1900 *The Cyclist* magazine reported that this company had built an electric vehicle which had already been tested. A picture of this first electric vehicle by *"Frezer and Co."* can be found in advertising publications of those years. Various firms proposed the innovation for sale and described its technical characteristics.

Frezer electric vehicle was four-seated, had two engines whose total power came to 7 hp. The advertisement booklets reported as following: "The accepted system of accumulator is remarkable for its solidity and life-time. Capacity of the elements is about 15 Amperes/ hour per a kilogram of electrodes. The size of the battery is defined according to calculation of 120 W/h per one ton and per one-kilometer of the distance; its weight is equal to 30-40% of the total weight of the vehicle including a payload". Weight of Frezer electric vehicle came to 70 poods (1120 kg). It made the speed of 15-18 km/h and required recharging every 35-50 versts of the path. The second variant of Frezer electric vehicle differed from the first one for less weight of the accumulator which was located above the rear axle.

In addition to the four-seated vehicles, *Frezer* Company produced two-seated electric vehicles equipped with engines of 3.5-hp power. The two-seated electric vehicle was remarkable for its more perfect steering tube. There is known one specimen of this model purchased by somebody from Riga (Latvia). Moreover, on the territory of *"Frezer and Co."* there was a station for recharging accumulators of the electric vehicles.

In the period of the Soviet Union pilot batches of electric vehicles began to be produced only after the II World War. In general there were small lorries applied for transportation inside great buildings, for example, in a main post office or an airport.

Now there is a great probability that Moscow will be the first Russian city where the electric vehicles can find mass application. Russian capital suffers from gas pollution which is especially heavy in the center of the city. At the same time the budget of the city allows acquire own ecologically appropriate transport. Now financing of production of the electric vehicles is realized through the Fund of Ecologization of Moscow Transport. The means are assigned due to income taxes coming to the budget of the city.

To tell the truth, citizens of big cities know electric vehicles very well, i.e. usual trolleybuses and trams are electric vehicles despite they are not autonomous. An autonomous public electric transport has one advantage which is especially valuable in the conditions of the cities overcrowded by cars. This advantage is their mobility. Trolleybuses are inseparable with their wires that causes decrease of their maneuverability. For example, they cannot pass several cars which have been parked wrongly. In this case a maneuverable and autonomous electric vehicle will run to the center of the road and pass the obstacle with ease.

A Moscow company named *Eltran* which deals with exploitation of electric transport has developed a model of EV which runs the distance of 60 kilometers without recharging. Total recharging of this electric vehicle takes about 5 hours, however a half of required energy they can obtain for 1 hour. Hence, if the accumulators are recharged before their full discharge then this vehicle can operate constantly. However, a developed infrastructure of charging stations is necessary for this aim.

From the economical point of view, EV does not yield to trolleybuses and trams which house more passengers but run twice more slowly than the autonomous and compact EV. Therefore EV does not experience difficulties in jams in the conditions of the traffic of the city. It maneuvers easily in thick traffic current.

Unfortunately, now EV cannot replace automobiles equipped with internal combustion engines. Imperfection of its accumulator batteries does not allow it to become a public vehicle. The battery imperfection causes a small run on one recharging, long cycle of recharging, and high price of the electric vehicle.

To tell the truth, EV has important advantages. Maintenance charges of EV are lower than the charges of the standard automobile requiring expenditures for support of cooling systems, powering systems and exhausting systems. The lifetime of the electric engine comes to 10 thousands hours. Quantity of operations for maintenance of the engine is minimal. For example, it is necessary to change brushes in the dc motor from time to time. As for a modern three-phase electric motor and synchronous ac motor they are practically maintenance-free.

EV is easy to drive. To start the car you should only insert the key, turn it and press the accelerator pedal. You do not need to make any manipulations with adherence or gearshift.

Use of EV is justified in so called zones of higher environmental requirements that are cities, parks, vacation resorts. Electric buses, developed by *Eltran* run in the public green space of All-Russia Exhibition Center. There are about ten compact commercial EV operating in Moscow.

Taking care of environmental sanitation the management of AZLK (big automobile plant) has developed EV on the basis of two production automobile models "Moskvich-2141" and "Moskvich-pikup-2335". "Moskvich-Elektro" (Fig. 1-2) at fully loaded mass of 2060 kg accelerates up to 60 km/h at 15 seconds. Maximum speed of the load-free vehicle is 110 km/hour. Cruising range at one battery charging

is 100 km, and it comes to 80 km with 400 kg of load. At present Electrical Vehicle "Moskvich" is filled with imported component parts, which are cheaper but functional. In time it will be supplied with Russian equipment that will make it cheaper.

Fig. 1

Fig. 2

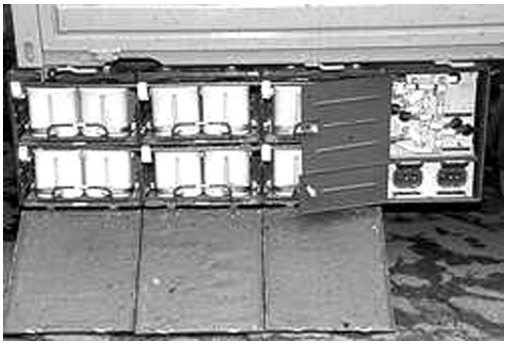

Fig. 3

The model of truck equipped with electric motor "ZIL-Electro", the authors of which being called "AVEKS" and "Optimum-electro", also enjoys the support of the Fund of Ecologization of Moscow Transport. Various privileges and free passage to any location in public green zones are promised to the future owners of "ZIL-Electro".

Forty-eight lead-acid traction batteries of roll type (Optima battery) are hanged in pairs along the ramps of the truck. They are united into 4 sections (Fig.3). Capacity of these batteries is enough for 70 km running. Probable charging station for these machines is the loading/unloading point. Charging time varies from 30 to 60 minutes. Substantial disadvantage of the model is that batteries take away a great percentage of carrying capacity. Among the advantages of the model there are small internal resistance, fast recovery (to 400 A), discharging to zero level without serious consequences.

A traction induction unit "ATAD-Optimum 50/120" serves as the engine for "ZIL-Electro". Its weight is only 100 kg and it doesn't require any diesel generator or transmission that compensates a little the loss of carrying capacity.

The engine is very simple. It is a non-contact rotor of a "squirrel cage" type rotating on the bearings. No brushes are used. Thus expensive maintenance is postponed for uncertain date. On the other hand there is asynchronism. It means that some equipment is needed for converting into three-phase current and further frequency and amplitude adjustment. However it is expensive and complicated.

In spite of all existing disadvantages, Electric Truck is considered to have a bright future ahead of it. There several reasons for that:

1 The vehicle is manufactured from cheap production component parts.
2 The system of optimum vector control of the drive is introduced. (The torque and shaft speed of rotation is regulated precisely, energy of the batteries is used rather efficiently.)
3 Microprocessor system with feedback coupling and great number of sensors (current sensor, heat sensor, velocity sensor, voltage sensor) minimizes losses, prevents the motor and batteries from overheating, protects mains from short circuit in case of an accident.
4 The vehicle is reasonably priced (for such an exotic object) – about $26 000 USD subject to serial production.

Volzhsky automobile plant has already been engaged in research of EV for a quarter of a century. Over 10 original models have been designed and produced for these years. They have been appreciated abroad as well as in Russia. These are electric vehicles "Poni", "Oka", "Elf", "Gnom", "Niva", "Rapan" "Lada-golf", etc.

The models manufactured on the basis of VAZ-1111 "Oka" became the most popular among them. These EV received many different rewards, and became world-renowned. For example, VAZ-111E "Oka", manufactured in 1993, kept all merits of a production midget car. Use of electric motor makes it a non-toxic and noiseless vehicle. Efficient fast-acting short circuit protection eliminates current rush, providing absolute car operating safety.

In EV of VAZ manufacture two direct-current motors are commonly used as a power-generating set. The first is a 25kW capacity motor with torque of 110 Nm.

Another one has 40 kW capacity and torque of 190 Nm. Motors of the first type are usually mounted on light vehicles, such as "Golf", "Oka-Electro", "Elf", while high-power motors are usually used for VAZ-2108, VAZ-2109, "Niva".

The first models of electric vehicles used to be equipped with nickel-zinc batteries. But as life time of these batteries is not long, it was decided to start using nickel-cadmium batteries, manufactured at Saint-Petersburg plants "Rigel" and "Istochnik". Nickel-cadmium batteries are power-consuming, they withstand temperature of –40°C. The only drawback of these batteries is their cost, and as a consequence a high cost of the vehicle itself. Because of that the final choice has been made in favor of lead-acid storage batteries, which were mounted at "Gamma Golf" in particular, thus reducing its price by several times. The batteries are located under the driver and passenger seats. They allow discharge of 80-85% and provide cruising range without recharge of up to 100 km within city area and several times more on a highway. Power current is transmitted from the electric motor to the front wheels through single-reduction gear unit, which substitutes the transmission.

For the present time electric vehicles are not developed to take the place of automobiles with internal-combustion engine in all industries and spheres of application, but only as a specific vehicle for highly specialized utilization. They are utilized when use of internal-combustion engine is objectionable or impossible.

It is considered that so-called hybrid models of EV would be able to replace automobiles with internal-combustion engines. These are vehicles with two motors, an electric motor and an internal-combustion engine usually running on diesel oil. In this case the combustion engine works constantly, but under the operation modes of little air pollution. Besides, fuel consumption is also much reduced.

In this direction real commercial success is possible. For example, "Toyota-Pirus" has already been chosen as a personal vehicle by tens of thousands of customers, this being a good result for such an original construction.

Nowadays three circuits of hybrid propulsion system are generally known. The simplest one is a series circuit, in which combustion engine operates together with a generator, and battery or generator powers electric motor providing propulsion. Actually this is the same circuit of electric transmission that is used at quarry trucks. Its main disadvantage is great losses of energy at transmitting the torque to the wheels. In parallel circuit the output shafts of the motor-generator and combustion engine are rigidly bound, and it doesn't allow working in steady-state mode (i.e. with permanent rotations and load).

In the third circuit, which is also the most commonly used there are an electric motor, combustion engine and a generator. The output shafts of all these units are bound by planetary differential. This allows almost lossless distribution of power between the units, and provides sustained performance of the combustion engine. The disadvantage of this circuit is the extreme complexity of coordination of units operating.

A hybrid EV was produced in Russia by automobile plant "Izhmash" though it has not been put in mass production yet. At the developing of the propulsion system instead of unique components there were used units of Russian mass automobile production that is one of the fundamental design solutions. "Orbit" Izh-21261 was used as a base for the device. It was equipped with gasoline engine (of 30 hp power and 650 cm^3 capacity), drive dc motor ПТ-125-12 (of 120V voltage and 49 H/m torque) and eight accumulators 6CE-55. Twin-engined propulsion system works according to the parallel circuit of engine joint. Electromotor serves as starter and at the acceleration it operates simultaneously with internal-combustion engine. On reaching some definite speed the electromotor changes its operation mode to the mode of generator and charges the accumulators. When the loads at gasoline engine increase then the electromotor begins to operate together with it. Operation of the hybrid propulsion system is controlled by starting regulation electronic equipment. Control unit, speed transducer of crankshaft of the internal combustion engine, detector of the accelerator pedal etc. are responsible for coordinated work of the engines.

During the tests fuel consumption of the hybrid vehicle "Orbit" was less by 20% than that of the usual model. For Russian prototype it is a good qualitative characteristic, however foreign designers reach better results, for example, "Crysler ESX3", which was presented in 1998 at Geneva auto show, consumes 3.3 liter of diesel oil per 100 km of path.

Representatives of specialized Moscow companies producing EV assert unanimously that these are hybrid electric vehicles which should change public transport with internal combustion engine. To encourage the automakers it is useful to create the proper laws drawing on foreign experience. For example, in California, USA, automakers whishing to present their production in the state market should put out 2% of automobiles with null blast. Legal system also supports an automobile user who is provided for free parking and free or cheap recharge. The user is granted with maximum of discounts to encourage him buying EV which is still twice as expensive. However it is said that in one of the villages situated near Moscow where the so called new Russians live, everybody drive electric vehicles leaving their cars with gasoline engine outside the gates. It would be quite good if EV turns to the real vehicle from the extravagancy of nouveau riches and beloved creation of ecologists.

The Richard Clem Motor and the Conical Pump

An Investigation of the Clem Motor

Robert Koontz, USA
rdkoontz@attbi.com

In December of 1992 Jerry Decker posted an article on the KeelyNet BBS, about a self-running motor that developed excess useable power. The information, gathered from newspaper and individual sources, gave an anecdotal account of the motor invented in 1972 by Richard Clem of Flower Mound, Texas. New information has since been added and can be found on http://www.keelynet.com/energy/clem1.htm.

Richard Clem worked with heavy machinery for the city of Dallas. He used asphalt-spraying equipment, which pumped liquid asphalt. He noticed the asphalt pump would continue to run for up to 30 minutes after the power was turned off. It was this discovery that led to the development of the motor. Modifications he made eventually resulted in a substantial 350 horsepower output from a 200-pound motor. Clem is said to have often driven a car, powered by this motor, up and down Central Expressway in Dallas. He claimed it didn't use any fuel, and only needed a change of oil every 150,000 miles.

The motor had only one moving part, a cone shaped rotor mounted vertically on a hollow shaft. Spiral channels cut into the cone wound around its length and feed into peripheral nozzles at its large end. When fluid flowed through the spiral channels it was ejected out the nozzles and caused the cone to spin. At a certain velocity, the rotating cone became independent of the starter pump and began to operate by itself. At an operating speed of 1800 to 2300 RPM the fluid heated up to 300 F, requiring a heat exchanger. Vegetable oil was used because at 300 F water boils and conventional engine oil breaks down. A 12-volt battery was the only other power source. Clem never applied for a patent because his motor design was derived from the asphalt pump that was already patented. Fifteen companies turned him down before a large coal company offered to back him and signed contracts to sell the motor. Soon after the deal was signed, Richard Clem died of a heart attack

The above account contains only what I considered to be relevant for analysis of the Clem motor. Visit http://www.keelynet.com/ for the original material.

The gear pumps, typically used for asphalt spraying, do not match the description of the pump used by the city of Dallas back in 1972. There should be public records showing what equipment manufacture the asphalt sprayer was purchased from. Since the asphalt pump was patented, I searched for a pump patent that met the following criteria:

1) Patent issued on or before 1972.
2) Delivered pressure equivalent to a positive displacement gear pump.
3) Cone shaped rotor with spiral channels.
4) Self-propelling action.
5) Capable of pumping a viscous fluid like asphalt.
6) Large heat transfer to pumped fluids.

The following illustration (Fig.1) is from US Patent 3,697,190 (Truncated Conical Drag Pump). The patent was issued October 10, 1972 (criteria 1) and appears to match the description of the asphalt pump that Clem converted into his motor.

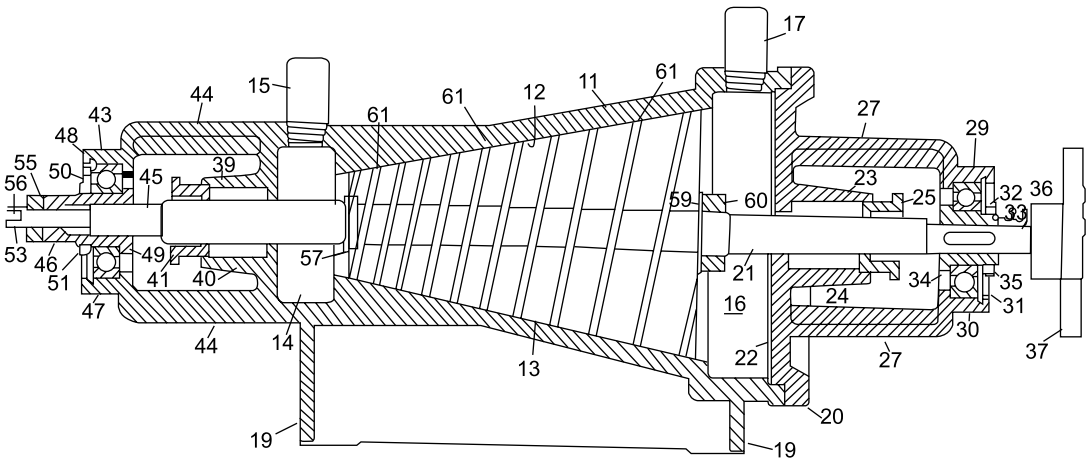

Fig.1

Housing 11, Conical interior wall 12, Conical rotor 13, Inlet chamber 14, Inlet pipe 15, Outlet chamber 16, Outlet pipe 17, Support feet 19, Detachable end cap 20, Rotor shaft 21, End cap wall 22, Boss 23, Packing 24, Adjustable gland nut 25, Bracket arms 27, Bearing boss 29, Bearing 30, Snap ring 31, Inner race 32, Sleeve 33, Shoulder 34, Retainer nut 35, Reduced diameter outer end 36, Coupling 37, Packing 39, Retainer 40, Gland nut 41, Bearing boss 43, Integrally formed bracket 44, Shaft reduced diameter 45, Bearing sleeve 46, Bearing 47, Snap ring 48, Inner flanged 49, Inner race 50, Nut 51,Shaft reduced diameter 53, Lock nut 55, Flat faces 56, Snap ring 57, Washer 59, Nut 60, Helical channel 61, Channel base 63, Channel sidewalls 64.

This is a high-pressure, low volume drag pump that can be used in place of conventional positive displacement pumps (criteria 2). It has a conical rotor that has a close fit clearance with the stationary housing wall. Delivered pressure is limited by back flow across the radial clearance and is inversely proportional to the square of the clearance. As a result, even a small increase in radial clearance would rapidly reduce pressure. The rotor is cone shaped so that the clearance can be controlled by axial adjustment of the rotor relative to the housing wall.

The conical rotor has two helical channels (criteria 3), in the form of square threads, spaced 180 apart for balance. The channel depth decreases as the rotor diameter increases. Fluid enters the channels at the small end of the rotor. The fluid is induced to rotate with the channel by boundary layer drag. The boundary layer is the thin layer of fluid adhering to the channel surface. Molecular cohesion tends to drag the adjacent fluid with the boundary layer. The fluid is also in contact with the housing wall. The boundary layer drag against this stationary wall slows the rotation of the fluid in the channels. Because the fluid rotates slower than the rotor, it is forced through the channels towards the large end of the rotor. In addition the fluid is forced towards the large end by centrifugal force.

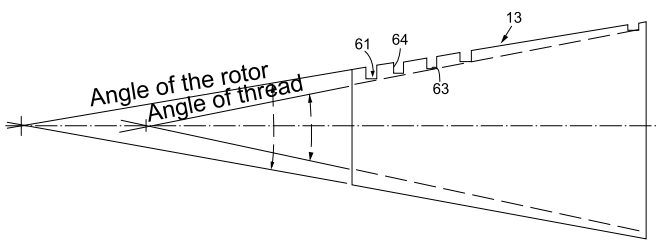

Fig.2

The above drawing illustrates the proportional decrease in channel depth as the rotor diameter increases. Why was this done? Note that as the diameter doubles so does the circumference. This means the fluid has to travel twice as far in the same time to maintain a constant slip velocity. By reducing the channel depth in half (cross-section area = depth x width) the fluid velocity is doubled thereby keeping the slip constant.

The spiral channels could be thought of as very long convergent nozzles. The increase in fluid velocity is in the opposite direction of the rotor spin. We should expect a reaction force from the acceleration of the fluid. This thrust would be directed tangent to the circumference and would increase the spin torque on the rotor. Even without the peripheral nozzles, that Clem later added, the pump rotor experiences a thrust force in a direction that would self-propel it (criteria 4).

Because fluid drag is the primary pumping force, it is well suited for viscous fluids like asphalt (criteria 5). The long channels also represent a large sliding surface area with frictional losses that would transfer heat to the pumped fluid (criteria 6).

All six of the patent search criteria have now been met. Of course this doesn't prove that it is the asphalt pump Richard Clem worked with.

A peculiar condition indicated by the patent is that as the velocity increases in the channels the pressure also increases. Bernoulli's Law requires the pressure to drop proportionally as the velocity increases. Assuming an ideal fluid without losses, when the channel depth is reduced in half, the cross section area is also half and this doubles the fluid velocity and the fluid pressure should drop in half. So what is going on here? There is a centrifugal component that would add to the fluid pressure.

My guess is it's too small to overcome the predicted pressure drop. Here is what I think may be going on. As the diameter and velocity increases the drag force propelling the fluid through the channel is proportionally greater. Energy is being added all along the length of the channel. Whatever the reason, if this high-velocity, high-pressure fluid is feed into tangent peripheral nozzles at the rotor large end, the energy will be converted to shaft horsepower.

The Clem motor is producing 350 shaft-horsepower and a large heat energy component. Where is this huge amount of energy coming from? Recent quantum mechanics zero-point field (ZPF) theories may point to the answer. From an article available at "BEYOND $E=mc^2$" Bernhard Haisch, Alfonso Rueda & H.E. Puthoff [1]:

"Our work suggests inertia is a property arising out of the vast, all-pervasive electromagnetic field we mentioned earlier, which is called the zero-point field (ZPF). The name comes from the fact that the field is held to exist in a vacuum-what is commonly thought of as "empty" space-even at the temperature of absolute zero, at which all thermal radiation is absent."

ZPF researchers theorize that mass, inertia and gravity are not intrinsic properties of matter but the interaction of matter with the zero-point field. By all pervasive it is meant that the ZPF exists not only in empty space but it is passing through your body right now and everywhere else. When you throw a stone you are interacting with this field since the ZPF resists change in motion. In essence the ZPF is the modern day aether.

The amount of energy making up the ZPF is thought to be enormous. Is the fluid acceleration in the Clem motor interacting with the ZPF in such a way as to rectify it and draw energy from it? Is it a hydraulic aether-diode? The fluid, in the Conical Drag Pump, flows through long convergent channels. Disregarding the boundary layer, is this accelerated flow laminar? Would such a long orderly flow entrain the aether energy?

From the perspective of the rotating channels the fluid appears as the discharge from a long nozzle. To exaggerate, if the fluid was held fast to the housing wall, the rotating channel would travel through the stationary fluid. This would be equivalent to achieving 100% efficiency. In reality the fluid is slipping against the stationary housing wall so that the rotating channel (nozzle) is moving faster than the fluid discharge velocity. Assuming the reaction thrust as the only propelling force, this would give efficiency greater than 100%. So, as the slip increases the reaction thrust decreases, but the efficiency increases.

Assuming the Conical Drag Pump is the pump Clem used, can it answer the following?

1) Why was a hollow shaft used?
2) Why was the cone mounted vertically?
3) Why was a starter pump needed?
4) How were the peripheral nozzles added?
5) How was the motor RPM regulated?
6) How did a large coal company get involved?
7) Was this kind of pump ever used in asphalt sprayers?

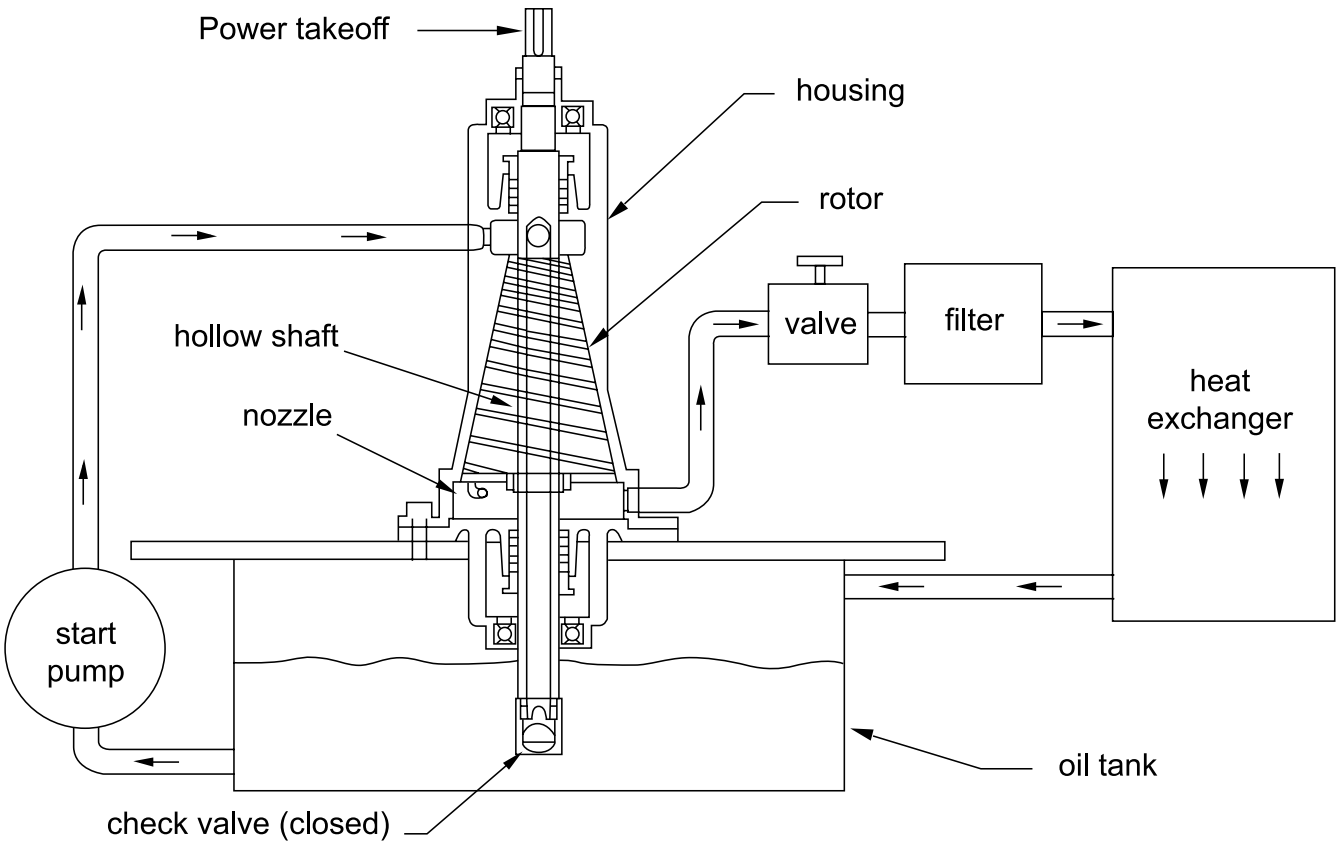

Fig.3

Clem motor shown in start mode
The arrows show oil flow

The above drawing shows a hypothetical Clem motor based on the Conical Drag Pump. The motor is mounted vertically so that the check valve on the hollow shaft is submerged down in the oil tank. The hollow shaft extends from the oil tank through the rotor into the inlet chamber. The start pump draws oil from the tank and forces it up

the external feed line connected to the inlet chamber at the small end of the rotor. This fills the hollow shaft and forces the check valve closed. The oil flows into the spiral channels and out the peripheral nozzles. The reaction thrust of the nozzles spins the rotor. The oil flows through the return line, through the valve, filter, and heat exchanger and back into the tank. The start pump is most likely a standard hydraulic gear pump. It continues to pump until the rotor spins up to its operating speed. The combinations of a start pump and check valve would be a simple way to both prime the motor and spin up the rotor.

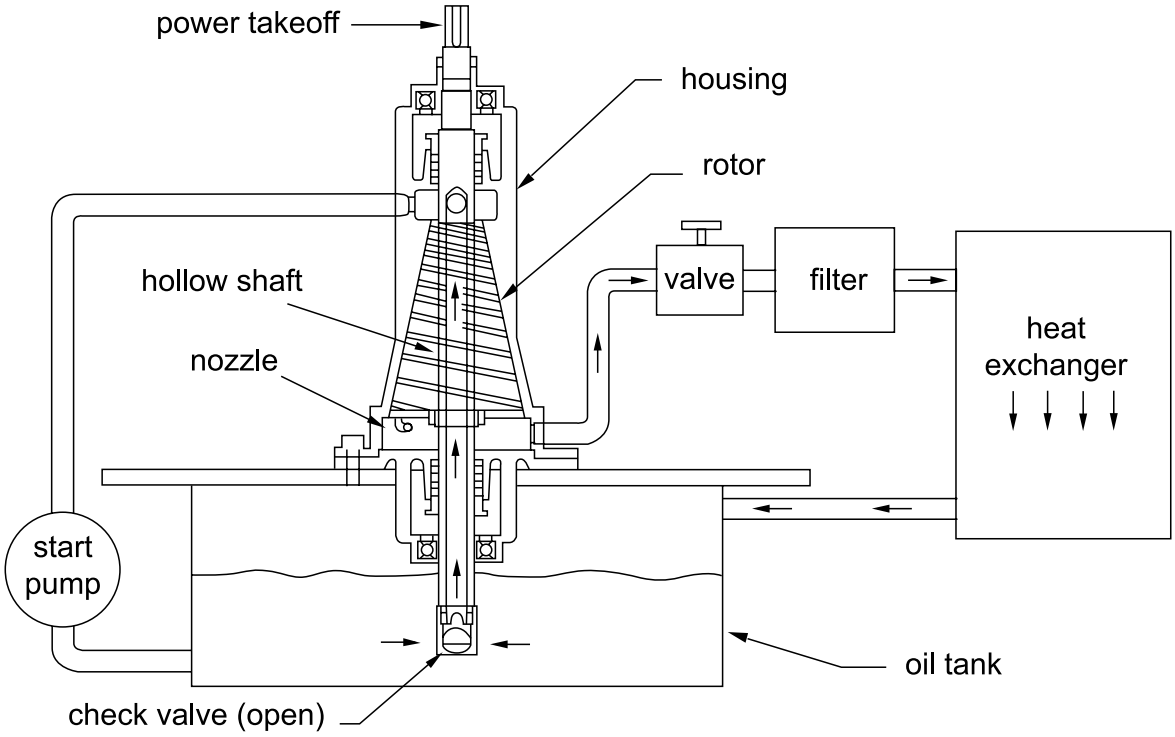

Fig.4

Clem motor shown in operation mode
The arrows show oil flow

Once the start pump is shut off the check valve is free to open. Oil is drawn up into the hollow shaft to the inlet chamber at the small end of the rotor. The spiral channels pump the oil down towards the large end of the rotor. A plate is attached to the large end of the rotor and fits with a close clearance with the housing wall. Nozzles attached to the outer edge receive high-pressure oil from the spiral channels. The jet reaction thrust from the nozzles delivers shaft horsepower to the power takeoff at the shaft top. Adjusting the valve to create hydraulic backpressure regulates the motor RPM. Closing the valve stops the motor.

When I first read about the Clem Motor I found it odd that a deal had been made with a coal company. Was there a connection with the pump? After finding the Conical Drag Pump patent, I wanted to contact the inventor Walter D. Haentjens of Barrett, Haentjens & Co., Hazleton, Pennsylvania. Otto Haentjens founded Barrett Haentjens & Co., in 1916. The business began in the coalmines of Pennsylvania with Otto Haentjens original patent on the balanced opposed impeller multi-stage volute pump. The company still supplies pumps to the coal industry. They have expanded to other markets and their pumps are installed in many industries worldwide. It is now known as Hazleton Pumps Inc., after its acquisition by The Weir Group.

I contacted Peter Haentjens, the VP/General Manager of Hazleton Pumps, by e-mail to find out if this pump had ever been put into production. He replied that they had not done anything with the patent.

An unusual pump design would have a tough time competing in the market with an industry standard like gear pumps. The Dallas asphalt sprayer may have been a one of a kind field test of the pump design. Or the pump manufacturer offered it for testing to an asphalt equipment company in the hopes of generating interest in it.

References

Bernhard Haisch, Alfonso Rueda & H.E. Puthoff, "BEYOND $E=mc^2$" //The Sciences, Vol. 34, No. 6, November / December 1994, pp. 26-31 copyright 1994, New York Academy of Sciences.

Spontaneous Flow Heat Pump

PACES : The Alternative Energy

Jean-Luc Brochet, France

http://www.new-energy-paces.com
Email: brochet.jean-luc@wanadoo.fr

"Paces" is a new high performance electronic process. It is not a traditional heat pump fitted with some electronic gadgets to improve its output, but a truly revolutionary process totally unused up to now. There are no moving parts, not even a moving fluid in it. "Paces" is an electronic process because for its development the pump's fundamental element uses micro-electronic techniques.

...an average of 9000MW could be produced, that is to say the equivalent of several nuclear power stations.

The principle consists in attracting the gas neutral molecules onto a so-called "electrostatic" plate, to accelerate them and heat the plate. An intense electric field is applied in a capacitor with micro-pores covering the plate. The neutral molecules are polarized and accelerated when they penetrate these micro-pores where the intense electric field exists. Each molecule accelerates and absorbs electrical energy when it enters into a pore. But in turn it decelerates and gives off an equal amount of energy upon its exit from the pore.

The molecules, by going back and forth between the plates, continually give off and take energy, thus resulting in a total consumption equal to zero.

The gas fluid does not undergo any change of thermodynamic state, contrary to all other heat pump processes. A thermodynamic cycle remains at the level of each gas molecule, but not at the level of the entire set of molecules.

There is more to this new process, it is not just heat pump process added to an already long list: **these new characteristics also enable some new applications.** Besides the traditional heat pump applications, due to its excellent coefficient of performance this process makes it possible **to produce electricity by cooling the environment.**

For instance, if the Rhine was equipped with heat exchangers into which diverted water could flow, thus cooling its temperature by just one degree, an average of 9000MW could be produced, that is to say the equivalent of several nuclear power stations. Please note that this process would also enable **both electricity and fresh water to be produced from seawater,** an interesting application for areas of the world where water is a scarce resource.

Thus we have at our disposal an ecological process for producing electricity, it would become conceivable to produce hydrogen in great quantities; vehicles would be hydrogen powered. Ozone, CO2 or any other type of pollution would become a thing of the past.

It will most probably be the energy source of future generations, ecological and excellent, inexhaustible, powerful yet completely harmless, stable and steady (contrary to the sun and wind); an invention capable of re-launching the world economy, in particular giving impetus to the currently depressed new technology sector.

However, you have probably noticed that this invention requires advanced technology, and the few French laboratories capable to develop this process have proven inaccessibility to do it for independent researchers such as the author of the article. Besides, the invention's claimed qualities, the revolutionary aspect was very often interpreted by examiners as 'utopian', even before they read the document! Having tired of battling against concept fixed for the past two centuries, the author of the article **has now decided to place this project within the hands of the international scientific and technological community,** in order to give the best chance of success to the invention.

It will most probably be the energy source of future generations!

Initial development requires the construction of a prototype; three possibilities are described on the website (http://www.new-energy-paces.com). As there is no longer legal protection abroad, anyone is free to experiment and to market, as he or she wishes, in all other countries outside of France.

Please help me to spread the word about this project, for example through scientific forums on the Internet. This will allow you to receive feedback and gather other opinions. Your participation, even the most modest, will be of use. To those of you who help this project to see the light of day, all of humanity will be indebted.

Registration of Gravitational Waves

Vladimir N. Petrov, Russia

173001, apt. 76, 10 Bolshaya Saint-Peterburgskaya st., Veliky Novgorod
E-mail: petvn@km.ru

Registration of gravitational waves is one of fundamental problems of physics. At the beginning of the last century A. Einstein's works predicted existence of these waves. Nevertheless, despite numerous attempts are made in different countries of the world these waves have not been fixed up today. Josef Veber, an American physicist working in 60th of the XX century, is sure to be called as the first experimenter who disclosed gravitational waves. Nowadays lots of many-million projects on registration of gravitation waves are developed and realized (LIGO (USA), GEO-600 (Germany-England), VIRGO (Italia), and TAMA (Japan)). However no positive results were achieved.

Failures in registration of gravitational waves can be explained by the fact that researchers have erroneous notion of the essence of these waves. This erroneous notion is laid in an experimental project that causes negative results.

Many researchers believe that influence of gravitational waves on the bodies should be resulted in deformation of these bodies (i.e. in change of mutual place of particles of a material body). All the attempts to disclose the gravitational waves are based on this notion. Now two types of ground gravitational antennas are supposed as priority.

The first type supposes the registration of mechanical oscillations of a massive test body that is initiated by influence of gravitational waves on it.

The second can register changes of a distance between space-apart free masses when gravitational waves act upon them. Great attention is paid to the second type of antennas in the developed projects. Failure attempts of registration of gravitational waves can be explained by their low intensiveness and insufficient accuracy of existing measuring equipments. Therefore, now there are made various attempts to register gravitational waves produced by such great cosmic phenomena as confluence of black holes. More accurate instruments and measuring equipments, for example, a laser interferometer, are developed. Nevertheless, positive results are hardly to be obtained.

Here is one of the fallacious explanations of action of gravitational waves on a body: *"Passing of gravitational waves changes an interval between objects transferring them one from another like two boats sometimes are approached sometimes moved from each other by sea waves".*

Following this example to explain influence of the gravitational waves on bodies placing on the Earth, it can be said that all bodies are in one boat and raising or sinking of the boat on sea waves does not cause change of the distance between the bodies. However, this example seems to be very simplified for explanation of influence of the gravitational waves on bodies. In fact, the case is much more difficult.

According to A. Einstein's theory, bodies moving with variable acceleration will radiate gravitational waves. **Gravitational waves represent the essence of changes of gravitational field occurring at light speed.** Since the gravitational field is a deformed space-time then the gravitational waves cause change of deformation of the space-time. Change of deformation of the space-time is accompanied with change of deformation of geodesic lines (i.e. lines by which all the bodies move).

A body moving by a geodesic line whose deformation is changed changes its acceleration. Change of acceleration of the body will change gravity applied to the body in this area of space. Hence, influence of gravitational waves on the body occurs through gravity which influences on it.

It is known that a fundamental difference between gravity and other forces appearing at a direct contact with a body consists in the fact that gravity provides all the elements of the body (all its points) with equal acceleration (deformation can not occur), and other forces influence on certain parts of the surface of a body and so cause its deformation.

Hence it is senseless to try to measure deformation of a body or change of a distance between test bodies occurring under influence of gravitational waves. It is necessary to note that, in particular, when a body is placed on an unmovable support relatively to the Earth, value and the direction of gravity coincides with weight of the body. Therefore, in this case gravitational waves can be registered at measuring of changes of the body weight.

An experiment on registration of the gravitational field of the Earth by measuring change of weight of

a test body was made. Before the beginning of the experiment there was set a problem to register gravitational waves produced by the Mercury and the Venus at approaching to the Earth. The gravitational field in which the Earth moves changes due to superposition of gravitational waves of other planets on it. These changes were necessary to be registered.

The experiment was as follows: a test body (a 100 grams weight) was weighted on an electronic balance in equal time intervals of 14 days. The experiment was lasting for 12 months. In the experiment it appeared that change of a distance between the Earth and the mentioned planets causes change of weight of the test body. The change of weight of the body occurred in proportion to the distance between the planets. The test body was weighted in the same conditions and in the same place. The performance of the experiment is so easy that every person can made it.

It is known that weight of a body changes (decreases) at moving along the Earth surface from its pole to the equator. Change of weight of a body locating in the same place has not been fixed until now.

The fixed change of weight of the test body proves change of gravity applied to it and, consequently, change of the gravitational field in which the test body moves as well as the Earth does. **These changes of the gravitational field were caused by motion (superposition) of the gravitational waves produced by the mentioned planets at their approaching towards the Earth at the distance of the existent gravitational field.**

Hence, the Earth and all the bodies locating on it move in the constantly changing gravitational field, therefore, constantly change their weight. Nevertheless, as it is known, change of the gravitational field is the influence of gravitational waves on it. Hence, measuring changing of weight of bodies we can speak about registration of gravitational waves.

In search of the 4th dimension

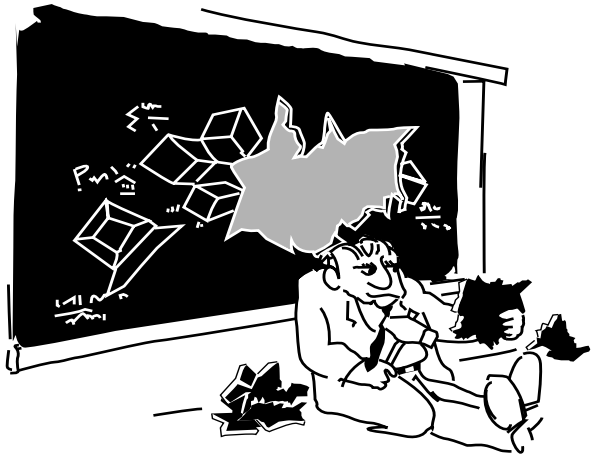

From http://home.ural.ru/~meop/index.html

High-Energy Hyper-Low-Frequency Electric Field

Yury V. Ivanko, Ukraine
E-mail: ux01w@hotmail.com

The article represents a practical and theoretical research on possibility of existence of a high-energy hyper-low-frequency electric field which is interpreted by modern measuring instruments and subjective perception as a static field. Besides there are observed a problem of the field registration, a hypothesis of relic origin of the registered field and a hypothesis of wave nature of the Universe.

A passenger on board a ship sailing in the ocean will never notice action of waves of high and low tide. At the same time, weathering waves of several numbers produce a dangerous storm. However, an ocean liner is designed for such a storm therefore the passenger would just experience some discomfort. It is another case if tide wave hides reefs… I wish our ship, i.e. the Earth, the Solar System, the Galaxy, and the Universe, not to be lead to such a place by any ignorant "navigator"!

One of the most mysterious persons in the history of electricity physics was an outstanding inventor Nicola Tesla (1856-1943). When the majority of scientists developed researches of microworld particles he followed the opposite scientific path. He was interested in the electrical potential of the whole Earth. He researched ways to influence on it, control its state and methods of its regulation. Therefore many of his patents, experiments as well as a purpose of constructions and devices built according to his ideas arouse perplexity and misunderstanding of modern scientists.

a test body was made. Before the beginning of the experiment there was set a problem to register gravitational waves produced by the Mercury and the Venus at approaching to the Earth. The gravitational field in which the Earth moves changes due to superposition of gravitational waves of other planets on it. These changes were necessary to be registered.

The experiment was as follows: a test body (a 100 grams weight) was weighted on an electronic balance in equal time intervals of 14 days. The experiment was lasting for 12 months. In the experiment it appeared that change of a distance between the Earth and the mentioned planets causes change of weight of the test body. The change of weight of the body occurred in proportion to the distance between the planets. The test body was weighted in the same conditions and in the same place. The performance of the experiment is so easy that every person can made it.

It is known that weight of a body changes (decreases) at moving along the Earth surface from its pole to the equator. Change of weight of a body locating in the same place has not been fixed until now.

The fixed change of weight of the test body proves change of gravity applied to it and, consequently, change of the gravitational field in which the test body moves as well as the Earth does. **These changes of the gravitational field were caused by motion (superposition) of the gravitational waves produced by the mentioned planets at their approaching towards the Earth at the distance of the existent gravitational field.**

Hence, the Earth and all the bodies locating on it move in the constantly changing gravitational field, therefore, constantly change their weight. Nevertheless, as it is known, change of the gravitational field is the influence of gravitational waves on it. Hence, measuring changing of weight of bodies we can speak about registration of gravitational waves.

In search of the 4th dimension

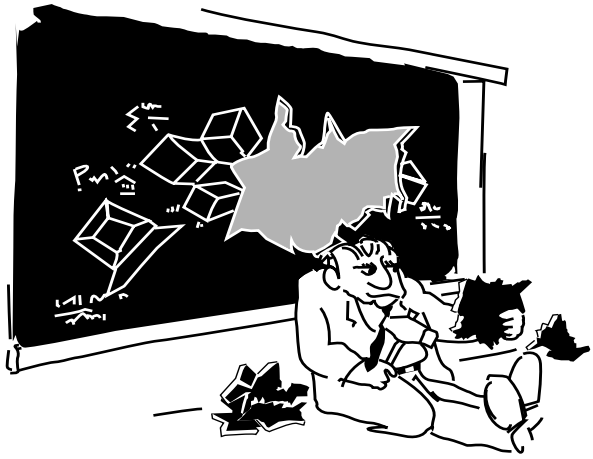

From http://home.ural.ru/~meop/index.html

High-Energy Hyper-Low-Frequency Electric Field

Yury V. Ivanko, Ukraine
E-mail: ux01w@hotmail.com

The article represents a practical and theoretical research on possibility of existence of a high-energy hyper-low-frequency electric field which is interpreted by modern measuring instruments and subjective perception as a static field. Besides there are observed a problem of the field registration, a hypothesis of relic origin of the registered field and a hypothesis of wave nature of the Universe.

A passenger on board a ship sailing in the ocean will never notice action of waves of high and low tide. At the same time, weathering waves of several numbers produce a dangerous storm. However, an ocean liner is designed for such a storm therefore the passenger would just experience some discomfort. It is another case if tide wave hides reefs… I wish our ship, i.e. the Earth, the Solar System, the Galaxy, and the Universe, not to be lead to such a place by any ignorant "navigator"!

One of the most mysterious persons in the history of electricity physics was an outstanding inventor Nicola Tesla (1856-1943). When the majority of scientists developed researches of microworld particles he followed the opposite scientific path. He was interested in the electrical potential of the whole Earth. He researched ways to influence on it, control its state and methods of its regulation. Therefore many of his patents, experiments as well as a purpose of constructions and devices built according to his ideas arouse perplexity and misunderstanding of modern scientists.

Having formulated my own hypotheses I often think why such a Great Genius as Nicola Tesla took his invention away with him.

Danger of this invention lies in simplicity of production of devices for generating (detecting) energy.

Practical Prerequisites

Prerequisites of this and other hypotheses were some undeclared effects occurring in practical wireless communication as well as investigation of devices for distant transmission of electric power.

Distant energy transmission was demonstrated by Nicola Tesla in 1892 in London and in 1893 in Philadelphia. However, even now the way he did it remains unknown.

In 1977-1985 I had to work a lot with radio transmitting equipment of different power of middle-wave (MW) and short-wave (SW) diapasons. According to fundamentals of physics, intensive electromagnetic field is produced around antenna curtain connected to a radio-frequency transmitter. There are brightly glowing gas-discharge electrovacuum devices at the distance up to several meters in this field. Attention was paid to the fact that more than ten daylight lamps of 80 W were successfully "glowed" at 40 W power of a transmitter. In this case a distant correspondent did not note significant decrease of a level of a received signal at the indicator of the receiver. It had to return to this fact in many years. The data of this experiment are represented in a particular document.

There is one more interesting effect which is disclosed when transmitting equipment (TX) and antennas (ANT) are adjusted. An incandescent lamp, which is connected to a certain place of a break of the antenna curtain or of a power feeder (L), glows brightly. The antenna circuit is not closed as galvanic element. (See Fig. 1).

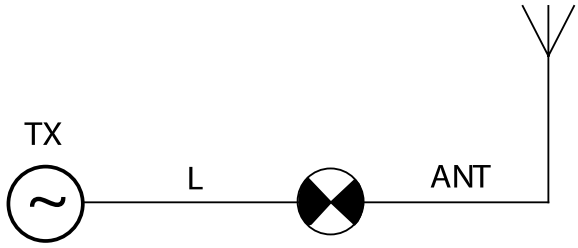

Fig. 1

Hence, the power line of the incandescent lamp is as if it is single-wire. It also had to return to investigation of this effect in many years. The data of this experiment are represented in a particular document. As in the case of the incandescent lamps, the correspondent did not note significant decrease of the level of the received signal at the indicator of the distant receiver.

S. V. Avramenko designed a plug of semiconductor diodes. Connecting this plug to a generator of alternating voltage of 10-10000 V by means of a single-wire line in the load of the plug he discovered current, which was continuous by the direction but pulsating by the value. Electric current measured in the single-wire line is very little, hence, the impression of superconductivity is produced, i.e. it is possible almost to avoid energy losses in the wires.

My experiments also represent a visual demonstration of the effect. For example, several links of light-emitting diodes connected inverse-parallel glow in the single-wire line. Garlands of light-emitting diodes and lamps having a single-wire power line can be produced. It is interesting that in this case power consumed by the generator do not increase practically (See Fig. 2, 3, 4). It was noted that if a standing wave is created around the generator "then an unlimited number of consumers would be able to apply a change of a value of this field to produce power in a load in their place" *(Editor: This phrase is in inverted commas since it is a part of the well-known article "Free Energy" by Alexander V. Frolov (Read in this issue, p. 15)).*

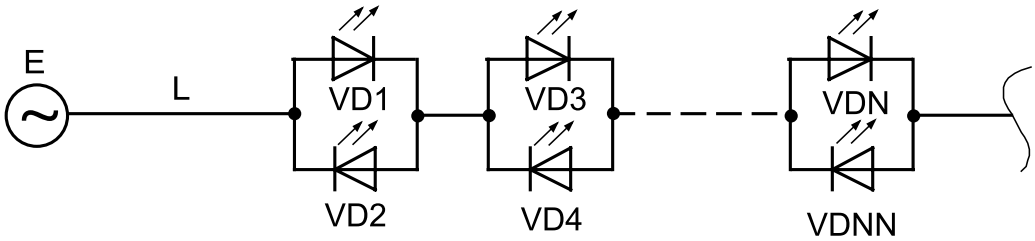

Fig. 2

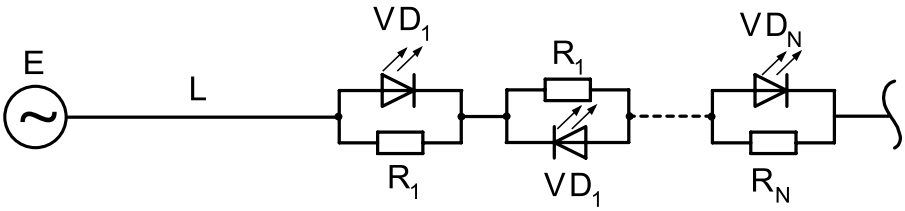

Fig. 3

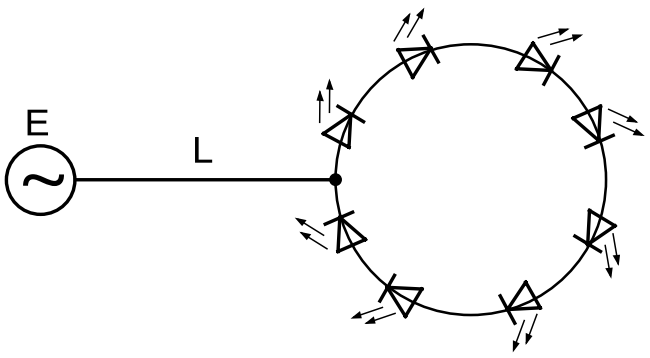

Fig. 4

Russian scientists investigated this phenomenon and proposed an explanation of producing active power in the load by means of reactive capacitive current. This was made applying resonant properties of the single-wire line made of a metallic conductor. Further, possibilities of application of nonmetallic conducting mediums for transmitting electric power were investigated. However, the researchers pay attention for the fact that this explanation is insufficient.

A task group named "Analysis" from Voronezh city (Russia) made a qualitatively new explanation of results of S. V. Avramenko's experiment. The works of this group from Voronezh are devoted to the comparison of properties and characteristics of so-called inertial and inertialess currents occurring in circuits at low frequencies. Their general and particular features have been disclosed. In the works there are demonstrated conditions at which conductivity caused by inertialess discharges predominates in conductors and conditions at which currents caused by conduction electrons predominate. There are demonstrated a description of S. V. Avramenko's experiments and the conclusions made by the researchers. The authors cite data of their test experiments which prove a part of conclusions made by S. V. Avramenko and his colleagues.

However this explanation does not have a right to exist as it does not have variants for practical application.

Results of my theoretical and experimental researches allow provide a **fundamentally new (!)** explanation of energy "transmission" having occurred in the experiments performed by S. V. Avramenko, investigations by D. S. Strebkov, V.A. Kuligin and other investigators. *(Editor: See publications of these works in previous issues of our magazine*). Moreover, they allow explain origin of many physical phenomena and processes including the origin of non-inertial charges and currents and their visualization.

First Hypothesis

Recently a number of scientists all over the world have declared a thought that surplus power is produced in the systems having overunit output due to inability to identify correctly all the existent energy sources. And a so-called phenomenology is observed due to the inability to deal with different types of energy (or fields).

In physics a negation of an overunit device follows a well known state which is considered to be true in other fields of knowledge, i.e. energy conservation law. It should be noted that it is formulated for isolated (closed) systems. I have devoted some time to the investigation of this state and to practical experiments and come to the following conclusion: there are **no isolated (closed)** systems in the nearest cosmos which can be observed by us!

Particular physical, chemical and other processes may actually be observed in closed circuits for making calculations with sufficient approximation.

Show me an isolated system, and I will prove that it is open.

Hence, according to fundamental physical laws, energy does not appear from nothing and not disappear to nowhere. However, the source of oscillations, i.e. our generator, does not provide a load with energy; nevertheless, power is produced in the load. Energy conservation law must be fulfilled! The classical formulation of the energy conservation law is as following: total energy of an isolated system is not changed in the course of time. According to this, the only fact remains valid, i.e. the single-wire system is not isolated from outer influence, hence, energy is consumed from some other source which is outer in relation to the system?! In this case our generator is one of sources of information about an amplitude, frequency, and phase.

Calculations and experiments have allowed made a following supposition. Avramenko's diode plug is a particular case of a device known in radio engineering for a long time, i.e. AM detector (a peak-detector, a limiter, a frequency mixer). I have examined the other known circuits of AM detectors and frequency mixers. The investigations are continued and by this time the supposition has been confirmed.

Let us accept an artificial generator (Tesla's transformer or any other one) as a main generator (or a main oscillator) and a hyper-low-frequency (HLF) oscillation of a huge amplitude as an envelope curve. Let us name it as RW ("relic wave") without placing emphasis on the sense of the name.

Let us suppose that the field can be of:
- local origin (artificial radio transmitters);
- atmospheric origin;
- geomagnetic Earth origin;
- the Moon – the Earth;
- the Sun – the Earth (the Sun as a nuclear reactor producing electromagnetic radiation, the Solar System);
- galactic origin;
- Universal origin – the Relic Wave; in contrast to the relic radiation occurring in the diapason of SHF (i.e. in

contrast to the convenient notion) it is the diapason of HLF. - Etc.

The researches have demonstrated that the field of local and atmospheric origin may be excluded. The other variants require to be developed. Nevertheless, the variant of the Universal scale seemed to be the most probable. There is some reason for this supposition: the modern notion of the birth and the state of the Universe, i.e. the Big Bang and the expanding Universe. The known variants of scenarios of the Big Bang are based on a nuclear explosion of enormous power. The nuclear explosion is accompanied by an electromagnetic impulse (disturbance). It can be supposed that the Big Bang caused forming of a field having enormous amplitude values and long (great) period of oscillations. Probably, we deal with this field.

The second hypothesis about inconstancy, i.e. about wave nature of the Universe

A Russian proverb says: "Everything passes, everything changes". Constant electric voltage does not exist (!). That, what is considered as the constant voltage, really is a constant component (occurring at a certain time interval). This component is formed by combining of variable sinusoidal oscillations and/or is a quite low frequency fundamental. Hence, it is a non-sinusoidal "changing" having amplitude linear part at the time interval of the observer.

For example, in reality a usual storage battery of "direct current" can not support invariable voltage, i.e. when a discharge appears the voltage decreases (changes in time, oscillates with a non-sinusoidal oscillation and a quite low frequency fundamental), when a charge appears the voltage increases.

It is necessary to observe the constant voltage occurring after a rectifier and even a stabilizer as a constant component existing in the time interval from switching on to switching off. This will correspond to that is proposed by Fourier!

Show me a device producing constant voltage, and I will prove that the voltage is not constant.

Conclusions

If the supposition is totally confirmed then the statement that an electric field plays a fundamental role in the Universe will be valid.

We live in an electric field of a huge potential but we do not notice it. Since **our reference point is the amplitude value of RW field in our point of space** then the potential is equal to zero for our perception and for measuring instruments. Besides, **RW has an amplitude linear part at the time interval of the observer**. Hence, we consider RW field existing as unrevealed or as weak interactions in natural processes. Nevertheless, this influences directly on the whole surrounding material world.

Artificial production of heterogeneities in the RW field can cause its significant visualization.

According to the concept of the physical field, which was called by Einstein as the most important discovery in physics since Newton's time, every body generates a force field in the ambient space (for example, the electric field occurring if the body has an electric charge). This force field becomes apparent when a test body located in a certain point is influenced by a force.

Discovery of the fields of this scale allows define this concept more accurately. I would like to restate the information mentioned above in the following way: every non-homogeneity of physical vacuum (aether), which is registered by our perception or by measuring instruments as a physical object or a physical field, interferes with RW (according to other interpretations, it absorbs or rereflects RW, or becomes excited) producing new wave fields. This perceived physical field has frequency which is higher than RW frequencies. It is perceived as static in the time interval of observation. Hence, the field generates a charge and not the reverse. Any linear or non-linear transmission (motion) of a material or field object changes non-homogeneity which is generated by this object.

A question about measuring of parameters of the Universe remains open. Can an oscillation of the period of T=14 billions years and of the amplitude of A~T be seen, perceived, registered or measured?

The used literature and references are not cited in the article due to its great volume. The reader can familiarize with them at the web-site of http://www.efir.com.ua. The complete text of the article and other materials can be received from the author.

EAGLE-RESEARCH

Energy Solutions
since 1984

A Research Organization that Develops & Distributes Practical Energy-Saving Methods & Devices

4 Energy Way, P.O. Box 118
Porthill, Idaho 83853
FAX: 250/492-7480

Technical questions to:
wiseman@eagle-research.com

To the Question of Work Made by Electrostatic Field

Alexander V. Frolov, Russia

General Director, Faraday Lab Ltd
Tel./Fax.: 7-812-380-3844
Email: office@faraday.ru

We know some simple examples of work making due to the forces, which appear in electrostatic field. Since the field itself does not require energy consumption from the source (not taking into account the charge leakage), then free energy can be received with these forces. The first phenomenon that we are going to consider is a phenomenon of **electrostriction**. Mechanical forces appearing in dielectric under the influence of electrical field tend to deform it. Sometimes these forces are small, but they can be huge in special dielectrics. The character of deformation also depends on non-linearity of electrical field. Suffice it to remember that heating of a body takes place during deformation, and we can make a conclusion on possible using of the given effect in practice. Periodical deformation can be created due to the rotor or any other methods to change the field.

The second effect is not so popular. It was found by Hertz in 1881 that there is a rotation of dielectrical cylinder (or ball) in permanent electric field if it is created in some liquid or in gas (see Fig.1).

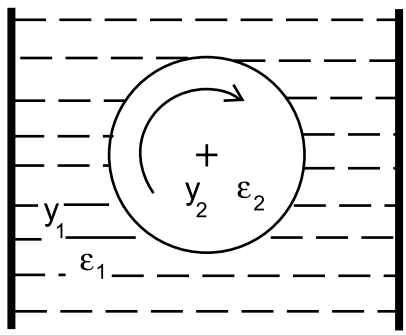

Fig.1

Here **ε1** is a dielectrical permittivity of the liquid, **ε2** is a dielectrical permittivity of the rotor, **γ1** is a conductivity of the liquid and **γ2** is a conductivity of the rotor. This effect was discovered by Hertz, then it was described by G. Quincke, Germany. Also Japan scientist I. Sumoto studied the effect in 1955. Modern research work was made by K.M. Polivanov, Moscow. There is the so called equation by Polivanov describing special conditions, which are necessary to begin rotation (**ε1/ ε2=γ2/γ1** is the Polivanov's condition).

Forces of electrostatic field produce this rotation and it is a real free energy system that can trap energy from inner structure of potential field. Let's try to describe the mechanism of this effect and then we'll be able to increase the power of the system up to the level of industrial application. So, why does it work? To my mind, there are some differences in conditions for polarization of the rotor and molecules of liquid or gas those are surrounding the rotor since there is a difference in permittivity and conductivity.

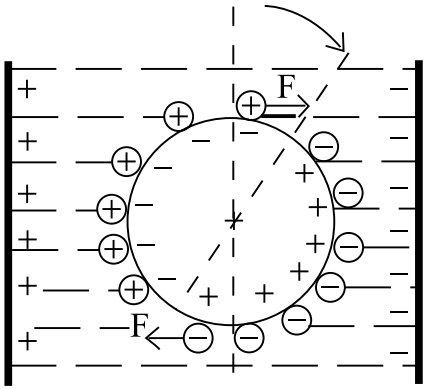

Fig.2

Due to this reason the molecules are polarized both by the field of electrodes and by the field of rotor. The rotor is polarized in the electrical field of electrodes, and molecules of liquid on its surface are polarized by the electric charge of the rotor, but not according to direction of the field. So, the rotor is surrounded by "screen" of molecules on its surface. The electric charge of this screen partially compensates the field of electrodes.

When some angle is created by the first initial turn, there is some part of the rotor surface, where molecules of liquid on the surface of the rotor are attracted to electrodes and it is the reason for future rotation. After some angle of the turn the polarization in this point of the rotor surface is changed but new molecules are incoming in the so called "sector of attraction" and the rotation is always accelerated. This well-known effect of 1881 is a very good example of possibility to produce useful work in load by means of electrostatic field only.

One more interesting effect is known as Faraday effect. In 1836 Faraday noted that raising of liquid upwards takes place in condenser with liquid dielectric (plates are installed vertically). During this process electrostatic field makes the work against gravity. A. Gyemant in 1926 established that value of this force is proportional to the square of voltage on condenser. Later in 1955 this phenomenon was studied in details by I. Sumoto, Japan. That's why in physical encyclopedias this effect is called "Faraday-Sumoto effect". In Tareev's book [1] it is pointed: "Under high voltage this phenomenon leads to flowing and turbulent boiling of liquid". I should remember for those, who see nothing unusual here, that it does not necessary to consume the power from initial source. Creating an initial field in electric capacitor, then we can use the received mechanical work. It is evident that the gradient of electrical field creates the conditions for movement of liquid dielectric. A task to create conditions for liquid circulation is more complex, but it has solution, if we take into account the presence of one more static field, i.e. gravitational field. Joint action of electrostatic and gravitational fields stipulates the circulation of liquid dielectric even in the simplest constructions. Besides, electrostatic filed can be partially screened.

The analyzed examples should draw attention of experimenters to these obvious ways of how to create useful work by means of electrostatic field.

References

1. Tareev B.M. Physics of dielectrical materials, Moscow, Energoisdat, 1982, p.199 – 200.

Editor: Below we publish the comments of our reader.

Letter On
Hertz-Quincke-Sumoto Effect

from Doug Marett
Email: doug.marett@sympatico.ca

…As far as I can tell, the original reference by Hertz is "On the Distribution of Electricity over the Surface of Moving Conductors", Wiedemann's Annalen, 13, pp.266-275,1881. Hertz's discussion of this phenomenon is cursory at best, having very little experimental work included. The real phenomenon appears to have been discovered by W. Weiler in 1893 (Zeitschrift fur den Physikalischen und Chemischen Unterricht, Vol.6, pp194-195). Weiler observed that a glass cylinder placed in a poorly conducting liquid between two spherical electrodes began to rotate when the electrodes were connected to an electrostatic generator. In 1896, George Quincke reported the same phenomenon and published a comprehensive report on it. This was in Annalen der Physik, Ser.3, Vol. 59, pp.417-486. Subsequent investigators have tended to attribute the discovery to Quincke, when in fact Weiler was the first to pioneer the work.

I do know that P.E. Secker et al. performed work on this field, references of which are available in the English language. These are:

P.E. Secker, et al., (1968) Journal of Applied Physics, Vol. 39, pp.2957-2961, and
P.E. Secker, et al., (1970) Journal of Physics D: Applied Physics Vol.3, pp 216-220.

I hope that this information might be of use to you.

The Foundations of Physchemistry of Micro World

Ph. M. Kanarev

The Second Edition

The book was published in Russian and English; you can also read it at http://book.Kanarev.innoplaza.net

The new axiomatic of natural sciences is given in the book; on its basis, quantum physics and quantum chemistry have been returned to the classical way of development. The first steps are made on this way, which have led to discovery of the structure of the photon, the electron, and the principle of the formation of the atomic nuclei, the atoms and the molecules.

The Planck's Law of radiation of perfect blackbody is given on the basis of classical concepts, and the connection of quantum phenomena with the laws of classical physics is proved.

The application of the new theoretical results to the solution of practical energy tasks on the basis of plasma electrolysis of water is shown. Due to this electrolysis, additional heat energy and the energy containing gases (hydrogen and oxygen) are generated. Cold Nuclear Transmutation of the atomic nuclei of alkaline metals and the atomic nuclei of the cathode material takes place during plasma electrolysis of water.

The book is intended for physicists, chemists and other specialists who are seeking the new directions for understanding the foundations of the micro world and the new energy sources.

Comments to Electro-Reactive LIFTER News

Alexander V. Frolov, Russia

General Director, Faraday Laboratories Ltd
E-mail: office@faraday.ru
http://www.faraday.ru

March 21, 2003 we got news from France about electro-reactive propulsion system.

Blaze Labs reached 100g PAYLOAD level.

You will find all the details of the Saviour's experiment at: http://blazelabs.com/exp14.htm.

This electro-reactive ionization-flying model requires 46 kVolt, 4 mA, i.e. about 200 watts to fly with 100 g useful load.

It is interesting to note that Jean-Louis Naudin's previous opinion of 1997 – 1999 about priority of the Frolov's asymmetrical capacitor now is changed. Sometimes people wish to re-write the history. It is possible and it is easy. Naudin's web page about http://jnaudin.free.fr/lifters/story.htm (see Fig. 1) is not started from the real beginning of the story. He forgot our discussion of 1997 and also photos and MPEG video I have send to him when he has started his way in electrograviticis.

If you remember the name of Naudin's first asymmetrical capacitor "Frolov's Hat" (see Fig.2) then you know why there is this name of this technology. But really it is not important to try for some serious reply from Jean since he has no personal post address, phone, or his photo on the web site…

Also it can be useful to visit this page http://www.faraday.ru/t-cap.html to know about something **more important than electric ionization flying models (Lifters),** since it is just a reactive ionization way, which is similar to rockets.

Ideas now developing by us are not aimed to increase the power level (from 1 gram to 100 gram propulsive force). It is **a qualitatively new idea**; it is really electrograviticis instead of "electro-reactive Lifter".

So**, what is about real "history of the question" instead of the French version?** The question here is not about a priority, it is nonsense after T.T. Brown's patents. As an example the NASA patents on asymmetrical capacitors can be mentioned since the ideas were opened before the NASA patent and there is nothing new in it. The problem is that people who develop reactive ionization Lifters develop only primitive reactive technology. **It is not essence of T.T. Brown research but it is the distortion of his ideas.**

So, the team in France is working to develop and support ideas of secondary and wrong method. Why? Perhaps they either do not see the real way or have payment for the wrong way **to mask a real work.**

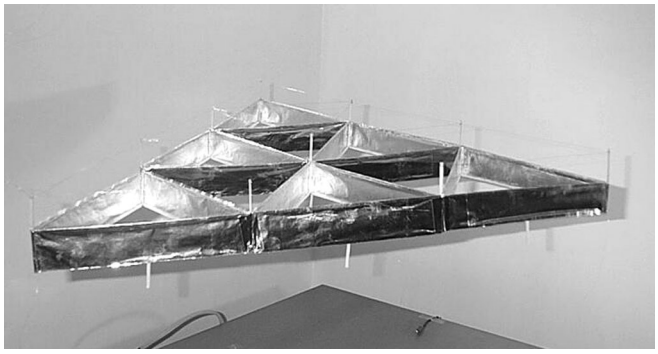

Fig. 1

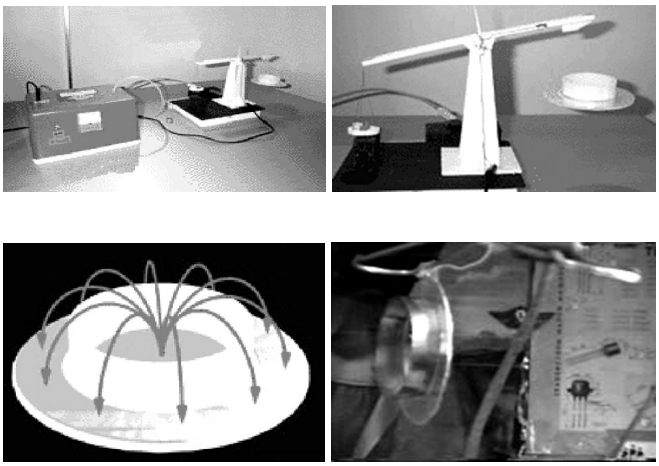

Fig. 2

Josh Werrmann (Email: jsh111@yahoo.com): I wanted to ask you a few questions about an article titled "Highly Efficiency Electrolysis" by A.V. Frolov. In this article it is stated that Dmitry A. Latchinov patented a method for electrolysis, where one of the electrodes is insulated completely from the water. It is also stated that another scientist, Igor Goryachev, used a method of pulsed electric fields. I don't know if you know, but inventor Stanley Meyer has a patent that covers both of these processes together, in a way. His patent is U.S. patent number: 4936961. Take a look at this. In the patent it states EXPLICITLY that there is a pulsed electric field, where a condition of NO CURRENT is preferred. This is very similar to the above to Russian scientists, except that the patent states a condition of resonance is necessary. I am wondering do the two scientists that are described require resonance in their devices? Or just plain pulsed electric fields, where one electrode is insulated from water.

Another patent I would like to refer you to is Archie Blue's electrolyser, U.S. patent number: 4124463. This device is similar to A.V. Frolov's idea, to get the oxygen and hydrogen bubbles off the electrodes, except he uses a blower to blow air in the cell, instead of rotating the cell like A.V. Frolov does. His invention also uses the conductivity current to work.

Alexander V. Frolov: As far as I know resonance is not created in this case. The main idea is the removal of gaseous film which appears on the surface of electrodes by rotation or some other methods.

NEWS REVIEW

Giant magnets lead the world to the new source of energy

http:// www.sciteclibrary.ru

The system of 150-tons magnets which have been developed by scientists of the USA, Japan and Russia opens a new era of safe and unlimited energy. In this system nuclear fusions serve as a source of energy. They accumulate heavy chemical elements not by means of nuclear reactions but by ultrahigh plasma pressure.

After supplementary research is held which aims to reduce manufacturing costs of the giant magnet weighing 925 tons, this magnet will be produced and demonstrated at the opening of the International Thermonuclear Experimental Reactor (ITER). This magnet in its turn will become a part of a bigger system, that is combined into a magnet weighing approximately 10 000 tons. The task of ITER is the demonstration of the process of nuclear fusion, as an energy source. During the process of nuclear fusion the light elements are combined by immense pressure, thus producing heavier elements. During this production process a lot of energy is emitted. The task of giant high-power magnets is to create magnetic fields, which must hold and control plasma, or to charge electrically the gas, in which the fusion is being held.

In Japan the system of 150-tons magnets serves as adjustment system of 925-tons magnets, which will be finally put into operation and heat up the ITER plasma. Two additional giant magnet systems will confine the plasma and will control its form. The model for one of them is presently being examined in Germany; the model of the other is in project.

Cylindrical 150-tons magnets have three main parts: external module, built by the Japanese team, internal module, built by the American team and a thin rod in the core which is equipped with process control equipment. Three different rods were separately checked, two of them were built in Japan, another in Russia.

Harnessing the Wheelwork of Nature

*(*340 pgs. Adventures Unlimited Publishers, 2002)

Thomas Valone
Email: iri@erols.com

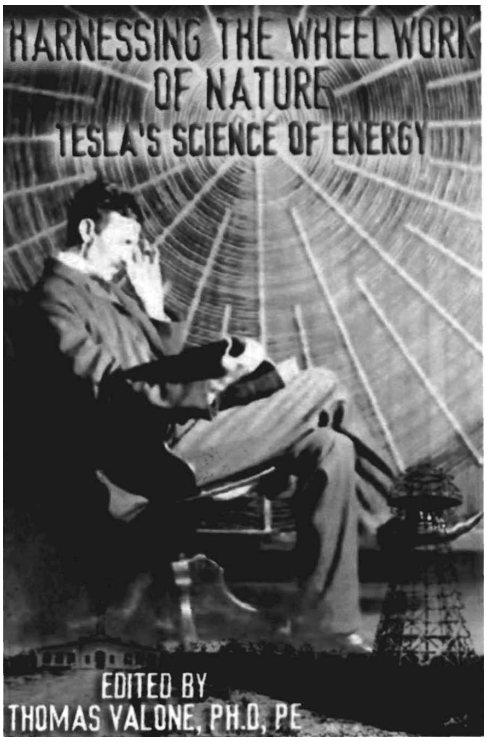

It is a new book by **Thomas Valone**, who edited this anthology in time for the **Wardenclyffe Tower Centennial (1903-2003)**. This book presents for the first time, the feasibility argument for Tesla's most ambitious dream, the wireless transmission of power. Pictured on the book's cover near his feet, the 187-foot Wardenclyffe Tower was Tesla's means to deliver natural 8 Hz electricity anywhere in the world, by longitudinal waves.

Unknown to most electrical engineers, Nikola Tesla's dream answers the energy crisis worldwide, saves electrical conversion losses, and provides a real alternative to transmission lines. In Dr. Corum's contributed papers, he explains Tesla's magnifying transmitter, which Tesla compared to a telescope. Corum points out that "the tuned circuit of his magnifying transmitter was the whole earth-ionosphere cavity resonator." This fact helps explain why Tesla stated, "When there is no receiver there is no energy consumption anywhere. When the receiver is put on, it draws power. That is the exact opposite of the Hertz-wave system...radiating all the time whether the energy is received or not." Thus, with Tesla's futuristic transmission of power, source dissipation will only be experienced when a load is engaged in a tuned receiver somewhere on the earth. This fact alone represents **a major leap forward** in electrical transmission efficiency, even one hundred years later.

Why wasn't the prototype of Wardenclyffe finished in 1903? Tesla offered this visionary conclusion: "The world was not prepared for it. It was too far ahead of time. But the same laws will prevail in the end and make it a triumphal success... Let the future tell the truth and evaluate each one according to their work and accomplishments. The present is theirs; the future, for which I really worked, is mine."

Up until now, there has been a general malaise regarding the lack of scientific comprehension of Tesla's greatest dream. For example, the Serb National Federation notes, "With the exception of the first biography of Tesla by John J. O'Neill, science editor of the *New York Herald Tribune*, and published in 1944, unfortunately no biographer since has had the necessary scientific/engineering academic credentials to discuss Tesla's work in the various fields." Contributors to ***Harnessing the Wheelwork of Nature*** are primarily physicists and engineers who are experts in Tesla technology. Their wealth of knowledge demonstrates their mastery of this extraordinarily progressive and technical subject. Finally, the best academic credentials have been brought to bear on the world's greatest electrical futurist.

This is a very readable and profusely illustrated reference volume on wireless transmission of power, besides being an excellent biographical gold mine of Tesla history. Nick Cook, editor of *Jane's Defence Weekly* and author of *The Hunt for Zero Point* says, "Tesla is one of the great overlooked geniuses of science and electricity. His full story deserves to be told. Tom Valone sheds important new light on his life and work."

Integrity Research Institute will hold a Tesla Energy Conference & Expo on November 8-9, 2003 to celebrate the Wardenclyffe Tower Centennial (1903-2003) in conjunction with the Tesla Wardenclyffe Project, Inc. (www.teslascience.org).

See www.IntegrityResearchInstitute.org for more details.

Experiment on the generation of gravitational field

by Dmitry Yu. Tsipenuk

Sergey S. Abramov

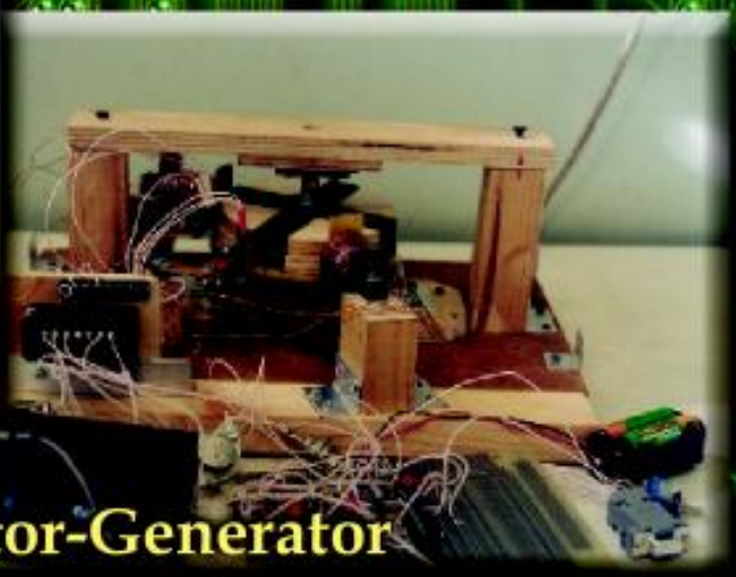

Model of Adams Motor-Generator

Electrolytic photoaccumulator for the XXI century energy systems

Read the new article by Anton I. Egorov

Flynn Generator

Original version of photomaterials is presented at http://www.flynnresearch.net

Joe Flynn Laboratory, USA

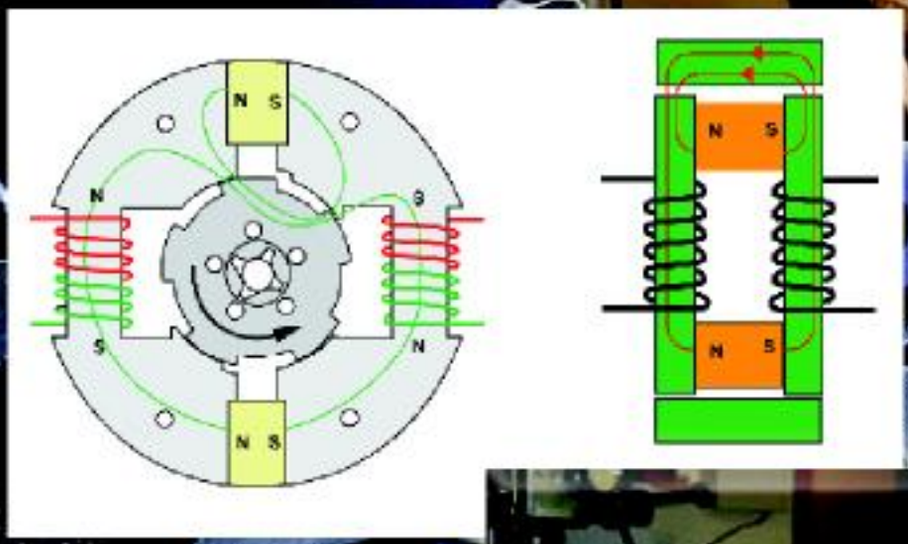

Electric generator by Joe Flynn

More than 350% efficiency generator operating on permanent magnets

ISSN 1684-7288

Read the article by Tim Harwood in this issue

New Energy Technologies

Printed version ISSN 1684-7288
Online version ISSN 1684-9698

Published by Faraday Laboratories Ltd. **Issue #3 (12), 2003**
Research on advanced aerospace systems and new energy sources

Time Machine

Conference in Moscow: discussion of the patent application on the method and device to control temporal parameters of matter

Time Machine

Experiments by research group "KOSMOPOISK"
Summer, 2001

Device designed
by Faraday Lab Ltd, 2002

Alexander V. Frolov
Vadim A. Chernobrov
April 12, 2003, Conference hall
Hotel "Cosmos", Moscow

NEW ENERGY TECHNOLOGIES #12

1. Works on the Designing of Time Machines. Vadim A. Chernobrov (Russia)
2. Control of Temporal Parameters of Physical Processes. Alexander V. Frolov (Russia)
3. Etherodynamics as a New Field of Physics. Vladimir A. Atsukovsky (Russia)
4. Electromagnetic Gravitational Interaction Vadim Ya. Kosyev (Russia)
5. Medium For Existing of Matter in Nature. Anatoly V. Rykov (Russia)
6. Adams Motor. Sergey S. Abramov (Russia)
7. Field Transformation in the Model of Extended Space. Dmitry Yu. Tsipenyuk (Russia)
8. Joe Flynn's Parallel Path Magnetic Technology. Tim Harwood (USA)
9. Flynn Laboratory Photos
10. Flux-machine and Its Analogies. Review
11. Russian Patents on Alternative Energetics.
12. Gravitational Spaceships. Gregory R. Uspensky (Russia)
13. On Velocity Of Drive-Free Motion. S.A. Gerasimov , V.V. Stashenko (Russia)
14. Electromagnetic Self-Action. S.A. Gerasimov, A.V. Volos (Russia)
15. Uranium Photoaccumulator. Anton I. Yegorov (Russia)
16. Global Energy Prize (reportage)
17. Teleportation. Alla V. Pashova (Russia)
18. "Mass Defect" in Home Conditions. Prokofy V. Sherbak (Russia)
19. Aether as Unified Field. Alexander M. Mishin (Russia)
20. Global Energy. Philip M. Kanarev (Russia)
21. Fusion Processes Of Molecules Of Oxygen, Hydrogen And Water. Philip M. Kanarev (Russia)
22. Plasma Energy Power Generation. Bruce A. Perreault (USA)
23. News
24. The Marcus Device Controversy. Tim Ventura (USA)
25. Systems of conversion of thermal energy to mechanical one. Review
26. I. Prigozin
27. Letters

Editorial: On April 12 of 2003 a scientific conference "The Time Machine" was organized by Faraday Laboratories Ltd in Moscow, Russia. It was devoted to the experiments on control of space-time physical properties. At the conference there were discussed problems of time and gravitation in the context of etherodynamics, experiments and applied aspects of these technologies. Below we publish a review of the main reports presented at the conference.

The First Results of the Works on the Designing of Devices to Control Parameters of Physical Processes (of Time)

Further Plans on Designing of the Time Machine

Vadim A. Chernobrov, Russia

"KOSMOPOISK", Nagatinskaya 19A, 111533,
Moscow, Russia
E-mail: chernobrov@kosmopoisk.org

To conduct the experiments on the influence upon physical Time (density of space energy) some special devices were used as a general method of such influence. These devices can create converging waves which can cause the appearance of quasi-monopole in the confined space. *Quasi-monopole* is a part of space which has some parameters of hypothetical unitary monopole or bunch of such particles (in particular, it allows registering one magnetic pole by means of measuring equipment from the outside at some distance from this pole).

The pilot experiments have shown that it is very difficult (if not impossible) to create long-living quasi-monopole by means of permanent magnets or electromagnets operating on direct currents (in this case quasi-monopole represents a space with one outer and one inner magnetic pole). It can be explained by the fact that lines of force of the "inner pole" invariably find a weak spot in the heterogeneous surface of magnets and break out. As a result, at the device along with one "outer" magnetic pole there is a local output of magnetic lines of the "inner" pole.

During the designing of new devices there was a task to create a quasi-monopole situation in the confined space. This situation should be created not uniformly but transiently by pulsation method. Frequency of work of electromagnetic oscillators first of all was selected depending on linear dimensions of the devices. Selection of the frequency was made in such a way that one period of pulsation does not exceed the period of time which is necessary for electromagnetic waves to reach the center and opposite waves of the device.

At the designing of laboratory devices, which generate converging longitudinal waves, several different principles to obtain required parameters were considered in the multi-layer quasi-monopole, which works in high-frequency mode. Several types of the devices were realized at different degrees of development and with different success. It was shown that the simplest devices were that ones which used electromagnetic (solenoid) oscillators connected in series and in parallel. In different experiments between 3 and 5 such surfaces were used. These surfaces were called electromagnetic work surfaces (EWS). All layers of EWS of different diameters were mounted in series in each other (like matreshka). The outer layer was either mounted at force shell or simultaneously represented such a shell by itself.

The size of the maximal EWS was about 0.9 m, the diameter of the minimal (inner) EWS was equal to 115 mm that was enough to place laboratory animals inside the control detection devices. Laboratory animals were used to determine the consequences of the influence of converging spherical electromagnetic waves. Payload, (i.e. that which was directly used for transfer in Time-Space), included the afore-mentioned detection devices and (occasionaly) laboratory animals. The term "payload" was coined by analogy with the term which is used in cosmonautics. Volume of payload section was placed in the center of symmetry of the Time Machine (TM). In all the earliest Machines (except the 7th model) this volume still has not exceeded the volume of a football. The device with an outer diameter of 2.1 m and inner payload section of 1 m has the maximum size. It allows making human-aided experiments.

At different stages of the experiments the calculations were made by all available known modern methods to fix time. All types of electronic, quartz, mechanical and several specially made doubled quartz generators were used (there were compared frequency readings of measuring and etalon heat-insulated generators which were placed at a distance). Certain experiments used lightguiding diodes and some other methods. Before and after the experiment (more rarely during the experiment) readings of measurement clocks were periodically compared with those of an etalon clock and with signals of exact time which were transmitting by radio. Other physical factors causes side effects upon some types of measuring devices, for example, upon quartz-crystal clocks. However, doubling of measurement methods allowed essentially decreasing inaccuracy of measurements.

At some operating modes (which were not always predicted) the change of Time speed was attained (Prof. Nikolay A. Kozyrev called it density of Time t/t_o). This change came to about a fraction of a second per an etalon hour. Let us take usual "etalon" earth time as $t_o=+1$ then it becomes clear that it is speed range of $+0.99<t/t_o<+1.01$ which is researched in the experiments. Thus being placed inside the device, the inanimate objects and animals were transferred in the Future (with "above-zero" speed) more slowly or faster than those around them. It occurred at all operational modes of the device (deceleration or acceleration).

Difference of Time (gradient of Time speed or curvature of Space-Time field) was observed not only inside the TM, though there is no doubt that a maximal value of changed Time was registered inside the smallest "matreshka". As was expected, during the experiments Time change was also registered outside the device. However such change which had an opposite sign was smaller than the change inside the device approximately by an order of magnitude. It entirely corresponds to geometric laws, i.e. in proportion to the cube of the distance).

In other words, TM influences not only its inner part and pay load but also the environment. It bears a strong resemblance to jet propulsion but in Time and not in Space. It is a flight which is realized by rejection of Time instead of mass.

Thus it was determined that the processes of deceleration and acceleration of Time distinctly differ in their nature and consequences. In such a way the deceleration was considerably smoother and more stable. During acceleration there were observed sudden changes in readings and this operational mode was characterized by general instability and dependence on any (or many) external factors. Particularly, acceleration instability also consisted in the following: at fixed power the value speed of Time depended on the time of day and situation of the Moon. Possibly it also depended on some other factors including the presence of an operator or other people near the device. Even insignificant external influence, for example, mechanical shaking, caused the change of speed value which sometimes was rather significant.

Inside the laboratory devices there was also registered that **Time can change with some sluggishness**. After the changed Time speed influenced some physical object (for example, soil) then residual effects were observed at it for some period of time. These effects can be eliminated only by the influence of another speed of Time.

Preliminary general conclusions

The Present is the transfer or transformation of the polyvariant easily changeable Future into the univariant unchangeable Past. Thus flights in the Past (at "negative" density-speed t/t_0) and in the Future will happen in different ways. They can be compared with the motion of an ant along the tree: from any point of the tree (i.e. from the Present) there is only one way downwards open to the ant (i.e. in the Past) and many different ways upwards (i.e. in the Future). However among all the ways to the Future undoubtedly there are most probable, low-probable and almost improbable variants for development of the Future. The less probable this variant of the Future the more unstable and energy-intensive the motion to the Future will be. According to

the "law of the crown of tree", return to the Present is possible only if when being in the Past the traveler does not interfere in the course of events and does not change the course of the past History. Otherwise the chronotraveler will return to the parallel Present from the Past by another branch of History. Penetration to the Future from the Present is hampered by the choice of the branch for transference. However return from any variant of the Future into the Present is possible at any scenario if there are no fusions of different variants of History…

In other words, we have a circumstantial evidence of the assumption that Time has more than one dimension. Thus there is an affirmation of the theoretical inferences of R. Bartini who believed that Time has 3 dimensions. Hence we can consider our terrestrial globe as 6-dimensional where the dimensions are: length; width; height; age or date of Time; variant of History or blur of Time; density or speed of Time. Thus the notion of "Arrows of Time" is completely absent in the fourth dimension (date of Time) but it is a special case of the notion of the sixth dimension i.e. speed of Time. At the same time the notion of speed of Time also relates to the physical notions of gravitation and energy. Thus the notion of "Einstein-Rosen bridge", which was introduced in 1916, or notion of "worm course", which was introduced by John Willer in the end of the fifties, are connected with transference in the 5th and 6th dimensions.

Method and Device to Control Temporal Parameters of Physical Processes by Means of Changing of Energy Density of Space

Alexander V. Frolov, Russia

General Director, Faraday Lab Ltd
Tel./fax: 7-812-380-3844
Email: office@faraday.ru

This invention belongs to the methods and devices to provide control on rate of physical processes (that includes the process of the existence of matter in space-time) by means of increasing or decreasing of energy density of space (i.e. energy density of physical vacuum or density of the aether).

Let us consider the history of the invention:

Earlier there were proposed some methods and devices to influence the rate of physical and chemical reactions, biological processes or period of oscillation of the system. In the works by N.A. Kozyrev [1] there is a description of the experiments on the influence of some process (for example, process of evaporation or crystallization of matter) upon the period of another process, which serves as a detector and can be compared with reference oscillation process. In one case, the rate of oscillations of the detector decreases in the surrounding area near the process of matter evaporation. In another case, the rate of detector oscillations increases in the surrounding area near the process of matter crystallization. If we use a term of "entropy" then it is possible to say that the processes which are accompanied with entropy increasing (for example, conversion of matter from solid state into liquid one) influence on the matter (surrounding processes) in such a way that entropy of systems decreases. In another case, for example, near the process of crystallization, entropy of systems increases in the surrounding area near this process. Kozyrev used the term "wave of density of time" and he made a conclusion that in addition to "directivity" of time (time course) there are active properties of time, for example, "density of time".

To develop this approach for applied purposes it is necessary to use in-depth analysis of the physical sense

the "law of the crown of tree", return to the Present is possible only if when being in the Past the traveler does not interfere in the course of events and does not change the course of the past History. Otherwise the chronotraveler will return to the parallel Present from the Past by another branch of History. Penetration to the Future from the Present is hampered by the choice of the branch for transference. However return from any variant of the Future into the Present is possible at any scenario if there are no fusions of different variants of History…

In other words, we have a circumstantial evidence of the assumption that Time has more than one dimension. Thus there is an affirmation of the theoretical inferences of R. Bartini who believed that Time has 3 dimensions. Hence we can consider our terrestrial globe as 6-dimensional where the dimensions are: length; width; height; age or date of Time; variant of History or blur of Time; density or speed of Time. Thus the notion of "Arrows of Time" is completely absent in the fourth dimension (date of Time) but it is a special case of the notion of the sixth dimension i.e. speed of Time. At the same time the notion of speed of Time also relates to the physical notions of gravitation and energy. Thus the notion of "Einstein-Rosen bridge", which was introduced in 1916, or notion of "worm course", which was introduced by John Willer in the end of the fifties, are connected with transference in the 5th and 6th dimensions.

Method and Device to Control Temporal Parameters of Physical Processes by Means of Changing of Energy Density of Space

Alexander V. Frolov, Russia

General Director, Faraday Lab Ltd
Tel./fax: 7-812-380-3844
Email: office@faraday.ru

This invention belongs to the methods and devices to provide control on rate of physical processes (that includes the process of the existence of matter in space-time) by means of increasing or decreasing of energy density of space (i.e. energy density of physical vacuum or density of the aether).

Let us consider the history of the invention:

Earlier there were proposed some methods and devices to influence the rate of physical and chemical reactions, biological processes or period of oscillation of the system. In the works by N.A. Kozyrev [1] there is a description of the experiments on the influence of some process (for example, process of evaporation or crystallization of matter) upon the period of another process, which serves as a detector and can be compared with reference oscillation process. In one case, the rate of oscillations of the detector decreases in the surrounding area near the process of matter evaporation. In another case, the rate of detector oscillations increases in the surrounding area near the process of matter crystallization. If we use a term of "entropy" then it is possible to say that the processes which are accompanied with entropy increasing (for example, conversion of matter from solid state into liquid one) influence on the matter (surrounding processes) in such a way that entropy of systems decreases. In another case, for example, near the process of crystallization, entropy of systems increases in the surrounding area near this process. Kozyrev used the term "wave of density of time" and he made a conclusion that in addition to "directivity" of time (time course) there are active properties of time, for example, "density of time".

To develop this approach for applied purposes it is necessary to use in-depth analysis of the physical sense

of the "time density" notion. Connection of notions about "time directivity" and "entropy of the system" was demonstrated in the work "Introduction into thermodynamic of irreversible processes", 1964 by Ilya Prigozhin [2]. In the work "Quantum fluctuations of vacuum in curved space and theory of gravitation" by A.D. Sakharov [3] the conception of vacuum structure was suggested. In the USA the work "Can the vacuum be engineered for space flight applications?" by H.E. Puthoff [4] is well-known. The author considered the applied aspects for study of vacuum structure and described the method and device to obtain propulsive force by means of changes in vacuum properties.

A substantive conception of time and methods for creation of waves of energy density were also considered by Prof. K.P. Butusov in the work "Time is a physical substance", 1991 [5]. In the book "What is The Time?" by Yu. G. Belostotsky [6] the connection between the notions of time and aether was demonstrated. This connection was considered from the point of view of astrophysics there.

We can also say that the modern conception of aether is successfully developed by V.A. Atsukovsky in his works [7].

In my articles, for example, "Physical principles of the Time Machine" [8], it was demonstrated that to develop experimental works on the topic it is useful to clarify the terminology and to consider **"waves of time density" as longitudinal waves of energy density in space.** In this case the notion of "time density" has a physical sense of energy density (aether density).

This approach can be realized practically by means of classical electro-technical and radio engineering methods and it is a development of aether-dynamical conception on the nature of electricity and magnetism by M. Faraday, "Experimental researches on electricity", volume 3, [9].

Let us consider a usual bipolar magnet from the point of view of aether-dynamics. Then it is possible to say that it is inflow and outflow of aether, i.e. it is a balanced energy system which does not change energy density in space. In this case it is evident that creation of magnetic monopole or modeling of quazi-monopole by means of electro-dynamical methods is a technical basis to create some local change of energy density in space.

Electric processes could also be used alongside with the magnetic phenomena. For example, in another book "Symmetrization of Maxwell-Lorenz equation" by Prof. Butusov [10] the creation of longitudinal wave was also considered. It was demonstrated that an electrically charged sphere can radiate longitudinal wave when the sphere radius is changing, i.e. when its surface is changing while the value of electric charge is constant.

One more well-known method is described in the book "Experimental gravitonics" by Polyakov [11]. There is a consideration of the generation of gravitational waves at the high-frequency magnetization and demagnetization of ferromagnetic material, i.e. at the powerful volume magnetostriction. Since at this phenomenon there are changes of matter density (i.e. changes of energy density in space, which is occupied by matter), then volume magnetostriction is a special case of changes of energy density.

Earlier Vadim A. Chernobrov had described a method and device to control temporal characteristics of physical and chemical processes by means of creation of the magnetic monopole (quasi-monopole). In this magnetic mono-pole there is a convergent wave, which is created by several sources situated in the spherical frame. According to this method in the multilayer spherical structure where every layer (the so called "electromagnetic work surface") is an assembly of electromagnets, by means of series connection of the layers the wave is created, which converges to the center of the device. The device has the same outside magnetic poles of the electromagnets (and the same inner poles) and thus a model of macroscopic magnetic monopole is created.

We assume that at in-phase operation of all sources of waves, interference of longitudinal waves provides some change of value of energy density of space in the focus of the system.

Experimental facts prove that detectors installed in the center of the device (for example, mechanical or electromagnetic oscillators) show change of period in their own oscillations. We have protected them by shielding them from heat radiation as well as from other kinds of electromagnetic influence. Thus it is possible to assert that the detectors decelerate or accelerate their oscillation period depending on the energy density, which is generated in the center of the device.

However for the experiments made by means of such a device, accurate adjustments of all wave sources are required to provide their in-phase operation. At the same time, operational stability of the system depends on the operational stability of each of the wave sources. Increase of the impulse frequency causes increase of

the effect; however, it is limited by the parameters of electromagnets and generator of impulses. Besides, to increase the effect it is necessary to use more powerful energy sources since the current in the windings of electromagnets determines the value of the magnetic field of the created quasi-monopole.

Since the efficiency of such systems directly depends on the frequency and the value of changes of energy density in space, then in the next version of realization of this technology we suggest using of plasma shells instead of electromagnetic working surfaces. This will allow significant improvment in the specific parameters of the device.

Thus let us consider general engineering principles of operation and outline the ways to develop this method. Fig. 1 represents a three-layered electromagnetic emitter. This electromagnetic emitter is designed according to the invention in which the directed radiation of wave of energy density is created along the axis of the device.

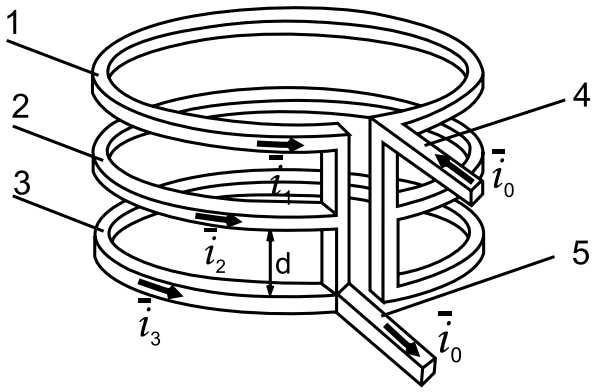

Fig. 1
Three-layered electromagnet

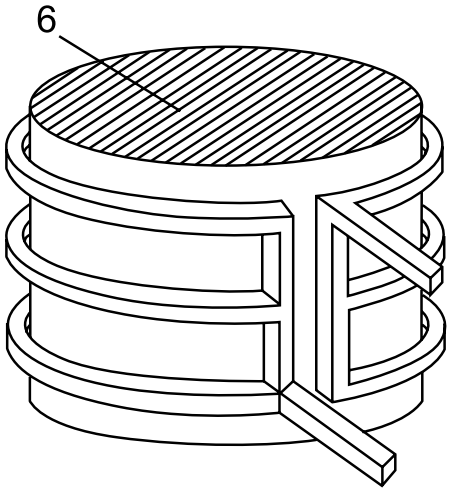

Fig. 2
Three-layered electromagnet with ferrite core

The device is designed according to the idea by Vadim A. Chernobrov for creation of the directed wave of energy density by means of phase shift in propagation of impulse front in three current branches, namely i_1, i_2, i_3. These branches are displaced along the electromagnet axis at some distance d.

The device works in the following way. When the pulsed generator is activated, front of current pulse i_0 appears at the output 4. Impulse front at branch 1 advances impulse front at branch 2 that is caused by spatial shift of current branches 1, 2, 3 relatively to each other along the electromagnet axis at the distance d. Impulse front at branch 2 in its turn advances impulse front at branch 3 for a certain time T. The second output of the electromagnet 5 is placed in such a way that impulse front at branch 1 will phase lag behind the impulse front at branch 2 (which in its turn will phase lag behind the impulse front at branch 3) for the same period of time T. Therefore at branch 5 the united impulse front is generated again.

Time T can be calculated in the following way:

$$T=d/c \text{ (seconds)} \qquad (1)$$

where c is a constant of propagation of impulse front. This constant is known as velocity of light.

At each impulse the T (i.e. the value of relative lag of impulse front) is a constant value. Thus high-frequency consequent excitation of layers of the electromagnet appears at each impulse. The frequency of the excitation is calculated in the following way:

$$f=1/T \qquad (2)$$

where T is relative lag of impulse front in seconds.

There is an example of frequency calculation: for the shift distance d=7 mm we can calculate a lag $T = (7/2.997924)\times10^{-11}=2.335\times10^{-11}$ (seconds) and frequency f=1/T approximately comes to 4.28×10^{10} (Hertz).

Thus this design of three-layered electromagnetic emitter allows creating the waves of super-high-frequency band (for example of millimeter range) without the use of a semiconductor or other radio components.

It is very expedient to use the electromagnets designed with magnetostrictive material cores, that will significantly increase energy density of the longitudinal

wave, which is generated by the multilayer electromagnet. In Fig. 2 there is an emitter with the core. In the case of high-frequency ferromagnetic magnetostrictive materials 6 the efficiency of emitter operation significantly increases.

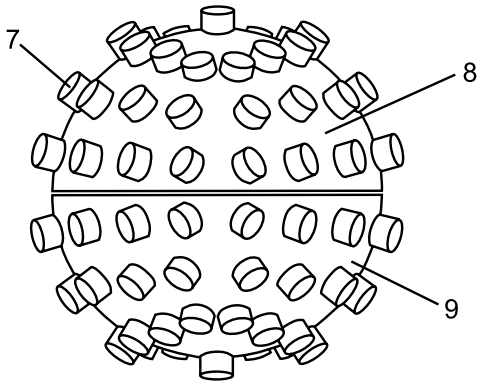

Fig. 3
Spherical design

Fig. 3 represents the spherical distribution of emitters 7 at the upper 8 and lower 9 hemisphere of the frame which could be opened in order to place detectors and different objects inside. It can also allow to establish in what way the changes of density of space energy influence the properties of different materials, velocity of physical and biological processes as well as chemical reactions. The installation of detectors 10 inside the device is shown on Fig. 4.

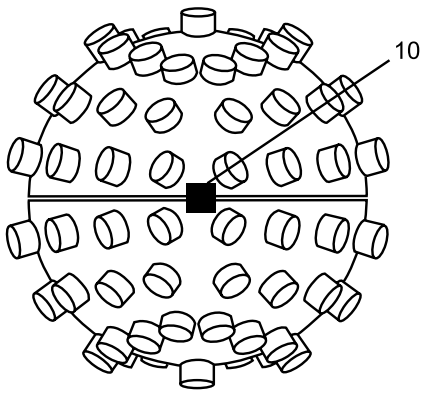

Fig. 4
Detectors inside the system

Another version of design is represented in Fig. 5, where the suggested method is realized by means of a spherical electric capacitor with three coats 11, 12, 13. Each capacitor coat is connected to the outlet of three-phase pulsed generator 14.

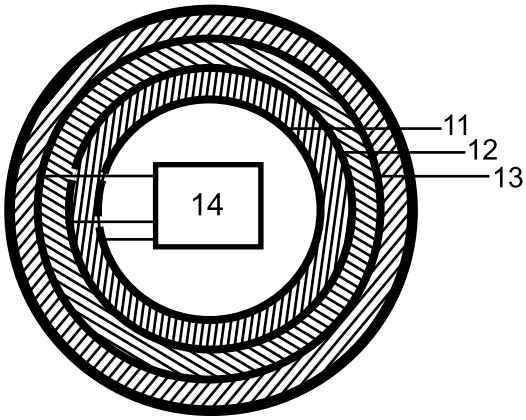

Fig. 5
Three-layered spherical capacitor

In this case the wave of energy density is created without electromagnetic emitters and this principle is not related to the modelling of magnetic quasi-monopole. The device operates due to the control unit, which provides the high-frequency changes of electric potential at each coat in such a way that the mode of high-frequency converging or diverging wave of energy density is created. In fact it is a standard three-phase generator but it produces not the rotation of the rotor of some electromotor but **"compression" or "decompression" of aether.** Aether is "pumped" in the center of the device or "pumped out" of the center.

In this case there is no need to tune separate sources of waves to make the device work in in-phased mode. It ensures reliability of the device operation if to be compared to the quasi-monopole. Besides, much less energy is necessary for the processes of charging and discharging of multi-layer spherical electric capacitor than for creation of magnetic field by means of conductivity currents.

Since the efficiency of such systems directly depends on the frequency and value of changes of energy density in space, we suggest the use of plasma shells instead of electromagnetic work surfaces for the next version of the device. It will allow significantly improvment in the specific parameters of the device. For that it is enough to place the electrodes of the multi-layers capacitor in a low-pressure gas area and these electrodes should be made as gauze electrodes. At that the wave is created in plasma, which is excited layerwise by several gauze electrodes placed in a spherical space between the inner and outer spherical bodies of the device. Therefore this version of design of the device can be considered as **the manipulation of the plasma method**.

Fig. 6 is a plan of one more design version. It is made as an inner frame 15 and outer frame 16, the space between them is filled with some gas 17. Three electrodes 18, 19 and 20 are connected to the three-phase pulsed generator 21. **Consequent excitation of plasma layers by electrodes 18, 19 and 20 creates the wave of energy density.** Propagation of this wave can be directed both to center of the device and from the center of the device.

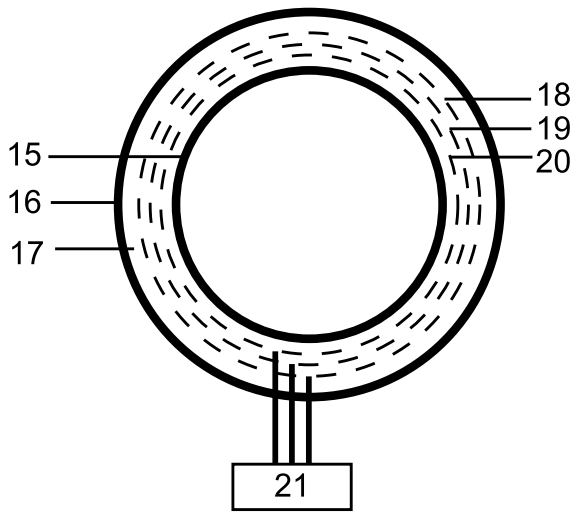

Fig. 6
Wave in plasma

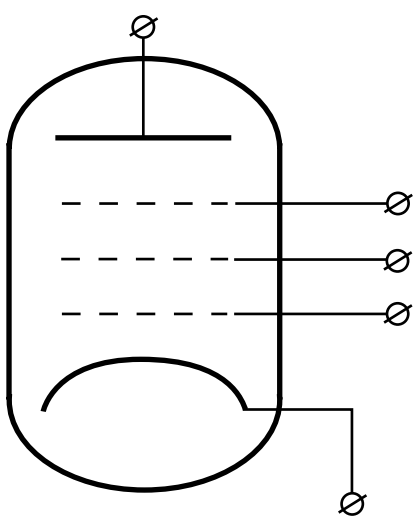

Fig. 7
Schematic electric circuit

In Fig. 7 there is a schematic electric diagram of the design.

To conclude. The work on time control has just started. We have clearly determined the main physical principles of operation of such devices, which can change the aether density in some given volume of space and thus influence temporal parameters of any physical process. The small experimental results today allow us to make real positive condusion on availability of this method and on the possibility of its practical application in applied aspects. The first aspect is antigravitation propulsion technology and we are developing the methods to detect mass (weight) changes in the time control experiments to prove this applied possibility. Another area is medical applications of the changes in the aether density.

Russian Federation patent claim #2003110067 was filled April 9, 2003. At present time we are interested in marketing for this technology as well as in search of additional investment and partners.

References

1. N.A. Kozyrev, Selected works, Leningrad State University, 1991
2. I. Prigozhin, Introduction in thermodynamics of irreversible processes. M., 1964
3. A.D. Sakharov, Quantum fluctuations of vacuum in curved space and theory of gravitation, Reports of USSR Academy of Sciences, vol. 12, 1968, p. 1040
4. "Can the vacuum be engineered for space flight applications & Overview of theory and experiments", Dr. H.E. Puthoff, Infinity Energy, July-November, 1997
5. K.P. Butusov, Time as physical substance. Collection of articles "Problems of space and time in modern natural science", Issue 14, L. 1990, pp. 301-311
6. Yu.G. Belostotsky "What is The Time?" Saint-Petersburg, 1991
7. V.A. Atsukovsky "General etherodynamics", M., 1990
8. A.V. Frolov, Physical Principles of The Time Machine, New Energy Technologies #3(6), pp. 8-10, Saint-Petersburg, 2002
9. M. Faraday, Experimental researches on electricity, vol. 3, M. 1959
10. K.P. Butusov, Symmetrization of Maxwell-Lorenz equation. Problems of Space and Time in modern natural sciences, vol. 15, L. 1991
11. S.M. Polyakov, O.M. Polyakov "Introduction in experimental gravitonics", pp. 58-59, M. 1991
12. V.A. Chernobrov "Mysteries of Time", M. 1999

Aetherodynamics as a New Field of Physics

Theory and Experiments

Vladimir A. Atsukovsky, Russia
Email: atsuk@dart.ru

A crisis exists these days both in Natural science on the whole, and, in its basis, i.e. physics. This situation is caused by fundamental errors in the methodology of its theory. The postulate method and predominance of mathematics above physical sense can be also considered as the reasons for this. Crisis situation has also taken place in the past and the way out was always to use a deeper level of matter organization than the accepted one.

A large amount of material on elementary particles of matter is collected in physics. It was discovered that all these particles can be transformed in each other. Besides that, there was discovered the ability of vacuum to create such particles at strong electromagnetic fields. In this connection it becomes clear that all these particles and vacuum have a common building material, i.e. a physical medium which fills all the world space. This medium was renamed **aether** and the element of the medium was renamed **amer**.

The worked out methodology of aetherodynamics allowed determining that aether is a usual viscous coercible gas for which all laws of usual dynamics of gases are valid. It has allowed to determine its characteristics for near-Earth space and then to describe the structures of primary stable elementary particles (i.e. proton, neutron, electron, photon, atomic nuclei, atoms and some molecules) as well as physical essence of general fundamental interactions (i.e. strong and weak nuclear interactions, electromagnetic and gravitational interactions) and some physical phenomena.

Also developed was the model of aether circulation in the Universe within the limits of perpetually existent matter, usual Euclidean space, and evenly flowing time. Formation and decay of matter, formation and decay of celestial bodies and galaxies as well as functional classification of galaxies are also included there.

To confirm some theses the author and his research team conducted several experiments mainly on electromagnetism that gave positive results. The research was conducted on testing of the presence of aether wind. These research works have confirmed the results obtained by D. Miller in 1925.

Report by Vladimir A. Atsukovsky

Electromagnetic Gravitational Interaction

Vadim Y. Kosyev, Russia

http://uft.h1.ru; http://uic.nnov.ru/~kovy2
Email: uft@inbox.ru

In the artide some mechanisms of electromagnetic gravitational interaction will be considered in the view of the Unified Theory of Field, Space and Time. See the complete description of The Unified Theory of Field, Space and Time at http://uic.nnov.ru/~kovy2; http://uft.h1.ru or in the book [1] which has the same title.

First of all, let us consider the structure of Space-Time where the radiation propagates. In our World gravitation is the unique substance which exists everywhere and gets over any obstacles. There are no known methods of insulation of gravitational field in modem science. It is impossible to imagine space and gravitation separately. Gravitation exists everywhere where there is some space. The gravitational field created by all masses of our metagalaxy is the aether in which cosmic objects moves and electromagnetic oscillations are propagated. The space surrounds us since the whole matter carries gravitational charge of only one sign. From astronomical research of cosmic space it follows that radius of metagalaxy is equal to the critical (gravitational radius) and hence gravitational potential is equal to $c^2 \sim 10^{17}$ $[m^2/c^2]$ in each point of space.

In our space the sum potential of the electric field is equal to zero. All bodies and space-time as a whole are electrically neutral. This assertion follows from two unique properties of gravitational space-time:

1. Values of electric charges of different signs of elementary particles are exactly equal.
2. There is an equal number of elementary particles which carry electric charges of different signs.

If electric potential is equal to zero in the given point of space then energy of alternating magnetic field passes entirely to the electric field and radiation gains the parameters of electromagnetic oscillations. However electric potential of positive and negative signs can prove its properties at the simultaneous charging of different local spatial regions. In the electric field the character of radiation differs from that one which is observed in ideal gravitational space-time (without electric potential).

In the presence of electric potential some part of magnetic energy is spent to create gravitational alternating field. Radiant energy is absorbed. Electrically charged spatial regions are perceived by us as filled with a strong absorbing substance. At the same time if the potential of the electric field can be compared to the potential of the gravitational field then spreading of radiation becomes impossible.

Change of both electric and gravitational field results in the creation of a magnetic field in the region of space-time which has a dual electrogravitational nature. Change in the magnetic field results in the creation of both electric and gravitational fields. The amplitude of electromagnetic and magnetogravitational constituents of the unified electromagnetic gravitational oscillations depends on field potential of opposite nature. The electromagnetic constituent is determined by gravitational potential and the magnetogravitational one is determined by electric potential. Transference of gravitational masses of matter in electrogravitational field-aether causes the creation of the proper magnetic field. Coming from the direction of magnetic field some force influences upon the moving electrically neutral masses. This force is similar to Laurence force.

Electromagnetic gravitational converter designed according to the Searl Effect (Fig. 1) visually demonstrates the mechanisms of electromagnetic gravitational interaction. A detailed description of the experiment is presented in the article [2] by Vladimir Roshschin and Sergey Godin (see http://www.n-t.org/tp/ts/dms.htm).

The device consists of a cylindrical stator of about 1 meter in diameter which is surrounded by 24 cylindrical rollers. Stator and rollers are made of magnetic material and they are magnetically linked (there is no contact between them). Vector of the magnetic field of the stator and rollers is vertically oriented along the axis of the cylinder but it has opposite direction. Rollers are mounted on the movable separator which circles round the stator. Each roller rotates on its axis in the same direction. The weight of the device is 350 kg. During rest, the device is electrically neutral and has proper gravitational charge, inertial mass, magnetostatic field of the stator and rollers.

On rotating of the magnetic system the following effects were observed:

- Depending on the frequency (up to 35%) the weight of the device was decreased.
- At a frequency of 550 rpm there is a spontaneous acceleration of the system and turns of the rotor abruptly increase (in quadratic dependence). To stabilize the mode it had to take off the excess energy to active load (up to 7 kWtt) by means of electromagnetic transducers.
- Magnetic field was distributed in a room as concentric surfaces of 5-8 cm thickness and 50-60 cm period. Depending on speed of rotation of the magnetic system there was a fixed temperature decrease from 0 to 8° within the regions of space which were curved by magnetic field.
- The glowing (corona discharge) appeared around the working converter.

Appearance of all mentioned effects is caused by the simultaneous presence of electric, magnetic and gravitational fields in the area of the converter.

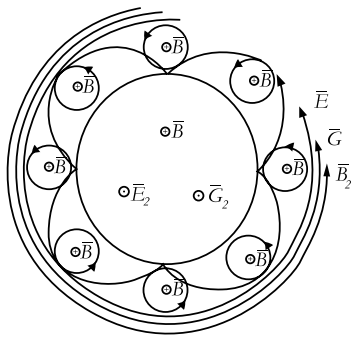

Fig. 1
Electromagnetic gravitational converter

Because of the Searl Effect a very complicated configuration of electric, magnetic and gravitational fields appears in the device. Rollers having their own field $\boldsymbol{B}$ rotate around the stator which has its field $\boldsymbol{B}$. Cycloidal motion of numerous magnets which are built in the rollers causes change in the magnetic flux. EMF $\boldsymbol{E}$ appears in the area of rotation of the rollers. EMF is directed along the perimeter around the device. The electric field creates stationary waves which are registered around the device as concentric electromagnetic gravitational walls. Magnetic rollers should be made non-conducting in such a way as to allow electric field penetrating inside. In the presence of the electric potential change of the magnetic flux causes appearance of gravitational field $\boldsymbol{G}$. This field is directed along the perimeter around the device. In the presence of electric potential the Lorenz force influences the gravitational masses of the rollers. These gravitational masses move in the external magnetic field of the stator. The Lorenz force is directed transversely to the velocity along the cycloid and in the direction of the field $\boldsymbol{B}$. The value of the Lorenz force depends on the electrical potential, magnetic intensity, mass of the rollers and their traverse speed. The electric potential in its turn depends on speed of rotation of rotor of the magnetic system. As a result the Lorenz force depends on speed according to square law. Rotating gravitational masses of the rollers generate magnetic field $\boldsymbol{B}_2$. Field $\boldsymbol{B}_2$ generates derived fields $\boldsymbol{E}_2$ and $\boldsymbol{G}_2$ etc.

Spontaneous acceleration of the system does not depend on the direction of rotation. Directions of fields and forces change at change of the direction of rotation that corresponds to acceleration in the opposite direction. When the direction of rotation is changed the weight of the device changes. When rotation is in one direction the field $\boldsymbol{G}_2$ is directed upwards (decrease of weight), when rotation is in another direction, it is directed downwards (increase of weight). In the presence of electrical potential many other interesting but still unstudied phenomena are observed (for example, curve of space, change of speed of time-flow, changes of ambient temperature…). Magnetogravitational converter transforms gravitational energy of space-time into energy of electric field which in its turn is transformed into mechanical energy of the rotating magnetic system and electric energy of the load. Energy resources of the future are not coal and gas reserves or nuclear power. They are in the inexhaustible energy of gravitational aether of our space-time.

Reference

1. V.Ya. Kosyev. Unified Theory of Field, Space and Time. Nizniy Novgorod, "Arabesk", 2000.
2. New Energy Technologies #1, 2003, p.35.

Medium For Existing of Matter in Nature

Anatoly V. Rykov, Russia
Email: rykov@uipe-ras.scgis.ru

By medium for existing of matter in Nature we understand physical vacuum which is a category determining all spheres of matter "life" (from particles of microworld to gravitational interactions in the Universe). Matter can not exist without this medium. Thus a question emerges, viz: how physical science can be developed without taking this fundamental aspect into consideration?

According to the Einstein postulate, in a void light always propagates with limited speed, which does not depend on the motion mode of a radiating body. It is a statement of deep physical sense which lies in the fact that only some physical medium can possess such a property. Indeed, if velocity of light, which was radiated by a body, further does not depend on speed of this body then it is possible only in a certain medium. For example, in air sound propagates with a certain speed which does not depend on the speed of the source and is determined only by density and volume elasticity of air. Thus, according to the Einstein postulate, there is a physical medium instead of void and velocity of light depends on the parameters of this medium (as is well known, velocity of light is equal to the square root from the product of inverse values of electrical and magnetic conductivity of vacuum).

The author of this article made an attempt to research this physical medium [1]. The author used a well-known experimental fact that at interaction of a photon with a charged real particle this photon transforms to electron-positron pair. Besides, it was taken into consideration that photon is an electromagnetic phenomenon. The research allows the following conclusion: the medium named in physics as vacuum (before the XX century it was called aether) is created by electric dipoles from (+) and (-) elementary charges. These dipoles are surrounded by magnetic (mass) continuum. There were determined dipole intervals, elasticity of decompression and ultimate strength of this interval. What does this model of medium mean?

1. This model is a physical validating for the "birth" of electron-positron pair at energy which is necessary to break dipole and create the "clot" of mass of these two particles. A certain model for the "birth" of mass must exist. It is not clear as yet but can be represented as a vortex of magnetic continuum inside the charge shell of electron and positron.

2. Let us suggest that values of (+) and (-) charges differ at 7.848981×10^{41} Coulomb, then this difference is sufficient for the medium to be a source of gravitation and inertia. According to Newton's law of gravity, a weak electric charge of medium (all material bodies exist in this medium) causes all bodies to attract one another (under Coulomb's law). On the other hand, weak medium charge of a like sign creates repulsive forces which manifest themselves in the form of the expanding Universe. Thus it becomes clear the amazing uniformity of gravity and forces of negative pressure for the Universe. The mentioned difference of values of (+) and (-) charges of medium dipoles is not used as arbitrary parameter but it logically follows from its electrical structure [2].

3. Hypothesis of nature of gravitation is confirmed by calculations of the deflection angle of electric waves by the Sun. Calculated angle differs from the experimental value only in the fifth sign, which depends on the accuracy of several physical values used in calculation formula. There is practically an absolute coincidence with Einstein's theory. The difference is that it is a concept of space and time (i.e. geometry) which prevails in the general theory of relativity while in the nature of gravitation physical basing is used. Velocity of light is unstable and determined by medium state which depends on electric, magnetic and gravitational potentials.

4. The existence of "black holes" relates to medium structure and nature of gravitation. At the edge of "black holes" the ultimate acceleration from gravity is realized. It causes breakdown of connections in electric dipoles of medium, creation of matter and antimatter (the so called "evaporation" of black holes which was theoretically predicted by E. Hoking, England). However at the border of a black hole the velocity of light is equal to zero since its propagation

medium disappears. According to Einstein's theory it is such a deceleration of time that electromagnetic oscillations gain zero frequency.

5. Naturally the medium is a carrier of all types of electromagnetic radiation, beginning at stationary electric voltage and ending with super-high-frequency "photons", which can be determined not as electromagnetic but as magnetoelectric phenomenon. In the latter case magnetic continuum of medium has a crucial importance since it determines very small degrees of magnetoelectric disturbance. These degrees are thousands of times less than those of a hydrogen atom. It is reasonable that such small degrees creates illusion that a photon possesses properties of particles.

6. Medium structure directly leads to the notions of Quantum Mechanics, beginning at quantification of electronic "orbits" in atoms. This medium determines the "allowed" spots for electrons to be placed around a nucleus. Thus medium is a necessary place for the existence of all matter or matter of the Universe. The so called Compton length of electron wave is one of the validations of this statement. It is directly calculated to a high accuracy according to electric structure of vacuum.

7. Thus Plank's constant is not a mysterious "quantum of action", on the contrary it is entirely determined by medium parameters. Thereby the crisis (which conventional physics is accused of) can be logically overcame by the introduction of medium which is capable to take radiation in electromagnetic region only by quanta. Plank's constant is always presented at all quantum approaches. It is additional evidence in favor of the necessity to take into account the medium as natural place for existence of all the matter in Nature.

8. It is still a question what processes take place in the centers of galaxies. The observations show that the centers of galaxies create star matter. They often flow out the centers and settle themselves at approximately the same plane. It is an evidence of the fact that centers of galaxies quickly rotate and the favorable conditions for stars to reject matter are created. Similarly planetary systems are created around the rotating stars. It is thought that centers of galaxies are gigantic black holes. In the context of the concept of medium for matter existence it can be set up a hypothesis that being at some special state the medium creates stellar systems, i.e. galaxies.

9. Astrophysicists more and more trend to accept the existence of unknown "dark" matter, which occupies approximately 70% of all matter. It is said that due to antigravitation property this dark matter is responsible for the expansion of the Universe. Hypothesis on the nature of gravitation gives the affirmative replies to such suggestions as: expansion of the Universe is caused by weak electric charge of the medium and distributed mass of magnetic continuum is the very dark matter.

10. All elementary particles (electrons, positrons, mesons, protons, neutrons etc.) are in the medium and interact with it. In the case of electrons and positrons this interaction causes the great extension of dipoles of medium which directly adjoins to borders of particles. This extension helps photons to break the particles. In case of protons, there is such a breakdown of the medium at their borders that protons turn to be dressed in "coats" of virtual electrons and positrons. And medium is shown to be in entire state only when reaching the first Bohr orbit. This interaction of the medium and particles leads to the factors which determine the life time of some of them. Thus life time of a neutron is up to 30 minutes depending on the state which it has while leaving the nucleus. For mesons "the tearing" Coulomb forces, which exist between the medium and particles, are very powerful that makes the life time of mesons very short. However if the particles moves with a high speed relatively to the medium, then these forces noticeably decrease and if the speeds of motion is close to velocity of light then these forces become very small. The life time of such particles noticeably increases. In Einstein's theory it is said about "deceleration" of time. Finally the life time of particles is determined by the inner steadiness and outer influence of the medium. Protons have fantastic binding energy and they cause such great external destructive effect that their life time becomes immense.

11. When particles move in medium with high speeds, there is a concentration of magnetic continuum which is recognized as increase of mass of particles at increase of their speed. Evidently, we can continue the list of physical phenomena which relate to the presence of medium for existing of matter in Nature. However it seems to be enough to admit that medium (physical vacuum, aether) is of a great importance for the very existence of the Universe and for the processes which take place there. "Mechanism" of gravitation and inertia has a special importance since

it is the only thing which can make clear the real mechanism of Nature. It is possible that the methodology, which is accepted in physics, is necessary for more accurate description of phenomena but it is not enough for understanding of the nature of "space" and matter. Research of the medium for existing of matter will be able to meet the conditions sufficiency.

The understanding of vacuum structure, which is created by electric lattice from charge dipoles, surrounded with magnetic continuum, gives an opportunity to control the forces of gravitation and inertia. The medium of vacuum can be influenced by:

1. The radiation which has frequencies coming to the frequency from point #11 of the list of parameters.
2. Electric voltages which exist in vacuum (it is not very promising because of real matter breakdown).
3. Magnetic intensities (magnetic flux density). It is the most promising influence method (1-10 Tesla is enough to compensate terrestrial gravity).
4. Transformations of low accelerations to high accelerations of impact type.

Potential electric and magnetic energy is immense in vacuum medium. Reasoning from energy of one dipole, which is equal to 1.6x10 (-13) Joule, we will derive the value of electric energy equal to about 10 (+31) Joule per one cubic meter of the medium that is equivalent to mass annihilation of 10 (+15) kg!

References

1. Rykov A.V. Foundations of aether theory// RAS, M., 2000, p. 54
2. Rykov A.V. Hypothesis on the nature of gravitation// MSU, M., 2001, pp. 59-63

Spartak M. Polyakov

(09 January, 1931 – 04 June, 2003)

Spartak M. Polyakov, a legendary physicist-experimentalist, known for his research in the field of gravitation, has died. Polyakov was the author of more than 50 research works, among them "Introduction into experimental gravitonics». Polyakov was the creator of the new model of photon. He also conducted numerous research in the field of electrodynamics, gravitational phenomena and superlight connection.

Spartak M. Polyakov graduated from Kishinev State University with degree in "General Physics". For many years he worked at the top secret military engineering department "Istok" (Russia).

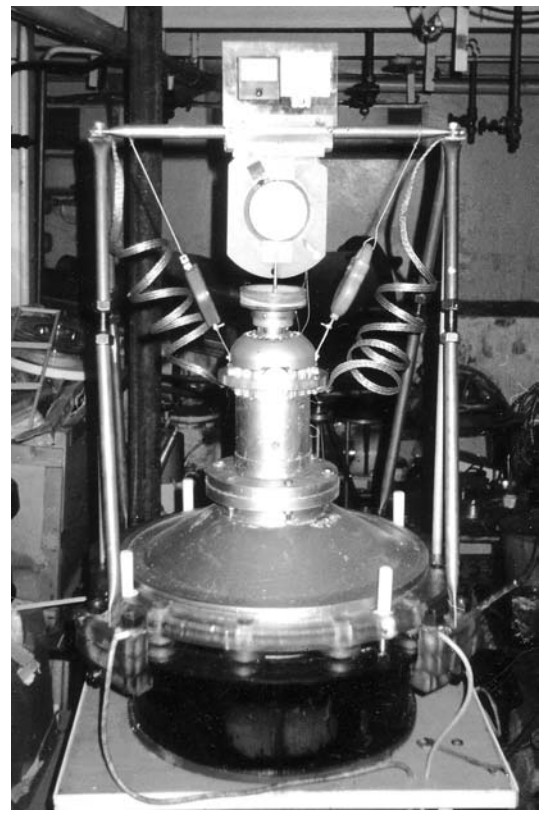

Plyakov's alternative physical theory allows explaining such phenomena as magnetostriction and optical magnetization. The basic postulate of this theory states that the speed of propagation of gravitational waves is dozens of times faster than velocity of light regarded by the traditional science as the limit. In his experiments Polyakov demonstrated such methods of generation of gravitational waves as precession of gyroscope and remagnetization of ferromagnetic.

While working for "Istok", Polyakov designed on his own a device which is possibly the first gravitational motor in history. Total specific thrust produced by rotation of gravitating mass comes to 2.5 kg/kWt. This index is close to that produced by the engines of modern helicopters, which is equal to 8 kg/kWt. Practical application and further development of Polyakov's ideas can provide humanity with new kinds of communication, gravitational engines and free energy devices.

Adams Motor

Principle of Operation and Experimental Data

Sergey S. Abramov, Russia

Email: a_serge@cards.lanck.net

Adams' motor-generator represents the type of devices which use, as their creators claim, so-called "free energy". The term "Zero point energy" is also used in some sources [1, 2]. Due to quanta-mechanical fluctuations, this energy exists even at zero temperature. Adams' motor-generator belongs to the group of Switch reluctance motors [3]. Robert Adams, **former Chairman of the Institute of Electrical Electronics Engineers, USA (New Zealand section)**, designed this machine in the late sixties of 20th century. Similarly to all the devices utilizing free energy (referred to in come sources as "overunity devices"), Adams' device remains practically unknown to the general public. **The device is rather simple to assembled even at home, which I experimentally proved. However, it is necessary to be very careful while choosing the model parameters. As to the latter I have managed to collect quite a big number of instructions from existing sources; the summary of these instructions is presented below in this article. Based on these instructions, a low-power model can be assembled even without a mathematical analysis and modeling of electromagnetic field. Such model would certainly facilitate optimization of the device.**

Adams' motor is most frequently a DC machine; however, it can also use an AC source through a rectifier. In the latter case only the adjustment of the device and its control system can be provided.

Editorial: We disagree with some assertions of the author; however this article is of great interest.

My experiments on my own model do not yet allow me to make an unambiguously positive conclusion concerning the possibility to generate excessive energy. Experiments with my new control system designed on the base of AVR controller AT90s2313-10PI (it is produced by Atmel company (http://www.atmel.com) will allow to be more specific. Below there is a general analysis of the motor principle of operation and a number of recommendations concerning the construction and technology. I do not propose to take this as compulsory rules to follow; other technical solutions are possible.

Basing on the principle described in this article, R. Adams (the link to his articles is available at: http://www.aethmogen.com/wri/intro.shtml) created a few DC motor-generators which operate on permanent magnets. Some of them, according to information found on the Internet, have manifested 690% electrical efficiency and 620% mechanical efficiency. These devices operate at room temperature without overheating. My device has shown between 1 and 3 degrees overheating after an hour of functioning. However, it is easy to prove that such overheating is predictable for an average current of 0.15 A in coils of 35 mm long and 25 mm in cross sectional diameter. I have not been able to prove the data published on the Internet concerning the Adams motor capability to operate when the stator temperature is a few degrees lower than that of the environment. The temperature of the coil and of the power transistor is a good indicator of correctness of the circuit set-up and of functioning of the control circuit. There were cases when transistor and coil were noticeably heated after adjustment. Usually this was explained by a bad choice of points of transistor switching or by too extensive current impulses in the stator (which must amount to approximately 25% of period length). After the required adjustment the motor continued to operate almost without overheating.

Adams' motor was first mentioned in Australian Nexus Magazine in 1992. Later, Harold Aspden (Britain) proposed a slightly improved version of the motor and received Great Britain patent No. 282708 [4], which strongly reminds of the original version published by the above magazine. **Adams' device** represents an electrical motor and/or generator consisting of a rotor

with radially directed permanent magnets and of a stator also constructed with a few radially directed and periodically magnetized cores with winding. (Fig. 1). In some models axial orientation of magnets and coils are also used.

Permanently magnetized poles of rotor can include any number of poles, even an odd number. Analogous poles of the magnets (all N poles or all S poles) are directed outside. A version with alternating poles is also possible; such model allows the torque to increase. In this case, after passing a rotor pole the stator is demagnetized by the current impulse and begins to be attracted by the magnet of different polarity. This circuit requires a more complicated control; on the other hand, it manifested rather good results in certain models.

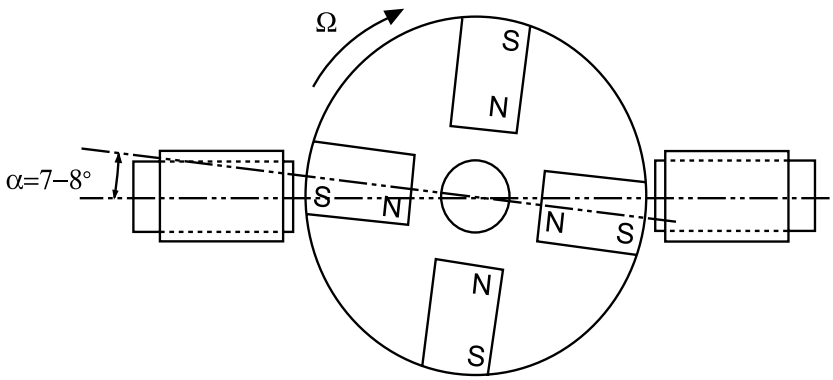

Fig. 1

Poles with winding placed on the rotor are radially oriented in order to obtain a supply of energy emerging as a result of the influence of counter emf from the rotor poles. Steel or iron cores are used for the poles of the stator with winding. It is also possible to use other materials, at that the core must have high magnetic inductivity and low level of magnetization reversal losses. The stator winding consists of a few hundred turns. The current inducted by the magnet in this winding will have the polarity which will cause repulsion of the magnet. Since the electromagnetic state of stator changes quite significantly and quite fast, then the stator core can be considered to be the most crucial element of the device. Ignoring this fact was one of the most frequent mistakes made by those who tried to reproduce Adams motor.

The current inducted in the stator is the function of:

- field size,
- number of winding turns,
- speed of flux changes.

Resultant parameters of this device cause each pole to be attracted or repulsed by stator poles when the rotor is in certain position in case when the rotor is unbalanced. To achieve this effect it is required to switch the input current in control coils after the signal from sensor of rotor position. R. Adams used a mechanical switch as a sensor. My device and a number of other devices use the signal from two Hall sensors. However, according to experimenters' information, better results are achieved if a position optical sensor is used.

Time of switching of impulses is determined by the size of the motor itself, i.e. the speed of motor rotation, location of rotor magnets towards the stator windings and the distance the rotor magnets pass while moving by the poles with stator winding.

It is necessary to take into account that any part of this motor can be modeled based on the existing electromagnetic theory and no part of the motor is in conflict with any laws of electromagnetism. There are so many ways to construct Adams' motor that any version may be considered to be correct.

One can say that the frequently pulsating electromagnetic process in the stator core is what allows Adams' device to function as a kind of diode which borrows energy from the field of permanent magnet but then does not return that energy in full.

5 stages can be defined in the periodical process which takes place in stator:

1. The magnet is attracted to the stator core. The permanent magnet is attracted to the iron core of the stator with winding. While doing so no consumption of electrical current takes place. It is as if kinetic energy is borrowed from an internal ferrite magnetic source and is supposed to be returned into the stator.
2. Stator core is magnetized. During the period when the magnet is positioned in front of stator core they both comprise a single magnetic conductor with an air gap and the stator core becomes an extension of the magnet side it faces. It is usually supposed that the energy "borrowed" on the first stage is getting back now.
3. Stator core is demagnetized. When the stator core becomes rotor magnet extension, the circuit closes and current impulse gets to stator windings. I have seen the instructions saying that the angle between

stator axles and rotor magnet must amount to 7-8 degrees as shown in Fig. 1. However, my model made it clear that at increase of speed of rotation it is necessary to start the coil a little earlier, when the magnet axle has not reached the stator axle. Probably this applies to the circuit with a Hall sensor only and if an optical switching is used the making angle will be different.

Magnetic field of this current acts to compensate magnetization of the stator, which is caused by the field of rotor magnet. Consequently, the summed current significantly compensates attractive force between rotor and stator and the rotor can freely rotate by using the inertia obtained at stage 1. This process is characterized by the fact that this current impulse is amplified by the current inducted in the stator winding by rotor magnet which, in accordance with Lentz law (1834), counteracts the power which induced it. Consequently, kinetic energy obtained as a result of attraction of the rotor to the stator at stage 1 is transformed into electrical demagnetizing impulse in stator winding during the period when the rotor and stator directions are congruent. This is the unique overunity characteristic of this model. However it is obvious that instead of returning this energy the motor transforms it into electromagnetic demagnetizing field.

4. Restoration: when the rotor is removed from the stator attraction zone the latter looses energy and returns to its initial demagnetized state. Decreasing electromagnetic field creates a current wave of reverse polarity which can be stored in the capacitor.
5. Reiteration of the process: This periodical process is renewed as described in stage 1 during the next magnetization of the stator, excluding the fact that emf preliminarily stored in the capacitor, on term of presence of suitable electrical circuit, can be used for facilitating stator demagnetization or even used to supply the load.

It may be briefly summarized that the frequently pulsating electromagnetic process in the stator core is what allows Adams device to function as a kind of diode which borrows energy from the field of the permanent magnet but does not return that energy in full. The important characteristic of such motors is that the stator windings are used for demagnetizing and not for magnetizing as it could seem from the first sight.

It is noteworthy that there is a small pause between attraction to the stator and repulsion from the stator. The effect of attraction to the core takes place a split second before the repulsion effect manifests clearly. This pause being the reason of electromagnetic asymmetry creates conditions necessary for achieving overunity effect. If the attraction to the core and repulsion by means of Lentz currents were taking place simultaneously and with the same power there would not be any overunity characteristics. That is why the rotor must be as lightweight as possible. From this point of view, T. Harwood's model is the most lightweight of the known models. In Harwood's device the magnets are mounted between two CD disks fixed on the shaft by means of plastic washers and glue. My model is heavier, which can be considered as one of its disadvantages.

The principle of operation of Adams' motor is based on the balance, which creates the electromagnetic asymmetry. To get the motor to operate the magnet must be attracted to the stator core which must have a smaller cross-section area in order to create attraction without any significant repulsion effect from the stator windings mentioned above. When stator and rotor axles are congruent the Lentz induced current must be sufficient for compensating the natural attraction of the magnet to the stator core. Consequently, stator windings must have enough turns for demagnetizing effect, but not to the extent that this effect fully manifests before the rotor reaches the stator axle when Lentz current has its maximal value.

During my experiments at 12 V voltage and on using two independently controlled stator coils the speed of rotation reached 3400 rpm. Please note that while reproducing such device it is necessary to take certain measures in order to ensure safety in case of possible breakdown. **The magnet disconnected from the rotor may be dangerous!**

Technological recommendations are as follows:

1. The device must be low power. It is better not to try to begin with a motor functioning in kilowatt range. This is feasible only on condition of having all necessary technological documentation which is not available at the moment.
2. The preferable voltage for the first model is 12 V. If the voltage is less the speed of rotation is too slow for indicating the expected characteristics of the device.
3. The best magnets are ferrite ones with dimensions 4x4x5 (where 5 is the magnet length). The practice has shown that at 12 V voltage neodymium-iron-boric (NdFeB) magnets cause a jerky rotation of the rotor.
4. The side of the stator core facing the rotor must

Control circuit with hall sensors

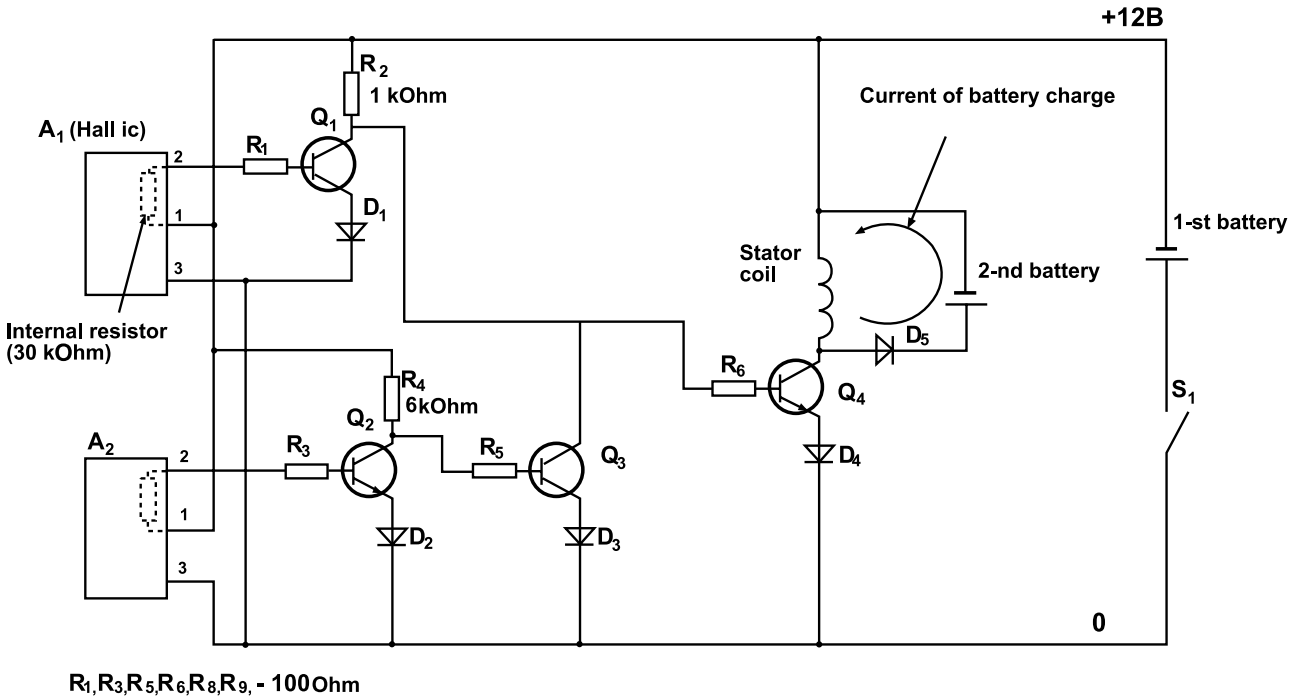

Fig. 2

have the size which is 4 times smaller than the corresponding side of the magnet. If cross-section area of the stator is larger, a bigger part of magnet field comes to the stator core when their axles coincide and thus there is nothing to induce Lentz' currents in the stator windings. It is a common point of view that it is necessary to try to minimize the volume of a device and to obtain the maximum efficiency at minimal material expense. In practice, it has always been the goal while designing electrical machines to decrease losses in stator I^2R. As for the Adams motor, it requires not only the use of disproportionate magnets but also stator windings with disproportionate number of turns specially designed to obtain maximum Lentz' currents that is achieved by hundred of turns of winding.

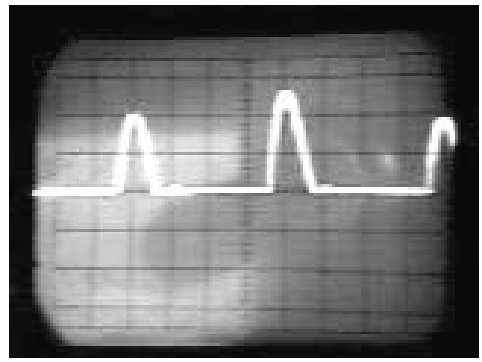

5. It is necessary to define approximately the effective zone of the magnet field. If practically applicable magnet field is equal to, for example, 8 cm, and the stator has a 10 cm long winding, then more than 20% of turns will not be efficiently crossed by magnetic force lines and will only create an excessive mass of the device. To define the degree of effective action of the magnet we can put a paperclip on the table and move it gradually in direction of the magnet until the paperclip is attracted to it. Actually if we take into account friction losses then the magnet influence zone will be a little larger. That is why the stator winding in the axle direction can be 10% larger than that in this experiment. The description of this test has been found on Tim Harwood's website (http://www.geocities.com/theadamsmotor/cdmotor.html).

6. The air gap clearance between the stator and the rotor must not exceed 1 1.5 mm.

7. Use as little metal in the device as possible. It is preferable that the metal is used in the core and stator windings only.

In order to increase the efficiency of this motor, it is necessary to build it in a manner, which allows removing the counter emf from the stator windings. To do that, this emf may be taken off and stored in the capacitor. The article published by Nexus magazine and Great Britain patent No. 282708 consider special generator windings; however, no sufficiently detailed data on operating rules are provided. Michael Smith (Australia, http://www.Fortunecity.com/greenfield/bp/16/content1.htm) has unequivocally informed me in one of his letters that

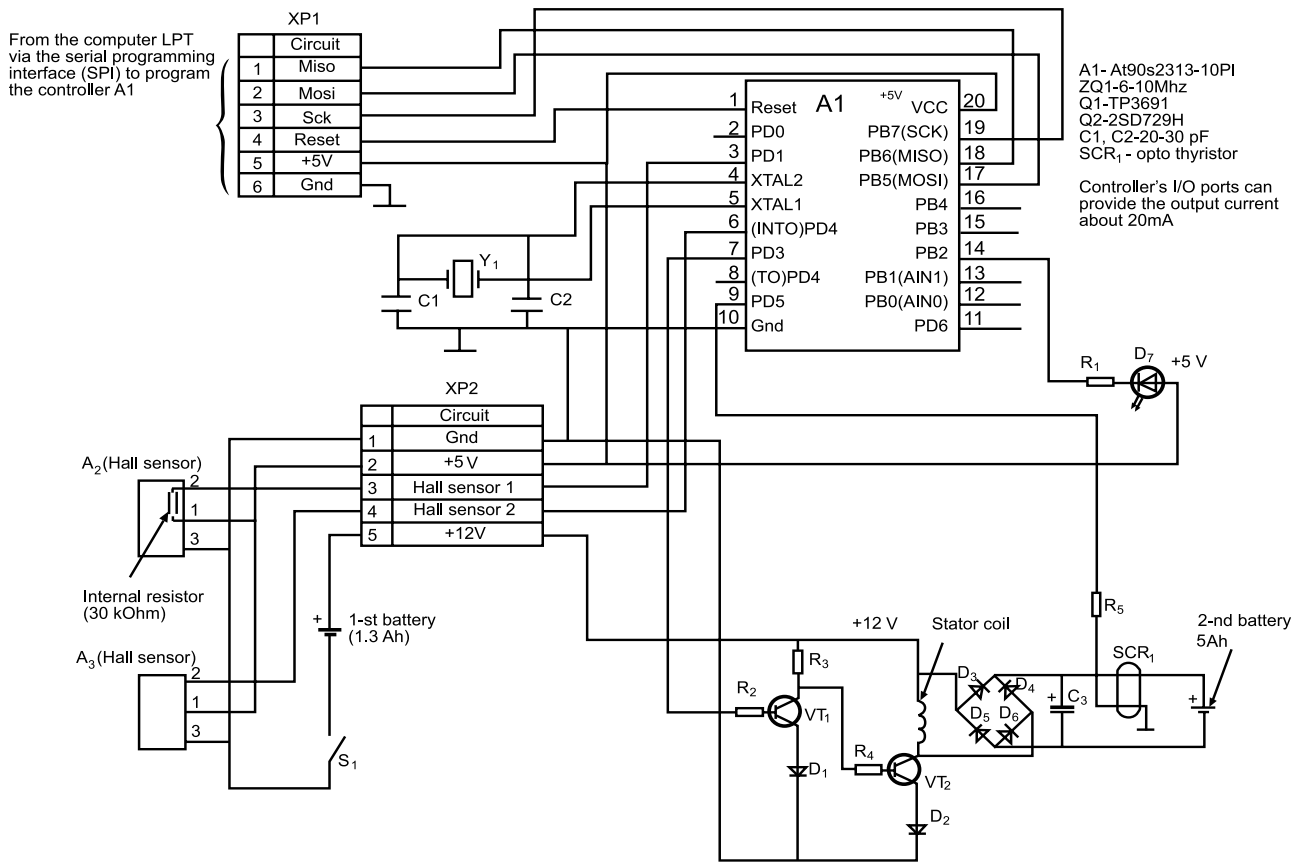

Fig. 3

he has not achieved generation of excessive energy in such a system. During his experiments a two-battery circuit proved to be more effective. In this circuit, during a part of periodical process the energy is stored in the capacitor and then a command is transferred to a thyristor, which discharges it into the second battery. At that capacity, the second battery must be no less than 4 times more than the capacity of the first one. Otherwise the excessive energy does not have enough time to be stored during the discharge. I have also managed to provide the charge of the second battery, but the control circuit has not been assembled fully yet, as it is shown below in Fig. 4. Better results are expected when its final adjustments together with AT90s2313 controller program have been made.

In order to increase the efficiency of this motor, it is necessary to build it in a manner, which allows removing the counter emf from the stator windings.

I managed to start my first model of the motor in April, 2002. Afterwards, I spent approximately six months increasing its rotational speed from 750 to 3200-3400 rpm, decreasing vibrations and improving control circuit. In order to achieve a better rotor balance I had to re-construct it twice. It is very important to align the axles of the bearings with maximum precision; otherwise a considerable decelerating torque will manifest. The shaft penetrates the lower moving base. It is possible to rotate the base at a small angle for the precise alignment of axles and then to fix it with screws and nuts.

In order to decrease aerodynamic losses, two veneer parts are mounted between the magnets. Thus I managed to increase the speed, although the rotor weight has also been increased.

Stator cores are made of plates taken from a disassembled radio transformer. Tim Harwood used nails with winding, however, my own results with such core proved to be poor. Dimensions of the core are 10x11x50 mm.

The type of power source is also important. First, I connected a 9 Volt accumulator of "Krona" type in series

with three metal-hydride 1.2 V accumulators. The speed of rotation did not exceed 1500 rpm. But when I used a lead/acid accumulator with 1.3 Ah capacity, the speed increased to 2600 rpm if there was one coil on the stator.

Four magnets mounted on the rotor have the dimensions of 20x20x35 mm and are fixed on a 105 mm glass fiber laminate disk. The current impulses proved to be too wide, by up to 40%. In order to make them shorter (down to 25-30%), I had to use the control circuit (Fig. 2) with two Hall sensors. At the signal from the first sensor the stator current is started, the second sensor switches it off. Many experimenters used a timer to control the impulse length while working with Adams' motor that is more practical since impulses are supposed to be wider during the start. I took this factor into account while designing the controller circuit. Current impulses are shown in Fig. 3. Their fronts are supposed to be shorter; it is probable that the coil has more inductivity than necessary. The impulses amplitudes are slightly different which is explained both by the difference in volume of induction of the magnets and by difficulty in achieving similar air gaps while working at home.

I have provided the charge mode of the 2-nd battery at my two-battery design. After 75 minutes of operation of the device the source lost 0.17 Volt whereas the second battery was charged at 0.36 Volt. The capacity of both batteries in this experiment was equal. Besides after such charging the second battery started to discharge quickly. The circuit where stator current charges the battery directly has to be considered ineffectual (see Fig. 1). To evaluate the charge, which is gained in non-hermetic accumulators, the density of electrolyte can be measured.

To obtain a more uniform torque I added the second stator which is controlled independently. This required installing two more Hall sensors and an additional power transistor. The angle between axles of the coils amounts to 135 (180-90.2=135) degrees. When the current is present in one part of the stator it is absent in another and vice versa. The speed has increased up to 3200-3400 rpm, and I deemed the further increasing of this characteristic unnecessary.

Increasing the number of circuit elements does not seem a good idea. Futhermore the adjustment process becomes more complicated. In order to improve the circuit of battery charge adding a timer circuit is required. Thus, I decided to use a controller circuit. A simple Basic program has been developed for AVR controllers. This program operates in mode similar to transistor circuit, but its capability can be significantly increased due to the built-in processor timers. Today program improvement is the most efficient way to solve the task of generation of excess energy in this circuit.

This article is meant to elucidate the principles of operation of one of the simplest devices which pretend to become an "overunity device", "free energy machine", "perpetual motion machine", whatever you call it. Probably someone will try to create such motor-generators on their own. I hope that my article will serve as a guide and will help to avoid the mistakes made by many experimenters (including myself) before they managed to build their own model.

References

1. Puthoff H.E. Source of vacuum electromagnetic zero-point energy. Phys. Rev. A 40.4857-4862; also 44. 3385-3386
2. Bernard Haich, Alfonso Rueda, Puthoff H.E. Physics of the zero-point field: implications for inertia, gravitation and mass. Speculation in Science and Technology, Vol.20, p.p. 99-114, 1997 (preprint version)
3. Miller, Switched Reluctancy Motors & Their Controls, ISBN: 10881855-02-03
4. Patent No. GB 2,282,708 (from NEN, Vol. 4, No. 8, December 1996, pp. 1-7).

INFINITE ENERGY
Cold Fusion and New Energy Technology
Including Conventional and Renewable Energy

Infinite Energy Magazine

* Cold Fusion * New Energy
* New Science
* New Technology

Subscriptions, 6 Issues Per Year
$29.95 North America
$49.95 Foreign
Single Sample Copy
$5.95 North America, $10.00 Foreign

Infinite Energy Magazine
P.O. Box 2816-FV
Concord, NH 03302-2816
Phone: 603-228-4516 Fax: 603-224-5975
http://www.infinite-energy.com

Prediction and Experiment on Field Transformation in the Model of Extended Space

Dmitry Yu. Tsipenyuk, Russia

119991, Vavilov str., 38, Moscow
E-mail: tsip@kapella.gpi.ru

A series of preliminary experiments on checking the possibility of generation of gravitational field at deceleration of charged massive particles in matter was carried out.

Introduction

In previous works [1-3] generalization of the special theory of relativity (STR) for the five-dimensional extended space with metric (+;-,-,-,-) was offered.

The model of extended space (ESM), combining electromagnetic and gravitational interactions, was made. For this, there was made (1+3)-dimensional space extension $M(T;\vec{X})$ of Minkovsky to (1+4)-dimensional space $G(T;\vec{X},S)$. Let us call it extended space. As the 5-th additional coordinate the value already existing in Minkovsky space, i.e, S interval

$$s^2 = (ct)^2 - x^2 - y^2 - z^2 \qquad (1),$$

is used.

Let us note that attempts to combine gravitation and electromagnetism have a substantial background.

Modern approaches to this problem trace back to the work of F. Klein [10] in which he proved that classical Hamiltonian mechanics can be represented as optics in the space of a great number of dimensions.

Then T. Kaluza tried to generalize Einstein's theory of gravitation to include electromagnetism in this theory as well [11]. He proposed to consider (1+4)-dimensional space with metric depending on potentials of the electromagnetic field. Kaluza's idea was evolved by O. Klein [12], G. Mandel [13] and V. Fock, and the model they had created got the name of the Kaluza-Klein theory. They proved that the trajectory of a charged particle has the form of a geodesic line with zero-length in 5-dimensional space.

In his works on 5-optics Y. Rummer [15] proposed to assign action dimensionality to the new dimension and to consider it periodical with the period equal to Plank's constant. Note that rest mass of particles in all these constructions unlike the model of extended space evolved in the works [1-7] was considered a fixed value. Subsequent development of multidimensional theories is given in the monograph [16].

A separate approach is represented by multidimensional constructions in the theory of strings and superstrings [17].

Approach to construction of (1+4) dimensional space evolved in [18] is close to the proposed model of extended space. Here it is proposed to use mass (matter) as the 5-th coordinate. However, in this model, as its originators admit, it is impossible, for example, to create the energy-pulse tensor. There is no such disadvantage in the extended space model [8].

Mechanics of a material point [1, 2, 7] and electrodynamics [1, 8] were made in the introduced extended space. Besides Lienar-Vihert potentials [6, 19] corresponding to such a model were also considered and properties of solutions of Maxwell augmented system of equations which are in conformity with these potentials were analyzed there.

Gravitational effects in extended space, such as the second orbital velocity, red shift and light deflection [4, 20, 21] were considered. It is proved that the formulas received in the general theory of relativity for calculation of values of these effects can be received by an absolutely different method within the framework of the extended space model as well.

It was proved [6, 19] that the fields in the model of extended space can change their signs. Such change of field-intensity sign and, consequently, change of sign of Lorenz force can be associated with radiation reaction of these fields which occurs when charged particles move with acceleration.

Thus, on the one hand, it was proved in the model of extended space that it is possible to get certain formulas describing gravitational effects of the general theory of relativity [4,20] using the technique of turns in extended space. On the other hand, it was proved that the electromagnetic field can be a source of gravitational field [6, 19].

Besides, a moving massively charged particle under deceleration can create a variable gravitational field around itself [9, 6, 19]. The following experiment was offered for experimental check of the latter assumption. In this experiment probable occurrence of gravitational field at deceleration of relativistic electrons was determined by change of oscillations of a massive torsion pendulum.

Experimental device

A narrow bunch of relativistic electrons from a microtron 1 (average power of the bunch is 450 Wt, electrons energy is 30 MeV) was directed to a brake target (position 2 or 3) made of wolfram exactly where deceleration of accelerated electrons took place.

A special torsion pendulum suspended on a vertical suspender 5 made of a springy metallic string with 1,8 mm diameter was placed near the brake target to register gravitational field which could probably appear at electrons deceleration. The length of the suspender made is 85 cm. The pendulum could rotate freely on the suspender only in horizontal plane.

The pendulum consisted of a light aluminum rod 4 (with a length of 120 cm) on the ends of which massive loads 6 and 7 made of non-magnetic material were fixed. The weight of each load was equal to 4kg. In the center a pendulum was fastened to a vertical suspender 5 by a special mounting preventing slippage during turns. To reduce the influence of magnetic inducings the pendulum was grounded and additionally screened by metallic grid from all sides. The period of free oscillations of the pendulum made were about 40 s.

Rigidity of the pendulum vertical suspender could be changed by means of limiting the length of effectively operating part of the suspender. As a result, the period of oscillations could be continuously changed within the limits of 40 to 27 s.

To reduce the influence of mechanical noise and to introduce additional attenuation in pendulum oscillations two liquid dampers 10 and 11 located near the pendulum massive loads were used.

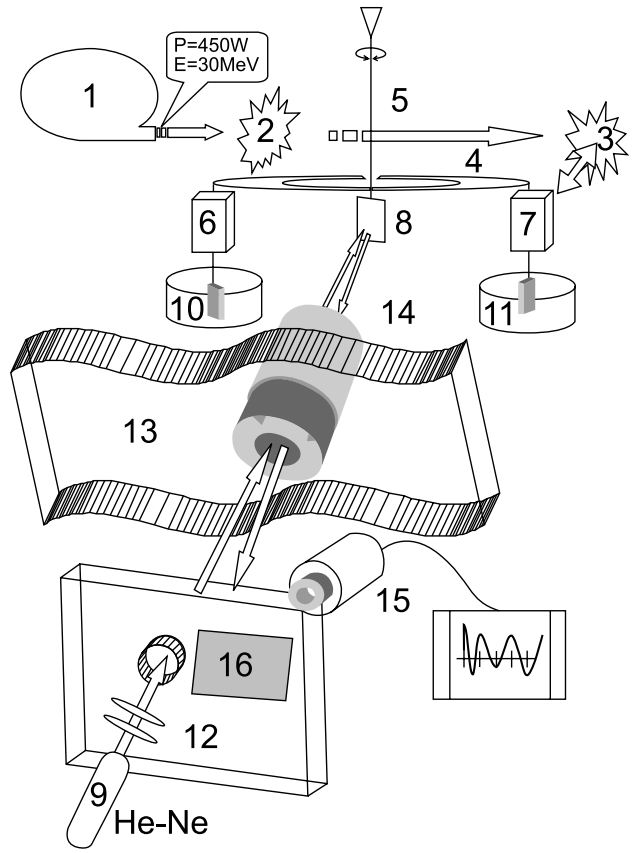

Fig. 1
Experimental device
1 – microtron, brake target made of wolfram – positions 2 or 3, 4 – rod, 5 – vertical suspender, 6 and 7 – massive loads, 8 – mirror, 9 – He-Ne laser, 10 and 11 – liquid dampers, 12 – optical system, 13 – concrete protection, 14 – observation channel, 15 – video system, 16 – screen.

Pendulum deflections were observed on a graduated screen by deflection of a laser beam reflected from a flat mirror 8. For this, the beam from a continuous He-Ne laser 9 through the optical system 12, which constricts the divergence angle of the laser beam, was directed to the mirror through a special narrow channel 14, located in concrete protection 13 around the microtron. By means of a video system 15 the beam reflected by the mirror was registered on the screen 16 located at a distance of 500 cm from the mirror. The video system allowed remote checking of vibrations of the laser spot and additionally enlarged the visual angle up to 12 times. The diameter of a focused laser beam on the screen was made 0.15 mm. The maximum turn angle of pendulum for the reflected beam to remain within the receiving channel was approximately 2 degrees. The accuracy of turn angle registration of the whole system was $5x10^{-4}$ degrees.

The pendulum was placed in such a way that one of the massive loads were close to the brake target at a distance

of about 20 cm. There was also an opportunity to move the brake target from one end of the pendulum (position 2) to the other (position 3). This allowed changing the place of deceleration of electron bunch at constant parameters of all unaccounted mechanical noise and magnetic inducing. Thus, direction of pendulum torsion was changed under probable exposure of occurring gravitational radiation.

Below there is a photo of the experimental plant (see also the colored photo on the cover page).

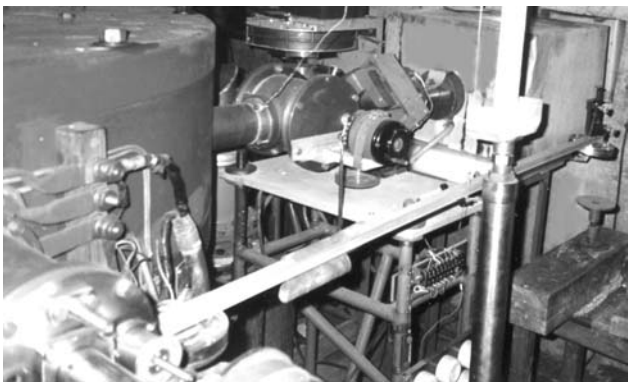

Calibration Measurements

To make measurements it was necessary to select optimal parameters of the pendulum (masses of loads, suspender rigidity and the value of oscillations attenuation). On the one hand, while carrying out the measurement it is desirable that the amplitude of pendulum oscillations should be as maximal as possible. On the other hand, the beam reflected from the mirror should not go outside the limits of observation, restricted by the diameter of the narrow observation channel in radiation protection around the accelerator. Besides, the typical operating time of the loaded accelerator usually is 10-15 minutes. Necessity to accumulate the minimum of sufficient statistical data within this time limited oscillations period and the time of setting of the pendulum in a new equilibrium position at outside influence. All these requirements were as far as possible taken into account during selection of the final setting parameters.

An example of free oscillations of the pendulum in the presence of minor mechanical vibrations caused by the operating of vacuum pumps is given in Fig. 2, series I (the experiment took place on 31 May, 2001). The diagram shows the amplitude of laser beam oscillations on the screen 16 (upper and lower rows of values) depending on the number of oscillation. The laser beam is reflected from the mirror 8 which was fixed to the pendulum. The diagram also shows the current central equilibrium position (the central row) calculated by these amplitudes. Series I represents oscillations at influence of the background mechanical noise. Series II represents the response of the pendulum to minor permanent outside force. Accuracy in determination of position of the center of a light spot was 0.1 mm.

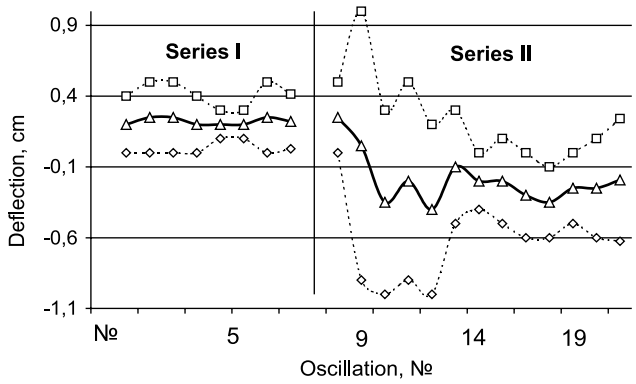

Fig. 2
Calibration Measurement 31 May, 2001

Measurement was carried out with one liquid damper in service and with increased rigidity of suspender (it was made by means of limiting the effectively operating suspender length). The period of free oscillations in these series was 29 sec. In this case there were set continuous oscillations of the pendulum around the average value of balance of 2.2 mm with the average amplitude of values fluctuation of about 0.2 mm.

Air cooling of one of the massive loads by a very light continuous air flow was carried out to study response of the pendulum to a minor constant external force. In this case (Fig. 2 Series II) noticeable change of pendulum oscillations already took place after 3-4 periods. Absolute setting of a new balance took place after 7-8 oscillations.

In the case of another series of calibration measurement (held on 7 June, 2001) both liquid dampers were used and rigidity of suspender was decreased. The period of free oscillations of pendulum was about 40 sec.

Addition of the second damper and decrease of suspender rigidity caused, on the one hand, increase amplitude of pendulum oscillations at influence of the external force and, on the other hand, in that case noticeable change of the equilibrium position of the pendulum took place after 1-2 oscillations.

Periodical checking of the invariability of initial central position of pendulum balance in time was also carried out. Thus, for example, in the series of measurement of 7 June 2001 measurement of equilibrium position was checked not only before the start of the main series of measurement, but also 2 hours after completion of the main works.

Experimental Results and Their Analysis

Within the period from 17 May, 2001 to 7 June, 2001 7 measurement series were carried out at various operation modes of the accelerator and at various pendulum parameters.

A record of check of equilibrium position of the pendulum was carried out before and after switching off the electron bunch (as well as during calibration measurement). At the same time, all electric inducing and mechanical noise remained stable within the whole measurement period. This was achieved by means of additional switching on all the devices which were used during measurement (water and vacuum pumps, magnetron, deflecting magnets, etc.) and their switching off only on completion of the measurements.

In Fig. 3 there are results on measuring the central position of the pendulum when brake target is in position 3 (see Fig. 1). Series I and III on the diagram correspond to check measurement directly before switching on and several minutes after switching off the electron bunch. Series II-A and II-B totally reflect pendulum oscillations at the time when the accelerator is operating (for about 10 minutes) and for some time after the bunch is off. Additionally, a trend line is drawn (averaging by 3 points).

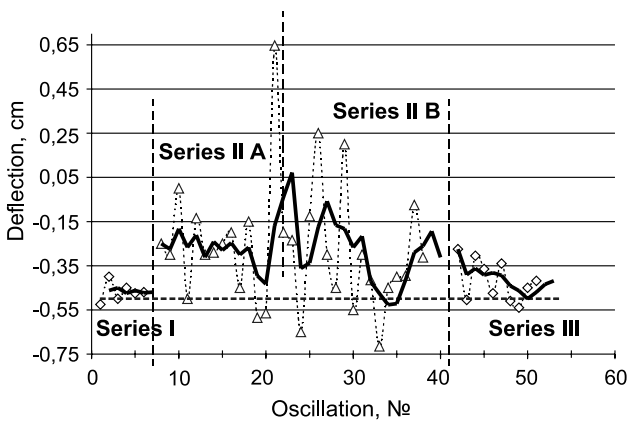

Fig. 3
Measurement of central position of pendulum equilibrium when brake target is in position 3.

Results of a similar experiment are given in Fig.4. The only difference in this experiment is that the brake target is in position 2. Also a trend line is added (averaging by 3 points). Series I and III are check measurements made directly before switching on and after switching off the electron bunch. Series II are pendulum oscillations at the time when accelerator is operating.

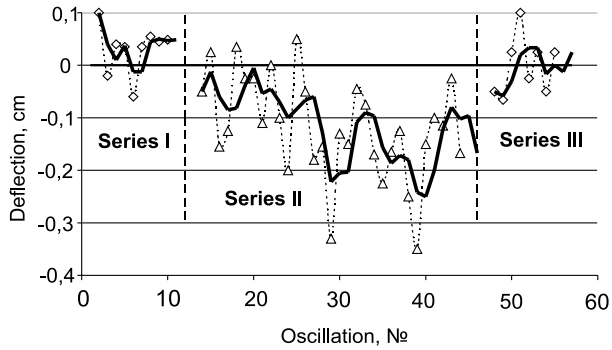

Fig. 4
Brake target in position 2

From qualitative comparison of trend lines (Fig. 3 and Fig. 4) it can be derived **that there is a correlation between switching on the electron bunch and the average deflection of the pendulum from equilibrium position if compared to checked series before and after switching on. At that, direction of deflection changes depending on what pendulum load the brake target is close to.**

Unfortunately, due to circumstances beyond the control of the author it seems to be difficult to improve experiments accuracy or to accumulate much of statistical data by now. Estimate of the value of the force which may cause such a shift of position of pendulum equilibrium was carried out. In the experiments this deflection did not exceed 1-2 mm (in the units of registering scale). Calibration of a rigid suspender (if it applies to a massive load at a pendulum end) gives the upper boundary of this force of not more than 10^{-6} N.

Conclusion

A series of experiments were made on checking the possibility to generate a field at deceleration of charged massive particles in matter.

Electrons accelerator was used as a source of charged particles. A narrow bunch of relativistic electrons (average beam power is 450 Wt, electrons energy is about 30 MeV) was directed at a brake target made of wolfram where deceleration of accelerated electrons took place.

Measurement proved appearance of statistically reliable deflection of a torsion pendulum, one of massive loads of which was located close to a brake target by the time of deceleration of relativistic electrons.

Change of direction of pendulum torsion at shift of a brake target from one end of the pendulum to the other was also registered. The value of the force which causes pendulum deflection has the upper boundary of N.

Of course, these first experimental results on checking the predictions made on the basis of development of the model of extended space are of preliminary nature and need more thorough checking. That will be the basis of future experiments.

References

1. Tsipenyuk D. Yu. Andreev V. A, "Extended space and model of combined interaction", Short reports on physics FIAN, No.6, pp. 23-24, (2000); gr-qc/0106093
2. Tsipenyuk D. Yu., Andreyev V. A., "Explored in Russia" E-magazine,60, (1999); http://zhurnal.ape.relarn.ru/articles/1999/060.pdf
3. Tsipenyuk D. Yu., Andreyev V. A., "Structure of extended space", Preprint IOFAN, 5, 25p., Moscow, (1999)
4. Tsipenyuk D. Yu., "Field transformation in the model of extended space: prediction and experimental test", Gravitation&Cosmology, Vol.7, No.4(28), pp336-338, (2001); physics/0203017
5. Tsipenyuk D. Yu., "Field transformation in the extended space model: prediction and experimental test", Short reports on physics FIAN, No, 7 p.39-49, (2001); physics/0107007
6. Tsipenyuk D. Yu., Andreyev V. A., "Lienar-Vihert potentials for the extended space model", Short reports on physics FIAN, No 6 p.3-15, Moscow,(2002); physics/0302006
7. Tsipenyuk D. Yu., "Explored in Russia" e-magazine, 81, p.907-916, (2001); http://zhurnal.ape.relarn.ru/articles/2001/081.pdf
8. Tsipenyuk D. Yu., Andreyev V. A., "Electrodynamics in extended space", Preprint IOFAN, 9, 26p., Moscow, (1999)
9. Tsipenyuk D. Yu., Andreyev V. A., "Interaction in extended space", Preprint IOFAN, 2, 25p., Moscow,(2000)
10. Klein F. Zeits.f.Math.a.Phys., 375, (1901) (see translation in collection "Variation principles of mechanics", M.: Physmatgis, 1960)
11. Kaluza Th. Sitz.d.Preuss.Akad., 966, (1921) (see translation in collection "Albert Einstein and gravics", M.: Mir, 1979)
12. Klein O. Zeits.f.Phys., 37,895, (1926)
13. Mandel H. Zeits.f.Phys., 39,136, (1926)
14. Fock V. Zeits.f.Phys., 39,226,1926
15. Rumer Yu. B. Investigations on 5-optics, M., Gostehizdat, 1956
16. Vladimirov Yu. S. Dimensionality of physical space-time and integration of interactions. M., MGU, 1987.
17. Green M., Schwartz G., Vitten E. Theory of superstrings, v.1, 2, M.: Mir, 1990
18. Wesson P.S. Space, time, matter: Modern Kaluza-Klein theory. Singapoure, World Scientific publishing Co.Pte.Ltd, 1999
19. Tsipenyuk D. Yu., Andreev V.A., "Lienar-Vihert potentials and Lorenz force in extended space", Preprint IOFAN,1,20p., Moscow,(2001)
20. Tsipenyuk D. Yu., Andreev V. A., "Gravitational effects in extended space", Preprint IOFAN, 4, 15p., Moscow,(2001)
21. Tsipenyuk D. Yu., "Field transformation in the model of extended space: prediction and experimental test", Preprint IOFAN, 5, 24p., Moscow, (2001)
22. "Tsipenyuk D. Yu., report "Electromagnetic and gravitational interaction in extended space" at the Conference of Nudear Physics Department of the Russian Academy of Sciences (RAN) "Physics of Fundamental Interactions", 27 November-1 December 2000, ITF, Moscow, http://www.itep.ru/
23. Tsipenyuk D.Yu. and Andreev V.A., "Interval as the fifth coordinate" proc. of 5-th Int. Conf. on Gravitation and Astrophysics of Asian-Pacific Countries, PFUR, Moscow, 2001, pp.29-30. http://rgs.da.ru/
24. Tsipenyuk D.Yu., "Direct transformation of the electromagnetic field to gravitational field in the model of extended space: predictions and possible way of its experimental test", proc. of 5-th Int. Conf. on Gravitation and Astrophysics of Asian-Pacific Countries, PFUR, Moscow, 2001, p.28. http://rgs.da.ru/
25. Tsipenyuk D.Yu., "Model of extended space: Prediction and test experiments on possible transformation of electromagnetic field into gravitational field", proc. of XVIth Workshop on High Energy Physics and Quantum Field Theory (QFTEP), Moscow, Russia, 2001, pp.398-405. http://theory.sinp.msu.ru/~qfthep/2001/Proceed2001.html
26. Tsipenyuk D.Yu., "Model of extended 5-d space and possible checking experiments", presented at 5-th Moscow international ITEP school of physics (30-th ITEP winter school of physics), 20-28 Febr., Moscow, 2002, http://www.itep.ru/
27. Tsipenyuk D.Yu., report "Second experiment on checking prediction on field transformation in extended space" at the scientific conference of nuclear physics section OFN RAN "Physics of Fundamental Interactions", ITF, 2-6 December 2002, Moscow, http://www.itep.ru/
28. Urbah V. Yu., Mathematical statistics, M., USSR Academy of Sciences Publishers, 1963.

Joe Flynn's Parallel Path Magnetic Technology

Tim Harwood, USA

Email: timharwood@usa.net

There is a widespread opinion common to the mainstream academic community and also to various alternative scientific forums, that some kind of exotic new physics will be required to design and implement over-unity technologies. That is to say electrical motors, electrical generators, or other apparatus, which produce an excess of magnetic force or energy above the value actually inputted.

However, this has recently been experimentally demonstrated not to be the case, as I have validated myself in simple $20 experiments undertaken at home with parts bought from the local hardware store. It is the purpose of this article to educate readers that with care, thought, and a little work, it can be demonstrated that existing textbook physical law, freely allows for the extraction of excess electrical energy from magnetic systems.

The Flynn Research Project

Joe Flynn has been engaged in magnetic flux research for over 25 years now. His work is long standing, comprehensive, and in later years, well funded. It is reported $7m has been spent to date, with over $1m alone developing a revolutionary high performance magnetic motor. His equipment is validated, and apparently already in mass production for select customers. Yet few researchers have heard of Joe Flynn. This surprising situation will hopefully shortly be changed, and Joe Flynn awarded the scientific accolades he deserves, for being the genius master mind behind one of scientific history's most outstanding research projects. Since many lines of research have been formulated and explored by Joe Flynn, the following article presents only a brief summary of some of his best art apparatus, but is nonetheless sufficient to convey the basic ideas.

The first illustration (Fig. 1) is taken from Joe Flynn's US patent 6,246,561, and explains a simple magnetic force multiplication experiment, which forms the basis for the Flynn magnetic art. If the windings on either side of the central magnet, which are normally connected in series, are properly pulsed, the field of the permanent magnet in the center will be diverted to the opposite side of the core flux path provided. Or in alternative language, the side of the core that is pulsed is demagnetized, relative to the field of the permanent magnet used in the apparatus. This is elementary textbook physics anyone can understand.

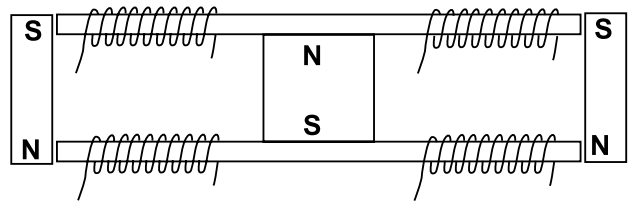

Fig. 1

1.75 times more force is delivered to the legs of the core than is provided by the electrical input to the control coils

So what is surprising about this apparently simple apparatus is that the armature on the side of the flux core will contain 1.75 times more units of magnetic force, that could be manifested by the electrical input to the apparatus alone. Since the ability to arbitrarily move the force from one point to another is the basis for motion or work, however simplistic, we therefore have a basis for a system that can be developed for practical technological purposes. Expressed in alternative language, we also have the capability to engineer a time varying magnetic field, without the need for moving parts, which will allow development of systems that output electrical energy. Both capabilities are highly desirable, and offer substantial opportunity for technical development.

Following on from this basic experiment, there is a second simple and logical improvement in layout illustrated in Fig. 2, which should be obvious, but has been shown not to be the case. In this instance, the pulse is centrally located, and a dual flux field layout employed, which both demagnetizes the core relative to one magnet, and magnetizes it relative to the other. Since the two actions are complementary, the input required to manifest the flux switching effect is halved, therefore doubling 'efficiency.'

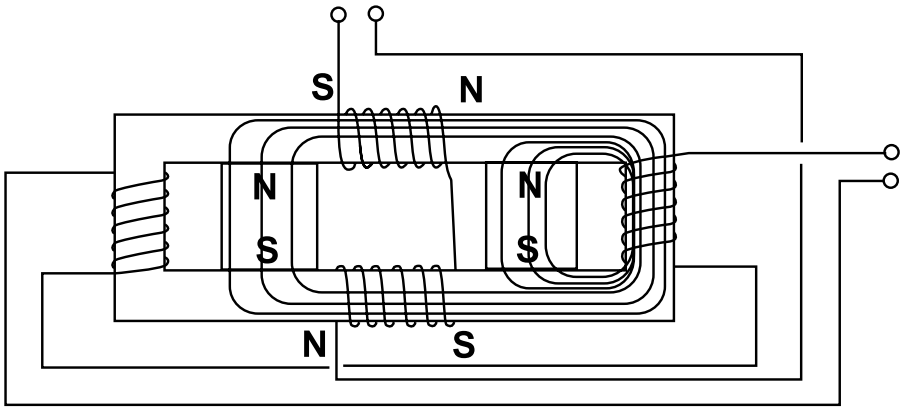

Fig. 2

3.47 times more force is delivered to the legs of the core than is provided by the electrical input to the control coils

It should be noted that while the efficiency is doubled, the absolute output may not be significantly improved. This is because the major weakness of this effect and technology is flux saturation of the core, with values depending upon the specific properties of the B-H curve of the core material employed, limiting the absolute output of both layouts the same.

The previous statements are not required to be taken on trust, and simple experiments have been proposed by Joe Flynn, such that anyone can validate this effect for themselves. Figure 3 is a simple experiment taken from the Flynn website (http://www.flynnresearch.net), that can be used to validate the principals put forth in this article.

Simple Magnetic Force Multiplication Experiments

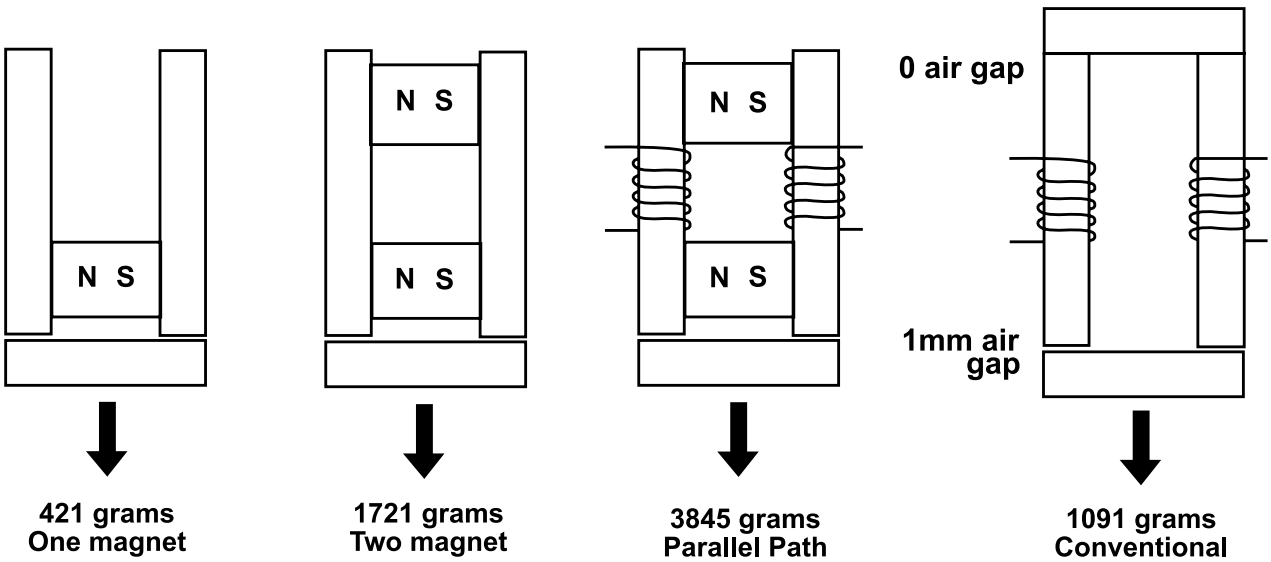

Fig. 3

Parallel Path can deliver 3.47 times more force to the legs of cores than any competing conventional technology

An even simpler non electrical flux experiment was proposed by GM in the Parallel Path Egroup. My apparatus is illustrated below in Figure 4. It is no more than magnets and steel staple strips, bought from a local hardware store for a total of under $10. The Parallel Path effect can be replicated with identical apparatus, at only a slight increase in cost and complexity, with the addition of a simple 12V polarity reversible power supply, such as those commonly sold to power computer speakers, among other applications.

Simple Magnetic Force Experiments

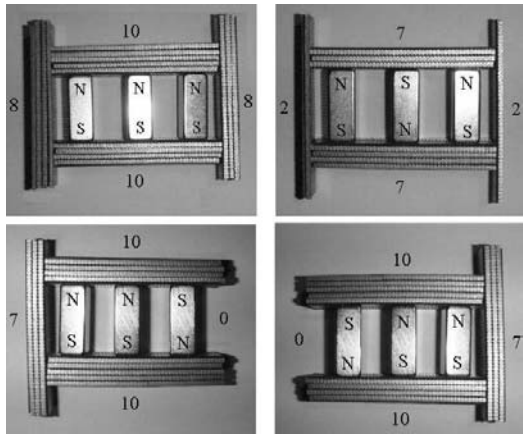

Fig. 4

Relatively small changes in layout produce large changes in force

Conservation of Energy / Field Potential

One of the aspects of the Flynn technology people find most difficult to understand, is how you can have a device that delivers 3.47 times more magnetic force than is electrically inputted, yet not violate accepted principals of text book physics, as stated in the introduction. The key point here is conservation of energy. Magnetic fields do not gain energy – they are conservative. You can only ever obtain less energy from a magnetic field minus losses, than is in fact present. I feel this apparent puzzle can not be better explained, than by reference to Joe Flynn's own words:

"Since the Parallel Path System produced 3.47 times more force than the conventional system, with the same electrical input, it appears to violate conservation, this is only true when observed from a traditional view point. The system contains three flux producing sources (2 magnets and an electromagnet) which together are capable of producing a far greater force than is actually produced. All of the flux sources together can produce a force of 13.11 units, therefore in the physical sense a loss of 1 - (9.01 / 13.11) = 31% is realized."

So the system is 350 % efficient, in terms of delivered magnetic force compared to net electrical input, yet still conforms to the accepted physical principals of energy conversation, by being only 69 % efficient, in terms of the fields present in the system. However surprising this result may appear, the analysis presented is in outline correct, with the difference between fields present in the system, and net electrical input, being the important concept presented.

Losses in the System and Optimisation

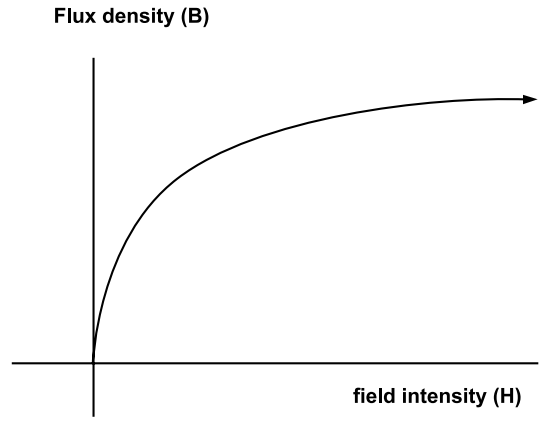

Fig. 5

In order to properly optimise flux cores, an appreciation of the physics that underlies the transfer of flux within a core is required. The normal magnetization curve, or B-H curve, is a mathematical relationship between applied field intensity H, and resultant flux density manifested in the core B. It varies according to core material, and the curve will shift, if there is a starting magnetism within the core, such as that provided by the field of a permanent magnet. If the start magnetism is excessive, the core is saturated, and will not properly respond to the applied force H. A simple B-H curves is illustrated in Fig. 5.

Hysteresis is a delay between applied magnetic force H, and resultant flux density B, that again varies according to material type. It also manifests as a delay between the termination of force H, and the manifestation of flux density B. So, the system will not turn on instantly, and will not turn off instantly, in simple terms. This is because the magnetic memory of the core, means a flux vector remains within it, even when the application of magnetic force H has been terminated. If we apply a reversed force H to the core, the basic B-H curve is now expanded as in Fig. 6, with the memory effect also illustrated.

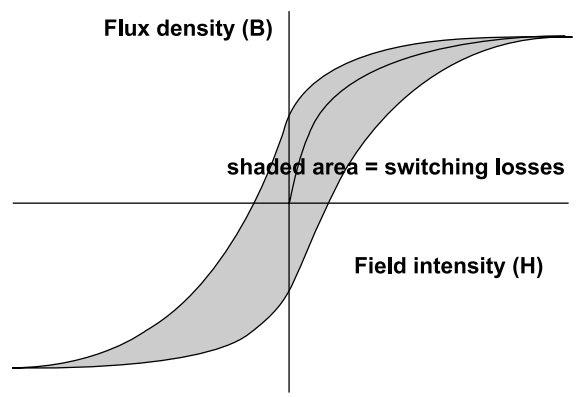

Fig. 6

Thus as can be seen, to return to the initial switched state, the remnance magnetism must now be overcome, hence input once in operation, will be greater than that required for the very first pulse. The area within the hysteresis curve gives a rough estimate for the amount of wasted energy, and along with other conventional sources of losses resultant in flux transfer within a core, is what reduces the efficiency of flux cores from maximum values of 2, or 4, down to values such as 1.75 or 3.47, typically.

Motor Apparatus

Simple Parallel Path Technology Demonstrator Motor

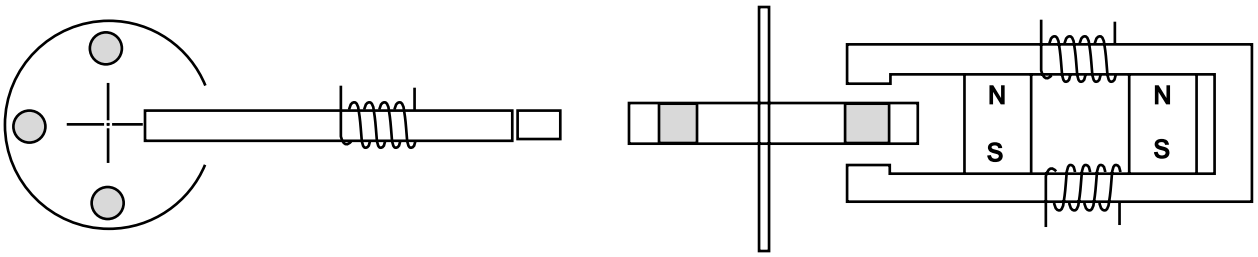

Fig. 7

Designed to demonstrate core principals, not provide over-unity

Although numerous practical applications abound for this effect, electric motor design remains the most outstanding opportunity. To this extent, again a few simple images, should be sufficient to explain how the basic flux switching apparatus, can be turned into a highly efficient electrical motor.

The first motor shown in Fig. 7 is one I have proposed to validate the flux switching effect at a most basic level. It illustrates the point made in the Flynn patent, that the armature of the core can be removed, and replaced with a motor flux path. This first motor is not claimed to be highly efficient, but it helps one to understand how the transition from simple flux core to motor takes place.

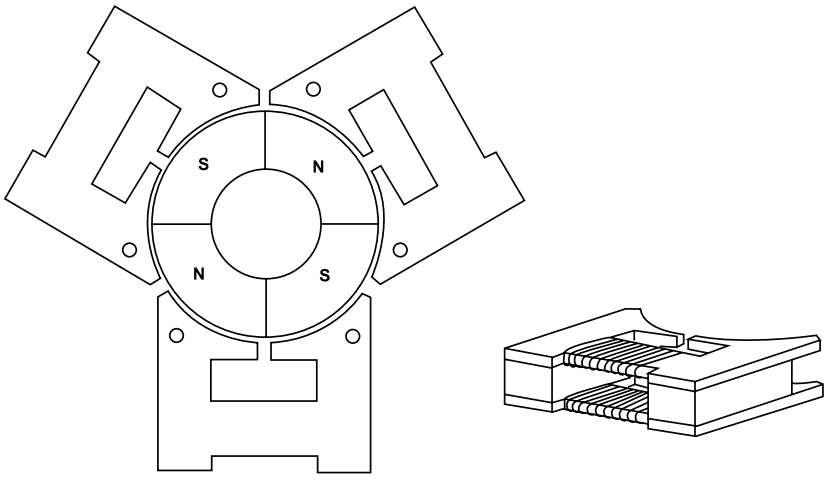

Fig. 8
Magnetic force is alternately switched from one leg to the other, imparting motion to the rotor sections

The next motor shown in Fig. 8 is again taken directly from the Flynn patent, and illustrates the next intermediate step to motor design. The fields of the permanent magnets are alternatively switched from one side of the surrounding flux cores to the other, alternately interacting with N and S poles on the rotor, imparting motion to the central rotor shaft.

With proper financial support, and the facilities to have metglas cores custom moulded, Joe Flynn was able to develop his final best art, shown in Fig. 9. No detailed performance numbers have been released for this motor, whose precise performance characteristics remain proprietary to Joe Flynn at this time. But the optimisation is so expert, it is stated to posses certain exotic properties, such as cool ambient operation, even during prolonged periods of continuous load. This 'cold running' is said to be of great interest to the American military, as it offers excellent stealth performance characteristics.

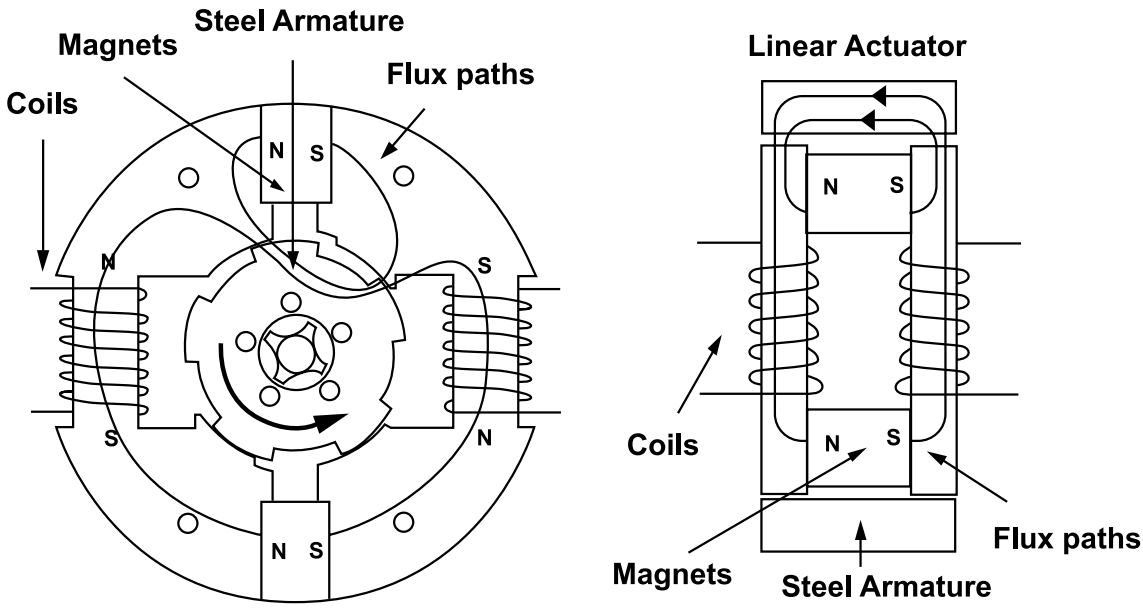

Fig. 9
Optimal Flux Core Motor Construction

Electrical Apparatus

Many readers will no doubt have noticed the similarity of the first illustration presented in this document, to the so called 'Tom Bearden MEG.' This is fair comment, and Joe Flynn has always highlighted this issue. However, it has been commonly stated Joe Flynn has simply developed mechanical apparatus, and the MEG with its electrical functionality, is distinct art, more advanced than the mechanical Flynn apparatus. However, this is shown not to be the case by a careful examination of the Flynn patent, in which the following is stated in the 'Power Conversion' section:

'The construction (shown in Fig.10 A) utilizes four control coils and a single permanent magnet and the construction (shown in 10 B) uses two control coils and two permanent magnets. The flux that would normally be supplied by a primary winding is supplied by the static flux of the permanent magnet or magnets and the control coils convert this static flux into a time varying flux in a novel way. Both arrangements use two secondary coils, the secondary coils are placed in the region of the continuous flux path that would be occupied by an armature or rotor in the linear or rotary arrangements. The regions of the flux paths that perform work are the same in all cases.'

'By alternating the polarity of the control coils during one cycle, one working region experiences an increasing flux and the opposite region experiences a decreasing flux and during the next cycle the opposite occurs. This results in the induction of a voltage in the secondary coils that is decided by the magnitude of the change in flux in the working region and the time in which this change occurs. The novelty of this discovery is that the primary flux inducing the voltage in the secondary coils is supplied by the permanent magnet or magnets and is far greater than the flux supplied by the control coils.'

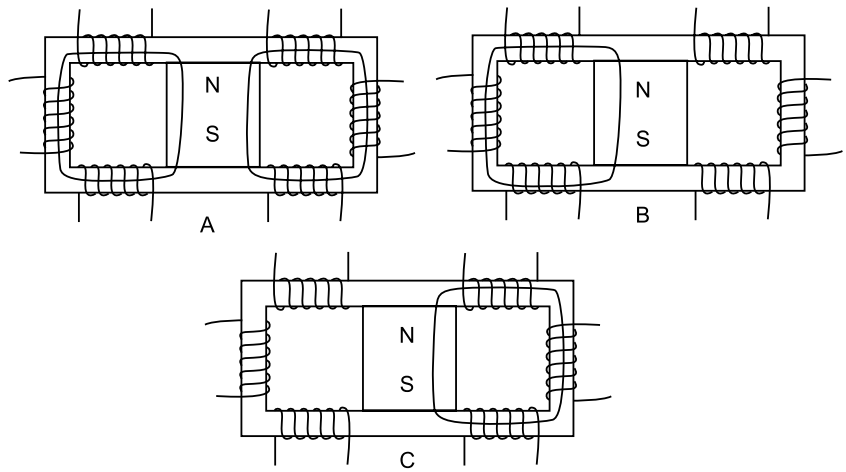

Fig. 10

Fig.10 taken directly from the Flynn patent makes the point even clearer. As can be seen, the device illustrated is in all functional respects absolutely identical to the so called 'Tom Bearden MEG.' This identical prior art, therefore calls into question the intellectual property rights of Magnetic Energy LTD, as the same invention can not be patented more than once. Joe Flynn has also stated that his intellectual property rights will be robustly defended, by legal action if necessary, and he regards himself and his company as being in possession of exclusive rights to the so called 'MEG' unit.

the input and output circuits must be closed in series. The disclosure of this technique amounts to putting the basic MEG methodology fully into the public domain.

As regards replication of electrical output orientated flux core devices, certain important details need to be stated. For example grade 8 ceramic magnets should be used, so as to avoid flux saturation of the core. A basic error, many early experimenters wasted time on. The requirement for strong magnets to obtain over-unity results, is as much of a myth, as the idea new physics is required.

But perhaps the greatest trade secret of the electrical devices, one which several lengthy non disclosure agreements are required to be signed before it can be disclosed, is that the input and output circuits must be closed in series. The disclosure of this technique amounts to putting the basic MEG methodology fully into the public domain.

The reason for this circuitry requirement is obvious enough, with only a little analysis. If the output circuit is closed when the input circuit is activated, then the input energy simply leaks into the output circuit, as in an ordinary transformer. So no flux switching effect is manifested, and the field of the permanent magnet is static in time. Thus you have an ordinary transformer, with reduced efficiency, because of the core flux saturation effect provided by the permanent magnet.

This is one of the most important point to make about the Flynn apparatus. If you approach it as if it is a normal piece of scientific equipment, then proper optimisation is not greatly problematic. For example more turns on the output coils, simply means more voltage and less current, exactly as standard textbook equations predict. Generally, problems only occur, if you imagine the effect is based upon exotic scalar type or vacuum energy physics, when in fact it is ordinary flux manipulation within a core.

Present Status of the Flynn Project

Initially Joe Flynn was remarkably open about his work and research. However, since performing a working demonstration of various advanced hardware samples for the American Department of Defence, little has been heard.

I want to clearly emphasize I do not speak for Flynn research, nor am I in any way connected with Flynn research, and by consequence, have no inside information whatsoever as to the present status of the project. But we all sincerely hope, that the project has not been swallowed whole by the American deep black military industrial research complex.

However, even if this is the case, it does not mean the technology is lost. Extensive and generous details have been provided by Joe Flynn of his research, both in his patent deposition, website, and other comments, such as to enable persons of scientific training and skill, to replicate the effects stated.

While replication of the electrical effect remains extremely demanding, the mechanical apparatus is very easy both to understand and replicate. There is no reason why scientists and home tinkers together, can not build Flynn type flux core motors, and explore over-unity flux manipulation for themselves. The future has arrived, and it is simpler and cheaper than anyone imagined to be possible.

Raum&Zeit

EhlersVerlag GmbH,
Geltinger Str.14e,
82515 Wolfratshausen
Telephon: 08171/41 84-76,
Telefax: 08171/41 84-66
Internet:
http://www.raum-und-zeit.com

Institut fur Raum-Energie-Forschung (IREF) i.m. Leonard Euler

- Global Scaling Theory
- Gravitation theory
- Mathematic Biology
- Gravitation energetics
- Hydrogen-Helium Energetic
- Information technologies
- Telecommunication technologies
- Transport technologies

Flynn Research Company

http://www.flynnresearch.net

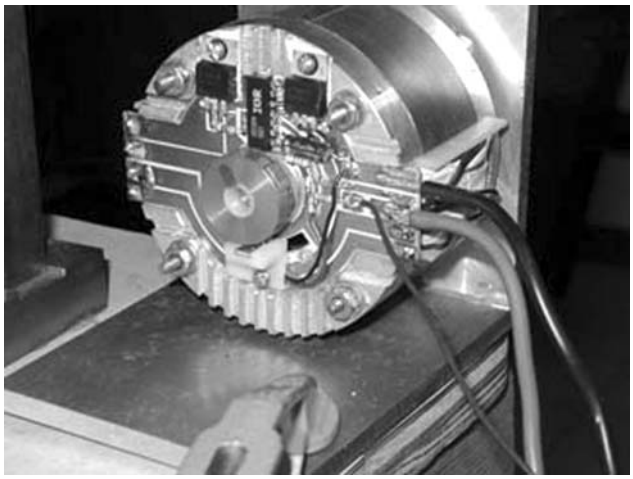

Photo 1

3.3" 1.2" stack height 1/2 hp weight 59 oz

Photo 2

Dynamometers, Power Analyzer etc.

Editor: Below we publish information and photos, represented on Flynn Research Company website (http://www.flynnresearch.net), and a description of the patent on methods for controlling the path of magnetic flux.

Flynn Research is dedicated to research focused on the novel application of permanent magnet and electromagnetic technology. Magnetism is a field that has potential for tremendous growth from both a science and application perspective. The researchers of Flynn Research Company believe that magnetism is one of the least understood and most misinterpreted of the natural forces, with the exception of gravity.

Even though much work has occurred in the advancement of magnetic materials, little advancement has occurred in the basic understanding of magnetism. The field of magnetism is based on both theory and 'myth' and is generally described as a 'phenomenon'.

We still do not know what a line of flux is and how it travels through space. We know flux "appears" to originate within a permanent magnetic material, forms a loop from one end to the opposite end of the magnetic material, appears to occur without a time constant, produces a force (attractive and repulsive) between other permanent magnets and "magnetically permeable materials and has a relationship to current flow. Everything known about magnetism is based on "effect and relationships" without a clear understanding or provable definition of what is a line of magnetic flux.

Everything known about magnetism is based on "effect and relationships" without a clear understanding or provable definition of what is a line of magnetic flux.

The research is based on the "magnetic force of attraction effect" that is related to magnetic flux by the number of lines of flux occupying a given area or flux density squared. The simple fact that if the number of lines of flux occupying a given area "doubles" the force of attraction becomes four

Photo 3

8" dia x 8" height motor presentation

Photo 5

Technology Discussion

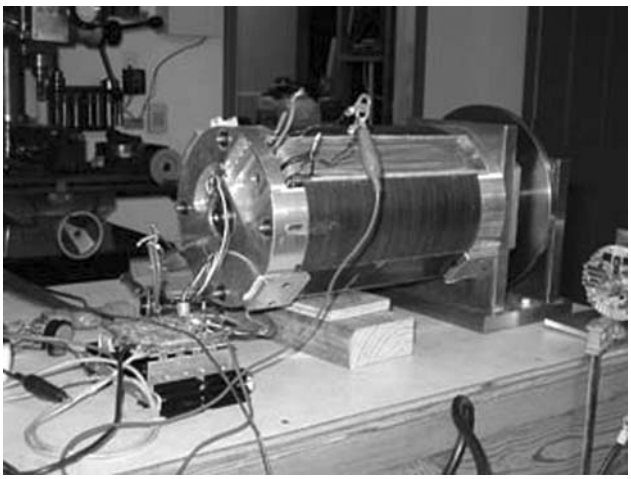

Photo 4

8" X 8" motor testing

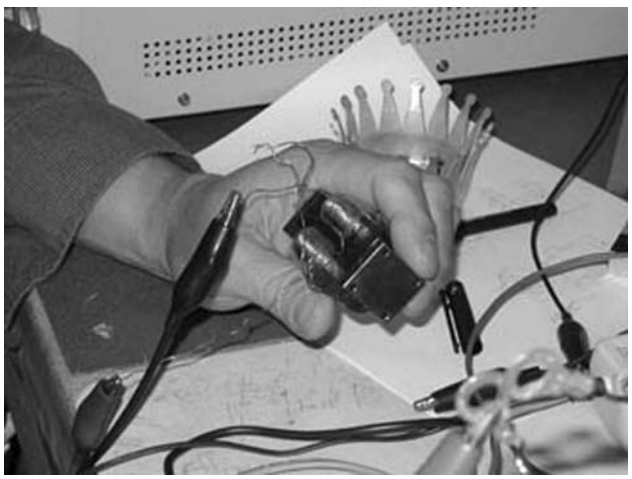

Photo 6

Parallel Path Test Apparatus

times greater. The basic model shows that with specific structures electromagnetism acting with permanent magnet materials can divide and multiply force in a manner that cannot be explained with conventional physics.

Rotary devices, linear devices, reciprocating devices and power conversion devices are now a patented product of this research. The goal of the Company is to commercialize their devices for use in an energy dependent world. Flynn Research is a research & development company and in cooperation with Magnetic Revolutions LLC licenses their technologies for use in the electric motor and power conversion industries.

The researchers do not construct their own test equipment nor write capture and data evaluation programs but use industry / scientific accepted products. Close to $1.5 million has been expended developing, protecting and evaluating the technology. Many fine minds have been involved in the development and evaluation of the technology. Many presentations have been given both to motor companies and academic groups. The prototypes have all been professionally built, which include a 1/2 hp 3.3" dia 1.2" stack height, the assembled motor weighs 59 oz and a motor 8" dia with a stack height of 8" currently undergoing testing.

United States Patent No. 6,246,561
June 12, 2001

Methods for controlling the path of magnetic flux from a permanent magnet and devices incorporating the same

Inventors: **Flynn; Charles J.** (Greenwood, MO)
Assignee: **Magnetic Revolutions Limited, L.L.C** (St. Louis, MO)
Appl. No.: **127056**
Filed: **July 31, 1998**

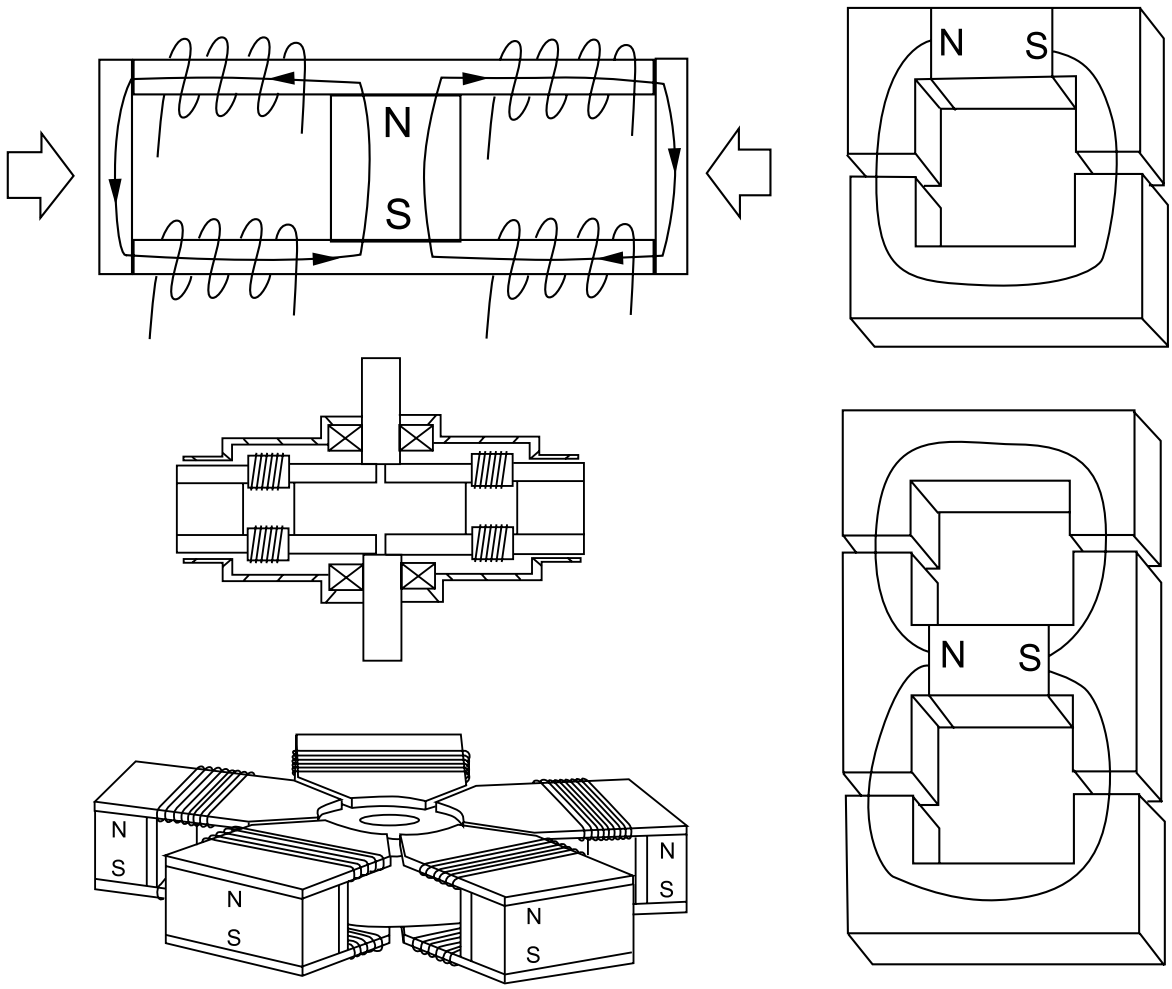

A permanent magnet device includes a permanent magnet having north and south pole faces with a first pole piece positioned adjacent one pole face thereof and a second pole piece positioned adjacent the other pole face thereof so as to create at least two potential magnetic flux paths. A first control coil is positioned along one flux path and a second control coil is positioned along the other flux path, each coil being connected to a control circuit for controlling the energization thereof. The control coils may be energized in a variety of ways to achieved desirable motive and static devices, including linear reciprocating devices, linear motion devices, rotary motion devices and power conversion.

Editorial: The principle of designing of the device (two counter parts of the flux are used) resembles Φ-machine or Gramm's generator. Read in this issue more details on these devices.

Flux-machine And Its Analogues

Review prepared by correspondent Alla Pashova, Russia

Flux-machine (or Φ-machine, since configuration of its field resembles the Russian letter "Φ") was designed by Alexander V. Frolov during the first half of 1990s. Φ-machine description was published more than once on the pages of scientific periodicals (1994, Institute of New Energy, Newsletter, June 1994, p.9.; 2002, New Energy Technologies, 2002, p.3), and it is well known to many researchers concerning themselves with such kinds of engineering.

Let us consider the arrangement of Φ-machine; see Fig. 1 (first published in 1994). A report was presented at the conference «New ideas in natural science», 1996 in Saint Petersburg (see photo in Fig. 1). The primary coil is mounted in the center of generator; two secondary ones are diametrically wound on a ring core. An air gap between ring and central magnetic circuits are of particular importance. **Two magnetic fluxes from two coils are balanced, and, thereby, there is no reaction in the primary circuit.**

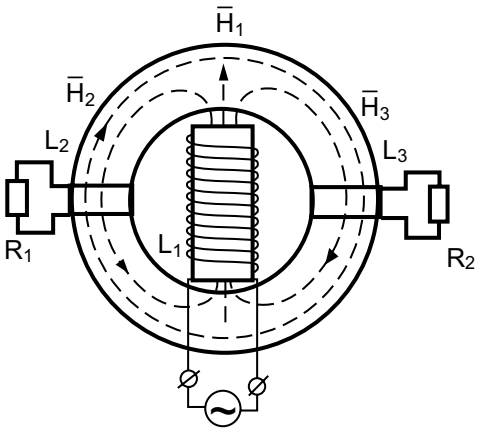

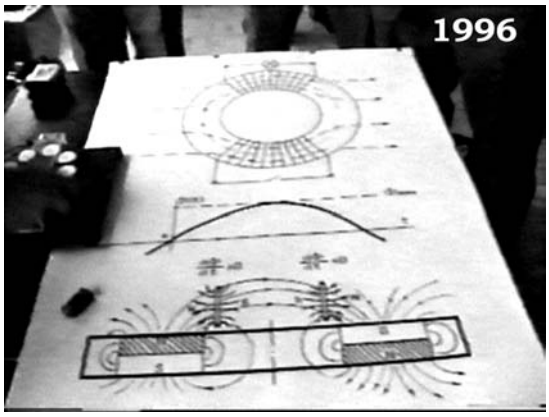

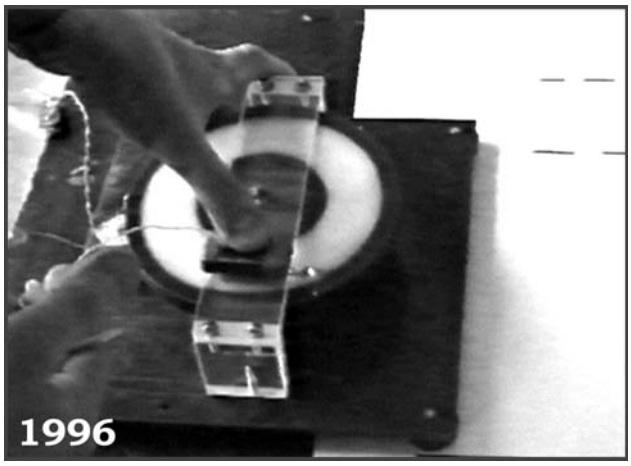

Fig.1
See also Fig. 7, p.29 – the analogy is evident

The device bears some similarity to the Gramm's generator (Zenob Theophyl Gramm, 1826-1901, Belgium-France, took out a patent for an electric ring-rotor generator in 1869). In Gramm's generator (Fig. 2) the ring rotor with a toroidal winding rotates. The toroidal winding touches two diametrically located conducting brushes. It turns out that in the ring of the rotor all winds of one rotor half create a field which is directed towards a field created by the other rotor half.

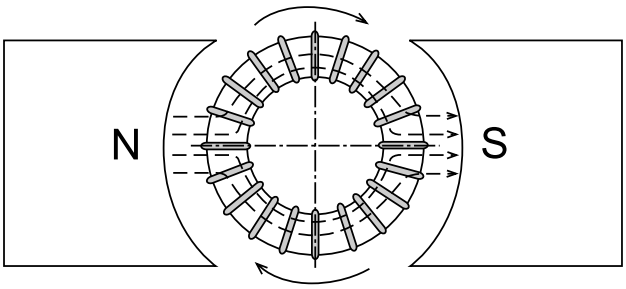

Fig. 2

An example of analogous device is represented in Fig. 3 (information is from the website: http://www.skif.biz/energy/arhiv1-6.shtml), and also in Fig. 4 (we have written about this invention in New Energy Technologies, Issue #5 (8), 2002, article by V.I. Boryak, Email: spin@i.com.ua).

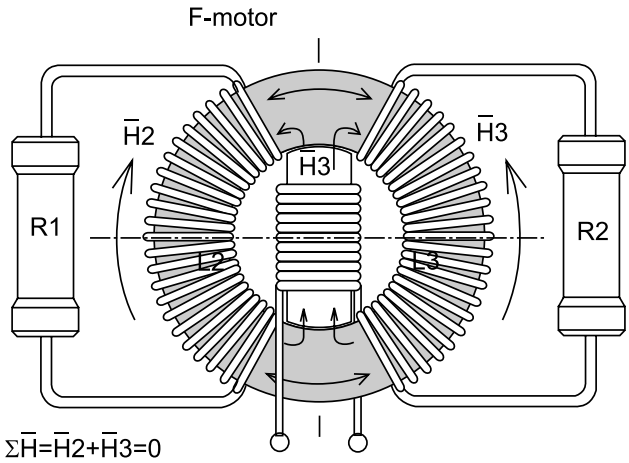

Fig. 3

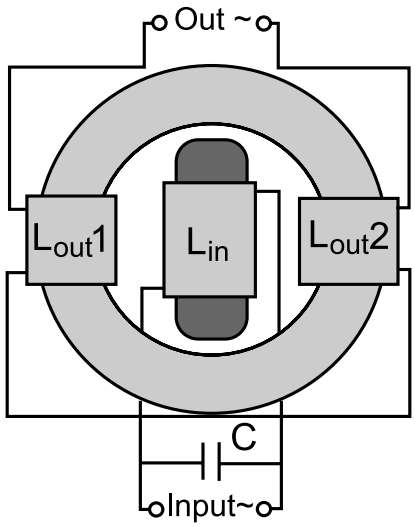

Fig. 4

In August 1999, according to Stephen Hartman (Hartman Multimedia Service, Email: hart@harti.com, info@ccard.net), a German research team designed a toroidal generator. As stated by the researchers, it obtained more than 1.200 W by load while efficiency exceeded 100%!

This subject has become very popular among different researchers. Fig. 5 illustrates a design with a magnet rotating in the center (designer - Olaf Berens, Email: olaf.berens@prognost.com).

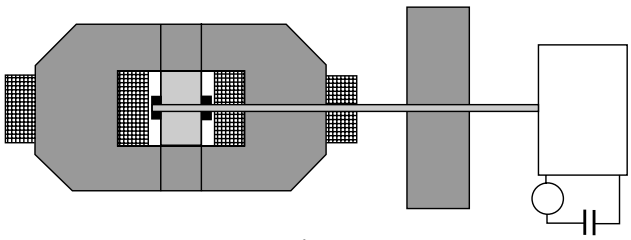

Fig. 5

One more example from the USA: in February, 2003 Donald Hofmann (USA) filed an application for patenting "Generators and transformers with toroidally wound stator winding». Below we publish the description of the patent.

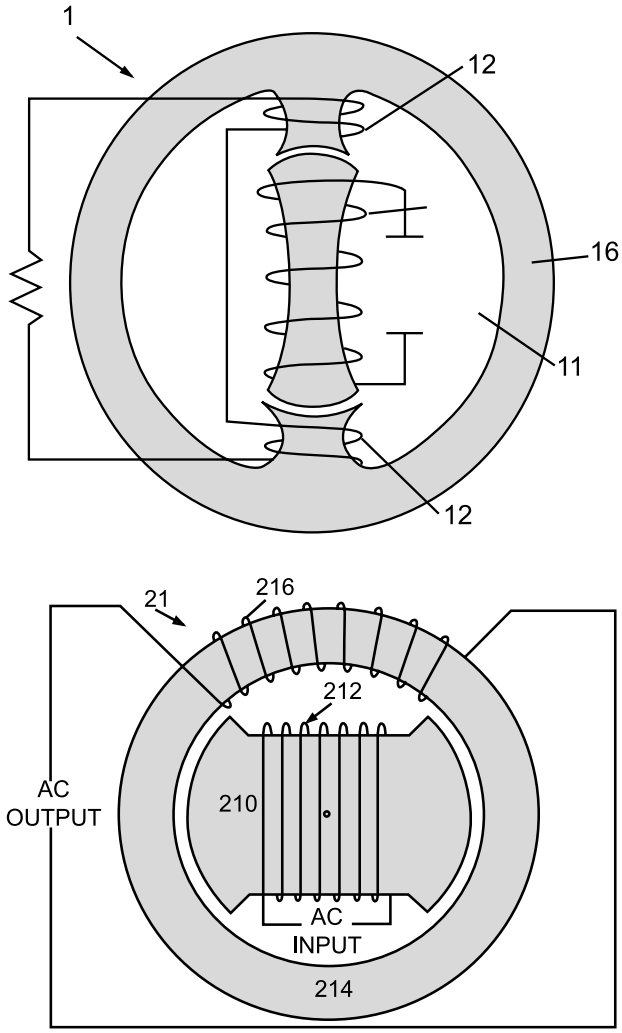

Fig. 6

Inventors: **Steven L. Sullivan, USA; David L. Goulet, USA; Donald Hofmann ,USA.**

Electrical generators are provided with toroidally wound stator windings electrically connected in series; a high permeability stator core, preferably an amorphous magnetic alloy material, glassy metal or HYPERCO™ 50 laminations; and a rotor. The toroidally wound stator coils and the stator core trap essentially all of the flux fields generated by the stator coils within the stator core. Since there is essentially no magnetic field leaving the stator, there is essentially no flux field interaction with the field generated by the rotor. The reduction of flux field interaction also reduces counter torque.

According to another embodiment of the invention, open positions of a rotor may be filled with magnetic material, preferably iron. Filling open portions of the rotor may assist in reducing undesirable flux leakage from the rotor. By trapping substantially all of the flux within the rotor, interaction between rotor and stator flux is reduced. In this manner, counter torque is reduced thereby increasing the overall efficiency of the device.

A prototype of this embodiment was constructed using a standard 10 kWtt gas-powered generator. The stator was removed from the generator and its housing. The stator windings were removed from the stator and rewound by hand using a No. 10 size copper wire with 180 winds wrapped in a toroidal fashion around approximately 180 degrees of the stator.

The stator was then reinstalled in the modified housing and re-attached to the gas-powered generator. A standard 12 volt car battery was attached to the input of the rotor. A 12.92 volt input with 0.8 Amps was measured as the input to the rotor. The output was measured as 6.5 volts with a 40 Amp output. A series of input and output measurements were taken for various inputs.

Editor: Thus input power is 10 Wt, and output power is 260 Wt.

So, the old well-known ideas have found new ways of embodiment, though their essence remains unchanged. Let us note that Faraday Labs Ltd has been working on creating a prototype of □-machine with a toroid of 200 mm in diameter.

Please, read more about this in the next issue!

Editorial: We publish the specification of several interesting patents, which were taken out by Russian inventors for recent years.

Russian patents on alternative energetics

- №93001754, 1996.06.27, Converter of gravitational forces into energy, V.V. Mironov and others
- №92008720, 1995.02.10, Slavic method to produce energy by conversion of gravitational forces, V.V. Mironov
- №93006696, 1995.04.30, Supporting converter of gravitational forces into energy, V.V. Mironov
- №2001121071, 2003.04.10, Method to create energy in liquid, heat-generator and heat-and-power device, A.Yu. Baurov and others
- №2132109, 1999.06.20, Generator of mechanical energy, A.Yu. Baurov and others
- №2001125794, 2003.05.10, Generator of static electricity, S.I. Danilov
- №2001120796, 2003.04.10, Electric power device, D.M. Beliy
- №98116077, 2000.05.10, Heat engine (monotherm, "perpetual mobile of second-type"), V.I. Likhachov and others
- №93048971, 1996.04.20, Float engine, I.P. Tchinarev
- №94023174, 1996.03.27, Gravitational-hydrostatic engine, I.P. Tchinarev
- №98112650, 2000.03.20, Water engine, V.A. Gylchuk
- №2001115953, 2003.03.20, Potential engine by Prokopenko, V.F. Prokopenko
- №2001115954, 2003.03.20, Potential amplifier by Prokopenko, V.F. Prokopenko
- №2001124364, 2003.04.20, Drum of gravitation (gravity), I.A. Strelnikov
- №95107181, 1997.02.20, Method to convert energy of physical vacuum into energy of physical space, O.K. Polev and others
- №92008695, 1995.04.20, Method to get overunity efficiency, Yu.V. Karasev and others
- №93006851, 1995.04.30, Principle, method and device for circulation of mass by force of gravitation and inertia, G.S. Kirichenko
- №93039885, 1996.05.20, Hydro-gravitational electric power station, L.S. Konkov
- №93036371, 1995.11.27, Method to convert energy created in result of interaction of earth's gravity force and air bearing capacity into electric energy, V.I. Kovalenko
- №93025690, 1996.07.27, Method and device to convert heat energy into mechanical one, A.I. Lendyaev
- №2001122885, 2003.04.20, Rotary method to convert magnetic energy into mechanical one, L.N. Mezentsev
- №2001106783, 2003.02.10, Gravitational source of energy, A.D. Yurik and others
- №2001115968, 2003.03.20, Method to convert energy, V.S. Gorelyuh

According to another embodiment of the invention, open positions of a rotor may be filled with magnetic material, preferably iron. Filling open portions of the rotor may assist in reducing undesirable flux leakage from the rotor. By trapping substantially all of the flux within the rotor, interaction between rotor and stator flux is reduced. In this manner, counter torque is reduced thereby increasing the overall efficiency of the device.

A prototype of this embodiment was constructed using a standard 10 kWtt gas-powered generator. The stator was removed from the generator and its housing. The stator windings were removed from the stator and rewound by hand using a No. 10 size copper wire with 180 winds wrapped in a toroidal fashion around approximately 180 degrees of the stator.

The stator was then reinstalled in the modified housing and re-attached to the gas-powered generator. A standard 12 volt car battery was attached to the input of the rotor. A 12.92 volt input with 0.8 Amps was measured as the input to the rotor. The output was measured as 6.5 volts with a 40 Amp output. A series of input and output measurements were taken for various inputs.

Editor: Thus input power is 10 Wt, and output power is 260 Wt.

So, the old well-known ideas have found new ways of embodiment, though their essence remains unchanged. Let us note that Faraday Labs Ltd has been working on creating a prototype of Φ-machine with a toroid of 200 mm in diameter.

Please, read more about this in the next issue!

Editorial: We publish the specification of several interesting patents, which were taken out by Russian inventors for recent years.

Russian patents on alternative energetics

- №93001754, 1996.06.27, Converter of gravitational forces into energy, V.V. Mironov and others
- №92008720, 1995.02.10, Slavic method to produce energy by conversion of gravitational forces, V.V. Mironov
- №93006696, 1995.04.30, Supporting converter of gravitational forces into energy, V.V. Mironov
- №2001121071, 2003.04.10, Method to create energy in liquid, heat-generator and heat-and-power device, A.Yu. Baurov and others
- №2132109, 1999.06.20, Generator of mechanical energy, A.Yu. Baurov and others
- №2001125794, 2003.05.10, Generator of static electricity, S.I. Danilov
- №2001120796, 2003.04.10, Electric power device, D.M. Beliy
- №98116077, 2000.05.10, Heat engine (monotherm, "perpetual mobile of second-type"), V.I. Likhachov and others
- №93048971, 1996.04.20, Float engine, I.P. Tchinarev
- №94023174, 1996.03.27, Gravitational-hydrostatic engine, I.P. Tchinarev
- №98112650, 2000.03.20, Water engine, V.A. Gylchuk
- №2001115953, 2003.03.20, Potential engine by Prokopenko, V.F. Prokopenko
- №2001115954, 2003.03.20, Potential amplifier by Prokopenko, V.F. Prokopenko
- №2001124364, 2003.04.20, Drum of gravitation (gravity), I.A. Strelnikov
- №95107181, 1997.02.20, Method to convert energy of physical vacuum into energy of physical space, O.K. Polev and others
- №92008695, 1995.04.20, Method to get overunity efficiency, Yu.V. Karasev and others
- №93006851, 1995.04.30, Principle, method and device for circulation of mass by force of gravitation and inertia, G.S. Kirichenko
- №93039885, 1996.05.20, Hydro-gravitational electric power station, L.S. Konkov
- №93036371, 1995.11.27, Method to convert energy created in result of interaction of earth's gravity force and air bearing capacity into electric energy, V.I. Kovalenko
- №93025690, 1996.07.27, Method and device to convert heat energy into mechanical one, A.I. Lendyaev
- №2001122885, 2003.04.20, Rotary method to convert magnetic energy into mechanical one, L.N. Mezentsev
- №2001106783, 2003.02.10, Gravitational source of energy, A.D. Yurik and others
- №2001115968, 2003.03.20, Method to convert energy, V.S. Gorelyuh

- №2002131190, 2003.04.20, Method to convert heat energy into useful work, G.R. Umarov and others
- №2001122676, 2003.05.27, Device to get energy by conversion of energy from one state to another, T.A. Trushina and others
- №2131636, 1999.06.10, Fuel-less engine, V.E. Alekseenko
- №5037775, 1996.10.10, Magnetic engine, V.E. Alekseenko
- №94003087, 1995.12.27, Gravitational engine, A.A. Voznyukov
- №93058095, 1996.06.27, Perpetual mobile, Yu.S. Parshutin
- №93056706, 1996.07.27, Perpetual mobile, A.V. Remezovich
- №93039002, 1996.01.20, Gas-dynamic perpetual mobile, A.I. Lendyaev
- №94011000, 1995.11.27, Perpetual mobile by Makagyan, V.S. Makagyan
- №97114829, 1999.06.27, Perpetual mobile by Makagyan, V.S. Makagyan
- №95114965, 1997.08.10, Electric perpetual mobile by Abrakitov, V.E. Abrakitov
- №9512209, 1998.02.20, Perpetual mobile, V.V. Sharov
- №99111572, 1999.09.27, Perpetual mobile, N.M. Rotar
- №98116343, 2000.05.10, Engine-electric saw (perpetual mobile), V.V. Smirnov
- №2000101256, 2001.11.20, Perpetual mobile, V.D. Rykov
- №2000120592, 2002.07.20, Perpetual mobile, K.I. Harazov
- №2001117783, 2003.03.20, Magnetic perpetual mobile, S.N. Verevkin
- №2001123502, 2003.04.20, Magnetic engine, A.E. Ryumin
- №5032711, 1995.02.20, Ferromagnetic engine, V.P. Levkin
- №94019782, 1996.01.10, Device for demonstration of conversion of permanent magnet energy, M.F. Ostrikov and others
- №95103846, 1996.11.27, Magnetic generator, M.F. Ostrikov and others
- №95112010, 1997.06.27, Method to convert permanent magnet energy into rotary motion, A.V. Starostin and others
- №2143170, 1999.12.20, Method to convert energy of mechanical loading into energy of repeated transference, V.I. Rahovsky and others
- №2000119415, 2002.06.20, Method to convert energy of fields of permanent magnets into mechanical work, Yu.S. Pilipkov
- №2001109811, 2003.02.27, Method to capture and convert energy of physical vacuum into electric energy, S.N. Kovalev
- №99121374, 2001.11.10, Perpetual mobile, E.M. Volodin
- №94026259, 1996.05.20, Device to convert magnetic field energy into kinetic energy, P. Imrish

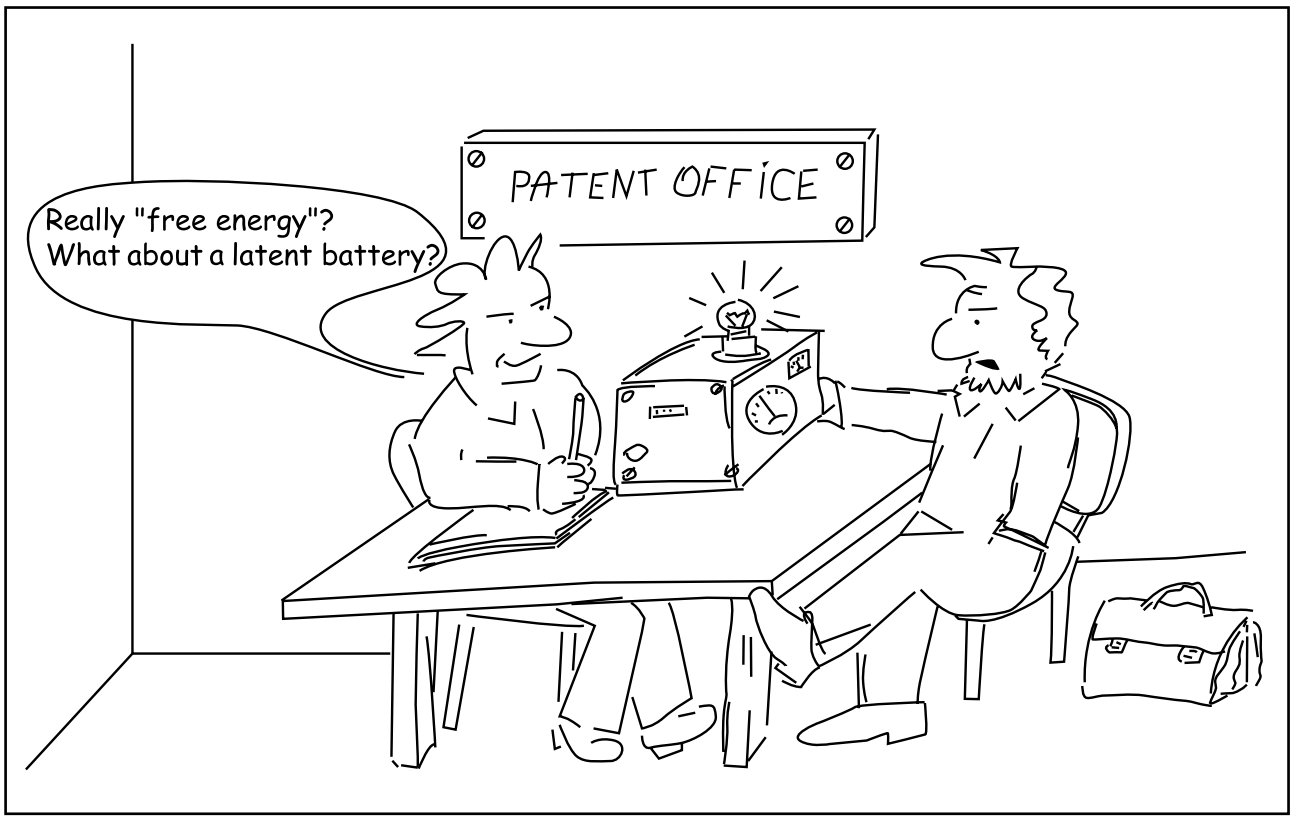

Device for conversion of magnetic field energy into kinetic energy

No. 94026259, 1996.05.20

Author: Pavel Imrish

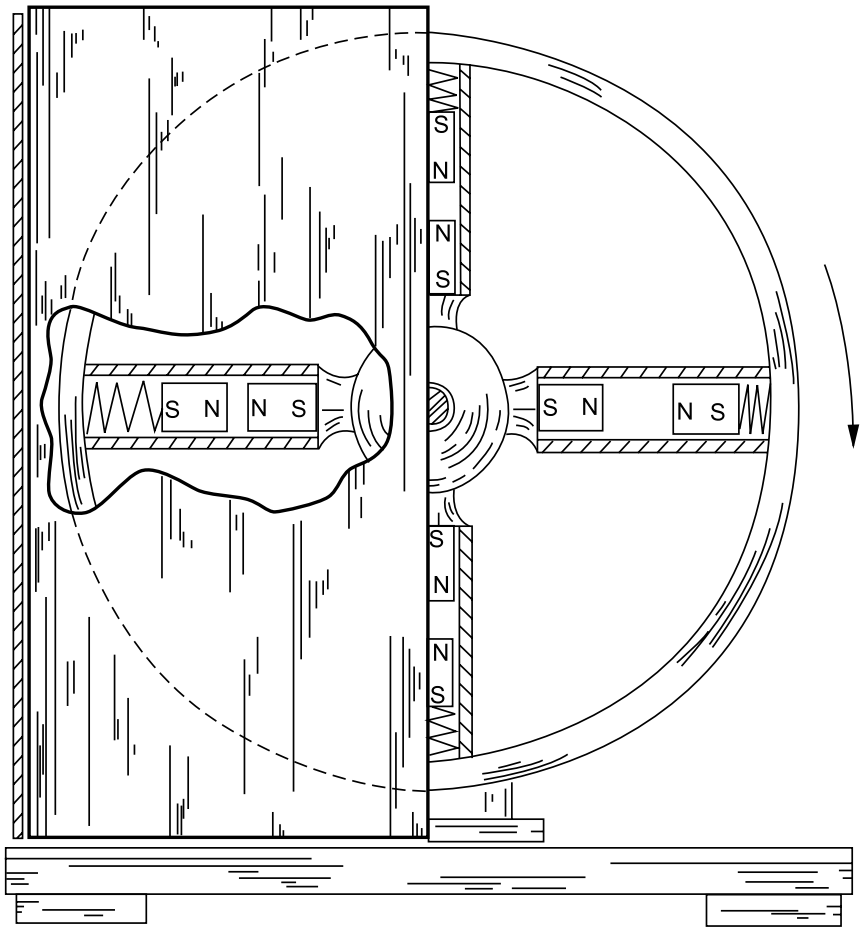

Fig. 1

The invention refers to a device for conversion of magnetic field energy into kinetic energy. The device has a rotating wheel with at least two radially opposing non-magnet holders used as guide ways for at least two permanent magnets, respectively. The permanent magnets are mounted in the holders so that there is a possibility to remove them. From the both sides of the wheel plates made of magnetic material are mounted axially; the plates surround the wheel partially. Depending on direction of the both poles, namely on location of the similar and opposite poles towards each other, compression element is situated on the holders, or between the wheel and the outer end of the permanent magnet located at the furthest radial distance from the axle of the wheel, or between two permanent magnets. (The device operation principle is obvious from Fig. 1).

Editor: We have found an example of a similar device whose description is presented in the book by R. Ford The Perpetual Motion mystery [1].

In this case, there is an analogous process, during which half of the cycle is screened and the rotor is supposed to rotate permanently (see Fig. 2).

1. RA. Ford, The Perpetual Motion mystery. Lost Technology Series, p.23.

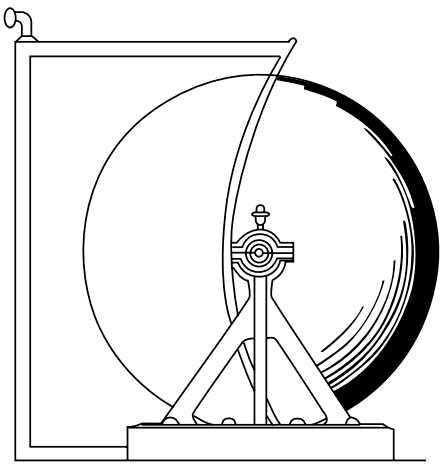

Fig. 2

Gravity spaceships

Review on Grigory R. Uspenskiy's works, Russia

http://space21.boom.ru/gravity.htm

The level of development of modern astronautics is primarily determined by the energy capabilities of space carriers. So, nowadays, the single-mission carrier rockets equipped with chemical engines allow space exploration within the solar system. These carriers have delimited the near-earth space in the form of a geostationary orbit, where the practical-purpose space complexes operate.

Newer and higher levels of quality will be reached by cosmonautics upon its mastering gravity power engineering. Flights towards the nearest stars will become possible and by the end of the next century this will be followed by travels throughout Galaxy.

Gravity engines are structurally simple (**two bodies of different density are rigidly connected**). To form some practicably significant value of thrust it is required to use absolutely new technology regarding creation and retaining of matter of high density which can be compared to that of atomic nuclei. For instance, at an engine mass of about 2 t, it is possible to attain 10 N thrust using bunches of aluminum and lead nuclei. The nuclei are approached to each other at a distance comparable with sizes of these bunches.

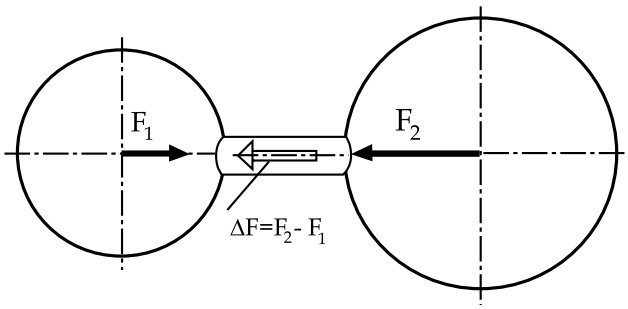

Fig. 1

Use of matter which is denser than nuclei bunch, increase of mass of the gravitating bodies, and reduction of the distance between the bodies causes increase of thrust. So, for a level of density of gravity holes (i.e. for extremely dense state of matter in which it is not attracted by other bodies) limit value of acceleration of the gravity engine reaches the order of 10^{100} ms^{-2}.

In engineering, we usually use units of distance as meters, centimeters, millimeters, and microns. Let us consider one of them – millimeters. With such a size of the gravitating bodies and distance between them, it is possible to obtain substantial thrust forces of the gravity engine and, accordingly, accelerations of its motion.

So, using an engine of 20 ton mass we will get the thrust of $2x10^4$ N, with mass of 200 ton we will get the thrust of $2x10^6$ N, and so on. Thus, by increasing the engine mass by one order of magnitude, we obtain increase of thrust by two orders, while sizes of the bodies remain unchanged. But acceleration, in this occasion, remains constant and equal to approximately 1 m/s^2.

Decrease in size of gravitating bodies of the engine leads to the corresponding increase of thrust by an order. Decrease of size is realized by increase of density of these bodies by 3 times up to 0.3 mm at the same masses. The acceleration they produce is increased by an order as well, i.e. up to 10 m/s^2. Decrease of sizes of the gravitating bodies and the distance between them down to 0.1 mm results in further increase of engine thrust by one more order and also increase of acceleration up to 100 m/s^2. If size of the bodies is 1 micron then acceleration increases up to 10^6 m/s^2.

It is apparent that even with up-to-date technological possibilities of miniaturization the gravity engine with masses of dozens and hundreds of tons is capable to create great thrust forces and form accelerations considerable enough to fly across the Galaxy. Therefore, the problem of creating a gravity engine is, mainly, the problem of producing and retaining the high-density matter. It will be possible after studying the mechanism of interaction between matter & gravitational substance followed by developing techniques for synthesizing of high-density, large-mass, and small-size substance from this matter.

It is possible to control the value of thrust of the gravity engine changing the distance between gravitating bodies. Thrust direction can be changed by turning the rigid connection of the gravitating bodies. The engine can

be activated by bringing the gravitating masses together, and switching-off by moving them apart.

In a 24-hour period, such a ship can reach a speed of 10^6 m/s and cover a distance of about 10^{10} m. In a month, with a top speed of 3x 10^7 m/s the ship will cover the distance of 10^{13} m; in a year, with a speed of 4x 10^8 m/s the ship will cover a distance of 10^{15} m; in 10 years - 4x 10^9 m/s and 10^{17} m, respectively. Apparently, the ship with sufficient over-load can be used for flights within the solar system and for manned flights towards the nearest stars.

When transporting unbreakable and non-urgent cargoes, the acceleration can be increased up to a few dozens of unities. The flight duration might be also increased by several tens of years. This extends the area of utilizing the gravity ships with over-loads of several unities. Besides these ships can be used for transporting operations within near vicinities of the Galaxy.

The high-speed flight will demand protection against approach flow of matter. So, per second (with a ship speed of 10^{10} m/s) 10^{-12}kg of matter will approach the ship. At that density of interstellar material is 10^{-24} kg/m^3 and midship area is 10^2 m^2.

The great speed of approaching matter will create a substantial resisting force. At a speed of 10^{10} m/s, this force will come to the order of 10^{-2} N, whereas with a speed of 10^{18} m/s it will come to 10^{14} N. This is a great value, but as compared to thrust of such a ship which is to equal to 10^{17} N, the former value is a small one. That is why it is possible to overcome such resisting force.

Intercommunication with these ships might be, most likely, realizable by means of distortion of gravitational field. It is possible that the gravitational field distortion will be formed, on the contrary, by generating the matter from the gravitational field, and, most probably, by a method as yet unknown.

Monograph **"General Etherodynamics. Modeling of matter structures and fields on the basis of conception of gas-like aether" by Vladimir A. Atsukovsky.** 2nd edition, M., Energoatomizdat, 2003;
Brochure **"12 experiments on etherodynamics**" Zhukovsky, Publisher "Petit", 2003.

On questions about purchasing, please, refer to Email: atsuk@dart.ru

Floyd Sweet Bench Test DVD

In order to demonstrate the reality of tapping free energy from the vacuum, we have now made available a very reasonably priced DVD of the bench tests of the late Floyd Sweet's Vacuum Triode Amplifier, with commentary by Tom Bearden.

During these two tests, the unit, which weighed about 6 lbs., can be seen to be putting out well over a million times more power than was put into it.

This DVD makes an excellent educational or instructional tool, and is priced at USD 9 including US domestic shipment. Running time is about 20 minutes.

Note: the full length Sweet DVD, which includes Sweet's proprietary conditioning process for the magnets, is also still available.

Order from http://www.cheniere.org/sales/order_by_credit_card.htm

On Velocity of Drive-Free Motion

S.A. Gerasimov , V.V. Stashenko, Russia

Physics Department, Rostov-on-Don State University,
Zorge St. 5, 344090, Rostov-on-Don, Russia

Editorial: *We publish a summary of the article. The original text you can receive from the authors.*

A drive-free system made on the basis of a planar mechanism is described. The experimental results on average velocities of the drive-free propulsive system are presented in a scaled view.

During usual motion, a system is repealed from the surface in the case of its motion on a plane or from the medium when it moves in a resistance medium. This kind of motion is achieved by using a drive mechanism. In contrast to the usual motion, the drive-free propulsive system moves due to interaction of a body of a system with another body of the same system. Sometimes such machines are called inertioids [1] or vibration propulsive devices [2]. To produce such kind of motion it is sufficient to provide anisotropy of the resistance force [3-5] or asymmetry of the internal force [6]. One of the simplest ways to do it is to use a simple two-link planar mechanism. A device for such a motion is shown in Fig. 1.

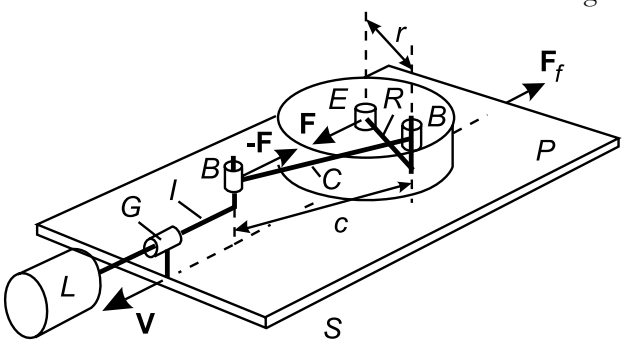

Fig. 1

Experimental device

This device with a total mass of M+m consists of a platform P on which an electric motor E rotating a drive rod R of length r is mounted. This is only one part of the planar mechanism. Another link is the connecting rod C of length c which connects the unbalanced load L and the drive rod R by means of two bell bearings B. The unbalanced load L of mass m on the rod I slides in guide G. The basic distinction of this mechanism is in that this variant of drive-free machine allows us to analyze the experimental data on average velocities of motion. Actually the only forces, which act on the platform and are collinear to the moving direction, are the force **F** caused by vibrations of the load L and the frictional force $\mathbf{F}_f$. The platform starts to move when the force acting on the platform becomes greater than the frictional force.

Let us discuss possibilities of the real propulsive system shown in Fig. 1. Measurements were made at r=0.01 m and at three mass ratios m/M. The values of frictional coefficients were measured for each parameter of the system and vary from k=0.25 to k=0.4. The system starts moving when theoretically the drift does not take place. When motion becomes reversible, the velocity of drive-free drift does not decrease.

Thus drive-free motion is possible even if the frictional coefficients are very small. When increasing the frequency of vibrations velocity does not decrease. We can not discuss the existence of some third force acting on the platform (we can suggest the existence of frictional force $\mathbf{F}_f$ and the internal force **F** caused by vibrations). Let somebody else take the liberty of making such a conclusion!

References

1. Tolchin V.N. Inertioid. // Perm: Perm Book Publisher. 1977. Blekhman I.I. Vibrational Motion. // Moscow: Nauka. 2000. Nappo F. Sulla Influenza Indiretta Delle Forze Inertne sul Moto del Baricentro. // La Ricerca Scientifica (Rendiconti). 1965. V. 8. No 1. P. 3-14.
2. Gerasimov S.A. Anisotropy of Frictional Force and Vibrational Motion. // Problems of Applied Physics. 2001. V 7. P. 85-88.
3. Gerasimov S.A. Self-Similarity of Vibrational Motion in a Resistant Medium. // Journal of Applied Mechanics and Technical Physics. 2002. V. 43. No 1. P. 90-92.
4. Gerasimov S.A. A Real Model of Vibratory-Impact Propulsive Device. // Problems of Applied Physics. 2000. V 6. P. 117-118.
5. Langhaar H. L. Dimensional Analysis and Theory of Models. // New York: Willey. 1951.

ELECTROMAGNETIC SELF-ACTION

S.A. Gerasimov, A.V. Volos, Russia

Physics Department, Rostov-on-Don State University,
Zorge St. 5, 344090, Rostov-on-Don, Russia

The torque of a self-action exerting on the mobile part of the reactionless engine is measured. It is shown that there exists a value of the height of the mobile electrode at which the torque of self-action is maximal.

There is an opinion that a body can not act on itself [1]. The existence of the so-called force of self-action is believed to contradict to the law of conservation of momentum. This is nothing but prejudice. Though the experimental confirmations of existence of self-action [2-4], conventional science is ready to refuse modern electrodynamics and make up a new theory of electromagnetism [1, 5] in order to save Newton's third law in use. It is comprehensible. First of all, these are the theoretical [5] and experimental [3] errors. The equivalence [5] of the Biot-Savart force is mathematically coarse since in this case the highest terms of expansion of force of self-action are cast out. This equivalence violates law of action and reaction and Ampere force law for which the principle of equality and collinearity of action and reaction forces is valid. Non-linearity of dependence of the torque of self-action on the current intensity [3] makes us doubt in the validity of these results. Moreover, typical values of force [2, 4] and torque [3, 6] are too small even if direct current in the circuit is significant. It is required to pass through the direct current of hundred amperes to produce the considerable displacement or turn of a body. As a result, small values of the effect caused ambiguity in the explanation of the phenomenon [1].

In fact, searching the reactionless propulsive devices we usually forget about the magnetic self-action which arises when a body consisting of a magnet and incomplete electric circuit can move violating law of action and reaction [7]. This violation is proved theoretically [8] but peculiarities of this motion are not well discussed. The principle of such a motion is shown in Fig. 1. This is the magnetic interaction between two current elements one of which is a part of a closed circular loop L and another is perpendicular to the first one. Since the force $d\mathbf{F}_{jm}$ acting on any current element of the loop L is perpendicular to the density of current $\mathbf{j}_m$ then the **Z**-component of the torque $d\mathbf{N}_m = [\mathbf{r}_m \mathrm{x} d\mathbf{F}_{jm}]$ is equal to zero while torque which exerted on the second current element by the magnetic field of the loop, does not.

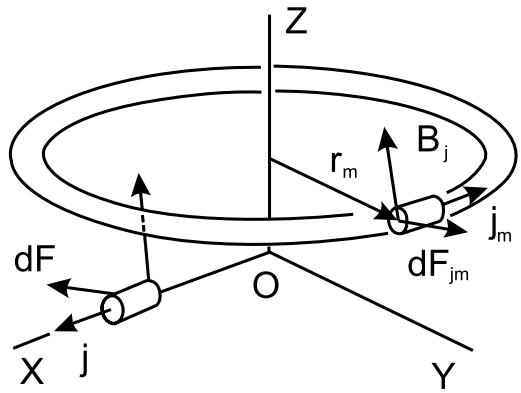

Fig. 1

Violation of law of action and reaction.
The force $d\mathbf{F}_{jm}$ with which the magnetic field $\mathbf{B}_j$ of another current element acts on the current of density $\mathbf{j}_m$, is not equal nor opposite to the force $d\mathbf{F}$ with which the magnetic field **B** of the first current element acts on the current of density **j**.

An experimental device is shown in Fig. 2. A commercially available ring-shaped carbon-steel magnet M (inner radius – 20 mm; outer radius – 55 mm, height – 25 mm) of 2.2×10^5 A/m magnetization is located on the cover of a cylindrical electrode E suspended by thread T. The electrode E is furnished with a central electrode C of the same height h and 5 mm diameter. The radius of the electrode E is 130 mm. The open end of electrode E and the central electrode C are submersed in a conducting liquid L_+ and L_- placed in two volumes of a vessel V so that the depth of submergence of these parts is about 5 mm. In this experiment the conducting fluid is 10% solution of copper sulfate ($CuSO_4 5H_2O$). The vessel V consists of two thin coaxial plastic cylinders of 2 mm thickness. The radii of the plastic cylinders having the common bottom are equal to 10.5 cm and 18 cm. The height of the vessel is 12.5 cm. A disk and a ring-shaped electrodes S_+ and S_- of 1.5 mm thickness are placed on the bottom of the vessel to supply the direct electric current of intensity I. All conducting parts of the device are made of copper. The thickness of the electrode E is 1.5 mm.

When the direct current ***I*** of density **j** flows through the electric circuit, the magnet and the electrode ***E*** rotate in the direction of the magnetic force ***d*F** which is proportional to the vector product [**j**x**B**] as shown in Fig. 2. This is a force of self-action by means of which the mobile part of this device consisting of the magnet ***M*** and the electrode ***E*** acts on itself. However there is no force of reaction which could cause such a rotation. This is really true since a ring-shaped magnet is equivalent to two cylindrical surfaces with the surface current of density $\mathbf{j}_m$. The force of self-action ***d*F** acting on the cover of the electrode is compensated by the force of self-action $d\mathbf{F}_*$ acting on the cylindrical part of the electrode ***E***. Magnetic induction field $\mathbf{B}_*$ "does its part" as shown in Fig. 2. Therefore, it would be appropriate to find out how the height of the electrode ***E*** influences the value of the torque **N**. Such an influence is demonstrated in Fig. 3.

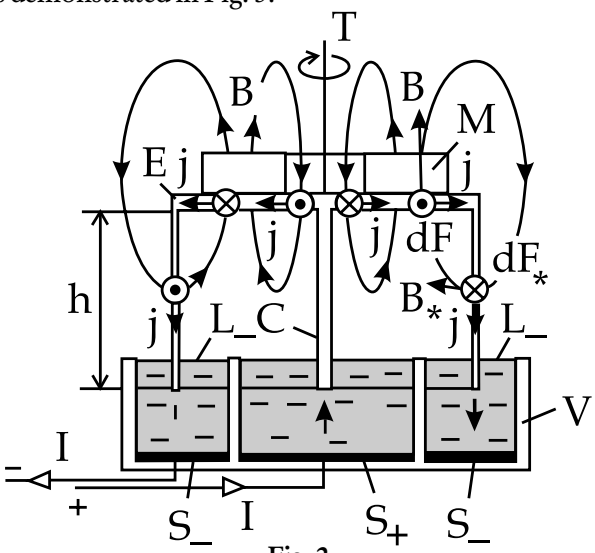

Fig. 2
Experimental device
(•) and (x) – directions of magnetic forces acting on various parts of the mobile electrode ***E***

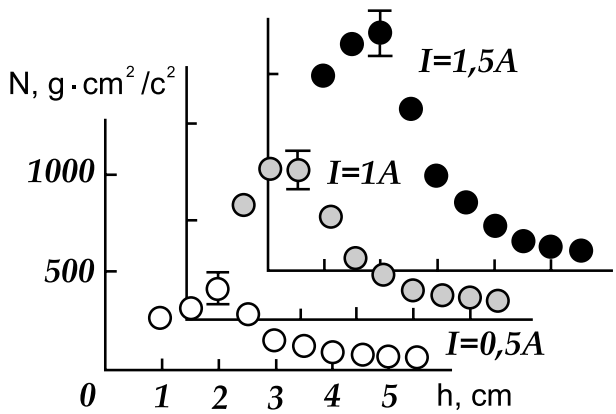

Fig. 3
Dependence of the torque ***N*** on the height of the electrode ***h*** at various values of the direct current ***I*** in the circuit

Thus there exists the value of the height ***h*** at which torque of self-action is maximal. This is the first result of the present work. At ***I***=1 A and ***h***=2 cm the electrode ***E*** turns at angle of 2.2 radian (126 °) with respect to the equilibrium position. Such a turn corresponds to 3.4×10^2 gxcm^2/s^{2}rad, i.e to the constant of torsion of the thread. The second result is that the maximum value of the torque of self-action ***N*** at the current ***I***=1 A is even larger than the value of the torque produced by the traditional unipolar device [3] at the current 50 A.

In fact, this work represents an attempt to draw attention to a more effective and simple practical application of the self-action. It remains only to transfer electric current in an unclosed electrical conductor and such a possibility really exists.

References

1. Graneau N. The Finite Size of the Metallic Current Element. // Physics Letters A. 1990. V. 147. N. 2-3. P. 92-95.
2. Sigalov R.G., Shapovalova T.I., Karimov H.H., Samsonov N.I. Magnetic Fields and Their New Applications. // Moscow: Nauka. 1976.
3. Das Gupta A.K. Unipolar Machines. Association of the Magnetic Field with the Field-Producing Magnet. // American Journal of Physics. 1963. V. 31. N 6. P. 428-430.
4. Cavalleri G., Bettoni G., Tonni E., Spavieri G. Experimental Proof of Standard Electrodynamics by Measuring the Self-Force on a Part of a Current Loop. // Physical Review E. 1998. V. 58. N 2. P. 2505-2517.
5. Christodoulides C. Equivalence of the Ampere and Biot-Savart Force Law in Magnetostatics. // Journal of Physics A. 1987. V. 20. N 8. P. 2037-2042.
6. Serra-Valls A., Gago-Bousquet G. Conducting Spiral as an Acyclic or Unipolar Machine. // American Journal of Physics. 1970. V. 38. N 11. P. 1273-1276.
7. Gerasimov S.A., Volos A.V. On Motion of Magnet in Conducting Fluid. // Problems of Applied Physics. 2001. V. 7. P. 26-27.
8. Gerasimov S.A. Self-Interaction and Vector Potential in Magnetostatics. // Physica Scripta. 1997. V. 56. N 3-4. P. 462-464.

JNET

New Energy Technologies collection of articles Japanese Version

Collection of articles from New Energy Technologies magazine, 2001-2002 is published in Japan.

On purchasing of the book, please, contact

Eiichi Yamamoto,
President Yama Trans Co. Ltd.

Email: admin@yamatrans.co.jp or eyama@yamatrans.co.jp

Uranium Photoaccumulator

Anton N. Yegorov, Russia

St.Petersburg Institute of Nuclear Physics, Russian Academy of Sciences, Gatchina, 188350, Leningrad region, Russia
http://www.pnpi.spb.ru, Email: bti@isppd.pnpi.nw.ru

Photoaccumulators are galvanic elements consisting of two communicating vessels, one of which is exposed to light and another is kept in darkness. Ionic composition of electrolyte, which fills these vessels, depends on intensity of illumination. If an inexpensive electrode is placed in each vessel, then a potential difference will appear. If the electrodes are closed at external working resistance the electron stream will begin to equalize ionic composition and the difference in illumination intensity will tend to disbalance it. As a result, a certain working mode will be established which will allow to utilize the photoaccumulator for production of industrial electrical energy. As distinct from the solar battery, which works while exposed to the light, the photoaccumulator stores some part of solar energy in its electrolyte which is supplied with electrical energy after sunset too.

The idea of photoaccumulator is not a new one. It was established in the end of 19th century that it is feasible to create a photoaccumulator containing electrolyte made of the following mixture: $Fe^{2+} + Hg^{2+} = Fe^{3+} + Hg^{+}$.

This photoaccumulator was not adopted in practice because of high toxicity of the electrolyte and very low EMF (approximately 0.018). Development of technology is accompanied by a widening range of materials and matters which can be used in large scale production and power industry. Among such materials are, in particular, titanium, depleted uranium and rare-earth elements. Nuclear power industry uses U235 isotope only. Naturally occurring compound contains only 0.72% of U235. Hundreds of thousands of U238 from which U235 has been extracted are kept as useless stock.

In the end of sixties in one of radiochemical laboratories of LINP (Leningrad Institute of Nuclear Physics) P.N. Moskalyov repeated the same experiment over a long period of time. In the morning he placed a tightly closed retort filled with uranyl-chloride soluted in compound of water, spirit and hydrochloric acid on the window-sill. The solution in the retort changed its color from yellow to emerald-green. Before leaving the laboratory Moskalyov removed the retort with green solution from the windowsill to a closed chest. In the morning Moskalyov retrieved the retort with the solution (which was already yellow) from the chest and placed it on the sill. The solution became green again and the whole process repeated daily.

Chemical processes in uranium electrolyte are rather complicated: first, under the light influence the uranyl ion oxidizes ethyl alcohol, which is then transformed to aldehyde: $UO_2^{+2} + C_2H_5OH^{+} = U^{iv}(OH)_2 + C_2H_4O$.

In the dark ions of urany-4 interact with aldehyde and are transformed to UO_2 uranyl ion and spirit again. Thus, **this cyclic process can take place over a significant period of time being supported by the energy provided by light quanta of visible light which are transformed into the heat.**

The idea of utilizing this process in order to obtain electrical energy emerged in the late nineties. The mechanism of uranium photoaccumulator is very simple (Fig. 1): two glass vessels, one made of transparent glass and another of non-transparent glass, are connected with a black acid-proof rubber tube. The communicating vessels are filled with aqueous electrolyte containing 40% of spirit, 80-100 g/l UO_2Cl_2 and 0.2 m HCL. The electrolyte is previously activated by multiple cycles of exposing it to light and then placing it in darkness in order to obtain a significant volume of aldehydic fraction. The major difficulty of designing uranium photoaccumulator is connected with the choice of the material for electrodes. In galvanic elements carbonized platinum electrodes are usually used. For practical use platinized titanium gives the best fit. Titanium foil covered with superfine layer of platinum is currently widely used in electrochemical industry and is procurable.

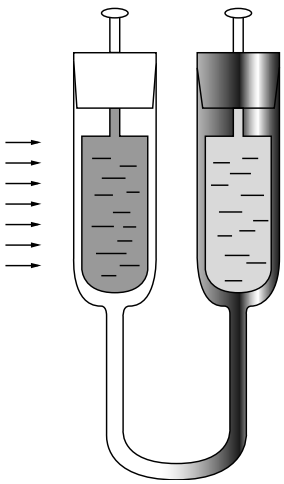

In the transparent vessel the titanium petal-shaped electrodes are parallel the light flow, so the light quanta move freely through the solution.

In working condition each photoaccumulator produces 10 mA of current at 0.3 volt voltage, so they are to be connected in large batteries, both in series and in parallel.

It is also necessary to consider the aspect of safety. Until now, the depleted uranium has been used for one purpose only, namely, for manufacturing of cores for armor-piercing shells. When used in this manner, the uranium is pulverized, which leads to environmental damage. The battery of photoaccumulators is placed in hermetic metal chest; the front panel of the latter must be made of solid safety glass. Such a system will protect the photoaccumulator battery from malicious intent and the security staff from weak uranium radioactivity.

International Prize on Power Engineering "GLOBAL ENERGY"

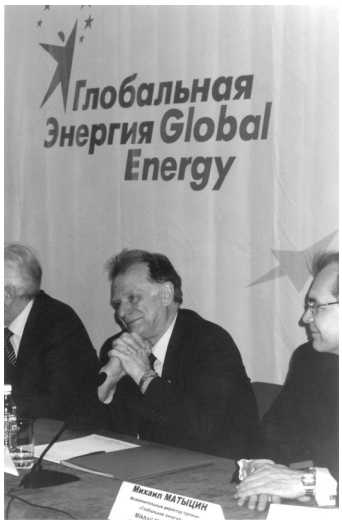

Zhores I. Alferov

International Prize "Global Energy" was first presented in St. Petersburg on June 15, 2003. The bonus fund of $900,000 was shared between three scientists "whose work has been and is still important both to the last century and future research", said Zhores Alferov, Chairman of the Global Energy Prize Award International Committee.

Nick Holonyak, Professor at the University of Illinois (USA), was awarded for "fundamental contributions to the development of power silicon electronics and invention of the first semi-conducting light-emitting diodes in a visible part of the spectrum". Thyristor invented by Holonyak allows the transformation of direct current into alternating and vice versa, to direct this process, to store and accumulate energy. This device is used for every electric locomotive, for frequency transformation. Such devices help to save significant amounts of energy, thus, about 30 percent of all energy produced in the world is processed through thyristors.

Nick Holonyak's other invention, i.e. semi-conducting light-emitting diodes in a visible part of the spectrum, has led to development of a new field of the modern power engineering. Supposedly, efficient and safe light-emitting diodes will replace daylight lamps in the next ten years.

"Although Nick Holonyak's invention dates back to the end of the 50ies of the last century, it remains current" said the Chairman of Expert Commission, Academician Vladimir Fortov. "This is one of the key inventions leading to the search of new ways of sustainable energy saving".

Diploma of Global Energy Prize laureate

Gennady Mesyats, Academician of Russian Academy of Sciences, and **Ian Douglas Smith**, Senior Scientist at The Titan Pulse Science Division, were awarded for giving birth to a new direction in the field of power engineering, i.e. power pulse energy. Due to their research, commutation of high-level currents at megavatt levels of voltage has become possible; a number of powerful current choppers have been created, futhermore, there have been developed transformer constructions which allow avoiding energy loss in power transmission lines. These research and innovations resulted in the creation of a number of unique pulse power machines and devices widely used in Russia and abroad ("Aurora", "Helia" (USA), "Sinus", "Gamma", "Maus", "Pik" (Russia) and others).

Teleportation

Review prepared by correspondent Alla Pashova, Russia

For conventional science, the term "teleportation" is not worthy of serious consideration unless ascertained by compulsory "quantum" teleportation. Thus, teleportation is unconditionally referred to microworld phenomena and, in fact, comes to distant information transfer. Spatial transference of a macroobject of definite mass has been excluded.

Teleportation of states

What does **quantum teleportation** mean? During active development of quantum theory, in 1935, the so-called EPR-paradox (Einstein-Podolskiy-Rozen paradox) was formulated in the well-known work "Can quantum-mechanical description of reality be full?" written by Albert Einstein, Boris Podolskiy, and Natan Rozen.

The gist of the paradox is as follows. There are two particles interacting for some time, thereby forming a common system. From the position of quantum mechanics, this coupled system can be described with a certain wave function. When interaction is over and particles scatter within arbitrarily large distances, they still will be described by the same function as before. At that, state of each separate particle cannot be known in principle that is apparent from uncertainty relation. Only when one of the particles enters a receiver, which records its parameters, the relevant characteristics of the other one emerge (exactly emerge, but not become known!). Thus instant unlimitedly distant "transmission" of quantum state of the particle is possible. Therewith, teleportation of the particle itself and transference of mass do not take place.

Einstein and his colleagues believed that existence of such particles predicted by quantum mechanics prove theory incompleteness. Thereof, the scientists inferred the necessity of other parameters (besides wave function) to describe quantum states. Otherwise, from the local viewpoint, correlations between elements of such a system could not be understood. It was far much later, when Bell showed that some of measurements could define these correlations and exclude any local hidden parameters. It was not until early 1980-s that famous experiments were performed finally eliminating a possibility of local hidden parameters.

In 1980, Alan Aspect experimentally proved that EPR-paradox in quantum world takes place indeed. Special measurements of state of EPR-particles indicated that EPR-pair not only has a common origin, but in addition, that one of the photons somehow "get to know" the way the second one was changed. In further experiments, existence of EPR-paradox was affirmed, even if particles of EPR-pair were removed from each other over a distance of 10 kilometers or so.

In 1993, Charles H. Bennett and his colleagues worked out a method to transfer the quantum state of some object of the microworld to another quantum object by means of EPR-pair and called this method "quantum teleportation". In 1997 a group of experimentalists under the direction of Anton Zeilinger for the first time implemented quantum teleportation of the photon state in the University of Innsbruck.

In such a way, researchers keep on improving the process of quantum teleportation. In 2001 Danish scientists managed to link gas particles spaced at a substantial interval from each other, by transmitting information about quantum state from one particle to another by means of laser. The quantum teleportation between two gaseous clouds were attained by Eugene Polzik and his colleagues in Orkhus University. They succeeded in coupling about million of cesium atoms, whereas the previous record was only four atoms.

Scientists of Australian National University destroyed a laser beam and nearly instantly recreated it in another point in space; in other words, they teleported photons of the laser beam. In contrast to previous similar experiments, the physicists managed to obtain the required result in 100 percents of cases. Ping Koy Lam, the head of the task group of Australian University, claimed that the first atom of solid substance was likely to be teleported within near three to five years. However, as most scientists admit, a task to teleport a human remains almost impracticable. Even teleportation of atoms, as compared to that of photons, is much more complicated process. It is even harder when dealing with molecules. It is basically possible (though practically very difficult) first to transfer a molecule to a minimum-energy state (ground state) causing it to radiate a certain

sequence of photons. These photons will find themselves in a certain superposition containing all the "quantum" information, which was available in the molecule. Thereafter, it is possible to teleport photon states by means of EPR-pairs. Moreover, it is also required that the classically measured information about a molecule. If molecule of minimum-energy state is present in the receiver, then this molecule, by interacting with teleported photons in a required order, will transform to the quantum state identical to that of the initial one. Consequently, the quantum state of molecule of a certain material will be transmitted, actually with velocity of light. When that happens, the quantum state at the transmitting side will be destroyed.

The human organism comprises about 10^{27} atoms. To save and transmit information on properties of that number of particles seems to be practically unachievable. "Theoretically, nothing prevents us from doing that, but complexity of the problem is such that now no one seriously thinks about the solution" – states Ping Koy Lam.

Being a method of information transmission, quantum teleportation has found its application in quantum computers, whose information is stored in the form of a set of quantum states. Impossibility to wiretap and copy transmitted information is considered to be an advantage of such computers. Those researchers, who, nevertheless, wish to answer the question of "How to teleport matter, but not its state?" have to seek for more perspective theories and techniques.

Teleportation of material objects

Those people, who really want to realize instant spatial transportation of objects, i.e. teleportation, should refer to studying properties of Space and Time. Quantum teleportation has a certain finite velocity that cannot exceed that of light. The genuine teleportation assumes that an object should set off from a starting point to a finishing point (these points differ by a certain distance X), at that the transference time comes to zero. The object to be teleported is not changed or taken to atoms to be gathered later at a distant point of space according to information transferred to this point. (Fig.1).

The object disappears from one place and simultaneously appears in another place. How is that possible? A body will disappear from point A and appear in point B if to bend space in such a way as to let point A and point B coincide. Then the object will instantly appear in point B since there is no interval between points A and B. Teleportation could be realized by a device, which would make it possible to superpose points A and B.

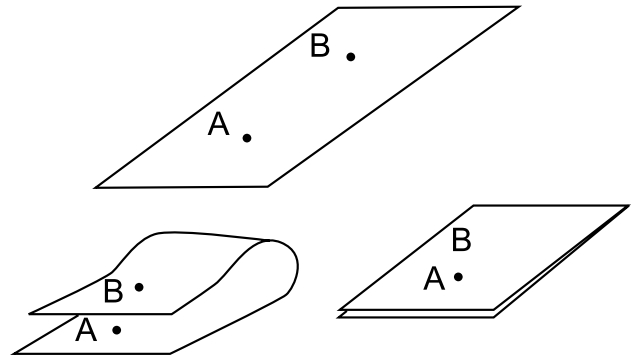

Fig. 1

Space is supposed to be unbendable without enormous energy consumption. However, Alexander V. Frolov points out that this issue is not so unambiguous: "Normally we consider space in connection with "natural" course of time existing in it. That is some degree of space curvature. Let us assume that it can be changed. The space curvature can be considered as acceleration or deceleration of time. Acceleration always demands, for instance in mechanics, some energy consumption. But if we "decelerate" time, energy is liberated and it can be accumulated for subsequent use".

K.Z. Leshan suggests surrounding a transferred object with a closed surface consisting of vacuum holes. Inside such a "hole sphere" there is geometry similar to that of a black hole. This place is absolutely isolated from the external Universe. No radiation is able to penetrate through the hole in space and time. For an observer, who is inside the hole sphere, the distance between sphere center and its border is infinitely large, since spatial metrics is ever-varying from the center to the border. Distances between the points is continuously shortened so that the distance between any couple of points comes to zero at the very hole surface. A matter transmitter can have inner or outer hole surface. In the first case a teleportation station has a spherical chamber to place the object. Equipment to produce holes should be located upon the outer side of the sphere. Such a station is capable to provide hundreds of launches a day by instantly expulsing spaceships to deep space over distances of millions of light years.

From microcosm towards macrocosm

Simeon Bocharov (member of Chemistry and Biochemistry Department, University of Delaver, Newark, USA) considers teleportation phenomenon using microobjects as an example and applying an interesting conception of protomatter.

In S. Bocharov's opinion, many paradoxes of the present-day science could be solved under condition of considering the whole existing matter to be a single continuum, i.e. protomatter. At this approach, the microcosm objects are not independent ones, being represented in the form of distortions of the very continuum and its manifestations here and now. Protomatter, whose distortion degree is beyond modern possibilities of detection, corresponds to vacuum. In the present-day paradigm redistribution of protomatter distortion corresponds to motion of particles. The important peculiarity is a refusal of such concepts as structure, dimensions, mass and other macroscopic characteristics with respect to microcosm objects, since here they are not considered as separate entities.

For experimental justification of his theory, S. Bocharov suggests to consider teleportation of microobjects incorporated in fullerens under low temperatures and pressure.

As a basis for reasoning he takes the fact that identical or similar conditions, whereon distortions are located, bring them to the state of identical or similar by lability/diffuseness. And vice versa, distortions, which are similar by lability/diffuseness, influence their near surroundings, creating, as a result, similar macroscopic states. In such a case protomatter distortion (in some spatial domains and under similar conditions) will cause appearance of similar distortions in another domain, whose degree of removal depends on presence of other distortions and their characteristics. In other words matter will be teleported from one spatial domain to another.

Possibility to realize teleportation of microobject causes the well-known phenomenon, which is nowadays described as embedding of particles into inner hollows of spheroid fulleren molecules without reacting with them. As object of teleportation there can be used distortions classified as elementary ones, such as hydrogen, helium or stable matters (noble gases). In both cases the influence of objects upon surroundings is minimized.

The researcher believes that in case of successful experiment, new pattern of matter structure will be confirmed, and valuable teleportation of microobjects (with prospects of such possibility for macrocosm objects) will be demonstrated.

One more approach to teleportation of physical macroobjects was considered in the work "Practical application of time rate control" (New Energy Technologies No. 3, 2001) by Alexander V. Frolov. It is assumed that density of space (aether) energy determines rate of passing of any processes including the very process of matter existence. Changes of aether density (increase or decrease) must result in the emergence of a force analogous to that of buoyancy, though acting towards the fourth dimension. This "chrono-motive force" (CMF) is also an analogue of electromotive force (EMF) and can be generated by analogy with electrodynamics. According to Alexander V. Frolov, laws of quantum mechanics as to discretization of levels of energy of material system, which exist in the domain of increased or decreased aether density, are valid in the macrocosm as well. Teleportation (as a transition from one state of the system to another one) can be studied with electron transference from one orbit to another as an example with the only difference that for the teleported object not only its location, but also the very spatial properties are changed. In aether of different density (after discrete transition) the same object will have different space around it, wherein time is decelerated or accelerated. Experiments of this field have already been in development stage.

Therefore, modern theoretical physics has handed the problem of teleportation to researchers-experimentalists, who possess sufficient breadth of mind. Perhaps, using teleportation technologies, they will manage to fundamentally alter the process of space exploration and raise our civilization up to radically new development level.

ELECTRIFYING TIMES

an online and published magazine about Electric, Hybrid, Fuel Cell Vehicles, advanced batteries, ultra capacitors,
fuel cells, microturbines, free energy systems, events and exhibitions worldwide

63600 Deschutes Mkt Rd,
Bend Oregon, 97701
541-388-1908 fax 541-388-2750
etimes@teleport.com
www.electrifyingtimes.com
Subscription $13/3 issues

"Mass defect" in Home Conditions

Prokofy V. Sherbak, Russia

Mitinskaya Str., 40-1-244, Moscow, 123430, Russia
Tel.: (095)950-4135
Email: Prokofy@mail.ru

The idea to conduct experiments on "mass defect" demonstration appeared after a cycle of seminars, which took place in1993-1996 at the Moscow Aviation Institute under the direction of V. I. Patrushev, Doctor of Technical Sciences, Professor of "Designing of aerohydrodynamic systems" Department (the author of the article is also a graduate of the Department). At the seminars, an enterprising group studied and developed an applied theory of "Displacing fields" by Alexis V. Murlikin and an associate "Theory of energy exchange processes". Later the group was called **"Group studying non-inertial transference"** (non-inertial natural processes).

The experiment was aimed to test some theoretical suppositions, namely, that it is possible to influence on existent energy flows which input and output to the matter. At that the simplest way to influence indirectly is to change the medium the flows come through. In general, optic experiments on luminous flux refraction show the same. But light refraction and change of speed of light propagation at passing through different mediums is one thing; and change of mass of a material body is something new that has not ever been dealt with. Moreover you can consider light (i.e. electromagnetic radiation) to be the secondary manifestation of output energy flow. Besides mass defect is very important for nuclear physics because it "helps" to develop this branch and stimulates drawing "energy dividends" in splitting reactions, decay reactions and nuclear fusion reactions. But unfortunately we can not touch element nucleus and even million nuclei while we can easily touch metallic balls of 1 gram weight.

Let us note that a concept of mass is one of the most uncertain in physics. We can not measure mass directly. It is possible to do it only indirectly, by gravity, using scales (it does not matter what kind of scales are used), or by kinetic momentum (in this case mass is a measure of inertia) by means of dynamometers.

Thus it is evident that change of WEIGHT shown by scales is not MASS change as measure of matter quantity. Since one of the most important points of the theory of "Displacing fields" is creation of a vehicle of new generation, then one of the major tasks is to overcome gravity (to decrease weight). And this "home experiment" shows the way to solve it. However we can call it "home" only in part, because for weighing there were used electronic scales (mass-comparator with measurement accuracy of 0.1 microgram. (See Fig. 1).

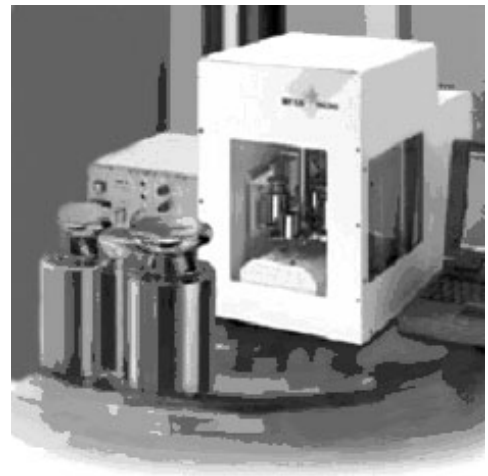

Fig. 1

Precision scales METTLER TOLEDO allows making:
High-accuracy weighing in the range
from 0.1 microgram to several tones
Measurement with resolution up to milliard points

Two sets were designed for weighing. The first one had an aluminum (Al) ball-kernel which weighed 1 gram and a lead (Pb) casing-shell consisted of two parts (half-spheres) which also has weight of 1 gram. The second set had on the contrary a lead kernel and an aluminum casing. The sets were disassembled and then hermetically assembled to make a single device with no gaps (See Fig. 2).

Since it had to be done with great accuracy and it was a piece article, not a Moscow product company undertook to produce it. And only one of the students, Nicholas Sorokin, a young boy with skilful fingers, had

helped. He invented a technology which allowed making balls of the necessary size at home conditions. He was literally pickling every micron of metal with acid and finally got the necessary size and weight.

So, the weight of a non-assembled set was: 1 gram (weight of kernel) and 1 gramm (weight of shell). Weight of an assembled set, according to the "Theory of energy exchange processes" by Murlikin, is not equal to the simple sum of the non-assembled components, and mass defect would be different for various sets right up to the change of sign.

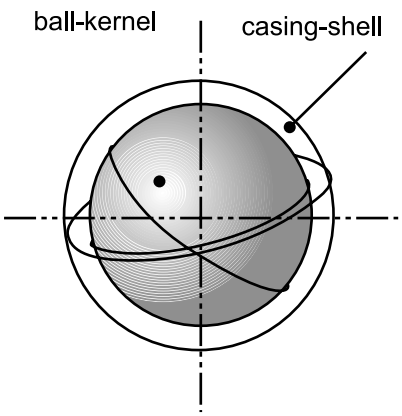

Fig. 2

Set of experimental balls

More than 50 experiments was carried out on weighing for every set. Assembled sets as well as non-assembled sets were weighed. **It was confirmed that there was an interaction between input and output flows for MATTER MAINTENANCE. It became apparent in the form of mass defect. Defect appeared in the sixth sign, i.e. it comes to the range from 0.0002% to 0.0007% of "kernel" mass (or "shell" mass). At that the lesser mass defect corresponds to aluminum shell, while the greater one corresponds to lead shell. Accuracy of weight measuring by the mass comparator exceeded the acquired result by 10 times. So we could not tell about inaccuracy of measurements.** So we had to apply to the "Russian center of testing and certification" which was very famous all over the world (Rostest-Moscow).

In general that is all, we have got an answer for ourselves, and the period of testing is behind. We have to advance; very much is still to be done. In addition let us mention one more surprise we got during the experiments. The matter concerns some time delay in receiving final results of every weighing. A qualitative picture of it is represented in Fig. 3. We did not expect that this effect would appear at such a rough level of measurement of energy exchange processes.

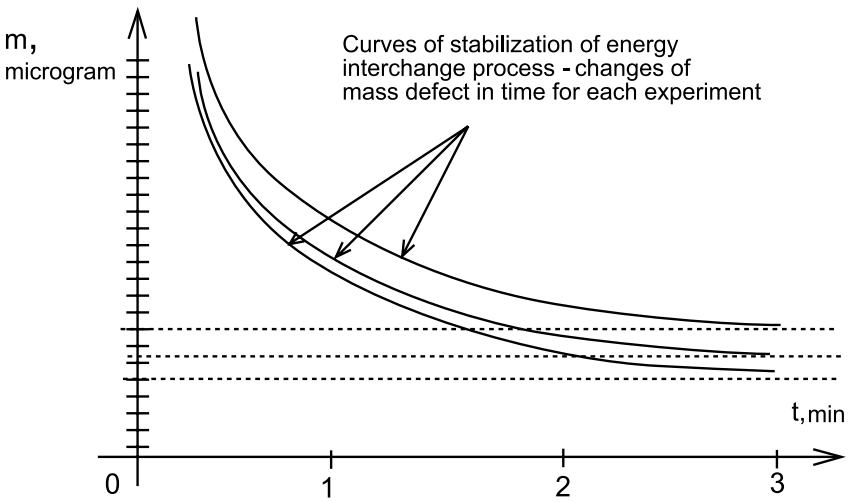

Fig. 3

Time stabilization of the process for receiving final weight

The subsequent report and detailed discussion of the experimental results by specialists (including physicists of various specializations) resulted in an unexpected non-recognition of facts and distrust. The main argument was a demand to increase the number of experiments up to 5-10 hundreds. And only then scientists would be ready to accept facts. It was quite a predictable reaction for the orthodox science in the middle of 90s. It remains to hope that if the discussion took place today it would have a paved way. However it is not a fact.

In conclusion let us note that this experiment on revealing mass defect ranks with famous experiments, in which rotating gyroscopes also demonstrate mass defect (decrease of weight) and even one of higher order than in our experiment. But in return we have no rotation, no chemical and nuclear reactions, while mass defect is presented.

Let us add that it is possible to complicate the task: to make a double casing and to choose other materials for "kernel" and "shell". (See Fig. 2). In our case low prices and availability made us use Al and Pb. The results will be more interesting, for example, with Li and Os (and with other supertransuranic elements).

Aether as Unified Field

Alexander M. Mishin, Russia

Planernaya Str., 79-208, St.Petersburg, 197373 Russia
E-mail: samish@mail.ru

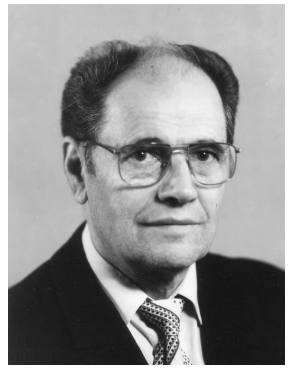

Based on the original observations and experiments, the article gives more precise definitions of aether model, than which was previously elaborated. General laws of the Universe aetherodynamic are considered. There is described a new physical reality in the form of quasi-real aetherodynamic structures ("topological harmonics") generated by dynamics of the substantial world.

At the present-day stage of physics development words of Maugham, an English philosopher, take on particular topicality: "The great verities are too important to be new". Indeed, we are increasingly making certain that our remote ancestors were familiar with fundamental laws of the Universe; furthermore, they knew these better than we do. But which methodology of cognition of Nature and what kind of information sources did the ancient scientists have? Today, we can openly say: they had not ordinary experience only, but also esoteric, pretersensual one, without feeling any necessity to be divided into materialists and idealists. For more details on evolution of physical ideas, refer to work [1].

In discovering all over again, I also had to elaborate a "cellular taction" strategy, which enables the most important characteristics of aetherodynamic processes to be sensually perceived and evaluated. The main thing is that all my sensory observations are definitely reproduced at laboratory experiments while the simplest physical equipment is used.

We may get reliable knowledge about Nature from Nature itself only. Thus foundation of classical physics describing usual substantial world is also based on empirical facts studied by Galilei, Newton, Faraday and many other physicists-natural philosophers. I also would like to defend great Newton against attacks on his adherence to inductive methods which really brought imperishable values into science.

A new convolution of cognition is possible on condition of introduction into science of new concepts based on empirical study of physical entities previously unknown. Thereupon, I share the thought of Elena Ventzel, professional mathematician: "Mathematical methods are not useful, but harmful until phenomenon is not studied at a pre-mathematical, humanitarian level". It is ideological and logical language that may be used today to discuss the aether problem, whose solution calls for comprehension of natural-science facts, which are beyond traditional notions settled over centuries.

The long-term investigations have confirmed that exhaustive definition of a fundamental natural entity was given by Rene Descartes: "Universe does not contain anything but aether and its vortexes". This is not merely a postulate; this is an objective summary of empirical observations of Nature phenomena. In any academical model of microcosm there is no answer to the question: what kind of substance are electrons, quarks, strings made of? That is the very substance our forefathers called aether. Aether is unified field indeed; and it appears that for nearly his whole life Einstein had been searching for something that was under his foot.

It must be recognized that there is no undistorted, quiescent aether in Nature; as well as no zero-size vortexes exist. Therefore, in a customary sense, the aether concept is pushed behind transcendental horizon and turned into an inconceivable entity whose mystique is tantamount to religious ideas. However, all quantum vortex-wave distortions of the superfluid three-dimensional aether, which have an appearance of tori, threads, solitons and occupy spatio-temporal spectrum from zero to inter-universe scale, are material and contain energy under scientific interpretation. Any spaces such as turbulent fields, physical vacuum, gravitational fields and, of course, matter are material. All of them are etherodynamic structures of the real world. Spatial hierarchy of aether vortices is referred to as quantum stairs, fractal structure or "matreshka" [2-5].

To understand basic laws of aetherodynamics it is necessary to give a general definition for classical matter

and other aether states. As a first approximation, let us give the name of matter to aether microscopic **left-screw** self-oscillating vortex-wave systems (elementary particles), whose existence and parameters are conditioned by higher hierarchical systems. This is our displayed world, with its electromagnetic fields and fundamental constants. Let us refer to vortex-wave structures of any vortex size, which in the considered space domain are **balanced** by a number of left- and right-screw vortices corresponding to matter and antimatter with prefix "quasi" to a free aether. Stable vortex lattices with alternating direction of helicity can be also considered in this case. Under natural conditions everything but classical matter or electromagnetic and gravitational fields can be related to the free aether. In the first place, these are the so-called physical vacuum and vortex fields, which attend gravitation. They represent anisotropic nonlinear subspaces and occupy definite places on spatio-temporal spectrum of the world aether. Particular free subspace creates an aggregate of topological harmonics [5] attending all the physical processes. Satellite of the gravitational field is distinguished because it belongs to specific class of stable vortex lattices.

Apparently, in general case, energy of free aether is virtual for our world due to its helical symmetry and quasi-matter, from the view of difference in sizes of typical vortices which correspond to protomatter. But this is not the entire point. There is also superfluidity of aether, whose vortex viscosity has marvellous properties. As a result, there are created phenomena of inertia and energy-information barrier separating material world from constant influence of quasi-real structures or turbulated space.

Classical inertia, as vortex viscosity, arises in the microscopic and more fine-structure free aether (in Newtonian space) and ever regularly reveals itself during acceleration of material bodies. However everything is different at stage of macrovortex aether, where inertia has properties of adaptation. Here it is affirmed that inertia phenomenon is "spread" throughout the spatial-temporal spectrum of vortex distortions of aether field. At that nature of inertia is changed. Within topoharmonic subspace in laboratory scales, the inertia law "diminishes" in time according to exponential dependence, whose time constant is determined by specific conditions and varied over wide limits (from seconds to many days). On the expiry of this time, inertial intercoupling transforms to the law of flicker effect. It may be said that flicker effect specify penetrability of energy and information barrier after expiry of time of paraphysical regular phenomenon [6]. Consequently, most of time the interaction with free macroaether is of random character and should be evaluated by mean observation.

To extend conceptual scope of our investigation it may be added that in classical hydrodynamics a liquid, along with ordinary inertia, has determined vortex macroinertia, which is created by vortices of the liquid itself. Therefore, it is necessary to keep on comparing processes at all levels of the unified field of aether. For instance, electric inductance is a kind of specific inertia, and topological harmonics of electromagnetic and other phenomena are subjected to the energy-information barrier (under laboratory conditions).

In the above arguments, the principle of relativity is latently and unconsciously presented. However, this complicated question needs to be separately considered. Physical nature of the energy-information barrier and reason for dependence of the inertia properties upon the size of vortices of free aether remain unclear, too. However, it can be supposed that classical elementary particles, as distinct from protomatter, have self-oscillating properties and are commensurable with vortices of the surrounding free world; and that the above-mentioned energy-information barrier does not exist for them on microscopic section of the spectrum. The gist of the barrier itself comes to "memorizing" topoharmonic processes by Earth's gravitational fields and laboratory equipment. Turbulent fields (physical vacuum) do not have such a "memory".

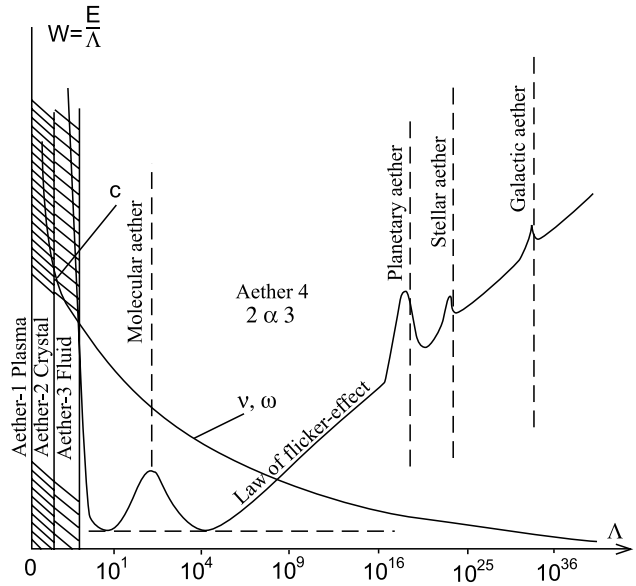

Fig.1

Fig.1 depicts diagrams of spectral density of vortices' energy; diagrams of rate of interaction transfer v and circular frequency ω depending on sizes of vortices of the world aether Λ (in picometers). As we can see, velocity of distortions propagation v is equal to velocity of light C in the physical vacuum, i.e. in electron sizes, exceeds C in nanocosm and tends to zero toward megacosms. Circular frequency of vortices rotation and course of physical time have the analogous qualitative dependence. However, vortices energy W has a feature and grows toward both ways from the lab scales; the aether numbers have been assigned conditionally, but all the specified phase states reflect some physical reality.

One of the most complicated questions is a definition of vortex matter in each particular case. The diagram demonstrates energy of free aether in the form of protomatter (simplest elementary particles – vortexes), and energy of classical elementary particles as helically definite self-oscillating emissions of aether field is localized in the most nonlinear subspace (physical or substantial vacuum). Unification of the elementary particles into atoms and macrobody does not denote direct transition to parallel world with different fundamental constants, whereas change of vortex size in the diagram exactly implies such a transition, though at a level of protomatter. This is a very intricate and crucial point. For example, a star is, unconditionally, an elementary particle of the relevant level of the Universe, even though comprising the ordinary matter.

Left wing of energy spectrum reflects property of the turbulent field of aether to gravitate, to sink down to the "bottom" transferring energy to the vortices of lesser scales. This phenomenon of distributed "gravitation" is available in every space point and explains a least-action principle. An illustrative analogue of this regularity is represented by the Earth's gravitational field and structure. Dense plasma assumed as iron core is situated in the center, and higher - there are magma, solid crust, water and air. These phase states exist in free aether within universe scales as well. Consequently, in femtocosm, and maybe at an even deeper energetic "bottom", there must be a plasmic subspace; evidently, it is assignable that aether translated from Greek means "fire".

Increase of energy to the right is connected with extending a dynamic band of the vortices spectrum, as the scale increases. In our world, this increase follows the flicker effect law, but this is only what we perceive across the energy-information barrier. Actually, at this section the vortex energy must increase well more strongly, because **our observation capabilities are limited** by accessible matter processes. Turning back to stars, one may affirm that modern science is unable to evaluate their real energy (evaluations are considerably underrated). The Galaxy vortex entrains such deep levels of multidimensional space-aether to its rotation that this causes violation of the Newton's law of inertia. Notion of "hidden mass" is unnecessary for explaining dynamics of galaxies. It is quite enough to take into account that differential rotation entrains the fine-structure aether (inertial subspace), and this process results in decreasing the inertia and external centrifugal forces. Unfortunately, Fig. 1 reflects only a characteristic size of the galactic vortex and does not visually demonstrate its active band of the spectrum. The finer is the space structure, the more inertial and closer to the absolute reference frame is the space. Obviously, the non-homogeneous, stereodynamically multidimensional and multiphase aether requires a perfectly new theory of random fields, which would also make allowance for the phenomenon of the material world.

Energy motion processes or spectral energy-cascades along abscissa axis are of decisive importance for existence of our world and the Universe. These processes have unusual properties. The "violet" cascade is attended with reduction of vortices size, absorption of matter energy and tends to increase energy concentration at the "bottom" of the world aether (near ordinate axis on Fig.1). This regularity experimentally confirmed in both spatial and temporal domains is a direct consequence of the above-mentioned phenomenon of distributed gravitation and clarifies an existence of the left wing of the spectrum. In classical physics "the violet" cascade effect is reflected in the least-action principle as well as in the thermodynamics laws.

The "red" energy cascade (right wing of the spectrum) corresponds to increase of vortices size and is accompanied with energy liberation. To start it up under earthy conditions special technologies are called for [7]. This has been confirmed with laboratory experiments and underlies the "perpetual motion" theory, where energy is pumped from nanocosm to the classical material world. Conception of artificial biofield [6], I have developed, considers methods of creating the aether vortex-wave macroscopic-scale distortions in physical systems. As a matter of fact, we deal with **ways of extending of natural spatio-temporal spectrum of aether (which settled into itself) by creation of a subspace of the topological subharmonics of the classical elementary particles, atoms and molecules**

(physical bodies), within the context of the etherodynamics fundamental law [5].

Even within action of fluctuating energy-information barrier, the spectrum right wing exhibits existence of natural processes in Nature that, supposedly, violate the known laws of thermodynamics [8]. But, as far as Nature cannot conflict with itself, we have to recognize that there is another physics, which "works" in geographic and greater scales, where role of the energy-information barrier demands to be reappraised. To all appearance, the universe vortex partialyl entrains plasmic subspace of aether into its rotation, and conditions for realizing "red" energy-cascade and generating matter are created on the sections of the maximum density gradient ("spectral" non-linearity). But the same way as a fish in ocean does not know reasons for storms and currents, we will never learn which force untwists the Universe handwheel, whose energy feeds our substantial world.

There are two components of free aether field that are the most essential for the present-day physics. The first one (left wing) is positioned on the spectrum beside the "bottom" in the form of dense liquid-crystalline "plasmatic" medium transforming to the Newtonian inertial subspace (physical vacuum). Since inertia is as regular as electric inductance is, the first subspace proves to be especially material and not such free, because it has properties which were imposed by the Universe rotation and distributed "gravitation". Let us conventionally limit the spatial spectrum of the first component with a nucleon size. The second component of aether space (right wing of the spectrum) stretches towards larger scales.

Except for known cosmic objects, this is an unknown ocean of the macrovortex and really free aether, or topoharmonics, which are born by dynamics of the substantial world. It is an experimentally proven fact that topoharmonics are generated by photons, electrons, and all the moving bodies [5, 9].

The second component has an ability to conversely affect the matter it was generated by as well as other material objects via "flickering" forces [10, 11]. This special subspace turns out to be doubly virtual, a genuine phantom. That is why, it has been winning the status of a real physical entity with such a difficulty, while Chinese philosophers were familiar with the same thousands years ago, separating entities "yang" and "yin".

The laboratory experiments indicate that topoharmonics have not only properties described in [5], but also an ability to interact with the space, creating a static domain of the excited aether in the course of propagation of the vortices-waves. At that physical bodies placing within this space volume are "charged" [2, 9]. The mentioned active domain (horizontal route) is "separated" by the Earth's gravitational field as follows: quasi-substantial constituent rapidly settles down creating vertical flow, but some phase structures are disintegrated very slowly (days, months, years).

The surprising thing is that biosystems equally belong to both aether components, not experiencing any constraint from the side of the energy-information barrier. The so-called human biofield is a topoharmonic part of physical body. It occupies its place on the spatio-temporal spectrum (Fig. 1). Quasi-substantial constituent (yang) and antiquasi-substantial one (yin) are strictly balanced, and acupuncture points and chakras are an analogue of Hartmann's geophysical grid, which is well-known to paraphysicists.

Conceptual generalization of physical ideas in the context of unified field of aether gives a constructive, cognitive impulse in solving of different problems, such as Nature's choice of exclusive laws for existence of "left-screw" material world as well as the problem of flicker-effect. At that, researching into the physical processes responsible for proton positive charge is of fundamental importance.

In conclusion, let us take note of conventional character of dividing the aether field into two components by the form of energetic spectrum. As a matter of fact, topoharmonics are generated by matter towards both larger spatial frequencies (subharmonics) and smaller ones (harmonics) and fill all levels of the Universe. The aforesaid is aimed at making perception of the most studied aspect of the **new physical entity** (vague due to diversity of hypothetical descriptions which exist in publications on this subject) more accessible.

Reference

1. A.P. Smirnov, I.V. Prokhortsev. Order principle. – Saint-Petersburg: ZAO «P and K», 2002. - 296 p.
2. A.M. Mishin. The aether model as a result of the new empirical conception. New ideas in natural sciences. (On materials of International Conference). Part 1 "Physical". - St.-Petersburg: RAS, 1996, p. 95-104.
3. A.M. Mishin. Fundamental properties of aether. Fundamental Problems of Natural Science. Series «Problems of the Universe research», fascicle 21 – Saint-Petersburg: RAS, 1999, p. 176-176.
4. A.M. Mishin. Physics of parallel worlds. / Fundamental Problems of Natural Science and Technics. Series «Problems of the Universe research», fascide 23 - Saint-Petersburg: Publishing

House of the Saint-Petersburg State University, 2001, p. 258-269.
5. A.M. Mishin. Etherodynamics basic law. / Fundamental Problems of Natural Science and Technics. Series «Problems of the Universe research», fascicle 26, part III. - Saint-Petersburg: Publishing House of the Saint-Petersburg State University, 2003, p. 206-218.
6. A.M. Mishin. Physical system with artificial biofield. / Fundamental Problems of Natural Science and Technics. Series «Problems of the Universe research», fascicle 23, - Saint-Petersburg: Publishing House of the Saint-Petersburg State University, 2001, p. 258-269.
7. V.F. Zolotarev, V.V. Roschin, S.M. Godin. About space-time structure and some interactions. - Moscow: Publishers «PREST», 2000. - 309 p.
8. V. Starr. Physics of phenomena with negative viscosity. - Moscow: MIR, 1971.
9. V.V. Kvartalnov, N.T. Perevozchikov. Discovery of a "non-physical" component of OKG radiation. Journal «Parapsychology and Psychophysics». - Moscow: 1999, No. 2 (28), p. 64-67.
10. A.M. Mishin. Longitudinal thermomagnetic effect. / Fundamental Problems of Natural Science and Technics. Series «Problems of the Universe research», fascicle 26, part III. - Saint-Petersburg: Publishing House of the Saint-Petersburg State University, 2003, p. 219-228.
11. A.A. Efimov, A.D. Shpitalnaya, Y.A. Zakoldaev. Eruptive prominences and earthquakes in the view of global space anisotropy. / «New Ideas in Natural Science». Series «Problems of the Universe research», fascicle 19, part II. – Saint-Petersburg: RAS, 1996, p. 403-413.

GLOBAL ENERGY

Philip M. Kanarev, Russia

The Kuban State Agrarian University, Department of Theoretical Mechanics
13, Kalinin Street, 350044 Krasnodar, Russia
E-mail: kanphil@mail.kuban.ru

Lately, the notion "Global energy" has become widely spread as a prize corresponding to this notion has been instituted in Russia. Since the Euclidean times, an unwritten law exists in science: to give definition to the notions, which are involved in scientific analysis. It is done for the purpose that everybody who uses this notion can understand the sense implied in it.

The Global energy problems have been discussed for a long time; they are well known. Depletion of natural energy carriers (oil, gas and coal) is the first problem. Environmental safety of energy carriers is the second problem. It is generally recognized that the solution of the issues connected with the aggregate of these two problems is of a global character. The results of scientific research, which should deal with global energy, originate from it. First and foremost, they are such scientific investigations, which result in the possibility to use an inexhaustible and environmental friendly energy carrier. It has been known for a long time. It is hydrogen produced from water.

Why hydrogen and why from water? At combustion of hydrogen, water is regenerated; thus, the energy carrier is inexhaustible. As far as inexhaustibility and environmental safety are concerned, hydrogen has no competitors. However implementation of these qualities is restricted by large energy expenses for hydrogen production from water. For hydrogen production, modern electrolyzers use from 10 to 20% more energy than it is produced at combustion of hydrogen.

It is easy to imagine what financial and intellectual resources of the world are included in the search of the ways to reduce energy expenses for hydrogen production from water. In Russia many scientific institutions of applied research and educational institutions deal with this problem. There is a Research Hydrogen Institute.

The associations of scientists on hydrogen energetics have been established in USA and Europe. This year, they carry out their regular scientific conferences, to which the author of this article has been invited.

Editorial: Let us note that it is not necessary to coin new scientific term "global energy", since quite for a long time the notion of "free energy" is used. This term represents the idea of the possibility to freely use energy by a consumer.

Energy problem is global not due to depletion of oil and gas, but due to their environmental unsafeness. However the confirmations exist that the world owners of energy resources do not bother about the problem of environmental unsafeness of modern energy carriers.

House of the Saint-Petersburg State University, 2001, p. 258-269.
5. A.M. Mishin. Etherodynamics basic law. / Fundamental Problems of Natural Science and Technics. Series «Problems of the Universe research», fascicle 26, part III. - Saint-Petersburg: Publishing House of the Saint-Petersburg State University, 2003, p. 206-218.
6. A.M. Mishin. Physical system with artificial biofield. / Fundamental Problems of Natural Science and Technics. Series «Problems of the Universe research», fascicle 23, - Saint-Petersburg: Publishing House of the Saint-Petersburg State University, 2001, p. 258-269.
7. V.F. Zolotarev, V.V. Roschin, S.M. Godin. About space-time structure and some interactions. - Moscow: Publishers «PREST», 2000. - 309 p.
8. V. Starr. Physics of phenomena with negative viscosity. - Moscow: MIR, 1971.
9. V.V. Kvartalnov, N.T. Perevozchikov. Discovery of a "non-physical" component of OKG radiation. Journal «Parapsychology and Psychophysics». - Moscow: 1999, No. 2 (28), p. 64-67.
10. A.M. Mishin. Longitudinal thermomagnetic effect. / Fundamental Problems of Natural Science and Technics. Series «Problems of the Universe research», fascicle 26, part III. - Saint-Petersburg: Publishing House of the Saint-Petersburg State University, 2003, p. 219-228.
11. A.A. Efimov, A.D. Shpitalnaya, Y.A. Zakoldaev. Eruptive prominences and earthquakes in the view of global space anisotropy. / «New Ideas in Natural Science». Series «Problems of the Universe research», fascicle 19, part II. – Saint-Petersburg: RAS, 1996, p. 403-413.

GLOBAL ENERGY

Philip M. Kanarev, Russia

The Kuban State Agrarian University, Department of Theoretical Mechanics
13, Kalinin Street, 350044 Krasnodar, Russia
E-mail: kanphil@mail.kuban.ru

Lately, the notion "Global energy" has become widely spread as a prize corresponding to this notion has been instituted in Russia. Since the Euclidean times, an unwritten law exists in science: to give definition to the notions, which are involved in scientific analysis. It is done for the purpose that everybody who uses this notion can understand the sense implied in it.

The Global energy problems have been discussed for a long time; they are well known. Depletion of natural energy carriers (oil, gas and coal) is the first problem. Environmental safety of energy carriers is the second problem. It is generally recognized that the solution of the issues connected with the aggregate of these two problems is of a global character. The results of scientific research, which should deal with global energy, originate from it. First and foremost, they are such scientific investigations, which result in the possibility to use an inexhaustible and environmental friendly energy carrier. It has been known for a long time. It is hydrogen produced from water.

Why hydrogen and why from water? At combustion of hydrogen, water is regenerated; thus, the energy carrier is inexhaustible. As far as inexhaustibility and environmental safety are concerned, hydrogen has no competitors. However implementation of these qualities is restricted by large energy expenses for hydrogen production from water. For hydrogen production, modern electrolyzers use from 10 to 20% more energy than it is produced at combustion of hydrogen.

It is easy to imagine what financial and intellectual resources of the world are included in the search of the ways to reduce energy expenses for hydrogen production from water. In Russia many scientific institutions of applied research and educational institutions deal with this problem. There is a Research Hydrogen Institute.

The associations of scientists on hydrogen energetics have been established in USA and Europe. This year, they carry out their regular scientific conferences, to which the author of this article has been invited.

Editorial: Let us note that it is not necessary to coin new scientific term "global energy", since quite for a long time the notion of "free energy" is used. This term represents the idea of the possibility to freely use energy by a consumer.

Energy problem is global not due to depletion of oil and gas, but due to their environmental unsafeness. However the confirmations exist that the world owners of energy resources do not bother about the problem of environmental unsafeness of modern energy carriers.

In history of science, the facts of annihilation of the scientists who have won success in reduction of energy expenses for production of hydrogen from water have already been registered. The requesters of these actions think that they will lose their profits with the coming of hydrogen energetics. They do not understand that this process cannot be abrupt. It is impossible to replace the infrastructure of the existing energy carriers by infrastructure of hydrogen energetics within one or even ten years. Besides, infrastructure of hydrogen energetics will not be created on a blank place. It will be integrated into the existing infrastructure of energetics gradually; and its owners will automatically become the owners of hydrogen energetics. The first step has already been made in this direction. In the USA, a decision has been taken to equip all filling stations with pumps to fill the cars with hydrogen.

It is known that a priority of results of theoretical investigations is their publication in press. Usually, such priority is a personal one. Generally a patent is a priority of the results of experimental investigations. As a rule, this patent belongs to a group of authors. A published patent is a genie released from a bottle. No finesse of the authors to hamper a reproduction of experimental data given in a patent without the participation of the authors can stop the process of their implementation. Thus, the authors or a group of the authors who have filed an application for a patent are deprived automatically of the opportunity to influence the process of practical realization of their ideas.

In Russia, the state is a main patent holder of the global patents. Due to the well-known reasons, it has proved to be unable to control the course of scientific investigations and to forecast significance of their results.

It is known that if it becomes possible to reduce energy expenses for hydrogen production of water fivefold, it will be the cheapest energy carrier. Russia has already got technology, which reduces these expenses tenfold and more. However another way of looking is more perspective. Is there any use to decompose water into hydrogen and oxygen and to use hydrogen as fuel for heating, for example, of water in heating systems? Is it possible to make water generate heat? It turned out that, it is possible.

In Russia, three firms ("Yusmar", "Termovikhr" and "Noteka") sell cavitation heating equipment with energy performance index up to 150%. Official science looks awry at this activity, since such results conflict with one of the main laws of physics: law of conservation of energy. But market profit is stronger than this law.

Meanwhile, engineering practice has already proved that additional energy in the form of heat is generated in the ventilation systems and in the systems of water cavitation. Thorough scientific analysis of this problem shows that physical vacuum is the most probable source of additional energy in the systems of ventilation and water cavitation. Valence electrons of destroyed molecules of water take energy from physical vacuum and release it during repeated fusion of these molecules.

Why is additional energy generated in the air systems of ventilation and in systems of water cavitation? Because they are mechanical systems and mechanical destruction of chemical links requires half energy as compared with thermal destruction of these links. This is the main reason why one fails to increase energy performance index of cavitation processes over 200%.

Certainly, an increase of efficiency of any process by 30 or 50% is a good result; if it is obtained, it is possible to get even better one. But what if a water molecule is destroyed not mechanically, but electrodynamically? In this case, it becomes possible to find resonance frequencies of influence on the molecules and therefore to reduce considerably expenses of electrical energy for their destruction. Subsequent fusion of destroyed molecules will release determined quantity of energy unavoidably. It is a simple idea, and it has already been implemented. At electrodynamic influence on water molecules, electrical energy is converted into thermal energy with tenfold energy performance index. It means that if we spend 1 kWh of electric energy, we will get 10 kWh of thermal energy. To obtain such results, it is necessary to have knowledge of physchemistry of the microworld, which corresponds to knowledge of the 21st century, and it has already been published. Every month more than 1000 foreign scientists become familiarized with this knowledge at
http://Kanarev.innoplaza.net and
http://book.physchemistry.innoplaza.net.
The Russian speaking readers get this information from:
http://www.n-t.org/tp/ns/if.htm,
http://www.ikar.udm.ru/sb28-2.htm and
http://www.n-t.org/tp/ts/eb.htm.

I hope that now the readers will know the essence of the notion "global energy" and will understand those results of scientific researches which can really solve the related problems.

Energy Balance of Fusion Processes of Oxygen, Hydrogen and Water Molecules

Philip M. Kanarev, Russia

The Kuban State Agrarian University, Department of Theoretical Mechanics
13, Kalinin Street, 350044 Krasnodar, Russia
E-mail: kanphil@mail.kuban.ru

There is revealed the cause of appearance of additional energy during formation of covalent bonds in the fusion processes of oxygen, hydrogen and water molecules, besides the source of this energy is described.

Introduction

Engineering practice connected with servicing of ventilation systems allows revealing appearance of excessive thermal energy in circulated air. Similar phenomenon has been registered in systems of water circulation with the devices for its active cavitation. The results of our investigations explain not only a cause of these phenomena, but they give an opportunity to perform quantitative calculations for energy processes, which generate additional thermal energy [1], [2], [3], [4], [5].

Theoretical part

An oxygen atom is the eighth element of the periodic table. It is situated in the sixth group. The structure of its nucleus is given in Fig. 1 [1], [2], [3].

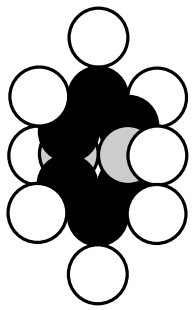

Fig. 1
Diagram of nucleus of oxygen atom: light – the protons, dark and grey – the neutrons

In Fig. 2 a diagram of the oxygen atom originating from the structure of its nudeus is given (Fig. 1). It has eight electrons. The electrons situated on the axis of symmetry are the most active ones (1, 2). Other six electrons situated in the plane, which is perpendicular to the axis line (a line of symmetry), by means of their total electric field remove electrons 1 and 2 from the nucleus at a large distance at that forming conditions for their large activity during the interaction with the electrons of the neighbouring atoms [1], [2], [3].

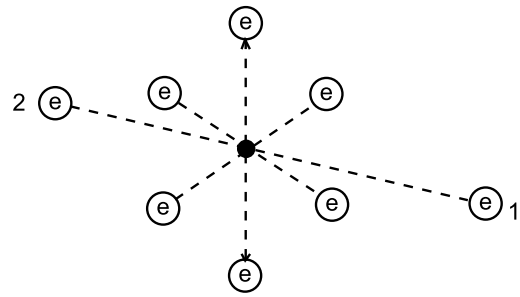

Fig. 2
Diagram of the oxygen atom

The least ionization energy of the electron of oxygen atom is equal to E_i=13.618 eV. Binding energy of this electron with the atomic nucleus corresponding to the first energy level is equal to E_1=13.752 eV. Let us call this electron the first one. The calculation of energy indices of this electron, including its binding energies E_b with the atomic nucleus, according to the formulas (1) and (2), gives the following results (Table 1) [1], [2], [3].

$$E_{ph} = E_i - \frac{E_i}{n^2} = E_i - \frac{E_1}{n^2} \qquad (1)$$

$$E_b = \frac{E_1}{n^2} \qquad (2)$$

Table 1
Spectrum of the first electron of the oxygen atom

Values	n	2	3	4	5	6
E_{ph} (exp.)	eV	10.18	12.09	12.76	13.07	13.24
E_{ph} (theor.)	eV	10.16	12.09	12.76	13.07	13.24
E_b (theor.)	eV	3.44	1.53	0.86	0.55	0.38

The oxygen molecule structure is given in Fig. 3, a. It is formed by means of a connection of unlike magnetic poles of axis electrons of two oxygen atoms [1], [2], [3]. It is known that the fusion process of the oxygen molecules is accompanied with a release of 495 kJ/mole of energy, or in calculation for one molecule

$$E_b = \frac{495 \cdot 1000}{6{,}02 \cdot 10^{23} \cdot 1.602 \cdot 10^{-19}} = 5.13eV. \quad (3)$$

What principle does the Nature follow by distributing energy of 5.13 eV between the electrons of oxygen molecule (Fig. 3, a)? Energy of 5.13 eV is a thermal binding energy between the electrons 1 and 2' of two oxygen atoms (Fig. 3, a). When the oxygen molecule is formed, it is emitted in the form of the photons by the electrons, which enter into the bond. Hence it is equal to an amount of energies of two photons emitted by these electrons. Consequently, each contacting electron emits a photon with energies of 5.13/2=2.565 eV=E_b (Fig. 3). According to Table 1, in this case the valence electrons are situated between the second energy level and the third one [1].

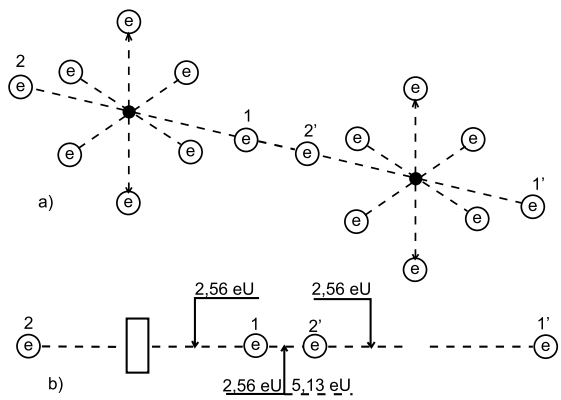

Fig. 3
Diagram of binding energy distribution between the electrons in the oxygen molecule

Two oxygen atoms are combined into a molecule in an excitation state. The excitation state is the state of an atom when its valence electrons are situated at such distances from the nuclei when the binding energy E_b between them is reduced to the thousandth of fractions of an electron-volt. In such state the atom can loose an electron and become an ion. Otherwise, without loosing electrons it is combined with an electron of the neighbouring atom by the valence electron, and a process of formation of oxygen molecule begins. It is an exothermic process when the axis valence electrons 1 and 2' emit photons, descend on lower energy levels and release 2.565x2=5.13 eV.

Let us pay attention to the fact that energy 5.13 eV is released by two electrons, which form a bond with energy of E_b=2.56 eV. In modern chemistry this bond is called a covalent bond. In order to break this bond it is necessary to use 2.56 eV of mechanical energy. For thermal cleavage of this bond, double quantity of energy is required, i.e. 5.13 eV. It is explained by the fact that the photon energy of 5.13 eV is absorbed by two electrons simultaneously. Only in this case, both electrons will be transferred to the highest energy levels with minimal binding energy E_b when they are disconnected, and each oxygen atom becomes a free one.

Thus, energy expenses for destruction of oxygen molecule depend on the method of influence upon the bond. During thermal action upon the bond it is destroyed when energy is 5.13 eV. During mechanical effect upon the bond, it is necessary to spend 2.56 eV of energy in order to destroy this bond. Therefore energetic of fusion process of the oxygen molecule depends on method of its destruction.

After thermal destruction of the oxygen molecule process of its formation begins from emission of the photons with energies of 2.56 eV by both valence electrons, and the previous electrodynamics binding energy (E_b=2.56 eV) is restored between the electrons of both atoms.

Thus during thermal destruction of the oxygen molecule the same amount of thermal energy is spent than that which is released during its further formation. No additional energy appears during thermal dissociation of oxygen molecule and at its further fusion.

If oxygen molecule is destroyed by a mechanical method, then it is necessary to spend 2.56 eV of mechanical energy for this purpose. Valence electrons of oxygen atoms are in a free state at lack of energy, which corresponds to such state, as there is no process of absorption of 2.56 eV of energy by each of them. The electrons cannot remain in such state; they should replenish immediately the energy, which they have failed to receive during a mechanical break of the bond between them. Where should they take it from? There is only one source: the environment, i.e. the physical vacuum filled with aether. They convert aether into energy of 2.56 eV immediately. The next stage is a connection of two oxygen atoms, whose valence electrons have replenished the reserves of their energy by means of aether. This process is accompanied by emission of the photons with energies of 2.56 eV by two electrons. Thus energy of absorbed aether is

converted into thermal energy of the photons. If we spend 2.56 eV of mechanical energy for destruction of oxygen molecule, we will get double quantity of energy (2.56x2=5.13) eV during further fusion of this molecule. Additional energy is equal to 2.56 eV.

Much experimental data show that in ventilation systems thermal energy of circulated air exceeds electric energy spent for a fan drive. Now we know that this energy is generated at mechanical destruction of covalent bonds in the molecules of gases, which the air consists of.

Using the above-mentioned method, let us analyse energetic of water molecule, which sometimes generates additional thermal energy. A water molecule consists of one oxygen atom and two hydrogen atoms. Binding energies E_b of the hydrogen atoms with its nucleus are given in Table 2 [1], [2], [3].

Table 2
Spectrum of hydrogen atom

Values	n	2	3	4	5	6
E_{ph} (exp.)	eV	10.20	12.09	12.75	13.05	13.22
E_{ph} (theor)	eV	10.198	12.087	12.748	13.054	13.220
E_b (theor.)	eV	3.40	1.51	0.85	0.54	0.38

It is known that combination of hydrogen and oxygen is accompanied by an explosion, but its cause remains unknown. Let us try to find it.

Energy of fusion of hydrogen molecule is equal to 436 kJ/mole, or 4.53 eV per a molecule. As the molecule consists of two atoms, then the above-mentioned energy is distributed between them. Thus energy of one bond E_b between the hydrogen atoms is equal to 2.26 eV (Fig. 4). At mechanical destruction of this bond 2.26 eV is enough. At thermal destruction of this bond double quantity is required (2.26x2=4.53 eV) [1].

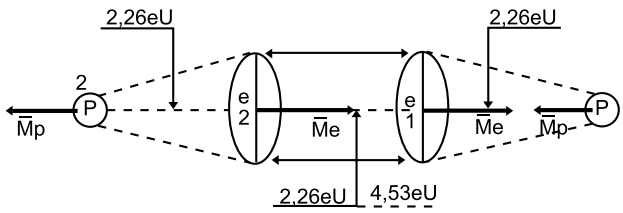

Fig. 4
Hydrogen molecule

In order to form two water molecules, it is necessary to break two hydrogen molecules and one oxygen molecule into atoms. At mechanical destruction of covalent bonds 2.26x2=4.53 eV is required to break two hydrogen molecules and 2.56 eV to break an oxygen molecule. Sum of these energies is equal to 7.13 eV. If the destruction processes of the above-mentioned molecules are carried out with a thermal method, then 4.53+4.53=9.06 eV is required for the destruction of two hydrogen molecules, and 5.13 eV is required for the destruction of one oxygen molecule. In total, it is equal to 14.19 eV. The difference between the energy spent for mechanical and thermal destruction of covalent bond of hydrogen and oxygen molecules is almost double.

It is known that during fusion of one mole of water 285.8 kJ or $285.8 \times 1000/6.02 \times 10^{23} \times 1.6 \times 10^{-19}$=2.96 eV per a molecule are released. As a water molecule consists of one oxygen atom and two hydrogen atoms, 2.96/2=1.48 eV falls per the bond (Fig. 5). Hence the electrons of hydrogen and oxygen atoms in water molecule are between the forth energy level and the fifth one at the usual temperature (1.48/2=0.74 eV = E_b), Table 1, 2 [1].

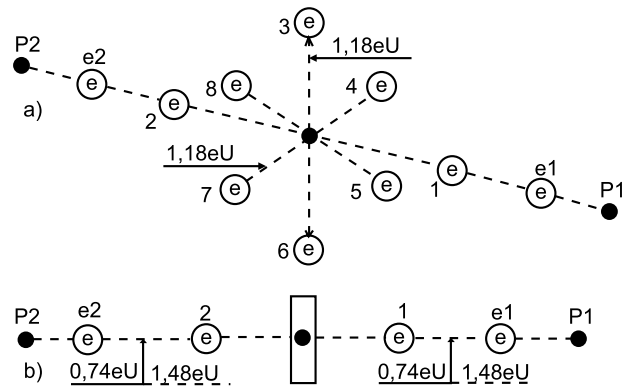

Fig. 5
Diagram of water molecule:
1, 2, 3, 4, 5, 6, 7, 8 are the numbers of the electrons of oxygen atom; P_1, P_2 are the nuclei of the hydrogen atoms (the protons); e_1 and e_2 are the numbers of the electrons of hydrogen atoms

Thus when two hydrogen molecules $2H_2$ and one oxygen molecule O_2 are destroyed by the thermal method, 14.19 eV are spent. As a result of fusion of two water molecules ($2H_2O$), 2.96x2=5.98 eV is released. There is some disbalance here since fusion process of water molecule is an exothermic one and 2.96 eV is released by one molecule. The given calculation shows that (14.19-5.98)/2=4.10 eV is absorbed during fusion of one water molecule. What is the cause of this contradiction?

The oxygen atom in the water molecule should reduce its volume when the transition from gaseous state into

liquid state takes place. It will happen when the ring electrons of oxygen atom descend on lower energy levels (nearer to the nucleus). They will emit the photons and their total energy will be equal to energy spent to destruction of two hydrogen molecules and one oxygen molecule, i.e. 14.19 eV. Since two water molecules have 12 ring electrons, each of them will emit 14.19/12=1.18 eV= E_b (Fig. 5). It is more than energy (E_b=0.74 eV) of binding of axis electron with the nucleus, and it shows that the ring electrons are situated nearer to the nucleus than the axis ones.

In this case quantity of energy produced due to fusion of two water molecules (14.19+5.98) eV exceeds energy, which was spent for the destruction of two hydrogen molecules (9.06 eV) and one oxygen molecule (5.13 eV). Energy difference of 5.98 eV is divided between two water molecules. It means that 5.98/2=2.99 eV or 285.8 kJ/mole fall per a molecule. It corresponds to the existing experimental data completely [1].

The above-mentioned facts clarify a cause of the explosion, which takes place when hydrogen is combined with oxygen. Simultaneous transition of six ring electrons of each oxygen atom in the nascent water molecules to lower energy levels is accompanied by simultaneous emission of the photons, which generate explosion phenomenon.

Let us pay attention to the fact that two binding energies E_b between valence electrons e2 and 2 and between 1 and e1 are shown in Fig. 5, b. Energy of one electrodynamics bond is equal to E_b= 0.74 eV. If this bond is destroyed by the thermal method, 0.74x2=1.48 eV is required. This energy will be released during further fusion of the water molecule from hydrogen atom H and hydroxyl ion OH^-. In this case, no additional energy is generated.

Therefore the given bond is destroyed by the mechanical method spending 0.74 eV per a bond, each electron will have energy deficit equal to 0.74 eV after bond destruction. This energy will be immediately absorbed from the environment and will be emitted during the repeated fusion of the water molecule from the hydrogen atom H and the hydroxyl ion OH^-. At mechanical destruction of one bond of water molecule, the covalent chemical bond forms E_b= 0.74 eV of additional thermal energy, which is registered in systems of water cavitation constantly (as we have already noted) [1], [2], [3].

It is known that water molecules combine and form clusters. If the bonds between the molecules in the clusters are covalent ones, mechanical destruction of these bonds should be accompanied by a release of additional thermal energy as well [1], [2], [3].

Experimental Part

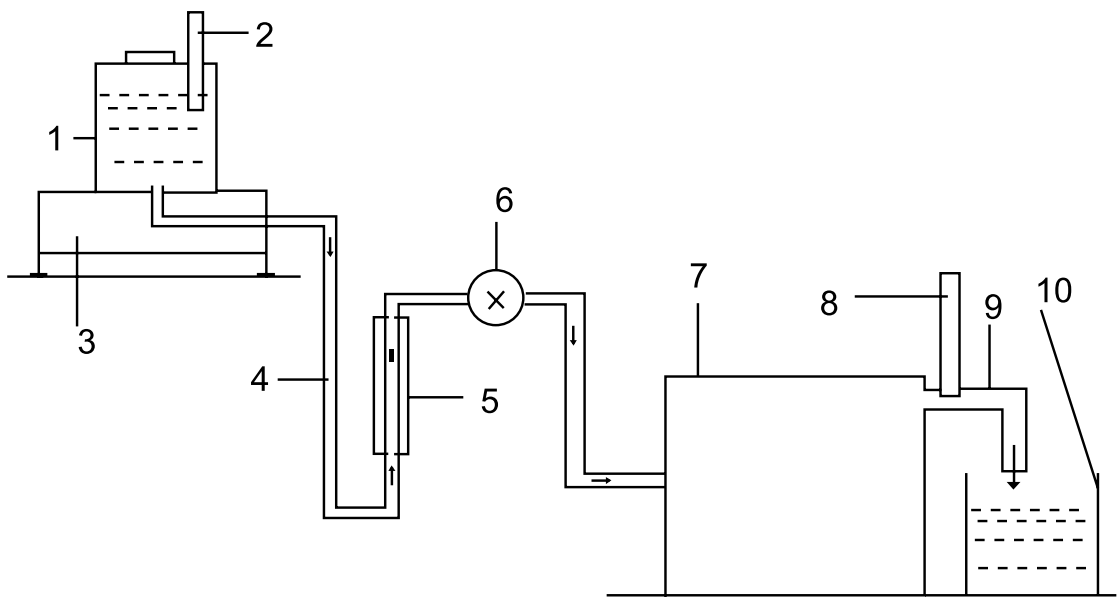

Fig. 6

Diagram of the experimental device: 1 - reservoir for solution; 2 - thermometer; 3 - electronic scales; 4 - solution supply duct; 5 - rotameter; 6 - feed solution regulator; 7 - a special thin plasma reactor is in the process of patenting; 8 - thermometer; 9 - discharge of heated solution; 10 - inlet reservoir

Thus, chemical bonds between the atoms in the molecules and the molecules in the clusters can be destroyed mechanically, by electrodynamic and thermal influence. We have already shown that the mechanical way of destruction of such bonds requires half energy as compared with thermal energy. It appears from this that energy expenses for electrodynamic destruction of these bonds should be less than thermal expenses as well. Electrodynamic impact on the bond gives the opportunity to form the resonance modes where energy expense for the destruction of these bonds is reduced to greater degree. In order to check this hypothesis a special experiment was carried out. It was connected with electrodynamic destruction of chemical bonds of water molecules with a changing frequency of impact. To test this hypothesis the check experiment was prepared and carried out by (besides the author of this article) A.I. Tlishev, G.P. Perekotiy, D.A. Bebko, D.V. Korneev. A diagram of the experimental device is given in Fig. 6. The results of this experiment are given in Table 3.

Table 3
Protocol of control test

Indices	1	2	3	Mean
1 – mass of the solution, which has passed through the reactor m, kg.	2.112	2.153	2.118	2.128
2 – temperature of solution at the input of the reactor t_1, degrees	24	24	24	24
3 – temperature of the solution at the output of the reactor t_2, degrees	33.5	33.5	33.5	33.5
4 – differential temperature of the solution $\Delta t = t_2 - t_1$, degrees	9.5	9.5	9.5	9.5
5 – durability of the experiment $\Delta\tau$, s	300	300	300	300
6 – reading of voltmeter V, B	25.0	25.0	25.0	25.0
7 – reading of ammeter I, A	1.40	1.40	1.40	1.40
8 – electric power consumption according to indices of voltmeter and ammeters, $E_2 = I x V x \Delta\tau$, kJ	10.50	10.50	10.50	10.50
9 – power spent for heating of the solution, $E_3 = 4.19 x m x \Delta t$, kJ	84.10	85.70	84.31	84.70
10 – reactor efficiency index according to the reading of voltmeter and ammeter $K = E_3 / E_2$	**8.00**	**8.16**	**8.03**	**8.06**

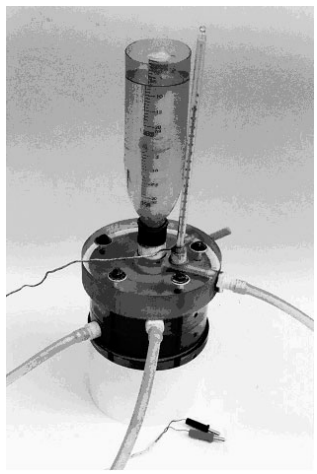

Fig. 7
Photo of heat reactor

In the Russian market three firms (Yusmar, Termovikhr and Noteka) sell cavitation water heating equipment with energy efficiency index of 150%. Soon, an air heating devices with the same efficiency will be produced. The processes of mechanical destruction of covalent bonds of the air gas molecules, molecules and clusters of water and their further fusion serve as a source of additional energy generated by these devices [1], [2], [3].

Conclusion

Analysis of energy balance of the molecules with covalent bonds shows the possibility of additional thermal energy formation during mechanical and electrodynamics destruction of these bonds.

References

1. Ph.M. Kanarev. The Foundation of Physchemistry of Micro World. Krasnodar. 2002. 320 pages. (In Russian).
2. Kanarev Ph.M. The Foundation of Physchemistry of Micro World. The second edition. (In Russian). http://www.ikar.udm.ru/sb28-2.htm
3. Kanarev Ph.M. The Foundation of Physchemistry of Micro World. The second edition. (In English). http://book.physchemistry.innoplaza.net
4. Kanarev Ph. M. Energy Balance of Fusion Processes of Molecules of Oxygen, Hydrogen and Water. (In English) http://Kanarev.innoplaza.net
5. Kanarev Ph. M. Energy Balance of Fusion Processes of Molecules of Oxygen, Hydrogen and Water. (In Russian) http://www.n-t.org/tp/ts/eb.htm.

The Fourth State Of Matter (Plasma Energy) Power Generation

Bruce A. Perreault, USA

http:// www.nuenergy.org
Email: nuenergy@cyberportal.net

Under the proper configurations and in the correct pre glow discharge environment more electrons can be released than what is required to trigger the release. This release of energy attains a high frequency oscillation that is indicative of the metal or metals involved in its release.

The release of high frequency energy from metals and semi metals (semi conductors) through the mechanism in the pre-glow discharge leads to the generation of radiant energy. This correlation has been identified through my findings. The release of high frequency energy from the atoms of electrical conductors is credited to my identification of the mechanism in the pre-glow discharge, or fourth state of matter. This has lead to extremely efficient alternative energy circuits.

The release of high frequency energy from the atoms of electrical conductors is credited to my identification of the mechanism in the pre-glow discharge, or fourth state of matter. This has lead to extremely efficient alternative energy circuits.

The pre-glow discharge condition occurs when a sufficient amount of charge difference is applied across the gap of two electrical conductors. It makes a hissing sound if the electrodes are surrounded by air. The electrical properties between this gap change: electrons become "stripped" from their respective atoms and are liberated. In this state, air is **ionized** and is transformed into a **plasma** and is no longer a gas. It is now in the fourth state of matter, the other three being solid, liquid, and vapor (gas). The fourth state of matter is a good conductor of electricity, its average resistance being much lower than that of the same substance in its gaseous state.

A good readily available spark gap combination is lead and iron. This combination generates plenty of radiant energy and causes noise to be heard on a radio in its vicinity. As a general rule, the better the thermoelectric difference between the dissimilar couple the more radiant energy that will be generated when it is exposed to a plasma field.

Early in the summer of 1981, the pre glow had first caught my attention. This is where I had observed it between two plastic insulated hook-up wires from radio shack. The plasma between the two wires was called into existence because of a high voltage power supply that I had obtained for my electrogravitic experiments. The two wires were twisted together and given a charge of around ninety kilovolts.

It was not until 1989 when I observed a high frequency signal on my oscilloscope coming from the pre-glow discharge phenomenon. These signals were coming from across the room and originated from a crude component that I had built. This crude component consisted of a guitar wire that was centered through a section of PVC tubing. Around this tube was wrapped a coil of insulated transformer wire. This was my first ion-valve. It was excited with the same power supply where I had observed the plasma effect several years previous.

I knew that my ion valve was generating high frequency oscillations using air ions but did not find any practical applications for it until six years later. It was in this year (1995) when I realized the importance of the ion valve and its associated high frequency ion field, known as radiant energy to Moray, it being the essential principle behind his energy receiver.

In one experimental set-up, it was confirmed that when a charged capacitor is discharged through a spark gap that the stored energy is transferred by way of high frequency electrical oscillations. It was found that these oscillations occur directly before the discharge of the capacitor, thus the term, pre-glow discharge. It was found that during the pre-glow discharge plateau, energy is transferred from a primary to a secondary electrical coil. Directly after pre-glow discharge, a surge of current is measured. At the point of current surge is where most

of the stored energy in the capacitor is released as wasted heat. It was apparent that by maintaining the pre-glow discharge plateau a very efficient mode of energy transfer and conversion can be obtained. Logically what is required is a control mechanism. This is where my ion valve finds its niche. Upon further investigation, it is found that it keeps pre-glow discharge oscillations at their plateau, and suppresses current surge in a spark gap. It is a self-regulating quenching device. When it is placed in series with an air-core transformer and arc gap, its plasma hisses smoothly, the arc in the spark gap is almost silent and is very small. Continuous oscillations can be seen on an oscilloscope. A light bulb connected to the secondary will glow brightly. This result is not possible without the ion valve included in the circuit. The ion valve has the added feature of preventing back electromotive force, generated from inductive loads, from being discharged back through the circuit. Without the ion valve, energy is normally lost when it is discharged and is transformed into heat. Using the ion valve therefore has the effect of conserving energy.

Fundamental Radiant Energy Device

"Standard" scientific principles are not being violated. There is no fringe science involved with radiant energy power generation. This is a very old source of energy being extracted and harnessed in a unique way through my discoveries. What I have discovered is practically a limitless source of energy. Radiant energy has existed since the beginning of time. What I hold daim to is an improved method to generate and to convert radiant energy, kinetically active ions, cosmic energy, call it what you will, into useful electrical power. Think of the radiant energy power generator as a type of energy detonator that liberates great quantities of energy with only a small exciting spark. No laws of physics are being violated. No new laws are being implied. They are being expanded. The concept is not that much different from how a lighted matchstick is able to start a bonfire.

The power generated from my circuits comes from the transformation of matter into radiant electricity. It does not come from the splitting of atoms. To obtain high wattage from a spontaneously radioactive substance would require unsafe amounts of radioactive material.

Under the right conditions, ordinary matter can be made to generate intense surges of radiant energy that can be heard on a radio receiver as static noise. Build a device that can efficiently capture this energy and convert it into useful electrical currents and you will have yourself a powerful source of electrical power. This device will be powered by artificially disintegrating matter as described by Gustave Le Bon in his book "The Evolution of Matter" and in his book "The Evolution of Forces".

Energy and matter are two distinct entities of the same manifestation. Matter represents a stable condensed form of energy. Heat, light, electricity, etc., are uncondensed vibrations of matter oscillating at differing rates. "Cosmic Energy" is the term that Le Bon used to define matter and energy as being one and the same manifestation. He theorized that when stable matter is disintegrated it is transformed into energy that we recognize as heat, light, electricity, radioactivity, etc.

Semiconductors will generate intense surges of electron oscillations that become powerful sources of radiant energy. A simple **ion valve**, or call it what you will, can be used to generate and convert this form of radiant energy into useful electromagnetic oscillations. A tuned transformer can be used to directly convert these oscillations into to a practical voltage and amperage. This unique valve is shown in Fig. 1. Before it can function it must be connected to a suitable voltage source. The circuit in Fig. 2 demonstrates the full working concept. Other embodiments are also possible. The proof of concept circuit reveals how radiant energy can be generated and converted into useful electrical currents. Many additional stages can be added for more power. Many other circuit and component configurations can also be used but the fundamental conversion principle remains the same. The circuit and components shown should give you a very clear idea of how the technology works. The actual mechanics and electronics of building and validating a radiant energy prototype are relatively simple. Contrary to what some people might think, dangerous levels of radioactivity are never used in my devices.

Ion-valve Converter Technology Explained

The ion-valve converter (ion-valve) shown in Fig.1 has an axial negatively charged tungsten cathode wire that extends the length its cylinder and is capable of emitting secondary electrons. The anode cylinder is positively charged and is made from a semiconductive material that will readily capture electrons.

Within a few milliseconds the accumulated negative ions are attracted to the positively charged onrushing atomic ions. When the negative and positive charges collide they

neutralize each other generating high frequency electrical oscillations.

There appears to be a common thread shared between several alternative energy devices. It is the pre-glow discharge. The report on the **Hans Coler** device released by the British Government indicates that there is excess energy released when electrical contacts are opened and closed. The **Lester Hendershot** device utilized a buzzer circuit that opened and closed its electrical contacts. In the **Alfred Hubbard** coil pre-glow discharge flowed through electrical contacts, a distributor cap and radium soaked spark plug. The **Joseph Newman** motor used a sparking commutator. **Thomas Moray** invented a glowing, cold cathode discharge tube that was the heart of his radiant energy device. **Hermann Plauson** was granted U.S. Patent No. 1,540,998 that used spark gaps to convert atmospheric energy. **Frank Wyatt Prentice** was granted Canadian Patent No. 253,765 that detailed his invention, which lighted 50 sixty-watt carbon lamps with an input of only 500 watts. His invention utilized a spark gap driven high frequency tuned resonant system. **Chancy Britten** used ion-valves constructed with a central wire that was surrounded by a coil of wire which is described in his US Patent No. 1,826,727. Britten's valve was said to have lit up his home in the 1930's according to a local newspaper article of that time period. **Alexander Chernetski** experimented with what appears to have been a type of ion-valve that was filled with hydrogen gas. It is said that he got up to five times more energy out of his device than what he put into it. **Edwin Gray** was granted U.S. Patent No. 3,890,548 for his efficient spark gap driven capacitive-discharge motor. He improved on this patent by replacing the spark gaps with a pre-glow discharge switching tube. His U.S. Patents No. 4,595,975 and No. 4,661,747 describes this tube in detail. Gray's patents claim to conserve battery power by sending unused energy back to the supply batteries. On close examination, we also find that his switching tube is actually a quenching device.

Radiant energy was generated during the pre-glow discharge cycle that also contributed to recharging the batteries. **Paulo N. Correa** and **Alexander N. Correa** obtained patents to a pulsed pre-glow discharge system that recovers energy and recharges a battery.

I have found that radiant energy is generated when a plasma field is in contact with the atoms of an electrical conductor. Most importantly, the quantity of radiant energy is greatly increased when the plasma field occurs between the inter-electrode couple of two differing electrical conductors. That, the wattage produced will depend largely on the type of electrode materials that are used. I do not suspect that the above referenced inventors were aware of this amplifying mechanism.

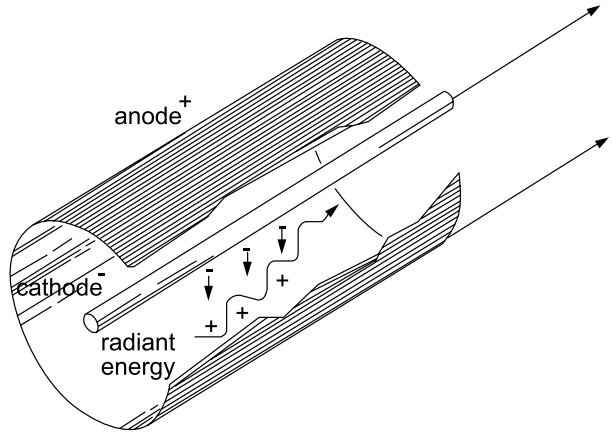

Fig. 1

Ion Valve

In the embodiment in Fig. 1 the negative charge on the wire in the ion-valve negatively ionizes any gas that contacts it. These ions rush towards the positively charged cylinder. When a metal ion that carries an excess electron hits head-on with an elementary differing positively charged onrushing metal ion a violent union of the two metals occurs. This causes the newly formed bimetallic alloy to violently oscillate, break up (dissociate) and to liberate a burst of electrons. The **"sea electron model"** helps to explain this effect. According to the sea electron model metals are bonded to each other through electron sharing. The model suggests that metal atoms be bathed in a sea of valence electrons. If this model is taken one step further it can be seen that when metallic atoms are dissociated from each other excess electrons are released in the form of electrical oscillations of high frequency (radiant energy). This occurs because the electrons no longer take part in the inter-atomic binding force that existed before the dissociation took place. It becomes clear that the freed electrons will add amperage to the output circuit to which it is connected. Henceforth, the equation **I x E = P** holds true in this system. Where, "I" represents the electrons (amperage), "E" electromotive force (ionic voltage), and "P" the power generated.

Obtaining Electrical Energy from the Transformation of Cosmic Energy

Matter is cosmic energy in a condensed state according to Le Bon and Moray. What this means is that matter can be excited its plasma state and caused to rapidly disintegrate transforming itself into electricity.

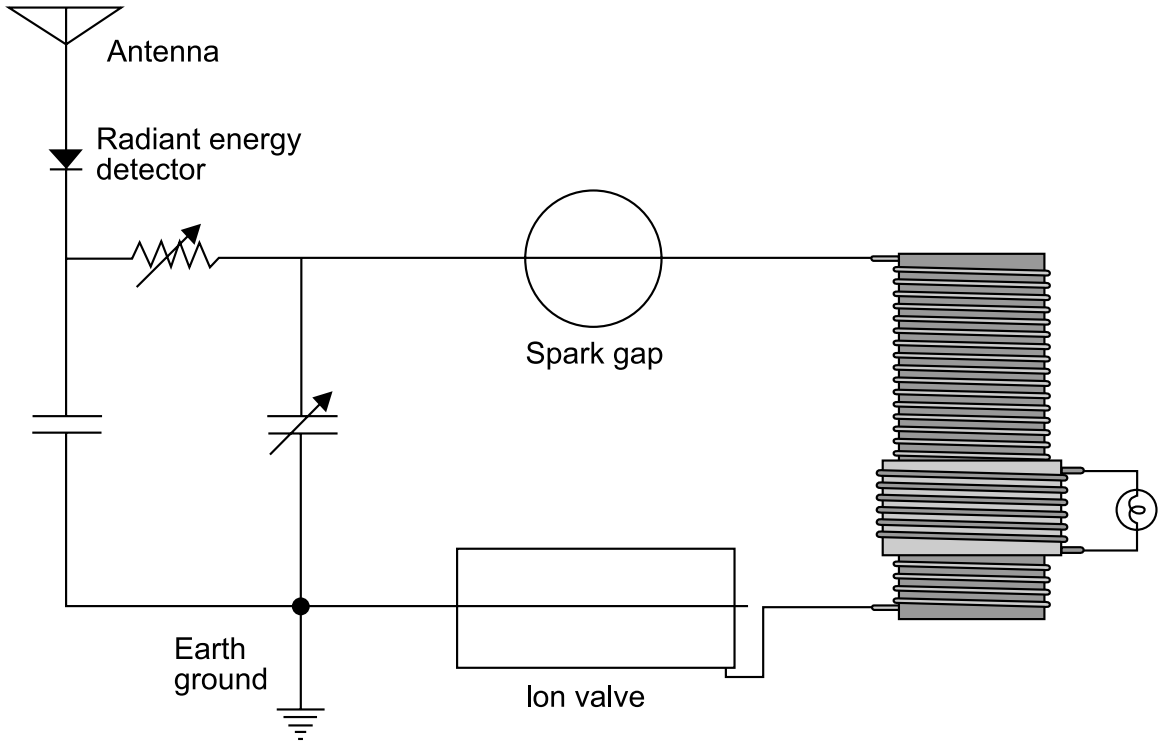

Fig. 2

Proof of Concept

The proof of concept shown will obtain energy from the dissociation of matter bringing the circuit to life. It does this by creating a plasma field between differing electrical conductors. Electrons are unleashed and feedback to the circuit where they are converted into useful power.

Plasma oscillating on the correct wavelength will act like a spark on a mass of explosive material but releasing electrical particles instead of heat. This is to say that the excited fourth state of matter (plasma) causes condensed energy (solid matter) to become uncondensed (radiant energy). The reaction will be far superior to the force that invoked it in the first place because the energy stored in matter is released. The energy that is condensed in the elements of matter is immense. The result is that an enormous amount of energy is released with only a slight loss of matter. Gustave Le Bon proved this when he demonstrated that the action of solar light and from electric arcs on bodies produced electric particles similar to those of uranium. He showed that it caused all bodies to disintegrate to different degrees.

the excited fourth state of matter (plasma) causes condensed energy (solid matter) to become uncondensed (radiant energy). The reaction will be far superior to the force that invoked it in the first place because the energy stored in matter is released

According to the law of conservation, when we give to a material body a determined quantity of energy, this energy might be transformed, but the body will never give back a quantity in excess of what it received. This principle is considered too self-evident to be disputed. It makes sense that matter can only give up energy that is given to it and is unable to create excess energy. Without violating this law, matter can be excited into giving up its stored inter-atomic energy. Condensed matter can become uncondensed if its oscillations become violent enough and henceforth transforming itself into radiant energy. No laws have been violated. They have been expanded. The first law of thermodynamics describes the principle of the conservation of energy. It states that "energy is not created or destroyed; it merely changes form". The fact is that the creation or destruction of energy is a result of matter being broken down or built up. They both go hand in hand.

Naturally occurring radioisotopes were created through the billions of years of **cosmic ray** bombardment of ordinary matter. Their matrixes became unbalanced. The

correct trigger will cause these isotopes to seek their original balanced state. Enormous amounts of electrical energy can be obtained from the transformation of stored cosmic energy. These isotopes contain a very old energy reserve that can be released in a unique way with my discoveries.

Have you ever wondered about spontaneous radioactive decay? Is it really a super charged state of matter? If an atom can become ionized by either gaining or by losing electrons then why can there not be a nuclear ionization too? I hypothesize that atoms do become ionized on the nuclear level by gaining or losing neutrons. This may appear incidental but could be at the very heart of an ultra-chemistry. It is highly probable that this hypothesized phenomenon is behind natural spontaneous radioactive decay and explains many unanswered questions about nuclear science.

Liberated Energy

With a slight excitement from a pre-glow discharge in a spark gap, or even with no excitement at all, as we observe in spontaneously disintegrating radioactive bodies, such as U235, we can obtain large quantities of energy. Clearly, we did not create this liberated energy, since it already exists in matter, but we release it under the right conditions. This is being done without violating the law of energy conservation. The idea that matter could be transformed into energy was absurd before the acknowledgement of nuclear transformations.

A Nu Science is on the horizon. It involves the means of transforming matter into energy without splitting atoms. This science recognizes several isotopes of matter that spontaneously liberate energy as observed in naturally occurring radioisotopes. My research indicates that it is also possible to artificially speed up the natural decay process of condensed energy (matter) using a minute plasma field, as from a pre-glow discharge, etc… With a very small quantity of energy, we will be able to produce a very large quantity of energy without splitting the atoms.

Capture Capacitor

Nature offers us cosmic energy that manifests itself in many different forms. Electricity is only one of its manifestations. From this knowledge, we can obtain electrical power with no moving parts. The natural world contains many storehouses of this cosmic energy. Energy is all around us just waiting to be transformed. The capture capacitor is one such example. It is called a capture capacitor because it captures and transforms electrical charge into electrical current. It does this with the aid of naturally occurring radioactive matter (N.O.R.M.). Put a pair of dissimilar metal electrodes together with a porous ceramic dielectric material sandwiched between them, along with a weak electrolyte and you have built a capture capacitor. In a low power capture component there exists a minute impurity of N.O.R.M. It is always present in clays and is usually present in ceramic materials.

If you want a capture capacitor to generate more power all you have to do is to add additional amounts of radioactive material to the dielectric. Lead–210 is the optimum choice because it has a half-life of around 22.3 years and is a pure beta (electron) emitter. Its half-life is almost twice as long as tritium. This means that it is feasible to build a component that will put out power for several years with little maintenance. Lead-210 is a decay product of radon gas. The parent source of radon is uranium. Therefore, uranium ore can be powdered and mixed into the ceramic material.

The atomic ions emitted from naturally occurring or artificially induced radioactive transformations can be directly converted to electrical power. The circuit shown can be used to convert radiant energy into useful electrical currents. Additional stages can be added for more power. The circuit shown gives a general idea of how such an energy conversion device functions. By no means is this technology limited to this one circuit, configuration, or source of radiant energy.

EAGLE-RESEARCH

Energy Solutions
since 1984

A Research Organization that Develops & Distributes Practical Energy-Saving Methods & Devices

4 Energy Way, P.O. Box 118
Porthill, Idaho 83853
FAX: 250/492-7480

Technical questions to:
wiseman@eagle-research.com

NEWS REVIEW

A new type of high field superconducting magnet from Oxford Instruments has enabled physicists at the University of Nottingham to balance the force of gravity and levitate heavy and dense materials such as lead, gold and diamonds. The patented Minimum Condensed Volume™ (MCV™) Cryofree™ superconducting magnet, developed and manufactured by Oxford Instruments in collaboration with the University of Nottingham, is the first of its kind in the world. Unlike conventional superconducting magnets, the MCV magnet never needs to be refilled with liquid helium and yet can generate a field over 300,000 times stronger than the Earth's magnetic field. MCV has a very small footprint and, operating at 4.2 K with a room temperature bore, can generate highly stable magnetic fields up to 16 Tesla.

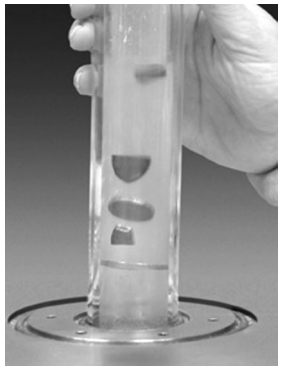

http://www.oxford-instruments.co.uk

Polish inventor Zygmunt Orlowski called attention of the scientific society to his perpetual motion machine **METOZ**, which according to the author after further improvement will be able to extract energy from the earth's gravitation.

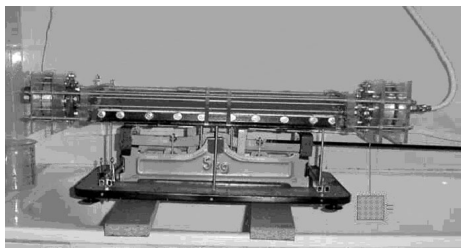

http://www.nets.pl/~metozor/perpetual_motion_machine.htm

It is necessary to change behavior of people in order to decrease environmental damage. This was the message of **"Green Week 2003"** which took place since June 2 through June 5 in Brussels.

The conference's key issues were three aspects of United Europe environmental policy: sustainable production and consumption, renewable energy and water supply.

Green Week is the first environmental forum of such a scale. Three thousand participants from all over the world represented governments and funds, industry and mass media. The exhibition organized in the framework of Green Week included 62 displays from 14 European countries and were dedicated to the newest environmental technologies and projects. During the Green Week 26 conferences and seminars took place, as well as a great number of press conferences and actions for young people.

British researchers (Gardner Watts company) **believe that they have made a groundbreaking scientific discovery after apparently managing to "create" energy from hydrogen atoms.**

The device represents "thermal energy cell" which appears to produce hundreds of times more energy than that put into it. If the findings are correct and can be reproduced on a commercial scale, the thermal energy cell could become a feature of every home, heating water for a fraction of the cost and cutting fuel bills by at least 90 per cent.

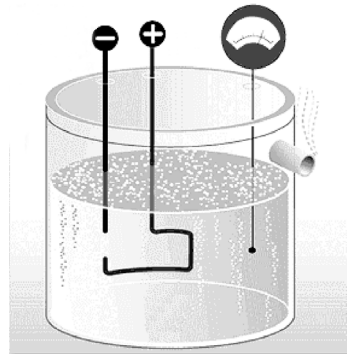

http://www.telegraph.co.uk

Gravity Conversion Rotary Device

The below figure is from
http://www.theverylastpageoftheinternet.com/newclaims/GravityMotor/gravity_motor.htm

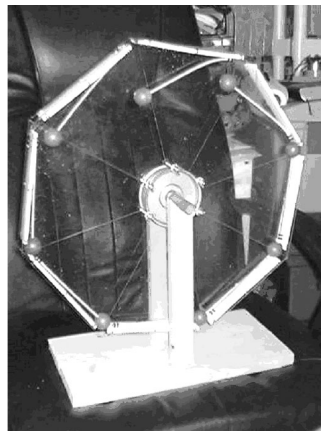

Does it really work?

The Marcus Device Controversy

Tim Ventura, USA

Email: tventura6@attbi.com
http://www.americanantigravity.com
http://www.americanantigravity.com/marcus.html

Editorial: This overview is devoted to the fantastical device created by inventor Marcus Hollingshead that encountered more than its share of publicity and controversy between November 2002 and March 2003. You can participate in discussion on aggroup@yahoogroups.com.

The problem with Marcus has been that he was pressured by too many people to produce too fast results. I started talking to him in November, and he is always sounded like an honest, rational man with a good heart. The problem is that once people started to hear his private claims that he could lift something like 2 tons of weight, things kind of went south.

While people in general have been very well-meaning, they are desperate to solve many of our current energy-problems, and when Marcus appeared with a potential solution it got out of control. Pretty soon film crews were showing up at his house unannounced, and he was getting unwanted phone calls from people who had looked up his number online.

In my opinion, it is really a problem of a "social dynamic" at work here – too many people, with too much access, all at once. This also correlates to the type of person that different people are. For instance, I am a very open person, and I really do not value my privacy a heck of a lot — therefore, when TV crews drop by with 5 minutes notice (and they have), I tend to just let them in for a demo. However, Marcus, who is much more of a private person, seems to have become a bit overwhelmed at this proposition.
Also, keep in mind that I had initiated working with the media because I felt that it was time for the excellent work in the Lifters groups to see the light of day. There was some debate about this, but the Lifters group as a whole has greatly benefited from being about to tell people about this new technology.

Marcus had not actually "gone public" about his work. He had leaked information about his research to a few people, and from there it was leaked to several others, who in turn told their friends about it. Unlike the Lifter technology, which has hundreds of people that can talk about how it works and where it came from, Marcus technology was represented solely by himself. That means that everything surrounding his device came back ultimately to him alone. Without any real group ownership of the expertise behind the device

As I said before, Marcus was new to the publicity, and did not have time to prepare the resources that the rest of us have had to answer questions, provide demo materials, etc. Naudin and Saviour have a masterful manner with regard to teaching people about Lifter technology, but they have had years to prepare this information and perfect a method of presenting it to people.

Most of us in the AG groups tend to proselytize for the technologies that we believe in. I know that I do, and if you haunt the newsgroups much you will notice that everybody there believes in something and can go on for months non-stop telling the world about it (again, I do this). Marcus, however, does not really have this personality — he is more of a "take it or leave it" type of person.

For me, this was another indicator that he was the "real deal". You have to understand that I have never seen working prototype pictures of the Marcus device, and all that I had to go on was the feeling that I got from interacting with him on the phone and online. The fact that he did not try to "sell me" on the idea was a big plus. He told me about the device, and his story was always consistent. The other people that he talked to also had a consistent story – I have not talked to anybody and heard a different version than I heard from Marcus himself. That is a big plus from the credibility perspective.

Marcus initial goal (from when I started talking to him in November) was to gradually ease into working with

the public to tell them about the technologies he was working on. Unfortunately, I probably aggravated the issue a great deal, because his early descriptions of the technology might have gone unnoticed if it had not been for some of the things he had mentioned about his research.

When I read Marcus' firsts posts on the device, my very first thought about his claims was that they were bogus. Judging from the reaction of the Antigravity newsgroup, I gathered that a few other people also had the same initial reaction. The reason might be a little selfish – after you hear claims but do not see results for a long enough period of time, you tend to protect yourself emotionally by becoming skeptical to the idea that somebody can be lifting hundreds of pounds of weight using a completely new and revolutionary technology.

Nonetheless, something that Marcus had said resonated with me. I remember that he was talking about his results being based on a study of the Earth's fields, which is something that I had read about myself during the college years. Telsa had done a lot of work involving the Earth's electrical and magnetic-fields, and I had always felt that this research might come in handy later as a potential basis for Antigravity research. However, I did not have any specific ideas, and began asking Marcus questions offline to find out more about his research.

In reality, I am nobody special, so I think that perhaps this would have happened in any event no matter what my reaction would have been. Certainly I am not the only person that took an early interest in his work, and from what I learned later he had already been a little bit too honest in the BBC online newsgroup before he ever became involved with the Antigravity newsgroups.

From January to mid-February Marcus became like somewhat of an addiction in the newsgroups. This was a strange phenomenon to watch, but if he did not answer questions in the newsgroups for even a day people started asking whether he had been kidnapped or the government had assassinated him.

You have to understand that most inventors tend to segregate their time into "public" and "private". I do, Naudin does, and everybody does this. When you talk to the public about what you have built, you really get into it — but when you are actually working on it, you tend to hole up in the garage and put the entire world on "ignore" until you have finished with whatever it is that you are doing.

Marcus really started to get publicity in late November 2002, and it built up over a few week period of time. By mid-December, he had a healthy following in the Antigravity newsgroup and people in the 5 or 10 other AG newsgroups were developing more than just a passing interest. Great stuff for Marcus – he had thought that he was the only person doing this research, and it turned out that lots of people shared this common interest with him. We had lots of really valuable and productive exchanges.

Marcus bided his time working on the projects – he had initially stated that he could lift around 200 pounds of weight with his November version (prototype #161, if I remember correctly). He did not have a digital camera, and he did not want to publish photos until he had a better prototype anyways. That was OK with me – I am used to work with a variety of inventors and came to realize a long time ago that everybody has their own style. I was content to wait until Marcus had additional data, and the only thing that I insisted upon was that sooner or later he ante-up and provide some photographic evidence.

Despite lacking photos or video evidence, Marcus did have documentation. In fact, he wrote more documentation about his device than I had ever hoped to receive. He cranked out about the equivalent of 30-pages of "real" documentation in a very detailed form within 1-month, and had the email equivalent of many more pages in postings about how the device worked online. Marcus had already been publishing details online for about 2.5 months.

Despite the incredible amount of published data that Marcus was able to complete, in some ways it made things worse for him than not having anything at all. The reason was the nature of his research. My work, currently focused on Lifters, was in a technology that is easy to explain – the device is built like this, it works like that, and it can be described in a manner similar to some other thing ....basic, easy to explain, and easy to compare.

After all, Lifters have been accused by science of being ion-wind devices. If nothing else, rebutting this claim gives us someplace to start – something to compare against to provide people with an idea about how the device works. Additionally, we had tons of video and photographic evidence to back up our claims. In Marcus case, the documentation that he provided made things worse because his technology is so utterly different. It is not ion-wind, nor the Biefeld-Brown effect, nor

apparently the Searle effect. In fact, the more than you tried to pin down exactly what it was, the harder it became to describe it.

Also, its not like he could simply fall back onto describing the construction of the device **– reason being that it contained a series of interrelated coils with a unique configuration that were intrinsically tied to the operation of the device.** Every time he wrote a detailed summary of the construction of the device, we had come away with more questions than we had started out with. After a time I gave up trying to understand how it was constructed, because I only had bits and pieces.

Marcus was using an arrangement of 6-coils, and what are described as "bifilar windings". Essentially, this means that you wind two wires together around a coil and then tie one of the ends to another, making the two wires essentially one long wire wound "against itself" down the length of the armature its on. There are 6 of these armatures on the device, mounted around a central RP (or reference point).

Marcus created all of the terminology for these parts – this lends additional credibility to the idea that he had had 7 years of experience with it. These are ideas that you just do not "make up" for publicity. For instance, the bifilar windings on the armature-coils are self-cancelling fields, and even a basic-electronics education will tell you that. However, the interesting thing is that once you really start to get into the advanced "post-scientific" research on magnetic fields you start to see self-cancelling magnetic coils all over the place. The reason is apparently that while the "B-field" *(Editor: i.e. magnetic field)* of the coils cancels, the "A-field" *(Editor: i.e. vector potential)* that Tom Bearden keeps talking about does not, which means that you can isolate the really interesting effects from the coil without having to deal with the high field-intensity effects from normal electromagnetism.

Marcus had described these six armatures as being activated in a series, or order, to obtain results. Each of the coils was spun by an electric motor mounted on the armature, and when the coil was spun up to a certain speed and "stubs" mounted a periodic intervals on the side of the armature were fired in sequence the antigravity effect was created.

Marcus Antigravity effect was a directional force that was applied in a unique manner depending on which coils were activated. This means that by activating (for instance) coils 1 and 3, he could create an antigravity effect and move the device left – or something to that effect. Turning on and off each set of coils gave him movement on one axis of thrust, which corresponded to X, Y, or Z in a standard 3-D geometric graph. Since you can move in either direction down any given axis of thrust, this means that you have 6 axis of movement height (up and down), width (left or right), and depth (forward or backward). His device provided movement on any axis by either one coil or an arrangement of coils.

For a while Marcus did not want to talk about side effects, but I pressured him into it. The reason was that I have seen side-effects that were pretty darned strange in a number of different experiments, and I was willing to bet that if I pressured him a bit he would talk about what he had seen but did not want to reveal (for fear that people would not take him seriously). It turns out that I was right.....

Marcus had talked about the RP, or "Reference Point" upon several occassions. This is a multi-layered device that acts somewhat like a capactive element. It sits in the direct center of the Marcus device, and it is the reference-point for the entire device. The RP is manufactured from cast-iron, and Marcus says that he has a local company build them for a few bucks each by pouring iron into a mold based on one of his designs.

You can active the RP at the same time that you activate the coils. You have coils rotating around the RP, with "stubs" on the coils firing periodically at points corresponding to spots on the surface of the RP. Meanwhile, you also have an electrical charge on the RP itself, which means that there are a lot of elements interacting at once to create a very complex dynamic.

One of the interesting side effects was a darkening and "blurring" effect of the RP, as if light was being reflected off it. Another was a Star-Trek like "force shield" around the RP. These only occurred when all of the coils were activated at once. Also note that since the coils are opposing in nature (one for each direction on each axis), that when you are creating the force field effect the device cannot be levitating. However, the device is operational, and you have a force-field that you can apparently bounce a heavy hammer off without being able to penetrate it (Marcus description).

Another interesting note is that the force-field effect can be modified to create a vacuum. I am not sure how

Marcus noticed this, but he had said that it appeared to create a vacuum inside of the field's boundaries during operation. Interestingly, it also ran very cold – apparently down to a hundred degrees below zero, but only within the localized boundaries of the field.

I am not a professional physicist, but this is something that has been reported with the Searl effect and several other experiments, and the reason that I believe it occurs is because you are taking the kinetic energy of the device as well as some of the kinetic energy of its molecules (i.e.: heat energy), and injecting it into another dimension. After all, anytime we directly modify a gravitational field we are creating a dimensional effect, but in normal life we do not notice it because the boundaries between gravitational fields are very gradual.

Well, in the Marcus device the boundary between gravitational fields is not a several thousand mile-long gradient like the Earth's field is – instead of you have a gradient perhaps 10-times more intense focused within a 3 to 4 inch area. That means that you are creating essentially a rift in time and space (self-healing) that is kept open by the energy that you are pumping into the device.

the energy input is used only in putting the device into another frame of reference, but that any interaction between us and our "normal" frame would have to be modified for any interactions with the "modified" frame.

To the best of my knowledge, this is the most accurate description that I have seen yet for why his device does this. Marcus himself could not explain why these effects occurred, and to be honest I scared him more than a little when I told him my theory.

In the hypothesis that I just put forth on the origin and functionality of the Marcus device effect, the interesting this is that there really is not a direct correlation between input energy and the effect itself. That is because you are not using the input energy to actually cause an effect – you are essentially using the input energy to translate the device into another dimension (although it is still partially within ours).

Einstein called these "frames of reference". The idea is that the energy input is used only in putting the device into another frame of reference, but that any interaction between us and our "normal" frame would have to be modified for any interactions with the "modified" frame.

Again, this takes place in normal physics – but usually it involves motion, and normally it takes place over a vastly larger gradient of time/space/whatever. The difference between two frames is the difference between two locomotives moving at different speeds – the energy input goes into accelerating each locomotive up to that speed, but the actual work is performed if those two trains interact is solely a product of the frame of inertial reference (mass & velocity = energy).

Another excellent example is a helium-balloon. You put the energy into condensing the helium and pumping it into the balloon, but it is not the helium that creates lift – it is the surrounding atmosphere. In a very real sense a helium balloon gets its energy from the surrounding environment. The energy that you put into "maintaining flight" in a helium balloon is only the strain on the fabric used in holding the helium into the confines of the bag that encloses it. With the Marcus device, I would bet money that it is not the input energy creating these effects – it is instead the difference in frames of dimensional/inertial reference between "our" environment and the "device's" environment, whatever that difference may be.

You see, even though this sounds like a load of BS, magnetism is not real. This is not an idea that I am making up – in fact, it is an entire chapter in the physics 101 textbook kicking around downstairs in my house. Take two magnetic fields, and project them in the same direction at the same speed. Field A can not interact with Field B, because neither of the fields really exists – they are merely ripples on a pond, and that pond is the background of the time-space continuum. People that believe in relativistic gravitational effects take for granted that things like this happen – after all, gravity is not a force per se in relativity – only a modification of the dimensions of time-space. Well, most people do not realize that Einstein based his theory of gravitational force on his study of magnetism. Magnetism is the same thing – it is a modification of the fabric of time-space.

Take two magnetic fields that did not interact from a moment ago, and now change the direction that one of them is traveling in. Suddenly, the two fields that could not even see each other a moment ago now create an incredible "torque" – this is the same thing that we see in bar-magnets and electric motors. This is the "torsion field" research.

Bar magnets are different than pure fields because they are composed of the discrete fields of thousands of tiny magnetic "domains". That is why the fields from bar-magnets are never "invisible" to each other – it is because that the fields in bar magnets are too jumbled to ever really "line up" to the point of being invisible. Pure fields can do this, however, reinforcing the supremacy of Einstein's relativistic effects with relation to electromagnetism.

Anyhow, that is about it for now – I will try to come up with a more detailed picture for you on this if you like, but I expect that you will probably have more questions about Marcus theory and device in near future. It is a very complex idea underlying his research, but the basis of it is the idea of "rotating magnetic fields".

If you want to do additional research on your own into related fields of study, I would definitely look up "relativity and magnetism" – it provides an excellent example of how to visualize relativity theory in the study of magnetic field interactions. This is something that electronics engineers are not taught, which is why you have never heard of this in an engineering sense before. However, in physics is a well-known concept, although most physicists prefer to work with quantum mechanics rather than relativity these days.

In terms of rotating magnetic fields, you can look up "torsion fields" – again, the Russians have the best understanding of advanced torsion field physics, although their best material probably has not been translated yet. Additionally, rotating magnetic fields are the basis for the Searle Effect and the Hamel device.

Marcus was intrigued by Searle's claims, because they appear to have matched many of his own results. Interestingly, Marcus had developed his work within an "intellectual vacuum" and had never heard of Searle before I told him about the similarities. Nevertheless, force-fields, ice-cold operating temperatures, and antigravity seem to be a pervasive similarity between all manners of experiments that have been reported using rotating magnetic fields. I had assumed that Searle's claims were bunk, but after hearing about similar effects from Marcus research it led to reconsider some of the criticism surrounding Searle lately.

One a final note – one group that may lend additional credibility to this research is Godin and Roshchin in Russia. They obviously benefit from the years of knowledge that the Russians accrued in magnetic field systems theory, and they attempted a replication of the Searle effect device some years back (and claimed to get some results). I hear that they have been working on a revised version of their experimental setup recently and hope to have even better results in the very near future.

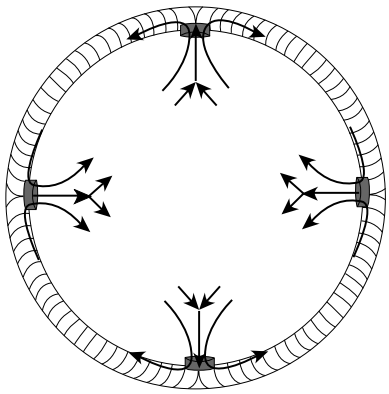

Fig. 1

Magnetic flow for a bifilar-wound toroid that is split at four points on the toroid. This configuration occurs when the coils in the nubs are charged to match the charge on the toroidal coil. The configuration is a quadra pole with a minimum magnetic field at the center

Fig. 2

Marcus recommends the Kikusui 6000L and 18000L multipurpose AC power-supplies

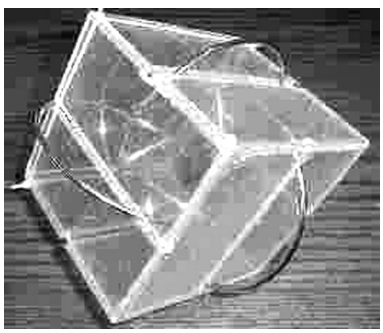

Fig.3

A scale-model mockup of the ring-arrangement within the Marcus device, showing the interlinking coils

History pages

Systems of conversion of thermal energy to mechanical one

Review prepared by correspondent Alla Pashova, **Russia**

There is a wide class of closed-cycle heat engines using differential temperature of water and ambient air. This kind of systems enables thermal energy to be directly converted to mechanical one so as to perform a useful work. We publish patent specifications of two analogous devices of this kind.

PATENT FOR INVENTION

Specification

of the engine, which uses differential temperature of water and ambient air.

To the patent by **P.I. Dobrokhotov** filled on October 22, 1928 (#34248).

Patent grant is published on March 31, 1930.
Patent is valid during 15 years from March 31, 1930.

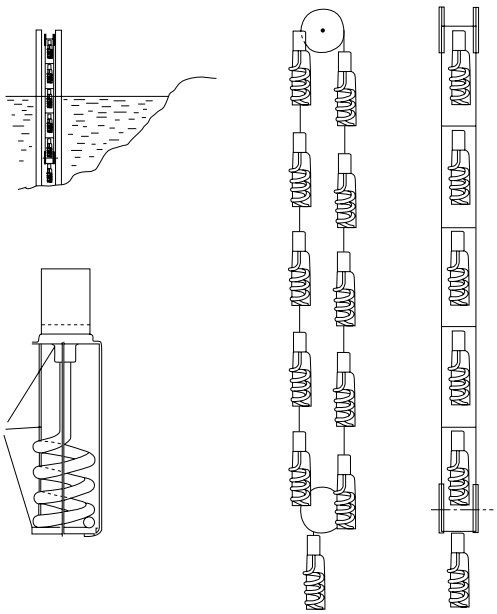

In 1928 **P.I. Dobrokhotov** proposed a design of such an engine. It represents an endless chain thrown over a pair of blocks and partly immersed into water. The chain consists of coiled pipes filled with a volatile liquid (such as sulfurous anhydride or ammonia). One end of each coil is fastened to a frame, while another end is fastened to a cylinder piston mounted on the same frame. When overwater elements are heated by means of ambient air, the liquid inside the coil evaporate. Vapor put pressure upon the pistons which being in motion compress air in the cylinder, and thereby reduce volume of each element. When submerging, the element gradually cools down, thereupon causing a decrease in pressure of vapor of the liquid, which is enclosed within coils. The pistons move in backward direction, and the volume of air available inside the cylinder increases. Increase of volume results in increase of water buoyancy force that sets the device in motion.

INVENTION SU1404681 A1

23.06.88
Yu.S. Grigoryev
Prototype: USSR patent #13534
F 03 G 7/06, 1928

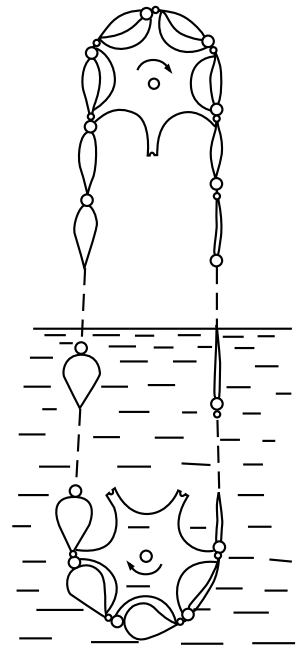

In 1980, **Y.S. Grigoriev** developed his forerunner's idea by improving the system described above. The inventor aspired to enhance the effectiveness of this method of conversion of heat energy to mechanical one. He suggested fixing the volume of chambers filled with a heat-sensitive actuating medium at its minimal magnitude before immersing of those chambers into warm water. In water the actuating medium heats and partially evaporates. At a maximum depth of submersion, the chambers are released from fixation to be expanded during emersion. Thus one may avoid expansion of the chambers during their submersion. Futhermore, there is a possibility to activate the device and get the useful work without preliminary spinup from an external drive.

Iliya R. Prigozhin
(25 January, 1917 – 28 May, 2003)

Iliya R. Prigozhin, aged 86, Nobel Prize Winner, Belgian scientist of the Russian origin, died on 28 May in Brussels. Prigozhin made a number of prominent discoveries in the field of thermodynamics and statistical mechanics of nonequilibrium processes. In particular, he developed a concept of irreversibility as applied to thermodynamics. Prigozhin was studying time as a physical phenomenon. In 1977, he was awarded the Nobel Prize for chemistry "for works on thermodynamics of nonequilibrium processes".

The scientist formulated one of the major theorems of the theory of nonequilibrium processes. This theory was later named after him. According to Prigozhin's theorem, stationary state of the system corresponds to minimal entropy generation. The outstanding physicist was also an initiator of applying methods of theory of nonequilibrium processes in biology.

Thermodynamics principles were enunciated in the middle of the XIX century after the invention of a steam-engine, when interaction of heat, electrical, and mechanical work aroused a higher interest. In accordance with the first law of thermodynamics representing an energy conservation principle, energy neither disappears nor appears in any closed system, but transforms from one form to another.

The Prigozhin's theorem sounds as follows: stationary state of the system (under conditions impeding attainment of equilibrium state) corresponds to the minimal generation of entropies. If there are no such impediments, then production of entropy reaches its bare minimum, i.e. zero. The theorem was proved by Prigozhin in 1947.
In thermodynamics the nonequilibrium specifically open systems were of most interest for Prigozhin. In such systems either or both (matter and energy) interchange in reactions with an environment. At that, quantity of matter and/or energy increases or decreases in the course of time.

It is obvious that human society as well as the biological environment is an example of dissipative and nondissipative structures. In the 60s and 70s, Prigozhin developed his theory of dissipative structures and described the formation and development of embryos. Critical points of bifurcation in his mathematical model are correlated with a point, where a biological system becomes consecutive and stabilized.

For his scientific career time, the physicist was awarded over 40 scientific rewards and admitted as an honorary member into national academies of many countries all over the world.

New Energy Technologies
PRINT EDITION ADVERTIZING RATES

Full Page Ad

B/W - $400

Color - $800

Half Page Ad

B/W - $200
Color - $400

Quarter Page Ad

B/W -$100
Color- $200

New Energy Technologies is distributed in the leading Scientific Laboratories in Russia and has subscribers in more than 20 countries all over the world

To advertise contact us:
Faraday Labs Ltd, Phone/fax: 7-812-380-3844
http://www.faraday.ru, office@faraday.ru

Russian Academy of Sciences
Russian Physical Society
Nuclear Society of Russia
Mendeleev Chemical Society of Russia
Moscow Lomonosov State University
Russian People's Friendship State University

The 11th Russian Conference on Cold Nuclear Transmutation of Chemical Elements and Ball-Lightning (RCCNT&BL-11) is to be held during September 28- October 5, 2003. The place of the Conference is in Dagomys near the city of Sochi.

The program of the Conference includes the following subjects:

- Experimental research in cold nuclear transmutation (fusion) and ball lightning;
- Theoretical models with respect to cold nuclear transmutation (fusion) and ball-lightning effects;
- Applied to these problems technologies and devices.

The Organizing Committee of the Conference is pleased to invite you to attend the Conference. The terms of your participation are as follows:

The full cast is $900, which will include the registration fee, hotel reservation and living, three daily buffet meals, conference proceedings, transportation from the Sochi airport and back, social dinner and special excursion or entertainment.

The languages of the Conference are Russian and English.

The total cost can be reduced to $800 if transferred before August 10 to the account of the Organizing Committee, which is to be announced on having received from you a confirmation about your decision to attend the Conference.

If you make a decision to take part in the Conference, please, let us know before July 1 about the title and abstract of your report.

Contact telephone: (7) (095) 196-9476 (ask Mr. Igor Goryachev), Fax: (7) (095) 196-6108
Email: gnedenko@kiae.ru; Bazhutov@erzion.madi.ru; bazhutov@izmiran.rssi.ru; bychvl@orc.ru
Address: I. Goryachev, Russia, 123182 Moscow, 1 Kurchatov Sq.,
Research Institute of High Technologies at RC "Kurchatov Institute"

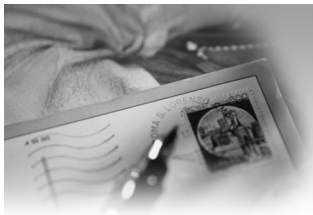

Letters from our readers

Thank you for publication of my article. Your magazine becomes more and more popular.

My special thanks to Editor-in-Chief Alexander V. Frolov. Whatever they say or write in the press, he has done a great work and it is not only my own opinion. He has managed to do that everybody had been waiting for a long time. My colleagues (not only from Rostov-on-Don State University but also from other Rostov Institutes of higher education) ask me personally send the best regards to the editorial staff of your magazine.

Sergey A. Gerasimov

Free energy?

The scientific community says that it cannot exist. Where did we hear that before? Academician Valery Sobolev from the Academy of Sciences, the head of the research group working on the experiment says: "This is not some new physics, but just experiments that have been performed very seriously. Make surge of electrons from the environment, remove them, deplete the fused electrolyte with basic typical metals; what you derive from it is what cannot be produced by chemical methods. This is a new state of substance." As the researchers say, first they discovered a particular electrochemical process where high-temperature materials in a new state are the product. This in its turn allowed to discover a new state of substance, new class of materials, a new source of energy, a new method of cold plasma generation, a new superconductor. See whole article at: http://english.pravda.ru/science/19/94/379/9675_energy.html

Josef Hasslberger

Personal home page on physics, energy technology, social and economic issues: http://www.hasslberger.com

Interference disc generator with permanent magnets

inventor Alan Francoeur, Canada

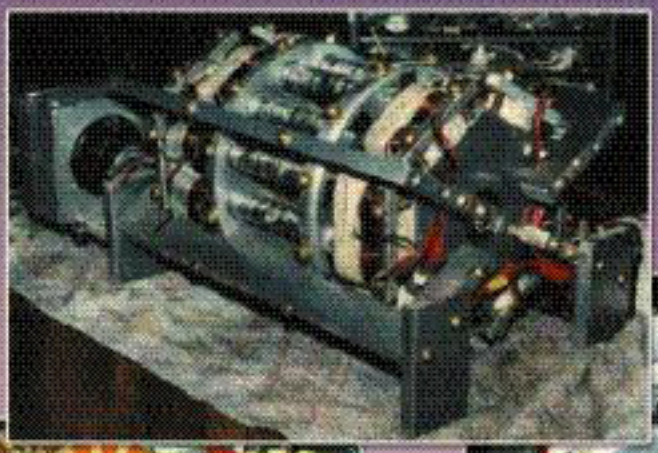

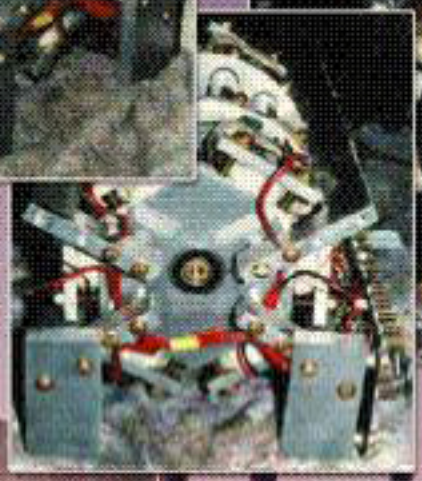

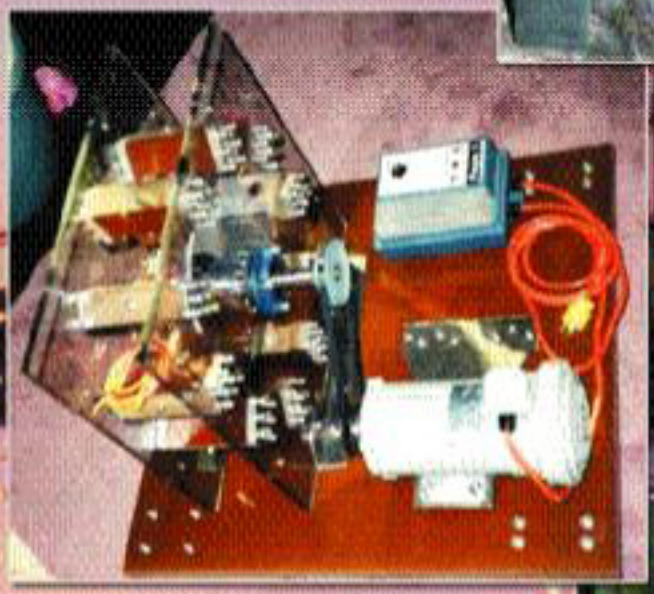

Carl Reich

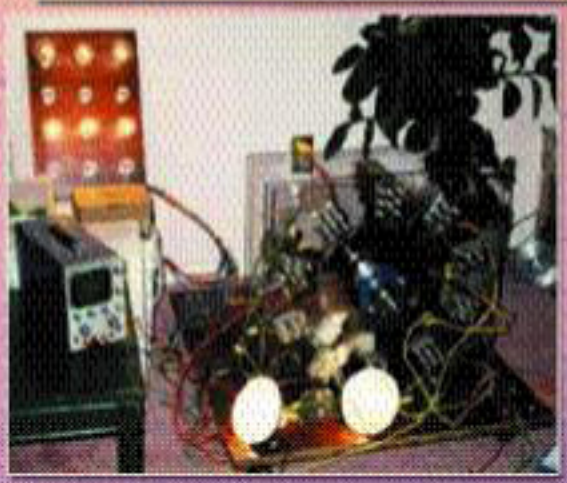

Bud Johnson

Vortex heat pump

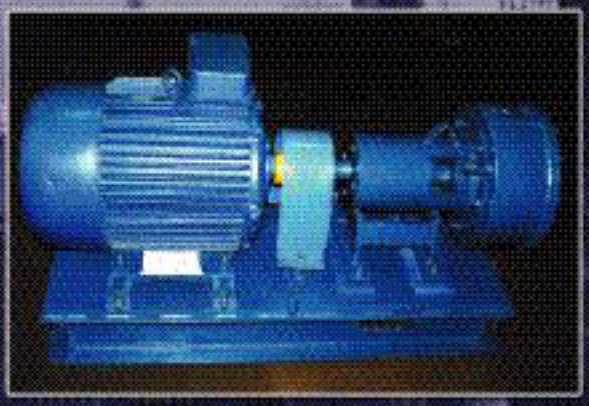

Efficiency 200% and more!

Inventor: Vladimir Susorov
(812) 342-2652
8-901-976-5151
susorow@rol.ru

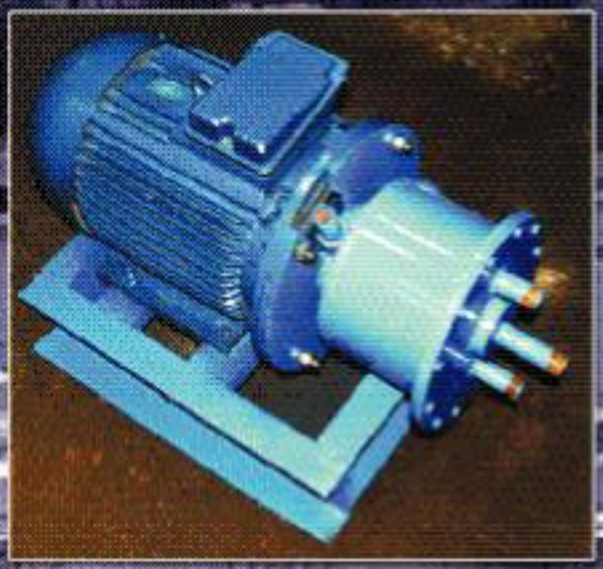

ISSN 1684-7288

Gravity-heat power system

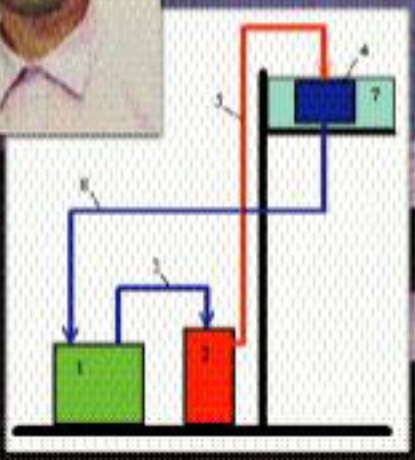

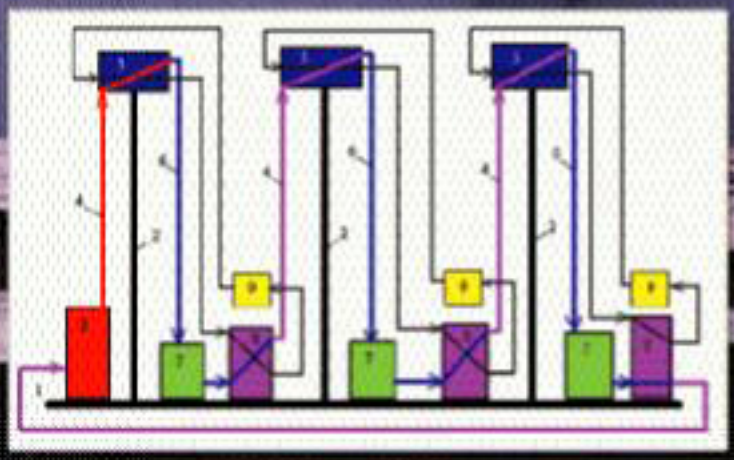

Author: Vladimir Sukhanov Wladimir.Sukhanov@soros.ksu.ru

New Energy Technologies

ISSN 1684 - 7288

Published by Faraday Lab. *Special Christmas Issue #5-6, 2003*

Research on advanced aerospace systems and new energy sources

In this issue:

- atomic hydrogen in power engineering
- magnetic generators
- capillary perpetuum mobile
- Hutchison effect

Photos from Faraday Laboratory: test bench for measuring the effectiveness of hydrogen dissociation and recombination processes

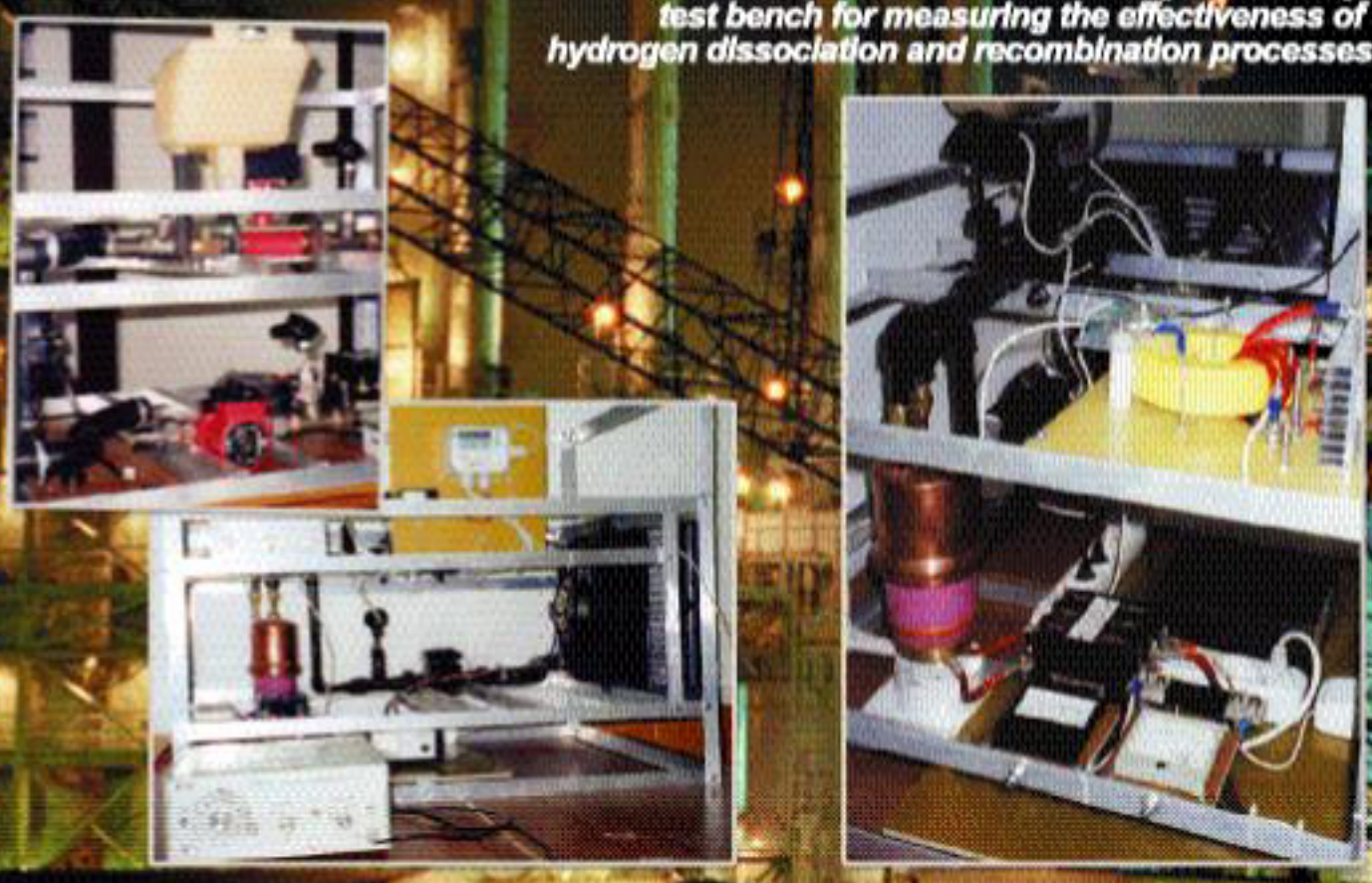

Bogomolov's Invention

Over-unity from elastic forces of spring, compressed by rotation.

Read in this issue!

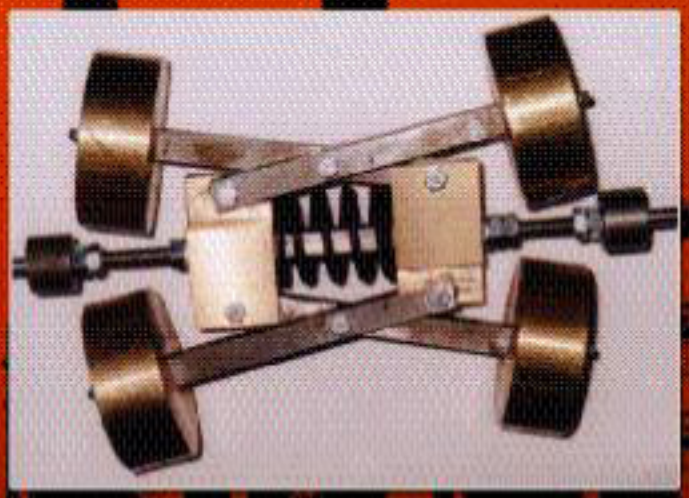

Spin Wave Laser of Ines Espinoza, USA

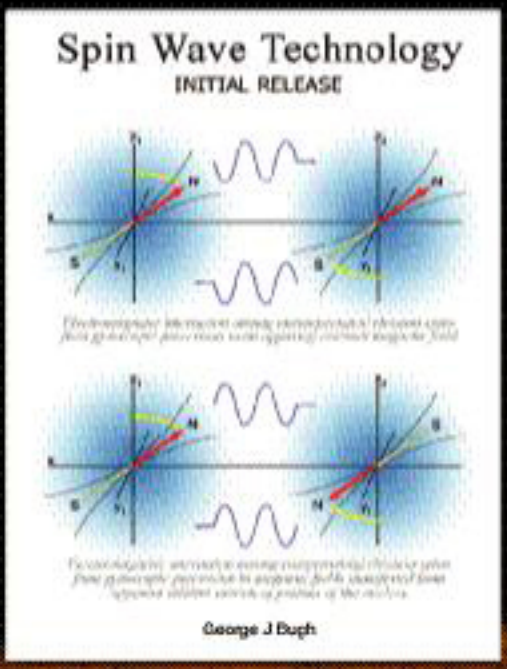

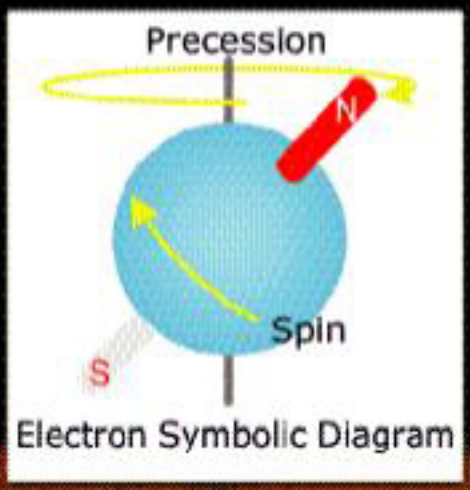

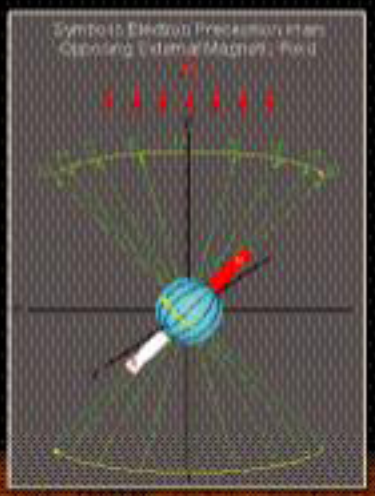

NEW ENERGY TECHNOLOGIES #14-15

1. News from our company
2. Novozhilov's motor, Y. Novozhilov, Russia
3. Self-action in the case of magnetic rotation, S. Gerasimov and others, Russia
4. Capillary motor, I. Elshansky, Russia
5. Gravity-heat energy system, V. Sukhanov, Russia
6. Modern perpetual mobile, Review
7. Free energy and antigravitation, (spin wave lasers), Ines Espinosa, USA
8. Mechanical analogies, Y. Ivanko, Ukraina
9. Cell of fine-plasma electrolyses, Ph. Kanarev, Russia
10. Smith Generator, Review.
11. Strategy of Over-unity Devices Marketing, R. Wood, USA
12. Hutchison effect, Mark Solis, USA
13. Heat energy conversion by means of non-linear dielectric, A Ries and others, Brasil
14. Gates motor, A. Akau, USA
15. "Cold electricity", A.Akau, USA
16. Gravity conversion rotary device
17. Torsion technologies, China
18. News
19. Antigravitation, B.Smith, USA
20. Electric levitation, MacLeod, Canada
21. Perpetual mobile, V. Likhatchev, Russia
22. Interference Generator, A.Francouer, Canada
23. New Paradigma of Time, D. Reed, USA
24. On the rotating permanent magnet system, A.Frolov, Russia
25. Inventor's week, USA
26. Patents on inertial drive topic
27. Bogomolov's experiment with spring drive, Russia
28. History of perpetual mobile
29. Tesla Energy Science Conference, USA
30. Perendev company, Review
31. Internet pages about free energy
32. Matveev's electrical generator, Russia
33. Perpetuum motor with magnets, France
34. The most interesting of 2003
35. Hydrogen power engineering, Review
36. News on hydrogen fuel cells
37. Electric discharge as part of the over-unity device, Review
38. Subscription page

Faraday Lab News

One of the most interesting research projects of our company in the year 2003 has been the research on hydrogen dissociation and recombination processes. It has taken us about half a year to build a special vacuum tube and in October, 2003 we obtained some experimental results on the heat output and efficiency of the system. The system we designed in our laboratory is shown in Fig.1 and also on the cover. The water-cooling system and the heat measurement system make it possible to measure the heat output within the range of 100 W to 5 kW with pinpoint accuracy. In the year 2004 we are planning to go on with our research work.

Fig.2

We have completed the second stage of designing and developing a high-efficiency magnetic generator with the neodymium permanent magnets of 1.25 Tesla. We confirmed the possibility of double output increase from the usage of two magnetic induction counter fluxes produced by the two coils wound on the generator core (Fig.2).

Our laboratory continues designing and perfecting a powerful "alternator"-type generator with permanent magnets and a drum-type rotor. We will give our readers more detailed information after we are aware of the patent examining result.

Our research on "The Control of Temporal Characteristics of Physical Processes by means of Ether Energy Density Change" is also awaiting the results of the patent examining group. This research on time and the construction of the "time machine" is not a pure theory but it has quite real prospects of being applied to the aerospace industry as a propulsion method.

Fig.1

It is worthy to note that now the alternative energy prospects in Russia do not entirely depend on financial factors. The cooperation is important between researchers, investors and organizations interested in the innovative development of Russian industry rather than in the development of Russia as the world primary natural resource is also important. Progressive political and public organizations should develop and introduce alternative energy programmes as well as render support to local researchers. The successful innovation of new technologies is impossible without this support and lobbying government. Let us hope that the year 2004 will bring along new opportunities and promising contacts.

Alexander V. Frolov
General Director Faraday Laboratory Ltd
http://www.faraday.ru

Novozhilov's Motor

Yury N. Novozhilov, Russia
Bratislavskaya Str., 25-6, 390035, Ryazan,
Tel.: (80912) 72-12-72

An interesting but a very simple motor has been designed. It operates on the basis of heating differences of its components due to temperature variations of contacting environments or due to variable radiation intensity.

Motor structure

The motor structure (see Fig.1) includes a metal or plastic wheel (1). In the center of the wheel there is an axis (2), on which spoke ends are fixed (3). Other spoke ends come through a hole in the wheel rim. On the spoke end there are weights, for example, in the form of small balls (4).

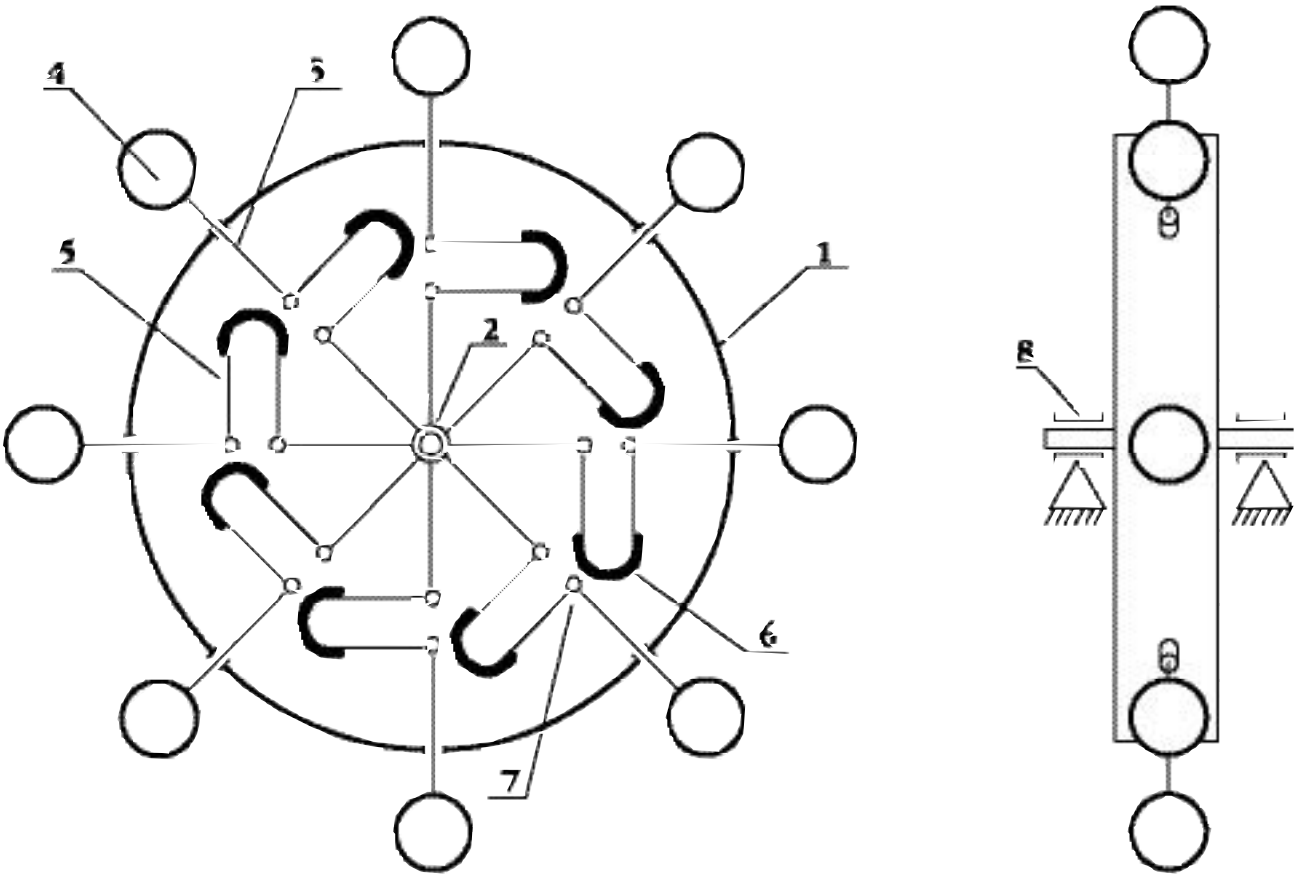

Fig.1
Motor

The structure peculiarity is preconditioned by a loop-shaped part placed on each spoke (5), which has a form of a metal strip or core. An arched bimetal component is built in the center of each loop-shaped part (6). Joints can be fixed at the joining point of loop-shaped parts and spokes to simplify the motor movement (7).

In the motor structure described arched bimetal components become straight when heated. The motor axis ends are placed in bearings (8).

To initiate the motor movement the loop-shaped parts need to be in mediums (zones) with different temperature. For instance, the lower part of the wheel may be placed into hot water (9) and the upper part will stay in the air (10).

Motor operation

When the motor is in a medium with identical temperature, for example, in the air, the temperature of all bimetal components will also be the same; therefore, they have identical form. In this case all spokes will similarly project over the wheel rim and all weights have similar distance from the wheel axis.

This state makes the whole system balanced and immovable. But if the motor wheel is partly placed into water with the temperature exceeding that of the ambient air **the bimetal components in water will become straight and shift the axis weights from the wheel axis.** This phenomenon initiates motor operation.

Let us consider this process in more detail.

On touching water, the bimetal component in the loop-shaped part becomes straight and shifts a weight from the wheel axis. The wheel becomes unbalanced, obtains torque and turns clockwise. This rotation makes the following bimetal component on the next loop-shaped part of the following spoke touch water. This bimetal component also becomes straight and shifts a weight from the wheel axis, generating an increased torque that turns the wheel clockwise.

At the same time a bimetal component comes from hot water on the left side of the wheel in zone "A". The component cools and restores its initial form, i.e. it curves more and pulls the weight on the spoke to the rotation axis. This leads to a decrease of its counterclockwise torque that affects the wheel.

The loop-shaped parts on the left side (A) and the right side (B) of the motor wheel will cause asymmetry in the number of weights projected by the spokes. On the motor left side (A) the weights will be projected from the wheel axis when the spokes are located in corner "C". On the right side (B) the weights on the spoke axes will be shifted from the axis when the spokes are located in corner "D". Fig.2 shows that corner "D" is far larger than corner "C". This means that more weights will be shifted on the right side of the wheel in zone "B" than on the left side in zone "A".

Fig.2 shows that the wheel weights generating a clockwise torque are projected on the right side. On the left side in zone "A" only one weight is projected and it generates a counterclockwise torque. More weights shifted from the wheel axis on the right side will generate a greater clockwise torque than the weights shifted from the wheel axis on the left side. This is the cause of the wheel clockwise rotation.

This interesting effect is achieved due to the loop-shaped parts on the wheel spokes with bimetal components placed on them. When the next wheel spoke reaches corner "D", the bimetal component connected with it touches hot water, becomes straight and shifts the corresponding weight further from the wheel rotation axis. The motor wheel continues rotation, making the next bimetal component touch water. It is also heated, becomes straight and shifts the corresponding weight from the wheel rotation axis. The wheel continues rotation. Bimetal components are touching water in succession. On the left side, in zone "A", the bimetal components successively come out of hot water, cool in comparatively colder air, return to the initial sharply curved form and pull the weights on spokes to the wheel rotation axis. This is the reason for the wheel torque to decrease.

Mass movement from the axis in a rotating object commonly causes reduction of rotation speed. And, on the contrary, the rotation speed increases when the mass comes close to the axis. In motor zone "A" the weights come close to the rotation axis after the corresponding bimetal components come out of hot water, and the same number of weights move from the center in zone "B", i.e. these effects on the rotation wheel compensate each other.

In essence this is a heat machine. The heat transfer from a warmer medium – water – to the cold medium – air – is achieved owing to the heat capacity of the band-form bimetal component. This is the reason for fast heating and cooling processes. Due to the fact that bimetal components are not large, not so much heat is needed for their heating.

The motor will operate when the air temperature exceeds that of water but in this case it rotates counterclockwise.

There is another model of this motor when nitanol components are used instead of bimetal ones. Nitanol is a memory metal alloy that changes shape when reaching certain temperature. In this instance, the nitanol component is normally curved but becomes straight when heated (for example, up to 50^0 C), and the weight on the spoke end moves from the wheel rotation axis initiating rotation of the wheel. That means similar operation of a nitanol-based and bimetal-based motor.

The motor structure is very simple and its operation does not require power or fuel supply: it is enough to place its wheel into the water the temperature of which is different from that of the air.

The motor structure may be further developed: for example, a focused sun ray can be used for the heating purposes; the bimetal component can be heated with a common electric lamp on one side of the wheel, the required heat may come from a heating radiator, stove or burning gas-jet. Such motor may be heated when installed on a mantelpiece, etc.

This article describes the motor model that can be used as a toy. Being supplied with looking-glass units it may be applied to get various luminous effects or may be installed in the shop showcases, or else at exhibitions. This motor is also able to operate in a gravity force environment, even on the Moon. There direct sun rays may heat bimetal components to 200^0 C, and the temperature of the components located in the shadow almost reaches absolute zero, i.e. the temperature difference in this instance is over 400^0 C, which enables constant efficient motor operation.

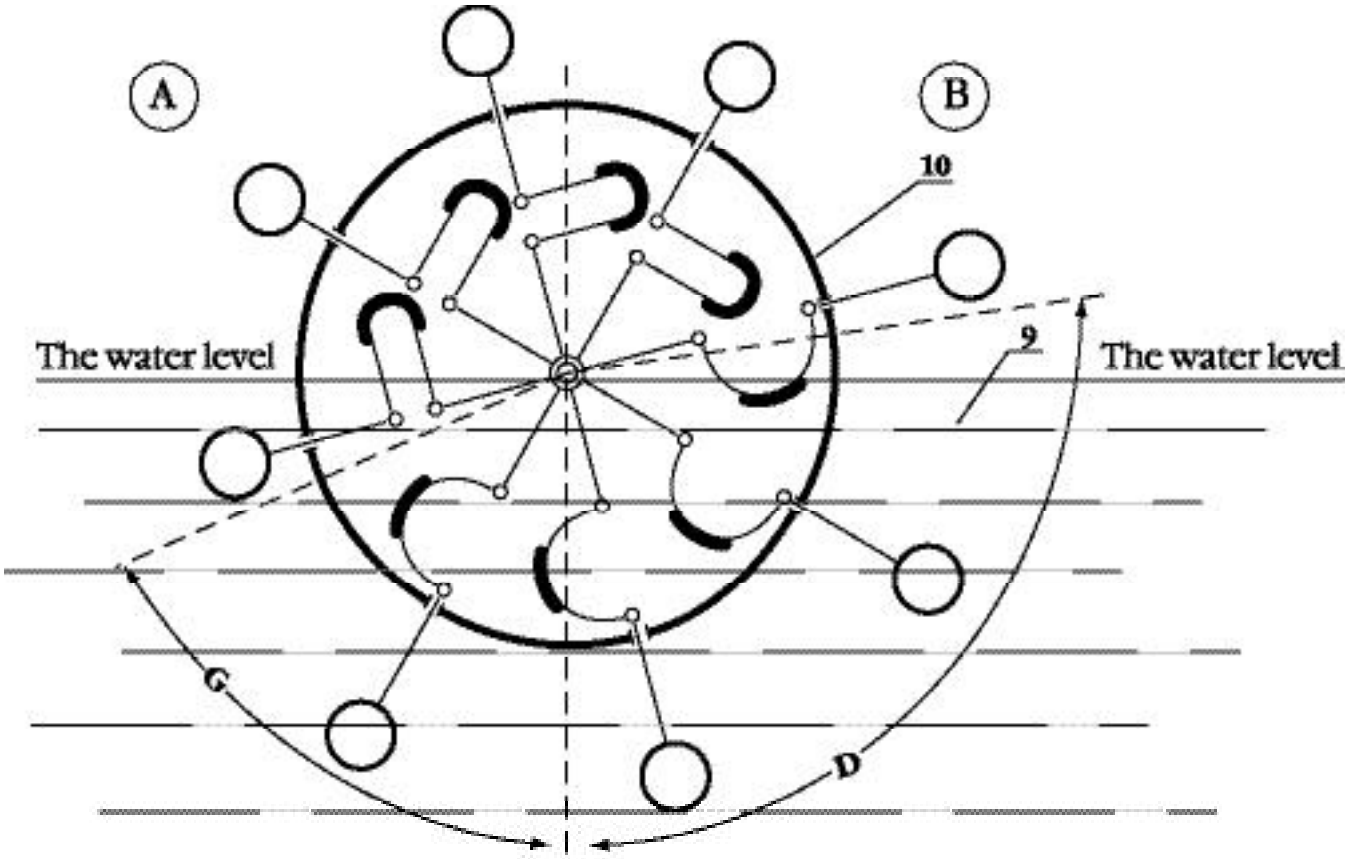

Fig.2
The motor in operation

Self-Interaction in Electromagnetic Rotation

S.A. Gerasimov , V.V. Stashenko, Russia
Physics Department, Rostov State University, Rostov-on-Don, 344090
Email:GSIM1953@mail.ru

Introduction

The electromagnetic rotation is the motion of a magnetized body ina direction perpendicular to both the vector of magnetization J_m and the direction of the electric current j in a liquid inside which the magnet is located (Fig. 1).

Editor: Readers can compare this vector composition and the device scheme of Godin and Roschin with the Searl experiments. The similarity is evident. *A. V. Frolov*

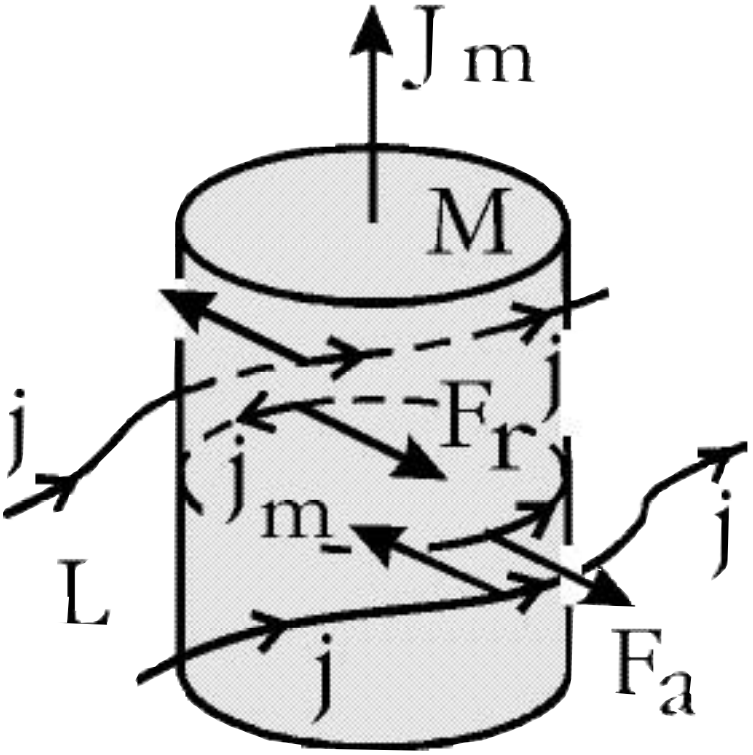

Fig.1
Electromagnetic rotation. A magnet M of magnetization J_m that is partly or entirely submerged in a conductive liquid L with a direct current of density j is moving in the direction of the force F_a+F_r

The force producing such a motion is sufficiently weak and, normally, the phenomenon is observed at rotation. Although, this is quite a well-explored phenomenon [1-6], nobody knows what makes the magnet rotate [4]. There is an opinion [2,3] that the motion of the magnet in the conductive liquid is caused by the forces of attraction $\mathbf{F}_a$ and repulsion $\mathbf{F}_r$ between currents of density **j** flowing in the liquid and surface magnetization currents $\mathbf{j}_m$ of the magnet, often called the Ampere currents as shown in Fig. 1.

The external magnetic field of a long cylindrical magnet originating far from either pole is zero. Therefore, no force is exerted on charges moving in the liquid far from the ends of the magnet. Nevertheless, the magnet still moves in the liquid with the direct current even if it is only a thin magnetized needle [5]. Thus, the deeper the magnet is immersed in the conductive liquid, the more liquid gathers around it. The deeper the immersion is, the higher the total force must be. That should be so.

In reality, it is quite different. During intermediate immersions when the magnet is partly submerged in the liquid, the torque N does not depend on the depth of immersion, in the other words, currents flowing round the cylindrical magnet do not influence the exerting force acting [6]. Moreover, during shallow immersions, the magnet moves together with the liquid. **This is none other than *the self-interaction* [7].** The conductive liquid under the magnet experiences the magnetic action. The direction of this force coincides with the direction

of the magnet motion. **Thus, the part of the conductive liquid moving in this direction under the action of the magnetic field B, affected by the frictional forces in the liquid causes the motion of the magnet in the same direction.** The only way to find out the role of the self-interaction in this phenomenon is experimental investigation. It would be appropriate to exclude the currents flowing under the magnet. In this case the magnet must rotate in the opposite direction.

Experimental system

A commercially available cylindrical magnet M of magnetization J_m=1,95•10^5 A/m and a balanced load *P* connected by a rocker R are suspended by a thread *T* as shown in Fig. 2.

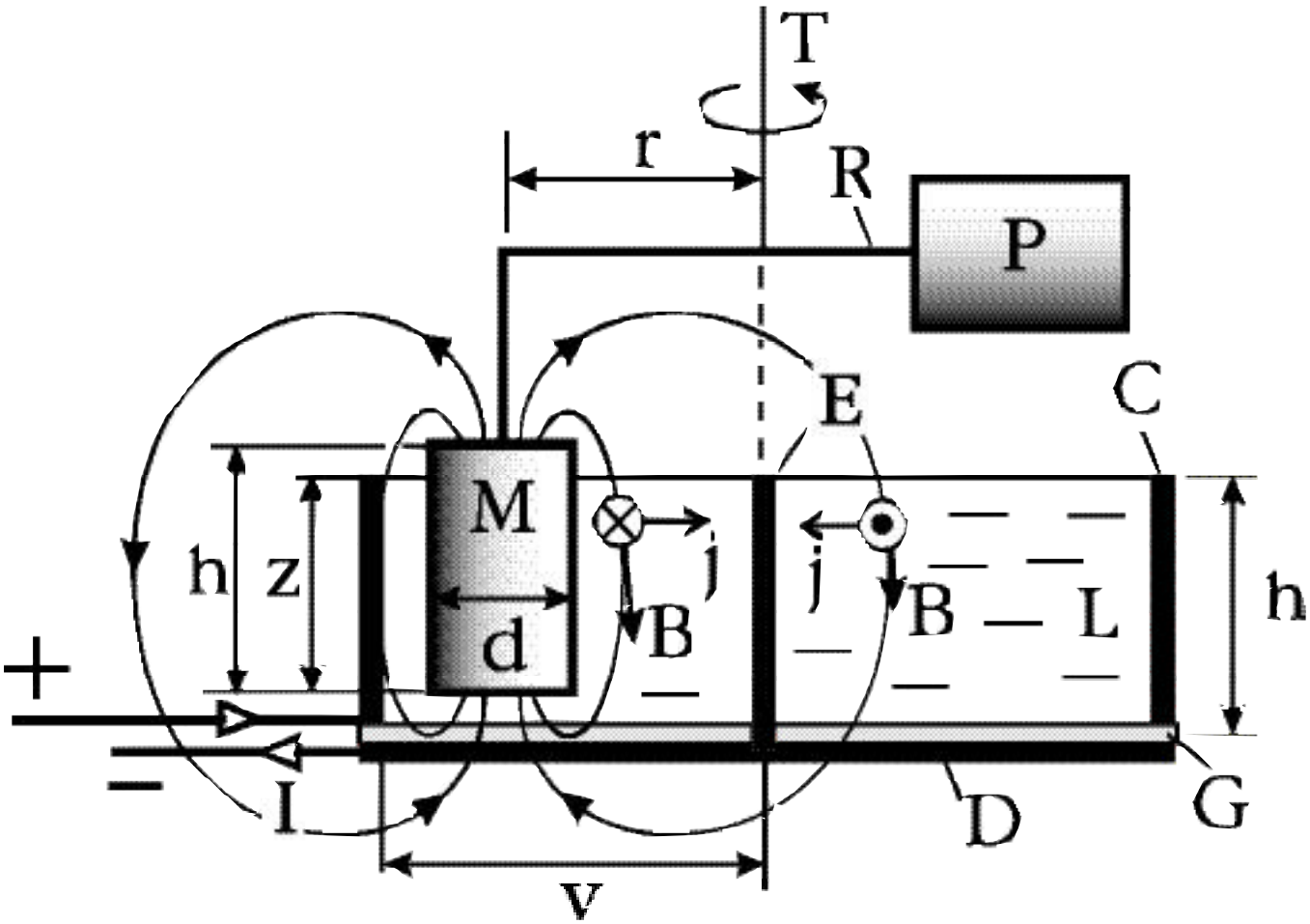

Fig.2
The experimental set and its parameters: h=50 mm, r=35 mm, d=25 mm, v=70 mm, the diameter of the central electrode E is 5 mm, the thickness of the bottom G is 2 mm. (×) and (•) are directions of the force acting on current elements of current density j in the magnetic field of inductance B

The magnet is immersed in the 5% copper sulfate solution ($CuSO_4$) so that the depth *z* of immersion can vary. A vessel containing the conductive liquid *L* is large enough for the magnet to be almost entirely immersed. The cylindrical surface *C* of the vessel and the central electrode *E* of the system are made of non-magnetic materials. The bottom of the vessel *G* is, of course, insulator. The magnet is coated with an insulating moisture-proof varnish. The length of the electrode *E* equals the height h of the vessel. A direct current of strength *I* passing through the cylindrical electrode *C*, the conductive liquid *L*, the central electrode *E* and the disk electrode *D* generate a torque of electromagnetic origin which results to the rotation of the magnet. The disk electrode *D* is intended to provide the system with the symmetrical supply of the current.

Experimental results

The size of this experimental device differs from that described previously [6]. **As a result we have obtained the torque N, which is about ten times more intensive than the former one.** But the main result is that the torque does not change its sign when the magnet is being immersed in the conductive liquid (Fig. 3).

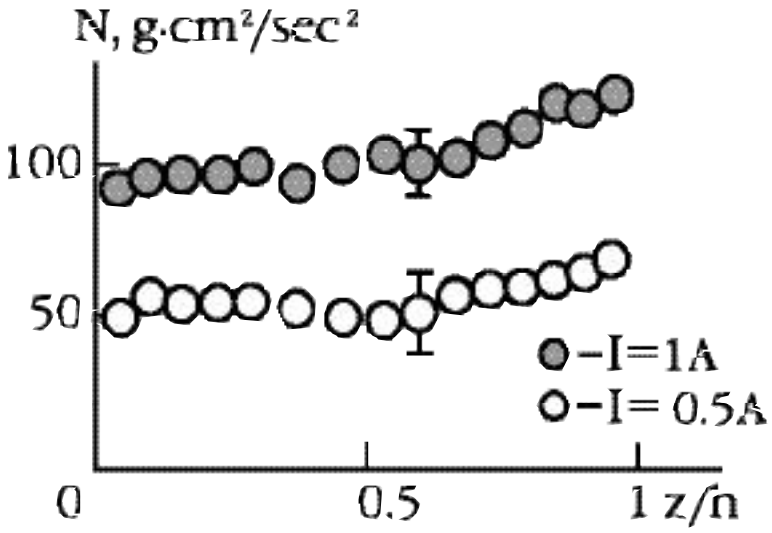

Fig.3
A typical experimental dependencies of the torque *N* acting on the magnet depending on the depth of immersion *z*

When the magnet is almost entirely submerged in the liquid the depth of which equals the height of the magnet, no currents are flowing under and above it. In this case the rotation of the magnet is expected to be the result of drag action of the rotating liquid located in the intermediate field relative to the magnet. This part of the conductive liquid is rotating in the direction opposite to that of the motion of the magnetized body. It seems to be the right way. The magnet pushes the liquid away and, therefore, is moving in the opposite direction. No, this is wrong. If it was correct, this effect would also occur during the shallow immersion. At small *z* the magnet and the liquid rotate together. So far we still do not know what makes the magnet rotate.

S.A. Gerasimov

References

1. Faraday M. Experimental Researches on Electricity. // London: Ed. by R. and J.E. Taylor. 1839.
2. Ampere A.M. Theorie Mathematique des Phenomenes Electrodynamiques. // Paris: Blanchard. 1958.
3. Sigalov R.G., Shapovalova T.I., Karimov H.H., Samsonov N.I. // Magnetic Fields and Their New Applications. // Moscow: Nauka. 1976.
4. Gerasimov S.A., Ershov A.V. What Makes a Magnet Rotate? // Physics Education (Moscow). 2002. V. 22. P. 70-75.
5. Grabovsky M.A., Mlodseevsky A.B., Telesnin R.V., Shaskolskaya M.P., Yakovlev I.A. Lecture Demonstrations on Physics. // Moscow: Nauka. 1965.
6. Gerasimov S.A., Ershov A.V. Mechanism of Electromagnetic Rotation. // Problems of Applied Physics. 2001. V. 7. P. 34-35.
7. Gerasimov S.A. Self-Interaction and Vector Potential in Magnetostatics. // Physica Scripta. 1997. V. 56. N 3-4. P. 462-464.

Capillary Motor

Iosiph I. Elshansky, Russia
Koshtoyantsa St., 1a - 75, 119454 Moscow
Email: ewrik@bisinter.ru

For several decades the author has been organizing a contest for young inventors on the radio, television, in mass media and the Internet. There have been accumulated thousands of engineering solutions that belong to schoolchildren and youth. There are many original ones, including perpetual mobile. Though unfeasible in principle, they have interesting structure and competent engineering solutions.

For example, a child's dream to create an oblique roof over a city or field and direct the rain flow to a turbine to obtain mechanical work is of little use. But it's quite another matter if this child takes a pencil, a sheet of paper and tries to make a sketch or a drawing of such construction. Even if the construction is primitive and unfeasible, the child will get his first engineering experience and self-reliance.

I can still remember one peculiar case. Once the editors were instructed (it was in the times of the USSR) to assist an honored inventor of new machines. It was a Stalin Prize laureate, creator of a special type of lime that was widely applied in construction (I will not disclose his name). The inventor was given (that was not common practice) a large room in a shared apartment situated in a prestigious block of apartments in Moscow. It turned out that all room space, except for narrow passages at the walls, was occupied by a huge table. On the table up to the ceiling there were some pipelines, glass and metal vessels, retorts and other laboratory ware. The most impressive thing was retorts heated by gas coming through a hose from the shared kitchen. All that staff was bubbling, hissing and steaming. The inventor was creating a perpetual mobile!

I will give one more example of a situation common for the editors of the "Inventor and Rationalizer". Once we had a respectable-looking visitor who made an odd request to get the President of the French Academy of Sciences to respond to his letters about a perpetual mobile plan. The essence of Alexander Rodionov's (Maloyaroslavets, Russia) invention was that "in accordance with Newton's and Guerin's laws fluid flows up through capillaries and turns a wheel when flowing down (see Fig.1).

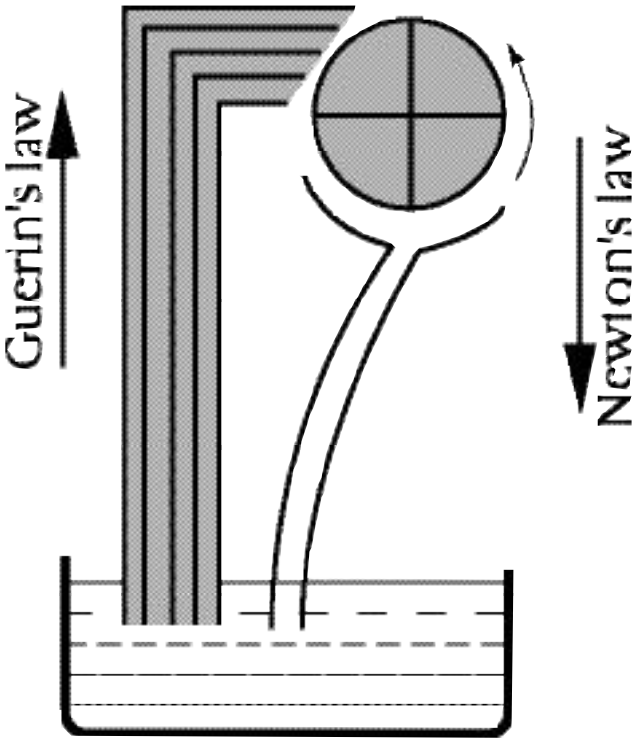

Fig. 1
Perpetuum-mobile

There are many similar projects in the history of engineering. Hence, this case may be considered as typical. We all know that the molecular adhesion forces (moistening) that push the fluid upwards will stick to it and the capillary motor will never work. But is the idea totally unfeasible? Since false modesty is inappropriate when it comes to perpetual mobile, I will present my ideas on this not so honorable subject for the reader's judgment.

It seems that all perpetual mobile inventors start not with a pencil and a sheet of paper but with experimenting on magnets, oblique plane, wicks, wheels, springs and other materials at hand. My first heat (perpetual) motor was also the result of an experiment.

The "Capillary" idea of Alexander Rodionov haunted me. I recalled that the great Lomonosov devoted lots of time to studying molecular adhesion and capillarity. They are present in everyday life, let alone the nature, especially in plants that would not be able to exist without them. How else would moisture flow up the trunks and stems? But, on the other hand, according to Mikhail V. Lomonosov's data, water flows up only for the maximum of several dozens of millimeters even through the thinnest capillary. But trees may have the height of several dozens of meters! If, as it is customarily considered, moisture flows from one capillary to another of its own accord, why not suppose that a capillary perpetual mobile is feasible? Explanations that moisture in plants flows up due to root pressure do not sound plausible. So where is the truth?

Years have passed since that visit of A. Rodionov. Now, just like I used to sympathize with, as it then seemed, a rather odd inventor, now my relatives sympathize with me. One can not blame them: for weeks and months there have been flowerpots all around the apartment - on the tables, window-sills and bookstands. With bottles, tubes and self-made water manometers to follow.

Once, when I was assembling a device, I could not find two similar glass tubes and had to put in the tube of thin polyethylene. But no matter how hard I worked the water in the communicating vessels was at different levels. In the glass tube the water level was always higher. It could not be otherwise, if you come to think of it, but isn't it the right time the words "made of equally wettable material" were inserted into the communicating vessels law?

Here is a primitive experiment: make a hole in the bottom of a plastic flowerpot containing soil and a plant, and insert there one end of an elastic tube. The other end is inserted into the bottom of a plastic bottle containing water (see Fig. 3). In accordance with the communicating vessels law, the water will flow from the bottle into the flowerpot. When we see that the soil has been made wet, the experiment shall get more complicated: elevate the flowerpot so that its bottom is higher than the liquid level in the bottle. In some days we shall notice that the soil has not dried up and the water level in the bottle has lowered. One should not be a Solomon to guess that the soil or the roots of the plant transfer the water from the lower to the higher level. Here is a typical natural perpetual mobile!

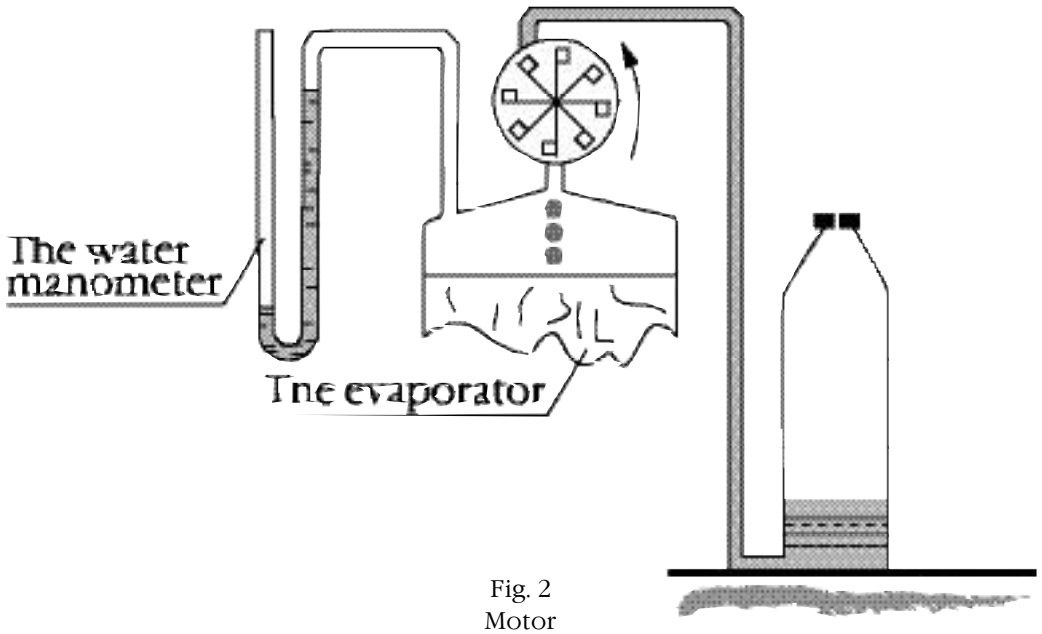

Fig. 2
Motor

It is no use referring to the molecular adhesion forces since they can not be applied at such height differences. What is it then? A molecular collision as in a boiling kettle? But a leaf has neither high temperature nor much space. Nevertheless, water evaporates both from the soil and leaf surfaces. At the same time there is rarefaction under the evaporating surface. Can it be the rarefaction that pulls up new portions of water?

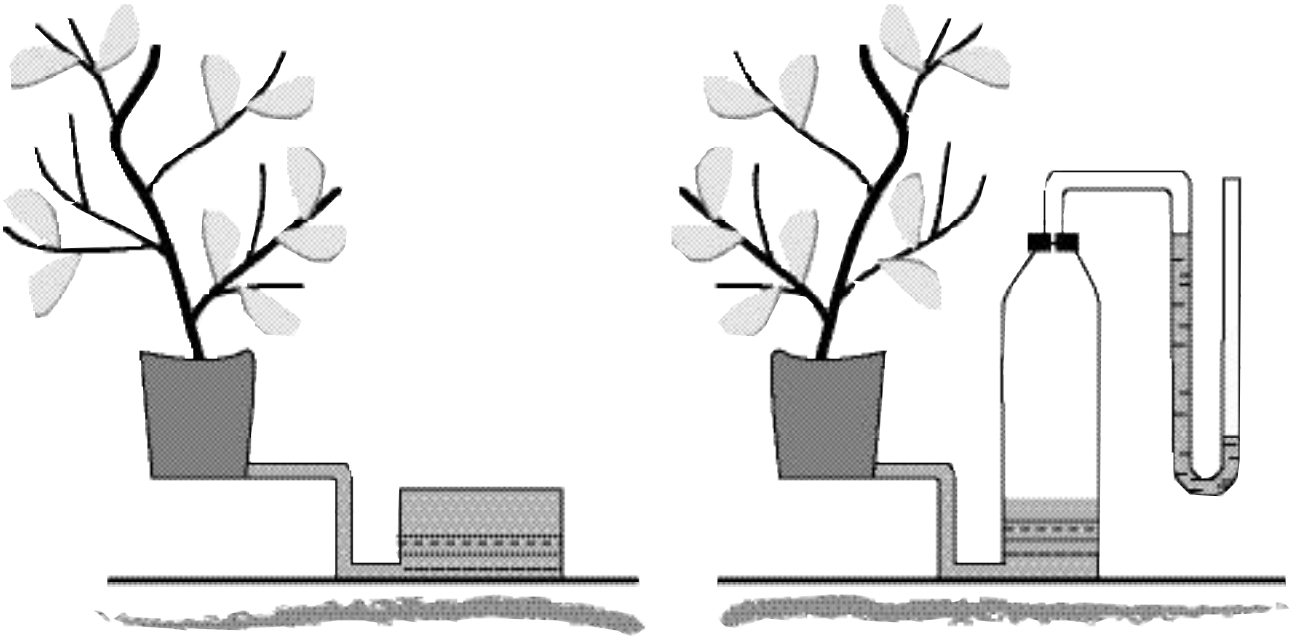

Fig. 3
Rarefaction

Let us make the experiment still more complicated. Put the leg pipe of a liquid manometer into the bottle cork. (Fig. 3) Almost immediately the water level in the closest leg to the bottle will start rising. It means that there is rarefaction in the bottle. Can it be the rarefaction that "rules" the plants?

Most likely, the essence of the mistake made by Rodionov and other authors of capillary motors consisted in attempts to get the water outflow from the capillary. **If it is not flowing out but evaporating, as it is common for the soil or plants, then, probably, vacuum will manifest itself and the capillary perpetual mobile will start working.**

I made my first capillary perpetual mobile many years ago (see Fig. 4). And it worked: though slowly, the wheel was steadily turning. No doubt, it was due to the heat inflow from the air. Therefore, such motor will work if there is a temperature difference and relative humidity of surrounding air is below 100%.

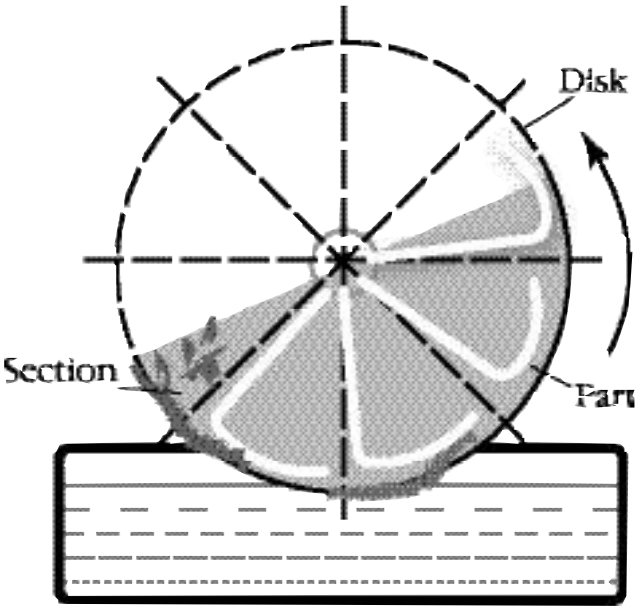

Fig. 4
Capillary Motor

The heat motor operating principle is clear from this figure. The disk (many disks on the common axis) is divided into isolated sections. Their surface is covered with a moisture-proof piece of material (filtered paper, cloth, etc.). The part of each section somewhat gets under the base of the next one. Hence, a small part of the base of one section and a part of the part following the section can get into water simultaneously. Due to the capillary moistening the section and the part will start to absorb water. Since the section is shifted about the center of gravity, the turning moment is bound to appear. The section that is out of water starts to dry up, the moment will increase and the wheel will start turning.

Having determined that, though slowly, the motor is turning, the author applied to a patent authority for a patent on the invention of the "Perpetual mobile", meaning it as a joke. I hoped that the experts (I knew some of them personally) will understand this joke. But, unexpectedly, the device was considered an invention, though under the name of the "Heat motor" (certificate of authorship USSR # 1455040).

Basically, the motor is similar to the project of A. Rodionov. I would not be surprised if he protested. The same capillaries and the spontaneous rise of liquid on the moisture-proof material. The only difference is that the liquid does not flow out but evaporates from the capillaries.

Almost without any reason - one can not predict his eccentricities - I have recently made one more capillary motor (see Fig. 3). Perhaps, it resulted from my experiments with plants. This motor directly and spontaneously lifts water to a higher level, which is more convincing. Moreover, water flows in the form of drops (or a stream) and turns the propeller! The motor is quite operable and has even been shown on TV. But do not try to verify it on your own - such work is useless without certain know-how. The author would not like to disclose the "secret" yet. I could still make a patent application.

NEWS

The Continuous Rotation Device

The essence of this invention is that in a closed circle the rotation of the object occurs without any outer influence or any power sources (electric energy, oil, diesel oil, etc.), which results in the rotation of the rotating part of the device. The torque can be easily enhanced by means of transmitting it to the reduction system. At that rate, the necessary rotation speed and rotation power can be acquired.

The device is small, easy to transport, mobile (both, in operation and switch-off), simple and inexpensive to make and assemble. It is economical, ecological and weather independent.

The device can be used in any industrial or household appliance field where the continuous rotation is required. It is especially important to note that this device can be used to generate energy on a large industrial scale as well as in small laboratories, in mountains and remote districts, in tunnels, at sea, etc. for it does not require any power lines.

Patent Claim Priority:
#20030059, April 19th 2003

For more information contact the author of the invention:
Eldar Sariyev,
Azerbaydzhan, Baku,
Tbilisskiy Prospekt, 75-26;
Tel: + (994 12) 92-47-73, 98-95-02;
Email: eldar_sariyev@yahoo.com

Gravity-heat Power System

Vladimir N. Sukhanov, Russia
Kosmonavtov Str., 35-39, 420061 Kazan
Email: Wladimir.Sukhanov@soros.ksu.ru

Natural hydrologic cycle is a widely recognized phenomenon. Water evaporates from the ground and water reservoir surfaces, generally, due to the Sun heat, then moves to the superstructure atmospheric layers where it is condensed, and precipitates onto the ground surface, but on higher levels compared with evaporation surfaces. In this process water is also purified and desalted. From the higher levels water flows to its main evaporation points, forming streams like brooks and rivers where water power plants could be established. Flowing to the lower surface layers with lower potential energy, water in the Earth's gravitational field performs work that can be utilized.

Natural hydrologic cycle principle is used in the gravity-heat power system (USA patent No. 3953971, International class. F03G7/04 of May 4, 1976).

In this system the temperature difference between ground surface layers (the mountain foot and its top) is used to produce electric power and obtain fresh water. The temperature difference does not change much with change of height, and the system effectiveness is quite moderate, which can be named as its drawback.

The system utilizes free environmental energy. Its efficiency (converted to the process maintaining energy) tends to infinity.

The author proposes a new gravity-heat power system that can substitute modern heat power plants. It contains all installation components as per USA patent No. 3953971 except for the heat exchanger on the ground surface whose functions are performed by a conventional steam boiler.

Gravity energy component **G** in the proposed system:

$$G = X_m \cdot T\, g\, H\,,$$

where

- X_m – fluid flow,
- **T** – time of operation,
- **g** – acceleration of gravity,
- **H** – tower height between the steam boiler and the freezer (condenser).

This formula does not allow for vapor density of operating fluid.

The vapor density is insignificant as compared with the operating fluid density.

Energy **P**, required to maintain operation:

$$P = X_m \cdot T\, q\,,$$

where **q** – specific fluid vaporization energy

Efficiency **K** – of the system should not be lower than 80%

To obtain efficiency that equals 120% the following is required:

$$H = 2{,}2q/g$$

Or **H** = 25,4 kilometers.

Construction of such towers is too complicated for modern technology. Therefore, a stratospheric balloon that is linked to the ground surface by a flexible twin-core hose rope may be used. One core is designed to send down fluid and the other to send up vapor. Flowing down to the ground surface through the hose, the fluid will generate fluid column pressure. The fluid will cross water-turbine generator cascades, after each of which the fluid pressure will decrease and the fluid will continue its way down.

There is an alternative. To make the tower several times lower the evaporation (at the tower foot) and condensation (at the tower/mountain top) should be phased (in the form of cascade) at various pressure values and with utilization of the same heat energy. For this purpose a heat carrier is used that will transfer heat from the tower (mountain) top to its foot. This operation will enable the tower height segmentation into **H/n** sections where **n** is the number of grades in a cascade.

Cascade structure is shown in Fig. 1

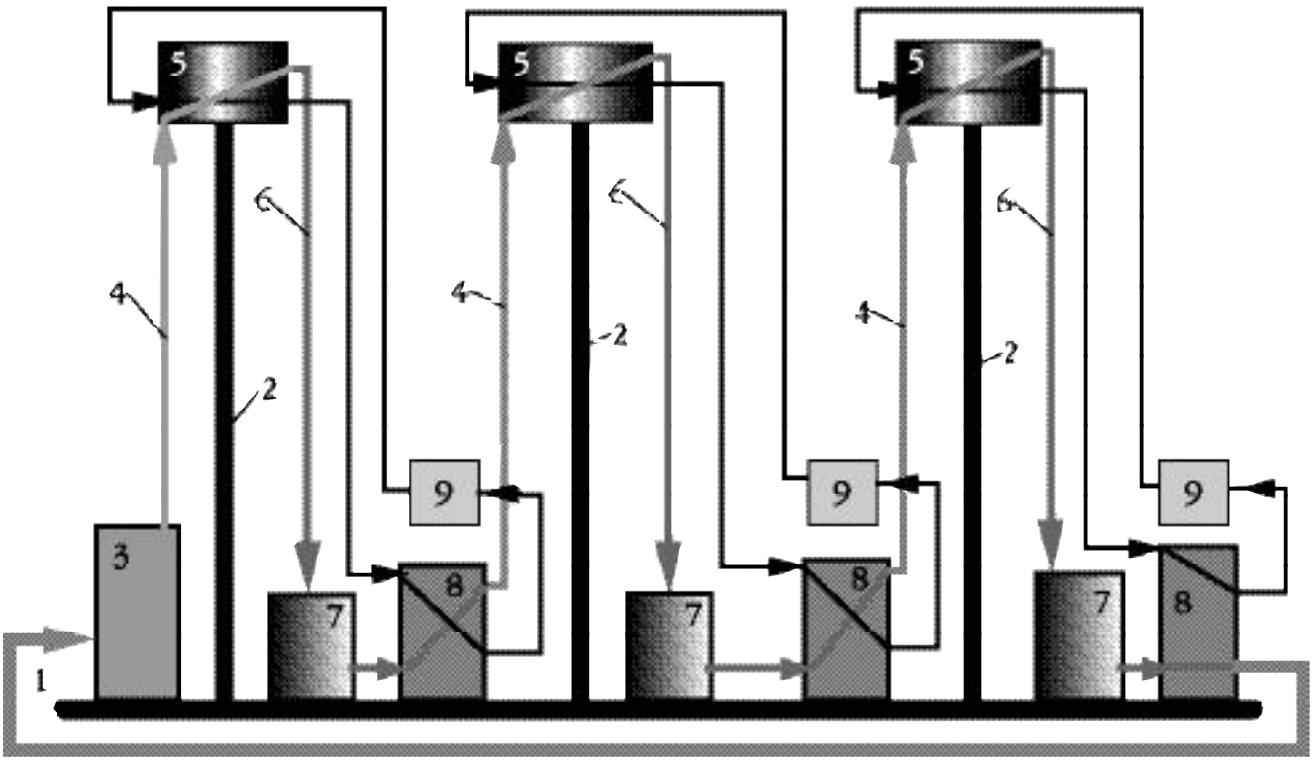

Fig. 1
Cascade

where

1 – ground surface,
2 – tower component or the smoke-stack of the steam boiler,
3 – steam boiler,
4 – steam pipe,
5 – heat exchanger and condenser,
6 – pressure pipeline,
7 – water-turbine generator,
8 – heat exchanger and evaporator,
9 – circulation pump,
10 – pipeline of the heat carrier circulation.

Cascade (operating fluid, water) with 500 meters of height can contain several dozens of grades (50 and more). **In this case the cascade efficiency may approach 120%.**

Decreasing the tower height to 500 meters (for water) will allow for utilization of conventional water-turbine generators and standard equipment.

In the proposed cascade the heat energy is required to maintain the cascade working capacity when Earth's gravitational field energy is utilized. In the author's opinion there are still other ways to use gravitation.

The system scale is its main drawback. Therefore, partial utilization of the proposed principle may

seem more attractive. The proposed engineering solution was simple.

In a thermal power station the condenser is installed on the top of the tower (mountain). After the condenser the water lift in the water tower finished at the steam boiler pressure pipe (omitting the pump that was no longer necessary). Energy required for pressure pipe operation was saved. In other words, the water tower was utilizing the Earth's gravitation at the conventional juncture of vapor condensation in the steam plant.

Such proposal was made on June 17, 1982 in the patent application USSR N3453603/06, (101161) expert code 060701KH. However, the utilization of free and environmentally friendly gravity energy did not arouse interest even on the part of patent experts.

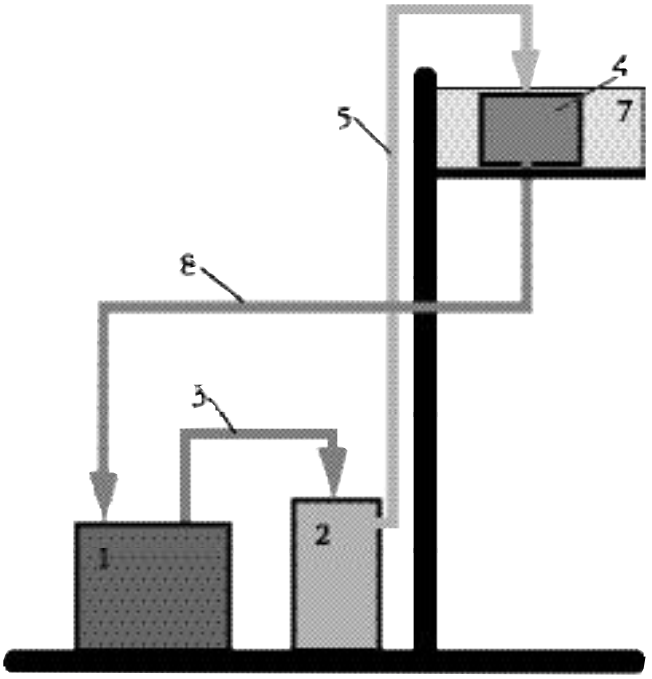

Fig. 2
System

The author is looking for serious partners.

The Alternative Energy Potential in Russia

According to the International Energy Agency (IEA) calculations, total investments into the energy industry constitute approximately 330 billion dollars annually. Almost half of this sum (150 billion annually) is allotted to the development of the electric power industry. This information only partially reflects the potential of the alternative energy development and does not include the market growth factor upon the introduction of autonomous power system technologies. Vast territories of the planet have not been sufficiently developed yet due to the absence of local energy resources and power lines. From this point of view, Russia is the country with an enormous consumer demand potential provided that the mass production of autonomous fuel-less energy systems guarantees low production prices.

Alexander V. Frolov
Editor-in-Chief

Faraday Lab Ltd

Fuel-less energy R&D
R&D in alternative astronautics

Read our
New Energy Technonlogies
magazine

Lev Tolstoy Str. 7-601
St.Petersburg
197376, Russia
Tel: 7-812-3803844
www.faraday.ru

Modern Perpetual Mobile

Review prepared by correspondent Alla Pashova, Russia.
Based on the Internet pages and other information sources

It is common knowledge that any experimental information, which is against a conventional scientific paradigm, is considered to be false, extracted from the society and finally is turned into something **classified and elite.**

Politics-oriented science as a whole and natural science in particular often result in misrepresentation and falsehood of **popular knowledge** that turns it into the fighting weapon of socio-political organizations, states and their groups.

World-outlook and political contradictions of any society often determine science development strategies. In 1885 Nicola Tesla presented his transformer in action by means of which he lit carbon lamps in a 25 miles circle without any cords, conductors or switches using the 5000-HP turbine of the Niagara hydroelectric power station. Afterward, he obtained financial support for one of his energy projects.

On a special testing ground Nicola Tesla built vacuum-energy systems. However, in 1885 the systems, as well as the testing ground, were destroyed as it became evident that if they went on the mankind would never need organic fuel again. But the destruction of the systems and testing ground does not at all mean the destruction of papers and documents...Ever since that moment people have been trying to find "free energy".

The experiment of distant lighting of carbon lamps without using any cords was repeated only once by the physicist Filippov. He managed to light the lamps in Tsarskoe Selo employing the electric generating systems in St. Petersburg. Filippov died in 1914 under mysterious circumstances.

In 1917 the Portuguese American Andres invented non-convetional fuel for an internal

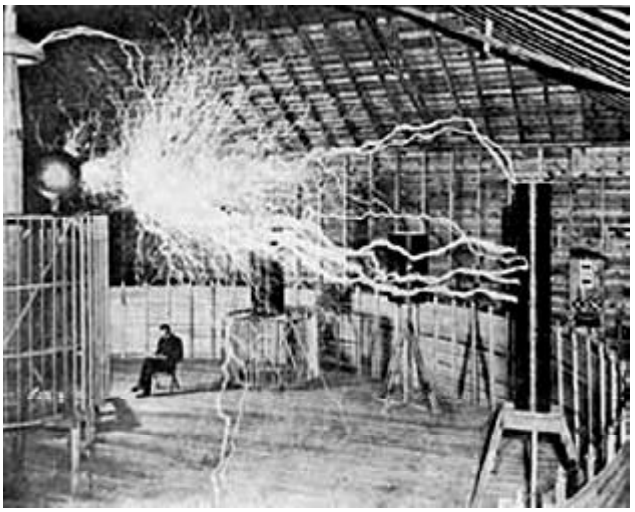

combustion engine. The essence of his invention was in some inexpensive chemicals, which he dissolved in water (some drops of chemicals per pail of water). A special state committee tested the new fuel during the New York - Washington - New York automobile races. After the races one of the largest oil monopolies in the U.S. offered Andres 2 million dollars in cash for the documents and all rights for his invention and later locked all the information in their safes. Two days later after getting the money Andres disappeared. (The information was disclosed by V. Vasilevsky, the former chief of the scientific and technical intelligence department of the KGB of the USSR, who had been in charge of the department since 1930).

The above-mentioned examples show that there were a lot of attempts to develop revolutionary energy technologies. But what then are the grounds for the 'energy crisis' complaints? The answer is simple: the desire of a group of financial and energy multinational corporations for an economic, political and, finally, for a total control of the world. That is why there is no room for "free-energy" hunters in our science, not even as laboratory assistants, not to mention some higher positions.

Practice often negates scientific dogmas, especially when it comes to the efficiency of different devices. In general, the traditional understanding of efficiency is quite limited and should be forgotten. Instead of the traditional notion "efficiency" we should consider the notion "energy-conversion efficiency" (ECE), which has no limits. In 1974 in the USA a six-stroke internal combustion engine was designed which had a double ECE. The fifth stroke of the engine operation included water injection; the sixth was characterized by the water vapor introduction. Firstly, the engine had a higher ECE than that of the Carnot cycle. Secondly, taking the 55 % ECE of the contemporary internal combustion engine, the ECE of a six-stroke engine exceeds 1.

Practice often negates scientific dogmas, especially when it comes to the efficiency of different devices.In general, the traditional understanding of efficiency is quite limited and should be forgotten. Instead of the traditional notion"efficiency" we should consider the notion "energy-conversion efficiency"...

Before the war there appeared "studebekkers" with the fuel consumption of 5.5 l per 100 km. But the fuel-economy record was set by the Japanese. In 1986 they built up an automobile, which used only 0.055 l of fuel per 100 km (about 44 g). Unfortunately, now we do not have plants, which could manufacture automobiles of the kind.

In 1832 Tomson came up with the idea of **a heat-pump unit**. Stating the unity and interconvertibility of substance movements, he proved that the mechanical energy consumption can restore stray heat. At that time cross-Atlantic ships had low-temperature steam engines, which employed exhaust steam and ether vapors. The efficiency of those engines was already higher than the Carnot cycle efficiency.

Now with the help of the facts acquired during the last century we will prove the scientific inconsistency of the orthodox model of the second stage of thermodynamics. In 1941 the English physicists O. Hougen and K. Watson published their work featuring the experimental fact that the ammonia-saturated vapor pressure in liquids was higher than the general pressure. For example, with the general pressure of 50 atm and the temperature of 0^0 C, such pressure was 17 % higher. This means that having placed a semitransparent partition and a turbine between two containers it could have been possible to build up a natural-heat vapor-converter. This method was used by **von Platen, the Nobel prizewinner from Sweden, who constructed a self-rotating centrifugal machine, which provided a 1000 atm pressure when ammonia interacted with water. The heat emitted was enough to compensate friction losses**. It is also known that the Carnot principle cannot be applied to closed cycles. W. Vielstich, 'Combustion Cells', 1968: "**If an entropy change of a reaction is negative, it can exceed 1**. It means that a certain amount of energy can be obtained from the natural heat. Such an effect is possible in electrochemical generators, which employ a direct oxidation process before oxidation and dioxidation".

A demonstrative example of scientific experiments withdrawn from science is discovery # 13 "The knock power-transfer regularity" made on December, 18th, 1962, which makes it possible to create a mechanical "perpetual mobile". The experiment shows that the conventional "knock theory" does not work in practice: **the bouncing energy of a body after it has been knocked can be higher than its energy before it has been knocked**.

Trying to get some recognition, **E. Aleksandrov, Doctor of Engineering Science, made his demonstrative experiment in front of many different commissions: a chilled-steel ball when falling from a 10 m height onto a firmly-fixed chilled-steel plate made a 14-15 m-high bounce**. That was the notorious 'perpetual mobile' as it is. It went on like this until somebody decided to explain the result of the experiment by a metal lattice internal

energy. At once, everything was clear. Since that moment the above-mentioned principle has been successfully employed in percussion-action machines. This principle can also be used in simple electric-power systems.

Now we can see that electro-technicians had already constructed demonstrative 'perpetual mobile' machines 10 years before politicians and economists started to speak about the 'energy crisis'.

In 1921 the mass media wrote about A. Hubbard who invented an electromagnetic generator without any external energy supply. The Hubbard generator was used as a boat motor.

> *...now we can see that electrotechnicians had already constructed demonstrative 'perpetual mobile' machines 10 years before politicians and economists started to speak about the 'energy crisis'...*

In 1928 L. Nidershot invented a 300 W electric generator, which did not require any external energy supply. The device consisted of a radio-technical oscillation generator (500 kHz) and a coil. After 68 years there appeared publications about A. Melnichenko who repeated the experiment.

In 1927 T. Brown (England) obtained a patent on the ways of originating a moving power and energy using an electric field. Later, in 1955 while working in France, he presented a system with the speed-capability of several miles per hour using a 2000 eV field. After that he had to stop his experiments and was sent to the USA.

In 1943 N. Tesla presented an electric-motor automobile. The energy was generated by a previously-unknown generator.

In 1960 Stovbunenko (whose research work results were subject to a special verdict of the Military-Industrial Complex) presented his motor, which made it possible to move in his old automobile 'Moskvich' around the city for the whole day utilizing the power of a standard automobile battery.

In 1980 there was a qualitative break through in electro-technical "perpetual mobiles". Baumann's electrostatic machines of the total capacity of 750 kW started functioning in the religious community of Liden (Switzerland), serving all daily needs of the village. (See the photos below)

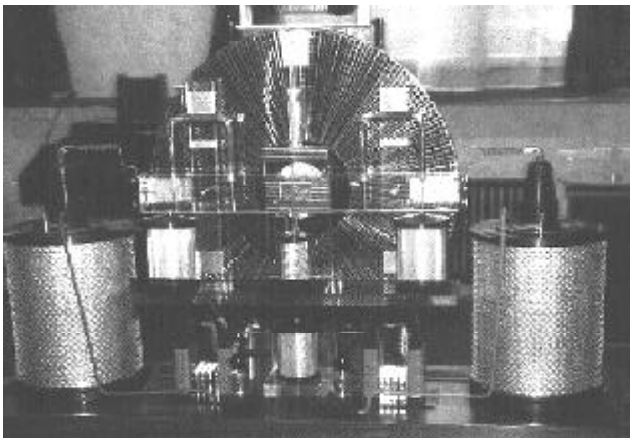

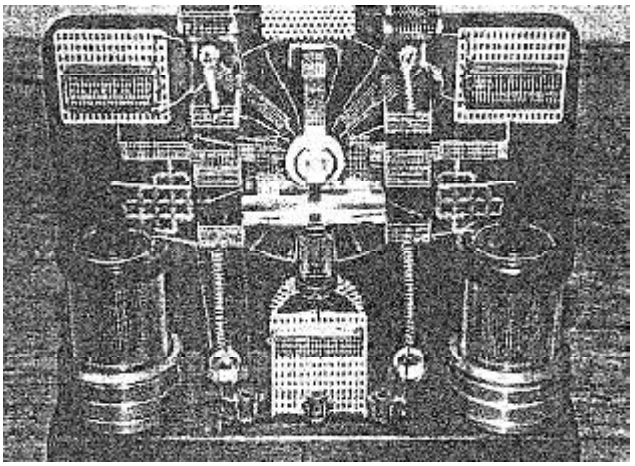

The photos are taken from www.free-energy.cc

Thus, in 1980 there appeared a community with no energy problems, no need for organic fuel and no fear for the 'energy crisis'.

In 1881 N. Sluginov discovered an energy imbalance that occurred in the water electrolysis process. In his experiments he got that the output energy was 30 % higher than the input energy. In 1980 American scientists recreated this energy imbalance and proved that while employing the steam turbine rejected heat, the water electrolysis efficiency reaches 120%.

This information introduces a story about an energy system invented in 1957 under the guidance of I. Filimonenko. The system did not simply generate energy in the form of a high-pressure vapor and output hydrogen and oxygen but also absorbed radiation. In 1960 the USSR Central Committee and Cabinet Council gave a special secret ruling, known as "The Three 'K's'" (Keldysh, Kurchatov, Korolyov) to go on with the research in this system. However, after Kurchatov's death the project was "oppressed" and later on after the death of Korolyov the project was completely cancelled. The special committee of the USSR Academy of Sciences stated that the system was functioning against "the Law of Nature". I. Filimonenko was dismissed and expelled from the party. Later, in 1980-1991 the experiments were partially renewed. Several testing systems were constructed in the Chelyabinsk region but the construction was never finished and the use of a mobile system for eliminating the damage caused by the Chernobyl accident was refused. This story is a demonstrative example of the traditional rejection of promising projects by science, which could be very beneficial for Russia.

Theoretical Background of 'Perpetual Mobile'

Originally, the term 'entropy' was used only in connection with the reasoning about limited or eternal nature of the Universe. Later it came to be used to describe the functioning principles of thermal machines. Now there exist more than 600 contradictory definitions for 'entropy', which are actually the results of a long and unfinished discussion between the supporters of Dekart and Leibnitz, who defined 'motion' in different ways. It is these permanent contradictions in the theoretical fundamentals of physics that make it impossible to explain the existence of a 'perpetual mobile'. However, standard physics has never denied the possibility of creating energy technologies allowing the ECE higher than 1.

We should remember that the basis of the so-called variational calculation is the mathematical apparatus technique of the conventional mechanics. It seems that if system behavior equations directly depend on time, this system cannot fall under any conservation laws. **This is the proof of a complete failure of the conventional energy conservation law!**

It is these permanent contradictions in the theoretical fundamentals of physics that make it impossible to explain the existence of a 'perpetual mobile'

In time-independent thermodynamics the existence of 'perpetual mobile' can be explained by the system internal energy usage. There exist two kinds of thermodynamic systems. Some of them when being heated or affected in some other way start increasing their internal energy while other systems show the internal energy decrease. The latter are called negative absorption systems. The standard version of the first law of thermodynamics does not cover all the processes occurring in such systems. The output of a negative absorption system can be higher than its energy. The additional output is acquired by the gradual internal energy loss.

To cap it all, there are more than a hundred experimental facts that show the limited nature of the Maxwell theory. They were obtained by scientists from different research institutes and construction bureaus, were tested and registered. Thus, for example, in 1973 in the USSR the acoustic magnetoelectricity effect was discovered. The author of the discovery proved the

interaction of electrons with ultrasonic waves with a 1000-times energy increase. This is against the Maxwell theory, which absolutely denies effects of the kind. But the limited nature of the theory was never accepted.

However, the examples of the machines in action prove that since 1834 when the first refrigerator was invented, when the cross-Atlantic ships were equipped with low-temperature ether-vapor steam-engines, the contemporary science had no right to introduce 'the second holy principle', especially in the orthodox form of 'the Carnot cycle efficiency'. The modern theoretical physics cannot provide grounds for the negation of creating over-unity devices. That is why we should rely on the physicists-experimentalists who develop the science in a practical rather than theoretical way.

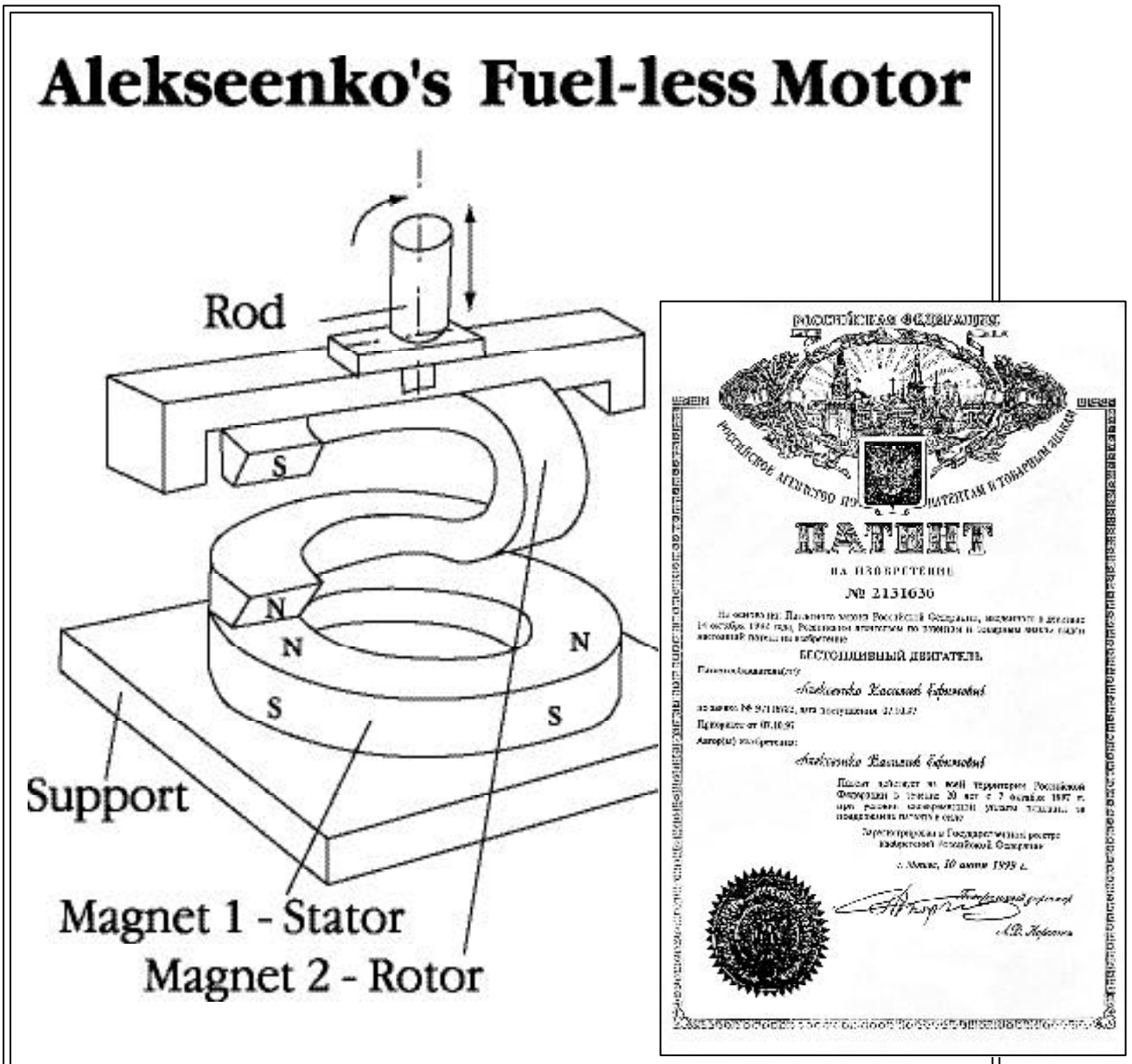

Patent # 2131636
Vasiliy E. Alekseenko

Aerospace Defense Research Finds Free Energy and Antigravity Possible

Dr. Ines Espinoza, USA
email: dr.ines@vasantcorporation.com

Editor: it is worth mentioning that the first gravitational-wave physical mechanism and the mechanism of spin-effect "grazer" (gravitational lasers) designing were described by S. M. Polyakov and O.S. Polyakov in the book "An Introduction to the Experimental Gravitational Studies", Moscow, 1991.

After a 7-year research study, a senior staff aerospace defense engineer, George J. Bugh, concludes economically free energy and even antigravity are possible.

A 7-year study of "free energy" devices, sometimes called "over unity" devices, was done to determine if any of these devices generated power by transferring energy from unknown sources and if so to determine where the energy was coming from. Included in the study is research of related devices with claimed antigravity effects. The study attempted to determine validity of claims, commonalities of device characteristics and to determine how these devices could work. **The results conclude that some devices can generate economically free energy. This study also concludes there is a possible link between gravity and electromagnetism that can be exploited to generate antigravity or electrogravity effects.**

The majority of the study was to come up with a theory to explain how the devices could work. In his research, Mr. Bugh used mostly classical electrodynamics rather than quantum electrodynamics. In Quantum theory, the wave-like characteristics of matter are described using abstract probability waves. However, Bugh proposes that the wave characteristics of matter may also be described as coming from a very real sea of unseen electromagnetic standing waves among all matter. There is a slide show presentation at the website that explains the differences between the Quantum and Classical way of explaining particle interactions.

According to classical electrodynamics, all electrically charged particles, like quarks of protons and neutrons as well as orbital electrons for example, **should radiate away energy from precessional and precessional plus orbital motion**.

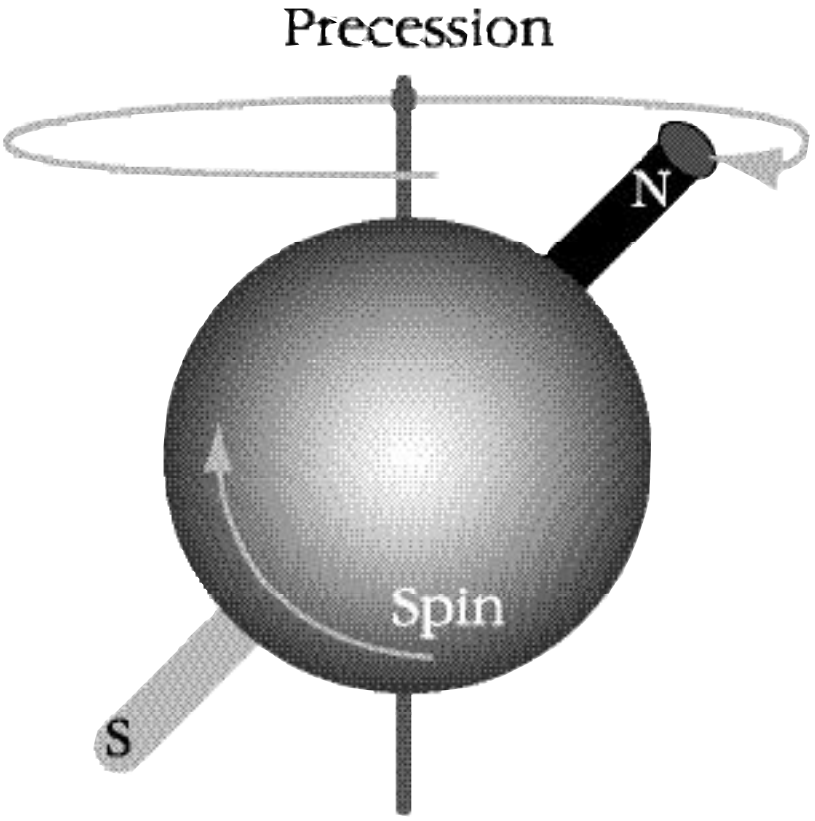

Fig.1
Electron motion

If in fact this really happens then all electrically charged particles can be radiating away energy all the time. However, all particles can also absorb just as much energy from all other radiating particles. The absorbed energy applies electromagnetic forces that naturally move all similar type particles into harmonious precessional motions with all other particles. This results in a vast sea of electromagnetic standing

waves among all matter. Even free particles would move into precessional motions that are in sync with the established sea of standing waves.

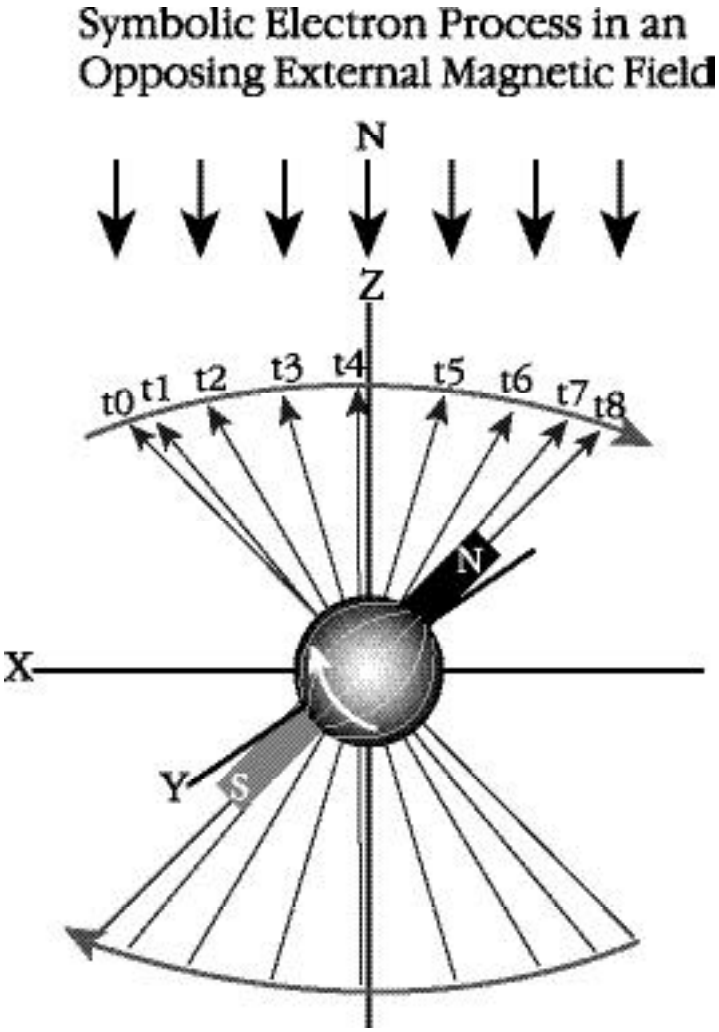

Fig. 2
Electron precession

There can be a hidden yet strong tendency towards harmony among all matter in the universe due to these unseen standing waves and spin interactions among all matter. This tendency can overcome to a great extent the tendency towards chaos and heat death of the universe. This tendency can also be exploited to perform work.

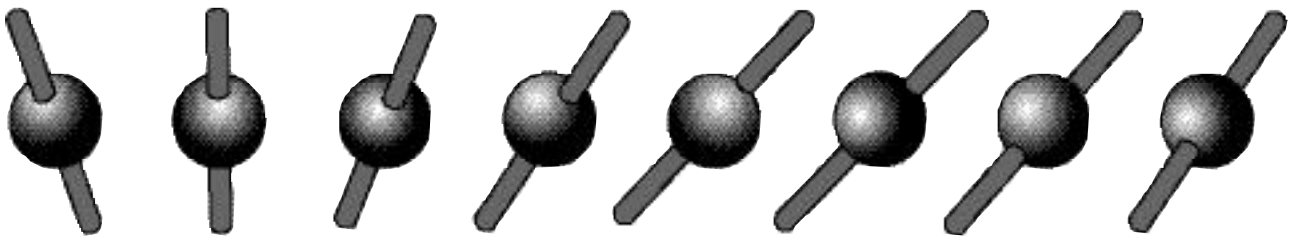

Fig. 3
Spin wave

This is an interaction among all matter that Ernst Mach alluded to as necessary to cause matter's characteristic of inertia. Einstein later called this Mach's Principle. Einstein studied Mach's ideas while developing his theory of General Relativity.

Bugh describes inertial resistance to acceleration as caused by electromagnetic forces. Changes in position of a mass will cause phase differences to develop between the precessional motions of the particles of that mass relative to the sea of standing waves. This in turn causes electromagnetic force that resists a mass from changing its position.

The research papers are published in a book and a CD titled "Spin Wave Technology Initial Release".

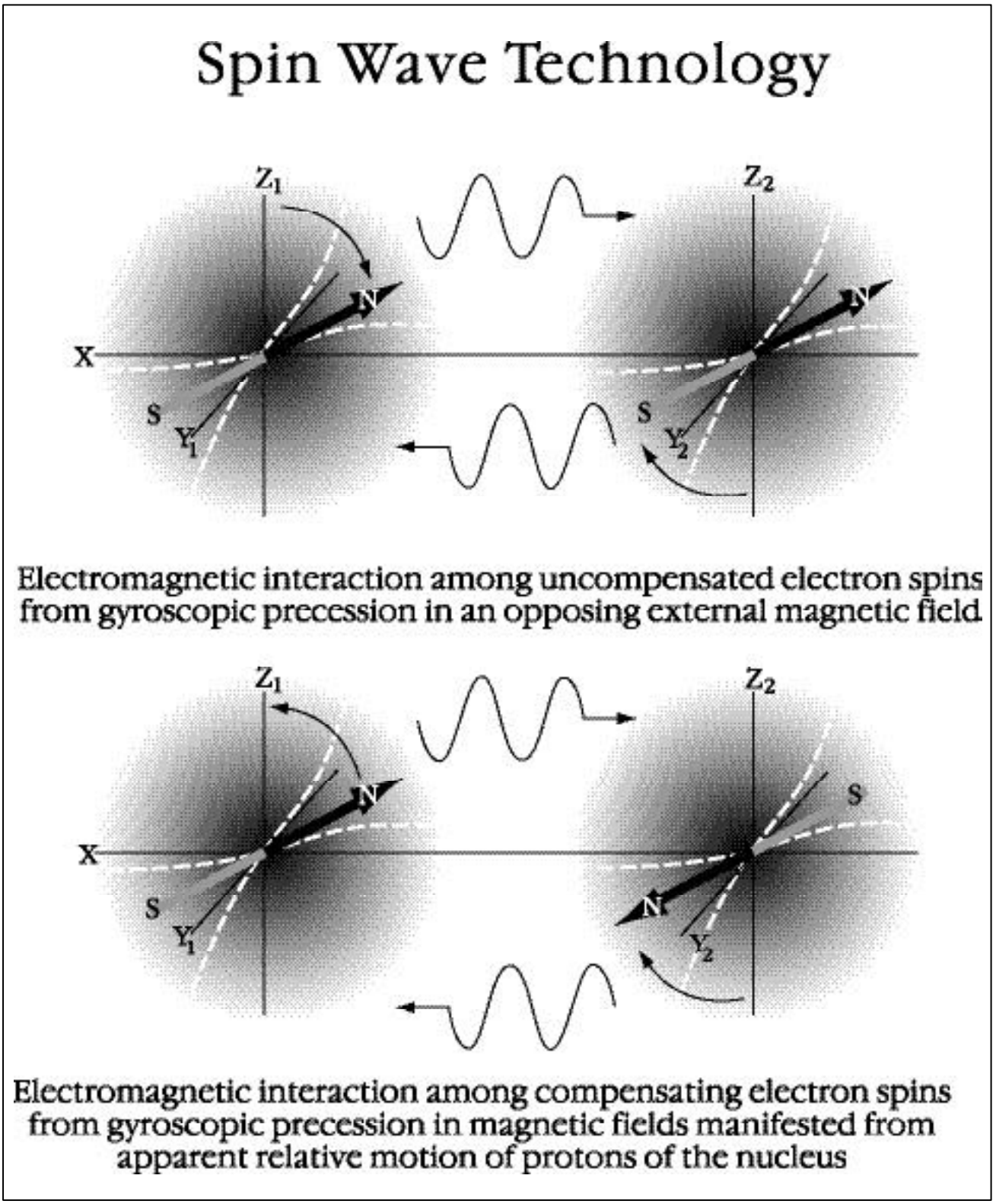

Fig. 4.
Spin wave technology

At the end of the book it suggests that it should be possible to create computer simulations of particle interactions using classical electrodynamics to demonstrate both inertial resistance and gravitational attraction and it should be possible to simulate devices that manipulate these particle interactions to demonstrate antigravity effects.

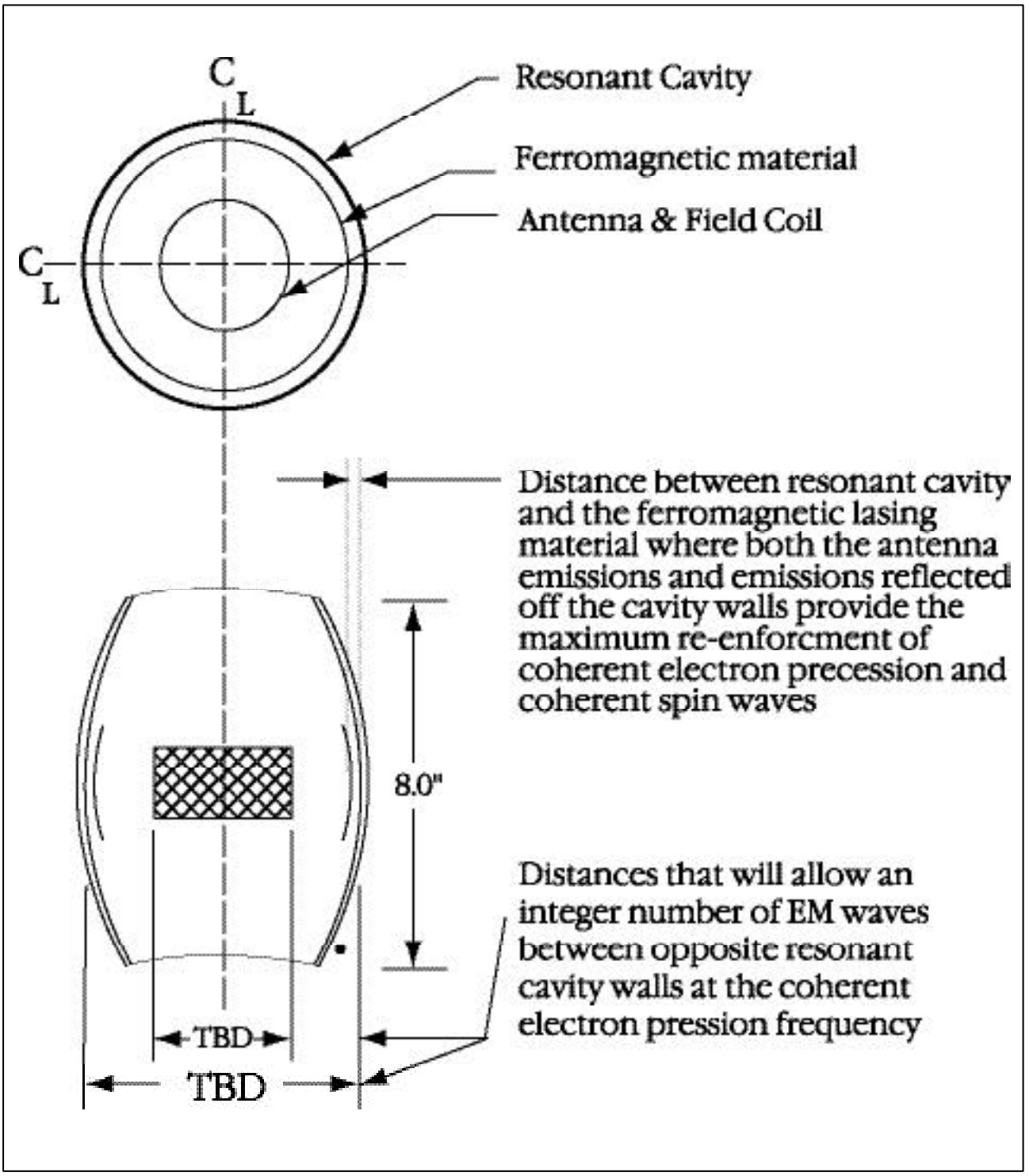

Fig. 5
Spin wave laser

More information is available about the research results at the website: www.vasantcorporation.com.

On Physics of Electromagnetism
Mechanical Analogue or Pure Mechanics?

Yury V. Ivanko, Ukraine
E-mail: ux0lw@hotmail.com

After publication of the article "Study of possibility of a high-energy hyper-low-frequency electric field" in the "New Energy Technologies" magazine, Issue #2, 2003 I am often asked why I have mentioned the Big Bang in my hypothesis.

I would like to reassure atheists since I do not back the Big Bang hypothesis. But I had to base myself on something. At present the origin of the Universe as a result of the Big Bang has priority and is recognized by the academic science.

Both theorists and experts have long noticed a deep analogue between vortex motion of air currents and electromagnetism. My vision of the physics of electricity and electromagnetism is fully based on existence of a vortex capable physical environment. What is considered to be and is measured **as electric voltage, electric current, magnetic or gravitational interactions is nothing but similar-originating phenomena - the result of vortex flow environment affecting our detectors - dissimilar formations for these vortex flows**.

For instance, let us consider three vectors for the flow along the skin-layer of the line conductor - aerial emitter, together with alternating voltage attached to it (Fig.1):

1) longitudinal - showing as electric voltage, the gradient of potentials between the emitter feeding point and the emitter cold end, U;

2) tangential - showing as amperage - electric current, I;

3) radial - showing as the interacting force of two flows - magnetic field (attraction/repulsion), H (not to be mixed with the commonly used term of magnetic intensity).

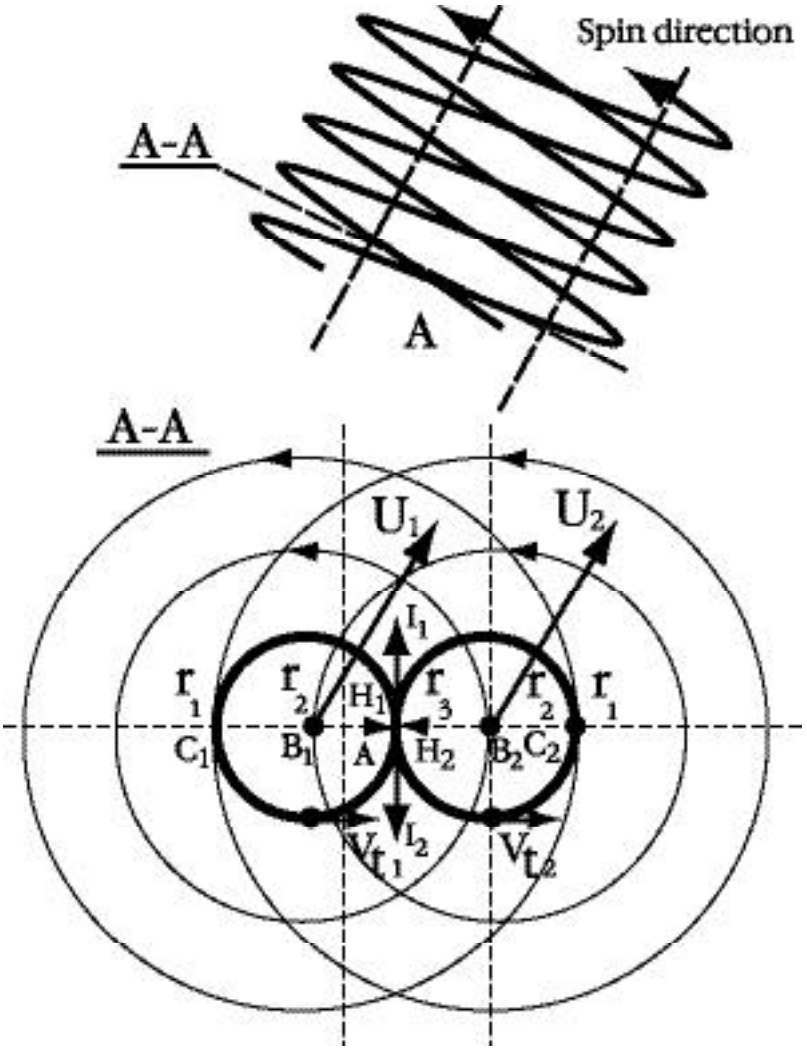

Fig.1
Interaction of two left-handed homogeneous parallel flows.

Let us consider it step by step:

Consider line conductor AB with length L in free space (Fig. 2).

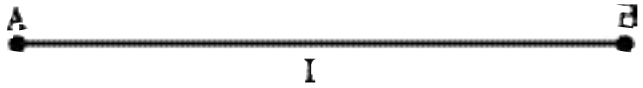

Fig.2
Line conductor in free space.

Let us assume that he is not affected by and fields. Then the gradient of potentials between A and B equals zero. Let us apply sinusoidal voltage from the generator output to point A (Fig. 3).

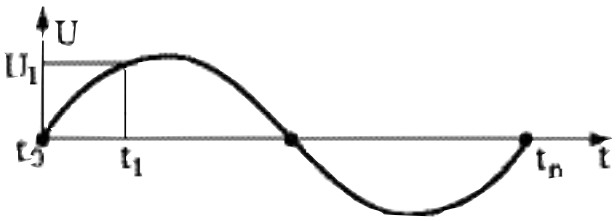

Fig.3
Sinusoidal voltage at the generator output.

Let us consider the initial time point t_0. The generator output voltage is U=0. At time point t_1 the generator output voltage has changed and took on value U_1.

It is necessary to note that (See Fig. 2) the propagation speed is finite: c=300000 km/sec. Point B will "learn" about the voltage alteration only in time $t_B=t_1+L/c$. Therefore, at time point t_1 between points A and B appears gradient of potentials $\Delta\varphi = U_1$. So what is the direction of vector U_1? Right, along conductor AB.

What practice says

One should not be a physicist or radio mechanic to notice small electro-shock of ungrounded metal objects close to aerials of powerful transmitters. Specialists term them as "electromagnetic inducers". Has an expert ever measured the actual characteristic of the field intensity distribution along a line conductor? Why should he? Everyone knows from school lessons how alternating voltage is distributed along the conductor, the length of which is comparable with the wave length (Fig. 4).

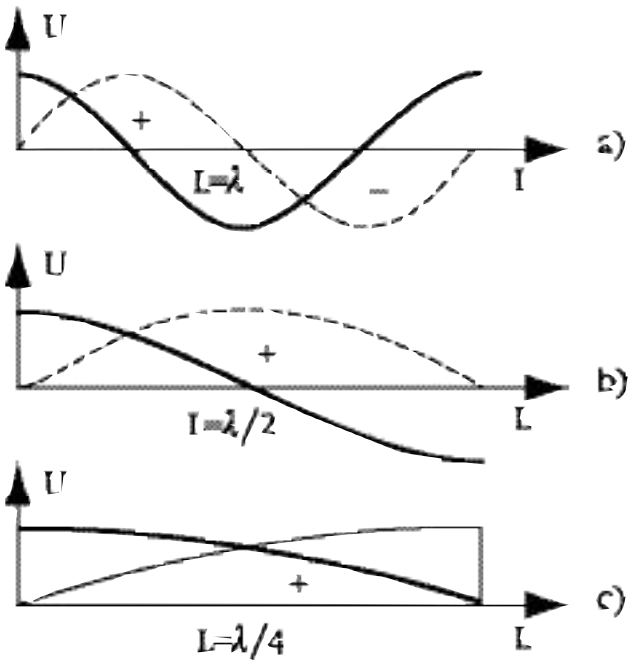

Fig.4
Classical representation of voltage distribution along a linear vibrator a) for λ, b) for $\lambda/2$, c) for $\lambda/4$.

Now let us consider what experimental measurements suggest.

An experiment of measuring the field intensity distribution along the line conductor is shown below. A classic field indicator (FI), assembled as per scheme in Fig.5, was used as an intensity measuring instrument.

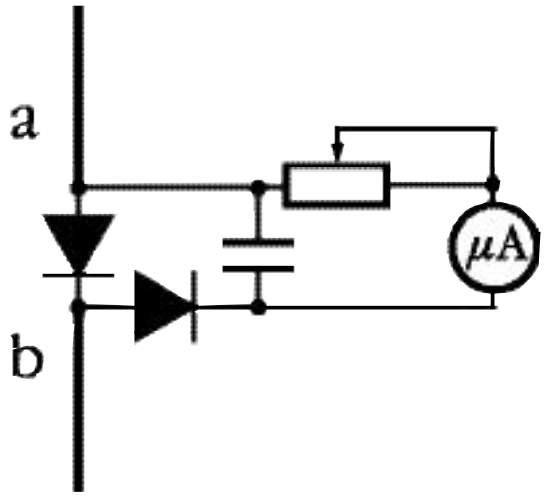

Fig.5
Field indicator principle diagram.

FI was located in immediate proximity to the vibrator but had no galvanic contact with it. Experimental frequencies were selected in

accordance with the standing wave coefficient minimum (SWC) for λ, $\lambda/2$, $\lambda/4$. Sinusoidal signal generator was connected to one end of the vibrator (Fig. 6a).

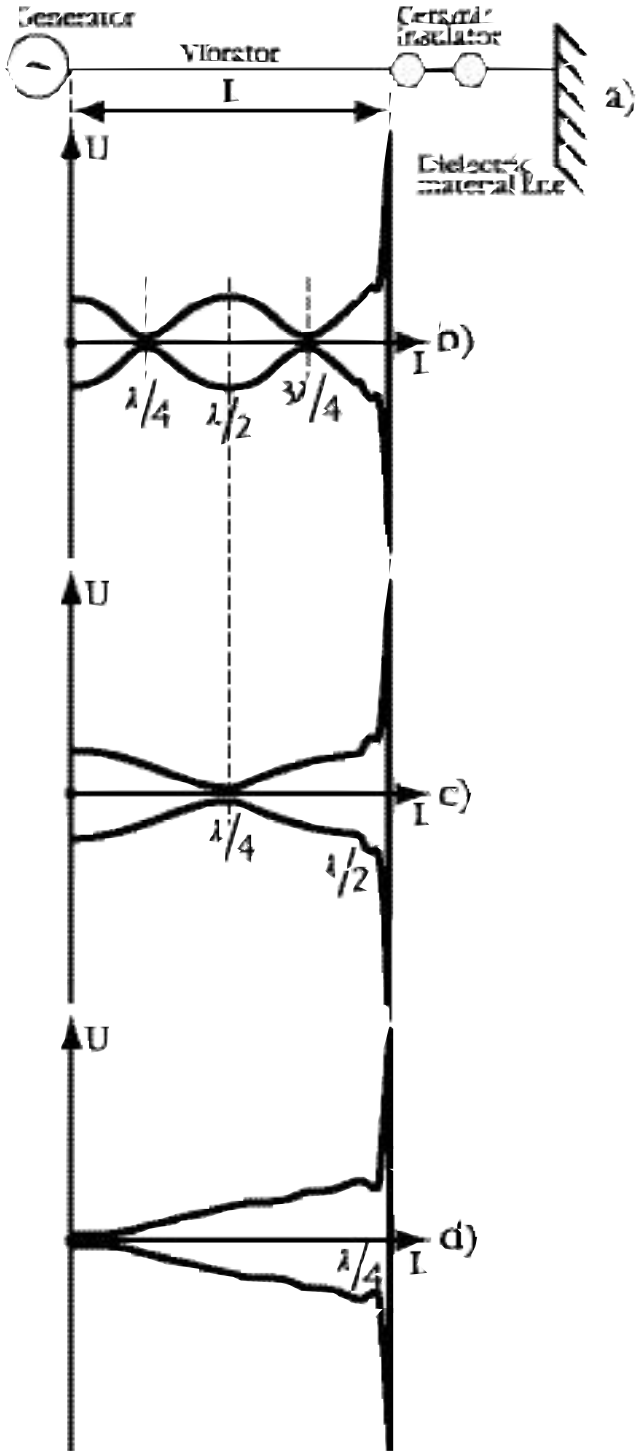

Fig.6
Measured field intensity along a linear vibrator.

To better understand diagrams in Fig. 6 curves are drawn at the upper and lower ends of each axis L that corresponds to the vibrator location. The curves were run with FI horizontally located on both sides of the vibrator.

From Fig. 6d it is clear that the diagram is axisymmetric and looks like a conic funnel.

Meanwhile, the vibrator directional diagram measured by the monitor receiver far more distant than λ, shows the characteristic that coincides with the simulated one through the Matlab-6 system (See Fig.7). As you can see from this figure, the spatial characteristic of the directional diagram is in the form of a toroid.

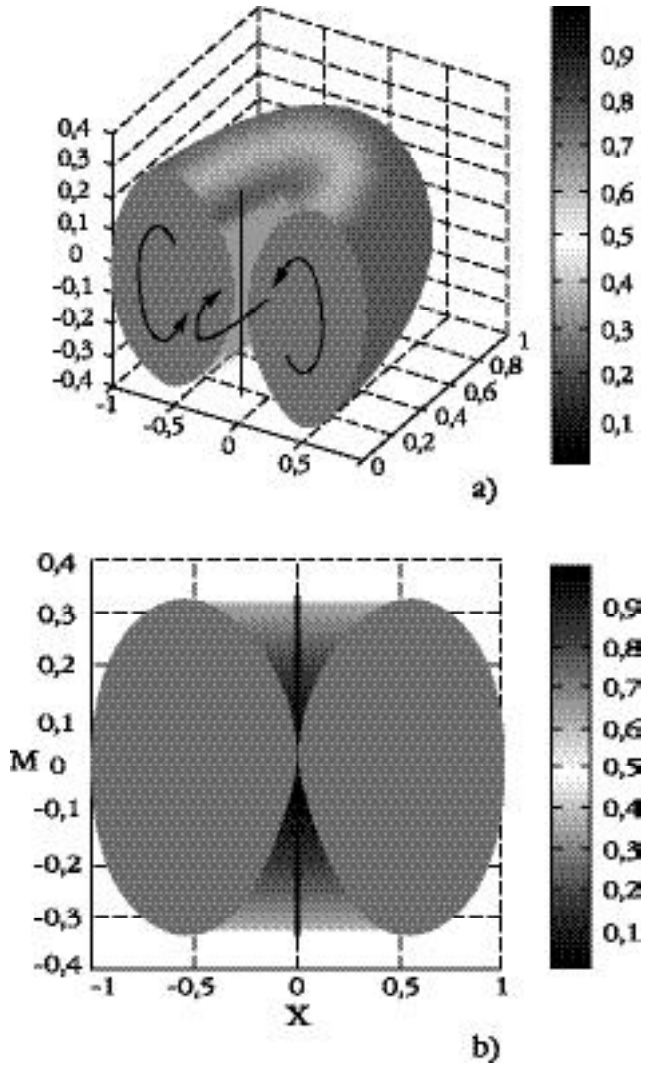

Fig.7
Matlab-6-simulated directional diagram of the semi-wave vibrator

A series of alterations was made to explore vortex ether dynamic processes with variable wave length and frequency in line conductors, solenoidal and flat coils, etc.

For certain purposes the solenoidal coil may be considered as a shortcut linear vibrator. On respective frequencies the field intensity distribution along the solenoid corresponds to the linear vibrator. This data may prove useful to many modern engineers of the Tesla transformers and generators. To increase voltage on the cold end a toroid capacitor is set in the Tesla transformers. Nuclear physicists use the hemisphere capacity for the particle accelerators. Thus, a voltage of millions of volts may be achieved.

Flat coils are best explored in terms of field intensity distribution (See Fig. 8)

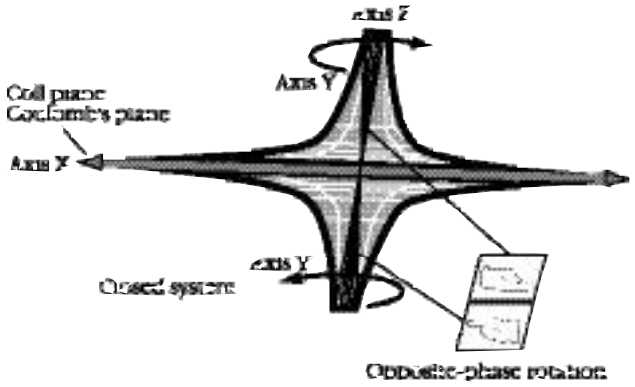

Fig.8
Field intensity distribution for a flat coil in a closed resonance circuit.

Field intensity distribution on a resonance frequency is correct.

The practical experiment for the case in fig. 6d has shown that the neon lamp that is connected with the vibrator end will be off. And this is with a 100 W generator! It is a paradox, one would say. The measurement diagram shows a "splash" of the field intensity at the vibrator end but we feel nothing. Indeed, when the FI is located as shown in Fig.9 for $\lambda/4$, the "electrodynamic vacuum" will generate. The device showed "0" intensity, which conforms neither with the diagram in Fig.6 nor with the diagram in Fig.7.

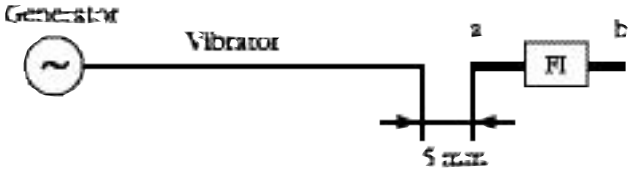

Fig.9
Field indicator shows "0" - "electrodynamic vacuum".

The same "vacuum" in the center of tornado was observed by people in the epicenter.

Remember what is measured with the field indicator (an ampere meter) along the linear vibrator. The Ampere force!

So, both people and their environment are in rotation process. The Earth rotates around its axis and around the Sun. The Sun rotates around the Galaxy center. The Galaxy rotates around the center of the Universe. The Universe rotates...

Every space point has an inceptive rotation impulse (torque). Let us remember the analogy. Water flowing out of the tub rotates counterclockwise in the northern hemisphere and clockwise in the southern hemisphere. If you set a right-handed torque in the northern hemisphere, the water will continue to flow counterclockwise.

The electromagnetism is the same. It has a natural left-handed rotation. Nevertheless, practical radiotechnology is familiar with right-handed fields artificially generated by transmitters.

The commonly used term of magnetic interactions is easier to understand if we consider the electromagnetic field as a vortex flow. Two left-handed homogeneous parallel flows are shown in Fig.1. At the point of interaction A of vector projection, the speeds of flow propagation on section plane **A-A** have opposite direction and compensate each other. The actual flow density is $\rho_1 < \rho_2 < \rho_3$. Reduced pressure occurs at point A. The flows are attracted. The resulting attraction vector for the whole flow is radially directed. The counter parallel flows will have composition, i.e. overpressure, and will repel.

One should note that graphic presentation in Fig.1 for vectors H and I for the etherdynamic systems is possible only in special cases. In dynamic vortex flows the current intensity vector is actually directed towards the flow movement and coincides with the vector direction of its propagation speed (V). The resulting vector H remains a radius-vector only for the considered point of interaction of two flows. The flow energy parameters are defined by its propagation speed V (Fig.1).

I am convinced of existence of ether vortex flows in the Universe. Modern astronomic and cosmological surveys confirm my hypotheses of aether Hyper-fields existence on a Universal scale.

The commonly used term of magnetic interactions is easier to understand if we consider the electromagnetic field as a vortex flow.

Even an amateur in aerodynamics and dynamic of gas vortex may make cosmological conclusions:

♦ vortex initiation implies the initial gradient flow of at least two counter flows;

♦ energy parameters of the emerging vortex flow can not exceed those of the parent flows

♦ there exist ether flows with energy exceeding that of our Universe

♦ our Universe has not originated from a point and is not finite. It is the spiral (vortex) structure of our Universe that testifies against the Big Bang hypothesis.

Conclusions:

Practical radiotechnology is familiar with the key difference between the field intensity distribution diagrams of aerial emitters in near and far zones. After combining diagrams 6d and 7b (Fig.10) it is possible to draw certain conclusions.

When transverse waves (radio waves) are formed around the aerial vibrator, the double transformation of the initial flow geometry starts:

♦ **the first flow is a homogeneous spiral flow on the conductor skin-layer;**

¨ **the second flow is a non-homogeneous vortex flow of the near zone;**

¨ **the third flow is a toroidal flow of the far zone.**

The toroid volume alteration in the far zone (as per the transmitter vibration frequency) forms volumetric planar transverse vibrations (spherical waves) that are called electromagnetic or radio waves. The gradient of potentials alterations (as per the transmitter vibration frequency) provoke changes of the Coulomb plane, which form longitudinal vibrations with a narrow directional diagram.

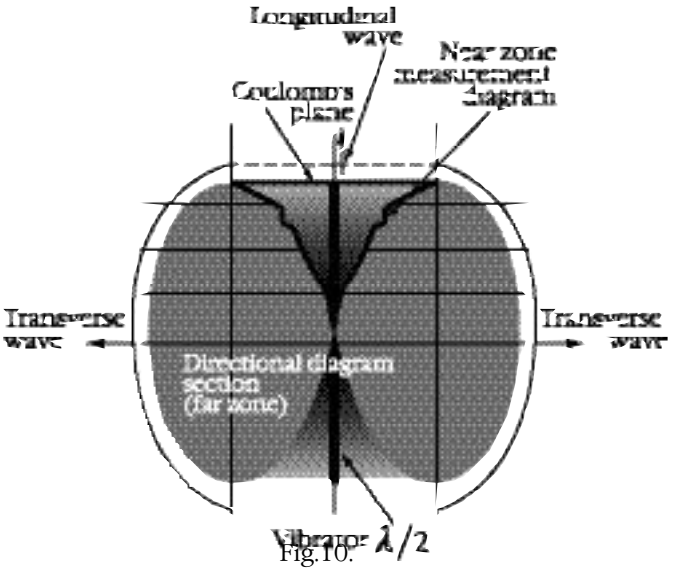

Fig.10.

The longitudinal flow is assumed to be formed as a chain of toroids (like smoke rings)

Ether-dynamic approach provides grounds for more substantial conclusions and assumptions. A new approach to energy and communication systems is made real. Further results of the experiments with transmitters and aerials, assembled on ether-dynamic principles, enabled to draw the following conclusions:

- all reasons, preventing transformation of the transmitter power into the power of transverse radio waves, are evident;
- all reasons for the transverse wave phase lagging with the increase of distance from the emitter, are also evident;
- besides the toroid that forms the transverse wave, the second flow generates a crucially new radiation that has a very narrow directional diagram along its longitudinal axis;
- the aerial ignores wave geometry for the second flow and its longitudinal derivative;
- the radiation along the second flow axis has a very high penetrating power;
- the radiation along the second flow axis has no signs of polarization.

The list of references is not shown in this article due to its size. It can be looked up at **www.efir.com.ua.**

In October 2003 the second stage of the research on the "time control" was completed. In the photo below you can see Chernobrov V. A. and Frolov A. V. in the laboratory, October 31st 2003.

The second stage conclusions are quite interesting, however the usage of timers (chronometers) as detectors is proven to be inappropriate for they are subject to magnetization and their indication variations cannot be reliable in this case.

The next stage will feature the following method of detection of the time rate changes (the rate of the matter existence) that is the radiation wave-length measurement. If it is possible to achieve significant results then we will be able to detect the change of the laser ray colour in the area of the effect and its linear path deviations. The experiments will be held to register the weight changes of the detector at the expected influence of the produced effect on the ether density.

Our company looks for cooperation with corporations, which are interested in the application aspects of these technologies.

Frolov A. V.
General Director, Faraday Lab Ltd
7-812-3803844
http://www.faraday.ru

CELL OF THE THIN PLASMAELECTRIC HEAT GENERATOR

Ph. M. Kanarev, A.I. Tlishev, Russia
E-mail: kanphil@mail.kuban.ru

EC 28 / 1!

The main task of the experiment was to check the hypothesis: "Electrodynamic influence on the water molecules gives the possibility to significantly reduce energy expenses on destruction of their chemical bonds; further fu-sion of these molecules considerably increases the output of additional energy in the form of heat".

Photo of the Thin Plasmaelectric Heat Generator

In order to solve this task, special experiments were carried out as regards the electrodynamic destruction of chemical bonds of water molecules by electric pulses of various frequencies.

CHECK TEST RECORD FOR PLASMAELECTRIC HEAT GENERATOR

Table 1

	Indices	1	2	3	Avg.
1	mass of the solution, which has passed through the reactor *m*, kg.	0.470	0.432	0.448	0.450
2	temperature of solution at the input of the reactor t_1, degrees	22	22	22	22
3	temperature of the solution at the output of the reactor t_2, degrees	66	66	65	65.67
4	temperature difference of the solution $\Delta t = t_2 - t_1$, degrees 44	44	43	43.67	
5	durability of the experiment $\Delta\tau$, s	300	300	300	300
6	reading of voltmeter V, V	4.50	4.50	4.50	4.50
6'	**Reading of oscillograph , *U'*, V**	**4.47**	**4.47**	**4.47**	**4.47**
7	reading of ammeter I, A	2.1	2.1	2.1	2.1
7'	**Reading of oscillograph , *I'*,** A	**2.2**	**2.2**	**2.2**	**2.2**
8	electric power consumption according to indices of voltmeter and ammeters, $E_2 = I \cdot V \cdot \Delta\tau$, kJ	2.84	2.84	2.84	2.84
9	power the heated solution, $E_3 = 4.19 \cdot m \cdot \Delta\tau$, kJ	79.64	80.01	80.72	80.46
10	**reactor efficiency index $K = E_3 / E_2$**	**28.04**	**28.17**	**28.42**	**28.21**

Supply voltage and current were measured with the help of a voltmeter, an ammeter and an oscillograph (Fig. 1-4)

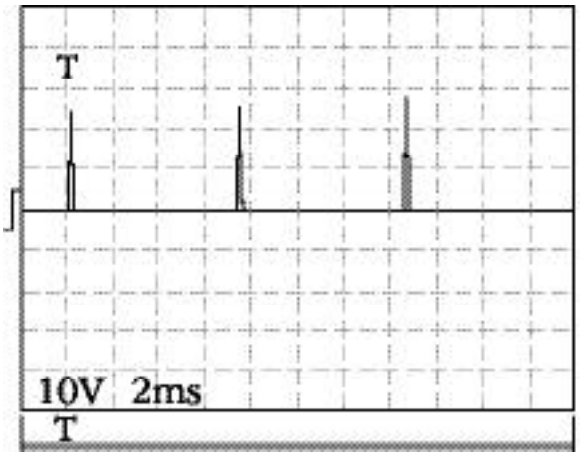

Fig. 1
Voltage

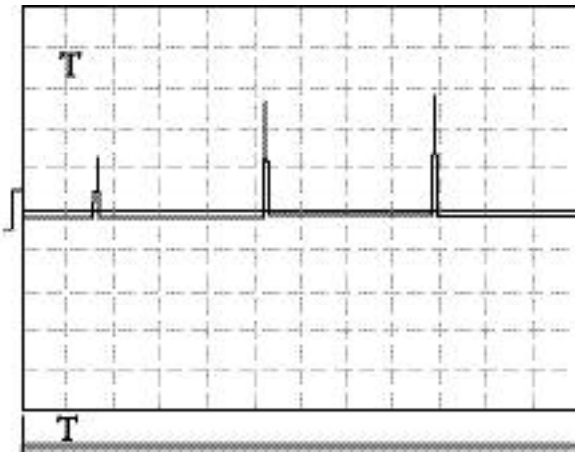

Fig. 2
Voltage

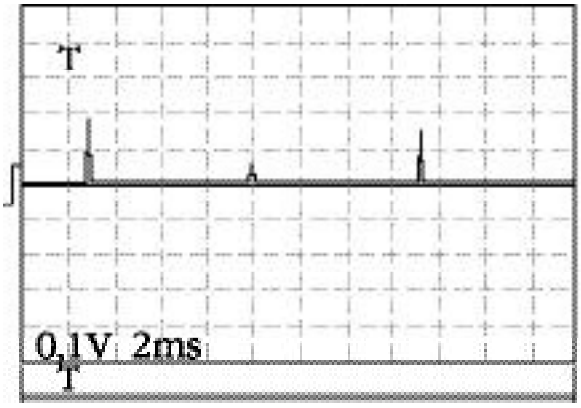

Fig. 3
Current

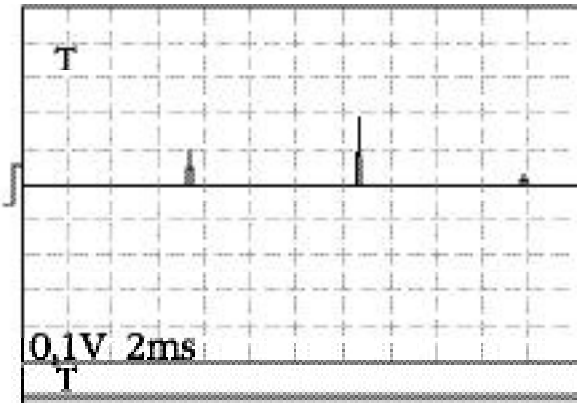

Fig. 4
Current

Process parameter calculation according to the oscillograms (Fig. 1-4) to the check test record (Table 1) gave the following results:

- Pulse scale 10.

- Average voltage amplitude according to Fig.1 and Fig. 2: Ua_{av} = (23+25+28+10+26+29) x 10/6 = 235 V.

- Average current amplitude according to Fig. 3 and Fig. 4: Ia_{av} = (20+6+17+7+10+19+3) x 10/7 = 117 A.

- Pulse repetition period T = 7.4 ms. Pulse duration t_p = 0.28 ms.

- Pulse frequency f = 1000/7.4 = 135.1 Hz. Relative pulse duration S = 7.4/0.28 = 26.32.

- Space factor Z = 0.5/26.32 = 0.019.

- Average pulse voltage U_{av} = 0.019 x 235 = 4.47 V.

- Average current in pulses I_{av} = 0.019 x 117 = 2.22 A.

Thus, it is possible to consider that the experimental test of energy efficiency of the water electric heat generator with the help of two methods gives practically identical results and confirms the above-mentioned hypothesis concerning the possibility to generate additional energy in the processes under consideration. It should be noted that as during measurements the pointer instruments of high class of accuracy of 0.2 have been used (relative conventional gauging error does not exceed 0.2%), and oscillographic measurement accuracy is much lower (usually, about 5%), the readings of the voltmeter and the ammeter should be considered more accurate.

Commercial efficiency of the water electric heat generator will depend on pulse generator economy. Since effi-ciency of powerful pulse

generators can be near one unit, energy efficiency in industrial plants that use the considered heat generators should not differ greatly from the data obtained during laboratory research.

Simplicity and one hundred per cent reproducibility of the described experiments open a prospect for quick commercialization of the water electric heat generator.

REFERENCES

1. Kanarev Ph.M. The Foundation of Physchemistry of Microworld (the second edition). (In Russian) http://www.ikar.udm.ru/sb28-2.htm
2. Kanarev Ph.M. The Foundation of Physchemistry of Microworld. The second edition. (In English). http://book.physchemistry.innoplaza.net
3. Kanarev Ph.M. Water Electric Generator of Heat. http://Kanarev.innoplaza.net

Professor Kanarev looks for co-projects with prospective investors.

Fantastic Projects

Smith's Generator

Review

TransWorld Energy,

8110 Bent Oak Lane Spring, Texas 77379, USA

Email: donsm1@earthlink.net

http://altenergy-pro.com

Don Smith is a University degreed professional in science & engineering. Served in three wars; WWII, Korea and Vietnam. He has enjoyed a long and successful profession as an executive in the petroleum industry. His life long outside interests include electronics and engineering. A popular walk on substitute for University Professors in physics, chemistry, biology and computer assisted drafting. Teaching style similar to Richard Feynman. He enjoys celebrity status in Japan and Saudi Arabia.

About 20 years ago, the book "Inventions, Researches and Writings of Nicola Tesla", resulted in his reconstructing, as a way of understanding the many theories and devices shown in the book. From this encounter, a very strong bonding resulted. The object then became putting his thinking inside that of Tesla, such that expanding upon and extrapolating areas not yet reached by Tesla. Technological advances in materials provide sourcing for devices not possible at earlier periods. For example, magnetic permeability which is the counter part of negative resistance is an open field for experimentation today.

Don does not sell his inventions, but trades licenses for shares in companies which then incorporate the new technology into their marketing systems. As such, he is on the Board of directors of several well established ventures located in Japan, Brazil, Mexico and Saudi Arabia.

Successful reproductions of Don's technology are present in Finland, Saint Petersburg - Russia, Yugoslavia, Romania, Japan, Hong Kong, and numerous other Countries. His book "Resonance Energy Methods" has a circulation of 40,000 copies in worldwide in many languages.

generators can be near one unit, energy efficiency in industrial plants that use the considered heat generators should not differ greatly from the data obtained during laboratory research.

Simplicity and one hundred per cent reproducibility of the described experiments open a prospect for quick commercialization of the water electric heat generator.

REFERENCES

1. Kanarev Ph.M. The Foundation of Physchemistry of Microworld (the second edition). (In Russian) http://www.ikar.udm.ru/sb28-2.htm
2. Kanarev Ph.M. The Foundation of Physchemistry of Microworld. The second edition. (In English). http://book.physchemistry.innoplaza.net
3. Kanarev Ph.M. Water Electric Generator of Heat. http://Kanarev.innoplaza.net

Professor Kanarev looks for co-projects with prospective investors.

Fantastic Projects

Smith's Generator

Review

TransWorld Energy,

8110 Bent Oak Lane Spring, Texas 77379, USA

Email: donsm1@earthlink.net

http://altenergy-pro.com

Don Smith is a University degreed professional in science & engineering. Served in three wars; WWII, Korea and Vietnam. He has enjoyed a long and successful profession as an executive in the petroleum industry. His life long outside interests include electronics and engineering. A popular walk on substitute for University Professors in physics, chemistry, biology and computer assisted drafting. Teaching style similar to Richard Feynman. He enjoys celebrity status in Japan and Saudi Arabia.

About 20 years ago, the book "Inventions, Researches and Writings of Nicola Tesla", resulted in his reconstructing, as a way of understanding the many theories and devices shown in the book. From this encounter, a very strong bonding resulted. The object then became putting his thinking inside that of Tesla, such that expanding upon and extrapolating areas not yet reached by Tesla. Technological advances in materials provide sourcing for devices not possible at earlier periods. For example, magnetic permeability which is the counter part of negative resistance is an open field for experimentation today.

Don does not sell his inventions, but trades licenses for shares in companies which then incorporate the new technology into their marketing systems. As such, he is on the Board of directors of several well established ventures located in Japan, Brazil, Mexico and Saudi Arabia.

Successful reproductions of Don's technology are present in Finland, Saint Petersburg - Russia, Yugoslavia, Romania, Japan, Hong Kong, and numerous other Countries. His book "Resonance Energy Methods" has a circulation of 40,000 copies in worldwide in many languages.

Abstract

Mr. Don Smith has discovered that Ohm's Law of Resistance does not apply to Magnetic Resonance that travels unrestricted for great distances. Therefore, multitudes of electrons are disturbed. The Magnetic moments are translated into usable electric energy. The Magnetic Dipole provides an unlimited source of electrical current. Mr. Smith's "Dipole Transformer" has been pending since last September.

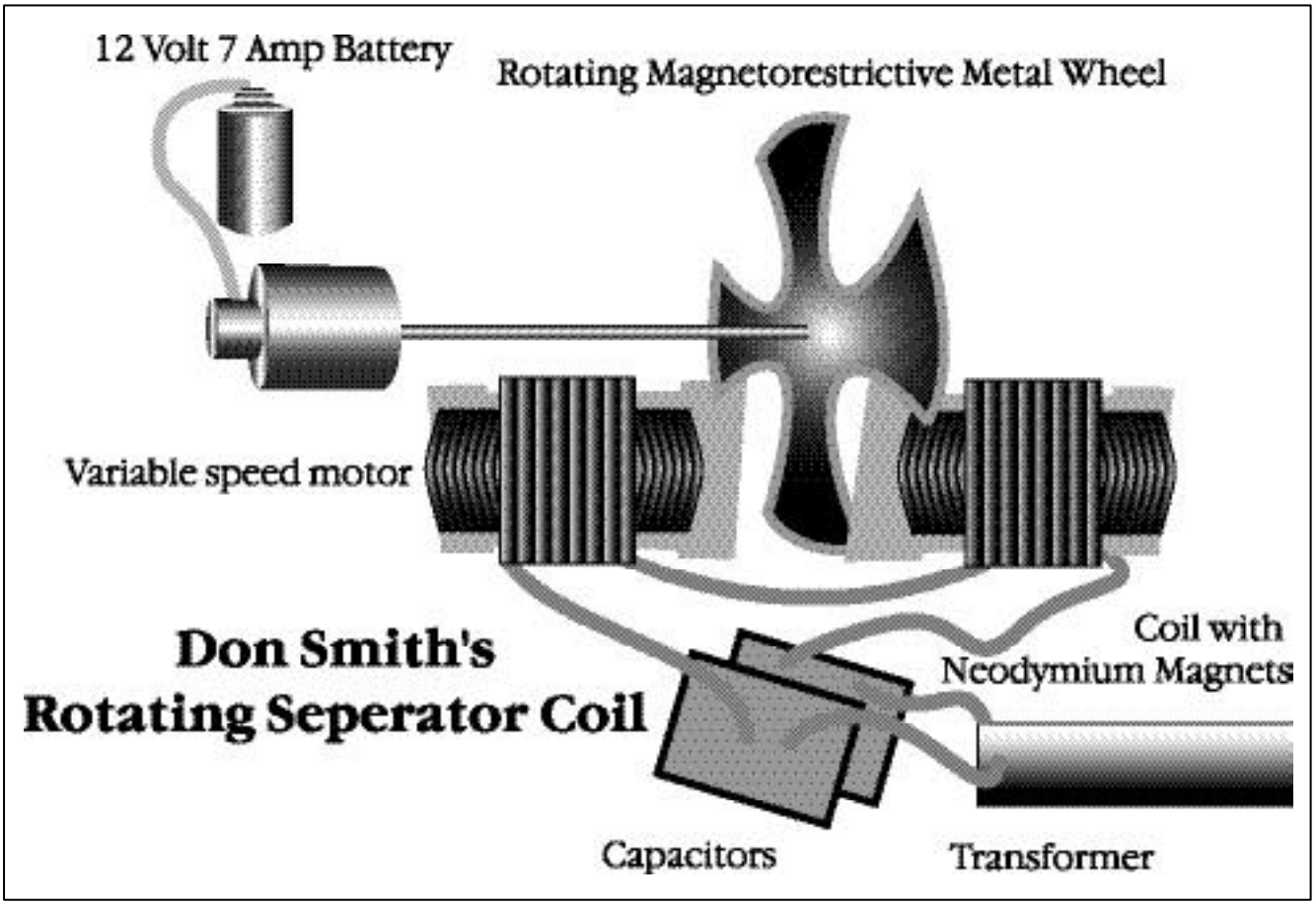

Fig.1
Smith's Energy Receiver

Useful energy occurs as the result of imbalances of ambient background energy and it is a transient phenomenon. In conventional circuits, the electrical field is in a closed system that is damped out with heat loss, which severely limits its utility. **The flip side of the electron generates magnetic waves, which is an open system, not subjected to heat loss. These being unrestricted are the universal source of energy. Universally present electrons are flipped to their electrical position, resulting in useful energy.** When properly constructed an electrical circuit can become self sustainable once started. An obvious corollary would be that the number of radio or television receivers in operation does not deplete the magnetic wave source providing the service. The key source of unlimited energy is Magnetic Resonance. To understand this requires putting a stake through outdated physics. An obvious example is the piano where the key impacts the one note giving one sound, which resonates with its two side keys providing a much higher level. Magnetic Resonant Energy clearly amplifies demonstrating more energy out than in. **Excess energy consequent to a reaction is called Free Energy and can be very large as is in the case of Magnetic Resonance.** The intentionally ignorant physicist makes a habit of ignoring this fact.

Useful electricity is obtained from disturbed electrons, which radiate magnetic fields and waves. The generator disturbs and collects this

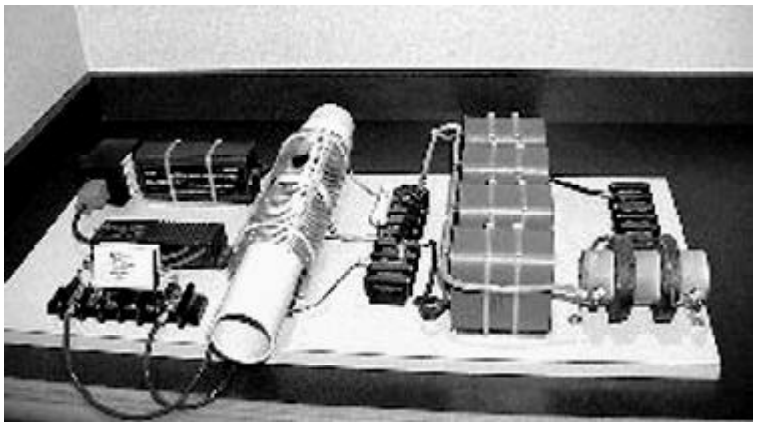

Fig.2
D. Smith's Energy Receiver

emitted electron energy. These electrons remain fully in tact and undiminished until the end of time. This Energy is free and the cost of accessing it depends on the ignorance of the collector. With an appropriate collector system an unending source of environmentally benign, inexpensive, available energy everywhere, is provided.

Editor: in September 2003 Donald Smith took part in the annual "Inventor's Week-end" Conference where he presented the report on his invention. In this issue you can find more details on the conference.

It is worth of a note that we have received ***a number of negative comments on this inventor's work****. However, we thought his articles to be quite interesting and decided to publish them. We would be glad to get readers' comments, who are familiar with the work and inventions of Donald Smith.*

NEWS

News from Farady Lab

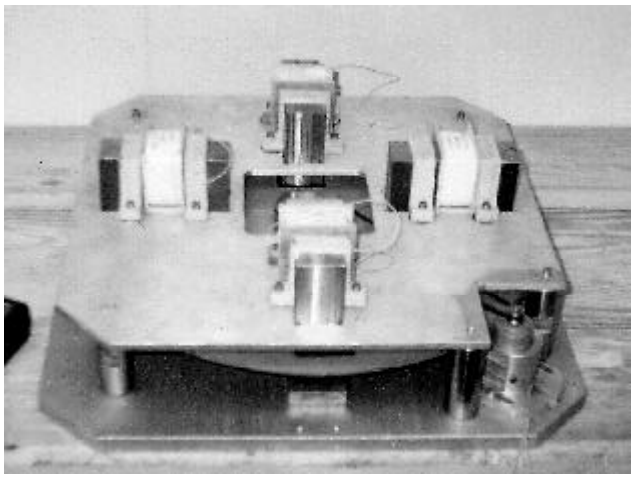

Disk permanent-magnet generator
Faraday Lab Ltd

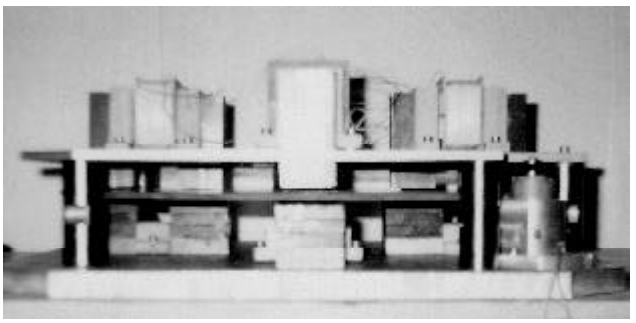

In our lab we are still working at the optimization of the alternator design (electro-magnetic generator with the permanent magnets). We have introduced the drum rotor instead of the disk rotor into the new design of the alternator. The operation mechanism is the same, namely, the alternation of the magnetic flux near the generator coils occurs as a result of the rotating elements operation of the rotor, which "shunt" the magnetic flux.

Frolov A.V.

Strategies for Launching a New Over-Unity Device

Ryan S. Wood, USA
14004 Quali Ridge Drive, Broomfield, CO 80020

Problem description: With any singly successful over-unity energy device comes a host of business, technical and financial problems and opportunities. A public announcement permanently will lead to a "Pons & Fleishman" effect that at best delays public success and at worst derails the entire technological effort. Careful attention needs to be applied to the marketing launch, replication, patents, legal defense and finances.

Potential Solution: With a few working devices that generate100-500 horsepower it is relatively easy to hook these units to the electrical gird and generate monthly checks from the utilities. The law states that major utilities must purchase electricity from any supplier at "cost avoidance" rate now typically, between 6 and 10 cents per kilowatt-hour. This law, California Public Utilities Commission - Rule 21, for example, is designed to help small hydro-electric producers and solar or wind farms. There is a safety requirement of grid transfer switches, but they are not terribly complicated or expensive. The entire equipment set-up must be approved by the utility, however, if you start with a diesel electric generator or small hydro plant it can be approved, operating and stable before the clandestine switch or hybrid operation with an over-unity machine. The law is strongly supportive of the energy producer and disconnection for non-safety or maintenance reasons is exceeding rare.

A key benefit of this approach is that you have established repeatability by having multiple working sites, you have established that it can generate money and the technology does real work and you have created several independent locations where press and scientists can visit to validate the over-unity effectiveness in-situ.

Typical revenues would be as follows:

Generator Horse Power	100	200	300	400	500
Annual $, 90% uptime @ 6 c/kWh	$ 35,100	$ 70,199	$ 105,299	$ 140, 398	$ 175, 498
Monthly payment @ 6 c/kWh	$ 2,92	$ 5,850	$ 8,775	$ 11,700	$ 14, 625
Annual $, 90% uptime @ 10 c/kWh	$ 58,499	$ 116, 999	$ 175, 498	$ 233,997	$ 292, 496
Monthly payment @ 10 c/kWh	$ 4,875	$ 9,750	$14, 625	$ 19,500	$ 24, 375

It will take money without the strings of investors to champion and defend a new breakthrough technology into the energy marketplace and this strategy offers a quiet way to prepare for the ultimate launch and resulting scientific and media frenzy that will ensue. It will take years for the business to form, products to be built and marketing and acceptance and industry confidence to be established. All during those years this strategy can generate cash to support engineering and operations.

Please call if there are questions at 303-941-9663 (cell),
Home: 720-887-8071
Ryan S. Wood

Fantastic Projects

The Hutchison Effect – An Explanation

Mark A. Solis, USA
http://www.geocities.com/ResearchTriangle/
Email: your_neighbor_2000@yahoo.com

People often ask, "What exactly is the Hutchison Effect?" This brief essay is an attempt to answer that question to the satisfaction of the majority. First of all, the Hutchison Effect is a collection of phenomena which were discovered accidentally by John Hutchison during attempts to study the longitudinal waves of Tesla back in 1979. In other words, the Hutchison Effect is not simply a singular effect. It is many.

The Hutchison Effect occurs as the result of radio wave interferences in a zone of spatial volume encompassed by high voltage sources, usually a Van de Graff generator, and two or more Tesla coils.

Editor: We can call this effect "The H. Wells Effect" because he was first to describe it in his book "The Invisible man". The main character of the book used two sources of electro-magnetic vibrations and Wells said that they were not Hertz waves but something else. "But the essential phase was to place the transparent object whose refractive index was to be lowered between two radiating centers of a sort of ethereal vibration..."("The Invisible Man", chapter 20).

A. V. Frolov

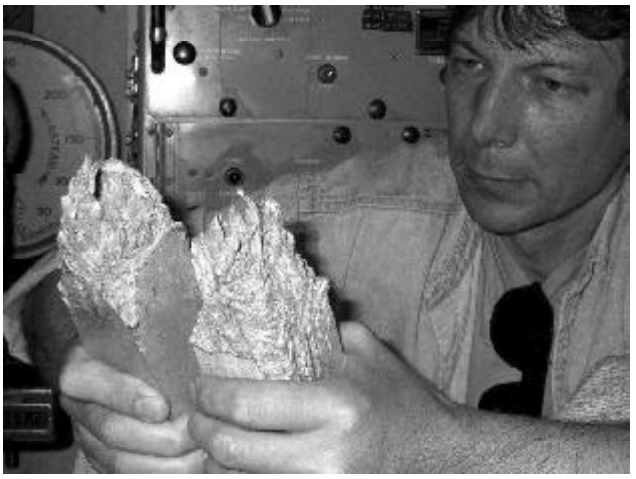

The effects produced include levitation of heavy objects, fusion of dissimilar materials such as metal and wood, the anomalous heating of metals without burning adjacent material, spontaneous fracturing of metals (which separate by sliding in a sideways fashion), and both temporary and permanent changes in the crystalline structure and physical properties of metals.

Fig.1 represents the proof of Hutchison Effect based on metal blocks. Deformation occurred at room temperature as a result of complex interaction of electromagnetic fields.

The levitation of heavy objects by the Hutchison Effect is not - repeat not - the result of simple electrostatic or electromagnetic levitation. Claims that these forces alone can explain the phenomenon are patently ridiculous, and easily disproved by merely trying to use such methods to duplicate what

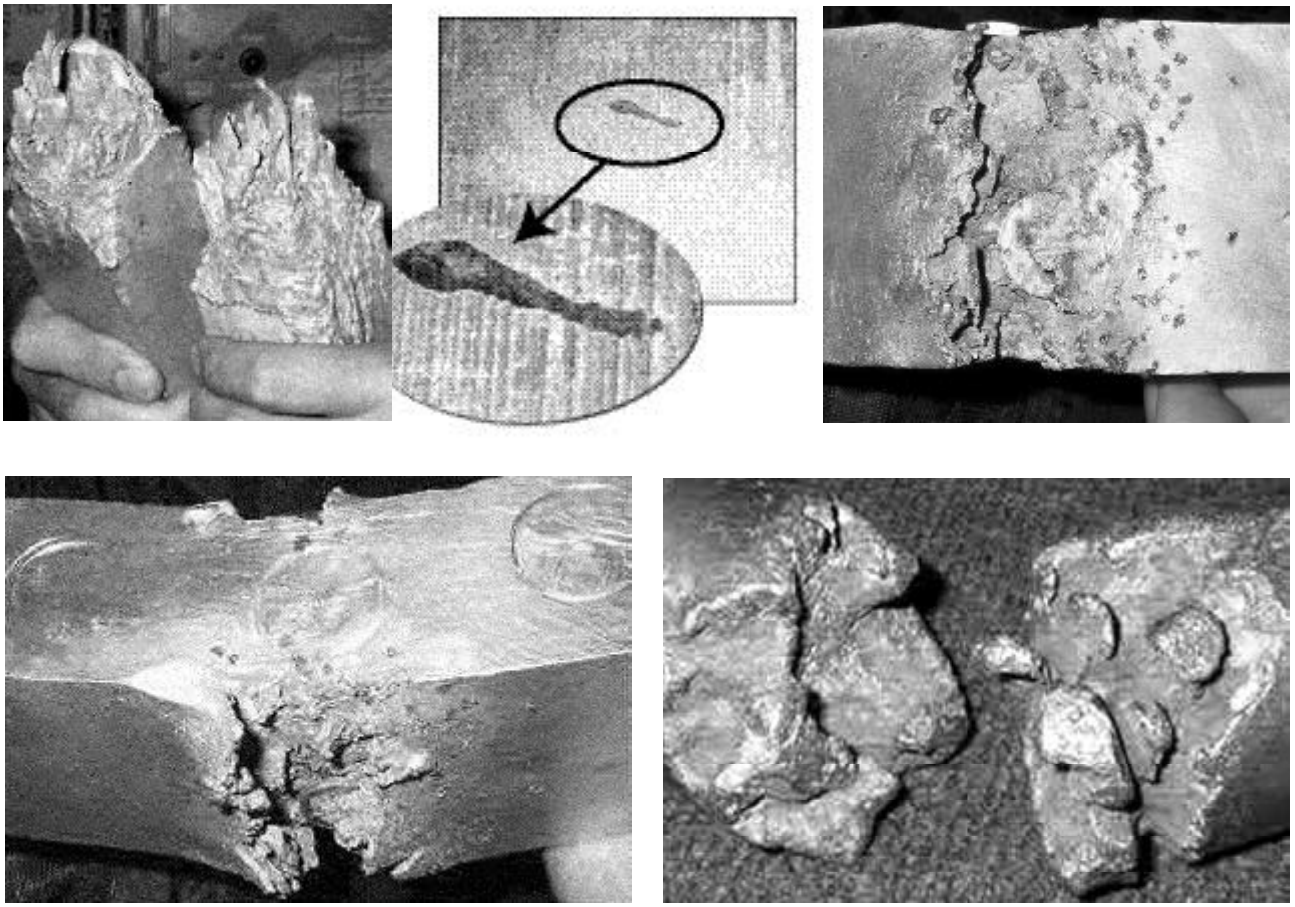

Fig.1

Cold melting of metals

The upper left: steel, The lower left: aluminium with coin prints and with a coin inserted in a partially open split; The lower right: fully torn aluminium bar; The middle upper and right: a section part of the aluminium block, into which a wood block is fused (brown matter)

http://www.rumormillnews.com/JOHN-HUTSHISON2.htm

the Hutchison Effect has achieved, which has been well documented both on film and videotape, and has been witnessed many times by numerous credentialed scientists and engineers. Challengers should note that their apparatus must be limited to the use of 75 Watts of power from a 120 Volt AC outlet, as that is all that is used by Hutchison's apparatus to levitate a 60-pound cannon ball.

The fusion of dissimilar materials, which is exceedingly remarkable, indicates clearly that the Hutchison Effect has a powerful influence on Van der Waals forces. In a striking and baffling contradiction, dissimilar substances can simply "come together," yet the individual substances do not dissociate. A block of wood can simply "sink into" a metal bar, yet neither the metal bar nor the block of wood come apart. Also, there is no evidence of displacement, such as would occur if, for example, one were to sink a stone into a bowl of water.

The anomalous heating of metal without any evidence of burning or scorching of the adjacent materials (usually wood) is a clear indication that possibly the nature of heat may not be completely understood. This has far-reaching implications for thermodynamics, which hinges entirely on the presumption of such knowledge. It should be noted that the entirety of thermodynamics is represented by the infrared portion of the electromagnetic spectrum, which is insignificant in a

context of 0 Hz to infinite Hz. The anomalous heating exhibited by the Hutchison Effect shows plainly that we have much to learn, especially where thermodynamics and electromagnetism meet.

The spontaneous fracturing of metals, as occurs with the Hutchison Effect, is unique for two reasons: (1) there is no evidence of an "external force" causing the fracturing, and (2) the method by which the metal separates involves a sliding motion in a sideways direction, horizontally. The metal simply comes apart.

Doctor John Hutchison

Some temporary changes in the crystalline structure and physical properties of metals are somewhat reminiscent of the "spoon bending" of Uri Geller, except that there is no one near the metal samples when the changes take place. One video shows a spoon flapping up and down like a limp rag in a stiff breeze. In the case of permanent changes, a metal bar will be hard at one end, like steel, and soft at the other end, like powdered lead. Again, this is evidence of strong influence on Van der Waals forces.

The radio wave interferences involved in producing these effects are produced from as many as four and five different radio sources, all operating at low power. However, the zone in which the interferences take place is stressed by hundreds of kilovolts.

It is surmised by some researchers that what Hutchison has done is tap into the Zero Point Energy. This energy gets its name from the fact that it is evidenced by oscillations at zero degrees Kelvin, where supposedly all activity in an atom ceases. The energy is associated with the spontaneous emission and annihilation of electrons and positrons coming from what is called "the quantum vacuum." The density of the energy contained in the quantum vacuum is estimated by some at ten to the thirteenth Joules per cubic centimeter, which is reportedly sufficient to boil off the Earth's oceans in a matter of moments.

Given access to such energies, it is small wonder that the Hutchison Effect produces such bizarre phenomena. At the present time, the phenomena are difficult to reproduce with any regularity. The focus for the future, then, is first to increase the frequency of occurrence of the effects, then to achieve some degree of precision in their control.

The spontaneous fracturing of metals, as occurs with the Hutchison Effect, is unique for two reasons: there is no evidence of an "external force" causing the fracturing, and the method by which the metal separates involves a sliding motion in a sideways direction, horizontally. The metal simply comes apart.

Editor: On November 17th 2003 we got to know that the inventor John Hutchison can eventually lose his home laboratory. The property can be confiscated upon court order due to neighbours' complaints. Apparently, it is dangerous to conduct experiments of the kind at home and even within a town. We wish him success!

A. V. Frolov

A SIMPLE DEVICE FOR HEAT TO ELECTRICAL ENERGY CONVERSION BY MEANS OF FERROELECTRICS

A. Ries, A. Z. Simoes, M. A. Zaghete, J. A. Varela,
Institute of Chemistry, Universidade Estadual Paulista, Rua Prof. Francisco Degni s/n,
14801-970 Araraquara-SP, Brazil
Email: ries@posgrad.iq.unesp.br

E. Longo,
Department of Chemistry, Universidade Federal de Sao Carlos, Rodovia Washington Luis - km 235, 13565-905
Sao Carlos-SP, Brazil

Introduction

A few years ago, Zaev [1, 2] demonstrated experimentally the possibility of heat to electrical energy conversion by means of ferroelectrics. A capacitor filled with a ferroelectric material was charged and discharged periodically at a temperature just a little lower than the Curie point. According to Zaev, the capacitor must have a nonlinear capacitance dC/dV > 0, which means the capacitance increases with rising voltage. Besides these experimental results, it was proven by a theoretical calculation that the electrical energy obtained during discharging can reach up to 1.35 of the energy introduced to charge the capacitor. The present paper presents an inexpensive and simple electric circuit which can be used to prove heat to electricity conversion experimentally. Moreover, the physical mechanism of heat to electricity conversion is explained in the form of a thermodynamic cycle.

Thermodynamic cycle for energy conversion

The following thermodynamic cycle is composed of four reversible steps. It works only at a temperature just a little lower than the Curie point, where the dielectric constant is highly temperature dependent. Fig. 1 shows the relative dielectric constant of a representative ferroelectric ceramic as a function of temperature.

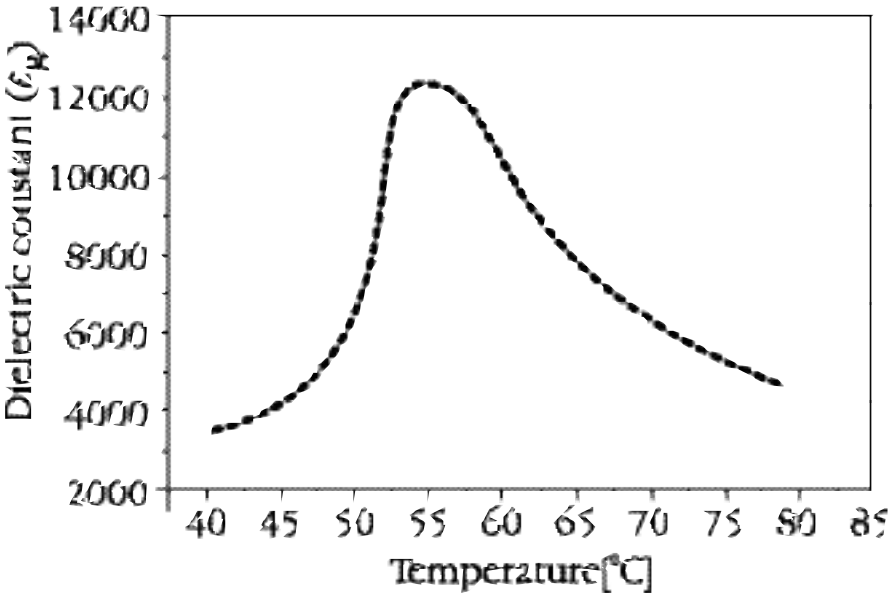

Fig. 1
Relative dielectric constant versus temperature for a barium strontium titanate ceramic (80% Ba, 20% Sr) prepared by the author. Curie point = 55^0 C.

As it can be seen, just below the Curie point in the range from 50 to 55^{0}C, small changes of the temperature cause high changes of the dielectric constant.

Furthermore, to understand the conversion mechanism, it is necessary to understand the electrocaloric effect. When an electric field is applied to a dielectric medium, the latter is polarized. For ferroelectric materials, the parallel domain alignment is the most important part of the total polarization. During the successive alignment of the domains, some material parameters in particular entropy, heat capacity and temperature change. Since the material possesses less degrees of freedom in the polarized state, its entropy and heat capacity are reduced. As a consequence, provided that no heat exchange with the environment is possible (adiabatic conditions), the temperature increases. It is very important to understand that the energy for warming of the dielectric is not taken from the polarizing electric field. The increase in temperature is a result of the decreased heat capacity only.

From this, it can be derived easily what means "nonlinear capacitance".

When a capacitor is charged adiabatically which means its voltage increases faster than any heat exchange with the environment is possible, due to the electrocaloric effect, the temperature of the dielectric must also increase. As it can be seen from Fig.1, below the Curie point, an increasing temperature leads to a higher dielectric constant. Assuming that both temperatures, the one before charging and the other after charging are still below the Curie point, one can say that the dielectric constant increases with an increase in voltage.

Since the capacitance is proportional to the dielectric constant, the capacitor has a nonlinear characteristic $dC/dV > 0$. In the same way it can be concluded that adiabatic charging just a little above the Curie point reveals a nonlinear capacitor characteristic with $dC/dV < 0$.

Quantitative experimental measurements on the electrocaloric effect in some representative ferroelectric and antiferroelectric materials were published by Thacher [3].

STEP 1: Adiabatic charging of the capacitor

We consider a capacitor filled with a ferroelectric medium at an environmental temperature a little lower than the Curie point.

An adiabatic charging of a capacitor (no heat exchange) effects an increase in temperature and capacitance due to the electrocaloric effect. We assume that this increase in temperature is so small that the temperature remains below the Curie point. Finally, the capacitor is completely charged while the dielectric medium has a higher dielectric constant and therefore a higher capacitance than it posseses at the environmental temperature.

To go further to step 2, the capacitor is hold under conditions where no discharge is possible, e.g. it is disconnected from the power supply.

STEP 2: Thermal equilibration

After a short time, the charged capacitor has cooled down to the environmental temperature. While cooling down, the dielectric constant and capacitance decrease. But the charges of the capacitor plates remain constant. As a consequence, the voltage and the electrical energy increase. This can be readily recognized from the general capacitor equation $q = C V$ (q = charge, C = capacitance, V = voltage):

$$q = \text{constant} = C_1 V_1 = C_2 V_2$$

STEP 3: Adiabatic discharging of the capacitor

While discharging the capacitor the temperature and capacitance decrease (again heat capacity changes) due to the electrocaloric effect, leading to a further increase in the available electrical energy. The ferroelectric medium posseses now a final temperature below the temperature of the environment.

STEP 4: Thermal equilibration

In order to proceed with step 1, it is necessary to reach the environmental temperature. An inflow of heat from the environment to the dielectric material is required.

Electric circuit to observe energy conversion

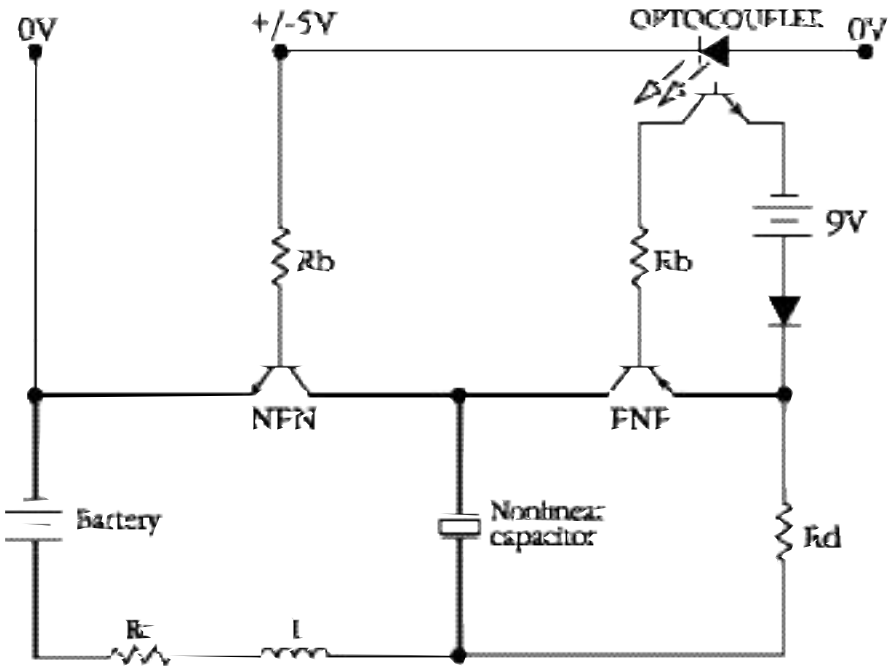

Fig. 2
Electric circuit for testing the energy conversion effect. The connections to the square wave generator are labeled with 0V and +/- 5V, the resistors Rb are to adjust the maximum base current of the transistors.

Assuming the experimenter has a nonlinear capacitor, the set-up shown schematically in Fig. 2 is proposed as a possible conversion device. The circuit contains two different types of transistors (NPN and PNP) which fulfill here the function of a switch.

The NPN junction transistor consists of two n-type semiconductors (called the emitter and collector) separated by a thin layer of p-type semiconductor (called the base). On the other hand the PNP junction transistor consists of a thin layer of n-type semiconductor lying between two p-type semiconductors. The base is the ON/OFF switch for the transistors. If a current flows to the base, there is a path from the collector to the emitter, where a current can flow (switch is ON). If there is no current flowing to the base, then no current can flow from the collector to the emitter (switch is OFF).

The charging-discharging process is controlled by a square wave generator which produces an output signal switching from +5V to -5V. The switching frequency is adjustable from 0.1 Hz up to at least 10 kHz. This output signal is applied to the bases of both transistors.

During the time the square wave generator output signal is +5V, a base current flows through the base-emitter junction of the NPN transistor which creates a low resistance path between the collector and the emitter. As a consequence, the capacitor is charged by the battery. The collector-emitter junction of the PNP transistor has a very high resistance, because here no base current flows. Therefore the capacitor is not discharged at the same time. When the output signal switches to -5V, a current flows to the base of the PNP transistor and not to the base of the

NPN transistor. Now the capacitor is discharged.

In order to understand the function of the inductance in Fig. 2, we analyze the thermodynamics of the charging process.

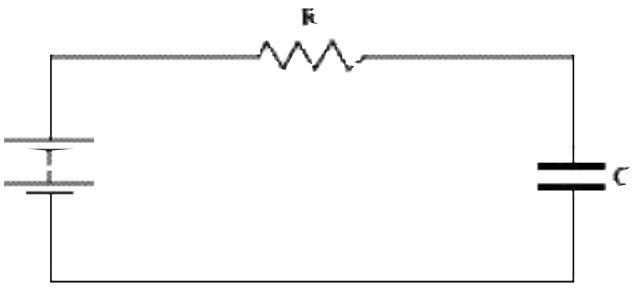

Fig. 3
Simple circuit for charging a capacitor

If a linear capacitor of capacitance C is charged to a voltage V through the load R according to Fig. 3, the energy $W = 0.5\ C\ V^2$ is stored in the capacitor. During the charging process, a time-dependent current I(t) flows:

$$I(t) = V/R \exp(-t/RC)$$

This current develops the heat Q in the load:

$$2Q = R \int I^2(t)dt = 0{,}5CV^2$$

Here the integration limits are from zero to infinity. This calculation shows, that the energy taken from the battery is the energy stored in the capacitor after charging plus the heat produced in the load, also 2•C V2. One can see that the heat Q is not dependent on the resistance value R.

The above used equations are only valid in case of a one-step charging process.

If the capacitor is charged stepwise to the final voltage V, e.g. using a ramp generator, and each voltage step effects a voltage increase , the total heat produced in the load is (N = number of voltage steps):

$$Q = N\ 0{,}5\ C\ (V/N)^2 = 0{,}5\ C/N\ V^2$$

Now the energy taken from the source is:

$$W = 0{,}5 \cdot (1 + 1/N) 1/2\ CV^2$$

If the number of steps N tends to infinity, the heat Q tends to zero.

This energy loss in the load dramatically influences the efficiency of any conversion device and must be taken into account, otherwise all experimental attempts to observe energy conversion would fail.

A more detailed discussion on charging a capacitor and the unavoidable energy losses was given by Heinrich [4] and Gupta et al. [5].

The inductance in the circuit (Fig. 2) effects a slower rising of the current during the charging process (due to self induction) and can reduce the heat generated in the load dramatically.

Acknowledgments

Financial support of this work was provided by the Brazilian agency FAPESP (www.fapesp.br) and the German Academic Exchange Service (DAAD), (www.daad.de).

References

1. N.E. Zaev, Yu.S. Spiridonov, Capacitance as a converter of heat to electrical energy, Russian Electrical Engineering, Vol. 69, (2000) pp. 69-72
2. N.E. Zaev, Research on the Capacitance Converter of Environmental Heat to Electric Power, New Energy Technologies, issue 2, (2001)
3. P.D. Thacher, Electrocaloric effects in some ferroelectric and antiferroelectric Pb(Zr, Ti)O3 compounds, Journal of Applied Physics, Vol. 39, (1963), pp. 1996-2002
4. F. Heinrich, Entropy change when charging a capacitor: A demonstration experiment, American Journal of Physics, Vol. 54, (1986), pp. 742-744
5. V.K. Gupta, G. Shanker, N.K. Sharma, Reversibility and step processes: An experiment for the undergraduate laboratory, American Journal of Physics, Vol. 52, (1984), pp. 945-947

Fantastic Projects

The Gates Motor

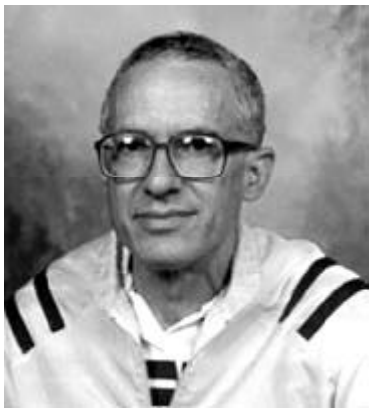

A. Akau, USA
Email: adrianakau@aol.com

The Gates motor company has produced a motor that does not run on fossil fuel or on electricity. It comes in a 28 HP and a 5,000 HP version. When linked to an electric generator, the larger motor will produce 2,200 kW.

My name is Adrian Akau. I am a recently retired school teacher, having taught science and math in the public school system, state of Hawaii for the past 36 years. One of the classes I taught was on energy.

Our world should be reaching the half-way mark in easily accessible oil by about the year 2016. Since the rate of oil usage is becoming higher each year, it is unlikely that the oil supply will last as long as the 140 years since the first well was drilled in Pennsylvania. We will become more dependent upon OPEC with all the political pressures and problems that accompany this type of dependency. As the easy oil is consumed, we must look for ways to extract less accessible oil such as from shale. The added expense will be passed on to the consumer.

The burning of coal is not the answer either because coal cannot supply convenient energy as does oil. An oil-based economy cannot transfer over readily to natural gas; there is not enough natural gas available and it is again, not a convenient and concentrated source as is oil. We also have serious pollution problems with the burning of fossil fuels (natural gas being the exception) but the burning of all fossil fuels have contributed to the serious problem of global warming.

It may take all of 50-80 years to transfer to a non-fossil fuel economy. The transfer must be made slowly so as not to disturb the infrastructure of our economy which is presently based upon fossil fuels. We must gradually create a new infrastructure that is non-fossil fuel dependent.

The motor incorporates a unique spring configuration to provide rotation

The production model of the motor is 24 inches high by 48 inches in length. Connected to a generator it will provide sufficient power for about eight hundred US homes. It is designed to be tough and to last a long time. It uses a high grade airplane synthetic engine oil

to prevent friction and the build up of heat. Only the oil filter needs to be changed. The motor has special needle bearings and portions of the motor are made of high quality steel.

The Gates motor is designed to run 24 hours/day, 365 days/year without incurring any fuel costs. The larger size motor would come in pairs; the spare motor being used as a back-up unit should the regular motor be turned off for maintenance such as to change the oil or in case there should be any problems with the first motor. The company is willing to enter into a contract for maintaining the motor after installation.

The Gates motor represents a major breakthrough in motor design technology and provides practical solutions to environmental and fuel conservation concerns. **Finally, a completely mechanical motor has been developed.** It can deliver the power needed in a wide variety of service applications without any waste products or emissions to adversely affect the environment. This revolutionary new motor utilizes spring power technology. Unlike conventional motors which must reach a maximum rpm level before the desired horsepower, the Gates motor provides maximum horsepower instantly by virtue of the torque stored in the springs.

The basic operating principle of the Gates motor involves a series of springs configured to provide the required motor rotation and power delivery. Consider, if you will, the operating principle of a grandfather clock. Once the clock is wound, it continues to operate until it runs down and stops. The springs must then be rewound so it will operate again. Suppose the clock is continually being rewound as it operates. Then the clock would run continuously. This condition is what forms the basis for the operating principle of the Gates motor. The motor incorporates a unique spring configuration to provide rotation. The springs inside the motor are wound and preset at the factory at the time the motor is assembled. The amount of torque wound into the springs at the factory determines the horsepower of the motor. Inside the motor are a multiple of springs positioned horizontally in a circular arrangement. As the motor operates, the springs are unwound a set number of degrees. A double ratchet system at one end of the motor rewinds the degrees used back into the springs. As the springs are unwinding, **the power generated from all the springs reset each spring (one at a time) during each revolution of the motor**. It is this reset action that produces and delivers power from the springs to the flywheel located at the opposite end of the motor. The flywheel serves to ensure the smooth operation of the motor and to convert the springs into useable horsepower. The smaller motor has 50 foot pounds of torque at a shaft speed of 3000 RPM and will produce 28 HP. The HP can be altered by factory adjustment. The speed of the engine is controlled by a hydraulic pump which provides pressure upon the power shaft.

Contacts: Gates Motor Corporation, P.O. Box 715, Hauula, HI, USA 96717
Email:gagates@earthlink.net

Editor: We tried to get the video of this device operation from Gates Motor Co., but after a long consideration it was not provided since the authors are competitor-conscious.

Alexander V. Frolov

Longitudinal Waves

Cold Electricity

Adrian Akau, USA
Email: adrianakau@aol.com

Dr. Peter Lindemann in his book "The Free Energy Secrets of Cold Electricity" presents the story of this type of electricity which really is not electricity as electricity is normally meant to be understood. Cold electricity behaves differently than normal electricity. Regular electricity may be used in the process to generate this cold form but this transformation is not the type of change in voltage and current that occurs in a transformer. Rather, it is the extraction of a form of current from "normal" electricity by a process that uses high voltage.

In discussing the Edwin Gray motor, Dr. Lindemann relates a demonstration by Gray. Gray used a 6 volt car battery with lead wires running to a system he had devised using a voltage booster and a series of capacitors which raised the voltage to 3,000 volts. He then closed a switch that ran the high voltage into two electromagnets which caused a loud popping sound and cause the top electromagnet weighing a pound and a quarter to be propelled over two feet into the air. Gray claimed that only 1% of the system's energy was used with 99% going back to the battery. He said that he had 'split the positive' with his system.

Other evidence of using this fractionated electricity was Gray's use of a small motorcycle battery (15 amps which would normally produce W=V x A = 6 V x 15 A= 90 watts) to run concurrently six 15-watt electrical light bulbs, a portable 110 volt T.V. set and two radios. A glowing 40 watt light bulb running off the system was dropped into water without the glass breaking; the bulb gave off light but not the heat that accompanied a bulb run by regular electricity. This would mean that tungsten in the filament of the light bulb was not resisting the flow of this fractionated electricity and that this "cold electricity" was causing the luminous glow by some other means.

According to Gray's Patent #4,595,975, low voltage was chopped into pulsating DC by passing it through a multi-vibrator (buzzer like a door bell). Then the pulsed DC was sent through the low voltage winding (primary) of a transformer which changed it to pulsating high voltage DC current at the secondary side. The pulsating high voltage DC was rectified by a full wave bridge and changed into high voltage DC.

The high voltage DC was used to repeatedly charge a capacitor as the current was sent to briefly discharge across a spark gap (rated at 3000 volts). The discharge of the spark across the gap had to be in one direction only and its duration was controlled by the size of the capacitor and by the strength of a magnetic field encompassing the gap. This magnetic field had a quenching effect because it caused a back EMF each time the discharge occurred. The current from the discharge across the gap was then sent through a resistor and then to a vacuum tube (the conversion switching element tube).

Another of Edward Gray's patents "Efficient Electrical Conversion Switching Tube Suitable for Inductive Loads" (April 1987, patent 4,661,747) described the switching tube. It utilizes a low voltage anode (positive plate), a low voltage anode (positive plate) and one or more electro-static or charge receiving grids (located between the positive

plates and the cathode or negative plate supplying the electrons). This tube's function was to 'split the positive'. A normal vacuum tube usually uses only a single anode at a particular voltage to control the voltage flow within the tube. The function of the charge-receiving grids was to collect the "cold electricity".

The most unusual part of this Power Supply circuit consisted of devices specifically designed to remove excess energy when the Switching Tube was functioning. A spark-gap protection device, served to "protect the inductive load and the rectifier elements from unduly large discharge currents". As stated, the rectifier elements are the two anodes and the grids in the Switching Tube. In a normal vacuum tube, no protection would be necessary because the maximum power of the tube would be based upon the electricity provided to heat the tube filament and to charge the anode (voltage x amps). Therefore, the excess energy comes from the process occurring as the spark gap affected electrical pulses pass through the Switching Tube. The process of extracting the "cold electricity" places danger of overload upon the system. (Please take note that the "electricity" from the Switching Tube is no longer the normal type of electricity we have from our batteries or from an electrical outlet but rather a completely new form with entirely different characteristics.)

The description continues, "Should the potentials (voltages) within the circuit exceed the predetermined values fixed by the mechanical size and spacing of the elements within the switching tube, the energy is dissipated (bypassed) by the protective device to the circuit common (electrical ground)" by two strategically placed diodes (devices that permit the passage of electricity in one direction only). The question now arises "What is the cause of this large amount of excess energy which must be dumped to ground through device acting like a lightning rod in order to prevent the circuit from burning out?"

To examine the cause of the excess energy source, we must go back over a hundred years to1889. Heinrich Hertz had just announced in 1887 that he had discovered electromagnetic waves and Nicola Tesla was attempting to duplicate Hertz's experiments. Tesla used abrupt and powerful electric discharges produced with banks of capacitors charged to very high potentials and was able to explode thin wire (copper bus bars). He came to the conclusion that Hertz had mistakenly associated electrostatic inductions (electrified shockwaves in air) for true electromagnetic waves.

The explosion of the copper bars by means of the "disruptive discharges" from the capacitor bank produced sharp shockwaves which struck Tesla with great force across the entire front of his body. Tesla said they felt more like powerful gunshots rather than electrical sparks. They produced effects similar to lightning or to those produced by high voltage DC generators previously discussed; the simple closing of a high voltage DC generator caused a stinging shock. AC generators were not in use in this pre-AC era and it was shown, later on, that AC generators did not produce these effects.

This shock was first assumed to be the result of residual static charging. It stood straight out of highly electrified conductors, seeking ground paths which included workmen and switchboard operators. In long cables, Tesla estimated that this electrostatic concentration was several orders in magnitude greater than any voltage the DC generator could actually produce. It caused a hedge or crown of bluish needles or spicules to point at right angles to the cable or straight from the electrical cable line into the surrounding space. The bluish needles appeared the very instant the switch was closed and disappeared a few milliseconds later, after which the system functioned normally. However, anyone through whom the blue needles passed, especially in large regional power systems which used high exceptionally high voltages, usually did not survive. Generators rated at a few thousand volts produced hundreds of thousands or even millions of electrostatic volts during the start-up pulse. Highly insulated, heavily grounded relay switches had to be installed to protect workers from certain death.

Engineers at this time assumed **the effect to be caused by a "bunching" action which occurred when a powerful force was not able to move charge sufficiently quickly through a system.** (A similar "choking effect" also happened with large steam engines; if steam was introduced too rapidly, the steam engine could explode.) The metal of which the wire was composed somehow offered resistance to the charge carriers before they were able to move away from the generator terminals. It seemed that the wire acted as a blocking force to the electrons or to some unknown part of the electrons for the first few milliseconds, rather than as a conductor. The powerful, deadly bluish spikes sprang from the line until the current charges actually "caught up" with the applied electrical field. It was as if the spicules were a form of relieving pressure on the system by converting the voltage impulse into some other form.

Tesla began wondering why the electrostatic field moved faster than the actual charges. He believed that this effect could help him find electric waves better than his capacitors because the line resistance caused the electrostatic charges to bunch together into a density much greater that obtainable with his capacitors.

Tesla understood that ordinary capacitor discharges were oscillating currents or spark currents which "bounced" between each capacitor plate until their stored energy was dissipated. The high surge voltage of the DC generator exerted such a high one way pressure on the dense line charges, due to the millisecond resistance of the metal, that possible voltage "bounces" were also oscillations of current as was true with the capacitors. Tesla used every means possible to block the "back-rush" (bouncing) of the oscillating current in order to prevent the supercharge to prematurely decline; he wanted to maintain this powerful "bunching" effect as long as possible in order to study it and to make use of it.

His face and hands experienced a penetrating shockwave; a sharp pressure and an electrical irritation were brought on at the sudden closing of the switch. His face and hands were especially sensitive to these shockwaves which caused a "stinging" effect at close range. Tesla believed that he was being struck by material particles approaching the vapor state as they were thrust from bluish crowned wire.

Later on, he was to discover they were not gas particles. **He placed himself behind a glass shield but to his amazement, he still felt the shockwaves and stinging effects; the glass shield did not protect him.** These stinging rays could be felt at great distances from their sources and, to his amazement, would penetrate shields of both glass and copper. Tesla knew that normal electrostatic charges spread over the surface of a metal (copper, for example) shield so that the stinging effect could not have an electrostatic origin and therefore was not electrostatic in nature but was from some other yet unknown source.

Joseph Henry in 1842 had noticed the magnetization of steel needles by the discharge of a Leyden Jar (type of primitive condenser made with a glass bottle). The Leyden Jar was at the top floor of a building while the needles were in the basement. Dr. Henry, noting the passage of these magnetizing rays through brick walls, oak doors, stone and iron flooring and tin ceilings believed that the spark given off by the discharge released "light-like rays" that passed through the material obstacles with ease before magnetizing the needles.

Elihu Thomson, a physics instructor in 1872 had been attempting to make sparks from a Ruhmkorrf Spark Coil more clearly visible for his physics students. He attached one pole of the coil to a cold water pipe and noted that the previously blue spark changed to white. He then attached the other pole to a large metal table top and produced a silver-white spark that would be clearly visible to all attending his lecture. He went to the door of the room to notify his colleague but received a strong shock from the door knob. Turning off the Ruhmkorrf coil prevented the brass knob on the oak door to stop shocking. He returned with his friend, again turned on the coil and discovered that all metal objects in the entire building, no matter how distant

from the coil or insulated from the floor, produced long and continuous white sparks upon the touch of a penknife or screwdriver.

The device Tesla perfected was far superior to the Ruhmkorrf Spark Coil. The effect of his disrupter device was so strong that a single wire placed in an oil bath produced what he had originally but mistakenly thought to be gaseous streams so powerful that they visibly depressed the oil into a depth of about two inches. Tesla concluded that "besides the air, another medium is present".

> *...he placed himself behind a glass shield but to his amazement, he still felt the shockwaves and stinging effects; the glass shield did not protect him. These stinging rays could be felt at great distances from their sources and, to his amazement, would penetrate shields of both glass and copper...*

Tesla had been able to perfect his device by placing a capacitor between the switch and the D.C. generator thus increasing the power and protecting the generator windings in much the same manner as the diodes Edwin Gray's Switching Tube protected Gray's circuit. Tesla also raised the voltage and quickened the "make-break" rate of the switch to increase the power level by placing a powerful permanent magnet crosswise to the discharge path of the high voltage output of the DC generator wires. The magnetic field caused the discharge arc to automatically "blow out"; the charge passing through the wires in the presence of the magnetic field built up reverse emf (electromotive force or voltage).

Tesla believed he had discovered a new type of electricity with special characteristics. This form of electricity did not consist of alternating waves. **They were longitudinal waves** composed of successive shocking waves with effects that could be seen and felt at a distance. **Vector components of these shock waves were unidirectional. They were able to force charges in the direction of their propagation.** In his patent #787,412, "Art Of Transmitting Electrical Energy Through The Natural Mediums" (April 18, 1905), Tesla calculated the mean velocity of the waves propagated by his device to be 471,240 Km/sec. Knowing that the velocity of light is 300,000 Km/sec would indicate that the type of transmission to which Tesla is referring is different than standard electromagnetic radiation; these special longitudinal "Radiant Energy" waves moved faster than the speed of light.

After conducting hundreds of experiments, Tesla found that "Radiant Energy" longitudinal waves **could penetrate all materials and cause "electronic responses" in metals such as copper and silver.** Impulses exceeding 0.1 millisecond duration produced effects such as pain, mechanical pressures, explosion of thin wires and vibration of objects. Impulses of 1.0 microseconds caused the sensation of physiological heat; at still shorter lengths white light would fill the room. Impulses less than 100 microseconds were safe to work with and Tesla planned to use them for his power broadcast system since they could pass through all matter.

In 1890, Tesla discovered that placing a long single turn copper helix near his magnetic disrupter became covered with an envelope of white sparks. Effects were strongest when the helical coil was placed within the disrupter wire circle. In this "shockzone", the coil was surrounded by a blast of long, fluid like silvery streamers which clung to the surface of the coil, flowing over the coil at right angles to the windings. Tesla hypothesized the electrostatic-like effect was due to radiant transformation rules requiring measurements of discharge lengths and attributes of the helix used (number of turns, diameter, etc.). (Editor: resonance)

The new induction law he discovered showed that radiant shockwaves became much stronger when encountering segmented objects. The radiant shockwaves

"flashed over" the outer skin of the helix from end to end without passing through the windings of the coil; shockwaves of 10,000 volts introduced to a 24 inch coil rise to 240,000 volts. The greater the resistance in the helix turns, the higher the maximum voltage. This was completely different from magneto-induction. Remember that he was not working with electricity but with radiant shockwaves.

> *Aether particles were incompressible and could easily pass through space and matter with a speed much greater than the speed of light. This was pure radiant matter but, at the same time, pure Radiant Energy. Cold electricity is one of the forms of this Radiant Energy*

This transformer he invented used radiant shockwaves to produce pure voltage without current. Each transformer had to be "tuned" by adjusting the disrupter to a specific impulse duration. At that point, voltage impulses could flow smoothly, flowing over the copper surface much like a stream of water in a pipe. No amperage could be detected but if the stream was aimed at a distant metal plates, "current" was produced which reached several hundred or even thousands of amperes. Tesla then began to wonder what made up this white, currentless stream.

Tesla determined that normal charge carriers (electrons) could not travel as quickly as the radiant pulse; no current moved the coil because the electrons were choked in the metal lattice of the coil. **The radiant pulse moving over the surface of the coil was not electronic in nature.** He placed the legs of a heavy U-shaped copper bus bar directly to the disrupter primary and then connected the short-circuited system to several incandescent lamps. These lamps glowed with a brilliant cold white light as with Gray's light bulb, proving that the power for the light was not electrical in nature. Tesla believed that the electrons were blocked from flowing through the wire while the radiant pulse was released over the coil surface as a "gaseous" pulse (splitting the positive, according to Gray).

Tesla came to believe that voltage could be viewed as streams of aether under various states of pressure and that his transformers affected the aether as to produce the luminous effects he observed. In his patents, he describes his "light-like rays" as tightly constricted aether streams propelled from his transformers along infinitesimal ray lines along which an incompressible movement occurs instantly through space on all points along its path. Aether streams were being drawn in through his transformer at higher natural pressure and then accelerated in the electrical discharge. The voltage in his transformer could control the brilliance of light in a room but this type of light was almost impossible to register on film. He could heat up a room or cause cool breezes by controlling the voltage in impulse duration in his transformer.

Tesla saw electrical current was really a complex combination of aether and electrons. Through the application of a disrupter, the electrons were removed from the gap by the magnetic field while the aether steams continued to flow through the circuit. He considered aether particles highly mobile with infinitesimally small mass and cross-section as compared to electrons. They were incompressible and could easily pass through space and matter with a speed much greater than the speed of light. This was pure radiant matter but, at the same time, pure Radiant Energy. Cold electricity is one of the forms of this Radiant Energy.

Edwin Gray, Dr. Nicola Tesla and Dr. Thomas Henry Moray all used radiant energy technologies. It is important to understand that the Laws of Thermodynamics and Maxwell's equations do not pertain to "Radiant Energy" technologies.

Fantastic Projects

Gravity Conversion Rotary Device

Review is prepared by editor Tatiana Ezhova

Here another fuelless perpetuum mobile is presented.

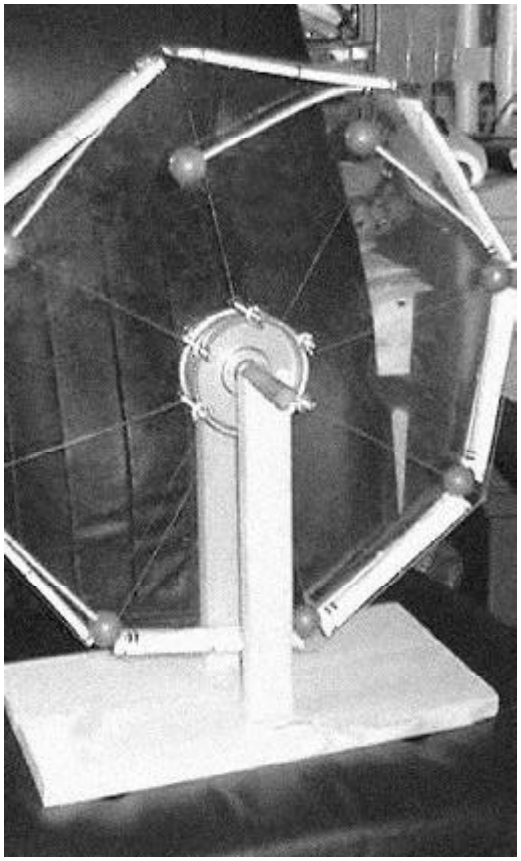

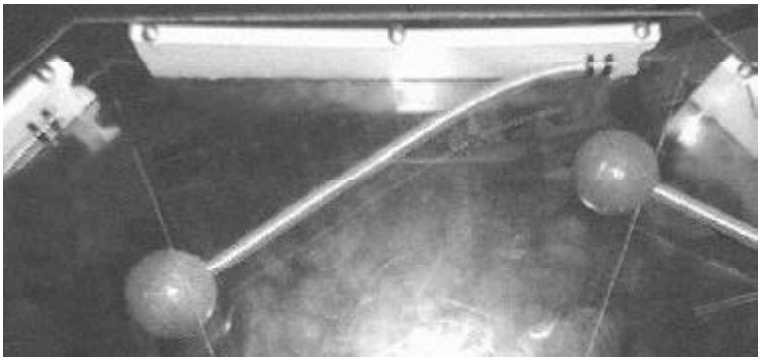

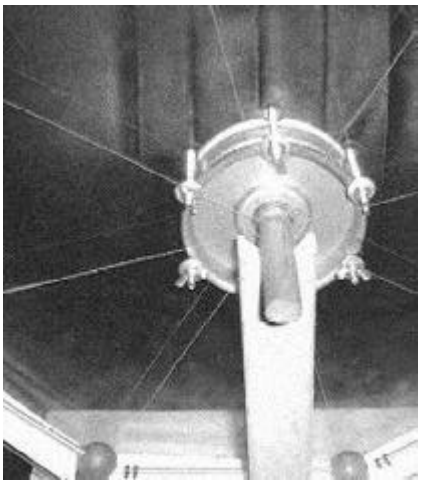

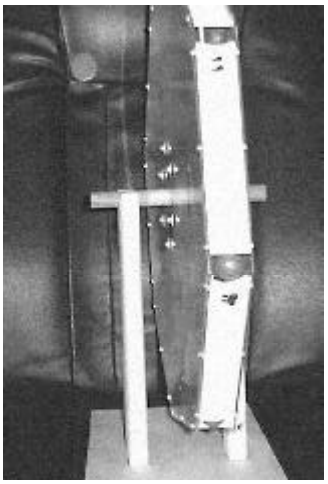

The system design

The design includes a wheel with spring spokes. Pegs may be fixed inside the wheel to balance movement of weights on springs. All parts should be homogenized as to dimension and weight. The author used 4 oz. lead balls and the 3/16" springs. The wheel measures 9" in radius as measured from hub center to center of each lead ball at outer periphery. This device is actuated and stopped by the hand. Its speed is self governing, it ramps up to speed quickly and simply stays there.

Note: you can find more detailed information about the device at http://www.greaterthings.com/News/FreeEnergy/Directory/GravityMotors/photos/. Also read in this issue article "Novozhilov's motor" that describes another wheel motor that does not require any fuel for its operation.

Torsion Technollogies

Xing-liu Jiang, Xiong-wei Wen, China
Science School,
Beijing University of Aeronautics and Astronautics, Beijing 100083
and
Li-jun Han, China
Department of Materials Science and Engineering,
Beijing University of Aeronautics and Astronautics, Beijing 100083

ABSTRACT

Highly localized nuclear activation in electrochemical systems and other electrical discharge processes have been observed by many laboratories in the world. This report is an attempt to explain such anomalous phenomena by using torsion field theory and axion model. Anisotopic behaviours of radiation products, burst character, "heat after death" of excess energy release in electrical discharge systems are considered to be interpreted by the torsion coherence of vortex dynamics with the zero-point energy induced by localized intense field emission of micro-protrusion of the cathode, and the dynamic Casimir effect of transient evolution of triple region of gas, liquid solution, and electrode protrusion. Axion model and Primakoff's effect are proposed for explanation of nuclear transmutation without noticeable gamma radiation.

Nuclear products with high concentration, unidentified tracks with highly collimated lines of low energy nuclear reactions in the electrochemical systems were recorded by CR-39 solid detectors and photo-films, and localized spots with chemical alterations were observed at our laboratory. It is suggested to carry out intensive study of vortex dynamic for explaining the anomalous phenomena in wide area of nature and laboratories. Analysis of vortex dynamics with wide range from pitting corrosion of electrochemical system, laboratory plasma, tornado, to quasar spiral model with extremely high energy cosmic rays in the center region, leads to a conclusion for that vortex dynamics creates torsion fields responding to the anomalous effects.

I. INTRODUCTION

Many laboratories in the world have observed nuclear reactions and **excess heat** in electrochemical systems. The mechanism of such anomalous phenomena is not being well understood according to normally accepted physics.

Nuclear products with high concentration and tracks with highly collimated lines of low energy nuclear reactions in the electrochemical systems were recorded by CR-39 solid detectors and films at our laboratory [1,2]. These facts suggest that quasar model with spiral structure and extremely high enrage cosmic rays in the center could be used to explain the mechanism. It is supposed to use the concept of torsion field to interpret the observed phenomena, typically, the properties of axion acceleration, memory effect, and the polarized nuclear reactions with torsion effect [3].

II. PHENOMENA IN NATURE AND AT LABORLATORIES

The vortex and spiral structures are the archetype that appears at all levels of nature and laboratories, for example, atom structure, vortex lattice in superconductors, dense plasma focus, lightning, quasar etc.

Recent report of dark matter annihilation at the galactic center describes that the cold dark matter near the galactic center is accreted by the central black hole into a

dense spike [4]. Particle dark matter annihilation makes the spike to be a compact source of photons, electrons, positrons, protons, antiprotons and neutrinos. It reminds us for that there is a similarity among pitting corrosion with electrochemical noise, laboratory plasma pinching (dense plasma focus, for example), fast laser induced ion beams [5] and quasar spiral model with high-energy cosmic rays in spiral center in spite of large dimension difference. Comparing the experimental results of electrochemical cells with excess heat and nuclear transmutation to astrophysics phenomena, it is supposed that the investigation of vortex dynamics of torsion coherence with the zero-point energy is essential for tapping the zero-point energy.

As it is predicted by quantum mechanics that the vacuum is seething with active energy, even at temperature of zero point Kelvin. This zero-point energy (ZPE) can be thought as an infinite number of virtual photons that are popping out of the vacuum and going back in, but should be a measurable effect en masse. To exam the origin of ZPE background, the interaction of matter with the ZPE can be treated on the basis of charged point particles interaction with a background of electromagnetic zero-point radiation with spectral-energy density.

Based on observation in the experiments, the following features are considered in order to understand the experimental results with electrical discharge systems.

A. ELECTROCHEMICAL DOUBLE LAYER

In an electrolytic cell, the electrolysis with high conductivity and the electrochemical double layer with large layer-capacitance lead to a typical structure of the cathode potential distribution similar to the cathode drop of glow discharge in low gas pressure. For a compact layer the thickness of the double layer is equal to one ionic layer, across which there is a linear fall of potential. Thus, high electric field exists in some regions on the surface of the cathode. The local enhancement of the electric field on the cathode surface with the double layer is related to the protrusions and cracks similar to the tip discharge in air or in a vacuum. The current distribution depends strongly on the surface roughness and the work function of the electron emission. A high transient current density ($> 10^8 A/cm^2$) could be expected due to enhanced field.

B. ENERGY CONCENTRATION

On the cathode surface, the high persistent electrical fields ($>10^7 V/cm$) and large equivalent capacitance ($>25 \mu F/cm^2$) lead to a high energy concentration in the double layer [6]. The concentrated field on the tips of the protrusions or cracks after a long-loading period with deuterium on the palladium cathode surface creates a high transient electron flux because of the large distributed capacitance and the negligible inductance in a localized discharge mini-network. The experimental data show that the reactions take place only in some restricted areas that have specific properties. The idea of micro fusion due to the results of energy concentration and the high deuteron flux could be used to explain the nuclear transmutation.

C. TORSION FIELD AND THEIR EXPERIMENTAL MANIFESTATIONS

Elementary particles have the moment of quantity of motion, i.e. spin. If in any substance the spins of particle have a preferable direction, then it is interpreted as spin polarization of the substance. Every substance creates a torsion-field (or called spin-field or axial field) in the space surrounding it when polarized by spins [7]. The superposition of torsion field, generated by the atomic and nuclear spins of each molecule, determines the intensity of torsion field in the space surrounding each molecule. Torsion field has strong penetration ability and does not interact with the crystal lattice of substances. The torsion field created by rotation of some sort of matter is concentrated in two opposite beams propagating along the rotation axis. The intensity of torsion-field with some

lower constant value can be retained for several weeks after the rotation is stopped. Such property of vortex mater has been recently observed in type II superconductors with magnetic flux line lattice [8]. The studies of vortex matter of type II superconductors have shown a number of puzzling phenomena associated with vortex motion, including: low-frequency noise and slow voltage oscillations; a history-dependent dynamic response, and memory of the direction, amplitude duration and frequency of the previously applied current.

Some behaviors of the torsion-field effect have been observed in the experiments of electrolysis regarding the so-called cold fusion, such as when the gas bubble chains come out from the protrusions of the cathode surface a long time after switching off the electrolysis potential. The more surprising thing is the heat after death, which has been recorded by many labs. This phenomenon could be explained by the persistence effect of the torsion-field produced by vortex dynamics of tip effect.

D. EXPERIMENTAL RESULTS IN THE ELECTROCHEMICAL CELL

CR-39 plastic films possessing with a high degree of optical clarity and isotope in track response, and are sensitive to neutron, proton, tritium, alpha, and other charged particles, were used to detect the products of nuclear reactions. The films of CR-39 were immersed in the NaOH electrolyte of heavy water and placed adjacent to the tips of the cathode [9]. After 110 hours, electrolysis experiment with the applied voltage 1 V and current 2 ma, the solid detector was etched by 6.25 N NaOH solution in 70^{0}C for 11 hours. The photomicrograph shows the cluster of tracks with a cycle crater of 100 μm in diameter and 25 μm in depth. According to the etching condition, the energies of the most of the particles, P, T, α are estimated roughly to be in the range of 1-4 MeV. On the backside of same region of the CR-39 film detector, one can clearly see a few of tracks in the circle area or nearby. Such tracks are believed to be created by recoil-protons of forward incident neutrons. High concentration of the cluster of nuclear tracks could be explained by the quasar spiral model and by the crystal channeling effect [Fig.1]. The experimental results of the generation of tritium with single crystal metal of Pd show that none of the generation of tritium has been revealed by using non-single crystal electrodes [10]. The importance of the crystal channeling effect for nuclear reactions in the electrochemical systems can be inferred.

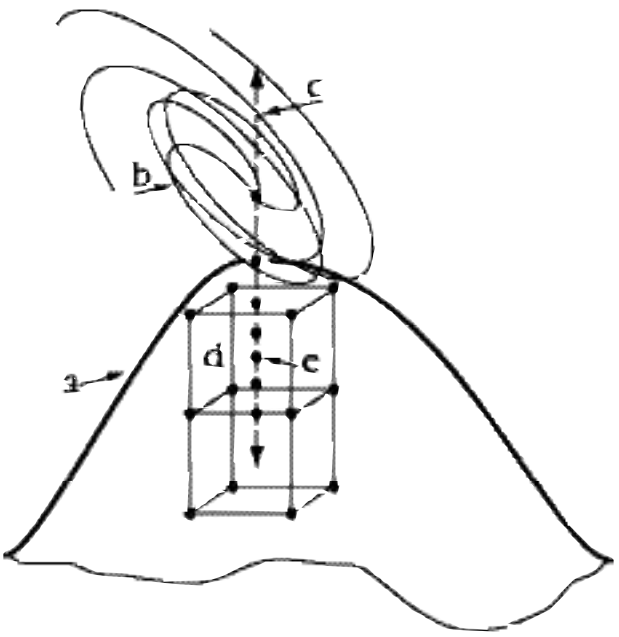

Fig.1
Schematic presentation of a micropinch spiral by tip effect in the electrolysis cell:
a) tip of the electrode; b) spiral structure of micropinch; c) electron beam; d) crystal channel; e) ion beam

To determine the spatial distribution of radiation active sites (RAS), Black-white 135 films of 27 DIN have been used to image the position of the RAS. After a 1,5 year of deposition in glass tube of finishing electrolysis experiments with light water electrolyte for more than 200 hours running, the patterns of RSA were clearly formed on the films after exposure of 100 hours [2]. The bright spots corresponding to the tips of palladium cathode edges can be seen due to

the tip effect. The effect of magnetic field on the traces of the charged particles has been observed while the Pd samples exposing to the films, which were folding and wrapping up the sample, were inserted between couple magnets. The tracks stretching along the film surfaces confirm that the tracks were created by charged particles, electrons for example, with low energy about some keVs. Highly oriented tracks can be observed by autoradiography by using normal films locally[Fig.2].

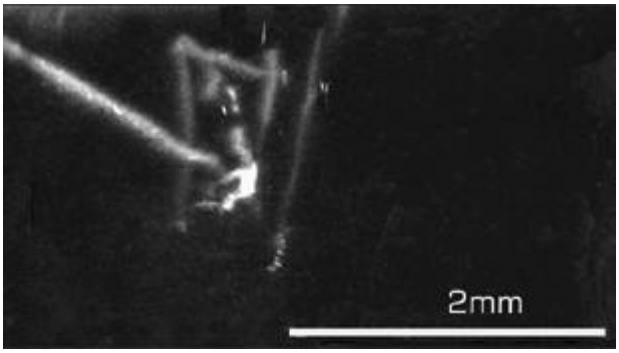

Fig.2
Autoradiography of charged particle tracks of beta delay isotopes on the surface palladium cathode. Some tracks of beta particles are paralleling the cathode surface.

E. SONOLUMINESCENCE AND "BUBBLE NUCLEAR FUSION"

Some scientists of Oak Ridge National Laboratory in America reported their articles of bubbles experiments in Science. Experimental results show that the radiation lights of sonoluminescence possess three characters: short duration with picoseconds; wide continual spectrum; highly oriented thin beams. **Based on those characters, vortex dynamics with axial acceleration of bubble collapse could be inferred.** Nuclear reaction with abnormal gamma radiation was observed [11]. Dr.Claudia Eberlein describes her conclusion on sonoluminescence that only the ZPE spectrum matches the light emission spectrum, which must be a ZPE phenomena [12]. The effect of torsion field on nuclear reactions along the axis of vortex should be taken into consideration for the low ratio of the nuclear products of n/T due to spin polarization of reaction particles.

Axion model and the Primakoff effect are proposed for explanation of nuclear transmutation without noticeable gamma radiation. Many laboratories in the world have been engaged in several experiments to search for axions, light neutral pseudoscalar particles yet to be discovered. The axion would be produced in the solar core through the Primakoff effect if its mass is a few electronvolts and could be detected in the laboratory.

III. CONCLUSION

Researchers of new energy study of "cold fusion" type should pay great attention to the general processes of electrolysis to find the key points, which could play a major role in the transit from the electrochemical processes to processes of torsion and the nuclear processes. From the authors' point of view, the evolution of double layers is of importance to understand the anomalous effect, typically on the protrusions of cathode. The change of space-time near the tips due to torsion field generated is expected to delivery the zero-point energy, and dynamic Casimir effect for the evolution of gas bubbles on the tips are expected to generate photons and excess heat [1]. The yields of transmutation products are related to the current distribution on the cathode surface. The cathodes of thin wire were benefit to the generation of nuclear reactions and excess heat for electrochemical systems. Careful examination of the evolution of electrochemical double layer will lead to a good understanding of pitting corrosion with electrochemical noise, and further to recognize the anomalous excess heat and nuclear reactions.

Heat after death was observed at many laboratories. It is believed that the persistence behaviors of torsion field can be used to explain such anomalous phenomena.

The contact between beads coated with a thin metallic layer or multilayered film and

palladium black particles could be regarded as point-contact similar to the tip-effect [13].

We may say that it is expected to reveal the puzzles of the mechanisms of high-Tc superconductivity with pinning vortices by the torsion field theory [14,15].

REFERENCES

[1] Xing-liu Jiang, Jin-zhi Lei, Li-jun Han, Dynamic Casimir Effect in an Electrochemical System, J. New Energy, Vol.3, No. 4, 47(1999).

[2] Xing-liu Jiang, Chang-ye Chen, Li-jun Han, Tip Effect and Nuclear Active Sites, Proc. of the 7th Intern. Conf. on Cold Fusion, Vancouver, April, 1998, pp.175.

[3] Don Read, Excitation and Extraction of Vacuum Energy Via EM-Torsion Field Coupling Theoretical Model, J. New Energy, Vol. 3, No. 2/3, p.130(1998).

[4] P.Gondolo, J.Silk, Dark matter annihilation at galactic center, Phys. Rev. Lett. 83, 1719(1999).

[5] BPS, Laser light in , stream of protons out, Physics Today, Jan.2000,p.9.

[6] G.Korluem and J.OM. Bookris, Textbook of Electrochemistry Vol. II. Elsevier Publishing company Amstorsan , 1951. P.364

[7] A.E.Akimov, G.I.shipov, Torsion fields and their Experimental Manifestations, Journal of New Energy, 2(2), 67(1999).

[8] Y.Paltiel, E.Zeldov Y.N.Myasoedov el. al. Dynamic instabilities and memory effects in vortex matter, Nature 403, 398 (2000).

[9] X.L.Jiang, L.J.Han and W.Kang. Concentrated energy and Micro Nuclear Fusion, ICCF6, Oct 1996, Japan p.580.

[10] R.L.Matlock, F.E.Collins, G.R.Bancher, Anomalous tritium found in the recombined off gasses during electrolysis using crystal cathodes. Elem. Energy(cold fusion), 26, 28(1998).

[11] Taleyarkhan R P, West C D, Cho J S, Lahey Jr R T, Nigmatulin R I, Block R C. Evidence for Nuclear Emissions During Acoustic Cavitation. Science, 2002 295: 1850~1862.

[12] Claudia Eberlein. Theory of quantum radiation observed as onoluminescence, Phy.Rev.Lett.53,2772(1996)

[13] G.H. Miley, G.Narne, M.J.Williams, J.A.Patterson, J.Nix, D.Cravens, and H. Hora, Quantitative Observation of Transmutation Products Occurring in Thin-Film Coated Microspheres During Electrolysis, Proceedings of ICCF-6, OCT. 1996, Japan, p. 629.

[14] T. Matsuda, K. Harada, H. Kasai, O. Kamimura and A. Tomomura, Observation of Dynamic Interaction of Vortices with Pinning by Lorentz Microscopy, Science, 271, 1393(1996).

[15] G.W. Crabtree and D.R. Nelson, Vortex Physics in High Temperature Superconductors, Physics Today, April 1997, p.32.

New Energy Technologies

PRINTED EDITION ADVERTIZING RATES

Full Page Ad

B/W - $400
Colour - $800

Half Page Ad

B/W - $200
Colour - $400

Quarter Page Ad

B/W - $100
Colour- $200

New Energy Technologies is distributed in the leading Scientific Laboratories in Russia and has subscribers in more than 20 countries all over the world

To advertise contact us:
Farady Labs Ltd, Phone/fax: 7-812-380-3844
http://www.faraday.ru, office@faraday.ru

Fantastic Projects

The Invention of Roman Solomyanny

Our previous issue featured an article about Roman Solomyanny who came to our office and told us amazing things. He said that during his army years (according to his words, he was in the military intelligence) he made a radio technology invention and later on built a free energy generator. The inventor claimed that his device had been working for a certain period of time without any fuel and had been producing power enough for heating and lighting his countryside house. We could not ignore such an intriguing piece of information. Moreover, Roman promised to build and present his device in 2003. We paid him for this interesting story to be published in the issue and prepared for the continuation...

Alas, to no avail... His mobile phone was silent and we started to worry about the inventor's health. Fortunately, we managed to contact his parents on his home telephone (Roman lives in St. Petersburg) and they told us that the chap was OK. It seems he's lost his interest in us. But we still hope that Roman did invent something really exciting and not only polished up his talent for writing science fiction articles. Those people, who want to know the details about this invention or discuss it with the inventor himself, can get in touch with us for his contact information. Anyway, we will be very pleased to see him again full of new exciting stories. We have already introduced the 'Humour' section into the magazine and are planning to start the 'It Just Can't Be So' section.

Editor

Physicists are Joking

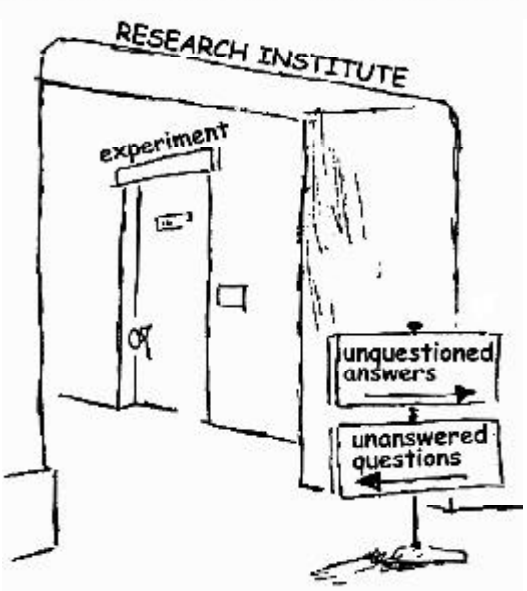

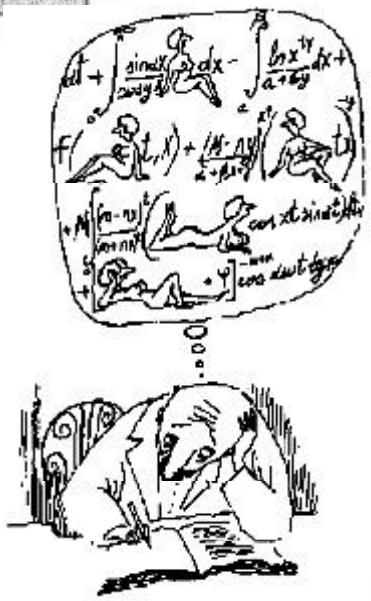

Anti-Gravity: The Holy Grail of the 21st Century

Bruce A. Smith, USA
PO Box 1676, Yelm, Washington 98597
Email: brucesmith@rainierconnect.com

A Primer on the Role of Electromagnetic, Electrostatic, and Torsion Fields in Anti-Gravity and Field-Effect Propulsion

Before visiting a University of Washington physics professor to talk about electrostatic propulsion, and hopefully anti-gravity, I realized: *Birds defy gravity. So do 747's for that matter. They apply the laws of physics and lift off the ground. That's anti-gravity, isn't it?* Yes, that's true, I suppose, in a metaphorical sense. But seagulls, jumbo jets and space crafts manifest anti-gravitation effects strictly speaking. What I want to address here is not the overcoming of gravity but the neutralizing of it.

Dr. Eugene Podkletnov, one of the foremost researchers in anti-gravity, and whose work is sought by NASA, Boeing and British Aerospace (now known as BAE Systems) describes the hunt for anti-gravity the greatest scientific quest of this century. He calls for an international effort, akin to the Manhattan Project that developed the atomic bomb, to conquer the secrets of anti-gravity, and usher in a new era of scientific understanding whose technological development will be at a scale so vast that the potential outcomes are merely hinted at by our previous achievements.

Just getting such a project off the ground will require unprecedented international cooperation, and public disclosure as well; the potentials are that vast, that scary, and that dangerous. Dr. Dan Marckus, noted British avionics expert, states in The Hunt for Zero Point, the seminal work-to-date on anti-gravity written by Jane's Defence Weekly aviation editor Nick Cook, that the secrets of anti-gravity in the wrong hands will make thermonuclear weapons look like firecrackers.

The secrecy surrounding anti-gravity research is phenomenal. Boeing refuses to publicly acknowledge any activity in anti-gravity development despite the fact that its competitor and sometime sub-contractor, British Aerospace (BAE Systems) is, the latter providing funds for four university research efforts as part of its Project Greenglow, one of which was a Podkletnov replication experiment headed by Dr. Clive Woods at the University of Sheffield,. Further, Nick Cook publicly, and privately to me in an email, states quite directly that George Muellner, former director of Boeing's ultra secret Phantom Works, claims Boeing sought the services of Dr. Podkletnov to unlock the secretes of his gravity-shielding research. Cook says that Muellner states Boeing was denied Podkletnov's services due to the objections of Russian officialdom, which the Russian-born Podkletnov must pay attention to, apparently, despite the fact that he works in Tempere, Finland. Dr. Podkletnov, wisely perhaps, chooses not to clarify these particulars despite our several emails.

Perhaps Boeing can deny any activity on anti-gravity because NASA is doing its own research, and as a prime contractor to NASA, such as by running the Space Shuttle Program, Boeing probably knows what NASA knows. NASA spent $600,000 recently in its Breakthrough Propulsion Physics program (BPP) to purchase Podkletnov replication equipment. Inexplicably, that equipment sits in boxes in NASA's Marshall Research Center in Huntsville, AL, awaiting more funding; according to an email I received from NASA propulsion researcher, Ron Koczor.

But enough with this business; what do we know about anti-gravity?

The search for that answer has taken me to some exciting and obscure places in this world, like the Aeronautics and Astrophysics lab at the Seattle campus of the University of Washington. I called those folks because Nick Cook in The Hunt for Zero Point, mentions that UW received a NASA contract to study theories of inertia as part of its BPP program. *That's a good place to start,* I thought, but it took backtracking to BPP Project Director Marc Millis at NASA's Glenn Research Center in Cleveland to find Dr. John Cramer at the UW Physics Department. His mission was to confirm with Dr. James Woodward the latter's 1996 preliminary research into the loss of gravitational mass in a targeted piece of metal from oscillating capacitors. Although Woodward's initial data appeared encouraging, NASA's Millis told me that their funding dried up before completing their research. Furthermore, the entire BPP became unfunded in 2002 and now in 2003 has become a hazy, privatized version of its former NASA subset self.

However, UW is continuing related research, such as magnetically confined fusion energy generators and that, for me, by using electromagnetism to contain an inner field makes it a close cousin of anti-gravity and field-effect propulsion. I spoke with Professor Uri Shumlak who told me that he and other UW staff from the Department of Aeronautics and Astronautics, along with a bevy of their grad students, are building a prototype of a fusion generator called HIT, which stands for Helicity Injected Torus.

This donut ring-shaped torus encloses a roundish chamber. Within that chamber a vacuum is first created, and then a volume of hydrogen gas is introduced and heated to a few million degrees Celsius, which separates the electrons and protons from their atoms turning the whole stew into a quasi-neutral foam of plasma. Then the torus envelopes the plasma with a magnetic field to keep it away from the sides of the chamber enabling the plasma mass to stay hot, and keep the rest of Seattle cool. (While I was standing next to his little eight foot long gizmo, Prof. Shumlak assured me there was no danger of a couple million degrees of heat escaping. The heat density of the plasma was "too low" for me to, well, break a sweat over. His quote was, "There's no more heat mass inside that chamber than what's contained in a cup of coffee." I sure hope you're right, Doc.)

Then, once the plasma field is contained, the magnetic field squeezes the plasma, fusing the nuclei of one hydrogen atom into another. As the hydrogen couples combine, a helium atom is created and a neutron is released, along with lots of energy in the form of heat. One day, such a generator will give us unlimited amounts of electricity, as the heat can produce electric voltage.

Lots of electrical power on the cheap the UW predicts; and the Department of Energy agrees, once the details of building reliable magnetic field generators are solved. What does magnetic fusion have to do with anti-gravity? Two things: first, magnets. Electromagnetism seems to be one of the major players in anti-gravity, particularly the use of electromagnetic fields to contain other fields, such as plasma fields in the HIT, or torsion fields, but more about that later. Secondly, the HIT works, or is about to. It's real and mainstream science embraces it, while anti-gravity is, well, a little more out there and reliable data is harder to obtain. So the technology of HIT lays a base that other research can build upon, such as not only containing other fields, but also building field effect propulsion systems, the most elementary of which is electrostatic propulsion, and aspects of that are already being applied by NASA.

Electrostatic propulsion uses electrical fields differently than electromagnetism does. In EM a current flows and creates a field, while in electrostatic systems the current is static and a charge builds up a field, such as in a capacitor.

These theories are utilized on NASA's Deep Space I, a probe bound for the outer reaches of our solar system. On Deep Space I, the

propellant, a tankful of xenon gas, is excited electrostatically into positive ions. The engine has a negative charge at the exit end, so the charged xenon rushes out the tail pipe with a greater thrust than if it was just using conventional chemical propellants. In fact, the electrostatic propulsion system on Deep Space I allows it to fly at 60,000 mph, or 10,000 mph faster than it would with a conventional rocket. In addition, only 82 kg of xenon is needed for its entire mission, so with its smaller mass and weight Deep Space I will fly along side its intended target, a comet, and drag race on equal footing while filming and conducting studies. Again, not anti-gravity per se, but electrically charging Deep Space I's fuel-field sets the stage for a closer look at electrostatic propulsion.

Taking that closer look is Tim Ventura and his fellow researchers at American Antigravity, an organization based in Kirkland, WA. Ventura and his crew use electrostatic asymmetrical capacitors to create a field that levitates objects, such as their small, kite-like "lifters." These lifters are very light, weighing only a few ounces, and have balsa wood struts that support the capacitors. When two capacitors of different size receive their share of a 30,000 volt charge, the lifter lifts- no motors or wings.

How, no one really knows in my judgment; and the phenomenon is replete with controversy and mystery. But as one who has seen a lifter fly, let me tell you what one looks like and what I saw when Tim Ventura's took off.

Tim has been building lifters since he was a kid and has perfected a four-foot, by-four-foot, by four foot triangular lifter which has flown so many missions in his garage that the silver aluminum foil has turned white. The thin, chopstick-like balsa wood ribs that hold the aluminum foil in place are joined every few inches by a vertical strut (much like a telephone pole on a HO model railroad set) which sticks up and secures the copper or stainless steel wire of the upper capacitor. The ribs are intersected every ten inches or so by the strut of an interior triangle, since the whole lifter is composed of interconnected isosceles triangles which give the necessary strength to the balsa wood frame. All told there is about 30 linear feet of aluminum foil and a similar run of wire.

The lower and larger capacitor is a strip of aluminum foil stretched between the horizontal balsa wood struts. The second capacitor is a thin strip of 50 gauge wire mounted about one inch above the aluminum foil. As capacitors they store electrical charge but don't pass it on in a current.

Fig.1
Lifter

The negative lead goes to the lower aluminum foil and the positive lead is attached to the upper wire. The three corners of the lifter are tethered to the work table so that the electrical leads from the power source are not broken off in flight.

The power source kicks out 15,000 volts at 250 watts. Tim uses a voltage generator made by Information Unlimited, Inc, but before the current reaches the capacitors, the voltage is stepped up to 30,000 volts by Tim's homemade voltage multiplier stack. At full throttle the lifter is straining at the tethers, bending the balsa wood frame near the point of fracture.

Throw the switch and at around 17,500 volts the lifter begins to quiver in take-off. At the full power of 30,000 volts the lifter is roaring and a noticeable downward breeze is observed. Many physicists call it "ion wind," and say that it is how the lifters fly. But what exactly is ion wind, and can it be the cause of flight?

"Ion wind is the movement of ionized air particles," according to Ventura, "which flow downward according to electrical charge." Here's his theory:

The positively charged wire on the top part of the lifter steals elections from the surrounding air, leaving the effected air molecules positively charged. These positively charged air molecules, or ions, then head downward toward the large source of negatively charged electrons generated by the aluminum foil. These air molecule ions are bigger and heavier than the electrons seeking them, so there is a net thrust downward pushing the whole lifter up. That's the theory, and frankly all I can do to verify the theory is to tell you what others tell me. Before I do that, though, let me tell you what I experienced standing next to a levitating lifter.

In flight the lifter emits a high whining, hissing buzz, and I could feel a good breeze coming up at me from the work table underneath the lifter. Also, standing next to the lifter but not touching it, the hair on the back of my head started to rise up in electrostatic-like fashion.

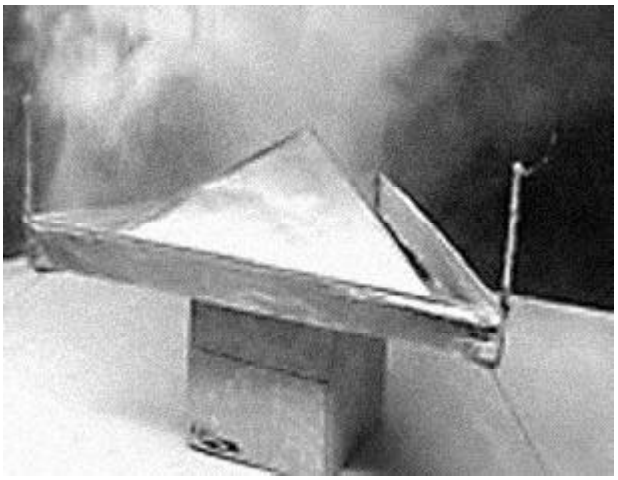

Fig.2
Lifter

To analyze the air currents Tim blew baby powder at the top of the lifter. The majority of the particulate cloud was drawn into the middle area of the lifter and then sucked downward. A kind of vortex was created at times, for intermittently I could see a cloud forming into an organized column beneath the lifter and then spreading out in 360 degrees once it hit the work table surface.

Electrostatic propulsion uses electrical fields differently than electromagnetism does. In EM a current flows and creates a field, while in electrostatic systems the current is static and a charge builds up a field, such as in a capacitor

Is that ion wind? Well, there certainly was a breeze, and it sure felt like air, but how would I know if it was ionized? Something definitely sucked the baby powder down, but was it more than just regular air blowing past me? Again, I don't know.

Is the movement of wind why lifters fly, regardless of whether it is ionic or not, or is the wind just a by-product and not the propulsion? Could the capacitors be creating a field that neutralizes gravity, allowing the craft to levitate? Or are they creating some kind of new field that is localized and the surrounding ambient field pushes this "field-bubble" up, much like a helium balloon is pushed up by the surrounding heavier air trying to fill the emptier "field" of the lighter helium?

Ventura thinks at least two phenomena are at work. Ion wind is definitely one he feels, for the breeze is self-evident. However, he thinks a second effect is at work, too, and many agree with him. Most speculation concerns what is called the Biefeld-Brown effect, the "Brown" being T. Townsend Brown, whose name is well known in early quantum research and whose work is prominently discussed in Nick Cook's The Hunt for Zero Point.

The Biefeld-Brown effect, according to Ventura, is the theory that high voltage, air-gapped capacitors with different or asymmetrical capacities generate a net

directional force upwards from the larger element to the smaller element, which on the lifter is from the aluminum foil to the wire. This force then pushes against the ambient energy field of the surrounding area, perhaps pushing against a more rigid energy field of the zero point energy field.

Brown apparently made his case for these electromagnetic effects, receiving patents in the 1960's for his research. NASA's Dr. Jonathan Campbell at Marshall Research Center in Huntsville confirmed to me that he also, has received a patent recently for his research into the thrust effects of asymmetrical capacitors.

Editor: By the way, this patent is meaningless from the point of view of a prime claim. Before that there had been many publications on the subject.

A.V. Frolov.

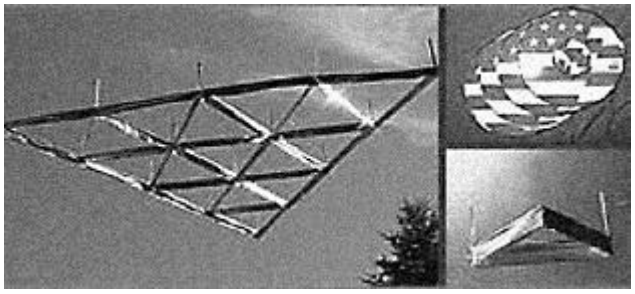

Fig.3
Lifter

However, prominent physicist Hal Puthoff, whose research is a broad swath across the fields of the 'new physics', featured in both The Field and The Hunt for Zero Point, and who was also the military's "Top Psychic" as the twelve-year director of the CIA's remote viewing squadron, has a different perspective: "I'm quite certain at this point that the so-called 'lifter' phenomena is just an electrostatic ion wind phenomena, not 'antigravity.'"

But Dr. John J. Rusek, Adjunct Professor of Aeronautics and Astronautics at both Purdue University and the United States Air Force Academy, says that "Initial findings of 'classroom' experiments with lifters show ionic wind to be way too small a factor, by three orders of magnitude." Dr. Rusek has formed a technological company, Swift Enterprises, to continue this research and bring it to the level that is "presentable to the mainstream physics community."

Along these lines, Jean-Louis Naudin shows on his extensive web site, not only how to build a lifter, but also several photos of research into the ion wind issue. Naudin's team has wrapped test lifters in plastic yet they still produce anti-gravitational effects.

Others may have a clue to the second or even a third force at work. Researcher Fran De Aquino, professor of physics at Maranhao State University in Sao Luis, Brazil, is described in the literature as showing that "bubbles of localized space-time" can exist in variance to the surrounding fields. Anecdotal experience suggests that the lifters may be undergoing such space-time anomalies.

Editor: At this point we need to interrupt the author as he has already completely confused the reader. I would recommend referring to Thomas T. Brown's patent: USA patent #3,187,206, 1965.

Alexander V. Frolov

The Hunt for Zero Point states that NASA sought the services of Dr. Eugene Podkletnov, and although their replication research languishes, The Hunt claims that researcher Ning Li, of Huntsville, AL is pursuing this line of research as a private contractor to NASA.

Another Huntsville operation, Transdimensional Technologies, is exploring these multi-faceted phenomena as well, and its extensive web site shows it to be a frequent contractor to NASA, including research into "asymmetrical capacitive propulsion," and capacitor-based devices to test "ion wind" forces. Jeff Cameron, of Transdimensional, is said by Ventura to be "the father of the lifter," having developed them while exploring anomalous torsional effects of high energy lasers. The lasers twisted and at the time it was considered a nuisance. But the unknown forces at work later led Cameron to found Transdimensional, develop lifter technology to a commercial level, and subsequently patent many pieces of related technology. Unfortunately, I have been unable to reach Jeff

Cameron or anyone at Transdimensional for any kind of confirmation.

Nevertheless, how would gravitons be blocked, or gravity shielded?

Dr. Hal Puthoff says there are two ways of looking at it. First, one can look at the issue from a quantum point of view, that there is a particle exchange between the gravitons and something else, and the net effect is anti-gravity. The how's and why's of that are speculative, so Puthoff turns to a classical approach for answers. He prefers looking at "engineering the vacuum." To do that one must first look at the vacuum.

As I understand it we are all in the vacuum, everything is. The "vacuum" is the matrix that contains all matter and all energy. It is the engineering perspective of the zero point energy field, or the *"Field"* as popularized by Lynn McTaggart in her masterpiece The Field. Puthoff shared with me statements from fellow researcher Dr. T. D. Lee that state: "The vacuum is the seat of energetic particle and field fluctuations, and ... is the seat of space-time structure ... that encodes the distribution of matter and energy.... The vacuum is energetic in its own right."

Thus energy can be drawn from the field; and spacecraft can have "vacuum propulsion systems, or propellant-less propulsion," in other words, field effect propulsion.

At any rate, more and more physicists are thinking that the vacuum can give them a whole lotta oomph, enough to propel spacecraft; and when they learn how to corral it, a whole bevy of new phenomena may be encountered, including anti-gravity. This new potpourri of research is being called by many the "new physics." And although his approach is classical, Dr. Hal Puthoff seems to be sensing what's out there waiting to be discovered.

Puthoff's current research as been to explore "the perturbation of atomic or molecular ground states, hypothesized to be equilibrium states involving dynamic radiation/ absorption exchange with the vacuum fluctuations. In this model atoms or molecules ... are expected to undergo energy shifts that would alter the spectroscopic signatures of excitations involving the ground state." Puthoff says he's had no success so far with this approach, but his words remind me of De Aquino's speculation that objects lose mass as they absorb energy. Pull energy from the field around you and you lose weight. Bingo, lift-off. **But how does one pull energy from the field?**

Editor: Some solve this problem by means of the ether density changes, which are performed with the help of vortex longitudinal-wave technologies.

A.V. Frolov

Torsion fields might play a role here according to many, and the literature on anti-gravity is filled with the phrase, "torsional effects." But what exactly is a torsion field? "It has something to do with spin," Nick Cook told me on the phone. "You have a torsion field when you spin something. Add a little electromagnetism and you might have anti-gravity." That's the short-hand version of it and here's a deeper look.

Mike Wright, resident physics expert at BeyondTheOrdinary.Net web stream radio, told me this: "When forces create curvature (such as rotation) in more than two planes, a torsion field results. Not only does the object go around, but it goes around and 'down' or 'up', and the up/down movement is an additional acceleration in that dimension. EM and gravitational fields differ by having a magnitude of force and only one direction of movement.

"A tornado is a structure of air in air. A whirlpool is a structure of water in water. So, because more than two planes are involved, objects can be created from 'nothing'; that is to say that objects can be created from the medium of the environment, such as a tornado from two air masses of differing temperature."

So spin plus movement is the key. Again, Tim Ventura is on the hunt. He demonstrated to me **that spinning magnets will cancel out their magnetic fields sufficiently so that two magnets facing each other with like poles will not push each other away if one of the magnets is rotating**

perpendicular to the force of opposition. It's not anti-gravity, but it gets us closer to the heart of the matter.

Further, Russian physicists have been researching the torsional effects of both sub-atomic particle spin, and the loss of gravitational mass in planets from the angular momentum of their orbits. Spinning makes something happen, but what? Tornadoes and Mother Nature might have a few clues.

Tornadoes spin, in a sense, although no one is Oklahoma who has spent a night in a storm shelter during an F5 event would describe the tornadoes in the night sky as *spinning*. Nevertheless, tornadoes have anomalous effects that are legendary: blades of grass stuck into mirrors, a piece of straw embedded flawlessly into a tree trunk. How? It seems as if the laws of mass, gravity and inertia are melted as winds swirl at speeds up to 300 mph in an organized vortex pattern. Is this a clue to melting the pull of gravity?

Getting information to this question has not been easy. Many scientists claim not to have even heard of torsion fields, including particle physicists at major US universities. So, again I turn to Nick Cook and The Hunt for Zero Point

Dr. Dan Marckus says that if "you generate a torsion field of sufficient magnitude the theory says you can bend the four dimensions of space around the generator. The more torsion you generate the more space you perturb. When you bend space you also bend time."

Marckus continues, "If you dipped ...one of these whirlpools ... into the zero point energy field, the seething mass of latent energy that existed on an almost undetectable level all around us [in the field would] ... react in an almost magical way by directing that energy."

The torsion field, in effect, is "a pump, a 'coupling' device that could dip into, and then direct, energy out of the zero point energy field." "But," Marckus continues, "the vortex wasn't a three-dimensional phenomena or even a four-dimensional one. It couldn't be. For a torsion field to be able to interact with gravity and electromagnetism it had to be endowed with attributes that went beyond the three dimensions of left, right, up and down, and the fourth-dimensional time field they inhabited; something that the theorists for convenience sake labeled a fifth dimension-hyperspace."

Cook concluded that the torsion fields "bind with gravity ... to produce a levitation effect -- an antigravity effect," but "it wasn't doing so in the four dimensions of this world, but somewhere else." That somewhere else is hyperspace. **So how do we activate torsion fields and enter hyperspace?**

Dr. Eugene Podkletnov may have a clue.

Podkletnov, the Russian researcher working in Finland, has studied the gravity shielding effects of superconductors. Again, Nick Cook in The Hunt, relays vital information. Cook says Podkletnov claims, "If the superconductors are rotated considerably faster than 5,000 rpm ... the disc experiences so much weight loss that it actually takes off." Thus, torsion field creates levitation. I emailed Dr. Podkletnov to find out more about this issue. He replied: "[A] fast rotating object can, under certain conditions, cause the polarization of the volume that it occupies in space and around it. This polarization causes the gravitational effect as it modifies [the] local gravity field. The vortex of the polarized particles will create a vertical thrust with a certain force and spatial momentum. Some scientists call these polarized particles gravitons. The term graviton is an artificial one and at present we are not sure if it is a wave or a particle and what type of particle. Maybe it is a usual tachyon or a superluminal neutrino (a faster-than-light-particle). Polarization of the media means that the spins of electrons, protons, neutrons and of small subatomic particles that constitute the fabric of space or vacuum would be parallel. Then a kind of gravity well is formed and the objects tend to fall into this well. We observe this picture as an object rising to the sky. Polarization of the media (of space) causes some glow around the object as it acquires additional

energy and because of it, the glow around some objects is observed."

What I understand from Dr. Podkletnov is that gravity is the effect of spin -- the spin of all subjected particles, from the sub-atomic level and up being parallel; thus they are all aligned to fall into the gravity well of earth. And spinning objects, such as his superconducting discs, when influenced additionally by an electromagnetic field, will experience a shift in the spin of the sub-atomic and atomic elements. They will be turned and not be aligned in parallel. Thus, they are able to levitate.

But how to polarize the media and get things spinning? Enter Dr. Marcus Hollingshed, an enigmatic figure allegedly from Cambridge University. Dr. Hollingshed claims to have built a six-ringed toroidal coil antigravity device, which achieved great effect using rotating magnetic fields. In January 2003 he announced on the Internet that he has developed a 160kg vehicle able to lift in excess of 2000kg and that it has both horizontal and vertical drive features. His device cannot only go up and down and sideways, but it can push things away and pull objects to it.

In addition, the field that the device purportedly generates is capable of being broadened and weakened, or narrowed and amplified in a lensing effect, with the field producing an absolute vacuum of 2.2m spherical diameter. Best of all, when it's cranked up the core of it goes invisible, although the term Dr. Hollingshed uses is that there is a "loss of reflected light." There are no reports of independent confirmation, and Nick Cook says he hasn't been invited to see it, so, he's skeptical.

Where does this leave us? Perhaps Dr. Podkletnov's words sum up our current situation."Modern theoretical physics cannot give you the direct answer to your questions (levitation, torsion fields, etc.,) and a scientist who would agree to give you the answer cannot be regarded seriously, softly speaking. If you had asked Dr. Einstein if he were an expert on gravity, the answer would be NO. I can repeat his words: No, I am not a magician, yet; I am still learning."

Wayne Macleod, USA
Email: dynamars2100@yahoo.ca, cwleod@shaw.ca

Gravity is the incremental slowing of time as we move closer to its source. If we imagine panes of glass stacked on top each other, one pane slightly denser than the one immediately above, a ray of light coming from above will constantly refract in a curved beam downward as it enters the stack. The same is true of a ray of light entering a gravity field. The analogy is not too far fetched because refraction is caused by a slowing of light in the denser medium. Of course, gravity affects material objects as well as light, but this is explained by every object traveling on a 'world line' in spacetime. We can use light as in the glass example because light is its own world line.

Why the world lines of objects take the paths they do can best be understood by compressing our normal 3 dimensional space into 2 dimensions, length and height only. When we throw a stone into the air it rises and falls in a parabolic arc in these two space dimensions. That path in space is a complete mystery until we consider another dimension, time, a dimension we can imagine measured at a right angle to the plane of the 2 space

energy and because of it, the glow around some objects is observed."

What I understand from Dr. Podkletnov is that gravity is the effect of spin -- the spin of all subjected particles, from the sub-atomic level and up being parallel; thus they are all aligned to fall into the gravity well of earth. And spinning objects, such as his superconducting discs, when influenced additionally by an electromagnetic field, will experience a shift in the spin of the sub-atomic and atomic elements. They will be turned and not be aligned in parallel. Thus, they are able to levitate.

But how to polarize the media and get things spinning? Enter Dr. Marcus Hollingshed, an enigmatic figure allegedly from Cambridge University. Dr. Hollingshed claims to have built a six-ringed toroidal coil antigravity device, which achieved great effect using rotating magnetic fields. In January 2003 he announced on the Internet that he has developed a 160kg vehicle able to lift in excess of 2000kg and that it has both horizontal and vertical drive features. His device cannot only go up and down and sideways, but it can push things away and pull objects to it.

In addition, the field that the device purportedly generates is capable of being broadened and weakened, or narrowed and amplified in a lensing effect, with the field producing an absolute vacuum of 2.2m spherical diameter. Best of all, when it's cranked up the core of it goes invisible, although the term Dr. Hollingshed uses is that there is a "loss of reflected light." There are no reports of independent confirmation, and Nick Cook says he hasn't been invited to see it, so, he's skeptical.

Where does this leave us? Perhaps Dr. Podkletnov's words sum up our current situation."Modern theoretical physics cannot give you the direct answer to your questions (levitation, torsion fields, etc.,) and a scientist who would agree to give you the answer cannot be regarded seriously, softly speaking. If you had asked Dr. Einstein if he were an expert on gravity, the answer would be NO. I can repeat his words: No, I am not a magician, yet; I am still learning."

Wayne Macleod, USA
Email: dynamars2100@yahoo.ca, cwleod@shaw.ca

Gravity is the incremental slowing of time as we move closer to its source. If we imagine panes of glass stacked on top each other, one pane slightly denser than the one immediately above, a ray of light coming from above will constantly refract in a curved beam downward as it enters the stack. The same is true of a ray of light entering a gravity field. The analogy is not too far fetched because refraction is caused by a slowing of light in the denser medium. Of course, gravity affects material objects as well as light, but this is explained by every object traveling on a 'world line' in spacetime. We can use light as in the glass example because light is its own world line.

Why the world lines of objects take the paths they do can best be understood by compressing our normal 3 dimensional space into 2 dimensions, length and height only. When we throw a stone into the air it rises and falls in a parabolic arc in these two space dimensions. That path in space is a complete mystery until we consider another dimension, time, a dimension we can imagine measured at a right angle to the plane of the 2 space

dimensions. By multiplying the time of the object in flight by the speed of light, we have a three-dimensional coordinate system, not of space but of spacetime. We can then graph the world line of the object. So why does the object fall? It is because spacetime near massive bodies is curved. A remarkable fact is that the curved world lines of all objects in the same gravity field, whether of a thrown ball or fired bullet, have the same radius of curvature. Hence all objects fall with the same acceleration.

To neutralize gravity we must somehow 'straighten' the world lines of objects traveling in curved spacetime. It would be as if we had in our stack of glass panes a bubble, around which the density of glass became less on approach to the bubble. Then the ray of light, when close to the bubble, would refract opposite to the path it would normally take when traveling thought the rest of the glass. Similarly, if we could manufacture a 'time bubble' in a gravity field opposite to the time slowing known as gravity, we would have any object embedded in the time bubble isolated from that gravity field.

The Electrical Levitation theory can best be understood by first considering an analogy. Let us imagine a wheel spinning on an arm like a child's propeller toy. The arm also rotates, in a direction opposite to the spinning wheel. We consider the rate of spinning of the wheel from the point-of-view of two observers, one observer stationary on the ground, the other observer rotating with the arm. Obviously the two observers will not see the same rate of spinning on the wheel. Because the arm is rotating opposite the spin of the wheel, its rotation must be subtracted from the rate of wheel spin as seen by the stationary ground observer. This is not true of the observer rotating with the arm, who will see the spin of the wheel as if there were no arm rotation.

The concept is easier to envision with linear motion, such as of a man throwing a ball on a moving train. The velocity of the ball seen by the pitcher on the train will not be the same as its velocity seen by a stationary observer on the ground. As the stationary observer sees it, that velocity will have the train's velocity subtracted from it if thrown against the train's velocity. It is the same with rotary motion: the velocity of the wheel for the stationary observer is slower because the arm's rotation is subtracted from it.

But suppose the wheel rotation is *the same* for the two observers! Something must be different between them, and that is time. As explained by Special Relativity for linear motion, time is not a universal constant; it differs between observers depending on their relative motion. The property of nature that *is* constant, that produces this relative time difference, is the speed of light. So we must look for a similar constant in nature for a relative time difference between observers in our rotary example. We have one in electron angular momentum, known as electron "spin," $h/4\pi = 5.28 \times 10^{-35}$ kg-m^2/sec, where h is Planck's constant. Like the speed of light, this quantity is constant for all observers, whether the observer is on a rotating system or stationary on the ground. Here is the tool for producing our time 'bubble'.

Let us now imagine a series of concentric rings, all rotating in the same plane and in the same direction. Electric current is pushed through these rings in the same direction as the ring rotation. (Current here is considered the flow of electrons, not conventional positive current.) The rotating rings are sandwiched between two magnetic plates, the function of which is to maintain the angular momentum of the current electrons oriented properly with ring rotation.

Analogous to the above example, each electron takes the place of the spinning wheel and the rotating arm is replaced by the rings. Thus, because electron angular momentum is a universal constant, an observer of the electrons in this rotating system will not have the same time as a stationary observer outside it. If each current electron has its "spin" oriented opposite the rotation of the rings, time on the rotating system would run faster than for a stationary ground observer, the same as in empty space relative to the Earth. The rotating system would therefore have the world line of empty space, not that of the

gravity field. Its spacetime would not be curved. Since gravity is a time phenomenon, such a system in a gravity field could not have the behavior of a normal object. This conclusion may seem erroneous considering that ring rotation could never reach relativistically significant velocities, but we have an analogy with magnetism that is caused by a Lorentz contraction of the distance between moving electrons. If we considered the diminutive drift velocity of electrons alone we would never conclude that magnetism was possible, but the effect is *accumulative* over trillions of electrons. The hypothesis here is that the same is possible with the trillions of free electrons oriented with a spinning ring, to produce an accumulative time effect.

We now come to the controversial part of this theory because the above treats electron angular momentum the same as angular momentum of a normal physical object, whereas the electron is a quantum particle and quantum particles have their own realities with bizarre consequences when analogized with our macro universe. For instance, the electron has quantum spin number 1/2, and such a particle would have 720 degrees in one rotation, not 360. Nevertheless, the electron *does possess* di-pole magnetism. It *does behave* as a spinning ball with negative charge. Electrical Levitation is therefore an empirical theory. The property of the electron that gives electron di-pole magnetism cannot be an actual physical rotation, but whatever that quantum property, if it produces di-pole magnetism there is reason to expect it to produce other macro physical phenomena as if it were.

The theoretical finding of General Relativity that time runs slower in a gravitational field was confirmed by the Pound-Rebka experiment in 1959. **It is not that gravity causes time slowing, gravity *is* time slowing.** Since time and energy are reciprocal, more time on our rotating ring system would mean less energy seen by an observer in that frame of reference than seen by a stationary observer on the ground, the opposite of the red shift of a gravity field. This energy difference must equal the energy of the mass in a gravity field that is to be levitated, its energy of weight, and lost. Experimenters should therefore be aware that their device might radiate. But this is not a free energy machine. The energy of levitation comes from its magnetic field, and the electron magnetic moment energy turns out to be $V_e = mc^2$ divided by the electrical current, *m* is the mass to be levitated and *c* is the speed of light. This is an enormous amount, but becomes practical if enough electrical current can be sent through the rings. That means the electrical resistance of the ring material must be very low. For copper it is not. No material currently exists with sufficiently low electrical resistance at room temperatures, but **superconducting materials** exist that at cryogenic temperatures experience a dramatic loss of electrical resistance.

An experimental device can therefore be envisioned using a superconducting disc substituting for the electric rings. The disc would serve as a conductor for an electric current and would therefore need to be sliced along one radius with an insulator placed in the notch. Both edges of the notch would be connected to a power source by brushes rotating with the disc. With a counterclockwise disc rotation as seen from the top, to have clockwise electron "spin" the magnetic field between the plates would have to be up. Only the moving free electrons of the current will be available for any time alteration effect. These will also **produce a magnetic field, which it is reasonable to assume would be of the same time alteration effect as the electrons, thus producing the required alternate time "bubble".**

The resources required for an experiment using superconducting material at cryogenic temperatures are beyond this writer's means and an experiment has not been attempted, but an experiment at the Tampere University, Finland, 1992, using a superconducting disc suggests that gravity shielding is possible. Owing to the immense advantages gravitational shielding would give to the present interest in space exploration, effort toward its development would be logical. This essay may offer clues on how to begin.

Editor: I find the article by Wane McLeod quite interesting as his approach is very similar to the idea I first presented in my report at the "Space, Time and Gravitation" Conference which took place in St. Petersburg in 1998. The report was included into The Proceedings of the Conference, Part I, 1999. Before that the brief version of the article was published in English in the 'ELECTRIC SPACECRAFT' magazine, Leicester, North Carolina 28748 USA, Issue 27, 1997 p.30-31.

I managed to demonstrate that the ideas of Thomas T. Brown, especially his USA patent # 3,187,206 of 1965, are something more than just the force asymmetry in the electric capacitor. According to the concept presented in my report, by creating a matter property gradient (in particular, the dielectric permittivity gradient) we actually change the curvature of the electric force line in space. Normally, the natural space curvature accounts for the electric field potential decrease with the distance increase from the surface of the charged object. By creating the dielectric permittivity gradient (described by T.T. Brown in his patent of 1965) we change the natural distance potential gradient law. We can both increase and decrease this change and even reverse it. With the dielectric permittivity change square function, the natural space curvature is completely compensated and with more extent it is reversed and can be turned to negative. At that rate, the potential is not decreased but increased with the increase of the distance from the surface of the charged object. This is the essence of my concept that has never been considered before by any author. By creating the gradient described by the quartic function we get the same distance potential gradient law as in the natural conditions only with a different sign!

T.T. Brown, who discovered a force in capacitors with a special dielectric, offered the practical application of this concept. However, he did not find the source of this force, which, according to my concept, is conditioned by two factors: the corresponding dielectric property gradient function and the elastic properties of the dielectric material, which is of no less significance. Normally, dielectric particles are attracted to the charged surface but when the reversion of the curvature of electric field force lines occurs, they are repulsed from it and we can use this propulsion force. Elastic deformations (including those occurring during the pulsating operation of the field) account for the reaction forces equivalent to the generated propulsion force. Thus, the momentum conservation law is in action, however, the device is still moving.

T.T. Brown also considered other ways of generating a force, such as the material magnetic property gradient. Logically, by analogy with the electric field we can consider the gravity field, which can be "designed" and "reversed" by means of creating a matter with the density gradient. At that rate, the gravity potential must change in accordance with a certain law when the distance from the gravity field source being increased.

We should also note that the local space volume levitation effect with the accelerated or decelerated time rate was first described in my articles "Physical Principles of the Time Machine", NET #3 (6), May-June 2002 and "Practical Application of the Time Rate Control (TRC) Theory", NET #3, November-December 2001.

Our company conducts experimental researches on creating new materials that possess the properties described. We are interested in serious business contacts with companies in the aerospace industry to further discuss eventual cooperation projects in this field, including *co-patenting*.

Alexander V. Frolov

Perpetuum Mobile Not in the Past but at the Present

Vladimir I. Likhachev, Russia
Krasnodarskaya str., 38/20-34, Moscow, 109386

In several issues of the "Nature and man. Light" magazine in 1995-97 my colleague E.Oparin and I wrote on the unscientific character of absolutizing the law of degradation of energy, on the important issue of creating the perpetuum mobile of the second kind utilizing infinitely available *environmental heat energy*. We even send a letter to Yury S. Osipov, the Russian Science academy President, but received no reply. Notwithstanding many official discussions, there are no well-reasoned objections to our arguments or proof on the part of "high" official science, because, in fact, we are right.

I have recently received one more confirmation: bright and feasible data on the negentropy cycle (the cycle with spontaneous reduction of entropy) with a chemically active working substance that will be described later.

After the publication of Victor M. Brodyansky's book "Perpetuum Mobile in the Past and at Present. From Utopia to Science and from Science to Utopia", Second Edition, one can not but return to these issues. More so because the foreword of V.A. Fabricant, member of the USSR Academy of Pedagogical Sciences, claims the law of degradation of energy to be the "law of nature" and supports shamefully the deformation of the monothermists, especially P.K.Oschepkov, by academicians P.Kapitsa, L.Artsimovich and I.Tamm ("Pravda" of November 22, 1959), followed by E. Velikhov, A.Prokhorov and V.Sagdeyev ("Pravda" of June 22, 1987).

After the publication of Brodyansky's book I met the author several times (notably at a special seminar in The Moscow Energy Institute) and expressed my opinion about his book: the book avoids serious discussion of the monothermists, stresses their failures which are quite normal in the initial development of perpetuum mobiles of the second kind.

For example, Brodyansky knew about Tsiolkovsky's discovery. Guay's book "On the Little-Known Hypothesis of Tsiolkovsky" is listed among the First Edition references. But Vladimir Brodyansky avoided analyzing this discovery both "in the past" and "at present". The Second Edition references even list the "Physical Thought in Russia" magazine, issue #1 of 1991, that contained for the fist and only time the modern edition of the "Law of Degrading of Energy" by Tsiolkovsky. "At present" V. Brodyansky knows my analysis of Boltsman's mistakes but he paid no scientific attention to my analysis either.

In Brodyansky's book the description level of chemical reaction cycles is even lower than that of Schpilrine. Schpilrine at least tried to present his arguments but here we see unsupported statements "justified" by the phrase "the detailed discussion would take too much space". Vladimir Brodyansky's analysis of anti-Stokes luminescence (pp.216-219) is also superficial. Dissipative and entropy processes prevail in it. But if there is evidence supporting higher frequency quanta than the frequency of radiating flux, **it is the evidence of negative entropy**. Vladimir Brodyansky not only is familiar with it and also shows it by the example of investigating the Sun and the Earth (p.247).

Vladimir Brodyansky's analysis of Rank's tube (pp.235-237) displays the same tendency. In the Rank's tube the dissipative processes also prevail. Its effectiveness as a refrigerator is lower than in the traditional schemes.

But one can not deny the existence of negentropy processes in it. It is these processes that "originate" the cold gas flow. And Brodyansky's "origination" on p.236 "The vortex tube in fact divides the coming gas into two fluxes: heated and refrigerated" - is totally false. That can be performed only by "Maxwell's demon" that does not exist in substance.

The refrigerated flux in the Rank's tube is formed by the "Tsiolkovsky's flux" by way of heat transfer "from cold to hot", from the tube center to its circumference by **centrifugal accelerations**. On its basis (to be more exact, on the basis of Finko's tube) the perpetuum mobile of the second kind can be created. And we have this engineering solution. E.Oparin and I made the corresponding patent application for an invention but the Federal Institute of Industrial Property again refused to consider such applications. Here one can see similarity with the causes of re-edition of Vladimir Brodyansky's book. And one need not be a big politician to admit the reality and understand the sources.

Environmental and, especially, anti-nuclear movement is invincibly expanding. Danger to human life and threat of ecological catastrophe are quite real. The Second Edition of Brodyansky's book protects behind scientific arguments those who use Russia as a source of easy money and then flee.

But we like our country - vast and austere. This austerity and space form REAL PEOPLE and support humanity and materialistic humanism of the energetic and talented, not just the rich.

In modern Russia the powerfully spread alcoholism, debauchery and drugs are the instruments of slavery. But the monothermy and development of alternative power engineering will become basis for Russia's revival and unprecedented prosperity.

Russians learn slowly, sometimes, very slowly, even disgracefully slowly. But we will learn. And then no one will stop us. The following tips are meant for those who are ready to risk their efforts and facilities in order to build alternative energy knowledge base: dissipative and negentropy processes are inseparable and very often their mechanism is the same. In our environment the dissipative processes are more effective and hide the negentropy ones. No dissipative process combination can generate the negentropy cycle. Look for examples in Brodyansky's book. To create the negentropy cycle and use the environmental energy at least one negentropy process is required that has effectiveness and negentropy exceeding entropy growth at all levels of the cycle.

News from "IntAlek" Company

William Alek [alekws@intalek.com] has updated the latest and greatest ZPOD system drawings:

hhtp://www.intalek.com/Index/Projects/SmartPAK/Projects/ZPOD/ZPOD_System05.pdf

This is release 5.0

Here is the latest electrical schematic: http://www.intalek.com/ZPOD/ZPOD_System05.gif

Based upon his "preliminary" tests thus far, he estimates the COP is around 2.0. This estimate is interpreted from the following scope traces:

http://www.intalek.com/ZPOD/in.GIF

Alan Francoeur's Generator
Canada

Alan L Francoeur, Canada
Email: al.f@shaw.ca

This is my writing and development about the Interference disc generator, and the permanent magnet dynamo machine, and other related inventions. I have always been intrigued with electricity and magnetism and aetheric energies starting at a young age. Back in 1980 I wanted to do something to help get my large vehicles better fuel economy. With this goal in mind, I experimented and designed my first heat exchanger vaporizer system to do my part to clean up our cars and trucks, fig. 1, 2, and 3 are two earlier vaporizer units under construction. For more information about this fuel system, please refer to my vaporizer fuel system report. The main body of this writing is referring the permanent magnet dynamo system that has been in the making since 1987, starting after the development of the interference disc generator.

Fig. 1

Fig. 2

Fig. 3

I invented the Interference Disc generator concept while I was employed at Giant Yellowknife Mines NWT from 1983 to early 1986. The idea of using metal blocking plates to shield magnetic fields stirred in my mind while working around heavy electrical mining equipment, and 1000hp and other electric motors with exposed coils that have heavy metal around the outer casing. I did a search at the time and found John Ecklin's work very interesting with his application of the shielding effect. During my off time in Yellowknife, I was experimenting with the interesting effect of producing induction with a stationary coil mounted beside a stationary magnet with a small air gap maintained between the magnet and the coil. During the construction of my first disc machine, I called it the Interference Shielding effect because of the interference the blocking disc does to cause induction, thus the Interference Disc Generator fits the description. The first transformer coils I used to test the interference shielding effect were used from old radios, and the magnets were alnico types. Back in 1986 in Calgary Alberta, a friend Bud Johnson and I constructed the first test disc generator model using alnico magnets, fig. 4, and later ceramic magnets were installed. Months later I designed and began construction of another larger Interference Disc machine with horseshoe shape neodymium 35 grade magnets mounted on the outside, and with the N and S magnetic poles facing toward the coils in the center portion of the machine. The coils and magnets in this larger machine are mounted in reverse of the first Interference Disc generator, fig. 5, 6.

Fig. 4

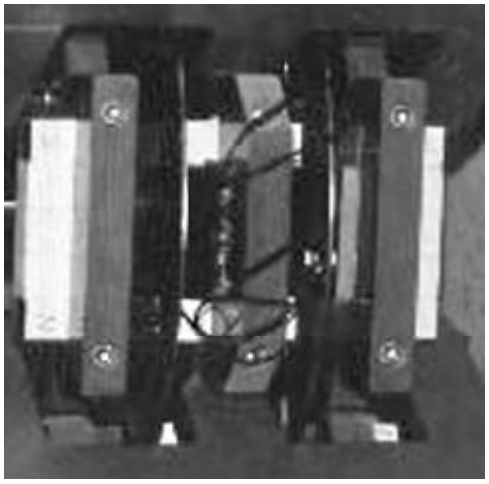

Fig. 5

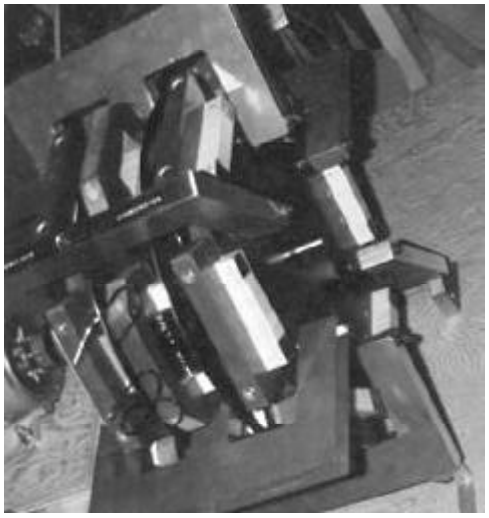

Fig. 6

General description of the interference disc generator

The Interference Disc electrical generator is made of a stator (114) consisting of an array of even number parallel mounted bar magnets (112) arranged and supported (114) in a circular fashion equidistant from each other, where the polarity of the magnets (112) are alternating when viewed at either end. Fig. 7

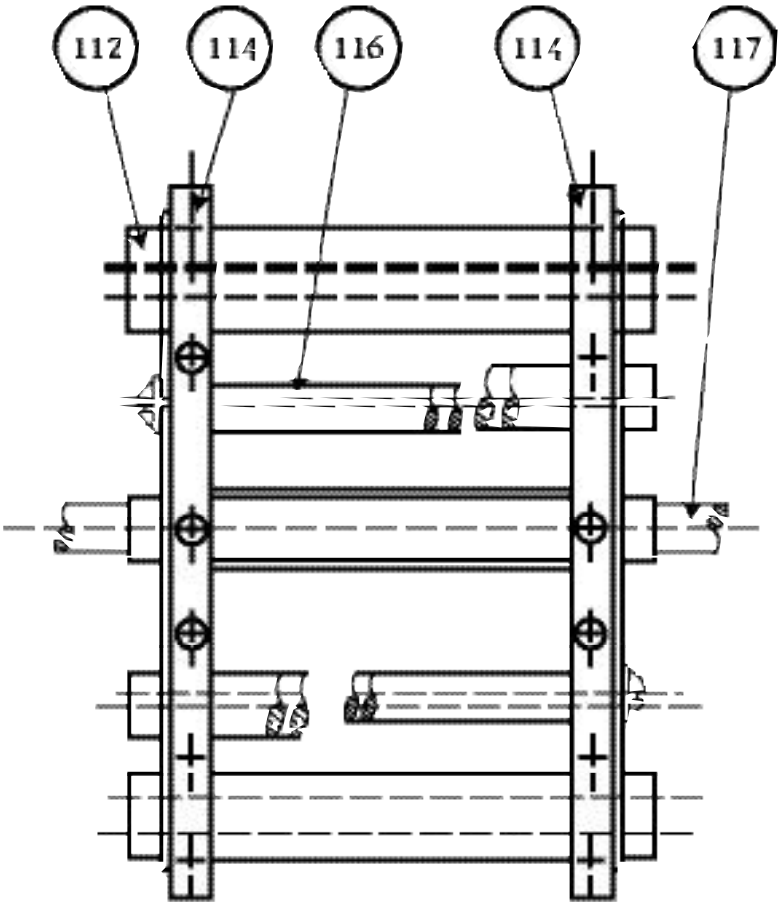

Fig. 7
Magnetic bars assembly (rotor)

Also in the stator fig. 8, (102) there are twice the number of coils (111) as bar magnets (112) wound in pairs on U-shaped cores (110). One half of the coil pairs mounted at one end of the bar magnets (112) in the same circular fashion, each corresponding to and aligned opposite to a pair of bar magnets (112) and separated from it by an air gap. On the other end of this pair of bar magnets (112) there are another set of coils (111) aligned likewise.

The rotor is made of two magnetically susceptible circular plates (109A or 109B) (such as iron or steel) Fig. 9, centrally mounted on an axle (107) fig. 7, which is in respect to the array of magnets and coils Fig. 9a.

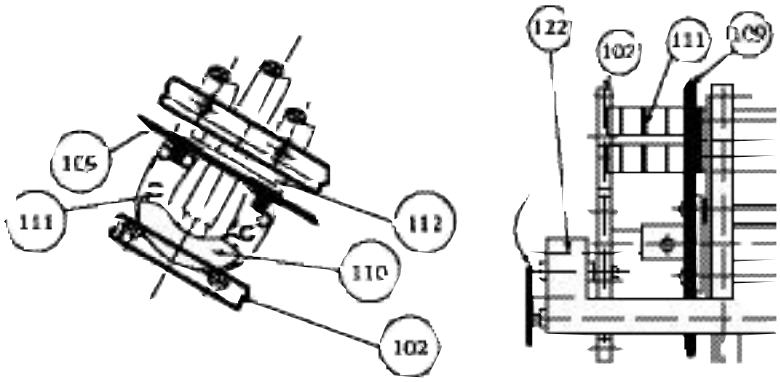

Fig. 8

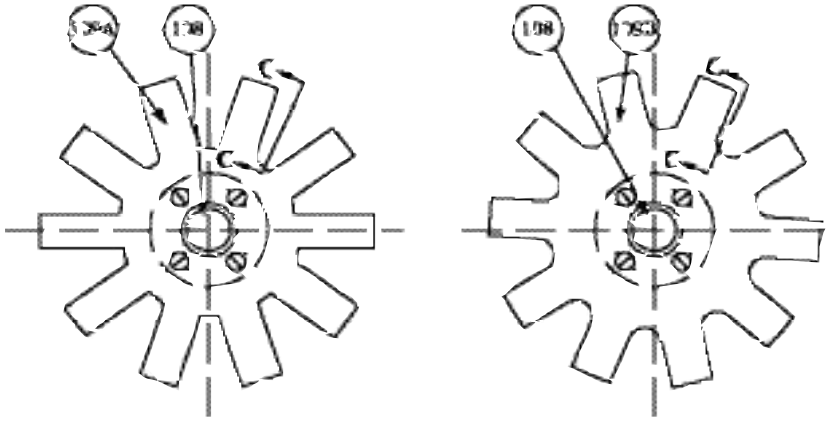

Fig. 9

The interference discs (109A or 109B) are separated from each other so that they can rotate in the air gaps between the magnets (112) and the coils (111). The interference discs (109A or 109B) have a number of **equidistant opening, either more or less in number than the number of the bar magnets (112)**.

The arrangement and size of the openings are such that when the discs (109A or 109B) are rotated by an outside motive force, they open the magnetic field between adjacent bar magnets (112), and the opposing coils (111) at both ends of the stator (114) simultaneously. Hence inducing an alternating electric current in the stationary coils (111) fig. 10.

By opening and closing the magnetic influx to the core (110) of the coils (111), an alternating current will be generated in the coils

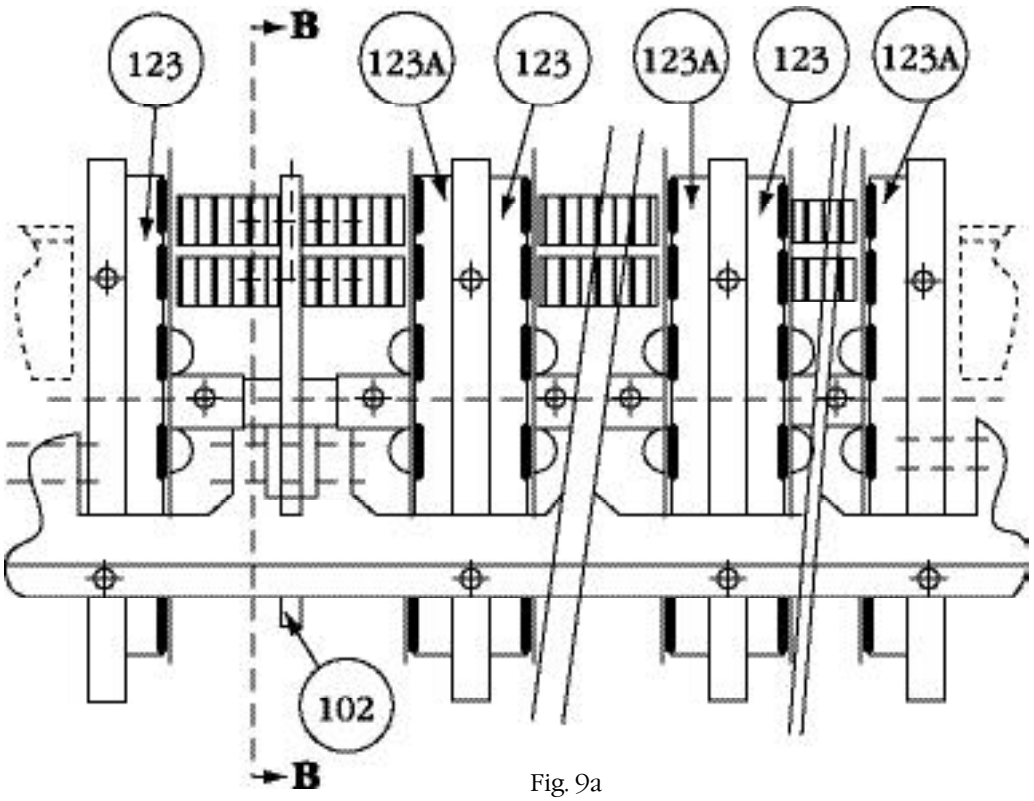

Fig. 9a
Magnetic bars assembly (stator)
Option II: multable magnetic coil-disk assembly

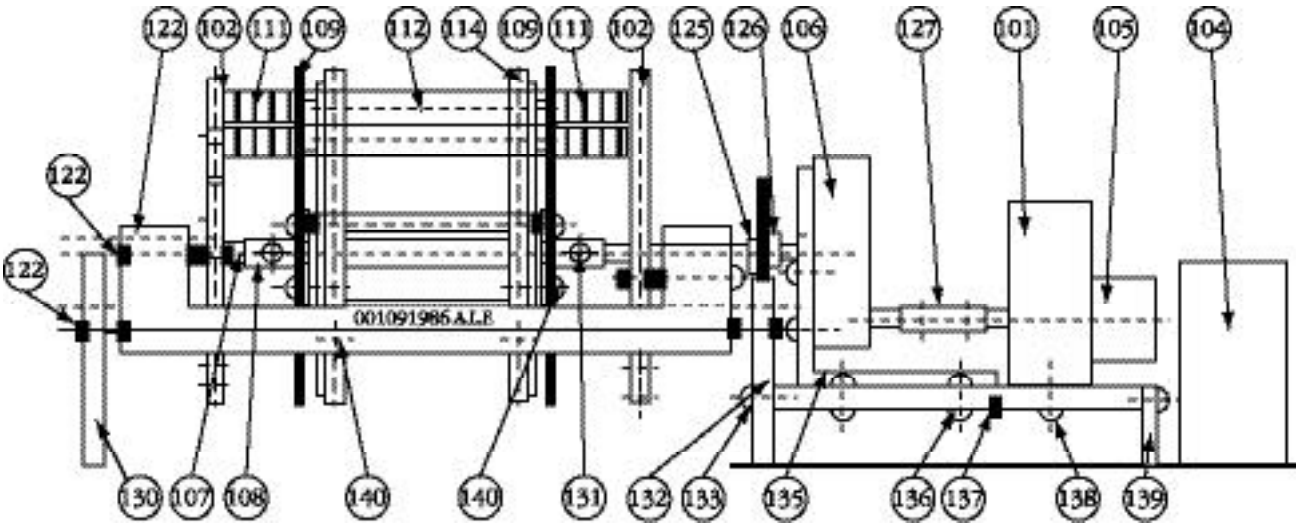

Fig. 10

(111) in a retro-order to the rotational direction of the interference discs (109A or 109B). Depending on the number of magnet-coil assemblies three phase AC current can be obtained. The regulation and attenuation of these currents can be achieved by known electric engineering methods (Fig. 10).

The efficiency of the unit would vary greatly depending on the speed of rotation, the width of the air gap, the strength of the magnets, and the materials used to construct the coils. I used nickel base amorphous metglass in the coils in both the smaller and larger machines, which as a result, shows greater efficiency as compared to conventional core laminates. Less energy is needed to spin the balanced disc rotor while causing a larger moving magnetic field to cause induction in the stationary coils. With this effect, it is easy to visualize the advantages this design has over conventional generators and motors. New testing of the coils will be conducted after the machine goes through all the upgrades to eliminate the problems with the warping interference discs.

The Interference Discs Generator described in this document **has the potential to produce more than unity effects**byeasy turning of a magnetically balanced (non-warping) interference disc. Optimizing the device with closer tolerances and correctly selected materials and incorporating internal magnetic balancing, will add to the success and improved performance of this unique generator design.

Improvements can be made with this design while the operating principal remains the same. Looking at the photographs included you will see the 1st proof of concept generator frame is constructed mainly from aluminum, this metal was used only because it was inexpensive material and easy to work with fig. 11. Non magnetic and non-conductive materials should be used to construct the generator frame supports to eliminate the eddy current losses. All of the nuts and bolts used to hold the disc generators together worked well for making the test machines capable to have adjustable air gaps, however, they can all be eliminated with design changes that preset the gaps and tolerances to optimize the conditions of the interference disc effect.

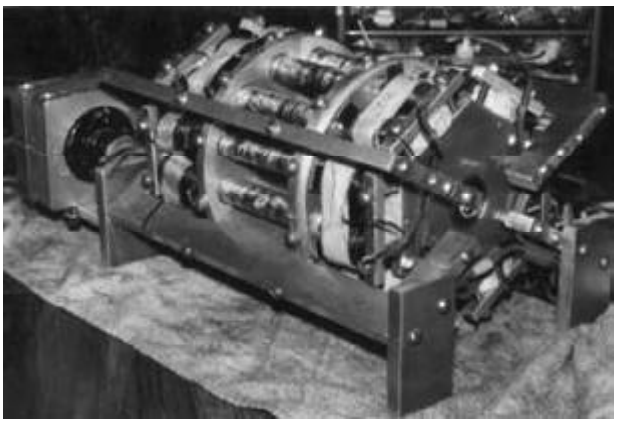

Fig. 11

Many improvements were adopted in the next larger #2 version of the Interference Disc generator fig. 12. Phanolic materials (non conductive and non magnetic) were used in the frame supporting the magnets and the coils, thus eliminating eddy current losses within the frame support. Large aluminum E bars were used to support the magnet frame support and the coil frame support with no noticeable eddy current losses. The aluminum used is positioned further away from the coils and magnets in the larger generator so as not to be affected by the magnets. Larger more powerful neodymium magnets and I shaped transformer coils were installed and tested in the larger machine which showed an increase in output power over the 1st machine fig. 13. Using more powerful neodymium magnets in this larger disc machine created some problems with the interference discs. Not only did they warp the discs they caused them to vibrate and chatter causing the fins to hit the magnets and the coils. I increased the air gap to over half an inch and moved the disc further away from the magnets to prevent damage. The effect was a reduction of magnetic flux reaching the coils that reduced the power output. The discs must be constructed much stronger and rigid if using neodymium magnet grade 35 or greater, then the air gap can be closed so more magnetic flux will reach the coils allowing for a greater electrical output.

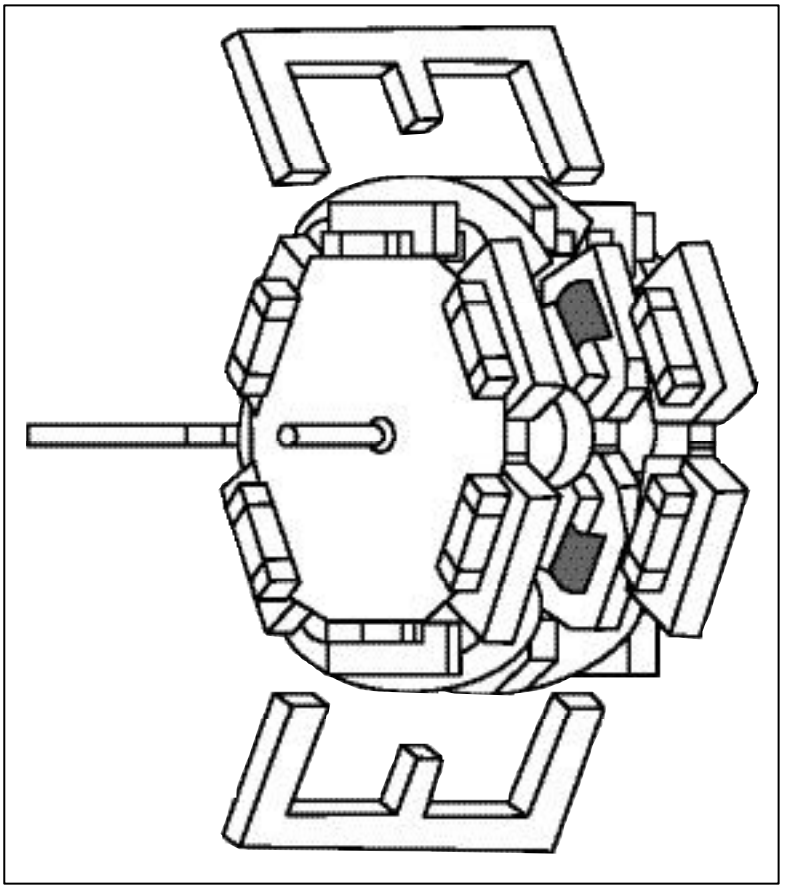

Fig. 12

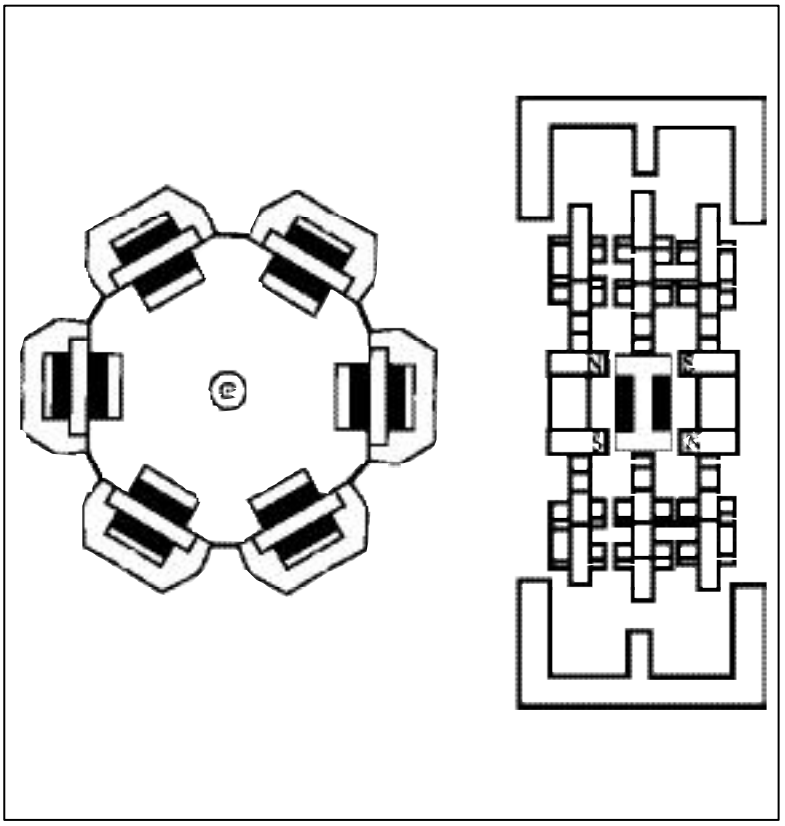

Fig. 13

The wiring of the coils circuit can be constructed by known engineering methods to achieve AC or DC power, and like any conventional transformer, wind the coils with heavy wire for more amps and more turns for more volts. The coils are stationary in this machine which makes it easy to harness AC power directly from the coils without brushes. All coils that are in phase can be wired in series or

parallel, the number of the blocking plates on the interference disc determines the phasing of the coils.

The diagram in fig. 14, 14a shows the path of the magnetic flux movement in relation to the position of the blocking plates of the interference disc. The magnetic field in the core/coil is switching polarity as the interference disc fins alternately moves in and out of the air gaps on each side of the coil. As you can see, depending on the position of the disc, positive and negative induction takes place for AC output of the coils. John Ecklin has achieved this effect using rotating blocking plates. I have achieved the same effect using balanced rotating interference discs with multiple stacks of isolated coils and poles mounted in a circle equal distance from each other.

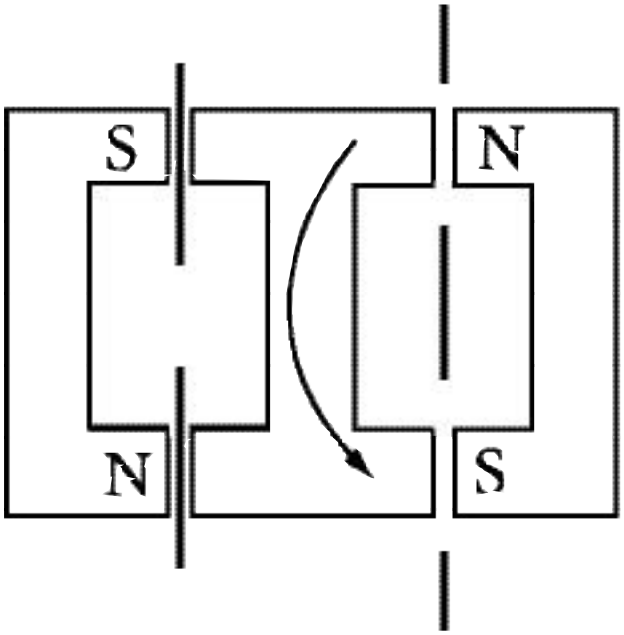

Fig. 14

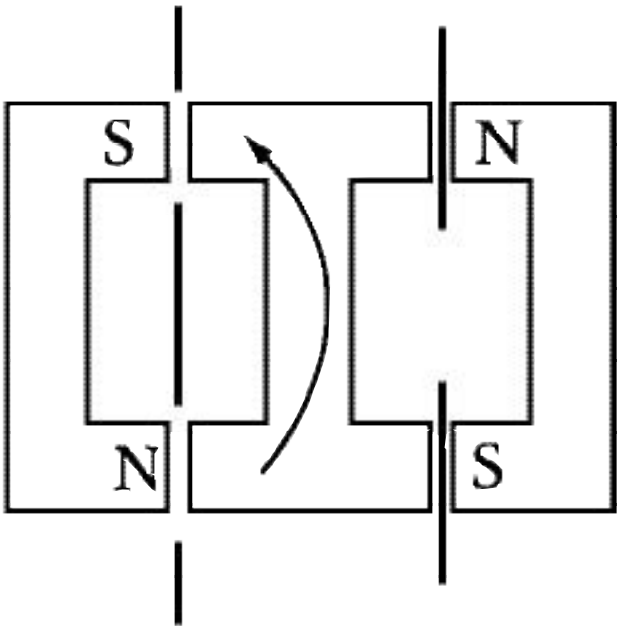

Fig.14a

The effect I reproduced with Gary Wesley's permanent magnet motor is related to the Interference Disc generator in the fact that blocking plates are used to shield the magnetic field, only we differ on methods to balance the blocking shields. Gary Wesley used springs to carefully balance the blocking plate, and I used a different number of interference fins working with the magnets to balance the blocking plates. The magnets in my Interference Disc machine become the springs.

More photos of both Interference Disc machines are shown in fig.15, 15a and 15b below.

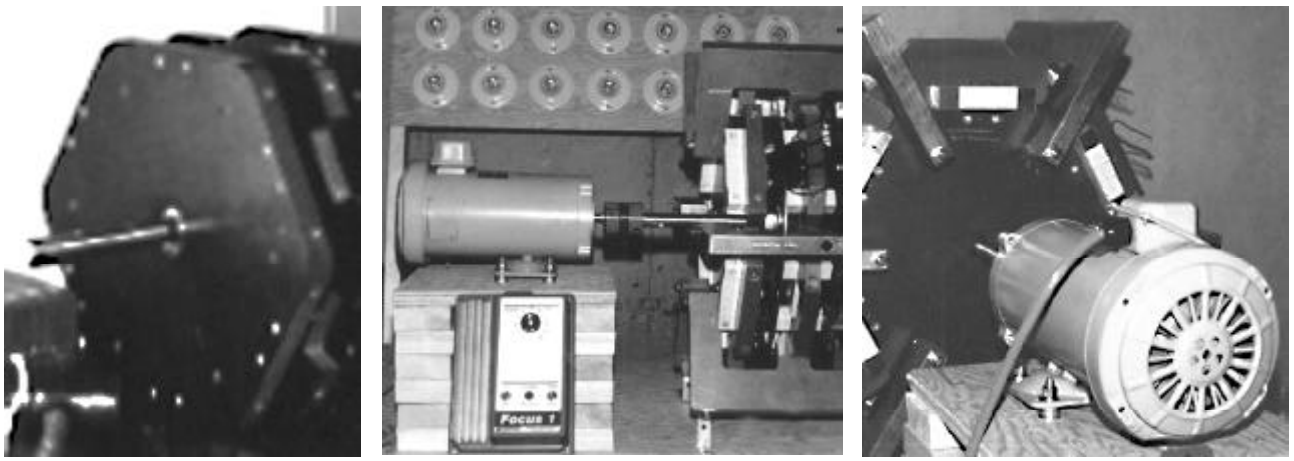

Fig. 15

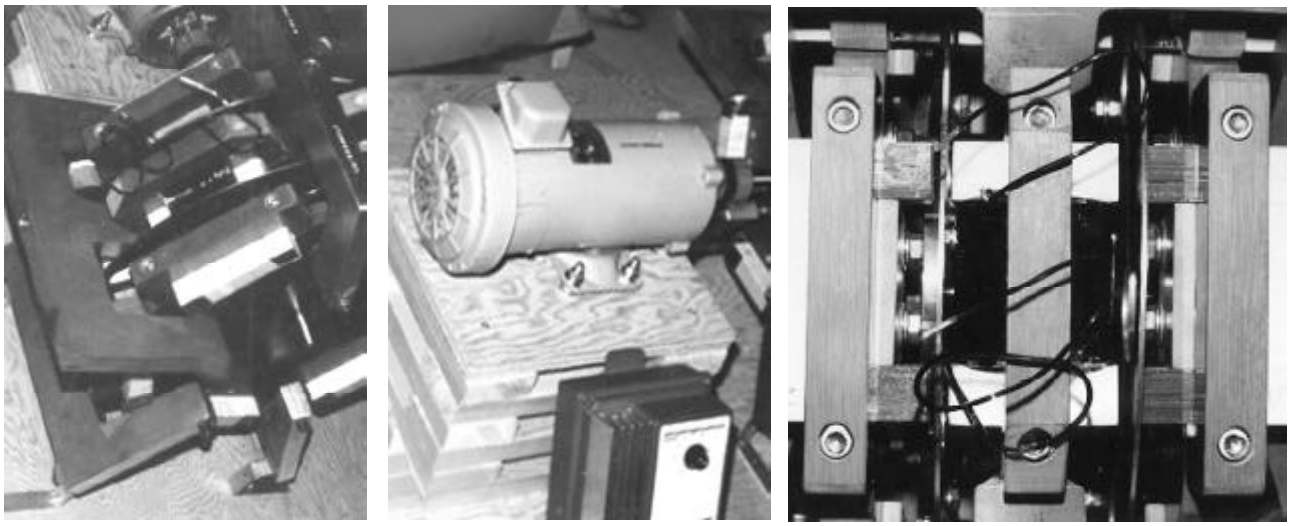

Fig. 15a

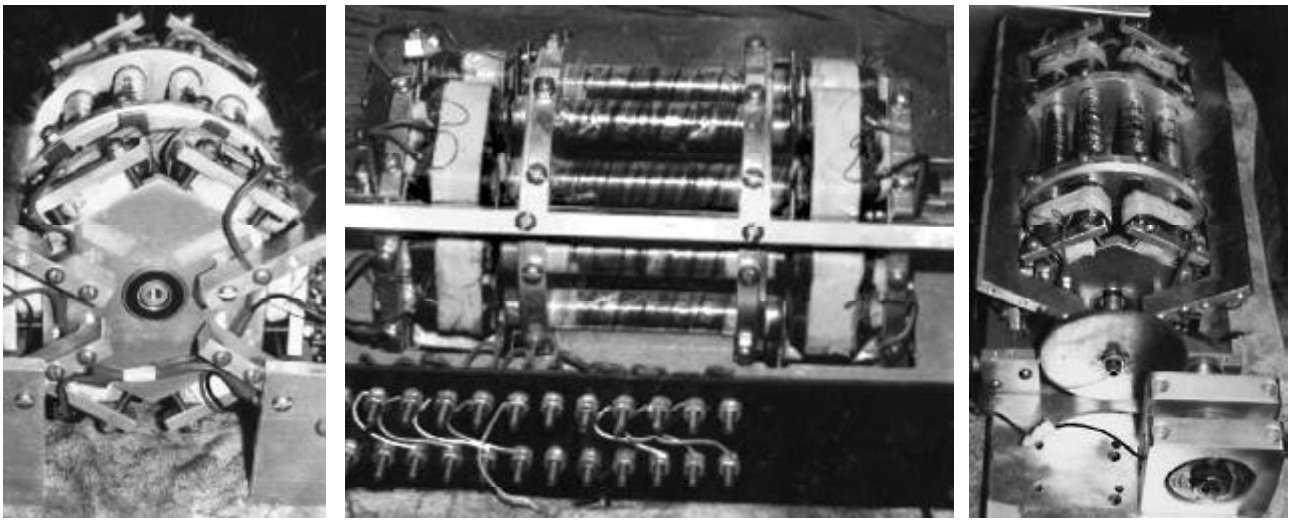

Fig. 15b

Closing comments on the disc generator

In closing this discussion of the Interference disc generator, I would like to go over and point out some of the concepts that I incorporated into the design of my permanent magnet dynamo.

As I made further progress and completed the later stages of the Interference disc generator, it became clear to me to use certain concepts of the machine and incorporate them into the design of my multiphase permanent magnet dynamo. Some of these concepts are explained here.

I have constructed several interference discs that have a different number of blocking shields, some with 10 blocking fins and some with 11 blocking fins and others with 12 blocking fins. They are all interchangeable on the machine to change the phase relations between all the isolated coils. The 12 finned disc will produce a single-phase dynamo with all the coils in phase, and the 10 finned disc on the machine will produce a three phase dynamo. One phase represents four groups of isolated coils, and the second phase represent the other four coils, and the four coils left are the third phase, for a total of twelve coils. All just by changing the number of fins on the interference disc and or adding more layers. Using 12 magnet poles and the 10 or 11 interference fins on the disc, the rotor discs becomes magnetically balanced and easy to rotate in spite of the load on the coils. The 12 finned disc has a larger holding force because

of the same number of fins as magnetic poles. However, it can be reduced to almost nil by adding more layers of interference disc and balance them against each other. Many in phase coils can then be added in series or in parallel to build your power levels to any desired potential.

Both machines have stationary coils, and the disc generator has 12 magnetic poles (6N and 6S), and the permanent magnet dynamo also has 12 magnetic poles (6N and 6S). The disc generator uses 10 or more fins on the interference shielding plate per rotor, and the permanent magnet dynamo has 10 or more coils around each rotor. There is the same number of interference blocking plates as there are induction coils on each of the two difference machines and the number of blocking fins and or coils are interchangeable. The back emf effects are different on both machines, the Interference disc generator demonstrates easy turning of the discs while the stationary coils are loaded, and when producing alternating current the permanent magnet dynamo rotor slows down when a load is placed on the stationary coils. Both machines produce AC power out of the coils and the Interference Disc generator has a closed magnetic circuit through the coils, and the permanent magnet dynamo has open magnetic circuit through the coils.

The Permanent Magnet Dynamo

I would like to begin this topic at this point by describing my permanent magnet dynamo machine.

I designed this machine to be completely interchangeable into many different motor generator combinations. These combinations involve different number of magnetic poles and different number of interchangeable coil poles in the same machine, two versions are possible, one with isolated coils and another with the coils that share a common core fig. 16.

We can change the magnetically balancing effect (*holding force*) by changing the number of coil poles or (*interference disc fins*) in relation to the magnetic poles. This turns the machine into a multipurpose, multiphase, variable output, and variable frequency ac dc permanent magnet motor generator system. I first designed this unique multi purpose dynamo in 1987 after I built my third Interference Disc generator.

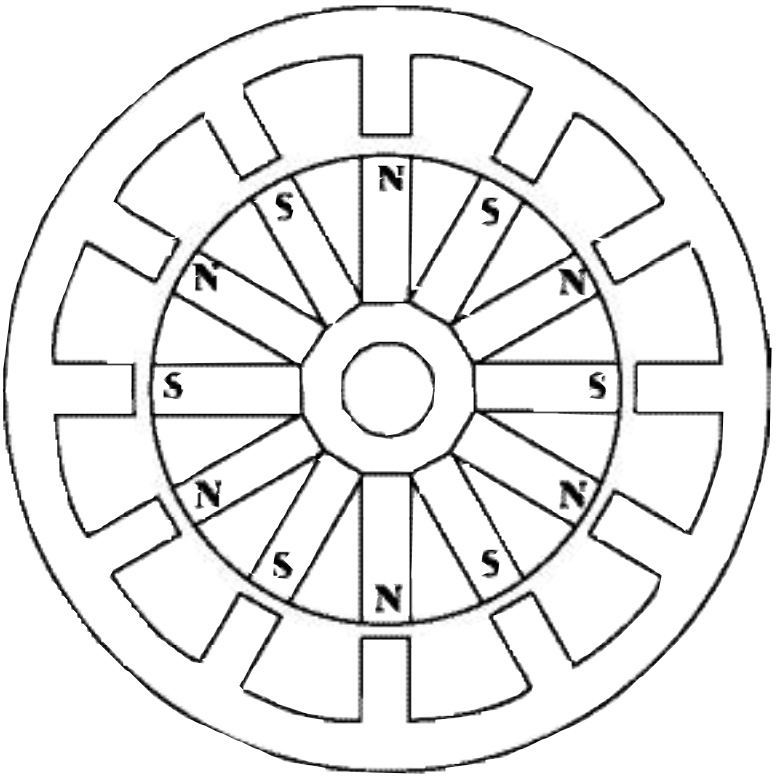

Fig. 16

Dynamo description:

Rotor:

It is well known that a bar magnet has its magnetic field concentrated at the N and S pole ends, and the half way line between the poles of a magnet is the neutral zone, this is the region where the magnetic field is canceled or neutralized. The *ferrous* keeper ring I designed for this rotor is mounted near the axle and it has machined flat decks so the magnets attach flush to the deck of the

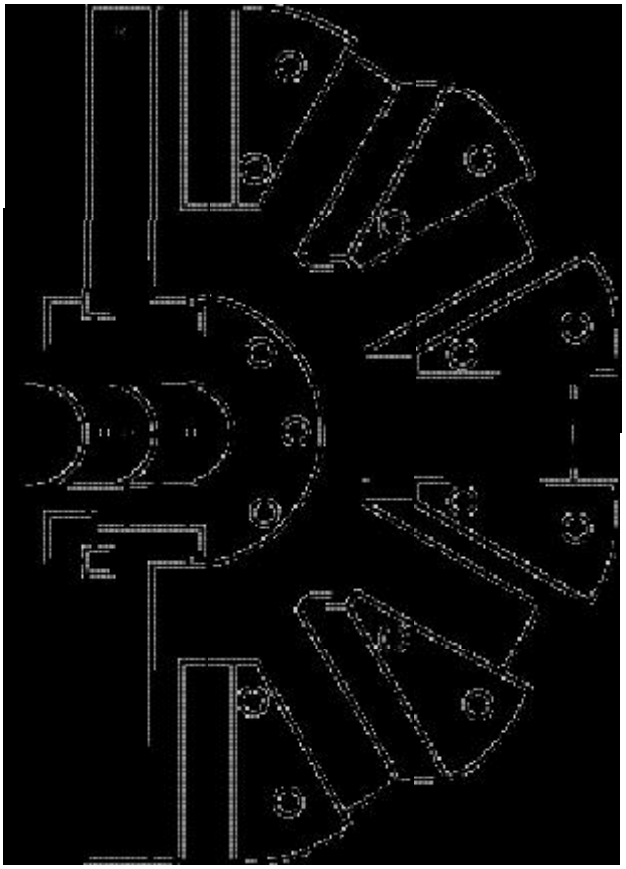

Fig. 17

keeper ring. Because of this feature, flux leakage is reduced at the keeper ring and the magnetic field concentrates at the rotor poles. With the poles of the magnet positioned near the axle and attached to the keeper ring in the rotor, the magnetic field that was there is now forced to add magnetic field density to the outer magnetic poles on the rotor rim. The density of the magnetic field at the poles is now greatly increased which makes a very powerful small size rotor. The *ferrous* inner keeper ring (*active iron*) that is installed inside this rotor design, is also the *neutral zone* of the magnetic field when viewing all the combined permanent magnets in the rotor. Shown is a cut away view diagram of the rotor, fig. 17.

I utilize rare earth rectangular shape neodymium grade 35 bar magnets with the dimensions of 3" long and 1"x1" on the end poles. There are 12 bar magnets mounted 30 degrees apart in NSNS configuration, and the bar magnets are attached to a precision machined inner keeper ring which makes the active iron the region of the middle of the magnetic field (the neutral zone). Another way to view this is to imagine two 3" long bar magnets attached together, you now have a 6" long magnet. Bend this magnet in half and install iron at the U and it now becomes a horseshoe magnet with two 3" long pole ends. It's a powerful rotor design in the fact that each of the 3" long bar magnetic poles has the field strength of a 6" long bar magnet. More poles on the rotor will allow for higher frequency ac generation at lower rpms, twelve magnetic poles on each rotor is shown in fig. 18, 19.

Fig. 18

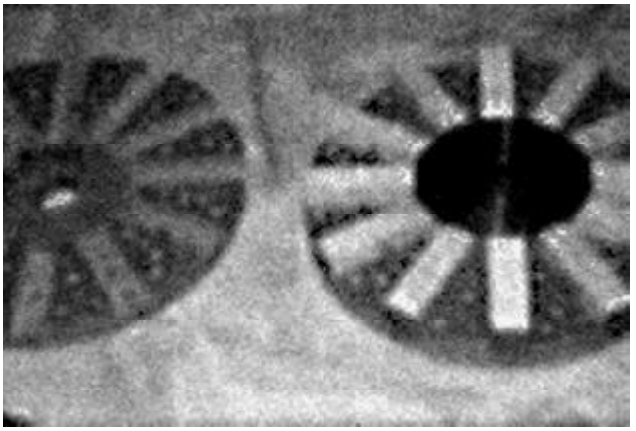

Fig. 19

The drawing in fig. 20 and picture in fig. 21, shows twelve magnet poles in each rotor in relation to the position of the coils. Ten *amorphous* cores are shown mounted around each of three rotors before they were wound with magnet wire fig. 21. The machine I have constructed houses a total of three rotors side

by side that are mounted 10 degrees apart in relation to their *magnetic poles*, each rotor has twelve magnets installed for a total of 36 magnetic poles shown in fig. 20. This dynamo concept can be constructed to any size with unlimited numbers of rotors and coil combinations to fit any power requirements.

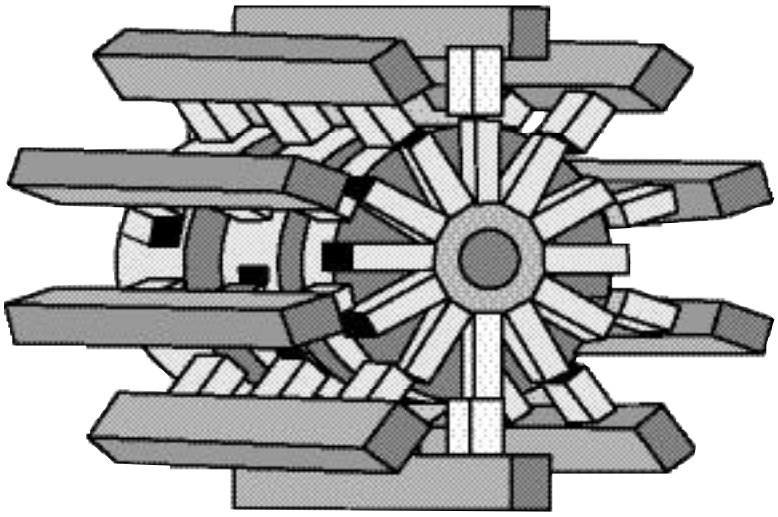

Fig. 20

Fig. 21

It is well known that a magnet exerts a force of attraction to iron bringing them closer together, after they have come together, they are in their **static position**. A force must be exerted to either the magnet or the iron in order to pull the magnet and the iron apart, removing them from their static position. The term **static position** is used to describe the point when the magnet and the iron bar are at their nearest point.

As in the Interference Disc Generator, this Permanent Magnet Dynamo I am describing also uses an internal magnetic balancing effect which reduces startup torque on the rotor.

In this system, one set of magnets is in their static position in relation to the coils, such as the impulse coils. Another set of magnets on one side of the rotor is not in the static position, and there is another set of magnets that is not in its static position on the opposite side. One side is half in to the coils, and the other side is half out the coils, allowing the rotor to have minimal start up torque in turning the rotor. The magnets function in two jobs, the first with its velocity is to cause induction into the transformer coils producing ac power.

The second function, is the opposite pair magnetic fields on the rotor balancing each magnet out of their static position in relation to the coil positions at any given time, they cancel their holding force which puts the rotor at equilibrium. This reduces the amount of start up energy required to rotate the rotor resulting in higher efficiency. It allows the rotor and or multiple rotors to turn easily and efficiently despite the inherent powerful holding force of the rare earth neodymium magnets. With the three rotor machine configuration, I have connected 6 impulse coils in three phase to function as the motor impulse circuits with a hall effect brushless motor controller fig. 22.

Star wound three phase motor impulse coils.

Fig. 22
Star wound
three phase motor impulse coils

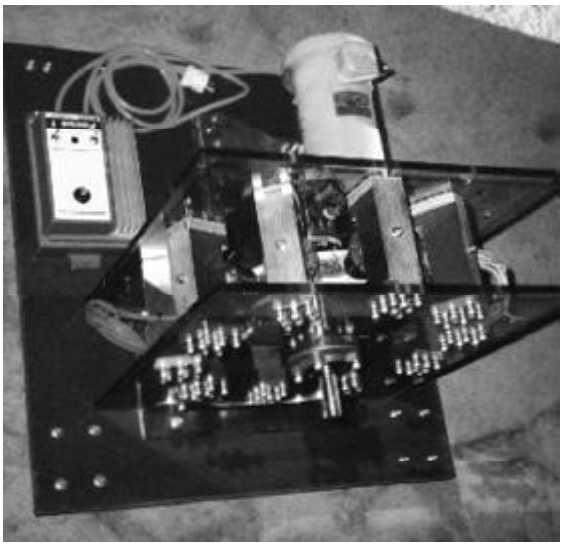

Fig. 23

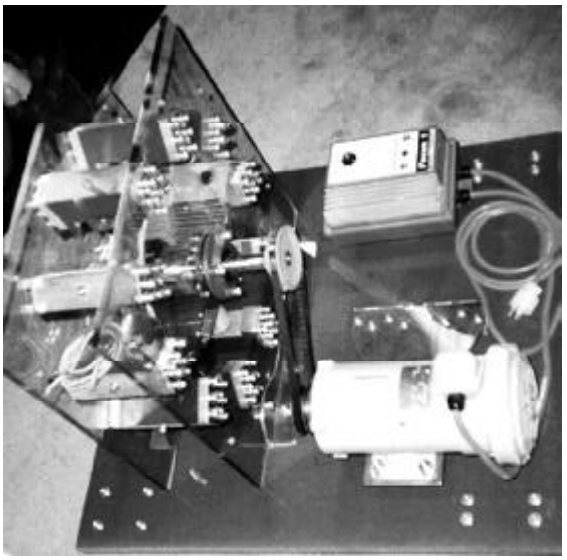

Fig. 24

Two more pictures of the one rotor dynamo option are shown with a 1hp dc motor turning the rotor with an 800 watt load on the coils, six 100 watt AC light bulbs, and two 100 watt 12 volt DC light bulbs, Fig. 25, 25a.

Fig. 25

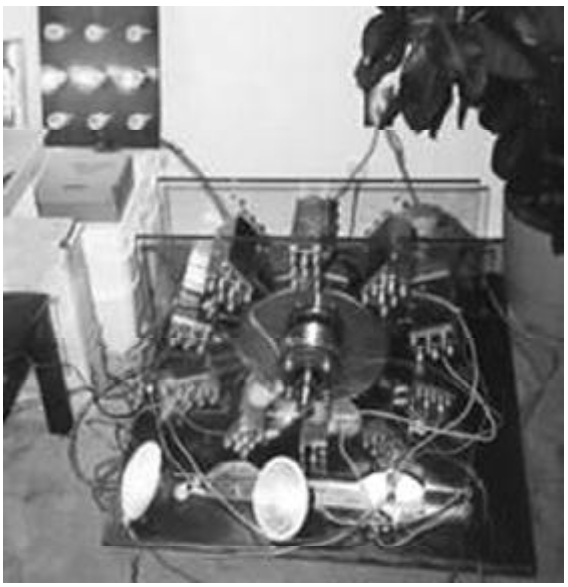

Fig. 25a

The efficiencies of this dynamo are so far inconclusive with regards to producing an endless self running machine. Our research is continuing to improve the efficiency by eliminating all conventional type ac and dc motors from this dynamo, and incorporating high voltage dc impulses of very short time duration's as Ed Gray did with his technology years ago. However, a description of my early self running attempts is included near the end of this dynamo report. These tests have manifested an abundance of heat in the 24 volt dc drive motor.

Another picture of the three-rotor dynamo configuration is shown with 12 regenerating ac to dc coils, and with the motor impulse coils removed fig. 26.

Fig. 26

Fig. 26a

Another close up of the regenerating coils and three phase motor impulse coils is shown on the dynamo fig. 27.

Fig. 27

Tests to produce an abundance of heat

I have testing the machine so as the output coils are connected to regenerate a 12 volt battery as the motor is turning the rotors. I used a bran new conventional permanent magnet 1/4 hp 24 volt dc motor that is running on 12 volts to turn the 110 pound 3 balanced rotors, and or the 35 pound 1 balanced rotor version.

The regenerating output coils produce AC to DC power with no noticeable ripple on the scope. The generated direct current from the coils is connected to go back into the battery, in which the motor uses to produce the torque needed to rotate the rotor. As this happens, the regenerated dc power from the coils is again going back into the battery first, and then to the motor. The result is that the battery supplies less power to the motor when the regenerating DC current is going into the battery. The motor takes on a load from two sources, one is from free wheeling the rotor with out loading or drawing current from the coils, and the other is the load induced on the motor when the coils are loaded to produce current.

The dc permanent magnet motor has shown that during one of many switch mode tests, it consumes 15 amps at 12 volts from the battery while a chosen number of regenerating coils supply ? the amount of current going back to the battery. The battery supplies 50% of the amps and the regenerating coils supply the other 50% amps. This effect can be changed depending on how many open isolated regenerating banks of coils are activated and loaded.

This test shows a 15 amp draw the motor while it is turning the rotors under load while regenerating current from the coils. It may be they balance each other and both battery and coils supply 7.5 amps each that make the total 15 amps draw on the motor. This accounts for the 15 amps total load that is shown on the dc drive motor. It produces an excessively large amount of heat in the dc motor that is useable output energy. On a larger scale the heat generated in a given motor can be enormous. More accurate measurements are needed to determine the true energy in verses energy out.

However, this electric heat pump effect can be altered to produce more or less heat depending on the size and type of the drive motor, and the amount of regenerating coils that are placed under load. Cooling tubes wound around the motor with water flowing through them is a way to pull the heat out for useful applications. Hot water from the drive motor and electric power from the coils at the same time.

After running the machine, the amorphous regenerating coils remain cool to the touch where as the conventional dc motor gets very hot with higher amps going through it. The machine also has a longer running time when the coils are regenerating the battery, as compared to running an outside equal load with the same amp draw, in that case the battery drains much faster.

This sheds light with the observation of high heat build up in the motor side (less efficient side) of the circuit while being cooler on the generator side (amorphous side) of the circuit. After hours of run time the battery begins to drain, when this happens, the battery begins to show tangible temperature changes from one side of the battery to the other. The whole negative side of the battery remains cool to the touch (temperature drop), while the whole positive side of the battery gets warmer to the touch (temperature rise). The effect is repeatable and only happens when the regenerating coils are connected to charge the battery as it is running. It may be approximately 20 degrees difference in temperature, depending on how many regenerating coils are activated sending its current to the battery. There must be exothermic reactions and endothermic reactions going on inside the battery motor generator combination that is causing this temperature difference. The load and heat generated can be changed the on the motor from the flick of a switch that activates and loads the output coils, which in turn dumps it's energy back into the battery pack or outside load. The efficiency ratio of the machine changes depending on how many and which banks of regenerating coils are activated, which again also effects the temperature difference manifesting on each side of the battery, motor, and amorphous coils.

Other tests

An Automotion dc brushless 3 phase motor controller with hall sensors was used to test the machine in fig. 26a. Tests have shown the 1hp dc motor and the three phase brushless dc motor controller will not be the answer to closing the loop on this motor generator machine. The brushless controller has a 50% duty cycle which will not manifest the electro radiant effect, and it also has a constant draw on the battery as a regular dc motor does. It is much less efficient than using very fast and short unidirectional dc impulses in the motor impulse coils to kick the rotor around. This brings the subject of Nikola Tesla's magnifying transmitter and Ed Gray's radiant energy impulse motors to light, and a possibly answer to closing the loop for a real auto-rotating machine.

Before I go further with this, I want to point out the many phase possibilities this dynamo has. If you look at the coil arrangements in the 10 coil machine, you can clearly see the coils that are in phase with each other. When a second and third rotor is installed with all the coils attached, one pair of coils on the first rotor is in phase with another pair of coils on the second rotor, and another pair of coils is in phase on the third rotor. With the ten coil to twelve magnet pole rotor assembly, the machine has five phases of isolated banks of coils. If twelve coil mounting bars are attached around the three rotors, and the three rotors are spiraled off set by 10 degrees, you will have a powerful three phase dynamo. If the rotors are not off set by 10 degrees and are lined up in phase with each other, all the coils on the machine will be in phase for a powerful single phase dynamo. The volts and or amperage can be tailored for an application by the winding of the transformer coils, and the machine produces 60hz at 600 rpm. This dynamo machine concept is also interchangeable into many other motor generator combinations, and sizes, and any volts or amps requirements, it all depends on the needs of the end user.

Cooling tubes wound around the motor with water flowing through them is a way to pull the heat out for useful applications. Hot water from the drive motor and electric power from the coils at the same time.

It is possible to have super efficiencies with this system using unidirectional hv dc impulses of very short duration's at the make brake contact at the closure of the switch.

I have acquired two of Ed Gray's radiant energy impulse motors #4 and #5 to revive an almost lost technology. I am proposing to combine a special permanent magnet dynamo with less back EMF that is tailored to produce 5kv dc under 2000rpm. This dynamo will energize a 5kv dc capacitor bank and replace Gray's 12 volt to 5kv dc converter. The energized capacitor bank will discharge through the conversion tubes in the very same manner as in Gray's original circuit, only the capacitors will get energized from the high voltage dc dynamo instead of from a battery through an inverter. This version of a high voltage dc dynamo will be connected to and turned by Ed Gray's EMA motor, a starter motor will disengage after it begins running.

There are three banks of high voltage coils that are connected 120 degrees out of phase from each other, each bank represents 12 - 100 watt coils for a total of 1200 watts per phase. All isolated coils in each phase are wired in series to produce the high voltage dc potential to energize the capacitor bank. The isolated capacitor bank will discharge their potential through its conversion tubes in 120 degree increments each time the impulse coils are at their closes point toward each other. One isolated capacitor bank will discharge through the conversion tube with it disconnected from the dc dynamo circuit. The second isolated capacitor is at this point beginning to receive its charge from the dc dynamo, while the third capacitor phase is fully energized just before the switching circuit disconnects it from the dc dynamo for it discharge phase. This fully aligns all the isolated 3 coil phases in this permanent magnet dynamo system to the 120 degree three phase radiant energy impulse system of Ed Gray's EMA motor #5.

The plan is to eliminate all the batteries and converter and use a rotating high voltage dc dynamo in its place. Nikola Tesla used high voltage dc dynamos with capacitors as part of his magnifying transmitter to produce radiant electricity. So it seems logical to do the same thing, merging Ed Gray's radiant energy motor and our version of a high voltage dc permanent magnet dynamo. Could it regenerate a car, or power a home, and or a factory?

Shown below are pictures of Ed Gray's motors in fig 28, 29.

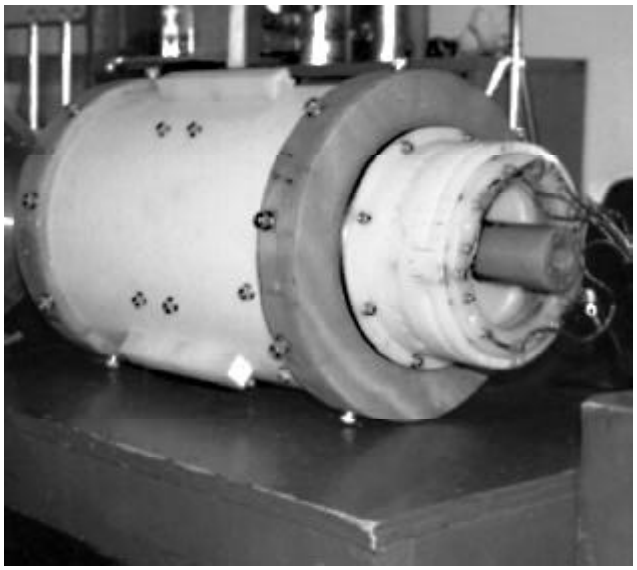

Fig. 28

Fig. 29

I would like to acknowledge two friends of mine who have helped make the Interference Disc machine possible, Bud Johnson 1986 shown in fig. 30 and the late Dr. Carl Reich shown 1987 in fig. 31. I would also like to acknowledge Wilbert Griffith and Brian & Rose Langan for their contribution in helping us make these projects possible, and there are others who wish to remain anonymous. Bud Johnson also an inventor, was one of the first people who I met after relocating to Alberta from the NWT, he made arrangements for us to construct the first disc machine in a machine shop.

Fig. 30
Bud Johnson

Fig.31
Dr. Carl Reich

Dr. Carl Reich was a pioneer in the alternate medical field and he published a book along with Robert R. Barefoot called "The Calcium Factor", copyright 1992. Through Carl's dedication and hard work with alternate health and energy, Dr. Carl Reich contributions have also helped made the Interference Disc machine and our Permanent Magnet Dynamo possible.

I also would like to thank my wife Jan Francoeur for being part of making this research possible, she has spent countless hours to prepare this report and assist in the reconstruction of these machines.

The test results and hypothesis I have written are not complete, and the research and development of the described magnetic energy machines is on going, and as such, the potential and performance and true efficiencies of these machines are still yet to be determined. This author knows that the aether is real and free energy systems are possible, and I will continue to work until I have completed the integration of Ed Gray's radiant energy motors with our larger version dc dynamo machine. When this happens, a new round of testing will begin with our attempts to run the two machines together in closed loop regenerating mode.

I hope I explained these energy machines in a way that you all can understand, and more information will be released as progress is made. ***You may find this information useful with your quest to be energy independent. However, if you profit from any of my ideas I have described in this writing, then in all fairness, please remember to reward the inventor so research and development can continue.***

This is my gift to humanity.

Interesting Information

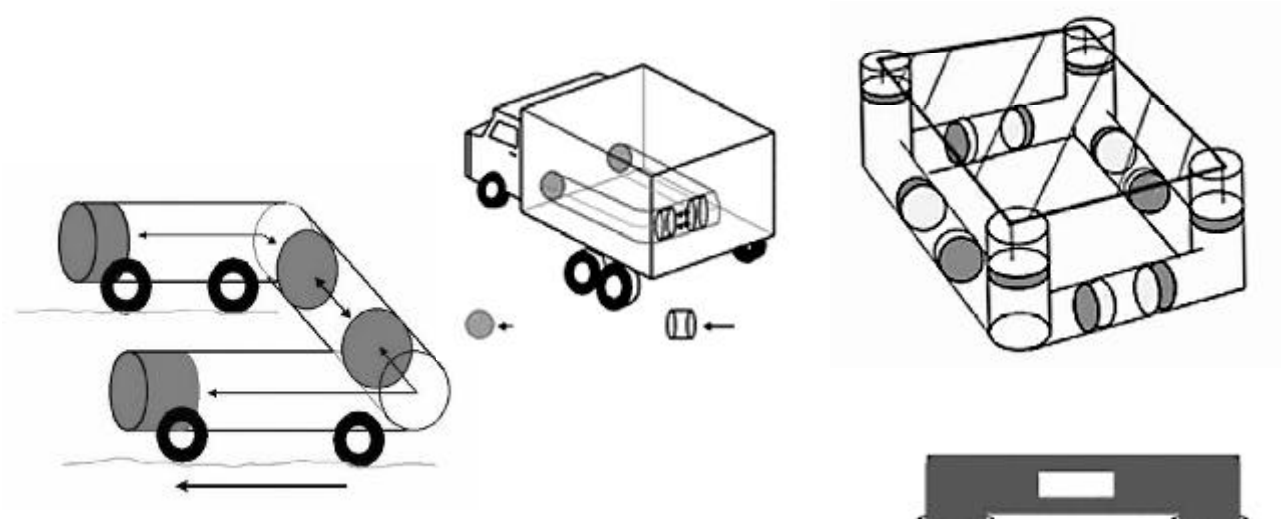

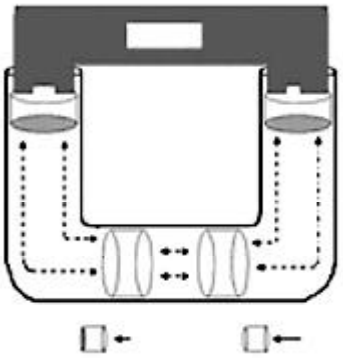

New Propulsion Letter
from Paul Toomer <jorjencar@leeds322.fsnet.co.uk>

Please take a look at this new web site on how to challenge Newton's third law of motion at

http://magnetic.propulsion.mysite.freeserve.com

A NEW PARADIGM FOR TIME

EVIDENCE FROM EMPIRICAL AND ESOTERIC SOURCES

Donald Reed, USA
1032 Borden Road, Depew, NY 14043
Email: torsionpower@yahoo.com

The author of this article presents an experimental approach to the teleportation problem and time pace control and space regularity questions.

Part I of II

ABSTRACT

The following essay seeks to establish awareness, through a far-ranging careful examination of various empirically documented anomalous research results in the field of new energy, the long-suspected evidence provided by associated key legendary secret government project work in the USA and former USSR, maverick new theoretical models in foundational physics for elementary particles/fundamental electromagnetic wave-field structures, as well as remarkably corroborative related information from esoteric (psychically channeled) sources, of the necessity for the development of a new paradigm for mass, energy and especially time. After having been guided through this process, the reader will hopefully be motivated to acknowledge the importance of this imperative for a new understanding of the workings of nature, as well as gain hints for the associated future development of new viable sustainable energy sources and related technologies.

Introduction

When we come to examine the annals of physics over the past century, we find them replete with several competing core theories of the physical world, each attempting to demonstrate a unified conception of space, time, energy and matter. Notable among these, the most successful and formally canonized in academia, are special and general relativity, and quantum theory, the latter of which includes quantum electrodynamics and quantum chromodynamics as recent offshoots.

However, even these fundamental theories have fallen short in achieving this coveted goal, due to many reasons, not the least of which is their failure to account for the anomalous but substantial documented evidence continually presented over the years by new energy research and other related empirical evidence considered outside mainstream science. In this author's opinion, these weaknesses in current physics and its relative ignorance and/or selective omission of the findings of non-orthodox scientific research, stem primarily from an ill-conceived institutionalized conception of **time**, as an immutable linear flow against which everything involving **change** can be measured. This "relational" concept of time treats it as a specific passive property of physical systems and changes happening to them. It is a one-dimensional continuous and homogeneous entity geometrically describing the property of duration. This antiquated relational view of time is abstracted from our unique prejudiced viewpoint as sentient beings whose particular point of waking conscious focus is this camouflage physical reality, which is apprehended through the limitations circumscribed by the physical senses.

Accordingly, modern physics is built on the basis of this relational conception of time. However, the use of this conception has not

so far resulted in resolving all the problems associated with time. Moreover, so far even an essential definition of time has not been formulated in physics, there are only operational definitions indicating different methods of measuring time intervals.

In contrast, the "substantial" conception of time, advanced in this paper, implies that time is an independent phenomenon of nature existing side by side with matter and physical fields, whose active essence can and does affect objects and processes occurring in the universe. Moreover, the following dissertation argues, by positing that active substantial **change** is the basic concept and relational **time** is its derivative, that those objects and processes can also have a reverse action on time.

Accordingly, we will attempt to show, through a wide-ranging examination of new energy research and other information, the necessity for the establishment of a fluidic, elastic, field nature for true active time which is malleable; one in which even the local pace of time, and mass and energy content can be influenced artificially by intelligent technological control, or naturally by conscious intent, or by a combination of these two methods. To help motivate the reader's awareness for this imperative, we will also examine several esoterically-based sources from key selected psychically channeled transcripts. These will be taken from the following sources: unpublished comments by Jane Roberts on an altered state of consciousness[1] (indicated in this manuscript by J.R.), or published transcripts from **The Seth Material** and The **"Unknown" Reality** (indicated in the manuscript by UR)[2], published chronicles from the entity Kryon, channeled by Lee Carroll [3], and concepts from Wilbert Smith's legendary discourse: **The New Science** (NS) [4]. For easier reference, all psychically channeled transcripts will appear in italics, with my additional explanatory comments in regular type within parentheses.

Granted, our unique investigative foray, ranging as it does from the concrete arena of knowledge represented by the cutting edge of visionary science to the intangible arcane realms bordering on the spiritual, will of necessity lack the exacting logic of scientific rigor.

Nevertheless, we hope to provide, through just such a unique eclectic format, the beginnings of a possible fresh understanding of the workings of nature and perhaps ultimately furnish a conceptual basis for extending the structure of current physical theory to compatibly encompass the elements of a unified framework of physics and metaphysics.

As "unscientific" as this proposed venture may appear, especially to the contemporary physicist or theoretician, we unabashedly press on, secure in the belief that the currently perceived "mutually exclusive" bodies of knowledge defined through psychic means and that of orthodox physics are more closely linked than is currently suspected. Indeed, it will be demonstrated that that some of the psychically defined data bears a striking resemblance to the tenets of present empirical knowledge.

New Research

Theories Indicate Necessity for Novel Time Concept

A body of work which postulates a fluid-field substantial nature for time, is the esoterically-based book written by Wilbert Smith in the early sixties, **The New Science**. Here, Smith outlined a unified theory of all physical interaction by positing that an active mass-free field energy he termed the *tempic field* exists, and is the parent field structure out of which our passive relational linear clock time emerges. To be sure, this book and its specific format of exposition has its weaknesses, not the least of which is a writing style which taxes one's comprehension to the limit. All researchers who have attempted to connect Smith's knowledge with the frontiers of current scientific knowledge, new energy research, etc., have been frustrated by his introduction of terms which may or not have the same meaning as the corresponding terms in mathematical science. This practice

causes many passages to appear so vague as to cause total bewilderment on the part of the reader.

> *...the establishment of a fluidic, elastic, field nature for true active time which is malleable; one in which even the local pace of time, and mass and energy content can be influenced artificially by intelligent technological control, or naturally by conscious intent...*

In coming to investigate the source of Smith's theory 25 years ago, I came into contact with Kenneth Killick of Canada. Killick was the individual who served as the original mentor and for a time a colleague of Smith in the mid-1950's. Smith, whose background was in electrical engineering, found it very difficult to accept or understand the philosophical overtones of Killick's thought. Consequently, he resorted to the use of psychic mediums to try to verify the information provided to him by Killick. This is the origin of Smith's association with discarnate entities known to those familiar with his work as "the boys topside". Thus Smith's subsequent writings promote such confusion perhaps because he only obtained a partial understanding of these cosmic ideas, and he opted to writing in a kind of code basically to try to hide his own confusion. Through my own association with Ken, I discovered that The New Science is able to be put into reference with known facts once the spiritual-philosophical elements of Killick's teachings are duly integrated. When this is done, "Wib" Smith's book can teach much and can become a cornerstone to new energy science. Otherwise, it remains at best, a fragmentary enigma.

The work by Smith and Killick is pertinent to the theme of the present paper, since they both showed through experimentation with a special caduceus-wound coil, that so-called relativistic parameters of mass and gravity, energy, and time-flow, can be altered through intelligent artificial control. Adequate delving into some of the elements of these theories will enable us to glean new insight for transforming the current paradigm of time. Further details on Ken's so-called tachion energy theory can be found in this author's earlier expositions on this subject in issues of **Energy Unlimited** (1978-1982)[5].

Smith's main error is in postulating a fundamental "spin" dynamics based upon conventional continuous rotation. As Killick points out, such a concept of spin on the microscopic level, precludes any possibility of true evolutionary change, in the cosmic sense.

Also, as we shall see presently, the continuous spin concept obviates expression by anything in the universe, of its personal moral responsibility. However, with tachion energy theory intact and untrammeled, the impersonal dualistic concept of interaction between two polar entities, such as is expressed not only in ordinary classical Newtonian physics, but its 20th century successors, relativity and quantum theory, is supplanted with the omnipresent workings of a **trinity** at all levels and manifestations of reality.

Indeed, the fundamental tachion field (mass-free) energy has **three** components: two polar opposite entities (a positive "charge" and a negative "charge"), and the ability for these two to be in what is called "static-dynamic balance". The static-dynamic balance completes the trinity.

A simple physical macroscopic manifestation of static-dynamic balance can be seen in two people arm wrestling. As the energy of one participant is brought to bear against that of the other, we will see a vibration or oscillation once a balance of their energies is obtained. As more effort is expended, the vibrations will increase in frequency and decrease in amplitude. At this point we will see a static state relative to the two arms; neither causes loss of arm position of the other. But simultaneously we also have a dynamic situation in the rapid oscillation which

maintains, and is in turn sustained by the muscular energy which produces the static state of the arms. Both states mutually support each other's existence. The two component entities (the arms) resonate together, but without losing their own identity.

The implications of this last statement, missing in current physical theory, is unique to the system of tachion energy. We will see in the following that the dynamic functioning of these sub-atomic tachions is such that by their inherent ability to manipulate space and the time-frame of matter through static-dynamic balance, they do not harm anything else in their environment, nor are they affected (forced to lose their own identity) by the ambient environment. Accordingly, inertial mass is not an inherent component of tachion energy, but is a derivative of certain tachion field modes.

We spoke earlier of tachion "charge". We keep the word in quotes to underscore that this is not to be equated to electrical charge, but merely signifies two polar energy states of the primordial ground-form, out of which all known physical forces come to be manifest. These tachion energy states can be defined in terms of "rotational" motion. Again "rotation" must also be placed in quotes as it does not signify the common idea of continuous spinning. Such a concept was suggested above in connection with evolutionary progress in its cosmic interpretation.

The tachion-pair could be described as executing a "back-and-forth" ratcheting movement. The tachion-pairs are analogous to the ends of a drum majorette's baton. But unlike the twirling motion of the baton, the tachion-pairs do not demonstrate the classic macroscopic continuous spin motion, but oscillate in a 3-component "clocking" action.

In Fig. 1 we have drawn a circle and have divided it into three 120 degree arcs. The first motion in the tachion cycle is an arc from the 0^0 -360^0 location, to the 240 degree position. This movement is stated philosophically as the question, "Can I go?" In the second phase it swings back from the 240 degree position to the 120 degree point, and then returns to the 240 degree position. This graphically represents an analysis of the first question, and can be phrased as the "Let me think" component. Finally, then it proceeds forward another 240 degrees taking it past the 360 degree point to 120 degrees. This last stage is the action motivated from the analysis in stage two, and is entitled, "Yes I can". In this activity it will be observed that all path lengths are 240 degrees.

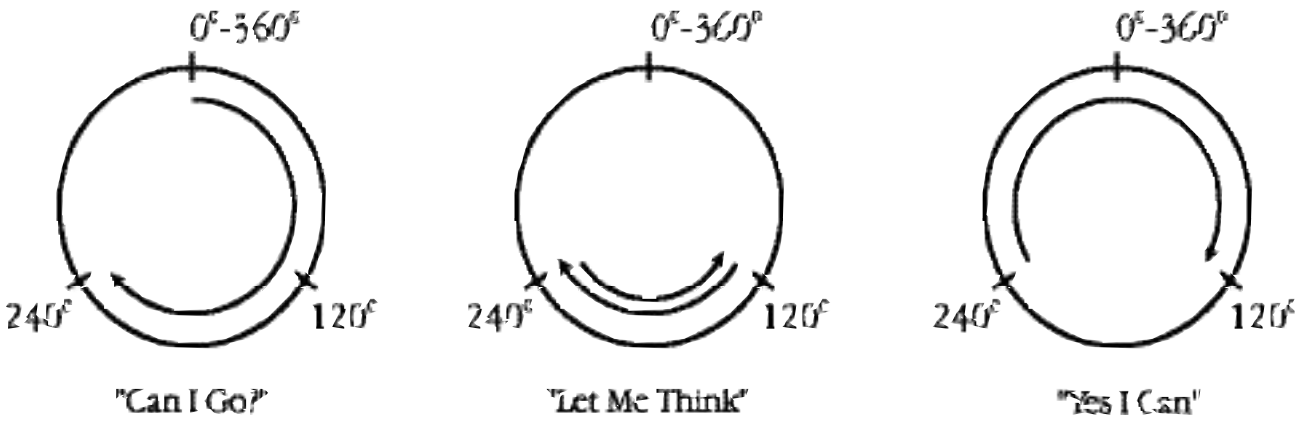

Fig.1
The 3-Component Tachion Movement

However, as representative of true evolutionary progress, the tachion-pair does not remain confined to the plane in its 3-phase cycle. After each "Let me think" stage, the entire pair unit could be considered to advance "upward", perpendicular to its plane of "rotation". The

combined motions can be viewed as an elevation up an inclined ramp, screw-fashion (Fig. 2).

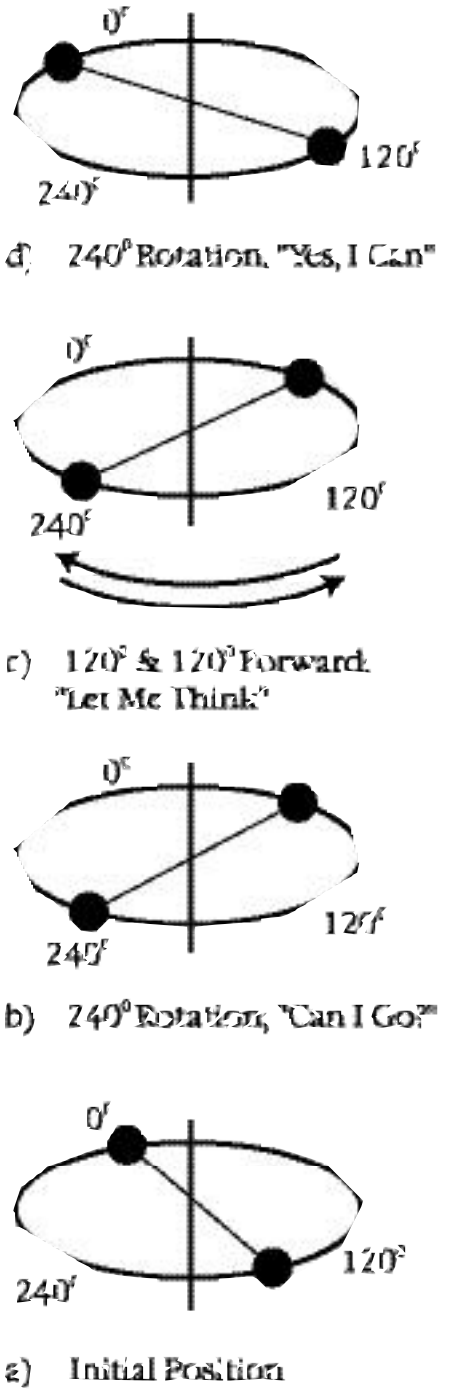

Fig.2
Tachion "Ratcheting"

Thus, while they clock themselves backwards in the plane, they never go back to where they were originally but only seem to do so from the point of view of an observer in the plane. This entire activity can be visualized as a diametrically opposed pair "rotating" in a plane, but there must still be considered an upward ratcheting movement. They execute the clocking motion simply because they adhere to the three principles of observation, analysis and motivation. A meaningful application of this idea to the structure of physics would eliminate the necessity for a totally impersonal type of interaction governed solely by force. Unlike all current theories of elementary particles, the tachion-pair, by its unique activity, thus expresses a personal moral responsibility. So this elemental energy of the universe never goes where it is not wanted, but only where it will not disturb its immediate environment.

The topological structure of each tachion in the pair is also significant in regards to this "ethical" modus operandi. First, tachions in their primordial state are massless, toroidal shaped fields which always occur in pairs. Like toroids, tachions will singly exhibit three motional degrees of freedom, to wit;

1. rotation around its major axis.

2. inner (P), or outer (N) rotation about its cross-sectional (poloidal) axis.

3. expansion and contraction of the field (each toroid pulsates radially about its cross-sectional axis).

As a pair-unit, the combined motions will give rise to the following possible orientations: two identical (N) rotations; (N) rotation - (P) rotation; two identical (P) rotations (Fig. 3).

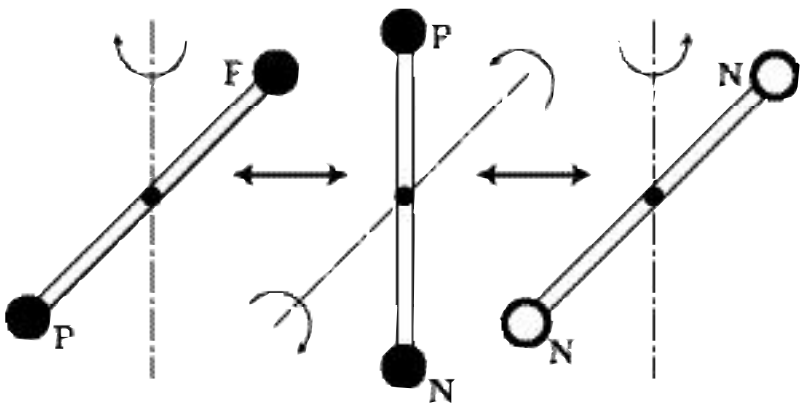

Fig.3
The Three Tachion Modes

The dual (P) or (N) rotations will always lie in the same plane, whereas in the "mixed" rotation mode, the orientations of the tachions will be mutually perpendicular. In the pair unit, the energy will shuttle

back and forth between the tachions by virtue of their harmonious expansion and contraction. The contraction of one pair partner is immediately compensated for by an equal amount of expansion in the other. When one is fully expanded and the other completely contracted, they will reverse roles executing the second portion of the cycle. There will be two points in the clocking cycle where the tachions will share an equal amount of energy ("field equity") stage. In each cycle of a tachion-pair the field equity stage is passed twice, a fact which is significant when topology of the field dynamics is considered (see [5]). Now, looking at the field geometry for the tachion-pair unit at the two field equity stages of the cycle, we observe that the two geometries are not identical but are *mirror images* of one another via a non-orientable field structure. See Fig. 5, which shows the isomorphism between the dynamics on a Moebius band (a non-orientable topological structure) and the tachion pair clocking cycle.

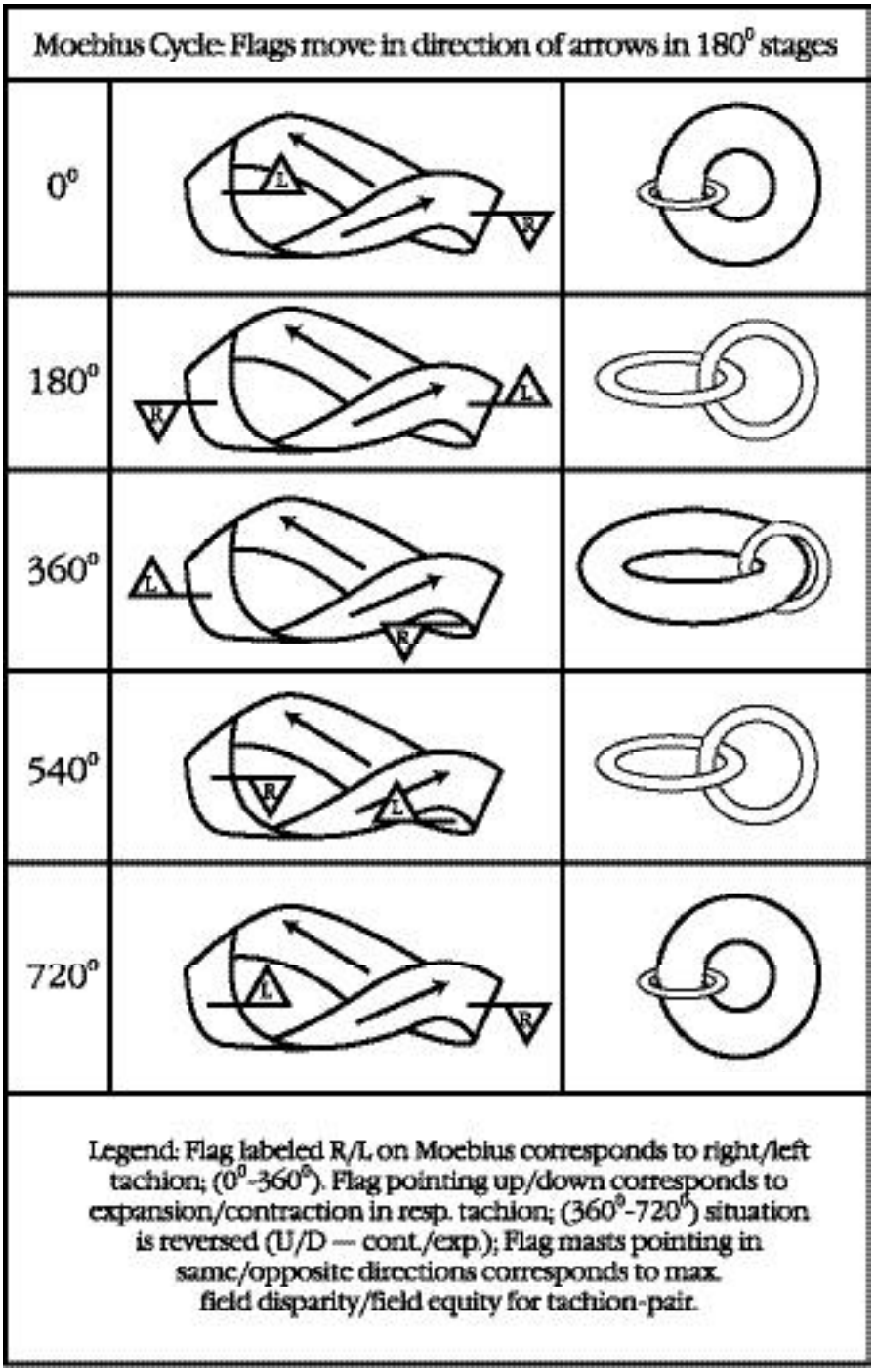

Fig.5

This suggests the remarkable idea that the space time points that the pairs generate are not, as commonly assumed, identical, static, and bereft of intrinsic character, but exhibit *enantiomorphic* topologies, which by virtue of their mirrored relationship exert upon one another a potential for dynamic interaction. For now we present a second diagram to illustrate the three pair energy modes: N-N, N-P, P-P, as well as one sequence of oscillation of the N-P pair (Fig. 4).

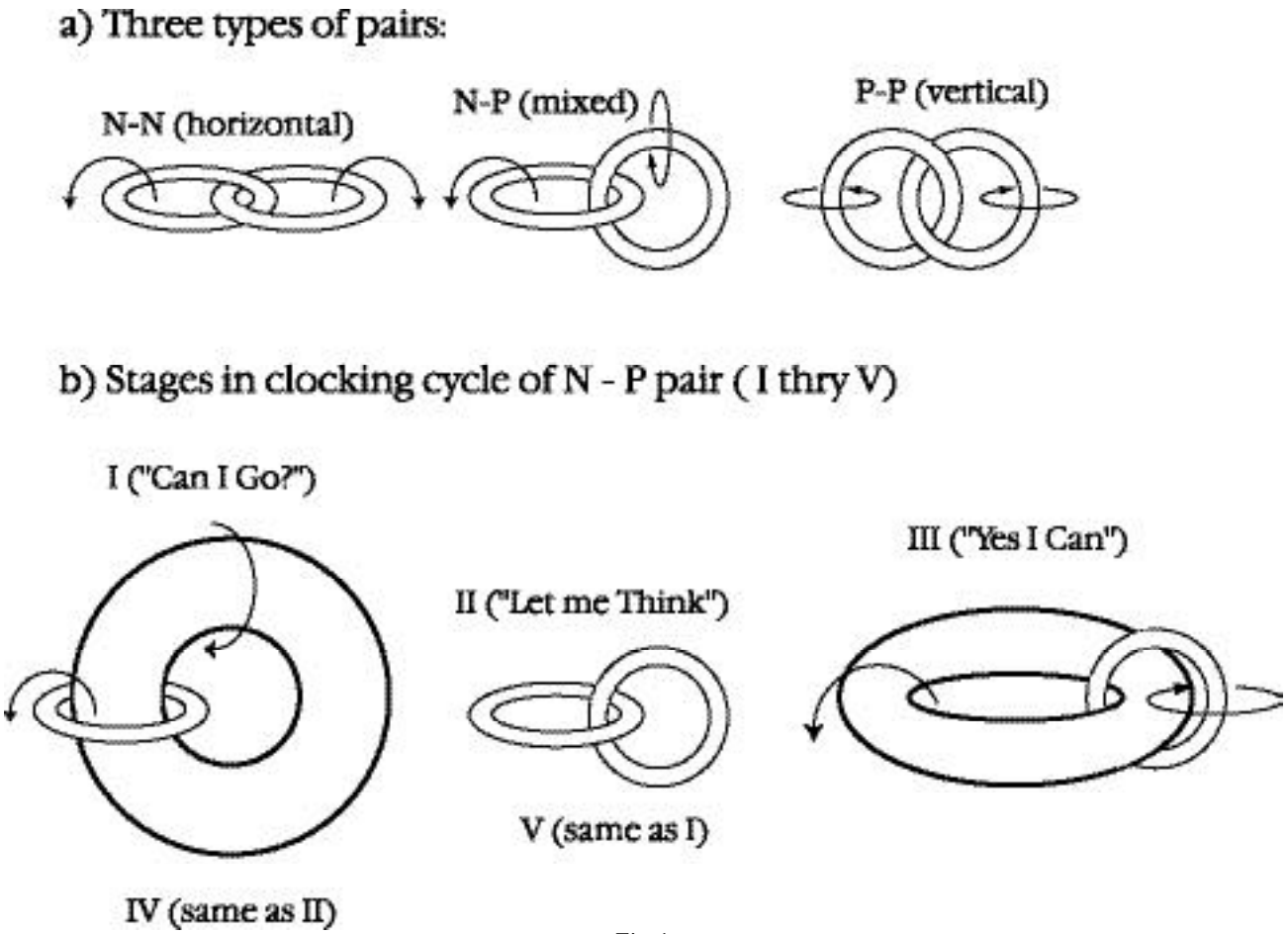

Fig.4

In this figure we note a unique trinity of field operation: two stages of maximum field disparity (I and III) connected by the intermediate condition of field equity (II). Upon postulating the additional requirement that the pair will create a new space-time location every time the field equity state is reached, we see that with each cycle the unit will not return to its original state with respect to the environment, but will advance to new evolutionary states with each pulsation. In accordance with the above comments, the tachion-pair unit "ascends" the evolutionary spiral via this unique action we have termed "clocking" motion. In acccordance with the description in Fig. 4A, in Fig. 4B, stage I represents "Can I go?", stage II represents "Let me think", and stage III represents "Yes I can".

Now, in this regard, the previous analogy of the tachion-pair as likened to the ends of a baton, where the baton rises and falls as it rotates, is quite apt. However, unlike the ends of the baton tachions are not rigidly connected but possess much freedom of movement outlined above. On the other hand, much like the baton ends, they are mutually supportive of each other's activity and requirements, never seeking to overpower, or to be eclipsed by the identity of their partner. In this manner they exhibit personal moral responsibility, as we have previously stated. By their mutual

harmonious action tachion-pairs will progress in a true evolutionary fashion, while never harming anything else in the universe by their action.

> *...the dynamic functioning of these sub-atomic tachions is such that by their inherent ability to manipulate space and the time-frame of matter through static-dynamic balance, they do not harm anything else in their environment...*

Now, the above is an inherent characteristic of tachion-pairs as long as they go about their business individually- that is, in their pre-physical state. Now, when the three fundamental tachion-pair energy modes described above exhibit a slow clocking frequency, there is opportunity for them to join together whereupon we begin to see matter being formed. The element of mass, or inertia is provided by the binding activity of the (N-P) mode, which is a function of the slow oscillation of the pair unit. Besides the clocking frequency, the factor of inertial mass or density of physical substance is also dependent upon the amount of separation between the two pair components in each individual sub-atomic tachion-pair unit. In general, the denser or more massive an object is, the slower its microscopic tachions will clock, and the farther apart will be the individual toroid components. This is a classic push-pull situation, i.e., there is a key inverse static-dynamic balance relationship between tachion-pair pulsation frequency and their area of operation (density of field). The rest mass that any physical substance displays to macroscopic observation, is thus a direct function of the amount of energy supplied by the master field to sustain the oscillation of the pair-unit. Thus, a primary feature of tachion dynamics is the following: if we change the energy, we must expect to observe a corresponding change in the manifestation of the mass, and vice versa. Consequently, in tachion dynamics there is a built-in interchangeability of energy and mass, an idea which concurs with similar conclusions in Einsteinean relativity (notably, $E = mc^2$).

But here is where tachion theory and relativity part company. We have seen that our postulated "clocking" pulsation of the pair is the factor, which determines both space and time. Both **space** (area of pair operation), and **time** (frequency of pulsation) are mutually dependent on what **we shall call the master field of thought and intention, which determines the clocking frequency**. From the dynamic influence of the master field arises subsidiary conditions of time and space which are truly "fluid" qualities of tachion operation. This is indeed consonant with the assumptions of a proper unified field theory in which all the factors of our objective world as apprehended by the physical senses, are subsumed under the relative state of a guiding master field. Moreover, under the geometrical constructs of such a theory neither space nor time should be subservient to the other but should retain their unique qualities in a mutually supportive relationship. This is guaranteed in tachion theory under the fluid give-and-take of the pair operation. Relativity, on the other hand, despite its logical consistency, does not meet the above requirements. To his great credit Einstein recognized the need to integrate time with space in a synthesis that would retain the distinctive qualities of both. The result was a theory, which extended the classical Euclidean concept of 3-dimensional space as a kind of "cosmic container" of matter, to embrace a structure of space, which arises from the laws interrelating its material content. Thus, for instance, in his General Relativity theory gravitation became interpreted as a distortion of the spatial fabric by sources of mass-energy in a non-Euclidean framework. Unfortunately, as a foundation of his theory, Einstein mistakenly assumed a subservient role of time to space. He tried to "freeze" time down into spatial-like dimensions utilizing metric equations, which were variants of a basic form. Before a true understanding of

gravitation is developed, the rationale for applying such metrics to this end should be seriously re-appraised. In short, instead of freezing time down into a spatial dimension in order to make it fit a world ruled by nothing but gravity, we must develop a conception of space sufficiently fluid to let true time have its proper place therein.

These and other similar ideas are articulated by Andrea and Paulo Correa in their recent insightful essay on the various serious shortcomings of relativity theory. They write: "Time is not treated by relativity as distinct in nature or in quality from the set of topological locations or lengths between points. Whether in the SR (Special Relativity) form of a flat Minkowski spacetime or in the GR (General Relativity) form of a curved Riemannian spacetime, the essence in relativity lies in its treatment of time as the fourth length of a 4-dimensional space. As the actual metric of a length of time is not fixed, only the intervals being invariant, one can no longer speak of the reality of timelines or of synchronicity" [6].

In their second installment, the Correas even imply the existence of a mass-free energy, which is an integral element of the Killick tachion energy theory: "From a strict physical viewpoint, only an energeticist position can make sense. While space and time may be considered to exist outside the function of matter, independently from it, *they cannot be conceived outside the function of energy*...the field remains conceptualizable (in Einsteinean relativity) only by the pseudo-Riemannian manifold, which, on its own, fails to analytically treat the difference in dimensionality between Space and Time, fails to differentiate between them as distinct manifolds, and fails to account for them as the intrinsic properties of energy in flux".

The tachion theory is such a model that delineates the functions of time and space in terms of a basic mass-free energy substratum. Now as we have seen, since tachion dynamics pre-supposes a static-dynamic balance feature connecting frequency of the pairs (fundamental time elements) with their area of operation ("fluid" space configurations), it represents such a foundation upon which to construct such a theory which will harmoniously treat time and space on an equal footing without neutralizing the unique structural features of each. Since the decrease/increase in the clocking frequency of the tachion-pairs will result in a corresponding increase/decrease of area of operation, the local *pace of time* will also decrease/increase at that space-time location. This is due to the push-pull relationship between energy and time. The intrinsic energy of a tachion-pair will be defined to be its energy of "motion" (energy in the "convergent", pre-physical state). Thus we see that an increase/decrease in the clocking frequency also implies that the intrinsic energy of the pair will also follow suit. Consequently, the intrinsic energy available for a manifestation will increase/decrease as time pace allotted for this purpose decreases/increases. Moreover, the product of intrinsic energy and time interval will always be constant due to the perfect trade-off between both factors in the tachion clocking action. This relationship is remarkably similar to the quantitative statement of the Uncertainty Principle in quantum mechanics in the form: $E \cdot t = h$. This formula states that the product of the energy exchange of a quantum mechanical particle and the time interval required for that exchange to take place, is equal to the so-called "quantum of action", or Planck's constant.

Thus, as a concomitant of tachion dynamics, which is argued could also be the basis of electron spin geometry among other things (see [5]), *time* is made malleable; no longer continuous, or rigidly uniform as in Newtonian conceptions, or subservient to space as in Einsteinean relativity, time "flow" can go to zero, and can even reverse under the application of certain electrodynamic field configurations such as provided by the caduceus coil and other devices [5]. With tachion dynamics even the laws of causality will no longer hold. This is due to the fact that tachions have a much broader field of operation than the purely physical realm. Thus, many unusual demonstrated features relative to quantum theory, such as the principle of Indeterminacy, quantum non-

locality (EPR experiment), "entangled particles" as well as hypothesized qualities of an *aether* of space, can find their source in this microscopic non-linear electrodynamic clocking oscillation attributed to the tachions. In fact, the ultimate expression of time as well as space to our sensory perception, could be a direct function of these substratum pulsations. From this consideration there emerges a new dynamic model for **fundamental time** as a "fluid-elastic" field effect arising from the unique ratcheting oscillatory motion of tachion-pair entities. Ultimately, it will be seen that tachions may even form the structural essence of consciousness itself, thus providing the long sought-for unifying link between physics and metaphysics.

N. Kozyrev

Other Recent Russian Research Implying New Dimensions for Time

Another key researcher who postulated an active substantial role for time was the Russian astrophysicist Nikolai Kozyrev [7]. He argued that the gap between the exact (physical) sciences and the natural sciences will not vanish until the principle of causality differentiating cause and effect is placed at the basis of the exact sciences. This implies the objective directionality of time or its flow. We encounter numerous manifestations of this principle in our life and in natural science. Yet this principle is new in both mechanics and physics as a whole. The natural scientist's time is not Minkowski's geometrical time, nor is it the time of mechanics, theoretical physics, etc.

Nikolai Kozyrev argued that the gap between the exact (physical) sciences and the natural sciences will not vanish until the principle of causality differentiating cause and effect is placed at the basis of the exact sciences

As Kozyrev argued, mechanics has been using only the "geometrical" property of time, its duration size, i.e., the intervals between the events under study. Timed, these intervals acquire the same passive properties as the interval measured between two points in space. It is only this property of time that the objective sciences assumed to be existing objectively, postulating that all other time properties are subjective. However, if we want to differentiate causes and effects, in reality the *flow of time* must be a physical quantity, duly expressed mathematically and entering the equations of mechanics. The physical meaning and mathematical expression of the flow of time can be obtained from the space-time properties of causality. Thus, processes in the world occur not only in time, but also *with the aid* of time. Time flow is an active property owing to which time may act on a material system. Consequently, it is in the properties of time that the source maintaining the vital processes of the world must be sought.

From these arguments, we can also derive a fundamental property of time. Let us assume that we have changed by a certain technique the flow of time in a material system. In this process we have perhaps changed the stresses within the system and hence its energy.

However, it is impossible to change the total amount of motion of the system, i.e., to obtain a momentum equivalent to an external action. In other words, time may carry energy but no momentum. Time is a non-momentum material reality. From the above property of the flow of time, Kozyrev concluded that it follows directly that the rotation of a body may be used as a device for changing the flow of time in a system. Time flows into the system in the cause-effect direction, the rotation increases the flow, and hence the system obtains additional energy.

In attempt to verify his theories, in the 1950s, Kozyrev thus performed experiments with spinning gyroscopes and discovered, in agreement with his predictions, that the weight of the spinning system changes slightly depending upon the magnitude of the angular velocity and the direction of

rotation. Although the effect detected was not large, the nature of the arising forces could not be explained by existing theories. By applying a vibrating framework to the gyroscope, Kozyrev also found that not only does time deliver an energy, but that near the cause-effect system *time density* changes. Time is rarefied near the generator and becomes denser near the receiver. In other words, time becomes stretched by cause and compressed by effect. In addition, the variation in time intensity is in inverse ratio to the first degree of the distance. This can be seen by the following consideration: Time is expressed by rotation and hence involves planes passing through a pole of the rotating system with any orientation in space. **In the case of lines of force issuing from a pole, their density decreases in inverse ratio to the square of the distance, while the density of planes can readily be shown to decrease with the first degree of the distance.**

Kozyrev discovered another property of time when investigating irreversible processes such as crystallization of a substance, condensation, or evaporation. This influence can be effected by any irreversible process and is registered by a measuring system without any preliminary excitation, i.e., when the cause and effect positions are not separated. In other words, apart from flow and density, time seems to have another property, causal orientation, resembling in a way the polarization of light [8]. This property proves to be so variable that even the sign of the observed influences may change and hence the reciprocal cause and effect positions become reversed.

Continuing his studies on the properties of time, Kozyrev (with V.V. Nasonov) conducted astronomical observations using a receiving system of a new type. When the telescope was directed at a certain star, the special detector positioned within the telescope registered the incoming signal even if the main mirror was shielded by metal screens. This fact implied that electromagnetic waves (light) had some component that could not be shielded by metal screens. When the telescope was directed, not at the visible but at the true position of the star, the detector registered a signal that was much stronger. The registration of the true position of different stars could only be interpreted as the detection of star radiation that had velocities billions of times the velocity of light. It was concluded that the radiation from stellar bodies hence had a component, which was non-electromagnetic. Kozyrev also found that the detector measured an incoming signal when the telescope was directed at a position symmetrical to the visible portion of the star relative to its true position. This fact was interpreted as a detection of the future positions of stars [9].

From the 1960's onward, additional Russian research groups continued and expanded upon the work began by Kozyrev on the unique non-electromagnetic radiation that was apparently a concomitant of all rotating bodies, whether accompanying macroscopic spinning objects of great mass (cosmological or terrestrial), or at the quantum level exhibited by elementary particles possessing recorded anomalous spin features which were not accountable by standard theories. This emanation which was exhibited by rotating bodies was termed torsion radiation [10]. Subsequently it was learned that this unique radiation was a part of all living or inert substances. This so-called "torsion field" research was carried on mainly in secret in the former Soviet Union, and only became known to the Western nations after the fall of the Iron Curtain. Many effects attributable to alterations in time and gravity have been reported through this research. For more information on this topic the reader is directed to this author's review in reference 10 and references therein.

Part II of II

Summary of Part I

It is the intention of this multi-part dissertation to motivate an imperative for considering the eventual establishment of a more expansive paradigm for the phenomenon of time, one which views time from the "substantial" as opposed to the orthodox "relational" standpoint. The

substantial concept of time implies the existence of an **active** essence which can and does affect objects and processes occurring in the universe. Furthermore, approaching time from such a fundamental basis implies that by positing active substantial change as the ground form **prime mover** and relational time (**passive** "clock-time", or entropy changes) as its derivative, that those objects and processes can also have a **reverse** action on time.

Towards this end in Part I (hereinafter referred to as I), we considered the key research of the late astrophysicist N.A. Kozyrev who, in carefully controlled experiments which were subsequently successfully replicated, recorded phenomena which have hitherto been unexplainable by standard contemporary received knowledge- whether from the standpoints of Newtonian, Relativistic or Quantum physics. Kozyrev pointed out that only by considering time as an active essence, could these cited "anomalous" phenomena, which are virtual conundrums from the viewpoints of a relational (passive) concept of time, be duly formulated on a logical basis. Accordingly Kozyrev's associated "causal mechanics" incorporates an objective directionality of time flow, implying differentiation between "cause" and "effect". **Consequently, by applying a thermodynamically irreversible process to a physical system (example: vibration to a spinning gyroscope), the rotor in this instance would be observed to lose (or gain) a small but detectable percentage of its weight, depending upon the direction of rotation.** Moreover, in this process **linear momentum** (linear speed of rotation) is not changed, but energy is nevertheless delivered to the system by additional forces directed along the axis causing a change in **angular momentum**, and that near the cause-effect system of the irreversible process, **time density** is altered - rarefied near the generator and concentrated in proximity to the receiver. Kozyrev concluded that time is a non-momentum material reality.

Other experiments of an astrophysical nature showed that registration of the true position or future position (as opposed to visual-present-position) of different stars via the non-electromagnetic component of star radiation, demonstrated the existence of an energy essence, which was apparently instantaneous, or had a propagation velocity of at least a billion times the velocity of light. In this regard, Kozyrev opposed the conventional astrophysical paradigm, which posits energy generated/ emitted by stars is a physical consequence of thermonuclear conversion. Instead he maintained that via rotation, stars converted time essence into non-physical (or pre-physical) energy. The latter was nevertheless detectable on Earth by transduction through reflecting telescopes shielded by metal screens, of stellar radiation by a Wheatstone bridge. Hence the "impact" of time was detected by resistor electric conductivity changes (see I and references therein).

Leaving no stone unturned in our investigation, we also took up a discussion of the related Killick-Smith tachion energy model for fundamental (pre-physical) reality. Here we coined a new term- a **trinitivity** of action, which was underscored as a key feature of the operation of tachion-pair entities. Accordingly, we posit the existence of two polar topologically orthogonal toroidal fields, with the unique ability, by the mutual shuttling back-and-forth of their energies, to exist in a third auto-generated state called "static-dynamic balance". Now, since tachions are hypothesized to transfer energy instantaneously, inertial/gravitational mass is not a primordial component of tachion operation (see I). Here we see a striking similarity to the Kozyrev conception of the operation of time in interaction with a physical system - where energy changes are manifested without linear momentum alterations delivered. Likewise, the Smith book, **The New Science** (see I) treats **the hypothetical tempic field as a scalar quantity, which only has direction in relation to its distribution (or "density" change). Only through establishing what Smith termed a *tempic field* gradient does the tempic field possess vectorial nature.** Similarly,

Kozyrev viewed time like space as possessing both geometrical and physical properties. The geometric property of time is duration (its scalar component), while physically the course of time is similar to vectorial field propagation and the density of time to field intensity. Although Smith and Kozyrev apparently never were aware of each other's research, the following quote from Kozyrev reveals that they both made key profound discoveries about nature which indeed bear more than a superficial similarity: "Time density is a scalar quantity, just the one observed in the above experiments. Time density decreases with increasing separation from the process creating it. Therefore, a vector property corresponding to density gradient and tractable as time obtaining, should also be observed"[7]. However, in I we also enjoined the reader to observe caution and selectivity when attempting to separate the wheat from the chaff in Smith's book.

Accordingly, the previous ideas are substantially correct, whereas his concept of "continuous spin" of tempic field energy is basically flawed. Killick replaces this outmoded counter-productive notion with a key ratcheting motion, like the escapement of a watch, which is performed by the tachion entities composing a pair-unit. Through this unique "clocking-motion", a cycle of tachion-pair operation exhibits what could only be described as an **ethical modus operandi**, passing through the three stages of observation - reflection - action. By virtue of this 3-stage process, tachion-pairs demonstrate in their individual activity and in interaction with their environment - *personal moral responsibility*.

This is indeed an unprecedented notion which implies that a type of conscious thought process can be ascribed to tachion operation. This can be related to current notions from quantum physics, relative to quantum coherence of states - such as wave-function collapse, Indeterminacy, quantum non-locality (EPR experiment), "entangled" particles, etc. This may be an indication that in such cases, whenever the Principle of Causality is breached or at least compromised, we may be witnessing the unique effects of the inherent conscious microscopic non-linear clocking oscillation of the tachions.

Along these lines, although Kozyrev did not report observing any effects of time energy, which could be considered as "value-motivated", he did report on an equally mysterious "after-effect" in many experiments, which could only be construed as signifying a **memory** process. For instance, it turned out that in experiments with a vibrating torsion balance (or pendulum), at points of support the emerging additional forces did not disappear when the vibration was stopped, but remained in the system for an appreciable time. Interestingly, **their relaxation times were found to be independent of the mass of a body but were dependent on its density**. The largest effects with maximum preservation times were observed on porous materials like brick or volcano tuff. In enumerating on this unusual preservation action Kozyrev observed: "...a body placed for a certain time near an (irreversible) process and then brought to a torsion balance, produced the same effect on it as the process itself...aluminum showed no memory. The largest memorizing effect for processes of both signs has been shown by sugar"[7]. Also, his colleague Danchakov later observed in conjunction with biological experiments that water with decreased viscosity due to having been subject to the action of a process, exerted a distant action on water that had not been under such an action, causing its viscosity to decrease as well.

In this second part of the current dissertation, we will examine other important related information gleaned principally from esoteric sources, referenced in I. These have been obtained from books by Jane Roberts: **The Seth Material**, **The "Unknown" Reality** (UR) [2], unpublished transcripts (J.R.)[1], and transcripts from the entity Kryon channeled by Lee Carroll [3]. This information is remarkably corroborative with that from Kozyrev research and the tachion energy theory. Finally, we will cap off

our exposition with a brief examination of a bold new maverick physical theory of sub-atomic electron structure, featuring variable time/mass attributes, which could be the catalyst for bringing the cited elements from esoteric knowledge and empirical physics research (Kozyrev, etc.) out from their hitherto relative obscurity, to the forefront in our ongoing mainstream investigations in probing the cutting edge frontiers of not only physics, but those of the natural sciences as well.

Other evidence

When one compares the transcripts from various esoteric sources it's remarkable how similar is their description of nature's fundamental operations at the pre-physical level. For instance, a careful reading of the Jane Roberts' channeled transcripts from the entity Seth, reveals a remarkable close connection with the particles termed EE (electromagnetic energy) units and the above Killick teachings on tachion pair dynamics. But first a word of caution to the reader. We should resist the tendency to put into the frame of reference of our sentient physical experience, structures whose essence is fundamentally non-physical. The customary physical characteristics of duality and dichotomy of fields, and the related yardsticks of mass, length and time, for the most part, may not apply in this situation.

It would be impossible, however, to formulate a comprehensive model for the EE unit dynamics were none of the factors for gauging physical reality to be able to be applied to higher dimensional realms. Fortunately, one characteristic does survive the transition to the non-physical framework- the element of **pulsation**. Seth reports in [2] how EE units, much like tachion-pairs are built up and dynamically pulsate in response to thought patterns. First, depending upon the relative intensity of the emotional energy, they will instantly be drawn together in clumps or may just as quickly disperse. Furthermore, being of a pulsating nature, these units can expand and contract. Theoretically, there is no limit to their size or frequency of pulsation. Seth describes their operation in the following manner: **Now, there are electromagnetic structures, so to speak, that are presently beyond your instruments, units that are the basic carriers of perception. Their size varies. Several units may combine, for example. To put this as simply as possible, it is not so much that they move through space, as that they use space to move through. There is a difference**.

On this point, if our conceptions remain "earthbound" we will not perceive any difference between these actions, but once we cast our mental gaze beyond physical experience, an important distinction becomes apparent. To understand this, we need only reflect on the similar non-classical logic that is the basis for the non-orientable Moebius topology that we have seen governs the dynamics of the tachion-pair unit [5]. Tachions, whose translational movement is governed by the relative pulsation frequency, apparently enter and leave our level of reality at two times (field equity stages) during each pulsation cycle. Before leaving our plane, the tachion-pair constitute what we call a space-time point.

Upon returning to our level, due to the Moebius topology of the clocking cycle, their essence creates a new space-time point with enantiomorphic (mirror image) characteristics to the first. The resulting progress of the units in physical reality is thus manifested by a "jerkily discontinuous" movement. Summing up, since the units **are** the point they create, it can now be understood that the units **use** space (or the nature of the space-time points) to move through, rather than the case of macroscopic matter which moves continuously (or appears to) through space.

Seth continues his description of the EE unit dynamics: *Laws of attraction and repulsion are used and, in a manner of speaking, thermal qualities are involved, and this is the only hint that your scientists have received of them so far. The units charge the air through which they pass, and*

draw to them other units. The units are not stationary in the way that, say, a cell is stationary. These units have no "home". They are built up in response to emotional intensity. They are one form that emotional energy takes. They follow their own rules of attraction and repulsion. As a magnet will attract with its filaments, so these units attract their own kind and form patterns which appear to you as perception. They are electromagnetic, in your terms, following their own patterns of positive and negative charge. In this instance, like definitely attracts like. The units are just beneath the range of matter. None are identical. However, there is a structure to them. The structure is beyond the range of electromagnetic qualities as your scientists think of them. Consciousness actually produces these emanations, and they are the basis for any kind of perception, both sensory and extrasensory. These emanations can also appear as sounds and you will be able to translate them into sounds long before your scientists discover their basic meaning. One of the reasons they have not been discovered is precisely because they are so cleverly camouflaged within ***all*** *structures.*

Being just beyond the range of matter, having a structure, but a non-physical one, and being of a pulsating nature, they can expand and contract. They combine qualities of a unit and a field, in other words. Since they are beyond the range of matter, upon which matter is formed, they will not follow the laws of matter, although at times they may ***mimic*** *the laws of matter. It is almost impossible to detect an individual unit, for in its dance of activity it constantly becomes a part of other such units, expanding and contracting, pulsating and changing in intensity, in force, and changing* ***polarity****. It would be as if the positions of your north and south poles changed constantly while maintaining the same relative distance from one another, and by their change in polarity upsetting the stablility of the planet- except that because of the greater comparative strength at the poles of the units, a newer stability is almost immediately achieved after each shifting.* Even the altruistic motives of the tachion-pair as cited by Killick parallels similar behavior of these EE units.

Again from J.R.: *The behavior of these units changes in the following manner. When a unit is in the act of combining with another, it aligns its components in a characteristic way. When it is separating itself from other units, it will align its components in a different way. The polarities change in each case, within the units. The unit will alter its polarities within itself, adapting the polarity-design of the unit to which it is being attracted; and it will change its polarity away from that design on breaking contact.*

Ken Killick has described the mutual action of several tachion-pairs bonding, as the origin of standard sub-atomic particles possessing features known to modern science such as mass, charge, spin angular momentum, magnetic moment, etc. Thus, according to tachion energy theory, the electron attains its validity, and maintains its structural integrity, by virtue of relations between the component pair dynamics [see [5]). Since for the bulk of their independent existence, tachion pairs are in the pre-physical state, we can speculate that they may actually be superluminal entities. Remarkably, J.R. echoes this view with similar notions: *...the electron achieves its validity because of these* (possibly superluminal) *orbital units* (tachions?). *What we see as an electron is not made of the same things as the orbital units, however; it is an* ***effect****... when you change the structure of the electron, you are changing the relationships between the orbital units. This change will require an application of energy. It may be possible to construct a chamber that would give the electron more freedom.*

Whatever we do now in the handling of electrons is not giving them enough freedom and we are structuring the way in which they can appear. The next observation made by Seth could prove to be essential in clarifying the true nature of time: *... If electrons were given more freedom they would affect* **our notion of time in perceiving them. The way the measurements (on electrons) are made forces the electron to appear**

in a particular way, but actually it's flitting around, seemingly in many places in rapid succession (pulsing in and out of physical reality). Turning to the structure of elementary particles in [2], Seth offers a similar observation in which he describes the electron as commonly perceived by scientific measurement apparatus, as merely a shadow or facade of the actual electron entity which constitutes a multi-dimensional structure.

In terms of a structural model for the electron, Seth says it would be more appropriate to view these units as composed of *interrelated fields* rather than as the current conception of a particle or a wave. Correspondingly, both of these criteria are key elements of the tachion theory, which posits the electron as composed of two-pair tachion fields. The electron achieves its stability-integrity from the interaction of these free-wheeling units.

Electron Spin and Structure of Fundamental Time

The electron "spin" feature is also claimed to be integral to the exhibit of "time's arrow" in UR [2]: *The electron spin determines time "sequences" from your viewpoint. In those terms, then, a reversed spin is a reversed time motion... electrons, however, spin in many directions at once, an effect impossible for you to perceive. You can only theorize about it. There are "electromagnetic momentums" thus achieved and maintained- certain stabilities that operate and maintain their own integrity, though these may not be "equal" at all portions of the spin. There are equalities set up "between" the inequalities... time, in your terms, then, is spinning newly backward as surely as it is spinning newly into the future. And it is spinning outward and inward* (pulsing inward and outward of physical reality) *into all probabilities simultaneously.*

It is vital that you understand this inward and outward "thrust" of time, however, and realize that from this flows the consecutive appearance of the moment. The thrusting gives dimension to time that so far you have not even begun to realize... This inward and outward thrusting allows for several important conditions that are necessary for the establishment of " relatively" separate, stable universe systems. Such a system may seem like a closed one from any viewpoint within itself. Yet this inward and outward thrusting condition effectively sets up the boundaries and uniqueness of each universal system, while allowing for a constant give-and-take of energy among them. By their unique operation , the EE-units, which form the elementary particles such as the electron, serve as the conduit for this energy flow once it is transduced by elements of thought that Seth terms "consciousness units"(CUs). Continuing in UR on this subject Seth **describes how time can be alternately created or "broken down"**: *The consciousness units serve as source points or "holes"* (Black holes or White holes?) *through which energy falls into your system or is attracted to it- and in so doing, forms it. The experience of forward time and the appearance of physical matter in space and time and all the phenomenal world, results. As CUs leave your system, time is broken down. Its effects are no longer experienced as consecutive, and matter becomes more and more plastic until its mental elements become apparent*. These observations are corroborated by Kryon in his dissertations to follow.

Specifically, in the Kryon channelings, further insight on this electron "freedom" is given in the context of change of frequency: *...There is something we call the electron haze which is around the nucleus of the atom. The space between the energy haze and the nucleus (which is great), varies more than you think in matter. As the space varies, the speed (*frequency*) of the haze must change. It is in the physics where the speed of the haze is strong and fast that you have a different time-frame than your own... you have not yet accepted that an object can seem to be stationary- yet traveling (*vibrating*) very fast. Not in a linear time from point A to point B, but in the electron haze of its vibrating parts.*

J.R. corroborates these comments in this dissertation: *Einstein considered relationships of this sort that hold in the far universe as one increases velocity towards the speed of light,*

*but there are also "inner" situations (*altered **stationary** states*) that relate these quantities, and that are much easier to get into.* In regards to atomic structure to allow for frequency changes, Kryon adds:*What is it that makes the distance between the parts change? This is the puzzle for the scientists. For the area between the nucleus and the energy haze although vast, is not void. It is a patterned soup of energy (*the so-called "vacuum"*), and it is within the pattern of this null that changes the distance, and therefore the speed* (frequency*) of the haze.*

Mass, gravity and time are intimately related to this frequency change in the atom. Witness the comments from J.R.*: **Time exists as an invisible drag on matter and this is interpreted as gravity. Time exerts a definite force like gravity, and this is connected with the behavior of the electron.** However, since we always look at electrons in a certain way and gravity in a certain way, we miss the connection.* And this related comment as well: *There is another equation to be discovered that expresses the relation between time, mass and gravity.* Kryon reiterates this sentiment, along with relatively detailed scientific information: *Gravity is an absolute product of the characteristics of mass and time... one of which you may change.*

*What has been missing so far in your thoughts is how gravity is related to time, and that the entire issue of gravity, mass and time is non-linear. You have yet to develop the formula of physics. It is not here yet, and we are going to give you three attributes of the formula, but without the formula. These attributes are understood but the way they relate are misunderstood. Your science is just now beginning to see the shadows of them, however. The first attribute of the formula is the ability to understand the **density** of mass. Why is the electron haze so far from the nucleus? We have told you that you can change this distance, and in doing so, the density will change in the mass that is defined by the atoms being shifted. The electron haze will have to vibrate faster (this is possibly the "freedom" referred to earlier by J.R.), the closer it is to the nucleus; when the electron haze vibrates faster, its **time-frame** will shift. Therefore, the second attribute of the formula is a time-shift, and they go together. Also, be aware that you make an erroneous assumption that the actual speed (frequency?) of the electron haze must always be the same no matter what the distance. This is not understood yet either. There is a difference between speed (velocity/ translatory rate) and vibratory rate, and it has to do with the actual physical definition of the **electron haze**.*

Mass discrimination is the ability to control the density of mass. With a density shift will come a time-shift, and with a time-shift will come a third attribute...we will call the **reality of location**, or where the matter is... in which dimensional reality it goes to when shifted. Here is an axiom: **shifts in dimensionality when matter is changed in this fashion create a reality where the matter has to be to exist in its new form**. It might be inches from where you changed it or miles. That depends on how much it got changed. The difficult thing to explain to you is a concept that has not been recognized... that matter has a **reality index**, and that its core attributes are linked to where it exists in time and space. Therefore, the three attributes that must work together are **density, time-frame and location**.

Electromagnetic Field Manipulation of Cosmic Lattice and Time-Space-Matter

In regards to tapping this (mass-free) energy-haze-soup, between the atomic nucleus and electron shells, Kryon speaks thusly: *There's something we are going to call APD (atomic phasic displacement). This is a term that is going to refer to the ability to tap the (Cosmic) Lattice for unlimited energy. The Cosmic Lattice is balanced, but it is not quiet. The Lattice has astounding power. It has a flow of energy that I cannot explain to you, for there is no paradigm model for it yet in your thinking. Therefore, you would not easily understand. The Lattice has vents that we can best describe as necessary for the flow of energy. It balances the slight inequity of the*

polarity. The vents also have to do with time... you will always find two vents together. One will be prominent, the other will be secondary. You might graphically and clearly see one, but you will have to look carefully to see its partner. There are always two. This is an axiom or physical rule of the Lattice energy, and of the universe: This information remarkably parallels Killick's teachings on tachion energy pairs.

Witness this Kryon pronouncement:*Hiding within common atomic structure is a marvelous peek at something that will totally and completely mystify you, for it will seem to break all the laws of time and space. The" twins" are a pair of atomic parts that always relate to each other, and are always found in pairs. You will discover that when stimulated correctly, they will always move together as a pair. When you start separating them by distance to experiment, they will continue to move exactly together. If one's energy is converted, then the other will do the same. This will cause you to totally reexamine your ideas of time and space, for this condition will not follow the "ultimate speed" of transmission that you thought was correct... that of the speed of light. You will have discovered something that travels faster than you can ever measure*. Compare this statement with the torsion energy claimed by the Russians to travel at a billion times light speed [10].

In returning to the discussion on how to tap the Cosmic Lattice for energy, Kryon continues: *The vents are very necessary for the balance of your universal energy. The vents are also energy portals, (drains, to you), and are where the front of each Lattice cell touches the back... Like so many other physical processes, however, its going to take a tremendous amount of energy in order to unbalance even one cell's null attribute... Once you understand how to" prod" the null to unbalance itself, you will be rewarded with a steady flow of energy, far beyond what you put into it. This is accomplished since you create your own tiny "vent". An unbalanced cell creates a situation where the other cells around it will try to" feed" energy to the one that is unbalanced. This creates a tap that will pull upon the Lattice indefinitely, as long as your work matches the properties the Lattice expects to see.* Kryon further expands on the specific method to accomplish this...*Here's how it works. Two magnetic fields together, postured in the correct way- a way that is very three-dimensional in your thinking process- will create a "designed magnetic field" that is very specific.*

> *...your math told you that there might be a possibility of invisibility and that was your goal. This was again because you did not understand that because the distance between the parts change, it doesn't necessarily mean that the overall size will dramatically change or that it might vanish...*

It's one you have never seen, and does not exist naturally. Start with trying several magnetic fields postured against one another- of unequal force and pattern, and at right angles. Don't make any assumptions. Think freely. Done in the right fashion, these two fields will create a third pattern which is unique and is the product of the original two. This third custom-created pattern is the one that you want to deal with, and is the one that has the potential of manipulating the Lattice. Once you have created it, you will know of its special qualities by how dramatically it changes the physics around it. And this important admonishment is given: Here is a caution. *Keep this experiment away from your body. Keep the experiment in check with your scientific methods. Go slowly. Understand what you're seeing before you go on to the next step. Do not expose yourself to any magnetic fields. Remotely conduct all energy experiments. Remember that magnetics also plays an important part within your body (DNA components).*

Here is another. Understand that if you unbalance the Lattice too grandly and too greatly, you will have a ***time displacement****,*

for the process also involves the property of ***time****... One of the actual physical players in the creative process of unbalancing the Lattice is the manipulation of the time-frame of matter.* ***This is not time travel, but time displacement.*** *It is where you are actually addressing tiny parts of matter, and changing the time-frame they are in. When the inequity of time-frames meet one another (*matter mixed up with differing time attributes*), the result is a displacement of distance (*reality of location*). Although there is no horrendous danger for Earth within this time displacement, it can and will affect the local situation within the experiment. In other words, it can create a matter-distorting effect, completely stopping the experiment, and actually dislocating the parts. We are not going to say any more about this at the moment, but the more astute scientific minds reading this will go to the next obvious step... and the answer is "yes", the Lattice is also the key to quick travel of large physical objects... even of very short distances.*

Possible Documented Demonstrations of Time-Space Warping

Such fantastic transformations were possibly evident in the Hutchison experiments [11], in which metal samples were catastrophically fractured when exposed to radiation from the unique electromagnetic field effect. It was also noticed that many physical objects of different composition which were separate in space before the electromagnetic field was applied, became inexplicably embedded in each other once these objects were radiated by the field effect. For instance, **pieces of wood contained metal knives**, etc. Other metal samples were catastrophically fractured in their molecular-atomic crystal arrangement, producing a substance which was uniform and geometrically symmetrical at one end but appeared to have the resemblance of corrugated cardboard at the other.

Also, similar to Kryon's assertion of the inevitability of time-shift with mass altering phenomena, in Hutchison's work anomalous inertial impulses were recorded on film, sometimes resulting in the complete lift/levitation of various substances of different mass. We notice also anomalous inertial impulses were a feature of the Zinsser "kinetobaric" effect [12], in which due to excitation by **sawtooth microwave impulses with very fast rise time**, a sample attached to a torsion balance, deflected the balance for days and weeks after the original excitation was extinguished. Notice the similarity between these results and those of the Kozyrev experiments, some of which reportedly featured a memorizing preservation effect on a torsion balance, etc.

We also find additional confirmation from the basically anecdotal evidence from the alleged legendary Philadelphia Experiment in 1943, which apparently caused either large time- or space (teleportation) shifts in a Navy ship. In fact, in another piece Kryon himself possibly speaks directly about the Philadelphia Experiment, providing us with further insight into important possible new paradigms for time, mass and energy: *In all your questions regarding magnetics and the massless condition, you have never asked about what happened in your year 1943. You tried to create a massless condition with coarse equipment and little understanding of what you were doing. In the process you actually did create an unstable massless condition for a moment. Its instability created a situation where, instead of a true massless condition, you received one where the time-frame changed but the parts within the sphere of the time change did not have the fine-tuned synchronicity needed for a massless object. The result was an actual distance displacement of the object instead of a true massless condition. Indeed, humans were involved on the large object and their biology was damaged greatly. Your experiment was done in an atmosphere of desperation, and your goal was flawed. For your math told you that there might be a possibility of invisibility and that was your goal. This was again because you did not understand that because the distance between the parts change, it doesn't necessarily mean that the overall size will dramatically change (or that it might vanish).*

Although this may seem like a paradox to you, the internal mechanics of small particle behavior supports this. The change is measurable but very small, much like what happens with heat and chill...Many of you have guessed correctly that ***magnetics and electricity play a critical role in the determination of the real attributes of mass****... and the magnetic variables that determine the mass product, are often working within very small particles to create the density of an object and also its time-frame. The time frame of a massless object is slightly different than your own, making you to appear slightly slower than the massless object. Its reaction to more traditional mass molecules around it is also predictable: because of the very slight time displacement, it tends to change the number of electrons within the atoms directly in contact with it. This is a clue on how to detect a massless object even if you can't see it.*

*The reason you felt the object (*ship*) would vanish was that you were able to simulate a "vanishing" in the laboratory with smaller objects. This observation was not consistent however, so you again were in desperation to try this experiment on a larger object. The "vanishing" was an illusion and was due to a distance displacement rather than an "in place" vanishing... does this give you a clue to long distance travel using magnetics and the vibratory rate of matter?... Only one human on the planet has ever captured a true massless condition, and even this was a coarse one and lasted for only for a few moments that were uncontrollable in scope. This massless condition was created in the primitive workshop of a great electrical scientist in your culture on the American continent not too long ago. If you were able to visit his workshop, you would note the holes in the ceiling and the patched glass-covered light port where his massless objects took off and wildly flew everywhere. If he had been born 50 years later he would have been able to control the attributes of the experiment. As it was, he did not have the precision tools you have now to direct and control such an experiment. It was his great passion to understand this phenomena, but because it was so uncontrollable and sporadic, he was never able to bring others to see it work, for he could not accurately create it consistently. This depressed him in his later years, for his was a great three-dimensional mind...* When asked the identity of this scientist Kryon replied*: The inventor of your multi-phase current, born in the land you now call Yugoslavia.*

From the above information, there emerges a remarkably consistent picture suggesting that atomic structure may not be as rigid or immutable as formerly thought. Changing the fundamental frequency of vibration of atomic structure can perhaps apparently not only change the density of matter by altering the distance of electron shells from the nucleus, but in so doing alter the time-frame of that object, its mass and also the reality of location of that substance. Certainly, the implications of the Kozyrev research, among others, can possibly form the basis for the eventual technological implementation of these futuristic principles. Perhaps those experimenting with the relatively detailed data provided by Kryon on APD can actually realize this coveted goal.

Maverick New Theories in Physics Suggest Fluid Nature for Time, Space, Energy

The Dirac theory is to be understood as a theory of the electron with electromagnetic interactions. It consists of the Dirac wave function and its properties, including the Dirac equation and relations to physical variables such as energy-momentum, spin and position probability current. In spite of its indisputable mathematical successes, the Dirac theory is still without a completely satisfactory physical interpretation. In particular, the so-called *zitterbewegung* ("jitter motion") is a distinctive feature of the Dirac theory which continues to be the subject of conflicting interpretations in the standard scientific literature. The concept of zitterbewegung was introduced by Schrodinger to interpret high frequency oscillations in free-particle wave packets of the Dirac theory. These oscillations with angular frequency $2mc^2/h$ arise from

interference between positive and negative energy components of a wave packet. Schrodinger interpreted the oscillations as fluctuations in position of the electron about an average motion. However, this concept has not been interpreted in the bulk of the literature as having an objective significance, but has erroneously been viewed by standard theory as a mathematical artifact of the one-particle Dirac theory which does not appear in a correctly formulated quantum field theory.

However, as noted theoretical physicist David Hestenes suggests in the first of his recent article series in the journal, **Foundations of Physics** [13], it is only by interpreting the zitterbewegung literally and objectively as point particle motion, that a complete and coherent interpretation of the Dirac theory can be achieved. Moreover, this model has implications that have not yet been previously considered by established physics that relate directly to some of the key features of sub-atomic behavior enumerated in the tachion energy theory and also in the microscopic dynamics of elementary particles revealed by the selected esoteric channelings that we have previously considered in the present exposition.

In particular, it implies that the electron is the seat of a fluctuating electromagnetic field which oscillates with the DeBroglie frequency of the electron (1.6×10^{21}cycles/sec).

Thus, it tells us that a kind of electromagnetic wave-particle duality is implicit in the Dirac theory. Of course, this contradicts the conventional view that wave-particle duality is a property of matter which is completely independent of the nature of its interactions. If the zitterbewegung is an objective phenomenon, then it originates from electron self-interaction, since it persists in the absence of external fields. In this new theory which considers the zitterbewegung as an objective physical phenomenon, the electron mass and spin can be identified with the energy and angular momentum of electromagnetic interaction. It suggests that the self-interaction is such that there exist certain stable, non-radiating but accelerated states of motion; in particular, for a free particle, this implies motion in a circle with the radius of a Compton wavelength- the zitterbewegung. The zitterbewegung implies that some of the mass, at least, is kinetic self-energy associated with a spin, and it reconciles the mass with a zero mass of the bare electron. Thus, according to this bold new theory, the electron spin arises from a helical world-line in spacetime. To be sure, some researchers have previously postulated such a helical electron dynamics. Unfortunately, such models have failed to explain why a helical motion for spin should depend on interference between positive and negative energy states or why the zitterbewegung should depend on the way a wave packet is constructed, or even how the zitterbewegung can be the origin for electron spin despite the fact that it vanishes for plane wave states that certainly describe a particle with spin.

The Hestenes model does offer an explanation for such effects and accounts for the ubiquitous feature of spin angular momentum as a function of the zitterbewegung. The essential unprecedented feature of the Hestenes' zitterbewegung idea is the association of the spin with a local circulatory-helical motion characterized by the phase factor of the electron wave function.

Thus, we reach the conclusion that the complex phase factor of the electron wave function can be associated directly with an objective helical motion of the electron, which is, in turn, a derivative of the zitterbewegung. Although the idea of helical motion connected with the electron has been considered before, it has not previously been related to electron phase to produce a complete interpretation of the Dirac theory.

Moreover, in the next installment of his dissertation [14], Hestenes argues that the zitterbewegung is not only an objective dynamical phenomenon associated with the electron, but is a ubiquitous phenomenon, with manifestation in every area of quantum mechanics, even in the non-relativistic domain. For instance, by showing that spin angular momentum can

be regarded as angular momentum of the zitterbewegung fluctuations, the zitterbewegung interpretation of the Dirac theory begun by Hestenes in reference 13 provides an explanation for the electron spin and magnetic moment in the physical circulation of momentum and charge. It also explains the mass as the energy of this circulation. Thus, the origin of the zitterbewegung is attributed to self-interaction of the electron with its own electromagnetic field. The relations derived by Hestenes in this article suggests that the interaction is of magnetic origin, since it has the form of a Larmor precession energy if spin angular momentum is proportional to a self-generated magnetic field. The so-called "rest mass" of the electron is thus a kinetic energy of self-interaction. It is this that gives the electron its inertial properties, and the flywheel-like nature of this inertia may be the ultimate origin of spin dependence in electron scattering. And the Heisenberg Uncertainty relations can now be attributed to the "zitterbewegung fact" that an electron cannot be confined to a region smaller than a Compton wavelength. Also, the stationary states of a bound electron exhibit a resonance of the orbital frequency with harmonics of the zitterbewegung frequency, which is imposed formally in the standard theory by requiring single-valuedness of the wave-function. Evidently, such resonances, so prominent in quantum mechanics, can be interpreted as zitterbewegung resonances. This leads to a new explanation of penetration of a potential barrier by sub-atomic particles as due to zitterbewegung fluctuations in momentum, and the Aharonov-Bohm effect as a shift in zitterbewegung phase. The zitterbewegung phase factor literally represents a physical rotation. The rotation rates of this phase in time and space directions are the source of the electron's energy, mass and momentum.

In his third paper [15], Hestenes draws a closer relation of the zitterbewegung dynamics to the Dirac theory by suggesting that the latter actually describes a statistical ensemble of possible electron motions, which are actually governed by the zitterbewegung sub-structure. Since the energy-momentum of the electron can now be interpreted in terms of a rotation rate in the spin-plane, Hestenes then derives a corresponding relation which defines a variable mass for the electron-another unprecedented idea which is in agreement with the information given by Kryon in his dissertations and Ken Killick's tachion theory. The mass m, the scalar radius of curvature r and the zitterbewegung frequency all covary with changes in the rotation rate in the electron spin-plane. Hestenes obtains a relation demonstrating that the electron mass is inversely proportional to the zitterbewegung frequency. This conforms to the relativistic concept of mass as a measure of energy content. But here, mass is concluded to be primarily a **frequency** measure. This also conforms to DeBroglie's original idea that the electron contains an internal clock with frequency determined by its mass, though for a free particle, the zitterbewegung frequency differs from the DeBroglie frequency by a factor of 2. Moreover, the new key relation derived by Hestenes: $m \cdot r = 1/2h$ (h, Planck's constant), says that this frequency measures the radius of curvature of the electron world-line, so it is a thoroughly geometrical quantity. Thus, as mass increases the radius of curvature decreases, in concert with the tachion dynamics as well. All this suggests that the electron mass relates our externally imposed time scale to a time scale intrinsic to the electron.

The reader can see that the information transmitted by J.R. is also remarkably similar in this connection. It should be evident that there is introduced a new concept of mass here, though, to a certain extent, it was already implicit in the Dirac theory. The formerly vague concept of mass as some kind of material stuff is completely gone. Also, no longer is vanishing mass a distinguishing feature of particles moving with the speed of light.

Corroborating Research on Oscillatory-Fluid Nature for Time

In his recent thought-provoking dissertation [16], Tom Bearden relates of

the dynamic influence of time on a material system: "But we can also legitimately state that 'time is energy' and be rigorously accurate...Time is extremely compressed EM spatial energy...Without further elaboration, we speak of a 'mass' in which a small portion exists as 'masstime' rather than mass, as having been 'time-charged' or 'time-excited'.

The t-polarization wave in the time dimension is quite unique: The *spatial* energy of the wave is in equilibrium and not vibrating at all; instead, the photons comprising the wave are vibrating in their **time**-components... In short, mass m is changed into masstime mt by photon absorption... Rigorously, a mass does not really 'travel through time' continuously, per se, but proceeds with an overall serial change mechanism, driven by its total virtual and observable photon interactions, as m→ mt→ m→ mt→...We propose that this may account for the duality of particle and wave...The particle actually oscillates at a high rate between the m and mt states... Mass 'travels through time' by an extremely high oscillation between corpuscle-like state and wave-like state". Notice how Bearden's description of the macroscopic operation of time on a physical system closely parallels Hestenes' proposed model for of the zitterbewegung dynamics at the sub-atomic level which provides the electron (and possibly photons, etc.), with a time-substructure (its internal "clock").

We can see many other places in Bearden's treatise where the unique terminology chosen can now be put into direct reference with equivalent concepts and unique phraseology employed by many of the researchers examined in the current exposition. This cross-referencing certainly provides much needed clarification about key ideas for researchers currently involved with the development of this fledgling discipline that we shall term causal mechanics, after Kozyrev's designation.

All such efforts will help to place investigative endeavors currently scoffed at by establishment science on a firm rational foundation, as well as assist in synthesizing seemingly disparate but surprisingly related "anomalous" phenomena. For instance, to implement the science he has termed "vacuum engineering", Bearden often speaks of the necessity of establishing a "local time-stress of the **vacuum potential**". This process, which as we hope to have shown here is completely legitimate, is identical to what Smith calls creating a "tempic field gradient", Kozyrev's "alteration of time-density", or Alexander Frolov's "change in the local time-rate".

It can clearly be seen that such ideas can only be perceived as science fiction fantasy, if we observe strict adherence to all current received paradigms (even in superstring theory), which consider space and time purely from their relational standpoints. These theories must of necessity involve models employing scalable metrics for their proper description. However, once we embrace the novel view posited here that vacuum energy is primary and both local space and time are derivatives of this mass-free non-scalable dynamic non-local oscillating substratum, then we can conceive of space and time properly as complementary aspects of non-local conscious reality, neither fixed in a scalable manner or subservient to the other, but fluid and mutually interdependent features of energy in constant flux (see the related ideas voiced by A. Correa and P. Correa in I).

With this approach we will then come to acknowledge the technological feasibility of many of the "futuristic" claims made in the channeled transcripts. For instance, we can see that it will no longer be necessary to propel elementary particles to relativistic velocities, or to probe astrophysical systems possessing large gravitational fields, to recognize alterations in space, time and mass parameters, since these phenomena can equally as well be accomplished in the laboratory by modifying atomic structure of stationary matter through electromagnetic means. Once again, peruse the Kryon dissertations on this process, for it may be key to future technology.

For those who wish to further investigate these theoretical possibilities, the papers of **A. A. Nassikas** are recommended. Nassikas has postulated what very few researchers before him have theorized: the existence of a ground-form probability density function for energy, as a necessary precursor to the malleable (deformable) characteristics of time and space [18]. One of Nassikas' conclusions is significant in light of ideas articulated in the present exposition concerning the hypothetical tachion-pair model for reality (see I). Here we refer to the key push-pull oscillatory ("breathing") operation between space and time, which may be responsible for the structural integrity of matter as we know it (again re-read the Hestenes zitterbewegung model).

Researcher **Alexander Frolov** has taken Nassikas' theory even further to suggest an explanation for the **anomalous over-unity effect** that has continually been demonstrated in low-energy nuclear reactions (LENR) over the past decade [19]. In such so-called "cold fusion" cells the Palladium cathode is over-saturated with protons, producing a local imbalance in the vacuum engine, causing a local alteration in the time-frame of the experiment to compensate the local change in energy density. **Subsequently, as Frolov claims, this time-frame change converts non-local time-energy directly into heat energy, similar to Kozyrev's description of energy production by stars.** Perhaps this observation might provide the hitherto missing key in our understanding of fusion by electrolytic action.

Conclusions and Prospects

In the preceding paper it is sincerely hoped that the author has demonstrated ample evidence that will spur on researchers of a kindred spirit towards the development of new paradigms for space, energy, mass and especially time. All these concepts, as well as the foundations of current classical electromagnetic theory, are in need of a drastic overhaul before we can fully appreciate and understand the operations of nature as it interrelates the metaphysical-mental realms with the physical level of reality.

At any rate, the continual appearance of research results, such as the Kozyrev effect, which up to present apparently resists explication in terms of conventional scientific paradigms, certainly offers clear evidence of the incompleteness of our knowledge of nature, even in this enlightened era since the dawn of the new millennium.

Accordingly, hints as to how the Kozyrev effect arises in association with the postulated active properties of time, and how the latter interacts with known physical forces, can assist us towards the development of a more comprehensive paradigm which embraces a wider spectrum of human knowledge - one in which the current conundrums rampant in the foundations of theoretical physics, and biological science disciplines as well, which have hitherto prevented the establishment of a unified model of all physical interaction, can find satisfactory solution. Also, such empirical evidence which generally flies in the face of current scientific wisdom, presents the greatest challenge to our ongoing search for new sustainable energy sources which will be of absolute necessity in the future.

In this light, if formally integrated into scientific thought, the tenets of tachion energy theory, which is based on an altruistic modus operandi, also may hold profound implications for the status of our very social, political and religious structures as well. Indeed, unlike the impersonally motivated interactions believed to be the basis for force interactions in modern sub-atomic physics, which help sustain our illusory belief in the supremacy of the ego, the philosophical basis of tachion dynamics is an able reminder of the humility of purpose which should be the guiding force whatever our walk of life. Like tachion-pairs, in the ideal social structure individuals will work side-by-side, yet achieving a common accord. United in the circle of their activity they will work together joyfully in freedom, each with his own task, yet always conscious of the common bond.

With the full import of these simple truths appreciated, tachions may afford a rational justification of the formerly "unprovable" mystical doctrine of the omnipresent intelligent plan behind the working of the universe at all levels of conscious reality. We will come to realize the profound truth of Einstein's vision of ultimate reality couched in his heretofore cryptic statement, *"God is subtle, never malicious"*.

REFERENCES:

1 J. Roberts, unpublished remarks as transcribed by W.H. Kautz.
2 J. Roberts, **The Seth Material**, Prentice-Hall, Inc. 1970. Pp. 292-298.
The "Unknown" Reality, Prentice-Hall, Inc., 1986.
3 L. Carroll, **Alchemy of the Human Spirit**, (Kryon Book III), The Kryon Writings, 1995.
Letters from Home (Kryon Book VI), The Kryon Writings, 1998.
Passing the Marker (Kryon Book VIII), The Kryon Writings, 2000.
4 W. Smith, **The New Science**, Fern-Graphic Pub., 1964.
5 D. Reed & K. Killick, "Tachion Energy Theory"(Parts I-IV), **Energy Unlimited**, 1978-1983.
6 A. Correa & P. Correa, "Consequences of the Null Result of the Michelson-Morley Experiment: The Demise of the Stationary Aether , the Rise of Special Relativity and the Heuristic Concept of the Photon", **Infinite Energy**, no. 38, July-Aug 2001, pp. 47-64.
"The Sagnac and Michelson-Gale Experiments", **Infinite Energy**, no. 39, Sept.-Oct. 2001, pp. 32-49.
7 N. Kozyrev, "On the Possibility for the Experimental Investigation of the Properties of Time", **Time in Science and Philosophy**, Prague, 1971, pp. 111-132.
"An Unexplored World", **Soviet Life**, 1965.
A.P. Levich (ed), **On the Way to Understanding the Time Phenomenon (Part II: The Active Properties of Time According to N.A. Kozyrev)**, World Scientific, Singapore, 1996 (rare English language excellent critical review of Kozyrev research and theories).
8 M. Lavrentiev, "Detection of the Reaction of Matter to an External Irreversible Process", **Sov. Phys. Dokl.**, Mar 1991, vol. 36, no. 3, p. 243.
9 M. Lavrentiev et al., "Remote Effects of Stars on a Resistor", **Sov. Phys. Dokl.**, Sept 1990, vol. 35. No. 9, p.818.
"Detection of the True Position of the Sun", **Sov. Phys. Dokl.**, Nov 1990, vol. 35, no. 11, p. 957.
"Scanning the Celestial Sphere with a Kozyrev Detector", **Sov. Phys. Dokl.**, Apr. 1992, vol. 37, no. 4, p. 163.
10 D. Reed, "Torsion Field Research and Implications for New Physics and Energy Technologies"**Jour. New Energy**, vol. 4, no. 2, Fall 1999, pp. 151-164 (and references therein).
11 J. Hutchison, "The Hutchison Effect Apparatus", **Proc. Of the 1st Symp on New Energy**, Denver, May 1994, p. 199.
"Inside View of the Hutchison Effect", **Extraordinary Science**, vol. III, issue 4, Oct-Dec 1991, pp. 23-26.
12 T. Valone(ed), **Mechanical Energy from Gravitational Anisotropy**, Integrity Research Institute, Washington, DC, 1996.
W. Peshka, "Kinetobaric Effect as Basis for a New Propulsion Principle", **Raumfahrt-Forschung**, Feb 1974 (in German); trans. By D.Reed, **Infinite Energy**, vol. 4, issue 22, 1998, pp. 52-56.
D. Reed, "Translator's Analysis and Comments on the Zinsser-Effect Device", **Infinite Energy**, vol. 4, issue 22, 1998, pp. 57-59.
13 D. Hestenes, "Quantum Mechanics from Self-Interaction", **Found. Phys.**, vol. 15, no. 1, 1985, pp. 63-87.
14 D. Hestenes, "The Zitterbewegung Interpretation of Quantum Mechanics", **Found. Phys.**, vol. 20, no. 10, 1990, pp. 1213-1232.
15 D. Hestenes, "Zitterbewegung Modeling", **Found. Phys.**, vol. 23, no. 3, 1992, pp. 365-387.
16 T. Bearden, **Extracting and Using Electromagnetic Energy From the Active Vacuum**, Association of Distinguished American Scientists, Huntsville, Alabama, 2000.
"Giant Negentropy in the Common Dipole", **Proc IC-2000**, St. Petersburg, Russia, 2000 (in press).
17 A.A. Nassikas, **The Hypothesis and the Equations of the Unified Matter Field**, in New Ideas in Natural Sciences (Part I: Physics), St. Petersburg, Russia, 1996.
18 A. Frolov, **Work Created By Means of the Potential Field**, in New Ideas in Natural Sciences(Part I: Physics), St. Petersburg, Russia, 1996.

ELECTRIFYING TIMES

an online and published magazine about Electric, Hybrid, Fuel Cell Vehicles, advanced batteries, ultra capacitors, fuel cells, microturbines, free energy systems, events and exhibitions worldwide

63600 Deschutes Mkt Rd,
Bend Oregon, 97701
541-388-1908 fax 541-388-2750
etimes@teleport.com
www.electrifyingtimes.com
Subscription $13/3 issues

On the Rotating Permanent Magnet System

Alexander V. Frolov, Russia
7 Lev Tolstoy Str., St. Petersburg, 197376, Faraday Laboratory Ltd.

In one of our issues we published an article about the results of the experiment conducted by S.M. Godin and V.V. Roschin. They started in 1990 at Moscow Aviation Institute (MAI) when a technical physics laboratory was created in Machine Industry Projects Institute at the "Aeropromservice" Association. Their research work was financed by private investors and was continued in close cooperation with Chair 310 of MAI, especially with Prof. PhD. L.K. Kovalev, Prof. PhD. V.V. Rybakov and PhD. K.V. Ilyushin. By 1991 "a device for inner energy of matter conversion" had been designed and tested (according to the Technical Design Assignment). The prototype was finished in the middle of 1993 (Fig.1).

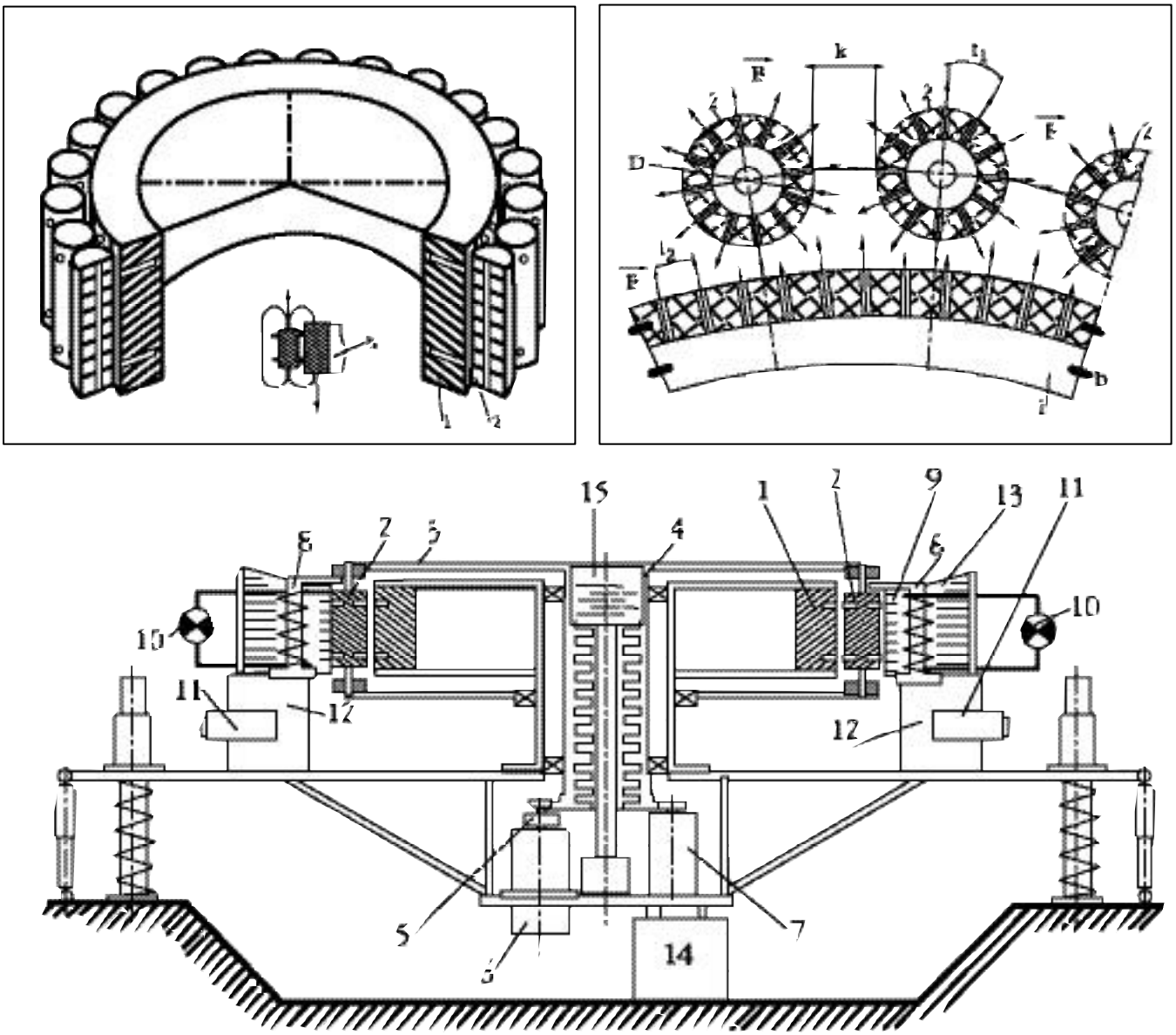

Fig.1

The experiments resulted in the possibility of creating a 7 kW output power in load after the rotor was sped up to 10 rps, but in the autumn of 1993 the laboratory was closed due to the investors' financial problems. Now their research work is continuing in Moscow and we hope the scientists will obtain new experimental results.

You can email S.M. Godin for more information at: smgodin@online.ru

Considering the theoretical basis of the functioning of these systems I should suggest a number of interesting details for prospective researchers.

S.M. Godin, V.V. Roschin et. al. (Physics of Negative Viscosity Phenomena. Prof. Victor P. Starr. Massachusetts Institute of Technology) spoke of vacuum (quantum medium) as **a physical medium possessing negative viscosity.** At that rate, it is worth making assumptions that can be useful to the developers of this topic. I think that standard (positive) viscosity of matter, from the physical point of view presupposes the presence of positive friction and a "work-to-heat" entropy transformation. Consequently, **negative viscosity** should correspond to the **negentropy cycle** "heat is converted to work". This is exactly the stray heat conversion once described by Tsyolkovsky in 1914. Apparently, **the medium of the kind supports self-sustained vortices** characterized by the surrounding medium heat absorption, which was mentioned yet not explained by S.M. Godin and V.V. Roschin.

It is possible that all the elements of matter are the self-sustainable vortex structures. To mathematically describe these physical mechanisms, the notions "heat-work-heat" transformation and "time" or "gravitation" should be interrelated. Russian philosopher Pavel D. Uspenskiy had been making related research since the year 1910.

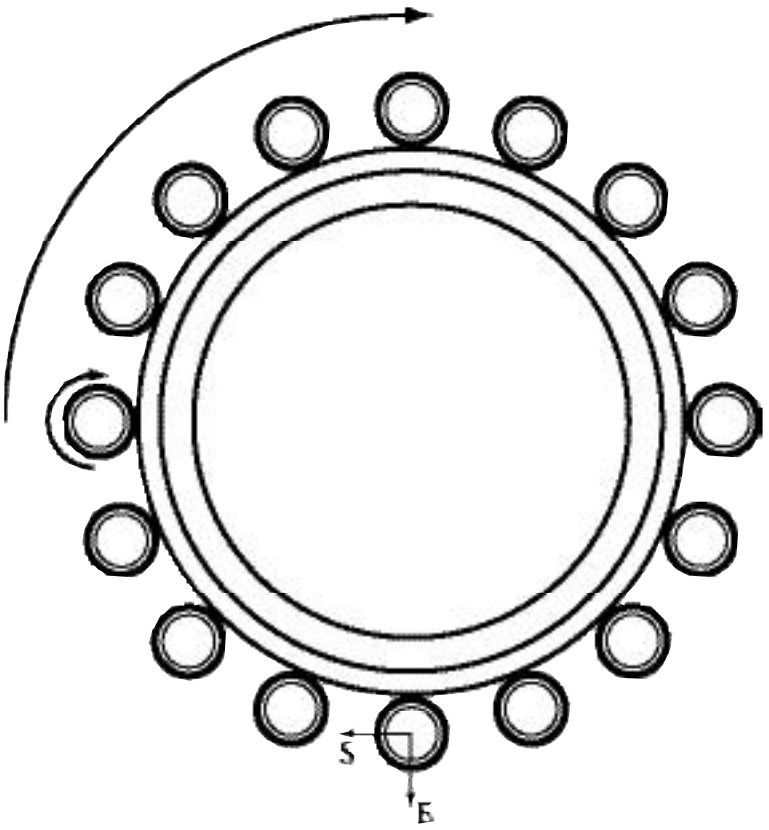

Fig.2

From the conventional point of view, this device (Fig.1) creates a circulating energy flux described by the Umov-Pointing vector (toroidal vortex) as the roller magnet field vector is vertical and the electric field is radial.

S.M.Godin (on the left) and A.V.Frolov (on the right), St. Petersburg, June 2001.

Inventor's Week Conference 2003, USA

Review is prepared by Editor Tatiana Ezhova

This year the annual Inventor's Week-end Conference was held on September 19-20 in Seattle, Washington. The conference featured several interesting inventions, including MEG.

Bill Alek demonstrated a device that he believed could let him detect Vortex-Energy. It was attached to a meter, and his belief was that if he walked into a naturally-occurring energy vortex carrying the device it would show him changes in gravitational and other energies. He cited the Vortices in Santa Cruz and Oregon as examples that might be good for experimentation.

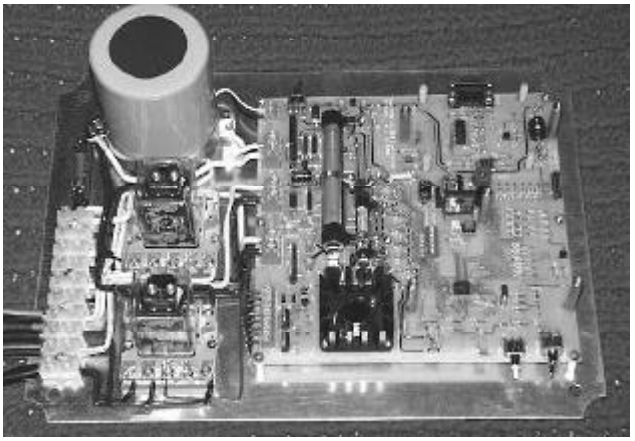

Bill Alek

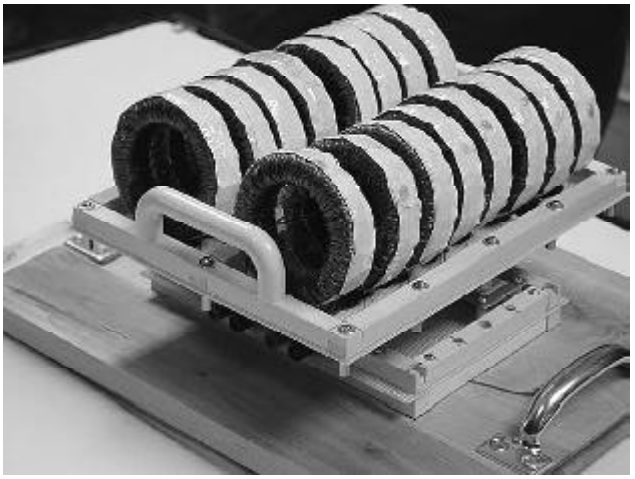

Z-Pod, Bill Alek

In his report "Introduction to Parametric Mass Fluctuation - a breakthrough in Energy and Inertialess Field Propulsion" Bill Alek presented the Z-Pod, developed to test a theory of solid-state parametric mass fluctuation. Here is the URL for a good overview of the device that he published online at www.intalek.com:

http://www.intalek.com/Index/Projects/SmartPAK/Projects/ZPOD/ZPOD_System03.pdf

Rio Von Sternberg

Rio Von Sternberg was presented as the original inventor of the MEG. He apparently has a patent on the device; however, from his presentation I understand that his configuration is somewhat different than the model that J.L.Naudin and T.E.Bearden have been experimenting with.

Alexander Peterson had a very interesting presentation on optical-mirror magnetic field systems. The crux of his presentation involved cutting precise notches into magnetic coils to separate them into identical optical-isomeric shapes. Apparently, by cutting a thin line directly down the center of the transformer-core is believed by Peterson to increase the efficiency of electric motors by up to 50%.

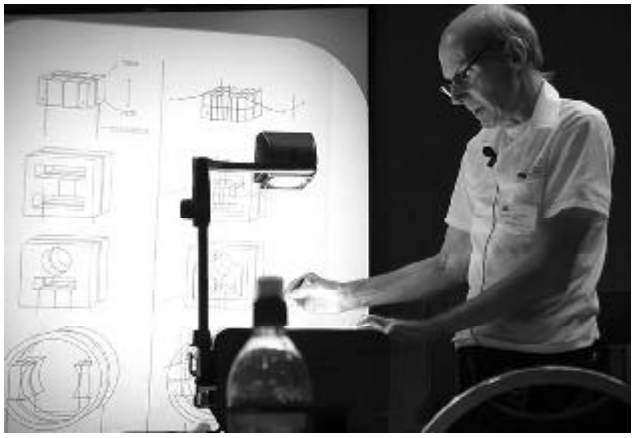

Alexander Peterson

Mark Plotkin, a well-known Washington DC attorney also took part in the conference. He is interested in new energy technologies and works with new technologies in collaboration with Mark Whitford at www.awetec.info. The photo of Mark shows him rotating a steel coil apparatus that was passed around the conference by Slim Spurling.

Mark Plotkin

Slim Spurling is an inventor from the Southwest, shown holding a helical-wound coil that he claims provides health benefits through an interface with zero-point energy. Spurling's belief is that this specific circumference of the coils provides a "Casimir-like Effect" that concentrates the energy.

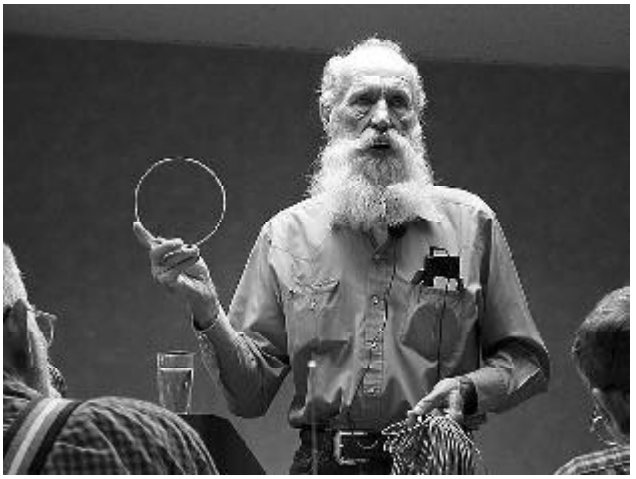

Slim Spurling

Donald Smith

Note: Donald Smith, a well-known inventor, also took part in this year's conference. His work is described in more detail in a separate article of this issue.

Full information on the conference and reports is presented at http://ionvalve.com/iw/2003/conference2003.htm.

USA "Inertia" Patents

Information from www.rexresearch.com/inertial/

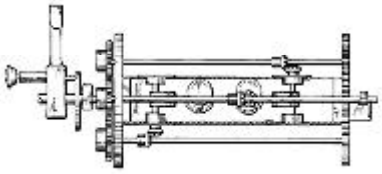

№ 6,290,622 (7/18/01)
Mechanical Force Generator
Murray, Lawrence D.

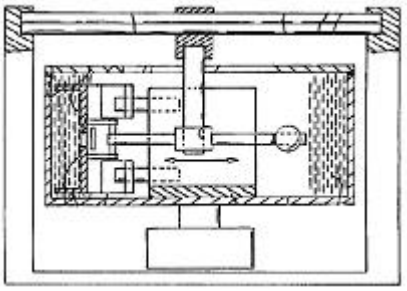

№ 6,259,177 (7/10/01)
Motion Imparting System
Deschamplain, Daviv

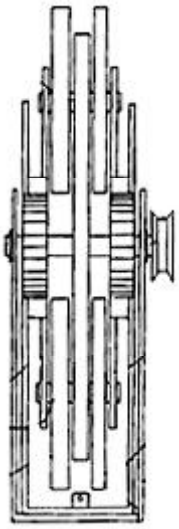

№ 5,890,400 (4/06/99)
Apparatus for Generating a Propulsion Force
Oades, Ross A.

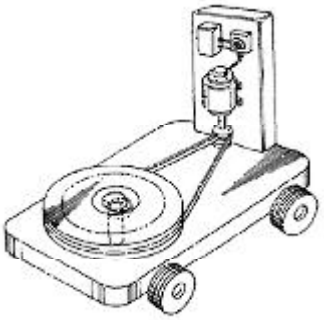

№ 5,937,698 (8/17/99)
Centrifugal Propulsi on System
Kunz, William T.

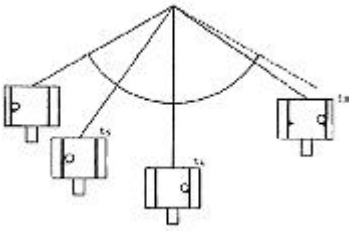

№ 6,089,511(7/18/00)
Method & Apparatus for Propulsion
Rasmussen, James K.

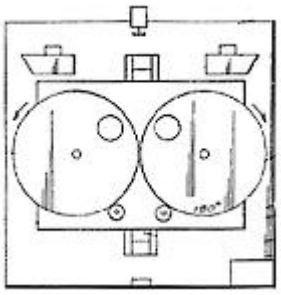

№ 5,966,986 (10/19/99)
Propulsion System
Laul, Virgil R.

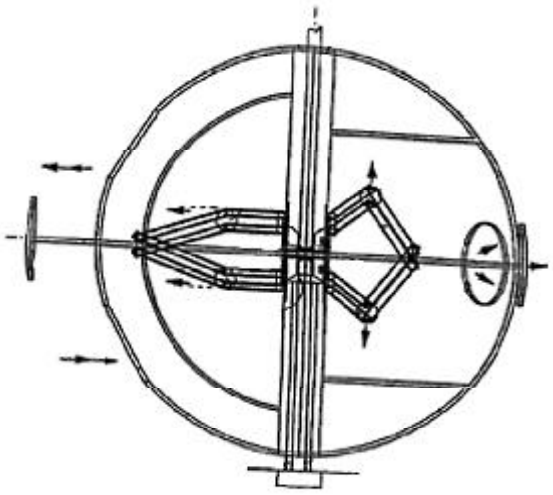

№ 5,673,872 (10/7/97)
Apparatus for Energy Transformation & Conservation
Shimshi, Ezra.

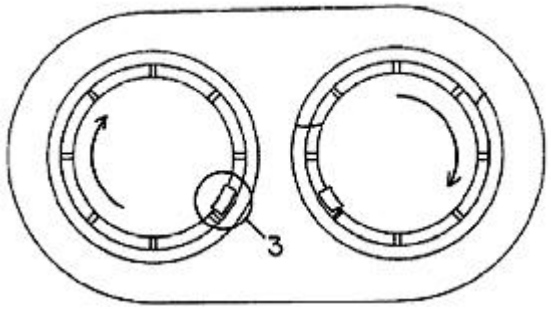

№ 5,831,354 (11/03/98)
Bootstrap Propulsion System
Stopplecamp, Timothy J.

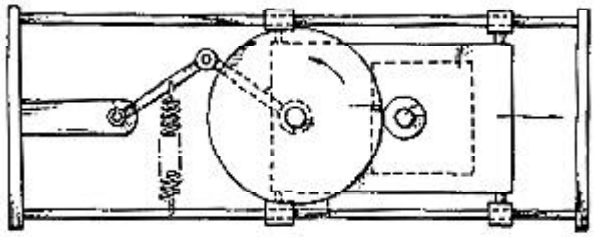

№ 3,492,881 (2/3/70)
Prime Mover
Auweele, Albert J. v.

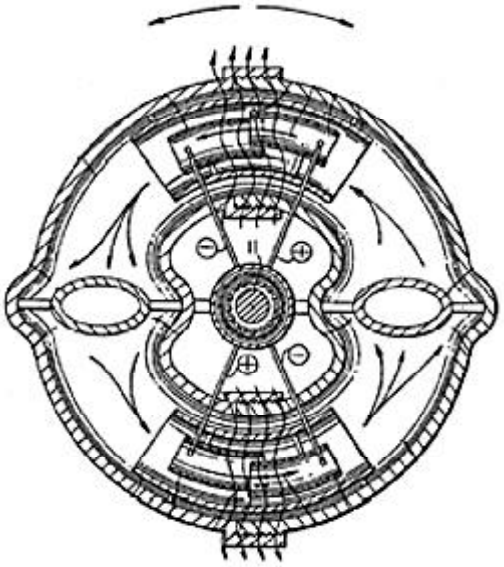

№ 5,410,198 (4/25/95)
Propulsion System
Butka, Kemal

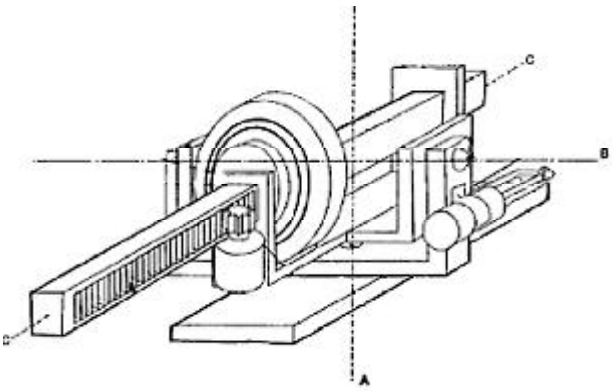

№ 5,860,317 (1/19/99)
Gyroscopic Propulsion System
Laithwaite, Eric R. & Dawson, Wm.

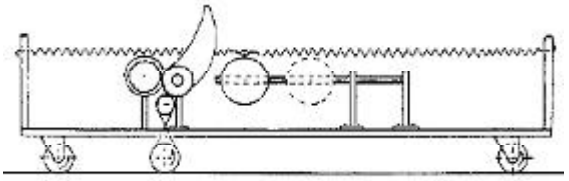

№ 5,685,196 (11/11/97)
Inertial Propulsion Plus Device & Engine
Foster, Richard E.

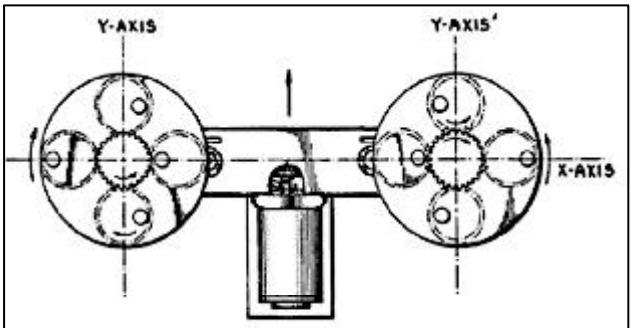

№ 5,167,163 (12/1/92)
Energy Transfer Device
McMahon, John C.

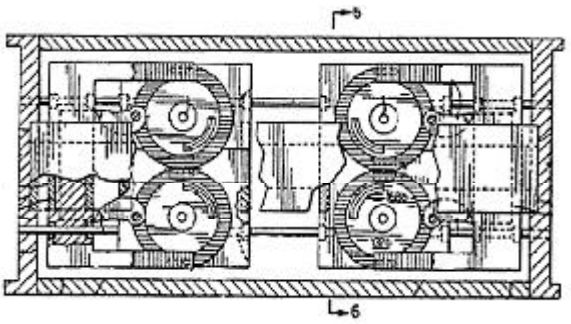

№ 5,182,958 (2/2/93)
Non-Linear Propulsion & Energy Conversion System
Black, James W.

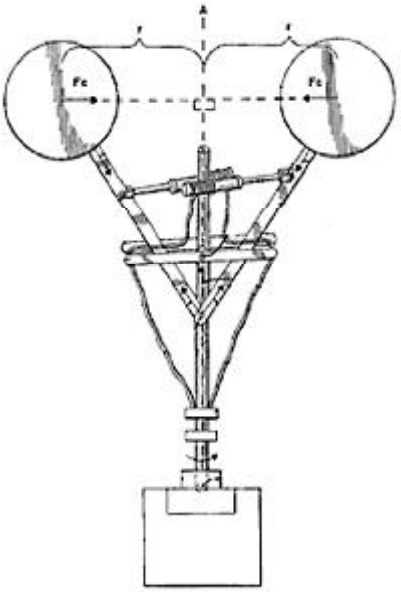

№ 5,557,988 (9/24/96)
Centripetally Impelled Vehicle
Claxton, John C.

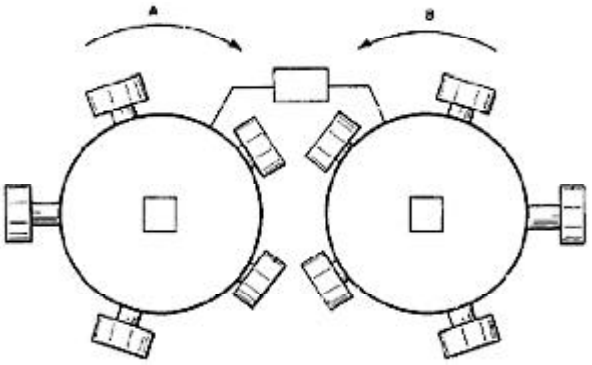

№ 5,782,134 (7/21/98)
Electromagnetically Actuated Thrust Generator
Bouden, James D.

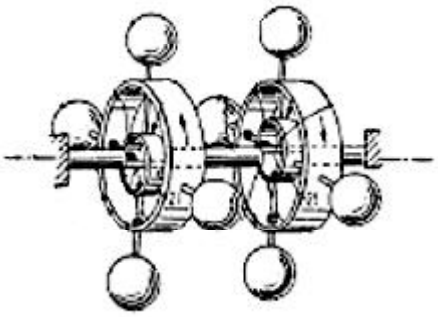

№ 5,156,058
Converting Rotary Motion to Lineal Motion
Bristow, Theodore R., Jr.

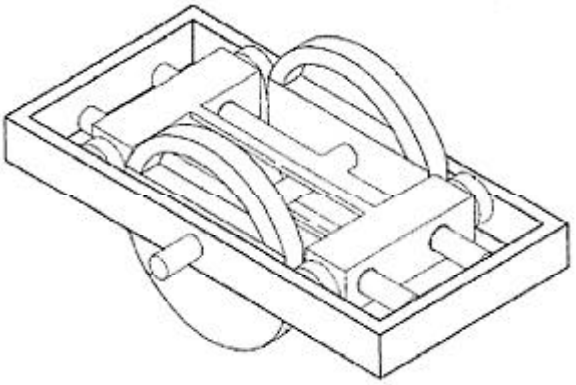

№ 5,488,877 (2/6/96)
Centrifugal Inertia Drive
Lieurance, Richard L.

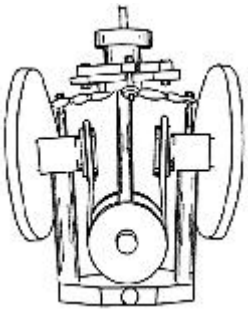

№ 5,024,112(6/18/91)
Gyroscopic Apparatus
Kidd, Alexander D.

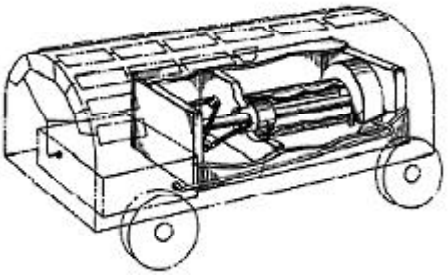

№ 4,801,111(1/31/89)
System for Propulsion & Positioning
Rogers, Charles E., et al.

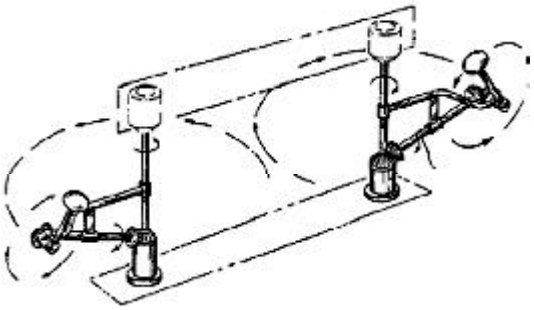

№ 4,991,453(2/12/91)
Centripedal Device for Concentrating Centrifugal Force
Mason, Lyle M.

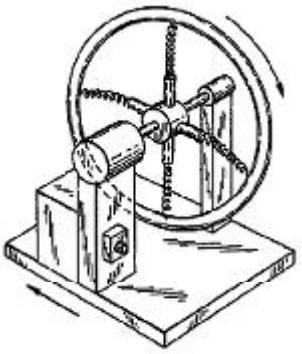

№ 4,784,006(11/15/88)
Gyroscopic Propulsion Device
Kethley, Lancelot I.

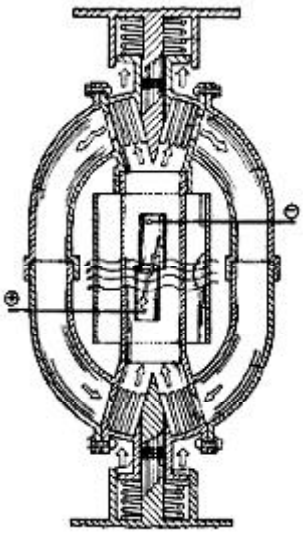

№ 5,111,087(5/5/92)
Propulsion System
Butka, Kemal.

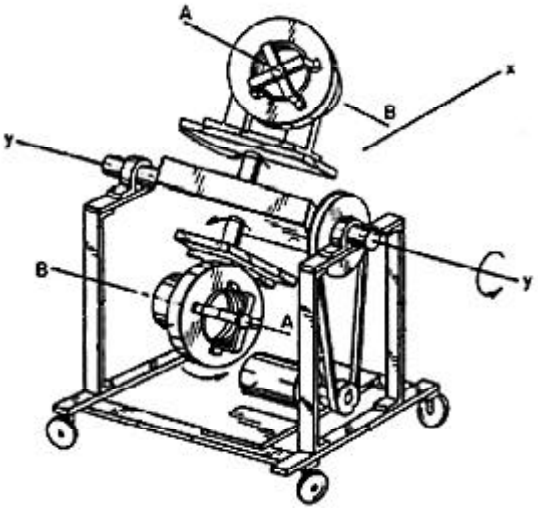

№ 5,090,260(2/25/92)
Gyrostat Propulsion System
Derloy, M.S.& Derloy M.

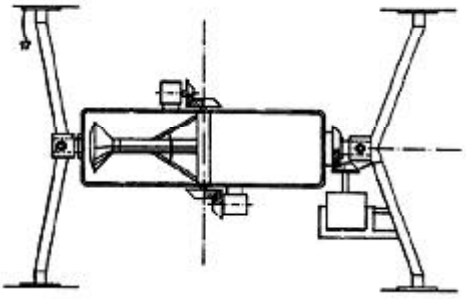

№4,884,456(12/5/99)
Centripedal Device for Concentrating Centrifugal Force
Zachystal, George J.

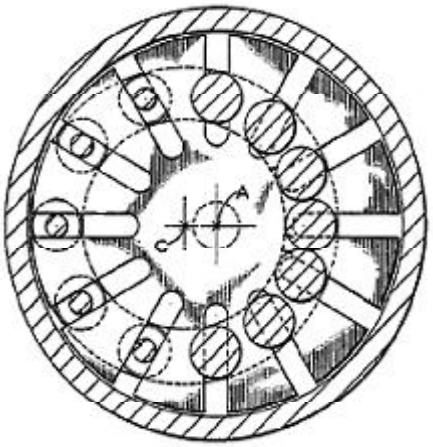

№4,788,882(12/6/88)
Flywheel
Fulop, Charles.

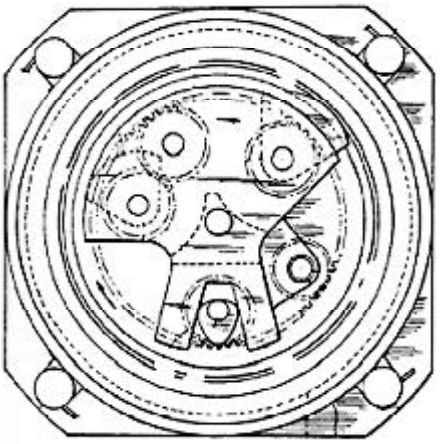

№ 5,042,313(8/27/91)
Conversion of Rotational Output to Linear Force
Montalbano, Paul J.

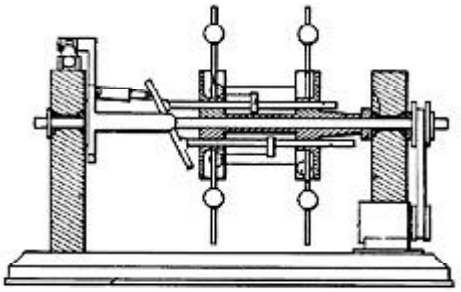

№ 5,054,331(10/8/91)
Controllable Gyroscopic Propulsion Apparatus
Rodgers, A.T.

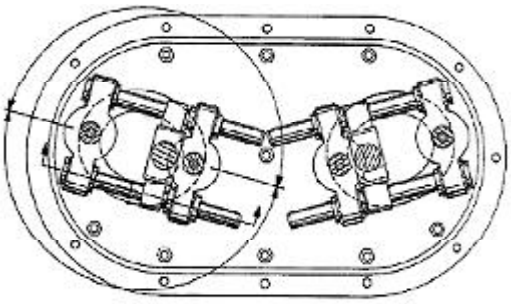

№4,770,063(9/13/88)
Universal Propulsion Powerplant & Impulse Drive Unit
Mundo, James D.

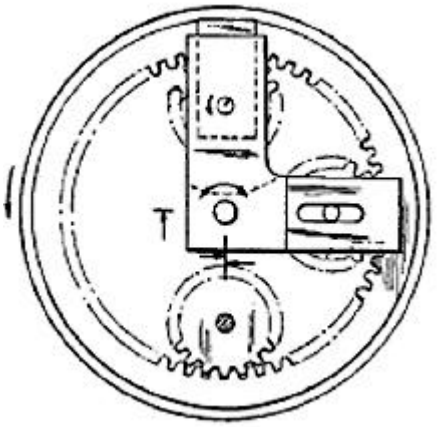

№4,856,358(8/15/89)
Conversion of Rotational Output to Linear Force
Montalbano, Paul J.

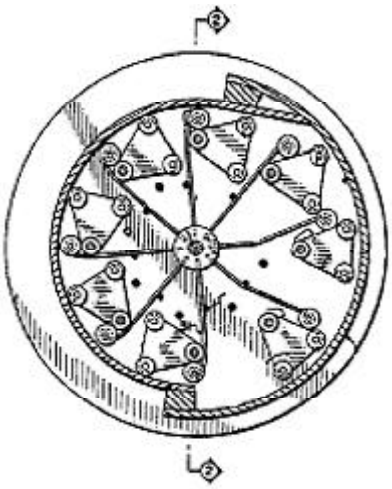

№4,744,259(7/17/88)
Apparatus for Producing a Directional Unit Force
Peterson, Oscar F.A.

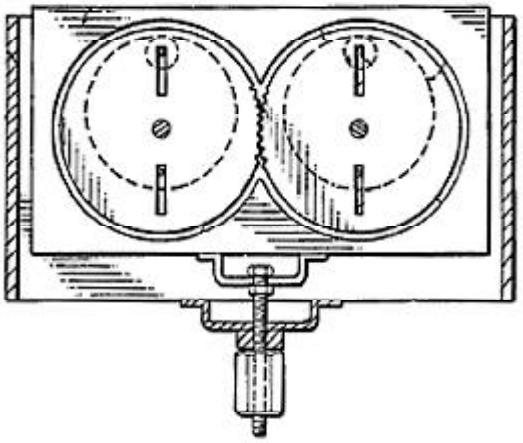

№4,712,439(12/15/87)
Apparatus for Producing a Force
North, Henry.

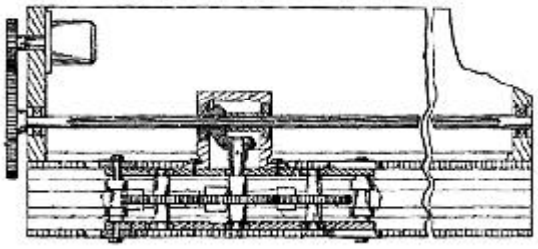

№4,242,918(1/6/81)
Mechanical Propulsion System
Srogi, Ladislaw G.

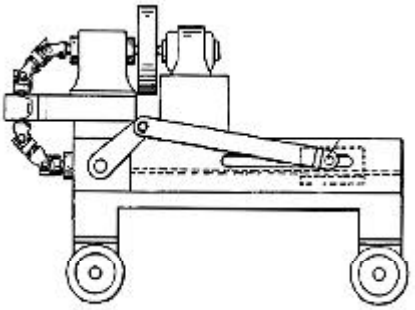

№4,674,583(6/23/87)
Impulse Drive
Peppiatt, Alvin C., et al

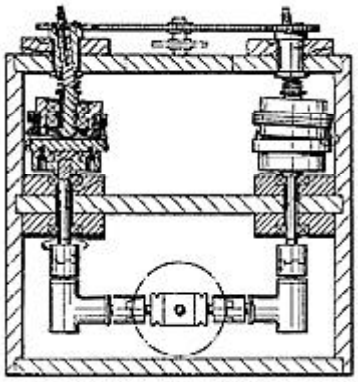

№4,409,856(10/18/83)
Propulsion System
de Weaver, Fred, III.

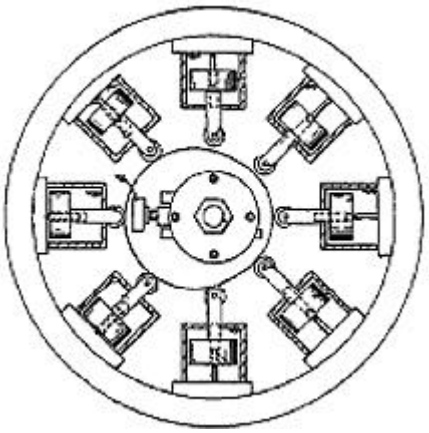

№4,579,011(3/1/86)
Propulsion Apparatus
Dobos, Elmer M.

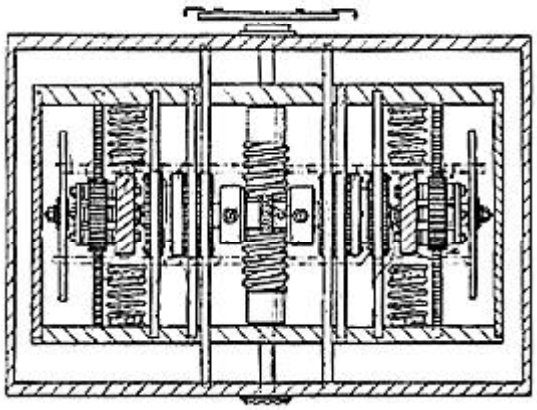

№4,577,520(3/25/86)
Mechanical Propulsion System
Colla, Joseph.

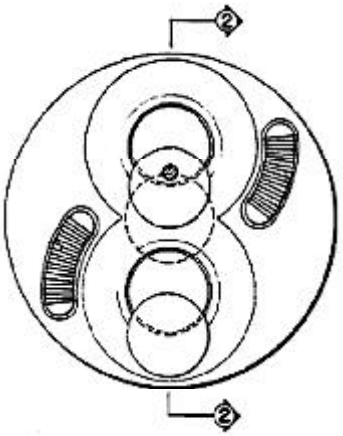

№4,631,971(12/30/86)
Apparatus for Developing a Propulsive Force
Thornson, Brandson R.

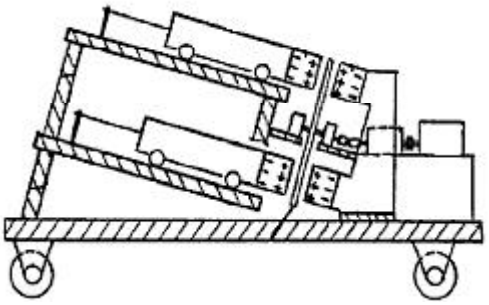

№3,889,453(6/17/75)
Propulsion System
Mast, Oscar.

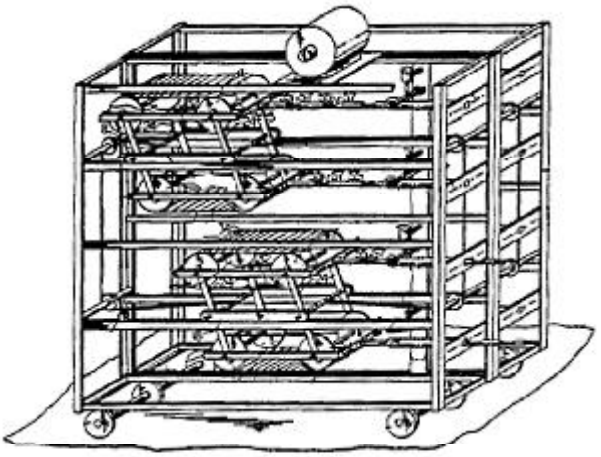

№4,726,241(2/23/88)
Continuous Force & Impact Generator
Melnick, Harry S.

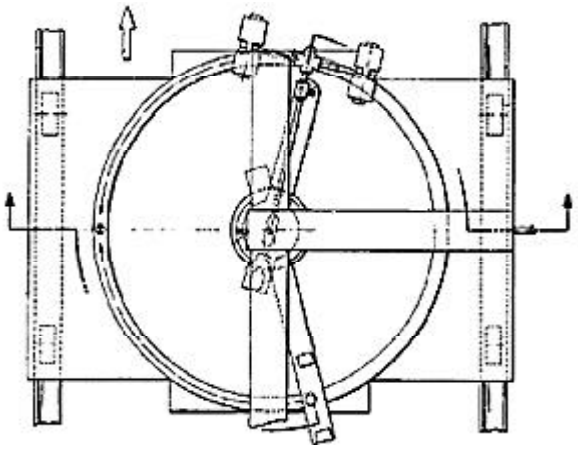

№4,238,968(12/16/80)
Conversion of Centrifugal Force to Linear Force & Motion
Cook, Robert L.

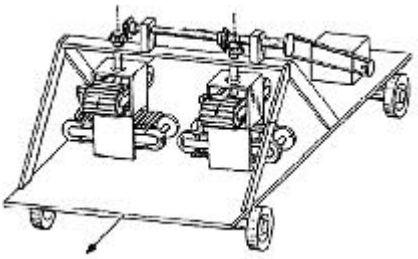

№4,261,212(4/14/81)
Unidirectional Force Generator
Melnick, Harry S.

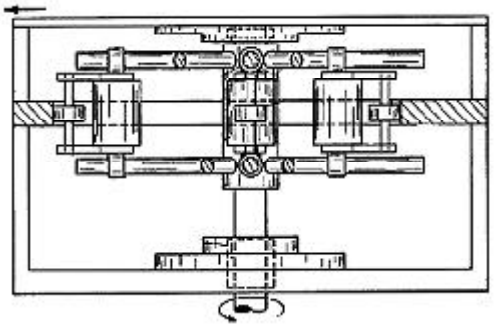

№ 3,968,700(7/13/76)
Converting Rotary Motion into a Unidirectional Linear Motion
Cuff, Calvin I.

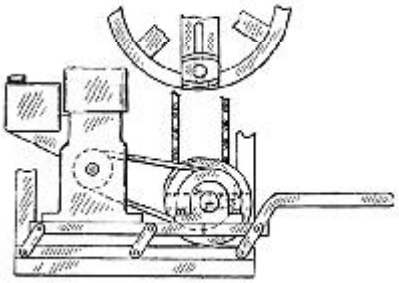

№ 4,347,752(9/7/82)
Converting Rotary Motion to a Rectilinear Force
Dehen, Frederick L.

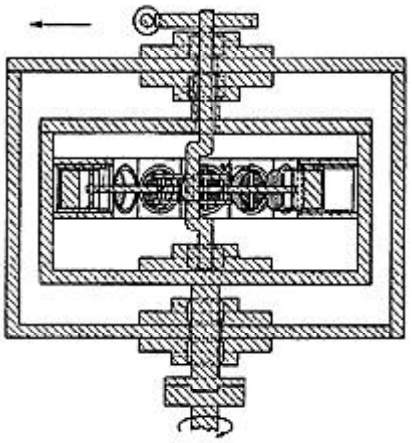

№ 3,998,107(12/21/76)
Converting Rotary Motion into a Unidirectional Linear Motion
Cuff, Calviv I.

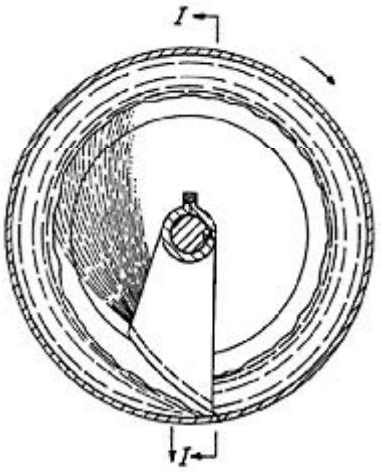

№ 3,979,961(9/14/76)
Propelling an Object by an Unbalanced Centrifugal Force...
Schnur, Nicolas J.

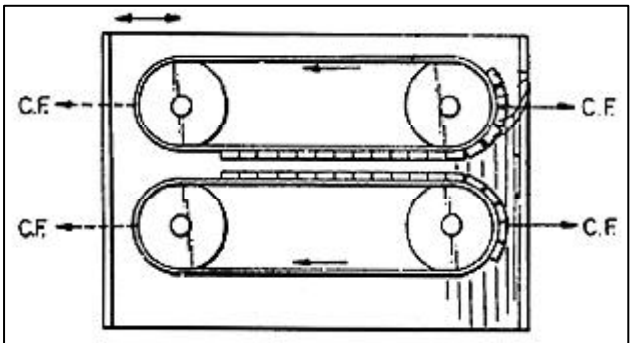

№ 4,398,431(8/16/83)
Mechanical Power Transmitting System
Melnick, Harry S.

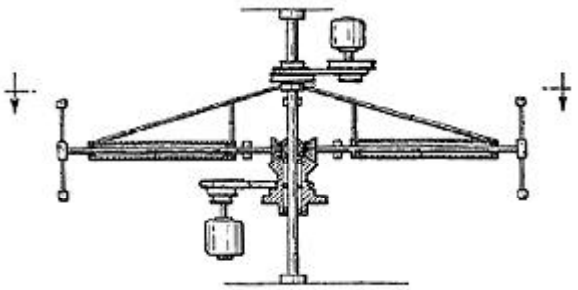

№ 3,555,915(1/19/71)
Directional Force Generator
Young, Hersey W., Jr.

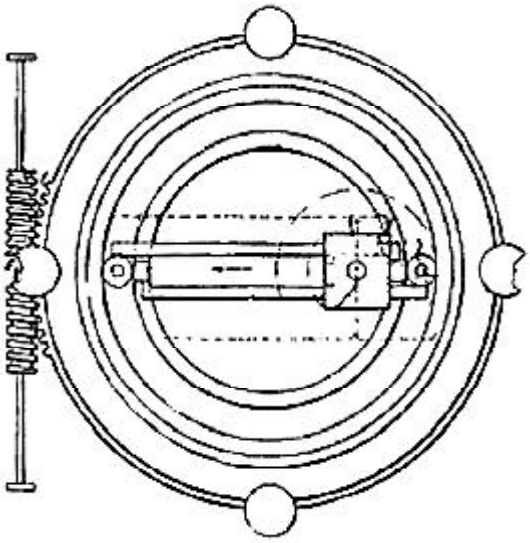

№ 3,750,484(8/7/73)
Centrifugal
Thrust Motor
Benjamin, Paul M.

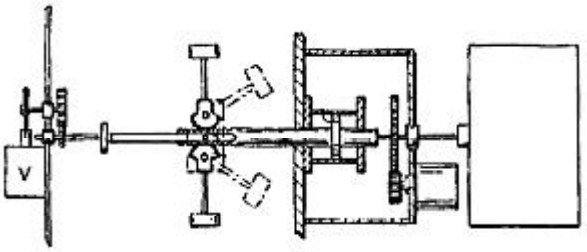

№ 3,863,510(2/4/75)
Inertia Engine
Benson, Everett H.

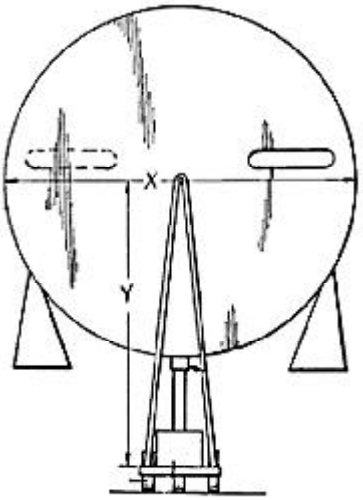

№ 3,756,086(9/4/73)
Propulsion System
McAlister, Roy E., et al.

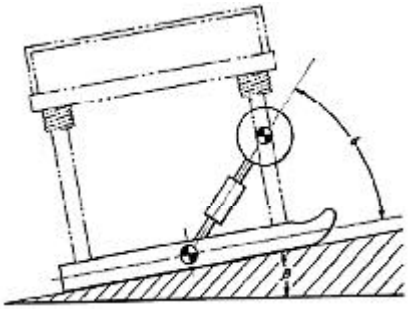

№ 3,916,704(11/4/75)
Vibratory Motion
Gaberson, Howard A.

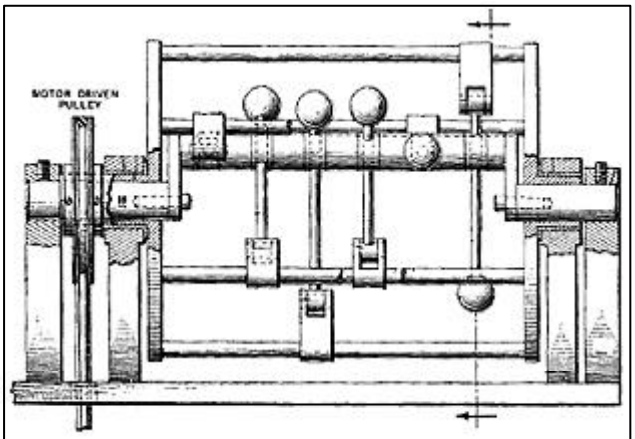

№ 3,810,394(5/14/74)
Centrifugal
Mechanical Device
Novak, Leo J.

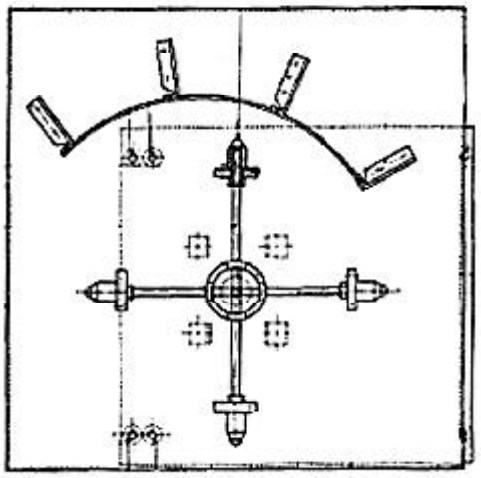

№ 3,807,244(4/30/74)
Device for Transforming Kinetic Energy
Estrade, Fernand.

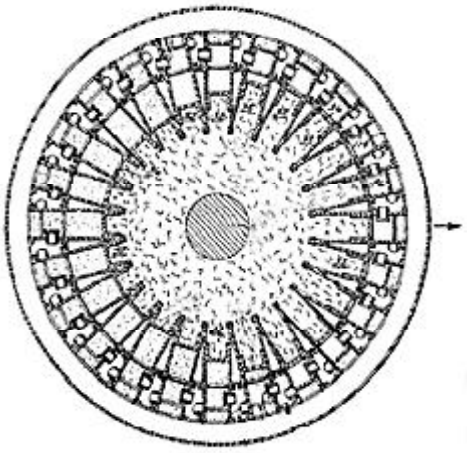

№ 3,584,515(6/15/71)
Propulsion Apparatus
Matyas, Laszlo B.

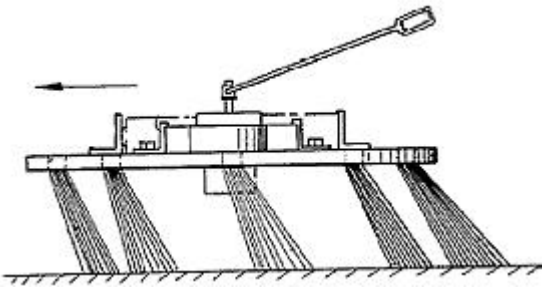

№ 3,196,580(7/27/65)
Toy Vehicle Having...Self-Contained Drive Means
Rakestraw, Robert G.

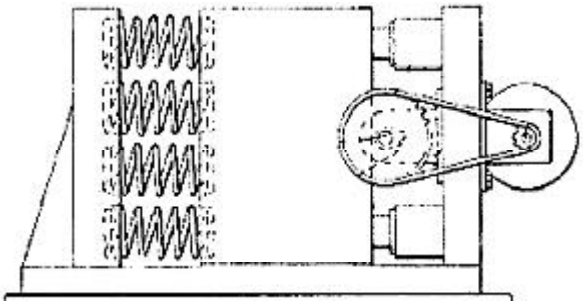

№ 3,266,233(8/16/66)
Inertia Propulsion Device
Farrall, Arthur W.

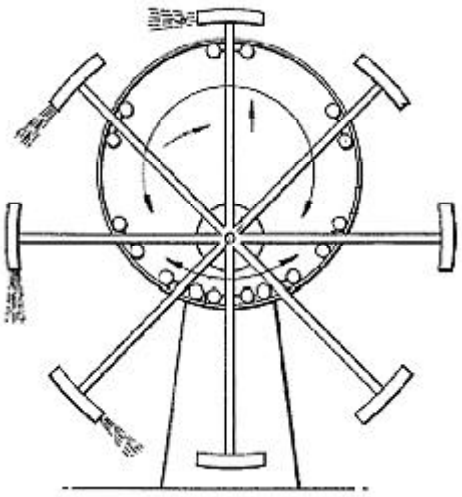

№ 3,177,660(4/13/65)
Propulsion Apparatus
Haller, Paul.

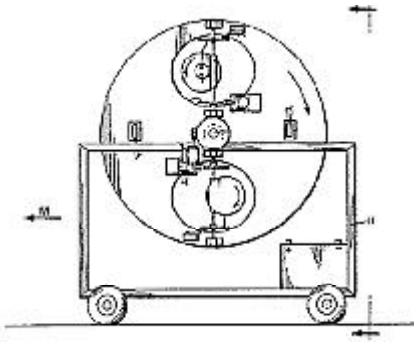

№ 3,653,269(4/4/72)
Converting Rotary Motion into Unidirectional Motion
Foster, Richard E.

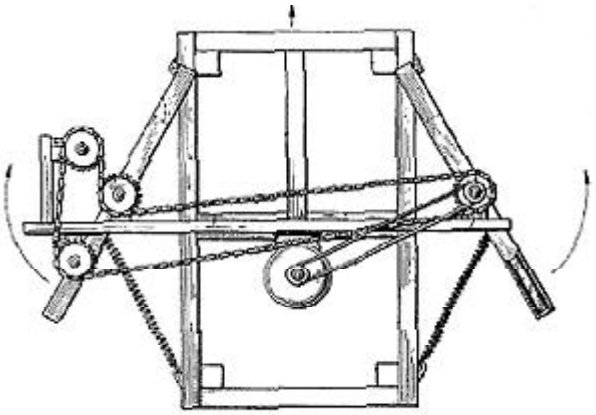

№ 3,683,707(8/15/72)
Propulsion System
Cook, Robert L.

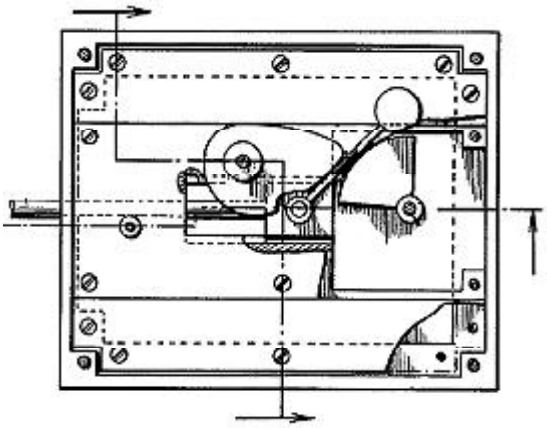

№ 3,182,517(5/11/65)
Variable
Oscillation System
Dean, Norman L.

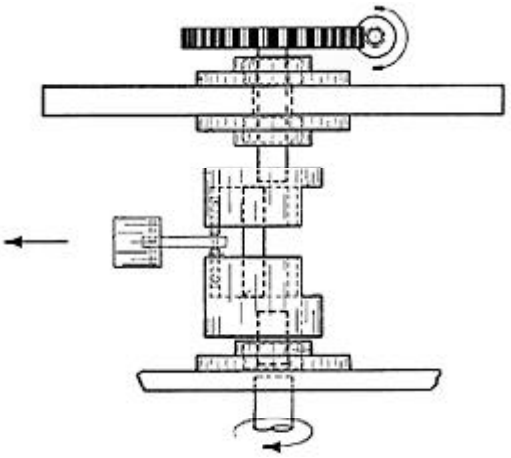

№ 4,095,460(6/20/78)
Converting
Rotary Motion into
Unidirectional Motion
Cuff, Calvin I.

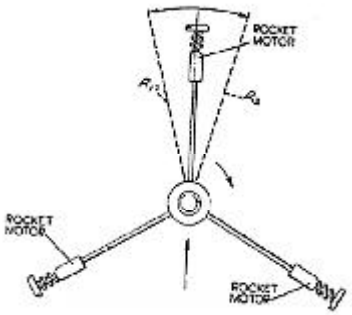

№ 4,087,064(5/2/78)
Orbital
Propulsion
Apparatus
Knap, George.

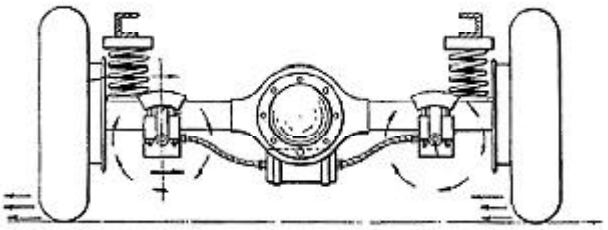

№ 2,639,777(5/26/53)
Method & Device for Imparting
Lateral Movement
Dull, Marshall L.

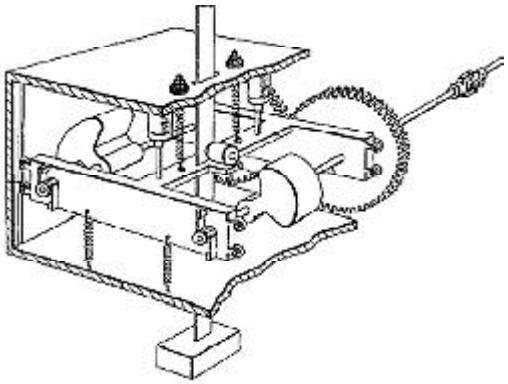

№ 2,886,976(5/19/59)
System for
Converting Rotary Motion into
Unidirectional Motion
Dean, Norman L.

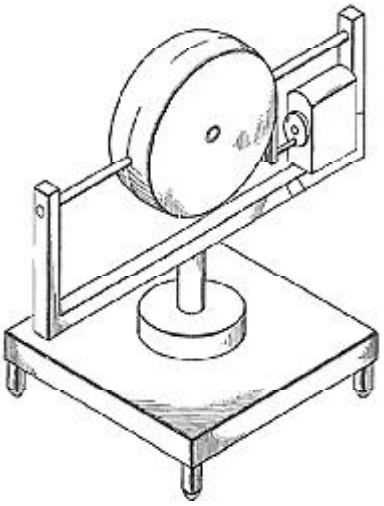

№ 3,203,644(8/31/65)
Gyroscopic
Inertial Space Drive
Kellogg, H. Dudley

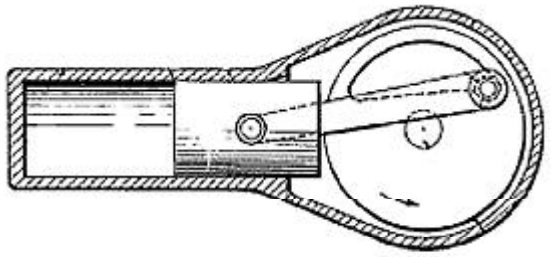

№ 2,636,340(4/28/53)
Direct Push
Propulsion Unit
Llamozas, Juan D. M.

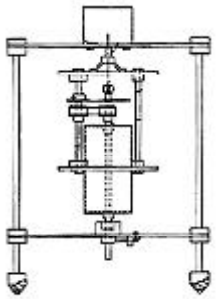

№ 5,150,626(9/29/92)
Translational Force
Generator
Navarro, T. L.

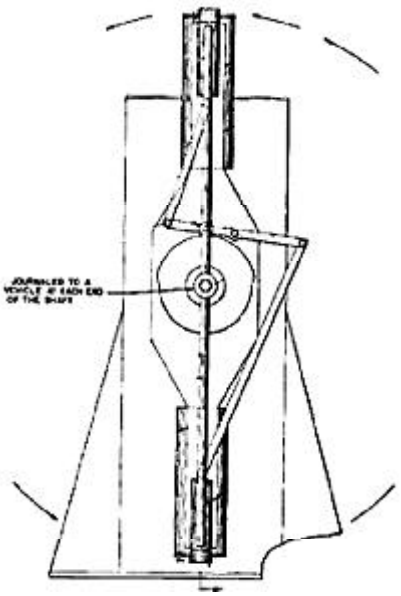

№ 3,238,714(3/8/66)
Thrust Motor
Schur, George O.

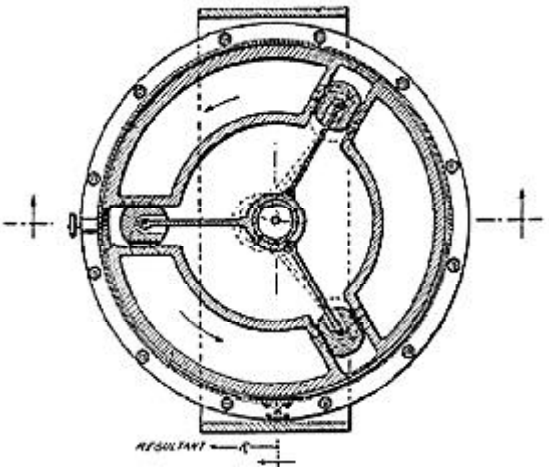

№ 2,009,780(7/30/35)
Centrifugal Variable Thrust
Mechanism
Laskowitz, Isidor B.

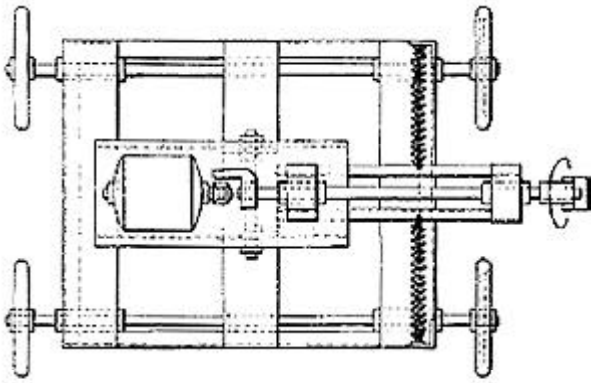

№ 2,088,115(7/27/37)
Reaction Motor
Neff, Tom.

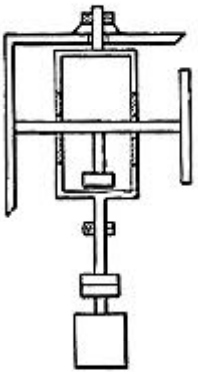

№ 3,404,854(10/8/68)
Apparatus for
Imparting Motion to a
Body
di Bella, Alfio.

The Free Energy Centrifugal Force Experiment

This experiment is conducted by Faraday Lab Ltd in cooperation with V. I. Bogomolov

In the previous issue we wrote about the invention of Bogomolov V. I. The device shown in Fig.1 (and also on the cover) was constructed and tested in our laboratory.

Fig. 1
The Device

The simplified diagram is known as "Maxwell's Pendulum" (Fig.2). This is a disk set onto the horizontal axis with two attached strings. The upper ends of the strings are fixed to the crossbar.

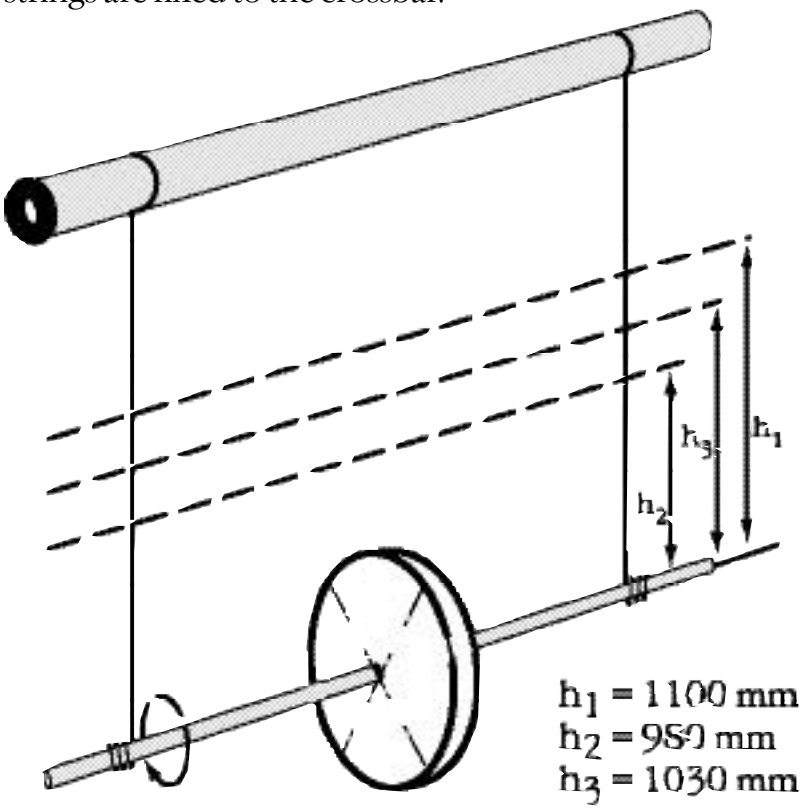

Fig. 2

If we wind the strings about the axis, the disk will lift (the height h) and store the potential energy of the Earth's gravitational field E = mgh (m - mass of the flywheel; g - free fall acceleration; h - the height of the mass fall). If we let the pendulum go, we can observe periodic "up-and-down" damped oscillations: first, the string spins and potential energy converts into rotation kinetic energy; upon reaching the lowest point the disk, still rotating, goes up using rotation kinetic energy and then converts it again into potential energy. This device is interesting: due to the energy conservation law we can observe the usage of rotation kinetic energy of the flywheel, measuring only the h-parameter, the lift height of the flywheel strings in the second semi-oscillation compared to the height with which the pendulum started falling in the first semi-oscillation, the difference h1 - h2 of the two semi-oscillations is directly proportional to the losses of rotation kinetic energy for air resistance work and friction.

We have made "Maxwell's Pendulum" more complicated by substituting the flywheel disk for the Watt centrifugal governor in accordance with its description in the article (1). The main difference of the device from Maxwell's flywheel is that the flywheel inertia momentum changes by the centrifugal force operation at the lever transferring of weights (the total weight - 1200 g) from the minimum radius position (40 mm) to the maximum radius position

(90 mm). At that, the levers compress the string with the force of about 16 N.

There have been three stages of the experiments. During the first stage we define the necessary lift height of 1100 mm at moment when the string winds around the axle. When the flywheel falls from this height, the rotation speed and centrifugal force are achieved, which move apart the loads to the maximum radius (90 mm) and which **completely compress the string**. During the second stage the loads are fixed at the minimum radius position (40 mm), thus the compress string centrifugal forces are not involved any more and we can measure the air resistance and friction **losses of kinetic energy**. At this stage the flywheel lifts up to 980 mm losing 120 mm. During the third final stage the load fixing rods are taken away and ***centrifugal forces are applied***. Just like during the second stage the Watt governor starts spin-falling from the height of 1100 mm. It compresses the string and lifts up to the height of 1030 mm thus **exceeding the second stage height by 50 mm**!

The experiment conclusions of the author:

1. At the third stage the flywheel exceeds the "loss height" h=980 mm. This means that the compression of the string was performed "for free".

2. At the third stage the flywheel converted kinetic energy into potential energy and lifted up 50 mm more. This means that in accordance with the principle of conservation of moment of momentum, the **outer compressed string energy force** has caused the moment of momentum change of the rotating masses, thus giving the additional acceleration to the flywheel and **increasing its kinetic energy "for free"**!

3. For the practical application of the Bogomolov generator in order to generate free energy it is necessary to achieve a high rotation speed (more than 10 000 rpm) and involve centrifugal forces to transfer the rotating mass to the less possible inertia radius difference.

The described centrifugal regulator diagram is not sufficient for larger experiments. For the industrial generator the author has a hydraulic-principle pneumatic string device drawing (know-how).

Editor: Also in this issue: the article on "Glen Gates Motor" by A. Akau. The principle is almost the same. The further implementation of this ideamay soon design purely mechanical power-generating systems, which use inertia and centrifugal forces.

References:

1. Bogomolov V.I. "The Bogomolov Generator", New Energy Technologies, Issue # 4, 2003.

Magnetic Power Inc. (MPI) is developing Self-Powered Generators. Together with its subsidiary, Room Temperature Superconductors Inc., (see the website www.ultraconductors.com), MPI has raised a total of more than $7 million from Angel investors to date.

Due to a pleasant surprise, solid-state electric power generators might be fabricated by modifying off-the-shelf utility hardware. If confirmed in coming weeks, this could result in serial fabrication by this time next year, since large devices of the type needed for conversion are presently manufactured worldwide.

Multiple modules may prove able to replace power plants. Smaller units appear practical for powering homes. Later, optimized designs might replace engines in every variety of vehicle. These generators may make possible very rapid utilization of fuel and pollution free electric power --a revolutionary, new, renewable energy alternative.

Accredited Angel investors can help speed the work needed to bridge into major capital, and accelerate this remarkable alternative. Multi-million dollar funding is on the horizon. Additional information is available privately. We welcome due diligence by qualified parties.

History of Perpetual Motion and Free Energy Machines

Web site http://www.phact.org/e/dennis4.html

Hundreds of people for centuries have attempted to solve the holy grail of energy production - **Perpetual Motion Machines**. Still to this day Eric Kreig gets weekly emails from people who feel they are about to get one working. Eric is very skeptical about free energy. But his collection of information is very interesting. Eric offered a special prize for those who will agree to publicly test their over-unity devices.

♦ **Villand de Honnecourt** 13th century had a drawing of one.

♦ **Leonardo da vinci** made a number of drawings of things he hoped would make energy for free.

♦ Jesuit priest, **Johanes Taisnerius** worked on a magnetic based perpetual motion machine.

♦ **Mimara** in 1518 designed a "self-blowing windmill".

♦ **John Dee** of 16th century reported seeing one - but wasn't allowed a closer look.

♦ **Cornelis Drebbel**, 1610, was an alchemist and magician supposedly made one.

♦ **Robert Fludd** 1630 proposed many machines -people were trying to patent variations of Fludd's device in the 1870's.

♦ **Edward Somerset** 1638 demonstrated many free energy water wheels to the king of France.

♦ **1635** - first of many English perpetual motion machine patents granted. - By 1903, 600 such patents had been granted. Free energy claimants love impressing people with patents.

♦ **Ulrich von Carnach** in 1664 in Germany designed a perpetual ball-moving machine.

♦ Scientist **Jean Bernoulli** (1667 - 1748) proposed a fluid energy machine.

♦ **Bockler** in 1686 made designs for self powered water mills.

♦ In 1712 **Johann Bessler aka Orffyreus** investigated 300 different perpetual motion models and claimed he had the secret of perpetual motion and got much investment money.

♦ **Dr Conradus Schiviers** in 1790 made a belt driven wheel.

♦ **Sir William Congreve** in 1827 tried a machine running on capillary action.

♦ Britisher **Henry Prince** 1866 described the first partially submerged perpetual motion machine.

♦ **Mark Zimara** of Italy had a huge air powered machine that never worked.

♦ **Horace Wickmam** of the USA got a patent to a machine with many balls that just rotate around.

♦ Austrian, **Alois Drasch** patented a machine in the US in 1868.

♦ German, **George Andreas Bockler** proposed 'self operating mills' using variants of Archimedes screws.

♦ **E. P. Willis** of Connecticut made money off a perpetual motion machine in 1870 - people eventually found out a secret source of power to it.

♦ **Charles Redheffer** in 1812 in **Philadelphia** made much money on a perpetual motion machine, tried to restrict scientific evaluation, but was eventually debunked.

♦ Scottish shoemaker **Spence** designed a magnetic based machine, which was debunked.

♦ **John Worrel Keely** of Philadelphia in 1872 (he also had a traveling show of exhibitions). He fooled many scientists with a machine, which appeared to run on water.

♦ **John Gamgee** in 1881 got considerable support for a machine very similar to Dennis Lee's, which used liquid ammonia - it got vaporized from heat readily available, thus expanding it would drive a piston. Gamgee thought the vapor would condense to liquid to start the cycle over again. The Navy appeared to have been fooled and showed it to president Garfield - it never went anywhere Tom Napier agrees that Dennis Lee may have resurrected Gamgee's engine.

♦ **J. M. Aldrich** was arrested for getting investors for his free energy machine in 1899 - he some how was able to avoid conviction and conned many investors. One of whom was finally able to inspect the machine found a hidden spring.

♦ **T.H. Moray** in the 20's demonstrated a "radiant energy device" to many people who were unable to find a hidden power source. Some how, the secret was said to have been forgotten.

♦ **Lester Hendershot** in 1928 got an Army commandant to endorse his free energy machine - but it was later found to have a hidden power source in the motor. His sons believe Lester lost his notes and that maybe they can rediscover how to get it to work.

♦ **Viktor Schauberger** claimed to have discovered some special vortex energy in water. Since he died in 1958, I don't know if his claims have been replicated, but people are still studying his works.

♦ **Mr Papf** in 1966 was a conspiracy believer alternative car engine got a few investors but killed someone during a demo. He tried to blame the problem on an investigating skeptic. He disappeared and became part of urban legend of scores of people, which the big conspiracy has been silencing for generations.

♦ **Guido Franch** was convicted of fraud in 1954 and 1973 of selling rights to distribute little green pills that would convert water into gas. He hid behind conspiracy theory and secrecy to avoid fair testing. A number of people have run this scam and many people still believe there are pill repressed by the oil companies.

♦ **Garabed T.K. Giragossian** in 1917 claimed to have a free energy machine. He was one of the early frauds to hide behind conspiracy theory. Woodrow Wilson signed a resolution offering him protection from some kind of conspiracy. After much fanfare, and delaying tactics his machine turned out to be a giant flywheel, which was charged up with energy slowly and put out a lot of energy for just a second. In spite of lack of proof of anything significant his followers still bothered the US congress for recognition.

♦ **Otis Carr** in 1958 sold stock for a company to manufacture UFO's and free energy machines from Oklahoma. He claimed inspiration from Tesla.

♦ **Edgar Cayce** even babbles about "Motor's with no Fuel".

♦ **McClintock** was claimed to use air as a fuel and had a patent.

♦ The **Evgray** machine scammed many investors (who didn't know how to test 'depleted' batteries).

♦ **Arnold Burke** in 1977 collected $800,000 of investor money (again, mostly from bible believing farmers) for a 'self acting pump'. He tried to hide behind religion. He called his device Jeremiah 33:3' Finally, an open test was done in 1979 and found a hidden source of electricity. His believers (with

an infinite supply of denial) still raised $250,000 to get out of a fraud conviction. He still went on making lots of claims with no evidence.

♦ **Robert Adams** in 1977 made all kinds of conspiracy and OU claims in New Zealand. Many still believe in the Adams Motor. - He had the obligatory battles over patents, debates over theory, debates over power measurement and dabbling in other areas of alt physics. He's 80 years old and said to have a scientific education. He has a lot of theories about Aether. Skeptical information.

♦ **Robert Stewart** in 1978 got over $3,000,000 of investment money (much from farmers) for a closed cycle engine using freon rather than water. This 'engine' used the same scheme John Gamgee tried to sell the navy in 1882. -Eric Krieg thinks this is the same approach Dennis Lee's free energy machine works on. I think he just faded away (people claim he was silenced).

♦ **Rory Johnson** of Elgin Illinois, claimed to have invented a cold fusion, laser activated, magnetic motor that produced 525 HP, weighed 475 lbs, and would propel a large truck or bus 100,000 miles. After signing a number of dealers, he moved all his equipment out of his labs, moved to CA and died. (To this day, folks say he was silenced by OPEC).

♦ **RJeseph Maglich** was a physicist and claimed to have a device in 1978, which harnessed fusion power from seawater. They say they put power in and get more power out. I've never heard of them since.

♦ **Howard Johnson** got a patent for a device that claimed to make free energy from a motor like device. As of 11/02, Stephen was claiming he would soon mail out samples of working ones. By 12/12/02, Stephen dropped out of contact.

♦ **Keith Kenyon** had a device claimed to produce more energy than consumed. Calculations seemed to not take power factor (also known as phase angle) into account. It never openly had its output hooked up to its input. Even Dennis Lee tells his followers that all the *over unity motors* (claim to make more electricity than consumed) usually just fool people who can't measure power factor.

♦ **Muller:** Bill Muller and Carmen Muller of Germany raised money on an over unity motor and got a few followers, but never actually demonstrated one working.

♦ **Dennis Lee** Since 1988 has been promising to demonstrate free electricity "in a month or two". He is much like Newman in his mixture of religion & extremist politics, evasion of qualified investigators, endless promises, threatening detractors, etc. He had a Fischer engine, a CRD device and now, and OU motor device. Dennis has invested in Searle and Stanley Meyer and joined Pantone in 2001 in a 50 state tour.

♦ **Stanley Meyer** 1996 claimed to have a water powered car and was also big on mixing Christianity and patriot politics in with fringe science. Meyer was found guilty of fraud after his Water Fuel Cell was tested before an Ohio judge. It is rare for an inventor to be prosecuted for an invention that does not work, but Meyer's problem was that he had been selling "dealerships", offering investors the "right to do business" in Water Fuel Cell technology. Meyer refused to allow anyone else to measure his device. Dennis Lee invested in him. He died in early 1998.

♦ **Joseph Newman** in 1984 claimed to have a free energy machine based on alternative physics. Like many perpetual motion inventors, he sued the US patent office. Many people wrongly measured the true power output of this machine, (they didn't realize you must specially calculate power for non sinusoidal current consumption). He now refuses to ship a unit for testing. Ten years ago, inventor Joseph Newman gave an open week-long demonstration in the Super dome in New Orleans. Over 9,000 people attended from across the country (including Dennis Lee who reportedly wanted to join his ideas with Newman). Newman is suing some former

investors he claims are trying to steal his invention. I give more information. Evan Soule of Newman's organization offers a rebuttal.

♦ **Bruce De Palma** had a machine in 1986, which appeared to one Electrical Engineering professor to put out 4 times more power than consumed. Turned out it was just a measurement error. (We could go on and on with such examples).

♦ **Dr. Potapov** sold a device that was claimed to produce more energy than consumed.

Editor: Eric's skeptical remarks can be tolerated but sometimes he writes about the things he does not know. Potapov and his team have created a technology, which have been replicated and sold by dozens of companies in Russia (see the cover picture of the Susorov heat generator). There are several devices in St. Petersburg to be tested. The efficiency is 200 % and more. The operation principle: electric motor rotates in water and causes the heating of water. We have also received the information about another Russian invention, namely the close cycle vortex generator: "water rotation – vapour – turbine – electric power " (the power is from 100 kW).

Alexander V. Frolov

♦ **John Bedini** claims to have a free energy device.

♦ **Mr. Finsrud** is a Norwegian artist who made a sculpture where a metal ball moves for weeks apparently with no outside influence.

♦ **Don Watts** of Las Vegas in around 1990 had a patented **CEACU**, which stands for Centrifugal Energy Amplification and Conversion Unit - it turned out to be one more investment fraud.

♦ **Stephan Marinov** claimed to have proven much alternative physics and to have contacted a Methernitha that claims to have a Free Energy Machine. He committed suicide on July 15, 1997 but he left behind some intense rants.

♦ **Greg Watson** sold kits for a rolling ball and track that were thought to have over unity in 1997. Attempts of replication I know of have failed.

♦ **CETI** These people have claimed to have a device that puts out anomalous yet small amounts of heat - maybe cold fusion. They raised millions. As of 10/97, they have not been willing to have me come over and see for myself. They have said, *we want people to think it doesn't work so we won't have competition.* I've wondered if the energy may have come from not accounting for friction effects from the cooling flow through the pellets. (**Jed Rothwell**, a rational editor of Infinite Energy Magazine says *"however, tests with CETI cells at Motorola, SRI and the French Atomic Energy Commission show no measurable friction"*). Milton Rothman has a response: "I openly admit that I have not followed all the history of cold fusion claims and am generally ignorant on the subject".

♦ In January 1998 **Barbara Hickox** allegedly has a patent dating from 1981 for a fusion powered free energy system.

♦ **Paramahamsa Tewari** of India claims to have a device that is 200% efficient.

♦ **RQM** is a Swiss company selling FE machines found at www.rqm.ch.

♦ **Ted King** is looking for people to buy stock for a car he plans to drive across the country using just 2 12-volt batteries. You can contact Ted if you want to buy shares.

♦ **Bruce Perreault** has claimed to have discovered a new element, the plasmatron, ion pump, radiant energy device, etc.

♦ **Daniel Pomerleau** of Canada claims to have something that works, but he isn't interested in releasing it (as 12/97).

♦ **Entropy Systems** of Ohio 1999 Sanjay Amin got 1.6 million investment dollars for a device that would violate the 2nd law of thermodynamics. I've asked them to apply for my prize for proof. - They seem to have folded. See a rational review of Amin's claims.

♦ **Brian Collin** of Australia claims revelation from God *(like most of these people)* to make a free energy device. A Stephen Mark claimed he invented it.

♦ **Kawai** and **Takahashi** - both of Japan claimed in the 90's to have overunity devices.

♦ **Carl Cella** claimed to have one of the many cars said to run on water.

♦ **Robert LeBreton** in 1999 claimed to be making a 600 hp free energy machine.

♦ **Renzo Boscolio** in 1999 in Italy claimed to have low-energy nuclear reactions but refused to supply real proof that he promised to people who came out from Infinite Energy Magazine.

♦ **Doug Konzen** of Seattle says he has an overunity motor in Jan of 2000 that anyone can see.

♦ **Troy Reed** of Oklahoma was ready to issue licenses for manufacturing his permanent magnet motor etc. He's taking investment money for a device he claims puts out more heat energy than input energy. He says he's dumped a few million into his designs over the last 10 years and had little interest in my prize offer when I contacted him in 2001.

♦ **Kipper Motor.** In 10/00, Steve Elswick thought it was overunity. But David Sligar who paid $175 for plans could not get it working.

♦ **Ludwig Brits and Victor Christie** in 2001, claim the **Lutec** free electricity over unity motor/generator will soon be in Australia.

♦ **Jasker** in 2002, an Irish company has claimed to have free electricity. (Some have said it is just a joke).

♦ **Confidential Technology -Wayne Cochran** died 12/29/02 Crazy Jack Carey took over. They have been promising FE soon for about 20 years now.

♦ **Tom Bearden's MEG device:** many articles on the Internet.

♦ **Gurbakhsh Singh Mann of India** claims to have invented gravity and buoyancy perpetual motion machines.

♦ **Michael J. Marshall** in Las Vegas has a device called QSFG , which stands for quick start fuel-less generator he says 64 nations have asked him to build factories.

♦ **Carl Tilley and Robert Kibbey** in 6/2001 in Tennessee have claimed some over unity device and other stuff. Their demonstration failed in 9/02 and as of 11/02, they have been evading proper demonstrations.

♦ **Stephen Walker** in 9/2002 promised to send me and several others a free energy machine in mail.

♦ **PerEnDev** promised to make some kind of free energy by means of magnets.

♦ **Bill Muller** of Canada in 2003 claimed to have some kind of OU device. Independent tests found it under unity.

♦ **Energie:** In 2003 this Greek company promised a homopolar magnet (De Palma design) FE design by June of 2003. They actively seek investors.

♦ **GWE Genesis World Energy** In 2002 this group claimed to have 400 people who developed some device that sounds like it separates water into H2 and O2 using less energy than mainstream science says is possible. As of 2003, they have evaded independent confirmation. More information is available.

♦ **Steven Greer (Disclosure Project)** In 02.2003, Steven announced he had discovered some real sources of Free energy, which he promised to make sure get proven to the general public.

Tesla Energy Science Conference and Exposition

1220 L Street NW, Suite 100-232 Washington DC 20005
Tel: 800-295-7674
Fax: 301-513-5728
www.IntegrityResearchInstitute.org
Email: iri@erols.com

Saturday, November 8, 2003
Wireless Electricity Seminar

9:30 AM 10:15 AM

Opening Address: "Space Solar Power" – Dr. **Paul Werbos** Program Director, National Science Foundation

10:15 AM 12:15 PM

Special 2-Hour Presentation: "Nicola Tesla and the development of RF Power Systems" - Dr. **James Corum**, Physics Professor, research Scientist and Inventor and **Kenneth Corum**, Physicist, teacher, consultant.

2:00 Pm 3:00 PM

"Power Engineering Scalar Field Theory: Faraday vs. Maxwell and Longitudinal Wave Demonstration" – Professor **Konstantin Meyl**, Engineer, Author, Inventor of the Demo-Set, Professor at the University of Berlin

3:15 PM 4:15 PM

"Wireless Energy Through the Earth-Ionosphere Cavity" – Dr. **Elizabeth Rauscher,** Nuclear and Astrophysicist, Inventor of the ELF Earthquake Predictor and Triangulator.

4:15 PM 5:15 PM

"Masters of the Ionosphere HAARP Modifies the Polar Electrojet" – **BBC Video on Tesla Technology**, with Wiliam Terbo, demonstrating ionospheric excitation by radio waves.

6:30 PM 7:15 PM

Masters of the Ionosphere – BBC Video Presentation **repeated** for the Special Tesla Evening Event attendees

7:30 PM 8:30 PM

"The Wardenclyffe Dream: Tesla's Plan for Wireless Worldwide Distribution" – **Dr. Marc Seifer** Professor, Author of the best-selling book *Wizard, The Life and Times of Nikola Tesla*, presents an illustrated historical account.

8:30 PM 9:00 PM

High Voltage Tesla Coil Demo – **High Voltage Device** with **Music**: The Tesla Tower wind ensemble composition by Prof. **Holland**, Skidmore College

Sunday November 9, 2003
Electrotherapeutic and Tesla History Day

9:30 AM – 10:30 AM

"A Family Perspective on the Personality of Nikola Tesla. Review of the Popular Interest in this Scientific Icon" with Q and A Session – **William Terbo**, Engineer, Closest living relative of Tesla (Grand-nephew). Founder and Director of the Tesla Memorial Society.

10:30 AM 11:30 AM

"The Search for Free Energy: Genius, Vision and Psychology of Invention" – **Keith Tutt**, British Writer and Author of the book *The Scientist, The Madman, The Thief and their Lightbulb* that includes Tesla.

11:30 AM 12:15 PM

"Electrotherapy with Tesla Coil Design: Intorduction to Bioelectromagnetics" – Dr. **Thomas Valone** Physicist, Professional Engineer, Author of the new book, Bioeletromagnetic Healing: A rational for its Use.

12:15 PM 1:00 PM

Exhibitors Presentations – **Brief Presentations by exhibitors** (5-10 minutes each)

2:00 PM-3:00 PM

"Emerging Opportunity: cancer Electromagnetic Frequency Therapy" – Dr. **Mark Neveu** President, the National Foundation for Alternative medicine.

3:00 PM 4:00 PM

"Turn of the Century Electrotherapy Discoveries" – **Jefrey Behay** Director, The Turn of the Century Electrotherapy Museum.

4:00 PM 5:00 PM

"How a Crushed Leg Helped Me Discover High Voltage Electromagnetic Healing Device" – **Ralph Suddath**, Third generation Tesla Electrotheraphy Inventor, radio Host, Entrepreneur.

5:00 PM 5:15 PM

Closing Remarks – **Thomas Valone** Program Coordinator

The Conference Report Compilation can be purchased from T. Valone, Integrity Research Institute.

"Nornikel" and Alternative Energy

"Norilsky Nikel", the largest Russian non-ferrous metal producing company has announced the beginning of the cooperation with the Russian Academy of Science. Metallurgists are planning to invest into the development of the hydrogen energy and fuel cell R&D projects of the Russian Academy of Sciences. Accordingly, last week an agreement was signed. **Mikhail Prohorov**, the General Director of "Nornikel" said that they are ready to invest 20-40 million dollars annually into R&D projects of the Academy in this field.

"Expert" magazine, # 43, November 17-23, 2003

PERENDEV Magnetic Motor

Review

www.perendev.co.za/products/magnetic_motor/index.html

Shown below is a Magnetic Motor with Alternator (Patent Pending):

Fig.1

This is the "PerEnDev" (Perpetuum Energy Devices) company latest motor predicted to deliver some 60 kW. Motors can be built up to 4 mW.

Background of the Magnetic Motor

The Company started in 1969 with the development of a magnetic motor to drive an alternator to produce electricity. The concept was sound but the problem they faced was that the magnets that were available at the time (ferrite magnets) were not very powerful. The unit ran but had very little power and the project was abandoned.

In 1996 the "Perendev" company started to investigate the possibility of reviving the original idea, magnets had now come a long way and were very powerful (rare earth).

Fig. 2
Rare earth magnets

After the engineers successfully designed a new model, the company developed a 3 rotor system producing 6 kW, coupling this to an alternator through an 11:1 gearbox to produce electricity in 220volt and 380volt, single or 3 phase.

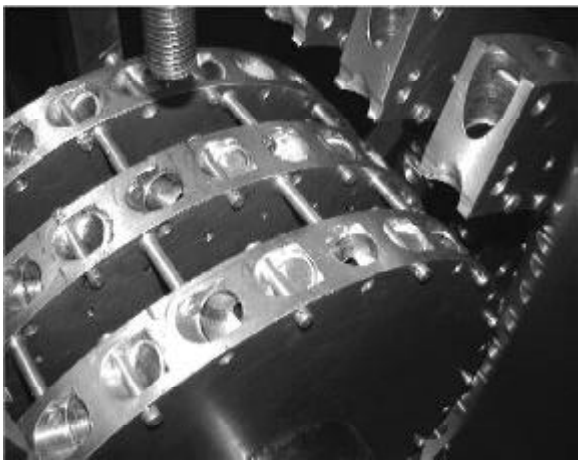

Fig.3

The units will be ideal for the small and large user, such as emergency, military, farms, plots,

industrial and large users... in fact any application requiring power.

Key Benefits Foreseen:

- No fuel costs
- Constant running
- Reliable
- Cost Effective
- Portable (6kw-120Kw)

Editor: In 2002 "Faraday Lab" got an offer from the company to buy their 6 kW generator for testing at the price of about $6,000. However, no contract was signed. The company is currently engaged in redesign of their motors and is looking for regional partners but they are not yet ready to produce on the line. In our issues we will try to inform the readers on their activities. Alexander V. Frolov

Internet Pages

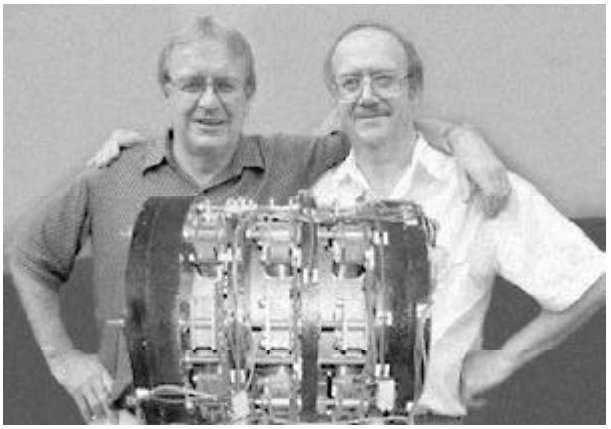

Lutec 1000

Jasker Power System

Electric Radial Motor

industrial and large users... in fact any application requiring power.

Key Benefits Foreseen:

- No fuel costs
- Constant running
- Reliable
- Cost Effective
- Portable (6kw-120Kw)

Editor: In 2002 "Faraday Lab" got an offer from the company to buy their 6 kW generator for testing at the price of about $6,000. However, no contract was signed. The company is currently engaged in redesign of their motors and is looking for regional partners but they are not yet ready to produce on the line. In our issues we will try to inform the readers on their activities. Alexander V. Frolov

Internet Pages

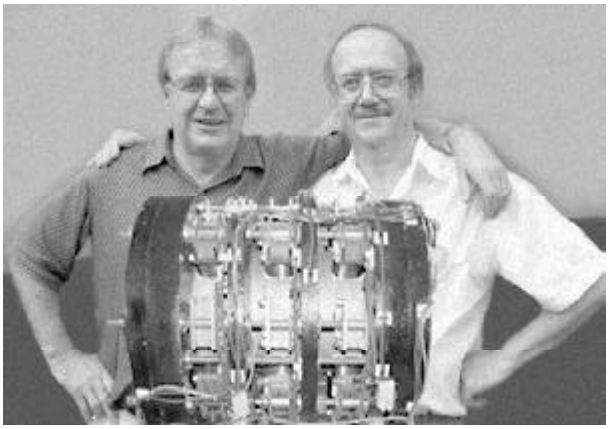

Lutec 1000

Jasker Power System

Electric Radial Motor

18 Meter Perpetual Wheel

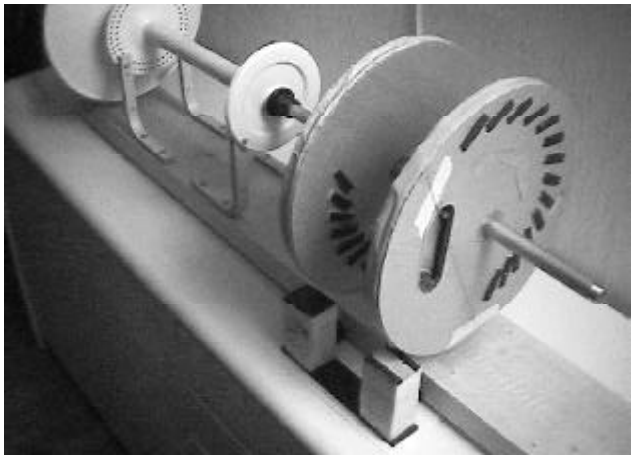

Minato Wheel, E. Vogel, Sweden

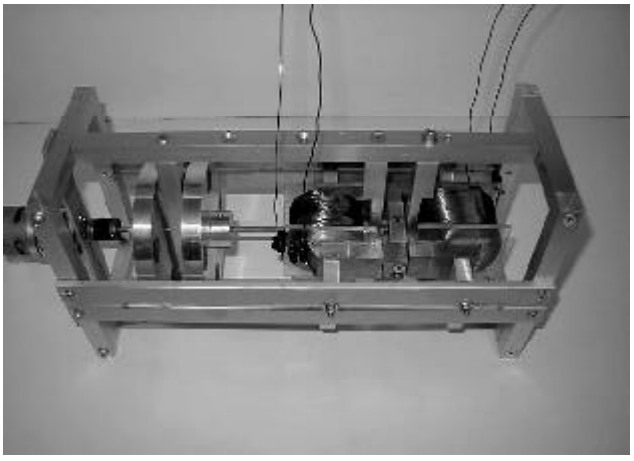

Generator from James W. German

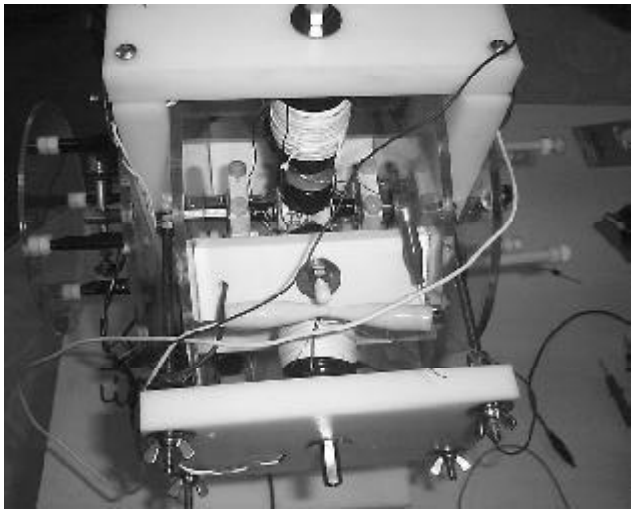

Konzen
Pluse Motor

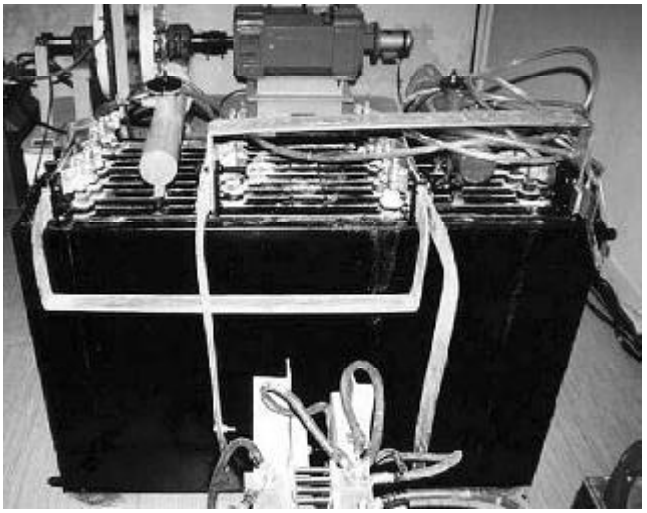

200-300 percent over-unity energy Space
Power Generator

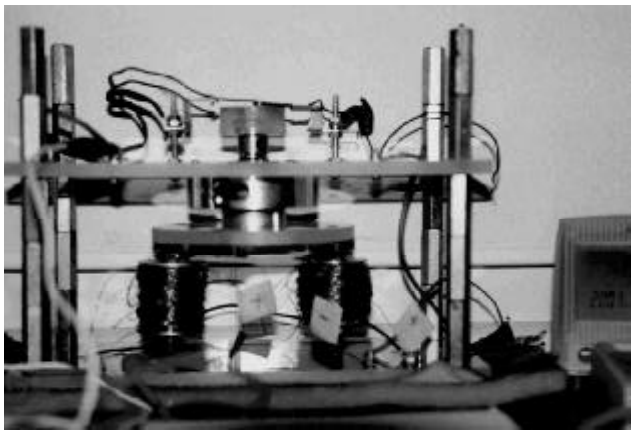

Adams Motor, Robert Adams

The RotoVerter

Bendini Pulse Motor

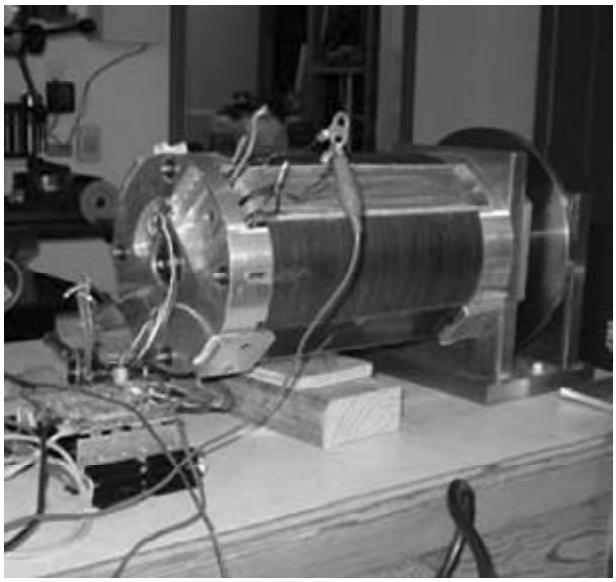

Motor based on Flynn Technology

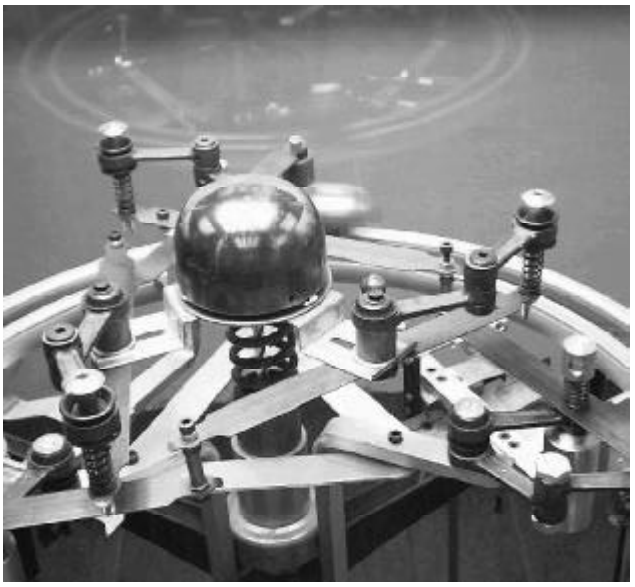

Finsrud Device

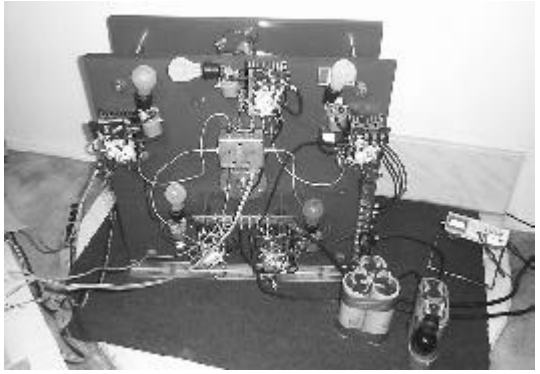

The Muller Unit

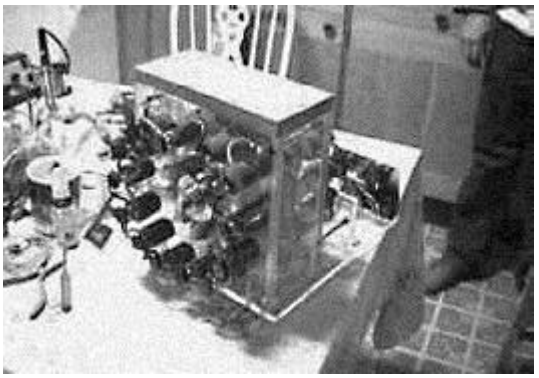

Alte Olsen Generator

Vladimir Matveev's Electrical Generator

Entirely New Kind Of Generator Invented!

(1-26-2003) TASHKENT, Uzbekistan (UPI) – An Uzbek inventor said he has created a type of electrical generator that does not rely on the principle of electromagnetic induction – on which all existing generators are based.

The new generator employs a concept called **magnetic conductivity modulation** and it has potential applications in industry, communications, households and even the military, explained Vladimir Matveev, the inventor, a specialist in electronics.

Matveev said he is convinced he has created a fundamentally different machine.

"All electrical machines I know are based on the principle of interaction between the magnetic fluxes (lines of force) of their rotor (rotating member) and stator (portion that remains fixed)," he explained.

Such machines, Matveev said, are based on electromagnetic induction, a property of energy discovered by Michael Faraday, an English physicist and chemist, in the 19th century. The machines produce electrical current either by moving a conductor across a magnetic field or by regulating the flux of that field.

"My machine has a principal difference," Matveev told United Press International. "The magnetic field of its stator does not interact with the magnetic field of the rotor (because) its rotor is not a magnet – the rotor only changes the magnetic resistance of the stator," he said.

The stator in Matveev's generator contains a magnetic core with a permanent magnet and a detachable winding. A rotor with changeable magnetic resistance is placed at a cutoff point in the core's magnetic field. It is composed of alternating magnetic and air parts and can operate in either linear or rotary form.

When the rotor is set in motion, its alternating components pass through the magnetic core's cutoff point. When the magnetic part passes through the cutoff point its magnetic resistance decreases. When the air part passes through, its resistance increases.

This pulsing of resistance results in changing the magnetic conductivity of the magnetic core, which in turn produces an alternating electrical current in the core's winding. The frequency of the winding's current can be controlled by regulating the rotor's speed or by changing certain qualities of its magnetic or air parts. Also, the generator's electrical

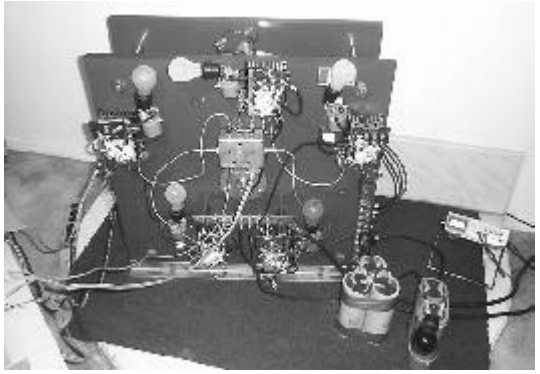

The Muller Unit

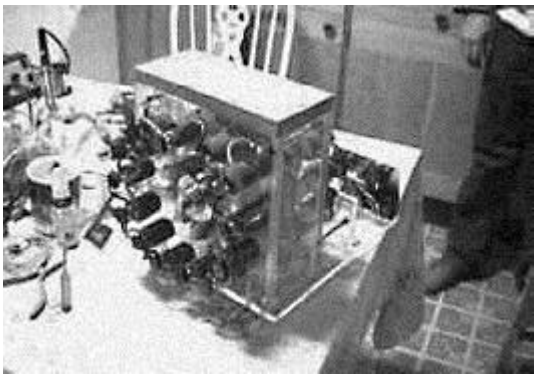

Alte Olsen Generator

Vladimir Matveev's Electrical Generator

Entirely New Kind Of Generator Invented!

(1-26-2003) TASHKENT, Uzbekistan (UPI) – An Uzbek inventor said he has created a type of electrical generator that does not rely on the principle of electromagnetic induction – on which all existing generators are based.

The new generator employs a concept called **magnetic conductivity modulation** and it has potential applications in industry, communications, households and even the military, explained Vladimir Matveev, the inventor, a specialist in electronics.

Matveev said he is convinced he has created a fundamentally different machine.

"All electrical machines I know are based on the principle of interaction between the magnetic fluxes (lines of force) of their rotor (rotating member) and stator (portion that remains fixed)," he explained.

Such machines, Matveev said, are based on electromagnetic induction, a property of energy discovered by Michael Faraday, an English physicist and chemist, in the 19th century. The machines produce electrical current either by moving a conductor across a magnetic field or by regulating the flux of that field.

"My machine has a principal difference," Matveev told United Press International. "The magnetic field of its stator does not interact with the magnetic field of the rotor (because) its rotor is not a magnet – the rotor only changes the magnetic resistance of the stator," he said.

The stator in Matveev's generator contains a magnetic core with a permanent magnet and a detachable winding. A rotor with changeable magnetic resistance is placed at a cutoff point in the core's magnetic field. It is composed of alternating magnetic and air parts and can operate in either linear or rotary form.

When the rotor is set in motion, its alternating components pass through the magnetic core's cutoff point. When the magnetic part passes through the cutoff point its magnetic resistance decreases. When the air part passes through, its resistance increases.

This pulsing of resistance results in changing the magnetic conductivity of the magnetic core, which in turn produces an alternating electrical current in the core's winding. The frequency of the winding's current can be controlled by regulating the rotor's speed or by changing certain qualities of its magnetic or air parts. Also, the generator's electrical

output – its voltage – can be controlled by changing the configuration of the rotor's components, Matveev explained.

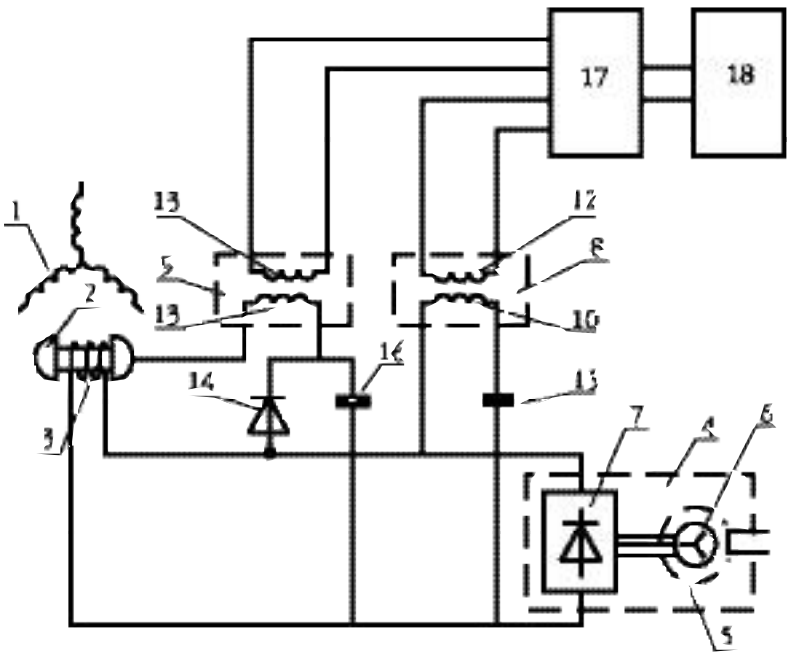

Electrical machine assembly - FEDORO V F 1996.10.10 1996RU-119822 (1998.09.27) G01R 31/34, 31/02

Addnl.Data: VOROBEI V K MATVEEV V A

NOVELTY - Device has electrical machine, non-brush field exciter with diode rectifier, two dynamics double-winding transformers, which primary windings are located on rotor and secondary windings on stator. One end of primary winding of second transformer is connected to rotor housing; another end is connected to common point of conductor which is connected between capacitor and cathode of semiconductor diode, which other terminals are connected to direct current terminals of diode rectifier. Semiconductor diode is connected to cathode group of rectifier; capacitor is connected to anode group. Secondary windings of transformers are connected to actuating member through generator of signal, which is proportional to resistance of insulation in excitation winding circuit.

USE - Electric power production

Matveev said his generator is different from an invention by Howard Johnson of the United States. Johnson discovered how to build motors that can run without input of electricity or any other kind of external energy. He obtained a patent in 1973 for describing electrical generation using only the energy contained in the atoms of permanent magnets.

Matveev also said some Russian inventors have experimented with a generator similar to his. Their generator changes its magnetic conductivity by changing temperature. However, the machine requires a lot of time to be heated and cooled alternately and results in a current frequency much lower than what generally is used in industry. Moreover, the Russian generator requires high steel density and greater mass.

Matveev's machine generates electric energy of industrial frequency. Furthermore, he said his machine is simple, reliable and requires less steel and mass than conventional generators. It also can be adapted to flows of low speeds, such as weak water or wind streams. Matveev tested the generator in his former household in Kazakhstan before he patented it in Uzbekistan.

"I want to pass the invention on to all mankind," he said.

Boris Abdurakhmanov, director of the Uzbek Koinot (Cosmos) design office and head of the laboratory of semiconductors and photoelectricity of the Institute of Electronics of the Uzbek Academy of Sciences, told UPI: "Matveev has offered a fundamentally new approach to a problem of the creation of electric power generators."

Utilization of the Gravity Force in Power Engineering

Editor: In the previous issue we made a review of Mikhail Smeretchanski's invention "Perpetual motor with magnetic control elements" (# 4, 2003). This invention was patented; shown below are some pages from the patent itself. You can contact the author by e-mail: smeretchanski.mikhail@wanadoo.fr, or the postal address: 13 av. Rochambeau 3800 GRENOBLE FRANCE

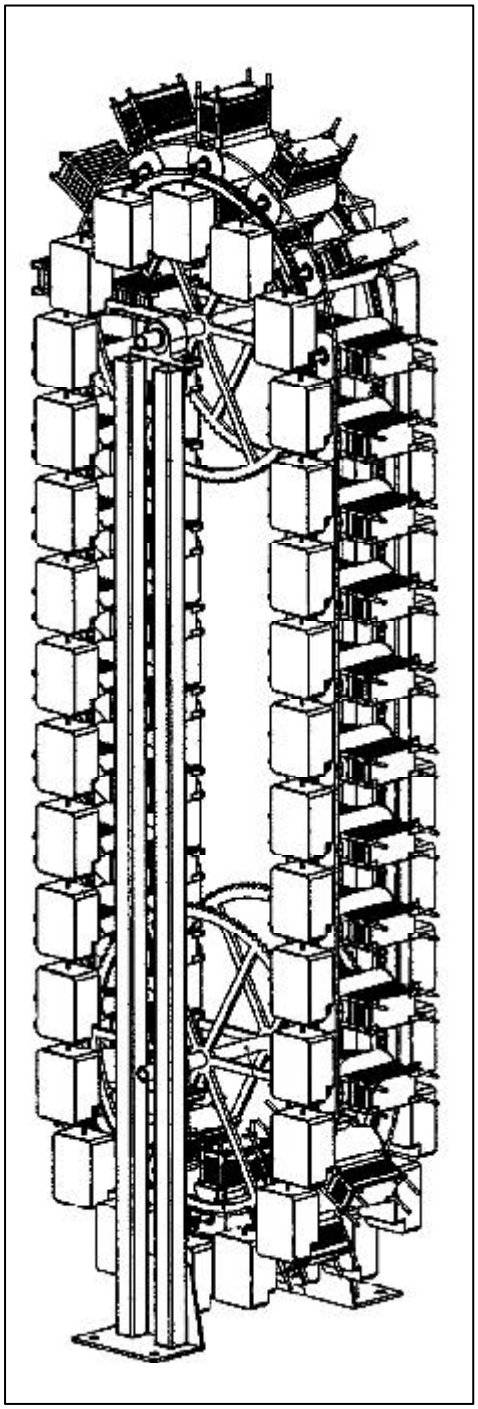

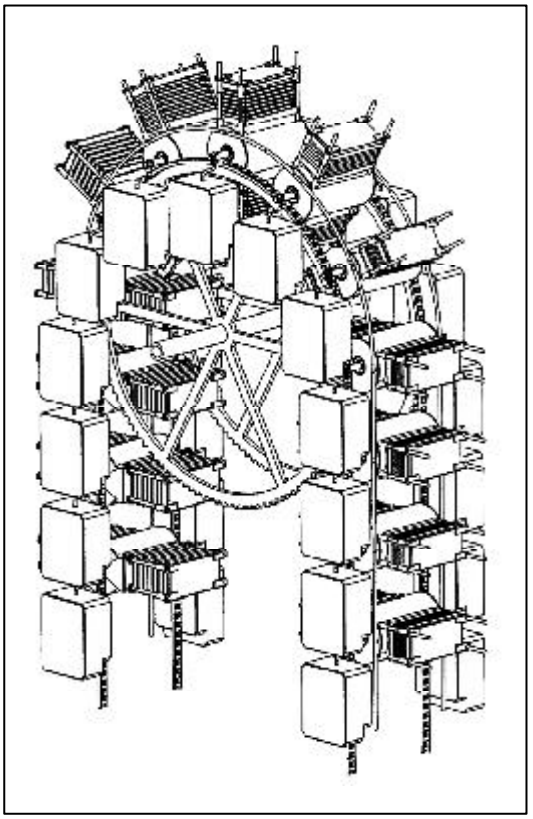

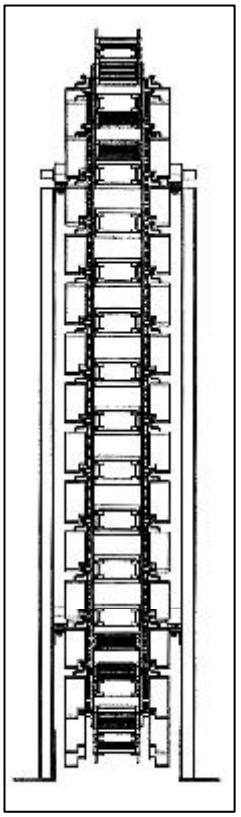

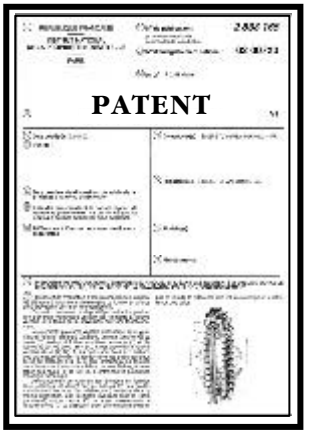

PATENT

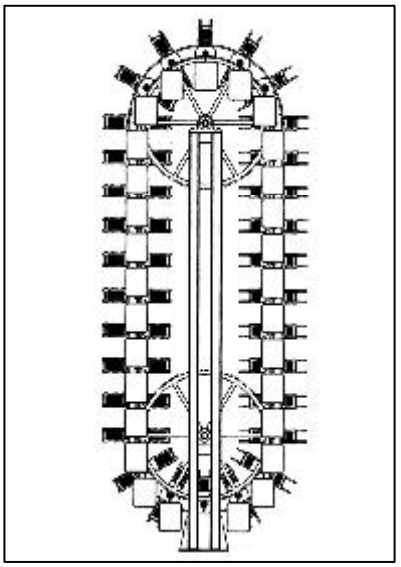

The Most Interesting Articles - 2003

In the year 2003 we have published more than 120 articles, mainly on the alternative energy, new propulsion principles and the development of ether dynamics.

"Cold fusion", low energy nuclear reactions (LENR) and highly-efficient electrolysis were represented by the works of Professor Kanarev, E. Storms, P. Hagelstein, T. Chubb and E. Cartlidge.

Almost every "New Energy" issue features articles on highly-efficient permanent magnet motor or generator experiments or patents of the kind. The articles by T. Valone, E. Vogel, A. Akau, T. Hardwood, A. Francouer and S. Abramov are of great value for engineers and researchers in this field.

The interesting articles by M. Filo, R. Koontz and V. Bogomolov reveal several principles of designing and building purely mechanical energy generating systems. All these systems possess one common feature: namely, the fact that a substance (a solid or fluid working mass) is accelerated in the gravitational field or in the centrifugal force field. The design characteristics of the system make it possible to obtain free energy.

We have published several articles by S. Gerasimov and his colleagues on the reaction-less propulsion device experiments. We hope that in the future we will keep in touch with these researchers.

The article by D. Reed on the new physics development concepts is worth mentioning too. The article by E. Sorokodum on new energy sources and the article by V. Chernobrov on the research into the active properties of time are of no less importance.

A. Egorov's article on the ball lightning makes it possible to form a number of experimental approaches to the problem of creation multi-purpose stable plasma objects.

Electrogravity questions, water-powered vehicles, longitudinal electromagnetic wave technologies, the Searl effect commercialization, capillary engines, resonance high-efficiency power-engineering, single-wire power lines, heat pumps and other similar research works were presented to our readers in the year 2003. We have minimized theoretical articles and we hope that the magazine has become more interesting and useful for the new energy practice development.

Alexander Frolov
St. Petersburg, Russia

There is interesting newsgroup of the site: http://www.overunity.com, Stefan Hartmann, email: harti@harti.com

Stefan Hartmann writes: This is the answer I got from Finsrud; it seems that the film they have done about him will be shown [on Discovery Channel] in 2004 when [if] I interpret this norwegian text right...

Subject: Documentary Film
Reidar Finsrud,

Dear Sir,

The Australian Broadcasting Company together with The Discovery Channel, have funded my company to make a documentary film entitled 'A Machine To Die For', the story of Perpetual Motion and the search for 'Free Energy'.
I have read extensively about your Perpetual Motion sculpture and we would be interested in traveling from Australia to Norway in order to film this now famous piece of work. At the same time we would request an interview with yourself.
If you are in agreement with this it is our intention to be in Norway on the 10th and 11th of July 2003.
This documentary will be released worldwide and should produce considerable interest in your Gallery.

Mark Eliot
Catherine Jarvis and Mark Eliot
Romany Mill Studios

Hydrogenics Secures $3 Million from Japan Auto Makers

Letter from RemyC remyc@prodigy.net
Contacts: investors@ hydrogenics.com

Hydrogenics Secures $3 Million in Test Equipment Orders Japanese Auto Makers Select Greenlight Power for Fuel Cell Testing Equipment

TORONTO, Sept. 30 – Hydrogenics Corporation (Nasdaq: HYGS; TSX: HYG), a developer and manufacturer of fuel cell products, announced today that its wholly owned subsidiary, Greenlight Power Technologies (Greenlight) has received orders totaling US $3 million for fuel cell test stations from two leading Asian automotive customers. Both are repeat orders for multiple machines.

Cumulatively, Greenlight is providing seven Fuel Cell Advanced Test Stations (FCATS) to two major customers. The first order is for three 3 kW PEM FCATS L-Series test systems. The second is for three 12 kW PEM FCATS H-Series test systems and one 60 kW PEM FCATS HX-Series testing station. The stations are expected to be delivered over the next two quarters.

"Our decision to open an office in Tokyo, Japan over three years ago continues to pay dividends," said Pierre Rivard, President and CEO of Hydrogenics. "The Japanese market is advancing quite aggressively towards the commercialization of fuel cell technology, as evidenced by our growth in test equipment sales to the region over the past three years. We are delighted to secure these major contracts with customers who are clearly setting the pace in fuel cell development."

Greenlight fuel cell testing systems provide high precision instrumentation, combined with full-featured software. They deliver fuel cell testing results that prove the reliability, repeatability and versatility required for world-leading fuel cell development programs.

About Hydrogenics Corporation

Hydrogenics Corporation (Nasdaq: HYGS; TSX: HYG) is a leading clean power generation company, engaged in the commercialization of fuel cell technology and test stations for fuel cells. The company is building a sustainable business, in a potentially "game changing technology" for transportation, stationary and portable power. Hydrogenics, based in Mississauga, Ontario, Canada, has operations in British Columbia, Canada, Japan, the United States and Germany. For more information, please visit www.hydrogenics.com .

About Greenlight Power Technologies, Inc.

Greenlight Power Technologies Inc. (http://www.greenlightpower.com), a wholly-owned subsidiary of Hydrogenics Corporation, is a leading global supplier of testing and diagnostic equipment to the fuel cell industry. It has supplied fuel cell test equipment to the world's premier fuel cell stack manufacturers, component manufacturers, system integrators and research organizations. Greenlight provides a full suite of test equipment for fuel cell stack, stack component, reformer and system testing for companies focused on portable, stationary, and transportation fuel cell applications.

Hydrogen Fuel Cells

Anuvu Incorporated

3980 Research Drive
Sacramento, CA 95838
USA
Tel: (916) 921-7040
Fax: (916) 921-7044
Email: anuvu@anuvu.com

www.anuvu.com/home.html

Now our readers can get familiar with some hydrogen fuel cell development photos. It is worth of a note that the prices are high for the majority of people. For example, a hydrogen fuel cell car costs 100 000 dollars FOB Sacramento, CA. The next picture features a fuel cell van, which costs 150 000 dollars.

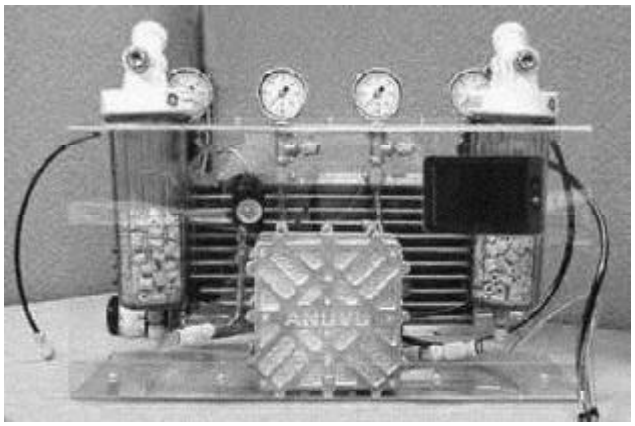

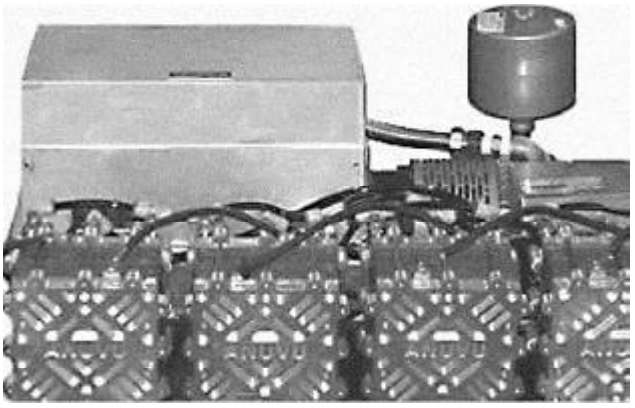

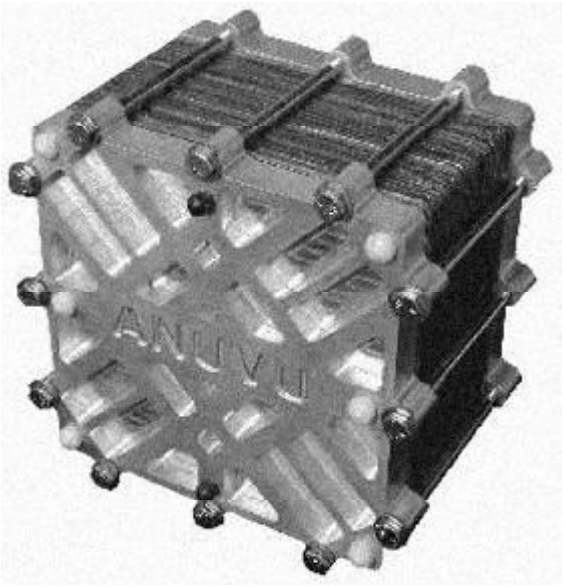

EXCESSIVE OUTPUT BY MEANS OF AIR IONIZATION

We have received an interesting article from California. Here is the short version of the article.

The Mechanism of The Electric Spark

Review of the research
by Leonard B. Loeb
Professor of Physics, University of California at Berkeley
and
John M. Meek, Research Engineer
Stanford University Press, Stanford University, California

Dedicated to Professor J. S. Townsend whose pioneer research and theory laid the whole foundation for the study of the mechanism of the electrical spark discharge.

Although the electric spark has been known to mankind in its various manifestations from time immemorial, its mechanism has to date been little understood. The initial clarification of the mechanisms involved is due to J.S. Townsend as a result of his brilliant researches in the early nineteen hundreds. On the basis of his theory of ionization by collision by electrons and positive ions, the fundamental mechanisms active and especially the coefficients required in their application were made available.

In 1936 the present senior author was forced to describe the mechanism of spark discharge in terms of a modified but distinctly unsatisfactory Townsend theory. In 1935 the discovery of photo-ionization in air by corona discharge indicated a solution was not far off. The turning point of a more successful theory came in the discovery of streamers in positive point to plane corona in 1936. The quantitative analysis of the self-propagating positive streamer in all breakdown phenomena became clearly evident as a result of the data concerning electron avalanches. As a result a qualitative mechanism of sparking by streamer propagation from anode to cathode functioning by means of photo-ionization in the gas was established.

The Townsend Sparking Criteria

It will not be necessary here to derive the famous equation of Townsend for the current [i] in a gap between electrodes as a function of the photoelectric current [io] from the cathode, the gap length [x] and the coefficients [a] and [B]. For this the reader can go to any standard text. *(Editor: the equation is omitted)*

In this equation the first Townsend coefficient [a] represents the number of new electrons created in the gas by an initial electron in its advance of 1 cm along the field axis from the cathode.

The second Townsend coefficient [B] in Townsend's original theory was the number of new electrons created by a single positive ion in its advance of 1 cm along the field from the anode.

The quantity [a] has been extensively studied in various gases. It varies with the ratio of field strength to pressure, X/p, where [X] is in volts per centimeter and [p] is in millimeters of Hg.

Note: the reason we are going through this is to determine the actual increase in current provided by the spark gap, and thus be able to design the circuit to avoid blowing out semiconductor components. It also provides a

sound and already proven scientific theory to work from giving us a good foundation and the confidence to proceed with technical design work.

The quantity [B] has been evaluated, albeit rather inaccurately, from the variations of [i] with [x] at various higher values of X/p, by many observers in different gases. Inasmuch as it has now been shown that there are numerous other mechanisms other than impact with positive ions, which can liberate the secondary electron, needed in discharge.

There has been an inclination to give up the mechanism of impact ionizations by positive ions in gas. The discovery of measurable photoelectric ionization in gas has now made it possible to explain such cases. The exact way in which photo-ionization in the gas could operate to cause a spark, was not clear until the development of the present **streamer theory**.

The Streamer Theory of Spark Discharge Anode Space-Charge Field Due to an Avalanche

Assume a spark gap of 1 cm in length. Assume that in air at atmospheric pressure the potential across the plates is 31,600 volts, which is the conventionally observed sparking potential [Vs].

Let us then calculate what happens in the field to one of those electrons. It starts across the gap, quickly acquiring an average random energy of some $E=1/2mC^2= 3.6$ electron volts and a drift velocity [v] in the field direction of about 1.5 to 2 times 10^7 centimeters per second. As it moves it creates new electrons at a rate of [a] per centimeters in the field direction so that in a distance [x] it and its progeny amount to e(ax) electrons, forming what is called an **electron avalanche**.

Therefore, e(ax) positive ions have been left behind by the electron group, virtually where they were formed in the 10^{-7} second of advance for the electrons in the distance x=q across the plates. As the electron avalanche advances, its tip is spreading laterally by the random diffusive movement of the electrons.From these data it is possible to compute the density of positive-ion space charge left behind at any point [x]. The value of [a] under these conditions is about 17, making e(aq)=e(17). The first ion pair is created at 0.0407 cm from the cathode. At 0.5 cm from the cathode there are 4914 ions, at 0.75 cm there are 3.66 times 10^5 ions, and within 0.0407 cm from the anode there are 1.2 times 10^7 ions. **Most electrons will be drawn to the anode except for some few that are bound by the positive ions, making a sort of a conducting discharge plasma in the avalanche.**

Such a distribution of ions does not make a conducting filament of charges across the gap, and hence in itself an avalanche that has crossed does not constitute a breakdown of the gap. Thus one must look further for the mechanism of the spark.

If Loeb and Meek are correct then if we assume a spark gap of 3 mm and a voltage of 5,000 voltsthere are roughly 2,000 electrons created by avalanche for every one electron leaving the cathode. They state that most of these 'free electrons' are absorbed by the anode. [This would certainly explain why the semiconductor components cannot handle the current gain.]

NOTE: Loeb and Meek make little reference to initial amperage. There are only two values they refer to 10^{-5} ampere and 10^{-12} ampere.

In conclusion: Sparks and Arcs are two different beasts. My initial research into the amperage necessary to form an arc does not apply to spark and the process of avalanche where this huge gain mechanism is possible.

Photoelectric Ionization in Gas as a Secondary Mechanism

Accompanying the cumulative ionization there is produced by electrons from four to ten times as many excited atoms and molecules. Some are excited to an energy exceeding the ionizing potential of some of the atoms and molecules present, either by excitation of an inner shell, by ionization and excitation, or in a **mixed gas like air by the excitation of molecules of higher ionizating potential, e.g., N2**. These excited atoms or molecules emit radiations of very short wave

length in some 10^{-8} second. This short ultraviolet radiation is **highly absorbed** in the gas and leads to ionization of the gas. In fact, the whole gas and the cathode as well are subjected to a shower of photons of all energies traveling from the region of dense ionization with the velocity of light. Thus nearly instantaneously in the whole gap and from the cathode new photoelectrons are liberated which almost at once begin to ionize cumulatively.

The Mechanism of Positive Streamer Formation

The photoelectrons created at points in the gas and at the cathode at any great radial distance from the avalanche axis will merely create other avalanches. Those in the gas will be short and those coming from the cathode region will be long and like that of the initial avalanche. Being smaller and, in any case, later in creation than the parent avalanche, such avalanches will be of no interest in breakdown. However, those photoelectrons created near the space-charge channel of positive ions, and especially near the anode, will be in an enhanced field, which exerts a directive action drawing them into itself. If the space-charge field [X1] is in the order of magnitude of the imposed field [X], this action will be very effective. In addition the values of [a] will be much enhanced.

The electrons from the intense cumulative ionization of such photoelectron avalanches in the combined fields [X] and [X1] which are drawn into the positive space charge feed into it, making it a conducting PLASMA which starts at the anode. The added fields will be most effective along [X] and so will the ionization. The positive ions they leave behind will therefore extend the space charge towards the cathode. These electrons also create photons, which produce electrons to continue this process. **In this fashion the positive space charge develops toward the cathode from the anode as a self-propagating positive space-charge streamer.**

As the streamer advances towards the cathode it produces a filamentary region of intense space-charge distortion along a line parallel to the field. The conducting streamer of a plasma consisting of electrons and ions extending to the anode thus makes a very steep gradient at the cathode end of the streamer tip. As this advances toward the cathode the photoelectron avalanches produced by radiation at the cathode, especially at the intercept of the extended streamer axis at the cathode, it begins to produce an intense ionization near the cathode. Hence the positive ions created there may increase the secondary emission. Thus, as the space-charge streamer approaches the cathode a cathode spot is forming which may become a source of visible light.

When the streamer reaches the cathode there is a conducting filament bridging the gap. As the streamer tip reaches the cathode the high field produces a rush of electrons towards the end of the streamer. This if followed by a current of electrons, gives a high-potential wave, which passes up the preionized conducting channel to the anode, **multiplying the electrons present by a large factor**. The channel is thus rendered highly conducting. If the metal can emit a copious supply of electrons because of the formation of an efficient cathode spot, the current of electrons continues the channel maintaining its high conductivity and **ever increasing in it**. This current, unless limited by external resistance, will then develop into **an arc**. It is, however, the intense increase in ionization by the potential wave, which gives the highly conducting channel characterizing the spark.

Conclusion: According to Loeb and Meek there are three means by which a spark in open air will provide a very large current gain. If this is true, it should be fairly easy to prove with inexpensive and unsophisticated equipment. Once the actual amount of current gain has been determined for the design parameters of the spark gap, then the rest of the circuit can be designed for the increased current value.

Editor: It is worth of a note that the current gain by means of ionization was patented by Pavel N. Yablotchkov (the patent of France # 120684, October 11th 1887). Some two years ago one of our issues featured an article about him. We think it is worth being published again.

PATENT of 1877 by Pavel N. Yablotchkov

Alexander V. Frolov
Faraday Lab Ltd,
Lev Tolstoy St., 7 St. Petersburg, 197376 Russia
Tel: 7-812-380-3844

Pavel N. Yablotchkov was born in 1847 near Saratov, Russia. He graduated as a Military Engineer in 1866 and spent several years in the Russian Army.

In 1872 he came to Moscow and started his activities in electrotechnical field. Since 1875 he had been working in Paris with the famous Louis Breget and his first French patent # 110479 of November 29th, 1875 was dedicated to an electromagnetic transformer. Then he developed and patented a lighting system (the well-known Yablotchkov electrical candle). In 1876 he patented a new electromagnetic transformer for industrial purposes, France # 115793 of November 30th, 1876.

The most interesting patent claim on over-unity devices by Pavel N. Yablotchkov is known as France patent # 120684, October 11th, 1877, "The system of distribution and amplification of electrical currents by means of atmosphere electricity..." The patent describes special capacitors connected in series with the load to increase the output current by means of ionization. Experiments were conducted together with the well-known physicists such as Dr. Maskar, Dr. Varren-Delaru and others and **they confirmed the 200 % efficiency of the circuit**. Now we will try to explain the method.

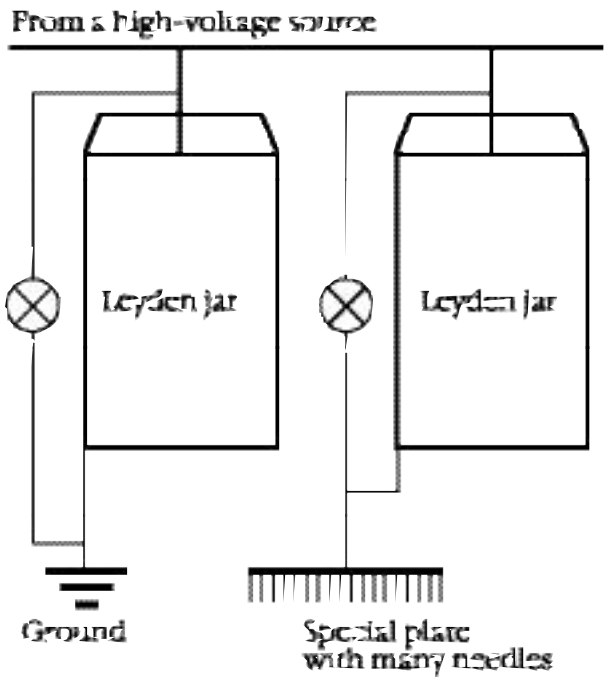

Fig.1 features a schematic drawing taken from Yablotchkov's patent. The Leyden jar is an asymmetrical capacitor, i.e. it is different in principle from a two-plate flat capacitor. The inner electrode of the jar should be connected to a high-voltage source and in this case the changes of the potential have an effect on the potential changes on the external electrode. It does not work in the opposite case and if you connect a high-voltage source to the external electrode no potential changes will be detected on the inner electrode. Connection to the ground or to a special plate (which is covered with many needles to increase air ionization) is necessary to attract the maximum number of electrons to the plate surface or to return the maximum electrons from the plate surface when potential changes on the external electrode are produced by means of electrical induction in the Leyden jar.

In conclusion I should mention one more supposition of the secrets of the well-known Swiss M-L converter (Methernitha). The main elements of the design are Leyden jar capacitors, which have the external surface made of perforated metal.

The other known fact is that great ionization of air is observed when the converter is in operation. So, the electrostatic machine can produce pulses of a very high voltage (potential difference) but it cannot be used as a source of a powerful current. In order to increase the current in the circuit we should apply a certain method and Yablotchkov's technology seems to be appropriate. A large surface of the external electrode of the Leyden jar can be a good solution to the problem. Maximum strong ionization allows us to obtain the output current several times stronger than the weak current generated by the electrostatic machine.

SUBSCRIPTION 2004!

To subscribe for
New Energy Technologies
please visit our web site:

http://www.faraday.ru/net.htm

One-year subscription
price for 2004 is $46.00

World-wide airmail delivery
included.

In 2004 we will publish
5,000 copies, 4 times per year.
Each printed issue will include
100 pages of printed information.
Alongside the English version
there is the Russian version
available.

CD "New Energy Technologies"

Back issues of 2001 - 2003 are
available on a CD with PDF files.
The price is $26.00.
You can order a CD from the same
web page:
http://www.faraday.ru/net.htm

Contact information for additional requests:

Faraday Lab Ltd,
New Energy Technologies magazine,
Lev Tolstoy Str. 7 -601,
St.Petersburg,
197376, Russia.
Tel/fax 7-812-3803844

TeslaTech, Inc.

296 E Donna Dr, Queen Valley, AZ 85218

Visit our site!.... **http://www.teslatech.info**

Benefits

- 1 yr *ExtraOrdinary Technology* (qtly)
- Mail Order Discounts
- Conference Fee Discounts

ExtraOrdinary Technology... our magazine containing news about ***the leading edge of our Scientific Revolution.***

...an invaluable resource to track leading edge research!!!

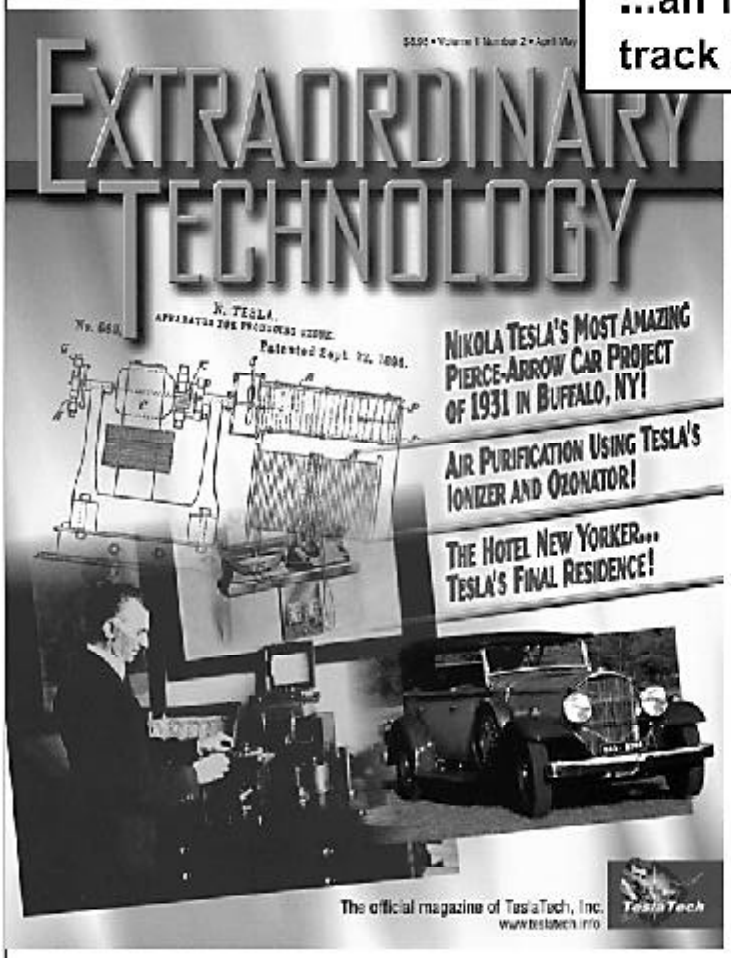

ExtraOrdinary Technology focuses on:

Tesla Technology
Low temperature plasma
Electrogravitation
Electrified water
Magnetic healing
Electromedicine
New Health Supplements

...and much, much more!

JOIN TODAY!

(520) 463-1994

Annual Membership Rates: $30 - United States • $35-Can/Mex · $55-Else

Advanced Energy • Alternative Medicine • Future Technology

New Energy Technologies

Magazine

Scientific news on advanced propulsion systems for aerospace industry and new energy technologies

Issue #3 (22) 2005

CONTENTS

- Excessive energy in molecular reactions, A. Sterling, A. Akau, USA 2
- News about Perendev Motor, A. Sterling, USA 14
- Gravity engine, A.N. Sakharov, Russia 21
- Paradoxes of gas structures, S. Geller, Russia 25
- Vortex liquid heaters, S. Geller, Russia 29
- The discoveries of John Keely, Review, E. Artemyeva, Russia 40
- A water-lifting device, V.V. Marukhin, Russia 49
- An anti-gravity platform of V.S. Grebennikov, Review 58
- Gravity Driven Generator, Russell Lee 78
- Membraneless Fuel Cells, Review, S. Shlenchak, Russia 79
- Hypothesis of I.O. Yarkovsky, Sizov A.V. , Russia 84
- Flying Platform, S.A. Gerasimov, Russia 92
- Company News: Cycclone Magnet Engines 94

Publisher: Faraday Lab Ltd

Editor-in-Chief Alexander V. Frolov, **Scientific Advisor** Kirill P. Butusov,
Technical Editor Svetlana A. Schlenchak, **Translator** Elena N. Artemieva

Correspondence Address: 7 Lev Tolstoy Str., St-Petersburg 197376 Russia,
Tel/fax: 7 (812) 380-3844, net@faraday.ru
2005 subscription $49. All the back issues as PDF files on CD $29.
Please pay online from our web site http://www.faraday.ru

Printed in Russia. Copyright © 2004-2005 by Faraday Lab Ltd.

Circulation: 500 printed copies

Please note that publications in 2006 are not planned.

Information reported in New Energy Technologies magazine is not necessary endorsed by the publisher or staff.
In many cases information received cannot be verified, though we try to report the news as accurately as possible.

Generation of excessive energy during molecular reactions

Experimenter Jean-Louis Naudin (France) claims to derive free energy cleanly and safely from the dissociation and association of hydrogen atoms. The invention has been made in 2003 by A.V. Frolov during the combined research project with Spectrum Investments Ltd. Data about several tests was posted. Plans, schematics, methods all listed openly to encourage replication and improvement of results. The idea is based on decades-old concepts set forth by Nobel laureate Irving Langmuir.

Last news from Jean-Louis Naudin's laboratory:
Using impulse heating of a 12V-cathode with a frequency of 51 Hz and under ratio of the impulse to the pause equal to 5%, efficiency more than 2000% was obtained. A theoretical maximum for the given kind of construction, according to A.V. Frolov's calculations, is 83:1, i.e. more than 8000%.

Jean-Louis Naudin's comment:
"Alexander Frolov was the first to carry out tests of the atomic hydrogen generator in Saint Petersburg, during the first stage of the project. You can read more about it at http://jlnlabs.imars.com/mahg/mahg1.htm. Now I have confirmed the results of his tests independently, using two kinds of completely different measurement equipment".

Jean-Louis Naudin, E-mail: jnaudin509@aol.com, Web-site: http://jlnlabs.org

Editor's note: The work has begun after Nicholas Moller's visit to Saint Petersburg, 2003. We have analyzed his idea of using the monatomic hydrogen recombination process for the generation of excessive energy. The idea also was published in William Lyne's book "Occult Ether Physics", USA,1997. Initially, Moller planned to work with free flame in a device of the hydrogen burner type, but I rejected this idea due to the explosive risk and suggested another approach without hydrogen consumption, i.e. with the dissociation-recombination cycle occurring in a closed volume. A powerful electronic-vacuum diode with a tungsten cathode of the direct heating was chosen as a basis of the device. Making a contract on the research on the given subject, we have determined that intellectual property on this project belong as 50/50 to Faraday Lab Ltd, A.V. Frolov, Russia, and Spectrum Investments Ltd, UK, Nicholas Moller. Further, Spectrum Investments Ltd paid a part of the works' expenses. Then, a test bench and two gas-filled lamps were exported to UK. Our company, Faraday Lab Ltd, invested additional funds for development of the works with different variants of the device. It happened more than a year ago but Spectrum Investments Ltd still did not paid for our customs fee on this contract (about 1,000 dollars). Due to this problem, relations between Faraday Lab Ltd and Spectrum Investments Ltd became strained. We understood that it is only a mere formality but we had to bring an local court action against an unfair partner because execution of export contracts shows mutual respect of the companies.

I have to say that due to Nicholas Moller's organizing efforts it was created the Global Institute For New Energy Technologies (GIFNET) http://gifnet.org). In August, 2005 Nicholas Moller called me by phone and informed me that UN General Secretary Kofi A. Annen visited the Institute and wished them success and promised a support.

Our firm also is developing this topic. Now we have established contacts with institutes in Australia and UK to continue the research. We also are interested in joint projects with Russian research institutes.

A.V. Frolov, CEO, Faraday Lab Ltd

Fig. 1. The experimental device in J.L. Naudin's laboratory. A test-bench with heat calculator, a system of water cooling and ESB 3.314.363 lamp was exported from Saint Petersburg in 2004 by Faraday Lab Ltd.

Information from web-site http://pesn.com was given by authors Allan D. Sterling (sterlingda@pureenergysystems.com) and Adrian Akau (adrianakau@aol.com).

French independent researcher Jean-Louis Naudin reported that he ran is experimental "Frolov/Moller Atomic Hydrogen Generator" (FMAGH) version 2.0 for one hour at an efficiency of 2000% - that's 20 times more energy out than he put in. The day before, using slightly different settings, he reported having achieved an efficiency of 682% for twenty minutes. On June 2, he reports to have run this generator for two hours at an efficiency of 243%. This is the first known replication and collaboration of the work done by inventor Alexander Frolov of Faraday Lab Ltd. of St. Petersburg, Russia, in January 2003.

Free Energy

According to Naudin's claims, this several-fold excess energy is being derived somehow in the process of molecular hydrogen dissociating into atomic hydrogen, and then re-associating into H_2. Free energy is derived, and hydrogen is neither lost nor gained. It is a closed system in terms of "fuel". "The Atomic Hydrogen Process is 100% clean and safe," says Naudin on his site. Once realized into a commercial product, such a generator would provide the consumer with a device that would supply energy for free, minus the expense of the device itself, and any maintenance it might require - similar to other free energy sources such as solar or wind energy. The development is still too young to be able to ascribe a cents-per-kilowatt-hour estimate. The hope would be that it will be less expensive than any energy technology available today.

Mechanism

In simplistic terms, the FMAHG is comprised of a cylinder that has an input and output channel for water flow around a closed inner chamber filled with hydrogen at 0.1 atmospheres pressure. **(Editor's note: Devices with another pressure have been also investigated in our laboratory. Frolov A.V.)** A 0.25 mm diameter tungsten filament at the heart of the device serves as the cathode, where the Hydrogen reacts to switch between monatomic and diatomic states. Again, the hydrogen is not consumed in the process of alternating between monatomic H and H_2. Extreme heat is given off as the H atoms recombine to H_2. The water cools the vacuum tube containing hydrogen at 0.1 atmospheres. The heated water is where the excess energy manifests for practical use. We speculate that a stirling-acoustic engine might be the ideal mechanism for efficiently converting that heat to mechanical energy.

The key is found in the frequency characteristics by which the positive anode and negative cathode are pulsed, to effect a low-energy separation of the H_2 into H. The anode/cathode voltage gradients range between 200 and 300 Volts. AC-driven pulses do not work. The pulses have to be DC, in the range of 10 megahertz. The shape of the pulses is important as well.

The recent improvement in efficiency that Naudin saw, came from changing from a power-supply-driven voltage pulse, to a battery-driven pulse. Naudin replaced the power supply by a high power battery connected through a high power MosFet Switcher. The Switcher is driven by a 10 MHz pulse generator. Apparently, the battery characteristics provide a better input reservoir. By using the battery, Naudin was better able to focus the pulse and gain better results. This is like using a sharp knife instead of a dull one to dice vegetables.

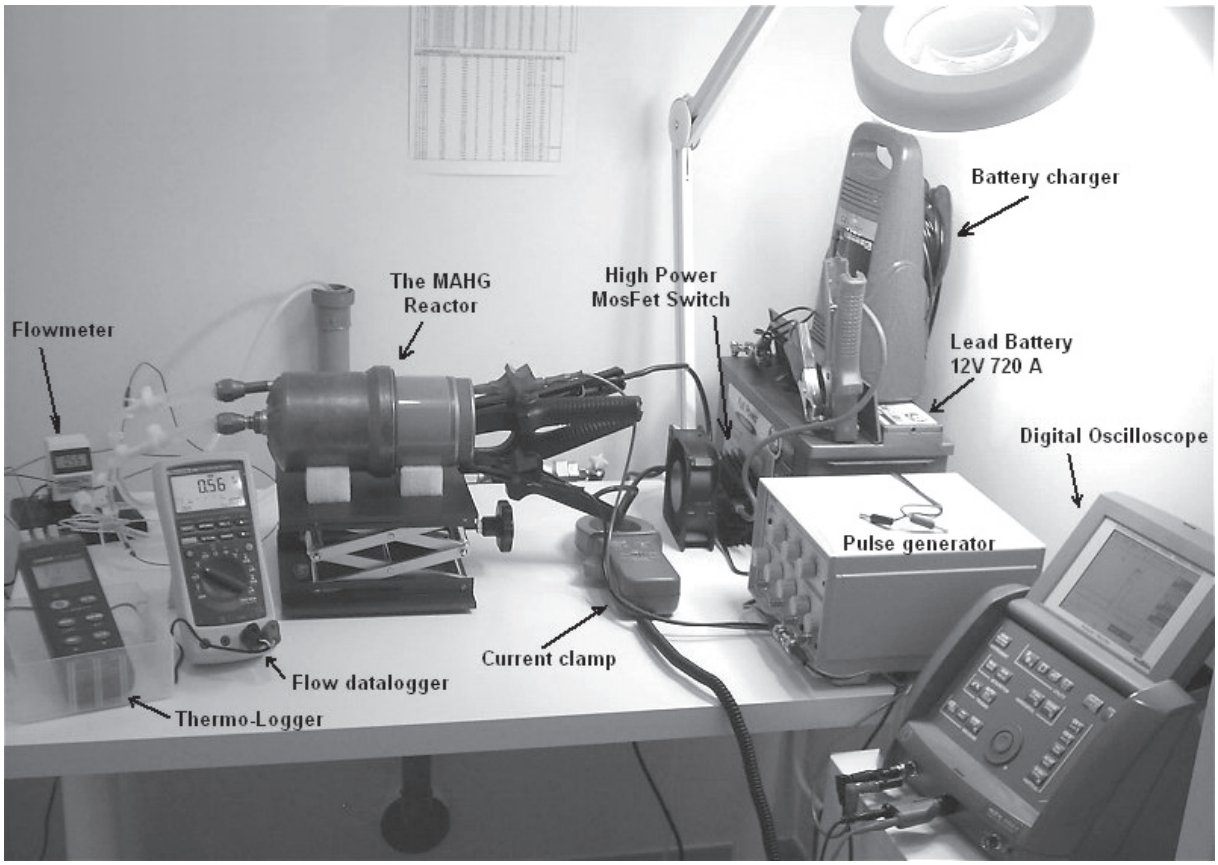

Fig. 2. The new experimental device in J.L. Naudin's laboratory, June 2005.

The shape and length of time for the pulse might be the most important part of the experiment. **Editor's note: hydrogen dissociation is a subject, which has been thoroughly studied in the classical experimental physics. According to the design, which Naudin has, it is advisable to work on its resonance frequencies. Besides, this is not the only method to obtain the effect in the given system. The effect's essence is not limited by the processes in hydrogen. Alexander V. Frolov.**

Self-run Capability? Not Yet

Jones Beene, an observer of the Naudin results, commented that until someone is able to make such a device as this self-run, with energy left over to use, the mainstream scientific community will remain aloof and uninterested. Historically, there are too many effects displaying in the same way but having nothing to do with free energy.

Naudin responded, "If I am able to greatly overcome the poor efficiency of the Carnot cycle at high power and for a long time, with the use of a high-efficiency TEG (Thermo Electric Generator), it seems possible to build up a closed-loop device. This is a long way off; a lot of work is required."

Beene has numerous ideas of his own about the FMAHG, both about how to improve the design as well as the theory behind its operation, and the political ramifications of open sourcing. He expects that a self-runner could appear quite soon, and then the scenery would change rapidly.

Open Source Project

Naudin reports additional experimental results on his website, along with photos of his apparatus, descriptions of his protocol, schematics and diagrams of his set-up, and copies of the data he has obtained during his experimental runs. He provides a history of the technology as well as an essay describing the principles and theories that underlie the

Fig. 3. MAHG, version 2.0 built by J.L. Naudin

technology. The information is clearly intended to be adequate for anyone who wishes to construct the device and try to replicate the results, or join in the quest to improve upon them.

"The results are stable and fully reproducible," said Naudin on his site. He describes the FMAHG as one of the best devices that he has tested to date, a very good candidate for producing a clean and independent energy "for the benefit of all." This technology is nearly 70 years old, and is not likely to be patentable. (A patent was obtained by Frolov in Russia, but a source that request to remain anonymous states that it is probably not valid). **(Editor's note: We sent a patent application to the patent authority of the Russian Federation but, after a prolonged correspondence, it was rejected due to the fact that they considered this result impossible, though our measuring bench had been specially certified by the state metrological center. Besides, some inaccuracy of measurements is not important in case of the efficiency of 210-245% (for the first experiments). We hope that the following attempt to patent this technology will be successful. Of course, according to our contract about cooperation work with Spectrum Investments Ltd., we will give them 50% of the patent. A.V. Frolov)**. It appears to be a feasible candidate for the "open source" model of development by interested scientists worldwide.

Nicholas Moller, one of two individuals after whom this particular variant (2.0) device is named, said, "The time has come for removing the responsibility of defining the energy policies and structures of the future from the hands of the established energy industries, and place it in the hands of men of science who will work for the preservation of the environment that sustains all life on Earth." (A quote is from Naudin's site.)

That does not mean, however, that there will not be contentious attempts to claim and patent the technology and its various nuances. Beene points out the problem of "claim jumpers" in some other countries such as Japan,

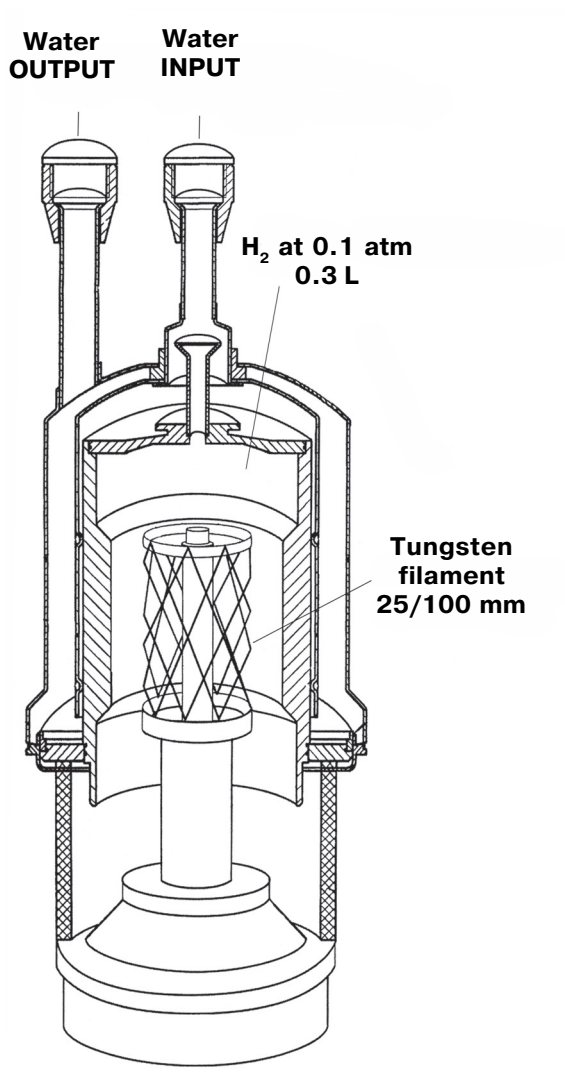

Fig. 4. ESB 3.314.363 lamp's design. A reaction chamber of the generator with tungsten filament.

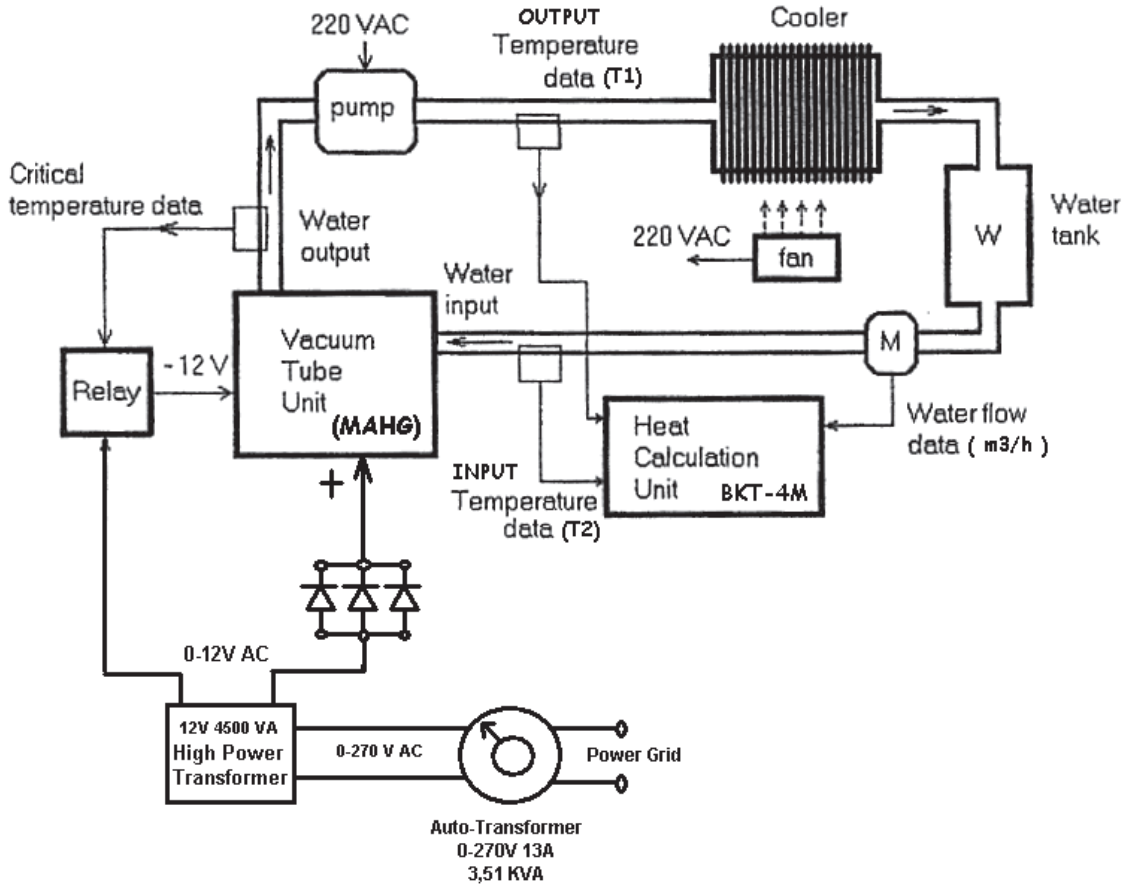

Fig. 5. A scheme of the experiments

Korea, and Taiwan; where the "first-to-file" rule trumps "first-to-publish." It will take a magnanimous spirit by many to see some staking their claims on this technology while others are freely sharing their ideas. In some countries, including the U.S., the rule is "first to publish," so open disclosures on the Internet will preclude the patenting of the idea by others, ensuring that the technology stays in the open domain in those countries. Beene further points out that Governments in China, Pakistan, and the Arab world might seek to obtain international patents, even on some small technical issue, like a more correct theory or a minor detail of operation; thus limiting or delaying the commercial implementation by others.

"Perhaps, since Moller himself has no problem with this open approach, then no one else should care either. After all, he is the one who is giving up the most," said Beene. The rush to derive a clear theory behind how the technology works is also likely to be animated. **(Editor's note: The theory already exists and is developed in details but its publication is not advisable before getting the patent)**.

Beene, who has a "bare proton" Dirac hypothesis about how this technology works, points out that Randall Mills might seek to claim that this is a hydrino device, while advocates of the low energy nuclear reaction (LENR) will claim that this is more akin to cold fusion. "The Langmuir explanation, being the one on which the device was built, is likely to be seen by most as being operative," says Beene, "but there could be others." All things considered, Beene concludes, "Yes, let's create something unique in all of free-enterprise - the

completely open project which benefits the poor as well as the wealthy - but also, let's not be naive enough to think that other forces are not at work to try to keep that from happening."

It may, therefore, be worthwhile to consider the example of Tim Berners-Lee, inventor of and copyright holder on the World Wide Web. He uses his copyright as a means to fend off attempts to introduce proprietary programs, and to keep the web both free and universal, which are both part of the definition. So, after this example, this publication and others can be used to establish the "anteriority" of the concept, and such a copyright may provide at least some leverage to keep the FMAHG universal and "free".

Nobel Laureate Irving Langmuir's Discovery

Naudin states that Frolov/Moller's Atomic Hydrogen Generator is based on a discovery by Irving Langmuir (1881-1957 b. Brooklyn, N.Y). Irving Langmuir won the Nobel Prize for Chemistry in 1932. His work on filaments in gases led to the discovery of the vacuum tube, gas-filled incandescent light bulbs (the life of tungsten-filament light bulbs would be lengthened by filling the vacuum with inert gas such as Argon), atomic hydrogen, and the atomic hydrogen welding process. Langmuir's doctoral thesis in 1906 at the University of Gottingen in Germany was entitled "On the Partial Recombination of Dissociated Gases During Cooling". In 1926, he invented the atomic hydrogen blowpipe in which hydrogen gas is sent through a small hole through by means of an electric arc formed by two tungsten rods, reaching temperatures of 3700 degrees Kelvin (K). Hydrogen (H_2) yields two ("monatomic") atoms of hydrogen, absorbing 422 kilojoules in the process. The atoms of hydrogen then quickly recombine into the more stable molecular form giving off extreme heat. The hydrogen is therefore thought to be a transport mechanism to extract energy from the arc plasma and to transfer it to a work surface. In 1912, Langmuir showed that hydrogen at low pressure in contact with a tungsten wire heated by an electric current is dissociated into atoms and is accompanied by a large absorption of heat (100kcal per gram molecule). He used electric currents of 20 amperes and voltages from 300 to 800 volts.

FMAHG

In the FMAHG (Frolov/Moller's Atomic Hydrogen Generator), as demonstrated by Frolov and then showed by Naudin, hydrogen changes between the diatomic and monatomic states without being used up. In this process, hydrogen appears to be acting as a vacuum energy pump because an excess of heat results from more energy being released during the monatomic to diatomic part of the cycle than from the dividing of the diatomic hydrogen molecules into monatomic hydrogen. Mr.Naudin's results show that the difference between output and input may reach a ratio higher than 10:1.

What is the mechanism for this excess energy production, and precisely what is occurring in the plasma? In other words, why is this cycle acting as a vacuum-energy heat pump? We know that the FMAHG works most efficiently with pulsed DC energy; it has no positive results with AC. The direct-current pulses must play a part in causing the H_2 molecules to break apart with less energy than when the individual atoms recombine. Why? The effect of the DC pulse on weakening the bonds must make the difference. A pulse can be controlled as to its voltage, current and duration.

Editor's note: It is important to take into account that the dissociation is produced by an electrical field between the electrodes. Avoiding creation of a conduction current between the electrodes, we will escape or decrease energy consumption. This concept is known according to the works of T.E.Bearden, USA, and it was also presented by Frolov A.V, Russia, in his article "Application of a potential field for the creation of power", New Energy News, USA, #1, May 1994. A.V. Frolov.

The recombination of the single hydrogen atoms into H_2 molecules, on the other hand, is a natural event which, to some degree under given conditions, provides the same amount of output energy.

However, all is not so simple, as temperature is another factor affecting the efficiency. Mr.Naudin has shown that the efficiency of the energy pump is greatly increased as the temperature of the hydrogen increases. His chart (voltage vs. current) shows that the resistance of the tungsten filament is not linear. Irving Langmuir's 1926 chart shows that at 8,000є K, well above the melting point of tungsten, the amount of hydrogen dissociated reaches a maximum of 99.9%. Remember that Irving Langmuir was not subjecting the diatomic hydrogen molecules to voltage pulses.

The curve on the diagram shows how the percentage of molecular hydrogen dissociated into atomic hydrogen is related to the temperature of the tungsten. These data were published by Irving Langmuir in March 1926. The following experimental curve from Naudin, enhanced by the warm to cool background hues, shows the FMAHG filament (the cathode) temperature in relation to time during the tests. You may notice that atomic hydrogen (1% to 7%) has been produced during only 25 of each 100 ms. Mr. Naudin's filament (cathode) temperature and time graph, based on data recorded in May 2005, shows that a minimum of 2,000є K must be attained before the hydrogen dissociation process begins. At the peak temperature of just below 3,000є K, there is a 7% dissociation of the diatomic hydrogen molecule into its mono-atomic form.

The voltage vs. power graph shows that the ratio between the output power and input power is increasing non-linear as the voltage of the pulses increases. Therefore, the voltage itself must also have the effect of increasing the number of dissociations per unit of time, or of increasing the difference in output over input power. Note that both input and output taken individually seem nearly linear except at the lower voltages (below 2 volts).

In the new tests on June 23rd, 2005, Naudin made some changes to the apparatus. He replaced the power supply by a high-power

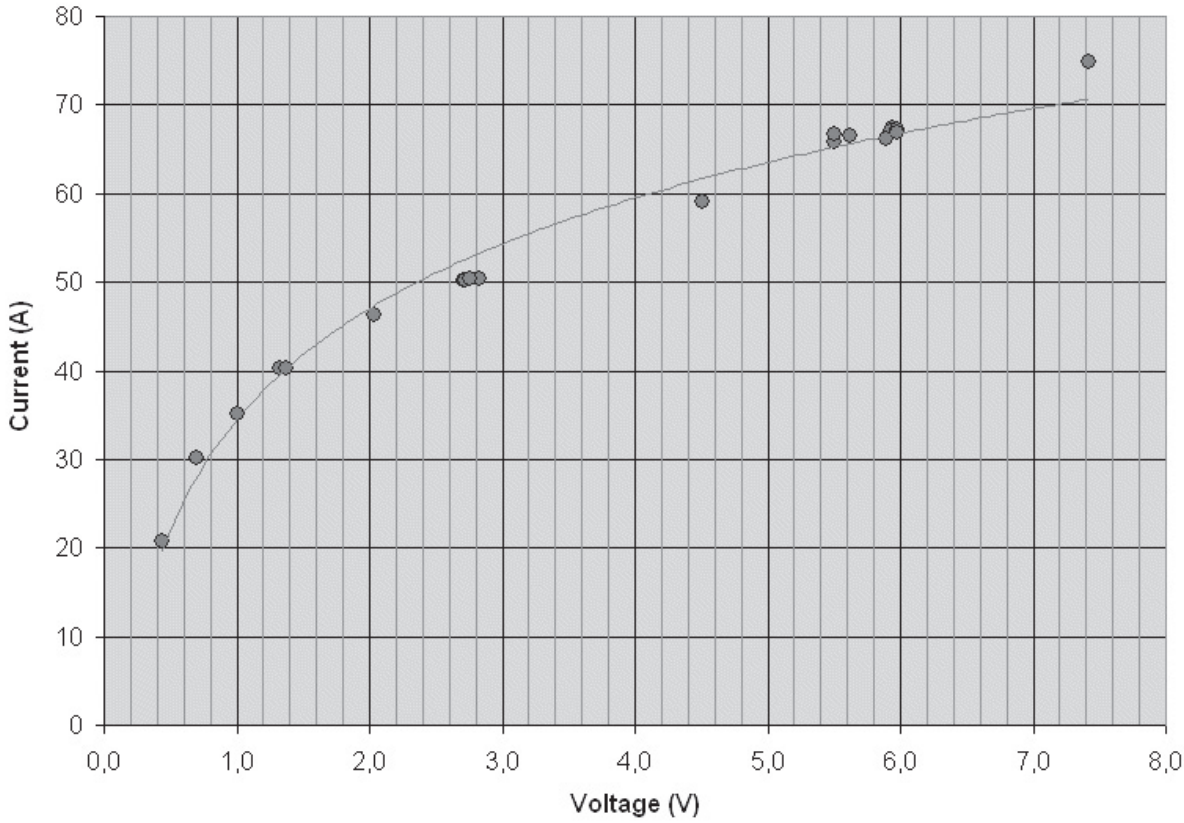

Fig. 6. MAHg Tests - May 2005 - J.L.Naudin

T (K) degrees	H %
2000	0.1
2100	0.2
2200	0.4
2300	0.65
2400	1
2500	1.6
2600	2.4
2700	3.5
2800	5
2900	7
3000	9
3200	15
3400	24
3600	36
3800	48
4000	62
4500	85
5000	94
6000	98
7000	99.7
8000	99.99

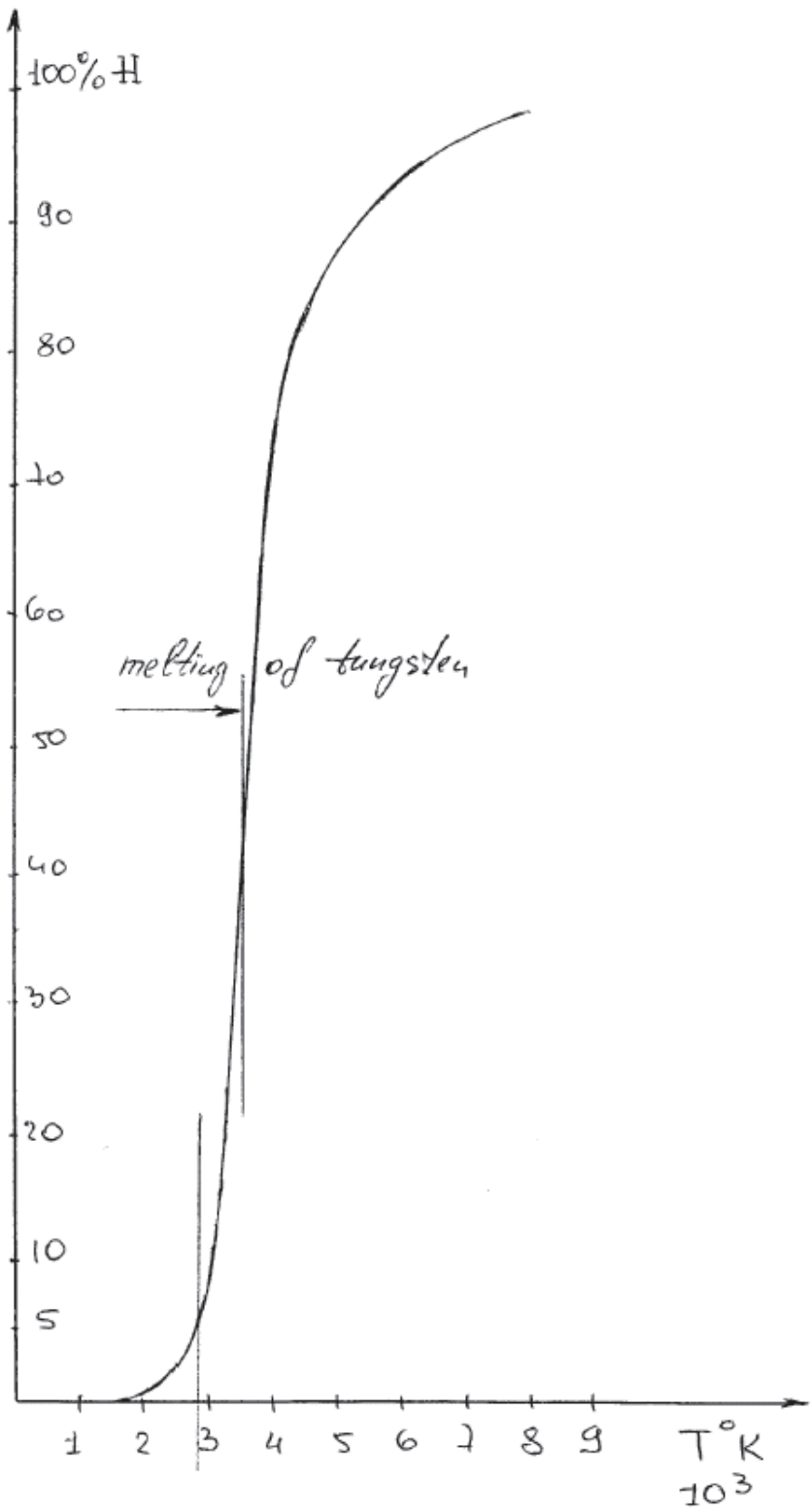

Fig. 7. Dissociation of hydrogen to atoms.
The diagram is taken from the research diary of A.V. Frolov.
The diary is completely published on J.L. Naudin's site.

battery connected through a high-power MosFet Switcher. The Switcher is driven by a 10 MHz pulse generator. The efficiency of the system went from a maximum of 243% up to 1153% while the duty of the squared pulse decreased (up to 5%). This refers to the time interval each DC pulse is acting on the hydrogen molecule. By using the battery and the special MosFet Switcher, the length of time for the pulse was shortened by up to 5%. In other words, by using a more precise pulse, Mr.Naudin was able to achieve much better results than with the previous pulse produced by a power supply. Apparently, the features of the new pulse allowed the vacuum energy pump to work more efficiently. We expect that Mr.Naudin will present a graph of this new pulse when available.

What Next?

Once others have been able to repeat these results, and the effect fully characterized, explained, and optimized; the big question will be how practical this technology will be as a free energy tapping modality.

Solar energy is free energy, but the hardware required to convert photons to electricity is anything but free. Likewise, even though this FMAHG technology apparently taps free energy, does not automatically mean that it will solve the world's energy problems. The machine cost and efficiency will be a primary consideration in the practicality of the technology for commercial application. Preliminary results and extrapolations appear promising for the FMAHG. Further studies and development will answer that question more definitively.

In an email granting permission to use the images that appear in this article, Naudin said, "I hope that my modest contribution of my researches about this fascinating device will soon give us a clean energy source for the future and will contribute to saving our planet".

Beene gives his opinion that "of all the many projects going-on in alternative energy right now, this is by far the closest thing to being a demonstrable (and shocking) success within the next 6 month time-frame. By success, I mean self-powered overunity leading to an immediate commercial prototype - or at least something which cannot be denied by the mainstream of physics as being overunity (probably ZPE) and instantly marketable."

In the throws of this recent success, Naudin's

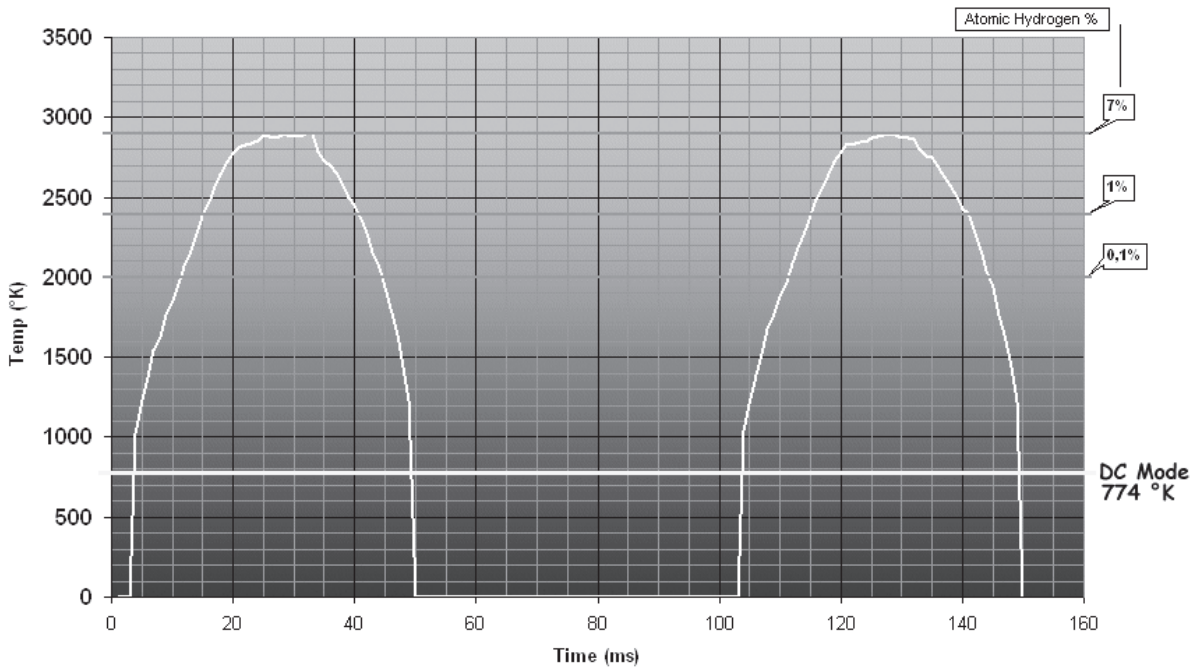

Fig. 8. MAHG tests: Filament temperature Vs time. Tested by J.L. Naudin, May 2005.

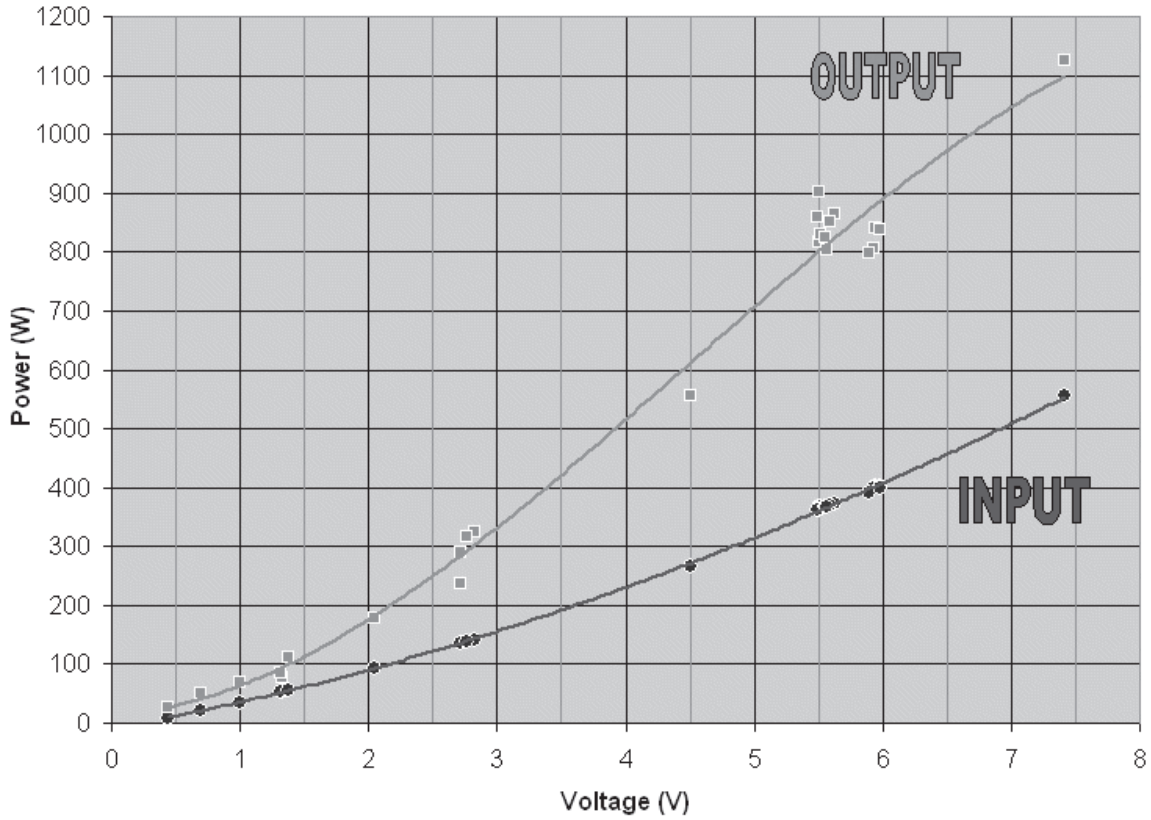

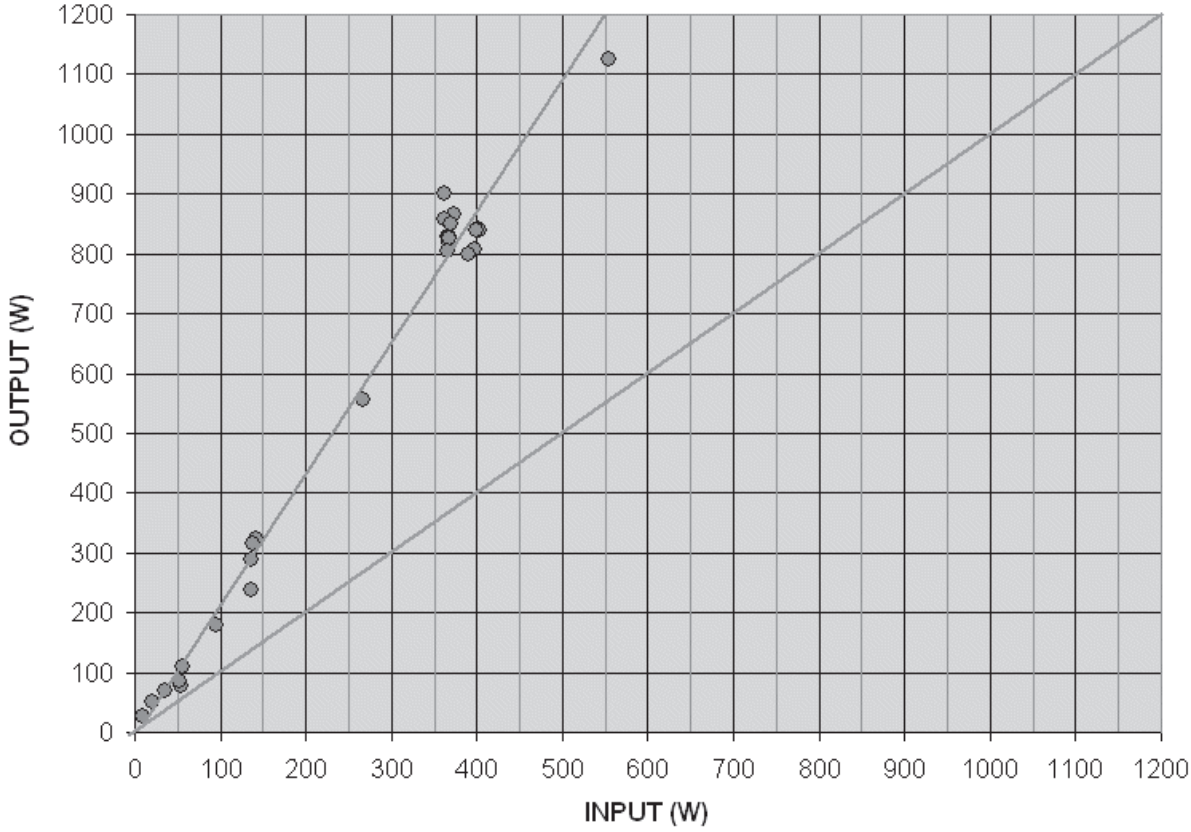

Fig. 9. MAHG Tests, J.L. Naudin, May 2005.

assessment of this technology is that it rises to the status of the "Holy Grail" of energy.

Follow-up

If you are interested in pursuing this concept, there is a project list that pursues various iterations of the atomic hydrogen generator concept such as JL Naudin's FMAHG above. The group is designed for those wishing to replicate, improve, and develop theories for this fascinating concept.

- http://groups.yahoo.com/group/aH-gen

SOURCES

- Email correspondence with JL Naudin, who reviewed a near to final draft of the above story and said, "Thanks for your very well documented paper about the FMAHG and for your contribution to this fascinating project."
- Email correspondence with Jones Beene.
- http://jlnlabs.imars.com/mahg/index.htm - MAHG Project home page
- Data Reports
  - o http://jlnlabs.imars.com/mahg/tests/lrtests.htm - 2-hour test run with 243% efficiency (June 2, 2005)
  - o http://jlnlabs.imars.com/mahg/tests/pultests.htm - Towards high efficiency in excess of 1000%. "The purpose of these tests is to improve the MAHG efficiency so as to overcome the losses due to the poor efficiency of the Carnot cycle at the MAHG output." (June 20, 2005)
  - o http://jlnlabs.imars.com/mahg/tests/mahg2a.htm - High efficiency confirmed with a new tests bench. "During the RUN #74 all the data [sic] have been recorded during 20 minutes, the average power output measured was 90.56 watts with only 13.22 watts at the input. The delta T was 2.8°C with a cooling water flow of 0.54 L/min. The average efficiency measured was 682 % during this test." (June 23, 2005)
  - o http://jlnlabs.imars.com/mahg/tests/mahg2b.htm - MAHG v2.0: one hour test run at 526%. "This 1 hour test confirms again all the previous measurements done with the MAHG." "During the RUN 75, the average power output measured was 66.5 Watt with only 12.5 Watt at the input. The delta T was 4.6°C with an average cooling water flow of 0.24 L/min. The average efficiency measured was 526 % during this test." (June 24, 2005)
  - o http://jlnlabs.imars.com/mahg/tests/index.htm - Full tests of the MAHG by JL Naudin (May 23, 2005)
  - o http://jlnlabs.imars.com/mahg/logbook.htm - Genesis phase of the project; 1st preliminary experimental tests results. (March 1, 2004)
- Instructions
  - o http://jlnlabs.imars.com/mahg/diagram.htm - The MAHG full construction diagrams.
  - o http://jlnlabs.imars.com/mahg/setup.htm - The MAHG experimental tests setups. (March 1, 2004)
- History:
  - o http://jlnlabs.imars.com/mahg/mahg1.htm - Documentation of genesis phase of the project, in which Alexandar Frolov of St. Petersburg, Russia, tested inventor, Nicholas Moller's, device (1.0), to demonstrate Langmuir's principle. (March 1, 2004)
  - o http://jlnlabs.imars.com/mahg/photos.htm - The MAHG photos album, with descriptions and labels. (March 1, 2004)
- Article: http://jlnlabs.imars.com/mahg/article.htm - Irving Langmuir and Atomic Hydrogen by Nicholas Moller
- Forum: http://groups.yahoo.com/group/jlnlabs/ - Naudin's discussion list covers a wide array of free energy topics. The forum is moderated and selective in what it allows.

ADDITIONAL READING

- The Atomic Hydrogen Reaction - Tom Bearden introduces William Lyne's book Occult Ether Physics. (July 6, 2003)
- Carnot Excedence - Patent and Mathematical Proofs by Kenneth Rauen, Science Advisor for PES Network Inc., show that super-efficient thermodynamic exchange is possible. (Pure Energy Systems; June 28, 2004)

CONTACTS

- Jean-Louis Naudin : jnaudin509@aol.com
- Jones Beene : jonesb9@pacbell.net
- Nicholas Moller :

wavebalance@icqmail.com

See also

- Hydrogen Technologies (index at FreeEnergyNews.com)
- PESN (Pure Energy Systems News) - feature stories
- This Week in Free Energy™ - Weekly five minute blurb.

Editor's note: We also advise you such a primary source as publications of Faraday Lab Ltd about the partial progress on this subject on our web-site http://www.faraday.ru and in "New Energy Technologies" magazine. Now we have exported new devices to Australia for testing. We would like to see interest of Russian research institutes and laboratories to this subject and carry out joint experiments with them.

Frolov A.V.
Director General of Faraday Lab Ltd.
Our site http://www.faraday.ru
Fax 812-3803844

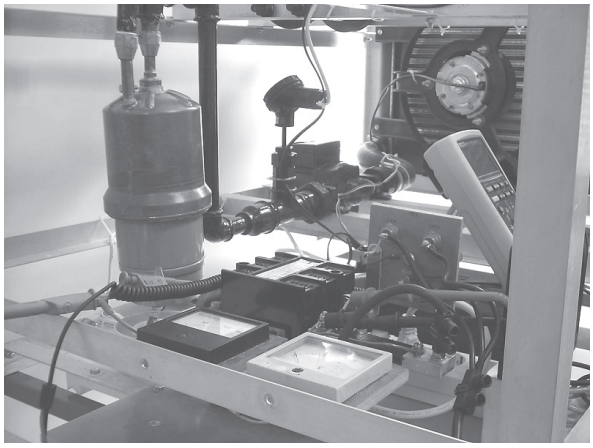

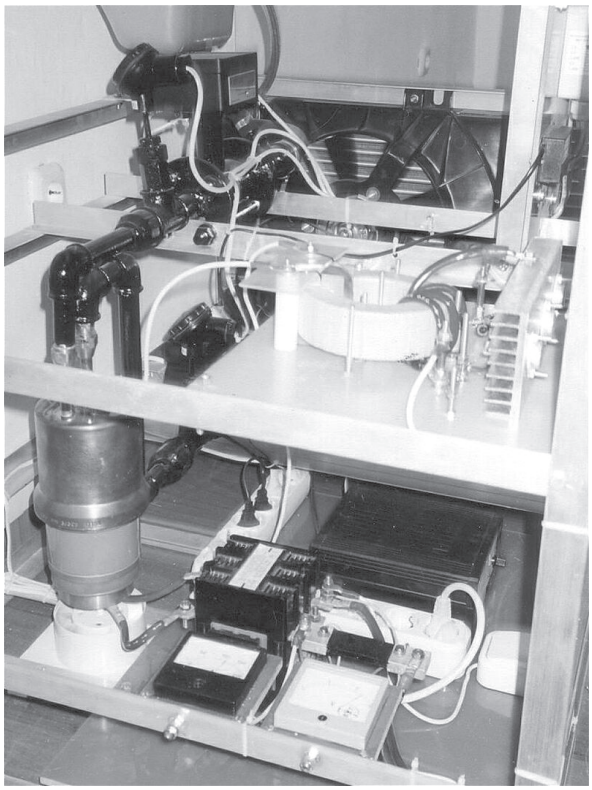

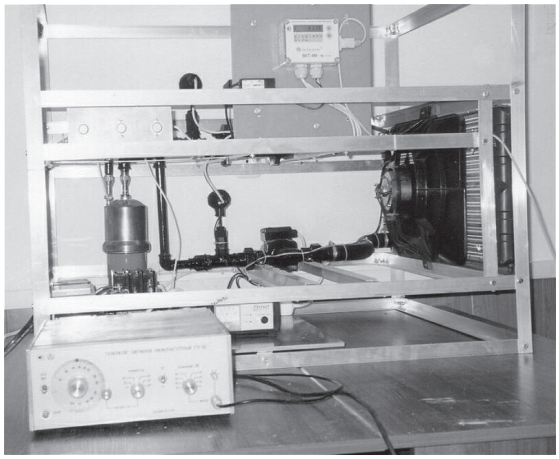

News about Perendev Motor

Sterling D. Allan
sterlingda@pureenergysystems.com
www.pureenergysystems.com
Phone: +1-801-789-8030 (MST)

Perendev is Tooling Up for Magnetic Motor Mass Production in Europe

All-magnet motor poised to be first to reach market. German manufacturer licensed to manufacture 20 kw unit for Europe and Russia. Estimated cost for first units: $8500 Euros.

JOHANNESBURG, SOUTH AFRICA -- For centuries, inventors have been claiming to come up with magnetic motor designs that use nothing more than the power of permanent magnets for the motive force; and for the same amount of time, mainstream science has responded that this is impossible. "It has been proven mathematically that no combination of permanent magnets in any arrangement will generate power."

History tells us that what has been proven in many people's back yards and garages does not always coincide with mathematics of the day.

Refusing to be daunted by what he considers to be petty dogmas of academic science, inventor Michael J. Brady of Johannesburg not only claims to have produced such a device, but reports that his company, Perendev Power Developments Pty (Ltd) is now in process of manufacturing it on a large scale for markets in Europe, Russia, and Australia.

Perendev's new website was published recently at Perendev-Power.com with the assertion that they have achieved the milestone of producing "the world's first fuelless magnetic engine."

Other inventors who claim to have built working all-magnetic motors would take exception to the Perendev claim to being the first, as stated on the site. Brady mentioned that he had noticed some inaccuracies on the wording on the site and that he would be addressing them.

What is yet to be attained by anyone is a market-ready device. If Perendev continues on the track claimed on its site, it could achieve that distinction, and set the hitherto balking scientists community into motion to come up with theories of why it works.

Brady estimates that the first units will sell for around $8500 Euros, but that the price will decrease as volume sales increase.

The site features video footage of an earlier prototype running as well as computer simulations of the newer designs. The prototype video is not skeptic proof, as it does not do a walk-around during acceleration. Brady has been promising another video that would do a walk around before, during, and after motor engagement and acceleration followed by disengagement and deceleration.

A page about the motor says that the motor works "by focusing the magnetic field, the angles of the magnets and a special method of shielding." Also, "the motor does not require external power to start up." Brady reports that tests run have shown no diminution of magnet strength over period of motor operation, which was two months in one instance.

As the stators become engaged, the three rotors with off-set magnet alignment begin to spin. The speed is controlled by a governor. Without the speed control, the device would accelerate to destruction.

Brady also states that a 4 megawatt unit is plausible with this design, and has been rendered in conceptual blue print form.

A German company has licensed the manufacturing and marketing rights for all of Europe and Russia, excluding the U.K., and is in process of tooling up to begin mass production.

Two other groups are in process of negotiating licensing terms with from Perendev. One is in the U.K., for rights to manufacture and market in the U.K., and the other is in Australia, for rights down under.

Brady brought a prototype to the Germans in mid March, and said they have been testing it since that time. The prototype has been undergoing testing by TЬV, a German consumer quality control agency.

The name of the German company will be revealed when they have finished tooling up and are ready to begin production, which Brady estimates will take place in a month or two. He said that these units will be consumer ready for application in home use, pending the stamp of approval from TUFF. Brady also plans to allow German television crews to document the device for public view.

Twenty kilowatts is adequate to handle the peak load of most homes. Ran continuously at that rate, the excess produced during average use, which is five percent of peak use, could be sold to the grid for a quick return on investment. It will put out quite a bit more than twenty kilowatts, said Brady. "That is what it is rated to produce continuously."

In May he reported to have tested the unit with a larger alternator rated at 60 kw "with very little degrading of the motor's performance."

Brady has been churning on this idea for thirty years, and actively developing it for approximately the last five. "We've been through hell -- no money coming from anywhere -- but we made it through." A German citizen working in South Africa for a Hollywood project came and talked to them and told them, "Let's put that behind us and move forward.

MUNICH GERMANY -- Mike Brady's claim to a working magnet motor, capable of putting out enough torque to run a 30kW generator continuously, has been a topic of interest for several years.

He has gone as far as releasing a video of the motor in operation, but has not followed up with a skeptic-proof video that shows a walk-around

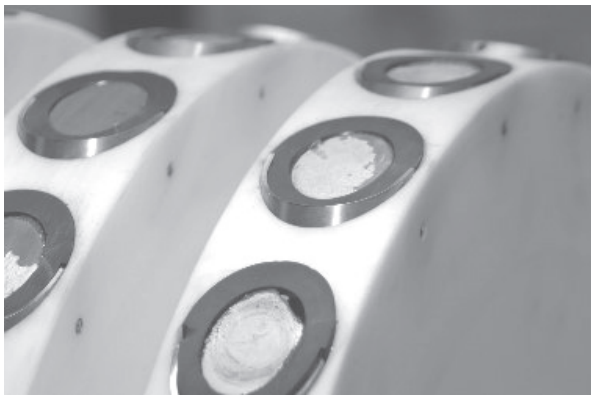

Fig. 1. Perendev Magnet Motor, Nov. 18, 2004

during acceleration, rather than just during deceleration. He was going to do a big debut on German television last Fall, but a series of Murphy's law type of problems compounded, and that public launch never materialized.

Though the "30kW" capability is a more recent claim, surpassing earlier claims of 5kW and then 10kW, Brady has been touting near-market readiness for at least three years.

Around the time of the claim to a pending debut on German television, Brady had come upon a sizeable amount of funding. Part of that was manifest in the improved professional look of the Perendev-Power website. The site also featured a fancy animated version of the motor in action.

Perhaps because these public demonstrations did not materialize, Brady felt he had to show at least something. In the past few months, he has also been touting several new lines of technology, as if they are in-house and in the bag, from an energy spark plug to water treatment. In in reality, however, at least one of them is held by a company out of Australia that had only discussed a possible arrangement with Brady, and had not actually solidified anything in contract form.

Presently, the Perendev-Power.com website seems to have taken a step backward. Perhaps another unpaid bill.

Another modification of note on the website is the addition of the statement: "In Association with EADS Space Transportation". In a telephone conversation, a representative of EADS said they have not heard of Perendev. Perhaps the word

has just not gotten around within EADS yet. I've submitted and email asking about this, and am awaiting their response.

Fig. 2. Author with Mike Brady, Dec. 2002, Johannesburg

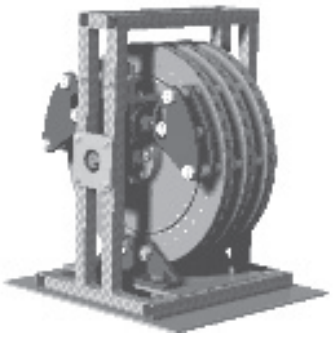

Fig. 3. June 17, 2003 Prototype Rendering

Like so many other inventors, Mike Brady tends to talk far ahead of himself. Part of that future vision in Brady's case includes dreams of dripping wealth. Though my first encounters with him gave me the impression of a person with an altruistic drive to help the planet, since that time it seems more apparent to me that for him, money and fame have become the primary driving factors. He expects to be paid today as if his device actually performs like he says it does, when in fact he has proven time and again to be misrepresenting just how far along he is.

He somehow seems to continue his work despite the clashes that inevitably occur when the optimism of the inventor disconnects with the rubber-hits-the-road practical nature of the investors and business partners. The further a technology is from the mainstream, the more pronounced this phenomenon seems to become. Those that are far enough away from the mainstream hardly get any money in the first place. Because of his prototype claims, Mike has been able to bridge that gap. That does not mean, necessarily, that he really is just months away from market readiness. Anyone investing or considering investing there should be aware of this.

I wish him well. Meanwhile, I've mothballed PerenTech.com, to which Perendev.com points. However, just because the team I pulled together three years ago to manufacture and market Brady's device in North America wilted away a good many months ago due to delays and broken promises from Brady, does not mean that Brady's device will never materialize. It merely serves as a point of advice for any person or party intending to engage.

A Word of Caution

I have known Mike Brady since May 2002. At that time, when I inquired about his magnetic motor, he said, "yes the motor is running and almost ready for the market, only the commercial packaging [is] still to be done." You will see below, in a letter soliciting licensing and investment funds, that he is still representing himself and his company as being this far along with the magnet motor.

As one who has been intimate to the workings of Perendev (I own Perendev.com and I built a team to spearhead the manufacturing and marketing of his magnet motor in North America), and as one who has stood by Mike through much skepticism and criticism, I feel I need to issue a caution in regard to this most recent development, as it involves the actual solicitation of funds. Previously this has not been the case.

Since our team was unable to verify what stage of development Mike has really reached with his magnet motor and other technology claims, we cannot vouch for their readiness to be marketed. I do believe he has created something worth while. However, in the past I have observed him to exhibit a strong tendency to talk far ahead of himself, thinking he's much farther along than he really is. Therefore it is important to take all statements with a grain of salt, and independently verify any claims, which can be difficult not only because of the distances involved, but because of the difficulty of pinning Mike down at a time when he actually has a prototype to view.

I do not believe Mike is intentionally running a scam operation. He believes in what he is doing. I will say, though, that his integrity quotient is among the lowest I've ever encountered of those I would yet consider friends. He makes promises readily, but seems to lack a built-in drive to carry through with his promises or explain why he is not able to deliver as promised.

One of the most blatant and significant examples of this, from a business point of view, was his continued promise of patent information (never delivered) as well as a skeptic proof demo video (never arrived). The one video he did produce showed a walk-around after acceleration, not during. An in-person demonstration was sought and promised on numerous occasions but never materialized.

The first statement in the document for investing or licensing supposedly certifies that he/she "has had a full and complete opportunity to ask all questions concerning Perendev Power International AG and its proposed business operations" is problematic. Unless the new people Mike has aboard his company are more forthcoming in cooperating with potential investors by providing answers to important questions, this provision is not likely to be satisfied.

Another red flag is that the solicitation mentions three new products: "zero-point sparkplugs, friction free lubricants and UV water treatment products." There is no information at this time on the perendev-power website about these new products that are allegedly ready for market. You would think that if they really did have patents, they would put patent numbers next to each item claimed.

Furthermore, the statement says that there are no other products like these available. I can say that I've heard a number of claims to related magnet motors gearing for market. Mike's might be the furthest developed according to their public pronouncements, but we don't know the details about other groups who might be more discrete in their pre-market development phase.

There are several other anomalies about this solicitation, such as the high price for licensing and for stock shares.

My personal suggestion would be this. If you put money into this, be sure it is money you can afford to lose. Those who take risks in business don't do so recklessly. Successful venture capitalists read the fine print, check the patents, and attend the product demos; they don't put cash on the table for wishful thinking or vague promises. The old expression "caveat emptor" (buyer beware) is a good one to keep in mind for all types of investments.

I would hope that Mike's team can pull off a miracle and actually deliver to market one or more of the products they are presenting here. The ideas sound great. Maybe some day Perendev-Power will be a tremendously successful company. Any company at its outset has its weak points, including flaws in personalities and even some thin areas in its individual and group level of integrity. Successful companies are able to weed out those weaknesses, pull together on a proper footing of good business practices, and ultimately offer pre-tested, viable products to investors first and then to customers.

Be sure to do your due diligence such as seeing the relevant patents claimed. Don't depend on this coming through anytime soon, if at all. It's not just about whether or not the technology is viable, but it hinges on whether the business team can pull it off. My hope is that they will, for the sake of the planet

Perendev Power Taking Orders for Magnet Motors

Manufacturer wishes to gauge level of interest. No monies accepted until delivery ready.

MUNICH, GERMANY -- Perendev Power Developments declares on the news page of their website that they are now ready to take orders for their permanent magnet motors. Magnetic forces are the driving power, eliminating the need for outside input of fuel or electricity of any kind. Combined with an alternator, the unit is said to produce 20 kilowatts -- more than enough to handle the peak load of most homes.

Perendev does not yet have units ready to ship, though they claim that they have had several working prototypes and that they have had some independent testing run on their devices, and that

they are gearing up to be able to volume-produce the product.

The purpose of inviting advance orders is to enable the manufacturer to gauge the level of interest in the product.

As similar claim was made around two years ago on Perendev's web site, any interested parties are advised to keep their hopes in check. This is a noteworthy development, but until actual product is being delivered, the news is not yet groundbreaking.

Managing Director and inventor Mike Brady states that Perendev will not accept any payment up front. Rather, they will keep the client advised as to the timing for delivery. When the product is ready for fulfillment to a particular customer, then Perendev will request a 50% deposit. The balance for the unit is to be paid upon proof that all shipping documents are ready to go and fees have been paid.

Brady anticipates that the unit will cost between 9,500 and 10,000 Euros.

Shipping costs will be paid by the client, and are expected to be rather high due to the size and weight of the unit, and due to the fact that the unit will need to be packaged in such a way as to not emit strong magnetic fields.

Consumers are advised that while this development sounds exciting, there are chilling bureaucratic obstacles to bear in mind at this early stage. Most countries require national laboratory certifications of safety and performance, such as Underwriter Laboratories (UL) in the U.S. or "CE" (European Union standard) in Europe, in order for an electrical device such as this to be used legally. Non-compliance can result in loss of fire insurance or other penalties, forcing the market to target at first mainly off-grid applications.

Shipments to countries where the product is still officially unknown could incur delays as the necessary bureaucratic clearances will need to be established.

Torque applications such as for automobiles or industry may also trip over bureaucratic stipulations, removing the romance of the notion of simply installing the device and having "free energy." Obstacles in the way of obtaining proper clearances are significant and must not be overlooked.

Extensive field tests and results will need to be compiled before such certifications will be granted. Furthermore, a new product such as this is bound to have performance issues, despite the rigorous pre-emptive engineering to avoid the same.

How well will such a unit be able to provide a stable power input for commercial application? Modern electrical appliances are designed to operate within a certain window of electrical input, including the right frequency as well maintenance of the proper energy level. What happens to the magnets if they get too hot in an enclosed shed or vehicle under intense summer sun? What happens to the rotating magnets if the unit is jarred in a collision?

Possible health implications of such strong magnetic forces may lead to calls for health-and-safety studies, which are very expensive and long-lasting affairs. Whether these studies would result in a finding of safety, and consequently in issuance of permits to install such devices in or near human habitation remains unknown.

Even if Perendev had units ready to ship today, this field is early in a pioneering stage. It will be years before such a technology becomes commonplace even under the best of circumstances.

These issues, and more unforeseen issues that will arise, will need to be ironed out. It may take years of stable performance history in pioneer settings to gain the level of consumer confidence required for such a device to become as ubiquitous as the computer.

Meanwhile, for those of an adventurous spirit, who understand the risks and restrictions at this early stage, Perendev is taking orders.

While they do not yet have a unit for public display, Brady anticipates that they will have one soon. "Possibly Dec. 17," he said. He hoped

to have had one several months ago, but Murphey's law seems to have ruled otherwise.

Part of that delay can be ascribed to the fact that Brady, as an inventor, is never satisfied with something that works now, if he can see a way to improve it -- and as an inventor, he will always see the next improvement. Two days ago, he reported that he is changing the number of magnets in the stator from 6 to 18. That was supposed to have been done today.

As long as he is in a controlling role in the company, and as long as he continues to have new ideas, this creative cycle will continue. While that is good for the technology, it spells perpetual delay for impatient consumers and business associates who want it now. Although through an inventor's eyes, that see each detail of progress, continually unfulfilled deadlines represent additional milestones that needed to be made, the delays tend to spell "fraud" in the minds of many of those impatiently watching and waiting, either as customers or associates.

Brady is confident that his day of vindication is soon at hand -- and has been for years.

Some feel he should follow the example of the computer industry and simply release the early models, although drawing-board concepts have already made them obsolete. Upgrading performance and capacity on a regular basis is a standard practice in many industries. Taking orders is a good first step -- again.

Perendev Magnetic Motor Analogue Winds Down

Kieth Anderson says he saw the Perendev motor running, and that his group has built two different working magnetic motor designs, including one that is analogous to the Perendev, but that they all depleted their magnets under load.

Message 1
From: "Keith Anderson"
<keith@purescience.com>
Date: Mon, 18 Oct 2004
Subject: Re: New perendev replication

I have seen first-hand three magnetic motors running and have written cost feasibility and reproducibility reports on all three. Two of them I had in my lab and my staff used the inventors' plans to build several working replicas. We also went and saw, first-hand, the Perendev device.

All three designs used "Rare Earth" magnets (Neodymium, or more correctly stated, Neodymium Iron Boron or NdFeB) and our various reproductions used NdFeB, SmCo and Ferrite magnets. We did not attempt to reproduce the Perendev device because of its design proximity to one of the other two.

The results were always the same: they all run down. Under load, they run down very quickly. It doesn't take very long for magnets to lose their magnetism when they are constantly being put in opposition to one another.

Every magnet has a "maximum energy product" rated in Mega Gauss Oersteds, MGOe. This is the amount of work a magnet can do before its level of magnetism has deteriorated to the point that its energy doesn't reach out far enough to affect anything surrounding it. Contrary to the popular notion that rare earth magnets are invincible, even the most expensive sintered NdFeB magnets max out at less than 50 MGOe. If they are used in a device that puts them constantly in opposition, they will run down, and this is the whole assumption behind so-called "magnetic motors".

The amount of energy used in manufacturing a magnet is typically 10 times what the magnet is capable of producing. More expensive magnets are even less efficient. Add to this the losses in energy incurred by these 33%-66% concept magnet devices themselves, and the energy consumed in the overall manufacturing process is 20-25 times the energy you will get out.

There are situations where these types of devices may be useful, but they are not "free energy", nor do they represent any sort of "overunity" phenomenon, nor any solution to the energy crisis.

Message 2
From: "Keith Anderson"
<keith@purescience.com>
Date: Mon, 18 Oct 2004
Subject: Re: New perendev replication

Without putting the magnets in opposition at some point during the cycle, and probably for at least 33% of the time, you will have the same problem that exists with the many hypothetical gravity motor designs that don't work. What goes up, comes down. Nothing will simply come down without having gone up first.

You have to treat magnets a lot like springs from a design standpoint, although the mechanics of magnetism aren't as simple as that of springs. There are billions of spring-powered motors in the world: clocks, toys, etc. They all run down. Nobody will ever design a spring-powered motor that runs forever without winding.

Message 3
From: "Keith Anderson"
<keith@purescience.com>
Sent: Wednesday, October 27, 2004
Subject: RE: your visit to Perendev

My company was paid to evaluate the Perendev device, and it was brought to Colorado during the summer of this year. As with the case of many of our contract jobs, the identity of the client and details of the testing process are confidential, but because the general results are so similar to the others we have tested, it wasn't a breach of our confidentiality agreement to state the general result in the "Energy2000" group. It should also be noted that the Perendev device is not a novel design, and the patent is therefore subject to legal challenge.

I'm not so arrogant as to believe our tests are 100% conclusive, but it's a fact that magnets are not "permanent", and because they are the sole source of energy behind the Perendev device and similar inventions, they are not a persistent or inexpensive source of energy. You might consider the diversionary/science kit market as an option for the Perendev design.

Message 4
From: "Keith Anderson"
<keith@purescience.com>
To: "Sterling D. Allan"
Sent: Wednesday, October 27, 2004
Subject: RE: your visit to Perendev

My parent company is Solar Thermal Energy Project (STEP) Corporation, and the STEP Group of Companies, with multiple locations, but will soon be consolidating to Utah where our $50 million STEP Solar Energy Park will be under construction starting next year.

The company that paid for the evaluation was someone interested in the Perendev device from a business standpoint, and they hand-carried it to Colorado where we tested it. I am unsure whether it was the original machine or a duplicate. We were paid in advance to perform the tests according to a negotiated contract. This is an old client, and confidentiality is part of the reason they keep coming back to us.

I have recently been directed to the Perendev web site where videos are shown of an operating Perendev magnetic device. I can confirm that the device does, in fact, spin as shown in the video. I can also say I was surprised at the claims they make on that web site.

Counter Point: Magnets Don't Demagnetize When Kept Within Their Rating

People know that in a car, you don't run the engine rpm's up into the red line, and certainly you don't go above the read line without risking your engine, not just for that moment, but henceforth. You damage the engine.

Same thing holds true of magnets. If you stress them, they will demagnetize. This has been shown in the laboratory. Magnet specialists know what a magnet's capabilities are, and know what the magnet's limits are.

If a magnetic motor is designed to stay within the magnet's tolerances, then conceivably, demagnetization should not occur.

Holds True in Electro-Magnetic Motors

"There are many Permanent Magnet motors in the world that continually apply similar magnetic loading forces as what the Perendev motor might experience. As long as the motors are not abused and properly cooled (and not overloaded or stalled in locked rotor mode), the magnets typically last for thousands of hours.

"However, if the motor is overloaded such that the magnets get too hot, they will lose their power (or "Demag" themselves). This is why cooling and proper loading is absolutely critical – even more so here as you don't have an auxiliary source of energy as in typical electric motors."

Sterling's Comment -- Wind Turbine Analogy

If a magnetic motor were feasible, I had envisioned that it would be operating like a turbine -- tapping into some magnetic field in a way not yet fully understood by science. I would like to think that Mike Brady will yet come through. He claims to have tested the gauss of his magnets and that it does not weaken in any detectible way.

Mike Brady Knows of No Test in Colorado

Kieth Anderson replies that he cannot divulge client specifics. What he can say is: "Prior to the contract we were told it was the Perendev motor and were referred to the web site. I don't believe we had any further conversation about the origin of the device." [Speculation: could be a reverse engineered job]

Gravity engine

A.N. Sakharov
Saint Petersburg, Russia
+7 (812) 434-32-36
ascold@mail333.com

Is it possible to make the earth's gravitational field serve as an energy source? Not all people consider this question absurd. Numerous attempts to design engines able to produce work without energy consumption, which use the influence of gravity of weights moving in a closed cycle, are known. Engines of this kind were called a "perp?tuum mobile" or a "perpetual motion machine" because their energy source is an inexhaustible gravity force.

"Orffyreus' wheel" set in motion by weights moving inside the wheel and creating a non-central moment of forces during rotation of the wheel was famous in the beginning of the XVIII century. The wheel not only rotated continuously with a frequency of 26-50 rev/min depending on its size but also allowed producing yield, for example, rising a weight with a mass of 16 kg at a height of 1.5 m. Over dozens of years, Orffyreus openly demonstrated different models of his wheel. Its operation was repeatedly tested by famous scientists and official establishments. A German prince, Karl, who knew its design, gave him a certificate for the Orffyreus' perpetual motion machine with the speed of 26 rev/min and able to produce yield. Under the control of a competent commission, in 1717, the wheel operated for forty days in a closed sealed up room and it was still rotating with the speed of 26 rev/min when a sudden check-up was carried out. The experiments continued while the wheel was repeatedly removed and the committee thoroughly searched for a possibility of hidden wires' existence.

Peter the Great was interested in the engine after he had been convinced in its efficiency by people whom he trusted. He was even going to buy it at a fabulous price; however, his unexpected death prevented this project. Despite the fact that one of Orffyreus' supervisors was Professor W.J.Gravesande, a close friend of Newton, the scientific community could not bear with the possibility of the perpetual motion machine's existence. Some people even offered a big sum of 1,000 marks to a person who would expose Orffyreus. Besides the fact that this prize stayed unclaimed, the scientific community was reassured by the appearance of a lampoon, which explained the effect of the invention as the following: supposedly, a thin rope was attached to the wheel's axle and a brother or a maidservant of Orffyreus made the wheel rotate with the help of this rope. An author of the lampoon said that this exposure was caused by a fight between them and Orffyreus.

Despite ineptitude of such an "exposure", the scientific community could more easily believe in the complete incompetence of Professor Gravesande, prince Karl and other respectable participants of numerous tests of Orffyreus' wheel than assume the possibility of existence of a phenomenon, which was beyond the established ideology. In 1775, Paris Academy of Sciences refused to consider perpetual motion machines at all because they did not exist. And the same Academy refused to consider the existence of meteorites because the possibility of stones falling from the sky was thought absurd. After the law of energy conservation had been formulated in the XIX century, the question of the possibility of perpetual motion machines' existence was finally buried as contradicting mathematical and physical laws. A paradoxical situation often happened when a working device posed as a Perpetuum mobile was demonstrated but no scientifically grounded refutation followed. Usually such a situation ended up with a magazine lampoon, as it happened in the case of Orffyreus' wheel.

A perpetuum mobile model shown at Paris exhibition in the middle of XIX century can be an example of such a pseudo-exposure. The engine had a form of a continuously rotating wheel with weights moving inside it. People interested could stop it by making a strong effort; after that the wheel continued rotating. A journalistic "exposure" of the perpetuum mobile was a presence of a spring in the wheel. Ostensibly, the spring became twisted during the device's stop and was a source of rotation energy. It is interesting that no scientists disputed such an "exposure".

How can the law of energy conservation work if the engine's wheel continues rotating while energy is always spent for its stop? Possibly, there was a flywheel inside a wheel with the spring attached to it, which became twisted during the wheel's stop by the flywheel's inertia while a locking device connected to the frame prevented the flywheel from untwisting. Thus, the spring created the effort necessary for starting the wheel's motion after a stop. Further motion could happen only due to the weights' motion inside the wheel. By the way, Orffyreus' wheel needed an effort imparting initial velocity of rotation, too.

Undoubtedly, due to the shirking position of the scientists, many perpetuum mobile projects originated from wrong suppositions but this does not mean that all demonstrated models were the results of a counterfeit or incompetence. An objective of real science is the search for truth instead of conservation of the previous paradigm at any price. That is why, if there are facts contradicting it, they should be objectively studied and, if necessary, the science paradigm should be changed instead of rejecting the facts without grounds.

The regular crisis of physics happening in the end of the XX and the beginning of XXI centuries makes scientists revise many physical theses. For example, the question of existence of aether or "physical vacuum", which is a medium having inexhaustible reserves of potential energy where electromagnetic waves spread, is the order of the day again.

The existing idea of the nature of matter and force fields, particularly the gravity one, must be revised. Finally, it is time to understand what the fundamental concepts, force and mass are because physics is still satisfied with the ideas of the XVIII century, when force was determined by mass and mass was determined by inertia. And it is still not understood what inertia is. Probably, the scientific paradigm, particularly the physics' one, can greatly change soon. The changes can also concern the existing interpretation of the law of energy conservation and, therefore, the scientific approach to the possibility of designing of the perpetuum mobile, i.e. a device able to produce yield using energy from a force field or directly from physical vacuum.

In order to hasten this process, besides a description of another perpetual motion machine's design given in this article, it is suggested to consider its validity from the physics' point of view not overstepping the limits of the existing paradigm except the ban against the possibility of such a machine's existence.

A basic model of the suggested gravity engine consists of hollow cylinders with pistons fixed at a flexible base of the type of a closed belt. The base is stretched on two freely rotating wheels with axles, placed one under another, fixed on the frame. Moving around the wheels, the belt with

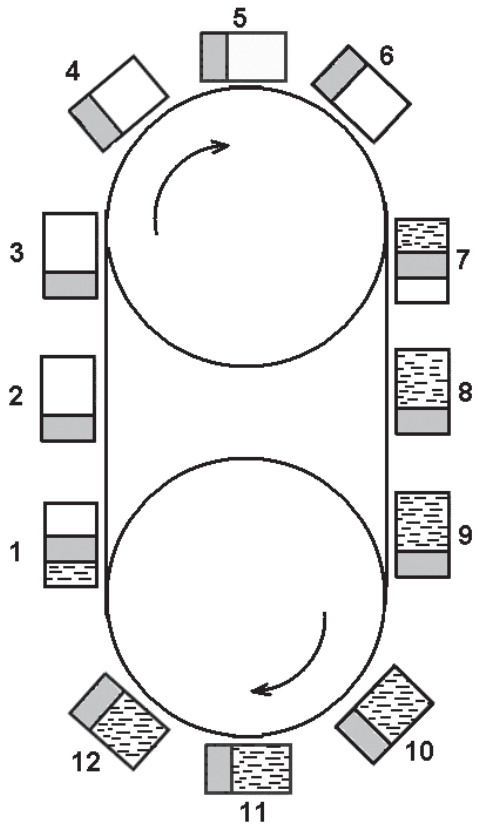

Fig. 1

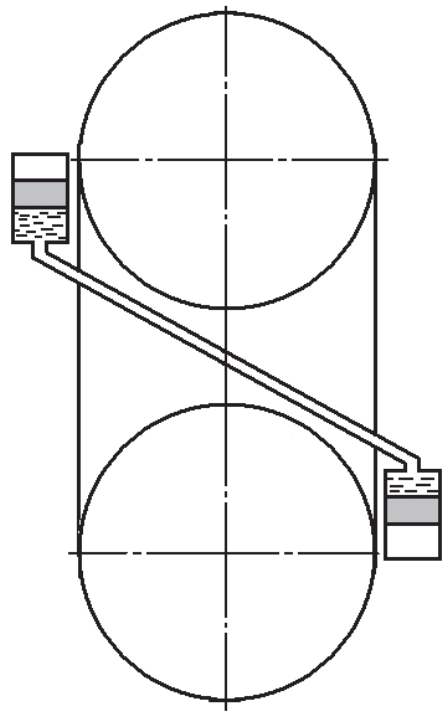

Fig. 2

the cylinders can move in the vertical direction in such a way that, on the one side of the device, they go up while, on the other side, they go down. The cylinders are equally spaced along the belt and fixed by their sides in such a way that a bottom of each cylinder is placed opposite the open side of the cylinder next to it (Fig. 1). There is a useful capacity in each cylinder, which is bounded, on the one side, by its bottom and, on the other side, by a free-moving piston, a massive weight attached to its external side. A connecting pipe is fixed into each cylinder's bottom, an end of a flexible hose put on it, while another end of the hose is put on the cylinder's hose, which is placed on the belt in the diametrically opposite position (Fig. 2). Flexible hoses connecting useful capacities of each couple of the cylinders (1-7, 2-8, 3-9... and so on) through the houses can be fixed on the belt, where the cylinders are fixed. In the vertical position of the system, the weights with the pistons will go down under the influence of gravity force. On the left side, the piston of each cylinder will go to its bottom while, on the right side, to the contrary, each piston will move away from the bottom as much as the cylinder's length allows and completely empty its useful capacity.

If we will move the belt clockwise, the pistons inside the cylinders will move in such a way that one whole useful capacity will account for each couple of the cylinders. The belt's motion will be limited only by friction force because motion of the pistons with the weights inside the cylinders must not change the impulse of the whole system due to the fact that their motion is carried out in the left and the right cylinders at the same time and completely neutralizes their influence on the belt's motion. Thus, we can assert that, if there are no friction forces, no energy is needed for the belt's motion. If now, when the cylinders' position is fast, all empty useful capacities are filled with water (or another liquid) and connected with houses, it will be found that, on the right side, there are more vertical cylinders filled with water than on the left side. Due to the fact that the weight of the right cylinders will be heavier than the

weight of the left ones by the weight of the water filling the useful capacities, an additional force will influence the right side of the belt and create a rotary moment of the systems:

$$Z=mgNR \quad (1),$$

where m is the mass of the water in the useful capacity; g is the acceleration of free fall; N is the number of the cylinders filled with water in the vertical sector of the belt; R is the wheel's radius.

Thus, the belt will rotate clockwise. When the cylinder filled with water will pass the lowest point and occupy a vertical position, the piston will press the water out of the cylinder under the influence of gravity force. At the same time, in the upper cylinder, which is connected with it, the piston will go down under the influence of the weight and draw the water from the lower cylinder into its useful capacity. Both weights will operate in the same direction under the influence of gravity force overcoming a pressure of a liquid spout with height H (where h is an upright distance from the bottom of the left lower cylinder to the bottom of the right upper one). A condition of the water raise will be determined by the excess of the sum of pressures created by two weights over a pressure created by water spout H:

$$2Mg/s \geq \rho gH \quad (2),$$

where M is the mass of the weight; s is the sectional area of the cylinder's useful capacity; ρ is the specific density of the liquid.

it follows that an optimal height of water rises:

$$H = 2M/s\rho \quad (3).$$

Due to the fact that, if the lower cylinder is located vertically, the water from it raises up to height H in the upper cylinder, which is connected with it, the system increases its potential energy by a value of

$$E_0 = mgH \quad (4)$$

under the influence of gravity force inside the cylinders. The water mass corresponds with the cylinder's useful capacity:

$$m = \rho sL \quad (5),$$

where L is a length of the useful capacity.

Using (4) and taking into account (3) and (5), the potential energy increase can be expressed as

$$E_0 = 2MgL \quad (6),$$

which is equivalent to the work produced during motion of the weights under the influence of gravity force in both cylinders.

Thus, the described system is a gravity engine of perpetual mobile type able to produce yield using only gravity force.

Thus, the gravity engine's power will be determined by a quantity of the cylinders passing through a permanent point of the system (n) per second and efficiency (η) taking into account friction losses:

$$W=nE_0\eta \quad (7)$$

Under permanent speed of the belt's motion (V):

$$n=V/(L+d) \quad (8),$$

where d is the interval between adjoining capacities of the cylinders. Putting (7) into expressions (6) and (8), we obtain an expression of the power as:

$$W=2MgV\eta L/(L+d) \quad (9)$$

It can be seen that a maximal power can be obtained by a possible increase of the belt's motion and placing the cylinders on the belt with minimal allowable intervals.

However, it is early to talk about efficiency and future possibilities of the gravity engine without making an experimental test.

The author would be thankful for critics and discussion the model proposed.

Arctic squall will heat up
paradoxes of gas structures

S. Geller
Rostov-on-Don, Russia
Tel. +7-863-270-13-49,
carma555@mail.ru

Conditions of the Russian North are rough, especially taking into account the insufficient energy carrier's supply. When a man is in difficult straits, his nature makes him think keenly in order to find resources. The suggested gas-dynamic heating system corresponds with such an approach. I think this system will become important (but I regret that it will be so difficult to find an "understanding" investor).

As early as in 1852, W. Tomson invented a "dynamic heating" aiming to take the internal energy of dank London smog by work inputs (during coal firing). An operation of such a heat pump is based on a so called refrigeration cycle (heat transfer to a higher temperature level). Tomson's idea was realized in the XX century as air-conditioner split-systems, which are in almost all offices now.

But tundra is not an office. As a rule, there is no place to put an air-conditioner's plug into there.

I call readers' attention to a completely autonomous kind of heat pump.

The gas-dynamic heating system takes heat from cold wind, which is an actuating body. First, the actuating body is pressed by a mechanical energy of wind (a work, which is necessary for "reverse" cycles). A heat gathering tool is a thermotransformer, a reliable device without moving parts. Its operation includes direct and reverse thermodynamic cycles.

A number of thermotransformers are known (even thermochemical ones). In the gas-dynamic heating system, I provided for a combined use of a vortex thermotransformer and a so called "resonance pipe". When used together, the vortex and the "resonance pipe" mutually strengthen each other increasing heating coefficient of the system. Processes taking place in these devices will be described below. I must note that any given explanation of a thermotransformer's operation will find its opponents (different scientific schools have no accordance concerning this problem). But it is absolutely obvious that the vortex device can considerably shake the academic hydrodynamic views. I will concentrate on this later.

A vortex thermotransformer was invented by a Frenchman, J. Ranque, in 1931. In his simple, as all great things, invention, complicated processes based on structuring of the actuating body occur. Some aspects of vortex structures were described in my article "Marshal Vortex" ("Engineer, 1993. #45). Many interesting things can be found in sources [1], [2], [3]. Vortexes have become a favorite object of synergy's study not without reason. Vortexes' tendency to self-organization is sometimes displayed quite nontrivially. For example, at great ocean depths, hundreds of quickly rotating discoid objects – lenses with a diameter of up to eighty kilometers were discovered [4]. The lenses are formed during seawater flowing into the ocean; they live up to ten years keeping their initial hydrologic properties! These structures are a typical example of so called anti-entropic processes (the processes when complex items are formed from simpler ones).

Let us return to Ranque's vortex thermotransformer. Due to tangential lead in of the pressed gas into an energy division chamber (Fig. 1), a complex vortex flow is formed, which has a huge radial temperature gradient. The initial one flow is divided into a cold part led out from a diaphragm and a hot flow led out through a throttle. Ranque's energy

A new view on thermotransformation process allowed me to invent a new kind of a thermotransformer with better energy efficiency. I am searching for an investor (for patenting and realization).

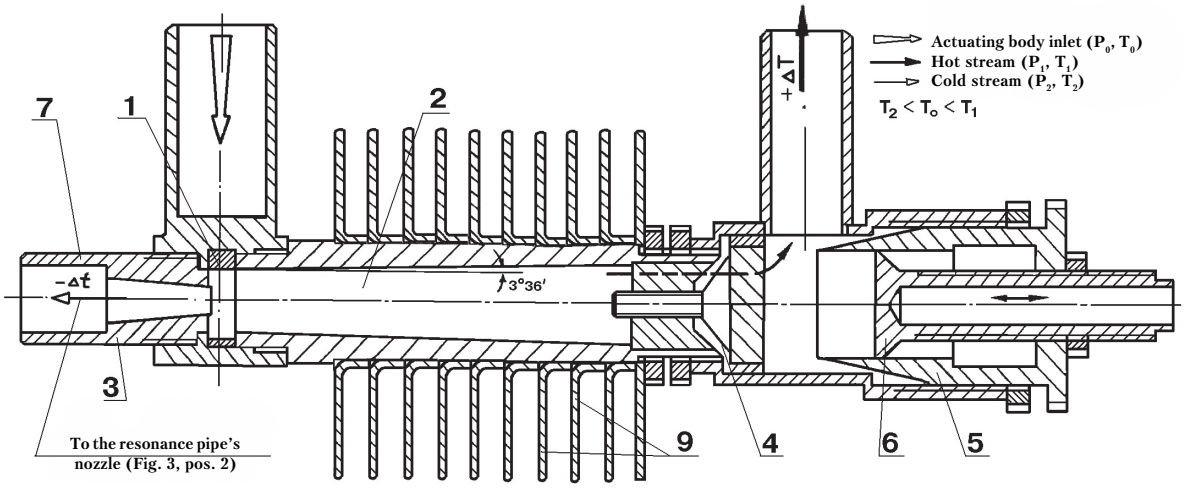

Figure 1. Ranque's vortex thermotransformer (the classical design)

1 – spiral gas supply; 2 – energy division chamber; 3 – diaphragm; 4 – throttle-unswirler; 5 – resonator (a noise blanking device); 6 – reflector (adjustable); 7 – fitting for cooled gas outlet; 8 – counter-nut; 9 – external beading.

division chamber had a form of a tube. Its forms have been improved over seventy years; this can be seen in Fig. 1 (an internal cylinder-conic cavity, a resonator for noise blanking, an external fanning). It is still unknown how thermotransformation occurs, though there are a lot of theories claiming to explain this process [5]. It is impossible, for example, to base the thermotransformation explanation on the molecular-kinetic theory (including centrifugal and pressure forces in a model) because molecules moving along a free path run, as it is well known, uniformly and in straight lines. Attempts to use average environmental parameters in the thermotransformer's chamber will lead into a dead end. In 1895, Osborn Reynolds suggested to describe a kinematics of the vortical motion on basis of statistical (probabilistic) characteristics. But even now manuals (for example, [6]) impose such a disputable approach.

If we translate a "probabilistic nature" into ordinary language, it means that vorticity is an effect, which occurs sporadically, i.e. it is a rather vague, unstable substance. Then, this ephemeral instability can easily, for instance, cut a tail unit of ?300 aerobus (as it happened above a New York suburb on the 12th of November 2001. And a vortex trail of a Japanese air liner, which took off a couple minutes earlier, was just the "instability"). However, a life time of an air structure (the vortex trail) is much less than that of the above mentioned vortex lenses.

I think it is obvious now that it is rather difficult but also very important to describe the energy division process. It must be taken into account that Ranque's vortex device is the first example of the anti-entropic systems designed. If an initial gas in the chamber is expanded, entropy (a disorder degree) decreases! A Nobel Prize laureate Ilya Prigozhin has created thermodynamics of irreversible processes. But even it cannot completely explain the discrepancy between real processes in the vortex thermotransformer and theoretical consequences of the second law of thermodynamics. It remains only to be happy because scientific orthodoxes have now less opportunities to hamper anything, which does not fall into their a priori patterns. I will give a historical fact, which directly concerns the article's topic.

In the beginning of the 1960th, the Soviet press attracted attention to a phenomenon of "Babiegorodsky pereulok". In a basement of one of the houses of this Moscow side street, a group of physics ("odd fellows") found out that

their experimental device produces more heat than it consumes electric energy. After discussions, which took place during a year (while the main arguments concern "Materialism and empirical criticism" work and not physical laws), a label of a "pseudo-science" has been stuck on the experiments. The object of this "ostracism" is interesting: the enthusiasts have designed... a prototype of the heat pump outstripping western and Japanese producers of air-conditioners of "winter-summer" type for two decades! At that careless time, when everyone took a great interest in growing corn beyond the Polar circle, an invention of a 23-years-old lieutenant, Vladislav Ivanov, was rejected. The invention was a computerized tomographic system. In 1983, after 23 years, Ivanov obtained an already completely useless author's certificate # 1112266 for "the method of determination of material bodies' internal structure". Americans P. Lauteburg and R. Damadian gained public acknowledgement as inventors of the tomographic system. It was too late for us.

Vortex thermotransformers were luckier because they came from the West. Scientific bureaucrats traditionally considered foreign innovations important (I.V. Stalin made A.N. Tupolev copy "a flying super-fortress" B29). It is interesting that it did not prevent Stalin from imprisoning others for "the blind worship of the West". Soviet researchers A. Merkulov, A. Azarov, A. Martynov, Sh. Piralishvily, V. Volov and others have considerably developed "the point of increase" determined by Ranque and a German researcher Hilsch. Domestic "vortexes" are successfully operating in all known media but in a rather limited range of actuating bodies' consumption (by an order less than the gas-dynamic heating system requires). It is helpful that vortexes can use cold actuating bodies (an adiabatic efficiency increases during cooling of a wall of the energy division chamber). Hence, we can easily lead an arctic wind in a package of transformers (pos. 3, Fig. 2), if we caught it previously by an air intake and pressed it. This "expropriated" heat is led to radiator 5 heating the object. I am not going to discuss how to press the actuating body.

Let us now speak about a vortex's partner, i.e. a resonance tube. In it, a gas flow is ordered (we have to do here with a periodic wave structure). I do not know whether Ranque discovered his effect

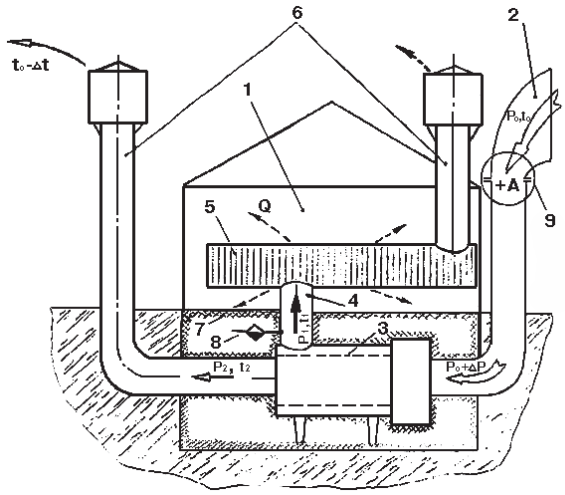

Figure 2. A scheme of dynamic heating. Its "cycle operation" is made by cold wind

1 – heated object; 2 - air inlet (turns to wind); 3 - thermotransformer ; 4 - fitting warm air outlet; 5 – radiator; 6 - discharge pipes with aspirators; 7 - thermo-insulation; 8 - hot-well; 9 - functional pressure block.

by accident, but Schprenger's effect, which underlies the resonance tube's operation, was discovered by chance during analysis of industrial objects' accidents (particularly chemical plants). It was found out that braking of a high-speed gas stream in a half-open space (a "glass") can cause blast waves, which bring the "glass" to a great heat of up to thousands of degrees (a "storm in a teacup" can be terrific!). In order to reproduce the effect, Schprenger determined interconnections between a geometry of a setting (a nozzle and the "glass"), a speed and a pressure of the stream of the "initiating" gas. This allowed finding an engineering application of the effect. Simple and reliable fuse-devices for gas are one of the examples of the effect's use. The process has a resonance nature; that is why the device was named the "resonance tube". In Russia, "resonance tubes" have being also actively studied as cryogenerators (the gas gives heat to the "glass" and, according to the energy conservation law, refrigerates).

Thus, the "resonance tube" is just another type of the thermotransformer, simpler than the vortex concerning the geometry calculation but having less efficiency. In my opinion, both devices will perfectly work together. A more complete heat gathering is achieved by directing a cooled air from the nipple 7 of the vortex thermotrasformer (Fig. 1) in nozzle 2 of

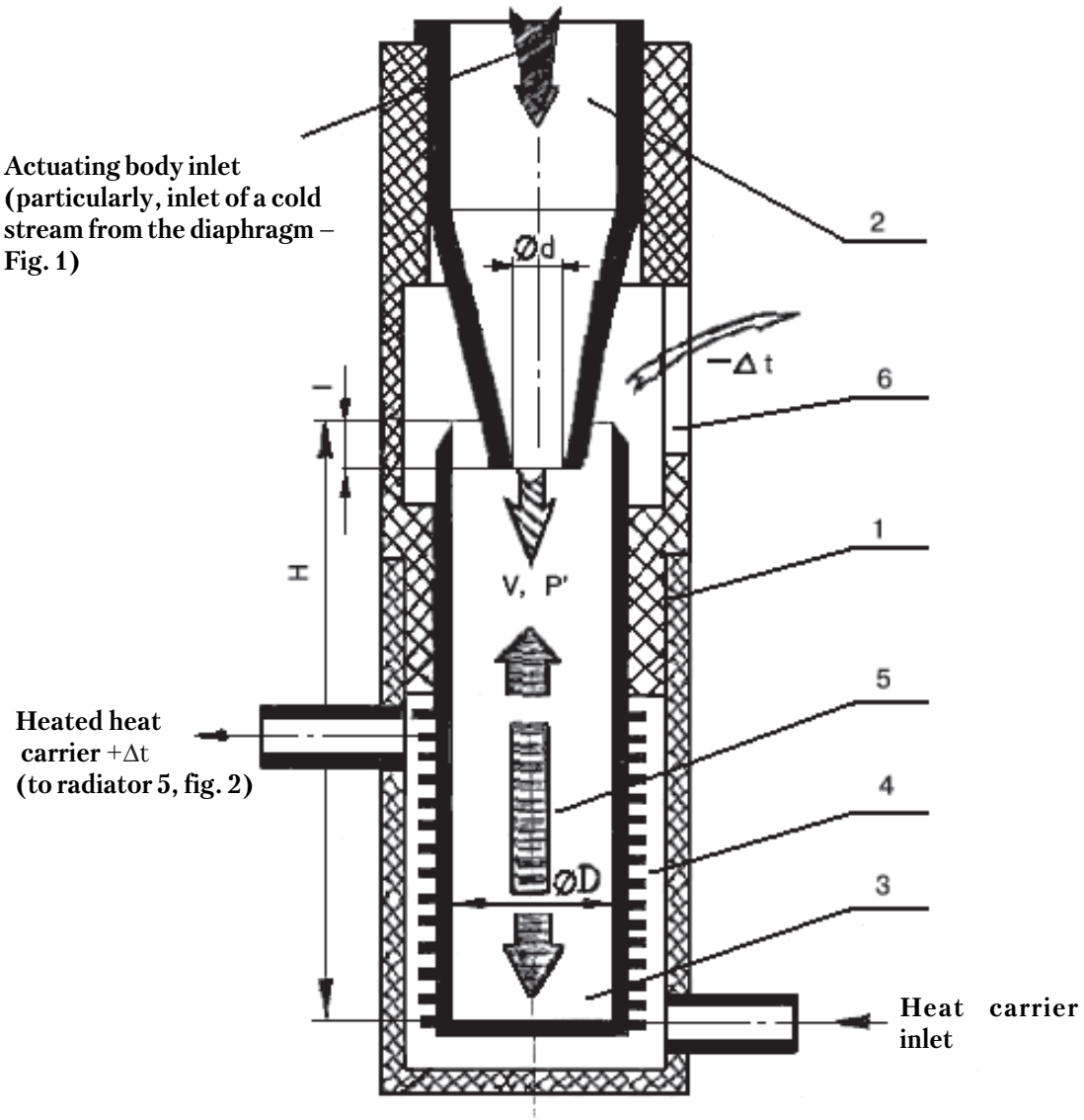

Figure 3. Resonance pipe

1 – body; 2 – nozzle; 3 – cup; 4 – heat exchanger; 5 – regular pulsation zone; 6 – opening for cooled gas outlet.

The conditions necessary for thermotransformation are the following: V – stream speed (a function of pressures P and P' and also of the nozzle's form); Certain mutual ratios expressed by dimensions H, l, D and d.

the resonance tube (Fig. 3); the exhaust flow from the vortex thermotrasformer is not wasted but transformed into the actuating body for the "resonance tube". The author knows no attempts to use the vortex thermotrasformer and the "resonance tube" with as much actuating body's consumption as it is in the gas-dynamic heating system. Although its elements are known separately, they obtain new properties being combined like that and allow thermostating objects, which are remote from electric energy supply (in field conditions).

References

1. Gupta and others. Swirling flows. M. Mir, 1987.
2. S. Geller. On the ejection air supply in the burnt gases' exhaust system. // Motor-car industry. 1995. # 1.
3. S. Geller, Bermant Yu. The method f hydrodynamic influence and "Tantsuyuschaya zvezda" device for its realization. Patent of the Russian Federation # 2 175 272.
4. Unknown floating plates. // Znaniye sila. 1990.
5. Information bulletin # 89190 of Leningrad Interindustrial Technical Research Institute,1989.
6. A. Bogomolov, K. Mikhaylov. Hydraulics: a manual for hydraulic engineering specialities of higher education's institute. M., 1972. p.99.

VORTEX LIQUID HEATERS

S. Geller
Rostov-on-Don, Russia
Tel. +7-863-270-13-49,
CARMA555@MAIL.RU

1. Vortex liquid heaters (VLH)

Recently, between the millenniums, a lot of materials concerning the excessive heat generation by VLH have been published.

According to the words of VLH developers, these heat devices belong to hydro-dynamic type and are remarkable for an unusually high efficiency, i.e. a ratio of the produces heat to the consumed energy. For example, numerical values of the efficiency of heatgenerators suggested in sources [1], [2] almost reach one while values of the generators suggested in [3], [4] exceed it within the limits of a possible mistake of calorimetric measurements and values of the generators suggested in [5], [6] and [7] exceed one by a few times! Are vortex liquid heaters extra-efficient?

All VLH, in spite of the variety of their designs, are noted for two common peculiarities:

- only liquid, mainly water, is used as an actuating body;
- the water is specially mechanically treated. The treatment is called mechanoactivation. Mechanoactivation process consists in that water is rendered moving in complex irregular way by mechanical influence. Choose of motion type imperted to water is made, as a rule, using "the more complex the better" principle. There are no reasonable theories and well-founded selection criteria considering this.

Choise of a motion type imperted to the water is made, as a rule, using a "the more complex, the better" principle. There are no reasonable theories considering this.

it is possible to find three main types of VLH:

- passive tangential,
- passive axial and
- active.

Passive ones are VLH of the static type, which do not contain moving parts in devices of the liquid flow formation. Mechanical activation in these generators results from interaction of moving liquid with motionless elements of the work chamber, which are made and located in such a way to turbulize the flow as much as possible.

Passive VLH are distinguished by the method of liquid flow bringing in the work chamber, which can be tangential or axial.

Active VLH include generators, where mechanical activation of the actuating body results from influence of generator's moving activating elements on liquid. The elements can be rotating, swinging or moving in a complex way.

Method of liquid flow bringing in the work chamber of the active VLH has no fundamental significance. The motion type of the moving activating element is more important for this type of generators.

It is important to note that passive VLH with tangential bringing in of the liquid flow by no means is not a modification of widely known vortex [7] based on Ranque-Hilsh effect and assigned for thermo-transformation of a gas flow. Often met analogies (even among authors of VLH!) with vortexes explain nothing and only create confusion. Fundamental difference of VLH from Ranque's vortex consists in absence of gaseous actuating body [1], hence, it is a question of cardinally diffrenet working processes.

Let us consider a design philosophy of each of the distinguished groups.

Basic elements of this device are stream-twirling device 1, work vortex chamber 2 with

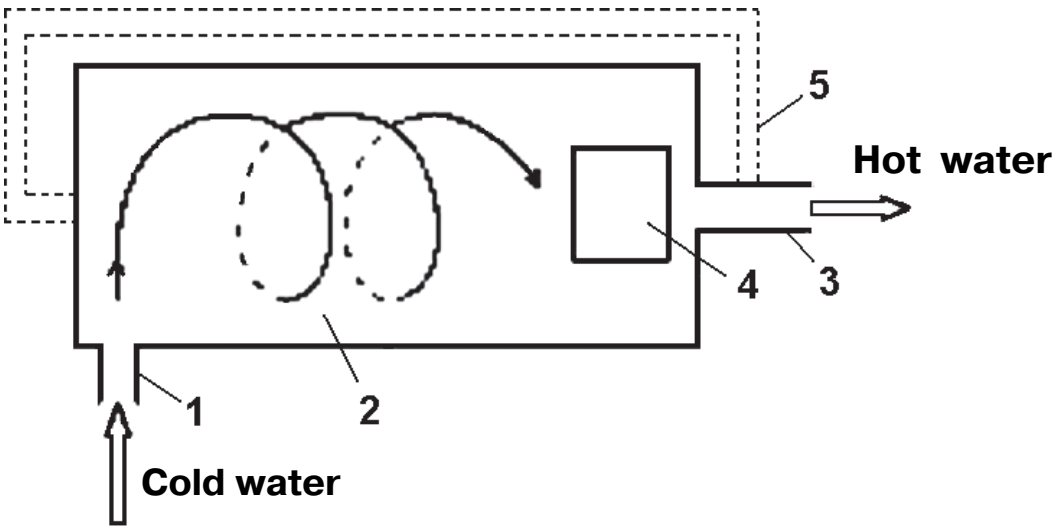

Fig. 1

outlet fitting 3 and brake device 4 (see Fig. 1). Sometimes the VLH has additional overflow pipe 5.

In the simplest case, the stream-twirling device of the generator is made in the form of an inlet fitting providing for bringing in a coldwater flow from the force-pump to the the periphery of the vortex chamber. In the cylindrical chamber, the flow twirls and moves to the axled outlet fitting where it is hampered by the specila device. In the process of vortex motion and braking, the liquid in the work chamber is activated, heated and hot water flows from the outlet fitting. A part of hot water can be transferred from the outlet to the inlet through the overflow pipe in order to improve a VLH's efficiency.

In modifications of vortex generators, stream-twirling devices are made with screw or spiral profiles of work chambers, with uniform or converging cross-sections, with one or more work chambers, with one or several tangential inlets, with inlets in the form of swirl atomizers etc. [2], [8], [9], [10], [11], [12], [13], [14].

Work chambers of these heatgenerators can be single straight-flow, double counterflow, cylindrical, conical, of complex form (up to toroid one) etc. [15], [16], [17], [18], [19], [20], [21], [22], [23].

Designs of brakes are also various: from streamline bodies to straightener blades [6], [17].

A passive VLH with an axial inlet of the liquid flow is even simpler. Its main elements are work chamber 1 with inlet fitting 2 and restriction 3 with outlet fitting 4 (see fig. 2). Sometimes VLH has additional flow former 5. The restriction of such VLH (a diaphragm, a nozzle, a throttle, a draw plate etc.) is usually a partition with a hole installed in the work chamber.

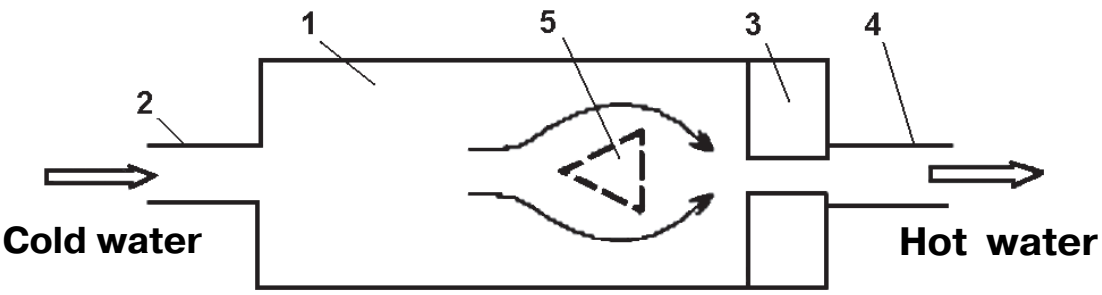

Fig. 2

In the passive axial VLH, different diafragms are used: with cylindrical, conical, fissured or spiral holes, with one or more holes, with axial or shifted holes, with one or several successively installed partitions etc. [24], [25], [26], [27], [28], [29], [30].

Besides passive VLH with tangential and axial inlets, generators of a mixed type are used. They use stream-twirling devices and diagrams at the same time in order to increase an efficiency of their work.

In VLH of the third group, active ones, mechanoactivation is carried out by moving activators located in their work chambers; as a rule, they belong to a rotor type (see Fig. 3).

A rotor is fixed at power shaft 2 and rotating inside cylindrical work chamber 3, which has inlet 4 and outlet 5 fittings and brake device 6. During supply of a cold water to the inlet fitting of an active generator, the water is forcibly twirling by the rotating rotor, accelerated, partially activated and heated and moves towards the motionless brake device. It is hampered and additionally activated there and is led outside through the outlet fitting.

Types of active VLH vary according to a design of rotors and brake devices. The rotors and brake devices can be made in the form of turbines with straight or profiled blades, figures of revolution with longitudinally profiled surfaces, perforated cylindrical or conical drums, uni-directional or oppositely rotating perforated discs and others [30], [31], [32], [33], [34], [35], [36], [37], [38], [39], [40].

In each of the distinguished groups of VLH, special operation modes can be additionally formed in order to promote activation of the liquid and, as a result, increase of the heat production. For these purposes, variable statistical pressures are set in the work chamber [41], self-oscillaltion are excited in the liquid [42], additional vortex flows are formed in an ortoganal direction of the main flow [43], percussion braking of counter flows, ultrasonic machining of the liquid is carried out [45] etc. Besides mechanical methods of intensification, electrophysical ones are sometimes used: magnetization of the liquid [32], [46], impulse radiation treatment of the liquid in an optical range [47], an electrical current running through the liquid [32] and even... a cosmological vector potential influencing the liquid [48].

In spite of absence of moving parts and high maintainability of the passive heaters, VLH of the active type can turn out to be more perspective for a practical use because they provide for more efficient mechanoactivation of the liquid.

It was and still is unknown what causes heating of the liquid in all types of VLH. Since a temperature increase of the water at the exit of the generator as a result of direct transformation of work into heat due to the liquid's internal friction, dispersion of an energy of acoustic vibrations etc., advantages of hydro-dynamic heatgenerators are brought to the simplisity of their design.

It is significant that, during VLH operation, a water temperature at the exit can reach boiling-point in the event that total energy inputs for

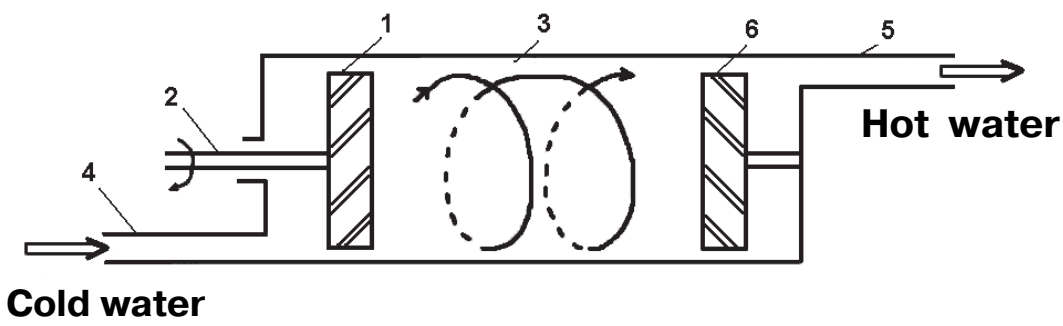

Fig. 3

the water heating are evidently insufficient for producing such a result.

Using a usual and rather plausible calorimeter procedure, a measured increase of the quantity of heat produced by the generator per unit of time can considerably exceed a measured energy consumed by the generator during the same period of time. Efficiency of the heating becomes specially notable if a temperature of an initial water subjected to mechanoactivation is (66.5 ± 3.5)C, [3], [4], [5]. Energy inputs for the water heating with initial temperature t = 66.5C are minimal and obviously inequivalent to the heat quantity, which is required for this.

Such facts require an explanation, therefore, different, sometimes rather unexoected hypotheses about "the reasons of the extra-productivity of hydro-dynamic heatgenerators" have been suggested.

For example, according to work [49], production of the excessive heat is connected with the theory of world aether. It is also suggested naming the heat production effect after V.A. Kochetkov, who considers this effect as a merely aether effect. A supporting data is provided.

In work [14], on the basis of the the virial law proven already by R. Klausis, it is affirmed that any accelerated rotation motion of an actuating body must be accompanied by a discharge of a part of its self-energy in the form of heat and, therefore, by a temperature increase.

In work [50], it is suggested that one of the reasons of the excessive heat can be chemical reactions of the actuating body – water and its solutes – stimulated by an influence of hypothetical torsion fields.

In article [51], the excessive heat is considered as an emanation of the energy of physical vacuum (!); in work [52] it is considered as a result of cold fusion using exotic anions and ersions; and in above mentioned work 48, it is considered as an influence of the "cosmological vector potential". ***However, if we take into account a possibility to "deceive" a supply meter by a thyristor transducer, which increases a frequency of a current supplied to the pump drive (a know-how of a "pioneer", Mr. Potapov), everything becomes more than simple!***

2. Mechanoactivation

Researches of the mechanoactivated water's properties have being carried out for quite a long time [53], [54], [55].

It has been found out that many of liquid's physical qualities can reversibly change as a result of a liquid's mechanical treatment. For example, numerical values of relative statistical dielectric penetrability ε, heat capacity C, light refraction coefficient n and others of the mechanoactivated water can considerably differ from reference values [56], which characterize usual water.

One of the most important reasons of such differencies are cavitation effects accompanying the liquid's mechanoactivation. Due to the fact that surfaces of cavitation cavities are borders of phases' division, near-surface layers of the liquid near the borders of the division are in a mechanical stress, which significantly differs from a state of free liquid. Under a developed cavitation, a relative volume of near-surface layers of the liquid becomes rather big: there are from 10^3 to 10^5 of steam-gas pulse cavitation bubbles with an average diameter of about 10 mkm each in each milliliter of the cavitating liquid.

Due to this, physical properties of the mechanoactivated cavitating liquid always depend on its properties in the near-surface layers.

According to the dependencies shown on Fig. 4, it is obvious that dielectric penetrability of water ε in a thin film or a drop, beginning with thickness of the film d_o or diameter of the drop D_o, becomes considerably less than a penetrability of water in a free volume.

In the event of a decrease of water flat layer's thickness d from 40 to 10 mkm, its relative dielectric penetrability permanently diminishes from nominal value ε = 81 to value ε = 10 ± 3, i.e. it diminishes up to almost an order of

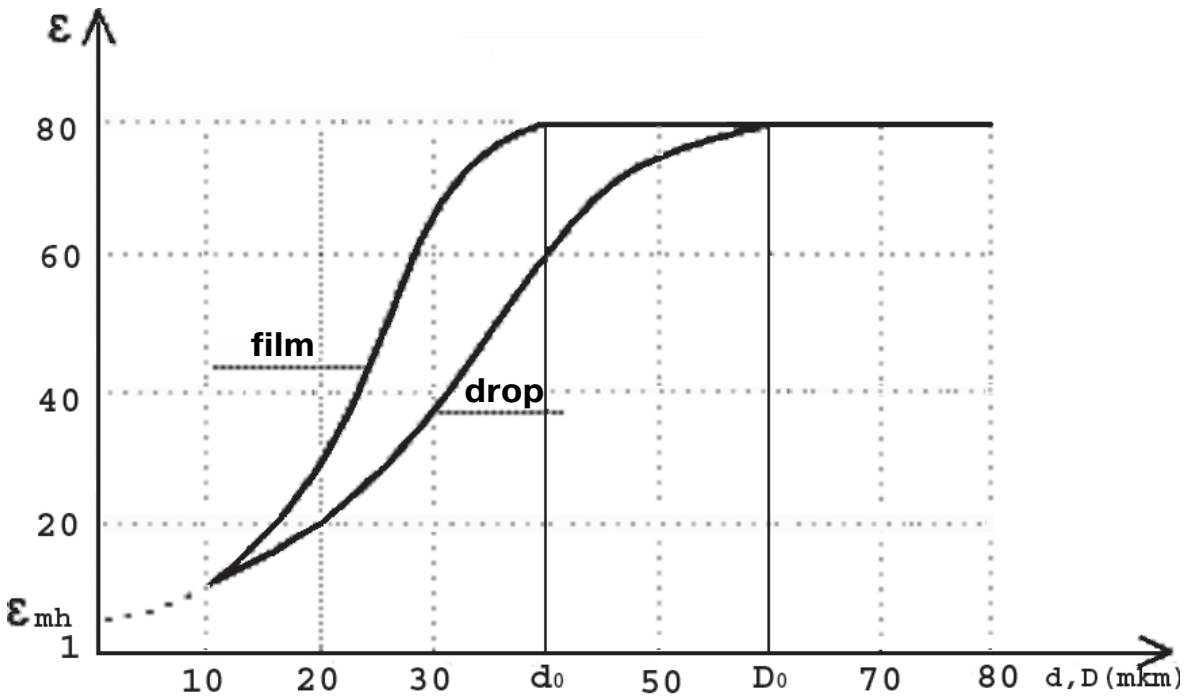

Fig. 4

magnitude. A similar picture can be observed for the water drop either, if diameter D decreases from 60 to 10 mkm.

It is usually considered that a relatively high value of a statistical dielectric penetrability of free water is connected with high values of dipole moments of supramolecular formations - short-lived molecular associations (nano-clusters of $(H_2O)_n$). Their spatial orientation in the external electrostatic field is determined by its direction.

Due to this, the decrease of the water dielectrical penetrability in the thin layer can be naturally connected with a decrease of an orientation receptivity of the molecular associations, i.e. with a partial "congelation" of clusters' resulting dipole moments in the near-surface layers by uncompensated coulomb forces of the surface layer, caused by structural regulating of this layer's molecules by mechanical forces of a surface tension [57].

It follows from the given diagrams that, under normal climatic conditions, a thickness of a flat one-sided near-surface water layer, where long range ordering partially remained, is about $0.5d_o$ = 20 mkm, while a radial thickness of a partially ordered near-surface water drop layer is about $0.5D_o$ = 30 mkm [54, 55].

Accordingly, effective thicknesses of near-surface layers for a flat surface and a drop is about 11 mkm and 16 mkm.

It is also follows from the diagrams that, during the decrease of dimensional parameters d and D, the value of the dielectric water penetrability aspires to value εmin (the dotted line), which is close to value of high-frequency dielectric penetrability ε_i of ice in its most spread modification I: $\varepsilon_{min} \approx \varepsilon_i$ [56].

Comparability of values ε_{min} and ε_i gives grounds to suggest that, under $d < d_o$, $D < D_o$, not only for the dielectric penetrability but also for other parameters with a structural dependence, particularly specific heat $C_в$, can approach by their values parameters of a solid phase during the water change from liquid state B_1 to partially ordered ice-like state B_2. Due to the fact that the water specific heat exceeds that of ice by 2 times, a change of water heat capacity, which happens during the water change from a free state to a partially bound state, is always accompanied by a partial heat generation.

This possibility was controlled by using a swirler as a passive mechanoactivator and forwarding a cold water under strong pressure at its inlet [58].

Due to the mechanoactivation, a water stream in the swirler was characterized by a strong maldistribution of local speeds and, accordingly, by high gradients of mechanical tensions in the liquid. Regions with negative pressures appeared in the stream and conditions were formed for tearing of the liquid's continuity and development of cavitation processes. These processes were accompanied by a clear sign of cavitation – a sonoluminescent glow of the liquid [59, 60] while a cavitating hot water, which was in a condition close to a dispersion one, was coming to the exit of the swirler.

While an initial water temperature had been T_1 = 20C at the swirler's inlet, a water temperature after a mechanical treatment increased up to T_2 = 55C. While the initial water temperature had been T_1 = 40C, the water temperature after the mechanical treatment increased up to T_2 = 85C. While the initial water temperature had been T_1 = 66.5C, a boiling water came to the outlet of the swirler.

A comparative appraisal of a quantity of heat, which is equivalent to a mechanoactivation work, and a quantity of heat, which is necessary for water heating in the given temperature intervals, allows making a conclusion that an additional heat generation happens during the mechanoactivation process.

During the mechanical treatment causing an intensive cavitation, a part of the water turns to ordered, colloid-like, close to liquid-crystal, state B_2, and transition $B_1 \rightarrow B_2$ is accompanied by the heat generation.

Such a transition can be determined as a "phase transition in in the wide sense" [61], [62], which results in excessive heat Q_{exc} generation:

$$B_1 \rightarrow B_2 + Q_{exc} \qquad (1)$$

It is found out in work [58], that the partially odered water state is unstable and accompanied by a reverse transfer from metastable state B_2 in state B_1. Reverse transfer $B_2 \rightarrow B_1$ is endothermic and can happen both with a relatively continuous and an uneven absorption of heat:

$$B_2 \rightarrow B_1 - Q_{exc} \qquad (2)$$

Uneven phase change $B_2 \rightarrow B_1$ is accompanied by an abrupt water cooling: for example, the water temperature can lower from T_2 = 75C in dispersion phase B_2 to T_1 = (45 – 55)C in B_1 phase.

Relaxation time τ_r during the reverse transition, in dependence on stability of the environment and water cleanness, can be a few or some dozen minutes: τ_r= (3 – 30) min.

Thus, the mechanical water treatment accompanied by an intensive cavitation [55, 58] can lead to the generation and absorption of heat.

It is important to note that, in the event that hot water temperature T_2 in dispersion state B_2 is decreased, for example, by a heat exhange with the environment, water temperature T_1 in dispersion phase B_1 after the reverse transition can be lower than the initial one.

This allows suggesting with sufficient certainty that the effect of VLH is based on this. Various manifestations of the above described heat effects have been observed earlier. In front of a buidling of the Estonian Academy of Sciencies in Tartu, a fountain with stream-swirlers is located. The swirlers form strong vertical streams of a cavitating water hazed by a mist of small waterdrops. In spite of the fact that a water with an initial temperature of about 20C is led to the swirlers, a temperature of a metastable dispersion phase, which looks like small drops hanging in the air near the cavitating streams, is about 40C, and a final temperature of a liquid state, which is a condensate in the fountain's pool, does not exceed 15C.

It is also know that water temperature can increase during the phase change, if the partially ordered liquid's state is formed not by a surface of a part "liquid - gas" but by a surface of a part "liquid – soild".

A heat produced during water moistening of hydrophilic surfaces is ususally called a heat of moistening. No matter which nature of this effect

is, according to thermodynamics of moistening and adsorption processes [63], a part of the produced heat, in the end, is released due to a decrease of the water's self-energy located in a contact layer during its turn into partially ordered phase B_2. It suggested that, since the water comes out of a contact zone, it must experience a reverse turn of the endothermic nature.

In order to test this opportunity, a water temperature was measured when water was going through a column filled with a refined ground quartz with particles' dimensional parameter d ≈ 40 mkm.

It was noted that a temperature of a water front going through the quartz layer was by 8...12 K higher than the initial one.

A temperature of a water collected in the thermostat right after its going through the quartz layer slightly exceeded the initial one.

However, after relaxation time τ_r = (5 – 15) min, the water in the thermostat spontaneously cooled by 2 – 3 K, perhaps as a result of the reverse cjange.

Possibly, an endothermic nature of the reverse change allows to explain a low summer temperature of subterranean waters, which lose a part of their self-energy and dissipate heat during filtration through upper fine-dyspersated soils.

Undoubtedly, other examples of the discussed effects exist.

It is quite possible that the heat effects, which appear in the mechanoactivated water during the exothermal and endothermal changes like $B_1 \rightarrow B_2 + Q_{exc}$ and $B_2 \rightarrow B_1 - Q_{exc}$, underlie operation of all VLH.

3. Efficiency

A quantity of heat produced during the water mechanoactivation in a generator depends on a heat of the phase change and a power dissipated in the water during the activation:

$$Q = Q_{exc} + \Delta Q, \qquad (3)$$

where Q_{exc} is a heat of change $B_1 \rightarrow B_2$, and ΔQ is a quantity of heat obtained by a direct change of work into heat.

It is possible to obtain a phenomenological assessment of quantity of heat Q_{exc}, which is produced in the water during release of its self-energy due to the phase change, by taking into account an intensity of the mechanoactivation, a degree of discrepancy of molar water's heat capacities in the free and activated states and also an initial water temperature:

$$Q_{exc} = k_1 m/\mu (C_{B1} - C_{B2}) (T_1 - T_{im}), \quad (4)$$

where C_{B1} and C_{B2} are, accordingly, specific heats under a continuous pressure of free water B_1 and the mechanoactivated water in phase B_2; it is convenient to present value C_{B2} as $C_{B2} = k_2 C_i$, where dimensionless constant $1 \leq k_2 < 2$ characterizes a difference degree of heat capacity C_{B2} of partially odered water phase B_2 from heat capacity C_i of the crystallographically ordered water phase in the solid state;

k_1 is a mechanoactivation coefficient, dimensionless value $0 < k_1 \leq 1$ characterizing a mass part of partially ordered phase B_2 in the mechanoactivated water:

$$k_1 = m_{B2} / (m_{B1} + m_{B2});$$

m is a mass of the mechanoactivated water; T_1 and T_{im} are, accordingly, a water temperature before the mechanoactivation and the melting-point of ice; μ = 18,015 is a molar mass of the liquid water.

Ideally, in the event of a complete mechanoactivation, where $k_1 = k_2 = 1$, the expression (4) becomes simpler:

$$Q_{exc} = km (T_1 - T_{im}),$$

where k is a constant, k ≈ 2,1 x 10^3 J/K kg.

In dependence on the initial temperature, a water temperature at the outlet of the heater must be the following, under the ideal conditions:

$$T_2 = T_1 + Q_{exc} / m C_B.$$

As it follows from the last expression, in the event that $C_B = C_{B1}$, in order to obtain boiling water at the outlet of the heater, it is necessary to get the initial temperature of the water subjected to the mechanoactivation of about T_1 = 66.5C. This coincides with the results given in [3], [4], [5].

Thus, the described heat effects allow obtaining a rather considerable additional heat generation Q_{exc} in the generator's work chamber.

However, the very fact of presence of additional heat Q_{exc} does not mean that it can be used for a considerable increase of the generator's heat productivity.

In order to make sure of this, let us consider two contours of hydro-dynamic generators' operation: the first contour is with a closed circuit of the actuating body's circulation and the second one is with an open circuit.

In the first contour, heat generation Q_{exc} during the water change from the stable low-temperature state to the metastable high-temperature one happens without a change of total energy content of a system "heatgenerator – circuit". During this, a heat, which was temporarily produced in the contour by the water in the phase change, will be absorbed again within the limits of the same contour by the water, which spontaneously returns in its initial low-temperature state after the relaxation time has passed.

It is obvious that, in this case, the heat, which was first produced and then absorbed, is a kind of virtual heat and cannot change the generator's productivity in such a way that its efficiency exceeds one.

The operation of the heatgenerator with the closed contour is explained on Fig. 5.

The countour of the actuating body of heatgenerator 1 circulation consists of force electric pump 2 and heat exchanger 3 connected by hydro-pipes.

Using the pump, a water with temperature T_1 is led to the inlet of the heatgenerator, heated there up to temperature T_2, and led to the heat exchanger where it is cooled up to temperature T_1, and then it is led to the inlet of the heatgenerator again through the pump.

A heating efficiency of the generator during time τ, as a rule, is determined by temperature drop $\Delta T = T_2 - T_1$ in the heat exchanger and water consumption G in the contour:

$$Q = k\,\Delta T\,G\,\tau \qquad (5),$$

where k is an aspect ratio.

The efficiency of the heatgenerator's operation, excluding heat diffusion in the hydro-pipes and elements 1 and 2 of the contour, is evaluated by ratio

$$\eta = Q / U, \qquad (6)$$

where U is an electric energy consumed by the pump during time τ.

However, ***evaluation (6) can be reliable just in the event when all heat Q produced by the generator is led to the environment, for example, to the consumer.***

Actually, as it follows from (3), heat Q is a sum of two components: the first, Q_{exc}, is caused by the exothermic water change while the second, finally, is obtained by electric energy transformation U into heat ΔQ, which is equivalent to it. Durng continuous heat production of the generator, the consumer can obtain only a part of the heat, which is obtained via heat excange, i.e. it is possible to get heat ΔQ, and always $\Delta Q \leq U$.

Another part of heat Q, heat Q_{exc}, is caused by a temporary heat production because, on the expiry of relaxation time τ_r, this part of the heat is absorbed by the water again and is unavailable for the consumer.

Hence, temperature drop ΔT in the heat exchanger cannot be used as a representative informative parameter for the evaluation of the heatgenerator's efficiency according to the diagram on Fig. 5.

The mentioned drop is caused by two reasons: first, by the water cooling during the heat emission and,

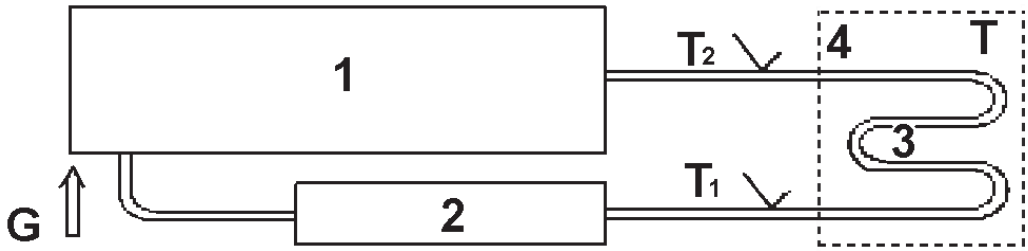

Fig. 5

second, by the water cooling during the heat absorption. Among them, it is only the first reason, which characterizes the generator's heating efficiency and can be used for the evaluation of its efficiency.

Thus, a procedure of the heating efficiency evaluation based on parameter ΔT is incorrect and the efficiency value is conservative.

In order to carry on a reliable evaluation, another measurement procedure can be recommended, which allows to control only the part of the generated heat, which is available for the consumer. Such an approach can be implemented, for example, using a calorimeter consisting of reservoir 4 with a reference liquid, where heat exchanger 3 is located (on Fig. 5, the reservoir is shown by a dotted line).

It is known that temperatute T of the reference liquid in the reservoir will change during time τ, it is possible to determine quintity of heat ΔQ given by the heat exchanger of the reference liquid during this time and to evaluate reliably the generator's efficiency using ratio

$$\eta_1 = \Delta Q / U, \qquad (7)$$

where always $\eta_1 \leq 1$ because, as it was mentioned earlier, $\Delta Q \leq U$.

According to (7), we come to a conclusion that ***the efficiency of the gydro-dynamic heatgenerator with the closed contour cannot exceed one.***

Analysing the premises, it is naturally to suggest that an overvaluation of the heatgenerators' efficiency can be caused by a superficial convincingness of calorimetric operations made according to expressions (5) and (6). Credibility of these operations can mislead even a rather objective researcher.

Possibly due to this, efficiency values obtained by authors [3], [4], [5], [6], [7] are quite reliable and experimentally grounded, on their opinion.

VLH with the closed contour can be used not due to their efficiency but due to their technical properties, which alternative heatgenerators do not have.

Use of VLH as simplest transformers of work into heat with natural sources of mechanical energy (wind, falling water etc.) can become rather perspective. In this type of VLH, it can be possible to obtain hot, including boiling, water at the outlet of a pump with a wind drive and an activator.

It is possible to provide the design with an open contour for an operation mode, during which a part of heat Q_{exc} will be permanently extracted from a running water experiencing a direct phase change within the limits of the contour and relaxing right after running beyond its bounds. The excessive heat is extracted from the environment; there are no limits concerning the efficiency of VLH.

The described operation mode of the generator with the open contour was practically realized during operation of an active rotary VLH with an activator of the rotor type with a turbine drive. It was based on the so called "Tantsuyuschaya zvezda", patent of the Russian Federation #2175272 (see Fig. 6).

"TZ" has ***a hexagonal-cycloidal generator*** invented by me as early as in 1994. It generates 6 parallel vortex flows, which form together a "tornado" structure. A back surface of the rotor

(which has three reach-through holes) periodically overlays three vortex chambers during rotation in contact with a front side of the stator. This process is automatically associated with cooling effects observed in a "sandwich" of the cylindrical field of Serl's machine.

A speed of the overlay is high enough to provide for a hydraulic shock. Waves of the hydraulic shock reflected from the rotor's plane are overflown to axled zones of the three other chambers, which are opened at this moment. Due to this, water flows out from the opened chambers with an increased kinetic energy. The process is like an operation of a sextuple aerogun (though only one barrel of the gun shoots at a time while three of them operate at a time in "TZ"). A combination of high speed of streams and their cyclical manifestation (pulsation) increases an efficacy of the mechanoactivation and an efficiency of the operation as a whole.

An inlet of the work chamber of "TZ" was attached to a water pipe and an otlet of its heat exhanger was attached to a reservoir-precipitation tank. During tests of this heater, a portion of a tap water with temperature about $T_1 \approx 20C$ was led to its work chamber and heated up to temperature $T_2 \approx 55C$, after that the water was led to the heat exchanger, where it gave a part of its heat to a calorimeter during time about $\tau \approx 1.5$ minutes and cooled itself up to temperature about $T \approx 25C$, and then it was led to the heat-insulated reservoir-precipitation tank.

In about $\tau \approx$ 10 minutes after the discharge, the water in the reservoir-precipitation tank was spontaneously cooled to temperature T = (12 – 15) C.

An efficiency of this VLH is considerably more than one. It was calculated as a ratio of the measured quantity of heat, which was transferred by the heat exchanger to the calorimeter during the preset time, to the measured energy consumed by the electric pump during the same time.

Such a result can be explained by the fact that, in order to produce electric energy, not only the external electric energy but also the external heat were used. The external heat was extracted from the tap water during its cooling from initial temperature $T_1 \approx 20C$ to a temperature, which, finally, was T = (12 – 15)C.

VLH can operate with the efficiency of more than one, however, this is provided by not only a generator but also a method of heat extraction from an external low-temperature source.

"Cold fusion" has absolutely nothing to do with it. It is advisable to remember a logical principle formulated as early as in the 12th century: substances must not multiply needlessly!

REFERENCES

1. G.L. Griggs. Patent of the USA # 5188090, 1993.
2. Yu.S. Potapov. A heatgenerator and a heating device. Patent of the Russian Federation RU #2045715, 1995.
3. L.P. Fominsky. How Potapov's vortex heatgen erator works. RANS, Cherkassy, "OKO-Plus", 2001.
4. Yu.S. Potapov, L.P. Fominsky. Progress of heat energy. Collection "Fundamental problems of natural science and technology". Vol. 1, SPb, 2002.
5. Yu.S. Potapov and others. A method of heat production. Patent of the Russian Federation RU #2165054, 2000.
6. L.G. Sapogin, Yu.S. Potapov nad others. A liquid heating device. Patent of the Russian Federation RU #2162571, 2000.
7. G. Ranque. Patent of the USA # 1952281, 1934.
8. V.A. Gorlov. Gorlov's hetagenerator. Patent application of the Ruusian Federation #200110 5711/06, 2001.
9. L.N. Britvin. A heatgenerator of the cavitation type. Patent of the Russian Federation according to application #99110396/06, 2001.
10. L.N. Britvin, V.M. Parshikov. A hydro-dynamic cavitation heatgenerator. Patent of the Russian Federation according to application #99110779/06, 2001.
11. I.B. Bystrov and others. A hydraulic heatgenerator. Patent of the Russian Federation according to application #2000129736/06, 2002.
12. R.I. Mustafiev. A heatgenerator and a device for water heating. Patent of the Russian Federation RU # 2132517, 1999.
13. N.E. Kurnosov. A heatgenerator device. Patent of the Russian Federation RU #2190162, 2001.
14. Yu.S. Potapov, L.P. Fominsky. Vortex energy. Kishinev – Cherkassy. 2000.
15. V.M. Eskov-Soskovets. A device for liquid heating. Patent of the Russian Federation RU #2171435, 2000.
16. V.A. Kudashkina and others. A vortex heater. Patent of the Russian Federation RU #2129689, 1999.
17. V.S. Podoprigorov and others. A heatgenerator and a device for liquid heating. Patent application of the Russian Federation RU #96124293106, 1996.
18. N. E. Kurnosov. A thermogenerator. Patent of the Russian Federation RU #2177591, 2000.
19. ?.G. Flynn. Devices for liquid heating. Patent of the USA #4333796, 1982.
20. R.K. Churkin, D.R. Churkin. A vortex heating system. Patent of the Russian Federation RU #2089795, 1997.
21. B.V. Yelin, V.V. Terekhin. A device for liquid heating

and a heatgenerator. Patent of the Russian Federation RU #2135903, 1999.
22. N.P. Lunin and others. A heatgenerator. Patent of the Russian Federation according to application #98105105/06, 1999.
23. N.V. Yurkov. A heatgenerator and its part used independently. Patent of the Russian Federation according to application #2001107321/06, 2001.
24. A.I. Koldamasov. Plasma equipment in a cavitating dielectric liquid. 1991.
25. H. Khasanov. Thermoeffect in fluid media. Collection "Structural and dynamical processes in disordered media". Samarkand, 1992.
26. L.I. Pischenko, Yu. A. Merenkov. A cavitation heatgenerator. Patent of the Russian Federation RU #2131094, 1999.
27. S.N. Chuvashev and others. A method of heat generation in liquid and a device for its implementation. Patent of the Russian Federation RU #2177121, 1999.
28. I.S. Medvedev and others. A hydro-dynamic cavitation device. Patent of the Russian Federation according to application #98114517/06, 2000.
29. I.B. Britvin and others. A cavitator of the hydro-dynamic type. Patent of the Russian Federation according to application #99113709/06, 2003.
30. L.V. Larionov and others. A cavitator for heat production in liquid. Patent of the Russian Federation according to application # 97118384/06, 1999.
31. S.V. Tsivinsky. An autonomous heating system for buildings. Patent of the Russian Federation RU # 2162990, 2001.
32. I.B. Britvin and others. A cavitation energy transformer. Patent of the Russian Federation according to application # 2001104604/06, 2003.
33. I.B. Britvin. A heatgenerator of the cavitation-vortex type. Patent of the Russian Federation according to application # 99110397/06, 2001.
34. I.B. Britvin and others. A drive cavitation heatgenerator. Patent of the Russian Federation according to application # 99110538/06, 2003.
35. A.D. Pertakov. A resonance pump-generator. Patent of the Russian Federation RU # 2142604, 1999.
36. N.I. Selivanov, S.V. Ageev. A method of liquid heating and a device for its implementation. Patent of the Russian Federation according to application # 96104366/06, 1998.
37. S.S. Kochkin and others. A cavitation vortex heatgenerator. Patent of the Russian Federation according to application # 2002119773/06, 2003.
38. A.D. Pertakov and others. A rotary pump-heatgenerator. Patent of the Russian Federation RU # 2159901, 2000.
39. A.D. Pertakov, G.P. Maspanov. A pump-heatgenerator. Patent of the Russian Federation RU # 2160417, 2000.
40. A.F. Kladov. A method of energy generation. Patent of the Russian Federation RU # 2054604, 1996.
41. N.P. Lunin. A method of liquid heating. Patent of the Russian Federation RU # 2125215, 1998.
42. A.L. Dushkin and others. A method of heat production in liquid. Patent of the Russian Federation according to application # 95110302/06, 1996.
43. L.N. Britvin. A method of the operation process' intensification in vortex cavitation devices. Patent of the Russian Federation according to application # 99110398/06, 2001.
44. V.N. Kirilenko, S.O. Brulev. A method of hydro-dynamic liquid heating. Patent of the Russian Federation RU # 2156412, 2000.
45. S.A. Lebedeva. A method of liquid heating by ultrasound. Patent of the Russian Federation according to application # 97106275/06, 1999.
46. V.M. Eskov-Soskovets. A method of liquid heating. Patent of the Russian Federation according to application # 97111474/06, 1999.
47. P.V. Efremkin and others. A method of heat generation in liquid. Patent of the Russian Federation according to application # 99111474/06, 1999.
48. A.Yu. Baurov and others. A method of energy generation in liquid. Patent of the Russian Federation according to application # 2001121071/06, 2003.
49. P.D. Prussov. Kochetkov's effect. Collection "Fundamental problems of natural science and technology". Part III, SPb, 2003.
50. G.I. Shipov. Theory of physical vacuum. M. 1993.
51. L.G. Sapogin and others. Some aspects of alternative energy's evolution from the position of unitary quantum theory. Collection "Works of Institute of Engineering Science of RAS", M., 1999.
52. Yu.N. Bazhutov and others. Registration of tritium, neutrons and radiocarbon during operation of hydro-unit "Yusmar". Works of the III Russian conference on cold fusion and nuclei's transmutation. M., "Ersion". 1996.
53. E.F. Furmakov. Dielectric effects in drops, films and threads of fluids. Works of the industry, issue 2, M., 1988.
54. E.F. Furmakov. Abnormal properties of thin films and drops of polar fluids. Works of the industry, issue 1, M., 1990.
55. E.F. Furmakov. A dimensional electrical effect in thin films of polar fluids. Collection "Structural and dynamical processes in unordered media", part 1, Samarkand, 1992.
56. G.N. Zatsepina. Properties and structure of water. M., 1974.
57. A.I. Rusanov, V.A. Prokhorov. Interphase tensiometry. SPb, "Khimiya". 1994.
58. E.F. Furmakov. Heat generation during phase balance's change in a water stream. Collection "Fundamental problems of natural science", vol. 1, RAS, SPb, 1999.
59. M.A. Margulis. Sonoluminescence. Progress of physical sciences. V. 170, #3, 2003.
60. M.A. Margulis. A new experimental evidence of electrical nature of multivesicular sonoluminescence. A journal of physical chemistry. V. 75, # 10, 2001.
61. Physical encyclopaedia. M. 1995, p. 200.
62. E.F. Furmakov, N.N. Golubev. Thermo-electric effects during polymorphic transformation of solids. Works of the industry, issue 42, M. 1968.
63. F.D. Ovcharenko. Research on mechanism of water interaction with a solids' surface. M. 1978.
64. M.P. Vukalovitch and others. Technical thermodynamics. "Energiya", M. 1961.
65. A.N. Alabovsky and others. Technical thermodynamics and heat transfer. Kiev, 1990.
66. L.L. Vasiliev. Economical and social prospects of heat pumps' use. Collection "Works of the international congress "Demografic problems of Belarus". Minsk, 1999.
67. Stibel Eltron offers an alternative. Promotional material of the company. 2003.

The discoveries of John Keely: the XIX century and the present time

Review by E. Artemyeva.
You can know more about John Keely on sites:
www.keelynet.com, http://www.lhup.edu, http://donhuan.da.ru

Brief biography of John Keely

John Worrell Keely (1837-1898) of Philadelphia was a carpenter and mechanic who announced in 1872 that he had discovered a new principle for power production. Keely persuaded a dozen engineers and capitalists to invest in the idea, forming the Keely Motor Company in New York in 1872. Soon he had capital of one million dollars, primarily from wealthy New York and Philadelphia businessmen. He used the money to buy materials necessary for building a motor based on his theories.

Soon he had constructed an aetheric generator, which he demonstrated to amazed audiences in 1874 in Philadelphia. Keely blew into a nozzle for half a minute, then poured five gallons of tap water into the same nozzle. After some fine adjustments the pressure gage indicated pressures of 10,000 pounds per square inch. This, said Keely, was evidence that the water had been disintegrated and a mysterious vapor had been liberated in the generator, capable of powering machinery.

Keely lived in high style, as befitted the head of any large company. To his credit, he plowed most of the invested money into research equipment. He did most of the experimentation himself, constructing his own apparatus. He was not willing to entrust his secret to those who could not or would not understand—especially physicists and engineers.

The work went slowly. To keep up the spirits of stockholders Keely staged public demonstrations. These were masterpieces of showmanship.

Biographers have described Keely as a "mechanical experimenter", "inventor and imposter", "professor of perfidy", "swindler", and "scandalous scamp". Keely's lack of formal scientific education didn't bother his supporters, and didn't deter Keely himself from grandly proclaiming his theories as "scientific". Some disillusioned stockholders withdrew their support as Keely's experiments suffered repeated delays. Keely declared he'd already proven his theory and it could be implemented for useful purposes, and he made vast claims for the economic benefits of aetheric energy over coal and other energy sources. But he resisted investor's demands that he produce some marketable product. Stockholders were not happy with Keely's insistence that more experimentation was needed to "perfect" the machines. Fortunately, when nearing bankruptcy, Keely acquired a wealthy backer, Mrs. Clara S. J. Bloomfield-Moore, the widow of a Philadelphia paper manufacturer.

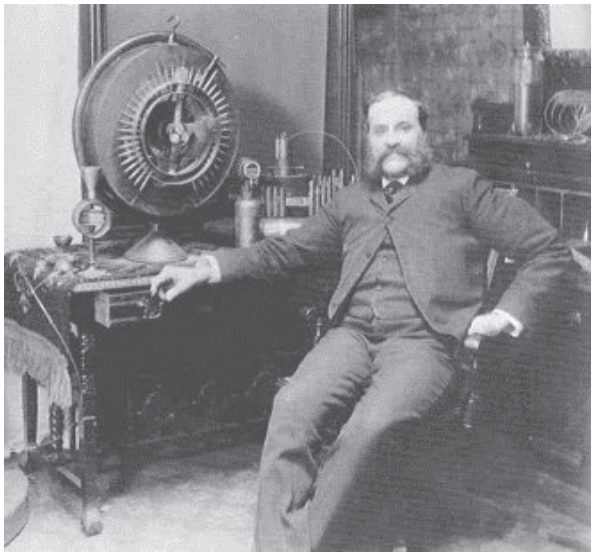

Figure 1. John Worrell Keely photographed in his laboratory in 1889. The Bettmann Archive.

She advanced him over $100,000 for expenses and promised him a salary of $2,500 per month. She became active in promoting Keely in journals and books and in seeking scientists who

might validate his claims. She suggested that he share his secret with Edison or Tesla to hasten its development, but Keely refused. Keely continued this research for fourteen years, occasionally staging demonstrations to placate impatient stockholders.

After Keely died on Nov. 18, 1898, suspicious skeptics and newspaper reporters did a careful examination of his laboratory. Some of Keely's machinery had already been removed by "believers" who hoped they could make it work. Some of the apparatus ended up in England. No one could make it function as it had in Keely's laboratory.

Keely had kept his company going for 26 years without ever putting a product on the market, paying a dividend or revealing his secrets. That's his one undisputed accomplishment. He never divulged his secrets with anyone, so far as we know. One close friend reported that he had once asked Keely "John, what do you want for an epitaph?" His answer: "Keely, the greatest humbug of the nineteenth century."

John Keely's perpetual motion machine

More than 100 years ago John Keely discovered a practical opportunity to obtain and use aether energy. He researched this energy for a quarter of a century and built about two thousand prototype devices and mechanisms, which used the energy in their operation. According to John Keely's opinion, it was a use of aether energy that could realize the centuries-old dream of mankind to create a so called "perpetual motion machine". He managed to prove that aether energy was real and confirm his discovery by working factory shops with his mechanical motors using aether energy. According to Keely's data, energy contained in a pail of water is sufficient to get our earth moving out of its orbit. Nicola Tesla, Tomas Edison, and Jules Verne were among witnesses of his numerous experiments.

In 1873, he informed the scientific community about discovery of a fundamentally new kind of energy. For several decades, Keely had been working with aether energy and used secret devices in order to use a source of the unlimited eternal energy of the environment for different purposes. The mechanical devices, motors rotated, produced work using no visible external energy sources. It was Keely's opinion that everything in Nature oscillates, vibrates. The nature of forces is vibratory. Organized vibrations are music. A harmonious interchange of vibrations is sympathy. A science about the nature of such effects is Sympathetic Vibratory Physics created by Keely.

How many people know now that, since the middle of the XIX century, alongside with traditional technologies and devices, various (from mechanical to electrical) working and patented so called "self-sustaining devices" existed? Self-sustaining devices were the devices which, when started, produced energy sufficient for passing of the technological process and maintenance of the device's operation, i.e. the devices needing no additional external energy (fuel) supply (Free Energy, Zero Point Energy etc.). A power supplied for starting the device could be much less than a power produced during the device's operation (of the device having efficiency >1). This was evidence of interchange processes with the subtle environment (aether, physical vacuum), which is always a real participant of the process. These inventions were based on those interchange processes: John Keely called them Sympathetic Vibration while Nicola Tesla, Tomas Morey, and Bruce de Palma called them Radiant Energy. William Reich, whose books were burned, as if in the Middle Ages, began working on climatic weapon and psychic energy (Phoenix project).

Thus, it turned out to be that, for more than 100 years, mankind has known but cannot apply the technologies based on the use of Free Energy, i.e. needing no production and transportation of fuel, using the subtle environmental material's energy – the energy of aether, physical vacuum.

Vibration laws

John Keely thought that any real formation (a "molecular unit"), no matter how small it is, is in a state of continuous internal vibrations and excites something like sound vibrations in the environment. Moreover, each formation can react to the vibrations coming from without.

It can be done in a variety of ways depending on whether this external vibration is accordant to its own tone or no. If vibrations of two bodies are acordant, the bodies are attracted; if there is a dissonance in their sound, they avoid each other. All physical forces appear due to a certain concordance (or a disagreement) of wave characteristics of vibration fields, which unite all existing matter. Vibrations play a role of an all-organizing and all-controlling source. And this source is not energy. Vibrations carry not energy but only an incentive to its absorption or production, i.e. its transformation from latent forms into evident ones. The energy is everywhere in the environment, which surrounds us and penetrates into us in an unbounded quantity. Eternal motion occurs everywhere and always. Energy reserves are unlimited in nature. We do not produce this energy and do not use it but, knowing the laws, we can transform it into useful forms. In order to do this, it is only necessary to co-ordinate operation of separate "molecular units". It can be achieved by obtaining their consonance.

Imagine that a metal support stands on a table, in front of you, and supports a hollow copper ball-sphere with a diameter of about 30 cm. Numerous metal rods of different lengths and thicknesses are around the support's base. They vibrate like tuning forks being touched by fingers. Plates and resonance tubes are placed inside the sphere. Their inter-location can be changed by handles. All this construction is called a "sympathetic transmitter".

Next to it, a cylindrical glass vessel with a diameter of 25 cm and a height of 120 cm is placed. It is filled with water. The vessel's head, which is also metal, is connected with the sphere by thick wire from gold, silver or platinum. Three metal spheres lie on the vessel's bottom, each of them with weight of about 1 kg. As the experimenter explains, each of the spheres, as well as any other material body, has its own internal melody.

The inventor comes to the sympathetic transmitter and begins to make the tuning forks vibrate, the handles turn. Suddenly, a trumpet sounds briefly and the sphere on the vessel's bottom begins to swing, then it slowly comes off from the bottom and goes up through water column. It hits the head, bounces off, goes up again and, finally, settles down pressing itself to the head tightly.

The trumpet sounds again, and the second metal sphere reacts to it and comes to the surface. Then the third does the same. Music subsides but the spheres still float. Actually, they still slightly come down sometimes, possibly, under the influence of accessory chords.

This astonishing experiment and many others took place in John Keely's labortory in Philadelphia more than 100 years ago. The scientist said that sound is "a violation of atomic balance destroying the existing atomic particles and a substance, which is released during this process, must undoubtedly be an aether current of some order". It is possible to say that Nature is based on vibrations of different frequencies, which create various combinations. The "accordant" harmonious combinations cause attraction and have a creative nature while disharmonious ones cause repulsion, destroy.

An example of the orginized vibrations are music. When two strings of an instrument are attuned in a harmonic combination (for example, according to a third, fifth or octave), motion of one of them causes a respond in another. Since ancient times, another music was known, Kepler's "music of the spheres" created by the Sun, the Moon and planets. Today we can listen to this music in a computer arrangement.

Keely brought his Sympathetic Vibratory Physics to fourty laws, in which, particularly, the unity of force and matter and also fundamental infinity of matter's divisibility are postulated. Keely considers force as a released matter and matter as a constrained force. This was brilliantly confirmed in the XX century in the form of famous formula $E=mc^2$. An idea of neutral center is considered by Keely as one of the most important physical and metaphysical

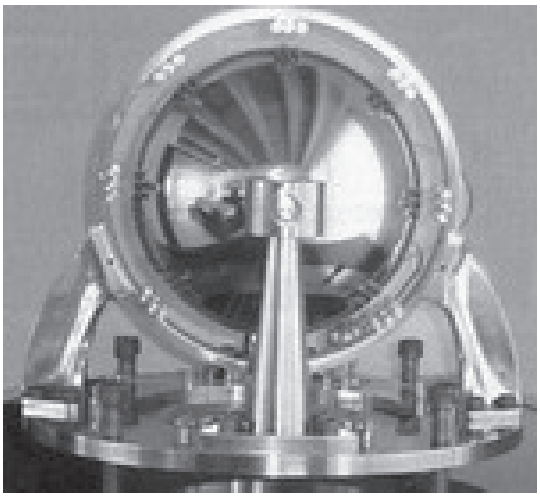

Fig. 2. A replica of Keely's device

categories. Every manifested body in the Universe – from an atom to a star system – has a neutral center as a base, an inviolable focal. Everything that we consider as matter is built around it and matter is its objective manifestation. It induces all objects to continuous motion and provides them with life impulse from the neutral center of the higher hierarchy level. This property of the neutral center allows designing a "perpetual motion machine". This was demonstrated during Keely's experiments. A small initial impulse was sufficient to induce a motor to work.

According to Keely, the most important vibration characteristic is frequency because, in dependence on frequencies' combination, vibrations can interact. Force, or energy, is manifested in three forms: as a generating, active force; as a perceiving, reacting force; and as a transmitting, transferring interactions one. Concordant vibrations form harmonic frequencies; due to this, subatomic particles are attracted to each other. Dissonance vibrations cause disconnection of the particles. Keely's laws connect electricity, magnetics and gravity since they are caused by vibrations and, therefore, are only special cases of the common law.

The expression "perpetual motion machine" in its contemporary meaning obtained a sense of a jeer of a coryphaeus aimed at an ignoramus, who does not know the basis of physics and dreams of abundant energy from nothing. The expression "perpetual motion machine" is a sad example of a creation of an effective, ingrained negative label used in a work on spreading the necessary scientific and technical policy and containment of technical data. That is why attempts to rehabilitate the idea "perpetual motion machine" give only the opposite, negative result instead of contributing to advanced scientific knowledge and technologies.

Keely's experiments were described by his contemporary Richard Harte in his article "Stone Decomposition", in 1888, this way.

Recently, the American mineral resource industry was inexplicably agitated... It has been known that a syndicate of far-sighted and richest mining magnates had secretly bought in the cheapest and useless gold-mines. ...A question appears: why do the experienced businessmen purchase the useless mines? This strange event can be explained as the following. Some weeks before the described events, twelve respectable men met, after making an appointment, in a laboratory in Philadelphia in order to see a demonstration of a new method of quartz decomposition. These people were extremely interested in a quick and cheap method of gold production from quartz. And an inventor rendered them this service slightly touching pieces of quartz by a small device, which was in his hands. The moment he touched each piece, it instantly disintegrated turning into dust, in which gold particles lay like pebbles in a sand sea. Then, the twelve respectable men with one accord said: "Mister Keely, if you desintegrate a quartz deposit like this, each of us will draw a cheque for you". Then all of them came to the Catskill Mountains and the twelve men pointed at a sound, just like them, gold-bearing quartz bed at a mountainside; mister Keely took his small device and said: "Gentlemen, be patient". In 18 minutes, a tunnel with a length of 5.5. meters and a diameter of 1.4 meters was formed in the quartz mountain. After that, Mr. Keely calmly returned to Philadelphia with the cheques in his pockets and the twelve respectable men went from New York to San Francisco in order to purchase the seemingly useless stocks of the mines, which were derelict for so long time...

Decomposition (splitting) of quartz was one of Keely's secrets. However, the decomposition

is only a minor and secondary influence of the tremendous force hidden in that mystery. The influence of this force had been discovered by chance. One day the inventor was investigating an influence of aether flows on fine sand scattered on the floor; aether currents twisted the sand in the form of ropes. And suddenly a piece of granite, which lied as a stop for the door, disintegrated before his eyes. He took the hint and, some days later, made a vibratory disintegrator.

Dispersion is more complex and delicate, and Keely can as easily split matter's atom as its molecules. But to what extent? Apparently, he can split it to aether or a hypothetical substance, which existence is postulated by modern scientists though they know nothing about its nature besides the fact that it had been invented by themselves. While did Keely considers it as not a supposition but a real thing just as his own shoes. Actually, it is the initial substance of all matters. **(The editors: A similar point of view and even an experiment is described in Sir Arthur Conan Doyle's story called "A discovery of Rolf Hose")**.

As for the gravitation law, from the standpoint of Keely's experiments, it is not completely convincing or, at least, is just one of manifestations of the more overall law, which provides for mutual change of attraction and repulsion processes. One of small Keely's experiments is the following: a piece of wire is winded around an iron cylinder with a weight of some hundreds of kilograms. When the force is moving along the wire, it is as easy to lift and carry the cylinder by a finger as if the cylinder is just a piece of cork. Recently the experimenter, without assistance, moved a vibratory motor with a power of 500 horse-powers from one part of his workshop to another making no scratches on the floor. Amazed engineers confirmed that they could not move it without a windlass, which could have been installed only if the roof was removed. Such an operation becomes possible if a device is designed, which, being polarized by a force of negative attraction (i.e. repulsion), will rise and move under the influence of an aether flow with a speed of 500 miles per hour in any direction. This is, essentially, a principle of Keely's airship.

Later, he used the same force in optics. He placed three wires around microscope's lenses and, thus, increased its magnification up to what is reached by the biggest telescope in the world. When the history of his discoveries and inventions will be published, a story of John Worrell Keely will be the most amazing story in the annals of geniuses' history. The people of tomorrow will hardly believe that, in the last quarter of the XIX century, a man who was able to fathom the essence of nature decrees, cognizant of its elusive forces, which could be used for mankind's liberation from hard work making most people's lives a misery, was doomed to die of starvation. There was no one lavish, generous, unselfish enough to furnish the capital for the purpose, which did not promise immediate benefit, among neither businessmen, stockbrokers, literary men nor cultural workers...

The forces controlled by Keely still have no practical application and cannot be compelety understood until the world is ready to accept them for its good. Keely himself is sure that the world will undoubtedly benefit from his inventions... Keely's discoveries have a secret aspect. He does not, possibly, realize it himself but it is up to him whether they will be recognized (due to the return, or sympathetic, vibration of even more spiritual aether than that Keely talks about) in order to get harmonized with the common system of the modern civilization and manifest in mankind's material life.

According to the opinion of the growing number of intellectuals, inventions and discoveries of our century have already proven their rather malignancy than good. They improved the global standard of living but, at the same time, considerably decreased a possibility to buy the facilities they had created a need for. Advantages, which appeared since steam and machines had been invented, became available for only a minority... However, Keely thinks that his inventions will allow to restore this disturbed balance.

It is considered now that Keely's discoveries are aimed at increase of human control over material nature, which already increased during the last hundred years. The world is not ready for appearance of such amazing forces at this stage of human life. Mankind is still too selfish,

savage, foolish, cruel, in other words, the brute is too strong in it for higher forces to be entrusted to it. Today, such forces cannot be used for the welfare of the people and for the progress of the human race.

Aether and gravity

Dan A. Davidson in his research on the aether and gravity followed Keely's discoveries. Over the years the existence and understanding of the aether has evolved as the basis for gravity and free energy effects at a micro and macro level. Laboratory experiments have shown that superluminal energy and information transfer has been effectively accomplished via aetheric engineering, which effectively eliminates the theory of relativity and its absurd views of physics and cosmology.

In XIX, John Keely performed extensive experiments in engineering the aether including producing various gravity phenomena, controlled breakdown of matter into aether and then using the aether in experiments, etc. From Davidson's research over 35 years, the existence of the aether is a reality. It led him to characterize the aether as follows:

1. A superfluidic particulate medium which pervades all space.
2. A medium, which in its various modes, is the building block of the physical universe.
3. A medium, which, in one of its modes, is responsible for gravity and inertia.
4. A medium which is controllable by our mind and can be manipulated my our thoughts.
5. A medium which can be controlled by geometric shapes.

The charge of matter is due to its interchange with aether. The electron as well as the other subatomic particles is basically self sustaining vortices in a fluidic particulate aether.

Charge represents a difference in concentration of the aether between two points. Mass (i.e., atomic particles) is made of aether, aether continually flows into and out of the particles as vortices, and the charge is due to its being at a different concentration of aether a apoint in time and space than the local aether concentration.

The electron is a vortex of aether caught in a rotating standing wave due to the vibrating flow of aether which flows into and out of the atom's nucleus.

Atomic structure builds according to the rules of geometry and the basic polarity of atomic particles. Polarities are the result of aetheric flows into and out of matter.

John Ernst Worrel Keely was the first sub atomic physicist. His basic elucidation of atomic structure was derived from his development of the science of vibratory physics. One of his basic discoveries was that of the substructure of the proton3.

He discovered it was a vortex made of three sub nuclear particles, also vortexes.

Further research led him to the idea that this three particle substructure continued down to smaller and smaller level of particles within each particle. Keely claimed to have learned to control the substructure 27 levels down from the basic proton. The Keely atom is depicted in a stylized format in Fig. 3.

The first level of substructure was finally theorized in the orthodox community by Feynman in 1958. Keely's discovery

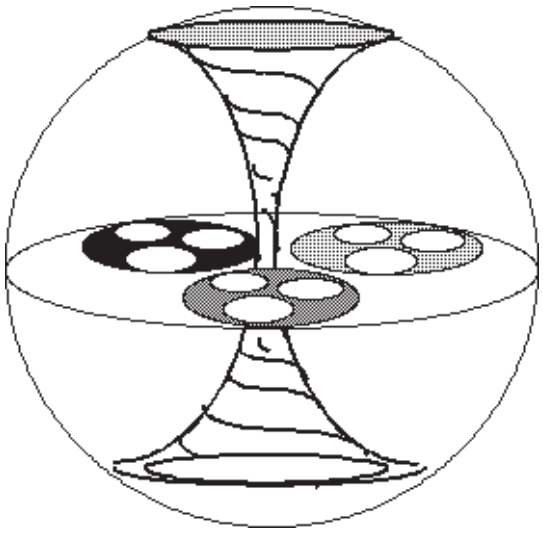

Fig. 3. Keely's "Atom" Showing the Substructure of the Neutron

antedated Feynman by over 60 years! Feynman called the three particles making up the proton quarks.

The gravitation constant as grad E correlates with the seminal work by T. Townsend Brown. Brown discovered that a capacitor will tend to move in the direction of the positive plate. Apparent weight loss is the result when the plates are perpendicular to the local gravity gradient. This effect can be enhanced by making one plate much smaller than the other plate. This essentially forces the grad E to maximize. It should be noted that grad E is independent of whether the field is AC or DC. Experiments have shown that even with this enhancement the capacitor does not have all its apparent weight nullified and levitate.

(The editor's note: Our researches have shown that gradient E produced due to the properties of the dielectric's material is a more perspective method. A. Frolov)

The reason for this can be found again in the nuclear particle's relationship with the aether. Even though each atom is in constant resonance with the aether this resonance is not synchronized across the mass4. Each atom is doing its own thing, so to speak, and there is a random interchange with the aether with respect to all the nuclei.

Thus, when a grad E acts as an aether pump across the capacitor plates only a small portion of the atoms become synchronized to this aetheric flow so the entire mass does not respond at the same time; therefore, all the atoms don't try and move at the same time.

Analysis of various apparently disconnected events where levitation was witnessed provides some important clues to a means of effecting synchronization of the nuclei.

Synchronization of the nuclei with the aether has been achieved by two main methods; namely, rotation or movement and sonically.

Analysis of the phenomenon of inertia provides the major clue to how rotation could act to synchronize the flow of aether into the nuclear sub structure of the gravitors.

The Detection of Aetheric Gravity Flow Using Dielectrics

It should be obvious that the larger the mass the more aether which flows into the atomic structure of the mass. Mass is both radiating and absorbing aetheric energy.

Other mass in the vicinity will cause perturbations in this aetheric flow. Because of this fact, aetheric flow detectors can be constructed by taking advantage of this principle.

Davidson's first working gravity or local aetheric stress/flow detector was demonstrated at the 1990 Extraordinary Science Conference in Colorado Springs, Colorado. The basic principle of the gravity detector is the fact that the electronic charge structure of a given mass is a function of the amount of aether flowing into the mass. The charge around the atom is governed by the amount of aether flowing into and out of the mass. His reasoning was that dielectrics would make the best aetheric flow detector. In dielectrics the electronic charge is isolated and trapped within the dielectric material since the charge cannot flow and dissipate. By using a high dielectric such as titanate zirconate or barium titanate the amount of charge change is directly readable by putting electrodes on each pole of a polarized dielectric.

Davidson's first detector circuit used a picoamplifier attached to the electrodes to amplify the signal. Then the voltage/current

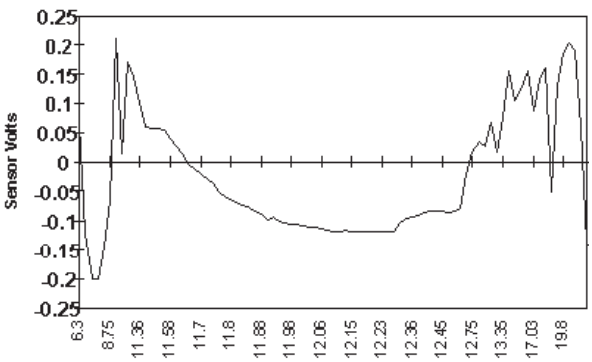

Fig. 4. Gravity Sensor Data Example. Data from July 11, 1991 Solar Eclipse

changes across the dielectric are easily measured directly by a voltmeter.

Fig. 4 depicts the output of the gravity detector circuit as a graph of local gravitational stress (i.e., aetheric stress). The graph readily shows the daily swing of aetheric flow on the dielectric material as the sun and moon affects the earth's gravity field and gravity flows into the earth.

The data was taken during a solar eclipse and shows the effect of local aetheric field stress dropping during the period of the eclipse.

Experiments with the dielectric detectors showed they tend to be noisy and susceptible to temperature, light, and sound pressure. If you are going to experiment with this type of gravity detector be sure to isolate the dielectric from temperature swings, light and sound.

The Detection of Aetheric Gravity Flow Using DNC Coil

When discussing Davidson's results of gravitational energies (i.e., aether stress flows), his fellow gravity researcher, Joe Parr, mentioned he had similar results with dielectrics and had accidentally discovered a better detector.

Parr used a strange coil to which he attached the moniker "Do Nothing Coil" (DNC). The DNC would detect the aetheric gravity flow without the bothersome temperature, photonic, and sonic noise effects.

Joe called the coil "do nothing" because it did not respond in any significant manner to magnetic or electrical signals from DC to about 300 Ghz. By accident he discovered that the coil's resistance changed during a 24 hour period.

The DNC coil consists of about 8000 turns of number 34 copper wire wound on a plastic hoop. In Davidson's duplication of the DNC coil he got a Hula Hoop and cut it open, removed the plastic noise maker beads, and shortened the tubing length to make a plastic loop 19 inches in diameter (i.e., center of toroid on one side to center of toroid in other side).

To wind the coil, Davidson set the coil form and wire and electrician tape on the coffee table in front of the TV set and whenever he was watching TV he would wind a couple of hundred turns on the loop and cover the turns with black electrician tape to keep the coil in place. After a couple of months he finally had wound the DNC coil. A BNC connector on the two ends of the coil completed the job.

Resistance changed daily. The change in resistance is a direct readout of the local aetheric stress flow changes.

Resistance changes in the coil because the atomic lattice electronic charge of the metal in the wire changes as more or less aether is flowing in the nuclei of the coils atoms. During the course of a 24 hour period the sun, moon, planets as well as the stars put differing stress levels on the earth's aetheric field which directly affects the flow rate into the nucleus.

(The editor's note: In Russia. these experiments are known according to the works of N.A. Kozyrev, 1947 – 1989)

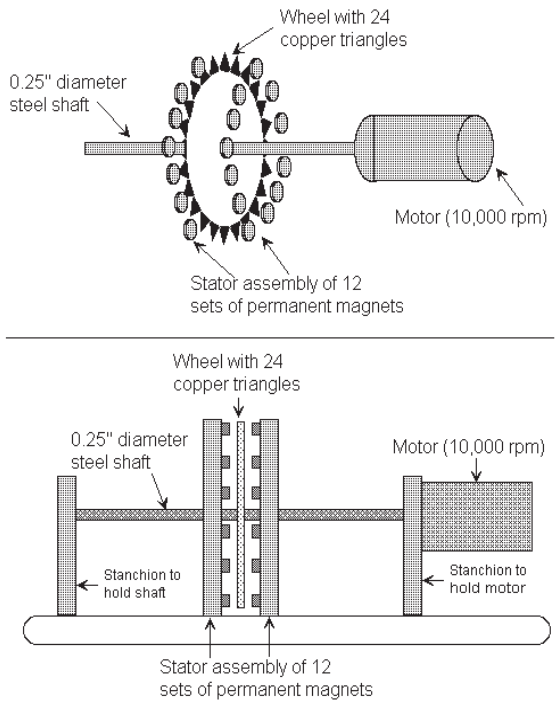

Fig. 5. Parr Gravity Wheel Experiment Design

The Parr Gravity Wheel Experiment

Around the periphery of the wheel are copper triangular shapes. When the motor spins the wheel the copper triangles move between permanent magnets mounted statically on either side of the wheel. This new experimental set up is depicted in Fig. 5.

Davidson had been following Joe Parr's experiments over a several year period and, with Joe Parr's assistance, built a duplicate experiment.

The shaft must be oriented east-west. A negative ion source is set within a few feet of the spinning wheel to feed the force fields which form around the copper triangles on gravity wheel.

The experiment is set on a delicate scale which measures accurate to 0.5 grams. The static weight of Davidson's experimental setup is about 1200 grams. Joe Parr's version is about 1800 grams. The experiment used machined maplewood to hold the motor and shaft, and the stanchions which hold the magnets and Parr's experiment was made of machined aluminum.

During experimental operations the weight of the experiment can drop from 0 to 6.5 grams. When one considers that the gravity wheel with the copper triangles weighs about 24 grams the total normal operational levitation effect is on the order of 25% weight loss. This by itself in a remarkable experimental effect and deserves acute attention.

The scale which is used in the experiment is an Ohaus Precision Plus purchased from Cole Parmer. The scale can measure accurately within 0.1 grams over a range of 0-4000 grams. The scale has an RS-232 serial interface which allows the scale to be interfaced to a printer or computer.

The scale outputs the weight continuously except when there is a scale upset. The upset weight can be varied and it was set at the maximum of 5 grams. This means that if the scale weight is changed more than 5 grams within a couple of milliseconds then the RS-232 interface stops outputting the weight.

Davidson's preliminary hookup of the scale was to a computer; however, the intense forcefield which builds up around the experiment destroyed two computer interface cards. Since the RS-232 interface stops outputting data on a scale upset, the serial output of the scale was converted to a voltage level and used as an indicator.

When the voltage drops, a scale upset has occurred. The voltage level was/is interfaced into a pulse counter. This provides a count of scale upsets greater than 5 grams. If the 6.5 gram weight loss is added to the 5 gram upset, we are looking at about a 50% weight loss of the gravity wheel. Joe Parr's data showed a correlated hit with Davidson's experiment's data on April 11th.

There are two basic types of force fields built up in and around the experiment. There is an ovoid shaped forcefield around each of the copper triangles.

When these small force fields build up in intensity they cause a drag on the motor which can be plainly heard in the lab. There is a larger forcefield which builds up around the entire experiment setup.

What seems to be happening is the earth moves through energy conduits which go from our sun to other planets and star systems. When the gravity wheel experiment crosses one of these energy conduits, the forcefield around the copper triangles intensifies to the extent that the bubble starts moving either toward the conduit or away from the conduit very rapidly and a scale upset occurs.

Attempts at simulating the energy conduit thus far have failed. Davidson and his collegues are in the process of evaluating the data and they have found some correlation with planetary and stellar conjunctions where the earth gets lined up with other planets or stars and our sun.

The data analysis is currently in its infancy so Davidson can make no statements of solid fact other than that they are getting some very impressive gravitational effects.

A water-lifting device

A new source of inexhaustible, ecologically clean and powerful energy

V.V. Marukhin, Russia
grwpower@mail.ru

In 1775, an article by J. Whitehurst containing a description of a device, which was invented and designed by him in 1772, appeared in a British magazine. The device of J. Whitehurst allowed water lifting from a small height to a considerable height without any additional power supply due to the use of a so called potential energy of water and due to a so called "hydraulic blow" effect. But the device could not operate in the completely autonomous mode. This disadvantage was removed by an inventor of a balloon, a Frenchman J.Montgolfier, in 1776. In 1797, he obtained a patent for his invention. In the same 1979, M.Bulton from England obtained a patent for the same device. In 1809, J. Cerneay and S.Hallet obtained a similar patent in America. And already in 1834, an American, H.Strawbridge, put an industrial model of the similar device into mass production.

It is considered that it was the device invented by J. Montgolfier, which was then called a "hydraulic ram".

As a rule, Montgolfier's "hydraulic ram" (Fig.1) consists of a water reservoir 1, a force pipe 2, an impact valve 3, pressure valve 5, an air chamber 4, and a draft tube 6.

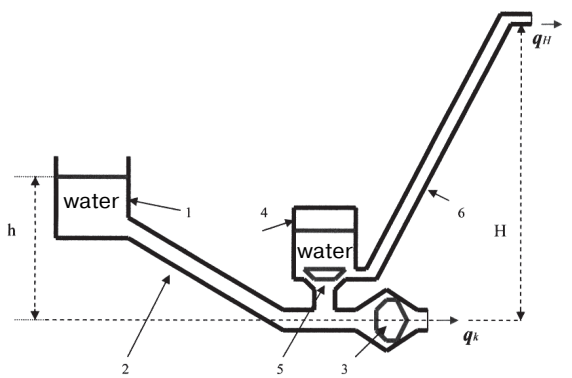

Fig. 1

Its operation happens as follows: water from water reservoir 1 goes by force pipe 2 to open impact valve 3 and, under pressure ***h***, flows out with an increasing speed. Under some water speed, a pressure to the impact valve exceeds the force keeping the valve open (for example, a spring force), closes it and blocks water's way out. An abrupt halt of moving water and the so called "hydraulic blow" occurs. In the space of the force pipe, from impact valve 3 to pressure valve 5, the water pressure almost momentarily increases up to a value, which coincides with ***H***, and, due to this, the pressure valve opens.

However, water spends only a part of its speed for the pressure increase. Using the residuary speed, it goes to air chamber 4 through the opening pressure valve. In the air chamber, the residuary air volume is also pressed up to the pressure, which coincides with water pressure ***H***. In its turn, water from the chamber, under the same pressure, goes by draft tube 6 to height ***H*** to a consumer.

After a time, the residuary speed in the reservoir is totally spent on the maintenance of the increased pressure in the reservoir. After that, the water pressure under the valves decreases a little lower than the atmosphere one. As a result, the existing increased pressure in the air chamber closes the pressure valve while the low pressure under the impact valve and an opening mechanism (for example, a compressed spring) allow the impact valve to open. Thus, all construction returns to the initial state and the process repeats. As a result, under certain standards of components' production, water can raise at rated altitude ***H*** continuously in the autonomous mode for many years.

Moving parts of the hydraulic ram – two valves – are designed in such a way that the pressure increases in the reservoir, closes the impact

valve and opens the pressure one while the pressure decrease influences the reverse sequence. All meaning of the device's operation is that it raises water volume ***qH*** at height ***H*** using water volume's energy ***q***.

However, the "hydraulic ram", as the water lifting device, has a very important disadvantage.

In order to obtain the water increase, it is necessary to discharge a certain amount of water ***qk=q-qH***. Water flowing out of the impact valve must quickly vacate a place for a new portion of water, which will flow out during the next cycle. If water at the outlet of the drain hole will gather somehow, an insuperable resistance for water flow out will form and, as a result, the water acceleration in the force pipe will be broken and then stop.

As a result, the given device being in the submerged state, i.e. submerged in water, cannot operate. This prevents its use in the flat country with open reservoirs and on rivers without slopes or without dams.

Besides that, the "hydraulic ram" attracted attention of scientific theorists and experts by its originality and operation simplicity. During the XIX century, many theoretical researches of the "hydraulic ram" were carried out but, until 1900, they all rested on the fact that the theory of a "hydraulic blow" in pipes had been unknown and, therefore, gave no correct results. As early as in 1804, Eitelvein from Germany carried out more than 1,000 experiments and published a number of empirical conclusions and formulas. Most of them, as it was found out already at that time, were not suitable for designing.

The fact of existence of the "hydraulic blow" effect was known as early as in the XVIII century, but a right theory was developed for the first time by a Russian scientist, N.E. Zhukovsky. Professor Zhukovsky checked and confirmed his theoretical conclusions by special experiments in 1897-1898. In 1898, his theory was first published in "Bulletins of Polytechnic Society".

In 1901, an Italian engineer Alievi published almost the same theory of the "hydraulic blow" but in relation to pipelines of different power-plants.

However, the experiments carried out by Zhukovsky and, later, by other researchers from other countries completely proved the accuracy of basic concepts of Zhukovsky's theory. But this theory, even after its publication, did not obtain proper acknowledgement. Researchers and enthusiasts of the "hydraulic ram", as usual, from year to year, carried out experiments and found different non-generalized formulas for their purposes.

The "hydraulic ram" was developed under the name of «ram-pump» in melioration and in private life as a device for free water lifting in America, Australia and other western countries. Today there are several dozen small companies specializing in the production and sale of the «ram-pump» in these countries. Searching Internet for words "hydraulic ram" or «ram-pump» by different search engines, it is possible to find not only these companies but also some publications on this subject. Many companies use only their own formulas installing their «ram-pumps».

In Russia, right after the publication of the "hydraulic blow" theory by Zhukovsky, the work on the creation and development of the "hydraulic ram" theory was successfully continued by his disciples and following: B. Bubekin, B. Bahmetiev, S. Chistopolsky. For example, Professor Zhukovsky created the right scheme of the "ram's" operation during water delivery relying on the results of special experiments carried out by B. Bubekin from 1903 to 1907 and described it in a report on "The new hydraulic ram theory" in Mathematical Society on the 18th of September 1907. Later on, Professor B. Bahmetiev gave the right interpretation of the water acceleration period in researches by Navler and Harza in his work "Introduction to the research of the unbalanced liquid flow" on the basis of the same theory of Zhukovsky. However, it was Professor S. Chistopolsky who finally combined theory and practice in his work "A hydraulic ram" in 1930. He created the first and, to present day, the only known and reliable method of the theoretical calculation. This method was, and is, completely confirmed by the results of numerous tests.

Unfortunately, the "hydraulic ram", as the device for free water lifting, was undeservedly forgotten as petroleum production has been

developed, despite the fact that, before the fifties, there were plants producing a lot of these devices for melioration in Russia. Only one remark about this device is left in the Big Soviet Encyclopedia. Almost all engineers and scientists, who were educated in the USSR and worked with hydrodynamics or at hydroelectric power stations, as a rule, heard nothing and know nothing about this device. The concept of the "hydraulic blow", as applied to water-pipes, exists in theory, in industry, in text-books and in the specialized literature but the concept of the "hydraulic ram" became identified with a device able to clean pipes and ship's bottom by the "hydraulic blow" or hole by water. All works on the "hydraulic blow" by N. Zhukovsky, B. Bubekin, B. Bahmetiev, and S. Chistopolsky have been forgotten. And only recently, obviously, in connection with the fact that people are talking about the possibility of the forthcoming oil crises' approach, isolated inventors, who found, to their surprise, information about this device, tried its reanimation. **An inventor, G. Rogozin, progressed even more. He was the first to suggest a combination of the "hydraulic ram" and a water turbine connected with an electric generator. This was, as a matter of fact, the first public statement that this water lifting device can be used also as an energy source.** According to his estimations, such a combination makes the water turbine work with water flows, which cannot be used by it alone. This constructive combination would allow producing electric energy using small rivers, streams and reservoirs with a small hydro-electric system, which has no prospects and cannot be used by traditional hydroelectric power stations. However, his estimations including estimations of the "hydraulic ram's" parameters are also based mainly on his own series of experiments.

As such a science as hydraulic gas dynamics appeared and has been developing, during all these years, in different countries, where the "hydraulic ram" was not forgotten, there were numerous attempts to find the accurate development of the main existing hydrodynamic equations in order to explain the existent processes and find optimal characteristics. But such a development for an unstable flow or, as is customary, a nonstationary stream, which is a process of water flow in the "hydraulic ram", is possible only by numerical methods. In order to use them, it is necessary to know a lot of the beforehand unknown input data. Due to this, such attempts were unsuccessful. It is confirmed by the fact that many different patents for modernization of this device have been obtained. They did not concern change or improvement of its operation principle. However, the "hydraulic ram" theory stated in S.Chistopolsky's work is sufficient for understanding, which factors and which parameters influence the "hydraulic ram" operation and also for making a comprehensive analysis.

This theory, which was many times proved in practice and considerably augmented by the author, underlies a proof of existence of another hydrodynamic system of water acceleration, i.e. a proof of existence of another water lifting device, which can have no water discharge at all.

Imagine a pipe, which is attached to a basis of a water reservoir and closed from both sides. There is a solid bottom, on the one side of the pipe, and there is a thin-wall membrane, which restricts water, on the other side, where the water reservoir is located. Under the certain design pressure, the membrane will break and the water flow with an accelerating speed will go to the closed pipe from the reservoir. If there is no air in the pipe or it is somehow freely replaced by water, the effect of the "hydraulic blow" will also appear when water reaches the pipe's bottom or its considerably restricted part in the end. If the pipe's bottom has, as the "hydraulic ram", a pressure valve, which opens under certain pressure, the "hydraulic blow" process will provide for the same pumping. The "air blast" with the increased pressure zone will go towards the water flow stretching the pipe's walls by an excessive pressure and providing, therefore, for water coming in through the pressure valve. Reflecting from water locating in the reservoir, the "air-blast" will move to the pipe's bottom again. During the "air blast" motion toward the pressure valve, as in the "hydraulic ram", decrease of the static pressure will occur in a zone from the pipe's inlet to the "air-blast" front. Such a motion with the recurring pressure increase and decrease will repeat many times until the water lift located in the pipe uses up its kinetic energy. In a certain amount of time, a certain quantity of water will go to chamber 4.

The same process will happen, if opening valve 3 will be installed at the pipe's inlet instead of the membrane, as it is shown on Fig. 2.

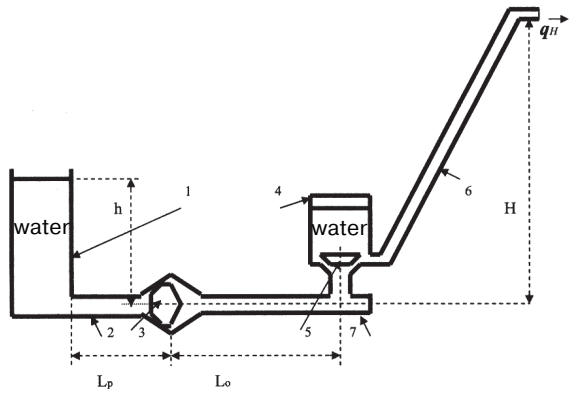

Fig. 2

However, if this valve will be designed reverse, i.e. closing from the direction of pipe's bottom 7, during contact with the very first "air blast", which moves towards the water flow and creating a zone of the increased pressure behind, the valve will tend to close due to the pressure difference. To a greater or lesser extent, it will begin to block the water flow going through it. A mathematical research of such a hydrodynamic scheme, an introduction into the theory of the real mechanism of the valves' closing and opening, taking into account their inertia, show that, under a certain design of valve 3 and certain initial parameters, the closing process can happen in such a way that the valve will not only close before the first "air blast" but also stay in the closed state until the excessive pressure influences in pipe 7 under pressure valve 5. As a result, conditions can be created that valve 3 will completely block the water flow for some time. After gathering a certain speed, the blocked water lift in pipe 7 has to continue its motion to chamber 4 mechanically.

Thus, the strength of water pressure for water pumping to the camber can be substituted by the equivalent inertia. However, unlike the "hydraulic ram", due to the fact that valve 3 is closed, each portion of water pumped in the chamber must cause losses of the whole water lift's mass, which cannot be made up. Due to this, in pipe 7, from the side of closed valve 3, a dilution zone with a pressure close to 0 must appear from the moment of the beginning of the first reflected "air blast" motion. Only a part of solute gases can be there. The zone's length will increase during the pumping. Due to the water pumping in the chamber, like in the "hydraulic ram", a difference of the initial and final kinetic energy will change to the potential energy of water, which came to the chamber. As a result, in both cases, the excess pressure in the chamber must close the pressure valve and an almost total absence of pressure in pipe 7 during the water lift destruction must open valve 3, which experiences the static water pressure from the side of pipe 2. Water will flow again through opening valve 3 to pipe 7. Its volume during flowing in will be exactly the same as the volume of the "zero" pressure zone or, as it is said in hydrodynamics, the "lift-off" area. A speed of this water can reach the initial one. Thus, all process must automatically repeat.

During the real process of water pumping in the chamber after valve 3 is closed, all following reflections of the "air blast" spreading in the direction of valve 3 must occur from the bound of the "lift-off" area with its length increasing. During this, each portion of the pumped water will decrease due to a decrease of the pressure influence's duration under pressure valve 5, because of a decrease of the "air blast" influence's duration.

As a result of the mathematical description of this scheme, taking into account the pumping mechanism, the mechanism of the pressure change in the chamber, taking into account all time characteristics, various losses, peculiarities of the horizontal and vertical scheme of water flowing in, a rather complete theory of such a hydrodynamic scheme has been developed. It contains more than 400 formulas and the method of parameters' calculation, which is necessary for the designing. As a result of engineering research, a necessary design of valve 3 was also found. However, such a construction can be built only for burial depths of more than 15 meters due to the fact that there are no necessary materials and a technology for their production in the industry. The obtained mathematical dependencies show that, in the end of the pumping, a volume of the "lift-off" area is always less than a volume of the pumped water in the chamber. As a result, under the same initial parameters, a total

quantity of the water pumped in the chamber will be less than that in the "hydraulic ram". However, all pumping period is also shorter. Besides, a dependency of the pressure on the speed, which was consumed for its production, is more complex in comparison with the "hydraulic ram". In spite of this, the pressure in the chamber is always more than the initial but its value is not more than its double initial value. Moreover, certain criteria of the initial parameters exist, which determine conditions of the automatic repetition of the process. One of these necessary conditions is an exact accordance of the masses of valve 3 and pressure valve 5 with the initial process' parameters. A certain design volume in the chamber for an air cushion and a certain square of the cross-section on the chamber's outlet for the water export must be realized. It should be mentioned that, from the energy point of view, this scheme consumes more energy for the operation than the net energy produced by it. Thus, the efficiency of this scheme is always less than 100%. A kind of the efficiency's change in dependence on the depth is shown in Figure 3.

The given scheme can be, obviously, used in the same conditions as the conditions of the "hydraulic ram" operation. But it can be used, as it was said above, on the lowland rivers, where the "hydraulic ram" cannot work.

There are, theoretically, no barriers for operation of such a water lifting device without a reservoir 1. In order to do this, it is enough to submerge it into water at certain depth ***h***, as it is shown in Fig. 4.

Under these conditions, the scheme becomes an ideal pump of low pressure, which can be used, fir example, in seawater desalters.

However, this scheme has the biggest prospects, as it is shown in Fig. 5, in the event when there is no outlet tube at all or in the case, when there is some short tube's section with a throat, which is equal to the cross-section of the chamber's outlet port at the chamber's outlet at depth $h_э \approx h$. As the obtained dependencies show, a theoretical dependency of the pressure in the chamber on the time will be like it is shown on Fig. 6, under the certain volume of the air cushion in the chamber and

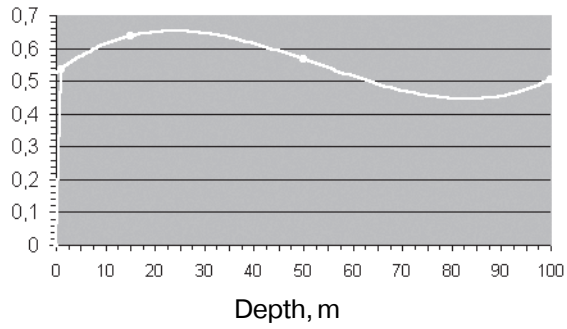

Fig. 3

the certain square of the throat of the outlet port in the chamber.

Time of the pressure increase ***tw*** and its abatement ***tu*** is always less than ***0.1 tH***. During time ***ty < tH***, an opening of valve 3, the water acceleration and energy accumulation occur. This allows considering the average speed of water flow out of the chamber during pumping time ***tH*** as a value, which is very close to some maximum possible speed.

Thus, a water stream, which is characterized by a certain water consumption and an average

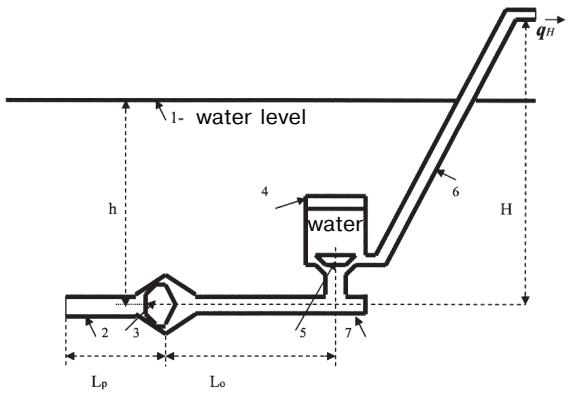

Fig. 4

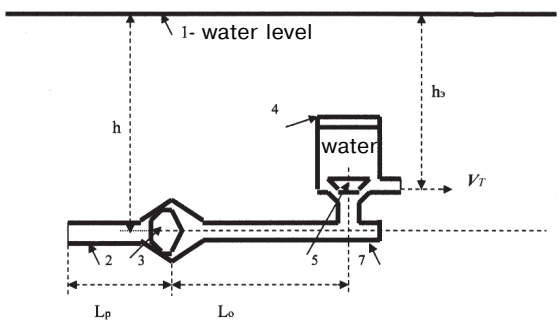

Fig. 5

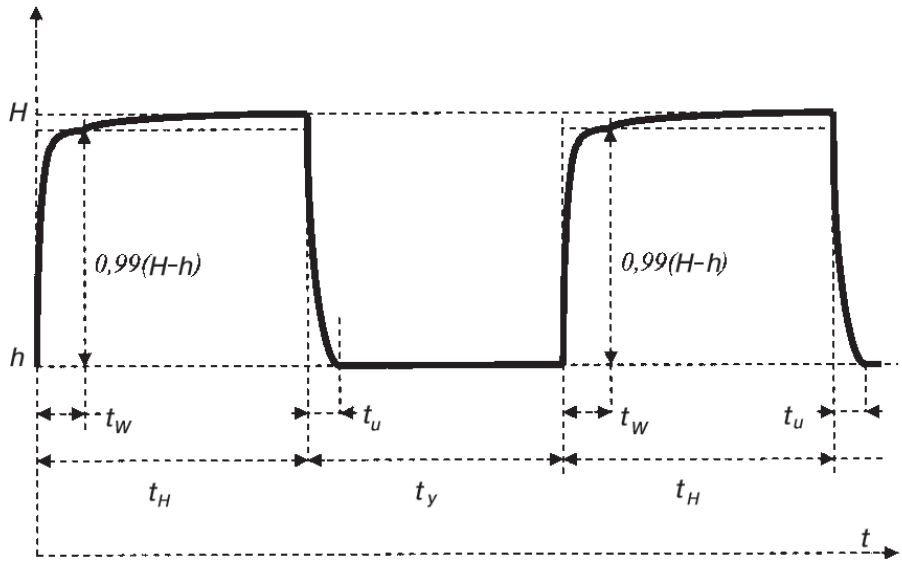

Fig. 6

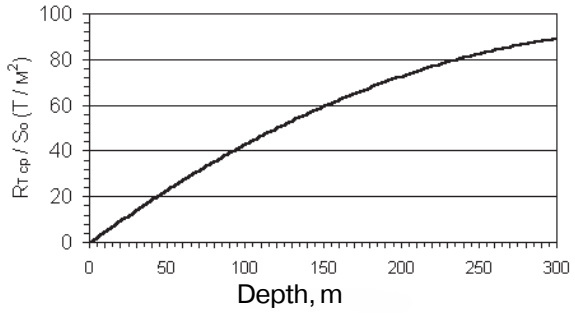

Fig. 7

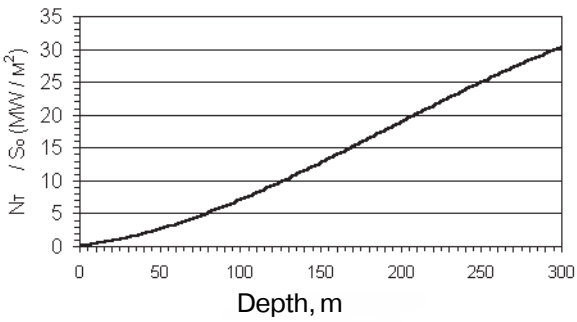

Fig. 8

speed, must be periodically formed in the outlet of the nozzle once during time ***tH***. The average water consumption during time ***tH*** can considerably exceed the value obtained in the "hydraulic ram". Hence, according to the law of impulse conservation, this water stream must create a reactive force because valve 3 is closed.

Thus, this design becomes an ideal hydrojet propulsion engine. Its efficiency, as well as the efficiency of any pulse system, will be determined by a total, in accordance with the time, force impulse, if there is no force during time ty.

Besides, such a water stream per se can produce some yield during time ***tH***. This allows installing a reaction-type hydraulic turbine with a concatenated electric generator at the chamber outlet. Therefore, electric energy can be produced. Naturally, the electric generator must be located either in a hermetic chamber or on the water surface and connected with the turbine by some rotating shaft. Due to the fact that a considerably short period of time ***ty*** will influence only during gathering of the design angular velocity by the hydro turbine and generator, the obtained electric power will be determined only by the hydro electric machine's efficiency.

In order to evaluate possibilities of this design, calculation results of a ratio of average reactive force ***Rcp*** and electrical power ***Ncp*** to a square of the inlet port of the device from burial depth ***h*** under a certain acceptable design size of pipe 7 and valve 3 are given on Fig. 7, 8. The calculation results show that there is a certain maximum at depths of approximately 450-650 meters.

Thus, this scheme can theoretically provide for any thrust and any electrical power. In order to do this, only the certain square of the inlet port is needed.

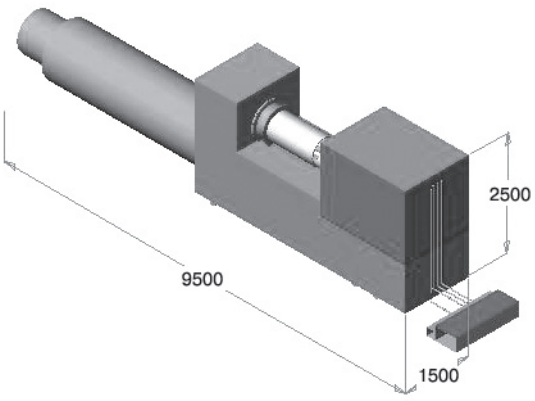

Fig. 9

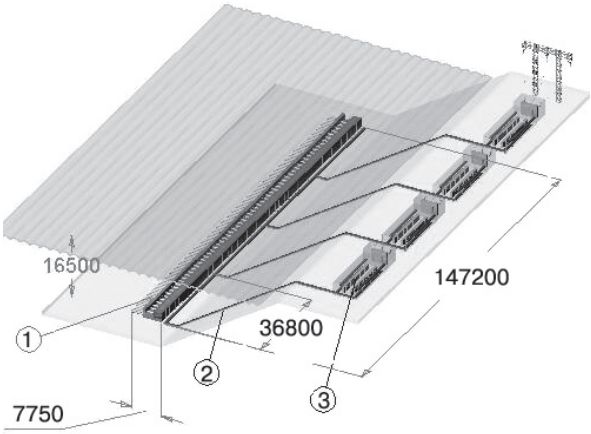

Fig. 10

Using the given scheme in generator engineering, it seems possible to create a single power module of any electric output power. Taking it as a base, it will be possible to gather a sea submarine or pool hydroelectric power station of any power consisting of a number of such modules. As an example, one of constructive variants of such a module with a design electric output power of approximately 315 kW and its possible size are given on Fig. 9. Its batch assembling (1) included in a coastal hydroelectric power station with a power of approximately 31.5 MW located at a depth of approximately 16.5 m is given on Fig. 10. Drive cable outlets (2) and current control units (3) can be located directly on the coast.

The same hydroelectric power station can provide for a power of approximately 150 MW at a depth of approximately 50 m and a power of approximately 320 MW at a depth of approximately 100 m.

The power module based on the same hydrodynamic scheme but located vertically in water, as it is shown on Fig. 11, 12, requires bigger depth and the same power. Such a module consisting of given water lifting device (6), hydro turbine (5), and electric generator (4) needs less area for its location. It can be, for example, simply hanged in water reservoir (1) by rope (3). The water reservoir can be made in the form of a closed cylinder tube installed in an underground well.

The vertical location of the module makes it simpler to use it in regions where there are no deep water resources because it allows using smaller volumes of the required water.

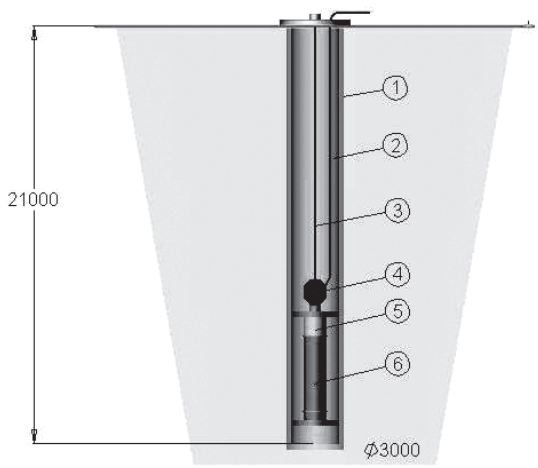

Fig. 11

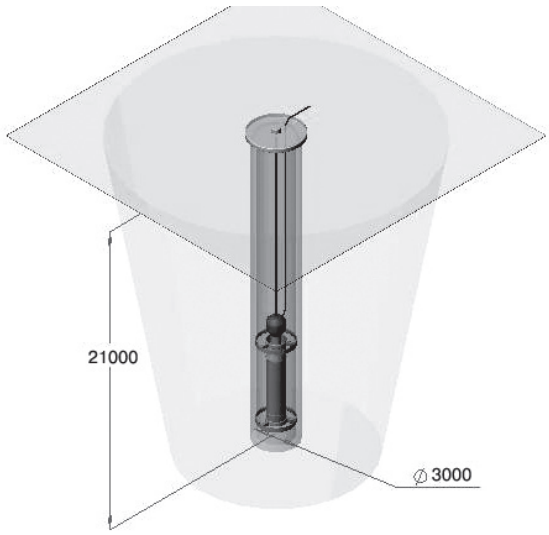

Fig. 12

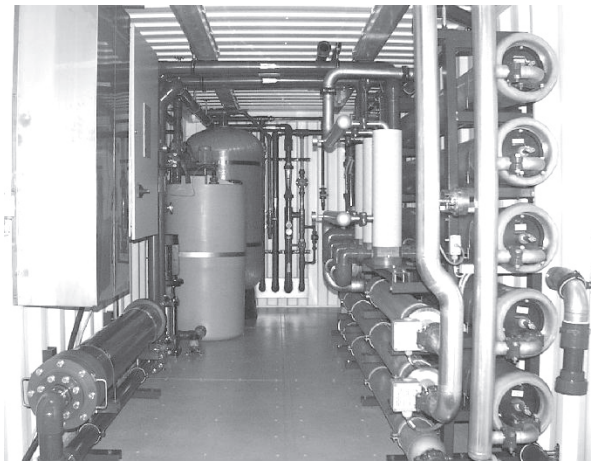

Fig. 13

The theoretical calculations' results of the given scheme and the developed method of its designing were confirmed by experimental researches. In 2003, an experimental desk-size power module has been developed, built and tested in Spain. It consisted of an analytical model of the horizontal construction, a hydro turbine, and an electric generator for testing at a depth of approximately 50 meters.

The given module had a design electric output power of approximately 97.4 kW. As the main parts (the chamber, pipes 2, 7 etc.) of the scheme and the pressure control units in the chamber, a set of construct elements of the certain seawater desalter shown on Fig. 13 had been used. The chamber's volume, the pipe's size, the valves' fittings had been selected taking into account their compatibility together with minimal redesign costs. A reaction-type hydraulic turbine produce by a Dutch company «Energi Teknikk, A/S» had been used as a hydraulic turbine. It had been specially modernized for an inlet pressure of approximately 33 meters. The hydraulic turbine is shown on Fig. 14.

An AC synchronous generator with a voltage rating of approximately 6 kV and a power rating of approximately 100 kW with an automatic frequency and pressure adjustment had been used as the electric generator. A ballast ohmic resistance by strong wind power generators had been used as a load.

All parts of this power module, registering equipment of the chamber pressure, a self-contained power source for the equipment, the hydraulic turbine and the electric generator were assembled in a hermetic container, which had a flanged joint for pipe splicing in the front part and a hatch for flowing out of the used water in the upper part. There were additional hermetic hatches in the container. They provided for access to the valves if their manual adjustment was necessary. The container design provided for splicing of acceleration and pressure pipes of any length and, if necessary, quick change of them. The appearance of the container with the given power module is shown on Fig. 15.

The tests were carried out by putting this container by the rope from a ship at the specified depth. Several test series have been carried out.

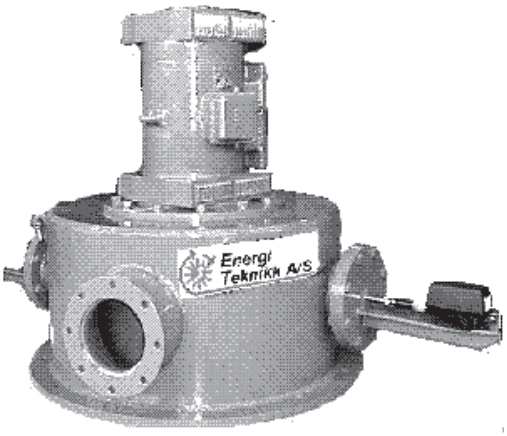

Fig. 14

Fig. 15

As a result of a certain updating of the valves' weight, a stable self-running operation mode was obtained at this depth after some tests. Processing of the chamber's excess pressure oscillogram gave average results shown on Fig. 16.

As a result, a direct measurement of the produced electric pressure showed a voltage value of 5.8±0.35 kV while a direct current measurement showed a current of 15.96±0.46 a. This coincides with the obtained electric power of 92.73±8.25. According to the average value, it is less than the theoretical value only by approximately 4.8%.

Thus, the new water lifting device, which is per se a new gravity energy transformer, first, can produce any industrial quantity of ecologically clean and powerful electric energy by the simple and cheap method and, second, according to its power, can substitute the existing heat and nuclear power stations.

Now there are no problems with wide technical introduction of this invention into energy. It depends only on investments. A detailed financial evaluation shows that, in order to develop and build such power modules for the possible hydroelectric power stations based on it, with a power of more than 100 MW, it is most advisable to use the scheme with the vertical module's location, with a unit output power of approximately 500 kW. A batch of such modules will need a water reservoir with a square of no more than 4.5 mI/MW and a height of 21 meter. A total mass of such a module using an electric generator "SG2-500-4УЗ» (Russia) and a special reaction-type hydraulic turbine «PHY-500P» (Spain) can be only 4,840 kg. And its prime cost during serial production, taking into account the existing prices, will not exceed 97,200 Euro. Hence, a specific prime cost of such an energy source can be only 194.4 Euro/kW, which is minimal of all known energy sources. General costs of such hydroelectric power stations' construction will not exceed 130 Euro/kW and a payback period will be 2 years after the construction beginning. During the after-payback period, it is possible to lower power rates up to a symbolically small value or sell electric energy at the market cost and get not less than 14% of the initial costs per month.

In conclusion, we should mention that the results of the theoretical and experimental research allowed the article's author together with other co-authors to obtain Eurasia patent # 005489 and some European patents in 2005.

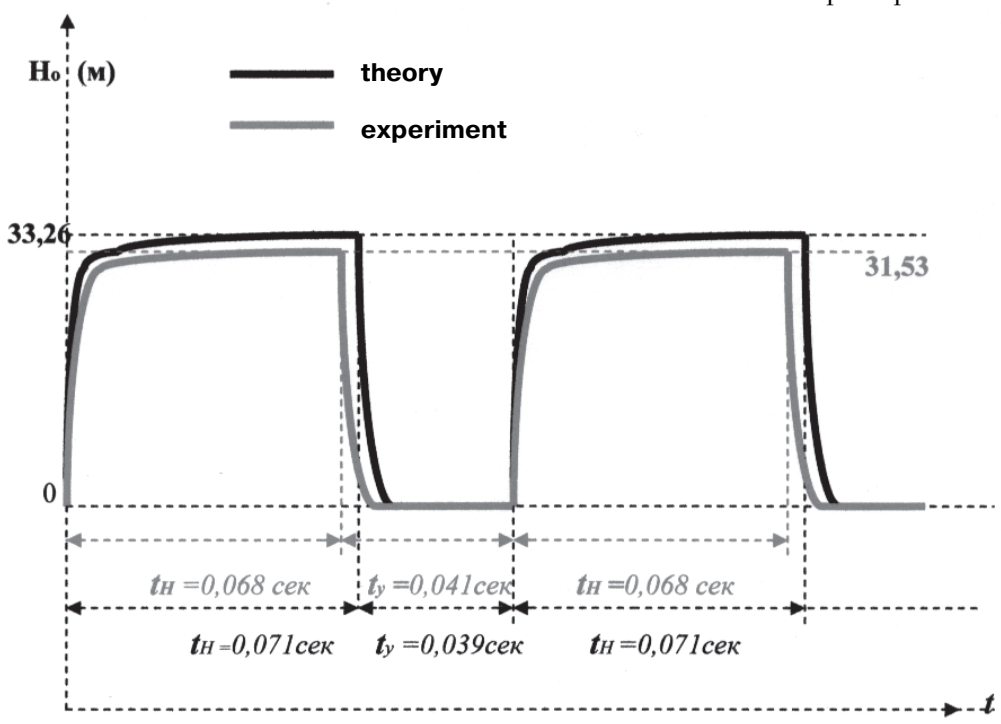

Fig. 16

An anti-gravity platform of V.S. Grebennikov

We publish materials from http://gragons-matrix.narod.ru. The site's author writes under the pseudonym of Dragon's Lord. His ideas are interesting enough for an inquisitive reader to analyze them.

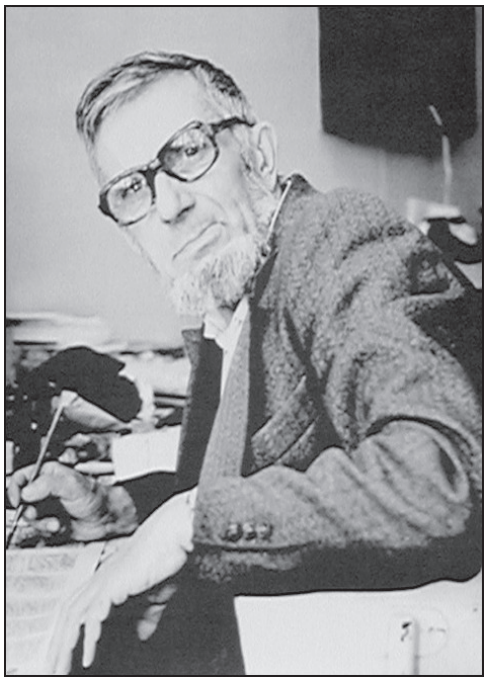

Fig. 1. Viktor Stepanovich Grebennikov

In summer 1988, an entomologist from Novosibirsk city, Viktor Stepanovich Grebennikov, examined a micro-structure of the lower surface of beetles' wing case by a microscope and became interested by "an unusually rhythmic, extremely ordered, incomparable honeycomb, solid multidimensional composition, which looked as if it was pressed by some complicated automatic machine". Studying this amazing micro-pattern allowed Grebennikov to design an aircraft of a new kind called "Gravity plane".

As usually, this discovery was made by chance. Once Grebennikov put a chitin bristle from some beetle's shell under a microscope and wanted to put another one but it slipped out from tweezers and... hung in the air. Then the scientist tied some laminae together from the top by a wire arranging them vertically. It was impossible to put even a thumbtack on this block because it was thrown up and then aside. When the thumbtack was forcefully fixed to the chitin block from the top, it was lifted and, for a moment, completely disappeared!

Grebennikov discovered a bio-antigravity effect in 1988 and then, during 3 years, studied it from many sides, developed the platform's designs, carried out experiments. Together with Professor V. Zolotarev, he sent a patent application. Finally, in 1991, Grebennikov built his gravity-plane and started flying by a noiseless aircraft, which reached a speed of 1,500-2,400 km/hour. The aircraft was inertialess and almost invisible from below. People, who observed it from ground, saw, instead of it, a light sphere or a disc or a cloud with sharply outlined edges.

It is unnecessary to say that this was discovered not yesterday but in 1980ies. Grebennikov tried to rouse interest of "real" scientists but it was useless. Nobody wanted to talk to him. In

Fig. 2. A wing and a wing case of Cetonia. In many parts of his book, Grebennikov describes remarkable properties of wing cases of scarabaeus, bronze poplar borer and especially Cetonia. Among five species of bronze poplar borer, almost all have the CHAOTIC-HONEYCOMB pattern on the INTERNAL side of wing cases.

April 2001, Grebennikov died of a stroke. A book called "My world" written by him in 1997 remained. There is a full variant of the book in Internet at http://bronzovka.narod.ru.

Grebennikov studied an effect of cavitary structures of insects. He gave this name to a mysterious radiation emanated from their nests.

In chapter 5-1 of the book, Grebennikov writes: «I have only a handful of old clay lumps, fragments of these nests, with numerous small rooms-cells. The cells were located side by side and looked like small thimbles or, more likely, small jugs with smoothly narrowing beaks. I've already knew that these bees belonged to species of Halictus – according to the number of light rings on their oblong bellies. There was a wide vessel filled with these spongy clay lumps on my working table, which was jammed with instruments, ant and grasshopper houses, vials with chemical agents and other things. I had to take something and I brought my hand above these spongy fragments. And a miracle happened: I suddenly felt heat above them... I touched the lumps by the hand – they were cold. But I obviously felt heat above them. Moreover, I felt unknown pushes, bounce, "tick" in my fingers".

This radiation cannot be screened. Grebennikov wrote: "I put a piece of cardboard on top – the feelings were the same. I put a pan's lid but it had no effect: this "something" ran through the barrier. I should immediately study this phenomenon. But the instruments did not react

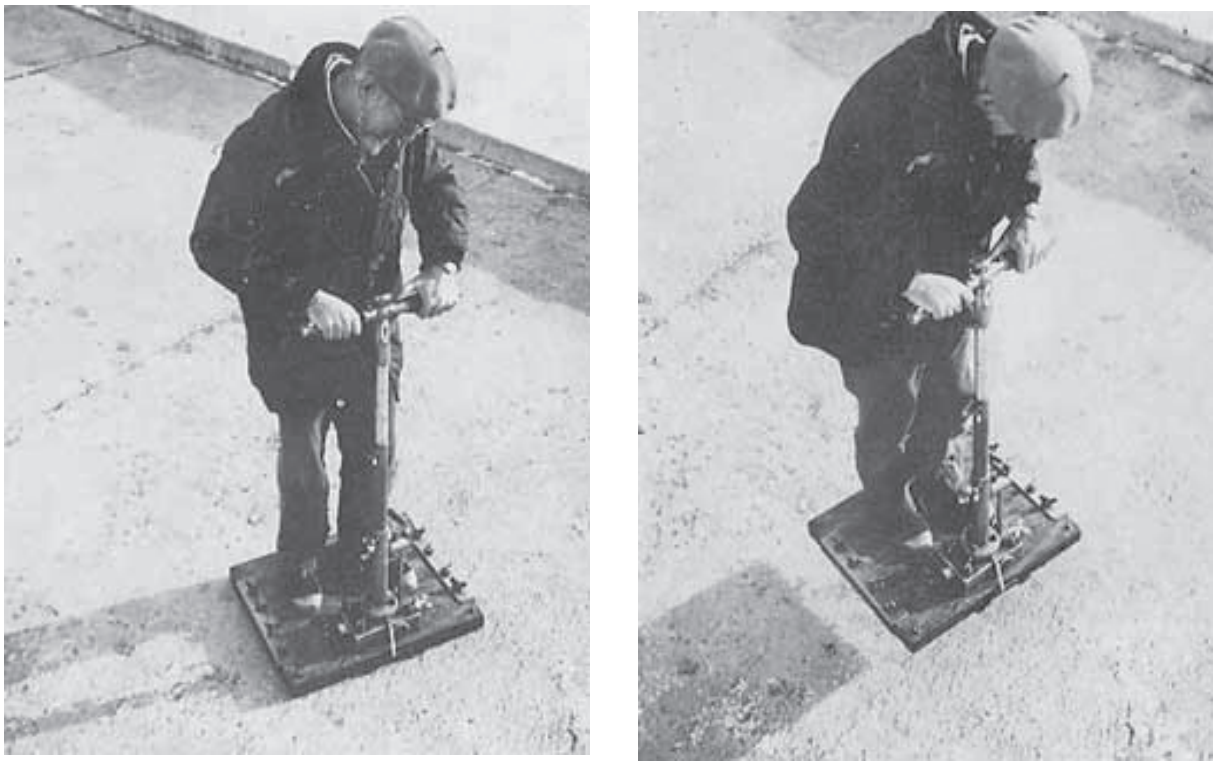

Fig. 3. Grebennikov's flying platform

at all: neither finest thermometers, nor ultrasound recorders, electrometers nor magnetometers. But usual human hands (and not only mine hands!) obviously felt either heat or cold wind or ticks or a denser medium above the nests. Some people's hands became heavier, other people's hands were pushed up; some people's fingers grew numb, fore arm's muscles felt spasms, some people felt giddy, secreted saliva voluminously".

But how did V. Grebennikov came to the idea of his aircraft? Let us read further: "In summer 1988, I watched by microscope chitin shells of insects, their fleecy antennae, butterfly wings' lamellae of finest structure, open-work of shad mooneye's wings with bright play and other Natural Patents. I was interested in an unusually rhythmic micro-structure of some parts of rather big insects. This was an extremely ordered composition, which looked as if it had been pressed by some complicated automatic machine according to special designs and calculations. In my opinion, this incomparable cellular structure was necessary neither for strength nor for decoration of this part.

Fig. 4. A picture from the sixth chapter of "My world" book

I did not notice something even resembling such an unusual amazing micro-pattern neither on other insects' parts nor in the rest of nature, nor in technology nor in art. Due to the fact that it was multi-dimensional, I could not copy it in a flat drawing or a photograph. Why does an insect have this? This structure is located in the bottom of wing cases and is almost always hidden. It can be seen only when an insect flies but who can do this?

I suspected that this can be a wave beacon having "my" effect of multi-cavitary structures. During this really happy summer, there were a lot of insects of this species and I caught them using light in the evenings. Neither before nor after that, I observed neither such a great number of them or even single individuals.

I put a small concave chitin lamella on a microscope table in order to watch its strange cells using strong magnification once more. I looked at a regular masterpiece of Nature-jeweler and, without any purpose, put another lamella with these unusual cells located on one of its sides on the first lamella by tweezers.

But the part was pulled out the tweezers, hung in the air for some seconds under the lamella, which lay on the microscope table, rotated clockwise, moved – in the air! - to the right, rotated anticlockwise, swung and only then quickly fall on the table.

A reader can only imagine what I felt that moment... After coming to consciousness, I tied some lamellae by a piece of wire. It was difficult and possible only if I took them vertically. So, I made a kind of a multilayer chitin "block". I put it on a table. Even such a comparatively heavy thing as a thumbtack could not lie on it: something pulled it up and then aside. I fixed the thumbtack to the top of the "block" and then so unbelievable things began to happen (particularly, the thumbtack completely disappeared for a moment) that I understood that this is not a beacon but some Other thing.

I was excited again and, due to agitation, everything around me was like in mist; but I could calm down and, in two hours, could continue working... Everything began from this accident."

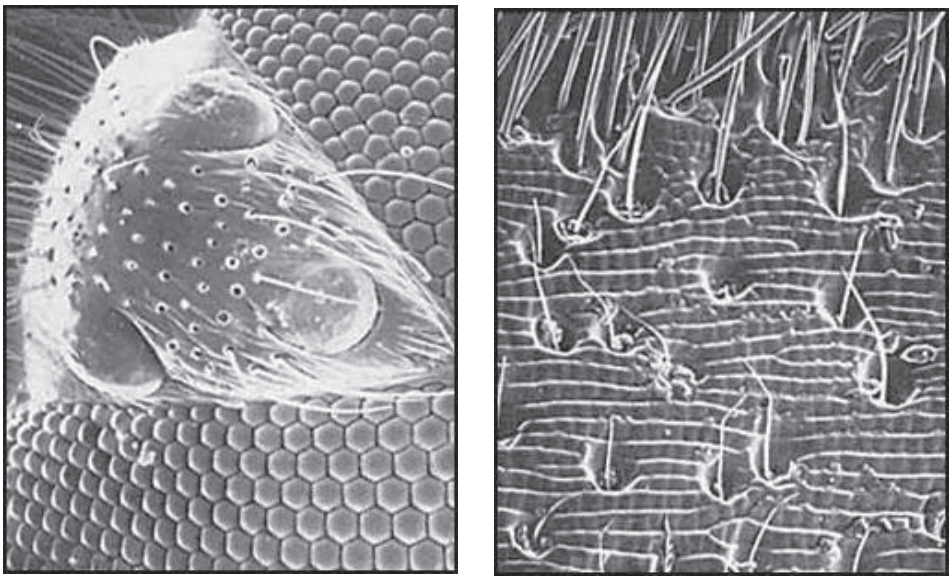

Fig. 5. ***"These strange, extraordinary fine and complex instruments and devices of insects are used not only for senses of touch, smell, vision, sound but they also receive or generate electronic waves while some of them hamper the Earth's gravity. The picture was made by an electronic microscope."***

Did you pay attention to magical words "*...and some of them oppose to the Earth's attraction...*"? It is really strange that "*...strange stellate cells...*" cannot be seen on them though "*...the unusually rhythm micro-structure... extremely ordered composition looking as if it had been pressed by some complicated automatic machine according to special designs and calculations... incomparable sponginess...*" is obviously seen on the third photograph. However, if we remember Grebennikov's remark: "*...I did not notice something even resembling such an unusual amazing micro-pattern neither on other insects' parts nor in the rest of nature, nor in technology nor in art...*". Usual hexagon honeycombs can be observed. Or does Grebennikov want to say that honeycombs (as in experiments on production of the effect of cavitary structures - ECS) are a simplified example of this complicated pattern and the antigravity effect can be observed already in such a simple structure? Here are more photographs of honeycombs:

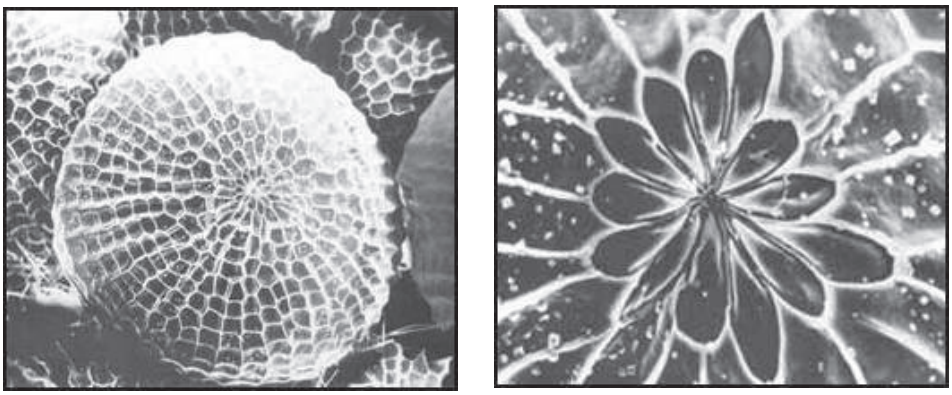

Fig. 6. Multi-cell structures of insects magnified by an electronic microscope by hundreds and thousands times

These are the only photographs in the book, where "*...strange stellate cells...*" can be seen. Possibly, it is the construction's prototype. At least, this is something very close. We can suppose that these are honeycombs (on micro-level) and an element with a star consisting of multi-layer mesh of cells is formed. Just like on the photographs.

And, in two years of laborious work, a gravity plane shown on Fig. 3 appeared: an aircraft with amazing characteristics. It is invisible, need no traditional engine as we imagine it, and has no wings or a propeller. It is noiseless; easily reach a safe flight speed of 1500 km/h, which is not felt by a pilot: there are no either inertia properties of a moving body or heat influence of the environmental air to the aircraft, or dynamic pressure or other effects. It also has a very simple design: a post with two handles placed on an opened platform.

A detective story

In 1992, in "Molodost Sibiri" newspaper, a pre-release of Grebennikov's book "My world" was published. The photographs of Grebennikov flying by his platform were published in the article for the first time. The photographs were also published in "Tehnika molodezhi" magazine.

From bad to worse, it was written in a "Tehnika molodezhi" article that total volume of the book was meant to be 500 pages and 400 colorful images. In the same article, it is written that the aircraft principles, heights and outfit will be given in "My world". Grebennikov was going to completely describe his invention. The whole book was aimed at it. But proofreaders and an editor (and, possibly, the according authorities) explained Grebennikov that it is forbidden to publish such information.

So, Grebennikov had to remove fragments of the text and patch it up. This is why a lot of hints and keys remained in the book. In order to completely remove information on the platform, he had to rewrite the whole book! Two photographs with Grebennikov's flight were left in the book because they were already known to people. As a result, the book's total volume was more than 300 pages and there were a lot of inappropriate butterfly images in the end of the 5th chapter".

Though Grebennikov could not publish the invention's description, he tried to tell readers fundamentals of his inventions by hints (because, in 1990ies, he WANTED to tell this to the world and, only in 2000ies, after he became ill, he began to reduce the information considering it dangerous for people's health).

In the "Tehnika molodezhi" article, it was written that Grebennikov had demonstrated his platform in a museum (in Siberian Research Institute of Agriculture and Agricultural Chemistry) FOR EVERYONE! Possibly, a big colorful photograph of the aircraft was taken in the museum. If it is so, there must be eye-witnesses who saw the aircraft. There must be a lot of them.

A real device was made in one copy and disappeared after Grebennikov's death. However, in the mentioned above museum, a model of the device made by Grebennikov remained. Actually, only the post remained. The board was stolen, the post was roughly pulled out, all plaster wing nuts were broken – apparently, they tried to untwist them! Everything – buttons, toggle, right handle of the handle bar – was made of playdough, plaster and papier-mache and then covered with silver paint. Grebennikov obviously tried to reproduce an appearance of the real device with maximal accuracy because it is much easier to use real wings nuts in the model. In this case, however, plaster copies were made using the real board. It is a pity that the lower part of the platform, i.e. the board, was lost. It could contain copies of block-boards' parts and mirrored a real scheme of kinematic blind control. If we could look at the control scheme, it would be possible to remove many versions considering antigravity production principle. A range of questions would narrow...

The device

A fine analysis of a possible design of Grebennikov's platform is published at http://dragon-matrix.narod.ru/ (it is not real but a supposed design).

The platform's post (the handle bar)

The first handle bar's section is a T-shaped welded construction with a lot of buttons, signal indicators (light-emitting diodes) and even an electrical toggle. The instrument at the handle bar's center is an altitude meter.

An electrical snap-action (two-position) toggle (5) is used for turning on board electrical equipment (signal light-emitting diodes) and,

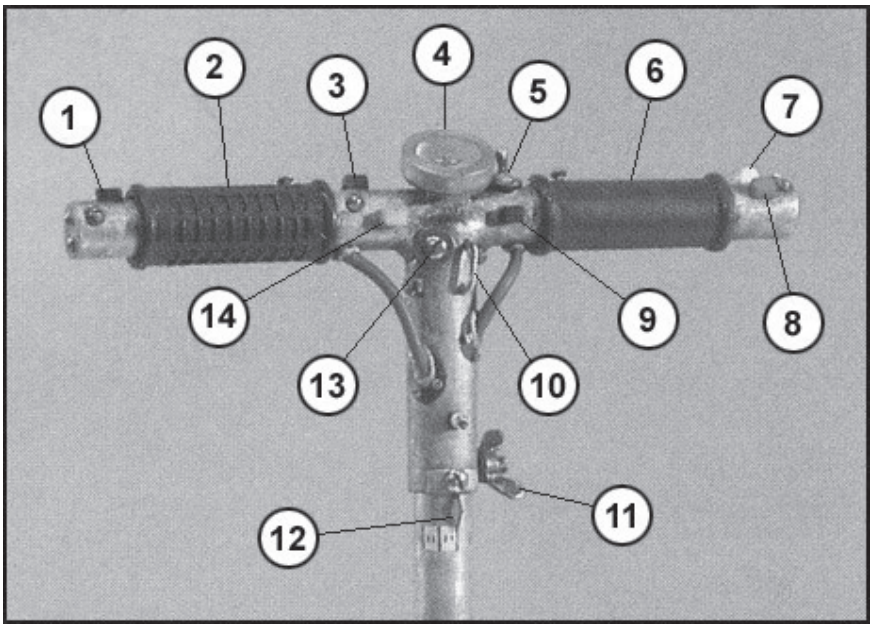

Fig. 7. A scheme of elements of the first (upper) post's elbow

possibly, additionally, for "permission" of motor device operation process.

At the left of the altitude meter, opposite to the toggle, the electrical button-starter (3) is located. Grebennikov pushed it when the device still stood on the ground (right before take-off). Pushing the button, a condenser plate in the motor device is charged by a high potential. On the end of the left handle, another light-emitting diode (1 – traditionally, it is called "green", in order to distinguish it). It shows charge presence on the motor device's condenser plate and, possibly, a charge degree of the plate (by different brightness of glow).

In the opposite direction, on the end of the right handle, two light-emitting diodes are placed: red (8) and white (7). They are directly connected to plug-and-sockets placed in mechanical units of joining-separation and change of blinds' tilting. The white light-emitting diode induces straight motion while the red one induces quick slowdown.

Left rotary handle (2) controls blinds separation with increase of an active surface – a vertical traction. The right one (6) controls change of rotation angle of every blinds' plate around the long axis – a horizontal traction.

Two mechanical buttons-catchers (14, 9) directed at a pilot's belly are placed lower than the toggle and the button-starter. They are connected to the rotary arms according to "push and turn" principle. In order to turn the arm, it is necessary to press an according button by a thumb (to release the arm's motion) and then it is possible to rotate it freely pressing the button. If you stop pressing the button, the arm will stay fixed in the existing position (with the given angle). This helps to carry out the hovering mode and choose a fixed height and flight speed (during a long flight time).

All other "convex" elements located at the first handle bar's elbow are retention screws. There are no control and diagnostics elements except the mentioned ones. The most interesting thing is that the upper (right) handle bar's section TURNS like a handle bar of a standard bike (!) controlling a mechanism of the platform rotation (unsynchronism of the symmetric block-boards' rotation). A rotary effort is transferred by a flexible elastic cable (with a diameter of about 10 mm). The biggest screw on the handle bar (13) located under the altitude meter in the center is a bonding of this cable. Bonding of the whole post to the platform, this rotary cable is set into a central socket (the biggest one on the photograph,

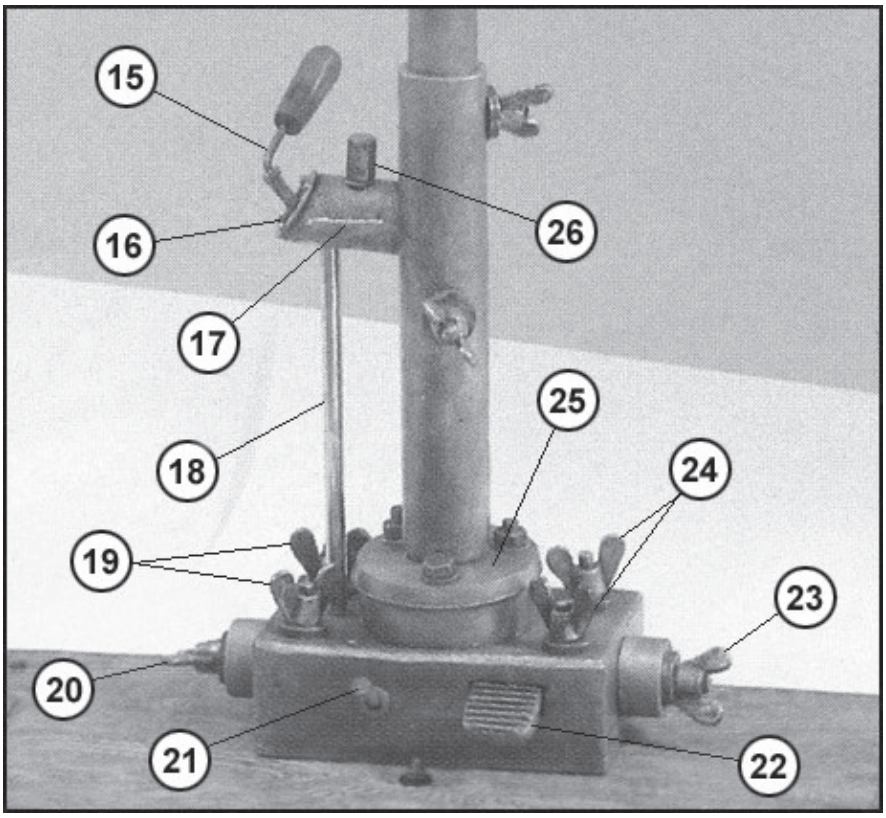

Fig. 8. A scheme of elements of the fourth (lower) post's elbow

where Grebennikov keeps his suitcase). ***"Loosening screw-nuts on the control post, I shorten it like an antenna of a radio set, and take it (Grebennikov means this cable) out of the platform, which is folded in two, due to joints".***

By the way, the handle bar could rotate. Near a bolt of the rotary cable bonding, a cramp is stuck (10). Grebennikov tied himself to it with a belt. The second elbow is not interesting because it is a standard pipe. It is only necessary to mention that it does NOT rotate together with the first one but is fixed to the third elbow, which, for its turn, is screwed to the fourth immovable elbow. A wing nut on the first elbow (11) DOES NOT ATTACH the first elbow to the second one. Instead, it holds a special bushing, which helps the handle bar to turn. There is a button directed to a pilot on the third elbow. It is not a light emitting diode but a button because Grebennikov painted it the same brown paint as the post. Who would paint light emitting diodes which do not light bright? The use of this button will remain unknown, perhaps. And we will not know how the wing nut on the forth elbow was used (it is located in the center and directed to a pilot).

The forth elbow ends by perpendicular flange (25, with three bolts), which decreases the "pull out" moment. The lower elbow cannot rotate because a device of the lower side rotary arm is stuck to it. A body of the device (17) is a CYLINDRICAL pipe section (it is stuck to the post horizontally). A free end of the body is cut with an angle of about 40 degrees and closed by round plate-stub (16) with three small screws. There is a hole in the stub's center, where our handle (15) protrudes from. The handle is spring-loaded and has a mechanical nature. It is necessary to pay attention to rod (18) starting from the handle's body to the control box. Actually, this is a hollow pipe, where either a cable or a rod with a bolt head (at the bottom) slides. When the handle is turned against a pilot, it is impossible to fly. If it is turned to a pilot, it is possible to fly.

There is an adjusting element (26) on the upper handle's surface. It looks like a small cylinder with a horizontal metal rod, which is used for

its rotation. It adjusts accuracy of the connection-disconnection mechanism's operation (by pulling up the cable or somehow else). Most likely, the handle is a standard protecting device, which blocks accidental operation of the platform's antigravity devices without a pilot.

Now let us discuss a small box in the bottom of the post. Four wing nuts (19, 24) located on the upper surface of the box fix the post to the platform. Two side (opposite) wing nuts (20, 23) adjust accuracy of "distributors" operation (accuracy of bringing together and synchronization of the blinds). There are two "distributors": the left one is used for separating the blinds and the right one is used for change of the blinds' angle. Each mechanical "distributor" of the efforts (located horizontally) is connected to a cable from each of the rotary arms of the handle bar. Then, efforts are distributed to several cables, to each of four blinds' blocks.

There is a treadle (22) in the box from the pilot's side for the right foot. Its function is quick slowdown (and also standard slowdown).

Another electrical snap-action toggle is located near the treadle (at the left of it). It has bright orange color and either made of transparent plastic and lit from inside by a light emitting diode or made of an opaque material and painted by a fluorescent paint (with phosphorus or something like this). Why is it painted? It is made so due to the fact that it is used only at night, i.e. under conditions of limited illumination.

What does it control? A small headlight is placed on the right side of the box (like a reflector of a flash-light). It turns the headlight on. A flash-light lamp is used. It is connected through a resistor to a small accumulator hidden in the same box at the handle bar's base (it is an analogue of "Krona" battery of 9 Volt; it has the same size but it is cylindrical).

It is necessary to mention that such an accumulator can supply all light emitting diodes, headlights and a high-voltage transformer and charge the condenser plates in the motion device for a couple of weeks of continuous operation (at least, it will be enough for a rather long time). It can also be charged at home.

The headlight can be used during take-off and landing and is useless during flight due to two reasons. First, there is nothing to light in the sky. Second, if the platform's irradiators have sufficient power, the platform becomes invisible and stops light from going out of its field's limits. Besides, it is difficult to ACCIDENTALLY step on and break the toggle glowing in the dark because it is placed not very well.

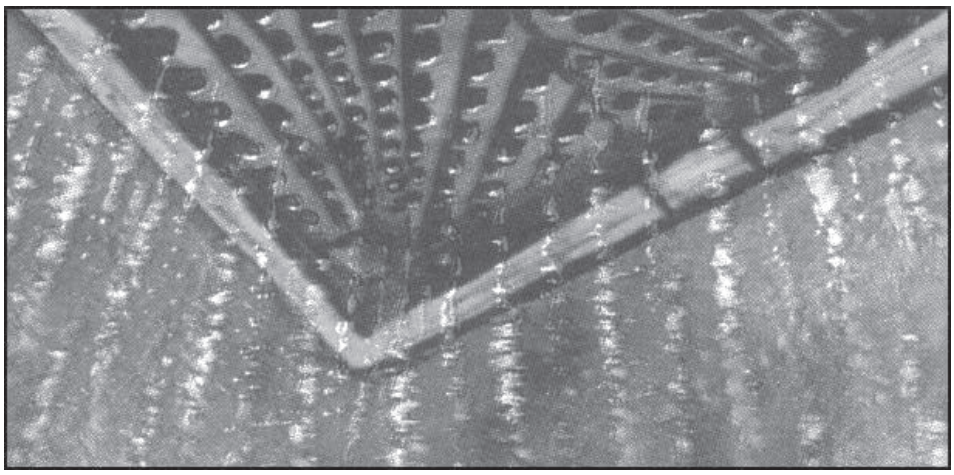

Fig. 9. A bottom view of the platform (the picture from "My world book"). The design of the back blinds-fans can be seen.

The platform's base

Grebennikov made his airplane of a platform, so numerous screws and wing nuts are just lightly modified platform's parts.

Each of the platform halves was made by Grebennikov of ONE wooden piece while industrially produced platforms are made of plywood with attached boards. But this is a box of old Soviet microscope package with an external walls' thickness of 8 mm and an internal walls' thickness of about 50 mm. Grebennikov only had to take out a plastic foam interlay and cover the body with drying oil. He made this though the board's thickness of 8 mm is rather unreliable. Possibly, Grebennikov strengthened the base by sheet metal from inside.

Blinds (block-boards)

The blinds' design is a standard FAN made of flat long elements. There are four fans. Each of their four axles is fixed vertically at the platform's corners. It can be seen in photographs. Even a picture by Grebennikov showing its device from below exists!

Two bolt heads can also be seen on the photographs, approximately in the center of each platform halves. This is a bonding of the distribution mechanism, which transfers effort from the "distributors" to a fan opening device. Each fan consists of nine plates. In order to make them strong, the plates are made of sheet metal. Micro-nets are stuck from the upper surface of each plate. On the one hand, the metal does not prevent nets from operating because the effect of cavitary structures cannot be screened and, on the other hand, protects them from mechanical influences such as influence of grass during landing. Holes in the plates, which can be seen, are not related to micro-cells. They are made only for lightening the metal plates' weight. Do you see that it is difficult for Grebennikov to hold even a lightened version of his platform?

Antigravity effect (created due to the effect of cavitary structures) is produced by the cells but they need "fuel" in order to work with maximal efficiency.

Roughly speaking, the effect of cavitary structures works the following way: any material consists of particles vibrating by its own frequency (read Tesla's cosmology, works of John Keely, Thomas Henry Morey, Wilhelm Reich and others). Due to such internal atomic vibrations, a stationary wave exists in the environment, around any object (and further, discrete "reflections" or maximums of such a wave).

Thus, a frequency and length of such vibration are unique for any material (according to Grebennikov, this is a "reflection of de Broglie waves). If we make a cavity, its walls will begin to "radiate" towards each other or under some angles. If a right size of such a cell will be found, waves' maximums will sum up and a field will be strengthened in the given point of space (field antinode).

So, let us make conclusions. First, as many as possible surfaces are necessary for one cell (it may seem strange but a polygon with maximal quantity of sides, which can be used for filling a plane without gaps and fractally is a hexagon). Second, the less the size of each cell, the more quantity of surfaces, which we can have with the same volume. The more cells and, accordingly, the more surfaces, the stronger the effect of cavitary structures. Let us remark more that size of one cell is not arbitrary but divisible by wave "reflections" (maximums' position), which, in their turn, depend on a used material. Wave "reflections" can be far from the surface as well as very close to it. Closer ones have stronger power.

So, we have a very fine net. By specifying a certain geometry of its cells (size and form of planes, angles between the planes), we concentrate our STATIC field (the material's "radiation") in certain points of space. However, we are interested, first of all, in force GRADIENT. The mentioned static field does not produce yield and confirms the law of energy conservation. We don't have antigravity so far.

Then we use lepton theory of Isakov (remember that lepton, aether, and orgone are the same). We have to determine such a form of cells, which will allow having different field force: from a

very low on the one side to a very high on another. The less distance to the cell material surface, the stronger wave "reflections" we have. We make a simple and logical conclusion that one side of the cell must be geometrically less than another. If an initial cell is cylindrical, we have a cone: if it is triangular or square, we have a pyramid with a triangular or square base. If we initially have a hexagonal cell, the pyramid will be hexagonal too.

It is necessary to tell about lepton explanation of gravity effect. This means that leptons fly all over space in all directions, chaotically. They pass through all bodies but still they transmit some (very small) part of their speed to these bodies. Now imagine two spheres. A lepton stream flying from one sphere to another passes through the first sphere, brakes and "irradiates" the second sphere less than the first one (the second sphere is in "lepton shadow" of the first one). And on the contrary. Thus, pressure from the direction of the internal space (between the spheres) will be less than the external pressure, which leads to attraction (i.e. pushing together) of two bodies. This effect is called gravity.

So, we need antigravity. There are leptons or aether everywhere in universe. If a device will be invented, which will be able to change leptons' direction to the necessary one (create aether wind), our task will be solved. We already have such a device – this is our cell. A cell of the conic (or cuneiform) kind takes up a lepton stream from the horizontal direction (it will become obvious after we read Wilhelm Reich's works in the attachment) and reapportion it to the vertical one: a small part of the stream goes in one direction while almost the whole stream goes in another. Of course, if the cell's axis is placed vertically as in Grebennikov's platform.

Now, if we place such a solid net consisting of the micro-cells under the platform (in a zone BETWEEN the bodies, i.e. between the Earth and the platform with a man) and orient it in such a way that "aether wind", which is created by it, blows the platform from the bottom compensating insufficiency of lepton pressure (as described above), the platform and its passenger will become imponderable and fly up. Controlling a power of an aether stream and its directions (the blinds are used for this), we have the same rough material idea of force vector as in the case of jet streams. The only difference is that aether is so insensible for us that there are no strong air streams. At first sight, there is nothing! The platform just picks up speed and height without any sound, visual and other effects. Inertia force doesn't influence a pilot. It is necessary to note that a head is heavier than legs while the legs, in their turn, are heavier than the platform – it is a gradient of the antigravity force!

It is interesting that it is possible to make symmetric cells (like usual honeycombs) instead of cuneiform ones. A half of this "aether wind" can blow in the ground – it s all right. It is unreasonable: about a half of the power is lost (power, however, can be increased by decreasing cells' size by 0.5) but, technologically, such nets are easier to build.

Now let us tell about the cells' "fuel". Grebennikov noted that, in case with the effect of cavitary structures experiments, it is necessary to take the Sun into account under normal conditions. The point is that, together with sunlight, an intensive aether (or lepton, this is the same) flow goes from the Sun. As it was noted by Grebennikov, during take-off, Grebennikov's aircraft was always carried away in a direction, which was opposite to the Sun. This happened because, from the Sun side, the fans got more effective supply and worked more effectively moving the aircraft in another direction. This is the answer. In the event when the aircraft was moved away due to different reasons, this cannon be explained by "usual conditions". In this case, different environmental disturbances take place. We will not consider them here because these are fluctuations, which do not hamper in flying.

Let us now think about electrostatics. If in all descriptions of Grebennikov's experiments including the beetle regularity "two layers of reticular structures are more powerful than one layer" takes place, how a fact can be explained

that a folded fan (a multi-layer package of nets) is much WEAKER than an unfolded by Grebennikov one (i.e. place all nets in one layer)?

It is obvious that power increases during fan unfolding: ***"Moving a handle, I unfold the blinds again and hoick vertically" or "A flexible cable inside the handle transmits motion from the left handle to the gravity blind. Folding and unfolding them, I carry out take-off or landing"***. What increases during the blinds' unfolding? Right, their square increases. But not just square but a square of interaction with the second layer. It is understandable that there are no additional elements under the fans. But there is such a structure above them! Remember about the sheet metal?

Why electrostatics? Various purely electrical elements are installed on the platform. It means that electricity is used. It is also known that an electrostatic field of high potential can produce yield (remember what Tesla told) and is not consumed during this. It is possible to obtain high voltage of dozens kilovolt by rather compact devices which use watch batteries. In Novosibirsk, in the 90ies, a whole kind of such devices was sold: from shokers to stimulators.

Such a "box" can be easily placed in the box under the post. Pressing the button-starter (the button on the left of the handle bar), the transformer turns on for a short time and the terminal's plate located a little higher than the nets obtains a considerable static charge. The "green" diode indicates a charging degree of the terminal. The terminal cannot discharge itself, during operation, but it is slowly discharged through the air (a so called corona discharge). Thus, Grebennikov periodically had to press the mentioned button taking into account the diode's light. It is possible to build an automatic scheme controlling this process but Grebennikov did not know radio electronics and hardly knew electrotechnology.

There is only one vexed question: "What did Grebennikov show on the picture? It could be either BOTH halves of the platform or only ITS BACK half". The first version will be asserted by supporters of a rough interpretation of the platform's operation: a repulsive force, which is directed DOWN (vortex technologies and others). The second version is confirmed by a reasonable thought: "there are NO two internal vertical partitions, to which rotary hinges are fixed, between the fans on the picture. It means that two BACK fans are shown on the picture". In our supposition, we consider a force directed UP and "blowing" at the platform from below. Understanding the construction this way, it is possible to explain how the brake is carried out by incline of the back couple of the fans. This is how the treadle on the platform works. Accordingly, the front fans work the same way but mirroring (creating traction in the motion direction). It is necessary to note, just in case (for military men and cosmonauts), that the incline changes not the whole fan but each separate plate. Each plate has its own axis.

The left handle USUALLY works only with the back fans (It will not be surprising if two back fans will turn out to be much stronger than the front ones), i.e. creates the vertical traction. Grebennikov stands **only on the back half of the platform.** Make your conclusions. The right handle ALWAYS controls only the front fans, i.e. creates the horizontal traction (the while diode lights). Rotation, as it was already discussed, is transmitted mechanically by twisting a thick flexible cable. The rotary effort is transferred from the lower transmitting unit in the center of the box under the handle bar by a standard "car" method, i.e. through hard control-rods with trunnion balls at their ends (but the trunnion balls can be absent) directly to "rotary" unit of the FRONT fans bonding. The back fans are not used by Grebennikov for control. This allows not transmitting all this to the back block-filters. So, the back couple is mechanically simpler than the front one by one third. During flight, the fans are unfolded and, when the treadle is pressed, the treadle drive rotates the plates and hampers the platform after preliminary turning off the "gas handle" (the white diode goes out and the red one lights). The effort for the plates' unfolding and their turn to the back fans is transmitted through flexible cables; this allows easily folding the platform. Thus, the treadle is an analogue of the right handle but for the front fans instead of the back ones.

Invisibility of the gravity plane

A reason of a pilot's instable invisibility described by Grebennikov is caused by four crossed fields exists instead of the place of one field's influence. A product space is where a pilot stands. If only one field would exist, it would be stable.

The fans, according to the flight mode, change radiation power and radiation direction all the time (take-off/fall, acceleration/slowdown and, mainly, turn). So we just have to comment presence of the invisibility effect.

Light could freely come to the "sphere" around Grebennikov (in the influence zone of the field created by the nets) but could not come back. This is why Grebennikov was invisible. He could see everything because light reached his retina. But no reflected beams came from him because the entire light (a flow of particles coming from outside) was absorbed by the process generated by the nets, i.e. light was utilized (a flow of particles bringing the "fuel" to the nets).

When Grebennikov stood on the ground, he was visible because the blinds were folded and did not work (therefore, they did not absorb light or any other particles). As soon as he began to rise and increase power (increasing the fans' square), he smoothly (not suddenly) started becoming invisible. Of course, the invisibility was full during flight and, coming back, the process was the same. This is why, when Grebennikov flew low above the ground (and generated low power), he became visible (cast shadow). The same happened during quick landing, in the "falling like a stone" mode, when the blinds were folded: he became fully visible.

This is why it was possible to take a photograph of Grebennikov during take-off, when he flew low. But when he flew "above pine's tops", it was impossible to photograph Grebennikov because there were no reflected beams from him, thus he was invisible.

Humidity and electrostatics

Grebennikov noticed one more detail: it was impossible to fly by the platform during rainy weather. On the one hand, actually, increased humidity does not promote electrostatics (and a bronze poplar borer flies only during sunny weather because chitin is very electrostatic; a beetle, most likely, uses the following effect: statics+ECS=strong antigravity). On the other hand, as Grebennikov wrote:

"Put a shower head on a tap and turn on cold water. Slowly bring your palm to a beam of falling drops aside: most people feel heat at this moment. In fact, this is ECS increased by motion of new elements of the "multilayer net": falling water drops and gaps between them. After training in a kitchen or in a bathroom, feel stronger ECS at fountains or waterfalls. Even if atmosphere pressure is not falling, remote rain creates a strong ECS field influencing at a distance of many kilometers. Remember how we want to sleep before rain even in a closed room: ECS cannot be screened".

Many small drops and gaps between them form a multidimensional void structure, which influences by its ECS. This, however, does not help the device based on the same principle to fly.

Under the picture with the bronze poplar borer Grebennikov wrote:

"When a big Middle-Asia bronze poplar borer sits like that (this is live!) on a finger, the finger feels like it is pulled up".

Pay your attention: the insect is "LIVE"!!! Possibly, wing cases of a dried beetle will NOT show the repulsion effect. I repeat: possibly. What do I mean? Perhaps, the dried beetle has no sufficient static charge on its chitin and this prevents display of antigravity effect. It is also possible that statics is transmitted not by wing cases' surface but by hemolymph (a blood type) of insects. Or maybe this is not statics but something else.

As an example, here is a small fragment from Mister X's "works" (The editor's note: Mister X is a visitor of http://gragons-matrix.narod.ru site forum):

"Once I accidentally killed a standard and not prominent ladybird (I knew about Grebennikov's discovery from the article). I am confused to confess but I tried even laying one wing case on another but it gave no result. I had no microscope and I used a standard magnifying glass for examination of the wing cases. Even under such a small magnification I could clearly see inside thin longitudinal walls-"edges". Following mere curiosity, I crushed one of the wing case between my fingers. As a result, a red liquid flew out of it. My curiosity continues, this is why I took a standard flat battery, a lamp and a piece of cross patching. I found out an interesting fact: the liquid was a conductor. After I read the book and analyzed the pictures, it dawned upon me that we have a simplest electrolytic condenser with hemolymph (insects' blood) as electrolyte and dielectric (chitin)!".

What an idea! The electrolytic condenser, what do you think?! In general, it is obvious that, even if we get the necessary wing cases, a lot of DIFFERENT experiments must be carried out. But how to impact properties of the "live" wing cases to the "dead" ones? Grebennikov's platform worked; this is a fact, so it is possible to technically reproduce the effect of the "live" wing cases.

The editor's note: Here it is appropriate to remember readers about another approach to creation of engines, which is called "asymmetrical condensers". Articles devoted to this topic have been published in our magazine.

Eye-witnesses

As it was found out, Grebennikov hoped to remain invisible in vain. People who saw him in the sky were found. Mister X writes:

"I was interested in Grebennikov's question since an article called "Night flight over the city" had been published in "Molodost Sibiri" newspaper in 1991. A precondition was my only observation of UFO flight in the middle of March 1990. The UFO did not look like a "saucer" or an "object". The observed object was practically the same as on the picture thought I cannot judge whether it was Grebennikov's flight or not."

Biological hazard

Grebennikov died at the age of 74. The age is venerable, but death was caused by a number of diseases, which can be obtained, for example, as a result of irradiation of **a strong electromagnetic field**. And Grebennikov confirmed that obtained the diseases due to flights by the platform. But a triangular bearer frame can be made of pipes, a platform can be placed in each corner of the frame and a pilot's seat can be placed in the middle of this construction. In this case, a pilot will NEVER be in a filed of the platform's influence. Moreover, Grebennikov mentioned that the triangular design with three elements (net platforms) is an ideal kind of control.

In order to exclude a pilot's contact with atmosphere, a hermetic cockpit is installed. It provides full comfort and safety.

Questions and answers

Question: Why did Grebennikov stood flying instead of, for example, sitting on the platform with his legs down and, in this case, why did not he make a shorter handle bar?

Answer: Both the platform and Grebennikov was COMPLETELY in the zone of compensated gravity's influence, i.e. their mass and, more precisely, their weight was not positive but negative, which allowed flying. If he would put his legs OUT the field's limits, their weight would become normal again, i.e. about 30-40 kg. As a result, the platform would change its vertical position in space to a horizontal one due to outweigh by the appeared weight. And Grebennikov would just fall from it. In general, nothing can be put out the platform's limits during flight.

Question: Thus, it is impossible to build a device where a pilot will be OUT of the dangerous radiation of the blinds. Is it necessary to be in the field's influence zone as Grebennikov did?

Answer: No, this is a mistake. The pilot's cockpit can be placed outside the limits of the admittedly harmful radiation. It is just necessary to have at least three independent platforms placed on the edges of such a "saucer"

in the device's construction. Besides, the blinds must be made more powerful than Grebennikov's blinds because we will have to carry a not nullificated mass of the cockpit and a pilot placed in the center between the irradiators. Moreover, it is necessary to have an automatic stability device, which would remove list of the aircraft manipulating by powers of all three irradiators.

Question: Why do cells (for example, pipes) oriented vertically "irradiate" stronger than the ones oriented horizontally (remember how Grebennikov tried to tie some wing cases together and all his experiments on ECS) if aether is everywhere?

Answer: There are not sufficient quantity of aether wind in a space BETWEEN two objects in a vector's direction from one object to another. As we see, the Earth has a huge size and, accordingly, considerably ties up a stream flowing through it. This causes its strong gravity influence on other objects. If we place any cell (pipe) horizontally, aether will be absorbed from the vertical direction through walls of such a cell. Due to the fact that a lepton flow in this case is very depressed, we obtain low efficiency. If we place any cell (pipe) vertically, aether will be absorbed from the horizontal direction. In the horizontal direction, aether winds are not "screened" (because the Earth is lower than the pipe and, for example, the platform is higher. The second object can be missing).

Question: What is a "fractal principle"?

Answer: Imagine standard honeycombs. We take one hexagonal cell. If it has the right size, antinodes of the ECS field from each wall of this cell must coincide exactly along the central axis (reflection of de Broglie waves), i.e. the same "maximum" of the stationary wave. We have a certain power. Let us add six cells along the circumference – it is an approximate hexagon. Antinodes of the ECS field from the newly formed EXTERNAL sides of this big hexagon will coincide again and meet in the center but these will be other reflections (stronger than the first ones observed by us). Both groups of "maximums" sum up and, as a result, we obtain a field, which is stronger than that created by all cells participating in the process and taken individually. Now we add other 12 cells along the external outline and so on. ECS maximums of different ranges will sum up all the time. This is a clear "fractal principle". Obviously, this is why there were so many hexagons in Grebennikov's book.

Question: How can we work with micro-cell nets – press them, assemble them in block-boards and install these boards to the device, - if a cell will immediately fly if we let it off?

Answer: This is a widely spread mistake. The nets do not fly themselves. Only objects placed in the compensated gravity zone (above the horizontally placed nets) has weight equal to 0. Difficulties appear only at the last stage of assembling when powers of construction elements are relatively strong and influence each other. In this case, assembling the device, it is necessary to watch the nets being in the vertical position. This relates to Grebennikov: when he folded and unfolded his platform, he put it vertically (I mean the board).

Question: Grebennikov could not turn at small power of the vertical traction (during take-off, landing and slowdown), could he?

Answer: Yes, it is because, in the event of the minimal vertical traction, the blinds are hardly unfolded. This does not allow normally turning the plates around their axes (change their incline angle). During slowdown, a drive of the "gas" handle turns off. This makes use of the handle bar useless because the plates of the front fans are placed in the horizontal plane too.

Due to the fact that the back fans bore the main vertical load, it is possible that the front fans are half-unfolded in their minimal position (when the right handle is not turned), which allows using the handle bar during low-power flight modes. If it is not so, it is still possible to do so. It seems to me that Grebennikov did not do this because he was pulled away from the Sun and he could not fight with it and, therefore, could not manipulate the turning function during take-off. Fundamentally, these details do not influence flight because motion is inertialess and, during change of reapportion of an aether wind flow, a motion vector changes at the same time.

Question: Could the handle bar really turn?

Answer: Let us think: actually, the left handle is busy (it unfolds the blinds and creates the vertical traction); the right handle, according to the description, changes incline of the blinds' elements (i.e. creates the horizontal traction from zero to maximum). Thus, only the treadle is left of all control tools. But, using the treadle (if we consider it as an analogue of another turn handle from a motorbike), we can turn the horizontal plane only in one side (motion of the treadle is one-way like motion of the handle). It is very inconvenient and, therefore, unreal. So, we make a conclusion that the handle bar actually turns to the left and to the right and the handle bar controls turning. The photographs confirm this.

Question: How can you prove that the treadle is used as a brake and is not, for example, a device controlling operation of a complex motion device?

Answer: Let us think again. Both handles change speed from zero to maximum (one – vertically while another – horizontally). In order to contradict, if necessary, a vertical force, it is possible simply to unfold the blinds (de-energize them) and, due to the fact that the platform ALWAYS flies with its bottom turned to the ground, gravity force does its work for us. It is different with the horizontal motion. We can gather speed from zero to maximum without any problems but how can we quickly slowdown if necessary? According to Grebennikov's words, there is not even air friction! It leads to a necessity to have another control element on the platform, i.e. the treadle-brake, which acts the same way but opposite to the right handle.

Question: It is not logically to trust one's life to presence or absence of voltage in the accumulator. What if it will run down during flight?

Answer: First, this is unlikely. Second, even this happens, nothing fatal will happen. The nets will work though not with maximal power. This event, possibly, will lead to a smooth landing of the aircraft (because the high-potential terminal will run down not quickly but smoothly).

Question: Why did Grebennikov tried to draw energy vortex exhaust from the platform on pictures of night flights?

Answer: Possibly, Grebennikov used not cone cells but symmetric ones in his design. I.e. an aether flow was distributed up as well as down in them. This variant is a working one, too. Taking into account use of high-voltage potential, aether flows carried bigger particles (charged ions, for example), which became visible in darkness. They were formed into single discrete pseudo-vortexes due to presence of holes in the blinds' metal plates (metal absorbs or hamper radiation while the holes let them pass freely).

Question: Why do you think that the drive from the right rotary handle goes only to the front fans but not for all of them?

Answer: Here is what Grebennikov wrote: ***"The upper part of my device is really a bike's one: the right handle is used for horizontal-forward motion, which is made by incline of both groups of the blinds also through the cable"***. He wrote "BOTH", i.e. he meant the two front fans (a fan is a single group of the blinds or, in other words, a block-board).

Appendixes: scientific hypotheses and extracts from articles

Lepton-hypothesis of B.I. Isakov. Extracts

Consequence 5. According to the formulas, an opportunity follows that high values of gradients of lepton physical fields' objects can be observed in zones opposite to acute angles of solid bodies, geological rocks, on tectonic plates' edges, on rock peaks, on tops of big cliffs and pyramids etc., particularly, matter outflow in the form of leptons and other elementary particles is possible.

Discovery of electron emission in zones of geological rocks' fractions (USSR, 1984) is a particular manifestation of a more general law. A body placed opposite to acute projected angles of other bodies or solid rocks, on tops of cliffs and pyramids etc. can be irradiated by leptons. On the contrary, bodies placed inside hollow planes of other solid bodies, for example,

inside pipes, cylinders, and cones or placed in a polyhedral or a 3-dimensional angle can experience "swap-out" of microleptons.

Biological objects with weakened microlepton fields can be "charged" with lepton energy on tops of rocks or pyramids. On the contrary, excessively excited biological objects calm down quicker if they are placed into internal cavities of solid matter with negative curvature or into an angle, a bay etc. with geometrical unbalance of matter, which is equivalent to negative curvature (possibly, a custom of many nations to calm down overexcited children placing them in a corner makes sense).

Consequence 14. According to the lepton hypothesis, each body is permeated extensively by lepton streams, which bombard it and balance lepton pressure up to a zero average resultant. Interaction of leptons with a body happens all over the body's volume, not only on its surface. If preponderance or deficiency of lepton pressure will be artificially created just on one side by focusing lepton streams or, on the contrary, by obstruct them from the body by some screen or an artificial lepton vortex, a no-zero resultant can be created, which will be able to move light objects.

This can explain telekinesis phenomenon, particularly, experiments of V. Avdeev, R. Kuleshova and others and also poltergeist effects. The lepton hypothesis allows comprehending the universal gravity mechanism expressed by Newton's law from a new point of view. Two bodies located close to each other partially screen each other from lepton streams' pressure. From the external sides, preponderance of lepton pressure in comparison with a pressure from the side of a space between the bodies is created because each body partially hampers lepton streams coming through it. If point mass m is located near distributed mass M, a force equal to the screening force influences m...

... where d is a constant of proportionality; p is a density of matter in the distributed mass, g is a distance and a multitude of distances from variable body point M to point mass m; l is a body angle corresponding to angle sizes of distributed mass M and a point of location of point mass m; f(r) is a function of body M geometry; 12 is a function of geometry and curvature of a lepton stream in the given point of space.

The lepton hypothesis allows not postulating but concluding, substantiating theoretically and comprehending, understanding Newton's law, understanding the concealed gravity and remote influence mechanism. If two bodies with distributed masses M1 and M2 are located close to each other, a resultant force does not change fundamentally, only a conclusion of Newton's low becomes more complex while the fundamental nature of the dependence does not change.

Thus, according to the lepton hypothesis, attraction is a deficiency of repulsion, i.e. the law of gravity can be considered as a consequence of the law of lepton repulsion (or lepton compression, pressure) during bodies' screening, which leads to that the bodies are pressed to each other. If the lepton hypothesis is right, it is possible to suppose a potential possibility of varying gravity and inertia mass of a body under certain conditions:

1) during change of lepton streams' focusing with the help of "lepton lenses" causing their concentration on the given, lepton rockets and lepton flying discs;

2) during huge speed of lepton vortexes' rotation with high angular velocity, which is equivalent to screening from lepton streams.
If the lepton hypothesis is right, the mentioned mechanism gives a possibility of partial or complete gravity control. The suggested mechanism of potentially possible partial or complete levitation must be thoroughly checked experimentally. If the lepton hypothesis is right, lepton engines, rockets and flying discs are possible.

A nature of the effect of cavitary structures

Which is a physical nature of the cavitary structures effect? Many suppositions and hypothesis have been expressed but, unfortunately, many of them are connected with extrasensory perception, which is fashionable among modern intellectuals for some reasons. A theory of Leningrad physician, Doctor of Technical Science, V.F. Zolotarev

deserves better attention. It was developed by him earlier and experimentally confirmed now.

As a result of long combined researches, we characterized the discovery as "an unknown effect of multi-cavitary structures' interaction with living systems consisting in that, due to interference, de Broglie waves accompanying motion of electron flows in solid walls of cavities form a macroscopic field of multi-cavitary structures, which cause change of functional state of living objects locating in this field".

De Broglie waves are peculiar to moving micro-particles of any body. They are compensated inside the body and displayed as radiation on its surface. They are so short-wave and super-high-frequency that instruments pick them up only in the form of diffraction but still they helped science. Remember peculiar pictures of electrons and neutrons obtained on crystals and films with the help of de Broglie waves. Nobody thought that these scanty radiations can influence living matter somehow. And they did not influence – at least near flat objects. But near multi-cavitary structures, where a square of solid bodies is big and multiply curved, de Broglie waves are put together and form, like musical overtones, harmonies with lower frequencies.

Thus, lengthening and strengthening due to laying on ach other in cells, they form antinodes-maximums of stationary de Broglie waves. Striking on these passive barriers, nerve impulses glitch changing their frequency and speed and causing not only seeming feelings but also sometimes considerable physiological changes.

Stationary de Broglie waves do not have their own energy and, therefore, the law of energy conservation is not violated. Due to the fact that de Broglie waves moves in physical vacuum, the effect of cavitary structures must permeate everything. We observe it when we uselessly try to stop the effect up by any screen.

The editors' note: In 1996, Prof. Zolotarev gave me a copy of his manuscript. We studied it, prepared a plan of experiments and began to search for investors. It was useless. Our situation that time could be described by words "starvation" and "poverty". I remember that Professor had to raise chickens in his flat for some food. Possibly, now somebody will be seriously interested in beginning a research program on the effect of cavitary structures aimed at creation of real engines for space systems. A.V. Frolov.

Energy fields of geometrical forms

www.keelynet.com

Works of Wilhelm Reich are also connected with change aether density. We would like to express some interesting thoughts:

"Energy fields of geometrical forms" are special effects connected with the modern concept of aether. Some optimal geometrical forms and materials can be used for constructing devices, which react under influence of only environmental conditions, i.e. without additional external stimulation. Contraction details of two simple devices, which produce a tangible linear force influence without use of any additional energy at the input. It is possible to note two meanings of these training demonstration devices: (1) they prove that an aetheric kind of matter exists and any average person can feel it; (2) they demonstrate reliable methods of aetheric activation, which can be used for new energy applications.

Other examples of devices with efficiency more than one include a venerable organ-pipe and an electromagnetic antenna.

These devices work using resonance method when relatively low vibration of amplitude is reflected back. An echo signal can be many times more than an input signal in dependence on sizes of the device. The most effective size of the resonator accurately corresponds with a quarter of the initial wave length. Resonance will also occur with any lengths which are divisible by an odd number of a quarter of waves' lengths. In these cases, we find that geometry of the specific device has minor significance. If the geometry is optimized for conditions at the

input, a maximal increase or an increased echo can be obtained.

We can summarize characteristics of these "super-single" devices as devices using "geometrical energy fields" because intensity of full energy of echo, which can be produced only as a function of size, form and location. Remembering that, we can suppose that certain highly optimized geometrical forms could provide for an increased echo without any additional input signal at all. Such a device could induce an effective echo increasing the finest vibrations at quantum level, which are much lower than the threshold our ability to measure them.

Despite the fact that the subtlest natural forces have been studied for thousands years, it can be proved that a modern era began in 1844. In 1844, Baron Karl von Reichenbach from Stuttgart published a series of letters describing his research of aether, which was called "OD" by him. Reichenbach discovered that a part of all people can visually feel outflow from tops of crystals and magnets if they had been first properly located in full darkness. He called such people "sensitives".

Some time later, Reichenbach decided that aether can permeate through materials like silk, glass and metal. According to his ideas, aether seems to permeate all things in different density. Large quantities of aether could be found in sunlight and candle flame.

On the edge of the century, an Austrian philosopher Rudolf Steiner with clairvoyance talent researched an invisible world of aetheric forces. His close partner and biographer Guenther Wachsmith continued this work after Steiner's death and published a masterwork of his teacher called "Aetheric shaping forces in Space, Earth and Man".

A first true engineer of aetheric forces was Wilhelm Reich who discovered, as he called it, an "orgone energy" in 1939. Like Reichenbach, Reich discovered that metals able to conduct aether a hundred ears ago. His real big achievement, however, was an understanding of the fact that organic materials have a tendency to absorb aether. Laying two kinds of materials together, Reich could produce a directed aether flow.

Reich developed a first working device for collection and concentration of aether. An "orgone accumulator" is a box with six walls made of alternating layers of metal and organic materials. Under controlled conditions, this device produced an inexplicable temperature increase in its internal part. This was enough for attracting attention of Albert Einstein who met Reich in January 1941. Reich also experimented with a "cloudbuster" (a buster for clouds dispersion), a tower-shaped device which, most likely, directed an aether flow through atmosphere.

Possible, the biggest contribution to aether engineering technologies was made by Trevor James Constable. He was a follower of Steiner, Wachsmith, Reich and others. He spent more than 40 years improving use of the aether technology of weather control. He discovered that some geometrical forms, possibly, show a big aether echo. During many years, he developed his methods so that a device with a size of a coffee mug located, accordingly, far from an ocean ship could change weather condition over a distance of many miles around it.

Constable discovery of resonance aetheric structures was important for research of the new energy. Now a simple geometrical device can direct a concentrated beam of aetheric forces through any type of a device with high accuracy. Actually, a degree of aether concentration is so high that human organs of senses can directly feel its resultant pressure.
Thanks to pioneer works of the above mentioned scientists, it is possible to describe a design of two resonance aether devices, which

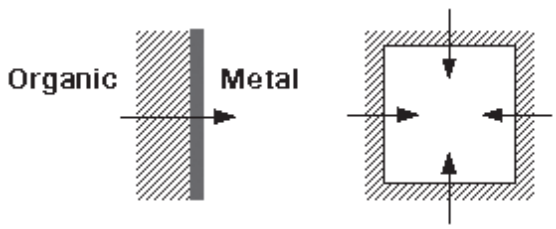

Fig. 10. Stimulation of the directed aether stream

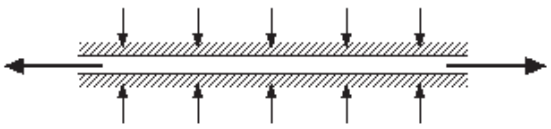

Fig. 11. The "emitting" device of ECS

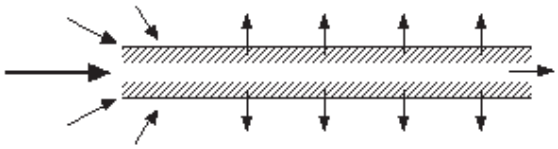

Fig. 12. The "vacuum" device of ECS

were called "Chi Pencils" by the author. Both devices are built around a central resonance cavity. A formula for calculation of the resonance cavity's size was obtained from a research of a ballistics expert Gerald Bull from Philadelphia.

An "emitting" device is generally a cylindrical metal cavity with a no-metal external layer. Due to boundary effects discovered by Reich, aether is absorbed from space through a side surface and emitted through both sides (actually, it is like laser). Geometrical energy fields around the emitting device are shown on Fig. 11.

How to build the emitting device. The following things are necessary:

- a piece of a 5/32-inches copper pipe;
- a 1/8-inches soft cotton cord;
- a metal knife for the pipe;
- a meter-stick, a sharp knife and glue.

Cut a piece of the copper pipe with a length of 18.1 cm. Apply a small bead of hot glue to the external part of one end and fix the cotton cord there. Wind 2 cm, apply a bead of hot glue and wind the cord arount the entire pipe. Cut excess of the cord.

A "vacuum" device is made the other way. We need a non-metal cylindrical cavity with a metal external layer. Aether is drawn into one end and dispersed through the sides. A geometrical energy field around the vacuum device is shown on Fig. 12.

How to build the vacuum device. The following things are necessary:

- a piece of vinyl hose with a diameter of 5/32 inches;
- a piece of a copper pipe with a diameter of 5/16 inches;
- a metal knife for the hose and the pipe;
- a meter-stick, a sharp knife and electrical insulation tape.

Cut a piece of the copper pipe with a length of 18.1 cm. Wind the electrical insulation tape around the vinyl hose in some places in such a way that it could closely go into the copper pipe. Push the vinyl hose into the copper pipe until its end appear. Cut excess of the vinyl hose.

The noted streams of aether forces generated by above described different resonance devices allow defying their discovery by standard instruments. It is not surprising that, as many people think, aether is "live" energy while standard instruments are, of course, "dead". However, discovery of aether forces by a living organism (such as a human body) is known.

Editors' note: we hope that publication of the given materials will cause interest of experimenters who will try to examine these effects. Creating aether streams, changing aether density, it is possible to produce not only force effects, i.e. motion. Due to the fact that matter elements are processes in aether (vortex processes), aether parameters influence speed of existence of any matter. It was confirmed in the experiments which were carried out by our company with V.A. Chernobrov. It is obvious that gravity and time speed are mutually connected effects. Due to this, creation of such devices defies not only the Earth's gravity but also Time. We would appreciate offers from organizations which could invest into development of these technologies.

A.V. Frolov,
General Director of
"Faraday Lab Ltd" company

In figures from Grebennikov's book "My world", effects of repulsion of recently cut plants' stems (Fig. 15) and a bunch of pipes (Fig. 13, 14) are shown. These are simple and convincing experiments during which the effect of repulsion is manifested.

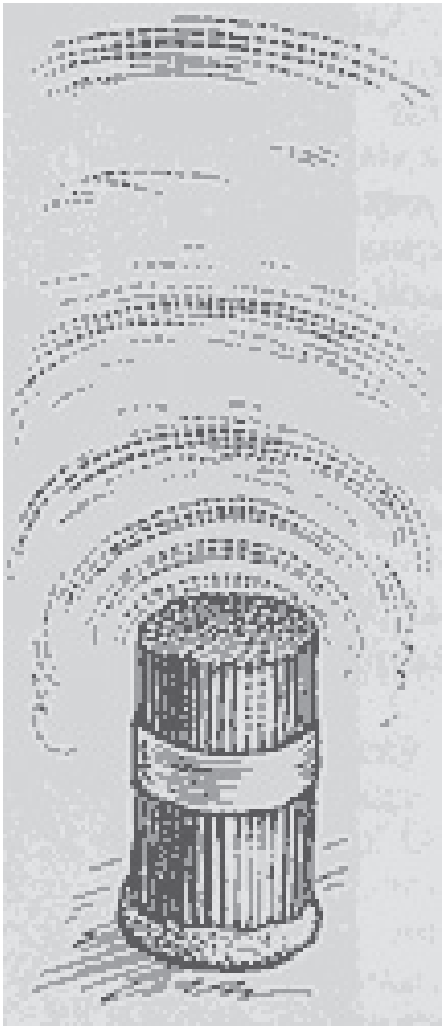

Fig. 13

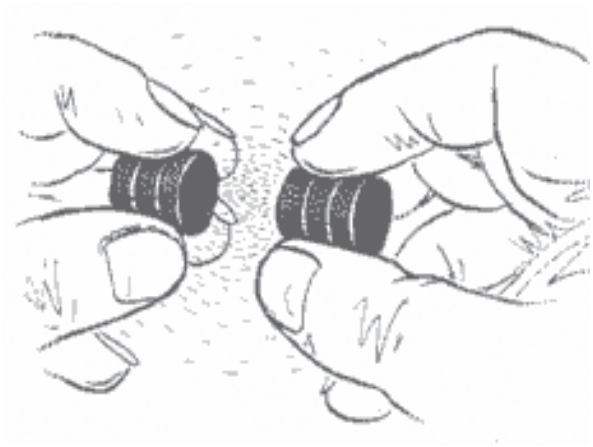

Fig. 14

Fig. 15

Dear subscribers, thank you for interest to "New Energy Technologies" magazine.

Please note that publications in 2006 are not planned.

All best respects,
Editors

Gravity Driven Generator

Russell Lee
RusLee863@aol.com

I would like to bring to your attention the Pinwheel Generator located at the following address: http://www.godproven.com/gp33.htm. The Designs for the World Project has openly given this design, as they have all of their others, freely to all nations of the world.

Description of the Pinwheel Generator

As weight ball #1 moves down cylinder (A), the fluid in (A) is forced at high pressure through piping #2, turning the Pelton wheel (C), and into cylinder (B). When the weight ball has reached the bottom of the cylinder, the situation will exist where the mechanism is over-weighted to one side, the side having the top cylinder filled with fluid, and the right horizontal cylinder filled with fluid. The weight ball in the empty left horizontal cylinder has rolled near the axis and is held in place there by magnetic attraction from the inside cradle. The filled right cylinder weighs more that the empty left cylinder so that when the #1 weight ball unlocks cylinder (A) (at the bottom of the cylinder), the weighted right side will begin moving down causing the entire mechanism to rotate 90 degrees until the full right cylinder has rotated to be on the bottom and vertical, where it's weight ball begins it's assent-beginning the process again.

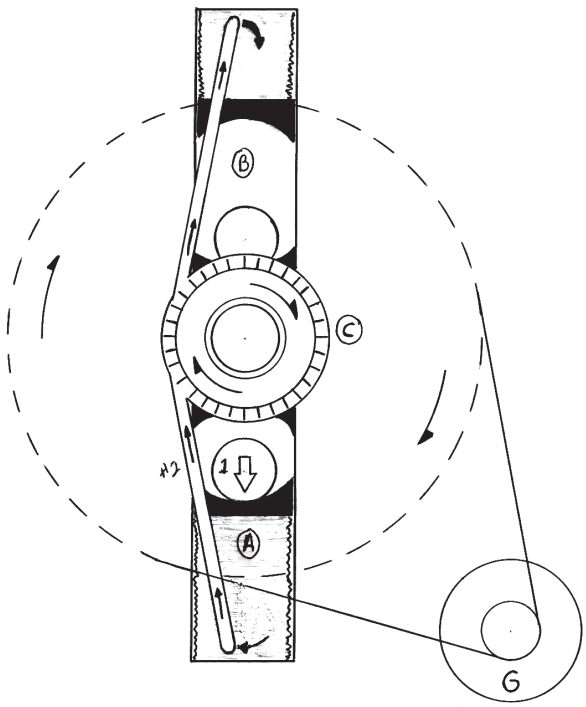

Fig. 1

During this process, as cylinder (A) began rotating up to the empty left side position, it's weight ball, still at the bottom begins to assert it's weight as a counter weight to the filled right cylinder's weight. At the same time, however, the filled top cylinder (B), now rotating to the filled right side cylinder position, begins to assert it's weight also-countering cylinder (A)'s weight with more weight. Now the situation exists where two full cylinders are combining their weights to rotate empty cylinder (A) to the horizontal position. They have more than enough weight to do this.

When cylinder (A) is at the horizontal position, it's weight ball rolls toward the axis, and, being magnetic, is held in place there. At the bottom, the unlocking mechanism, as it is depressed by the 20,000 pound weight ball (made of a magnetic material- a solid steel ball would be 1/4+- the inside diameter of the cylinder), depresses the spring loaded shock absorber-type mechanism and compresses it's inner spring-storing 15,000 pounds+ energy in the spring.

As the mechanism unlocks, and the rotation begins, the shock absorber rotates with the unlocking mechanism, applying it's compressed spring energy to the rotation, giving cylinder (A) a 15,000 pound push-off. Between the combined weights of the filled cylinders, and the 15,000 pound boost, the successful operation of the mechanism is assured. The turning of the Pelton wheel also turns the larger wheel that turns the generator.

The scale of the mechanism, the weight of the balls, and the length/width of the cylinders, can be adjusted to produce the amount of electricity needed. This is a perpetual motion mechanism, the generator is an attachment, as would be a water pump, an air compressor, etc... In a chain these generators could pump water from South Africa to the Sahara, without ever needing one watt of electricity, or one gallon of fuel! No more droughts, no more lack of energy, no more justification for energy wars.

Membraneless Fuel Cells

Review by S. Shlenchak, Russia
using materials from www.physorg.com

Fuel Cell Prototype for ThinkPad Notebooks

IBM and SANYO Electric unveiled initial plans for a prototype micro direct methanol fuel cell system for IBM ThinkPad notebooks. Leveraging SANYO's latest advancements in fuel cells that increase the longevity of notebook batteries, IBM and SANYO jointly developed a basic design of a fuel cell power source. Based on the design, the companies developed a prototype fuel cell system that could supply up to 8 hours of power per cartridge on current and future ThinkPad models.

SANYO's system was designed to be compatible with most current ThinkPad models without the need to alter the notebook design.

A fuel cell is an electrochemical device similar to a battery, but differing from the latter in that it is designed for continuous replenishment of the reactants consumed; i.e. it produces electricity from an external fuel supply as opposed to the limited internal energy storage capacity of a battery. Typical reactants used in a fuel cell are hydrogen on the anode side and oxygen on the cathode side (a hydrogen cell). The only byproduct of a hydrogen fuel cell is water vapor.

The fuel cell system also includes an auxiliary bay IBM's Ultrabay Slim Battery to supplement peak power consumption for business applications. In addition, the auxiliary bay could be used to make the power supply even more versatile by charging an Ultrabay Slim Battery.

The fuel cell system could enable ThinkPad notebooks to run intensive business applications such as multimedia, graphics and computation programs, while performing tasks such as security updates and scheduled maintenance without draining PC battery power. These capabilities could provide added stability for increased productivity, access to information and customer service.

"There are a number of vendors developing fuel cell battery prototypes for PCs and mobile devices, but the combination of IBM's first-class ThinkPad notebooks and SANYO's leadership position in the technology will accelerate research and development in the field," said Peter Hortensius, vice president, IBM Personal Computing Division. "We do not focus simply on the 'wow factor' of fuel cells - we see it as a powerful enabler that could support a wide variety of business applications. These companies are collaborating to help carry ThinkPad notebooks to the next generation of power supplies, while supporting the highest levels of business productivity."

The IBM PC Division's ThinkPad development team has focused on new behavioral usage models for fuel cells in mobile computing, such as docking stations used for office 'hoteling' concepts and the deployment of notebook computers in locations remote from traditional power sources.

"SANYO, as the world technology leader in rechargeable batteries, has been conducting research and development of fuel cells. I am proud to work in earnest specifically with IBM to create an innovative fuel cell system with the ThinkPad design, the industry standard in business computing," said Mitsuru Homma, Group Executive of SANYO's Power Solutions Group. "This is quite a new concept that utilizes both micro fuel cells and rechargeable batteries. This hybrid system could enable the user to efficiently operate IBM's ThinkPad notebooks for a longer time compared to systems with only a fuel cell while also providing the convenience of an AC cordless environment."

The IBM PC Division's research and development of ThinkPad mobile computing technology takes place at the Yamato Laboratory in Kanagawa Prefecture, Japan and at development facilities in Research Triangle Park, North Carolina. After the launch of the new

Lenovo Group in the second quarter, 2005, these resources will be joined by Lenovo R&D facilities in Beijing and Shanghai.

SANYO is the world's leading producer of rechargeable batteries, supplying power to mobile phones, notebook PCs and other mobile devices. SANYO's Energy Research Facility is a stronghold for research and development in the mobile energy field. SANYO is building a strong base for the next generation of mobile energy businesses by consistently performing fundamental and application technology research, working with a wide range of mobile energy related technology.

Membraneless fuel cell is tiny, versatile

A fuel cell designed by researchers at the University of Illinois at Urbana-Champaign can operate without a solid membrane separating fuel and oxidant, and functions with alkaline chemistry in addition to the more common acidic chemistry.

Like a battery, a fuel cell changes chemical energy into electrical energy. While most fuel cells employ a physical barrier to separate the fuel and oxidant, the microfluidic fuel cell developed at Illinois utilizes multi-stream laminar flow to accomplish the same task.

"The system uses a Y-shaped microfluidic channel in which two liquid streams containing fuel and oxidant merge and flow between catalyst-covered electrodes without mixing," said Paul Kenis, a professor of chemical and biomolecular engineering and a researcher at the Beckman Institute for Advanced Science and Technology.

Fluids flowing through channels of microscale dimensions behave differently than fluids flowing through the much larger pipes found in home plumbing systems, Kenis said. "At the microscale, there is no turbulence. This laminar flow means streams of fuel and oxidant can pass side by side without having a physical barrier in between."

A fuel cell consists of two electrodes (an anode and a cathode), a fuel source and an oxidant. Reactions occur as the anode liberates protons and electrons from hydrogen atoms. The protons pass through the cell to the cathode, where they recombine with electrons, which traveled through an external circuit. Most fuel cells use a polymer electrolyte membrane to separate the cathode and anode.

In the Illinois fuel cell, the physical membrane is replaced by the behavior of laminar flow. The fuel and oxidant are brought together as liquid streams in the microchannel. The protons and electrons diffuse through the liquid-liquid interface.

This configuration offers several advantages over PEM-based fuel cells, including fewer parts and simpler design. It also means that membraneless fuel cells are compatible with alkaline chemistry.

Just as alkaline batteries outperform acidic batteries, alkaline fuel cells should be superior to acidic fuel cells, Kenis said. Several problems, however, have prevented the widespread use of alkaline chemistries in PEM-based fuel cells. Among them are poor permeability of the membranes to hydroxide ions (which take the place of protons in acidic fuel cells) and clogging of the membranes from the formation of carbonates.

The system designed by Paul Kenis (Fig. 1), a professor of chemical and biomolecular engineering, uses a Y-shaped microfluidic channel in which two liquid streams containing fule and oxidant merge and flow between catalyst-covered electrods without mixing.

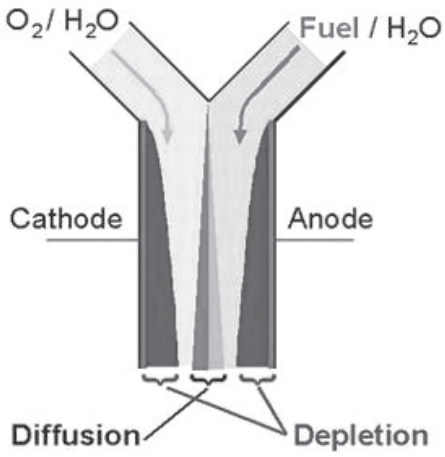

Fig. 1. Paul Kenis' system

“Our fuel cell doesn’t suffer from these problems, because it doesn’t make use of a membrane,” said Kenis.

“Since the membraneless fuel cell is based on a phenomenon that occurs only at the microscale, we can’t just scale up to larger dimensions,” Kenis said. “Instead, we need to scale out by creating arrays of many fuel cells connected in series and in parallel.”

In applications such as power sources for portable computers or battery chargers, multiple fuel cells will have to be integrated to attain sufficient power levels.

New fuel cell drives around hydrogen economy roadblocks

"A hydrogen economy is not a perfectly clean system," said Scott A. Barnett, professor of materials science and engineering. "You have to process fossil fuels at a plant to produce hydrogen fuel as well as develop an infrastructure to get that fuel into vehicles. We have bypassed these technological hurdles by basically bringing the hydrogen plant inside and pairing it with a high-temperature fuel cell in one compact unit that has a fuel efficiency of up to 50 percent."

In a paper to be published online today (March 31) by the journal Science, Barnett and graduate student Zhongliang Zhan report the development of a new solid oxide fuel cell, or SOFC, that converts a liquid transportation fuel - iso-octane, a high-purity compound similar to gasoline - into hydrogen which is then used by the fuel cell to produce energy. The cells could lead to cost-effective, clean and efficient electrical-power sources for applications ranging from aircraft and homes to cars and trucks.

Although only demonstrated on a small scale, Barnett and Zhan's fuel cells are projected to have a 50 percent fuel efficiency when used in a full-sized fuel cell generator, which would improve on other technologies. Higher fuel efficiencies mean less precious fuel is consumed and less carbon dioxide, a greenhouse-effect gas related to global warming, is produced. Internal combustion engines have a "well-to-wheels" efficiency of a mere 10 to 15 percent. Current hydrogen fuel cells that require hydrogen plants and new infrastructure have been calculated to have a 29 percent fuel efficiency while commercial gas/electric hybrid vehicles already have achieved 32 percent.

"The advent of hybrid vehicles has shaken up the fuel cell community and made researchers rethink hydrogen as a fuel," said Barnett, who drives a Toyota Prius and foresees his new fuel cells being developed for use in battery/SOFC hybrid technology for vehicle propulsion or in auxiliary power units. "We need to look at the solid oxide fuel cell - the one kind of fuel cell that can work with other fuels beside hydrogen - as an option."

A fuel cell is like a battery that can be replenished with fresh fuel. It consists of two electrodes sandwiched around an electrolyte material that conducts ions between them. Oxygen enters at the cathode, where it combines with electrons and is split into ions that travel through the electrolyte to react with fuel at the anode. Fuel cells are environmentally friendly: water and carbon dioxide are the only by-products. In the process, the oxygen ions traversing the electrolyte produce a useful current. Heat is also generated.

Because conventional solid oxide fuel cells operate at such high temperatures (between 600 and 800 degrees Centigrade) Barnett recognized that the heat could be used internally for the chemical process of reforming hydrogen, eliminating the need for hydrogen plants with their relatively low fuel efficiency. Barnett and Zhan found the optimal temperature for their system to be 600 to 800 degrees.

The real key to the new fuel cell is a special thin-film catalyst layer through which the hydrocarbon fuel flows toward the anode. That porous layer, which contains stabilized zirconia and small amounts of the metals ruthenium and cerium, chemically and cleanly converts the fuel to hydrogen.

"A major drawback of using solid oxide fuel cells is that carbon from the fuel is deposited all over the anode because of the high temperatures," Barnett said. "But our thin film catalyst, plus the addition of a small amount of oxygen, eliminates those deposits, making it a viable technology to pursue with further research. We

have shown that the fuel cell is much more stable with the catalyst and air than without."

"The main drawback of fuel cells has been their complexity and high cost," said Barnett. "The simple design of our system, which brings the hydrogen reformer in house, is a great advantage for a range of applications. For example, imagine a unit cheap enough to be used for auxiliary power in cars or diesel trucks. It would supply electricity continuously, cleanly, quietly and efficiently even when the engine is not running. This work has the potential to lead us in that direction."

UNC researchers study fuel cells, focus on portable possibilities

The University of North Carolina at Chapel Hill is among the newest participants in a statewide alliance formed last summer to explore renewable and efficient energy sources. UNC is participating in the N.C. Fuel Cell Alliance through the laboratory of Dr. Joseph DeSimone, W.R. Kenan Jr. distinguished professor of chemistry and chemical engineering at UNC and N.C. State University. DeSimone recently was elected to membership in the National Academy of Engineering.

First devised in 1839, fuel cells are not currently used in the commercial industry. Researchers believe they have the potential to provide energy for a wide range of applications, such as powering laptops, providing light and heat to homes and running automobiles.

"You can use fuel cells anywhere you use batteries. For example, if you used a fuel cell in a laptop it could last about a week, instead of lasting three-to-four hours with batteries," said Dr. Everett Baucom, deputy director of the NSF Science and Technology Center and adjunct professor of chemistry at UNC. "Then, instead of recharging the cell you would simply replace the fuel cartridge."

UNC's fuel cell research will focus on portable uses for the technology, including laptops, cellular phones and U.S. departments of Defense and Homeland Security applications, DeSimone said.

Fuel cells offer high automotive fuel efficiency (especially in city traffic), low emissions and silent operation. Most major automotive manufacturers worldwide are active in fuel cell development, said Baucom. In addition, several ongoing demonstration projects employ fuel cells in city buses in the United States, Canada and Europe, he said.

"We are working primarily on the chemistry end, designing a new type of membrane that would give higher surface area and higher performance per unit volume," said Baucom, formerly the technology manager for DuPont's PEM division and who joined UNC in 2000. "This would lead to more effective use of the membrane."

UNC researchers are taking this field in a new direction, said DeSimone.

"Most of the PEMs used in fuel cell manufacture are solid materials. We are pioneering liquid precursors. Having a liquid precursor can open new ways of fabricating fuel cells."

UNC researchers will work with the Teflon division of DuPont in Fayetteville, the leading manufacturer of PEMs. UNC's Institute for Advanced Materials, Nanoscience and Technology and its NSF Science and Technology Center both focus on this kind of technology.

A Prototype Next-Generation Mobile Phone Fuel Cell With High Output Power

Nippon Telegraph and Telephone Corporation have developed a prototype micro polymer-electrolyte fuel cell (PEFC) 1 that uses hydrogen gas as a fuel and is small enough to directly fit in a mobile phone. Under tests using a production-model mobile phone, this prototype PEFC successfully powered start-up and signal reception/transmission (i.e., video phone, voice calls, and "i-mode" internet services). In conjunction with this development, a device for automatically topping up the micro PEFC with hydrogen was also developed.

At present, the direct-methanol fuel cell (DMFC)-which uses methanol as the hydrogen fuel supply-is the mainstream development concerning batteries for mobile-phone use. However, a DMFC suffers two key problems: firstly, CO_2 is produced during power generation;

secondly, since the power density per unit area of the power-generation part is insufficient, battery miniaturization is difficult.

In light of this problem, utilizing hydrogen gas as a fuel, the PEFC NTT have developed attains a high output power compatible with that of a lithium-ion battery without producing CO_2 during power generation. On top of that, as a result of unifying the power-generation unit and the hydrogen-storage alloy tank and simplifying electrical circuitry, our PEFC has a compact size (external dimensions: 42*80*13 mm; weight: 104g), which makes it suitable for directly fitting into a mobile phone, and enables a talk time of nine hours. Furthermore, by changing the surface area of the PEFC's power-generation part, it is possible to apply the PEFC to a wide variety of mobile electronic devices like video cameras, digital cameras, PDAs, and notebook PCs.

Development background

In recent years, as high performance and multi-functionality of mobile electronic devices (such as mobile phones and notebook PCs) has advanced, the problem of insufficient capacity of batteries as the power source of these devices has come to the forefront.

Under these circumstances, investigations on energy sources to replace the lithium-ion battery-which is nearing its limit on further improvements in energy density-are continuing. At the same time, as a breakthrough technology exerting a low environmental load, fuel cells are continuing to create great expectations and spur on their development by many manufacturers.

NTT, as part of our creation of fundament technologies for supporting a “Resonant” communication environment, is making great efforts to establish environmental energy technologies aimed at realizing a sustainable society, and driving forward with research and development on powerful, high-efficiency, clean fuel-cell technologies that will contribute to reductions in CO_2 emissions.

Characteristics of the micro PEFC

In a micro PEFC, with hydrogen gas as a fuel, water vapor only is produced as emission. This means that even under a high-power-density environment, a PEFC is a benign and extremely clean power source. It is thus regarded as a next-generation power source that is compact enough for directly mounting in a mobile phone. The main characteristics of our PEFC are summarized as follows.

1. *High power density*. Compared to a DMFC (i.e., methanol-fuelled), our PEFC produces a higher output, since it is hydrogen-gas fuelled, even though the power-generation area is smaller.
2. *Compactnes*. Its high energy density enables a compact size.
3. *Simple construction*. Owing to booster technology, the conventionally required "stacking" of cells is unnecessary. And by unifying the hydrogen-storage alloy tank and electricity-generation part, the number of parts and battery size have been reduced.
4. *Long-term power generation*

By utilizing a high-capacity bcc2 (body-centered-cubic) type alloy system for hydrogen storage, our PEFC attains long-term power generation.

In addition to the above, even in the case of mobile electronic devices such as notebook PCs-which have relatively high power consumption-the micro PEFC can be easily adapted by increasing the area of its electricity-generation part.

Future developments

As regards all-out practical application of fuel cells, several challenges-such as setting up hydrogen-fuel supply systems as part of a social infrastructure-remain to be overcome. However, even given the forecasted increases in power consumption of future devices due to their higher performance and more functions, micro PEFCs are expected to meet the power demand and target early commercial applications.

At NTT, from now onwards, with our goal of realizing the next generation of fuel cells, we will continue to push forward research and development in areas such as further validation of safety and investigation into optimum utilization conditions from a general user's viewpoint.

Hypothesis of I.O. Yarkovsky

Sizov A.V.
Saint Petersburg, Russia
Tel. +7 (812) 586-96-25
dva@tu.spb.ru

It is undoubtedly so, let us say…
if only we have common sense.
For it is impossible to disagree
with the one who tell the truth.

Socrates

Scientific truth develops by a complicated and winding way and not all scientific ideology expresses it.

V. Vernadsky

This article is devoted to Russian scientist Ivan Osipovitch Yarkovsky (12.05.1844-09.01.1902). I.O. Yarkovsky is an author of the book called "Universal gravity as the result of the formation of ponderable matter inside celestial bodies" published in 1889. [1]

Yarkovsky attracts attention to his book only by its name though it is not easy to make a summary of the "Universal gravity" book's meaning after reading. If a reader judges only by names of its chapters, he or she will find a natural science encyclopedia or, more precisely, philosophy of natural science. Unfortunately, some generations in Russia and in the world did not and still do not know about this work's existence and the author's name is almost consigned to oblivion. Yarkovsky's book takes the reader's attention from the very beginning; it makes him or her think, object to the author's conclusions and, then, follow the scientist searching for confirmations of his ideas in the environment. All strange things have a simple and logical explanation in the book.

What is the main point of I.O. Yarkovsky's work? We think that, in memory of people who published its second edition, we should give them permission to speak: "The main purpose of this work can be briefly summarized as the following: to recreate the universe, with its complex transformations, using one single matter – aether". [2].

Speaking of I.O. Yarkovsky and his work, it is impossible to keep silent about aether. In natural science history, this Something was considered as something passive. No attention has been paid to the thoughts and theories of ancient people taking into account scientific achievements of the following centuries. Ivan Yarkovsky, on the contrary, expresses his main idea through his entire book: interactions of aether and chemical elements are the main reason of gravity formation and the main condition of celestial bodies' evolution, self-consciousness.

Yarkovsky has found a reasonable and logical explanation of the integration of an "invisible" world, which is aether, and ponderable matter. The developed gravity concept became rather unexpected even for its author: "...in short, it does not matter which point of view on universal gravity and chemical elements you have, you must consider it absurd that there is a connection between these two things".

A thoughtful modern researcher will find many interesting and new things familiarizing himself or herself with Yarkovsky's work. This means that the concept of material aether is not subjected to ageing and cannot fall to oblivion. We will not make a mistake thinking that any person who read the main Yarkovsky's work asks the same questions: why the author of the so well grounded hypothesis is not known? Why does a silent conspiracy exist around the scientist's work for more than a century? Who was this man?

I.O. Yarkovsky had an excellent education: he graduated from Saint Petersburg Technological University. After he defended his thesis in 1872, Yarkovsky obtained a rank of a mechanical engineer. It may seem strange but long-standing financial troubles and limitations of childhood and youth could do him good: Ivan Yarkovsky learned not to divert himself on empty and senseless dreams. It is also possible that, in this period of his life, Yarkovsky could develop a very high level of

self-consciousness, which later helped him uphold his views with firmness and resolution. He also was naturally observant and inventive; his quick mind was always aimed at solution of practical problems. Working on his work, I.O. Yarkovsky provided himself for a thing, which was inadmissible for most scientists: complete freedom of research and independence on influence of different scientific schools.

I. Yarkovsky managed to do, possibly, the best analytical review of ideas and names connected with problems of gravity, celestial bodies' genesis and star energy sources in all natural science. Yarkovsky thought about numerous poorly argued descriptions of effects in the environment. Conclusions, which were made by the scientist and underlay the developed hypothesis, exceeded the bounds of usual scientific ideology. Yarkovsky understood it: "I offer readers a book, which includes thoughts so different from the ones now acknowledged by science that I thought a lot before deciding to publish them".

Yarkovsky did not claim to explain everything. Possibly, the strength of careful prudence showing up in his works' conclusion and opinions had Socrates spirit: "What is higher than we, it does not concern us". We suppose that, due to such self-control, "gathering patiently facts according to the ideas", the author successfully moved toward his work's purpose, which was to explain the reasons of universal gravity. There were no fantasies in his ideas. In one of his works, I.O. Yarkovsky said: "I, naturally, value my ideas; it is understandable that I will fight for them *to the best of my ability* but, however high I value them, I will not be keen on them so much that I will fight against indisputable scientific truth defending them; I will never act against *logic* and *common sense*". [3]

It is possible that all developers of cosmological hypotheses were inconsistent materialists. Formally, they recognized materialism but their world outlooks were tangled and contradictory. Scientists forgot that the world is material and single when talking about the most subtle effects, which could not be observed by instruments. It caused serious defects of concepts, which explained material things only by a so called ponderable matter. This was a methodological and ideological impasse and mistake.

Ivan Yarkovsky has found the way out. He was not afraid to introduce the concept of material aether and gave it an active, creative role in the Earth's life and life of all celestial bodies. It was not easy for I. Yarkovsky to make such a decision: "...I have to discuss so many scientific fields that my knowledge is insufficient". Yarkovsky paid attention to an interconnection between the formation of chemical elements and universal gravity. This regularity was never a subject of serious scientific study. A research method suggested by Yarkovsky gave amazing results. Possibly, due to this, scientific ideology tried to keep silent about Yarkovsky later.

Proofs of Yarkovsky's hypothesis, which were so obvious, are, possibly, not connected enough with just a sum of scientific intelligence. Why could not other scientists make the same conclusions? What prevented them? Here, it is advisable to mention an interesting article by N.A. Morozov devoted to the same problems as Yarkovsky's work. Morozov only marked the following lines: "*...during the long evolution of celestial bodies, no matters were ever formed and will never be formed except the ones belonging to Mendeleev's periodic table*". [4] No conclusions follow from this established fact. The article was published in 1912. There were no references to Yarkovsky's ideas in it, and this is difficult to explain.

What was the reaction of contemporaries to Yarkovsky's idea? In 1891, a book of Professor Mushketov called "Physical geology" was published. Yarkovsky is mentioned there. The Professor included him into a list of authors of hypotheses of Earth formation. In 1902, D.I. Mendeleev, in his article devoted to aether study [5], paid attention to Yarkovsky's thoughts [6] and mentioned respectfully the author's aspiration for clarifying a matter of understanding of this matter, which can be hardly measured.

The Imperial Academy of Sciences kept silent during Yarkovsky's life. The reason of the absence of polemics concerning his works are considered to be very well argued statement of thoughts and the practically complete absence of gaps in the concept theses' defense. It is also possible to add an unusual ideological approach to investigation of gravity and a number of other cosmological problems. Yarkovsky kept distance from the orthodox science. An insuperable gap

for any criticism appeared. Paying attention to Yarkovsky's ideas could cause serious and objectionable "disturbance" among views on natural science problems. Possibly, in order to stop a "destructive" influence of Yarkovsky's ideas on usual scientific views, a very effective method was applied to Yarkovsky's hypothesis – suppression.

Besides life-time reviews of Yarkovsky's book, some interest to his hypothesis existed in popular science periodicals [7], [8], [9]. The scientist was formally mentioned in a work devoted to aether dynamics [10]. A member of Academy of Sciences, E.E. Milanovsky, referred to Yarkovsky's ideas [11]. 100 years after the scientist's death, a work of V.F. Blinov appeared [12]. It was the first book devoted to I.O. Yarkovsky's ideas.

The unexpected and unusual ideas of Yarkovsky, the encyclopedic nature of the book, the seriousness and vital importance of the considered questions make it rather difficult even to approach a narration about the scientist and his ideas. That is why we will consider only energy aspects of Yarkovsky's hypothesis of the entire variety of his conclusions and their practical applications. In order to do this, we will have to consider the situation, which developed in the according fields of natural science in his period.

Ivan Yarkovsky could sum up the science of the XIX century and show ways of natural science development next century. Actually, studying gravity problems, I.O. Yarkovsky began to develop, according to his own words, a "view of integrity" for creation of a "truly strong science". However, the scientific community paid no attention to Yarkovsky's ideas. It was not by accident, taking into account his epoch. At that time, physicians began to refuse to try to obtain a description of the world on the basis of phenomenological models; a new method of research and interpretation of nature decrees appeared. Undoubtedly, Yarkovsky saw the rise of a "new physics" and a "new world outlook". The engineer's attitude to the beginning scientific age totally differed from enthusiasm of the 'public opinion". The scientist warned of danger of unreasonable introduction of such trends into natural science and, probably, his unconquerable arguments were the main reason of his falling into oblivion.

We suppose that the unwillingness to tolerate the idea of aether in physics was caused by impossibility to explain logically its role in different physical laws. There were not even suggestions considering how the role of this Something in natural effects can be understood. Such an intellectual impotence was irritating. Possibly, that is why there was such a cruel and ruthless fight against the aether theory in physics as nowhere else among the fields of natural science. Against a background of doubts and scruples, which were typical for the scientific community of that age, I. Yarkovsky made material aether a full member of the main universal effect – gravity.

During Yarkovsky's age, many attempts to detect aether by instruments were carried out. At the same time, there is an impression that the scientific world of that time impatiently waited for an experiment, which would undoubtedly prove that aether did not exist. This waiting ended up with the experiment of A. Michelson – A. Morley, 1887.

The results of A. Michelson's experiments became the "facts", which underlay the theory of relativity (TR). In the Russian scientific community, one of the first responses to the appeared TR postulates was the following: "... first of all, it is not necessary to search for the explanation of these negative experiments, for example, Michelson's ones...,...the first postulate of the principle (TR) clearly makes such a search absolutely unnecessary..., ...we must inevitably conclude that aether does not exist, i.e. there is no interstellar medium... ...negation of aether lead to a new wide energy doctrine" [13].

Here, it is necessary to mention that no one among thoughtful scientists ever stated that it was possible to detect aether by instruments. This follows from the definition of aether: "Something permeating everyone and everything". In the series of Albert Michelson's experiments, the purpose was another: some characteristic of light was detected".

Nevertheless, A. Michelson got a Noble Prize of physics for the "Invention of a high-accuracy optical device (an interferometer), which allowed proving that "aether wind" does not exist. This work was an experimental prerequisite for the creation of Einstein's TR". It is difficult to explain the change of the "aether" idea to "aether wind"

one in the given formula. Possibly, the reasons of this are hidden not only in the above described situation in physics at that time.

The experiments of 1887 became classics of physics. Everyone knows that they proved that aether does not exist. This statement was introduced into the scientific community with surprising haste and insistence. No one paid attention to the remarks and objections of A. Michelson [14].

In the beginning of the twenties of the last century, Michelson's experiments were reproduced. The titanic efforts of Dayton A. Miller, who used a more sensitive device than in the experiments of 1887, allowed determining speed of aether wind and making an important conclusion: "the experiment of Michelson – Morley must not give a zero result and, most likely, never gave such a result" [4].

In 1913, a book of G. Mi (Greifold) called "Molecules, atoms, and universal aether" was translated into Russian. This work is a collection of proofless and contradictory discourses, which explain almost nothing. G. Mi is considered one of not many creators of general relativity (GR). Possibly, G. Mi wrote about aether in such a way, which was typical for theoretical physics of those days: "Before we go further, we should ask again a serious question: does it make sense to speak of a physical substance, which is not actually matter? How can such a substance be an object of physical study? Maybe we should substitute it for a better, more natural system of ideas?"

An exclusion of the aether idea from natural science, which seems so harmless, hid an ideological impropriety. Later this fundamental mistake led to serious problems in the understanding of energy effects' meaning. The existing method of physical-chemical processes' research is that ponderable matter is given all properties, which has been displayed. The following interpretation of the obtained results leads to the loss of a part, which possesses energy and is as material as anything in the world though it remains "invisible" for us. Now the words of D.I. Mendeleyev must be cited: "... it must not be said that aether is imponderable but that it is impossible to weigh" [5]. Undoubtedly, it is difficult to detect aether in physical-chemical processes. But, possibly, we are just used to thinking so? Probably, we should take into account Leibniz's words: "Possibly, ... many people who thought deeply had some knowledge, which allowed them to introduce and fight for substance forms... And these people are not as far from the truth and funny as the most ordinary of our modern philosophers think". [20]

In his book and the following works, I.O. Yarkovsky permanently emphasized that his hypothesis is based only on facts. An example of GR shows what can be caused by the reation of "completely mathematical" theories. In this case, the search of facts-proofs began after the mathematical model was designed. Yarkovsky predicted such things: "A deliberately false, quite out of place hypothesis, *which has no confirmatory fact in nature, contradicts both experience and common sense, can be introduced in science only if there are facts, which can be explained by it*".[16]

By the 80th of the XX century, an opinion was formed that GR gave an "explanation to the precession of Mercury's orbit, which was caused by space band caused by gravity influence of the Sun" [17]. Before this explanation was given, an article by a German astronomer E. Freindlich about Mercury anomaly had appeared. E. Freindlich had showed impossibility of a satisfactory explanation of the anomaly on the basis of Newton theory [18]. The astronomer's conclusions had not been new. He had to know about his predecessors' achievements. In his book, Yarkovsky showed possibly reasons of the mentioned discrepancies.

Let us read Yarkovsky: "After thorough calculations, Bessel even made a conclusion that it is possible to suggest a hypothetical construction of the Sun, the planets and their satellites in such a way, *that the Sun's attraction of the planets and their satellites would be proportional to the matter's quantity, i.e. to their mass, but attraction of one planet to another could have some other ratio*. But this suggestion was *equal to rejection* of the universal law of gravity. Evaluation of other planets' masses often led to some disagreement. In 1813, Lindenau published Mercury tables and paid special attention to disturbances produced by neighboring Venus. Thus, he showed that the estimated up to now *mass of Venus had to be considerably increased* in

order to coordinate a position of Mercury, which was shown in the tables, with the observed one".

During I.O. Yarkovsky's time, it was considered a difficult task to take into account the mass increase of celestial bodies and making according dynamical corrections in systems of equations during astronomic calculation. Now it is easy to make the necessary calculations. If such a work will be done, its performer will discover amazing things.

The importance of such works is confirmed by a message about research of our solar system's planets by space probes: "Even after the evaluation of Uranus' mass had been considerably changed (it was increased by 0.3%), it became possible to achieve the necessary coincidence of the calculated and observed paths..." [19]. The spacecraft "Voyager-2" was meant. Undoubtedly, the age-old slowing down of the Earth's rotation also confirms I. Yarkovsky's hypothesis.

In the history of the "new ideology", A. Addington was the first to suggest some hypothesis about reasons of stellar heat appearance (except unknown Yarkovsky). A name of the chapter in Addington's article must be noted: "Material and aether heat" [20]. Something in these words imperceptibly looks like Yarkovsky's words. But this expression is illusive. Addington compares ponderable matter and aether while Yarkovsky considers the world single and material. We think that Yarkovsky created his concept, first of all, in order to establish a precedent, i.e. to show how changeability and dynamics of the world must be explained.

In the beginning of the XX century, a conviction clearly appeared that science knows everything about matter and energy. Now it seems premature. It is possible to say that there is no evidence that ponderable matter is connected with energy and Poincare dependency explains almost nothing. Taking into account the orthodox method of investigation of the given world's properties, I.O. Yarkovsky is always very reserved and careful in its suppositions: "I did not try to understand the essence of matter and energy. These questions may remain unascertained for mankind forever. Instead, I considered matter only the properties, which undoubtedly belong to matter and are acknowledged by everyone".

The main book of Yarkovsky arouses a feeling that the author's confidence demonstrated on its pages hides many untold things. Yes, the book is devoted to the explanation of the universal gravity reasons by aether and energy united by a process of chemical elements' formation. The scientist's work is also a call for action. Undoubtedly, Yarkovsky understood the operation principle of the World Machine. Possibly, he could understand how the inexhaustible energy source can be used. There are rough drafts of how to carry out according experiments in the book.

Scientists knew that the understanding of gravity is a key to energy sources. In an article- reflection devoted to aether, D.I. Mendeleyev wrote: "It is impossible to solve problems of gravity and energy engineering without a real understanding of aether as the universal medium transmitting energy for a distance". [5]

In all theories where something called "energy" is present, one element is always missing – an intermediary between energy effects and ponderable matter. This gap in knowledge is especially evident in cases of gravity theory development and explanation of the reasons of the stellar heat appearance. This problem with the "missing part" took place in Newton's theory and in GR. In Newton's case, something was untold and had in mind while, in case of GR, incomprehensible gravitons were introduced as a violation of logic and, possibly, common sense. Unlike the mentioned theories, Yarkovsky's idea contained such an intermediary, which was not a passive medium but dynamical material aether. The engineer's hypothesis explained and revealed cause-and-effect relations, which cause and maintain each energy process in celestial bodies. Due to such a balanced description of the world, Yarkovsky's concept is convincing and grounded.

It seems difficult to compare Yarkovsky's conclusions with the results of cosmological researches of the XX century. Possibly, since works of D.G. Gins had appeared, an opinion was formed that "a source of stellar heat is a star's mass" [21]. Gins meant that suns lose their mass due to radiation; this is a theory. Actually, on the contrary, stars become brighter every century [1], [22]. This is confirmed by modern measurements and coincides with Yarkovsky's conclusions: "Our Sun

must grow like our Earth and any other planet. That is why it can never die away". More from Yarkovsky: "... which were the reasons of the view that the Sun must get cold and then die away and the Earth must turn into a cold sphere?"

The new gravity theory was, according to Brillouin's opinion, "a brilliant example of a great mathematical theory built on sand, which leads to the increase of the mathematics' part in cosmology (a typical example of science fiction). [23] This note was confirmed by cosmogony researches, which followed Yarkovsky's epoch. Then they went into a field of explanation of the Universe's formation, the search for virtual black holes and gravity waves. A new competition concerning singularity of purely created mathematical theories began in cosmology. In Russia, no attention was paid to the "obsolete" and, therefore, "useless" works on gravity research. Yarkovsky foresaw such things and envisaged that they are temporary: "*an idea will not die without a trace even if it has a part of truth...*".

In the 30-40ties of the XX century, scientific interest to origin of the stellar heat increased. At that time, the first works of A. Bete appeared in Germany. In 1957, the Noble committee formulated achievements of this scientist in such a way: "A contribution to the nuclear reaction theory (Bete cycle), which is the main stellar energy source".

For some reason, Bete's ideas were instantly acknowledged by the scientific community though a part of scientists doubted that they were true. Before Bete's theory was acknowledged, another hypothesis had appeared. It was as beautiful and heretical as Yarkovsky's one. It was created by Nikolay Alexanrovitch Kozyrev [24]. It is considered that N.A. Kozyrev "paid" for doubts that thermonuclear reactions exist inside stars. An article by three members of Academy of Sciences appeared in "Pravda" newspaper: L. Artsimovich, P. Kapitsa, and I. Tamm [25]. The article devoted to "mistakes' of Professor Kozyrev was multidimensional and had correct style.

Claims connected with the fact that his hypothesis "violates" the second law of thermodynamics were also presented to Kozyrev. Such remarks will undoubtedly be applied to Yarkovsky. He understood and explained this: "It seems to me that we forget about the sources... It seems to me that, in this case, thermodynamics makes its conclusions on the basis of facts of one kind not taking into account others". Talking about "the source", Yarkovsky meant aether. Another extract from his book must be added to this: "...the universe must be... eternal, *...it cannot have such a pitiful end, which is predicted by thermodynamics!*".

Reading I. Yarkovsky, it is possible to find a permanently mentioned idea that strong pressures influence processes of chemical elements formation inside celestial bodies: "... under a certain pressure, aether turns into something we call the primary matter, i.e. into this explosive amorphous mass with enormous energy reserves, which, under violation of balance, makes this *primary matter* disintegrate and form ponderable or chemical matter". It is necessary to make a correction that the book's author did not know scientific data on structure and properties of the nuclear nucleus and he had to create its own terminology. In spite of this, it is possible that Yarkovsky could predict behavior of ponderable matter inside celestial bodies.

Probably, the most amazing conclusion of the ones created by Yarkovsky's hypothesis is explanation of the solar heat reasons. Comparing Yarkovsky's views on the construction and operation principle of the Sun with the according theories of the XX century, we find a great difference. The idea of thermonuclear reaction occurring inside stars appeared on the basis of theoretical physics' conclusions concerning the Sun's structure. Presuppositions of this were evaluation of the Sun's density, the following supposition of its internal chemical structure and ideas of physical processes creating its energy supply etc. Yarkovsky's doubts concerned accuracy of evaluation of the Sun's density and were caused by the mistaken calculation of its mass: "Attractive force of the Sun and the planets has been determined by astronomers on the basis of its influence on other bodies. This definition is indubitably true but, on the basis of this, it is impossible to determine masses of the planets because this attraction, possibly, depends not on mass but on some other reasons. ...Believing in accuracy of the numerator of Newton's formula, scientists... consider it gaseous".

Such an idea of the Sun (of all stars) is a canon, only a gas is substituted by "plasma" now. The impossibility to evaluate real masses of celestial bodies and the following strange ideas of their structure show an obvious divergence of Newton's gravity theory. This means that the known explanation of gravity must be seriously corrected. Now such a revision is not carried out.

Almost one hundred years since the book "Universal gravity" was published, an article of a member of the Academy of Sciences E.B. Alexanrdov appeared [26]. The scientist made a review of reports on research results, which, according to his words, could lead to the "revision of Newton's law". It is possible to say that the article consists of the same key words as Yarkovsky's book chapter. Right there the similarity ends because E.B. Alexanrdov copies all mistakes caused by the impossibility to find analogies between gravity and mutual attraction of check weights. Yarkovsky warned against this mistake many times. Naturally, Yarkovsky's hypothesis is not mentioned in the article. Nevertheless analyzing the existing situation with determination of celestial bodies' masses, Yarkovsky suggested rational methods of elimination of mistakes. Newton's doubts concerning the gravity reasons are rarely cited: "the fact that one body can interact with another over a distance, through vacuum, without influence of something else, seems to me so absurd that I cannot imagine that someone, who can think with competence in the field of philosophical questions, can make such a conclusion". [27] Thinking about gravity, Leibniz considered it a "physical barbarism" to explain it in such a way, that, "using the suggested presuppositions, conclusions are made, which are not only unreliable but also wrong and impossible like this universal attraction of matter to matter" [28].

I. Yarkovsky made two conclusions developing the hypothesis about the origin of gravity and evolution of celestial bodies (all without exceptions, including stars): "1. Due to the fact that new layers of ponderable matter are permanently forming inside a body, we can say that *the body transforms aether into ponderable matter; that the body grows.* 2. Due to the fact that aether turned into ponderable matter cannot go to the surface as aether again and has to form chemical bodies, which has the same ability to absorb and condense aether, the absorption will continue and cause a kind of a permanent aether current from the surface to the center of the body".

The given important conclusions point at the source of enormous energy hidden in the process of gravity formation.

In the XX century, interesting researches were carried out directly or indirectly connected with the gravity problem. On the basis of their analysis, V.F. Blinov wrote a work showing presence of Yarkovsky's ideas in many of the effects around us. According to Blinov's book, another conclusion is possible: the western scientific community, which considers itself sufficiently independent, does not know Yarkovsky's works.

A new century has come, but nothing has changes in the scientific "public opinion". The works of Miller and Kozyrev are considered unremarkable as well as the works of the most evident "unknown" Yarkovsky. Possibly, this is why recognized cosmology specialists can hardly understand that the equations, which formed a fantastical idea of "the big bang", are based on wrong and shaky grounds.

Let us read Yarkovsky: "Even if the temperature in universe becomes the same, if aether of universal space has the same energy, but if there is only one material body of a big size in universe, it is sufficient for aether to condense itself inside the body using its own, even small, energy and, therefore, create a new source of heat and, hence, to revive the universe again".

Yarkovsky understood the complexity of the idea of "energy". This is why he refused to try to find out what is meant by the word "energy" in an introduction to his book (1889): "we will not try to explain the essence of matter and energy because this is a completely wasted labour considering the existing state of our intellect". In chapter IV, Yarkovsky writes about the essence of energy: "possibly, it will always remain an incomprehensible and inexplicable element of motion. ...we can always consider energy as a special matter".

Despite the fact that Yarkovsky only lightly went into the energy side of his hypothesis, nevertheless, his explanation of the universal

gravity reasons can show a direction of researches on a path leading to new energy. An analysis of Yarkovsky's ideas and the research results of some scientists of the XIX and XX centuries allow finding a hypothetical possibility to find the source of this energy. Undoubtedly, it will require using some aether properties, but it is a mistake to thing that this matter is "fuel".

The most important observed aether effect is heating of the Earth and all celestial bodies after they reach a certain size. Which size? This is a very important question and, maybe, it is possible to explain the reason of the stellar energy answering it. Yarkovsky understood it: "*...the body only has to have a size of the certain magnitude*. We cannot say now what magnitude it is – probably, very big or maybe not. Anyway, we know that *there must be the certain size of the body*". Kozyrev mentioned a diameter of celestial bodies of about 2,000 km. Having this diameter, the body begins to heat. The scientist noted that this process can be also initiated in bodies of the smaller size. According to Kozyrev's works, it is also necessary to take into account "a geometrical form of these bodies" [24]. Photographs of a number of extraterrestrial objects obtained by spacecrafts allow considering that, in addition to the size and form, plastic morphology of satellites of our solar system's planets must be taken into account. There are a lot of such objects, celestial bodies of different sizes and forms, which can be used for tracing their evolution from the beginning of the heating process.

It is unknown whether Kozyrev knew about Yarkovsky's works but a copy of "Universal gravity" book is kept in a library of Pulkovo observatory, where Kozyrev worked. It is natural to mention Kozyrev in the article devoted to Ivan Yarkovsky. The Professor was a peculiar successor of Yarkovsky.

The researches of Yarkovsky and Kozyrev gave another approach to creation of an artificial source of the stellar heat, which is different from the orthodox one. Even if we understand the reasons of the internal Earth's heat formation, we will be able to make the following steps in exploration of the world. Undoubtedly, the operation principle of the Earth's heat machine will underlie energy technologies of the future. Possibly, there are confirmations of this in Blinov's book: "Plasma necessarily appears inside a nucleus of a growing planet because *the development of the planet leads to its turning into a star*. The question is when plasma appears in the nucleus. Possibly, plasma already exists in the Earth's nucleus". [12]

The oracular ideas of Yarkovsky turned out to be uncalled. They were not understood in Russia and in the West and, due to this, became obsolete. There were important reasons for this: Ivan Yarkovsky's thoughts appeared at the inappropriate time.

References

1. I.O. Yarkovsky. Universal gravity as the result of formation of ponderable matter inside celestial bodies. M. 1889.
2. I.O. Yarkovsky. Universal gravity as the result of formation of ponderable matter inside celestial bodies. M. 1889. SPb. 1912.
3. I.O. Yarkovsky. New view on the reasons of meteorological effects. M. 1891.
4. N.A. Morozov. The past and the future of worlds according to the modern geophysical and astrophysical point of view. // Priroda. #3. / 1912. p. 333
5. D.I. Mendeleyev. An attempt of chemical understanding of universal aether. // "Periodic law. M. Nauka. 1958.
6. I.O. Yarkovsky. Density of light aether. Bryansk. 1901.
7. K. Arsenyev. A mystery of global fissures. // Tehnika molodezhi. N11/ 1969, p. 27.
8. V. Neiman. The Sun shines brighter! // Tehnika molodezhi. N4/ 1977, p. 59.
9. V. Novitsky. The undecidable problem of physics. // Tehnika molodezhi. N5/ 1990, p. 20.
10. V.A. Ayutskovsky. General aetherdynamics. M. 1990.
11. E.E. Milanovsky. The expanding and pulsatile Earth. // Priroda. N8/ 1982, p. 48.
12. V.F. Blinov. The growing Earth: from planets to stars. M. 2003.
13. O.D. Khvolfson. Relativity principle. // Priroda. N11/ 1912, p. 1275.
14. D.K. Miller. Aether wind. 1925.
15. Leibniz. Thoughts of metaphysics. M. 1982.
16. I.O. Yarkovsky. A passion for mathematical theories in modern science". M. 1893.
17. P. Davis. Super-power. M. Mir. 1989, p. 84.
18. V.P. Vizgin. Einstein and others. Priroda. N3/ 1979, p. 41.
19. R.P. Lazer and others. A meeting of "Voyager-2" with Uranus. // V mire nauki. N1/1987, p. 12.
20. A. Addington. Internal construction of stars. 1926.
21. D.G. Gins. New in cosmology. 1928.
22. Planetology. // Priroda. N6/ 2000, p. 61.
23. L. Brilloin. A new view on relativity. M. Mir. 1972. 28.
24. N.A. Kozyrev. A nature of stellar energy on the basis of the observed data's analysis. L. 1991. p. 199.
25. L. Artsimovich and others. On thoughtless chase of scientific sensations. "Pravda" newspaper. 22.11.1958.
26. E.B. Alexandrov. Searching for the fifth force. // Nauka I zhizn. N1/1988, p. 50.
27. V.F. Mitkevich. The main physical views. M. 1939, p. 23.
28. Leibniz. Against barbarism in physics. M, 1982, p. 349.

Flying Platform

S.A. Gerasimov

Faculty of Physics, Rostov State University,
Rostov-on-Don, 344090, Russia
E-mail: GSIM1953@MAIL.RU

An endless ribbon with apertures rotating on shafts with unbalanced masses can exerts non-zero lifting force. The influence of the phase shift between rotations of the ribbon and the unbalanced bodies on the lift force is considered.

This is an attempt to find out what parameters of the device shown in Fig. 1 must be to ensure the lift of the system in the gravitational field. Essentially, the system is an endless ribbon W of length πnd having apertures of length πd, where n is digital number. The ribbon rotates between four shafts of diameter d two of which have unbalanced masses $m/2$. In fact this is a variant of the vibrational air craft [1]. The only distinction is in that the body W contacting with the surrounding medium changes its sizes and form synchronously with the rotation of the unbalanced masses. In the vibrational air craft, the form and the sizes of this body are immutable. Therefore, one may consider this system as a variant of the ornithopter [2]. Possibly that the aspiration to save the form of the wing was a reason of failures in attempts to build the ornithopter [3]. Unfortunate choice of the phase shift Δ can be another reason of the mentioned failures. There is meaning to consider a case when the resistance force F_r proportional to the effective area of wing W is also proportional to the velocity of this body relative to surroundings.

The unbalanced bodies rotate in opposite directions. Therefore, the motion of these bodies may be represented as a vibration of one body of the mass m executed forced oscillations in the vertical direction. When the wing is open (small effective area of the wing) the mass m must move downwards to produce the motion of the wing upwards. When the mass m moves upwards the wing should be closed (large effective of the area of the wing). In this case the essential magnitude of the resistance force prevents the wing from motion downwards. The center of mass of the system, therefore, rises. It is all over up with the principle of action of the platform. But such an interpretation of the lifts valid only in the case of the piecewise-constant dependence of the area of the wing on time when the wing is open or closed. In the device shown in Fig. 1 the area of wing changes harmonically with time. Therefore the influence of the phase shift Δ on the lift force must be investigated. Now about the lift force. By all appearance, this is the weight of the system that can be kept on a immutable distance from the earth to the platform. In another words, this is the weight corresponding the critical regime

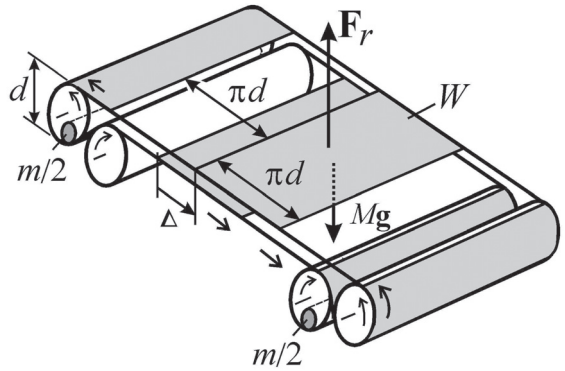

Fig. 1. The flying platform

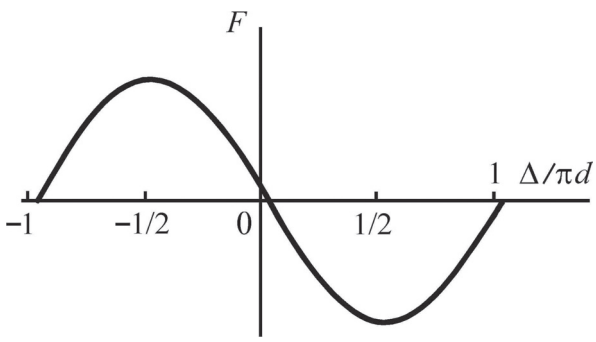

Fig. 2. The dependence of the lift force *F* on the phase shift Δ

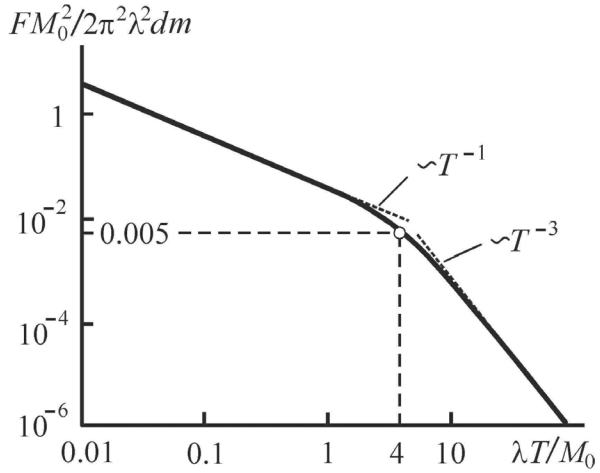

Fig. 3. The dependence of the lift force *F* on the period of rotation *T*

of the flight [4]. In this case the calculation procedure is almost identical to that corresponding to the vibrational air craft [2,4]. But the results of calculations are quite unexpected (Fig. 2). It turns out that when the unbalanced bodies are downstairs, the wing must be *half open and must be in state of closing*.

Suppose that $\Delta=-d/2$ and d=0.5 m. A plane of area 1 m^2 moving with velocity $<v>$=10 m/s exerts the resistance force 76 N [5]. This means that the period of rotation of the unbalanced bodies must approximately be $T \approx 2d/<v>$=0.1 s if the mass of the system without the unbalanced bodies is small $M<<m$. At such frequency of rotation, the platform can lift the mass 80 kg if the minimal area of the wing is about 60 m^2. More the frequency of rotation, more the weight of the system which can be lifted. Therefore it would be a good thing to calculate the lift force as a function of all parameters of the platform. It is found out that the results of calculations can be presented as an universal scaling curve which enable us to find any parameter of the platform (Fig. 3). It is sufficient to know the resistance coefficient λ corresponding to the minimal area of the wing. The maximal area is two times more. M_0 is the total mass of the platform. It is interesting to note that at small periods of rotation the lift force F is inversely proportional to the period T. If the value T is large ($T>>4M_0\lambda$) the system cannot even lift itself .

References

1. Udalova E.S. Vibrational Air Craft by Engineer Gerasimov. // Engineer. 2005. No 3. P. 2-5.
2. Gerasimov S.A. On Theory of Ornithopter. // Technique and Technology. 2005. No 2. P. 17-20.
3. DeLaurier J.D. An Aerodynamic Model for Flapping-Wing Flight. // The Aerodynamic Journal. 1993. V. 97. N 964. P. 125-130.
4. Gerasimov S.A. Vibrational Displacement in Gravity Field. // Journal of Applied Mechanics and Technical Physics. 2003. V. 44. No 6. P. 786-789.
5. Kasnevsky V.P. Aerodynamics in Nature and Technique. // Moscow: Prosveschenie. 1985.

News

I have invented, patented, and tested a chip containing very many very small diodes that absorbs uniform ambient heat and releases D.C. Electrical power. This is a superior energy source that is very inexpensive and will power mall appliances out of the box without a need for power wiring anywhere in the world.

Michael Huff at the Stanford MEM network, a network of nanotechnology evelopers, has given me a quote that $50,000 would pay for developing this chip. He could receive grant funding directly to improve the accountability as I am an unaffiliated inventor that cannot personally produce the chip.

U.S. Patent 3,890,161, DIODE ARRAY. As a 1975 patent, it may be vailable in an image form only, not yet in an electronically searchable text form. The original materials specified in the patent have been superseded by C60 carbon buckyballs as anodes on an N type InSb (semiconductor) substrate.

In 1993, I commissioned the preparation and testing of an adapted satellite transponder chip containing 5,600 Au on GaAs diodes fabricated in a patch as an expedient for assemblers to find one diode where diodes operating at high frequencies have to be very small. Conductive paste was applied over the face of the chip to connect all the diodes in consistent alignment parallel as required. Next, the chip was immersed in a constant temperature pure vegetable oil bath inside a shielding box in the California desert. The chip produced approximately 25 watts where an output more than 1/2 watts validates the theory that electrical thermal noise (Johnson Nouse) can be rectified and aggregated.

If replication of this test is desired, the chips may still be available as draw down obsolete stock from Virginia Diodes Inc. www.virginiadiodes.com. I have lost contact with the lab that adapted and tested the chip. The C60 / N type InSb version of the chip should perform much better.

Charles M. Brown
phone (808) 828-0297
abundance@logonhi.net
www.diodearray.com

Company News

Cycclone Magnet Engines

http://cycclone.com/

All-permanent-magnet engine by U.S. company with R&D lab in Australia. October 2003 TV footage shows demo prototype in action. Company claims to be building a prototype that can be fitted to an automobile.

The Project

Recent developments in the manufacture of magnets has opened this exciting new arena for technological advancement.

Cycclone Magnetic Engines (CME) is the concept of using permanent magnets in a configuration that supplies mechanical power on demand. To offer an alternative to the ubiquitous internal combustion engine that is commercially viable, the technology must imitate the manner and principles that the internal combustion engines operate under. That is to, accelerate, decelerate, maintain a required revolutions per minute while responding to an increase or decrease in load and to have the ability to be operated by humans in a fool proof fashion.

CME believes that it is able to meet this criteria by concentrating development on the control and configuration of the applied magnets. The shape and composition of the magnets is the technical heart of the concept and one of our most guarded secrets.

The composition of the metals that the magnets are mounted to or applied with, is another area that gives accurate control.

Practically all of the research and development work carried out in the race to create a power source utilizing the attraction and repulsion of magnets has been derived from linear motion. Cycclone magnetic engines combine cyclic motion with the use of spinning metals that clone the magnetic pole, hence the name cyc-clone.

The Magnets

Magnets attract certain materials - such as iron, nickel, cobalt, certain steels and other alloys. They also exert an attractive or repulsive force on other magnets, have an effect on electrical conductors, and have an effect on electrically charged particles.

Based on these effects, magnets transform energy from one form to another, without any permanent loss of their own energy. Examples of magnet functions are;

- Mechanical to mechanical - such as attraction and repulsion
- Mechanical to electrical - such as generators and microphones
- Electrical to mechanical - such as motors, loudspeakers, charged particle deflection

There are four classes of modern commercialized magnets, each based on their material composition. Within each class is a family of grades with their own magnetic properties. These general classes are;

- Neodymium Iron Boron (NdFeB)
- Samarium Cobalt (SmCo)
- Ceramic (also known as Ferrite magnets)
- Alnico (Al Ni Co)

NdFeB and SmCo are collectively known as Rare Earth magnets because they are both composed of materials from the Rare Earth group of elements in the lanthanides section of

the Periodic Table of the Elements. NdFeB is the most recent commercial addition to the family of modern magnet materials. At room temperatures, NdFeB magnets exhibit the highest properties of all magnet materials. Samarium Cobalt is manufactured in two compositions: Sm1Co5 and Sm2Co17 - often referred to as the SmCo 1:5 or SmCo 2:17 types. 2:17 types, with higher Hci values, offer greater inherent stability than the 1:5 types.

Sintered Rare Earth/Neodymium Magnets made from rare earth elements are the most powerful permanent magnetic materials commercially available. Made from either Neodymium Iron Boron(NdFeB) or Samarium Cobalt(SmCo), rare earth magnets boast magnetic energy values ranging from 18 MGOe to over 45 MGOe, depending on grade and material.

Basic problems of permanent magnet design revolve around estimating the distribution of magnetic flux in a magnetic circuit, which may include permanent magnets, air gaps, high permeability conduction elements, and electrical currents. Exact solutions of magnetic fields require complex analysis of many factors, although approximate solutions are possible based on certain simplifying assumptions. Obtaining an optimum magnet design often involves experience and tradeoffs.

The basis of magnet design is the B-H curve, or hysteresis loop, which characterizes each magnet material. This curve describes the cycling of a magnet in a closed circuit as it is brought to saturation, demagnetized, saturated in the opposite direction, and then demagnetized again under the influence of an external magnetic field. The second quadrant of the B-H curve, commonly referred to as the "Demagnetization Curve", describes the conditions under which permanent magnets are used in practice. A permanent magnet will have a unique, static operating point if air-gap dimensions are fixed and if any adjacent fields are held constant. Otherwise, the operating point will move about the demagnetization curve, the manner of which must be accounted for in the design of the device.

The ability of a permanent magnet to support an external magnetic field results from small magnetic domains "locked" in by crystal anisotropy within magnet material. Once established by initial magnetization, these positions are held until acted upon by forces exceeding those that lock the domains. The energy required to disturb the magnetic field produced by a magnet varies for each type of material. Permanent magnets can be produced with extremely high coercive forces (Hc) that will maintain domain alignment in the presence of high external magnetic fields. Stability can be described as the repeated magnetic performance of a material under specific conditions over the life of the magnet.

The effect of time on modern magnets is minimal. Studies have shown that permanent magnets will see changes immediately after magnetization. These changes, known as "magnetic creep", occur as less stable domains are affected by fluctuations in thermal or magnetic energy, even in a thermally stable environment. This variation is reduced as the number of unstable domains decreases. Rare Earth magnets are not as likely to experience this effect because of their extremely high coercivities. Long-term time versus flux studies have shown that a newly magnetized magnet will lose a minor percent of its flux as a function of age. Over 100,000 hours, these losses are in the range of essentially zero for Samarium Cobalt materials to less than 3% for Alnico 5 materials at low permeance coefficients.

If a permanent magnet is stored away from power lines, other magnets, high temperatures, and other factors that adversely affect the magnet, it will retain its magnetism essentially forever. Shock and vibration do not affect modern magnet materials, unless sufficient to physically damage the material.

The Mechanical Application

The internal combustion engine produces power through the mechanical advantage of a reciprocating crankshaft. These engines are configured as either two stroke or four stroke. In a two stroke engine, there is a power stroke for every revolution, however, these engines have proven to be uneconomical in the modern environment. A four stroke engine has a power

stroke for every two revolutions. Both engines use a scalene triangle with two fixed sides to convert the power stroke into usable rotating mechanical power. The concept behind CME is to replace the liquid fuel power stroke of two revolutions with a load line (permeance coefficient, Pc) power pulse in four to eight deliveries per revolution depending on the size and power requirement.

This will equate to four power strokes per revolution in a four cycle configuration eliminating the wasted energy of one and a half rotations of the four stroke engine. Further, the power consuming components of the reciprocating engine such as the camshaft, valve train, oil pump, water pump, fan, and fuel pump in diesel engines will further advantage the CME as they will not be required.

When arrays of magnets are assembled, especially when the magnets must be placed in repelling positions, it is very important to consider safety issues. Modern magnet materials such as the Rare Earth types are extremely powerful, and when in repulsion they can behave as projectiles if adhesives were to break down. CME has identified several potential methods of mechanical retention.

CME believes now is the time to forge forward and consolidate it's technology into commercial reality. With the advent of hybrid powered vehicles at the cutting edge and the ever increasing demand on environmental management, the need for alternative power systems has never been greater.

See the Engine Running

You can view the video clips (http://www.cycclone.com/videos/cycc_20031125-215Kbps.wmv) over a broadband connection (1.8MB) and (http://www.cycclone.com/videos/cycc_20031125-56Kbps.wmv) over a dial up connection (918KB). Requires Windows Media Player 7 or greater.

Founder and Inventor

Micheal Peter Nugent (mnugent@cycclone.com) is the Chief Executive Officer of Cycclone Magnetic Engines. He is highly regarded as one of the top engine builders of today. Being a member of the Australian Corporate Lawyers Association and Australian Institute of Company Directors, Mr Nugent brings more than 25 years experience in engine technology. Mr Nugent will manage the Technical Development Centre for Cycclone Magnetic Engines and carry out the assembly and further development of the new engines including the fitment of an engine to a vehicle for testing in a long distance drive in the near future.

Contacts

Corporate Directory
Cycclone Magnetic Engines Inc.
1005 Terminal Way, Suite 110
Reno, Nevada, USA 89502

Technical Development Centre
2/6 Millennium Circuit
Gaven, Queensland, Australia 4211

Postal Address
PO Box 152
Arundel, Queensland, Australia 4214
Phone: +61 7 5580 6000
Fax: +61 7 5580 6111
Email: info@cycclone.com

New Energy Technologies

Research on advanced propulsion systems and new energy sources
Published by Faraday Lab Ltd *#3 November -December 2001*

Time Machine

First experiment with people!
30 min in local space of 3% decelerated time!

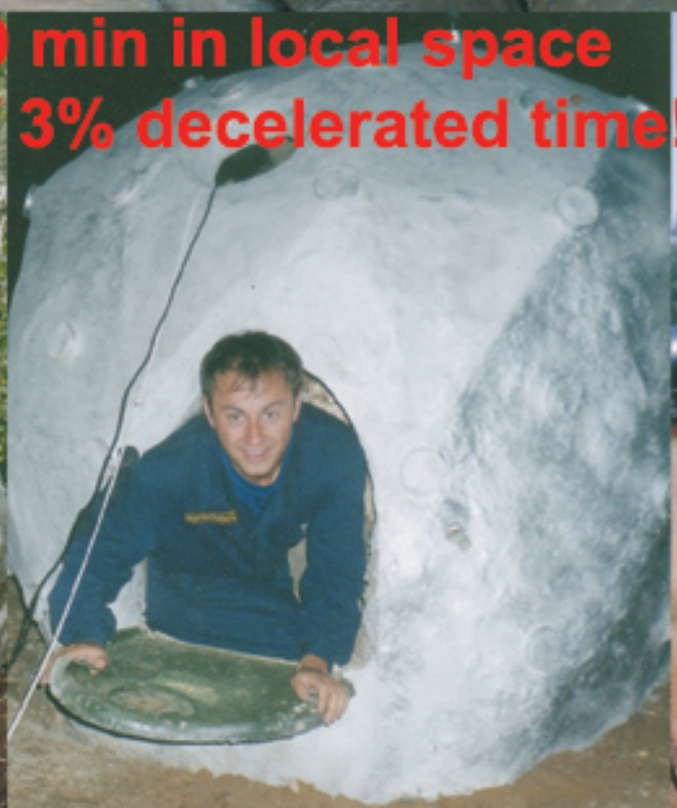

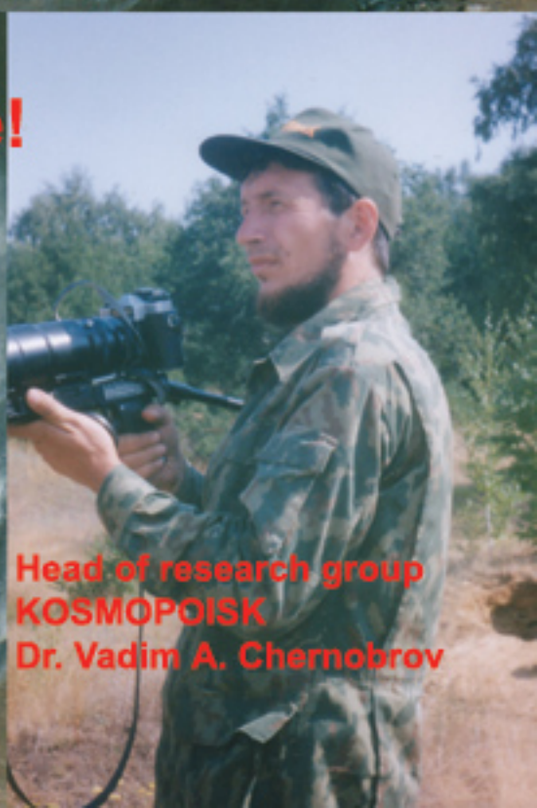

Head of research group
KOSMOPOISK
Dr. Vadim A. Chernobrov

Faraday Lab Ltd

Scientific Research & Development Company

The company is developing experimental work on advanced propulsion systems for aerospace industry and new technologies in energetics.

POBox 37, St.Petersburg, 193024, Russia
7-812-2764761
http://www.faraday.ru
office@faraday.ru

Electrical hydrogen generator 150 KWt output power !

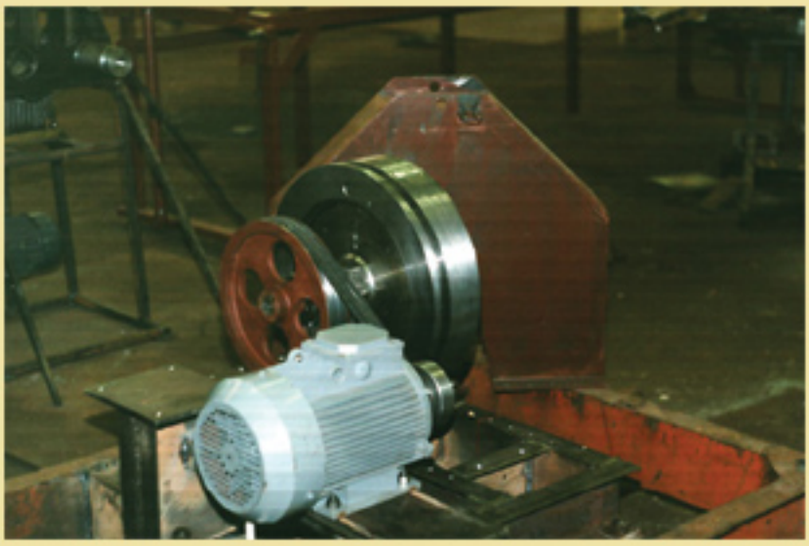

Electrical hydrogen generator is realized by V.Studennikov and G.Kudymov as a prototype of 150 KWt heat power. Authors create an artificial gravitational field by means of rotation. With this they produce cheap hydrogen. Read more in this issue.

The excessive power, which is produced by this generator is compensated by environmental heat!

New energy research in New Zealand

Dr. Ashley Gray

Electrokinetic experiments

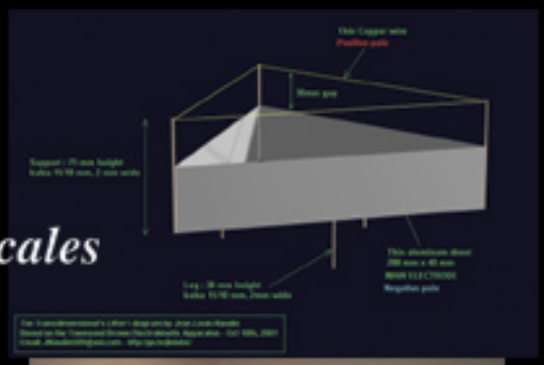

Simplest asymmetrical capacitor by Jean-Louis Naudin, France named as "Frolov's Hat" was tested on the scales in 1999. The name is related with Alexander Frolov's experiments on this topic.

US Patent N 2,949,550 Aug. 16, 1960 and N 3,187,206 June 1, 1965, author T.T.Brown.

Now Naudin's "triangle lifter" version can fly and the next step is to create an onboard high voltage power supply for demonstartion of autonomous flight.

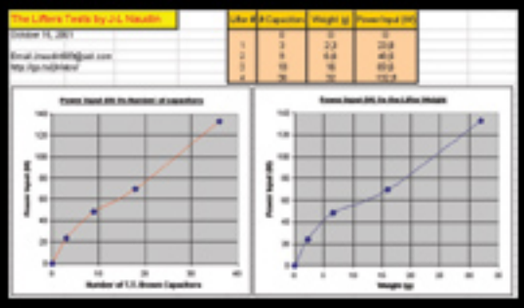

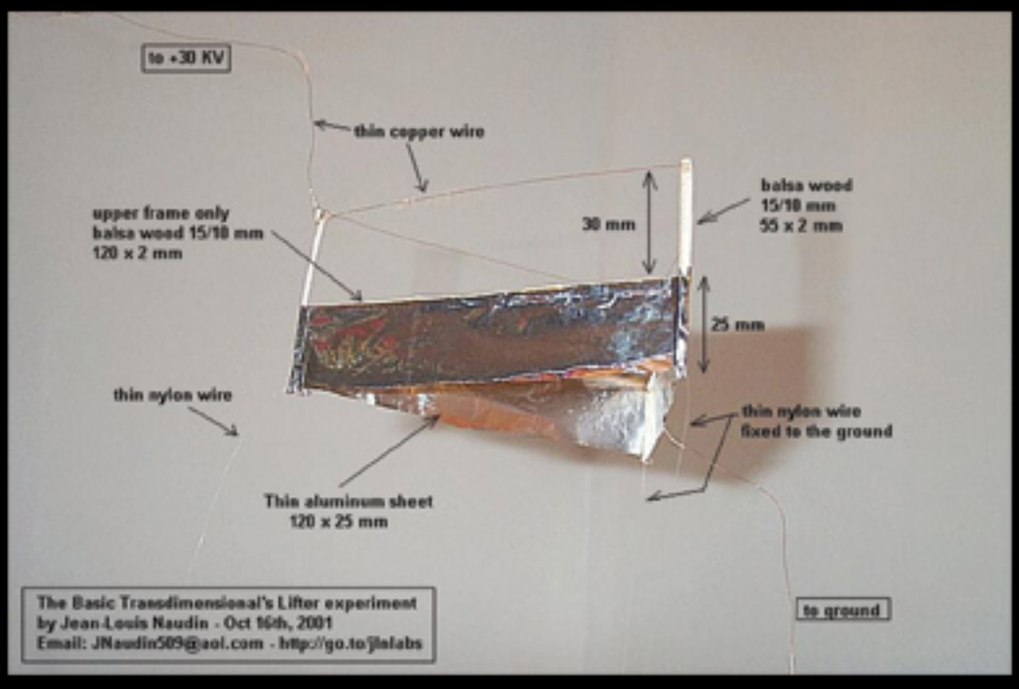

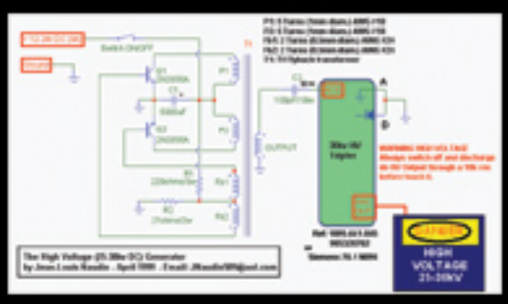

NEW ENERGY TECHNOLOGIES #3

1. Time is a Mystery of the Universe, **Dr. Lavrenty S. Shikhobalov,** St.Petersburg, Russia
2. Experiments with a man in the Time Machine. **Dr. Vadim Chernobrov,** Moscow, Russia
3. Time is a physical substance, **Dr. Kirill P. Butusov,** St.Petersburg, Russia
4. Experimenting with time, **Prof. Velimir Abramovich,** "Time Institute", Rotterdam, Holland
5. Practical application of time rate control (TRC) theory. **Alexander V. Frolov**, Russia
6. Irving Langmuir and atomic hydrogen. **Dr. Nicholas Moller**, Greece
7. Hydrogen energy. **Studennikov V.V., Kudymov G.I,** Russia
8. About strange effects related to rotating magnetic systems. **M. Pitkanen,** Finland
9. The transdimensional's lifters experiment. **Jean-Louis Naudin,** France
10. On the great constant 137.036. **Dr. Anatoly Rykov,** Russia
11. Inertial propulsion drives. **Boris D. Shukalov,** Russia
12. Technical design of antigravitational spacecraft "Silver Cup". **Eugeny Kovalyov,** Latvia
13. Gravito-inert mass. **J.A. Asanbaeva,** Republic Bashkiria
14. Propulsion from relativity effect of inertial force. **Takuya Ishizaka,** Japan
15. Physical properties of axion fields. Influence of axion field on hardness of pearlitic cast iron. **Alexander Shpilman,** Kazakhstan.
16. On the significance of conical shape of rotor in Clem's generator. **Alexander V. Frolov**, Russia
17. On history of cold nuclear fusion in Russia of 1960s. Review **Alexander V. Frolov**, Russia

At the present moment in aerospace it's technically possible to realize only the jet propulsion or use the inertial forces (for an example Tolchins' or Savelkaevs' inertial machines). But they are non-efficient and slow methods. (We'll pay no attention to exotic methods of propulsion: the space sail-ship based on the Sun-wind etc., because they are not promising enough.) The jet propulsion unit or inertial machines need on-board energy source, which is limited. That is a problem for aerospace systems.

The first simple and rough illustration of the new principle of motion is a small experiment. Let's take a piece of soap and press it in the palms strongly. Incidentally, if the pressure of the palms is even, the soap will be left in the state of immobility. If the pressure is not even the soap will slip out of hands with a high speed. It is most important to understand that the soap will not spend any energy. We can press and press it as long as we wish, and the soap will keep slipping out.

The aerodynamic (hydrodynamic) force is the analogous example. It's a **reaction of environment (the space) on the shape** of a moving wing. The appearance of a rarefaction above the wing creates the lifting capacity. It should be noted that environment creates the force itself and the wing doesn't expend any energy except for the translation motion.

The third example is an appearance of the buoyancy in water. It's also **a reaction of environment** (the space) that depends **on the density of an object's matter.**

Time is a Mystery of the Universe

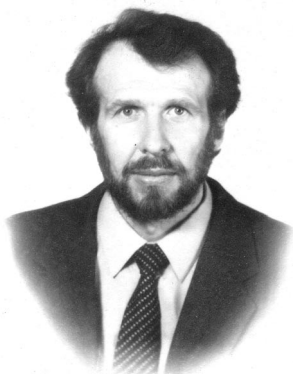

Dr. Lavrenty S. Shikhobalov

St.Petersburg, Russia lavr@niimm.spb.su

Milleniums pass, but we still do not know, what is time. We hardly have another such notion, which has so different and even alternative conceptions. Here are some widespread conceptions of time:

- *There is no time; it is a subjective sensation.*
- *Time is an objective reality, which is a form of matter existence as space.*
- *Time is only a comfortable method to describe the motion of bodies and processes, which take place in the World.*
- *Time is a cause of motion of bodies and passing processes.*
- *Time is absolute, it does not depend on anything and it is similar for all systems.*
- *Time is relative, it is own for every system.*
- *Time is a measure of strictly periodic (cyclic) processes, which are realized in stationary systems only.*
- *Time is a measure of changeability of systems; time does not pass in stationary systems.*
- *Time is reversible (because basic equations in physics do not change with change of sign of time).*
- *Time is essentially irreversible (because all human experience is an evidence that the future differs from the past, and that a movie, which was started counter, is not realistic).*
- *Time can be described mathematically as a scalar variable quantity, which changes equally in all points of three-dimensional physical space.*
- *Time can be described as one of directions in four-dimensional variety, which is called space-time, at that this direction, generally speaking, is own for every physical system.*

In general, the situation about the problem of time now is similar to the situation some centuries ago. It is well illustrated by the words, which are attributed to Augustine Blessed. They sound like this: "While I do not think about time, I know that time exists, but when I begin to think about it, I stop understanding, what it is." Situation related with the notion of time is complicated by the circumstance that this notion is widely used by representatives of various fields of knowledge (biologists, geologists, historians, philologists, and psychologists). With this many authors put their own sense in the notion of time. Often they do not want to take the trouble of explanation, what do they understand under the term of "time".

Let's consider some basic theses concerning time, which were based on achievements of philosophy and physics, sciences, where problem of time is investigated most deeply and in full. The most of known conceptions of time can be kept within two principally different conceptions of time, those are relational and substantial. These conceptions differ in interpretation of relation of time and physical matter (substance and physical fields belong to physical matter). According to relational conception there are no time itself in nature, and time is only a relation or system of relations between physical events. In other words, time is a specific manifestation

of properties of physical bodies and changes occurring to them.

Another conception, substantial one, vice versa supposes that time represents an independent phenomenon of nature; it is a substance of a special kind, which exists along with space, substance and physical fields. Relational conception of time is usually associated with the names of Aristotle, G.V. Leibnitz, A. Einstein. The brightest spokesmen of substantial conception of time are Democrites, I. Newton and one of the modern scientists N.A. Kozyrev.

From the philosophical position both conceptions of time are analyzed in the monograph [1] in details. It is shown in this monograph that each concept has its own merits and demerits, but with the modern extent of their development not one of them describes all properties of time. In relation with this fact we made a conclusion, that not one of these conceptions has advantages to each other (though we can mention that substantial conception is more adequate to the materialistic ideology). The analysis of relational and substantial concepts is made in the article [2] from positions of physics. A conclusion that modern physics including theory of relativity also does not give a ground to prefer one of these conceptions is made in this article. Besides, a wide range of fundamental questions connected with time has no answer. That's why both conceptions of time need further development.

Let's note the difficulties on the way of development of these conceptions. A complexity of generation of physical theory of time on the basis of relational conception lies in the following. Since relational conception assumes that time is fully determined by physical matter, then time in the frames of such theory should be expressed in some characteristics of processes, which take part in physical systems. But then the notion of process itself should be defined before introduction of notion of time and independently on it.

However, we hardly can imagine, how we can formulate a definition of process without paying attention on the notion of time, in particular, without using such characteristics of process as its duration or speed of its passing. Let's note that analogous situation could appear during the development of relational conception of space. Here we need to formulate a definition of physical system before introduction of notion of space, i.e. without mentioning even of such simplest characteristic of system as its spatial size. It is not clear how we can do it.

An essential difficulty during the construction of physical theory of time on the basis of substantial conception lies in the need to answer the question: "How does time substance transfer its properties to physical matter?"

The author of this article does not know the works, in which we can find a fact of successful overcoming of the above mentioned difficulty being on the way of development of relational conception of time. Researchers holding this conception usually concentrate their attention on description of methods to measure time and do not clear up the essence of time phenomenon itself in details. Let's remind that the term "time" has two different senses. On the one hand it means a certain phenomenon of nature (time-phenomenon). And on the other hand it means a quantitative characteristic of this phenomenon (time-parameter). Since the clocks as any physical device is an element of physical matter, then it seems to be natural that we can generate a theory, in which the readings of clocks giving the values of time-parameter are expressed by some properties of physical matter. However, even the successfully construction of such a theory (which can be called the relational theory of clocks or relational theory of time-parameter) does not mean a binding correctness of relational conception of time, since this theory does not tell anything about the essence of time-phenomenon. Let's underline in repetition of [3] that a skill to measure some value is not a guarantee of understanding of nature of physical phenomenon described by it.

The most obvious case to illustrate it is the case with the phenomenon of heat. The temperature of bodies was measured by means of thermometer as in the times when existence of hydrogen was recognized or after the creation of molecular-kinetic theory of substance. Thus, we can state that there is no real progress in development of physical theory of time on the basis of relational concept yet.

As opposed to this theory a certain development took shape in substantial conception of time. First of all it is related with the name of Saint Petersburg physicist Nickolay A. Kozyrev (1908-1983). Working on the problem of the source of stellar energy, N.A. Kozyrev advanced a hypothesis on presence of other properties of time along with duration. These are the properties, which give time a possibility to influence events in the World. The scientist called these properties physical or active, and the theory to describe them he called "causal mechanics" (such name was stipulated by the fact that according to scientist's ideas physical properties of time manifest in cause-effect relations). N.A. Kozyrev made a huge theoretical and experimental work in development of his hypothesis and expanded it with a cycle of astronomical observations. Main results of these researches are stated in score of his publications. Most of them were included in the collection of scientist's selected works [4]. Unfortunately, N.A. Kozyrev didn't have time to finish the development of his theory. The scientist showed a possible way to study time and passed a significant part of this way himself.

Followers of the scientist make the further advance on the way outlined by N.A. Kozyrev. In particular, in the work [5] a notion of spatial-time substance is introduced to the development of Kozyrev's ideas. The latter represents a four-dimensional variety, which has geometry of pseudoeuclidian space by Minkovsky (due to this fact it matches all theses of the theory of

relativity). Besides, substance has certain physical properties. It is supposed in the given model that substance and fields, which form our world, are not independent physical realities, but specific structures of such substance (like concentrations, vortexes, etc.) and as a whole our World is a single wave like solitary wave, which propagates through substance in the direction from the past to the future. In frames of the given model we can immediately solve the question formulated above: how the time substance transfers its properties to the physical matter? Since substance and fields are particular states of substance itself, then there is no requirement of special transfer of properties from substance to matter and fields. These objects initially have properties, which are common with substance. In such model the notions of the course of time and its direction get a clear sense, it is easy to prove the statement on symmetry of the World, which is analogous to the known CPT-theorem of quantum theory of field. We have a possibility to show that mirror asymmetry of the World and asymmetry of it regarding particles and antiparticles can be the consequences of spatial-time substance acting upon the World. Development of the given notions was a construction of a model of electron as a structure formed by such substance [6,7]. This model describes the electromagnetic field of arbitrarily moving charge in details (without an application of Maxwell's equations).

Up to the present time many results of theoretical, laboratory and astronomical researches by N.A. Kozyrev found a confirmation and development in the works by other specialists, which used different approaches. Some of these works were published in the collective monograph [8] and in two special issues of "Galilean Electrodynamics" journal [9]. The work of Russian interdisciplinary seminar on temporology permanently acting on the base of Moscow State University (head of this seminar is A.P. Levitch) is devoted to the studying of time phenomenon. Materials of the seminar are placed at: www.chronos.msu.ru/SEMINAR/rindex.htm.

A flow of information on researches, which work out Kozyrev's ideas has been growing during last years; and it is the evidence that this direction of studying of time founded by this outstanding scientist has perspectives. At the same time we should recognize that many problems concerning time are not solved yet, and time remains the mystery of the Universe.

References

1. Molchanov Ju.B. The problem of time in modern science. - M.: Nauka, 1999 – 136 p.
2. Shikhobalov L.S. Time: substance or relation? There is no answer. // Bulletin of Saint Petersburg department of Russian Academy of Natural Sciences. – 1997. - #1 (4). – p. 369-377.
3. Levich A.P. Scientific understanding of time.//Question of philosophy. – 1993, #4 – p. 115-124.
4. Kozyrev N.A. Selected works. – L.: Leningrad University, 1991. – p.447.
5. Shikhobalov L.S. What can be obtained from the substantial conception of time? // On the way to understanding the time phenomenon: the constructions of time in natural science. Part 2: The "active" properties of time according to N.A. Kozyrev / Editor A.P. Levich. – Singapore; New Jersey; London; Hong Kong: World Scientific Publishing Co. Pte. Ltd., 1996. – p. 174-221. – (Series on advances in mathematics for applied sciences; vol.39).
6. Shikhobalov L.S. Electrodynamics reexamined. // Bulletin of Saint Petersburg State University. Series 1: Mathematics, mechanics and astronomy. – 1997, issue 3 (#15). – p. 109-114.
7. Shikhobalov L.S. On structure of physical vacuum.// Bulletin of Saint Petersburg State University. Series 1: Mathematics, mechanics and astronomy. – 1999, issue 1 (#1). – p. 118-129.
8. On the way to understanding the time phenomenon: the constructions of time in natural science. Part 2: The "active" properties of time according to N.A. Kozyrev / Editor A.P. Levich. – Singapore; New Jersey; London; Hong Kong: World Scientific Publishing Co. Pte. Ltd., 1996. – p. 228. – (Series on advances in mathematics for applied sciences; vol.39).
9. Galilean Electrodynamics. – 2000, vol. 11, special issues 1 (spring 2000). – p. 1-20; special issues 2 (fall 2000). – p. 21-40.

N. A. Kozyrev's Ideas Today

Dr. Lavrenty S. Shikhobalov

St Petersburg, Russia Lavr@niimm.spb.su

(Editor's notes by Alexander V. Frolov)

Introduction

Nikolay Alexandrovich Kozyrev's ideas amaze our imagination. They are full of optimism. For the first time in physical constructions we can see vital, creative principles of the World, which are able to oppose to its heat death foretold by traditional physics to be inevitable.

N.A. Kozyrev came to his ideas by the analysis of the observed data about luminance, masses and sizes of stars. This analysis brought him to a conclusion that the processes of thermonuclear synthesis cannot serve as a main source of stellar energy. **The scientist made a hypothesis that Time is a source of stellar energy.** According to N.A. Kozyrev, Time has active (physical) properties besides its passive property of duration. Time effect the events in the World due to these active properties. These properties manifest in cause-effect relations and express themselves in the counteraction to the usual course of processes, which lead to the destruction of systems organization. Time influence is very small in comparison with usual destructive course of processes, however it is dispersed everywhere in Nature, therefore **there is a possibility of its accumulation.** Such possibility is provided in living organisms and massive cosmic bodies, in stars at first. **Active properties of Time can provide the interrelation of objects, when there are no usual physical effects between them. Time joins the entire**

Experiments With a Man in the Time Machine

Flights of the first temporonauts (time astronauts)

Dr. Vadim A. Chernobrov

111553, Moscow, Nagatinskaya 19A "KOSMOPOISK"

In 14 years our Research association "Kosmopoisk" could build 4 laboratory systems of small size and small power to test the possibility of time course control (other two systems are under construction now). These systems allow changing the speed of physical Time (these systems are usually called the prototypes of the Time Machine, TM). Some experiments on acceleration and deceleration of Time were made. Besides the devices, we used insects and mice as laboratory animals. It took us a long time to make the experiments of a great scale (experiments with a man, in particular). The idea to build a system seemed to be very difficult. And it was very expensive to build it without State financing or any sponsor.

We had not got any of it yet, but there is always a way out.

Construction of "LOVONDATR-7"

Editor's: the name LOVONDATR in Russian means a trap for musk-rat. This name historically belongs to all Chernobrov's designs, because the creation of the first TM was masked as a research project on creation of electromagnetic trap for musk-rats.

In summer 2001, after several years of preparation work, "Kosmopoisk" began the assembling of the biggest system of this type. The works lasted about 3 months; about one hundred people took part in the construction and assembling of the Time Machine system. There were: a sphere of 30 cm with a double electromagnetic work surface (EWS) inside of the sphere of 1 meter with a double EWS, which was placed inside of another sphere of 2,1 meters with a triple EWS. Each EWS is a system of solenoids emitters, which create the convergent electromagnetic wave. *Editor's: see details about the convergent electromagnetic waves in the previous article of the autor.*

The entire triple construction (like Russian doll Matroyshka) was supposed to use for the experiments with mice. For the experiments with a man we took out the inner EWS and the medium EWS worked as a module of useful load (UL). The medium and external spheres have the doors for access of a man and load. Also they have a simple system of life support (in particular, there are systems of passive and active conditioning and removal of the condensate).

Experiments with animals

During the testing of a new experimental system of TM we supposed the following succession: mice were the first to take part in experiments, then cats, and a man should follow them. A special delivery of 21 mice and then 10 laboratory mice from Moscow took place. During the experiments with mice, due to the anomalous zone influence and high temperature, most of mice (25 among 31) died. But after that other mice survived during the 2-hour experimentance, we decided to begin the next stage.

The volunteer was chosen in a month before the experiments. Purebred cats are not good for the experiments due to their susceptibility, or their loving owners were afraid to make them the victims. The cat that we needed came himself. One of the members of "Kosmopoisk" experiments Maria Lorenz was buying an ice cream, when an exhausted cat came from the nearest gateway for mendicancy. The future test animal was immediately called Plombir (sort of ice-cream) and brought to the research center. A month passed, and Plombir got his fit while eating the canned fish, caught all the mice in the surroundings and achieved the standard weight corresponding to his age. This old stager seemed to be the ideal candidate for our difficult experiments, which could have unpredictable results. But the cat was too experienced. When we turned on the system in a distance of 200 meters from the cat, he somehow felt its weak field (possibly, cats exactly felt this field, because the system worked absolutely quietly). The cat had a foreboding in our intentions and scratched Masha, his "foster mother" (it was the first incident with this very kind cat). Then the cat quickly disappeared in the forest. In the evening, when we turned out the system, the cat came back. In the following days the cat also run at the first seconds of the experiments and appeared immediately after the last seconds.

It was the very reason to take the dog as a first experimental animal. Just in few days before the first experiment the other volunteer appeared in the center. It was a black male dog of unknown breed with a white breast. We still do not know from what place in this wild forest he appeared. Due to his strange appearance (immediately after the decline of the young Moon) the dog got the name Lunokhod (Moon-buggy). This Lunokhod was put inside the system. During the boarding he was trembling with fear and he was not quite calm during the experiment. He had not patience for the planned 2 hours in the cabin, and he released himself and left the system at the 108 minute of the experiment.

Not taking into account the nervous stress, we didn't found any deviations in the health of the dog as well as in the health of the last group of laboratory mice. At 7 p.m. on August 26, 2001, after the final medical examination of the sleeping dog Lunokhod, we decided to start the experiments with a man.

Experiments with a man

Selection of the first candidates to the experimental group was made beforehand from several tens of volunteers. We didn't know exactly the extent of physical and psychological stress, which will influence the man during the travel in Time. That's why we had the extended requirements to the candidates. Though, after some articles and books about these experiments were published, our research center "Kosmopoisk" got several tens of letters with a request to take part in experiments and even to "travel to the Past to make some corrections there", we decided not to work with the volunteers, which have no training. Only members of "Kosmopoisk" took part in this selection. These members were tested in the real expeditions with very extreme conditions.

The first man to take part in the experiment was Ivan Konov. Possibly this name will go down in history as a name of the first temporonaut. It will depend on the fact, how this series of experiments will be historically evaluated by other scientists, but now we can be absolutely sure that it was the first attempt to travel the man in Time by means of the technical device, and it is a real fact.

The first flight of a man in Time took place from 7.30 p.m. till 8.00 p.m. (August 26, 2001). Deceleration of the physical Time was registered during the half an hour of reference Time. The maximal decrease in the speed of Time constituted 3% regarding to the speed of reference Earth Time. Dr. V. Chernobrov, Head of the experiments, made measurements and control of TM from the outside.

Since after the Konov's flight, in this day and the next days some more people took part in the experiments on deceleration of Time inside the TM. They were: Dr. V. Chernobrov, V. Fokeev, A. Gavritchenko, D. Kurkov, M. Lorenz, L. Kuleshova, E. Golovina and others.

What did people feel during the travel in Time? Of course, this question was the most interesting. There were no experiments with measurement equipment or animals inside the TM, which could give the answer. Only one man among 9 people felt nothing. 5 men among 6 felt that their pulse became a little more rapid, easy giddiness, a little itch on the skin and other slight feelings. All 3 women felt a lot more range of emotions. They were: appearance of the "starry sky", "luminous vortex", "color spots" in their field of vision, twist of their body, astral leaving their body, "freezing of extremities", etc.

There were no unusual feelings among the people, who were outside of the system, except headache**. We should only say in addition, that we got the most surprising feelings before it was turned on, but not after it.** Here is a small list of observations: a significant amount of ozone in the air (it was felt in several hundreds meters from the TM), sudden appearance and the similar disappearance of radiation (it was registered by devices), strange lighting effects (including the repeated lighting effects in the sky above the system), some strange sounds heard from the inside and other objective and subjective feelings. We should underline that these feelings were observed before the first starting, i.e. in the moment, when there were nothing inside the TM to create the strange smells, especially radiation.

Conclusions from the experiments

When the experiments are not finished, certainly we can call them the preliminary conclusions. So, it was stated during the experiments, that the processes of acceleration and deceleration of Time are distinctly different in their characteristics and consequences. Thus, the deceleration occurred much more fluently and steadily. During the acceleration sharp jumps in indications were observed. The general instability and dependence from the external factors characterized the behavior of this mode of the TM. In particular, the instability of acceleration lies in the fact that with a fixed power the effect of Time course deviation depended on the daytime and the Moon phase. Possibly, it depended on the other reasons including the presence of operator near the TM. Even the small external influence (for example, mechanical vibration) led to the significant change in the effect.

In spite of the small changes of Time, even the so small acceleration can be called the likeness of "travel to the Future". But deceleration is smaller than 1 hour per hour cannot be considered as a "travel to the Past". So, physics of the Future Time is radically different from physics of the Past Time.

Present Time is the transition or conversion of a multi-alternative Future Time in the unchangeable Past Time. So, flight to the Past Time (at the "negative density t/t_E") and flight to the Future Time should be different. It can be compared with moves of an ant along a tree: from any point of a tree (from the Present Time) there is only one way down (to the Past Time) and there are several ways upwards (in the Future Time). However, for different possible ways to the Future there are doubtless and most probable variants, also there are impossible and almost possible variants. The movement to the Future will be especially unstable and power-intensive if the variant of Future is close to the impossible version. According to the suggested "law of the top of a tree ", the return move is possible only if the traveler in Time does not interfere with occurring events and his way to the Past remained unchanged, otherwise the traveler will return to another parallel Present Time of History on another branch of the tree. The penetration into the Future from the Present is hindered by the choice of a branch, but the return move from any variant of the Future Time to the Present Time is possible regardless as to the behavior of the traveler.

Experiments proved that the Person and Time have a very strong influence on each other. The effect of the operator on experiment is detected, but it has not been

investigated completely yet. It was found also that harmful effect on biological systems is not related to the process of movement in Time itself but is a result of the difference of the Time rate value in various parts of a body (a biological system).

Inside of the laboratory setup it was also discovered that Time could be changed with some inertia. Areas of space having different Time rates have vague borders. With sufficient difference in Time rate the human can see an area with a different Time rate as some white mist. Higher the difference – the mist is denser, that can be used as an alarm signal for biological systems. It is possible to consider Time-travel as possible and (after experiments with mice) there are reasons to suppose it will be safe for travelers if they follow certain rules. It is especially necessary to emphasize: the trips through Time (due to new discovered properties of Time) can't affect the Past and they can't change our past history. All the so-called paradoxes for the traveler in Time (for example when "he meets himself in the Past" or "he kills his grandfather in his childhood" have clear solutions in 3-dimensional Time.

It is possible to consider as a proven fact that Time has more than one dimension, i.e. O. Bartini's theoretical calculations are confirmed by these experiments: Time has 3 dimensions. Hence our Earth world can be considered as a 6-dimensional object: length, width, height, age or date of Time, variant of a History or erosion of Time, density or rate of Time. The concept of "the Arrow of Time" as fourth dimension (moment of Time) is a particular case of the concept of sixth dimension (rate of Time) that leads to the physical concepts of gravitation and energy and they are simultaneously connected. Concepts of the " Einstein-Rosen bridges" known since 1916 or "worm-holes"

introduced into science by John Willer in the 50's, are travels in 5th and 6th dimensions, i.e. the "classical" Time travels, which were described by H. Wells.

Editor's: As the reader could note, the author does not disclosure the secrets of the TM design. From the photo you can see the electromagnets, which form the regular stereometrical construction as well as the cables from the TM to the control unit. Dr. Chernobrov mentioned the converging electromagnetic waves only. So, to understand how it works, it is necessary to get a clear notion of the converging electromagnetic waves. Let's imagine the ripple effect created by a stone in the water. The waves move from a central point to periphery. The converging waves are just an opposite process: the waves move from periphery to the central point. Is it possible in Nature? Yes, sure. Dr. Chernobrov wrote: "Let's throw a hoop on the water and inside of the hoop we'll see converging waves." The Time Machine technology by Dr. Chernobrov is based on the similar principle.

Time Machine Project

Alexander V. Frolov

Scientific Expert of the Russian Physical Society,
General Director, Faraday Lab Ltd
Tel/fax: 7-812-380-6564 Tel: 7-921-993-2501
Email: director@faraday.ru alex@frolov.spb.ru

May 29, 2002

Faraday Labs Ltd and Dr. Vadim Chernobrov have signed the agreement on scientific-research work on investigation of active properties of time.

In the course of the previous experimental works, carried out by Dr. Chernobrov's research team during the period from 1984-2002, four versions of Time Machine had been made and tested. At these devices (the biggest system is about 1 meter in diameter) the effects of deceleration and acceleration of time course were created and measured. The principles of control of time course velocity were based on the

Alexander V. Frolov, General Director Faraday Labs Ltd and Ph. Dr. Vadim A. Chernobrov have just signed the Contract

interconnection of electromagnetic processes and physical properties of space-time. Special electromagnets, operating in pulse mode, are placed at the spherical frame. They create the so-called "converging wave", which by Alexander Frolov is a longitudinal wave in nature.

A joint solution of equations (IX) and (XII) gives us, as it is well known, a transverse wave with the density of energy flow equal to:

$$\vec{P}_{\perp} = \left[\vec{E} \times \vec{H}\right];$$

A joint solution of equations (X) and (XI) gives a longitudinal wave with the density of energy flow equal to:

$$\vec{P}_{II} = \frac{1}{2}\left[c^2 \rho \cdot \vec{A} + \varphi \cdot \vec{j}\right];$$

As distinct from the emitters of transverse waves (dipoles of the cylindrical symmetry) the emitters of longitudinal waves should have spherical symmetry, i.e. to be the monopoles.

During the analysis of the known physical fields we can see that most of them show themselves in a small volume near the sources, i.e. nuclear field, field of weak interaction, electrostatic field (which is compensated by the fields of charges of other sign) and magnetostatic field, though the latter can spread for the distances similar to the size of Galaxy. However, electromagnetic waves and gravitational field are really long-distance fields. At the same time both fields decrease according to the analogous law: inversely to the square of distance.

All this gives us a thought that the gravitational field can be undulatory just as the electromagnetic field. But unlike the latter it is some other class of waves, i.e. longitudinal, but not transverse. The penetrability of these waves should be very high. Admittedly, telecommunication by these waves can be made through the entire globe.

We can suppose that typically wave phenomena should be observed in gravitational field, i.e. diffraction and interference.

Material on this question was stated by the author in detail in 1991 in the article "Symmetrization of the Maxwell-Lorenz equations" in collected articles "Problems of space and time in modern natural science", part 15, Academy of Science, Russian Federation , Leningrad, 1991.

Table 1

		Statics in time		Dynamics in time	
Intensity of fields		$\vec{E} = \vec{V} \times \vec{B}$ (I)	$\nabla \times \vec{E} = 0$ (V)	$\nabla \times \vec{E} = -\frac{\partial \vec{B}}{\partial t}$ (IX)	Vectorial products
	Sources of fields		$\nabla \cdot \vec{D} = \rho$ (VI)		Scalar products
		$\rho = -\frac{1}{c^2}\vec{V} \cdot \vec{j}$ (II)		? (X)	
			Equations of connection		
		$\vec{J} = -\vec{V} \cdot \rho$ (III)		$\nabla \cdot \vec{j} = -\frac{\partial \rho}{\partial t}$ (XI)	
			$\nabla \cdot \vec{B} = 0$ (VII)		
		$\vec{H} = -\vec{V} \times \vec{D}$ (IV)	$\nabla \times \vec{H} = \vec{j}$ (VIII)	$\nabla \times \vec{H} = \frac{\partial \vec{D}}{\partial t}$ (XII)	
		Dynamics in space	Statics in space		

Time is a Physical Substance

Prof. Dr. Kirill P. Butusov

Angliysky Prospekt, 5 – 18, St.Petersburg, 190121, Russia
Phone 812-113-8511

One hundred years ago in 1889 Russian physicist I.O. Yarkovsky suggested a thought [7] that attraction of bodies to the Earth is stipulated by inflow of ether in it, which is partially transformed into substance in bowels of the Earth. This thought showed a possible way to overcome the problem of warming-up of the Earth by particles falling on it. J. Maxwell wrote about it when he considered the hypothesis by Lesaje, which explained the gravitational interaction by the pressure of flow of "extraworld corpuscles".

An important consequence about the continuous growth of the Earth's mass followed from the hypothesis by I.O. Yarkovsky that found its confirmation in further development of Earth science.

It was showed in works by I.V. Kirillov [2-4] that 250-350 millions years ago all continents closed up without any space on the surface of the globe of two time smaller diameter. There is also a consequence from his works that gravity in this epoch was two time lower than today.

L.S. Smirnov and Ju.N. Lubina [6] paid their attention to the fact that in ancient sediments natural angles of slope of sands in aqueous medium greatly exceed modern ones. They worked several thousands of their measurements and data from literature and found that

gravity on the surface of the Earth grew in several times during last 1,5 billion years.

Taking into account the simultaneous two time growth of gravity and radius of the Earth we naturally come to a conclusion that mass of the Earth grew in 8 times during 250-350 millions years. A hypothesis by P. Dirac that the cause of swelling of the Earth is a decrease of value of gravitational constant should be rejected since it is not true.

Let's show that average density of the Earth during the period of 250-300 millions years practically didn't change. Acceleration of free fall on the surface of the Earth can be found byu the formula:

$$g = \frac{\gamma M}{R^2} = \frac{\gamma}{R^2} \cdot \frac{4}{3}\pi\rho R^3 = \frac{4}{3}\pi\rho\gamma R \qquad (1)$$

where g is an acceleration of free fall,
γ is a gravitation constant,
M, ρ, R are the mass, density and radius of the Earth.

Let's find the density of the Earth from this formula:

$$\rho = \frac{3g}{4\pi\gamma R}; \qquad (2)$$

From this formula we can see that simultaneous growth of acceleration of free fall and radius of the Earth in two times, taken place in the period of 250-300 years don't affect the value of its density.

Let's consider possible parameters, which define the growth of mass of the Earth, on the assumption of the hypothesis by I.O. Yarkovsky. Let's regard that the density of energy flow, which flows into nuclei of atoms from outside, is defined by the density of energy of gravitational field on the surface of nuclei, and let's take the speed of movement of the flow equal to the speed of light:

$$\omega = \frac{G^2}{8\pi}; \qquad (3)$$

where G is the tension of gravitational field, which in its turn is equal to:

$$G_n = \frac{\sqrt{\gamma} m_n}{R_n^2}; \qquad (4)$$

where m_n and R_n are the mass and radius of nucleus. It follows that the density of gravitational energy will be equal to:

$$\omega = \frac{\gamma m_n^2}{8\pi R_n^4}; \qquad (5)$$

The value of the flow of gravitational energy, which flows into the nucleus, will be equal to:

$$\Delta W = \omega \cdot 4\pi R_n^2 \cdot c \cdot \Delta t; \qquad (6)$$

where c is the speed of the flow, Δt is the time of its inflow. Taking into account the ratio of mass and energy:

$$mc^2 = W, \qquad (7)$$

let's find the increment of the mass of nucleus during the time Δt taking into account the formula (5):

$$\Delta m_n = \frac{\Delta W}{c^2} = \frac{\omega}{c} \cdot 4\pi R_n^2 \cdot \Delta t = \frac{\gamma \cdot m_n^2 \cdot \Delta t}{2 \cdot R_n^2 \cdot c}; \qquad (8)$$

Since densities of nuclei can be considered to be equal to each other, then:

$$R_n = R_N \cdot A^{1/3}; \qquad (9)$$

where atomic weight is defined by the ratio between the mass of nucleus and nucleon:

$$A = \frac{m_n}{m_N}; \qquad (10)$$

From formulas (8), (9) and (10) we will get:

$$\frac{\Delta m_n}{m_n} = \frac{\gamma \cdot m_N \cdot A^{1/3} \cdot \Delta t}{2 \cdot R_N^2 \cdot c}; \qquad (11)$$

Changing the increments on differentials we will get:

$$\frac{dm_n}{m_n} = \delta_A \cdot dt; \qquad (12)$$

where $\delta_A = \delta_N \cdot A^{1/3}$; and $\delta_N = \frac{\gamma \cdot m_N}{2 \cdot R_N^2 \cdot c}$; (13)

in which connection the value $\delta_N \sim m^{1/3}$; i.e. it changes very slowly. That's why to be simple we will consider it as a constant in the first approximation. Let's find the value δ_N:

$$\delta_N = \frac{6{,}67 \cdot 10^{-8} \cdot 1{,}6735 \cdot 10^{-24}}{2 \cdot (1{,}56 \cdot 10^{-13})^2 \cdot 3 \cdot 10^{10}} = 0{,}76445 \cdot 10^{-16}\ \sec^{-1};$$

Considering that the relative increase of the mass of the Earth is equal to the same increase for nuclei of atoms

$$\frac{dM}{M} = \delta_A \cdot dt \qquad (14)$$

and solving this equation we will get:

$$M = M_0 \cdot \exp(\delta_A \cdot t); \qquad (15)$$

Let's find the period of doubling of the Earth's mass:

$$2M_0 = M_0 \cdot \exp(\delta_A \cdot \tau_A); \qquad \ln 2 = \delta_A \cdot \tau_{A;}$$

$$\tau_A = \frac{\ln 2}{\delta_A} = A^{-1/3} \cdot \frac{\ln 2}{\delta_N}.$$

Thus: $$\tau_A = \tau_N \cdot A^{-1/3}. \qquad (16)$$

where $$\tau_N = \frac{\ln^2}{\delta_N} \qquad (17)$$

is a period of doubling of mass of nucleon numerically equal to:

$$\tau = \frac{0{,}69315}{0{,}76445} \cdot 10^{16} =$$
$$= 0{,}9067 \cdot 10^{16} \text{ sec} = 287{,}33 \text{ mln.years}$$

Let's calculate the average value δ_{av} taking into account the elementary structure of Earth's substance on the basis of Brown's and Masset's data [1]. (See table 1).

Table 1

#	Element	n%	A	$A^{1/3}$	$A^{1/3}$(n%)/92
1	Oxygen	32.0	16	2.5198	0.87645
2	Iron	25.0	56	3.8258	1.03963
3	Silicon	14.5	28	3.0366	0.47858
4	Magnesium	12.5	24	2.8845	0.39191
5	Sulfur	8.0	32	3.1748	0.27608
	TOTAL:	92.0	-	-	3.06274

It follows from the table that $A_{av}=(3.06274)^3 \approx 28.73$; from this

$$\delta_{av} = \delta_N \cdot A_{av}^{1/3} = 0{,}76445 \cdot 10^{-16} \cdot 3{,}06274 =$$
$$= 2{,}3368 \cdot 10^{-16} \text{ sec}^{-1},$$

as well as

$$\tau_{av} = \tau_N \cdot A^{-1/3} = \frac{287{,}33}{3{,}06274} = 93{,}8 \text{ mln. years.}$$

On the assumption of that mass of the Earth increased in $\delta=2^3$ times, let's find the time of its increase: $T=3t_{av}=93{,}8\times3=281{,}4$ mln years.The received figure keeps with the interval of 250-300 mln. years given in the works by Kirillov. Let's calculate the value d_e for an electron with a supposition that its density is equal to the density of nucleon:

$$\delta_e = \delta_N \left(\frac{m_e}{m_N}\right)^{1/3} = 0{,}76445 \cdot 10^{-16} (1837{,}4)^{-1/3} =$$
$$= 6{,}24 \cdot 10^{-18} \text{ sec}^{-1}.$$

$$\tau_e = \frac{\ln 2}{\delta_e} = 3{,}52 \text{ billion years}$$

accordingly.

Let's suppose, that the mass of an electron also increases by exponential law:

$$m_e = m_{e0} \cdot \exp(\delta_e \cdot t); \qquad (18)$$

with this, if m_e is the mass of an electron in the given moment of time, then m_{e0} is the mass of an electron in the moment of time, which is distant back on the value t. therefore,

$$m_{e0} = m_e \cdot \exp(-\delta_e \cdot t); \qquad (19)$$

Then the energy of photon emitted by atom of hydrogen will depend on time in the following way:

$$E_{ph} = h_1 \cdot \omega = \frac{e^4 m_{e0}}{2h_1^2}\left(\frac{1}{n^2} - \frac{1}{k^2}\right); \qquad (20)$$

where $h_1 = \frac{h}{2\pi}$ is a reduced Plank's constant, ω is a cyclic frequency, e is a charge of an electron, n, k are the main quantum numbers. From this the relative change of frequency will be equal to:

$$\frac{d_\omega}{\omega} = \frac{dm_{e0}}{m_{e0}} = -\delta_e \cdot dt; \qquad (21)$$

The passage time of the way *dl* by photon is equal to:

$$dt = \frac{dl}{c}; \qquad (22)$$

From this:

$$\frac{d\omega}{\omega} = -\delta_e \cdot \frac{dl}{c}; \qquad (23)$$

So, atom of hydrogen will emit two different photons in the interval of time of *dt*. These photons are different from each other by their frequency at the value of

$$d\omega = \omega \cdot \delta_e \cdot dt;$$

If we compare the photon, which came from the source situated on a distance of *dl* from us, with a laboratory photon, then the relative change of its frequency will be equal to:

$$\frac{d\omega}{\omega} = -\delta_e \cdot \frac{dl}{c}; \qquad (24)$$

i.e. the farther the source of radiation is situated from us, the more its spectrum will be shifted in the direction of lower frequencies. E. Hubble discovered this phenomenon known as a «red shift» in 1929 and it is described by the formula:

$$\frac{d\lambda}{\lambda} = -\frac{d\omega}{\omega} = H \cdot \frac{dl}{c}; \qquad (25)$$

where l is the wavelength,
dl is a distance to the object of observation,
H is Hubble's constant.

Now there is a following accepted value of Hubble's constant:

$$H = 75\frac{km}{c \cdot \mathrm{MPC}} = \frac{75 \cdot 10^3}{3{,}086 \cdot 10^{22}} = 2{,}4303 \cdot 10^{-18}\ \mathrm{sec}^{-1},$$

where 1 MPC is 1 megaparsec equal to $3{,}086 \cdot 10^{22}$m.

However, the value of the constant found by Hubble himself was equal to 530 (km/sec MPC), then in 1952 Baade gave a value equal to 290 (km/sec MPC); later a value of 180 (km/sec MPC) was received, and at last the value, which is accepted now, is given in the limits of 50-100 (km/sec MPC). The value of Hubble's constant calculated by the formula (24) has a value of:

$$H = \delta_e = 6{,}24 \cdot 10^{-18}\ \mathrm{sec}^{-1} = 192{,}6(km/\sec MPC)$$

i.e. it blends with the dispersion of values given by different authors [9] (see Table 2).

The result received by us is good to explain the "red shift" without using of the idea on extension of the Universe!

Table 2

#	Author	Year	H km/sec. MPC
1	E. Hubble	1929	530
2	V. Baade	1952	290
3	V. Baade, H. Swop	1955	100
4	E. Sandidge	1962	98
5	S. Vandenberg	1965	100
6	E.Sandidge	1968	75
7	E Sandidge, G. Tammenn	1975	55
8	R. Tallu J. Fisher	1977	90
9	J. Voculaer	1979	100
10	G. Tammenn	1982	50
11	M. Aaronson	1982	85

So, we got a connection between the mass of the Earth and time on the basis of Yarkovsky's hypothesis. Taking into account the formulas (1) and (14) we will get:

$$\frac{dM}{dt} = \delta_N \cdot A_{av}^{1/3} \cdot M; \qquad \frac{dg}{dt} = \frac{1}{3} \cdot \delta_N \cdot A_{av}^{1/3} \cdot g; \qquad \frac{dR}{dt} = \frac{1}{3} \cdot \delta_N \cdot A_{av}^{1/3} \cdot R; \qquad (26)$$

Thus, we obtained that speeds of growth processes of different physical parameters (mass and radius of the Earth, acceleration of free fall) are proportional to the values of these parameters. **Therefore, the value itself can serve as a measure of past time and the speed of change of the value of parameter as a measure of time rate.**

Really, the analysis of distributions of zones with increased value of acceleration of free fall on the Earth shows that location of all ancient civilizations get into these zones. It indicates the higher time rate of evolution in these regions, which contributed to the quicker development of cultures of these civilizations.

As it is known, acceleration of free fall is less in area near the pole in southern hemisphere of the Earth than in north hemisphere on the value $\frac{\Delta g}{g} = 30 \cdot 10^{-6}$.

The difference in time of southern hemisphere from northern hemisphere on the segment of time Δt should correspond to this value according to the formula (26) and it is equal to:

$$\Delta t = 3 \cdot \frac{\Delta g}{g} \cdot \frac{1}{\delta_N} = \frac{3 \cdot 30 \cdot 10^{-6}}{0{,}76445 \cdot 10^{-16}} = 117{,}8 \cdot 10^{10} \text{ sec} = 37{,}33$$

thousand years.

Therefore, ***evolutionary processes in northern hemisphere should surpass the same processes in southern hemisphere.*** Actually, we know that the whole range of ancient animals like marsupials had already disappeared in northern hemisphere and remained only in southern hemisphere. From the other side, approximately all ancient civilizations existed only in northern hemisphere.

As it is known, in one's time it was supposed to make a analogy of time with the entropy of closed systems, which increases continuously like time does, to have a pictorial view of direction of time arrow.

However, the analysis made above, which relies on geological experimental data, shows that it is better to corre late the course of time with changes of mass and radius of the Earth as well as with the change of acceleration of free fall. These changes are connected with deep processes in Nature called by the inflow of some positive energy from the surrounding vacuum to the Earth and accordingly into nuclei of atoms.

We should do only one step from the supposition on connection between time and process of energy inflow into nuclei of atoms to authentication of time with the flow of energy itself, and we will do it.

So, let's suppose that time is some physical substance, which has positive energy and flows into nuclei of atoms from the surrounding vacuum. Thus, in our notions of time we share A.N. Kozyrev's opinion [5], which consider that internal energy of stars grows due to the flow of time.

Inflow of some physical substance, which has energy and momentum, into bodies from the surrounding vacuum should lead to their mutual attraction as it was shown in the works by V. Thomson, who proved that attraction between bodies appears in the case of simultaneous inflow of some liquid into these bodies as well as in the case of outflow. That's why, taking into account Thomson's results, **we can suppose that time represents a physical substance, which has positive energy and flowing into nuclei of atoms or has negative energy and flowing out of them.**

The case of outflow is more preferable since gravitation energy is negative, as we know.

This substance can be structured, for example, due to the wave process, i.e. it can represent a longitudinal wave, which enter nuclei or leave them. In this case an attraction between bodies also appears, as it was shown by K. A. Bjerknes [8].

In further works we will try to build a theory of gravitational interaction of bodies on the basis of Yarkovsky's hypothesis.

Where is the source of this substance-time? If we suppose that the surface of elementary particle separates our space from some other space, then the outflow of substance-time comes from another space to our space. In the case of three-dimensionality of these spaces we should speak about seven-dimensional space-time, which includes our and another Universe, and they are connected by the flow of substance-time.

It is possible that this process of transmitting of substance-time and accordingly energy and mass from one Universe to another one takes place as periodical oscillation from one side to another.

Transmission of signal by meaus of the flow of substance-time, i.e. modulation of this flow, can allow to produce an immediate communication between points of our Universe though the space of another Universe situated inside of elementary particles.

Thus, it is possible that the entire Universe is connected together through time and all processes of the universe are synchronized.

Let's enumerate the results obtained in thr given work:

1. The hypothesis by I.O. Yarkovsky on the reason of growth of mass and radius of the Earth is analyzed and its productivity is shown.

2. Numerical values of constants of growth of mass and radius of the Earth as well as acceleration of free fall are obtained.

3. The "red shift" is explained on the basis of Yarkovsky's hypothesis without attraction of hypothesis on expansion of the Universe.

4. Numerical value of Hubble's constant is obtained.

5. The explanation of correlation between location of ancient civilizations and zones of increased gravity is given.

6. The explanation of advanced evolutionary development of northern hemisphere of the Earth is given and time of this advance is calculated.

7. The notion of physical substance-time, which is the cause of growth of mass and energy of heavenly bodies, is introduced.

8. The supposition on nature of gravitational interaction of heavenly bodies due to physical substance-time is made.

References

1. Brawn D., Masset A. Inaccessible Earth. M.: "Mir", 1984.
2. Kirillov I.V. Increase in volume of rocks is one of the reasons of tectonic deformations. AS USSR, ...Geologist, #1, 1963.
3. Kirillov I.V. Evidences in favor of expansion of the Earth by means of reconstruction of preoceanic earth's crust on spherical models according to paleomagnetic data. VI Meeting on planetology. Theses of reports, issue 1, L.: 1968.
4. Kirillov I.V. On possible direction of development process of the Earth. Astronomical bulletin. Volume VII, #2, 1973.
5. Kozyrev N.A., Nasonov V.V. On some properties of time found by means of astronomical observations. Collection Problems of research of the Universe. Volume IX, M-L.: 1980.
6. Smirnov L.C., Lubina J.N. On possibility of studying of change in gravity together with geological time. Reports of AS USSR. 187, #4, 1964.
7. Yarkovsky I.O. Universal gravitation as a result of formation of ponderable matter inside of heavenly bodies. M.: 1889.
8. K.A. Bjerknes. Vorlesungen über Hydrodinamische Fernkräfte. Leipzig, 1900-1902.
9. Encyklopedia Astronomie, Hubblova Konstanta. Vydavatel'stvo OBZOR, Bratislava, 1987.

Experiments on Change of the Direction and the Rate of Time

Dr. Vadim A. Chernobrov

111553 Moscow, Nagatinskaya 19A "KOSMOPOISK"

Professor N.A.Kozyrev, Russia, who wrote some papers on causal or asymmetrical mechanics, made the first experimental study into the physical properties of Time. Experiments managing the direction and rate of Time were made. Since 1967 in Moscow Aviation Institute some research works were made under the direction of Professor Felix Yu. Zigel (up to his death in 1988) on UFOs, which had some technical forms. According to the work on State Budget topic "Preliminary researches on abnormal phenomena in the atmosphere" a lot of important information was collected on this phenomena. The information was used to determine connections between the cause and effect, and some physical processes were determined by authentic cases of traces and fragments, cinema and photos, and telemeter images of UFOs from 1987 up to the present time. There is data about influences of some parts of these objects and their body (surface of device) on the rate and direction of Time. To confirm this last statement a series of experiments was made with 4 types of laboratory systems (and in the present time one more system for new experiments is developed).

In experiments on deceleration and acceleration of physical Time in a small closed area of space (made since 1988) ***the effect of electromagnetic field influence on space-time continuum was tested.*** The experimental system used to investigate such kinds of effects consists of a set of electromagnets connected in series and in parallel and they are installed on spherical surfaces. In various experiments from 3 to 5 Electromagnetic Working Surfaces (EWS) were used. All EWS layers of various diameters were installed inside each other (similarly to a Russian doll "matrioshka"). The maximum EWS size was about meter, the minimum EWS diameter (internal) was 115 mm, which is the quite sufficient to allow experiments with some control equipment, detectors and animals (various kinds of insects and laboratory mouse) to investigate the so called effects of ***converging spherical electromagnetic waves.***

The measurements of Time rate were made by all known modern means of measurement: all kinds of electronic, quartz, mechanical, nuclear clocks were used; as well as the specially produced duplicated quartz generators (to compare frequencies of standard heat-shielded generators); fiber-optic line diodes and other ways were tested. Though some kinds of measuring devices, for example, quartz clock, can be influenced by other physical factors, the duplication method of measurement allowed us to reduce the error of measurement. Thus a change in the rate of Time was produced (Professor Kozyrev named this "density of Time"). We can write t/t_E, where "t_E" is the normal Time of the Earth space and "t" is the local Time inside of the experimental system. This change in the rate was detected as several seconds per hour, but in one experiment the deceleration of the Time was measured as minus 4 minutes per 8 hours (minus 30 sec per hour) due to some incompletely understood reasons. Slowing down of the rate of Time up to minus 1,5 sec per hour and acceleration up to plus 0,5 sec per hour was produced and explained. If we accept the usual Earth Time as $t_E = +1$ it will become clear that we investigated a change in the speed of Time through a very small range: $+ 0{,}99 < t/t_E < + 1{,}01$. So, the tested subjects and animals at any mode of operations (slowing down or acceleration) were moved into the Future faster or slower that those in normal space.

Through experiment it was established that the processes of slowing down and acceleration of Time are absolutely different. The slowing down of Time was smoother and steadier than acceleration, which showed sharp jumps. The mode of acceleration is unstable and it depends on some external factors. In particular, the instability of Time acceleration is connected to the period of day or night and also the Moon phase, probably to other reasons. One of the reasons is human presence near the Time Machine. Even small external effects, for example mechanical vibration, can produce a great result and change the value of the effect.

Experimenting With Time

Prof. Velimir Abramovich

"Time Institute", Foundation for The Science of Time,
Dordtselaan 137 A, 3081 BL, Rotterdam, Holland,
velimir_abramovic@hotmail.com

"The notion of Time should be kicked out from Physics."
Archimedes

1. All Physical and Biological Systems are naturally driven 'time-machines' with inbuilt internal times.

2. There are three levels of Time:

(a) "***General Time"*** is infinite and essentially different and independent of Space and Matter; it is real, identical with a Being and exists beyond our sensory perception as non-spatial, dimensionless entity. It generates, underlies and governs all universal phenomena appearing nowhere directly as the apparent cause of change and can be experienced through consequential events, only. Moreover, this is nothing new – "General Time" works as any other known Natural Law, existing as a pure "Time Principle". It belongs to the realm of Metaphysics and its ontological definition is "Continuity". However, what is the most important to be comprehended and recognized, is its rank: The "Time Principle" is the most fundamental "Natural Law". Since it is dimensionless, the "quantum" concept is not applicable in its interpretation;

(b) ***"Internal time"*** is the "time code", which structures the Physical System and regulates its functioning, that means its reactive changing caused by external influences;

(c) "***Local time"*** is the "time operator" or time condition external to the Physical System and if applied on it yields its new physical state. In the case of total rearrangement of the "internal time code", the "local time operator" generates an entirely new Physical System. Both internal and local times are given and fixed by units of the frequency set of Electromagnetic Spectrum and ***that is exactly what the time-engineering makes possible and the time control achievable aim.***

3. **Why EM fields are affecting (and adjusting) the rate of time-flow in solid material objects?** It might be so because Matter itself ultimately consists of the same kind of fields (deeply cooling the solid matter, experimentation finally gets the wave pattern, which behaves as Light and can be manipulated in the same way). What is related with time: "hard" particle or "soft" wave? Since specific times are given by frequencies, there is no actual "dualism" of Matter, but only relative effects due to time-arrangement of the frequencies involved. The natural frequency calculus between the internal "time code" of the Physical System and applied local "time operator" creates properties of "softness" and "hardness". Probably, each of the chemical elements of the Periodic System has its own specific "internal time code" and their interactions are basically "time – operations". Resonance is a synchronicity of structures. The ancient Greek philosopher Democrites conceived that "Atoms" can be of any size and there are worlds, which are built, of so big atoms that look to us as "empty" space and we are passing through them without knowing. Today we maybe need a better view on what are true atoms. "Atom" should be an elementary entity, indivisible under all conditions. Seems that it is the main property of the units of EM Spectrum; no matter how long it is, millimeter or kilometer, EM entity cannot be cut in parts. Modulation is the "time-shift" effect too. Modulated EM emission still exists in whole, but cannot be so perceived in a new "present" created by modulating field.

4. Arrow of time in Electromagnetic Spectrum: "Present" is established by the field, from which experiment begins (any frequency of the Spectrum can be used); higher frequencies are the "past"; lower frequencies are the "future". So, naturally given time orientation past-future in EM Spectrum is represented as traverse from higher to lower frequencies (of course, the same holds for "term" and "wave-length"). **Practically, there is no limitation in direction or rate of controlled time traveling.** Whenever the EM field is switched on by man, the new initial time condition - the local-time "Present" is created. The set of three EM fields is the most effective covering of all the three modes of time: past, present and future. But, even better results will be obtained if the experimenter isolates his experiment from inevitable spontaneous influence of natural EM fields - by additional, the fourth field of special characteristics. **If the experimenter applies EM fields of higher frequencies, the system will "travel" into the future; if lower frequency fields are applied, the system will be shifted into the past;** if applied EM fields are of the frequencies higher than those, which structure the system itself, it will be completely shifted into the future, it will disappear before the eyes of those who are subject to reference "present time"; if the system is exposed to low frequencies (according to the exact mathematical Law, which regulates all the time-shift occurrences), the system will start moving in leaps, jumping in the fields or disappear into the past. "Jumping" is just a macro-effect demonstrating the true nature of motion in general: it is exclusively discontinual (quantization of space is the only physical solution to Zenon's paradoxes). It should be stressed here that Maxwell's Electromagnetics does not cover these cases, neglects inherent time-properties of EM Spectrum and is very distant of any consideration on active role of time in electromagnetic events (**N. Tesla never used Maxwell's equations calling them "poetical"**).

5. If we take very ancient radically realistic approach towards mathematics, we shall get its profoundly new picture that would enable us to comprehend its enormous, but still unused power. Taken as a whole,

mathematics is nothing else, but the hidden Science of Time (not only Algebra is that as was already indicated by Hamilton). The representation of the dimensionless "General Time" in Geometry is "Point"; in Arithmetic it is "Zero". "Point" is the "General Time" image; "Zero" is the "General Time" number. Mathematical operations themselves are also non-spatial and dimensionless, they are of time-nature and the "Time Principle" is working through them, they are time-tools.

6. Geometrical and Arithmetical objects that have dimensions and quantities correspond to Space and Matter. Since the infinities cannot coexist (Melissus of Samos), if Time is infinite, Space and Matter must be finite. Space (or "Continuum" - ontological definition of Space as dimensional and finite) is structured of indivisible quanta of any length, arranged (rarified) by time. Range of Space quanta coincides with the range of EM Spectrum, **in fact, Space and EM Spectrum are identical, and they are the same**. "One" is Arithmetical quantum of Space and should be interpreted as any "present frequency" of EM Spectrum - frequency chosen to start the time-experiment. "One" could be of any length as in Euclidian Arithmetic – "one" is a "line". Kronecker was inspired stating that we should use only Natural Numbers ("created by God"). Indeed, using "one" as a "line" we can mathematically express the whole physical space. The 'length' has no preferential direction or position and from this follows that "spherical law" spontaneously generates a Sphere. To build the whole space, only one dimension - length (Diameter) and "spherical law" are necessary; other dimensions and Space properties appear with them. Natural Numbers (except "zero" – "General Time" and "one" – "line" or "quantum of space") correspond to internal and local times. But, if we look closely, we shall find that both internal and local times are contrary (mutually dependant) operators, which generate and conduct Space and Matter through constantly time-shifting. Time is also the cause of "eternal motion" in the Universe; the motion is asinchronicity like it is the change itself.

Matter is a Number…

7. Matter is a Number. Physical system is a special case of space-configuration subjected to only one and intrinsically harmonious internal "time code"; it is conducted (set into motion) by local "time operator", or external EM fields. (N. Tesla noted that there is no energy in the system besides that which is incoming from the environment – "**There is no energy in matter except that absorbed from medium.")**

Ball Lightning ("Fire Balls") is a primary natural macro-fusion. "Fire Balls" are synthesizing of EM fields by "time-mathematics" and can be stable structures under certain EM conditions. Material bodies are formed in the same way; the difference is only in complexity (number of time-organized frequencies). The Law (Time) and the initial shape (spherical) are the same; varieties in size come from the constitutive frequencies and varieties in shape (deformations of the sphere) come from "local time operators" (external EM fields).

8. **In the entire History of Science, Kozyrev was the first who clearly pointed the deepest issue in Physics claiming that concepts of Force (and Energy, as well) are to be substituted by "Time", by formulation of the "Time Law". For him Time was a Force.** (Already Archimedes thought that notions of "Time" and "Force" suffer of overlapping contents and because of that both are indistinct; he also believed that leverage has "mystical" properties: longer physical leverage plus weight is heavier than the shorter leverage plus the equal weight, but needs less force to be operated. For Archimedes it demonstrates the unrevealed relation between Space and Force. However, let's consider the "mathematical leverage": its "hands" are dimensional, have length, but what about its "stand-point"? Is the dimensionless "stand-point" of a mathematical leverage - a Space, spatial? It doesn't look like that. Newton in "Principia" said: "The Absolute Time flows…" How comes that "motion of time" and what is its relation to Force? Newton was seeking for the "cause of Force".

9. In conclusion: contemporary theoretical research in Physics, especially in Cosmology, is deeply disconnected with Physical Reality. The Criteria of "natural limitations in mathematics" (Rene Thom) are to be reintroduced as strict physical interpretation of every symbol and formula used in physical experimenting. The role of Time is almost completely unknown. Time is considered inactive in experiments; there are no even its Hypotheses, not to mention the lack of any kind of its definition. The Relativity Theory cannot help very much, since Einstein started from the assumption that "Time isn't really existing". **But, according to the extremely important work of Vadim Chernobrov, the pioneer of intensive experimenting with the "change of rate of time flow" caused and controlled by EM fields,** the path has been found leading to the full cognition and mastering of Time. Soon it will be obvious that all the physical experiments are ultimately explainable as Time-based. Time generates Space and then Matter; it is the cause and conductor of all the cosmic change. **Successful experimenting with Time by EM fields is uncovering totally new fundament of Physics.** The valid, repeatable and easy measurable initial results in obtaining "Time-control" are not in question, there are more of them then we can recognize as such at the moment. However, the corresponding new mentality in Science needed to release ideas in support of the new, I would dare to say – "Time-shift Technologies" - is yet to come.

References

1. Nikola Tesla, THE ETERNAL SOURCE OF ENERGY OF THE UNIVERSE; ORIGIN AND INTENSITY OF COSMIC RAYS; October 13, 1932, New York, First Published in Tesliana *Journal*, Special Edition., Bijeljina, Idvor, Belgrade, 1995, pp. 56-59.

Practical Application of Time Rate Control (TRC) Theory

Alexander V. Frolov

In the modern World strategic balance of political forces is provided mainly due to military power. Not one country can be sure that use of weapons will remain without a response action from the enemy. Rather the contrary, this response action is unavoidable. Maintenance of this condition is a guarantee of some stability in the world. This condition is **an example of cause-effect relations**. In reality they have some probability or "extent of hardness". The period of delay and the scale of consequence describe this hardness of cause-effect connection. The power of these processes as well as the forms of cause-effect manifestation also can be different. The similar situation is observed not only in relations between states, but also on other levels of social relations, though the causality here is not so hard.

We can find the reflection of our desire to restore the justice in the principle of causality. We can assume that religious commandments, social rules of behavior for people and state laws written by people are the analogues of real physical mechanism. The space itself is designed according to this higher law. Let's remind also the law of momentum conservation, law of electromagnetic induction and its manifestation in the common electromagnetic transformer. Theory by N.A. Kozyrev [1] considers cause-effect relations from positions of the concept of active properties of time. In this concept the speed of the course of time is defined as a ratio of distance between the cause and the effect to the period of time delay between them. For our space it is equal to the product of the speed of light and the fine structure constant, i.e. the speed of the course of time is 137 times smaller than the speed of light. Let's note, that it is not the speed of motion in space, but the "rotation speed of the cause-effect connection". From the other hand, in his work [2] Dr. Shipov presents the mathematics of four-dimensional rotations and firstly introduces the notion of torsion fields. In my mind, there is a clear analogy between notion of four-dimensional rotations in torsion technologies and cause-effect transformations by Kozyrev.

Now let's try to clarify physical sense of the fine structure constant. This constant is known in physics mainly as a factor, related with ratio between own spin and orbital spin momentum of a particle. Besides, Dr. Spartak M. Polyakov in his work [3] described internal structure of photon. On his assumption, minimal prolongation of any electromagnetic quantum is equal to the product of the wavelength and ratio between the fine structure constant and the speed of light. So, the internal structure of photon according to Polyakov reflects the features of inner structure of space, which was described by Kozyrev. Also we have to note Dr. Rykov's work on the fine structure constant [4]. He showed that the Plank's constant depends on parameters of Ether and the fine structure constant, so **we can assume an analogy between "structure element of Ether" and "elementary cause-effect connection"**. Also there is a clear analogy between Rykov's notion of "elasticity of Ether structure" and Kozyrev's "hardness of cause-effect connection", which in my view can be described as some probability.

These links between few theories had not been discussed before and now we have a conclusion, which first gives us theoretical grounds for the known supposition that light (electromagnetic wave, i.e. photon) and time are allied physical notions. So, it is possible to state the following: The fine structure constant is a factor, which related with present physical structure of our space-time. Another structure of space-time means changes of all constants and all properties of matter. It means other time and other matter. Physical properties of element of space-time (some "elasticity" or "hardness of cause-effect connection") defines Plank's constant, speed of light and speed of course of time (rate of cause-effect transformations). Since cosmic processes define the fine structure constant, then all physical properties of our real space are the effect of real cosmic processes. There is similar situation in micro world, in which the fine structure constant is described by parameters of own spin and orbital spin of an elementary particle. If now we have a real understanding of the fine structure constant, then it should be possible to create local space-time by means of special technical systems. Space-time engineering becomes an applied science. From this we can develop the practically valuable technologies.

There is a real way to confirm this conception. The cosmic processes (motion of planet, stars and other processes in Galaxy) are stable only for relatively short period of our observation and some variations should be detected for a long period of time. In the article "Search for Time Variation of the Fine Structure Constant" John K. Webb and other authors investigated possible variation **in the fine structure constant** [1]. Also in another article "Space-Time Variation of Physical Constants and Relativistic Corrections in Atoms" the author V. A. Dzuba reported on this topic [2]. Analysis of the light from distant quasars has shown that billions of years ago the fine structure constant was different at earlier times in the history of the Universe. Now the value "alpha" a ≅ 1/137 is a little bit more than in the past.

According to Kozyrev, the speed of the course of time (rate of cause-effect transformations) can be calculated as

$$\upsilon = c \cdot \alpha \cong c / 137 \qquad F.1$$

where **c** is the speed of light. Increase of the fine structure constant means an increase of the speed of the course of time for our space-time.

According to Kozyrev, there are two extreme cases of the cause-effect relations:

1. In classical mechanics the distance cannot be equal to zero, but time can be arbitrarily small, including

the situation, when it can be equal to zero. The speed of the time course in this case is equal to infinity.

2. In the atomic world vice versa the speed of the course of time is equal to zero since the distance can be equal to zero, but there is always some delay in time, which we should take into account.

Our real world occupies the intermediate position and it has a certain time course as a transformation of the cause to the effect. There is a conclusion: Modern World became more stable and its laws became more similar to classical mechanics laws due to strengthening of the causality. Also it is possible to state the following: at the beginning of our World, physical laws of its space-time were more similar to laws of quantum mechanics.

It is possible to assume that changes in physical laws are related with changes of position of our real World in the Universe due to the cosmic processes of motion. In other words, from point of view of the Ether conception, it can be explained as some natural changes in density and other parameters of Ether wind in space of our planet for different stages of development of our Galaxy in the Universe.

Let's consider how can we use this natural cause-effect mechanism of space to create teleportation systems or "an ideal weapon" and how it will work. But at first we should specify some notions.

So, the real World occupies the intermediate position between classical mechanical World and quantum World and we move from chaos of quantum World to the strengthening of the causality. Specific parameter of space is a certain speed of the time course as a transformation of the cause to the effect. N.A. Kozyrev supposed and showed in the series of experiments that for interaction of some systems with the flow of time we can expect the appearance of additional forces in these systems. Therefore, mechanical tensions and changes of full energy of the system can occur due to the changes of energy of the time course [1, p. 344]. We should note, that all material systems always exist in time and in this sense they always interact with time. **The cause of the appearance of additional forces is the asymmetry of the cause-effect energy relations**. It can be realized by means of various technical methods. We should also note that according to Kozyrev "…mechanics, which corresponds to the principles of causality, should be developed from the extreme case of Newtonian mechanics, but not from the quantum mechanic case. Some features, which are characteristic to the quantum mechanics, can appear during this process. For example, we can expect the appearance of the quantum effects in the macroscopic mechanics" [1, p.345].

Further we can turn to the consideration of new conception of defense. Let's suppose, that military system A stroke some system B. For the real World we should take into account, that there is some distance in space between systems A and B. Manifestation of the forces of causality is expected only in the irreversible processes. That's why we suppose that the impact led to the irreversible processes in the system B. In such a way the common cause-effect connection will form a cycle.

Now let's suppose, that the system B could prevent the irreversible processes of its destruction by some technical way, for example, by means of anti-missile rocket. The cause-effect connection will form a cycle in this case also. It was made by certain actions in the period, when the system B was stricken, but the effect had not came yet. Theoretically it is possible since with the known speed of the time course for some real distance between the interacting systems, interval of time between the cause and the effect cannot be equal to zero. But in real situations instantaneous or sufficiently prompt reaction of the system B is not possible. Just rely on this aspect, the system A will try to reduce delay between "cause" and "effect" and distance between its military base and the system B.

New conception of weapon does not mean the repulse of the impact by some material counteraction, i.e. by means of some energy consumption. **Since it is impossible to do so that the cause-effect connection will not be closed (it will contradict to the laws of space structure), then it is necessary to close it artificially.** In other words, it is necessary to put in action the natural mechanism of causality before irreversible damages of the system B occurred.

For more than defense action, it is possible to produce a response action to the system A through the natural mechanism of causality. The effect (equivalent of missile action) should come in area of space, where the cause was, but a little bit later. Spatial matching of cause and effect in one point (with some interval in time) is possible in quantum mechanics, as we considered above. Therefore, the techniques being in arsenal of the system B should change the parameters of space (reduce the speed of the course of time in some area of space) in such a way, which allows the laws of quantum mechanics to work for the system A.

We can hardly suppose the possibility to create an artificial 100% quantum mechanic reality in macro world, but it can work even partly. In this case the effect will come in the same place, where the cause (system A) is situated. The real position of the cause in the Universe does not play any role. The energy of the system A should change due to the active properties of time. According to Kozyrev, these properties led to the appearance of an additional torsion moment in the experimental unit. On the micro-level it can mean that energy of atoms of matter will change in the area of cause and this will produce mechanical destruction of the system A.

In any case it should lead to increase of entropy in area of space where the cause is situated.

This effect is an analogy of change of the light beam trajectory on the boundary between two mediums of different index coefficient. With the full reflection the

whole momentum should return to the launching point of the missile, but not due to the return of the missile itself. The equivalent of this momentum returns due to the active properties of time and not in the form of the linear vector of speed, but in the form of additional energy, which is transferred to the particles of matter due to changes of the time course.

Only part of the momentum will returns with the partial reflection. It will increase the entropy of all matter in area of the cause.

Technical realization of these principles depends on the final goal of the research work. To make it easier, the term "speed of the course of time" can be replaced with the notion of "density of ether" and "speed of the ether flow".

Another aspect is following. In area of space with changed time course, the changes in operation parameters of electronic equipment will not allow controlling the missile. Thus, this part of defense problem is solved also. We should note that Kozyrev's experiments already proved the influence of changes in the time course on the quartz oscillators, sensors, semi-conductors elements and resistors. A number of other authors showed the influence of "radiation of a special kind", for example, torsion fields, to the speed of chemical reactions proceeding and physical properties of materials. Since the area of space with the changed properties can have significant sizes, then by means of this method we can provide the defense of large territories.

Technical realization of these principles depends on the final goal of the research work. To make it easier, the term "speed of the course of time" can be replaced with the notion of "density of ether" and "speed of the ether flow". A number of authors consider time as a result of motion in ether. Really, the Galaxy, stars and planets move in the universal medium. From this point of view we can consider one more useful analogy. The known Archimedes' law defines the forces acting on the body, which is immersed into some liquid.

The analogy between ether and liquid is considered and experimentally proved by Dr. Alexander M. Mishin [7] and others.

Further we can turn to the forces analogous to Archimedes' forces and they act to the area of space with the changed course of time. Due to these forces, this **area of space will be forced out in some direction.** It is known that the balloon is forced out from the dense air in the direction of the rarified one. There is a question: is the area of slowed time the more dense ether or more rarified ether?

According to Kozyrev, the following terminology is accepted now: matter acquires more ordered structure (less entropy) in the area of high density of time [1, p. 387]. Usually time course is directed from the past to the future and in this case the entropy always increases. That's why the decrease of entropy corresponds to the decelerated time course and to the area of high density of time.

From the ether conception we can get the same conclusion. Besides, we get a number of technical details. More dense ether means more number of ether elements in the same volume. Earlier we considered time as an order of elementary cause-effect connections.

Thus, we can make an important conclusion: the elementary cause-effect connection is an element of ether (graviton in some conceptions), which was the subject of many scientific researches. In full accordance with Kozyrev's theory, the denser ether, the more elementary cause-effect connections are required for the same action. That's why the time course is slowed in more dense ether.

The area of accelerated time course should be forced out in the direction of the rarified ether. Analogously, the area of slowed time is forced out in the corresponding direction, to the more dense ether. It is a theoretical basis to create the teleportation systems.

On the basis of these considerations it is possible to design new defense systems and principally new transport systems.

References

1. Kozyrev N.A. Selected works, Leningrad University, 1991.

2. Shipov G.I. Theory of physical vacuum. New paradigm. M.: 1993.

3. Polyakov S.M., Polyakov O.S. Introduction in experimental gravitonics. M.: 1991, page 32.

4. On the Great constant 137.036 Dr. Anatoli Rykov

5. Search for Time Variation of the Fine Structure Constant, John K. Webb et al. Phys. Rev. Lett. 82, 884 (1999)

6. Space-Time Variation of Physical Constants and Relativistic Corrections in Atoms, V. A. Dzuba, V. V. Flambaum, and J. K. Webb, School of Physics, University of New South Wales, Sydney, New South Wales 2052, Australia, Physical Review Letters, February 1, 1999, Volume 82, Issue 5 pp. 888-891

7. Mishin A.M. The physical system of artificial biofield. New Energy Technologies, #1, p. 45. Main principles of etherodynamics. New Energy Technologies, #2, p. 32.

constituent of bigger system, until everything is embraced by the Biggest System, that is the Universe.

The seventh principle of the universal energy interchange is the physical realization of the law of unity and struggle of oppositions. This principle determines spontaneous creation of thermodynamic and antigravitation potentials. Any local matter mass (a body), situated in the open space, creates an exchange process with the surrounding aether volume in the way that more fine-structure fluid aether is absorbed by the body, and the less power-consuming gas aether is radiated. As the result the body as a heat engine gets energy due to the cooling of aether exteriors. At that, antigravitation forces acts between bodies and aether exteriors, which have different temperature.

This principle, which establishes the existence of antipodes of the second law of thermodynamics and Newtonian attraction, is realized mainly in cosmic scales and explains in which way the energy is created in the bowels of planets and stars and why the Universe is stable as regards to gravitation. Obviously, the most unexpected for the modern Physics is the discovery of non-traditional nuclear processes where conditional reactions of decay and fusion occur at the usage of quasimatter.

More deep research of new experimental results and of the stated above scientific principles lets to determine the priority-driven strategic tendencies in Physics, to open more entirely the laws of mechanics and thermodynamics of many-dimensional aether, including the theory of non-traditional waves and new types of electromagnetism. At that, the supreme aim is the research of differences in aetherodynamics laws on the Earth (in a laboratory) and in outer space, the unknowing of these differences has caused logical insularity, false all-sufficiency of classical physics, which had refused as "not wanted" the aether conception and fundamental Universal laws.

References

1. Mishin A.M. On the new properties of physical vacuum, gravitational field and mass. DD USSR, 1988, p. 44
2. Mishin A.M. Experimental results on the registration of aether wind // New ideas in Natural Sciences. Series: Problems of research of the Universe, issue 18. – SPb: RAS, 1995, p. 24-33
3. Mishin A.M. The Aether Model as Result of New Empirical Conception. New Ideas in Natural Sciences. (On materials of the International Conference). Part I – SPb: RAS, 1996, p.95-104
4. Mishin A.M. The physical system of artificial biofield // "New Energy Technologies" – SPb: Faraday Labs Ltd, 2001, issue #1, p. 45-50
5. Mishin A.M. Antigravitation and new energy processes // "New Energy Technologies" – SPb: Faraday Labs Ltd, 2001, issue #2, p. 37-41
6. Longitudinal thermomagnetic effect // New Energy Technologies – SPb: Faraday Labs Ltd, 2002, issue #2(5), p. 38-41

Irving Langmuir and Atomic Hydrogen

Nicholas Moller

PO Box 201
34008 Eretria
Greece

Editorial

In this paper Dr. Nicholas Moller describes the history of development of Atomic Hydrogen technologies in details. It is remarkable that this technology can be applied not only for welding processes but also as a clean free energy source. It is important to note that in this case the hydrogen process does not involve a consumption of hydrogen, which is not combusted in the process. Atomic hydrogen is not really a fuel but rather a medium, gateway or a super-conductor of ZPE form the vacuum of space, converting ZPE radiation and ultra-high frequency electrical energy into infrared (heat) radiation.

This is the story of Irving Langmuir who was the first to develop a theory on Atomic Hydrogen on the basis of empirical research and experimentation. His work in this field lasted from 1909 to 1927. During this period he was employed by the Research Laboratory of General

Irving Langmuir.

Electric Company. Patents and discoveries developed by Langmuir during his time with General Electric were to a considerable extent instrumental in laying the foundations for what is today one of the largest corporations in the world.

The question that gave birth to this article, is why his work and discoveries on Atomic Hydrogen were the only work that received hardly any attention at all and why his revolutionary breakthrough was deprived of world attention for almost 100 years? This question becomes even more relevant when taking into consideration the high standing he enjoyed with his contemporaries (including being awarded the Nobel Prize in Chemistry)

and with his employers, which is an acknowledgement of the high commercial value of all his other work.

The answer to this question is given through a detailed account of his work on Atomic Hydrogen and followed by suggestions for new applications of Atomic Hydrogen in the field of CLEAN SUSTAINABLE ENERGY.

Irving Langmuir was born in Brooklyn, New York, on January 31, 1881, as the third of four sons of Charles Langmuir and Sadie, *nee* Comings. His early education was obtained in various schools and institutes in USA, and in Paris (1892-1895). He graduated as a metallurgical engineer from the School of Mines at Columbia University in 1903. Postgraduate work in Physical Chemistry under Nernst in Göttingen earned him the degree of M.A. and Ph.D. in 1906.

Dr. Langmuir returned to America and became an Instructor in Chemistry at Stevens Institute of Technology, Hoboken, New Jersey, where he taught until July 1909. Then he entered the Research Laboratory of General Electric Company at Schenectady where he eventually became an Associate Director.

Langmuir's studies embraced chemistry, physics, and engineering and were largely the outgrowth of studies of vacuum phenomena. In seeking the atomic and molecular mechanisms of vacuum phenomena he investigated the properties of adsorbed films and the nature of electric discharges in high vacuum and in an environment of certain gases at low pressures.

His work on filaments in gases led directly to the invention of the gas-filled incandescent lamp and to the discovery of atomic hydrogen. Later he applied his knowledge of atomic hydrogen in the development of the atomic hydrogen welding process.

He was the first to observe the very stable adsorbed monatomic films on tungsten and platinum filaments, and was able, after experiments with oil films on water, to formulate a general theory of adsorbed films. He also studied the catalytic properties of such films.

Langmuir's work on space charge effects and related phenomena led to many important technical developments, which have had a profound effect on later technology.

In chemistry, his interest in reaction mechanism caused him to study structure and valency, and he contributed to the development of the Lewis theory of shared electrons.

Some of the awards he received include: Nichols Medal, (1915 and 1920); Hughes Medal (1918); Rumford Medal (1921); Cannizzaro Prize (1925); Perkin Medal (1928); School of Mines Medal (Columbia University, 1929); Chardler Medal (1929); Willard Gibbs Medal (1930); Popular Science Monthly Award (1932); Nobel Prize in Chemistry (1932)(Although Niels Bohr recommended him for the Nobel Prize in Physics, Langmuir was awarded the Prize for Chemistry. A fact that most probably bears relation to the efforts of ignoring the importance of his discoveries on the properties of Atomic Hydrogen.)*; Franklin Medal and Holly Medal (1934); John Scott Award (I937); "Modern Pioneer of Industry" (1940); Faraday Medal (1944); Mascart Medal (1950).

In addition, he was a Foreign Member of the Royal Society of London, Fellow of the American Physical Society, Honorary Member of the British Institute of Metals, and a member of the British Chemical Society (London). He had served as a President of the American Chemical Society and as a President of the American Association for the Advancement of Science.

Honorary degrees were bestowed upon Langmuir by the following colleges and universities: Northwestern, Union, Edinburgh (Scotland), Columbia, Kenyon, Princeton, Lehigh, Harvard, Oxford, Johns Hopkins, Rutgers, Queens (Canada), and Stevens Institute of Technology.

Dr. Langmuir's hobbies were mountaineering, skiing, flying. However, his biggest hobby and life passion was the pursue of the understanding of the mechanism of simple and familiar natural phenomena.

He married Marion Mersereau in 1912. They had a son, Kenneth, and a daughter, Barbara. He died on August 16, 1957 after a short illness.

General Electric Company

Langmuir first entered the Research Laboratory of General Electric Company in summer, 1909, expecting that by fall he would return to Stevens Institute, where he had been teaching chemistry. Instead of assigning him to any definite work, Doctor Whitney who headed the Lab suggested him to spend several days in various rooms of the laboratory, becoming familiar with the work that was carried out there. Dr. Whitney also asked him to let him know what he found the most interesting as a problem for the summer vacation.

A large part of the laboratory staff was busily engaged in the development of drawn tungsten wire made by new Coolidge process. A serious difficulty was being experienced in overcoming the "offsetting" of the filaments. It was a kind of brittleness, which appeared only when the alternating current was run through lamps. Out of a large number of samples of wire, three had accidentally been produced which gave lamps that ran equally well with alternating and with direct current, but there was no explanation as to what had made these wires so good. It seemed to Langmuir that there was one factor that had not been considered, which was, that the offsetting possibly was due to impurities in the wire in the form of gases. He therefore suggested to Doctor Whitney that he would like to heat various samples of wire in high vacuum and measure the quantities of gas obtained in each case.

When he observed the laboratory, he had been particularly impressed with the remarkably good methods that were used for exhausting lamps. These methods were, he thought, far better than those known to scientific research workers of this time. His desire to become more familiar with these methods was undoubtedly one of the factors that led him to select an investigation of the gas content of wires for his first research.

After starting the measurements that he had planned, he found that filaments gave surprisingly large quantities of gas. Within a couple of weeks he realized that something was entirely wrong with his apparatus, because from a small filament in a couple of days he obtained a quantity of gas which had, at atmospheric pressure, a volume 7000 times that of the filament from which it appeared to have come; and even then there was no indication that this gas evolution was going to stop.

At the time one could find in the literature - for example in J. J. Thomson's book on the "Conduction of Electricity through Gases" - many statements that metals in vacuum give off gases almost indefinitely, and that it is impossible to free metals from gas by heating. Still he thought that 7000 times its own volume of gas was an entirely unreasonable amount to obtain from a filament. He spent most of the summer trying to find where this gas came from, and did never investigate the different samples of wire to see how much gas they contained. To any other researcher, it would have been much more logical if he had dropped the work as soon as he found that he would not be able to get useful information on the "off-setting" problem by the method that he had employed. Instead Langmuir continued working.

What he really learned during that summer was that glass surfaces, which have not been heated a long time in vacuum slowly, give off water vapor, and this reacts with a tungsten filament to produce hydrogen. At the same time, the vapors of Vaseline from a ground-glass joint in the vacuum system give off hydrocarbon vapors, which produce hydrogen and carbon monoxide.

This summer work was so interesting to him that he dreaded to return to the comparative monotony of teaching, and gladly accepted Doctor Whitney's offer to continue working at the laboratory. No definite program of work was laid down. At first he was given one assistant and then others to continue experiments on the sources of gas within vacuum apparatus, and a study of effects produced by the introduction of various gases into tungsten filament lamps. The truth is that he was merely curious about the mysterious phenomena that occurred in these lamps. Doctor Whitney had previously found that gases had a habit of disappearing in lamps, and no one knew where they went to, so Langmuir wanted to introduce each different kind of gas, which that he could lay his hands on, into a lamp with a tungsten filament and definitely find out what happened to that gas.

It was the universal opinion among the lamp engineers with whom he came in contact that the better vacuum could be produced in a lamp, the better lamp would be. Doctor Whitney, particularly, believed that every effort should be made to improve vacuum, for all laboratory experience seemed to indicate that this was the hopeful line of attack on the problem of a better lamp. However, Langmuir really didn't know how to produce a better vacuum, and instead proposed to study the bad effects of gases by putting gases in the lamp. He hoped that in this way he would become so familiar with the effects of these gases that he could extrapolate gas pressure to zero, and thus predict, without really trying it, how good the lamp would be if they could produce a perfect vacuum.

He found this principle of research to be extremely useful on many occasions. When it is suspected that some useful result is to be obtained by avoiding certain undesired factors, but it is found that these factors are very difficult to avoid, then it is a good idea to increase one of these factors so as to exaggerate their bad effects, and thus become so familiar with them that one can determine whether it is really worth while avoiding them. For example, if you have vacuum in lamps as good as you know you can produce, but suspect that lamps would be better if you had vacuum, say, 100 times as good it may be the best policy, instead of attempting to devise methods of improving this vacuum, to spoil the vacuum deliberately in known ways, and you may then find that no improvement in vacuum is needed or just how much better the vacuum needs to be.

During these first few years, while he was thus having a good time satisfying his curiosity and publishing scientific papers on chemical reactions at low pressures, he frequently wondered whether it was fair that he should spend his whole time in an industrial organization on such purely scientific work, for he didn't really see what applications could be made of it. Several times he talked the matter over with Doctor Whitney, saying that he could not tell where this work was going to lead them. Whitney replied that it was not necessary, as far as he concerned, that it should lead anywhere. He would like to see him continue working along any fundamental lines that would give them more information in regard to the phenomena taking place in incandescent lamps, and that he should feel himself perfectly free to go ahead on any such lines, which seemed to be interesting to him. He had been working for nearly three years in this way with several assistants working for him before any real application was made of any of his work. In adopting this broadminded attitude Doctor Whitney showed himself to be a real pioneer in the new type of modern industrial research known as *Free Research*, and thus made Langmuir the first scientist in modern history, who got tools and resources for free research.

He had to devise new types of vacuum apparatus for his study of the effect of gases. He needed particularly to be able to analyze the small quantities of gas that

existed in the tungsten lamp. With some of this special apparatus he was able to make a practically complete quantitative analysis of an amount of gas, which would occupy about $1mm^3$ at atmospheric pressure. In this sample of gas they could determine the percentages of oxygen, hydrogen, nitrogen, carbon dioxide, carbon monoxide and inert gases.

In regard to the behavior of the different gases, which he introduced into the lamp bulb, he found that no two gases acted alike. For example, Oxygen attacked the filament and formed tungstic oxide, $W0_3$. It seemed to be simple enough, but the kinetics of the reaction presented many features of considerable scientific interest.

During the studying of the effect of hydrogen he observed very peculiar phenomena. A limited amount of hydrogen disappeared and became adsorbed on the bulb, where it remained in a chemically active form, which was capable to react with oxygen at room temperature even long after the tungsten filament had been allowed to cool. These suggested hydrogen atoms and seemed to confirm some conclusion, which Langmuir had already drawn from observations on the heat losses from tungsten filaments in hydrogen at atmospheric pressure. During the making squirted tungsten filaments, and sometimes during the cleaning of the drawn wire, filaments were heated in this manner in hydrogen. Because tungsten filaments melt at a temperature 1500°K above the melting point of platinum, it seemed to him that ***tungsten*** furnished a tool of particular value for the scientific study of phenomena in gases at high temperatures. From his work on lamps he knew the approximately relation between the electrical resistance of tungsten wire and its temperature, and could thus use a tungsten wire as a kind of resistance thermometer. By connecting a voltmeter and an ammeter to the tungsten filament, which was being heated in hydrogen, he could determine the temperature as well as find the heat loss from the filament in watts. He wanted to see if anything abnormal happened when the temperature was raised to the extremes, which were only possible with tungsten.

The results greatly interested him, because they showed that the energy loss through the gas was proportional to the square of the temperature up to about 1800°K. Then they increased at a much higher rate above that, until at the highest temperatures the energy loss was proportional to about the fifth power of the temperature. This result could only be explained if hydrogen at high temperatures was dissociated into atoms.

The diffusion of the hydrogen atoms from the filament, and their recombination at a distance from it, would cause an enormous increase in heat conduction.

After publishing these preliminary results, he was naturally very interested in getting more information about the properties of these hydrogen atoms. A large number of experiments, lasted over several years, were thus made in this study of atomic hydrogen. Nearly all of these experiments would seem quite useless, or even foolish, to a man who was making a direct and logical attack on the problem of improving of tungsten lamps.

When nitrogen at low pressure was introduced into a bulb containing a tungsten filament at extremely high temperatures, such as 2800°K, the nitrogen disappeared at a rate, which was independent of its pressure. This suggested that the reaction velocity was limited by the rate at which the tungsten evaporated from the filament. To check this hypothesis the rate of loss of weight of filaments at various temperatures was measured in perfect vacuum. This rate varied with the temperature in accordance with known thermodynamic laws, and it was concluded that the loss of weight was really due to evaporation but not to chemical action of residual gases or to electric currents, which passed from the filament to the surrounding space.

A comparison of the rate of disappearance of nitrogen with the loss of weight in the filament showed that one molecule of nitrogen disappeared for every evaporated atom of tungsten. A brown compound, WN2, was formed, which deposited on the bulb and decomposed when water vapor was introduced, forming ammonia gas.

From time to time the question kept arising - how good would a lamp be if it had a perfect vacuum? And now he got an answer. Hydrogen, oxygen, nitrogen, carbon monoxide, and in fact every gas that he introduced, with the exception of water vapor, did not produce blackening of the lamp bulb. The serious blackening that occurred with only small amount of water vapor depended upon a cyclic reaction in which atomic hydrogen played an essential part. Molecules of water vapor in contact with the hot filament produced a volatile oxide of tungsten and hydrogen was liberated in atomic form. The volatile oxide deposited on the bulb where it was reduced to the metallic state by the atomic hydrogen, while the produced water vapor returned to the filament and caused the action to be repeated indefinitely. Thus, a minute quantity of water vapor may cause a relatively enormous amount of tungsten to be carried to the bulb.

The question then arose whether the amount of water vapor, which might still exist in a well-exhausted lamp, were responsible for the blackening which limited the life or the efficiency of many of these lamps. They made some tests in which well-made lamps were kept completely immersed in liquid air during their life, so that there could be no possibility of water vapor coming in contact with the filament. The rate of blackening, however, was exactly the same as if no liquid air had been used.

Having thus proved that the blackening of a well-made lamp was due solely to evaporation, he could conclude

with certainty that the life of the lamp would not be appreciably improved even if they could produce a perfect vacuum.

Early in 1911 William Stanley, one of the pioneers in the electrical industry, felt that General Electric should do more fundamental work in connection with heating devices. Since Langmuir had become interested in the physics of heat losses from filaments in gases, he was glad to work along these lines and therefore undertook to direct a small laboratory at Pittsfield, Massachusetts, USA, where he spent about two days a week. Besides studying heat losses from plane surfaces at various temperatures he measured heat losses from wires of various sizes in air at different temperatures, working at first with platinum wires, and was able to develop a theory of heat losses, which enabled him to calculate the loss from a wire of any size at any temperature in any gas, provided of course, that the gas did not dissociate at high temperatures.

Having now a definite theoretical basis to calculate the normal heat loss by convection, he was able to prove that the abnormal rate of heat loss previously observed with tungsten filaments at high temperatures in hydrogen was due to actual dissociation; in fact he was able to calculate the heat of dissociation and the degree of dissociation at different temperatures.

In order to confirm these conclusions, he undertook experiments with heated tungsten wires in mercury vapor at atmospheric pressure to measure heat losses under such conditions. A little later he experimented with nitrogen and found that nitrogen did not dissociate either. In both of these gases the filaments could be maintained at temperatures close to the melting point for a far longer time than if heated in vacuum at the same temperature. Thus the rate of evaporation was greatly decreased by the gas, many of evaporating tungsten atoms being brought back to the filament after striking the gas molecules.

By this time he was familiar with all harmful effects, which gas can produce in contact with filaments and knew under what conditions these bad effects could be avoided. In particular, he realized the importance of avoiding even almost infinitesimal amount of water vapor. Thus, when he found a marked effect of mercury vapor and nitrogen in reducing the rate of evaporation, it occurred to him that it might be possible to operate a tungsten filament in gas at atmospheric pressure and obtain a long useful life. Of course, it would be necessary to raise the temperature far above that at which the filament could be operated in vacuum in order to compensate the serious loss in efficiency due to convection. Whether or not the increased rate of evaporation, due to this increase in temperature, would be more important than the decrease in the rate due to the gas was a matter that could only be tested by experiment.

After a series of detailed experiments, they were soon able to make lamps having a life of over 1000 hours with efficiency about of 80 to 40 percent better than could have been obtained with filaments in vacuum. General Electric made astronomic fortunes out of this result.

The invention of the gas-filled lamp is thus nearly a direct result of experiments made for the purpose of studying atomic hydrogen. Langmuir had no other objective in view when he first heated tungsten filaments in gases at atmospheric pressure. Even at the time that he made these experiments at higher pressures, they would have seemed to him useless if his prime objective had been to improve the tungsten lamp. However, as it turned out, this preliminary work, not only produced a superior lamp but also resulted in the following important conclusions:

- The energy loss from heated wires in various gases can be readily calculated by simple equations.

- For nitrogen and mercury vapor the results calculated in this way agree well with experimental results up to temperatures as high as 3500°K.

- With air and carbon dioxide similar agreement was obtained up to the melting point of platinum.

- In the case of hydrogen, however, there was agreement only up to about 2100°K. Above that the energy loss increased extremely rapidly such that at 3300°K it was four or five times the calculated value.

- This was explained by assuming that hydrogen at very high temperatures is dissociated into atoms.

- A theory of the heat conductivity of a dissociating gas was developed.

- The heat of reaction and the degree of dissociation at various temperatures was thus calculated.

Experiments at low pressures proved that the phenomenon was a true dissociation, and that the volume of the dissociation products was approximately twice the volume of the original hydrogen. That is, the dissociation took place according to the equation $H_2 \rightarrow 2H$.

- There was much evidence that the dissociation was not electrolytic.

- Nitrogen, even at 3500°K, was not dissociated at atmospheric pressure. That is, its dissociation did not exceed 5%, at 3500°K.

- The following quantitative results were obtained. The heat of reaction at constant volume for $2H \rightarrow H_2$ was 550,000 joules, or 130,000 calories. At constant pressure it was approximately 575,000 joules, or 136,000 calories at 3000° K.

- The degree of dissociation at any temperature, T, was given by the equation

$$\log \frac{p_1}{\sqrt{P - p_1}} = 2.665 - \frac{14{,}400}{T} + \frac{1}{2}\log T$$

Here p_1 is the partial pressure of the hydrogen atoms (in atm), and P is the total pressures (in atm).

From this equation the free energy of formation of hydrogen molecules from atoms can be calculated.

Flames of Atomic Hydrogen

Armed with fresh knowledge, Langmuir continued his work exploring the new phenomenon of Atomic Hydrogen and found that the heat carried away from an incandescent wire by a surrounding inert gas at ordinary temperatures increases roughly in proportion to the 1.9 power of the absolute temperature T of the filament. This relation holds, for example, for such gases as nitrogen, argon, and mercury vapor up to the temperature of melting tungsten, 3660°K.

In the case of hydrogen, however, abnormal results were obtained in experiments made at high temperatures. Up to about 1700°K the normal exponent of 1.9 was observed, but at higher temperatures the exponent increased until at 2600°K and above it was about 5.0. At 3400°K the heat conducted by hydrogen was twenty-three times as high as that carried by nitrogen under similar conditions.

Nernst in 1904 had developed the theory of heat conduction in a dissociating gas and had shown that dissociation results in a great increase in the heat conductivity. The dissociation products diffuse from the hot portions of the gas into the cold portions and there, by recombining, give up the large energy of the reaction. This suggested, as mentioned earlier that the abnormal heat conductivity of hydrogen at high temperatures was due to dissociation of the hydrogen into atoms according to the reaction $H_2 \rightarrow 2H$.

By means of theoretical considerations it was possible to determine the degree of dissociation and the heat of the reaction by which atoms combine to form molecules. The results that were published in 1915 gave 90,000 calories as the heat of combination of 2 grams of hydrogen atoms at constant pressure and at 3000°K. The degree of dissociation, **X**, expressed as the fraction of the molecules which have been dissociated, was found to be, at atmospheric pressure, 0.00165 at 2000°K, 0.0109 at 2400°K, and 0.0421 at 2800°K.

Niels Bohr, one of the most prominent theoretical physicist of the time and a close friend of Langmuir, calculated in a valuable and wonderfully suggestive paper on the Constitution of Atoms and Molecules *(Phil. Mag.* XXVI, p.863, 1913), the heat of formation of hydrogen molecules from the atoms to be 60,000 calories per gram-molecule. He pointed out that this value was "considerably less than the value of 130,000 found by Langmuir (J. *Amer. Chem. Soc.* XXXIV, p. 860, 1912) by measuring the heatconduction through the gas from an incandescent wire in hydrogen."

In order that the results obtained by Langmuir should not bear false evidence against the theory derived by Dr. Bohr, he gave a preliminary account of some more recent measurements carried out by Mr. G.M.J. Mackay and himself, on the dissociation of hydrogen.

The method adopted was similar to that previously used, namely, to determine the heat-loss from electrically heated tungsten wires in hydrogen. In these experiments, however, very much greater care was used in determining the temperatures of the wires and in obtaining extremely pure hydrogen. Pressures of hydrogen ranging from 1 mm up to 760 mm of mercury were used. Still further experiments were made at pressures from 0.01 mm up to 20 mm pressure.

The measurements at low pressures gave very interesting results: At about one-tenth of an atmospheric pressure in hydrogen, the total heat-loss from filaments heated to very high temperatures (3000°K) was several times as great as in hydrogen at atmospheric pressure.

By subtracting the heat-loss due to *normal* heat-conduction from the *total* observed heat-loss, the heat carried by diffusion of hydrogen atoms was obtained. By plotting the logarithm of this quantity against the reciprocal of the absolute temperature, straight lines were obtained in each experiment. The slopes of all these lines were practically equal, no matter what pressure of the hydrogen was used (above 10 mmHg).

On the assumption that the diffusion coefficient varies with the 3/2 power of the temperature, this lead to the result that the heat of formation of hydrogen is about 76,000 calories per gram-molecule, as against 130,000 previously found. The reason for the high value of the latter figure is that it was based on a calculation of the actual value of the diffusion coefficient of hydrogen atoms through ordinary hydrogen. These results showed that the actual degree of dissociation was much smaller than that previously found, and that even at 3500°K hydrogen was probably not dissociated to a very great extent.

Further measurements finally suggested the heat of recombination to be 90.000 calories per gram/molecule, that is still a value of extraordinary proportions.

Chemical Properties of Atomic Hydrogen

While the measurements of the heat losses from filaments in hydrogen were being made, other experiments showed that hydrogen which had been in contact with heated filaments acquired entirely new chemical properties, and they were quite in accord with those to be expected of an atomic form of the element.

A very remarkable phenomenon occurred when a mixture of oxygen and hydrogen at low pressure was admitted to a bulb containing a filament at 1500°K. The

oxygen reacted with the filament rapidly to form $W0_3$, which evaporated at this temperature as fast as formed. The oxygen thus cleaned up at a rate proportional to its own pressure and the pressure of oxygen thus fell to half value about every 2 minutes in a bulb of ordinary size. All this occurred exactly as if no hydrogen were present. During this time there was no measurable disappearance of hydrogen. After 10 or 15 minutes the oxygen was nearly all gone and then for 5 or 10 minutes more the gas pressure remained apparently constant and corresponded exactly to that of the hydrogen which was admitted.

Then suddenly, when the pressure of oxygen was low enough (10^{-9} mm), the hydrogen pressure began to drop by dissociation and in a few minutes the pressure fell practically to zero. Water vapor has an effect similar to oxygen in preventing the dissociation of hydrogen. At filament temperatures of 1750°K some of the hydrogen disappeared while the oxygen was cleaning up, but the kink in the curve still occurred when the oxygen was gone. **Water vapor and oxygen are thus powerful catalytic poisons for the reaction of the hydrogen dissociation.**

Arcs in Hydrogen at Atmospheric Pressures

Several years earlier in the General Electric laboratory studies were made of arcs between tungsten electrodes in various gases. Arcs in hydrogen were remarkable because of the high voltage drop and small cross section. A 10-ampere, direct-current arc between heavy tungsten electrodes about 7 mm apart in a bulb containing pure hydrogen at atmospheric pressure appeared as a sharply defined, brilliant red line about 0.5 mm in diameter along which the potential gradient was 150 volts per centimeter, making a power dissipation of 1500 watts per centimeter of length, this being about fifteen times as great as in nitrogen or argon. This abnormal behavior of hydrogen was then attributed to the dissociation which apparently carried energy so rapidly out of the arc.

Arcs in Hydrogen at Low Pressures

In attempting to obtain the Balmer spectrum of hydrogen without contamination by the secondary spectrum, they built very long vacuum tubes of moderate bore, in which they passed currents as large as 20 amperes through moist hydrogen at about 0.5 mmHg pressure. They observed many remarkable phenomena. Short pieces of tungsten wire projecting into the discharge were heated to incandescence, although a fine thread of glass or a platinum wire in a similar position was apparently not heated by the discharge.

On drying the hydrogen with phosphorus pentoxide the secondary spectrum (due to molecular hydrogen) appeared strongly and the Balmer spectrum (due to atomic hydrogen) nearly disappeared. The heating of the tungsten wire was also prevented by drying the hydrogen.

In correspondence with Professor Wood, Langmuir pointed out that oxygen and water vapor decrease the rate of dissociation of hydrogen in contact with tungsten and must thus also tend to prevent the recombination of hydrogen atoms an a tungsten surface. He also suggested that moisture poisons the catalytic activity of the dry glass surfaces that otherwise converts atomic into molecular hydrogen. Thus with moist hydrogen the tube becomes filled with nearly pure atomic hydrogen and the diffusion of this to the catalytically active tungsten wire causes the heating of the latter. Calculations based on the measured heat of dissociation proved that a pressure of only 0.16 mmHg of atomic hydrogen at 500°C would suffice to maintain a tungsten filament at 2400°K.

These conclusions were confirmed by Wood's observations that the walls of the tube became only slightly heated if the hydrogen was moist, whereas they were strongly heated with dry hydrogen. A tungsten wire was heated red hot even when mounted in a side tube (of 5 mm diameter) at a distance of 4 cm from the discharge tube, showing that the hydrogen atoms could diffuse in relatively large quantities out of the discharge.

It occurred to Langmuir that it should be possible to obtain even higher concentrations of atomic hydrogen by passing powerful electric arcs between tungsten electrodes in hydrogen at atmospheric pressure and this atomic hydrogen could be blown out of the arc by a jet of molecular hydrogen directed across the arc.

Preliminary Experiments with Flames of Atomic Hydrogen

To try out the possibility of blowing atomic hydrogen out of an arc, 20 - ampere arcs from a constant-current transformer were passed between two tungsten rods of 6mm in diameter mounted transversely in a horizontal alundum tube (10 cm diameter) through which a stream of hydrogen flowed. With voltages from 300 to 800V, arcs could be maintained with electrode separations up to 2 cm. The magnetic field of the arc caused the hydrogen to move transversely so that it became fan-shaped. Iron rods 2 or 3 mm in diameter melted within 1 or 2 seconds when they were held 3 to 5 cm above the arc.

By directing a jet of hydrogen from a small tube into the arc, the atomic hydrogen could be blown out of the arc and formed an intensely hot flame. To maintain the arc in a stable condition the electrodes were brought close together (1 to 3 mm), but the arc did not remain entirely between the electrodes, but extended as a fan to a distance of 5 to 8 mm. The flame of atomic hydrogen, however, extended far beyond the arc.

Molybdenum (m.p. 2900° K) easily melted at distances of 1 or 2 cm from the arc. Near the end of the arc tungsten rods and even sheet tungsten (m.p. 3660° K) could be melted.

The use of hydrogen under these conditions for melting and welding metals proved to have many advantages. Iron can be melted without contamination by carbon, oxygen, or nitrogen. Because of the powerful reducing action of the atomic hydrogen, alloys containing chromium, aluminum, silicon, or manganese can be melted without fluxes and without surface oxidation.

Temperature of Atomic Hydrogen Flame Compared with Other Flames

Let us suppose we could obtain atomic hydrogen in bulk at atmospheric pressure and room temperature and that we could then let this "burn" to the molecular form in a flame. What would be the temperature of this flame and how would it compare with that of other flames? Taking the heat of reaction (for 2 grams) to be 98,000 calories and taking the specific heat of molecular hydrogen (for 2 grams) to be $6.5 + 0.0009\,T$, we find that the heat of the reaction would be sufficient to heat the hydrogen to 9200°K.

The dissociation of the hydrogen, however, would prevent the temperature from rising to any such high value. If x is the degree of dissociation at the maximum temperature reached, the available heat of recombination is only (1-x) 98,000.

Langmuir plotted two curves based on his accumulated data. These two curves intersected at T = 4030°K and x = 0.642. Thus atomic hydrogen at room temperature and atmospheric pressure would heat itself to 4030°K and the degree of dissociation would then be 0.642.

There is another factor which tends greatly to increase the temperature of the atomic hydrogen flame even above the calculated value of 4030°K. The atomic hydrogen, instead of being originally at room temperature, is already at a high temperature at the moment of its escape from the arc. The conditions are analogous to those in an oxyhydrogen flame in which both gases are preheated. **Thus the upper limit of temperature is fixed only by the degree of dissociation of the hydrogen and the rate at which heat is lost by radiation or contact with bodies of lower temperature.**

Rate of Surface Heating by Flames

Although the high temperature of the atomic hydrogen flame is of great importance when it is desired to melt substances of very high melting point such as tungsten, a factor of even greater importance in for example in ordinary welding operations is the speed with which heat can be delivered to a surface per unit area.

If a Bunsen burner flame delivers 51 watts per sq. cm to the whole surface of a black body, it would thus heat it to a maximum temperature of 1730°K. If heat is applied by the flame to one side of a plate-shaped body and the heat is radiated from both sides, the maximum temperature reached would be 1450°K. The fact that the Bunsen flame does not heat bodies so hot as this indicates that the rate of surface heating decreases as the temperature of the body increases. The heat reaches the surface from such a flame by conduction through a relatively stationary film of gas. The decrease in the temperature gradient when the body becomes hot would explain the lower rate of surface heating. With 1330 watts per sq. cm delivered by the atomic hydrogen flame, the temperature of a black body would rise to 3900°K. The power radiated from tungsten at its melting point is 395 watts per sq. cm, and 1330 watts per sq. cm should heat tungsten to about 5300°K.

At such high temperatures, however, the rate of surface heating by an atomic hydrogen flame must decrease because of the fact that the hydrogen remains partly dissociated so that the recombination is not complete. With surface temperatures below 2000°K, however, this factor would be negligible. It is probable that the rate of surface heating would be dependent not so much on the temperature gradient in the surface film of gas as on the rate of diffusion of atomic hydrogen through this film. Thus we may expect the rate of delivery of energy to a metal surface to remain nearly constant until the surface reaches a temperature of at least 2000°K.

Total Heat Delivered to Surfaces

It now became of interest to determine what fraction of the total energy in an arc or a flame could be delivered to a large flat surface against which the flame was directed. For this purpose a cylinder of copper 10.5 cm in diameter and 9.8 cm long was used, which weighed 7950 grams. The flame was directed against one of the flat polished ends, and the rate of temperature rise was measured. A 60-ampere AC are using a torch like that shown on the Fig. 2 produced an atomic hydrogen flame.

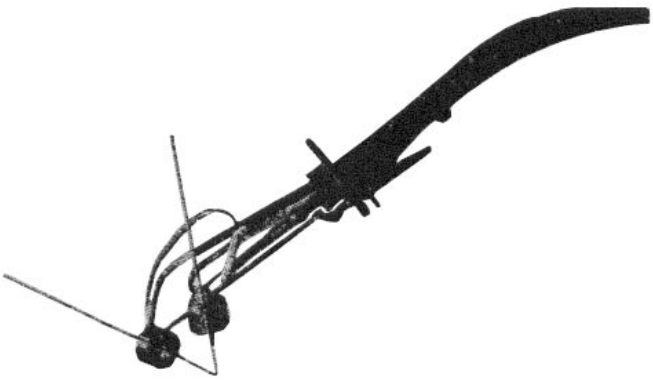

Fig. 2. Atomic Hydrogen Torch

The voltage across the electrodes was 70 volts. A wattmeter showed that the power consumption in the arc was 3510 watts, which gives a power factor of 0.84. The electrodes were tungsten rods 3.2 mm in diameter which made an angle of 55 degrees with one another. The rate of flow of hydrogen which bathed the electrodes was 14.2 liters per minute (30 cubic feet per hour). From the temperature rise of the copper block

the heat delivered to the surface was found to correspond to 3100 watts when the electrode tips were 3 to 5 mm from the copper surface. This decreased to 2800 watts at 13 mm, 2500Wt at 25 mm, and 2200Wt at 35 mm. With the arc turned off but the molecular hydrogen burning in the air, the rate of heating corresponded to 250 watts with the electrodes 6 mm from the surface. Subtracting this energy delivered by the combustion of the hydrogen in the air, we find that the energy carried to the metal by the atomic hydrogen ranged from 2850 to 1950 watts. Thus with the electrodes 3 mm from the metal 82 per cent of the power input into the arc was delivered to the copper surface. This efficiency became 78 per cent at 6 mm, 71 at 13 mm, 65 at 25 mm, and 55 per cent at 35 mm. The power corresponding to the complete combustion of 14.2 liters of hydrogen per minute is 2360 watts. Actually, only 250 watts or 11 per cent of this reaches the copper. The total energy of the arc and the flame of molecular hydrogen is 5870 watts, of which 3100 watts or 53 per cent is delivered to the copper.

An oxy-acetylene flame from a standard welding torch consuming 30.6 liters of oxygen per minute (64.8 cubic feet per hour) and 28.6 liters of acetylene per minute (60.6 cubic feet per hour) delivered energy at the rate of 4400 watts to the copper surface. A smaller torch consuming 13.7 liters of oxygen per minute and 13.0 of acetylene (29.0 and 27.5 cubic feet per hour, respectively) gave energy to the copper at the rate of 3900 watts.

Application of Atomic Hydrogen Flames to Welding of Metals

The high temperature of The Atomic Hydrogen flame, together with its powerful chemical reducing action and the avoidance of gases containing oxygen and nitrogen, render it particularly useful for welding, not only for iron and its alloys, but for such metals and alloys as contain aluminum, magnesium, chromium, manganese, etc.

Fifg. 2. illustrates one of the later forms of torch used for welding. Two tungsten rods, as electrodes, are held at a definite angle to one another by easily adjustable clamps, and a jet of hydrogen is directed from a small nozzle along each of these rods near its end. The hydrogen thus bathes the heated parts of the electrodes and forms a gentle blast of gas which passes through the arc between the electrode tips, and blows the atomic hydrogen away from the electrodes so that these are not unduly heated. Other torches were also built suitable for automatic welding using machine feed. The electrodes were ordinarily separated 3 or 4 mm and the arc assumed a fan shape extending 6 to 10 mm from the electrodes. Alternating current was generally used.

To utilize the atomic hydrogen flame for the welding of metals it became important to have easy and complete control of the flame. Many different forms of welding torches were constructed and tested. The electrodes between which the arc passed were mounted at a convenient angle to one another and were adjustable so that they could be brought into contact at a point which was exposed to a blast of hydrogen from one or more orifices. Thus the atomic hydrogen was blown out of the arc in a definite direction and formed a flame which could be brought into contact with the metal to be welded. The jet of hydrogen also served to bathe all the heated parts of the electrodes and the work, thus preventing oxidation and the introduction of impurities such as nitrogen into the weld.

Hydrogen was supplied by a tube which passed through the handle and then by flexible tubes was delivered to each of the electrode holders and escaped through the annular spaces between the electrodes and the lava insulators. Sufficient hydrogen was used not only to surround each of the electrodes to their tips but to form a blast which blew the atomic hydrogen against the work and bathed it in hydrogen.

Electrical Apparatus

Both the striking voltage and the arc voltage were higher for an arc in hydrogen than for the ordinary welding arc since there was no appreciable amount of metallic vapor generated in the arc. The standard arc welding equipment of those days was therefore not suitable as a power source for operating the atomic hydrogen torch. If direct current was used the arc could be stabilized by a series resistance or a specially designed generator of the constant-current type could also be used. With series resistance a line voltage of 250 was found to give good results.

Alternating current was more convenient and, since the arc could then be stabilized by reactance instead of resistance, greater efficiency was usually obtained. A line voltage of 350 to 400 gave satisfactory operation. Voltages as high as this were needed solely to give stability and to enable the arc to be started at any time by separating the electrodes even when these were cold.

A number of tests were made to determine the voltages required to strike an arc by means of the lever mechanism of the torch. With cold electrodes an open circuit ac voltage of 320 was needed for striking the arc. After the arc had been started and the electrode tips had reached the operating temperature a line voltage of only 150 was sufficient to restart the arc as long as the electrodes remained nearly at the operating temperature. These lower voltages could also be employed to start and maintain the arc if the electrodes were first raised to high temperature by a high current while separating them very slightly so as to have a high contact resistance or by bringing a thin tungsten rod between the separated tips of the electrodes.

It was more convenient, however, to use open circuit voltages of approximately 400V rather than to employ these special means of starting the arcs. In normal operation the drop across the arc was in the neighborhood of 80 volts. To avoid danger to the operator

the entire arc circuit was preferably insulated from ground. A motor-generator was used to give either direct or alternating current for the arc, but it was usually more satisfactory to use a specially designed transformer.

Connections that were used in most of the work to be described are shown on the Fig. 3. When the arc was not operating the electrodes were in contact by the action of the spring attached to the control lever, so that there were no voltages on the electrodes and the torch could be laid down on any material without danger of flashing the operator's eyes. To strike the arc the electrodes were merely separated by pressing the lever.

Should the open-circuit voltage at any time be impressed across the electrodes when separated, or the operator break the arc by spreading the electrodes too far apart, a relay in the arc circuit (contactor *B* as shown on the Fig.3) would trip the feeder circuit, in which case it was necessary for the electrodes to be brought in contact again before the main feeder circuit could be restored.

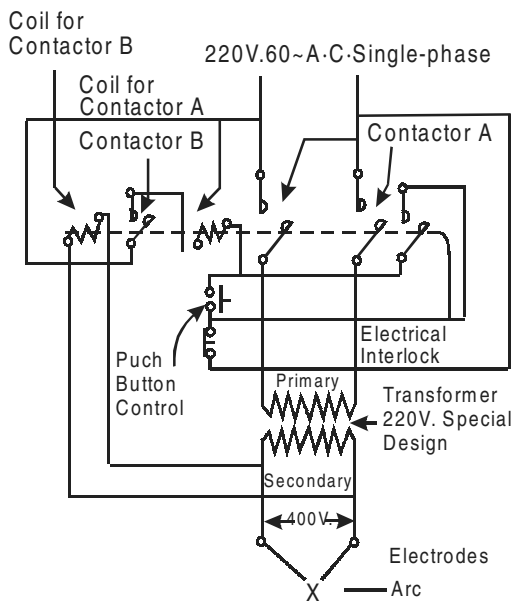

Fig.3. Circuit diagram of apparatus used with atomic hydrogen welding torch.

The voltage drop across the arc while in operation varied from 60 to 100 volts, depending on the amount of opening between the electrode tips. This voltage was nearly independent of the current, between the limits of 20A and 70 A, although a slight decrease in voltage was usually noted when the current was increased. Repeated experiments showed that the lower voltage arc (60 to 80 volts) obtained by separating the electrodes only at $^{1}/_{16}$ or $^{1}/_{8}$ inch had a more concentrated working zone and was the most efficient arc for most kinds of welding.

By bringing the arc closer to the surface of a larger mass of metal it was found that the metal melted very rapidly. For welding, the maximum rate of heating was desired and this was obtained by bringing the torch so close to the metal that the lower portion of the fan shaped arc was just about in contact with the metal and this caused the arc to change its shape somewhat.

The tips of the electrodes were then usually about $^{3}/_{8}$ to $^{1}/_{2}$ inch from the metal. Portions of the arc could at times become shortcircuited by the metal so that the tracks of cathode spots on the metal could be seen, but this seemed to play no important part in the welding process.

Conclusions

The above is a general account of the course of events that led to the development of the atomic hydrogen arc welding technique. Although Langmuir himself had many ideas for other applications of atomic hydrogen, such as using it in melting furnaces, and although General Electric themselves were aware of the vast potential of atomic hydrogen (as expressed by the editor of the General Electric Research Laboratory Publication "….The point of inception of many important practical processes can be found in researches in pure science. Following Dr. Langmuirs discovery of atomic hydrogen, conclusion was reached that flames of this gas make possible new applications of far-reaching importance"), no subsequent effort was made to develop neither the welding method nor any other application using atomic hydrogen.

In spite of the obvious value of the process, industry's excuse for laying the process aside was that it had been 'replaced' by 'better' processes such as Heliarc, TIG, and MIG welding, though *plasma arc welding* is rarely mentioned which has also almost disappeared from the market. Since plasma arc welding is merely an extension of the atomic hydrogen process, the reasons are undoubtedly the same.

As a welding process, atomic hydrogen arc welding was "obsolesced" by MIG and TIG neither of which compare to its welding efficiency and uses. Considering that atomic hydrogen arc welding hardly got of the ground before it was replaced, it is not a far fetched thought to assume that the interests of welding suppliers and electric power companies were being nursed so that more archaic tanks, transformers, gauges, torches, electrodes, gases, fluxes, power etc. could continue to be sold at profit.

The reader is reminded of the fact that Langmuir's experiments and findings were taking place almost 100 years ago. Since then, technology has progressed dramatically in many fields. If Langmuir had at his disposal the knowhow and technology of today, our world may have looked different.

However, we are now in the fortunate situation that we do possess the data of Langmuir's findings, which can be combined with today's technological knowhow. The obvious direction in which to look is the same direction that seems to have been the fundamental

reason for Langmuirs discoveries having been swept under the carpet: CLEAN AND ABUNDANT ENERGY.

If anyone looks up to find any information on atomic hydrogen arc welding, only a few lines will appear, simply informing that "the arc is maintained between two metal electrodes in an atmosphere of hydrogen. Shielding is obtained from the hydrogen. Pressure and/or filler metal may or may not be used. Although the process has limited industrial use today, atomic hydrogen welding is used to weld hard-to-weld metals, such as chrome, nickel, molybdenum steels, Inconel, Monel and stainless steel. Its main application is tool and die repair welding and for the manufacture of steel alloy chains. Also used in special military welding requirements."

Nothing is mentioned of the extraordinary properties of atomic hydrogen, nor of its potential for the use as energy to drive the wheels of mankind. However, and quite surprisingly, in one edition of Van Nostrand's Encyclopedia of Science it was stated *"Hydrogen molecules dissociate to atoms endothermically at high temperatures (heat of dissociation about 103 cal/gram mole) in an electric arc, or by irradiation" ...."the hydrogen atoms recombine at the metal surface to provide heat required for welding."* What is surprising here is that the actual energy value needed for the dissociation of the hydrogen molecule is given, but the calorific value for the recombination of the atoms into molecules is strangely omitted.

From Langmuir's experiments and findings we know that the minimum calorific value for the recombination of atoms was agreed to be in the region 90.000 cal/gram molecule. In other words we have an input energy that 103 cal/gram molecule and an output energy of 90.000 cal/gram molecule. In conventional science this seems to be violating the law of conservation of energy. Langmuir explained this (however, not very convincingly) by the heat being carried forward from the arc to the metal surface. One area which certainly deserves the attention of modern science, is the replication of Langmuirs experiments using high-tech measurement equipment.

During the 1920s there was a general scientific consensus in the community of theoretical physics, that the space between the nucleus of the atom and its orbiting particles, was empty space, vacuum. It was not before the late 1950s that the existence of Zero Point Energy was discovered by the Dutch physicist M. J. Sparnaay. He continued the experiments carried out by Hendrick B. G. Casimir in 1948 which showed the existence of a force between two uncharged plates that arose from electromagnetic energy surrounding the plates in a vacuum.

Mr. Sparnaay discovered that the forces acting on the plates arose from not only thermal energy (heat) but also from another type of radiation now known as classical Zero Point Energy. Mr. Sparnaay determined that not only did the zero point electromagnetic energy exist in a vacuum but also that it persisted even at a temperature of absolute zero. The term Zero Point Energy (ZPE) has been based on the concept that even if matter were cooled down to absolute zero (minus 273°C), in terms of its temperature, the energy field still remains.

Because it exists in a vacuum, ZPE is homogeneous (uniform) and isotropic (identical in all directions) as well as ubiquitous (exists everywhere). In addition, the intensity of the energy at any frequency is proportional to the cube of that frequency. Consequently, the intensity of the energy field increases without limit as the frequency increases resulting in an infinite energy density for the radiation spectrum. With the introduction of the ZPE into the classical electron theory, a vacuum at a temperature of absolute zero is no longer considered empty of all electromagnetic fields. **Instead, the vacuum is now considered as filled with randomly fluctuating fields having the ZPE spectrum.**

The special characteristics of ZPE are, as mentioned above, that it has a virtually infinite energy density and that it is ubiquitous (even present in outer space), which makes it very desirable as an energy source. However, because high energy densities exist at very high frequencies, and because conventional methods are only able to convert or extract energy efficiently at lower frequencies, effectively tapping this energy source has been unavailable using conventional techniques....*Until now!*

Had Langmuir been familiar with ZPE, he would most certainly have reached other conclusions in terms of explaining the extraordinary energy properties of atomic hydrogen. As it was proven by Langmuir, the volume of the hydrogen when dissociated into atoms increases to the double of the volume of its molecular state. Upon recombination, heat energy is released to the tune of 90.000 cal/gram molecule. When incorporating ZPE in the explanation of the hydrogen process, it could be argued **that the hydrogen is not really a fuel but rather a medium, gateway or a super-conductor of ZPE from the vacuum of space, converting ZPE radiation and ultra-high frequency electrical energy into infrared (heat) radiation.** On recombination into molecules the ZPE is "squeezed" out, releasing the absorbed energy.

Actually since heat is infra-red spectrum radiation, the process can be conceived as a means of converting ZPE from an ultra-penetrating cold spectrum radiation, to a mass-reactive infra-red heat spectrum radiation, and that is the proximate source of so called FREE ENERGY, in the form of exothermic heat radiation. ZPE can be analogized to a concentrate of sunshine, except it penetrates all matter all the time and is not affected by day or night, so it can be converted into usable energy at all times with the appropriate technology, such as the atomic hydrogen process. The apparent source of the anomalous exothermic heat produced in "Cold Fusion" is also based on atomic hydrogen.

ATOMIC HYDROGEN FURNACE

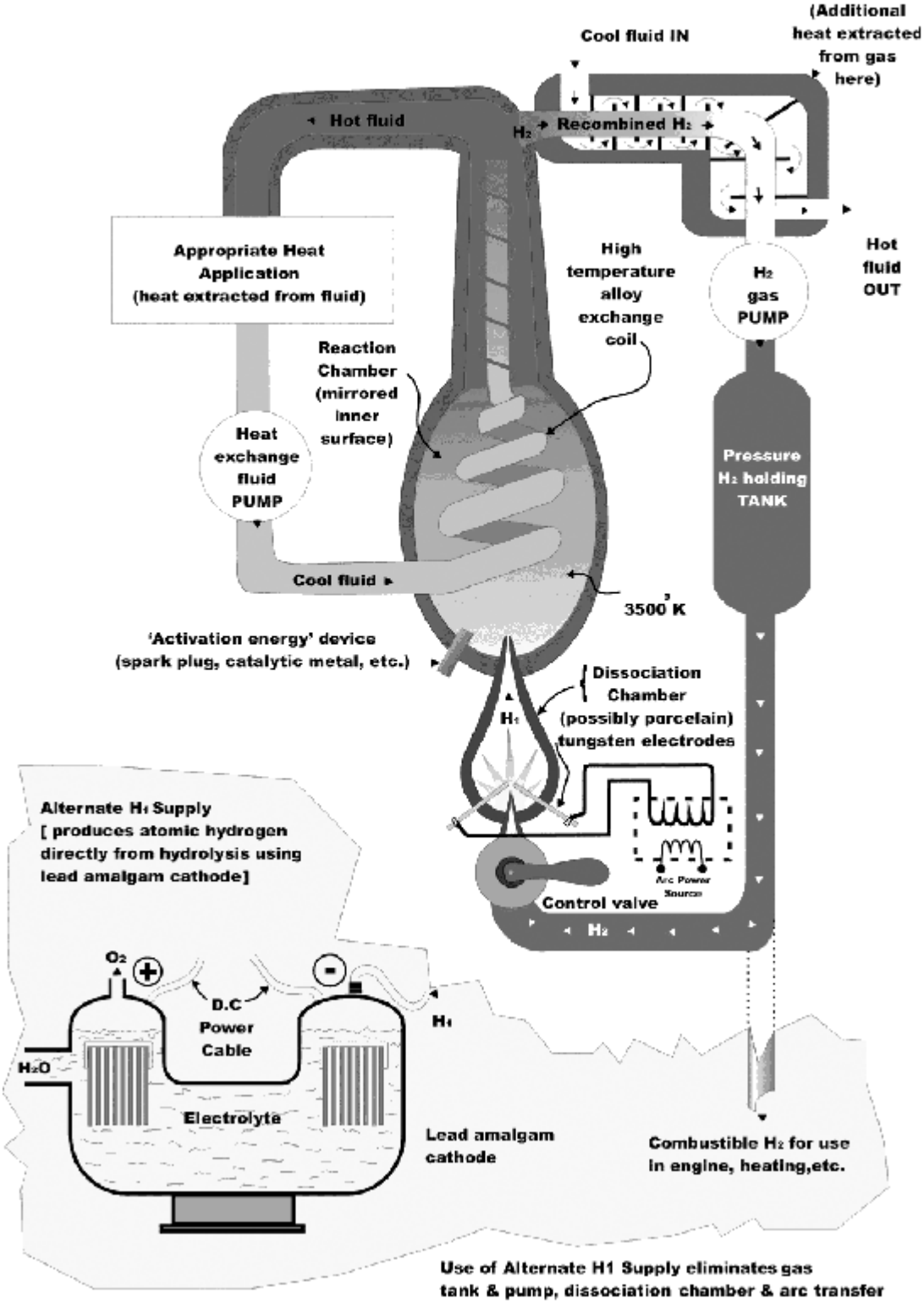

Fig.4

It is important to note that the hydrogen process does not involve a consumption of the hydrogen as it is not combusted in the process. It is merely dissociated and recombined and can therefore be recycled over and over again without consuming more hydrogen than the quantity used to start with.

So how do we move forward and develop a feasible technology that harnesses this abundant and clean source of energy? The answer is simple. Take Langmuirs work, dust it of a bit and upgrade it by applying modern technology and knowhow. The basic design in Fig. 4. should serve as a source of inspiration for researchers to accept the challenge and pour their attention in that direction.

Today we have extensive knowledge of materials, heat-exchangers and direct heat converters producing electricity from heat without any movable parts by using photo-voltaic technology. Even an atomic hydrogen torch is now available in the market (see Fig.5.), that could eliminate the use and consumption of Tungsten which unfortunately is becoming a relatively scarce commodity and therefore increasingly expensive.

Fig.5

This Atomic Hydrogen source works by thermally dissociating hydrogen in an electron bombardment heated tungsten capillary and was developed for the following applications:

- Damage free in situ cleaning e.g GaAs, InP, Ge and Si. Removal of residual oxygen and carbon.
- Low temperature cleaning
- Surfactant - improvement of layer properties during growth
- Post growth surface treatment/improvement
- Chemical passivation and surface reconstruction
- Annealing of amorphous silicon

However, modifying this torch to serve an Atomic Hydrogen Energy Generator should not represent a big problem. Langmuirs method of dissociating hydrogen could also be improved considerably by bringing down the expenditure of electric power and by increasing the degree of dissociation as well as the degree of recombination at the catalytic metal surface.

Relative simple and inexpensive research will do the job in a very short period of time. The investment of time, work and funds is so negligible in comparison to the potentially gigantic rewards, that it should appear very difficult for any researcher in any relevant field to find a viable excuse for remaining inactive in this respect.

Below is a comparison of values for commercial fuels in MJ/kg (megajoules/kilogram):

	Gross	**Net**
Hydrogen	141.9	120.0
Carbon to Carbon monoxide	10.2	-
Carbon to Carbon dioxide	32.8	-
Sulfer to Sulfur dioxide	9.16	-
Natural Gas	53.1	48.0
Liquefied petroleum gas	49.8	46.1
Aviation gasoline	46.0	44.0
Automotive gasoline	45.8	43.8
Kerosene	46.3	43.3
Diesel	45.3	42.5

The value at the top of the list is for ***molecular*** hydrogen as opposed to the value of ***atomic*** hydrogen which is over ten times higher.

The value at the top of the list is for ***molecular*** hydrogen which does not even come anywhere close to the energy value of ***atomic*** hydrogen. These figures alone, should be enough to attract both funding and brainpower to research. Due to the connotations that the word "atomic" has in everyday language, the reader is reminded that the term "Atomic Hydrogen" does not in any way imply the existence of nuclear radioactivity. The term is used solely to distinguish between molecular and atomic hydrogen. The Atomic Hydrogen Process is 100% CLEAN and SAFE.

When you add the fact that the hydrogen is not consumed in the "burning" process, and can thus be recycled, it should become very clear to any scientist, humanist, environmentalist, business executive and indeed to every human being that is concerned about the state of our wonderful planet, that no more time should be wasted.

The time has come for removing the responsibility of defining the energy policies and structures of the future from the hands of the established energy industries, and place it in the hands of men of science who will work for the preservation of the environment that sustains all life on Earth. Men who will work for the economic development of the third world by means of providing clean, abundant and inexpensive energy technologies.

Such initiative will only succeed when massively supported by the visionary captains of industry who will have the courage to dismantle the existing and

scandalous energy grid which now envelopes our planet, by investing in the production and marketing of small energy generators for individual households, factories, transport etc.

Once such a generator has been acquired by the consumer, his further energy requirements will be covered for *FREE,* giving him independence in terms of energy as well as increased buying power any other economic development.

However, before industry will move, Science and the Individual in society must join hands and raise a highly visible flag, proclaiming the desirability and the feasibility of such technologies.

Nicholas Moller, August 2001.

Scalar Wars
The Brave New World of Scalar Electromagnetics

Bill Morgan

"Electric power is everywhere present in unlimited quantities and can drive the world's machinery without the need of coal, oil, gas, or any other of the common fuels." Nikola Tesla

"At any point and at any time, one can freely and inexpensively extract enormous EM energy flows directly from the active vacuum itself." Tom Bearden

(Published in short by Alexander V. Frolov's edition)

Editor's note: In this very interesting article you can find important Bearden's idea on scalar electromagnetism and its relation with MEG (motionless electromagnetic generator). I removed from original text most of text about weaponization of this technology.

For the past six months I have been undergoing the greatest **paradigm shift** I have ever had to go through. It has rattled my nerves and shaken my bones. This intense adjustment of my "world"has come about by studying the information given by Col. Tom Bearden at his website Cheniere. The new knowledge there has necessitated a total revision of my ideas about physical reality, the world we live in, and the future of humanity. This paradigm shifting even actually made me dizzy on certain days as I tried to absorb and digest Bearden's vast amount of information. I am not a scientist at all, just a layman, and I have little comprehension of the math and high physics of this new science called "**Scalar Electromagnetics**." But there is a great deal of information at Cheniere which needs to become common knowledge as fast as possible, for the sake of the survival of life on earth. To that end I have put together this small primer of Bearden's ideas, as a kind of "beginner's guide" to his website. (I have tried to underline certain words and phrases which are part of the new "jargon" of talking about these "new" phenomena. Also I have taken the liberty of bolding certain words and phrases to help them stick in the mind).

(Note: Throughout "**EM**" means "**electromagnetic**," and "**LW**" means "**longitudinal wave**")

1. New waves discovered

Longitudinal EM energy fills vacuum of space, the time domain of spacetime, time as compressed energy, $E=tc^2$, waves of time, phase conjugate wave pairs.

Some Immediate Implications

The implications of successful engineering of the longitudinal waves are enormous, and will change the world as we know it, one way or another. Among other things, these discoveries mean that:

1. The **solutions to the energy crisis and the "oil problem" are in hand**. These oil wars are unnecessary. There is endless energy available freely from the domain of time.

2. **Unbelievably powerful weapons** are not only possible, but are already operating in several nations. The many powers of these weapons are unprecedented and mind-boggling.

3. The cure of diseases such as cancer and AIDS, in fact nearly any disease, has become possible within a few years of sufficient funding. Everyone can be made healthy and stay healthy.

4. **Mind control on a mass scale** has now become possible, and the machines to do it are already in place in certain nations. It has become possible to mentally enslave whole populations with the twist of a few dials. **So the layman will need to understand that there is a new kind of electromagnetic energy that is altogether different from what he knows, e.g. radio, TV, cell phones, etc. The ordinary EM waves that we have known about are called transverse EM waves, to distinguish them from the new longitudinal EM waves. These scalar waves do not actually exist in our "material" world, but exist only in the vacuum of empty space, or the time domain. And we must keep in mind that this vacuum of space we speak of exists all through everything. Even our bodies are mostly empty space between atoms and molecules. So the gateway to this seething ocean of energy can be there at every point in the universe. This seething ocean of energy is all around us and all through us.**

Hydrogen Energy

V.V. Studennikov

117574, Russia, Moscow, Vil'nusskaya str., 4-339
Tel. 7-095-421-1387, e-mail: ehg@com2com.ru

G.I. Kudymov

115580, Russia, Moscow, Jalilya str, 27, building 2, apt 284
Tel/fax 7-095-396-8027

Editorial: in this work Studennikov and Kudymov develop the problem of hydrogen energy. Their electrical hydrogen generator (EHG) is realized as a prototype of 150 KWt heat power. The authors create an artificial gravitational field by means of rotation. With this they produce cheap hydrogen and electric input is very small. Really, we believe that the authors are modest, because effectiveness of their system is more than 100%. The excessive power produced by their generator is compensated by environmental heat.

Letter to editor

Dear Alexander Frolov!

Thank you for your complimentary estimation of our modest work. You are right we should have more publications. Let's publish our work. Lenin sometimes gave wise thoughts such as "Idea that got the control over people masses, is a material force".

Situation with hydrogen energy in Russia is very inauspicious. To make sure that it is right, let's try to brows for "hydrogen energy" in Alta Vista Internet search system. As a result you will find thousands of websites devoted to this problem. In Russia this problem is worked out only by Kurtchatovsky Institute and our Institute. Energy Department of USA spends 200 millions dollars annually to finance R&D work on this problem. We do all this work on our enthusiasm only. The most interesting fact that now we are in the vanguard of this research. Of course, we are not able to keep our positions for a long time. In this case a critical situation can appear in Russian economy, because it is based on the export of energy resources.

With regard,
Studennikov V.V.

Introduction

It became absolutely evident in the last decade that the further intensive development of modern energetics and transport lead humanity to the large-scale ecological crisis. A rapid reduction of fossil fuel resources on a background of natural annual growth of energy consumption constrains industrially developed countries to extend the system of atomic energy installations. These installations increase the damage of their exploitation in a higher extent. The problem of recycling of radioactive wastes is sharply increasing.

Taking into account this alarming situation, many scientists and experts support the more rapid search of alternative non-traditional energy sources and application of new energy resources in energetics and transport. In particular, they draw attention to hydrogen. Resources of hydrogen in the waters of World Ocean are inexhaustible. Besides, the indisputable advantages of this fuel are the comparative environmental safety of usage, acceptability for heat-engines without any considerable changes in their design, high calorie content, possibility of long-term storage, transportation by existing transport network, non-toxicity, etc. However, the essential problem to get over up to the present day is the problem of diseconomy of its production. More than 600 firms, companies, concerns, university laboratories and social scientific and technical organizations of Western Europe, USA, Australia, Canada and Japan are working hardly to make hydrogen cheaper (see the magazine "Avtomobilny Transport" /"Motor Transport"/, #4, 1992, p. 38). Successful solution of this problem will revolutionary change all world economy and will improve our environment.

Description

There are numerous known ways to decompose water. They are chemical, thermochemical, electrolysis and others, but all of them have one big shortcoming. A very expensive and high-grade energy is used in the technological process of hydrogen production. In its turn, to produce this energy we should spend the unprofitable fossil fuel (coal, natural gas, oil products) or electrical energy produced on electric power stations. Suffice it to say that during the traditional electrolysis in industrial conditions the electrical energy consumption to produce one cubic meter of hydrogen constitutes 18-21 MJ and total energy consumption (taking into account the production of electrical energy itself) exceeds 50 MJ. It makes hydrogen to be very expensive (about 2\$/m^3).

At the same time, our planet literally bathes in the flow of heat energy, produced by the Sun, earth bowels and human activity. The problem is only to introduce this inexhaustible source of free low-grade heat to the industrial technology of hydrogen production. Now the hypothesis is developed and its theoretical scientific validation is given. According to this hypothesis there is a principal possibility to transform the heat of any origin directly to the potential chemical energy by means of water decomposition into hydrogen and oxygen in the solution of electrolyte placed in the strong artificial inertial field. ***Thereby, we can replace the traditional energy in the common energy balance of electrochemical process of water decomposition to the heat of external source and mechanical energy of inertial field.*** This natural physical and chemical phenomenon got the name of ***gravitational electrolysis***. An efficient device, electrical hydrogen generator (EHG) was designed and patented according to RST system (international application RU98/00190 of 07.10.97) to provide this electrolysis.

It is operated by mechanical drive and works with a common temperature in the mode of heat pump. This device absorbs the necessary heat from the environment through its heat exchanger or utilizes the heat wastes of industrial or transport energy installations. In the process of water decomposition the excessive energy applied to the drive of EHG can be transformed into electric energy on 80%. This energy then can be used in external active load. During this process from 20 to 88 energy units of low-grade heat are absorbed for every unit of consumed power. It depends on the given operation mode. This process compensates the negative thermal effect of water decomposition as a chemical reaction. In the generator of one cubic meter of operation volume (for the optimal mode with efficiency of 86-98%) we can produce 3,5 m^3 of hydrogen per second together with about 2,2 MJ of direct electric current. Unit heat power of EHG can vary from few tens Watt up to 1000 MWatt dependently of the technical task. Designed specific energy consumption to produce gaseous hydrogen constitutes 14,42 MJ/ m^3. Since we use only free heat in this process, the cost of production of 1 cubic meter of hydrogen decreases up to 0,0038$ and becomes 2,5-3 times cheaper than the total cost of production and transportation of equivalent volume of natural gas.

The wide range of control and nonordinary specific performance of this process allows applying the invention in big and small energetics with a guaranteed success. The application is possible in various kinds of transport, in agriculture, in municipal economy, in chemical, cement, pulp and paper, refrigeration, atomic and space industries, non-ferrous and ferrous metallurgy, for the water desalination, welding fabrication, etc.

Physical essence of the operating process of EHG is very simple and it is a logical development of the known physical experiments by Tolmen and Stewart made in 1916. It is known that electrolyte dissociate in ions, which are hydrated by molecules of water, during its solution. As a result, hydrated shells of different density are formed around them. Energy of interaction of hydrated unlike ions with each other sharply decreases and becomes closer to the energy of Brownian motion of water molecules (with 18^0C $Wk=3/2\ KT=6\cdot10^{-21}$J, where K is Boltzmann constant, T is an absolute temperature). If we place the concentrated solution of dissocated electrolyte having a significant difference of anion and cation masses to the strong artificial gravitational (inertial) field (for example, to rotate it into the EHG reservoir) and the effective rate of rotation for various electrolytes and parameters of the device is 1500-45000 rpm, then ions will begin partly separating.

Heavy ions influence each other with their electrical field and they will move to the periphery of the reservoir. With this their kinetic energy will be close to the energy of heat movement. For example, for the ion BrO3 having the mass of $m=21{,}26\cdot10^{-26}$kg and with the peripheral velocity $V=330\ m/s^{-1}$(the inner diameter of the reservoir is 0,14 m, rate of rotation is 45000 rpm), kinetic energy will constitute $W=0{,}5m\upsilon^2=11{,}57\cdot10^{-21}$ J. The extreme ions will press to the inner surface and will create the spatial concentrated electrical potential. **With this the resulting centrifugal force acting on ions pressed to anode (anions) will destroy their hydrate shells as the weakest ones.** The light ions are less responsive to gravitation and they surrounded with more strong shells. That's why they cannot give their molecules of water to the heavy ions. Due to these circumstances they will concentrate above the heavy ions and in the area of rotation axis (near cathode) forming the electrical potential of the opposite sign. Free electrons in anode will move to cathode under the action of spatial (volumetric) anion charge (it is a known property of Faraday cage). For some minimal (threshold) rate of rotation with given electrolyte, i.e. for some critical value of electrical potentials on electrodes, the balance of charges will be broken. Electrons will leave cathode and will ionize the molecules of hydrated shells, and these shells will pass charges to cations. **In other words, the electric disruption of this electrolytic condenser will take place and discharge of ions will begin. During this process free hydrogen will form on cathode and oxygen and anodic gases (deposit) will form on anode.**

Thus, due to the action of natural principle of energy reversibility, gravitational filed will create an electrical field energetically adequate to it, which will overcome the energy of aquation and will provide an electrolysis. This process goes with the absorption of heat through the heat exchanger and it requires a constant dilution with water to get the initial concentration of the solution. Its principal energy scheme in many respects is similar to the scheme of traditional electrolysis, but in this scheme the external expensive electric current is not necessary. The environmental heat or other sources is used here.

Some formulas:

In the solution $HBrO_3 \rightarrow H^+ + BrO_3^-$

or , for example, $H_2O + SO_2 + 0{,}5\ O_2 \rightarrow H_2SO_4$

$H_2SO_4 \rightarrow 2\ H^+ + SO_4^-$

On cathode $H^+ + 2e \rightarrow H_2^-$

On anode $2BrO_3^- - 2\ e^- \rightarrow 0{,}5\ O_2^- + Br_2O_5$

or $SO_4 - 2\ e \rightarrow SO_2^- + O_2^-$

In the near-anodic space the reaction of deposit with hydration water

$Br_2O_5 + H_2O \rightarrow 2HBrO_3$

or $H_2O + SO_2 \rightarrow H_2SO_3$

$HBrO_3 \rightarrow H^+ + BrO_3^-$

$H_2SO_3 \rightarrow 2\ H^+ + SO_3^-$

Here we should note four very essential features of gravitational electrolysis.

First, the work of mechanical inertial field, which is spent to the precipitation of water molecules, light and particular heavy ions, is almost fully returned to the system. It is a kinetic energy of hydrogen, oxygen and anodic gases floating to the axis, because their density is smaller than the density of solution. As a result, the sum of angular momentum of initial and final products of electrolysis becomes close to zero, i.e. mechanical work of EHG drive is consumed mainly against frictional force. The anodic deposit and floated gases react again with water and oxygen to form the initial composition of the solution.

Secondly, intensive self-cooling of the solution provides the condition for the absorption of heat from environment or other sources to compensate the endothermic effect of decomposition reaction of water, i.e. the work in the mode of high-efficiency heat pump. Flora of the Earth have been used heat for hundreds millions years to decompose water and carbonic acid gas for built-up of hydrocarbon biomass. It is known from practice that this process goes in the conditions of full darkness, for example, in old mines, caves, cellars of houses or metro tunnels. Therefore, the spontaneous thermochemical process of transition or transformation of heat to the potential chemical energy is principally possible in nature. The second law of thermodynamics proves this fact and point out the increase of entropy of the system.

Thirdly, it is able to produce direct electrical current on the external load in the case, if the rotation frequency of the reservoir is more than minimal necessary (threshold) one. Then EHG shows the properties of electric generator with voltage-current characteristic of condenser type (voltage on the clamps is in direct proportion to the external load).

Fourthly, EHG simultaneously is an electrical generator of direct current and electrolyzer.

And at last, the use of free heat of environment, heat waists of industrial, energy systems or transport in the process of hydrogen production sharply decrease production cost of this gas. All this features provide incomparable higher efficiency of the gravitational electrolysis, and therefore, higher economy.

Application

The electric hydrogen generator is simple in construction and matches the assembling of various powered propulsion systems of transport, for example, automobile, bus, agricultural implement, diesel locomotive or tractor. It is good in unitizing with all these systems, with heat turbines in particular. Along with the solution of main technical and economic problem, a precondition to create the principally new, more perfect transport in near future is formed. It will be a mass electric vehicle with big fuel distance, working on the heat-mechanic source of current.

Application of EHG as a utilizer of heat on numerous compressor plants of gas-main pipelines will allow 2-2,5 time increasing of fuel efficiency of turbounits due to the utilization of their heat waists and heat emitting during compression of natural gas to produce hydrogen, which can fill up the consumption of hydrocarbon fuel in 60% and thus provide its tangible saving, i.e. to increase the sales volume without increase of production.

The idea to cool the cargo natural gas up to the minus temperature seems to be promising. It will allow applying the elevator (gas-static) principle of creation of additional excessive pressure in the gas-main (approximately in 6-8%) as well as to increase the throughput capacity and lifetime of the pipeline. Heat extracted from natural gas can be transformed and used to the needs of economic organizations, which are situated along the trace of gas pipeline…

Energy advantages of this method are evident, especially in the mountain conditions of gas pipeline laying. Equipment of drivers of road-building techniques and various self-propelled machines with EHG will 1,7-2 times decrease the consumption of diesel or gaseous fuel. It will entail the decrease of cost of construction work.

Conversion of railway transport to systems with EHG application promises a sharp decrease of exploitation costs on the technical service of electric mains and considerable saving of electric power.

EHG on the sea crafts and riverboats can use the heat of outboard water and it will give a chance to change the atomic energy installation. It will allow increasing the efficient tonnage and ecological safety of vessel exploitation with an actual unlimited autonomy of navigation. Together with this, instead of traditional screw we can use the direct transformation of chemical energy of burnt hydrogen and oxygen to the mechanical kinetic energy of the uniflow water-jet propellers. It will simplify the design of propulsion engine of the vessel. Floating mobile electrogas generator stations can provide big coastal settlements, industrial or agricultural objects with free heat and electrical power. Design value of production of 1 MJ of heat in Russia will constitute 0,00027-0,0004 $ and production of electrical power will be 0,0008 - 0,0011 $.

EHG can be applied for aircraft also. In this case heat exchangers additionally should include the onboard condenser of water steam of auxiliary gas turbo-prop engine, which works on pure hydrogen-oxygen mix. It will give a chance to multiple usage of minimal recycle water in the closed circle as well as to adequately provide the vehicle with electric power. Such design will entail the decrease of the flight weight due to decrease of fuel storage, and therefore, will increase the load capacity of aircraft.

EHG on the space stations can replace gyroscopes and traditional solar batteries as well as provide the space jet engines with effective, much more cheaper and safe fuel.

Utilization of excessive heat in coalmines liquidates a sharp problem of coal mining safety. Underground burning of coal remains in unpromising mines and using of the received heat to produce hydrogen fuel and electric power will decide social problems of coal-mining regions.

Various modifications of power range of EHG can be applied in small stationary and mobile energetics, particularly in the field of energy supply of remote settlements, military and industrial objects, expeditions, farms, drying machines, greenhouses, etc. In the last case the perennial gross production of crop production in the regions of cold climate will be possible. The energy source for EHG can be the heat of any reservoirs, industrial and household drains, heat from rubbish burning and organic wastes, inner or outer air (for example, from metro, mines, residential and public constructions), various industrial vapor and gases including those from metallurgy, chemistry and heat-and-power engineering, compost pits in agriculture as well as solar, wind and geothermal energy.

Application of this invention on the acting heat and nuclear power plants will substantially increase their profitability due to the effective use of heat losses.

There is a real possibility of conversion of heat power plants to use hydrogen as a fuel. This hydrogen is produced from the transformation of heat of nearby water reservoirs. In this case the cost of electric power production will 1,5 times decrease. In ferrous metallurgy hydrogen will replace the expensive and scarce coke. It will allow organizing more effective ladle process of steel production, to heat furnaces and apply oxygen, secondary emitted during the reaction of water decomposition, in convectors, but not produce it especially for this purpose. With this, tubes of metallurgical plants will stop to release the hundreds thousands tons of carbonic acid gas to the atmosphere.

This invention is the most interesting one for specialists, which work with the problems of separation of various inorganic materials, for example, with uranium enrichment. The suggested method allows dividing isotopes U235 and U238 continuously, simply and effectively, simultaneously extracting them from the water solution as a metal powder, i.e. to combine these two different processes in one high-performance and compact device.

The simplicity of EHG design to the industrial plants gives a possibility to develop a production run of some the simplest modifications of this generator for needs of small energetics during few months and without any particular technical-organizational efforts and significant investments. Modernization of active freight automobile and bus parks in the country can be the first stage of a large-scale application of the invention on transport. Some more spending and time will be required to develop EHG for other kinds of transport and powerful energy complex. But final qualitative results will be much more higher here. With serial production run of the generator in specific Russian conditions the cost of production of this device is evaluated to be 25-28$/KWt of heat power. The estimated profitability of investment into the mastering of innovation constitutes more than 100% with the payback period of less then 1,5 years. The annual economic effect of application of the generator constitutes of about 87 $/KWt of its heat power.

Prototype

You can address the authors for the detailed scientific and technical validation of operation process of gravitational electrolysis, comments and references of scientific institutions as well as design documentation and see the prototype of the generator.

Main features of the prototype of electrical hydrogen generator.

1. Rotation frequency of the rotor, rpm	13000
2. Electrical drive capacity, kWatt	5
3. Productivity on hydrogen, liter per second	12,3
4. Heat power, kWatt	150
5. Mass, kg	143

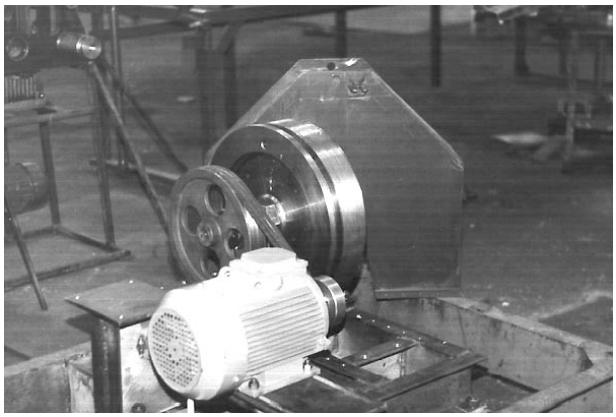

Editorial: below there is an information on interesting organizing aspects in the deal of development of the "Gravitational Electrolysis" technology.

On January, 2002 Mr. Studennikov presented a press release about GenOil Inc. He claimed that deal between Hydrogen Solutions Inc. and GenOil Inc was illegal. The new company Hydrogen Solution Inc. was created without participation of Dr. Studennikov who was one of principal co-authors of the technology. This fact violates author's rights, which officially belong to EHG Technology L.L.C. (co-owners are Mr. Studennikov and Mr. Kudimov).

Dr. Studennikov has an intention to appeal against Hydrogen Solutions Inc.

About Strange Effects Related to Rotating Magnetic Systems

M. Pitkanen

Dept. of Physics, University of Helsinki, Helsinki, Finland.
Email: matpitka@rock.helsinki.fi
http://www.physics.helsinki.fi/~matpitka/.

Abstract

The basic hypothesis of topological geometrodynamics (TGD) is that spacetime is representable as a 4-surface in 8-dimensional space $M^4_+ \times CP_2$. The notion of manysheeted spacetime forced by this hypothesis implies numerous new physical effects including gravitational anomalies, the possibility of negative energy spacetime sheets makes possible the overunity energy production and classical communications to the geometric past. The geometrization of the classical gauge fields in turn predicts the existence of long range colour and electroweak gauge fields, in particular classical Z^0 field, which gives rise to macroscopic effects resembling those assigned usually with torsion fields. In this article the strange findings about the physics of rotating magnetic systems are discussed in order to illustrate the new physics predicted by TGD.

Classical TGD in nutshell

Topological Geometro-Dynamics (TGD) is a unified theory of fundamental interactions, which appeared as an attempt to construct a Poincare invariant theory of gravitation [1,2,3,4]. Spacetime, rather than being an abstract manifold endowed with a pseudo-Riemannian structure, is regarded to be the 4-surface in the 8-dimensional space $H= M^4_+ \times CP_2$, where M^4_+ denotes the interior of the future light cone of the Minkowski space (to be referred as a light cone in the sequel) and $CP_2= SU(3) / U(2)$ is the complex projective space of two complex dimensions [1]. The identification of spacetime as a submanifold of $M^4_+ \times CP_2$ leads to Poincare invariance broken only in cosmological scales and solves conceptual difficulties related to the definition of the energy-momentum in General Relativity. Sub-manifold geometry, being considerably richer in structure than the abstract manifold geometry, leads to a geometrization of all basic interactions and elementary particle quantum numbers. In particular, classical electroweak gauge fields are obtained by inducing the spinor curvature of CP_2 to the spacetime surface.

TGD approach forces a generalization of the conventional spacetime concept to what might be called manysheeted spacetime. The topologically trivial 3-space of General Relativity is replaced with a "topological condensate» containing matter as particle like 3-surfaces "glued" to the topologically trivial background spacetime sheet by connected sum operation. Spacetime sheets have outer boundaries and form a hierarchical structure. Macroscopic material bodies are identified as 3-surfaces with boundary identified as the outer surface of the macroscopic body. This implies a radical reformulation of the condensed matter physics. Spacetime sheets are connected to each other by wormhole contacts and join along boundaries bonds. Various new physical effects related to the manysheeted spacetime concept are described in four books about TGD: see for instance, the chapters "TGD and Nuclear Physics" and "Anomalies Explainable by TGD Based Spacetime Concept" in [2]. Manysheeted spacetime concept is especially important in TGD inspired theory of consciousness and its applications to biosystems [3,4].

Various new physics effects related to many-sheeted spacetime concept

Many-sheeted spacetime concept implies several new physical effects. Effects important in the recent context are the following.

a) Topological field quantization: classical fields have kind of a Bohr orbit representation as spacetime sheets. For instance, magnetic field decomposes to magnetic flux tubes with quantized magnetic fluxes so that spacetime 'ends' at the boundaries of magnetic flux tubes.

b) **Spacetime sheets can have negative time orientation and negative energies.** This makes possible **effective over unity energy production** and classical signalling to the direction of geometric past (in TGD subjective time and geometric time are two different notions).

c) Gravitational flux from a given spacetime sheet can be distributed in several manners among larger spacetime sheets in the hierarchy and effective gravitational flux from this spacetime sheet (its effective gravitational mass) to a given spacetime sheet can thus vary: this implies gravitational anomalies and can lead to an effective variation of the gravitational coupling constant. **Also the reduction of gravitational mass of rotating body becomes possible by a mechanism to be described in more detail below.**

d) Vacuum can carry purely geometric charge densities: the electric potential associated with a rotating magnetic disk provides an example of this kind of effect observed already by Faraday. In Maxwell's theory this charge density must be due to charged particles.

e) TGD predicts the existence of classical long-range Z^0 fields above cellular length scale. In particular, Z^0 magnetic fields are possible even when system has a vanishing Z^0 charge density (neutrinos screen the Z^0 charge of atomic nuclei). **The effects thought to be due to torsion fields [8,9] could be due to classical Z^0 fields.** Large parity breaking effects in long length scales are the signatures of these fields.

Two examples of new physical effects not directly related to the recent context deserve to be mentioned because of their fundamental role in TGD Universe.

a) The so-called 'massless extremals' (MEs) represent classical gauge fields propagating with light velocity without dispersion. The propagation of energy is channelled and the lightlike vacuum current at given point is completely non-deterministic so that classically **MEs are optimal for communications**. The lightlike vacuum current generates coherent photons and MEs act as quantum holograms. MEs play a key role in TGD inspired theory of consciousness [3,4].

b) Manysheeted spacetime makes possible macroscopic quantum phases at non-atomic spacetime sheets, which contain very low densities of particles and can be in extremely low temperatures. In particular, the flux tubes of Earth's magnetic field carry ionic supra phases. These macroscopic quantum phases are crucial for TGD based model of biosystems [3,4].

The effects related to rotating magnetic systems and manysheeted spacetime concept

In the sequel the effects reported by Roshchin and Godin in their article 'An experimental investigation of the physical effects in a dynamic magnetic system' [5] are discussed as a possible manifestation of various new physics predicted by TGD. A more general discussion of various anomalous effects can be found in the chapter "Anomalies explainable by TGD based spacetime concept" of [2]. The model discussed here involves also new and crucial aspects, which became clear during writing of this article.

Gravitational anomalies and manysheeted spacetime

TGD spacetime is manysheeted surface in $H = M^4_+ \times CP_2$, which can be regarded as the future lightcone of Minkowski space with points replaced with CP_2 having size about 10^4 of Planck lengths. One can visualize the spacetime sheets as almost parallel pieces of plane glued together by wormhole contacts and also connected by join along boundaries bonds (for illustrations see my homepage http://www.physics.helsinki.fi/~matpitka/illua.html.). The distance between the sheets is about CP_2 radius.

This makes possible antigravitation like effects since a macroscopic object (itself a spacetime sheet containing hierarchy of smaller spacetime sheets glued to it) can feed its gravitational flux to several spacetime sheets. By modifying somehow the standard distribution of gravitational flux between various spacetime sheets, one could produce gravitational anomalies at a given spacetime sheet. More precisely, what happens is that the gravitational force experienced by the object is replaced with

$$F_{gr} = \sum_i M_i F_{gr,i} ,$$

where the summation over spacetime sheets is understood. This means that the simple Newtonian picture fails and the determination of the gravitational constant can give varying values.

The first idea to come into mind is that **this effect might be responsible for the huge loss of weight in the experimental arrangement studied by Roshchin and Godin [5].** Part of the gravitational flux of the rotating magnet would flow to some other spacetime sheet than 'ours' so that magnet would loose part of its weight. The experiments suggest that effect can be very large (30 per cent loss of effective weight). A little thought experimentation however suggests that this mechanism very probably does not explain the observed loss of weight.

The loss of weight should relate directly to the rotation of the system and this serves as a hint about what might be involved.

a) The gravitational flux of the rotating system runs to larger spacetime sheets by two alternative mechanisms: through extremely tiny wormhole contacts with CP_2 size and via join along boundaries bonds connecting the boundary of the rotating spacetime sheet to the boundary regions of the larger spacetime sheets.

b) When the system rotates, join along boundaries bonds (in particular, gravitational flux tubes) get entangled. This relates interestingly to the orientation-entanglement relation discovered by Dirac. When one connects the corners of a cube D_1 to the corresponding corners of a larger cube D_2 containing D_1 by elastic threads and rotates D_1, the threads get entangled. Rather remarkably, for a 2π rotation entanglement cannot be straightened out, but can be done so for a 4π rotation: thus also classically 2π rotation can be non-trivial operation physically! The reason is that the entangled threads provide a geometric representation for the homotopy group Z_2 of SO(3) realized by the rotations of the smaller cube. Join along boundaries bonds carrying gauge and gravitational fluxes realize this fictive system invented by Dirac quite concretely in TGD framework.

c) One might expect that if the rotation velocity gets too high, gravitational flux tubes are not able to straighten out their entanglement and begin to split much like the magnetic flux tubes of the solar magnetic field. The splitting generates negative and positive gravitational charges at the ends of the flux tubes. The gravitational flux entering to the external world from the rotating system is not changed but the gravitational mass of the rotating system itself gets gradually lower since it is gradually transferred to the boundary of the external world spacetime sheet where it acts like a surface charge.

d) At the extreme situation system has neither wormhole contacts nor join along boundaries contacts to the larger spacetime sheets and **has a vanishing gravitational mass (using TGD terminology, system has suffered 'topological evaporation') in accordance with the fact that closed 3-space has a vanishing gravitational mass**. The system could still have an inertial mass so that equivalence principle would not hold true. The long length scale limit of TGD indeed allows also solutions, for which Einstein's equations are not true (see the chapter "TGD and GRT" of [1]).

e) The findings of [5] suggest that at least 30 percent of gravitational flux of the rotating magnet flows join along boundaries bonds to the larger spacetime sheets. If magnetic flux tubes serve also as gravitational flux tubes, **the splitting would generate also effective magnetic monopoles.**

By its extreme generality, this mechanism might be behind all reported loss of weight phenomena, for instance, those reported in [6,7]. In particular, in the experiment by Podkletnov the effective reduction of the gravitational field above the rotating superconductor could be due to the rotation of the mass of air above the superconductor defining a spacetime sheet and leading to the splitting of the gravitational flux tubes so that the gravitational potential is reduced. For instance, pressure gradient is not anymore balanced by gravitational force and air begins to flow upwards.

An obvious question relates to the linear friction known to be proportional to the weight of the system (the reason for which is in fact still today poorly understood!). If gravitational join along boundaries bonds are responsible for the friction, then the proportionality of the frictional force to gravitational force could be understood. **If gravitational flux tubes split when the object slides sufficiently fast, the gravitational mass of the object should be reduced.** Note however that the object put in motion along the support of a scale does not demonstrate this effect since the support receives the lost gravitational mass. What would however happen is that the nearby gravitational field generated by the object plus scale behaves anomalously, since only part of object's gravitational mass would be moving.

Generation of negative energy spacetime sheets in rotating magnetic systems

The very fact that spacetime is a 4-surface means that energy momentum tensor is replaced with a collection of conserved vector currents. This makes Poincare invariance exact apart from a cosmological breaking caused by the lightcone boundary, and the notions of energy and momenta are well defined unlike in General Relatitivity.

One important implication is that the sign of the energy depends on the time orientation of the spacetime surface and both positive energy and negative energy spacetime sheets are possible. The following argument supports the view that negative energy spacetime sheets are indeed generated by rotating magnetic systems. TGD allows purely geometric vacuum charge densities with no elementary particles acting as charge carriers. In particular, if one 'kicks' a 3-surface containing a constant magnetic field into a rotational motion, then vacuum charge density results. This is seen by considering a simple model for the imbedding of a magnetic field $Bz(\rho)$ as an induced gauge field in $M^4_+ \times S^2$, where S^2 is a geodesic sphere of CP_2. In spherical coordinates $(\cos(\Theta),\Phi)$ for S^2 the electromagnetic component of CP_2 spinor connection is

$$A_\Phi = \cos(\Theta) \qquad (1)$$

apart from a multiplicative numerical constant. The induced electromagnetic gauge potential is

$$A_\mu = A_\Phi \partial_\mu \Phi \qquad (2)$$

as a projection of the component of the spinor connection to the spacetime surface. In cylindrical coordinate (t,z,ρ,ϕ) for M^4_+ one has for the imbedding of magnetic field as an induced gauge field

$$\cos(\Theta) = f(\rho)\ ,\ \Phi = n\phi\ ,\ B_z(\rho) = \partial_\rho A_\phi = n\,\partial_\rho f \qquad (3)$$

where n is integer. Note that the imbedding necessarily fails at some critical radius since cos(Q) cannot be larger than one: this is nothing but topological field quantization of magnetic field to flux tubes.

When the magnetic 3-surface is 'kicked' to a rotating motion one has

$$\cos(\Theta) = f(\rho)\ ,\quad \Phi = n(\phi - \omega t)\ , \qquad (4)$$

and an electric field

$$E_r = \partial_\rho A_t = -\omega\rho B \qquad (5)$$

is generated.

The condition $E_\rho = vB = \omega\rho B$, **which can be interpreted as the vanishing of the net Lorentz force locally**, gives rise to a vacuum charge density

$$\rho_{vac} = -\partial_\rho E_\rho = -\omega B\ \ (h/2\pi = c = 1)\ . \qquad (6)$$

The sign of the vacuum charge density depends on the direction of rotation. This means a large parity breaking effect. It is very difficult to understand how the sign of the charge density could depend on the direction of rotation if charge carriers were ordinary elementary particles. Thus this effect, observed already by Faraday, seems to be in conflict with Maxwell's theory and to support TGD.

Note from Faraday Lab Ltd: it is one more example of the advantage of experimental science by Faraday in front of theoretical science by Maxwell.

Charge conservation requires that the radial electric gauge flux of vacuum goes somewhere at the boundary

of the magnet spacetime sheet. The only possibility is that a new spacetime sheet is generated parallel to the magnet spacetime sheet (unless it exists already). The electric flux runs through wormhole contacts or join along boundaries bonds to this spacetime sheet and back in radial direction at the second spacetime sheet. If this spacetime sheet has negative time orientation (guaranteing that the sign of the electric field as tensor component F_{0r} changes), it has also negative energy, and energy conservation requires that the rotating system get positive compensating energy.

Negative energy spacetime sheets and over unity energy production in rotating magnetic systems

As found, rotating magnet can generate a negative energy spacetime sheet and energy conservation requires that system itself get a compensating positive energy. This alone cannot however lead to overunity energy production reported in [5] and a more refined mechanism is needed. What is essential is that the negative spacetime sheet defines a quantum system in which particle energies are negative: the roles of creation and annihilation operators are effectively changed. It happens that negative energy spacetime sheet begin to be filled with negative energy particles, presumably photons and gravitons and perhaps even charged particles. **If the rate for the generation of negative energy in this manner overcomes the rate of the ordinary dissipation, the rotating system begins to accelerate.**

a) The electrostatic energy of the negative energy spacetime sheet is of order

$$E_e \approx -\tfrac{1}{2} E_m \omega^2 r^2/c^2,$$

where $\mathbf{E_m}$ is the ordinary magnetic energy and $\mathbf{r}$ the radius of the rotating magnetic system.

b) **Overunity energy production requires that the rate for the change of the rotational energy $E_{rot} = I\omega^2/2$ is positive (I is the moment of inertia), that is ω increases spontaneously. This rate is given by**
$E_{rot}/dt \approx dE_e/dt + P - P_d$, where P_d denotes the power dissipated by friction losses and P denotes the rate of negative energy generation due to the filling of negative energy particle states (at least photon and graviton states) associated with the negative energy spacetime sheet.

c) Since E_{rot} and E_e are both proportional to ω^2, one has

$$d\log(\omega^2)/dt \approx 2\,(P - P_d)/(E_{rot} - E_e)\,.$$

Since E_e is negligible as compared to E_{rot}, then ω can increase only if one has $P \geq P_d$. Thus for $P = 0$ spontaneous acceleration of the system is not possible. Notices that the splitting of the gravitational join along boundaries bonds between rotating system and external World could also reduce frictional losses and facilitate the effect. The proposed mechanism might be called 'buy now pay later (or somewhere else)' mechanism. **The negative energy could leave the system and be received by some subsystem elsewhere. Instead of sucking energy from the external world, system sends negative energy to its surroundings or to parallel negative energy spacetime sheets.** This mechanism is crucial for understanding how negative potential energy, say gravitational energy is generated (a cloud of negative energy virtual gravitons represented as spacetime sheets), and is of utmost importance in TGD inspired cosmology: without it one could not understand huge energy densities generated near the moment of big bang (see the chapter "TGD inspired cosmology" of [1]).

Coronal discharge and acceleration of ions in the electric field are generated by vacuum charge density

Standard wisdom suggests that the presence of coronal discharge in the experiments by Roshchin and Godin [5] could be analogous to what happens in TV screen when electrons accelerate in electric field and loose their energy by bremsstrahlung in collision with the 'wall'. In this case the electromagnetic potential energy difference in the radial direction at the spacetime sheet not containing the magnetic field is $\Delta E = eV = e\omega B\Delta\rho^2$, and causes acceleration since the electric force is not cancelled by the magnetic force. Thus the coronal discharge could be seen as an evidence for the manysheeted spacetime concept. The objection against this mechanism is that also charged particles at the negative energy spacetime sheet should reside in negative energy states. If so, the acceleration of these charges means that they emit positive energy photons so that the observed radiation could result from this kind of process rather than from a collision with the 'wall'. A temporal mirror image of the bremsstrahlung process would be in question! Electrons and other ions, if present at the negative energy spacetime sheet, accelerate in this electric field. Depending on the sign of the charge, the acceleration occurs inwards or outwards. The sign of the acceleration is predicted to depend on the direction of rotation since the sign of the electric field depends on it. The intensity of radiation allows estimating the total number of ions present at this spacetime sheet: this number should be very small.

The maximum energy E_{max} of a photon emitted as bremsstrahlung is given by the maximal electric potential energy difference and a simple estimate gives $E_{max} \approx 3$ keV for $B = 0.85$ Tesla, $\omega = 500$ rpm and $\Delta\rho = 1$ m. Whether the bremsstrahlung type spectrum is really there could be easily tested. The charges in ionic clouds should have different signs for clockwise and counter clockwise directions of rotation since the signs of ions at the exterior boundary (and interior boundary) are opposite.

Strange magnetic field structures

In TGD framework, strange magnetic field structures observed in the experiments by Roshchin and Godin

[5] and having geometry of cylindrical shells are identiable as topological field quanta of the magnetic field generated by the rotating magnetic system (flux quanta could also carry Z^0 magnetic fields, see below). **One could understand the lowering of the temperature inside the magnetic flux structures in the following manner**. In ordinary hydrodynamics the condition: $p+½(\rho v)^2 = p_0$, where p_0 is the pressure in the region where flow velocity vanishes, holds true by energy conservation along flow lines. In magnetohydrostatics the corresponding condition reads as

$$p + ½ (e^2B^{2)} = p_0 = n T_0 .$$

Here p_0 and T_0 denote the pressure and temperature outside the magnetic flux tubes and the equation $p=nT$ for ideal gas has been used.

The equation implies a lowering of the temperature as follows:

$$\Delta T/T = - ½ e^2B^2/ p_{0.}$$

For a magnetic field strength of order 0.05 Tesla and pressure of one atmosphere (10^5 N/m^2) the estimate for the reduction is $\Delta T/T \approx 10^{-2}$, which is of the same order of magnitude as the reported reduction of temperature $\Delta T/T \approx 6K/295 K=0.02$.

The classical Z^0 fields as TGD counterpart for torsion fields

TGD predicts the existence of classical Z^0 fields (Z^0 bosons are ultraheavy companions of photons responsible for neutral current weak interactions; see the chapter "Anomalies explainable by TGD based spacetime concept" of [2]). The Z^0 charge of the atomic nucleus is essentially its neutron number since proton's Z^0 charge is very small. Neutrinos screen the Z^0 charge of the condensed matter above length scales of neutrino Compton length that is of about cell size (see the chapter "TGD and condensed matter physics" of [2]). Under certain circumstances also Z^0 electric fields can cause detectable effects. For instance, the TGD based explanations of the tritium beta decay anomaly [10], the acceleration anomaly of spaceships in outer space [11] discovered in NASA, and the anomalous variation of the radioactive decay rates [12] involve the interaction of small sized objects with large Z^0 charges with astrophysical Z^0 electric fields.

Z^0 neutrality does not exclude the possibility of Z^0 magnetic fields: what is required that nuclei and neutrinos rotate with slightly different velocities. **Thus rotating macroscopic objects could generate Z^0 magnetic fields and the claimed properties of the torsion fields [8], torsion are very much like those of Z^0 magnetic fields**. In particular, also classical Z^0 field has parity breaking axial coupling to elementary particles, and large parity breaking effects are predicted (chiral selection in living matter has explanation along these lines). The generation of classical Z^0 magnetic field might be involved with the large parity breaking observed in the experiments by Roshchin and Godin [5] (the critical rotation velocities were different for clockwise and counter clockwise rotations). Note however that also the sign of vacuum charge density involves parity breaking effect. It is also possible that flux structures carry combination of magnetic and Z^0 magnetic fields and the strange shell like magnetic field structures could be accompanied also by Z^0 magnetic fields.

To sum up, it seems that the experimental findings by Roshchin and Godin could be satisfactorily understood at the phenomenological level in TGD framework although quantitative modelling is not possible at this stage.

Acknowledgements

I am grateful to Alexander V. Frolov for providing me information about the work related to New Energy Technologies carried out in Russia, in particular the article about experiments by Roshchin and Godin.

References

1. M. Pitkanen, Topological *Geometrodynamics*. Internal Report HU-TFT-IR-95-4 (Helsinki University), 1995. Online book at http://www.physics.helsinki.fi/~matpitka/tgd.html.

2. M. Pitkanen, Topological *Geometrodynamics and p-Adic Numbers.* Internal Report HU-TFT-IR-95-5 (Helsinki University), 1995. Online book at http://www.physics.helsinki.fi/~matpitka/padtgd.html.

3. M. Pitkanen, TGD *inspired theory of consciousness with applications to biosystems*, 1998. Online book at http://www.physics.helsinki.fi/~matpitka/cbookI.html.

4. M. Pitkänen, Genes*, Memes, Qualia, and Semitrance*, 2001. Online book at http://www.physics.helsinki.fi/\tildematpitka/cbookII.html.

5. V. V. Roshchin and S. M. Godin, An Experimental Investigation of the Physical Effects in a Dynamic Magnetic System, New Energy Technologies Issue #1, July-August, 2001.

5. H. Hayasaka and S. Takeuchi, Anomalous weight reduction on a gyroscopes right rotation around the vertical axis of the earth, Phys. Rev. Lett., 1989, # 25, p.2701.

6. E. Podkletnov and R. Nieminen, Physica C 203, 1992, p. 441. E. Podkletnov, Weak *gravitational shielding properties of composite bulk YBa2Cu3O7-x superconductor below 70 K under electro-magnetic field*, report MSU-chem 95, improved version (cond-mat/9701074).

7. G. I. Shipov, Theory *of physical vacuum*, Nauka, Moscow, 1997.

8. A. E. Akimov*, Torsion Technologies are XXI Age Technologies*, New Energy Technologies, Issue #1, July-August, 2001.10. V. M. Lobashev et al, in Neutrino 96 (Ed. K. Enqvist, K. Huitu, J. Maalampi). World Scientific, Singapore, 1996.

11. J. D. Anderson et al, Phys. Rev.Lett., Vol. 81, No 14, 1998, p. 2858.

12. S. E. Shnoll et al, Realization *of discrete states during fluctuations in macroscopic processes*, Uspekhi Fisicheskikh Nauk, Vol. 41, No. 10, 1998, pp. 1025-1035.

But hopefully it is changing a little bit. At least now we cite chapter and verse when these things were done, and what they are, and the young grad students and post docs can go check the papers and make up their own minds.

That is the real hope of the future: that we get a generation of young fellows, with excellent skills, who now know where all the skeletons got hidden in the closet, and understand that the electrical engineering model arbitrarily assumes an inert vacuum environment (falsified for more than a half century in particle physics) and a local flat spacetime (falsified for nearly a century by general relativity).

Once they know that past history, and go read into what broken symmetry of opposite charges means for a dipole and for all dipolar EM circuits, they will set to and change that more than a century of error. In that case, we shall have numerous solutions to the energy crisis rather quickly, popping up all over.

Good thing. It will certainly displace some great energy barons, but it will also free the populace. One can extract all the EM energy from the vacuum one wishes, anywhere, anytime, with ridiculous ease. One can produce that "electrical wind of energy" at will, by making a simple dipole and then letting it alone. The only energy problem is in how to then intercept some of that energy flow and "catch" it in a circuit, discharge it in a load to power it, and not use half the "caught" energy to kill that dipole that is gushing out the extracted EM energy from the vacuum.

Very best wishes,

Tom Bearden

The Transdimensional's Lifters Experiment

Jean-Louis Naudin

France
Email : Jnaudin509@aol.com

In June 2001, Transdimensional Technologies has presented the *Lifter1* and *Lifter2* devices. The Lifter1 device was built with three capacitors joined so as to form a triangle assembly and the *Lifter2* is three time heavier and three time bigger than the *Lifter1*. These devices are able to lift their own weight and they are a "modern version" of the Townsend Brown Electrokinetic Apparatus. The Lifters are using the Biefeld-Brown Effect to generate the main thrust to self levitate. I have already built some similar devices in April 1999, with "EHD Flying Saucer v1.0 ".

In Townsend Brown Electrokinetic Apparatus described in the US Patent N°2949550 filed on Aug 16, 1960 and titled "Elektrokinetic Apparatus" you will find the full description of the main principle used in Lifter devices:

It is therefore an object of my invention to provide an apparatus for converting the energy of an electrical potential directly into mechanical force suitable for causing relative motion between the system and surrounding medium.

It is another object of this invention to provide a new apparatus for converting electrostatic energy directly into kinetic energy.

It is another object of this invention to provide a vehicle propelled by electrostatic energy without the use of moving parts.

Another goal of my invention is to provide a self- propelled vehicle without moving parts. It is a feature of my invention to provide an apparatus for producing relative motion between structure and surrounding medium. This apparatus includes a pair of electrodes of appropriate form held in fixed spaced relation to each other and immersed in a dielectric medium and oppositely charged.

It is another feature of my invention to provide apparatus which includes a body defining one electrode, another separate electrode supported in fixed spaced relation by said body, and a source of high electrical potential connected between the body and the separate electrode.

(Extract from US Patent N°2949550 filed on Aug 16, 1960 titled "Elektrokinetic Apparatus")

The Lifter v4.0 specificationsThe Lifter v4.0 uses 36 asymmetrical T.T. Brown capacitors joined (called cells) so as to form a hexagonal assembly. Each asymmetrical capacitor is built with one electrode made with a thin corona wire placed at 30 mm from the main rectangular electrode constructed "ala" Townsend Brown.

- Weight : 32 g
- Size: 820x 700 mm and 40 mm high made with a thin aluminium sheet.
- Mounting legs: 30-mm length.
- Main frame: balsa wood 15/10 mm thick and 2 mm wide. The construction of the frame is lighter than the previous versions (half of the lower balsa frame has been removed).
- Power required to compensate the weight : 81.4 Watts (40.5 KV at 2.01 mA)
- Power required for a stable flight above the ground : 132.9 Watts (44 KV at 3.02 mA)

Today, I have replicated successfully the Transdimensional Power[3] Lifter1 and Lifter2 and developed some new enhanced and bigger versions. The Lifter V3.0 is a bigger version of the Lifter2 presented by Transdimensional Technologies in June 2001. The Lifter v3.0 uses nine asymmetrical T.T. Brown capacitors joined (called cells) so as to form a triangle assembly. It is 2.4 time heavier than the *Lifter2* and 7 time heavier than the Lifter1. The Lifter V4.0 is a bigger version of the Lifter v3.0. It uses 36 asymmetrical T.T. Brown capacitors joined (called cells) so as to form a hexagonal assembly and it is 2 time heavier than the Lifter v3.0.

Lifter v4.0 Test Results : The Lifter v4.0 is the biggest one that I have built today. Its size in the lab is very impressive (820 x700 mm). The Lifter v4.0 is able to accelerate upwards very quickly and silently. The Lifter v4.0 has a weight of 32 g and it is very stable during the hovering.

Lifters comparison chart:

	Weight	Payload	Power to compensate the weight	Power for a stable flight
Lifter 1	2.3 g	1 g	18 Watts (40 KV at 450 uA)	23.9 Watts (41.9 KV at 570 uA)
Lifter 2	6.6 g	3 g	21.9 Watts (38.5KV at 570 uA)	48.5 Watts (43.35 KV at 1.12mA)
Lifter 3	16 g	4 g	45.4 Watts (18.45KV at 2.46 mA)	69.6 Watts (27.5 KV at 2.53 mA)
Lifter 4	32 g	-	81.4 Watts (40.5 KV at 2.01 mA)	132.9 Watts (44 KV at 3.02 mA)

For a tabletop demonstration you may use the basic lifter. The Basic Lifter is maintained on the ground base with 3 thin nylon threads to avoid that it escapes to the ceiling...

Basic Lifter photo

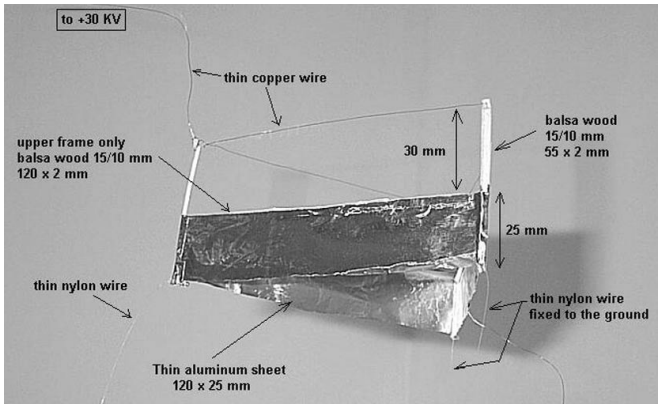

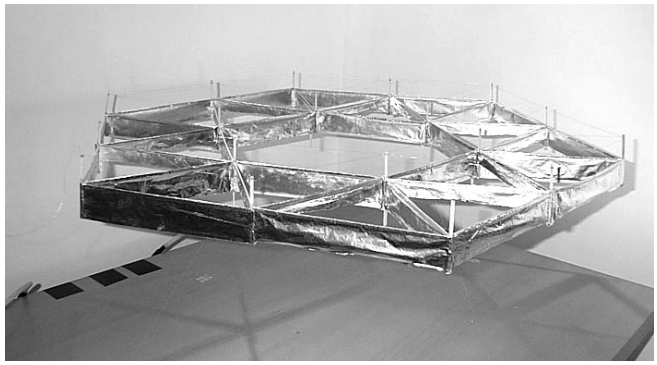

The Basic Lifter remains very stable above the ground while the power supply is energised. A 330 Kohms/10 Watts resistor is connected in series with the HV Output to limit the current flow. This High Voltage power supply is able to generate up to 25-30kV DC Output from 12-24v DC input. With a fully adjustable DC input power supply (0-24V/4A), it is possible to adjust the HV output between 5 to 30kV. This HV power supply uses a common flyback driver circuit with two 2N3055-power transistors as a push-pull oscillator. A common flyback transformer from an old TV/monitor can be used, the transformer HV output is connected to a 30kv Voltage tripler which commonly used in all colour TV monitors. In the Basic Lifter experiment the DC Input of the HV Power supply is 15 V at 2.3 A.

Some Researches Projects planned: Today, after a successful and impressive test of the Lifter v4.0, I have planned to build a device which will be able to flight by itself for few seconds with its own power on board. This will be a very good demonstrator for going further…

References

- The JLN Labs Lifters experiment : http:// jnaudin.free.fr/html/lifters.htm
- The Transdimensional Technologies web site : http://www.tdimension.com/
- "Electrogravitics Systems" (Report on a new propulsion methodology) by Thomas Valone - ISBN 0-9641070-0-7
- " Subquantum Kinetics " by Paul A. LaViolette - ISBN 0-9642025-0-6
- " L'Effet Biefeld-Brown - Histoire secrète de l'antigravité - Vol 1 "by Alexandre Szames - ISBN 2-91377-01-7
- The T-capacitor by Alexander V. Frolov
- Potential in Power Generation by Alexander V. Frolov
- Electrokinetics brown by Paul E. Potter http://homepage.ntlworld.com/ufophysics/electrokineticsbrown.htm
- US Patent N°2949550 filed on Aug 16, 1960 "Elektrokinetic Apparatus" from Thomas Townsend Brown
- The Thomas Townsend Brown dedicated web site : http://www.soteria.com/brown/

For more informations, please contact : Jean-Louis Naudin, Email: Jnaudin509@aol.com
Web site : http://go.to/jlnlabs/

On the Great Constant 137.036

Dr. Anatoli V. Rykov

In the first half of XX century English astrophysicist Eddington stated that if physics find out a sense of a fine structure constant **137.036**, then many secrets of Nature would be discovered. Some incomplete examples of the manifestation of this constant are given below. As Ether does not admitted by traditional physics, these examples can cause criticism from its side.

Electromagnetic radiation in Ether

The portion of electromagnetic radiation named photon of frequency v, deforms structure of Ether. Being in Ether with the size r_e between its elements, photon makes deformation Δr. Thus the energy of deformation will be $e_O E \Delta r_e$, where e_O is the electron or positron charge, E is the intensity of an electrical field. Energy of photon is equal to energy of deformation, where h is the Plank constant:

$$hv = e_o E \Delta r_e \qquad (1)$$

This deformation depends on time. Photon is an electromagnetic phenomenon with the amplitude $r\sin(2\pi vt)$:

$$dr = d[r_e \sin(2\pi vt)] = 2\pi v r_e dt \cos(2\pi vt) \qquad (2)$$

Let's determine the intensity of an electrical field, where N is a certain factor of proportionality:

$$E = N\xi \frac{e_o}{r_e^2} \qquad (3)$$

Let's substitute the received ratio (amplitude from (2) and intensity from (3) to (1):

$$h = 2\pi N e \xi \frac{1}{r_e / dt} \qquad (4)$$

It is possible to assume that $r_e / dt = c = \sqrt{v\xi}$ is the speed of light.

Let us note that this assumption seems to be natural, but not obvious. Let's determine the unknown number:

$$N = \frac{h}{2\pi e_o^2 r_q} = 137{,}036 = \alpha^{-1} \qquad (5)$$

Where $r_q = \sqrt{\xi / v}$,

$$v = \frac{1}{\mu} = 1{,}0000000028 \cdot 10^7 [a^2 kg^{-1} м^{-1} s^2]$$

is a magnetic constant of vacuum, which is equal to reversed magnetic permeability,

$$\xi = \frac{1}{\varepsilon} = 8{,}98755179 \cdot 10^9 [a^{-2} м^3 kg s^{-4}]$$

is an electrical constant of vacuum equal to reversed dielectric permittivity. Thus, interaction of electromagnetic radiation (photon) with Ether is related with the number **137.036**. It, probably, characterizes some cluster of ether, which is related to photon. Let's receive the known formula for a Plank constant from (5):

$$h = 2\pi e_o^2 r_q \alpha^{-1} \qquad (6)$$

All components, included in the Plank constant, completely concern to structure of Ether. The conclusion is the following: the so-called «ultra-violet catastrophe», which has put under doubt a correctness of classical physics, is a completely far-fetched problem from the point of view of existence of Ether. It is simply solved by ability of ether to perceive and to transfer radiation only as quantum.

We should construct elements of structure of vacuum on the well-known experimental fact. There is an equation of photon energy for the frequency « of red border » hv_{rb} and energy of pair

$$w = \xi \frac{e_o^2}{r} = 2\pi \alpha^{-1} e_o^2 r_q v_{rb} = 1{,}6493 \cdot 10^{-13} \qquad (7)$$

From (7) we can find the size of a structural element:

$$r_e = \frac{\alpha^{-1}\xi}{2\pi r_q v_{rb}} = 1{,}398688 \cdot 10^{-15} \qquad (8)$$

Therefore, we have the distance between virtual electron and positron charges forming a bond charge or dipole of Ether.

The «red» border of its «destruction» at the photoelectric effect is determined from:

$$\Delta r_{rb} = \frac{hv_{rb} r^2 \alpha}{e_o^2 \xi} = 1{,}020672 \cdot 10^{-17} \qquad (9)$$

The dipole deformation is less than the given value and it should have an electroelastic property. When the value of deformation increases, it leads to destruction of dipole and a pair of free electron and positron will appear. A remarkable consequence from the formula (9) is:

$$\Delta r_{rb} = 1{,}020672 \cdot 10^{-17} = r_e / 137.036 \qquad (10)$$

Again we have received a constant **137.036**. Now it is related with deformation properbonds of Ether structure.

Substance

Nature gives us some help: a certain hierarchy in a structure of matter is observed during consideration of the growth of masses of fundamental particles 2·137.036 m_e, 2 ·137.036 ·7 m_e and 2 ·1836 m_e. Masses of pair of electron - positron will form masses of pions, proton, antiproton, and neutron. Number 1836.125 is a mass number of a proton. Number 1838.6 is a mass number of a neutron. It is easy to notice that a structural element is the mass $2m_e$. Let's multiply it on $137.036 \cdot 2m_e = 274.0720 \cdot m_e$ and we will get a value, which is very close to the pion mass $m_{\pi(+-)} = 273.2 \cdot m_e$. Such concurrence does not seem senseless. Pions represent particles formed from electron and positron. In π_o -pion the integer of 264.2 are masses of electron and positron. The integer determines a zero-charged pion «0», and the minus 9.872 can be accepted as a mass equivalent to energy neutral pion connection. In π_+, π_- pions contain the odd number of electron and positron masses 273. The nature again prompts, that π_+ pion consists of one superfluous positron, and π_- consists of one superfluous electron. It is clear that pions represent a single unit (indivisible quantum systems capable to virtual and real existence according to their short time of life). The lack of mass charging pions up to number 274.072 can be treated as a defect of mass of bond or energy of bond $\Delta m_{\pi(+-)} = 0.8720 \cdot m_e$. It is possible to assume two variants of mass defect for pion «0»: $\Delta m_{\pi o} = 1.8 \cdot m_e$ or $\Delta m_{\pi o} = 9.872 \cdot m_e$. These variants can be distinguished by the time of pion life «0». The greatest time of particle life, at which mass defect is maximal. As pion «0» has time of life less, than at charged pion, it is necessary to accept the first variant, i.e. $\Delta m_{\pi o} = 1.8 \cdot m_e$.

It is possible to assume, that the protons and antiprotons can be formed from mesons and pions. For example, the particle with mass equal to 1836,12 electronic masses (proton) can contain 3 pairs charged pions, one positive pion and 7 neutral pions. Structure of a proton or antiproton contains charged mesons, participating in strong nuclear interactions. Superfluous mass in 1836 electronic masses makes mass defect equal to bond energy. It corresponds to the huge energy providing large stability of protons. You can see the role of number **137.036** on the given examples of a structure of matter.

Paradox of the «wave - particle»

The De Broglie's formula $\lambda = \frac{h}{mV}$ is used for calculation of a wavelength of a particle movement. It is shown above that the Plank's constant depends on parameters of Ether and the constant **137.036**. Particle, moving in Ether structure, produces transverse fluctuations with frequency $\nu = c / \lambda$. Thus, the given frequency or given length of a wave will be formed only with the movement of particle in Ether. Particle moves by spiral trajectory with a step of the screw $\lambda = \frac{h}{mV}$ and it is the reason for the particle diffraction phenomena. The amplitude of a wave can be determined by the formula $A = \frac{e_o^4\, 137.036}{(\nu m)^2 \Delta r_e}$. This amplitude depends not on the speed of a particle, but on structural elements of Ether (dipole charge, the number **137.036** and deformation limit), on mass of a particle and, especially, on the Ether magnetic constant. We shall receive amplitude equal to 1,066134 ·10^{-10} (m) for electron, for a proton it will be 3,162334 ·10^{-17} (m). A large difference in amplitudes is due to a square law dependence of amplitude on mass of particles. It can be checked in experiment on diffraction of electron and proton beams. The amplitude of particle's trajectory is formed in open Ether. Hence, at the presence of a nucleus of atom or other particle (changing parameters of Ether structure) the amplitude of trajectory can be different.

Ether structure and the constant 137.036 also define Compton length of the electron wave:

$$2\pi(r_e + \Delta r_e) \cdot 2 \cdot 137.036 = h / m_e c = 2.42626 \cdot 10^{-12} \text{ (m)}$$

Generality of ether of three different levels

The interactions of electromagnetic radiation with Ether can appear on three levels, those are space, meson and nuclear level. Length of a "red border» wave $\lambda_{rb} = \frac{c}{\nu_{rb}}$ of a photo effect in the space Ether is an additional tool to research structure of Ether. There is a formulation $\frac{1}{2\pi 137.036\, r}\left(\frac{c}{\nu_{rb}}\right) \equiv 1$. Index i=e,π,p corresponds to three Ether levels in the generalizing table of its structural elements. The "red border" frequencies are equal to $\nu_{irb} = w_i / h$.

Table 1

i	$w_i = h\nu$, J	$2m_ic^2$, J	$w_i - 2m_ic^2$, J	r_i, м	Δr_i, м
e	1,649459·10^{-13}	1.637422·10^{-13}	1,203700·10^{-15}	1,398688·10^{-15}	1,020672·10^{-17}
π	4,487716·10^{-11}	4.473438·10^{-11}	1,427800·10^{-13}	5,140876·10^{-18}	1,635613·10^{-20}
p	6,013007·10^{-10}	3,010701·10^{-10}	3,010701·10^{-10}	3,836815·10^{-19}	3,836815·10^{-19}

The main conclusion is: electromagnetic phenomena at all three levels of Ether are equivalent and they are determined by the number **137.036** and speed of light (dielectric and magnetic Ether constants).

Ratio of speed of light 2.99792458 ·10^8 to speed of the movement of electron on the first orbit of atom of hydrogen 2.187691 ·10^6 is equal to 137.0360.

Gravitational constant of Ether of the Universe also depends on Ether basic parameters and number 137.036:

$$G = \xi e_o^2 \cdot 137.036 / m_{Pl}^2 = 6.6726 \times 10^{-11},$$

where Plank's mass is a denominator.

Inertial force of the mass *m* and its acceleration *a* are also determined by parameters of Ether and the constant 137.036

$$f = ma = 15.5\pi \cdot 137.036 \cdot b \cdot \Delta r_a ,$$

where b = 1.155065 ·10^{19} (kg/s^2) is **an elasticity of Ether structure**. This formula shows how it is possible to transform elastic energy of Ether to energy of substance at acceleration of mass.

Editor's: Theory by N.A. Kozyrev considers the cause-effect relations from positions of the concept of active properties of time. In this concept the speed of the course of time is defined as a ratio of distance between the cause and the effect to the period of the time delay between them. For our space it is equal to the product of the speed of light and Zommerfield's fine structure constant, i.e. the speed of the course of time is 137 times smaller than the speed of light. Let's note, that it is not the speed of motion in space, but the "rotation speed of the cause-effect connection". To my mind, there is a clear analogy between this four-dimensional rotation and the so-called torsion technologies. In his work Dr. Shipov presents the mathematics of four-dimensional rotations and firstly introduces the notion of torsion fields. Besides, Dr. Spartak M. Polyakov in his work noted the features of the internal structure of photon. On the assumption of this structure, minimal prolongation of any electromagnetic quantum is equal to the product of the wavelength and ratio between the fine structure constant and the speed of light. So, the internal structure of photon according to Polyakov reflects the features of inner structure of space, according to Kozyrev. This link between two theories had not been discussed before. The work by Rykov about fine structure constant is another theory, which can be used to create a new scientific paradigm of Ether. In my view, there is some analogy between Rykov's notion of "elasticity of Ether structure" and Kozyrev's "hardness of cause-effect connection".

Alexander V.Frolov

There are no Secrets in Inertialess Motion and Antigravitation

Dr. Anatoli Rykov

Actually the way to open this secret was shown by the article "Structure of vacuum and community of interactions" and the publication "Principles of ether theory" [1]. The main thing to be done successfully in these works was to find the structure of ether. It was formed by massless elementary charges (+) and (-), analogs of electron and positron. The basic distance or arm of dipoles formed by charges is equal to 1,398688·10^{-15} m and a limit of electroelastic deformation was determined according to photoeffect in vacuum (ether) and it is equal to 1,020672·10^{-17} m.

Interaction of usual substance and ether takes place through the forces of gravity and inertia, through electromagnetic tensions. Deformation of ether from acceleration of forces is given by the equation:

$$\Delta r_g = \sqrt{\frac{g}{4\pi E_\sigma S}} = 1{,}2703 \cdot 10^{-22} \text{ [m]}$$

To make the formula shorter the value of gravity acceleration was already substituted as acceleration of Earth 9.82 m/c^2. Direction of deformation coincides with the slope of the bob to the Earth. **To decrease gravity we should only decrease the value of deformation in this direction.** We can do it by electrical or magnetic effect around the body that we want to have antigravitational properties. Classical way to affect the value of above-mentioned deformation by another body is to place another cosmic body (for example, the Moon). **In the point of libration between the Earth and the Moon there is ether with zero deformation and accordingly the forces of gravity regarding the Earth and the Moon are absent in this point. The cause of it is evident. The Moon creates deformation of ether in this point, which is equal by the value and inverse by the sign of deformation of ether from the Earth.**

What is inertia from the point of view of ether structure? It is determined by the ratio: $f = ma = 16\pi\alpha^{-1} b \cdot \Delta r_a$, where m is mass of the body, a is acceleration of the body,

hardness was observed at 6-8%, i.e. weakening of metal took place. For the high-carbon alloys (steel of У-8 kind, cast iron) the increase of hardness took place at 27.0-35.0%, which is the evidence of occurred hardening.

Thus, it was stated that AR influences the atomic- crystalline state of ferricarbonic alloys, and it was proved by the change of hardness.

/Signed/
L.A.Dachno
The chief of laboratory of metal - management and plastic deformation

The characteristic of a sample of metal	Value of microhardness, kg/mm^2 * H%, H (relative change of microhardness)				
	Initial condition	Source AR-FeO	Source AR-Mn	Source AR-C	Source AR-Se
Steel 08J (C=0.08% of weight, annealed, sheet)	161.2±2.4	151.6±3.0 (-0,6%)	148.2±5.3 (0.8%)	164.8±5.4 (+2.0%)	151.7±4.8 (-6.0%)
Steel U-8 (C=0.8 of % of weight)	636.6	60.5±30.8 (+35.0%)		810.4±17.4 (+27.0%)	
Cast iron (C>2.5%)	361.4±9.8	521.3±68.7 (+31.0)			

Inertial Propulsion Drives

Boris D. Shukalov

Engineer
153025, Ivanovo, Lenin Prospekt 73-34, Russia

Introduction

The notion "inertial propulsion system" or device, which is moved by means of inertia forces, requires an exact definition. Usually the "drive" is a wheel, track, propeller or gas flow reaction. By means of "drive" the moving device is attracted or repulsed to the support, which exists outside the device.

Inertial drive does not interact with any support outside the device, but it interacts with the body of device by means of inertia force.

So, it is more true to name the inertial drives as an "inertioid" according to inventor Tolchin, Perm city, Russia. He has been made such sort of systems for more than 30 years [1]. His book about mechanics of 1969 was the cause for critical attacks on inertioids. For example, Dr. Gulia [2] states that unidirectional motion by means of inertia forces is impossible. But other scientists [3] like Dr. Levinson L.B., for example, wrote that all calculations in techniques take into consideration real inertia forces.

So, the notion of inertioid depends on the notion of inertia. Theoretical researches have a conclusion: reality of inertia forces follows from Newtonian mechanics, but the fictitious inertia forces are the effect of Einstein's relativity theory.

According to Newton, there are three real inertia forces: second law force, centrifugal force, Coriolius force. Let's consider the notion of space and forces.

Space

According to modern concept, the space is a closed material medium (Ether), which expands. All bodies are connected by gravitation field and they move. Magnetic, electric, electromagnetic and gluon fields also exist in vacuum. The space does not exist without a physical vacuum, which is a material medium, like river and sea cannot exist without water. Physical vacuum consists of moving virtual particles. The geometry of the space is Euclidian.

The Gravitation Field

The value for intensity and distance of propagation of gravitational field in space depends on the value of mass, numbers of atoms; those consist of particles (protons, neutrons, electrons). Each particle has its own gravitational field and it conforms to the fact: air atmosphere of the Earth (atoms and molecules) is kept near the planet by gravitational field. From Mendeleev's periodical table it is obvious that atom, which has more protons, neutrons, electrons, has greater mass and gravitational field. So, gravitational field of any body is a joint, total field of all neutron, proton, electron

gravitation fields, but we suppose that it is not the curved space geometry according to Einstein's relativity theory.

Gravitational fields penetrate all space of the Universe. Gravitational field of any body is motionless relatively to its surface. The Earth rotates and its gravitational field rotates also. It is the main aspect for determination of the Earth inertial system.

Newton's Law

The first Law is a law for inertia by Galilee - Newton. Newton's formulation is: Any body keeps its rest state or even rectilinear motion before the applied forces make it to change this state [4, p.36]. Conclusions: 1. Space doesn't prevent even the rectilinear motion. 2. Space order and define the rectilinear trajectory for motion of the body since space geometry is Euclidian.

The third law. Newton's formulation: For action there is always an equal and opposite reaction, or interaction for two bodies on each other is equal and directed in opposite sides [4, p.38].

The second law. There are different modern formulations for this law. One of them: Force is the product of mass and acceleration, which force creates for this body [5]

$$F = ma$$

where **F** is force, **m** is mass, **a** is acceleration.

Yablonsky A.A. describes this law in more exact version. According to Yablonsky, "ma" is a reaction force, or inertia force according to the third law. It is a real force [6, p.10]. According to Newton, inertia force is "Inborn force" of matter, which has a property to resist acceleration; due to this force any body keeps its rest or even rectilinear motion. This force is always proportional to the mass. Inborn force can be named as inertia force. It is demonstrating itself when other force makes changes in the body state. Demonstration of this force can be considered in two versions: as a resistance and *as a pressure.* It is a resistance since the body tries to keep its state and it is a pressure since the body yield to the force of resisting barrier and tries to change the state of this barrier [4, p.24, 25].

So, Newton named the inborn matter force as inertia force and he divided its manifestation into resistance and pressure. Modern mechanics classifies forces to be active (those can make the work) and passive (inertia, friction, reaction...). So, in modern understanding, resistance is a passive force action and pressure is an action of active inertial force from the body to other bodies. Newton's inertial forces, both passive and active are volumetric forces since they consist of the proton, neutron, and electron inertia forces sum. Proofs of this fact are Galilee's and Newton's experiments for different masses, different material bodies drop; and also the proof is a weightlessness state of the body. Active inertia forces (according to Newton) have been using from the ancient times: stones, arrow and bullet... These forces are great and we cannot call them fictitious. Some inventors use Newton's active inertia forces for motion of inertioid.

Centrifugal Inertia Forces

There is a contradiction for centrifugal forces notion in mechanics: in one case it is a real force but in other case it is not a real force.

There is a formula

$$F = \frac{m\upsilon^2}{R}$$

where m is the mass of the body, υ is linear velocity of the body, R is radius of the circumference. The properties of the force, which change the direction of the motion, are not taken into consideration here. For example, Dr. Gulia explains the fictitious nature of the centrifugal force: Circular motion is forcible, since the centripetal force should be applied to the body by means of a thread. In the difference to centrifugal force, this force (centripetal) is real... Centripetal acceleration, according to Dr.Gulia, is directed to the centre. Centrifugal force is directed from the centre. But the real force cannot be directed in opposition to the created acceleration. So, according to Dr. Gulia, centrifugal force is not real but fictitious [2, p.18, 19]. Academician Ishlinsky also agrees with this conclusion [2, p.4, 5].

Logically it is true, but it leads to a paradox: there is acceleration, but velocity does not change. The kinetic energy of the body must also change, since force makes the body to accelerate; but kinetic energy does not change.

There are no paradoxes in Nature. So, some notion is wrong in this case. In contradiction to Dr. Gulia's conclusion, there is Max Born's and Landau's proof of reality of the centrifugal acceleration, and the proofs of both centrifugal and centripetal forces [7, p.33, 83-86] and [8, p.64]. Einstein also recognised the reality of the centrifugal force and he introduced the notion of the centrifugal field [9].

There are many applications of real centrifugal forces: separation of particles in centrifuges, in washing machines, in pump... Centrifugal forces compensate gravitational force on the planet orbit of the satellites. Inventors can use centrifugal forces for motion of the devices.

So, what is the mistake in the notion of the even circular motion? The answer is simple: For even motion of the body along the circumference trajectory the deviation from rectilinear motion is a result of the reaction of the connection, but it is not a result of the active external force. This reaction force don't make the work and it don't produce the acceleration. So, centripetal acceleration is fictitious instead of centrifugal force. The formula $\omega=\upsilon^2/R$ is not a description of the centripetal

acceleration, and the formula $F=mv^2/R$ is not an expression of the Newton's second law. Let's note that Newton explained: The change of direction of the motion along circumference is produced by reaction force.

Coriolius Inertia Forces

This force is created, when the body moves along the curve-line trajectory and curvature radius changes. The angular velocity is constant in this case and there are two velocity components: linear (tangent) and radial (normal) components. If body moves spirally and it approaches to the centre, then the angular velocity should increase (if there is no resistance to motion) and some deceleration is necessary to keep constant angular velocity. So, Coriolius active force of inertia is created as a reaction to this deceleration force and its vector is co-ordinated with linear velocity vector.

If the body moves spirally from the centre, so it is necessary to use some force to keep the constant angular velocity. This force is co-directed to the linear velocity vector and reaction for this force is a Coriolius passive force.

Such sort of forces is demonstrated in Nature: rivers move from the North to the South or from the South to the North undermine their left and right riversides differently. Inventors can use Coriolius active force in inertioids.

Fictitious Inertia Forces

Fictitious inertia forces are used for simplification of calculation for the relative motion in the non-inertial system, i.e. in systems, which move with acceleration.

According to Yavorsky B.M. and Pinsky A.A.:

1. Inertia forces have some properties, which are different from interaction forces (elastic, electric, gravitation, and friction forces). The main differences are:
a) Inertia force is not a result of the body's interaction but a result of accelerated motion of the system itself; so the third law of Newton is not available for inertia forces.
b) Inertia force acts to the body in non-inertial reference frame only, there is no such sort of force in inertial system.
c) For any bodies there are non-inertial reference frame, for which the inertia forces are external forces, so there are no closed systems here and conservation law is not available in this case.
d) Note, that inertia force like gravitational force is proportional to body mass so in the inertia force field (like in gravitational force field) all bodies move with the same acceleration, which does not depend on the mass of the body.
2. There is no inertia force in the inertial reference frame. So, the application of inertia forces for such sort of system is a mistake. In the inertial reference frame the notion "force" is available only in Newtonian sense, and it is a measure for interaction between bodies. In non-inertial frame of reference the inertia forces are acting by the same way like interaction forces. So, sudden deceleration of the car produces inertia force, which throws you forward, and you feel this real force like gravity force [5, p.251].

These explanations of inertia forces properties allow us to make the following conclusions:

The above-mentioned notion of inertia is tangled, contradictional and it does not correspond to reality in some aspects. But in the points a) b) c) the fictitious inertia properties are described. In the point 2 a real Newtonian force of inertia is described.

The main difference between fictitious and real inertia forces is a reference frame. Special reference frame is necessary for fictitious forces. Real forces act in inertial or non-inertial frames. All living world feel such sort of forces in the process of motion, when the velocity changes.

The statement of Yavorsky and Pinsky number 2 about the absence of inertia forces (for inertial reference frame) is wrong. In this case only fictitious inertial forces are absent. For example, motion of the piston in motionless device is the motion in inertial reference frame if co-ordinate system is considered to be related with this device. So, the changing linear velocity of this piston is a reason for inertia forces. But forces are also acting for the piston independently from our consideration of the co-ordinate system. The choice of inertial or non-inertial reference frame is necessary only for design and calculation purposes.

What is the source of "fictitious inertia force" notion? We explained the nature of fictitious centrifugal and Coriolius forces above. Now let's consider the nature of fictitious inertia forces for the case of rectilinear motion. Inertia forces are created when the velocity of motion changes. The motion is described by different ways: Newton's motion is absolute; according to Einstein it is relative. Newton's explanation of absolute and relative motion is: True absolute motion can be produced or changed only as result of force action, which is applied directly to the moving body; relative motion can be produced or changed without application of the force to this body and in this case it is enough to apply the force to other bodies. In relation with these bodies, motion of the body is determined [4, p.33].

Einstein's explanation of motion: Any motion is relative by definition. A car moves relatively to the road and the road moves relatively to the car. In the first case, reference frame is a road; in the second case the reference frame is a car. For simple description of motion there is no difference in principle, what is the reference frame for motion [9, p.196].

But in reality there is the difference. If force is applied to a car and it moves with acceleration. According to classical mechanics, the car increases its kinetic energy

as well as quantity of motion. If the car stops, this energy will be transformed by means of friction. In another case, the road, station and the entire world move with acceleration if the reference frame is a car. According to classical mechanics, the road, station, etc. have an increasing kinetic energy as well as quantity of motion from nothing. If the car stops, this energy and quantity of motion must vanish in nothing.

This is the reason for fictitious nature of inertia forces. To separate it from the real forces, Newton used the notion "absolute" for true motion and "mathematical" for relative motion. But in more general sense, the absolute motion takes place in material medium, i.e. in physical vacuum, relatively to gravitational field. Accelerated, even rectilinear motion and even motion along the circumference are the absolute motion.

Einstein considered the **true** and **mathematical** motions as one relative motion.

Inertial Drives Description

Inertial drive is a mechanism, which moves unidirectionally by means of active inertial force produced by moving inner support to the body of the device. Several inner supports can be used in devices of one type. The inner support creates a closed cycle of action on the body of the whole device. Unidirectional motion of the body is a result of created non-balanced pulse inertial force action in one period (cycle) of the inner support action. Solid body or liquid can be used as inner support, which moves in return-forward way, or it oscillates around the axis, or it rotates around the axis, which is connected with the body of the device.

The Newton's, centrifugal and Coriolius inertial forces or superposition of all these forces can be used for inertial drive.

By means of different schemes the author of this paper created many devices. Energy of motion is transmitted from electromotors or from solenoid (electromagnets) or from other electrical devices. Unbalanced inertial force impulse for most devices is created by means of partial compensation of the negative force pulse of the inner support.

The demerits of the inertioids devices created by the author are small velocity and small propulsion power, which is not sufficient to fly up and move the device in space.

The merit of inertioids is the possibility of reactionless motion, which allows creating an accelerated motion without reactive fuel. Also devices have high efficiency factor.

On Space Application of the Inertioid Drive

Human came to space by means of the powerful reactive propulsion drive. Next step in cosmos assimilation is interplanet spacecraft. Reactive drives are not available in this spacecraft since it uses a lot of fuel and its efficiency is very small. So, the interplanet flight needs a non-reactive type drive. Academician Korolev S.P. and Kurtchatov I.V. understood this aspect clearly and they made a requirement on government resolution of 23 June 1960 #715/296 on the new principles for reactionless propulsion [10].

There is the question: what is the pre-condition for inertial drive? Many scientists stated that accelerated motion in space is impossible without any external support since it contradicts to the law of momentum conservation. For example, Dr. Gulia, expert on inertial mechanisms of the State Inventions Department of Russia, wrote that there is no support in space, so in empty space movement is possible only by means of reactive systems [11, p.22].

Do inertial drives really cannot be used in space? To move space apparatus in vacuum with some acceleration it is necessary to increase the quantity of motion and its kinetic energy (if the velocity increases)... So, we can assume that inertial drive leads to violation of the law of momentum conservation. But this law also is not valid in the case of ordinary rocket. For example, momentum created for rocket is more than momentum of fuel and the difference depends on the design of the rocket nozzle [2, p.24] and [13, p.20]. Also, conservation of the moment is violated and cosmonaut V. Lebedev makes his body to rotate by means of inner forces in the weightlessness state [14, p.68].

So, the claim that "it is impossible to make motion by means of inner forces" is not connected with inertioids, since inertia forces are external forces. *(Editor's: these forces are external because they are produced not by the body, but by space itself, which reacts on the accelerated motion of the body).* Inertia forces are the result of change in velocity or direction of motion in physical vacuum but for physical vacuum there are no closed systems. So, inertial drive can move itself by means of active inertial forces. It is not a reactive but active type of motion. *(Editor's: it is necessary to note that this term "active motion" was introduced at first by the author in 1996. The Scientific Congress "New Ideas in Natural Science", Saint Petersburg).*

It is necessary to remove the mistakes from mechanics and to organize serious researches on inertial drives. In this case it is possible to create an inertial drive, which can be used for spacecraft propulsion. It is necessary to solve one problem to find a closed cycle of the inner support, which has the unbalanced inertia force moment.

What are the pre-conditions for it?

1. It is an application of the difference between momentum and kinetic energy of the moving inner support, that mathematically is shown as the difference between $p=m\upsilon$ and $W=(m\upsilon^2)/2$. To change the momentum of some body it is necessary to act on the

body with the force F during some time $F\,t = m\upsilon$. But to pass kinetic energy it is necessary to make the work of the force F on the way of length l, i.e. $F\,l = (m\upsilon^2)/2$

This difference allows creating different inertial drive cycles, taking into account the transformation of kinetic energy into other energy forms.

2. There is an inadequate between momentum and kinetic energy due to the factor of velocity (υ or υ^2), which increases if the inner support makes translational motion plus rotational motion. *(Editor's: Thus, we get a helical trajectory of motion. This type of motion is commonly used in Nature).* In this case the force is created of two components: translational and rotational

$$\frac{m\upsilon^2}{2} + \frac{I\omega^2}{2}$$

where I is the inertial moment of the body, ω is the angular velocity. Inertial drives of several types cycles can be created by means of this principle.

3. Repulsion between two bodies (for the case of different masses) leads to the equal momentums, but different energies, which are reverse proportional to the mass value according to the law of momentum conservation: $m_1\,\upsilon_1 = m_2\,\upsilon_2$

$$\text{but } \frac{m_1\upsilon_1^2}{2} \text{ is not equal to } \frac{m_2\upsilon_2^2}{2}$$

This property of the interaction between the bodies also can be used to create inertial drive cycles of different types.

4. Acad. E. Alexandrov made a very interesting discovery: new (after Newton) correction of theory of collision, since the momentum and kinetic energy are transmitting to the body of the device from the inner support of the inertial drive by means of collisions [15].

5. The author didn't investigate the liquid-steam closed cycles to create reactionless motion. Calculations show that in this case there is some discordance between the law of energy conservation and the law of momentum conservation. Specialists, who calculate thermal cycles (isobar, isothermal and adiobatical), usually don't take into account the law of momentum conservation. There is a wide area, which is not investigated yet in aspect of reactionless motion. There is an idea to close the single reactive process in the closed cycle without mass wasting. *(Editor's: We should note that this topic was considered in details in "Reactionless Propulsion and Active Force" by Alexander V. Frolov. At first it was reported in 1996, The Scientific Congress "New Ideas in Natural Science", Saint Petersburg. Development of this idea was started in 1994 in close collaboration with Acad. Vladimir I. Zubov).*

6. Newton's laws are presented in physics textbooks in superficial way. These laws describe the properties of material world, but its basis lies in quantum mechanics, i.e. in the microworld but not in classical mechanics. Due to this reason all industry, transport and space techniques is created according to these laws, and nobody can refute Newton's laws.

Some enigma is hidden in the second and the third Newton's laws. A body moves with acceleration in space under the action of the force (the second law) but for any acting force there is some opposite and equal inertial force (the third law). These forces are in equilibrium and resultant force is equal to zero that means a static situation, but really the body moves with acceleration. The motion can be called dynamical motion, if forces are in equilibrium. In another case the even motion of the body along circumference is also static, since these balanced forces act to the body. But this motion is named as inertial motion, but not dynamical. This enigma is a property of space and it is hidden in the microworld.

The author made an attempt to use the difference between dynamical motion and inertial motion to create the experimental systems to demonstrate reactionless motion. It is necessary to continue this research.

7. Besides the research on inertial drives, the author made some investigations on correctness of Einstein's special relativity principle. Instead of the known Newton's experiment with a pail of water, the author made an experiment with rotating de-balances. Results showed that relativity principle is questionable, since the motionless body and the moving body in the gravitational field are in different conditions. Reliable results can be obtained in the simplest experiment for the cases of even rectilinear motion of the transport and motionless transport.

Practical Application of Inertial Drives

Inertial drives for space apparatus can be applied both for long distance space flights and for satellites, or for the space stations. For satellites it allows to increase the period of operation on the orbit. Fuel is saved and ozone of the planet is not demolished in this case. Active drives can be used as a personal haversack propulsion drive of a spaceman and in future as a drive to correct the orbit of the space stations. Also inertial drives can be used in ground transport for North region or for desert regions since the high velocity is not required for these cases.

Conclusion

Inertial drive is not a single way to create non-reactive space propulsion. Magnetic and electrical fields can be used for motion in space also. Earth have magnetic field, so Lorenz forces can be used to create repulsion from the Earth magnetic field even in the area of orbital space. There is a question: are Lorenz forces sufficient for practical application in this case.

Besides, it is necessary to develop R.G.Sigalov's research [16] to create **space propulsion drive by means**

of non-linear elements of electric currents in metal conductors, which are bent at some angle.

A valuable information about antigravitational device according to Ph.D. Dokutchaev V.T., was published in 1989[17]. This device had weight less than one gram and it used electromagnetic waves to create propulsion force of about a milligram. It is not the limit for the devices of such type, and a more powerful result can be created. *(Editor's: See the above article "Design of an Engine for Free Space based on the Pondemotor Effect" by Acad. Gennady F. Ignatyev, who got a propulsion force about 60 N, i.e. equivalent to 6 kg-force).*

Space has different reaction on translational motion and rotational motion. Gyroscopes use this property. Member of Byelorussian Academy of Science, Albert I. Veinik discovered these effects during his experiments.

Prof. Kaznacheev made an analogous experiment using the rotating gyroscope and he explained weight changes as a result of the inner lifting force [18].

There are a number of proofs on possibility to create the reactionless space propulsion drive. This problem requires a serious State research program.

References

1. Toltchin V.N. Main principles of mechanics in materialistic understanding. Perm', 1969.
2. Gulia N.V. Inertia. M., Nauka, 1982.
3. Bogolubov A.N. Soviet School of machines mechanics. M., Nauka, 1975.
4. Newton I. Mathematical principles of natural philosophy.
5. Yavorsky A.A., Pinskiy A.A. Principles of physics, vol. 1, M., Nauka, 1969.
6. Yablonsky A.A. Course of theoretical mechanics, vol. 2, Vysshaya Shkola, 1977.
7. Max Born. Einstein's theory of relativity. M., Mir, 1972.
8. Landau L.D., Kaigorodsky A.I. Physics of a body. M., Nauka, 1984.
9. Einstein A. Physics and reality. M., Nauka, 1965.
10. Newspaper "Rabochaya tribuna", article "If, you, doctor, listen the lungs of the country" of 25.09.1991.
11. Magazine "Technika Molodyogi", article by Gulia N. "Alphysics of the XX century", #8, 1986
12. Favorsky O.N., Fishgoit V.V., Yantovsky E.I. Principles of theory of electro-reactive propulsion systems. M., Vysshaya Shkola, 1970.
13. Levantovsky V.I. Mechanics of space flight in elementary statement. M., Nauka, 1970.
14. Lebedev V. Journal of cosmonaut, magazine "Nauka i Zhizn'", #6, 1984.
15. Alexandrov E.V., Sokolinsky V.B. Applied theory and calculations of percussion systems. M., Nauka, 1969.
16. Sigalov R.G. New research on propulsion forces of magnetic field. Tashkent, Nauka, 1965.
17. Newspaper "Sozialisticheskaya industriya", article "On a new wave crest". 2.12.1989.
18. Newspaper "Sozialisticheskaya industriya", article "Let the secretes of ages fall". 7.06.1987.

Experimental Investigations Based on the Model of Electromagnetic Solitary Waves (Solitons)

(It is published here in short version)

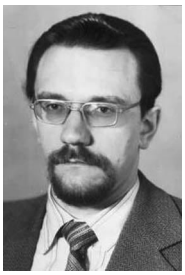

Mikhail V. Smelov

Schelkovsky passage 3, 1-47, Moscow, Russia
Tel. 7-095-164-6078

Using transceiver of electromagnetic solitary waves [1] and mathematical idea on the nature of electromagnetic (EM) solitary waves (solitons) [9] there were made experimental attempts to find interaction of artificially generated EM solitary waves and natural formations, which contain the same solitary waves. To do this the experiments on influence of EM solitary waves radiation on objects, which have various nature, were made, in particular, on biological processes and biophysical objects (processes of bioplast fission and neurostructure of brain and others), on ultrahigh frequency plasma, on the process of atomic nucleus decay as well as gravitation. In all of them **we found specifically soliton effects**, which were due to the fact that the mentioned effects and processes contained **coherent spiral structures**. These structures were stipulated by the presence of multilinked (many-sheeted) EM solitary waves.

For example, an effective influence of EM solitary waves was observed on the following biological objects. Growth of food barm in solution of honey kvass increased two times (in comparison with process in standard solution) during radiation by solitary waves of positive polarization (by electromagnetic component). It was made by two transmitting magnetic antennas (MA) shifted relatively each other at 90-degree and 90-degree phase delay. The same barm slowed their reproduction during radiation by solitary waves of negative polarization. Obviously, such effect is related with the change of spiralization threshold. Change of this threshold stimulates the excitation of electron-vibron field (it is some component of triune field of many-sheeted EM solitary wave). At that electromagnetic component of EM solitary wave field (biofield) was observed before as luminescent filaments of mitogenetic (ultraviolet) radiation for process of the cell fission.

In another experiment a single (for the time of less than 1 second) radiation by EM solitary waves on simple

Technical Design of Antigravitational Spacecraft "Silver Cup"

Eugeny Kovalyov

Head of the Group on Antigravitation, Riga
E-mail: libra2@zb.lv

Introduction

Kinematical schemes of known vehicles are very simple. Weight of an automobile increases frictional force and creates cohesion of wheels with the road. Due to the transmission of rotation from the engine to wheels the automobile moves along the road. The road serves as a fulcrum to the automobile.

A helicopter repulses from air by its fan baffles, it allows the helicopter to move upright. Air serves as a fulcrum to the helicopter.

Due to the convex form of airplane wings the reduced pressure appears above the wing with incoming airflow. This pressure overpowers the gravity of the airplane mass. The incoming airflow serves as a fulcrum to the airplane.

Editor's: it is a very simplified view and it can not be considered as fully correct idea.

A rocket flies due to reactive gas flow. Similarly it is possible to move repelling water. A combination of rocket and airplane led to the creation of jet airplane.

The power antigravitational spacecraft that I'll speak about repulses from it using the strongest force in Nature, i.e. the so-called "released force". I especially exaggeratedly showed how simple are the kinematical schemes of movement of the known vehicles. All they are usual for us and we do not notice them and we are not surprised. But let's remember, how did the first automobiles look and how do they look now? Thus, do not be surprised that kinematical schemes of movement of my antigravitational spacecrafts are very simple too. Besides, they are not perfect, because this cause is a new one. It is a business for designers to make them perfect. But in any case my antigravitational spacecraft is a great step forward in the development of transport techniques.

Some explanation

Do you know, if anybody ever asked himself why do material UFO apparatus being in our material world easily elude the pursuit of rockets and military aircraft, which work at the maximum power of their engines? According to UFO literature, the extraterrestrial apparatus sometimes "laughing" at the imperfection of the earth flying techniques. They can sharply increase their speed and disappear far away, then they can return. Looking on such "maneuvers" and other " wonders" like flights at straight angles on a high speed, everyone have an impression that these objects are not material, since such a "flight" contraries to people's conceptions about motion.

As numerous eyewitnesses stated that UFO are material and some people touched them or visited these objects, then various fantastic hypotheses appear on this basis that extraterrestrial can control space and time during their flights, neutralize gravitation, etc. But is it true?

If we believe these eyewitnesses and base on the theory that extraterrestrial's apparatus are material, then according to physics we should consume power, energy to move a mass from the point A to the point B. This mass cannot move immediately from one point of space to another without any energy consumption, otherwise it will be in contradiction with the law of conservation of energy and common sense. We can ask then, what kind of engines do extraterrestrial have, which can move their apparatus with such a high speed from one point of space to another? These systems are much better in acceleration and speed of flight, than all our kinds of flying techniques.

You can say that extraterrestrial can use some fields of unknown nature to move their UFO systems. Yes, they can, but are these fields really unknown to our science? And may be it's not a problem for us to use them also. Any field unknown to science should create the force of ordered action, i.e. traction to move a mass. Sometimes a usual spring can create higher traction than any unknown field!

I'd like to underline that we should not advance any fantastic theories. If UFO systems can move with such a high speed, then they have the corresponding superpower engines. There is no another explanation in our real World. You can find and understand the principle of operation of these super-power engines. *Editor's: we have already mentioned the simplifications made by the author to present these complex scientific ideas in a popular view. So, we ask our readers to be indulgent to this style of narration.*

Also there is one more prevalent opinion that extraterrestrial learned to neutralize gravitation to make their large-tonnage systems weightless. This vague statement sounds beautiful, but when we begin to think about neutralization in a physical sense and how can we neutralize gravitation taking into account gravitational properties of atom, then we will find out that gravitation can be neutralized only by static repulsion, by charge of another sign, i.e. using opposite directed force. There is no another possibility.

Editor's: we believe, that the author is limited by consideration of his original idea only and other ideas are not possible from his point of view. Sure, we cannot agree with him in this point.

It means that we should spend energy anyway to neutralize attraction force of large-tonnage mass of the system. This leads to the fact that any system should overpower gravitation force, make an antigravitational action, i.e. it should be an antigravitational spacecraft.

But even this scheme to neutralize gravitation, which was described here, can be simplified and improved by means of creation of a static flight, which is also known to me. My colleague from Latvia Alexander studies this method of flight. The system (theoretically developed by Alexander) radically differs from Searl's system.

Editors: See S. M. Godin and V. V. Roschin works on creation of Searl's generator. The change of weight was about 100 kg.

It is simple in design and production, lighter and much more powerful than Searl's system, because it creates the difference of potentials between the body and environment. It attracts energy from environment by whole external surface of the system, then makes repolarization and repulses it like rocket does. The power of the system can be higher due to the big square of surface, which attracts energy. Alexander knows problems of heavy systems made by John Searl as well as those made by Roschin and Godin. With their design scheme they will not achieve Alexander's results. But he also has problems, for example, to get and make composite materials with necessary properties. He knows these properties, but he has no research laboratory to study them. It is a main complexity in his occupation. Without this problem he could create a small static system.

I think that the main imperfection of systems, which use only static flight for movement, will be bad maneuverability and impossibility to start immediately in the case of danger. Also the imperfection of static antigravitational spacecraft is the fact that designers of these systems are limited due to the physical principle of operation. So, they will not be able to create systems of different shapes. We should note that maneuverability of static systems is small.

I can say that static method of flight by Alexander called energoplane, had been already considered in the history of Science, but I should mention that it was not developed up to industry level. Alexander on the base of his numerous experiments got better results in his method of flight. A demonstrational prototype (cart) designed by him moved being attracted to environment only. It is a matter of "techniques" now to create a flying static system. Alexander called his static system "Electrical lens", which collects, focuses energy in itself.

These two methods of flight, force and electrostatic, are different from each other by their method of work. Static method needs environment to make its engine work and move the system. Force system does not need environment to make the engine work. It needs environment only to move the system, because it can store energy for its engine inside the system as well as it can take it from environment by static method or using a generator.

To be unbiassed, I should say that the main advantage of the static flight to the force flight lies in the fact that static flight takes energy for the movement directly from environment and there is no need to store it. It substantially decreases the weight of the system. Energy in environment is infinite. It means that static systems can fly "perpetually" that is very important during long intergalactic flights.

I see the future in combination of both methods of flight in one system.

Explanation

When a gun shoots, then gases released from the case push the shell forward and mass of the gun is pushed back. If all people know about the recoil force of the gun, then only some physicists know about "released force".

Let's imagine that the mass of the gun is 1 ton and the mass of the shell is 10 kg. If we shoot from this gun and place imaginary scales on some distance from it, then the power of blow of armor-piercing shell upon this scales will be about 20 tons or more. The opposite scales will register that recoil force will be of 1 ton. Here you can see the disproportion of forces!

If we fasten an imaginary elastic line between the gun and the shell, then the released force according to resultant of forces will overpower all other forces (mass of the gun, recoil force and frictional force). From this example we can see that the shell will carry off the gun due to its movement. If we place the gun upright and shoot from it upwards, then the shell also will carry it. And such a system consists of two uncoordinated masses, the gun and the shell, which are not tied together, will fly upwards.

Editor's: Really, it is true only if there are different momentums $p=m\upsilon$ for the gun and the shell!

Direction of movement as it is known takes place towards the bigger resultant force. Every inventor has its own "language of physics", because the usual one does not allow him to create. I introduced my own language and should make it understandable. As I see it, kinetic energy is a "released energy" and potential energy is a "stored force". If we consider physical phenomena only from the position of energy, we will not be able to understand the entire pattern of reality, since many physical phenomena cannot be explained only from positions of energy structure of the World. And as I see it, such position is comparable with a special case in physics. But we can explain everything from the position of force, all structure of the World on micro and macro levels. The World is very simple, and people created complexities in its explanation themselves, due to the lack of knowledge. That's why further I will adhere to my own language in physics as a simple and popular one. I think it will be a language for future physics! It is

not necessary to give scientific mathematical solutions when they have no common with the physical reality.

One can say that the system considered above can fly up in such a way only for one time, and then it will drop to the Earth, because there is no fulcrum!

Surely? And who will prevent you from further "shooting" when you fly upwards? You can shoot with certain frequency, time and pulsation. And are you sure that there is no fulcrum? Being repulsing from the body, the moving mass starts acceleration, and then it increases speed (increases its force also) and carries the body upwards. *Editor's: In this case we periodically create a fulcrum. In some works it is called "dynamical support"*. Or may be it's better for you to push using diffused gases like a rocket does, than to have a stable fulcrum? We can decrease recoil force of any of masses by various technical methods, we can remove or use recoil force to fly upwards! I know how to do it…

Further let's imagine two guns placed one opposite to another as it is shown on the Fig. 1, which shoot synchronously. What will happen to them during shots?

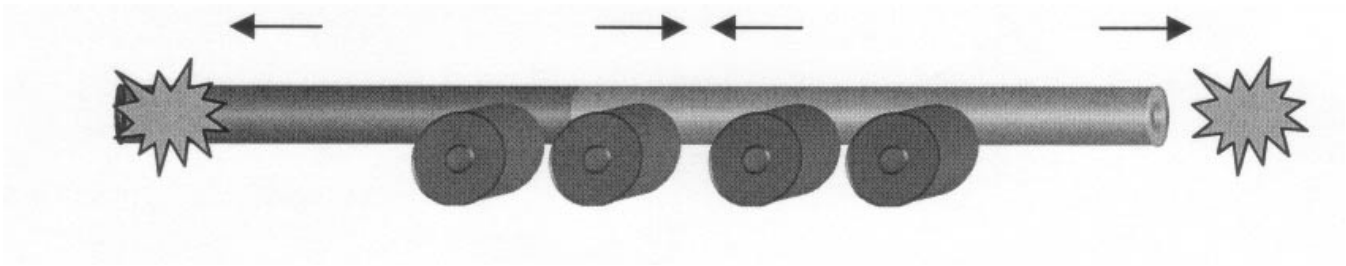

During the shot, recoil forces of two guns will be mutually compensated and there will be no recoil! This example also shows how we can eliminate recoil force by the force equal in weight, but opposite in direction of action. We can mentally remove backs of guns and during the synchronous shot released gases will push cases of shells backwards, which will mutually repulse and will be fulcrums to each other.

Then let's consider what will happen to the same metal tube bent at different angles. To compare them we will simultaneously consider what will happen inside this tube with mechanical variant of release of force using springs, which repulse the mass. We can also push the mass using pressure, pneumatics, electromagnets, etc. You know, all phenomena in nature are similar by the action of force they made.

Case A

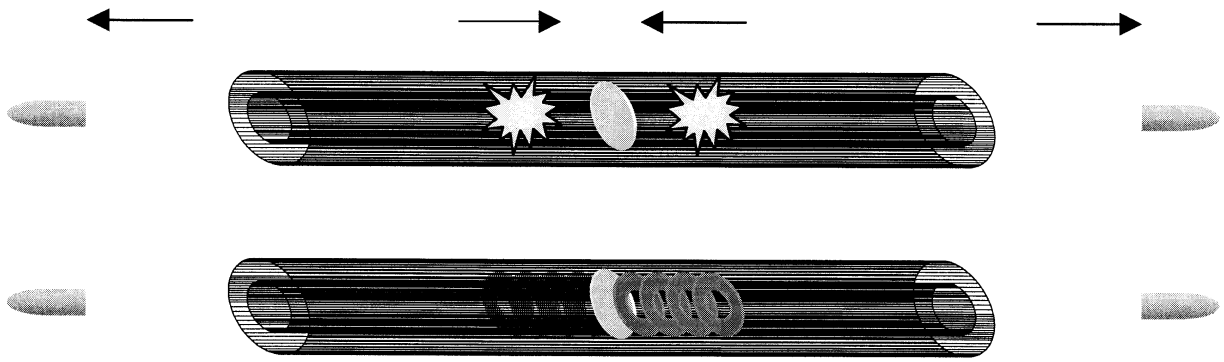

The "released force" in both variants, explosive and mechanical, will not get the tube moving forward. The force of pressure or stored force of spring will repulse from their fulcrums and will push cannon balls forward. Here is a classic case; the action is equal to counteraction.

In this variant the "released force" will act on the tube and will call a small reactive effect. The "released force" of gases will go in one direction, and recoil force of these gases will push the tube in the opposite direction like a rocket.

Case B.

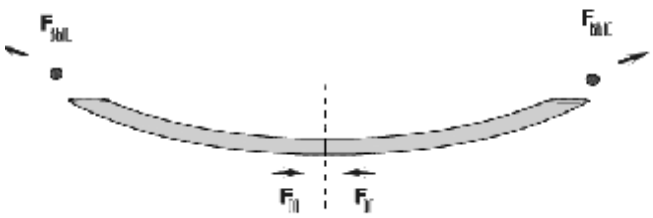

In mechanical variant with springs the reactive effect will be less, and it can be so small that it will not be able to get the tube moving forward. It takes place due to the changed direction of force to the fulcrum as a result of bent tube. In this variant two springs have their inner fulcrum, from which this springs repulse and push masses. It also assumes the inner recoil force of both springs is mutually compensated. I.e. there is no recoil force! May be, there is an outer recoil force, which is a reactive effect. But the value of reactive effect and frictional force cannot be compared with the value of "released force"!

The essence of reactive movement is based on the fact that one mass moves in one direction and another moves in the opposite direction. Every mass serves as a fulcrum to another one, from which it repulses. It cannot be any movement of the mass without the presence of another mass. The only problem is: what mass we should consider as a fulcrum. It can be the rocket or gases, but all things are relative. Usually we consider the mass, which has more force, mass and solidity to be the fulcrum. Another mass can repulse from it and then move. Not in vain we say that the rocket repulses from its gases, which serve as a fulcrum to it. We only understand that released gases serve as a fulcrum to the rocket and it flies due to recoil force repulsing from these gases. If the rocket uses released force, but not throw it away like a useless one, then it will be a "force antigravitational spacecraft"! Or it can be an automobile without a drive to its wheels that is a horizontal flight of antigravitational spacecraft.

Besides some inventors make horizontal inertioids to move without a drive to wheels, by means of flywheels, disbalances and other rotary and impact mechanisms as well as they decrease the weight of vertical inertioids. Sometimes they do not understand the main aspect that is why they create movement or decrease weight. It's very simple; they all use the "released force" or some percent of it. Movement can be created due to this force as well as decrease of weight of their systems. Other forces are not able to do it. If we understand it, then we will easily get 100% of this force.

Case C

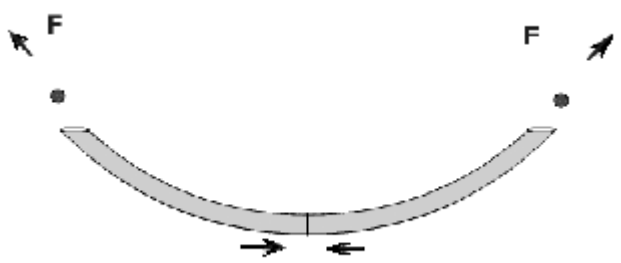

The "released force" will act on the tube in a greater extent due to the greater convolution of the tube and it will throw away the tube by its recoil force. It will call the bigger reactive effect. I have already spoken about it.

Case D

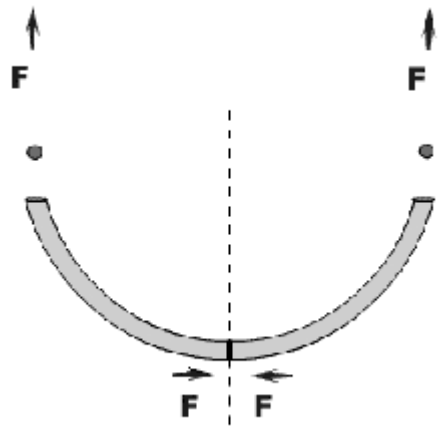

It is obvious that reactive effect is expressed in a greater extent due to the big convolution of the tube. This method of movement is used by rockets, which throw away the released mass of gas by its engine.

The conclusion is: If we look on these examples, we will see that the smaller the force of reactive effect will be, the bigger efficiency will be obtained by the released force.

Now if we mentally fix an elastic line between flying cannon balls and the tube, then cannon balls will push the tube. Here everything depends on the power of shot, i.e. on the stored force, which was stored by the spring. If there was enough force, then during the release of force, accelerating cannon balls will overpower the counteraction, attraction of mass and force of the tube and frictional force, thus this mental system will fly.

Cannon balls will act on the inner walls of the tube due to the changed trajectory of their movement and will call reactive effect, i.e. the recoil of the tube backwards. Much depends on the convolution of the tube, the value of power of reactive effect also depends on it. But this value of power cannot be comparable with the force of release.

Editors: Here the author writes about another method, which is described by the formula F=ma for nonlinear motion. In my opinion, exactly this method will be more perspective for future spacecrafts.

Further we will keep improving this tube and will start the immediate designing of the force antigravitational spacecraft.

Model of Antigravitational spacecraft "Silver Cup"

The flying cannon balls can carry off the tube and it is a fact of a flight! Then we can place several pairs of such tubes and join them crosswise. We can extend them with some engine and periodically shoot with certain frequency. And such design will also fly away due to its bigger power. The main problem is that this unusual

engine should be able to store the power for a new push in the moment when it flies upright upwards.

Editor's: this is the weakest aspect of the author's theory, which does not consider the return move of the "ball" to the initial point.

Let's keep on improving the system. We can join the balls-masses flying upwards between each other during the synchronous shot. Then we can put some covering on these connections and make some kind of a round floor. But now it is only a "raw" mechanical variant, which is difficult to make in techniques. It's a draft for kinematical structure of a system of new generation. We can do it simpler and much more powerful.

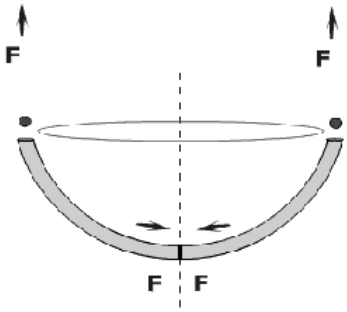

Technical structure of the antigravitational spacecraft "Silver Cup"

If we consider the upper figure, we will see that the system consists of two separate parts, masses, which do not have a rigid connection. They are connected by springs, shock absorbers, spades and similar things placed along the circumference of the system.

As I wrote above, the engine can be different (explosive, pneumatic, electrical, etc.). During the force release, for example, by explosive engine, the mass 2 will repulse from the inner fulcrum, i.e. from the mass 1. It will fly away pushed by explosive force like a shell (1500 m/sec). Since the mass 2 is tied with the mass 1 by the loose coupling, the mass 2 will involve the mass 1 to the flight. The main problem is that the force of upward movement of the mass 2 should overpower attractive force of the mass 1. I.e. the value of released force or explosive force should be always higher than the total weight of all system. Only in this case the flight can take place.

Many will depend on the convolution of tubes (!) and on the length of barrels, in which the shells-pistons are

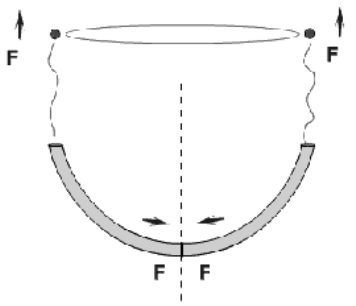

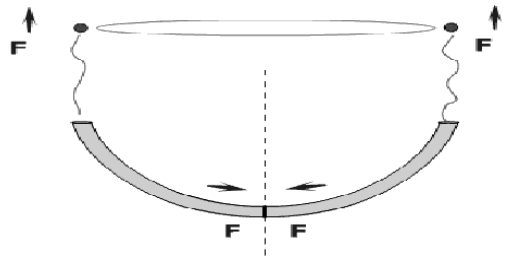

placed. These shells also need time for acceleration, to pick up force and overpower the reverse action of another mass. The role of shock absorbers is to carry the second mass and to cushion the power of impact.

In the explosive variant of engine (in contrast to other variants) there is a problem, what to do with waste gases. We can entrain them in the work of engine converting them to another aggregate state or to throw them away like a rocket does through some exhaust valve working in the same clock cycle with the engine.

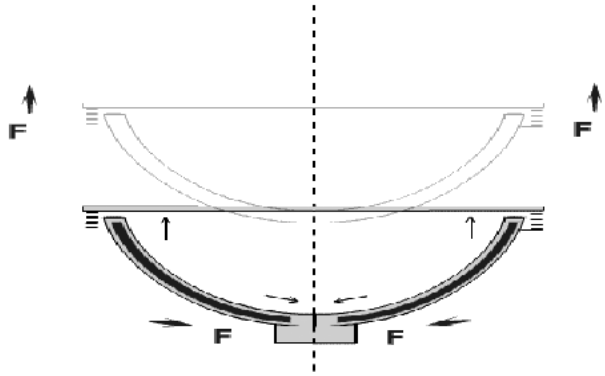

But I should advise to all: Let's follow the way of released force created inside the system, but not the collision way, then the flight will be silent and noiseless. The mass should carry another mass, but not strike mass against mass. During the long flight by collision method no metal can stand it for a long time. Horizontal flight in this model can be made in such a way: It will be enough to place the same bent tubes under the floor. The other things are easy to find. Please, note that the antigravitational spacecraft is empty inside. And every body that enters it can ask a question: Where is the engine? Since all are accustomed to the traditional position of engine. The engine of the given model of force antigravitational spacecraft is situated under the floor, and the lower part of the body.

Conclusion

Many people can ask a question, why I wrote this paper? The first reason is the unbelief of people that it is possible to create an antigravitational spacecraft like aliens have. The second reason is that I have been working all this years during whole days for you and without any salary, only for humankind evolution. Thirdly, taking into account the importance of this discovery for Humankind, I'd like people to fly to stars in the near future. I want to organize a foundation to develop this technology.

solenoidal, herewith it is forgotten, that poles of the magnet can be oriented not only along the direction of motion, but across also.

From the electrodynamics textbook: "The vortex electric field differs from electrostatic field that it is not related with any electric charges and its lines of intensity are closed lines."

From theory and from experiments it follows, that under transverse motion of magnet the lines of disturbance of vortex electric field can be unclosed and, accordingly, the flow of induction through the closed surface is not a zero. Then there is a direct discrepancy to facts in modern electrodynamics. It is strange, but for the whole history of researches in magnetism the transverse magnet's motion was not is considered. It leads to revising of electrodynamics' postulates, which plays such role in electrodynamics, as the Newton's laws plays in classical mechanics. The postulates, giving invalid belief about field processes, accordingly, do not allow to make some correct calculations. Fallaciousness of these postulates was one of the reasons, on which the electrodynamics could not to consider and to calculate the discrete electromagnetic waves (photons), where the magnetic field also is the transverse field (the field construction and calculation of photons are represented on the page http://www.comail.ru/~alemanov). **That is to say, not only particles has the charges, but areas of disturbance of field (without particles) are the charges also,** where the flow of electric induction through the closed surface is not a zero. Thereby, the vortex electric fields can be not only as closed flows of induction, but as well as inducted electric charges, accordingly, the laws for electric charges are valid for induced electric charges also. For instance, in the law of conservation of charge: if somewhere the area of disturbance with positive sign appears, that negative area appears also.

From the electrodynamics textbook: "The vortex electric field is generated by the variable magnetic field. Its force lines are always closed, like force lines of magnetic field."

But before this fundamental postulate, confirming, that force lines of vortex electric field are always closed, it was necessary to consider all variants of change for the magnetic field, including the variant of the transverse motion of the magnet. That is to say, the consideration of physical processes could not be unilateral. Faraday considered the longitudal motion of magnet and discovered the electromagnetic induction, but the transverse motion of magnet that have the principle importance for understanding of field processes in electrodynamics was not considered. Thereby, the longitudal motion of magnet brings to arising a vortex electric field with closed force lines, but transverse motion of magnet brings to arising a vortex electric field, where the lines of forces are not closed. In this case it lead to induced electric charges. It is necessary to notice, that this is first mistake, detected in electrodynamics postulates for all time of existence of electrodynamics.

From the electrodynamics textbooks: "…Gauss' theorem is valid not only for electrostatics, but also for electrodynamics, which using a variable in time electromagnetic fields. We are not sure if this hypothesis is valid or it is not valid… Only the experiment can give the answer on this question. The whole collection of experimental facts speaks in favor of this hypothesis." But, unfortunately, the experiment with transverse motion of magnet was not considered seriously in this textbook.

(Editor's note: Well-known Searl's experiments and Godin & Roshchin's experiments are based on such transverse motion of magnets (rollers). In Alemanov's article it was demonstrated that in this case the experiment should lead to induced electric charges. Really it was detected in experiments. Hence this missed aspect of electrodynamics is very important for development of the new energy technologies.)

Gravito-Inert Mass

J.A. Asanbaeva

720000, Kyrgyzstan, Bishkek, Kadyrov's Scientific Center
+996 (312) 47-25-40, +996 (312) 65-02-83
bondarenko@nazaraliev-centre.com

Nature of mass is one of the important problems of modern physics. It is accepted to consider that the mass of elementary particle is determined by fields, which are connected with it (electromagnetic, nuclear and others). However, we didn't create any quantitative theory of mass. There is no theory to explain why masses of elementary particles form a discrete spectrum of values and to allow determining this spectrum.

Mass (m) is a physical value, one of characteristics of matter, which defines its inert and gravitational properties. Accordingly, we distinguish inert mass (m_i) and gravitational mass (m_g).

Inert mass (m_i) characterizes dynamical properties of a body, its property to accelerate under the action of the force $(\vec{F}_i)$ and according to the second Newton's law is considered to be constant coefficient of proportionality for the given body between $\vec{F}$ and acceleration $\vec{a}$.

$$\vec{F}_i = m_i \vec{a} \qquad (1)$$

Gravitational mass (m_g) is a source of gravity field. Every body creates its gravity field, which is

proportional to the mass of the body. This field initiates an attraction of any other body to the given one with a force determined by Newton's law of gravity:

$$F_H = \sigma_H \frac{Mm_g}{r^2} \qquad (2)$$

where r is the distance between bodies, δ_H the universal gravitational constant, M and m_g are the masses of attracting bodies.

In principle, it follows from nothing that the mass (m_g), which creates gravity field, defines inertia of the same body (m_i). However, the experiment made before the creation of relativity theory showed that inert and gravitational masses are equal to each other:

$$m_i = m_g \qquad (3)$$

This law was considered to be fundamental law of nature called "the principle of mass equivalence" and was a basis for general theory of relativity (GTR) by A. Einstein.

According to general physical theory of a universal field (GPTUF) by Kadyrov [1] the mass usually observed (m_{obs}) consists of the mass immovable regarding to the selected inert frame (IF) of particle (m) and mass, which depends on rate of movement of particle (m_i):

$$m_{obs} = m + m_i \qquad (4)$$

Kadyrov called the mass m_i «inert mass», but it is not the mass m_i in (1), which is called in the same way. That's why to prevent the mishmash with m_i in (4) further we will call "gravito-inert mass" and will indicate it as m_{gi} that will be a correct reflection of physical sense of this mass.

Mass m in (4) expresses the same mass as in (2), and then we will rewrite the formula (4) as

$$m_{obs} = m_g + m_{gi} \qquad (5)$$

where

$$m_{gi} = m_g \cdot \frac{v^2}{c^2} \qquad (6)$$

Developing these Kadyrov's laws we will show the change of mass m_{obs} with the change of speed of particle. Experiments made after the creation of GTR showed the dependence of acceleration of gravity on the chemical composition of bodies. The body, which weight is more, falls to the Earth slower then the body of smaller weight, since there are more protons and neutrons in atoms of heavy bodies. These protons and neutrons antigravitate with protons and neutrons of the Earth. According to Kadyrov a mutual repulsion appears between similar particles (i.e. antigravitation) and attraction appears between any two dissimilar particles. Such interaction takes place independently, whether a particle has electrical charge or not. Every elementary particle has gravitational charge, which is proportional to its mass (m) according to Kadyrov's formula

$$q = \pm\sqrt{\sigma_H} \cdot m \qquad (7)$$

where q is a gravitational charge of the particle.

In result we get that gravity acceleration depends on the speed of bodies according to Kadyrov's formula

$$g = g_H\left(1 + \frac{v^2}{c^2}\right) \qquad (8)$$

where g_H is determined from (2) according to the following formula:

$$g_H = \frac{\sigma_H M}{r^2} \qquad (9)$$

and we will call it "Newtonian gravity acceleration".

As a result the principle of equivalence is not true and the foundation of GTR is broken.

Let's rewrite (2) taking into account (9) as

$$F_H = m_g \cdot g_H \qquad (10)$$

The mass m_i in (1) is the mass m_{obs} in (5), which is determined taking into account (6) as follows:

$$m_{obs} = m_g \cdot \left(1 + \frac{v^2}{c^2}\right) \qquad (11)$$

Dependence of m_{obs} (*v*) is presented on the Fig. 1 according to the Table 1:

Table 1

$\frac{m_{obs}}{m_g}$	$\frac{v}{c}$	$\frac{v^2}{c^2}$	$\frac{F_i}{F_H}$
1	0	0	a_l/g_H
1,04	0,2	0,04	1,04 a_l/g_H
1,16	0,4	0,16	1,16 a_l/g_H
1,36	0,6	0,36	1,36 a_l/g_H
1,64	0,8	0,64	1,64 a_l/g_H
2,0	1,0	1,0	2 a_l/g_H

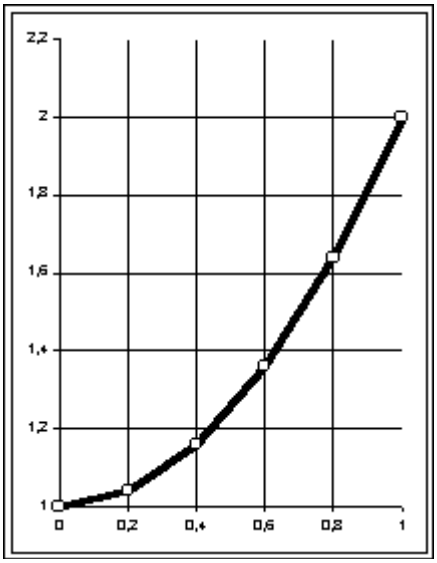

Fig. 1 Dependence of mass on speed

Note: $\frac{m_{obs}}{m_g}$ is laid off by OY axis and $\frac{v}{c}$ is laid off by OX axis.

The observed mass (m_{obs}) grows with the growth of speed of the particle until it will be double to its initial mass, which corresponds to rest mass state (m_g). With achieving of top speed (v=c) the particle gives birth to antiparticle. Antiparticle has the same mass as particle.

According to GPTUF by Kadyrov [1,2,3], the ravitational charge (7) does not differ from electrical charge on the boundary of quantum volume of the particle, i.e.

$$\pm q = \pm e = \pm\sqrt{\sigma_H} \cdot m_{obs}$$

and if we will take into account (11), then we will get

$$\pm e = \pm e_0 \mp \Delta e \qquad (12)$$

and with v=c, then

$$\pm e = \pm 2e_0 \qquad (13)$$

where e_0 is the charge of particle in immovable state,

$$\Delta e = e_0 \cdot \frac{v^2}{c^2}, \qquad e_0 = \sqrt{\sigma_H} \cdot m_g$$

If we take into account (11), then the force F_i will be equal to:

$$F_i = m_g(1+\frac{v^2}{c^2})a \qquad (14)$$

or

$$F_i = m_g a + m_{gi} a \qquad (15)$$

If we will take a ratio of (14) to (10), then we will get that $F_i \neq F_H$, namely

$$\frac{F_i}{F_H} = \frac{a}{g_H} \cdot (1+\frac{v^2}{c^2}) \qquad (16)$$

this implies with v=0

$$\frac{F_{i1}}{F_H} = \frac{a_1}{g_H} \qquad (17)$$

at the same time from (11) $m_{obs}=m_g$, and with v=c

$$\frac{F_{i2}}{F_H} = \frac{2a_1}{g_H} \qquad (18)$$

in this case from (11) $m_{obs}=2m_g$ (19)

According to (19) when speed of the particle is equal to the speed c, a new identical particle is formed from gravito-inertial field of the particle.

This particle has a spin opposite to the moving particle. Appearance of electron-positron pair is possible as a result of accelerated motion of electron. In general case the mass m_{obs} of the particle increases according to (11), i.e. the more the speed of the particle, the rapidly m_{gi} increases.

According to (17) and (18) with v=c the force F_{i2} will be double in its value, and the force equal to F_{i1} will act on every particle. It means that two particles will fall back to the Earth.

Let's allow that electron (e) with the mass m_e accelerates from the Earth athwart to its surface. Its mass increases due to its gravito-inert mass, which will cover and compress the initial mass. Gravito-inert mass can be constantly emitted as photons. This fact explains the emanation by Vavilov-Cherenkov during the movement of charged particles. While reaching of v=c, the antiparticle of electron is born (positron) and they fall back to the Earth. Possibly, it explains the avalanche of electron-positron pairs, which regard to the secondary space beams. With the acceleration of proton up to v=c an antiproton should appear, and with acceleration of neutron an antineutron should appear. ***Thus, no particle can fly out of our Universal, i.e. it is a black hole.*** An antiparticle appears from the field and when it meets with a correspondent particle, they turn to the field. This field is unified, it is a gravitational field, and electromagnetic and nuclear fields are various manifestations of it.

According to Kadyrov [1,2,3], particles (electron, proton, and photon) are self-rotating clots of gravitational field, they have a dense nucleus in the center, and layers move around this nucleus with de Broglie's frequency. With

this movement their masses increase according to (11). This increase takes place because the mass of the field of particle, which is called "gravito-inert mass", increases. With a top speed (v=c) an antiparticle appears from it. But antiparticle is the same formation as a common particle, but its spins are opposite to spines of common particles. Gravito-inert mass is a mass of magnetic field of particle. Kinetic energy of magnetic field is equal to $m_{gi}\frac{v^2}{2}$ and when it becomes equal to $m_g c^2$, then a new antiparticle will form from this magnetic field, i.e. with energy of $m_{gi}v^2=2m_g c^2$.

References

1. S. Kadyrov. Analysis of some fundamental questions of natural science in the light of theory of a single field. Bishkek: Ilim, 1996, p.89.

2. S. Kadyrov. Unified theory of field and questions of cosmology and elementary particles. Frunze: Ilim, 1989.

3. S. Kadyrov. General physical theory and solution of fundamental problems of natural science. Bishkek: Sham, 2000.

On the Eve of the Sixth Revolution in Physics

Dr. V.A. Atsukovsky

Dugina st., 6-14, Gukovsky town, Moscow region
140187, Russia

Condition of modern theoretical physics and the ways of its development

Methodological crisis in modern theoretical physics.

Modern physics achieved outstanding results in the field of cognition of laws of nature and in many applied fields. The twentieth century is characterized with such great achievements as splitting of nucleus and creation of atomic energy on this base, creation of quantum generators, discovery of astronomic objects with unexpected properties, research of properties of "elementary particles" of the matter and many others. Absolutely new directions of natural science appeared, which not only solved many theoretical problems, but also put them to serve the all mankind.

However, in spite of this, it becomes more evident, that in some fundamental fields of natural science, first of all in theoretical physics, some contradictions appeared and they keep on accumulating. They are nicely named as ""divergences", which have the fundamental character and which are the serious hindrance of further development of fundamental and applied science.

The numerous attempts to combine the basic fundamental interactions on the base of conceptions existing in modern physics turned out to be practically unsuccessful. The amount of opened "elementary particles" of matter does not correlate with the full uncertainty of their structure. Energy of radiation of the stars including the Sun is not explained because its radiation shall wear out long ago taking into consideration the time. Even in such a developed field as electrodynamics we have the whole classes of problems, which cannot be solved in the frames of existing theory. For example with the movement of two similar charges a paradox appears: quiet similar charges should repel from each other by the law of Coulomb, but they attract each other because they are the currents. If they are still immovable in relation to each other, then why do they attracting in the movement?

In spite of many public appearances, statements and popular and special articles having the aim to prove the greatness of modern physics and great possibilities, which are waiting for the mankind in relation with its achievements, we should state that there is no anything similar in reality. There are a series of contradictions, so called "paradoxes" in physics; some of its theses became discrepant with the theses of dialectical materialism. For example, the idea of "Big explosion" is in contradiction to the thesis of dialectical materialism about the absence of origin, birth or creation of the Universe. But some theorists suppose that dialectical materialism should be corrected because some parts of it are in contradiction with the universally recognized theories in physics, for example with the relativity theory.

In the applied physics different promises do not realize nevertheless. Many years passed from the moment when the "stable plasma" was created and existed for 0,01 second. Since then the numerous units were constructed to get a thermonuclear energy, which should provide the mankind with the energy. However the units exist, institutes and plants were built for this purpose, conferences and meetings are hold, awards and academic degrees are given... The only problem is: we have no thermonuclear energy itself, and nobody knows if it will ever appear.

We have spoken a lot and for a long time about STR – scientific and technical revolution, about achievements of science; the nuclear weapon and nuclear power were created, the flights into the close space were organized, the numerous materials were developed, computers of high complexity, robots and other things were created, and so on. However with all this we should state that the quantity of new discoveries decreases and development has a quantitative character, and even with the studying of "elementary particles" of the

each other, but they have equal Poynting vector P, and place them coaxially then ether will move asymmetrically according to law of conservation of the quantity of the motion, and the result for it is the propulsion force Ft.

At the present time the third model of the fragment of the engine was built and its main technical parameters were measured. So, on the frequency of 80 kHz we measured that the electric intensity is $E=10^5$ V/m, the total electric intensity is $E=10^6$ V/m, the magnetic intensity is $H=2 \times 10^4$ A/m, the Poynting's vector is $P=10^{10}$ Joule/(m^2 x s), the propulsion force is F=60 N (about 6 kg-force) if the input power to one LC circuit of the system is about 10 kW. The system is shown on the photo.

In the near future will start experiments on engines based on the "pondemotor effect": measurement of rotation moment, interaction between the exciter and its mirror reflection from the Earth surface and so on. We started to design a fragment of the engine with radius R=40 m, which will create $P=10^{14}$Joule/(m^2 x s) and $F_t=3 \times 10^4$N (about 3 tons).

References

1. Acad. Tamm, The principles of the electric theory, Moscow, Leningrad, 1949.

2. N. Kalashnikov, G. Phrantov, V. Gordienko. The foundations of the theory of electromagnetic dipole and possibility of its application in electro prospecting, Lvov, 1977.

3. The pondemotor action of electromagnetic field, edited by Dr. R.V. Alitov, Moscow, 1975.

Propulsion From Relativity Effect of Inertial Force

Takuya Ishizaka

Midori 3-4-3-205
Utsunomiya Tochigi, Japan
Zip 321-0165
Amateur-institute for General Relativity , Japanese branch office

Many scientists challenged to get propulsion from inertial force. No one succeeded. Here we show the possibility of propulsion system by the effect of relativity of inertial force. Activity matter may be a gravitational wave or "space-time". We named it "space-time propeller". If we success to show that the system will work, then we will get a propulsion from electric power.

The system consists of a turntable and 2 wheels. Wheels were set on the edge of this turntable. We call it "space time propeller ". Proper time at point P in wheels will be delayed by rotation of turntable and wheels. This delay depends on the position in the wheels. Delay describes as follows, if we neglect the effect of own mass of wheels. We do not need to think about mass of the turntable. The " τ " is proper time on P. The " t " is the time at the inertia system fixed on the center of a turntable.

$$d\tau = \gamma dt \qquad (1)$$

$$\gamma = \frac{1}{\sqrt{1 - \frac{r^2\omega^2}{c^2} - \frac{R^2\Omega^2}{c^2} - \frac{r^2\Omega^2\cos\varphi^2}{c^2} + \frac{2rR\omega\Omega\sin\varphi^2}{c^2}}} \qquad (2)$$

In general the "inertial force field in the accelerated coordinate system" is in inverse proportion to proper time of each point.

$$\textit{inertial force field} = -\frac{dx_\mu}{d\tau} \qquad (3)$$

In the case of the space-time propeller, the sum of inertial forces on each point of wheels is not equal to zero.

It means that all the sum of inertial forces in wheels is never canceled. It is a "relativity effect". We call this phenomenon the "inertial force deviation".

Non-compensated inertial force =

$$= \int_{Volume\,of\,all\,Wheel} -\frac{dx_\mu}{d\tau} dm \neq 0 \qquad (4)$$

The new propulsion force is just a non-compensated inertial force. If we put plus spin on the turntable and minus spin on wheels, we can get directed propulsion.

How many propulsion we can get? We can get 70,000 N propulsion under the following condition. The radius of the turntable and wheels is 1m; linear density of wheels is 10Kg/m, frequency of rotation of turntable and wheels is 16,000 Hz.

The idea of the space-time propeller includes 2 problems. The first one is that we used a rigid body in above discussion. But any terms will not be divergent under the condition that λ in (2) is real. Therefore we can avoid the physical failure in above discussion. The second one is that active matter is unknown. According to above discussion, we can't explain energy-momentum conservation.

We should find an active matter to explain the energy-momentum exchange mechanism. It is natural to think that the active matter is the gravitational wave. It means that the space-time propeller "kicks" the space time like the propeller kicks the air.

To explain that active matter is a gravitational wave, we need to know the structure of space-time inside of

the rotating solid-state object, which is filled with mass. It is an inner solution of Einstein equation of the rotating solid-state object. The inner solution of rotating solid-state object is unknown. If the shape of the rotating solid-state object is a sphere, then inside of it space-time must have characters of Schwarzshild inner space-time and rotating coordinate system. And it must be continuous smoothly with Kerr space-time on the surface of the object. If we get above solution, then next we will discuss the external space time of the rotating solid-state object, which has valuable rotation. The solid-state object, which has valuable rotation, can generate a gravitational wave. We will be able to get information of energy-momentum conservation by analysis of above gravitational wave.

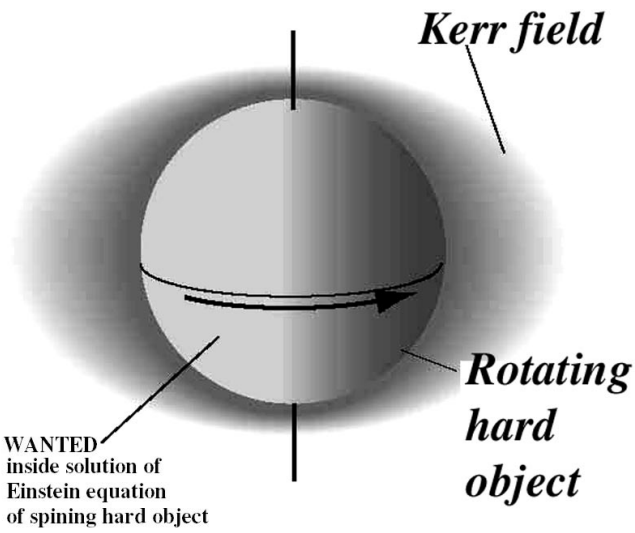

Fig.1 Space-Time propeller.

Rotation of the turntable and the wheels causes a difference of time delay late in the turntable and the wheels. Time delay in the wheels (at point P) depends on *Sin*ϕ. It means that time delay of P at $0 < \phi < \pi$ and P at $0 > \phi > -\pi$ is different.

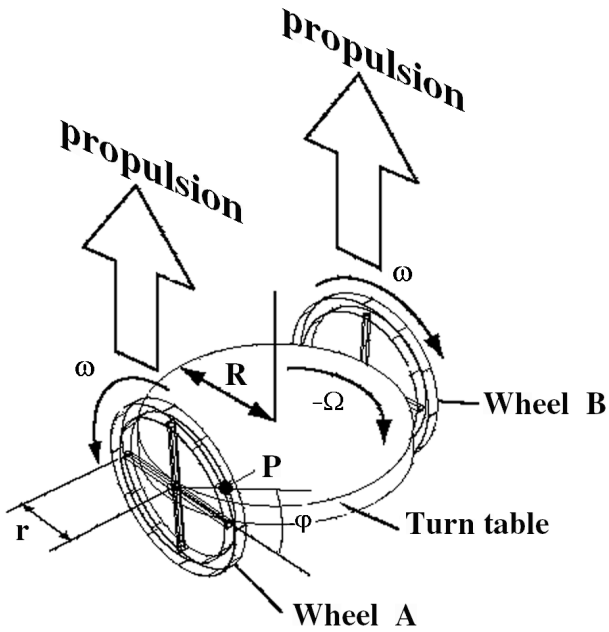

Fig 2. Space-time image of rotating hard object.

Space-time structure of inside field of rotating hard object is unknown. Out side solution should be Kerr field. Both fields should be smoothly continuous. To know the structure of inside field is the first step for the discovery for activity matter of space-time propeller.

Rythmodynamics of Amplitudeless Fields

Yu. N. Ivanov

Moscow, http://mirit.narod.ru/

Theory is a well-reasoned hypothesis!

In this article we give an example of hypothetical black holes and effects, which accompany this phenomenon. This example helps us to develop the closest reason of gravitational attraction of the bodies. Also we introduce new ideas of amplitudeless field (gravitational field), amplitudeless quantum (graviton), frequency horizon. It is supposed that the reader has already got acquainted with the main principles of monographs "Rythmodynamics" and "Frequency space".

BLACK HOLES

In the XXst century all people know about black holes. "According to the Newton's laws and theory of relativity even the only one quantum of light cannot leave the star. Space in the place, where black hole appeared, becomes distorted and isolated in itself." [14].

In the world of science when we speak about black holes two theories are considered to be principal. These are classic (diffusive) and "neoclassic" (Buracanian) concepts of cosmogonical process. The first one is based on the ideas and constructions by V. Gershel (the end of the XVIII century). V.A. Ambartsumyan proposed another concept in the late 40s of the XX century.

In contrast with the "classics", who consider black holes to be the natural steps of evolution of substance, the «buracans» postulate the hypothetical "prestellar substance" (D-body) as a relic heritage of cosmogonical

PHYSICAL PROPERTIES OF "AXION (SPIN) FIELDS"

Influence of "Axion Field"on Hardness of Pearlitic Cast Iron

P.M. Myachin, A.A. Shpilman

Kazakhstan Republic

The samples of iron alloys were tested on their microhardness in 1993 by means of the equipment PMT-3 (see "Results of experiment on studying of influence of axion radiation on hardness of metal"). The tests were made to find the possible effects of axion fields on the various material objects. As a result of test the changes in microhardness were registered. These changes were both the decrease and increase of microhardness. A series of experiments on pearlitic cast iron were made in 2000 (C-3.5%, Si-0.8%, Mn-1%, S-0.15%, Cr-1%, P-0.15%).

In the laboratory of KSS Iron Kazgan mechanical plant the tests of surface hardness were made by Brinel's method.

The tests were conducted with the load of 3000 kGauss and a ball of 5 mm diameter. Generators of three modifications were used for radiation. They are the generator «COMFORT-M» (K), the generator with an optical excitation (O) and the generator of (S) type.

Radiation by various types of generators showed the same increase of hardness of pearlitic cast iron in the limits of error. Hence, we can make a conclusion that the reversible phase conversion, which was unknown before, takes place in the cast iron under the influence of "axion field". This process gives a fixed step of hardness change.

#	Type of generator	Average value	Error	% of change
1		460,5	5,5	
	K	512,8	5,3	11,4
2		470,4	4,4	
	S	480,1	7,4	9,1
3		403,4	17,2	
	O	445,0	6,2	10,3

In the laboratory of material composition of Chemistry-metallurgical Institute of Academy of Science of Republic Kazakhstan the measurements of hardness were made on the separate phases of cast iron (pearlitic, cementite and conglomerate). These measurements were made by means of the equipment PMT-3 with the load of 50 Gauss and microscope magnification of 487*. The diamond pyramid with a square base and vertex angle between the opposite sides of 136^0 was used as a indenter instrument (indicator). The radiation was made by "axion field" generator "Comfort-5". The results of measurements are given in the table.

From this table we can see that pearlit and cementit conglomerate phases are mostly expose to the influence. It can be explained by the maximal activity of carbon in these phases.

#	Phase component	Average value	%of change
1	Pearlitic phase before the radiation	416,0	
2	Pearlitic phase after the radiation	478,2	15%
3	Cementit congl. before the radiation	1524,1	
4	Cementit congl. after the radiation	1794,8	17,8%
5	Cementit plast. before the radiation	1711,6	
6	Cementit plast. after the radiation	1670,5	-2,4%

Results of experiment on studying of influence of axion radiation on hardness of metal

Measurement of metal hardness is one of the kinds of mechanical testings. Hardness is an integral property, which is defined by many mechanical characteristics of the studied material (plasticity, limit of elasticity, toughness, etc.). The influence of axion radiation (AR) on the hardness (microhardness) of ferricarbonic alloys was studied in the given research. In particular we studied steel and cast iron selected from the production technical prototypes.

Measurement of hardness was made by means of the equipment PMT-3 with the load of 20 Gauss, 100 Gauss and 200 Gauss and microscope magnification of 487*. The diamond pyramid with a sqauare base and vertex angle between the opposite sides of 136^0 was used as a indenter instrument (indicator). The results of measurements are given in the table.

As we can see from the table, the change of hardness values during the influence of AR in comparison with the initial state of iron took place practically in all cases. So, for the mild annealed steel 08J the decrease of

hardness was observed at 6-8%, i.e. weakening of metal took place. For the high-carbon alloys (steel of У-8 kind, cast iron) the increase of hardness took place at 27.0-35.0%, which is the evidence of occurred hardening.

Thus, it was stated that AR influences the atomic- crystalline state of ferricarbonic alloys, and it was proved by the change of hardness.

/Signed/
L.A.Dachno
The chief of laboratory of metal - management and plastic deformation

The characteristic of a sample of metal	Value of microhardness, kg/mm^2 * H%, H (relative change of microhardness)				
	Initial condition	Source AR-FeO	Source AR-Mn	Source AR-C	Source AR-Se
Steel 08J (C=0.08% of weight, annealed, sheet)	161.2±2.4	151.6±3.0 (-0,6%)	148.2±5.3 (0.8%)	164.8±5.4 (+2.0%)	151.7±4.8 (-6.0%)
Steel U-8 (C=0.8 of % of weight)	636.6	60.5±30.8 (+35.0%)		810.4±17.4 (+27.0%)	
Cast iron (C>2.5%)	361.4±9.8	521.3±68.7 (+31.0)			

Inertial Propulsion Drives

Boris D. Shukalov

Engineer
153025, Ivanovo, Lenin Prospekt 73-34, Russia

Introduction

The notion "inertial propulsion system" or device, which is moved by means of inertia forces, requires an exact definition. Usually the "drive" is a wheel, track, propeller or gas flow reaction. By means of "drive" the moving device is attracted or repulsed to the support, which exists outside the device.

Inertial drive does not interact with any support outside the device, but it interacts with the body of device by means of inertia force.

So, it is more true to name the inertial drives as an "inertioid" according to inventor Tolchin, Perm city, Russia. He has been made such sort of systems for more than 30 years [1]. His book about mechanics of 1969 was the cause for critical attacks on inertioids. For example, Dr. Gulia [2] states that unidirectional motion by means of inertia forces is impossible. But other scientists [3] like Dr. Levinson L.B., for example, wrote that all calculations in techniques take into consideration real inertia forces.

So, the notion of inertioid depends on the notion of inertia. Theoretical researches have a conclusion: reality of inertia forces follows from Newtonian mechanics, but the fictitious inertia forces are the effect of Einstein's relativity theory.

According to Newton, there are three real inertia forces: second law force, centrifugal force, Coriolius force. Let's consider the notion of space and forces.

Space

According to modern concept, the space is a closed material medium (Ether), which expands. All bodies are connected by gravitation field and they move. Magnetic, electric, electromagnetic and gluon fields also exist in vacuum. The space does not exist without a physical vacuum, which is a material medium, like river and sea cannot exist without water. Physical vacuum consists of moving virtual particles. The geometry of the space is Euclidian.

The Gravitation Field

The value for intensity and distance of propagation of gravitational field in space depends on the value of mass, numbers of atoms; those consist of particles (protons, neutrons, electrons). Each particle has its own gravitational field and it conforms to the fact: air atmosphere of the Earth (atoms and molecules) is kept near the planet by gravitational field. From Mendeleev's periodical table it is obvious that atom, which has more protons, neutrons, electrons, has greater mass and gravitational field. So, gravitational field of any body is a joint, total field of all neutron, proton, electron

On the Significance of Conical Shape of Rotor in Clem's Generator

Alexander V. Frolov

At first I found information about Clem's generator on a web site http://prometheus.newpower.org/. I have principally different understanding of the given technology. Creation of the given motor-generator is impossible without such understanding, so I should dispute with authors of "Prometheus" web site.

So, in 1972 Richard Clem announced that he invented an automobile engine of a closed cycle, which produced 350 horsepower and worked in self-running mode. The generator weighted about 200 pounds. The main part of its mass is rotating vegetable oil, which was heated up to 150°C during its work. Due to this reason we should not use water because it will boil. There is a conical rotor inside the generator and it is fixed on a horizontal axis. The axis, on which this conical rotor is fixed, is empty. The oil moves inside the axis and passes into spiral coreless channels inside the conical rotor. They are wound round the conical rotor and they end near the foundation of the rotor with nozzles (atomizers).

The figure is taken from the web site "Prometheus" http://prometheus.newpower.org/

In the beginning of operation the starter motor produces rotation and the liquid is given to the central axis (axle) by the pump under the pressure of 300-500 pounds on 1 square inch. Then the liquid flows by spiral channels and runs away through atomizers. The more the pressure of liquid, the more rotation momentum of the rotor is.

Thus the rotor is placed inside the box (body), the liquid (oil) does not consumed. Liquid is heating during the work that requires the presence of heat exchanger to emit heat into environment. The rotor begins its self-rotation with some speed, which is independent from the starter motor. Speed of rotation is about 1800-2300 rpm.

The main question is: "Do we necessarily need a conical rotor or a cylindrical one?"

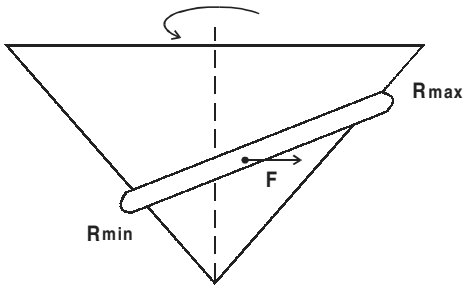

Fig.1

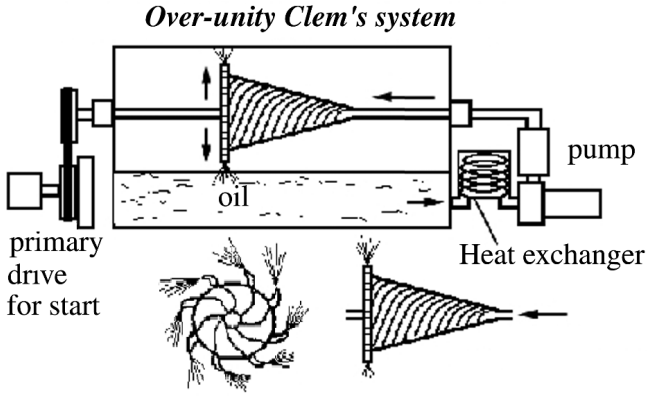

Fig. 2

Let's imagine the conical rotor with a tube winded on it and placed into some conical body:

Cone is an essential part of this design, since this is a gradient of centrifugal force that act on liquid and makes it to shift in the area of bigger radius of rotation (except the force, which is created by the pump). So we get a closed logic chain. Rotation creates centrifugal force, which creates pressure to the wall of conical channel in such a way that this pressure accelerates rotation and increases centrifugal force. The more the pressure of liquid, the quicker the cone rotates increasing pressure.

It is evident that atomizers also do their share in the work of generator increasing moment of rotation. This effect was previously known as "turbine by Heron from Alexandria" and later as Segner's wheel.

However, conical shape of the rotor allows getting a directed axial tractive force that can be used in reactionless drive of a new type. Of cause, the direction of rotation and direction of conical spiral should be coordinated.

Conclusion: **The conical shape of the rotor creates a gradient of centrifugal force. Due to this, the movement of liquid appears, which goes in the direction of maximal rotation radius. Momentum of this movement is transferred from liquid to the body and the whole system will have a propulsion force. The tangential component of this force is responsible for rotational momentum of the rotor. So, modern development of different versions of Clem's design seems us to be a very perspective project for the future fuel-less energetics.**

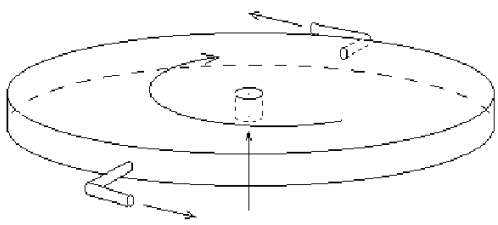

Fig. 3

On History of Cold Nuclear Fusion in Russia

Review prepared by Alexander V. Frolov

On December 25, 1991, the Moscow Council got an official letter from the Moscow Committee on support of the work by Ivan S. Philimonenko (G.V. Kravzov was the chairman of this committee). The letter told about development work made by the scientist, rocket-space techniques designer Ivan S. Philimonenko. This committee expressed its concern about the delay of the development work in spite of their great importance. The author of its work was infringed upon his professional and social rights.

As it follows from the facts presented by the declarant, the development work by Philimonenko concerned the creation of pollution-free energy systems, systems on neutralization of radiation and associated units.

According to the profile of its activity the Subcommission of Moscow Council on ecological problems of industry, energetics and transport studied the given problem in-depth and made a huge work to define the real state of affairs. Together with the Standing commission of Moscow Council on legality, law and order and human rights protection and Standing commission of Moscow Council on science and techniques, the Standing commission on ecological problems of industry, energetics and transport (hereinafter referred to as the Subcommission) made the following:

- studied the publications devoted to the works of Ivan S. Philimonenko published in Russian free press;
- required all necessary information from the corresponding organizations;
- acquainted through its representatives with technological start of this type of works on the corresponding plants;
- contacted with the Supreme Soviet of Russian Federation, RF ministries and departments;
- intimately contacted with the author of the developments and his colleagues;
- took part in a number of meetings, conferences, symposiums of the corresponding subject conducted in Russia, Ukraine and Byelorussia.

As a result of this work the Subcommission stated the following reliable information about the scientist and designer Ivan S. Philimonenko and his development work. In 1960 the Head Space System Designer Sergey P. Korolyov, Marshal Gregory K. Zhukov and Acad. Kurchatov assisted these new developments. Kurchatov thought these works would be of great importance in future and said it to the inventor during their discussions. Marshal Gregory K. Zhukov personally sent a wire to the Kremlin: "Being concerning about the destiny of Russia, I ask to sign this resolution". He mentioned the Resolution of USSR Council of Ministers and USSR Central Committee of the Communist Party #715/296 of 23.07.1960. A development of new methods to produce energy and protection from the nuclear radiation by I.S. Philimonenko was planned according to the following principles. They are:

- high efficient generation of energy;
- creating of thrust (propulsion) without the reactive mass flow;
- protection from the nuclear radiation.

Approximately 80 organizations were drawn to this research program, for example "Lutch", "Red Star", Research Institute of Heat Processes, corporation "Energy", Russian Academy of Sciences, Ukrainian Academy of Sciences and Byelorussian Academy of Sciences. Ivan S. Philimonenko was appointed as a responsible senior designer of this line. The first outstanding result of this program was the creation of energy systems "Topaz-1" and "Topaz-2", which were used on the satellites "Cosmos-1818" and "Cosmos-1819".

The next step of the program was to develop and create the pollution-free thermoemission hydrolytic energy system (TEHES), which has no analogies in our country and abroad.

The difference of TEHES from "Topaz" is the usage of low temperature nuclear fusion system as fuel element instead of a nuclear reactor. The nuclear fusion system works in low temperatures ($T=1150^0C$). Its lifetime will be 5-10 years without refueling (the fuel is heavy water).

In 1960-68 they have got the first positive result, which could be applied for production. In particular, they got power output parameters of the system of 200 Watt, hydrogen and oxygen were generated as well as such components as helium 3, helium 4, tritium, oxygen 16, oxygen 17 and oxygen 18. It was the evidence of the fact that they have got the nuclear fusion with the temperature of $T=1150^0C$.

The author stated that these systems do not emit any pollutants to the environment during its operation. They consume heavy hydrogen only. TEHES could become a real alternative to the existing faulty energy systems (nuclear power station, heat-electric generating station, hydroelectric power station, boiler-house, diesel, etc.).

Also TEHES could be applied

- in industries, which consume hydrogen (airplanes TU, for example), oxygen (metallurgy);
- to power existing combustion engines instead of liquid fuel;
- in new generation of engines for the water, land and air transport;
- as an autonomous long-term energy systems at home, in the rural areas, in back regions.

As the scientist states, the systems of a special modification, analogous to the above-mentioned

systems, can neutralize radioactivity, for example those emitted to the environment (in Chelyabinsk, Semipalatinsk, Novaya Zemlya, Chernobyl). Systems to neutralize the radioactivity could be placed on the land, air transport, and spacecraft for the corresponding purposes.

In 1968 the official works by Ivan S. Philimonenko were stopped, and the author had no chance to complete his experiments on neutralization of the radiation.

In 1962 Ivan S. Philimonenko got a patent priority # 717239/38 of 27.07.1962.

Later he tried to register it as a discovery, but on 30.12.1970 he got an official answer # OTED 1179 about the necessity to revise his application due to the factual multiply of his claims that is not one discovery but several discoveries. That's why he still has no patent for his inventions.

Also his ideas were discussed in free press. Those are: "Tekhnika Molodyogi" #2, 1970, newspapers "Moscow Pravda" of 16.04.1971 and "Socialistic Industry" of 24.04.1971.

The announcement about the cold fusion experiment made by American scientists Stanley Pons and Martin Fleischmann followed the works by Philimonenko. The interest to the cold fusion in Russia increased again. During 1989-90 in NPO "LUTCH" Minatom RF two experimental models of energy system by Philimonenko were produced to recommence the experiments on cold nuclear fusion. Then three thermoemission hydrolytic transformers for the pilot energy system were developed and created. Necessary experimental and design works were made. Preliminary methodical provision on calculation of the systems was made.

The high level of the systems made by Philimonenko is proved by the fact that USA acquired the thermoemission nuclear reactor «Topaz», which was mastered by USSR space industry.

Technical characteristics of TEHES systems, in comparison with the existing nuclear power stations and nuclear energy systems under project ("Tokomak"), showed that the thermoemission nuclear technology has big advantages in front of the fission reactor. However, as we know, the works on realization of nuclear energy systems based on the light nucleus fusion are monopolized by the line oriented on the thermonuclear fusion on the systems of "Tokomak" model. This work has been conducting for 40 years and the Director of Institute of Nuclear Energy E.P. Velikhov considers, that we can expect such results not earlier than the middle of this century.

Now there are a lot of articles about Ivan Philimonenko and his works published in free press. The committees to support the work of the scientist were established in Moscow, other Russian cities, Ukraine and Byelorussia. Foreign scientific and military organizations are interested in his developments, USA in particular. There were some attempts to repeat the experiments by Philimonenko on cold nuclear fusion (1989). In this case we cannot exclude the drain of information from Russia.

As the author of these developments consider, the further work requires the initial, developmental and resource testings on the existing scientific and experimental base in Moscow

Nowadays there is a problematic environment situation in Moscow and in Russia as a whole. There is a direct relation between the increase of radiation pollution and oncological sickness rate and death rate. In this connection the development work by Philimonenko is of great importance.

The Subcommission attended to the further worsening of ecological situation. Together with the Moscow committee on support of the works by Philimonenko addressed to various departments and tried to attract their attention to the Philimonenko's developments (1991-1992). This information reached RF President and Government. President gave an order to Russian Academy Of Science (Osipov Yu. S.) and the Ministry of Russian Federation on nuclear energy (Mikhailov V.N.) to prepare the proposals how to continue the works by Philimonenko. But the President of RAS, Acad. Velekhov E.P. announced that these materials do not contain any scientific and technical information, which could be useful to estimate the ideas by Philimonenko.

There is a question: Who should estimate new ideas? One time more it seems evident that RAS can develop scientific problems only in the framework of existing conceptions and RAS is not ready to support qualitatively new ideas.

In 1992 the Subcommission on ecological problems attended the NPO "LUTCH" and had a meeting with scientists and deputy director on production Kleschyov A.M. He and his colleagues proved that they have been working to reconstruct the system (TEHES) under the leadership of Philimonenko. The system itself and design documentation were also demonstrated to the Subcommission.

The Subcommission was surprised with the fact that leaders of Russian science had not found any chance to get acquainted with these ideas and their realization. The Subcommission hopes that in spite of Russian instability the government bodies will find some ways to pay attention to the unique developments made by outstanding scientist.

On the basis of this analysis the Subcommission made the following conclusions:

- To recognize the works by Philimonenko to be an outstanding achievement in Russian science.

- To give the inventors certificate to Philimonenko on his TEHES "KURS".

- To restore all professional and social rights of the scientist.

- To address the Russian government for the support in further realization of Philimonenko's developments and assign a priority on these developments to Russia.

- To revive the testing works on Philimonenko's TEHES as well as studying and introduction of his developments on protection from the nuclear radiation.

Short biography

Mr. Ivan S. Philimonenko was born in 1924 in Irkutsky region. In 1941 he went to the front of the Great Patriotic War. From 1941 till 1945 he has been taking part in military operations on the North-West, South-West, 2nd Ukrainian and Zabaikilsky fronts of the Great Patriotic War as a scout. He has the Order of Red Banner, medals for the Victory over Germany, for the Victory over Japan and others.

From 1945 till 1951 he has been studying the Technical School named by Bauman and showed himself to be an advanced, disciplined and active student. He had an authority over other students, heads and teachers of the faculty.

From 1951 till 1967 he has been working in OKB-670 (design bureau). He began as a technician-designer and from 1963 he has been working as a senior designer. In 1954 he got an academic degree in nuclear physics.

From 1967 till 1968 he has been working in MKB "Krasnaya zvezda" as a senior designer. The leaders of the bureau honored him for the successful works on creation of new techniques.

In June 1968 he was discharged due to liquidation of the department from the structure of the bureau. Analysis of this situation made by the Subcommission allowed finding out that the liquidation of this department was made due to:

- the conflict between Ivan S. Philimonenko and leaders of the bureau, because he found some breach in technological process in this bureau, which caused the radionucleid pollution of the Moscow surroundings;

- the course of technical policy of this industry was changed by the higher technical leaders. They were oriented on development and creation of systems using the energy of nuclear fission of heavy chemical elements isotope and creation of nuclear power stations and systems of "TOKOMAK» type.

From 1968 till 1989 Ivan S. Philimonenko has been practically unemployed. He tried to address in various departments with a requirement to continue his scientific work and creation of pollution-free thermoemission hydrolytic energy systems and systems for radiation neutralization. But he had no positive results.

In 1989 Ivan S. Philimonenko suddenly got a proposal from the firm NTKO "FORT-INFO" to head the works on his subject as a senior designer. 8 months after he was moved to the firm NPPSO "KURS" due to unknown reasons. He had not got any salary there and then retired. Now he is not working on his subject.

Editor's: notes on aging aspect

Mr. Ivan S. Philimonenko, the author of Russian "cold fusion" research program (1960's) claimed the following: all people have about 1400 years of natural life resource. His calculations are based on the real 7-year cycle of human biological cell life period and the known resource of "cell repair", which is about 200 times. In other words, we are living in permanent biological repair process and activity of this repair depends on environment. So, there are 200x7=1400 years of resource, if there are no any reasons for repair. The cause for aging according to Philimonenko is the so-called "background radioactivity", which we can see anywhere on the planet. It is produced mainly (about 90%) by potassium isotope K-40. It is a radioactivity element and it periodically emits electrons. Human organism is building during many years from natural chemical elements including K-40 and other isotopes. That's why the electron emitted by isotope permanently damages all biological cells on its way. This is the reason for the accelerated spending of the human biological cell resource.

It is important to know the historical fact: the background radioactivity was created by some accident long time ago, and geologists know, when it occurred. Before it all people have been living for many hundred years according to old books and ancient data.

Radioactivity elements of different kinds are collected inside of each human body with food and air. We are "collectors" of isotopes and there are no easy medical ways to remove it from body. ***But now there are new methods to reduce radioactivity by means of special fields.*** Particularly, a special generator based on the Moebius band elements (designed by Dr. Ivan M. Shakhparonov, published in New Energy Technologies, issue #2, 2001) produces stabilization of isotopes, i.e. decreases the radioactivity, and it was measured in many accurate experiments. Also in August of 1995 Atomic Energy of Canada, Ltd., published in Newsletter of The Planetary Association for Clean Energy a review of modern methods to transform the radioactivity wastes. So called "scalar field" can be used for the distant influence on radioactivity.

In Philimonenko's research work of 1960 the same effect was discovered for the "cold fusion" generator. There are modern experiments on vector magnetic field influence on radioactivity, plasma wave and other methods, which are not a theory but a real working technologies, and it can be used to stabilize isotopes in human body. Why this important work is not known yet? Do people have not any desire to become younger? This question is not of technological nature, but of political one.

School, college, office, pension... Now it is a standard 60-80-year period of life to change the "biological material" during the natural selection process. But let's assume, that this short period is not a law of Nature, but some temporary program for the civilization, which is in the initial state of its development. Really, most people are not ready to make their life sensible and purposeful. Thus, they do not need many hundred years of life. Now we already have the new technologies to reduce radioactivity by means of special fields, and the aging process can be normalized up to 1400 years period. Are you ready to think about it?

Modern economy, politics, finance are not ready for it and all old systems will not work in the conditions of new civilization. But the World should be changed for the better one.

New Energy Technologies

Published by Faraday Laboratories Ltd. Issue #3 (6) 2002

Research on advanced propulsion systems and new energy sources

Time Control experiments

Also in this issue:

* New experiments: magnet monopole beam cures cancer
* Electrogravity experiments
* High efficiency ceramic heater
* New aether experiments
* Instantaneous telecommunication

Editorial

Dr. Chernobrov and NET editor Olga Leontyeva.

The head of the Moscow research group "Kosmopoisk" Dr. Vadim A. Chernobrov (our readers certainly remember his articles on experiments with time) has recently visited the editorial office of New Energy Technologies in Saint-Petersburg, Russia. His visit was caused by discussion on the Time Machine project (investigation of active properties of time), started under agreement with Faraday Labs Ltd. Our magazine will inform readers on the topic in later issues.

Publisher Faraday Lab Ltd

Editor-in-Chief Alexander V. Frolov
Editor Olga O. Leontyeva
Designer Ekaterina F. Yakovleva
Translator Antonina V. Nikolaeva

Scientific Advisory Board
Kyrill P. Butusov
Ivan M. Shakhparonov

New Energy Technologies Magazine
is published by Faraday Lab Ltd
six times a year

Correspondence Address:
POBox 37, St.Petersburg,
193024, Russia
Phone/fax: 7-812-380-6564
net@faraday.ru
www.faraday.ru

Subscription: $90 any foreign
Air mail delivery included

PRINTED IN RUSSIA

Copyright © 2002 by Faraday Lab Ltd.
All rights reserved.

NEW ENERGY TECHNOLOGIES
New Book

Dear Reader!
All articles of the previous 6 NET issues will soon be published as a new book in English (400 pages, more than 100 photos, figures and drawings, format A4).
You can order by e-mail: book2001@faraday.ru
or fax 7-812-3806564
Price with airmail delivery is 83 USD.

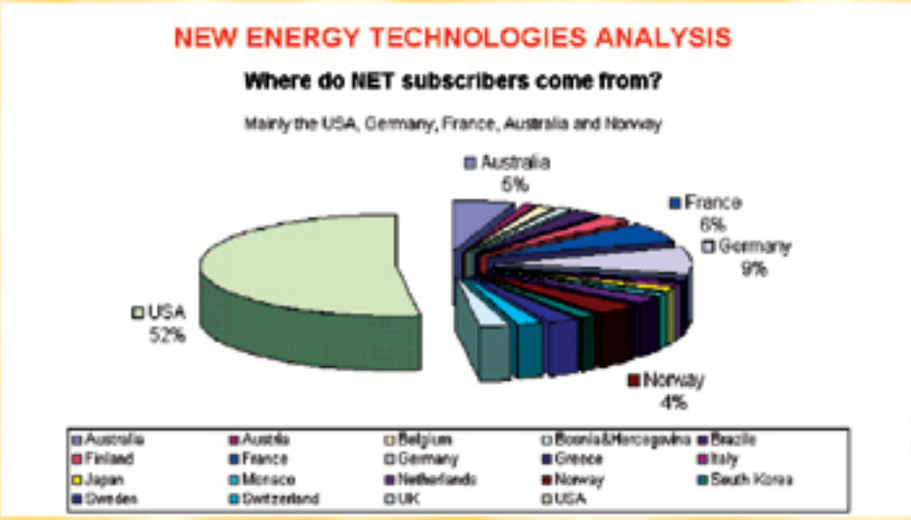

LUTEC 1000

News from Australia

Magnet motor-generator

www.lutec.com.au

"There are a couple of other major factors that we won't go into here, suffice it to say that our current prototype demonstrates 1500% more " out" than "in"... "

"The Lutec 1000 will be sold throughout Australia within three years. The majority of buyers are expected to be the home owners, although there is strong support for our product throughout the entire strata of society and business. Market leadership should be maintained for the next five years. The product is sold through commission only sales agents and our staff at the plant, mainly to anyone who needs or uses electricity."

John Christie (left) is the co-founder, CEO and chairman of Lutec (Aust.) Pty Ltd.

Ludwig (Lou) Brits (right, above) is the co-founder, managing director and head of development of Lutec (Aust.) Pty Ltd. He is Chairman and director of TTI Pty Ltd. TTI Pty Ltd is a state government recognised R.A.P. (remote area power) system provider.

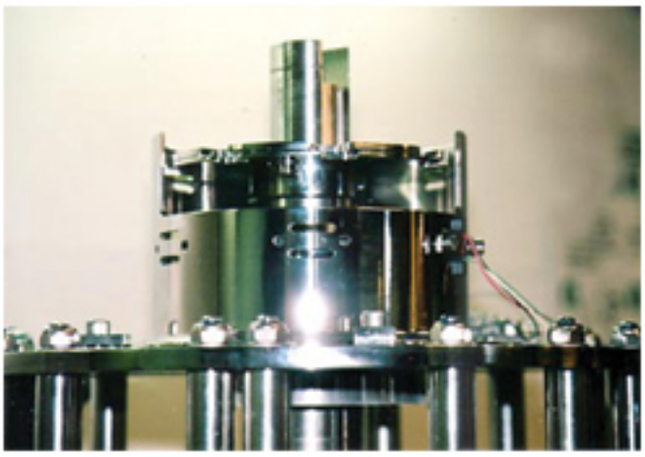

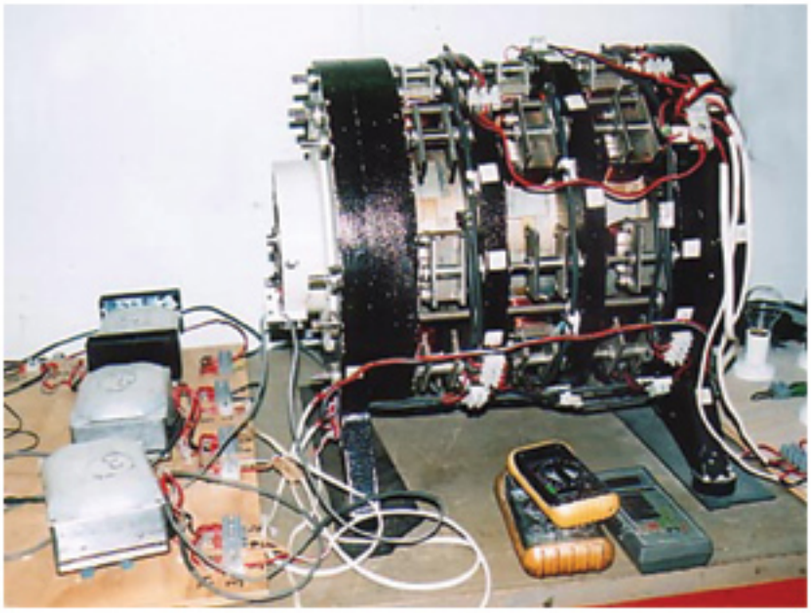

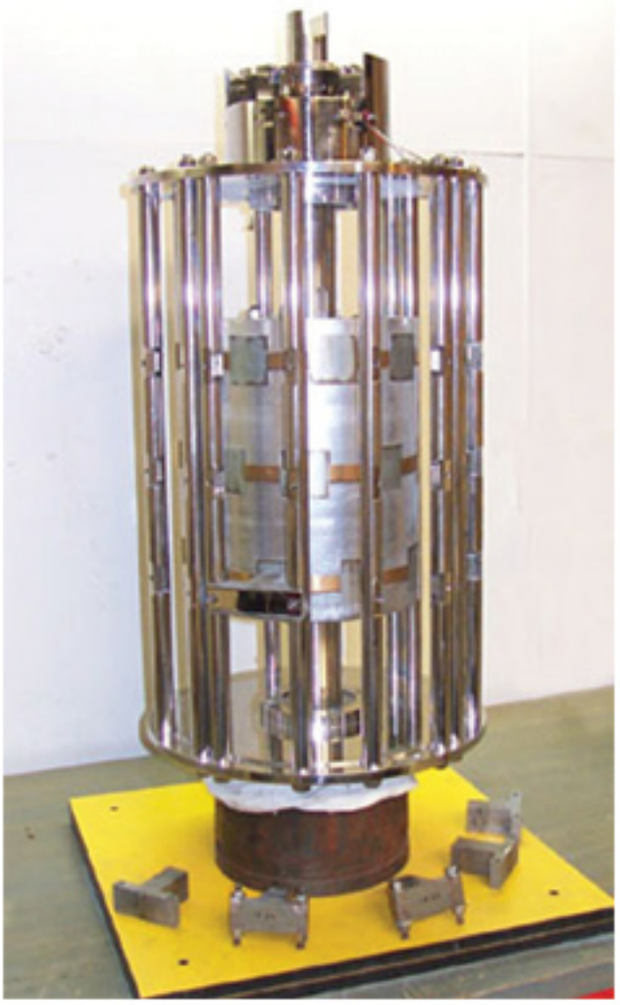

Electrogravity

by Tim Ventura
tventura@attbi.com

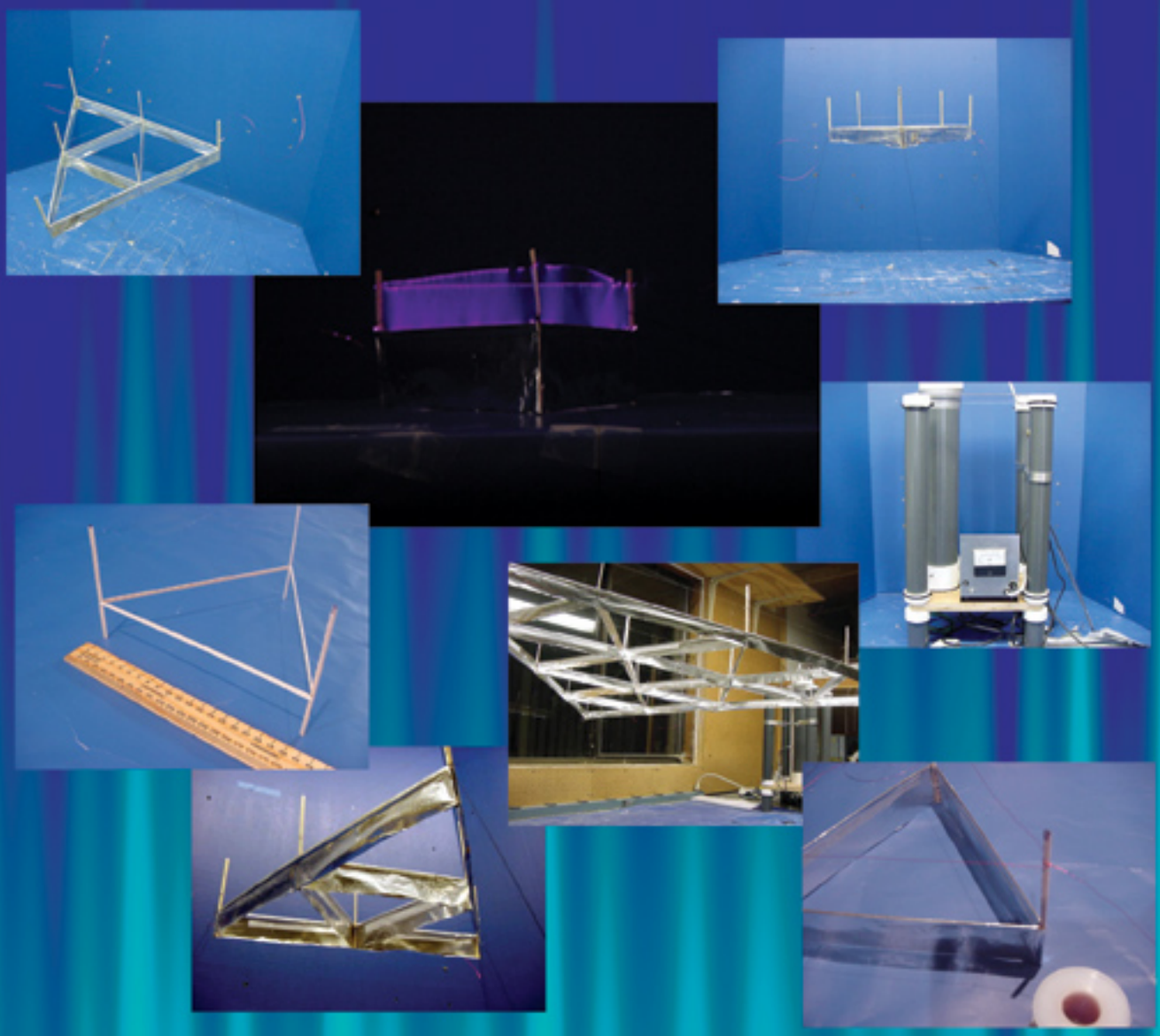

In this issue a report by Tim Ventura, USA on experimenting with asymmetrical capacitors.
www.americanantigravity.com

NEW ENERGY TECHNOLOGIES #6

1. Large-Scale Shakharov condition, **David Noever and Christopher Bremner**
2. Matter as a resonance longitudinal wave process, **Alexander V. Frolov**
3. Physical Principles of The Time Machine, **Alexander V. Frolov**
4. Time Machine Project by **Alexander V. Frolov**
5. Kozyrev-Dirak radiation, **Ivan M. Shakhparonov**
6. The Electrical Vortex Non-Solenoidal Fields**, S. Alemanov**
7. Physical Mechanism of Nuclear Reactions at Low Energies, **V.Oleinik, Yu. Arepjev**
8. The Evolution of Lifter Technology, **T. Ventura**
9. Reality and consciousness in education and activity, **A.Smirnov**
10. Old new energy, **Y. Andreev, A. Smirnov**
11. On the influence of time on matter, **A. Belyaeva**
12. Life without diseases and ageing-preventive electrical bio-heater features, **A. Belyaeva**
13. Technical report, on Belyaeva's high efficient ceramic heater, **Sh. Mavlyandekov**
14. Fundamental properties of aether, **A. Mishin**
15. Effect of Magnetic Blow Wave Field on Wine Systems, **I. Shakhparanov and others**
16. Nikola Tesla and Instantaneous Electric Communication, **V. Korobeynikov**
17. The Unitied Gravitation theory, **I. Kuldoshin**
18. New Sources of Energy from the Point of View of Unitary Quantum Theory, **L.G. Sapogin, Yu.A. Ryabov, V.V. Graboshnikov**
19. Antigravitation Force and antigravitation of matter. Methods of its creation, **A. K. Gaponov**
20. The capacitor, which has energy of atomic bomb (Review of A. Gaponov's research)

consequence of many commonly accepted concepts and dogmas of the modern "scientific perspective of natural phenomena". This crisis situation in modern physics is a direct consequence of many conservative scientific viewpoints, unfortunately supported and protected by modern official academic science. The evolution of our consciousness has been influenced by many undoubtedly well known experts and has been evolving for a long time in the environment of specific scientific vacuum and requires immediate revival. Even methods used for dissemination of new knowledge should be improved, if one actually wishes to accelerate the progress of Humankind.

The perspective for practical applications of new previously unknown scientific phenomena and effects looks very attractive, and they may be achieved by cooperative efforts of the human intellect. New breakthrough technologies of the 21st Century will require serious changes of many commonly accepted concepts and dogmas in fundamental physics. This process of progressive development cannot be stopped.

REFERENCES

1. Richard P. Feynman, Robert B. Leighton, Matthew Sands. The Feynman Lectures on Physics, Addison-Wesley, 1964, Vol. 2, Ch. 1. Paragraph 6 "Electromagnetism in Science and Technology" (the very end of paragraph)
2. J. Maxwell, Selected Works on the Electromagnetic Field Theory, Gostekhizdat, Moscow (1954).
3. G. V. Nikolaev, Non-contradictory Electrodynamics. Theories, Experiments, and Paradoxes, Publishing House of the Tomsk State University, Tomsk (1997).
4. A. S. Kompaniets, in: Theoretical Physics, State Technical and Theoretical Press, Moscow (1957), pp. 126-128.
5. R. T. Sigalov, T. I. Shapovalova, Kh. Kh. Karimov, and N. I. Samsonov, New Research of Forces of the Magnetic Field, FAN Press of the Uzbekskaia SSR, Tashkent (1975).
6. Ya. I. Frenkel, Electrodynamics. Vol. 1, United Scientific and Technical Presses, Leningrad/Moscow (1934).
7. G. V. Nikolaev and B. V. Okulov, Inertial Properties of Electrons, deposited at VINITI, No. 4399-77, Moscow (1978).
8. Observations of the Aharanov-Bohm Effect, Nature, No. 7, 106 (1983).
9. G. V. Nikolaev, Scientific Vacuum. Crisis in Basic Physics. Is There Any Way Out?! Publishing House Kursiv, Tomsk (1999).

Large-Scale Sakharov Condition

David Noever and Christopher Bremner

NASA Marshall Space Flight Center,
Space Sciences Laboratory
Mail Code: ES76, Huntsville AL 35812

Editor's note: This article was presented by the autors for publication in New Energy Technologies. For the first time it was published in 1999 by the American Institute of Aeronautics and Astronautics, Inc. All copyrights belong to the authors.

Abstract

Recent far reaching theoretical results have used the quantum vacuum noise as a fundamental electromagnetic radiation field to derive a frequency (ω) dependent version of Newton's gravitational coupling term, $G(\omega)$. This paper reconciles the cut-off frequency with the observed cosmological constant, and then briefly puts forward a realizable laboratory test case in the 10 - 100 MHz frequency range. One analogy is drawn between the classical vacuum energy experiments with attraction between two closely spaced plates (Casimir cavity) and the arbitrarily dense material boundaries possible in Bose condensates, such as irradiation at MHz frequencies of superfluid helium or superconductors.

Theoretical Background

Zel'dovich [1] first suggested that gravitational interactions could lead to a small disturbance in the (non zero) quantum fluctuations of the vacuum and thus give rise to a finite value of Einstein's cosmological constant in agreement with astrophysical data. Using dimensional analysis and the suggestion by Zel'dovich, Sakharov [2] derived a value for Newton's gravitational constant, G, in only one free parameter, frequency, ω:

$$G \sim c^5 \Big/ h\int \omega d\omega \sim 1 \Big/ \int \omega d\omega$$

where c is the speed of light and h is the Planck constant. The free parameter in frequency when integrated over all values from zero to high frequencies must contain the usual integration cutoff value (Planck frequency on observable electromagnetic phenomenon).

Puthoff [3] and others [4 5] have extended Sakharov's condition in a relativistically consistent model to determine constants of proportionality. His model derives an acceleration term in first order expansion (in flat space time), then equates inertial and gravitational mass (by the equivalence principle) to make contact with the gravitational constant, G, directly as:

$$G = \left(\pi c^5 / h\omega_c^2\right) \sim 1/\int \omega d\omega$$

which is the Sakharov condition [2,3]. This paper revisits the meaning of the cutoff frequency, ω_c ,for radiation interactions, of which the quantum vacuum [6-10] and

Planck frequency are only the leading terms, and for which linear combinations of forces can introduce other plausible frequencies. One purpose of this reexamination is whether the resulting gravitational coupling constant, G, can be reconciled with the anticipated energy density of the universe [11] without resorting to extreme space time curvature and thus yield enough critical density to contain the expansion of the universe. Finally we particularize the case to the high-density fluctuations possible in Bose condensates [12], a potential experimental test case for how the effects of vacuum noise might manifest observably.

One far-reaching consequence of the vacuum energy model is the attractive force of gravity becomes reducible to the radiative interaction between oscillating charges, e.g. the zero point field (ZPF) applied to subatomic charges. Mass and inertia arise from the fundamentally electromagnetic ZPF oscillations.

This random background gives the usual quantum mechanical energy spectrum from particle field effects:

$$\rho(\omega)d\omega \sim \omega^3 d\omega$$

a very important dimensional relationship, since the third power in frequency avoids anomalous Doppler shifts from velocity boosts, or stated alternatively is the correct spectra for a Lorentzian (non accelerated) invariant radiation field [13].
More specifically, the energy spectrum [3] can be written as:

$$\rho(\omega)d\omega = [\omega^2/\pi^2c^3][h\omega/2]d\omega =$$
$$= h\omega^3/2\pi^2c^3 d\omega \sim \omega^3 d\omega$$

which is an expression in the first parenthesis of the density of the normal modes and in the second parenthesis of the average energy per mode. When this energy density is integrated over all frequencies, the ω^3 divergence produces well known infinities in the integration limit of high frequencies, thus an assumed cutoff frequency (appropriate to experimental observation limits at the Planck frequency), is usually introduced:

$$\omega_\rho = \left(c^5/hG\right)^{1/2}$$

For mass, m, moving in an accelerated reference frame $g = -a = Gm/r^2$, the resulting energy spectrum includes a gravitational spectral shift [3],

$$\Delta\rho'(\omega)d\omega = h\omega/2\pi^2c^5[Gm/r^2]^2 d\omega \sim 1/r^4 d\omega$$

a kind of short range ($1/r^4$) gravitational energy shift, but electromagnetic in origin when zero point fluctuations are included. (N.B. To account for equal gravitational mass effects in neutrons and protons, the ZPF oscillations must involve subatomic charges, or 'parton' effects. The assumption derives from high frequency interactions of ZPF wherein these subatomic particles are asymptotically free to oscillate as independent or free particles as quantum noise).

A further far reaching consequence [3] is mass itself becomes interpretable as a dependent quantity derived from a damped (with decay constant Γ) oscillation driven by random ZPF:

$$m = \Gamma c^3/G = 2h\Gamma/\pi^2c^3 \int \omega d\omega$$

with the only two free parameters, the damping factor Γ, and again the frequency, ω. The internal kinetic energy of the system contributes to the effective mass.

This leads to an overall average spectral density, written in terms of mass as:

$$\Delta\rho'(\omega) = m^2c^5\omega/2h\omega_c^4 r^4$$

for the electromagnetic field distribution near ($1/r^4$) to the mass, m, which in detail is half electric and half magnetic.

One additionally attractive feature is the correspondence between this derivation and the view of gravity as a dynamical scaleinvariance breaking model (e.g. symmetry breaking near the Planck mass energy [14]). A final result includes the force calculation between two ZPF radiation oscillators of the correct form yielding Newton's average force law

$$< F >= -Gm^2/r^2$$

Thus, for a Newtonian force to first order in a flat space time, Sakharov [2] could be credited for proposing gravity as not a fundamentally separate force and Puthoff [3] and co workers [4-5] applied the vacuum electromagnetic field to equate gravity to a long-range radiation force (e.g. van der Waals like force). Higher order oscillatory gravity modes vary as $\left(\sin[\omega_o/\omega_c]\right)^2$.

To first order, a weak G coupling constant, $G = \left(\pi c^5/h\omega_c^2\right)$, appears for high frequency cutoff at the Planck scale. A corollary in analogy to electromagnetic shielding by ordinary matter can be rationalized as the problem of frequency mismatch at high Planck frequencies, e.g. ZPF cannot be fundamentally shielded. In other words, frequency mismatch precludes gravity shielding by matter.

The purpose here is to revisit the only free parameter, the frequency cutoff, more in the spirit of a mass resonant frequency. The motivation for this approach

can be summarized as: 1) the generality of other complementary radiation effects without relying on ZPF alone (e.g. other isotropic, homogeneous radiation sources); 2) the weak coupling constant, G, yields a vastly smaller than observed size of the universe (e.g. too small cosmological constant) when the Planck frequency is used as a cutoff value; and (3) the particle mass, $m = \Gamma c^3/G$, can be viewed as a renormalized or 'dressed' mass with a resonant interaction potential that is frequency dependent in its coupling constant, G, and with 'bare' mass that is large, $m_o \sim \left(m_\rho^2 / m\right)$, where the experimentally unobservable, $m_\rho = \left(hc / G\right)^{1/2}$ is the Planck mass.

In particular, why this large 'bare' mass does not generate a large gravitational field is not a unique anomaly in the Sakharov derivation, since similarly large vacuum point energies are common to field theories. The important point is that the derivation $G(\omega)$ is general however to any isotropic radiation field with the Lorentz invariant energy spectra $\left[\rho(\omega) \sim \omega^3\right]$, thus the candidates for the cutoff frequency of the particular radiation source can be interpreted as a Planck scale only if the rest mass, m_o, is not composed of many terms, rather than just the ZPF leading term. Since the ZPF is akin to a van der Waals force [3 5], polarizability (in charge and mass) must be considered, but without also excluding any number of linear combinations that might have alternative cutoff frequencies, ω_c, or damping terms, Γ, 'ala particle physics interpretations for resonant masses during renormalization. In other words, once a gravitational energy spectrum, $\rho(\omega)$ is postulated that is Lorentzian invariant, many fundamental sizes (or corresponding frequency values) are smeared (or dressed) by any number of characteristic frequencies between zero and the high frequency electromagnetic (Planck) cutoff ω_ρ. Quite simply, is the expression, $\omega_c = \omega_\rho$, a requirement for all radiation sources?

Many types of particle oscillations may satisfy the general requirements of a Sakharov condition, each having a characteristic mass (and energy) as in calculating the mass of any fundamental particle at its resonant frequency (including underlying partial charges or dense bosons). This brings the calculation to a consideration of the high density fluctuations characteristic of a Bose condensate [15 19]. While the high density variation may intrinsically be of interest, the exploration has more to do with reconciling the ZPF interpretation of the Sakharov condition with the observed cosmological constant [14].

A "top down" view of calculating the cutoff frequency imposes the self consistency test for the cosmological constant, Λ, from the outset. To calculate, the total frequency integrated energy density of the universe must be included:

$$\rho(E) = \int \rho(E) dE = h\omega_c^4 / 8\pi^2 c^3$$

which must have a mass equivalent, contribute to the universe's curvature, and thus have a fundamental relation to the critical density to contain the expansion of the universe [14 15]. The mass - equivalent ZPF to reach the universe's critical density [15], $\rho \sim 10^{-29}$ g cm^{-3} would necessarily limit the cutoff frequency for gravity to the value, $\omega_c < 7 \cdot 10^7 s^{-1}$, or between 10 -100 MHz.

A higher frequency greatly overshoots the cosmological constant, Λ, and induces extreme curvature in the universe. This problem has been cited frequently and stated most bluntly, as either ZPF or the cosmological constant requires revision. The relevance here arises from similarly large positive coupling terms in quantum gravity [15], which also generate a local gravitational Instability for typical upper limits on the cosmological constant, $\Lambda/8\pi G < 10^{12}$ cm^{-4}.

Rather than to dwell on the inconsistencies that plague attempts to reconcile quantum gravity, we particularize the problem to a case where the restriction to Planck scale becomes less clew, namely the high density fluctuations and universal scaling introduced in a Bose condensate. A Bose condensate, such as superfluid helium or superconductors [15 19], becomes of potential interest, mainly because of its arbitrarily dense boundaries and the classic Casimir experiment [20 22] which allows such dense material boundaries (two closely spaced conducting plates), if available, to modulate the background quantum fluctuation of ZPF. In other words, the matter-ZPF interaction becomes measurable by the observed attraction between two material boundaries. What dense boundaries might generate in Bose condensates remains a subject of great interest.

The significant case to investigate is whether Casimir-like interactions [20 22] will not only couple to ZPF radiation at a scale comparable to the quantum noise (or other radiation field), but also alter the value imposed by the Sakharov condition for G. It remains an open question whether this potential coupling interaction shares, as in ordinary critical phenomenon, the density correlation function, Φ, that is both independent of the coupling strength (or universal in renormalization) and consistent with the observed average energy density of the visible universe.

Thus the purpose here has bow to restate the Sakharov condition in the gravitational coupling constant, G, based on its only free parameter, a frequency cutoff, ω_c. Any potential relevance arises from similarly large values for the positive coupling term in quantum gravity, which generate conditions for a local gravitational instability for typical upper limits on the constant, $\Lambda/8\pi G < 10^{12}$ cm^{-4}.

To restate the Sakharov condition, matter in the vacuum provides boundaries for reduced 'Casimir like' modes available for otherwise isotropic radiation from quantum fluctuations (broad spectral noise). That this view reproduces Einstein gravity has been examined, including the full relativistic derivation [4-5]. The details of the appropriate mass, however, remain buried in the kinetic energy of general internal particle ('parton') motion [3]. Any appeal to a specific parton representation is limited only by essentially free particles with high frequency interactions, including underlying partial charges or dense bosons. The basis of considering arbitrarily high-density fluctuations in Bose condensate in analogy to the ZPF-Casimir experiment remains both an empirical and theoretical case to examine. There exist laboratory scale cases [15-19] where resonant radiation in the required 10-100 MHz range appear to produce anomalous effect for such Bose condensates as superconductors, but further work to confirm these results would be needed. In other contexts, these effects have been discussed as the Schiff-Barnhill effect for superconductors interacting with a gravitational field [23], but for the static rest moss rather than an effective mass in a conduction band.

Experimental Propositions

J. Weber [24,25] proposed the use of a superconducting Bose condensate for gravity wave detection, principally because of its potentially higher signal to noise ratio in carrying electrical signals upon length dilations in a relativistic framework for gravity waves travelling near the speed of light. W. Weber and Hickman [26] derived an experimentally testable relation based on torquing of a charged capacitor parallel to a gravity field, with

$$\tau = 2E_g / \pi[\alpha / (1-\alpha)^{1/2}]$$

where the capacitor will rotate relative to the gravity vector, for $\alpha = 2GM / rc^2$, is Schwarzschild radial coordinate [$dR = dr(1-\alpha)^{1/2}$] , E_g is dependent on the capacitor charge and geometry of the plates, $E_g = [Q^2 d/2\varepsilon WL(1-\alpha)^{1/2}]$, for a plate separation, and radial dimensions,W and L, charge Q, and ε the permittivity of free space. For plate separations of 2 mm on Earth, the maximum torque is approximately $\tau = 10^{-12}$ Nm, when charged to 2/3 dielectric breakdown. While not entirely promising for detection of such low torques, the large separation (2 mm) distance between capacitative plates naturally prompts generalization to the classic Casimir force [21] experiments only recently confirmed experimentally [20]. In particular, we rewrite the torque values to include the frequency terms derived with the Sakharov condition

$$[G = (\pi c^5 / h\omega_c^2)]:$$

$$\alpha = 2M\pi c^3 / h\omega_c^2 r$$

The appeal of this formulation is that a frequency dependent torque is derived, which further makes contact with proposals to modulate the Casimir capacitative plates for continuous extraction of energy [27]. This result requires further investigation experimentally, particularly to compare with previous reports for anomalies in AC- tuned electrical capacitors [28].

References

1. Ze1'dovich Ya. B. JETP Letters, 6, 345, 1967.
2. Sakharov A. Vacuum quantum fluctuations in Curved Space and the Theory of Gravitation, Sov. Phys. Reports, 12,1968,1040 1041.
3. Puthoff H. E. (1989) Gravity as a zero-point fluctuation force, Physical Review A, 39(5): 2333 2342, March 1, 1989.
4. Haisch B., Rueda A., Puthoff H.E., (1994) Inertia as a Zero Point Field Lorentz Force, Physical Review A, 49:678 694.
5. Haisch B., Rueda A., Puthoff H.E.,"Inertia as a Zero Point Field Force" Physical Review A 49, N 2, 678 (1994).
6. Ambjorn J. and Wolfram S. (1983) Properties of the Vacuum, 1. Mechanical and Thermodynamic, and Properties of the Vacuum, 2. Electrodynamics, Annals of Physics
7. Ambjorn J. and Wolfram S. (1983) Properties of the Vacuum. 1. Mechanical and Thermodynamic, Annals of Physics, 147:1 32.
8. Fulcher et al., "The Decay of the Vacuum," Sci. Am., vol. 241, p. 150, Dec. 1979
9. Puthoff, H.E. "Source of Vacuum Electromagnetic Zero Point Energy" Physical Review A 4 0, 4857 Nov 1 (1989); Errata and Comments, Physical Review A 4 1, March 1(1990); Physical Review A4 4, 3382, 3385 (1991)
10. Senitzky I.P., "Radiation Reaction and Vacuum Field Effects in Heisenberg Picture Quantum Electrodynamics", Phys. Rev. Lett. 31(15), 955 (1973). As pointed out by Puthoff [3] the relativistic results for the Sakharov condition have so far been encouraging, while the consequences for nuclear interactions in all coordinate frames have not been fully explored.
11. da Costa L. N., Freudling W., Wegner G., Giovanelli R., Haynes M. P., and Salzer J. J. (1996) The Mass Distribution in the Nearby Universe, Astrophysical Journal Letters, 468: LS L8 and Plate L 1
12. Modanese G. (1996) Theoretical analysis of a reported weak gravitational shielding effect, Europhy. Lett., 35(6):413 418.
13. Shupe M.A. The Lorentz invariant vacuum media, Am. J. Phys. 53, 122 (1985). A cautionary note is that lower frequency cutoffs can violate Lorentzian invariance, thus allowing a moving detector to reveal absolute motion by recording Doppler sifted frequencies. Standard methods might treat such effects like the cancellation of terms that remove anomalous ZPF infinities from field theories, but these topics remain to be explored.
14. Zee, A. Phys. Rev, Lett, 42,417 (1979); Phys. Rev. D. 23, 858, (1981).
15. Torr D. G. and Li. N. (1993) Gravitoelctric Electric Coupling vVia Superconductivity, Foundations of Physics Letters, 6(4): 371 383.
16. Unnikrishan C. S. (1996) Does a superconductor shield gravity? Physics C, 266:133 137.
17. Podkletnov E. and Nieminen R (1992) A Possibility of Gravitational Force Shielding by Bulk $YBa_2Cu_3O_{7-x}$ Superconductor, Physics pp.203: 441 444.
18. Li N, and Torr D. G. (1992) Gravitational effects on the magnetic attenuation of superconductors, Physical Review B, 46(9): 5489 5494. A simple consequence of the Sakharov condition $G = (\pi c^5 / h\omega_c^2) \sim 1/\int \omega d\omega$, can be written for the gravitomagnefic permeability as: $\mu_g = 4\pi G / c^2 = 4\pi^2 c^3 / \left(h\int_\circ^{\omega c} \omega d\omega\right) \sim 1/\int \omega d\omega$ which suggest that the same frequency resonance implied by the ZPF derivation will share similar consequences for vector gravity

effects. See also, DeWitt, B. S. Superconductors and Gravitational Drag, Phys. Rev. Lett. 16, 102(1966).

19. Li N., Noever D., Robertson T., Koczor R., and Brantley, W. (1997) Static Test for a Gravitational Force Coupled to Type II YBCO Superconductors, Physics p., 55, 287.

20. Lamoreaux S. K. (1997) Demonstration of the Casimir Force in the 0.6 to 6 mm Range, Phys. Rev. Letters, 78:5 8.

21. Milonni P.W. et al., "Radiation pressure from the vacuum: Physical interpretation of the Casimir force", Phys. Rev. A, Vol. 38, No. 3, 1621 August 1988.

22. Milonni P. W. (1994) The Quantum Vacuum, Academic Press, San Diego, CA.

23. Schiff L.I. and Barnhill M.V. Bull. Am. Phys. Soc. 11, 96, (1966) and refn. 18.

24. Weber J. (1960), Detection and Generation of Gravitational Waves, Physical Review, 117(1)306 313.

25. Weber J. (1966) Gravitational Shielding and Absorption, The Physical Review (The American Physical Society), 146(4): 935 937.

26. Weber W. and Hickman H. (1997) A possible interaction between gravity and the electric field, Spec. Science Tech. 20, 133 136

27. Forward R.L. "Extracting electrical energy from the vacuum by cohesion of charged foliated conductors" Phys. Rev. B, Vol. 30, No. 4,1700 August 1994

28. Woodward, J. F. (1992) A Stationary Apparent Weight Shift From a Transient Machian Mass Fluctuation, Foundations of Physics Letters, 5:425 442.

The Problem of Electron and Physical Properties of Time:

To the Electron Technologies of the 21st Century

V.P. Oleinik

*Department of General and Theoretical Physics, National Technical University of Ukraine "Kiev Polytechnic Institute", Prospect Pobedy 37, Kiev, 03056, Ukraine **Institute of Semiconductor Physics, National Academy of Sciences, Prospect Nauky 45, Kiev, 03028, Ukraine;
e-mail: yuri@arepjev.relc.com

"...it is necessary to periodically subject to the deepest revision the principles, which were recognized as final and were no longer discussed".
Louis de Broglie

Abstract

The results of an approach based on the synthesis of standard quantum electrodynamics and of the ideas of self-organization in physical systems are briefly outlined. The quantum model of electron as an open self-organizing system is constructed, with the physical mechanism of self-organization consisting in the back influence of the own field created by electron on the same electron. The own field is considered as a physical property of electron, intrinsically inherent in electrically charged matter, which is included in the definition of the particle from the very beginning. The own field of electron endows the particle with wave properties and represents a bearer of superluminal signals, which can be used for the creation of qualitatively new communication systems. Because of the inseparable link between space and time, the force in relativistic mechanics is the cause of change not only of the velocity of particle, but also of the course of time along the particle's trajectory. For this reason the flow of time in some area of space depends on the character of physical processes, occurring in it, and, therefore, time can be controlled by slowing down or accelerating its course with the help of material processes. The conclusions of the paper are not in conflict with the special theory of relativity (STR); they are a direct consequence of relativistic equations of motion and represent an essential development of the generally accepted notions about space and time. At present all the necessary prerequisites are available, both theoretical and technical, for the practical mastering of the own fields of particles and of the physical properties of time.

1. Introduction. The Problem of Electron and Future Outlook

Electrodynamics, what is this? What is its value for man? Electrodynamics is the theory of electromagnetic interaction, one of four interactions existing in nature. Its role in the life of society is seen from the fact that the most part of natural phenomena, which we encounter at every step, is of electromagnetic origin: it is due to the interaction of electromagnetic field with electrically charged particles entering into atoms and molecules. It is fair to say that electromagnetism plays a crucial role in the life of mankind as it determines the ways of technical advance of society [1].

The key problem of quantum electrodynamics is the problem of electron, which can be formulated as follows: to construct from the first principles a non-contradictory model of electron, which takes into account experimental facts, i.e. to find the dynamical equation capable of describing the unique physical properties of electron, its internal structure, its behaviour when it interacts with electromagnetic field.

Electron was discovered a little more than 100 years ago, in 1897. With discovering the electron the revolution in physics began, which has resulted in unprecedented technical advance of society. The summit of development was reached in the middle of the 1950s and then the long period of evolutional development followed, when new physical principles were used to describe various physical processes and phenomena. The violent development of physics became slower in the 1970s and was replaced by stagnation in the subsequent years. The stagnation in electrodynamics continuing already over a period of several decades is gradually giving place now to a new ascent. The new scientific revolution is starting, which is associated with electron again, much as it happened hundred years ago. The reason is that electron is the most unique particle storing in itself the deepest mysteries of nature and the degree, to which they are disclosed, determines the

wants to stay anonymous, until his patent application is done and university verification tests will be done). The claims are: 1200 Watts coil out with about 1076.4 Watts in into the driving motor at 3450 RPM. 8 amps 117volts at no load 9.2 amps 117 volts at full load. The output of about 1200 Watts is already a total overunity operation! As they just increase the input power by about 140 Watts only between idle and load state and they get 1200-Watts output it seems indeed a case, where Lenz law is violated! This generator also has NO motor effect! If you supply current to the coil, the permanent magnet in the center will not rotate; cause the flux just stays inside the toroid core! There you can see, that the back drag does not influence the mechanical rotation of the magnet!" Stefan used very good criterion to prove high efficiency of the design: **There is no back-torque effect! It is most important aspect of Gramm's generator.** You can contact directly Stefan Hartmann: Keplerstr. 11 B, 10589 Berlin, Germany. Tel: +49 30 345 00 497, FAX: +49 30 345 00 498 email: harti@harti.com info@ccard.net (Please, note: Dr. Harman referred to my old web site www.time-machine.spb.ru which is closed now).

So, basic principles of MEG and Φ-machines are the same. It was patented more than 100 years ago. Primary magnetic flux is topologically separated in two (or more) fluxes, which are mutually compensated in the ring core. Advantages of MEG are absence of moving parts since special input coils produce changes of primary flux. Also level of saturation in ferromagnetic material obviously should be corresponding to intensity of primary magnetic field, which is created by the permanent magnet, Fig.4.1.

Besides MEG the same principle can be (and already was!) realized in many other systems. So, there is no any news in the USA patent #6,362,718 granted for "The Motionless Magnetic Generator". What did they claim? You can find it in the patent: "The first input coil and the first output coil **extend around portions of the first magnetic path**, while the second input coil and the second output coil **extend around portions of the second magnetic path.**" Yes, it is the same bi-directional principle we discussed above: two parts of the magnetic flux and each coil produce effect to reduce flux due to this superposition.

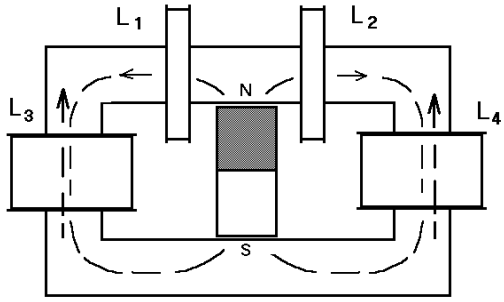

Fig.4.1

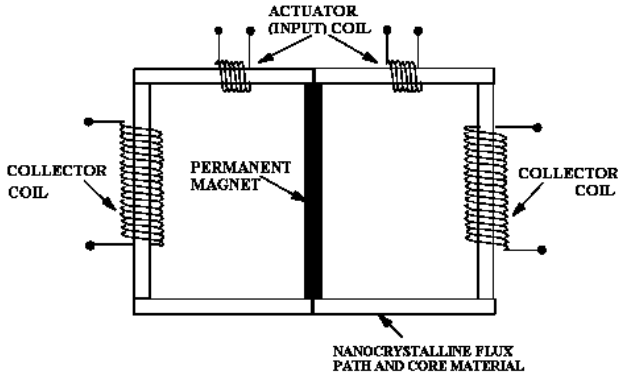

Fig.4.2
Diagram of prototype by Bearden.

In conclusion I'd like to confirm our sincere interest to develop joint work with all new energy research teams if they are not trying to obscure the issue of the technology by means of complex theoretical constructions and common words about zero point energy.

Matter as a Resonance Longitudinal Wave Process

Alexander V. Frolov

Abstracts

There is experimental data on gravitation anomalies for cases of resonance irradiation of the Bose condensates (superfluid helium or superconductor) at 10-100 MHz frequencies. It is developed by the author in frames of his aether theory that can be used for practical applications in aerospace and new energetics.

ZPF or aether fluctuations

The fundamental electromagnetic radiation field (Zero Point Field) ZPF or the quantum vacuum noise is a recently accepted physical notion. In the article [1] David Noever and Christopher Bremner used it to derive a frequency – dependent version of Newton's gravitational coupling term G. On the other hand we can consider the quantum vacuum noise as aether fluctuations. Dr. Alexander Mishin [2] described experiments on registration of these processes by means of special equipment. Both approaches (ZPF and aether fluctuation) allow to conclude that mass and inertia arise from these oscillations. However if we are considering the oscillation as some aether process then we can assume and describe some physical mechanism of this process.

One of consequence of the vacuum energy model, which is described in [1] is that "the attractive force of gravity becomes reducible to the radiative interaction between oscillating charges..." Let's clarify which kind of radiation can be created by oscillating electric charges.

There are many different sources to find the answer on this question and one of them is the article by Prof. Kirill P.Butusov [3] on symmetrization of Maxwell's equations and practical methods of generation of longitudinal waves in vacuum. So, ZPF model has a direct relation with the aether model since indirectly it leads to the question of longitudinal waves in vacuum. Physically they are waves of density of energy and in the aether model the waves are areas of more dense and more rarefied aether. Let's note that there are standing waves besides moving waves.

To consider the interaction of some mass particles and the fundamental field the notion of subatomic charges "partons" was introduced [1]. So, the mass itself "becomes interpretable as a dependent quantity derived from a damped oscillation driven by random ZPF" [1]. The authors wrote about "internal kinetic energy" of the mass particle and it can be considered as a function of ZPF oscillation frequency. In the aether theory of mass there is a similar notion of "aether vortex", which represents some cyclical process of some frequency and it is possible to calculate its kinetic energy. This aether vortex model of matter elements allows to assume real methods to change parameters of vortex and to get changes in parameters of existence of the matter. On the other hand we can discuss the possibility to change some physical parameters of aether in areas of the vortex to get the same result. This possibility follows from the well-known N.Kozyrev's experiments, which were named "investigation of active properties of time". N.Kozyrev used chronal (temporal) approach in his theory. We have to change his notion "the density of time" to "the density of aether" to get a direct link between his experiments and the aether theory of mass.

N.Kozyrev and others have [4,5,6] experimentally demonstrated that irreversible processes in matter produced changes of aether density in the area of the experiment. Detectors of different type can register this change. It is obviously that any matter element (i.e. the aether vortex) in this area of changed aether density should get more inner (kinetic) energy or slow the inner motion. From the chronal point of view these are changes of inner time of this matter element.

Gravity shield

One more interesting point that is discussed in the article by Noever and Bremner [1] is a problem of gravity shield. The authors show that resonance interaction with ZPF produces "the particle mass" and it can be viewed as "a renormalized or "dressed" mass with a resonant interaction potential. Similar resonance approach is used in the conception of de Broglie's matter waves. Also the authors [1] mentioned the existence of an experimentally unobservable mass. In this case ZPF cannot be fundamentally shielded by matter since "frequency mismatch precludes gravity shielding by matter" [1]. The only way to get screening of ZPF fluctuations seems to be very complex: it is necessary to provide frequency matching for whole wavelength band of the oscillations.

I think some specialization is necessary here to explain experimental gravity anomalies with Bose condensates experiments (superfluid helium or superconductors): **special process in matter can be used as the gravity screen and this approach does not involve the frequency-matching problem.**

We have concluded above that any matter element is a resonance process and its energy is derived from ZPF. It is useful to note that these are longitudinal wave oscillations of energy density in aether. In this case, the gravity shield problem can be solved in frames of the aether vortex conception of matter.

The longitudinal wave is a moving (or standing) areas of rarified and thickened aether. Let's consider the moving wave, which is responsible for gravitation attraction effect. How can we stop, re-direct or reflect longitudinal wave in aether by means of aether vortexes (matter elements)? **We can produce interaction with this wave only by means of other longitudinal waves.**

In macro-level this idea can be realized as longitudinal wave generator. Electromagnetic processes, which can be used as sources of directed longitudinal waves, are known and some of them are described in [3]. In other way the gravity shield can be produced as longitudinal waves generated by natural aether vortexes (i.e. by matter elements) if the matter exist in a special exited state, for example for cases of resonance irradiation of superfluid helium or superconductor at 10-100 MHz frequencies.

Matter element as resonance process

In [1] the authors wrote that it is possible to calculate "the mass of any fundamental particle at its resonant frequency." There is the question: what is the general basis of whole spectrum of stable elements masses?

In 1996 the author published the article "The concept of mass process" [7]. At first in this work physical sense and notion of 3-dimensional curvature was introduced. By analogy with known mathematical notion of linear curvature $\rho_1 = \frac{1}{r}$ (where r is radius) and uniform surface curvature $\rho_2 = \frac{2}{r}$ it was proposed to calculate curvature of a 3-dimensional space as

$$\rho_3 = \frac{3}{r} \qquad (1)$$

The radius r in this case means that in a 3-space there is some periodical process. In other words, 3-dimensional matter is a resonance process.

Further, de Broglie used formulations E=hf and E=pc (where p is momentum, h is Planck constant, f is frequency and c is velocity of light) to derive the following:

$$hf=pc \qquad (2)$$

that allows us to get the well-known formulation

$$\lambda = \frac{h}{p} \qquad (3)$$

There is another logical branch of this idea that leads to the understanding of the mass properties of matter as a resonance process. Instead of E=pc in [7] it was proposed to use $E=mc^2$. In strength of the wave-particle duality we can write the equation

$$mc^2 = hf \qquad (4)$$

and from this equation the mass can be presented as resonance electromagnetic oscillations

$$m = \frac{h}{c^2} f \qquad (5)$$

Let's note that f=1/T, where T is some period of oscillation. So, we can write the following

$$m = \frac{h}{c^2}\frac{1}{T} \qquad (6)$$

where $\frac{h}{c^2}$ is new constant between mass and period of time.

There is an important conclusion: any mass is a process and there is some period of time, which corresponds to this mass. In other words, there is no physical sense of time separate from some process of existence of mass. Product mass and period is a constant value, which was named as a chronal constant

$$mT = \frac{h}{c^2} = const \qquad (7)$$

The chronal constant is a parameter of some real space and it is equal to $0.73725 \cdot 10^{-50} [Js^2 / m^2]$

Also in this work [7] there was a demonstration of several examples of newly discovered physical law: spatial curvature of some natural objects (proton, planet, DNA molecule) is a whole number. There is some analogy with the nuclear physics notion of wave number. From this fact we can assume that main natural matter elements exist in main resonance states. For example, if Bohr radius is 0.52917 Angstrom, then we can find the wave-length $l = \pi d$ and the linear curvature is $\rho = 1/l = 3.0075 \cdot 10^9$ (m) and 3-dimensional curvature of this object is $\rho = 3/l = 1.0025 \cdot 10^9$ (m) that is unit of mater, corresponding to simplest atom, i.e. unit matter engine. Let's note that it is near the unit and some distortion of 0.0025 means non-ideal resonance state of the system.

Calculations for planet Earth in [7] were based on the known period of orbital rotation T=31557600 sec that corresponds to frequency of electromagnetic oscillations

$$f = 1/T = 3.168861 \cdot 10^{-8} (1/s) \qquad (8)$$

and wave-length

$$\lambda = c / f = 9.46... \cdot 10^{16} (m) \qquad (9)$$

The curvature (if this wave-length is considered as radius of the resonator) is following wave number

$$\rho = 1057.00 \cdot 10^{-20} (1/m) \qquad (10)$$

Also we can use other known data about the planet. Daily rotation period of our planet is known T=86400 sec and we can calculate its wavelength $\lambda = 3469{,}82(m)$ and corresponding curvature (wave-number). Sure, it is also a whole number with a good accuracy:

$$\rho = 2882 \cdot 10^{-7} (1/m) \qquad (11)$$

The laws of physics in macro cosmos and micro cosmos are similar. From these calculations it was assumed that whole formation of mass spectrum of stable chemical elements of matter is determined by similar physical mechanism.

Creation of mass

In short we can summarize that technology of longitudinal waves in aether is a real basis for creation of matter with mass and inertia properties. N. Tesla used this method to produce different objects: from ball lightning up to electrons. Velimir Abramovic says in his article [8]: "The principle of resonance and harmonic oscillation of aether seems to be so clear that all problems of modern physics, especially a problem of energy conversion, will be solved with its development. By means of his vacuum tube Tesla got protons, electrons and neutrons directly from aether and reproduced them at any distance. Instead of giving a possibility to the bundle of protons to move through space to some place, he created conditions for momentary appearance of arbitrary quantity of particles in the given place."

Any objects can be classified as aether vortex and parameters of this vortex determine its mass, electric charge and other properties of matter.

The "parton" as element of matter in [1] is a useful tool for description of physical properties of aether.

Longitudinal waves in Woodward's experiment

In [1] the authors state that resonant radiation in the required 10-100 MHz range appears to produce

anomalous effects for such Bose condensates as superconductors. In my opinion it is a particular case of discussed above technology of longitudinal waves in aether due to possibility of transformation of transverse electromagnetic waves in longitudinal waves in the superconductors. This transformation in plasma is a well known physical mechanism.

More facts to prove this idea: by Woodward [9] there is a special requirement, i.e. the frequency of mechanical vibrations should be twice the frequency of electrical oscillations in the capacitor, which demonstrates the weight anomalies. But from the other hand it is a common rule for creation of longitudinal weaves in plasma! Also it is a necessary condition for generation of parametrical oscillations! So, we can assume that basis of the effects in [1] and [9] is a generation of longitudinal wave in aether.

Conclusion

Any element of matter can be considered as resonance process of aether oscillations, which are longitudinal waves. There is an analogy with description of these longitudinal waves and well-known matter waves by de Broighl. Experimenting on the longitudinal waves generation and especially experiments on standing waves to get gradient of aether pressure allows to develop gravity control technology.

References

1. D. Noever and C. Bremner, NASA Marshall Space Flight Center, Large Scale Sakharov Condition, 35th AIAA/ASME/SAE/ASEE joint Propulsion Conference and Exhibit, 1999, Los Angeles, Ca, USA.

2. Alexander M. Mishin, The physical system of artificial biofield (experimental research of ether), New Energy Technologies, #1, 2001, p.45.

3. Kirill P.Butusov, Symmetrization of Maxwell-Lorenz equations, New energy Technologies, #2(5), 2002, p.14.

4. Kozyrev N.A. Selected Works, 1991, Leningrad, publ. by Leningrad State University.

5. L. Shikhobalov, N. Kozyrev's ideas today, New Energy Technologies #2 (5), 2002, p. 20.

6. Alexander V. Frolov, Kozyrev on possibility of decrease of mass and weight of the body, New Energy Technologies #2 (5), 2002, p. 35.

7. The Concept of Mass Process, Frolov A.V., Proceedings of the congress "New Ideas in Natural Sciences", 1996, St.Petersburg, published by PiK Co., p.123-134.

8. Tesla, Velimir Abramovic, New Energy technologies, #1(4) 2002, p.17.

9. Woodward, J.F. A Stationary Apparent Weight Shift From a Transient Machian Mass Fluctuation, Foundations of Physics Letters, 5, p.425-442, 1992.

Gerlovin's Theory of Activation

Alexander V. Frolov

It is a review of the famous book by Ilia L. Gerlovin "Basis of unified theory of all interactions in matter"published in 1990, St.Petersburg, Russia. We hope this article let you discover some new aspects of physical vacuum structure to develop more new experimental methods. Comments made by Alexander V. Frolov, Editor.

In [1] the author wrote about different methods to activate water solutions: mechanical, thermal, acoustic, magnetic and electrical. One of the known methods is an activation by means of electrohydraulic method. There is also some information about activation of other mediums, mainly liquids, but also some gases and solid bodies.

There are no theoretical explanations of these facts to explain all aspects of these phenomena. Furthermore, complexity of interpretation of these phenomena in frames of common physical notions induced some scientists to announce these phenomena as non-existing and "illegal".

Ilia L. Gerlovin formulated the physical principles of theory of activation of mediums on the basis of new physical theory, the Theory of Fundamental Field (TFF). These principles are based on his two important conclusions from the TFF:

a) "Space around us is not empty, physical vacuum consists of material physical objects, i.e. elementary particles of vacuum (EPV). These particles are responsible for main activation processes;
b) Force interactions between atoms in molecule, between molecules in crystals has not spherical symmetry in the crystals of solid bodies, but an axial symmetry and the interactions are changing in time with very high frequency of about 10^{18} Hz. This feature of force interactions also makes its own contribution to the activation of mediums." [1, p. 314]

So, it was assumed that the phenomenon of activation of mediums can be defined as anisotropy of force interactions, which leads to **"meta-stable state, which can be called *structurally activated state of the given structure".***

Here is some difference in principle between chemical term "activation", which characterizes a transformation of molecule or atom in some active state with an increased energy, which is sufficient to provide a chemical reaction. It is ***energy activation*. Gerlovin described new notion, a *structural activation:* "This phenomenon can be classified as some change of structure of activation object. With this, energy of molecule can have no changes, and *active properties***

Coupled with aetherodynamics time conception, which was suggested by Alexander V. Frolov, the works on the control of space-time parameters gain the possibility for development and commercial application. As a theoretical basis there are those N. Kozyrev works where his conception of "time density" are replaced by that of "aether density" according to Frolov.

In September 2002, Faraday Labs Ltd Company plans to complete testing of the first experimental system, and to start the patenting and research of applied aspects, first of all in medicine.

Physical Principles of the Time Machine

Alexander V. Frolov

Experimental success of research team headed by Dr. Vadim A. Chernobrov, Moscow was reported in [1]. The time course can be controlled as rate of any process in local space-time (inner space of the Time Machine). It can be decelerated or accelerated by means of special "converging electromagnetic waves". Ordinary waves move from the source whereas special "converging waves" move to some central point, i.e. into the focus of the system. In Chernobrov's design of the Time Machine this process is organized by means of several spherical envelops, which consist of several electromagnets. Electronic control unit controls the processes in this design. Dr. Chernobrov reported about 3% change of the time course in 4th version of the system, which was tested with a human inside. The goal of Dr. Chernobrov's work is to research the medical aspects and experimental investigation of the principles. Several important conclusions were obtained from the project: the time course can be controlled and character of the changes is different for acceleration and deceleration mode.

Other known publication and research projects on the same topic seem to be very far from any commercial and practically useful application. Obviously the topic is very new and fantastic for most of scientific community and at first we have to clarify the physical principles of the time control project, which is started by Faraday Labs Ltd.

In this project we believe that notion of time is one of possible description of real physical properties of our Universe. So, it is not mathematical abstraction but some aspect of physical reality and we can discover some physical properties of time. Russian astrophysicist N. A. Kozyrev [2] developed a theory of active properties of time and according to his point of view there are two properties: time course and time density. Prof. Kozyrev demonstrated experimentally that time density in area of some process (changes of matter) is dependent on entropy parameters of the processes. In [3] it was demonstrated that Kozyrev's experiments could be interpreted in aether theory and it has led to simple physical conclusions and clear experimental perspectives: **time course and its density can be explained and controlled as parameters of aether.** Directions of aether flow and density of aether are subjects of experimenting with non-reversible changes in matter, for example, in crystallization or melting processes. Also it is possible to use special electromagnetic processes, for example, Chernobrov's "converging waves" or other longitudinal waves as methods of aether compression or rarefaction. If we assume that process of existence of elements of matter physically can be explained as aether vortex processes then its rate is a parameter of **aether income/outcome balance** (aether inflow in element of matter and aether outflow from the element of matter). It was also described in Time Rate Control (TRC) theory [3]. To control this balance it is necessary to develop technology of longitudinal waves generation, its focusing and resonance effects. The previous research and experimenting on the topic has been made by N. Tesla.

Let's assume that we have some technology to change parameters of time course. How should we organize this local space-time (what is spatial topology of the design)? There is a very interesting experiment to get the answer: rotation of a heavy cone (for example, lead cone) entrains surrounding aether, so a vortex appears, which is a toroidal formation of aether (rings). The rings can exist in space for a long period. The further question is: Why does the beam of light (laser beam) directed to the cone by tangent create a luminous ring? We can assume that due to natural properties of photons (light propagates along the geodesic line in space) some autonomous closed toroidal space should be created in such experiment. The next thought is: since space and any matter exist in time then we can speak about some autonomous time. The general conclusion is to be the following: autonomous 4-dimensional space-time can be created as toroidal aether vortex.

Here is point to note some aspects of research project by Prof. Robert Mallett, Connecticut University, USA. In fact, sometime next year, he hopes to produce the first piece of technology that eventually will allow him to build a time machine. By Mallett it will be a device that employs lasers "to twist space". Why is he going to close the beam of light? His theoretical background is knowledge about black holes, i.e. understanding of the connection between gravity and curvature of space-time. In Einstein's theory both matter and energy can bend space and time. So Prof. Mallett assumes that curvature of space-time can be changed not only by mass (like a black hole) but it can be affected by energy of photons. This has led Prof. Mallett to consider the possibility of using a circulating beam of light to twist space and to create closed loops in time. It is predicted that a spinning neutral particle, when placed in the ring, is dragged around by the resulting gravitational field [4]. From the

first view it is the same approach we have considered above (experiment with aether toroidal rings). But proposals by Prof. Mallett differ in principle from the aether conception.

The main aspect of this technology is a creation of autonomous (self-closed) toroidal space-time. Autonomous geodesic world line of this space-time is self-closed. Any photon should be circulating in this system due to its properties: photon is always moving along the straight line of the space.

More deep understanding of this technology follows from the explanation of photon as oscillation of aether. Any photon can be considered as result of relative motion of the matter (observer) in absolute space (immovable aether). Usually a photon is considered as moving object in space. But we can assume that observer is in the motion and the photon is oscillations of the absolute space (immovable aether). Which approach is more real one? Sure, it is more easy to consider a photon as moving object but let's remember fact of our real motion in the Universe and fact of the Universe expansion.

So, ideas by Prof. Mallett are very far from the **aether nature of the time phenomenon.** He follows the black holes theory and general understanding of space-time distortion due to mass or energy presence. Also he knows that a light beam should be closed in a ring. However Prof. Mallett is very far from physical basis of the effects. **The key of time rate control is technology of artificial aether flow, creation of aether vortex systems (AVS), management on density and direction of aether flow.** There are several technical methods to produce it. Any light beam should be curved in self-closed "light ring" if it is placed in a toroidal aether vortex and we can say that this system has own space-time.

What does "some changes of time course" mean? We can measure it as some changes of standard rate of oscillation process, for example, some stable wavelength of laser beam or quartz oscillations. There is a well-known experiment with two atomic clocks (one of the clocks is placed on the roof of some building and another one is placed on surface of planet). Due to vertical component of gravity the time course should be different and it can be measured. How can we organize difference in these measurements if both atomic clocks are placed in the same altitude?

It is necessary to consider gravity nature in frames of the aether conception. Two atomic clocks demonstrate difference in measurements due to difference in aether flow density. Hence, by means of aetherodynamics methods it is possible to control the rate of oscillation processes in the atomic clocks and in any matter (i.e. time course itself).

The aetherodynamics methods have a clear analogy with electrodynamics: **motion of charge produce field and there is the induction law**. Really, classical electrodynamics can be considered as particular case of the aetherodynamics. So, physical sense of any field is stress or deformation (it is some static field) or oscillations of aether.

Let's introduce the notion of chronal (temporal) charge to consider some technical aspects. In electrodynamics we assume an electric charge as element of matter with positive or negative electric properties and we have to compare it with some reference (zero charge or test charge). Let's note that in any case we have to consider "charge of some particle" but not an "abstract charge". So, we can postulate that any element of matter has **zero chronal charge** if it is moving from Past in Future with standard (usual for measurements of surface of our planet) time course. If the time course (i.e. existence of some element of matter) is decelerated then it can be measured as decrease of standard oscillation frequency of the matter. Time course acceleration means some increase of standard oscillation frequency of the matter. Let's determine that in the first case it is negative chronal charge and in the second case it is some positive chronal charge. Atomic clock is one of possible methods to measure zero chronal charge or to find some relative positive or negative difference.

It is predicted here that motion of chronal charge should produce a chronal field. Some provisional data was received by Frolov from simple experiments on the rotation of a heat source. Accelerated motion of chronal charge (changes of density of chronal current) should produce aethero-induction effect that is an analogy (or more general case) of Faraday's induction effect. This effect can be detected as secondary (induced) deceleration of time course in nearest area of accelerated time matter. Another case is a secondary (induced) acceleration of time course in the nearest area of decelerated time matter.

Technical realization of aethero-induction method seems to be very close to idea, which is described in classical epic "Back to the Future". At first, it is necessary to create or to collect some chronal charge in a "flux condenser" and then to accelerate it in space up to some velocity. According to the aether conception, this creation of the chronal charge is a real technical process.

It is assumed that estimated chronal effects are demonstrated as some threshold field, i.e. space-time has some stable discrete energy levels and changes of its curvature should have discrete threshold mode. All new aspects disclosed in this paper are the subject of a patent process. Faraday Labs Ltd organizes experimental program on the topic. Practical application of this technology is new energy systems and propulsion methods.

References

1. Chernobrov V.A. Experiments with a man in the Time Machine, New Energy Technologies, #3 November-December 2001, p.6.
2. Kozyrev N.A. Selected works, Publ. by Leningrad State University, 1991.
3. Frolov A.V. Practical application of the Time Rate Control theory, New Energy Technologies, #3 November-December 2001, p. 15.
4. Mallett, R.L., Weak gravitational field of the electromagnetic radiation in a ring laser, Phys. Lett. A, 2000.

investigated completely yet. It was found also that harmful effect on biological systems is not related to the process of movement in Time itself but is a result of the difference of the Time rate value in various parts of a body (a biological system).

Inside of the laboratory setup it was also discovered that Time could be changed with some inertia. Areas of space having different Time rates have vague borders. With sufficient difference in Time rate the human can see an area with a different Time rate as some white mist. Higher the difference – the mist is denser, that can be used as an alarm signal for biological systems. It is possible to consider Time-travel as possible and (after experiments with mice) there are reasons to suppose it will be safe for travelers if they follow certain rules. It is especially necessary to emphasize: the trips through Time (due to new discovered properties of Time) can't affect the Past and they can't change our past history. All the so-called paradoxes for the traveler in Time (for example when "he meets himself in the Past" or "he kills his grandfather in his childhood" have clear solutions in 3-dimensional Time.

It is possible to consider as a proven fact that Time has more than one dimension, i.e. O. Bartini's theoretical calculations are confirmed by these experiments: Time has 3 dimensions. Hence our Earth world can be considered as a 6-dimensional object: length, width, height, age or date of Time, variant of a History or erosion of Time, density or rate of Time. The concept of "the Arrow of Time" as fourth dimension (moment of Time) is a particular case of the concept of sixth dimension (rate of Time) that leads to the physical concepts of gravitation and energy and they are simultaneously connected. Concepts of the " Einstein-Rosen bridges" known since 1916 or "worm-holes"

introduced into science by John Willer in the 50's, are travels in 5th and 6th dimensions, i.e. the "classical" Time travels, which were described by H. Wells.

Editor's: As the reader could note, the author does not disclosure the secrets of the TM design. From the photo you can see the electromagnets, which form the regular stereometrical construction as well as the cables from the TM to the control unit. Dr. Chernobrov mentioned the converging electromagnetic waves only. So, to understand how it works, it is necessary to get a clear notion of the converging electromagnetic waves. Let's imagine the ripple effect created by a stone in the water. The waves move from a central point to periphery. The converging waves are just an opposite process: the waves move from periphery to the central point. Is it possible in Nature? Yes, sure. Dr. Chernobrov wrote: "Let's throw a hoop on the water and inside of the hoop we'll see converging waves." The Time Machine technology by Dr. Chernobrov is based on the similar principle.

Time Machine Project

Alexander V. Frolov

Scientific Expert of the Russian Physical Society,
General Director, Faraday Lab Ltd
Tel/fax: 7-812-380-6564 Tel: 7-921-993-2501
Email: director@faraday.ru alex@frolov.spb.ru

May 29, 2002

Faraday Labs Ltd and Dr. Vadim Chernobrov have signed the agreement on scientific-research work on investigation of active properties of time.

In the course of the previous experimental works, carried out by Dr. Chernobrov's research team during the period from 1984-2002, four versions of Time Machine had been made and tested. At these devices (the biggest system is about 1 meter in diameter) the effects of deceleration and acceleration of time course were created and measured. The principles of control of time course velocity were based on the

Alexander V. Frolov, General Director Faraday Labs Ltd and Ph. Dr. Vadim A. Chernobrov have just signed the Contract

interconnection of electromagnetic processes and physical properties of space-time. Special electromagnets, operating in pulse mode, are placed at the spherical frame. They create the so-called "converging wave", which by Alexander Frolov is a longitudinal wave in nature.

Coupled with aetherodynamics time conception, which was suggested by Alexander V. Frolov, the works on the control of space-time parameters gain the possibility for development and commercial application. As a theoretical basis there are those N. Kozyrev works where his conception of "time density" are replaced by that of "aether density" according to Frolov.

In September 2002, Faraday Labs Ltd Company plans to complete testing of the first experimental system, and to start the patenting and research of applied aspects, first of all in medicine.

Physical Principles of the Time Machine

Alexander V. Frolov

Experimental success of research team headed by Dr. Vadim A. Chernobrov, Moscow was reported in [1]. The time course can be controlled as rate of any process in local space-time (inner space of the Time Machine). It can be decelerated or accelerated by means of special "converging electromagnetic waves". Ordinary waves move from the source whereas special "converging waves" move to some central point, i.e. into the focus of the system. In Chernobrov's design of the Time Machine this process is organized by means of several spherical envelops, which consist of several electromagnets. Electronic control unit controls the processes in this design. Dr. Chernobrov reported about 3% change of the time course in 4th version of the system, which was tested with a human inside. The goal of Dr. Chernobrov's work is to research the medical aspects and experimental investigation of the principles. Several important conclusions were obtained from the project: the time course can be controlled and character of the changes is different for acceleration and deceleration mode.

Other known publication and research projects on the same topic seem to be very far from any commercial and practically useful application. Obviously the topic is very new and fantastic for most of scientific community and at first we have to clarify the physical principles of the time control project, which is started by Faraday Labs Ltd.

In this project we believe that notion of time is one of possible description of real physical properties of our Universe. So, it is not mathematical abstraction but some aspect of physical reality and we can discover some physical properties of time. Russian astrophysicist N. A. Kozyrev [2] developed a theory of active properties of time and according to his point of view there are two properties: time course and time density. Prof. Kozyrev demonstrated experimentally that time density in area of some process (changes of matter) is dependent on entropy parameters of the processes. In [3] it was demonstrated that Kozyrev's experiments could be interpreted in aether theory and it has led to simple physical conclusions and clear experimental perspectives: **time course and its density can be explained and controlled as parameters of aether.** Directions of aether flow and density of aether are subjects of experimenting with non-reversible changes in matter, for example, in crystallization or melting processes. Also it is possible to use special electromagnetic processes, for example, Chernobrov's "converging waves" or other longitudinal waves as methods of aether compression or rarefaction. If we assume that process of existence of elements of matter physically can be explained as aether vortex processes then its rate is a parameter of **aether income/outcome balance** (aether inflow in element of matter and aether outflow from the element of matter). It was also described in Time Rate Control (TRC) theory [3]. To control this balance it is necessary to develop technology of longitudinal waves generation, its focusing and resonance effects. The previous research and experimenting on the topic has been made by N. Tesla.

Let's assume that we have some technology to change parameters of time course. How should we organize this local space-time (what is spatial topology of the design)? There is a very interesting experiment to get the answer: rotation of a heavy cone (for example, lead cone) entrains surrounding aether, so a vortex appears, which is a toroidal formation of aether (rings). The rings can exist in space for a long period. The further question is: Why does the beam of light (laser beam) directed to the cone by tangent create a luminous ring? We can assume that due to natural properties of photons (light propagates along the geodesic line in space) some autonomous closed toroidal space should be created in such experiment. The next thought is: since space and any matter exist in time then we can speak about some autonomous time. The general conclusion is to be the following: autonomous 4-dimensional space-time can be created as toroidal aether vortex.

Here is point to note some aspects of research project by Prof. Robert Mallett, Connecticut University, USA. In fact, sometime next year, he hopes to produce the first piece of technology that eventually will allow him to build a time machine. By Mallett it will be a device that employs lasers "to twist space". Why is he going to close the beam of light? His theoretical background is knowledge about black holes, i.e. understanding of the connection between gravity and curvature of space-time. In Einstein's theory both matter and energy can bend space and time. So Prof. Mallett assumes that curvature of space-time can be changed not only by mass (like a black hole) but it can be affected by energy of photons. This has led Prof. Mallett to consider the possibility of using a circulating beam of light to twist space and to create closed loops in time. It is predicted that a spinning neutral particle, when placed in the ring, is dragged around by the resulting gravitational field [4]. From the

Kozyrev-Dirak Radiation
Its influence on animals

Dr. Ivan M. Shakhparonov

International Academy of Energy-Informational Sciences

In the experiment with animals, that were made in the Center of Oncology Researches (COR) at the Russian Academy of Medical Sciences (RAMS), on the applying of Kozyrev-Dirak's Focused Radiation (KDFR), it has been found that KDFR decreases the quantity of glucose in the blood, reduces its tenacity, promotes the strengthening of immunity and the rise of the quantity of marrow cells.

Introduction

This time researchers in Russia and abroad experiment on ball lightnings by means of nonoriented circuits, which are similar to the electric analogues of Mobius band, also by means of Klein bottle and their combinations. Non-oriented fields are investigated very intensively now. Accordingly, organisms of the researchers, who observe the interactions of such fields with a matter, are also changed, thus they should take it into account on making such experiments. The aim of the article is to show in which way the fields of nonoriented circuits influence on animal and human organism. Besides the article has for its object the prevention of negative consequences, which can appear for experimenters through the research process.

Experiments with animals that were carried out in 1992-1993 in Russian Academy of Medical Sciences (RAMS) had not been published in proper time because there were no quantitative methods of radiation detection. Later, in 1996 they were developed [1] and KDFR parameters were measured in that geometry, which were applied in RAMS. In 1998 powerful and super-powerful KDRF sources were obtained. These sources were applied (and are applied now) in the researches at the controlled radioactive decay [2]. Kozyrev and Nasonov [3] and later also Lavrentyev with the collaborators [4,5] have proved experimentally that the Sun and some stars generate the radiation, which has early unknown properties. We suggest that the radiation, discovered by Kozyrev [3], and the radiation, which is researched by us and by other experimenters with nonoriented circuits, are of the same phenomenon. At first, it should be noted that on interaction between Kozyrev-Dirak radiation (KDR) and a matter made it colder. As it was demonstrated above [1], cooling effect can be explained by matter re-magnetization under the influence of KDFR beam (adiabatic demagnetization). According to the still unpublished data, KDFR bunch destroys matter lattice by the way of it's moving. However, after a couple of week matter reconstructs it to the almost tabulated points, without defects, blockness and other damages, which are peculiar to other natural crystal structures. **In the definite sense nature demonstrates the way to rejuvenate compound structures**. As it is well known, vital functions of biological systems on the Earth depend on the structure and composition of water. Therefore, we have a right to expect considerable changes in the vital functions of biological organisms under the influence of KDFR.

Experimental Devices

In experiments with animals there were applied the devices, which concentrated KDR (KDCR) and had 50 Wtt aggregate electrical power. The description is presented in [2].

KDFR indication was obtained by calorimetric method [1], along the way of movement of the main bunch (with 10 cm across diameter) and at angle of 45° from the geometrical axis of a device.

Researches of Bleeding Duration

Let us consider KDFR influence on the blood composition of animals. At the experiment 24-28 gram weighting, pelletized fed male mice were used. In the process of the experiment it was discovered that 3 and 4 hour processing of mice with KDFR at the distance 2.5 m and at the presence of animals in the sphere of maximum radiating power, caused some changes of fibrillation system. The bleeding duration was determined according to Duke method. Two groups of animals were used at the experiments: a group with 4-hour duration of KDRF processing and a group with 6-hour duration. Time of bleeding was considered in dynamics at 1, 2, 7, 14, 21, 28 and 35 day (Fig. 1). The bleeding duration of the intact animals was determined by the value 128±11 sec. After the applying of KDFR there was noticed some increase of bleeding duration to 261±15 sec and 223±21 sec on the first day after the stopping of the influence. In the subsequent periods bleeding duration gradually decreases up to the level of physiological norm. The whole normalization of the index is observed at the animals, which were processed by KDFR during 4 and 6 hours, on 28-35 day up to 115±12 and 133±18 sec correspondingly. In the process of observations at the animals, the correlation between time of fibrillation and periods of KDRF processing of the animals has not been revealed (Fig. 1).

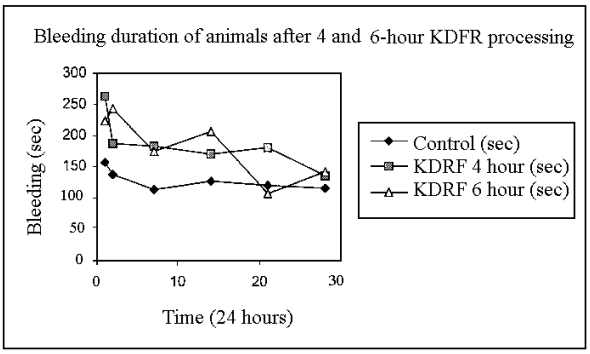

Fig.1

In the course of the experiment the strongly marked chronometric hypocoagulation was discovered due to the extension of the parameter "K" or, probably, because of the change of aggregation properties of platelets (Table 1).

For the determination of biochemical indexes serum was obtained from 5-8 ml of rats' venous blood. Beforehand (24 hours before the slaughter), forage was taken away from the animals. The determination of biochemical indexes was provided by means of biochemical analyzer HITACHI. As a result of the experiment it was determined that at the first day after influence of KDRF there was a tendency of decrease of the glucose content (Table 2). Other indexes varied in the limit of physiological norm.

Table 1 Parameters of thromboflexogramm after KDFR, 4 hours

Animal #	Parameters of thromboflexogramm			Fibrio gene	Fibrinal activity
	R (sec)	K (sec)	Ma (mm)		
1	72	∞	10	-	-
2	102	∞	18	-	-
1	90	∞	10	275	75
2	180	150	52	315	90
1	180	∞	5	-	100

Table 2 KDFR influence on the glucose content in blood of the rats

Time (days) after the experiment	KDFR 4 hours (mmole/l)	Test (mmole/l)	KDFR 6 hours (mmole/l)	Test (mmole/l)
1	3.14	6.12	6.39	7.27
10	7.59	9.35	8.90	6.69
30	6.05	6.69		

Research of haemopoiesis system

Several criteria were considered: the dependence of biological effect on the distance, on the power flux density, on the duration of processing. Besides, KDRF influence on mice survival was considered.

At the experiment 24-28 gram weighting, pelletized fed male mice were used. The marrow was examined in the dynamic at 1, 3 and 7 day after KDFR influence. Six animals were taken on each point. After the decapitation of the mouse their thighbones were taken out and after that the absolute number of myelokaryocytes was calculated by the standard method in Goryaev chamber.

Dependence of the biological effect on the distance

In all experiments the maximum flux density along the geometrical axis of KDCR device was a constant. There were used four temporal modes of the influence (1, 2, 3, 4 hours) and three points of long distance between KDSR and the biological object (0.5; 1.5; and 2.5 m). At 0.5 m distance there were no differences in the number of marrow cells in comparison with the control cells. With the increase of distance between KDCR and the object from 0.5 to 1.5 m some tendency to the increase of the number of marrow cells up to the 7th day was observed. Four-hour KDRF processing caused the increase of the number of karyocytes up to $29.99 \pm 1.25 \times 10^6$ ($P < 0{,}001$). Thus, any dependence of the biological effect on the exposition has not been revealed. For instance, at the 7th day after one hour of the exposition the number of karyocytes was equal to $28.45 \pm 1.87 \times 10^6$ at the same time after 3-hour processing it came to $27.65 \pm 0.74 \times 10^6$. Alongside with the change of the distance to the biological object from 1.5 to 2.5 m the tendency towards the increase of the number of marrow cells has kept within the same limits $28.27 \pm 1.32 \times 10^6$ and $29.57 \pm 0.88 \times 10^6$.

Dependence of the biological effect on the power flux density

The comparative investigation of KDFR influence on the biological object in the coverage of KDCR (along its geometric axis) and outside the coverage has demonstrated that alongside with the increase of the radiation intensity there was a tendency towards the decrease of stimulative influence of KDFR on haemopoiesis.

Dependence of the biological effect on the duration of processing

On processing the animals at distances up to 2.5 m from KDCR and on increase of exposition to 3-4 hours it is possible to obtain reliably significant difference in the number of marrow cells from the physiological norm to the 7th day.

KDRF influence on the survival of mice

The experiments, determining the survival reaction of animals, were made by means of gamma radiation. 30-day survival is the criterion of determination. Conditions for the experiments are the following: in the coverage of KDCR and aside the coverage, (the distance between the KDCR and the object is 2.5 m in the coverage of KDCR and 0.5m outside the coverage). Time of influence is 4 hours. Animals of both sex were used. Two groups of animals were used. The test group was put to the gamma radiation in the diapason of doses, which caused marrowy syndrome, i.e. from 7.5 to 8.5 Gr. The second group of animals after the irradiation in the same diapason of doses was repeatedly processed with KDFR. Time of the influence is 4 hours at 7.5 Gr gamma radiation on 15 mice in one bath and 8.5 Gr on 15 mice in another bath. Total gamma radiation of the animals was made by means of the source ^{137}Cs with the dosage rate of 5.2 Gr/min. Gamma radiation in this dose diapason causes death of the animals during the development of the marrowy syndrome, i.e. from the 6th to the 20th day along with the aplasia of haematogenic tissue. Combination of gamma radiation and KDFR sometimes leads to the slight increase of the number of survived animals. If the animals are irradiated by gamma rays at first and then by KDFR, the death control at 7.5 Gr radiation is equal to 5.5% from the total number of the animals and at the following KDFR processing 16% of the irradiated animals die. However, 67% of the animals in the tested group have died after KDFR processing and after the coming next gamma radiation with 8.5 Gr total dose. And in the group, which was processed with KDFR, only 46% of the animals died.

Immunity strengthening

For the investigation of KDFR influence the following tests were chosen: activity of natural killers and T-killers, which had been obtained by the immunization in vitro in the unidirectional mixed culture of lymphocytes and also in the reaction of blast transformation on the specific mitogen [6, 7]. All tests were made on the 7th day after a single KDFR influence. Unfortunately, data have been obtained with the applying of radioisotope preparations. Though the experiments of this kind were successful and though they have demonstrated the increase of some immune reactions' level, there is a certain doubt in the relevancy of radioisotopes application [2]. Thus the series of experiments was made. These experiments were aimed at the investigation of KDFR influence on the development of the swelling process. The aim of the experiment is the investigation of KDFR influence on the development of Ehrlich cancer and sarcoma-37, which were repeatedly inoculated to mice. At the first stage of the experiment there was a single KDFR influence on the mice repeatedly inoculated with sarcoma-37, on the 2nd day after the repeated inoculation of the swelling cells to the animals. The repeated inoculation was made intramuscularly in a right thigh, in a dose 10^6 of cells per a mouse. Time of KDFR influence for the first group of animals was equal to 1 hour; for the second one it came to 2 hours; and for the third one it came to 4 hours. Each group consisted of 6 animals. The test group consisted of six mice with repeatedly inoculated sarcoma-37 and which had not been processed with KDFR. As a result, the average lifetime of tested animals was equal to 9 days. The average lifetime of animals of KDFR groups came to 48 days (for 1-hour KDFR influenced group); to 12 days (for 2-hour group); and to 31 days (for 4-hour group). Thus, the average lifetime of the experimental group came to 29 days. Besides, in the group, which has been processing with KDFR during 1 hour, **the half of mice had survived (three of six mice).**

At the second stage of the experiment the repeated (5 times during 2 hours) KDFR influence on the mice was applied. These mice have been inoculated with sarcoma-37 at seven days before the beginning of the influence. As a result, the average lifetime of the animals was equal to 27 days, and for the mice, which were processed with fivefold KDFR influence, the average lifetime was equal to 76 days. The obtained results are the evidence of inhibition of swelling development for the animals, which were processed with KDFR influence. This leads to the increase of lifetime of such animals in comparison with the test. **Thereby, at a great extent the results of the previous experiments on the strengthening of immune status after KDFR influence were confirmed.**

Results and discussion

Let us make a conclusion. At the KDFR influence on animals' organism the following effects were observed: decrease of blood viscosity; strongly pronounced hypocoagulation; decrease of contents of glucose. Increase in the number of karyocytes and the extended lifetime of the animals, infected with Ehrlich cancer and sarcoma-37 were also observed.

As for human being, the researches in this area have not been carried out yet and they are still confined to the single observations. It is possible to give an example from the author's practice. In 1975 nonoriented circuit of 3kWtt power was examined. Field strength was measured. The author of the article had been working in the field for about 8 hours. And after five hours after the experiment I had felt bad. That time it was nothing known about the influence of the new radiation on human organism. The arrived ambulance has quickly diagnosed that I was close to hypoglycemic coma. On several hours after the intravenous glucose injection, my state has become normal. **Now we know that before the experiments with powerful KDFR bunches it is necessary to eat sugar.** Thus we believe that the data, which were obtained after the experiments with animals, can be applied to a human being. We can suggest that the manifestation of the symptoms of the KDFR influence on human organism depends on the power of the applied source, on the total mass of the organism and on the time of it in the coverage of the irradiation. From aforesaid it is clear that the experiment with powerful KDFR sources is far from being harmless

and it is better to make it distantly after exclusion of man presence near experimental stands and devices. At the same time it is quite obvious that on applying of small capacity and fixed time of irradiation it is possible to develop methods for curing of human diseases, which are considered now as incurable (for instance of diabetes, some diseases of haematogenic system, of cancer and possibly of AIDS.

References

1. Proceeding of the International Scientific Conference "New Ideas in Natural Sciences" Problems of Modern Physics, p. 176-187
2. Journal of new energy, Vol. 3, #4,1999, I.M. Shakhparonov "Interaction between Kozyrev – Dirak radiation and radionuclides", p. 85-89
3. Kozyrev N.A. Selected works, Leningrad State University, 1991, part 3
4. Lavrentyev M.M. Eganova I.A. Luzet M.L., Fominykh S.F./ / Reports by AS USSR. – 1990, Vol. 314, #2, p. 352-355
5. Lavrentyev M.M., Gusev V.A., Eganova I.A., Luzet M.L., Fominykh S.F.// Reports by AS USSR. – 1990, Vol. 315, #2, p. 368-370
6. Methodological materials on experimental pharmacological and clinical trials of immune modulating effect of pharmacological remedies. - Ministry of Health USSR, M., 1984
7. Talmadge J.E. and Chiragos M.A. Comparison of immunomodulatory and immunotherapeutic properties of biologic response modifiers. Springer Seminar Immunopathol., 1985, 8, 429-443

Effect of Magnetic Blow Wave Field on Wine Systems

I.M.Shakhparonov (Corresponding author), S.A.Grin, S.R.Tsimbalaev, L.N.Kreindel, V.N.Kocheshkova, A.I.Podlesny, S.Yu.Gelfand

AGD Firm, Peschanyi pereulok, House No.20P korpus No.1, Lfl. 33 125252, Moscow, A- 252, Russian Federation

Russian Institute of Canning Industry, Shkolnaya Street. 78. 142703 Vidnoe 3. Moscow Region, Russian Federation

Introduction

Authors communicate the data on influence of Magnetic Blow Wave (MBW) field on several wineproducts. It was found, that MBW did not lead to significant changes in the major components of the wineproduct (sugar, organic acids, minerals). At the same time the taste and aroma of treated wine become more pleasant; content of heavy alcohols and wine stone in the treated samples was less than in non treated ones. A mechanism of transformations was also discussed.

Keywords: *Magnetic Blow Wave (MBW), Wineproduct, GLC of aroma compounds and ethanol, HPLC of sugars, Atomic Absorption Spectrometry (AAS) of minerals, Heavy alcohols and aldehydes, Wine stone, Turbidity tendency, Organoleptic evaluation*

Magnetic Blow Wave (MBW) was obtained for the first time during the investigations on ball lighting generation under the laboratory conditions (Shakhparonov 1994). MBW as a physical object is interesting because of some facts, which suggest that MBW is a magnetic monopole. The MBW can also interact with the matter and transforms it in a definite way. Typical example is an elementary carbon in the form of graphite, which is transformed by such magnetic treatment into ferromagnetic substance (ibid). The graphite, which is initially diamagnetic, transforms to paramagnetic one with general radiation doze of about $7 \cdot 10^{19}$ neutrons/cm^2. Other types of radiations could not affect this way (Svoistva 1975). So one unit of MBW can be considered as $1 \cdot 10^5$ of neutron masses. This fact may be regarded as an indirect evidence for assuming that MBW and magnetic monopole are the same things. In the absence of excited radioactivity a slow MBW [$v/c < 1 \cdot 10^4$] occurs, which does not ionize atoms (Devons, 1963). Therefore, their interaction with the matter can be observed only indirectly. No data exist on the interaction of MBW with organic substances. The experiments and results reported in the present communication may be a starting point for development of technology and to formulate the methods for vintage wine and best quality spirit production.

Materials and Methods

Assuming that MBW and magnetic monopole are the same things, a number of conditions were selected for all experiments. The MBW source and the samples were placed in the same axis and the axis was oriented according to magnetic meridian direction. Such magnetic orientation is appropriate, as the energy of magnetic monopole theoretically increases in a magnetic field (Devons, 1963). All of samples were placed at 250 cm distance from MBW source, in hermetically closed glasses. It should be noticed that MBW could penetrate through many other barriers, for example into cast iron reservoir with wall thickness of 5 cm (Amaldi, 1970).

The quality investigations were made by using of standard equipment. HPLC, equipped with refractometric detector was used for sugars estimation. Separation of organic acids in forms of their ethyl esters and acid esters was carried out chromatographically using a column packed with polyethylenglycol succinate and the following temperature option: initial temperature is 120°C, final temperature is 220°C, temperature growth rate: 8°/min. GLC was also employed for determination of ethanol. Minerals content

conclusion: in order to obtain complete information about any system, it should be destroyed. However, destruction of tissues of the man in order to get information about their state is a too high price to pay for the information about his health.

However, the above Van Hoven's criterion can be satisfied with the minimum influence, when the cells are not destroyed and the atoms of these cells, being primary sources of torsion spectrums to be registered, are bring into the non-equilibrium state by means of outer disturbing influence.

In order to choose the frequency of the disturbing torsion influence correctly, it is necessary to take into account the role of water in physical and biochemical organization of tissues of the human organism.

At the same time, it is necessary to take into account the resonance torsion frequencies of various human organs. Finally, it turns out that the signal of torsion disturbance should be rather sophisticated considering both these factors. The TORDI system is a ready-to-use production device. Nevertheless, it is important to understand that the model is not the limit of scientific and technical potential incorporated in it and that enhanced variants of the system will appear with the course of time.

Summing up, I would like to draw your attention once more to the fact that work on torsion technologies is not limited by the directions that were discussed here. Actually, as it was pointed out in the beginning, on-going development includes all branches of economy, industry, agriculture and medicine, as well as all problems of everyday life. Technologies that we mentioned are the forerunner of the fact that the mankind is on the threshold of the age of torsion technologies, which, we believe, will change our life in the 21st century more than all the scientific and technical revolutions of the 20th century.

Reference

1. Cartan E. Compates Rendus. Akad.Sci., Paris, 1922, v.174.
2. V.Melnikov, P.Pronin. Problem of gravitation constant stability and additional interactions. Itogi Nauki I Tekniki, ser. Astronomy, v.41, Gravitation and Astronomy, Moscow, VINTI, 1991.
3. G.I.Shipov Theory of the Physical Vacuum. Nauka, Moscow 1997.
4. I.Ternov, V.Bordovitsin. On the modern interpretation of classical spin theory of Ya.Frenkel. UFN, 1980, v.132, No.2.
5. V.Bagrov, V.Bordovitsin. Classical spin theory. Izvestiya VUZ, Phys.Series, 1980, No.2.
6. F.I.Belinfante. On the spin augular momentum of mesons. Physica VI, 1939, v-6, No.9.
7. M.Markov. The very early universe. Proc of the Nuttfield Workshop, Eds. G.V.Gibbson, S.W.Hawking, S.T.Siklov, Cambridge, 1988.
8. Hideo Uchida.A method apparatus for detecting a fluid. Patent England, No 511662, May 24, 1978.
9. Anatoly Akimov. Heuristic discussion of the problem of finding long-range interactions. EGS-concepts. CISE VENT, preprint N7A, Moscow, 1992.
10. IITAP RANS, TORTECH USA, Horizonts of the Science and Technology XXI age Proc, Editor A.E.Akimov, Folium, Moscow, 2000, vol.1 (in Russian).
11. N.Kozyrev, Astronomical observations by means of the physical properties of time. In "Flarestarse" International Symposium in Byurakan, 1976,Armenian Academy of Sciences Publ., Yerevan, 1977 (in Russian)
12. Bouwmecster D. et.al. Nature, v.390, 11 dec, 1997.
13. G.I.Shipov. Theoretical and Experimental Research of Inertial Mass of Four-Dimensional Gyroscope. ITTAP RANS, preprint N10, Moscow, 2001, (in Russia).
14. The way of correction of metal alloy microstructure. Patent Russian, RU 2107105, 1998.
15. A.Dolgov, Yu.Zel'dovich, M.Sazshin. Cosmology of the Early Universe. MGU Publ., Moscow, 1988.
16. I.A.Wheeler. Einstein's vision. Springer Verlag, 1968.
17. Convegno Internazionale:Quale Fisica per 2000, Proc. Bologna, 1991. see: The Manual of Energy Devices and Systems.
Complied D.A.Kelly, D.A.K. WLFUB, Burband, California, 1986, Publ. N1269/F-289.
18. Daytlov V.L. Polarization Model of the Heterogeneous Physic Vacuum. Institute Mathematical, Sibirians Academic Science, 1998 (in Russian).

The Electrical Vortex Non-Solenoidal Fields

Sergey B. Alemanov
E-mail: alemanov@inbox.ru Phone 7 (095) 323-6848

A mistake was found in the electrodynamics: it is detected that all electrodynamics' postulates corresponds to the experimental facts, but vortex electric fields has unclosed inductive lines.

When the magnet is moving, then the current of magnetic induction is moving together with it. From known velocity of motion **v** and the value of magnetic induction **B**, it is possible to calculate the intensity **E** of appearing vortex field according to electrodynamics formula of transformation of fields **E=vB**.

If to change the E=vB on induction $D=\varepsilon_0 E$ in formula of fields' transformation, that will get $D=\varepsilon_0 Bv$, where D is electric induction, B is magnetic induction, v is velocity of motion, ε_0 is electric constant.

Herewith the appearing electric induction is always transverse to the direction of motion. It is possible to formulate the rule of origin for electric induction under the condition of rectilinear motion: if to dispose the right hand palm so four fingers shows the motion direction of the magnetic flow (the field), connected with moving magnet, and the vector B fells into palm, then the moved aside big finger will indicate the direction of vector D. The given rule is like the rule for Lorenz' force, but on the contrary (the difference is in frame). In the first case the charge moves, but the magnet rests. Here the magnet moves, but the charge, which points the direction for lines of force of electric induction, is immovable. So, there it is the rule for left hand, but here, on the contrary, it is the rule for right hand. Thereby, if the charge moves, but the magnet is immovable, then the rule of left hand uses for determination of the force. But if the magnet moves, but the charge rests, then the rule of right hand uses for determination of the force.

The origin of electric force is connected with that, the vortex electric field $D=\varepsilon_0 Bv$ appears around moving magnet (the magnetic field does not act on immovable charges).

In common literature on electrodynamics there is no any difference between electric vortex field and solenoidal field, but these are different notions. The sign of solenoidal field is the closed lines of electric induction (the flow of vector D through the closed surface is a zero), but for the vortex field the sign is following: the work of forces can be different from zero under the condition of motion along a closed line. That is to say, the vortex fields can agitate the rotational currents.

From the electrodynamics textbook: "The work of forces of vortex electric field can be different from zero, when the electric charge is moving along a closed line."

For instance, when the magnet moves, the vortex electric field appears and this field can be solenoidal or not, depending on magnet's orientation. Let's take such example: the magnet moves evenly, rectilinearly, and it's poles are oriented transversely to direction of motion. According to the rule of origin for electric induction ($D=\varepsilon_0 Bv$ that is the rule of right hand), the appearing vortex electric flow is not a solenoidal, since the lines of electric induction are not closed. Its begins in one conditional area of disturbance (+), accompanies the moving magnet, and it finish in another area of disturbance (-). For presentation it is enough to consider only two areas (+) and (-), represented on Fig.1. These dissimilar areas of disturbance appears because that flow of magnetic induction inside the magnet has the inverse direction, that outside the magnet.

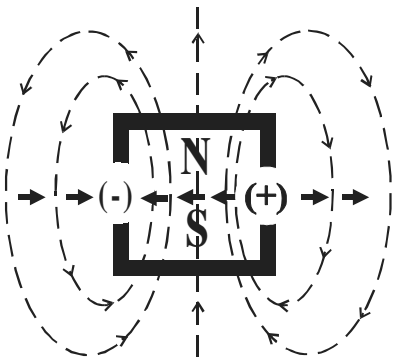

Fig.1

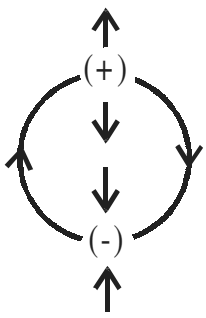

Fig.2

That moving disturbance of electric and magnetic fields presents itself as transverse electromagnetic disturbance. Also, it is necessary to notice, that under such magnet's motion, the appearing vortex electric field is not closed, but the current of electric displacement, connected with it, is closed (a currents are always closed). In given example, for clarity, it is possible to present a intensity of electric field through the Lorenz' force, if to take the frame, in which the magnet rests, and the test charge moves.

On the Fig.1 the moving magnet is conditionally represented (motion is toward to the text, magnet is moving away). N and S are poles of magnet. The direction of lines of electric induction, appearing when the magnet is moving, specified by arrows → and ←. Part of the lines begins in positive area (+) and finishes in negative area (-), the areas are placed on the ends of magnet. **The flow of electric induction through closed surface is not a zero; that is to say, these areas of disturbance are moving electric charges.**

From the electrodynamics textbook again: "The flow of vector D through any closed surface is equal to algebraic amount of external charges, covered by this surface. In the electrodynamics these postulates has the same role, as Newton' laws in classical mechanics."

Thereby, according to postulate, it is necessary to consider the appearing dissimilar areas of disturbance (+) and (-) to electric charges, or it is necessary to change the postulate.

It is interesting, that a part of lines of electric induction, which placed frontal and behind magnet, starts and finish at infinity, since the distribution of magnetic induction around magnet has not determined borders.

For clarity, it is possible to make following calculation. For instance, the coil (loop or turn) with current, as a magnet, moves evenly and rectilinearly, but its magnetic poles are oriented transversely on motion direction. Under such motion the lines of electric induction are not closed, and the dissimilar areas of electric field's disturbance appears in space on the edges of this coil.

On Fig.2 the moving coil with current is conditionally represented. It moves from left to right side of the page. The arrows on the coil indicate the direction of current. The appearing dissimilar areas of disturbance of electric field are marked by signs (+) and (-). Knowing, that in medium of the coil $B=\mu_0 I/2r$ and according to $D=\varepsilon_0 Bv$, it is possible to find the electric induction, appearing in the center, between two dissimilar areas $D=\varepsilon_0\mu_0 Iv/2r$, where I is current in the coil, r is radius of the coil, v is velocity of motion, ε_0 is electric constant, μ_0 is magnetic constant. The electromagnetic disturbances in transverse electromagnetic waves has the similar field construction, there also dissimilar areas of disturbance of electric field exists, that is to say the lines of electric inductance are not closed. Only the currents of electric displacement and magnetic induction are closed.

Let's consider another example: magnet moves rectilinearly, but its poles are oriented longitudinally to direction of motion. According to the rule for origin of electric induction ($D=\varepsilon_0 Bv$ is the rule of right hand), the appearing rotational electric flow is solenoidal, since in this case the inductive lines become closed lines. **Usually in books on the electrodynamics such moving magnet is considered, and the wrong conclusion is thereof done, that vortex electric field is always**

solenoidal, herewith it is forgotten, that poles of the magnet can be oriented not only along the direction of motion, but across also.

From the electrodynamics textbook: "The vortex electric field differs from electrostatic field that it is not related with any electric charges and its lines of intensity are closed lines."

From theory and from experiments it follows, that under transverse motion of magnet the lines of disturbance of vortex electric field can be unclosed and, accordingly, the flow of induction through the closed surface is not a zero. Then there is a direct discrepancy to facts in modern electrodynamics. It is strange, but for the whole history of researches in magnetism the transverse magnet's motion was not is considered. It leads to revising of electrodynamics' postulates, which plays such role in electrodynamics, as the Newton's laws plays in classical mechanics. The postulates, giving invalid belief about field processes, accordingly, do not allow to make some correct calculations. Fallaciousness of these postulates was one of the reasons, on which the electrodynamics could not to consider and to calculate the discrete electromagnetic waves (photons), where the magnetic field also is the transverse field (the field construction and calculation of photons are represented on the page http://www.comail.ru/~alemanov). **That is to say, not only particles has the charges, but areas of disturbance of field (without particles) are the charges also,** where the flow of electric induction through the closed surface is not a zero. Thereby, the vortex electric fields can be not only as closed flows of induction, but as well as inducted electric charges, accordingly, the laws for electric charges are valid for induced electric charges also. For instance, in the law of conservation of charge: if somewhere the area of disturbance with positive sign appears, that negative area appears also.

From the electrodynamics textbook: "The vortex electric field is generated by the variable magnetic field. Its force lines are always closed, like force lines of magnetic field."

But before this fundamental postulate, confirming, that force lines of vortex electric field are always closed, it was necessary to consider all variants of change for the magnetic field, including the variant of the transverse motion of the magnet. That is to say, the consideration of physical processes could not be unilateral. Faraday considered the longitudal motion of magnet and discovered the electromagnetic induction, but the transverse motion of magnet that have the principle importance for understanding of field processes in electrodynamics was not considered. Thereby, the longitudal motion of magnet brings to arising a vortex electric field with closed force lines, but transverse motion of magnet brings to arising a vortex electric field, where the lines of forces are not closed. In this case it lead to induced electric charges. It is necessary to notice, that this is first mistake, detected in electrodynamics postulates for all time of existence of electrodynamics.

From the electrodynamics textbooks: "…Gauss' theorem is valid not only for electrostatics, but also for electrodynamics, which using a variable in time electromagnetic fields. We are not sure if this hypothesis is valid or it is not valid… Only the experiment can give the answer on this question. The whole collection of experimental facts speaks in favor of this hypothesis." But, unfortunately, the experiment with transverse motion of magnet was not considered seriously in this textbook.

(Editor's note: Well-known Searl's experiments and Godin & Roshchin's experiments are based on such transverse motion of magnets (rollers). In Alemanov's article it was demonstrated that in this case the experiment should lead to induced electric charges. Really it was detected in experiments. Hence this missed aspect of electrodynamics is very important for development of the new energy technologies.)

Gravito-Inert Mass

J.A. Asanbaeva

720000, Kyrgyzstan, Bishkek, Kadyrov's Scientific Center
+996 (312) 47-25-40, +996 (312) 65-02-83

bondarenko@nazaraliev-centre.com

Nature of mass is one of the important problems of modern physics. It is accepted to consider that the mass of elementary particle is determined by fields, which are connected with it (electromagnetic, nuclear and others). However, we didn't create any quantitative theory of mass. There is no theory to explain why masses of elementary particles form a discrete spectrum of values and to allow determining this spectrum.

Mass (m) is a physical value, one of characteristics of matter, which defines its inert and gravitational properties. Accordingly, we distinguish inert mass (m_i) and gravitational mass (m_g).

Inert mass (m_i) characterizes dynamical properties of a body, its property to accelerate under the action of the force $(\vec{F}_i)$ and according to the second Newton's law is considered to be constant coefficient of proportionality for the given body between $\vec{F}$ and acceleration $\vec{a}$.

$$\vec{F}_i = m_i \vec{a} \qquad (1)$$

Gravitational mass (m_g) is a source of gravity field. Every body creates its gravity field, which is

18. Kozyrev N.A. *Selected Transactions* (Leningrad University Press, Leningrad, 1991) (in Russ.).

19. Lavrent'ev M.M., Eganova I.A., Medvedev V.G., Olejnik V.K., and Fominykh S.F. *On Scanning of Celestial Sphere by Kozyrev's Sensor.* Doklady AN SSSR, 323 (4), p.649-652 (1992) (in Russ.).

20. Akimov A.E., Kovaltchuk G.U., Medvedev B.P., Oleinik V.K., Pugatch A.F. *Preliminary Results of Astronomic Observations of the Sky by the Kozyrev Procedure.* Academy of Sciences of Ukraine, Central Astronomic Observatory. Preprint CAO-92-5P, 1992, p.16 (in Russ.).

21. *Oleinik V.P. Superluminal Transfer of Information in Electrodynamics.* SPIE Material Science and Material Properties for Infrared Optoelectronics. 3890 p. 321-328 (1998) (http://www.spie.org /).

22. Oleinik V.P. *Faster-than-Light Transfer of a Signal in Electrodynamics.* Instantaneous Action-at-a-Distance in Modern Physics (Nova Science Publishers, Inc., New York, 1999), p.261-281.

23. Eganova I.A. *The World of Events Reality: Instantaneous Action as a Connection of Events through Time.* Instantaneous Action-at-a-Distance in Modern Physics (Nova Science Publishers, Inc., New York, 1999).

24. Lavrent'ev M.M. and Eganova I.A. *Physical Phenomena Predicted and Revealed by N.A.Kozyrev, in the Light of Adequacy of Space-Time to Physical Reality.* Philosophy of Science, 1(3), p.34-43 (1997) (in Russ.).

25. Logunov A.A. *Lectures in the Theory of Relativity and Gravity.* A Present-Day Analysis of the Problem. (Nauka, Moscow, 1987) (in Russ.).

26. Oleinik V.P. *The Newest Development of Quantum Electrodynamics: Self-Organizing Electron, Superluminal Signals, Dynamical Inhomogeneity of Time.* Physical Vacuum and Nature. 4 p.3-17 (2000) (in Russ.).

27. Jefimenko O.D. *Electromagnetic Retardation and Theory of Relativity* (Electret Scientific Company, Star City, 1997).

28. Oleinik V.P., Borimsky Ju.C., Arepjev Ju.D. *Time, What is this? Dynamical Properties of Time.* Physical Vacuum and Nature. 5 p.65-82 (2001); *New Ideas in Electrodynamics: Physical Properties of Time.* Semiconductor Physics, Quantum Electronics and Optoelectronics. 3 N4 p.558-565 (2000). E-print: quant-ph/0010027.

29. Borimsky Ju.C., Oleinik V.P. *The Course of Time in Classical and Quantum Systems and Dynamical Principle.* Physical Vacuum and Nature. 6 (2001) (in print).

The Principle of Self-Organization, which can be formulated as follows: any material object represents an open self-organizing system whose internal structures are formed with the participation of the whole universe. Apparently, the Principle of Self-Organization, incorporated in nature as one of the integral properties of matter, is nothing more nor less than a spirit (or absolute idea, or creator) which operates the world and creates all its variety.

Physical Mechanism of Nuclear Reactions at Low Energies

V.P. Oleinik* and Yu.D. Arepjev

Tell me what the electron is,
and I shall explain to you everything else.
W. Thomson

Abstract

The physical mechanism of nuclear reactions at low energies caused by spatial extension of electron is considered. Nuclear reactions of this type represent intra-electronic processes, more precisely, the processes occurring inside the area of basic localization of electron. Distinctive characteristics of these processes are defined by interaction of the own field produced by electrically charged matter of electron with free nuclei. Heavy nucleus, appearing inside the area of basic localization of electron, is inevitably deformed because of interaction of protons with the adjoining layers of electronic cloud, which may cause nuclear fission. If two or more light nuclei occur "inside" electron, an attractive force will appear between the nuclei that may result in the fusion of nuclei. The intra-electronic mechanism of nuclear reactions is of a universal character. For its realization it is necessary to have merely a sufficiently intensive stream of free electrons, i.e. heavy electric current, and as long as sufficiently a great number of free nuclei. This mechanism may operate only at small energies of translational motion of the centers of mass of nuclei and electron. Because of the existence of simple mechanism of nuclear reactions at low energies, nuclear reactor turns out to be an atomic delayed-action bomb, which may blow up by virtue of casual reasons, as it has taken place, apparently, in Chernobyl. **The use of cold nuclear reactions for production of energy will provide mankind with cheap, practically inexhaustible, and non-polluting energy sources.**

Introduction

Nuclear reactions at low energies, occurring in physical and biological systems, and, in particular, the cold fusion (CF) of nuclei, attract ever increasing attention (see review articles [1,2]). This is explained by the fact that research on CF (in what follows, by cold fusion we shall understand any nuclear reactions at low energies) opens up the way to the solution of the problem which was set more than 50 years ago in the field of controlled thermonuclear reactions (CTR) and which has not been solved that is the problem to provide mankind with cheap fuel. An important point is that CF allows to create not only cheap, but also non-polluting energy sources, as nuclear reactions at low energies are not accompanied by radiations dangerous to health (γ-radiations, streams of fast neutrons and other particles). Note that the energetic problem facing mankind is presently of special interest in connection with the fact that, according to expert evaluations, the oil-and-gas resources in the world will suffice only for some decades. For this reason the study of CF is among the most important problems of physics.

It is necessary to note that, relying on the standard theory of nuclear reactions describing nuclear processes in vacuum, experts in the field of nuclear physics, engaged in CTR, reject the very possibility of existence of nuclear fusion at low energies. Two basic objections are raised against CF:

1. at low energies the penetrability of Coulomb barrier around nuclei is so small that the probability of nuclear fusion is practically equal to zero;
2. distinction between the atomic and nuclear energy scales is so great that the energy, which might be evolved as a result of nuclear fusion, could not be transferred directly to atomic lattice; therefore the energy above should be emitted in the form of streams of γ-quanta, fast neutrons and other particles. However, such streams of sufficient intensity have not been registered.

The answer to the first objection against existence of CF is that at the heart of CF are nuclear processes occurring in environment, and the basic role is played here, apparently, by collective effects caused by interaction of nuclei with particles of environment in which the nuclear reaction takes place. The laws governing the behavior of interacting nuclei in vacuum are inapplicable to the description of CF of nuclei [3]. Nuclear reactions occurring at low energies submit to completely different laws, which can be established only provided that collective effects mentioned above are taken into account. For this reason the standard theory of nuclear reactions in vacuum can by no means refute the existence of CF.

As to the impossibility of transferring the energy between levels of various scales, we can give an example of the phenomenon of sonoluminescence (luminescence of a liquid when a sound wave causing cavitation passes through it) [4], in which the energy transfer from an acoustic wave to electromagnetic field occurs with appreciable probability in spite of the fact that the distinction between energies of acoustic phonons and quanta of light reaches 11 orders.

As early as 10 years ago J. Schwinger, the Nobel winner and the known expert in the field of the theory of elementary particles and quantum electrodynamics, asserted that it is impossible to deny the reality of CF phenomenon [3,4]. Since then the CF phenomenon for nuclei was repeated hundreds times in laboratories all over the world, tens of patents on the ways of energy generation on the basis of CF were registered and enormous number of experimental works were published, which not only confirmed the existence of effect, but also contained its detailed analysis.

The most convincing evidence for the existence of nuclear reactions at low energies seems to give the mass-spectrometric research of reaction products [5] as well as research on biological systems [6]. Detailed study of electric explosion of foil made of especially pure materials in water, described in [5], suggests that at electric discharges transformation of chemical elements occurs. Study of optical spectrum of plasma arising at discharge and of the mass-spectrometric analysis of sediments, which remained after the discharge, shows that in plasma there is an appearance of a significant number of chemical elements which were not presented in the initial material of explosive foil and electrodes and also that the isotope structure of the foil material changes appreciably. The change of experimental conditions, for example, of energy contribution in foil, its mass and dimensions results only in redistribution of intensity of plasma spectral lines, i.e. in the change of statistical weight of chemical elements in plasma, but the composition of chemical elements remains unchanged and it essentially depends on the material of foil. As it is seen from the received results, nuclear reactions, which take place at electric discharge, are not accompanied by the occurrence of a neutrons stream and γ-radiation and proceed at low energies of atomic nuclei.

The research mentioned above as well as many others, carried out by different researchers in different laboratories, **allow to draw a conclusion that existence of nuclear reactions at low energies is reliably established.**

The development of research on CF is hampered by the absence of theory of the phenomenon. As noted by Schwinger [3,4], the situation in CF is closely parallel to that one in high-temperature superconductivity: reality of the last, as a result of careful experimental research, is completely established, though theory of the phenomenon is absent till now.

In [5], to account for the transformation of chemical elements, the hypothesis is put forward that at the electric explosion of foil in the plasma channel magnetic monopoles are formed which may overcome the Coulomb barrier even at insignificant kinetic energy due to the great magnitude of their magnetic charge. The monopole, appearing not far from a nucleus, causes its polarization: those nucleons of the nucleus, which are situated more close to the monopole, experience stronger influence of the last, than the nucleons situated on the opposite side of the nucleus. As a result, a deformation of the nucleus arises (the nucleus is lengthened), which may result in nuclear fission.

Obvious drawback of this mechanism of nuclear reactions is that magnetic monopoles have yet to be found out in nature.

Numerous attempts to construct a consistent theory of CF (see reviews [1,2]) have not been crowned with success. As it was noted above, for the CF to be described, the account of the collective effects may be important caused by interaction of nuclei with environment, in which nuclear reaction takes place. But does it suffice to take into account these effects in order that the theory of the phenomenon is constructed? The analysis of the experiments on transformation of chemical elements at low energies and on the CF of nuclei suggests that the discussed phenomenon does

not fall within the domains of exotic ones: it seems to occur in nature constantly, at every step, in both physical and biological systems. Therefore, it is natural to expect that nuclear reactions at low energies should have a simple physical explanation.

However such explanation, which is not beyond the scope of existing representations, is yet to be found. Does not it mean that we are facing here the situation similar to that which has arisen in physics at the end of the 19th century and which has been figuratively described in the words: on the light sky of physics there are only two small dark clouds – the radiation of absolutely black body and the Michelson experiments? Let us remind that in order for these clouds to be removed, it has taken the revision of physical notions about electromagnetic field as well as about space and time.

As is noted in [8], there is a simple physical mechanism of nuclear transformations at low energies which existence follows from the quantum theory of electron as an open self-organizing system [9]. If two or the greater number of light nuclei appear inside free electron, more precisely, inside the area of basic localization of the particle, because of interaction of nuclei with electrically charged matter of electronic cloud, a force of attraction appears between the nuclei which may result in fusion of nucleus. This means that **cold nuclear reaction represents an intra-electronic process** which character is defined by physical properties of the own field produced by electrically charged matter of electron. The purpose of this paper is more detailed consideration of the mechanism above stemming from the spatial extension of electron.

In section 2 physical ideas are formulated and basic results are schematically presented of quantum theory of electron as an open self-organizing system. The theory outlined is necessary to elucidate the origin of the mechanism resulting in the occurrence of nuclear reactions of fusion and fission at low energies. The essence of the developed approach consists in that **the own field created by electron is treated as a congenital, integral physical property of electron, intrinsically inherent in the particle by the very nature of things and for this reason the own field and self-action are included in the definition of the particle** at the initial stage of formulating the theory. As is seen from the received results, electron represents a quantum (elementary excitation) of the field of electrically charged matter. It is a solition, which physical and geometrical properties are described by the non-linear and non-local dynamical equation similar to the known Dirac equation.

In section 3 the application of quantum model of self-organizing electron to nuclear reactions at low energies is considered. It is noted that because of the presence of simple physical mechanism of nuclear reactions at low energies, which is of a universal character, nuclear reactors represent, in effect, nuclear delayed-action bombs, which from time to time may blow up by virtue of the casual reasons. Hence, though nuclear stations may provide mankind with energy, however atomic engineering is a very dangerous way of energy production. The only acceptable way of solving the energetic problem consists in the use of nuclear reactions at low energies.

Quantum model of electron as an open self-organizing system

The basis for the standard formulation of quantum electrodynamics (QED) is the hypothesis that electron is a structureless point particle which does not experience self-action. This assumption results in serious difficulties – the divergences of mass and charge of electron and the impossibility to explain stability of the particle (see, for example, [10-12]).

The difficulties mentioned above are very serious. According to Dirac, **the difficulties of QED "in view of their fundamental character can be eliminated only by radical change of the foundations of the theory, probably, radical to the same extent as transition from the Bohr orbits theory to modern quantum mechanics"** ([13], p. 403). "Correct conclusion", Dirac emphasizes, "is that the basic equations are incorrect. They should be changed in such a way that divergences do not appear at all".

The main reason of occurrence of difficulties is the assumption that electron is a point-like particle. Therefore, abandonment of this hypothesis is inevitable. As an analysis of the problem shows, the key to constructing a consistent quantum theory of electromagnetism lies in taking account of the Coulomb self-action of electron, i.e. the back action of the own field created by charged particle in environmental space upon the same particle. In the special case that the particle is at rest in an inertial reference frame, own field of the particle turns into static Coulomb field.

E.Schrödinger who suggested the historically first physical interpretation of quantum mechanics put one of the boldest ideas concerning the problem of electron forward. According to Schrödinger's hypothesis, the quantity $e\left|\Psi(\boldsymbol{r})\right|^2$ (e and $\Psi(\boldsymbol{r})$ are charge and wave function of electron, respectively) is the density of spatial distribution of electron's charge and, consequently, **the linear sizes of electron are the same as those of atom** [14,15]. However, they did not succeed in substantiating the interpretation and, for this reason, it was rejected by the majority of physicists [16].

An important step to the correct understanding of the physical nature of electron was made by A. Barut and by his collaborators [16-18] who formulated and developed quantum theory of electromagnetic processes on the basis of self-energy picture (the Self-Field QED). Using expression for the total own energy of electron, they managed to calculate the Lamb shift and other radiative corrections and to show that radiative phenomena may be described in terms of the

action function, without using the second quantization method. As is pointed out by Barut [17], "the correct quantum equation of motion for radiating electron is not the Dirac or the Schrödinger equation for bare electron, but an equation containing an additional non-linear self-energy term".

New lines of approach to the problem of electron are offered in [9, 19-24]. The formulation of electrodynamics is considered which represents a synthesis of standard quantum electrodynamics and ideas of the theory of self-organization [25]. The physical mechanism of self-organization of electron consists in self-action. Taking into account the self-action means that electron is treated as a feedback system.

Let us outline schematically the results of the formulation of quantum electrodynamics in which electron is an open self-organizing system.

Editor's note: The authors develop mathematics by using Lagrangian functions, 7 equations. You can contact the authors for more information about.

Thus, the negative result is received: we have tried to take into account self-action of electron in a natural way by supplementing the Lagrangian function with the self-energy term, but we came to an equation that has no reasonable physical solutions at all. This result seems to mean that the standard theoretical scheme reaches here the limits of its applicability and so, remaining in its framework, it is impossible to solve the problem of electron and elucidate the physical nature of electromagnetic interaction.

Essentially new point, which is introduced in [9] into quantum mechanics consists **in the replacement of the model of isolated system described by harmonic oscillator with the model of open system**. Let us advance the arguments indicating the inevitability of using the model of open system as a basis of the description of interaction between microparticles [26].

Note, first of all, that quantum particle theory based on the use of the models of isolated system is, strictly speaking, physically meaningless. Really, any observation conducted on a system represents a process of interaction of the system with the means of observation. But in case of microparticles (quantum particles) this interaction is not weak and consequently it is inadmissible to neglect it, i.e. microparticles should be necessarily considered as essentially non-isolated systems.

A starting point of the standard formulation of quantum mechanics is the physical idea that interaction between physical fields can be reduced to collision of the particles corresponding to these fields, the particles before and after collision being considered as free ones. According to these representations, quantum mechanics is based on the notions of "bare", non-interacting particles, with the interaction between them being considered as an additional factor which can only insignificantly alter the physical properties of non-interacting particles. However, such an approach to interaction between physical fields is obviously of an idealized character because particles constantly interact "with vacuum as with some kind of physical medium in which the particles move" [27]. Interaction of particles with vacuum fluctuations is not small and it cannot be removed.

It is well also to bear in mind that the necessary intermediary at studying micro-objects are the means of observations (the devices) with the classical field corresponding to them which should be taken into account in consistent quantum theory [28]. Inclusion in theoretical scheme of arbitrarily weak classical external field results in occurrence of non-zero width Γ of energy levels of "dressed" particles. The basic impossibility to isolate a real particle from vacuum fluctuations of the field and from the classical sources connected to the means of observation is indicative, thus, of necessity to take into account the non-zero width of energy levels of real particles [26].

The use of the harmonic oscillator model, when describing the interaction of electromagnetic radiation with substance, seems to be the main source of serious difficulties of the standard formulation of quantum theory, as such an approach means apparent neglect of those physical processes which, proceeding constantly, are responsible for inseparable coupling of real physical system to surrounding medium. Introducing artificial notion about switching on and switching out of interaction of oscillator with radiation field, we are able to calculate within the framework of existing theory the width of energy levels of oscillator, but we cannot assert with certainty that such an approach results in correct description of interaction.

From the reasoning given above it is seen that they are the models with energy levels of non-zero width that should form the basis for the description of interaction of radiation with substance. It is necessary to formulate such a quantum theory, which would take into account the energy levels of non-zero width Γ. The case in point is that one should introduce an infinitesimal damping Γ into the initial set of equations describing interaction of charged particles with electromagnetic field. Such an approach means the violation in infinitesimal of homogeneity of physical system relative to translations in time. Necessity of violating the homogeneity of time follows from that fact that in the usual approach (with $\Gamma = 0$) the states of the system of interacting fields have degeneracy of infinitely large multiplicity in relation to time translations. According to the fundamental Bogoliubov's concept of quasi-averages [29], when describing the behavior of degenerate systems, one should include into Hamiltonian an infinitesimal term removing degeneracy. In the theory presented here degeneracy of states of quantized fields relative translations in time is removed by introducing the infinitesimal damping Γ into Lagrangian. Thereby the degeneracy under study is removed already in the initial, zero-order approximation, which is of

fundamental importance for the approach based on perturbation theory.

Formulation of the physical idea that quantum friction arises at the very elementary level - at the level of one particle is given in monograph [26]. Impossibility to isolate real particle from the surrounding world is that property which should be taken into account already in the one-particle theory (for each kind of particles), even before switching on the interaction with other particles. Model of the particle as an open system ($\Gamma \neq 0$) is attractive owing to the fact that from the very beginning the degeneracy of states relative to time translations is absent in it, the degeneracy, which is removed in standard approach by taking into account the interaction of particle with vacuum field fluctuations and classical fields. The basis for the developed formulation is the fundamental concept of quasi-averages supplemented with the requirement that the equations of motion of the particle with $\Gamma \neq 0$ follow from the action principle. It should be emphasized that the non-zero damping Γ is introduced into electrodynamics with the aim to establish the structure of the Lagrangian function, which takes into account the property of openness of physical system. After establishing the structure, the limiting transition $\Gamma \to 0$ is fulfilled.

In our opinion, the development of quantum theory will be inevitably connected with the use of models of open system; as such models reflect more completely the physical essence of interrelations in the real world. It is necessary, thus, to define more exactly the concept of openness of physical system, which, on the one hand, would describe real system accurately enough and, on the other, would be simple enough to describe the particular physical processes.

As open system has the richer physical contents in comparison with isolated system, some essentially new mathematical ideas are needed for its description. First of all, it is necessary to increase the number of independent dynamical variables describing the particle as open system. In papers [9,19-24], as a basis for the description of self-acting electron, the simplest model of open system is used which can be described by the Morse-Feshbach-Bateman Lagrangian function [30,31] and which was successfully used for the description of dispersive medium (the review of articles, in which applications of the model of open system to electrodynamics of dispersive medium are considered, is given in monograph [26]). In this model the number of dynamical variables is doubled as compared with the isolated system, namely, to each dynamical variable of "bare" particle, Ψ, there correspond two dynamical variables, which are denoted by Ψ and $\tilde{\Psi}$. These quantities are considered as components of the wave function describing the quantum state of self-acting particle. One of them, say, Ψ, corresponds in a sense to the particle alone (to the "bare" particle) and the other, $\tilde{\Psi}$, to the surrounding medium, in which the particle moves.

Editor's note: You can contact the authors directly for more information (8-16 equations).

Equation (16) coincides in its appearance with the usual Dirac equation for charged particle in an external field described by 4-potential . However, in reality, it differs essentially from Dirac's equation. The distinction consists in that **equation** (16) **is non-linear and non-local**, with the non-locality being of both spatial and time character. Potential ($A_{||}$) and vortex ($A_{\perp}$) components of the 4-potential, entering equation (16), differ from each other by their physical nature: the former describes the Coulomb field and is expressed quadratically in terms of the wave function components of electron, and the latter describes transverse electromagnetic waves and is expressed in terms of vortex electromagnetic field. As a detailed analysis shows, solutions to the basic dynamical equation describe the clots of self-acting electrically charged matter, localized in space, i.e. the particle is a soliton.

The internal energy spectrum of electron is discrete with an indefinitely large number of levels, and to each value of internal energy E_k (k is the set of quantum numbers) there correspond certain linear dimensions and geometrical form of the region of localization of electron's charge. Dimensions and the number of extreme of wave function increase with increasing the value of energy E_k. The distribution of electric charge of atomic electron in the ground state consists of the range of basic localization with the linear dimensions of the order of Bohr radius a_0 ($a_0 \sim 10^{-10} m$) and of the tail stretching up to infinity. It is essential that because of non-linearity of the dynamical equation of electron, wave function does not obey the superposition principle. By virtue of this, electron acquires the properties of absolutely rigid body: the perturbation acting on electron at an instant of time in the range of basic localization becomes known at the next instant $t + 0$ at any distance from the particle.

In Fig. 1 the results of calculation are represented schematically, carried out on the basis of equation (13), of the distribution of electric charge in atomic and free electrons in the ground (a) and first excited (b) states.

According to [9,19], the atom represents a system of nuclear and electronic solitons interacting with each other, the internal energy spectrum of the hydrogen atom, due to electromagnetic interaction, being of a zoned character. The occurrence of zoned structure of energy spectrum of hydrogen atom is explained as follows. Free nucleus, because of existence of Coulomb self-action, has a discrete internal energy spectrum. As the interaction of nucleus with electron is small in comparison with the energy of Coulomb self-action of the nucleus, it can be taken into account by perturbation theory. From here it follows at once that each energy

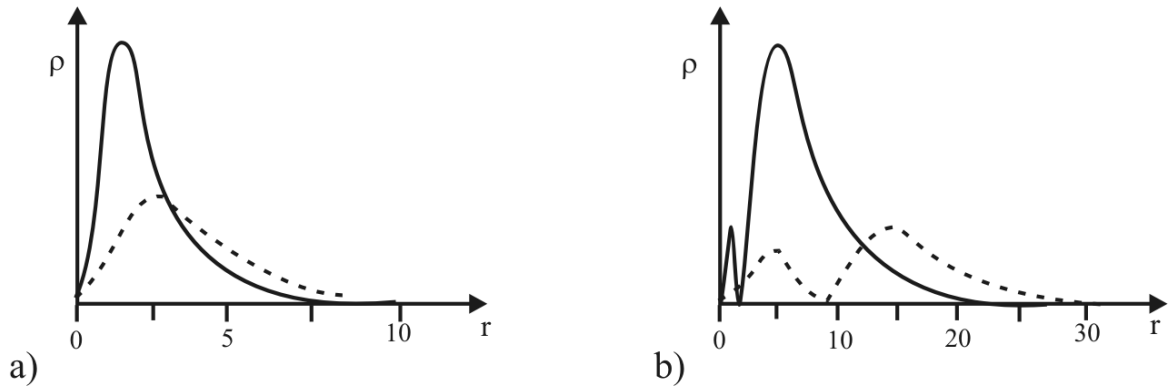

Fig. 1. Density of electric charge (ρ) of electron in the ground state (a) and in the first excited state (b): the continuous lines correspond to electron in the hydrogen atom, and the dotted ones to free electron, r is the distance from the center of mass of electron measured in Bohr radii.

level of free nucleus is split in a zone. There are indefinitely many zones (Balmer's replicas) and in each of them there are indefinitely many energy levels. The lowest zone coincides with the usual Balmer spectrum.

Physical mechanism of nuclear reactions at low energies

The quantum theory presented above schematically of electron as an open self-organizing system is indicative of the existence of the following mechanism of nuclear reactions at low energies [8].

If there occur in the region of basic localization of free electron, which linear sizes in the ground state of the particle are several times as large as those for hydrogen atom (see Fig. 1), two or the greater number of nuclei, each of them attracts on itself the adjoining areas of electronic cloud, resulting in compression of the electronic cloud as a whole. As a result, there appears automatically an attraction of the nuclei, which proved to be "inside" electron, on each other (see Fig. 2).

Calculation shows that the Coulomb barrier around nuclei is deformed, its height decreases and the probability of penetration through the barrier accordingly increases due to tunnel transition. Under certain conditions this process may result in fusion of nuclei. Obviously, the process in question can occur only at small energies of translational motion of the centers of mass of electron and nuclei: nuclei should be "inside" electron long enough for them to have time to come nearer to each other as a result of electron-nuclear interaction. This mechanism of nuclear fusion is of a universal character. In order for it to be realized, it is necessary to have only a stream of free electrons intensive enough, i.e. heavy electric current, and as long as sufficiently great number of free nuclei.

If heavy nuclei appear "inside" free electron, owing to their interaction with the electronic cloud there occurs polarization of nuclei. Because the own field of electron interacts with protons more strongly than with neutrons, nuclei are deformed (become extended), and this process may result in the decomposition of nuclei to fragments (in nuclear fission).

As is noted in [7], the official version of the reasons for Chernobyl accident contains serious contradictions, a number of facts concerning the accident has no convincing explanations, and this circumstance forces to search for the true reasons for the happening, since

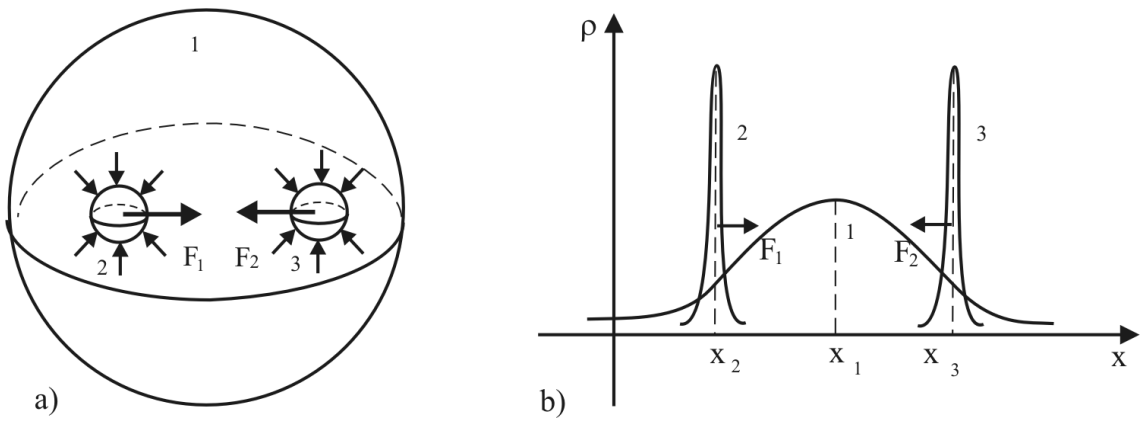

Fig. 2.
The schematic image of interaction of nuclei with electronic cloud: (a) 1 is the region of basic localization of electron, 2 and 3 are nuclei, F_1 and F_2 are the attractive forces between nuclei, which appear at the expense of electronic cloud compression induced by Coulomb forces; (b) ρ is the charge density, 1 is electronic soliton, 2 and 3 are nuclear solitons, X_n (n=1, 2,3) are coordinates of the centers of mass of particles.

"not having understood the mechanism of the one tragedy, we sooner or later shall become witnesses of the other". The authors hypothesize that the reason of the accident was penetration into the nuclear reactor of magnetic monopoles, which have caused the decay of nuclei ^{238}U, and this has resulted in production of delayed neutrons, growth of power output of the reactor and explosion. As an argument in favor of the assumption, the fact is presented that nucleus ^{238}U are disintegrated under the action of "strange" radiation appearing at explosion of foil.

In the opinion of the authors of [5,7], "strange" radiation is created by those magnetic monopoles, which form bound states with nuclei of atoms. These compound particles give the abnormally wide tracks similar to those of a creeping caterpillar, and also the tracks of complicated shape reminiscent of spirals and gratings. Character of tracks changes when imposing magnetic field, which, as the authors believe, is an argument in favor of the assumption above. There are also some special tracks very similar to scratches and ink spots. "Strange" radiation is of spherical form, it resembles a ball lightning, and its duration is more than ten times as great as that of the current pulse arising at electric discharge. With the course of time the luminous sphere (the ball-like plasma formation) is dividing into many small "balls".

It is our opinion that "strange" radiation is caused by free electrons in excited state arising in the area of electric discharge. According to [9, 19], linear sizes of the region of basic localization of such electrons can make many tens of sizes of atom. The heavy nucleus, for example, the nucleus ^{238}U, appearing inside the electronic cloud, is inevitably deformed because of interaction of protons with adjoining layers in the distribution of electric charge of electron, and this deformation can cause nuclear fission. If two or the greater number of light nuclei appears "inside" electron, then attractive forces arise between nuclei, which may result in fusion reaction. When electric discharge is strong enough, the areas of basic localization of some electrons can overlap, and if a nucleus lands in the area of overlap, because of Coulomb attraction of nucleus on the adjoining layers of electronic clouds, a bound state may be formed, of two electrons and the nucleus, characterized by the relative stability and significant spatial extension.

Obviously, if the concentration of free electrons is great enough, there may be formed some relatively stable bunch of plasma consisting of great number of free electrons and nuclei, which in virtue of chaotic movement of nuclei and because of the absence of preferred directions should have approximately spherical form. Let us note that atomic electrons, belonging to additional energy zones of atom (Balmer's replicas associated with nuclear self-action, see Section 2) can contribute to "strange" radiation.

As is seen from above, to account for the reasons for Chernobyl accident, there is no need to involve magnetic monopoles. The scenario of development of events during the accident, described in [7], seems to be quite plausible if only to understand by initiators of nuclear fission not hypothetical monopoles but free electrons, which powerful pulse might arise as a result of electric discharge in the region of turbo-generators.

The existence of simple physical mechanism of nuclear reactions at low energies, indicated in this paper, implies that nuclear reactors are, in effect, nuclear delayed-action bombs, which will blow up from time to time. Explosion of nuclear reactor may take place because of casual short circuit at an electric subcircuit, owing to which there appears an intensive stream of free electrons. This stream, having got for any reasons in nuclear reactor, may initiate explosion of the reactor. It follows from here that though nuclear stations may provide mankind with cheep energy, atomic energetics represents a very dangerous way of producing energy (as well as the energetics using controlled thermonuclear fusion). The only acceptable way of resolving the energetic problem consists in the use of nuclear reactions at low energies.

According to the results obtained, nuclear reactions at low temperatures occur "inside" electron under the action of own field of particle. Hence, to elucidate physical mechanism of CF, it is necessary to study in detail intra-electronic processes and physical properties of own fields of particles. Note that the own field, by its physical properties, essentially differs from the field of electromagnetic waves: this is the field of standing waves of matter, it is of purely classical character and may not be reduced to the set of photons. The own field of charged particle plays in nature a special role, consisting in that it transforms environmental space into the physical environment (physical vacuum) with the properties of absolutely rigid body [32].

As it was repeatedly noted in the literature [1,2], experiments on CF are badly reproduced, and this fact gives rise to doubt the very existence of the phenomenon. Bad reproducibility of results seems to be explained by the fact that CF depends upon great number of parameters: upon electric current density, concentration of free nucleus, concentration of impurities and dislocations in samples, sizes of samples etc. In order to obtain reproducibility of results, it is necessary that all these parameters, describing the environment in which nuclear reactions occur, be the same in various experiments, but to achieve this as a difficult task.

In conclusion we shall dwell upon the problem of linear dimensions of electron, which is of special interest in connection with the mechanism of nuclear reactions indicated here. The inference that the dimensions of electron in the ground state of atom are of the order of Bohr radius, i.e. of the order of atomic dimensions, following from dimension considerations [9,19] and confirmed by quantum model of electron, seems completely unexpected. At first sight, it is in conflict with both the theory of quarks and experimental data

on scattering of electrons. According to quark models, the radius of electron corresponding to its quark structure makes up the quantity of the order of 10^{-22} m [33]. It is necessary to emphasize, however, that the above-mentioned magnitude of linear dimensions of electron refers to the internal structure induced by Coulomb field. The last is long-distance and consequently the linear dimensions of internal structures produced by it (i.e. spatial inhomogeneities in the distribution of electric charge in various quantum states) should considerably exceed the dimensions of quark structures connected with electron. There seems to exist a hierarchy of internal structures of particle produced by Coulomb forces, nuclear forces, inter-quark interactions etc. characterized by the smaller and smaller linear sizes.

As to the experiments on scattering of high energy electrons, according to which the internal structure of electron is not manifested up to distances of the order of $10^{-16} \div 10^{-17}$ m, two arguments, at least, can be adduced in favor of that there is no contradiction here with the experiment. Firstly, in experiments on scattering, investigators were trying to register the details of internal structure of electron within intervals much smaller than Bohr radius, which is why it is not surprising that results of experiments proved to be negative: at high energies electrons behave like point particles, their internal structure has no time to be manifested. Secondly, the results of experiments were analyzed from the point of view of standard representations about electron, which refer to a point particle, but are obviously inapplicable to real, self-acting electron. According to the predictions of quantum theory of electron as an open self-organizing system, real electron is a special object - soliton, i.e. such a cloud of electrically charged substance which, when interacting with other particles, tends to keep its sizes and geometrical form.

At present there is as yet no scattering theory of this kind of particles and for this reason it is impossible to predict with certainty how can the internal structure of electron be manifested in experiments on scattering.

References

1. Storms E. A *Critical Review of the "Cold Fusion" Effect.* J. Sci. Explor., **10**, #2, p.185 (1996). See also: http://www.jse.com/storms/1.html
2. Storms E. *Cold Fusion Revisited.* Infinite Energy, 4, #21, p.16(1998).
3. Schwinger J. *Cold Fusion: A Hypothesis.* Z. Nat. Forsch. A 45, 756 (1990); *Cold Fusion: A Brief History of Mine.* Infinite Energy, 1, #1, p.10 (1995).
4. Schwinger J. *Nuclear Energy in an Atomic Lattice I.* Z. Phys. D15, 221 (1990); Prog. Theor. Phys. 85, 711 (1991); *Energy Transfer in Cold Fusion and Sonoluminescence.* http://www.geocities.com/CapeCanaveral/Lab/4520/theory.htm
5. Urutskoev L. I., Liksonov V. I., Tsinoev V. G. *Experimental Detection of "Strange" Radiation and Transformation of Chemical Elements.* Applied Physics, M., 2000, p.83-100. Urutskoev L.I., Liksonov V.I., Tsinoev V.G. *Observation of Transformation of Chemical Elements During Electric Discharge* http://arxiv.org/ftp/physics/papers/0101/0101089.pdf
6. Vysotskii, V. I., Kornilova A. A., and Samoylenko I. I. *Experimental Discovery of Phenomenon of Low-Energy Nuclear Transformation of Isotopes (Mn55=Fe57) in Growing Biological Cultures.* The Sixth International Conference on Cold Fusion, Progress in New Hydrogen Energy (Ed. M. Okamoto) Oct. 13-18, 1996, Hokkaido, Japan, Vol. 2, p. 687; Infinite Energy, 2, #10, p.63 (1996).
7. Urutskoev L.I., Geras'ko V.N. *On the Possible Mechanism of Chernobyl Accident.* http://www.recom.hotmail.ru/CHER_INC_1.doc
8. Oleinik V.P. *To Electronic Technologies of the 21st Century: on the Threshold of Revolution in Communication Systems. Collection of Reports*, Millenium 2002, International Conference "To Innovations in the 21st Century", Odessa, April 13, 2002, p.268-273.
9. Oleinik V.P. *The Problem of Electron and Superluminal Signals.* (Contemporary Fundamental Physics) (Nova Science Publishers, Inc., Huntington, New York, 2001).
10. Berestetsky V.B., Lifshits E.M., Pitaevsky L.P. *Relativistic Quantum Theory*, part 1. (Moscow, Nauka, 1968).
11. Medvedev B.V. *Foundations of Theoretical Physics.* (Moscow, Nauka, 1977).
12. Dirac P.A.M. *Relativistic Wave Equation of Electron.* Progress in Phys. Sciences, 129, #4, p.681–691 (1979).
13. Dirac P.A.M. *The Principles of Quantum Mechanics.* (Moscow, Nauka, 1979).
14. Schrödinger E. *Quantisierung als Eigenwertproblem.* Vierte Mitteilung. Ann. der Physik, Bd. 81, S.109–139 (1926).
15. Schrodinger E. *Selected Works on Quantum Mechanics*, Edited by Polak L.S. (Moscow, Nauka, 1976).
16. Barut A.O. *Schrodinger's Interpretation of as a Continuous Charge Distribution.* Ann. der Physik, Bd. 45, S.31-36 (1988).
17. Barut A.O., van Huele J.F. *Quantum Electrodynamics Based on Self-Energy: Lamb Shift and Spontaneous Emission without Field Quantization.* Phys.Rev., A32, #6, p.3187–3195 (1985).
18. Barut A.O., Dowling J.P. *Quantum Electrodynamics Based on Self-Energy*: Spontaneous Emission in Cavities. Phys.Rev., A36, #2, p.649–654 (1987).
19. Arepjev Yu.D., Buts A.Yu., Oleinik V.P. *To the Problem of Internal Structure of Electrically Charged Particles. Spectra of Internal Energy and Charge Distribution for the Free Electron and Hydrogen Atom.* Preprint of the Inst. of Semiconductors of Ukraine, N8-91 (Kiev, 1991) 36 p.(in Russ.).
20. Oleinik V.P. *Quantum Electrodynamics Describing the Internal Structure of Electron.* Quantum Electronics. #44, p.51-59 (1993) (in Russ.).
21. Oleinik V.P. T*o the Theory of the Internal Structure of Electron. Second Quantization and Energy Relations.* Quantum Electronics. #45, p.57-79 (1993) (in Russ.).
22. Oleinik V.P. *Quantum Theory of Self-Organizing Electrically Charged Particles. Soliton Model of Electron.* Proceedings of the NATO-ASI "Electron Theory and Quantum Electrodynamics. 100 Years Later." (Plenum Press, N.-Y., London, Washington, D.C., Boston, 1997), p.261-278.
23. Oleinik V.P. Nonlinear *Quantum Dynamical Equation for the Self-Acting Electron.* J. Nonlinear Math. Phys. 4, #1-2, p.180-189 (1997).
24. Oleinik V.P. *Quantum Equation for the Self-Organizing Electron.* Photon and Poincare Group (Nova Science Publishers, New York, Inc., 1999), p.188-200.
25. Nicolis G., Prigogine I. *Self-Organization in Non-Equilibrium Systems* (Wiley-Interscience, 1977).
26. Oleinik V.P., Belousov I.V. *The Problems of Quantum Electrodynamics of Vacuum, Dispersive Media and Intense Fields.* (Kishinev, Shtiintsa, 1983).
27. Bogoliubov N.N., Shirkov D.V. *Introduction to the Theory of Quantized Fields.* (Moscow, Nauka, 1976).
28. Bohr N. *Selected Scientific Works*, V.2. (Moscow, Nauka, 1971).
29. Bogoliubov N.N. *Quasi-Averages in the Problems of Statistical Mechanics.* In the Book: Statistical Physics and Quantum Field Theory. (Moscow, Nauka, 1973).
30. Morse P.M., Feshbach H. *Methods of Theoretical Physics*, V.1. (Moscow, Foreign Literature, 1958).
31. Dakker H. *Classical and Quantum Mechanics of the Damped Harmonic Oscillator.* Phys. Reports, 80, # 1, p.1-112 (1981).
32. Oleinik V.P. *Superluminal Signals, the Physical Properties of Time, and the Principle of Self-Organization.* Physics of Consciences and Life, Cosmology and Astrophysics, #1, p.68-76 (2001).
33. Dehmelt H. *Experiments with an Isolated Subatomic Particle at Rest.* Progress in Phys. Sciences, 160, #12, p.129–139 (1990).

The Evolution of Lifter Technology

Tim Ventura

tventura6@attbi.com

INTRODUCTION

Readers of the electric-spacecraft journal might know a little about the Lifter technology popularized recently be Jean-Louis Naudin, but they probably don't know the whole story. In the short amount of time that has transpired since the publication of that article, this technology has both literally and figuratively taken off – going from a "proof-of-concept" prototype by Naudin to an international group of researchers investigating how to give the lifter higher-performance and greater efficiency. With the first commercial products now on the horizon, if you haven't taken the time to read up on lifter technology, this is the perfect time to do so. . .
To give you a complete up-to-date overview of where this technology is, where it is going, and what I think it is capable of, let me start with the basics – an overview of how I became involved with Electrogravity research and what eventually led me to become involved with lifter technology.

MY BACKGROUND

I started college at 16 years old, back in 1992 – at the same time, I purchased a kit containing "hoverboard plans" from Hovertech, Inc. The moment that I received that $20 white-manilla envelope in October 1992 was the moment that I became involved with what has now been nearly 10 years of electrogravity research.

I worked with Bill Butler – the president and chief-scientist of Hovertech – on a variety of different antigravity, Electrogravity, and levitation ideas from approximately 1992 through 1996. While putting in my college time, I was also taking distinct advantage of the enormous college library at Western Washington University to read up on everything that might possibly relate to Electrogravity. I read books on standard electronics and physics theory alongside with books by the masters of this science, such as TT Brown and Nikola Tesla.

Bill and I played with several different ideas – many of them only peripherally related to Electrogravity. For instance, I published a manuscript initially in 1996 describing Tesla's theory on how to reliably produce Ball-Lightning using a standard Tesla coil – the information courtesy of WWU's excellent library. Bill also assisted me with obtaining video footage of a Searl-effect conference that he attended in Denver in the early 90's – this footage was an excellent overview of Searl's design and construction concepts for what he believes is the next major technological step in aviation and space travel.

Bill and I eventually found different paths, and in some ways drifted apart. Bill moved into Geomagnetic levitation research and started intense investigation on the patents of How Wachspress and the magnetic dipole levitator. I went to more traditional technologies – eventually becoming a UNIX system administrator for AT&T Wireless.

I hadn't heard from Bill Butler in about 6 months when he sent me a short email containing the words "hey, check this out" – and a link to Jean-Louis Naudin's "Lifter Experiments" home-page. I visited the site, watched all of the video clips, and then watched them again. This was the technology that I had been waiting for!

LIFTER TECHNOLOGY

I can say without a doubt that the lifter technology is completely revolutionary, but you might not realize how profoundly revolutionary it is until you've stopped to think about it for a bit. What is it about the lifter that makes it so unique, especially when so many inventions claim to produce more and better electromagnetic thrust? The answer is simple – the lifter works repeatedly.

Jean-Louis Naudin started a figurative bonfire when he decided to replicate a "proof-of-concept" experiment by a small Huntsville, AL aerospace contracting firm. The lifter initially came into being in the mind of Jeff Cameron – the chief scientist of Transdimensional Technologies – in the 1970's from experiments conducted with high-power military and research-grade lasers. A device in the lasers called a "pre-ionizer" was used to apply a high-voltage to the lasing-medium to facilitate better performance. Repeated operation of the pre-ionizer had a common side-effect of horribly twisting the wire and foil combination out of shape, which required a decent amount of work to repair.

Jeff Cameron realized that the torsional effect on the pre-ionizer was a side-effect of some unknown force acting on the pre-ionizer apparatus, and he began a long-term investigation into what was causing the apparatus to deform. His eventual results indicated that a force in the foil collector in the pre-ionizer was causing a net-thrust in the entire pre-ionizer apparatus that was making it twist and move on its mounts within the laser – the lifter came to him later as a three-dimensional device to demonstrate this force.

Naudin's genius became readily apparent not through a giant breakthrough in technology, but rather in a more subtle fashion – he replicated the lifter experiments of Transdimensional Technologies and published videos, articles, and complete construction plans on his website to allow others to do the same. In a manner similar to the open-source software movement, Naudin had taken an incredible scientific find that might have otherwise been overlooked and done and incredibly charitable and intelligent thing – he gave it away for others to play with. By following Naudin's instructions, inventors all over the globe began to slowly replicate the

Transdimensional Technologies experiments and thereby validate the proof of concept that Jeff Cameron had created to show that his "mystery force" was real after all. Naudin of course took advantage of these replications of the experiment by showcasing them on his own website – which in turn lends additional credibility to his research.

As far as technology goes, the lifter demonstrates that science and engineering have more than their share of humorous irony. For the years that I researched Electrogravity and antigravity claims, all of the devices that I had seen required something "magic" to make them work. For instance, Bob Lazar's UFO-claims could have been reverse-engineered except that they require 'element 115' to make them work – an element chemically related to Bismuth that is theorized to potentially have electrogravitic properties. I will come back to the possible electro-gravitational properties of Bismuth in a bit, as it turns out that this element may in fact provide some use for future lifter technology.

The Searl-effect disc is an even better example of the "magic" usually involved with building a working Electrogravity device. Searl's ideas seem valid enough, but although he supposedly demonstrated several working prototypes in the 1950's, he is currently pursuing millions of dollars in research funding in to replicate those experiments in a modern-day setting.

The irony involving lifter technology is that while inventors all over the world have been searching for the perfect electro-gravitational device for decades, the possible working proof of concept for many of these theories has been sitting in front of us the whole time – the lifter costs less than $10 in parts to build, and none of them are magic – in fact, for my experiments, all of them were at stores within 2 blocks of my house — balsa wood from the craft store, aluminum foil from the supermarket, 30-gauge magnet wire from the local Radio Shack, and an old computer monitor for the high-voltage power-supply.

LIFTER PHYSICS

Whether or not Jeff Cameron knew it at the time he constructed his lifter prototype, what he was actually building was a 3 dimensional representation of a drawing on a patent application by TT Brown in the 1950's. In the patent application, the drawing shows a positively charged wire suspended over a grounded foil body which was meant to demonstrate the most basic Biefeld-Brown effect generator. While Brown's drawing is a little different than Jeff's design, the resemblance is uncanny enough to indicate that both of these men had the same basic force in mind.

TT Brown's patent indicates that this Biefeld-Brown effect generator works due to a gradient electrostatic-field between the wire and the foil – in essence, these two elements compose a low-efficiency, high-voltage air-gap capacitor in which the difference in geometries between the two capacitive elements generates a net-directional force from the larger element towards the smaller element. Jeff Cameron seems to have a practical axiom that goes along with this scientific philosophy, which is that there must be both a leakage current and a capacitance between the wire and the foil in order for the lifter to function.

Conventional physics says that two capacitor elements of different sizes will not generate a net-directional force, so what gives? This is actually the thinking that convinced me to abandon my research into Biefeld-Brown effect technology in 1996 – physics says it doesn't work. What the books say will happen is that since the wire can only maintain a lower-capacitance than the foil, the overall capacitance between the two elements will be reduced to be equivalent to that on the smallest element (or plate) in the capacitor. This, of course, assumes a 2-element series-wired capacitor, such as the lifter.

I can give you the conventional physics answer to this small riddle by simply saying that the lifter uses a manifestation of ion-wind. This would state that the electrons crossing the air-gap cause a breeze that causes thrust – since the breeze would be traveling down from the wire to the foil, the thrust would be up, as demonstrated in testing. In the ion-wind explanation, the electrons are emitted from small-diameter of the positively charged wire in such great abundance that they move a significant airflow down to the foil where they are absorbed and transported electrically back to the HV power-supply's electrical ground.

Conventional physics would seem to have the theoretical answer to why the lifter causes lift, but in the experimental setting, which is what we now have an abundance of thanks to Jean-Louis Naudin, the conventional physics explanation doesn't suffice. Experimentally, there are several deviations from the ion-wind explanation that seem to invalidate it. For instance, if you completely contain the lifter in a plastic-enclosure, it will still generate lift – this would not be the case if a breeze was responsible for lifting the device. How could it be, if the breeze is limited to the inside of an enclosure which itself is levitating?

A more compelling proof that Biefeld-Brown is something other than ion-wind comes from Purdue University, where the lifter experiment was replicated inside a vacuum-enclosure with positive results. While ion-propulsion can work in space, it usually assumes that there is argon, krypton, or other noble gas to be used as the propellant – the vacuum enclosure showed that with no gas available for transport the lifter showed a moderate improvement in performance.

The vacuum enclosure tests are definitely compelling evidence that something else is going on other than ion-wind – at least compelling enough for NASA to file patent number 6,317,310 – "Apparatus and Method for Generating Thrust using a Two Dimensional, Asymmetrical Capacitor Module". The NASA patent description – which can be accessed from Naudin's lifter

website – is as vague is it is compelling in that NASA is basically requesting a patent on any technology that generates force using two geometrically dissimilar capacitive plates. Disregarding the fact that this patent was issued nearly 50 years after TT Brown's patent using nearly identical descriptions and pictures, and also disregarding the fact that NASA also doesn't understand why the lifter generates thrust, it seems apparent the this phenomena is gaining credibility in engineering circles while physicists seemingly continue to deny that anything is going on.

THE EVOLUTION OF LIFTER TECHNOLOGY

Every good movie always has a sequel, and in technology, if at first a major government agency 'liberates' your idea, it may seem that a sequel is in order. In the case of the lifter, it would appear that the NASA patent would cover this technology to at least some degree – at least until someone overturns this patent under the prior-art rule – which means that the next generation has to be considerably more advanced to escape having the research and development be forfeit to the government.

The pursuit of more advanced versions of the lifter technology is currently underway by several independent inventors, as well as Transdimensional Technologies themselves. Most of the private research by inventors has delved into improving the current lifter design to produce a greater force output and utilize less power to do so. Because the lifter is so simplistic in design, many of these enhancements have been of a very basic nature.

Jean-Louis Naudin was the first independent inventor to do serious work with improving the technology behind the lifter – and even so, the majority of his work has utilized similar materials in more complex arrangements. Naudin has demonstrated dramatically increased lifting forces by building a "lifter inside a lifter" for demonstration purposes. Naudin has also done a great deal of work in taking breaking up the concept of the single triangular lifter into a parallel series of lifting cells – which means that these cells, working in parallel, can contributed to greater stability and higher force output than any single lifting element.

Saviour – an independent inventor working with Jean-Louis Naudin – has done some of the most interesting improvements on lifter design since those by Naudin himself. Saviour's concerns have not focused around the "bigger is better" philosophy that many inventors have stuck by – he has done several experiments to determine the radiation output, remote-controlled applications development, and materials analysis and improvement on the lifter that others have not had the time or expertise to conduct.

A recent experiment by Saviour demonstrates just how this gentleman's foresight is helping other experimenters – Saviour substituted nichrome heating wire for the common lightweight wire used for the emitter, and demonstrated that the lifting force greatly increased when a higher potential 12-volt charge was used to heat the emitter wire in conjunction with the standard high-voltage charge coming off it.

Transdimensional Technologies – the developers of the initial lifter design – are taking the approach to optimizing lifter performance to another level. They are currently not-so-secretly working on a 2nd generation lifter, which will consist of a 1-piece layered material to replace the current wire and foil design.

The layered material approach to the lifter is an idea that Jeff Cameron may or may not have had after some lengthy discussions with Travis Taylor – the man responsible for testing some anomalous materials known as "Art's Parts".

Art's Parts were some pieces of material sent by an unknown person to the Art Bell radio talk-show with a note stating that the they were pieces of UFO wreckage taken from the often-cited "Roswell crash" in 1947. Whether or not the pieces of material actually came from that crash is unknown, but Art Bell did the honorable thing by sending them to an acquaintance in US Army research named Travis Taylor for a professional scientific investigation.

Taylor, who apparently tested the materials after-hours in a world-class research lab to avoid potential classification by his superiors, used an electron-microscope to determine that the layered materials were actually pieces of metal – containing several hundred microscopically thin layers of magnesium and bismuth. Taylor also tested the layered-metal with a high-voltage apparatus, which seemed to indicate that when a voltage was applied to the material, the layered metal would move – and in some cases levitate.

Taylor reported his findings to Art Bell and sent video clips of his high-voltage experiments, which eventually made it back to a permanent home on the Art Bell radio show website. In addition, Taylor conveyed his belief that the only manner in which the pieces of metal could properly be produced was through an advanced form of electron-deposition technology, due (apparently) to an absence of oxygen-molecules between the different layers of metals. Additionally, the layers of metal were too thin to have been mechanically produced.

Jeff Cameron indicated that Transdimensional Technologies maintained some contact at one point in time with Travis Taylor, apparently as professional colleagues in the defense community in Huntsville, AL. I am not an expert on this relationship, other than to say that to the best of my knowledge these two individuals knew and contacted each other, and that this is how Jeff Cameron might have come up with the 2nd generation lifter idea.

ADVANCED LIFTER TECHNOLOGY

As an inventor, I couldn't care less whether or not the idea for the technology came from a crashed UFO. To be perfectly honest, I'm not what you would call a "believer" anyways, although I have often wondered

about it. My point is not to attempt to lend any credibility to "Art's Parts", but rather to tie in the properties of the anomalous material's high-voltage movement with the underlying theory of lifter operation.

Even mentioning a UFO in a respected publication or article is the kiss of death in today's world – and I wouldn't do it if it wasn't an intricate part of the story. The other interesting thought is that the layered material is once again partially composed of Bismuth – which is thought to possibly have some of the same electro-gravitational properties as Bob Lazar's Area 51 "element 115". Is there a similarity, or merely a coincidence between a claim that hasn't gained credibility and a technology currently under development?

The lifter in its own right is essentially a layered material. One of those layers is the emitter wire, which is highly charged with about 30kV worth of electrons, another layer is the air-gap, which is approximately 3 cm in height, and the final layer is an electrically-grounded "skirt" of aluminum foil that surrounds the lifter. It is also reasonable to expect that there are only two possible forces at work in the lifter – one of which being a possible ion-wind effect moving down from the emitter to the foil, and the other being a possible Biefeld-Brown effect, moving up through the foil to the emitter.

There are a few shortcomings in the lifter as a design that might be overcome if we could transition the layered material from one containing an air-gap to one that does not. For instance, the lifter is currently a rather delicate object, in that having a wire under tension as the emitter makes construction difficult for future automated assembly. Additionally, because the air-gap requires struts to support the emitter wire, a trade off involving the weight versus the strength of the struts is additionally involved in any current implementation of lifter technology.

Some of the other changes that would be helpful to implement when transitioning lifter technology from one type of air-gap to another are changes in the materials used to increase the dielectric capacity. High-K dielectric materials may be used to increase the displacement of electrons in the material to enhance charge transport. And since increasing the dielectric potential of the layered materials also increases the breakdown resistance, it means that thinner materials can be used.

Designing a lifter without an air gap would accommodate lower voltage requirements between the foil and the emitter. The voltage would not have to create the large e-field gradient to create a leakage current across such a large void. Therefore the overall voltage across the device could be greatly reduced, without much cost in thrust. A lower operating voltage in turn means that a lower-output power-supply can be used for a given amount of current, which increases the overall efficiency.

Transdimensional Technologies recent research is utilizing the layered materials approach to eliminate the air-gap and substitute for it high-k dielectric materials that may allow higher overall performance. Although they have not yet released details about the exact composition or thickness of the materials that they are working with, they claim to currently have a 10% reduction in weight using a low-voltage current across the thickness of their newest device.

FUTURE LIFTER TECHNOLOGY

Thanks to the tremendous amount of research being done on lifter technology by Transdimensional Technologies and a loosely affiliated group of inventors around the world, the future of lifter technology seems very bright at this point.

Transdimensional hopes to release some breakthrough research to allow replication of their newest 2nd generation experiments in the very near future, and along with that stands the massive body of research and advancements being done by inventors and researchers such as Jean-Louis Naudin, Saviour, the Lifters-group, and myself.

My personal goals are to attempt to assist Transdimensional Technologies in popularizing this technology to increase awareness of it and help "spread the word" about what it is and how it can potentially help the world.

Imagine if instead of getting in your car and driving through the usual maze of thoroughfares and side streets you were able to simply type in your destination and have a flying vehicle take you there automatically. The lifter technology offers to potential to transform the current transportation market by offering point-to-point aerial transport without the need for roads or freeways.

Additionally, unlike the magnetic-levitation ("Maglev") technologies that are currently being promoted as the future of transportation, the lifter does not require a specially constructed and exorbitantly expensive track to operate – the greatly reduces the per-unit cost on the technology and opens the door for wider adoption by the general public for transportation solutions.

Other individuals are currently working to see if lifter technology may offer cost-effective methods of transport into space, which would reduce the cost greatly and allow a one-piece, reusable method of moving things into orbit.

LIFTER RESOURCES

All of the research involved with the lifter technology is available to the public on the internet. The list of resources below are some of the better and more common resources to obtain detailed lifter information.

American Antigravity
→ http://tventura.hypermart.net

→ The author's website that includes video clips, complete instructions, and other related lifter information.

Jean-Louis Naudin's "Lifter Experiments Website"
→http://jnaudin.free.fr
→ A very in-depth website containing video clips, complete instructions,

World-Wide Lifter Replications
→ http://jnaudin.free.fr/html/lftwrld.htm
→ An overview with photos and video from many of the independent inventors who have replicated the lifter experiments.

Transdimensional Technologies, Inc
→http://www.tdimension.com
→ The home page for Transdimensional Technologies, the developers of the lifter design.

Blaze Labs (Saviour's Research Website)
→http://bel.150m.com
→An excellent site on research into lifter enhancements, radiation testing, sealed devices, power supplies, and other topics relating to lifter technology.

Lifter Builders Group
→ http://groups.yahoo.com/group/Lifters
→ An email group for the exchange of research findings for those interested in building lifters or staying current on the state of the technology.

NASA Patent #6,317,310
→ The NASA patent regarding obtaining thrust from an asymmetrical two-dimensional capacitor, grant Nov 13, 2001.

Research on the Capacitance Converter of Environmental Heat to Electric Power

N.E. Zaev

143970, Moscow region, village Saltykovka,
Granitchnaya Str., 8 529-9664

Nickolay E. Zaev works on creation of the prototypes of converter energy, which do not require any fuel. The direct conversion of environmental heat to electric power is possible in the processes of "charge-discharge" in non-linear condensers or by means of "magnetization-demagnetization" of ferrites. Such converters of energy create cold and electric power without any fuel.

Theory of the converter, results of early experiments on the generation of microwatt power, methods and features of research are given in this article. The methods of generation of a few watts power are described in details. The possibilities and difficulties of creation of powerful capacitance converters are discussed in this article.

I. Grounds of research.

1.1. From positions of orthodox physics there is no subject of research. It is evident that the energy of charging (C) A_c condenser C_x is always equal or more than the energy of discharging (D) A_d, i. e. always $A_c \geq A_d$. Only the advanced analysis shows that it is not always true. Exactly, in C_x, where $\frac{\partial C}{\partial V} < 0$ an inequality $A_d > A_c$ is possible, and in C_x, where $\frac{\partial C}{\partial V} < 1$, then the work $A_c > A_d$. Therefore we should discuss the nonlinear capacitors (NC). In the end of 1969 I noticed a systematic inequality $A_d > A_c$ during the measurement of A_c and A_d of many capacitors with different dielectrics. Theoretical grounds and results of measurements of this phenomenon are given in the publications in 1984 [1], [2, page 73]. On the industrial standards NC (varicond), ceramic condensers VK2-ZSH, $4 \cdot 6{,}8 \cdot 10^{-9}$μF with an optimal voltage about 95 V it was stated that $\frac{A_d}{A_c} \sim 1{,}21$ with the power to about $98 \cdot 10^{-6}$ Wt and "generated" extra power is equal to $21 \cdot 10^{-6}$ Wt.

1.2. In [1] and [2] the strict theoretical proofs of realization of $A_d > A_c$ (there are four of them) are given. On 1m³ of dielectric $|A_d| - |A_c| = -\frac{1}{2} a \cdot \varepsilon_0 \cdot E_c^{\,3}$ (E_c is an intensity of the field, V/m; ε_0 is a dielectric constant of vacuum, a is a coefficient of nonlinearity of the capacitor). Below we state one more proof more connected with the parameters of circuit.

It is well known that with the charge of a linear capacity from the source of constant voltage V_0=const through the resistor R=const it gets an energy $A_c = \frac{C \cdot V_0^{\,2}}{2}$ exactly equal to the output energy in the time of charging t_c. The output energy irradiated from the load R is a Joule heat $\Theta = R \cdot \int_0^{t_c} i^2 \cdot dt$ [3, page 546]. If NC (nonlinear condenser) is charged, then there are no proofs of such equation. The NC are the variconds or other capacitors, which have $\frac{\partial C}{\partial V} > 0$ in the interval $V = 0 \div V_k$. For the variconds V_k is some voltage, which corresponds to the maximum C_v. If $V > V_k$, then $\frac{\partial C}{\partial V} < 0$. For some other capacitors V_k is a voltage breakdown.

For further consideration let's believe that in the operating area of the given sample of varicond a function

Reality and Consciousness in Education and Activity

A.P. Smirnov

Vice president of International Club of Scientists
190031, Saint Petersburg, Kazanskaya str., 36
Tel: +7 (812) 312-0508
E-mail: science@shaping.org

Relation of thought to existence is the main question of philosophy as science on general laws of Nature was formulated but it still did not interpreted and solved in the frames of generally accepted logic standards. The ways to solve it lead to futile discussions of materialists and idealists, to senseless disputes of determinists with eclectics and apologists of the "chance". This discussion lost its sense without a determination of terms under discussion and condemned debaters to have subjective "gustatory" senses, which were changing while aging and depended on the extent of received and conceived knowledge. Such is the situation in this link of World studying, which does not allow creating a logic chain of reasoning in the understanding of cognizable things.

A paradoxicality of all things that happen is connected with incorrect translations and interpretation of wisdom of ancient philosophers and scornful attitude both to the knowledge of distant past and classical heritage, which highlighted the elements of natural-science approach to Weltanschauung.

According to Plato, **an ideal thing** is a visual thing, which can be felt by our organs of sense. Therefore, the understanding of objective reality is mediated by the crowd of our feelings in such a way that perception of reality by means of these feelings gives us a notion of the World. Hence, **our notions about reality are the subject of research in science, but not the World itself, i.e. the World outside of our consciousness.** So, what should be studied in our notions about the World? Let us refer to the wisdom of ancient scientists again: " The World is given in motion and its laws are the laws of motion". Then, we should speak about laws, order, i.e. about relation and interrelation in the phenomena of motion. This is the distinctness in notions and actions (determinism) to predetermine further development of reality cognition logic, i.e. what has an influence on us and determines specific character of our perception. Further we can speak about formation of ideas about reality, which require some premises, principles to organize these ideas. These principles are given in classical heritage, in "Dialogues" by G. Galilee [1] and "Mathematical principles of natural philosophy" by I. Newton [2]. A notion of force as a measure for momentum was introduced, which manifests in action and disappears from the body after the action is over, and the body keeps its new state due to the inborn "inertia force". **But the force itself cannot do anything without its application with a certain speed.** Then we introduce a notion of action as a product of acting force F_A and the speed of action V_A.

We offer a law of interaction, which determines the interaction between action of the cause and the effect appeared during this action as a reaction, i.e. the product of the force of reaction F_R and the speed of reaction V_R. Thus, this interaction between the cause and the effect is determined by the transfer of action from one object to another in equal quantity, but with appearance of new quality, which is determined by specificity of interacting objects according to fundamental law of interaction:

$$\mathbf{F_A V_A = -F_R V_R}.$$

Unfortunately, an incorrect interpretation of interaction manifestation as an opposite counteraction became strong in our mind. This manifestation is perceived as a compensation of cause by action of the effect. Moreover, the incorrect way of writing of the mathematical form of Newton's third law manifestation established in textbooks and scientific literature due to the incorrect translation as $F_A = -F_C$. This very tragic situation for the science suppressed the development of logic in description of processes. Chance and statistic approach to the description of phenomena has taken place in our perception. This approach is based on the model of non-interacting elements, in which there is no order stipulated by the interrelation of elements. The science has developed this model and its properties, and this fact predetermined the evolution of notions about real World.

This ideology penetrated in mathematics, which for sake of physics began to study properties of objects, but not operations with them. Moreover, a possibility to reflect specific character of real physical processes in the interconnection of cause-effect relations by mathematical operations is not realized. It is essential, that fundamental law of interaction establishes manifestation and description of elementary act of cause and effect interrelation, **the law of manifestation of a Fact.** It means that order in the World is conceived through manifestation of concrete facts. The action of law of interaction lies in the basis of these facts.

So, there is a conclusion: the World is perceived through the discrete manifestation of motion forms evolution. Hence, the discrete mathematics of finite discrete aggregate can be applied to describe the World, but not the continual mathematics, which lies in the basis of traditional orthodox physics. All these circumstances lead to numerous problems and difficulties in description of our notions of reality, to the plenty of used principles, which are in contradiction to each other, as R. Feinmann noticed once [3].

And what we can get from determinism, which is based on fundamental law of interaction, law of cause and effect interrelation? **The change of force value in a reaction takes place, i.e. the change of value of the potential gradient, i.e. the change of energy**

concentration. This circumstance is visually demonstrated by the operation of Archimedean lever as well as in all phenomena of the real World. This is Archimedean lever, where the loss of speed takes place, but there is a gain in force. And the load raised on a lower height than the way, which was made by the applied force, will give a huge power during its free fall. This power is higher in so many times, in how many times the time of the load fall is less than the time of action spent on its raising! And this is the fact, which determines specific character of **creation in the real World**. We should attribute both quantitative and qualitative characteristics to energy. This is the side of energy manifestation, which is reflected in Plank's formula: energy is proportional to frequency.

Manifestation of fundamental law of interaction also lies in the basis of general universal regularity of evolution of real many-particle systems with the change in external conditions. This process develops in multistage way, and on the each stage the logarithm of the ratio between the event happened and the event to happen always is equal to the work of external forces. In other words, the relation of the event happened to the resource is in exponential dependence on the initial conditions and extent of external influence. Exponential character of development of processes is the evidence that Nature develops according to the law, which conserves itself during evolution. This regularity, which manifests everywhere, can be naturally called **the Principle of Order.**

Fundamental law of interactions and Principle of Order appeared to be enough to describe and understand phenomena in the observed World. And it is natural to expect that this principle of Nature manifest in finer World also. This World includes lower and higher frequencies, which are not available for us yet to watch this wide-range frequency-wave emanating Universe.

From all aforesaid we should make a conclusion that the logic, which exists in the traditional physical tool, appeals to the model and principles of the World of non-interacting elements using the range of regularities, which also reflect some features of the real World, but they do not include fundamental law of interaction and Principle of Order, which are necessary and sufficient to describe reality. Descriptions existing in traditional physics are phenomenological ones and concern only those aspects of the phenomena under investigation, which do not include possible qualitative changes during development of processes, because the main property of real processes of interactions (creation of new energy property) was excluded.

The current situation in physics had a strong influence on formation and development of other sciences, other fields of knowledge, since the logic of reflection of cause-effect links was initially excluded. These are the links to determine existence, i.e. existence of constant creation of the World. All these circumstances give grounds to fundamentally revise educational programs, first of all, in physics, philosophy, mathematics, chemistry and biology. A change to the offered logic of cognition, which is based on the Principle of Order and fundamental law of interaction, will fundamentally change our notions about the World as well as will open big opportunities for new technique and technology. A Man has got huge opportunities in cognition and existence, but due to his immorality and features of incorrect aims in the logic of cognition he cannot use these gifts of Nature. We present wider and deeper view on the World and a Man in it, which allow analyzing, watching and operating with those fields of reality, which manifest in finer World, World of higher-frequency energies and other structures of fields. Logic of cognition had not touched these structures yet.

References

1. Galilee Galileo. Selected works in 2 volumes. M.: Nauka, 1964.
2. Newton Isaac. Mathematical principles of natural philosophy. News of Nickolaevskaya Marine Academy, issue IV, V, Petrograd, 1915-1916. Volumes I, II and III, 620 p.
3. Feinmann Richard. Character of physical laws. M.: Nauka, 1967, 160 p.

Old New Energy

Y. I. Andreev, A.P. Smirnov

St.Petersburg, Russia
E-mail: science@shaping.org
Internet: http://www.physical-congress.spb.ru

Two kinds of energy, accumulated energy [1] and free energy [2], are considered as an inexhaustible source of natural energy created by Nature itself. It is ecologically clean and possible to be renewed in natural conditions.

The energy accumulated in substance is released as a result of partial decay of substance in elementary particles. At that, the acquired defect of mass is so small that it does not change chemical properties of substance and is compensated in natural conditions. Physical mechanism of energy-release lies in the fact that an electron in plasma layerwise takes sufficiently smaller elementary particles (electrino) from positively charged atoms or fragments of substance (ions). Electrino give their kinetic energy to plasma, heat it up and move beyond the bounds of reaction zone in the form of thermal and optical radiation. There is no substance, which could not take part in such process of energy-release, i.e. phase transfer of higher form (PTHF). The most appropriate, available and low-cost substances are air and water, which play the role of nuclear fuel in PTHF. It is turned out that usual combustion is also a process of PTHF, in which oxygen is a nuclear fuel and organic fuel is a donor of electrons. In the process of combustion oxygen atoms get the defect of mass equal

concentration. This circumstance is visually demonstrated by the operation of Archimedean lever as well as in all phenomena of the real World. This is Archimedean lever, where the loss of speed takes place, but there is a gain in force. And the load raised on a lower height than the way, which was made by the applied force, will give a huge power during its free fall. This power is higher in so many times, in how many times the time of the load fall is less than the time of action spent on its raising! And this is the fact, which determines specific character of **creation in the real World**. We should attribute both quantitative and qualitative characteristics to energy. This is the side of energy manifestation, which is reflected in Plank's formula: energy is proportional to frequency.

Manifestation of fundamental law of interaction also lies in the basis of general universal regularity of evolution of real many-particle systems with the change in external conditions. This process develops in multistage way, and on the each stage the logarithm of the ratio between the event happened and the event to happen always is equal to the work of external forces. In other words, the relation of the event happened to the resource is in exponential dependence on the initial conditions and extent of external influence. Exponential character of development of processes is the evidence that Nature develops according to the law, which conserves itself during evolution. This regularity, which manifests everywhere, can be naturally called **the Principle of Order.**

Fundamental law of interactions and Principle of Order appeared to be enough to describe and understand phenomena in the observed World. And it is natural to expect that this principle of Nature manifest in finer World also. This World includes lower and higher frequencies, which are not available for us yet to watch this wide-range frequency-wave emanating Universe.

From all aforesaid we should make a conclusion that the logic, which exists in the traditional physical tool, appeals to the model and principles of the World of non-interacting elements using the range of regularities, which also reflect some features of the real World, but they do not include fundamental law of interaction and Principle of Order, which are necessary and sufficient to describe reality. Descriptions existing in traditional physics are phenomenological ones and concern only those aspects of the phenomena under investigation, which do not include possible qualitative changes during development of processes, because the main property of real processes of interactions (creation of new energy property) was excluded.

The current situation in physics had a strong influence on formation and development of other sciences, other fields of knowledge, since the logic of reflection of cause-effect links was initially excluded. These are the links to determine existence, i.e. existence of constant creation of the World. All these circumstances give grounds to fundamentally revise educational programs, first of all, in physics, philosophy, mathematics, chemistry and biology. A change to the offered logic of cognition, which is based on the Principle of Order and fundamental law of interaction, will fundamentally change our notions about the World as well as will open big opportunities for new technique and technology. A Man has got huge opportunities in cognition and existence, but due to his immorality and features of incorrect aims in the logic of cognition he cannot use these gifts of Nature. We present wider and deeper view on the World and a Man in it, which allow analyzing, watching and operating with those fields of reality, which manifest in finer World, World of higher-frequency energies and other structures of fields. Logic of cognition had not touched these structures yet.

References

1. Galilee Galileo. Selected works in 2 volumes. M.: Nauka, 1964.
2. Newton Isaac. Mathematical principles of natural philosophy. News of Nickolaevskaya Marine Academy, issue IV, V, Petrograd, 1915-1916. Volumes I, II and III, 620 p.
3. Feinmann Richard. Character of physical laws. M.: Nauka, 1967, 160 p.

Old New Energy

Y. I. Andreev, A.P. Smirnov

St.Petersburg, Russia
E-mail: science@shaping.org
Internet: http://www.physical-congress.spb.ru

Two kinds of energy, accumulated energy [1] and free energy [2], are considered as an inexhaustible source of natural energy created by Nature itself. It is ecologically clean and possible to be renewed in natural conditions.

The energy accumulated in substance is released as a result of partial decay of substance in elementary particles. At that, the acquired defect of mass is so small that it does not change chemical properties of substance and is compensated in natural conditions. Physical mechanism of energy-release lies in the fact that an electron in plasma layerwise takes sufficiently smaller elementary particles (electrino) from positively charged atoms or fragments of substance (ions). Electrino give their kinetic energy to plasma, heat it up and move beyond the bounds of reaction zone in the form of thermal and optical radiation. There is no substance, which could not take part in such process of energy-release, i.e. phase transfer of higher form (PTHF). The most appropriate, available and low-cost substances are air and water, which play the role of nuclear fuel in PTHF. It is turned out that usual combustion is also a process of PTHF, in which oxygen is a nuclear fuel and organic fuel is a donor of electrons. In the process of combustion oxygen atoms get the defect of mass equal

to 10^{-6} %, which constitutes the so small value that it cannot change chemical properties of oxygen and does not call killing radioactive emanation.

There is a possibility to use energy properties both of oxygen and nitrogen of free air in the process of PTHF. To do this it is necessary to destroy nitrogen molecule at least in atoms or smaller fragments by some initiating influence. It is achieved by electrical discharge, magnetic flow, explosion and other means. These means consume much less energy than produced in PTHF. In particular, such processes were achieved in combustion engines. Such nitrogen mode of operation and combustion is accompanied by oxidation to H_2O, but not to CO_2, which is more effective in energy and ecological aspects. Accordingly, the power of engine increases and organic fuel is saved. Exhausts from this process mainly contain water vapor [3].

PTHF processes with excessive power release (more than consumed power) were also obtained in heat-generators operating with water.

Free energy diffused in the surrounding space could be transformed into mechanical, electrical or another kind of energy by means of vibration-resonance, electromagnetic and other energy systems. Classification of these systems as well as physical mechanism of energy transformation is given in [2]. The known Searl's engines can serve as an example of energy systems working with free energy.

The developed physical mechanisms of energy-release processes will allow to create industrial, stably operating, ecologically clean energy systems, which do not consume organic and nuclear kinds of fuel, harmful for humankind.

References

1. Andreev Ye.I., Smirnov A.P., Davydenko R.A., Klucherev O.A. Natural enegetics. – SPB, Nestor, 2000, 126 p.
2. Andreev Ye.I., Andreev S.Ye., Glazyrin Ye.S. Natural energetics –2. – SPb, Nevskaya Zhemchuzhina, 2002, 104 p.
3. Patent 2179649, Russia, 2000 / Andreev Ye.I., Smirnov A.P., Davydenko R.A.

On General Nature of Forces

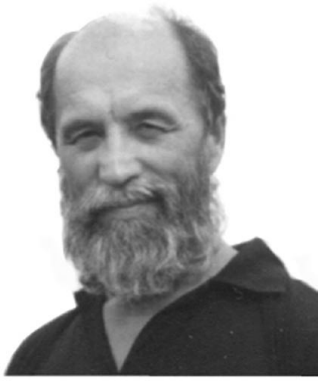

Dr. Evgueni D. Sorokodoum

Entrepreneur and General Director, Vortex Oscillation Technology Ltd, Volochaevskaya Street, 40-B, Flat 38, 109033, Moscow, Russia
Telephone: 7-095-362-8084
e40dum@dol.ru http://vortex.viptop.ru

Introduction

In techniques and in our life we got used to certain physical notions concerning force. We usually use these notions in creation of automobiles, airplanes, rockets and other techniques, but we don't think about **the origin of forces** in general. Usually appearance of force in continuum is connected with presence of momentum gradient.

A number of works, which describe various versions about origin of a force appeared [1, 2, 5, 8, 17, 21, 22, 23, 25, 30, 35, 36, 38, 39]. Different mechanisms of appearance of force are considered in these articles. Usually they consider origin of a force in one of the fields, which are: electromagnetic, gravitational and others. **There was a theoretical attempt to connect the force initiation with energy gradient [33]. Experimental proof of force initiation due to energy gradient was obtained in the works [7, 38].**

Below we made an attempt to show the general regularity of force initiation, which is connected with non-uniform distribution of energy in space. With this process, physical nature of any kind of energy and specific mechanism of force initiation does not play any role. These are only particular cases of general nature of force initiation.

General nature of forces

We are surrounded by space, which is full of energy. Here we mean the energy of any nature: mechanical, thermal, electromagnetic and others. Energy is related with material world and its value is connected with the volume.

Any particle (volume) of continuum has energy:

$$A = A(x, y, z, t) \qquad (1)$$

where *x, y, z* are Eighler's coordinates of the center of particle, *t* is time.

Transmission of energy from one point of space to another one can take place by various methods, both in connection with energy transmission by material particle itself (which is a "carrier" of energy in this case) and without such transmission (for example, with wave motion). For the volume degenerated in ideal point the energy will be zero. That's why it is more comfortable to operate with the energy density concluded in the

increasing constantly. We are the first who analytically got the law of gravity of the masses from the known equation of thermal conductivity. Appeared that on the relatively small distances (in the bounds of the Sun System) the law of gravity by Newton remains valid, but on the larger distances the sudden decrease goes on (Gauss integral), which naturally solves the famous Zelinger's paradox of gravity.

As a conclusion we should note that in the bounds of a stable galaxy of a spiral kind there is the circulation of ether. Ether moves from the periphery of the galaxy to its center (nucleus) by two spiral branches. This becomes apparent as a weak magnetic field (8-10 micro Gauss). In the nucleus of the galaxy there is the impact of two strings as well as there is formation of the spiral toroidal circles (protons). Then the protons form the adjoined vortexes around themselves (electron shells) and from the proton- hydrogen gas the stars are forming, which are moving to the periphery by the same branches. There they dissolve in ether at the periphery since the protons will loose their energy and stability due to the viscosity. Ether which have got the freedom will return to the nucleus of the galaxy and this process is going on in our galaxy for hundreds milliard years and it will keep going until the new center of vortex formation will begin to concentrate ether. Then the new galaxy will appear and our galaxy will disappear. But it will not happen soon and we have enough time to understand that we should return to the concept of ether in modern science.

Experimental Demonstration
of Cosmic Influence on the Earth Life in N.A. Kozyrev's Researches
("On the Influence of Time on Matter")

Alexandra L. Belyaeva

Bishkek, 720075, Russia 8th Location, 46, apt.80
Tel.: 7-996-31-41-25-79
E-mail: artem_belyaev@mail.ru
Internet: www.newphysics.h1.ru

Editor's note: this article represents a part of the big scientific conception "World models in the new scientific progress". On applying of this conception a great number of practical technical devices have been created (as an example of such device we offer the description of universal electrical bio-heater, which was created by the group of researchers from Bishkek, Kyrgyz Science Technical Center "Energy" during the *work on ceramic electroconvector).*

We have to note that the position of our editorial board concerning "time" and Kozyrev's work is not in a good correlation with the authors' one.

Nicolay Alexandrovich Kozyrev scientifically and experimentally discovered the action of relations' interconnection, which was falsely named as time. Time cannot cause action because it is absolute and does not have any physical sense (Samat Kadyrov. Monograph "Theory of unified field").

Author's note: relations' interconnection is an interaction of structurally similar objects. It is a nuclear resonant gain-frequency process: in a stationary electric field, which is modeled by systematic organization, there is a development of similar to structural one, in-focus rays of powerful regular coherent radiations. These coherent radiations are determined by properties of chemical components of interrelated substances.

According to N.A. Kozyrev, it is ought to expect not identical density of relations' interconnection in space. Some processes decrease density; others on the contrary increase density of relations' interconnection. Action of the increased density is weakened according to the law of reversed squared distances; it is shielded by a solid matter, at thickness about 5cm, and is reflected by a mirror, according to the familiar optics law. The action of the decreased density on a detector is shielded, but does not reflected by a mirror. Properties of a matter can be changed under the influence of relations' interconnection. In this sense there is a big advantage in changes of electric current conductivity of resistor, which is brought into Witson bridge and is located near some process. For instance, in order to increase density it is useful to realize the process of evaporation of a volatile liquid; and for density decrease the process of cooling of a warmed-up agent can be realized. Due to these processes, change of conductor resistance is actually realized with opposite signs. Increase of density of the conductor with positive temperature coefficient leads to decrease of its resistance. At negative temperature coefficient there is an effect of the opposite sign, in the direction of changes, caused by temperature changes. Such correspondence to fall in temperature should be observed at changes of other properties of a matter, **because disorder in a matter structure is reduced along with fall in temperature**. The researches have shown the following results at the resistor, which was situated near processes of acetone evaporation on cotton wool and of solution of sugar in water. The

relative resistance change of resistor was observed at the 6th or 5th digit after comma (or even at the 4th digit if resistors had especially high temperature coefficient).

There is now a possibility to study the Universal World not only by means of the investigated spectrum of electromagnetic oscillations, but also through physical properties of relations' interconnection.

At many researches the influence of relations' interconnection on resistor electroconductivity was investigated. Acetone evaporation (at 10-15 cm distance from the resistor) was applied there as the process, which controls sensitivity of a system. However, the process of evaporation can influence on the resistor not only with density increase, but also due to temperature increase that occurs at evaporation. In order to take into consideration this cooling effect, (in the area of evaporating acetone) temperature was measured by Beckman mercurial thermometer with 0.01°C multiplying factor. The first experiments (without thermal protection) have shown the fall in temperature by several hundredth of degree. This fall was enough to cause the changes of resistor electroconductivity. However, the thermometer had been keeping on the demonstration of practically the same fall in temperature at thermal insulation of the resistor. The thermometer reacted on the radiation of relations' interconnection at acetone evaporation.

The part of the thermometer with a placed in a pasteboard tube mercury tank was laid round with cotton wool and put into a glass retort. The experimental process was fulfilled near the retort, and the reading of mercury altitude in capillary was determined by the scale of the thermometer through the closed window in the next room. The mercury altitude was decreased at dissolution of sugar in water (with steady temperature) and it was increased at the release of the squeezed spring, which was placed near the thermometer.

The radiation of the relations' interconnection was observed from many stars. It is caused by the inner processes, which take place on these heavenly bodies. The Sun (with its turbulent processes) radiates the relations' interconnection besides the searched electromagnetic radiation. Actually, if sunlight is recovered with a thin screen, the significant influence on the resistor will be discovered. The influences of the Sun to the Earth through the relations' interconnection become doubtless. These influences of the Sun should have a particular significance in vital functions of organisms, because it brings the beginning for life support. The totality of the researches demonstrates the dependence of matter state from the changes of the general background of the relations' interconnection. The drift of the devices (that show daily changes) usually stops about at midnight and then changes its direction. As for the seasonal course, there is a density decrease of the relations' interconnection in spring and summer; and there is an increase of it in autumn and winter. It is connected with the absorption of the relations' interconnection by the vital functions of plants and with the return of it at their fading. There are indications at the seasonal changes of chemical processes. For instance, reaction of polymerization has more difficulties in its realization in springtime. V. Zhvirilis observations of minimum and maximum light admission by means of the crossed Nickolya prisms can be explained by the crystalline reconstruction of these prisms.

By Kozyrev, as being invisible, vital source is disseminated everywhere in Nature, thus possibility of its accumulation is the only necessary thing. Such a possibility is realized in vital organisms because all vital functions counteract to the usual course of systems' destruction. The ability of organisms to keep and accumulate this counteraction is the reason, which determines the great role of biosphere for the Earth life. But even if we assume, that spreading of life in Space is one of its peculiar properties, biosphere will not have a decisive significance.

Cosmic bodies (and first of all stars) can serve as the reservoir, which gathers vital source. Enormous stocks of energy flow out of stars in a very weak degree through the radiation of comparatively cold external layers. Inner stars energy is preserved so well, that even at the lack of supplement, matter of the Sun would become cold only at one third degree per year. For the Universe the creative source carries the relations' interconnection. Thus cosmic bodies are necessary for support of life.

Author's note: We apprehend relation's interconnection as natural radioactive background. In fact, it is a nuclear resonance gain-frequency interaction of inertial masses that depends on living systems, especially on its rituals and that regulates its survival. Cosmic bodies regulate this process. Humanity is able to control nature only obeying to natural laws. In-focus beams of powerful laser streams are formed in the electric field of living system organisms. The creation of proton-antiproton pair in the living cells, alongside with the process of the absolute release of energy serves as a creative vital force. The process of radiation, support, absorption of energy by the organization (assembly of particles) is realized through the relation's interconnection and regulates its total mass.

Humanity is able to control nature only obeying to natural laws.

Life without Diseases and Old Aging Preventive Electrical Heater with Programmed Features

Alexandra L. Belyaeva

Bishkek, 720075, Russia 8th Location, 46, apt.80
Tel.: 7-996-31-41-25-79
E-mail: artem_belyaev@mail.ru
Internet: www.newphysics.h1.ru

Universal electrical bio-heater is intended for heating of rooms and preventive clearing of an air atmosphere from disease-producing organisms at continuous exposition (continuous work). The principle of its work fundamentally differs from those of the existing analogues. Carbon crystals are in the basis of bio-heater, which makes it environmentally appropriate.

Bio-heater represents a range of ceramic cylinders, jointed with metal plates on top and underneath. These plates play the role of load-carrying structure. It is used in production areas and living rooms for heating alongside with destruction of pathogen microorganisms. One bio-heater with 0,2 kWtt power is oriented for heating of the area with volume 35-45m^3 (in the future production of modernized models powered from solar cells is planned).

As distinct from the usual oil heater, preventive electrical bio-heater destructs agents of infectious diseases, whereas, according to the researches, oil heater stimulates their reproduction.

Absolute ecological cleanness is obtained by release of the quarters from the effect of increased atmospheric dampness with the temperature, appropriate to sanitary code. Any type of mold or fungus disappears in the quarter and in the future these forms do not renew their existence (even after removal of bio-heater).

The absence of injurious radiations is attained by the following: features of raw material, which is used during the process of electrical bio-heater production; radiation is normal during bio-heater working. Pollution-free temperature influence is attained by favorable infrared radiation.

Among the other properties of electrical bio-heater there are following: fire-safety; explosion proof; chemical inertness; enormous effectiveness from the point of view of electric energy demand. Structural simplicity facilitates its durability; there is nothing in bio-heater to be broken.

Technical aspects (applied Know How): In the process of technologic production of ceramic cylinders, from which bio-heater is consisted, **diamond-like cellular ceramic structure** with superimposed combination of atoms of lattice elements is created. Rhythmic work of cells, which form ceramic mixture, leads to resonance and creates a kind of blow wave (at micro level). This blow wave physically destroys microorganisms that have no calcium framework. It is related only to those microorganisms that are agents of infectious diseases, such as: staphylococcus, enterococcus, enterobacterium, etc. Thus parameters of the evoked blow wave coincide with vibration frequency of the definite types of bacterium and elementals. These blow waves cause the similar effect in room near of bio-heater, e.g. colonies of microorganisms are noticeably decreased there (even at the absence of bio-heater in the nearest room).

Due to its self-organization, bio-heater works in the range of living systems, it is approached to them. There is a realization of active connection with living coaly forms of biological systems. Actually the work of bio-heater is adjusted to them. Bio-heater properties can be programmed at the process of its production.

Bio-heater is a patented product. Patent KR #464 MKI C 04 V 33/24 "Ceramic mixture, possessing heat-radiating properties". Application #20010075.1 at Patent KR #464 MKI C 04 V 33/24 "The way of creation of energy, renewable, programmed hard-phase ceramic-carbon mass structure". Application at Patent KR #464 MKI C 04 V 33/24 "Technology of producing of electrical heaters with anti-resonant air prophylactic effect".

Finale product (FP) purchase is not more expensive than those of existent models of electrical heaters. Cost value is noticeably brought down on organization of the scaled production. It is ought to take into consideration that from all existent types of heating, from the customer's point of view, this one is the most energy-efficient. Manufacturing of such bio-heaters can be organized on the base of acting industrial production of ceramic fabrics. It will require some expenses. Moreover production service is rather cheap because there is no need in maintenance staff.

Electrical bio-heater can be applied everywhere, where there is a need in: a) economical heating; b) decrease of air moisture; c) disinfections of rooms.

As for the life cycle of bio-heater it does not become obsolete morally and technically. It is produced from the materials, which are not liable to wear.

The invention has a certificate of KR Gosstandart. From the end of 1998 the first unimproved modification of bio-heater (with power 0,6 KWtt) were put into serial production in Bishkek (with small test production runs). This time bio-heaters are readily used as medical equipment in hospitals and maternity hospitals in Bishkek. **Inventor: Alexandra L. Belyaeva.**

Technical Report

The comparison of quantity of heat energy, required for heat of rooms, and of heat quantity, which is produced by Belyaeva's electroconvector.

Mavlyanbekov Sh.Yu.

Deputy Director KSTC "Energy"
Internet: www.newphysics.h1.ru

Editor's note: this calculatious demonstrates the advantages of the device, which at 340 Wtt energy consumption produces about 700 Wtt of heat power.

The calculation of heat output, coming from the ceramic electroconvector to a room, was based on the basis of research statement of EVNA-0.2/220 electroconvector's influence on air micro flora of industrial rooms at 23.10.01. - 06.11.01. period.

The researchers were carried out in the arbitrary room in a four-storied large-panel building. This room was on the 3rd floor, with facing east windows. The room was of 52.5 m^3 air-space, 3.5 m height and 15 m^2 area. The calculation of heat, was made on the basis of "Methods for calculation of the requirement in heat and electric energy of buildings". These methods were registered by Department of Justice of Kyrgyz Republic on 08.09.2000, #154. According to the normative data, temperature of inner air (t_{in}) in the room must be equal to +20° C. In Bishkek planned specified temperature of external air (t_{ex}) for heating is minus 23°C. The average temperature of heating period is t_{av}= -0.9°C, specific heat characteristic of the building is:
q=0.4 Kcal/m^3 h °C.

Medium quantity of heat energy, which is required for heating, is determined by the formula:

$$Q_{av}heating = q \cdot V \cdot (t_{in} - t_{ex}) \cdot 1.12 \cdot \cdot [(t_{in} - t_{av}) \div (t_{in} - t_{av})] \text{Kcal/h}$$

$$Q_{av}heating = 0.4 \cdot 52.5 \cdot (20+23) \cdot 1.12 \cdot \cdot [(20+0.9) \div (20+23)] = 492 \text{Kcal/h}$$

Thus at the average annual temperature of the heating period, which is: t_{av}= - 0.9°C, the quantity of heat energy required for this room, comes to 492 Kcal/h.

According to the research statement, the trials of the electroconvector with 200Wtt power were carried out at the following external air temperature: +10.2°C; +8.5°C; +10°C; +6.6°C. The calculation data and results of its examination are brought together in a table. The parameters of electroconvector with 340Wtt power are demonstrated in the same table.

Table 1
Table of determination of heat entry and heat consumption's correspondence in the experimental room

#	External air temperature, °C	Inner air temperature °C	Normative heat consumption KWtt (Gcal/h)	Experimentalheat consumption KWtt (Gcal/h)	Percentage depending on normative heat consumption %	Economy of heat energy kWtt (Gcal/h) comparing with power consumption of the device 0.2 kWtt (0.000172 Gcal/h)	Economy of heat energy kWtt (Gcal/h) comparing with power consumption of the device 0.34 kWtt (0.000292 Gcal/h)
1	- 0.9	+20	0.572 (0.000492)		100	-	
2	+10.2	+20	0.267 (0.00023)		100	-	
	+10.2	+16		0.158 (0.000136)	59	0.2-0.158=0.042	0.34-0.158= =0.182
3	+8.5	+20	0.314 (0.00027)		100		
	+8.5	+17		0.233 (0.000200)	74	0.2-0.233=-0.033	0.34-0.233= =0.107

4	+10	+20	0.273 (0.000235)		100		
	+10	+23		0.355 (0.000305)	130	0.2-0.355=-0.155	0.34-0.355= =-0.015
5	+6.6	+20	0.366 (0.000315)		100		
	+6.6	+19		0.338 (0.000291)	92	0.2-0.338=-0.138	0.34-0.338= =0.002

Calculation data demonstrate a considerable economy of heat energy at daily unevenness of external air temperature.

Heat productivity of the new structure of electric convector with 340Wtt power was calculated on the assumption on the suggestion that heating of the room is carried out by the irradiation at the process of heat exchange.

$$E = \varepsilon \cdot C_o \cdot T^4 \cdot 10^{-8} \quad \text{Wtt/m}^2$$

where: C_0 =5.67 Wtt/m^2 K^4 is a radiant emittance of blackbody, ε=0.93 is an emissivity factor of the surface of earthenware duct tube; T=70°C=343 K is the temperature of the surface of earthenware duct tube.

On substitution of the known values into the formula we get:

$$E = 0.93 \cdot 5.67 \cdot 343^4 \cdot 10^{-8} = 727 \text{ Wtt/m}^2$$

As the area of irradiation surface is equal to S=0.96 m^2, then quantity of heat, which is evolved by the convector, comes to:

$$E_k = S \cdot E = 0.96 \cdot 727 = 698 \text{ Wtt (or 600 Kcal/h)}$$

The quantity of heat, which is required for the heating of the room, is 492 Kcal/h (at the external air temperature equal to minus 0.90 and temperature in the room equal to plus 200).

Thus, electric convector with 340 Wtt power is able to heat totally the room with 60m3 area.

Editors note: 340 input and 700 output!!!

Longitudinal Waves in Vacuum: Creation and Research

Ph. Dr. Kirill P. Butusov

190121, Saint Petersburg, Angliysky prospect, 5-18
Tel: (812) 113-8511

The author presents a new elegant system, which is the symmetrized Maxwell's equations. In practice it gives a possibility to create the longitudinal waves in vacuum. This system is of great importance in telecommunications and aerospace technigue.

There is a stable paradigm in electrodynamics that the existence of the longitudinal waves in vacuum is impossible. This paradigm played its negative role preventing scientific minds from solving this problem. However, Maxwell was not as categorical in his opinion on this question as his following were.

Particularly he wrote: "Science of electromagnetism as well as optics is not able to confirm or deny the existence of longitudinal oscillations."

Maxwell's dynamic equations are usually considered as partial derivatives in time. However, the total derivative in time includes the so called substantial derivative, which was shown in the equations for the moving coordinate system. In particular, one of these equations was written by Maxwell himself to explain the phenomenon of electromagnetic induction discovered by Faraday. This induction takes place in the conductor moving across the field lines of electromagnetic field:

$$\vec{E} = \vec{V} \times \vec{B}\,; \qquad \text{(I)}$$

Other equations were obtained later by other scientists. In the table I below Maxwell's equations are given in a split form. Their static and dynamic parts are given separately as well as the equations for moving and fixed coordinate systems. Such matrix concept of Maxwell's equations allowed finding their incompleteness. Really, the analysis of the matrix shows its high symmetry. However, full symmetry of the system of equations is broken by the absence of the equation (X). It seems to be strange and calls a desire to remove this defect in such an elegant system of equations.

A new equation is introduced in the Table 1 for the full symmetry of the matrix:

$$\nabla \cdot \rho = -\frac{1}{c^2} \cdot \frac{\partial \vec{j}}{\partial t}\,; \qquad \text{(X)}$$

Fundamental Properties of Aether

Alexander M. Mishin

Author's note: In the article the principles determining major properties of aether are formulated on the basis of an empirical material.

Real aether [1-6], the primary and superfine essence of which is still a secret, has turned out to be absolutely non-standard superfluid three-dimensional material medium, which simultaneously is at solid, liquid and gas phases. The first master phase of aether is a specifically solid absolute space or an energetical "bottom" of the Universe ("celestial stronghold"). At that the solid phase is considered as mesomorphic vortical-wave structure, which has particular holographic properties. Classical matter represents to be one of the stable and energetic space-time levels of the Universe. Aether vortexes exceed all conceivable space scales, have quasi-material properties and create a great number of stereo-dynamic subspaces (parallel worlds).

The first basic principle, to which aether entirely follows, is the principle of the least disturbance (the least action). Many well-known and unknown physics laws are the subsequent of this principle. In particular, any motion in macroscopic aether happens in such a way to minimize the interaction with the matter of our world, with zero moment of the disturbance momentum. In the classical physics this principle has been reflected as Le Shatelye principle, as variation principle, laws of thermodynamics etc.

The second principle is the principle of fractality, which confirms the similarity of forms and properties of quantum aether vortex structures regardless of their space scale. This principle also determines the Universe as stereodynamically multivariate system in the form of hierarchy of vortical-wave structures of the unified aether (fractal matreshka). On the researching of the macroscopic objects of the Universe it is possible to make a conclusion about microcosm structure if taking into account the changes of frequencies and velocities of action transmission.

In the third place there is a principle of physical autonomy, which confirms that any solitary mass (for example a planet) creates aether system. The particular principle of relativity, which reflects one of the fractal properties of the Universe, can be applied to this system. Such autonomous mass becomes similar to the miniuniverse with its aether subspaces, which repeat the basic phases of the Universe spectrum in more narrow (which depends on the size of mass) frequency band of space-time frequencies. Thus, in the local system of the Earth solid aether reproduces the structure of gravitational field with energy "bottom" in the mass center. As the result such spherical body occurs to be an energy drain and warms up from within.

The fourth is the principle of interaction between matter and vortex-wave forms, which do not depend to the spectral part of the Universe, that is quasimatter. This is the principle of new interaction in nature. The value of energy interaction in each experiment diminishes in time according to exponential law that is explained by the forming of energy informational or adaptation barrier, which separates parallel worlds and reflects the properties of vortex tenacity of aether as superfluid medium. At that, time of interaction is proportional to the size of quasimatter and the barrier for the earthly conditions is lowered at the indefinite period, on the assumption of only thrice-repeated observation of forces (triad law).

According to this principle, aether dynamic experiments in the earth laboratory do not have classical repeatability that, from the one hand, gives occasion to doubts in the objectivity and scientific character of the non-traditional experiments and from another hand it is the most reliable test feature of macroscopic aether motions. Biosystems have special relations with this principle.

The fifth is the principle of many-dimensional autobalance of forces. All vortex and linear motions of macroscopic aether organize themselves in the way that in the band of space-time spectrum of the local system (usually with the aid of fluid and gas aether) occurs to be self-balanced, that is they have zero resulting impulse and the moment of impulse due to the existence of the proportionate antivortexes and antistreams of another spectral structure at the same space volume. The self-balanced vortex structures and streams are practically closed for the outer watch from the direction of our material world, at least with respect to the methods of classical physics. The principle of autobalance of forces reflects aether properties as unified synergetic system and has a significant applied meaning.

Let call the principle of viability of aether dynamic systems as the sixth principle. Only a stereodynamic multivariate system is a viable one, that is a system, which during a definite period of time has the opportunity, called as life cycle, to realize interconcerted self-oscillating processes of vortex-wave character simultaneously at different phase states (subspaces, layers) of aether. The most important features of such a system are its space-time quasimaterial (vortex-wave) broadbandness and finite time of existence, which is determined by the conditions of creation of the energy-informational barrier. Self-oscillation regime demands the presence of an energy source, oscillatory circuit (a pendulum) of any character, intensive process (of negative tenacity) and a channel of positive feedback (negative entropy).

In the sense, referred above, any material system is viable and occurs to be a big system in the form of coordinated community of multivariate subsystems. In its turn each big system as a part of the hierarchy is a

constituent of bigger system, until everything is embraced by the Biggest System, that is the Universe.

The seventh principle of the universal energy interchange is the physical realization of the law of unity and struggle of oppositions. This principle determines spontaneous creation of thermodynamic and antigravitation potentials. Any local matter mass (a body), situated in the open space, creates an exchange process with the surrounding aether volume in the way that more fine-structure fluid aether is absorbed by the body, and the less power-consuming gas aether is radiated. As the result the body as a heat engine gets energy due to the cooling of aether exteriors. At that, antigravitation forces acts between bodies and aether exteriors, which have different temperature.

This principle, which establishes the existence of antipodes of the second law of thermodynamics and Newtonian attraction, is realized mainly in cosmic scales and explains in which way the energy is created in the bowels of planets and stars and why the Universe is stable as regards to gravitation. Obviously, the most unexpected for the modern Physics is the discovery of non-traditional nuclear processes where conditional reactions of decay and fusion occur at the usage of quasimatter.

More deep research of new experimental results and of the stated above scientific principles lets to determine the priority-driven strategic tendencies in Physics, to open more entirely the laws of mechanics and thermodynamics of many-dimensional aether, including the theory of non-traditional waves and new types of electromagnetism. At that, the supreme aim is the research of differences in aetherodynamics laws on the Earth (in a laboratory) and in outer space, the unknowing of these differences has caused logical insularity, false all-sufficiency of classical physics, which had refused as "not wanted" the aether conception and fundamental Universal laws.

References

1. Mishin A.M. On the new properties of physical vacuum, gravitational field and mass. DD USSR, 1988, p. 44
2. Mishin A.M. Experimental results on the registration of aether wind // New ideas in Natural Sciences. Series: Problems of research of the Universe, issue 18. – SPb: RAS, 1995, p. 24-33
3. Mishin A.M. The Aether Model as Result of New Empirical Conception. New Ideas in Natural Sciences. (On materials of the International Conference). Part I – SPb: RAS, 1996, p.95-104
4. Mishin A.M. The physical system of artificial biofield // "New Energy Technologies" – SPb: Faraday Labs Ltd, 2001, issue #1, p. 45-50
5. Mishin A.M. Antigravitation and new energy processes // "New Energy Technologies" – SPb: Faraday Labs Ltd, 2001, issue #2, p. 37-41
6. Longitudinal thermomagnetic effect // New Energy Technologies – SPb: Faraday Labs Ltd, 2002, issue #2(5), p. 38-41

Irving Langmuir and Atomic Hydrogen

Nicholas Moller

PO Box 201
34008 Eretria
Greece

Editorial

In this paper Dr. Nicholas Moller describes the history of development of Atomic Hydrogen technologies in details. It is remarkable that this technology can be applied not only for welding processes but also as a clean free energy source. It is important to note that in this case the hydrogen process does not involve a consumption of hydrogen, which is not combusted in the process. Atomic hydrogen is not really a fuel but rather a medium, gateway or a super-conductor of ZPE form the vacuum of space, converting ZPE radiation and ultra-high frequency electrical energy into infrared (heat) radiation.

This is the story of Irving Langmuir who was the first to develop a theory on Atomic Hydrogen on the basis of empirical research and experimentation. His work in this field lasted from 1909 to 1927. During this period he was employed by the Research Laboratory of General

Irving Langmuir.

Electric Company. Patents and discoveries developed by Langmuir during his time with General Electric were to a considerable extent instrumental in laying the foundations for what is today one of the largest corporations in the world.

The question that gave birth to this article, is why his work and discoveries on Atomic Hydrogen were the only work that received hardly any attention at all and why his revolutionary breakthrough was deprived of world attention for almost 100 years? This question becomes even more relevant when taking into consideration the high standing he enjoyed with his contemporaries (including being awarded the Nobel Prize in Chemistry)

and it is better to make it distantly after exclusion of man presence near experimental stands and devices. At the same time it is quite obvious that on applying of small capacity and fixed time of irradiation it is possible to develop methods for curing of human diseases, which are considered now as incurable (for instance of diabetes, some diseases of haematogenic system, of cancer and possibly of AIDS.

References

1. Proceeding of the International Scientific Conference "New Ideas in Natural Sciences" Problems of Modern Physics, p. 176-187
2. Journal of new energy, Vol. 3, #4,1999, I.M. Shakhparonov "Interaction between Kozyrev – Dirak radiation and radionuclides", p. 85-89
3. Kozyrev N.A. Selected works, Leningrad State University, 1991, part 3
4. Lavrentyev M.M. Eganova I.A. Luzet M.L., Fominykh S.F./ / Reports by AS USSR. – 1990, Vol. 314, #2, p. 352-355
5. Lavrentyev M.M., Gusev V.A., Eganova I.A., Luzet M.L., Fominykh S.F.// Reports by AS USSR. – 1990, Vol. 315, #2, p. 368-370
6. Methodological materials on experimental pharmacological and clinical trials of immune modulating effect of pharmacological remedies. - Ministry of Health USSR, M., 1984
7. Talmadge J.E. and Chiragos M.A. Comparison of immunomodulatory and immunotherapeutic properties of biologic response modifiers. Springer Seminar Immunopathol., 1985, 8, 429-443

Effect of Magnetic Blow Wave Field on Wine Systems

I.M.Shakhparonov (Corresponding author), S.A.Grin, S.R.Tsimbalaev, L.N.Kreindel, V.N.Kocheshkova, A.I.Podlesny, S.Yu.Gelfand

AGD Firm, Peschanyi pereulok, House No.20P korpus No.1, Lfl. 33 125252, Moscow, A- 252, Russian Federation

Russian Institute of Canning Industry, Shkolnaya Street. 78. 142703 Vidnoe 3. Moscow Region, Russian Federation

Introduction

Authors communicate the data on influence of Magnetic Blow Wave (MBW) field on several wineproducts. It was found, that MBW did not lead to significant changes in the major components of the wineproduct (sugar, organic acids, minerals). At the same time the taste and aroma of treated wine become more pleasant; content of heavy alcohols and wine stone in the treated samples was less than in non treated ones. A mechanism of transformations was also discussed.

Keywords: *Magnetic Blow Wave (MBW), Wineproduct, GLC of aroma compounds and ethanol, HPLC of sugars, Atomic Absorption Spectrometry (AAS) of minerals, Heavy alcohols and aldehydes, Wine stone, Turbidity tendency, Organoleptic evaluation*

Magnetic Blow Wave (MBW) was obtained for the first time during the investigations on ball lighting generation under the laboratory conditions (Shakhparonov 1994). MBW as a physical object is interesting because of some facts, which suggest that MBW is a magnetic monopole. The MBW can also interact with the matter and transforms it in a definite way. Typical example is an elementary carbon in the form of graphite, which is transformed by such magnetic treatment into ferromagnetic substance (ibid). The graphite, which is initially diamagnetic, transforms to paramagnetic one with general radiation doze of about $7 \cdot 10^{19}$ neutrons/cm^2. Other types of radiations could not affect this way (Svoistva 1975). So one unit of MBW can be considered as $1 \cdot 10^5$ of neutron masses. This fact may be regarded as an indirect evidence for assuming that MBW and magnetic monopole are the same things. In the absence of excited radioactivity a slow MBW [$v/c < 1 \cdot 10^4$] occurs, which does not ionize atoms (Devons, 1963). Therefore, their interaction with the matter can be observed only indirectly. No data exist on the interaction of MBW with organic substances. The experiments and results reported in the present communication may be a starting point for development of technology and to formulate the methods for vintage wine and best quality spirit production.

Materials and Methods

Assuming that MBW and magnetic monopole are the same things, a number of conditions were selected for all experiments. The MBW source and the samples were placed in the same axis and the axis was oriented according to magnetic meridian direction. Such magnetic orientation is appropriate, as the energy of magnetic monopole theoretically increases in a magnetic field (Devons, 1963). All of samples were placed at 250 cm distance from MBW source, in hermetically closed glasses. It should be noticed that MBW could penetrate through many other barriers, for example into cast iron reservoir with wall thickness of 5 cm (Amaldi, 1970).

The quality investigations were made by using of standard equipment. HPLC, equipped with refractometric detector was used for sugars estimation. Separation of organic acids in forms of their ethyl esters and acid esters was carried out chromatographically using a column packed with polyethylenglycol succinate and the following temperature option: initial temperature is 120°C, final temperature is 220°C, temperature growth rate: 8°/min. GLC was also employed for determination of ethanol. Minerals content

was examined with Atomic Absorption Spectrometry (AAS). Electronic spectra of samples were obtained with double beams UV Vis spectrophotometer equipped with permanent wavelength scanning. Redox potential was measured with EV-74 potentiometer.

The aroma alterations in the wine samples were investigated by GLC method after preliminary concentration of aromas by solid phase adsorption. The concentration was carried out by barbotation of inert gas (nitrogen) through liquid and consecutive catching of volatiles with tube trap, filled by Polysorb 1 sorbent (Lur'e 1972). The well-known analogue of Polysorb 1 is Porapak Q. The tube may be regarded as a short chromatographic column, and volatiles go through it according to their retention times. The choice of sorbent was motivated by the fact, that retention times of water and ethanol was rather small (ibid). Thus, a concentration process can be ended at the moment, when water and ethanol have passed through the column, as the other volatiles remained bonded. The aroma desorption was made with ethyl ester. The analysis of the concentrates obtained was carried out with gas chromatograph equipped with flame ionisation detector (FID), column 3 m x 3 mm, packed by Carbovax M on the Supelcoport. Temperature for the analysis was programmed from 100 to 190°C with increase of 1°/min. Isothermal conditions in the borders had durations of 2 and 40 min respectively. The "mild" conditions of separation were also employed (initial oven temperature was 80°C with isothermal condition duration 5 min, temperature growth rate 1°/min, final temperature 150°C and isothermal condition duration 40 min).

Optical activity was tested with Spectropol at D line of Na (580 nm). The samples were evaluated organoleptically by a group (12 persons) of workers from Russian Institute of Canning Industry. Turbidity tests were made under the methods of Valuiko et al (1987). In some cases, qualitative tests were completed by MPL turbiditymetric measurements. Before testing samples were filtered. Determinations of heavy alcohols and aldehydes contents were carried out in accordance to National Standard (GOST, 5363-67) as follows below. Determination of the constituents of "heavy spirits"(i pentanol, i butanol) was based on reaction of the sample with salicylic aldehyde in a presence of H_2S0_4. Rose colour develops if sample contains the heavy alcohols. The density was measured with Vis-photometer and the quantative determination was carried out using standard graph made with mixture solution of i pentanol and i butanol. A method for determination of aldehydes content is based on a reaction of fuchsine sulphite. The developed colour was measured with Vis-photometer. Calibrating plot constructed basing on typed solutions was used for quantification.

Results and Discussion

Investigations of wine quality changes after MBW treatment were performed using two samples of portwine ("Zemfira") type wine. Sample 1 was a reference (non treated) and sample 2 was treated with MBW.

In both samples, the fructose and glucose levels were practically the same and amounted to 43.8 ± 3,32.22.5 g/*l* respectively. Sucrose and maltose were absent. Total sugar content was 76.0 g/1 though the level marked on the label was 80 g/*l*. It is thus apparent that the treatment of wine with MBW does not lead to noticeable changes of sugars content. Results of organic acids determinations are given in the Table 1.

Table 1
Main organic acids content, g/1

Acid	Treated wine	Initial wine
Lactic	0.0265	0.00187
Oxalic	0.010	0.0088
Succinic	0.209	0.18
Malic	4.56	4.22
Tartric	0.0805	0.0895
Citric	0.401	0.483

Standard deviation for the determination method was estimated as 7 %. This fact shows that differences in organic acids content are not significant. It should be noted that a tendency of slight increase in light acids (up to malic) in the treated wine was observed in contrast to noticeable change in more heavy acids. The ethanol content of both of samples was 181 and 184 g/*l* for non treated and treated samples, respectively, though the label on the bottle indicated 190 g/*l* concentration. Standard deviation was 5 %. Thus, MBW treatment does not lead to significant changes in alcohol content.

Atomic Absorption Spectrometry (AAS) data indicated that the samples were practically identical in terms of K, Na, Ca, Mg, Fe, Cu and Zn contents (data are not shown).

Similarly, spectra of treated and non treated wines, diluted 150 times before photometring, were practically identical, thereby pointed out that polyphenols are unchanged.

When wine is industrially treated with IR or microwave heating, ultrasonic, ultraviolet and g radiation, different reactions occur and there include redox reaction, esterification, condensation, hydrolysis, Maillard reactions, etc (Kishkovsky 1988). Most of reactions are accompanied by redox potential changing. Increase in Redox potential points out the increase in concentration of oxidants, i.e. oxygen, peroxides, and other compounds, which are electron acceptors. Redox decrease is a result of oxidation processes (ibid). Redox potential was practically constant ($\Delta E =$ 145 mV and 150 mV in samples # 1 and 2 respectively). Evidently, oxidation processes, like they occurred during heat treatment, were absent during the MBW treatment.

One of the important reactions to be considered is the Maillard reaction. Essentially it appears in form of browning, decrease in reducing sugars and amino acids, and new aromas formation. While our result evidences on absence of irrelevant aromas, alterations of wine colour, and sugar content, thereby indicating insignificant contribution of Maillard reaction on wine quality changes due to MBW treatment. Technological treatment often leads to esters accumulation that improves wine aroma. It's well known that the most important in this context are the esters of C_6-C_{14} fatty acids (Kishkovsky 1988). During heat treatment, storage and other physical influences, different kinds of acid esters accumulate. These have weaker aroma than esters of fatty acids. But their appearance proves the existence of esterification processes. A comparison of aromas chromatograms of the samples 1 and 2 proves occurrence of changes in concentrations of the individual substances (increasing of peaks length with retention times of 13.10, 100.9; decreasing of peaks length of 54.85 min). An order of peaks exit of different volatives is given in the Table 2.

Table 2

Exit order of different volatiles

Exit order, from published data for Carbovax 20 M	Retention time in our experiments, min	Exit order, from published data for Carbovax 20 M	Retention time in our experiments, min
Acet aldehyde	3.8	i-Pentanol	23.56
Ethyl acetate	4.71	i-Amyl butyrate	
Diacetyl	4.82	Acetone	
Methanol	4.91	n-Pentanol	27.92
Ethanol	6.01	i-Amyl valerate	
n-Propanol		Ethyl lactate	
i-Butanol	13.58	Ethyl caprilate	52.6
Butyl acetate	13.59	Acetic acid	
i-Butyl acetate		Diethyl succinate	
Ethyl valerate		Ethyl laurate	
n-Butanol	17.73	Phenyl ethanol	
Amyl acetate	20.70	Diethyl malate	

A comparison of retention times of components with peaks of standard substances of wine aroma indicates that butyl acetate and i-butanol are very close to peak 2. Data on chromatographic separation with mild condition showed that i butanol and butyl acetate peaks exited simultaneously. Organoleptic evaluation recorded a nice smell in the treated wine, thereby due to the formation of butyl acetate. Data indicated the presence of ethyl malate, ethyl tartrate and ethyl citrate in the samples, in addition to two peaks corresponding to ethyllactate and ethyl oxalate. The large experiment error does not allow any inference on changes of their height after magnetic treatment. Identification of peaks with retention time factor especially in such complex system is not unquestionable. However, the best way is to use the chromato mass spectrometer, which allows inference according to their individual mass-spectrum.

Organoleptic evaluation can depend on aliphatic alcohols content. Determination with GLC shows (Table 3), that their quantity in the both samples is rather small with respect to average values taken from literature for this type of wines. Thus such changes can not be recognized with such evaluation. For both of samples pH was equal to 4.0.

Table 3
Aliphatic alcohols content, mg/1

Alcohol	Sample #1	Sample # 2	Average literature values (Kishkovsky 1988)
Methanol			80-350
i-Propanol			0,3-3
n-Propanol	less than 20		5-50
i-butanol	less than 20	less than 20	20-100
n-Butanol	less than 10	less than 10	2-10
i-Pentanol	less than 20	less than 20	100-250

The results of optical activity measurements indicated, that both samples are not optical active. Filtration, clarification and dilution could not change the optical activity. Perhaps, there is a compensation of different forms of D- and L- compounds in the samples, thus total activity was very close to zero, and magnetic influences could not change equilibrium between the forms.

Organoleptic evaluation of more delicate taste and aroma of the treated sample with respect to non treated one, MBW treated sample as more complete, harmonic, noble, and natural in contrast untreated sample was recorded as excessively bitter and sour in spite of practically the same pH of samples.

It is interesting to test the tendency of wine to make a different kind of turbidity after the MBW treatment. Data showed that both samples were not positive for protein turbidity. In term of reversible colloid turbidity formation, after storage at 7.5°C for 1 day, the MBW treated sample was homogeneous, in contrast to the formation of different phases with different refractometric numbers in untreated sample. Both the phases in untreated sample were liquid, with a density very close to each other, but the borders of phases were like broken lines when crystallization begins in crystallization process. This alteration in untreated sample may be due to micelle state changes or of structurization of product.

The tendency test for polysaccharide turbidity based on the reaction with phenol in presence of H_2S0_4 and determination of the derivative formed by photometrically, indicated, that difference in concentrations of polysaccharide in the both samples are very small, the levels being 119 and 106 mg/*l* for untreated and treated samples respectively. These values are close to range of polysaccharide stability (150-200 mg/*l*), and thus do not allow any conclusion on changes of relative stability of the samples. A tendency for polyphenols turbidity, due to polyphenols associates precipitation upon addition of salt did not show differences. Turbidity, as determined in MPL apparatus, was 15 FEM as against value of 0.2 FEM before testing in untreated sample. These numbers were respectively 14 and 0.3 FEM for treated sample. Thus it indicates that both the samples are very stable with respect to polyphenols turbidity and that the magnetic treatment does not lead to alteration in the polyphenols stability.

The data on the colloid stability indicate, that both the samples showed rather high resistance against protein, polysaccharide and polyphenols turbidities. Besides, treated sample showed higher stability with respect to reversible colloid turbidities.

It is interesting to investigate as to how heavy alcohols and aldehydes, which are often produced, when low-grade technology is used, are affected by magnetic treatment. For these studies, a system of simple mixture, consisting only of spirit and water, was used. Commercial vodka bottled in standard 0.5 l bottles and artificial solutions, containing 40 % of food derived rectified spirit were used. Data showed, that MBW treatment significantly influenced the heavy alcohols content, as the reduction in heavy alcohol was more than two times. In addition, it reduced aldehydes by more than 3 times in vodka, and more than 30 % in rectified spirit. Data indicate that efficiency of aldehydes removal is higher when the sample contained higher level of aldehydes. Thus, the MBW treated vodka and rectified spirit will be better than untreated one. It is however stressed that untreated samples were also recorded as good by sensory panel. So, limits for aldehydes are usually present in high quality vodka established by National Standard (GOST 5363- 67) are 6 - 15 mg/*l*. Thus the organoleptic evaluation of samples does not allow to find difference in aldehyde levels in these samples.

Table 4

The main results of heavy alcohols and aldehydes determination (mg/1) in vodka and solution, contained 40 % of rectified spirit

Substance	Non-treated vodka	Treated vodka	Non-treated spirit	Treated spirit
Alcohols	8.7	2.55	3.38	1.5
Aldehydes	1.5	0.4	0.6	0.4

Sediments formation and its character were also evaluated. The sediment in treated grape juice was dense and more dark, the formless, non crystalline sort, and gel like form. The volume of the sediment occupied up to 30% of total volume. The sediment did not sink or float, nor it stick to the walls of glass. It was found that 100 ml of juice gave about 155 mg of dry sediment. Microscopic investigations showed an absence of any kind of bacteria or fungi in the sediments.

The effects of high energy of magnetic influences on sediment were also investigated. The experiments were carried out with "Portwine Erevanski, vol. 0.5 1, white, spirit content 19 vol %, sugar 10 %, prepared according to GOST (National Standard) 7208-84". Crystalline sediment appeared on the walls and especially on the bottom of the bottle after the BMW treatment. An amorphous precipitate was also presented, and it can be separated by decantation. Crystalline sediment, after washing with ethanol and drying to constant weight, weighted 69.2 mg, and was of bright brown colour. A tartrate content as a tartrate acid, of the sediment was 59% mass. If it is considered as a tartar (a wine stone) of potassium sodium tartrate, then tartar content in sediment works out to be 86%. If it is considered as a tartar of dipotassium tartrate, tartar content in sediment will be 93%.

Generalization of data shows the positive effect of magnetic treatment on the wine samples, leading to harmonic taste of treated wine and absence of non

pleasant tastes. Most of the changes were found to bein the flavour and taste components, which were minor substances in the product. For example esters concentration changes during the treatment. At the same time the content of major components, such as sugars, organic acids, particularly, heavy organic acids, and especially ethanol remain constant. It seems logical from kinetic point of view, when simple processes, like esterification, are preferable with respect to many stages reactions, and reactions with high activation energies, which can go at hard conditions. Also, it seems logical that magnetic treatment may influence on electrical state of colloid species. Thus magnetic treatment can be considered as mild, selective in the comparison with many other physical methods. Nevertheless, the changes lead to acceptable energetical and nutritious value of the product. Data show that difficult problems, such tartar removal, can be solved by MBW treatment.

References

1. Amaldi E. et al in: Preprint CERN, Report 63 13. Search of Dirak Magnetic Pole, 1970.
2. Devons S. Search for Magnetic Monopole, Sci., Progr. (No.204), 601 (1963).
3. GOST (National Standard) 5363 67. Vodka. Metody ispytaniy (Testing Methods).
4. Kishkovsky Z.N., Skurikhin I.M., Khimiyavina (Wine Chemistry), Moscow: VO "Agropromizdat", 1988, 253 p. (in Russian)
5. Lurle A.A. Sorbenty i khromatograficheskie nositely (Handbook on Sorbents and Chromatographic Supporters), Moscow, Khimiya, 1972, 320 p.(in Russian)
6. Shakhparonov I.M. in: Sharovaya molniya v laboratorii (Ball Lighting in the Laboratory) / Collection of Articles. Moscow: Khimiya, 1994, 400 p.
7. Svoistva konstrukzionnykh materialov na osnove ugleroda (The Properties of Constructional Materials Based on Carbon) / Handbook/ Nagorny V.G., Kotosonov A.S., Ostrovsky V.S., Dymov B.K., Lutkov A.I., Anufriev Yu.P., Barabanov V.N., Belgorodsky V.D., Kuteinikov A.F., Virgelev Yu.S., Sokker G.A. Moscow, Metallurgy, 1975, P. 73 77 (in Russian)
8. Valuiko G.G., Zinchenko V.I., Mekhuzla N.A. Stabilizatsiyavina (Wine Stabilization), Moscow: "Agropromizdat", 1987, 160 p. (in Russian).

The Fundamentals of the New Principle of Motion

By The Group Studying Inertialess Natural Processes (GSINP)
123430, Moscow, Mitinskaya Str., 40-1-244 Email: gibip@mail.ru

P. Sherbak

The concepts of active and passive interaction between the moving object and the space form the basis of the new principle of motion.

So as to be more understandable, let's consider what is the old principle of motion. For this we will use the concept of a moving object and the space in which the object is moving. Naturally, material objects and the space can't interact between each other directly, because the space is the philosophical category. In this case we can understand physical essence of natural phenomena easily. In our view, the material objects interact with some fundamental energy of space (FAM), which fills all space with a different density. Thus the energy (FAM) is inalienably connected with the space. One of the first names of this energy is "ether" in the early scientific works. So, for the simplicity we will accept that the object and the space interact between each other.

Thus, all existing methods of motion which have been invented by mankind till the present time are based on activity of the material object that means the one expends some energy to produce the motion, and at the same time space is passive, it means that space does not need to spent any energy to move the object. And so in common case space tries to keep the object in the former state interfering with accelerated movements of the object (in accordance with **the 1st , the 2nd and the 3rd Newton's laws**).

It should be noticed that such method of motion (for the speed, which is much less than the speed of light) takes place both in animate and inanimate natures. In this case the level of energy of motion and reaction of space (or an environment) are not very high. Incidentally, the energy of object can be of different types: electrical, chemical, biochemical, mechanical etc. The common consequence of this type of motion is existence of the ***inertia***. The classical physics can't answer the question: "what is inertia?» The same situation is applied to the concept of ***mass,*** which is closely connected with inertia. The classical physics says that ***the mass is a measure of inertia.***

There is the new principle of motion of material object: the object is passive and space is active. In this case it's more favorably for space in the energy aspect to move the passive object and to spent some power then to keep the object in the present place in the former state of immobility (in accordance with **the 1st, the 2nd and the 3rd Newton's laws**). And so we should introduce **the 4th law of** Newton's **mechanics**. It says that ***there are the systems of coordinates in which the body is moving not rectilinearly with acceleration when this body is in the state of immobility***.

The basic and the main differences of the offered principle of motion from the existing methods at the end of the XX century are the following:

1) The absence of inertia of motion;

2) There are no limits for the speed of motion;

3) The absence of "fuel reserves" "on board" of the moving material object.

Nikola Tesla and Instantaneous Electric Communication

Vladimir I. Korobeynikov

Russia
E-mail: elen@mail.infos.ru

Nikola Tesla (1856-1943), an outstanding inventor, was and still remains one of the most mysterious persons in the history of electrophysics. Whereas the most scientists were moving together in direction of microparticles investigations, as the basis of matter structure and of nature itself, he was going in opposite direction. He had a keen interest in the investigation of electric charge of the Earth as a whole. He was looking for the ways to influence on it, to control its state and methods of its regulation.

Therefore, exactly, the most of his searches, experiments, the purpose of constructions and buildings, created according to his conceptions, cause perplexity and misunderstanding of scientists even in nowadays.

The most mysterious of his main experiments were made in USA after 1904. After Nikola Tesla death in 1943, all his diaries and records over a period from 1904 year had mysteriously disappeared. Probably they were stolen (it was known, what to take). Lost records could "cast light" on one of the most "strange" of his buildings in the form of the enough tall tower, on the top of which a specially created toroidal transformer was placed. This transformer could create there a huge electric potential up to the billion volts.

Nikola Tesla switched on this tower-device, what caused the fright and even panic in mind of people from nearby settlements. Of course! Because of very high electric potential there began air ionization, which spread very high to the atmosphere accompanying by the effect of color play. Such luminous, color-playing sky caused even a horror of people, who knew nothing about the experiment made and its goals. They did not guess that Tesla by means of the electric charge, created of the tower, was influencing on the electric charge of the Earth as a whole (about 600000 Coulomb). There was a global scale in Nikola Tesla's investigations.

There is no point in detailed analysis of the fact that the potential of the tower top influenced on the Earth charge. Interaction of charges-balls with the distortion of field lines, distortion-distribution of charge on their surfaces, induced charge, is beautifully described even in school physics textbooks. In Nikola Tesla investigations the Earth had the role of one of the charged balls. It was possible by changing of charge on the tower to deform electric charge distribution on the whole Earth surface at once. This deformation (electric currents) could be fixed at once in every point of the Earth surface. It is alluring to use this effect for data transfer telecommunication, both on the Earth, and in space.

After such introduction the question "How does the system of instantaneous electric communication for any distance look like and work?" is still opened. First of all, the readers need to know, that such instantaneous communication is possible in principle. The proving it theoretical calculations, are rather difficult for popular interpretation. Some part of readers can take it on trust, and those who are most interested in can apply to works of Oleinik V.P. (quantum physics) the professor from Kiev Polytechnic University. At the minimum there are two necessary works: Oleinik V.P. "Faster-than-light transfer of a signal in electrodynamics. Instantaneous action-at-a-distance in modern physics" (Nova Science Publishers. Inc. New York. 1999) and Oleinik V.P. "Latest development of quantum electrodynamics: self-organizing electron, faster-than-light signals, dynamical heterogeneity of time." (Physical vacuum and nature. 4. 3-17. 2000).

"PC" magazine has devoted a rather significant article entitled "Computers and teleportation" to V.P. Oleinik works, concerning instantaneous electric communication ("PC" #6, 2000). Note, that the author of the given article has also found the possibility of instantaneous electric communication, but by means of materialistic methods, absolutely different from Oleinik's ones, what is most important – two different solutions point to the possibility of this communication. "PC" #6, 2000 in the article "Circles on fields" cited mathematical formulae of the structure of electron electro-magnetic field as an illustration (it refers to the Earth too) that the author of this article has got.

The most attentive readers of that article could notice, that one vector Hz absolutely "ignores" Special Theory of Relativity, since its mathematical expression does not include the velocity of light, whereas it presents in other vectors as a product of electric and magnetic conductivity. Magnetic line of this Hz vector goes to infinity and returns back from infinity. It surrounds the whole Universe. It is alluring to use exactly this (Hz) line for the **instantaneous** communication for any distance.

It is not so difficult to do it. In the Fig. 1 the easiest and most available for understanding line of the **instantaneous** electric communication is shown. A rotating charged dielectric ball (an "electron", isn't it?) is used as transmitter. The ball can be electrically charged up to the limit of charge flow-out into the ambient space. Around the charged rotating ball there appears electro-magnetic field, entirely analogous to the electro-magnetic field of the Earth (and of the electron too). The central magnetic line Hz goes to the infinity and returns

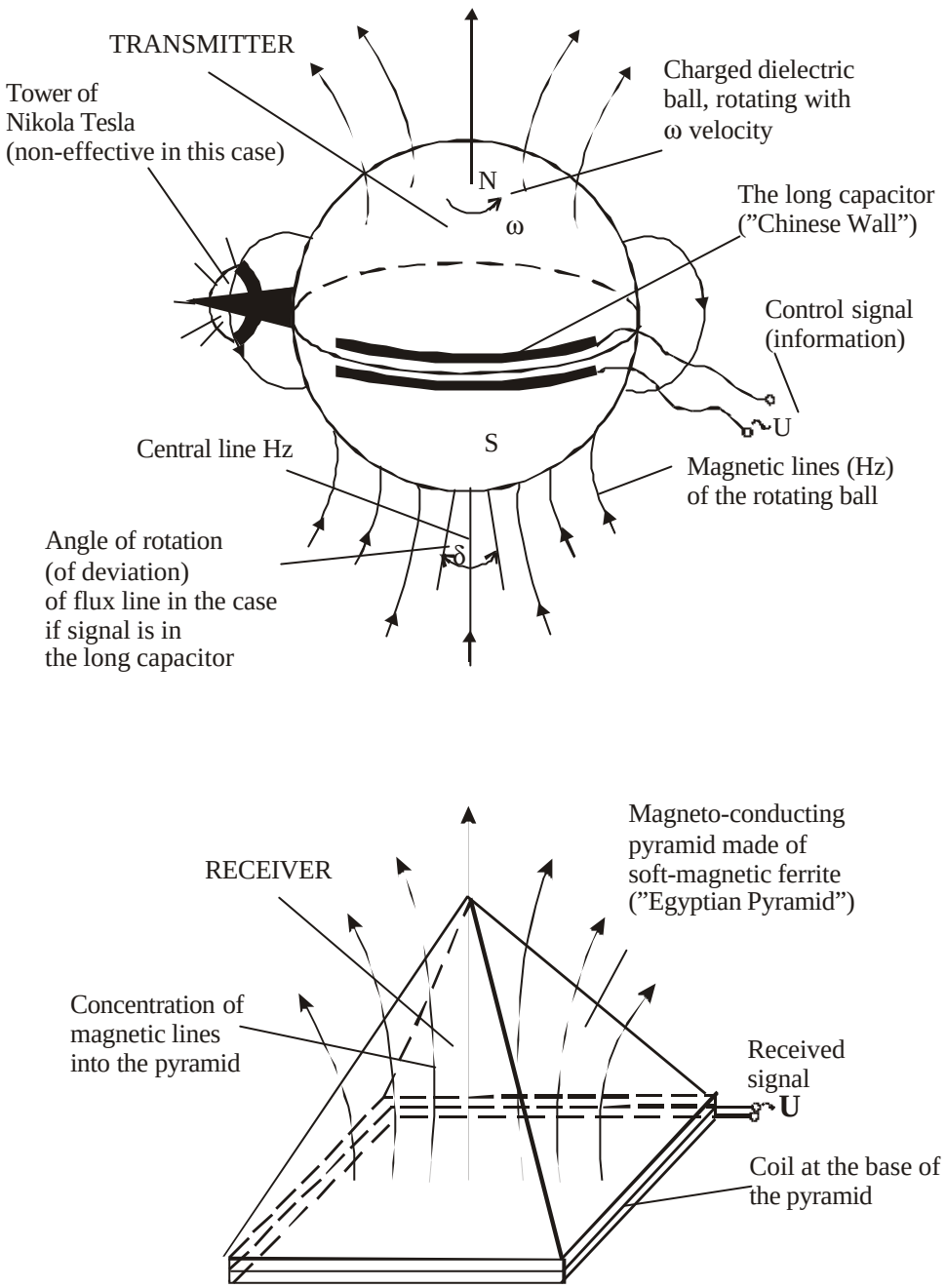

Fig.1

Line of the instantaneous electric communication on the basis of rotating charged ball and pyramid

back from it to the opposite side of the ball. In the same way the central magnetic line of the Earth (Hz) goes from one pole to the infinity through the whole Universe and returns from it to the center of the opposite pole.

If by the information to force the rotating ball (electron) to "wag by tail" (by Hz vector) which stretches through the whole Universe, then this "wagging" can be controlled instantly in every point of the Universe. While the rotating ball has a steady distribution of the surface charge, the line Hz does not change its dynamic position in the Universe.

If such distribution of the surface charge is broken, space position of the line Hz also will change. On mounting the Tower of Nikola Tesla on the surface of rotating ball and measuring the potential on this tower in time with an information it is possible to change the charge distribution on the ball, and, respectively, the space position of central magnetic line (Hz) in the whole Universe at once. Big disadvantage of the Tesla tower is that maximum influence on charge is executed in the point under the tower, and farther it began decreasing roughly (exponentially), according to physics laws.

Hence it is advisable to influence on the whole surface of charged ball, but not on some point of it. It is possible to influence at once on the very big part of surface by the long capacitor, placed on the perimeter (equator) of the charged rotating ball. Because of optimality reasons, this capacitor length should not exceed a quarter of the ball perimeter (equator) length. Charging and discharging this long capacitor on the ball equator by the data signal, only the position (angle 5) will be changed, not a value of the infinitely long magnetic line (Hz) in the Universe. It is a data transfer.

The natural question appears: "How to make on the Earth the most powerful transmitter for the **instantaneous** electric communication?" The answer suggests itself: "It is necessary to use the Earth itself as a rotating charged ball." It is not effective to use Nikola Tesla's Tower to deform the Earth electric charge. To place on the Earth very long (about thousands km) capacitor is quite easier. However, it must be placed not on the equator exactly, but moved a little bit because of the initial heterogeneity of the Earth surface charge distribution, caused by the presence of continents and oceans. It will be necessary to find the line of electric equator, where the amount of charge north and south of it is similar. This line will not be ideally straight and will be situated near the 30th parallel.

As a matter of fact, this grand capacitor is already built, but is half-broken. This capacitor is very well known – it is a Great Chinese Wall. The ancient, powerful Chinese Tzcin' Shi Huandi empire adapted and used it (capacitor) for the protection from nomads incursions. How unexpectedly and originally it is! In this case the electric iron would be the best tool for spiking. It is clear enough that the charged ball (as well as the Earth) will "wag by tail", which stretches through the whole Universe and does not change its energy, but only changes its position in space in time with information. Now we can go on to the question, concerning the way to control the Earth "wagging by tail" in the Universe, and thus to read information **instantaneously** in any point of the Universe.

In the Fig. 1 it is shown the input device of the electric communication receiver, made of the magnet sensitive material (it can be soft-magnetic ferrite) in the form of pyramid, with the proportions of well-known Egypt pyramids. Magnetic field lines of the far space pass through the pyramid from the top to the base and are concentrated by pyramid. If there is no signal (the "wagging by tail" of the far planet-transmitter is absent), then the magnetic flow, coming through the pyramid, does not change, and induced voltage in the coil, placed in the base of the pyramid, is absent (no information). If "wagging by tail" begins, then the magnetic flow, coming through the pyramid, will change, and it will cause the appearance of voltage on the coil in the base of the pyramid in time with the information.

Thus, the signal is received instantly. Here it is necessary to remind once again the difference between the instantaneous and usual radio transmission. The usual radio transmitter for the transmission of the information uses the **energy** distortion of space by the information. This energy change in space happens with the velocity of light and hence there is the loss of time for information passing. In the considered case there is no **energy** change in space, there is only a change of magnetic lines position (Hz).

This is exactly the vivid and fundamental difference between the usual electric communication and the instantaneous one. **In other words, in usual transmitter during the fixed time interval there is the change of signal energy (instantaneous value), whereas in instantaneous transmitter there is no this change (only information). This is exactly the fundamental difference.**

Evidently, to receive instantly the signal from the opposite part of our Galaxy, we need rather big pyramid, in order to concentrate a big amount of field lines into the oscillatory circuit under the pyramid. The question can appear: why the pyramid, why not a cone? The point is that lines of the Earth magnetic field (the very lines that compass needle reacts on) in the any place of the pyramid horizontal section have the same density of distribution and are directed strictly parallel to the pyramid base. The cone in its horizontal section cannot provide such uniformity of distribution that is why it is not advisable to use it. From the space magnetic field lines pass through and concentrate in the pyramid strictly at right angle to the pyramid base.

This is the riddle of pyramids wonderwork. Any person coming into a pyramid, at the same moment feels the change of mental and physical condition of organism; whish is very different from that it was before the entering into a pyramid. Of course! Visitors come inside, into concentrated magnetic field lines of the powerful and functioning magnetic core of the receiving electric circuit, what is absent outside the pyramid.

It is strange, but most of tourists are afraid of the ill effect, which can be produced by electrical systems on their health, but there they stand in a queue to feel this effect in pyramids. Concentration and division of magnetic field lines are the easy and effective way to reject a noise, created by the Earth magnetic field.

It is clear, pyramids should be oriented very thoroughly, so that lines of the Earth magnetic field would be strictly parallel to the base and to the opposite (East-West) sides of pyramid. To get such exactness of orientation in modern conditions is very problematically.

The most convenient place to build a pyramid (pyramids) is on the electric equator, in the place of its intersection with the electric meridian. Such place is located in Egypt, near its capital Cairo. And again we meet a paradox: such pyramids are already built on the Earth, but they are half-

broken. And Egypt was not less powerful than the ancient Chinese empire.

The Egyptian dynasty of Pharaohs has “completed” and adapted pyramids to burial-vaults, where mummies of dead Pharaohs were buried. Perhaps, it is even more incredible than in China. The impression is given that ancient powerful civilizations on the Earth had a competition between themselves, who will use radio-engineering constructions for instantaneous galactic communication in the most incredible way. Let’s give to a reader an opportunity to select a “winner”.

It must be noted that «PC» already published information that the Chinese Wall and Egyptian Pyramids are radio engineering constructions, intended for the instantaneous galactic communication (PC #114, 1997, etc).

There appears an interest in the possibility to produce very simple and manufacturable systems of instantaneous electric communication right now. Radio-electronic industry can produce them, but still does not guess about it.

Furthermore, such systems of instantaneous electric communication can be created at home, and even senior

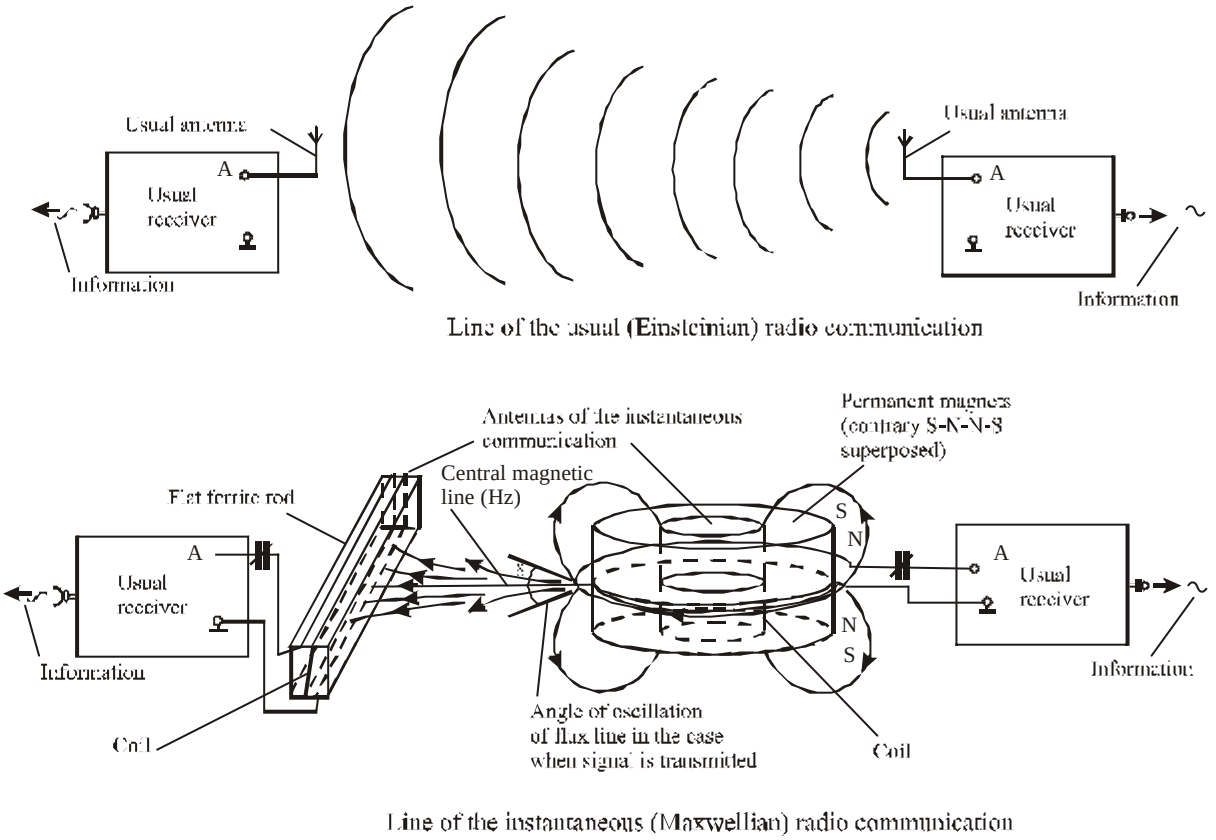

Fig. 2

Transformation of the usual line of communication of usual receiver-transmitter into the instantaneous one

pupils are capable to use them. In the Fig. 2 there is shown the construction of instantaneous electric communication line in comparison with the usual one. It can be produced even at home conditions. Two permanent magnets, connected between each other by analogous poles, are used as transmitting circuits.

Permanent magnets can be replaced by electromagnets. In the magnet connection point there is a coil, which while the signal passing through it will change its position (angle 5) in the space of the central magnetic line (Hz), coming out from the place of two magnets connection. Receiving circuit is available to be made of the flat ferrite, but coil must be winded along, through butt-ends of core, so that the whole internal part of the coil would be maximal (in area extent) filled by ferrite.

The obtained coil can be completely “winded” (screened) by flat ferrite of big size. For more clearness of the experiment the central magnet line of transmitting part must be directed strictly along the axis of the receiving coil.

Now, if we give the alternating voltage (information) from transmitter to the transmitting coil, fixed on the permanent magnet, then the receiver, connected to the circuit of the

transmitting coil, placed on the flat ferrite, will detect an alternating voltage (information). Maximum effect is achieved at the resonance (coincidence of transmitter and receiver frequencies).

It is checked. It works. The dullest experts in radio-electronic (after the reading above) can rejoin, without making an experiment, that it is an absolute nonsense that any communication is out of the question. Coils with absolutely perpendicular axes, besides one of them is screened, do not interact with each other.

And here the most interesting thing starts. In the Fig.2 as it was mentioned above, the usual communication line and the instantaneous one were compared. The usual transmitter cannot generate the vector Hz that is why systems of usual and instantaneous communication cannot see each other in strict sense. What does it mean? It means, that in the same city it is possible to transmit on the one-carrier frequency ("what a nightmare!") two absolutely different television channels without any noises of one to another.

Usually by frequency match of a transmitter to the working frequency of another one, the radio communication is broken, but here it does not happen. Here some additional explanation should be given. As the vector Hz, which "ignores" the theory of Einstein is received from Maxwell equations, it follows that the usual (Einsteinian) system and the instantaneous (Maxwellian) one work on mutually perpendicular electromagnetic field lines (vectors).

In the Fig. 2 such difference is shown clearly. These are just "jokes" of complex numbers, when one value is absolutely perpendicular to another and nevertheless together they form a single whole. In other words it means, that two greatest persons in science Einstein and Maxwell as a matter of fact are something like "Siamese twins", completely grown together at the angle of 90 degrees, even by heads. On the one hand every one is on his own, but nevertheless they are the common (complex) organisms.

Hence there are a lot of misunderstandings on happened phenomena. How many scientists tried to find some mistakes of Einstein? They produced very convincing proofs concerning instantaneous interactions in nature. These scientists did not suspect that time and still do not guess now that they already for a long time are "walking" in the complex physics, which still does not exist. Einstein and Maxwell ("Siamese twins"), each occupies his own part of the complex number (complex physics) and they cannot be already taken off from there.

The only third, free "vacancy" is left to throw on the both of them at once the common "collar" and "reins", i.e. to fasten them ("twins") together by module and argument as any complex number. In this case no matter how the one part of complex number "ignore" the other one, only its argument will change, and module always will be equal to the conditional unit. Only this single fact in principle changes the conception about "appearance" and "disappearance" of elementary particles! Even considered instantaneous and usual communications on the same receivers and transmitters in a complex conception (complex physics) eliminate appeared "misunderstandings" of all kinds.

Advantages of the instantaneous (Maxwellian) electric communication are especially evident during the connection with long-distance spacecraft. At present in the interval between sending of control signal to the station in region of Solar System peripheral planets and getting the reply it is possible to have a small break for dinner (it is very convenient).

In the case of the instantaneous electric communication use, duty operators will have "no dinner". Moreover, the system of instantaneous electric communication can realize two-way communication underwater and from underwater to overland. It is clear that input and output circuits of such system must be covered by slushing composite for the protection from aggressive effect of the salt sea-water. Such systems of instantaneous communication are very required to submarines.

Now, when readers know and understand the principle of operation of instantaneous (Maxwellian) electric communication systems and their advantages over usual ones (Einsteinian), we can only wait, when radio-electronic industry will start to produce these very required systems.

ELECTRIFYING TIMES

an online and published magazine about Electric, Hybrid, Fuel Cell Vehicles, advanced batteries, ultra capacitors, fuel cells, microturbines, free energy systems, events and exhibitions worldwide

63600 Deschutes Mkt Rd,
Bend Oregon, 97701
541-388-1908
fax 541-388-2750
etimes@teleport.com
www.electrifyingtimes.com
Subscription $13/3 issues

Institute for Planetary Synthesis

P.O. Box 128, CH-1211 Geneva 20, Switzerland
Tel. 41-022-733.88.76, Fax 41-022-733.66.49
E-mail: ipsbox@ipsgeneva.com
website: http://www.ipsgeneva.com

The Unified Gravitation Theory

(The unified super-principle, which controls the Universe)

I. P. Kuldoshin

Orenburg, Neftyanikov str., h. 2, apt. 9,
460019, Russia

(Editor's comments by Alexander V. Frolov)

A forum of the leading USA physicians took place in the White House in March 1998 in presence of President Clinton. There was only one question: "When will the nature of Gravitation be opened?"

The well-known USA physician-astrologer S. Hoking declared that it possibly would occur in twenty years and it would be **the Unified Theory of All.** So, the scientific world by default called it the greatest discovery of the future.

Some time later a new hypothesis pretending to this discovery has got its birth in Orenburg. Despite this fact this hypothesis would gain recognition and status of the **Greatest Discovery of Mankind** only by 2018 that was predicted by S. Hoking.

To present day there have been written a lot of hypotheses on this problem but they haven't been recognized. Many scientists consider our Universe as living and functioning according to the unified and rigid laws in Macro and Microworld, which provides automatic regulations of all its processes due to **circulation of radiant energy of the Universe life in cosmic space**. This energy is inexhaustible and environmentally clean, and Mankind may learn using it in the nearest time for the welfare and for prevention of **contradirectional irreversible ecological** catastrophe.

There is no alternative for humankind to escape and it will not appear in the future. Only cosmic energy will save us. From the book "Secret Doctrine" by E.P. Blavatskaya we can get complete information about the fact that a highly developed civilization of Atlases on the Earth had a "**General Theory of All**" yet 10-12 thousand years before our civilization. They had no automobiles, but instead they had flying objects (aircrafts) "Vimana" of various types as well as ships and submarines, on which they also used **Cosmic energy.**

While reading an abstract in General Soviet Encyclopedia, I got acquainted with the theory of "Aether wind", which was abolished in the beginning of the XX century, and then I understood that this theory contains a deposit to discover the nature of gravitation.

The nature of gravitation is the only one and there are no alternatives in theoretical as well as in physical sense. When scientific world of entire planet abolished the theory of "Aether wind", it lost the possibility to

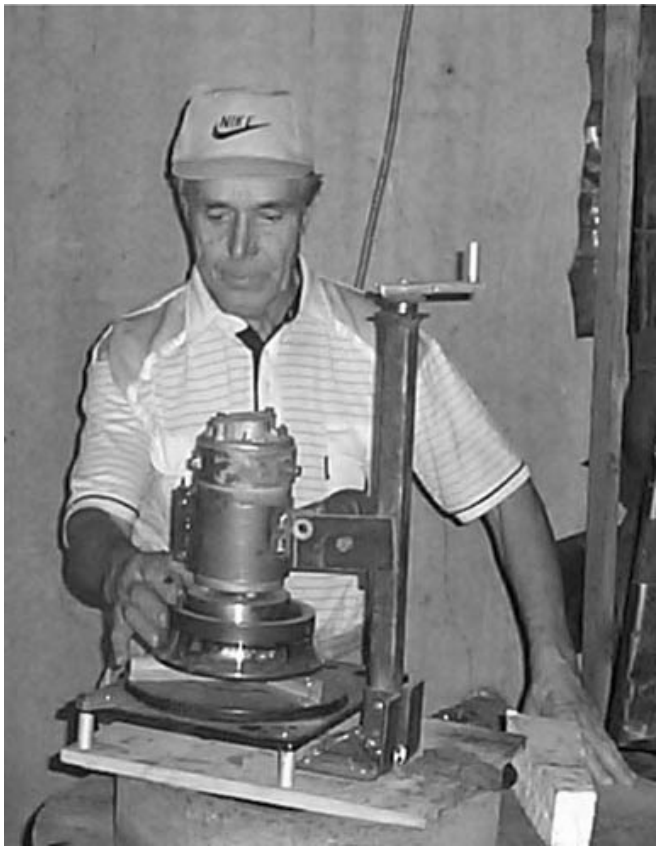

discover the nature of gravitation. The XX century was marked by a revolutionary development of scientific and technical progress, but there was an almost 100-year stagnation in cognition of the Universe elements.

The theory of "Aether wind" supposed that all Cosmos is filled with aether particles flying with the speed of light (these particles are "neutrino" according to modern understanding). **The role of gravitation, carrier of light and retarding medium in Cosmos** was attributed to this motion of particles.

But this theory allowed chaotic motion of particles, which is impossible in mechanism of the Universe, which is adjusted up to automatic mode. Besides, motion of these particles is not possible without an absolute buffer unit, which prevents their head-on collision at the speed of 600000 km/sec (it is thermonuclear explosion and death of matter, i.e. the Universe). E.P. Blavatskaya wrote that Cosmos is filled with radiant energy of the Universe life, luminophore, electromagnetic aether. Thereby she predicted a ready solution to make correction in the uncompleted theory of "aether wind". On the basis of above stated and due to the **un-assumed dawning up,** the theory of "aether wind" was completed. It was the ground to develop a hypothesis of radiant "aether wind". Particles of this wind (neutrino) are electromagnetic particles and move with the speed of light in all directions as **contradirectional paired single-stream flows** (like electrical current in twin-wire cable). Due to this, an absolutely stable concentration of these beams in cosmic space is provided according to the principle "what has come in, the same has gone out".

The hypothesis formulates new views on the problem of structure of elements of the Universe material world.

Some separate conclusions do not match the views of modern scientific thought on the problems of physical principles of material world structure and functioning of the Solar system.

List of topics of the hypothesis

1. The hypothesis disclosures the operating environment of a super-mechanism, which controls the Universe (it is a radiant "aether wind").

2. It disclosures the nature of retarding mechanism of flying objects in Cosmos (its name is Lorenz-Fitzgerald compression).

3. It proves the absence of Universal gravity and beams of light as we usually conceive it. (The beams of aether wind collide and compress matter. An alternative to the notion about beams of light is a temperature wave impulse on the beam of aether wind. It explains why the speed of light doesn't depend on the speed of the source of light. Light is a "passenger" on the beam of "aether wind").

4. This hypothesis disclosures the mechanism of stablization of rotary and orbital movement of the Universe matter in macro- and micro world due to retarding medium in Cosmos.

5. It disclosures the mechanism of reverse rotation of Venus due to the forces of autorotation.

6. It disclosures the mechanism of reverse orbital movement of planets and satellites of planets. (Such a planet had not been opened yet, but there are 6 satellites in the Solar system, which move counter to the others, and it is not an occasion, but **a particular case of the effect of aether wind beams**).

7. It disclosures a real nature of Tungusska catastrophe. (There were about 100 hypotheses, but **neither of them** was recognized to be true).

8. It disclosures **the nature of gravitation** and gives an explanation that gravitation can be:

- usual (vertical);
- horizontal;
- circular

It is important to note: not the entire matter takes part in gravitation, but 1/3, i.e. 33,3% of matter.

9. It disclosures the **nature of Levitation** and proves that 1 liter of water on the surface of the Earth can have the weight from 0 up to 3 kg.

10. It disclosures the role of gyroscope effect in life support of the Universe. The gyroscope effect allows transformation of translation energy of radiant "aether wind" to the rotational energy for practical needs of humankind.

11. This hypothesis gives scientific and technical recommendation for creation of cosmic energy converters.

12. It gives scientific and technical recommendation for producing of levitation effects for any technical systems.

13. It disclosures the possibility of cosmic flights with the super-light speed.
14. It explains experiments on metering of horizontal gravitation (The first experiment was made on February 27, 1999).

15. It disclosures the particle (neutrino) of original matter of the Universe and gives its characteristic. (Ancient thinkers called modern "neutrino" as "Aether", and it was not occasionally, because its diameter is in 10^{25} times smaller than atom's diameter.

All matter of the Universe consists of the same indivisible particles "neutrino" presented by three groups:
- "energy" group, which is in the beams of "aether wind";
- building group, which forms the part of any micro particle;
- free group (neutral-reserve) as a building material for new matter and operating environment of all electromagnetic processes.

All neutrino of three groups rotate with the speed of 3×10^{43} rps (equatorial speed of neutrino is equal to the speed of light).

Fields are formed in every particle as a result of rotation:
- strong field of a small volume doesn't allow particles to close up;
- weak field of a big volume is a general mechanism of gravitation.

As scientists write at the present time, the World is subdivided on a dense world (which we can see) and fine world (invisible). At that the density of such world is in 10^{15} times less than density of water.

It is known in science that all matter of the Universe both great and small rotates and is a gyroscope. Particles of matter get rotation with their birth, thus the fields are born in them simultaneously. **Matter cannot exist without rotation, which generates fields.**

All mechanism of interaction between three groups of particles is based on the mutual repulsion. This is the only mechanism, which always and automatically is able to create the necessary stable interval between the particles and only this mechanism provides the function of gravitation.

Many scientists of the late XX came close to the discovery of the nature of gravitation, but they didn't accept a thought to conceive **the motion of aether particles as a pair-counter flow**. And there are three necessary conditions to realize gravitation:

1. The particles should have the fields of repulsion.
2. The contradirectional flows should envelop the particle of matter from two sides.
3. While one beam is passing a matter mass then the force of fields should decrease and gravitation effect should appear.

Mechanism of gravitation

Gravitation appears due to the intersection *(Editor's note: interference)* of fields, produced by beams particles and fields of the visual matter. As it was mentioned above, the beams are paired and contradirectional. Usually the beams in cosmos are mutually balanced and they do not call gravitation effects.

But on the surface of the Earth the contradirectional beams are not similar in their power. The powerful beams come from above, i.e. they only penetrate the atmosphere, and the weakened beams come from below, i.e. they penetrated all the Earth. Thus, gravitation appears.

Gravitation is a unique property of "aether wind" beams to loose part of their power during penetrating of matter mass. **Gravitation** is the difference of forces of contradirectional beams. *(Editor's note: Really other authors reported this idea also. I cannot find who was the first in discussion about gradient of aether as nature of gravitation.)*

Horizontal gravitation

As a particular case, there is **horizontal** gravitation on the surface of the Earth. It appears on the boundary between lowland (of the sea) and plateau. In this case one beam goes above the surface of the Earth (water), and the counter beam penetrates mountain range and

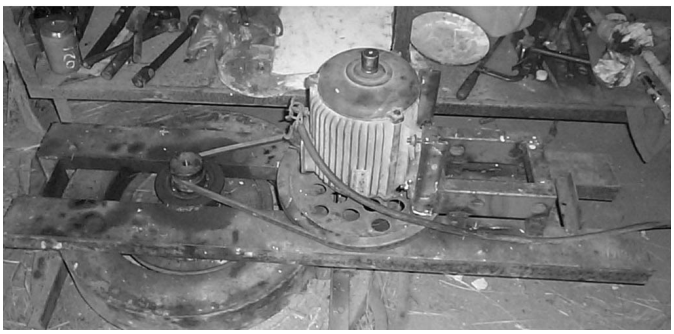

weakens. The first measurements of horizontal gravitation effect were made on February 27, 1999 on the route Orenburg – Samara at 49 km before Syrtinskiy slope.

A leaden load (0,5 kg) on the float (a piece of foam plastic) moved on the water surface (not in the sea but in basin) towards the mountain.

Horizontal gravitation is much more weaker than usual gravitation, but it can reach the value that makes water to flow at some angle upwards.

Circular gravitation

Only fast-rotating bodies can create circular gravitation.

All bodies rotate by their orbits around the Sun in the open space of Solar system **due to circular gravitation guided by rotating the Sun.** Furthermore; circular gravitation always is direct (co-directional to the Sun rotation) and reversed gravitation on the periphery of Solar system. A planet with reverse orbital movement had not been discovered until now, but 6 satellites of planets in the Solar system have reversed orbital movement.

Here is the proof of the fact that circular gravitation appears only around the fast-rotating bodies and **slow-rotating bodies, for example, the planets Venus and Mercury cannot form circular gravitation**, that's why they have no satellites.

Our Sun is a prototype of mechanism to transform translation energy of aether wind beams into rotary energy.

(Editor's note: According to Kozyrev, any star is a transformer of time (chronal type of energy) into heat energy. Really, the aether wind can be considered as the chronal type of energy in our understanding and for our usual three-dimensional measurement equipment. To my mind it is a clear link to notion of 4-dimensinal objects, i.e. the time. ***Time can be described by parameters of the aether wind, i.e. its velocity, direction and density. So, we can say that quantitatively time can be described by formulations for kinetic energy of the aether movement. From the other hand it is equivalent of heat energy, which can be measured by usual methods after transformation of the longitudinal waves of the aether in transverse electromagnetic waves).***

Therefore, any mechanical disk rotating very fast will create a circular gravitational field, which is able to rotate all bodies in the direction of the disk (for example, a rim mounted on its bearing co-axially with rotating gyroscope). I designed and tested a similar device in January 2000. A gyroscope (of 200 mm diameter and 3 mm thick) was over-speeded up to 18 thousand rpm. Rotation of gyroscope called slow (but with a good momentum) rotation of the rim of 15 kg weight.

The gyroscopes with the mass of 0,5 kg, 15 kg and 90 kg were tested during summer of 2001. All them called rotation of the rims.

(Editor's note: There are other experimental facts. Fast rotation of mass should produce rotation of some part of nearby aether. Self-closed aether forms vortex and if photon is trapped by this vortex, then

experimenters can see "ring of light" near rotating mass. The rings or self-closed photos can exist in the same place after the mass was stopped or removed away.)

Nowadays gyroscopes in military devices are over-speeded up to hundreds of thousands of rpm. The more rates the gyroscope has, the more energy the rim will produce if it is connected to some generator. But these research works led to single-valued conclusions that gyroscopes themselves cannot produce big quantity of additional cosmic energy not jointly with permanent electromagnets. The Sun as well as planets has natural electromagnetism and their circular gravitation increases in many times due to the presence of electromagnetic fields.

(Editor's note: I think it is obviously that a rotating magnet can involve into the rotation much more quantity of aether than any simple rotating mass. In some theories any magnetic field is considered as circulation of aether particles.)

Electromagnetic fields are the unique boosters of circular gravitation. So, the gyroscopes themselves cannot produce necessary quantity of cosmic energy per unit mass of gyroscope without using of electromagnetism.

In October 2001, I got a copy of 24 patents description. There were patents on "perpetual motion machines". But since such "perpetual motion machines" cannot exist in reality, then we can explain them as gyroscopical transformers of cosmic energy. Efficiency of these transformers varies from 150% up to 10^6 % and practically all of them work using gyroscope. But nowadays only the transformer (Bauman's machine) works in Switzerland, in Maethernitha theological community, Linden city. Some systems have been working from 1980 and producing total power of 750 kWtt, the gyroscopes of 2m diameters are provided with constant magnets.

Besides, there are ready transformers of cosmic energy in Russia. The Professor of Moscow State University, Academician of Russian Academy of Natural Science Leonid Leskov spoke about them in the first half of 2001. He actually said that Mr. Chubais does not allow innovation of energy transformers, which are ready for commercialization (see newspaper "Raduga", Samara, July 2001).

I assume that any kinds of such transformers work on the energy produced by "Aether wind" beams. Perhaps our earth ancestry (Atlases) used this energy to fly as well as extraterrestrials. I remember information about flying platforms, which were designed in Germany in 1943-1945. Nowadays there are publications that there are not less than 10 captured extraterrestrial's spacecrafts on the Earth, and some samples were tested in Russia and the USA.

On the basis of all above-mentioned it becomes extremely clear that the main secret of Nature was discovered, and let's representatives of conservative science don't pull the wool over people's eyes to prove that "it is impossible". It is possible! Physics is an experimental science in its main part, and there is no completed theory until now.

As a result, I'd like to make some conclusions: The secret of Gravitation nature was discovered not in connection with new scientific investigation, but due to dawning up and understanding of the fact that gravitation since earliest times was produced by "Aether winds", which fill all cosmic space. Instead of improvement of "Aether wind" theory, academician science abolished it and forgot it such as some scientists of nowadays don't have an idea of it. While abolishing of "Aether wind" theory, scientific world spent 100 years in vain to find an alternative to it. A real Cosmic scientific and technical progress was slowed down during this term. Without this progress all humankind will kill environment of the Earth in 30-40 years!

Rush hours for humankind to turn to cosmic energy came, we have not even an hour to wait, and otherwise we will loose a chance to survive. Today the scientific and technical level is such that taking into consideration the buildup made by inventors – enthusiasts, who created more than 50 types of Cosmic energy transformers, it is possible to begin repetition work in one year. Now there is the only barrier to do it, i.e. market relations in energetics developed during last 100 years.

Let's look into near Future. The process of energy resources (coal, oil, gas) formation in bowels of the Earth took hundreds million years. There was period of clean ecology in the World Ocean, on land and in the atmosphere. **And all it catastrophically had been diminishing during 2-nd half of the XX century**. **There are about 40 years for our civilization to reach the boundary of having no chance to support normal life on the Earth.** An irreversible process of struggle for survival using underground environment and protection from mortal ecology will begin. Our close posterity will not forgive us this betrayal.

Is there any solution? Yes, there is.

It is necessary to publish the descriptions of all "perpetual motion machines" models as well as unprofitable publication of short technical documentation in the Internet and magazines, which will give a chance to many companies, research groups and individuals to re-produce them. But at first we should choose the models, which are the most reasonable in technology and prime cost. Such a way of replication of the models will give people confidence, interest and reliable information on existence of inexhaustible salutary cosmic energy. And the victory will be the reward for courageous, enterprising and advanced people.

which generates electrical voltage $E_{\updownarrow} = \ell \frac{dB_{rot}}{dt}$ in the structure of vacuum. This voltage generates Gravitational Impulse itself $G = 4\pi E_{\sigma} S \cdot (\Delta r_g)^2$, where $\Delta r_g = e_0 \frac{E_{\updownarrow}}{b}$.

The supposed "Gravitational Impulse" in the experiment by Podkletnov is modeled by a quarter of cosine curve.

Duration of this curve is determined by the decrease of magnetic field "trapped" into the superconductor due to the partial heating of semi-conductor emitter after plasma passed the discharge of 2MV with the current strength of 10000 A. The formula of the model is the following:

$$X'' = Ae^{-2\pi f_0 D_0 t} \cos(2\pi f_0 \sqrt{1 - D_0^2}\, t) \qquad (1)$$

the calculation is made for the frequencies of 30, 3, 0,3 and 0,03 Hz and acceleration of 12 m/sec^2, which appears for the mass of the pendulum 30 g with the force horizontally to gravitation 0,03·12=0,36 N.

It can be supposed that it is necessary to make more careful solution of the problem to find the effect on the pendulum by its reaction, which is known from experiment. We should apply the more correct use of spectral method of solution of differential equation for the pendulum with setting of impulse effect. Further, having the recording of temporal function of magnetic field by Hall-effect devices and using Maxwell formulas, we should find electrical field acting in physical vacuum. This field will give us the force of gravitational impulse.

The experiment by V. Roshchin and S. Godin is simpler for physical modeling (Editor's note: the author assumes it is simpler than Podkletnov's effect). All input and output parameters are known to the authors, i.e. force of the magnets, frequency of variable magnetic field in the local place of space vacuum, change of gravity. Furthermore, there are known cylindrical formations of magnetic "loops" around the device and their approximate arrangement with the intervals divisible by the half of rotor radius. Effects of temperature decrease at 8° C in cylindrical atmospheric formations can be simply explained by adiabatic decrease of air pressure due to the decrease of gravitation between molecules of air. Formulas for estimation of decrease of gravitational and inertial forces are the same that for Podkletnov's experiment:

$$E_{\updownarrow} = \ell \frac{dB_{rot}}{dt}, \qquad (2)$$

$$G = 4\pi E_{\sigma} S \cdot (\Delta r_g)^2, \text{ where } \Delta r_g = e_0 \frac{E_{\updownarrow}}{b}. \qquad (3)$$

References

1. Podkletnov E., Giovanni M. Impulse Gravity Generator Based on Charged Superconductor with Composite Crystal Structure.
2. Roshchin V., Godin S. Experimental research on physical effects in dynamic magnetic system // Letters to the Journal of Theoretical Physics, 2000, vol. 26, issue 24.
3. Rykov A.V. Principles of full-scale physics. // Institute of Earth Physics RAS, M.: 2001, 58 p.

New Sources of Energy from the Point of View of Unitary Quantum Theory

L.G. Sapogin,

Department of Physics, Technical University (MADI)
Leningradsky pr. 64, A-319, 125829, Moscow, Russia
E-mail:sapogin@cnf.madi.ru, sapogin@cnf.madi.msk.su

Yu.A. Ryabov,

Department of Mathematics, Technical University (MADI)
Leningradsky pr. 64, A-319, 125829, Moscow, Russia
E-mail:ryabov@vmat.madi.ru

V.V. Graboshnikov

Representative in Moscow of Sceptre Electronics Ltd.
Millennium House Business Center
12, Troubnaya Street, Moscow 103045, Russian Federation.
E-mail: sceptre@orbita.ru

Abstract

The Unitary Quantum Theory (UQT) is a new version of the field quantum theory, which has been developed by the principal author (Prof. L.Sapogin) of this paper for over 25 years. The theory is directly related to the problem of new energy sources, and this paper can be of interest for Journal of New Energy for it is the UQT (and not the classical Newton mechanics or the modern standard quantum mechanics) that provides a theoretical basis for the development of new sources of energy and for the explanation of the operation principles of the existing and functioning over unity devices.

The fundamental provisions of the UQT and a number of results received on the basis of it were published in many scientific journals and reported at international conferences (see [1-6], etc.). Generally, the UQT as expressed by the language of formulae and equations represents a new mathematical model of interaction and movement of elementary particles in the form of a complicated system of non-linear integral-differential equations, an important property of this model principally defines the trajectories and velocities of the particle movement in space (unlike the standard quantum theory, which directly defines only the probabilities of the presence of the particles at a certain point in space). Another, and the most essential (for the problem of new energy sources) property of the UQT is the absence of the energy conservation laws and the

impulse for single particles in it. That is why the UQT makes theoretically possible processes of energy generation as if from nothing, if they are regarded from the classical mechanics point of view or the standard quantum theory (while the UQT is able to explain the phenomenon), as well as creation of a device with efficiency above 1. In other words, the UQT provides for a theoretic possibility of making a perpetual mobile!

In the 1970's, when the UQT started to be developed, there was nearly no data of the observed phenomena, or any experimental results confirming this unusual theory. Today, such data are abundant. For example, such processes can be named as generation of excessive heat energy during cavitation of very small water bubbles; generation of excessive electric energy in an anomalous gas discharge; excess generation of electric energy when electric current passes through proton-conducting ceramics, etc. Besides, and still more important, operating devices that have been created much more energy than it was necessary for these devices functioning: electric current generators "Testatica" (Switzerland); thermal cell CETI (J.Patterson, USA); heat generators (Yu.S. Potapov, Moldavia, J.Griggs, USA); electric current generators (P.Correa, A.Correa, Canada); electric engines on magnetic ceramics (Japan), and others. The said phenomena and operation principles of the above-mentioned devices can be explained with the help of the UQT.

In this paper we will also touch upon such an important problem as cold nuclear fusion. The feasibility of this nuclear process, which is categorically denied by the standard quantum theory and nuclear physics specialists, was predicted by the author of the UQT as far back as in 1983. This phenomenon was discovered in 1989 (electrochemical experiments, M.Fleischmann, S.Pons). Many subsequently received experimental data confirmed the existence of nuclear reactions under very small energies, of nuclear transmutations in plants and biological objects, very slightly connected with generation of energy [7-8]. From the point of view of the UQT, which provides an explanation of the cold nuclear fusion mechanism, this process can be applied in practice (after the relevant devices are designed) for generation of energy, for production of isotopes, and for nuclear waste liquidation.

Introduction

Inventors, as well as swindlers of all kinds, had long ago been trying to construct, or at least design, a *perpetual mobile*, i.e. an imaginary machine that produced work without any outside energy. Peter the Great even founded the Imperial Russian Academy of Sciences for such research, but the modern Russian Academy of Sciences does not like to recollect this circumstance. On the other hand, the French Immortals in 1755 decided not to consider any *perpetual mobile* projects at all, and, as we would see, were quite right as regards the Newton mechanics. The brilliant success of the classic mechanics has strengthened still more the sacred belief of the mankind in the Divine Infallibility of the Conservation Laws, and today it is nearly indecent to express any doubts about these laws.

Let us first of all find out the origin of the conservation laws in ordinary mechanics. Practically any textbook will tell you that the Energy Conservation Law (ECL) follows from the homogeneity of time, the Impulse Conservation Law from the homogeneity of space, and the Angular Momentum Conservation Law from the isotropy of space. That is why many people have an impression that the conservation laws themselves follow only from the quality of time and space, which is today an undoubtedly relativistic notion. But, for example, the angular momentum is not a relativistic notion. So, such a narrow approach is not altogether correct, and it is necessary to turn to the second Newton law, or the equation of relativistic dynamics and the system insularity. However, *the qualities of the time and space ensue exactly from the analysis of the Newton mechanics*, though they are often construed incorrectly. Let us remind you the correct interpretation.

Homogeneity of time suggests that *if at any two moments of time two similar experiments are made in similar closed loop systems, the results thereof will not differ.*

Homogeneity and isotropy of space mean that *if a closed loop system is moved from one part of space to another, or is oriented differently, nothing will change.*

The making of the fundamental energy and impulse conservation laws from the Newton equation is very simple. Let us put down the main equation of dynamics as

$$\mathbf{F} = \frac{d\mathbf{P}}{dt}$$

For closed loop system $\mathbf{F}=0$ (no external forces operating) and the equation integral will be $\mathbf{P} = Const$ the impulse conservation law.
Now let us take the main equation of dynamics as:

$$\mathbf{F} = m\mathbf{a} = m\frac{d\mathbf{v}}{dt}$$

and multiply it scalarwise by $\mathbf{v}$

$$\mathbf{F}\cdot\mathbf{v} = m\frac{d\mathbf{v}}{dt}\mathbf{v} = \sum_{i=1}^{3} m\frac{dv_i}{dt}v_i = \sum_{i=1}^{3} m\frac{d}{dt}\left(\frac{v_i}{2}\right) = \frac{d}{dt}\left(\frac{mv^2}{2}\right)$$

where v is the module of the velocity vector $\mathbf{v}$. For closed loop system $\mathbf{F}=0$, and the equation integral will be

$$\frac{mv^2}{2} = Const$$

one of the forms of the energy conservation law. From the definition of the angular momentum for a particle,

$$\mathbf{L} = [\mathbf{r} \times \mathbf{P}]$$

Differentiating both parts by *t*, we get

$$\frac{d\mathbf{L}}{dt} = \left[\frac{d\mathbf{r}}{dt} \times \mathbf{P}\right] + \left[\mathbf{r} \times \frac{d\mathbf{P}}{dt}\right]$$

Since the impulse vector is parallel to the velocity vector, the first bracket will equal to zero. On the basis of the resultant equation and the definition of central force as not creating any momentum, we get

$$[\mathbf{r} \times \mathbf{F}] = 0 \quad \text{or} \quad \mathbf{L} = Const.$$

In case of the central force in an unclosed system, the angular momentum is preserved by value and direction. The angular momentum conservation law for a closed loop system results in the same way as the impulse conservation law from the equation of the rotary motion dynamics:

$$\mathbf{M} = \frac{d\mathbf{L}}{dt}$$

For a closed loop system, the momentum of external forces **M**=0 and the integral of the equation will be the angular momentum conservation law

$$\mathbf{L} = Const$$

In relativistic dynamics the emergence of the energy and impulse conservation laws separately can be easily received from the relativistic ratio for energy and impulse

$$E^2 = P^2c^2 + m^2c^4$$

Term m^2c^4 is an invariant, i.e. the same in all reference systems. In other words, it is a certain constant. This equation can be represented in a slightly different form

$$E^2 - P^2c^2 = Const$$

For the equation to be valid, it is required that

$$E = Const \text{ and } P = Const$$

and this none the other but conservation laws for energy and impulse.

Strictly, relativistic mechanics has a conservation law for 4-impulse vector P^{μ}, but we will not dwell on these details, because small energies are what we are interested in.

In the classical theory, the energy conservation law states that the energy of a closed loop system remains unchanged, so, if the energy of such a system is designated at a moment *t=0* as E_0, and at the moment *t* as E_t, $E_0 = E_t$.

Conservation laws in ordinary quantum mechanics

The standard quantum theory formulates the energy conservation law in the same way. In quantum mechanics we have the same movement integrals as in classic mechanics. A certain value *L* will be a movement integral, if

$$\frac{d\hat{L}}{dt} = \frac{\partial \hat{L}}{\partial t} + \left[\hat{H}, \hat{L}\right] = 0 \qquad (1)$$

Since $\left[\hat{H}, \hat{L}\right]$ is defined by commutator of operator $\hat{L}$ and of Hamilton's operator, any value *L*, *not depending explicitly on time*, will be the movement integral, if its operator commutes with the Hamilton's operator. When value *L* does not explicitly depend on time, the first item in (1) turns to zero. There remains

$$\frac{d\hat{L}}{dt} = \left[\hat{H}, \hat{L}\right] = 0 \qquad (2)$$

and for the movement integrals not explicitly depending on time the Poisson quantum bracket equals zero. From (1) and (2) it follows that the average value of the movement integrals does not depend on time:

$$\frac{d}{dt}(L) = 0$$

All good papers on the quantum theory prove that probability $w(L_n, t)$ to find at any moment *t* any value of the movement integral, i.e. L_n, does not depend on time. Further, is constructed as the movement integrals not explicitly dependent on time. Since operators $\hat{\mathrm{L}}$ and $\hat{\mathrm{H}}$ commute, they have common proper functions, which are functions of stationary states. Let us note that the latter follows from solutions of the equation without time, which was received from the full equation with imposition of requirement

$$\Psi(\mathbf{r}, t) = \Psi_0(\mathbf{r}) \exp\left(i\frac{E}{t}\right)$$

equivalent to search of only periodic solutions. Further, quite naturally, *there appeared an equation without time with actually imposed conservation laws, because now nothing depends on time*. Expansion by such proper functions looks as follows:

$$\hat{L}\Psi_n = L_n\Psi_n \qquad \hat{H}\Psi_n = E_n\Psi_n$$

where

$$\Psi(x,t) = \sum_n c_n \Psi_n(x) \exp\left(-i\frac{E_n}{\hbar}t\right) = \sum_n c_n(t)\Psi_n(x) \qquad (3)$$

$$c_n(t) = c_n \exp\left(-i\frac{E_n}{\hbar}t\right) = c_n(0)\exp\left(-i\frac{E_n}{\hbar}t\right)$$

Since (3) is expansion into proper functions of operator L_n, probability does not depend on time:

$$w(L_n, t) = |c_n(t)|^2 = |c_n(0)|^2 = Const$$

Since energy is a movement integral and probability *w (E,t)* to find at a moment *t* an energy value equaling E, does not depend on time, then:

$$\frac{dw(E,t)}{dt} = 0$$

Let us note once again that it is *the probability to find a certain value that does not depend on time, but not the value itself, which for any separate event is accidental and can assume a wide range of values.*

The quantum energy conservation law in the above form suggests a possibility of defining energy at a given moment without subjecting it to uncontrolled change, which raised no doubts in classic mechanics. But in the quantum theory the energy, without changing its value, can only be measured to

$$\Delta E \geq \frac{\hbar}{\tau}$$

where r - is measurement duration. Formally, it does not present any difficulties for the energy conservation law, since energy is a movement integral, and we have much time to make long measurement. For example, let us make measurements during time r, then leave the system to itself for time *T*, and then define energy again. The classic quantum energy conservation law states that the result of the second measurement will coincide with the result of the first measurement to $\Delta \mathrm{E} \approx \frac{\hbar}{\tau}$.

But even in the ordinary quantum theory all this is not consistent enough. For the real vacuum fluctuations can interfere, that always influences the results of a single process, but their influence disappears after the passage to an ensemble of events. Here we have a violation of the conservation law due to vacuum fluctuations, though existence of movement integrals, unlike in the Unitary Quantum Theory (UQT).

The generally accepted quantum theory carefully avoids the question of conservation laws for individual events in the case of small energies. This question is either not discussed at all, or it is said that *the quantum theory does not describe individual events. Yes, it does describe individual events, but it can only predict a probability of this or that result.* It is clear that in this case there are no conservation laws for individual events (it is wrong to speak about it in case of an accidental result of an individual event), and they appear only after the averaging by large ensembles of events. Essentially, it can easily be proved that classic mechanics follows from quantum mechanics after summing up by a large number of particles, because for a sufficiently big mass, the length of the de Broglie wave becomes much less than the body dimensions, and no quantum-wave qualities can be talked about.

Conservation laws in Unitary Quantum Theory

In the UQT [1-14] any quantum particle is not a point, but a source of field like in the ordinary quantum mechanics, but it represents a bunched field (wave packet) of a certain unified field. The dispersion equation of such a nonlinear field turned out to be such that the wave packet (particle) during its movement periodically appears and disappears, and the envelope of this process coincides with the de Broglie wave. Numerous particles during their periodic disappearance (spreading in the Universe) are repeated appearance from vacuum fluctuations. A theory of quantum measurements has been built, and the probability interpretation follows from the mathematical formalism of the quantum theory [10,11], and it is not postulated as in conventional quantum mechanics. Unfortunately, the main UQT equation turned out very complicated, for it is a system of 32 nonlinear integral-differential equations, which could require for their solution some new mathematical methods. But from this the relativistically invariant Hamilton-Jacoby equation, and the Dirac equation system strictly follow.

Papers [13,14] give a solution of the simplified scalar integral-differential UQT equation, which gave a localized solution for the form of a wave packet representing a particle. It turned out that the integral from a bilinear combination of such a solution for the whole volume gives with the precision of 0.3% the value of a non-dimensional elementary electric charge [13,14], which was essentially its first theoretical calculation. Then, this solution in the form of a periodically appearing and disappearing wave packet (which square describes the density of a spatial charge) can be replaced by an oscillating charged particle [15-18], the movement whereof will be described by the conventional Newton equations:

$$m\frac{d^2\mathbf{r}}{dt^2} = -2Q\mathbf{GRAD}U(\mathbf{r})\cos^2\left(\frac{mt}{2\hbar}\left(\frac{d\mathbf{r}}{dt}\right)^2 - \frac{m\mathbf{r}}{\hbar}\frac{d\mathbf{r}}{dt} + \varphi_0\right) \quad (4)$$

$$m\frac{d^2\mathbf{r}}{dt^2} = -2Q\mathbf{GRAD}U(\mathbf{r})\cos^2\left(-\frac{m\mathbf{r}}{\hbar}\frac{d\mathbf{r}}{dt} + \varphi_0\right) \quad (5)$$

where *m, Q,* **r** - mass, charge, and radius-vector of the particle, *U*(**r**) – external potential, φ_0 - initial phase.

Since $\mathrm{E} = -\mathrm{GRAD}U$, and a magnetic field also exists, the Lorenz force should also be calculated for $\mathbf{F} = \frac{Q}{c}[\mathbf{v}\times\mathbf{H}]$, but in the electromagnetic wave **E** and **H** are equal, and for small energies value $\frac{v}{c} \to 0$, and

force **F** can be ignored. Both these equations produce qualitatively similar results for different problems, but the first non-autonomous equation evidently does not have any movement integrals at all, and any hope for analytical solutions is very unreal. But for the second autonomous equation such hope still exists. Let us note that these equations describe more accurately the experimental results of scattering on the coulomb potential than the classic Rutherford formula! Application of these equations for the tunnel effect and scattering on short potential also produces correct results, but in this case passage through a high barrier (tunnel effect) will be defined by the initial phase. Of greatest interest, however, is the harmonic oscillator problem.

It is possible that a change in the properties of a material point in the process of its movement is just another step in the material point movement theory. In conventional mechanics this idea is not altogether new. There are Meshchersky's equations for bodies with a changing mass, and Tsiolkovsky's equation for a rocket. But so far, in the conventional quantum theory, the particle has a permanent and stable in space and time set of properties, and in the UQT all the parameters of the particle are changed and oscillate during movement.

It should be noted that *Newton did not introduce the notion of a material point at all,* and it would be ridiculous to think that he was not able to have this natural and rather trivial idea. Most probably, and it is not by chance, for today many troubles of the field quantum theory are rooted in the approach to the particle, as to the point, the most vivid example being a large bouquet of divergences. Nevertheless, this approach is very convenient and should only be used correctly. Let us also remember, that in accordance with the Newton corpuscular theory, beams of light were to be regarded as a flow of certain particles. They are emitted by a shining body in all directions and move in an empty space or a homogeneous medium evenly and straight, i.e. in the same way as the ordinary material particles do in the absence of any external or interaction forces. Newton explained reflection and refraction of light beams on the surface of border between two homogeneous mediums by the effect of certain forces on this border, in the direction perpendicular to the surface. These forces changed the normal velocity component, but did not touch upon the tangential one, which allowed to derive the reflection and refraction laws. However, the inability of such a theory to account for the light partial reflection and passage phenomena, as well as the Newton rings (which he himself discovered), led him to bouts (or fits) theory, which is quite modern, although nearly forgotten. Newton believed that for full explanation of all the processes it was necessary to suggest that some light particles could experience reflection bouts, and others – passage bouts. Let us imagine light falling to a flat surface, which is partially, reflects and partially passes. With quantum description of this phenomenon, a particle connected to the falling wave at the time of hitting the surface has a certain probability of passing or being reflected, and Newton simply used the word "bouts" in place of the word "probability".

It is absolutely clear that all descriptions of processes by the equation with an oscillating charge will be an approximation, because it is evident that no movement equations for a material point can describe even the simplest interference processes on a semi-transparent mirror, during which a material particle should be divided in two parts which will later eliminate each other by destructive addition. It is surprising, but the numerical solution of the problem of scattering on a short potential (the Ramsauer effect) for equations (4) and (5) gives the correct diffraction picture! But if we want to describe an individual particle correctly in the conventional quantum mechanics, the picture becomes inexact and purely probabilistic. At every given moment of time a particle can exist in only one of the mutually incoherent states, because one particle cannot move in different directions simultaneously (it cannot have many impulses at the same time). Nevertheless, there seems to exist a whole class of processes, where description with the help of equations (4) and (5) have certain sense. It is well known that in all experiments the local energy and impulse conservation law in individual quantum processes are true only under high-energy values. But under small energy values it is not so, at least because of the ratio of uncertainties and the probabilistic character of all the quantum theory predictions, and the idea of a global, not local ECL, is invisibly present in the quantum mechanics, and is certainly far from new.

In the strict UQT and the quantum measurement theory, a great role belongs to unavoidable vacuum fluctuations. It is clear that these fluctuations are totally unpredictable and non-invariant in relation to space and time translations. The same can be said otherwise: there are no habitual properties of time and space in this theory. Space-time is now not homogeneous and not isotropic. For example, if the system is transferred to a new point in space, or a certain experiment is repeated at another time, at the point where particle parameters are studied, and it interacts with the macro-device, a new value of vacuum fluctuations (different from the previous one) can appear and produce a different result. Of course, all this is only true for small energies and individual events.

Still more destructive is the UQT for the notion of a closed system. For individual events under small energy values this notion is simply unacceptable for the following reason: vacuum fluctuation at the location of the particle (e.g. in a potential pit) can be sharply changed at any moment. It can be caused by different factors – the nature of vacuum fluctuations itself, or the tunnel effect of another random particle.

Sometimes it is stated that conservation laws follow from the Nether theorem, though these results are present in the works by D. Gilbert and F. Klein. For any physical system, the movement equations from which can be received from the variation principle, each one-parametric continuous transformation that leaves the

variation functional invariant, corresponds to one differential conservation law, and there exists a clearly conserved value. It is easy to see, however, that vacuum fluctuations imposed on the varied function (integral of Lagrangian) do not in sum remain unchanged during parametric transformations (at least today it seems so), and this consideration does not work without preliminary of ensemble.

And now we are in for a little philosophy. The local Energy Conservation Law (ECL) in individual processes follows from the Newton equations for closed systems. It would be naive to think that its local formulation will be preserved forever, and would be a bad mistake to transfer the ECL from the Newton mechanics to the quantum processes without any changes, because the latter are more fundamental.

References to the first principle of thermodynamics are, strictly speaking, groundless, because this principle is a postulate. For example, well-known Russian mathematician N. Luzin, in a letter to an inventor wrote that the first principle of thermodynamics is the result of unsuccessful attempts of the mankind at building a *perpetual mobile*, and strictly follows from nothing. *Today it may be said with a great degree of certainty that no sophisticated machine in the framework of the Newton mechanics can be a perpetual mobile,* and the decree of the French Academy of 1755 not to consider any *perpetual mobile* projects is still valid. We will only add that now it is valid only for those projects that are based exclusively on the Newton mechanics.

There is the tendency in modern physics to reduce ECL, especially in theory, to the rank of a secondary derivation from the movement equations (movement integrals). Some physicists restrict the ECL to the framework of the first principle of thermodynamics, others, like D. Blokhintsev [37], think it quite probable that with the development of a new theory the form of the ECL will undergo certain changes. F. Engels wrote in his "Dialectics of Nature": "…none of the physicists actually regard the ECL as an eternal and absolute law of nature, a law of spontaneous transformation of the movement forms of the matter and the quantitative constancy of this movement in all its transformations". But many people do not share this opinion. M. Bronstein in his book "Structure of Matter" wrote: "The ECL is one of the main laws of the Newton mechanics. Nevertheless, Newton did not ascribe to this law the general character that this law actually possesses. The reason for this *erroneous* (italicized by authors) opinion of Newton of the ECL is very interesting…". It is now clear that in view of the above, such an opinion was not at all erroneous. Let us remind you that Newton predicted many things, even the UQT, in his "bouts theory".

On the other hand, the authors of quantum mechanics realized that there was no conservation law for single quantum processes under small energies at all. The idea that the construction of ECL, together with the second law of thermodynamics, was a statistical law, true only on the average and inapplicable to individual processes with small energy, first occurred to Schroedinger, and later to Bohr, Kramers, Slater, and Gamov. In 1923 Bohr, Kramers and Slater made a desperate attempt to develop the theory, where the energy and impulse conservation laws in case of scattering would be true only statistically, on an average for long periods of time, but would be inapplicable to elementary events. Lev Landau even called it "Bohr's wonderful idea".

Later, however, the authors gave up this approach and, besides, this idea at that time did not follow from the quantum theory equations, and the authors, *to come out of the predicament, simply declared that quantum mechanics did not describe individual events at all*. Thus, the most vivid paradox of the quantum science was removed by a simple ban on thinking about it! But the ingenious idea that conservation laws do not apply to individual quantum processes and emerge only after the averaging by the ensemble of particles remains alive. This idea might have been a little premature, and, possibly, should be a little different.

The Unitary Quantum Theory (UQT), on the contrary, individual particles, and the difference in their behavior is accounted for by the initial phase of the wave function. In this case, local conservation laws do not exist for a single particle, and measuring the initial phase or some other parameters for an individual particle is quite a different matter. It is not true that the UQT has given up probabilistic description. Probabilistic interpretation remains, but the probability now is strongly dependent on the initial phase. Although the equations with an oscillating charge can determinately predict a particle's behavior, the measurements can be made only with the help of a macro device, which will give only a probabilistic result. Impossibility to determinate measurements does not change anything, for the UQT provides for a possibility of influencing the probability value, which was earlier unavailable. The existing Von Neumann theorem about hidden parameters does not effect our result, but the relevant discussion is too cumbersome, and we will leave it out.

*In other words, **all the requirements**, wherefrom the classical conservation laws follow, are now absent. We can hardly expect the conservation laws for individual particles to be preserved under small energies in such a situation.* Today we are convinced that the classical energy, impulse and angular momentum conservation laws for individual quantum objects are not valid under small energy values because of periodic appearances and disappearances of the particle. All direct experimental tests of the conservation laws were made for large energy values, and for small energies of an individual particle only probabilistic results can be received, and, in this case, it would be indecent even to recall the conservation law.

Energy generation and perpetual mobile

Let us make the following imaginary experiment. For simplification purposes we will use in our reasoning a

certain quantum ball-particle. When a classical ball approaches a wall (perpendicularly for simplification), the speed of the reflected ball is always equal to the initial speed (we ignore friction and regard the ball and the walls as absolutely elastic). In the case of a quantum ball, the speed of the reflected ball will acquire in different experiments with absolutely equal initial conditions a whole range of values: some balls will be reflected at a speed greater than the initial speed, others – at a speed equal or lower than the initial speed, and all this is described by quantum mechanics.

Let us ask the following question: what if a second wall is found, parallel to the first one, in order for the ball to increase its speed after each reflection from the wall? Then we will have increased ball energy without any special efforts on our part. Such phenomena appear in the problem of particle oscillations in a potential pit (not necessarily parabolic) on the basis of equations (8) and (9), when four types of solutions are possible, three of which are most important for us: stationary, "maternity home", and "crematorium". In the two latter solutions traditional conservation laws do not work. These solutions are presented in Fig. 1. Such oscillator behavior explains many experimental facts. From the physical point of view, it means that in stationary solutions with fixed discrete energies (conventional quantum mechanics) the speed of the particle reflected from the wall will be equal to the speed of the falling particle. If the speed of the particle is decreased after each reflection, it will mean the "crematorium" solution, and if it increases, the "maternity home". Scenarios for situations will depend on the initial phase of the wave function and the particle energy. In ordinary situations the "crematorium" and "maternity home" solutions always compensate each other, and we find conservation laws.

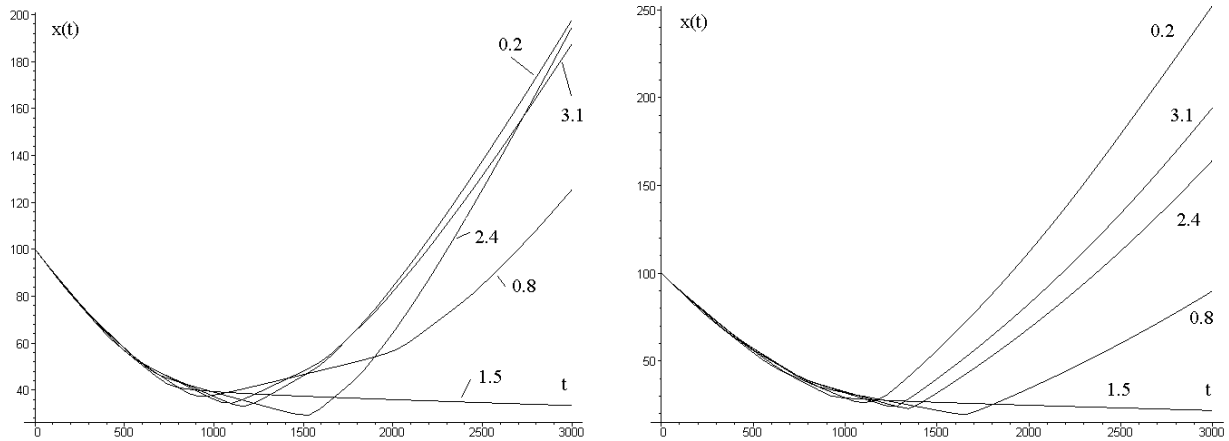

Fig. 1. Dependence of the distance between the moving charge and the nucleus on time for autonomous and non-autonomous equations.

The task of the future developers of new energy systems of the 21st century will consist in creating such initial conditions for a great number of particles making up a body that only the "maternity home" solution would be realized, and the "crematorium" solution would, if possible, be suppressed.

It follows from the above that if the unitary quantum theory ideas are applied correctly, there is no fundamental taboo for a perpetual mobile. Such a taboo, as it was shown, does not formally exist even in conventional quantum mechanics (no conservation laws for individual processes with small energies), and, in order to generate energy, they should be somehow accumulated (all random processes with excess energy should be grouped together). But conventional quantum mechanics refuses to describe individual events and is unable to offer any ways for such grouping. The unitary quantum theory seems to offer such an opportunity.

However, the great idea of free energy generation was distorted by effort of some research associations interested to keep their stability degree, that everyone who started speaking about it was considered to be a crazy man.

Modern experimental physics has verified the correctness of conservation laws either for very large energies in individual quantum events, or for big macroobjects, when automatic averaging by ensemble is made, but the area of very small energies for individual events today is a *terra incognita*.

In order to see how the conservation laws for reflection (repulsion) of an individual particle from the Coulomb heavy nucleus with different values of the initial phase are violated, we have solved numerically one-dimensional equations (8) and (9) under the different initial conditions:

$$\hbar = 1, m = 1,\ 2Zze^2 = 1,\ x_0 = 100,\ V_{x0} = -0.1$$

In the Fig. 2 the distances between the moving particle and repulsive nucleus are shown as a time function, for

different initial phases in cases of non-autonomous and autonomous equations.

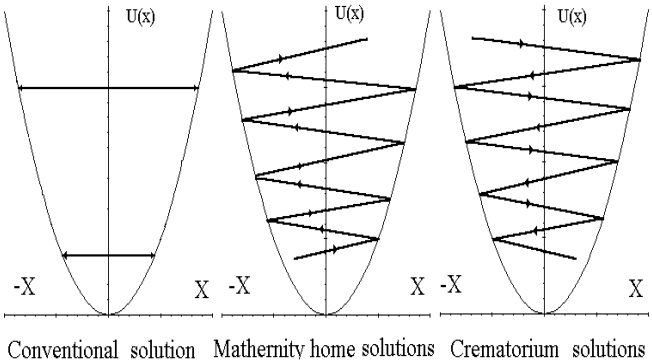

Fig.2 Three types of solutions for oscillator

It is evident from the calculations that the speed of a reflected particle can be equal, lower or higher than the speed of a falling particle. This situation seems to be true for all potentials.

Calculations were also made for other potentials: harmonic oscillator, Yukawa, Gauss, dipole, hyperbolic secant, and Wood-Saxon, and the quality results were nearly the same. If we sum up the impulse of all the particles falling with different phases and compare it with the summarized impulse of all the reflected particles, the summarized reflected impulse, for example, for the Coulomb potential, will be several percent higher than the summarized impulse of the falling particles. For other potentials such a small deviation can even be in the opposite direction. On the whole, this problem is very complicated and requires additional research, because all this is also dependent in quite a complex way on the initial conditions (initial speed, phase and distance).

Philosophically, any categorical taboos, like the impossibility of creating a *perpetual mobile*, are absolutely unacceptable. If everyone is convinced of it forever, the conservation laws and *perpetual mobile* taboos will remain unshakable as long as the human civilization exists. Of course, the funeral of the Conservation Laws can be very prolonged. Anyway, we are not going to do it, and our article might be just a cleanup for the future tomb, and the splendid funeral with all the necessary honors will be organized by future generations. *On the other hand, these laws will never die out completely and will surely be applied, but such spheres of science and technology will appear, though small at first, where these laws are not valid.*

The truth should be accepted irrespective of where it comes from. Words of F. Engels from the "Dialectics of Nature" will be quite appropriate here: "When the solar system ends its life circle and shares the fate of all the finite things, when it falls victim to death, what will happen next? Thus, we come to a conclusion that the heat emitted into the universe should have an opportunity, in a way yet to be established by the natural sciences, to turn into another form of movement, where it can be accumulated again and start functioning. And in this casethe main problem that prevented transformation of dead suns , back to red-hot nebulas will disappear".

The question of whether the conservation law exists in global form (we have already proved its not being local) remains open, because nothing leads to it except the inertia of the human mind. This inertia was based on the Newton laws, which were replaced by quantum laws. This mental inertia leads to a situation, when in case excessive energy is generated during solution of movement equations, a question arises how it can happen, and where it comes from. Of course, if a particle (e.g. a photon) falls on a semitransparent mirror, the packet is divided into two halves, which, due to imposition of vacuum fluctuations, will be recorded by photomultipliers as full-fledged photons [1-5]. The result is that energy is taken as if from vacuum: two photons appear in place of one. Another photon can be divided on the mirror into two halves, but they will not be recorded by the meters, and the energy will allegedly pass into vacuum. So, at one time we borrowed energy from vacuum, and then gave the same amount of energy back to vacuum at another place. You can think like that, and this process might take place. But if we consider the equation with an oscillating charge, the energy and impulse conservation laws are not valid there for solution of the movement problem, and vacuum fluctuations have nothing to do with it at all. As for the question of where the energy comes from, it is the result of our mental inertia, and is, essentially, an atavism imposed by the Newton mechanics. But the latter appears as a result of an extreme passage from quantum mechanics, which is more fundamental.

It is interesting to note that there is a bomb in the logical definition itself of the energy conservation law. If energy is something that cannot appear or disappear and always simply passes from one form to another, the only value satisfying this condition is zero. We are far from assuming that energy does not exist. But the problem of existence is solved differently in different philosophical systems, and the mathematical approach seems to be the most correct one: *an object exists if it is free from contradictions*. Energy has bad luck in this case, for under such an approach it should be zero.

Some cosmologists (for example, British prof. Fred Hoyle) are very willing to have a process, in accordance with which the Universe has certain places where energy appears from other certain places, in which it is eliminated. Besides, any philosopher at least a little bit familiar with astronomy, looking at the bright night sky, will see the birth of matter and its expansion into a still greater space. But for this purpose the Global Energy Conservation Law is superfluous and only denies what is observed. The head reels…

Cold Nuclear Fusion and Nuclear Transmutation.

Let us approach the epoch-making experiments made by Fleischmann and Pons in March 1989 [30] from the positions of the equation with an oscillating charge. One

of the authors predicted in 1983 [9] the possibility of such nuclear reactions under very small energies. Without going into well-known details, we will sum it up very briefly: cold nuclear fusion exists, and there are no people or theories capable of giving a clear explanation. The chain of various mechanisms meant to explain this intriguing phenomenon is growing, but few really believe in them. The reason is as follows.

When a charged particle interacts with the nucleus, the potential energy is like in Fig. 3, where the right top part of the curve is conditioned by mutual Coulomb repulsion between the nucleus and the charged particle.

The repulsion potential will be

$$U(r) = \frac{Zze^2}{r}$$

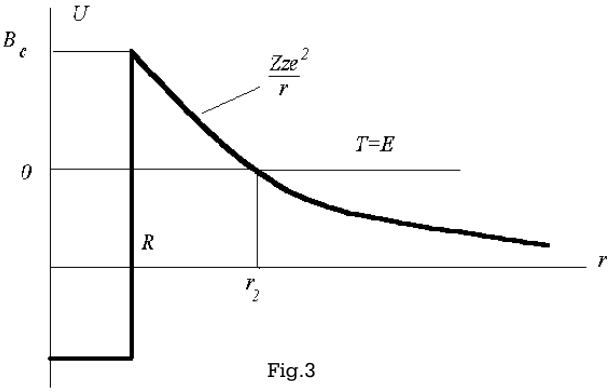

Fig.3

where Z – charge of the nucleus, and z – charge of the approaching particle, e – charge of the electron, r – distance between the particle and nucleus. When $r=R$ (critical distance), then the potential energy curve goes sharply down, which is due to the emergence of intense nuclear gravitation, the potential whereof today appears more complex than could be imagined mathematically. If the charged particle overcomes the Coulomb barrier with a height of

$$B_c = \frac{Zze^2}{R} \approx \frac{Zz}{\sqrt[3]{A}} MeV$$

it will further get into the nuclear gravitation area and a nuclear reaction will take place.

Let us look at the nuclear interaction of a charged particle with kinetic energy $T < B_c$. From the point of view of classical mechanics, there will be no nuclear reaction in this case, because the particle will approach the nucleus and at a certain distance $r < R$ from the top of the Coulomb barrier will turn back and be reflected from it. However, from the point of view of quantum mechanics, there exists a tunnel effect, and the probability of such a tunnel passage, or transparency of potential barrier D is described by a well-known formula:

$$D \approx \exp\left(-\frac{2}{\hbar} \int_{r_1}^{r_2} \sqrt{2\mu(U-T)}\,dr \right) \qquad (6)$$

where $\mu = \frac{Mm}{M+m}$ is reduced mass. The bottom integration limit r_1 coincides with the nucleus radius R, and the top limit r_2 can be found from the condition $T = \frac{Zze^2}{r_2}$. After integration we will get

$$D = \exp(-2g\gamma)$$

where $g = \frac{R}{\lambda_{B_c}}$; $\gamma = \sqrt{\frac{B_c}{T}} \arccos\left(\sqrt{\frac{T}{B_c}}\right) - \sqrt{1-\frac{T}{B_c}}$,

and value $\lambda_{B_c} = \frac{h}{\sqrt{2mB_c}}$, the de Broglie wavelength corresponding to the kinetic energy of the particle equal to the barrier height $T = B_c$. If $T << B_c$, expression (6) is easily transformed to look as

$$D = \exp\left(-\frac{2\pi R B_c}{\hbar v} \right) = \exp\left(-\frac{2\pi Zze^2}{\hbar v} \right) \qquad (7)$$

where v is velocity.

Let us now see what the shocking cold nuclear fusion will look like on the basis of the above considerations. The deuteron energy in an ordinary electrolytic Fleischmann-Pons cell will be about 0.025 eV, and the height of the Coulomb barrier for this case is $B_c = \frac{Zze^2}{\sqrt[3]{A}} = 0.8MeV$. In classical mechanics it would be just naive to talk about overcoming such a barrier with a height dozens times greater than the kinetic energy. Let us now see how the tunnel effect will improve the situation. Let us assess the value of g and γ for the case of collision between two deuterons with such energy:

$$g = \frac{R\sqrt{2mB_c}}{\hbar} = 1.9;$$

$\gamma = \sqrt{\frac{B_c}{T}} \arccos\left(\sqrt{\frac{T}{B_c}}\right) - \sqrt{1-\frac{T}{B_c}} \approx 8883$ and the probability of such a process will be $\exp(-2 \cdot 1.9 \cdot 8883) \approx 10^{-7328}$, i.e. practically pure zero. The fusion cross-section will be defined by the product of nuclear cross-section and the tunneling probability:

$$\sigma = \sigma_{nucl} D$$

and, in the case under review, is also a very small value. If the clash parameter of deuterons is not zero, the emergence of centrifugal potential

$$U = \frac{\hbar^2 l(l+1)}{2mr^2}$$

will still further lower the probability of such interaction.

It is these very circumstances that make the nuclear physics scientist think that there is no cold nuclear fusion as such. For example, such a serious and responsible edition as Encyclopedia Britannica 2001 found no place for the notion of cold nuclear fusion at all. Such an official position can be understandable only from the point of view that quantum mechanics is absolutely true and unshakable. Despite this, for the 12 years since the Fleischmann-Pons experimental discovery, nearly 30 international conferences have been devoted to this subject, there are lots of books and magazines on this subject, and the number of articles on the problem is nearing ten thousand. Today the situation is gradually developing in the positive direction, and the research in the field of hot nuclear fusion, which has already wasted over $90 billion for 45 years, is slowly coming to naught.

But today there exist well known experimental data on cold nuclear fusion. They are numerous and various. We will dwell only upon the most important and sufficiently reliable results. Thus, the classical view of electrolysis of a palladium cathode saturated with heavy hydrogen in heavy water identifies an anomalous quantity of heat energy up to 3 kWt/cm^3, or up to 200 Mj per small sample. Products of nuclear reaction have also been found: tritium (10^7 - 10^9t/s), neutrons with energy of 2.5 MeV (10-100n/s), and helium. Absence of He^3 among the reaction products shows that heat is not generated by reaction $d+p$. Besides, emission of charged particles ***(p, d, t, γ)*** is observed. Similar processes are observed in case of a gas discharge on a palladium cathode, of phase passage in different crystals saturated with heavy hydrogen, irradiation of deuterium mixture with a powerful sound or ultrasound flow, in cavitating microbubbles in heavy water, in a tube with palladium powder saturated with heavy hydrogen under a pressure of 10-15 atm., etc. In certain reactions (e.g. $d + t \rightarrow \alpha + p$) neutrons of 14 MeV are absent, and such a strange situation occurs in other cases too. Activity of Li^6 , Li^7 in reactions with heavy hydrogen and protons failed to be discovered, whereas reaction

$$K^{39} + p \rightarrow Ca^{40}$$

was well recorded even in biological objects. But the most intriguing fact of all these processes is the shortage of nuclear reaction products for explanation of the emerging heat effects. Thus, in certain cases the number of nuclear reaction products (tritium, helium, neutrons, quanta) should be millions of times greater in order to account in some way for the quantity of the generated heat. Generation of such a big amount of energy cannot be accounted for by either chemical or nuclear reactions, or by phase passages. The well-known interaction $d+d$ goes along three channels:

D + D —> T (1.01) + p (3.03) *(Channel 1)*
D + D —> He (0.82)+ n(2.45) *(Channel 2)*
D + D —> He + γ(5.5). *(Channel 3)*

All these reactions are exothermal. The third channel has a very small probability. It was experimentally discovered that they could occur under very small energies. In a molecule D_2 the equilibrium position between atoms is 0.74A and in accordance with the conventional quantum theory, these two deuterons could accidentally enter a nuclear fusion reaction. But the interaction value is very small $\lambda_{D_2} = 10^{-64} c^{-1}$. There is a known estimate that in the water of all seas and oceans there are 10^{43} deuterons, and in 10^{14} years there will be only one fusion.

It follows from the aforesaid that the main problem impeding the occurrence of the $d+d$ reaction lies in the existence of a very high Coulomb barrier. Our approach allows for this problem to be solved, and there is such an opportunity in the UQT. The UQT equation solutions show that the distance to which deuterons can approach each other is strongly dependent on the phase of the wave function (by the way, it is absolutely clear intuitively).

Let us consider the one-dimensional problem [15-18,31]. There is a stationary nucleus with charge *Ze* at the point of origin, and another nucleus is approaching it along axis x (charge *ze*, mass *m*) at a certain initial velocity. The non-autonomous and autonomous equations of such a problem will look as follows:

$$m\frac{d^2x}{dt^2} = -\frac{2Zze^2}{x^2}\cos^2\left(\frac{m}{2\hbar}\left(\frac{dx}{dt}\right)^2 t - \frac{m}{\hbar}\frac{dx}{dt}x + \varphi_0\right) \quad (8)$$

$$m\frac{d^2x}{dt^2} = -\frac{2Zze^2}{x^2}\cos^2\left(-\frac{m}{\hbar}\frac{dx}{dt}x + \varphi_0\right) \quad (9)$$

Since an analytical solution was not found for all the areas of initial phases , numerical methods were applied with the following initial values: $Z=z=1$, $e=1$, $m=1$, $x_0=-10$, $\hbar=1$ for different initial velocities and initial phase values. As had been expected, braking or acceleration of the particle happens only when the charge is large. But at the last stage, under certain initial phases close to $\frac{\pi}{2}$, a wonderful process occurs: velocity, charge and repulsing force are very small. Due to phase ratios, the small charge is not changed for a long time, which means that the particle (or rather what is left of it) is not influenced by any forces, and it is crawling at a permanent small speed for a very long time ("the snail effect") inside the field of another particle, and can come very close to the center. Such movement with a very small charge and a small speed can last for several hours, and disconnection of the external field will not effect this movement. This process reminds of quiet and

invisible scout penetration into the enemy territory. This phenomenon occurs only in certain phase areas, and can be conveniently called a phase hole, which is illustrated in Fig. 4 resulting from the solution of equation (8).

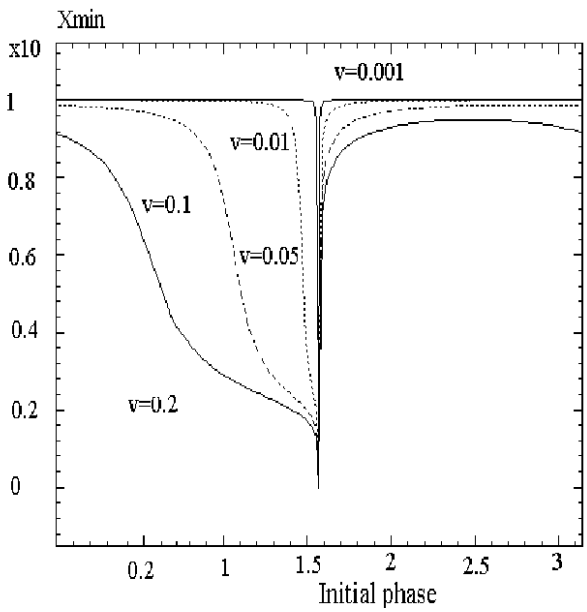

Fig.4. Distance to the turning point of the moving charge depending on the initial phase value for different initial velocities.

Let us note in passing that now we can account for one of the nuclear physics anomalies, which has a tendency to be totally ignored. Under a nucleon energy of 1 MeV, its velocity is 10^9 cm/s, nuclear radius is 10^{-12} cm, and the passage time of the nucleus is 10^{-21}s, but the time period in which the nucleon passes is usually anomalously long - 10^{-14} and even more, and it is absolutely unclear what the nucleon is doing in the nucleus so long. In our model it is easily explained by the "snail effect".

For the same equation, the minimum distance was calculated between the charges dependent on velocity (Fig. 5) for different initial phase values. For comparison, Fig. 5 also shows the result of the classical calculation based on the Coulomb law. It is obvious from Fig. 4 and 5 that the minimum distance to which charges can approach each other is nearly independent of kinetic energy, but with reduction of speed the initial phase area width is reduced as well. In other words, reduced energy brings also reduced probability of a nuclear reaction.

The same results are true for the autonomous equation (9). Under the conventional quantum theory, the ratio of the reaction speeds in the tritium and neutron channels should be close to unity: $\frac{t}{n}=1$. But in many experiments on cold nuclear fusion this value is very different from unity and equals $\frac{t}{n}=10^9$. In different

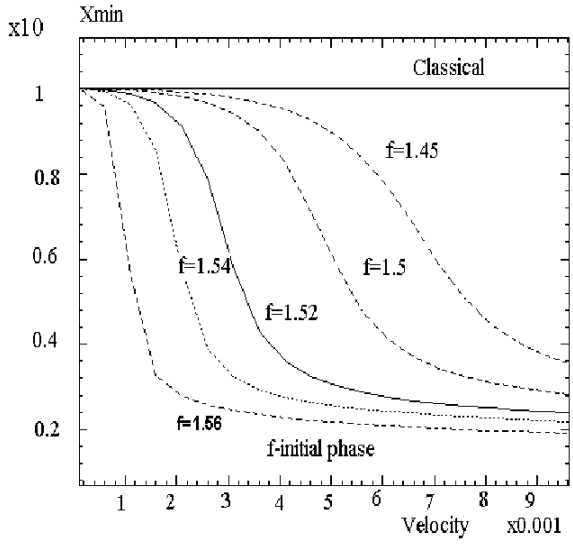

Fig.5 Minimum distance between charges depending on the initial velocity for different initial phase values.

experimental situations it is reproduced by different experimental groups with a very high accuracy. This very intriguing problem has so far received no simple explanation. Let us dwell on a possible cause for such aphenomenon. With a small velocity in the phase hole, neutrons are affected by nuclear gravitation forces, and protons are affected by electrostatic repulsion forces. Under the effect of this momentum, the deuteron will have enough time to turn in such a way that the neutron parts of the deuteron would faceeach other. After the neutron gravitation the nuclear forces will be saturated, which will weaken the proton connection, and one of the protons will leave the system. This reaction can be conditionally presented in the following form:

$$d+d \rightarrow p+(n+d) \rightarrow p+t$$

This reminds of the Oppenheimer-Phillips effect.

It is well known, however, that under big energies, the probabilities of the first and second reaction channels are the same, and this phenomenon should somehow be accounted for. Increased probability of the neutron channel with growing energy can be connected with the appearance of secondary neutrons in the reaction *T + D = He + n (14.1 MeV).* In a deuterium-rich environment, a big part of the resultant tritons will pass to neutrons in the process of this reaction, which has a cross-section of 5 barns under an energy value of 70 KeV. According to assessments in [32], the number of such secondary neutrons per one triton is $7.9\cdot10^{-12}, 1.7\cdot10^{-9}, 2.7\cdot10^{-6}$ for energy tritons 10, 20 and 100 KeV respectively. Thus, the prevalence of $\frac{t}{n}>10^6$ can be expected only in those reactions, where tritium is born with energies over 40 KeV.

It should not be assumed, however, that the phase hole phenomenon in its whole area leads to a nuclear reaction. It can be assumed that reduction of the Coulomb repulsion is followed by reduction of strong

interaction. But how? Today nobody knows the exact equation of the strong interaction potential. Besides, the particle approaches the turning point X_{min} is rather "thin". Will it be able to take part in a full-fledged nuclear reaction, or will it fly through, like it happens with the electron in the s – states of the atom? There are very narrow phase areas, when soon after the particle stops the charge grows quickly and is sharply accelerated. The charge can even be maximum in the nuclear force effect area. May be, it is this narrow phase area that is responsible for cold nuclear fusion, and in case of strong interactions the phase hole mechanism must be operating as well.

It was discovered long ago that nuclear transmutations have a mass character (especially in plants and biological objects), but they have little to do with energy generation. Examples of such reactions:

$$Mn^{55} + p \rightarrow Fe^{56} \ ; \ Al^{27} + p \rightarrow Si^{28} \ ;$$
$$P^{31} + p \rightarrow S^{32} \ ; K^{39} + p \rightarrow Ca^{40}$$

In reactions of this type, a very slow proton (with practically zero kinetic energy) penetrates the nucleus in the above-mentioned way and remains there. *No intranuclear energy is generated, because both before and after the reaction the nucleus remains a stable object.* In classical nuclear physics, the nucleus usually became unstable after it was penetrated by a charged nucleon with a large kinetic energy and always broke into parts, and the nuclear debris had an even greater kinetic energy. Reactions of the above type were considered impossible under small energies and for this reasons were not studied by classical nuclear physics. It seems to be *a completely new type of nuclear transmutations, not recognized by modern nuclear science, but experimentally discovered rather long ago.* Today there is a great deal of experimental material confirming mass nuclear transmutation phenomena. Moreover, there are many projects of neutralizing nuclear excess with the help of this technology. Journals *Infinite Energy, New Energy, Cold Fusion, Fusion Facts*, etc. and Internet are full of such projects.

Of course, a change in the nuclear charge will result in restructuring of electronic atom shells, but the energy related to this process will be about several electron-volts and is nothing in comparison with the energies of nuclear reactions from several to hundreds million electron-volts. By the way, nuclear engineers are accustomed to such energy ranges in nuclear reactions. It was this circumstance that made them deny *a priori* all nuclear processes in biology, because under such energy values of the debris dozens and hundreds thousand of complex biological molecules will be destroyed.

Quite a long time ago, Lois C. Kervran [33] wrote a book about nuclear transmutations in biology, and now, nearly 20 years later, its second edition was published! It gives, evidently for the first time, numerous *experimental* data of the above-mentioned phenomena. The reaction of the official science is very interesting. For example, well-known physicist Karl Sagan, after reading the book about such *experimental* data, advised Kervran to read elementary textbooks in nuclear physics!

Some time later a research was made by Panos T. Pappas [58], who studied one of the well-observed nuclear reactions in biological cells:

$$Na_{23}^{11} + O_{16}^{8} = K_{39}^{19}$$

Classical biology has long known about the existence of equilibrium, when the ratio between the number of K and Na ions is maintained with greatest accuracy despite the shortage or even absence of K ions in food. Later, in work [59] this nuclear reaction was even called the life equation, and the existence of such nuclear reactions in biological objects was proved by M.Sue Benford with the help of direct physical methods.

All thermonuclear fusion programs are based on blunt heating and compression of the reacting material. Despite the progress achieved, the head of the works in England, Dr. Alan Gibson [34], established several years ago that the model reactor design would be created not earlier than in 50 years. Today, this point of view is generally accepted. Even if the reactor is once made (although the authors have grave doubts about it), it will be very complicated, expensive, and harmful for the environment.

Classical approaches have so far not yielded any positive results, despite multi-billion investments and a great number of physicists, engineers, service personnel, and managers involved. It is only natural that this army of researchers is a potential impediment for all alternative projects of new power engineering. It has been noted that *"viability" of any idea is proportionate to the number of people involved and investments made.* For these reasons, the Fleischmann-Pons works were given a hostile reception in the USA and other countries.

All the controlled thermonuclear fusion programs are accompanied with the adjective "controlled", although there is no control whatever. It is simply that the initial quantity of the reacting substance is *prudently* made very small. For example, a ball of lithium deuteride during laser reduction has a diameter of several mm. So far no one has been seriously considering the question of utilizing the energy of an explosion of such a ball, which is approximately equal to the energy of an explosion of a box of antitank grenades.

The straightforward approach to fusion used by the modern science is very natural, because quantum mechanics has no methods of influencing this process. The future of really controlled nuclear fusion systems may be not on the way of primitive and blunt method of heating and compression of the material, but following UQT on the way of using collisions of nuclei having small

energy and corresponding fine adjustment of the wave function phase.

It is essentially possible in case of imposition of the external controlling electromagnetic field on the reacting system, which contains quasi-fixed ordered deuterium atoms and free deuterons. The same properties can be demonstrated by special atomic grid geometry. Diffraction scattering of a deuteron flow on such grids will lead to automatic deuteron selection by energies and phases.

It seems that in the Fleischmann-Pons electrochemical experiments such an ordered system existed in the *Pd-D* grid, and some phasing occurred, which accounts for the results of these experiments [30].

Today it appear to us that the cold nuclear fusion processes will be effectively used for nuclear waste liquidation and production of isotopes.

Many researchers [35,36] discovered that the quantity of heat generated in the process of electrolysis of ordinary water on nickel electrodes (there is no hope for nuclear reactions in such systems) is the same as in the electrolytic cell with heavy water. It confirms other measurements, which showed that the quantity of nuclear reaction products is millions times less than is required for such an amount of generated heat, and its origin remains a mystery.

Further we will give certain concrete data demonstrating the phase values of a deuteron with an oscillating charge, under which the deuteron can approach the nucleus to a critical distance of 10^{-12} cm or less, i.e. giving the data to estimate the value of the above-mentioned phase "hole" in the interval (0,π) of the phase change.

Assume that the stationary nucleus with the charge q is placed to the coordinate origin x=0 and the deuteron with the same charge q is placed at the initial moment t=0 to the point $x_0 < 0$on the x-axis, and the deuteron velocity equals $\dot{x}_0 = v_0 > 0$. The units of mass, length and time are chosen in such a way that $m = 1, \hbar = 1, c = 1$ (*m* - deuteron mass, *c* - light velocity). Charge *q* equals 0.085137266. Our units are connected (to 4 significant figures) with the system (kg, m, s) as follows:

1 mass unit = 3.345×10^{-27}kg,
1 length unit = $1.049\cdot 10^{-16}$ m,
1 time unit = $3.502\cdot 10^{-25}$ s.

The electron velocity corresponding to its energy of 1eV equals $5.931\cdot 10^{7}$ cm/s. The deuteron velocity corresponding to such energy will be assumed to be 3680 times less, and in our units it will be $5.372\cdot 10^{-7}$ (if $c = = 3\cdot 10^{10}$ cm/s). Then the deuteron movement towards the nucleus is described by the equation

$$\ddot{x} = -\frac{2q^2}{x^2}\cos^2(\frac{1}{2}(t+t_*)\dot{x}^2 + x\dot{x} + \varphi_0), \qquad (10)$$

where the parameter t_* is defined under the condition that the argument of cosine equals φ_0 for $t = 0, x = x_0, \dot{x} = \dot{x}_0$ (thus $t_* = -(2x_0)/\dot{x}_0$), and this parameter may be considered as the initial moment of so called local time.

In the interest for us are namely solutions of eq. (10) under very small deviation ε from phase φ_0 and so we put $\varphi_0 = \frac{\pi}{2} + \varepsilon$ and rewrite eq.(10) in the following form:

$$\ddot{x} = -\frac{a}{x^2}\sin^2(\frac{1}{2}(t+t_*)\dot{x}^2 + x\dot{x} + \varepsilon), \qquad (11)$$

where *a* = 0.0144967 Let the initial x_0 to be equal - 500000 of our length units (i.e. approximately $5\bullet 10^{-9}$ cm) and the initial deuteron velocity v_0 to be equal to the velocity v_{00} corresponding to the deuteron energy of 1 eV or less. But it turned out that the precision of numerical integration of this equation under such initial conditions and under values $|\varepsilon|$ = $10^{-15}$and less is small and besides the interval of the integration must be very large. That is why this equation also had to be transformed by passing to "slow" time $\tau = |\varepsilon| t$ to the equation relative to the variable $w = \left(\frac{dx}{d\tau}\right)^2$ as a function of *x:*

$$\frac{dw}{dx} = -\frac{2a}{x^2}\left\{\frac{1}{\varepsilon^2}\sin^2\left[|\varepsilon|(\frac{1}{2}(\tau+\tau_*)w + x\sqrt{w} \pm 1)\right]\right\}, \qquad (12)$$

where $\tau_* = -(2x_0)/\sqrt{w(x_0)}$ and +1 if ε >0, and -1 if ε < 0. It must be added also the equation for τ as a function of *x* :

$$\frac{d\tau}{dx} = \frac{1}{\sqrt{w}}. \qquad (13)$$

The system of equations (12, 13) is, so to say, a "model" system describing fairly accurately the deuteron movement under all values of |ε| from 10^{-24} to 10^{-6}. Numerical integration of this system was fulfilled under different values of e and under following initial conditions:

$$w(x_0) = 2.103, \tau(x_0) = 0, x_0 = -500000, \tau_* = 689573.18 \qquad (14)$$

It may be noted that the initial deuteron velocity v_0 equals 1.450172 (following the relation $\dot{x}_0 = |\varepsilon|\sqrt{w(x_0)}$) for given initial $w(x_0)$ and for |ε| = 10^{-7} , i.e. such velocity is approximately 3.7 times less than velocity v_{00} corresponding the deuteron

energy of 1eV. If $|\varepsilon| = 10^{-6}$ then the velocity v_0 is approximately 2.7 times greater than velocity v_{00} .

It turned out that the numerical tables for values of w, τ obtained under different values of $\varepsilon < 0$ in the interval (-10^{-24}, -10^{-6}) don't differ essentially from each other. The following table is true to three-four significant figures for τ and $\dot{x}/|\varepsilon| = \sqrt{w}$:

x	τ	$\dot{x}/\lvert\varepsilon\rvert$
-500 000	0	1.450
-50 000	$1.426 \cdot 10^6$	0.0493
-500	$1.002 \cdot 10^7$	0.000489
-200	$1.067 \cdot 10^7$	0.000440
-100	$1.090 \cdot 10^7$	0.000425
-80	$1.100 \cdot 10^7$	0.000423

If reducing the table values of x to centimeters, we obtain the following corresponding approximate values:

$$5 \cdot 10^{-9}, 5 \cdot 10^{-10}, 5 \cdot 10^{-12}, 10^{-12}, 0.8 \cdot 10^{-12}$$

The time interval ΔT , in which the deuteron reaches the critical distance 10^{-12} *cm* from the center, is $67350/|\varepsilon|$ of our time units or $(1.090 \cdot 10^7 / |\varepsilon|) \cdot 3.502 \cdot 10^{-25}$ seconds. If nuclear forces are not taking into account then the deuteron may approach the distance less 10^{-12} *cm* .

We present here the table, where are given the initial deuteron velocities v_0 in velocities shares v_{00} and the corresponding time intervals ΔT (in seconds) for different values of ε.

ε	$\frac{v_0}{v_{00}}$	ΔT (s)
-10^{-6}	2.7	$3.82 \cdot 10^{-12}$
-10^{-7}	0.27	$3.82 \cdot 10^{-11}$
-10^{-22}	$0.27 \cdot 10^{-15}$	$3.82 \cdot 10^{4}$ (≈ 10.6 hours)
-10^{-23}	$0.27 \cdot 10^{-16}$	$3.82 \cdot 10^{5}$ (≈ 10.6 hours)

Let us note that the given data change essentially under positive values of ε (10^{-6}, 10^{-7}, etc.). There is some asymmetry of solutions behavior under negative and positive values of ε. The calculations show the minimum distance $|x|_{\min}$ more than 500 of our lengths units even for relative big initial $w(x_0)$ = 10000. Thus, if we limit ourselves to the condition that the deuteron energy is not over $(0.27)^2$ eV at a distance of $5 \cdot 10^{-9}$ cm from the central nucleus, and the whole process of deuteron movement towards the nucleus does not exceeds approximately 10.5 hours, then the interval $(\frac{\pi}{2} - 10^{-7}, \frac{\pi}{2} - 10^{-23})$ is approximately the sought phase "hole" in the whole interval ($(0, \pi)$) of phase change φ_0 in eq. (10).

If many deuterons with the energy not more than $(0.27)^2$eV at the distance $5 \cdot 10^{-9}$ *cm* from the nucleus are equally distributed along their phases φ_0 , the ratio of the length of this "hole" to π, equaling approximately $0.3 \cdot 10^{-7}$, is equal to a share (or a relevant percentage of $0.3 \cdot 10^{-5}$) of deuterons overcoming the Coulomb barrier.

The above figures express at least the order of probability of the cold nuclear fusion occurrence, and this order is absolutely incompatible with the figures in the classical quantum mechanics mentioned above. Let us note once again that a one-dimensional problem was solved, and in case of an accurate analysis (not zero sighting distance will be taking into account) this probability will be lower. Let us also pay attention to the large time intervals ΔT calculated if $|\varepsilon|$ is very small. It explains well the effect (observed by many researchers) of continuation of cold nuclear fusion reactions during even many hours after the disconnection of the voltage in the electrolytic cell. This effect was named even "life after death".

As for the analysis of the deuteron movement with the help of the autonomous equation, the calculations lead to initial velocities v_0 , exceeding the above mentioned numbers, although the general motion picture is the same. But the autonomous equation is interesting, because in the area of those values $x, \dot{x}$, under which the product $x\dot{x}$ is modulo small, it is possible to replace $\sin(x\dot{x})$ with $x\dot{x}$, and the eq.(11) under ε=0 to replace with simplified equation (describing the deuteron motion from initial point $x_0 > 0$ to center)

$$\ddot{x} = a\frac{(x\dot{x})^2}{x^2} = a\dot{x}^2$$

This equation has a very simple analytical solution. Without giving very simple calculations, we will present the final formulas.
Let us take the following initial conditions:

$$x(0) = x_0 > 0, \quad \dot{x}(0) = -v_0 < 0$$

Then

$$\dot{x}(t) = -\frac{v_0}{1 + av_0 t}, x(t) = x_0 - \frac{1}{a}\ln(1 + av_0 t)$$

It follows from these formulas that the velocity of a particle moving in accordance with the initial equation never turns to zero, and under

$$t = t_* = \frac{\exp(ax_0) - 1}{av_0}$$

$x(t_*) = 0$, i.e. the particle reaches the center of the nucleus, its velocity at this moment being

$$\dot{x}(t_*) = \frac{-v_0}{1 + av_0 t_*} = -v_0 \exp(-ax_0) \ ,$$

so that it *passes through the nucleus and moves further..*

For example, let $a = 0.0144967$, $x_0 = 1000$ ($\approx 10^{-11}$ cm), $\dot{x}(0) = 5.37 \cdot 10^{-10}$ (≈ 16 cm/s).

Under such initial data, the product $x\dot{x} = -0.0000537$, so it is quite possible to replace $\sin(x\dot{x})$ with $x\dot{x}$. In this case,

$$t_* \approx 2.3 \cdot 10^7 \qquad (\approx 8 \cdot 10^{-18} \text{ s}),$$

$$\dot{x}(t_*) \approx -29.9 \cdot 10^{-17} \qquad (\approx 9 \cdot 10^{-6} \text{ cm/s})$$

These figures fit well into the reasonable framework, so the autonomous model can also be of use for the movement analysis in the problem under review. The phenomenon of particle passage through the Coulomb potential accounts very well for the existence of pendulum orbits in the Bohr-Sommerfeld model, when in states *1s,2s,3s* etc. the electron passes through the nucleus. Such states in the strict theory and experiment have no impulse, so in the Bohr-Sommerfeld model they were discarded as absurd. Now they have a right to existence. Further, the experimental data for angular distribution of non-elastic scattering by nuclear reactions (including reactions with heavy ions) reveal the big amplitude of the scattering forward. It is impossible to explain such effect by the formation of intermediate nuclei but it is may be explained from the viewpoint of our UQT.

General Principles of Creating New Energy Sources

In the ancient classical *perpetual mobile* idea it is supposed that energy is just created and not taken from outside (impossibility of *a perpetual mobile* is the first law of thermodynamics). There have appeared lately many articles and even books dwelling on the idea of energy generation from vacuum. We are not in complete agreement with many of these works, and we will dwell only on some of them, which, in our view, can be of interest. One of the main ideologists of this completely new sphere in science are Daniel C. Cole and Harold E. Puthoff, and their first serious work entitled «Extracting energy and heat from the vacuum» was published in Physical Review E, vol. 48, #2, (1993). In this work authors use the Casimir forces [60] making them produce useful work. The appearance of such forces in vacuum is understandable intuitively: if in a stormy sea we put vertically into the water two big parallel plates, on the outside part of these plates the waves will hit them at random, and between the plates there will be no waves. Then, the hitting of the waves outside the plates will produce a gravitation force between them (the Casimir force discovered experimentally long ago), which the authors of this interesting work are going to exploit. It is easily seen that in this idea energy is generated from vacuum fluctuations.

Our approach is altogether different. When the equation with an oscillating charge was solved for the quantum oscillator, 4 types of solutions were discovered. For us only two of them matter – "crematorium" and "maternity home". In one solution ("crematorium") the particle slowly falls to the bottom of the pit and finally turns into a "specter" (under the strict unitary quantum theory it disappears, spreads about the Universe and contributes to vacuum fluctuations everywhere). In the other solution ("maternity home") the particle can even be born of a very small fluctuation, or accumulate a sufficiently big energy. Let us underline once again that both these processes are not at all logically connected. In other words, there are such systems where energy will disappear completely (electrolytic baths), or increase unlimitedly (it might be our Universe).

It is the energy conservation law that presents the strongest impediment in all cosmological approaches. However, universes with birth of matter have long existed in scientific cosmology independently of us. There is known the theory of British astronomer Fred Hoyle based on the idea of continued creation of matter from nothing. The question of whether such an approach is realized in nature and whether the energy emitted by quasars is the result of work produced by a certain gigantic pit, is the most intriguing question of the future.

It is yet unclear whether the values of appearing and disappearing energy in these solutions are equal. But neither in the strict UQT nor in the equation with an oscillating charge vacuum (as a big set of random oscillations) is needed for energy generation. Of course, UQT admits of such an energy exchange with vacuum. For example, during split of a photon on a semitransparent mirror, at one time both halves of the photon will not be registered and will give their energy to the vacuum and disappear for the observers for good, at another time there will appear two photons out of one, and the lacking energy will be taken from vacuum. But *the movement equations (4) and (5) themselves know nothing about vacuum and can generate energy due to their nature* (they are noninvariant relative to the coordinate translations) and the conservation laws we are so accustomed to do not exist for them.

Let us remind you once again that the latter follow from the Newton equations, and the Newton equations result from averaging by a big number of events, while for individual events of small energies no conservation laws in quantum physics exist.

In other words, it can be said philosophically that a motion of a small wave packet, once started, will give birth to other movements (energy) and, consequently, to matter. Since most various and breath-taking speculations are possible, up to the creation of a universe, we will stop here.

Thus, the generated or disappearing energy in our approach can be manifest not only in the changes of the particle velocity during movement in a certain potential, but in the appearance or disappearance of the particles themselves as well. A change of the particle velocity in movement is most easily discoverable, and it is the velocity increase that can be used for generation of heat or electric current. There can be energy systems, which exploit the fact itself of charge oscillation and the consequence of it. It is very probable that these phenomena, contradicting the most fundamental laws of modern science, have been long discovered and even applied. But these are the very phenomena that are the easiest to be exploited at the first stage of development of such new energy technologies.

When an energy generation mechanism is used, crematorium-type solutions should be suppressed. But all the quantum processes are built on the basis of elementary acts, and each of them is impossible to be controlled separately. But if the probabilities of such processes are controlled, they, being multiplied by the great number of participants in the process, automatically become macroscopic variables of quantum kinetics, and the process itself becomes possible. It can easily be achieved, if process participants with correlated initial phases are selected.

Let us remind you that the Newton and relativistic classical mechanics follow from the strict UQT, while the Newton movement equations with the resultant energy and impulse conservation laws follow from the oscillating charge equation with averaging by the particle ensemble composing a classical body (material point). But these conservation laws are nonexistent for individual microparticles in our theory, and they appear only in case of averaging by the ensemble of particles. Thus, if the energy-generating processes are accumulated, and the processes where energy disappears are suppressed, a classical *perpetual mobile* can be created.

But the UQT and the oscillating charge equation have other differences not only from the equations of classical mechanics, but also from some equations of electrostatics and electrodynamics.

There is a fundamental theorem of circulation for the electric field. Let us dwell on it in more detail. Let us have a vector field **E,** which can be an electrostatic or a gravitation field.

$$\mathbf{E} = \mathrm{P}(\mathrm{x},\mathrm{y},\mathrm{z})\mathbf{i} + \mathrm{Q}(\mathrm{x},\mathrm{y},\mathrm{z})\mathbf{j} + \mathrm{R}(\mathrm{x},\mathrm{y},\mathrm{z})\mathbf{k}$$

Line integral

$$\Gamma = \oint_l \left(\mathrm{P}\,dx + \mathrm{Q}\,dy + \mathrm{R}\,dz\right) = \oint_l \mathbf{E}\mathbf{dl} \qquad (15)$$

is called circulation of vector field **E** by contour *l*. Of course, circulation depends not only on **E**, but also on the passage direction accepted in contour *l*; by changing the passage direction we will change the circulation sign. Form (15) is convenient for mathematicians, but for our purposes we will present equation (15) in a different way. If both parts of equation (15) are multiplied by electric charge *q,* on the right we will get the integral of force $q\mathbf{E}$ by way **dl,** i.e. work for moving the charge along a closed loop contour. It is well known that this value is zero.

$$\int_l q\mathbf{E}\mathbf{dl} = \mathbf{0} \qquad (16)$$

If this value were not zero, an energy source could be created. For this purpose a charge should be moved in electric field **E** from point *a*, located in the high voltage area of the field, to point *b,* located in low voltage area of the field, and then back, but along another route. The values of work from $a \to b$ and from $b \to a$ would be different, and we could extract work from the field without making any changes in the system. When the charge is constant, it is certainly true, so for a macroscopic constant charge this theorem is an analog of the energy conservation law. The authors have not come across such an interpretation of the energy conservation law in other works. If the charge is microscopic, then in the UQT it changes, depends on time, coordinate and velocity, so work from $a \to b$ and from $b \to a$ will be different, in this case work can in principle be extracted from the field without any changes made in the system.

Discussion of Experimental Results

Let us now get down to explaining some very unusual experimental results, which the authors have nothing to do with, and which they sometimes regard rather skeptically. The point is that the sphere of new energy sources is the headache of all the human civilization, and in this sphere, like nowhere else, the dividends can be exorbitantly high, and for this reason there are in this sphere a lot of swindlers (even among the theoreticians) and simply erring people. The official science of the world does not so far believe in such research, but the most suspicious fact is the great multiplicity of such works. The authors are not inclined to regard all these people as swindlers or erring, because the UQT can offer a beautiful and simple interpretation of certain phenomena.

There are strange plants with the efficiency over 100%. They are even manufactured in small quantities and are rated among energy-saving devices already termed over unities. Japanese researchers take these problems very seriously, and the leading role in studying this problem belongs not to the USA, but to Japan, which even finances many US institutes in this framework. The total Japanese expenditures for this research exceed $200.000.000 a year. It can be forecast that with the Japanese mentality and the state policy of exporting not natural resources, but superhigh technologies and intellect, Japan will find itself among the leading countries early in the 21st century. We think that our readers will not be surprised to hear that Russia has

not allocated a single cent for this program, and all research was made on pure enthusiasm.

In the USA such works do not get official governmental support either (like, for example, the dying out hot nuclear fusion problem), but a great number of private firms and individual businessmen are conducting large-scale research. The following US journals are devoted to the subject: *Journal of New Energy, Infinite Energy, Cold Fusion, New Energy News, Fusion Facts*, and *NET-Journal* (Switzerland).

Switzerland, Italy, Germany, and France are also among the countries where the new energy problems are seriously researched from the cold nuclear fusion point of view.

A very young sphere of power engineering has emerged and is quickly developing, which researches many new energy sources. In future those new energy-saving sources will first be used, which will considerably differ from the existing ordinary energy transformers in that they will generate additional energy that can be used in the interests of the mankind. The development of civilization will then be limited not by long-expected reduction of natural fuel resources, but by heat pollution of the environment.

Let us enumerate just a few of the new energy directions:
1. The Patterson fuel cell (CETI).
2. Supermagnet-superengines of Takahashi, Aspden and Adams
3. Swiss plant Testatika.
4. Engines operating on water.
5. Hypersound Griggs pump, the Potapov and Schaffer heat generators.
6. Schoulder and Fox cluster systems.
7. N – machines of Farade, Bruce de Palma, Newman, Searl, Tewari, etc.
8. PAGD reactor of Canadian researchers P. Correa and A. Correa.

This list can be complemented with the surprising experimental results received by physicists A. Samgin and A. Baraboshkin (Russia, Institute of High-Temperature Electrochemistry under the Russian Academy of Sciences, Ekaterinburg) [24,25] and T.Mizuno [26] (Japan). They appear to have used, totally independently of each other, special proton-conducting ceramics, which, when electric current runs through them, generate a thousand times more heat energy than the electric energy consumed. In some experiments by T.Mizuno this value even exceeded 70000(!). T. Mizuno in a personal talk with one of the authors of this report said that he feared very much the radiation sickness. But no α, β, γ radiation or nuclear debris was found, and the nuclear processes are not responsible for such energy generation. Such proton-conducting (or, to be more exact, deuteron-conducting) ceramics was made using the power metallurgy methods by agglomeration under high temperatures. In other words, all the chemical processes in it had long been over. The origin of such an amount of excessive energy is absolutely incomprehensible in the framework of conventional science, for they cannot be accounted for either by nuclear or chemical reactions, or by phase passages. At first the authors of this experiment supposed nuclear fusion reactions of the D+D type. At our request, A. Samgin replaced heavy hydrogen (deuterium) during ceramics production with ordinary hydrogen. If the effect of such huge energy generation was connected with the nuclear D-D reactions, all the anomalous heat effects would have disappeared, but they persisted. After such a large quantity of energy was generated, the tablet disintegrated into powder.

These effects can easily be explained by UQT from the harmonic oscillator theory point of view. When the tablet is agglomerated, there remain in it some caverns of a size of hundreds Angstrom units. When direct or alternating current flows through it, the protons and deuterons in their movement (there are few electrons in such ceramics) get into these caverns, and a process can start which is described by the "maternity home" solution. A particle accumulating energy, oscillates in such a pit, and finally the energy will be sufficient both for heating and for destruction of the pit walls (tablet turning into powder). The same processes seem to be taking place in a palladium electrolytic cell with heavy water, and in a nickel electrolytic cell with ordinary water, which accounts for anomalously large heat generation, not related to nuclear processes.

It would be good to verify experimentally the dependence of the tunnel effect on the initial phase. But it seems us that it is more important for our opponents, since both cold nuclear fusion (CNF) and discovery of nuclear transmutations *(which, from the point of view of modern science, are even more absurd than the existence of CNF*) evidently cannot be accounted for in any other way. Besides, such a direct experiment is of a fundamental value. There are today a lot of people and groups in the world, who pin great hope on exploiting the nuclear transmutation phenomenon for the purposes of processing and recycling of nuclear wastes, and the question of industrial generation of tritium for military purposes using CNF methods was under consideration in Los-Alamos. Internet magazines are full of such information. We are not giving Internet addresses here, because everything is constantly changing in this live system.

Let us analyze some of the above-mentioned devices. The first, the oldest and the most mysterious information was information about internal combustion engines operating on water.

Let us give just one example. When we were students, one of our teachers, the late Professor G.V. Dudko (1959) told us that in 1951 he had participated in the testing of an internal combustion engine [39,55-57]. The device represented a hybrid of a diesel and an ordinary carburetor engine, where a gas of petrol was needed to start it and then ignition was switched off, and an

ordinary fuel pump sprayed into the cylinder warmed up and strongly compressed water with special additives (which the inventor himself put into the tank in small quantities, and which, as we now understand, represented the principal secret). The engine was installed on a boat. The researchers were riding for two days in the Azov Sea, and only water vapor was the engine exhaust. Professor Dudko himself drew the water fuel overboard and poured it into the tank. They needed much water, several buckets a day, but there was no shortage of it… The question of why, if everything was so great, these engines are still not in use, can occur only to a person who has never lived in Russia.

From the point of view of the solutions of the harmonic oscillator problem, the following theoretical possibility exists [40,44,47,55-57]: if water with the necessary additives (which, evidently, represent the secret of many invented engines operating on water) is compressed and sprayed into the cylinder, each drop of water, when it gets into the cylinder after being compressed, will start dilating and will pass by inertia the equilibrium position. As a result, caverns (empty volumes) can be formed in it, with a size of several dozen of Angstrom units. If a free proton (or some other microparticle) gets into such a cavern in the required phase (it is supposed that the task of the additive is exactly this), the "maternity home" solution will be realized and some of the drops will explode… Later we heard and read many times about various Russian inventors, who had successfully created and tested engines operating on ordinary water with some mysterious additives.

Of course, the possibility of catalytic water decomposition with small energy consumption before spraying into the cylinder is not at all excluded. There are films and information in Internet about testing of cars operating on water, which is catalytically (with small energy consumption) decomposed into oxygen and hydrogen. Such power engineering would be ecologically absolutely clean, and the only restriction would lie in heat pollution of the environment.

An ideal solution for the motor transport could also lie in use of some new types of electric energy generators. The UQT even admits of the possibility, which was long observed in the experiments of Nicolas Tesla and in those made by Canadian physicists the Correas, who even received a patent for a system generating energy from vacuum fluctuations (as they believe) [45]. The readers could have got acquainted with our detailed theory of these processes in [46]. But the ideal system for the automobile would certainly be Testatika.

Any imagination will be amazed at the thermal cell CETI created by James Patterson, USA [27], in which takes place the electrolysis of specially made nickel balls in ordinary water. The US paper «Fortean Times» [1] 85, 1995, wrote about it: "December 4, 1995 will go down into history. On this day a group of independent experts from 5 US universities was testing a new source of energy with a stable output heat power of 1.3 kWt. The consumed electrical energy was 960 times smaller". All experts note that the generated heat is of mysterious origin and cannot be explained by chemical or nuclear reactions, as well as by phase passages. The US ABC TV showed on February 7 and 8 1996 in the «Nightline» and «Good Morning America» cycles of programs about the development by Patterson of a new energy source generating hundreds of times more energy than it consumes. The mysterious nature of the generated heat was again underlined. It is interesting [34] that Motorola tried to buy the CETI patent from its authors for $20.000.000, but met with a refusal. We are sure that Motorola had invested a certain amount of money into the study of this problem before making such a serious offer. All that happens within the Patterson element has nothing to do with nuclear reactions (although Patterson told one of the authors that he was of a different view), and, in our opinion, can be accounted for by exactly the same processes as were described above for proton-conducting ceramics.

The sonoluminescence phenomenon, when certain liquids start shining if weak ultrasound is run through them, also looks very mysterious. No satisfactory explanation has so far been found for this experimentally proved phenomenon, discovered by Moscow University Professor S.N. Rzhevkin in 1933. As Nobel Prize winner Professor Yulian Schvinger said, "it has no right to exist, but it does exist" [38]. This phenomenon can also be explained from the above-mentioned positions.

There are also heat generators (Yu. Potapov [21-23], Moldavia, James J.Griggs [28], and Huffman [29], Schaffer - USA). In them many cavitating bubbles are formed during circulation of ordinary water, in which excessive energy is generated, with the output to input energy ratio approaching 1.7. In these experiments and plants no chemical or nuclear reactions can take place, and thousands of Potapov's heat generators have been manufactured for heating homes. In such devices (they are very different in appearance) a great number of cavitating bubbles are created in a flow of water. This is achieved either with the help of interrupting the water flow with a special rotor (J.Griggs, Huffman, Schaffer), or the water flow is twirled by a special helix and then enters the zone of sharp dilation, where cavitating bubbles are formed (Yu. Potapov). In general, it should be said that cavitation remains a great puzzle for theoretical hydrodynamics and science. For example, forged multi-ton screw propellers of big nuclear submarines under certain operation modes and geometry of the surrounding forms can be destroyed by cavitation within only a few hours. It happens because of huge energy generated in cavitating bubbles.

Under certain values of phase and energy, a particle in the pit, each time reflecting from the walls, will have a greater velocity than that of a falling particle (this is within the uncertainty relation), and after many reflections will accumulate a fairly big energy which will be generated in the form of heat or bremsstrahlung when the pit is destroyed, and, finally, the energy of the oscillations of such a particle accumulated in the

pit will always be transformed into heat in an ordinary solid body or a liquid. This physical idea immediately accounts for both sonoluminescence (although for sonoluminescence in general this mechanism is less primitive), and energy generation in proton-conducting ceramics, nickel during electrolysis in ordinary water (CETI element), and water bubbles of commercial heat generators. The theory predicts that the samples should be fissure due to increased pressure on the walls of the potential pit with the growth of energy, which fact also takes place, since both ceramic samples and nickel balls in the CETI element finally disintegrate. It is evidently for these reasons that any metal containing much hydrogen in its grid becomes fragile and is quickly destroyed, which fact is well known to engineers.

The small number of experiments does not so far allow for making concrete conclusions as to what particles generate energy in pits (microbubbles). Besides, for at least an electron to disappear a pit of about 0.5 MeV is required, while in a solid body the pits are about several eV deep, and what seems to happen is only loss of kinetic energy, and not disappearance of particles. The fact that this process requires very deep potential pits, which do not exist in a solid body, does not change the essence of the matter.

Of course, under ordinary conditions, both competing solutions usually take place at once: "maternity home" and "crematorium", which compensate for each other and the energy is preserved. For energy generation, the "maternity home" solution should prevail. Both these processes take place simultaneously and compete with each other, but, formally, they are not connected in space and time. The complexity of the energy generation problem lies in suppressing the "crematorium" solution by a careful selection of different parameters and promoting the "maternity home" solutions. So far we cannot say for sure what the optimum dimensions of such cavitating bubbles are, or which object oscillates in them, because for this purpose special experiments are needed, which so far have not been staged.

Of course, the inexorable Robber in the form of the Carnot principle stands in the way of transformation of the heat generated in a heat generator or ceramics into electrical or mechanic energy. In accordance with this principle, all mechanic or electrical energy can be transformed into heat, but the reverse process is always connected with big losses.

If there are experiments and plants in which energy generation contradicting the conventional conservation laws is discovered, there should also exist opposite ones, where energy disappears completely, i.e. the "crematorium" solution prevails. It proved to be true. There are such modes during electrolysis in electrolytic baths, under which the temperature of the solution in the bath is strongly reduced for unaccountable reasons, and this fact has no explanation at all. This phenomenon long ago was noted by attentive industrial engineers, and it is called the "bath-freezing" mode [49,50]. Chinese physicist Swe-Kai Chen from Taiwan in his experiments [48] stably observed the same phenomena. It is quite easily explained: a particle with a velocity exceeding the most probable velocity in this distribution gets into caverns on electrodes and after some oscillations reduces its velocity, which becomes smaller than the most probable one, and then the particle leaves the cavern at a small speed, and the same process can happen to another energetic particle. This leads to the cooling of the cell in the case of such mass processes.

The problem of ferromagnet magnetization (the Easing model) can also be reduced to the orientation of a magnetic doublet by the external magnetic field, and then it is essentially the harmonic oscillator equation with a slightly different return force ($F = \frac{\mu}{r^3}$) and all the conclusions made earlier remain in effect. That is why magnetization should also produce energy generation effects. This proved to be true. For the general public everything began on May 17, 1996, when Frode Olsen from the research group "Free Energy" showed on the Norwegian TV (TV2) a surprising film about a "dynamic sculpture" made by artist and sculptor Reidar Finsrud from Skaarer, Norway. The author of this "dynamic sculpture" *had no idea about physics* and had been making it for 12 years. Einstein's idea of how discoveries are made conveniently comes to mind at this point: everyone knows that a certain thing cannot be done, but there is a man who does not know it, and it is he who makes the discovery.

This "dynamic sculpture" accompanied by an "explaining" poster «*perpetual mobile*» represents an iron well-polished ball with a diameter of 2.7 inches weighing about 2 pounds. The ball is rolling along a circle on close guides resembling two parallel skids with a diameter of 25 inches past the poles of three permanent magnets, where it is magnetized. In the area of three permanent magnets three more mobile magnets are installed on special mobile 5-inch long levers, and these magnets, when the ball passes them, are slightly inclined (due to the ball gravitation) and, after the ball passes them, are raised by the holding springs (sway like yokes). The ball makes a complete turn in 3 seconds. All this magic (***they say the ball had been rolling along the close contour for more than a year***) does not have any sources of energy and is installed for everyone to see in a Norwegian picture gallery on a special stand covered with a glass cover. The authors only saw a good TV film about this installation and were mostly surprised at the fact that the ball had not stopped during uninterrupted shooting (about 20 minutes).

We are well acquainted with circus tricks, but it is absolutely incomprehensible how such a trick could be staged using some secret methods. It is clearly seen that the ball in its movement always partially transfers its energy to the three long swaying pendulums, but there is no way to use them for pushing the ball and making up for friction, this being the only trick that could, in our view, be applied here. All the rest is clearly visible and contains nothing suspicious.

Let us estimate the generated energy. At an initial speed of about 1m/s the ball stops after 30 seconds, if all the magnets are removed. It means that the energy consumed in 30 seconds is about 0.5 joules, or 1/60 Watt. The total energy generated in a month is 43,200 joules, and this is huge energy, much greater than that of a good shell!

It is clear (if the word is relevant here at all) that when the ball is approaching the permanent magnet and the process of magnetization is going on, it is accelerated, but when it mechanically gets past the equilibrium position and, moving away from the magnets, becomes demagnetized, the gravitation (which now starts slowing the ball down) will be slightly less than it was at the moment of the ball's acceleration. This small difference in forces provides for small positive work to overcome friction. Energy generation and similar things during magnetization had been *predicted* by one of the authors in magazines *Infinite Energy* vol.1, No.2, p.38, (1995); *Proceedings of the ICCF*5, p.361, April 9-13, (1995), Monte-Carlo; *Cold Fusion*, No 11, p.10, (1995); *Chinese Journal of Nuclear Physics* (vol. 19, ¹2, 1997). The quantum-mechanic processes are very complicated, but some of them can be understood.

All keen physicists were quick to understand it, and J. Naudin in France made a similar, but much simpler experiment. A ball of a soft magnetic material is swaying along parallel U-formed skids in a system of four magnets. Near the bottom of the U-form there is a small smooth step. It may have been made to make the magnetization and demagnetization processes different in time, which is very important. If there are no magnets, nothing interesting happens and oscillations are quickly (in a few seconds) damped. If the magnets are present, oscillations go on up to 3 hours 27 minutes. It appears that in this case the author failed to find good material and parameters of the plant, so friction was not compensated completely. In all these experiments demagnetization of permanent magnets does not happen, because the experiment is repeated many times with the same results.

And now a few vague words about demagnetization processes. During magnetization of the ball, the magnetic moments of its atoms are oriented (like the hands of a compass) along the field lines. When the ball leaves the magnetic field area, the atom magnetic moments are disoriented under the influence of the heat motion, and it becomes demagnetized. In the unitary quantum theory the share of the oriented magnetic moments in the external field can be bigger than in the conventional quantum mechanics (the "maternity home" solution), and the ball gravitation can be stronger due to it. Disorientation of these moments happens similarly in both theories. It seems to be for this reason and due to the difference in magnetization and demagnetization time that a difference in magnetic forces occurs when the ball approaches the magnet or moves off from it.

The scientists of the older generation will remember that a similar toy was shown in the 30's to David Gilbert, who said it was the most interesting thing he had ever seen. A question arises as to why it has not yet been realized. We do not know a physical-mathematical answer to this question, and it is not our task to analyze the social reasons of this phenomenon. Japan has a different mentality, and there is a governmental program for generating energy from permanent magnets. Takahashi [51] even seems to have made an electric engine with an efficiency of up to 318%!

Still more mysterious is the long-known problem of energy shortage in many biochemical reactions with ferments (enzymes). For example, in the well-studied reaction of disintegration of polysaccharides in the presence of lysozyme the following happens: a polysaccharide molecule gets into a special cavern in a big lysozyme molecule, and some time later its debris are thrown out of it (Fig. 6). The broken binding energy of the polysaccharide is about 3 eV, while the energy of the heat movement is only 0.024 eV. From the standard science point of view, it is absolutely unclear where lysozyme takes the energy to break the polysaccharide. No satisfactory mechanism for explanation of such reactions (and they are very numerous) was found, and all this was "swept under the carpet", as physicists say. The UQT provides for a completely new look at the catalytic processes, which has an incomprehensible source of energy reducing the molecule activation energy. From our point of view, this process is a variant of the "maternity home" solution for oscillator.

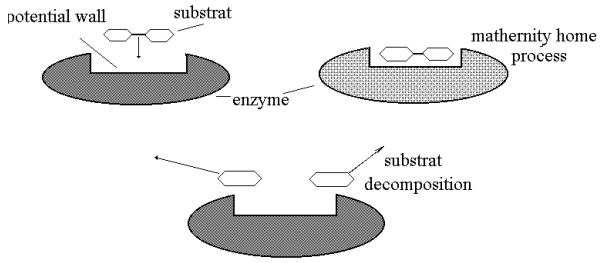

Fig.6. Break of polysaccharide molecule by lysozyme.

The most surprising thing is that in all the cases generation of excessive energy cannot be accounted for by chemical reactions or phase passages. If nuclear reactions do sometimes happen (which should not be according to modern science), they can account for only a hundredth or a thousandth share of the generated heat energy. There is no doubt that all these are effects of new physics, for in the framework of the old physics all this is simply unexplainable.

But the existence of a plant that produces *out of nothing* about 10 kilowatt of direct current electric energy with a voltage of 300 V seems nearly impossible. The story was described by one of the authors in three different magazines, and we will just give a brief resume [52-54].

In summer 1999, at the invitation of Swiss physicists (Director of the Institute of New Energy Sources in Egerkinhen Adolph Schneider), one of the authors

visited several research organizations. It is interesting that there is such an institute in small Switzerland, and there is none in big Russia. The purpose of the invitation was very simple: to explain the operation of a plant generating energy out of nothing, i.e. a *perpetual mobile*. In Switzerland such plants are called Testatik Machine M/L Converter from religious group «Methernitha» (Address: Methernitha, CH-3517 Linden, Switzerland, phone: ++41 31 97 11 24).

Such machines exist today in the Swiss town of Linden near Bern. Part of the town belongs to the Religious Christian Community, which is fenced and heavily guarded. There are about 250 members of the Community, many of them are physicists, graduates of the universities of Geneva, Lozanne, Bern. It is not only a research laboratory, they have their own TV center, a film studio, a small furniture plant, shops, garages, residential blocks, and support services. You will probably have guessed that this community does not consume any energy, and this is the most accurate fact in the whole story, for the inquisitive journalists have found out that no money from them comes to the accounts of the local power station, which provides power for all the town. In a cellar of one of the houses they have a power station that produces energy… out of nothing. The author of this inexhaustible source of free direct current energy is Swiss physicist Paul Baumann. Let us briefly describe these fantastic plants: they are of four types (sizes) with capacities of 0.1, 0.3, 3 and 10 kWt. Externally, the plant resembles very much the standard electrostatic machine with Leyden jars often used in physical demonstrations. There are two acryl disks with 36 pasted narrow sectors of thin aluminum, which rotate in different directions. In the first samples ordinary gramophone records were used for disks. The machine is started by pushing the disks in different directions by fingers. The rotation speed is 50-70 turns per minute. After the start disks rotate independently and can be easily stopped by hand, the direct current voltage is about 300-350 V, and the current is up to 30A. The mechanical energy used for rotation (only 100 mWt, according to measurements made by Austrian Professor S. Marinov) is hundreds of thousand times smaller than the generated electrical energy. The biggest plant for 10 kWt has plastic disks with a diameter of over 2 m, the smallest one – 20 cm, the weight of the plants is small enough, the 3-kWt machine weighing about 20 kg.

The charge separation process (which consumes energy!) practically does not slow down the disks. Connection of a load in the form of a 200-Wt bulb does not change the rotation speed either. No cooling or heating of the air or machine parts during long operation takes place, only a slight smell of ozone is felt. The system is noiseless, compact, environment-friendly, and can be installed anywhere.

The Community management thinks, and quite rightly, that wide spread of such systems in the world will lead to a heat explosion, because all the energy generated by the mankind finally finds itself in an energy dump (is transformed into heat), and all this can finally lead to overheating of the environment. They absolutely do not believe (and not without grounds) in the capability of the mankind as a whole to negotiate reasonable use of this invention, and they think that the harm caused by it will be greater than from nuclear, bacteriological, or conventional weapons. Their main idea for the mankind is to live in balance with the environment and to make full use of the energy of the wind, the sun, the water, etc. For this reason the Community is heavily guarded, and they are not going to donate their main discovery to the mankind.

Professor Stephan Marinov visited the Community twice (in July 1988 and in February-March 1989). He was even given such a plant with a capacity of 100 Wt (300 V, 0.3A), which he studied in his laboratory. As far as we now know, even the inventor of this machine does not fully understand its operation principle, so he contacted Marinov out of sheer curiosity of a scientist.

In 1989 Professor Marinov published a book "Thorny Path to Truth – Documents of Violation of Conservation Laws" in International Publishers East-West. The book contains a lot of photos, a measurement report, and a description of the plant. He also organized a research group called "Free Energy" within the Community (Methernitha Group Stephan Marinov Free Energy).

There are very interesting words in this book: "I can state without any doubts that this machine is a classical *perpetual mobile* in its pure form. After the initial push, it goes on rotatingby itself for an indefinitely long time, constantly producing electrical energy in the amount of 100 Watt… It is still unclear, however, how it all can happen…". As far as we know, nobody has managed to build a similar plant elsewhere.

We have an approximate idea of how the plant operates. The idea is as simple and ingenious as that of the wheel, which is absent from the surrounding nature, so the inventor could not borrow the idea. We will just show that the existence of such a plant is in full conformity with the UQT. It is natural that the plant operates on the basis of the charge separation principle. Let us have two metal spherical surfaces with a hole, isolated from the earth and from each other. If, with the help of an insulated stick, we transfer the first electron from Ball A to the internal surface of Ball B through the hole, a difference of potentials will occur, and if we transfer the second and the subsequent electrons, Ball A will attract the transferred charge, while Ball B will repulse it, and energy will have to be spent during the transfer of charges (Fig. 7).

Let us remind you that under the existing circulation theorem (16), the charge transfer work will consume the same amount of energy as will later be generated during the passage of electric current resulting from charge separation. But in the UQT the circulation theorem (16) for *an individual elementary charge* is not valid. Thus, we can select the time and route, along which the charge will be transferred in such a way, that

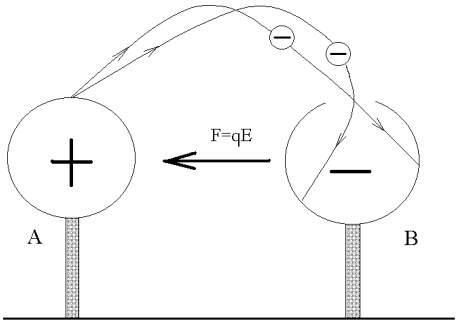

Fig.7. Work for moving the charge depends on method of movement and route.

the charge value during the transfer will be close to zero, and, consequently, the electrostatic force and the charge transfer and separation work will be close to zero too. For example, instead of selecting the route you can wait for the charge to be reduced to zero and then transfer it quickly, and when the charge increases, immediately stop the transfer and fix the charge. Or you can duly select the route and velocity. There are many options. This was evidently realized by Paul Baumann, who is *so far* practically unknown to the official science, and who can find consolation in the idea that the inventor of the wheel will never be known at all. The problem of simple arrangement of all this is just a matter of technique.

You cannot help, thinking that all these might be just tricks. The history of *perpetual mobile* abounds in evidence of downright swindling and frauds, and not a single positive result before, and who can guarantee that the information given above will not prove to be another swindle?

First of all, if all the people always piously believe in the unquestionable stability of the energy conservation law, there will never be any progress in this sphere, and it is then unexplainable how man got down from the palm at all. Secondly, to justify the proposed rebellious position, the following idea comes in mind: if 30 years ago somebody had told the authors (who were then already professors) that at the beginning of the next millennium they would deal in such research, it would have seemed not only a silly joke, but an absolutely impossible thing as well. But, as Voltaire said, "He is silly who does not change".

In conclusion we wish to express with certainty that the time of theoretical recognition and of practical universal using of overunity devices will come soon and become the epoch of new energetics. The people of our planet will regret that so much oil, coal and gas was burned causing terrible ecological losses.

The authors thank astronaut V.A. Dzhanibekov and Professor A.P. Buslaev.

References

1. Sapogin, L.G. Unitary Field and Quantum Mechanics. In: Investigation of Systems. Academy of Sciences of the USSR, Vladivostok, No 2, p. 54-84, 1973 (in Russian).
2. Sapogin L.G. On Unitary Quantum Mechanics. Nuovo Cimento, vol.53A, No 2, p.251, 1979.
3. Sapogin, L.G. A Unitary Quantum Field Theory. Annales de la Fondation Louis de Broglie, vol.5, No 4, p.285-300, 1980
4. Sapogin, L.G. A Statistical Theory of Measurements in Unitary Quantum Mechanics. Nuovo Cimento, vol.70B, No 1, p.80, 1982.
5. Sapogin, L.G. Statistical Theory of Detector in Unitary Quantum Mechanics. Nuovo Cimento, vol.71B, No 3, p.246, 1982.
6. Boichenko, V.A. and L.G. Sapogin On Equation of Unitary Quantum Theory. Annales de la Fondation Louis de Broglie, vol.9, No3, p.221, 1984.
7. Sapogin, L.G. and V.A. Boichenko On Solution of One Non-linear Equation. Nuovo Cimento, vol.102B, No 4, p.433, 1988.
8. Sapogin, L.G. and V.A. Boichenko On Charge and Mass of Particles in Unitary Quantum Theory. Nuovo Cimento, vol.104A, No 10, p.1483.
9. Sapogin, L.G. Clearcut Picture of Microworlds. "Journal Technique for the Young" (Tekhnika Molodezhi). Moscow, No 1, p.41, 1983 (in Russian).
10. Sapogin L.G., "Statistical Theory of Measurements in Unitary Quantum Mechanics," Nuovo Cimento, vol. 70B, No.1, p.80, 1982.
11. Sapogin L.G., "Statistical Theory of Detector in Unitary Quantum Mechanics," Nuovo Cimento, vol. 71B, No. 3, p. 24M, 1982.
12. Boichenko V.A., Sapogin L.G., "On Equation of Unitary Quantum Theory," Annales de la Fondation Louis de Broglie, vol. 9, No. 3, p.221, 1984.
13. Sapogin L.G., Boichenko V.A., "On Solution of One Non-linear Equation", Nuovo Cimento, vol. 102B, No.4, p.433, 1988.
14. Sapogin L.G., Boichenko V.A., "On Charge and Mass of Particles in Unitary Quantum Theory," Nuovo Cimento, vol. 104A, No.10, p.1483, 1991.
15. Sapogin L.G. "Deuteron Interaction in Unitary Quantum Theory", and "On Mechanisms of Cold Nuclear Fusion". In: Proceedings of the Forth International Conference on Cold Fusion, vol.4, Theory and Special Topics Papers TR-104188-V4, July 1994, p.171-178, Hawaii. 1994.
16. Sapogin L.G. "Deuterium Interaction in Unitary Quantum Theory", and "On Mechanisms of Cold Nuclear Fusion". In: Fusion Source Book. International Symposium on Cold Nuclear Fusion and Advanced Energy Sources, Belarussian State University, Minsk, May 24-26, p.91-98. 1994.
17.Sapogin, L.G. "Cold Nuclear Fusion and Energy Generation Processes in Terms of theEquation". Chinese Journal of Nuclear Physics vol.19,#2, p.115-120, 1996 .
18. Sapogin, L.G. «Cold Nuclear Fusion and Energy Generation Processes in Terms of the Schrödinger Equation». Infinite Energy [E.Mallove, editor], vol.1, No 5,6, p.75-76, 1996.
19. Sapogin, L.G. «Energy Generation Processes and Cold Nuclear Fusion in Terms of the Schrödinger Equation». In: Proceedings of the Sixth International Conference on Cold Fusion, Progress in New Hydrogen Energy, October 13-18, 1996, Japan, vol.2, p.595-600.
20. Sapogin, L.G. "Energy Generation Processes in Terms of the Schrödinger Equation."Proccedings îf the 2nd Russian Conference CNFNT (in Russian) p.18-24, Sochi, September 19-23,1994.
21. Potapov J.S. Patent of the Russian Federation No 2045715 Heat Generator and Device for Heating of Liquids. Registered on the 10-th of October 1995; priority from the 26-th of April 1993 (in Russian).
22. Potapov J.S. Water as a Source of Life and Energy. Enerjia-takarekossadi, Revu. p.25- 29, September 1998, Budapest.
23. Potapov J.S., MD, Patent No 649 Instalatie pentru obtiinerea enerjiei electrice si-temice. Buletin Oficial de Proprietate Industriala, No12, p.18-19, Chisinau (in Moldavian).
24. Samgin A., Baraboshkin A. et al. Influence of Conductivity on Neutron Generation Process in Proton-Conducting Solid Electrolytes. In: Proceedings of the 4th International Conference on Cold Fusion. Palo Alto, USA, v.3, p.51-57, 1994.
25. Samgin A. Cold Fusion and Anomalous Effects in Deuteron Conductors during Stationary High-Temperature Electrolysis. In: Proceedings of the 5th International Conference on Cold Fusion. April 9-13,1995, Monte-Carlo, p.201.
26. Mizuno T., Enio M., Akimoto T. and K. Azumi Anomalous Heat Evolution from $SrCeO_3$-type proton conductors during absorption/desorbtion of deuterium in alternate Electric Field. Proceedings of the 4th International Conference on Cold Fusion, December 6-9,1993, Hawaii, vol.2, p.14., EPRI, Palo Alto, USA, 1994.
27. Patterson J.A System for Electrolysis, U.S. patent No 5,494,559,27 Feb.1996; Miley G.H. and J.A. Patterson in: Proceedings of the 6th International Conference on Cold Fusion, Progress in New Hydrogen Energy, October 13-18,1996, Japan, vol.2, p.629-644.

28. Griggs J. Calorimetric Study of Excess Heat Production within Hydrosonic Pump System Using Light Water. Fusion Source Book. International Symposium on Cold Fusion and Advanced Energy Sources, Belarussian State University, Minsk, Belarus, May 24-26, p.248-253, 1994.
29. Huffman M.T. From a Sea of Water to a Sea of Energy, Infinite Energy, vol.1, No 1, p. 38-45, 1995.
30. Fleischmann M., Pons S. Electroanal. Chem., v.261, p.301, 1989.
31. Sapogin, L.G. and I.V.Kulikov "Cold Nuclear Fusion in Unitary Quantum Theory". Chinese Journal of Nuclear Physics, vol.17, No 4, p.360-370, 1995.
32. Cryz W.: Rivista Nuovo Cimento, 1, Special No, 42, 1969.
33.Kervran Lois C. Biological Transmutations. Swan House Pub. Co, NY, 11223, 1972.
34.Private Communication.
35. Notoya R., Noya Y., Ohnisi T. Fusion Technology. vol. 26, p. 179-183, 1993.
36.Swartz M. Journal of New Energy vol.1, #3, 1996.
37. Blokhintsev D.I. On Energy Conservation Law. In: Works on Methodological Problems of Physics, p.51, 1993, Print of Moscow State University. (In Russian).
38. Schwinger J. Casimir "Energy for Dielectric". In: Proceedings of the National Academy of Sciences, vol.87, p.8370-8372, 1990, "Cold Fusion: Does it Have a Future?" Journal "Cold Fusion", vol.1, #1, page 14-17,1994.
39. Sapogin L.G. «What Can Our Power Engineering Be Like in the Next Millennium», Journal Business-Match, 14, 1998 (In Russian).
40. Sapogin, L.G. On One of Energy Generation Mechanisms in Unitary Quantum Theory. Infinite Energy [E.Mallove, editor], vol.1, No 2, p.38-39, 1995.
41. Sapogin, L.G. On One of the Energy Generation Mechanisms in Unitary Quantum Theory. Proceedings of the ICCF5, p.361, April 9-13,1995, Monte Carlo.
42. Sapogin, L.G. Energy Generation Processes and Cold Nuclear Fusion in Terms of the Schrödinger Equation. In: Proceedings of the Sixth International Conference on Cold Fusion, Progress in New Hydrogen Energy, October 13-18, 1996, Japan, vol.2, p.595-600.
43. L.G. Sapogin, "On One of Energy Generation Mechanisms in Unitary Quantum Theory". Proceedings of the 2nd Russian Conference CNFNT (in Russian) p.18-24, Sochi, September 19-23, 1994; Cold Fusion, No 11, p.10, 1995.
44. L.G. Sapogin, "On One of Energy Generation Mechanisms in Unitary Quantum Theory". Cold Fusion, No 11, p.10, 1995.
45. Correa Paulo and Correa Alexandra XS NRG in Technology, Infinite Energy, vol.2, #7 p.18-38, Nr 8 p.10-15, #9 p.33-37, 1996. US Patents, numbers: 5.416.391, 5.502.354, 5.449.989.
46. Sapogin L.G. Theory of Excess Energy in PAGD Reactor (Correa reactor). In: Proceedings of ICCF-7, Vancouver, April 1998; Infinite Energy, No 20, 1998, p.49.
47. Sapogin L.G. "New Source of Energy?" Journal "Acknowledgement and Physical Reality", Moscow, vol. 2, #1, page 34-40,1997, (in Russian).
48. Swe-Kai Chen, Chu-Yung Liang «Observation of Cell Temperature Drops». In: Proceedings of ICCF-7, Vancouver, April 1998, p.68-72.
49. Jakimenko L.M. Electrolysis of Water. Chimia Press, Moscow, p.p. 33, 86, 90-114, (1970) (in Russian).
50. Pfleiderer N. Electrolysis of Water. pp. 12, 17-18, 1935, Leningrad (in Russian).
51. Rothwell J. Yasunori Takahashi´s Supermagnets, Infinite Energy, vol.1, No 5,6, p.33, 1996.
52. Sapogin L.G. "Is This Really True?", Infinity Energy, N 28, 2000.
53. Sapogin L.G. «Perpetual Mobiles Operating in Switzerland»,magazine «Chudesa I Prikluchenia» # 2, 2000.
54. Sapogin L.G. «They Say There are No Perpetual Mobiles. Then what is it?", magazine "Samolet", 4, 2000.
55. Sapogin L.G. XXI Century - New Sources of Energy? In: Chudesa i Prikliuchenia, Moscow, No 11, p.32-35 (In Russian) 1996, and No 3, 1998.
56. Sapogin L.G.,Kulikov I.V. "Neue Quantenfeldtheorie und prozesse zur electromagnetischer und thermisher energie mit overunity effekt", DVR-Mitglieder-Journal 2/2000.
57. Sapogin L.G. "The 21st Century: Will it Bring a New Quantum Picture of the Universe and New Energy Sources?", Journal of New Energy,vol.2, #3/4,1999.
58. Panos T. "Electrically Induced Nuclear Fusion in the Living Cell ", Journal of New Energy vol.3, #1, 1998.
59. M.Sue Benford, R.N. M.A. "Biological Nuclear Reactions: Empirical Data Describe Unexplained SHC Phenomenon" Journal of New Energy vol.3, #4, 1999.
60. Schwinger J. "Casimir Energy for Dielectric". In: Proceedings of the National Academy of Sciences, vol.87, p.8370-8372, 1990, "Cold Fusion: Does it Have a Future?" Journal "Cold Fusion", vol.1, #1, page 14-17,1994.

KOZYREV-DIRAC EMANATION.

INTERACTION WITH MATTER and METHODS OF DETECTING

Dr. Ivan M. Shakhparonov

125252, Russia, Moscow,Pestchanny Pas. 20-1-33
phone/fax 8·095-198-2012

In this paper the authors show the possibility of creation of a new kind of emanation. The magnetic monopole beam can be made in space as a result of focusing of some natural substance. Special devices based on the Moebius band elements make the given focusing. This emanation is able to magnetize graphite and organics, decrease the radioactivity, and influence the oncology diseases .The time reverse technology is realized in such devices.

Experimental data, which allow making a conclusion about existence of previously unknown emanation, are presented in this report. Here are descriptions of experiments and methods of measurement. The effects of interaction between new type of emanation and matter have been obtained.

Till the present moment theoretical physics didn't pay attention to the nonoriented configurations and spaces. The reason of this situation is the fact, that from the philosophic point of view it is not possible to determine and locate the area of the nonoriented topological structures in our world. We (eight scientific teams) joined our forces and we needed more than 30 years to solve this problem by an experimental approach.

The fundamental tenet of the casual mechanics developed by Kozyrev can be formulated as follows. There are two types of energy in the Universe. The positive or «right» energy acts as a factor of the entropy increase. The negative, or «left» energy tends to decrease the entropy, i.e. it acts as a factor, which regulates the entropy increase. The «right» energy is transformed to the «left» one and this fact may be interpreted as a course of time from the past to the future. When the energy is transformed from the «left» to the «right» form, time is reversed. Kozyrev supposed [1] that through revolving of a body together with a

6. Activation by nuclear magnetic resonance;
7. Activation by electronic paramagnetic resonance;
8. Activation by electrochemical force.

All these methods can be used as possible way to high efficient energy systems. Gerlovin wrote: "Usually 1, 6 and 7-th methods of structural activation are realized in catalysis simultaneously. Besides, catalysis differs from macroscopic methods because it has the most minimal distances from the sources of activator fields to the activated molecules. And finally, an active participation of force fields created by nuclei of atoms and significantly more active participation of disturbed EPV is possible in catalysis. That's why catalysis is the most effective method of structural activation. The detailed account of this method exceeds the limits of this article and we can only annotate it." [1, p.333]

Information stated above is only a small part of the questions appeared under consideration in Gerlovin's theory of fundamental field (TFF). Other important questions should be considered with a new experimental data.

References

1. Ilia L. Gerlovin, "Foundations of unified theory of all interactions in matter", published in 1990, St.Petersburg, Russia.
2. To the question of multipolarity, Alexander V. Frolov, New Energy Technologies, #1 (4) 2002, St.Petersburg, Russia.
3. N. A. Kozyrev, Selected works, St.Petersburg, LGU, 1991.
4. Practical application of time rate control (TRC) theory, Frolov A.V., New Energy Technologies, #3, 2001, p.15, St.Petersburg, Russia.

Antigravitation Force and Antigravitation of Matter. Methods of its Creation

Anatoly K. Gaponov

Sadovaya Str. 195, Novosibirsk, 630009, Russia

Part I

For a long time there is an opinion in physics about antimatter as a possible source of antigravitation, but the researches on this subject came into a dead end. The existent presentations and formulas forbade the conclusion about antigravitation, but our conducted investigations brought us to the possibility to get antigravitation of substance and to the paradoxical conclusions concerning the next:

1. Two types of space exist:
   a) The Absolute space
   b) The Relative space

2.a The Gravitation Field is the relative space, which has accelerated motion, directed to the center of a planet.

2.b The Antigravitation Field is the relative space, which has accelerated motion, directed from the center of a planet.

3. Gravity force does not depend on mass of a body! The mass can be presented in three versions:

a) m_k –mass as amount of atoms.

b) $W_{m_A^e}$ - electronic-atomic energy in mass.

c) $W_{m_G^m}$ – mechano-gravitational energy in mass.

On the basis of the stated notions we offer to revise the essence of force not only in Coulomb's formula, but in Newton's formula too.

$$F = K\frac{q_1 \cdot q_2}{R^2} \qquad F = P\frac{m_1 \cdot m_2}{R^2}$$

It is well known, that mechanical energy can be bringing in electrostatic charge, where mechanical energy runs (turns) into energy of electric field, where

(mechanical energy) $F \cdot R \rightarrow \frac{E_2 \cdot V_{m^3}}{2}$ (electrical energy)

Similarly it is also possible to insert mechanical energy into mass of a body. As the result, the mechanical energy will turn into energy of gravitational field, where

(mechanical energy) $V \cdot F \cdot t \rightarrow \frac{g^2 \cdot V_{m^3}}{2}$ (gravitational energy)

Since the volume of the Earth is constant, the acceleration of gravitational field will be increased.

It should be logical to expect, that when removing the mechanical energy from mass the inverse process will occur, that is to say acceleration reduction of gravitation field will occur.

In his works I. Newton affirmed about existence of two spaces:

The Absolute space - is an immovable non-rotatable space, which represents a limited cube, with our planet in the center.

The Relative space – is a movable space. It can move with acceleration in the absolute space.

Editor's note: In aether conception this means two parts of aether: some part is involved into the motion with the mass, but another part of aether is immovable.

The main mistake in search of aether consisted in the following: Maikelson's experiments were aimed on

search of relative velocity between bodies and space. However, it was the **relative acceleration** between bodies and space that was necessary to search for.

To quote the conclusions of I. Newton: "Body can keep the quiescent mode or mode of rectilinear uniform motion …" By this, he postulates, that the relative linear velocity between solids and space does not exist. But we know that for rotation it exists (the famous experiments with revolving pail of water).

The gravitational field is the accelerated "falling" relative space, which represents a spherical form. If relative space moves, thus the question appears: where does it move? There is only answer: it moves in the absolute cubic space.

In Einstein's theory there is notion of unified and curved space in gravitational field, but the contradictions appear here, and on concerning that N. Tesla writes: "Only by presence of force field it is possible to explain the observed motion of celestial bodies, but thus the hypothesis of curvature of space is not necessary. The whole scientific literature on this subject is futile and doomed on oblivion". [1]

The fact that gravitation is the accelerated moving relative space can be proved by observation of accelerated moving rocket, where the acceleration in rocket is equivalent to the acceleration in gravitational field. Accelerated movement of rocket is relatively, that allows speaking about either acceleration of rocket motion in immovable space, or accelerated motion of space in immovable rocket!

The anti-gravitational field is the relative space, which has accelerated motion from the center of a body (for example: rotating cylinder, Earth satellite and etc.) But it is possible to create the model of anti-gravitation without rotations. On the basis of analogy between mechanical and electric energy comes to conclusion that gravity between bodies does not depend on mass of the body, but on mechanical-gravitation energy, contained in this mass, which is possible to contribute or to extract from. **Therefore, this is the internal gravitation energy.**

Part II

The "Mass" can be considered as a measure of three different conditions of matter:

m_k - as a measure of amount of atoms, representing a "framework" or "container", in which two types of independent energies are concentrated.

$W_{m_A^e}$ - as a measure of electric energy, which can be either accumulated or extracted, and it have a "compressed" form.

An example of accumulation of electric energy in mass is a big cylinder, rotating with linear velocity, close to velocity of light, in this cylinder the mass of electric and magnetic fields of atoms increases. There are another possible ways to contribute and to extract the said energy from mass.

And finally $W_m M_G$ is the mass, which can be a measure of mechanical energy, or it can be either inserted or extracted from the matter (it can be identified as the gravitational mass). This gravitational mass is what we put our attention on, because it affects upon gravitation and it is able to create antigravitation.

"In his time N. Tesla worked on more general problem, which is the problem of matter and energy. And he has found, as he believed, the new physical principle, on the ground of which he brought forth his gravitational theory that was named dynamic gravitation. But he did not tell about it until almost the end of his life". [2] **Really, dynamic gravitation is the energy of motion.**

Let's take the following indications:

V – mechanical velocity
F – force
t – time.
In this case the product $W = V \cdot F \cdot t$ has the dimension of energy. Hereinafter, let's take

I – strength of electric current
U – difference of potentials
t – time.

Then $W' = I \cdot U \cdot T$ has the dimensional of energy. Thereby, *W* ~ *W'* that is to say, the following products are accepted as equivalent:

1. $V \cdot F \cdot t \sim I \cdot U \cdot T$

2. In previous materials it was reported about untraditional way for accumulation of energy, under the condition, in which at constant current I the product $q = U \cdot t$ will depend on amount of inserted energy in unchangeable circuit L = const, in which the energy can be accumulated by untraditional way not only in electric capacity, but also in inductance.

Similarly the energy can be accumulated by untraditional way in a moving body, under the condition V=const and m_k=const (the product $qr = F \cdot t$ will depend on inserted energy and have unlimited value). **Exactly this charge will create the powerful gravitational fields.**

3. Let's take: F is mechanical force, R is distance. Then the product $F \cdot R$ has the dimensionality of energy. For the uniform electric field the product $E_a \cdot \frac{E^2 \cdot V}{2}$ also has the dimensionality of energy. In this case E_a is constant, E is intensity of electric field, V is volume. Thereby, $F \cdot R \sim E^2 \cdot V$. Similarly, $V \cdot R \cdot t \sim g^2 \cdot V$

We have received the correlations of resemblance for heterogeneous physical values, on the ground of which the following physical experiments can be offered:

On the grounds of the above-mentioned analogies it can be assumed that the accumulation of "compressed" energy is possible in mechanics, as well as in electricity. Since the velocity is relative, that the mass can have zero velocity relatively a observer, who moves with this mass, but the force field will remain unchangeable, since it depends on already invected mechanical energy.

Let's note that:
When the "compressed" electric energy is accumulated, the power field does not change.

When the "compressed" mechanic energy is accumulated, the power field increases.

Now we have come to the amazing conclusion that the gravitational force does not depend on mass of matter, but it depends on mechanic energy, which is included in this mass. This energy is unstable and at contact with land it is disappearing, and at zero gravity it can be saved for a long time.

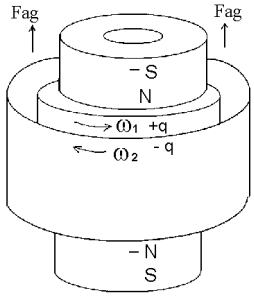

Fig. 1 The first way to obtain the antigravitational force.

1. The magnets are not revolved.
2. The cylinders of charged capacitor are revolving in different directions.

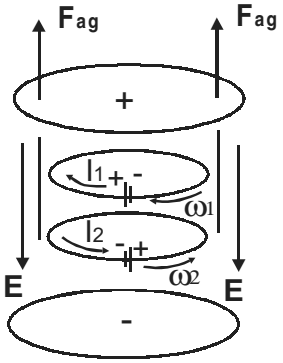

Fig. 2 The second way to obtain the antigravitational force.

1. The capacitor plates are charged and not revolving.
2. The current circuits are revolving in different directions.

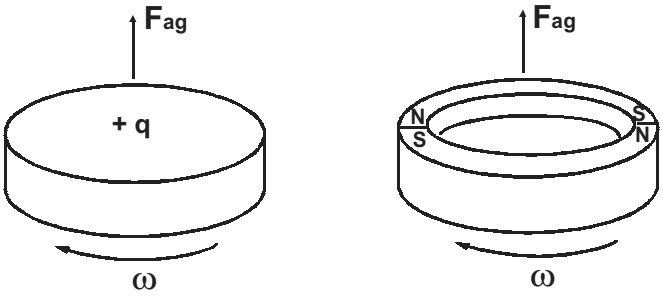

Fig. 3. The third way to obtain the antigravitational force

a) electric
b) magnetic

1. The disk and the ring are made from electrical current conductive material.

2. When these disks rotate, the currents, which emit the mechanic-antigravitational energy in the manner of heat, are formed there.

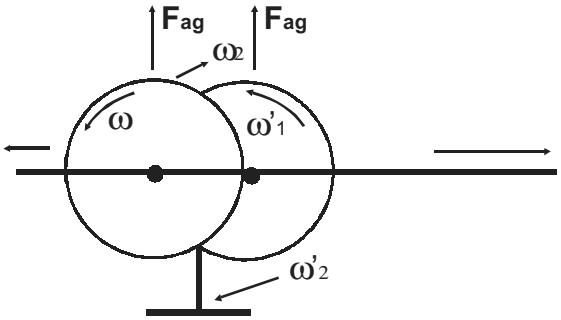

Fig. 4. The fourth way to obtain the antigravitational force. Mechanical method.

1. This is an extraction of energy from matter. It was reported in details on the 10 international symposium in Volgo-Donsk, Russia.

2. The difference with electric circuits is that it is possible not only to extract the mechanical energy, but also to insert additional energy in the system.

References

1. Magazine Inventor and Rationalizator, Russia, #9, 1979.

2. Magazine Inventor and Rationalizator, Russia, #9, 1979, p.28

The Capacitor, which has the Energy of an Atomic Bomb

(Review of Anatoly K. Gaponov's research by Eugenie and Marina Golomolzins)

Is it possible to place a pail of water into a one-liter jar? At the first look the answer is obvious: certainly not! However, the inventor from Novosibirsk, Anatoly Gaponov thinks differently. He does not "press" water, but electrical energy, placing an energy equivalent of atomic bomb into ordinary electrical capacitor.

Everybody using ordinary batteries knows its defect: they need frequent recharging. Gaponov's capacitor is slightly smaller than a matchbox. Just come home by electrical automobile, take out the capacitor from engine, and then put it into the pocket. For home needs you can just insert the capacitor into plughole to power the light, boiler, and TV system. In general, each electronic device can have its own capacitor, then an electrical wiring is not necessary. After one

On the grounds of the above-mentioned analogies it can be assumed that the accumulation of "compressed" energy is possible in mechanics, as well as in electricity. Since the velocity is relative, that the mass can have zero velocity relatively a observer, who moves with this mass, but the force field will remain unchangeable, since it depends on already invected mechanical energy.

Let's note that:
When the "compressed" electric energy is accumulated, the power field does not change.

When the "compressed" mechanic energy is accumulated, the power field increases.

Now we have come to the amazing conclusion that the gravitational force does not depend on mass of matter, but it depends on mechanic energy, which is included in this mass. This energy is unstable and at contact with land it is disappearing, and at zero gravity it can be saved for a long time.

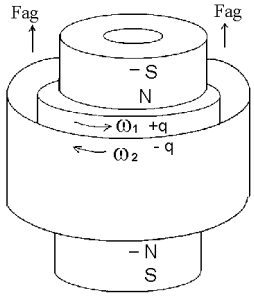

Fig. 1 The first way to obtain the antigravitational force.

1. The magnets are not revolved.
2. The cylinders of charged capacitor are revolving in different directions.

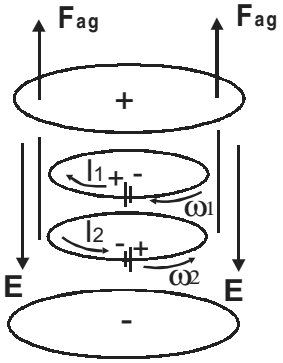

Fig. 2 The second way to obtain the antigravitational force.

1. The capacitor plates are charged and not revolving.
2. The current circuits are revolving in different directions.

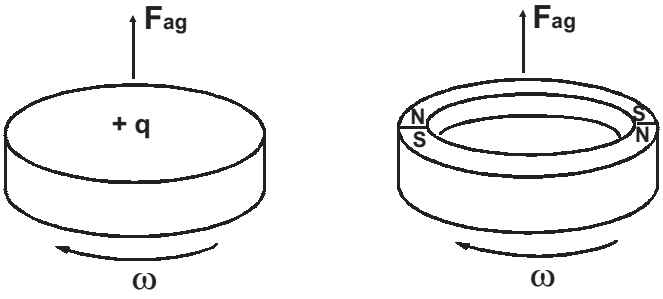

Fig. 3. The third way to obtain the antigravitational force

a) electric
b) magnetic

1. The disk and the ring are made from electrical current conductive material.

2. When these disks rotate, the currents, which emit the mechanic-antigravitational energy in the manner of heat, are formed there.

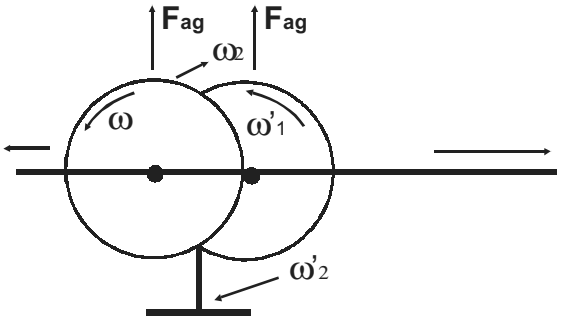

Fig. 4. The fourth way to obtain the antigravitational force. Mechanical method.

1. This is an extraction of energy from matter. It was reported in details on the 10 international symposium in Volgo-Donsk, Russia.

2. The difference with electric circuits is that it is possible not only to extract the mechanical energy, but also to insert additional energy in the system.

References

1. Magazine Inventor and Rationalizator, Russia, #9, 1979.

2. Magazine Inventor and Rationalizator, Russia, #9, 1979, p.28

The Capacitor, which has the Energy of an Atomic Bomb

(Review of Anatoly K. Gaponov's research by Eugenie and Marina Golomolzins)

Is it possible to place a pail of water into a one-liter jar? At the first look the answer is obvious: certainly not! However, the inventor from Novosibirsk, Anatoly Gaponov thinks differently. He does not "press" water, but electrical energy, placing an energy equivalent of atomic bomb into ordinary electrical capacitor.

Everybody using ordinary batteries knows its defect: they need frequent recharging. Gaponov's capacitor is slightly smaller than a matchbox. Just come home by electrical automobile, take out the capacitor from engine, and then put it into the pocket. For home needs you can just insert the capacitor into plughole to power the light, boiler, and TV system. In general, each electronic device can have its own capacitor, then an electrical wiring is not necessary. After one

or two years you will just have to come into electric service station and charge your magic capacitor like a gas balloon. Meantime, this research work began from hypnosis.

Anatoly Konstantinovich Gaponov (by birth from Kaluzhskaya region) is Ziolkovsky' countryman. In his youth Gaponov was brought by fate into Sakhalin, where he showed hypnotic abilities. As an inquisitive person Gaponov had organized a research group, started experiments and soon he understood that human brain had incredible possibilities.

A mental prick was made distantly to the hypnotized man, and he uttered a cry of pain. The ability to see people through, to define and to avoid organism's faults, was revealed in a hypnotic trance. It was possible to inspire pleasant emotions, to force "watching" a film on the given subject, as if on the screen. An uneducated person became an erudite, as if being connected to a certain global information database. Thus an idea to make an amazing experiment was appeared.

In one of the experiments Gaponov hypnotized the person with four classes education, and asked, if it was possible to transmit the electric current without wires? The hypnotized person gave the answer, that it was possible. For that it is required to convert the electric energy in x-ray radiation. And what afterwards? Afterwards it is required to focus that rays. By what? By the lens made from quartz glass, gold coated. It was a miracle! The person told about things that in usual condition he had no idea of! The information was received from somewhere outside.

Further quite an amazing thing has occurred. Gaponov asked the hypnotized person, if it was possible to intensify the abilities of hypnotist's brain?

He answered, that he could. "He turned me round and stared at the back of my head, - recalls Anatoly. - And suddenly the smile began to tear my mouth. I could not do anything with myself. When my mouth was sprawled literally from ear to ear, the hypnotized person in some inhuman voice declared that experience could not be continue since the cerebral hemorrhage would occur. I was hardly able to give the order to stop the experiment".

Thereby, the experiments with hypnosis gave the beginning to the thirty-years period of inventions in the field of accumulation and transmission of energy. After the return to native Kaluzhskaya region, Gaponov was occupied with physics, development of logical thinking and became the town champion in chess.

The necessary books fell into his hands by themselves: some time a certain acquaintance gave it to read; another time he found the last copy in a bookstore. As a majority of self-taught inventors, Anatoly preferred practical experimentation. In quest of laboratory for realization of his own ideas, he moved to Novosibirsk. **As a result, in 1980 Gaponov has made experimental system for compression of energy.**

From the school Physics we have known the notion of "electric arc" – it is a small blue lightning between two electrodes. Gaponov has tamed this lightning in such a way, that having drawn apart two wires, which executed the role of electrodes, by hands and got the arc by length up to half meter. Anatoly confirms that in principle, it is possible to create an arc of any desired length under any amperage.

One of the experiments found out one more enigmatic characteristic of electric discharge. During electric photography of arc a person happened to be between the camera and the system. On typing pictures, the researchers have found with surprise, that the electric arc was perfectly seen through the person. That is to say, it created the invisible field, for which material object was not an screening obstacle, and which was fixed on the film.

The further experiments with electric arc have allowed to get a new source of energy, as well as to open the possibility of setting light and sound on fire! Just imagine, you ring up a bell, it's sound waves spread at once in all directions, and then flash up with bright blaze.

(Editor's note: this experimental facts are rare modern evidences of possibility to create longitudinal electric waves. It is clear analogy here with sound waves in air since they are longitudinal waves also. Alexander V. Frolov)

When the problem of energy source was solved, Gaponov turned to the problem of energy accumulation. According to Gaponov, he has provedexperimentally the possibility of charging of an ordinary capacitor with any amount of energy. This statement sounds paradoxically: how it is possible to place the unlimited amount of contents in limited volume? However, this is not a simple way.

Gaponov believes that energy "placing" occurs not in space, but in time by means of his system! In what way? Imagine, that you fill one-liter jar with water. But already after an instant the water-filled jar is in past, and that present one is once again ready to be filled. And so ad infinitum. Water as if it fills a certain "time reservoir", and a jar is just a neck of this "time reservoir".

(Editor's note: This method is described in other articles also but usually it is pure mathematical discussion about Minkovsky space-time and theoretical proposals. Gaponov's experiments are realization of fantastical idea to take power from the time flow, i.e. from Past or from Future to get over-unity in Present space. Alexander V. Frolov)

"It is possible to demonstrate one more example, - Anatoly Gaponov adds. – Let's charge the capacitor with the expectation, that it will supply the light bulb

for one second. Thereby, on the Earth this light bulb will be on only for an instant. But if the same capacitor with light bulb is placed in rocket and dispersed around the Earth at the velocity, closed to velocity of light, time on the board of rocket will be so slowed that the light bulb on rocket will be glowing infinitely long for an observer from the Earth. It means, that in any case it is the same energy quantity, but in one case it's action is sprawling for a second, and in another one it is sprawling for eternity! It is possible to say, that in my system I have created the condition corresponding to this hypothetic rocket".

The system for accumulation of electric energy could be charged by ordinary wall plug 220 VAC. Time period of charging is different and depends on the certain scheme of the system. By the way, sea electric slopes are the certain natural analogues of such capacitor. Some elements of internal device of these sea creations reminds the "pump" elements for placing of electric energy into "temporal jar".

Finally, the third Gaponov's invention is the system for transmitting of energy without wires. As well as in two previous cases, there is an experimental device. Anatoly Gaponov speaks that he has succeeded in getting the essence of experiments for transmitting of energy, which were conducted by Tesla.

It is clear, that the main advantage of this method is an absence of wires and losses of electric energy. The electricity could be transmitted directly into any point, where receiving equipment placed, let say from Kaluga to Sahara. However, this is not so interesting for anybody, since for the present day Anatoly Gaponov's inventions don't have demand.

" The first system was created twenty years ago", - says Mr. Gaponov. – "Now I am fifty five, but things have not budged an inch". He adds dreamily: "Eh, if only I had a laboratory and some money...".

Gritskevitch's Hydro-Magnetic Dynamo

Oleg V. Gritskevitch

RUSSIA, 690002, VLADIVOSTOK,
Okeansky prospect, 99 - ap.112
phone/fax: (7-4232) 424-674 Email: ogri@mail.primorye.ru
Russian Academy of Energy and Information,
Russian Academy of Natural Sciences

Editorial: The article presents construction and operation of Oleg V. Gritskevitch's hydro-magnetic dynamo, which is an example of very powerful new energy system. The prototype in Armenia has been produced over 1500 KWtts power during several years.

The author was born on 14 August 1936 and grew up in Vladivostok, Russia. He is married and has a son Boris. Gritskevitch is a physicist by education. He worked in the Far - East branch of the USSR Academy of Sciences. Since 1985 he has been working independently as an inventor. He has more than 70 patents on inventions ranging from household engineering up to high technologies, which he has been trying to apply in our country and met big difficulties. After numerous attempts to receive the patents the author was convinced that outflow of the information occurred. Therefore he has received the state certificates as on know-how (on a French way of patenting), for all his inventions.

Introduction

During the Institute for New Energy 1999 Symposium, I lectured on my hydro-magnetic dynamo. This paper is my attempt to explain the construction and operation of my dynamo.

To fool investigators of my secrets, I have an occasion provided misleading information. For example, the drawing accompanying the Russian patent referenced below shows a cylinder across the toroid to fool readers. The real dynamo only has the toroid without the cylinder. Even its name "hydro-magnetic dynamo" is somewhat deliberately misleading.

I have some familiarity with the new energy field. Nearly all purported new energy devices are fairly small electrical generators. The dynamo may be the only new electrical generator which most nearly meets all the requirements of an ideal large-scaled electrical generator. My dynamo really is the single most valuable invention the world has ever known.

Alexander V. Frolov of St. Petersburg recommended me to contact with Dr. Patrick Bailey, Institute for New Energy since Pat has lots of contacts who could possibly help me with patenting my invention of a new source of energy in USA.

I conducted the work on the theory and creation of the electrostatic generator-converter «Hydro-magnetic dynamo» about 20 years. (See dynamo history below.) The first primitive equipment was created when I worked in Academy of Sciences. During that time various changes were introduced in the generator and in the theory of its work. It is now possible to manufacture, install, and apply it in industry.

For the first time I made the public report on this work in 1991 on a symposium in Volgodonsk city. The report received the positive replies and reviews of the experts of a nuclear industry in USSR. The same year I was accepted in International Nuclear Society. In these years I offered development of this technology to different state bodies and private enterprises. But there was the only answer: "It is very interesting and perspective project, but there is no money for it".

New Energy Technologies

Printed version ISSN 1684-7288
Online version ISSN 1684-9698

Published by Faraday Laboratories Ltd. **Issue #3 (12), 2003**
Research on advanced aerospace systems and new energy sources

Time Machine

Conference in Moscow: discussion of the patent application on the method and device to control temporal parameters of matter

Time Machine

Experiments by research group "KOSMOPOISK"
Summer, 2001

Device designed
by Faraday Lab Ltd, 2002

Alexander V. Frolov
Vadim A. Chernobrov
April 12, 2003, Conference hall
Hotel "Cosmos", Moscow

Experiment on the generation of gravitational field

by Dmitry Yu. Tsipenuk

Sergey S. Abramov

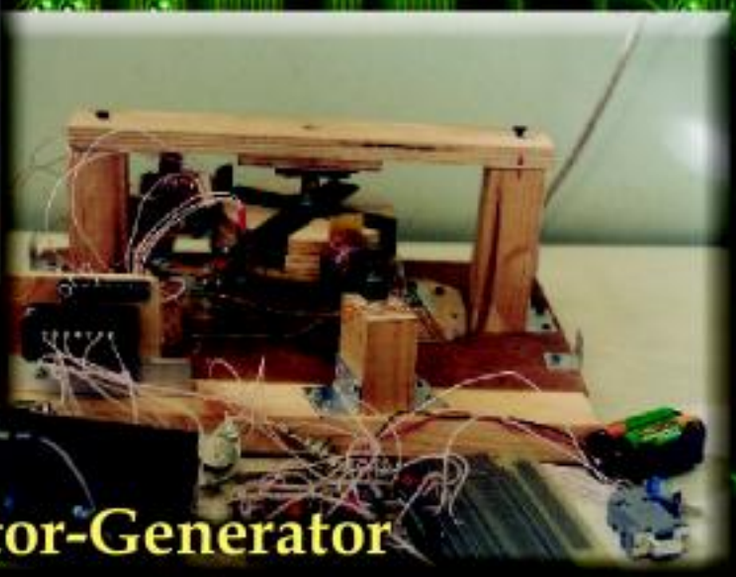

Model of Adams Motor-Generator

Electrolytic photoaccumulator for the XXI century energy systems

Read the new article by Anton I. Egorov

Flynn Generator

Original version of photomaterials is presented at http://www.flynnresearch.net

Joe Flynn Laboratory, USA

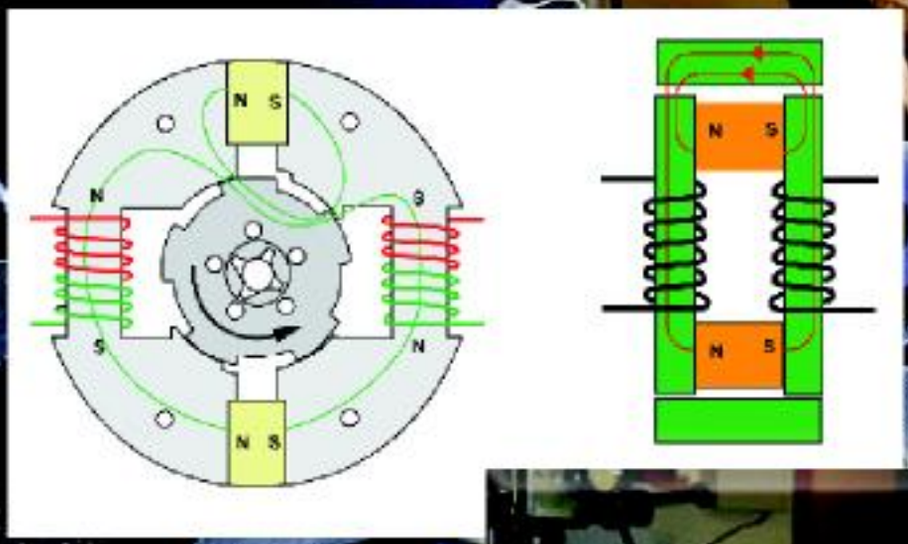

Electric generator by Joe Flynn

More than 350% efficiency generator operating on permanent magnets

ISSN 1684-7288

Read the article by Tim Harwood in this issue

NEW ENERGY TECHNOLOGIES #12

1. Works on the Designing of Time Machines. Vadim A. Chernobrov (Russia)
2. Control of Temporal Parameters of Physical Processes. Alexander V. Frolov (Russia)
3. Etherodynamics as a New Field of Physics. Vladimir A. Atsukovsky (Russia)
4. Electromagnetic Gravitational Interaction Vadim Ya. Kosyev (Russia)
5. Medium For Existing of Matter in Nature. Anatoly V. Rykov (Russia)
6. Adams Motor. Sergey S. Abramov (Russia)
7. Field Transformation in the Model of Extended Space. Dmitry Yu. Tsipenyuk (Russia)
8. Joe Flynn's Parallel Path Magnetic Technology. Tim Harwood (USA)
9. Flynn Laboratory Photos
10. Flux-machine and Its Analogies. Review
11. Russian Patents on Alternative Energetics.
12. Gravitational Spaceships. Gregory R. Uspensky (Russia)
13. On Velocity Of Drive-Free Motion. S.A. Gerasimov , V.V. Stashenko (Russia)
14. Electromagnetic Self-Action. S.A. Gerasimov, A.V. Volos (Russia)
15. Uranium Photoaccumulator. Anton I. Yegorov (Russia)
16. Global Energy Prize (reportage)
17. Teleportation. Alla V. Pashova (Russia)
18. "Mass Defect" in Home Conditions. Prokofy V. Sherbak (Russia)
19. Aether as Unified Field. Alexander M. Mishin (Russia)
20. Global Energy. Philip M. Kanarev (Russia)
21. Fusion Processes Of Molecules Of Oxygen, Hydrogen And Water. Philip M. Kanarev (Russia)
22. Plasma Energy Power Generation. Bruce A. Perreault (USA)
23. News
24. The Marcus Device Controversy. Tim Ventura (USA)
25. Systems of conversion of thermal energy to mechanical one. Review
26. I. Prigozin
27. Letters

Editorial: On April 12 of 2003 a scientific conference "The Time Machine" was organized by Faraday Laboratories Ltd in Moscow, Russia. It was devoted to the experiments on control of space-time physical properties. At the conference there were discussed problems of time and gravitation in the context of etherodynamics, experiments and applied aspects of these technologies. Below we publish a review of the main reports presented at the conference.

The First Results of the Works on the Designing of Devices to Control Parameters of Physical Processes (of Time)

Further Plans on Designing of the Time Machine

Vadim A. Chernobrov, Russia

"KOSMOPOISK", Nagatinskaya 19A, 111533,
Moscow, Russia
E-mail: chernobrov@kosmopoisk.org

To conduct the experiments on the influence upon physical Time (density of space energy) some special devices were used as a general method of such influence. These devices can create converging waves which can cause the appearance of quasi-monopole in the confined space. *Quasi-monopole* is a part of space which has some parameters of hypothetical unitary monopole or bunch of such particles (in particular, it allows registering one magnetic pole by means of measuring equipment from the outside at some distance from this pole).

The pilot experiments have shown that it is very difficult (if not impossible) to create long-living quasi-monopole by means of permanent magnets or electromagnets operating on direct currents (in this case quasi-monopole represents a space with one outer and one inner magnetic pole). It can be explained by the fact that lines of force of the "inner pole" invariably find a weak spot in the heterogeneous surface of magnets and break out. As a result, at the device along with one "outer" magnetic pole there is a local output of magnetic lines of the "inner" pole.

During the designing of new devices there was a task to create a quasi-monopole situation in the confined space. This situation should be created not uniformly but transiently by pulsation method. Frequency of work of electromagnetic oscillators first of all was selected depending on linear dimensions of the devices. Selection of the frequency was made in such a way that one period of pulsation does not exceed the period of time which is necessary for electromagnetic waves to reach the center and opposite waves of the device.

At the designing of laboratory devices, which generate converging longitudinal waves, several different principles to obtain required parameters were considered in the multi-layer quasi-monopole, which works in high-frequency mode. Several types of the devices were realized at different degrees of development and with different success. It was shown that the simplest devices were that ones which used electromagnetic (solenoid) oscillators connected in series and in parallel. In different experiments between 3 and 5 such surfaces were used. These surfaces were called electromagnetic work surfaces (EWS). All layers of EWS of different diameters were mounted in series in each other (like matreshka). The outer layer was either mounted at force shell or simultaneously represented such a shell by itself.

The size of the maximal EWS was about 0.9 m, the diameter of the minimal (inner) EWS was equal to 115 mm that was enough to place laboratory animals inside the control detection devices. Laboratory animals were used to determine the consequences of the influence of converging spherical electromagnetic waves. Payload, (i.e. that which was directly used for transfer in Time-Space), included the afore-mentioned detection devices and (occasionaly) laboratory animals. The term "payload" was coined by analogy with the term which is used in cosmonautics. Volume of payload section was placed in the center of symmetry of the Time Machine (TM). In all the earliest Machines (except the 7th model) this volume still has not exceeded the volume of a football. The device with an outer diameter of 2.1 m and inner payload section of 1 m has the maximum size. It allows making human-aided experiments.

At different stages of the experiments the calculations were made by all available known modern methods to fix time. All types of electronic, quartz, mechanical and several specially made doubled quartz generators were used (there were compared frequency readings of measuring and etalon heat-insulated generators which were placed at a distance). Certain experiments used lightguiding diodes and some other methods. Before and after the experiment (more rarely during the experiment) readings of measurement clocks were periodically compared with those of an etalon clock and with signals of exact time which were transmitting by radio. Other physical factors causes side effects upon some types of measuring devices, for example, upon quartz-crystal clocks. However, doubling of measurement methods allowed essentially decreasing inaccuracy of measurements.

At some operating modes (which were not always predicted) the change of Time speed was attained (Prof. Nikolay A. Kozyrev called it density of Time t/t_o). This change came to about a fraction of a second per an etalon hour. Let us take usual "etalon" earth time as $t_o=+1$ then it becomes clear that it is speed range of $+0.99<t/t_o<+1.01$ which is researched in the experiments. Thus being placed inside the device, the inanimate objects and animals were transferred in the Future (with "above-zero" speed) more slowly or faster than those around them. It occurred at all operational modes of the device (deceleration or acceleration).

Difference of Time (gradient of Time speed or curvature of Space-Time field) was observed not only inside the TM, though there is no doubt that a maximal value of changed Time was registered inside the smallest "matreshka". As was expected, during the experiments Time change was also registered outside the device. However such change which had an opposite sign was smaller than the change inside the device approximately by an order of magnitude. It entirely corresponds to geometric laws, i.e. in proportion to the cube of the distance).

In other words, TM influences not only its inner part and pay load but also the environment. It bears a strong resemblance to jet propulsion but in Time and not in Space. It is a flight which is realized by rejection of Time instead of mass.

Thus it was determined that the processes of deceleration and acceleration of Time distinctly differ in their nature and consequences. In such a way the deceleration was considerably smoother and more stable. During acceleration there were observed sudden changes in readings and this operational mode was characterized by general instability and dependence on any (or many) external factors. Particularly, acceleration instability also consisted in the following: at fixed power the value speed of Time depended on the time of day and situation of the Moon. Possibly it also depended on some other factors including the presence of an operator or other people near the device. Even insignificant external influence, for example, mechanical shaking, caused the change of speed value which sometimes was rather significant.

Inside the laboratory devices there was also registered that **Time can change with some sluggishness**. After the changed Time speed influenced some physical object (for example, soil) then residual effects were observed at it for some period of time. These effects can be eliminated only by the influence of another speed of Time.

Preliminary general conclusions

The Present is the transfer or transformation of the polyvariant easily changeable Future into the univariant unchangeable Past. Thus flights in the Past (at "negative" density-speed t/t_0) and in the Future will happen in different ways. They can be compared with the motion of an ant along the tree: from any point of the tree (i.e. from the Present) there is only one way downwards open to the ant (i.e. in the Past) and many different ways upwards (i.e. in the Future). However among all the ways to the Future undoubtedly there are most probable, low-probable and almost improbable variants for development of the Future. The less probable this variant of the Future the more unstable and energy-intensive the motion to the Future will be. According to

the "law of the crown of tree", return to the Present is possible only if when being in the Past the traveler does not interfere in the course of events and does not change the course of the past History. Otherwise the chronotraveler will return to the parallel Present from the Past by another branch of History. Penetration to the Future from the Present is hampered by the choice of the branch for transference. However return from any variant of the Future into the Present is possible at any scenario if there are no fusions of different variants of History…

In other words, we have a circumstantial evidence of the assumption that Time has more than one dimension. Thus there is an affirmation of the theoretical inferences of R. Bartini who believed that Time has 3 dimensions. Hence we can consider our terrestrial globe as 6-dimensional where the dimensions are: length; width; height; age or date of Time; variant of History or blur of Time; density or speed of Time. Thus the notion of "Arrows of Time" is completely absent in the fourth dimension (date of Time) but it is a special case of the notion of the sixth dimension i.e. speed of Time. At the same time the notion of speed of Time also relates to the physical notions of gravitation and energy. Thus the notion of "Einstein-Rosen bridge", which was introduced in 1916, or notion of "worm course", which was introduced by John Willer in the end of the fifties, are connected with transference in the 5th and 6th dimensions.

Method and Device to Control Temporal Parameters of Physical Processes by Means of Changing of Energy Density of Space

Alexander V. Frolov, Russia

General Director, Faraday Lab Ltd
Tel./fax: 7-812-380-3844
Email: office@faraday.ru

This invention belongs to the methods and devices to provide control on rate of physical processes (that includes the process of the existence of matter in space-time) by means of increasing or decreasing of energy density of space (i.e. energy density of physical vacuum or density of the aether).

Let us consider the history of the invention:

Earlier there were proposed some methods and devices to influence the rate of physical and chemical reactions, biological processes or period of oscillation of the system. In the works by N.A. Kozyrev [1] there is a description of the experiments on the influence of some process (for example, process of evaporation or crystallization of matter) upon the period of another process, which serves as a detector and can be compared with reference oscillation process. In one case, the rate of oscillations of the detector decreases in the surrounding area near the process of matter evaporation. In another case, the rate of detector oscillations increases in the surrounding area near the process of matter crystallization. If we use a term of "entropy" then it is possible to say that the processes which are accompanied with entropy increasing (for example, conversion of matter from solid state into liquid one) influence on the matter (surrounding processes) in such a way that entropy of systems decreases. In another case, for example, near the process of crystallization, entropy of systems increases in the surrounding area near this process. Kozyrev used the term "wave of density of time" and he made a conclusion that in addition to "directivity" of time (time course) there are active properties of time, for example, "density of time".

To develop this approach for applied purposes it is necessary to use in-depth analysis of the physical sense

of the "time density" notion. Connection of notions about "time directivity" and "entropy of the system" was demonstrated in the work "Introduction into thermodynamic of irreversible processes", 1964 by Ilya Prigozhin [2]. In the work "Quantum fluctuations of vacuum in curved space and theory of gravitation" by A.D. Sakharov [3] the conception of vacuum structure was suggested. In the USA the work "Can the vacuum be engineered for space flight applications?" by H.E. Puthoff [4] is well-known. The author considered the applied aspects for study of vacuum structure and described the method and device to obtain propulsive force by means of changes in vacuum properties.

A substantive conception of time and methods for creation of waves of energy density were also considered by Prof. K.P. Butusov in the work "Time is a physical substance", 1991 [5]. In the book "What is The Time?" by Yu. G. Belostotsky [6] the connection between the notions of time and aether was demonstrated. This connection was considered from the point of view of astrophysics there.

We can also say that the modern conception of aether is successfully developed by V.A. Atsukovsky in his works [7].

In my articles, for example, "Physical principles of the Time Machine" [8], it was demonstrated that to develop experimental works on the topic it is useful to clarify the terminology and to consider **"waves of time density" as longitudinal waves of energy density in space.** In this case the notion of "time density" has a physical sense of energy density (aether density).

This approach can be realized practically by means of classical electro-technical and radio engineering methods and it is a development of aether-dynamical conception on the nature of electricity and magnetism by M. Faraday, "Experimental researches on electricity", volume 3, [9].

Let us consider a usual bipolar magnet from the point of view of aether-dynamics. Then it is possible to say that it is inflow and outflow of aether, i.e. it is a balanced energy system which does not change energy density in space. In this case it is evident that creation of magnetic monopole or modeling of quazi-monopole by means of electro-dynamical methods is a technical basis to create some local change of energy density in space.

Electric processes could also be used alongside with the magnetic phenomena. For example, in another book "Symmetrization of Maxwell-Lorenz equation" by Prof. Butusov [10] the creation of longitudinal wave was also considered. It was demonstrated that an electrically charged sphere can radiate longitudinal wave when the sphere radius is changing, i.e. when its surface is changing while the value of electric charge is constant.

One more well-known method is described in the book "Experimental gravitonics" by Polyakov [11]. There is a consideration of the generation of gravitational waves at the high-frequency magnetization and demagnetization of ferromagnetic material, i.e. at the powerful volume magnetostriction. Since at this phenomenon there are changes of matter density (i.e. changes of energy density in space, which is occupied by matter), then volume magnetostriction is a special case of changes of energy density.

Earlier Vadim A. Chernobrov had described a method and device to control temporal characteristics of physical and chemical processes by means of creation of the magnetic monopole (quasi-monopole). In this magnetic mono-pole there is a convergent wave, which is created by several sources situated in the spherical frame. According to this method in the multilayer spherical structure where every layer (the so called "electromagnetic work surface") is an assembly of electromagnets, by means of series connection of the layers the wave is created, which converges to the center of the device. The device has the same outside magnetic poles of the electromagnets (and the same inner poles) and thus a model of macroscopic magnetic monopole is created.

We assume that at in-phase operation of all sources of waves, interference of longitudinal waves provides some change of value of energy density of space in the focus of the system.

Experimental facts prove that detectors installed in the center of the device (for example, mechanical or electromagnetic oscillators) show change of period in their own oscillations. We have protected them by shielding them from heat radiation as well as from other kinds of electromagnetic influence. Thus it is possible to assert that the detectors decelerate or accelerate their oscillation period depending on the energy density, which is generated in the center of the device.

However for the experiments made by means of such a device, accurate adjustments of all wave sources are required to provide their in-phase operation. At the same time, operational stability of the system depends on the operational stability of each of the wave sources. Increase of the impulse frequency causes increase of

the effect; however, it is limited by the parameters of electromagnets and generator of impulses. Besides, to increase the effect it is necessary to use more powerful energy sources since the current in the windings of electromagnets determines the value of the magnetic field of the created quasi-monopole.

Since the efficiency of such systems directly depends on the frequency and the value of changes of energy density in space, then in the next version of realization of this technology we suggest using of plasma shells instead of electromagnetic working surfaces. This will allow significant improvment in the specific parameters of the device.

Thus let us consider general engineering principles of operation and outline the ways to develop this method. Fig. 1 represents a three-layered electromagnetic emitter. This electromagnetic emitter is designed according to the invention in which the directed radiation of wave of energy density is created along the axis of the device.

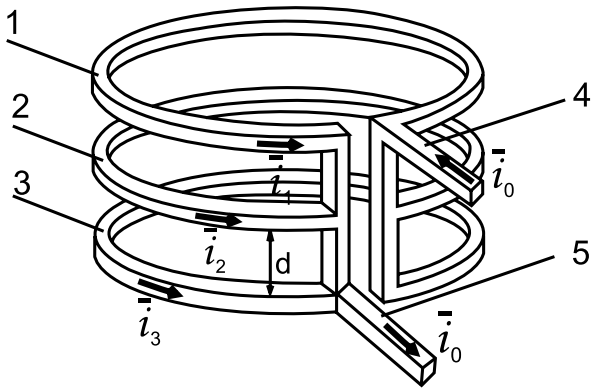

Fig. 1
Three-layered electromagnet

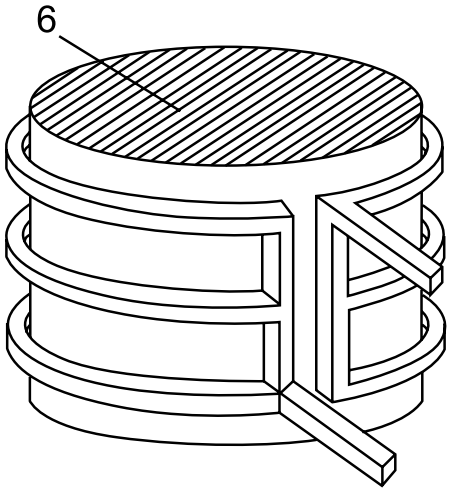

Fig. 2
Three-layered electromagnet with ferrite core

The device is designed according to the idea by Vadim A. Chernobrov for creation of the directed wave of energy density by means of phase shift in propagation of impulse front in three current branches, namely i_1, i_2, i_3. These branches are displaced along the electromagnet axis at some distance d.

The device works in the following way. When the pulsed generator is activated, front of current pulse i_0 appears at the output 4. Impulse front at branch 1 advances impulse front at branch 2 that is caused by spatial shift of current branches 1, 2, 3 relatively to each other along the electromagnet axis at the distance d. Impulse front at branch 2 in its turn advances impulse front at branch 3 for a certain time T. The second output of the electromagnet 5 is placed in such a way that impulse front at branch 1 will phase lag behind the impulse front at branch 2 (which in its turn will phase lag behind the impulse front at branch 3) for the same period of time T. Therefore at branch 5 the united impulse front is generated again.

Time T can be calculated in the following way:

$$T=d/c \text{ (seconds)} \qquad (1)$$

where c is a constant of propagation of impulse front. This constant is known as velocity of light.

At each impulse the T (i.e. the value of relative lag of impulse front) is a constant value. Thus high-frequency consequent excitation of layers of the electromagnet appears at each impulse. The frequency of the excitation is calculated in the following way:

$$f=1/T \qquad (2)$$

where T is relative lag of impulse front in seconds.

There is an example of frequency calculation: for the shift distance d=7 mm we can calculate a lag $T = (7/2.997924)\times10^{-11}=2.335\times10^{-11}$ (seconds) and frequency f=1/T approximately comes to 4.28×10^{10} (Hertz).

Thus this design of three-layered electromagnetic emitter allows creating the waves of super-high-frequency band (for example of millimeter range) without the use of a semiconductor or other radio components.

It is very expedient to use the electromagnets designed with magnetostrictive material cores, that will significantly increase energy density of the longitudinal

wave, which is generated by the multilayer electromagnet. In Fig. 2 there is an emitter with the core. In the case of high-frequency ferromagnetic magnetostrictive materials 6 the efficiency of emitter operation significantly increases.

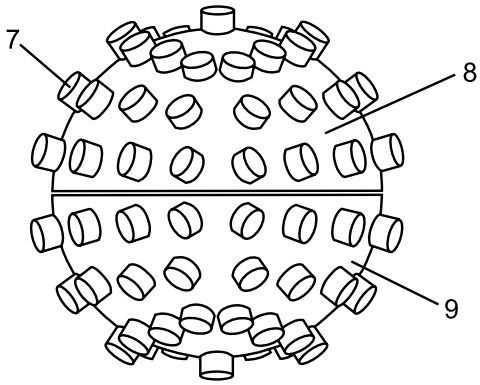

Fig. 3
Spherical design

Fig. 3 represents the spherical distribution of emitters 7 at the upper 8 and lower 9 hemisphere of the frame which could be opened in order to place detectors and different objects inside. It can also allow to establish in what way the changes of density of space energy influence the properties of different materials, velocity of physical and biological processes as well as chemical reactions. The installation of detectors 10 inside the device is shown on Fig. 4.

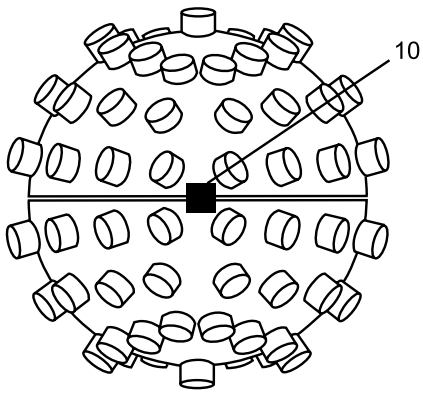

Fig. 4
Detectors inside the system

Another version of design is represented in Fig. 5, where the suggested method is realized by means of a spherical electric capacitor with three coats 11, 12, 13. Each capacitor coat is connected to the outlet of three-phase pulsed generator 14.

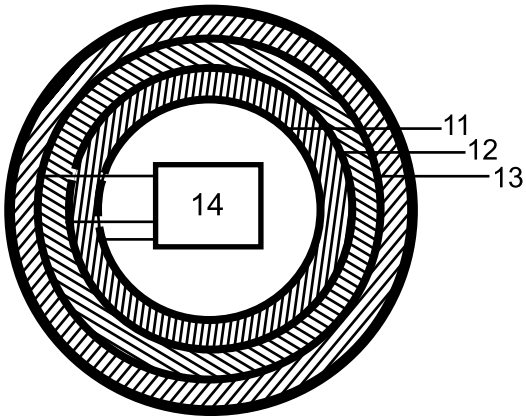

Fig. 5
Three-layered spherical capacitor

In this case the wave of energy density is created without electromagnetic emitters and this principle is not related to the modelling of magnetic quasi-monopole. The device operates due to the control unit, which provides the high-frequency changes of electric potential at each coat in such a way that the mode of high-frequency converging or diverging wave of energy density is created. In fact it is a standard three-phase generator but it produces not the rotation of the rotor of some electromotor but **"compression" or "decompression" of aether.** Aether is "pumped" in the center of the device or "pumped out" of the center.

In this case there is no need to tune separate sources of waves to make the device work in in-phased mode. It ensures reliability of the device operation if to be compared to the quasi-monopole. Besides, much less energy is necessary for the processes of charging and discharging of multi-layer spherical electric capacitor than for creation of magnetic field by means of conductivity currents.

Since the efficiency of such systems directly depends on the frequency and value of changes of energy density in space, we suggest the use of plasma shells instead of electromagnetic work surfaces for the next version of the device. It will allow significantly improvment in the specific parameters of the device. For that it is enough to place the electrodes of the multi-layers capacitor in a low-pressure gas area and these electrodes should be made as gauze electrodes. At that the wave is created in plasma, which is excited layerwise by several gauze electrodes placed in a spherical space between the inner and outer spherical bodies of the device. Therefore this version of design of the device can be considered as **the manipulation of the plasma method**.

Fig. 6 is a plan of one more design version. It is made as an inner frame 15 and outer frame 16, the space between them is filled with some gas 17. Three electrodes 18, 19 and 20 are connected to the three-phase pulsed generator 21. **Consequent excitation of plasma layers by electrodes 18, 19 and 20 creates the wave of energy density.** Propagation of this wave can be directed both to center of the device and from the center of the device.

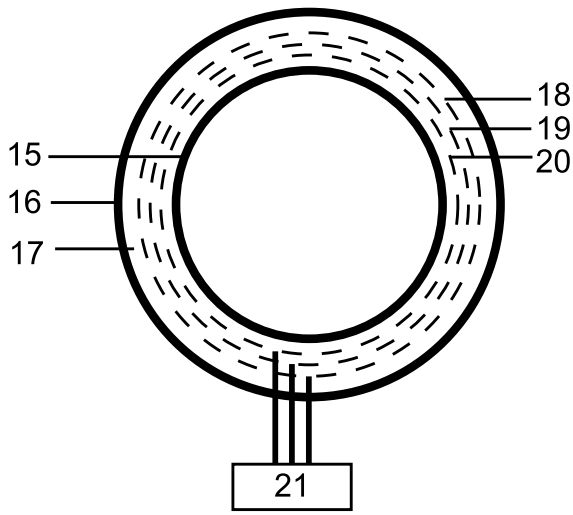

Fig. 6
Wave in plasma

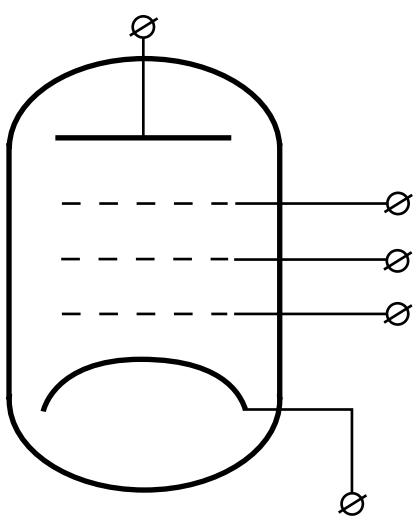

Fig. 7
Schematic electric circuit

In Fig. 7 there is a schematic electric diagram of the design.

To conclude. The work on time control has just started. We have clearly determined the main physical principles of operation of such devices, which can change the aether density in some given volume of space and thus influence temporal parameters of any physical process. The small experimental results today allow us to make real positive condusion on availability of this method and on the possibility of its practical application in applied aspects. The first aspect is antigravitation propulsion technology and we are developing the methods to detect mass (weight) changes in the time control experiments to prove this applied possibility. Another area is medical applications of the changes in the aether density.

Russian Federation patent claim #2003110067 was filled April 9, 2003. At present time we are interested in marketing for this technology as well as in search of additional investment and partners.

References

1. N.A. Kozyrev, Selected works, Leningrad State University, 1991
2. I. Prigozhin, Introduction in thermodynamics of irreversible processes. M., 1964
3. A.D. Sakharov, Quantum fluctuations of vacuum in curved space and theory of gravitation, Reports of USSR Academy of Sciences, vol. 12, 1968, p. 1040
4. "Can the vacuum be engineered for space flight applications & Overview of theory and experiments", Dr. H.E. Puthoff, Infinity Energy, July-November, 1997
5. K.P. Butusov, Time as physical substance. Collection of articles "Problems of space and time in modern natural science", Issue 14, L. 1990, pp. 301-311
6. Yu.G. Belostotsky "What is The Time?" Saint-Petersburg, 1991
7. V.A. Atsukovsky "General etherodynamics", M., 1990
8. A.V. Frolov, Physical Principles of The Time Machine, New Energy Technologies #3(6), pp. 8-10, Saint-Petersburg, 2002
9. M. Faraday, Experimental researches on electricity, vol. 3, M. 1959
10. K.P. Butusov, Symmetrization of Maxwell-Lorenz equation. Problems of Space and Time in modern natural sciences, vol. 15, L. 1991
11. S.M. Polyakov, O.M. Polyakov "Introduction in experimental gravitonics", pp. 58-59, M. 1991
12. V.A. Chernobrov "Mysteries of Time", M. 1999

Aetherodynamics as a New Field of Physics

Theory and Experiments

Vladimir A. Atsukovsky, Russia
Email: atsuk@dart.ru

A crisis exists these days both in Natural science on the whole, and, in its basis, i.e. physics. This situation is caused by fundamental errors in the methodology of its theory. The postulate method and predominance of mathematics above physical sense can be also considered as the reasons for this. Crisis situation has also taken place in the past and the way out was always to use a deeper level of matter organization than the accepted one.

A large amount of material on elementary particles of matter is collected in physics. It was discovered that all these particles can be transformed in each other. Besides that, there was discovered the ability of vacuum to create such particles at strong electromagnetic fields. In this connection it becomes clear that all these particles and vacuum have a common building material, i.e. a physical medium which fills all the world space. This medium was renamed **aether** and the element of the medium was renamed **amer**.

The worked out methodology of aetherodynamics allowed determining that aether is a usual viscous coercible gas for which all laws of usual dynamics of gases are valid. It has allowed to determine its characteristics for near-Earth space and then to describe the structures of primary stable elementary particles (i.e. proton, neutron, electron, photon, atomic nuclei, atoms and some molecules) as well as physical essence of general fundamental interactions (i.e. strong and weak nuclear interactions, electromagnetic and gravitational interactions) and some physical phenomena.

Also developed was the model of aether circulation in the Universe within the limits of perpetually existent matter, usual Euclidean space, and evenly flowing time. Formation and decay of matter, formation and decay of celestial bodies and galaxies as well as functional classification of galaxies are also included there.

To confirm some theses the author and his research team conducted several experiments mainly on electromagnetism that gave positive results. The research was conducted on testing of the presence of aether wind. These research works have confirmed the results obtained by D. Miller in 1925.

Report by Vladimir A. Atsukovsky

Electromagnetic Gravitational Interaction

Vadim Y. Kosyev, Russia

http://uft.h1.ru; http://uic.nnov.ru/~kovy2
Email: uft@inbox.ru

In the artide some mechanisms of electromagnetic gravitational interaction will be considered in the view of the Unified Theory of Field, Space and Time. See the complete description of The Unified Theory of Field, Space and Time at http://uic.nnov.ru/~kovy2; http://uft.h1.ru or in the book [1] which has the same title.

First of all, let us consider the structure of Space-Time where the radiation propagates. In our World gravitation is the unique substance which exists everywhere and gets over any obstacles. There are no known methods of insulation of gravitational field in modem science. It is impossible to imagine space and gravitation separately. Gravitation exists everywhere where there is some space. The gravitational field created by all masses of our metagalaxy is the aether in which cosmic objects moves and electromagnetic oscillations are propagated. The space surrounds us since the whole matter carries gravitational charge of only one sign. From astronomical research of cosmic space it follows that radius of metagalaxy is equal to the critical (gravitational radius) and hence gravitational potential is equal to $c^2 \sim 10^{17}$ $[m^2/c^2]$ in each point of space.

In our space the sum potential of the electric field is equal to zero. All bodies and space-time as a whole are electrically neutral. This assertion follows from two unique properties of gravitational space-time:

1. Values of electric charges of different signs of elementary particles are exactly equal.
2. There is an equal number of elementary particles which carry electric charges of different signs.

If electric potential is equal to zero in the given point of space then energy of alternating magnetic field passes entirely to the electric field and radiation gains the parameters of electromagnetic oscillations. However electric potential of positive and negative signs can prove its properties at the simultaneous charging of different local spatial regions. In the electric field the character of radiation differs from that one which is observed in ideal gravitational space-time (without electric potential).

In the presence of electric potential some part of magnetic energy is spent to create gravitational alternating field. Radiant energy is absorbed. Electrically charged spatial regions are perceived by us as filled with a strong absorbing substance. At the same time if the potential of the electric field can be compared to the potential of the gravitational field then spreading of radiation becomes impossible.

Change of both electric and gravitational field results in the creation of a magnetic field in the region of space-time which has a dual electrogravitational nature. Change in the magnetic field results in the creation of both electric and gravitational fields. The amplitude of electromagnetic and magnetogravitational constituents of the unified electromagnetic gravitational oscillations depends on field potential of opposite nature. The electromagnetic constituent is determined by gravitational potential and the magnetogravitational one is determined by electric potential. Transference of gravitational masses of matter in electrogravitational field-aether causes the creation of the proper magnetic field. Coming from the direction of magnetic field some force influences upon the moving electrically neutral masses. This force is similar to Laurence force.

Electromagnetic gravitational converter designed according to the Searl Effect (Fig. 1) visually demonstrates the mechanisms of electromagnetic gravitational interaction. A detailed description of the experiment is presented in the article [2] by Vladimir Roshschin and Sergey Godin (see http://www.n-t.org/tp/ts/dms.htm).

The device consists of a cylindrical stator of about 1 meter in diameter which is surrounded by 24 cylindrical rollers. Stator and rollers are made of magnetic material and they are magnetically linked (there is no contact between them). Vector of the magnetic field of the stator and rollers is vertically oriented along the axis of the cylinder but it has opposite direction. Rollers are mounted on the movable separator which circles round the stator. Each roller rotates on its axis in the same direction. The weight of the device is 350 kg. During rest, the device is electrically neutral and has proper gravitational charge, inertial mass, magnetostatic field of the stator and rollers.

On rotating of the magnetic system the following effects were observed:

- Depending on the frequency (up to 35%) the weight of the device was decreased.
- At a frequency of 550 rpm there is a spontaneous acceleration of the system and turns of the rotor abruptly increase (in quadratic dependence). To stabilize the mode it had to take off the excess energy to active load (up to 7 kWtt) by means of electromagnetic transducers.
- Magnetic field was distributed in a room as concentric surfaces of 5-8 cm thickness and 50-60 cm period. Depending on speed of rotation of the magnetic system there was a fixed temperature decrease from 0 to 8° within the regions of space which were curved by magnetic field.
- The glowing (corona discharge) appeared around the working converter.

Appearance of all mentioned effects is caused by the simultaneous presence of electric, magnetic and gravitational fields in the area of the converter.

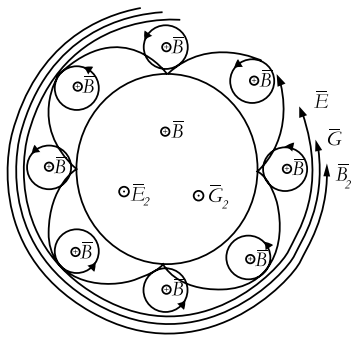

Fig. 1
Electromagnetic gravitational converter

Because of the Searl Effect a very complicated configuration of electric, magnetic and gravitational fields appears in the device. Rollers having their own field $\boldsymbol{B}$ rotate around the stator which has its field $\boldsymbol{B}$. Cycloidal motion of numerous magnets which are built in the rollers causes change in the magnetic flux. EMF $\boldsymbol{E}$ appears in the area of rotation of the rollers. EMF is directed along the perimeter around the device. The electric field creates stationary waves which are registered around the device as concentric electromagnetic gravitational walls. Magnetic rollers should be made non-conducting in such a way as to allow electric field penetrating inside. In the presence of the electric potential change of the magnetic flux causes appearance of gravitational field $\boldsymbol{G}$. This field is directed along the perimeter around the device. In the presence of electric potential the Lorenz force influences the gravitational masses of the rollers. These gravitational masses move in the external magnetic field of the stator. The Lorenz force is directed transversely to the velocity along the cycloid and in the direction of the field $\boldsymbol{B}$. The value of the Lorenz force depends on the electrical potential, magnetic intensity, mass of the rollers and their traverse speed. The electric potential in its turn depends on speed of rotation of rotor of the magnetic system. As a result the Lorenz force depends on speed according to square law. Rotating gravitational masses of the rollers generate magnetic field $\boldsymbol{B}_2$. Field $\boldsymbol{B}_2$ generates derived fields $\boldsymbol{E}_2$ and $\boldsymbol{G}_2$ etc.

Spontaneous acceleration of the system does not depend on the direction of rotation. Directions of fields and forces change at change of the direction of rotation that corresponds to acceleration in the opposite direction. When the direction of rotation is changed the weight of the device changes. When rotation is in one direction the field $\boldsymbol{G}_2$ is directed upwards (decrease of weight), when rotation is in another direction, it is directed downwards (increase of weight). In the presence of electrical potential many other interesting but still unstudied phenomena are observed (for example, curve of space, change of speed of time-flow, changes of ambient temperature…). Magnetogravitational converter transforms gravitational energy of space-time into energy of electric field which in its turn is transformed into mechanical energy of the rotating magnetic system and electric energy of the load. Energy resources of the future are not coal and gas reserves or nuclear power. They are in the inexhaustible energy of gravitational aether of our space-time.

Reference

1. V.Ya. Kosyev. Unified Theory of Field, Space and Time. Nizniy Novgorod, "Arabesk", 2000.
2. New Energy Technologies #1, 2003, p.35.

Medium For Existing of Matter in Nature

Anatoly V. Rykov, Russia
Email: rykov@uipe-ras.scgis.ru

By medium for existing of matter in Nature we understand physical vacuum which is a category determining all spheres of matter "life" (from particles of microworld to gravitational interactions in the Universe). Matter can not exist without this medium. Thus a question emerges, viz: how physical science can be developed without taking this fundamental aspect into consideration?

According to the Einstein postulate, in a void light always propagates with limited speed, which does not depend on the motion mode of a radiating body. It is a statement of deep physical sense which lies in the fact that only some physical medium can possess such a property. Indeed, if velocity of light, which was radiated by a body, further does not depend on speed of this body then it is possible only in a certain medium. For example, in air sound propagates with a certain speed which does not depend on the speed of the source and is determined only by density and volume elasticity of air. Thus, according to the Einstein postulate, there is a physical medium instead of void and velocity of light depends on the parameters of this medium (as is well known, velocity of light is equal to the square root from the product of inverse values of electrical and magnetic conductivity of vacuum).

The author of this article made an attempt to research this physical medium [1]. The author used a well-known experimental fact that at interaction of a photon with a charged real particle this photon transforms to electron-positron pair. Besides, it was taken into consideration that photon is an electromagnetic phenomenon. The research allows the following conclusion: the medium named in physics as vacuum (before the XX century it was called aether) is created by electric dipoles from (+) and (-) elementary charges. These dipoles are surrounded by magnetic (mass) continuum. There were determined dipole intervals, elasticity of decompression and ultimate strength of this interval. What does this model of medium mean?

1. This model is a physical validating for the "birth" of electron-positron pair at energy which is necessary to break dipole and create the "clot" of mass of these two particles. A certain model for the "birth" of mass must exist. It is not clear as yet but can be represented as a vortex of magnetic continuum inside the charge shell of electron and positron.

2. Let us suggest that values of (+) and (-) charges differ at 7.848981×10^{41} Coulomb, then this difference is sufficient for the medium to be a source of gravitation and inertia. According to Newton's law of gravity, a weak electric charge of medium (all material bodies exist in this medium) causes all bodies to attract one another (under Coulomb's law). On the other hand, weak medium charge of a like sign creates repulsive forces which manifest themselves in the form of the expanding Universe. Thus it becomes clear the amazing uniformity of gravity and forces of negative pressure for the Universe. The mentioned difference of values of (+) and (-) charges of medium dipoles is not used as arbitrary parameter but it logically follows from its electrical structure [2].

3. Hypothesis of nature of gravitation is confirmed by calculations of the deflection angle of electric waves by the Sun. Calculated angle differs from the experimental value only in the fifth sign, which depends on the accuracy of several physical values used in calculation formula. There is practically an absolute coincidence with Einstein's theory. The difference is that it is a concept of space and time (i.e. geometry) which prevails in the general theory of relativity while in the nature of gravitation physical basing is used. Velocity of light is unstable and determined by medium state which depends on electric, magnetic and gravitational potentials.

4. The existence of "black holes" relates to medium structure and nature of gravitation. At the edge of "black holes" the ultimate acceleration from gravity is realized. It causes breakdown of connections in electric dipoles of medium, creation of matter and antimatter (the so called "evaporation" of black holes which was theoretically predicted by E. Hoking, England). However at the border of a black hole the velocity of light is equal to zero since its propagation

medium disappears. According to Einstein's theory it is such a deceleration of time that electromagnetic oscillations gain zero frequency.

5. Naturally the medium is a carrier of all types of electromagnetic radiation, beginning at stationary electric voltage and ending with super-high-frequency "photons", which can be determined not as electromagnetic but as magnetoelectric phenomenon. In the latter case magnetic continuum of medium has a crucial importance since it determines very small degrees of magnetoelectric disturbance. These degrees are thousands of times less than those of a hydrogen atom. It is reasonable that such small degrees creates illusion that a photon possesses properties of particles.

6. Medium structure directly leads to the notions of Quantum Mechanics, beginning at quantification of electronic "orbits" in atoms. This medium determines the "allowed" spots for electrons to be placed around a nucleus. Thus medium is a necessary place for the existence of all matter or matter of the Universe. The so called Compton length of electron wave is one of the validations of this statement. It is directly calculated to a high accuracy according to electric structure of vacuum.

7. Thus Plank's constant is not a mysterious "quantum of action", on the contrary it is entirely determined by medium parameters. Thereby the crisis (which conventional physics is accused of) can be logically overcame by the introduction of medium which is capable to take radiation in electromagnetic region only by quanta. Plank's constant is always presented at all quantum approaches. It is additional evidence in favor of the necessity to take into account the medium as natural place for existence of all the matter in Nature.

8. It is still a question what processes take place in the centers of galaxies. The observations show that the centers of galaxies create star matter. They often flow out the centers and settle themselves at approximately the same plane. It is an evidence of the fact that centers of galaxies quickly rotate and the favorable conditions for stars to reject matter are created. Similarly planetary systems are created around the rotating stars. It is thought that centers of galaxies are gigantic black holes. In the context of the concept of medium for matter existence it can be set up a hypothesis that being at some special state the medium creates stellar systems, i.e. galaxies.

9. Astrophysicists more and more trend to accept the existence of unknown "dark" matter, which occupies approximately 70% of all matter. It is said that due to antigravitation property this dark matter is responsible for the expansion of the Universe. Hypothesis on the nature of gravitation gives the affirmative replies to such suggestions as: expansion of the Universe is caused by weak electric charge of the medium and distributed mass of magnetic continuum is the very dark matter.

10. All elementary particles (electrons, positrons, mesons, protons, neutrons etc.) are in the medium and interact with it. In the case of electrons and positrons this interaction causes the great extension of dipoles of medium which directly adjoins to borders of particles. This extension helps photons to break the particles. In case of protons, there is such a breakdown of the medium at their borders that protons turn to be dressed in "coats" of virtual electrons and positrons. And medium is shown to be in entire state only when reaching the first Bohr orbit. This interaction of the medium and particles leads to the factors which determine the life time of some of them. Thus life time of a neutron is up to 30 minutes depending on the state which it has while leaving the nucleus. For mesons "the tearing" Coulomb forces, which exist between the medium and particles, are very powerful that makes the life time of mesons very short. However if the particles moves with a high speed relatively to the medium, then these forces noticeably decrease and if the speeds of motion is close to velocity of light then these forces become very small. The life time of such particles noticeably increases. In Einstein's theory it is said about "deceleration" of time. Finally the life time of particles is determined by the inner steadiness and outer influence of the medium. Protons have fantastic binding energy and they cause such great external destructive effect that their life time becomes immense.

11. When particles move in medium with high speeds, there is a concentration of magnetic continuum which is recognized as increase of mass of particles at increase of their speed. Evidently, we can continue the list of physical phenomena which relate to the presence of medium for existing of matter in Nature. However it seems to be enough to admit that medium (physical vacuum, aether) is of a great importance for the very existence of the Universe and for the processes which take place there. "Mechanism" of gravitation and inertia has a special importance since

it is the only thing which can make clear the real mechanism of Nature. It is possible that the methodology, which is accepted in physics, is necessary for more accurate description of phenomena but it is not enough for understanding of the nature of "space" and matter. Research of the medium for existing of matter will be able to meet the conditions sufficiency.

The understanding of vacuum structure, which is created by electric lattice from charge dipoles, surrounded with magnetic continuum, gives an opportunity to control the forces of gravitation and inertia. The medium of vacuum can be influenced by:

1. The radiation which has frequencies coming to the frequency from point #11 of the list of parameters.
2. Electric voltages which exist in vacuum (it is not very promising because of real matter breakdown).
3. Magnetic intensities (magnetic flux density). It is the most promising influence method (1-10 Tesla is enough to compensate terrestrial gravity).
4. Transformations of low accelerations to high accelerations of impact type.

Potential electric and magnetic energy is immense in vacuum medium. Reasoning from energy of one dipole, which is equal to 1.6x10 (-13) Joule, we will derive the value of electric energy equal to about 10 (+31) Joule per one cubic meter of the medium that is equivalent to mass annihilation of 10 (+15) kg!

References

1. Rykov A.V. Foundations of aether theory// RAS, M., 2000, p. 54
2. Rykov A.V. Hypothesis on the nature of gravitation// MSU, M., 2001, pp. 59-63

Spartak M. Polyakov

(09 January, 1931 – 04 June, 2003)

Spartak M. Polyakov, a legendary physicist-experimentalist, known for his research in the field of gravitation, has died. Polyakov was the author of more than 50 research works, among them "Introduction into experimental gravitonics». Polyakov was the creator of the new model of photon. He also conducted numerous research in the field of electrodynamics, gravitational phenomena and superlight connection.

Spartak M. Polyakov graduated from Kishinev State University with degree in "General Physics". For many years he worked at the top secret military engineering department "Istok" (Russia).

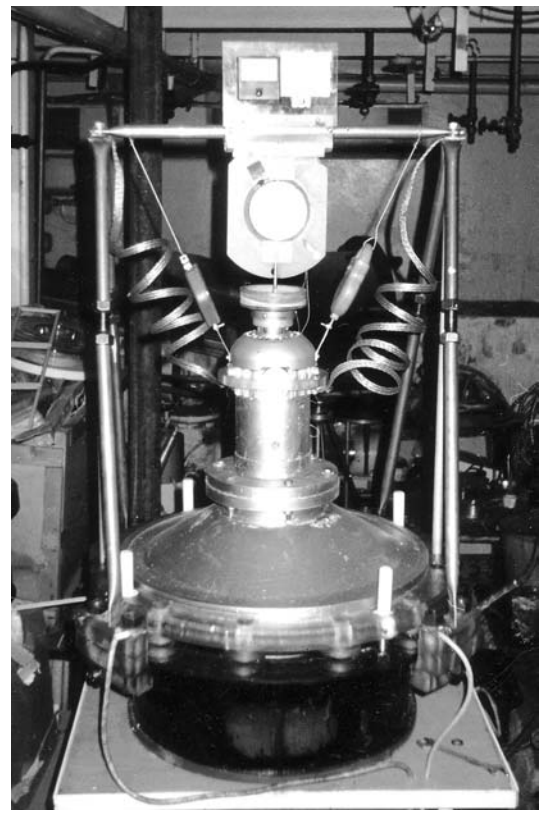

Plyakov's alternative physical theory allows explaining such phenomena as magnetostriction and optical magnetization. The basic postulate of this theory states that the speed of propagation of gravitational waves is dozens of times faster than velocity of light regarded by the traditional science as the limit. In his experiments Polyakov demonstrated such methods of generation of gravitational waves as precession of gyroscope and remagnetization of ferromagnetic.

While working for "Istok", Polyakov designed on his own a device which is possibly the first gravitational motor in history. Total specific thrust produced by rotation of gravitating mass comes to 2.5 kg/kWt. This index is close to that produced by the engines of modern helicopters, which is equal to 8 kg/kWt. Practical application and further development of Polyakov's ideas can provide humanity with new kinds of communication, gravitational engines and free energy devices.

Adams Motor

Principle of Operation and Experimental Data

Sergey S. Abramov, Russia

Email: a_serge@cards.lanck.net

Adams' motor-generator represents the type of devices which use, as their creators claim, so-called "free energy". The term "Zero point energy" is also used in some sources [1, 2]. Due to quanta-mechanical fluctuations, this energy exists even at zero temperature. Adams' motor-generator belongs to the group of Switch reluctance motors [3]. Robert Adams, **former Chairman of the Institute of Electrical Electronics Engineers, USA (New Zealand section)**, designed this machine in the late sixties of 20th century. Similarly to all the devices utilizing free energy (referred to in come sources as "overunity devices"), Adams' device remains practically unknown to the general public. **The device is rather simple to assembled even at home, which I experimentally proved. However, it is necessary to be very careful while choosing the model parameters. As to the latter I have managed to collect quite a big number of instructions from existing sources; the summary of these instructions is presented below in this article. Based on these instructions, a low-power model can be assembled even without a mathematical analysis and modeling of electromagnetic field. Such model would certainly facilitate optimization of the device.**

Adams' motor is most frequently a DC machine; however, it can also use an AC source through a rectifier. In the latter case only the adjustment of the device and its control system can be provided.

Editorial: We disagree with some assertions of the author; however this article is of great interest.

My experiments on my own model do not yet allow me to make an unambiguously positive conclusion concerning the possibility to generate excessive energy. Experiments with my new control system designed on the base of AVR controller AT90s2313-10PI (it is produced by Atmel company (http://www.atmel.com) will allow to be more specific. Below there is a general analysis of the motor principle of operation and a number of recommendations concerning the construction and technology. I do not propose to take this as compulsory rules to follow; other technical solutions are possible.

Basing on the principle described in this article, R. Adams (the link to his articles is available at: http://www.aethmogen.com/wri/intro.shtml) created a few DC motor-generators which operate on permanent magnets. Some of them, according to information found on the Internet, have manifested 690% electrical efficiency and 620% mechanical efficiency. These devices operate at room temperature without overheating. My device has shown between 1 and 3 degrees overheating after an hour of functioning. However, it is easy to prove that such overheating is predictable for an average current of 0.15 A in coils of 35 mm long and 25 mm in cross sectional diameter. I have not been able to prove the data published on the Internet concerning the Adams motor capability to operate when the stator temperature is a few degrees lower than that of the environment. The temperature of the coil and of the power transistor is a good indicator of correctness of the circuit set-up and of functioning of the control circuit. There were cases when transistor and coil were noticeably heated after adjustment. Usually this was explained by a bad choice of points of transistor switching or by too extensive current impulses in the stator (which must amount to approximately 25% of period length). After the required adjustment the motor continued to operate almost without overheating.

Adams' motor was first mentioned in Australian Nexus Magazine in 1992. Later, Harold Aspden (Britain) proposed a slightly improved version of the motor and received Great Britain patent No. 282708 [4], which strongly reminds of the original version published by the above magazine. **Adams' device** represents an electrical motor and/or generator consisting of a rotor

with radially directed permanent magnets and of a stator also constructed with a few radially directed and periodically magnetized cores with winding. (Fig. 1). In some models axial orientation of magnets and coils are also used.

Permanently magnetized poles of rotor can include any number of poles, even an odd number. Analogous poles of the magnets (all N poles or all S poles) are directed outside. A version with alternating poles is also possible; such model allows the torque to increase. In this case, after passing a rotor pole the stator is demagnetized by the current impulse and begins to be attracted by the magnet of different polarity. This circuit requires a more complicated control; on the other hand, it manifested rather good results in certain models.

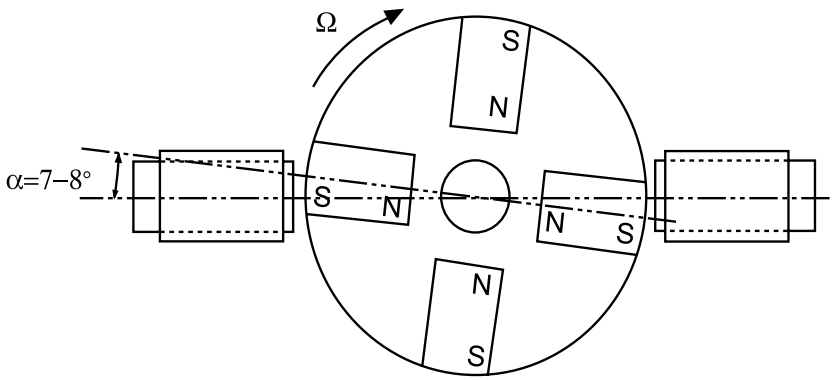

Fig. 1

Poles with winding placed on the rotor are radially oriented in order to obtain a supply of energy emerging as a result of the influence of counter emf from the rotor poles. Steel or iron cores are used for the poles of the stator with winding. It is also possible to use other materials, at that the core must have high magnetic inductivity and low level of magnetization reversal losses. The stator winding consists of a few hundred turns. The current inducted by the magnet in this winding will have the polarity which will cause repulsion of the magnet. Since the electromagnetic state of stator changes quite significantly and quite fast, then the stator core can be considered to be the most crucial element of the device. Ignoring this fact was one of the most frequent mistakes made by those who tried to reproduce Adams motor.

The current inducted in the stator is the function of:

- field size,
- number of winding turns,
- speed of flux changes.

Resultant parameters of this device cause each pole to be attracted or repulsed by stator poles when the rotor is in certain position in case when the rotor is unbalanced. To achieve this effect it is required to switch the input current in control coils after the signal from sensor of rotor position. R. Adams used a mechanical switch as a sensor. My device and a number of other devices use the signal from two Hall sensors. However, according to experimenters' information, better results are achieved if a position optical sensor is used.

Time of switching of impulses is determined by the size of the motor itself, i.e. the speed of motor rotation, location of rotor magnets towards the stator windings and the distance the rotor magnets pass while moving by the poles with stator winding.

It is necessary to take into account that any part of this motor can be modeled based on the existing electromagnetic theory and no part of the motor is in conflict with any laws of electromagnetism. There are so many ways to construct Adams' motor that any version may be considered to be correct.

One can say that the frequently pulsating electromagnetic process in the stator core is what allows Adams' device to function as a kind of diode which borrows energy from the field of permanent magnet but then does not return that energy in full.

5 stages can be defined in the periodical process which takes place in stator:

1. The magnet is attracted to the stator core. The permanent magnet is attracted to the iron core of the stator with winding. While doing so no consumption of electrical current takes place. It is as if kinetic energy is borrowed from an internal ferrite magnetic source and is supposed to be returned into the stator.
2. Stator core is magnetized. During the period when the magnet is positioned in front of stator core they both comprise a single magnetic conductor with an air gap and the stator core becomes an extension of the magnet side it faces. It is usually supposed that the energy "borrowed" on the first stage is getting back now.
3. Stator core is demagnetized. When the stator core becomes rotor magnet extension, the circuit closes and current impulse gets to stator windings. I have seen the instructions saying that the angle between

stator axles and rotor magnet must amount to 7-8 degrees as shown in Fig. 1. However, my model made it clear that at increase of speed of rotation it is necessary to start the coil a little earlier, when the magnet axle has not reached the stator axle. Probably this applies to the circuit with a Hall sensor only and if an optical switching is used the making angle will be different.

Magnetic field of this current acts to compensate magnetization of the stator, which is caused by the field of rotor magnet. Consequently, the summed current significantly compensates attractive force between rotor and stator and the rotor can freely rotate by using the inertia obtained at stage 1. This process is characterized by the fact that this current impulse is amplified by the current inducted in the stator winding by rotor magnet which, in accordance with Lentz law (1834), counteracts the power which induced it. Consequently, kinetic energy obtained as a result of attraction of the rotor to the stator at stage 1 is transformed into electrical demagnetizing impulse in stator winding during the period when the rotor and stator directions are congruent. This is the unique overunity characteristic of this model. However it is obvious that instead of returning this energy the motor transforms it into electromagnetic demagnetizing field.

4. Restoration: when the rotor is removed from the stator attraction zone the latter looses energy and returns to its initial demagnetized state. Decreasing electromagnetic field creates a current wave of reverse polarity which can be stored in the capacitor.
5. Reiteration of the process: This periodical process is renewed as described in stage 1 during the next magnetization of the stator, excluding the fact that emf preliminarily stored in the capacitor, on term of presence of suitable electrical circuit, can be used for facilitating stator demagnetization or even used to supply the load.

It may be briefly summarized that the frequently pulsating electromagnetic process in the stator core is what allows Adams device to function as a kind of diode which borrows energy from the field of the permanent magnet but does not return that energy in full. The important characteristic of such motors is that the stator windings are used for demagnetizing and not for magnetizing as it could seem from the first sight.

It is noteworthy that there is a small pause between attraction to the stator and repulsion from the stator. The effect of attraction to the core takes place a split second before the repulsion effect manifests clearly. This pause being the reason of electromagnetic asymmetry creates conditions necessary for achieving overunity effect. If the attraction to the core and repulsion by means of Lentz currents were taking place simultaneously and with the same power there would not be any overunity characteristics. That is why the rotor must be as lightweight as possible. From this point of view, T. Harwood's model is the most lightweight of the known models. In Harwood's device the magnets are mounted between two CD disks fixed on the shaft by means of plastic washers and glue. My model is heavier, which can be considered as one of its disadvantages.

The principle of operation of Adams' motor is based on the balance, which creates the electromagnetic asymmetry. To get the motor to operate the magnet must be attracted to the stator core which must have a smaller cross-section area in order to create attraction without any significant repulsion effect from the stator windings mentioned above. When stator and rotor axles are congruent the Lentz induced current must be sufficient for compensating the natural attraction of the magnet to the stator core. Consequently, stator windings must have enough turns for demagnetizing effect, but not to the extent that this effect fully manifests before the rotor reaches the stator axle when Lentz current has its maximal value.

During my experiments at 12 V voltage and on using two independently controlled stator coils the speed of rotation reached 3400 rpm. Please note that while reproducing such device it is necessary to take certain measures in order to ensure safety in case of possible breakdown. **The magnet disconnected from the rotor may be dangerous!**

Technological recommendations are as follows:

1. The device must be low power. It is better not to try to begin with a motor functioning in kilowatt range. This is feasible only on condition of having all necessary technological documentation which is not available at the moment.
2. The preferable voltage for the first model is 12 V. If the voltage is less the speed of rotation is too slow for indicating the expected characteristics of the device.
3. The best magnets are ferrite ones with dimensions 4x4x5 (where 5 is the magnet length). The practice has shown that at 12 V voltage neodymium-iron-boric (NdFeB) magnets cause a jerky rotation of the rotor.
4. The side of the stator core facing the rotor must

Control circuit with hall sensors

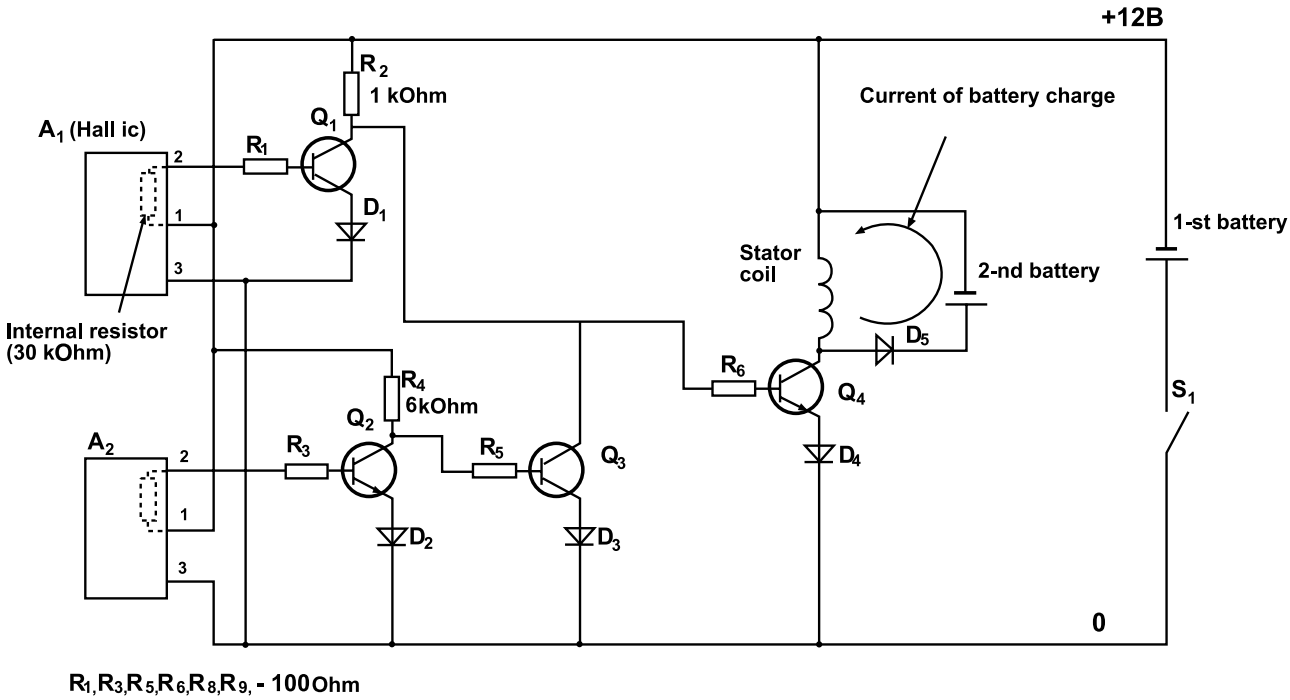

Fig. 2

have the size which is 4 times smaller than the corresponding side of the magnet. If cross-section area of the stator is larger, a bigger part of magnet field comes to the stator core when their axles coincide and thus there is nothing to induce Lentz' currents in the stator windings. It is a common point of view that it is necessary to try to minimize the volume of a device and to obtain the maximum efficiency at minimal material expense. In practice, it has always been the goal while designing electrical machines to decrease losses in stator I^2R. As for the Adams motor, it requires not only the use of disproportionate magnets but also stator windings with disproportionate number of turns specially designed to obtain maximum Lentz' currents that is achieved by hundred of turns of winding.

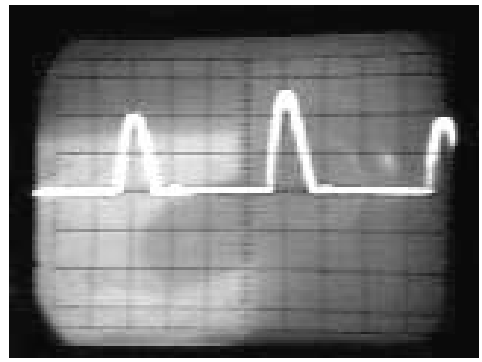

5. It is necessary to define approximately the effective zone of the magnet field. If practically applicable magnet field is equal to, for example, 8 cm, and the stator has a 10 cm long winding, then more than 20% of turns will not be efficiently crossed by magnetic force lines and will only create an excessive mass of the device. To define the degree of effective action of the magnet we can put a paperclip on the table and move it gradually in direction of the magnet until the paperclip is attracted to it. Actually if we take into account friction losses then the magnet influence zone will be a little larger. That is why the stator winding in the axle direction can be 10% larger than that in this experiment. The description of this test has been found on Tim Harwood's website (http://www.geocities.com/theadamsmotor/cdmotor.html).

6. The air gap clearance between the stator and the rotor must not exceed 1 1.5 mm.

7. Use as little metal in the device as possible. It is preferable that the metal is used in the core and stator windings only.

In order to increase the efficiency of this motor, it is necessary to build it in a manner, which allows removing the counter emf from the stator windings. To do that, this emf may be taken off and stored in the capacitor. The article published by Nexus magazine and Great Britain patent No. 282708 consider special generator windings; however, no sufficiently detailed data on operating rules are provided. Michael Smith (Australia, http://www.Fortunecity.com/greenfield/bp/16/content1.htm) has unequivocally informed me in one of his letters that

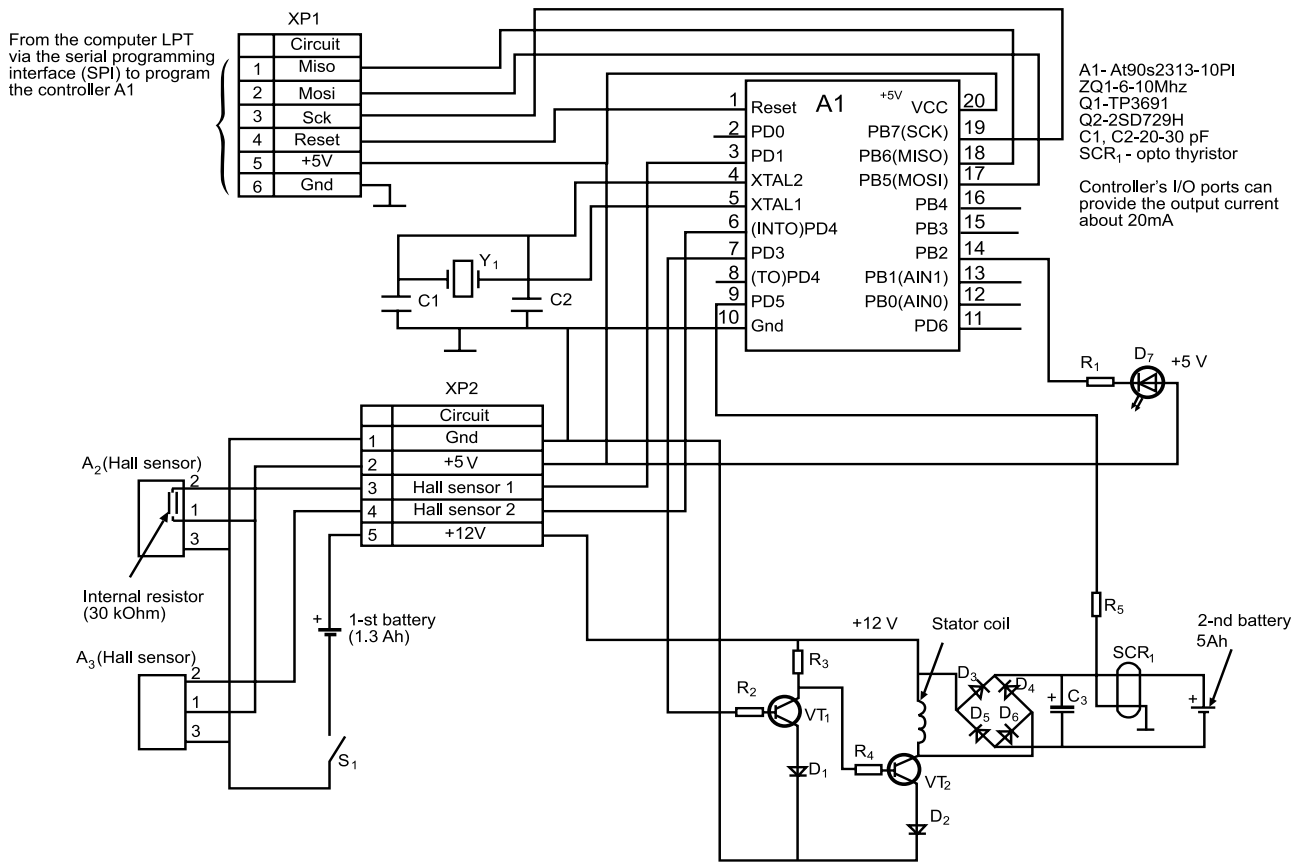

Fig. 3

he has not achieved generation of excessive energy in such a system. During his experiments a two-battery circuit proved to be more effective. In this circuit, during a part of periodical process the energy is stored in the capacitor and then a command is transferred to a thyristor, which discharges it into the second battery. At that capacity, the second battery must be no less than 4 times more than the capacity of the first one. Otherwise the excessive energy does not have enough time to be stored during the discharge. I have also managed to provide the charge of the second battery, but the control circuit has not been assembled fully yet, as it is shown below in Fig. 4. Better results are expected when its final adjustments together with AT90s2313 controller program have been made.

In order to increase the efficiency of this motor, it is necessary to build it in a manner, which allows removing the counter emf from the stator windings.

I managed to start my first model of the motor in April, 2002. Afterwards, I spent approximately six months increasing its rotational speed from 750 to 3200-3400 rpm, decreasing vibrations and improving control circuit. In order to achieve a better rotor balance I had to re-construct it twice. It is very important to align the axles of the bearings with maximum precision; otherwise a considerable decelerating torque will manifest. The shaft penetrates the lower moving base. It is possible to rotate the base at a small angle for the precise alignment of axles and then to fix it with screws and nuts.

In order to decrease aerodynamic losses, two veneer parts are mounted between the magnets. Thus I managed to increase the speed, although the rotor weight has also been increased.

Stator cores are made of plates taken from a disassembled radio transformer. Tim Harwood used nails with winding, however, my own results with such core proved to be poor. Dimensions of the core are 10x11x50 mm.

The type of power source is also important. First, I connected a 9 Volt accumulator of "Krona" type in series

with three metal-hydride 1.2 V accumulators. The speed of rotation did not exceed 1500 rpm. But when I used a lead/acid accumulator with 1.3 Ah capacity, the speed increased to 2600 rpm if there was one coil on the stator.

Four magnets mounted on the rotor have the dimensions of 20x20x35 mm and are fixed on a 105 mm glass fiber laminate disk. The current impulses proved to be too wide, by up to 40%. In order to make them shorter (down to 25-30%), I had to use the control circuit (Fig. 2) with two Hall sensors. At the signal from the first sensor the stator current is started, the second sensor switches it off. Many experimenters used a timer to control the impulse length while working with Adams' motor that is more practical since impulses are supposed to be wider during the start. I took this factor into account while designing the controller circuit. Current impulses are shown in Fig. 3. Their fronts are supposed to be shorter; it is probable that the coil has more inductivity than necessary. The impulses amplitudes are slightly different which is explained both by the difference in volume of induction of the magnets and by difficulty in achieving similar air gaps while working at home.

I have provided the charge mode of the 2-nd battery at my two-battery design. After 75 minutes of operation of the device the source lost 0.17 Volt whereas the second battery was charged at 0.36 Volt. The capacity of both batteries in this experiment was equal. Besides after such charging the second battery started to discharge quickly. The circuit where stator current charges the battery directly has to be considered ineffectual (see Fig. 1). To evaluate the charge, which is gained in non-hermetic accumulators, the density of electrolyte can be measured.

To obtain a more uniform torque I added the second stator which is controlled independently. This required installing two more Hall sensors and an additional power transistor. The angle between axles of the coils amounts to 135 (180-90.2=135) degrees. When the current is present in one part of the stator it is absent in another and vice versa. The speed has increased up to 3200-3400 rpm, and I deemed the further increasing of this characteristic unnecessary.

Increasing the number of circuit elements does not seem a good idea. Futhermore the adjustment process becomes more complicated. In order to improve the circuit of battery charge adding a timer circuit is required. Thus, I decided to use a controller circuit. A simple Basic program has been developed for AVR controllers. This program operates in mode similar to transistor circuit, but its capability can be significantly increased due to the built-in processor timers. Today program improvement is the most efficient way to solve the task of generation of excess energy in this circuit.

This article is meant to elucidate the principles of operation of one of the simplest devices which pretend to become an "overunity device", "free energy machine", "perpetual motion machine", whatever you call it. Probably someone will try to create such motor-generators on their own. I hope that my article will serve as a guide and will help to avoid the mistakes made by many experimenters (including myself) before they managed to build their own model.

References

1. Puthoff H.E. Source of vacuum electromagnetic zero-point energy. Phys. Rev. A 40.4857-4862; also 44. 3385-3386
2. Bernard Haich, Alfonso Rueda, Puthoff H.E. Physics of the zero-point field: implications for inertia, gravitation and mass. Speculation in Science and Technology, Vol.20, p.p. 99-114, 1997 (preprint version)
3. Miller, Switched Reluctancy Motors & Their Controls, ISBN: 10881855-02-03
4. Patent No. GB 2,282,708 (from NEN, Vol. 4, No. 8, December 1996, pp. 1-7).

INFINITE ENERGY
Cold Fusion and New Energy Technology
Including Conventional and Renewable Energy

Infinite Energy Magazine

* Cold Fusion * New Energy
* New Science
* New Technology

Subscriptions, 6 Issues Per Year
$29.95 North America
$49.95 Foreign
Single Sample Copy
$5.95 North America, $10.00 Foreign

Infinite Energy Magazine
P.O. Box 2816-FV
Concord, NH 03302-2816
Phone: 603-228-4516 Fax: 603-224-5975
http://www.infinite-energy.com

Prediction and Experiment on Field Transformation in the Model of Extended Space

Dmitry Yu. Tsipenyuk, Russia

119991, Vavilov str., 38, Moscow
E-mail: tsip@kapella.gpi.ru

A series of preliminary experiments on checking the possibility of generation of gravitational field at deceleration of charged massive particles in matter was carried out.

Introduction

In previous works [1-3] generalization of the special theory of relativity (STR) for the five-dimensional extended space with metric (+;-,-,-,-) was offered.

The model of extended space (ESM), combining electromagnetic and gravitational interactions, was made. For this, there was made (1+3)-dimensional space extension $M(T;\vec{X})$ of Minkovsky to (1+4)-dimensional space $G(T;\vec{X},S)$. Let us call it extended space. As the 5-th additional coordinate the value already existing in Minkovsky space, i.e, S interval

$$s^2 = (ct)^2 - x^2 - y^2 - z^2 \qquad (1),$$

is used.

Let us note that attempts to combine gravitation and electromagnetism have a substantial background.

Modern approaches to this problem trace back to the work of F. Klein [10] in which he proved that classical Hamiltonian mechanics can be represented as optics in the space of a great number of dimensions.

Then T. Kaluza tried to generalize Einstein's theory of gravitation to include electromagnetism in this theory as well [11]. He proposed to consider (1+4)-dimensional space with metric depending on potentials of the electromagnetic field. Kaluza's idea was evolved by O. Klein [12], G. Mandel [13] and V. Fock, and the model they had created got the name of the Kaluza-Klein theory. They proved that the trajectory of a charged particle has the form of a geodesic line with zero-length in 5-dimensional space.

In his works on 5-optics Y. Rummer [15] proposed to assign action dimensionality to the new dimension and to consider it periodical with the period equal to Plank's constant. Note that rest mass of particles in all these constructions unlike the model of extended space evolved in the works [1-7] was considered a fixed value. Subsequent development of multidimensional theories is given in the monograph [16].

A separate approach is represented by multidimensional constructions in the theory of strings and superstrings [17].

Approach to construction of (1+4) dimensional space evolved in [18] is close to the proposed model of extended space. Here it is proposed to use mass (matter) as the 5-th coordinate. However, in this model, as its originators admit, it is impossible, for example, to create the energy-pulse tensor. There is no such disadvantage in the extended space model [8].

Mechanics of a material point [1, 2, 7] and electrodynamics [1, 8] were made in the introduced extended space. Besides Lienar-Vihert potentials [6, 19] corresponding to such a model were also considered and properties of solutions of Maxwell augmented system of equations which are in conformity with these potentials were analyzed there.

Gravitational effects in extended space, such as the second orbital velocity, red shift and light deflection [4, 20, 21] were considered. It is proved that the formulas received in the general theory of relativity for calculation of values of these effects can be received by an absolutely different method within the framework of the extended space model as well.

It was proved [6, 19] that the fields in the model of extended space can change their signs. Such change of field-intensity sign and, consequently, change of sign of Lorenz force can be associated with radiation reaction of these fields which occurs when charged particles move with acceleration.

Thus, on the one hand, it was proved in the model of extended space that it is possible to get certain formulas describing gravitational effects of the general theory of relativity [4,20] using the technique of turns in extended space. On the other hand, it was proved that the electromagnetic field can be a source of gravitational field [6, 19].

Besides, a moving massively charged particle under deceleration can create a variable gravitational field around itself [9, 6, 19]. The following experiment was offered for experimental check of the latter assumption. In this experiment probable occurrence of gravitational field at deceleration of relativistic electrons was determined by change of oscillations of a massive torsion pendulum.

Experimental device

A narrow bunch of relativistic electrons from a microtron 1 (average power of the bunch is 450 Wt, electrons energy is 30 MeV) was directed to a brake target (position 2 or 3) made of wolfram exactly where deceleration of accelerated electrons took place.

A special torsion pendulum suspended on a vertical suspender 5 made of a springy metallic string with 1,8 mm diameter was placed near the brake target to register gravitational field which could probably appear at electrons deceleration. The length of the suspender made is 85 cm. The pendulum could rotate freely on the suspender only in horizontal plane.

The pendulum consisted of a light aluminum rod 4 (with a length of 120 cm) on the ends of which massive loads 6 and 7 made of non-magnetic material were fixed. The weight of each load was equal to 4kg. In the center a pendulum was fastened to a vertical suspender 5 by a special mounting preventing slippage during turns. To reduce the influence of magnetic inducings the pendulum was grounded and additionally screened by metallic grid from all sides. The period of free oscillations of the pendulum made were about 40 s.

Rigidity of the pendulum vertical suspender could be changed by means of limiting the length of effectively operating part of the suspender. As a result, the period of oscillations could be continuously changed within the limits of 40 to 27 s.

To reduce the influence of mechanical noise and to introduce additional attenuation in pendulum oscillations two liquid dampers 10 and 11 located near the pendulum massive loads were used.

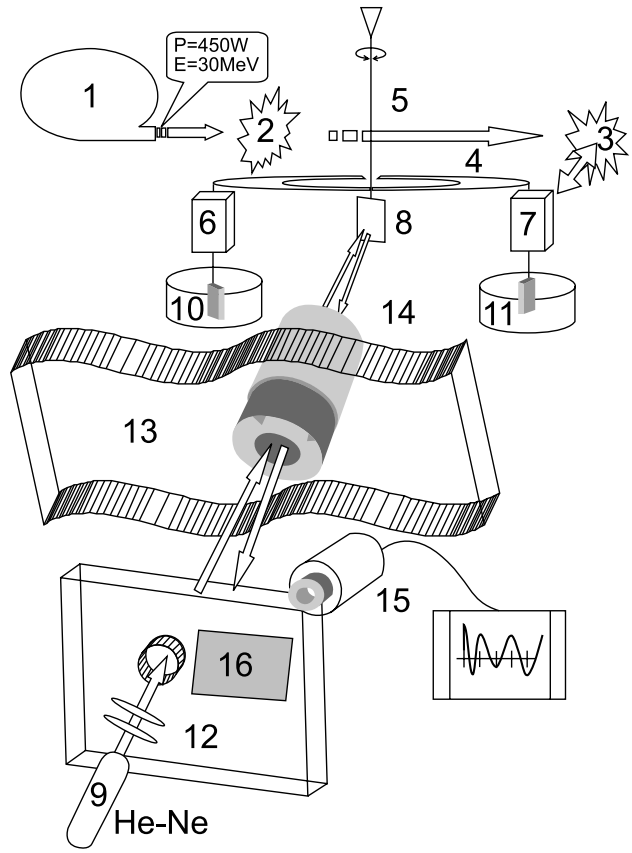

Fig. 1
Experimental device
1 – microtron, brake target made of wolfram – positions 2 or 3, 4 – rod, 5 – vertical suspender, 6 and 7 – massive loads, 8 – mirror, 9 – He-Ne laser, 10 and 11 – liquid dampers, 12 – optical system, 13 – concrete protection, 14 – observation channel, 15 – video system, 16 – screen.

Pendulum deflections were observed on a graduated screen by deflection of a laser beam reflected from a flat mirror 8. For this, the beam from a continuous He-Ne laser 9 through the optical system 12, which constricts the divergence angle of the laser beam, was directed to the mirror through a special narrow channel 14, located in concrete protection 13 around the microtron. By means of a video system 15 the beam reflected by the mirror was registered on the screen 16 located at a distance of 500 cm from the mirror. The video system allowed remote checking of vibrations of the laser spot and additionally enlarged the visual angle up to 12 times. The diameter of a focused laser beam on the screen was made 0.15 mm. The maximum turn angle of pendulum for the reflected beam to remain within the receiving channel was approximately 2 degrees. The accuracy of turn angle registration of the whole system was $5x10^{-4}$ degrees.

The pendulum was placed in such a way that one of the massive loads were close to the brake target at a distance

of about 20 cm. There was also an opportunity to move the brake target from one end of the pendulum (position 2) to the other (position 3). This allowed changing the place of deceleration of electron bunch at constant parameters of all unaccounted mechanical noise and magnetic inducing. Thus, direction of pendulum torsion was changed under probable exposure of occurring gravitational radiation.

Below there is a photo of the experimental plant (see also the colored photo on the cover page).

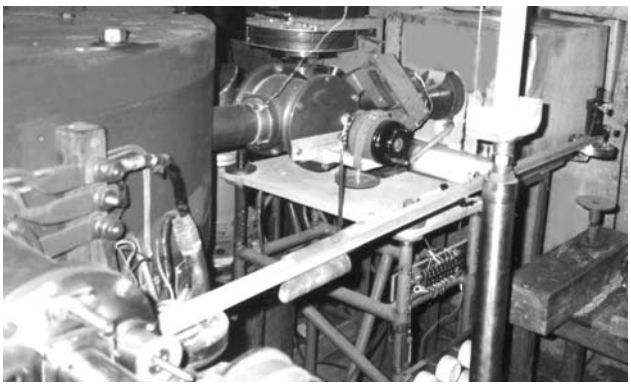

Calibration Measurements

To make measurements it was necessary to select optimal parameters of the pendulum (masses of loads, suspender rigidity and the value of oscillations attenuation). On the one hand, while carrying out the measurement it is desirable that the amplitude of pendulum oscillations should be as maximal as possible. On the other hand, the beam reflected from the mirror should not go outside the limits of observation, restricted by the diameter of the narrow observation channel in radiation protection around the accelerator. Besides, the typical operating time of the loaded accelerator usually is 10-15 minutes. Necessity to accumulate the minimum of sufficient statistical data within this time limited oscillations period and the time of setting of the pendulum in a new equilibrium position at outside influence. All these requirements were as far as possible taken into account during selection of the final setting parameters.

An example of free oscillations of the pendulum in the presence of minor mechanical vibrations caused by the operating of vacuum pumps is given in Fig. 2, series I (the experiment took place on 31 May, 2001). The diagram shows the amplitude of laser beam oscillations on the screen 16 (upper and lower rows of values) depending on the number of oscillation. The laser beam is reflected from the mirror 8 which was fixed to the pendulum. The diagram also shows the current central equilibrium position (the central row) calculated by these amplitudes. Series I represents oscillations at influence of the background mechanical noise. Series II represents the response of the pendulum to minor permanent outside force. Accuracy in determination of position of the center of a light spot was 0.1 mm.

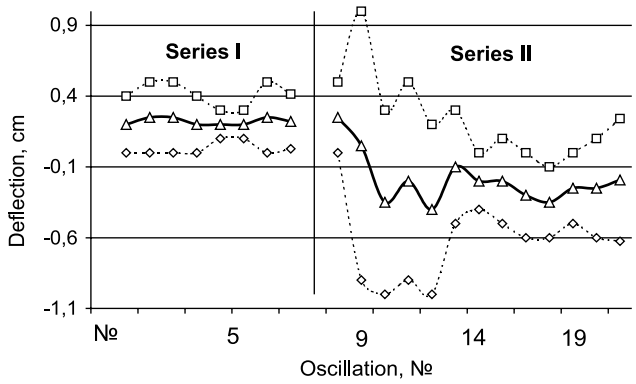

Fig. 2
Calibration Measurement 31 May, 2001

Measurement was carried out with one liquid damper in service and with increased rigidity of suspender (it was made by means of limiting the effectively operating suspender length). The period of free oscillations in these series was 29 sec. In this case there were set continuous oscillations of the pendulum around the average value of balance of 2.2 mm with the average amplitude of values fluctuation of about 0.2 mm.

Air cooling of one of the massive loads by a very light continuous air flow was carried out to study response of the pendulum to a minor constant external force. In this case (Fig. 2 Series II) noticeable change of pendulum oscillations already took place after 3-4 periods. Absolute setting of a new balance took place after 7-8 oscillations.

In the case of another series of calibration measurement (held on 7 June, 2001) both liquid dampers were used and rigidity of suspender was decreased. The period of free oscillations of pendulum was about 40 sec.

Addition of the second damper and decrease of suspender rigidity caused, on the one hand, increase amplitude of pendulum oscillations at influence of the external force and, on the other hand, in that case noticeable change of the equilibrium position of the pendulum took place after 1-2 oscillations.

Periodical checking of the invariability of initial central position of pendulum balance in time was also carried out. Thus, for example, in the series of measurement of 7 June 2001 measurement of equilibrium position was checked not only before the start of the main series of measurement, but also 2 hours after completion of the main works.

Experimental Results and Their Analysis

Within the period from 17 May, 2001 to 7 June, 2001 7 measurement series were carried out at various operation modes of the accelerator and at various pendulum parameters.

A record of check of equilibrium position of the pendulum was carried out before and after switching off the electron bunch (as well as during calibration measurement). At the same time, all electric inducing and mechanical noise remained stable within the whole measurement period. This was achieved by means of additional switching on all the devices which were used during measurement (water and vacuum pumps, magnetron, deflecting magnets, etc.) and their switching off only on completion of the measurements.

In Fig. 3 there are results on measuring the central position of the pendulum when brake target is in position 3 (see Fig. 1). Series I and III on the diagram correspond to check measurement directly before switching on and several minutes after switching off the electron bunch. Series II-A and II-B totally reflect pendulum oscillations at the time when the accelerator is operating (for about 10 minutes) and for some time after the bunch is off. Additionally, a trend line is drawn (averaging by 3 points).

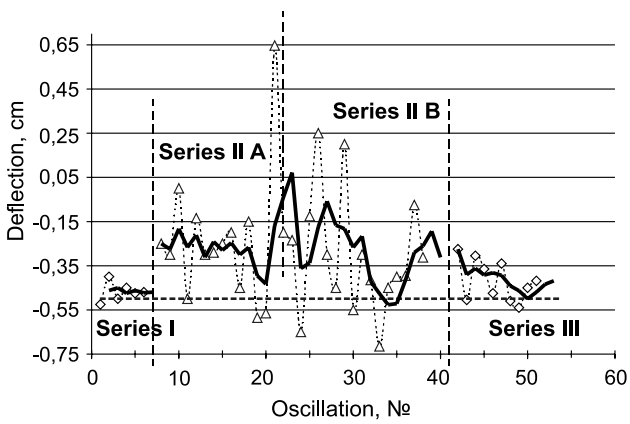

Fig. 3
Measurement of central position of pendulum equilibrium when brake target is in position 3.

Results of a similar experiment are given in Fig.4. The only difference in this experiment is that the brake target is in position 2. Also a trend line is added (averaging by 3 points). Series I and III are check measurements made directly before switching on and after switching off the electron bunch. Series II are pendulum oscillations at the time when accelerator is operating.

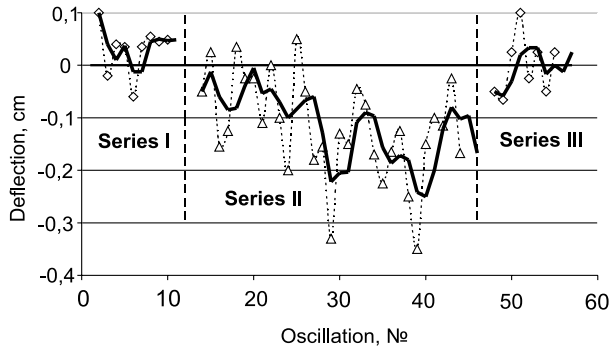

Fig. 4
Brake target in position 2

From qualitative comparison of trend lines (Fig. 3 and Fig. 4) it can be derived **that there is a correlation between switching on the electron bunch and the average deflection of the pendulum from equilibrium position if compared to checked series before and after switching on. At that, direction of deflection changes depending on what pendulum load the brake target is close to.**

Unfortunately, due to circumstances beyond the control of the author it seems to be difficult to improve experiments accuracy or to accumulate much of statistical data by now. Estimate of the value of the force which may cause such a shift of position of pendulum equilibrium was carried out. In the experiments this deflection did not exceed 1-2 mm (in the units of registering scale). Calibration of a rigid suspender (if it applies to a massive load at a pendulum end) gives the upper boundary of this force of not more than 10^{-6} N.

Conclusion

A series of experiments were made on checking the possibility to generate a field at deceleration of charged massive particles in matter.

Electrons accelerator was used as a source of charged particles. A narrow bunch of relativistic electrons (average beam power is 450 Wt, electrons energy is about 30 MeV) was directed at a brake target made of wolfram where deceleration of accelerated electrons took place.

Measurement proved appearance of statistically reliable deflection of a torsion pendulum, one of massive loads of which was located close to a brake target by the time of deceleration of relativistic electrons.

Change of direction of pendulum torsion at shift of a brake target from one end of the pendulum to the other was also registered. The value of the force which causes pendulum deflection has the upper boundary of N.

Of course, these first experimental results on checking the predictions made on the basis of development of the model of extended space are of preliminary nature and need more thorough checking. That will be the basis of future experiments.

References

1. Tsipenyuk D. Yu. Andreev V. A, "Extended space and model of combined interaction", Short reports on physics FIAN, No.6, pp. 23-24, (2000); gr-qc/0106093
2. Tsipenyuk D. Yu., Andreyev V. A., "Explored in Russia" E-magazine,60, (1999); http://zhurnal.ape.relarn.ru/articles/1999/060.pdf
3. Tsipenyuk D. Yu., Andreyev V. A., "Structure of extended space", Preprint IOFAN, 5, 25p., Moscow, (1999)
4. Tsipenyuk D. Yu., "Field transformation in the model of extended space: prediction and experimental test", Gravitation&Cosmology, Vol.7, No.4(28), pp336-338, (2001); physics/0203017
5. Tsipenyuk D. Yu., "Field transformation in the extended space model: prediction and experimental test", Short reports on physics FIAN, No, 7 p.39-49, (2001); physics/0107007
6. Tsipenyuk D. Yu., Andreyev V. A., "Lienar-Vihert potentials for the extended space model", Short reports on physics FIAN, No 6 p.3-15, Moscow,(2002); physics/0302006
7. Tsipenyuk D. Yu., "Explored in Russia" e-magazine, 81, p.907-916, (2001); http://zhurnal.ape.relarn.ru/articles/2001/081.pdf
8. Tsipenyuk D. Yu., Andreyev V. A., "Electrodynamics in extended space", Preprint IOFAN, 9, 26p., Moscow, (1999)
9. Tsipenyuk D. Yu., Andreyev V. A., "Interaction in extended space", Preprint IOFAN, 2, 25p., Moscow,(2000)
10. Klein F. Zeits.f.Math.a.Phys., 375, (1901) (see translation in collection "Variation principles of mechanics", M.: Physmatgis, 1960)
11. Kaluza Th. Sitz.d.Preuss.Akad., 966, (1921) (see translation in collection "Albert Einstein and gravics", M.: Mir, 1979)
12. Klein O. Zeits.f.Phys., 37,895, (1926)
13. Mandel H. Zeits.f.Phys., 39,136, (1926)
14. Fock V. Zeits.f.Phys., 39,226,1926
15. Rumer Yu. B. Investigations on 5-optics, M., Gostehizdat, 1956
16. Vladimirov Yu. S. Dimensionality of physical space-time and integration of interactions. M., MGU, 1987.
17. Green M., Schwartz G., Vitten E. Theory of superstrings, v.1, 2, M.: Mir, 1990
18. Wesson P.S. Space, time, matter: Modern Kaluza-Klein theory. Singapoure, World Scientific publishing Co.Pte.Ltd, 1999
19. Tsipenyuk D. Yu., Andreev V.A., "Lienar-Vihert potentials and Lorenz force in extended space", Preprint IOFAN,1,20p., Moscow,(2001)
20. Tsipenyuk D. Yu., Andreev V. A., "Gravitational effects in extended space", Preprint IOFAN, 4, 15p., Moscow,(2001)
21. Tsipenyuk D. Yu., "Field transformation in the model of extended space: prediction and experimental test", Preprint IOFAN, 5, 24p., Moscow, (2001)
22. "Tsipenyuk D. Yu., report "Electromagnetic and gravitational interaction in extended space" at the Conference of Nudear Physics Department of the Russian Academy of Sciences (RAN) "Physics of Fundamental Interactions", 27 November-1 December 2000, ITF, Moscow, http://www.itep.ru/
23. Tsipenyuk D.Yu. and Andreev V.A., "Interval as the fifth coordinate" proc. of 5-th Int. Conf. on Gravitation and Astrophysics of Asian-Pacific Countries, PFUR, Moscow, 2001, pp.29-30. http://rgs.da.ru/
24. Tsipenyuk D.Yu., "Direct transformation of the electromagnetic field to gravitational field in the model of extended space: predictions and possible way of its experimental test", proc. of 5-th Int. Conf. on Gravitation and Astrophysics of Asian-Pacific Countries, PFUR, Moscow, 2001, p.28. http://rgs.da.ru/
25. Tsipenyuk D.Yu., "Model of extended space: Prediction and test experiments on possible transformation of electromagnetic field into gravitational field", proc. of XVIth Workshop on High Energy Physics and Quantum Field Theory (QFTEP), Moscow, Russia, 2001, pp.398-405. http://theory.sinp.msu.ru/~qfthep/2001/Proceed2001.html
26. Tsipenyuk D.Yu., "Model of extended 5-d space and possible checking experiments", presented at 5-th Moscow international ITEP school of physics (30-th ITEP winter school of physics), 20-28 Febr., Moscow, 2002, http://www.itep.ru/
27. Tsipenyuk D.Yu., report "Second experiment on checking prediction on field transformation in extended space" at the scientific conference of nuclear physics section OFN RAN "Physics of Fundamental Interactions", ITF, 2-6 December 2002, Moscow, http://www.itep.ru/
28. Urbah V. Yu., Mathematical statistics, M., USSR Academy of Sciences Publishers, 1963.

Joe Flynn's Parallel Path Magnetic Technology

Tim Harwood, USA

Email: timharwood@usa.net

There is a widespread opinion common to the mainstream academic community and also to various alternative scientific forums, that some kind of exotic new physics will be required to design and implement over-unity technologies. That is to say electrical motors, electrical generators, or other apparatus, which produce an excess of magnetic force or energy above the value actually inputted.

However, this has recently been experimentally demonstrated not to be the case, as I have validated myself in simple $20 experiments undertaken at home with parts bought from the local hardware store. It is the purpose of this article to educate readers that with care, thought, and a little work, it can be demonstrated that existing textbook physical law, freely allows for the extraction of excess electrical energy from magnetic systems.

The Flynn Research Project

Joe Flynn has been engaged in magnetic flux research for over 25 years now. His work is long standing, comprehensive, and in later years, well funded. It is reported $7m has been spent to date, with over $1m alone developing a revolutionary high performance magnetic motor. His equipment is validated, and apparently already in mass production for select customers. Yet few researchers have heard of Joe Flynn. This surprising situation will hopefully shortly be changed, and Joe Flynn awarded the scientific accolades he deserves, for being the genius master mind behind one of scientific history's most outstanding research projects. Since many lines of research have been formulated and explored by Joe Flynn, the following article presents only a brief summary of some of his best art apparatus, but is nonetheless sufficient to convey the basic ideas.

The first illustration (Fig. 1) is taken from Joe Flynn's US patent 6,246,561, and explains a simple magnetic force multiplication experiment, which forms the basis for the Flynn magnetic art. If the windings on either side of the central magnet, which are normally connected in series, are properly pulsed, the field of the permanent magnet in the center will be diverted to the opposite side of the core flux path provided. Or in alternative language, the side of the core that is pulsed is demagnetized, relative to the field of the permanent magnet used in the apparatus. This is elementary textbook physics anyone can understand.

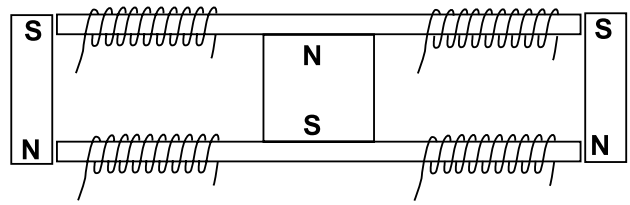

Fig. 1

1.75 times more force is delivered to the legs of the core than is provided by the electrical input to the control coils

So what is surprising about this apparently simple apparatus is that the armature on the side of the flux core will contain 1.75 times more units of magnetic force, that could be manifested by the electrical input to the apparatus alone. Since the ability to arbitrarily move the force from one point to another is the basis for motion or work, however simplistic, we therefore have a basis for a system that can be developed for practical technological purposes. Expressed in alternative language, we also have the capability to engineer a time varying magnetic field, without the need for moving parts, which will allow development of systems that output electrical energy. Both capabilities are highly desirable, and offer substantial opportunity for technical development.

Following on from this basic experiment, there is a second simple and logical improvement in layout illustrated in Fig. 2, which should be obvious, but has been shown not to be the case. In this instance, the pulse is centrally located, and a dual flux field layout employed, which both demagnetizes the core relative to one magnet, and magnetizes it relative to the other. Since the two actions are complementary, the input required to manifest the flux switching effect is halved, therefore doubling 'efficiency.'

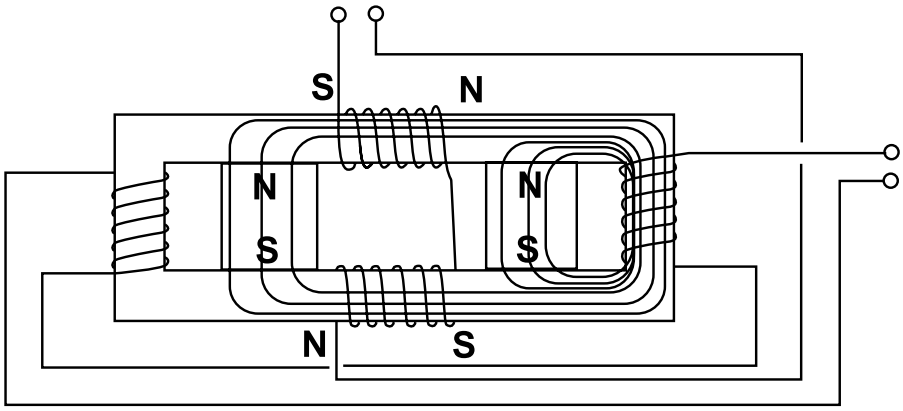

Fig. 2

3.47 times more force is delivered to the legs of the core than is provided by the electrical input to the control coils

It should be noted that while the efficiency is doubled, the absolute output may not be significantly improved. This is because the major weakness of this effect and technology is flux saturation of the core, with values depending upon the specific properties of the B-H curve of the core material employed, limiting the absolute output of both layouts the same.

The previous statements are not required to be taken on trust, and simple experiments have been proposed by Joe Flynn, such that anyone can validate this effect for themselves. Figure 3 is a simple experiment taken from the Flynn website (http://www.flynnresearch.net), that can be used to validate the principals put forth in this article.

Simple Magnetic Force Multiplication Experiments

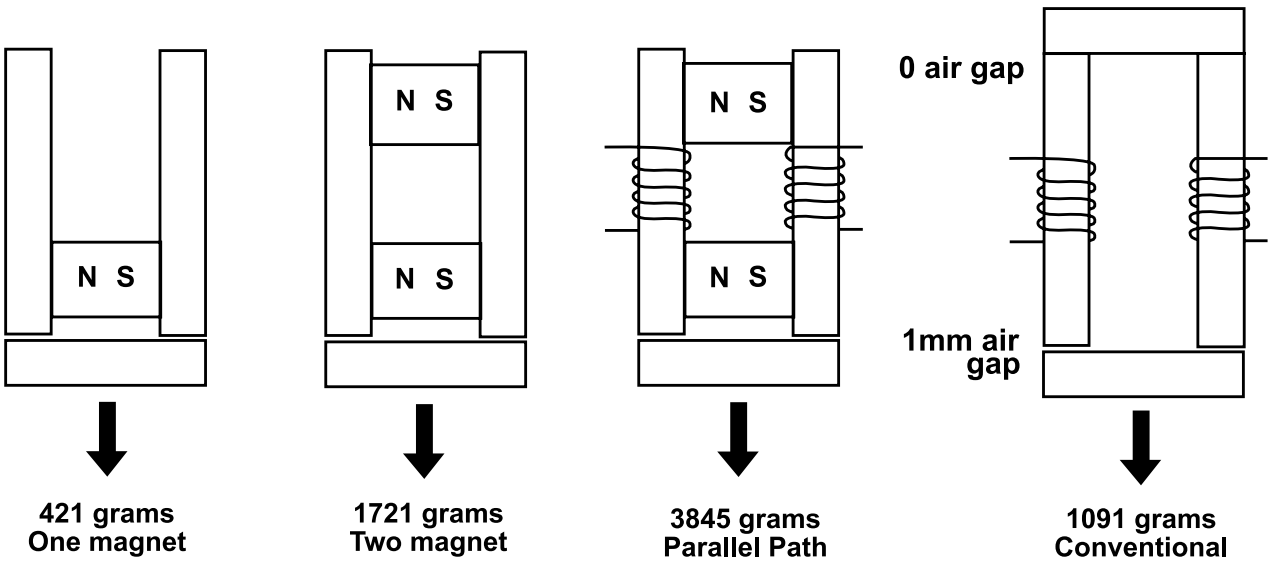

Fig. 3

Parallel Path can deliver 3.47 times more force to the legs of cores than any competing conventional technology

An even simpler non electrical flux experiment was proposed by GM in the Parallel Path Egroup. My apparatus is illustrated below in Figure 4. It is no more than magnets and steel staple strips, bought from a local hardware store for a total of under $10. The Parallel Path effect can be replicated with identical apparatus, at only a slight increase in cost and complexity, with the addition of a simple 12V polarity reversible power supply, such as those commonly sold to power computer speakers, among other applications.

Simple Magnetic Force Experiments

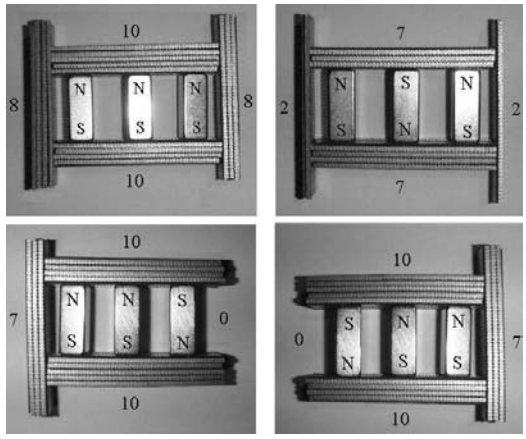

Fig. 4

Relatively small changes in layout produce large changes in force

Conservation of Energy / Field Potential

One of the aspects of the Flynn technology people find most difficult to understand, is how you can have a device that delivers 3.47 times more magnetic force than is electrically inputted, yet not violate accepted principals of text book physics, as stated in the introduction. The key point here is conservation of energy. Magnetic fields do not gain energy – they are conservative. You can only ever obtain less energy from a magnetic field minus losses, than is in fact present. I feel this apparent puzzle can not be better explained, than by reference to Joe Flynn's own words:

"Since the Parallel Path System produced 3.47 times more force than the conventional system, with the same electrical input, it appears to violate conservation, this is only true when observed from a traditional view point. The system contains three flux producing sources (2 magnets and an electromagnet) which together are capable of producing a far greater force than is actually produced. All of the flux sources together can produce a force of 13.11 units, therefore in the physical sense a loss of 1 - (9.01 / 13.11) = 31% is realized."

So the system is 350 % efficient, in terms of delivered magnetic force compared to net electrical input, yet still conforms to the accepted physical principals of energy conversation, by being only 69 % efficient, in terms of the fields present in the system. However surprising this result may appear, the analysis presented is in outline correct, with the difference between fields present in the system, and net electrical input, being the important concept presented.

Losses in the System and Optimisation

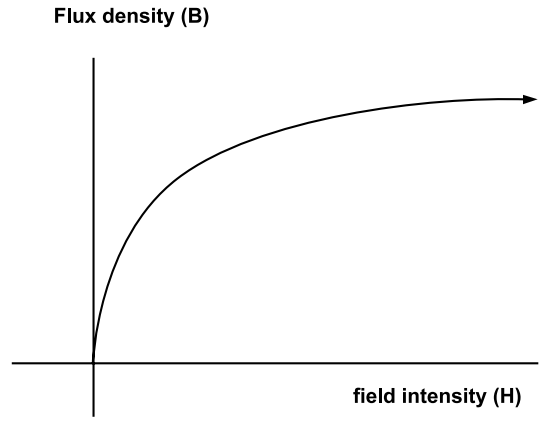

Fig. 5

In order to properly optimise flux cores, an appreciation of the physics that underlies the transfer of flux within a core is required. The normal magnetization curve, or B-H curve, is a mathematical relationship between applied field intensity H, and resultant flux density manifested in the core B. It varies according to core material, and the curve will shift, if there is a starting magnetism within the core, such as that provided by the field of a permanent magnet. If the start magnetism is excessive, the core is saturated, and will not properly respond to the applied force H. A simple B-H curves is illustrated in Fig. 5.

Hysteresis is a delay between applied magnetic force H, and resultant flux density B, that again varies according to material type. It also manifests as a delay between the termination of force H, and the manifestation of flux density B. So, the system will not turn on instantly, and will not turn off instantly, in simple terms. This is because the magnetic memory of the core, means a flux vector remains within it, even when the application of magnetic force H has been terminated. If we apply a reversed force H to the core, the basic B-H curve is now expanded as in Fig. 6, with the memory effect also illustrated.

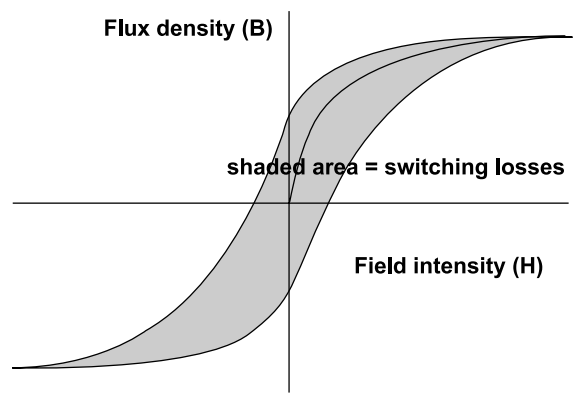

Fig. 6

Thus as can be seen, to return to the initial switched state, the remnance magnetism must now be overcome, hence input once in operation, will be greater than that required for the very first pulse. The area within the hysteresis curve gives a rough estimate for the amount of wasted energy, and along with other conventional sources of losses resultant in flux transfer within a core, is what reduces the efficiency of flux cores from maximum values of 2, or 4, down to values such as 1.75 or 3.47, typically.

Motor Apparatus

Simple Parallel Path Technology Demonstrator Motor

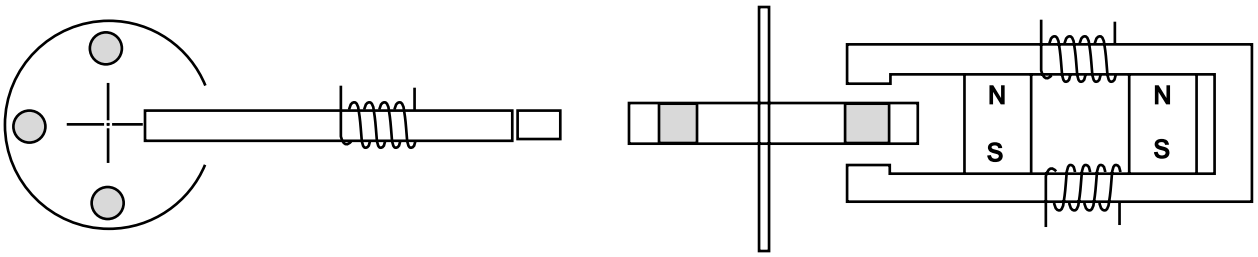

Fig. 7

Designed to demonstrate core principals, not provide over-unity

Although numerous practical applications abound for this effect, electric motor design remains the most outstanding opportunity. To this extent, again a few simple images, should be sufficient to explain how the basic flux switching apparatus, can be turned into a highly efficient electrical motor.

The first motor shown in Fig. 7 is one I have proposed to validate the flux switching effect at a most basic level. It illustrates the point made in the Flynn patent, that the armature of the core can be removed, and replaced with a motor flux path. This first motor is not claimed to be highly efficient, but it helps one to understand how the transition from simple flux core to motor takes place.

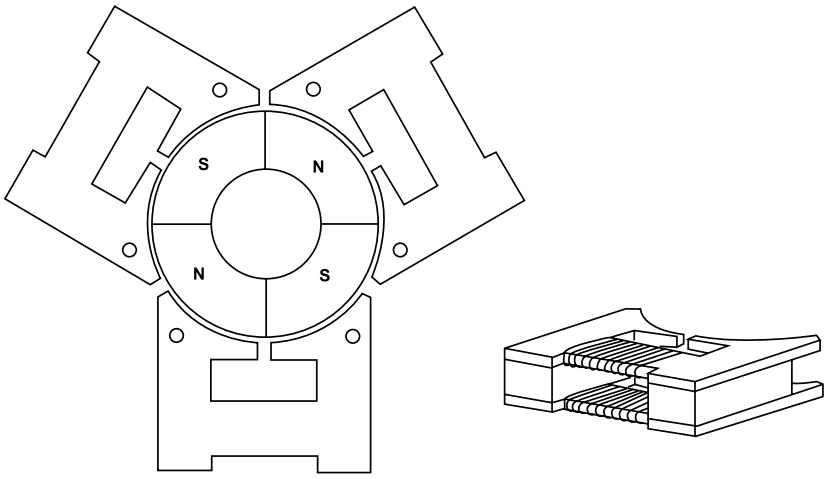

Fig. 8
Magnetic force is alternately switched from one leg to the other, imparting motion to the rotor sections

The next motor shown in Fig. 8 is again taken directly from the Flynn patent, and illustrates the next intermediate step to motor design. The fields of the permanent magnets are alternatively switched from one side of the surrounding flux cores to the other, alternately interacting with N and S poles on the rotor, imparting motion to the central rotor shaft.

With proper financial support, and the facilities to have metglas cores custom moulded, Joe Flynn was able to develop his final best art, shown in Fig. 9. No detailed performance numbers have been released for this motor, whose precise performance characteristics remain proprietary to Joe Flynn at this time. But the optimisation is so expert, it is stated to posses certain exotic properties, such as cool ambient operation, even during prolonged periods of continuous load. This 'cold running' is said to be of great interest to the American military, as it offers excellent stealth performance characteristics.

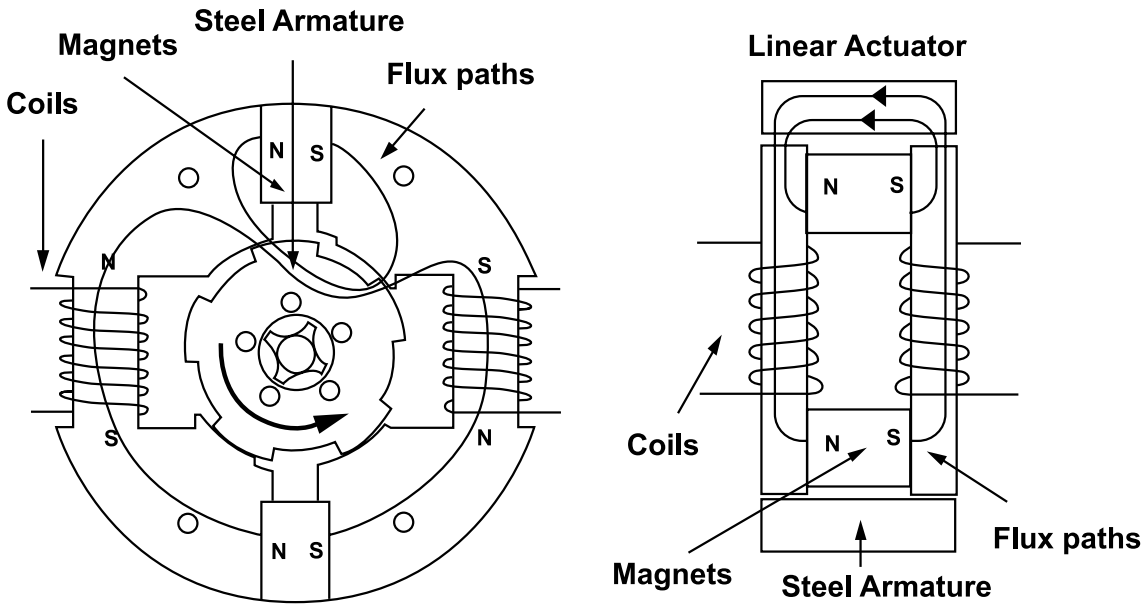

Fig. 9
Optimal Flux Core Motor Construction

Electrical Apparatus

Many readers will no doubt have noticed the similarity of the first illustration presented in this document, to the so called 'Tom Bearden MEG.' This is fair comment, and Joe Flynn has always highlighted this issue. However, it has been commonly stated Joe Flynn has simply developed mechanical apparatus, and the MEG with its electrical functionality, is distinct art, more advanced than the mechanical Flynn apparatus. However, this is shown not to be the case by a careful examination of the Flynn patent, in which the following is stated in the 'Power Conversion' section:

'The construction (shown in Fig.10 A) utilizes four control coils and a single permanent magnet and the construction (shown in 10 B) uses two control coils and two permanent magnets. The flux that would normally be supplied by a primary winding is supplied by the static flux of the permanent magnet or magnets and the control coils convert this static flux into a time varying flux in a novel way. Both arrangements use two secondary coils, the secondary coils are placed in the region of the continuous flux path that would be occupied by an armature or rotor in the linear or rotary arrangements. The regions of the flux paths that perform work are the same in all cases.'

'By alternating the polarity of the control coils during one cycle, one working region experiences an increasing flux and the opposite region experiences a decreasing flux and during the next cycle the opposite occurs. This results in the induction of a voltage in the secondary coils that is decided by the magnitude of the change in flux in the working region and the time in which this change occurs. The novelty of this discovery is that the primary flux inducing the voltage in the secondary coils is supplied by the permanent magnet or magnets and is far greater than the flux supplied by the control coils.'

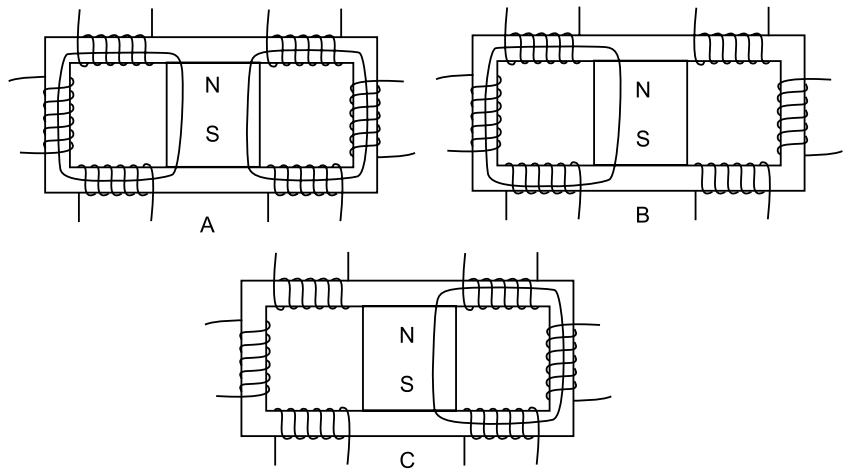

Fig. 10

Fig.10 taken directly from the Flynn patent makes the point even clearer. As can be seen, the device illustrated is in all functional respects absolutely identical to the so called 'Tom Bearden MEG.' This identical prior art, therefore calls into question the intellectual property rights of Magnetic Energy LTD, as the same invention can not be patented more than once. Joe Flynn has also stated that his intellectual property rights will be robustly defended, by legal action if necessary, and he regards himself and his company as being in possession of exclusive rights to the so called 'MEG' unit.

the input and output circuits must be closed in series. The disclosure of this technique amounts to putting the basic MEG methodology fully into the public domain.

As regards replication of electrical output orientated flux core devices, certain important details need to be stated. For example grade 8 ceramic magnets should be used, so as to avoid flux saturation of the core. A basic error, many early experimenters wasted time on. The requirement for strong magnets to obtain over-unity results, is as much of a myth, as the idea new physics is required.

But perhaps the greatest trade secret of the electrical devices, one which several lengthy non disclosure agreements are required to be signed before it can be disclosed, is that the input and output circuits must be closed in series. The disclosure of this technique amounts to putting the basic MEG methodology fully into the public domain.

The reason for this circuitry requirement is obvious enough, with only a little analysis. If the output circuit is closed when the input circuit is activated, then the input energy simply leaks into the output circuit, as in an ordinary transformer. So no flux switching effect is manifested, and the field of the permanent magnet is static in time. Thus you have an ordinary transformer, with reduced efficiency, because of the core flux saturation effect provided by the permanent magnet.

This is one of the most important point to make about the Flynn apparatus. If you approach it as if it is a normal piece of scientific equipment, then proper optimisation is not greatly problematic. For example more turns on the output coils, simply means more voltage and less current, exactly as standard textbook equations predict. Generally, problems only occur, if you imagine the effect is based upon exotic scalar type or vacuum energy physics, when in fact it is ordinary flux manipulation within a core.

Present Status of the Flynn Project

Initially Joe Flynn was remarkably open about his work and research. However, since performing a working demonstration of various advanced hardware samples for the American Department of Defence, little has been heard.

I want to clearly emphasize I do not speak for Flynn research, nor am I in any way connected with Flynn research, and by consequence, have no inside information whatsoever as to the present status of the project. But we all sincerely hope, that the project has not been swallowed whole by the American deep black military industrial research complex.

However, even if this is the case, it does not mean the technology is lost. Extensive and generous details have been provided by Joe Flynn of his research, both in his patent deposition, website, and other comments, such as to enable persons of scientific training and skill, to replicate the effects stated.

While replication of the electrical effect remains extremely demanding, the mechanical apparatus is very easy both to understand and replicate. There is no reason why scientists and home tinkers together, can not build Flynn type flux core motors, and explore over-unity flux manipulation for themselves. The future has arrived, and it is simpler and cheaper than anyone imagined to be possible.

Raum&Zeit

EhlersVerlag GmbH,
Geltinger Str.14e,
82515 Wolfratshausen
Telephon: 08171/41 84-76,
Telefax: 08171/41 84-66
Internet:
http://www.raum-und-zeit.com

Institut fur Raum-Energie-Forschung (IREF) i.m. Leonard Euler

- Global Scaling Theory
- Gravitation theory
- Mathematic Biology
- Gravitation energetics
- Hydrogen-Helium Energetic
- Information technologies
- Telecommunication technologies
- Transport technologies

Flynn Research Company

http://www.flynnresearch.net

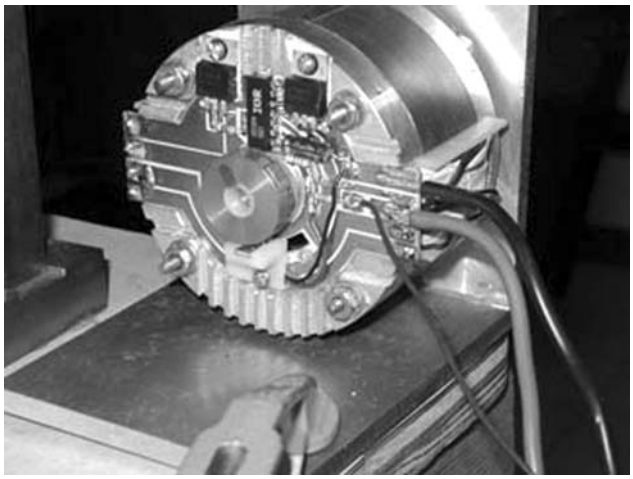

Photo 1

3.3" 1.2" stack height 1/2 hp weight 59 oz

Photo 2

Dynamometers, Power Analyzer etc.

Editor: Below we publish information and photos, represented on Flynn Research Company website (http://www.flynnresearch.net), and a description of the patent on methods for controlling the path of magnetic flux.

Flynn Research is dedicated to research focused on the novel application of permanent magnet and electromagnetic technology. Magnetism is a field that has potential for tremendous growth from both a science and application perspective. The researchers of Flynn Research Company believe that magnetism is one of the least understood and most misinterpreted of the natural forces, with the exception of gravity.

Even though much work has occurred in the advancement of magnetic materials, little advancement has occurred in the basic understanding of magnetism. The field of magnetism is based on both theory and 'myth' and is generally described as a 'phenomenon'.

We still do not know what a line of flux is and how it travels through space. We know flux "appears" to originate within a permanent magnetic material, forms a loop from one end to the opposite end of the magnetic material, appears to occur without a time constant, produces a force (attractive and repulsive) between other permanent magnets and "magnetically permeable materials and has a relationship to current flow. Everything known about magnetism is based on "effect and relationships" without a clear understanding or provable definition of what is a line of magnetic flux.

Everything known about magnetism is based on "effect and relationships" without a clear understanding or provable definition of what is a line of magnetic flux.

The research is based on the "magnetic force of attraction effect" that is related to magnetic flux by the number of lines of flux occupying a given area or flux density squared. The simple fact that if the number of lines of flux occupying a given area "doubles" the force of attraction becomes four

Photo 3

8" dia x 8" height motor presentation

Photo 5

Technology Discussion

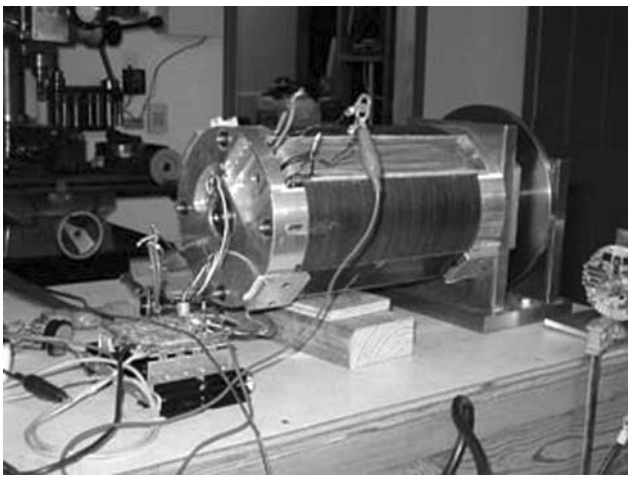

Photo 4

8" X 8" motor testing

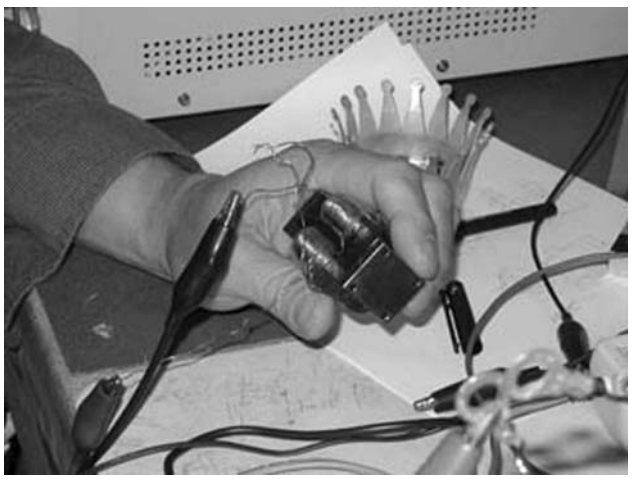

Photo 6

Parallel Path Test Apparatus

times greater. The basic model shows that with specific structures electromagnetism acting with permanent magnet materials can divide and multiply force in a manner that cannot be explained with conventional physics.

Rotary devices, linear devices, reciprocating devices and power conversion devices are now a patented product of this research. The goal of the Company is to commercialize their devices for use in an energy dependent world. Flynn Research is a research & development company and in cooperation with Magnetic Revolutions LLC licenses their technologies for use in the electric motor and power conversion industries.

The researchers do not construct their own test equipment nor write capture and data evaluation programs but use industry / scientific accepted products. Close to $1.5 million has been expended developing, protecting and evaluating the technology. Many fine minds have been involved in the development and evaluation of the technology. Many presentations have been given both to motor companies and academic groups. The prototypes have all been professionally built, which include a 1/2 hp 3.3" dia 1.2" stack height, the assembled motor weighs 59 oz and a motor 8" dia with a stack height of 8" currently undergoing testing.

United States Patent No. 6,246,561
June 12, 2001

Methods for controlling the path of magnetic flux from a permanent magnet and devices incorporating the same

Inventors: **Flynn; Charles J.** (Greenwood, MO)
Assignee: **Magnetic Revolutions Limited, L.L.C** (St. Louis, MO)
Appl. No.: **127056**
Filed: **July 31, 1998**

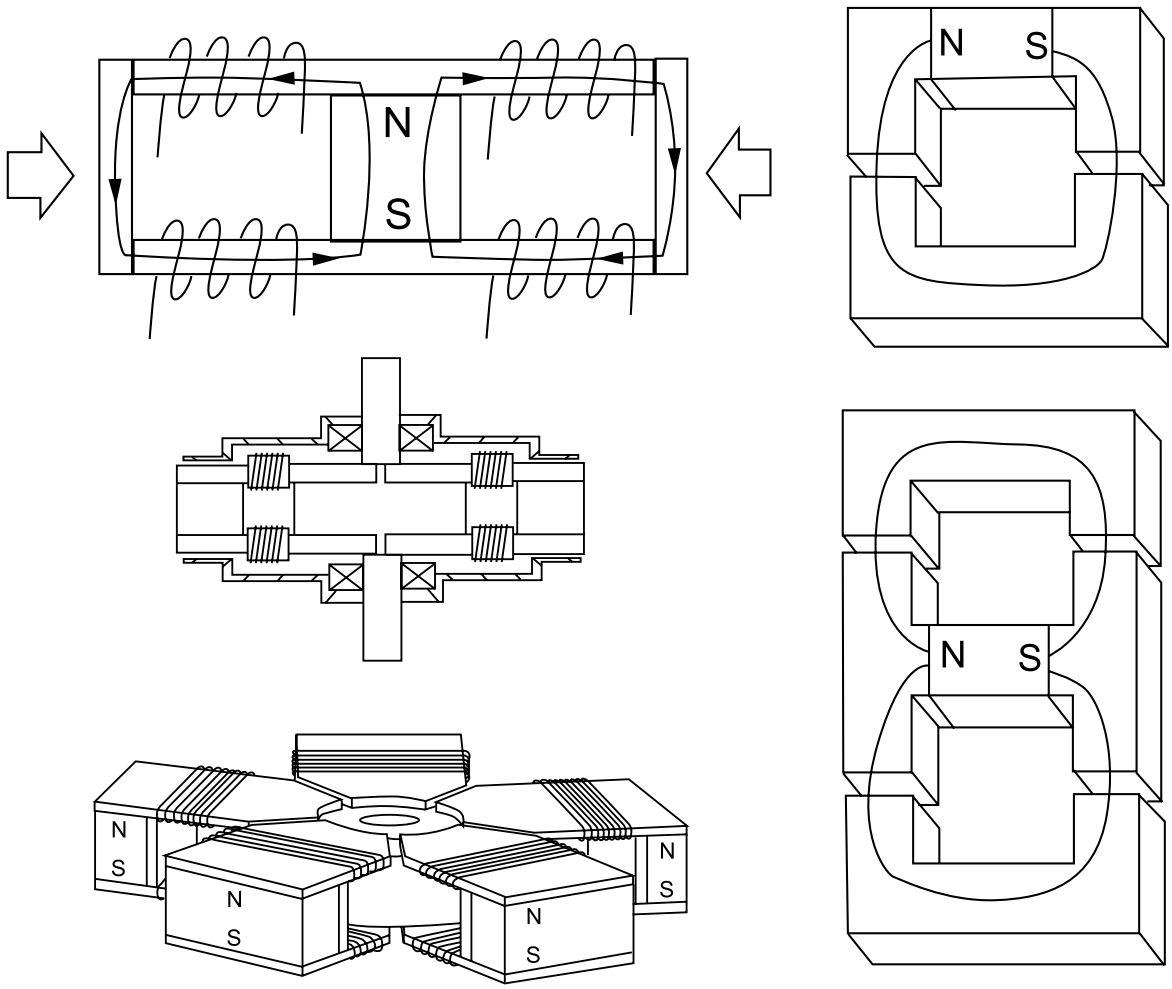

A permanent magnet device includes a permanent magnet having north and south pole faces with a first pole piece positioned adjacent one pole face thereof and a second pole piece positioned adjacent the other pole face thereof so as to create at least two potential magnetic flux paths. A first control coil is positioned along one flux path and a second control coil is positioned along the other flux path, each coil being connected to a control circuit for controlling the energization thereof. The control coils may be energized in a variety of ways to achieved desirable motive and static devices, including linear reciprocating devices, linear motion devices, rotary motion devices and power conversion.

Editorial: The principle of designing of the device (two counter parts of the flux are used) resembles Φ-machine or Gramm's generator. Read in this issue more details on these devices.

Flux-machine And Its Analogues

Review prepared by correspondent Alla Pashova, Russia

Flux-machine (or Φ-machine, since configuration of its field resembles the Russian letter "Φ") was designed by Alexander V. Frolov during the first half of 1990s. Φ-machine description was published more than once on the pages of scientific periodicals (1994, Institute of New Energy, Newsletter, June 1994, p.9.; 2002, New Energy Technologies, 2002, p.3), and it is well known to many researchers concerning themselves with such kinds of engineering.

Let us consider the arrangement of Φ-machine; see Fig. 1 (first published in 1994). A report was presented at the conference «New ideas in natural science», 1996 in Saint Petersburg (see photo in Fig. 1). The primary coil is mounted in the center of generator; two secondary ones are diametrically wound on a ring core. An air gap between ring and central magnetic circuits are of particular importance. **Two magnetic fluxes from two coils are balanced, and, thereby, there is no reaction in the primary circuit.**

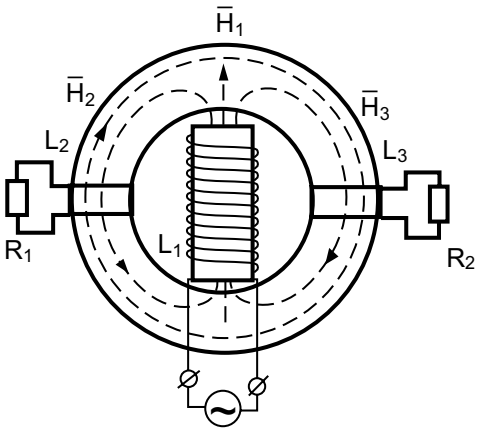

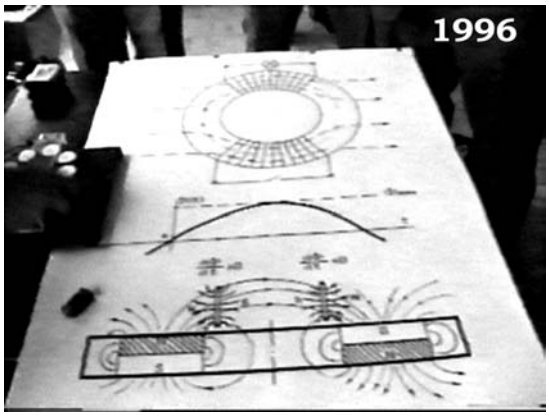

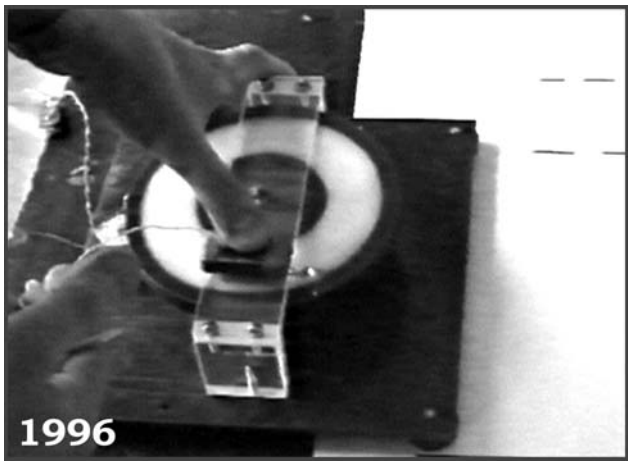

Fig.1
See also Fig. 7, p.29 – the analogy is evident

The device bears some similarity to the Gramm's generator (Zenob Theophyl Gramm, 1826-1901, Belgium-France, took out a patent for an electric ring-rotor generator in 1869). In Gramm's generator (Fig. 2) the ring rotor with a toroidal winding rotates. The toroidal winding touches two diametrically located conducting brushes. It turns out that in the ring of the rotor all winds of one rotor half create a field which is directed towards a field created by the other rotor half.

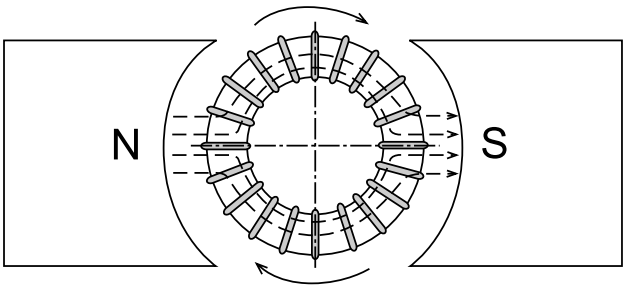

Fig. 2

An example of analogous device is represented in Fig. 3 (information is from the website: http://www.skif.biz/energy/arhiv1-6.shtml), and also in Fig. 4 (we have written about this invention in New Energy Technologies, Issue #5 (8), 2002, article by V.I. Boryak, Email: spin@i.com.ua).

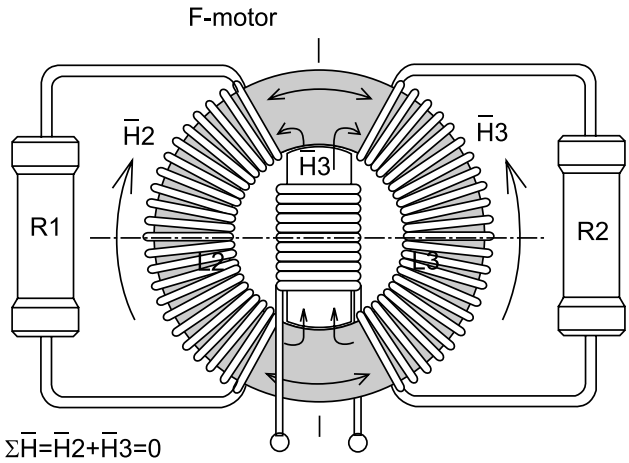

Fig. 3

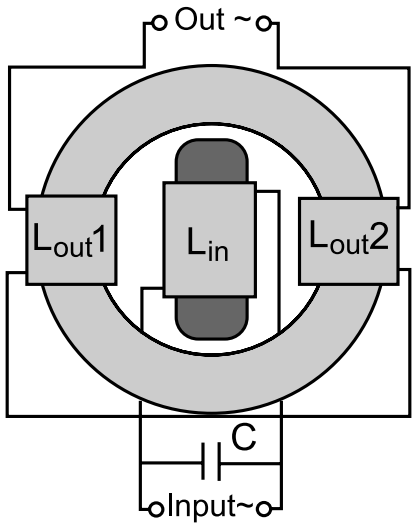

Fig. 4

In August 1999, according to Stephen Hartman (Hartman Multimedia Service, Email: hart@harti.com, info@ccard.net), a German research team designed a toroidal generator. As stated by the researchers, it obtained more than 1.200 W by load while efficiency exceeded 100%!

This subject has become very popular among different researchers. Fig. 5 illustrates a design with a magnet rotating in the center (designer - Olaf Berens, Email: olaf.berens@prognost.com).

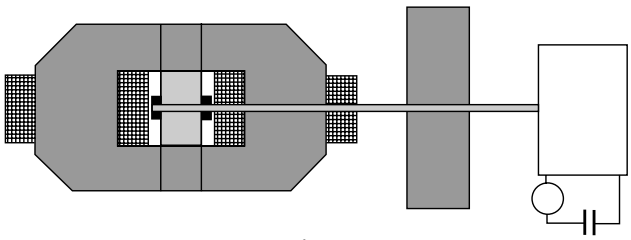

Fig. 5

One more example from the USA: in February, 2003 Donald Hofmann (USA) filed an application for patenting "Generators and transformers with toroidally wound stator winding». Below we publish the description of the patent.

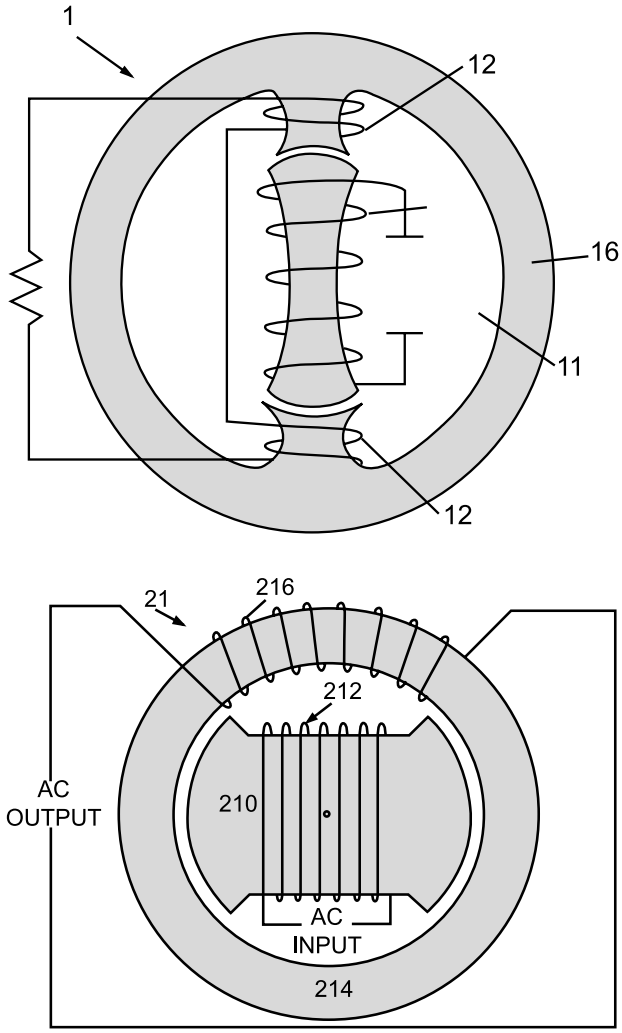

Fig. 6

Inventors: **Steven L. Sullivan, USA; David L. Goulet, USA; Donald Hofmann ,USA.**

Electrical generators are provided with toroidally wound stator windings electrically connected in series; a high permeability stator core, preferably an amorphous magnetic alloy material, glassy metal or HYPERCO™ 50 laminations; and a rotor. The toroidally wound stator coils and the stator core trap essentially all of the flux fields generated by the stator coils within the stator core. Since there is essentially no magnetic field leaving the stator, there is essentially no flux field interaction with the field generated by the rotor. The reduction of flux field interaction also reduces counter torque.

According to another embodiment of the invention, open positions of a rotor may be filled with magnetic material, preferably iron. Filling open portions of the rotor may assist in reducing undesirable flux leakage from the rotor. By trapping substantially all of the flux within the rotor, interaction between rotor and stator flux is reduced. In this manner, counter torque is reduced thereby increasing the overall efficiency of the device.

A prototype of this embodiment was constructed using a standard 10 kWtt gas-powered generator. The stator was removed from the generator and its housing. The stator windings were removed from the stator and rewound by hand using a No. 10 size copper wire with 180 winds wrapped in a toroidal fashion around approximately 180 degrees of the stator.

The stator was then reinstalled in the modified housing and re-attached to the gas-powered generator. A standard 12 volt car battery was attached to the input of the rotor. A 12.92 volt input with 0.8 Amps was measured as the input to the rotor. The output was measured as 6.5 volts with a 40 Amp output. A series of input and output measurements were taken for various inputs.

Editor: Thus input power is 10 Wt, and output power is 260 Wt.

So, the old well-known ideas have found new ways of embodiment, though their essence remains unchanged. Let us note that Faraday Labs Ltd has been working on creating a prototype of □-machine with a toroid of 200 mm in diameter.

Please, read more about this in the next issue!

Editorial: We publish the specification of several interesting patents, which were taken out by Russian inventors for recent years.

Russian patents on alternative energetics

- №93001754, 1996.06.27, Converter of gravitational forces into energy, V.V. Mironov and others
- №92008720, 1995.02.10, Slavic method to produce energy by conversion of gravitational forces, V.V. Mironov
- №93006696, 1995.04.30, Supporting converter of gravitational forces into energy, V.V. Mironov
- №2001121071, 2003.04.10, Method to create energy in liquid, heat-generator and heat-and-power device, A.Yu. Baurov and others
- №2132109, 1999.06.20, Generator of mechanical energy, A.Yu. Baurov and others
- №2001125794, 2003.05.10, Generator of static electricity, S.I. Danilov
- №2001120796, 2003.04.10, Electric power device, D.M. Beliy
- №98116077, 2000.05.10, Heat engine (monotherm, "perpetual mobile of second-type"), V.I. Likhachov and others
- №93048971, 1996.04.20, Float engine, I.P. Tchinarev
- №94023174, 1996.03.27, Gravitational-hydrostatic engine, I.P. Tchinarev
- №98112650, 2000.03.20, Water engine, V.A. Gylchuk
- №2001115953, 2003.03.20, Potential engine by Prokopenko, V.F. Prokopenko
- №2001115954, 2003.03.20, Potential amplifier by Prokopenko, V.F. Prokopenko
- №2001124364, 2003.04.20, Drum of gravitation (gravity), I.A. Strelnikov
- №95107181, 1997.02.20, Method to convert energy of physical vacuum into energy of physical space, O.K. Polev and others
- №92008695, 1995.04.20, Method to get overunity efficiency, Yu.V. Karasev and others
- №93006851, 1995.04.30, Principle, method and device for circulation of mass by force of gravitation and inertia, G.S. Kirichenko
- №93039885, 1996.05.20, Hydro-gravitational electric power station, L.S. Konkov
- №93036371, 1995.11.27, Method to convert energy created in result of interaction of earth's gravity force and air bearing capacity into electric energy, V.I. Kovalenko
- №93025690, 1996.07.27, Method and device to convert heat energy into mechanical one, A.I. Lendyaev
- №2001122885, 2003.04.20, Rotary method to convert magnetic energy into mechanical one, L.N. Mezentsev
- №2001106783, 2003.02.10, Gravitational source of energy, A.D. Yurik and others
- №2001115968, 2003.03.20, Method to convert energy, V.S. Gorelyuh

According to another embodiment of the invention, open positions of a rotor may be filled with magnetic material, preferably iron. Filling open portions of the rotor may assist in reducing undesirable flux leakage from the rotor. By trapping substantially all of the flux within the rotor, interaction between rotor and stator flux is reduced. In this manner, counter torque is reduced thereby increasing the overall efficiency of the device.

A prototype of this embodiment was constructed using a standard 10 kWtt gas-powered generator. The stator was removed from the generator and its housing. The stator windings were removed from the stator and rewound by hand using a No. 10 size copper wire with 180 winds wrapped in a toroidal fashion around approximately 180 degrees of the stator.

The stator was then reinstalled in the modified housing and re-attached to the gas-powered generator. A standard 12 volt car battery was attached to the input of the rotor. A 12.92 volt input with 0.8 Amps was measured as the input to the rotor. The output was measured as 6.5 volts with a 40 Amp output. A series of input and output measurements were taken for various inputs.

Editor: Thus input power is 10 Wt, and output power is 260 Wt.

So, the old well-known ideas have found new ways of embodiment, though their essence remains unchanged. Let us note that Faraday Labs Ltd has been working on creating a prototype of Φ-machine with a toroid of 200 mm in diameter.

Please, read more about this in the next issue!

Editorial: We publish the specification of several interesting patents, which were taken out by Russian inventors for recent years.

Russian patents on alternative energetics

- №93001754, 1996.06.27, Converter of gravitational forces into energy, V.V. Mironov and others
- №92008720, 1995.02.10, Slavic method to produce energy by conversion of gravitational forces, V.V. Mironov
- №93006696, 1995.04.30, Supporting converter of gravitational forces into energy, V.V. Mironov
- №2001121071, 2003.04.10, Method to create energy in liquid, heat-generator and heat-and-power device, A.Yu. Baurov and others
- №2132109, 1999.06.20, Generator of mechanical energy, A.Yu. Baurov and others
- №2001125794, 2003.05.10, Generator of static electricity, S.I. Danilov
- №2001120796, 2003.04.10, Electric power device, D.M. Beliy
- №98116077, 2000.05.10, Heat engine (monotherm, "perpetual mobile of second-type"), V.I. Likhachov and others
- №93048971, 1996.04.20, Float engine, I.P. Tchinarev
- №94023174, 1996.03.27, Gravitational-hydrostatic engine, I.P. Tchinarev
- №98112650, 2000.03.20, Water engine, V.A. Gylchuk
- №2001115953, 2003.03.20, Potential engine by Prokopenko, V.F. Prokopenko
- №2001115954, 2003.03.20, Potential amplifier by Prokopenko, V.F. Prokopenko
- №2001124364, 2003.04.20, Drum of gravitation (gravity), I.A. Strelnikov
- №95107181, 1997.02.20, Method to convert energy of physical vacuum into energy of physical space, O.K. Polev and others
- №92008695, 1995.04.20, Method to get overunity efficiency, Yu.V. Karasev and others
- №93006851, 1995.04.30, Principle, method and device for circulation of mass by force of gravitation and inertia, G.S. Kirichenko
- №93039885, 1996.05.20, Hydro-gravitational electric power station, L.S. Konkov
- №93036371, 1995.11.27, Method to convert energy created in result of interaction of earth's gravity force and air bearing capacity into electric energy, V.I. Kovalenko
- №93025690, 1996.07.27, Method and device to convert heat energy into mechanical one, A.I. Lendyaev
- №2001122885, 2003.04.20, Rotary method to convert magnetic energy into mechanical one, L.N. Mezentsev
- №2001106783, 2003.02.10, Gravitational source of energy, A.D. Yurik and others
- №2001115968, 2003.03.20, Method to convert energy, V.S. Gorelyuh

- №2002131190, 2003.04.20, Method to convert heat energy into useful work, G.R. Umarov and others
- №2001122676, 2003.05.27, Device to get energy by conversion of energy from one state to another, T.A. Trushina and others
- №2131636, 1999.06.10, Fuel-less engine, V.E. Alekseenko
- №5037775, 1996.10.10, Magnetic engine, V.E. Alekseenko
- №94003087, 1995.12.27, Gravitational engine, A.A. Voznyukov
- №93058095, 1996.06.27, Perpetual mobile, Yu.S. Parshutin
- №93056706, 1996.07.27, Perpetual mobile, A.V. Remezovich
- №93039002, 1996.01.20, Gas-dynamic perpetual mobile, A.I. Lendyaev
- №94011000, 1995.11.27, Perpetual mobile by Makagyan, V.S. Makagyan
- №97114829, 1999.06.27, Perpetual mobile by Makagyan, V.S. Makagyan
- №95114965, 1997.08.10, Electric perpetual mobile by Abrakitov, V.E. Abrakitov
- №9512209, 1998.02.20, Perpetual mobile, V.V. Sharov
- №99111572, 1999.09.27, Perpetual mobile, N.M. Rotar
- №98116343, 2000.05.10, Engine-electric saw (perpetual mobile), V.V. Smirnov
- №2000101256, 2001.11.20, Perpetual mobile, V.D. Rykov
- №2000120592, 2002.07.20, Perpetual mobile, K.I. Harazov
- №2001117783, 2003.03.20, Magnetic perpetual mobile, S.N. Verevkin
- №2001123502, 2003.04.20, Magnetic engine, A.E. Ryumin
- №5032711, 1995.02.20, Ferromagnetic engine, V.P. Levkin
- №94019782, 1996.01.10, Device for demonstration of conversion of permanent magnet energy, M.F. Ostrikov and others
- №95103846, 1996.11.27, Magnetic generator, M.F. Ostrikov and others
- №95112010, 1997.06.27, Method to convert permanent magnet energy into rotary motion, A.V. Starostin and others
- №2143170, 1999.12.20, Method to convert energy of mechanical loading into energy of repeated transference, V.I. Rahovsky and others
- №2000119415, 2002.06.20, Method to convert energy of fields of permanent magnets into mechanical work, Yu.S. Pilipkov
- №2001109811, 2003.02.27, Method to capture and convert energy of physical vacuum into electric energy, S.N. Kovalev
- №99121374, 2001.11.10, Perpetual mobile, E.M. Volodin
- №94026259, 1996.05.20, Device to convert magnetic field energy into kinetic energy, P. Imrish

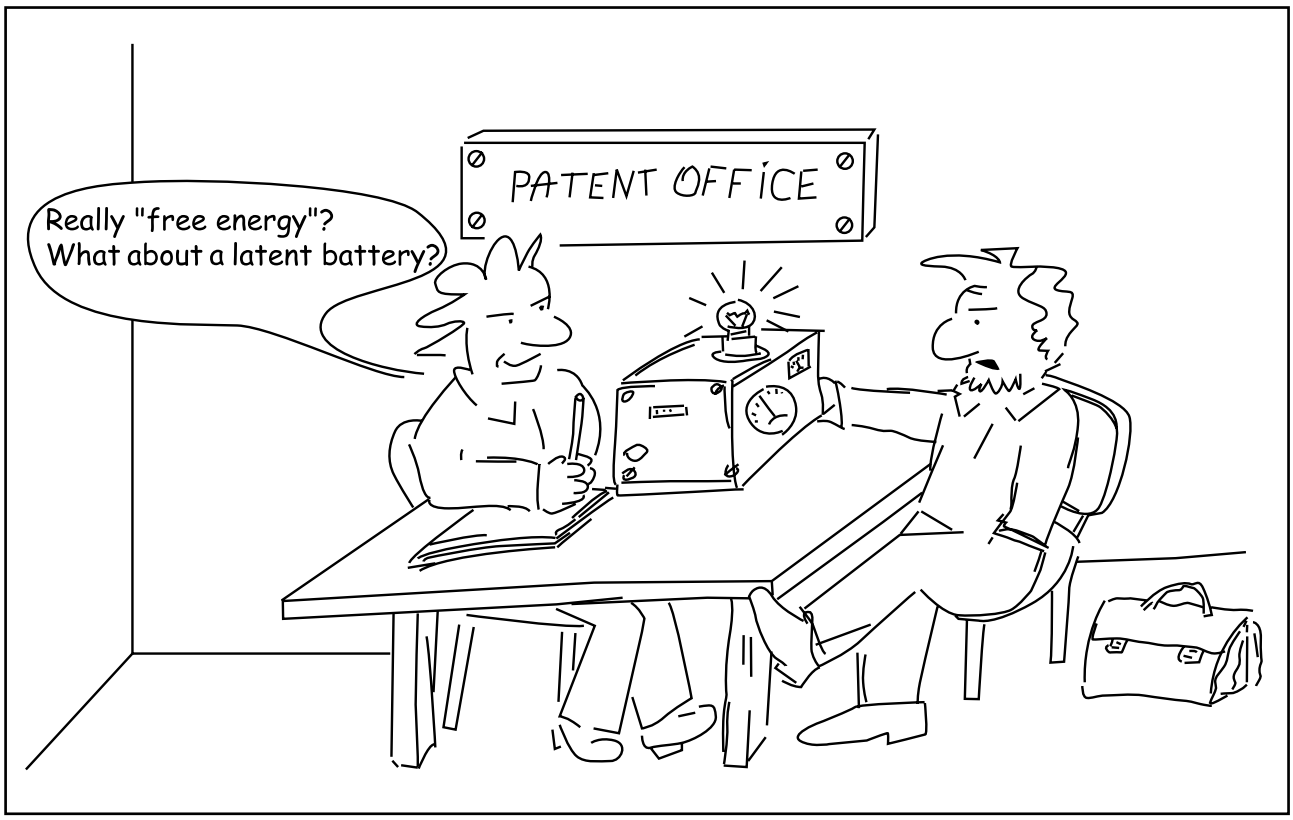

Device for conversion of magnetic field energy into kinetic energy

No. 94026259, 1996.05.20

Author: Pavel Imrish

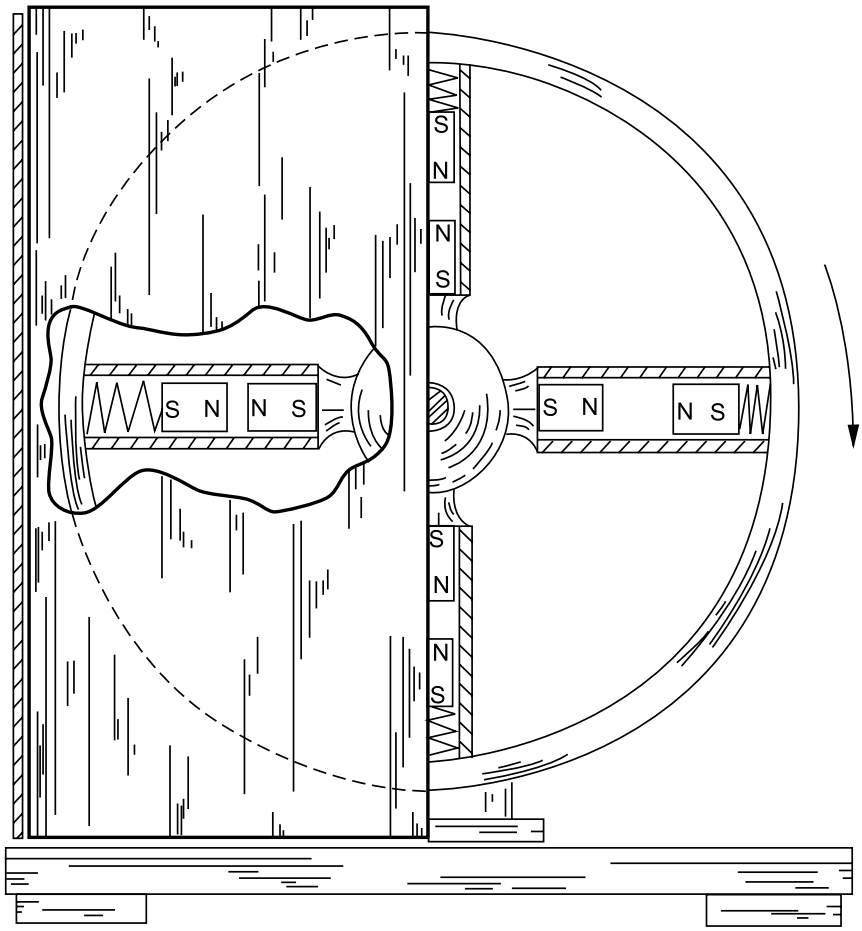

Fig. 1

The invention refers to a device for conversion of magnetic field energy into kinetic energy. The device has a rotating wheel with at least two radially opposing non-magnet holders used as guide ways for at least two permanent magnets, respectively. The permanent magnets are mounted in the holders so that there is a possibility to remove them. From the both sides of the wheel plates made of magnetic material are mounted axially; the plates surround the wheel partially. Depending on direction of the both poles, namely on location of the similar and opposite poles towards each other, compression element is situated on the holders, or between the wheel and the outer end of the permanent magnet located at the furthest radial distance from the axle of the wheel, or between two permanent magnets. (The device operation principle is obvious from Fig. 1).

Editor: We have found an example of a similar device whose description is presented in the book by R. Ford The Perpetual Motion mystery [1].

In this case, there is an analogous process, during which half of the cycle is screened and the rotor is supposed to rotate permanently (see Fig. 2).

1. RA. Ford, The Perpetual Motion mystery. Lost Technology Series, p.23.

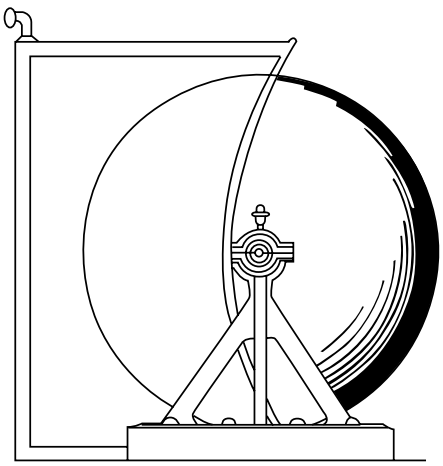

Fig. 2

Gravity spaceships

Review on Grigory R. Uspenskiy's works, Russia

http://space21.boom.ru/gravity.htm

The level of development of modern astronautics is primarily determined by the energy capabilities of space carriers. So, nowadays, the single-mission carrier rockets equipped with chemical engines allow space exploration within the solar system. These carriers have delimited the near-earth space in the form of a geostationary orbit, where the practical-purpose space complexes operate.

Newer and higher levels of quality will be reached by cosmonautics upon its mastering gravity power engineering. Flights towards the nearest stars will become possible and by the end of the next century this will be followed by travels throughout Galaxy.

Gravity engines are structurally simple (**two bodies of different density are rigidly connected**). To form some practicably significant value of thrust it is required to use absolutely new technology regarding creation and retaining of matter of high density which can be compared to that of atomic nuclei. For instance, at an engine mass of about 2 t, it is possible to attain 10 N thrust using bunches of aluminum and lead nuclei. The nuclei are approached to each other at a distance comparable with sizes of these bunches.

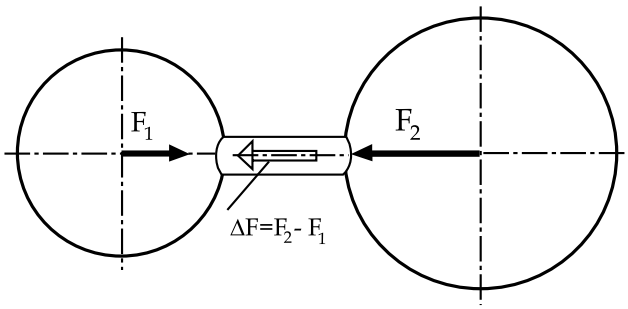

Fig. 1

Use of matter which is denser than nuclei bunch, increase of mass of the gravitating bodies, and reduction of the distance between the bodies causes increase of thrust. So, for a level of density of gravity holes (i.e. for extremely dense state of matter in which it is not attracted by other bodies) limit value of acceleration of the gravity engine reaches the order of 10^{100} ms^{-2}.

In engineering, we usually use units of distance as meters, centimeters, millimeters, and microns. Let us consider one of them – millimeters. With such a size of the gravitating bodies and distance between them, it is possible to obtain substantial thrust forces of the gravity engine and, accordingly, accelerations of its motion.

So, using an engine of 20 ton mass we will get the thrust of $2x10^4$ N, with mass of 200 ton we will get the thrust of $2x10^6$ N, and so on. Thus, by increasing the engine mass by one order of magnitude, we obtain increase of thrust by two orders, while sizes of the bodies remain unchanged. But acceleration, in this occasion, remains constant and equal to approximately 1 m/s^2.

Decrease in size of gravitating bodies of the engine leads to the corresponding increase of thrust by an order. Decrease of size is realized by increase of density of these bodies by 3 times up to 0.3 mm at the same masses. The acceleration they produce is increased by an order as well, i.e. up to 10 m/s^2. Decrease of sizes of the gravitating bodies and the distance between them down to 0.1 mm results in further increase of engine thrust by one more order and also increase of acceleration up to 100 m/s^2. If size of the bodies is 1 micron then acceleration increases up to 10^6 m/s^2.

It is apparent that even with up-to-date technological possibilities of miniaturization the gravity engine with masses of dozens and hundreds of tons is capable to create great thrust forces and form accelerations considerable enough to fly across the Galaxy. Therefore, the problem of creating a gravity engine is, mainly, the problem of producing and retaining the high-density matter. It will be possible after studying the mechanism of interaction between matter & gravitational substance followed by developing techniques for synthesizing of high-density, large-mass, and small-size substance from this matter.

It is possible to control the value of thrust of the gravity engine changing the distance between gravitating bodies. Thrust direction can be changed by turning the rigid connection of the gravitating bodies. The engine can

be activated by bringing the gravitating masses together, and switching-off by moving them apart.

In a 24-hour period, such a ship can reach a speed of 10^6 m/s and cover a distance of about 10^{10} m. In a month, with a top speed of 3x 10^7 m/s the ship will cover the distance of 10^{13} m; in a year, with a speed of 4x 10^8 m/s the ship will cover a distance of 10^{15} m; in 10 years - 4x 10^9 m/s and 10^{17} m, respectively. Apparently, the ship with sufficient over-load can be used for flights within the solar system and for manned flights towards the nearest stars.

When transporting unbreakable and non-urgent cargoes, the acceleration can be increased up to a few dozens of unities. The flight duration might be also increased by several tens of years. This extends the area of utilizing the gravity ships with over-loads of several unities. Besides these ships can be used for transporting operations within near vicinities of the Galaxy.

The high-speed flight will demand protection against approach flow of matter. So, per second (with a ship speed of 10^{10} m/s) 10^{-12}kg of matter will approach the ship. At that density of interstellar material is 10^{-24} kg/m^3 and midship area is 10^2 m^2.

The great speed of approaching matter will create a substantial resisting force. At a speed of 10^{10} m/s, this force will come to the order of 10^{-2} N, whereas with a speed of 10^{18} m/s it will come to 10^{14} N. This is a great value, but as compared to thrust of such a ship which is to equal to 10^{17} N, the former value is a small one. That is why it is possible to overcome such resisting force.

Intercommunication with these ships might be, most likely, realizable by means of distortion of gravitational field. It is possible that the gravitational field distortion will be formed, on the contrary, by generating the matter from the gravitational field, and, most probably, by a method as yet unknown.

Monograph **"General Etherodynamics. Modeling of matter structures and fields on the basis of conception of gas-like aether" by Vladimir A. Atsukovsky.** 2nd edition, M., Energoatomizdat, 2003;
Brochure **"12 experiments on etherodynamics**" Zhukovsky, Publisher "Petit", 2003.

On questions about purchasing, please, refer to Email: atsuk@dart.ru

Floyd Sweet Bench Test DVD

In order to demonstrate the reality of tapping free energy from the vacuum, we have now made available a very reasonably priced DVD of the bench tests of the late Floyd Sweet's Vacuum Triode Amplifier, with commentary by Tom Bearden.

During these two tests, the unit, which weighed about 6 lbs., can be seen to be putting out well over a million times more power than was put into it.

This DVD makes an excellent educational or instructional tool, and is priced at USD 9 including US domestic shipment. Running time is about 20 minutes.

Note: the full length Sweet DVD, which includes Sweet's proprietary conditioning process for the magnets, is also still available.

Order from http://www.cheniere.org/sales/order_by_credit_card.htm

On Velocity of Drive-Free Motion

S.A. Gerasimov , V.V. Stashenko, Russia

Physics Department, Rostov-on-Don State University,
Zorge St. 5, 344090, Rostov-on-Don, Russia

Editorial: *We publish a summary of the article. The original text you can receive from the authors.*

A drive-free system made on the basis of a planar mechanism is described. The experimental results on average velocities of the drive-free propulsive system are presented in a scaled view.

During usual motion, a system is repealed from the surface in the case of its motion on a plane or from the medium when it moves in a resistance medium. This kind of motion is achieved by using a drive mechanism. In contrast to the usual motion, the drive-free propulsive system moves due to interaction of a body of a system with another body of the same system. Sometimes such machines are called inertioids [1] or vibration propulsive devices [2]. To produce such kind of motion it is sufficient to provide anisotropy of the resistance force [3-5] or asymmetry of the internal force [6]. One of the simplest ways to do it is to use a simple two-link planar mechanism. A device for such a motion is shown in Fig. 1.

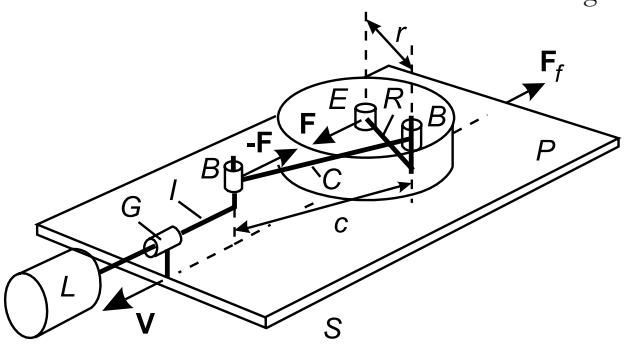

Fig. 1

Experimental device

This device with a total mass of M+m consists of a platform P on which an electric motor E rotating a drive rod R of length r is mounted. This is only one part of the planar mechanism. Another link is the connecting rod C of length c which connects the unbalanced load L and the drive rod R by means of two bell bearings B. The unbalanced load L of mass m on the rod I slides in guide G. The basic distinction of this mechanism is in that this variant of drive-free machine allows us to analyze the experimental data on average velocities of motion. Actually the only forces, which act on the platform and are collinear to the moving direction, are the force **F** caused by vibrations of the load L and the frictional force $\mathbf{F}_f$. The platform starts to move when the force acting on the platform becomes greater than the frictional force.

Let us discuss possibilities of the real propulsive system shown in Fig. 1. Measurements were made at r=0.01 m and at three mass ratios m/M. The values of frictional coefficients were measured for each parameter of the system and vary from k=0.25 to k=0.4. The system starts moving when theoretically the drift does not take place. When motion becomes reversible, the velocity of drive-free drift does not decrease.

Thus drive-free motion is possible even if the frictional coefficients are very small. When increasing the frequency of vibrations velocity does not decrease. We can not discuss the existence of some third force acting on the platform (we can suggest the existence of frictional force $\mathbf{F}_f$ and the internal force **F** caused by vibrations). Let somebody else take the liberty of making such a conclusion!

References

1. Tolchin V.N. Inertioid. // Perm: Perm Book Publisher. 1977. Blekhman I.I. Vibrational Motion. // Moscow: Nauka. 2000. Nappo F. Sulla Influenza Indiretta Delle Forze Inertne sul Moto del Baricentro. // La Ricerca Scientifica (Rendiconti). 1965. V. 8. No 1. P. 3-14.
2. Gerasimov S.A. Anisotropy of Frictional Force and Vibrational Motion. // Problems of Applied Physics. 2001. V 7. P. 85-88.
3. Gerasimov S.A. Self-Similarity of Vibrational Motion in a Resistant Medium. // Journal of Applied Mechanics and Technical Physics. 2002. V. 43. No 1. P. 90-92.
4. Gerasimov S.A. A Real Model of Vibratory-Impact Propulsive Device. // Problems of Applied Physics. 2000. V 6. P. 117-118.
5. Langhaar H. L. Dimensional Analysis and Theory of Models. // New York: Willey. 1951.

ELECTROMAGNETIC SELF-ACTION

S.A. Gerasimov, A.V. Volos, Russia

Physics Department, Rostov-on-Don State University,
Zorge St. 5, 344090, Rostov-on-Don, Russia

The torque of a self-action exerting on the mobile part of the reactionless engine is measured. It is shown that there exists a value of the height of the mobile electrode at which the torque of self-action is maximal.

There is an opinion that a body can not act on itself [1]. The existence of the so-called force of self-action is believed to contradict to the law of conservation of momentum. This is nothing but prejudice. Though the experimental confirmations of existence of self-action [2-4], conventional science is ready to refuse modern electrodynamics and make up a new theory of electromagnetism [1, 5] in order to save Newton's third law in use. It is comprehensible. First of all, these are the theoretical [5] and experimental [3] errors. The equivalence [5] of the Biot-Savart force is mathematically coarse since in this case the highest terms of expansion of force of self-action are cast out. This equivalence violates law of action and reaction and Ampere force law for which the principle of equality and collinearity of action and reaction forces is valid. Non-linearity of dependence of the torque of self-action on the current intensity [3] makes us doubt in the validity of these results. Moreover, typical values of force [2, 4] and torque [3, 6] are too small even if direct current in the circuit is significant. It is required to pass through the direct current of hundred amperes to produce the considerable displacement or turn of a body. As a result, small values of the effect caused ambiguity in the explanation of the phenomenon [1].

In fact, searching the reactionless propulsive devices we usually forget about the magnetic self-action which arises when a body consisting of a magnet and incomplete electric circuit can move violating law of action and reaction [7]. This violation is proved theoretically [8] but peculiarities of this motion are not well discussed. The principle of such a motion is shown in Fig. 1. This is the magnetic interaction between two current elements one of which is a part of a closed circular loop L and another is perpendicular to the first one. Since the force $d\mathbf{F}_{jm}$ acting on any current element of the loop L is perpendicular to the density of current $\mathbf{j}_m$ then the **Z**-component of the torque $d\mathbf{N}_m = [\mathbf{r}_m \mathrm{x} d\mathbf{F}_{jm}]$ is equal to zero while torque which exerted on the second current element by the magnetic field of the loop, does not.

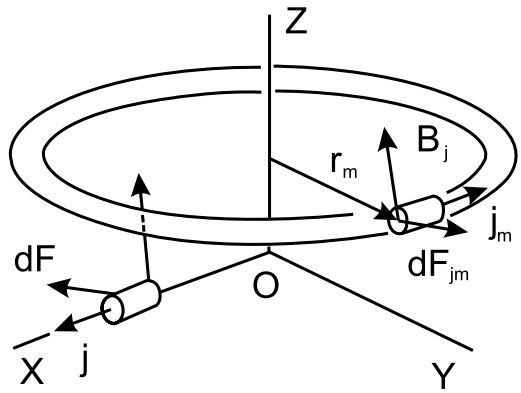

Fig. 1

Violation of law of action and reaction.
The force $d\mathbf{F}_{jm}$ with which the magnetic field $\mathbf{B}_j$ of another current element acts on the current of density $\mathbf{j}_m$, is not equal nor opposite to the force $d\mathbf{F}$ with which the magnetic field **B** of the first current element acts on the current of density **j**.

An experimental device is shown in Fig. 2. A commercially available ring-shaped carbon-steel magnet M (inner radius – 20 mm; outer radius – 55 mm, height – 25 mm) of 2.2×10^5 A/m magnetization is located on the cover of a cylindrical electrode E suspended by thread T. The electrode E is furnished with a central electrode C of the same height h and 5 mm diameter. The radius of the electrode E is 130 mm. The open end of electrode E and the central electrode C are submersed in a conducting liquid L_+ and L_- placed in two volumes of a vessel V so that the depth of submergence of these parts is about 5 mm. In this experiment the conducting fluid is 10% solution of copper sulfate ($CuSO_4 5H_2O$). The vessel V consists of two thin coaxial plastic cylinders of 2 mm thickness. The radii of the plastic cylinders having the common bottom are equal to 10.5 cm and 18 cm. The height of the vessel is 12.5 cm. A disk and a ring-shaped electrodes S_+ and S_- of 1.5 mm thickness are placed on the bottom of the vessel to supply the direct electric current of intensity I. All conducting parts of the device are made of copper. The thickness of the electrode E is 1.5 mm.

When the direct current ***I*** of density **j** flows through the electric circuit, the magnet and the electrode ***E*** rotate in the direction of the magnetic force ***d*F** which is proportional to the vector product [**j**x**B**] as shown in Fig. 2. This is a force of self-action by means of which the mobile part of this device consisting of the magnet ***M*** and the electrode ***E*** acts on itself. However there is no force of reaction which could cause such a rotation. This is really true since a ring-shaped magnet is equivalent to two cylindrical surfaces with the surface current of density $\mathbf{j}_m$. The force of self-action ***d*F** acting on the cover of the electrode is compensated by the force of self-action $d\mathbf{F}_*$ acting on the cylindrical part of the electrode ***E***. Magnetic induction field $\mathbf{B}_*$ "does its part" as shown in Fig. 2. Therefore, it would be appropriate to find out how the height of the electrode ***E*** influences the value of the torque **N**. Such an influence is demonstrated in Fig. 3.

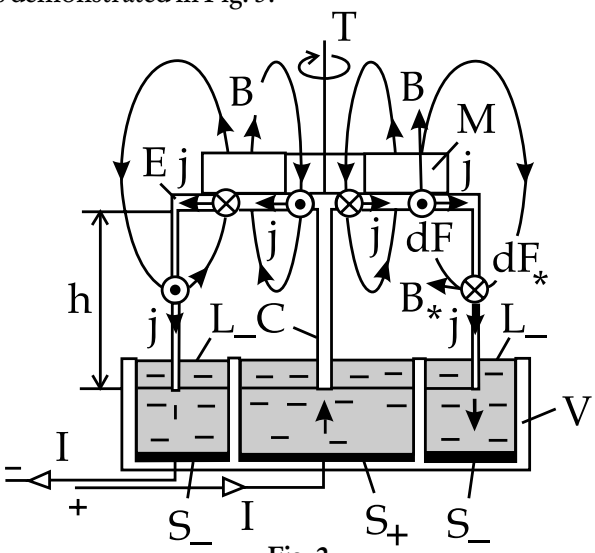

Fig. 2
Experimental device
(•) and (x) – directions of magnetic forces acting on various parts of the mobile electrode ***E***

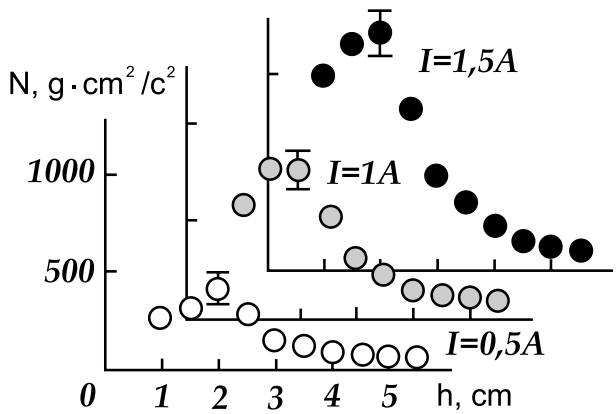

Fig. 3
Dependence of the torque ***N*** on the height of the electrode ***h*** at various values of the direct current ***I*** in the circuit

Thus there exists the value of the height ***h*** at which torque of self-action is maximal. This is the first result of the present work. At ***I***=1 A and ***h***=2 cm the electrode ***E*** turns at angle of 2.2 radian (126 °) with respect to the equilibrium position. Such a turn corresponds to 3.4×10^2 gxcm^2/s^{2}rad, i.e to the constant of torsion of the thread. The second result is that the maximum value of the torque of self-action ***N*** at the current ***I***=1 A is even larger than the value of the torque produced by the traditional unipolar device [3] at the current 50 A.

In fact, this work represents an attempt to draw attention to a more effective and simple practical application of the self-action. It remains only to transfer electric current in an unclosed electrical conductor and such a possibility really exists.

References

1. Graneau N. The Finite Size of the Metallic Current Element. // Physics Letters A. 1990. V. 147. N. 2-3. P. 92-95.
2. Sigalov R.G., Shapovalova T.I., Karimov H.H., Samsonov N.I. Magnetic Fields and Their New Applications. // Moscow: Nauka. 1976.
3. Das Gupta A.K. Unipolar Machines. Association of the Magnetic Field with the Field-Producing Magnet. // American Journal of Physics. 1963. V. 31. N 6. P. 428-430.
4. Cavalleri G., Bettoni G., Tonni E., Spavieri G. Experimental Proof of Standard Electrodynamics by Measuring the Self-Force on a Part of a Current Loop. // Physical Review E. 1998. V. 58. N 2. P. 2505-2517.
5. Christodoulides C. Equivalence of the Ampere and Biot-Savart Force Law in Magnetostatics. // Journal of Physics A. 1987. V. 20. N 8. P. 2037-2042.
6. Serra-Valls A., Gago-Bousquet G. Conducting Spiral as an Acyclic or Unipolar Machine. // American Journal of Physics. 1970. V. 38. N 11. P. 1273-1276.
7. Gerasimov S.A., Volos A.V. On Motion of Magnet in Conducting Fluid. // Problems of Applied Physics. 2001. V. 7. P. 26-27.
8. Gerasimov S.A. Self-Interaction and Vector Potential in Magnetostatics. // Physica Scripta. 1997. V. 56. N 3-4. P. 462-464.

JNET

New Energy Technologies collection of articles Japanese Version

Collection of articles from New Energy Technologies magazine, 2001-2002 is published in Japan.

On purchasing of the book, please, contact

Eiichi Yamamoto,
President Yama Trans Co. Ltd.

Email: admin@yamatrans.co.jp or eyama@yamatrans.co.jp

Uranium Photoaccumulator

Anton N. Yegorov, Russia

St.Petersburg Institute of Nuclear Physics, Russian Academy of Sciences, Gatchina, 188350, Leningrad region, Russia
http://www.pnpi.spb.ru, Email: bti@isppd.pnpi.nw.ru

Photoaccumulators are galvanic elements consisting of two communicating vessels, one of which is exposed to light and another is kept in darkness. Ionic composition of electrolyte, which fills these vessels, depends on intensity of illumination. If an inexpensive electrode is placed in each vessel, then a potential difference will appear. If the electrodes are closed at external working resistance the electron stream will begin to equalize ionic composition and the difference in illumination intensity will tend to disbalance it. As a result, a certain working mode will be established which will allow to utilize the photoaccumulator for production of industrial electrical energy. As distinct from the solar battery, which works while exposed to the light, the photoaccumulator stores some part of solar energy in its electrolyte which is supplied with electrical energy after sunset too.

The idea of photoaccumulator is not a new one. It was established in the end of 19th century that it is feasible to create a photoaccumulator containing electrolyte made of the following mixture: $Fe^{2+} + Hg^{2+} = Fe^{3+} + Hg^{+}$.

This photoaccumulator was not adopted in practice because of high toxicity of the electrolyte and very low EMF (approximately 0.018). Development of technology is accompanied by a widening range of materials and matters which can be used in large scale production and power industry. Among such materials are, in particular, titanium, depleted uranium and rare-earth elements. Nuclear power industry uses U235 isotope only. Naturally occurring compound contains only 0.72% of U235. Hundreds of thousands of U238 from which U235 has been extracted are kept as useless stock.

In the end of sixties in one of radiochemical laboratories of LINP (Leningrad Institute of Nuclear Physics) P.N. Moskalyov repeated the same experiment over a long period of time. In the morning he placed a tightly closed retort filled with uranyl-chloride soluted in compound of water, spirit and hydrochloric acid on the window-sill. The solution in the retort changed its color from yellow to emerald-green. Before leaving the laboratory Moskalyov removed the retort with green solution from the windowsill to a closed chest. In the morning Moskalyov retrieved the retort with the solution (which was already yellow) from the chest and placed it on the sill. The solution became green again and the whole process repeated daily.

Chemical processes in uranium electrolyte are rather complicated: first, under the light influence the uranyl ion oxidizes ethyl alcohol, which is then transformed to aldehyde: $UO_2^{+2} + C_2H_5OH^{+} = U^{iv}(OH)_2 + C_2H_4O$.

In the dark ions of urany-4 interact with aldehyde and are transformed to UO_2 uranyl ion and spirit again. Thus, **this cyclic process can take place over a significant period of time being supported by the energy provided by light quanta of visible light which are transformed into the heat.**

The idea of utilizing this process in order to obtain electrical energy emerged in the late nineties. The mechanism of uranium photoaccumulator is very simple (Fig. 1): two glass vessels, one made of transparent glass and another of non-transparent glass, are connected with a black acid-proof rubber tube. The communicating vessels are filled with aqueous electrolyte containing 40% of spirit, 80-100 g/l UO_2Cl_2 and 0.2 m HCL. The electrolyte is previously activated by multiple cycles of exposing it to light and then placing it in darkness in order to obtain a significant volume of aldehydic fraction. The major difficulty of designing uranium photoaccumulator is connected with the choice of the material for electrodes. In galvanic elements carbonized platinum electrodes are usually used. For practical use platinized titanium gives the best fit. Titanium foil covered with superfine layer of platinum is currently widely used in electrochemical industry and is procurable.

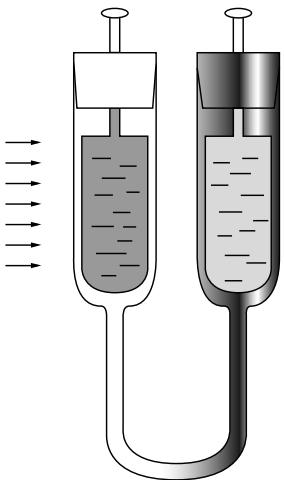

In the transparent vessel the titanium petal-shaped electrodes are parallel the light flow, so the light quanta move freely through the solution.

In working condition each photoaccumulator produces 10 mA of current at 0.3 volt voltage, so they are to be connected in large batteries, both in series and in parallel.

It is also necessary to consider the aspect of safety. Until now, the depleted uranium has been used for one purpose only, namely, for manufacturing of cores for armor-piercing shells. When used in this manner, the uranium is pulverized, which leads to environmental damage. The battery of photoaccumulators is placed in hermetic metal chest; the front panel of the latter must be made of solid safety glass. Such a system will protect the photoaccumulator battery from malicious intent and the security staff from weak uranium radioactivity.

International Prize on Power Engineering "GLOBAL ENERGY"

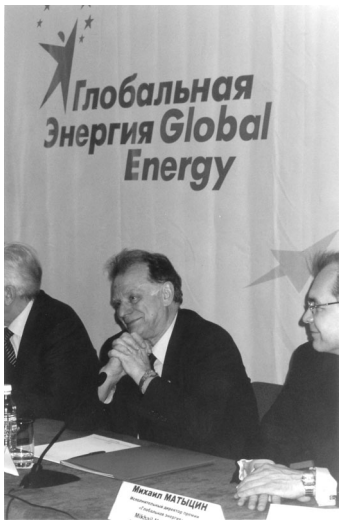

Zhores I. Alferov

International Prize "Global Energy" was first presented in St. Petersburg on June 15, 2003. The bonus fund of $900,000 was shared between three scientists "whose work has been and is still important both to the last century and future research", said Zhores Alferov, Chairman of the Global Energy Prize Award International Committee.

Nick Holonyak, Professor at the University of Illinois (USA), was awarded for "fundamental contributions to the development of power silicon electronics and invention of the first semi-conducting light-emitting diodes in a visible part of the spectrum". Thyristor invented by Holonyak allows the transformation of direct current into alternating and vice versa, to direct this process, to store and accumulate energy. This device is used for every electric locomotive, for frequency transformation. Such devices help to save significant amounts of energy, thus, about 30 percent of all energy produced in the world is processed through thyristors.

Nick Holonyak's other invention, i.e. semi-conducting light-emitting diodes in a visible part of the spectrum, has led to development of a new field of the modern power engineering. Supposedly, efficient and safe light-emitting diodes will replace daylight lamps in the next ten years.

"Although Nick Holonyak's invention dates back to the end of the 50ies of the last century, it remains current" said the Chairman of Expert Commission, Academician Vladimir Fortov. "This is one of the key inventions leading to the search of new ways of sustainable energy saving".

Diploma of Global Energy Prize laureate

Gennady Mesyats, Academician of Russian Academy of Sciences, and **Ian Douglas Smith**, Senior Scientist at The Titan Pulse Science Division, were awarded for giving birth to a new direction in the field of power engineering, i.e. power pulse energy. Due to their research, commutation of high-level currents at megavatt levels of voltage has become possible; a number of powerful current choppers have been created, futhermore, there have been developed transformer constructions which allow avoiding energy loss in power transmission lines. These research and innovations resulted in the creation of a number of unique pulse power machines and devices widely used in Russia and abroad ("Aurora", "Helia" (USA), "Sinus", "Gamma", "Maus", "Pik" (Russia) and others).

Teleportation

Review prepared by correspondent Alla Pashova, Russia

For conventional science, the term "teleportation" is not worthy of serious consideration unless ascertained by compulsory "quantum" teleportation. Thus, teleportation is unconditionally referred to microworld phenomena and, in fact, comes to distant information transfer. Spatial transference of a macroobject of definite mass has been excluded.

Teleportation of states

What does **quantum teleportation** mean? During active development of quantum theory, in 1935, the so-called EPR-paradox (Einstein-Podolskiy-Rozen paradox) was formulated in the well-known work "Can quantum-mechanical description of reality be full?" written by Albert Einstein, Boris Podolskiy, and Natan Rozen.

The gist of the paradox is as follows. There are two particles interacting for some time, thereby forming a common system. From the position of quantum mechanics, this coupled system can be described with a certain wave function. When interaction is over and particles scatter within arbitrarily large distances, they still will be described by the same function as before. At that, state of each separate particle cannot be known in principle that is apparent from uncertainty relation. Only when one of the particles enters a receiver, which records its parameters, the relevant characteristics of the other one emerge (exactly emerge, but not become known!). Thus instant unlimitedly distant "transmission" of quantum state of the particle is possible. Therewith, teleportation of the particle itself and transference of mass do not take place.

Einstein and his colleagues believed that existence of such particles predicted by quantum mechanics prove theory incompleteness. Thereof, the scientists inferred the necessity of other parameters (besides wave function) to describe quantum states. Otherwise, from the local viewpoint, correlations between elements of such a system could not be understood. It was far much later, when Bell showed that some of measurements could define these correlations and exclude any local hidden parameters. It was not until early 1980-s that famous experiments were performed finally eliminating a possibility of local hidden parameters.

In 1980, Alan Aspect experimentally proved that EPR-paradox in quantum world takes place indeed. Special measurements of state of EPR-particles indicated that EPR-pair not only has a common origin, but in addition, that one of the photons somehow "get to know" the way the second one was changed. In further experiments, existence of EPR-paradox was affirmed, even if particles of EPR-pair were removed from each other over a distance of 10 kilometers or so.

In 1993, Charles H. Bennett and his colleagues worked out a method to transfer the quantum state of some object of the microworld to another quantum object by means of EPR-pair and called this method "quantum teleportation". In 1997 a group of experimentalists under the direction of Anton Zeilinger for the first time implemented quantum teleportation of the photon state in the University of Innsbruck.

In such a way, researchers keep on improving the process of quantum teleportation. In 2001 Danish scientists managed to link gas particles spaced at a substantial interval from each other, by transmitting information about quantum state from one particle to another by means of laser. The quantum teleportation between two gaseous clouds were attained by Eugene Polzik and his colleagues in Orkhus University. They succeeded in coupling about million of cesium atoms, whereas the previous record was only four atoms.

Scientists of Australian National University destroyed a laser beam and nearly instantly recreated it in another point in space; in other words, they teleported photons of the laser beam. In contrast to previous similar experiments, the physicists managed to obtain the required result in 100 percents of cases. Ping Koy Lam, the head of the task group of Australian University, claimed that the first atom of solid substance was likely to be teleported within near three to five years. However, as most scientists admit, a task to teleport a human remains almost impracticable. Even teleportation of atoms, as compared to that of photons, is much more complicated process. It is even harder when dealing with molecules. It is basically possible (though practically very difficult) first to transfer a molecule to a minimum-energy state (ground state) causing it to radiate a certain

sequence of photons. These photons will find themselves in a certain superposition containing all the "quantum" information, which was available in the molecule. Thereafter, it is possible to teleport photon states by means of EPR-pairs. Moreover, it is also required that the classically measured information about a molecule. If molecule of minimum-energy state is present in the receiver, then this molecule, by interacting with teleported photons in a required order, will transform to the quantum state identical to that of the initial one. Consequently, the quantum state of molecule of a certain material will be transmitted, actually with velocity of light. When that happens, the quantum state at the transmitting side will be destroyed.

The human organism comprises about 10^{27} atoms. To save and transmit information on properties of that number of particles seems to be practically unachievable. "Theoretically, nothing prevents us from doing that, but complexity of the problem is such that now no one seriously thinks about the solution" – states Ping Koy Lam.

Being a method of information transmission, quantum teleportation has found its application in quantum computers, whose information is stored in the form of a set of quantum states. Impossibility to wiretap and copy transmitted information is considered to be an advantage of such computers. Those researchers, who, nevertheless, wish to answer the question of "How to teleport matter, but not its state?" have to seek for more perspective theories and techniques.

Teleportation of material objects

Those people, who really want to realize instant spatial transportation of objects, i.e. teleportation, should refer to studying properties of Space and Time. Quantum teleportation has a certain finite velocity that cannot exceed that of light. The genuine teleportation assumes that an object should set off from a starting point to a finishing point (these points differ by a certain distance X), at that the transference time comes to zero. The object to be teleported is not changed or taken to atoms to be gathered later at a distant point of space according to information transferred to this point. (Fig.1).

The object disappears from one place and simultaneously appears in another place. How is that possible? A body will disappear from point A and appear in point B if to bend space in such a way as to let point A and point B coincide. Then the object will instantly appear in point B since there is no interval between points A and B. Teleportation could be realized by a device, which would make it possible to superpose points A and B.

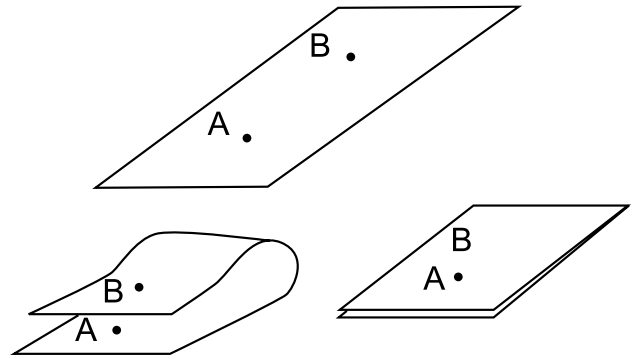

Fig. 1

Space is supposed to be unbendable without enormous energy consumption. However, Alexander V. Frolov points out that this issue is not so unambiguous: "Normally we consider space in connection with "natural" course of time existing in it. That is some degree of space curvature. Let us assume that it can be changed. The space curvature can be considered as acceleration or deceleration of time. Acceleration always demands, for instance in mechanics, some energy consumption. But if we "decelerate" time, energy is liberated and it can be accumulated for subsequent use".

K.Z. Leshan suggests surrounding a transferred object with a closed surface consisting of vacuum holes. Inside such a "hole sphere" there is geometry similar to that of a black hole. This place is absolutely isolated from the external Universe. No radiation is able to penetrate through the hole in space and time. For an observer, who is inside the hole sphere, the distance between sphere center and its border is infinitely large, since spatial metrics is ever-varying from the center to the border. Distances between the points is continuously shortened so that the distance between any couple of points comes to zero at the very hole surface. A matter transmitter can have inner or outer hole surface. In the first case a teleportation station has a spherical chamber to place the object. Equipment to produce holes should be located upon the outer side of the sphere. Such a station is capable to provide hundreds of launches a day by instantly expulsing spaceships to deep space over distances of millions of light years.

From microcosm towards macrocosm

Simeon Bocharov (member of Chemistry and Biochemistry Department, University of Delaver, Newark, USA) considers teleportation phenomenon using microobjects as an example and applying an interesting conception of protomatter.

In S. Bocharov's opinion, many paradoxes of the present-day science could be solved under condition of considering the whole existing matter to be a single continuum, i.e. protomatter. At this approach, the microcosm objects are not independent ones, being represented in the form of distortions of the very continuum and its manifestations here and now. Protomatter, whose distortion degree is beyond modern possibilities of detection, corresponds to vacuum. In the present-day paradigm redistribution of protomatter distortion corresponds to motion of particles. The important peculiarity is a refusal of such concepts as structure, dimensions, mass and other macroscopic characteristics with respect to microcosm objects, since here they are not considered as separate entities.

For experimental justification of his theory, S. Bocharov suggests to consider teleportation of microobjects incorporated in fullerens under low temperatures and pressure.

As a basis for reasoning he takes the fact that identical or similar conditions, whereon distortions are located, bring them to the state of identical or similar by lability/diffuseness. And vice versa, distortions, which are similar by lability/diffuseness, influence their near surroundings, creating, as a result, similar macroscopic states. In such a case protomatter distortion (in some spatial domains and under similar conditions) will cause appearance of similar distortions in another domain, whose degree of removal depends on presence of other distortions and their characteristics. In other words matter will be teleported from one spatial domain to another.

Possibility to realize teleportation of microobject causes the well-known phenomenon, which is nowadays described as embedding of particles into inner hollows of spheroid fulleren molecules without reacting with them. As object of teleportation there can be used distortions classified as elementary ones, such as hydrogen, helium or stable matters (noble gases). In both cases the influence of objects upon surroundings is minimized.

The researcher believes that in case of successful experiment, new pattern of matter structure will be confirmed, and valuable teleportation of microobjects (with prospects of such possibility for macrocosm objects) will be demonstrated.

One more approach to teleportation of physical macroobjects was considered in the work "Practical application of time rate control" (New Energy Technologies No. 3, 2001) by Alexander V. Frolov. It is assumed that density of space (aether) energy determines rate of passing of any processes including the very process of matter existence. Changes of aether density (increase or decrease) must result in the emergence of a force analogous to that of buoyancy, though acting towards the fourth dimension. This "chrono-motive force" (CMF) is also an analogue of electromotive force (EMF) and can be generated by analogy with electrodynamics. According to Alexander V. Frolov, laws of quantum mechanics as to discretization of levels of energy of material system, which exist in the domain of increased or decreased aether density, are valid in the macrocosm as well. Teleportation (as a transition from one state of the system to another one) can be studied with electron transference from one orbit to another as an example with the only difference that for the teleported object not only its location, but also the very spatial properties are changed. In aether of different density (after discrete transition) the same object will have different space around it, wherein time is decelerated or accelerated. Experiments of this field have already been in development stage.

Therefore, modern theoretical physics has handed the problem of teleportation to researchers-experimentalists, who possess sufficient breadth of mind. Perhaps, using teleportation technologies, they will manage to fundamentally alter the process of space exploration and raise our civilization up to radically new development level.

ELECTRIFYING TIMES

an online and published magazine about Electric, Hybrid, Fuel Cell Vehicles, advanced batteries, ultra capacitors,
fuel cells, microturbines, free energy systems, events and exhibitions worldwide

63600 Deschutes Mkt Rd,
Bend Oregon, 97701
541-388-1908 fax 541-388-2750
etimes@teleport.com
www.electrifyingtimes.com
Subscription $13/3 issues

"Mass defect" in Home Conditions

Prokofy V. Sherbak, Russia

Mitinskaya Str., 40-1-244, Moscow, 123430, Russia
Tel.: (095)950-4135
Email: Prokofy@mail.ru

The idea to conduct experiments on "mass defect" demonstration appeared after a cycle of seminars, which took place in1993-1996 at the Moscow Aviation Institute under the direction of V. I. Patrushev, Doctor of Technical Sciences, Professor of "Designing of aerohydrodynamic systems" Department (the author of the article is also a graduate of the Department). At the seminars, an enterprising group studied and developed an applied theory of "Displacing fields" by Alexis V. Murlikin and an associate "Theory of energy exchange processes". Later the group was called **"Group studying non-inertial transference"** (non-inertial natural processes).

The experiment was aimed to test some theoretical suppositions, namely, that it is possible to influence on existent energy flows which input and output to the matter. At that the simplest way to influence indirectly is to change the medium the flows come through. In general, optic experiments on luminous flux refraction show the same. But light refraction and change of speed of light propagation at passing through different mediums is one thing; and change of mass of a material body is something new that has not ever been dealt with. Moreover you can consider light (i.e. electromagnetic radiation) to be the secondary manifestation of output energy flow. Besides mass defect is very important for nuclear physics because it "helps" to develop this branch and stimulates drawing "energy dividends" in splitting reactions, decay reactions and nuclear fusion reactions. But unfortunately we can not touch element nucleus and even million nuclei while we can easily touch metallic balls of 1 gram weight.

Let us note that a concept of mass is one of the most uncertain in physics. We can not measure mass directly. It is possible to do it only indirectly, by gravity, using scales (it does not matter what kind of scales are used), or by kinetic momentum (in this case mass is a measure of inertia) by means of dynamometers.

Thus it is evident that change of WEIGHT shown by scales is not MASS change as measure of matter quantity. Since one of the most important points of the theory of "Displacing fields" is creation of a vehicle of new generation, then one of the major tasks is to overcome gravity (to decrease weight). And this "home experiment" shows the way to solve it. However we can call it "home" only in part, because for weighing there were used electronic scales (mass-comparator with measurement accuracy of 0.1 microgram. (See Fig. 1).

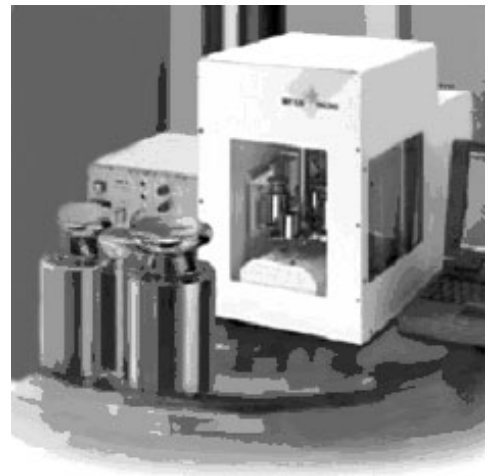

Fig. 1

Precision scales METTLER TOLEDO allows making:
High-accuracy weighing in the range
from 0.1 microgram to several tones
Measurement with resolution up to milliard points

Two sets were designed for weighing. The first one had an aluminum (Al) ball-kernel which weighed 1 gram and a lead (Pb) casing-shell consisted of two parts (half-spheres) which also has weight of 1 gram. The second set had on the contrary a lead kernel and an aluminum casing. The sets were disassembled and then hermetically assembled to make a single device with no gaps (See Fig. 2).

Since it had to be done with great accuracy and it was a piece article, not a Moscow product company undertook to produce it. And only one of the students, Nicholas Sorokin, a young boy with skilful fingers, had

helped. He invented a technology which allowed making balls of the necessary size at home conditions. He was literally pickling every micron of metal with acid and finally got the necessary size and weight.

So, the weight of a non-assembled set was: 1 gram (weight of kernel) and 1 gramm (weight of shell). Weight of an assembled set, according to the "Theory of energy exchange processes" by Murlikin, is not equal to the simple sum of the non-assembled components, and mass defect would be different for various sets right up to the change of sign.

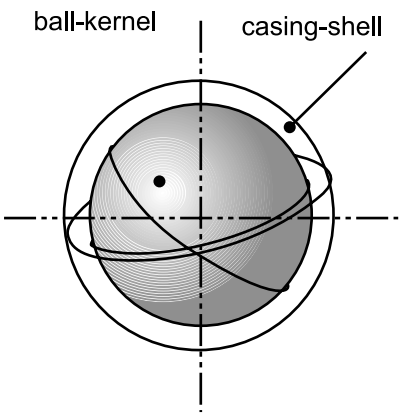

Fig. 2

Set of experimental balls

More than 50 experiments was carried out on weighing for every set. Assembled sets as well as non-assembled sets were weighed. **It was confirmed that there was an interaction between input and output flows for MATTER MAINTENANCE. It became apparent in the form of mass defect. Defect appeared in the sixth sign, i.e. it comes to the range from 0.0002% to 0.0007% of "kernel" mass (or "shell" mass). At that the lesser mass defect corresponds to aluminum shell, while the greater one corresponds to lead shell. Accuracy of weight measuring by the mass comparator exceeded the acquired result by 10 times. So we could not tell about inaccuracy of measurements.** So we had to apply to the "Russian center of testing and certification" which was very famous all over the world (Rostest-Moscow).

In general that is all, we have got an answer for ourselves, and the period of testing is behind. We have to advance; very much is still to be done. In addition let us mention one more surprise we got during the experiments. The matter concerns some time delay in receiving final results of every weighing. A qualitative picture of it is represented in Fig. 3. We did not expect that this effect would appear at such a rough level of measurement of energy exchange processes.

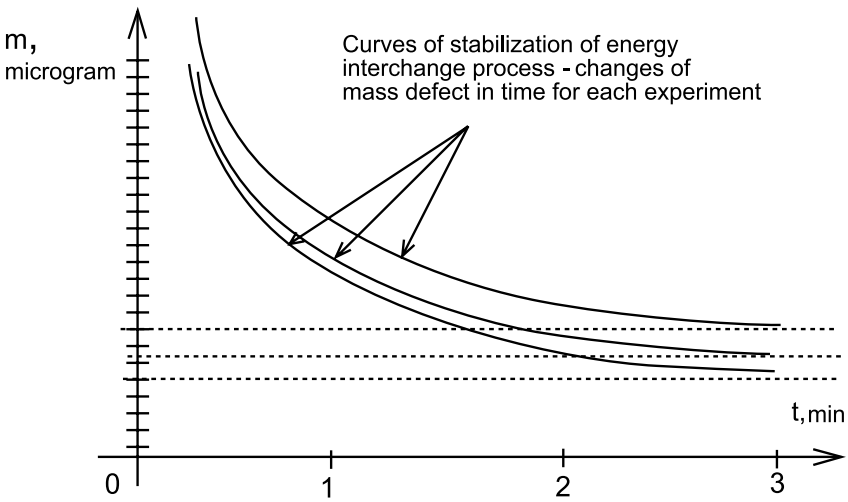

Fig. 3

Time stabilization of the process for receiving final weight

The subsequent report and detailed discussion of the experimental results by specialists (including physicists of various specializations) resulted in an unexpected non-recognition of facts and distrust. The main argument was a demand to increase the number of experiments up to 5-10 hundreds. And only then scientists would be ready to accept facts. It was quite a predictable reaction for the orthodox science in the middle of 90s. It remains to hope that if the discussion took place today it would have a paved way. However it is not a fact.

In conclusion let us note that this experiment on revealing mass defect ranks with famous experiments, in which rotating gyroscopes also demonstrate mass defect (decrease of weight) and even one of higher order than in our experiment. But in return we have no rotation, no chemical and nuclear reactions, while mass defect is presented.

Let us add that it is possible to complicate the task: to make a double casing and to choose other materials for "kernel" and "shell". (See Fig. 2). In our case low prices and availability made us use Al and Pb. The results will be more interesting, for example, with Li and Os (and with other supertransuranic elements).

Aether as Unified Field

Alexander M. Mishin, Russia

Planernaya Str., 79-208, St.Petersburg, 197373 Russia
E-mail: samish@mail.ru

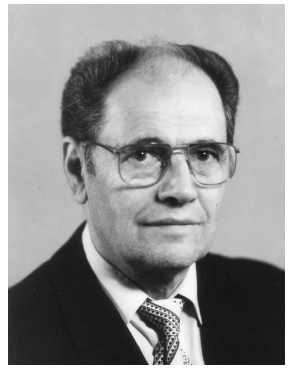

Based on the original observations and experiments, the article gives more precise definitions of aether model, than which was previously elaborated. General laws of the Universe aetherodynamic are considered. There is described a new physical reality in the form of quasi-real aetherodynamic structures ("topological harmonics") generated by dynamics of the substantial world.

At the present-day stage of physics development words of Maugham, an English philosopher, take on particular topicality: "The great verities are too important to be new". Indeed, we are increasingly making certain that our remote ancestors were familiar with fundamental laws of the Universe; furthermore, they knew these better than we do. But which methodology of cognition of Nature and what kind of information sources did the ancient scientists have? Today, we can openly say: they had not ordinary experience only, but also esoteric, pretersensual one, without feeling any necessity to be divided into materialists and idealists. For more details on evolution of physical ideas, refer to work [1].

In discovering all over again, I also had to elaborate a "cellular taction" strategy, which enables the most important characteristics of aetherodynamic processes to be sensually perceived and evaluated. The main thing is that all my sensory observations are definitely reproduced at laboratory experiments while the simplest physical equipment is used.

We may get reliable knowledge about Nature from Nature itself only. Thus foundation of classical physics describing usual substantial world is also based on empirical facts studied by Galilei, Newton, Faraday and many other physicists-natural philosophers. I also would like to defend great Newton against attacks on his adherence to inductive methods which really brought imperishable values into science.

A new convolution of cognition is possible on condition of introduction into science of new concepts based on empirical study of physical entities previously unknown. Thereupon, I share the thought of Elena Ventzel, professional mathematician: "Mathematical methods are not useful, but harmful until phenomenon is not studied at a pre-mathematical, humanitarian level". It is ideological and logical language that may be used today to discuss the aether problem, whose solution calls for comprehension of natural-science facts, which are beyond traditional notions settled over centuries.

The long-term investigations have confirmed that exhaustive definition of a fundamental natural entity was given by Rene Descartes: "Universe does not contain anything but aether and its vortexes". This is not merely a postulate; this is an objective summary of empirical observations of Nature phenomena. In any academical model of microcosm there is no answer to the question: what kind of substance are electrons, quarks, strings made of? That is the very substance our forefathers called aether. Aether is unified field indeed; and it appears that for nearly his whole life Einstein had been searching for something that was under his foot.

It must be recognized that there is no undistorted, quiescent aether in Nature; as well as no zero-size vortexes exist. Therefore, in a customary sense, the aether concept is pushed behind transcendental horizon and turned into an inconceivable entity whose mystique is tantamount to religious ideas. However, all quantum vortex-wave distortions of the superfluid three-dimensional aether, which have an appearance of tori, threads, solitons and occupy spatio-temporal spectrum from zero to inter-universe scale, are material and contain energy under scientific interpretation. Any spaces such as turbulent fields, physical vacuum, gravitational fields and, of course, matter are material. All of them are etherodynamic structures of the real world. Spatial hierarchy of aether vortices is referred to as quantum stairs, fractal structure or "matreshka" [2-5].

To understand basic laws of aetherodynamics it is necessary to give a general definition for classical matter

and other aether states. As a first approximation, let us give the name of matter to aether microscopic **left-screw** self-oscillating vortex-wave systems (elementary particles), whose existence and parameters are conditioned by higher hierarchical systems. This is our displayed world, with its electromagnetic fields and fundamental constants. Let us refer to vortex-wave structures of any vortex size, which in the considered space domain are **balanced** by a number of left- and right-screw vortices corresponding to matter and antimatter with prefix "quasi" to a free aether. Stable vortex lattices with alternating direction of helicity can be also considered in this case. Under natural conditions everything but classical matter or electromagnetic and gravitational fields can be related to the free aether. In the first place, these are the so-called physical vacuum and vortex fields, which attend gravitation. They represent anisotropic nonlinear subspaces and occupy definite places on spatio-temporal spectrum of the world aether. Particular free subspace creates an aggregate of topological harmonics [5] attending all the physical processes. Satellite of the gravitational field is distinguished because it belongs to specific class of stable vortex lattices.

Apparently, in general case, energy of free aether is virtual for our world due to its helical symmetry and quasi-matter, from the view of difference in sizes of typical vortices which correspond to protomatter. But this is not the entire point. There is also superfluidity of aether, whose vortex viscosity has marvellous properties. As a result, there are created phenomena of inertia and energy-information barrier separating material world from constant influence of quasi-real structures or turbulated space.

Classical inertia, as vortex viscosity, arises in the microscopic and more fine-structure free aether (in Newtonian space) and ever regularly reveals itself during acceleration of material bodies. However everything is different at stage of macrovortex aether, where inertia has properties of adaptation. Here it is affirmed that inertia phenomenon is "spread" throughout the spatial-temporal spectrum of vortex distortions of aether field. At that nature of inertia is changed. Within topoharmonic subspace in laboratory scales, the inertia law "diminishes" in time according to exponential dependence, whose time constant is determined by specific conditions and varied over wide limits (from seconds to many days). On the expiry of this time, inertial intercoupling transforms to the law of flicker effect. It may be said that flicker effect specify penetrability of energy and information barrier after expiry of time of paraphysical regular phenomenon [6]. Consequently, most of time the interaction with free macroaether is of random character and should be evaluated by mean observation.

To extend conceptual scope of our investigation it may be added that in classical hydrodynamics a liquid, along with ordinary inertia, has determined vortex macroinertia, which is created by vortices of the liquid itself. Therefore, it is necessary to keep on comparing processes at all levels of the unified field of aether. For instance, electric inductance is a kind of specific inertia, and topological harmonics of electromagnetic and other phenomena are subjected to the energy-information barrier (under laboratory conditions).

In the above arguments, the principle of relativity is latently and unconsciously presented. However, this complicated question needs to be separately considered. Physical nature of the energy-information barrier and reason for dependence of the inertia properties upon the size of vortices of free aether remain unclear, too. However, it can be supposed that classical elementary particles, as distinct from protomatter, have self-oscillating properties and are commensurable with vortices of the surrounding free world; and that the above-mentioned energy-information barrier does not exist for them on microscopic section of the spectrum. The gist of the barrier itself comes to "memorizing" topoharmonic processes by Earth's gravitational fields and laboratory equipment. Turbulent fields (physical vacuum) do not have such a "memory".

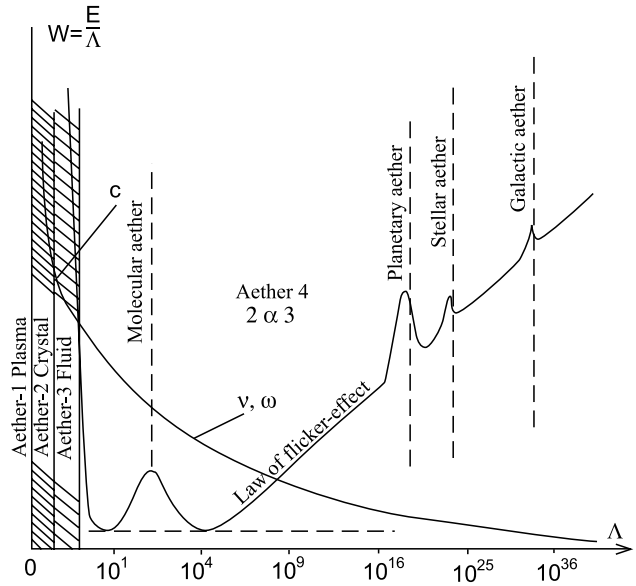

Fig.1

Fig.1 depicts diagrams of spectral density of vortices' energy; diagrams of rate of interaction transfer v and circular frequency ω depending on sizes of vortices of the world aether Λ (in picometers). As we can see, velocity of distortions propagation v is equal to velocity of light C in the physical vacuum, i.e. in electron sizes, exceeds C in nanocosm and tends to zero toward megacosms. Circular frequency of vortices rotation and course of physical time have the analogous qualitative dependence. However, vortices energy W has a feature and grows toward both ways from the lab scales; the aether numbers have been assigned conditionally, but all the specified phase states reflect some physical reality.

One of the most complicated questions is a definition of vortex matter in each particular case. The diagram demonstrates energy of free aether in the form of protomatter (simplest elementary particles – vortexes), and energy of classical elementary particles as helically definite self-oscillating emissions of aether field is localized in the most nonlinear subspace (physical or substantial vacuum). Unification of the elementary particles into atoms and macrobody does not denote direct transition to parallel world with different fundamental constants, whereas change of vortex size in the diagram exactly implies such a transition, though at a level of protomatter. This is a very intricate and crucial point. For example, a star is, unconditionally, an elementary particle of the relevant level of the Universe, even though comprising the ordinary matter.

Left wing of energy spectrum reflects property of the turbulent field of aether to gravitate, to sink down to the "bottom" transferring energy to the vortices of lesser scales. This phenomenon of distributed "gravitation" is available in every space point and explains a least-action principle. An illustrative analogue of this regularity is represented by the Earth's gravitational field and structure. Dense plasma assumed as iron core is situated in the center, and higher - there are magma, solid crust, water and air. These phase states exist in free aether within universe scales as well. Consequently, in femtocosm, and maybe at an even deeper energetic "bottom", there must be a plasmic subspace; evidently, it is assignable that aether translated from Greek means "fire".

Increase of energy to the right is connected with extending a dynamic band of the vortices spectrum, as the scale increases. In our world, this increase follows the flicker effect law, but this is only what we perceive across the energy-information barrier. Actually, at this section the vortex energy must increase well more strongly, because **our observation capabilities are limited** by accessible matter processes. Turning back to stars, one may affirm that modern science is unable to evaluate their real energy (evaluations are considerably underrated). The Galaxy vortex entrains such deep levels of multidimensional space-aether to its rotation that this causes violation of the Newton's law of inertia. Notion of "hidden mass" is unnecessary for explaining dynamics of galaxies. It is quite enough to take into account that differential rotation entrains the fine-structure aether (inertial subspace), and this process results in decreasing the inertia and external centrifugal forces. Unfortunately, Fig. 1 reflects only a characteristic size of the galactic vortex and does not visually demonstrate its active band of the spectrum. The finer is the space structure, the more inertial and closer to the absolute reference frame is the space. Obviously, the non-homogeneous, stereodynamically multidimensional and multiphase aether requires a perfectly new theory of random fields, which would also make allowance for the phenomenon of the material world.

Energy motion processes or spectral energy-cascades along abscissa axis are of decisive importance for existence of our world and the Universe. These processes have unusual properties. The "violet" cascade is attended with reduction of vortices size, absorption of matter energy and tends to increase energy concentration at the "bottom" of the world aether (near ordinate axis on Fig.1). This regularity experimentally confirmed in both spatial and temporal domains is a direct consequence of the above-mentioned phenomenon of distributed gravitation and clarifies an existence of the left wing of the spectrum. In classical physics "the violet" cascade effect is reflected in the least-action principle as well as in the thermodynamics laws.

The "red" energy cascade (right wing of the spectrum) corresponds to increase of vortices size and is accompanied with energy liberation. To start it up under earthy conditions special technologies are called for [7]. This has been confirmed with laboratory experiments and underlies the "perpetual motion" theory, where energy is pumped from nanocosm to the classical material world. Conception of artificial biofield [6], I have developed, considers methods of creating the aether vortex-wave macroscopic-scale distortions in physical systems. As a matter of fact, we deal with **ways of extending of natural spatio-temporal spectrum of aether (which settled into itself) by creation of a subspace of the topological subharmonics of the classical elementary particles, atoms and molecules**

(physical bodies), within the context of the etherodynamics fundamental law [5].

Even within action of fluctuating energy-information barrier, the spectrum right wing exhibits existence of natural processes in Nature that, supposedly, violate the known laws of thermodynamics [8]. But, as far as Nature cannot conflict with itself, we have to recognize that there is another physics, which "works" in geographic and greater scales, where role of the energy-information barrier demands to be reappraised. To all appearance, the universe vortex partialyl entrains plasmic subspace of aether into its rotation, and conditions for realizing "red" energy-cascade and generating matter are created on the sections of the maximum density gradient ("spectral" non-linearity). But the same way as a fish in ocean does not know reasons for storms and currents, we will never learn which force untwists the Universe handwheel, whose energy feeds our substantial world.

There are two components of free aether field that are the most essential for the present-day physics. The first one (left wing) is positioned on the spectrum beside the "bottom" in the form of dense liquid-crystalline "plasmatic" medium transforming to the Newtonian inertial subspace (physical vacuum). Since inertia is as regular as electric inductance is, the first subspace proves to be especially material and not such free, because it has properties which were imposed by the Universe rotation and distributed "gravitation". Let us conventionally limit the spatial spectrum of the first component with a nucleon size. The second component of aether space (right wing of the spectrum) stretches towards larger scales.

Except for known cosmic objects, this is an unknown ocean of the macrovortex and really free aether, or topoharmonics, which are born by dynamics of the substantial world. It is an experimentally proven fact that topoharmonics are generated by photons, electrons, and all the moving bodies [5, 9].

The second component has an ability to conversely affect the matter it was generated by as well as other material objects via "flickering" forces [10, 11]. This special subspace turns out to be doubly virtual, a genuine phantom. That is why, it has been winning the status of a real physical entity with such a difficulty, while Chinese philosophers were familiar with the same thousands years ago, separating entities "yang" and "yin".

The laboratory experiments indicate that topoharmonics have not only properties described in [5], but also an ability to interact with the space, creating a static domain of the excited aether in the course of propagation of the vortices-waves. At that physical bodies placing within this space volume are "charged" [2, 9]. The mentioned active domain (horizontal route) is "separated" by the Earth's gravitational field as follows: quasi-substantial constituent rapidly settles down creating vertical flow, but some phase structures are disintegrated very slowly (days, months, years).

The surprising thing is that biosystems equally belong to both aether components, not experiencing any constraint from the side of the energy-information barrier. The so-called human biofield is a topoharmonic part of physical body. It occupies its place on the spatio-temporal spectrum (Fig. 1). Quasi-substantial constituent (yang) and antiquasi-substantial one (yin) are strictly balanced, and acupuncture points and chakras are an analogue of Hartmann's geophysical grid, which is well-known to paraphysicists.

Conceptual generalization of physical ideas in the context of unified field of aether gives a constructive, cognitive impulse in solving of different problems, such as Nature's choice of exclusive laws for existence of "left-screw" material world as well as the problem of flicker-effect. At that, researching into the physical processes responsible for proton positive charge is of fundamental importance.

In conclusion, let us take note of conventional character of dividing the aether field into two components by the form of energetic spectrum. As a matter of fact, topoharmonics are generated by matter towards both larger spatial frequencies (subharmonics) and smaller ones (harmonics) and fill all levels of the Universe. The aforesaid is aimed at making perception of the most studied aspect of the **new physical entity** (vague due to diversity of hypothetical descriptions which exist in publications on this subject) more accessible.

Reference

1. A.P. Smirnov, I.V. Prokhortsev. Order principle. – Saint-Petersburg: ZAO «P and K», 2002. - 296 p.
2. A.M. Mishin. The aether model as a result of the new empirical conception. New ideas in natural sciences. (On materials of International Conference). Part 1 "Physical". - St.-Petersburg: RAS, 1996, p. 95-104.
3. A.M. Mishin. Fundamental properties of aether. Fundamental Problems of Natural Science. Series «Problems of the Universe research», fascicle 21 – Saint-Petersburg: RAS, 1999, p. 176-176.
4. A.M. Mishin. Physics of parallel worlds. / Fundamental Problems of Natural Science and Technics. Series «Problems of the Universe research», fascide 23 - Saint-Petersburg: Publishing

House of the Saint-Petersburg State University, 2001, p. 258-269.
5. A.M. Mishin. Etherodynamics basic law. / Fundamental Problems of Natural Science and Technics. Series «Problems of the Universe research», fascicle 26, part III. - Saint-Petersburg: Publishing House of the Saint-Petersburg State University, 2003, p. 206-218.
6. A.M. Mishin. Physical system with artificial biofield. / Fundamental Problems of Natural Science and Technics. Series «Problems of the Universe research», fascicle 23, - Saint-Petersburg: Publishing House of the Saint-Petersburg State University, 2001, p. 258-269.
7. V.F. Zolotarev, V.V. Roschin, S.M. Godin. About space-time structure and some interactions. - Moscow: Publishers «PREST», 2000. - 309 p.
8. V. Starr. Physics of phenomena with negative viscosity. - Moscow: MIR, 1971.
9. V.V. Kvartalnov, N.T. Perevozchikov. Discovery of a "non-physical" component of OKG radiation. Journal «Parapsychology and Psychophysics». - Moscow: 1999, No. 2 (28), p. 64-67.
10. A.M. Mishin. Longitudinal thermomagnetic effect. / Fundamental Problems of Natural Science and Technics. Series «Problems of the Universe research», fascicle 26, part III. - Saint-Petersburg: Publishing House of the Saint-Petersburg State University, 2003, p. 219-228.
11. A.A. Efimov, A.D. Shpitalnaya, Y.A. Zakoldaev. Eruptive prominences and earthquakes in the view of global space anisotropy. / «New Ideas in Natural Science». Series «Problems of the Universe research», fascicle 19, part II. – Saint-Petersburg: RAS, 1996, p. 403-413.

GLOBAL ENERGY

Philip M. Kanarev, Russia

The Kuban State Agrarian University, Department of Theoretical Mechanics
13, Kalinin Street, 350044 Krasnodar, Russia
E-mail: kanphil@mail.kuban.ru

Lately, the notion "Global energy" has become widely spread as a prize corresponding to this notion has been instituted in Russia. Since the Euclidean times, an unwritten law exists in science: to give definition to the notions, which are involved in scientific analysis. It is done for the purpose that everybody who uses this notion can understand the sense implied in it.

The Global energy problems have been discussed for a long time; they are well known. Depletion of natural energy carriers (oil, gas and coal) is the first problem. Environmental safety of energy carriers is the second problem. It is generally recognized that the solution of the issues connected with the aggregate of these two problems is of a global character. The results of scientific research, which should deal with global energy, originate from it. First and foremost, they are such scientific investigations, which result in the possibility to use an inexhaustible and environmental friendly energy carrier. It has been known for a long time. It is hydrogen produced from water.

Why hydrogen and why from water? At combustion of hydrogen, water is regenerated; thus, the energy carrier is inexhaustible. As far as inexhaustibility and environmental safety are concerned, hydrogen has no competitors. However implementation of these qualities is restricted by large energy expenses for hydrogen production from water. For hydrogen production, modern electrolyzers use from 10 to 20% more energy than it is produced at combustion of hydrogen.

It is easy to imagine what financial and intellectual resources of the world are included in the search of the ways to reduce energy expenses for hydrogen production from water. In Russia many scientific institutions of applied research and educational institutions deal with this problem. There is a Research Hydrogen Institute.

The associations of scientists on hydrogen energetics have been established in USA and Europe. This year, they carry out their regular scientific conferences, to which the author of this article has been invited.

Editorial: Let us note that it is not necessary to coin new scientific term "global energy", since quite for a long time the notion of "free energy" is used. This term represents the idea of the possibility to freely use energy by a consumer.

Energy problem is global not due to depletion of oil and gas, but due to their environmental unsafeness. However the confirmations exist that the world owners of energy resources do not bother about the problem of environmental unsafeness of modern energy carriers.

In history of science, the facts of annihilation of the scientists who have won success in reduction of energy expenses for production of hydrogen from water have already been registered. The requesters of these actions think that they will lose their profits with the coming of hydrogen energetics. They do not understand that this process cannot be abrupt. It is impossible to replace the infrastructure of the existing energy carriers by infrastructure of hydrogen energetics within one or even ten years. Besides, infrastructure of hydrogen energetics will not be created on a blank place. It will be integrated into the existing infrastructure of energetics gradually; and its owners will automatically become the owners of hydrogen energetics. The first step has already been made in this direction. In the USA, a decision has been taken to equip all filling stations with pumps to fill the cars with hydrogen.

It is known that a priority of results of theoretical investigations is their publication in press. Usually, such priority is a personal one. Generally a patent is a priority of the results of experimental investigations. As a rule, this patent belongs to a group of authors. A published patent is a genie released from a bottle. No finesse of the authors to hamper a reproduction of experimental data given in a patent without the participation of the authors can stop the process of their implementation. Thus, the authors or a group of the authors who have filed an application for a patent are deprived automatically of the opportunity to influence the process of practical realization of their ideas.

In Russia, the state is a main patent holder of the global patents. Due to the well-known reasons, it has proved to be unable to control the course of scientific investigations and to forecast significance of their results.

It is known that if it becomes possible to reduce energy expenses for hydrogen production of water fivefold, it will be the cheapest energy carrier. Russia has already got technology, which reduces these expenses tenfold and more. However another way of looking is more perspective. Is there any use to decompose water into hydrogen and oxygen and to use hydrogen as fuel for heating, for example, of water in heating systems? Is it possible to make water generate heat? It turned out that, it is possible.

In Russia, three firms ("Yusmar", "Termovikhr" and "Noteka") sell cavitation heating equipment with energy performance index up to 150%. Official science looks awry at this activity, since such results conflict with one of the main laws of physics: law of conservation of energy. But market profit is stronger than this law.

Meanwhile, engineering practice has already proved that additional energy in the form of heat is generated in the ventilation systems and in the systems of water cavitation. Thorough scientific analysis of this problem shows that physical vacuum is the most probable source of additional energy in the systems of ventilation and water cavitation. Valence electrons of destroyed molecules of water take energy from physical vacuum and release it during repeated fusion of these molecules.

Why is additional energy generated in the air systems of ventilation and in systems of water cavitation? Because they are mechanical systems and mechanical destruction of chemical links requires half energy as compared with thermal destruction of these links. This is the main reason why one fails to increase energy performance index of cavitation processes over 200%.

Certainly, an increase of efficiency of any process by 30 or 50% is a good result; if it is obtained, it is possible to get even better one. But what if a water molecule is destroyed not mechanically, but electrodynamically? In this case, it becomes possible to find resonance frequencies of influence on the molecules and therefore to reduce considerably expenses of electrical energy for their destruction. Subsequent fusion of destroyed molecules will release determined quantity of energy unavoidably. It is a simple idea, and it has already been implemented. At electrodynamic influence on water molecules, electrical energy is converted into thermal energy with tenfold energy performance index. It means that if we spend 1 kWh of electric energy, we will get 10 kWh of thermal energy. To obtain such results, it is necessary to have knowledge of physchemistry of the microworld, which corresponds to knowledge of the 21st century, and it has already been published. Every month more than 1000 foreign scientists become familiarized with this knowledge at
http://Kanarev.innoplaza.net and
http://book.physchemistry.innoplaza.net.
The Russian speaking readers get this information from:
http://www.n-t.org/tp/ns/if.htm,
http://www.ikar.udm.ru/sb28-2.htm and
http://www.n-t.org/tp/ts/eb.htm.

I hope that now the readers will know the essence of the notion "global energy" and will understand those results of scientific researches which can really solve the related problems.

Energy Balance of Fusion Processes of Oxygen, Hydrogen and Water Molecules

Philip M. Kanarev, Russia

The Kuban State Agrarian University, Department of Theoretical Mechanics
13, Kalinin Street, 350044 Krasnodar, Russia
E-mail: kanphil@mail.kuban.ru

There is revealed the cause of appearance of additional energy during formation of covalent bonds in the fusion processes of oxygen, hydrogen and water molecules, besides the source of this energy is described.

Introduction

Engineering practice connected with servicing of ventilation systems allows revealing appearance of excessive thermal energy in circulated air. Similar phenomenon has been registered in systems of water circulation with the devices for its active cavitation. The results of our investigations explain not only a cause of these phenomena, but they give an opportunity to perform quantitative calculations for energy processes, which generate additional thermal energy [1], [2], [3], [4], [5].

Theoretical part

An oxygen atom is the eighth element of the periodic table. It is situated in the sixth group. The structure of its nucleus is given in Fig. 1 [1], [2], [3].

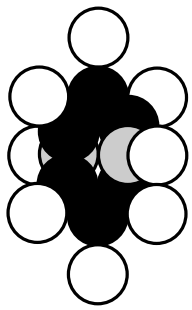

Fig. 1
Diagram of nucleus of oxygen atom: light – the protons, dark and grey – the neutrons

In Fig. 2 a diagram of the oxygen atom originating from the structure of its nudeus is given (Fig. 1). It has eight electrons. The electrons situated on the axis of symmetry are the most active ones (1, 2). Other six electrons situated in the plane, which is perpendicular to the axis line (a line of symmetry), by means of their total electric field remove electrons 1 and 2 from the nucleus at a large distance at that forming conditions for their large activity during the interaction with the electrons of the neighbouring atoms [1], [2], [3].

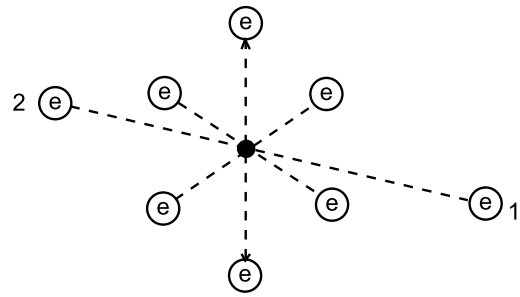

Fig. 2
Diagram of the oxygen atom

The least ionization energy of the electron of oxygen atom is equal to E_i=13.618 eV. Binding energy of this electron with the atomic nucleus corresponding to the first energy level is equal to E_1=13.752 eV. Let us call this electron the first one. The calculation of energy indices of this electron, including its binding energies E_b with the atomic nucleus, according to the formulas (1) and (2), gives the following results (Table 1) [1], [2], [3].

$$E_{ph} = E_i - \frac{E_i}{n^2} = E_i - \frac{E_1}{n^2} \qquad (1)$$

$$E_b = \frac{E_1}{n^2} \qquad (2)$$

Table 1
Spectrum of the first electron of the oxygen atom

Values	n	2	3	4	5	6
E_{ph} (exp.)	eV	10.18	12.09	12.76	13.07	13.24
E_{ph} (theor.)	eV	10.16	12.09	12.76	13.07	13.24
E_b (theor.)	eV	3.44	1.53	0.86	0.55	0.38

The oxygen molecule structure is given in Fig. 3, a. It is formed by means of a connection of unlike magnetic poles of axis electrons of two oxygen atoms [1], [2], [3]. It is known that the fusion process of the oxygen molecules is accompanied with a release of 495 kJ/mole of energy, or in calculation for one molecule

$$E_b = \frac{495 \cdot 1000}{6{,}02 \cdot 10^{23} \cdot 1.602 \cdot 10^{-19}} = 5.13eV. \quad (3)$$

What principle does the Nature follow by distributing energy of 5.13 eV between the electrons of oxygen molecule (Fig. 3, a)? Energy of 5.13 eV is a thermal binding energy between the electrons 1 and 2' of two oxygen atoms (Fig. 3, a). When the oxygen molecule is formed, it is emitted in the form of the photons by the electrons, which enter into the bond. Hence it is equal to an amount of energies of two photons emitted by these electrons. Consequently, each contacting electron emits a photon with energies of 5.13/2=2.565 eV=E_b (Fig. 3). According to Table 1, in this case the valence electrons are situated between the second energy level and the third one [1].

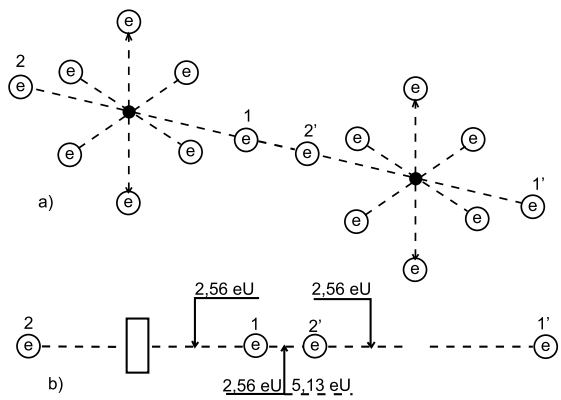

Fig. 3
Diagram of binding energy distribution between the electrons in the oxygen molecule

Two oxygen atoms are combined into a molecule in an excitation state. The excitation state is the state of an atom when its valence electrons are situated at such distances from the nuclei when the binding energy E_b between them is reduced to the thousandth of fractions of an electron-volt. In such state the atom can loose an electron and become an ion. Otherwise, without loosing electrons it is combined with an electron of the neighbouring atom by the valence electron, and a process of formation of oxygen molecule begins. It is an exothermic process when the axis valence electrons 1 and 2' emit photons, descend on lower energy levels and release 2.565x2=5.13 eV.

Let us pay attention to the fact that energy 5.13 eV is released by two electrons, which form a bond with energy of E_b=2.56 eV. In modern chemistry this bond is called a covalent bond. In order to break this bond it is necessary to use 2.56 eV of mechanical energy. For thermal cleavage of this bond, double quantity of energy is required, i.e. 5.13 eV. It is explained by the fact that the photon energy of 5.13 eV is absorbed by two electrons simultaneously. Only in this case, both electrons will be transferred to the highest energy levels with minimal binding energy E_b when they are disconnected, and each oxygen atom becomes a free one.

Thus, energy expenses for destruction of oxygen molecule depend on the method of influence upon the bond. During thermal action upon the bond it is destroyed when energy is 5.13 eV. During mechanical effect upon the bond, it is necessary to spend 2.56 eV of energy in order to destroy this bond. Therefore energetic of fusion process of the oxygen molecule depends on method of its destruction.

After thermal destruction of the oxygen molecule process of its formation begins from emission of the photons with energies of 2.56 eV by both valence electrons, and the previous electrodynamics binding energy (E_b=2.56 eV) is restored between the electrons of both atoms.

Thus during thermal destruction of the oxygen molecule the same amount of thermal energy is spent than that which is released during its further formation. No additional energy appears during thermal dissociation of oxygen molecule and at its further fusion.

If oxygen molecule is destroyed by a mechanical method, then it is necessary to spend 2.56 eV of mechanical energy for this purpose. Valence electrons of oxygen atoms are in a free state at lack of energy, which corresponds to such state, as there is no process of absorption of 2.56 eV of energy by each of them. The electrons cannot remain in such state; they should replenish immediately the energy, which they have failed to receive during a mechanical break of the bond between them. Where should they take it from? There is only one source: the environment, i.e. the physical vacuum filled with aether. They convert aether into energy of 2.56 eV immediately. The next stage is a connection of two oxygen atoms, whose valence electrons have replenished the reserves of their energy by means of aether. This process is accompanied by emission of the photons with energies of 2.56 eV by two electrons. Thus energy of absorbed aether is

converted into thermal energy of the photons. If we spend 2.56 eV of mechanical energy for destruction of oxygen molecule, we will get double quantity of energy (2.56x2=5.13) eV during further fusion of this molecule. Additional energy is equal to 2.56 eV.

Much experimental data show that in ventilation systems thermal energy of circulated air exceeds electric energy spent for a fan drive. Now we know that this energy is generated at mechanical destruction of covalent bonds in the molecules of gases, which the air consists of.

Using the above-mentioned method, let us analyse energetic of water molecule, which sometimes generates additional thermal energy. A water molecule consists of one oxygen atom and two hydrogen atoms. Binding energies E_b of the hydrogen atoms with its nucleus are given in Table 2 [1], [2], [3].

Table 2
Spectrum of hydrogen atom

Values	n	2	3	4	5	6
E_{ph} (exp.)	eV	10.20	12.09	12.75	13.05	13.22
E_{ph} (theor)	eV	10.198	12.087	12.748	13.054	13.220
E_b (theor.)	eV	3.40	1.51	0.85	0.54	0.38

It is known that combination of hydrogen and oxygen is accompanied by an explosion, but its cause remains unknown. Let us try to find it.

Energy of fusion of hydrogen molecule is equal to 436 kJ/mole, or 4.53 eV per a molecule. As the molecule consists of two atoms, then the above-mentioned energy is distributed between them. Thus energy of one bond E_b between the hydrogen atoms is equal to 2.26 eV (Fig. 4). At mechanical destruction of this bond 2.26 eV is enough. At thermal destruction of this bond double quantity is required (2.26x2=4.53 eV) [1].

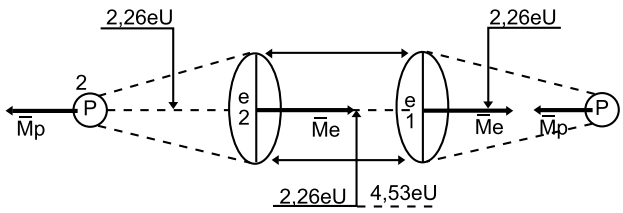

Fig. 4
Hydrogen molecule

In order to form two water molecules, it is necessary to break two hydrogen molecules and one oxygen molecule into atoms. At mechanical destruction of covalent bonds 2.26x2=4.53 eV is required to break two hydrogen molecules and 2.56 eV to break an oxygen molecule. Sum of these energies is equal to 7.13 eV. If the destruction processes of the above-mentioned molecules are carried out with a thermal method, then 4.53+4.53=9.06 eV is required for the destruction of two hydrogen molecules, and 5.13 eV is required for the destruction of one oxygen molecule. In total, it is equal to 14.19 eV. The difference between the energy spent for mechanical and thermal destruction of covalent bond of hydrogen and oxygen molecules is almost double.

It is known that during fusion of one mole of water 285.8 kJ or $285.8 \times 1000/6.02 \times 10^{23} \times 1.6 \times 10^{-19}$=2.96 eV per a molecule are released. As a water molecule consists of one oxygen atom and two hydrogen atoms, 2.96/2=1.48 eV falls per the bond (Fig. 5). Hence the electrons of hydrogen and oxygen atoms in water molecule are between the forth energy level and the fifth one at the usual temperature (1.48/2=0.74 eV = E_b), Table 1, 2 [1].

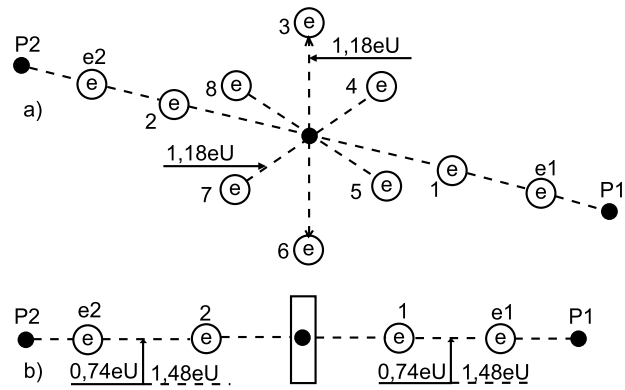

Fig. 5
Diagram of water molecule:
1, 2, 3, 4, 5, 6, 7, 8 are the numbers of the electrons of oxygen atom; P_1, P_2 are the nuclei of the hydrogen atoms (the protons); e_1 and e_2 are the numbers of the electrons of hydrogen atoms

Thus when two hydrogen molecules $2H_2$ and one oxygen molecule O_2 are destroyed by the thermal method, 14.19 eV are spent. As a result of fusion of two water molecules ($2H_2O$), 2.96x2=5.98 eV is released. There is some disbalance here since fusion process of water molecule is an exothermic one and 2.96 eV is released by one molecule. The given calculation shows that (14.19-5.98)/2=4.10 eV is absorbed during fusion of one water molecule. What is the cause of this contradiction?

The oxygen atom in the water molecule should reduce its volume when the transition from gaseous state into

liquid state takes place. It will happen when the ring electrons of oxygen atom descend on lower energy levels (nearer to the nucleus). They will emit the photons and their total energy will be equal to energy spent to destruction of two hydrogen molecules and one oxygen molecule, i.e. 14.19 eV. Since two water molecules have 12 ring electrons, each of them will emit 14.19/12=1.18 eV= E_b (Fig. 5). It is more than energy (E_b=0.74 eV) of binding of axis electron with the nucleus, and it shows that the ring electrons are situated nearer to the nucleus than the axis ones.

In this case quantity of energy produced due to fusion of two water molecules (14.19+5.98) eV exceeds energy, which was spent for the destruction of two hydrogen molecules (9.06 eV) and one oxygen molecule (5.13 eV). Energy difference of 5.98 eV is divided between two water molecules. It means that 5.98/2=2.99 eV or 285.8 kJ/mole fall per a molecule. It corresponds to the existing experimental data completely [1].

The above-mentioned facts clarify a cause of the explosion, which takes place when hydrogen is combined with oxygen. Simultaneous transition of six ring electrons of each oxygen atom in the nascent water molecules to lower energy levels is accompanied by simultaneous emission of the photons, which generate explosion phenomenon.

Let us pay attention to the fact that two binding energies E_b between valence electrons e2 and 2 and between 1 and e1 are shown in Fig. 5, b. Energy of one electrodynamics bond is equal to E_b= 0.74 eV. If this bond is destroyed by the thermal method, 0.74x2=1.48 eV is required. This energy will be released during further fusion of the water molecule from hydrogen atom H and hydroxyl ion OH^-. In this case, no additional energy is generated.

Therefore the given bond is destroyed by the mechanical method spending 0.74 eV per a bond, each electron will have energy deficit equal to 0.74 eV after bond destruction. This energy will be immediately absorbed from the environment and will be emitted during the repeated fusion of the water molecule from the hydrogen atom H and the hydroxyl ion OH^-. At mechanical destruction of one bond of water molecule, the covalent chemical bond forms E_b= 0.74 eV of additional thermal energy, which is registered in systems of water cavitation constantly (as we have already noted) [1], [2], [3].

It is known that water molecules combine and form clusters. If the bonds between the molecules in the clusters are covalent ones, mechanical destruction of these bonds should be accompanied by a release of additional thermal energy as well [1], [2], [3].

Experimental Part

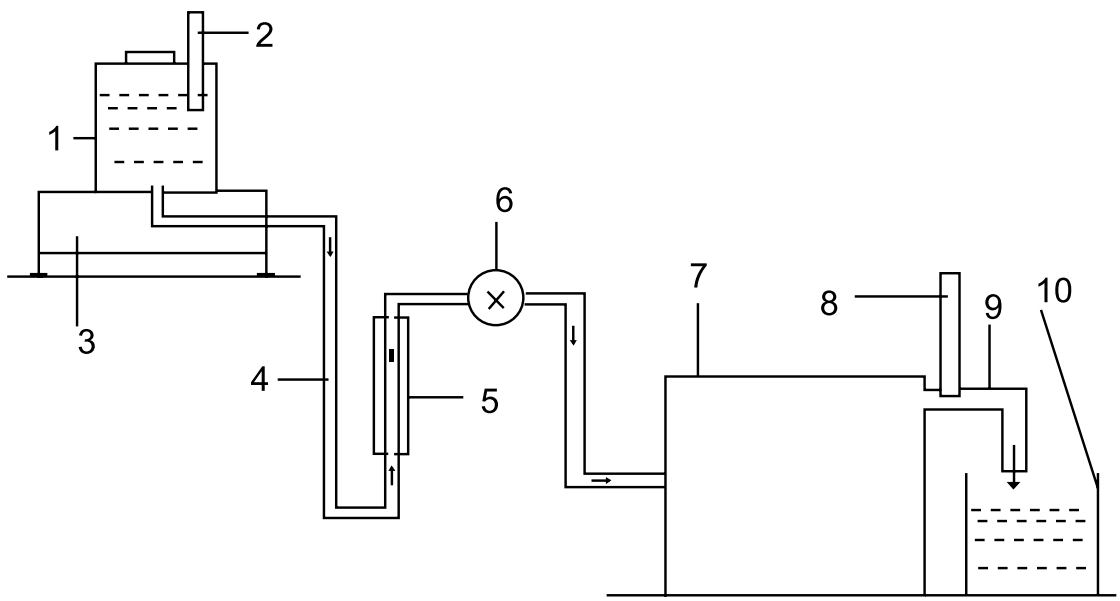

Fig. 6

Diagram of the experimental device: 1 - reservoir for solution; 2 - thermometer; 3 - electronic scales; 4 - solution supply duct; 5 - rotameter; 6 - feed solution regulator; 7 - a special thin plasma reactor is in the process of patenting; 8 - thermometer; 9 - discharge of heated solution; 10 - inlet reservoir

Thus, chemical bonds between the atoms in the molecules and the molecules in the clusters can be destroyed mechanically, by electrodynamic and thermal influence. We have already shown that the mechanical way of destruction of such bonds requires half energy as compared with thermal energy. It appears from this that energy expenses for electrodynamic destruction of these bonds should be less than thermal expenses as well. Electrodynamic impact on the bond gives the opportunity to form the resonance modes where energy expense for the destruction of these bonds is reduced to greater degree. In order to check this hypothesis a special experiment was carried out. It was connected with electrodynamic destruction of chemical bonds of water molecules with a changing frequency of impact. To test this hypothesis the check experiment was prepared and carried out by (besides the author of this article) A.I. Tlishev, G.P. Perekotiy, D.A. Bebko, D.V. Korneev. A diagram of the experimental device is given in Fig. 6. The results of this experiment are given in Table 3.

Table 3
Protocol of control test

Indices	1	2	3	Mean
1 – mass of the solution, which has passed through the reactor m, kg.	2.112	2.153	2.118	2.128
2 – temperature of solution at the input of the reactor t_1, degrees	24	24	24	24
3 – temperature of the solution at the output of the reactor t_2, degrees	33.5	33.5	33.5	33.5
4 – differential temperature of the solution $\Delta t = t_2 - t_1$, degrees	9.5	9.5	9.5	9.5
5 – durability of the experiment $\Delta\tau$, s	300	300	300	300
6 – reading of voltmeter V, B	25.0	25.0	25.0	25.0
7 – reading of ammeter I, A	1.40	1.40	1.40	1.40
8 – electric power consumption according to indices of voltmeter and ammeters, $E_2 = I x V x \Delta\tau$, kJ	10.50	10.50	10.50	10.50
9 – power spent for heating of the solution, $E_3 = 4.19 x m x \Delta t$, kJ	84.10	85.70	84.31	84.70
10 – reactor efficiency index according to the reading of voltmeter and ammeter $K = E_3 / E_2$	**8.00**	**8.16**	**8.03**	**8.06**

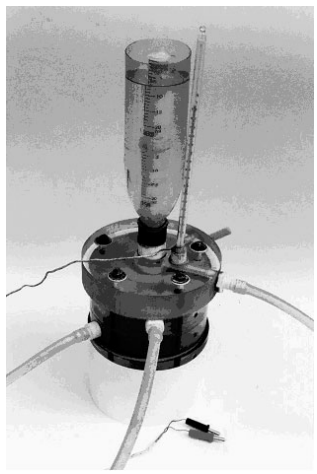

Fig. 7
Photo of heat reactor

In the Russian market three firms (Yusmar, Termovikhr and Noteka) sell cavitation water heating equipment with energy efficiency index of 150%. Soon, an air heating devices with the same efficiency will be produced. The processes of mechanical destruction of covalent bonds of the air gas molecules, molecules and clusters of water and their further fusion serve as a source of additional energy generated by these devices [1], [2], [3].

Conclusion

Analysis of energy balance of the molecules with covalent bonds shows the possibility of additional thermal energy formation during mechanical and electrodynamics destruction of these bonds.

References

1. Ph.M. Kanarev. The Foundation of Physchemistry of Micro World. Krasnodar. 2002. 320 pages. (In Russian).
2. Kanarev Ph.M. The Foundation of Physchemistry of Micro World. The second edition. (In Russian). http://www.ikar.udm.ru/sb28-2.htm
3. Kanarev Ph.M. The Foundation of Physchemistry of Micro World. The second edition. (In English). http://book.physchemistry.innoplaza.net
4. Kanarev Ph. M. Energy Balance of Fusion Processes of Molecules of Oxygen, Hydrogen and Water. (In English) http://Kanarev.innoplaza.net
5. Kanarev Ph. M. Energy Balance of Fusion Processes of Molecules of Oxygen, Hydrogen and Water. (In Russian) http://www.n-t.org/tp/ts/eb.htm.

The Fourth State Of Matter (Plasma Energy) Power Generation

Bruce A. Perreault, USA

http:// www.nuenergy.org
Email: nuenergy@cyberportal.net

Under the proper configurations and in the correct pre glow discharge environment more electrons can be released than what is required to trigger the release. This release of energy attains a high frequency oscillation that is indicative of the metal or metals involved in its release.

The release of high frequency energy from metals and semi metals (semi conductors) through the mechanism in the pre-glow discharge leads to the generation of radiant energy. This correlation has been identified through my findings. The release of high frequency energy from the atoms of electrical conductors is credited to my identification of the mechanism in the pre-glow discharge, or fourth state of matter. This has lead to extremely efficient alternative energy circuits.

The release of high frequency energy from the atoms of electrical conductors is credited to my identification of the mechanism in the pre-glow discharge, or fourth state of matter. This has lead to extremely efficient alternative energy circuits.

The pre-glow discharge condition occurs when a sufficient amount of charge difference is applied across the gap of two electrical conductors. It makes a hissing sound if the electrodes are surrounded by air. The electrical properties between this gap change: electrons become "stripped" from their respective atoms and are liberated. In this state, air is **ionized** and is transformed into a **plasma** and is no longer a gas. It is now in the fourth state of matter, the other three being solid, liquid, and vapor (gas). The fourth state of matter is a good conductor of electricity, its average resistance being much lower than that of the same substance in its gaseous state.

A good readily available spark gap combination is lead and iron. This combination generates plenty of radiant energy and causes noise to be heard on a radio in its vicinity. As a general rule, the better the thermoelectric difference between the dissimilar couple the more radiant energy that will be generated when it is exposed to a plasma field.

Early in the summer of 1981, the pre glow had first caught my attention. This is where I had observed it between two plastic insulated hook-up wires from radio shack. The plasma between the two wires was called into existence because of a high voltage power supply that I had obtained for my electrogravitic experiments. The two wires were twisted together and given a charge of around ninety kilovolts.

It was not until 1989 when I observed a high frequency signal on my oscilloscope coming from the pre-glow discharge phenomenon. These signals were coming from across the room and originated from a crude component that I had built. This crude component consisted of a guitar wire that was centered through a section of PVC tubing. Around this tube was wrapped a coil of insulated transformer wire. This was my first ion-valve. It was excited with the same power supply where I had observed the plasma effect several years previous.

I knew that my ion valve was generating high frequency oscillations using air ions but did not find any practical applications for it until six years later. It was in this year (1995) when I realized the importance of the ion valve and its associated high frequency ion field, known as radiant energy to Moray, it being the essential principle behind his energy receiver.

In one experimental set-up, it was confirmed that when a charged capacitor is discharged through a spark gap that the stored energy is transferred by way of high frequency electrical oscillations. It was found that these oscillations occur directly before the discharge of the capacitor, thus the term, pre-glow discharge. It was found that during the pre-glow discharge plateau, energy is transferred from a primary to a secondary electrical coil. Directly after pre-glow discharge, a surge of current is measured. At the point of current surge is where most

of the stored energy in the capacitor is released as wasted heat. It was apparent that by maintaining the pre-glow discharge plateau a very efficient mode of energy transfer and conversion can be obtained. Logically what is required is a control mechanism. This is where my ion valve finds its niche. Upon further investigation, it is found that it keeps pre-glow discharge oscillations at their plateau, and suppresses current surge in a spark gap. It is a self-regulating quenching device. When it is placed in series with an air-core transformer and arc gap, its plasma hisses smoothly, the arc in the spark gap is almost silent and is very small. Continuous oscillations can be seen on an oscilloscope. A light bulb connected to the secondary will glow brightly. This result is not possible without the ion valve included in the circuit. The ion valve has the added feature of preventing back electromotive force, generated from inductive loads, from being discharged back through the circuit. Without the ion valve, energy is normally lost when it is discharged and is transformed into heat. Using the ion valve therefore has the effect of conserving energy.

Fundamental Radiant Energy Device

"Standard" scientific principles are not being violated. There is no fringe science involved with radiant energy power generation. This is a very old source of energy being extracted and harnessed in a unique way through my discoveries. What I have discovered is practically a limitless source of energy. Radiant energy has existed since the beginning of time. What I hold daim to is an improved method to generate and to convert radiant energy, kinetically active ions, cosmic energy, call it what you will, into useful electrical power. Think of the radiant energy power generator as a type of energy detonator that liberates great quantities of energy with only a small exciting spark. No laws of physics are being violated. No new laws are being implied. They are being expanded. The concept is not that much different from how a lighted matchstick is able to start a bonfire.

The power generated from my circuits comes from the transformation of matter into radiant electricity. It does not come from the splitting of atoms. To obtain high wattage from a spontaneously radioactive substance would require unsafe amounts of radioactive material.

Under the right conditions, ordinary matter can be made to generate intense surges of radiant energy that can be heard on a radio receiver as static noise. Build a device that can efficiently capture this energy and convert it into useful electrical currents and you will have yourself a powerful source of electrical power. This device will be powered by artificially disintegrating matter as described by Gustave Le Bon in his book "The Evolution of Matter" and in his book "The Evolution of Forces".

Energy and matter are two distinct entities of the same manifestation. Matter represents a stable condensed form of energy. Heat, light, electricity, etc., are uncondensed vibrations of matter oscillating at differing rates. "Cosmic Energy" is the term that Le Bon used to define matter and energy as being one and the same manifestation. He theorized that when stable matter is disintegrated it is transformed into energy that we recognize as heat, light, electricity, radioactivity, etc.

Semiconductors will generate intense surges of electron oscillations that become powerful sources of radiant energy. A simple **ion valve**, or call it what you will, can be used to generate and convert this form of radiant energy into useful electromagnetic oscillations. A tuned transformer can be used to directly convert these oscillations into to a practical voltage and amperage. This unique valve is shown in Fig. 1. Before it can function it must be connected to a suitable voltage source. The circuit in Fig. 2 demonstrates the full working concept. Other embodiments are also possible. The proof of concept circuit reveals how radiant energy can be generated and converted into useful electrical currents. Many additional stages can be added for more power. Many other circuit and component configurations can also be used but the fundamental conversion principle remains the same. The circuit and components shown should give you a very clear idea of how the technology works. The actual mechanics and electronics of building and validating a radiant energy prototype are relatively simple. Contrary to what some people might think, dangerous levels of radioactivity are never used in my devices.

Ion-valve Converter Technology Explained

The ion-valve converter (ion-valve) shown in Fig.1 has an axial negatively charged tungsten cathode wire that extends the length its cylinder and is capable of emitting secondary electrons. The anode cylinder is positively charged and is made from a semiconductive material that will readily capture electrons.

Within a few milliseconds the accumulated negative ions are attracted to the positively charged onrushing atomic ions. When the negative and positive charges collide they

neutralize each other generating high frequency electrical oscillations.

There appears to be a common thread shared between several alternative energy devices. It is the pre-glow discharge. The report on the **Hans Coler** device released by the British Government indicates that there is excess energy released when electrical contacts are opened and closed. The **Lester Hendershot** device utilized a buzzer circuit that opened and closed its electrical contacts. In the **Alfred Hubbard** coil pre-glow discharge flowed through electrical contacts, a distributor cap and radium soaked spark plug. The **Joseph Newman** motor used a sparking commutator. **Thomas Moray** invented a glowing, cold cathode discharge tube that was the heart of his radiant energy device. **Hermann Plauson** was granted U.S. Patent No. 1,540,998 that used spark gaps to convert atmospheric energy. **Frank Wyatt Prentice** was granted Canadian Patent No. 253,765 that detailed his invention, which lighted 50 sixty-watt carbon lamps with an input of only 500 watts. His invention utilized a spark gap driven high frequency tuned resonant system. **Chancy Britten** used ion-valves constructed with a central wire that was surrounded by a coil of wire which is described in his US Patent No. 1,826,727. Britten's valve was said to have lit up his home in the 1930's according to a local newspaper article of that time period. **Alexander Chernetski** experimented with what appears to have been a type of ion-valve that was filled with hydrogen gas. It is said that he got up to five times more energy out of his device than what he put into it. **Edwin Gray** was granted U.S. Patent No. 3,890,548 for his efficient spark gap driven capacitive-discharge motor. He improved on this patent by replacing the spark gaps with a pre-glow discharge switching tube. His U.S. Patents No. 4,595,975 and No. 4,661,747 describes this tube in detail. Gray's patents claim to conserve battery power by sending unused energy back to the supply batteries. On close examination, we also find that his switching tube is actually a quenching device.

Radiant energy was generated during the pre-glow discharge cycle that also contributed to recharging the batteries. **Paulo N. Correa** and **Alexander N. Correa** obtained patents to a pulsed pre-glow discharge system that recovers energy and recharges a battery.

I have found that radiant energy is generated when a plasma field is in contact with the atoms of an electrical conductor. Most importantly, the quantity of radiant energy is greatly increased when the plasma field occurs between the inter-electrode couple of two differing electrical conductors. That, the wattage produced will depend largely on the type of electrode materials that are used. I do not suspect that the above referenced inventors were aware of this amplifying mechanism.

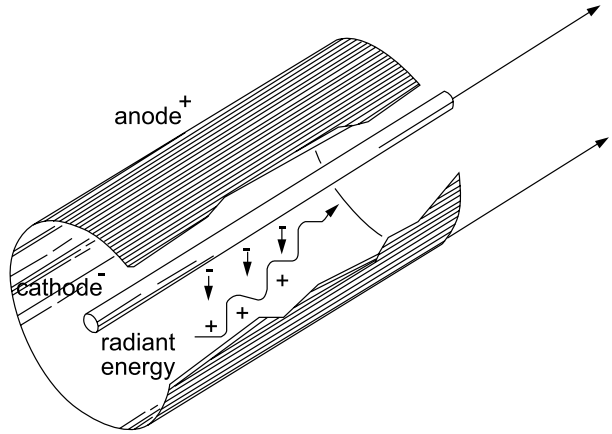

Fig. 1

Ion Valve

In the embodiment in Fig. 1 the negative charge on the wire in the ion-valve negatively ionizes any gas that contacts it. These ions rush towards the positively charged cylinder. When a metal ion that carries an excess electron hits head-on with an elementary differing positively charged onrushing metal ion a violent union of the two metals occurs. This causes the newly formed bimetallic alloy to violently oscillate, break up (dissociate) and to liberate a burst of electrons. The **"sea electron model"** helps to explain this effect. According to the sea electron model metals are bonded to each other through electron sharing. The model suggests that metal atoms be bathed in a sea of valence electrons. If this model is taken one step further it can be seen that when metallic atoms are dissociated from each other excess electrons are released in the form of electrical oscillations of high frequency (radiant energy). This occurs because the electrons no longer take part in the inter-atomic binding force that existed before the dissociation took place. It becomes clear that the freed electrons will add amperage to the output circuit to which it is connected. Henceforth, the equation **I x E = P** holds true in this system. Where, "I" represents the electrons (amperage), "E" electromotive force (ionic voltage), and "P" the power generated.

Obtaining Electrical Energy from the Transformation of Cosmic Energy

Matter is cosmic energy in a condensed state according to Le Bon and Moray. What this means is that matter can be excited its plasma state and caused to rapidly disintegrate transforming itself into electricity.

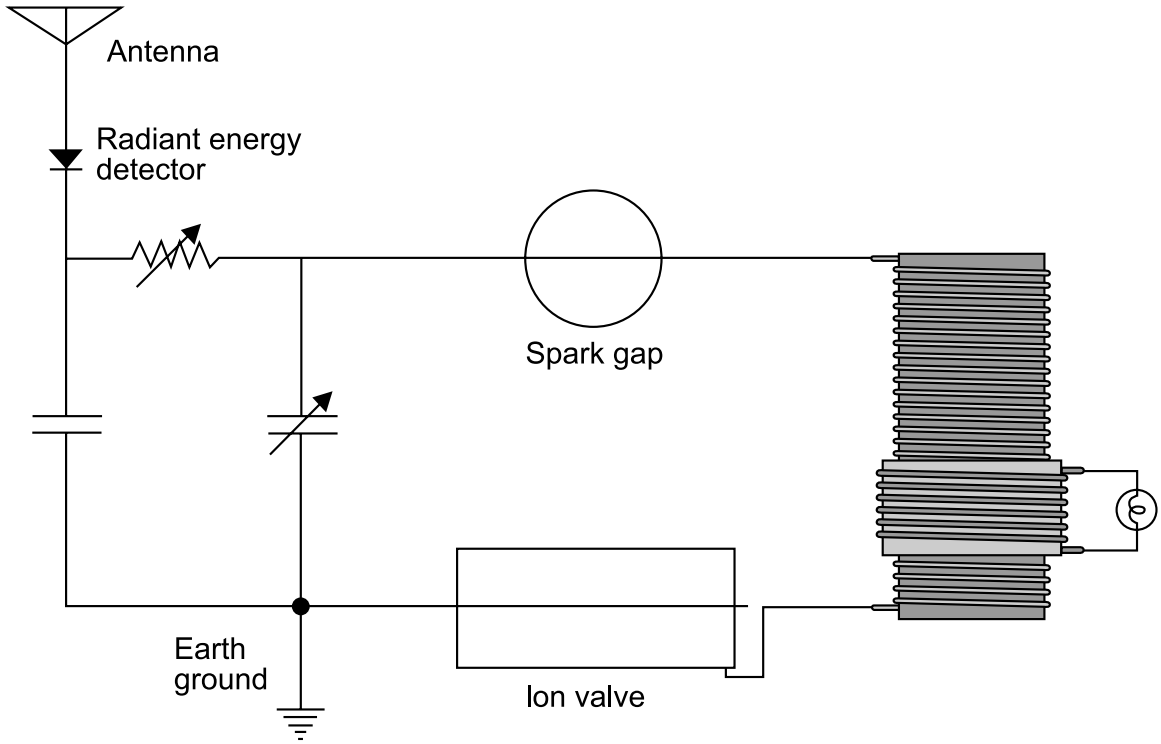

Fig. 2

Proof of Concept

The proof of concept shown will obtain energy from the dissociation of matter bringing the circuit to life. It does this by creating a plasma field between differing electrical conductors. Electrons are unleashed and feedback to the circuit where they are converted into useful power.

Plasma oscillating on the correct wavelength will act like a spark on a mass of explosive material but releasing electrical particles instead of heat. This is to say that the excited fourth state of matter (plasma) causes condensed energy (solid matter) to become uncondensed (radiant energy). The reaction will be far superior to the force that invoked it in the first place because the energy stored in matter is released. The energy that is condensed in the elements of matter is immense. The result is that an enormous amount of energy is released with only a slight loss of matter. Gustave Le Bon proved this when he demonstrated that the action of solar light and from electric arcs on bodies produced electric particles similar to those of uranium. He showed that it caused all bodies to disintegrate to different degrees.

the excited fourth state of matter (plasma) causes condensed energy (solid matter) to become uncondensed (radiant energy). The reaction will be far superior to the force that invoked it in the first place because the energy stored in matter is released

According to the law of conservation, when we give to a material body a determined quantity of energy, this energy might be transformed, but the body will never give back a quantity in excess of what it received. This principle is considered too self-evident to be disputed. It makes sense that matter can only give up energy that is given to it and is unable to create excess energy. Without violating this law, matter can be excited into giving up its stored inter-atomic energy. Condensed matter can become uncondensed if its oscillations become violent enough and henceforth transforming itself into radiant energy. No laws have been violated. They have been expanded. The first law of thermodynamics describes the principle of the conservation of energy. It states that "energy is not created or destroyed; it merely changes form". The fact is that the creation or destruction of energy is a result of matter being broken down or built up. They both go hand in hand.

Naturally occurring radioisotopes were created through the billions of years of **cosmic ray** bombardment of ordinary matter. Their matrixes became unbalanced. The

correct trigger will cause these isotopes to seek their original balanced state. Enormous amounts of electrical energy can be obtained from the transformation of stored cosmic energy. These isotopes contain a very old energy reserve that can be released in a unique way with my discoveries.

Have you ever wondered about spontaneous radioactive decay? Is it really a super charged state of matter? If an atom can become ionized by either gaining or by losing electrons then why can there not be a nuclear ionization too? I hypothesize that atoms do become ionized on the nuclear level by gaining or losing neutrons. This may appear incidental but could be at the very heart of an ultra-chemistry. It is highly probable that this hypothesized phenomenon is behind natural spontaneous radioactive decay and explains many unanswered questions about nuclear science.

Liberated Energy

With a slight excitement from a pre-glow discharge in a spark gap, or even with no excitement at all, as we observe in spontaneously disintegrating radioactive bodies, such as U235, we can obtain large quantities of energy. Clearly, we did not create this liberated energy, since it already exists in matter, but we release it under the right conditions. This is being done without violating the law of energy conservation. The idea that matter could be transformed into energy was absurd before the acknowledgement of nuclear transformations.

A Nu Science is on the horizon. It involves the means of transforming matter into energy without splitting atoms. This science recognizes several isotopes of matter that spontaneously liberate energy as observed in naturally occurring radioisotopes. My research indicates that it is also possible to artificially speed up the natural decay process of condensed energy (matter) using a minute plasma field, as from a pre-glow discharge, etc… With a very small quantity of energy, we will be able to produce a very large quantity of energy without splitting the atoms.

Capture Capacitor

Nature offers us cosmic energy that manifests itself in many different forms. Electricity is only one of its manifestations. From this knowledge, we can obtain electrical power with no moving parts. The natural world contains many storehouses of this cosmic energy. Energy is all around us just waiting to be transformed. The capture capacitor is one such example. It is called a capture capacitor because it captures and transforms electrical charge into electrical current. It does this with the aid of naturally occurring radioactive matter (N.O.R.M.). Put a pair of dissimilar metal electrodes together with a porous ceramic dielectric material sandwiched between them, along with a weak electrolyte and you have built a capture capacitor. In a low power capture component there exists a minute impurity of N.O.R.M. It is always present in clays and is usually present in ceramic materials.

If you want a capture capacitor to generate more power all you have to do is to add additional amounts of radioactive material to the dielectric. Lead–210 is the optimum choice because it has a half-life of around 22.3 years and is a pure beta (electron) emitter. Its half-life is almost twice as long as tritium. This means that it is feasible to build a component that will put out power for several years with little maintenance. Lead-210 is a decay product of radon gas. The parent source of radon is uranium. Therefore, uranium ore can be powdered and mixed into the ceramic material.

The atomic ions emitted from naturally occurring or artificially induced radioactive transformations can be directly converted to electrical power. The circuit shown can be used to convert radiant energy into useful electrical currents. Additional stages can be added for more power. The circuit shown gives a general idea of how such an energy conversion device functions. By no means is this technology limited to this one circuit, configuration, or source of radiant energy.

EAGLE-RESEARCH

Energy Solutions
since 1984

A Research Organization that Develops & Distributes Practical Energy-Saving Methods & Devices

4 Energy Way, P.O. Box 118
Porthill, Idaho 83853
FAX: 250/492-7480

Technical questions to:
wiseman@eagle-research.com

NEWS REVIEW

A new type of high field superconducting magnet from Oxford Instruments has enabled physicists at the University of Nottingham to balance the force of gravity and levitate heavy and dense materials such as lead, gold and diamonds. The patented Minimum Condensed Volume™ (MCV™) Cryofree™ superconducting magnet, developed and manufactured by Oxford Instruments in collaboration with the University of Nottingham, is the first of its kind in the world. Unlike conventional superconducting magnets, the MCV magnet never needs to be refilled with liquid helium and yet can generate a field over 300,000 times stronger than the Earth's magnetic field. MCV has a very small footprint and, operating at 4.2 K with a room temperature bore, can generate highly stable magnetic fields up to 16 Tesla.

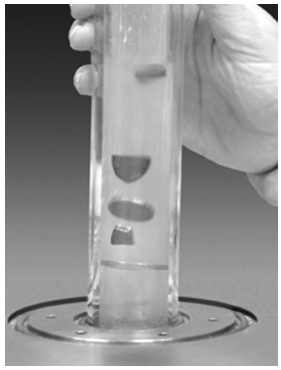

http://www.oxford-instruments.co.uk

Polish inventor Zygmunt Orlowski called attention of the scientific society to his perpetual motion machine **METOZ**, which according to the author after further improvement will be able to extract energy from the earth's gravitation.

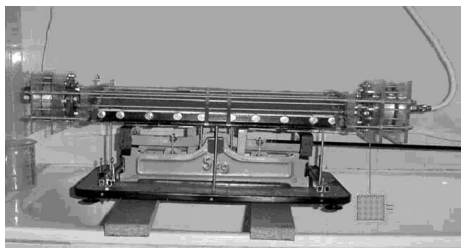

http://www.nets.pl/~metozor/perpetual_motion_machine.htm

It is necessary to change behavior of people in order to decrease environmental damage. This was the message of **"Green Week 2003"** which took place since June 2 through June 5 in Brussels.

The conference's key issues were three aspects of United Europe environmental policy: sustainable production and consumption, renewable energy and water supply.

Green Week is the first environmental forum of such a scale. Three thousand participants from all over the world represented governments and funds, industry and mass media. The exhibition organized in the framework of Green Week included 62 displays from 14 European countries and were dedicated to the newest environmental technologies and projects. During the Green Week 26 conferences and seminars took place, as well as a great number of press conferences and actions for young people.

British researchers (Gardner Watts company) **believe that they have made a groundbreaking scientific discovery after apparently managing to "create" energy from hydrogen atoms.**

The device represents "thermal energy cell" which appears to produce hundreds of times more energy than that put into it. If the findings are correct and can be reproduced on a commercial scale, the thermal energy cell could become a feature of every home, heating water for a fraction of the cost and cutting fuel bills by at least 90 per cent.

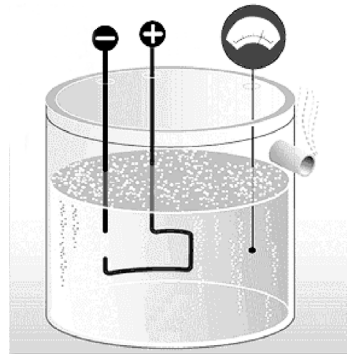

http://www.telegraph.co.uk

Gravity Conversion Rotary Device

The below figure is from
http://www.theverylastpageoftheinternet.com/newclaims/GravityMotor/gravity_motor.htm

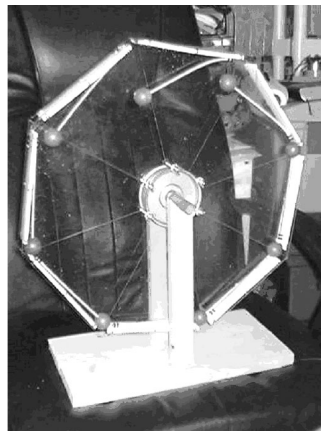

Does it really work?

The Marcus Device Controversy

Tim Ventura, USA

Email: tventura6@attbi.com
http://www.americanantigravity.com
http://www.americanantigravity.com/marcus.html

Editorial: This overview is devoted to the fantastical device created by inventor Marcus Hollingshead that encountered more than its share of publicity and controversy between November 2002 and March 2003. You can participate in discussion on aggroup@yahoogroups.com.

The problem with Marcus has been that he was pressured by too many people to produce too fast results. I started talking to him in November, and he is always sounded like an honest, rational man with a good heart. The problem is that once people started to hear his private claims that he could lift something like 2 tons of weight, things kind of went south.

While people in general have been very well-meaning, they are desperate to solve many of our current energy-problems, and when Marcus appeared with a potential solution it got out of control. Pretty soon film crews were showing up at his house unannounced, and he was getting unwanted phone calls from people who had looked up his number online.

In my opinion, it is really a problem of a "social dynamic" at work here – too many people, with too much access, all at once. This also correlates to the type of person that different people are. For instance, I am a very open person, and I really do not value my privacy a heck of a lot — therefore, when TV crews drop by with 5 minutes notice (and they have), I tend to just let them in for a demo. However, Marcus, who is much more of a private person, seems to have become a bit overwhelmed at this proposition.
Also, keep in mind that I had initiated working with the media because I felt that it was time for the excellent work in the Lifters groups to see the light of day. There was some debate about this, but the Lifters group as a whole has greatly benefited from being about to tell people about this new technology.

Marcus had not actually "gone public" about his work. He had leaked information about his research to a few people, and from there it was leaked to several others, who in turn told their friends about it. Unlike the Lifter technology, which has hundreds of people that can talk about how it works and where it came from, Marcus technology was represented solely by himself. That means that everything surrounding his device came back ultimately to him alone. Without any real group ownership of the expertise behind the device

As I said before, Marcus was new to the publicity, and did not have time to prepare the resources that the rest of us have had to answer questions, provide demo materials, etc. Naudin and Saviour have a masterful manner with regard to teaching people about Lifter technology, but they have had years to prepare this information and perfect a method of presenting it to people.

Most of us in the AG groups tend to proselytize for the technologies that we believe in. I know that I do, and if you haunt the newsgroups much you will notice that everybody there believes in something and can go on for months non-stop telling the world about it (again, I do this). Marcus, however, does not really have this personality — he is more of a "take it or leave it" type of person.

For me, this was another indicator that he was the "real deal". You have to understand that I have never seen working prototype pictures of the Marcus device, and all that I had to go on was the feeling that I got from interacting with him on the phone and online. The fact that he did not try to "sell me" on the idea was a big plus. He told me about the device, and his story was always consistent. The other people that he talked to also had a consistent story – I have not talked to anybody and heard a different version than I heard from Marcus himself. That is a big plus from the credibility perspective.

Marcus initial goal (from when I started talking to him in November) was to gradually ease into working with

the public to tell them about the technologies he was working on. Unfortunately, I probably aggravated the issue a great deal, because his early descriptions of the technology might have gone unnoticed if it had not been for some of the things he had mentioned about his research.

When I read Marcus' firsts posts on the device, my very first thought about his claims was that they were bogus. Judging from the reaction of the Antigravity newsgroup, I gathered that a few other people also had the same initial reaction. The reason might be a little selfish – after you hear claims but do not see results for a long enough period of time, you tend to protect yourself emotionally by becoming skeptical to the idea that somebody can be lifting hundreds of pounds of weight using a completely new and revolutionary technology.

Nonetheless, something that Marcus had said resonated with me. I remember that he was talking about his results being based on a study of the Earth's fields, which is something that I had read about myself during the college years. Telsa had done a lot of work involving the Earth's electrical and magnetic-fields, and I had always felt that this research might come in handy later as a potential basis for Antigravity research. However, I did not have any specific ideas, and began asking Marcus questions offline to find out more about his research.

In reality, I am nobody special, so I think that perhaps this would have happened in any event no matter what my reaction would have been. Certainly I am not the only person that took an early interest in his work, and from what I learned later he had already been a little bit too honest in the BBC online newsgroup before he ever became involved with the Antigravity newsgroups.

From January to mid-February Marcus became like somewhat of an addiction in the newsgroups. This was a strange phenomenon to watch, but if he did not answer questions in the newsgroups for even a day people started asking whether he had been kidnapped or the government had assassinated him.

You have to understand that most inventors tend to segregate their time into "public" and "private". I do, Naudin does, and everybody does this. When you talk to the public about what you have built, you really get into it — but when you are actually working on it, you tend to hole up in the garage and put the entire world on "ignore" until you have finished with whatever it is that you are doing.

Marcus really started to get publicity in late November 2002, and it built up over a few week period of time. By mid-December, he had a healthy following in the Antigravity newsgroup and people in the 5 or 10 other AG newsgroups were developing more than just a passing interest. Great stuff for Marcus – he had thought that he was the only person doing this research, and it turned out that lots of people shared this common interest with him. We had lots of really valuable and productive exchanges.

Marcus bided his time working on the projects – he had initially stated that he could lift around 200 pounds of weight with his November version (prototype #161, if I remember correctly). He did not have a digital camera, and he did not want to publish photos until he had a better prototype anyways. That was OK with me – I am used to work with a variety of inventors and came to realize a long time ago that everybody has their own style. I was content to wait until Marcus had additional data, and the only thing that I insisted upon was that sooner or later he ante-up and provide some photographic evidence.

Despite lacking photos or video evidence, Marcus did have documentation. In fact, he wrote more documentation about his device than I had ever hoped to receive. He cranked out about the equivalent of 30-pages of "real" documentation in a very detailed form within 1-month, and had the email equivalent of many more pages in postings about how the device worked online. Marcus had already been publishing details online for about 2.5 months.

Despite the incredible amount of published data that Marcus was able to complete, in some ways it made things worse for him than not having anything at all. The reason was the nature of his research. My work, currently focused on Lifters, was in a technology that is easy to explain – the device is built like this, it works like that, and it can be described in a manner similar to some other thing ....basic, easy to explain, and easy to compare.

After all, Lifters have been accused by science of being ion-wind devices. If nothing else, rebutting this claim gives us someplace to start – something to compare against to provide people with an idea about how the device works. Additionally, we had tons of video and photographic evidence to back up our claims. In Marcus case, the documentation that he provided made things worse because his technology is so utterly different. It is not ion-wind, nor the Biefeld-Brown effect, nor

apparently the Searle effect. In fact, the more than you tried to pin down exactly what it was, the harder it became to describe it.

Also, its not like he could simply fall back onto describing the construction of the device **– reason being that it contained a series of interrelated coils with a unique configuration that were intrinsically tied to the operation of the device.** Every time he wrote a detailed summary of the construction of the device, we had come away with more questions than we had started out with. After a time I gave up trying to understand how it was constructed, because I only had bits and pieces.

Marcus was using an arrangement of 6-coils, and what are described as "bifilar windings". Essentially, this means that you wind two wires together around a coil and then tie one of the ends to another, making the two wires essentially one long wire wound "against itself" down the length of the armature its on. There are 6 of these armatures on the device, mounted around a central RP (or reference point).

Marcus created all of the terminology for these parts – this lends additional credibility to the idea that he had had 7 years of experience with it. These are ideas that you just do not "make up" for publicity. For instance, the bifilar windings on the armature-coils are self-cancelling fields, and even a basic-electronics education will tell you that. However, the interesting thing is that once you really start to get into the advanced "post-scientific" research on magnetic fields you start to see self-cancelling magnetic coils all over the place. The reason is apparently that while the "B-field" *(Editor: i.e. magnetic field)* of the coils cancels, the "A-field" *(Editor: i.e. vector potential)* that Tom Bearden keeps talking about does not, which means that you can isolate the really interesting effects from the coil without having to deal with the high field-intensity effects from normal electromagnetism.

Marcus had described these six armatures as being activated in a series, or order, to obtain results. Each of the coils was spun by an electric motor mounted on the armature, and when the coil was spun up to a certain speed and "stubs" mounted a periodic intervals on the side of the armature were fired in sequence the antigravity effect was created.

Marcus Antigravity effect was a directional force that was applied in a unique manner depending on which coils were activated. This means that by activating (for instance) coils 1 and 3, he could create an antigravity effect and move the device left – or something to that effect. Turning on and off each set of coils gave him movement on one axis of thrust, which corresponded to X, Y, or Z in a standard 3-D geometric graph. Since you can move in either direction down any given axis of thrust, this means that you have 6 axis of movement height (up and down), width (left or right), and depth (forward or backward). His device provided movement on any axis by either one coil or an arrangement of coils.

For a while Marcus did not want to talk about side effects, but I pressured him into it. The reason was that I have seen side-effects that were pretty darned strange in a number of different experiments, and I was willing to bet that if I pressured him a bit he would talk about what he had seen but did not want to reveal (for fear that people would not take him seriously). It turns out that I was right.....

Marcus had talked about the RP, or "Reference Point" upon several occassions. This is a multi-layered device that acts somewhat like a capactive element. It sits in the direct center of the Marcus device, and it is the reference-point for the entire device. The RP is manufactured from cast-iron, and Marcus says that he has a local company build them for a few bucks each by pouring iron into a mold based on one of his designs.

You can active the RP at the same time that you activate the coils. You have coils rotating around the RP, with "stubs" on the coils firing periodically at points corresponding to spots on the surface of the RP. Meanwhile, you also have an electrical charge on the RP itself, which means that there are a lot of elements interacting at once to create a very complex dynamic.

One of the interesting side effects was a darkening and "blurring" effect of the RP, as if light was being reflected off it. Another was a Star-Trek like "force shield" around the RP. These only occurred when all of the coils were activated at once. Also note that since the coils are opposing in nature (one for each direction on each axis), that when you are creating the force field effect the device cannot be levitating. However, the device is operational, and you have a force-field that you can apparently bounce a heavy hammer off without being able to penetrate it (Marcus description).

Another interesting note is that the force-field effect can be modified to create a vacuum. I am not sure how

Marcus noticed this, but he had said that it appeared to create a vacuum inside of the field's boundaries during operation. Interestingly, it also ran very cold – apparently down to a hundred degrees below zero, but only within the localized boundaries of the field.

I am not a professional physicist, but this is something that has been reported with the Searl effect and several other experiments, and the reason that I believe it occurs is because you are taking the kinetic energy of the device as well as some of the kinetic energy of its molecules (i.e.: heat energy), and injecting it into another dimension. After all, anytime we directly modify a gravitational field we are creating a dimensional effect, but in normal life we do not notice it because the boundaries between gravitational fields are very gradual.

Well, in the Marcus device the boundary between gravitational fields is not a several thousand mile-long gradient like the Earth's field is – instead of you have a gradient perhaps 10-times more intense focused within a 3 to 4 inch area. That means that you are creating essentially a rift in time and space (self-healing) that is kept open by the energy that you are pumping into the device.

the energy input is used only in putting the device into another frame of reference, but that any interaction between us and our "normal" frame would have to be modified for any interactions with the "modified" frame.

To the best of my knowledge, this is the most accurate description that I have seen yet for why his device does this. Marcus himself could not explain why these effects occurred, and to be honest I scared him more than a little when I told him my theory.

In the hypothesis that I just put forth on the origin and functionality of the Marcus device effect, the interesting this is that there really is not a direct correlation between input energy and the effect itself. That is because you are not using the input energy to actually cause an effect – you are essentially using the input energy to translate the device into another dimension (although it is still partially within ours).

Einstein called these "frames of reference". The idea is that the energy input is used only in putting the device into another frame of reference, but that any interaction between us and our "normal" frame would have to be modified for any interactions with the "modified" frame.

Again, this takes place in normal physics – but usually it involves motion, and normally it takes place over a vastly larger gradient of time/space/whatever. The difference between two frames is the difference between two locomotives moving at different speeds – the energy input goes into accelerating each locomotive up to that speed, but the actual work is performed if those two trains interact is solely a product of the frame of inertial reference (mass & velocity = energy).

Another excellent example is a helium-balloon. You put the energy into condensing the helium and pumping it into the balloon, but it is not the helium that creates lift – it is the surrounding atmosphere. In a very real sense a helium balloon gets its energy from the surrounding environment. The energy that you put into "maintaining flight" in a helium balloon is only the strain on the fabric used in holding the helium into the confines of the bag that encloses it. With the Marcus device, I would bet money that it is not the input energy creating these effects – it is instead the difference in frames of dimensional/inertial reference between "our" environment and the "device's" environment, whatever that difference may be.

You see, even though this sounds like a load of BS, magnetism is not real. This is not an idea that I am making up – in fact, it is an entire chapter in the physics 101 textbook kicking around downstairs in my house. Take two magnetic fields, and project them in the same direction at the same speed. Field A can not interact with Field B, because neither of the fields really exists – they are merely ripples on a pond, and that pond is the background of the time-space continuum. People that believe in relativistic gravitational effects take for granted that things like this happen – after all, gravity is not a force per se in relativity – only a modification of the dimensions of time-space. Well, most people do not realize that Einstein based his theory of gravitational force on his study of magnetism. Magnetism is the same thing – it is a modification of the fabric of time-space.

Take two magnetic fields that did not interact from a moment ago, and now change the direction that one of them is traveling in. Suddenly, the two fields that could not even see each other a moment ago now create an incredible "torque" – this is the same thing that we see in bar-magnets and electric motors. This is the "torsion field" research.

Bar magnets are different than pure fields because they are composed of the discrete fields of thousands of tiny magnetic "domains". That is why the fields from bar-magnets are never "invisible" to each other – it is because that the fields in bar magnets are too jumbled to ever really "line up" to the point of being invisible. Pure fields can do this, however, reinforcing the supremacy of Einstein's relativistic effects with relation to electromagnetism.

Anyhow, that is about it for now – I will try to come up with a more detailed picture for you on this if you like, but I expect that you will probably have more questions about Marcus theory and device in near future. It is a very complex idea underlying his research, but the basis of it is the idea of "rotating magnetic fields".

If you want to do additional research on your own into related fields of study, I would definitely look up "relativity and magnetism" – it provides an excellent example of how to visualize relativity theory in the study of magnetic field interactions. This is something that electronics engineers are not taught, which is why you have never heard of this in an engineering sense before. However, in physics is a well-known concept, although most physicists prefer to work with quantum mechanics rather than relativity these days.

In terms of rotating magnetic fields, you can look up "torsion fields" – again, the Russians have the best understanding of advanced torsion field physics, although their best material probably has not been translated yet. Additionally, rotating magnetic fields are the basis for the Searle Effect and the Hamel device.

Marcus was intrigued by Searle's claims, because they appear to have matched many of his own results. Interestingly, Marcus had developed his work within an "intellectual vacuum" and had never heard of Searle before I told him about the similarities. Nevertheless, force-fields, ice-cold operating temperatures, and antigravity seem to be a pervasive similarity between all manners of experiments that have been reported using rotating magnetic fields. I had assumed that Searle's claims were bunk, but after hearing about similar effects from Marcus research it led to reconsider some of the criticism surrounding Searle lately.

One a final note – one group that may lend additional credibility to this research is Godin and Roshchin in Russia. They obviously benefit from the years of knowledge that the Russians accrued in magnetic field systems theory, and they attempted a replication of the Searle effect device some years back (and claimed to get some results). I hear that they have been working on a revised version of their experimental setup recently and hope to have even better results in the very near future.

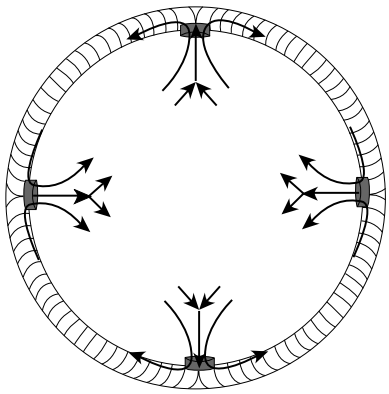

Fig. 1

Magnetic flow for a bifilar-wound toroid that is split at four points on the toroid. This configuration occurs when the coils in the nubs are charged to match the charge on the toroidal coil. The configuration is a quadra pole with a minimum magnetic field at the center

Fig. 2

Marcus recommends the Kikusui 6000L and 18000L multipurpose AC power-supplies

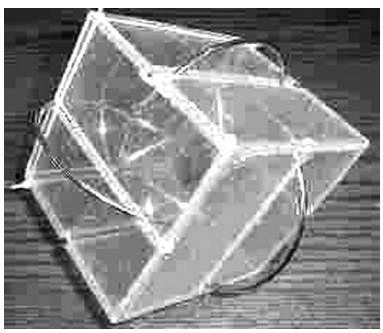

Fig.3

A scale-model mockup of the ring-arrangement within the Marcus device, showing the interlinking coils

History pages

Systems of conversion of thermal energy to mechanical one

Review prepared by correspondent Alla Pashova, **Russia**

There is a wide class of closed-cycle heat engines using differential temperature of water and ambient air. This kind of systems enables thermal energy to be directly converted to mechanical one so as to perform a useful work. We publish patent specifications of two analogous devices of this kind.

PATENT FOR INVENTION

Specification

of the engine, which uses differential temperature of water and ambient air.

To the patent by **P.I. Dobrokhotov** filled on October 22, 1928 (#34248).

Patent grant is published on March 31, 1930.
Patent is valid during 15 years from March 31, 1930.

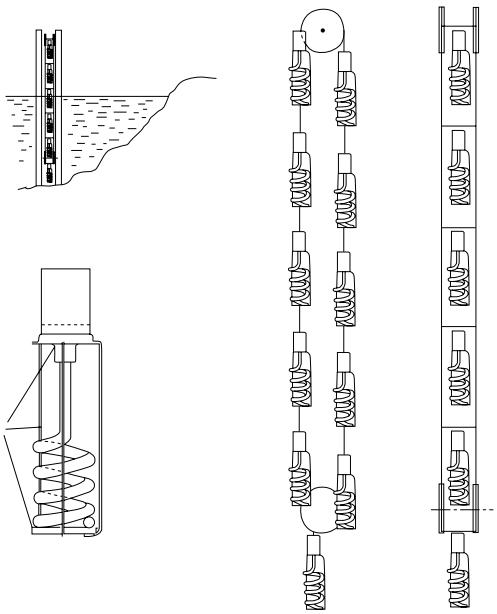

In 1928 **P.I. Dobrokhotov** proposed a design of such an engine. It represents an endless chain thrown over a pair of blocks and partly immersed into water. The chain consists of coiled pipes filled with a volatile liquid (such as sulfurous anhydride or ammonia). One end of each coil is fastened to a frame, while another end is fastened to a cylinder piston mounted on the same frame. When overwater elements are heated by means of ambient air, the liquid inside the coil evaporate. Vapor put pressure upon the pistons which being in motion compress air in the cylinder, and thereby reduce volume of each element. When submerging, the element gradually cools down, thereupon causing a decrease in pressure of vapor of the liquid, which is enclosed within coils. The pistons move in backward direction, and the volume of air available inside the cylinder increases. Increase of volume results in increase of water buoyancy force that sets the device in motion.

INVENTION SU1404681 A1

23.06.88
Yu.S. Grigoryev
Prototype: USSR patent #13534
F 03 G 7/06, 1928

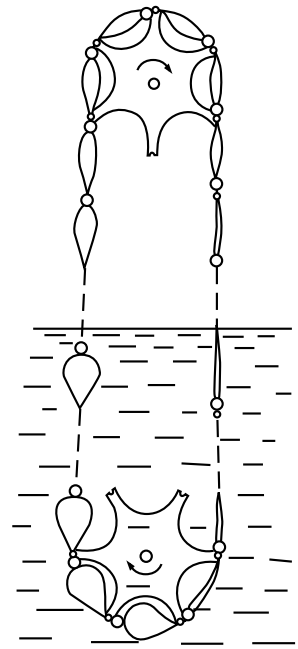

In 1980, **Y.S. Grigoriev** developed his forerunner's idea by improving the system described above. The inventor aspired to enhance the effectiveness of this method of conversion of heat energy to mechanical one. He suggested fixing the volume of chambers filled with a heat-sensitive actuating medium at its minimal magnitude before immersing of those chambers into warm water. In water the actuating medium heats and partially evaporates. At a maximum depth of submersion, the chambers are released from fixation to be expanded during emersion. Thus one may avoid expansion of the chambers during their submersion. Futhermore, there is a possibility to activate the device and get the useful work without preliminary spinup from an external drive.

Iliya R. Prigozhin
(25 January, 1917 – 28 May, 2003)

Iliya R. Prigozhin, aged 86, Nobel Prize Winner, Belgian scientist of the Russian origin, died on 28 May in Brussels. Prigozhin made a number of prominent discoveries in the field of thermodynamics and statistical mechanics of nonequilibrium processes. In particular, he developed a concept of irreversibility as applied to thermodynamics. Prigozhin was studying time as a physical phenomenon. In 1977, he was awarded the Nobel Prize for chemistry "for works on thermodynamics of nonequilibrium processes".

The scientist formulated one of the major theorems of the theory of nonequilibrium processes. This theory was later named after him. According to Prigozhin's theorem, stationary state of the system corresponds to minimal entropy generation. The outstanding physicist was also an initiator of applying methods of theory of nonequilibrium processes in biology.

Thermodynamics principles were enunciated in the middle of the XIX century after the invention of a steam-engine, when interaction of heat, electrical, and mechanical work aroused a higher interest. In accordance with the first law of thermodynamics representing an energy conservation principle, energy neither disappears nor appears in any closed system, but transforms from one form to another.

The Prigozhin's theorem sounds as follows: stationary state of the system (under conditions impeding attainment of equilibrium state) corresponds to the minimal generation of entropies. If there are no such impediments, then production of entropy reaches its bare minimum, i.e. zero. The theorem was proved by Prigozhin in 1947.
In thermodynamics the nonequilibrium specifically open systems were of most interest for Prigozhin. In such systems either or both (matter and energy) interchange in reactions with an environment. At that, quantity of matter and/or energy increases or decreases in the course of time.

It is obvious that human society as well as the biological environment is an example of dissipative and nondissipative structures. In the 60s and 70s, Prigozhin developed his theory of dissipative structures and described the formation and development of embryos. Critical points of bifurcation in his mathematical model are correlated with a point, where a biological system becomes consecutive and stabilized.

For his scientific career time, the physicist was awarded over 40 scientific rewards and admitted as an honorary member into national academies of many countries all over the world.

New Energy Technologies
PRINT EDITION ADVERTIZING RATES

Full Page Ad

B/W - $400

Color - $800

Half Page Ad

B/W - $200
Color - $400

Quarter Page Ad

B/W -$100
Color- $200

New Energy Technologies is distributed in the leading Scientific Laboratories in Russia and has subscribers in more than 20 countries all over the world

To advertise contact us:
Faraday Labs Ltd, Phone/fax: 7-812-380-3844
http://www.faraday.ru, office@faraday.ru

Russian Academy of Sciences
Russian Physical Society
Nuclear Society of Russia
Mendeleev Chemical Society of Russia
Moscow Lomonosov State University
Russian People's Friendship State University

The 11th Russian Conference on Cold Nuclear Transmutation of Chemical Elements and Ball-Lightning (RCCNT&BL-11) is to be held during September 28- October 5, 2003. The place of the Conference is in Dagomys near the city of Sochi.

The program of the Conference includes the following subjects:

- Experimental research in cold nuclear transmutation (fusion) and ball lightning;
- Theoretical models with respect to cold nuclear transmutation (fusion) and ball-lightning effects;
- Applied to these problems technologies and devices.

The Organizing Committee of the Conference is pleased to invite you to attend the Conference. The terms of your participation are as follows:

The full cast is $900, which will include the registration fee, hotel reservation and living, three daily buffet meals, conference proceedings, transportation from the Sochi airport and back, social dinner and special excursion or entertainment.

The languages of the Conference are Russian and English.

The total cost can be reduced to $800 if transferred before August 10 to the account of the Organizing Committee, which is to be announced on having received from you a confirmation about your decision to attend the Conference.

If you make a decision to take part in the Conference, please, let us know before July 1 about the title and abstract of your report.

Contact telephone: (7) (095) 196-9476 (ask Mr. Igor Goryachev), Fax: (7) (095) 196-6108
Email: gnedenko@kiae.ru; Bazhutov@erzion.madi.ru; bazhutov@izmiran.rssi.ru; bychvl@orc.ru
Address: I. Goryachev, Russia, 123182 Moscow, 1 Kurchatov Sq.,
Research Institute of High Technologies at RC "Kurchatov Institute"

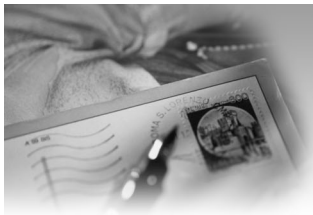

Letters from our readers

Thank you for publication of my article. Your magazine becomes more and more popular.

My special thanks to Editor-in-Chief Alexander V. Frolov. Whatever they say or write in the press, he has done a great work and it is not only my own opinion. He has managed to do that everybody had been waiting for a long time. My colleagues (not only from Rostov-on-Don State University but also from other Rostov Institutes of higher education) ask me personally send the best regards to the editorial staff of your magazine.

Sergey A. Gerasimov

Free energy?

The scientific community says that it cannot exist. Where did we hear that before? Academician Valery Sobolev from the Academy of Sciences, the head of the research group working on the experiment says: "This is not some new physics, but just experiments that have been performed very seriously. Make surge of electrons from the environment, remove them, deplete the fused electrolyte with basic typical metals; what you derive from it is what cannot be produced by chemical methods. This is a new state of substance." As the researchers say, first they discovered a particular electrochemical process where high-temperature materials in a new state are the product. This in its turn allowed to discover a new state of substance, new class of materials, a new source of energy, a new method of cold plasma generation, a new superconductor. See whole article at: http://english.pravda.ru/science/19/94/379/9675_energy.html

Josef Hasslberger

Personal home page on physics, energy technology, social and economic issues: http://www.hasslberger.com

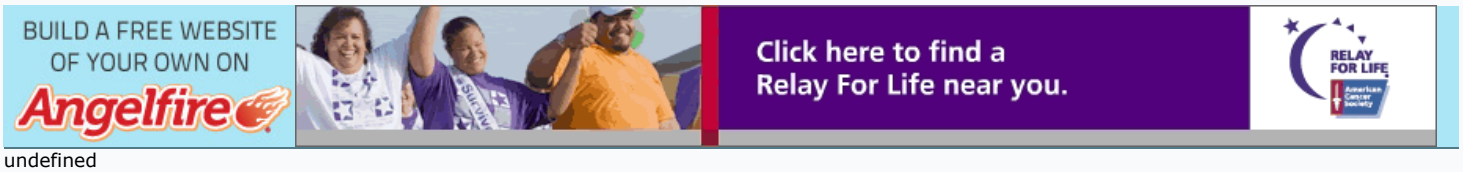

undefined

The Nic Nac Crystal Radio

Copyright © **Austin Hellier** 12/02/2001

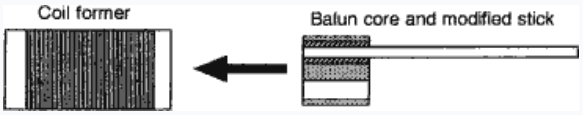

How It Works

Radio signals are travelling through the atmosphere all the time. This simple radio receiver has been designed to capture them, and turn them into sound waves, so that you can hear what's going on. The Aerial and Earth wires form a return signal path from the AM transmitter, for these signals, and they are then fed into the coil and capacitor. This arrangement is known as a 'tank' circuit, because it stores radio energy, much in the same way your family car's tank stores petrol. The combination of a certain sized capacitor (68pF) and the amount of turns on the coil (around 120 turns) determines the frequency you will receive at. The Diode changes the signal from a radio one, to an audio one, and the Crystal Earphone changes the audio signal into sound waves that you can hear. the resistor adds stability by helping to prevent the Earphone from occasional 'dropout'.

Building The Radio

You'll need all the components listed below and a Tic Tac lolly box. Start by mounting the earphone jack into the lid of the box and then solder up each of the components into a tidy version of the 'rat's nest' construction method. Make sure you use a crocodile clip as a heat sink for the diode when soldering - they're pretty sensitive devices to heat. Then take the coil and remove the ferrite rod from inside it. Take the ferrite balun core and place one end of the plastic stick (obtained by cutting off both ends of a cotton bud) and glue it inside the hole, with its end level with the end of the balun core.

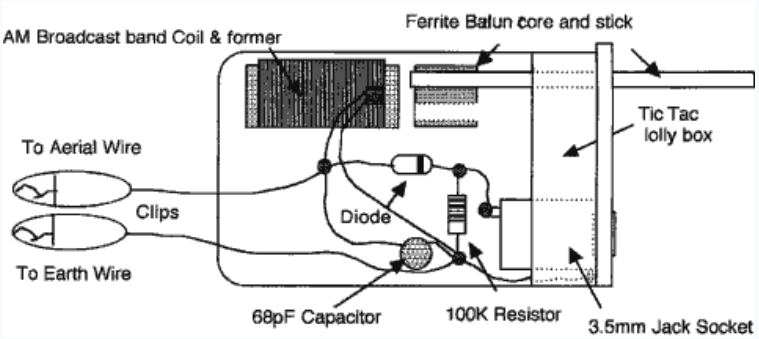

Diagram 2. Place balun inside coil former and use the stick to slide it up and down inside the coil to tune the Nic Nac Radio.

Experimenting With The Radio

You can perform a number of experiments with your new radio receiver, so try the following experiments and have lots of fun while you do:

1. Try hooking up your Aerial wire first, without the Earth wire, to see if you're close enough to a radio station, not to need the Earth wire.

2. Try using different things for an Aerial, instead of the long wire - e.g.: a wire clothes line, a Hills Hoist clothes line, a metal window frame, a metal security door, a cyclone fence, bedsprings etc.

3. If you live really close to a radio transmitter, try rotating the Crystal Radio without an Aerial or Earth wire, to see if you can pick up these local stations.

I hope that you have as much fun making the **Nic Nac Radio**, as I did in designing it.

design by **the manikin**

Copyright © **A. Hellier** 1998 **Disclaimer**.

BUILD A FREE WEBSITE ON Angelfire

American Diabetes Association diabetes

AUTODESK Make anything. (http://www.autodesk.com)

advertisement

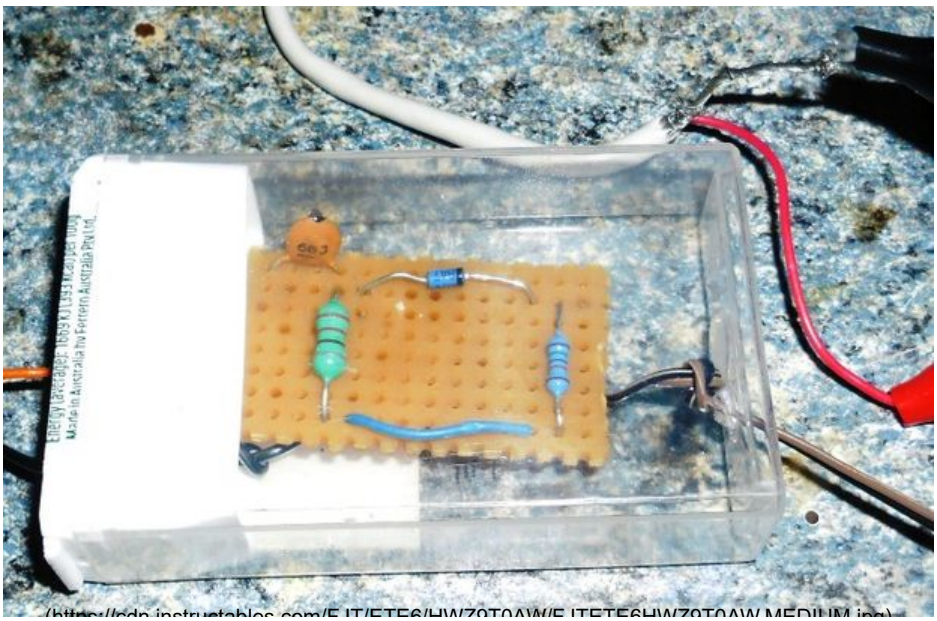

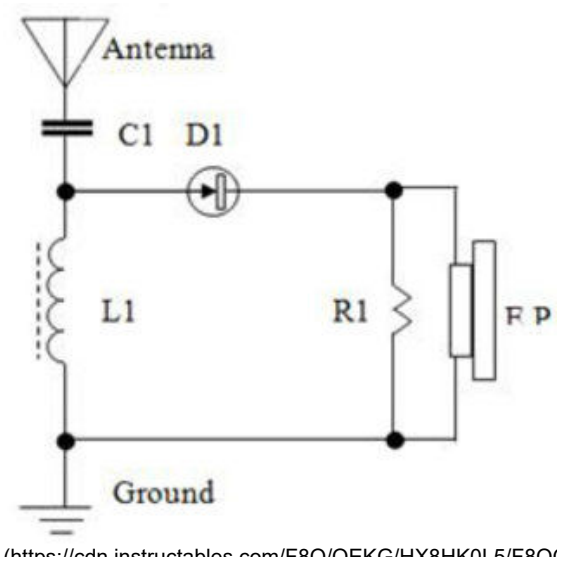

Hi there! **This Instructable is all about building a basic crystal radio set that is so simple to build and understand, that a child could do it - with help from mum or dad** - or even at school, as a class project. Parts can be bought

advertisement

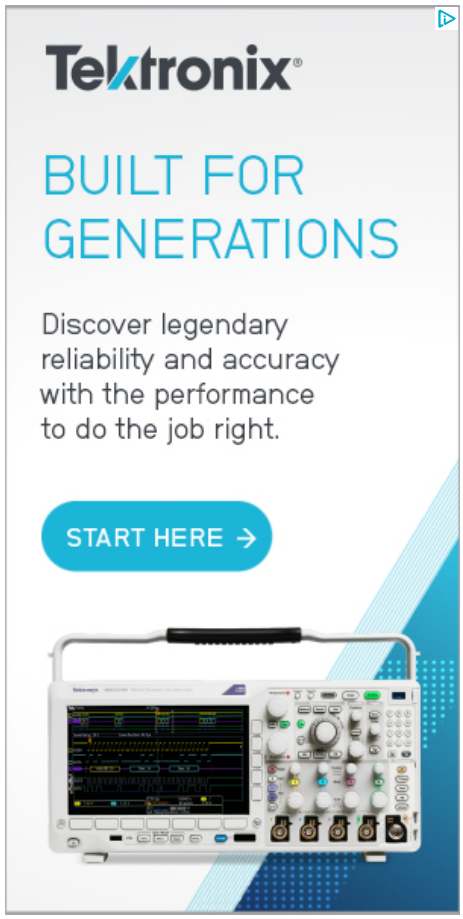

About This Instructable

10,581 views

84 favorites

License: Public Domain

mk484 (/member/mk484/)
(http://)
Follow 82
(/member/mk484/)

"off the shelf" at Jaycar Electronics and other suppliers, or purchased online via Ebay and Paypal.

I built my first ever crystal set when I was 9 years old, but that was a different world. We're going to build a 21st century style radio with all modern components which are relatively easy to obtain at your local electronics store or on the Internet.

The radio is contained inside a Tic Tac box, and is called "The Nic Nac Tic Tac Radio". It is built on a square of matrix board, with the component leads poked through the holes in the board, and joined underneath. It is a very simple crystal set, designed to initially receive only one station, but you can expand the tuning range with the addition of only one extra component.

The Tic Tac radio can be constructed by simply twisting the component leads together, underneath the matrix board and attaching antenna/ground wires as well as the earphone wires to the board, using that same technique. You don't have to solder any wires, but there is another way to join them all together - more on that later.

The Tic Tac Radio is a very easy set to put together - you don't need to wind bulky coils or use heavy tools and screw strange looking parts onto a large breadboard. See step 1 for the parts list you will need.

Step 1: Parts and Tools You Will Need

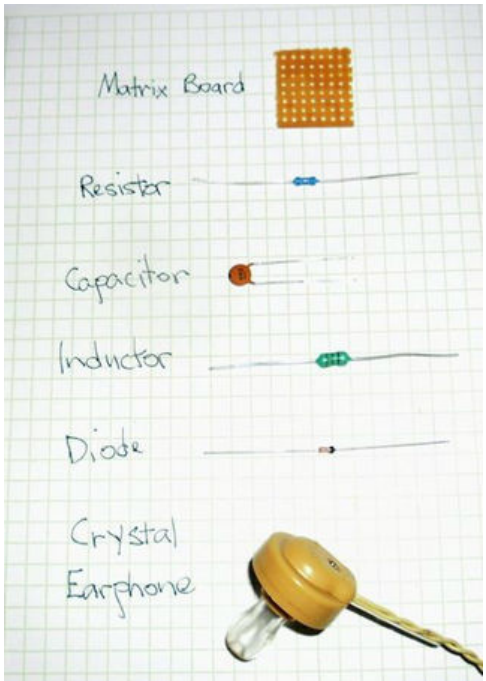

You will need to acquire the following components from a local electronics shop or an online electronics business.

Bio: Started as a hobbyist at 9 - built my first crystal radio on one of mum's prized cutting boards (eeek) - Worked in 2 electrical/electronics ... More » (/member/mk484/)

I am adding the catalogue numbers for Jaycar Electronics, so if you live in Australia or North America, you may be able to visit a Jaycar store and buy the parts over the counter, if not then you may be able to do an online mail order via Paypal:

Parts List

Resistor - 47k - yellow-purple-black-red and brown - RR 0612 (pkt of 8)

Capacitor - 68pF - ceramic x 2 - RC 5322 (pkt of 2) and a 100 or 120 pF value as well for experiments.

Inductor - 220 uH - red-red-brown silver - LF 1538 (resistive type)

Polyvaricon tuning capacitor - 220 pF - RV 5728 - with knob and mounting screws

Diode - BAT46 - ZR 1141 (You can also use a 1N34A Germanium Diode too if you have one at home)

Ceramic Earphone - AS 3305 *

A 25 meter roll of yellow hook up wire for the Antenna wire and a 3 meter length of wire for the Ground wire.

Please note that some Jaycar parts come in multiples of 2 or more per packet. **And please note the following:**

PLEASE NOTE: THIS PROJECT/KIT CONTAINS SMALL PARTS THAT MAY FORM A CHOKING HAZARD FOR SMALL CHILDREN OR PETS. NOT SUITABLE FOR CHILDREN UNDER FIVE (5) YEARS OLD.

*A normal crystal radio earphone is OK, but if you can't get one of these, or if the one you bought goes dead (as they sometimes do,) you can use a substitute, such as the Murata PKM44EW passive transducer (see picture above) which is available from an old Telstra TF200 touchphone, (the one on the left in the diagram above,) or an equivalent, such as the ARIO transducer, from an old Telstra T1000 pushbutton phone.

The ARIO unit is soldered to the phone's pc board so you'll need to be able to unsolder the three mounting pins underneath the board, or find someone in the neighbourhood who is able.

Take the back off the TF200 (if you've obtained one of these phones,) and you'll see a black disc shaped object 2" round by 1/2' thick - with a red and black wire. Unplug the wires from the circuit board, and unscrew any retaining screws and remove the transducer. Cut the mini plug off, **carefully** strip the insulation from the ends of the wires and extend them by about 18" with 2 thin lengths of hookup wire. These pietzo devices make good earphones for crystal sets and can be housed in an old pair of ear muffs.

Miscellaneous Materials:

A Tic Tac box (smaller size)

A piece of matrix board at least 7 holes long by 8 holes across. Cut the board to fit neatly inside the Tic Tac box.

A short length of 2 differently coloured wires 60 mm in length and 2 crocodile clips with red and black plastic covers

A length of antenna wire at least 25 metres long and a 3 metre length of a different colour for the Ground wire.

A metal rod or cold water pipe for the ground stake. **Be careful which pipes you connect your Ground wire to.**

You will need a small sharp object for punching holes in the Tic Tac box.

A small pair of wire cutters for cutting and stripping wires.

Step 2: How a Crystal Radio Works

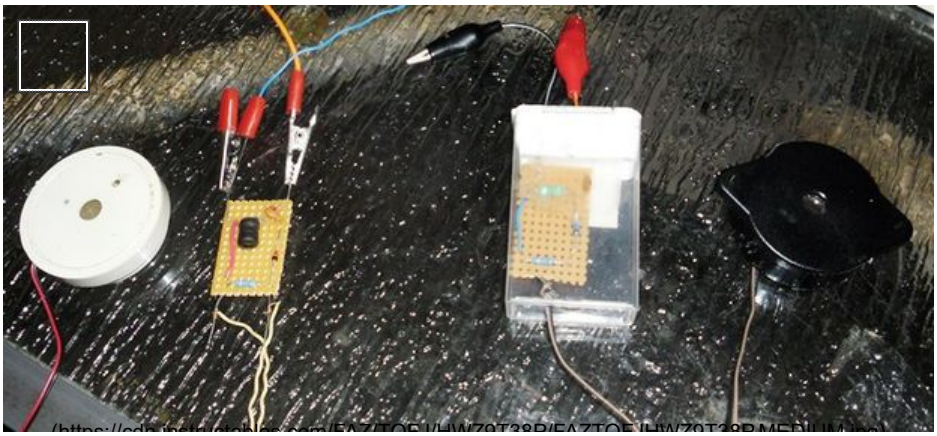

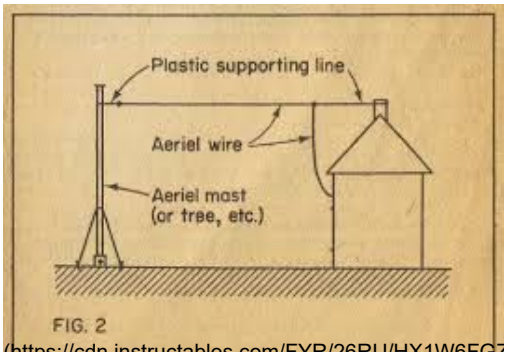

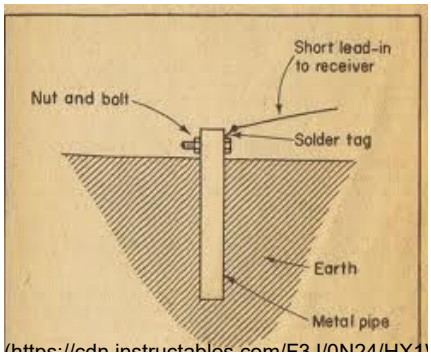

Radio signals consists of two parts - the 'carrier wave' which is the AM radio station's frequency of operation, and the 'program signal' which is mixed with the carrier wave for transmission.

Radio waves travel out from the AM transmitter tower through the atmosphere. We want to capture one specific frequency so we can listen to it, so we need the antenna/ground wire system to capture that signal. We also need a 'tuned circuit' that will filter out the desired AM signal, and discard the rest, so that all the other unwanted radio signals pass out through the ground wire to earth.

Two components in our circuit will perform that task for us. The **capacitor** C1, together with L1 **inductor**, form a basic 'series tuned' circuit. Their respective values will determine just which local AM radio station we will capture.

We also need a **diode** to 'detect' the voice and music, so we can hear them in our **earphone**, which transduces electrical signals into sound waves that we can hear.

In the photo above you can see a completed Tic Tac crystal radio. It is already inside the box. The other set is connected to the antenna/ground wire circuit, undergoing a 'soak test'. It is necessary to do this to ensure that the radio will work once inside the box!

The first diagram shows a typical antenna wire installation. Coming out of a window, the wire is anchored to the building and then over some distance (10 metres +) to a nearby tree or other building.

You must take great care not to erect antenna wires near to power or telephone cables, near your home!

The ground wire comes out the same window and is anchored to a metal pipe/water pipe or metal ground stake, embedded in soft, moist soil.

You must not connect ground wires to electrical mains wiring installations, including wall power outlets!

Another electrical hazard to consider is **lightning strikes!** Although it is very rare for anyone to be seriously injured or die from a lightning strike it is **not impossible**. So, if you hear a thunderstorm coming your way (you may hear the lightning 'crashes' in your earphone first,) then **disconnect your antenna wire immediately**, connect it to the ground wire and put it well up out of the way. Stay well clear of this temporary antenna/ground connection until the storm has completely passed away from your general area - miles away!

Step 3: How to Build the Tic Tac Crystal Radio Set

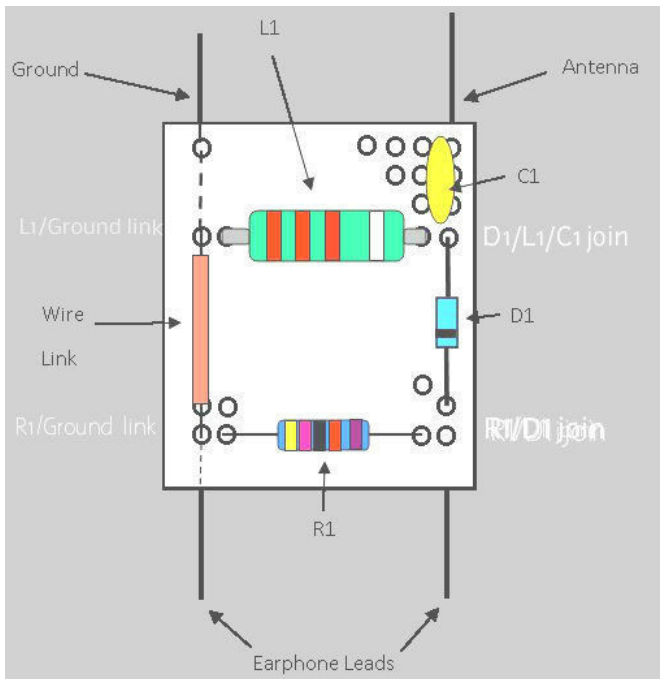

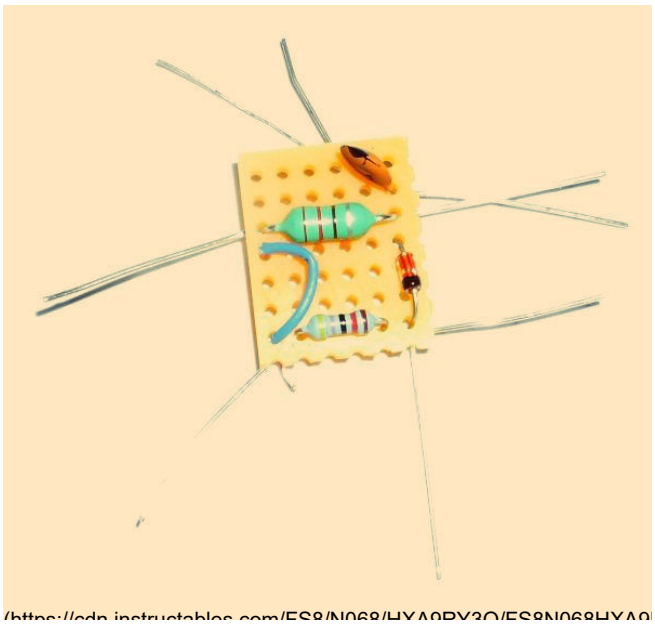

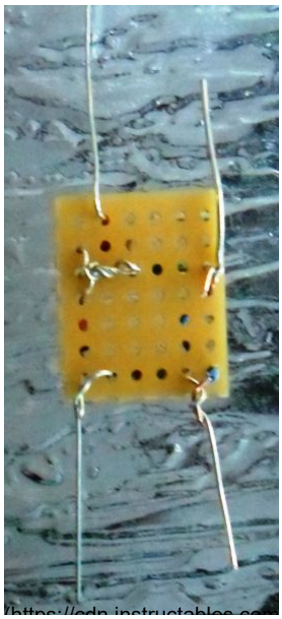

1. Take the components and lay them out on a clean surface.

2. Take the square of matrix board (this is also called 'perf board' because of all the holes or perforations in the material) and beginning with the 220uH (uH = micro-Henry) and place it as shown in the diagram.

3. Then take the diode, capacitor and resistor and place them in the places shown for them, making sure that the coloured band at one end of the diode joins with the resistor wire, as shown

4. Then take each junction where wires come together through their respective holes and gently twist them together, until they form a neat, tight bundle. Take your side cutters and cut off any excess length, taking care not to cut any one wire too short, so that it comes undone from the join.

.5. Take the link wire, strip 2 centimetres of insulation from each end of the wire and install that wire between the free ends of the inductor and resistor, and the matrix board construction is complete.

6. Then take the ceramic earphone, cut the plug off the end, and strip the 2 wire ends about 1.5 centimetres in length. Wrap each earphone wire around each end of the resistor component, underneath the matrix board.

7. Finally, strip the insulation off both ends of the 60mm long differently coloured wires, and attach them to the matrix board - one goes to the inductor/link wire junction and this will be the Ground connection wire. Attach the other one to the free end of capacitor C1 and this will be the antenna wire connection. Both connections are made underneath the matrix board. The Nic Nac Tic Tac Crystal Radio is now ready for testing.

Step 4: Final Checks and Installation of Wires

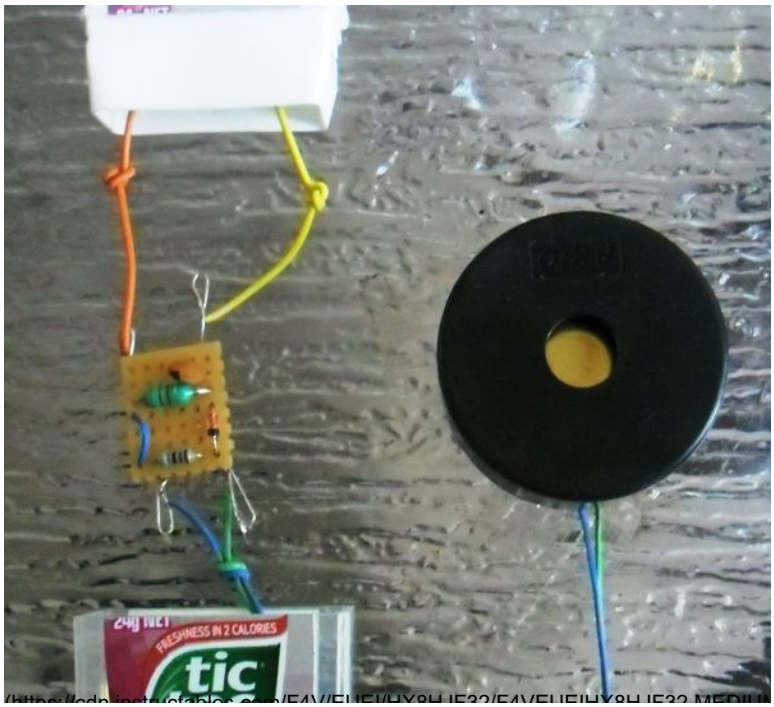

When you've finished constructing the matrix board circuit and have clipped all the excess component leads off, puncture three (3) holes in the Tic Tac box - 2 small holes on the top lid of the box, about an inch (24mm) apart, so that your antenna and ground wire leads can come through the box lid, and be connected to the matrix board at those 2 points.

Feed the wires through the holes and then tie small knots in each one, near the underside of the box lid, so that they won't pull back out if strained, and disconnect themselves from the matrix board.

Then make one larger hole in the centre of the bottom of the box (clear part) so that your earphone wires can be fed through to the connecting points on that part of the matrix board. Tie a larger knot in the earphone lead so as to prevent it from pulling out of the box if it is strained. Strip the insulation off the earphone leads, and wrap them around the matrix board leads at those 2 points. You are now ready to test out the Nic Nac Tic Tac Crystal Radio.

Step 5: Testing Out the Tic Tac Radio

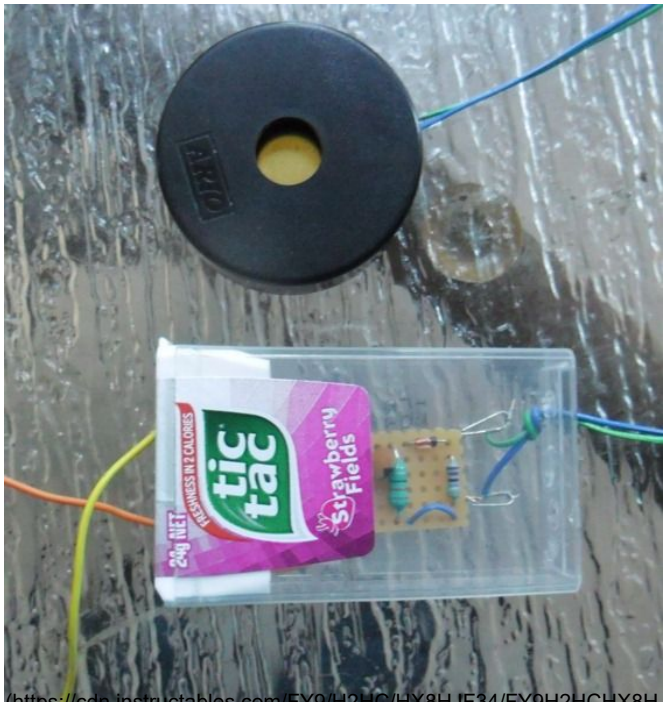

(https://cdn.instructables.com/FY9/H2HC/HX8HJF34/FY9H2HCHX8H

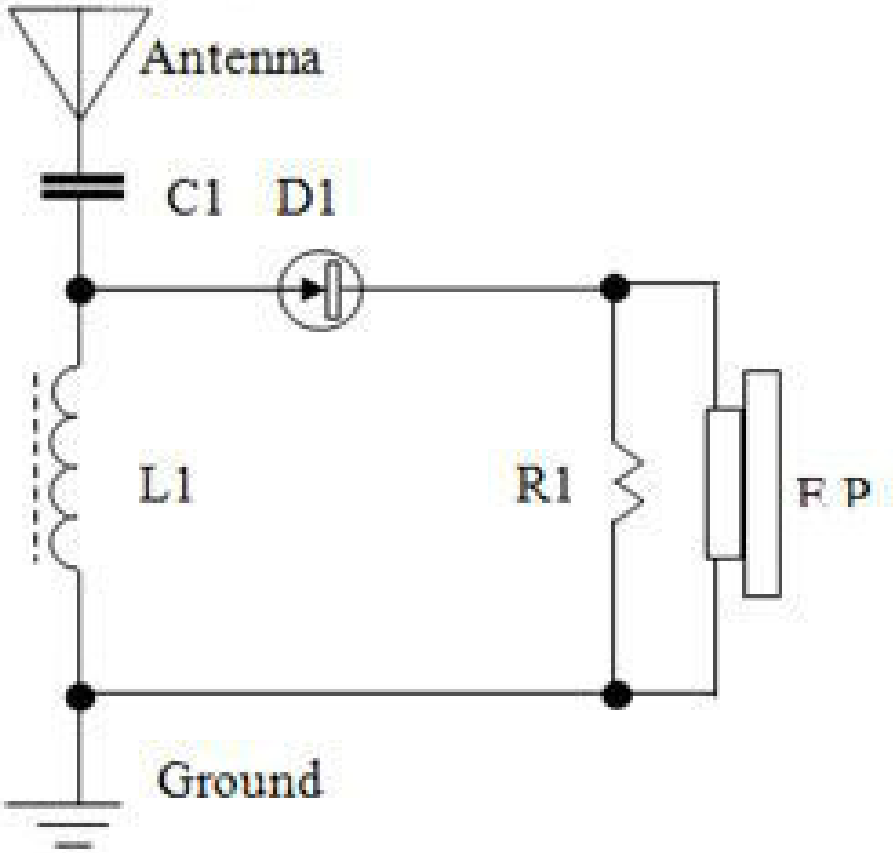

(https://cdn.instructables.com/FL6/41GU/HX5H55A2/FL641GUHX5H55A2.MEDIUM.jpg)

Take your finished Tic Tac Radio (with the lid part gently pushed back inside the top of the box) and connect your Antenna and Ground wires to the lead outs from the box lid. Place the earphone in/over your ear,and listen carefully for a local AM radio station. This crystal radio is a simple one, and you may have to make one or two adjustments to the components, before you succeed in receiving one or more local AM radio stations, in your area.

If you can't hear anything in the earphone, don't panic. It might just be a simple wiring mistake, which is easily fixed. Go back over all of the steps, making sure that you have the right value components from the electronics store. Make sure that each component is in the right place on the matrix board, (don't confuse the L1 inductor with the R1 resistor - they look a lot like each other!) and that no component wires have come undone from the twisted joins you have just made. I'll be writing up a troubleshooting step soon, so if you run into any problems, post your questions in the 'comments' section down at the bottom of the page, and I'll try and answer them as soon as possible.

Make sure that your antenna and ground wires aren't snagged on anything metal or anything **dangerous!**

If you have ANY doubts about the electrical safety of your antenna or ground wires, then consult a licensed electrical trades person, who will be able to advise you on electrical safety principles and procedures!

Always remember that electrical safety is your responsibility! If you don't think it is safe to proceed, then don't!

You will need at least 10 to 15 metres of antenna wire, strung between 2 insulating points (not connected to anything metallic, or that gets wet,) at least 2 to 3 metres in height - anything less than this minimum arrangement may mean that you cannot receive any signals at all.

Some places are regarded as 'radio dead spots', so you may need to try an open space, such as a park or a remote corner of a beach. If you do erect antenna and ground wires in public places, hang some streamers or balloons off of them, to alert people to their presence, otherwise people going past may become entangled with them - and get cranky with you!!!

As a final word for now, you'll be happy to know that the completed "Nic Nac Tic Tac Radio" shown in the picture above, picked up local AM radio station **1116 khz 4BC** here in Brisbane, with a very clear signal and quite good volume. It works! So be safe kids, have some fun and look forward to more... mk484

Step 6: Nic Nac Extras

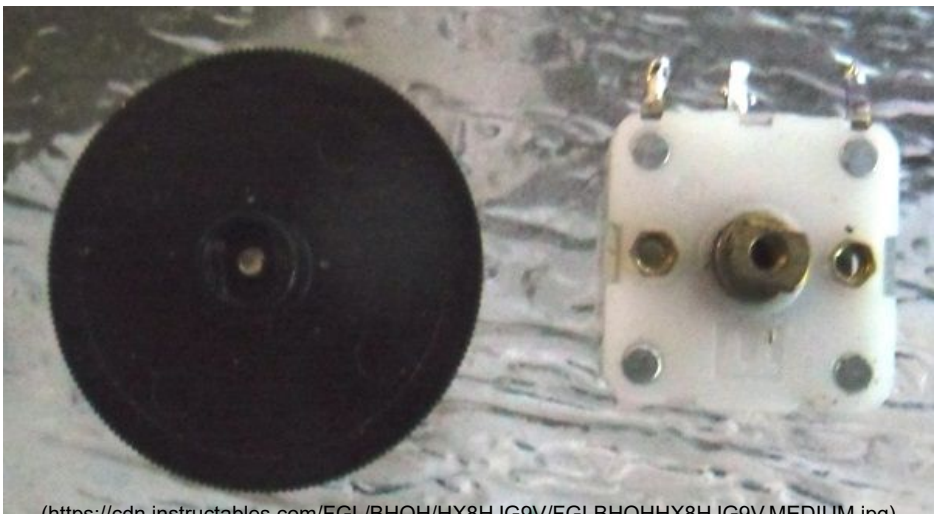

(https://cdn.instructables.com/FGL/BHOH/HX8HJG9V/FGLBHOHHX8HJG9V.MEDIUM.jpg)

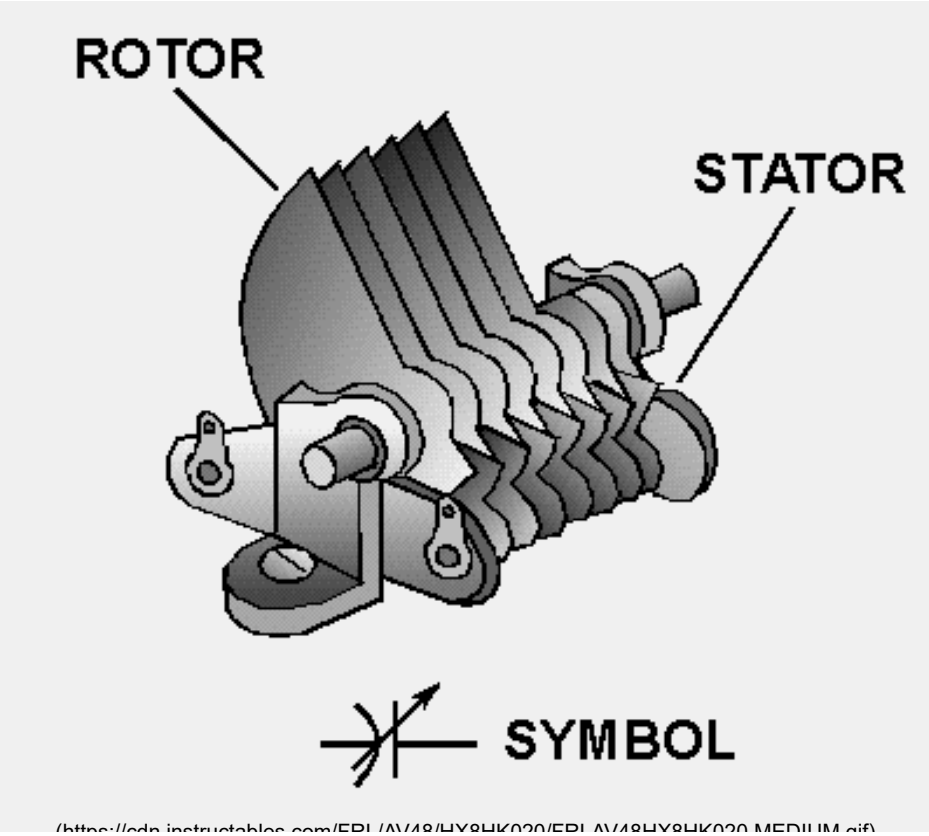

(https://cdn.instructables.com/FRLAV48/HX8HK020/FRLAV48HX8HK020.MEDIUM.gif)

If you've built your Tic Tac crystal set and found that you can't receive a local AM radio station yet - don't panic - help is in on the way. You have just built the simplest version of the Tic Tac crystal radio and you may need to add one more component part for it to work properly. This is called a 'polyvaricon' - a miniature tuning capacitor, which can vary the frequency that your radio will receive at. You can see a picture of one up above - the small white box with the black knob next to it. It has 3 connecting tags - the one in the middle ('G') goes to the moving plates and the shaft, while the 2 outer tags ('O' and 'A') go to 2 sets of fixed plates. the smaller set of plates has a value of 60pF - pF is short for 'picoFarad' - a unit of measurement for capacitance. The larger set of plates is valued at 160 pF so that the combined value of the polyvaricon is 220 pF - or 220 picoFarads.

The other picture shows you what happens inside a basic tuning capacitor. there are 2 sets of metal plates - one set is fixed and the other set moves on a rotating shaft, connected to the tuning knob of your radio set. Both sets of plates are mounted on an insulating frame so that they won't 'short out' by touch each other.

The fixed capacitor C1, was chosen to tune somewhere close to the middle of the AM radio band. This band of frequencies starts at 531 kilohertz (Khz) and goes as far as 1701 Khz here in Australia. So we need a combination of coil and capacitor which will tune across all of those frequencies. Our simple Tic Tac radio is known as a 'series tuned' set. If you look at the circuit diagram, you can see electronic symbols for all components in the radio set.If you start at the top with the antenna symbol, you can see the capacitor C1 underneath that, the inductor L1 underneath C1 and then finally, the ground symbol - all wired in series with each other.

The diode D1 detector, the resistor and the earphone plus the link wire, can be considered as one block - the "detector unit". The Antenna wire, ground wire, inductor/coil and capacitor/polyvaricon, can be also be considered as another

block - the "tuned circuit". So joining both blocks together, we have the tuned circuit that tunes in only one frequency, passing all other unwanted signals out through the ground wire to earth. This one 'tuned frequency' passes through the diode detector, which strips away the 'carrier wave' and leaves only the 'program signal' (voice, music etc,) behind, which is then fed via the resistor into the earphone. The earphone changes electrical impulses from the diode detector, into sound waves that we can hear. You need the R1 resistor to provide a pathway for the signals going through the diode, out to the ground wire connection. Without this resistor, the signals would sound very distorted and you couldn't hear the program signal very clearly.

Step 7: Adding the Polyvaricon Tuning Capacitor

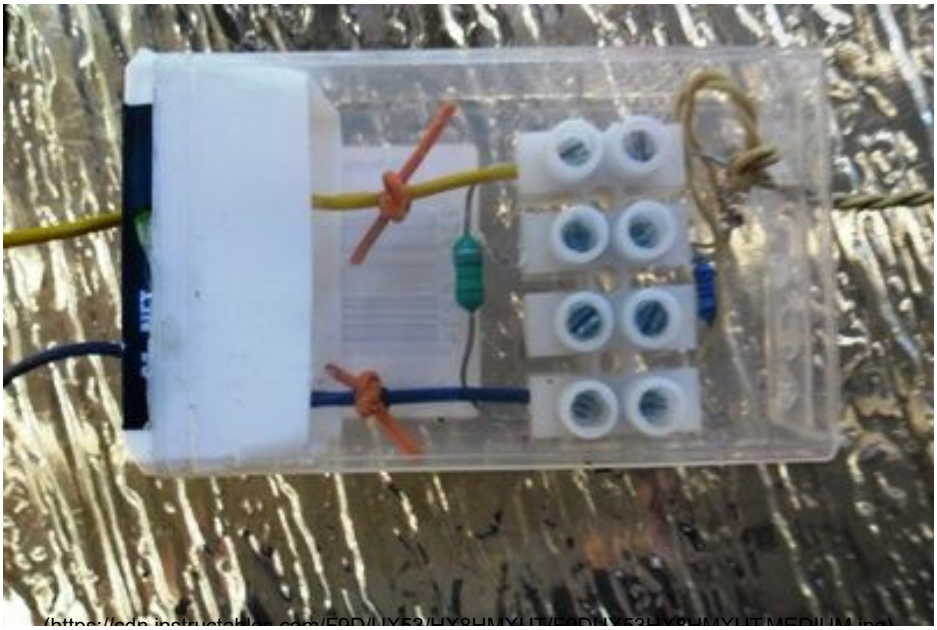

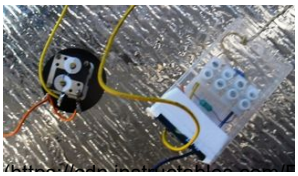

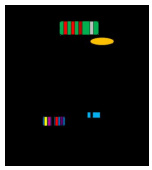

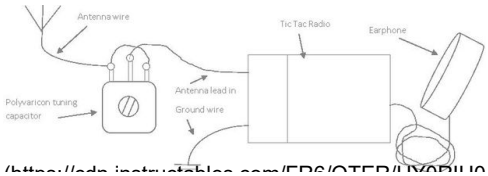

If you want to expand the tuning range of your Tic Tac Radio, than all you have to do is a simple modification (change) to the circuit of your radio set. You can see from the 2 pictures above, that there's an alternative way of building the crystal radio - you can use the matrix board method or you can use a 4 way screw terminal strip.

To use the screw terminal version, cut yourself a 4 way strip of terminals as shown in the diagram and pictures. Undo the screws right out as far as they will go without falling out of the strip. Connect the component leads and wires from the antenna/ground system as well as the earphone wires. Cut off any excess from component leads that you don't need. Wrap thin wires from the antenna/ground system and the earphones, around the thicker component leads before screwing the screws in tight.

Regardless of which method you have used, all we will now wire up the tuning capacitor between the actual Antenna wire and the junction (join) where the diode D1, the fixed capacitor C1 and one end of the inductor meet. Remove the capacitor from the matrix board, and connect the Antenna lead out wire straight to the join of the diode and inductor. Then take the polyvaricon and another

piece of wire. Strip both ends of that wire and join the two outer tags (tagged 'O' and 'A' - the centre on is tagged 'G') and then connect you actual Antenna wire to one of the outer tags. Connect the antenna lead out wire, coming out of the box, to the 'G' (middle) tag of the tuning capacitor,so that the antenna wiring now looks like the picture up above.

If you're having problems following the pictures, then refer to the diagrams, which clearly shows all of the connections Make sure your ground wire is connected to the set, and then, listening with your earphone in/over your ear, slowly turn the tuning cap's flat knob, until you hear one or more stations. Congratulations - you now have a "tuneable" Tic Tac crystal set! Happy listening! And don't forget to post in your results, questions, problems etc... mk484 :)

Step 8: Tic Tac One Transistor Amplifier - Use Your Earbuds and Hear Great Sound...

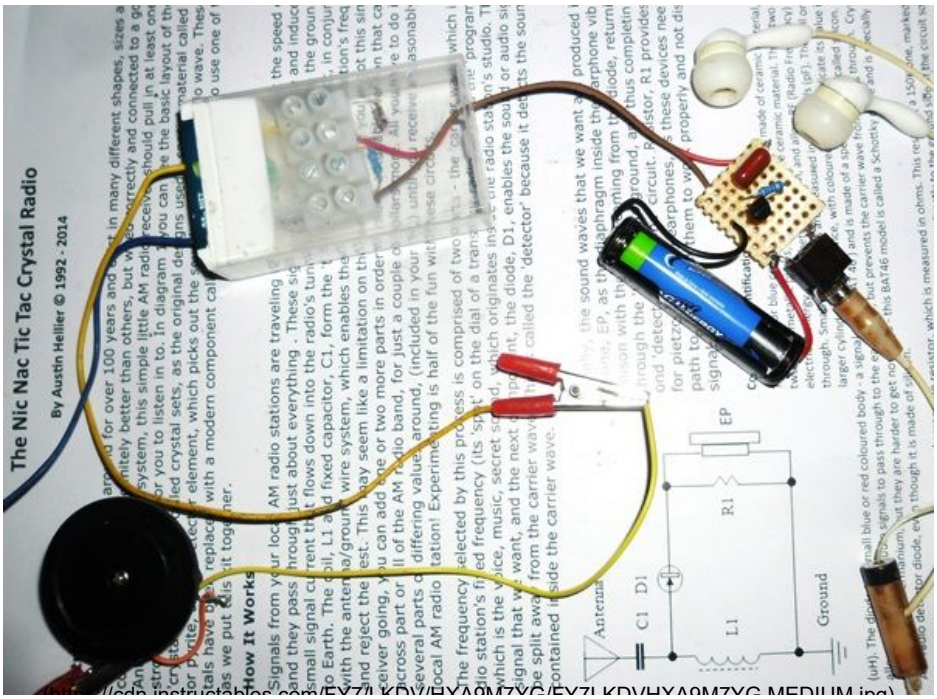

Hi there folks - this isn't really an extra 'Step' as such - it's a sneak preview at a picture of my upcoming Instructable for a one transistor amplifier, which will connect to the Tic Tac Radio - and give you some really good volume - in your Iphone earbuds!

Yes, it's entirely possible nowadays, with modern circuit design, to fit a one transistor amp in such a small space (yes kiddies - it WILL fit inside the smaller Tic Tac box...) and at the same time, get that great sound that comes from those "inside your ear" type earbuds.

This circuit took me about a half hour to complete, uses only 3 electronic components, costing about $1.00, a stereo earphone jack and a 1.5 volt AAA battery and plastic holder costing about another $3 to $4, so you can build the amplifier for about $5 all up - don't forget to shop around and - mums and dads - cheap batteries will be OK for this project, and the battery can simply be replaced without soldering or undoing half a dozen screws....

I can hear my Tic Tac Radio with great volume and clarity - and so will you, so "stay tuned" (ha ha ha) to this series of Instructables, and you will hear great sound too...

mk484

advertisement

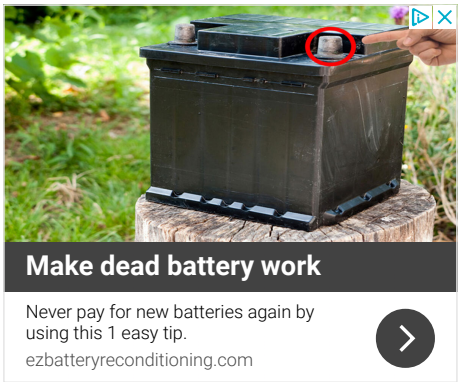

Comments

be nice

We have a be nice comment policy.
Please be positive and constructive.

I Made it! | Add Images | Post Comment

Colaris (/member/Colaris/) 2014-10-29 Reply

Can't you use regular headphones for both ears?

mk484 (/member/mk484/) ▸ Colaris (/member/Colaris/) 2014-10-29 Reply

Hi Colaris - earphones for crystal radios need to exhibit a fairly high impedance to the circuit (diode end and ground) - in the order of 2 to 4,000 ohms, as a bare minimum.

Low impedance phones (8 to 64 ohms like your average earbuds/large headphones) won't have anywhere near the impedance required. Trying to drive a low impedance 'load' such as a pair of earbuds, is like trying to drive a mains powered with a 9 volt battery - it's not going to happen...

While crystal earphones or the Murata substitute may not be perfect, they are more than adequate for kids and adults who are just experimenting with basic radio receivers.

mk484 (/member/mk484/) ▸ mk484 (/member/mk484/) 2016-01-16 Reply

Hi Colaris - what I meant to say was that

"Trying to drive a low impedance 'load' such as a pair of earbuds, is like trying to drive a mains powered (toaster) with a 9 volt battery - it's not going to happen..."

TravisM18 (/member/TravisM18/) 2015-11-03 Reply

I think you may need a tuning capacitor in there some where?

nupogodi (/member/nupogodi/) 2015-09-10 Reply

It is so pitty that in the near future all AM radiostations at least in USA and Europian Union will change to digital modulation so those amazing constructs will become useless :-(

mk484 (/member/mk484/) ▸ nupogodi (/member/nupogodi/) 2015-09-12 Reply

Thereare no plans to dump off AM or FM radio here, or in many other countries. Singapore has gone all digital but many other Asian countries are keeping their AM and FM transmitters for now

mk484 (/member/mk484/) 2015-07-15 Reply

Hello there - can any body tell me if they actually built this Tic Tac crystal radio, and if so, how did you go with it?

Thanks

MK484 :)

ViktorV1 (/member/ViktorV1/) 2014-09-28 Reply

So is there any way to have a smaller antenna or less grounding for this setup? I was thinking of making a "walkie-talkie" type thing with this and a simple AM transmitter. Are there things I can add to the circuit that would reduce the need for a big stationary antenna?

mk484 (/member/mk484/) ▸ ViktorV1 (/member/ViktorV1/) 2014-09-28 Reply

Hi Viktor - if you live really close to an AM transimitter or two, you could try a 2 foot length of very thick pvc covered wire as a portable antenna. You may still need a ground wire though. Walkie talkies on the AM band would tend to be very noisy though.

mk484 (/member/mk484/) 2014-07-10 Reply

Thanks to everyone who has marked this project as a favourite

jessyratfink (/member/jessyratfink/) 2014-07-08 Reply

What a neat build - I could see this getting assembled in schools really easily. :D

mk484 (/member/mk484/) ▸ jessyratfink (/member/jessyratfink/) 2014-07-08 Reply

Hi jessyratfink - I "invented" the Tic Tac xtal radio back in 1992 and used to sell it as a kit at flea markets - I also ran classes as a one of at a local community centre for adults. One little old lady who came and built her set, used a curtain rod in her kitchen as the antenna and the cold water tap in the sink as her ground. She told me that she used to sit there each night and listen to the ABC and smile whenever she reminded herself that SHE built it!

mk484 (/member/mk484/) 2014-07-07 Reply

Hi folks - the Tic Tac Radio article is finished - no more mods or additions for now, so feel free to post in with questions, problems in building your radio etc - mk484

mk484 (/member/mk484/) 2015-11-03 Reply

Hi Travis - this set was designed as a basic 'bare bones' one for the beginner. In the later construction pages, I do add a small polyvaricon tuner cap in place of the fixed ceramic cap so you can vary the frequency you can receive at.

The set is wired to be 'series tuned' so reception may not be perfect at first, but you can experiment with the height and length of the antenna wire to try and get better reception - eg: more stationsor better volume.

ALWAYS REMEMBER FOLKS TO CHECK OUT THE ELECTRICAL SAFETY OF YOUR ANTENNA AND GROUND WIRE SYSTEMS BEFORE CONNECTNG YOUR CRYSTAL SET TO THEM...

charris8 (/member/charris8/) 2015-10-15 Reply

Do you really need it grounding? What are the chances of an electrical surge from a non powered device?

mk484 (/member/mk484/) ▸ charris8 (/member/charris8/) 2015-10-15 Reply

Hi - a ground wire provides a return path so that the AM radio signal can be fully received by the set. If you leave the ground wire off, you may not get very good volume in the earphone, or worst still, you may not get a signal at all.

You need to install a safe ground wire - one that goes straight to a metal pole, embedded in soft, wet soil. Make sure there are no pipes or cables underneath the ground where you are going to do this. If you have any doubts, consult a qualified electrician who can advise you on how to do that safely.

As for electrical shocks, they are possible during thunderstorms, due to potential lightening strikes, so it's best to disconnect your crystal set from both the antenna and ground wires for the duration of the storm. Quite often you can hear the 'crackle' of distant thunder/lightening in the distance, long before you can see/hear them.

More Comments

Nic Nac Tic Tac Crystal Radio Set - an Ideal Primary School Project...

by mk484 (/member/mk484/) in science (/topics/science/)

by mk484 (/member/mk484/) in science (/technology/science/)

Download | (/id/Nicholas-Tesla-Crystal-Radio-Set/) | (/id/Nicholas-Tesla-Crystal-Radio-Set/) | 8 Steps

+ Collection | I Made it! | Favorite | Share

Newsletter

Join Instructables and receive daily emails with the best projects, classes, and contests. Instructables will help you learn how to make anything!

enter email | I'm in!

About Us

- Who We Are (/about/)
- Advertise (/advertise/)
- Contact (/about/contact.jsp)
- Jobs (/community/Positions-available-at-Instructables/)
- Help (/id/how-to-write-a-great-instructable/)

Find Us

- Facebook (http://www.facebook.com/instructables)
- Youtube (http://www.youtube.com/user/instructablestv)
- Twitter (http://www.twitter.com/instructables)
- Pinterest (http://www.pinterest.com/instructables)
- Google+ (https://plus.google.com/+instructables)

Resources

- For Teachers (/teachers/)
- Residency Program (/pier9residency)
- Gift Premium Account (/account/give?sourcea=footer)
- Forums (/community/?categoryGroup=all&category=all)
- Answers (/tag/type-question/?sort=RECENT)
- Sitemap (/sitemap/)

advertisement

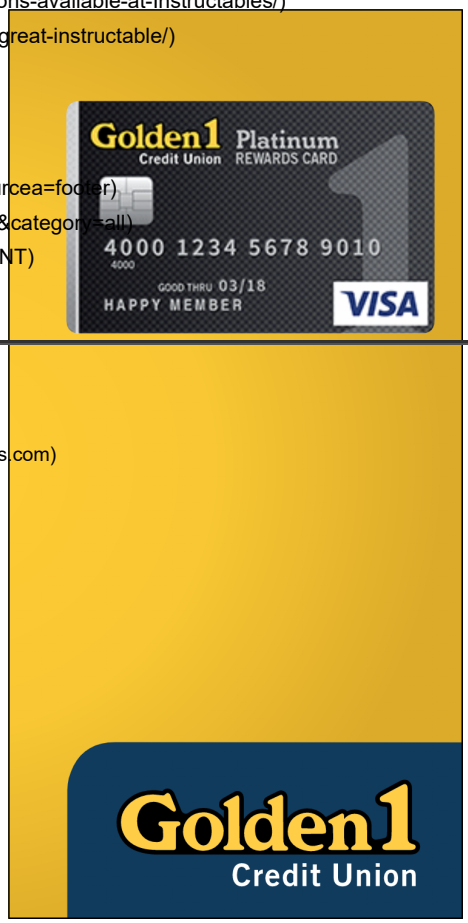

Terms of Service (http://usa.autodesk.com/adsk/servlet/item?siteID=123112&id=21959721) |
Privacy Statement (http://usa.autodesk.com/adsk/servlet/item?siteID=123112&id=21292079) |
Legal Notices & Trademarks (http://usa.autodesk.com/legal-notices-trademarks/) | Mobile Site (https://www.instructables.com)
(http://usa.autodesk.com/adsk/servlet/pc/index?id=20781545&siteID=123112)
© 2017 Autodesk, Inc.

US005167786A

United States Patent [19]

Eberle

[11] **Patent Number: 5,167,786**

[45] **Date of Patent: Dec. 1, 1992**

[54] **WAVE-POWER COLLECTION APPARATUS**

[76] Inventor: **William J. Eberle,** 102 Oak Forrest Trail, Euless, Tex. 76039

[21] Appl. No.: **646,353**

[22] Filed: **Jan. 25, 1991**

[51] **Int. Cl.**[5] **C25B 1/10;** C25B 1/12; C25B 9/00; C25B 15/02

[52] **U.S. Cl.** **204/229;** 204/242; 204/264; 204/266

[58] **Field of Search** 204/129, 275-278, 204/263-266, 229, 242; 210/242.1, 170

[56] **References Cited**

U.S. PATENT DOCUMENTS

242,233	5/1881	Swales .	
321,229	6/1885	Leavitt .	
366,768	6/1887	Elias .	
581,067	4/1897	Fletcher .	
706,620	8/1902	Williams .	
739,538	9/1903	Fredson .	
787,182	4/1905	Huchings .	
791,366	5/1905	Rapp .	
852,232	4/1907	Kohler .	
879,992	2/1908	Wilson .	
884,080	4/1908	Fallis .	
975,157	11/1910	Quedens .	
1,377,163	5/1921	Pool	60/497
1,389,445	8/1921	Hare .	
1,403,702	1/1922	Melvin .	
1,471,222	10/1923	Taylor .	
1,623,341	4/1927	Hare .	
1,647,025	10/1927	Stich .	
2,668,918	2/1954	Howell .	
2,706,077	4/1955	Searcy	230/67
2,749,085	6/1956	Searcy	253/10
3,060,119	10/1962	Carpenter	210/242.1 X
3,487,228	12/1969	Kriegel et al.	290/52
3,652,431	3/1972	Reynolds	204/129
4,125,463	11/1978	Chenoweth	210/170 X
4,206,601	6/1980	Eberle	60/398
4,235,693	11/1980	Rowe et al.	204/129 X
4,335,576	6/1982	Hopfe	210/242.1 X
4,452,696	6/1984	Lopez	210/242.1 X
4,490,232	12/1984	Lapeyre	204/278

Primary Examiner—Donald R. Valentine
Attorney, Agent, or Firm—Woodcock Washburn Kurtz Mackiewicz & Norris

[57] **ABSTRACT**

A novel tidal and wave-power collection apparatus is disclosed which is adapted to produce hydrogen and/or oxygen gas. The apparatus is particularly well suited for oceanic installations. In the preferred embodiment, a matrix of gas producing units is easily assembled at sea, each being bridged and reinforced by catwalks extending therebetween which form trilateral gas producing modules having such units at each of the corners thereof. Each gas producing unit comprises a central tubular pilaster embedded in the ocean floor around which is disposed a toroidal float which moves up and down with the waves and tide and which acts to drive a DC generator while rising and falling. The output of the generator is utilized to electrolytically produce hydrogen and/or oxygen gas, which is compressed for storage in the float's chamber. The apparatus is efficient, economical and capable of capturing and storing large quantities of gas. In an alternative embodiment, the DC generator drives a high pressure pump which forces sea water through the microporous membrane of a reverse osmosis unit, thereby converting the sea water into potable water.

18 Claims, 8 Drawing Sheets

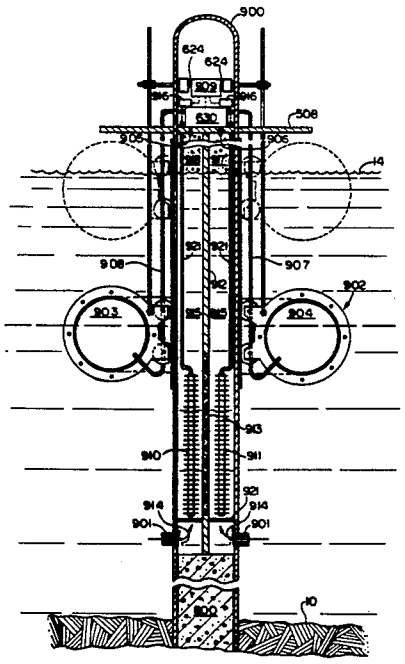

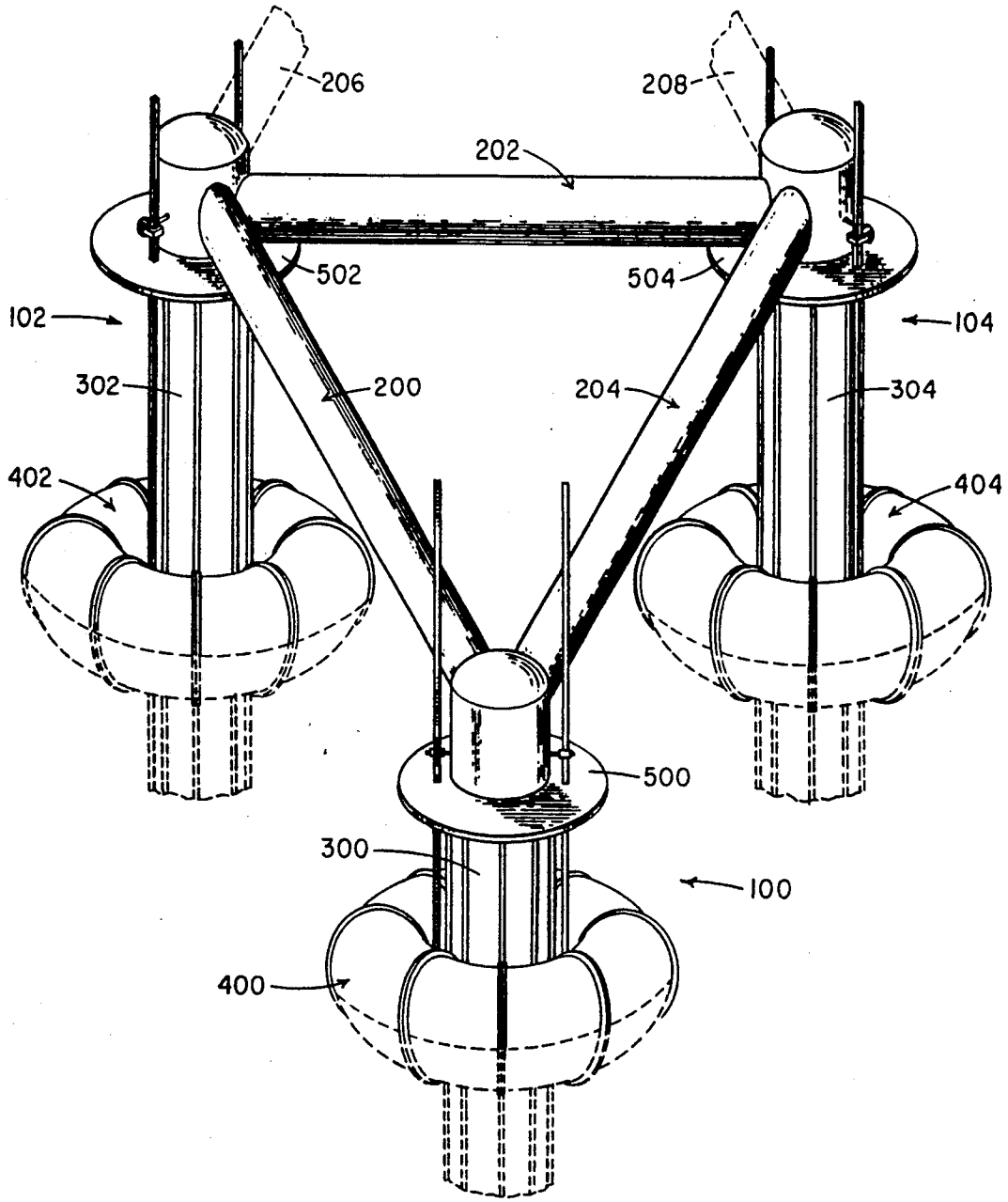
206
208
202
502
504
102
104
302
200
204
304
402
404
500
300
100
400

FIG. 1

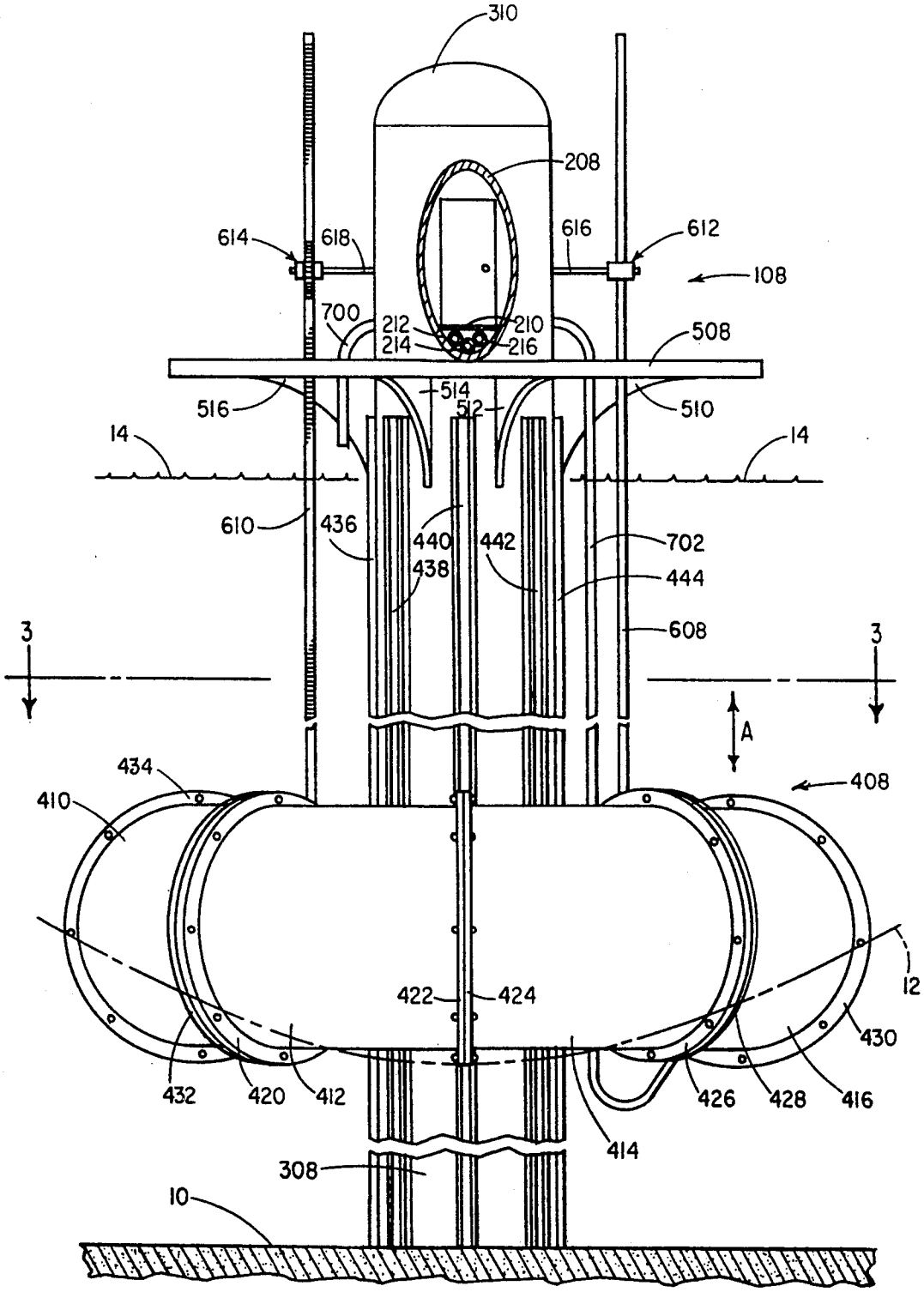
310
208
614
618
616
612
108
700
212
214
210
216
508
516
514
512
510
14
14
610
436
440
438
442
702
444
608
3
3
A
434
410
408
422
424
12
430
432
420
412
426
428
416
414
308
10

FIG. 2

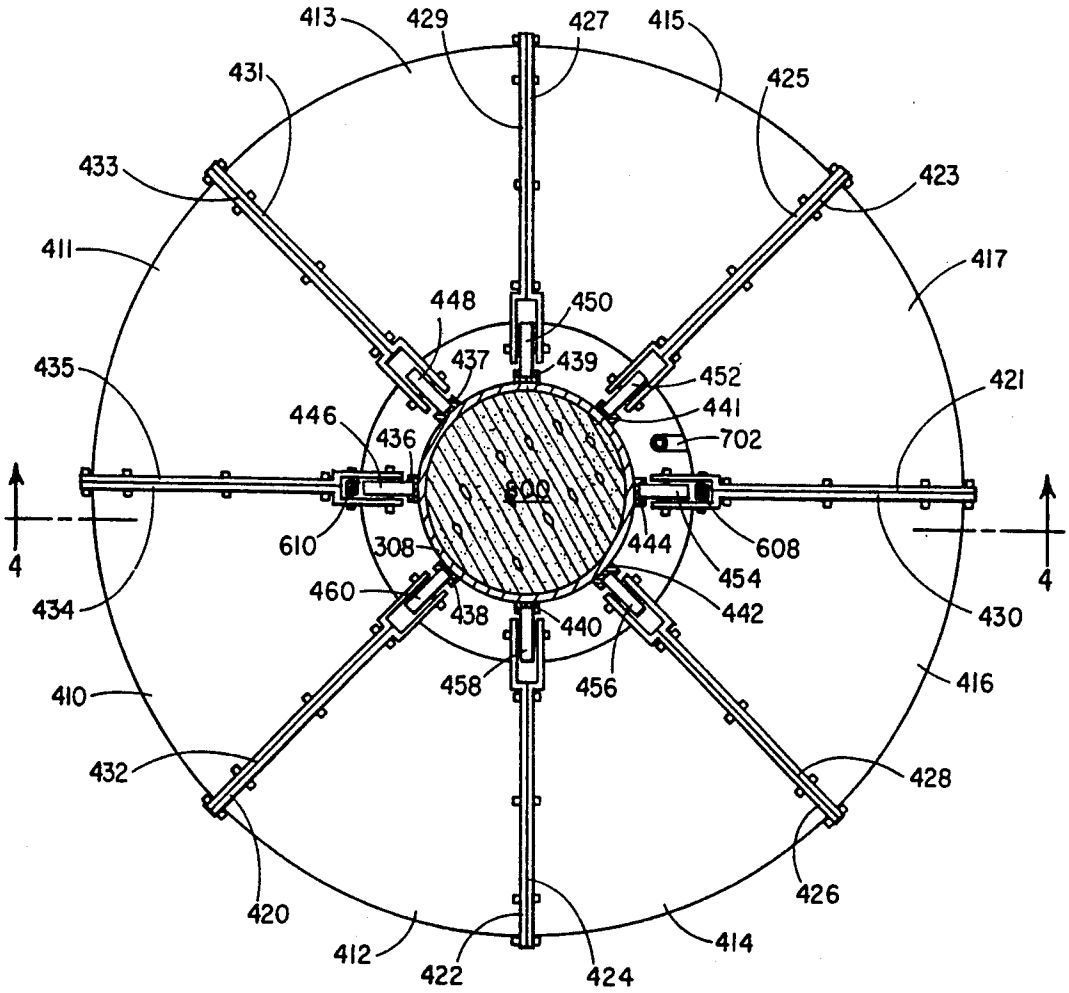
413
429
427
415
431
425
433
423
411
417
448
450
435
437
439
452
421
441
446
702
436
800
4
4
610
308
444
608
434
460
454
438
442
430
440
458
456
410
416
432
428
420
426
412
422
424
414

FIG. 3

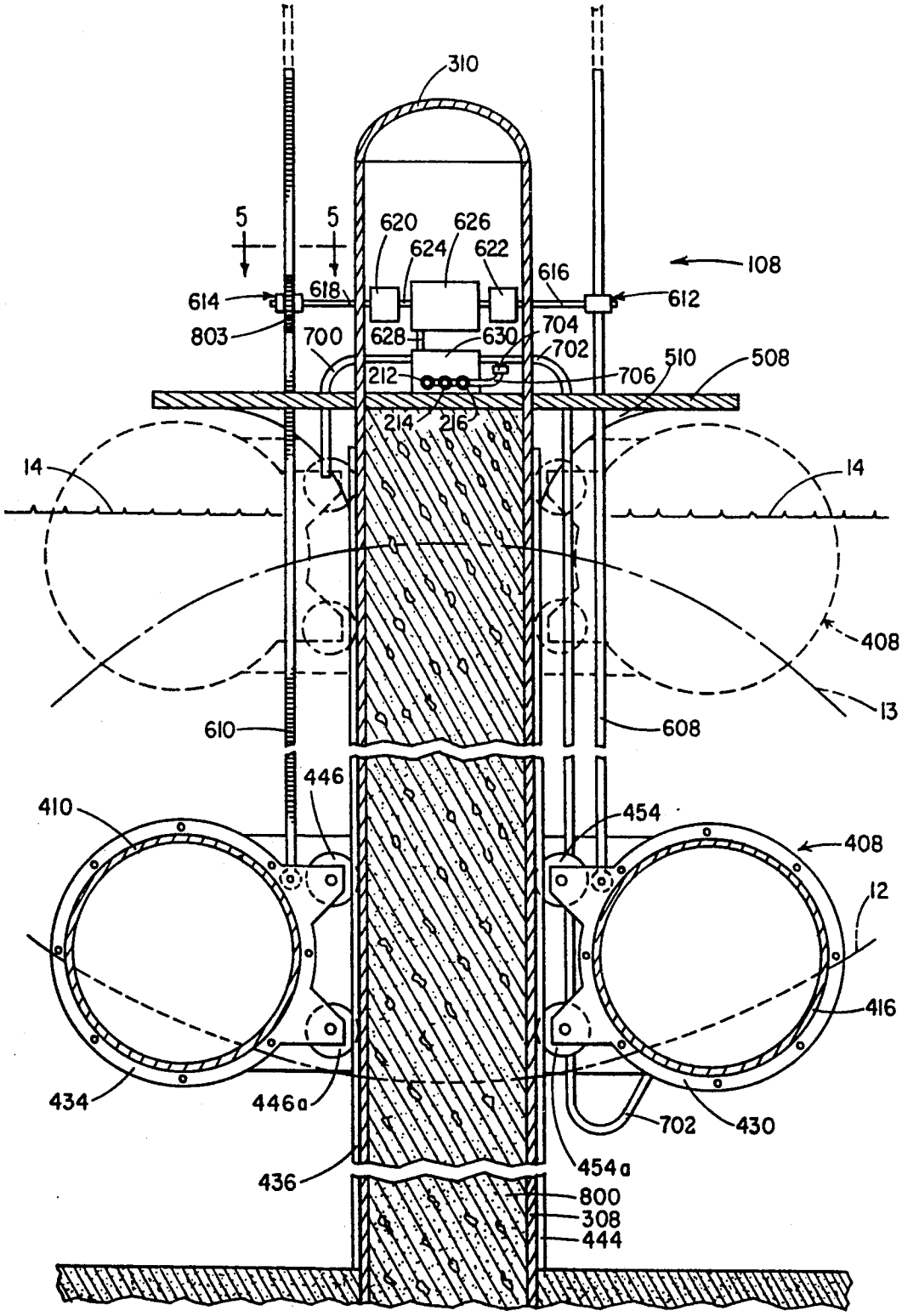
310
5
5
620
626
624
622
108
616
614
618
612
803
700
628
630
704
702
510
508
212
706
214
216
14
14
408
13
610
608
446
410
454
408
12
416
434
446a
702
430
436
454a
800
308
444

FIG. 4

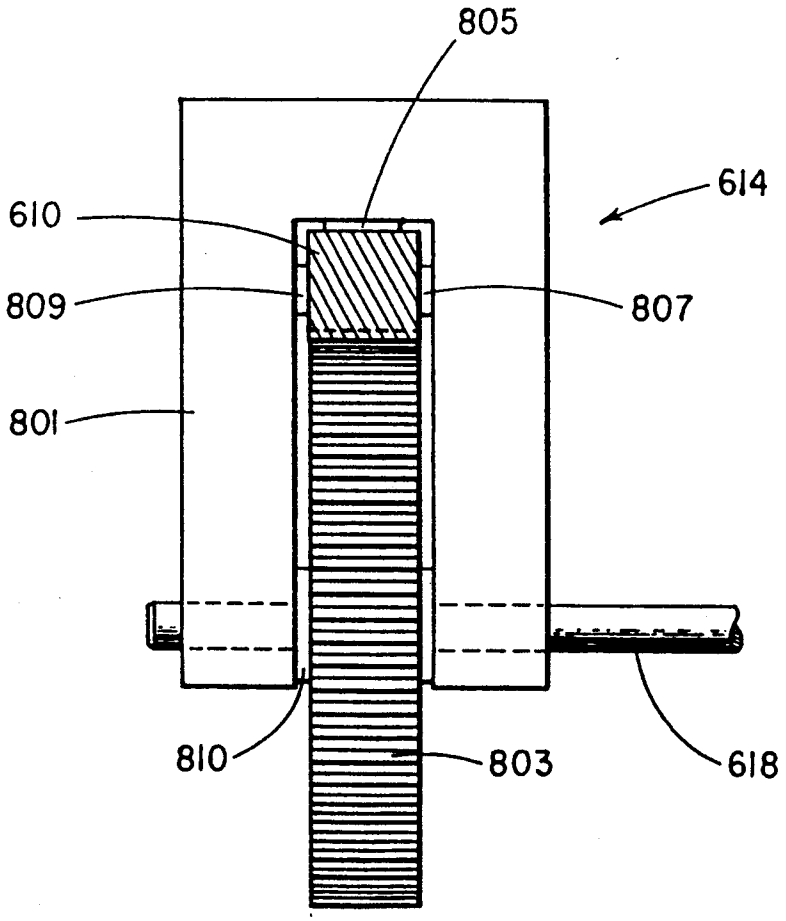

FIG. 5

FIG. 6

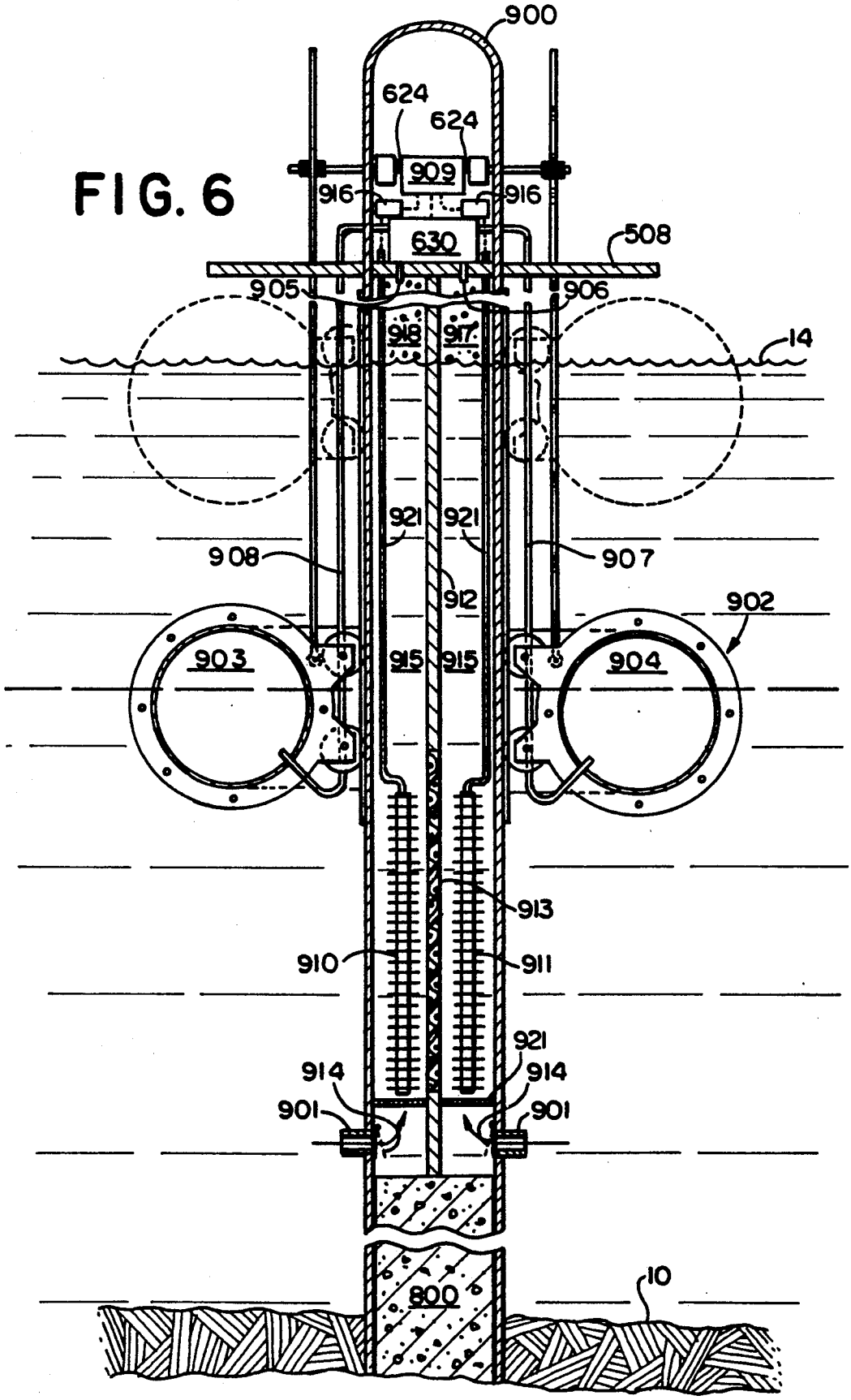
900
624
624
909
916
916
630
508
905
906
918
917
14
921
921
908
907
912
902
903
915
915
904
913
910
911
921
914
914
901
901
800
10

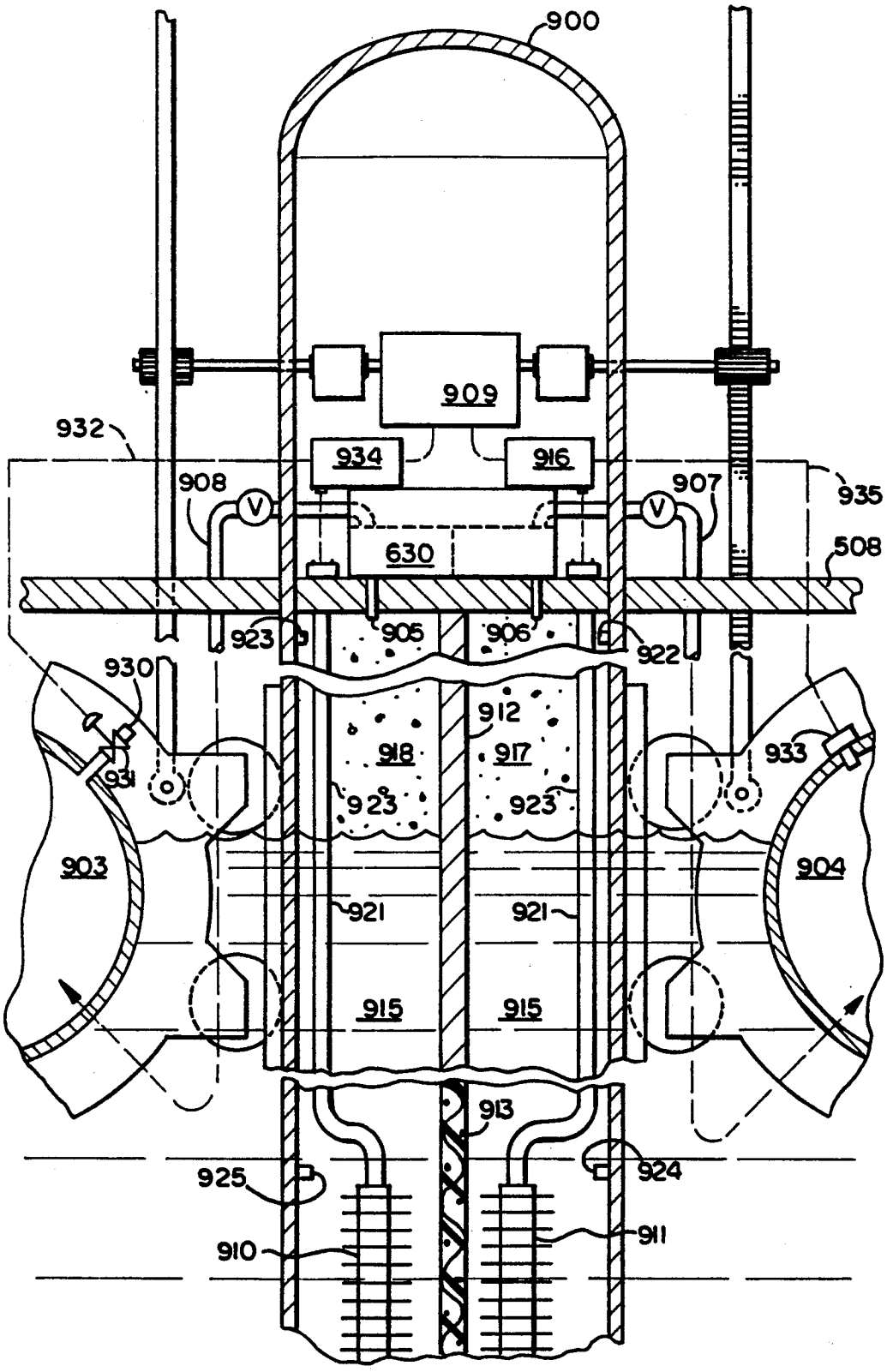
900
909
932
934
916
908
907
935
630
508
923
905
906
922
930
912
918
917
933
931
923
923
903
904
921
921
915
915
913
925
924
910
911

FIG. 7

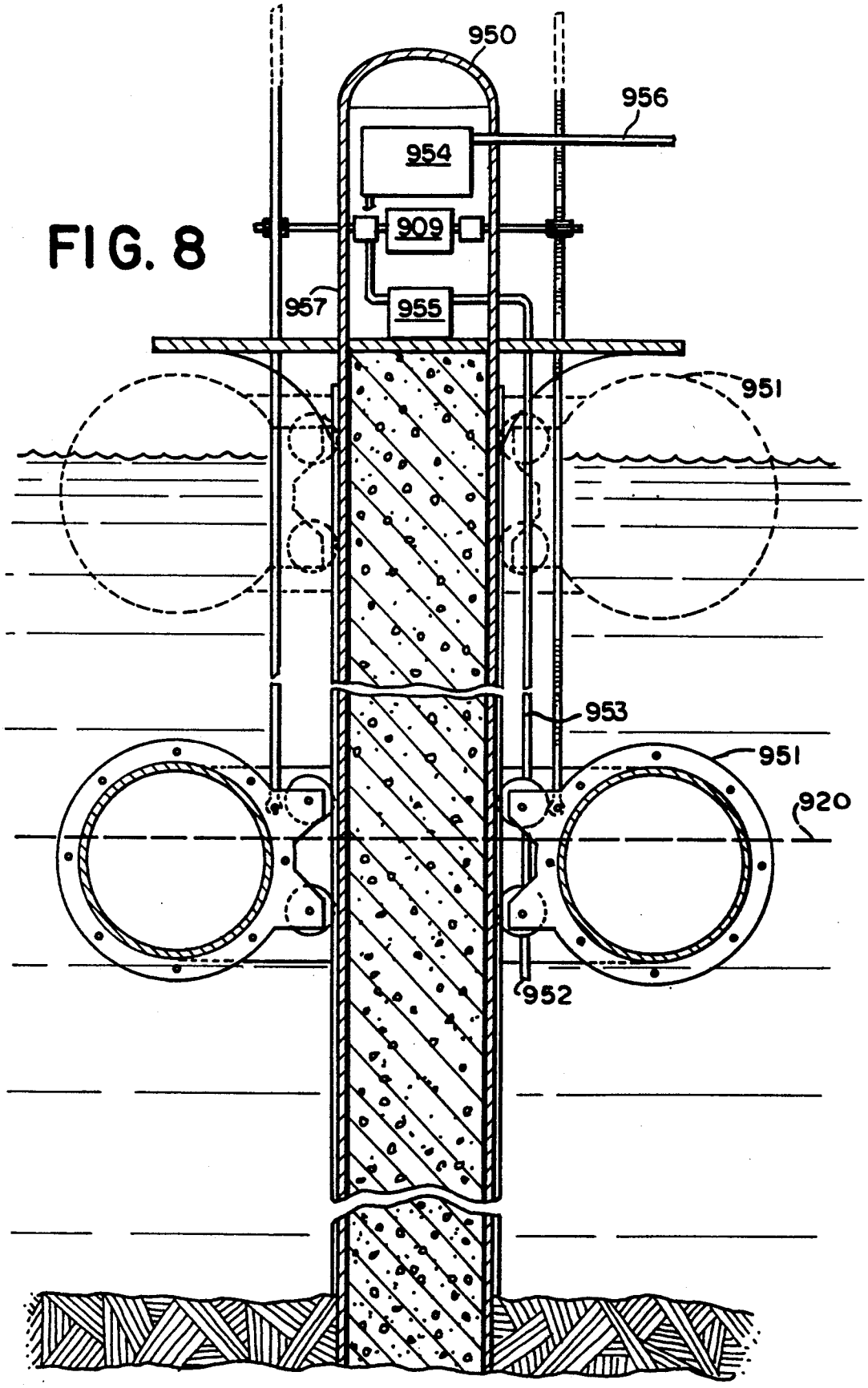

FIG. 8

WAVE-POWER COLLECTION APPARATUS

CROSS-REFERENCE TO RELATED PATENT

The present application is related to my prior U.S. Pat. No. 4,206,601, dated Jun. 10, 1980, which patent is hereby incorporated by reference as if fully set forth herein.

BACKGROUND OF THE INVENTION

It has long been recognized that waves and/or tidal forces contain tremendous amounts of potential energy which, if harnessed, could not only supply substantial power but might also, if appropriately installed, protect large areas of shore line from the ravages of oceanic erosion.

In the prior art, extensive patent literature exists dealing with the subject of "wave motors" and relating to various ways of utilizing floats which rise and fall with passing waves, the movement of the floats being translated by various means into mechanical energy, and then into electrical energy. For example, U.S. Pat. Nos. 321,229 and 1,647,025 disclose compressed air storage in combination with a wave motor. U.S. Pat. No. 2,706,077 is titled "Ocean Wave Air Compressor". Other forms of energy storing means are known to this art, including means utilizing balance wheels or flywheels in combination with various mechanisms for supplying power from waves. Additionally, the art teaches the use of multiple pontoons, or floats, the floats being arranged in various ways for improving the continuity of power derived from the passing waves, while occasionally also showing means for deriving energy from the lateral motion of waves as well as from the up and down motion of waves. In these regards, please refer to U.S. Pat. Nos. 242,233; 321,229; 366,768; 581,067; 706,620; 739,538; 787,182; 791,366; 852,232; 884,080; 879,992; 975,157; 1,377,163; 1,389,445; 1,403,702; 1,471,222; 1,623,341; 1,647,025; 2,668,918; 2,706,077; 2,749,085 and 3,487,228.

While many of the devices disclosed in the prior art are no doubt operative, the failure of such devices to gain widespread acceptance suggests that these devices may, in practice, be too expensive, complex, and difficult to maintain to serve as practical energy sources.

SUMMARY OF THE INVENTION

The present invention overcomes many of the disadvantages of the prior art by providing an extremely simple, economical device for capturing substantial amounts of energy and converting that energy into hydrogen and/or compressed oxygen which is stored within the floats of each power unit. These gas(es) may then be collected, or supplied through conduits, as needed, to satisfy energy and or raw material demands.

Applicant has recognized that a drawback of prior art wave power collection devices is the inability to collect and store large amounts of energy. The present invention takes advantage of the ocean's plentiful supply of highly conductive sea water to serve as a reservoir for the electrolytic production of hydrogen, and if desired, oxygen, gas. Production of hydrogen gas in large quantities is particularly timely, since that gas is currently in high demand as an alternate, non-polluting fuel source for automobiles.

The preferred embodiment device of the present invention comprises a plurality of tubular members which have been designed to facilitate on site "at sea" assembly Each of the power collection units comprises a central, substantially cylindrical pilaster around which a toroidal (donut-shaped) float is trackingly mounted. One end of the cylindrical pilaster is embedded in the ocean floor and the pilaster extends vertically through the water to protrude some distance above the highest expected high water line. Each pilaster is interconnected to at least two adjacent pilasters by tubular bridging members which serve to reinforce the pilasters, to house high pressure conduits, and to act as pedestrian catwalks to facilitate servicing of each energy collection unit. In the preferred embodiment, the floats are manufactured in accurate tubular sections which have flanges formed thereon which, upon assembly, create high pressure seals between sections to define a gas chamber within the float. Portions of these flanges additionally act in combination with axles mounted therebetween to position wheels which track up and down the outside surface of the pilaster. Portions of these flanges also act as attachment sites for several rack and pinion drives which power a drive shaft in response to the ascension and descension of the float with respect to the pilaster. The drive shaft drives a DC generator which is connected to electrodes located in a hollow well formed in the core of the tubular support member. This well, which is in liquid communication with the surrounding ocean, is partially filled with sea water which totally submerse the electrodes. Baffles and appropriate separators separate the electrodes so that the gases generated in the vicinity of each may be separately collected, or separately vented to the atmosphere, as desired. A compressor, driven either manually by the drive shaft or electrically by the output of the generator, compresses at least hydrogen gas drawn from the appropriate, hydrogen containing chamber of the well headspace, for transmission and storage in the toroidal floats.

In an alternative embodiment of the invention, the DC generator drives a high pressure pump which forces sea water through the microporous membrane of a reverse osmosis unit, thereby converting the sea water into potable water.

As seen from the above, a primary object of the present invention is the provision of a superior tidal and wave-power collection apparatus which is easily assembled and installed at sea.

Another object of the present invention is the provision of such an apparatus which may produce, store, and supply substantial amounts of hydrogen and/or oxygen gas(es) which has been captured by electrolytic conversion of tidal and wave energy.

Still another object of the present invention is the provision of such an apparatus which may produce potable water from sea water using the tidal and wave energy collected.

These and other objects of the present invention will become apparent from the following more detailed description.

BRIEF DESCRIPTION OF THE DRAWINGS

FIG. 1 is an isometric view of a single power collection module having three preferred embodiment power collection units disposed at the corners thereof, connections to other unit(s) and portions of each unit disposed below the water line being represented in phantom;

FIG. 2 is a front view on an enlarged scale of a power collection unit similar to that illustrated in FIG. 1, the

height of which has been foreshortened for purposes of illustration, and portions of an elliptical tubular bridging member and high pressure transmission conduits being shown in cross-section;

FIG. 3 is a cross-sectional top view of the embodiment illustrated in FIG. 2 taken as indicated by the lines and arrows 3—3 in FIG. 2;

FIG. 4 is a cross-section of the embodiment shown in FIG. 2 taken as indicated by the lines and arrows 4—4 in FIG. 3;

FIG. 5 is a cross-sectional top view on a greatly enlarged scale of a portion of the embodiment shown in FIG. 4 taken as indicated by the lines and arrows 5—5, in FIG. 4;

FIG. 6 is a cross-section showing a first alternate embodiment of the invention shown in FIG. 4;

FIG. 7 is an enlarged view of the upper portion of the cross-section shown in FIG. 6;

FIG. 8 is a cross-section showing a second alternate embodiment of the invention shown in FIG. 4.

DESCRIPTION OF THE PREFERRED EMBODIMENTS

Although specific forms of the invention have been selected for illustration in the drawings, and the following description is drawn in specific terms for the purpose of describing these forms of the invention, this description is not intended to limit the scope of the invention which is defined in the appended claims.

Referring now to the figures, and particularly FIG. 1, the preferred embodiment wave power collection apparatus should be installed in a relatively large body of water for converting wave and tidal energy into high pressure compressed air. The preferred embodiment apparatus further is capable of collecting and storing air in the apparatus, and for transmitting the compressed air to a preselected consumption site. The preferred embodiment apparatus generally comprises a plurality of power collection units which are structurally interconnected by bridging means for rigidly connecting the power collection means to create a rigid connection module. In the preferred embodiment, at least three power collection units are interconnected to form a trilateral power collection module which is capable of withstanding any lateral forces which might be applied there against by ocean currents or winds In FIG. 1, power collection units designated generally **100**, **102**, and **104** are illustrated which are interconnected by bridging members designated generally **200**, **202**, and **204**. Each power collection unit comprises a central pilaster, such as pilasters **300**, **302**, and **304** which are substantially cylindrical structures which are driven into the sea bed or floor and which extend as shown in FIG. 1 for a preselected distance above the expected high water mark for a given location. Floats designated generally **400**, **402**, and **404** are trackingly mounted for substantially vertical movement up and down their respective pilasters, such that the movement of these floats will drive rack and pinion mechanisms associated therewith to drive a fly wheel and ultimately a compressor which are disposed in the hollow upper portion of the pilaster. Compressed air produced thereby is fed into the floats **400**, **402**, and **404** for storage, and/or is fed into conduits which are housed in the bridging members **200**, **202**, and **204** for eventual transmission from unit to unit and then to a remote power consumption site.

FIG. 1 illustrates the minimum number of power collection units which may be used in a single installation. In phantom in FIG. 1, however, connections to an additional power collection unit as illustrated by the phantom bridging members **206** and **208** which may be used to interconnect this additional unit to power collection units **100** and **102** to expand the apparatus and to create therewith a second trilateral collection module. Accordingly, as power requirements increase, it is a relatively simple matter to expand the system to accommodate the needs of any particular power consumption site.

As shown particularly in FIG. 1, the bridging means, such as bridging members **200**, **202**, and **204**, are substantially tubular and have elliptical cross-sections. In the preferred embodiment, these members are sized to act as catwalks which facilitate pedestrian movement between one power collection unit and the next. By orienting the axis of the elliptical cross-section substantially vertically, the bridging members are not only configured for easy pedestrian movement therethrough, but are also configured to permit the power collection units to be disposed at substantial distances apart, yet be spanned by relatively simple bridging structures. Finally, due to the enclosed nature of the catwalks maintenance workers servicing the power modules are well protected from the environment.

In order to limit the maximum vertical travel of each of the floats in an upward direction and also to provide a deck for use in servicing various portions of the apparatus, a substantially planar, annular deck is provided such as decks **500**, **502**, and **504**. During assembly these decks may act to temporarily support the bridging members prior to their permanent attachment to the pilasters.

The float **408** is seen in FIG. 2 to encircle the pilaster and to be trackingly mounted with respect thereto for movement in response to variations in water level, that is, so that the float may travel in directions which are substantially parallel to the axis of the pilaster. The float itself comprises a plurality of float sections, such as float sections **410–417**. Each of these sections is preferably identical to the other. At either end of each section are outwardly depending flanges, such as outwardly depending flanges **420** and **422** for section **412**; **424** and **426** for section **414**; **428** and **430** for section **416**; and **432** and **434** for section **410**. As shown particularly in FIGS. 2 and 3, these outwardly depending flanges are complementally configured to bolt to the outwardly extending flanges of the adjacent float sections to thereby form a high pressure seal therebetween, and to create a compression chamber within the float which is not only water tight so that the float will not become swamped with water which might otherwise seep between the flanges, but also gas-tight to contain compressed air within the float so that the float may act as a compressed air reservoir. In order to stabilize and guide the movement of the float **408** a plurality of tracks, such as tracks **436–442** and **444** are applied to the exterior surface of pilaster **308**, one for each intersection between adjacent float sections, which tracks receive and guide wheels (two for each track) generally disposed between the float **408** and the pilaster **308**, as illustrated particularly in FIG. 4. In FIG. 2 the water level, indicated by line **12**, is shown buoying the float **408** in a relatively low position with respect to the pilaster and other equipment mounted thereon. Attached to various places on the float are a plurality of racks, such as racks **608**

and 610 which are pivotally connected at one end to portions of the float 408. These racks extend through openings in the deck 508 and engage pinion assemblies designated generally 612 and 614 which are oscillated in opposite rotational directions in response to the up and down movement of the racks 608 and 610. This rack movement is produced by movement of float 408 in the directions illustrated by double ended arrow A. The pinion assemblies 612 and 614 are mounted on remote ends of clutched drive shafts 616 and 618.

A fluid intake conduit for supplying fluids to the air compressor located within the upper portion of the pilaster extends through an opening in deck 508 downwardly to a point between the highest expected high water line 14 and the undersurface of the deck 508. By orienting the fluid intake means in this position, the fluid intake will normally supply air to the compressor but will be under water in the event that the expected high water mark is exceeded, as for example under hurricane conditions. In this event, weather conditions may be so severe that protection of the apparatus from destruction by such forces may become a matter of primary importance. Accordingly, the fluid intake conduit 700 will, under these conditions, supply sea water to the compressor. Since the output of the compressor communicates through output conduit 702 with the interior of the float 408, water introduced through the fluid intake conduit will be channeled through output conduit 702 into the interior of the float, causing the compressor to act as a liquid pump, thereby lowering the float in the water and lowering the center of gravity of the apparatus. Depending upon the ferocity of the storm, the float will eventually settle down the pilaster until caused to stop at an appropriate position below the water's surface, yet at a position which is readily retrievable once weather conditions have improved. Assuming the float is not completely swamped (in which case auxiliary bilge pumps may become necessary), by reversing the compressor (and by providing negative pressure valves in the interior of the float chamber) the compressor may automatically pump out the interior of a float, discharging the sea water through fluid intake means 700 to reestablish the float as a gas filled chamber.

FIG. 2 has been taken so that a portion of the bridging means 208 connecting it with an adjacent power collection unit is shown in cross-section, and will be seen to have a floor 210 under which are disposed a plurality of high pressure compressed air transmission conduits 212, 214, and 216.

Referring now in particular to FIG. 3, which is a cross-sectional top view of the apparatus shown in FIG. 2, the interrelationship between the toroidal float 408 and pilaster 308 is clearly illustrated. In FIG. 3 toroid sections 410, 411, 412, 413, 414, 415, 416, and 417 are illustrated as are outwardly depending flanges 420–435. As seen particularly in FIG. 3, these flanges mate with complemental flanges of adjacent sections for almost their entire length, however, the portions thereof which are disposed toward the toroid's center are differentiated into spaced apart flange portions which act as an axle mounting assemblies for wheels 446, 448, 450, 452, 454, 456, 458, and 460 which move along tracks 436, 437, 439, 441, 444, 442, 440, and 448 respectively. Ballast 800 is provided in the center of the pilaster in order to weight the entire unit and increase both its strength and ability to withstand the tendency of ocean currents etc. to displace the unit.

Referring now in particular to FIG. 4, many of the features discussed above with reference to the other figures are also illustrated in FIG. 4. Additionally, FIG. 4, which is a cross-section of the power collection unit shown in FIGS. 2 and 3, depicts the machinery disposed within the upper hollow portion of pilaster 308, as well as additional wheel mounting and float details. In particular, clutched drive shafts 616 and 618 extend inwardly from pinion assemblies 612 and 614 to pass through openings in the pilasters to engage unidirectional clutches 620 and 622. Since the tracks 608 and 610 are disposed on opposite sides of their respective pinion assemblies, both of these clutches may be either clockwise or counter-clockwise clutches so that one of the racks, such as rack 610 will act through pinion assembly 614, drive shaft 618, and clutch 620 to drive the main drive shaft 624 in a preferred rotational direction in response to the ascension of the float, while the other rack, rack 608, will act through pinion assembly 612, clutch drive shaft 616, and clutch 622 to continue driving the main drive shaft in that direction during the descension of the float. The clutches 620 and 622 allow their respective clutch shafts to idle with respect to the drive shaft upon the return strokes of the racks. A flywheel 626 is diagrammatically illustrated disposed on main drive shaft 624, and a belt or other drive means 628 is shown spanning between the flywheel and compressor 630 so that the compressor is continuously driven by the flywheel and main drive shaft even though the power supplied thereto by either of the racks is discontinuous.

The output of compressor 630 is connected to output conduit 702 and also through a ball check valve 704 to transmission supply conduit 706. The ball check valve prevents any water which might enter the system from inadvertently being introduced into transmission conduits 212, 214 or 216, and additionally seals off those transmission conduits when the gas pressure within conduit 702 is less than the pressure within conduit 706.

FIG. 4 additionally shows the relative vertical orientations of each wheel set, such as wheel set 446 and 446*a* and wheel set 454 and 454*a*, which wheel sets are spaced apart and vertically aligned to move within a single pilaster track. By mounting two vertically spaced apart wheels between opposing flange portions from each of the sections, any tendency of the float to twist with respect to the pilaster is effectively resisted.

FIG. 4 also shows the pivotal attachment of racks 608 and 610 between opposing portions of flanges 430 and 421 for rack 608 and 434 and 435 for rack 610. An aperture formed at the float end of each rack is sized to receive a rod extending between these opposing flange portions. Since the rack aperture is somewhat oversized, some lateral play is accordingly created between the racks and the float.

In FIG. 4, the float is shown in its solid lined position buoyed by water level 12 which represents a wave or tidal trough, whereas the float 408 is shown in dotted outline buoyed to a greater nearly maximum height with respect to the pilaster on a wave or tidal crest, as indicated by phantom water level height 13. It should be noted in FIG. 4 that the height of the apparatus illustrated in FIG. 4 has been foreshortened in several places. While the deck 508 is designed to resist any forces which might be applied thereto by interference with the float 408, as described hereinabove, the height of the pilaster should not be made so short that the travel of the float is unduly limited by the deck position,

but rather under most weather conditions the float should be free to move between its crest and trough positions. At the same time, by designing the apparatus with reference to an expected high water mark and by providing the preferred embodiment apparatus with various means for withstanding occasional water heights which may be substantially higher than the maximum expected high water line, expenditures for unduly high pilasters and other mechanisms which might otherwise be used only very infrequently are avoided.

In FIG. **5**, which is a top cross-sectional view on a greatly enlarged scale, the details of the pinion assembly designated generally **614** is illustrated. The pinion assembly is seen to comprise a substantially U-shaped rack follower assembly sol, the ends of which are journalled on the end of clutched drive shaft **618**. A main drive gear **803** is attached to shaft **618** and is positioned between the two arms of the rack follower assembly. The rack **610**, which is shown in cross-section in FIG. **5**, is journalled between main drive gear **803** and bearings **805**, **807**, and **809** which are mounted on the inner surfaces of the rack follower assembly near the interior base of the "U". These bearings preferably are biased towards the rack yet provide enough forgiveness to prevent undue stress on the rack member. Similar bearings **810** are provided between the main drive gear **803** and the interior surfaces of the arms of the rack follower assembly **801** so that the movement of the rack **610** will ride smoothly so that axial movement of the rack **610** with respect to the main drive gear will produce a positive rotational driving of clutched shaft **618**. Although not illustrated in the drawings, according to one embodiment of the present invention, a unidirectional clutch may be incorporated between the main drive gear **803** and the shaft on which it is mounted. In this instance, the main drive shaft **624** would extend substantially through the pinion assemblies, with the unidirectional clutching action taking place within those assemblies. It is also within the scope of the present invention, if desired, to provide additional bearing means at various places along the clutched and main drive shafts to further stabilize the pinion, flywheel, and clutched assemblies.

In FIG. **6**, a first alternate embodiment of the invention is shown. In this embodiment a pilaster **900**, driven into the sea floor **10**, extends a preselected distance above the expected high water line **14**, as before. However, in this embodiment, ballast **800** is provided in only the lower portion of the pilaster **900** so that a hollow well **915** is formed within the pilaster above the ballast. A plurality of apertures **901** are disposed in the pilaster **900** below the low water line **920** so as to allow water to enter the well **915** through flapper type check valves **914**. A filter **921**, which may be a stainless steel strainer, removes debris from the water entering into the well **915** through apertures **901**. Two finned electrodes **910** and **911**, Which may be of the type commonly used in lead batteries, are disposed in the well **915** below the low water line **920**. The electrodes **910** and **911** are oppositely charged so that an electrical potential is created between them, causing current to flow through the water between the electrodes. As a result of this current, a portion of the water dissociates into hydrogen and oxygen molecules by an electrolysis process, the hydrogen molecules forming on the cathode electrode **910** and the oxygen molecules forming on the anode electrode **911**.

A microporous barrier **913**, which may be of the type commonly used as battery separators, is mounted in the pilaster **900** between the electrodes **910** and **911**. The microporous barrier **913** allows the water to pass freely across it but is impervious to gases. Thus, the microporous barrier **913** ensures that the hydrogen and oxygen molecules which form on the electrodes **910** and **911** remain separated.

After dissociation, the hydrogen and oxygen molecules form bubbles which rise through the water and collect in a headspace formed between the water level and the deck **508**. A baffle **912** is disposed above, and is contiguous with, the microporous barrier **913** and divides the headspace into two portions **917** and **918** so that the hydrogen and oxygen remain separate as they collect in the headspace **917**, **918**. From the headspace, the hydrogen and oxygen are drawn into a compressor **630** for compression therein. The compressor **630** is disposed on the deck **508** above the headspace and the hydrogen and oxygen enter the compressor **630** through intake conduits **906** and **905**, respectively, which extend through the deck. The compressed hydrogen and oxygen from the compressor **630** are directed, via conduits **907** and **908**, respectively, to the float **902** for storage. In the float **902**, the oxygen and hydrogen are stored in separate portions **903** and **904**, respectively, formed in the float by two vertically extending baffles (not shown) disposed within two of the torus sections.

Alternatively, if it were deemed undesirable or uneconomical to store both the hydrogen and the oxygen produced, the oxygen could be vented to atmosphere, rather than drawn into the compressor **630** as shown in FIG. **6**. In this case, the aforementioned baffles would be unnecessary and the entire volume within the float could be utilized for the storage of hydrogen.

In any event, after being stored in the floats, the hydrogen/oxygen gas is fed into conduits housed in the bridging members **200**, **202** and **204**, shown in FIG. **1**, for eventual transmission from unit to unit and then to a remote consumption site, as was done with the compressed air produced by the embodiment shown in FIG. **4**.

In the embodiment shown in FIG. **6**, the float **902** drives the drive shaft **624** through the rack and pinion arrangement, as previously discussed. Although in this embodiment the compressor **630** could be mechanically driven via the fly wheel, as before, in the preferred arrangement, the drive shaft **624** turns a D.C. generator **909** which provides electrical power to drive the compressor **630**. The generator **909** is also electrically connected to the electrodes **910** and **911** via bus bars **923** so as to create the aforementioned electrical potential.

With respect to the energy which can be produced by the generator **909**, as driven by the oscillations of the float **902** due to wave action, it should be noted that the energy flux in an incident wave can be approximated by the equation:

$$E_f = \rho g H^2 L\,[(1+2kh)/\sinh(2kh)]/16T \qquad (1)$$

where

E_f = energy flux per unit wave crest width
ρ = density of water
g = acceleration due to gravity
H = wave height
L = wave length
k = wavenumber, $2\rho/L$

h=depth of water
T=wave period.

Based on dispersion, the wave length L can be determined from the equation:

$$\omega^2 = gk \tanh(kh) \quad (2)$$

where ω=wave frequency, $2\pi/T$. By combining equations (1) and (2), the total power contained in an incident wave can be estimated for a given float outside diameter. For a water depth of 30 feet and a float outside diameter of 30 feet, the total power estimated for waves of various heights and periods, using the aforementioned analysis, is shown in Table 1.

TABLE 1

Wave Height, Ft.	Wave Period, Sec.	Wave Power, kW
3	6	54.8
3	10	74.4
3	20	85.8
6	6	219.2
6	10	297.6
6	20	343.2

It has been further estimated that the apparatus disclosed herein, taking into account the movement of the float induced by the incident wave field and the cancelling effect of the waves radiated by the float itself, is capable of extracting approximately 50% of the incident wave power. Thus, these theoretical estimates suggest that ample energy will be produced in the generator **909** to compress the gas to a relatively high pressure.

It will be appreciated that to avoid damage to the electrodes **910** and **911**, they must remain submerged at all times. To this end, flapper type check valves **914** are disposed at the discharges of the apertures **901**. The check valves are oriented so as to open only in the inward direction. Thus, water will enter the well **915** only when the pressure in the surrounding water is greater than that in the well. Initially, the gravity head in the surrounding water will cause the water in the well **915** to rise to the level of surrounding water. Any further rises in the level of the surrounding water will cause a similar rise in the water level in the well **915**. Should the level of the surrounding water drop, the check valves will prevent the loss of water from the well **915**. Thus, regardless of the action of the surrounding sea, the electrodes **910** and **911** will remain submerged except in the unlikely event that the surrounding water drops below its normal low level **920** for a sufficiently long period of time to enable the quantity of water stored in the well **915** above the electrodes to be consumed by the electrolysis process. Note that as the electrolysis progresses, the concentration of brine in the well water will increase. Therefore, it is expected that it will be necessary to periodically pump the fluid out of the well **915** to allow fresh sea water to re-enter the well.

Notwithstanding the safety features designed into the apparatus as described above, in the preferred embodiment, logic devices **916** and **934**, electrically coupled to the generator **909**, are utilized to ensure the reliable operation of the apparatus. As shown in FIG. **7**, level sensors **924** and **925**, which may be level switches of the type commonly used in boilers, are mounted in the well **915**. In the event either of the level sensors **924** and **925** sense that the level of the water in the well **915** has dropped below a predetermined level—that is, the level at which they are mounted—the logic devices **916** and **934** will cut off power to the electrodes **910** and **911** to protect them from damage.

In the event of a severe storm or other unusual sea conditions, the level of the surrounding sea water may rise excessively high. Such rise in the surrounding water will cause the water level in the well **915** to rise. Accordingly, level switches **922** and **923** are also mounted in the well **915**. As shown in FIGS. **7**, the level switches **922** and **923** are disposed in the head space portions **917** and **918**, respectively, at the level of the compressor intakes **915** and **916**. The signals from the level switches **922** and **923** are directed to logic devices **916** and **934**, respectively, so that the logic devices will shut down the compressor **630** should the water reach the level of the switches. Moreover, as shown in FIG. **7**, a sea cock **930** is mounted in portion **903** of the float. In the event level sensors **922** and **923** indicate the aforementioned high water level, logic device **934** will actuate valve **931** installed on the sea cock **930** to flood the portion **903** of the float, thereby causing it to sink deeper into the water where it may safely ride out the storm. A second sea cock and valve (not shown) is mounted in portion **904** of the float and is actuated in a similar fashion by logic device **916**.

As shown in FIG. **7**, a pressure sensor **933**, which may be a transducer, is installed in portion **904** of the float **902** to measure the pressure therein. Electrical line **935** transmits the signal from the pressure sensor **933** to the logic device **916**. Should the pressure of the hydrogen in portion **904** exceed a predetermined level, logic device **916** will shut down the compressor. A similar pressure sensor (not shown) is installed in portion **903** of the float and transmits its signal to logic device **934** for similar protection against oxygen over pressure.

FIG. **8** shows a second alternate embodiment of the invention shown in FIG. **4**. In this embodiment, the float **951** powers a high pressure pump **955** via the generator **909** discussed with respect to the embodiment shown in FIG. **6**. Alternatively, the pump **955** could be mechanically driven via the flywheel **626** discussed with respect to the embodiment shown in FIG. **4**. In either case, the pump **955** draws in sea water through intake conduit **953** having an inlet **952** disposed well below the low water line **920**. Pump **955** directs the sea water, via conduit **957**, to a reverse osmosis unit **954**, thereby producing potable water which is then transported to a consumption or storage site through discharge conduit **956** The reverse osmosis unit **954** may be of the microporous membrane type, relying on the pump **955** to force the water through the membrane.

It will be understood that various changes in the details, materials and arrangement of parts which have been herein described and illustrated in order to explain the nature of this invention may be made by those skilled in the art within the principle and scope of the invention as expressed in the following claims.

It will further be understood that the "Abstract of the Disclosure" set forth above is intended to provide a non-legal technical statement of the contents of the disclosure in compliance with the Rules of Practice of the U.S. Patent and Trademark Office, and is not intended to limit the scope of the invention described and claimed herein.

What is claimed is:

1. A wave-power collection apparatus for installation in a body of water for converting wave energy into at

least hydrogen gas and for at least collecting said gas in said apparatus, comprising:

(a) pilaster means located extending to protrude for a preselected distance above the high water line of said body of water;

(b) float means trackingly mounted for movement along said pilaster means in response to tidal and wave motion;

(c) generating means mounted on said pilaster, for generating current from the movement of said float means;

(d) electrolysis means electrically connected to said generating means, and in liquid communication with said body of water, said electrolysis means generating hydrogen and oxygen utilizing said current generated by said generating means, said electrolysis means comprising at least two oppositely charged electrodes;

(e) gas separation means mounted on said pilaster means generally disposed between said electrodes, for separating oxygen and hydrogen gases produced by said electrolysis means;

(f) compressor means mounted on said pilaster means, for compressing at least hydrogen gas separated by said gas separation means; and,

(g) gas storage means for at least storing hydrogen gas, said storage means comprising at least a portion of said float means, said gas storage means being in fluid communication with the output of said compressor means.

2. The apparatus of claim **1**, wherein said pilaster means comprises a hollow tubular member defining a hollow well portion, and wherein said electrodes are disposed below a predetermined low water line within said hollow well portion.

3. The apparatus of claim **2**, wherein said gas separation means comprises a microporous barrier between said electrodes.

4. The apparatus of claim **3**, wherein said hollow tubular member defines a head space and wherein said gas separation means comprises a baffling means for separating portions of said headspace of said well portion.

5. The apparatus of claim **4**, wherein the compressor means compresses said hydrogen gas generated by said electrolysis means and transmits said compressed hydrogen gas to said float means.

6. The apparatus of claim **5**, further comprising means for placing said well portion in liquid communication with said body of water at a location below said low water line.

7. The apparatus of claim **6**, wherein said compressor means is powered by current produced by said generator means.

8. The apparatus of claim **6**, wherein said compressor means is mechanically powered by the movement of said float means.

9. The apparatus of claim **6**, wherein said liquid communication means comprises a plurality of apertures formed in said pilaster means.

10. The apparatus of claim **9**, further comprising filtering means disposed in said pilaster means for filtering debris from water entering said well portion.

11. A wave-power collection apparatus for installation in a body of water, comprising:

(a) a tubular member forming a hollow well therein, said tubular member having a first end attached to the floor of said body of water and a second end extending above the surface of said body of water, said hollow well in flow communication with said body of water, whereby said water fills at least a portion of said hollow well;

(b) a toroidal float adapted for vertical movement along said tubular member in response to tidal and wave motion in said body of water;

(c) a shaft mounted in said tubular member and means for converting said vertical movement of said float into rotation of said shaft;

(d) a generator adapted to be driven by said rotation of said shaft and produce electrical current thereby; and

(e) first and second electrodes mounted in said portion of said hollow well filled with said water and electrically coupled to said generator, said electrodes adapted to cause current to flow therebetween through said water.

12. The apparatus of claim **11** wherein said electrodes are adapted to dissociate a portion of said water through which said current flows, thereby producing hydrogen and oxygen, and further comprising a compressor for compressing said hydrogen.

13. The apparatus of claim **12** wherein said compressor is driven by said rotation of said shaft.

14. The apparatus of claim **12** wherein said compressor is driven by said electrical current produced by said generator.

15. The apparatus of claim **11** further comprising means for flooding said float with water from said body of water, said flooding means responsive to the level of said water filling said well.

16. The apparatus of claim **11** further comprising means for severing said electrical couple between said electrodes and said generator if the level of said water filling said well drops below a predetermined level.

17. The apparatus of claim **11** wherein said electrical couple severing means comprises logic means.

18. The apparatus of claim **17** wherein said electrical couple severing means further comprises level sensing means.

* * * * *

US 20120286623A1

(19) United States

(12) Patent Application Publication

Ogram

(10) Pub. No.: US 2012/0286623 A1

(43) Pub. Date: Nov. 15, 2012

(54) ATMOSPHERIC ENERGY COLLECTION

(75) Inventor: **Mark E. Ogram**, Tucson, AZ (US)

(73) Assignee: **Sefe, Inc.**, Tempe, AZ (US)

(21) Appl. No.: **13/103,963**

(22) Filed: **May 9, 2011**

Publication Classification

(51) **Int. Cl.**
H02N 3/00 (2006.01)

(52) **U.S. Cl.** **310/309**

(57) **ABSTRACT**

The subject matter described herein is an atmospheric energy collector. The atmospheric energy collector includes of a windsock arrangement that has a large up-wind opening on one side and that tapers from the larger up-wind opening on the one side to a small down-wind opening on the other side. The up-wind side is secured to a tether such that an electrically conducting material (e.g. metal) included in construction of the atmospheric energy collector is connected to the tether. The windsock arrangement is extended outwards by wind and the like atmospheric conditions such that the electrically conducting material collects the atmospheric energy and transfers the collected energy to the tether.

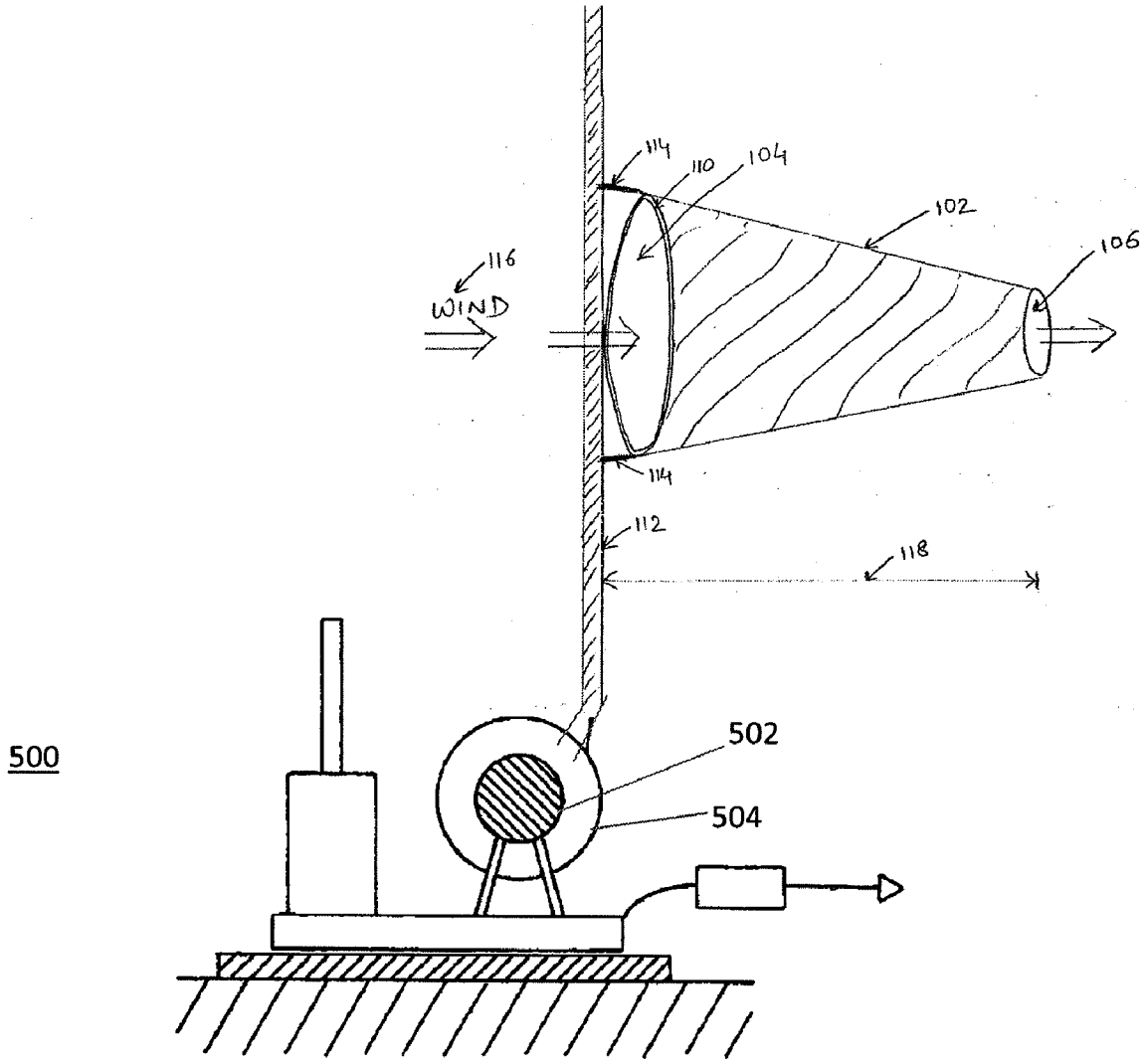

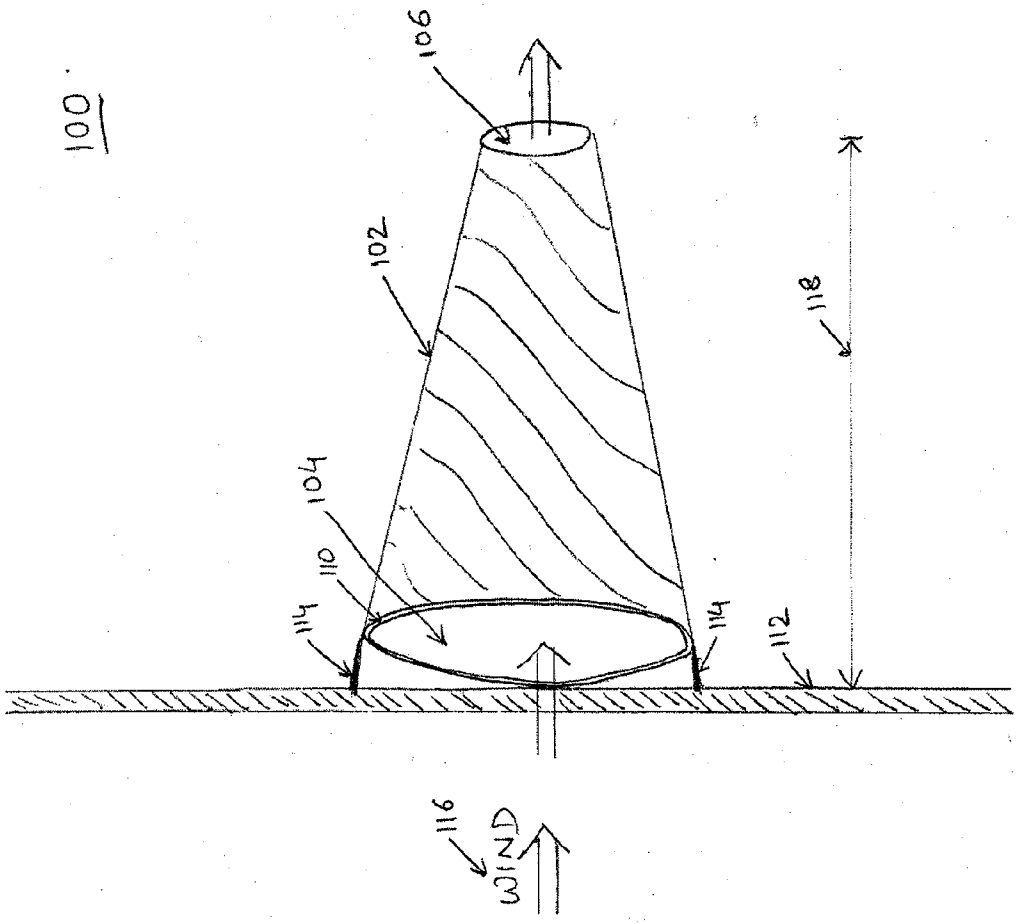

FIG. 1A

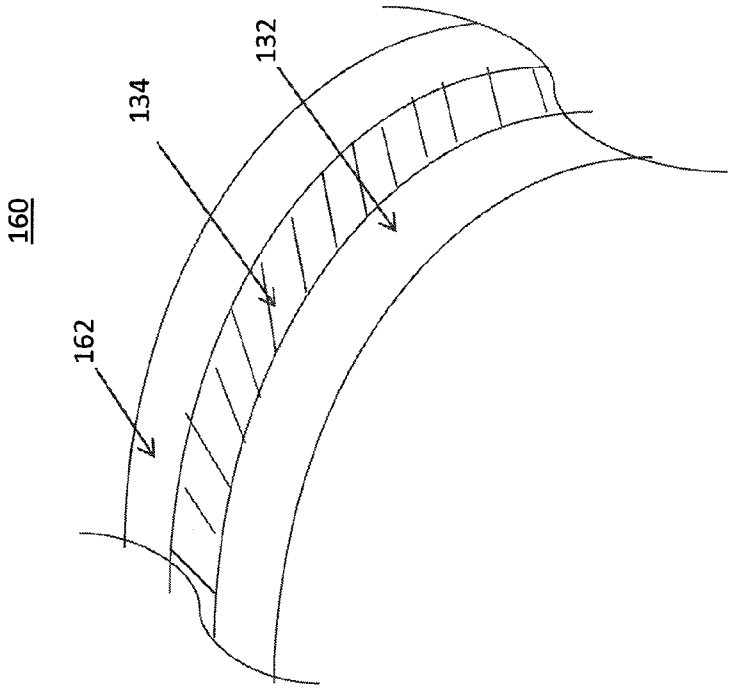

FIG. 1C

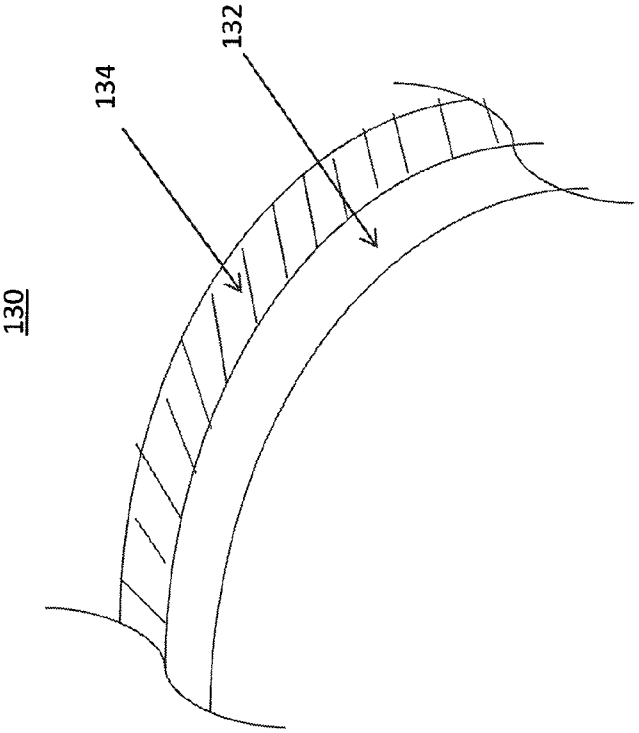

FIG. 1B

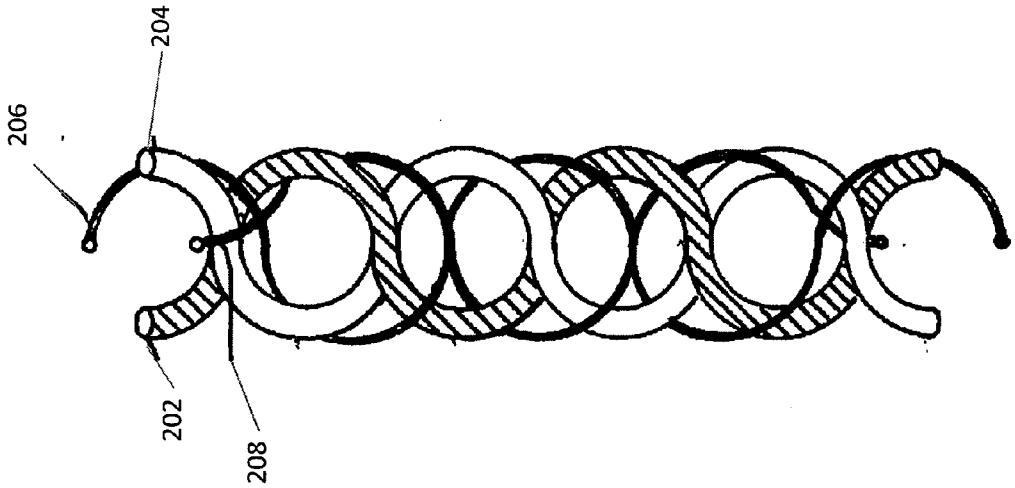

FIG. 2

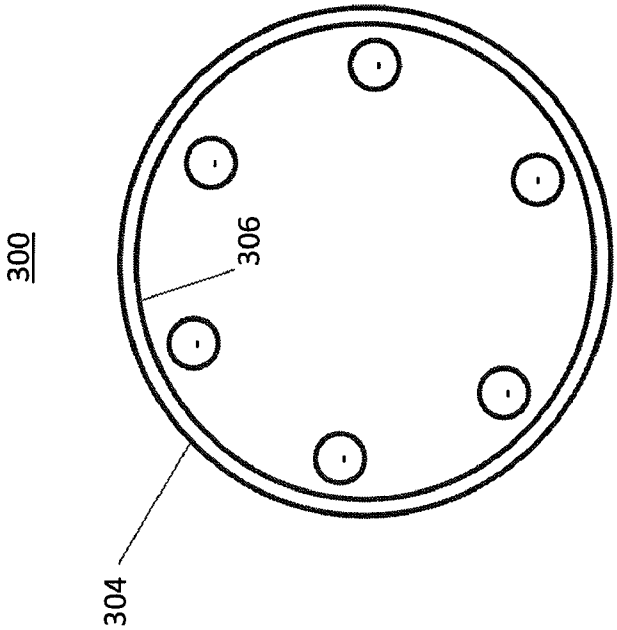

FIG. 3B

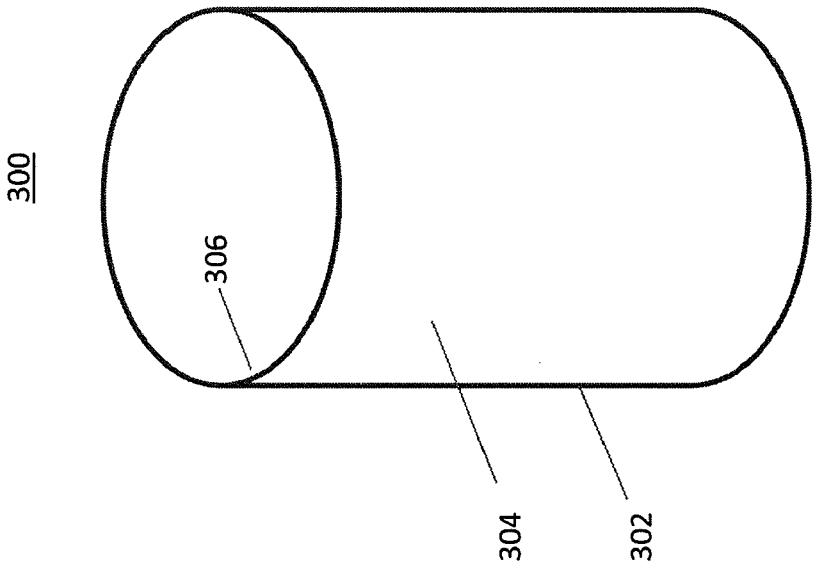

FIG. 3A

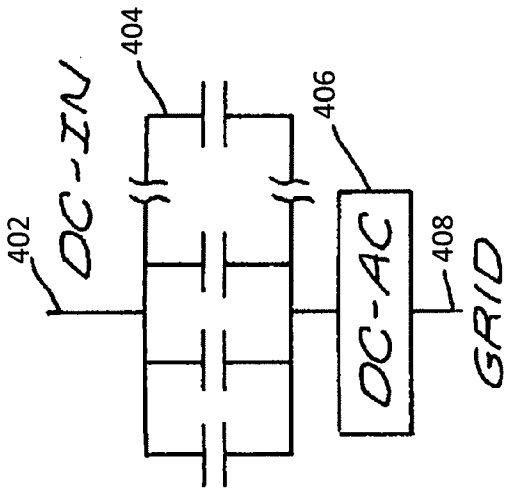

FIG. 4A

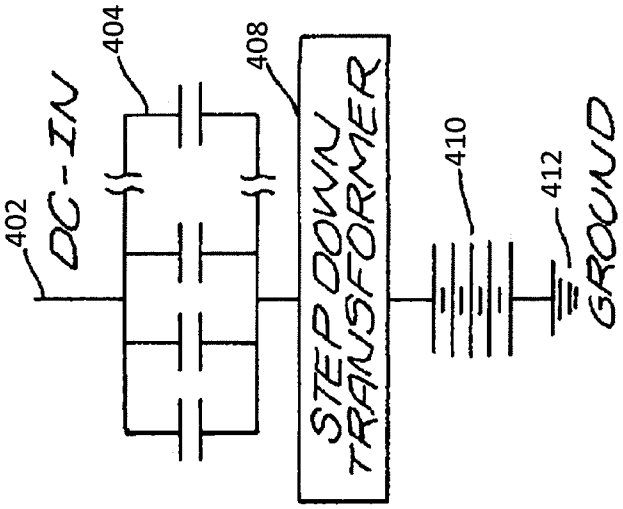

FIG. 4B

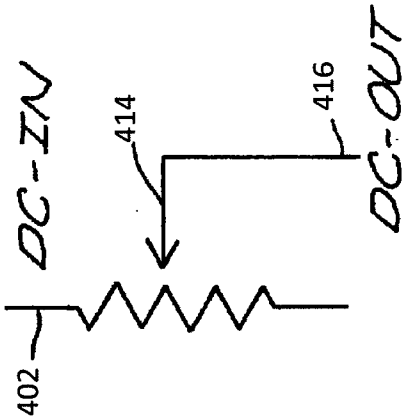

FIG. 4C

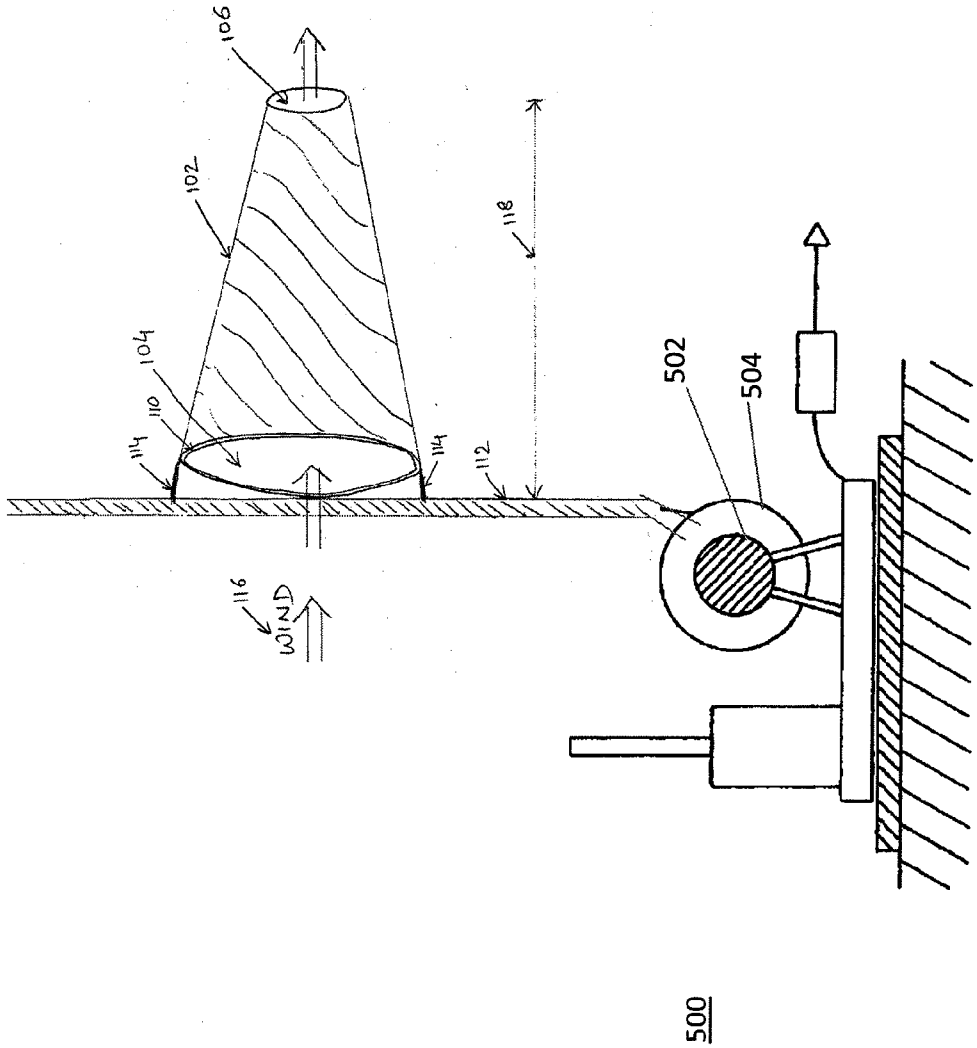

FIG. 5

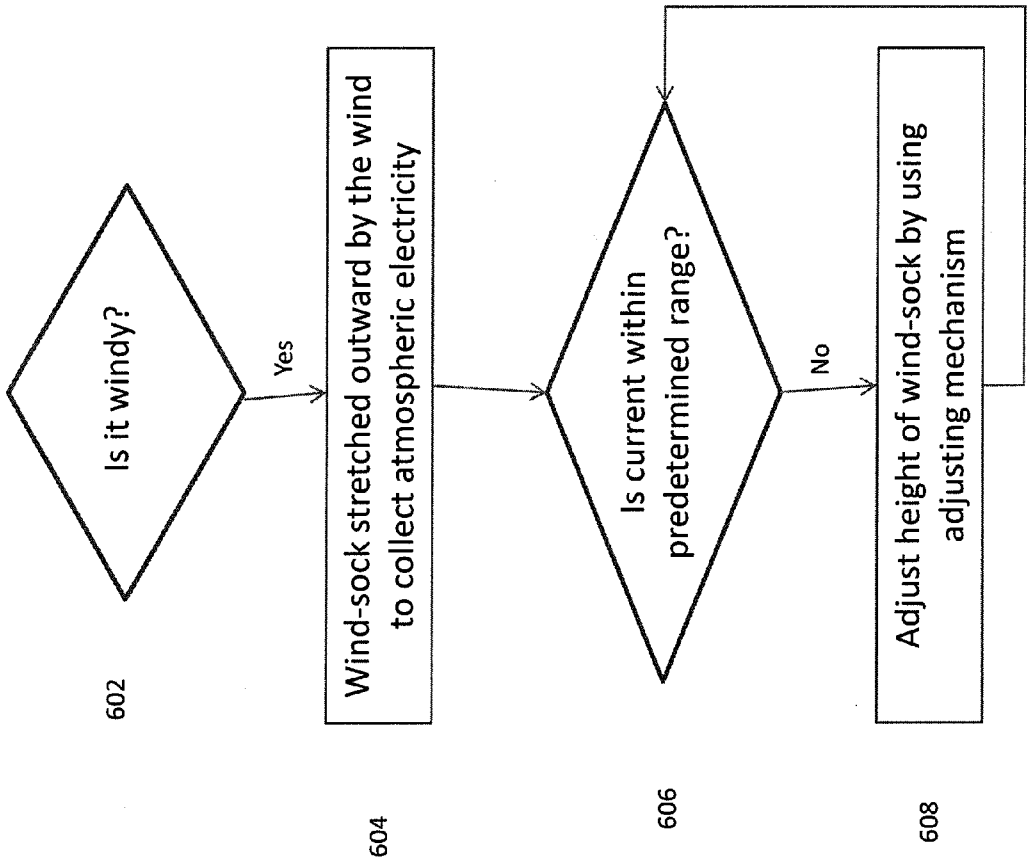
Is it windy?
602
Yes
Wind-sock stretched outward by the wind to collect atmospheric electricity
604
Is current within predetermined range?
606
No
Adjust height of wind-sock by using adjusting mechanism
608

FIG. 6

ATMOSPHERIC ENERGY COLLECTION

TECHNICAL FIELD

[0001] The subject matter described herein relates to a light-weight, extendible electricity collecting windsock arrangement comprising an enhanced collection surface for atmospheric electrical energy collection.

BACKGROUND

[0002] The atmosphere above the earth is known to include electrical charge. The earth's surface is negatively charged, while the air above it is positively charged. All atmospheric effects are a result of an interplay between these two huge areas of opposite electrical energy. The potential difference between the positively charged atmosphere and the negatively charged earth surface causes atmospheric electrical energy to be developed. Some of this atmospheric electrical energy may be experienced through thunderstorms.

[0003] Even though there is a huge amount of atmospheric electrical energy in the atmosphere, collection of the atmospheric electrical energy still remains a problem. Due to high voltage and low current conditions, there is a need for large collection surfaces for maximizing the collection of atmospheric electrical energy. Note that the terms atmospheric electricity, atmospheric energy, and atmospheric electrical energy have been used interchangeably in this specification.

[0004] The problem of low current is compounded by a heavy weight of the collectors of atmospheric electrical energy. The heavy weight of the collectors increases payload requirements of a lift mechanism, which may be used to lift the collectors to an appropriate height or altitude so that the collection of atmospheric electrical energy is maximized. Thus, a need exists for large yet light-weight collectors such that payload requirements for the lift mechanism remain reasonable.

SUMMARY

[0005] The subject matter described herein relates to an atmospheric energy collector. The atmospheric energy collector includes an electricity collecting windsock arrangement that has a large up-wind opening on one side and that tapers from the larger up-wind opening on the one side to a small down-wind opening on the other side. The up-wind side is secured to a tether such that an electrically conducting material (e.g. metal) included in construction of the atmospheric energy collector is connected to the tether. The electricity collecting windsock arrangement is extended outwards by wind and the like atmospheric conditions such that the electrically conducting material collects the atmospheric energy and transfers the collected energy to the tether. Further, the electricity collecting windsock includes light-weight collectors such that payload requirements for the lift mechanism remain reasonable (i.e. remain within a predetermined value).

[0006] In one aspect, an electricity collection apparatus includes a tether and a windsock. The windsock is formed of an insulation material with a metal deposited on at least a portion of the insulation material. The metal of the windsock is electrically connected to the tether. The windsock extends in a direction of ambient wind to provide a surface area based on the ambient wind, and the surface area provides the metal to collect electrical energy from the ambient wind, the collected electrical energy being transferred to the tether.

[0007] In another aspect, an electricity collection apparatus includes a windsock formed of an insulation material the windsock to extend in a direction of ambient wind to provide a surface area based on the ambient wind. The apparatus further includes one or more electrical conductors provided on at least a portion of the insulation material to collect electrical energy from the ambient wind. The apparatus further includes an electrically conductive tether connected with windsock to anchor the windsock in the direction of the ambient wind, the electrically conductive tether being electrically connected to the one or more electrical conductors provided on at least a portion of the insulation material to transfer the collected electrical energy from the one or more electrical conductors to an electrical storage.

[0008] The subject matter described herein provides many advantages. For example, large collection surfaces allow a maximized collection of atmospheric energy. Moreover, the light-weight collectors allow payload requirements for the lift mechanism to remain reasonable (i.e. remain within a predetermined value).

[0009] The details of one or more variations of the subject matter described herein are set forth in the accompanying drawings and the description below. Other features and advantages of the subject matter described herein will be apparent from the description and drawings, and from the claims.

DESCRIPTION OF DRAWINGS

[0010] The accompanying drawings, which are incorporated in and constitute a part of this specification, show certain aspects of the subject matter disclosed herein and, together with the description, help explain some of the principles associated with the disclosed implementations. In the drawings,

[0011] FIG. **1**A illustrates extendible electricity collecting windsock arrangement that is used for collection of atmospheric electrical energy in accordance with implementations of the current subject matter;

[0012] FIG. **1**B illustrates a cross-section of one implementation of the electrically conducting windsock in accordance with implementations of the current subject matter;

[0013] FIG. **1**C illustrates a cross-section of another implementation of the electricity collecting windsock in accordance with implementations of the current subject matter;

[0014] FIG. **2** illustrates an exemplary conductive line in accordance with implementations of the current subject matter;

[0015] FIG. **3**A illustrates a front view of a conductive line in accordance with implementations of the current subject matter;

[0016] FIG. **3**B illustrates a top view of the conductive line shown in FIG. **3** in accordance with implementations of the current subject matter;

[0017] FIGS. **4**A, **4**B, and **4**C illustrate electrical schematics for handling the static charge from the atmosphere in accordance with implementations of the current subject matter;

[0018] FIG. **5** illustrates an adjusting apparatus (winch motor and spool) that enables adjustment of location/height of the electricity collecting windsock arrangement in accordance with implementations of the current subject matter; and

[0019] FIG. **6** is a process flow diagram illustrating aspects of a method in accordance with implementations of the current subject matter.

[0020] When practical, similar reference numbers denote similar structures, features, or elements.

DETAILED DESCRIPTION

[0021] To address these and potentially other issues with currently available solutions, one or more implementations of the current subject matter provide methods, systems, articles or manufacture, and the like that can, among other possible advantages, provide an energy collector formed as a windsock and having an enhanced collection surface for atmospheric electrical energy collection. In preferred implementations, an electricity collecting windsock is formed as a flexible cylinder, a truncated cone, or a cone with a metal surface, and is mounted to a mast or other tether so as to capture ambient wind which extends the windsock outward from the mast, in turn forming the largest possible surface area for the wind conditions to enable the metal surface to collect atmospheric amperage. The collected amperage is transferred from the metal surface of the electricity collecting windsock to the mast or tether, and eventually to an electricity storage device. Although implementations in which windsock arrangements having one windsock each are discussed below, those or ordinary skill in the art understand that a windsock arrangement may include two or more windsocks for enhanced atmospheric electricity collection.

[0022] FIG. **1**A illustrates an implementation of electricity collecting windsock arrangement **100** that is used to collect atmospheric electrical energy. The electricity collecting windsock arrangement **100** includes an extendible electricity collecting windsock **102**. The extendible electricity collecting windsock **102** is made of a material that has a high tensile strength and provides electrical insulation. This electrically insulating material **134** (discussed below with respect to FIG. **1**B) may be a plastic or a flexible glass, such as polyester like polyethylene terephthalate (PET) or biaxially-oriented polyethylene terephthalate (BoPET). BoPET is known in the industry by different trade names, some of which are Mylar, Melinex and Hostaphan.

[0023] As is described later with respect to FIGS. **1**B and **1**C, which illustrate cross-sections of implementations of electricity collecting windsock **102**, a thin coat of an electrically conducting material **132**, **162** is deposited on the electrically insulating material **134**. The deposited electrically conducting material **132**, **162** is a good conductor of electricity, and helps electricity collecting windsock **102** to tap atmospheric electrical energy. The electrically conducting material may be any one of a metal or a suitable alloy, such as one of or a combination of one or more of gold, silver, copper, aluminum, and the like.

[0024] The electricity collecting windsock **102** has a large up-wind opening up-wind opening **104** on one side. The electricity collecting windsock **102** tapers from the large up-wind opening **104** on the one side to a small down-wind opening **106** on the other side of the electricity collecting windsock **102**. The up-wind opening **104** has a metal loop **110** on the circumference of the up-wind opening **104**. The metal loop **110** is attached to a tether **112** using an attachment mechanism **114**. The attachment mechanism **114** may include a soldering mechanism. In some implementations, other attachment mechanisms **114** are also known to be used, such as nut and bolt mechanism, threading mechanism, gluing mechanism, and the like. The electricity collecting windsock **102** is extended outwards by wind **116** and/or like atmospheric conditions such that the electrically conducting material (e.g. metal) collects the atmospheric electrical energy and transfers the collected energy to the tether **112**.

[0025] The tether **112** includes a conductive line that is isolated from the ground. The conductive line is used to transfer the collected atmospheric electrical energy from the electricity collecting windsock **102** to an electricity storage device (not shown) where the collected atmospheric charge may be gathered for later or simultaneous use.

[0026] When wind **116** strikes against the electricity collecting windsock arrangement **100** in the direction illustrated, the electricity collecting windsock **102** extends outward, thus allowing the electrically conducting material **132** (discussed below with respect to FIG. **1**B) to collect maximum possible atmospheric electricity. In one implementation, the outward extension **118** is fifty feet or more. When there is no wind, the electricity collecting windsock **102** may be in a relatively compressed state such that the length of the electricity collecting windsock **102** is less than the outward extension **118** caused by windy conditions or like atmospheric conditions. The collected atmospheric electrical energy is communicated to the tether **112**.

[0027] FIG. **1**B illustrates a cross-section **130** of one implementation of the electrically conducting windsock **102**. The cross-section **130** illustrates the electrically conducting material **132** deposited on the inner surface of the electrically insulating material **134**. The electricity collecting windsock **102** includes the electrically conducting material **132** and the electrically insulating material **134** such that the electrically conducting material **132** forms the inner surface of the electricity collecting windsock **102**. When the wind **116** strikes the electricity collecting windsock arrangement, the electricity collecting windsock **102** extends outward, thus allowing the electrically conducting material **132** to collect maximum possible atmospheric electricity. The electrically conducting material **132** may include multiple collectors that are spaced apart such that the collection surface is greatly enhanced. The multiple collectors may be spaced apart in patterns, such as spaced apart lines, squares, rectangles, circles, and the like, or any other pattern that may maximize the collection of the atmospheric electrical energy. As noted above, the electrically insulating material **134** may be a plastic or a flexible glass, such as polyester like polyethylene terephthalate (PET) or biaxially-oriented polyethylene terephthalate (BoPET). The electrically conducting material **132** may be a metal or alloy, such as one of or a combination of one or more of gold, silver, copper, aluminum, and the like.

[0028] FIG. **1**C illustrates a cross-section **160** of another implementation of the electricity collecting windsock **102**. The electrically conducting material (e.g. metal deposit) **132**, **162** may be placed on both sides of the electrically insulating material **134** such that the collection ability is increased even further. Multiple collectors are implemented and are spaced apart on electrically conducting material **132**, **162** such that the collection surface is greatly enhanced. The multiple collectors may form one or more patterns, as noted above with respect to FIG. **1**B. Furthermore, the electrically insulating material **134** (e.g. mylar) used in the electricity collecting windsock **102** is light, thereby minimizing the overall weight of the electricity collecting windsock **102** and reducing the weight for payload calculations. The electrically conducting materials **132**, **162** may be an electrically conducting metal or alloy, such as one of or a combination of at least one of gold, copper, aluminum, silver, and the like. The electrically con-

ducting materials **132**, **162** may be made of the same metal/alloy or a different metal/alloy.

[0029] The electrically conducting materials **132**, **162** may be attached to the electrically insulating material **134** by a gluing mechanism. In some implementations, other attachment mechanisms are known to be implemented, such as paint coating mechanism, a threading mechanism, a nut and bolt mechanism, soldering mechanism, and the like. The attachment mechanism between the electrically conducting material **132** and the electrically insulating material **134** may or may not be the same as the attachment mechanism between the electrically conducting material **162** and the electrically insulating material **134**.

[0030] FIG. **2** illustrates an exemplary conductive line in accordance with one implementation. This type of conductive line is commonly referred to as poly-wire. The conductive line consists of multiple interwoven strands of plastic **202** and **204** woven into a cord or rope arrangement having intertwined therein exposed metal wires **206** and **208**. Although FIG. **2** illustrates two plastic strands and two metal wires, any number of possible combinations of plastic strands and metal wires is possible. The exposed metal wires **206** and **208** attract the atmospheric static charge and transmit the charge down to the electricity storage device (not shown).

[0031] FIG. **3**A illustrates a front view of a conductive line **300** in accordance with another implementation. FIG. **3**B illustrates a top view of the conductive line **300** illustrated in FIG. **3**. The conductive line **300** creates an ionized pathway for the flow of the static charges from the atmosphere to the electricity storage device via the electricity collecting windsock arrangement **100**. This conductive line utilizes a tube **302** having an outer layer **304** of PET Film (Biaxially-oriented polyethylene terephtalate polyester film). The tube **302** provides exceptionally high tensile strength and is chemically and dimensionally stable. In one implementation, the tube **302** may have an ideal diameter of between two and three inches. An interior metal coating **306** provides an initial conduit for the flow of static charge. The static charge through the metal may force the tube **302** to expand due to the repulsion experienced by like charges. Further, the flow of electricity causes the interior of the tube **302** to become ionized to provide an additional pathway for the atmospheric static charges to the electricity storage device (not shown).

[0032] FIGS. **4**A, **4**B, and **4**C illustrate electrical schematics for handling the static charge from the atmosphere. By maintaining the voltage being collected in a prescribed range, an electrical conversion system is easily designed. While FIGS. **4**A, **4**B, and **4**C illustrate some electrical configurations, those of ordinary skill in the art readily recognize a variety of other configurations that may serve the same function.

[0033] Referencing FIG. **4**A, Direct Current In (DC IN) **402** is buffered by a gang of capacitors **404** before being communicated to a DC/AC converter **406**. The DC/AC converter converts the direct current into alternating current suitable for placement over an existing electrical grid **408** such as normally found from a power-plant. Those of ordinary skill in the art readily recognize a variety of DC/AC converters that may work in this capacity.

[0034] FIG. **4**B illustrates an electrical arrangement suitable for use in charging a battery. DC IN **402** is buffered by capacitor bank **404** before entering into a step down transformer **408**. Step down transformer **408** reduces the voltage so that the voltage can safely be introduced into battery **410**, which is connected to ground **412** at the battery's other pole. Those of ordinary skill in the art readily recognize a variety of batteries that may work in this capacity.

[0035] In FIG. **4**C, DC IN **402** is fed into an adjustable rheostat **414**, which is controlled by the controller so that the DC OUT **416** falls within a specified range.

[0036] FIG. **5** illustrates an adjusting apparatus **500** that enables adjustment of height of the electricity collecting windsock arrangement **100** in accordance with one implementation. As per one implementation, the height of the electricity collecting windsock **102** can be adjusted using a winch motor **502** and a spool **504**. The winch motor **502** and the spool **504** can release or withdraw the tether **112** to adjust the height of the electricity collecting windsock **102** that is connected to the tether **112**. In one implementation, this release and the withdrawal may be performed manually. In another implementation, this release and the withdrawal may be performed automatically based on information obtained from a sensor system that measures atmospheric electrical energy being collected per unit time. If the sensor indicates that a current flow is diminishing, then the tether **112** is released/extended from the spool **504** to increase the altitude of the electricity collecting windsock **102** such that more static charge from the atmosphere is gathered. If the sensor indicates that collected atmospheric electrical energy exceeds a preset level per unit time, the tether **112** is withdrawn onto the spool **504** to decrease the static charge being collected from the atmosphere.

[0037] FIG. **6** is a process flow diagram illustrating aspects of a method consistent with implementations of the current subject matter. At step **602**, the functioning of the electricity collecting windsock arrangement **100** depends on whether atmospheric conditions are windy. If the atmospheric conditions are windy, the wind **116** stretches/extends outward the electricity collecting windsock **102**—Step **604**. Next, it is determined whether the atmospheric electrical energy (atmospheric current) that is collected is in a predetermined range—Step **606**. If the collected atmospheric electrical energy is in the predetermined range, the flow goes back to step **604**. If the current is not in the predetermined range, the height of the electricity collecting windsock **102** may be adjusted using adjusting apparatus **500**, such as the winch motor **502** and spool **504**. One skilled in the art understands that other implementations may include any other adjusting apparatus **500**, such as a pulley, a wheel mechanism, or the like.

[0038] The implementations set forth in the foregoing description do not represent all implementations consistent with the subject matter described herein. Instead, they are merely some examples consistent with aspects related to the described subject matter. Although a few variations have been described in detail herein, other modifications or additions are possible. In particular, further features and/or variations can be provided in addition to those set forth herein. For example, the implementations described above can be directed to various combinations and sub-combinations of the disclosed features and/or combinations and sub-combinations of one or more features further to those disclosed herein. In addition, the logic flows depicted in the accompanying figures and/or described herein do not necessarily require the particular order shown, or sequential order, to achieve desirable results. The scope of the following claims may include other implementations or embodiments.

What is claimed is:

1. An electricity collection apparatus comprising:

a tether; and

a windsock formed of an insulation material with a metal deposited on at least a portion of the insulation material, the metal of the windsock being electrically connected to the tether, the windsock to extend in a direction of ambient wind to provide a surface area based on the ambient wind, the surface area providing the metal to collect electrical energy from the ambient wind, the collected electrical energy being transferred to the tether.

2. The apparatus in accordance with claim **1**, wherein the metal is deposited on at least one of opposite sides of the insulation material.

3. The apparatus in accordance with claim **2**, wherein the metal is a metal selected from a group of metals comprising gold, silver, copper and aluminum.

4. The apparatus in accordance with claim **1**, wherein the insulation material is a polyester film.

5. The apparatus in accordance with claim **1**, wherein the transferred electrical energy at the tether is further transferred from the tether to an electricity storage device.

6. The apparatus in accordance with claim **1**, wherein the metal comprises conductors that are light-weight thereby allowing payload requirements for adjusting the windsock to an optimum location to be within a predetermined value, the optimum location comprising a height of the windsock from ground level.

7. The apparatus in accordance with claim **6**, wherein the deposited metal conductors form a pattern that maximizes the collection of the electrical energy at the optimum location.

8. An electricity collection apparatus comprising:

a windsock formed of an insulation material having a metal deposited on at least a portion of the insulation material, the windsock to extend in a direction of ambient wind to provide a surface area based on the ambient wind, the surface area providing the metal to collect electrical energy from the ambient wind; and

an electrically conductive tether connected with windsock to anchor the windsock in the direction of the ambient wind, the electrically conductive tether being electrically connected to the metal of the insulation material, the collected electrical energy being transferred to the tether.

9. The apparatus in accordance with claim **8**, wherein the metal is deposited on at least one of opposite sides of the insulation material.

10. The apparatus in accordance with claim **9**, wherein the metal is a metal selected from a group of metals comprising gold, silver, copper and aluminum.

11. The apparatus in accordance with claim **8**, wherein the insulation material is a polyester film.

12. The apparatus in accordance with claim **8**, wherein the transferred electrical energy at the tether is further transferred from the tether to an electricity storage device.

13. The apparatus in accordance with claim **8**, wherein the metal comprises conductors that are light-weight thereby allowing payload requirements for adjusting the windsock to an optimum location to be within a predetermined value, the optimum location comprising a height of the windsock from ground level.

14. The apparatus in accordance with claim **13**, wherein the metal conductors form a pattern that maximizes the collection of the electrical energy at the optimum location.

15. An electricity collection apparatus comprising:

a windsock formed of an insulation material the windsock to extend in a direction of ambient wind to provide a surface area based on the ambient wind;

one or more electrical conductors provided on at least a portion of the insulation material to collect electrical energy from the ambient wind; and

an electrically conductive tether connected with windsock to anchor the windsock in the direction of the ambient wind, the electrically conductive tether being electrically connected to the one or more electrical conductors provided on at least a portion of the insulation material to transfer the collected electrical energy from the one or more electrical conductors to an electrical storage.

* * * * *

US007855476B2

(12) **United States Patent**
Ogram

(10) **Patent No.: US 7,855,476 B2**
(45) **Date of Patent: Dec. 21, 2010**

(54) **ATMOSPHERIC ELECTRICAL GENERATOR**

(76) Inventor: **Mark Ellery Ogram**, 780 S. Freeman Rd., Tucson, AZ (US) 85748

(*) Notice: Subject to any disclaimer, the term of this patent is extended or adjusted under 35 U.S.C. 154(b) by 254 days.

(21) Appl. No.: **12/218,297**

(22) Filed: **Jul. 14, 2008**

(65) **Prior Publication Data**

US 2010/0007218 A1 Jan. 14, 2010

(51) **Int. Cl.**
H02G 11/00 (2006.01)

(52) **U.S. Cl.** **307/145**; 307/149; 361/218; 361/230

(58) **Field of Classification Search** 307/149, 307/145; 244/30, 31; 174/2; 361/212, 215–218, 361/230, 231
See application file for complete search history.

(56) **References Cited**

U.S. PATENT DOCUMENTS

674,427 A * 5/1901 Palencsar 307/149
911,260 A * 2/1909 Pennock 307/149
1,014,719 A * 1/1912 Pennock 307/149
1,540,998 A * 6/1925 Plauson 310/309
3,121,196 A * 2/1964 Kasemir 324/464
4,234,167 A * 11/1980 Lane 254/291
4,486,669 A * 12/1984 Pugh 290/44
4,842,219 A * 6/1989 Jakubowski et al. 244/31
5,203,542 A 4/1993 Coley et al.
6,254,034 B1 * 7/2001 Carpenter ..... 244/153 R
6,829,911 B2 12/2004 Davis et al.
6,961,662 B2 11/2005 Murphy
7,016,785 B2 3/2006 Makela et al.
7,200,418 B2 4/2007 Kaikuranta et al.
7,330,366 B2 2/2008 Lee et al.
7,375,492 B2 5/2008 Calhoon et al.
7,378,181 B2 5/2008 Skinlo
7,388,350 B1 6/2008 Wright
7,394,671 B2 7/2008 Fukumoto et al.
7,397,220 B2 7/2008 Uchida et al.

* cited by examiner

Primary Examiner—Fritz M Fleming
(74) *Attorney, Agent, or Firm*—Mark Ogram

(57) **ABSTRACT**

A mechanism to tap an electrical source which uses an aircraft (preferably a lighter than air balloon) tethered by a conductive line. The conductive line is extended/withdrawn by a winch motor to adjust the altitude of the aircraft. The conductive line is isolated from the ground and an electrical conductor is connected to the conductive line and to an electrical load. In this manner, static electricity generated in the atmosphere is gathered for use.

15 Claims, 4 Drawing Sheets

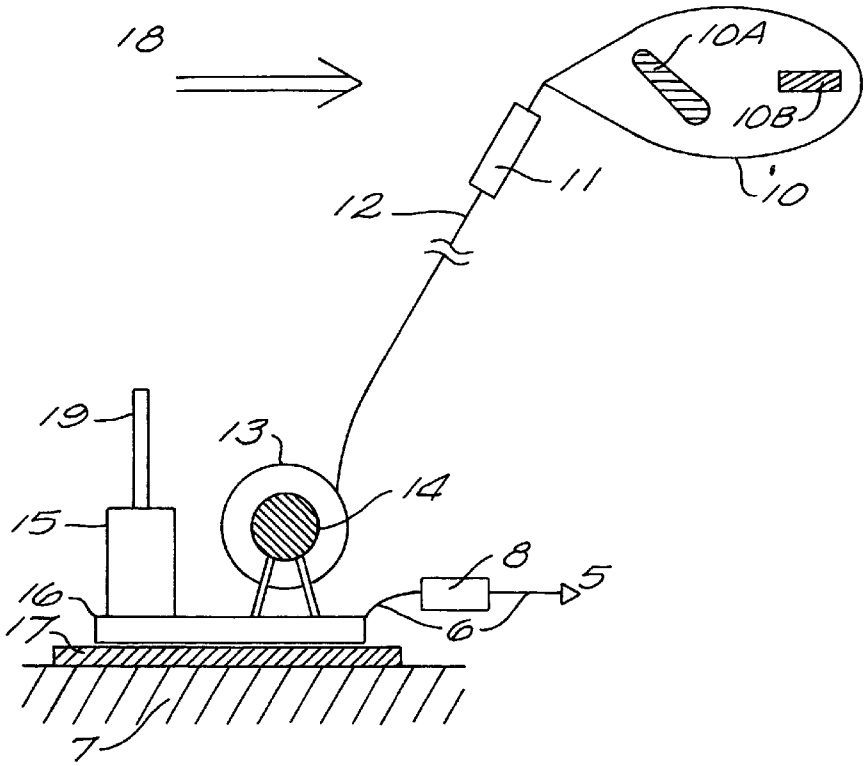

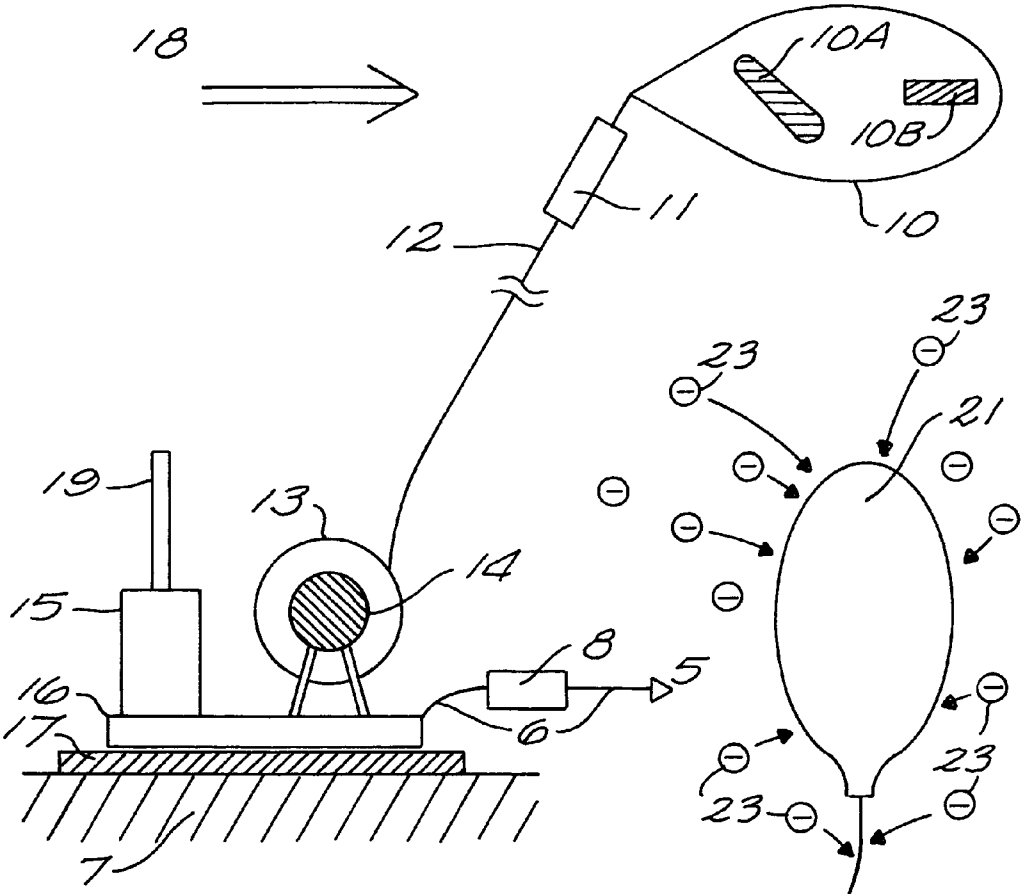

FIG. 1

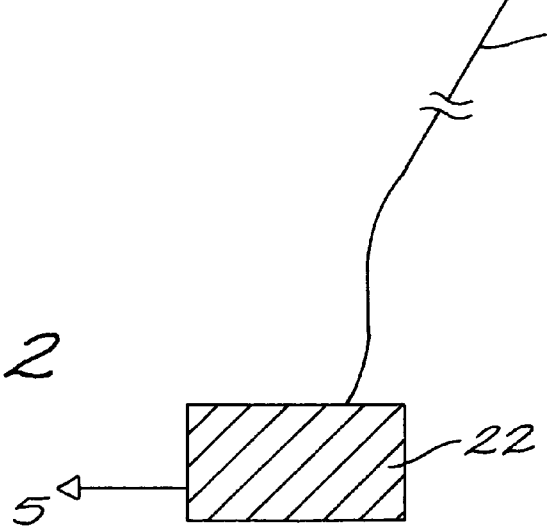

FIG. 2

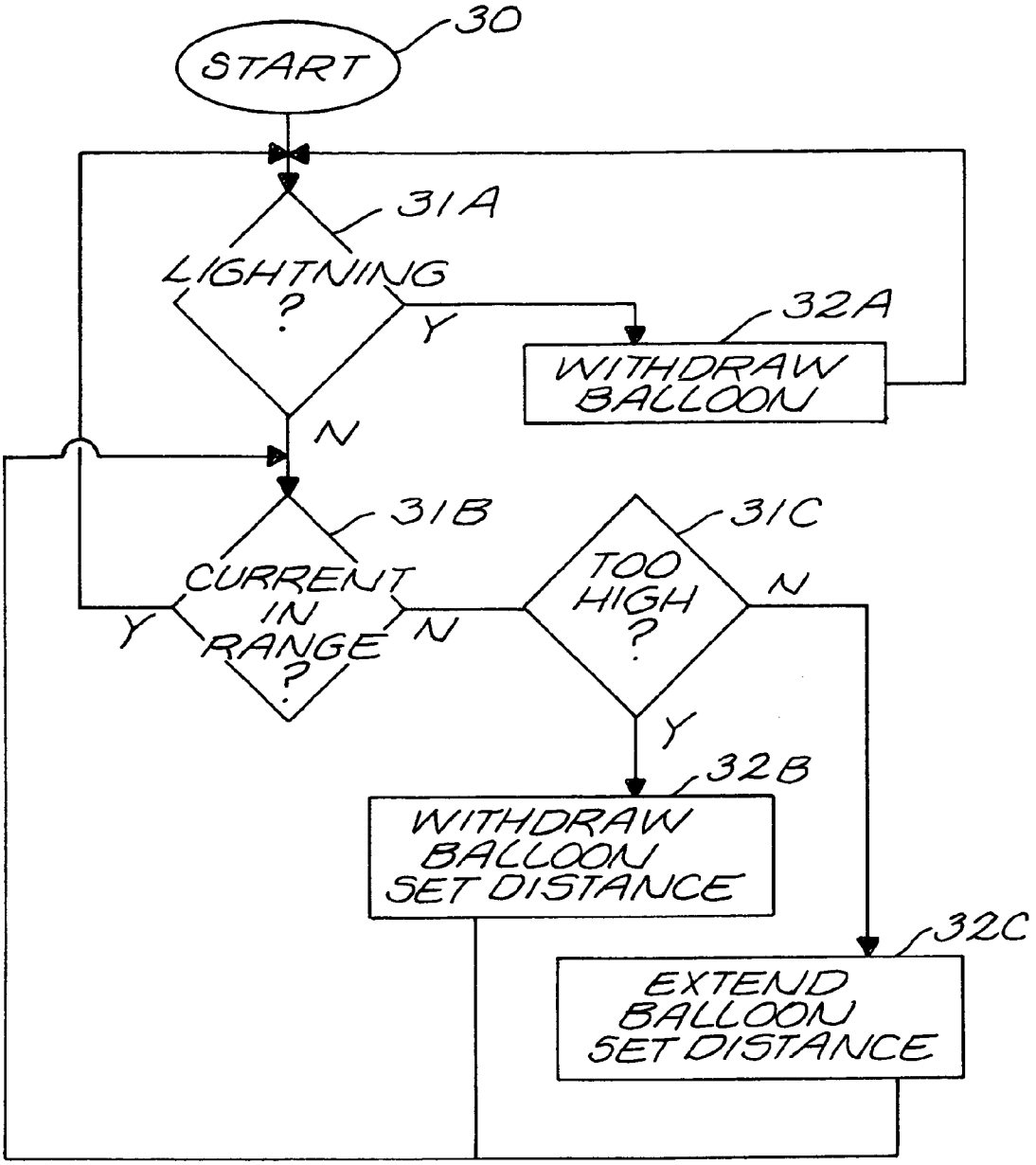
30
START
31A
LIGHTNING ?
Y
32A
WITHDRAW BALLOON
N
31B
CURRENT IN RANGE ?
Y
N
31C
TOO HIGH ?
N
Y
32B
WITHDRAW BALLOON SET DISTANCE
32C
EXTEND BALLOON SET DISTANCE

FIG. 3

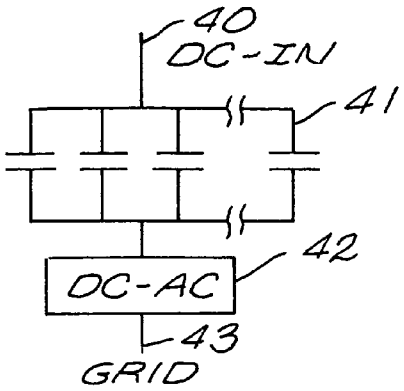

FIG. 4A

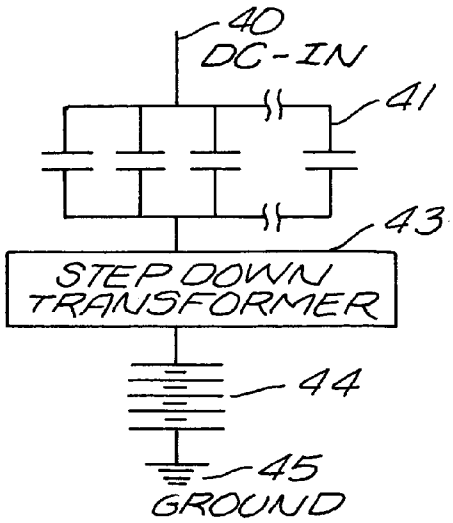

FIG. 4B

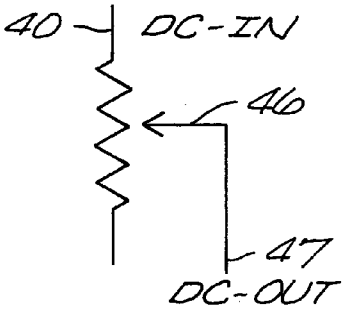

FIG. 4C

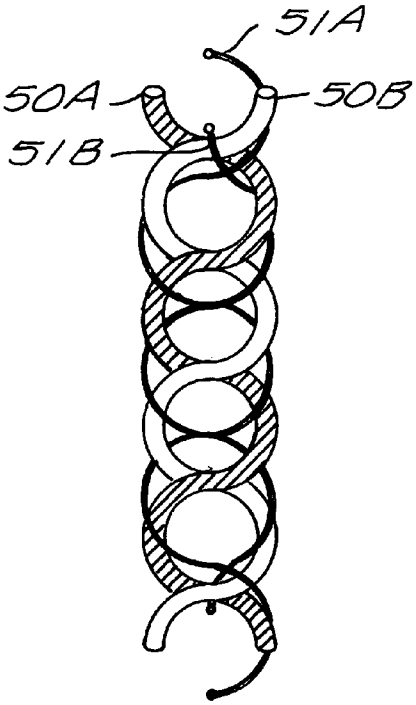

FIG. 5

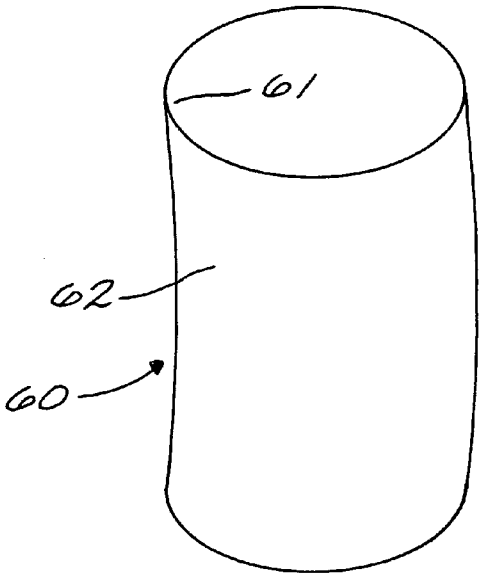

FIG. 6A

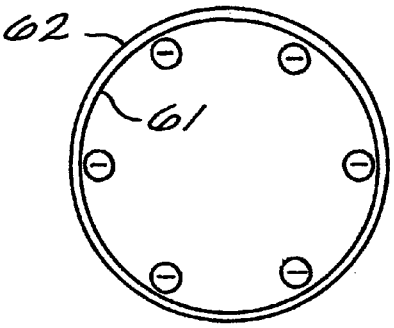

FIG. 6B
REPLACEMENT

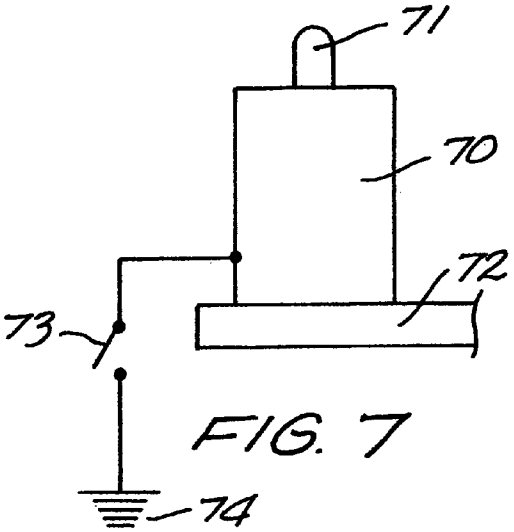

FIG. 7

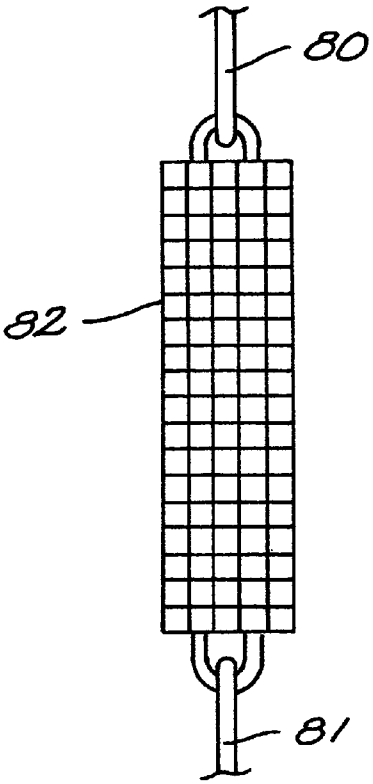

FIG. 8A

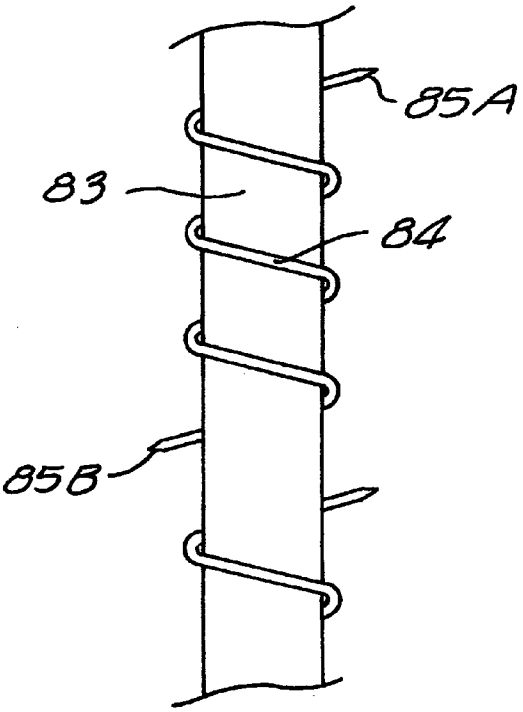

FIG. 8B

ATMOSPHERIC ELECTRICAL GENERATOR

BACKGROUND OF THE INVENTION

This invention relates to the production of electrical energy and more particularly to the production of electrical energy from the atmosphere.

Everyone is familiar with Benjamin Franklin's kite experiment of 1752. Using a kite whose string had become wet, negative charges from the passing clouds flowed into the string, down to the suspended key, and then into a Leyden jar via a thin metal wire. Franklin was protected by a dry silk string; but, when Franklin's knuckle came too close to the key, he received a strong shock. Fortunately, Benjamin Franklin was not killed, others who tried this same experiment were not so lucky.

Since then, the formation of lightning has remained something of a mystery. Lightning bolts are triggered when a negatively charged cloud base induces a positive charge from the ground, thereby forming a "pathway" for the discharge of the collected electrical energy.

Lightning travels up to 60,000 miles per hour with a flash that is brighter than ten million 100-watt lightbulbs. This wattage is as much power as is produced by all of the electricity plants in the United States and with a voltage of up to 300 million volts.

It is this very fact, the power within lightning is immense, that has prevented any successful collection of the electrical energy from lightning. The electricity in lightning is far too extreme for current technology to harness.

While lightning has attracted a energy starved industrial world, no one has developed any technique to harness this naturally occurring electrical source.

It is clear there is a continuing need for an electrical source other than carbon-based fuels and that the naturally occurring electricity in the atmosphere is being ignored.

SUMMARY OF THE INVENTION

The invention is a mechanism which taps into the naturally occurring static electricity in the atmosphere. Whereas heretofore, the attempt to garner electricity from the atmosphere has focused exclusively on capturing lightning, the present invention syphons off the static electricity which is generated from any agitated air and avoids lightning.

Lightning is only the final discharge of the static electricity, whether that lightning is intra-cloud lightning, cloud-to-ground lightning, or inter-cloud lightning. Other types of final discharges are known as heat lightning, summer lightning, sheet lightning, ribbon lightning, silent lightning, ball lightning, bead lightning, elves, jets, and sprites. Well before these discharges are observed, as the atmosphere becomes agitated by wind or thermal activity, static electricity is being generated.

The present invention recognizes that this static electricity is being formed and creates a mechanism to capture it.

The mechanism of this invention utilizes an aircraft such as a lighter than air balloon. While the preferred embodiment uses a foil balloon, a variety of other aircraft are obvious to those of ordinary skill in the art, including, but not limited to: gliders, rubber balloons (such as weather balloons), biaxially-oriented polyethylene terephthalate polyester film balloons, and latex balloons.

Within this discussion, the balloon is referenced, but, the invention is not intended to be limited solely to balloons.

The balloon is sent aloft and is tethered by a conductive line. In this context, the conductive line may be any obvious to those of ordinary skill in the art. For the preferred embodiment, the conductive line is a generically referred to as a "poly-rope" and is commercially available through a variety of sources. A suitable conductive line is described in U.S. Pat. No. 5,203,542, entitled "Apparatus for Improved Electric Fence Wire Construction for use with Intensive Grazing" issued Apr. 20, 1993, to Coley, et al. and incorporated hereinto by reference.

The conductive line is played out of a winch to control the altitude of the balloon. The motor controlling the winch is able to reverse direction to both extend and withdraw the conductive line which is wrapped around a spool on the winch. The winch/spool combination are part of a base unit.

In some embodiments of the invention, the spool is constructed of rubber so as to insulate the conductive line from the winch assembly. In this embodiment, only the conductive line is charged by the atmospheric static electricity while the winch remains neutral.

In yet another embodiment, the winch/spool are part of a base unit which is itself isolated from the ground by an insulator. In this embodiment, the entire base unit is charged by the atmospheric static electricity.

A conductor, such as an insulated wire, is electrically connected to the conductive line. In one embodiment, where the conductive line is electrically isolated from the spool and winch motor, the conductor is connected to the conductive line. In the embodiment where the conductive line is electrically connected to the base unit, then the conductor is connected anywhere on a metallic base unit.

The other end of the conductor is connected to a load. The load in this case can be any of a variety of electrical loads well known to those of ordinary skill in art, including, but not limited to a motor, a battery system, or the electrical grid for the system.

In the preferred embodiment, a sensor array is used to monitor the activities both at the base unit (such as electrical flow within the conductor) and in the surrounding locale.

A sensor monitoring the electrical flow (i.e. voltage and/or current) within the conductor is used to monitor the electrical activity within the conductor.

In the preferred embodiment, a lightning sensor monitors for lightning activity within the locale. As noted earlier, the electrical characteristic of lightning is so extreme that ideally this discharge is avoided as it might damage the mechanism of this invention.

The sensor array is utilized by a controller, such as microprocessor, programmed to operate the mechanism as outlined herein.

The controller operates the winch motor to extend or withdraw the conductive line and by extension the altitude of the balloon. The controller is programmed to operate the winch by monitoring the electrical characteristics of the conductor and adjusting the balloon's altitude to maintain these characteristics within the conductor within a preset range.

This preset range is established either in the base programming of the controller or is established by an operator of the system.

As example, by controlling the amount of current being withdrawn from the atmosphere, the mechanism operates within a safe range and also provides a relatively stable current flow from which a variety of activities can take place (such as DC-AC conversion).

The controller also utilizes the lightning sensor to protect the mechanism from a lightning strike. Should lightning be detected within a pre-determined range (as established by the software or defined by an operator), then the balloon is pulled down to minimize the risk of damage from a lightning strike.

The invention, together with various embodiments thereof will be more fully explained by the following description of the accompanying drawings.

DRAWINGS IN BRIEF

FIG. **1** diagrams the preferred embodiment of the invention.

FIG. **2** illustrates the collection of the negative charged particles in the atmosphere.

FIG. **3** is a flow-chart of the operation of the controller for the preferred embodiment of the invention.

FIGS. **4**A, **4**B, and **4**C are electrical schematics for handling the static charge from the atmosphere.

FIG. **5** illustrates a conductive line used in the preferred embodiment of the invention.

FIGS. **6**A and **6**B illustrate an alternative conductive line creating an ionized pathway for the flow of the static charges from the atmosphere.

FIG. **7** illustrates the controller of an alternative embodiment and the associated safety devices.

FIGS. **8**A and **8**B illustrate two embodiments of enhanced electrical collection leads.

DRAWINGS IN DETAIL

FIG. **1** diagrams the preferred embodiment of the invention.

Balloon **10** is an aircraft which, in this illustration, is a lighter than air balloon. Wings **10**A, extending from the body of balloon **10**, provide additional lift in air flow **18**. Tail **10**B helps to stabilize balloon **10**.

Balloon **10** is tethered to the ground via conductive line **12**. As noted earlier, a variety of configurations and materials are available to serve as conductive line **12**. In this illustration, a poly-wire is used Poly-wire is commercially available through a variety of vendors, including, but not limited to: Jeffers Livestock and Zareba Systems, Inc, of Ellendale, Minn.

In this embodiment, located proximate to balloon **10**, is an electrical collection enhancement lead **11** which assists in the collection of the static electrical charge in the atmosphere. Electrical collection enhancement lead **11** is configured to attract the static charge and conduct the charge into the conductive line **12**.

The electricity flows down the conductive line into spool **13**, where the conductive line **12** is collected and either withdrawn or dispensed through operation of winch motor **14**.

Winch motor **14** and spool **13** are mounted onto base unit **16** which is electrically isolated from ground **7** using insulator **17**. Note, in this embodiment of the invention, when electricity is being collected from the atmosphere, the entire base unit **16** becomes charged. In another embodiment of the invention, spool **13** is constructed of rubber, thereby preventing base unit **16** from becoming charged, thereby restricting the charging from the atmosphere to only conductive line **12**.

In this embodiment, conductor **6** is connected to base unit **16** (since the entire base unit **16** is charged and the base unit is metallic) to communicate the electrical current to load **5**. Conductor **6** is ideally an insulated wire.

The electrical current through conductor **6** is measured using sensor **8**.

In the alternative embodiment discussed above, where only the conductive line **12** is charged, then conductor **6** is connected to conductive line **12**.

Controller **15**, located in this embodiment on base unit **16**, operates winch motor **14** in response to signals from sensor **8** (measuring the current being discharged to load **5**) to maintain the current flow within a pre-defined range. As the current flow diminishes, then the conductive line **12** extended from spool **13** to increase the altitude of balloon **10** to that more static charge from the atmosphere is gathered; as the current flow falls exceeds a preset level, conductive line **12** is withdrawn onto spool **13** to decrease the static charge being collected from the atmosphere.

The range of current flow through conductor **6** is ideally set by the program, although some embodiments of the invention permit an operator to establish this range of operation.

In an alternative embodiment, the sensor monitoring conductor **6** monitors the voltage therein.

In the preferred embodiment of the invention, controller **15** is also equipped with a lightning sensor **19**. In this embodiment, when lightning is sensed within a preset range, then substantially all of conductive line **12** is wound onto spool **13** to pull balloon **10** near the ground and protect the entire mechanism from being damaged from a lightning discharge.

In the preferred embodiment, the "safe" distance form lightning is set in the programming of controller **15** and is ideally two miles; other embodiments permit the operator to "safe" distance.

There are a variety of lightning sensors well known to those of ordinary skill in the art, including, but not limited to those described in: U.S. Pat. No. 7,016,785, entitled "Lightning Detection" issued to Makela, et al. on Mar. 21, 2006; U.S. Pat. No. 6,829,911, entitled "Lightning Detection and Prediction Alarm Device" issued to Jones, et al. on Dec. 7, 2004; U.S. Pat. No. 7,200,418, entitled "Detection of Lightning" issued to Karikuranta, et al. on Apr. 3, 2007; and U.S. Pat. No. 6,961,662, entitled "Systems and Methods for Spectral Corrected Lightning Detection" issued to Murphy on Nov. 1, 2005; all of which are incorporated hereinto by reference.

In another embodiment of the invention, controller **15** is not located on base unit **16**, rather it is remote and communicates its control signals to winch motor **14** using radio waves.

FIG. **2** illustrates the collection of the negative charged particles in the atmosphere.

Static charges **23** are generated in the atmosphere by agitated air. These static charges are often collected at the bottom of clouds, but exist in other environments as well.

Balloon **21** is extended into this strata of static charges **23** which are then attracted to conductive line **12** to flow to base unit **22** and then onto load **5**.

By increasing or decreasing the altitude of balloon **21** (defined by the length of the extended conductive line **12**), conductive line **12** is selectively exposed to varying densities and levels of the static charge strata, and by extension, the current flow or voltage is increased or decreased.

FIG. **3** is a flow-chart of the operation of the controller for the preferred embodiment of the invention.

Once the program starts **30**, the lightning sensor is checked to determine if lightning has occurred within the unsafe range **31**A, if it has, then the balloon is lowered **32**A, and the program continues monitoring the status of lightning until no lightning is detected.

When the lightning status is acceptable, then the current within the conductor is checked to see if the current is within the prescribed range **31**B. If the current is acceptable (within range) the program returns to check the lightning status **31**A; otherwise a determination is made to see if the current is above the prescribed range **31**C.

If the current is above the prescribed range, then the altitude of the balloon is withdrawn a set amount **32**B (ideally twenty-five feet) and the program loops back to see if the current is within range **31**B.

If the current is below the prescribed range, then the altitude of the balloon is extended a set amount **32**C (ideally twenty-five feet) and the program loops back to see if the current is within range **31**B.

In this manner of feed-back and minor adjustments in the altitude of the balloon, the current is maintained within a prescribed range which can be handled by the downstream electrical system.

As noted earlier, some embodiments of the invention monitor the voltage instead of the current.

FIGS. **4**A, **4**B, and **4**C are electrical schematics for handling the static charge from the atmosphere.

By maintaining the voltage being collected in a prescribed range, an electrical conversion system is easily designed. While FIGS. **4**A, **4**B, and **4**C illustrate some electrical configurations, those of ordinary skill in the art readily recognize a variety of other configurations which will serve the same function.

Referencing FIG. **4**A, Direct Current In (DC IN) **40** is buffered by a gang of capacitors **41** before being communicated to a DC/AC converter **42**. The DC/AC converter converts the direct current into a an alternating current suitable for placement over an existing electrical grid **43** such as normally found from a power-plant.

Those of ordinary skill in the art readily recognize a variety of DC/AC converters, including, but not limited to: U.S. Pat. No. 7,394,671, entitled "Controller IC, DC-AC Conversion Apparatus, and parallel running system of DC-AC Conversion Apparatuses" issued to Fukumoto, et al. on Jul. 1, 2008; and, U.S. Pat. No. 7,330,366, entitled "DC-AC Converter" issued to Lee, et al. on Feb. 12, 2008; all of which are incorporated hereinto by reference.

FIG. **4**B illustrates an electrical arrangement suitable for use in charging a battery. DC IN **40** is buffered by capacitor bank **41** before entering into a step down transformer **43**. Step down transformer **43** reduces the voltage so that the voltage can safely be introduced into battery **44** which is connected to ground **45** at the battery's other pole.

Those of ordinary skill in the art readily recognize a variety of batteries which will work in this capacity, including, but not limited to those described in: U.S. Pat. No. 7,378,181, entitled "Electric Storage Battery Construction and Manufacture" issued to Skinlo on May 27, 2008; U.S. Pat. No. 7,388,350, entitled "Battery with Electronic Compartment" issued to Wright on Jun. 17, 2008; U.S. Pat. No. 7,397,220, entitled "Connection Member and Battery Pack" issued to Uchida, et al. on Jul. 8, 2008; and, U.S. Pat. No. 7,375,492, entitled "Inductively Charged Battery Pack" issued to Calhoon, et al. on May 20, 2008; all of which are incorporated hereinto by reference.

In FIG. **4**C, DC IN **40** is fed into an adjustable rheostat **46** which is controlled by the controller so that the DC OUT **47** falls within a specified range.

FIG. **5** illustrates a conductive line used in the preferred embodiment of the invention.

This type of conductive line is commonly called poly-wire and consists of multiple interwoven strands of plastic **50**A and **50**B woven into a cord or rope arrangement having intertwined therein exposed metal wires **51**A and **51**B. While this illustration shows two plastic strands and two metal wires, any number of possible combinations is possible.

The exposed metal wires **51**A and **51**B attract the atmospheric static charge and transmit the charge down to the base unit (not shown).

FIGS. **6**A and **6**B illustrate an alternative conductive line creating an ionized pathway for the flow of the static charges from the atmosphere.

This conductive line utilizes a tube **60** having an outer layer **62** of PET Film (Biaxially-oriented polyethylene terephtalate polyester film) which provides exceptionally high tensile strength and is chemically and dimensionally stable. The tube has an ideal diameter of between two and three inches.

An interior metal coating **61** provides an initial conduit for the flow of static charge. The static charge through the metal forces the tube to expand due to the repulsion experienced by like charges. Further, the flow of electricity causes the interior of the tube **60** to become ionized to provide an additional pathway for the atmospheric static charges to the base unit (not shown).

Because outer layer **62** provides a gas barrier, the resulting ionization is not dissipated by air currents, thereby providing a highly stable pathway.

FIG. **7** illustrates the controller of an alternative embodiment and the associated safety devices.

In this embodiment, controller box **70**, resting on insulating pad **72**, is in communication with the sensors as described above. Using the input from these sensors, when there is flow of electricity through the base unit, warning flashing light **71** is illuminated. To electrically neutralize the mechanism, switch **73** is activated to pass any existing current into the ground **74**.

FIGS. **8**A and **8**B illustrate two embodiments of enhanced electrical collection leads.

Referencing FIG. **8**A, enhanced electrical collection lead **82** is a wire mesh which is in electrical communication with conductive line **81** and balloon **80**. Because of the significant amount of metal exposed by enhanced electrical collection lead **82**, more static electricity from the atmosphere is drawn to the collection lead **82**, and then down conductive line **81** to the base unit (not shown).

Conductive lead **82** is positioned proximate to balloon **80**.

In FIG. **8**B, poly-wire **83** has enhanced electrical collection leads **84** wrapped therearound. Collection leads **84** have pointed ends **85**A and **85**B which have a propensity to attract more electricity than rounded ends do.

It is clear from the foregoing that the present invention captures an entirely new source of electrical energy.

What is claimed is:

1. A mechanism to tap an electrical source comprising:

a) a lighter than air balloon suspended in the atmosphere;

b) a base unit having a spool of conductive line on a winch motor, one end of said conductive line secured to said lighter than air balloon, a portion of said conductive line collecting electricity in the atmosphere, said winch motor capable of selectively extending or withdrawing said conductive line from said spool;

c) an insulator electrically isolating said conductive line from ground;

d) a conductor having a first end electrically connected to said conductive line and a second end electrically connected to a load being powered by collected electricity from said conductive line;

e) an electrical flow sensor monitoring electrical flow through said conductor and generating an electrical flow indicia indicative of said electrical flow in said conductor; and,

f) a controller receiving said electrical flow indicia and selectively operating said winch motor such that said electrical flow indicia remains within a selected operating range.

2. The mechanism to tap an electrical source according to claim **1**, wherein said selected operating range is established by an operator.

3. The mechanism to tap an electrical source according to claim **2**, further including a warning light activated when said electrical flow indicia is non-zero.

4. The mechanism to tap an electrical source according to claim **1**,

a) further including a lightning sensor generating a lightning presence indicia indicative of lightning within a prescribed range, said presence indicia being communicated to said controller; and,

b) wherein said control mechanism, in response to said lightning presence indicia, operates said winch motor to withdraw substantially all of said conductive line onto said spool.

5. The mechanism to tap an electrical source according to claim **4**, wherein said prescribed range is established by an operator.

6. The mechanism to tap an electrical source according to claim **1**, further including an electrical collection enhancement lead in electrical contact with a first end of said conductive material, said electrical collection enhancement lead configured to attract static electricity.

7. The mechanism to tap an electrical source according to claim **6**, wherein said electrical collection enhancement lead is positioned proximate to said lighter than air balloon.

8. The mechanism to tap an electrical source according to claim **7**, wherein said electrical collection enhancement lead includes at least two pointed electrical conductors.

9. The mechanism to tap an electrical source according to claim **1**, wherein said insulator electrically isolates said conductive line from said winch motor.

10. The mechanism to tap an electrical source according to claim **1**, wherein said insulator electrically isolates said base unit from ground.

11. A mechanism comprising:

a) an airborne aircraft having a conductive line secured to a winch capable of extending or withdrawing said conductive line from a spool, when said airborne aircraft is aloft, said conductive line collecting electricity from the atmosphere;

b) a conductor having a first end electrically connected to said conductive line and a second end electrically connected to a load such that collected electricity from said conductive line powers said load;

c) an electrical flow sensor monitoring electrical flow through said conductor and generating an electrical flow indicia indicative of said electrical flow in said conductor; and,

d) a controller receiving said electrical flow indicia adjusting an altitude of said airborne aircraft via said winch such that said electrical flow indicia remains within a selected operating range.

12. The mechanism to tap an electrical source according to claim **11**,

a) further including a lightning sensor communicating with said controller; and,

b) wherein said controller, in response to selected signals from said lightning sensor withdraws substantially all of said conductive line.

13. A mechanism to tap an electrical source comprising:

a) a lighter than air balloon suspended in the atmosphere;

b) a base unit having a spool of conductive line on a winch motor, one end of said conductive line suspended by said balloon, a portion of said conductive line collecting electricity from the atmosphere, said winch motor capable of adjusting an altitude of said lighter than air balloon by selectively extending or withdrawing said conductive line from said spool;

c) a conductor having a first end electrically connected to said conductive line and a second end electrically connected to a load being powered by said collected electricity from said conductive line;

d) a sensor array having,

1) an electrical flow sensor monitoring electrical flow through said conductor and generating an electrical flow indicia indicative of said electrical flow in said conductor, and,

2) a lightning sensor monitoring existence of proximate lightning; and,

e) a controller responsive to said electrical flow indicia from said sensor array to selectively operate said winch motor.

14. The mechanism to tap an electrical source according to claim **13**,

a) further including a warning light; and,

b) wherein said controller activates said warning light when said electrical flow in said conductor is non-zero.

15. The mechanism to tap an electrical source according to claim **14**, further including an electrical collection enhancement lead in electrical contact with said conductive material, said electrical collection enhancement lead configured to attract static electricity and positioned proximate to said lighter than air balloon.

* * * * *

US008102082B2

(12) **United States Patent**
Ogram

(10) **Patent No.: US 8,102,082 B2**
(45) **Date of Patent: *Jan. 24, 2012**

(54) **ATMOSPHERIC STATIC ELECTRICITY COLLECTOR**

(75) Inventor: **Mark Ellery Ogram**, Tucson, AZ (US)

(73) Assignee: **Sefe, Inc.**, Scottsdale, AZ (US)

(*) Notice: Subject to any disclaimer, the term of this patent is extended or adjusted under 35 U.S.C. 154(b) by 295 days.

This patent is subject to a terminal disclaimer.

(21) Appl. No.: **12/321,306**

(22) Filed: **Jan. 16, 2009**

(65) **Prior Publication Data**

US 2010/0008011 A1 Jan. 14, 2010

Related U.S. Application Data

(63) Continuation-in-part of application No. 12/218,297, filed on Jul. 14, 2008, now Pat. No. 7,855,476.

(51) **Int. Cl.**
H02G 11/00 (2006.01)

(52) **U.S. Cl.** **307/145**; 307/149; 307/151; 361/218; 361/230

(58) **Field of Classification Search** 361/212, 361/215, 216–218, 230, 231; 307/145, 149, 307/151; 174/2; 244/30, 31
See application file for complete search history.

(56) **References Cited**

U.S. PATENT DOCUMENTS

674,427	A *	5/1901	Palencsar	307/149
1,014,719	A *	1/1912	Pennock	307/149
1,540,998	A *	6/1925	Plauson	310/309
4,486,669	A *	12/1984	Pugh	290/44

* cited by examiner

Primary Examiner — Fritz M Fleming
(74) *Attorney, Agent, or Firm* — Mintz Levin Cohn Ferris Glovsky and Popeo, P.C.

(57) **ABSTRACT**

An antenna for the collection of atmospheric static electricity in which an electrically conductive hub is suspended from a balloon or blimp via a tether. The hub is either solid or uses a spoke/arm arrangement. A number of rods extend from the hub enhance the collection of atmospheric static electricity. The collected atmospheric electricity is conducted from the rods to an electrical connection where the electricity is conducted to earth via a conductive line.

16 Claims, 7 Drawing Sheets

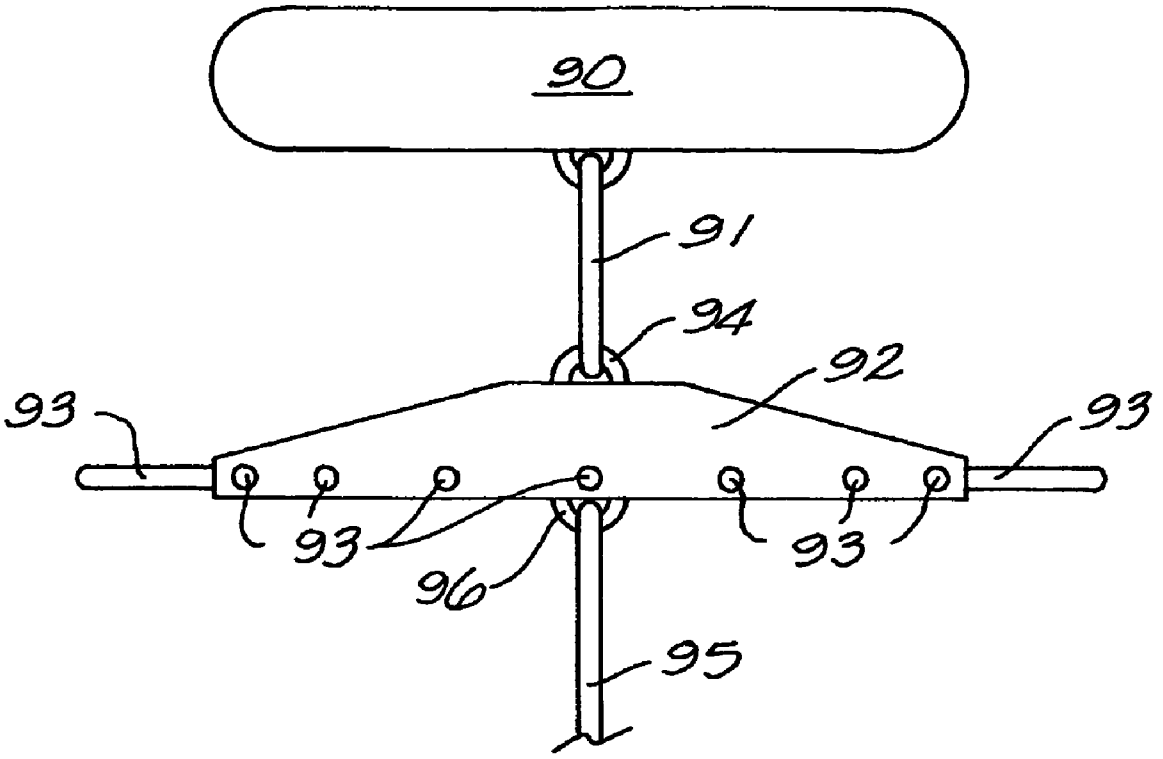

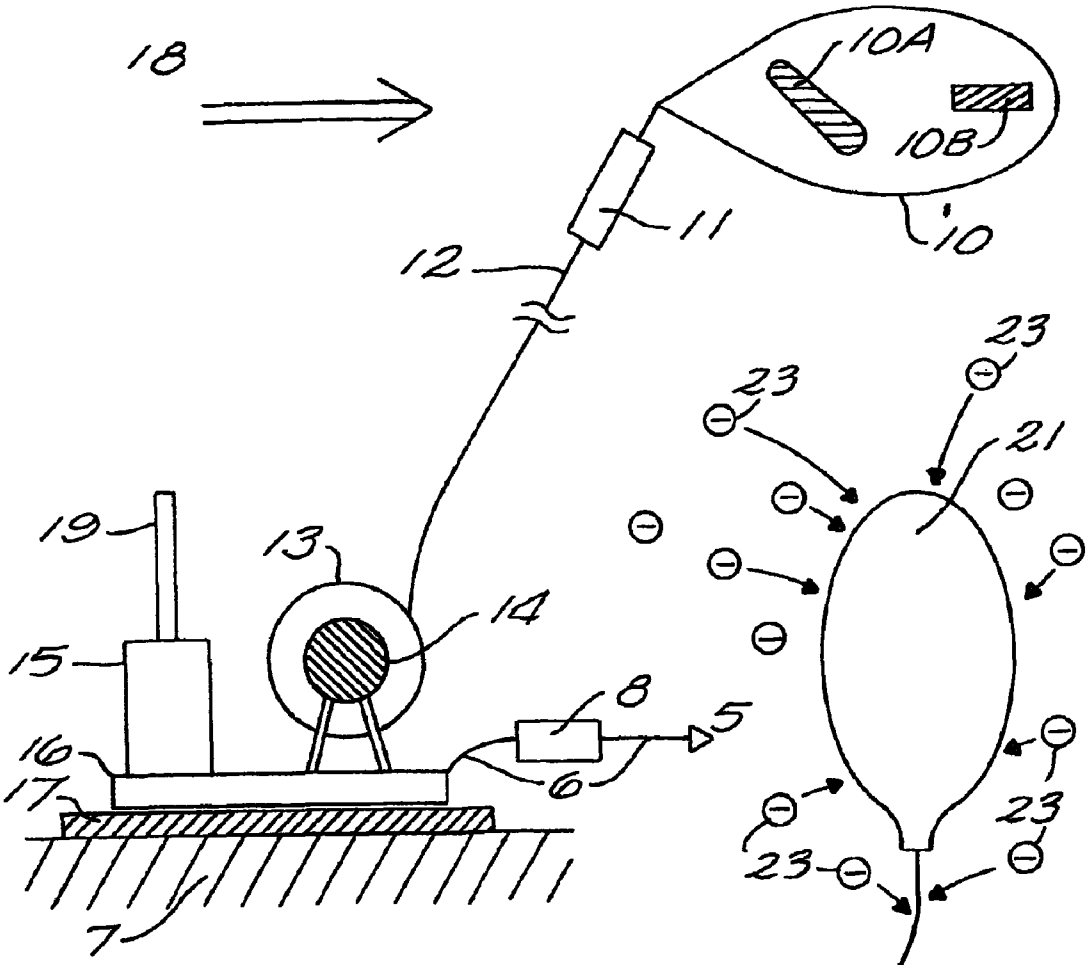

FIG. 1

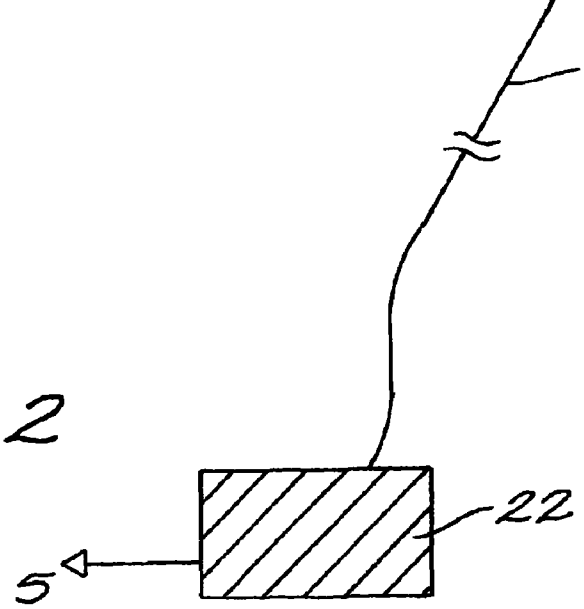

FIG. 2

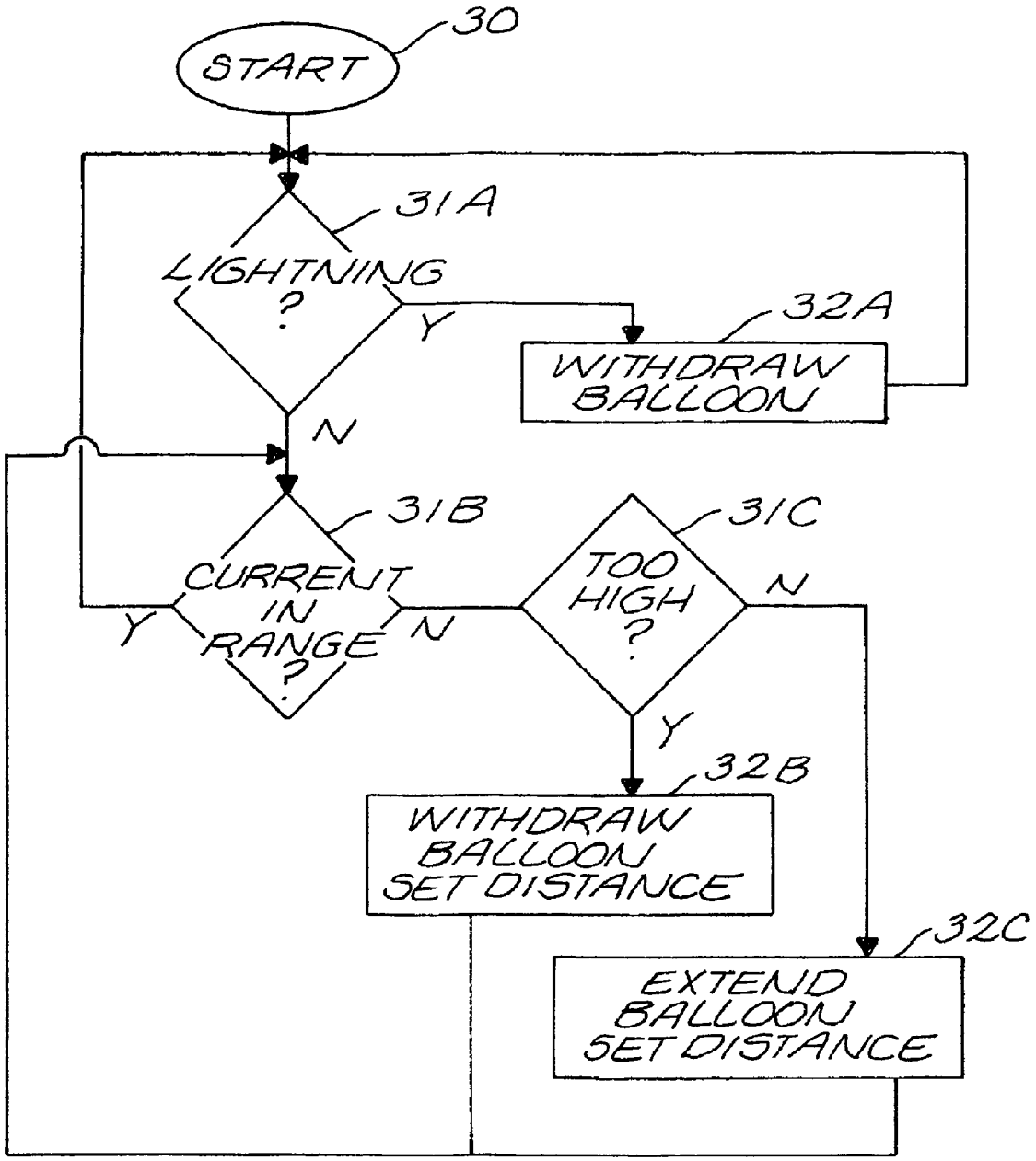
30
START
31A
LIGHTNING ?
Y
32A
WITHDRAW BALLOON
N
31B
CURRENT IN RANGE ?
Y
N
31C
TOO HIGH ?
N
Y
32B
WITHDRAW BALLOON SET DISTANCE
32C
EXTEND BALLOON SET DISTANCE

FIG. 3

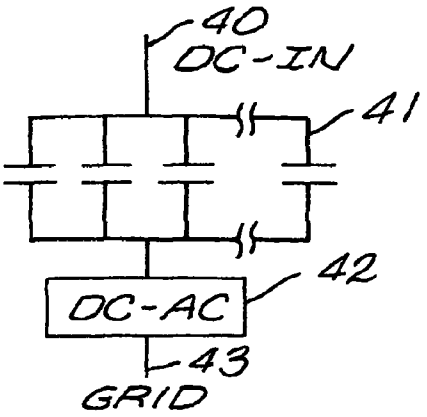

FIG. 4A

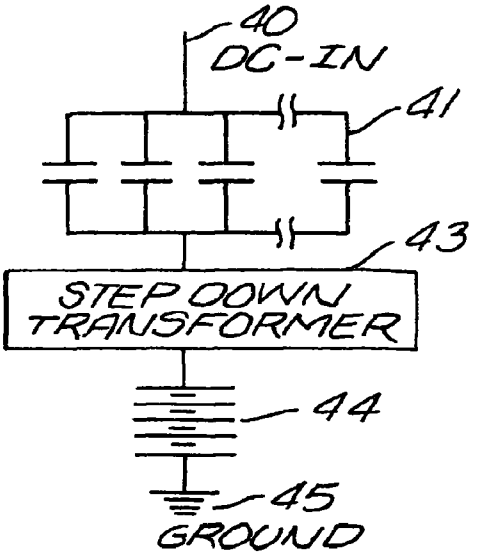

FIG. 4B

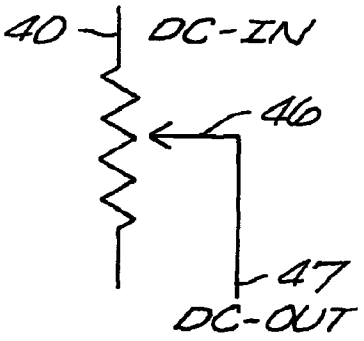

FIG. 4C

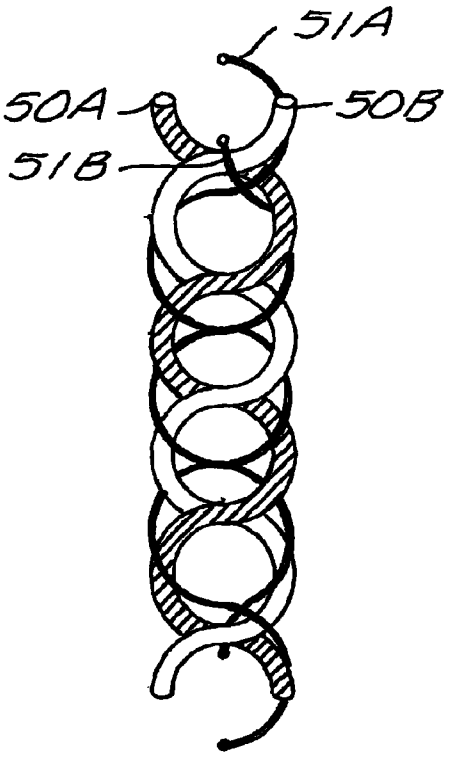

FIG. 5

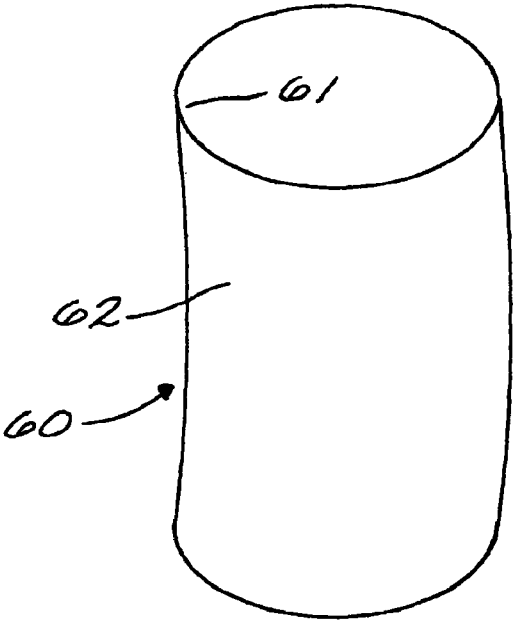

FIG. 6A

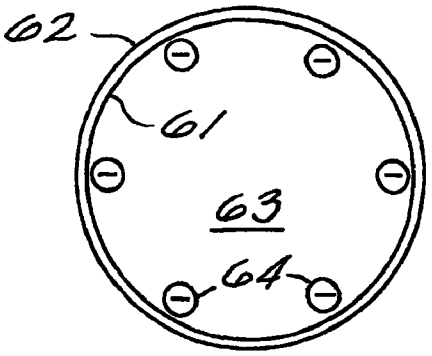

FIG. 6B

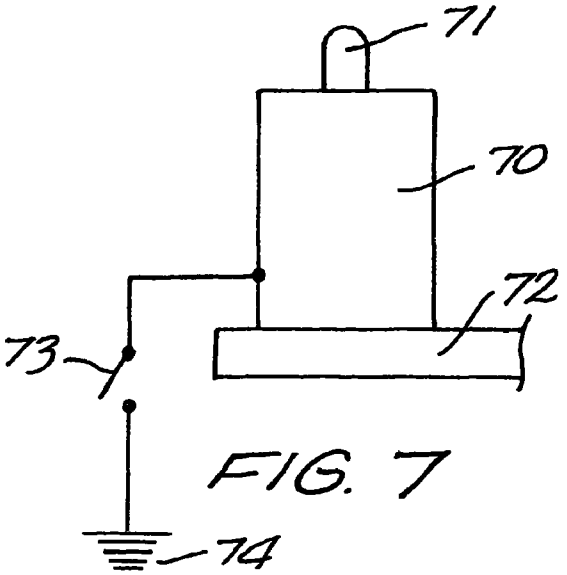

FIG. 7

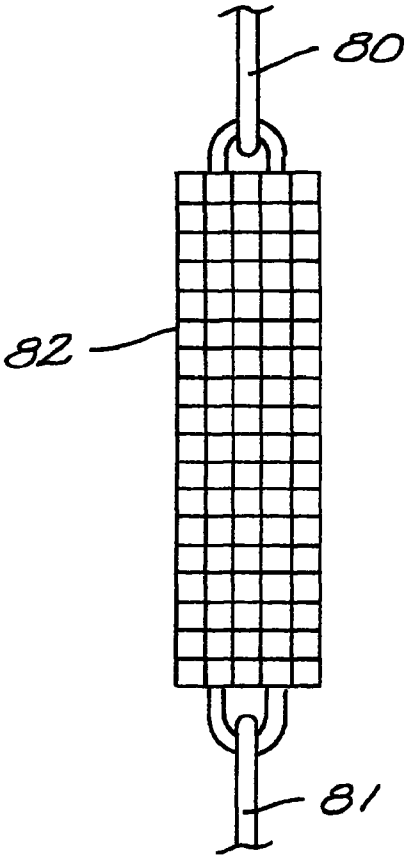

FIG. 8A

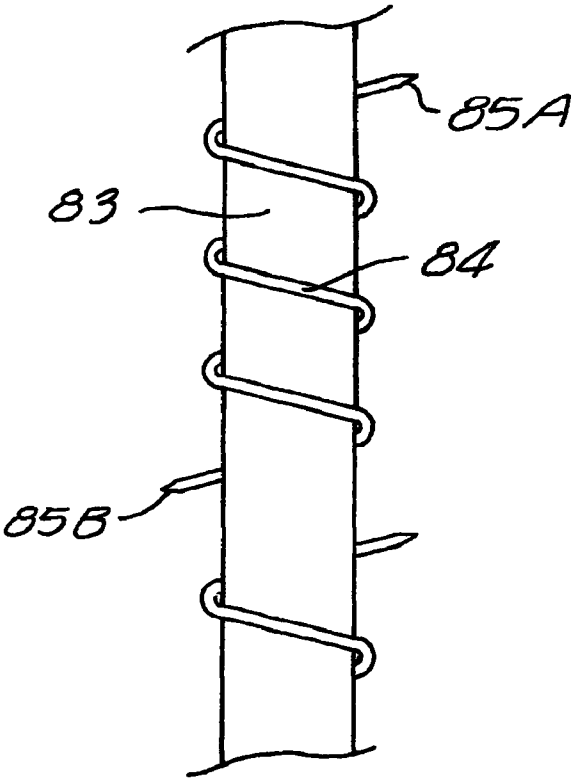

FIG. 8B

FIG. 9A

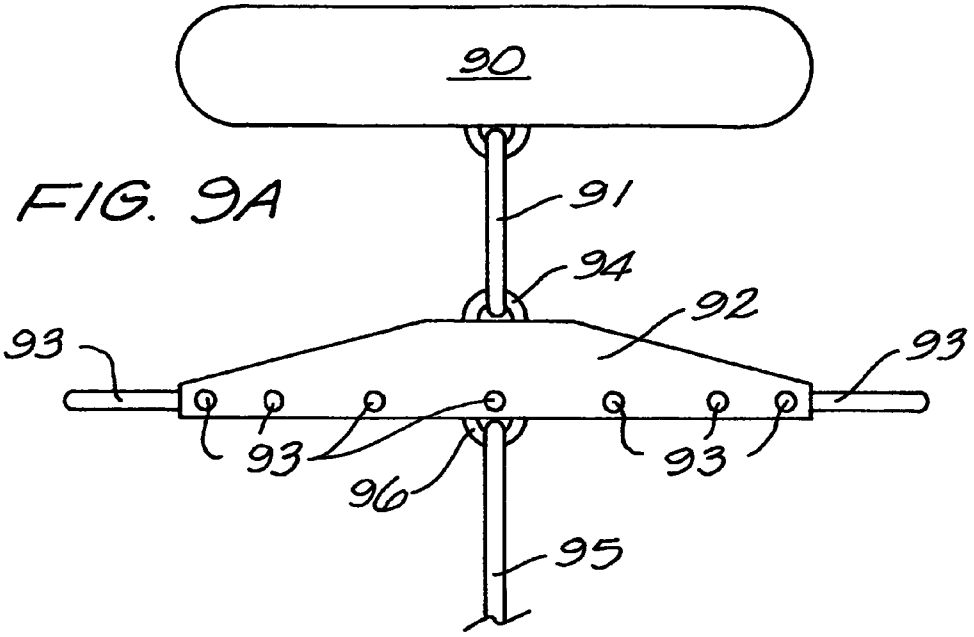

FIG. 9B

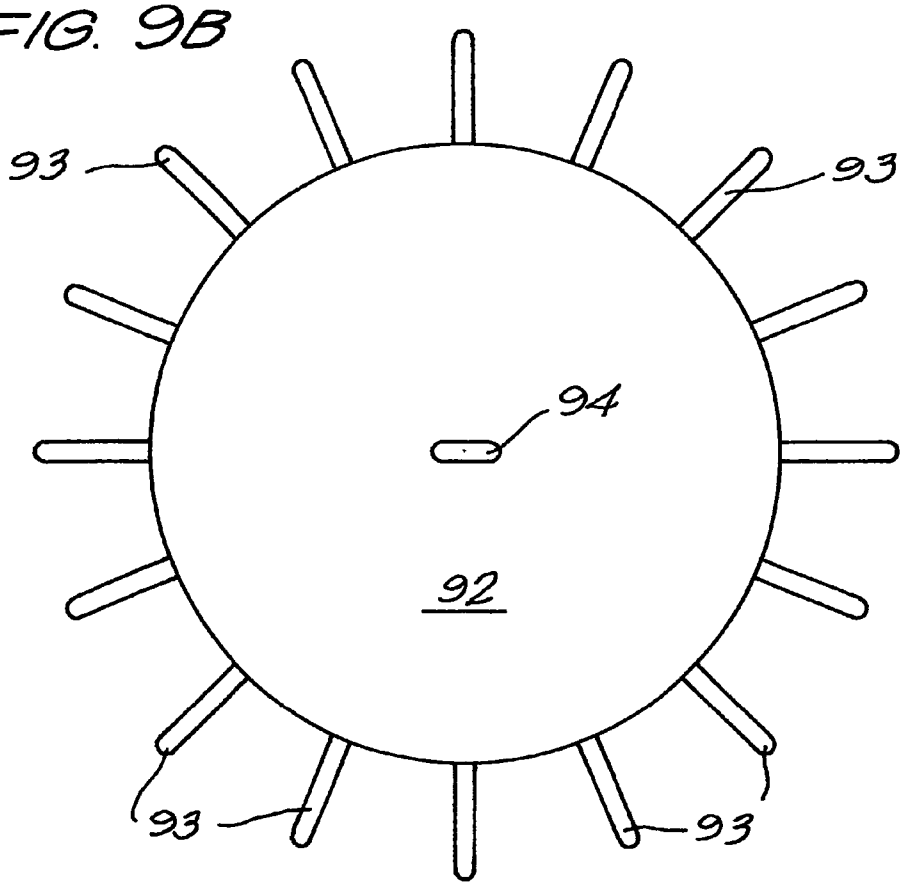

FIG. 10

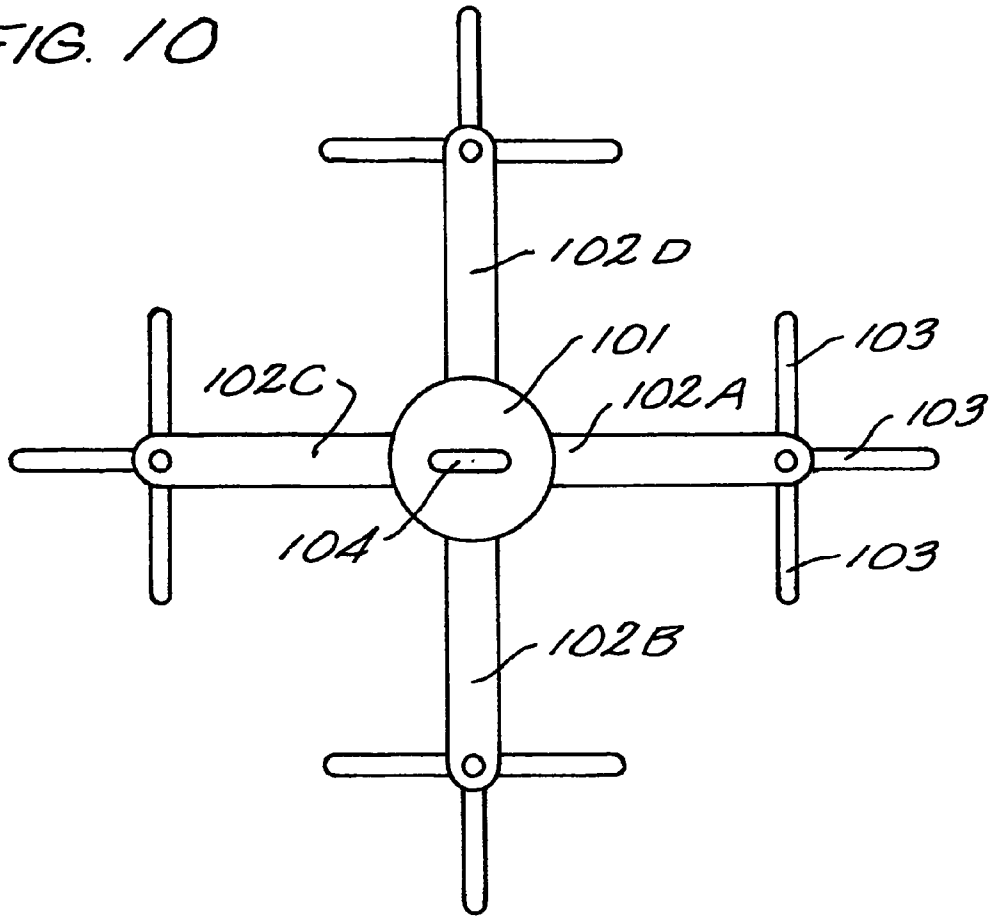

FIG. 11

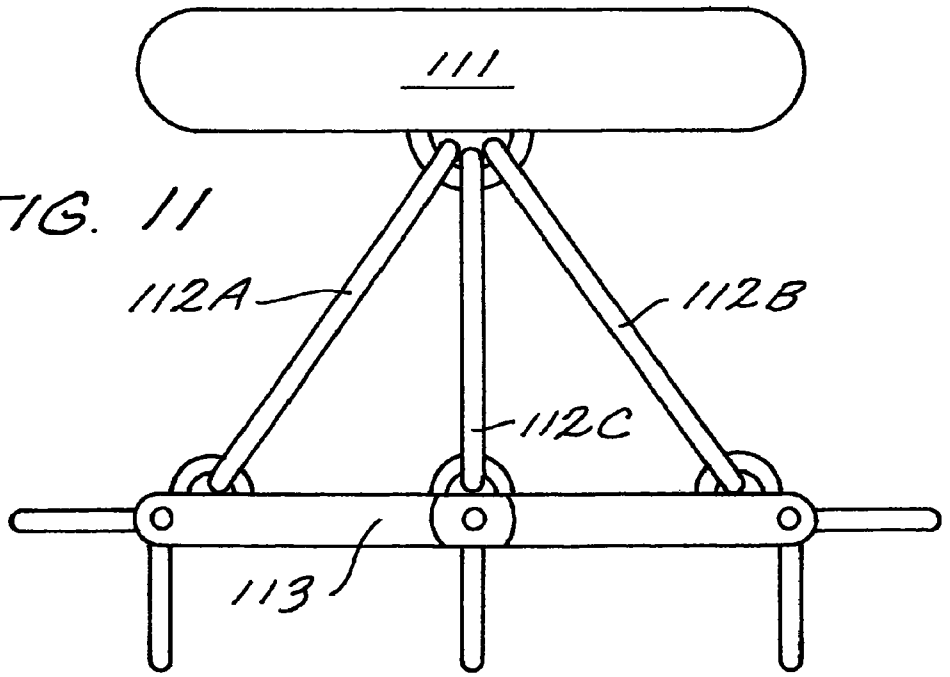

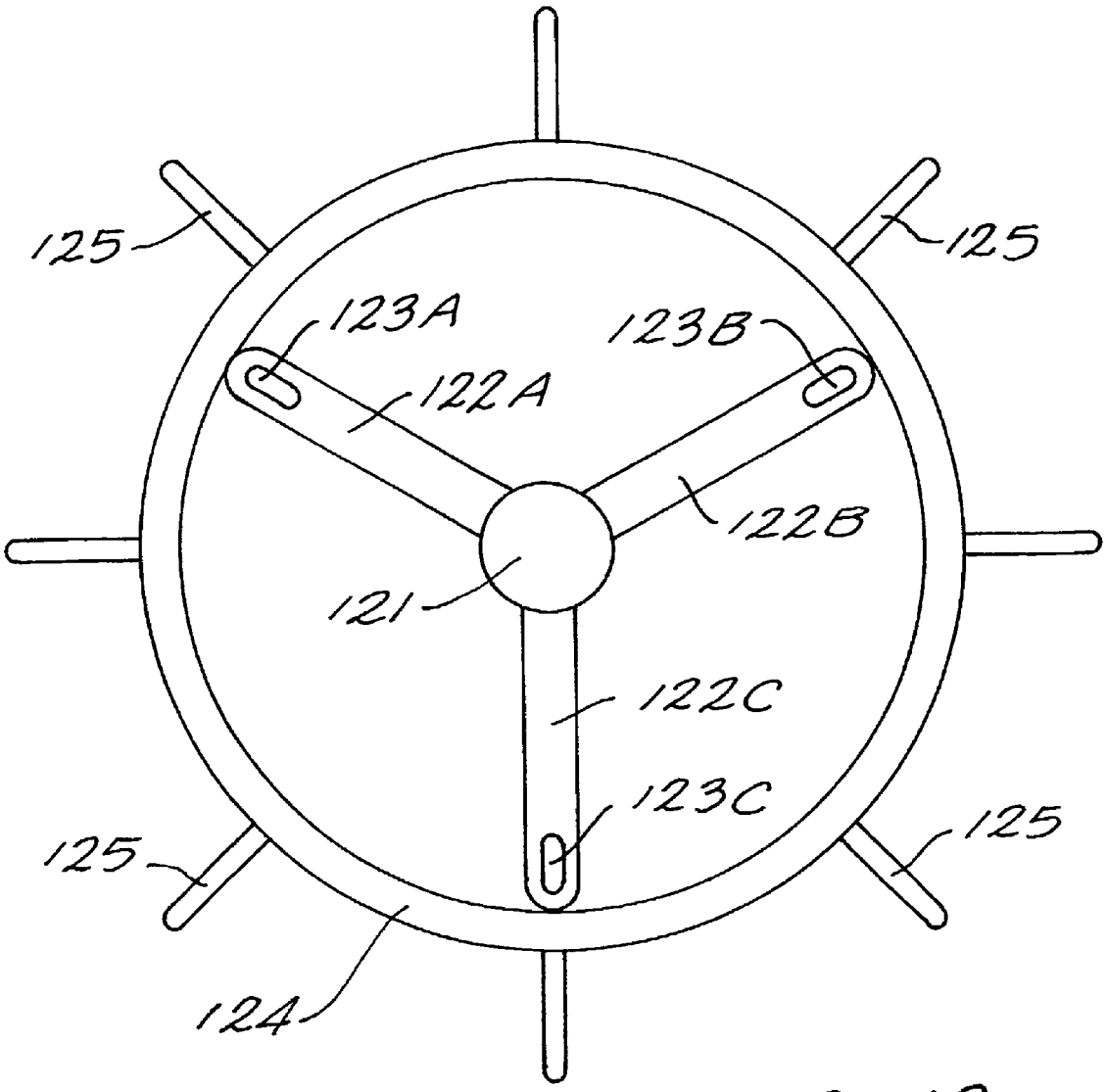

FIG. 12

ATMOSPHERIC STATIC ELECTRICITY COLLECTOR

This is a continuation in part of U.S. patent application Ser. No. 12/218,297, filed on Jul. 14, 2008, now U.S. Pat. No. 7,855,476 and entitled, "Atmospheric Electrical Generator".

BACKGROUND OF THE INVENTION

This invention relates to the production of electrical energy and more particularly to the collection of static electricity from the atmosphere.

Everyone is familiar with Benjamin Franklin's kite experiment of 1752. Using a kite whose string had become wet, negative charges from the passing clouds flowed into the string, down to the suspended key, and then into a Leyden jar via a thin metal wire. Franklin was protected by a dry silk string; but, when Franklin's knuckle came too close to the key, he received a strong shock. Fortunately, Benjamin Franklin was not killed, others who tried this same experiment were not so lucky.

Since then, the formation of lightning has remained something of a mystery. Lightning bolts are triggered when a negatively charged cloud base induces a positive charge from the ground, thereby forming a "pathway" for the discharge of the collected electrical energy.

Lightning travels up to 60,000 miles per hour with a flash that is brighter than ten million 100-watt lightbulbs. This wattage is as much power as is produced by all of the electricity plants in the United States and with a voltage of up to 300 million volts.

It is this very fact, the power within lightning is immense, that has prevented any successful collection of the electrical energy from lightning. The electricity in lightning is far too extreme for current technology to harness.

While lightning has attracted a energy starved industrial world, no one has developed any technique to harness this naturally occurring electrical source.

It is clear there is a continuing need for an electrical source other than carbon-based fuels and that the naturally occurring electricity in the atmosphere is being ignored.

SUMMARY OF THE INVENTION

The invention is a mechanism which taps into the naturally occurring static electricity in the atmosphere. Whereas heretofore, the attempt to garner electricity from the atmosphere has focused exclusively on capturing lightning, the present invention syphons off the static electricity which is generated from any agitated air and voids lightning.

Lightning is only the final discharge of the static electricity, whether that lightning is intra-cloud lightning, cloud-to-ground lightning, or inter-cloud lightning. Other types of final discharges are known as heat lightning, summer lightning, sheet lightning, ribbon lightning, silent lightning, ball lightning, bead lightning, elves, jets, and sprites. Well before these discharges are observed, as the atmosphere becomes agitated by wind or thermal, static electricity is being generated.

The present invention recognizes that this static electricity is being formed and creates a mechanism to capture it.

The mechanism of this invention utilizes an aircraft such as a lighter than air balloon. While the preferred embodiment uses a foil balloon, a variety of other aircraft are obvious to those of ordinary skill in the art, including, but not limited to: gliders, rubber balloons (such as weather balloons), biaxially-oriented polyethylene terephthalate polyester film balloons, and latex balloons.

Within this discussion, the balloon is referenced, but, the invention is not intended to be limited solely to balloons.

The balloon is sent aloft and is tethered by a conductive line. In this context, the conductive line may be any obvious to those of ordinary skill in the art. For the preferred embodiment, the conductive line is a generically referred to as a "poly-rope" and is commercially available through a variety of sources. A suitable conductive line is described in U.S. Pat. No. 5,203,542, entitled "Apparatus for Improved Electric Fence Wire Construction for use with Intensive Grazing" issued Apr. 20, 1993, to Coley, et al. and incorporated hereinto by reference.

The conductive line is played out of a winch to control the altitude of the balloon. The motor controlling the winch is able to reverse direction to both extend and withdraw the conductive line which is wrapped around a spool on the winch. The winch/spool combination are part of a base unit.

In some embodiments of the invention, the spool is constructed of rubber so as to insulate the conductive line from the winch assembly. In this embodiment, only the conductive line is charged by the atmospheric static electricity while the winch remains neutral.

In yet another embodiment, the winch/spool are part of a base unit which is itself isolated from the ground by an insulator. In this embodiment, the entire base unit is charged by the atmospheric static electricity.

A conductor, such as an insulated wire, is electrically connected to the conductive line. In one embodiment, where the conductive line is electrically isolated from the spool and winch motor, the conductor is connected to the conductive line. In the embodiment where the conductive line is electrically connected to the base unit, then the conductor is connected anywhere on a metalic base unit.

The other end of the conductor is connected to a load. The load in this case can be any of a variety of electrical loads well known to those of ordinary skill in art, including, but not limited to a motor, a battery system, or the electrical grid for the system.

In the preferred embodiment, a sensor array is used to monitor the activities both at the base unit (such as electrical flow within the conductor) and in the surrounding locale.

A sensor monitoring the electrical flow (i.e. voltage and/or current) within the conductor is used to monitor the electrical activity within the conductor.

In the preferred embodiment, a lightning sensor monitors for lightning activity within the locale. As noted earlier, the electrical characteristic of lightning is so extreme that ideally this discharge is avoided as it might damage the mechanism of this invention.

The sensor array is utilized by a controller, such as microprocessor, programmed to operate the mechanism as outlined herein.

The controller operates the winch motor to extend or withdraw the conductive line and by extension the altitude of the balloon. The controller is programmed to operate the winch by monitoring the electrical characteristics of the conductor and adjusting the balloon's altitude to maintain these characteristics within the conductor within a preset range.

This preset range is established either in the base programming of the controller or is established by an operator of the system.

As example, by controlling the amount of current being withdrawn from the atmosphere, the mechanism operates within a safe range and also provides a relatively stable current flow from which a variety of activities can take place (such as DC-AC conversion).

The controller also utilizes the lightning sensor to protect the mechanism from a lightning strike. Should lightning be detected within a pre-determined range (as established by the software or defined by an operator), then the balloon is pulled down to minimize the risk of damage from a lightning strike.

An aspect of the present invention is the use of an antenna which are used to collect the atmospheric static electricity. The antenna is shaped as a hub which is suspended from the blimp/balloon. The hub is ideally spoked shaped although an alternative embodiment uses a solid hub.

A number of rods extend from the hub so as collect atmospheric static electricity These rods are ideally rounded at the ends to enhance the attraction of the atmospheric static electricity.

The collected atmospheric electricity is conducted from the rods to an electrical connection on the hub where the electricity is conducted to a power plant on earth such as described above.

The invention, together with various embodiments thereof will be more fully explained by the following description of the accompanying drawings.

DRAWINGS IN BRIEF

FIG. **1** diagrams the preferred embodiment of the invention.

FIG. **2** illustrates the collection of the negative charged particles in the atmosphere.

FIG. **3** is a flow-chart of the operation of the controller for the preferred embodiment of the invention.

FIGS. **4**A, **4**B, and **4**C are electrical schematics for handling the static charge from the atmosphere.

FIG. **5** illustrates a conductive line used in the preferred embodiment of the invention.

FIGS. **6**A and **6**B illustrate an alternative conductive line creating an ionized pathway for the flow of the static charges from the atmosphere.

FIG. **7** illustrates the controller of an alternative embodiment and the associated safety devices.

FIGS. **8**A and **8**B illustrate two embodiments of enhanced electrical collection leads.

FIGS. **9**A and **9**B are side views and top views of an embodiment of the antenna used to collected atmospheric electricity.

FIG. **10** is a top view of an alternative embodiment of the antenna of this invention.

FIG. **11** is a side view of yet another alternative embodiment of the antenna used to collect atmospheric electricity.

FIG. **12** is the preferred embodiment of the antenna of this invention.

DRAWINGS IN DETAIL

FIG. **1** diagrams the preferred embodiment of the invention.

Balloon **10** is an aircraft which, in this illustration, is a lighter than air balloon. Wings **10**A, extending from the body of balloon **10**, provide additional lift in air flow **18**. Tail **10**B helps to stabilize balloon **10**.

Balloon **10** is tethered to the ground via conductive line **12**. As noted earlier, a variety of configurations and materials are available to serve as conductive line **12**. In this illustration, a poly-wire is used. Poly-wire is commercially available through a variety of vendors, including, but not limited to: Jeffers Livestock and Sareba Systems, Inc. of Ellendale, Minn.

In this embodiment, located proximate to balloon **10**, is an electrical collection enhancement lead **11** which assists in the collection of the static electrical charge in the atmosphere. Electrical collection enhancement lead **11** is configured to attract the static charge and conduct the charge into the conductive line **12**.

The electricity flows down the conductive line into spool **13**, where the conductive line **12** is collected and either withdrawn or dispensed through operation of winch motor **14**.

Winch motor **14** and spool **13** are mounted onto base unit **16** which is electrically isolated from ground **7** using insulator **17**. Note, in this embodiment of the invention, when electricity is being collected from the atmosphere, the entire base unit **16** becomes charged. In another embodiment of the invention, spool **13** is constructed of rubber, thereby preventing base unit **16** from becoming charged, thereby restricting the charging from the atmosphere to only conductive line **12**.

In this embodiment, conductor **6** is connected to base unit **16** (since the entire base unit **16** is charged and the base unit is metalic) to communicate the electrical current to load **5**. Conductor **6** is ideally an insulated wire.

The electrical current through conductor **6** is measured using sensor **8**.

In the alternative embodiment discussed above, where only the conductive line **12** is charged, then conductor **6** is connected to conductive line **12**.

Controller **15**, located in this embodiment on base unit **16**, operates winch motor **14** in response to signals from sensor **8** (measuring the current being discharged to load **5**) to maintain the current flow within a pre-defined range. As the current flow diminishes, then the conductive line **12** extended from spool **13** to increase the altitude of balloon **10** to that more static charge from the atmosphere is gathered; as the current flow falls exceeds a preset level, conductive line **12** is withdrawn onto spool **13** to decrease the static charge being collected from the atmosphere.

The range of current flow through conductor **6** is ideally set by the program, although some embodiments of the invention permit an operator to establish this range of operation.

In an alternative embodiment, the sensor monitoring conductor **6** monitors the voltage therein.

In the preferred embodiment of the invention, controller **15** is also equipped with a lightning sensor **19**. In this embodiment, when lightning is sensed within a preset range, then substantially all of conductive line **12** is wound onto spool **13** to pull balloon **10** near the ground and protect the entire mechanism from being damaged from a lightning discharge.

In the preferred embodiment, the "safe" distance form lightning is set in the programming of controller **15** and is ideally two miles; other embodiments permit the operator to "safe" distance.

There are a variety of lightning sensors well known to those of ordinary skill in the art, including, but not limited to those described in: U.S. Pat. No. 7,016,785, entitled "Lightning Detection" issued to Makela, et al. on Mac. 21, 2006; U.S. Pat. No. 6,829,911, entitled "Lightning Detection and Prediction Alarm Device" issued to Jones, et al. on Dec. 7, 2004; U.S. Pat. No. 7,200,418, entitled "Detection of Lightning" issued to Karikuranta, et al. on Apr. 3, 2007; and U.S. Pat. No. 6,961,662, entitled "Systems and Methods for Spectral Corrected Lightning Detection" issued to Murphy on Nov. 1, 2005; all of which are incorporated hereinto by reference.

In another embodiment of the invention, controller **15** is not located on base unit **16**, rather it is remote and communicates its control signals to winch motor **14** using radio waves.

FIG. **2** illustrates the collection of the negative charged particles in the atmosphere.

Static charges **23** are generated in the atmosphere by agitated air. These static charges are often collected at the bottom of clouds, but exist in other environments as well.

Balloon **21** is extended into this strata of static charges **23** which are then attracted to conductive line **12** to flow to base unit **22** and then onto load **5**.

By increasing or decreasing the altitude of balloon **21** (defined by the length of the extended conductive line **12**), conductive line **12** is selectively exposed to varying densities and levels of the static charge strata, and by extension, the current flow or voltage is increased or decreased.

FIG. **3** is a flowchart of the operation of the controller for the preferred embodiment of the invention.

Once the program starts **30**, the lightning sensor is checked to determine if lightning has occurred within the unsafe range **31**A, if it has, then the balloon is lowered **32**A, and the program continues monitoring the status of lightning until no lightning is detected.

When the lightning status is acceptable, then the current within the conductor is checked to see if the current is within the prescribed range **31**B. If the current is acceptable (within range) the program returns to check the lightning status **31**A; otherwise a determination is made to see if the current is above the prescribed range **31**C.

If the current is above the prescribed range, then the altitude of the balloon is withdrawn a set amount **32**B (ideally twenty-five feet) and the program loops back to see if the current is within range **31**B.

If the current is below the prescribed range, then the altitude of the balloon is extended a set amount **32**C (ideally twenty-five feet) and the program loops back to see if the current is within range **31**B.

In this manner of feed-back and minor adjustments in the altitude of the balloon, the current is maintained within a prescribed range which can be handled by the downstream electrical system.

As noted earlier, some embodiments of the invention monitor the voltage instead of the current.

FIGS. **4**A, **4**B, and **4**C are electrical schematics for handling the static charge from the atmosphere.

By maintaining the voltage being collected in a prescribed range, an electrical conversion system is easily designed. While FIGS. **4**A, **4**B, and **4**C illustrate some electrical configurations, those of ordinary skill in the art readily recognize a variety of other configurations which will serve the same function.

Referencing FIG. **4**A, Direct Current In (DC IN) **40** is buffered by a gang of capacitors **41** before being communicated to a DC/AC converter **42**. The DC/AC converter converts the direct current into a an alternating current suitable for placement over an existing electrical grid **43** such as normally found from a power-plant.

Those of ordinary skill in the art readily recognize a variety of DC/AC converters, including, but not limited to: U.S. Pat. No. 7,394,671, entitled "Controller IC, DC-AC Conversion Apparatus, and parallel running system of DC-AC Conversion Apparatuses" issued to Fukumoto, et al. on Jul. 1, 2008; and, U.S. Pat. No. 7,330,366, entitled "DC-AC Converter" issued to Lee, et al. on Feb. 12, 2008; all of which are incorporated hereinto by reference.

FIG. **4**B illustrates an electrical arrangement suitable for use in charging a battery. DC IN **40** is buffered by capacitor bank **41** before entering into a step down transformer **43**. Step down transformer **43** reduces the voltage so that the voltage can safely be introduced into battery **44** which is connected to ground **45** at the battery's other pole.

Those of ordinary skill in the art readily recognize a variety of batteries which will work in this capacity, including, but not limited to those described in: U.S. Pat. No. 7,378,181, entitled "Electric Storage Battery Construction and Manufacture" issued to Skinlo on May 27, 2008; U.S. Pat. No. 7,388,350, entitled "Battery with Electronic Compartment" issued to Wright on Jun. 17, 2008; U.S. Pat. No. 7,397,220, entitled "Connection Member and Battery Pack" issued to Uchida, et al. on Jul. 8, 2008; and, U.S. Pat. No. 7,375,492, entitled "Inductively Charged Battery Pack" issued to Calhoon, et al. on May 20, 2008; all of which are incorporated hereinto by reference.

In FIG. **4**C, DC IN **40** is fed into an adjustable rheostat **46** which is controlled by the controller so that the DC OUT **47** falls within a specified range.

FIG. **5** illustrates a conductive line used in the preferred embodiment of the invention.

This type of conductive line is commonly called poly-wire and consists of multiple interwoven strands of plastic **50**A and **50**B woven into a cord or rope arrangement having intertwined therein exposed metal wires **51**A and **51**B. While this illustration shows two plastic strands and two metal wires, any number of possible combinations is possible.

The exposed metal wires **51**A and **51**B attract the atmospheric static charge and transmit the charge down to the base unit (not shown).

FIGS. **6**A and **6**B illustrate an alternative conductive line creating an ionized pathway for the flow of the static charges from the atmosphere.

This conductive line utilizes a tube **60** having an outer layer **62** of PET Film (Biaxially-oriented polyethylene terephtalate polyester film) which provides exceptionally high tensile strength and is chemically and dimensionally stable. The tube has an ideal diameter of between two and three inches.

An interior metal coating **61** provides an initial conduit for the flow of static charge. The static charge through the metal forces the tube to expand due to the repulsion experienced by like charges. Further, the flow of electricity causes the interior of the tube **60** to become ionized to provide an additional pathway for the atmospheric static charges to the base unit (not shown).

Because outer layer **62** provides a gas barrier, the resulting ionization is not dissipated by air currents, thereby providing a highly stable pathway.

FIG. **7** illustrates the controller of an alternative embodiment and the associated safety devices.

In this embodiment, controller box **70**, resting on insulating pad **72**, is in communication with the sensors as described above. Using the input from these sensors, when there is flow of electricity through the base unit, warning flashing light **71** is illuminated. To electrically neutralize the mechanism, switch **73** is activated to pass any existing current into the ground **74**.

FIGS. **8**A and **8**B illustrate two embodiments of enhanced electrical collection leads.

Referencing FIG. **8**A, enhanced electrical collection lead **82** is a wire mesh which is in electrical communication with conductive line **81** and balloon **80**. Because of the significant amount of metal exposed by enhanced electrical collection lead **82**, more static electricity from the atmosphere is drawn to the collection lead **82**, and then down conductive line **81** to the base unit (not shown).

Conductive lead **82** is positioned proximate to balloon **80**.

In FIG. **8**B, poly-wire **83** has enhanced electrical collection leads **84** wrapped therearound. Collection leads **84** have

pointed ends **85**A and **85**B which have a propensity to attract more electricity than rounded ends do.

FIGS. **9**A and **9**B are side views and top views of an embodiment of the antenna used to collected atmospheric electricity.

Blimp **90** supports antenna **92** via tether **91** which is attached to antenna **92** by connection **94**. In this embodiment, antenna **92** is made of electrically conductive material and is ideally light in weight to lessen the payload requirements on blimp **90**.

Encircling antenna **92** and extending therefrom are rods **93** which are rounded at their distal ends so as to enhance attraction of the atmospheric static electricity. The static electricity is communicated to connection **96** and then to electrical line **95** which communicates the electricity to the ground based station (not shown) as described above.

FIG. **10** is a top view of an alternative embodiment of the antenna of this invention.

In this embodiment of the antenna a central hub **101** has the blimp connection **104** (capable of receiving the tether to the blimp) secured thereto. In this illustration, four arms **102**A, **102**B, **102**C, and **102**D extend from hub **101**. Hub **101**, and arms **102**A, **102**B, **102**C, and **102**D are all electrically conductive in this embodiment.

At the end of each arm are rods **103** which are used to enhance the collection of the atmospheric static electricity.

Although this embodiment illustrates four arms, the invention is not intended to be limited to four arms, rather, any number of arms may be used and the number of rods extending from the distal ends of the arms also varies.

FIG. **11** is a side view of yet another alternative embodiment of the antenna used to collect atmospheric electricity.

In this embodiment, several tethers **112**A, **112**B, and **112**C, are used to secure the antenna **113** to the blimp **111**. This arrangement of several tethers provides heightened stability of the antenna by reducing the affects wind will have on the antenna.

FIG. **12** is the preferred embodiment of the antenna of this invention.

In this embodiment of the antenna, arms **122**A, **122**B, and **122**C extend from a central hum and are electrically connected to rim **124**. Tether connectors **123**A, **123**B, and **123**C, are used to secure the antenna to the blimp or balloon.

Rods **125** extend from rim **124** to increase the collection of the static charges in the atmosphere.

It is clear from the foregoing that the present invention captures an entirely new source of electrical energy.

What is claimed is:

1. A system for collection of atmospheric static electricity comprising:

a balloon;

a hub that is electrically conductive and connected to the balloon by a tether, the hub having:

at least three electrically conductive arms, a first end of each of said conductive arms electrically connected to said hub; and

a plurality of rods, a first end of each of said rods being electrically connected to a second end of at least one of said at least three arms;

a base unit having a spool of conductive line on a winch motor, one end of said conductive line secured to said hub, a portion of said conductive line and said hub collecting electricity in the atmosphere, said winch motor selectively extending or withdrawing said conductive line from said spool;

a conductor having a first end electrically connected to said conductive line and a second end electrically connected to a load being powered by collected electricity from said conductive line;

an electrical flow sensor monitoring electrical flow through said conductor and generating an electrical flow indicia indicative of said electrical flow in said conductor; and

a controller receiving said electrical flow indicia and selectively operating said winch motor such that said electrical flow indicia remains within a selected operating range.

2. The system according to claim **1**, wherein each of said plurality of rods has a rounded second end.

3. The system according to claim **2**, wherein at least two rods are attached to the second end of each of said at least three arms.

4. The system according to claim **1**, further comprising an electrically conductive rim connected to a second end of said electrically conductive arms.

5. The system according to claim **4**, wherein at least a portion of said plurality of electrically conductive arms are connected substantially at right angles to an exterior of said electrically conductive rim.

6. A system for collection of atmospheric static electricity comprising:

a radial arrangement of at least three electrically conductive arms;

a plurality of rods, each of said rods being electrically connected to at least one of said at least three arms; and

a balloon tether connected between a balloon and said radial arrangement of at least three electrically conductive arms;

a base unit having a spool of conductive line on a winch motor, one end of said conductive line secured to said radial arrangement of at least three electrically conductive arms, a portion of said conductive line and said radial arrangement of at least three electrically conductive arms collecting electricity in the atmosphere, said winch motor selectively extending or withdrawing said conductive line from said spool;

a conductor having a first end electrically connected to said conductive line and a second end electrically connected to a load being powered by collected electricity from said conductive line;

an electrical flow sensor monitoring electrical flow through said conductor and generating an electrical flow indicia indicative of said electrical flow in said conductor; and

a controller receiving said electrical flow indicia and selectively operating said winch motor such that said electrical flow indicia remains within a selected operating range.

7. The system according to claim **6**, wherein each of said plurality of rods has a rounded end distal from said electrically conductive arm.

8. The system according to claim **7**, further including a balloon tether connection secured to the first end of said at least three arms.

9. The system according to claim **8**, further including an electrical connection secured to the first end of said at least three arms.

10. The system according to claim **9**, wherein said at least two rods attached to said at least three arms is five rods.

11. The system according to claim **9**, further including an electrically conductive rim connected to a second end of said electrically conductive arms.

12. The system according to claim **11**, wherein said plurality of arms are electrically connected to said electrically conductive rim.

13. The system according to claim **12**, wherein at least a portion of said plurality of rods are connected to an exterior of said electrically conductive rim substantially at right angles thereto.

14. A system for the collection of atmospheric static electricity comprising:

a generally circular electrically conductive body;

a balloon tether connected to a first side of said generally circular electrically conductive body and to a balloon; and

an electrical connection connected to a second side of said generally circular electrically conductive body;

a base unit having a spool of conductive line on a winch motor, one end of said conductive line secured to said electrical connection, a portion of said conductive line and said generally circular electrically conductive body collecting electricity in the atmosphere, said winch motor selectively extending or withdrawing said conductive line from said spool;

a conductor having a first end electrically connected to said conductive line and a second end electrically connected to a load being powered by collected electricity from said conductive line;

an electrical flow sensor monitoring electrical flow through said conductor and generating an electrical flow indicia indicative of said electrical flow in said conductor; and

a controller receiving said electrical flow indicia and selectively operating said winch motor such that said electrical flow indicia remains within a selected operating range.

15. The system according to claim **14**, wherein said generally circular electrically conductive body comprises:

an electrically conductive hub;

at least three electrically conductive arms, each of said arms connected at a first end to said hub; and

an electrically conductive rim connected to the second end of each of said at least three arms.

16. The system according to claim **15**, further comprising a plurality of electrically conductive rods, a first end of each of said rods connected to said rim and extending therefrom substantially at rights angles thereto.

* * * * *

US 20100007218A1

(19) United States

(12) Patent Application Publication

(10) Pub. No.: US 2010/0007218 A1

(43) Pub. Date: Jan. 14, 2010

Ogram

(54) ATMOSPHERIC ELECTRICAL GENERATOR

(76) Inventor: **Mark Ellery Ogram**, Tucson, AZ (US)

Correspondence Address:
Mark E. Ogram (30343)
Ste. 110-186, 6990 E. 22nd Street
Tucson, AZ 85710-5192 (US)

(21) Appl. No.: **12/218,297**

(22) Filed: **Jul. 14, 2008**

Publication Classification

(51) **Int. Cl.**
H02G 11/00 (2006.01)

(52) **U.S. Cl.** **307/145**

(57) **ABSTRACT**

A mechanism to tap an electrical source which uses an aircraft (preferably a lighter than air balloon) tethered by a conductive line. The conductive line is extended/withdrawn by a winch motor to adjust the altitude of the aircraft. The conductive line is isolated from the ground and an electrical conductor is connected to the conductive line and to an electrical load. In this manner, static electricity generated in the atmosphere is gathered for use.

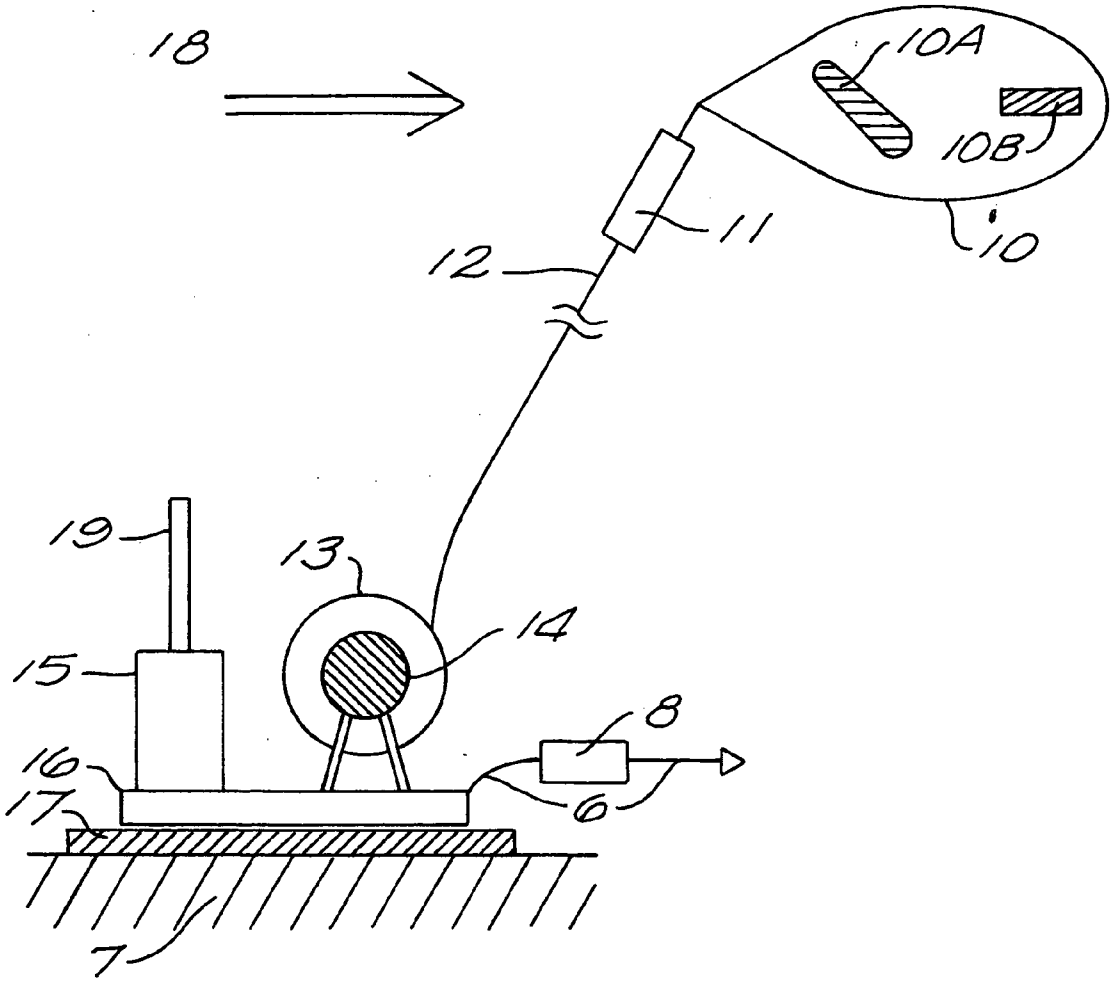

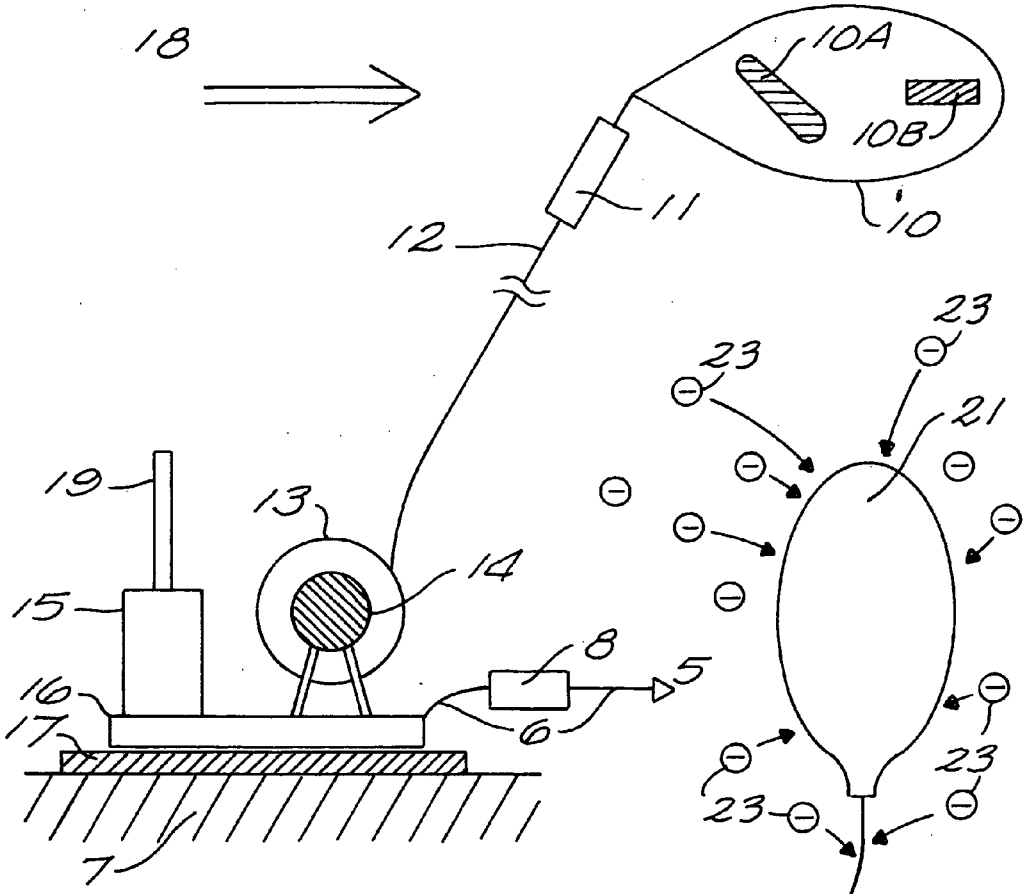

FIG. 1

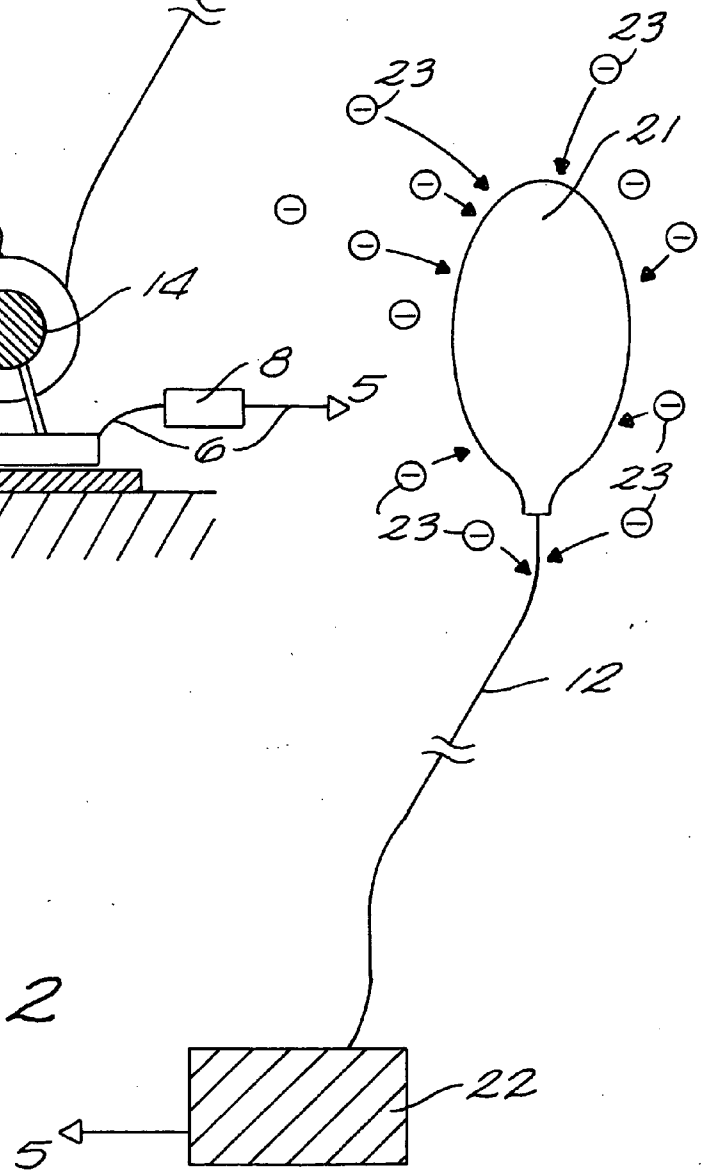

FIG. 2

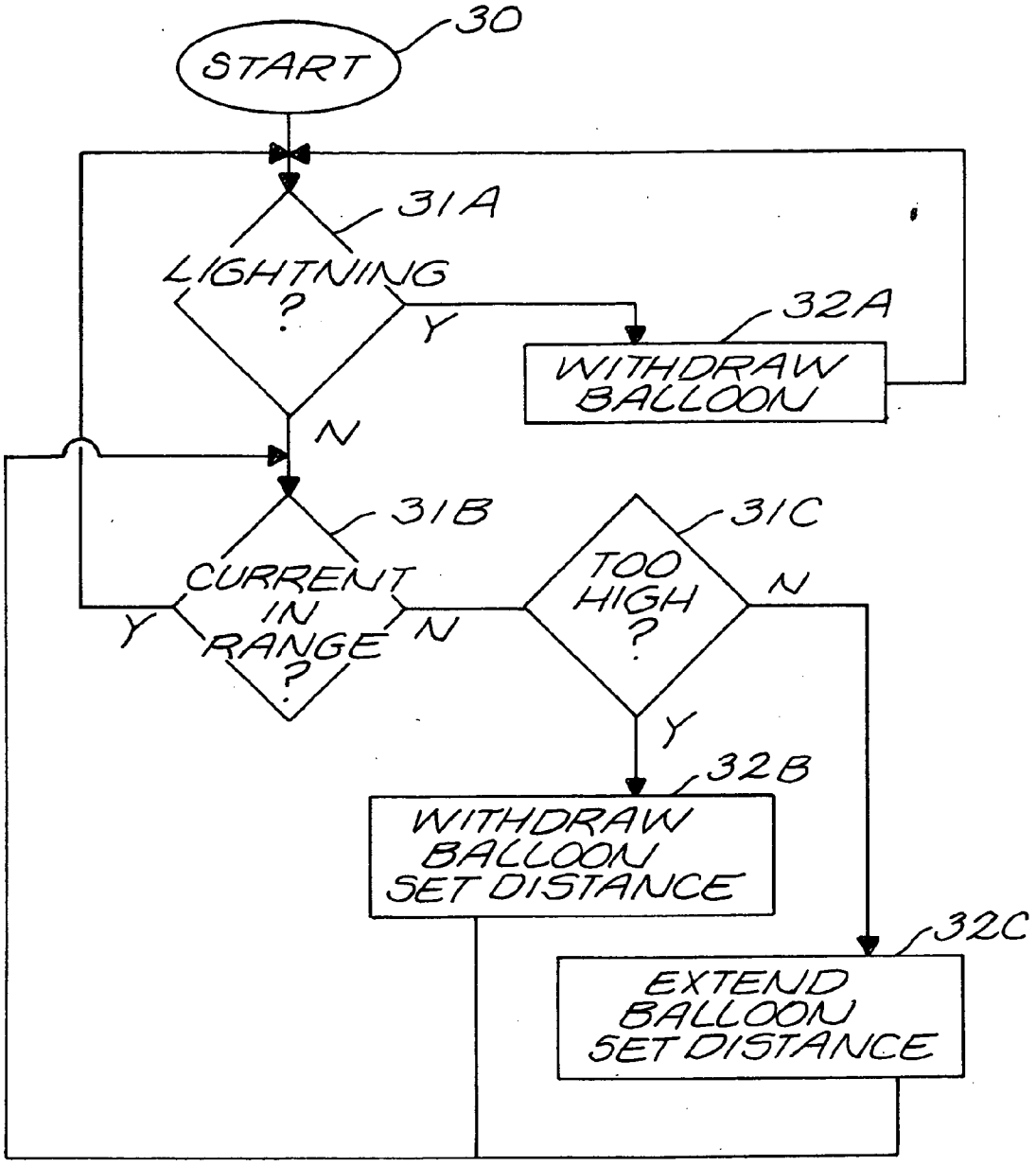
30
START
31A
LIGHTNING ?
Y
32A
WITHDRAW BALLOON
N
31B
CURRENT IN RANGE ?
Y
N
31C
TOO HIGH ?
N
Y
32B
WITHDRAW BALLOON SET DISTANCE
32C
EXTEND BALLOON SET DISTANCE

FIG. 3

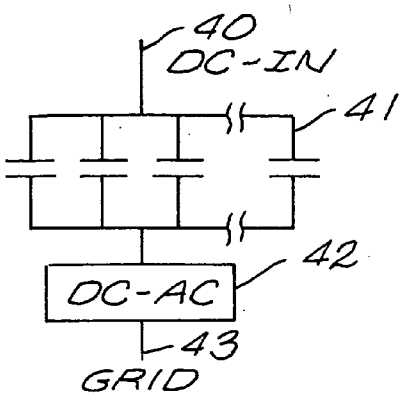

FIG. 4A

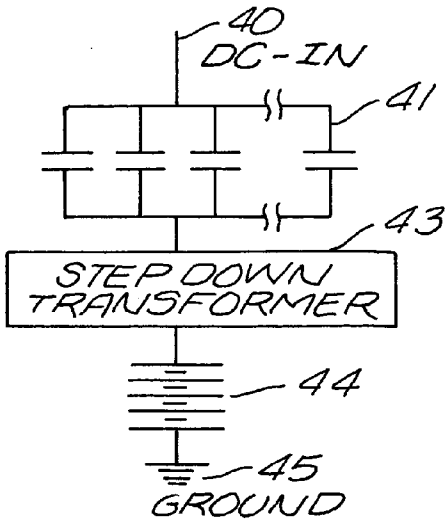

FIG. 4B

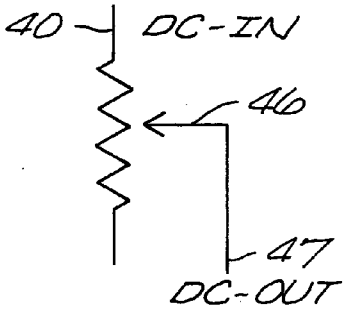

FIG. 4C

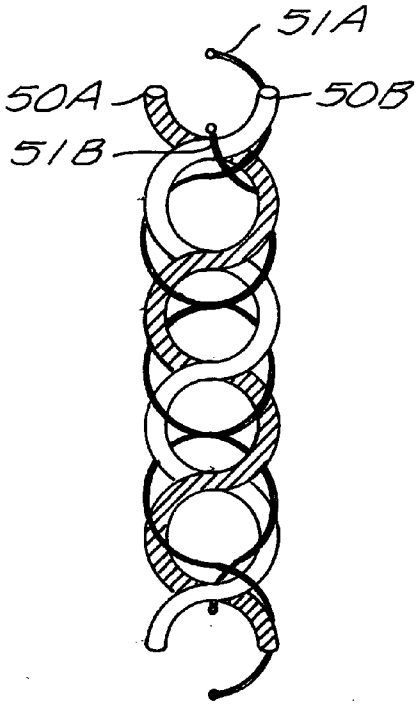

FIG. 5

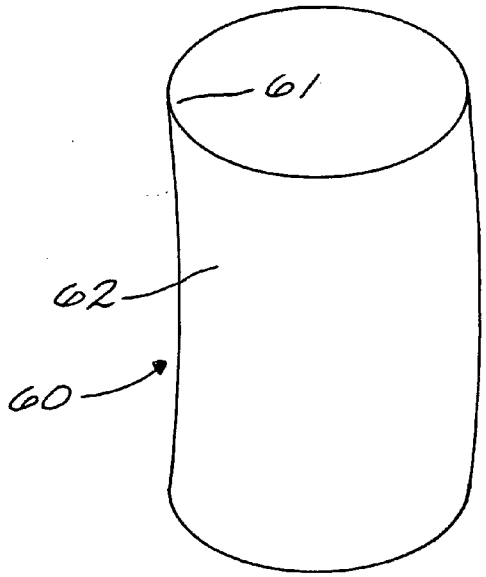

FIG. 6A

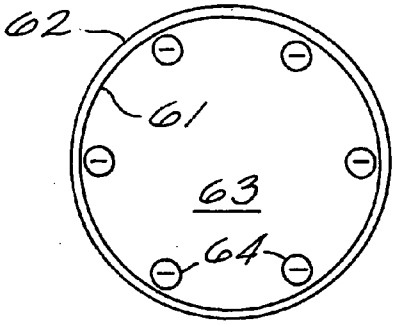

FIG. 6B

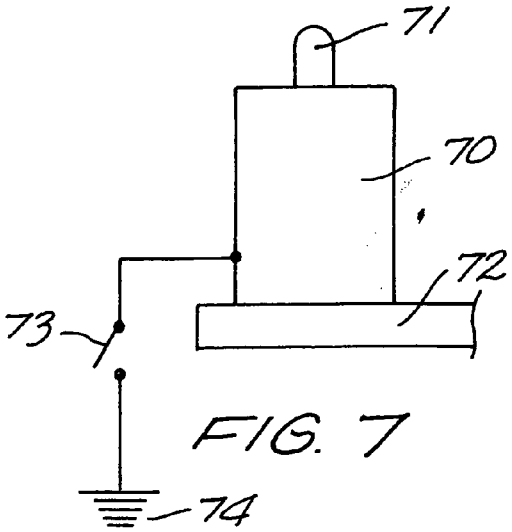

FIG. 7

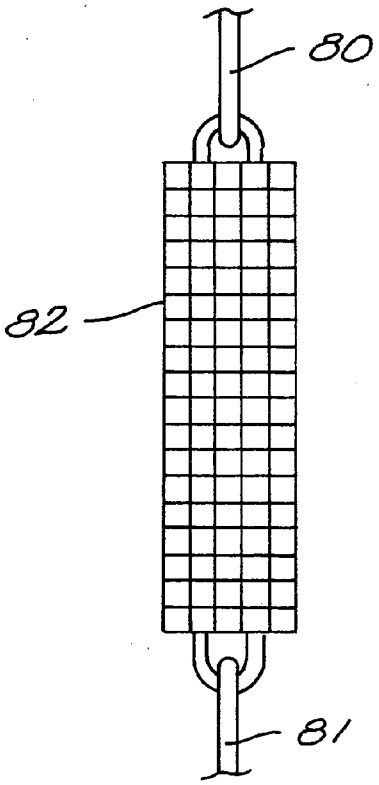

FIG. 8A

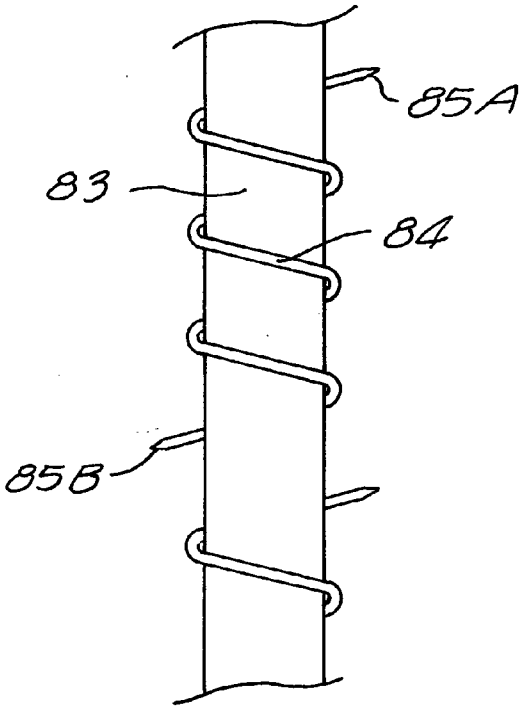

FIG. 8B

ATMOSPHERIC ELECTRICAL GENERATOR

BACKGROUND OF THE INVENTION

[0001] This invention relates to the production of electrical energy and more particularly to the production of electrical energy from the atmosphere.

[0002] Everyone is familiar with Benjamin Franklin's kite experiment of 1752. Using a kite whose string had become wet, negative charges from the passing clouds flowed into the string, down to the suspended key, and then into a Leyden jar via a thin metal wire. Franklin was protected by a dry silk string; but, when Franklin's knuckle came too close to the key, he received a strong shock. Fortunately, Benjamin Franklin was not killed, others who tried this same experiment were not so lucky.

[0003] Since then, the formation of lightning has remained something of a mystery. Lightning bolts are triggered when a negatively charged cloud base induces a positive charge from the ground, thereby forming a "pathway" for the discharge of the collected electrical energy.

[0004] Lightning travels up to 60,000 miles per hour with a flash that is brighter than ten million 100-watt lightbulbs. This wattage is as much power as is produced by all of the electricity plants in the United States and with a voltage of up to 300 million volts.

[0005] It is this very fact, the power within lightning is immense, that has prevented any successful collection of the electrical energy from lightning. The electricity in lightning is far too extreme for current technology to harness.

[0006] While lightning has attracted a energy starved industrial world, no one has developed any technique to harness this naturally occurring electrical source.

[0007] It is clear there is a continuing need for an electrical source other than carbon-based fuels and that the naturally occurring electricity in the atmosphere is being ignored.

SUMMARY OF THE INVENTION

[0008] The invention is a mechanism which taps into the naturally occurring static electricity in the atmosphere. Whereas heretofore, the attempt to garner electricity from the atmosphere has focused exclusively on capturing lightning, the present invention syphons off the static electricity which is generated from any agitated air and voids lightning.

[0009] Lightning is only the final discharge of the static electricity, whether that lightning is intra-cloud lightning, cloud-to-ground lightning, or inter-cloud lightning. Other types of final discharges are known as heat lightning, summer lightning, sheet lightning, ribbon lightning, silent lightning, ball lightning, bead lightning, elves, jets, and sprites. Well before these discharges are observed, as the atmosphere becomes agitated by wind or thermal, static electricity is being generated.

[0010] The present invention recognizes that this static electricity is being formed and creates a mechanism to capture it.

[0011] The mechanism of this invention utilizes an aircraft such as a lighter than air balloon. While the preferred embodiment uses a foil balloon, a variety of other aircraft are obvious to those of ordinary skill in the art, including, but not limited to: gliders, rubber balloons (such as weather balloons), biaxially-oriented polyethylene terephthalate polyester film balloons, and latex balloons.

[0012] Within this discussion, the balloon is referenced, but, the invention is not intended to be limited solely to balloons.

[0013] The balloon is sent aloft and is tethered by a conductive line. In this context, the conductive line may be any obvious to those of ordinary skill in the art. For the preferred embodiment, the conductive line is a generically referred to as a "poly-rope" and is commercially available through a variety of sources. A suitable conductive line is described in U.S. Pat. No. 5,203,542, entitled "Apparatus for Improved Electric Fence Wire Construction for use with Intensive Grazing" issued Apr. 20, 1993, to Coley, et al. and incorporated hereinto by reference.

[0014] The conductive line is played out of a winch to control the altitude of the balloon. The motor controlling the winch is able to reverse direction to both extend and withdraw the conductive line which is wrapped around a spool on the winch. The winch/spool combination are part of a base unit.

[0015] In some embodiments of the invention, the spool is constructed of rubber so as to insulate the conductive line from the winch assembly. In this embodiment, only the conductive line is charged by the atmospheric static electricity while the winch remains neutral.

[0016] In yet another embodiment, the winch/spool are part of a base unit which is itself isolated from the ground by an insulator. In this embodiment, the entire base unit is charged by the atmospheric static electricity.

[0017] A conductor, such as an insulated wire, is electrically connected to the conductive line. In one embodiment, where the conductive line is electrically isolated from the spool and winch motor, the conductor is connected to the conductive line. In the embodiment where the conductive line is electrically connected to the base unit, then the conductor is connected anywhere on a metallic base unit.

[0018] The other end of the conductor is connected to a load. The load in this case can be any of a variety of electrical loads well known to those of ordinary skill in art, including, but not limited to a motor, a battery system, or the electrical grid for the system.

[0019] In the preferred embodiment, a sensor array is used to monitor the activities both at the base unit (such as electrical flow within the conductor) and in the surrounding locale.

[0020] A sensor monitoring the electrical flow (i.e. voltage and/or current) within the conductor is used to monitor the electrical activity within the conductor.

[0021] In the preferred embodiment, a lightning sensor monitors for lightning activity within the locale. As noted earlier, the electrical characteristic of lightning is so extreme that ideally this discharge is avoided as it might damage the mechanism of this invention.

[0022] The sensor array is utilized by a controller, such as microprocessor, programmed to operate the mechanism as outlined herein.

[0023] The controller operates the winch motor to extend or withdraw the conductive line and by extension the altitude of the balloon. The controller is programmed to operate the winch by monitoring the electrical characteristics of the conductor and adjusting the balloon's altitude to maintain these characteristics within the conductor within a preset range.

[0024] This preset range is established either in the base programming of the controller or is established by an operator of the system.

[0025] As example, by controlling the amount of current being withdrawn from the atmosphere, the mechanism oper-

ates within a safe range and also provides a relatively stable current flow from which a variety of activities can take place (such as DC-AC conversion).

[0026] The controller also utilizes the lightning sensor to protect the mechanism from a lightning strike. Should lightning be detected within a pre-determined range (as established by the software or defined by an operator), then the balloon is pulled down to minimize the risk of damage from a lightning strike.

[0027] The invention, together with various embodiments thereof will be more fully explained by the following description of the accompanying drawings.

DRAWINGS IN BRIEF

[0028] FIG. **1** diagrams the preferred embodiment of the invention.

[0029] FIG. **2** illustrates the collection of the negative charged particles in the atmosphere.

[0030] FIG. **3** is a flow-chart of the operation of the controller for the preferred embodiment of the invention.

[0031] FIGS. **4**A, **4**B, and **4**C are electrical schematics for handling the static charge from the atmosphere.

[0032] FIG. **5** illustrates a conductive line used in the preferred embodiment of the invention.

[0033] FIGS. **6**A and **6**B illustrate an alternative conductive line creating an ionized pathway for the flow of the static charges from the atmosphere.

[0034] FIG. **7** illustrates the controller of an alternative embodiment and the associated safety devices.

[0035] FIGS. **8**A and **8**B illustrate two embodiments of enhanced electrical collection leads.

DRAWINGS IN DETAIL

[0036] FIG. **1** diagrams the preferred embodiment of the invention.

[0037] Balloon **10** is an aircraft which, in this illustration, is a lighter than air balloon. Wings **10**A, extending from the body of balloon **10**, provide additional lift in air flow **18**. Tail **10**B helps to stabilize balloon **10**.

[0038] Balloon **10** is tethered to the ground via conductive line **12**. As noted earlier, a variety of configurations and materials are available to serve as conductive line **12**. In this illustration, a poly-wire is used. Poly-wire is commercially available through a variety of vendors, including, but not limited to: Jeffers Livestock and Sareba Systems, Inc. of Ellendale, Minn.

[0039] In this embodiment, located proximate to balloon **10**, is an electrical collection enhancement lead **11** which assists in the collection of the static electrical charge in the atmosphere. Electrical collection enhancement lead **11** is configured to attract the static charge and conduct the charge into the conductive line **12**.

[0040] The electricity flows down the conductive line into spool **13**, where the conductive line **12** is collected and either withdrawn or dispensed through operation of winch motor **14**.

[0041] Winch motor **14** and spool **13** are mounted onto base unit **16** which is electrically isolated from ground **7** using insulator **17**. Note, in this embodiment of the invention, when electricity is being collected from the atmosphere, the entire base unit **16** becomes charged. In another embodiment of the invention, spool **13** is constructed of rubber, thereby preventing base unit **16** from becoming charged, thereby restricting the charging from the atmosphere to only conductive line **12**.

[0042] In this embodiment, conductor **6** is connected to base unit **16** (since the entire base unit **16** is charged and the base unit is metallic) to communicate the electrical current to load **5**. Conductor **6** is ideally an insulated wire.

[0043] The electrical current through conductor **6** is measured using sensor **8**.

[0044] In the alternative embodiment discussed above, where only the conductive line **12** is charged, then conductor **6** is connected to conductive line **12**.

[0045] Controller **15**, located in this embodiment on base unit **16**, operates winch motor **14** in response to signals from sensor **8** (measuring the current being discharged to load **5**) to maintain the current flow within a pre-defined range. As the current flow diminishes, then the conductive line **12** extended from spool **13** to increase the altitude of balloon **10** to that more static charge from the atmosphere is gathered; as the current flow falls exceeds a preset level, conductive line **12** is withdrawn onto spool **13** to decrease the static charge being collected from the atmosphere.

[0046] The range of current flow through conductor **6** is ideally set by the program, although some embodiments of the invention permit an operator to establish this range of operation.

[0047] In an alternative embodiment, the sensor monitoring conductor **6** monitors the voltage therein.

[0048] In the preferred embodiment of the invention, controller **15** is also equipped with a lightning sensor **19**. In this embodiment, when lightning is sensed within a preset range, then substantially all of conductive line **12** is wound onto spool **13** to pull balloon **10** near the ground and protect the entire mechanism from being damaged from a lightning discharge.

[0049] In the preferred embodiment, the "safe" distance form lightning is set in the programming of controller **15** and is ideally two miles; other embodiments permit the operator to "safe" distance.

[0050] There are a variety of lightning sensors well known to those of ordinary skill in the art, including, but not limited to those described in: U.S. Pat. No. 7,016,785, entitled "Lightning Detection" issued to Makela, et al. on Mach 21, 2006; U.S. Pat. No. 6,829,911, entitled "Lightning Detection and Prediction Alarm Device" issued to Jones, et al. on Dec. 7, 2004; U.S. Pat. No. 7,200,418, entitled "Detection of Lightning" issued to Karikuranta, et al. on Apr. 3, 2007; and U.S. Pat. No. 6,961,662, entitled "Systems and Methods for Spectral Corrected Lightning Detection" issued to Murphy on Nov. 1, 2005; all of which are incorporated hereinto by reference.

[0051] In another embodiment of the invention, controller **15** is not located on base unit **16**, rather it is remote and communicates its control signals to winch motor **14** using radio waves.

[0052] FIG. **2** illustrates the collection of the negative charged particles in the atmosphere.

[0053] Static charges **23** are generated in the atmosphere by agitated air. These static charges are often collected at the bottom of clouds, but exist in other environments as well.

[0054] Balloon **21** is extended into this strata of static charges **23** which are then attracted to conductive line **12** to flow to base unit **22** and then onto load **5**.

[0055] By increasing or decreasing the altitude of balloon **21** (defined by the length of the extended conductive line **12**),

conductive line **12** is selectively exposed to varying densities and levels of the static charge strata, and by extension, the current flow or voltage is increased or decreased.

[0056] FIG. **3** is a flow-chart of the operation of the controller for the preferred embodiment of the invention.

[0057] Once the program starts **30**, the lightning sensor is checked to determine if lightning has occurred within the unsafe range **31**A, if it has, then the balloon is lowered **32**A, and the program continues monitoring the status of lightning until no lightning is detected.

[0058] When the lightning status is acceptable, then the current within the conductor is checked to see if the current is within the prescribed range **31**B. If the current is acceptable (within range) the program returns to check the lightning status **31**A; otherwise a determination is made to see if the current is above the prescribed range **31**C.

[0059] If the current is above the prescribed range, then the altitude of the balloon is withdrawn a set amount **32**B (ideally twenty-five feet) and the program loops back to see if the current is within range **31**B.

[0060] If the current is below the prescribed range, then the altitude of the balloon is extended a set amount **32**C (ideally twenty-five feet) and the program loops back to see if the current is within range **31**B.

[0061] In this manner of feed-back and minor adjustments in the altitude of the balloon, the current is maintained within a prescribed range which can be handled by the downstream electrical system.

[0062] As noted earlier, some embodiments of the invention monitor the voltage instead of the current.

[0063] FIGS. **4**A, **4**B, and **4**C are electrical schematics for handling the static charge from the atmosphere.

[0064] By maintaining the voltage being collected in a prescribed range, an electrical conversion system is easily designed. While FIGS. **4**A, **4**B, and **4**C illustrate some electrical configurations, those of ordinary skill in the art readily recognize a variety of other configurations which will serve the same function.

[0065] Referencing FIG. **4**A, Direct Current In (DC IN) **40** is buffered by a gang of capacitors **41** before being communicated to a DC/AC converter **42**. The DC/AC converter converts the direct current into a an alternating current suitable for placement over an existing electrical grid **43** such as normally found from a power-plant.

[0066] Those of ordinary skill in the art readily recognize a variety of DC/AC converters, including, but not limited to: U.S. Pat. No. 7,394,671, entitled "Controller IC, DC-AC Conversion Apparatus, and parallel running system of DC-AC Conversion Apparatuses" issued to Fukumoto, et al. on Jul. 1, 2008; and, U.S. Pat. No. 7,330,366, entitled "DC-AC Converter" issued to Lee, et al. on Feb. 12, 2008; all of which are incorporated hereinto by reference.

[0067] FIG. **4**B illustrates an electrical arrangement suitable for use in charging a battery. DC IN **40** is buffered by capacitor bank **41** before entering into a step down transformer **43**. Step down transformer **43** reduces the voltage so that the voltage can safely be introduced into battery **44** which is connected to ground **45** at the battery's other pole.

[0068] Those of ordinary skill in the art readily recognize a variety of batteries which will work in this capacity, including, but not limited to those described in: U.S. Pat. No. 7,378,181, entitled "Electric Storage Battery Construction and Manufacture" issued to Skinlo on May 27, 2008; U.S. Pat. No. 7,388,350, entitled "Battery with Electronic Compartment" issued to Wright on Jun. 17, 2008; U.S. Pat. No. 7,397,220, entitled "Connection Member and Battery Pack" issued to Uchida, et al. on Jul. 8, 2008; and, U.S. Pat. No. 7,375,492, entitled "Inductively Charged Battery Pack" issued to Calhoon, et al. on May 20, 2008; all of which are incorporated hereinto by reference.

[0069] In FIG. **4**C, DC IN **40** is fed into an adjustable rheostat **46** which is controlled by the controller so that the DC OUT **47** falls within a specified range.

[0070] FIG. **5** illustrates a conductive line used in the preferred embodiment of the invention.

[0071] This type of conductive line is commonly called poly-wire and consists of multiple interwoven strands of plastic **50**A and **50**B woven into a cord or rope arrangement having intertwined therein exposed metal wires **51**A and **51**B. While this illustration shows two plastic strands and two metal wires, any number of possible combinations is possible.

[0072] The exposed metal wires **51**A and **51**B attract the atmospheric static charge and transmit the charge down to the base unit (not shown).

[0073] FIGS. **6**A and **6**B illustrate an alternative conductive line creating an ionized pathway for the flow of the static charges from the atmosphere.

[0074] This conductive line utilizes a tube **60** having an outer layer **62** of PET Film (Biaxially-oriented polyethylene terephtalate polyester film) which provides exceptionally high tensile strength and is chemically and dimensionally stable. The tube has an ideal diameter of between two and three inches.

[0075] An interior metal coating **61** provides an initial conduit for the flow of static charge. The static charge through the metal forces the tube to expand due to the repulsion experienced by like charges. Further, the flow of electricity causes the interior of the tube **60** to become ionized to provide an additional pathway for the atmospheric static charges to the base unit (not shown).

[0076] Because outer layer **62** provides a gas barrier, the resulting ionization is not dissipated by air currents, thereby providing a highly stable pathway.

[0077] FIG. **7** illustrates the controller of an alternative embodiment and the associated safety devices.

[0078] In this embodiment, controller box **70**, resting on insulating pad **72**, is in communication with the sensors as described above. Using the input from these sensors, when there is flow of electricity through the base unit, warning flashing light **71** is illuminated. To electrically neutralize the mechanism, switch **73** is activated to pass any existing current into the ground **74**.

[0079] FIGS. **8**A and **8**B illustrate two embodiments of enhanced electrical collection leads.

[0080] Referencing FIG. **8**A, enhanced electrical collection lead **82** is a wire mesh which is in electrical communication with conductive line **81** and balloon **80**. Because of the significant amount of metal exposed by enhanced electrical collection lead **82**, more static electricity from the atmosphere is drawn to the collection lead **82**, and then down conductive line **81** to the base unit (not shown).

[0081] Conductive lead **82** is positioned proximate to balloon **80**.

[0082] In FIG. **4**B, poly-wire **83** has enhanced electrical collection leads **84** wrapped therearound. Collection leads **84** have pointed ends **85**A and **85**B which have a propensity to attract more electricity than rounded ends do.

[0083] It is clear from the foregoing that the present invention captures an entirely new source of electrical energy.

What is claimed is:

1. A mechanism to tap an electrical source comprising:

a) a lighter than air balloon;

b) a base unit having a spool of conductive line on a winch motor, one end of said conductive material secured to said lighter than air balloon, said winch motor capable of selectively extending or withdrawing said conductive line from said spool, one end of said conductive line connected to said lighter than air balloon;

c) an insulator electrically isolating said conductive line from ground; and,

d) a conductor having a first end electrically connected to said conductive line and a second end electrically connected to a load.

2. The mechanism to tap an electrical source according to claim **1**, further including a controller, said controller selectively operating said winch motor based upon a voltage level in said conductor.

3. The mechanism to tap an electrical source according to claim **2**,

a) further including an electrical flow sensor monitoring electrical flow through said conductor and generating an electrical flow indicia indicative of said electrical flow in said conductor, said electrical flow indicia communicated to said controller; and,

b) wherein said controller operates said winch motor such that said electrical flow indicia remains within a selected operating range.

4. The mechanism to tap an electrical source according to claim **3**, wherein said selected operating range is established by an operator.

5. The mechanism to tap an electrical source according to claim **4**, further including a warning light activated when said electrical flow indicia is non-zero.

6. The mechanism to tap an electrical source according to claim **3**,

a) further including a lightning sensor generating a lightning presence indicia indicative of lightning within a prescribed range, said presence indicia being communicated to said controller; and,

b) wherein said controller, in response to said lightning presence indicia, operates said winch motor to withdraw substantially all of said conductive line onto said spool.

7. The mechanism to tap an electrical source according to claim **6**, wherein said prescribed range is established by an operator.

8. The mechanism to tap an electrical source according to claim **3**, further including an electrical collection enhancement lead in electrical contact with a first end said conductive material, said electrical collection enhancement lead configured to attract static electricity.

9. The mechanism to tap an electrical source according to claim **8**, wherein said electrical collection enhancement lead is positioned proximate to said lighter than air balloon.

10. The mechanism to tap an electrical source according to claim **9**, wherein said electrical collection enhancement lead includes at least two pointed electrical conductors.

11. The mechanism to tap an electrical source according to claim **1**, wherein said insulator electrically isolates said conductive line from said winch motor.

12. The mechanism to tap an electrical source according to claim **1**, wherein said insulator electrically isolates said base unit from ground.

13. A mechanism comprising:

a) an airborne aircraft tethered by a conductive line secured to a winch capable of extending or withdrawing said conductive line from a spool, thereby adjusting an altitude of the airborne aircraft;

b) an insulator electrically isolating said conductive line from ground; and,

c) a conductor having a first end electrically connected to said conductive line and a second end electrically connected to a load.

14. The mechanism according to claim **13**, further including a controller, said controller selectively operating said winch motor based upon a voltage level in said conductor.

15. The mechanism to tap an electrical source according to claim **14**,

a) further including a lightning sensor communicating with said controller; and,

b) wherein said controller, in response to selected signals from said lightning sensor withdraws substantially all of said conductive line.

16. A mechanism to tap an electrical source comprising:

a) a lighter than air balloon;

b) a base unit having a spool of conductive line on a winch motor, one end of said conductive material secured to said balloon, said winch motor capable of adjusting an altitude of said lighter than air balloon by selectively extending or withdrawing said conductive line from said spool;

c) an insulator electrically isolating said conductive line from ground; and,

d) a conductor having a first end electrically connected to said conductive line and a second end electrically connected to a load;

e) a sensor array having,

1) an electrical flow sensor monitoring electrical flow through said conductor, and,

2) a lightning sensor monitoring existence of proximate lightning; and,

f) a controller responsive to signals from said sensor array to selectively operate said winch motor.

17. The mechanism to tap an electrical source according to claim **16**,

a) further including a warning light; and,

b) wherein said controller activates said warning light when said electrical flow in said conductor is non-zero.

18. The mechanism to tap an electrical source according to claim **17**, further including an electrical collection enhancement lead in electrical contact with said conductive material, said electrical collection enhancement lead configured to attract static electricity and positioned proximate to said lighter than air balloon.

* * * * *

Nov. 10, 1959 O. T. CARR 2,912,244

AMUSEMENT DEVICE

Filed Jan. 22, 1959 5 Sheets-Sheet 1

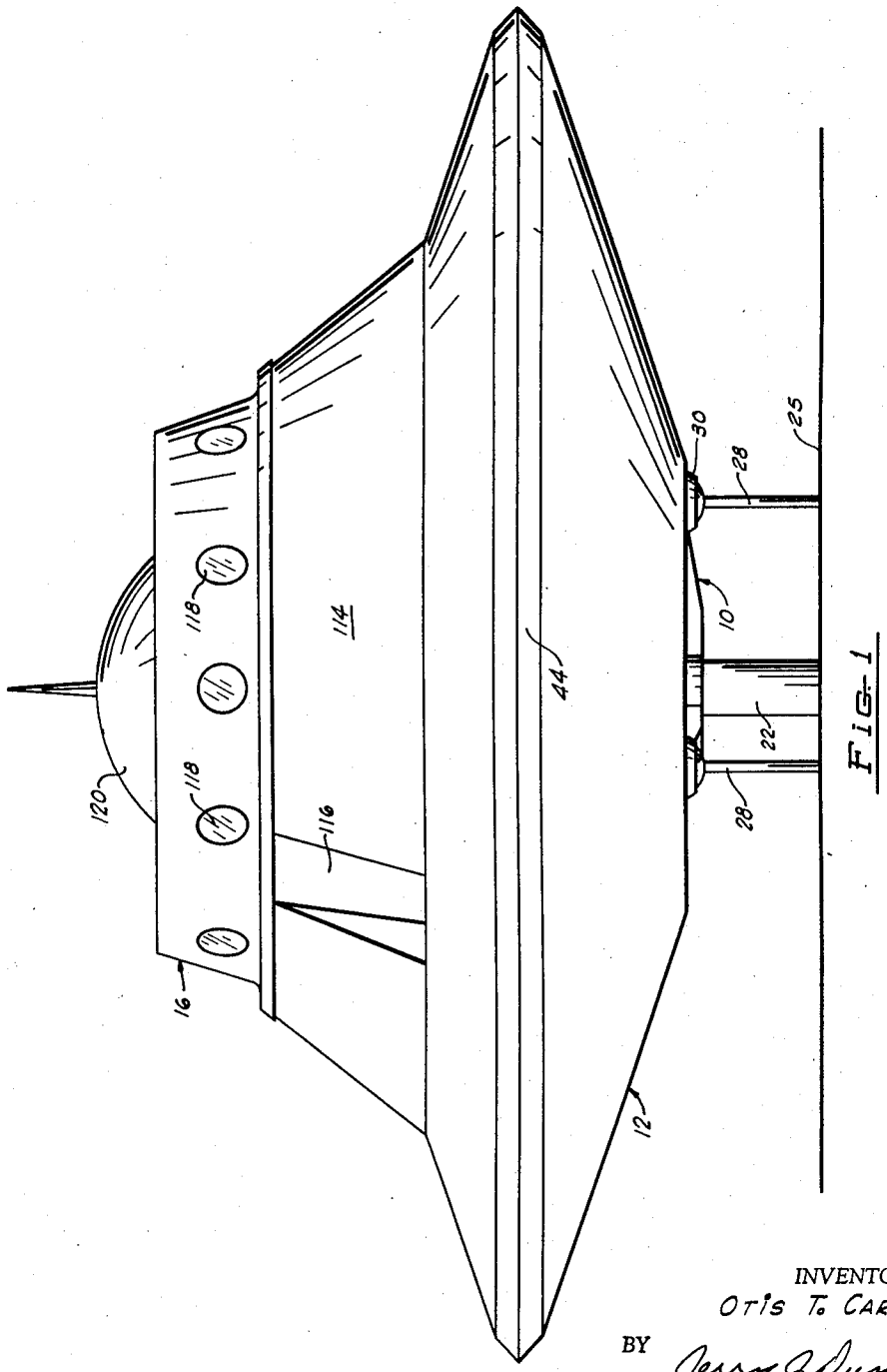

FIG. 1

INVENTOR.
OTIS T. CARR

BY Jerry J. Dunlap

ATTORNEY

Nov. 10, 1959 O. T. CARR 2,912,244

AMUSEMENT DEVICE

Filed Jan. 22, 1959 5 Sheets-Sheet 2

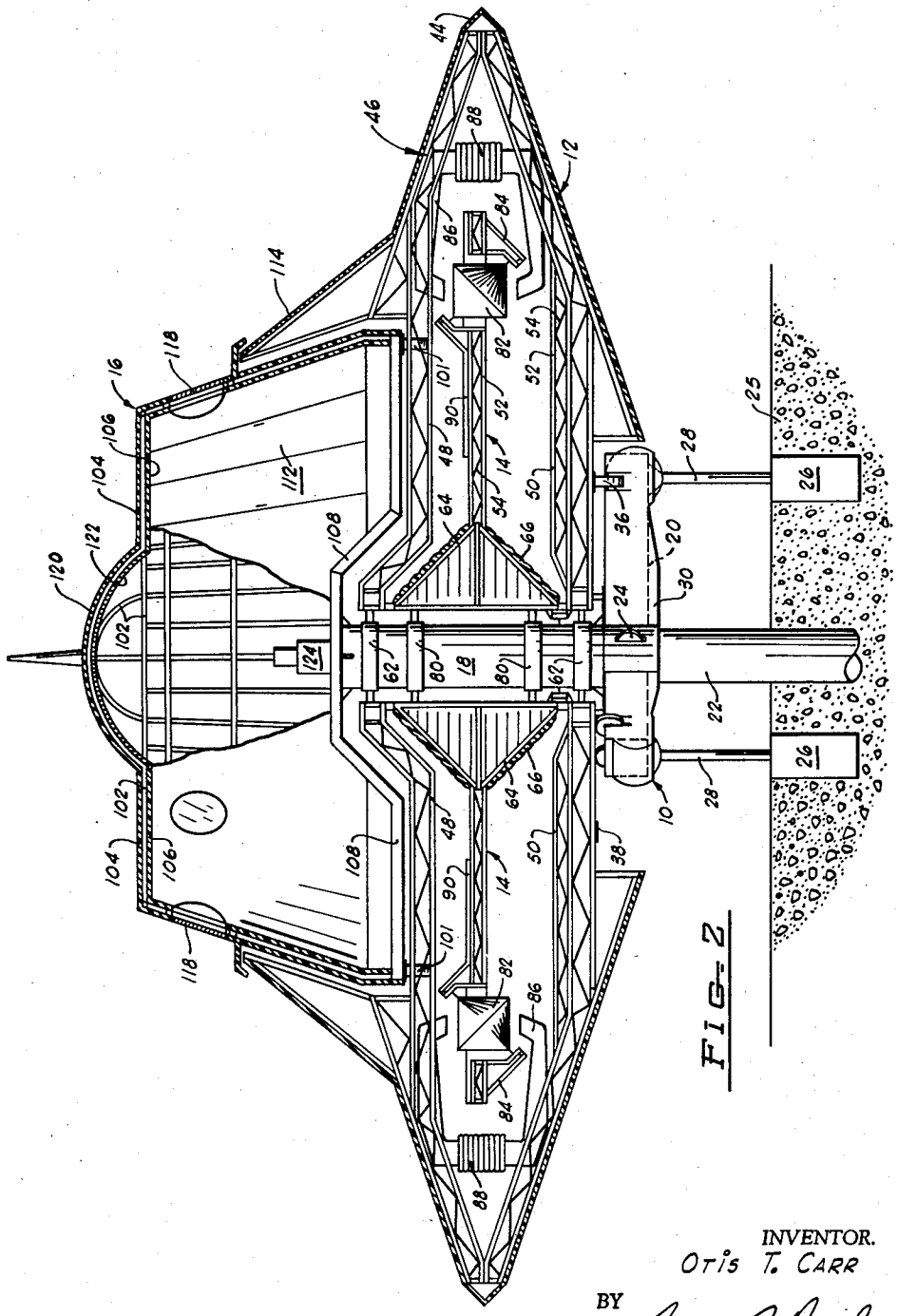

FIG. 2

INVENTOR.
OTIS T. CARR

BY Jerry J. Dunlap

ATTORNEY

AMUSEMENT DEVICE

Filed Jan. 22, 1959 5 Sheets-Sheet 3

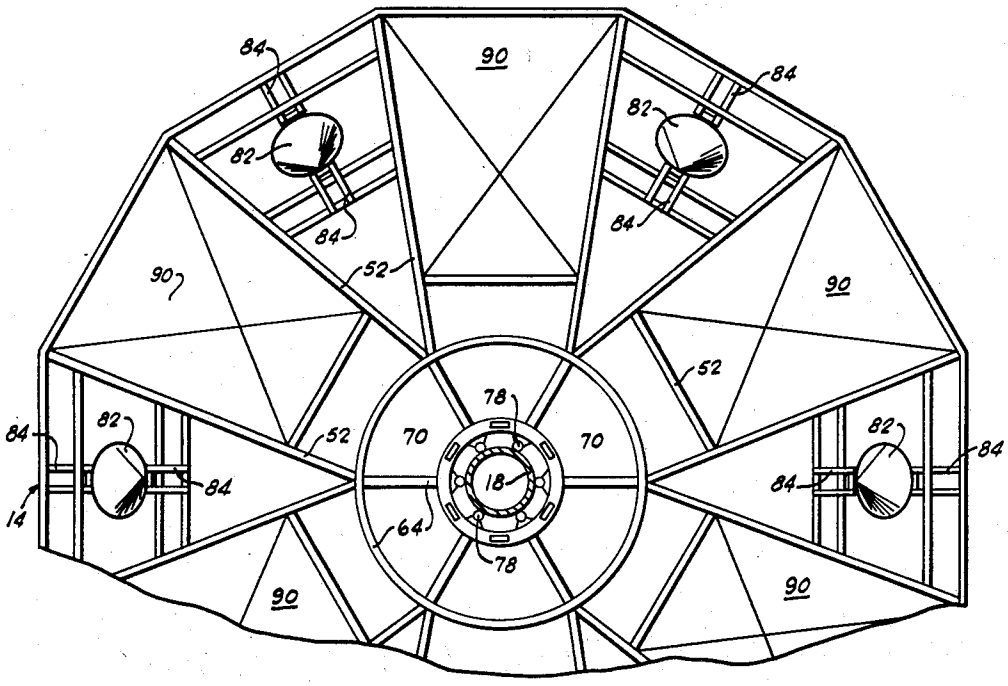

Fig. 5

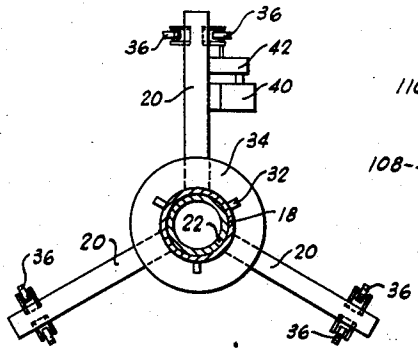

Fig. 3

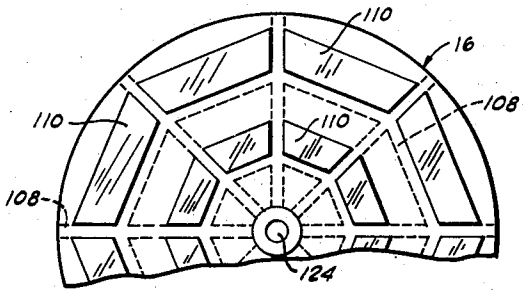

Fig. 7

INVENTOR.
OTIS T. CARR

BY Jerry J. Dunlap

ATTORNEY

AMUSEMENT DEVICE

Filed Jan. 22, 1959 5 Sheets-Sheet 4

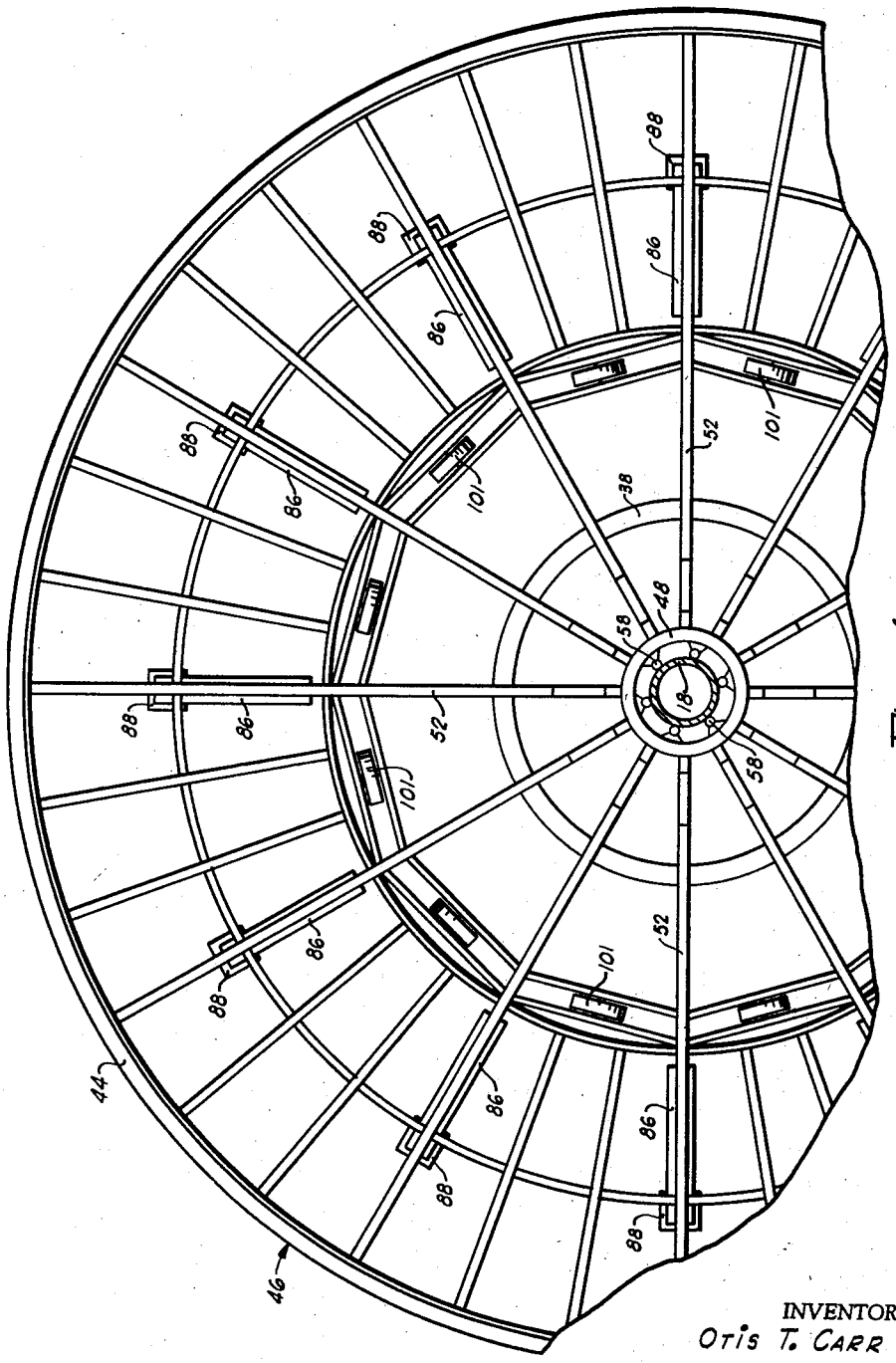

FIG. 4

INVENTOR.
Otis T. Carr
BY
Jerry J. Dunlap
ATTORNEY

AMUSEMENT DEVICE

Filed Jan. 22, 1959 5 Sheets-Sheet 5

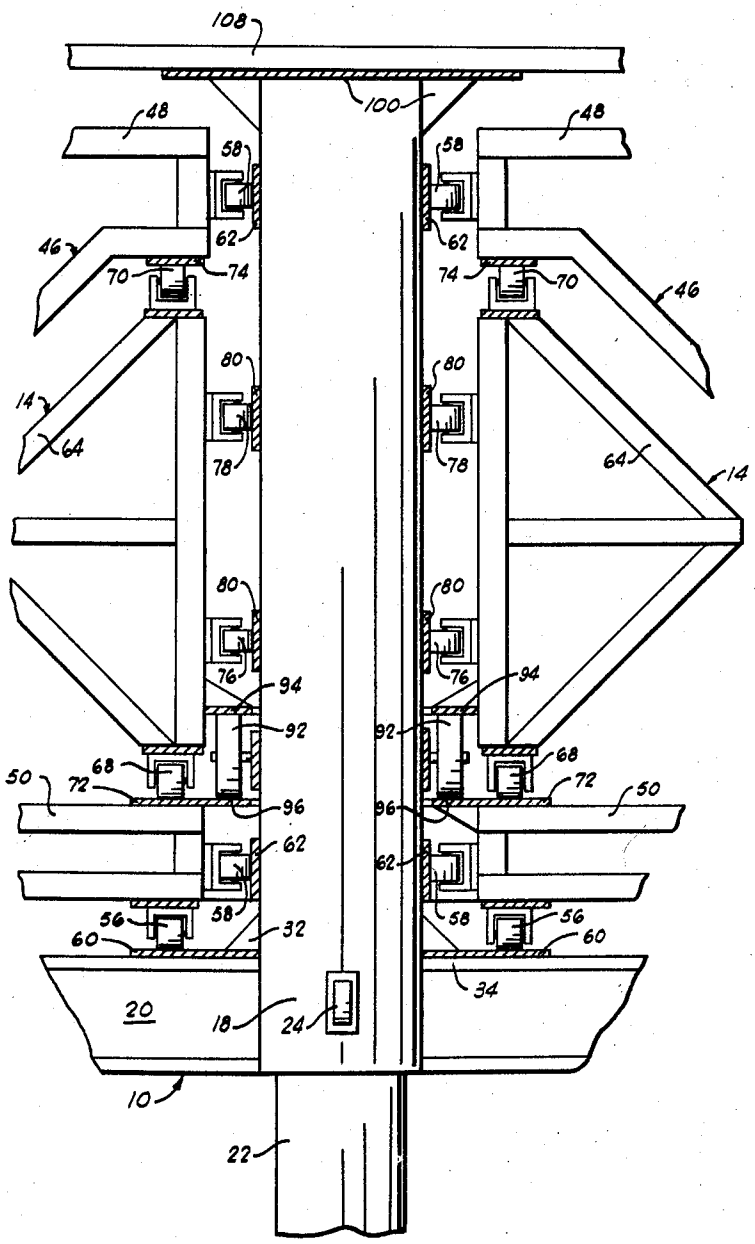

FIG. 6

INVENTOR.
OTIS T. CARR

BY Gerry J. Dunlap

ATTORNEY

United States Patent Office

2,912,244

Patented Nov. 10, 1959

1

2,912,244

AMUSEMENT DEVICE

Otis T. Carr, Baltimore, Md.

Application January 22, 1959, Serial No. 788,392

9 Claims. (Cl. 272—18)

This invention relates generally to improvements in amusement devices, and more particularly, to an improved amusement device of the type wherein the passengers will receive the impression of riding in an interplanetary space craft.

The present invention contemplates a novel amusement device having the overall configuration of a space craft and being formed in various sections, with portions of the sections being rotated in opposite directions to give the impression of movement to the passengers. It is also contemplated to move the craft up and down and display an animated movie of heavenly bodies above the passengers to give the passengers an impression of leaving the earth and approaching a distant planet or the like. This invention further contemplates the provision of electro-magnets, cones and the like carried by the oppositely rotating sections of the device, and windows through which the passengers may view these simulated objects to give the impression to the passengers that they are viewing the inner workings of an interplanetary space craft during flight of the craft. Finally, this invention contemplates the construction of the various portions of an amusement device simulating an interplanetary space craft in such a manner that the device may be easily transported in sections from one location to another and reassembled in a minimum of time.

An important object of this invention is to provide an amusement device wherein a passenger in the device receives the impression of flying in an interplanetary space craft.

Another object of this invention is to provide an amusement device having a general configuration of an interplanetary space craft and having oppositely rotating sections simulating the movement of various portions of such a space craft during flight.

A further object of this invention is to provide an amusement device simulating an interplanetary space craft and having a passenger cabin wherein the passengers may view various moving portions of the device to impress the passengers with flight in a space craft.

Another object of this invention is to provide an amusement device simulating an interplanetary space craft wherein the passengers will be physically moved a very minor distance and yet will receive the impression of flying in a space craft.

A further object of this invention is to provide a portable amusement device simulating an interplanetary space craft which may be easily disassembled and transported from one location to another.

A still further object of this invention is to provide an amusement device which is simple in construction, may be economically manufactured, and which will have a long service life.

Other objects and advantages of the invention will be evident from the following detailed description, when read in conjunction with the accompanying drawings which illustrate my invention.

2

In the drawings:

Figure 1 is an elevational view of an amusement device constructed in accordance with this invention.

Figure 2 is a vertical sectional view through the device illustrated in Fig. 1.

Figure 3 is a plan view of the landing gear for the amusement device, with the housing around the legs of the landing gear removed.

Figure 4 is a plan view of the supporting structure or frame work for the outer rotating shell of the amusement device shown in Figs. 1 and 2.

Figure 5 is a plan view of the central rotating assembly which rotates within the outer shell frame illustrated in Figs. 2 and 4.

Figure 6 is an enlarged sectional view illustrating the support and the drive between the inner rotating assembly and the outer rotating assembly.

Figure 7 is a plan view of the floor portion of the passenger cabin.

Referring to the drawings in detail, and particularly Figs. 1 and 2, a preferred embodiment of the present invention comprises, generally speaking, a supporting structure and landing gear **10**, an outer rotating shell **12**, an inner rotating assembly **14** (shown only in Fig. 2) and a passenger cabin **16** extending downwardly into the upper end portion of the outer shell **12**. The landing gear and supporting mechanism **10** comprises a vertically extending tubular member **18** around which the outer shell **12** and inner rotating assembly **14** are journaled, as will be hereinafter set forth, and a plurality of legs **20** extending radially outward in circumferentially spaced relation from the lower end of the tubular member **18**. The tubular member **18** is telescoped over a supporting stanchion **22** which may be in the form of a pipe, and the tubular member **18** is slidingly supported on the stanchion **22** by suitable wheels or rollers **24** to facilitate vertical movement of the member **18** on the stanchion **22**, as will be hereinafter set forth. The stanchion **22** is preferably supported in a suitable foundation **25** to provide adequate strength for the amusement device.

A suitable jack **26**, preferably a hydraulic jack, is anchored in the foundation **25** underneath the outer end portion of each of the landing gear legs **20** and is provided with an extension **28** extending upwardly into connection with the respective leg **20**. The jacks **26** are operated simultaneously to raise and lower the landing gear and supporting structure **10**, as will be described. A suitable shaped housing **30** is preferably secured around each of the landing gear legs **20** to provide a streamlined appearance. It may be noted that each of the legs **20** is preferably constructed out of a structurally strong member, such as an I-beam, and is secured to the lower end portion of the tubular member **18** by suitable braces **32** and plates **34** to assure a rigid and adequate connection of the legs **20** to the tubular member **18**.

A pair of rollers **36** (see also Fig. 3) are rotatably supported adjacent the outer end portion of each leg **20** of the landing gear and are arranged to engage a circular track **38** (Figs. 2 and 4) for partially supporting the outer shell **12** and inner rotating assembly **14** as will be described. Also, a suitable drive motor **40** (Fig. 3) is mounted on one of the legs **20** of the landing gear and is connected through a suitable gear box **42** to one of the rollers **36** to rotate the outer shell **12** with respect to the landing gear and supporting structure **10**. The roller **36** connected to the drive motor **40** may be suitably chained (not shown) to its companion roller **36** to assure an adequate drive connection between the drive motor **40** and the circular track **38**.

The shell **12** (Fig. 2) is tubular in configuration, with the diameter of the central portion thereof substantially

larger than the diameter at the opposite ends thereof, and is supported in an upright position to give the general appearance of two saucers placed face-to-face. The outer edge portion 44 of the shell 12 is preferably formed of partially transparent material, such as Plexiglas, and is illuminated from within (not shown) to provide a band of light around the central portion of the shell 12. The remainder of the shell 12 is formed of any desired opaque and relative strong material, such as aluminum-laminated Masonite sheets.

The shell 12 is supported on a frame generally designated by reference character 46 and illustrated in Figs. 2 and 4. The frame 46 is circular in plan, as viewed in Fig. 4, and is substantially U-shaped in cross-section (as shown in Fig. 2) to provide an upper horizontally extending portion 48 and a lower horizontally extending portion 50 which extend from adjacent the support-member 18 outwardly to the central portion of the shell 12. The frame 46 may be easily formed with industrial square steel tubing 52 formed into a truss with bracing of steel rods 54. With this construction, the frame 46 may be easily fabricated in sections for convenient assembly, or the entire frame 46 may be lifted off of the supporting member 18 and transported to another location.

Support of the frame 46 and the outer shell 12 is provided by the track 38 (previously mentioned) which is secured on the lower face of the lower horizontally extending portion 50 of the frame 46 in a position to engage the rollers 36 carried by the landing gear legs 20. Additional support for the frame 46 is provided by rollers 56 (Fig. 6) secured around the inner edge of the lower portion 50 of the frame, and rollers 58 secured around the inner periphery of both portions 48 and 50 of the frame. The rollers 56 are arranged in circumferentially spaced relation around the inner periphery of the frame 46 and engage a circular track 60 supported by the legs 20 of the landing gear. The track 60 may be an extension of the upper plate 34 shown in Fig. 3. The rollers 58 engage tracks 62 extending circumferentially around the supporting member 18 to accommodate any radial forces imposed on the frame 46. It will be understood that any desired number of the rollers 58 may be provided around the inner periphery of the frame 46 to provide the necessary support. It will thus be apparent that when the drive motor 40 is placed in operation, the rollers or wheels 36 operated by the motor 40 will engage the track 38 to rotate the shell 12 in one direction around the longitudinal axis of the supporting member 18. The rollers 56 will engage the track 60, and the rollers 58 will engage the tracks 62 during such rotation of the outer shell 12 and frame 46.

The inner rotating assembly 14 is generally annular-shaped, as illustrated in Fig. 5, for movement around the supporting member 18 between the upper and lower horizontally extending portions 48 and 50 of the frame 46. The assembly 14 is also preferably constructed as a frame out of square steel tubing 52 formed into a truss with steel rods 54 for bracing, and is provided with a double conically-shaped framework 64 adjacent the supporting member 18. The framework 64 is provided to support a covering material 66 of any suitable type, such as laminated metal or plastic, to simulate a solid member in the central portion of the amusement device, which in turn simulates a portion of a space craft, such as the power unit for the craft. The covering material 66 may be corrugated if desired. The framework 64, as illustrated in Fig. 6, is also provided to support the rotating assembly 14 on the supporting member 18 and the frame 46. A plurality of rollers 68 are provided around the lower face of the framework 64, and a plurality of rollers 70 are provided around the upper face of the framework 64 to engage circular tracks 72 and 74, respectively, which are mounted on the frame 46. The rollers in each set of rollers 68 and 70 are provided in circumferentially spaced relation around the inner periphery of the rotating assembly 14 to accommodate vertical thrusts imposed on the rotating assembly 14. Additional rollers 76 and 78 are provided around the inner periphery of the framework 64 to engage tracks 80 extending circumferentially around the supporting member 18 to accommodate radial thrusts imposed on the central rotating assembly 14. It will be apparent that any desired number of rollers 76 and 78 may be provided around the inner periphery of the framework 64 to adequately support the rotating assembly 14.

I also prefer to support a plurality of conically-shaped members 82 in the outer edge portion of the central rotating assembly 14. Each conically-shaped member 82 may be easily formed out of a suitable sheet material, such as laminated aluminum or plastic, and is supported at its opposite ends by suitable trunnions 84 to extend through the truss comprising the frame of the central rotating assembly 14. The conically-shaped members 82 are preferably provided in circumferentially spaced relation around the assembly 14, as illustrated in Fig. 5, and are positioned to move through simulated electro-magnets 86 supported around the frame 46, as illustrated in Figs. 2 and 4. Each simulated electro-magnet 86 may be formed in horse shoe shape out of any suitable sheet material, and is provided with tubing or the like 88 around a portion thereof to simulate the winding of an electro-magnet. I further prefer to secure a plurality of plates 90 in spaced relation around the upper face of the rotating assembly 14 to simulate capacitor plates in a space craft. The plates 90 may be formed out of any suitable material, such as aluminum laminated Masonite, to provide a striking appearance.

The inner rotating assembly 14 is driven by a friction or dead wheel 92 pivotally supported on the tubular member 18, as illustrated in Fig. 6, engaging circular plate 94 and 96 carried by the inner rotating assembly 14 and the frame 46, respectively. The plates 94 and 96 are arranged in vertically spaced relation with sufficient distance therebetween to frictionally engage opposite portions of the wheel 92. It will therefore be apparent that when the frame 46 is turned in one direction, the plate 96 will engage the periphery of the wheel 92 to drive the wheel 92 and in turn drive the central rotating assembly 14 in an opposite direction by frictional engagement of the wheel 92 with the plate 94. Therefore, the various conically-shaped members 82 will be moved successively through the simulated electro-magnets 86 and give the appearance of the generation of electrical energy.

The cabin 16 is supported on the upper end of the tubular supporting member 18 and is rigidly secured to the member 18 by bracing 100 to move with the supporting member 18 and to be prevented from rotating with the shell 12 or rotating assembly 14. Additional support is provided by a plurality of rollers 101 carried by the frame 46 engaging a complementary track on the bottom of the cabin. The cabin 16 is constructed out of a suitable framework 102 covered by suitable sheet material 104, such as aluminum laminated with Masonite, on the outer surface of the framework and any other suitable material 106, such as Masonite, around the inner surface of the framework. It will be understood that substantially strong members 108 must be provided in the floor of the cabin 16 to adequately support passengers in the cabin. As illustrated in Fig. 7, a plurality of transparent windows 110 are provided adjacent the outer and inner peripheries of the floor of the cabin 16, through which passengers in the cabin may adequately view the inner rotating assembly 14 and the frame 46.

Passengers may either stand or sit in the cabin 16 and may gain entrance and exit from the cabin through suitable doors 112 as illustrated in Fig. 2. It will also be

noted that the upper edge portion **114** of the outer shell **12** is extended upwardly to overlap the lower end portion of the cabin **16**. A portion of the upper edge **114** of the shell **12** is removed, as at **116** in Fig. 1, such that passengers may enter the cabin **16** through the doors **112**. Simulated port holes **118** are provided around the upper edge portion of the cabin **16** to further simulate an interplanetary space craft. It will be noted, however, that the port holes **118** are preferably covered with an opaque material on the inside of the cabin **16** to prevent the passengers from seeing familiar objects outside of the cabin **16**.

A dome **120** is preferably provided in the top central portion of the cabin **16** and the under surface thereof is covered with a suitable material **122**, such as cloth or the like, which will display a movie scene. A projector **124** is suitably mounted in the central portion of the floor of the cabin **16** to project an animated movie onto the screen **122** during operation of the amusement device. The movie displayed by the projector **124** is preferably an animated movie of heavenly bodies made in such a manner that the heavenly bodies displayed on the screen **122** will appear to come closer to and move away from the passengers during operation of the amusement device to give the impression of interplanetary flight.

In summarizing the operation of the preferred amusement device, the passengers are directed into the cabin **16** through the opening **116** in the upper edge portion of the shell **12** and through the doors **112**. The doors **112** are then securely fastened in closed positions and the passengers are thereafter prevented from viewing any object outside of the amusement device during the simulated flight. The drive motor **40** is then placed in operation to rotate the shell **12** and frame **46** in one direction, while the friction wheel **92** drives the inner rotating assembly **14** in an opposite direction. Passengers in the cabin **16** will then view the movement of the inner rotating assembly **14** and the frame **46** through the windows **110** to receive the impression of watching the inner workings of a space craft. Also, suitable lighting effects (not shown) are preferably provided in the shell **12** to illuminate the moving parts. Simultaneously with rotation of the shell **12** and the inner rotating assembly **14**, the jacks **26** are actuated to raise the supporting member **18** on the stanchion **22**. This upward movement of the supporting member **18** will be rather minor, but will be sufficient to give the sensation of rising to the passengers in the closed cabin **16**. It will be observed that when the supporting member **18** is raised, the shell **12** and inner rotating assembly **14** are simultaneously raised to retain the vertical relationship between the cabin **16** and the remainder of the apparatus viewed by passengers in the cabin. Also, simultaneously with rotation of the shell **12** and rotating assembly **14**, the movie is displayed by the projector **124** on the screen **122** on the dome of the cabin to give the passengers the impression of approaching one or more heavenly bodies. The jacks **26** are then operated in the opposite direction to lower the cabin **16** and the movie projected by the projector **124** may then provide an impression on the screen **122** that the passengers are returning to earth.

From the foregoing it will be apparent that the present invention provides an amusement device which will give the impression and sensation to patrons or passengers of the device that they are taking an interplanetary flight. The device includes counter-rotating sections simulating the inner workings of a space craft and these moving sections may be easily viewed by passengers in the device. Also, the passengers are slightly raised during operation of the device to simulate flight from the earth and a movie is simultaneously displayed to give the impression of approaching a heavenly body. It will also be apparent that the construction of the amusement device is such that the device may be easily disassembled and moved from one location to another. It will further be apparent that the present amusement device is simple in construction, may be economically manufactured and will have a long service life.

Changes may be made in the combination and arrangement of parts or elements as heretofore set forth in the specification and shown in the drawings, it being understood that changes may be made in the embodiment disclosed without departing from the spirit and scope of the invention as defined in the following claims.

I claim:

1. In an amusement device simulating a space ride, the combination of: an outer tubular shell, the diameter of the central portion of said outer shell being substantially larger than the diameter at the opposite ends thereof, means for supporting the outer shell in an upright position with the largest diameter thereof extending horizontally, means for rotating the outer shell about its longitudinal axis, a plurality of simulated electro-magnets carried in circumferentially spaced relation in the outer shell, an annular-shaped frame rotatably supported concentrically in the outer shell, means for simultaneously turning said frame in a direction opposite to the rotation of the outer shell, conically-shaped members carried by said frame in positions for movement through the simulated electro-magnets in the outer shell, a passenger cabin having a floor therein, means for non-rotatably supporting the cabin above the outer shell with the floor of the cabin positioned within the upper end portion of the outer shell, and transparent windows in the floor of the cabin for viewing movement of the outer shell and said frame from the interior of the cabin.

2. An amusement device as defined in claim 1 wherein said means for supporting said outer shell comprises a tubular support member extending downwardly from the cabin through the outer shell and said frame, a base portion on the lower end of said tubular support member simulating a landing gear, cooperating rollers and tracks supporting the outer shell on the base portion, and means for raising and lowering said base portion during rotation of the outer shell and said frame.

3. In an amusement device simulating a space ride, the combination of: a vertically extending supporting member, a passenger cabin mounted on the upper end of the supporting member and having transparent windows in the floor thereof, an outer shell extending downwardly and outwardly from the lower end portion of the cabin and then inwardly and downwardly toward the supporting member, a first frame extending radially inward from the outer shell and having a generally U-shaped cross section with upper and lower horizontally extending portions, means rotatably supporting said first frame on the supporting member, a second frame rotatably supported on the supporting member for rotary movement horizontally between the upper and lower horizontally extending portions of the first frame, and means for rotating said first and second frames in opposite directions to simulate movement of the inner workings of a space craft as viewed from the cabin.

4. An amusement device as defined in claim 3 characterized further to include at least one jack connected to said supporting member for raising and lowering the cabin and first and second frames during rotary movement of said frames.

5. An amusement device as defined in claim 3 wherein said supporting member is a tube, and characterized further to include a fixed stanchion telescoped into the supporting member for holding the supporting member vertical, legs extending outwardly in circumferentially spaced relation from the supporting member below the lower horizontal portion of the first frame simulating a landing gear for the device, rollers carried by each leg, a circular track on the lower horizontal portion of the first frame arranged to ride on said rollers during rotation of the first frame, and a jack connected to each leg of the

landing gear for raising and lowering the supporting member on the stanchion during rotation of said frames.

6. An amusement device as defined in claim 5 wherein said means for rotatably supporting the first frame on the supporting member includes a track around the supporting member opposite each of the upper and lower horizontal portions of the first frame, and a plurality of rollers carried by each of the upper and lower horizontal portions of the first frame in circumferentially spaced relation in positions to engage the respective track.

7. An amusement device as defined in claim 5 wherein said means for rotatably supporting the second frame on the supporting member comprises a pair of vertically spaced tracks around the supporting member, two sets of circumferentially spaced rollers carried by the second frame in positions to engage said tracks on the supporting member, circular tracks on the upper and lower horizontal portions of the first frame, and circumferentially spaced rollers on the upper and lower faces of the second frame for engaging the last-mentioned circular tracks.

8. An amusement device as defined in claim 3 wherein

said means for rotating said frames in opposite directions comprises concentric annular plates secured around the first and second frames in vertically spaced relation adjacent the supporting member, a friction wheel carried by the supporting member in a position to engage said plates and drive the second frame in one direction upon rotation of the first frame in an opposite direction, and means for rotating the first frame.

9. An amusement device as defined in claim 3 characterized further to include a movie projector in the cabin arranged to project a movie of heavenly bodies on the interior of the cabin and provide passengers in the cabin with a sensation of interplanetary space flight.

References Cited in the file of this patent

UNITED STATES PATENTS

754,532	Austen et al.	Mar. 15, 1904
868,369	Stewart et al.	Oct. 15, 1907
981,672	Napp	Jan. 17, 1911
1,818,647	Pronnecke	Aug. 11, 1931

rexresearch.com

Otis T. CARR

UTRON

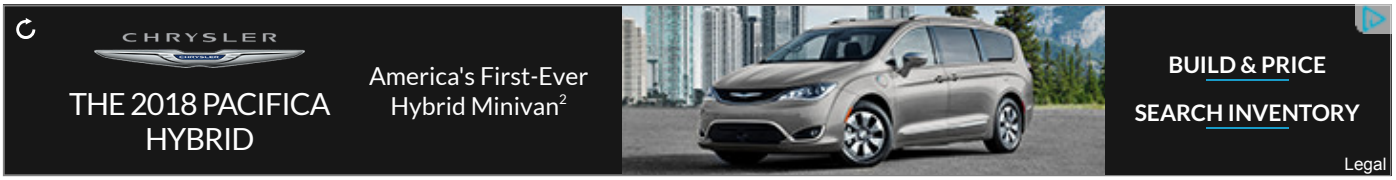

Introduction
Interview: "Long John" Nebel & Otis Carr, *et al.* (WOR Radio, NY, 1959)
***Information Bulletin* #3 (December 23, 1957)**
US Patent # 2,912,244: Amusement Device
OTC-X1 Model Construction Plans
Fate Magazine (May 1958): "Gravity Machine?"
Fate Magazine (August 1959): "The Saucer That Didn't Fly"

[Click Photo to View Large Image]

Introduction

In the late 1950s, Otis Carr claimed to have discovered what he called the "Utron", a "molecular shell" that houses the atoms. The cohesion of molecular shells is brought about by inertial systems in the gravity field, manifesting in the two poles of natural magnetism and electromagnetism. He claimed that by "hatching" the atomic egg, particularly of paramagnetic and diamagnetic elements (especially bismuth), atomic energy could be released gently. The Carr affair is generally considered to be a fraud. This file is a collection of excerpts of technical factoids from articles, interviews, etc., on the subject, without consideration of Carr's botched attempts to make a business of it. The technology actually makes some sense (to me, anyhow, with qualifications and reservations). I was told by Ralph Ring (one of Carr's engineers) that he himself had flown in a short test flight of a small model of the craft. Carr's business methods (fraudulent stock offerings and amateurish publicity tainted with hubris and non-performance) doomed his efforts. His engineer Norman Colton was an alcoholic who stupidly threatened a local newspaper publisher, thus generating more negative feedback. It was a sad pass from Carr's earlier statement that "We shall not stop until we have penetrated our great discoveries into all the ends of the earth, or even as far into outer space as man desires to go!"

The historic details as published in various newspaper articles and particularly in *True, The Man's Magazine* ("King of the Non-Flying Saucers", January 1961), are too long to be transcribed here for any useful purpose. This file is composed only of technical factoids gleaned from the collection of papers offered by Rex Research (albeit as poor-quality photocopies, caveat emptor), plus a couple of short articles cribbed from Keelynet/Fate magazine.

According to Carr, "Any vehicle accelerated to an axis rotation relative to its attractive inertial mass, immediately becomes activated by free-space-energy and acts as an independent force... We have shown that a charged body, accelerated to an axis rotation relative to this attractive inertial mass, indicates polarity in a given direction. The dip-needle points, say, up toward the top of the body. But mount this while rotating body, with its spindle, on another platform and rotate this platform on a spindle, then if the counter-rotation is greater than the inertial forward rotation of the body, a dip-needle on the second platform will point down while the first dip-needle points up, indicating complete relativity of polarity. When the exact counter-rotation matches the forward rotation the body loses its polarity entirely and immediately becomes activated by free-energy (tensor stresses in space) and acts as an independent

force... The above-described assembly of counter-rotating charged masses becomes weightless and will escape the immediate attraction of gravitational forces..."

The Utron

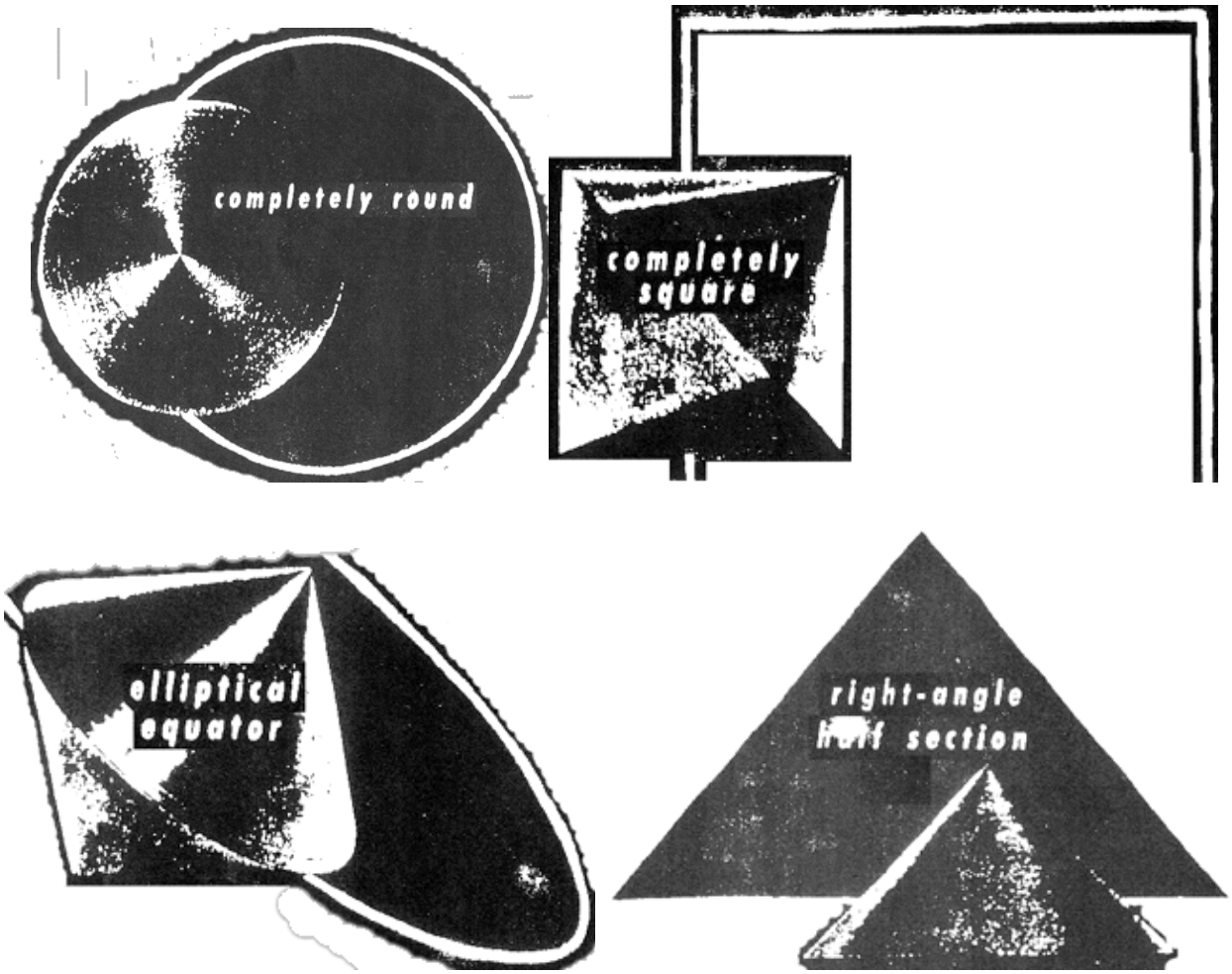

Interview: "Long John" Nebel (WOR Radio, NY) with Otis Carr, *et al.* (1959) ---

OTC (Otis T. Carr): "Our system utilizes gravity, electromagnetism, and electromotive force and a relative field to get its functional operation. We use an electrified sender. It's a sensor power core. Now this is what we call an accumulator... It is a storage cell, an accumulation of storage cells which provide an electromotive force in the same manner that any known battery produces and electromotive force...

This [the Utron] is a dimensional product. It was designed with the dimensions of space itself. We say it is truly the geometric form of space, because it is completely round and completely square. It has been proven in scientific laboratories that the very smallest unit of mass matter ever photographed in the electron microscope are square in shape... We have applied this principle into an electrified system, which is the power core of our space vehicle. Now what makes this unique and novel from a battery is the fact that this is a piece of moving machinery that rotates. Our average storage battery is an inanimate object set in an inertial spot and then the electromotive force is conducted by wires from this battery to animate some object.

LJ ["Long John" Nebel]: Let me interrupt for a moment; I'll try to describe it further. Well, it looks like two ice cream cones put together at the wide ends, but he angle is a lot wider [90 degrees] than that of the ice cream cones. There are a series of ridges; they look like gears would fit in. Is that correct?

OTC: No, those are in a sense turbine; they are reactive channels and where there is atmosphere a flow of air there aids in rotation.

LJ: Well, then, this is one of the components of the drive; this is the battery.

OTC: This is the center power core.

LJ: This generates electricity?

OTC: This is right. This is a storage cell for electrical energy. In operation it generates electricity at the same time it puts out electromotive force. This is the central power system for our spacecraft.

LJ: I can tell this: that it opened up and it appears to be hollowed out on the inside... it's circular, the inside; when the two parts are put one on top of the other and they fit into place, the cavity inside is circular...

OTC: It is a sphere, yes. And each unit is a hemisphere. We call the center of this large dimension the equator and of course it contracts and expands to a point on each side It's the union of two presto-conical sections; that is what it is Two right angle sections, and we say it is the dimensions of space and we have shown how this comes about...

LJ: In the literature you've provided us with, there's a mathematical formula that crops up here that intrigues me: minus zero divided by plus zero equals zero. Can you tell me more about it and how you stumbled on this idea?

OTC: The equation is brought about by the shape of our Utron electrical accumulator; this is the name given to our central power system. In our operation of working models and in checking out experiments, we had to find the formula that fir the reason for the action and reaction we were getting. So in exploring nature and studying the great inspirational work of the Dr. Einstein on relativity, we came upon this formula of linear correlation. And when we study linear correlation in geometric form we have to have a starting point and this is the point. And from there it explains through the cross and through the circle. And the only mathematical way we can express it is in the symbolism of zero X or 0X, and this formula brings us to that. We claim that this is the true unified field theory in physical practice.

In a further study of Dr Einstein's great inspirational work --- and we corresponded with him and we had the great good fortune of being advised by him at one time --- we learned that all measurements of time and space had to be considered in relationship to the observer and therefore there never was a fixed quantity of any number. Now in physical form, this is something else again...

On this craft, insofar as the individuals are concerned, we can travel in the same manner as a pressurized airliner. We don't have the problem of a heat shield... because the electromagnetic system sets up a protective shield in our craft which enables us to overcome this [thermal] barrier without any discomfort to the occupants of the craft. And we can very slowly rise, and once we are outside the atmosphere we can accelerate to tremendous velocities up to the speed of light itself.

LJ: How would it land, sir?

OTC: Very simply, we can fall at a very slow velocity of 100 feet/minute or less and we can set it down as gently as a feather because we have joined part of the operation of our craft to universal systems. This is a relative velocity craft and the minute it reaches the relative velocity of the attractive inertial mass, it becomes weightless as regards this inertial attraction. Individually, it is not weightless; t has the same weight as before, but when it reaches the relative location it becomes an independent system just as a planet is an independent system.

LJ: Is there any gravitational pull at this point, sir?

OTC: None whatsoever. They will have the same feeling of pressure or weight that they have right now because we will maintain as far as possible the atmospheric pressure of the earth at sea level inside the

craft.

LJ: I am under the impression that the only reason I'm able to sit in this chair is because of gravitational pull.

OTC: We have around 14 lb/square inch pressure within our atmosphere. We have been able to be sealed off away from such a condition and then artificially with atmospheric pressure the pressure in the cabin is maintained. We have it very well in submarines. The same may be used in our craft.

LJ: In other words, under sea where a submarine may be there is no gravitational pull; is that what you're saying?

OTC: There is gravitational pull at all times, but we are speaking about the atmosphere of the occupants inside a sealed unit.

LJ: Is that necessary to keep the occupants in the position they desire?

OTC: Absolutely, because in a vacuum they are at the mercy of any velocity.

LJ: What would happen, sir, if there were some kind of instrument that you could turn on and eliminate the gravitational pull that was in this room?

OTC: You would in a sense become very buoyant and this is not in itself a novelty but it certainly does not have any disastrous effect on humanity.

LJ: Would I remain in this position?

OTC: You could, but any movement would move you out of it.

LJ: Would objects remain in position?

OTC: Until they were brought into any movement. Any movement would make them buoyant themselves.

LJ: I have a lead pencil; if I hold it in the air and release my fingers it would fall because of gravitational pull. If we had this other condition which you so aptly described a moment ago, if I released my fingers would the pencil remain in midair?

OTC: This is true; it would stay there.

LJ: I believe what you're saying is that you'd be creating an artificial gravitational field within the body of the spacecraft and yet there would not be any gravity on the outside?

OTC: Exactly correct.

LJ: And this is done by the battery which I attempted to describe, spinning around and producing its own gravitational influence?

OTC: Yes, this is the beginning of an answer to your question: we have capacitor plates and electromagnets as a part of this system. Now, this is counter-rotating; the electromagnets rotate in one direction, and the batteries rotate in another. The capacitor plates rotate in conjunction with the battery so that we have a clockwise and counterclockwise rotation. Now the third system is the cabin that maintains the crew. This does not rotate; it is fixed due to the fact that the two bodies are rotating clockwise and counterclockwise. Therefore the system causes the craft to escape from the gravity pull. The craft itself due to this system still has internal gravity because it still has the same weight that it had in the beginning.

LJ: What charges this battery?

OTC: This starts out electrochemically the same as other batteries, but we do have a regenerating system that is very unique. We are able here, for the first time to our knowledge, to use atmospheric electricity as a recharging system. This is done as part of the operational principle of the craft.

LJ: You say you use atmospheric electricity. What happens when you leave the atmosphere?

OTC: We have electrochemical systems to provide us with all the energy that we need and have a regenerating system in the manner of a regenerative coil that recharges this battery in the same manner that the storage battery in the automobile is recharged now, by a generator.

LJ: What you have doe is made the first perpetual motion machine.

OTC: There is nothing perpetual about our machine. The energies which cause it to operate are perpetual. You cannot destroy matter, and you cannot destroy energy; molecular flow is perpetual and that has been proven in the laboratory. It has been proven that electricity itself is immortal. When we take away resistance we can set up a spark of electricity and it will continue to operate; therefore we have perpetual energy. No machine that we can conceive of made by man would be perpetual, but it is free energy. It's self-energizing and as long as all parts function and do not wear out this is truly a self-energizing machine.

Ben: About this formula: were using conventional algebraic methods?

OTC: No, we weren't. Partially conventional, but we were joining actual space forms. We arrived at satisfactory equations for ourselves which can be demonstrated.

Ben: Are the physical laws upon which your invention works expressed in mathematical terms?

OTC: Possibly, but I wouldn't say that I'm qualified. We're satisfied with this formula.

Ben: Well, it's like saying plus 4 divided by minus 4 equals 4.

OTC: Sometimes these solutions are not always what appear. As we know in synergy, we know 1 plus 1 equals 3.

Ben: 1 plus 1 equals 3, when?

OTC: Because two conditions always produce a third.

Ben: the third condition is 2, isn't it?

OTC: Not necessarily.

Ben: Could you go over these conditions?

OTC: If one condition operates one way and another operates another way, when you join them you have another condition and their sum is 3.

Ben: Well, that is a little bit over my head. I've been looking at this prototype you have here and I notice a wooden frame or scaffolding you have a larger model of that you have on a turbine and around it is a wooden ring and it seems to be filled with electromagnets.

OTC: That's right; this is a wood model of an operational model. What we have here is the cones, our Utron electric accumulator; that is the power system. This system activates the electromagnets and in turn activates.

Ben: Does the system --- the thing inside --- activate the electromagnets on the outside?

OTC: This is true. We do this by contacting this lead wire from the positive and negative poles of these batteries to the electromagnets and then we have circuit breakers from these electromagnets and we have

counter-rotation. These electromagnets will rotate counter-clockwise while the internal area is rotating clockwise.

Ben: Are these spools of wire on the model itself, are they magnetized also?

OTC: The coils of wire inside the ring are regenerative coils; they are electromotive force coils and they assist in regenerating the battery, because they are loops of wire brought through a magnetic field which sets up an electromotive force. These others are capacitor plates and these are also activated by the central power core, but these plates, which can accept a very high charge in neutral conductance also through the process of ionization utilize atmospheric electricity.

Ben: The fact that you have two cones meeting at their bases, so that you have something that is also square. I don't see how you get a square.

OTC: Dimensionally it is; it is square in these dimensions and when this rotation starts and builds up to a certain velocity, this form is very important because we have the total equation of action and reaction. Now this is done by a system of coil winding wherein we start at a point, expand to an equator, and continue our winding down to a point. With this physical expansion and contraction, is an electromagnetic field. Gravity enters the picture in the form of this relative rotation. When the relative rotation ---- inertial effective mass ---, it's a matter of dimension. So that is the earth, say, is 8,000 miles in diameter, we know its fixed rotation is 1 in 24 [blurred text, possible additional digit]. If we were 1 mile in diameter its rotation would be 8000 in 24 [blurred text, possible additional digit]. And by the same system, our 45-foot craft has a rotation of 580 rpm and when it reaches this rotation it is totally independent of its inertial attractive mass, in an electromagnetic field.

Ben: If your models get up to 580 rpm, will they take off?

OTC: This model was spun at 40,000 rpm and when it did it set a pressure pattern of 1,000 tons; the horsepower reading was a little over 700. Six engineers checked this out. Now the relative rotation of this model would be about 68,000 rpm, and when it reaches this rotation, it would immediately take off.

LJ: Would the time factor be involved with this craft?

OTC: In our solar system, the time factor would be involved, yes. We evaluate time on the velocity of light and in certain systems, if we exceed the velocity of light, unquestionably time would slow up.

Ben: Your craft can exceed the velocity of light?

OTC: We don't say this; I say I other systems.

Ben: I thought nothing could do this. I thought it was a constant factor, one of Einstein's factors.

OTC: Possibly in our system, but not necessarily true in other systems.

Ben: Anything approaching the sped of light becomes pure energy.

OTC: Pure energy, but in other systems it could change.

Ben: What other systems?

OTC: Other solar systems. We are completely controlled by our system and the velocity of light is our yardstick and our pattern and our craft is designed around this.

Ben: You don't just upset one of the basic principles of the universe.

Mel Salomey: Doesn't Einstein say any measurement is relative?

Ben: Except this one; it's the first axiom.

Mel: What is an axiom?

Ben: Self-evident truth.

Mel. Thank you. Wasn't Einstein theorizing; wasn't he assuming?

[Discussion of the speed of light, not included in transcript of the interview]

Roy: What are these coils? To describe this the best I can, imagine if you will a circle about 18 inches in diameter. Two circles that form a sort of a -- In other words, one circle fits over another circle and from the top of the circle and coming down from the other an inverted round pyramid. There are a number of what appear to be copper wound coils around the edge of it. And then there's a sort of a framework on top and underneath there's sort of braces. That's the general idea. I noticed these cones placed mouth to mouth with some coils, the coils on the edge of this thing; it revolves within this structure. A tough thing to describe.

Q: What is this over here, Mr Colton?

Colton: This is a paper mockup to show the counter-rotation principle and its outside section that Roy is describing looking at the other mockup. It contains the electrified horseshoe magnets. This would rotate in one direction counter-clockwise while the center section with the electron accumulator [Utron] would rotate clockwise in the other direction.

Q: Would these coils in the outer rim?

Colton: Rotate counter-clockwise -- It has a rotation speed relatively equal the earth's rotation speed, at about 580 rpm.

Q: When you say 580 rpm do you mean the outer rim is rotating on one direction 580 rpm and the inner rotating in the other direction at the same speed, giving a total rotation, one relative to the other, of 1160?

Colton: Exactly, although I don't know if 1160 has any bearing on it or not.

Q: Well, it would be twice the rotation in reference to the earth.

Colton: We're not giving it for a certain rotation for the sake of rotation but for the sake of relativity to the attractive mass. The earth at 8,000 miles diameter rotating once in 24 hours is relatively equal to a 45-foot craft rotating at 580 rpm, and 580 rpm would calculate to be the approximate rotational speed of an automobile tire on a car moving at about 25-30 mph.

LJ: Could a small craft be made to take off?

OTC: We plan to build a prototype model as a demonstration device. Now I would like to state that certain models have been built by me and tested. Each one has been airborne. One was lost entirely in space. We had a control system and this one didn't function. This has already been done.

Q: As was calculated, the speed of the circumference was 1263 mph. It gets kind of warm at that, doesn't it?

OTC: No, it won't because it has its own protection field which is its electromagnetic actuation. We described it as a self-contained unit. This ionization of the capacitor plates sets up a glow brilliantly with a very soft luminescent light.

LJ: What color?

OTC: It would be in the nature of blue-green or very similar to the electric arc you see in welding. This is the field we are testing. It does not have a heat barrier in forward velocity at all. This electromagnetic field is being tested out now in conventional aircraft and proved very efficient.

Q: Would you suppose you could put rockets toward the edges of the cone and have the thing spin by rocket propulsion?

OTC: We don't need it. We have a tremendous spin here. An electric motor operates the same way. You set up an electromotive force inside a magnetic field and you get rotation. So what we actually have here is an improved electrical motor which in itself is a circular device, and we say we make energy out of the air, from another dimension.

To clear your analogy up also, we would like to demonstrate the fact that this earth itself is literally a space craft demonstrating what we're talking about; it's rotating and orbiting at a certain constant speed with a magnetic field and it is in itself a spacecraft.

Q: Mr Colton, we assume the moon has a gravitational field. How does it make a gravitational field and yet it does not rotate on its axis.

Colton: It does not rotate on its axis?

Q: No, the moon does not rotate on its axis.

Ben: Sure it does, 1 rotation for 1 revolution.

Q: How long does it take?

Ben: 28 days.

Q: And the earth takes one day.

OTC: And that's how engineers and scientists have evaluated the velocity of the craft we call the earth by the orbit of it. Upon the pattern already set up, by the amount of time it takes the moon to rotate once around the earth from the center of the earth's core: 28 days. The distance being 245,000 miles. It is easy to calculate.

Q: These cones seem to revolve over intricately wound copper coils. Do you supply any motor power to this?

OTC: All energy comes from these two cones [Utron]. This in vernacular is a battery. The big novelty is that we have put a battery in motion. We have designed it within the accepted knowledge of total dimensions of space-matter and we have activated it electrochemically [electrolyte in the hollow center] and used the force through chemical activation to activate the entire craft, after which we have motion as the feature of this accumulator.

Ben: Mr Osgood's telegram brought up a very important and perhaps crucial point, mainly, James Clerk Maxwell demonstrated that light is an electromagnetic radiation, also verified by hertz who laid the foundation for modern radio. Now the speed of electromagnetic radiation such as radio waves also travels 186,000 miles per second. In other words, light and all forms of electromagnetic radiation travel at the speed of 186,000 miles per second. Now if it were possible for your craft to travel faster than the speed of light, it could, therefore, travel faster than the speed of electromagnetic radiation. So once it exceeded 186,00 miles per second, you wouldn't be gaining all this energy from this electromagnetic radiation you're generating and wouldn't you fall rapidly down?

OTC: There is a continuous falling in space which in itself can bring velocity and can bring you to another system. We mentioned conjecturally that in other systems, there could be different velocities. We're not applying them to our craft. We don't identify them wit our craft. Relatively, we could not go faster than the speed of light unless we were in a system that permitted it. In our solar system, which we have mentioned now 3 times, it is designed on known principles. We conjectured about other systems. If we go beyond the speed of light in other systems the conditions within that system would make it possible for us to have power.

Roy: Let's assume, Mr Carr, this vehicle is at rest. What is it that originally overcomes the inertia of this rotor and starts the rotor moving?

OTC: The electromagnetic force stored in the energy of the Utron electric-accumulator, which in vernacular is a battery.

Roy: Now the Utron electric accumulator is these cones that are inverted to each other with bases together. I know of zinc batteries, nickel-cadmium, lead-acid cells. Could you use those?

OTC: We could use any of the kinds you mentioned; what we have here is tremendous power size in comparison to other batteries; therefore, it's very easy to put 1000 2-volt cells inside this one unit as you see it. It has functioned very well. In our 45-foot craft we plant to have 12,000-volt batteries which will extend an electromotive force which will energize the electromagnets and the capacitor plates. The generative coils will put back into the batteries in this system the same amount of volts going out until there is a breakdown of electro-chemicals or wear-out of equipment. But it could last as long as average storage batteries in automobiles.

Roy: In order to start the motor off originally, is it necessary to cause a flow of electricity through one set of the coils?

OTC: That's true.

Roy: Is there any magnetic force in the other set of coils at this point?

OTC: They individually operate by circuit breakers and the first motion begins to start a repetition. The same we have in a motor that has the opposite of a commutator, which is an accumulation of contact points where each coil is energized as the current flows through this coil. Then this starts the motion, the repetition of this motion brings the whole motor into phase in the same sense our accumulator and magnets become speeded up and the circuits are made and broken as they rotate.

Roy: Where the inner rotor rotates in one direction and the outer in the other direction. and if the cabin is located on top of the rotating mechanism, what keeps it from rotating in one direction or the other?

OTC: We have this cabin as the center of the craft and the battery below the cabin and the electromagnets are the total outside of the circular foil. The shaft of the accumulator goes through the cabin and there is a bearing. Now, just as this stays stationary when this is rotated, so will the cabin because there are two rotating forces. You have the clockwise rotation of the accumulator, the capacitor plates, the generative coils, you have a counter-rotation of the entire circular area of the craft, the larger diameter which houses the electromagnets; therefore, when you have rotation in both directions, the cabin itself is like a bearing and extension of the shaft. We've built models and proved this is correct.

Roy: OTC XI was accomplished?

OTC: Six crafts were airborne, one escaped; we used circuit breakers of various types and fuses burned through the switch and we lost one craft.

Roy: What was the size?

OTC: The largest and the one lost was 6 feet in diameter.

Roy: You also talk of the Caroto Gravity Motor and you mention it requires no fixed location in which to function, and you also say a lot of other wonderful things about the possibility for this motor. Is it something else than the spacecraft?

OTC: They are two separate packages. The spacecraft utilizes the electrical accumulator and the gravity motor uses the energy of the inertial attractive forces. We have learned how to take this energy and key it to a working shaft and get work power which we call free energy because it is. We don't make any part of it. Now in the rather vulgar vernacular sense this would have been classified as perpetual motion. It is

nothing of the sort. It's free energy. Now we have learned that all masses that are smaller than the masses to which they are attracted exert energy. Even this ashtray; if it takes a pound of energy to lift it, then it is exerting a pound of energy. We have a true gravity motor. Its functional operation is to produce power continuously without any dissipation of the energy which causes it to operate, and we have built models of this and they operate and function and we are in the patent procedure with this.

Mel: Back to a question a while ago regarding an analogy of the earth as a spacecraft. Taking another look at the mock up prototype power package there in front of you. It resembles the solar system itself, and as a matter of fact one of the statements in the brochure published in 1957, stated it illustrated the geometry of the universe. It seems that this device miniaturizes and essentially duplicates the motion of bodies in the solar system. It must have the ability to miniaturize their energy. So in a sense, the bodies in the solar system, in all time, have maintained their constant motion perpetually in those motions and this is why people characterize this power package as a perpetual motion machine.

OTC: But we do not make any such claim.

Colton: The Utron has many applications, has many forms, many variation. In one sense you might describe it as an energized armature or in other words a motor with a self-contained moving battery, also capable of continuously re-energizing itself. The offer in regards to spacecraft applies to government and industry alike. We will only make total disclosure demonstration after we have procured a firm order. In other words, we're not looking for anyone to evaluate our development. Mr Carr has come a long way in his research. He doesn't need any risk money from taxpayers or industries for further exploration and development. We will disclose to anyone who is a purchaser, but not to anyone who comes along for curiosity.

Mel: What does the word "Utron" mean?

Colton: "Utron" is a coined word, a word Mr Carr put together: the letter "U" and "tron", U meaning the direction or shape of motion as applied and used and equated in this accumulator or battery we described -- U is the plane, the geometrical figure that is the portrait of the wave, you might say. The letter U as described on paper, the two-dimensional, is a portrait on paper of the wave or the wave motion with the cut field, with the straight line, the pressure energy in the Utron accelerator.

OTC: To me there's no such thing as a completed curve; you only go half way, just like you only go half way into the woods, then you're coming out. This is the same. A bisection of a total sphere is its exact curve and one half of it is primarily U-shaped. Because in magnets there are always two poles and one normal way to show them is in a U-shape, but if it's in a bar magnet, there are still two poles and the shape is still the same. We can only put a rope one half way around the tree and it's coming back the other way, and this is true in all wave motion. Now, if you extend this into velocity, this is the pattern in the sine wave and definitely the electromagnetic wave.

Ben: I see... the vortexian of the wave

OTC: All motion is relative to all other motion, so this serpentine, spiral state.

Ben: So it's not the form of that motion, the graph and the equation. I'll accept the fact that it's the form of the utron motion though.

OTC: Also the form as well in two dimensions is intensified in the geometry of our accumulator.

Q: Why do you refer to this vehicle as a 4th dimensional vehicle?

OTC: Because the geometry of the accumulator is such as the 4th dimension. To me the application of space and time, a vibratory field and electricity as we know it is a vibratory force in motion. This is symbolic of it and when it is activated it becomes such. Now this may be a little bit difficult to understand, but nevertheless the very smallest electronic particles of matter have been shown under the highest type of electron microscope to be one-dimensional squares. To me this is verification that this is truly a space dimension because it is the shape of matter. Without matter you couldn't have space.

Q: I'm holding a thing that looks like two loudspeakers in a simplified form, placed mouth to mouth, two cones mouth to mouth, like two tops together so they have a point at each end and actually like a thickened flying saucer... Now what is it that comes from that: is it a high voltage?

OTC: The voltage is whatever we wish to make it by design.

Q: In other words, then, this is a battery?

OTC: That's right.

Q: The battery then goes through these magnets?

OTC: The battery rotates in this magnetic field. The average armature today in any electrical system is usually the permeability, iron wound with copper, then through a magnetic field acts as a motor, or it becomes a generator, depending upon the lead. The great novelty here in the area in which an armature is normally used, we have a [power unit, and this a battery, and this is a moving power unit.

Q: In other words, you might call this a self-contained power supply, right? How would this generator --- maybe I'm using the wrong word --- gather additional energy from outside?

OTC: This is due to its circular motion. Electrical forces are motions where they manifest. Now we have cycles in alternating current; AC gives you 60 cycles per second; we have discovered in our experiments that there is a space cycle related to electricity, and if we join the cycle we get energy from it.

Q: Mr Colton, will you try to describe to our listeners how they can draw at home a facsimile of an Utron?

Colton: You can take a pencil and draw four lines to form an open square. When you have a square, draw a straight line from one point of the square to an opposite point and you'll have two right angle triangles. Now if you convert the line you've just drawn into a small lip you'll begin to see two inverted cones, the base of which form a circular equator. While you started with a square, you now have two cones. Obviously, the base of the cone is a circle or completely round as we describe it, and you have the device which is described as completely round and completely square, the Utron electric accumulator. The cavity in the center of these which is a hemisphere when the two cones are put together have a hollow sphere. This is the cavity which contains the electrolyte which would be used in some of the applications of the accumulator.

Q: Of what value is the term "completely round and completely square" apart from its obvious redundancy.

Colton: It is Carr's definition of the geometry or the basic space form or the basic form of all matter large or small relatively as we describe it. It is the definition of the terminal motions of universal energies in what we call space.

Q: In one of your brochures you make mention of a "photon gun" and you say, "This is primarily a development that works outside of the earth's atmosphere. We are entering an age of space flight and the use of solar energy is practically unlimited"... What is a photon gun?

OTC: I am using the word gun as a reaction principal instead of as a weapon, nevertheless it is a gun and in fact fires billions of rays of solar energy at right angles to the reception. By placing them through a certain chamber, we have been able to get a reaction and whenever there is a reaction, we can get power, we can get force from it. So we feel outside the earth's atmosphere new systems of propulsion even beyond our own of electromagnetism will make themselves apparent.

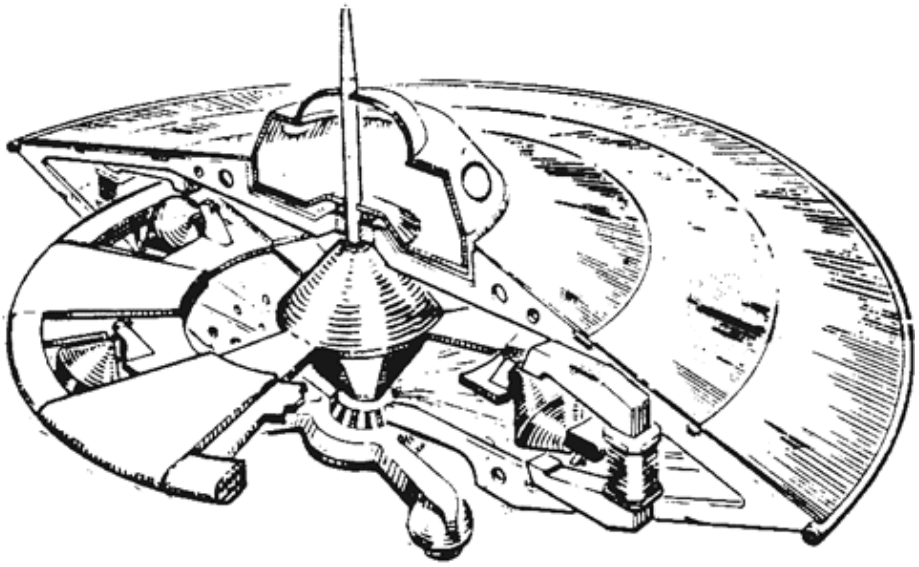

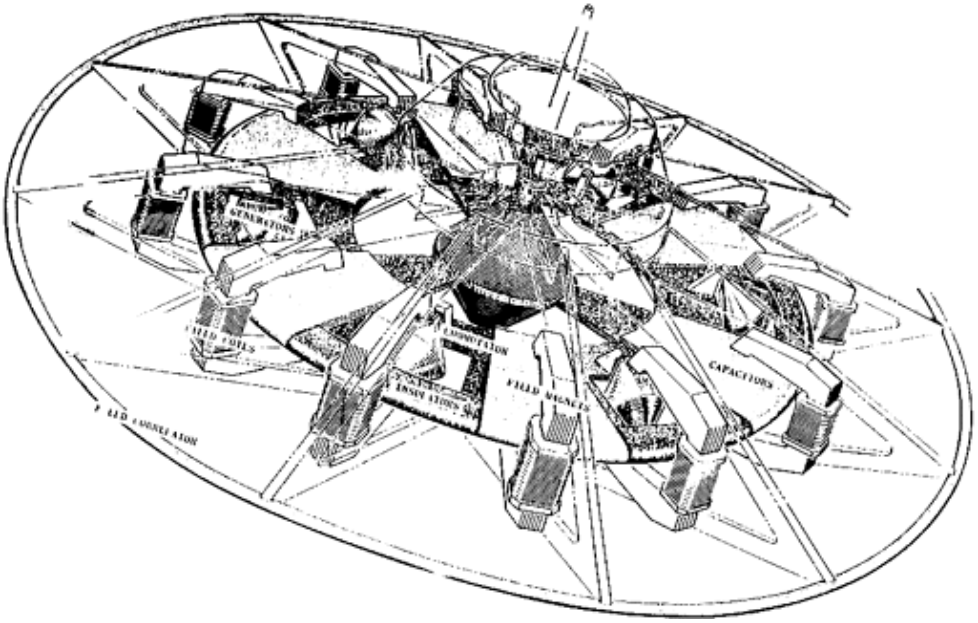
GENERATORS
FIELD COILS
CONNECTION
CAPACITORS
FIELD MAGNETS
FIELD CONNECTION

***Information Bulletin* #3 (December 23, 1957) [Excerpts]**

"Carr's Principles of Free Energy Space Flight Accorded Highest Scientific Verification"

Otis T. Carr, President of OTC Enterprises in Baltimore and inventor of a manmade spacecraft, which he has offered to build and deliver to the government without one penny of risk to the American taxpayer, publicly revealed the propulsion principle of his spacecraft in the following statement:

"Any vehicle accelerated to an axis rotation relative to its attractive inertial mass, immediately becomes activated by free-space-energy and acts as an independent force..."

An excellent example of this principle applied in practice is the fact that the two satellites now orbiting the earth, have achieved space-energy activation by an equivalent inertial velocity, and were it not for their susceptibility to internal or inherent physical deterioration, they would theoretically and factually be kept orbiting by natural space forces until the end of time in our solar system. These statements in evaluation of natural physical phenomena as first discerned and made public by Mr Carr, have been physically tested in laboratory experiment by an impartial scientific laboratory and confirmed as follows:

"We have shown that a charged body, accelerated to an axis rotation relative to this attractive inertial mass, indicates polarity in a given direction. The dip-needle points, say, up toward the top of the body. But mount this while rotating body, with its spindle, on another platform and rotate this platform on a spindle, then if the counter-rotation is greater than the inertial forward rotation of the body, a dip-needle on the second platform will point down while the first dip-needle points up, indicating complete relativity of polarity. When the exact counter-rotation matches the forward rotation the body loses its polarity entirely and immediately becomes activated by free-energy (tensor stresses in space) and acts as an independent force... The above-described assembly of counter-rotating charged masses becomes weightless and will escape the immediate attraction of gravitational forces.

"Your discovery therefore is distinctly a possibility, and its creative genius lies in its inventor's ability to provide it with a process for generating its own power as a result of its self-rotation."

Translated into familiar terms, this scientific explanation means that the above-described assembly of counter-rotating charged masses becomes weightless and will escape the immediately attractive gravitational forces...

Our experiments and investigations have made known to us that the mighty power from the Sun can be utilized when the geometry of design is properly evaluated. We are aware of the resistance factors involved, due to the earth's atmosphere, and our developments have been predicated on overcoming these, which in some instances has been done.

We have invented a Fourth Dimensional Vehicle. This Fourth Dimensional Vehicle is powered by the revolutionary Utron electric accumulator, which is completely round and completely square, and generates its own power, which is electromagnetism and electromotive force. It can be launched form the earth, and does not have to be blasted into space. The basic design was brought to the attention of the United States Government, and a patent application was filed in 1949.

Some tests were independently made by qualified engineers at one of America's leading plants and it was estimated that a small model, only 4 inches in diameter, produced energy equivalent to 1,000 tons. This was in 1952, and Mr Carr was unable to interest anyone in his efforts at that time. Things have changed, and the Government has now put its blessing on space flight development.

At the present time the rocket enthusiasts are commanding topmost attention. But there will be changes in thinking, and new directions of endeavor very soon. Our experiments with circular-foil design, as relates to gravity, electromagnetism, and electromotive force, have led us to the certain conclusion that it is possible to use the inverse-proportion laws of Newton as successfully as the third law of motion applies

to accelerated rockets. We will produce the OTC-X1 circular-foil spacecraft as the first operational prototype as symbolized in this conception drawing.

Claims Christ Disclosed True Nature of the Universe in Symbolism of the Cross ~

Visionary Mr Carr claims that Christ disclosed the true nature of the Universe in the Symbolism of the Cross. He pointed out that "Christ is truly expressed in the sign of the Cross -- the true Cross -- the absolute, the finite expression of the cosmos that we call the Universe". The inventor further stated:

"A universe has only two basic properties: the motions and the directions. The correlation of these properties manifest in several forms, their two categories being called energy and matter.

"These two forms are equal to each other, and are the product of each other, matter being energy under the pressure of motion and having relative finity because of the harmonious correlation of the direction of such pressure, and energy being matter released from pressure by any change in the direction of motion.

"In any universal system, these motions and directions manifest their finite totality in what we call space, and describe their total form in what we call straight lines and curves, the geometry of which is expressed in a finite form whose dimensions are a constant correlation of the directions and motions. We have equated the shape of this universal space and translated it into physical form which we have called the Utron Electrical Accumulator, which expresses the linear correlation of space motions and directions in a form that is therefore completely round and completely square.

"In its linear proportions the Utron Electrical Accumulator is the union of straight lines brought together in and from all directions, and in its correlation of and with curved lines it expands from a point to the circumference of its equator and contracts from that equator to a point, always being a correlation of complete curves. The aim of these linear correlative dimensions is three points, the exact center point of which is +0 and -0, the exact peripheral points of which are +X and -X.

The space ship designer then mathematically points out his theory:

-0 / +0 = 0

-X / +X = X

0 + X = 0X

Continued Mr Carr:

"We were inspired to complete this work in the service of the Christ Jesus by Albert Einstein's search for a unified field. This relativity is a unified field, expressed in physical form is the square in the circle bisected by the Cross. The Utron Electrical Accumulator is the full expression of the dot that was the beginning of 0X, extended in all directions to form the cross, which in motion continues on to form the square and the circle.

"In the beginning was the Word. The Word was 0X [actually: AeTZI], and in the revelation of Jesus, was given for all who wanted to see, in the symbolism of the true cross.

"Set the cross in motion and you will see the halo that is Light and which we also call Energy.

"If there is not time
And there is no space
There can be no other place.
And perhaps there is no far.
Perhaps the Universe
Is right where we are."

Peace and plenty through the Application of Free Energy to Supply All Things to All People.

US Patent # 2,912,244

Amusement Device

(November 10, 1959)

Otis T. Carr

This invention relates generally to implements in amusement devices, and more particularly to an improved amusement device of the type where the passengers will receive the impression of riding in an interplanetary spacecraft.

The present invention contemplates a novel amusement device having the overall configuration of a spacecraft and being formed in various sections, with portions of the sections being rotated in opposite directions to give the impression of movement to the passengers. It is also contemplated to move the craft up and down and display an animated movie of heavenly bodies above the passengers to give the passengers an impression of leaving the earth and approaching a distant planet or the like. This invention further contemplates the provision of electromagnets, cones, and the like carried by the oppositely rotating sections of the device, and windows through which the passengers may view these simulated objects to give the impression that they are viewing the inner workings of an interplanetary spacecraft during flight of the craft. Finally, this invention contemplates the construction of the various portions of an amusement device simulating an interplanetary spacecraft in such a manner that the device may be easily transported in sections from one location to another and reassembled in a minimum of time.

An important object of this invention is to provide an amusement device wherein a passenger in the device receives an impression of flying in an interplanetary spacecraft.

Another object of this invention is to provide an amusement device having a general configuration of an interplanetary spacecraft and having oppositely rotating sections simulating the movement of various portions of the device to impress the passengers with flight in a spacecraft.

Another object of this invention is to provide an amusement device simulating an interplanetary spacecraft wherein the passengers will be physically moved a very minor distance and yet will receive the impression of flying in a spacecraft.

A further object of this invention is to provide a portable amusement device simulating an interplanetary spacecraft which may be easily disassembled and transported from one location to another.

A still further object of this invention is to provide an amusement device which is simple in construction, may be economically manufactured, and which will have a long service life.

Other objects and advantages of the invention will be evident from the following detailed description, when read in conjunction with the accompanying drawings which illustrate my invention.

In the drawings:

Figure 1 is an elevational view of an amusement device constructed in accordance with this invention.

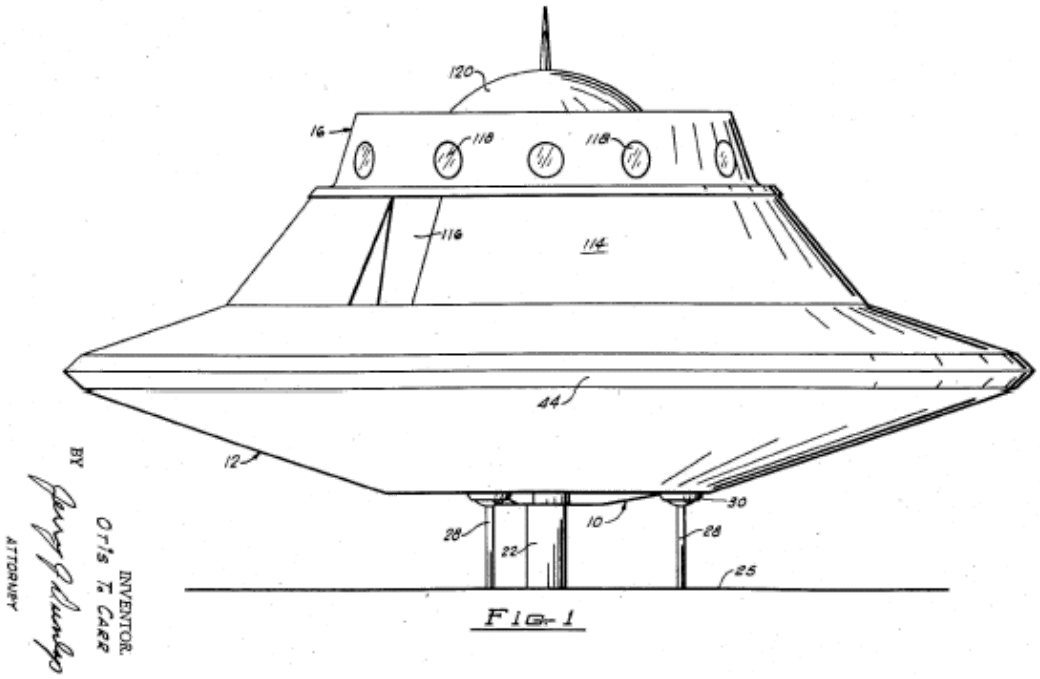

Figure 2 is a vertical sectional view through the device illustrated in Figure 1.

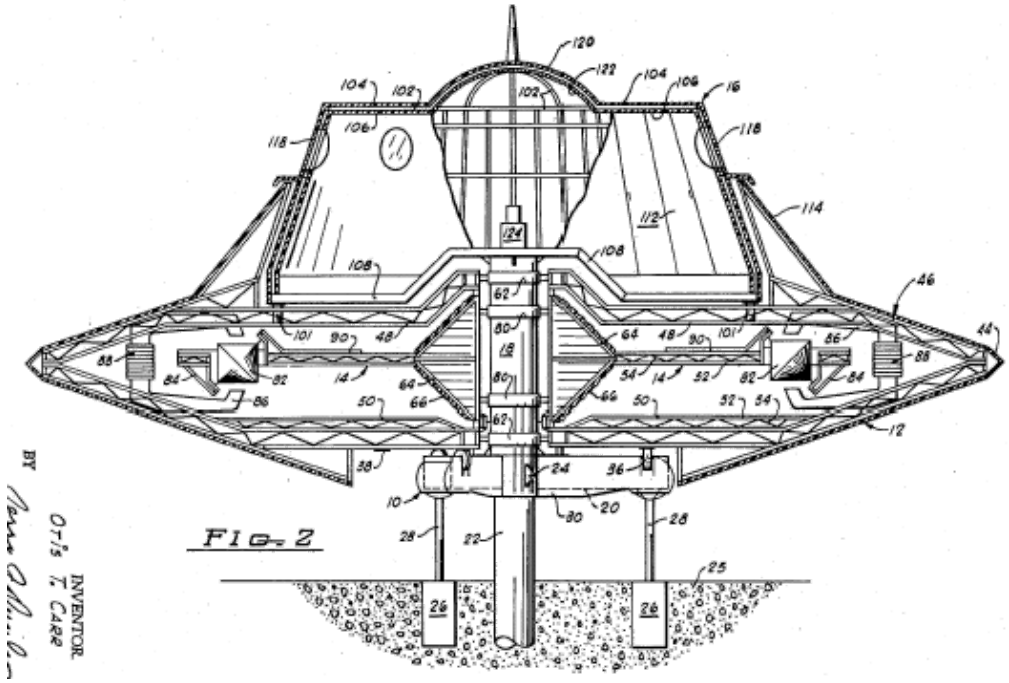

Figure 3 is a plan view of the landing gear for the amusement device, with the housing around the legs of the landing gear removed.

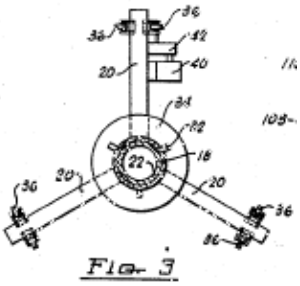

Figure 4 is a plan view of the supporting structure or framework for the outer rotating shell of the amusement device shown in Figures 1 and 2.

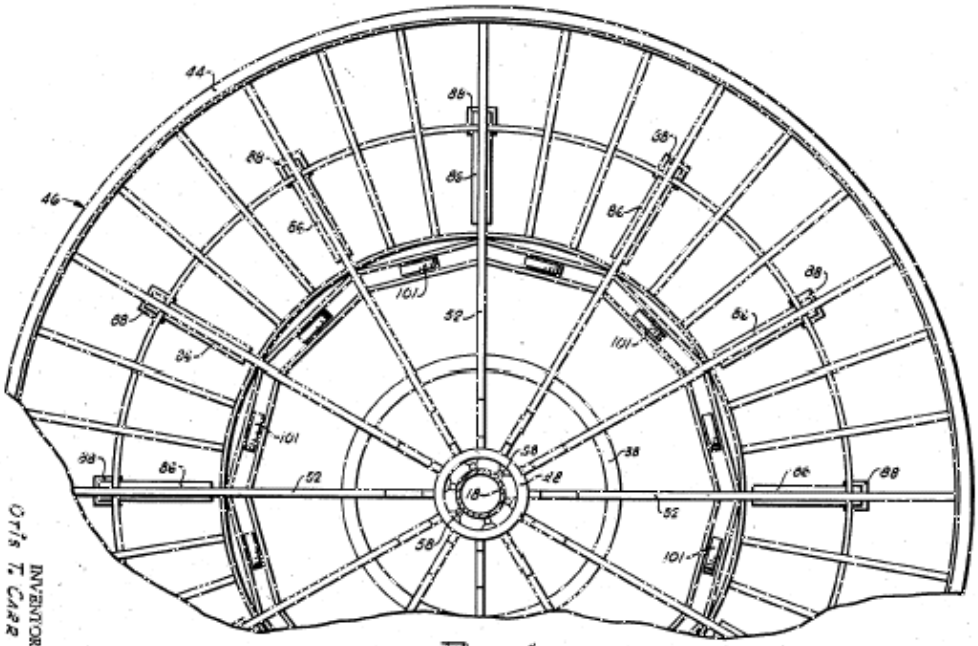

Fig. 4

Figure 5 is a plan view of the central rotating assembly which rotates within the outer shell frame illustrated in Figures 2 and 4.

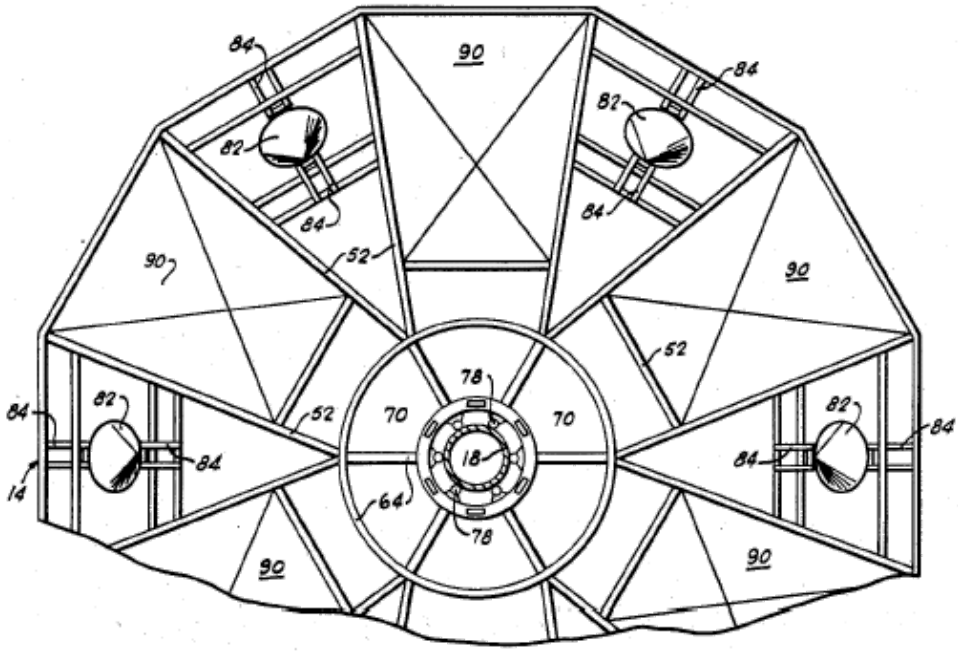

Fig. 5

Figure 6 is an enlarged sectional view illustrating the support and the drive between the inner rotating assembly and the outer rotating assembly.

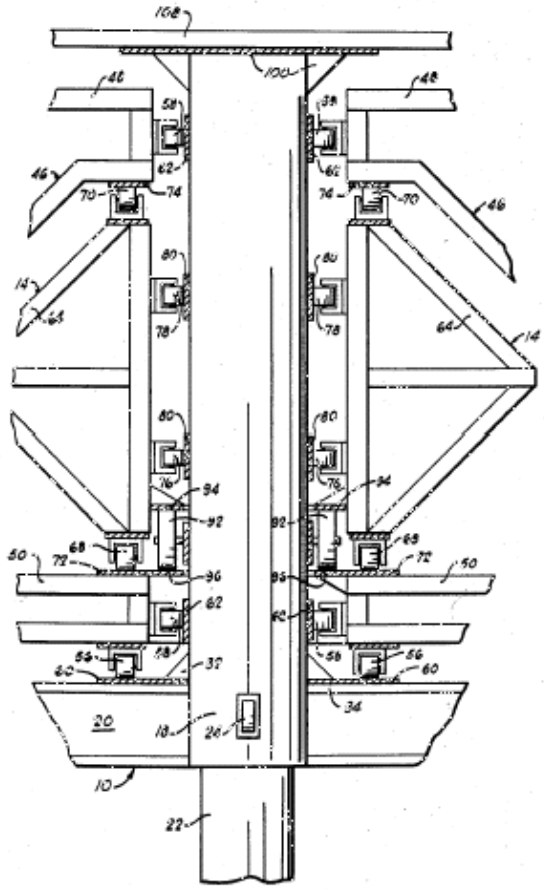

FIG. 6

INVENTOR.
OTIS T. CARR

Figure 7 is a plan view of the floor portion of the passenger cabin.

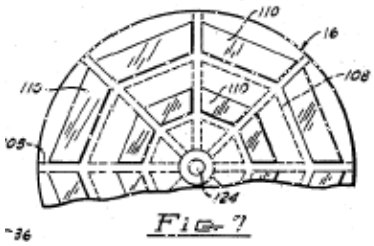

FIG. 7

Referring to the drawings in detail, and particularly Figures 1 and 2, a preferred embodiment of the present invention comprises, generally speaking, a supporting structure and landing gear 10, an outer rotating shell 12, an inner rotating assembly 14 (shown only in Figure 2) and a passenger cabin 16 extending downwardly into the upper end portion of the outer shell 12. The landing gear and supporting mechanism 20 comprises a vertically extending tubular member 18 around which the outer shell 12 and inner rotating assembly 14 are journaled as will be hereinafter set forth, and a plurality of legs 20 extending radially outward in circumferentially spaced relation from the lower end of the tubular member 18. The tubular member 18 is telescoped over a supporting stanchion 22 which may be in the form of a pipe, and the tubular member 18 is slidingly supported on the stanchion 22 by suitable wheels or rollers 24 to facilitate vertical movement of the member 18 on the stanchion 22, as will be hereinafter set forth. The stanchion 22 is preferably supported in a suitable foundation 25 to provide adequate strength for the amusement device.

A suitable jack 26, preferably a hydraulic jack, is anchored in the foundation 23 underneath the outer end portion of each of the landing gear legs 20 and is provided with an extension 28 extending upwardly into connection with the respective leg 20. The jacks 26 are operated simultaneously to raise and lower the landing gear and supporting structure 10, as will be described. A suitable shaped housing 20 is preferably secured around each of the landing gear legs 20 to provide a streamlined appearance. It may be noted that

each of the legs 20 is preferably constructed out of a structurally strong member, such as an I-beam, and is secured to the lower end potions of the tubular member 18 by suitable braces 32 and plates 34 to assure a rigid and adequate connection of the legs to the tubular member 18.

A pair of rollers 36 (see also Figure 3) are rotatably supported adjacent the outer end portion of each leg 20 of the landing gear and are arranged to engage a circular track 38 (Figures 2 and 4) for partially supporting the outer shell 12 and the inner rotating assembly 14 as will be described. Also, a suitable drive motor 40 (Figure 3) is mounted on one of the legs 20 of the landing gear and is connected through a suitable gear box 42 to one of the rollers 36 to rotate the outer shell 12 with respect to the landing gear and the supporting structure 10. The roller 36 connected to the drive motor 40 may be suitably chained (not shown) to its companion roller 36 to assure an adequate drive connection between the drive motor and the circular track 38.

The shell (Figure 2) is tubular in configuration, with the diameter of the central portion thereof substantially larger than the diameter at the opposite ends thereof, and is supported in an upright position to give the general appearance of two saucers placed face-to-face. The outer edge portion 44 of the shell 12 is preferably formed of partially transparent material, such as Plexiglass, and is illuminated from within (not shown) to provide a band of light around the central portion of the shell 12. the remainder of the shell 12 is formed of any desired opaque and relatively strong material, such as aluminum-laminated masonite sheets.

The shell 12 is supported on a frame generally designated by reference character 46 and illustrated in Figures 2 and 4. the frame 46 is circular in plan, as viewed in Figure 4, and is substantially U-shaped in cross-section (as shown in Figure 2) to provide an upper horizontally extending portion 48 and a lower horizontally extending portion 50 which extend from adjacent the support member 18 outwardly to the central portion of the shell 12. The frame 46 may be easily formed with industrial steel tubing 52 formed into a truss with bracing of steel rods 54. With this construction, the frame 46 may be easily fabricated in sections for convenient assembly, or the entire frame 46 may be lifted off of the supporting member 18 and transported to another location.

Support of the frame 46 and the outer shell 12 is provided by the track 38 (previously mentioned) which is secured on the lower face of the lower horizontally extending portion 50 of th3 frame 46 in a position to engage the roller 36 carried by the landing gear legs 20. Additional support for the frame 46 is provided by rollers 56 (Figure 6) secured around the inner edge of the lower portion 50 of the frame, and rollers 58 secured around the inner periphery of both portions 48 and 50 of the frame. The rollers 56 are arranged in circumferentially spaced relation around the inner periphery of the frame 46 and engage a circular track 60 supported by the legs 20 of the landing gear. The track 60 may be an extension of the upper plate 34 shown in Figure 3. The rollers 58 engage tracks 62 extending circumferentially around the supporting member 18 to accommodate any radial forces imposed on the frame 46. It will be understood that any desired number of the rollers or wheels 36 operated by the motor 40 will engage the track 38 to rotate the shell 12 in one direction around the longitudinal axis of the supporting member 18. The rollers 56 will engage the track 60, and the rollers 58 will engage the tracks 62 during such rotation of the outer shell 12 and frame 46.

The inner rotating assembly 14 is generally annular-shaped, as illustrated in Figure 5, for movement around the supporting member 18 between the upper and lower horizontally extending portions 48 and 50 of the frame 46. The assembly 14 is also preferably constructed as a frame out of square steel tubing 52 formed into a truss with steel rods 54 for bracing, and is provided with a double conically-shaped framework 64 adjacent the supporting member 18. The framework 64 is provided to support a covering material 66 of any suitable type such as laminated metal or plastic, to simulate a solid member in the central portion of the amusement device, which in turn simulates a portion of a spacecraft, such as the power unit for the craft. The covering material 66 may be corrugated if desired. The framework 64, as illustrated in Figure 6, is also provided to support the rotating assembly 14 on the supporting member 18 and the frame 46. A plurality of rollers 68 are provided around the lower face of the framework 64, and a plurality of rollers 70 are provided around the upper face of the framework 64 to engage circular tracks 72 and 74, respectively, which are mounted on the frame 46. The rollers in each set of rollers 68 and 70 are provided in circumferentially spaced relation around the inner periphery of the rotating assembly 14 to

accommodate vertical thrusts imposed on the rotating assembly. Additional rollers 76 and 78 are provided around the inner periphery of the framework 64 to engage tracks 80 extending circumferentially around the supporting member 18 to accommodate radial thrusts imposed on the central rotating assembly 14. It will be apparent that any desired number of rollers 76 and 78 may be provided around the inner periphery of the framework 64 to adequately support the rotating assembly 14.

I also prefer to support a plurality of conically-shaped member 82 in the outer edge portion of the central rotating assembly 14. Each conically-shaped member 82 may be easily formed out of a suitable sheet material, such as aluminum or plastic, and is supported at its opposite ends by suitable trunions 84 to extend through the truss comprising the frame of the central rotating assembly 14. The conically-shaped members 82 are preferably provided in circumferentially spaced relation around the assembly 14, as illustrated in Figure 5, and are positioned to move through simulated electromagnets 86 supported around the frame 46, as illustrated in Figures 2 and 4. Each simulated electromagnet 86 may be formed in horseshoe shape out of any suitable sheet material, and is provided with tubing or the like 88 around a portion thereof to simulate the winding of an electromagnet. I further prefer to secure a plurality of plates 90 in spaced relation 14 to simulate capacitor plates in a spacecraft. The plates 90 may be formed out of any suitable material such as aluminum-laminated masonite to provide a striking appearance.

The inner rotating assembly 14 is driven by a friction or dead wheel 92 pivotally supported on the tubular member 18, as illustrated in Figure 6, engaging circular plate 94 and 96 carried by the inner rotating assembly 14 and the frame 46, respectively. The plates 94 and 96 are arranged in vertically spaced relation with sufficient distance therebetween to frictionally engage opposite portions of the wheel 92. It will therefore be apparent that when the frame 46 is turned in one direction, the plate 96 will engage the periphery of the wheel 92 to drive the wheel 92 and in turn drive the central rotating assembly in the opposite direction by frictional engagement of the wheel 92 with the plate 94. Therefore, the various conically-shaped members 82 will be moved successively through the simulated electromagnets 86 and give the appearance of the generation of electrical energy.

The cabin 16 is supported on the upper end of the tubular supporting member 18 and is rigidly secured to the member 18 by bracing 100 to move with the supporting member 18 and to be prevented from rotating with the shell 12 or rotating assembly 14. Additional support is provided by a plurality of rollers 101 carried by the frame 46 engaging a complementary track on the bottom of the cabin. The cabin 6 is constructed out of a suitable framework 102 such as aluminum laminated with masonite, on the outer surface of the framework and any other suitable material 106, such as masonite, around the inner surface of the framework. It will be understood that substantially strong members 108 must be provided in the floor of the cabin 16 to adequately support passengers in the cabin. As illustrated in Figure 7, a plurality of transparent windows 110 are provided adjacent the outer and inner peripheries of the floor of the cabin 16, through which the passengers in the cabin may adequately view the inner rotating assembly 14 and the frame 46.

Passengers may either stand or sit in the cabin 16 and may gain entrance and exit from the cabin through suitable doors 112 as illustrated in Figure 2. It will also be noted that the upper edge portion 114 of the outer shell 12 is extended upwardly to overlap the lower end portion of the cabin 16. A portion of the upper edge 114 of the shell 12 is removed, as at 116 in Figure 1, such that passengers may enter the cabin 16 through the doors 112. Simulated portholes 118 are provided around the upper edge portion of the cabin 16 to further simulate an interplanetary spacecraft. It will be noted, however, that the portholes 118 are preferably covered with an opaque material on the inside of the cabin 16 to prevent the passengers from seeing familiar objects outside the cabin 16.

A dome 120 is preferably provided in the top central portion of the cabin 16 and the under surface thereof is covered with a suitable material 122, such as cloth or the like, which will display a movie scene. A projector 124 is suitably mounted in the central portion of the cabin 16 to project an animated movie onto the screen 122 during the operation of the amusement device to give passengers the impression of interplanetary flight.

In summarizing the operation of the referred amusement device, the passengers are directed into the cabin 16 through the opening 116 in the upper edge portion of the shell 12 and through the doors 112. The doors

112 are then securely fastened in close depositions and the passengers are thereafter prevented from viewing any object outside the amusement device during the simulated flight. The drive motor 40 is then placed in operation to rotate the shell 12 and frame 46 in one direction, while the friction wheel 92 drives the inner rotating assembly 14 in an opposite direction. Passenger sin the cabin 16 will then view the movement of the inner assembly 124 and the frame 46 through the windows 110 to receive the impression of watching the inner workings of a spacecraft. Also, suitable lighting effects (not shown) are preferably provided in the sell 12 to illuminate the moving parts. Simultaneously with rotation of the shell 12 and the inner rotating assembly 14, the jacks 26 are actuated to raise the supporting member 18 on the stanchion 22. This upward movement of the supporting member 18 will be rather minor, but will be sufficient to give the sensation of rising to the passengers in the closed cabin 16. It will be observed that when the supporting member 18 is raised, the shell 12 and the inner rotating assembly 14 are simultaneously raised to retain the vertical relationship between the cabin and the remainder of the apparatus viewed by passengers in the cabin. Also, simultaneously with rotation of the shell 12 and rotating assembly 14, the movie is displayed by the projector 124 on screen 122 on the dome of the cabin to give the passengers the impression of approaching one or more heavenly bodies. The jacks 26 are then operated in the opposite direction to lower the cabin 16 and the movie projected by the projector 124 may then provide an impression on the screen 122 that the passengers are returning to earth.

From the foregoing it will be apparent that the present invention provides an amusement device which will give the impression and sensation to patrons or passengers of the device that they are taking an interplanetary flight. The device includes counter-rotating sections simulating the inner workings of a spacecraft and these moving sections may be easily viewed by passengers in the device. Also, the passengers are slightly raised during operation of the device to simulate flight from the earth and a movie is simultaneously displayed to give the impression of approaching a heavenly body. It will also be apparent that the construction of the amusement device is such that the device may be easily disassembled and moved from one location to another. It will further be apparent that the present amusement device is simple in construction, may be economically manufactured and will have a long service life.

Changes may be made in the combination and arrangement of parts or elements as heretofore set forth in the specification and shown in the drawings, it being understood that changes may be made in the embodiment disclosed without departing from the spirit and scope of the invention as defined in the following claims.

I claim: --- [Claims not included here]

Model OTC-X1 Construction Plans

As your eyes take in the shapes and relationships in these illustrations of the miniature model you are about to build, your reasoning will let you understand much about the invisible forces that contribute to the noise-free, pressure-free, and vibrationless sensation of floating flight to be experienced in the passenger living rooms aboard the OTC-X1. It will be very much like reclining in an overstuffed armchair on our comfortable old planet Earth.

It mechanical behavior being like that of a giant gyroscope, and electrically like a planet with its own atmosphere and force field, the OTC-X1 craft will know nothing of sound barriers, shockwaves, skin friction, turbulence, or G-strains.

Neither will its occupants need fear any harm from cosmic forces, gamma rays, x-rays, or other radiation, because the OTC-X1 craft will either be using or absorbing all such forces, or by the pressure and polarity of its own force field, be shielded against their penetration.

While the commutation system for the actual energized flight model craft is not shown together with the other components on this on this sheet, its design for the circuitry of electro-gravitational forces permits an environmental surroundment of equal and opposite pressures in and from all direction, whose circumference is nowhere and whose center is everywhere relative to the universal field.

Thus, by imitating nature, we become one with nature --- by translating her shapes and duplicating her motions we join forces with natural energies and become magnetically independent of manmade limitations, man-constructed barriers, man-invented feats, and man-imposed controls! [&c, &c., yada yada yada]

Construction Plan Thumbnails: Click on the Images to open the Full-Size Drawings ~

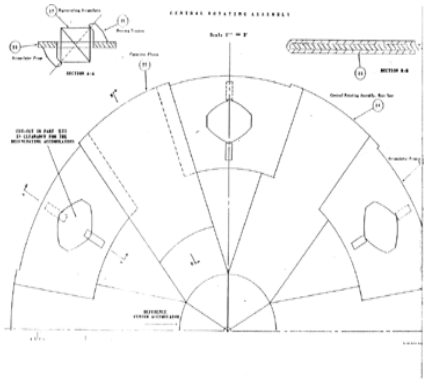

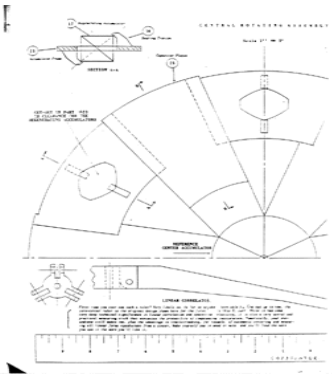

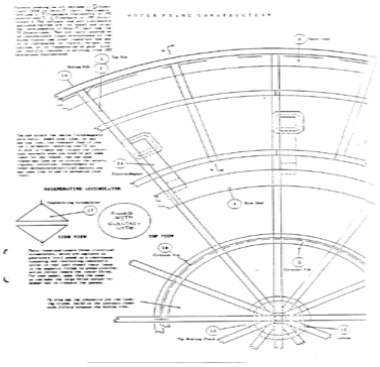

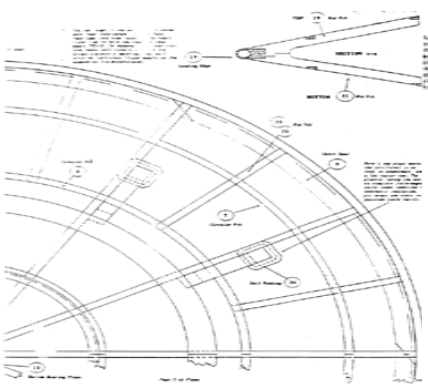

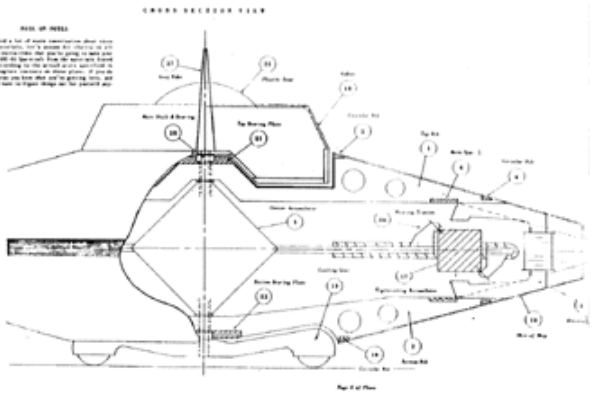

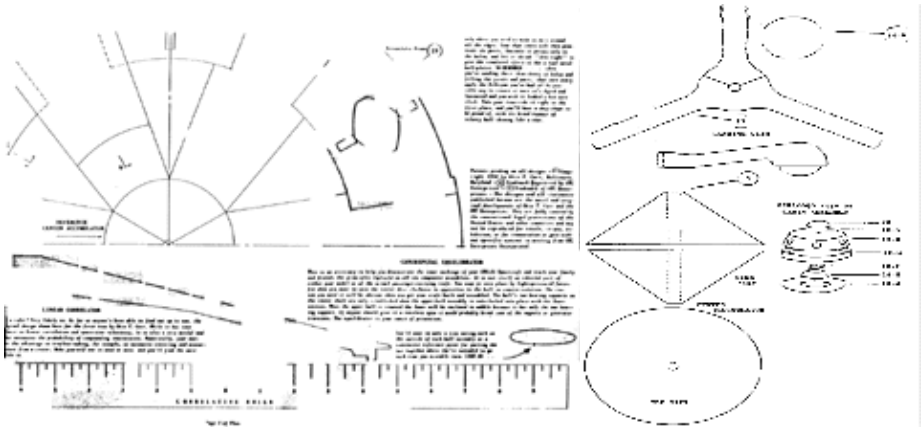

Additional Large Specifications Images (Links open in new windows): [1] ~ [2] ~ [3] ~ [4] ~ [5]

---

http://www.projectcamelot.org/ralph_ring.html

Excerpts from an Interview with Ralph Ring

Ralph Ring is a technician who worked with Otis T. Carr in the late 1950s and early 1960s. Ring stresses that resonance is the key to working with nature: "Resonance. You have to work with nature, not against her." According to Ring, when the model Utrons were powered up to operational speed, "...the metal turned to Jell-o. You could push your finger right into it. It ceased to be solid. It turned into another form of matter, which was as if it was not entirely here in this reality. That's the only way I can attempt to describe it. It was uncanny, one of the weirdest sensations I've ever felt."

Ralph Ring describes Otis Carr thus: "He was an unquestioned genius. Tesla had recognized his quality immediately and had taught him everything he knew. He was inspired, and – like Tesla – seemed to know exactly what to do to get something to work. He was a private man and was also very metaphysical in his thinking. I think the fact that he was not formally trained in physics helped him. He was not constrained by any preconceived ideas. As crazy as it sounds now, he was determined to fly to the moon and really believed it could be done. I believed it. We all did."

Ring described his "flight" in the Utron craft, saying that "Fly is not the right word. It traversed distance. It seemed to take no time. I was with two other engineers when we piloted the 45' craft about ten miles. I thought it hadn't moved --- I thought it had failed. I was completely astonished when we realized that we had returned with samples of rocks and plants from our destination. It was a dramatic success. It was more like a kind of teleportation.

"What's more, time was distorted somehow. We felt we were in the craft about fifteen or twenty minutes. We were told afterwards that we'd been carefully timed as having been in the craft no longer than three or four minutes. I still have no complete idea how it worked. We just built it exactly according to Carr's instructions. Everything had to be perfect... it all had to be just so, or it he said it would not work: a kind of symbiotic state between man and machine.

"The Utron was the key to it all. Carr said it accumulated energy because of its shape, and focused it, and also responded to our conscious intentions. When we operated the machine, we didn't work any controls. We went into a kind of meditative state and all three of us focused our intentions on the effect we wanted to achieve. It sounds ridiculous, I know. But that's what we did, and that's what worked. Carr had tapped into some principle which is not understood, in which consciousness melds with engineering to create an effect. You can't write that into equations. I have no idea how he knew it would work. But it did.

"...There are two secrets to making the alien saucers work. One is their advanced engineering, and the other is their mental ability."

"I've lost count of the number of people who have refused to believe what happened. I no longer talk about it. It's no fun being laughed at and ridiculed. But I've described it exactly as it occurred. One day someone will build the disk just as we did and they'll have the same experience. All his blueprints still exist. Nowadays, it would all be done with digital and solid state circuitry --- no moving parts would be necessary.

"I've heard that the aliens use the same principle to operate their craft. Their physics seems to work in harness with their consciousness. The craft amplifies the power of their minds. Their craft won't operate without the pilots. I've heard that's why we can't operate their craft --- or, at any rate, we can't operate them the way they do. We're just not adept enough mentally and spiritually. So there are two secrets to making the saucers work. One is the advanced engineering, and the other is the mental and spiritual ability. We may have duplicated some of the first, but we may be a long way from the second yet."

***FATE* (May 1958), page 17**

"Gravity Machine?"

The following summary was sent from a Ship's Paper of October 30,1957, after being copied from a CW News broadcast while at sea. It is unusual because no other report of this announcement reached us. It certainly is sensational --- if true.

Baltimore, MD (October 29):--- A group of inventors claimed Monday they have been able to utilize gravity in circular motion machines capable of powering everything from hearing aids to space cruisers.

Otis T. Carr, president of OTC Enterprises, Inc., detailed his claims in an interview and demonstration of a crude model of a circular motion machine which he said is the principle of a "free energy circular foil" spacecraft he can build, if someone puts up the money.

He said the machine can be adapted to devices of any size to produce continuous power absolutely free of dissipation.

Its immediate application, Carr said, would be in a spacecraft --- which would be able to fly among the planets in controlled flight.

It could land or take off as desired on the earth, the moon or any planet in the earth's solar system, he said.

Carr and his associates said their claims are based on the most simple practical applications of natural laws and discoveries in science and mathematics. They have no formal education in science or engineering.

He said the same "free energy" which causes the earth to rotate on its axis and orbit around the sun will turn a machine he described as two cones joined at their circular bases.

When the rotation of such a machine reaches a certain velocity relative to the earth's orbital velocity, Carr said, it will take off.

Carr said the core of his space ship would be a huge battery which would spin at the velocity of the external craft and which would be recharged, he said, by its motion. Carr declared such a battery, built to any size, could be designed to power the largest electric generating plant, operate an automobile, heat a house or power any conceivable machine or device.

The principle on which Carr said such circular motion machines would operate is that "any vehicle accelerated to an axis rotation relative to its attractive inertial mass (the earth) immediately becomes activated by free space energy and acts as an independent force."

***FATE* (August 1959), page 32.**

"The Saucer That Didn't Fly"

by

W. E. Du Soir

The serious field of UFO's and flying saucer research received a setback at Oklahoma City in late April when a highly publicized launching attempt by O.T.C. Enterprises of Baltimore, Md., resulted in failure. Hundreds of persons had been invited to Oklahoma City by Otis T. Carr to watch him "launch a six-foot prototype model of the O.T.C. X-1, a space craft which works on 'utron' energy." Those who were there came away disappointed. The flying saucer did not fly. The six-foot model, well-hidden in a warehouse, never even got to the launching site, or to the amusement park called Frontier City, where it was to have been displayed beside a 45-foot version of the same X-1 which will be an amusement "ride" in the near future.

The launching site was to have been a gravel pit eight miles north of Oklahoma City where Carr claimed the saucer would rise "400 to 600 feet." Launching time was set for 3:00 PM Sunday, April 19. Two and a half hours past this time Major Wayne Aho finally announced that the launching had to be postponed because of "technical difficulties." Later it was stated by O.T.C. officials that one bearing housing was "off one-sixteenth of an inch." Most of the major flying saucer clubs had ignored the "launching". Except for a story in early April there was no advance news on Carr's experiment in Oklahoma City newspapers.

One Oklahoma City television reporter expressed the general feeling of the townspeople, "This thing will never leave the ground. And I feel that a great deal of the ballyhoo they're giving out is tied in with the ride at Frontier City. I have tried constantly to get in to see the saucer model, but they've kept it hidden." Equally well hidden was Carr himself. He was finally located in Mercy Hospital, Room 302, by John Nebel, the famed "Long John" of WOR, New York City. Carr did not show up at a meeting at a local church the day before the scheduled launching but a taped speech was delivered to the 70 people who attended. "Barring any flat tires," Carr said, "I feel that history will be made Sunday afternoon when the model of the O.T.C. X-1 is launched here."

Carr did not leave his hospital room until Monday, when he was taken to the home of Major Aho, the man in charge of publicity for the company. A scheduled "victory" dinner was pretty dismal Sunday night, where again a taped message from Carr was presented. Monday morning at 5 AM a rumor spread that the model launching would again be attempted. At that early hour a group of a half-dozen people, including Norman Colton, Carr's chief aide, went to the warehouse. But it was three hours later before anyone else showed up and most of those who had come to see the model had given up in disgust and left. Many believers in UFO's, although skeptical, had traveled to Oklahoma City to see what developed. All of them had left town by Monday afternoon.

One member of a Pennsylvania saucer club commented, "I don't know what's going on but I feel they never had any intention of trying to launch the model. I could not see any plans in sight for the model and, in fact, I understand, that a Mr. Maywood Jones presented only what he called "three-dimensional illustrations" of Carr's ideas." Monday afternoon there was more activity in the warehouse and finally, around 4 PM, the model was "turned on" and revolved, although it showed no signs of taking off from the table on which it sat. "We hoped to try to launch it again but unfortunately one of the seams burst during the test," an O.T.C. official said. "We still hope to have a launching shortly," another member of Carr's group added. Left unanswered were such questions as:

1) Why was there no publicity about the launching in Oklahoma City for two weeks before the model was supposed to fly?

2) Why did Carr ready a taped message for delivery at the "victory dinner" a day before the scheduled launching?

3) How could any engineer make a mistake of one-16th of an inch in a precision part? This would be similar to a navigator landing an airplane 300 miles off course. A mistake of one-10,000th of an inch can be a major engineering calamity.

Carr was apparently undaunted by the weekend's developments. He again commented, "This indeed is an historic occasion." Questioned about the failures of his model, he added, "The theory itself has been proven. The model will go up, if not this week, then next week or next month." Mr. Carr also has stated that he and Major Wayne Aho will "fly to the moon in a flying saucer on December 7, 1959."

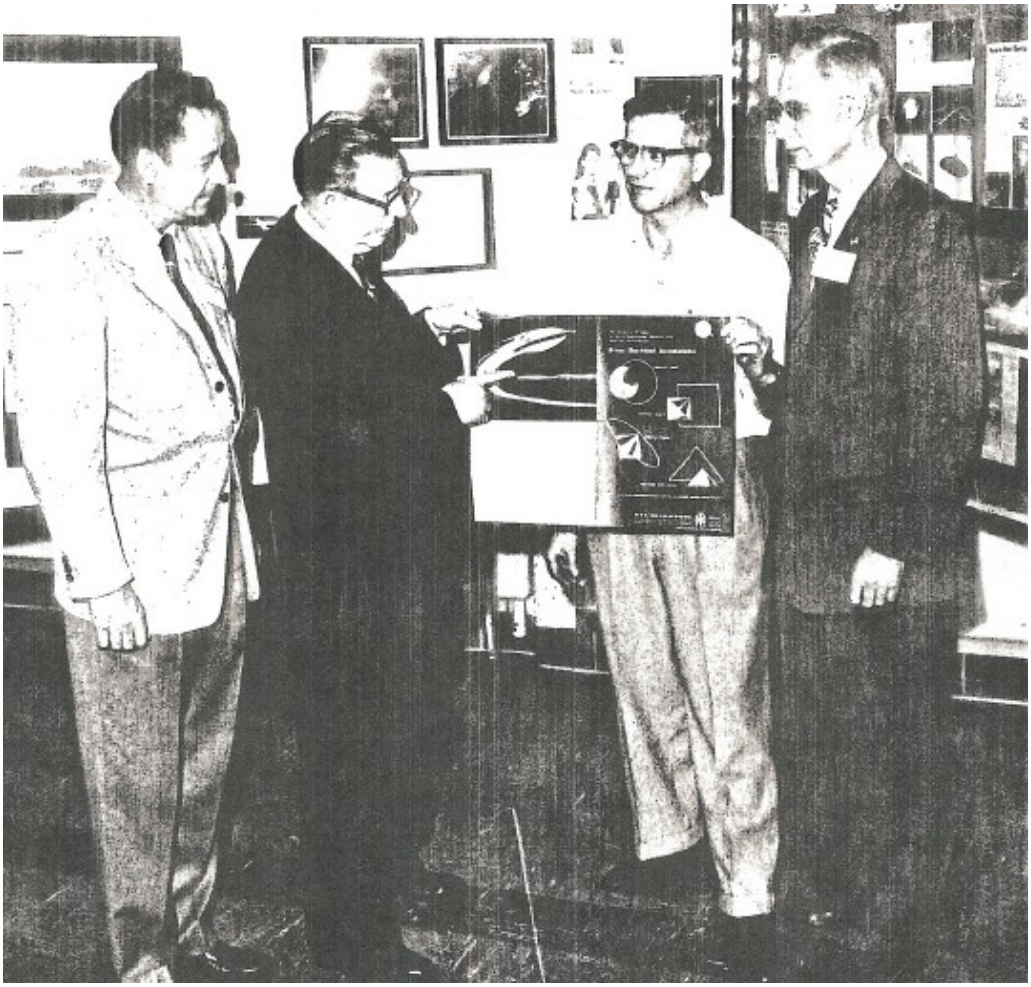

Your Support Maintains this Service --

BUY

The Rex Research Civilization Kit

... It's Your Best Bet & Investment in Sustainable Humanity on Earth ...
Ensure & Enhance Your Survival & Genome Transmission ...
Everything @ rexresearch.com on a Data DVD !

ORDER PAGE

No. 674,427. Patented May 21, 1901.

A. PALENCSÁR.

APPARATUS FOR COLLECTING ATMOSPHERIC ELECTRICITY.

(Application filed July 10, 1900.)

(No Model.) 3 Sheets—Sheet 1.

Fig. 1.

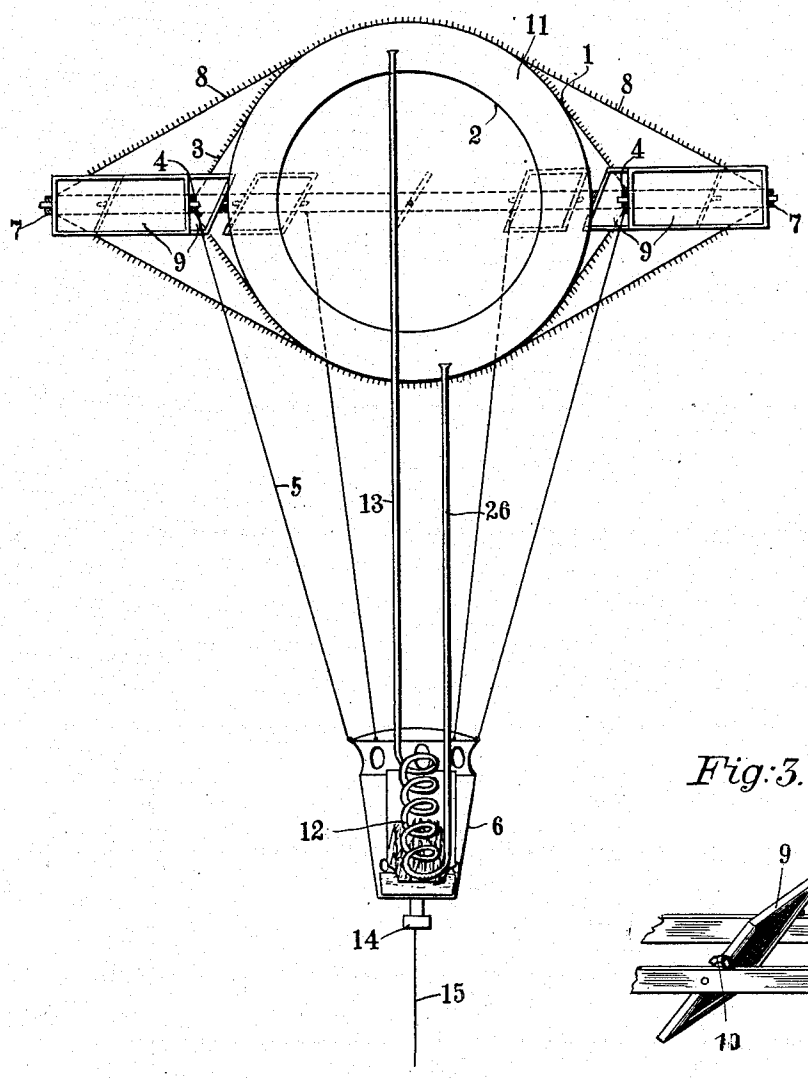

Fig. 3.

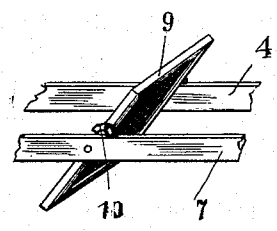

WITNESSES:
Ella L. Giles
Otto Munk

INVENTOR
Andor Palencsár
BY
Richards
ATTORNEYS

THE NORRIS PETERS CO., PHOTO-LITHO., WASHINGTON, D. C.

No. 674,427. Patented May 21, 1901.

A. PALENCSÁR.

APPARATUS FOR COLLECTING ATMOSPHERIC ELECTRICITY.

(Application filed July 10, 1900.)

(No Model.) 3 Sheets—Sheet 2.

Fig. 2.

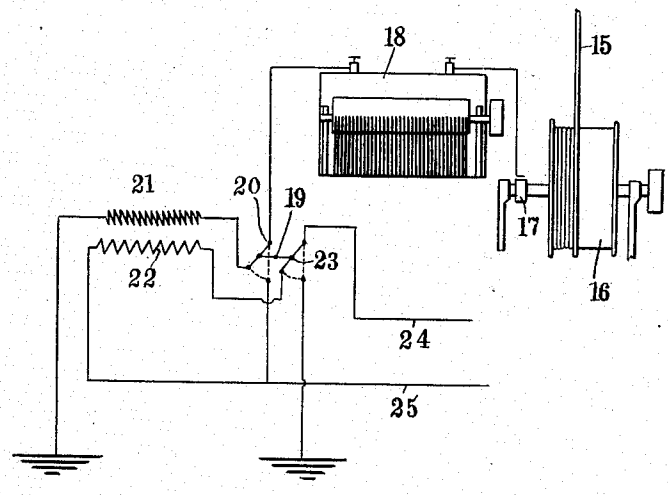

WITNESSES:
Ella L. Giles
Otto Munk

INVENTOR
Andor Palencsár
BY
Richards
ATTORNEYS

THE NORRIS PETERS CO., PHOTO-LITHO., WASHINGTON, D. C.

No. 674,427. Patented May 21, 1901.

A. PALENCSÁR.

APPARATUS FOR COLLECTING ATMOSPHERIC ELECTRICITY.

(Application filed July 10, 1900.)

(No Model.) 3 Sheets—Sheet 3.

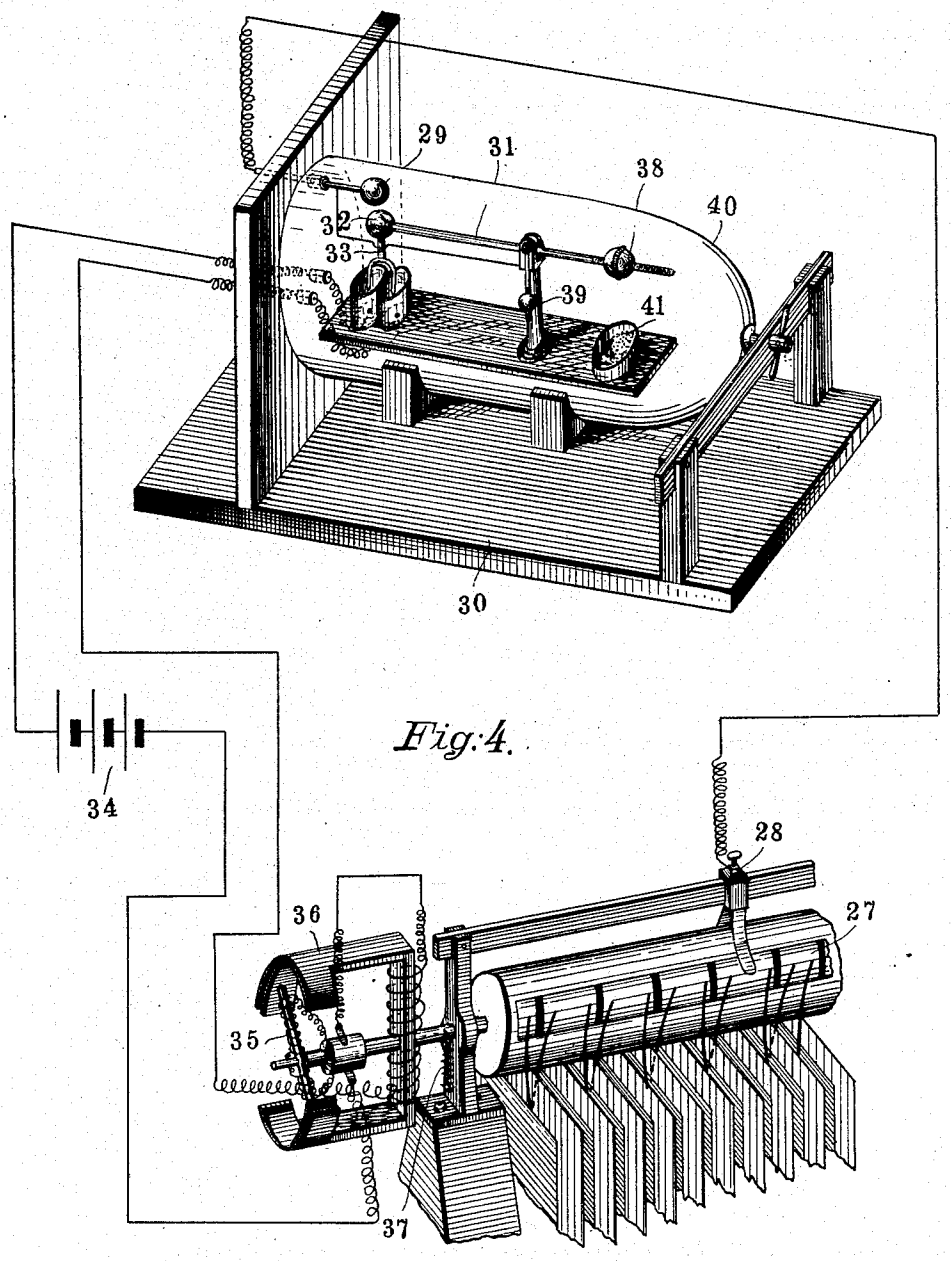

Fig. 4.

WITNESSES:
Ella L. Giles
Attorney

INVENTOR
Andor Palencsár
BY
Richards & Co
ATTORNEYS

THE NORRIS PETERS CO., PHOTO-LITHO., WASHINGTON, D. C.

UNITED STATES PATENT OFFICE.

ANDOR PALENCSÁR, OF BUDA-PESTH, AUSTRIA-HUNGARY.

APPARATUS FOR COLLECTING ATMOSPHERIC ELECTRICITY.

SPECIFICATION forming part of Letters Patent No. 674,427, dated May 21, 1901.

Application filed July 10, 1900. Serial No. 23,102. (No model.)

To all whom it may concern:

Be it known that I, ANDOR PALENCSÁR, a subject of the King of Hungary, residing at Buda-Pesth, Austria-Hungary, have invented a certain new and useful Apparatus for Collecting Atmospherical Electricity, of which the following is a full, clear, and exact specification.

The present invention concerns an apparatus for collecting and driving or conducting atmospherical electricity which renders it practicable to obtain material quantities of the same in serviceable form.

The experiments made hitherto have been limited to deviating or conducting the electricity by simple lightning-rods without making allowance for the progress of the theory of atmospherical electricity. It is obvious that only extremely small quantities of electricity can be collected in this manner, and, moreover, it was obtained in a form which entirely precluded its utilization. It is evident that a source of electricity of irregular yield can only be utilized by means of accumulators and for charging accumulators only a current of constant potential can be employed. The potential of electricity derived or deviated by means of a lightning-rod varies within wide limits, and, moreover, it is so high that it cannot be used at all for charging accumulators. All these drawbacks are remedied by the present invention, by which the atmospheric electricity is obtained in larger quantities with as low and constant a potential as may be desired.

The idea underlying the invention is based on the modern theory of atmospheric electricity, according to which it is produced by the condensation of steam or aqueous vapors, and that the increase of potential is effected by the concentration of the small drops of water into larger ones, as the proportion of the surface of the drops to the volume of same is materially reduced thereby. According to this theory the water-droplets floating in the layers of air are considered as vehicles or carriers of the electricity, and a rational system of the deviation of the atmospheric electricity must derive it from the water-drops. This is attained by the present invention in the following manner: A collecting-body of as large a surface as possible is provided with sharp needles. This is moved in the higher layers of air, while being continually heated by a suitable heating device. Owing to the heat the water-drops immediately ambient to the collecting-body will be evaporated, their capacity is gradually reduced, while the potential of the charge grows until it reaches an infinite height with infinite smallness of the drops. It is readily apparent that the whole charge of the drops as soon as they have been evaporated will have passed to the collector or collecting-body, from which it can be conducted. For the purpose of replacing the evaporated drops, which have been deprived of their charge by new-charged drops, the collector is moved in relation to the ambient air.

One way of carrying out the invention is represented in diagram in the accompanying drawings, in which—

Figure 1 is a longitudinal section of the collecting-balloon. Fig. 2 shows the deviating and conversion device, and Fig. 3 a detail. Fig. 4 is a diagrammatic perspective view of a form of automatic regulator for the rheostatic machine.

The apparatus consists of a balloon having two walls and covered with a light wire net, preferably of aluminium wire, said net being studded with needles. Besides, the balloon carries the net 3, on which the ring 4, made of a solid but light material, (wood, cane, &c.,) is fixed. This ring carries the basket 6 by means of the cords or ropes 5. On a level with the ring 4 is the ring 7, which is kept spread by the blades or wings 9, which are journaled in a manner to rotate easily. The ring 7 is kept fixedly in position by the cords or ropes 8. The blades or wings consist of a frame covered with light material, and their rotation in either direction is limited by the stops or ledges 10. The blades or wings form advantageously an angle of sixty to seventy degrees with the vertical line.

All wire nets, ropes, rings, and blades or wings may be covered with small metal needles which are electrically connected with each other.

From the space 11, formed between the double walls of the balloon, the pipe 26 leads from the lowest point of the same to the serpentine 12, arranged in the basket 6, which in turn is

connected with the pipe 13, ending in the upper part of the space 11 between the two walls 1 2. The serpentine is heated by means of a suitable source of heat, whereby a warm current of gas or air circulates continually between the double walls of the balloon.

Under the basket the ball-bearing 14 is arranged in electrical connection with the wire nets, and its stud is electrically connected with the carefully-insulated light though sufficiently strong cable 15.

On the earth's surface is a winch 16, Fig. 2, by means of which the balloon can be made to ascend or descend as soon as the interior space of the balloon is filled with illuminating gas or hydrogen.

The end of the cable-core is soldered to a collector arranged upon and insulated from the axle of the winch, and the electricity is conducted from this collector by means of a sliding contact. The collecting of the electricity takes place by moving the balloon continuously up and down by means of the winch. In this movement the balloon is turned by means of the wings or blades 9, which are adapted to turn the balloon always in the same direction whether ascending or descending, as in the change from ascending into descending of the balloon, or vice versa, the blades are turned over by the aerial resistance, and thus impart the rotating motion to the balloon in the same direction. In order to avoid torsion of the cable, the ball-bearing 14 is provided. This up-and-down motion and rotating of the balloon accomplishes the purpose of bringing it into contact with as many water particles floating in the air as possible.

As the electricity conducted from the collector-wing 17 possesses a much too high and varying potential for making its direct application practicable, and as it is usual with an irregular source of electricity to first charge accumulators and to further utilize the easily-regulated current of the same only, it becomes necessary to seek to maintain the electricity conducted from the collector 17 for the charging of the accumulators at a constant potential and convert the potential to a much lower one; but as we deal in this case with a direct current ordinary converters cannot be used for this purpose. Moreover, the electricity possesses in this case a much too high potential, so that with the employment of ordinary converters the greatest part of the collected electricity would be lost again. The only practical method for this purpose is the converting by means of the Planté rheostatic machine, by which this high-voltage electricity can be transformed almost without any loss whatever. Thus the question of conversion would be solved, and only the question of maintenance of constant potential remains. This is obtained in the following manner: The rheostatic machine 18 or only a part of the plates is connected with an electrometer of any construction, the movable part of which closes a contact which eventually actuates an electromagnet which effects the switching or reversion of the rheostatic machine. After the switching of the rheostatic machine it is discharged, the potential falls to zero, (*nil*,) and the electrometer resumes its initial position, whereby the current of the electromagnet which effects the reversion is interrupted and the plates of the rheostatic machine are reconnected to potential. The machine is then ready for renewed charge and is again discharged when the determined potential is reached. This action is continually repeated as long as the apparatus is in operation.

A form of the automatic regulator for the rheostatic machine is represented in Fig. 4. 27 is the contact-cylinder of the rheostatic machine, on which, for clearness sake, only the contacts for the charging position of the condenser-plates are shown, while the contacts for the discharging position, which come into action after the contact-cylinder has been turned, are omitted. The coating of the condenser-plates is connected in electrical circuit with the stationary ball 29 and the movable ball 32 of the charge-meter 30. When the charge of the rheostatic machine rises, the ball 32, arranged on the one extremity of the lever 31, is repelled and at a certain stroke actuated by means of the fork 33, which is fastened on the ball 32, and by dipping into a mercury-cup it closes the circuit of the source of current 34. This current passes through the windings of the anchor or armature 35, fixed on the shaft of the contact-cylinder, and it also passes through the electromagnet 36. Thereby the contact-cylinder is turned by a certain angle and the rheostatic machine is thus reversed. Then if the tension decreases by discharge and the repulsion of the balls 29 32 declines so far that the contact is interrupted at 33 the spring 37 turns the contact-cylinder into its normal position and the rheostatic machine is again switched to tension. The regulation of the electrometer is effected by the adjustable weights 38 39. When larger quantities of electricity shall be derived or deviated, two rheostatic machines may operate alternately so, that while the one is being discharged the other can be charged. It is readily apparent that if the capacity of the rheostatic machine is not changed the switching or reversion by the electrometer will always take place at the same potential of the rheostatic machine, and as the number of plates, and hence the proportion of conversion, remains the same the current impulses derived or deviated from the rheostatic machine will also have the same potential.

The irregularities of the source of electricity change the interval of time in which the charges follow each other; but as long as the potential remains constant this has no injurious effect on the charge of the accumulators. The current derived, or deviated from the

rheostatic machine can be further transformed by an ordinary converter 21 22, and whenever it is sufficiently constant it can be utilized without the intervention of the accumulators. The converters can be connected or disconnected by means of the double switch 19 20 23.

24 and 25 are the conducting-wires, which run either directly to the place of consumption or to an accumulator-battery.

Having now described my invention, what I claim as new, and desire to secure by Letters Patent, is—

1. An apparatus for collecting atmospheric electricity comprising a collecting-body adapted to be kept in motion, heating means for said body, and a rheostatic machine and a converter connected with the said body electrically, substantially as described.

2. An apparatus for collecting atmospheric electricity for storage comprising a collecting-body adapted to be kept in motion in the ambient air, heating means for said body, a conductor leading from said body, a rheostatic machine connected with the said conductor, an electrometer connected with said rheostatic machine electrically, a contact controlled by the electrometer, and an electromagnet controlled by said contact, said electromagnet controlling the reversing of the rheostatic machine, substantially as described.

3. In combination, the balloon-like collecting-body, having the collecting-points, means for heating the interior space of said body, a conductor leading from the balloon-like body, and electrical devices for receiving the current therefrom, substantially as described.

4. In combination, the balloon-like collecting-body, means for turning the same constantly in one direction in both ascending and descending, conducting means leading from the balloon and electrical devices for receiving the current therefrom, substantially as described.

In witness whereof I have hereunto set my hand in presence of two witnesses.

ANDOR PALENCSÁR.

Witnesses:
EUGÈNE HARRÄNJO,
PAUL BÖLESKEY.

United States Patent [19]

Malech

[11] **3,951,134**

[45] **Apr. 20, 1976**

[54] **APPARATUS AND METHOD FOR REMOTELY MONITORING AND ALTERING BRAIN WAVES**

[75] Inventor: **Robert G. Malech,** Plainview, N.Y.

[73] Assignee: **Dorne & Margolin Inc.,** Bohemia, N.Y.

[22] Filed: **Aug. 5, 1974**

[21] Appl. No.: **494,518**

[52] **U.S. Cl.** ..... **128/2.1 B**

[51] **Int. Cl.**[2] **A61B 5/04**

[58] **Field of Search** ..... 128/1 C, 1 R, 2.1 B, 128/2.1 R, 419 R, 422 R, 420, 404, 2 R, 2 S, 2.05 R, 2.05 V, 2.05 F, 2.06 R; 340/248 A, 258 A, 258 B, 258 D, 229

[56] **References Cited**

UNITED STATES PATENTS

2,860,627	11/1958	Harden et al.	128/2.1 B
3,096,768	7/1963	Griffith, Jr.	128/420
3,233,450	2/1966	Fry	128/2.1 R
3,483,860	12/1969	Namerow	128/2.05 F
3,495,596	2/1970	Condict	128/1 C
3,555,529	1/1971	Brown et al.	128/2.1 R
3,773,049	11/1973	Rabichev et al.	128/1 C
3,796,208	3/1974	Bloice	128/2 S

Primary Examiner—William E. Kamm
Attorney, Agent, or Firm—Darby & Darby

[57] **ABSTRACT**

Apparatus for and method of sensing brain waves at a position remote from a subject whereby electromagnetic signals of different frequencies are simultaneously transmitted to the brain of the subject in which the signals interfere with one another to yield a waveform which is modulated by the subject's brain waves. The interference waveform which is representative of the brain wave activity is re-transmitted by the brain to a receiver where it is demodulated and amplified. The demodulated waveform is then displayed for visual viewing and routed to a computer for further processing and analysis. The demodulated waveform also can be used to produce a compensating signal which is transmitted back to the brain to effect a desired change in electrical activity therein.

11 Claims, 2 Drawing Figures

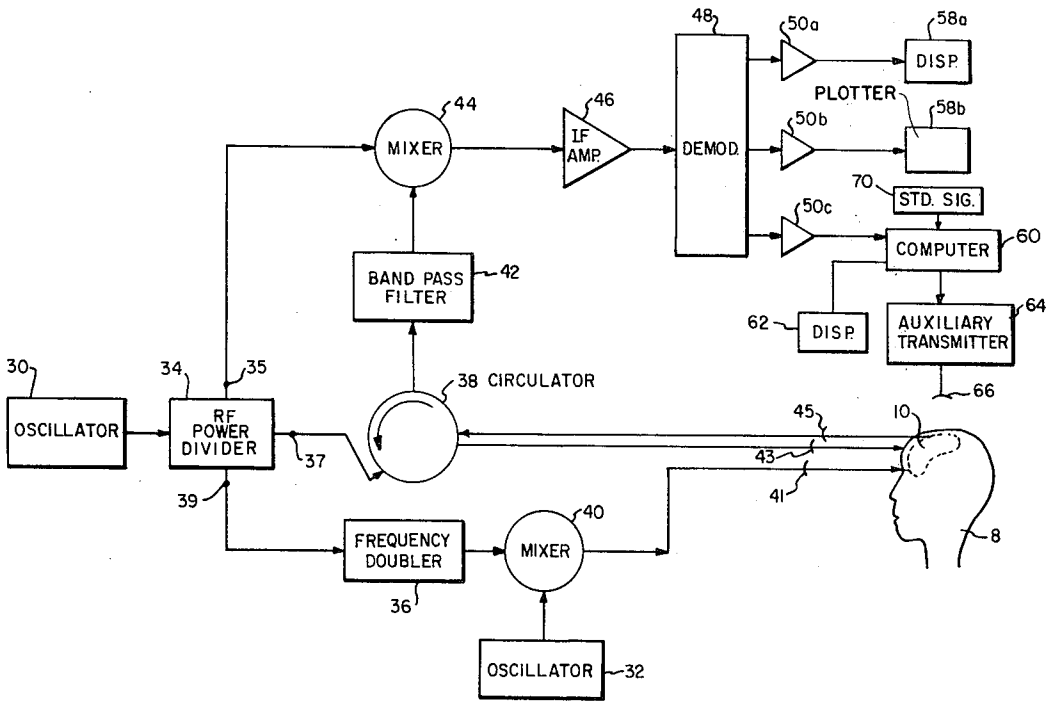

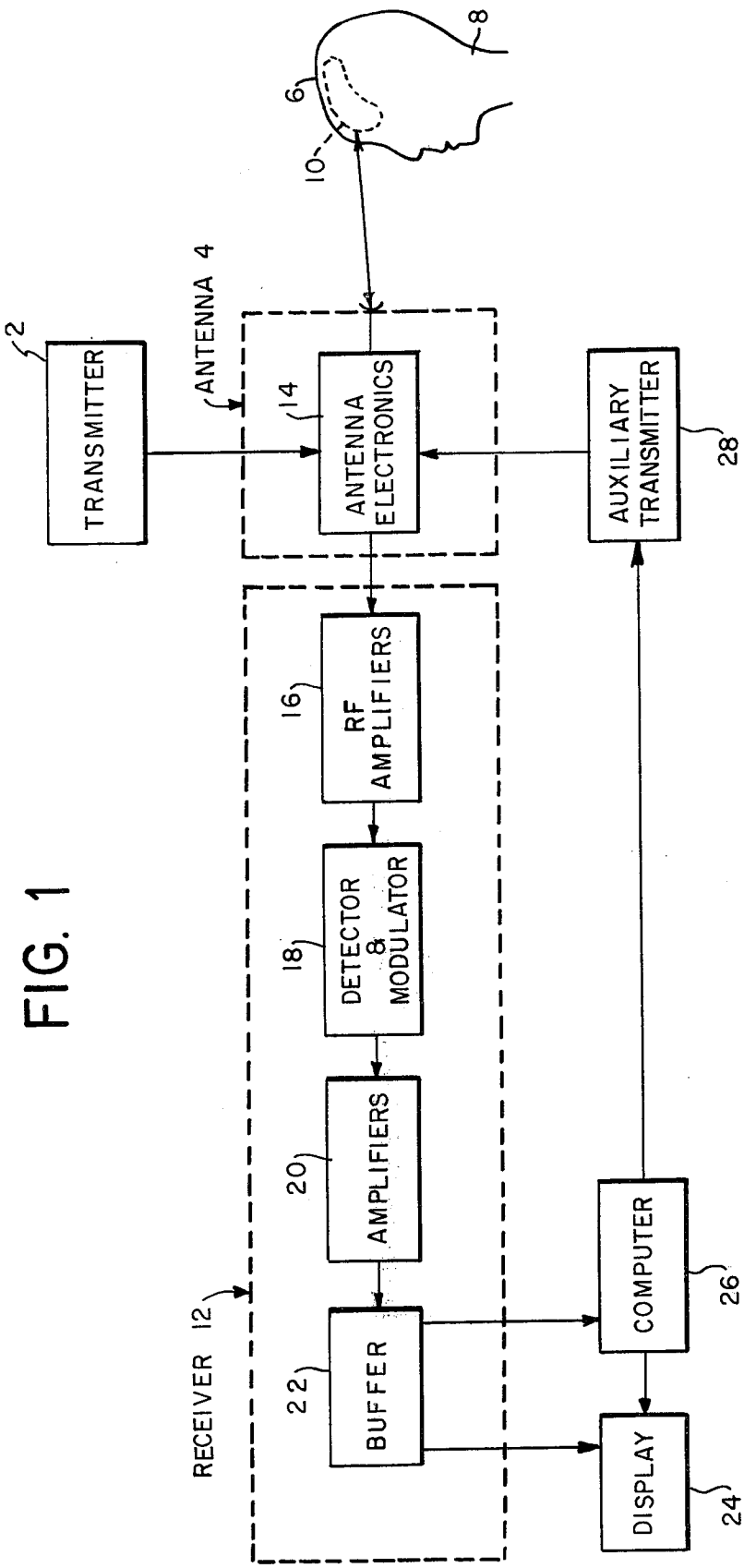
TRANSMITTER
2
ANTENNA 4
ANTENNA ELECTRONICS
14
AUXILIARY TRANSMITTER
28
8
6
10
RECEIVER 12
RF AMPLIFIERS
16
DETECTOR & MODULATOR
18
AMPLIFIERS
20
BUFFER
22
COMPUTER
26
DISPLAY
24

FIG. 1

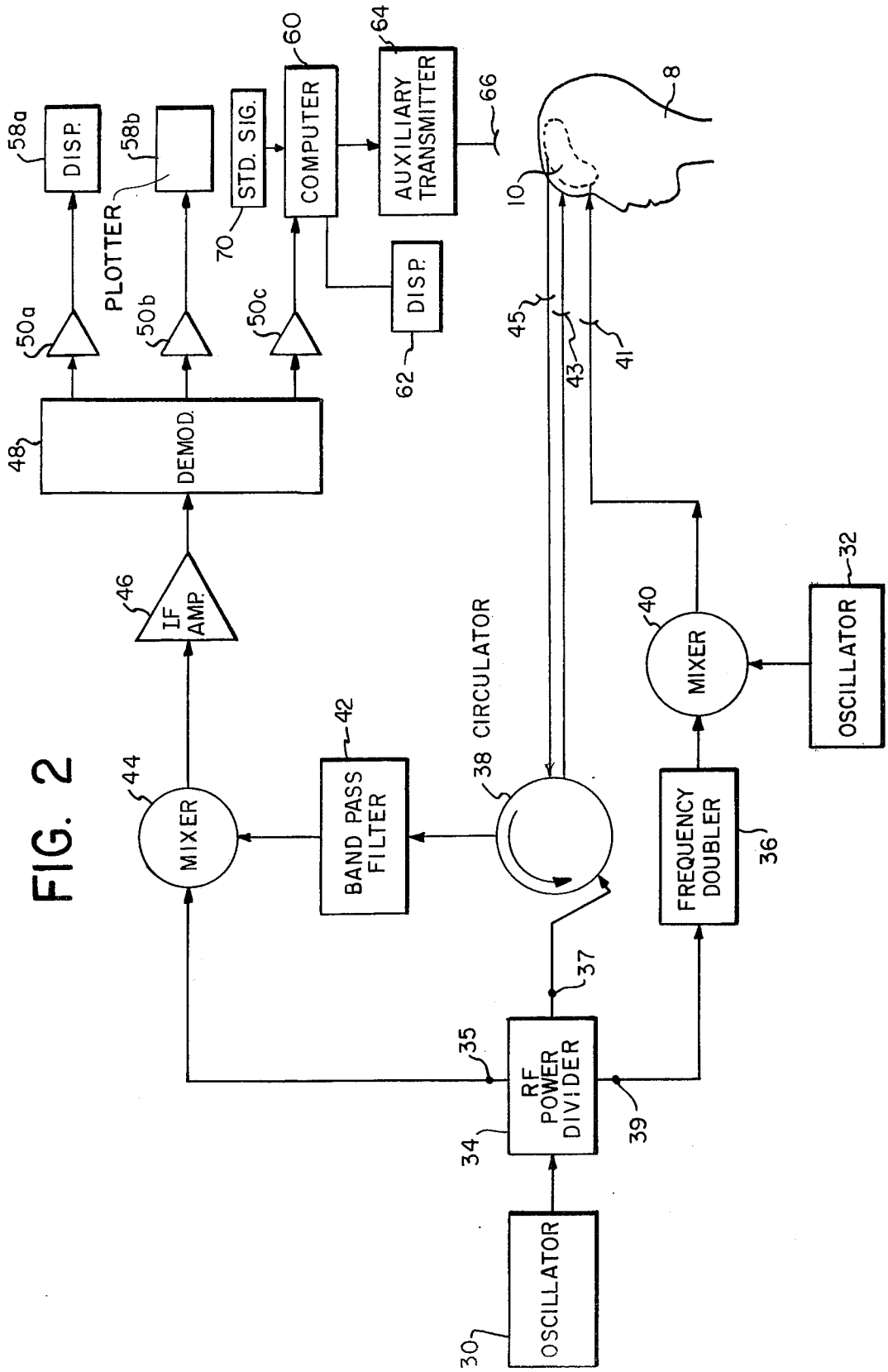
DISP.
58a
58b
PLOTTER
50a
50b
50c
STD. SIG.
70
COMPUTER
60
AUXILIARY TRANSMITTER
64
66
DISP.
62
8
10
45
43
41
48
DEMOD.
46
IF AMP.
44
MIXER
42
BAND PASS FILTER
38 CIRCULATOR
40
MIXER
32
OSCILLATOR
FREQUENCY DOUBLER
36
37
35
RF POWER DIVIDER
34
39
30
OSCILLATOR

FIG. 2

APPARATUS AND METHOD FOR REMOTELY MONITORING AND ALTERING BRAIN WAVES

BACKGROUND OF THE INVENTION

Medical science has found brain waves to be a useful barometer of organic functions. Measurements of electrical activity in the brain have been instrumental in detecting physical and psychic disorder, measuring stress, determining sleep patterns, and monitoring body metabolism.

The present art for measurement of brain waves employs electroencephalographs including probes with sensors which are attached to the skull of the subject under study at points proximate to the regions of the brain being monitored. Electrical contact between the sensors and apparatus employed to process the detected brain waves is maintained by a plurality of wires extending from the sensors to the apparatus. The necessity for physically attaching the measuring apparatus to the subject imposes several limitations on the measurement process. The subject may experience discomfort, particulary if the measurements are to be made over extended periods of time. His bodily movements are restricted and he is generally confined to the immediate vicinity of the measuring apparatus. Furthermore, measurements cannot be made while the subject is conscious without his awareness. The comprehensiveness of the measurements is also limited since the finite number of probes employed to monitor local regions of brain wave activity do not permit observation of the total brain wave profile in a single test.

SUMMARY OF THE INVENTION

The present invention relates to apparatus and a method for monitoring brain waves wherein all components of the apparatus employed are remote from the test subject. More specifically, high frequency transmitters are operated to radiate electromagnetic energy of different frequencies through antennas which are capable of scanning the entire brain of the test subject or any desired region thereof. The signals of different frequencies penetrate the skull of the subject and impinge upon the brain where they mix to yield an interference wave modulated by radiations from the brain's natural electrical activity. The modulated interference wave is re-transmitted by the brain and received by an antenna at a remote station where it is demodulated, and processed to provide a profile of the suject's brain waves. In addition to passively monitoring his brain waves, the subject's neurological processes may be affected by transmitting to his brain, through a transmitter, compensating signals. The latter signals can be derived from the received and processed brain waves.

OBJECTS OF THE INVENTION

It is therefore an object of the invention to remotely monitor electrical activity in the entire brain or selected local regions thereof with a single measurement.

Another object is the monitoring of a subject's brain wave activity through transmission and reception of electromagnetic waves.

Still another object is to monitor brain wave activity from a position remote from the subject.

A further object is to provide a method and apparatus for affecting brain wave activity by transmitting electromagnetic signals thereto.

DESCRIPTION OF THE DRAWINGS

Other and further objects of the invention will appear from the following description and the accompanying drawings, which form part of the instant specification and which are to be read in conjunction therewith, and in which like reference numerals are used to indicate like parts in the various views;

FIG. **1** is a block diagram showing the interconnection of the components of the apparatus of the invention;

FIG. **2** is a block diagram showing signal flow in one embodiment of the apparatus.

DESCRIPTION OF THE PREFERRED EMBODIMENT

Referring to the drawings, specifically FIG. **1**, a high frequency transmitter **2** produces and supplies two electromagnetic wave signals through suitable coupling means **14** to an antenna **4.** The signals are directed by the antenna **4** to the skull **6** of the subject **8** being examined. The two signals from the antenna **4,** which travel independently, penetrate the skull **6** and impinge upon the tissue of the brain **10.**

Within the tissue of the brain **10,** the signals combine, much in the manner of a conventional mixing process technique, with each section of the brain having a different modulating action. The resulting waveform of the two signals has its greatest amplitude when the two signals are in phase and thus reinforcing one another. When the signals are exactly 180° out of phase the combination produces a resultant waveform of minimum amplitude. If the amplitudes of the two signals transmitted to the subject are maintained at identical levels, the resultant interference waveform, absent influences of external radiation, may be expected to assume zero intensity when maximum interference occurs, the number of such points being equal to the difference in frequencies of the incident signals. However, interference by radiation from electrical activity within the brain **10** causes the waveform resulting from interference of the two transmitted signals to vary from the expected result, i.e., the interference waveform is modulated by the brain waves. It is believed that this is due to the fact that brain waves produce electric charges each of which has a component of electromagnetic radiation associated with it. The electromagnetic radiation produced by the brain waves in turn reacts with the signals transmitted to the brain from the external source.

The modulated interference waveform is re-transmitted from the brain **10,** back through the skull **6.** A quantity of energy is re-transmitted sufficient to enable it to be picked up by the antenna **4.** This can be controlled, within limits, by adjusting the absolute and relative intensities of the signals, originally transmitted to the brain. Of course, the level of the transmitted energy should be kept below that which may be harmful to the subject.

The antenna passes the received signal to a receiver **12** through the antenna electronics **14.** Within the receiver the wave is amplified by conventional RF amplifiers **16** and demodulated by conventional detector and modulator electronics **18.** The demodulated wave, representing the intra-brain electrical activity, is amplified by amplifiers **20** and the resulting information in electronic form is stored in buffer circuitry **22.** From the buffers **22** the information is fed to a suitable visual

display **24**, for example one employing a cathode ray tube, light emitting diodes, liquid crystals, or a mechanical plotter. The information may also be channeled to a computer **26** for further processing and analysis with the output of the computer displayed by heretofore mentioned suitable means.

In addition to channeling its information to display devices **24**, the computer **26** can also produce signals to control an auxiliary transmitter **28**. Transmitter **28** is used to produce a compensating signal which is transmitted to the brain **10** of the subject **8** by the antenna **4**. In a preferred embodiment of the invention, the compensating signal is derived as a function of the received brain wave signals, although it can be produced separately. The compensating signals affect electrical activity within the brain **10**.

Various configurations of suitable apparatus and electronic circuitry may be utilized to form the system generally shown in FIG. **1** and one of the many possible configurations is illustrated in FIG. **2**. In the example shown therein, two signals, one of 100 MHz and the other of 210 MHz are transmitted simultaneously and combine in the brain **10** to form a resultant wave of frequency equal to the difference in frequencies of the incident signals, i.e., 110 MHz. The sum of the two incident frequencies is also available, but is discarded in subsequent filtering. The 100 MHz signal is obtained at the output **37** of an RF power divider **34** into which a 100 MHz signal generated by an oscillator **30** is injected. The oscillator **30** is of a conventional type employing either crystals for fixed frequency circuits or a tunable circuit set to oscillate at 100 MHz. It can be a pulse generator, square wave generator or sinusoidal wave generator. The RF power divider can be any conventional VHF, UHF or SHF frequency range device constructed to provide, at each of three outputs, a signal identical in frequency to that applied to its input.

The 210 MHz signal is derived from the same 100 MHz oscillator **30** and RF power divider **34** as the 100 MHz signal, operating in concert with a frequency doubler **36** and 10 MHz oscillator **32**. The frequency doubler can be any conventional device which provides at its output a signal with frequency equal to twice the frequency of a signal applied at its input. The 10 MHz oscillator can also be of conventional type similar to the 100 MHz oscillator herebefore described. A 100 MHz signal from the output **39** of the RF power divider **34** is fed through the frequency doubler **36** and the resulting 200 MHz signal is applied to a mixer **40**. The mixer **40** can be any conventional VHF, UHF or SHF frequency range device capable of accepting two input signals of differing frequencies and providing two output signals with frequencies equal to the sum and difference in frequencies respectively of the input signals. A 10 MHz signal from the oscillator **32** is also applied to the mixer **40**. The 200 MHz signal from the doubler **36** and the 10 MHz signal from the oscillator **32** combine in the mixer **40** to form a signal with a frequency of 210 MHz equal to the sum of the frequencies of the 200 MHz and 10 MHz signals.

The 210 MHz signal is one of the signals transmitted to the brain **10** of the subject being monitored. In the arrangement shown in FIG. **2**, an antenna **41** is used to transmit the 210 MHz signal and another antenna **43** is used to transmit the 100 MHz signal. Of course, a single antenna capable of operating at 100 MHz and 210 MHz frequencies may be used to transmit both signals. The scan angle, direction and rate may be controlled mechanically, e.g., by a reversing motor, or electronically, e.g., by energizing elements in the antenna in proper synchronization. Thus, the antenna(s) can be of either fixed or rotary conventional types.

A second 100 MHz signal derived from output terminal **37** of the three-way power divider **34** is applied to a circulator **38** and emerges therefrom with a desired phase shift. The circulator **38** can be of any conventional type wherein a signal applied to an input port emerges from an output port with an appropriate phase shift. The 100 MHz signal is then transmitted to the brain **10** of the subject being monitored via the antenna **43** as the second component of the dual signal transmission. The antenna **43** can be of conventional type similar to antenna **41** herebefore described. As previously noted, these two antennas may be combined in a single unit.

The transmitted 100 and 210 MHz signal components mix within the tissue in the brain **10** and interfere with one another yielding a signal of a frequency of 110 MHz, the difference in frequencies of the two incident components, modulated by electromagnetic emissions from the brain, i.e., the brain wave activity being monitored. This modulated 110 MHz signal is radiated into space.

The 110 MHz signal, modulated by brain wave activity, is picked up by an antenna **45** and channeled back through the circulator **38** where it undergoes an appropriate phase shift. The circulator **38** isolates the transmitted signals from the received signal. Any suitable diplexer or duplexer can be used. The antenna **45** can be of conventional type similar to antennas **41** and **43**. It can be combined with them in a single unit or it can be separate. The received modulated 110 MHz signal is then applied to a band pass filter **42**, to eliminate undesirable harmonics and extraneous noise, and the filtered 110 MHz signal is inserted into a mixer **44** into which has also been introduced a component of the 100 MHz signal from the source **30** distributed by the RF power divider **34**. The filter **42** can be any conventional band pass filter. The mixer **44** may also be of conventional type similar to the mixer **40** herebefore described.

The 100 MHz and 110 MHz signals combine in the mixer **44** to yield a signal of frequency equal to the difference in frequencies of the two component signals, i.e., 10 MHz still modulated by the monitored brain wave activity. The 10 MHz signal is amplified in an IF amplifier **46** and channeled to a demodulator **48**. The IF amplifier and demodulator **48** can both be of conventional types. The type of demodulator selected will depend on the characteristics of the signals transmitted to and received from the brain, and the information desired to be obtained. The brain may modulate the amplitude, frequency and/or phase of the interference waveform. Certain of these parameters will be more sensitive to corresponding brain wave characteristics than others. Selection of amplitude, frequency or phase demodulation means is governed by the choice of brain wave characteristic to be monitored. If desired, several different types of demodulators can be provided and used alternately or at the same time.

The demodulated signal which is representative of the monitored brain wave activity is passed through audio amplifiers **50** *a*, *b*, *c* which may be of conventional type where it is amplified and routed to displays **58** *a*, *b*, *c* and a computer **60**. The displays **58** *a*, *b*, *c* present the raw brain wave signals from the amplifiers

50 *a*, *b*, *c*. The computer **60** processes the amplified brain wave signals to derive information suitable for viewing, e.g., by suppressing, compressing, or expanding elements thereof, or combining them with other information-bearing signals and presents that information on a display **62.** The displays can be conventional ones such as the types herebefore mentioned employing electronic visual displays or mechanical plotters **58***b*. The computer can also be of conventional type, either analog or digital, or a hybrid.

A profile of the entire brain wave emission pattern may be monitored or select areas of the brain may be observed in a single measurement simply by altering the scan angle and direction of the antennas. There is no physical contact between the subject and the monitoring apparatus. The computer **60** also can determine a compensating waveform for transmission to the brain **10** to alter the natural brain waves in a desired fashion. The closed loop compensating system permits instantaneous and continuous modification of the brain wave response pattern.

In performing the brain wave pattern modification function, the computer **60** can be furnished with an external standard signal from a source **70** representative of brain wave activity associated with a desired nuerological response. The region of the brain responsible for the response is monitored and the received signal, indicative of the brain wave activity therein, is compared with the standard signal. The computer **60** is programmed to determine a compensating signal, responsive to the difference between the standard signal and received signal. The compensating signal, when transmitted to the monitored region of the brain, modulates the natural brain wave activity therein toward a reproduction of the standard signal, thereby changing the neurological response of the subject.

The computer **60** controls an auxiliary transmitter **64** which transmits the compensating signal to the brain **10** of the subject via an antenna **66.** The transmitter **64** is of the high frequency type commonly used in radar applications. The antenna **66** can be similar to antennas **41, 43** and **45** and can be combined with them. Through these means, brain wave activity may be altered and deviations from a desired norm may be compensated. Brain waves may be monitored and control signals transmitted to the brain from a remote station.

It is to be noted that the configuration described is one of many possibilities which may be formulated without departing from the spirit of my invention. The transmitters can be monostratic or bistatic. They also can be single, dual, or multiple frequency devices. The transmitted signal can be continuous wave, pulse, FM, or any combination of these as well as other transmission forms. Typical operating frequencies for the transmitters range from 1 MHz to 40 GHz but may be altered to suit the particular function being monitored and the characteristics of the specific subject.

The individual components of the system for monitoring and controlling brain wave activity may be of conventional type commonly employed in radar systems.

Various subassemblies of the brain wave monitoring and control apparatus may be added, substituted or combined. Thus, separate antennas or a single multimode antenna may be used for transmission and reception. Additional displays and computers may be added to present and analyze select components of the monitored brain waves.

Modulation of the interference signal retransmitted by the brain may be of amplitude, frequency and/or phase. Appropriate demodulators may be used to decipher the subject's brain activity and select components of his brain waves may be analyzed by computer to determine his mental state and monitor his thought processes.

As will be appreciated by those familiar with the art, apparatus and method of the subject invention has numerous uses. Persons in critical positions such as drivers and pilots can be continuously monitored with provision for activation of an emergency device in the event of human failure. Seizures, sleepiness and dreaming can be detected. Bodily functions such as pulse rate, heartbeat reqularity and others also can be monitored and occurrences of hallucinations can be detected. The system also permits medical diagnoses of patients, inaccessible to physicians, from remote stations.

What is claimed is:

1. Brain wave monitoring apparatus comprising
means for producing a base frequency signal,
means for producing a first signal having a frequency related to that of the base frequency and at a predetermined phase related thereto,
means for transmitting both said base frequency and said first signals to the brain of the subject being monitored,
means for receiving a second signal transmitted by the brain of the subject being monitored in response to both said base frequency and said first signals,
mixing means for producing from said base frequency signal and said received second signal a response signal having a frequency related to that of the base frequency, and
means for interpreting said response signal.

2. Apparatus as in claim **1** where said receiving means comprises
means for isolating the transmitted signals from the received second signals.

3. Apparatus as in claim **2** further comprising a band pass filter with an input connected to said isolating means and an output connected to said mixing means.

4. Apparatus as in claim **1** further comprising means for amplifying said response signal.

5. Apparatus as in claim **4** further comprising means for demodulating said amplified response signal.

6. Apparatus as in claim **5** further comprising interpreting means connected to the output of said demodulator means.

7. Apparatus according to claim **1** further comprising
means for producing an electromagnetic wave control signal dependent on said response signal, and
means for transmitting said control signal to the brain of said subject.

8. Apparatus as in claim **7** wherein said transmitting means comprises means for directing the electromagnetic wave control signal to a predetermined part of the brain.

9. A process for monitoring brain wave activity of a subject comprising the steps of
transmitting at least two electromagnetic energy signals of different frequencies to the brain of the subject being monitored,
receiving an electromagnetic energy signal resulting from the mixing of said two signals in the brain modulated by the brain wave activity and retrans-

mitted by the brain in response to said transmitted energy signals, and,

interpreting said received signal.

10. A process as in claim **9** further comprising the step of transmitting a further electromagnetic wave signal to the brain to vary the brain wave activity.

11. A process as in claim **10** wherein the step of transmitting the further signals comprises

obtaining a standard signal,

comparing said received electromagnetic energy signals with said standard signal,

producing a compensating signal corresponding to the comparison between said received electrogagnetic energy signals and the standard signal, and

transmitting the compensating signals to the brain of the subject being monitored.

* * * * *

US006119651A

United States Patent [19]

Anderson

[11] **Patent Number: 6,119,651**

[45] **Date of Patent: Sep. 19, 2000**

[54] **HYDROGEN POWERED VEHICLE, INTERNAL COMBUSTION ENGINE, AND SPARK PLUG FOR USE IN SAME**

[75] Inventor: **Herman P. Anderson**, Brentwood, Tenn.

[73] Assignee: **Herman P. Anderson Technologies, LLP**, Brentwood, Tenn.

[21] Appl. No.: **09/220,286**

[22] Filed: **Dec. 23, 1998**

Related U.S. Application Data

[63] Continuation-in-part of application No. 08/905,862, Aug. 4, 1997, Pat. No. 5,852,993.

[51] **Int. Cl.**[7] **F02M 57/06**

[52] **U.S. Cl.** **123/297**; 123/635; 123/DIG. 12

[58] **Field of Search** ..... 123/3, DIG. 12, 123/527, 297, 636, 637, 635, 169 EL; 313/120

[56] **References Cited**

U.S. PATENT DOCUMENTS

2,208,030	7/1940	Holmes	123/169 EL
3,165,099	1/1965	Vanderpoel	123/637
3,926,169	12/1975	Leshner et al.	123/297
3,980,061	9/1976	McAlister	123/297
4,164,912	8/1979	Beyler	123/26
4,186,712	2/1980	Fitzner et al.	123/633
4,319,552	3/1982	Sauer et al.	123/297
4,343,272	8/1982	Buck	123/297
4,383,198	5/1983	Hosking	313/120
4,448,160	5/1984	Vosper	123/297
4,820,957	4/1989	Zivkovich	315/209 T
5,852,993	12/1998	Anderson	123/297

FOREIGN PATENT DOCUMENTS

686943	8/1930	France	123/297

Primary Examiner—Noah P. Kamen
Attorney, Agent, or Firm—Lucian Wayne Beavers Waddey & Patterson

[57] **ABSTRACT**

The internal combustion engine fuel system described includes a structure for mixing the alternative fuel, preferably hydrogen, with oxygen in ambient air to stratify the fuel. The system includes an adapter, and the adapter includes a housing mounted between spark plug and cylinder of the internal combustion engine. A plug is placed within the housing. The plug has ridges or grooves on its outer surface that act as mixing structures. Thus, when hydrogen is introduced into the adapter housing it is mixed with ambient oxygen within the chamber as it flows over the plug. The mixing structures in the housing creates a vortexing action as the hydrogen flows over the plug and towards the cylinder of the engine. An electrode protrudes from the plug towards the cylinder. The electrode is preferably platinum and generates the necessary spark to create combustion of the hydrogen/air mixture adjacent to the cylinder to thereby power the cylinder in the engine. A platinum electrode is preferably used because it enhances a catalytic conversion of combustion by-products to more environmentally compatible products. The present invention also teaches a spark plug producing a hotter spark for a hydrogen fuel system. Also taught is a hydrogen powered vehicle with reduced emissions by producing a spark during the power stroke and the exhaust stroke. Methods for reducing exhaust pollution are also taught. Methods of reducing exhaust pollution by generating a plasma are taught as well.

13 Claims, 12 Drawing Sheets

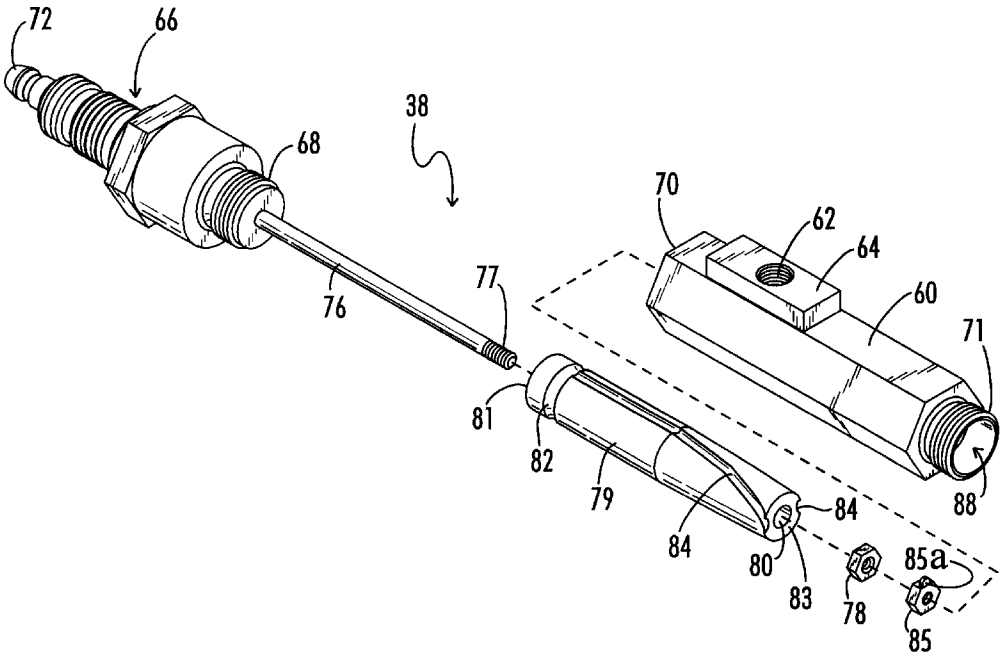

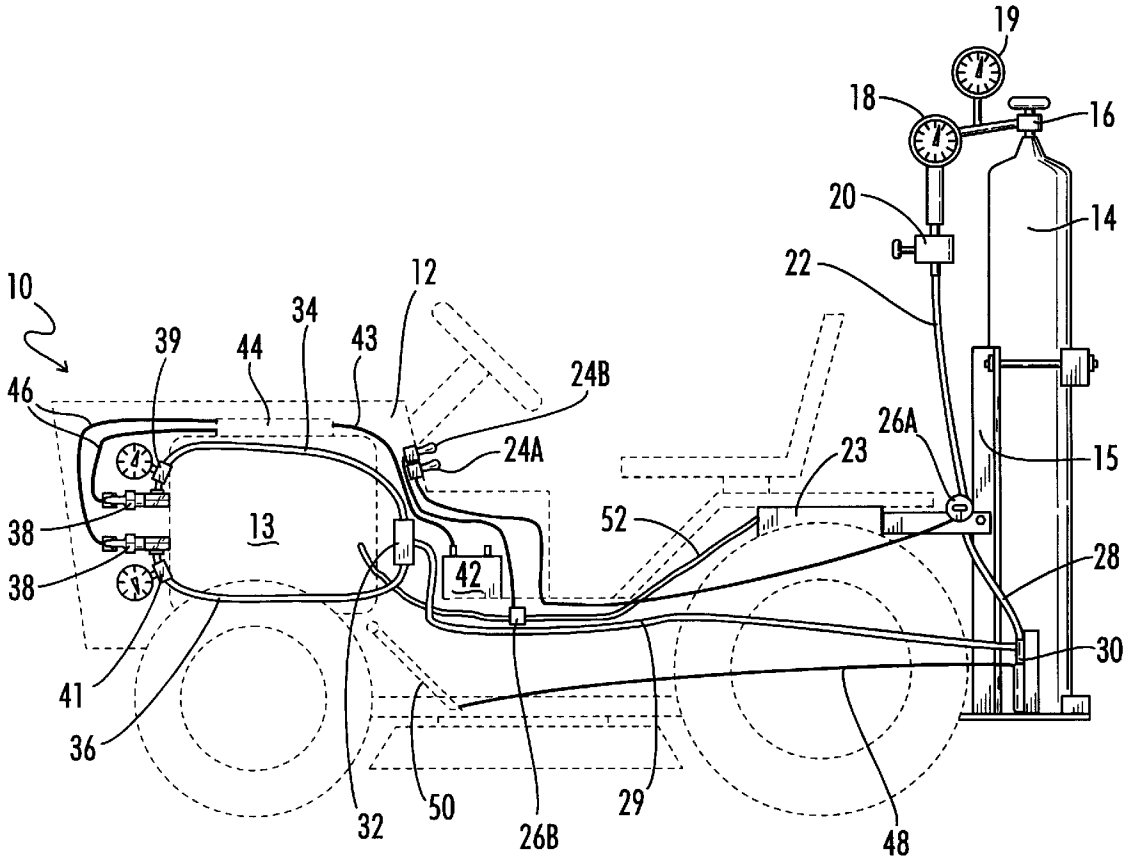
19
18
16
20
14
22
10
12
34
39
44
43
24B
46
24A
26A
23
15
13
52
38
42
28
38
30
41
36
32
50
26B
29
48

FIG. 1

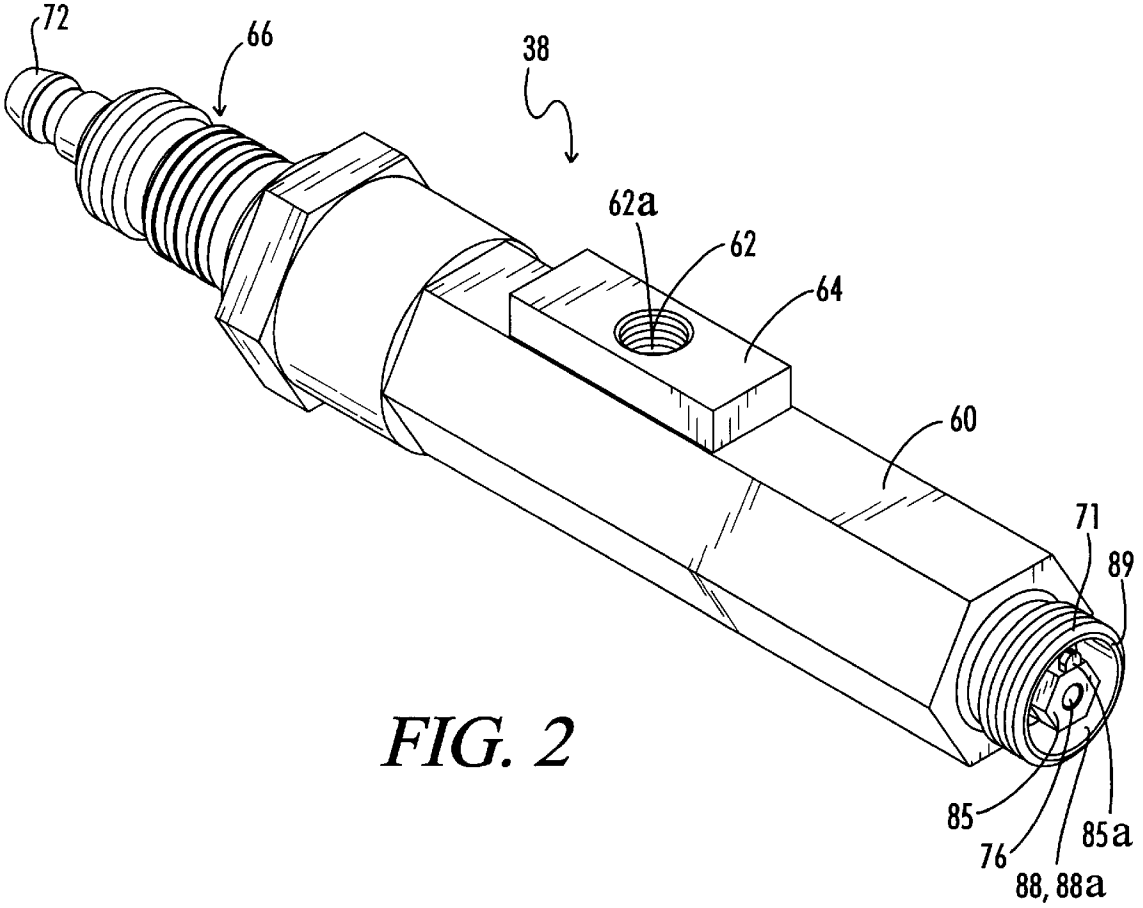

FIG. 2

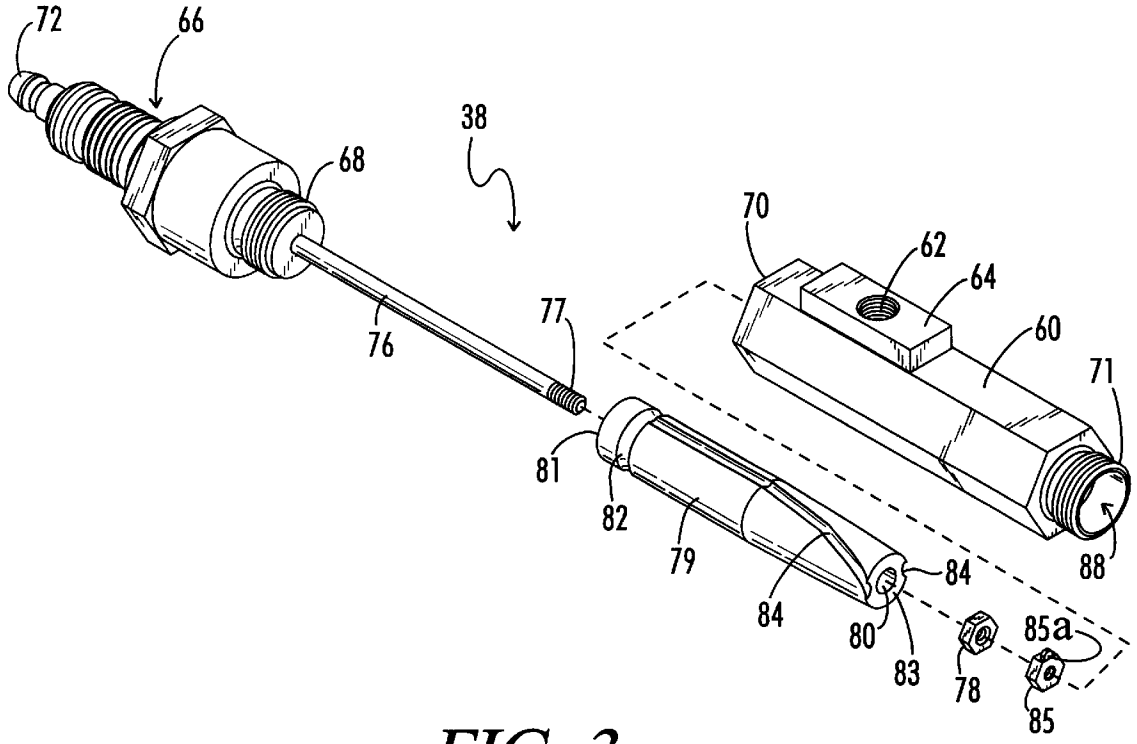

FIG. 3

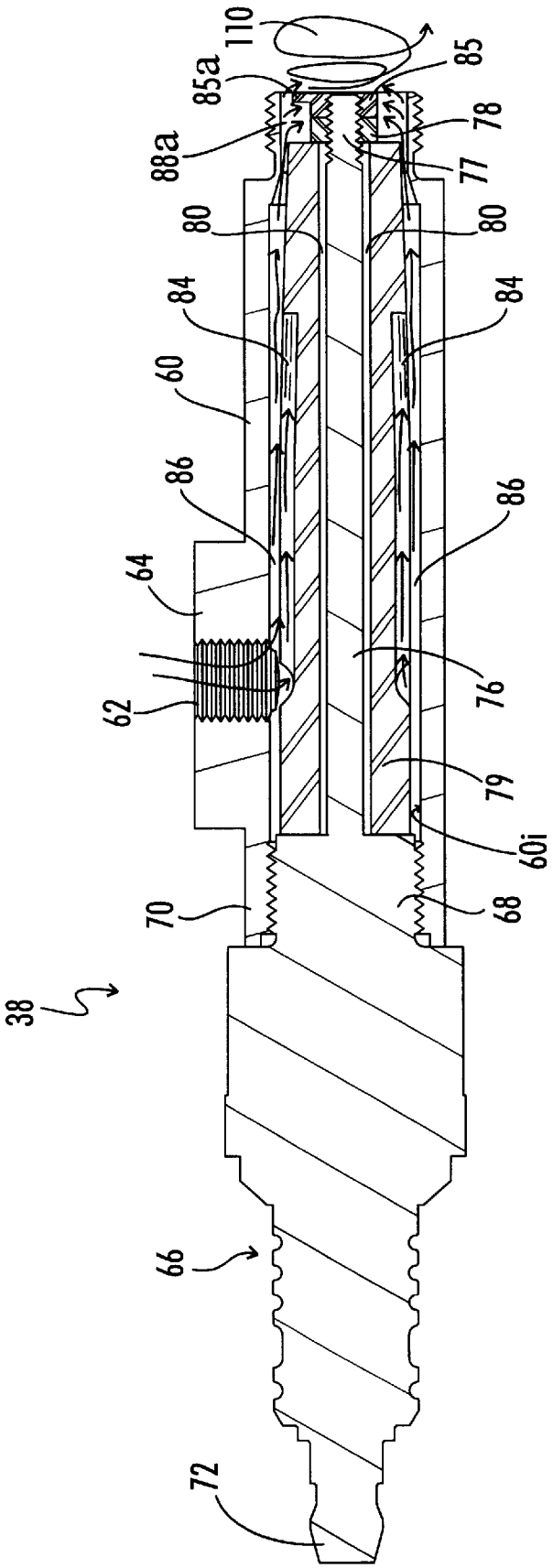
110
85a
85
88a
78
77
80
80
84
84
60
86
86
64
62
76
79
60i
70
68
38
66
72

FIG. 4

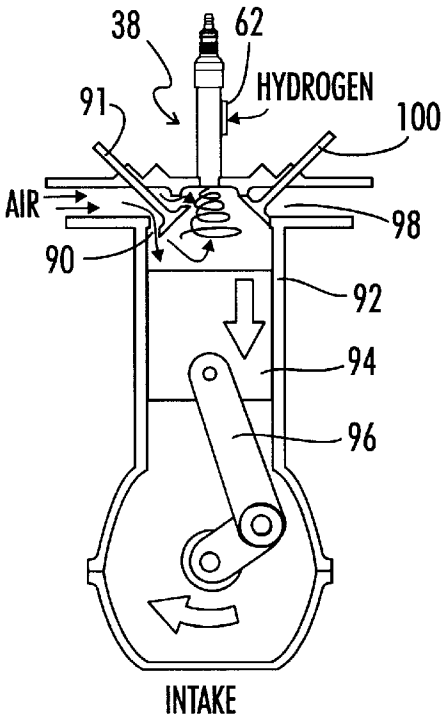

FIG. 5A

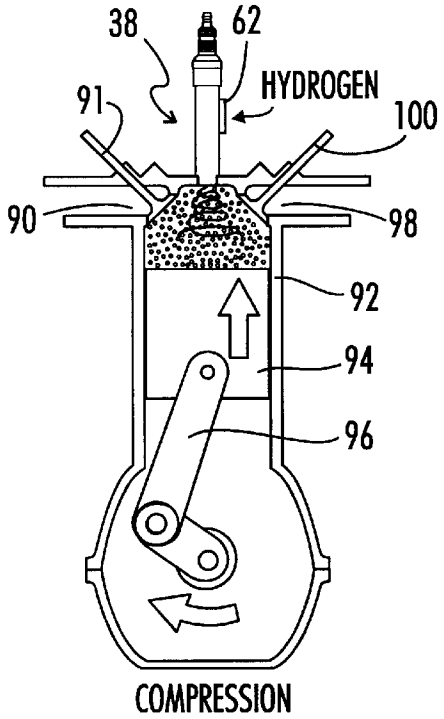

FIG. 5B

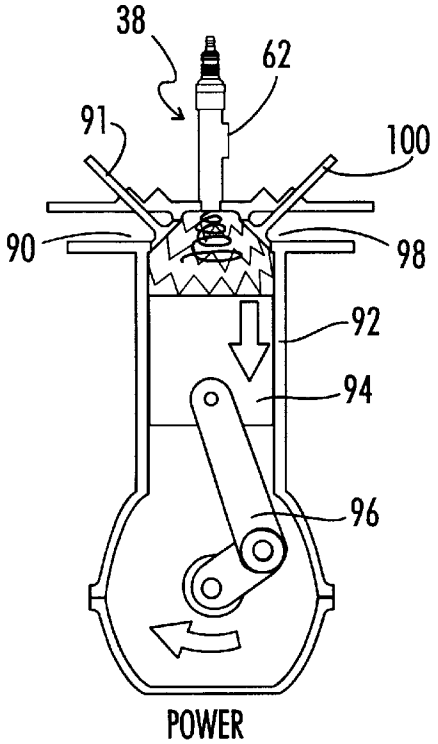

FIG. 5C

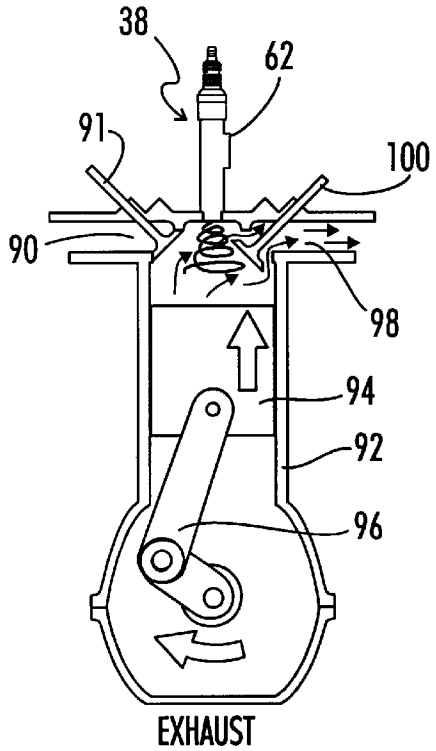

FIG. 5D

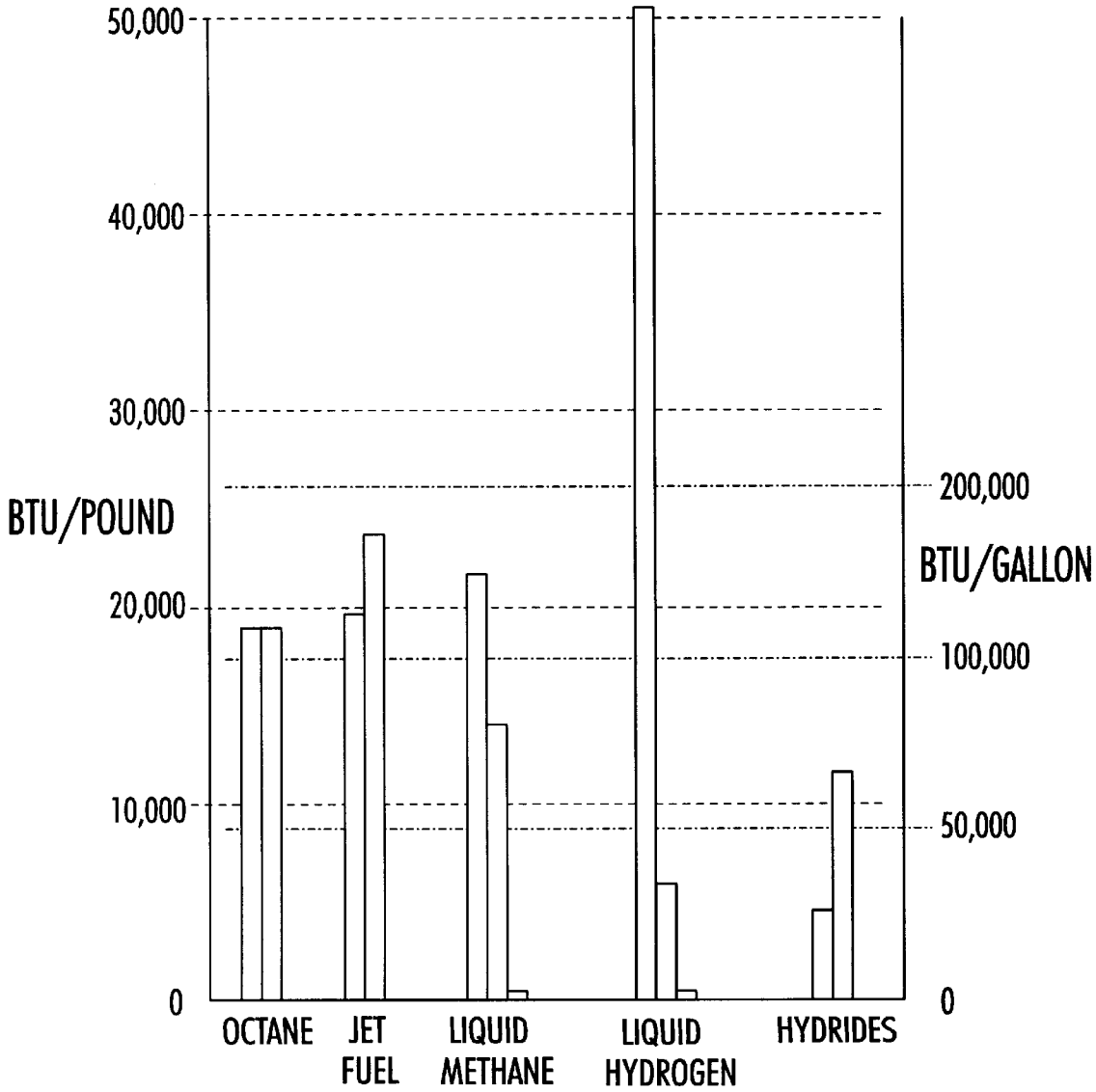

METHANE GAS - 140 BTU/GAL
HYDROGEN GAS - 40 BTU/GAL

FIG. 6

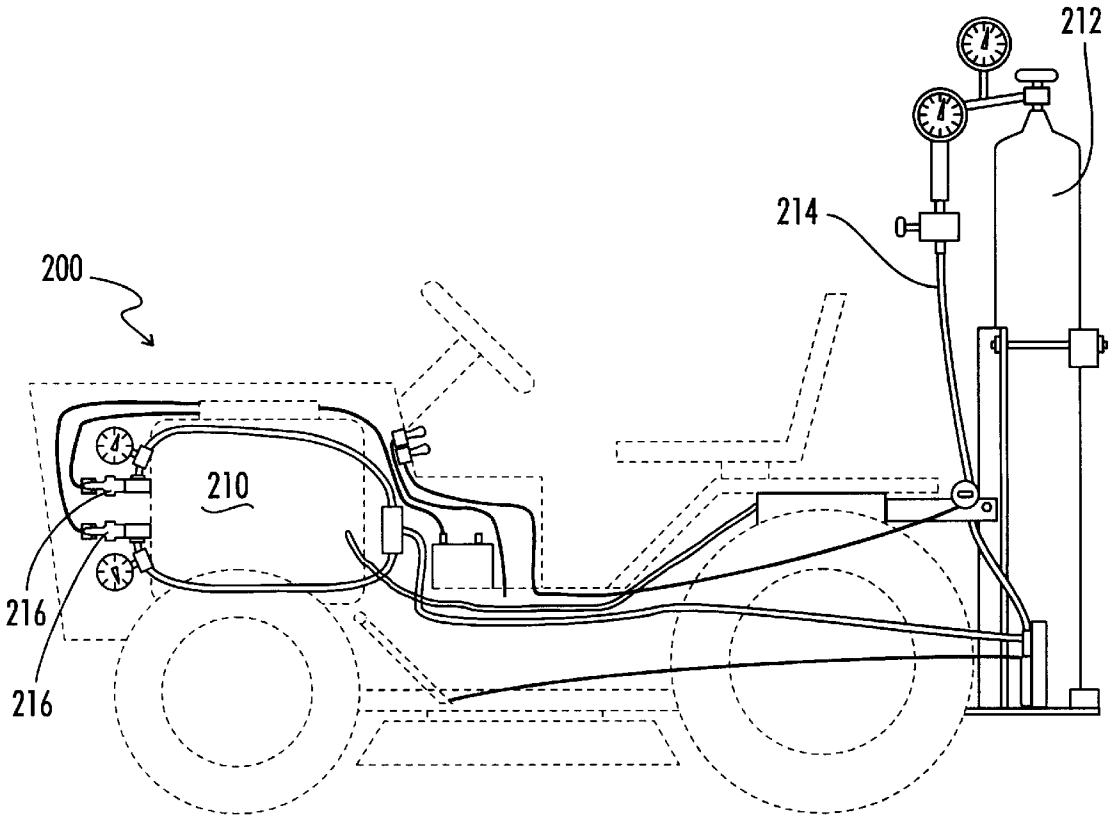

FIG. 7

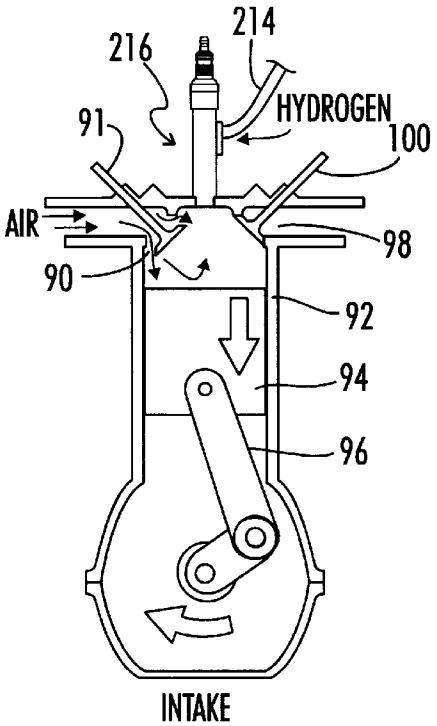

FIG. 8

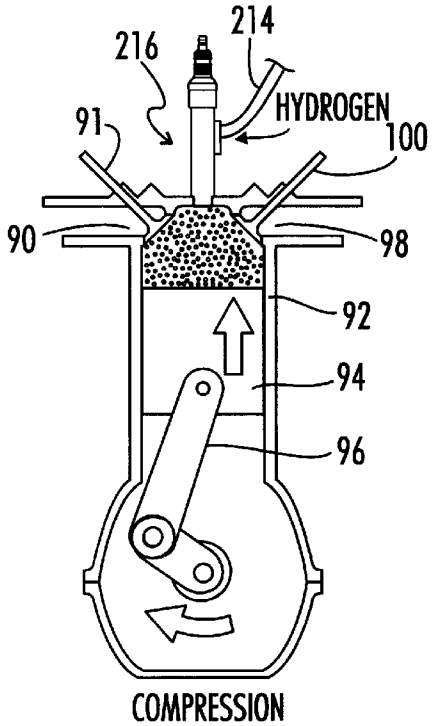

FIG. 9

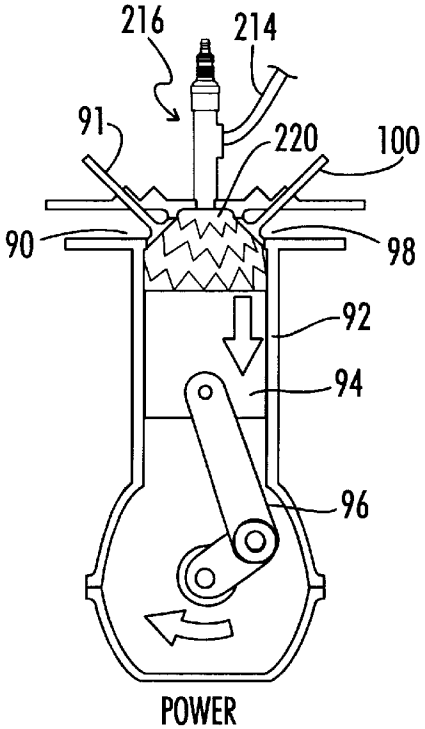

FIG. 10

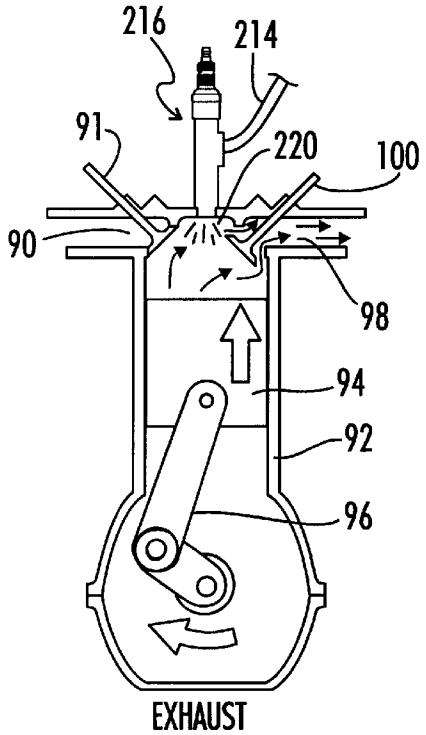

FIG. 11

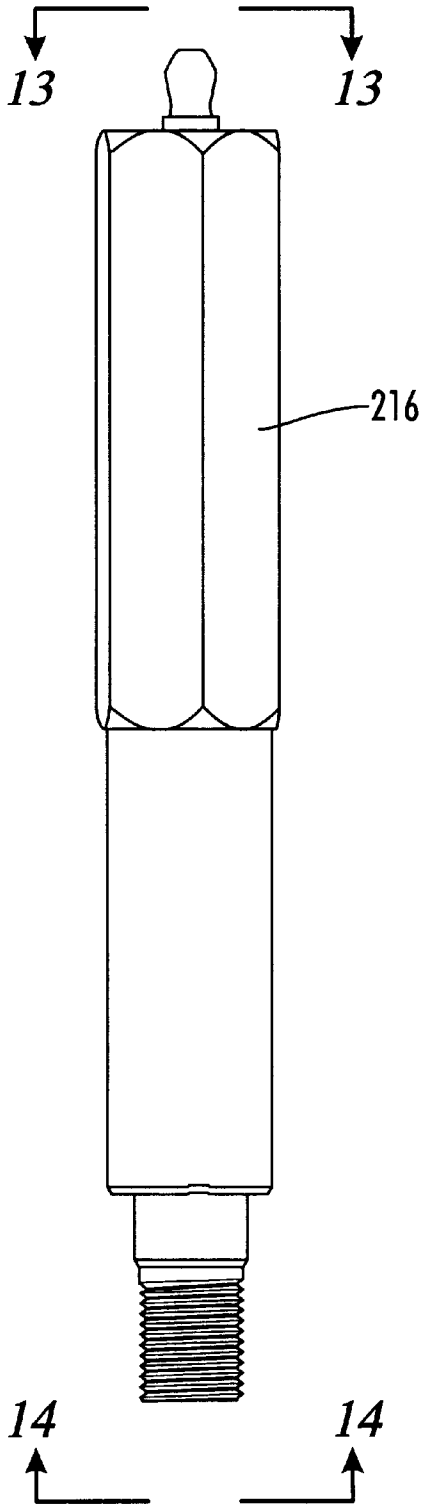

FIG. 12

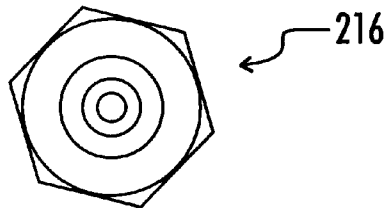

FIG. 13

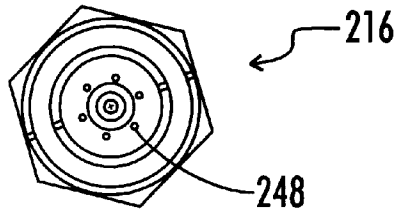

FIG. 14

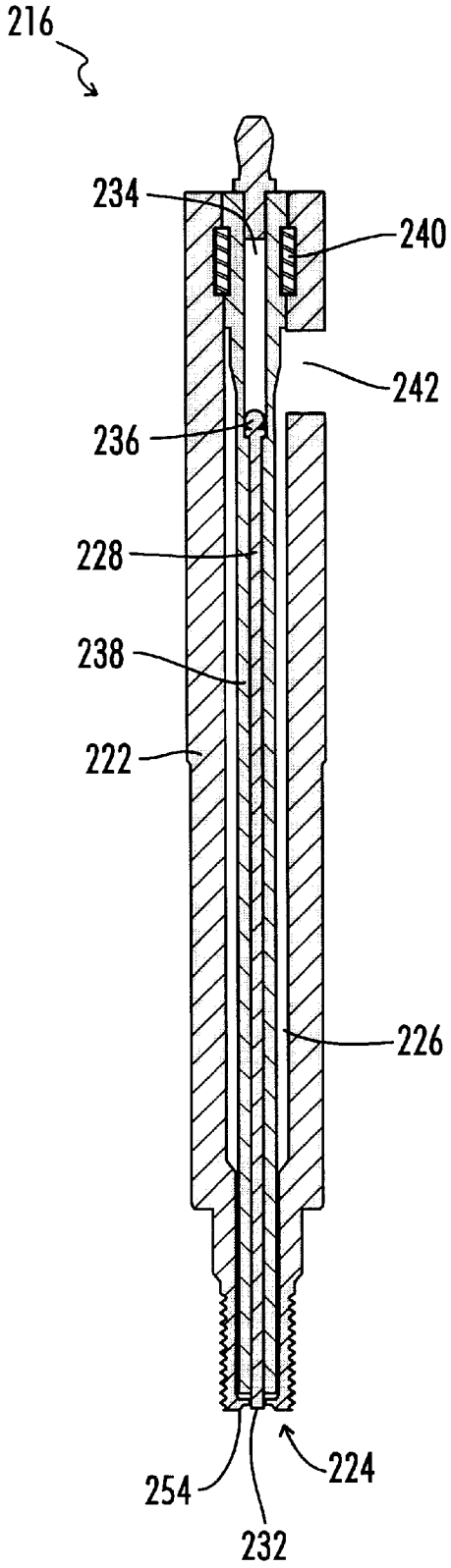
216
234
240
242
236
228
238
222
226
254
224
232

FIG. 15

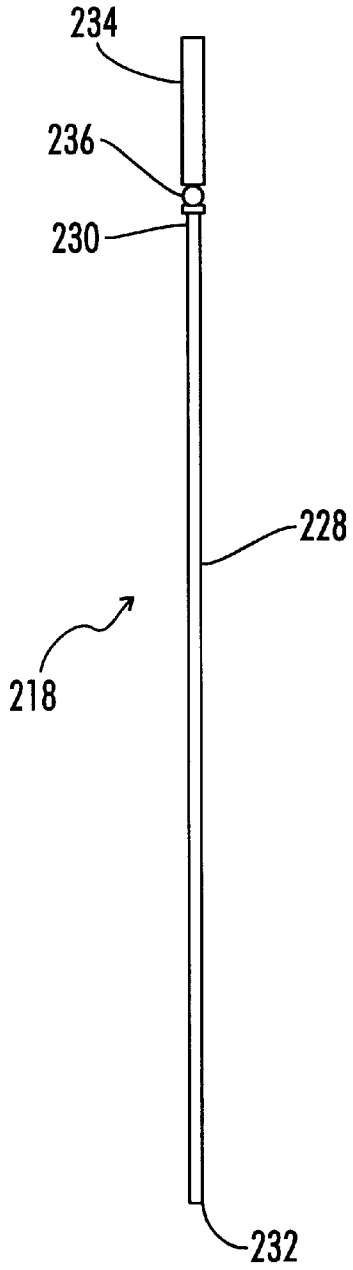
234
236
230
228
218
232

FIG. 16

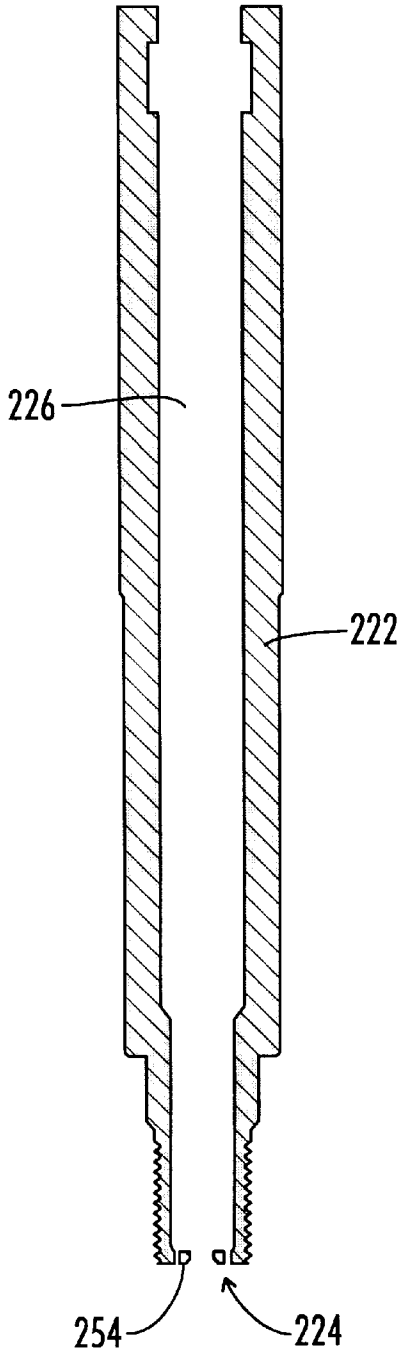

FIG. 17

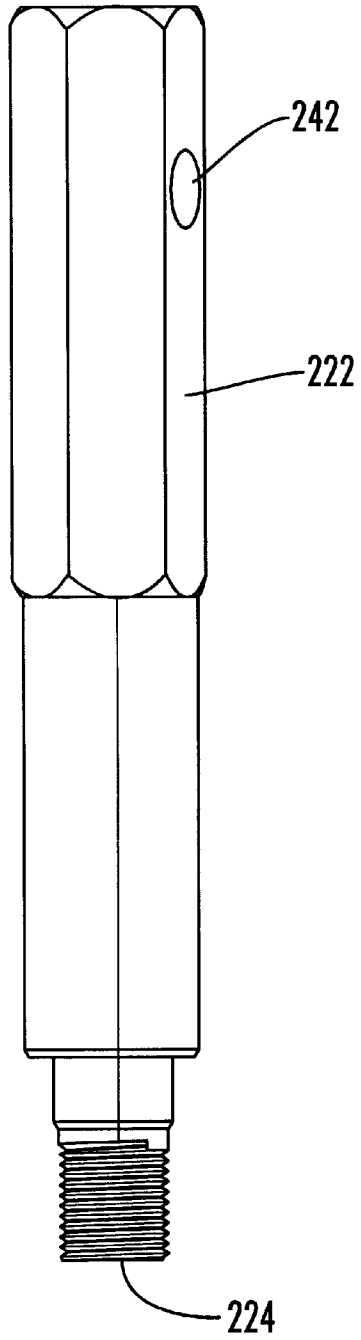

FIG. 18

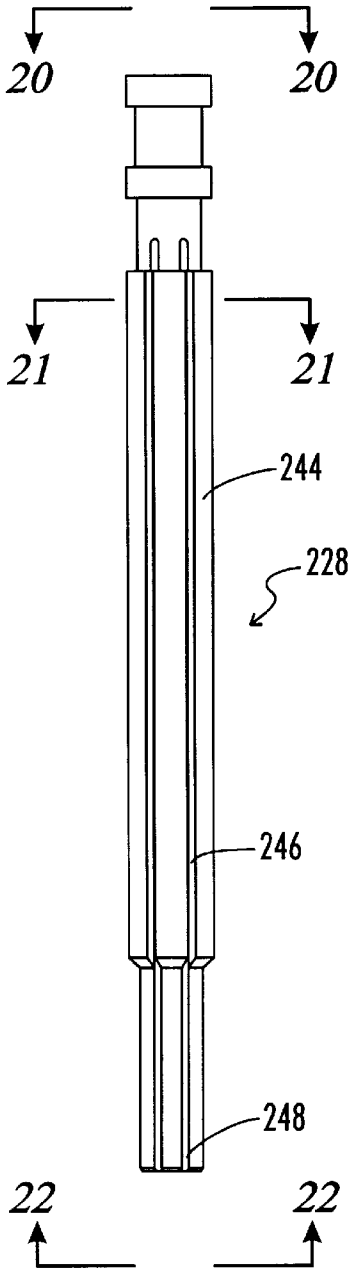

FIG. 19

FIG. 20

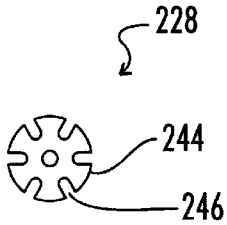

FIG. 21

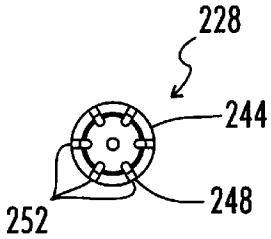

FIG. 22

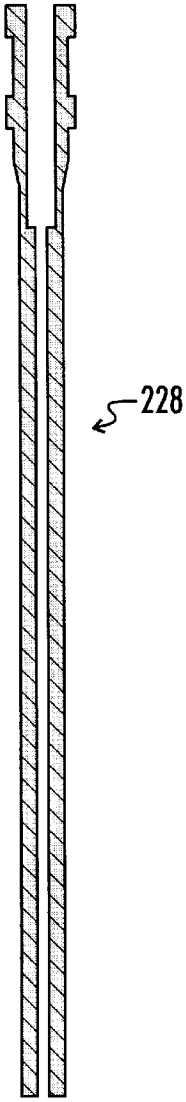

FIG. 23

HYDROGEN POWERED VEHICLE, INTERNAL COMBUSTION ENGINE, AND SPARK PLUG FOR USE IN SAME

This application is a continuation-in-part of U.S. patent application Ser. No. 08/905,862 filed Aug. 4, 1997 by Herman P. Anderson, entitled "Fuel System For Internal Combustion System And Adapter For Use In Same" , now U.S. Pat. No. 5,852,993. U.S. patent application Ser. No. 08/905,862 is hereby incorporated herein by reference.

BACKGROUND OF THE INVENTION

The present invention relates generally to a fuel system for internal combustion engines that enables the invention to utilize alternative fuels; and, more particularly to an improved fuel system for an internal combustion engine and an adapter and spark plug for use in same.

The problems of air pollution caused by automobiles, lawn mowers and other vehicles that have internal combustion engines powered by gasoline is well documented. This problem is particularly described in an article in the San Diego Union Tribune, Wednesday, Sep. 25, 1996 and in Popular Science, August 1996. Indeed, under the Clean Air Act, in the next few years cars that do not run on standard fossil fuels like gasoline will be required in several states. Currently, there are no vehicles available to meet this need.

Thus, it will be appreciated by those skilled in the art that there has been a push to seek other fuels for use in internal combustion engines. These fuels include methane, propane and gasohol.

Hydrogen has also been characterized as a promising fuel source. See Department of Energy publication entitled "Hydrogen Fuel", printed in 1978, U.S. Government Printing Office, U.S. Department of Energy, Office of Public Affairs, Washington, DC 20585. Particularly, the graph presented in FIG. **6**, which is copied from this publication, shows the potential for hydrogen in BTUs/Lb. However, the mass energy density for hydrogen is low; and thus, hydrogen needs to be compressed before its energy potential can be realized. Hydrogen is a "dry fuel" that is more difficult to ignite than "wet fuels." It becomes more difficult to ignite when it is cooled. However, cooling is preferred in most systems to avoid premature ignition of the fuel. Other systems deliver the hydrogen under pressure to prevent ignition in the supply line, which is a form of pre-ignition. No prior art fuel system has been able to capture the energy of hydrogen.

Several fuel systems for use with hydrogen have been proposed. Examples are described in U.S. Pat. Nos. 4,167,919; 4,253,428; 4,016,836; 4,178,882; 5,222,993; 5,085,176; and 5,085,176. The problem with these prior art fuel systems is they cannot take advantage of the alternative fuels to generate sufficient power from the fuels to drive an internal combustion engine for use in a lawn mower, automobile or other vehicle. As noted above, this is a particular problem when hydrogen is used as a fuel. Additionally, the prior art systems do not address the problem of back fire, i.e. undesired explosion of the fuel in the cylinder during the exhaust stroke of the internal combustion engine.

Premature ignition or backfire is often a problem with hydrogen fueled systems. U.S. Pat. No. 4,383,198 (Hosking) teaches a fuel injection spark plug with a pre-cooling chamber to avoid premature ignition indentination of a gaseous fuel supplied to the spark plug. U.S. Pat. No. 4,383,198, Hosking, entitled "Fuel Injection Spark Plug", issued May 10, 1983, is hereby incorporated herein by reference. However, cooling hydrogen makes it more difficult to ignite. This is because hydrogen is a dry fuel whereas gas is generally considered a wet fuel. Thus to reduce fuel pollution one prefers to utilize a fuel such as hydrogen and ignite it with a hotter spark.

One patent discussing very high energy (VHE) ignition systems is U.S. Pat. No. 5,207,208 issued to Ward, entitled "Integrated Convertor High Power CD Ignition", issued May 4, 1993. U.S. Pat. No. 5,207,208 is hereby incorporated herein by reference. Pat. '208 teaches very high energy ignition systems, for instance on the order of 36K volts. It teaches voltage doubling utilizing pulsating sparks of peak current on the order of two amps. While 36K volts may at times be adequate, it is preferable to achieve a higher voltage in the ignition chamber when using hydrogen.

It is known in the art to use a direct ignition system, also referred to as a distributorless ignition system, to increase the spark plug voltage. Such direct ignition systems use a "waste spark" method of spark distribution. Each cylinder is paired with its opposing cylinder in the firing order (1-4, 2-3, on a four cylinder, 1-4, 2-5, 3-6 on a V6) so that one cylinder on compression fires simultaneously with its opposing cylinder on exhaust stroke. Since the cylinder on exhaust stroke requires very little of the available voltage to fire its plug, most of the voltage is used to fire the cylinder on the compression stroke.

U.S. Pat. No. 4,462,380 discusses a distributorless ignition system. U.S. Pat. No. 4,462,380 entitled "Enhanced Spark Energy Distributorless Ignition System" issued Jul. 31, 1984 by Asik is hereby incorporated herein by reference. Pat. '380 teaches a distributorless ignition system of an internal combustion engine which has a supplementary spark energy module to increase spark energy. Each high voltage terminal is connected to a single spark plug and each ignition coil primary is alternately energized and quickly de-energized, producing opposite polarity ignition voltages at each coil terminal. As a result, pairs of spark plugs are alternately fired, with each firing pair occurring in a compression or exhaust stroke and thereby providing the proper ignition to the engine. Asik asserts that firing a spark plug does not affect engine performance or emissions. As taught by the instant invention this is incorrect for hydrogen fuels when the exhaust is sparked at a sufficient voltage.

U.S. Pat. No. 5,146,882 (Brinkman) teaches use of specific wet fuel mixtures in conjunction with direct ignition systems (D.I.S.). It teaches that technical breakdown voltages for typical spark plugs are on the order of 15–20 kV and DIS typically yield between 30 kV–40 kV. U.S. Pat. No. 5,146,882, entitled "Method And Apparatus For Cold Starting A Spark Ignited Internal Combustion Engine Fueled With An Alcohol-Based Fuel Mixture", by Brinkman, et al., issued Sep. 15, 1992, is hereby incorporated herein by reference. The previously referenced prior art discusses alternate fuels and fuel systems but does not teach a method of achieving a sufficient voltage with a hydrogen system.

What is needed, then, is a fuel system for an internal combustion engine that provides a way to generate sufficient power from the alternative fuels and that reduces backfire problems. Such a system is lacking in the prior art. Also lacking in prior art is a system utilizing alternate fuels with reduced pollution capabilities. Also lacking is a way of generating sufficient voltage spark to ignite the alternate fuel.

The following U.S. Patents discuss spark plugs designed for gas internal combustion engines to reduce radio frequency noise and interference. U.S. Pat. No. 4,224,554,

entitled "Spark Plug Having A Low Noise Lever" issued to Nishio et al., Sep. 23, 1980 is hereby incorporated herein by reference. U.S. Pat. No. 4,029,990 entitled "Spark Plug Construction" issued to Nagy et al., Jun. 14, 1977 is hereby incorporated herein by reference.

SUMMARY OF THE INVENTION

It is an object of this invention to provide an improved fuel system for use with alternative fuels.

It is a further object of this invention to provide an improved fuel system for use particularly with hydrogen, and particularly to enhance the mass energy density of hydrogen.

It is an object to provide a hotter sparking plug to ignite the fuel.

It is still a further object of this invention to provide an adapter for use in a fuel system for an internal combustion engine that enhances the power obtained from the alternative fuels.

It is still a further object of this invention to provide an improved fuel system for an internal combustion engine that does not present the environmental hazards of a standard gasoline engine by providing reduced or zero emission of environmentally harmful gases.

It is yet a further object of this invention to provide an improved fuel system for an internal combustion engine that can use an alternative fuel and can use gasoline to facilitate the transition from gasoline to alternative fuels.

It is yet a further object of this invention to provide an improved fuel system for an internal combustion engine that reduces backfire problems.

It is yet a further object of this invention to provide an improved fuel system for an internal combustion engine that reduces backfire problems by cooling the electrode in the spark plug with the hydrogen gas fuel.

It is an object to reduce backfire by providing hydrogen at a sufficient pressure to reduce backfire and igniting it with a hotter spark (i.e. a higher voltage).

It is still a further object of this invention to provide an adapter for use in a fuel system for an internal combustion engine that enhances the power obtained from the alternative fuels.

It is a further object to generate a plasma field in a cylinder to burn residual exhaust and reduce emissions.

It is yet a further object of this invention to provide a direct injection fuel system wherein fuel is injected directly into the cylinder.

It is an object to provide a "2-fire" direct injection system, wherein the fuel is ignited during the power stroke and the exhaust stroke.

It is yet a further object of this invention to provide a way to convert the standard induction fuel system of a lawnmower to a direct injection fuel system wherein fuel is injected directly into the cylinder.

It is yet a further object of this invention to provide a way to convert the indirect injection fuel system of an automobile to a direct injection fuel system wherein fuel is injected directly into the cylinder.

The internal combustion engine fuel system of this invention includes a structure for mixing the alternative fuel, preferably hydrogen, with oxygen in ambient air to stratify the fuel. The term "alternative fuels" is known in the art and is meant to refer to fuels other than conventional gasoline.

The invention in one embodiment comprises an adapter, the adapter including a housing mounted between spark plug and cylinder of the internal combustion engine. A plug is placed within the housing. The plug has ridges or grooves on its outer surface that act as mixing structures. Thus, when hydrogen is introduced into the adapter housing it is mixed with ambient oxygen within the chamber as it flows over the plug. The mixing structures on the plug create a vortexing action as the hydrogen flows over the plug and towards the cylinder of the engine.

An electrode protrudes from the plug towards the cylinder. The electrode is preferably platinum and generates the necessary spark to create combustion of the hydrogen/air mixture adjacent to the cylinder to thereby power the cylinder in the engine. A platinum electrode is preferably used because it enhances a catalytic conversion of combustion by-products to more environmentally compatible products.

Thus, the combination of the compression action generated by the conventional piston and push rod within the cylinder of the engine in conjunction with the hydrogen/air mixing structure that vortexes the hydrogen/air create compressed hydrogen that is mixed with a combustion facilitator, i.e. oxygen in the ambient air to enable the system of this invention to capture the abundant energy found in hydrogen fuel.

The enhanced mixing capabilities of this invention is also adaptable for use with other alternative fuels such as natural gas, alcohol, propane and the like.

One embodiment of the present invention is for a hydrogen powered vehicle including an internal combustion engine operably connected to power the vehicle and adapted to connect to a hydrogen supply line. The internal combustion engine comprises a cylinder operably connected to the supply line; a piston operably disposed in the cylinder; and a spark plug having an electrode assembly in operable sparking communication with the cylinder, wherein the spark plug is capable of producing a spark of at least 45 kV.

Preferably the spark plug comprises a housing having a sparking end and a hollow chamber containing the electrode assembly. The electrode assembly comprises an electrode having a connector end and a sparking end, wherein the sparking end is positioned adjacent to the housing sparking end. The electrode assembly preferably comprises a coil electrically connected to the electrode connector.

Preferably the housing comprises a fuel inlet port in fluid communication with the supply line, and an insulator surrounding the electrode assembly, wherein the insulator is positioned in the hollow chamber. Preferably the insulator comprises an outer surface defining a first fuel channel having a first respective fuel exit port, wherein the first fuel channel is in fluid communication with the fuel inlet port and the fuel exit port exits into the cylinder.

The present invention also includes a method of operating an internal combustion engine comprising supplying hydrogen fuel to the engine and creating a spark in the cylinder during the power stroke and the exhaust stroke, wherein the spark created during the power stroke is at least 45 kV. In one embodiment the spark is at least 70 kV. In certain embodiments the method comprises generating plasma during the exhaust stroke. The exhaust fuel converts to an exhaust emission and coalesces with the plasma, thereby reducing fuel pollution.

Accordingly, it is an object in the invention to provide a spark plug producing a sufficiently hot spark to ignite hydrogen fuel, including cooled hydrogen fuel.

Another object of the present invention is to provide a device for reducing fuel exhaust emissions.

Another object of the present invention is to provide a cleaner burning engine.

Another object is to provide a spark plug for reducing emissions.

Another object of the present invention is to provide a device functional with dry fuels. Use of the term hydrogen, as discussed herein, is intended to encompass such dry fuels. However the term as used excludes such wet fuels as gas and alcohol.

Another object of the present invention is to provide an integrated fuel system adapted to provide these and objectives.

Other objects and advantages of the present invention will be apparent to those of skill in the art by reference to the teachings disclosed herein, including the attached drawings, detailed description of exemplary embodiments, and claims.

BRIEF DESCRIPTION OF THE DRAWINGS

FIG. **1** is a plan view of the fuel system of this invention with a lawn mower shown in phantom.

FIG. **2** is a perspective view of the adapter of the fuel system of this invention.

FIG. **3** is an exploded perspective view of the adapter of the fuel system of this invention.

FIG. **4** is a cross-sectional view of the adapter of the fuel system of this invention.

FIGS. **5**A–**5**D are a schematic of the 4 cycle combustion in an internal combustion engine including the adapter of this invention.

FIG. **6** is a graph which shows the energy potential for hydrogen in BTUs/Lb.

FIG. **7** shows a vehicle of the present invention utilizing hydrogen fuel.

FIG. **8** depicts an intake stroke of a cylinder connected to a hydrogen source.

FIG. **9** depicts a compression stroke of a cylinder connected to a hydrogen source.

FIG. **10** depicts a power stroke of a cylinder connected to a hydrogen source. The spark plug shown in FIG. **10** is depicted sparking.

FIG. **11** depicts a cylinder in an exhaust stroke connected to a hydrogen source, wherein the spark plug is sparking during the exhaust stroke.

FIG. **12** shows an elevated side view of a spark plug of the present invention.

FIG. **13** shows a plan view in the direction of view line **13**—**13** of the spark plug shown in FIG. **12**.

FIG. **14** depicts a plan view in the direction of view line **14**—**14** of the spark plug shown in FIG. **12**.

FIG. **15** depicts an elevated side section view of the spark plug shown in FIG. **12**.

FIG. **16** shows a electrode assembly which is disposed in the hollow chamber depicted in FIG. **15**.

FIG. **17** shows a section view of the spark plug housing clearly showing the hollow chamber and a torridal ground electrode.

FIG. **18** depicts an elevated side view of the spark plug housing and a fuel inlet port.

FIG. **19** depicts an insulator comprising fuel channels and fuel exit ports.

FIG. **20** is a top plan view of the insulator shown in FIG. **19** viewed in the direction of view line **20**—**20**.

FIG. **21** is a cross section view of the insulator shown in FIG. **19** along section line **21**—**21**.

FIG. **22** is a cross section view of the insulator shown in FIG. **19** viewed in the direction of view line **22**—**22**.

FIG. **23** is an elevated section view of the insulator shown in FIG. **19**.

DESCRIPTION OF THE PREFERRED EMBODIMENT

Referring now to the drawings, wherein like reference numerals refer to like parts throughout, the fuel system is referred to generally at **10**. The fuel system of this invention is contemplated for use with an internal combustion power system, such as an internal combustion engine or such as a home heating system. Fuel system **10** is portrayed in this case as connected to a standard lawn mower. The lawn mower is shown in phantom at **12** in FIG. **1**. The lawn mower is a conventional lawn mower as can be purchased from a company such as Murray of Ohio. The internal combustion engine in the lawn mower is a standard 4-cycle engine with two cylinders and develops 18 horsepower. A suitable example can be purchased from Briggs & Stratton, Milwaukee, Wis. 53201.

Referring particularly to FIG. **1**, system **10** includes fuel tank **14** that is mounted to lawn mower **12** via mounting assembly **15**. In the preferred embodiment, fuel tank **14** includes hydrogen gas. Accordingly, for the purposes of the foregoing detailed description, hydrogen gas will be described.

A line **22** begins at fuel tank **14** and proceeds to back-flow valve **16**. Back-flow valve **16** is a standard valve and is available from AirCo Gases Company, 575 Mountain Avenue, Murray Hill, N.J. 07974, part no. WCS CV-4M. PSI tank gauge **19** is inserted in line **22** between back-flow valve **16** and flow pressure gauge **18**. PSI tank gauge **19** is available from AirCo Gases Company also, part no. WCS CV5M, and serves as an indicator of fuel remaining in the tank **14**. Flow pressure gauge **18** is used to monitor the flow of the hydrogen in pressure units. The flow is started using valve **16**. The optimal flow pressure is 25 pounds of flow pressure from the tank **14** to the cylinder of the engine.

The flow of hydrogen is regulated via valve **20** that is part of gauge **18**. Thus, when valve **20** is opened, hydrogen proceeds through line section **22** to hydrogen flow solenoid **26**A. The user can access the hydrogen fuel by flipping hydrogen flow switch **24**A into the "on" mode so that hydrogen gas in line **22** can proceed through hydrogen flow solenoid **26**A and into line section **28**.

Throttle **30** regulates the flow of hydrogen from line section **28** into line section **29** and ultimately, to engine **13**. Throttle **30** is connected to throttle pedal **50** via includes throttle cable **48**. Throttle pedal **50** also operates the butterfly valves in the carburetor in engine **13** in a conventional manner.

As an option, the throttle can be controlled electronically by a digital fuel controller product. Such a product is commercially available from Autotronic Controls Corp., 1490 Henry Brennan Drive, El Paso, Tex. 79936.

Line portion **29** proceeds through splitter **32** and is split into upper line **34** and lower line **36**. Lines **34** and **36** proceed to adapters **38**. Additional back-flow prevention valves **39** and **41** are mounted between lines **34** and **36** and adapters **38**. Braided Teflon® is the preferred material for the fuel lines of the system.

Battery **42** is connected via battery cable **43** to magneto **44**. Magneto **44** then controls the current through spark plug

lines **46** to adapters **38** in a conventional manner. Thus, the regulation of the spark that ignites the fuel in the cylinder of engine **13** is conventional. Additionally, the intake of air into the engine **13** is accomplished through the standard carburetor system of engine **13**. In a car, the sparking of the spark plugs can be controlled by the standard distributor/battery ignition system.

A second solenoid **26**B controls the flow of gasoline from tank **23** through gasoline line **52**. Solenoid **26**B is controlled by switch **24**B. Throttle **30** is connected to gasoline line **52** and can also be used to control the flow of gasoline to engine **13**. Thus, this invention can be used with both an alternative fuel and gasoline.

Referring now to FIGS. **2**, **3** and **4**, the adapter **38** of this invention is shown in more detail. Adapter **38** includes housing **60**. A threaded port **62** is formed into housing **60** through port block **64**. Hydrogen lines are threadably connected to the adapter **38** via port **62**. Port **62** is also referred to as an entrance port. The entrance port has an entrance area **62***a*.

Adapter **38** also includes spark plug **66** which is effectively a standard spark plug except for the modification to the electrode as described below. Spark plug **66** includes a threaded end **68** which is threadably received in the threaded upper end **70** of housing **60**. Spark plug wires **46** (as seen in FIG. **1**) are connected to connector end **72** of spark plug base **66**.

Electrode **76** protrudes from spark plug **66** and is of a length sufficient so that the threaded tip **77** (best seen in FIGS. **3** and **4**) of the electrode **76** is proximate to the cylinder of the internal combustion engine when the adapter **38** is mounted. In one embodiment the electrode **76** is coterminus with an exit port **88** of the adapter **38**. This most clearly is shown in FIG. **4**. Electrode **76** is preferably platinum to enhance catalysis of combustion by-products, as will be more fully discussed below.

Adapter **38** also includes plug **79**. Plug **79** includes an axial internal void space **80**. Thus, plug **79** fits over electrode **76** via internal void space **80**. Plug **79** preferably comprises a ceramic material that acts as a good insulator. A suitable source for ceramic plug **79** is AM/PRO Machinery, Inc. 134 Church Street, Plain City, Ohio 43064-1321.

An important aspect of this invention is found on the external surface of plug **79**. An annular groove **82** is formed on the surface of plug **79** near its distal end **81** so as to be proximal to the port **62** where hydrogen enters housing **60**. Two stratifying grooves **84** proceed along the surface of plug **79** until they reach its distal end **83**. It is these mixing structures, i.e. annual groove **82** and stratifying grooves **84**, that facilitate the improved power generation from alternative fuels as provided by this invention. It will be apparent to those skilled in the analogous arts that mixing structure may be formed in the inner surface of the adapter housing **60**.

Alternatively a combination of vortex producing structures is integral with both the plug **79** and adapter housing **60**. Also any conventional vortex producing means should be sufficient groves, per se, are not required.

On threaded tip **77** of electrode **76**, there are mounted a spacer nut **78** and a spark gap nut **85**. As best seen in FIG. **2**, the spark gap nut **85** includes a protrusion **85***a* that provides the spark gap between electrode **76** and periphery **89** of the exit port **88** of housing **60**. The exit port **88** includes an exit area **88***a*. Preferably, the exit area **88***a* is no larger than the entrance area **62***a*, though this is not critical. Preferably, the spark gap nut **85** is brass and the preferred spark gap distance is 25/1000 of an inch. Of course, the electrode may be coterminus with the plug distal end **83**.

As best seen in FIG. **4**, where arrows represent gas flow, hydrogen gas flows into chamber **60** via port **62**. The hydrogen gas cools electrode **76**, which facilitates combustion. Stratifying grooves **84**, preferably there are two, act to mix the hydrogen that is flowing into housing **60** with ambient air therein. Though more or less vortex creating grooves (stratifying grooves) may be desired. Typically this will depend on the relative dimensions of the grooves and diameter of the plug as well as the pressure or velocity of the mixture in the housing. The mixing occurs within void space **86** of housing **60** and creates a vortexing or tornado action. Plug **79** tapers as it proceeds from its distal end **81** to its proximal end **83**. Thus, proximal end **83** is smaller in diameter than distal end **81**. This provides additional space within void space **86** for the mixing of the hydrogen and air. The stratified hydrogen/air are twisting in a vortex fashion when leaving housing **60** via exit port **88**. The vortexing action produced by grooves **84** on the plug **79** creates a "tornado" **110** of hydrogen/air with a hollow center that generates a vacuum. Similar effect would result were t he grooves to be placed on the housing. The vacuum propels the hydrogen/air mixture into the cylinder of the engine for combustion. Such mixing cannot be accomplished in a conventional induction system.

Referring now to FIG. **5**, a schematic of the system of this invention is portrayed, with arrows representing gas flow. Hydrogen flows in through port **62** through adapter **38** and into cylinder **92**. Air enters cylinder **92** through air intake **90** and air intake valve **91**. The stratified hydrogen/air mixture is compressed in the compression stroke of the engine via piston **94** and push rod **96**, which are standard structures in an internal combustion engine. In the power stroke shown in FIG. **5**-C, a spark is generated in the compressed stratified hydrogen/air mixture ignites and drives piston **94** and push rod **96** to power the engine.

The mass energy density of hydrogen is enhanced through the increased pressure on the hydrogen exerted by piston **94** on the hydrogen/air mixture within the cylinder **92** in the uptake stroke in an internal combustion engine. The pressurized and well-mixed hydrogen/air mixture is rapidly ignited through the spark because hydrogen has a fast flame front. This reduces problems with timing. Thus, the energy store found in hydrogen is captured through this system via the compression of the hydrogen gas within cylinder **92** and via the thorough mixing of hydrogen and air provided by adapter **38**.

In addition, in the exhaust phase in a four cycle engine a second spark is generated from the plug to ensure complete combustion of by-products. This is enhanced by using an electrode made of platinum. Exhaust leaves cylinder **92** through exhaust port **98**. Exhaust port **98** is closed during other phases by exhaust outlet valve **100**.

In the exhaust stroke, because air valve **91** is closed, the substantial component of the gases in cylinder **92** is hydrogen. This is also accomplished due to the fact that in the system of this invention, the hydrogen is continuously flowing. When this spark interacts with what is predominately hydrogen, a plasma is formed. This plasma blocks back-flow of air from exhaust port **98**. Prevention of back-flow of air prevents the hydrogen fuel system from backfiring, which is another common problem of hydrogen fuel systems. In effect, then, the plasma formed by the hydrogen acts as a virtual valve in that the plasma blocks the back-flow of air.

When the plasma of the hydrogen is generated as described above, UV radiation is generated which also facilitates consumption of combustion by-products. This increases the environmental friendliness of the system.

In addition to hydrogen the following fuels can be used in this system: natural gas; alcohol; gasohol; propane and buthane. A mixture of hydrogen and natural gas can also be used. As noted above, gasoline can be used in this system when solenoid **26** is used to stop the flow of hydrogen.

Further, it is contemplated that an adapter that is described herein for use with an internal combustion engine can also be used with a home heating system such as a home heating system that may currently use natural gas. The vortexing action created by the plug would enable appropriate power to be captured from the hydrogen fuel so as to effectively heat a home.

Another embodiment of the invention is a hydrogen powered vehicle **200** shown in FIG. **7**. The hydrogen powered vehicle **200** includes an internal combustion engine **210** operably connected to power the vehicle **200** and adapted to connect to a hydrogen supply **212** through a supply line **214**.

Referring to FIG. **8**, the internal combustion engine **210** comprises a cylinder **92** operably connected to the supply line **214**. A piston **94** is operably disposed in the cylinder **92**. A spark plug **216** having an electrode assembly **218** (not shown in FIG. **8**) is in operable sparking communication with the cylinder **92**, wherein the spark plug **216** is capable of producing a spark **220** (shown in FIG. **10**) of at least 45 kilovolts. FIGS. **8–11** are substantially similar to FIGS. **5A–5D** depicting schematic representations of a 4-cycle piston-cylinder engine. Other piston and cylinder embodiments will be apparent to those with skill in the art. FIG. **8** represents an intake stroke. FIG. **9** depicts a compression stroke. FIG. **10** depicts a power stroke, in which the spark plug **216** sparks. FIG. **11** depicts an exhaust stroke, where the spark plug **216** is sparking. Refer to FIGS. **5A–5D** discussed earlier for further description of similar components of FIGS. **8–11**.

FIG. **12** shows one embodiment of the spark plug **216** in an elevated side view. FIG. **13** shows a plan view of the spark plug **216** along line **13—13** shown in FIG. **12**. FIG. **14** shows a plan view of the spark plug **216** in the direction of line **14—14** shown in FIG. **12**.

FIG. **15** depicts a section view of the spark plug **216**. FIG. **15**, section view, depicts a representative spark plug **216**. The spark plug shown in FIG. **15** comprises a housing **222** having a sparking end **224** and a hollow chamber **226** containing the electrode assembly **218**.

FIG. **16** depicts the electrode assembly **218** removed from the hollow chamber **226**. The electrode assembly **218** depicted in FIG. **16** comprises an electrode **228**. The electrode **228** has a connector end **230** and a sparking end **232**. As shown in FIG. **15** the sparking end **232** of the electrode **228** is positioned adjacent to the housing sparking end **224**. The electrode assembly further comprises a coil **234** electrically connected to the electrode connector end **230**.

Referring to FIGS. **10** and **11**, wherein the piston **94** moves through a power stroke in FIG. **10** and an exhaust stroke in FIG. **11**, the spark plug **216** is shown to fire during the power stroke and the exhaust stroke.

The electrode assembly **218** shown in FIG. **16** comprises a steel ball **236** positioned between the coil **234** and the electrode connector end **230**. Other operable ball-coil-electrode arrangements will be apparent to those of skill in the art.

The spark plug **216** shown in FIG. **15** also comprises an insulator **238** surrounding the electrode assembly **218** and positioned in the hollow chamber **226**. A ceramic pore **240** is shown stabilizing the insulator **238** in the hollow chamber **226**. Other methods of locating the insulator in the hollow chamber will be apparent to those of skill in the art.

An elevated section view of the housing **222** is shown in FIG. **17**. An elevated side view of the housing **222** is shown in FIG. **18**. In the exemplary embodiment of the housing **222** shown in FIG. **18**, the housing **222** comprises a fuel inlet port **242** in fluid communication with the supply line **214** (not shown). FIG. **19** depicts an exemplary embodiment of the insulator **238**. The insulator **238**, shown in FIG. **19**, comprises an outer surface **244** defining a first fuel channel **246** having a first respective fuel exit port **248**. The first fuel channel **246** is in fluid communication with the fuel inlet port **242**. The fuel exit port **248** exits into the cylinder **292**.

FIG. **20** shows a plan view of the insulator **228** shown in FIG. **19** along line **20—20**. FIG. **21** shows a section view of the insulator **228** shown in FIG. **19** viewed along section line **21—21**. FIG. **22** depicts a bottom plan view of the insulator **228** shown in FIG. **19** along line **22—22**. FIG. **23** shows a section view of the insulator **228** cut through section line **23—23** shown in FIG. **19**.

In the embodiment of the insulator **228** shown in FIGS. **19–22**, the insulator outer surface **244** defines a plurality of fuel channels **250**, including the first fuel channel **246**. The fuel channels **250** include a plurality of respective fuel exit ports **252**, including the first fuel exit port **248**. This is shown clearly in FIG. **22**. Preferably, the plurality of fuel channel exit ports **252** are spaced equally, or equi-distant, about the electrode **228**. This is shown well in FIGS. **21** and **22**.

Referring to FIGS. **15** and **17**, one embodiment of the housing **222** sparking and **224** comprises a torridal ground electrode **254** positioned about the electrode sparking end **232** (shown in FIG. **15**). Preferably the housing sparking end **224** and the electrode sparking end **232** are co-terminous. In one embodiment the first respective fuel exit port **248** is co-terminous with the housing sparking end **224** and the electrode sparking end **232**.

More generally the present invention includes an internal combustion engine **210** adapted to operate on hydrogen fuel supplied through a supply line **214**. Typically the engine comprises a first cylinder **92** in fluid communication with the supply line **214**; a first piston **94** disposed in the first cylinder **92** to move through a power stroke and an exhaust stroke (See FIGS. **10** and **11**) in the first cylinder **92**. The engine **210** also comprises a spark plug **216** having a housing **222** including a sparking end **224** and an electrode assembly **218** located in the housing **222**, wherein the sparking end **224** is in operable communication with the cylinder **92** and capable of producing a spark **220** of at least 45 kV. Preferably, the spark plug **216** fires during the power stroke and the exhaust stroke. In one embodiment the housing sparking end **224** comprises a torridal ground electrode **254**. The electrode assembly **218** comprises an electrode **228** having a sparking end **230** capable of sparking toward the torridal ground electrode **254**. Preferably the electrode assembly **218** comprises a coil **234** in electrical communication with the electrode **228**.

In one embodiment the electrode assembly **218** comprises an electrode **228** having a sparking end **230** and a coil **234** electrically connected to the electrode **228** opposite the electrode sparking end **230**. This is the embodiment shown in FIG. **15**. Typically the spark plug **216** comprises an insulator **228** surrounding the electrode assembly **218**. Preferably the insulator **228** includes a fuel channel **246** having a fuel exit port **248** near the electrode sparking end **232**.

It will be apparent to those with skill in the art that the present invention also comprises a method of operating an internal combustion engine **210** comprising the steps of supplying hydrogen fuel to the engine **210**; moving a piston **94** in a cylinder **92** through a power stroke and an exhaust stroke; creating a spark **220** in the cylinder **92** during the power stroke and the exhaust stroke, wherein the spark created during the power stroke is at least 45 kV; and supplying the fuel to a location sufficiently near the spark to ignite the fuel. This is shown well in FIGS. **10**, **15** and **19**.

The present invention also includes a method wherein the step of creating a spark **220** comprises passing an electric current (not shown) through an electrode assembly **218** including a coil **234** electrically connected to an electrode **218** having a sparking end **232**; insulating the electrode assembly **218**; and arcing the electric current from the electrode sparking end **232** to a ground electrode **254**. The ground electrode **254** as shown in FIGS. **15** and **17** a toroidal ground electrode **254**.

In certain embodiments the step of creating a spark **220** includes creating a spark **220** having at least 70 kV. Creating a spark of sufficient voltage will generally reduce the exhaust pollution. Typically this happens by generating a plasma or plasma field during the exhaust stroke. Thus, one method of the present invention further comprises the steps of generating plasma during the exhaust stroke; and allowing exhaust fuel converted to an exhaust state to coalesce with the plasma. This reduces exhaust pollution.

Thus, the apparatus and system of this invention provides an effective means to use alternative fuels. The use of alternative fuels can enhance the environment by reducing the use of conventional gasoline and the environmentally detrimental by-products caused by the consumption thereof.

Thus, although there have been described particular embodiments of the present invention of a new and useful "Hydrogen Powered Vehicle, Internal Combustion Engine, And Spark Plug For Use In Same", it is not intended that such references be construed as limitations upon the scope of this invention except as set forth in the following claims. Further, although there have been described certain dimensions used in the preferred embodiment, it is not intended that such dimensions be construed as limitations upon the scope of this invention except as set forth in the following claims.

What is claimed is:

1. A hydrogen powered vehicle including an internal combustion engine operably connected to power the vehicle and adapted to connect to a hydrogen supply through a supply line, the internal combustion engine comprising:

a cylinder operably connected to the supply line;

a piston operably disposed in the cylinder;

a spark plug having an electrode assembly in operable sparking communication with the cylinder, wherein the spark plug is capable of producing a spark of at least 45 kV, the spark plug including:

a housing having a sparking end and hollow chamber, the housing including a fuel inlet port in fluid communication with the supply line;

an electrode assembly, received in the hollow chamber and including an electrode having a connector end and a sparking end, the sparking end positioned near the housing sparking end;

an insulator surrounding the electrode assembly and positioned in the hollow chamber,

the insulator including an outer surface defining a first fuel channel having a first respective fuel exit port, wherein the first fuel channel is in fluid communication with the fuel inlet port and the fuel exit port exits in the cylinder.

2. The apparatus of claim **1**, wherein the piston moves through a power stroke and an exhaust stroke in the cylinder, and the spark plug fires during the power stroke and the exhaust stroke.

3. The apparatus of claim **2**, wherein:

the spark plug comprises a housing having a sparking end and hollow chamber containing the electrode assembly; and

the electrode assembly comprises an electrode having a connector end and a sparking end, the sparking end positioned adjacent to the housing sparking end and the electrode assembly further comprises a coil electrically connected to the electrode connector end.

4. The apparatus of claim **1**, wherein the electrode assembly comprises a steel ball positioned between a coil and the electrode connector end.

5. The apparatus of claim **3**, wherein the insulator outer surface defines a plurality of fuel channels, including the first fuel channel, wherein the fuel channels include a plurality of respective fuel exit ports, including the first respective fuel exit port.

6. The apparatus of claim **5**, wherein the plurality of fuel channel exit ports are spaced equally about the electrode.

7. The apparatus of claim **6**, wherein the housing sparking end comprises a toroidal ground electrode positioned about the electrode sparking end, and wherein the housing sparking end and the electrode sparking end are co-terminous.

8. The apparatus of claim **7**, wherein the housing sparking end comprises a toroidal ground electrode positioned about the electrode sparking end, and wherein the housing sparking end, the electrode sparking end, and the first respective fuel exit port are co-terminous.

9. An internal combustion engine adapted to operate on hydrogen fuel supplied through a supply line, the engine comprising:

a first cylinder in fluid communication with the supply line;

a first piston operably disposed in the first cylinder to move through a power stroke and an exhaust stroke in the first cylinder;

a spark plug having housing including a sparking end, and an electrode assembly located in the housing, wherein the sparking end is in operable communication with the cylinder and capable of producing a spark of at least 45 kV; and wherein

the spark plug fires during the power stroke and the exhaust stroke;

the spark plus comprises an insulator located in the housing around the electrode assembly;

the housing comprises a fuel inlet port in fluid communication with the supply line; and

the insulator includes a first fuel channel in fluid communication with the fuel inlet port, the first fuel channel having a respective first fuel exit port exiting into the cylinder.

10. The device of claim **9**, wherein the housing sparking end comprises a toroidal ground electrode, and wherein the electrode assembly comprises an electrode having a sparking end capable of sparking toward the toroidal ground electrode.

11. The device of claim **10**, wherein the electrode assembly comprises a coil in electrical communication with electrode.

12. The device of claim **11**, wherein the electrode sparking end, the toroidal ground electrode, and the first respective fuel exit port are co-terminus.

13. The device of claim **12**, wherein:

the electrode assembly comprises an electrode having a sparking end, and a coil electrically connected to the electrode opposite the electrode sparking end.

* * * * *

US007383792B1

(12) **United States Patent**
Sharpe

(10) **Patent No.: US 7,383,792 B1**
(45) **Date of Patent: Jun. 10, 2008**

(54) **HYDROGEN GAS INJECTOR PLUG**

(76) Inventor: **Thomas H. Sharpe**, 55 Dorr Dr., North Augusta, SC (US) 29841

(*) Notice: Subject to any disclaimer, the term of this patent is extended or adjusted under 35 U.S.C. 154(b) by 0 days.

(21) Appl. No.: **11/902,588**

(22) Filed: **Sep. 24, 2007**

Related U.S. Application Data

(60) Provisional application No. 60/877,138, filed on Dec. 27, 2006.

(51) **Int. Cl.**
F02B 43/00 (2006.01)
F02B 43/04 (2006.01)

(52) **U.S. Cl.** ..... **123/1 A**; 123/25 A

(58) **Field of Classification Search** ..... 123/3, 123/DIG. 12, 1 A, 25 B, 25 A, 25 R, 25 D, 123/468, 470
See application file for complete search history.

(56) **References Cited**

U.S. PATENT DOCUMENTS

3,799,124 A * 3/1974 Swain ..... 123/1 A
4,037,568 A 7/1977 Schreiber
4,140,090 A 2/1979 Lindberg
4,448,160 A * 5/1984 Vosper 123/297
4,702,894 A 10/1987 Cornish
5,085,176 A 2/1992 Brinkley
5,676,100 A * 10/1997 Dam et al. ..... 123/145 A
5,690,902 A 11/1997 Werth
5,852,993 A * 12/1998 Anderson 123/297
6,062,185 A * 5/2000 Chiu et al. ..... 123/145 A
6,119,651 A * 9/2000 Anderson 123/297
6,941,901 B2 * 9/2005 Taxon ..... 123/25 E
2004/0149256 A1 * 8/2004 Dye et al. 123/297

* cited by examiner

Primary Examiner—Mahmoud Gimie
(74) *Attorney, Agent, or Firm*—Richard C. Litman

(57) **ABSTRACT**

The hydrogen gas injector plug for generating hydrogen gas from ambient air drawn into the piston chamber of an engine includes an array of nozzles fabricated from a metal or a mixture of metals. When heated to a pre-determined temperature, the metallic nozzles react with atmospheric water to disassociate hydrogen gas. The hydrogen gas is injected from the nozzles into the piston chamber and mixed with air. An ignition device ignites the mixture of hydrogen and air so that it burns to power the piston in a conventional manner. The metallic nozzle is heated via a copper conductor connected to a source of electric current.

14 Claims, 3 Drawing Sheets

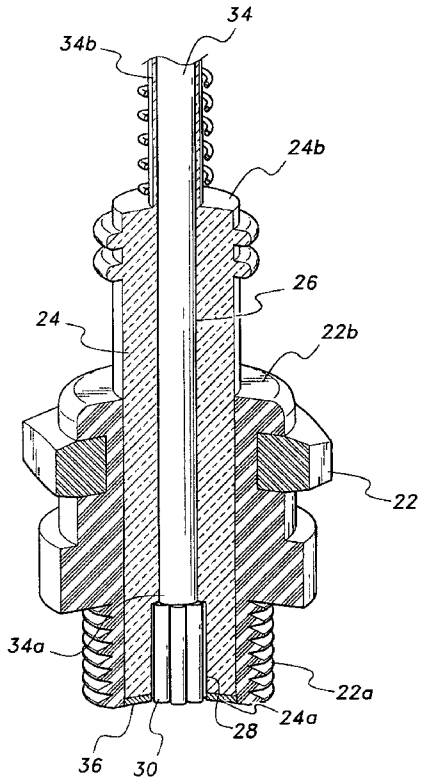

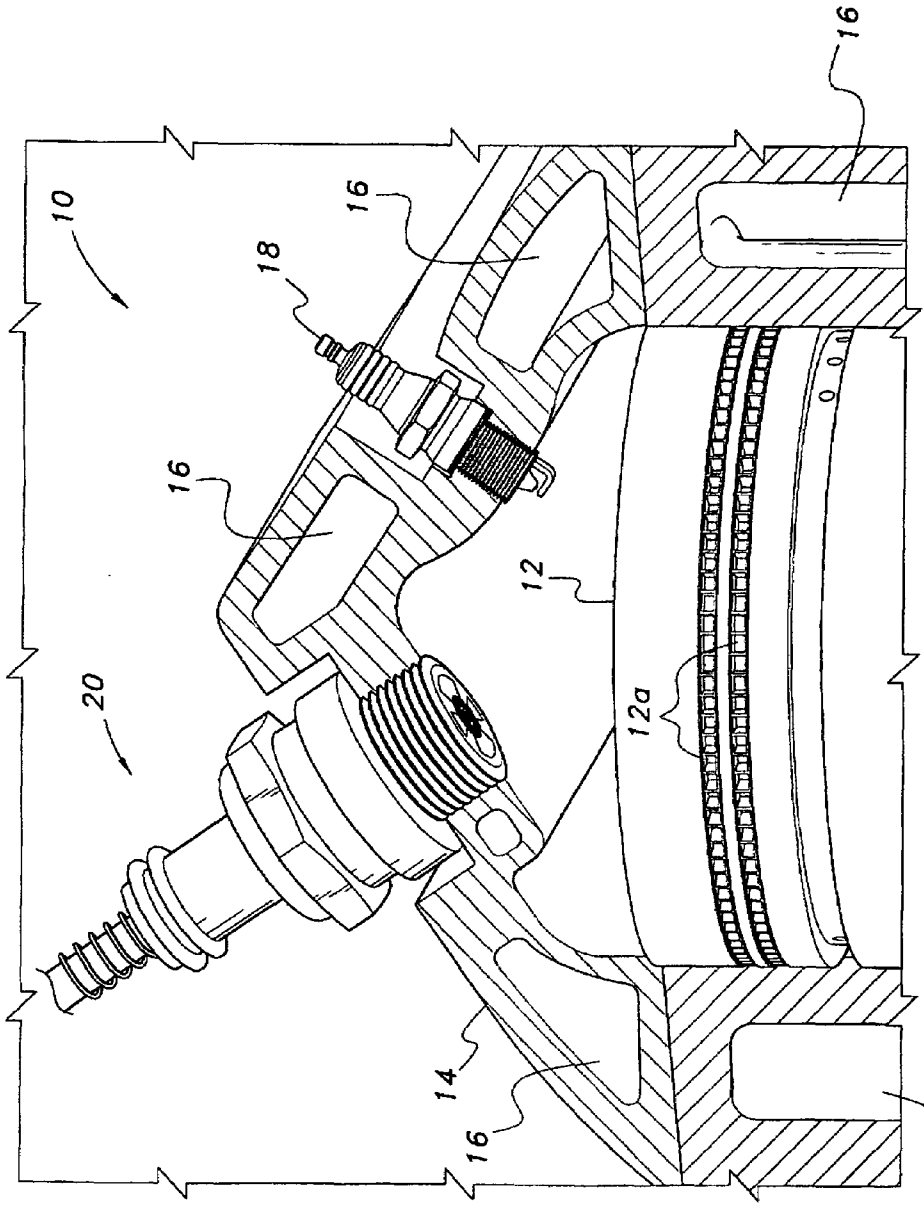

FIG. 1

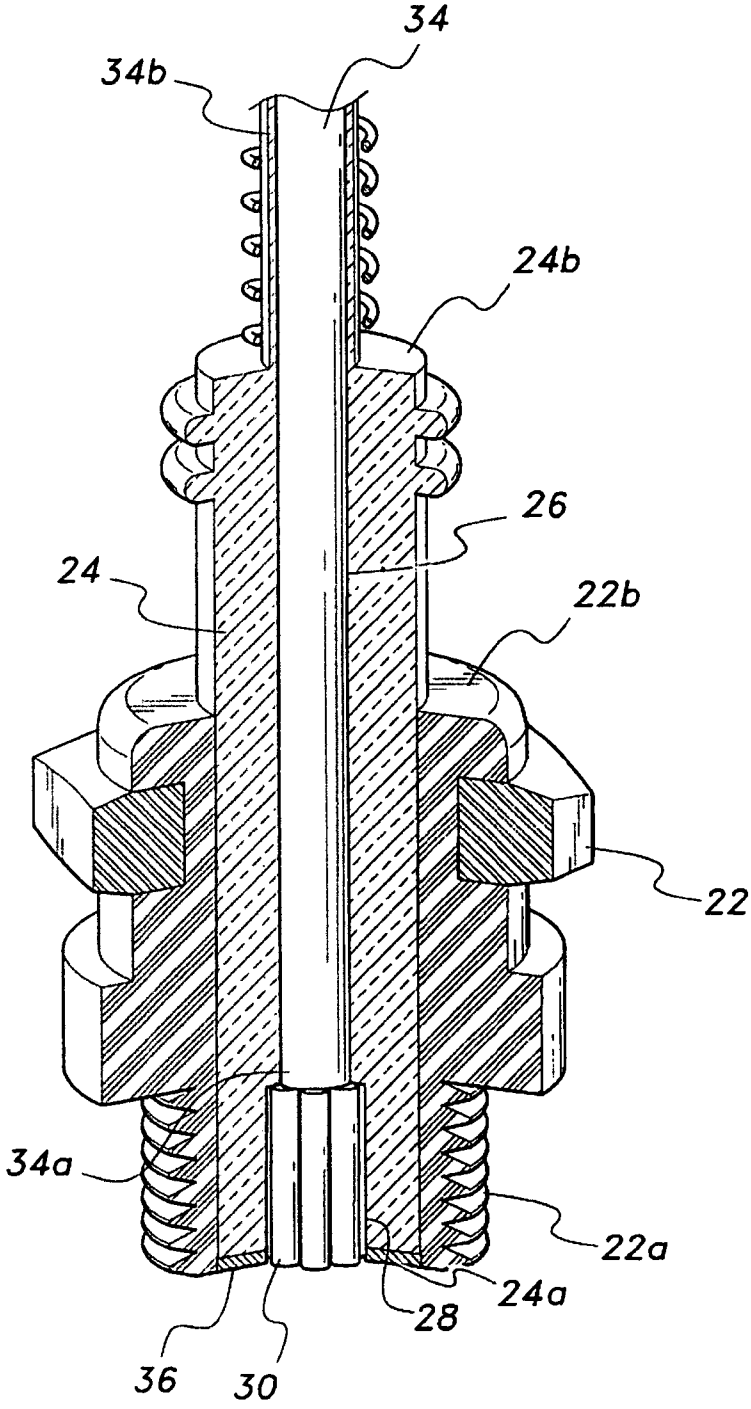

FIG. 2

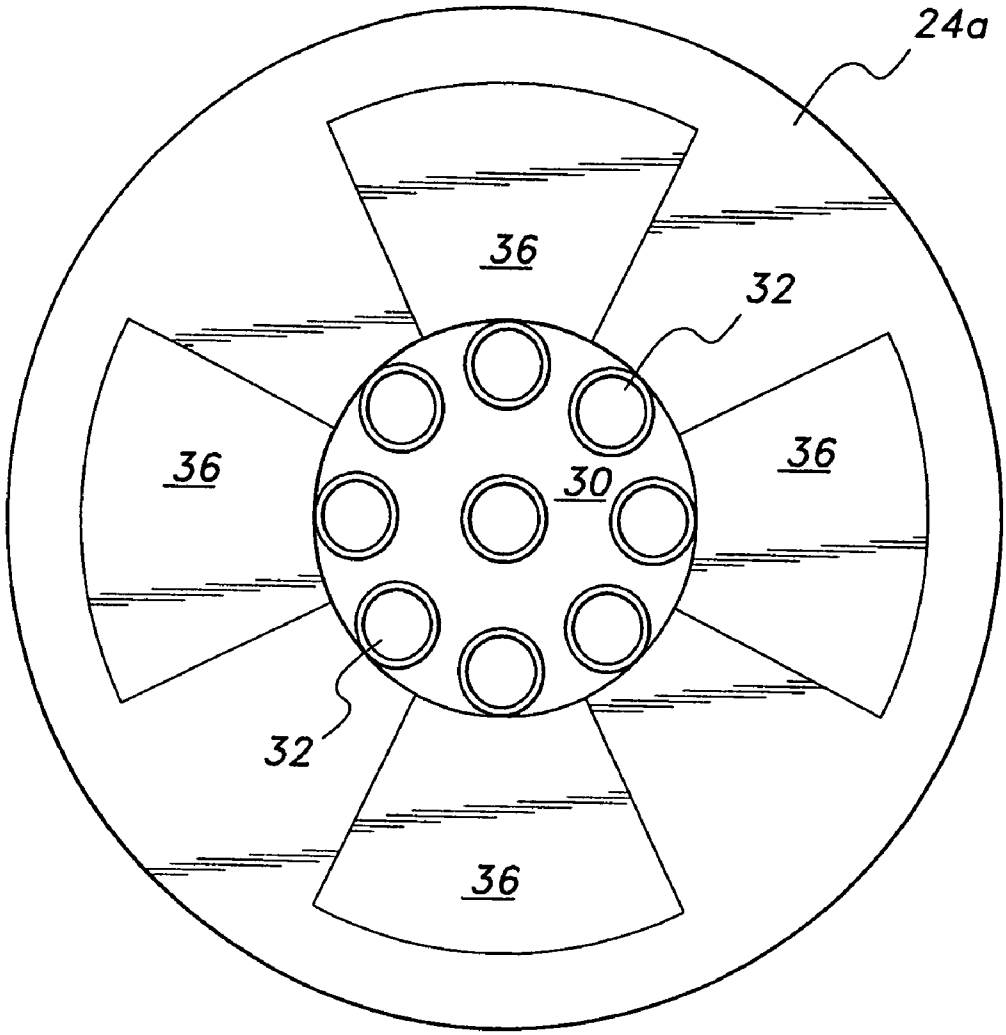

FIG. 3

HYDROGEN GAS INJECTOR PLUG

CROSS-REFERENCE TO RELATED APPLICATION

This application claims the benefit of U.S. Provisional Patent Application Ser. No. 60/877,138, filed Dec. 27, 2006.

BACKGROUND OF THE INVENTION

1. Field of the Invention

The present invention generally relates to internal combustion engines. More specifically, the present invention is drawn to a device for injecting hydrogen gas into the combustion chamber of an engine for use as a fuel for powering the engine.

2. Description of the Related Art

The rising cost and diminishing supply of hydrocarbon fuels, i.e. gasoline, have increased the criticality of developing or finding alternative fuels. Furthermore, pollution caused by burning hydrocarbon fuels is suspected of creating a "greenhouse" effect in the atmosphere, thereby creating problems that may have a bearing on the future course of human civilization. The art would certainly welcome a device that could utilize a virtually inexhaustible supply of a common element to power internal combustion engines, which device would also cause production of pollution-free byproducts.

The use of hydrogen as a fuel to power engines has been contemplated for many years. Hydrogen is one of the most abundant elements on earth and combustion of this abundant element produces pollution-free water. Unfortunately, hydrogen poses many risks when stored in large quantities, thus creating many problems in making the gas available to the general public. Thus, a hydrogen gas injector plug solving the aforementioned problems is desired.

SUMMARY OF THE INVENTION

The hydrogen gas injector plug is used for generating hydrogen gas from ambient air drawn into the piston chamber of an engine. The plug comprises an array of nozzles fabricated from one or a mixture of metals. When heated to a pre-determined temperature, the metallic nozzles become "white-hot" and generate photons that react with atmospheric water to disassociate hydrogen gas therefrom. The nozzle is designed so that no reaction will occur if the temperature is below 350° F. The hydrogen gas is injected from the nozzles into the piston chamber and mixed with air. An ignition device ignites the mixture of hydrogen and air so that it burns to power the piston in a conventional manner. The metallic nozzle is heated via a copper conductor connected to a source of electric current.

Accordingly, the invention presents a hydrogen gas generator capable of generating small amounts of hydrogen gas from water available in the atmosphere. The invention provides for improved elements thereof in an arrangement for the purposes described that are inexpensive, dependable and fully effective in accomplishing their intended purposes.

These and other features of the present invention will become readily apparent upon further review of the following specification and drawings.

BRIEF DESCRIPTION OF THE DRAWINGS

FIG. **1** is an environmental, perspective view of a hydrogen gas generator injector plug according to the present invention.

FIG. **2** is a side, sectional view of a hydrogen gas generator injector plug according to the present invention.

FIG. **3** is an end view of a hydrogen gas generator injector plug according to the present invention.

Similar reference characters denote corresponding features consistently throughout the attached drawings.

DETAILED DESCRIPTION OF THE PREFERRED EMBODIMENT

Attention is first directed to FIG. **1** wherein an engine cylinder chamber is generally indicated at **10**. A piston **12** having rings **12***a* is housed within chamber **10**. The head **14** and the cylinder wall are surrounded by coolant chamber **16**. Conventional intake and exhaust valves (not shown) are also disposed on head **14**. The structure and arrangement of the aforementioned items are conventional and are not part of the inventive concept, per se. A hydrogen gas generator injector plug **20** and a conventional spark plug **18** are mounted on head **14**. Injector plug **20** and conventional spark plug **18** each have proximate ends disposed within cylinder chamber **10**.

As best seen in FIGS. **2** and **3**, hydrogen gas generator injection plug **20** comprises a circular member **22** fabricated from steel and having a threaded proximate end **22***a* and a distal end **22***b*. A passageway extends through member **22** from the distal end **22***b* to proximate end **22***a*. An insulation member **24** is disposed in the passageway. Insulation member **24** is fabricated from a material having high temperature insulation characteristics. Member **24** has a first end **24***a* that is disposed adjacent to, but spaced slightly inwardly of proximate end **22***a*. The second end **24***b* of insulation member **24** extends above the distal end **22***b* of member **22**. A passageway **26** extends through insulation member **24** from second end **24***b* and terminates at a cavity **28**, which cavity is formed in the first end **24***a* of insulation member **24**. A nozzle member **30** is positioned in cavity **28**. Nozzle member **30** is fabricated from a metal or a metal mixture that has the ability to react with water at relatively high temperatures to oxidize and generate hydrogen gas. Nozzle member **30** must also have the ability to become "white hot" very quickly when an adequate electrical current is applied thereto. As currently contemplated, iron, certain alloys of iron and tungsten exhibit the requisite abilities needed to function as the nozzle member. It should be noted however, that any metal or alloy could be utilized if suitable. An array of hydrogen gas injector passages **32** is formed in nozzle member **30**. It has been determined that nine injector passages will provide an adequate amount of hydrogen gas to power piston **12**. An electric current conductor **34**, preferably fabricated from copper, extends through passageway **26**. The lower end **34***a* of conductor **34** abuts nozzle member **30**. The upper end defines a terminal for an electrical connection **34***b*. Four electrical conductors **36** abut the second end **24***a* of member **24** and are evenly spaced therearound. Conductors **36** are fabricated from a nickel-copper alloy.

In use, ambient air containing water vapor is drawn into the cylinder chamber via conventional intake valves (not shown) on the intake stroke. A portion of the air water vapor mixture is forced into injector passages **32** on the compression stroke. An electric current is applied to nozzle member

30 via conductor 34 during the latter part of the compression stroke, heating the nozzle member to a "white-hot" temperature. The water vapor reacts with the metal in nozzle member 30 to oxidize the metal and produce hydrogen gas. The hydrogen gas expands through the passages 32 back into the cylinder chamber where it mixes with the oxygen in the air. Spark plug 18 is fired to ignite the mixture, which mixture burns thereby creating a high gas pressure to drive the piston. Occasionally (and in some climates), the humidity may be very low and the ambient air will not contain enough water vapor to produce an adequate amount of hydrogen gas to properly drive the piston. In such instances additional water vapor is injected into the intake valve.

It is to be understood that the present invention is not limited to the embodiment described above, but encompasses any and all embodiments within the scope of the following claims.

I claim:

1. A hydrogen gas injector plug comprising:

a circular member having a proximate end and a distal end;

a first passageway extending through said circular member from said proximate end to said distal end;

a heat insulating member disposed in said first passageway, said heat insulating member having a first end and a second end, said first end terminating adjacent said proximate end of said circular member;

a second passageway extending through said heat insulating member, said second passageway extending from said first end to said second end of said heat insulating member;

a cavity formed in said second passageway at said first end;

a nozzle array disposed in said cavity; and

a first electrical conductor disposed in said second passageway, said electrical conductor in abutment with said nozzle array.

2. The hydrogen gas injector plug according to claim 1, wherein said circular member has an outer surface having threads disposed on said outer surface at said proximate end.

3. The hydrogen gas generator injector plug according to claim 1, further including plural electrical conductors disposed on said first end of said heat insulating member.

4. The hydrogen gas injector plug according to claim 1, wherein said circular member is fabricated from steel.

5. A hydrogen gas injector plug, comprising:

a circular member fabricated from steel and having a proximate end, a distal end and an outer surface;

screw threads disposed on said outer surface at said proximate end;

a first passageway extending through said circular member from said proximate end to said distal end;

a heat insulating member disposed in said first passageway, said heat insulating member having a first end and a second end, said first end terminating adjacent said proximate end of said circular member;

a second passageway extending through said heat insulating member, said second passageway extending from said first end to said second end of said heat insulating member;

a cavity formed in said second passageway at said first end;

a nozzle array disposed in said cavity; and

a copper electrical conductor disposed in said second passageway, said electrical conductor in abutment with said nozzle array.

6. The hydrogen gas injector plug according to claim 5, wherein the number of nozzles in said array is nine.

7. The hydrogen gas injector plug according to claim 5, wherein the number of nozzles in said array is nine, the hydrogen gas injector plug further including plural electrical conductors disposed on said first end of said heat insulating member.

8. The hydrogen gas injector plug according to claim 5, wherein each nozzle in said array is fabricated of material from the group consisting of iron, iron alloys and tungsten.

9. The hydrogen gas injector plug according to claim 5, wherein the number of nozzles in said array is nine, the hydrogen gas injector plug further including plural electrical conductors disposed on said first end of said heat insulating member, each of said plural electrical conductors being fabricated from a nickel-copper alloy.

10. A hydrogen gas injector plug in combination with a piston chamber of an internal combustion engine, the combination comprising:

a circular member fabricated from steel and having a proximate end, a distal end and an outer surface;

screw threads disposed on said outer surface at said proximate end for removably mounting said circular member on the piston chamber;

a first passageway extending through said circular member from said proximate end to said distal end;

a heat insulating member disposed in said first passageway, said heat insulating member having a first end and a second end, said first end terminating adjacent said proximate end of said circular member;

a second passageway extending through said heat insulating member, said second passageway extending from said first end to said second end of said heat insulating member;

a cavity formed in said second passageway at said first end;

a nozzle array disposed in said cavity;

a copper electrical conductor disposed in said second passageway, said electrical conductor in abutment with said nozzle array; and

a spark plug mounted on the piston chamber.

11. The hydrogen gas injector plug combination according to claim 10, wherein the number of nozzles in said array is nine.

12. The hydrogen gas injector plug combination according to claim 10, wherein the number of nozzles in said array is nine, the combination further including plural electrical conductors disposed on said first end of said heat insulating member.

13. The hydrogen gas injector plug combination according to claim 10, wherein each nozzle in said array is fabricated of material from the group consisting of iron, iron alloys and tungsten.

14. The hydrogen gas injector plug combination according to claim 10, wherein the number of nozzles in said array is nine, the combination further including plural electrical conductors disposed on said first end of said heat insulating member, each of said plural electrical conductors being fabricated from a nickel-copper alloy.

* * * * *

US008981261B1

(12) **United States Patent**
Tillotson

(10) **Patent No.: US 8,981,261 B1**
(45) **Date of Patent: Mar. 17, 2015**

(54) **METHOD AND SYSTEM FOR SHOCKWAVE ATTENUATION VIA ELECTROMAGNETIC ARC**

(75) Inventor: **Brian J. Tillotson**, Kent, WA (US)

(73) Assignee: **The Boeing Company**, Chicago, IL (US)

(*) Notice: Subject to any disclaimer, the term of this patent is extended or adjusted under 35 U.S.C. 154(b) by 336 days.

(21) Appl. No.: **13/483,995**

(22) Filed: **May 30, 2012**

(51) **Int. Cl.**
F42D 5/045 (2006.01)
F41H 5/007 (2006.01)

(52) **U.S. Cl.**
USPC **219/383**; 219/201; 219/202; 89/36.01; 89/36.07; 89/36.08; 89/36.09

(58) **Field of Classification Search**
None
See application file for complete search history.

(56) **References Cited**

U.S. PATENT DOCUMENTS

1,195,042	A	8/1916	Leon	
2,405,694	A	8/1946	Nicolas	
2,513,279	A	7/1950	Albert	
3,050,707	A	8/1962	Baker et al.	
3,660,951	A	5/1972	Cadwell	
3,773,168	A	11/1973	Meinass	
3,875,844	A	4/1975	Hicks	
3,943,870	A	3/1976	Paslay	
4,215,630	A	8/1980	Hagelberg et al.	
4,313,181	A	1/1982	Holm	
4,543,872	A	10/1985	Graham et al.	
5,020,411	A *	6/1991	Rowan	89/1.11
H1231	H	9/1993	Richards	
5,341,718	A	8/1994	Woodall et al.	
5,394,786	A	3/1995	Gettle et al.	
5,400,688	A	3/1995	Eninger et al.	
5,739,458	A	4/1998	Girard	
6,029,558	A	2/2000	Stevens et al.	
6,256,263	B1	7/2001	Stevens	
6,266,926	B1	7/2001	Figge et al.	
6,279,449	B1	8/2001	Ladika et al.	
6,412,391	B1	7/2002	Stevens et al.	
6,595,102	B2	7/2003	Stevens et al.	
6,653,972	B1	11/2003	Krikorian et al.	
6,782,790	B2 *	8/2004	Barrett	89/1.11

(Continued)

FOREIGN PATENT DOCUMENTS

WO	97/16697	5/1997
WO	2011/148165	12/2011

OTHER PUBLICATIONS

"Review of methods to attenuate Shock/Blast waves," Igra et al, Dec. 2012.*

Primary Examiner — Joseph M Pelham
(74) *Attorney, Agent, or Firm* — Thompson Hine LLP

(57) **ABSTRACT**

A method and system for attenuating a shockwave propagating through a first medium by heating a selected region of the first fluid medium rapidly to create a second, transient medium that intercepts the shockwave and attenuates its energy density before it reaches a protected asset. The second medium may attenuate the shockwave by one or more of reflection, refraction, dispersion, absorption and momentum transfer. The method and system may include a sensor for detecting a shockwave-producing event, determining a direction and distance of the shockwave relative to a defended target and calculating a firing plan, and an arc generator for creating the second medium. The arc generator may create the second medium by creating an electric arc that travels along an electrically conductive path utilizing at least one of high intensity laser pulses, pellets forming a conductive ion trail, sacrificial conductors, projectiles trailing electrical wires, and magnetic induction.

23 Claims, 7 Drawing Sheets

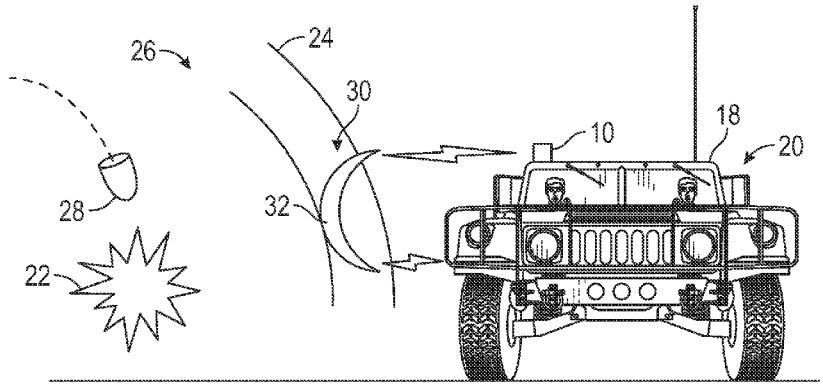

(56) **References Cited**

U.S. PATENT DOCUMENTS

7,077,049	B2	7/2006	Shumov et al.	
7,213,494	B2	5/2007	James	
7,350,447	B1 *	4/2008	Smith	89/1.13
7,421,936	B2	9/2008	Barger et al.	
7,437,987	B1	10/2008	Ohnstad et al.	
7,827,900	B2	11/2010	Beach et al.	
7,866,250	B2	1/2011	Farinella et al.	
7,878,103	B2	2/2011	Imholt et al.	
8,042,449	B2	10/2011	Farinella et al.	
8,051,762	B2	11/2011	Beach et al.	
8,141,470	B1	3/2012	Farinella et al.	
8,151,710	B2	4/2012	Fu et al.	
8,436,730	B2	5/2013	Fischbach et al.	
8,437,223	B2	5/2013	Barger et al.	
8,448,559	B2	5/2013	Hunn et al.	
8,555,768	B1	10/2013	Barker et al.	
8,863,666	B2 *	10/2014	Tillotson et al.	102/215
2003/0233931	A1 *	12/2003	Nemtsev	89/1.11
2004/0107827	A1	6/2004	Edberg et al.	
2004/0118270	A1 *	6/2004	Barrett	89/1.11
2007/0006723	A1	1/2007	Waddell, Jr. et al.	
2007/0180983	A1	8/2007	Farinella et al.	
2008/0190276	A1	8/2008	Barger et al.	
2009/0114084	A1	5/2009	Thinn et al.	
2009/0266226	A1	10/2009	Beach et al.	
2010/0319524	A1	12/2010	Farinella et al.	
2010/0319526	A1	12/2010	Imholt et al.	
2011/0120294	A1	5/2011	Beach et al.	
2011/0168004	A1	7/2011	Henegar	
2011/0297031	A1	12/2011	Fu et al.	
2012/0060677	A1	3/2012	Farinella	

* cited by examiner

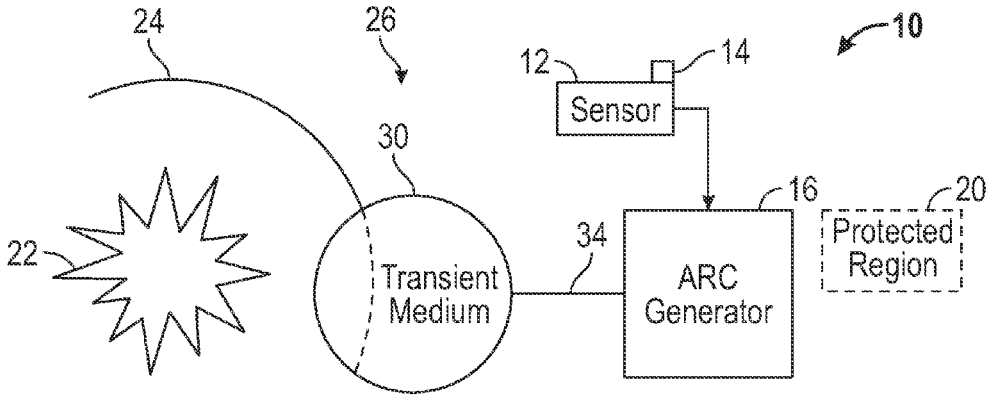
24
26
10
12
14
Sensor
30
16
20
22
34
Protected Region
Transient Medium
ARC Generator

FIG. 1

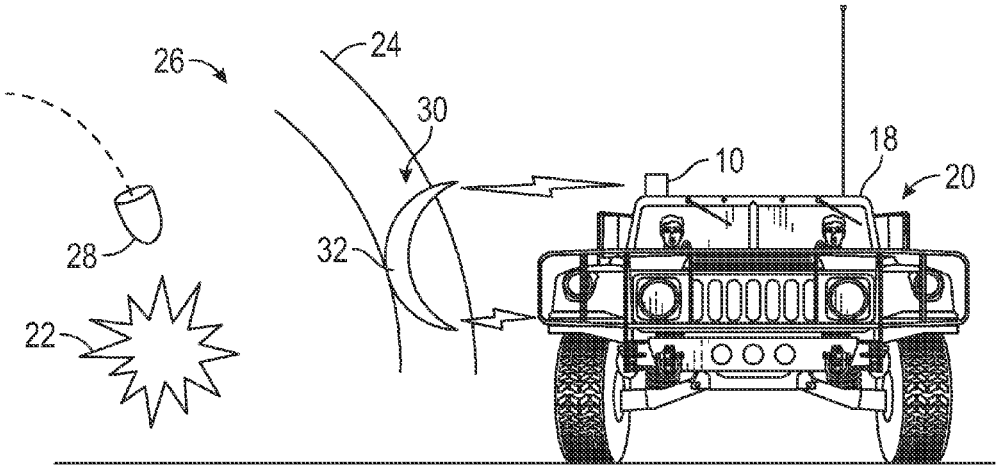
26
24
30
10
18
20
28
32
22

FIG. 2

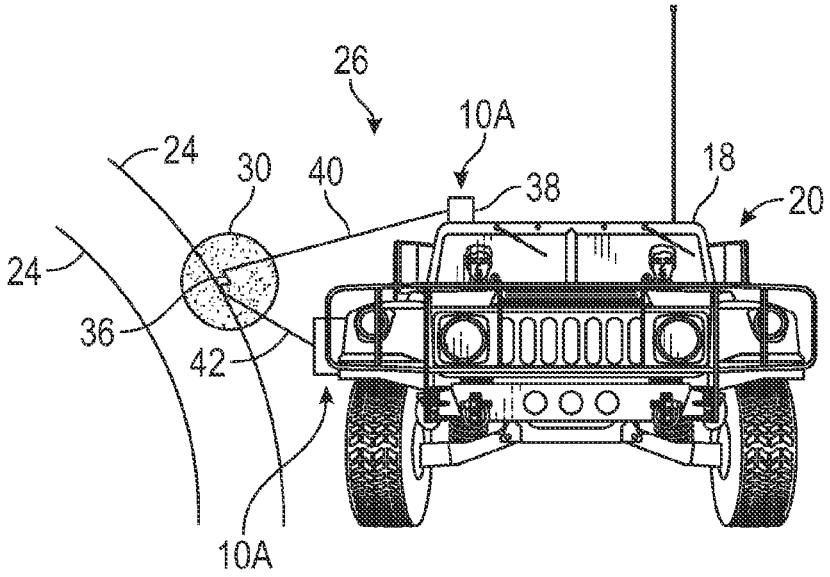
26
10A
24
30
40
38
18
20
24
36
42
10A

FIG. 3

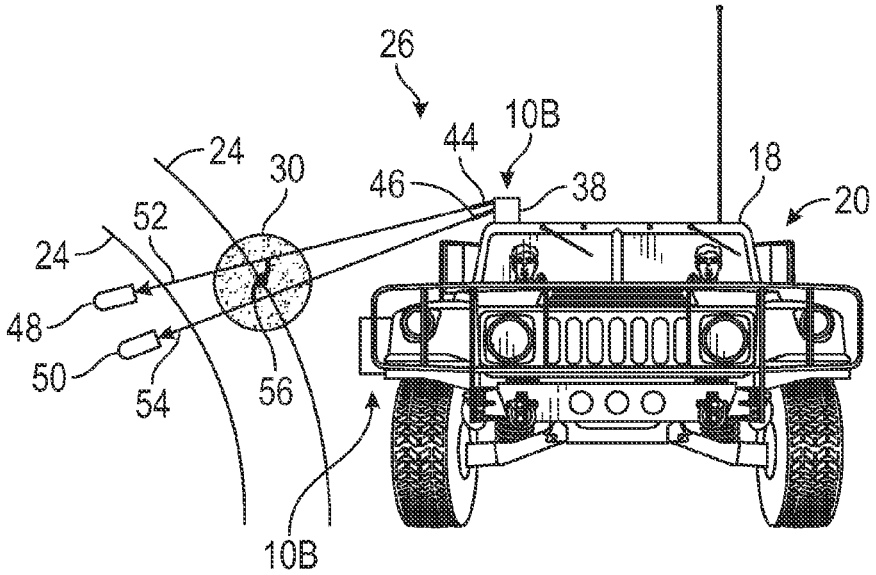
26
10B
44
24
30
46
38
18
20
52
24
48
50
54
56
10B

FIG. 4

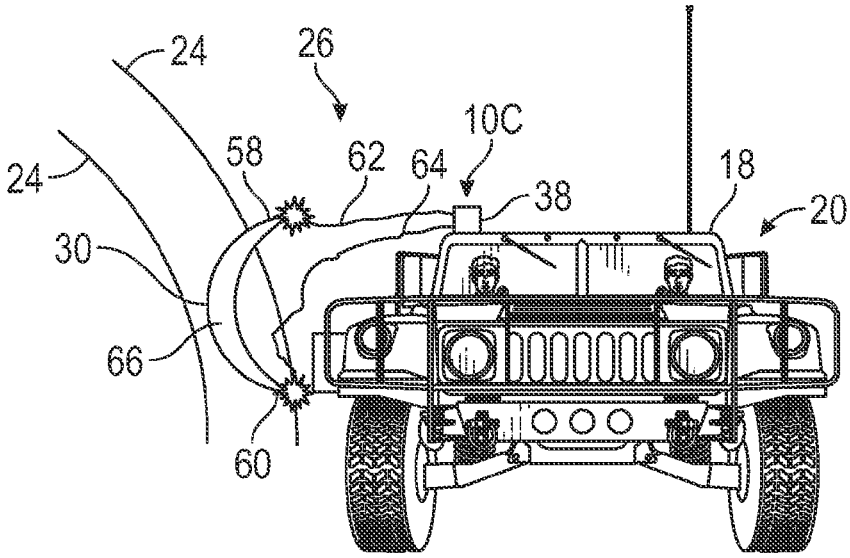

FIG. 5

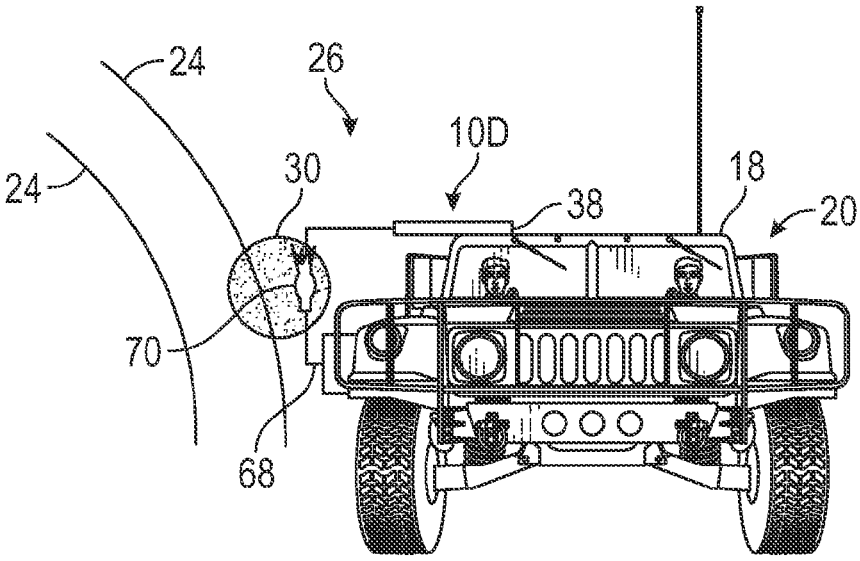

FIG. 6

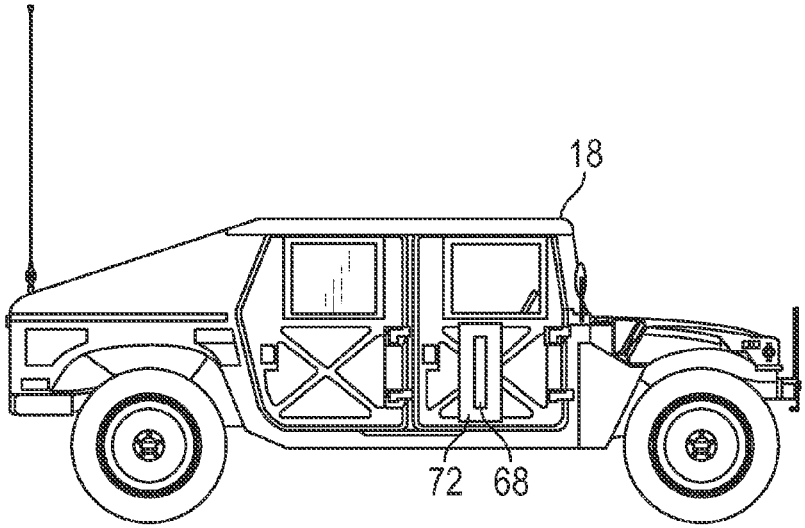

FIG. 7

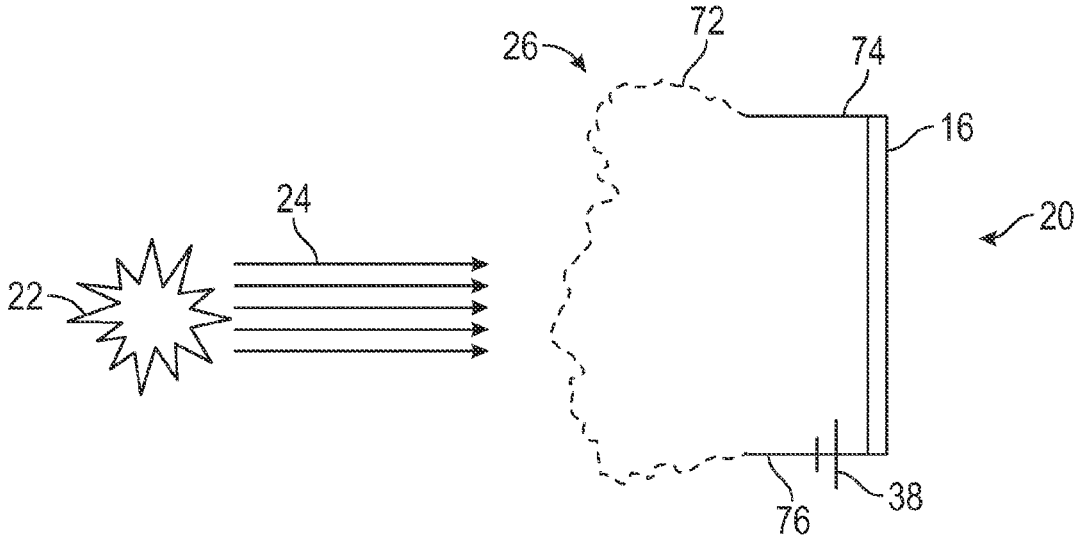

Prior to Shock Interaction

FIG. 8A

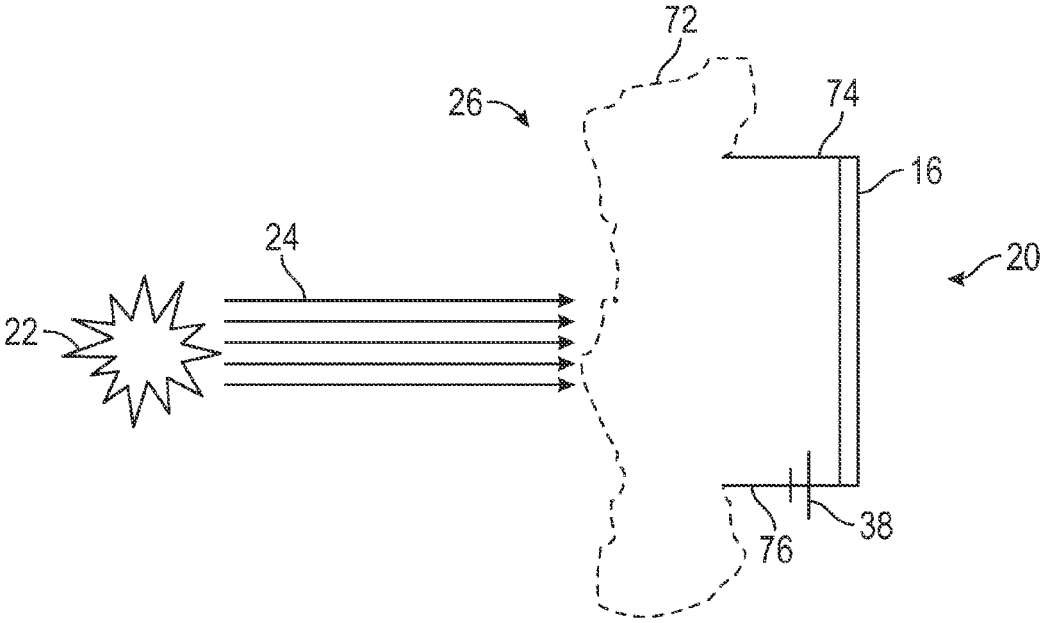

After Shock Interaction

FIG. 8B

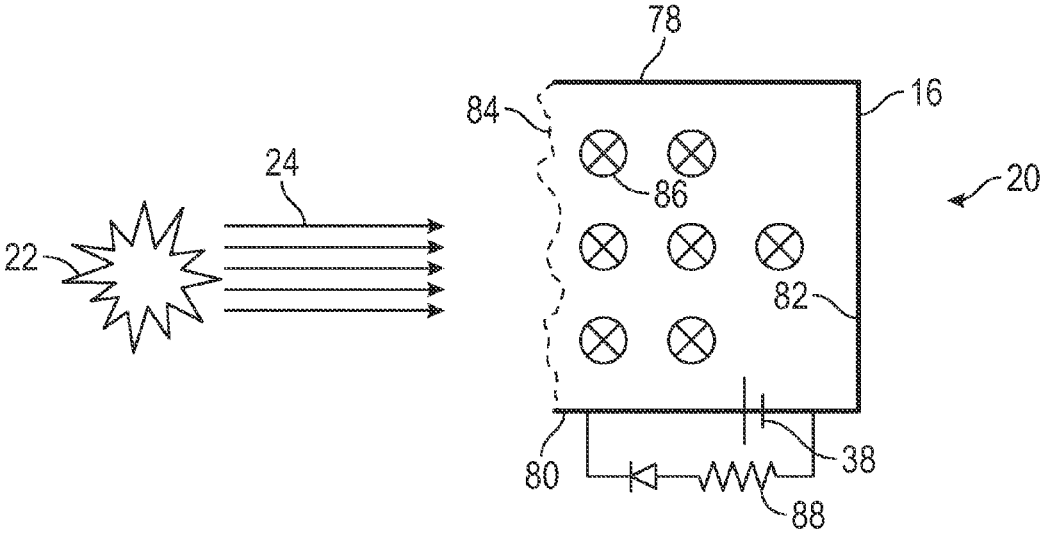

Prior to Shock Interaction

FIG. 9A

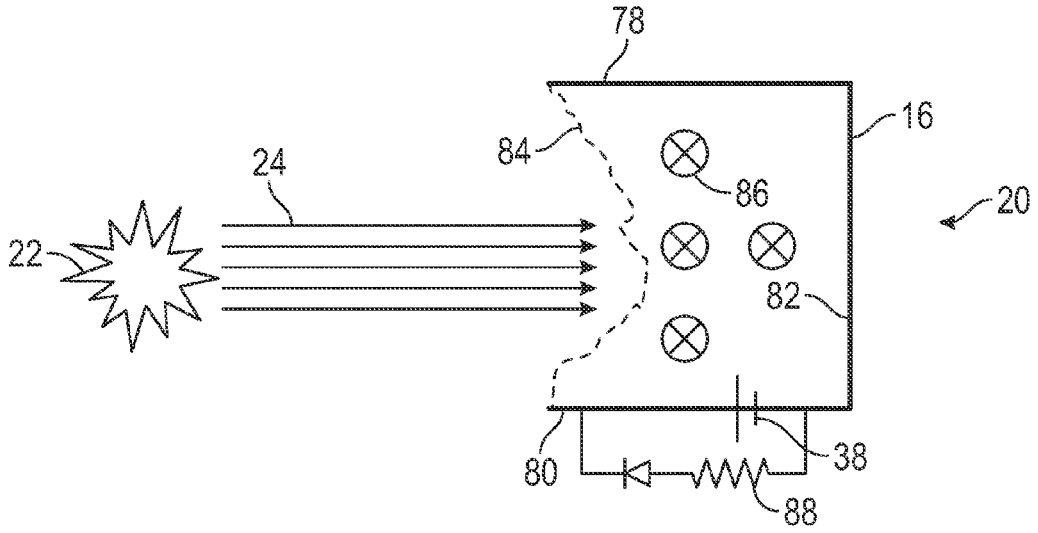

After Shock Interaction

FIG. 9B

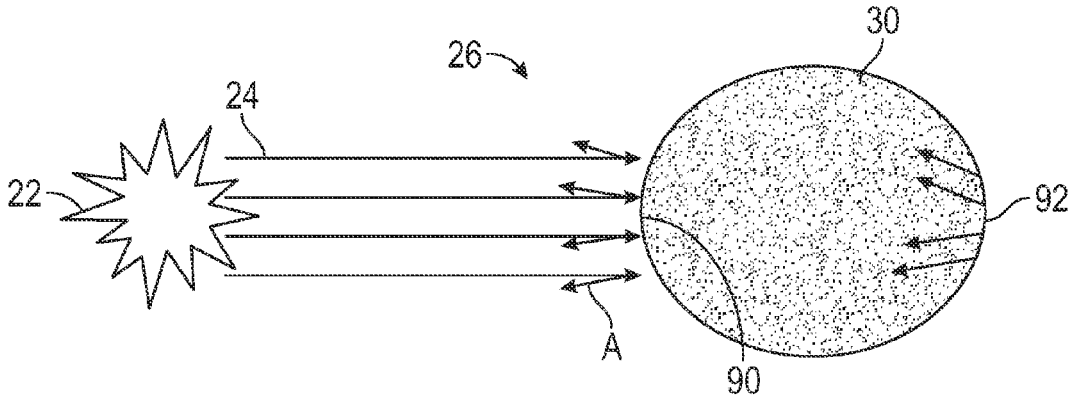

FIG. 10

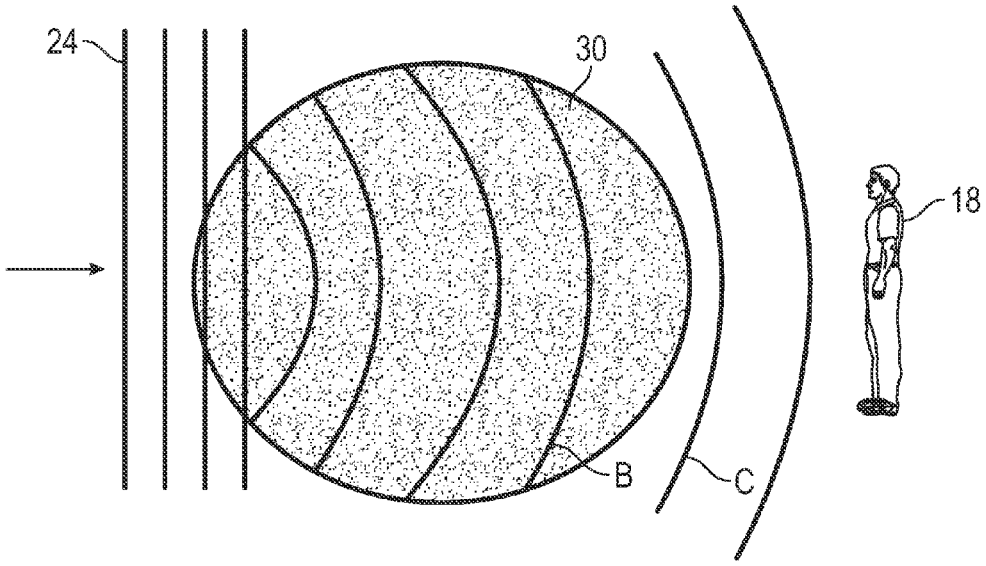

FIG. 11

METHOD AND SYSTEM FOR SHOCKWAVE ATTENUATION VIA ELECTROMAGNETIC ARC

FIELD

The disclosure relates to methods and systems for shockwave attenuation, and more particularly to methods and systems for attenuating shockwaves by rapidly heating air to interpose an intermediate medium between the shockwave and a protected region.

BACKGROUND

Explosive devices are being used increasingly in asymmetric warfare to cause damage and destruction to equipment and loss of life. The majority of the damage caused by explosive devices results from shrapnel and shockwaves. Shrapnel is material, such as metal fragments, that is propelled rapidly away from the blast zone and may damage stationary structures, vehicles, or other targets. Damage from shrapnel may be prevented by, for example, physical barriers. Shockwaves are traveling discontinuities in pressure, temperature, density, and other physical qualities through a medium, such as the ambient atmosphere. Shockwave damage is more difficult to prevent because shockwaves can traverse an intermediate medium, including physical barriers.

Damage from shockwaves may be lessened or prevented by interposing an attenuating material between the shockwave source and the object to be protected. This attenuating material typically may be designed or selected to absorb the energy from the shockwave by utilizing a porous material that distorts as the energy of the shockwave is absorbed.

U.S. Pat. No. 5,394,786 to Gettle et al. describes a shockwave attenuation device that utilizes an absorbing medium. That assembly includes porous screens that form an enclosure filled with a pressure wave attenuating medium. This attenuating medium may be an aqueous foam, gas emulsion, gel, or granular or other solid particles. However, as shown and described in the drawings of that patent, the shockwave attenuating assembly must be positioned before the explosion occurs and surround the area to be protected. For example, the assembly may be positioned on the side of a vehicle to prevent damage to the vehicle or passengers within.

A similar shockwave attenuation device is described in U.S. Patent Publication No. 2007-0006723 to Waddell, Jr. et al. That device includes a number of cells filled with an attenuating material, such as aqueous foams. However, like the device described in Gettle et al., the pressure-attenuating material and device must be positioned on a structure, surface, or person desired to be protected by the system before the explosion occurs.

One feature common among prior art shockwave attenuation systems is that they require an intermediate medium or structure that acts to attenuate the force of the shockwave by absorbing the energy of the shockwave. Although only a portion of the shockwave may pass through the medium, the energy of the shockwave is nevertheless significantly reduced by the intermediate medium. However, because these systems are structural, they must be fixed in place before a shockwave is created. Further, these shockwave attenuation systems may not protect an entire vehicle or person. For example, attenuating panels are not transparent and therefore cannot be placed over windows or used as facemasks in helmets. They also may be bulky and heavy, and therefore negatively impact the performance of a vehicle on which they are mounted.

Such prior art shockwave attenuation systems may not be effective to protect highly mobile land assets for which an incoming threat may be in the form of a ballistic shell, rocket, IED, or landmine, or waterborne assets for which an incoming threat may be in the form of a torpedo, ballistic shell, bomb or a naval mine. Therefore, a need exists for a shockwave attenuation device that is capable of dynamically interposing a medium between an explosion source and a protected asset. There is also a need for an intermediate medium that effectively attenuates the energy from a shockwave and that allows for protection of a protected asset in a marine environment.

SUMMARY

Presented is a system and method for attenuating a shockwave propagating in a first medium by detecting a shockwave-producing event, determining a direction of the shockwave relative to a protected asset, and interposing a second, transient medium, different from the first medium, between the shockwave and the protected asset such that a shockwave produced by the event contacts the second medium and is attenuated in energy thereby prior to reaching the protected asset. The second medium may be formed by rapidly heating a region of the first medium so that the second medium differs from the first medium in at least one of temperature, density and composition.

In one embodiment, a system for attenuating a shockwave propagating in a first medium may include a sensor for detecting a source of the shockwave and generating a detection signal, an arc generator in communication with the sensor and configured to receive the detection signal therefrom, and in response thereto create an electromagnetic arc to heat a selected region of the first fluid medium rapidly to create the second, transient medium, different from the first medium, interposed between the shockwave and the protected region such that the shockwave contacts the second, transient medium. The arc generator may be configured to heat the selected region by generating an electromagnetic arc, such as an electric arc or a laser or microwave arc, between the protected region and the incoming shockwave. In one embodiment, the arc generator may include a power supply for generating the arc and may provide a conducting path.

In embodiments, the arc generator may be configured to generate a focused microwave beam or a focused laser beam. In each case, the beam may rapidly heat the fluid medium in the selected region to create the second medium. In one embodiment, in which the fluid medium is atmospheric air, the focused beam rapidly heats the air in the selected region and changes its temperature, density and composition, the latter the result of the creation of free electrons.

In other embodiments, the arc generator may be adapted to develop and drive a large electric current through the fluid medium rapidly. In the embodiment in which the medium is atmospheric air, the second medium may differ from ambient air in temperature, density and composition. With these embodiments, the arc generator may be adapted to create a conducting path for the electric current. Accordingly, the arc generator may be configured to generate one or more of a laser-induced plasma channel (LIPC) from converging laser beams, ionizing tracer pellets fired along converging paths, and projectiles trailing fine electrical wires fired along converging paths. In each of these embodiments, an electric arc may be generated to travel along a conducting path created by dielectric breakdown of ionized ambient air at the selected region.

In still other embodiments, the arc generator may include a sacrificial conductor that may not rely on current travel along a path of ionized air. Rather, the arc generator may include a power supply that applies current to a conductor in the form of one or more strips or wires of conductive material. The high current flowing through the conductor from the power supply may vaporize the conductor, forming a conductive channel of vapor that may rapidly heat and ionize the air in the selected region to create a rapidly expanding second medium. An advantage of this embodiment is that the sacrificial conductor may be attached directly to the protected asset, such as a vehicle.

Such embodiments as described above may reduce the energy density of the shockwave by creating a second medium in the path of the advancing shockwave that reflects, refracts, absorbs and deflects at least a portion of the shockwave. This may result from creating a second medium that differs from the ambient medium (e.g., atmospheric air) in density, temperature and/or composition. Such differences may change the index of refraction of the wave front as it contacts the second medium, causing at least some of the shockwave to be reflected from the surface of the second medium, to diverge as the shockwave travels through the medium, and to be reflected and diverge further as the shockwave contacts the rearward boundary of the second medium. The second medium, some embodiments, acts to absorb the energy of the shockwave as the medium may be increased in temperature.

In yet other embodiments, the arc generator create the second medium by magnetic induction. The arc generator may be adapted to create channels or ionized air. When contacted by an advancing shockwave, the conducting channel may be deformed as ionized air is pushed inward. This movement does mechanical work, which removes energy from the shockwave, making it weaker. In one aspect, the channels may not be rigid, and may be pushed by the shockwave against the ambient air that the channels are displacing, which may transfer energy from the shockwave to kinetic energy of displaced air. In another aspect, parts of the conductive channels are not rigid, but the channels of ionized air pushed ahead of the magnetic flux are disrupted and broken until they form new channels through the air that heat the air. At least a portion of the shockwave energy may be transformed to ionization energy of air ions and into pressure-volume-temperature energy of expanded hot air.

In still another aspect, the conductive channels of magnetic flux are rigid may not be deformed by contact with the advancing shockwave. Instead, the flux may be compressed by contact with the shockwave, which may increase the electric current in the conductive channels. This increased current results from energy lost by the shockwave. The arc generator may be configured such that the excess current may bypass the power supply and be shunted to heat a resistive load, or charge a capacitor where it may be used later to power the arc generator.

With such embodiments, the advancing shockwave is diminished in force as the energy of the shockwave is converted either into mechanical energy, as when it deforms magnetic induction channels, or into electrical energy, as when it interacts with rigid magnetic flux channels. It is within the scope of this disclosure to provide a system and method in which combinations of the foregoing embodiments are deployed to defend a protected asset, or in which an embodiment is deployed multiple times against an incoming threat.

The features, functions, and advantages that have been discussed can be achieved independently in various embodiments of the present invention or may be combined in yet other embodiments further details of which can be seen with reference to the following description, drawings and claims.

BRIEF DESCRIPTION OF DRAWINGS

FIG. **1** is a schematic diagram of the elements of a disclosed system, according to an embodiment;

FIG. **2** is an elevational, schematic view of the disclosed system mounted on a protected asset generating an arc to encounter a shockwave from an explosion;

FIG. **3** is an elevational, schematic view of the disclosed system configured to utilize converging laser or microwave beams;

FIG. **4** is an elevational, schematic view of the disclosed system configured to utilize pellets leaving conductive trails;

FIG. **5** is an elevational, schematic view of the disclosed system configured to utilize projectiles trailing conductive wires;

FIG. **6** is an elevational, schematic view of the disclosed system configured to utilize a sacrificial conductor;

FIG. **7** is an elevational, schematic view of the system of FIG. **6** surface mounted on a protected asset;

FIGS. **8**A and **8**B are schematic views of an embodiment of the heating element of the disclosed system configured to generate an arc using flexible electrodes;

FIGS. **9**A and **9**B are schematic views of an embodiment of the arc generator of the disclosed system configured to generate an arc using relatively rigid electrodes; and

FIGS. **10** and **11** are diagrams showing some of the effects of a shockwave impacting the second, fluid medium.

DETAILED DESCRIPTION

The disclosed shockwave attenuation method and system may utilize a second, transient fluid medium that may be dynamically deployed in a first fluid medium between an explosion and a protected asset within a protected region. When contacted by an advancing shockwave produced by the explosion traveling through the first fluid medium, the second fluid medium may attenuate the energy from the shockwave through several vectors, rather than simply by absorbing the energy of the shockwave. While the following discussion describes various embodiments of the disclosed system and method as operating in a first fluid medium of atmospheric air, it is to be understood that the first fluid medium may be water, such that the disclosed system and method may be deployed in a marine environment.

As shown in FIG. **1**, in one embodiment, the system for attenuating a shockwave via electromagnetic arc, generally designated **10**, may include a sensor **12** including or incorporating a computer **14**, and an arc generator, generally designated **16**. The sensor **12** and computer **14** may be mounted on or incorporated in a protected asset, such as a vehicle **18**, which may be a military vehicle as shown in FIG. **2**, or they may be physically separate from the vehicle. Although FIG. **2** shows vehicle **18** as a military vehicle, it is to be understood that the depicted vehicle **18** also may represent other types of land vehicles, such as automobiles, armored vehicles such as tanks and armored personnel carriers; fixed structures such as encampments, bunkers, revetments, buildings or portions of buildings such as balconies; marine vessels such as surface ships, submarines, a hovercraft or air-cushion vehicles, offshore platforms, and other structures that operate in, under or adjacent a body of water; aircraft including fixed wing aircraft, vertical takeoff and landing (VTOL) craft and helicop-

ters; and people and animals. Each of the foregoing would be placed in a protected region **20**.

Referring to FIG. **1**, the sensor **12** may be selected to provide measurements that enable the computer **14** to estimate the location and time of an explosion **22**, either before or after it occurs, and direct the arc generator **16** to respond. In one embodiment, the sensor **12** is configured to detect an explosion **22** that has occurred, but before the shockwave **24** caused by the explosion, traveling through a first fluid medium **26**, which in this embodiment is atmospheric air at ambient temperature and pressure, reaches the protected region **20**. This type of sensor **12** may be configured to detect any one or more of the electromagnetic signals emitted during chemical detonations, including microwave bursts, flashes of infrared radiation, flashes of visible light, flashes of ultraviolet light, and x-ray bursts. In an embodiment a sensor **12** may be configured to detect two or more of the foregoing types of electromagnetic radiation, which may result in the sensor detecting fewer false positives. In a variation of such an embodiment, the sensor **12** may be in the form of two discrete sensors, each configured to detect a different type of electromagnetic radiation. In an embodiment in which the sensor **12** is selected for use in a marine environment (e.g., to detect underwater explosions from naval mines or torpedoes), the sensor **12** may be configured to detect electromagnetic radiation at wavelengths for which water is substantially transparent, such as visible light near-ultraviolet light and near-infrared light.

In some embodiments, once the sensor **12** has detected an explosion **22**, the sensor may be configured to estimate one or more of the magnitude, distance, and azimuthal position of the explosion and provide the estimates to the computer **14** or to the arc generator **16**. In some embodiments, the computer **14** may measure the signature of the explosion **22** and compare it with stored known explosion signatures of a plurality of different known explosive devices. The computer **14** may then determine a probability that the explosion is from one of the known explosive devices. The computer **14** may then calculate an estimated probability distribution function (p.d.f.) of explosion magnitudes and locations relative to the protected asset **18** or protected region **20** based on at least one of stored data about the type of explosive device, location of the explosion, and the shape, relative orientation and relative motion of the protected asset, and make a determination to counter the explosion **22**, including determining when and where to activate the arc generator **16**, or not counter the explosion, based on one of stored data, models of vulnerability of the protected asset to shockwaves, and data from at least one of data and models of performance of the arc generator **16** with respect to attenuating shockwaves from at least one of an estimated explosion magnitude and location. Such calculations and estimates may prevent the deployment of the arc generator **16** in the event that the explosion **22** is too far away or too weak to generate a shockwave **24** that damages the protected region **20** significantly.

In another embodiment, the sensor **12** may be configured to detect an incoming threat **28** containing an explosive device or devices, such as a ballistic shell, bomb, torpedo, depth charge, naval mine or bomb-laden surface vessel. In such an embodiment, the sensor **12** may be configured to use radar, visible or infrared light, passive or active acoustic sensors, or other threat-detection method known to those skilled in the art, as well as trajectory tracking and prediction methods known to those skilled in the art.

In yet another embodiment, the sensor **12** may be configured to detect both the incoming threat **28** and the explosion **22** from the threat. In one embodiment, two systems **10** may be deployed on a protected asset **18** in which one system is configured to detect an incoming threat **28** and the other system is configured to detect an explosion **22**. In yet another variation of such an embodiment, the sensor **12** may be in the form of two discrete sensors: one configured to detect an incoming threat **28**, and the other configured to detect an explosion **22** from that incoming threat.

In some embodiments, the computer **14** may receive measurements from the sensor **12**, estimate where and when an incoming threat **28** will detonate, or has already detonated, and directs the system **10** to deploy. When used with a sensor **12** that may detect an explosion that already has occurred, the computer **14** may be configured to receive information from the sensor pertaining to one or more of the direction, location, time, distance and magnitude of the explosion **22**, the computer determines when and where to activate the arc generator **16**.

In an embodiment wherein the sensor **12** is configured to detect an incoming threat **28** before explosion **22** has occurred, the computer **14** may be configured to compare the signature of the incoming threat **28** with stored known signatures of various threats (e.g., particular missiles). The computer **14** then estimates how probable each type of threat is, and, based on the stored data about the type of warhead for each threat, the measured motion of the incoming object (with associated uncertainty), and the shape, trajectory, orientation, speed and motion of the protected asset **18** in the protected region **20**, the computer estimates a probability distribution function (p.d.f.) of explosion magnitudes and locations relative to the protected asset.

Based on data or models of vulnerability of the protected asset **18** to shockwaves **24** of various magnitudes from various directions (including crew injuries likely to result from shockwaves) stored in a database (either locally or available over a network), together with data or models of what the arc generator **16** can do to attenuate shockwaves in what positions and in what time interval, the computer **14** may then form a firing plan to counter the threat at minimum cost. Cost may include not only the cost to operate the arc generator **16**, but also the probable cost of damage from the attenuated shockwave. In cases where the probable explosion yield is small and the probable distance of the explosion **22** from the protected region is large, the lowest cost plan may be not to deploy the system **10**.

As shown in the embodiments of FIGS. **1** and **2**, the arc generator **16** may be configured to create a transient second medium **30** between the advancing shockwave **24** resulting from the explosion **22** and the protected region **20**, which may contain a protected asset **18**. As shown in FIG. **2**, generally speaking, the sensor **12** may generate a detection signal in response to detecting at least one of the explosion **22** or explosive device such as incoming threat **28**. The detection signal is received by arc generator **16**, and in response, may create an electromagnetic arc through the first medium **26** which rapidly heats the medium to change one or more of its composition and temperature to create the second, transient medium **30**, different from the first medium **26**. The location of the second medium **30** may be in a selected region calculated by the computer **14** of the sensor **12** to be interposed between the shockwave **24**, or predicted shockwave path, and the protected region **20**. Thus, the shockwave **24** contacts the second, transient medium **30** and is attenuated in energy density before it reaches the protected region **20**. The arc generator **16** shown schematically in FIG. **1** may take the form of multiple, discrete arc generators, each connected to and controlled by the sensor **12**.

In one embodiment, shown schematically in FIG. **1**, the arc generator **16** is configured to direct a beam **34** of electromagnetic energy to focus in a selected region where the second medium **30** may be created. The beam **34** may be in the form of a relatively powerful microwave beam or laser beam. The electric field of the intense beams **34** may cause dielectric breakdown of the ambient air at the focal point of the focused beams, in which the electrons are separated from the molecules in the air. The free electrons are accelerated by the electric field and strike other molecules to knock other electrons loose, creating a cascade of electrons and ions.

As the density of free charge carriers in the air increases, the air becomes opaque to the incoming electromagnetic beams and rapidly absorbs energy from the beams as heat, which raises the temperature of the air as well as its density and composition, thus creating the second medium **30** to intercept the advancing shockwave **24**. The composition changes of the second fluid medium **30** may include adding free electrons, which have a relatively low molar mass, ionization of molecules so that they interact more strongly and therefore propagate shockwaves at higher speeds, and breaking diatomic molecules such as molecular oxygen into single atoms, which reduces the average molar mass.

In some embodiments, the beam **34** may be a microwave beam. The arc generator **16** may include a vacuum tube amplifier (e.g., a magnetron) and focused by a static focusing device (e.g., a dish antenna or a Fresnel plate), or produced and focused by other means of combinations apparent to those skilled in the art. In other embodiments, the beam **34** is a laser beam. The laser beam may be a single beam focused to a point by optics, or multiple beams converging to a common point. In either case, the beam **34** may create single or multiple arcs **32** (FIG. **2**). In some embodiments, the arc generator **16** may use many converging beams **34** to create one arc **32**. In other embodiments one beam **34** may be used multiple times in quick succession to create many arcs **32**. The beams may be fixed or steerable.

As shown in FIG. **3**, in another embodiment of the system **10**A the arc generator **16** (FIG. **1**) may be configured to generate an electric arc **36** through a volume of ambient air **26** to create the second medium **30**. Electrical resistance to the current heats the air, changing its temperature, density and composition to create the second medium **30** to attenuate the shockwave **24**. The change in composition may include adding free electrons, which have very low molar mass, ionization of molecules so they interact at longer distance and therefore propagate shockwaves at higher speed, and breaking diatomic molecules like oxygen into single atoms, which reduces the average molar mass of the fluid in the second medium **30**.

The arc generator **16** (FIG. **1**) of the system **10**A of this embodiment may include a power supply **38** configured to initiate a large electric current quickly—typically on the order of a few milliseconds or less. Such a power supply **38** may include a capacitor, a superconducting storage coil, and an explosive flux compression generator. The first two examples may require fast-acting, high-current switchgear, such as a gas-insulated switch, to turn on a large current quickly (for the capacitor) or to divert it quickly from a shunt to the electric arc (for the storage coil).

In one aspect of this embodiment, the arc generator **16** creates an electrically conductive path from the power supply **38** to the selected region between the shockwave **24** and the protected region **20** to establish the arc, and back to the power supply. In one embodiment, shown in FIG. **3**, the arc generator **16** creates a laser-induced plasma channel (LIPC). The arc generator **16** fires two high-intensity laser beams **40**, **42** along converging paths. The laser wavelengths and intensities are selected to ionize the air along their paths, thereby forming the plasma channels. The power supply **38** applies voltage across the terminals at the bases of the two channels **40**, **42**, and the voltage is sufficient to form the arc **36** through the air **26** where the beams are close to each other. Current flows through the channels of the LIPC and induces a magnetic field. The current interacts with the magnetic field and produces an outward force (J×B). This force acts to widen the area enclosed by the current loop.

As shown in FIG. **4**, in another embodiment of the system **10**B the arc generator **16** (FIG. **1**) is a gun, which may have at least two or multiple barrels **44**, **46** that fire two pellets **48**, **50** along converging paths. The pellets **48**, **50** are configured to create trails **52**, **54** of ions, for example, by burning silver iodide, in the manner of tracer bullets. The two trails **52**, **54** form conductive channels through the air (the first fluid medium), and the power supply **38** applies voltage across terminals at the bases of the two conductive channels, preferably the barrels **44**, **46**. The voltage is sufficient to form an arc **56** through the air **26** between the two trails **52**, **54** (i.e., the conductive channels) where they are at their closest. The arc **56** heats the air **26** to create the second transient fluid medium **30**. In other embodiments, the pellets **48**, **50** may be selected to melt or burn up completely, thereby avoiding creating a hazard for by standers.

As shown in FIG. **5**, in another embodiment of the system **10**C the arc generator **16** (FIG. **1**) is a projectile launcher configured to launch projectiles **58**, **60** trailing conductive wires **62**, **64** much like a Taser®. The power supply **38** applies voltage across the two wires sufficient to form an arc **66** through the air **26** where the paths of the projectiles **58**, **60** are closest to each other. The arc **66** heats the air **26**, forming the second fluid medium **30** in a selected region between the advancing shockwave **24** and the protected asset **18** in the protected region **20**. As electrical current flows through the wires **62**, **64**, which form conductive channels, the current further heats and ionizes the air **26**. In some embodiments, the current is sufficient to vaporize the wires **62**, **64**, thereby heating additional nearby air **26**.

As shown in FIGS. **6** and **7**, in another embodiment the system **10**D includes a arc generator **16** (FIG. **1**) in the form of one or more sacrificial conductors **68** connected to the power supply **38**. The heating mechanism of this embodiment does not rely on dielectric breakdown of the air **26** to create a current channel. The sacrificial conductor **68** may be in the form of strips or wires made of electrically conductive material. In some embodiments, the conductor **68** may be mounted on the protected asset **18**.

To deploy the system **10**D, the arc generator **16** actuates the power supply **38** to supply current to one of more of the conductors **68**, first vaporizing it, then ionizing it to form a conductive channel of vapor **70**. Due to both the resultant magnetic field (J×B) force and the expansion of the hot vapor created by vaporizing the conductor, the ionized vapor moves outward from its initial position and heats and ionizes the nearby air to create the second fluid medium **30**.

In one embodiment, shown in FIG. **7**, the sacrificial conductor **68** may be attached to a protected asset **18**, which may be the land vehicle shown. The conductor **68** may be attached to a wider insulating strip **72** that in turn is mounted on the asset **18**. With such a placement of the conductor **68**, the conductor **68** may be protected from routine vehicle operations, and may be further protected by overlaying it with a coat of paint. When energized by the power supply **38** (FIG. **6**), the conductor **68**, which may be a metallic strip, vaporizes, and the heated and ionized air may expand from the vehicle

surface and move away from the vehicle to create the second medium **30** in the selected region.

In yet another embodiment, the sacrificial conductor **68** may be made partly or entirely of lithium. Lithium has a very low molecular weight, and consequently a higher shock speed and lower effective index of refraction than other metallic vapors. Further, it disperses into nearby air **26** more quickly, which helps to heat the air more rapidly.

In other embodiments, the arc generator **16** may be configured to attenuate the advancing shockwave by magnetic induction. As shown in FIG. **8**A, the arc generator **16** may be powered by the power supply **38** to create an electric arc **72** that forms a conducting channel between two electrodes **74**, **76** that are not rigid, such as thin rod antennae. The conducting channel **72** interacts with its own magnetic field to produce an outward force $F=J\times B$ (where F is the outward force, J is the current density and B is the magnetic field flux).

When the shockwave **24** created by an explosion **22** reaches the arc **72**, as shown in FIG. **8**B, the shockwave deforms the arc in directions perpendicular to the conductive channels. Specifically, the shockwave **24** pushes the ionized air created by or making up the arc **72** inward, and the current tends to flow where the air **26** is ionized. This movement by the shockwave **24** may do mechanical work against the magnetic field force F and remove energy from the shockwave, making it weaker. Although not shown, the movement by the shockwave **24** also may deform the electrodes **74**, **76**, which also represents physical work that drains energy from the shockwave **24**.

In the embodiment shown in FIGS. **8**A and **8**B, because the electrodes **74**, **76** may be relatively non-rigid, these parts and the conductive channel **72** push against the air **26** they are displacing. This may transform energy from the shockwave **25** into kinetic energy of displaced air. In some cases it may be possible for the conductive channels **72** and electrodes **74**, **76** to push the air so fast that they may create new shockwaves moving away from the protected region **20**.

In a variation, the parts of the conductive channels **72** and electrodes **74**, **76** may not be rigid, but the channels of ionized air pushed ahead of the magnetic flux are disrupted (broken) when they flow rapidly through the air **26**. Each time a channel **72** breaks, the electric current briefly stops. When it stops, the trapped magnetic flux creates an electromotive force strong enough to ionize a new channel through the air **26** and then heat that air. This may transform energy from the shockwave **24** into ionization energy of air ions and into pressure-volume-temperature energy of expanded hot air.

In the embodiment shown in FIGS. **9**A and **9**B, the arc generator **16** may be configured to have rigid electrodes **78**, **80** joined by a rear wall **82** to form three sides of a box. An arc **84** may be formed by the power supply **38** of the arc generator **16** between electrodes **78**, **80**. When the arc **84** is contacted by the shockwave **24**, the magnetic flux (represented by the crossed circles **86**) is deflected inward but movement is constrained by the electrodes **78**, **80** and wall **82**. Instead, the flux **86** is compressed and increases the electric current in the electrodes **78**, **80**. In one embodiment, the power supply **16** is configured so that this additional electric current bypasses the power supply and instead is directed to a resistive load **88**. Resistive load **88** also may take the form of a capacitor, which may receive a charge from the additional electric current. Thus, with the embodiments of FIGS. **8** and **9**, magnetic induction is used to remove energy from the advancing shockwave by the additional mechanism of converting the shockwave energy to mechanical energy or converting the shockwave energy to current.

A system **10** may be comprised of multiple copies of each embodiment. In an embodiment, a system **10** may include a single sensor **12** connected to and controlling multiple, discrete arc generators **16**, each mounted on the protected asset **18**. In some applications, an embodiment may produce a relatively narrow, substantially linear arc of hot, ionized air. Multiple copies of each embodiment may be used to increase the frontal area as desired. Alternatively, a single copy of an embodiment may be used multiple times in rapid succession, producing multiple arcs that collectively cover the desired protected region **20**. Further, these embodiments may be combined. For example, a system **10** may utilize ionizing tracer pellets to protect an asset **18** from explosions **22** relatively far away, and employ sacrificial conductors to protect the same asset from explosions at short range.

With each of the embodiments discussed, the system **10** is deployed to attenuate the energy of an advancing shockwave **24** form an explosion **22** by creating a second fluid medium **30** that differs from the first fluid medium **26**, which may be ambient air, positioned so that it interacts with the shockwave. As shown in FIG. **10**, as the shockwave contacts the interface **90** between the first fluid medium **26** and the second fluid medium **30**, the difference in refractive index reflects a fraction of the incoming energy toward the explosion **22**, as indicated by arrows A. This partial reflection occurs a second time as the shockwave passes through the second fluid medium **30** and contacts the interface **92** between the second medium and the ambient **26** as it exits the second medium. All gradients or discontinuities in the medium provide a reflection point for the incoming shockwave **24**. For example, if the second medium **30** is non-uniform, reflection will occur at each of many places within the medium.

As shown in FIG. **11**, shockwaves **24** obey Fermat's theory of least time and therefore an effective refractive index for the shockwave can be defined that is inversely proportional to the shock speed. The properties or composition of the second medium **30** are chosen such that the effective refractive index of the second medium **30** differs from the first medium **26** in at least one of temperature, molecular weight and composition. As the shockwave passes into or out of the second medium **30**, the difference in effective refractive index refracts the wave, as shown by lines B, diverting it and defocusing it away from the protected asset **18**. In the disclosed embodiments, the second medium **30** is created such that the shockwave travels faster in the second medium **30** than in the first medium **26**, so the refractive index of the second medium is less than that of the first medium. Further, the second medium is created to have a convex shape and therefore acts as a divergent lens, so that the energy of the shockwave **24** spreads out, as shown by lines C, so its intensity drops as it approaches the protected asset **18**.

In addition, the second medium **30** may absorb some shock energy as the shock travels through it. Factors contributing to the absorption of energy include energy retained in the molecules of the second medium itself (e.g., enhanced rotational energy, excited molecular bonds, excited electrons, molecular decomposition, and ionization) and shock energy converted to electromagnetic energy through blackbody emission from hot particles or photon emission from de-exciting various excited states.

A further mechanism for attenuating the energy density of the shockwave **24** is momentum exchange. If the second medium **30** is moving relative to the first medium **26**, then it will exchange momentum with the shockwave **24**. The result is a combination of reflection, slowing, and redirection of the shockwave. Any or all of the foregoing mechanisms may operate in a given embodiment. The composition, tempera-

ture, speed and location of the second medium **30** may be chosen or created to create any one or all of the aforementioned mechanisms.

While the method and forms of apparatus disclosed herein constitute preferred aspects of the disclosed shockwave attenuation apparatus and method, other methods and forms of apparatus may be employed without departing from the scope of the invention.

What is claimed is:

1. A shockwave attenuation system, comprising:

a sensor for generating a detection signal based on at least one of detecting an explosion capable of producing a shockwave traveling through a first fluid medium to a protected region, and estimating a location and time of the explosion, and detecting an explosive device and estimating a location and time of an explosion from the explosive device that is capable of producing the shockwave traveling through the first fluid medium; and

an arc generator in communication with the sensor for receiving the detection signal therefrom, and in response thereto heat a selected region of the first fluid medium rapidly to create a second, transient medium, different from the first medium, interposed between the shockwave and the protected region such that the shockwave contacts the second, transient medium and is attenuated in energy density before it reaches a protected asset in the protected region.

2. The system of claim **1**, wherein the second medium differs from the first medium in at least one of temperature, density and composition.

3. The system of claim **1**, wherein the arc generator heats the region of the first fluid medium to create the second medium by using one of an electric arc, a laser-induced arc and a microwave-induced arc.

4. The system of claim **1**, wherein the arc generator includes a power supply, and the arc generator rapidly creates the second medium by creating an electrically conductive path from the power supply to the selected region and back to the power supply.

5. The system of claim **4**, wherein the arc generator creates the electrically conductive path utilizing at least one of high intensity laser pulses to form a laser-induced plasma channel (LIPC), pellets that leave a conductive trail of ions, sacrificial conductors, projectiles trailing electrical wires fired along converging paths, magnetic induction utilizing flexible channels of ionized air, and magnetic induction utilizing substantially rigid conductors.

6. The system of claim **1**, wherein the protected region includes at least one protected asset, and at least one of the sensor and the arc generator is mounted on the protected asset.

7. The system of claim **1**, wherein the sensor detects at least two bands of electromagnetic radiation generated by the explosion.

8. The system of claim **1**, wherein the sensor detects at least one of a shape, trajectory and speed of an incoming threat containing the explosive device, and to calculate a signature of the incoming threat, the sensor also using the signature to determine likely explosion characteristics of the explosive device.

9. The system of claim **8**, wherein the explosion characteristics include at least one of a location of the explosion, a time of the explosion, and a magnitude of the explosion.

10. The system of claim **9**, wherein the sensor uses the explosion characteristics to calculate a location of the selected region.

11. The system of claim **6**, wherein the protected asset is one of a surface vessel, a submarine vessel, an offshore platform, a land vehicle, a land structure, and a human, and wherein the sensor determines the selected region based on one or more predetermined vulnerabilities of the protected asset.

12. The system of claim **1**, further comprising multiple arc generators, each connected to the sensor.

13. The system of claim **12**, wherein the multiple arc generators are adapted to be mounted on a protected asset.

14. The system of claim **1**, wherein the first fluid medium is ambient air, and the arc generator utilizes at least one of electric, microwave and laser energy to produce at least one of relatively hot and ionized air to form the second, transient medium in the selected region, such that the shockwave contacts the second, transient medium and is attenuated in energy density by at least one of reflection, refraction, absorption, momentum transfer and magnetic induction.

15. A method of attenuating a shockwave, the method comprising:

detecting with a sensor at least one of an explosion capable of producing a shockwave traveling through a first fluid medium to a protected region, and an explosive device:

estimating a location and time of the explosion of the at least one of an explosion from the explosive device and the explosive device that is capable of producing the shockwave;

generating a detection signal by the sensor in response to detecting at least one of the explosion and the explosive device;

heating a selected region of the first fluid medium rapidly to create a second, transient medium, different from the first medium, by an arc generator in communication with the sensor, in response to the detection signal, the second medium being interposed between the shockwave and the protected region such that the shockwave contacts the second, transient medium and is attenuated in energy density before it reaches the protected region.

16. The method of claim **15**, wherein the second, transient medium attenuates the energy density of the shockwave by at least one of reflection, refraction, absorption, momentum transfer and magnetic induction.

17. The method of claim **15**, wherein detecting includes detecting, with one or more sensors, at least two bands of electromagnetic radiation from the explosion.

18. The method of claim **15**, wherein heating includes rapidly creating the second medium by creating an electrically conductive path from a power supply to the selected region and back to the power supply.

19. The method of claim **18**, wherein creating an electrically conductive path utilizes at least one of high intensity laser pulses to form a laser-induced plasma channel (LIPC), pellets that leave a conductive trail of ions, sacrificial conductors, projectiles trailing electrical wires fired along converging paths, magnetic induction utilizing flexible channels of ionized air, and magnetic induction utilizing substantially rigid channels of ionized air.

20. A method of attenuating a shockwave, the method comprising:

detecting with a sensor at least one of an explosive device and an explosion from the explosive device;

estimating a location and time of the explosion of the at least one of an explosion from the explosive device and the explosive device and predicting an explosion therefrom that is capable of producing the shockwave;

calculating with a computer a firing plan based upon at least one of data and models of vulnerability of a pro-

tected asset, and at least one of data and models of effectiveness of actuating an arc generator to heat a selected region adjacent the protected region; and

if the firing plan determines that it is cost effective to execute the firing plan in view of a cost to operate an arc generator and probable cost of damage from a shockwave from the explosion, actuating the arc generator to heat a selected region of a first fluid medium rapidly to create a second, transient medium, different from the first medium, the second medium being interposed between the shockwave and the protected region such that the shockwave contacts the second, transient medium and is attenuated in energy density before it reaches the protected asset.

21. The method of claim **20**, wherein detecting includes

measuring a signature of an incoming threat carrying the explosive device;

comparing the signature with known signatures of a plurality of different threats;

determining a probability the incoming threat is one of the plurality of different threats; and

calculating includes estimating a probability distribution function of explosion magnitudes and locations relative to the protected asset based on at least one of stored data about the type of explosive device, measured motion of the incoming threat, and a shape, relative orientation and relative motion of the protected asset; and making a determination to counter the incoming threat or not counter the incoming threat, based on one of stored data and models of vulnerability of the protected asset to shockwaves, and data from at least one of data and models of performance of the arc generator with respect to attenuating shockwaves from the estimated explosion magnitudes and locations.

22. The method of claim **20**, wherein detecting includes

measuring a signature of the explosion from the explosive device;

comparing the signature with stored signatures of a plurality of known different explosive devices;

determining a probability the explosion is from one of the plurality of known different explosive devices; and

calculating includes estimating a probability distribution function of explosion magnitudes and locations relative to the protected asset based on at least one of stored data about the type of explosion, the location of the explosion and the shape, relative orientation and relative motion of the protected asset; and making a determination to counter the explosion or not counter the explosion, based on one of stored data and models of vulnerability of the protected asset to shockwaves from the explosion, and data from at least one of data and models of performance of the arc generator with respect to attenuating shockwaves from at least one of an estimated explosion magnitude and location.

23. The method of claim **20**, wherein calculating includes calculating with a computer a firing plan based upon at least one of data and models of vulnerability of the protected asset within a protected region.

* * * * *

United States Patent [19]

Meyer

[11] **Patent Number: 4,826,581**

[45] **Date of Patent: May 2, 1989**

[54] **CONTROLLED PROCESS FOR THE PRODUCTION OF THERMAL ENERGY FROM GASES AND APPARATUS USEFUL THEREFORE**

[76] Inventor: **Stanley A. Meyer,** 3792 Broadway, Grove City, Ohio 43123

[21] Appl. No.: **81,859**

[22] Filed: **Aug. 5, 1987**

Related U.S. Application Data

[63] Continuation-in-part of Ser. No. 835,564, Mar. 3, 1986, abandoned.

[51] **Int. Cl.**[4] **C07G 13/00**

[52] **U.S. Cl.** **204/157.41;** 204/164

[58] **Field of Search** 204/164, 157.41, 157.44

[56] **References Cited**

U.S. PATENT DOCUMENTS

4,233,109	11/1980	Nishizawa	204/164 X
4,406,765	9/1983	Higashi et al.	204/164
4,687,753	8/1987	Fiato et al.	204/157.41 X
4,695,357	9/1987	Boussert	204/157.41

Primary Examiner—Stephen J. Kalafut

Attorney, Agent, or Firm—Porter, Wright, Morris & Arthur

[57] **ABSTRACT**

A method of and apparatus for obtaining the release of energy from a gas mixture including hydrogen and oxygen in which charged ions are stimulated to an activated state, and then passed through a resonant cavity, where successively increasing energy levels are achieved, and finally passed to an outlet orifice to produce thermal explosive energy.

2 Claims, 7 Drawing Sheets

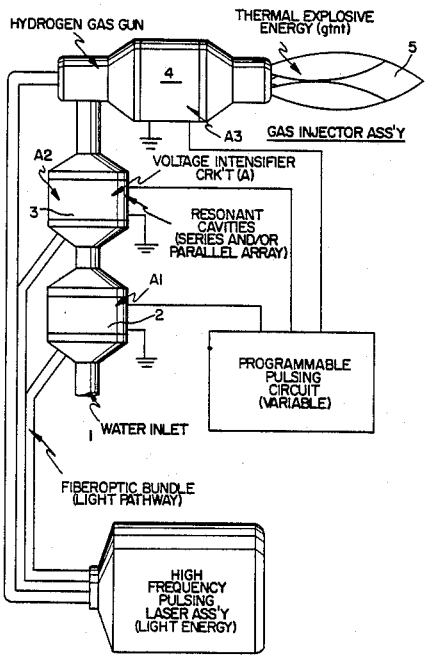

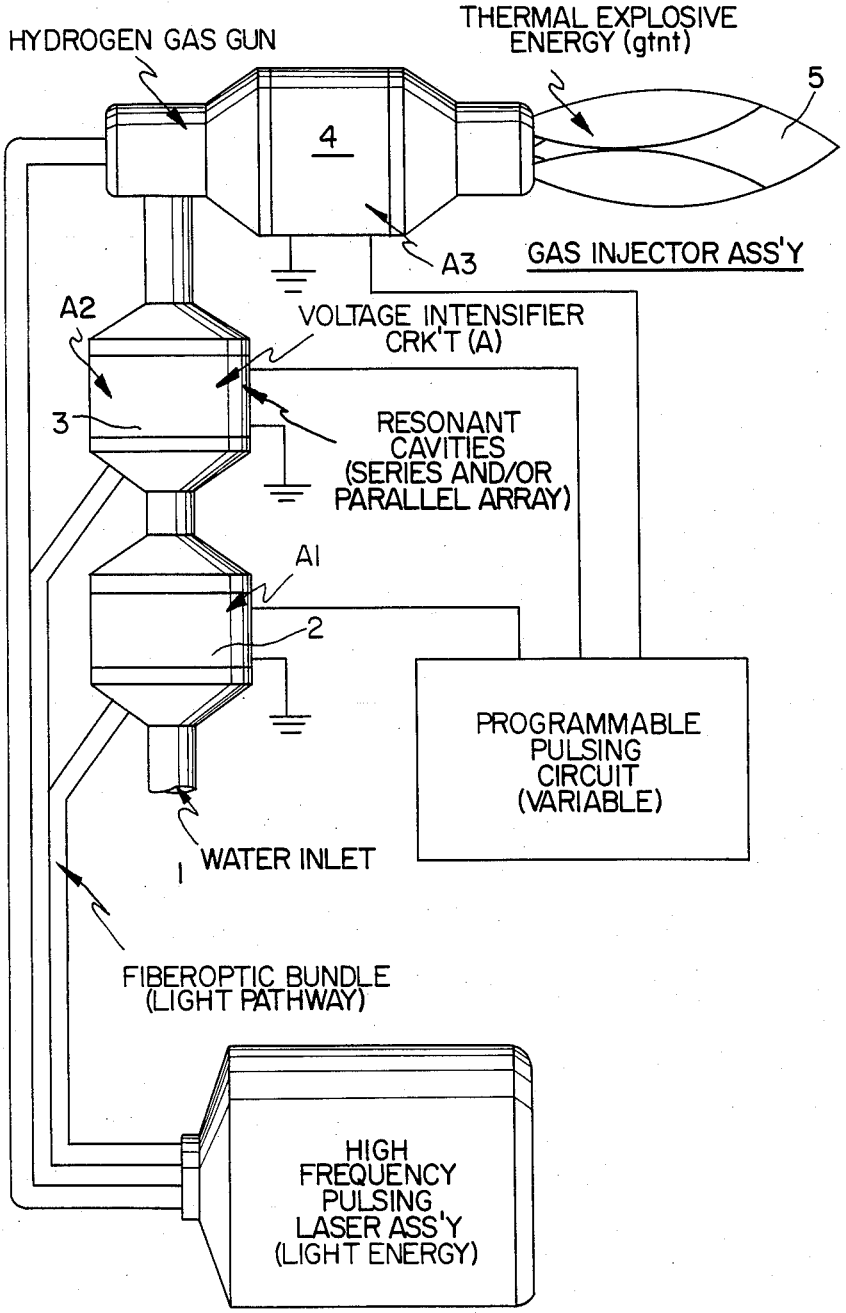
HYDROGEN GAS GUN
THERMAL EXPLOSIVE ENERGY (gtnt)
5
4
A3
GAS INJECTOR ASS'Y
A2
VOLTAGE INTENSIFIER CRK'T (A)
3
RESONANT CAVITIES (SERIES AND/OR PARALLEL ARRAY)
A1
2
PROGRAMMABLE PULSING CIRCUIT (VARIABLE)
WATER INLET
1
FIBEROPTIC BUNDLE (LIGHT PATHWAY)
HIGH FREQUENCY PULSING LASER ASS'Y (LIGHT ENERGY)

FIG. 1

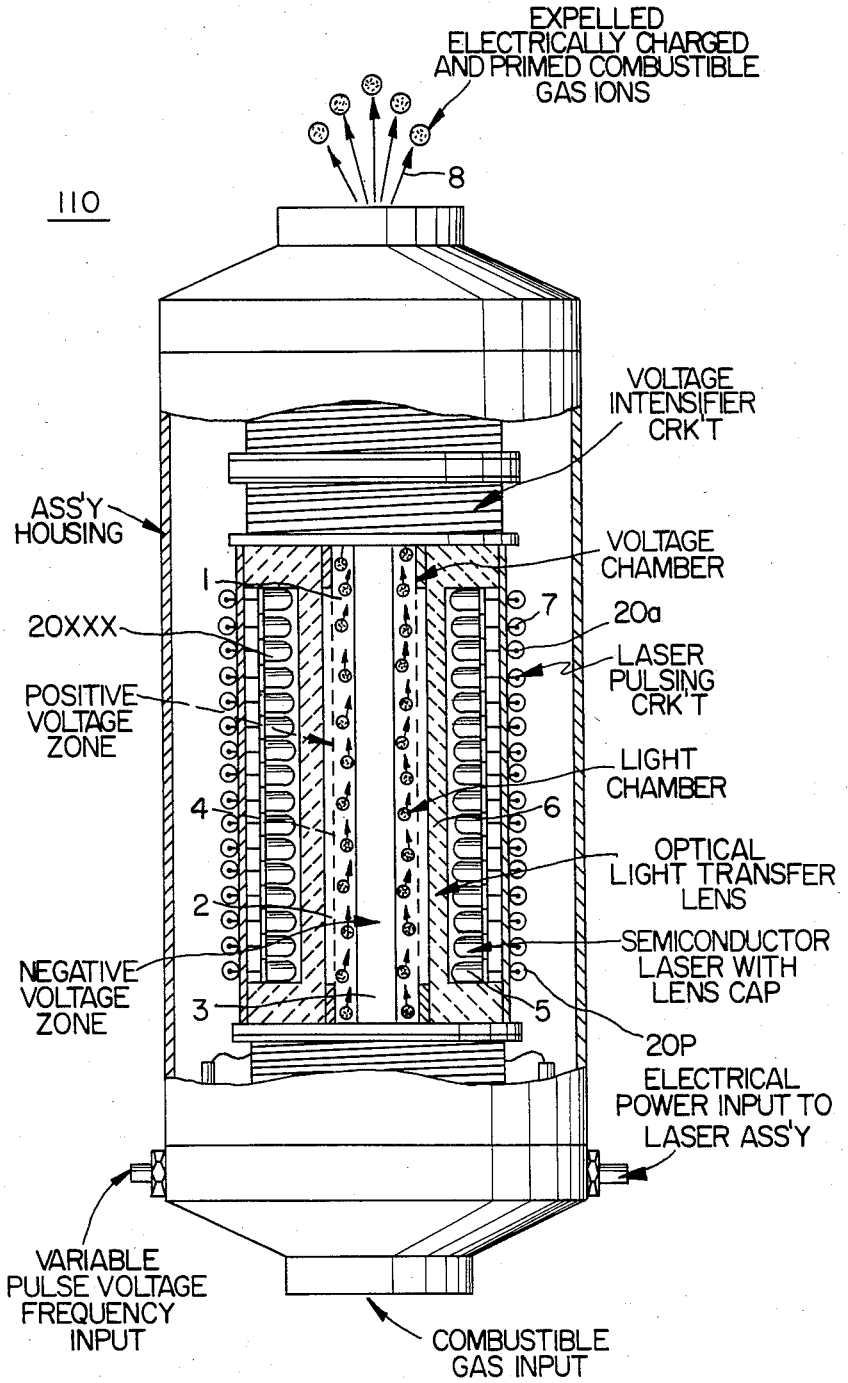
EXPELLED ELECTRICALLY CHARGED AND PRIMED COMBUSTIBLE GAS IONS
8
110
VOLTAGE INTENSIFIER CRK'T
ASS'Y HOUSING
VOLTAGE CHAMBER
1
7
20XXX
20a
LASER PULSING CRK'T
POSITIVE VOLTAGE ZONE
LIGHT CHAMBER
4
6
OPTICAL LIGHT TRANSFER LENS
2
SEMICONDUCTOR LASER WITH LENS CAP
NEGATIVE VOLTAGE ZONE
3
5
20P
ELECTRICAL POWER INPUT TO LASER ASS'Y
VARIABLE PULSE VOLTAGE FREQUENCY INPUT
COMBUSTIBLE GAS INPUT

FIG. 2

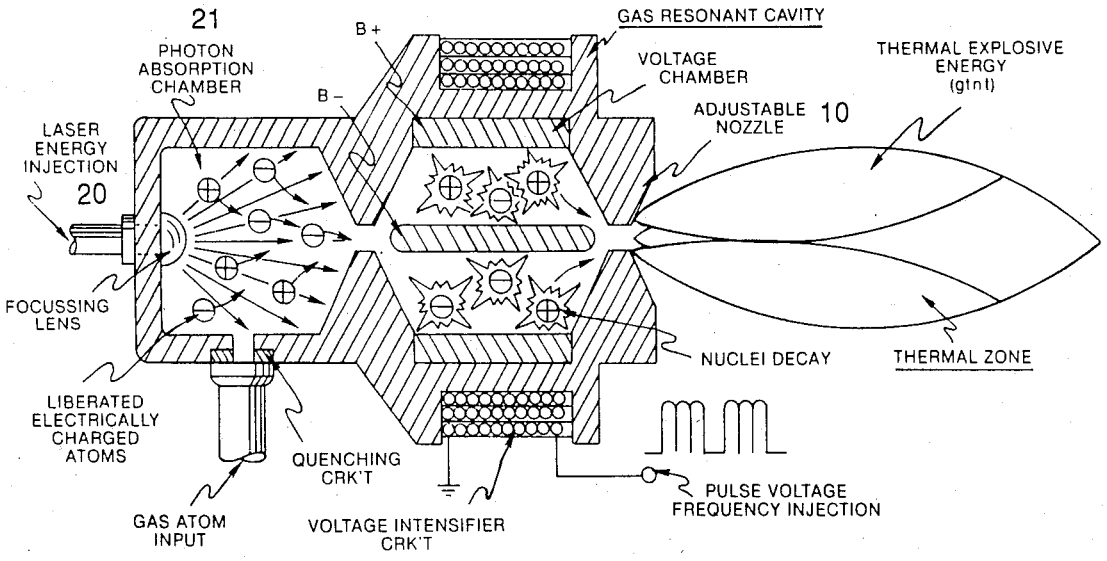
21
PHOTON ABSORPTION CHAMBER
B +
B −
GAS RESONANT CAVITY
VOLTAGE CHAMBER
THERMAL EXPLOSIVE ENERGY (gtnt)
ADJUSTABLE NOZZLE
10
LASER ENERGY INJECTION
20
FOCUSSING LENS
NUCLEI DECAY
THERMAL ZONE
LIBERATED ELECTRICALLY CHARGED ATOMS
QUENCHING CRK'T
PULSE VOLTAGE FREQUENCY INJECTION
GAS ATOM INPUT
VOLTAGE INTENSIFIER CRK'T

FIG. 3

FIG. 4

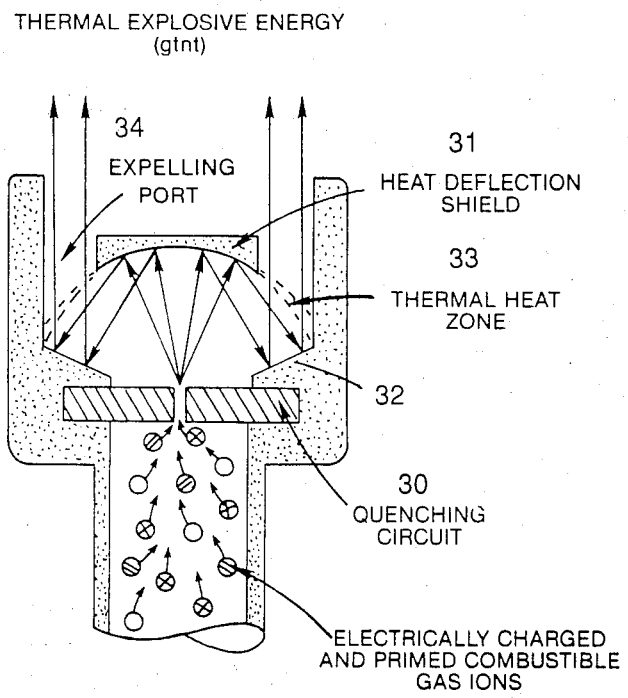
THERMAL EXPLOSIVE ENERGY (gtnt)
34
EXPELLING PORT
31
HEAT DEFLECTION SHIELD
33
THERMAL HEAT ZONE
32
30
QUENCHING CIRCUIT
ELECTRICALLY CHARGED AND PRIMED COMBUSTIBLE GAS IONS

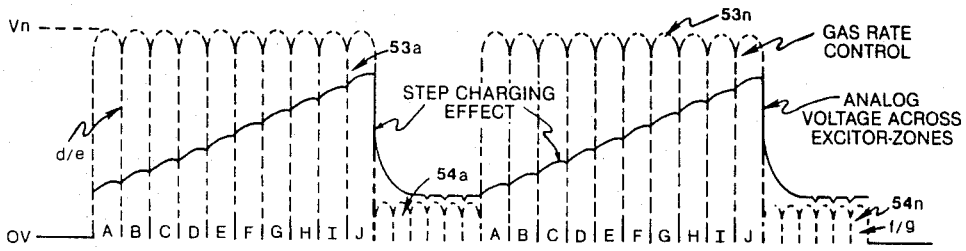

SECTION AA: APPLIED VOLTAGE PULSE TRAIN

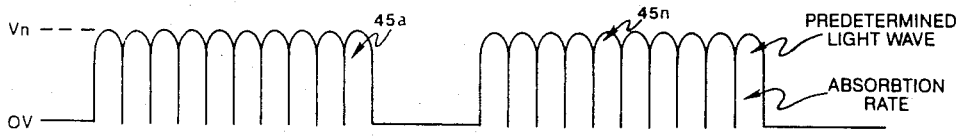

SECTION BB: APPLIED LASER OR PHOTON PULSE TRAIN

FIG. 5

FIG. 6

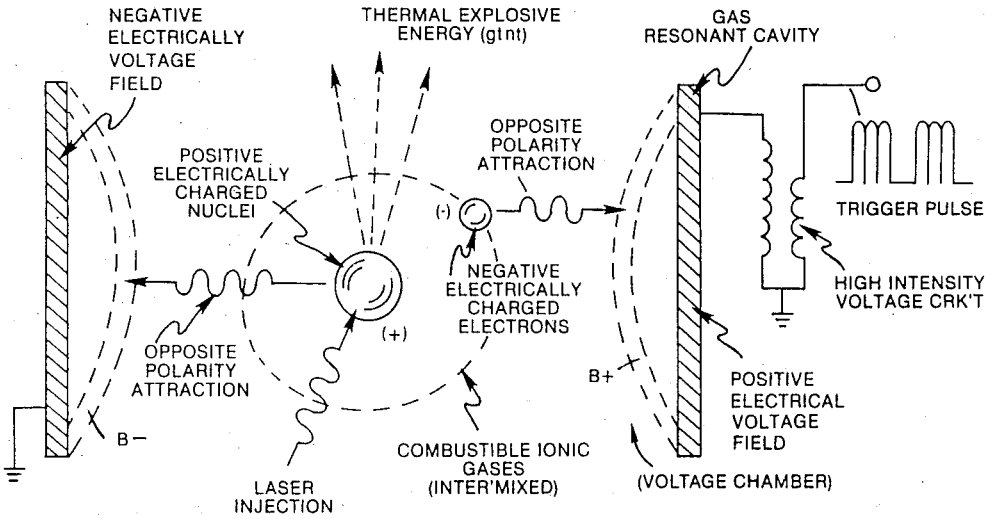

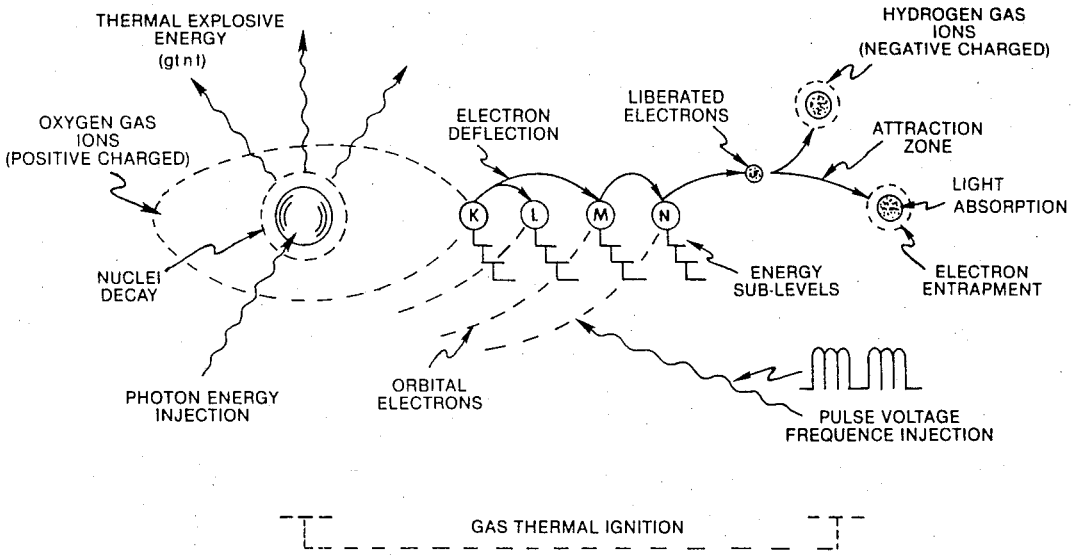
THERMAL EXPLOSIVE ENERGY (gtnt)
OXYGEN GAS IONS (POSITIVE CHARGED)
NUCLEI DECAY
PHOTON ENERGY INJECTION
ELECTRON DEFLECTION
ORBITAL ELECTRONS
K
L
M
N
LIBERATED ELECTRONS
ENERGY SUB-LEVELS
HYDROGEN GAS IONS (NEGATIVE CHARGED)
ATTRACTION ZONE
LIGHT ABSORPTION
ELECTRON ENTRAPMENT
PULSE VOLTAGE FREQUENCE INJECTION
GAS THERMAL IGNITION

FIG. 7

FIG. 8

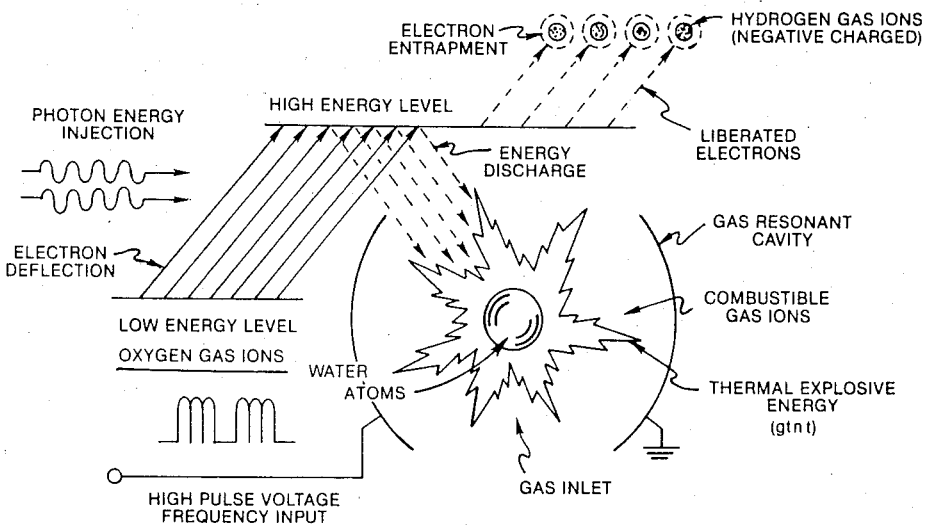
ELECTRON ENTRAPMENT
HYDROGEN GAS IONS (NEGATIVE CHARGED)
PHOTON ENERGY INJECTION
HIGH ENERGY LEVEL
LIBERATED ELECTRONS
ENERGY DISCHARGE
GAS RESONANT CAVITY
ELECTRON DEFLECTION
COMBUSTIBLE GAS IONS
LOW ENERGY LEVEL
OXYGEN GAS IONS
WATER ATOMS
THERMAL EXPLOSIVE ENERGY (gtnt)
GAS INLET
HIGH PULSE VOLTAGE FREQUENCY INPUT

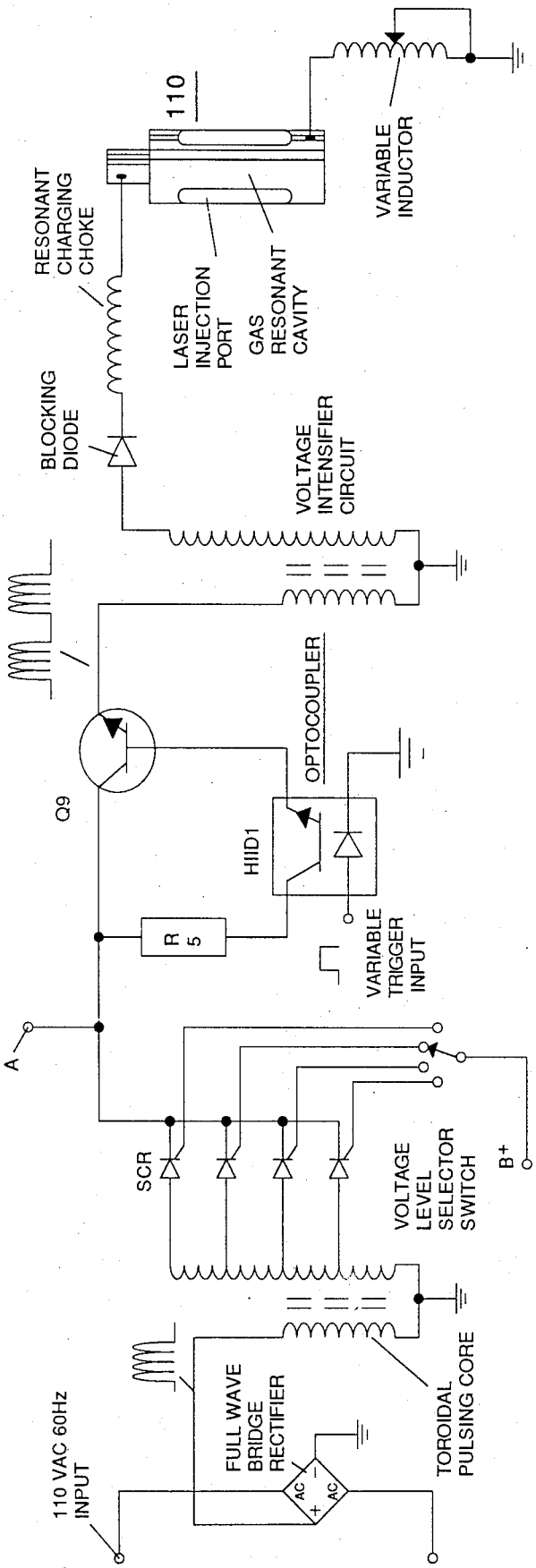
110
RESONANT CHARGING CHOKE
BLOCKING DIODE
LASER INJECTION PORT
GAS RESONANT CAVITY
VARIABLE INDUCTOR
VOLTAGE INTENSIFIER CIRCUIT
Q9
OPTOCOUPLER
HIID1
R 5
VARIABLE TRIGGER INPUT
A
SCR
VOLTAGE LEVEL SELECTOR SWITCH
B+
110 VAC 60Hz INPUT
FULL WAVE BRIDGE RECTIFIER
AC
AC
TOROIDAL PULSING CORE

FIG. 9

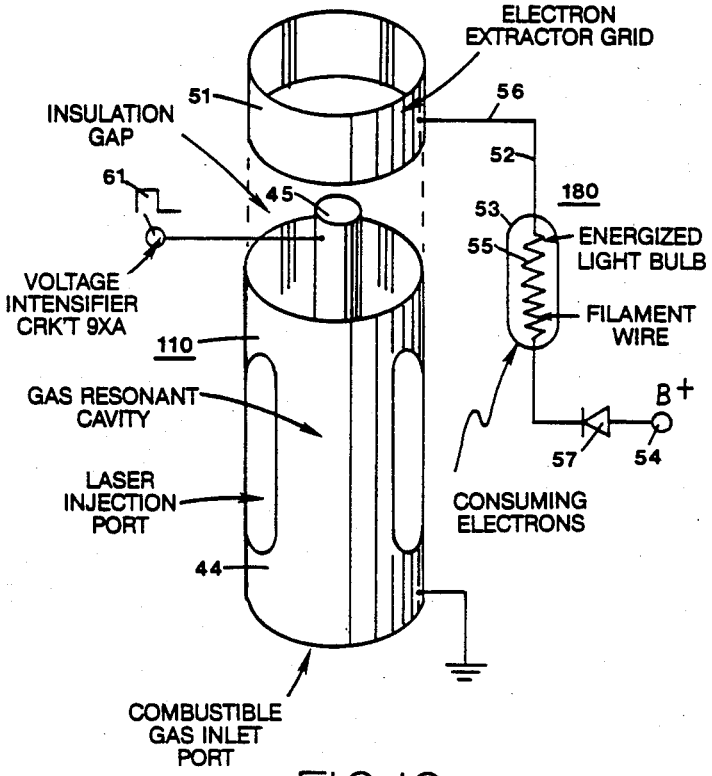
ELECTRON
EXTRACTOR GRID
51
56
INSULATION
GAP
52
61
45
180
53
55
ENERGIZED
LIGHT BULB
VOLTAGE
INTENSIFIER
CRK'T 9XA
FILAMENT
WIRE
110
B+
GAS RESONANT
CAVITY
57
54
LASER
INJECTION
PORT
CONSUMING
ELECTRONS
44
COMBUSTIBLE
GAS INLET
PORT

FIG. 10

FIG. 11

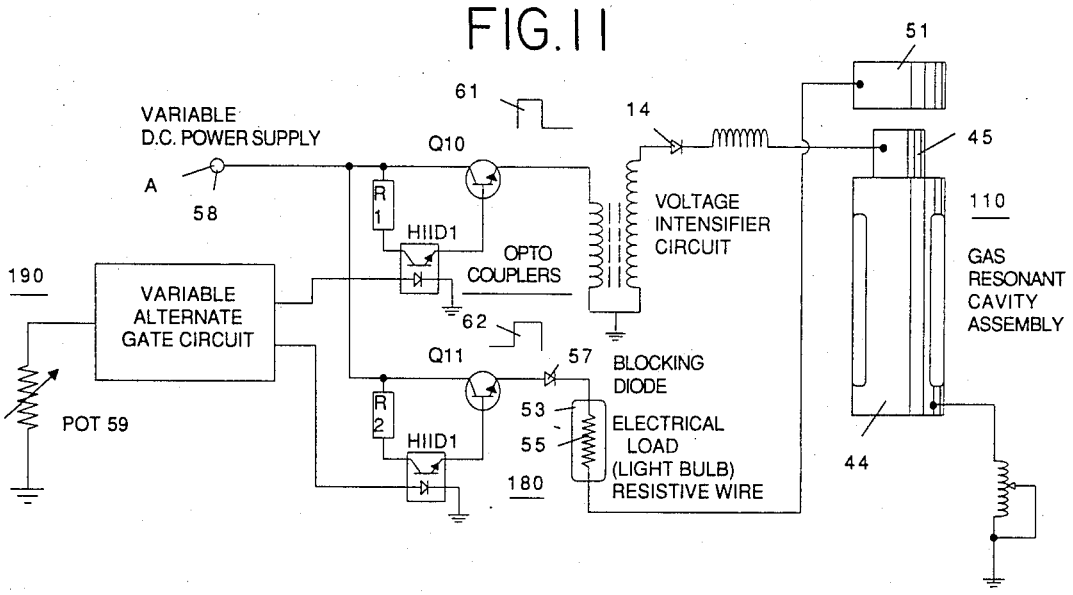
51
61
14
VARIABLE
D.C. POWER SUPPLY
Q10
45
A
58
R1
110
HIID1
VOLTAGE
INTENSIFIER
CIRCUIT
OPTO
COUPLERS
GAS
RESONANT
CAVITY
ASSEMBLY
190
VARIABLE
ALTERNATE
GATE CIRCUIT
62
Q11
57
BLOCKING
DIODE
R2
53
ELECTRICAL
LOAD
(LIGHT BULB)
RESISTIVE WIRE
POT 59
HIID1
55
44
180

CONTROLLED PROCESS FOR THE PRODUCTION OF THERMAL ENERGY FROM GASES AND APPARATUS USEFUL THEREFORE

RELATED APPLICATION

This is a continuation-in-part of my co-pending application Ser. No. 835,564, now abandoned.

FIELD OF THE INVENTION

This invention relates to a method of and apparatus for obtaining the release of energy from a gas mixture including hydrogen and oxygen in which charged ions are stimulated to an actived state, and then passed through a resonant cavity, where successively increasing energy levels are achieved, and finally passed to an outlet orifice to produce thermal explosive energy.

BACKGROUND OF THE PRIOR ART

Processes have been proposed for many years in which controlled energy producing reactions of atomic particles are expected to occur under "cold" conditions. [See. e.q.. Rafelski, J. and Jones, S.E., "Cold Nuclear Fusion," *Scientific American,* July, 1987, page 84]. The process and apparatus described herein are considered variations to and improvements in processes by which energy is derived from excited atomic components in a controllable manner.

OBJECTS OF THE INVENTION

It is an object of the invention to realize significant energy-yield from water atoms. Molecules of water are broken down into hydrogen and oxygen gases. Electrically charged gas ions of opposite electrical polarity are activated By Express Mail No. 26224690 on August 5, 1987 by electromagnetic wave energy and exposed to a high temperature thermal zone. Significant amounts of thermal energy with explosive force beyond the gas burning stage are released.

An explosive thermal energy under a controlled state is produced. The process and apparatus provide a heat energy source useful for power generation, aircraft, rocket engines, or space stations.

BRIEF DESCRIPTION OF THE DRAWINGS

FIG. **1** illustrates a staged arrangement of apparatus useful in the process, beginning with a water inlet and culminating in the production of thermal explosive energy.

FIG. **2A** shows a cross-section of a circular gas resonant cavity used in the final stage assembly of FIG. **1**.

FIG. **2B** shows an alternative final stage injection system useful in the apparatus of FIG. **1**.

FIG. **2C** shows an optical thermal lens assembly for use either final stage of FIG. **2A** or FIG. **2B**.

FIGS. **3A**, **3B**, **3C** and **3D** are illustrations depicting various theoretical bases for atomic phenomena expected to occur during operation of the invention herein.

FIG. **4** is an electrical schematic of the voltage source for the gas resonant cavity.

FIGS. **5A** and **5B**, respectively, show (A) an electron extractor grid used in the injector assemblies of FIG. **2A** and FIG. **2B**, and (B) the electronic control circuit for the extractor grid.

DESCRIPTION OF THE PREFERRED EMBODIMENT

The hydrogen fracturing process, follows the sequence of steps shown in the following Table I in which beginning with water molecules, the molecule is subjected to successively increasing electrical, wave energy and thermal forces. In the succession of forces, radomly oriented water molecules are aligned with respect to molecular polar orientation and are themselves polarized and "elongated" by the application of an electric potential to the extent that covalent bonding of the water molecule is so weakened that the atoms disassociate and the molecule breaks down into hydrogen and oxygen elemental components. The released atomic gases are next ionized and electrically charged in a vessel while being subjected to a further energy source that promotes inter-particle impact in the gas at an increased overall energy level. Finally, the atomic particles in the excited gas, having achieved successively higher energy levels, are subjected to a laser or electromagnetic wave energy source that produces atomic destabilization and the final release of thermal explosive energy. Engineering design parameters based on known theoretical principles of atomic physics determine the incremental levels of electrical and wave energy input required to produce resonance in each stage of the system. Instead of a dampening effect, a resonant energization of the molecule, atom or ion provides a compounding energy interaction resulting in the final energy release.

TABLE I

PROCESS STEPS LEADING TO IGNITION	
RELATIVE STATE OF WATER MOLECULE AND/OR HYDROGEN/OXYGEN/OTHER ATOMS	
RANDOM	1st Stage
ALIGNMENT	Water to Gas
POLARIZATION	2nd Stage
MOLECULAR ELONGATION	Gas Ionization
ATOM LIBERATION	3rd Stage
LIQUID TO GAS IONIZATION	Priming
ELECTRICAL CHARGING EFFECT	Final Stage
PARTICLE IMPACT	Ignition
ELECTROMAGNETIC WAVE, LASER OR PHOTON INJECTION	
ELECTRON EXTRACTION	
ATOMIC DESTABILIZATION	
THERMAL IGNITION	

After the first stage in which water is broken down into its atomic components in a mixture of hydrogen, oxygen and formerly dissolved entrapped gasses, the gas atoms become elongated during electron removal as the atoms are ionized. Laser, or light wave energy of a predetermined frequency is injected into a containment vessel in a gas ionization process. The light energy absorbed by voltage stimulated gas nuclei causes destabilization of gas ions still further. The absorbed laser energy causes the gas nuclei to increase in energy state, which, in turn, causes electron deflection to a higher orbital shell.

The electrically charged and laser primed combustible gas ions from a gas resonant cavity may be directed into an optical thermal lens assembly for triggering. Before entry into the optimal thermal lens, however, electrons are stripped from the ions and the atom is destabilized. The destabilized gas ions which are electrically and mass unbalanced atoms having highly energized nuclei are pressurized during spark ignition. The

unbalanced, destablized atomic components thermally interact; the energized and unstable hydrogen gas nuclei collide with highly energized and unstable oxygen gas nuclei, causing and producing thermal explosive energy beyond the gas burning stage. The ambient air gas components in the initial mixture aid the thermal explosive process under a controlled state.

In the process, the point of optimum energy-yield is reached when the electron deficient oxygen atoms (having less than a normal number of electrons) lock onto and capture a hydrogen atom electron prior to or during thermal combustion of the hydrogen/oxygen mixture. Atomic decay results in the release of energy.

In a general outline of the method, a first gas mixture including at least a portion of hydrogen and oxygen gases is provided. The gas mixture is subjected to a pulsating, polar electric field whereby electrons of the gas atoms are distended in their orbital fields by reason of their subjection to electrical polar forces. The polar pulsating frequency applied is such that the pulsating electric field induces a resonance with respect to an election of the gas atom. A cascade effect results and the energy level of specific resonating electron is increased in cascading, incremental steps.

Next, the gas atoms are ionized and subjected to electro-magnetic wave energy having a predetermined frequency to induce a further election resonance in the ion, whereby the energy level of the election is successively increased. Electrons are extracted from the resonating ions while such ions are in an increased energy state to destabilize the nuclear electron configuration of said ions; and the gas mixture of destabilized ions is thermally ignited.

In the apparatus shown in FIG. **1**, water is introduced at inlet **1** into a first stage water fracturing module **2** in which water molecules are broken down into hydrogen, oxygen and released entrapped gas components by an electrical disassociation process and apparatus such as shown in my co-pending application Ser. No. 835,564, filed March 3, 1986, which is incorporated herein by reference. The released atomic gases and other gas components formerly entrapped as dissolved gases in water may be introduced to a successive stage **3** or other number of like resonant cavities, which are arranged in either a series or parallel combined array. The successive energization of the gas atoms provides a cascading effect, successively increasing the voltage stimulation level of the released gasses as they sequentially pass through cavities **2**, **3**, etc. In a final stage, an injector system **4**, of a configuration of the type shown in FIGS. **2A** or **2B**, receives energized atomic and gas particles where the particles are subjected to further energy input, electrical excitation and thermal stimulation, whereby thermal explosive energy results **5**, which may be directed thru a lens assembly of the type shown in FIG. **2C** to provide a controlled thermal energy output.

Electromagnetic wave activated and electrically charged gas ions of hydrogen and oxygen (of opposite polarity) are expelled from the cascaded cells **2**, **3**, etc. The effect of cascading successively increases the voltage stimulation level of the released gases, which then are directed to the final injector assembly **4**. In the injector assembly, gas ions are stimulated to a yet higher energy level. The gases are continually exposed to a pulsating laser or other electromagnetic wave energy source together with a high intensity oscillating voltage field that occurs within the cell between electrodes or conductive plates of opposite electrical polarity. A preferred construction material for the plates is a stainless steel T-304 which is non-chemically reactive with water, hydrogen, or oxygen. An electrically conductive material which is inert in the fluid environment is a desirable material of construction for the electrical field producing plates, through which field the gas stream of activated particles passes. Gas ions of opposite electrical charges reach and maintain a critical energy level state. The gas ions are oppositely electrically charged and subjected to oscillating voltage fields of opposite polarity and are also subjected to a pulsating electromagnetic wave energy source. Immediately after reaching critical energy, the excited gas ions are exposed to a high temperature thermal zone in the injection cell, **4**, that causes the excited gas ions to undergo gas combustion. The gas ignition triggers atomic decay and releases thermal energy, **5**, with explosive force.

Once triggered, the thermal explosive energy output is controllable by the attenuation of operational parameters. With reference to FIG. **4A**, for example, once the frequency of resonance is identified, by varying applied pulse voltage to the initial water fuel cell assemblies, **2**, **3**, the ultimate explosive energy output is likewise varied. By varying the pulse shape and/or amplitude or pulse train sequence of the electromagnetic wave energy source, final output is varied. Attenuation of the voltage field frequency in the form of *OFF* and *ON* pulses likewise affects output of the staged apparatus. Each control mechanism can be used separately, grouped in sections, or systematically arranged in a sequential manner.

The overall apparatus thus includes means for providing a first gas mixture consisting of at least a portion of hydrogen and oxygen gas. The gases may be obtained by disassociation of the water molecule. An electrical circuit of the type shown in FIG. **4** provides a pulsating, polar electric field to the gas mixture as illustrated in FIG. **3A**, whereby electrons of the gas atoms are distended in their orbital fields by reason of their subjection to electrical polar forces, changing from the state conceptually illustrated by FIG. **3B** to that of FIG. **3C**, at a frequency such that the pulsating electric field induces a resonance with respect to electrons of the gas atoms. The energy level of the resonant electrons is thereby increased in cascading, incremental steps. A further electric field to ionize said gas atoms is applied and an electromagnetic wave energy source for subjecting the ionized gas atoms to wave energy of a predetermined frequency to induce a further electron resonance in the ion, whereby the energy level of the election is successively increased is an additional element of the apparatus as shown in FIG. **3D**.

An electron sink, which may be in the form of the grid element shown in FIG. **5A**, extracts further electrons from the resonating ions while such ions are in an increased energy state and destabilizes the nuclear electron configuration of the ions. The "extraction" of electrons by the sink means is coordinated with the pulsating electrical field of the resonant cavity produced by the circuit of FIG. **4**, by means of an interconnected synchronization circuit, such as shown in FIG. **5B**. A nozzle, **10** in FIG. **2B**, or thermal lens assembly, FIG. **2C**, provides the directing means in which the destabilized ions are finally thermally ignited.

As previously noted, to reach and trigger the ultimate atomic decay of the fuel cell gases at the final stage, sequential steps are taken. First, water molecules are

split into component atomic elements (hydrogen and oxygen gases) by a voltage stimulation process called the electrical polarization process which also releases dissolved gases entrapped in the water (See my co-pending application for letters patent, Ser. No. 835, 564, supra). In the injector assembly, a laser produced light wave or other form of coherent electromagnetic wave energy capable of stimulating a resonance within the atomic components is absorbed by the mixture of gases (hydrogen/oxygen/ambient air gases) released by the polarization process. At this point, as shown in FIG. 3B, the individual atoms are subjected to an electric field to begin an ionization process.

The laser or electromagnetic wave energy is absorbed and causes gas atoms to lose electrons and form positively charged gas ions. The energized hydrogen atoms which, as ionized, are positively charged, now accept electrons liberated from the heavier gases and attract other negatively charged gas ions as conceptually illustrated in FIG. 3C. Positively and negatively charged gas ions are re-exposed to further pulsating energy sources to maintain random distribution of ionized atomic gas particles.

The gas ions within the wave energy chamber are subjected to an oscillating high intensity voltage field in a chamber **11** in FIGS. 2A and 2B formed within electrodes **12** and **13** in FIGS. 2A and 2B of opposite electrical polarity to produce a resonant cavity. The gas ions reach a critical energy state at a resonant state.

At this point, within the chamber, additional electrons are attracted to said positive electrode; whereas, positively charged ions or atomic nuclei are attracted to the negative electrode. The positive and negative attraction forces are co-ordinate and operate on said gas ions simultaneously; the attraction forces are non-reversible. The gas ions experience atomic component deflection approaching the point of electron separation. At this point electrons are extracted from the chamber by a grid system such as shown in FIG. 5A. The extracted electrons are consumed and prevented from re-entering the chamber by a circut such as shown in FIG. 5B. The elongated gas ions are subjected to a thermal heat zone to cause gas ignition, releasing thermal energy with explosive force. During ionic gas combustion, highly energized and stimulated atoms and atom nuclei collide and explode during thermal excitation. The hydrogen fracturing process occurring sustains and maintains a thermal zone, at a temperature in excess of normal hydrogen/oxygen combustion temperature, to wit, in excess of 2500° F. To cause and maintain atomic elongation depicted in FIG. 3C before gas ignition, a voltage intensifier circuit such as shown in FIG. 4 is utilized as a current restricting voltage source to provide the excitation voltage applied to the resonant cavity. At the same time the interconnected eletron extractor circuit, FIG. 5B, prevents the reintroduction of electrons back into the system. Depending on calculated design parameters, a predetermined voltage and frequency range may be designed for any particular application or physical configuration of the apparatus.

In the operation of the assembly, the pulse train source for the gas resonant cavity shown at **2** and **3** in FIG. **1** may be derived from a circuit such as shown in FIG. **4**. It is necessary in the final electron extraction that the frequency with which electrons are removed from the system by sequenced and synchronized with the pulsing of the gas resonant cavity In the circuit of FIG. **5B**, the coordination or synchronization of the circuit with the circuit of FIG. **4** may be achieved by interconnecting point "A" of the gate circuit of FIG. **5B** to coordinate point "A" of the pulsing circuit of FIG. **4**.

Together the hydrogen injector assembly **4** and the resonant cavity assemblies **2**, **3** form a gas injector fuel cell which is compact, light in weight and design variable. For example, the hydrogen injector system is suited for automobiles and jet engines. Industrial applications require larger systems. For rocket engine applications, the hydrogen gas injector system is positioned at the top of each resonant cavity arranged in a parallel cluster array. If resonant cavities are sequentially combined in a parallel/series array, the hydrogen injection assembly is positioned after the exits of said resonant cavities are combined.

From the outline of physical phenomena associated with the process described in Table **1**, the theoretical basis of the invention considers the respective states of molecules, gases and ions derived from liquid water. Before voltage stimulation, water molecules are randomly dispersed throughout water within a container. When a unipolar voltage pulse train such as shown in FIG. 3A (**53***a* xxx **53***n*) is applied, an increasing voltage potential is induced in the molecules, gases and/or ions in a linear, step-like charging effect. The electrical field of the particles within a chamber including the electrical field plates increases from a low energy state (A) to a high energy state (J) in a step manner following each pulse-train as illustrated in FIG. 3A. The increasing voltage potential is always positive in direct relationship to negative ground potential during each pulse. The voltage polarity on the plates which create the voltage fields remains constant. Positive and negative voltage "zones" are thus formed simultaneously.

In the first stage of the process described in Table **1**, because the water molecule naturally exhibits opposite electrical fields in a relatively polar configuration (the two hydrogen atoms are positively electrically charged relative to the negative electrically charged oxgen atom), the voltage pulse causes initially randomly oriented water molecules in the liquid state to spin and orient themselves with reference to positive and negative poles of the voltage fields applied. The positive electrically charged hydrogen atoms of said water molecule are attracted to a negative voltage field; while, at the same time, the negative electrically charged oxygen atoms of the same water molecule an attracted to a positive voltage field. Even a slight potential difference applied to the inert, conductive plates of a containment chamber will initiate polar atomic orientation within the water molecule based on polarity differences.

When the potential difference applied causes the orientated water molecules to align themselves between the conductive plates, pulsing causes the voltage field intensity to be increased in accordance with FIG. 3A. As further molecular alignment occurs, molecular movement is hindered. Because the positively charged hydrogen atoms of said aligned molecules are attracted in a direction opposite to the negatively charged oxygen atoms, a polar charge alignment or distribution occurs within the molecules between said voltage zones, as shown in FIG. 3B. And as the energy level of the atoms subjected to resonant pulsing increases, the stationary water molecules become elongated as shown in FIG. 3C. Electrically charged nuclei and electrons are attracted toward opposite electrically charged volt-

age zones—disrupting the mass equilibium of the water molecule.

In the first stage, as the water molecule is further exposed to a potential difference, the electrical force of attraction of the atoms within the molecule to the electrodes of the chamber also increases in intensity. As a result, the covalent bonding between said atoms which forms the molecule is weakened and ultimately terminated. The negatively charged electron is attracted toward the positively charged hydrogen atoms, while at the same time, the negatively charged oxygen atoms repel electrons.

Once the applied resonant energy caused by pulsation of the electrical field in the cavities reaches a threshold level, the disassociated water molecules, now in the form of liberated hydrogen, oxygen, and ambient air gases begin to ionize and lose or gain electrons during the final stage in the injector assembly. Atom destablization occurs and the electrical and mass equilibrium of the atoms is disrupted. Again, the positive field produced within the chamber or cavity that encompasses the gas stream attracts negatively charged ions while the positively charged ions (and/or hydrogen nuclei) are attracted to the negative field. Atom stabilization does not occur because the pulsating voltage applied is repetitive without polarity change. A potential of approximately several thousand volts triggers the ionization state.

As the ionized particles accumulate within said chamber, the electrical charging effect is again an incremental stepping effect that produces an accumlative increased potential while, at the same time, resonance occurs. The components of the atom begin to "vibrate" at a resonant frequency such that an atomic instability is created. As shown in FIG. **3D**, a high energy level is achieved, which then collapses resulting in the release of thermal explosive energy. Particle impact occurs when liberated ions in a gas are subjected to further voltage. A longitudinal cross section of a gas resonant cavity is shown in FIG. **2A**. To promote gas ionization, electromagnetic wave energy such as a laser or photon energy source of a predetermined wave length and pulse-intensity is directed to and absorbed by the ions forming said gas. In the device of FIG. **2A**, semiconductor optical lasers **20***a*–**20***p*, **20***xxx* surround the gas flow path. In the device of FIG. **2B**, photon energy **20** is injected into a separate absorption chamber **21**. The incremental stimulation of nuclei to a more highly energized state by electromagnetic wave energy causes electron deflection to a higher orbital state. The Pulse rate as well as intensity of the electromagnetic wave source is varied to match the absorption rate of ionized particles to produce the stepped incremental increase in energy. A single laser coupled by means of fiber optic light guides is an alternative to the plurality of lasers shown in FIG. **2B**. Continued exposure of the gas ions to different forms of wave energy during voltage stimulation maintains individual atoms in a destabilized state and prevents atomic stabilization.

The highly energized gas ions are thermally ignited when said combustible gas ions pass from injector **4** and enter into and pass through a nozzle, **10** in FIG. **2B**, or an optical thermal lens assembly such as shown in FIG. **2C**. In FIG. **2C**, the combustible gas ions are expelled through and beyond a quenching circuit, **30**, and reflected by lenses, **31** and **32**, back and forth through a thermal heat zone, **33**, prior to atomic breakdown beyond exiting through a final port, **34**. A quenching circuit is a restricted orifice through which the particle stream passes such that flashback does not occur. (See my application Ser. No. 835, 564, supra.) The deflection shield or lens, **31**, superheats beyond 3,000° F. and the combustible gas ions passing through said exiting-ports are regulated to allow a gas pressure to form inside said thermal zone. The energy yield is controlled by varying the applied voltage, or Pulse-train since said thermal-lens assembly is self-adjusting to the flow-rate of said ionized and primed gases. The combustible ionic gas mixture is composed of hydrogen, oxygen, and ambient air gases. The hydrogen gas provides the thermal explosive force, the oxygen atoms aid the gas thermal ignition, and the ambient air gases retard the gas thermal ignition process to a controllable state. As the combustible gas mixture is exposed to a voltage pulse train, the stepped increasing voltage potential causes said moving gas atoms to become ionized (losing or gaining electrons) and changes the electrical and mass equilibrium of said atoms. Gases that do not undergo the gas ionization process may accept the liberated electrons (electron entrapment) when exposed to light or photon stimulation. The electron extractor grid circuit, FIGS. **5A** and **5B**, is applied to the assembly of FIG. **2A** or FIG. **2B**, and restricts electron replacement. The extractor grid, **56**, is applied adjacent to electric field producing members, **44** and **45**, within the resonant cavity. The gas ions incrementally reach a critical-state which occurs after a high energy resonant state. At this point the atoms no longer tolerate the missing electrons, the unbalanced electrical field, and the energy stored in the nucleus. Immediate collapse of the system occurs and energy is released as the atoms decay into thermal explosive energy.

The repetitive application of a voltage pulse train (A through J of FIG. **3A**) incrementally achieves the critical state of said gas ions. As the gas atoms or ions (la xxx ln) shown in FIG. **3C** become elongated during electron removal, electromagnetic wave energy of a predetermined frequency and intensity is injected. The wave energy absorbed by the stimulated gas nuclei and electrons causes further destabilization of the ionic gas. The absorbed energy from all sources causes the gas nuclei to increase in energy state, and induces the ejection of electrons from the nuclei.

To further stimulate the electron entrapment process beyond the atomic level (capturing the liberated electrons during the hydrogen fracturing process) the electron extractor grid (as shown in FIG. **5A**) is placed in spaced relationship to the gas resonant cavity structure shown in FIG. **2A**. The electron extractor grid is attached to an electrical circuit (such as shown in FIG. **5B**) that allows electrons to flow to an electrical load, **55**, when a positive electrical potential is placed on the opposite side of said electrical load. The electrical load may be a typical power consuming device such as a light bulb or resistive heat producing device. As the positive electrical potential is switched on or pulse-applied, the negative charged electrons liberated in the gas resonant cavity are drawn away and enter into resistive load where they are consumed and released as heat or light energy. The consuming electrical circuit can be directly connected to the gas resonant cavity positive electrical voltage zone. The incoming positive wave form applied to resonant cavity voltage zone through a blocking diode is synchronized with the pulse train applied to the gas resonant cavity by the circuit of FIG. **4** via alternate gate circuit. As one pulse train is gated

"ON," the other pulse train is switched "OFF." A blocking diode directs the electron flow to said electrical load while resistive wire prevents voltage leakage during pulse train "ON" time.

The electron extraction process is maintained during gas flow-rate change by varying the trigger pulse rate in relationship to applied voltage. The electron extraction process also prevents spark-ignition of the combustible gases traveling through the gas resonant cavity because electron build-up and potential sparking is prevented.

In an optical thermal lens assembly or thrust-nozzle, such as shown in FIG. 2C, destablized gas ions (electrically and mass unbalanced gas atoms having highly energized nuclei) can be pressurized during spark-ignition. During thermal interaction, the highly energized and unstable hydrogen gas nuclei collide with the highly energized and unstable oxygen gas nuclei and produce thermal explosive energy beyond the gas burning stage. Other ambient air gases and ions not otherwise consumed limit the thermal explosive process.

Variations of the process and apparatus may be evident to those skilled in the art.

What is claimed is:

1. A method of obtaining the release of energy from a gas mixture including hydrogen and oxygen consisting of:

(A) providing a first gas mixture including at least a portion of hydrogen and oxygen gases;

(B) subjecting the gas mixture to a pulsating, polar electric field whereby electrons of the gas atoms are distended in their orbital fields by reason of their subjection to electrical polar forces, at a frequency such that the pulsating electric field induces a resonance with respect to an electron of the gas atom;

(C) cascading said gas atoms with respect to the pulsating electric field such that the energy level of the resonant electron is increased in cascading incremental steps;

(D) ionizing said gas atoms;

(E) subjecting the ionized gas atoms to electromagnetic wave energy having a predetermined frequency to induce a further election resonance in the ion, whereby the energy level of the electron is successively increased;

(F) extracting further electrons from the resonating ions while such ions are in an increased energy state to destabilize the nuclear and electron configuration of said ions; and

(G) subjecting the destabilized ions to thermal ignition.

2. An apparatus for obtaining the release of energy from a gas mixture including hydrogen and oxygen consisting of successively interconnected:

(A) first means for providing a first gas mixture including at least a portion of hydrogen and oxygen gas;

(B) second means for providing a pulsating, polar electric field to the gas mixture, whereby electrons of the gas atoms are distended in their orbital fields by reason of their subjection to electrical polar forces, at a frequency such that the pulsating electric field induces a resonance with respect to an electron of the gas atom; and the energy level of the resonant electron is increased in cascading, incremental steps;

(C) third means for providing a further electric field to ionize said gas atoms;

(D) an electromagnetic wave energy source for subjecting the ionized gas atoms to wave energy of a predetermined frequency to induce a further election resonance in the ion, whereby the energy level of the electron is further successively increased;

(E) an electron sink for extracting electrons from the resonating ions while such ions are in an increased energy state to destabilize the nuclear and electron configuration of said ions;

(F) fourth means for directing particle flow in a continuous manner through the electric fields, wave energy source and electron sink to a final orifice at which the destabilized ions are thermally ignited; and

(G) a final orifice at which the mixture initially provided by the first means, after having passed through and been processed by the preceeding means of the apparatus, is thermally ignited.

* * * * *

United States Patent [19]

Meyer

[11] **Patent Number: 4,936,961**

[45] **Date of Patent: Jun. 26, 1990**

[54] **METHOD FOR THE PRODUCTION OF A FUEL GAS**

[76] Inventor: **Stanley A. Meyer,** 3792 Broadway, Grove City, Ohio 43123

[21] Appl. No.: **207,730**

[22] Filed: **Jun. 16, 1988**

Related U.S. Application Data

[63] Continuation-in-part of Ser. No. 81,859, Aug. 5, 1987, Pat. No. 4,826,581.

[51] **Int. Cl.**[5] **C07G 13/00**

[52] **U.S. Cl.** **204/157.5;** 204/157.52

[58] **Field of Search** 204/157.5, 157.52, 183.1

[56] **References Cited**

U.S. PATENT DOCUMENTS

3,740,283	4/1988	Laas et al.	204/183.1 X
4,511,450	4/1985	Neefe	204/152.5 X
4,696,809	9/1987	Vialoron et al.	204/157.52 X

OTHER PUBLICATIONS

Julius Grant, ed., *Hachh's Chemical Dictionary,* 4th ed., McGraw-Hill Book Co., 1969, p. 282.

Primary Examiner—Stephen J. Kalafut

Attorney, Agent, or Firm—Porter, Wright, Morris & Arthur

[57] **ABSTRACT**

A method for obtaining the release of a fuel gas mixture including hydrogen and oxygen from water in which the water is processed as a dielectric medium in an electrical resonant circuit.

2 Claims, 3 Drawing Sheets

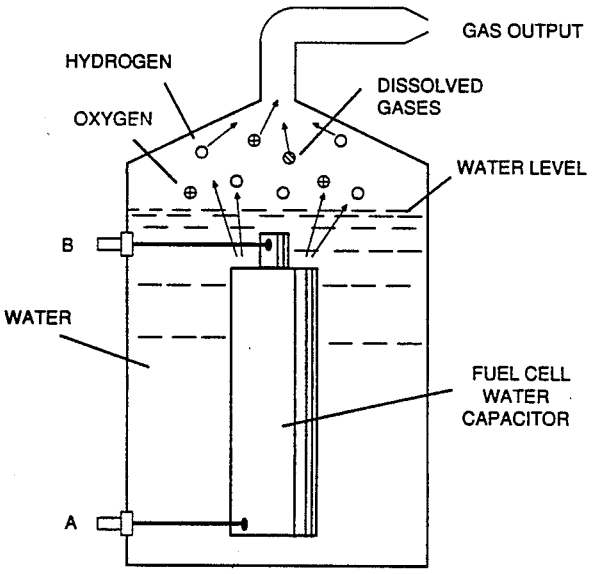

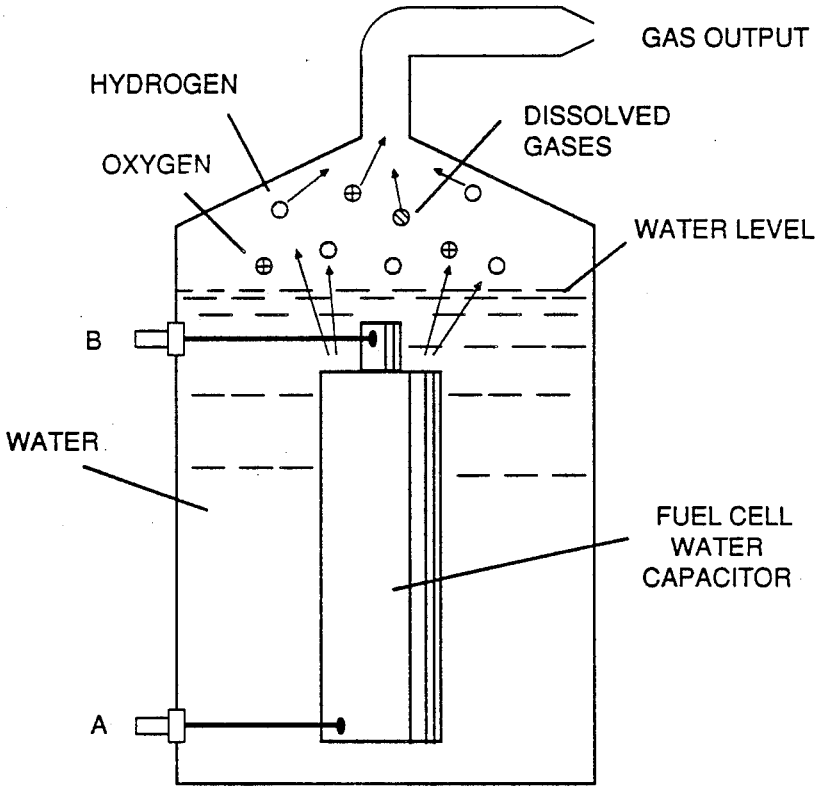
GAS OUTPUT
HYDROGEN
DISSOLVED GASES
OXYGEN
WATER LEVEL
B
WATER
FUEL CELL WATER CAPACITOR
A

FIGURE 2

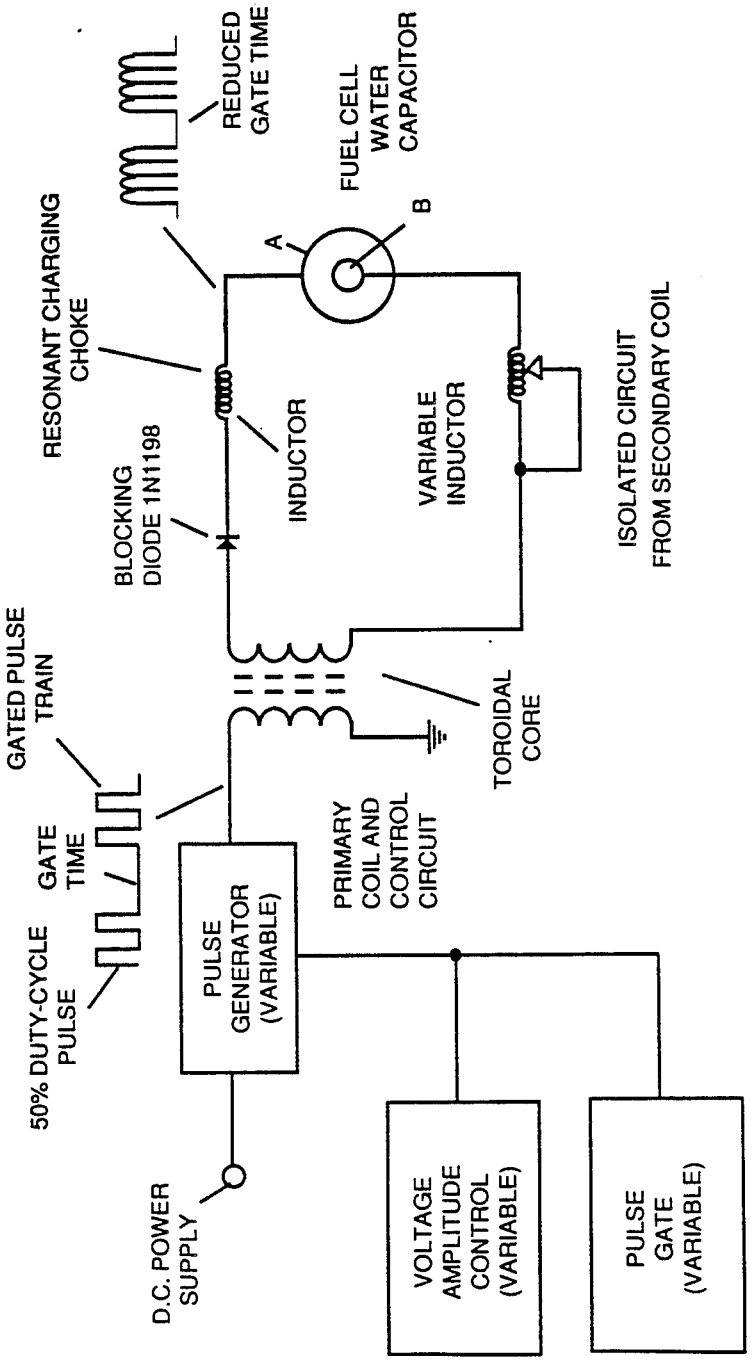
REDUCED GATE TIME
FUEL CELL WATER CAPACITOR
A
B
RESONANT CHARGING CHOKE
INDUCTOR
VARIABLE INDUCTOR
ISOLATED CIRCUIT FROM SECONDARY COIL
BLOCKING DIODE 1N1198
GATED PULSE TRAIN
TOROIDAL CORE
GATE TIME
PRIMARY COIL AND CONTROL CIRCUIT
50% DUTY-CYCLE PULSE
PULSE GENERATOR (VARIABLE)
D.C. POWER SUPPLY
VOLTAGE AMPLITUDE CONTROL (VARIABLE)
PULSE GATE (VARIABLE)

FIGURE 1

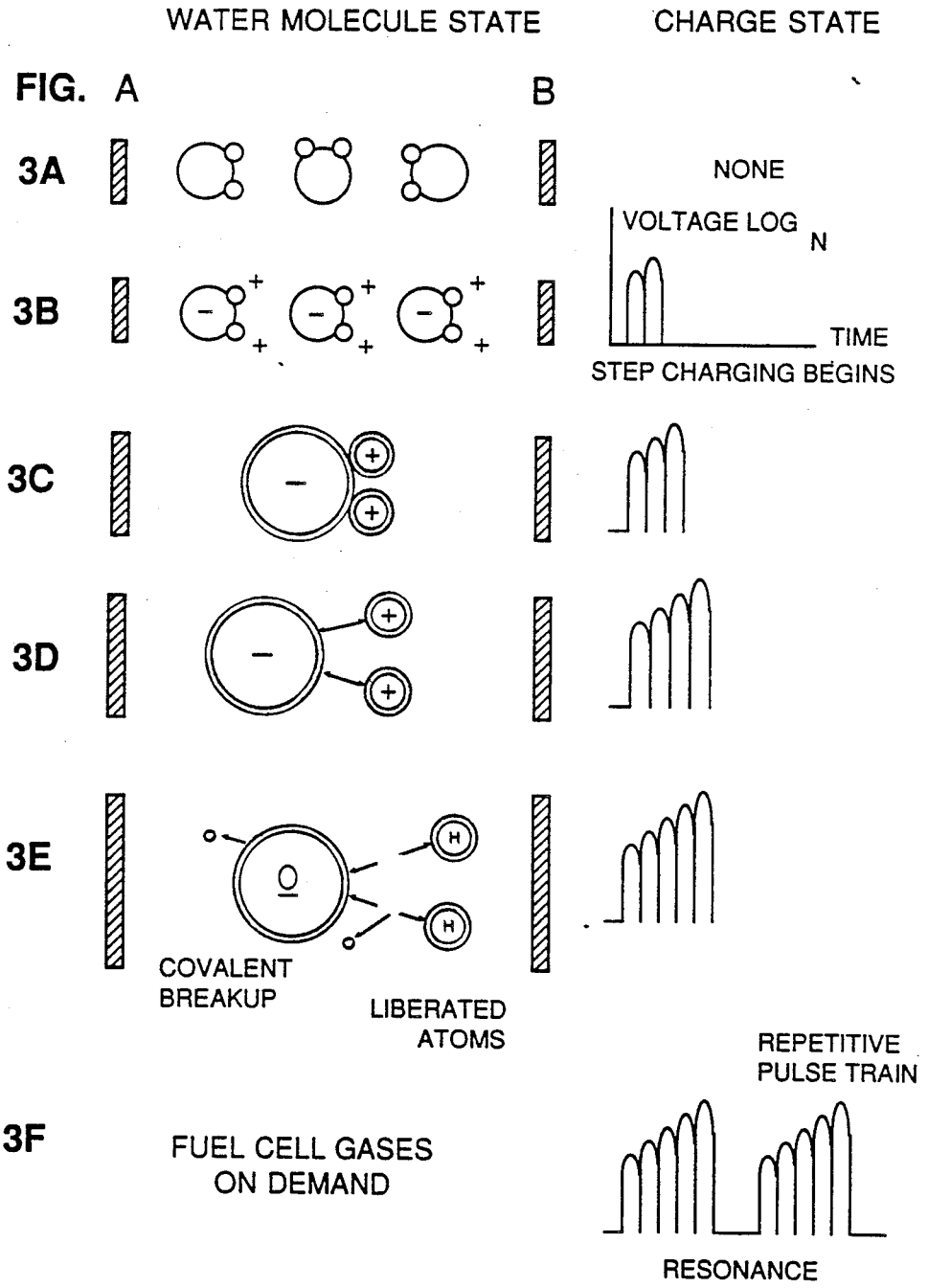
WATER MOLECULE STATE
CHARGE STATE
FIG. A
B
3A
NONE
VOLTAGE LOG N
TIME
STEP CHARGING BEGINS
3B
3C
3D
3E
COVALENT BREAKUP
LIBERATED ATOMS
REPETITIVE PULSE TRAIN
3F
FUEL CELL GASES ON DEMAND
RESONANCE

METHOD FOR THE PRODUCTION OF A FUEL GAS

Related Application

This is a continuation-in-part of my co-pending application Ser. No. 081,859, filed 8/5/87, now U.S. Pat. No. 4,826,581.

Field of Invention

This invention relates to a method of and apparatus for obtaining the release of a fuel gas mixture including hydrogen and oxygen from water.

BACKGROUND OF THE PRIOR ART

Numerous processes have been proposed for separating a water molecule into its elemental hydrogen and oxygen components. Electrolysis is one such process. Other processes are described in United States patents such as 4,344,831; 4,184,931; 4,023,545; 3,980,053; and Patent Cooperation Treaty application No. PCT/US80/1362, published 30 April, 1981.

OBJECTS OF THE INVENTION

It is an object of the invention to provide a fuel cell and a process in which molecules of water are broken down into hydrogen and oxygen gases, and a fuel gas mixture including hydrogen, oxygen and other gasses formerly dissolved within the water is produced. As used herein the term "fuel cell" refers to a single unit of the invention comprising a water capacitor cell, as hereinafter explained, that produces the fuel gas in accordance with the method of the invention. Brief Description of the Drawings

FIG. 1 illustrates a circuit useful in the process.

FIG. 2 shows a perspective of a "water capacitor'-'element used in the fuel cell circuit.

FIGS. 3A through 3F are illustrations depicting the theoretical bases for phenomena encountered during operation of the invention herein.

Description of the Preferred Embodiment

In brief, the invention is a method of obtaining the release of a gas mixture including hydrogen and oxygen and other dissolved gases formerly entrapped in water, from water consisting of: (A) providing a capacitor, in which the water is included as a dielectric liquid between capacitor plates, in a resonant charging choke circuit that includes an inductance in series with the capacitor; (B) subjecting the capacitor to a pulsating, unipolar electric voltage field in which the polarity does not pass beyond an arbitrary ground, whereby the water molecules within the capacitor are subjected to a charge of the same polarity and the water molecules are distended by their subjection to electrical polar forces; (C) further subjecting the water in said capacitor to said pulsating electric field to achieve a pulse frequency such that the Pulsating electric field induces a resonance within the water molecule; (D) continuing the application of the pulsing frequency to the capacitor cell after resonance occurs so that the energy level within the molecule is increased in cascading incremental steps in proportion to the number of pulses; (E) maintaining the charge of said capacitor during the application of the pulsing field, whereby the co-valent electrical bonding of the hydrogen and oxygen atoms within said molecules is destabilized such that the force of the electrical field applied, as the force is effective within the molecule, exceeds the bonding force of the molecule, and hydrogen and oxygen atoms are liberated from the molecule as elemental gases; and (F) collecting said hydrogen and oxygen gases, and any other gases that were formerly dissolved within the water, and discharging the collected gases as a fuel gas mixture.

The process follows the sequence of steps shown in the following Table I in which water molecules are subjected to increasing electrical forces. In an ambient state, randomly oriented water molecules are aligned with respect to a molecular polar orientation. They are next, themselves polarized and "elongated" by the application of an electric Potential to the extent that covalent bonding of the water molecule is so weakened that the atoms disassociate and the molecule breaks down into hydrogen and oxygen elemental components. Engineering design parameters based on known theoretical principles of electrical circuits determine the incremental levels of electrical and wave energy input required to produce resonance in the system whereby the fuel gas comprised of a mixture of hydrogen, oxygen, and the other gases such as air test were formerly dissolved within the water, is produced.

TABLE I

PROCESS STEPS THE SEQUENCE OF THE RELATIVE STATE OF THE WATER MOLECULE AND/OR HYDROGEN/OXYGEN/OTHER ATOMS:	
A.	(AMBIENT STATE) RANDOM
B.	ALIGNMENT OF POLAR FIELDS
C.	POLARIZATION OF MOLECULE
D.	MOLECULAR ELONGATION
E.	ATOM LIBERATION BY BREAKDOWN OF COVALENT BOND
F.	RELEASE OF GASES

In the process, the point of optimum gas release is reached at a circuit resonance. Water in the fuel cell is subjected to a pulsating, polar electric field produced by the electrical circuit whereby the water molecules are distended by reason of their subjection to electrical polar forces of the capacitor plates. The polar pulsating frequency applied is such that the pulsating electric field induces a resonance in the molecule. A cascade effect occurs and the overall energy level of specific water molecules is increased in cascading, incremental steps. The hydrogen and oxygen atomic gases, and other gas components formerly entrapped as dissolved gases in water, are released when the resonant energy exceeds the co-valent bonding force of the water molecule. A preferred construction material for the capacitor plates is a stainless steel T-304 which is non-chemically reactive with water, hydrogen, or oxygen. An electrically conductive material which is inert in the fluid environment is a desirable material of construction for the electrical field plates of the "water capacitor" employed in the circuit.

Once triggered, the gas output is controllable by the attenuation of operational parameters. Thus, once the frequency of resonance is identified, by varying the applied pulse voltage to the water fuel cell assembly, gas output is varied. By varying the pulse shape and/or amplitude or pulse train sequence of the initial pulsing wave source, final gas output is varied. Attenuation of the voltage field frequency in the form of OFF and ON pulses likewise affects output.

The overall apparatus thus includes an electrical circuit in which a water capacitor having a known dielec-

tric property is an element. The fuel gases are obtained from the water by the disassociation of the water molecule. The water molecules are split into component atomic elements (hydrogen and oxygen gases) by a voltage stimulation process called the electrical polarization process which also releases dissolved gases entrapped in the water.

From the outline of physical phenomena associated with the process described in Table 1, the theoretical basis of the invention considers the respective states of molecules and gases and ions derived from liquid water. Before voltage stimulation, water molecules are randomly dispersed throughout water within a container. When a unipolar voltage pulse train such as shown in FIGS. 3B through 3F is applied to positive and negative capacitor plates, an increasing voltage potential is induced in the molecules in a linear, step-like charging effect. The electrical field of the particles within a volume of water including the electrical field plates increases from a low energy state to a high energy state successively in a step manner following each pulse-train as illustrated figuratively in the depictions of FIG. 3A through 3F. The increasing voltage potential is always positive in direct relationship to negative ground potential during each pulse. The voltage polarity on the plates which create the voltage fields remains constant although the voltage charge increases. Positive and negative voltage "zones" are thus formed simultaneously in the electrical field of the capacitor plates.

In the first stage of the process described in Table 1, because the water molecule naturally exhibits opposite electrical fields in a relatively polar configuration (the two hydrogen atoms are positively electrically charged relative to the negative electrically charged oxygen atom), the voltage pulse causes initially randomly oriented water molecules in the liquid state to spin and orient themselves with reference to positive and negative poles of the voltage fields applied. The positive electrically charged hydrogen atoms of said water molecule are attracted to a negative voltage field; while, at the same time, the negative electrically charged oxygen atoms of the same water molecule are attracted to a positive voltage field. Even a slight potential difference applied to inert, conductive plates of a containment chamber which forms a capacitor will initiate polar atomic orientation within the water molecule based on polarity differences.

When the potential difference applied causes the orientated water molecules to align themselves between the conductive plates, pulsing causes the voltage field intensity to be increased in accordance with FIG. 3B. As further molecular alignment occurs, molecular movement is hindered. Because the positively charged hydrogen atoms of said aligned molecules are attracted in a direction opposite to the negatively charged oxygen atoms, a polar charge alignment or distribution occurs within the molecules between said voltage zones, as shown in FIG. 3B. And as the energy level of the atoms subjected to resonant pulsing increases, the stationary water molecules become elongated as shown in FIGS. 3C and 3D. Electrically charged nuclei and electrons are attracted toward opposite electrically charged voltage zones —disrupting the mass and charge equilibrium of the water molecule.

As the water molecule is further exposed to an increasing potential difference resulting from the step charging of the capacitor, the electrical force of attraction of the atoms within the molecule to the capacitor plates of the chamber also increases in strength. As a result, the co-valent bonding between atoms which form the molecule is weakened —and ultimately terminated. The negatively charged electron is attracted toward the positively charged hydrogen atoms, while at the same time, the negatively charged oxygen atoms repel electrons.

In a more specific explanation of the "sub-atomic" action that occurs in the water fuel cell, it is known that natural water is a liquid which has a dielectric constant of 78.54 at 20° C. and 1 atm pressure. [*Handbook of Chemistry and Physics*, 68th ed., CRC Press (Boca Raton, Florida (1987–88)), Section E-50. H_2O (water)].

When a volume of water is isolated and electrically conductive plates, that are chemically inert in water and are separated by a distance, are immersed in the water, a capacitor is formed, having a capacitance determined by the surface area of the plates, the distance of their separation and the dielectric constant of water.

When water molecules are exposed to voltage at a restricted current, water takes on an electrical charge. By the laws of electrical attraction, molecules align according to positive and negative polarity fields of the molecule and the alignment field. The plates of a capacitor constitute such an alignment field when a voltage is applied.

When a charge is applied to a capacitor, the electrical charge of the capacitor equals the applied voltage charge; in a water capacitor, the dielectric property of water resists the flow of amps in the circuit, and the water molecule itself, because it has polarity fields formed by the relationship of hydrogen and oxygen in the covalent bond, and an intrinsic dielectric property, becomes part of the electrical circuit, analogous to a "microcapacitor" within the capacitor defined by the plates.

In the Example of a fuel cell circuit of FIG. 1, a water capacitor is included. The step-up coil is formed on a conventional torroidal core formed of a compressed ferromagnetic powdered material that will not itself become permanently magnetized, such as the trademarked "Ferramic 06# "Permag" powder as described in *Siemens Ferrites Catalog*, CG-2000-002-121, (Cleveland, Ohio) No. F626-1205. The core is 1.50 inch in diameter and 0.25 inch in thickness. A primary coil of 200 turns of 24 gauge copper wire is provided and a coil of 600 turns of 36 gauge wire comprises the secondary winding.

In the circuit of FIG. 1, the diode is a 1N1198 diode which acts as a blocking diode and an electric switch that allows voltage flow in one direction only. Thus, the capacitor is never subjected to a pulse of reverse polarity.

The primary coil of the torroid is subject to a 50% duty cycle pulse. The torroidal pulsing coil provides a voltage step-up from the pulse generator in excess of five times, although the relative amount of step-up is determined by pre-selected criteria for a particular application. As the stepped-up pulse enters first inductor (formed from 100 turns of 24 gauge wire 1 inch in diameter), an electromagnetic field is formed around the inductor, voltage is switched off when the pulse ends, and the field collapses and produces another pulse of the same polarity; i.e., another positive pulse is formed where the 50% duty cycle was terminated. Thus, a double pulse frequency is produced; however, in a pulse train of unipolar pulses, there is a brief time when pulses are not present.

By being so subjected to electrical pulses in the circuit of FIG. 1, water confined in the volume that includes the capacitor plates takes on an electrical charge that is increased by a step charging phenomenon occurring in the water capacitor. Voltage continually increases (to about 1000 volts and more) and the water molecule starts to elongate.

The pulse train is then switched off; the voltage across the water capacitor drops to the amount of charge that the water molecules have taken on, i.e. voltage is maintained across the charged capacitor. The pulse train is then reapplied.

Because a voltage potential applied to a capacitor can perform work, the higher the voltage potential, the more work is performed by a given capacitor. In an optimum capacitor that is wholly non-conductive, zero (0) current flow will occur across the capacitor. Thus, in view of an idealized capacitor circuit, the object of the water capacitor circuit is to prevent electron flow through the circuit, i.e. such as occurs by electron flow or leakage through a resistive element that produces heat. Electrical leakage in water will occur, however, because of some residual conductivity and impurities or ions that may be otherwise present in the water. Thus, the water capacitor is preferably chemically inert. An electrolyte is not added to the water.

In the isolated water bath, the water molecule takes on charge, and the charge increases. The object of the process is to switch off the co-valent bonding of the water molecule and interrupt the sub-atomic force, i.e. the electrical force or electromagnetic force, that binds the hydrogen and oxygen atoms to form a molecule so that the hydrogen and oxygen separate.

Because an electron will only occupy a certain electron shell (the shells are well known) the voltage applied to the capacitor affects the electrical forces inherent in the co-valent bond. As a result of the charge applied by the plates, the applied force becomes greater than the force of the co-valent bonds between the atom of the water molecule; and the water molecule becomes elongated. When this happens, the time share ratio of the electrons between the atoms and the electron shells is modified.

In the process, electrons are extracted from the water bath; electrons are not consumed nor are electrons introduced into the water bath by the circuit as electrons are conventionally introduced in an electrolysis process. There may nevertheless occur a leakage current through the water. Those hydrogen atoms missing electrons become neutralized; and atoms are liberated from the water. The charged atoms and electrons are attracted to opposite polarity voltage zones created between the capacitor plates. The electrons formerly shared by atoms in the water co-valent bond are reallocated such that neutral elemental gases are liberated.

In the process, the electrical resonance may be reached at all levels of voltage potential. The overall circuit is characterized as a "resonant charging choke" circuit which is an inductor in series with a capacitor that produces a resonant circuit. [*SAMS Modern Dictionary of Electronics*, Rudolff Garff, © 1984, Howard W. Sams & Co. (Indianapolis, Ind.), page 859.]Such a resonant charging choke is on each side of the capacitor. In the circuit, the diode acts as a switch that allows the magnetic field produced in the inductor to collapse, thereby doubling the pulse frequency and preventing the capacitor from discharging. In this manner a continuous voltage is produced across the capacitor plates in the water bath; and the capacitor does not discharge. The water molecules are thus subjected to a continuously charged field until the breakdown of the co-valent bond occurs.

As noted initially, the capacitance depends on the dielectric properties of the water and the size and separation of the conductive elements forming the water capacitor.

EXAMPLE I

In an example of the circuit of FIG. 1 (in which other circuit element specifications are provided above), two concentric cylinders 4 inches long formed the water capacitor of the fuel cell in the volume of water. The outside cylinder was 0.75 inch in outside diameter; the inner cylinder was 0.5 inch in outside diameter. Spacing from the outside of the inner cylinder to the inner surface of the outside cylinder was 0.0625 inch. Reasonance in the circuit was achieved at a 26 volt applied pulse to the primary coil of the torroid at $0KH_z$, and the water molecules disassociated into elemental hydrogen and oxygen and the gas released from the fuel cell comprised a mixture of hydrogen, oxygen from the water molecule, and gases formerly dissolved in the water such as the atmospheric gases or oxygen, nitrogen, and argon.

In achieving resonance in any circuit, as the pulse frequency is adjusted, the flow of amps is minimized and voltage is maximized to a peak. Calculation of the resonance frequency of an overall circuit is determined by known means; different cavities have a different frequencY of resonance dependent on parameters of the water dielectric, plate size, configuration and distance, circuit inductors, and the like. Control of the production of fuel gas is determined by variation of the period of time between a train of pulses, pulse amplitude and capacitor plate size and configuration, with corresponding value adjustments to other circuit components.

The wiper arm on the second inductor tunes the circuit and accommodates to contaminants in water so that the charge is always applied to the capacitor. The voltage applied determines the rate of breakdown of the molecule into its atomic components. As water in the cell is consumed, it is replaced by any appropriate means or control system.

Variations of the process and apparatus may be evident to those skilled in the art.

What is claimed is:

1. A method of obtaining the release of a gas mixture including hydrogen and oxygen and other dissolved gases formerly entrapped in water, from water, consisting of:

(A) providing a capacitor in which water is included as a dielectric between capacitor plates, in a resonant charging choke circuit that includes an inductance in series with the capacitor;

(B) subjecting the capacitor to a pulsating, unipolar electric charging voltage in which the polarity does not pass beyond an arbitrary ground, whereby the water molecules within the capacitor are subjected to the electric field between the capacitor plates;

(C) further subjecting the water in said capacitor to a pulsating electric field resulting from the subjection of the capacitor to the charging voltage such that the pulsating electric field induces a resonance within the water molecules;

(D) continuing the application of the pulsating charging voltage to the capacitor after resonance occurs so that the energy level within the molecules is increased in cascading incremental steps in proportion to the number of pulses;

(E) maintaining the charge of said capacitor during the application of the pulsating charging voltage, whereby the co-valent electrical bonding of the hydrogen and oxygen atoms within said molecules is destabilized, such that the force of the electrical field applied to the molecules exceeds the bonding force within the molecules, and hydrogen and oxygen atoms are liberated from the molecules as elemental gases.

2. The method of claim **1** including the further steps of collecting said liberated hydrogen and oxygen gases, and any other gases that were formerly dissolved with in the water and discharging said collected gases as a fuel gas mixture.

* * * * *

US005149407A

United States Patent [19]

Meyer

[11] Patent Number: 5,149,407

[45] Date of Patent: * Sep. 22, 1992

[54] PROCESS AND APPARATUS FOR THE PRODUCTION OF FUEL GAS AND THE ENHANCED RELEASE OF THERMAL ENERGY FROM SUCH GAS

[76] Inventor: Stanley A. Meyer, 3792 Broadway, Grove City, Ohio 43123

[*] Notice: The portion of the term of this patent subsequent to Jun. 26, 2007 has been disclaimed.

[21] Appl. No.: 460,859

[22] PCT Filed: Jun. 15, 1989

[86] PCT No.: PCT/US89/02622

§ 371 Date: Feb. 13, 1990

§ 102(e) Date: Feb. 13, 1990

[87] PCT Pub. No.: WO89/12704

PCT Pub. Date: Dec. 28, 1989

Related U.S. Application Data

[63] Continuation-in-part of Ser. No. 207,730, Jun. 16, 1988, Pat. No. 4,936,961, which is a continuation-in-part of Ser. No. 81,859, Aug. 5, 1987, Pat. No. 4,826,581.

[51] Int. Cl.[5] C07G 13/00

[52] U.S. Cl. 204/157.41; 204/157.5; 204/157.52; 204/193

[58] Field of Search 204/157.41, 157.5, 157.52, 204/164, 193

[56] References Cited

U.S. PATENT DOCUMENTS

3,772,180	11/1973	Prestidge	204/305
4,511,450	4/1985	Neefe	204/278
4,696,809	9/1987	Vialaron et al.	204/157.52 X
4,740,283	4/1988	Laas et al.	204/182.8
4,826,581	5/1989	Meyer	204/157.41
4,936,961	6/1990	Meyer	204/157.5

OTHER PUBLICATIONS

Chemical Abstracts vol. 88, NO. 52526n, 1978 (Hasebe).

Chemical Abstracts vol. 77, No. 156261m, 1972 (Zubrilov et al.).

Primary Examiner—Stephen J. Kalafut

Attorney, Agent, or Firm—Porter, Wright, Morris & Arthur

[57] ABSTRACT

Water molecules are broken down into hydrogen and oxygen gas atoms in a capacitive cell by a polarization and resonance process dependent upon the dielectric properties of water and water molecules. The gas atoms are thereafter ionized or otherwise energized and thermally combusted to release a degree of energy greater than that of combustion of the gas in ambient air.

12 Claims, 15 Drawing Sheets

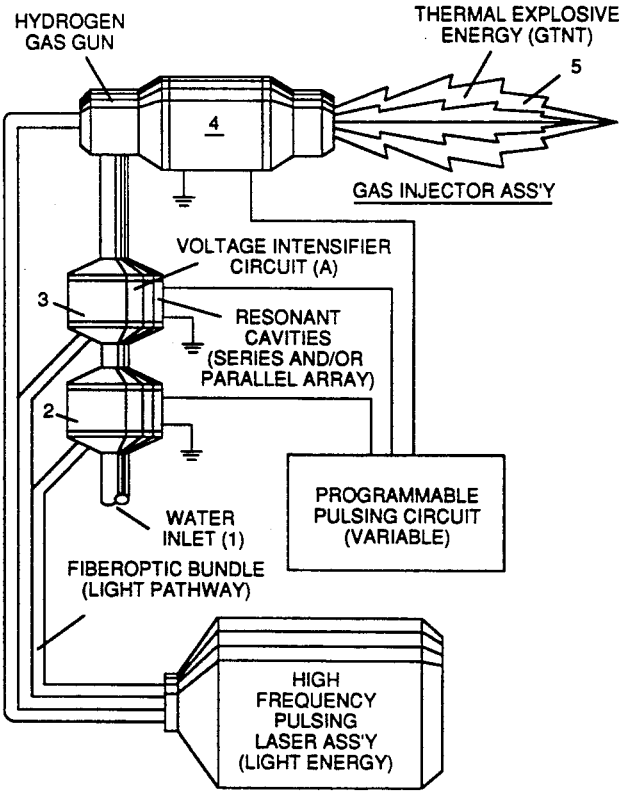

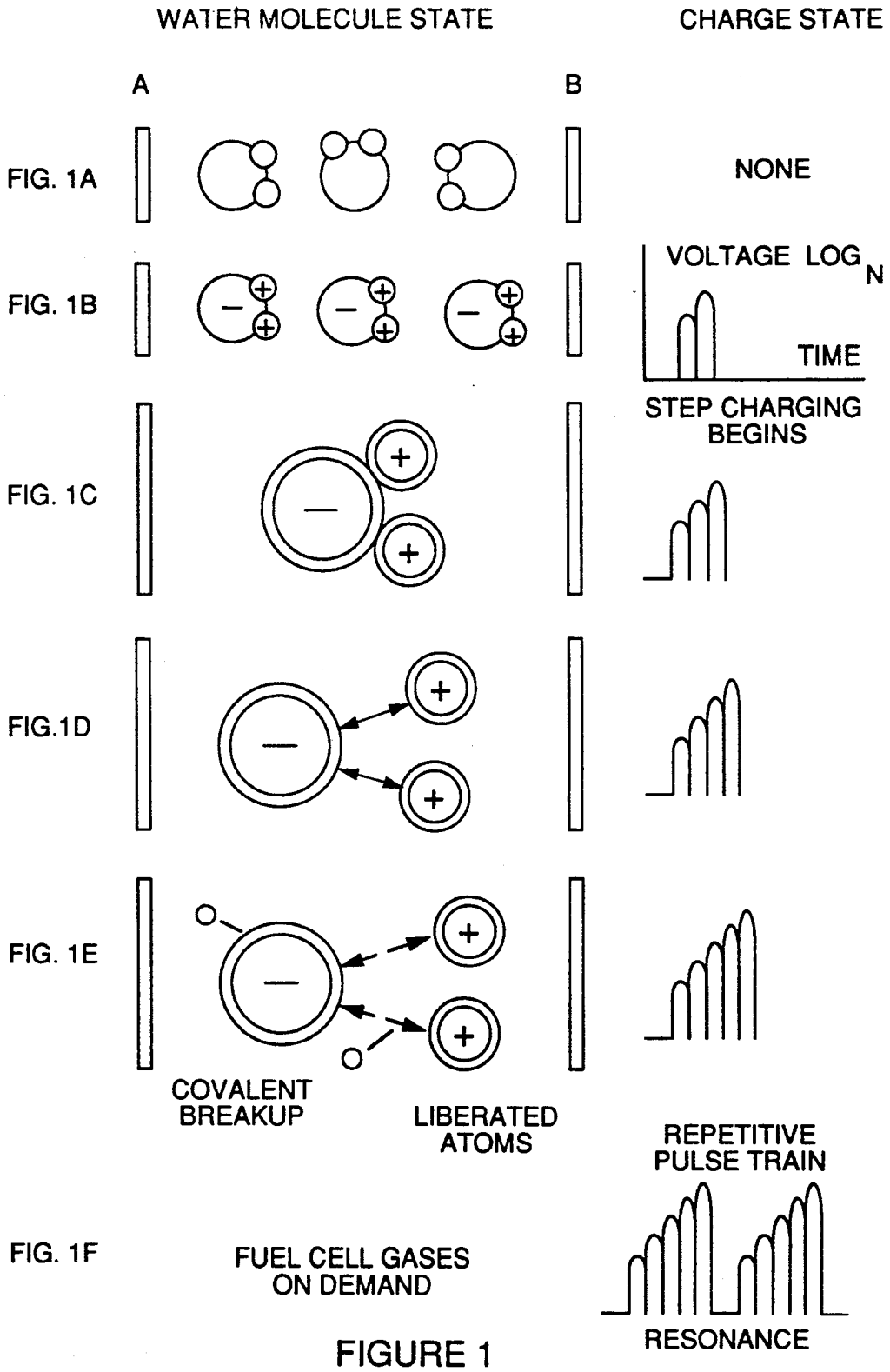
WATER MOLECULE STATE
CHARGE STATE
A
B
FIG. 1A
NONE
FIG. 1B
VOLTAGE LOG N
TIME
STEP CHARGING BEGINS
FIG. 1C
FIG.1D
FIG. 1E
COVALENT BREAKUP
LIBERATED ATOMS
REPETITIVE PULSE TRAIN
FIG. 1F
FUEL CELL GASES ON DEMAND
RESONANCE

FIGURE 1

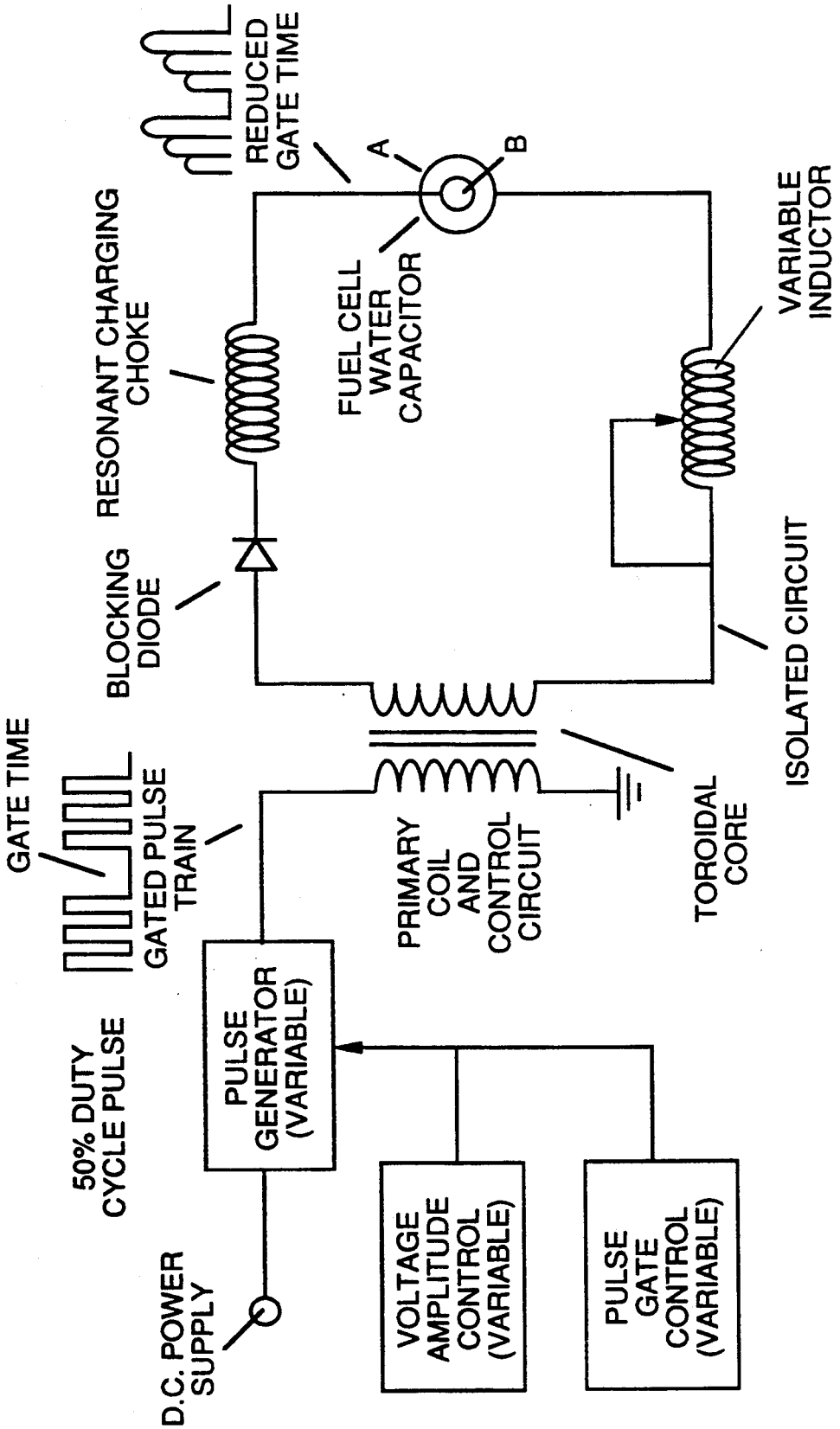
REDUCED GATE TIME
A
B
RESONANT CHARGING CHOKE
FUEL CELL WATER CAPACITOR
VARIABLE INDUCTOR
BLOCKING DIODE
ISOLATED CIRCUIT
GATE TIME
GATED PULSE TRAIN
PRIMARY COIL AND CONTROL CIRCUIT
TOROIDAL CORE
50% DUTY CYCLE PULSE
PULSE GENERATOR (VARIABLE)
D.C. POWER SUPPLY
VOLTAGE AMPLITUDE CONTROL (VARIABLE)
PULSE GATE CONTROL (VARIABLE)

FIGURE 2

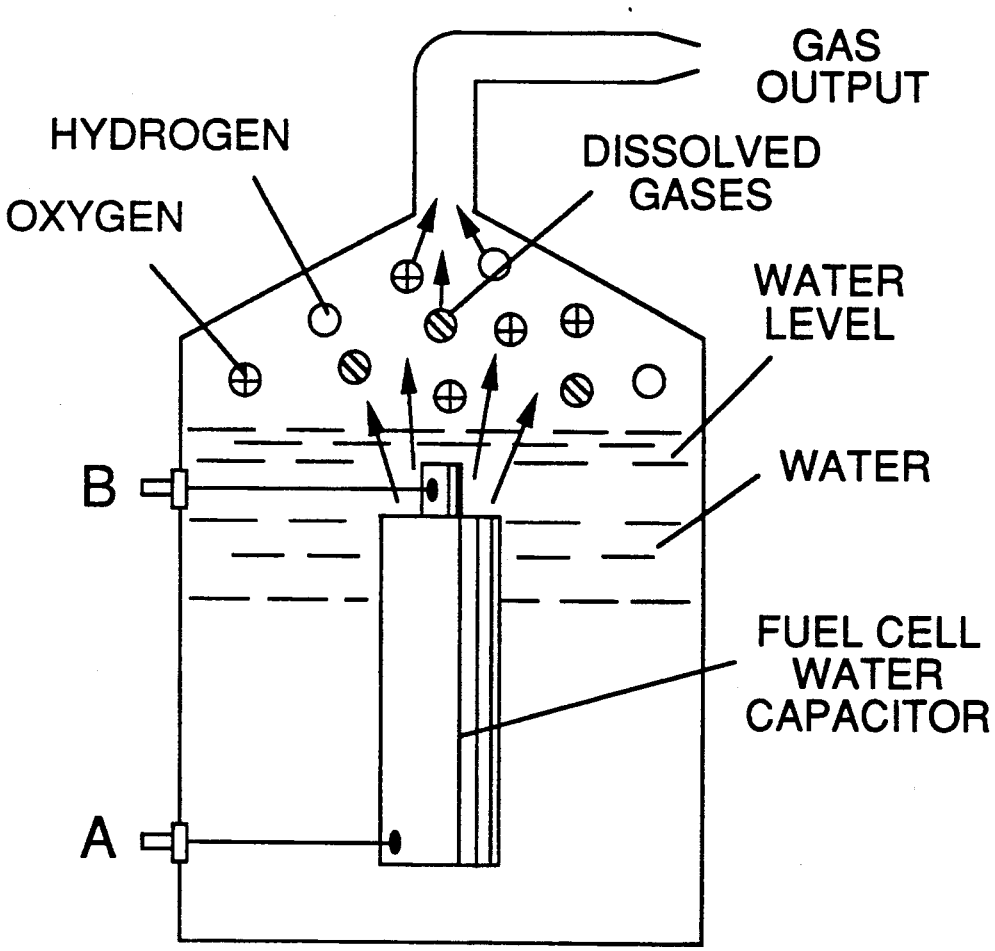
GAS
OUTPUT
HYDROGEN
DISSOLVED
GASES
OXYGEN
WATER
LEVEL
B
WATER
FUEL CELL
WATER
CAPACITOR
A

FIGURE 3

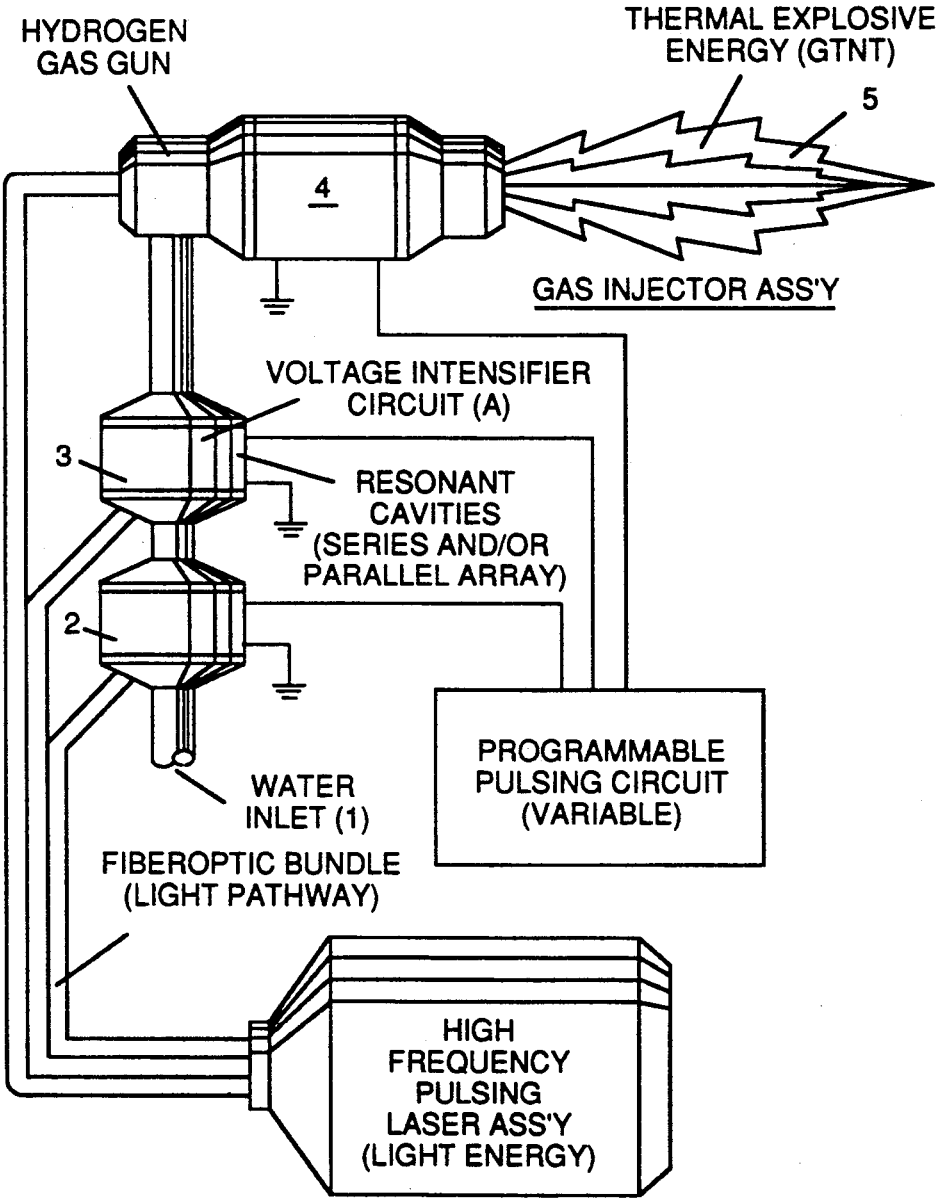
HYDROGEN
GAS GUN
THERMAL EXPLOSIVE
ENERGY (GTNT)
5
4
GAS INJECTOR ASS'Y
VOLTAGE INTENSIFIER
CIRCUIT (A)
3
RESONANT
CAVITIES
(SERIES AND/OR
PARALLEL ARRAY)
2
PROGRAMMABLE
PULSING CIRCUIT
(VARIABLE)
WATER
INLET (1)
FIBEROPTIC BUNDLE
(LIGHT PATHWAY)
HIGH
FREQUENCY
PULSING
LASER ASS'Y
(LIGHT ENERGY)

FIGURE 4

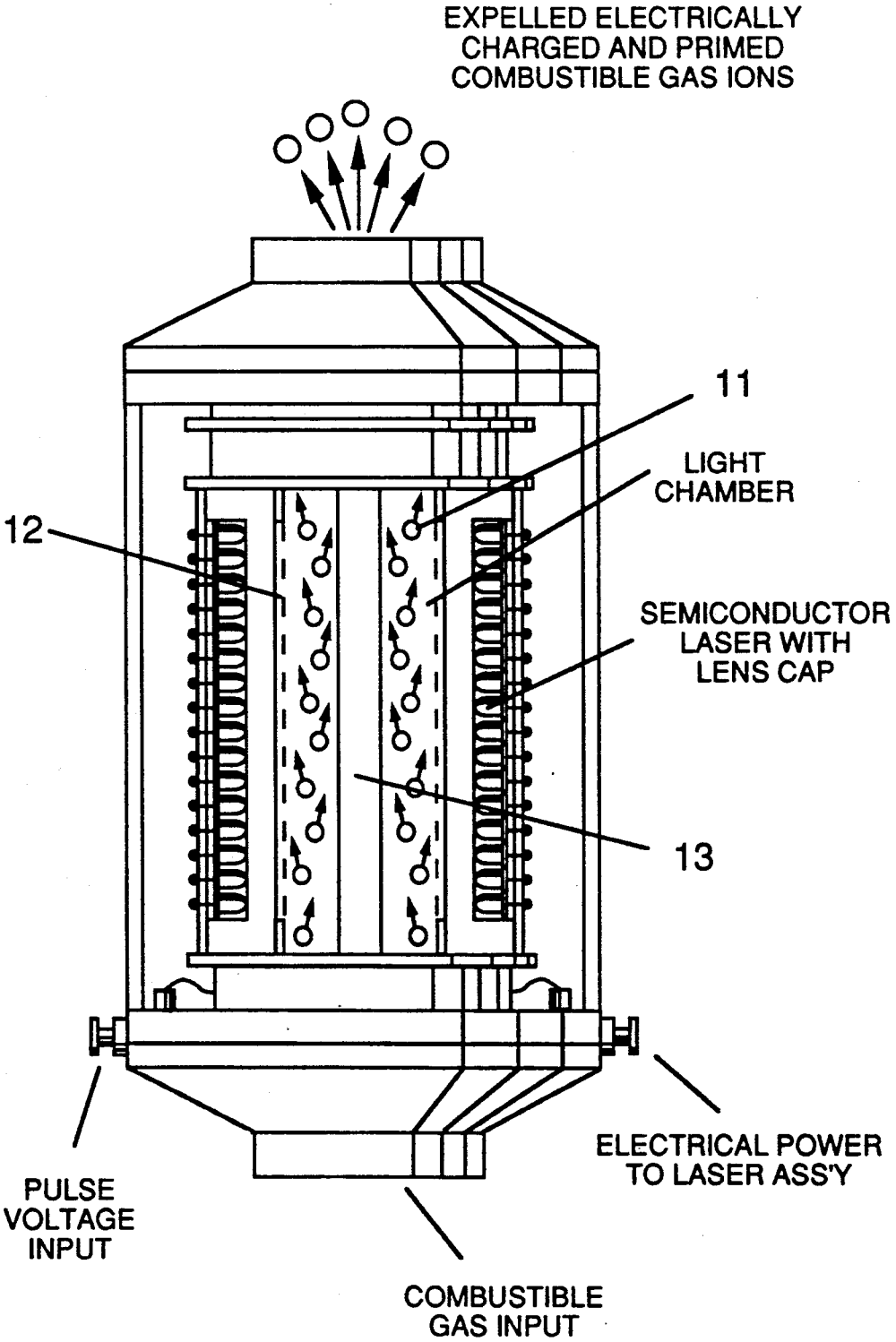
EXPELLED ELECTRICALLY CHARGED AND PRIMED COMBUSTIBLE GAS IONS
11
LIGHT CHAMBER
12
SEMICONDUCTOR LASER WITH LENS CAP
13
ELECTRICAL POWER TO LASER ASS'Y
PULSE VOLTAGE INPUT
COMBUSTIBLE GAS INPUT

FIGURE 5A

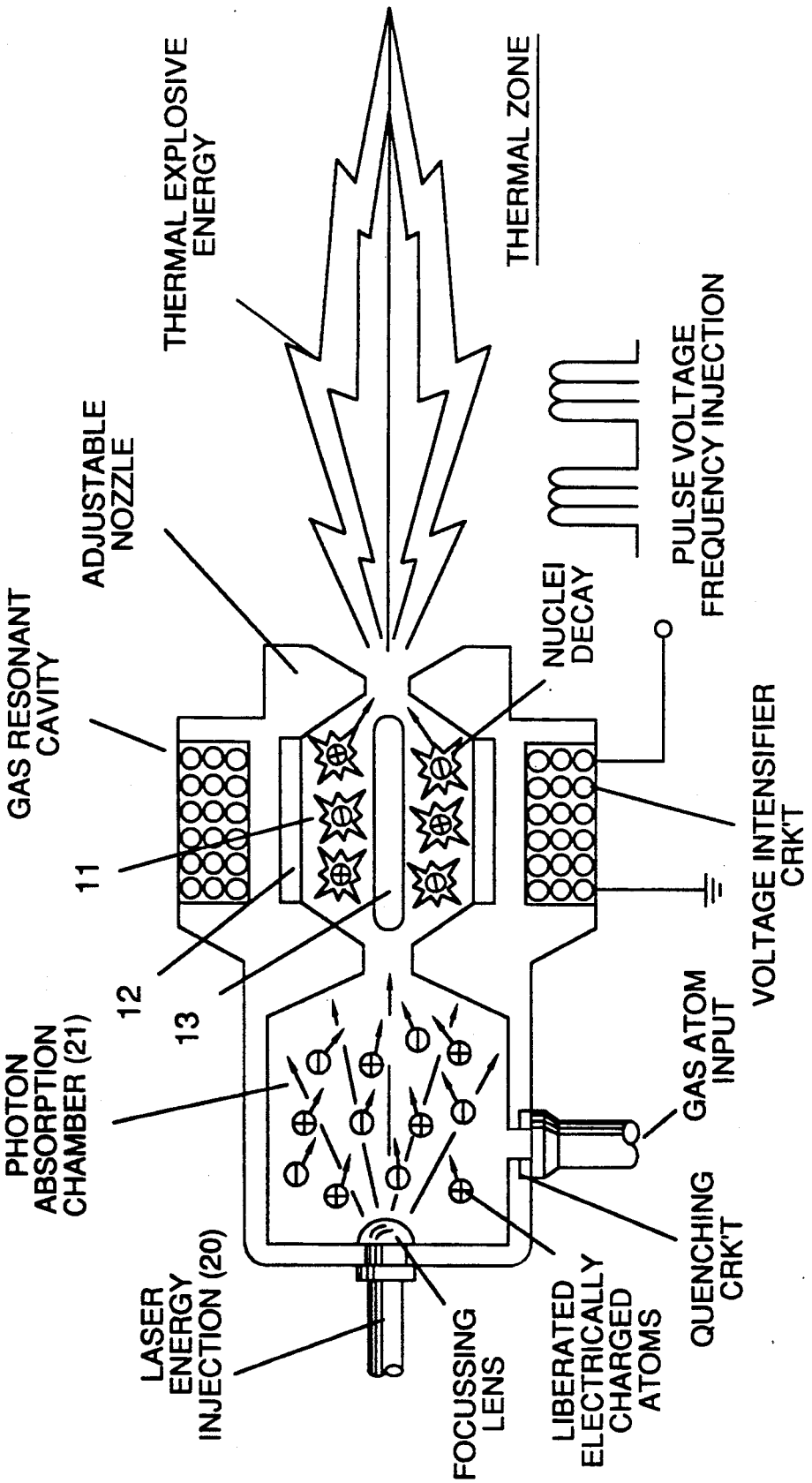
THERMAL EXPLOSIVE ENERGY
THERMAL ZONE
ADJUSTABLE NOZZLE
PULSE VOLTAGE FREQUENCY INJECTION
GAS RESONANT CAVITY
NUCLEI DECAY
11
12
13
VOLTAGE INTENSIFIER CRK'T
PHOTON ABSORPTION CHAMBER (21)
GAS ATOM INPUT
QUENCHING CRK'T
LASER ENERGY INJECTION (20)
FOCUSSING LENS
LIBERATED ELECTRICALLY CHARGED ATOMS

FIGURE 5B

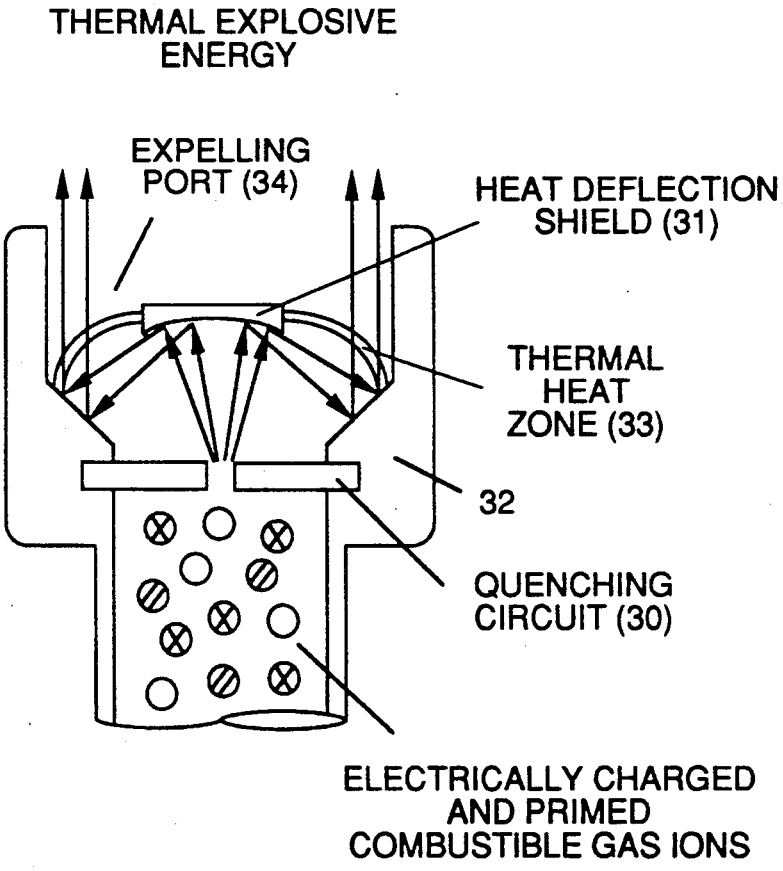
THERMAL EXPLOSIVE ENERGY
EXPELLING PORT (34)
HEAT DEFLECTION SHIELD (31)
THERMAL HEAT ZONE (33)
32
QUENCHING CIRCUIT (30)
ELECTRICALLY CHARGED AND PRIMED COMBUSTIBLE GAS IONS

FIGURE 5C

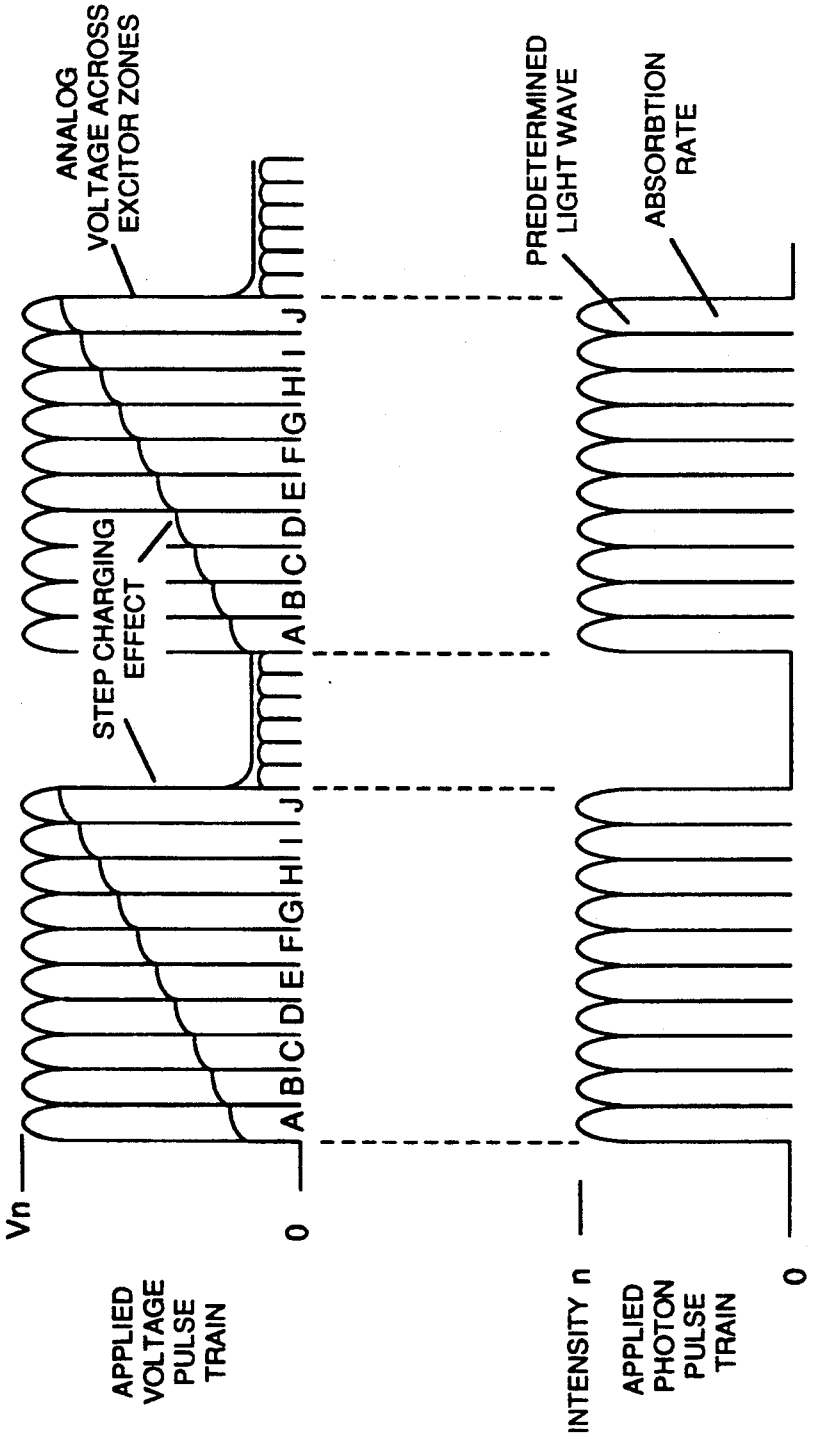
ANALOG VOLTAGE ACROSS EXCITOR ZONES
STEP CHARGING EFFECT
Vn
0
A B C D E F G H I J
A B C D E F G H I J
APPLIED VOLTAGE PULSE TRAIN
PREDETERMINED LIGHT WAVE
ABSORBTION RATE
INTENSITY n
0
APPLIED PHOTON PULSE TRAIN

FIGURE 6A

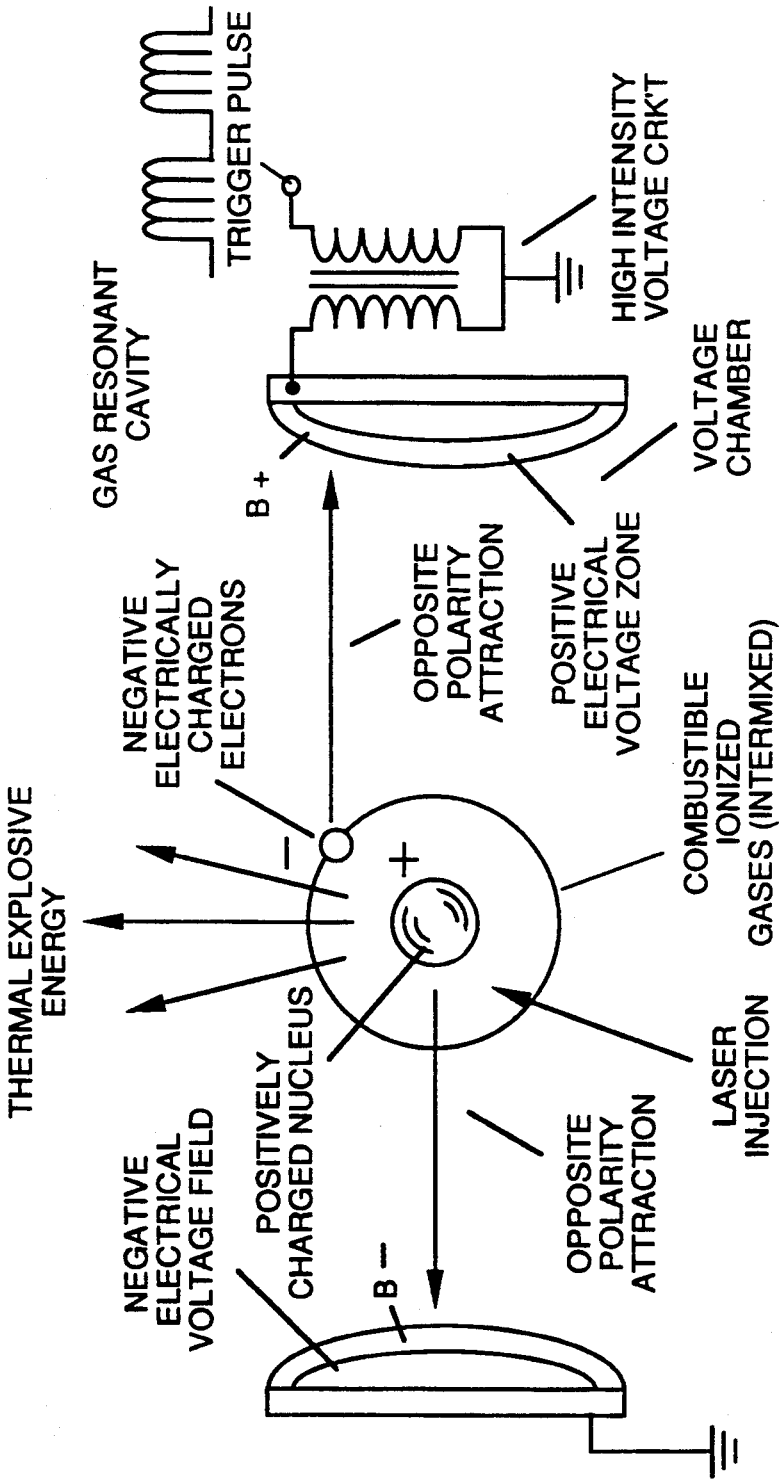
TRIGGER PULSE
GAS RESONANT CAVITY
HIGH INTENSITY VOLTAGE CRK'T
VOLTAGE CHAMBER
B +
NEGATIVE ELECTRICALLY CHARGED ELECTRONS
OPPOSITE POLARITY ATTRACTION
POSITIVE ELECTRICAL VOLTAGE ZONE
THERMAL EXPLOSIVE ENERGY
COMBUSTIBLE IONIZED GASES (INTERMIXED)
POSITIVELY CHARGED NUCLEUS
LASER INJECTION
NEGATIVE ELECTRICAL VOLTAGE FIELD
OPPOSITE POLARITY ATTRACTION
B −

FIGURE 6B

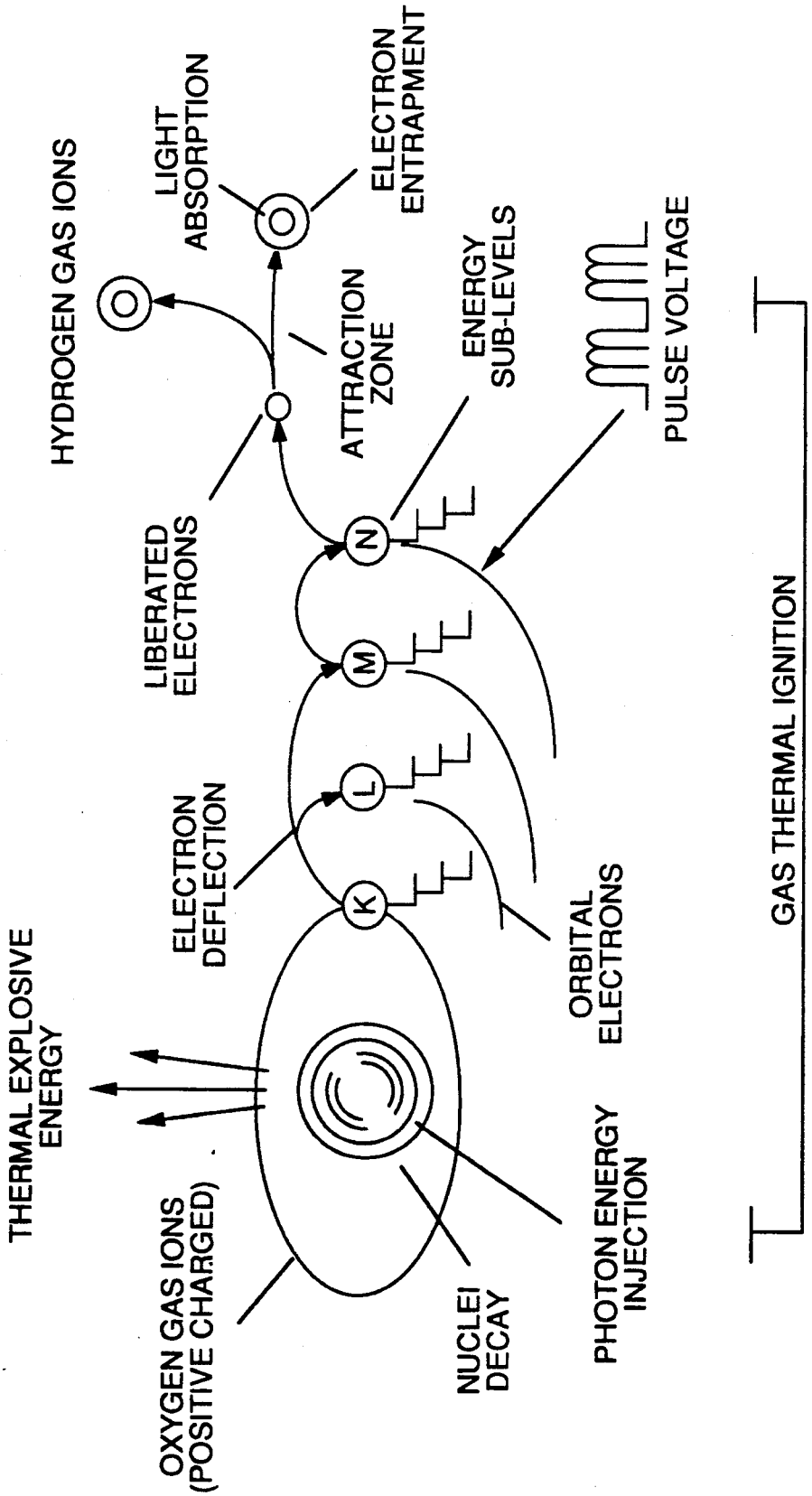
HYDROGEN GAS IONS
LIGHT ABSORPTION
ELECTRON ENTRAPMENT
ATTRACTION ZONE
ENERGY SUB-LEVELS
PULSE VOLTAGE
LIBERATED ELECTRONS
N
M
L
K
ELECTRON DEFLECTION
ORBITAL ELECTRONS
THERMAL EXPLOSIVE ENERGY
OXYGEN GAS IONS (POSITIVE CHARGED)
NUCLEI DECAY
PHOTON ENERGY INJECTION
GAS THERMAL IGNITION

FIGURE 6C

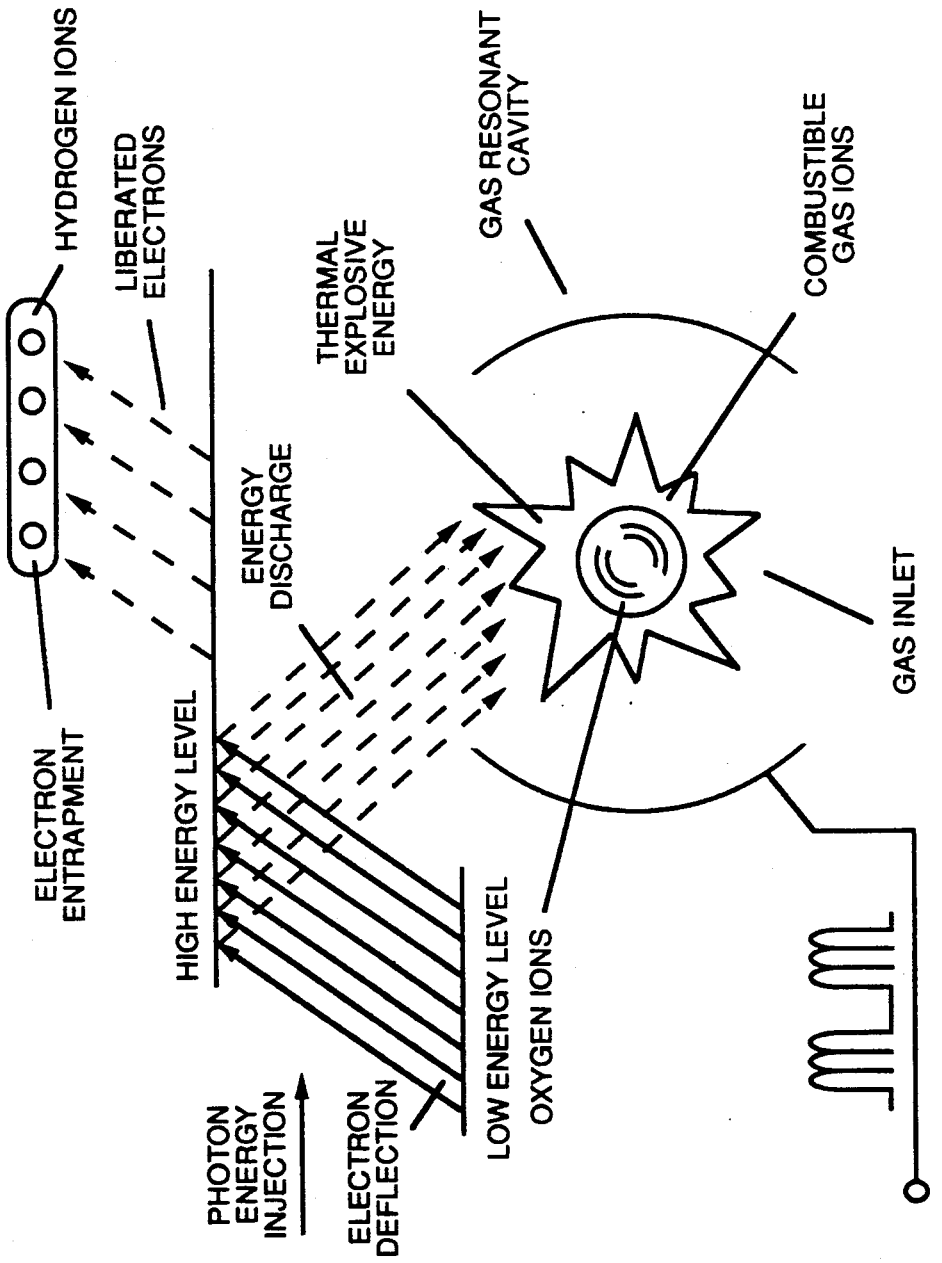
HYDROGEN IONS
LIBERATED ELECTRONS
ELECTRON ENTRAPMENT
HIGH ENERGY LEVEL
PHOTON ENERGY INJECTION
ELECTRON DEFLECTION
ENERGY DISCHARGE
THERMAL EXPLOSIVE ENERGY
LOW ENERGY LEVEL
OXYGEN IONS
GAS RESONANT CAVITY
COMBUSTIBLE GAS IONS
GAS INLET
HIGH PULSE VOLTAGE FREQUENCY INPUT

FIGURE 6D

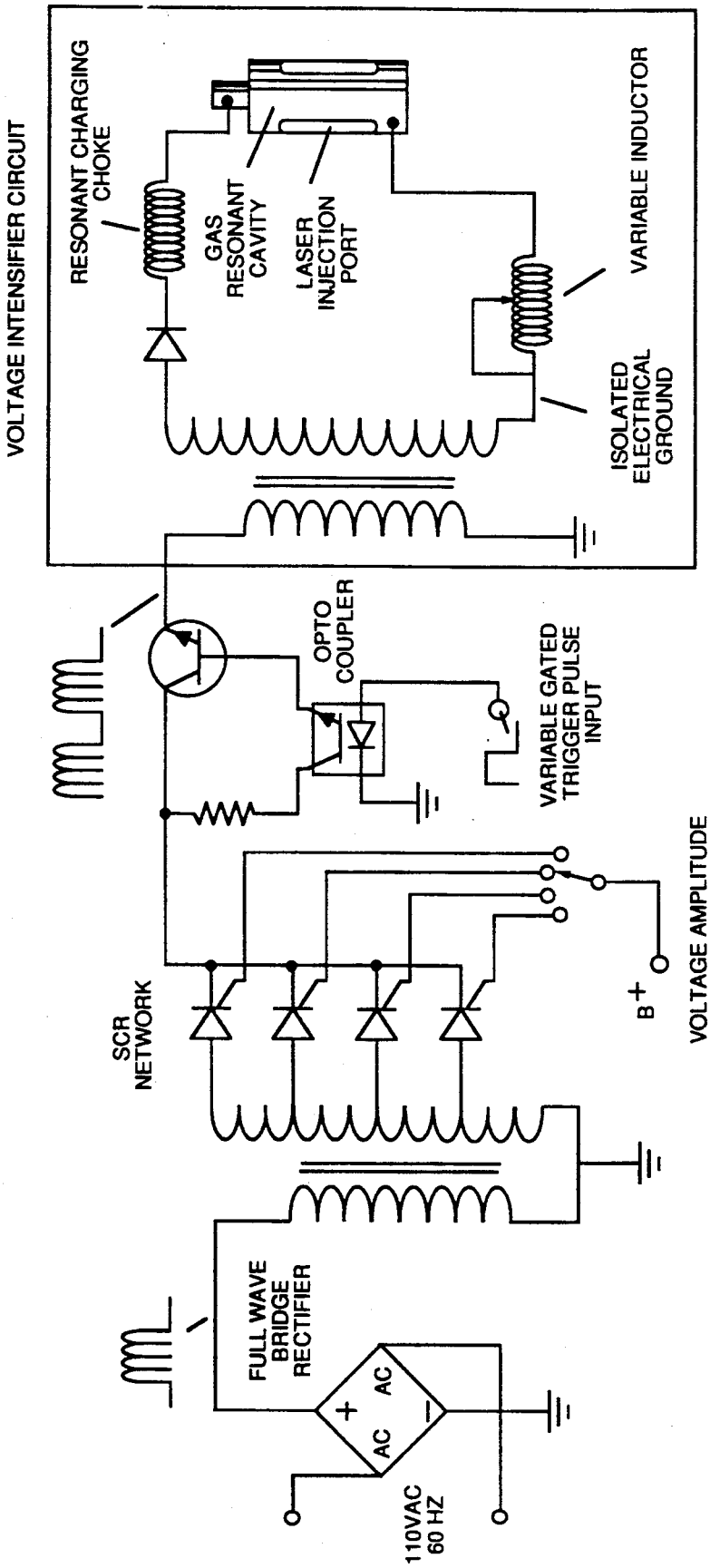
VOLTAGE INTENSIFIER CIRCUIT
RESONANT CHARGING CHOKE
GAS RESONANT CAVITY
LASER INJECTION PORT
VARIABLE INDUCTOR
ISOLATED ELECTRICAL GROUND
OPTO COUPLER
VARIABLE GATED TRIGGER PULSE INPUT
SCR NETWORK
B+
VOLTAGE AMPLITUDE SELECTOR SWITCH
FULL WAVE BRIDGE RECTIFIER
AC
AC
+
−
110VAC 60 HZ

FIGURE 7

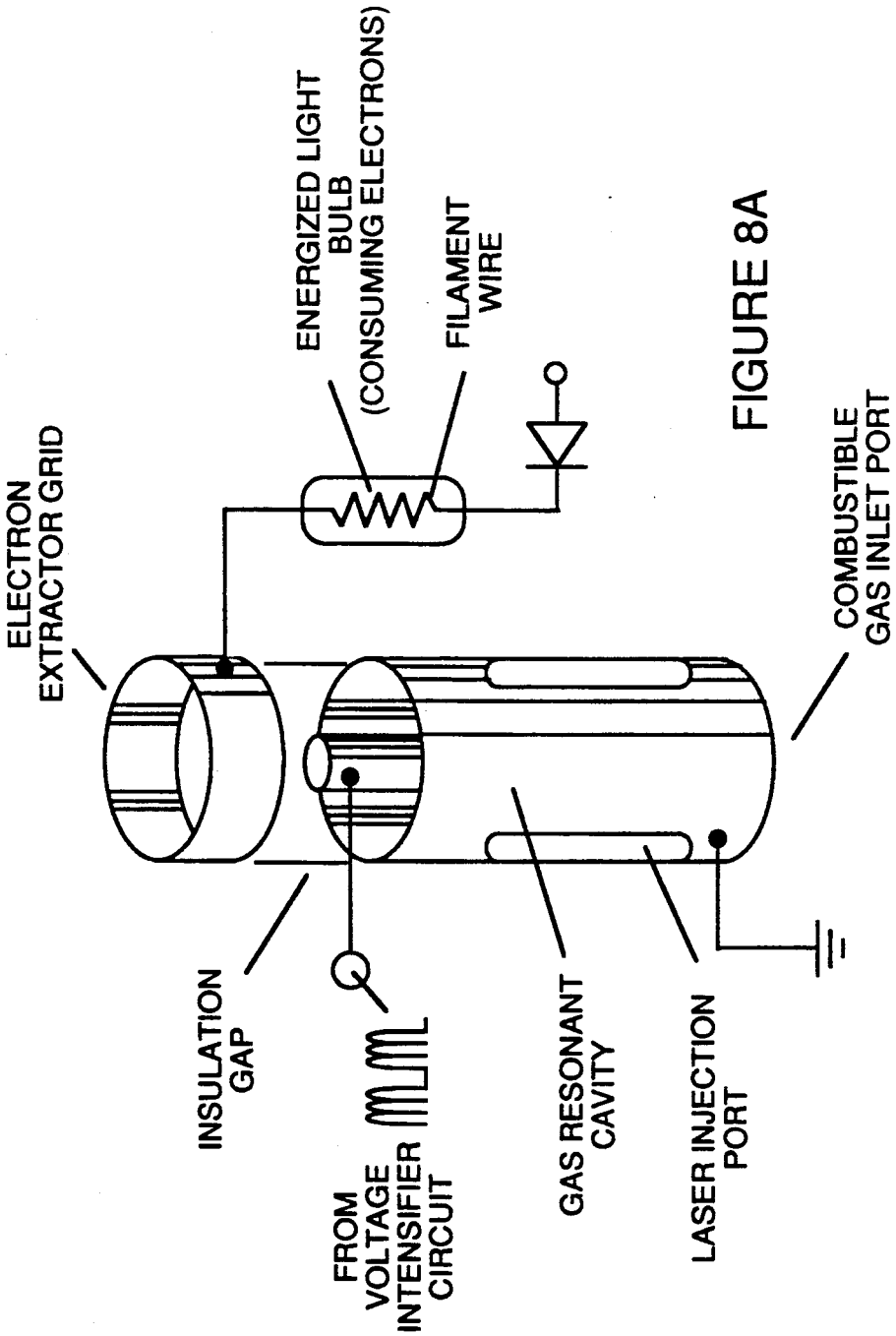
ELECTRON EXTRACTOR GRID
ENERGIZED LIGHT BULB (CONSUMING ELECTRONS)
FILAMENT WIRE
COMBUSTIBLE GAS INLET PORT
INSULATION GAP
FROM VOLTAGE INTENSIFIER CIRCUIT
GAS RESONANT CAVITY
LASER INJECTION PORT

FIGURE 8A

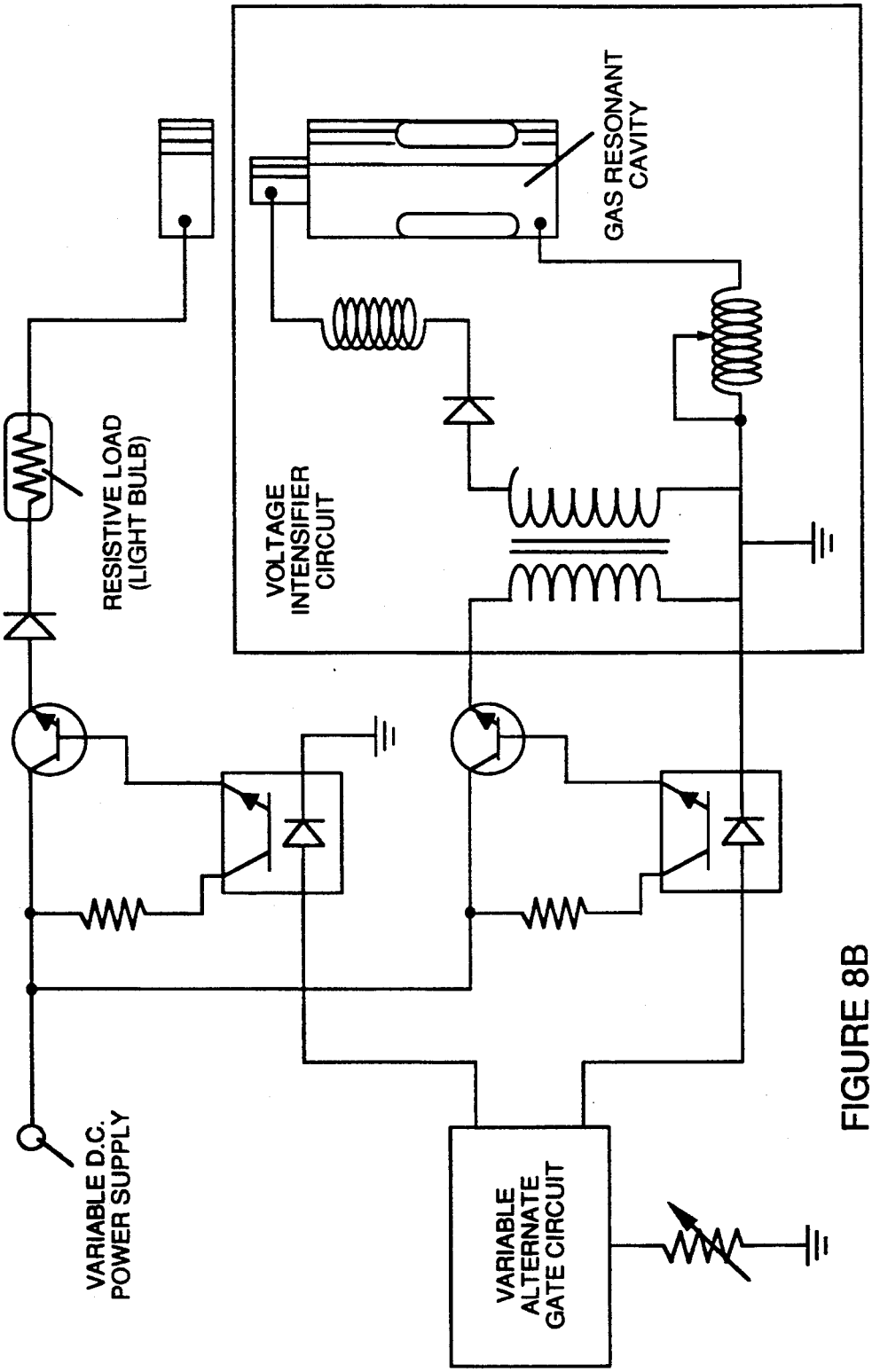
GAS RESONANT CAVITY
RESISTIVE LOAD (LIGHT BULB)
VOLTAGE INTENSIFIER CIRCUIT
VARIABLE D.C. POWER SUPPLY
VARIABLE ALTERNATE GATE CIRCUIT

FIGURE 8B

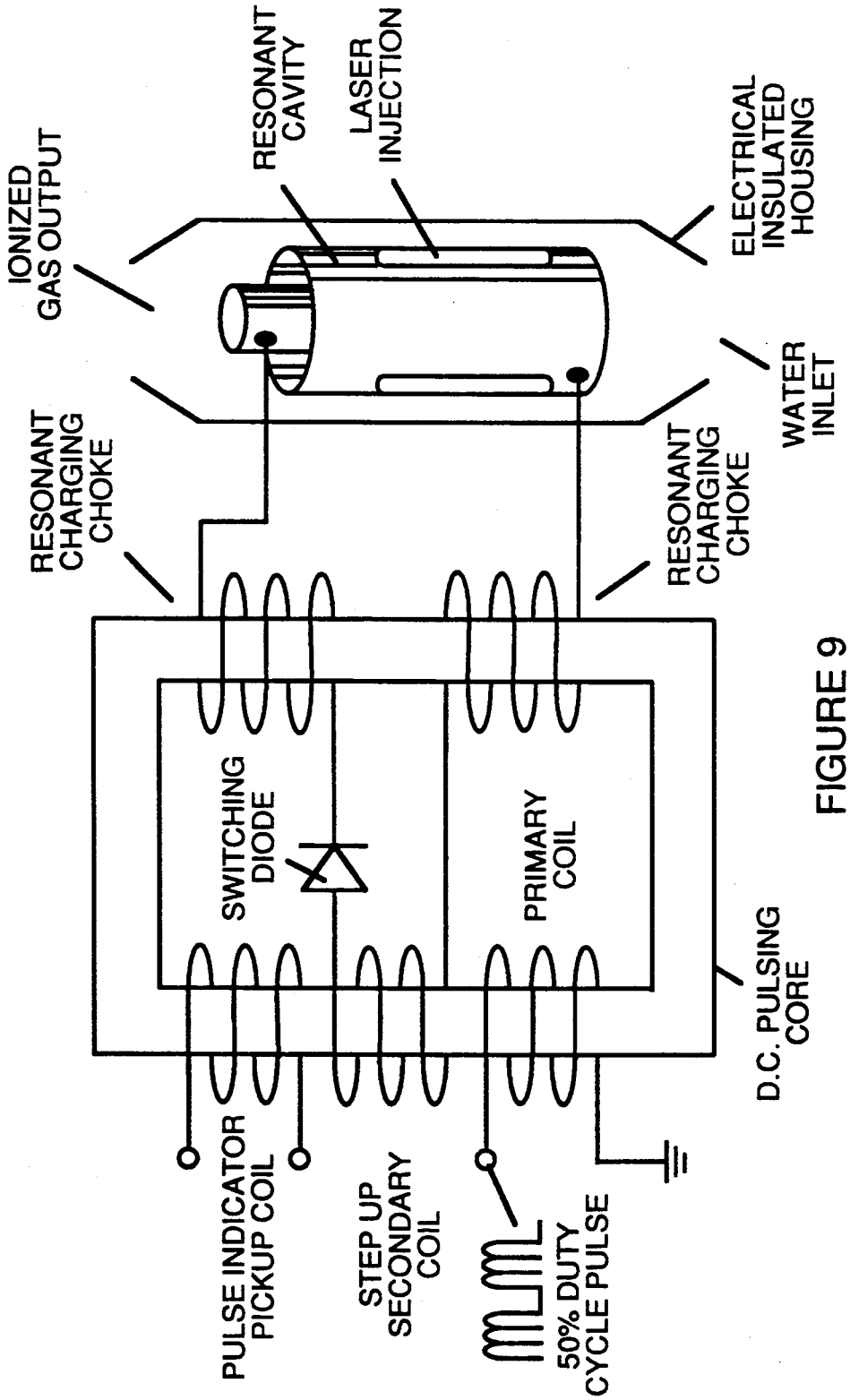
IONIZED GAS OUTPUT
RESONANT CAVITY
LASER INJECTION
ELECTRICAL INSULATED HOUSING
WATER INLET
RESONANT CHARGING CHOKE
RESONANT CHARGING CHOKE
SWITCHING DIODE
PRIMARY COIL
D.C. PULSING CORE
PULSE INDICATOR PICKUP COIL
STEP UP SECONDARY COIL
50% DUTY CYCLE PULSE

FIGURE 9

PROCESS AND APPARATUS FOR THE PRODUCTION OF FUEL GAS AND THE ENHANCED RELEASE OF THERMAL ENERGY FROM SUCH GAS

RELATED APPLICATIONS

This is a continuation-in-part of my co-pending application Ser. No. 207,730 filed Jun. 6, 1988, now U.S. Pat. No. 4,936,961, which in turn was a continuation in part of Ser. No. 081,859, filed Aug. 5, 1987, now U.S. Pat. No. 4,826,581.

FIELD OF THE INVENTION

This invention relates to a method of and apparatus for obtaining the release of a fuel gas mixture including hydrogen and oxygen from water and to a method of and apparatus for obtaining the further release of energy from such a fuel gas mixture. Charged ions derived from the fuel gas are stimulated to an activated state, and then passed through a resonant cavity, where successively increasing energy levels are achieved, and finally passed to an outlet orifice to produce thermal explosive energy.

BACKGROUND OF THE PRIOR ART

Numerous processes have been proposed for separating a water molecule into its elemental hydrogen and oxygen components. Electrolysis is one such process. Other processes are described in U.S. patents such as U.S. Pat. Nos. 4,344,831; 4,184,931; 4,023,545; 3,980,053; and Patent Cooperation Treaty Application No. PCT/US80/1362, published Apr. 30, 1981. Other processes have been proposed for many years in which controlled energy producing reactions of atomic particles are expected to occur under "cold" conditions. [See, e.g., Rafelski, J. and Jones, S. E., "Cold Nuclear Fusion," *Scientific American*, July, 1987, page 84].

Further processes are also described in U.S. Pat. Nos. 4,233,109; 4,406,765; 4,687,753 and 4,695,357. The process and apparatus described herein are considered variations to and improvements in fuel sources and processes by which energy is derived from fuel gas components in a controllable manner.

OBJECTS OF THE INVENTION

A first object of the invention is to provide a fuel cell and a process in which molecules of water are broken down into hydrogen and oxygen gases, and a fuel gas mixture including hydrogen, oxygen and other gasses formerly dissolved within the water is produced. A further object of the invention is to realize significant energy-yield from a fuel gas derived from water (H_2O) molecules. Molecules of water are broken down into hydrogen and oxygen gases. Electrically charged hydrogen and oxygen ions of opposite electrical polarity are activated by electromagnetic wave energy and exposed to a high temperature thermal zone. Significant amounts of thermal energy with explosive force beyond the gas burning stage are released.

An explosive thermal energy under a controlled state is produced. The process and apparatus provide a heat energy source useful for power generation, aircraft, rocket engines, or space stations.

BRIEF DESCRIPTION OF THE DRAWINGS

FIGS. **1A** through **1F** are illustrations depicting the theoretical bases for phenomena encountered during operation of the fuel gas production stage of the invention herein.

FIG. **2** illustrates a circuit useful in the fuel gas generation process.

FIG. **3** shows a perspective of a "water capacitor" element used in the fuel cell circuit.

FIG. **4** illustrates a staged arrangement of apparatus useful in the process, beginning with a water inlet and culminating in the production of thermal explosive energy.

FIG. **5A** shows a cross-section of a circular gas resonant cavity used in the final stage assembly of FIG. **4**.

FIG. **5B** shows an alternative final stage injection system useful in the apparatus of FIG. **4**.

FIG. **5C** shows an optical thermal lens assembly for use with either final stage of FIG. **5A** or FIG. **5B**.

FIGS. **6A**, **6B**, **6C** and **6D** are illustrations depicting various theoretical bases for atomic phenomena expected to occur during operation of the invention herein.

FIG. **7** is an electrical schematic of the voltage source for the gas resonant cavity.

FIGS. **8A** and **8B**, respectively, show (A) an electron extractor grid used in the injector assemblies of FIG. **5A** and FIG. **5B**, and (B) the electronic control circuit for the extractor grid.

FIG. **9** shows an alternate electrical circuit useful in providing a pulsating waveform to the apparatus.

DESCRIPTION OF THE PREFERRED EMBODIMENT

A fuel gas is produced by a hydrogen fracturing process that follows the sequence of steps shown in the following Table I. Beginning with water molecules, the molecule is subjected to successively increasing electrical, wave energy and thermal forces. In the succession of forces, radomly oriented water molecules are aligned with respect to molecular polar orientation and themselves polarized and "elongated" by the application of an electric potential to the extent that covalent bonding of the water molecule is so weakened that the atoms disassociate and the molecule breaks down into hydrogen and oxygen elemental components. The released atomic gases are next ionized and electrically charged in a vessel while being subjected to a further energy source that promotes inter-particle impact in the gas at an increased overall energy level. Finally, the atomic particles in the excited gas, having achieved successively higher energy levels, are subjected to a laser or electromagnetic wave energy source that produces atomic destabilization and the final release of thermal explosive energy. Engineering design parameters based on known theoretical principles of atomic physics determine the incremental levels of electrical and wave energy input required to produce resonance in each stage of the system. Instead of a dampening effect, a resonant energization of the molecule, atom or ion provides a compounding energy interaction resulting in the final energy release.

TABLE I

PROCESS STEPS LEADING TO IGNITION	
RELATIVE STATE OF WATER MOLECULE AND/OR HYDROGEN/OXYGEN/OTHER ATOMS	1st Stage
RANDOM (AMBIENT STATE)	Water to Gas
ALIGNMENT OF POLAR FIELDS	
POLARIZATION OF MOLECULES	

TABLE I-continued

PROCESS STEPS LEADING TO IGNITION	
MOLECULAR ELONGATION ATOM LIBERATION BY BREAKDOWN OF COVALENT BOND	
	2nd Stage
RELEASE OF GASES LIQUID TO GAS IONIZATION ELECTRICAL CHARGING EFFECT PARTICLE IMPACT	Gas Ionization
	3rd Stage
ELECTROMAGNETIC WAVE, LASER OR PHOTON INJECTION ELECTRON EXTRACTION ATOMIC DESTABILIZATION	Priming
	Final Stage
THERMAL IGNITION	Ignition

In brief, in the first stage a gas mixture including hydrogen and oxygen and other dissolved gases formerly entrapped in water is obtained, from water. In general, the method used in the first stage consists of: (A) providing a capacitor, in which the water is included as a dielectric liquid between capacitor plates, in a resonant charging choke circuit that includes an inductance in series with the capacitor; (B) subjecting the capacitor to a pulsating, unipolar electric voltage field in which the polarity does not pass beyond an arbitrary ground, whereby the water molecules within the capacitor are subjected to a charge of the same polarity and the water molecules are distended by their subjection to electrical polar forces; (C) further subjecting the water in said capacitor to said pulsating electric field to achieve a pulse frequency such that the pulsating electric field induces a resonance within the water molecule; (D) continuing the application of the pulsing frequency to the capacitor cell after resonance occurs so that the energy level within the molecule is increased in cascading incremental steps in proportion to the number of pulses; (E) maintaining the charge of said capacitor during the application of the pulsing field, whereby the co-valent electrical bonding of the hydrogen and oxygen atoms within said molecules is destabilized such that the force of the electrical field applied, as the force is effective within the molecule, exceeds the bonding force of the molecule, and hydrogen and oxygen atoms are liberated from the molecule as elemental gases; and (F) collecting said hydrogen and oxygen gases, and any other gases that were formerly dissolved within the water, and discharging the collected gases as a fuel gas mixture.

The water molecules are subjected to increasing electrical forces. In an ambient state, randomly oriented water molecules are aligned with respect to a molecular polar orientation. They are next, themselves polarized and "elongated" by the application of an electric potential to the extent that covalent bonding of the water molecule is so weakened that the atoms disassociate and the molecule breaks down into hydrogen and oxygen elemental components. In the process, the point of optimum gas release is reached at a circuit resonance. Water in the fuel cell is subjected to a pulsating, polar electric field produced by the electrical circuit whereby the water molecules are distended by reason of their subjection to electrical polar forces of the capacitor plates. The polar pulsating frequency applied is such that the pulsating electric field induces a resonance in the molecule. A cascade effect occurs and the overall energy level of specific water molecules is increased in cascading, incremental steps. The hydrogen and oxygen atomic gases, and other gas components formerly entrapped as dissolved gases in water, are released when the resonant energy exceeds the co-valent bonding force of the water molecule. A preferred construction material for the capacitor plates is a stainless steel T-304 which is non-chemically reactive with water, hydrogen, or oxygen. An electrically conductive material which is inert in the fluid environment is a desirable material of construction for the electric field plates of the "water capacitor" employed in the circuit.

Once triggered, the gas output is controllable by the attenuation of operational parameters. Thus, once the frequency of resonance is identified, by varying the applied pulse voltage to the water fuel cell assembly, gas output is varied. By varying the pulse shape and/or amplitude or pulse train sequence of the initial pulsing wave source, final gas output is varied. Attenuation of the voltage field frequency in the form of OFF and ON pulses likewise affects output.

The overall apparatus thus includes an electrical circuit in which a water capacitor having a known dielectric property is an element. The fuel gases are obtained from the water by the disassociation of the water molecule. The water molecules are split into component atomic elements (hydrogen and oxygen gases) by a voltage stimulation process called the electrical polarization process which also releases dissolved gases entrapped in the water.

From the outline of physical phenomena associated with the first stage of the process described in Table 1, the theoretical basis of the invention considers the respective states of molecules and gases and ions derived from liquid water. Before voltage stimulation, water molecules are randomly dispersed throughout water within a container. When a unipolar voltage pulse train such as shown in FIGS. **1B** through **1F** is applied to positive and negative capacitor plates, an increasing voltage potential is induced in the molecules in a linear, step-like charging effect. The electrical field of the particles within a volume of water including the electrical field plates increases from a low energy state to a high energy state successively in a step manner following each pulse-train as illustrated figuratively in the depictions of FIGS. **1A** through **1F**. The increasing voltage potential is always positive in direct relationship to negative ground potential during each pulse. The voltage polarity on the plates which create the voltage fields remains constant although the voltage charge increases. Positive and negative voltage "zones" are thus formed simultaneously in the electrical field of the capacitor plates.

In the first stage of the process describe in Table 1, because the water molecule naturally exhibits opposite electrical fields in a relatively polar configuration (the two hydrogen atoms are positively electrically charged relative to the negative electrically charged oxygen atom), the voltage pulse causes initially randomly oriented water molecules in the liquid state to spin and orient themselves with reference to positive and negative poles of the voltage fields applied. The positive electrically charged hydrogen atoms of said water molecule are attracted to a negative voltage field; while, at the same time, the negative electrically charged oxygen atoms of the same water molecule are attracted to a positive voltage field. Even a slight potential difference applied to inert, conductive plates of a containment chamber which forms a capacitor will initiate polar

atomic orientation within the water molecule based on polarity differences.

When the potential difference applied causes the orientated water molecules to align themselves between the conductive plates, pulsing causes the voltage field intensity to be increased in accordance with FIG. 1B. As further molecular alignment occurs, molecular movement is hindered. Because the positively charged hydrogen atoms of said aligned molecules are attracted in a direction opposite to the negatively charged oxygen atoms, a polar charge alignment or distribution occurs within the molecules between said voltage zones, as shown in FIG. 1B. And as the energy level of the atoms subjected to resonant pulsing increases, the stationary water molecules become elongated as shown in FIGS. 1C and 1D. Electrically charged nuclei and electrons are attracted toward opposite electrically charged voltage zones—disrupting the mass and charge equilibrium of the water molecule.

As the water molecule is further exposed to an increasing potential difference resulting from the step charging of the capacitor, the electrical force of attraction of the atoms within the molecule to the capacitor plates of the chamber also increases in strength. As a result, the co-valent bonding between atoms which form the molecule is weakened—and ultimately terminated. The negatively charged electron is attracted toward the positively charged hydrogen atoms, while at the same time, the negatively charged oxygen atoms repel electrons.

In a more specific explanation of the "sub-atomic" action that occurs in the water cell that provides a fuel gas for the subsequent stages, it is known that natural water is a liquid which has a dielectric constant of 78.54 at 20° C. and 1 atm pressure. [*Handbook of Chemistry and Physics,* 68th ed., CRC Press (Boca Raton, Fla. (1987–88)), *Section E*-50, H_2O (water)].

When a volume of water is isolated and electrically conductive plates, that are chemically inert in water and are separated by a distance, are immersed in the water, a capacitor is formed, having a capacitance determined by the surface area of the plates, the distance of their separation and the dielectric constant of water.

When water molecules are exposed to voltage at a restricted current, water takes on an electrical charge. By the laws of electrical attraction, molecules align according to positive and negative polarity fields of the molecule and the alignment field. The plates of a capacitor constitute such an alignment field when a voltage is applied.

When a charge is applied to a capacitor, the electrical charge of the capacitor equals the applied voltage charge; in a water capacitor, the dielectric property of water resists the flow of amps in the circuit, and the water molecule itself, because it has polarity fields formed by the relationship of hydrogen and oxygen in the covalent bond, and an intrinsic dielectric property, becomes part of the electrical circuit, analogous to a "microcapacitor" within the capacitor defined by the plates.

In the Example of a fuel cell circuit of FIG. 2, a water capacitor is included. The step-up coil is formed on a conventional torroidal core formed of a compressed ferromagnetic powdered material that will not itself become permanently magnetized, such as the trademarked "Ferramic 06# "Permag" powder as described in *Siemens Ferrites Catalog*, CG-2000-002-121, (Cleveland, Ohio) No. F626-1205. The core is 1.50 inch in diameter and 0.25 inch in thickness. A primary coil of 200 turns of 24 gauge cooper wire is provided and a coil of 600 turns of 36 gauge wire comprises the secondary winding. Other primary/secondary coil winding ratios may be conventionally determined.

An alternate coil arrangement using a conventional M27 iron transformer core is shown in FIG. 9. The coil wrap is always in one direction only.

In the circuit of FIG. 2, the diode is a 1N1198 diode which acts as a blocking diode and an electric switch that allows voltage flow in one direction only. Thus, the capacitor is never subjected to a pulse of reverse polarity.

The primary coil of the torroid is subject to a 50% duty cycle pulse. The torroidal pulsing coil provides a voltage step-up from the pulse generator in excess of five times, although the relative amount of step-up is determined by pre-selected criteria for a particular application. As the stepped-up pulse enters first inductor (formed from 100 turns of 24 gauge wire 1 inch in diameter), an electromagnetic field is formed around the inductor, voltage is switched off when the pulse ends, and the field collapses and produces another pulse of the same polarity; i.e., another positive pulse is formed where the 50% duty cycle was terminated. Thus, a double pulse frequency is produced; however, in a pulse train of unipolar pulses, there is a brief time when pulses are not present.

By being so subjected to electrical pulses in the circuit of FIG. 2, water confined in the volume that includes the capacitor plates takes on an electrical charge that is increased by a step charging phenomenon occurring in the water capacitor. Voltage continually increases (to about 1000 volts and more) and the water molecules starts to elongate.

The pulse train is then switched off; the voltage across the water capacitor drops to the amount of charge that the water molecules have taken on, i.e. voltage is maintained across the charged capacitor. The pulse train is then reapplied.

Because a voltage potential applied to a capacitor can perform work, the higher the voltage potential, the more work is performed by a given capacitor. In an optimum capacitor that is wholly non-conductive, zero (0) current flow will occur across the capacitor. Thus, in view of an idealized capacitor circuit, the object of the water capacitor circuit is to prevent electron flow through the circuit, i.e. such as occurs by electron flow or leakage through a resistive element that produces heat. Electrical leakage in water will occur, however, because of some residual conductivity and impurities or ions that may be otherwise present in the water. Thus, the water capacitor is preferably chemically inert. An electrolyte is not added to the water.

In the isolated water bath, the water molecule takes on charge, and the charge increases. The object of the process is to switch off the co-valent bonding of the water molecule and interrupt the sub-atomic force, i.e. the electrical force or electromagnetic force, that binds the hydrogen and oxygen atoms to form a molecule so that the hydrogen and oxygen separate.

Because an electron will only occupy a certain electron shell (the shells are well known) the voltage applied to the capacitor affects the electrical forces inherent in the co-valent bond. As a result of the charge applied by the plates, the applied force becomes greater than the force of the co-valent bonds between the atoms of the water molecule; and the water molecule becomes

elongated. When this happens, the time share ratio of the electrons between the atoms and the electron shells is modified.

In the process, electrons are extracted from the water bath; electrons are not consumed nor are electrons introduced into the water bath by the circuit as electrons are conventionally introduced in an electrolysis process. There may nevertheless occur a leakage current through the water. Those hydrogen atoms missing electrons become neutralized; and atoms are liberated from the water. The charged atoms and electrons are attracted to opposite polarity voltage zones created between the capacitor plates. The electrons formerly shared by atoms in the water co-valent bond are reallocated such that neutral elemental gases are liberated.

In the process, the electrical resonance may be reached at all levels of voltage potential. The overall circuit is characterized as a "resonant charging choke" circuit which is an inductor in series with a capacitor that produces a resonant circuit. [*SAMS Modern Dictionary of Electronics*, Rudolff Garff, ©1984, Howard W. Sams & Co. (Indianapolis, Ind.), p. 859.] Such a resonant charging choke is on each side of the capacitor. In the circuit, the diode acts as a switch that allows the magnetic field produced in the inductor to collapse, thereby doubling the pulse frequency and preventing the capacitor from discharging. In this manner a continuous voltage is produced across the capacitor plates in the water bath; and the capacitor does not discharge. The water molecules are thus subjected to a continuously charged field until the breakdown of the co-valent bond occurs.

As noted initially, the capacitance depends on the dielectric properties of the water and the size and separation of the conductive elements forming the water capacitor.

EXAMPLE I

In an example of the circuit of FIG. 2 (in which other circuit element specifications are provided above), two concentric cylinders 4 inches long formed the water capacitor of the fuel cell in the volume of water. The outside cylinder was 0.75 inch in outside diameter; the inner cylinder was 0.5 inch in outside diameter. Spacing from the outside of the inner cylinder to the inner surface of the outside cylinder was 0.0625 inch. Reasonance in the circuit was achieved at a 26 volt applied pulse to the primary coil of the torroid at 10 KH_z, and the water molecules disassociated into elemental hydrogen and oxygen and the gas released from the fuel cell comprised a mixture of hydrogen, oxygen from the water molecule, and gases formerly dissolved in the water such as the atmospheric gases or oxygen, nitrogen, and argon.

In achieving resonance in any circuit, as the pulse frequency is adjusted, the flow of amps is minimized and voltage is maximized to a peak. Calculation of the resonance frequency of an overall circuit is determined by known means; different cavities have a different frequency of resonance dependent on parameters of the water dielectric, plate size, configuration and distance, circuit inductors, and the like. Control of the production of fuel gas is determined by variation of the period of time between a train of pulses, pulse amplitude and capacitor plate size and configuration, with corresponding value adjustments to other circuit components.

The wiper arm on the second inductor tunes the circuit and accommodates to contaminants in water so that the charge is always applied to the capacitor. The voltage applied determines the rate of breakdown of the molecule into its atomic components. As water in the cell is consumed, it is replaced by any appropriate means or control system.

Thus in the first stage, which is of itself independently useful, a fuel gas mixture is produced having, in general, the components of elemental hydrogen and oxygen as well as formerly dissolved entrapped atmospheric gases such as nitrogen, argon, and the like. The fuel gas is itself combustible in a conventional manner.

After the first stage the gas atoms become elongated during electron removal as the atoms are ionized. Laser, or light wave energy of a predetermined frequency is injected into a containment vessel in a gas ionization process. The light energy absorbed by voltage stimulated gas nuclei causes destabilization of gas ions still further. The absorbed laser energy causes the gas nuclei to increase in energy state, which, in turn, causes electron deflection to a higher orbital shell.

The electrically charged and laser primed combustible gas ions from a gas resonant cavity may be directed into an optical thermal lens assembly for triggering. Before entry into the optimal thermal lens, however, electrons are stripped from the ions and the atom is destabilized. The destabilized gas ions which are electrically and mass unbalanced atoms having highly energized nuclei are pressurized during spark ignition. The unbalanced, destablized atomic components thermally interact; the energized and unstable hydrogen gas nuclei collide with highly energized and unstable oxygen gas nuclei, causing and producing thermal explosive energy beyond the gas burning stage. The ambient air gas components in the initial mixture aid the thermal explosive process under a controlled state.

In the process, the point of optimum energy-yield is reached when the electron deficient oxygen atoms (having less than a normal number of electrons) lock onto and capture a hydrogen atom electron prior to or during thermal combustion of the hydrogen/oxygen mixture. Atomic decay results in the release of energy.

After the first stage, the gas mixture is subjected to a pulsating, polar electric field whereby electrons of the gas atoms are distended in their orbital fields by reason of their subjection to electrical polar forces The polar pulsating frequency applied is such that the pulsating electric field induces a resonance with respect to an electron of the gas atom. A cascade effect results and the energy level of specific resonating electron is increased in cascading, incremental steps.

Next, the gas atoms are ionized and subjected to electro-magnetic wave energy having a predetermined frequency to induce a further election resonance in the ion, whereby the energy level of the election is successively increased. Electrons are extracted from the resonating ions while such ions are in an increased energy state to destabilize the nuclear electron configuration of said ions; and the gas mixture of destabilized ions is thermally ignited.

In the apparatus shown in FIG. 4, water is introduced at inlet 1 into a first stage water fracturing module 2, such as the water fuel cell described above, in which water molecules are broken down into hydrogen, oxygen and released entrapped gas components. The released atomic gases and other gas components formerly entrapped as dissolved gases in water may be introduced to a successive stage 3 or other number of like resonant cavities, which are arranged in either a series

of parallel combined array. The successive energization of the gas atoms provides a cascading effect, successively increasing the voltage stimulation level of the released gasses as they sequentially pass through cavities **2**, **3**, etc. In a final stage, an injector system **4**, of a configuration of the type shown in FIGS. **5A** or **5B**, receives energized atomic and gas particles where the particles are subjected to further energy input, electrical excitation and thermal stimulation, whereby thermal explosive energy results **5**, which may be directed thru a lens assembly of the type shown in FIG. **5C** to provide a controlled thermal energy output.

A single cell, or a battery of cells such as shown in FIG. **3**, provides a fuel gas source for stages after the first stage. The fuel gas is activated by electromagnetic waves, and electrically charged gas ions of hydrogen and oxygen (of opposite polarity) are expelled from the cascaded cells **2**, **3**, etc. shown in FIG. **4**. The circuit of FIG. **9** may be utilized as a source of ionizing energy for the gases. The effect of cascading successively increases the voltage stimulation level of the released gases, which then are directed to the final injector assembly **4**. In the injector assembly, gas ions are stimulated to a yet higher energy level. The gases are continually exposed to a pulsating laser or other electromagnetic wave energy source together with a high intensity oscillating voltage field that occurs within the cell between electrodes or conductive plates of opposite electrical polarity. A preferred construction material for the plates is a stainless steel T-304 which is non-chemically reactive with water, hydrogen, or oxygen. An electrically conductive material which is insert in the fluid environment is a desirable material of construction for the electrical field producing plates, through which field the gas stream of activated particles passes. Gas ions of opposite electrical charges reach and maintain a critical energy level state. The gas ions are oppositely electrically charged and subjected to oscillating voltage fields of opposite polarity and are also subjected to a pulsating electromagnetic wave energy source. Immediately after reaching critical energy, the excited gas ions are exposed to a high temperature thermal zone in the injection cell, **4**, that causes the excited gas ions to undergo gas combustion. The gas ignition triggers atomic decay and releases thermal energy, **5**, with explosive force.

Once triggered, the thermal explosive energy output is controllable by the attenuation of operational parameters. With reference to FIG. **6A**, for example, once the frequency of resonance is identified, by varying applied pulse voltage to the initial water fuel cell assemblies, **2**, **3**, the ultimate explosive energy output is likewise varied. By varying the pulse shape and/or amplitude or pulse train sequence of the electromagnetic wave energy source, final output is varied. Attenuation of the voltage field frequency in the form of OFF and ON pulses likewise affects output of the staged apparatus. Each control mechanism can be used separately, grouped in sections, or systematically arranged in a sequential manner.

A complete system in accordance with the present application thus includes a water fuel cell for providing a first fuel gas mixture consisting of at least a portion of hydrogen and oxygen gas. An electrical circuit of the type shown in FIG. **7** provides a pulsating, polar electric field to the gas mixture as illustrated in FIG. **6A**, whereby electrons of the gas atoms are distended in their orbital fields by reason of their subjection to electrical polar forces, changing from the state conceptually illustrated by FIG. **6B** to that of FIG. **6C**, at a frequency such that the pulsating electric field induces a resonance with respect to electrons of the gas atoms. The energy level of the resonant electrons is thereby increased in cascading, incremental steps. A further electric field to ionize said gas atoms is applied and an electromagnetic wave energy source for subjecting the ionized gas atoms to wave energy of a predetermined frequency to induce a further electron resonance in the ion, whereby the energy level of the election is successively increased is an additional element of the apparatus as shown in FIG. **6D**.

An electron sink, which may be in the form of the grid element shown in FIG. **8A**, extracts further electrons from the resonating ions while such ions are in an increased energy state and destabilizes the nuclear electron configuration of the ions. The "extraction" of electrons by the sink means is coordinated with the pulsating electrical field of the resonant cavity produced by the circuit of FIG. **7**, by means of an interconnected synchronization circuit, such as shown in FIG. **8B**. A nozzle, **10** in FIG. **5B**, or thermal lens assembly, FIG. **5C**, provides the directing means in which the destabilized ions are finally thermally ignited.

As previously noted, to reach and trigger the ultimate atomic decay of the fuel cell gases at the final stage, sequential steps are taken. First, water molecules are slit into component atomic elements (hydrogen and oxygen gases) by a voltage stimulation process which also releases dissolve gases entrapped in the water. In the injector assembly, a laser produced light wave or other form of coherent electromagnetic wave energy capable of stimulating a resonance within the atomic components is absorbed by the mixture of gases (hydrogen/oxygen/ambient air gases) released by the polarization process. At this point, as shown in FIG. **6B**, the individual atoms are subjected to an electric field to begin an ionization process.

The laser or electromagnetic wave energy is absorbed and causes gas atoms to lose electrons and form positively charged gas ions. The energized hydrogen atoms which, as ionized, are positively charged, now accept electrons liberated from the heavier gases and attract other negatively charged gas ions as conceptually illustrated in FIG. **6C**. Positively and negatively charged gas ions are re-exposed to further pulsating energy sources to maintain random distribution of ionized atomic gas particles.

The gas ions within the wave energy chamber are subjected to an oscillating high intensity voltage field in a chamber **11** in FIGS. **5A** and **5B** formed within electrodes **12** and **13** in FIGS. **5A** and **5B** of opposite electrical polarity to produce a resonant cavity. The gas ions reach a critical energy state at a resonant state.

At this point, within the chamber, additional electrons are attracted to said positive electrode; whereas, positively charged ions or atomic nuclei are attracted to the negative electrode. The positive and negative attraction forces are co-ordinate and operate on said gas ions simultaneously; the attraction forces are non-reversible. The gas ions experience atomic component deflection approaching the point of electron separation. At this point electrons are extracted from the chamber by a grid system such as shown in FIG. **5A**. The extracted electrons are consumed and prevented from re-entering the chamber by a circuit such as shown in FIG. **8B**. The elongated gas ions are subjected to a thermal heat zone to cause gas ignition, releasing ther-

mal energy with explosive force. During ionic gas combustion, highly energized and stimulated atoms and atom nuclei collide and explode during thermal excitation. The hydrogen fracturing process occurring sustains and maintains a thermal zone, at a temperature in excess of normal hydrogen/oxygen combustion temperature, to wit, in excess of 2500° F. To cause and maintain atomic elongation depicted in FIG. **6C** before gas ignition, a voltage intensifier circuit such as shown in FIG. **7** is utilized as a current restricting voltage source to provide the excitation voltage applied to the resonant cavity. At the same time the interconnected electron extractor circuit, FIG. **8B**, prevents the reintroduction of electrons back into the system. Depending on calculated design parameters, a predetermined voltage and frequency range may be designed for any particular application or physical configuration of the apparatus.

In the operation of the assembly, the pulse train source for the gas resonant cavity shown at **2** and **3** in FIG. **4** may be derived from a circuit such as shown in FIGS. **2**, **7** or **9**, and such cavity circuits may be in sequence to provide a cascading energy input. It is necessary in the final electron extraction that the frequency with which electrons are removed from the system by sequenced and synchronized with the pulsing of the gas resonant cavity. In the circuit of FIG. **8B**, the coordination of synchronization of the circuit with the circuit of FIG. **7** may be achieved by interconnecting point "A" of the gate circuit of FIG. **8B** to coordinate point "A" of the pulsing circuit of FIG. **7**.

The circuit shown in FIG. **9** enhances the voltage potential across the resonant charging choke coils during pulsing operations and restricts amp flow by allowing an external electromagnetic pulsing field, F, derived from the primary coil A being energized to transverse the coil windings D and E being energized by the incoming pulse train Ha xxx Hn, through switching diode G. The external pulse field, F and the incoming pulse-train Ha xxx Hn, are sequentially the same, allowing resonant action to occur, restricting amp flow while allowing voltage intensity to increase to stimulate the electrical polarization process, the gas ionization process and the electron extraction process. The voltage intensifier circuit of FIG. **9** prevents electrons from entering into those processes.

Together, the hydrogen injector assembly **4** and the resonant cavity assemblies **2**, **3** form a gas injector fuel cell which is compact, light in weight and design variable. For example, the hydrogen injector system is suited for automobiles and jet engines. Industrial applications require larger systems. For rocket engine applications, the hydrogen gas injector system is positioned at the top of each resonant cavity arranged in a parallel cluster array. If resonant cavities are sequentially combined in a parallel/series array, the hydrogen injection assembly is positioned after the exits of said resonant cavities are combined.

From the outline of physical phenomena associated with the process described in Table 1, the theoretical basis of the invention considers the respective states of molecules, gases and ions derived from liquid water. Before voltage stimulation, water molecules are randomly dispersed throughout water within a container. When a unipolar voltage pulse train such as shown in FIG. **6A** (**53***a* xxx **53***n*) is applied, an increasing voltage potential is induced in the molecules, gases and/or ions in a linear, step-like charging effect. The electrical field of the particles within a chamber including the electrical field plates increases from a low energy state (A) to a high energy state (J) in a step manner following each pulse-train as illustrated in FIG. **6A**. The increasing voltage potential is always positive in direct relationship to negative ground potential during each pulse. The voltage polarity on the plates which create the voltage fields remains constant. Positive and negative voltage "zones" are thus formed simultaneously.

In the first stage of the process described in Table 1, because the water molecule naturally exhibits opposite electrical fields in a relatively polar configuration (the two hydrogen atoms are positively electrically charged relative to the negative electrically charged oxygen atom), the voltage pulse causes initially randomly oriented water molecules in the liquid state to spin and orient themselves with reference to positive and negative poles of the voltage fields applied. The positive electrically charged hydrogen atoms of said water molecule are attracted to a negative voltage field; while, at the same time, the negative electrically charged oxygen atoms of the same water molecule are attracted to a positive voltage field. Even a slight potential difference applied to the inert, conductive plates of a containment chamber will initiate polar atomic orientation within the water molecule based on polarity differences.

When the potential difference applied causes the orientated water molecules to align themselves between the conductive plates, pulsing causes the voltage field intensity to be increased in accordance with FIG. **6A**. As further molecular alignment occurs, molecular movement is hindered. Because the positively charged hydrogen atoms of said aligned molecules are attracted in a direction opposite to the negatively charged oxygen atoms, a polar charge alignment or distribution occurs within the molecules between said voltage zones, as shown in FIG. **6B**. And as the energy level of the atoms subjected to resonant pulsing increases, the stationary water molecules become elongated as shown in FIG. **6C**. Electrically charged nuclei and electrons are attracted toward opposite electrically charged voltages zones—disrupting the mass equilibrium of the water molecule.

In the first stage, as the water molecule is further exposed to a potential difference, the electrical force of attraction of the atoms within the molecule to the electrodes of the chamber also increases in intensity. As a result, the covalent bonding between said atoms which forms the molecule is weakened and ultimately terminated. The negatively charged electron is attracted toward the positively charged hydrogen atoms, while at the same time, the negatively charged oxygen atoms repel electrons.

Once the applied resonant energy caused by pulsation of the electrical field in the cavities reaches a threshold level, the disassociated water molecules, now in the form of liberated hydrogen, oxygen, and ambient air gases begin to ionize and lose or gain electrons during the final stage in the injector assembly. Atom destabilization occurs and the electrical and mass equilibrium of the atoms is disrupted. Again, the positive field produced within the chamber or cavity that encompasses the gas stream attracts negatively charged ions while the positively charged ions (and/or hydrogen nuclei) are attracted to the negative field. Atom stabilization does not occur because the pulsating voltage applied is repetitive without polarity change. A potential of approximately several thousand volts triggers the ionization state.

As the ionized particles accumulate within said chamber, the electrical charging effect is again an incremental stepping effect that produces an accumulative increased potential while, at the same time, resonance occurs. The components of the atom begin to "vibrate" at a resonant frequency such that an atomic instability is created. As shown in k FIG. **6D**, a high energy level is achieved, which then collapses resulting in the release of thermal explosive energy. Particle impact occurs when liberated ions in a gas are subjected to further voltage. A longitudinal cross section of a gas resonant cavity is shown in FIG. **5A**. To promote gas ionization, electromagnetic wave energy such as a laser or photon energy source of a predetermined wave length and pulse-intensity is directed to and absorbed by the ions forming said gas. In the device of FIG. **5A**, semiconductor optical lasers **20***a*–**20***p*, **20**xxx surround the gas flow path. In the device of FIG. **5B**, photo energy **20** is injected into a separate absorption chamber **21**. The incremental stimulation of nuclei to a more highly energized state by electromagnetic wave energy causes electron deflection to a higher orbital state. The pulse rate as well as intensity of the electromagnetic wage source is varied to match the absorption rate of ionized particles to produce the stepped incremental increase in energy. A single laser coupled by means of fiber optic light guides is an alternative to the plurality of lasers shown in FIG. **5B**. Continued exposure of the gas ions to different forms of wave energy during voltage stimulation maintains individual atoms in a destabilized state and prevents atomic stabilization.

The highly energized gas ions are thermally ignited when said combustible gas ions pass from injector **4** and enter into and pass through a nozzle, **10** in FIG. **5B**, or an optical thermal lens assembly such as shown in FIG. **5C**. In FIG. **5C**, the combustible gas ions are expelled through and beyond a quenching circuit, **30**, and reflected by lenses, **31** and **32**, back and forth through a thermal heat zone, **33**, prior to atomic breakdown beyond exiting through a final port, **34**. A quenching circuit is a restricted orifice through which the particle stream passes such that flashback does not occur. The deflection shield or lens, **31**, superheats beyond 3,000° F. and the combustible gas ions passing through said exiting-ports are regulated to allow a gas pressure to form inside said thermal zone. The energy yield is controlled by varying the applied voltage, or pulse-train since said thermal-lens assembly is self-adjusting to the flow-rate of said ionized and primed gases. The combustible ionic gas mixture is composed of hydrogen, oxygen, and ambient air gases. The hydrogen gas provides the thermal explosive force, the oxygen atoms aid the gas thermal ignition, and the ambient air gases retard the gas thermal ignition process to a controllable state. As the combustible gas mixture is exposed to a voltage pulse train, the stepped increasing voltage potential cases said moving gas atoms to become ionized (losing or gaining electrons) and changes the electrical and mass equilibrium of said atoms. Gases that do not undergo the gas ionization process may accept the liberated electrons (electron entrapment) when exposed to light or photon stimulation. The electron extractor grid circuit, FIGS. **8A** and **8B**, is applied to the assembly of FIG. **5A** or FIG. **5B**, and restricts electron replacement. The extractor grid, **56**, is applied adjacent to electric field producing members, **44** and **45**, within the resonant cavity. The gas ions incrementally reach a critical-state which occurs after a high energy resonant state. At this point the atoms no longer tolerate the missing electrons, the unbalanced electrical field, and the energy stored in the nucleus. Immediate collapse of the system occurs and energy is released as the atoms decay into thermal explosive energy.

The repetitive application of a voltage pulse train (A through J of FIG. **6A**) incrementally achieves the critical state of said gas ions. As the gas atoms or ions (**1***a* xxx **1***n*) shown in FIG. **6C** become elongated during electron removal, electromagnetic wave energy of a predetermined frequency and intensity is injected. The wave energy absorbed by the stimulated gas nuclei and electrons causes further destabilization of the ionic gas. The absorbed energy from all sources causes the gas nuclei to increase in energy state, and induces the ejection of electrons from the nuclei.

To further stimulate the electron entrapment process beyond the atomic level (capturing the liberated electrons during the hydrogen fracturing process) the electron extractor grid (as shown in FIG. **8A**) is placed in spaced relationship to the gas resonant cavity structure shown in FIG. **5A**. The electron extractor grid is attached to an electrical circuit (such as shown in FIG. **8B**) that allows electrons to flow to an electrical load, **55**, when a positive electrical potential is placed on the opposite side of said electrical load. The electrical load may be a typical power consuming device such as a light bulb or resistive heat producing device. As the positive electrical potential is switched on or pulse-applied, the negative charged electrons liberated in the gas resonant cavity are drawn away and enter into resistive load where they are consumed and released at heat or light energy. The consuming electrical circuit can be directly connected to the gas resonant cavity positive electrical voltage zone. The incoming positive wave form applied to resonant cavity voltage zone through a blocking diode is synchronized with the pulse train applied to the gas resonant cavity by the circuit of FIG. **7** via alternate gate circuit. As one pulse train is gated "ON", the other pulse train is switched "OFF." A blocking diode directs the electron flow to said electrical load while resistive wire prevents voltage leakage during pulse train "ON" time.

The electron extraction process is maintained during gas flow-rate change by varying the trigger pulse rate in relationship to applied voltage. The electron extraction process also prevents spark-ignition of the combustible gases traveling through the gas resonant cavity because electron build-up and potential sparking is prevented.

In an optical thermal lens assembly or thrust-nozzle, such as shown in FIG. **5C**, destabilized gas ions (electrically and mass unbalanced gas atoms having highly energized nuclei) can be pressurized during spark-ignition. During thermal interaction, the highly energized and unstable hydrogen gas nuclei collide with the highly energized and unstable oxygen gas nuclei and produce thermal explosive energy beyond the gas burning stage. Other ambient air gases and ions not otherwise consumed limit the thermal explosive process.

Variations of the process and apparatus may be evident to those skilled in the art.

What is claimed is:

1. In an apparatus for obtaining the release of a gas mixture including hydrogen and other dissolved gases entrapped in water, from water, the improvement consisting of a resonant electronic circuit in operative relationship with the water in which the dielectric property of water determines the resonance of the circuit.

2. The apparatus of claim 1 in which the resonant circuit includes a resonant charging choke.

3. The apparatus of claim 1 in which water is included as a dielectric between conductive members that form a capacitor in the resonant circuit.

4. A method of obtaining thermal energy from water, consisting of:

(A) providing a capacitor, within which water is included as a dielectric, in a resonant charging choke circuit that includes an inductance in series with the capacitor;

(B) subjecting the capacitor to a pulsating, unipolar electric field in which the polarity does not pass beyond an arbitrary ground, whereby the water molecules within the capacitor are subjected to a charge of the same polarity;

(C) further subjecting the water in said capacitor to said pulsating electric field to achieve a pulse frequency such that the pulsating electric field induces a resonance within the water molecule;

(D) continuing the application of the pulsing frequency to the capacitor after resonance occurs so that the energy level within the molecule is increased in cascading incremental steps in proportion to the number of pulses;

(E) maintaining the charge of said capacitor during the application of the pulsing field, whereby the co-valent electrical bonding of the hydrogen and oxygen atoms within said molecules is destabilized, such that the force of the electrical field applied within the molecule exceeds the bonding force of the molecule, and hydrogen and oxygen atoms are liberated from the molecule as elemental gases;

(F) collecting said hydrogen and oxygen gases, and any other gases that were formerly dissolved within the water

(G) subjecting the collected gas mixture to a pulsating, polar electric field whereby electrons of the gas atoms are distended in their orbital fields by reason of their subjection to electrical polar forces, at a frequency such that the pulsating electric field includes a resonance with respect to an electron of the gas atom;

(H) cascading said gas atoms with respect to the pulsating electric field such that the energy level of the resonant electron is increased in cascading incremental steps;

(I) ionizing said gas atoms;

(J) subjecting the ionized gas atoms to electromagnetic wave energy having a predetermined frequency to induce a further election resonance in the ion, whereby the energy level of the electron is successively increased;

(K) extracting further electrons from the resonating ions while such ions are in an increased energy state to destabilize the nuclear and electron configuration of said ions; and

(L) subjecting the destabilized ions to thermal ignition.

5. The apparatus of claim 2 in which water is included as a dielectric between conductive members that form a capacitor in the resonant circuit.

6. An apparatus in accordance with claim 1 or claim 2 or claim 3 or claim 5 in which the gas mixture released is collected and utilized as a source of thermal energy, and including further successively interconnected:

(A) means for collecting the gas mixture released in the apparatus;

(B) means for providing a pulsating, polar electric field to the gas mixture, whereby electrons of the gas atoms are distended in their orbital fields by reason of their subjection to electrical polar forces, at a frequency such that the pulsating electric field induces a resonance with respect to an electron of the gas atom; and the energy level of the resonant electron is increased in cascading, incremental steps; and

(C) means for providing a further electric field to ionize said gas atoms;

said further means being connected to an electromagnetic wave energy source for subjecting the ionized gas atoms to wave energy of a predetermined frequency to induce a further election resonance in the ion, whereby the energy level of the electron is further successively increased; and

(D) an electron sink for extracting electrons from the resonanting ions while such ions are in an increased energy state to destabilize the nuclear and electron configuration of said ions;

(E) a control means for directing particle flow in a continuous manner through the electric fields, wave energy source and electron sink to a final orifice at which the destabilized ions exit from the apparatus; and

(F) a terminal orifice at which the said ions exit from the apparatus.

7. An apparatus in accordance with claim 1 or claim 2 or claim 3 or claim 5 including means for collecting the gas mixture released from the water.

8. An apparatus in accordance with claim 7 including means for directing the gas mixture to a combustion locus.

9. The apparatus of claim 8 in which a flame is produced at the combustion locus.

10. The apparatus of claim 8 in which an explosion is produced at the combustion locus.

11. The apparatus of claim 8 in which the combustion locus is in an automobile.

12. The apparatus of claim 8 in which the combustion locus is in a jet engine.

* * * * *

A- (javascript:changeFontSize(-1)) A+ (javascript:changeFontSize(1)) (#)

The main objectives of this project are, to make a Double-Tuner Crystal Radio Set with: 1) Careful and well thought-out construction practices; 2) As low-cost as possible; 3) Using most-available parts and materials, and 4) Keeping design as low-loss as possible, as well as High Performance, with all the aforementioned.

Note: The pictures of the prototype set, has some component/hardware positioning a little different from from the illustrations and drawings. As usual, the prototype showed me a few places where positioning can be

improved, and cleaned-up. The illustrations will prove to be best way to construct the set. The prototype and drawings, are electrically/electronically the same. The drawings are just a little cleaner.

The set is built on two separate, 8-7/8" x 13-7/8" x 3/8" (approx.) Cutting Boards, made of HDPE plastics. Found in any store that provides a nice variety of household products. The Coils are made on 5" x 5" (approx.) Plastic, Generic Peanut Butter Jars. The coils are wound with 22ga, PVC-coated, solid hook-up wire that I purchased from my local Radio-Shack Store. The Front Panels/Sub-Panels, are made of 1/8" HDPE Plastic, that can be obtained in most scrap barrels of most Plastics Suppliers. The rest of the parts are readily available from this website, Peebles Originals (../index.php), your local hardware store, and other, common sources.

The main-tuning, Variable Capacitors P/N 15-007 (../catalog/15.php) were used for two reasons: 1) They are "Frequency Linear" (offset), for easier tuning on the higher-end of the BC Band, and 2) By paralleling the two sections with an Alligator Clip-Lead, then the coil only needs to be 140uHy. Thus, the BC-Band is split into a "hi-Band", and "Lo-Band" mode. Note that Alligator Clip-Leads are used in this project, rather than switches to keep losses minimal, project expenses low.

The Fine-Tuning control is comprised of: a 1/16" x 3" disk, attached to the shoulder/shaft of the non-metallic shaft-coupler. The drive mechanism is a ¼-Dowel, two ¼" I.D., 5/16" O.D. Rubber Grommets. Jumbo Paper Clips are used to help maintain tension while rotation is smooth and positive. See pictures for details of the Fine Tuning Mechanism.

The proto-type set has a built-in TRAP-Circuit, using a 410pf Single-Gang Variable Capacitor P/N 15-001 (../catalog/15.php), and a coil of 230uHy. The Coil is 28ga Magnet Wire, wound on the far-end of the DET COIL, to trap those overwhelming stations you may have, near-by. I have two: 860/1550, and the trap is most necessary, here. If your area is not plagued with stations like this, the TRAP may not be necessary.

The circuitry for both ATU, and DET/AUDIO sections are very conventional, and using commonly-available parts components, parts and hardware. My initial tests of the prototype have proven to be very impressive. The set-up is very selective, and sensitive, and was able to pull-in a lot of nice DX.

The set, and its usage is a learning-curve, so please be patient with yourself, as you will find, with practice, the total capabilities of the set's performance.

If you have an interest in building the set, or any variations there-of, please, contact me for a custom-made kit of parts, suited to your needs. I will give some package discounts, for any orders exceeding $65.00, and I will then calculate a package discount (5% to 10%), depending on how much your needs will be. E-mail me. (../order.php)

Additional to aforementioned items, I can supply:

#78-014 (../catalog/78.php), F0-215 FO-215 Diode
#78-015 (../catalog/78.php) Ten FO-215 Diodes
#72-725 (../catalog/72.php), Bogen Transformer
Also, Chokes, Resistors, Capacitors, etc. . .Contact me for your needs.

Hope this project proves to be interesting, fun, and very satisfactory for all you fine Radio Hobbyists.

Will try to come-up with new, and interesting projects, as time goes-on.

Mike Peebles

BTW: I am offering the Proto-Type of the PBJ Listener for: $150.00 + Shipping.

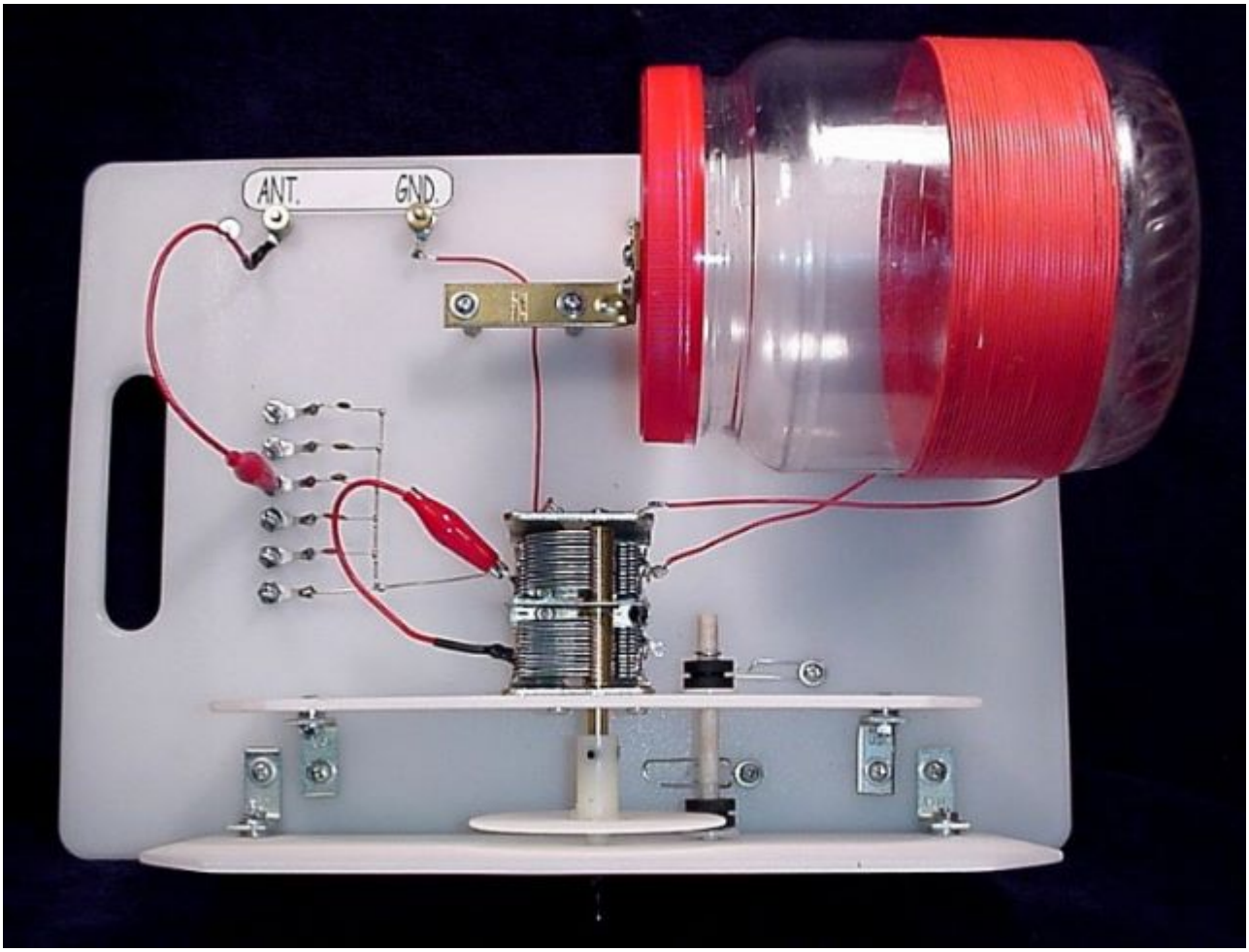

Antenna Tuning Unit, Top View

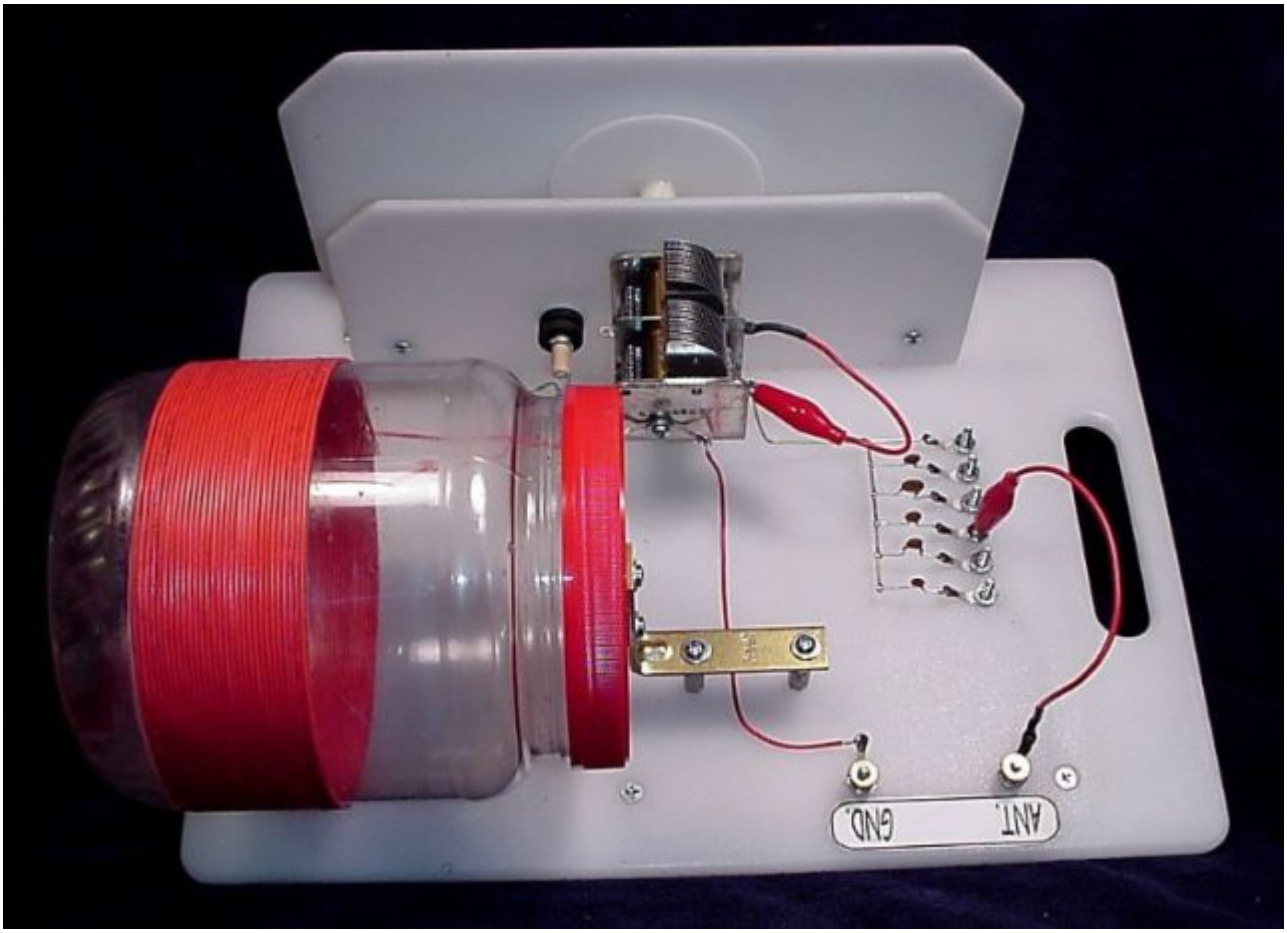

Antenna Tuning Unit, Side View

Antenna Tuning Unit, Bottom View

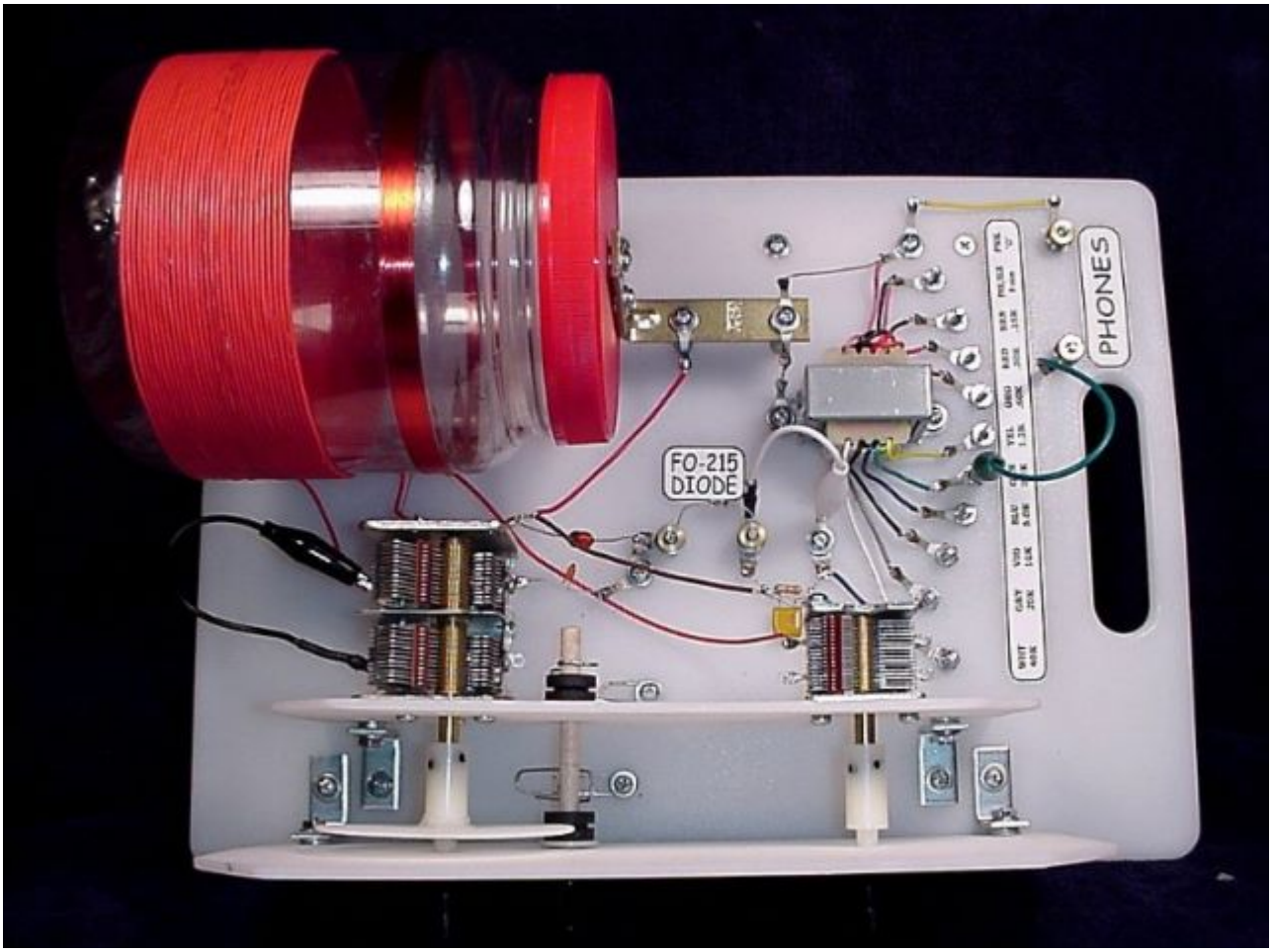

Detector Unit, Top View

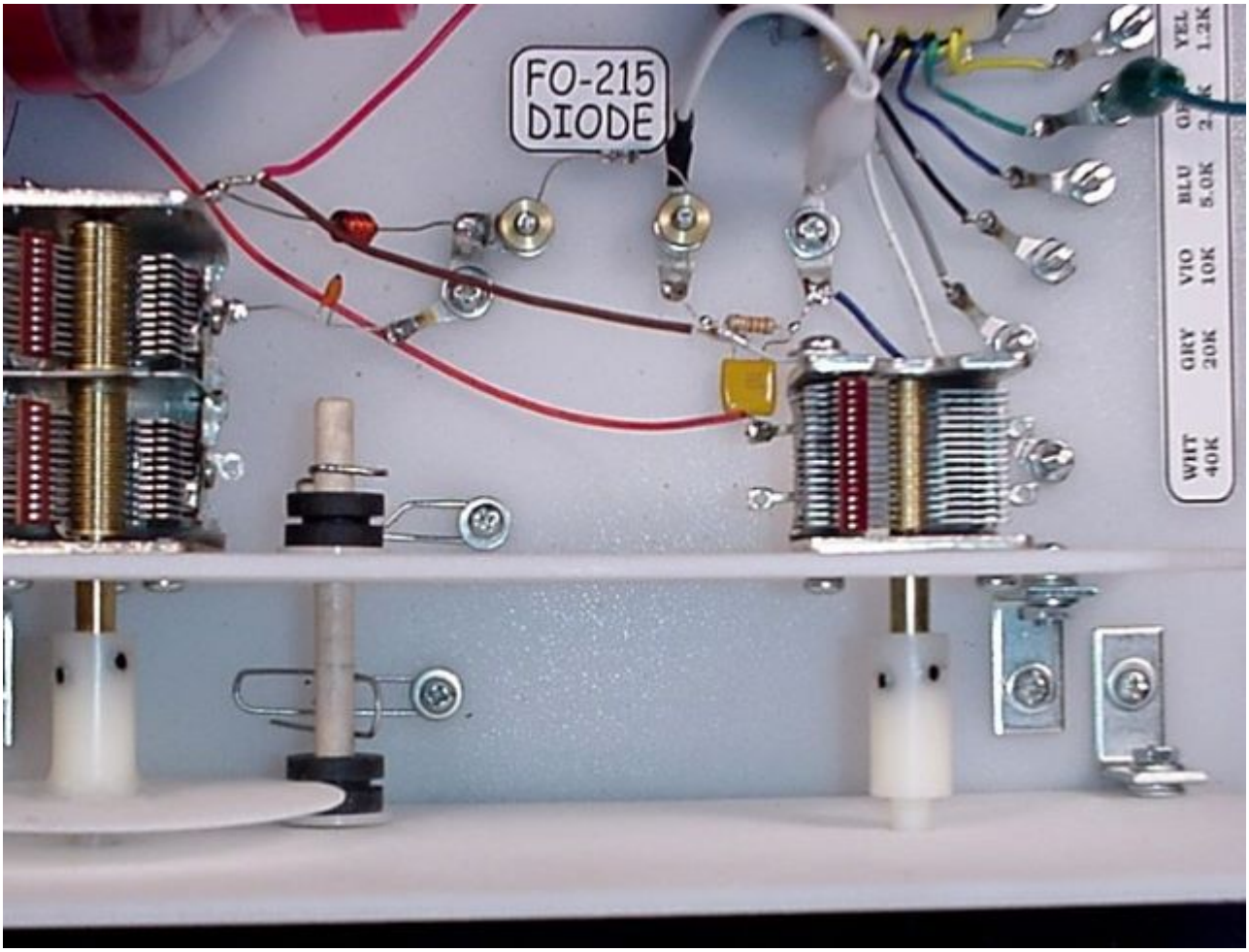

Detector Unit, Detail View

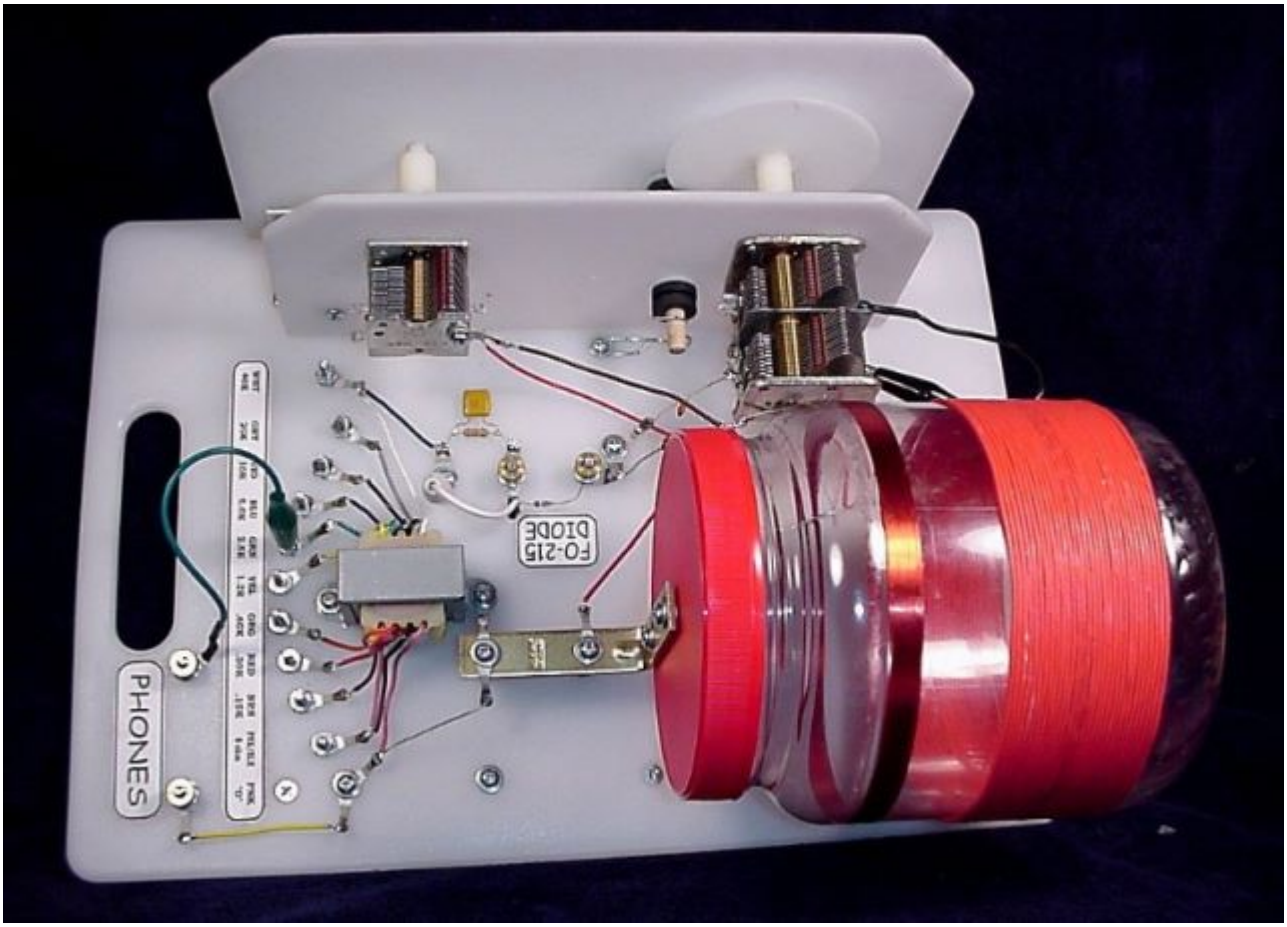

Detector Unit, Back View

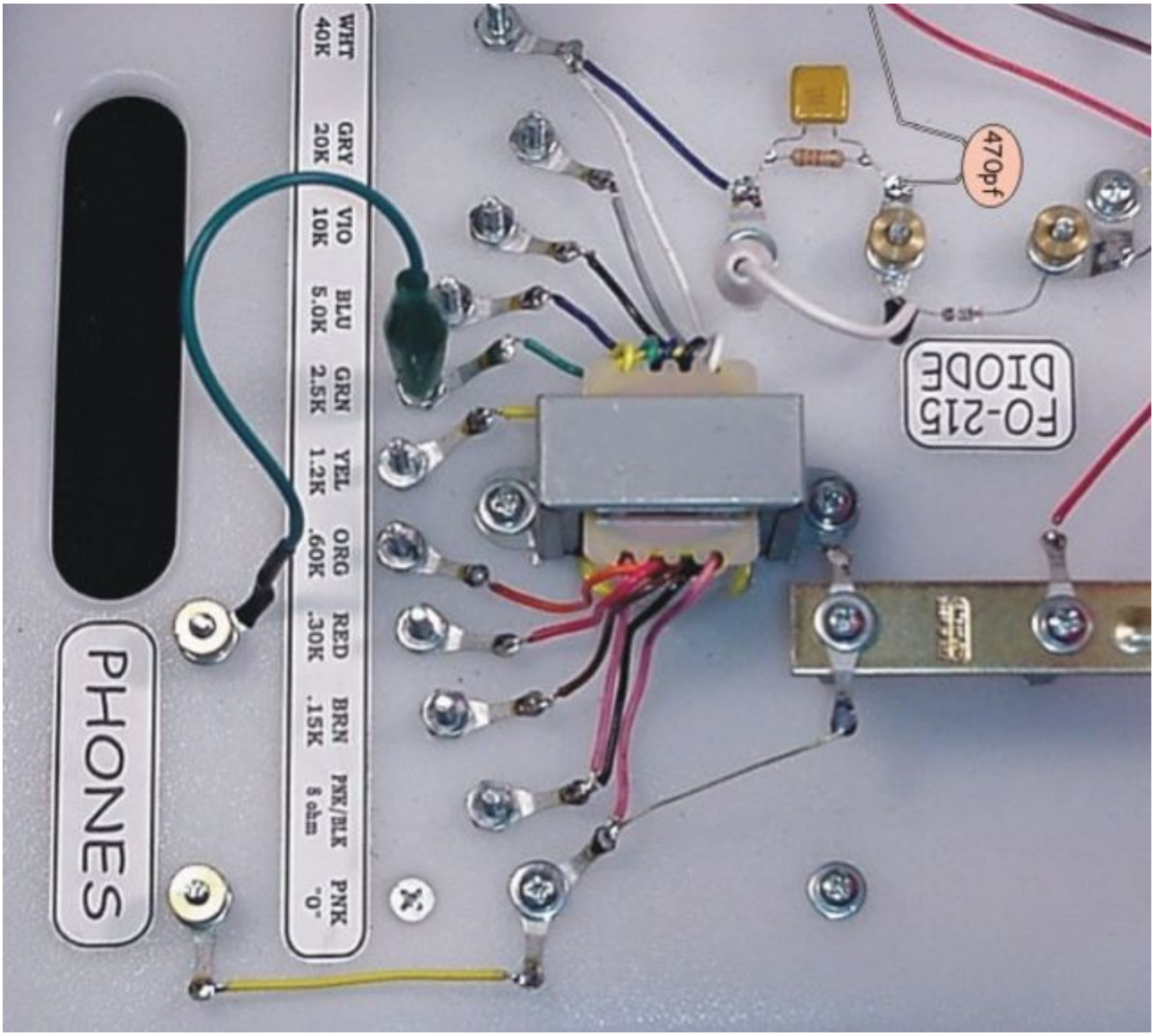

Detector Unit, Matching Transformer Detail

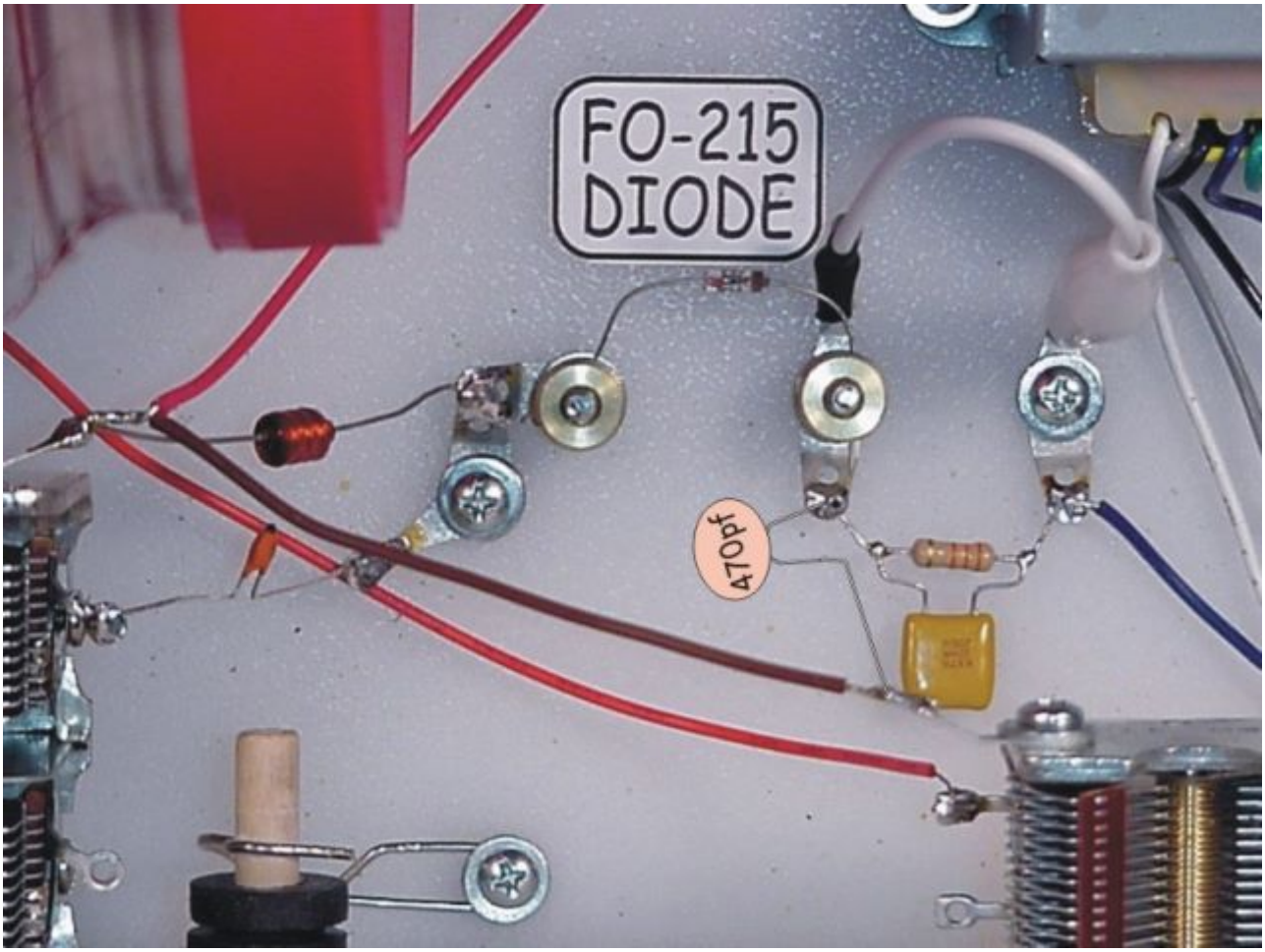

Detector Unit, Detail View

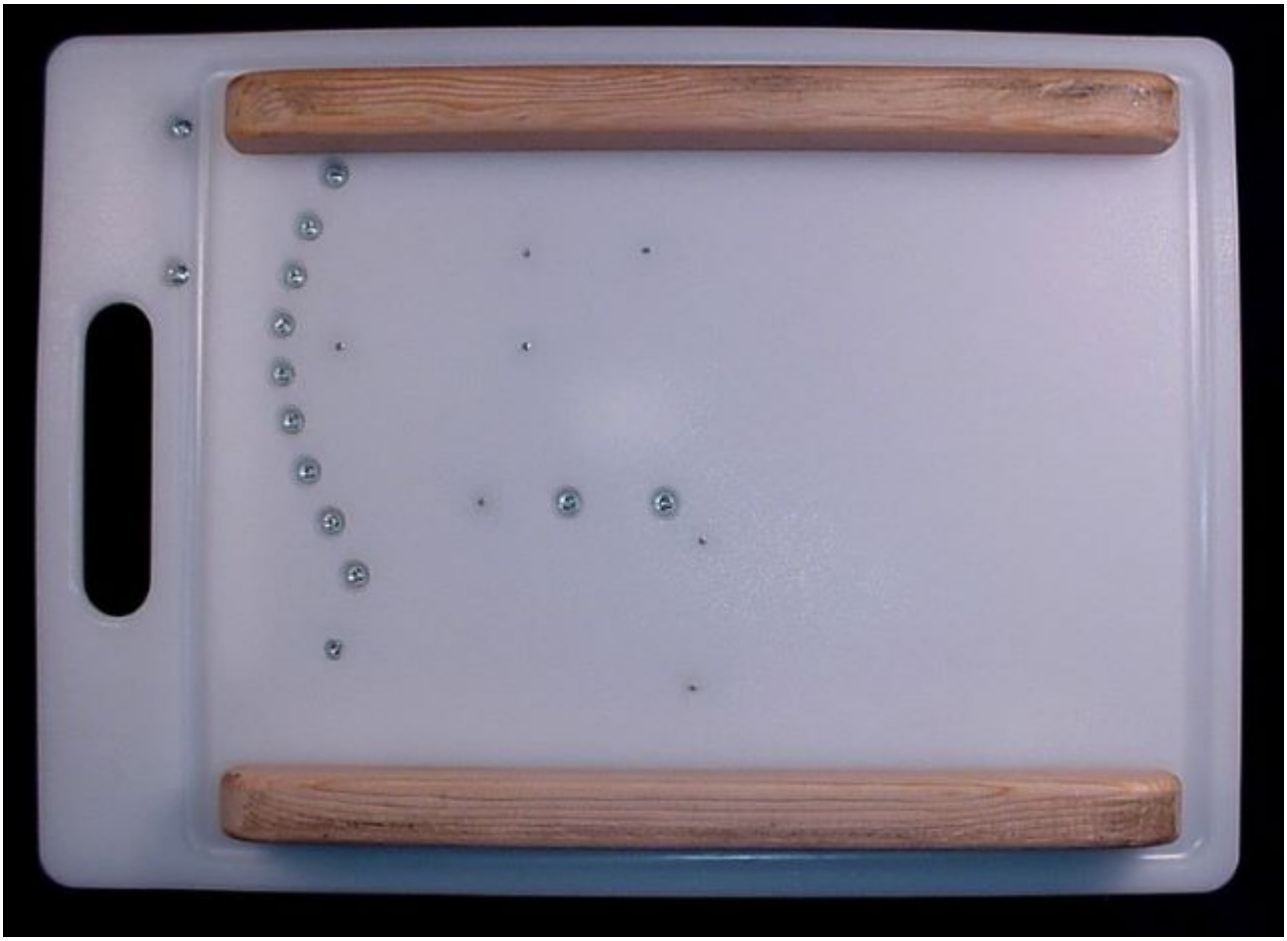

Detector Unit, Bottom View

Template Section – Click For Large View

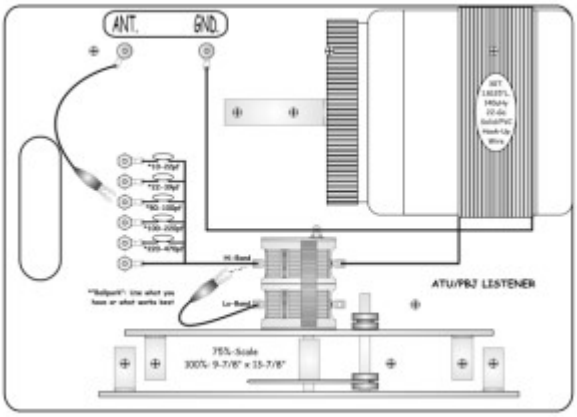

(img/pbj1a.jpg)

Antenna Tuner Layout (img/pbj1a.jpg)

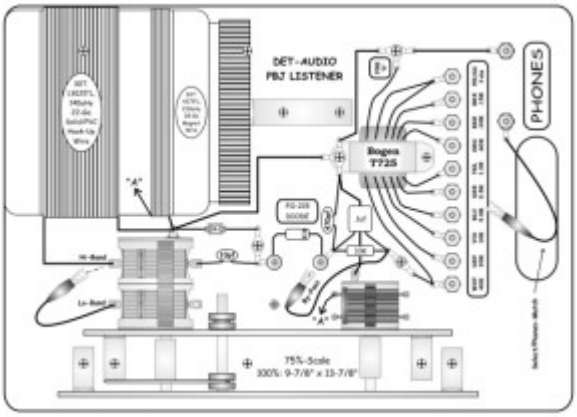

(img/pbj1b.jpg)

Detector Layout (img/pbj1b.jpg)

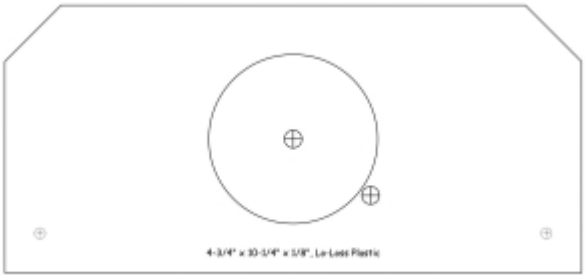

(img/pbj1c.jpg)

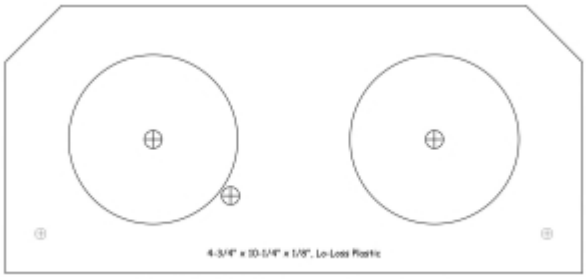

(img/pbj1d.jpg)

Antenna Tuner Panel Layout (img/pbj1c.jpg)

Detector Panel Layout (img/pbj1d.jpg)

(img/pbj1g.jpg)

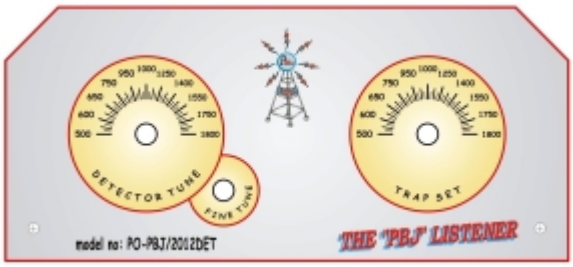

(img/pbj1f.jpg)

Antenna Tuner Front Panel Overlay (img/pbj1g.jpg)

Detector Front Panel Overlay (img/pbj1f.jpg)

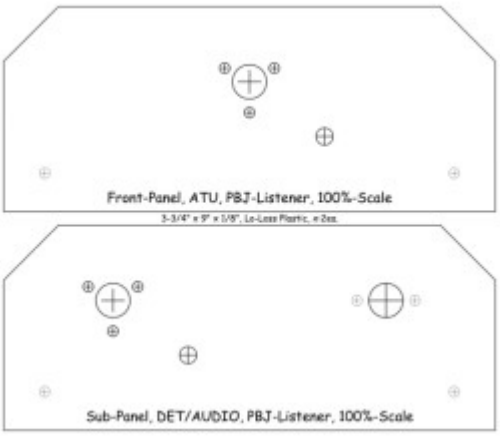

(img/pbj1e.jpg)

ATU & DET Sub Panels (img/pbj1e.jpg)

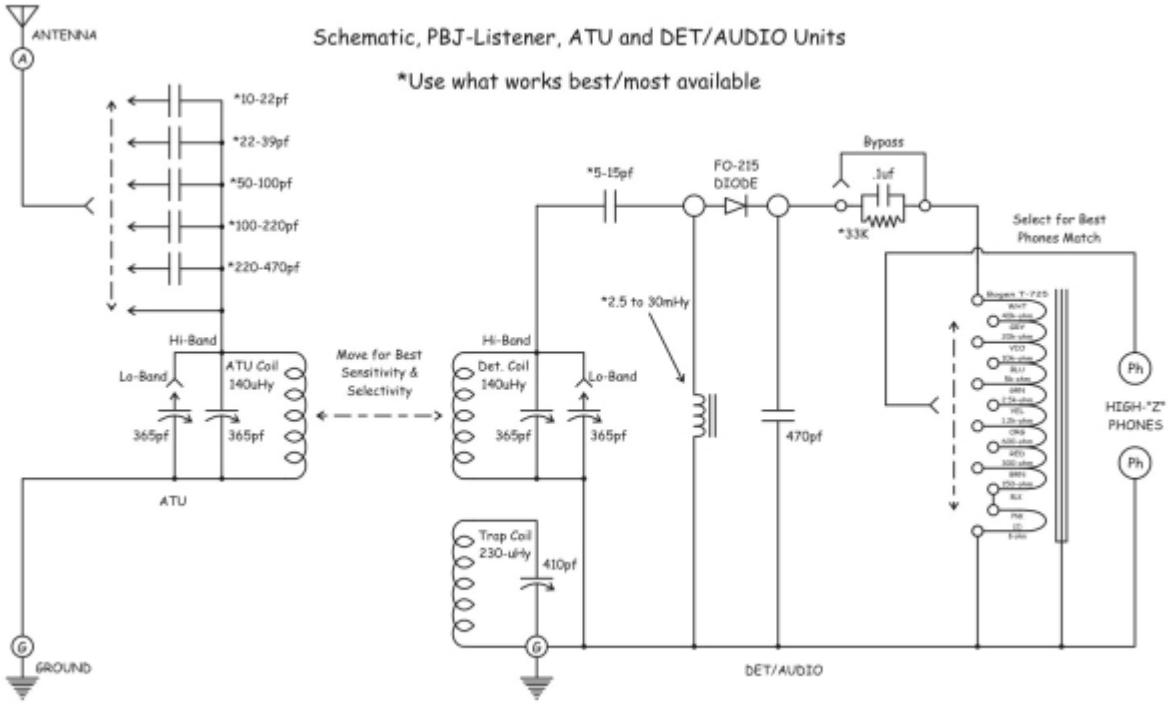

(img/pbj1h.jpg)

Schematic (img/pbj1h.jpg)

W. I. PENNOCK.

CAPTIVE BALLOON.

APPLICATION FILED AUG. 9, 1910.

1,005,871. Patented Oct. 17, 1911.

Fig. 1.

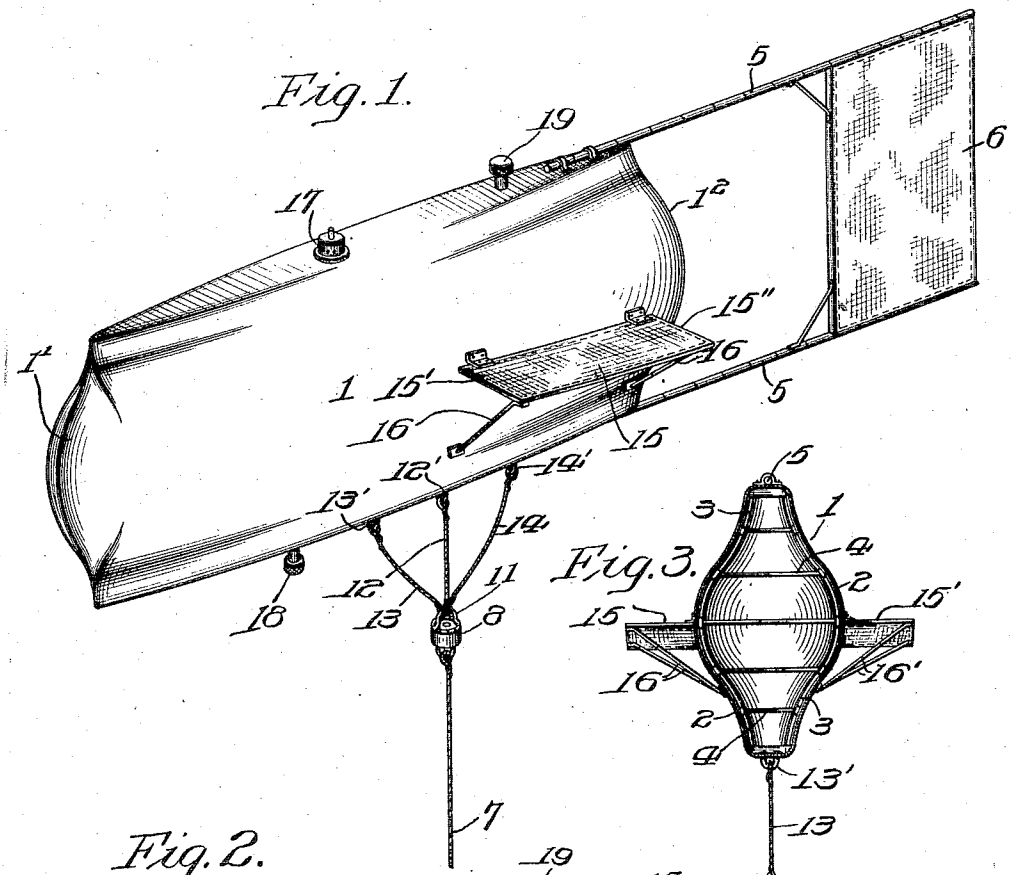

Fig. 3.

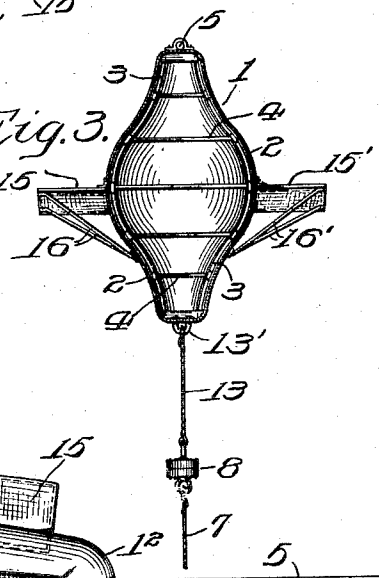

Fig. 2.

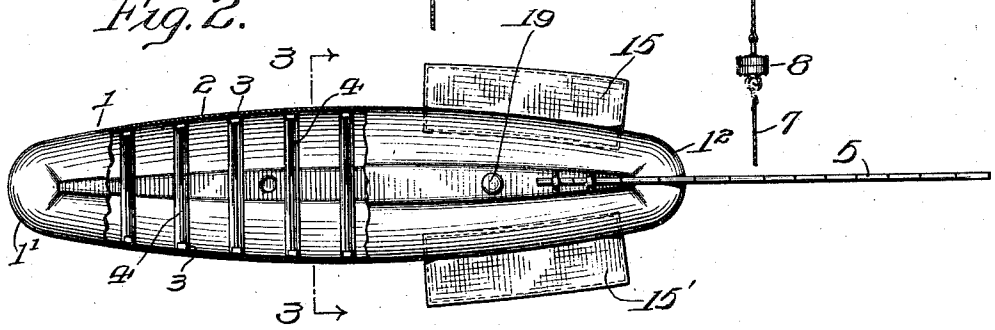

Fig. 4.

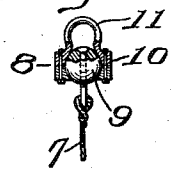

INVENTOR

Walter I. Pennock.

BY

ATTORNEY

WITNESSES

F. G. Hartman.

Alexander P. Moulton

UNITED STATES PATENT OFFICE.

WALTER I. PENNOCK, OF PHILADELPHIA, PENNSYLVANIA.

CAPTIVE BALLOON.

1,005,871. Specification of Letters Patent. Patented Oct. 17, 1911.

Application filed August 9, 1910. Serial No. 576,414.

To all whom it may concern:

Be it known that I, WALTER I. PENNOCK, a citizen of the United States, residing at Philadelphia, county of Philadelphia, and State of Pennsylvania, have invented certain new and useful Improvements in Captive Balloons, of which the following is a full, clear, and exact disclosure.

My invention relates to captive balloons, and particularly to such balloons as may be used for elevating collectors of atmospheric electricity from the high altitudes of the earth's atmosphere, and it relates to the construction and arrangement of the parts and shape of the balloon body or envelop.

The objects of my invention are, the providing of the balloon with an envelop or gas container, which is elongated in shape and which will freely turn in the air as it may be acted upon by the wind or air currents; to keep the end of the balloon or envelop which is of least transverse cross sectional area toward the direction from which the wind is blowing; to provide the balloon or gas container with a stationary vane or rudder, by means of which the forward and smaller end of the balloon is kept against the wind; to provide the envelop with side wings or planes, so arranged as to assist in elevating the balloon to high altitudes, and to utilize the force of the wind or air currents in lifting the balloon; to provide a means whereby the elongated envelop or gas container is maintained in a substantially fixed plane, with the forward end elevated a little above the level of the rear end, so that the side wings or planes may have a kite effect and lift the rear end of the gas container or envelop, should it tend to drop; to attach the anchor line or stay to the bottom of the balloon or gas container in such a manner that the forward end of the balloon will always be kept at a little higher level than the rear end, and to further provide means whereby the point of the virtual attachment of the stay or anchor line to the bottom of the balloon may be shifted forwardly or rearwardly whenever the balloon substantially deviates from its normal position; to swivel the balloon to the anchor line or stay so that the balloon will turn as the wind may change without being required to twist the whole length of the anchor line; and to make the envelop or gas container of a suitable, thin, metallic material, so that it may act as a collector of atmospheric electricity and to conduct the electricity which may collect upon the envelop or gas container to the earth, to be used for any useful purpose.

Other objects of my invention will appear in the specification and claim below.

Referring to the drawings forming a part of this specification, in which the same reference numerals are used to designate the same part throughout the various views, Figure 1 is a perspective view of one embodiment of my invention; Fig. 2 a top plan view of the same, the forward part of the envelop being broken away to show the interior construction; Fig. 3 is a vertical transverse cross sectional view on the line 3—3 of Fig. 2; and Fig. 4 is a detail of the swivel joint, by means of which the balloon is attached to the stay or anchor line.

The balloon body or gas container or envelop, 1, is elongated in shape, having its largest dimensions substantially midway between its ends, from which point the body or envelop gradually tapers forwardly and rearwardly to form relatively narrow ends of small transverse area. The forward and rear ends $1'$ and 1^2, respectively, are preferably slightly bulged and rounded, so as not to present an absolutely sharp edge to the wind, to give space for the gas to be contained in the envelop, and to prevent the end of the envelop from being flattened or bent inwardly by the action of the wind. I also prefer to make the bottom and top edges of the balloon narrow, so that the sides of the balloon widen out from the top and bottom as they approach the horizontal, longitudinal, diametrical plane of the balloon or gas container, at which point the width of the envelop is greatest.

The body or envelop 1 may be constructed of any suitable material, but I prefer to make the shell 2 of very thin, tough steel, stiffened as may be necessary by substantially vertically arranged angle iron ribs 3, and suitable cross bars 4 reaching from side to side of the envelop and engaging with the ribs 3. At the rear ends of the top and bottom sides of the body or gas envelop 1, I secure light rods 5—5, of bamboo or other suitable light strong material, the said rods

extending outwardly from the rear end of the body 1 for such a distance as may be found necessary, and I stretch a light tough fabric between the said rods 5—5 to form a vane or rudder 6.

The end of the stay or anchor line 7 is provided with a suitable swiveled joint 8, which may consist, and preferably does, of a ball and socket construction. In the form shown in Fig. 4 of the drawings, the ball 9 is secured to the stay or anchor line 7, and surrounding and inclosing the ball 9 is a socket 10 provided with a loop or eye 11. In using this swiveled joint 8 in connection with my improved captive balloon, the main cord or line 12 is attached to the loop or eye 11 at its lower end, and to the bottom of the balloon or gas container 1 at the point 12′. This point 12′ is so positioned with respect to the whole balloon, that in a still atmosphere the forward end 1′ of the gas container is at a little higher level than the rear end 1^2. To do this the point 12′ would generally be slightly to the rear of the middle of the gas container; at least it is to the rear of a vertical plane passing through the center of buoyancy of the balloon when the balloon is in a horizontal position. From the eye 11 also run secondary or supplemental cords 13 and 14 attached to the bottom of the gas container as at points 13′ and 14′, the former forwardly of, and the latter to the rear of the point 12′. The length of the cords 13 and 14 is such that when the balloon or gas container is in its normal position, the cords 13 and 14 will be slack. When, therefore, one end of the balloon, as, for instance, the rear end, tends to swing downwardly about the point 12′ as a center, tension will immediately be put upon the cord 13, thus virtually making the point of attachment of the stay or anchor line 7 to the bottom of the balloon or gas container intermediate of the points 12′ and 13′. As these points 13′ and 14′ are on opposite sides of a line passing through the center of gravity or the center of buoyancy of the balloon, the gas in the rear end of the balloon will immediately tend to lift that end about this new point of virtual attachment of the stay or anchor line 7 with the bottom of the balloon or gas container, and the balloon will immediately come to its normal position. The converse is true whenever the forward end of the balloon dips downwardly. Tension is immediately put upon the cord 14; the point of the virtual attachment of the cord 7 immediately shifts to a point somewhere between 12′ and 14′ and the gas in the forward end of the balloon will lift that end until the gas container reassumes its normal position. To further steady the balloon body or gas container 1, and to assist in elevating the same, I provide side or laterally extending wings or planes 15 and 15′, stationary with respect to the envelop or gas container 1, and rigidly secured to the sides thereof, preferably to the ribs 3 through the shell 2. These wings or planes 15 and 15′ are suitably braced by braces 16 and 16′, and are set relatively to the gas container or envelop 1 so that when said envelop is in its normal position, the forward ends of the wings or planes 15 and 15′ will be higher than the rear ends of the same. When the wind is blowing against the forward end of the balloon, as it passes the body it strikes upon the end sides of the wings or planes 15 and 15′, and exerts a lifting effect upon the whole balloon in the same manner as a kite exerts a lifting pull when similarly inclined.

From the above description it will be plain that the whole balloon or gas envelop, with its attached vanes and wings, will be maintained in the air with its forward end slightly higher than its rear end, and with its forward end always turned toward the direction from which the wind is blowing, by reason of the action of the stationary rudder or vane 6 and the swiveled connection 8 between the body or gas envelop 1 and the stay or anchor line 7. It will also be seen that the body will tend to be always maintained in this slightly inclined position, and that should one end or the other end of the gas container or body 1 drop or lift so as to turn the body in a vertical plane around the point 12′ as a center, tension will immediately be put on the cord 13 or 14, depending upon which direction the balloon turns, and the balloon will be righted and brought to its normal position by a shifting of the virtual point of attachment of the cord 7 with the bottom of the balloon.

Any suitable metal may be used in constructing the balloon, although thin steel appears to me to be the best material for the same, inasmuch as it can be made very thin and its tensile strength is very high. The ribs and cross bars 3 and 4, respectively, may be made of thin steel, aluminum or wood, and the rudder 6 and wings 15 and 15′ may be made of thin, tough silk, oiled or otherwise treated so that the same will not absorb moisture.

Inasmuch as the pressure of the gas contained within the body or envelop 1 will expand as the atmosphere in which the balloon is suspended grows rarer, I provide a safety valve 17 of any approved type which may relieve the interior of the balloon of pressure when the pressure within the gas container or envelop 1 becomes so great as to be liable to burst the container or envelop.

In order to fill the envelop or gas container 1 with gas, I prefer to fill the envelop first with water and to then displace the water with hydrogen gas, as, for instance, by allowing the water to escape through the

valve 18, the water as it runs out drawing in the hydrogen gas, as through the valve 19 at the top of the envelop.

When the envelop is made of a suitable metal, such as steel or copper, the same may be used as a collector of atmospheric electricity, and to conduct the electricity so collected upon the envelop 1 to the earth, where it may be used as desired, I prefer to either incorporate into the anchor line 7 and the cord or line 12 a copper wire, or to wrap said wire around said anchor line 7 and cord 12, and to secure the upper end of said wire to the metallic covering of the balloon or gas container 1. This wire is indicated diagrammatically by the line 20.

Although I have described but one embodiment of my invention, it is to be understood that other forms and modifications are fully contemplated by me, so long as the structure thereof falls within the scope of the appended claim.

Having thus described my invention, what I claim and desire to protect by Letters Patent of the United States, is:

The combination of an elongated longitudinally rigid balloon, and a stationary rudder secured to the rear end thereof, with an anchor line secured to said balloon wholly to the rear of the center of buoyancy thereof, laterally projecting rearwardly positioned and angularly elevated planes secured to said balloon, and a pair of slack auxiliary lines secured to said anchor line and to said balloon on opposite sides of said anchor line, the whole coöperating to increase the vertical stability of the balloon.

In witness whereof, I have hereunto set my hand this 6th day of August, A. D., 1910.

WALTER I. PENNOCK.

Witnesses:
H. N. Dority,
Laura Evans Lalor.

W. I. PENNOCK.

APPARATUS FOR COLLECTING ELECTRICAL ENERGY.

APPLICATION FILED JAN. 4, 1911.

1,014,719. Patented Jan. 16, 1912.

2 SHEETS—SHEET 1.

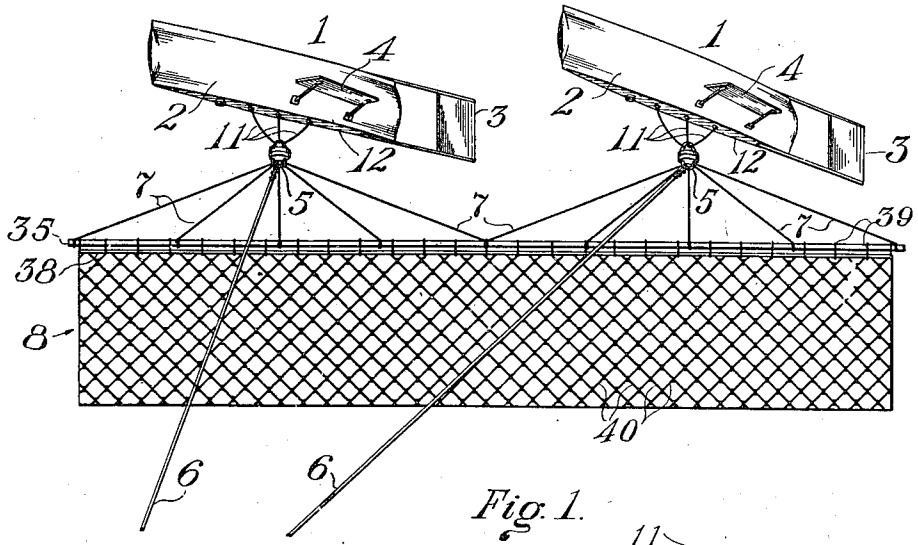

Fig. 1.

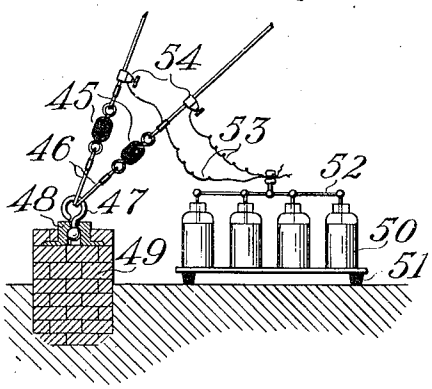

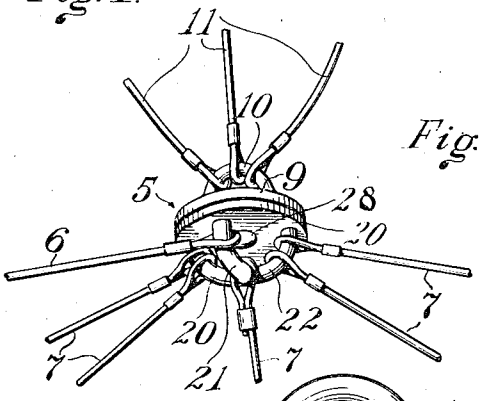

Fig. 3.

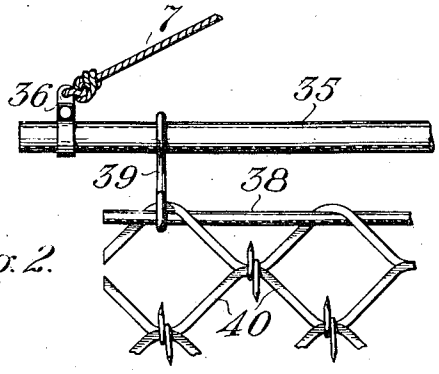

Fig. 2.

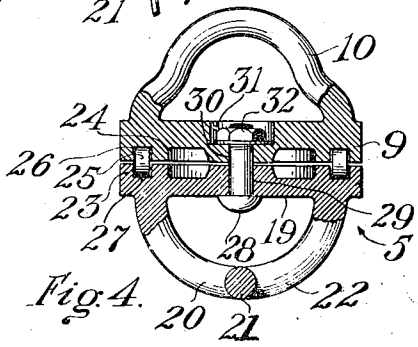

Fig. 4.

INVENTOR

Walter I. Pennock.

WITNESSES

Elizabeth L. Smith

J. Stuart Freeman.

BY

ATTORNEY

W. I. PENNOCK.

APPARATUS FOR COLLECTING ELECTRICAL ENERGY.

APPLICATION FILED JAN. 4, 1911.

1,014,719. Patented Jan. 16, 1912.

2 SHEETS—SHEET 2.

Fig. 5.

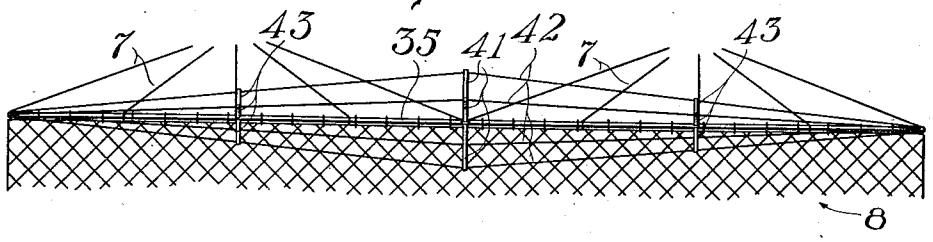

Fig. 6.

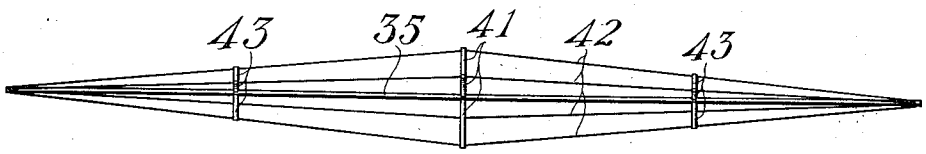

Fig. 7.

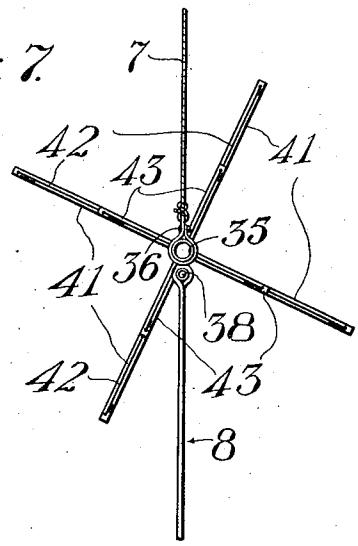

INVENTOR

Walter I. Pennock.

WITNESSES

Elizabeth L. Smith,

J. Stuart Freeman,

BY

Howard Telle

ATTORNEY

UNITED STATES PATENT OFFICE.

WALTER I. PENNOCK, OF PHILADELPHIA, PENNSYLVANIA.

APPARATUS FOR COLLECTING ELECTRICAL ENERGY.

1,014,719. Specification of Letters Patent. Patented Jan. 16, 1912.

Application filed January 4, 1911. Serial No. 600,777.

To all whom it may concern:

Be it known that I, WALTER I. PENNOCK, a citizen of the United States, residing at Philadelphia, county of Philadelphia, and State of Pennsylvania, have invented certain new and useful Improvements in Apparatus for Collecting Electrical Energy, of which the following is a full, clear, and exact disclosure.

The present invention relates to an improved means for collecting the charges of electricity from the upper atmosphere and more particularly to that form which consists in one or more captive balloons from which is suspended a suitable form of metallic conductor.

The principal objects of the device are: to provide a collector for atmospheric and static electricity, which when in operative position will present a large surface to currents of air, but which will offer comparatively little resistance thereto, to provide a collector of such material and construction as will be more efficient in its operation than any previously constructed for a similar purpose, to provide a means for maintaining such a collector suspended in the air and at right angles to opposing currents thereof, and to provide a suitable anchorage for holding said means captive.

With these principal objects in view, the present invention consists in further advantages which are brought out in the following specification and accompanying drawings, in both of which like numerals refer to like parts, and in which drawings—

Figure 1 is a perspective view of the complete device in operative position, Fig. 2 is an enlarged detail view of the wire mesh and the manner in which it is attached to the supporting balloons, Fig. 3 is a detail of the manner of securing the collector-supporting and anchor cables to the balloons, Fig. 4 is an enlarged cross section of the swivel connection shown in Fig. 3, Fig. 5 is top plan view of the reinforcing braces on the screen, Fig. 6 is an elevation of the same and Fig. 7 is an end view of the structure shown in Figs. 5 and 6.

Referring to the drawings, in Fig. 1 thereof, a plurality of balloons 1 of any suitable type is shown, each of which embodies hollow metallic elongated gas tanks 2, extending from the rear of which are single, rigidly affixed rudders 3, while on the sides of the tanks are secured stationary lifting planes 4.

To the bottom and slightly to the rear of the center of the tanks 2 is secured a suitable swivel 5, by which the anchor ropes 6 and the suspension ropes 7 for the metallic conductor 8 are secured to the balloons 1. A suitable form of swivel joint is illustrated in Figs. 3 and 4, but any type can be used that embodies the essential features shown therein.

The swivel joint illustrated consists in the base plate 9 having a looped portion 10 integral therewith and projecting from the upper face thereof. Secured to the loop 10 is a set of three light electrically conductive supporting ropes or cables 11 which extend upwardly and are secured at intervals to the bottom 12 of the balloon above.

The lower or revoluble member 19 of the swivel joint preferably comprises three upwardly directed curved arms, 20, 21, and 22, respectively, forming at their junction a T-shape as shown, said arms at their upper extremities being integral with the plate 23. The member 19 is revoluble below and concentric with the plate 9, and the two members are lightened in weight by opposed concentric grooves as shown at 24. Contact between said members is made through the roller bearings 25, which are carried in the opposed concentric grooves 26 and 27 of the respective upper and lower plates. Furthermore, said plates are maintained in coöperative relation with each other by means of a bolt 28 passing through centrally drilled holes 29 and 30 in the respective lower and upper plates, the drilled hole 30 opening upwardly into an enlarged recess 31, in which is sunken the nut 32 on the bolt 28. Two of the arms 20 and 22 of the lower revoluble member 19 extend in diametrical alinement, while from the central point thereof extends the third arm 21 at right angles thereto, and upward to the plate 23.

Suspended below the plurality of balloons is a hollow rod 35, of any suitable material, connected at regular intervals such as at points 36, by metallic ropes 7, to the alined arms 20 and 22 of the swivel joint 5. Below and parallel to the rod 35 is a similar but smaller rod 38 suspended therefrom by means of suitable couplings 39. From the rod 38 hangs a wire mesh 40 of any suitable form, such as can be extended over a considerable area and which will offer comparatively little resistance to the passage of air therethrough. The metal in such a screen is preferably rough, sharp or jagged and a convenient form embodying these characteristics is expanded sheet metal such as is used for lathing and for reinforcing concrete construction. Instead of the single hollow rod 35 alone, applicant contemplates the use of reinforcing means to prevent the buckling of the rod in a stiff wind, such, for instance, as the arrangement of wire bracing shown in Figs. 5, 6 and 7 in which cross rods 41, secured to the rod 35 at the center thereof are attached to the ends thereof by means of stretched wires 42. Between the rods 41 and the ends of the rod 35 are secured sets of cross rods 43 which support the wires 42 and strengthen the rod 35 at as many points as they may be placed.

For the purpose of maintaining the balloons and apparatus suspended therefrom captive, the light metallic cables 6 terminating downwardly in insulators 45 are employed. These insulators in turn are connected by means of short sections of rope 46 to the eye 47 of a suitable swivel 48, embedded in the anchorage 49.

When the balloons with the metallic screen suspended therefrom are allowed to rise into one of the higher altitudes, the entire apparatus being of metallic construction and uninsulated will become energized by contact with the surrounding natural charges of electricity. From the above description it is evident then that, while the screen 8, on account of its great extent, will be the greatest collecting agent, it will be seen that the balloons themselves and the suspending wires will also coöperate as one large collector, since no parts of which are insulated from any of the neighboring parts thereof. Consequently, when the apparatus described has reached an altitude or strata of the atmosphere abounding in static charges of electricity, an amount of the said charges proportionate to the surface area of the metal exposed will collect upon the apparatus as a whole and will be conducted downwardly toward the earth by means of the various anchor ropes 6, but will not pass into the ground on account of the interposition of the insulators 45.

To use the electrical charges thus acquired, a plurality of Leyden jars 50, or other suitable collectors are supported above the surface of the earth and insulated therefrom by any suitable means as represented by the blocks 51. Either the inner or outer conducting surfaces of the jars may be connected together and energized by the accumulated charge. In the present instance, the inner surfaces of the accumulators are shown to be connected, and the connecting means 52 is in turn connected to the ropes 6 by means of wires 53. These wires are secured to the ropes mentioned by means of suitable binding posts 54.

In the device described the anchor ropes 6 are of substantially the same length, and when the apparatus is raised to the desired altitude and is being blown by the currents of air, the balloons are turned by means of the vanes 3 to parallel relation with each other, and furthermore, from the manner in which the device is held captive and the collecting net 40 is suspended from the balloons, it is obvious that said net will at all times readily swing into a plane substantially perpendicular to any current of air acting upon the balloons above. The purpose of the swivel joint shown in Figs. 3 and 4 is principally for allowing the balloons to readily aline themselves with any new direction of the wind before the apparatus, including the suspended screen, can swing about the swivel 48, and said joint will also prevent the twisting of the ropes 7, when any rapid shifting of the air currents may occur.

While applicant has shown a set of Leyden jars as the accumulators in the accompanying drawings, it is obvious that any other suitable form may be used, and furthermore, that although not illustrated, any suitable apparatus may be run thereby, such as for instance, wireless telegraphic instruments.

Furthermore, although but one embodiment of the invention has been described, it is to be understood that various modifications may be made therein, and in fact several are contemplated by applicant that are of such structure as fall well within the scope of the appended claim.

Having thus described my invention, what I claim and desire to protect by Letters Patent of the United States, is:

A collector for charges of electricity, comprising a plurality of supporting means, a metallic gauze sustained thereby to lie in a plane and substantially equidistant from each of said supporting means, anchoring means emanating from a common point to each of said supporting means, means operative to maintain said supporting means

in their normal positions, and means between each of said supporting means and said gauze to permit each of said supporting means to readily and independently aline itself to accord with any alteration in the direction of opposing air currents.

In witness whereof I have hereunto set my hand this 28 day of December, A. D. 1910.

WALTER I. PENNOCK.

Witnesses:
MILDRED S. TEMPLE,
E. EUGENIA PENNOCK.

US 20010032905A1

(19) United States

(12) Patent Application Publication

(10) Pub. No.: US 2001/0032905 A1

(43) Pub. Date: Oct. 25, 2001

Grandics

(54) METHOD AND APPARATUS FOR CONVERTING ELECTROSTATIC POTENTIAL ENERGY

(76) Inventor: **Peter Grandics**, Carlsbad, CA (US)

Correspondence Address:
OPPENHEIMER WOLFF & DONNELLY LLP
Suite 3800
2029 Century Park East
Los Angeles, CA 90067-3024 (US)

(21) Appl. No.: **09/732,110**

(22) Filed: **Dec. 7, 2000**

Related U.S. Application Data

(63) Non-provisional of provisional application No. 60/169,378, filed on Dec. 7, 1999.

Publication Classification

(51) **Int. Cl.**[7] **B64C 15/00**; B64C 27/82

(52) **U.S. Cl.** **244/51**

(57) **ABSTRACT**

A new method is described to produce directional currents in the space lattice, the fundamental fabric of the universe. The currents may be unidirectional or vortexual in nature and are suitable for propulsion or the generation of electric power. For propulsion, the unidirectional currents are induced by charging capacitors possessing suitable geometries. This will allow the manufacture of vehicles capable of levitation and flight. The vortexual space lattice currents are produced in a suitable pyramid when electrostatic and magnetic fields interact transversally. The vortex causes charge separation and current in the coil wrapped around the pyramid.

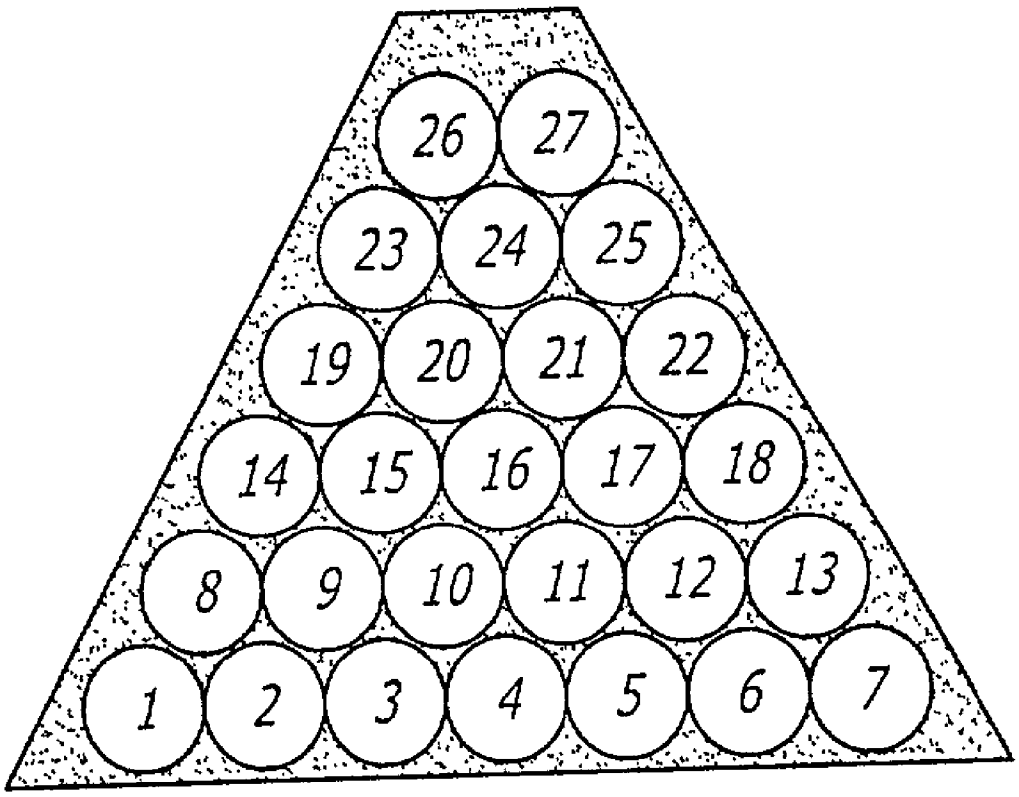

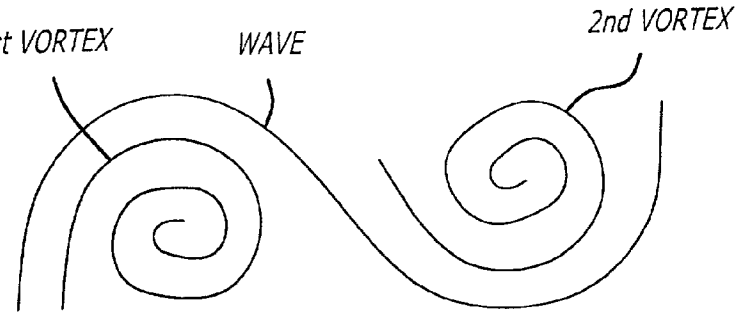

FIG. 1

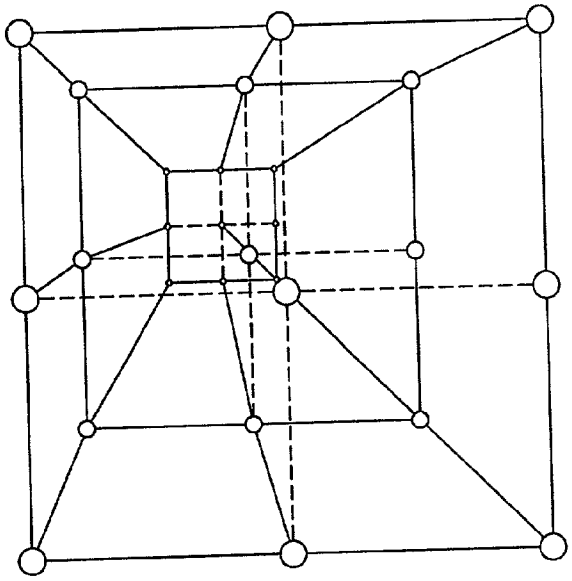

FIG. 2

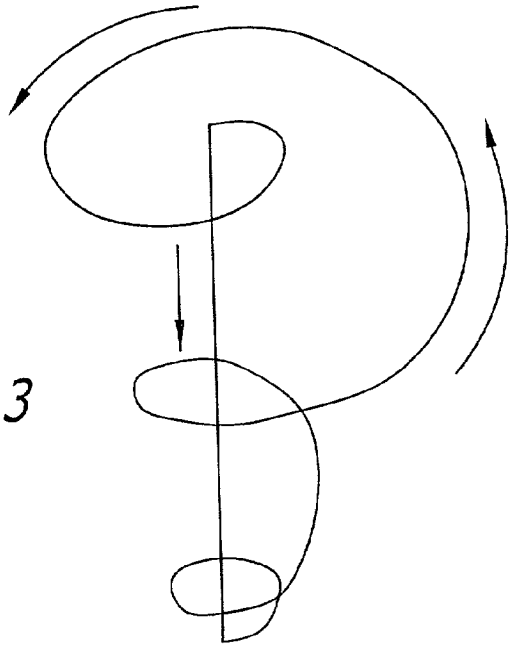

FIG. 3

FIG. 4

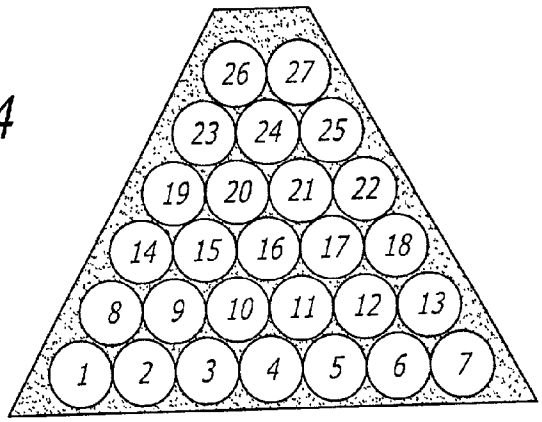

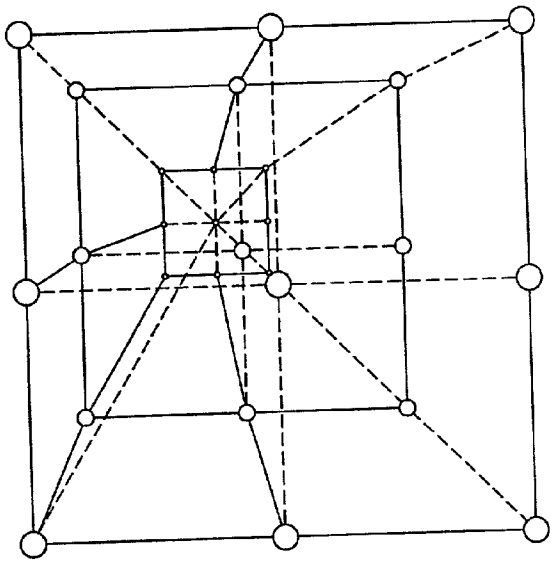

FIG. 5

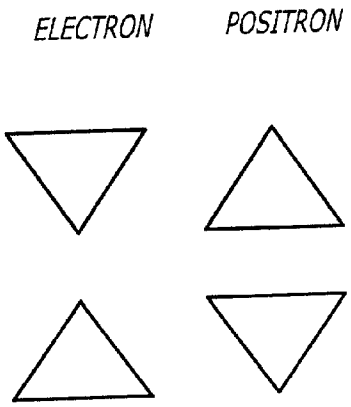

FIG. 6

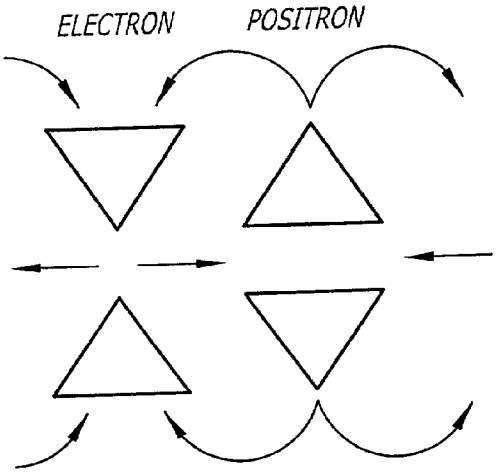

FIG. 7

FIG. 8

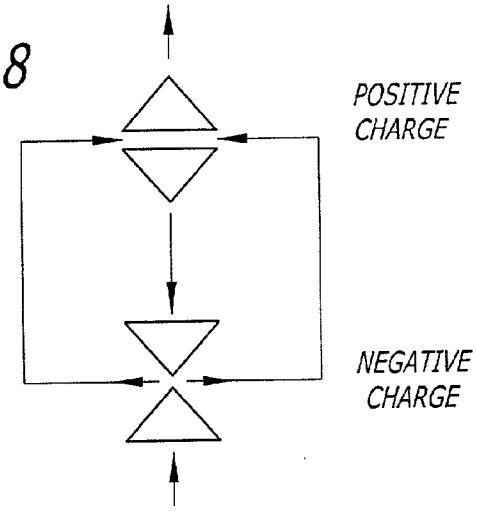

FIG. 9

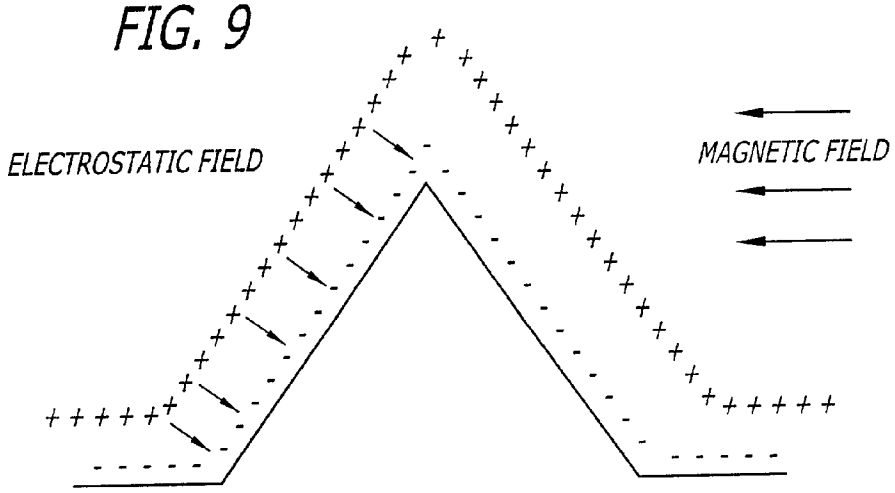

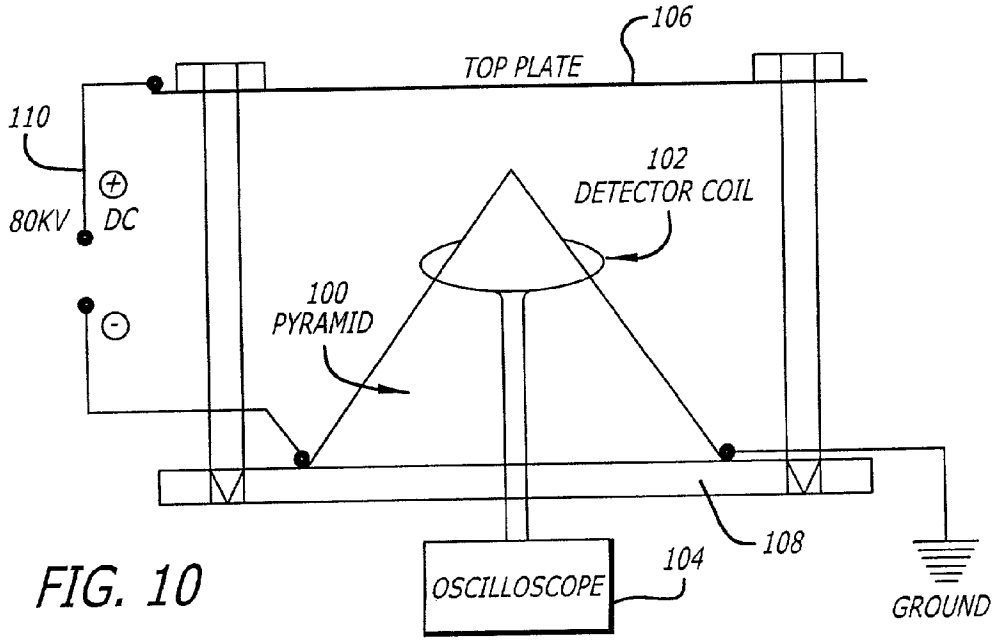

FIG. 10

METHOD AND APPARATUS FOR CONVERTING ELECTROSTATIC POTENTIAL ENERGY

CROSS-REFERENCES

[0001] This application claims priority from Provisional Application Ser. No. 60/169,378, by Peter Grandics, filed Dec. 7, 1999, also entitled "Method and Apparatus for Converting Electrostatic Potential Energy," the contents of which are hereby incorporated by this reference.

BACKGROUND OF THE INVENTION

[0002] This invention is directed to methods and apparatus for conversion of electrostatic energy. Specifically, this invention describes methods to cause directional movements in the space lattice.

[0003] To fully comprehend the theoretical basis for these methods, first the genesis of the elemental particles electron and positron needs to be discussed based on geometric or space relationships, and their interactions at the sub-elemental particle level must be clarified. The advantage of such an approach is that it can be visualized, and not just expressed mathematically. by definition, the word "structure" implies a geometric relationship, and such relationship must be of great importance in atomic structures even though they are hidden from direct view.

[0004] The study of geometric relationships of macroscopic structures of matter may provide important insights into the properties of matter at the microscale. Astrophysics suggests the universe probably started with an energy burst from one point. This big bang theory is supported by visual and electronic evidence that the galaxies are expanding away from a single center.

[0005] In stellar formation, gravitational pull and velocity generate a rotary vortex. Even in the relative absence of such factors, all objects spiral at some given rate peculiar to their special influences. A spiral is created when an object moves forward while rotating. Earth's movement in space is an example of this process. The Earth orbits the sun, while the sun pulls it along towards the direction of Vega in the constellation Hercules. the combined circular and forward motion creates a spiral. Our sun has the same motion in relation to the galaxy center. Our galaxy, the Milky Way, also spirals away from the Big Bang center.

[0006] Water going down a drain demonstrates some of the special influences affecting spiral formation. The spiral, caused by Coriolis forces, changes dynamically under the effects of gravitational pull, drain diameter, obstructions, temperature, pressure, volume, viscosity, and stirring. The spiral changes shape and acceleration but maintains the universal shape of a spiral. The water flow is responsive to all possible factors, and so is the spiral.

[0007] Remarkably, the spiral vortex has a "memory" of itself. When a vortex is distorted to become elliptical, it spontaneously returns to its original circular form. The vortex is a self-sustaining type of motion; its resiliency is comparable to that of atomic bodies.

[0008] Spirals condense energy and sine waves transmit it along a frictional line of force between them (**FIG. 1**). Spirals and waves could be considered illusions of each other. Two opposed spirals form a wave, or a wave produces two spirals. A sine is the producer of waves of spiral forces. Any fluid capable of supporting wave motion can also support vortex motion.

[0009] The spiral is the prominent form of organization of matter. The large proportion of spiral galaxies among celestial bodies visibly demonstrates this. On the microscale, even the building block of life, the DNA uses this structure and spirals are likely to be dominant at the level of the atom and below. This is the subject of the present theory. I propose that all atoms, all stellar formations use the mutable spiral to adapt to their spiral environment.

[0010] Another proposition is that all mediums of matter can be considered a type of crystal. Crystallinity is readily recognizable in the mineral world, but it is also a more general state of matter. Besides solid crystals, liquid crystals also exist. by definition, a crystal is a regularly repeating atomic arrangement, such as a chemical element, a compound or an isomorphous mixture. Therefore, the term crystal applies to material expressions where crystallinity is not so obvious, e.g., gases, complex biologics and various life forms, including viruses, bacteria and higher organisms. Air and water could be considered loose crystals subject to fast molecular drift. At low temperatures where molecular drift is reduced, gases form solid or liquid crystals. Soil and stone and metal are opaque cryptocrystals with slower rates of molecular drift. On the macroscale, the Earth could be seen as faceted crystal with its mountain ridges are the ridges of a geodesic sphere. Biopolymers such as DNA, proteins or polysaccharides fit well the definition of a crystal and are commonly made into crystals. All life can be seen as a crystal. From fish to humans, we are liquid crystals on a skeletal lattice.

[0011] Crystals are the shape of discrete units of matter and notably the channelized direction of energy, that is, the direction energy that flows unforced. Crystals form the basis for corpuscle-wave conversion. Crystals create resonance and conduct the flow of energy between states. Crystals can also be considered lenses. By definition, a lens is a device capable of refracting, or bending light. Light is an energy flow, so on a more general term, a lens can be defined as any object capable of changing the direction of energy flow. By this broader definition, even an electric wire is a lens as it is capable of changing the direction of flow of electrical energy. lenses communicate energy as part of the principle that all matter vibrate, all matter transmit, and all matter receives energy. The universe changes energy states with lenses. Following this line of reasoning, the universe could be viewed as a resonant crystal lens.

[0012] This observation is important because the universe is considered to be largely empty, the largest component of which is the so-called vacuum space. Since Nature seems to use the same geometrical organizing principles from macro to micro, I suggest that the vacuum space must also be "crystalline". Since the term crystalline is associated with material of which the vacuum space is substantially devoid, I will use an extended meaning of "structured" when discussing crystallinity of vacuum space.

[0013] The theory of "crystalline" vacuum space was introduced by Simhony (Simhony, M. (1990) The Electron-Positron Lattice Space, Cause of Relativity and Quantum Effects, Physics Section 5, The Hebrew University, Jerusalem., and Simhony, M. (1994) Invitation to the Natural

Physics of Matter, Space, and Radiation, World Scientific Publishing Co., London, UK.). Simhony reasoned that three-dimensional physical phenomena must have three-dimensional physical causes and explanations.

[0014] He demonstrated that physical reality can be described by the laws of classical physics supplemented by the presence of a space lattice. This led to the development of the theory of an electron-positron lattice space (epola for short). In the epola, bound electron-positron pairs reside at the lattice sites of a face-centered cubical "crystal" structure similar to that of NaCl crystals (Kennon, N. F. (1978) Patterns in Crystals, John Wiley & Sons, New York.).

[0015] The epola theory allowed a physical explanation of all yet unexplained postulates of quantum mechanics and relativity including the particle-wave duality, the quantized nature of electron orbits in the atom, the electromagnetic radiation, the photon, and gravitational interactions as well as the relationship of electrostatic, magnetic and gravitational interactions. He demonstrated gravity to be a derivative of electromagnetism.

[0016] There is a large body of evidence suggesting that the vacuum space is not empty at all. Experiments verify that the vacuum space contains an enormous residual background energy (some examples are: Boyer, T. H. (1985) The classical vacuum (zero-point energy) Scientific American 70-78, Haisch, B., Rueda, A. and Puthoff, H. E. (1994) Beyond $E=mc^2$, The Sciences, 34, No. 6, 26-31, and B.

[0017] Haisch and A. Rueda, (1999).On the relation between zero-point-field-induced inertial mass and the Einstein-de Broglie formula, Physics Letters A, in press), called zero-point energy (ZPE). The ZPE manifests as a pervasive and vast electromagnetic field called the zero-point field (ZPF). a dynamic field, ZPF is a virtual plasma, with particles arising and disappearing of a background energy field serving as a baseline, or zero point, for all physical processes. The ZPE remains even at absolute zero. Simhony has described zero-point energy fluctuations as analogous to brownian motion of epola particles around their lattice sites. A potential alternative term for the lattice space is zero-point-field (ZPF) described in 1994 by Haisch, Rueda and Puthoff (Haisch, B., Rueda, A. and Puthoff, H. E. (1994) Beyond E=mc2, The Sciences, 34, No. 6, 26-31). This area remains an active field of research.

[0018] Simhony also suggested that all particles of matter are directly formed from the lattice space, the mechanism of which remains undetermined. The present theory intends to answer this question in terms of lattice space.

[0019] I propose that the vacuum space has a lattice structure similar to that introduced by Simhony. this structure is a face-centered cube having 27 lattice sites (**FIG. 2**). on the lattice sites reside the elemental "particles" forming all particles of matter. These are "particles of energy" rather than particles of matter.

[0020] I propose that the "particle of energy" of the space lattice, called here the subtle electron, is a spiral energy vortex tied into itself in the form of a circumvolution cissoid. The circumvolution cissoid is a spiral turn around an axis converging into an apex, in a self-imploding, self-sustaining vortex motion (**FIG. 3**). The vortex pulsates and its vibration is a function of **(2_Ø)x, where Ø is the Fibonacci series number and x**=0,1,2,3, the number of turns the circumvolution cissoid makes. Once started up, such a vortex would run practically indefinitely inside the space lattice.

[0021] The internal friction of such a space lattice must be so low that it would only be noticeable as a red shift in the spectra of distant galaxies. The space lattice, like its constituent energy vortices, must also be a resilient structure with only limited compressibility. At the same time, it must have fluidity since it is capable of transmitting waves with transverse displacement. In the absence of atomic oscillators, the space lattice would be incapable of dissipating energy in the form of heat.

[0022] Vortices maintain their circular forms as well as their proportions and dimensions. The adjacent vortices have a coordinating effect that establishes axial alignment and rolling contact between vortices within the space lattice. In that sense, there is a great deal of similarity between crystals of material bodies and the structure of the space lattice. I postulate that the space lattice is an incompressible, frictionless fluid made out of cubes of units cells of subtle electron vortices.

[0023] We can consider the space lattice equivalent to motion. A space lattice in motion necessarily has inertia. Although inertia is generally attributed to moving material bodies, it is actually a property of motion. Inertia is just the continuity of motion. In the case of vortex motion the inertia is localized. Localized inertia can also be called momentum. To account for the elemental particles of matter, we need a space lattice that is capable of moving.

[0024] Anderson discovered in 1932, that when 1.02 MeV photon energy is absorbed into the vacuum space, an electron-positron pair can appear. this observation is explained here as a glimpse into the formation of elemental particles of matter. To become matter, energy must become more angular. This hypothesis is derived from the observation that all material expression is a type of crystal, and is the compound and derivative of a fundamental triangular form which all the seven crystal systems can be derived (Kennon, N. F. (1978) Patterns in Crystals, John Wiley & Sons, New York.). The mechanics of this expression at the level of the space lattice are explained as follows: As the energy of electromagnetic radiation propagates through the space lattice, it polarizes the subtle electron energy vortices (for analogy see **FIG. 1**). Subsequently, the "energy particles" of the space lattice, the subtle electrons, undergo a phase transition similar to the condensation of gases. This happens at the resonant frequency of the 1.02 MeV gamma radiation.

[0025] The 27 subtle electrons of the unit cell of space lattice rearrange into a pyramidal segment of the cube (**FIG. 5**) on six levels each forming circles of vortices. An open-flat presentation of the rearrangement is shown in **FIG. 4**. This structure is the postulated smallest unit of matter. note that the cube is composed of six interlocking pyramids so the cube and the pyramid are resonant structures. Inside the pyramid, the subtle electron rings form a vortex capable of circulating the fluid space lattice. The pumping action is driven by the self-sustaining, pulsating vortex motion of its constituent subtle electrons (**FIG. 3**). The overall shape is a cone fitting inside the pyramid. The formation of matter follows the geometry of the space lattice (**FIG. 5**) and thus we may conclude that the space lattice provides the blueprint for matter.

[0026] An electron is produced when two such cones are joined in a tip-to-tip conformation (**FIG. 6**). The positron is

made out of two vortices (cones) facing base-to-base. The energy vortices which make up the electrons have a resilient vibratory structure which should be capable of vibrating at various frequencies and modes. This would allow us to account for the series of spectral lines, a signature of absorbing and emitting energy at various frequencies.

[0027] These complex vortex particles have a pumping effect and circulate the fluid space lattice. For the electron, the space lattice is drawn in polarly and expelled equatorially. For the positron, the space lattice is drawn in equatorially and expelled polarly (**FIG. 7**). The direction of circulation of fluid space lattice determines the positive or negative polarities. When in close proximity, a specific flow coupling occurs between the electron and positron (**FIG. 7**). It is quite probable that a similar flow coupling exists between a proton and an electron inside the atom, although such coupling is stable in the case of the proton. This is likely a result of the different vibratory structure of the vortex proton.

[0028] The instability of the electron-positron pair is also derived from this model. The perfectly fitting, counter-rotating cones of energy extinguish each other with the release of a combined energy of 1.02 Mev. This results in the reconstitution of the respective unit cells of the space lattice along with the release of the phase transition energy.

[0029] The size of the subtle electron is estimated based on the "nuclear radius" of 0.1 fm for the electron, to be approximately 0.005 fm. The lattice constant for the unit cell of space lattice is approximately half of the "nuclear radius" of the electron, i.e,.0.05 fm. This indicates that the space lattice is quite dense compared to atomic bodies.

[0030] The model explains the attraction of free electric charges as follows (**FIG. 8**): Opposite charges move towards each other. This movement is due to the equatorial circulation of fluid space lattice from the negative charge to the positive charge and the polar circulation of space lattice from the positive to the negative charge. The attraction of the vortices pull the two partners together. The electrostatic field between separated charges is defined as the flow of the space lattice from the protons to the electrons and the outside return flow of space lattice from the electrons to the protons (see **FIG. 8**). This explanation will eventually lead to a hydromechanical theory of electricity.

[0031] Interestingly, there is a net unidirectional flow of fluid space lattice in the axial direction of the free electric charges (**FIG. 8**) flowing in at the negative pole and flowing out at the positive pole. if the charges have a steady parallel orientation, e.g., as in an electric condenser, then a pressure differential must arise in the space lattice around the opposite poles of the condenser. To fully appreciate the significance of this conclusion, we must first examine how material bodies accelerate through the space lattice.

[0032] Accelerating objects encounter resistance facing an increased pressure of the space lattice at the front end and a reduced pressure at the rear end of the object. This situation is common to all propulsion methods which apply mechanical force on the physical object. Therefore, it is logical to suggest that a pressure differential of space lattice at the opposite sides of material bodies is always accompanied by a change in the rest or motion of such bodies. To obtain a propulsion force, instead of exerting force on the physical object we should transfer the space lattice that controls the behavior of the object from the rear end of the object to its front end.

[0033] Therefore, a sufficiently charged object in which the charges have a steady parallel orientation should behave as an accelerating object, i.e., it should move toward the direction of its positive pole. In fact, this happens due to its own generated space lattice pressure differential Now that the fundamentals are developed, the effect may provide the basis for a new propulsion and gravity cancellation method, and may give us insights into the mechanism of gravitation. A craft utilizing such propulsion method could exhibit inertialess acceleration as it would meet no resistance from the surrounding space lattice.

[0034] The theory also allows us to develop strategies for tapping into the energy of the space surrounding us. Separated charges in an electric condenser cause a directional flow of the fluid space lattice. Conversely, if we could induce a directional flow of the space lattice, it would cause a separation of charges in material objects. To explain how such an effect could be produced, first the physical basis of magnetism must be explained.

[0035] I have described the physical basis for the electrostatic field as a flow of a space lattice current from the positive charges to the negative charges and back on the outside to the positive charges. I shall now explain how these space lattice currents flow in an electric wire. The space lattice flow which connects the electrons to the protons of the atoms in the wire becomes extended in the length of the wire. This is the same direction as the direction of movement of electrons which, in the current, flow in the outer shell of the wire. The external return flow of the space lattice will be in the opposite direction in the space around the wire. This flow constitutes the magnetic field. In a solenoid, the surrounding space lattice flows in the opposite direction relative to the path of the electrons. The magnetic effect will appear as either N or S magnetic poles. The magnetic poles are mirror images of each other. This suggests that a single isolated magnetic pole cannot exist.

[0036] In the electrostatic field, the outside space lattice currents flow between electrically charged particles. The magnetic field, on the other hand exhibits a closed circuit flow of the space lattice along the path of a solenoid or a circuit. Electric and magnetic forces are produced by movement of the space lattice in spirals or whirls.

[0037] An electric charge and a magnetic pole do interact even though they do not apply any force to each other. A magnetic pole will bring about a directional orientation of the electrons in a charged object, while an electric charge will cause the electric polarization of the adjacent surface of a magnetic pole.

[0038] The final question remains is the superimposition of electrostatic and magnetic fields on each other. The practical significance of the interaction of axially oriented electrostatic and magnetic fields is likely to be small compared to their interaction at an angle. A transversal superimposition of a magnetic field on an electrostatic field will cause the distortion of both fields. The axial flow of the space lattice between the electric poles, which is the physical basis for the electrostatic field, will be distorted, but its circulation will continue. Similarly, the rotating space lat-

tice, which is the basis for the magnetic field, will also be distorted, flowing in irregular circuits.

[0039] To study the transverse superimposition of electrostatic and magnetic fields, a shaped electrostatic field must be created (**FIG. 9**). When a magnetic field interacts with the shaped flow of the space lattice, it could result in the formation of a space lattice vortex at the points where the two flows intersect. This is based on previous hypothesis that the space lattice is an incompressible fluid, wherein the intersecting currents cannot penetrate but distort each other's flow patterns.

[0040] To expand this shaped electrostatic field into three dimensions, a pyramid is required. I have already discussed the importance of the pyramidal geometry in the formation of matter. The pyramidal geometry may also be important for producing a space lattice perturbation, which is the equivalent of a magnetic field when it follows a rotational symmetry (e.g. a vortex).

[0041] If with transversally superimposed electrostatic and magnetic fields a pyramid did indeed produce a vortex in the space lattice, then the rotational flow of the space lattice should cause the separation of charges and an electric current in material bodies, as predicted by this theory. This means that under appropriate conditions, a pyramid could become a power generator.

[0042] For power generation in a pyramid, the source of the electrostatic and magnetic fields could potentially be the Earth. The earth has a high voltage electric field such that the earth's surface is negatively charged while the atmosphere is positively charged (Feynman, R. P. (1964) Lectures on Physics, v.2, 9-2, Addison Wesley, Inc., Palo Alto, Calif.). The voltage field is believed to be maintained by the Sun's radiation energy and/or cosmic ray energy and extends from the ionosphere to the surface creating a potential difference of about 400,000 V. The Earth's electrostatic field never seems to get depleted despite all the storm activities and discharging of energy. The voltage gradient is estimated to be 200 V/m around the surface of the earth. The total energy reaching earth at any moment is about 700 MW (400,000 V multiplied by a current of 1800 A). The magnetic field strength of the earth is about 0.5 Gauss and exhibits continuous pulsations with main frequencies of 8 to 16 Hz.

[0043] Therefore, the earth's electrostatic and magnetic fields could potentially be utilized to create a space lattice vortex in and around a sufficiently sized pyramid. This hypothesis has been tested experimentally. The earth's electrostatic field was modeled as described in the Examples.

[0044] Therefore, there is a need for an improved method and apparatus for the conversion of electrostatic energy as described herein.

SUMMARY OF THE INVENTION

[0045] Pursuant to this invention new techniques are described to produce directional currents in the space lattice. The currents are induced either by separated charges, properly positioned magnetic fields or by the interaction of electrostatic and magnetic fields at an angle, specified by the side angle of a pyramid. The induced space lattice currents can be utilized to generate specific effects which may vary from propulsion, to gravity cancellation and power generation.

[0046] In particular, an aspect of the present invention is a method producing directional currents in the space lattice utilizing:

[0047] (1) separated electric charges; and

[0048] (2) the interaction of electrostatic and magnetic fields.

[0049] In one preferred embodiment of the invention, electric charges are separated in an oriented fashion. The orientation can be a parallel orientation. The orientation can be obtained in a capacitor. The capacitor can be used for the propulsion of a vehicle. The capacitor can provide lift and lateral movement control for said vehicle.

[0050] The interaction of electrostatic and magnetic fields can be set up in a pyramid.

[0051] The interaction can produce a vortex in the space lattice.

[0052] The vortex can be tapped to produce electric power, which can be obtained by wrapping a coil around the pyramid.

BRIEF DESCRIPTION OF THE DRAWINGS

[0053] The following invention will become better understood with reference to the specification, appended claims, and accompanying drawings, where:

[0054] **FIG. 1** is a diagram showing the relationship between a spiral and a wave;

[0055] **FIG. 2** is a diagram demonstrating the geometry of the space lattice;

[0056] **FIG. 3** is a diagram demonstrating the circumvolution cissoid;

[0057] **FIG. 4** is a diagram demonstrating the smallest unit of matter;

[0058] **FIG. 5** is a diagram showing the rearrangement of the unit cell;

[0059] **FIG. 6** is a diagram exhibiting the structures of electron and positron;

[0060] **FIG. 7** is a diagram demonstrating the flow coupling of electron and positron;

[0061] **FIG. 8** is a diagram showing the attraction of electric charges;

[0062] **FIG. 9** is a diagram showing the interaction of a shaped electrostatic field with a magnetic field;

[0063] **FIG. 10** is a diagram displaying the arrangement of the capacitors in the craft; and

[0064] **FIG. 11** is a diagram demonstrating the pyramid experimental setup.

DESCRIPTION OF THE PREFERRED EMBODIMENT

[0065] Pursuant to this invention, novel methods are described to induce directional currents in the space lattice which is postulated to be part of the boundary conditions of the Universe. These methods are useful in providing for the conversion of electrostatic energy into a useful form. The first method relates to generating an unidirectional flow of

the space lattice which could be useful in cancelling gravity and generating a propulsion force. A possible configuration for keeping the charges separated and stored is in the form of a capacitor. The shape of the capacitor and the body of such device is important for optimal performance. A pyramidal or conical shape is preferred for the alignment of the capacitors (**FIG. 10**). Optimally, the shape of the capacitor follows the shape of the craft.

[**0066**] In **FIG. 10**, the pyramid **100** is surrounded by a detector coil **102** which is in turn connected to an oscilloscope **104**. In the experimental setup shown, the field is established by a top plate **106** and a ground **108** connected to a source of DC electrical energy **110**.

[**0067**] The conductive elements of the capacitor are layered into the pyramidal or conical segment of the hull of such craft. Optimally, there should be several layers of negatively charged conductors on the outside while a single layer of positively charged conductor in the inside of the craft. All conductive elements should be carefully insulated in order to keep the charges inside the capacitor.

[**0068**] In the center of the craft, a conductive, insulated pole is mounted such that the pole extends out into the exterior at the top of the craft. The tip of that pole has a metal ball mounted on which is also positively charged. When all the capacitor plates are charged, they induce an unidirectional, upward flow of the space lattice. This means that the space lattice pressure above the craft will be higher than the space lattice pressure at the bottom of the craft. This pressure differential is unstable and progresses towards an equilibrium. It will grab the craft and propels it forward in order to eliminate the pressure gradient. This requires that a sufficiently high voltage be applied. My estimation is that about 5 kV is needed to lift every gram of an object. The capacitors incorporated into the hull will give control over lift.

[**0069**] To obtain directional control over all three axes of movement, three capacitors need to be mounted at the bottom of the craft apart from each other. These capacitors, could take the shape of a ball and would be mounted on retractable shafts. The top half of the capacitors would be positively charged while the bottom half is negatively charged. When in flight, the capacitors are retracted and charged based on the needs of directional control. To achieve forward movement, the charges on one capacitor facing the direction of the desired path should be reduced relative to the other two capacitors. This would make the craft tilt forward and start moving in that direction. An alternative method of lateral directional control could be obtained by dividing the capacitor bank in the hull into segments which segments could be charged individually.

[**0070**] Upon landing, the three ball capacitors would be protracted on their shafts and serve as landing gear. On landing, they would be discharged because the earth is the greater ground. On launching, the main capacitors of the body would be activated causing a lift-off. The three capacitor landing gear would then be retracted and charged up so that they can function for lateral directional control. Onboard static generators would supply the voltage required for the operation of the craft.

[**0071**] The most significant aspect of this type of propulsion system would be the loss of inertia during acceleration. Inertial forces pose great obstacles to improving the performance of current propulsion techniques. Since we are now in control of the space lattice surrounding the craft, it will encounter no resistance from the space lattice. The passengers of such craft would feel no forces acting upon their bodies even if the craft achieved enormous accelerations.

[**0072**] This overall design is suitable for the development of a wide range of transportation vehicles, from automobile-type to aircraft and spacecraft. The impact of such a technology on our economy would be enormous. We could eliminate a major factor in environmental pollution, the generation of greenhouse gases which place a great stress on our ecosystem. In the United states, 66% of the greenhouse gases are produced by transportation vehicles and just 34% by power generation. The signs of global warming and the deterioration of the ecosystem are visible from every direction.

[**0073**] The developing countries are bent on establishing the same economical model evolved in the developed countries, representing about 16% of the world population. Worldwide mass deployment of our current energy technologies would most likely cause an environmental catastrophe which may terminate higher life-forms on this planet.

[**0074**] This makes it very important that the focus of our energy sector shifts towards renewable, non-polluting sources of energy. The subject invention offers a solution in this regard. The transversal interaction of electrostatic and magnetic fields in and around a pyramid offers the potential to tap into the electromagnetic field of our planet. I have found that a pyramid becomes a power generator when the electrostatic voltage field gradient of the earth is reproduced around it. Tapping the energy field was as simple as placing a coil around the pyramid.

[**0075**] The optimal size production pyramid is likely going to be large. The optimal material composition may be alternative layers of metal and dielectric to maximize the total amount of charges the pyramid can hold. This is important for increasing the performance of the pyramid. A coil is then wrapped around the pyramid to tap into the generated field. The orientation of the pyramid to the magnetic North pole does not seem to be a prerequisite for operation. Such a pyramid generator will be called the pyramitron.

[**0076**] The following Examples illustrate the features and advantages of the subject invention. Accordingly, it is to be understood that the description in this disclosure is to facilitate comprehension of the invention and should not be construed to limit the scope thereof as persons skilled in the art can, in light of this disclosure, generate additional embodiments without exceeding the scope or departing from the spirit of the claimed invention.

EXAMPLE 1

[**0077**] Demonstration of the pyramitron: For the experiments, I have randomly selected a one-foot base length foam pyramid from a pyramid vendor (The Pyramid Project, Ft. Wayne, Ind.). The outside of the pyramid was covered with aluminum foil. The pyramid was placed on a 2'×2' insulating polyethylene platform equipped with an adjustable height 2'×2' size aluminum top plate, 1/16" thick (**FIG. 10**). The height of the aluminum plate was adjusted as needed and a gap of 1 1/4" between the plate and the tip of the pyramid was used in the experiments.

[0078] A high voltage (HV) CRT power source producing 30 kV DC was taken from a television set. I have assumed that an actual energy producing pyramid should be relatively high in order to obtain a large voltage drop from its tip to the ground. Therefore, assuming a height of 150 m for a life-size pyramid and a voltage drop of 200 V/m near the surface of the Earth, the 30 kV voltage is in the range of the voltage-drop expected for the height of a practical size pyramid.

[0079] The positive pole was attached to the top aluminum plate. This simulated the positive charge of the atmosphere. One corner of the pyramid was attached to the negative pole of the high voltage power source, while the opposite corner of the pyramid was grounded. This setup served as a model for the electrostatic field distribution around a potential life sized pyramid.

[0080] As controls, either a 1'×1' sheet of aluminum foil or an aluminum foil-covered box, having the main dimensions of the test pyramid (1'×1'×⅝"), was used as a negative pole. The detector coils were made by winding up a 24 gauge enamel-coated magnetic wire (20 turns, approximately 8 cm diameter). A Tektronix high-frequency oscilloscope, model no.2236 was used for signal acquisition and analysis.

[0081] The first set of experiments were control measurements with the box of the same height and base lengths as the test pyramid. The detector coil was placed on the top of the box. Measurements were taken with and without the high voltage applied. One corner of the box was attached to the HV power source (negative pole) and the opposite corner to the ground. The same arrangement was used for the flat square (1'×1') foil. The peak-to-peak signal amplitude for the box was 8 mV and the signal frequency was 2 MHz. For the flat foil sheet, the signal amplitude was 12 mV with a frequency of 1.43 MHz. The signal form was of a decaying sine wave.

[0082] When high voltage was applied to these shapes, a signal amplitude of 14 mV was obtained for the flat sheet and a 16 mV for the box. The signal frequency was 1.54 MHz for the flat sheet and 2 MHz for the box. The wave forms were of decaying sine waves in all these experiments.

[0083] When the pyramid was tested without HV, the peak-to-peak signal amplitude was measured at 60 mV with a frequency of 2 MHz. The wave form was different from those of the control experiments; it was a modulated, decaying sine. When the high voltage was applied, the signal amplitude increased up to 180-200 mV, while the frequency remained at 2 MHz. The pyramid produced a signal intensity significantly higher than the controls. When a metal (aluminum) pyramid of the same size (wall thickness 1/16" inch) was tested in the same high voltage field using the same detection coil, a voltage of 1-1.5 V was detected at the frequency of 2 MHz.

[0084] The experiments confirmed theoretical assumptions about the pyramidal shape's ability to cause perturbations in the space lattice when the pyramid is placed in transverse electrostatic and magnetic fields. The resulting space lattice vortex causes a separation of charges in the detection coil, producing a voltage signal greatly exceeding control levels. Control values for the flat sheet and the box in the electrostatic field were at the level of the background noise. Thus, when the electrostatic and magnetic fields intersected at 90° or 0°, no effect was observed. However, when the fields intersected at an angle defined by the pyramidal shape, a large signal was produced. The pyramid is clearly instrumental in generating the signal. This finding provides the second experimental proof for the present theory of electric polarities. It also demonstrates that potentially, we may be able to tap into the electromagnetic field of our planet and draw electric energy. The practical implications of this finding are enormous.

I claim:

1. A method producing directional currents in the space lattice utilizing:

(a) separated electric charges; and

(b) the interaction of electrostatic and magnetic fields.

2. The method of claim 1 wherein said electric charges are separated in an oriented fashion.

3. The method of claim 2 wherein said orientation is a parallel orientation.

4. The method of claim 3 wherein said orientation is obtained in a capacitor.

5. The method of claim 4 wherein said capacitor is used for the propulsion of a vehicle.

6. The method of claim 5 wherein said capacitor is providing lift and lateral movement control for said vehicle.

7. The method of claim 1 wherein interaction of electrostatic and magnetic fields is set up in a pyramid.

8. The method of claim 1 wherein said interaction is producing a vortex in the space lattice.

9. The method of claim 8 wherein said vortex can be tapped to produce electric power.

10. The method of claim 9 wherein said electric power is obtained by wrapping a coil around the pyramid.

* * * * *

US 20070007393A1

(19) United States

(12) Patent Application Publication

(10) Pub. No.: US 2007/0007393 A1

(43) Pub. Date: Jan. 11, 2007

Pinto

(54) METHOD FOR PROPULSION

(75) Inventor: **Fabrizio Pinto**, Monrovia, CA (US)

Correspondence Address:
DEMONT & BREYER, LLC
100 COMMONS WAY
HOLMDEL, NJ 07733 (US)

(73) Assignee: **InterStellar Technologies Corporation**, Monrovia, CA

(21) Appl. No.: **11/197,697**

(22) Filed: **Aug. 4, 2005**

Related U.S. Application Data

(60) Provisional application No. 60/598,658, filed on Aug. 4, 2004.

Publication Classification

(51) **Int. Cl.**
B64G 1/40 (2006.01)

(52) **U.S. Cl.** **244/171.5**

(57) **ABSTRACT**

A method for propulsion that does not consume fuel. The method involves the modification of the dispersion force (i.e., van der Waals) that arises between particles, such as neutral atoms. The method comprises generating a lifting force by subjecting a plurality of confined particles to a trigger acceleration, exposing the particles to an amount of electromagnetic radiation that is sufficient to induce the lifting force to (1) exhibit relatively long-range interactions and (2) increase the momentum of the particles, and then transferring at least a portion of the increase in momentum to a vehicle.

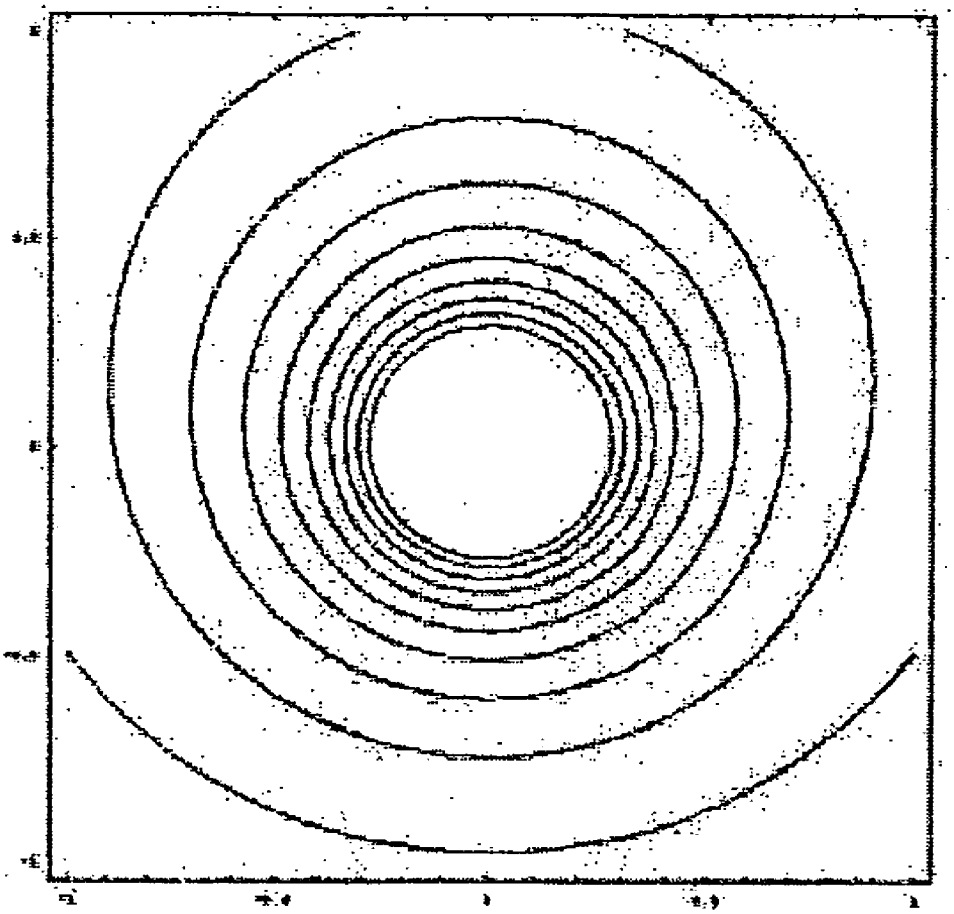

Figure 1

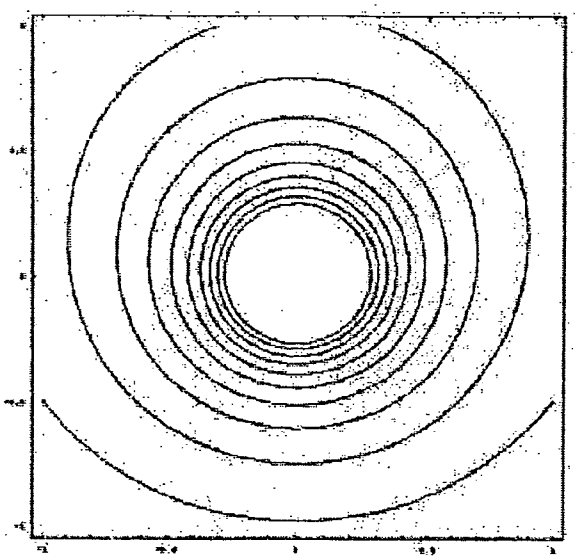

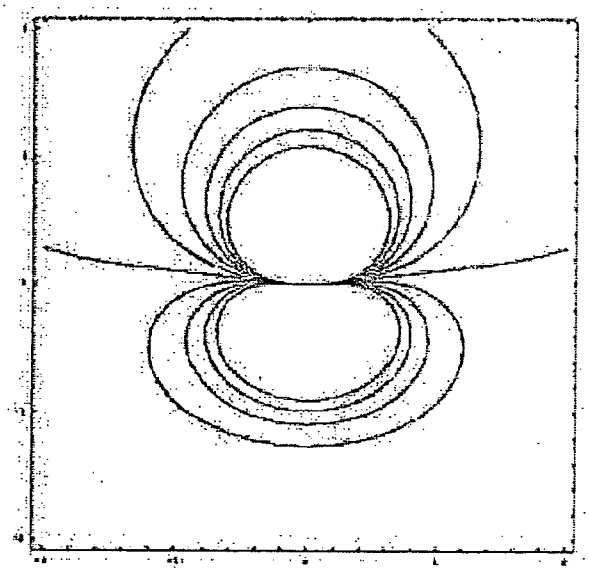

Figure 2

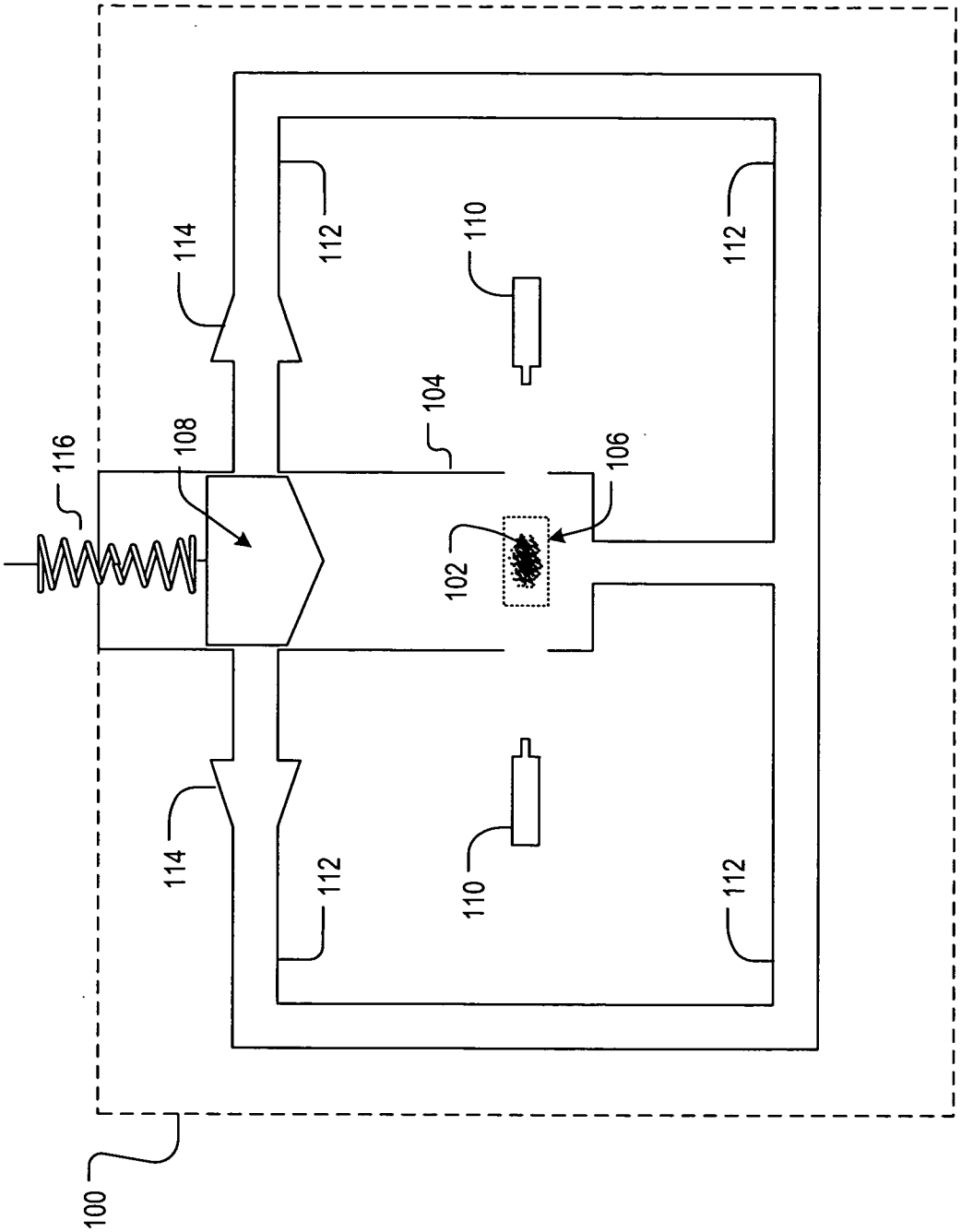

Figure 3

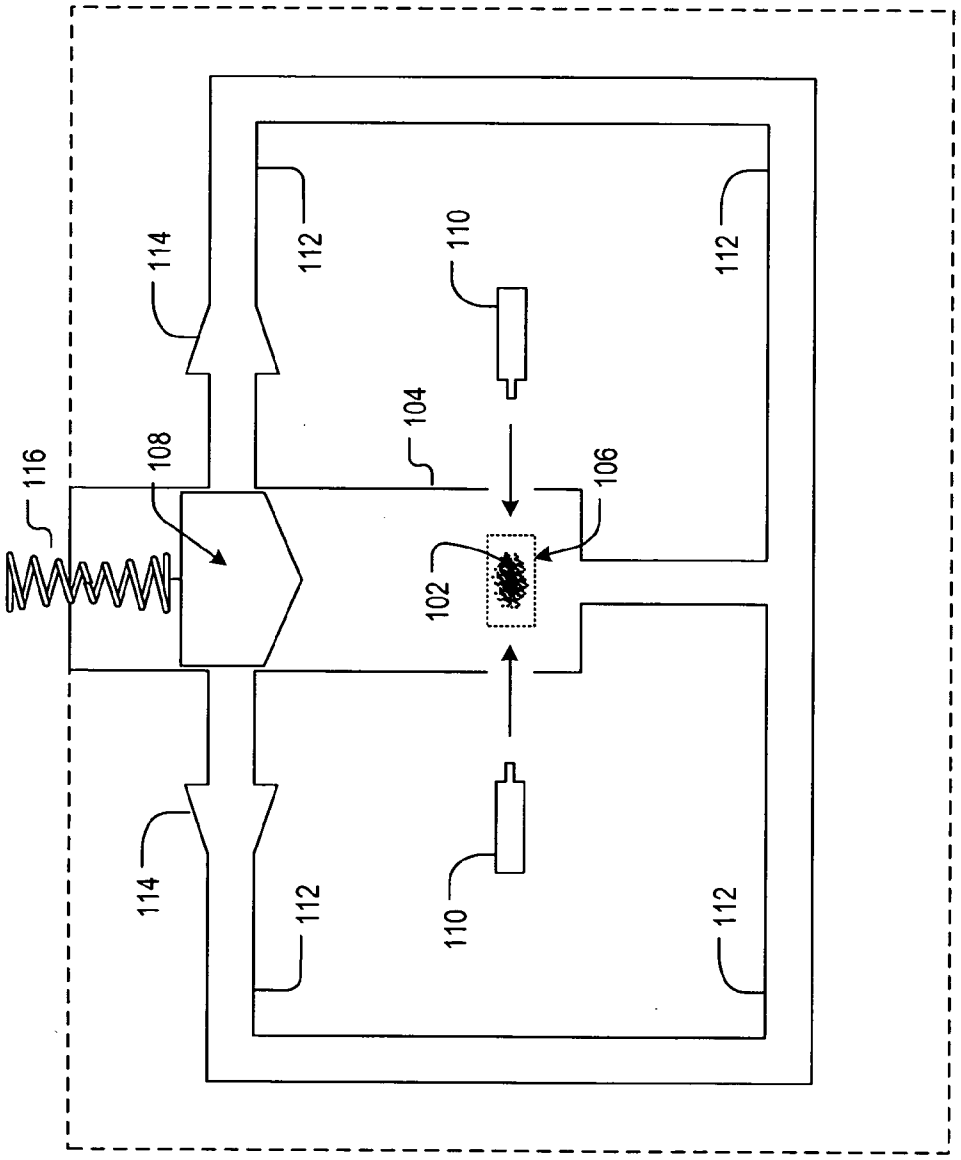

Figure 4

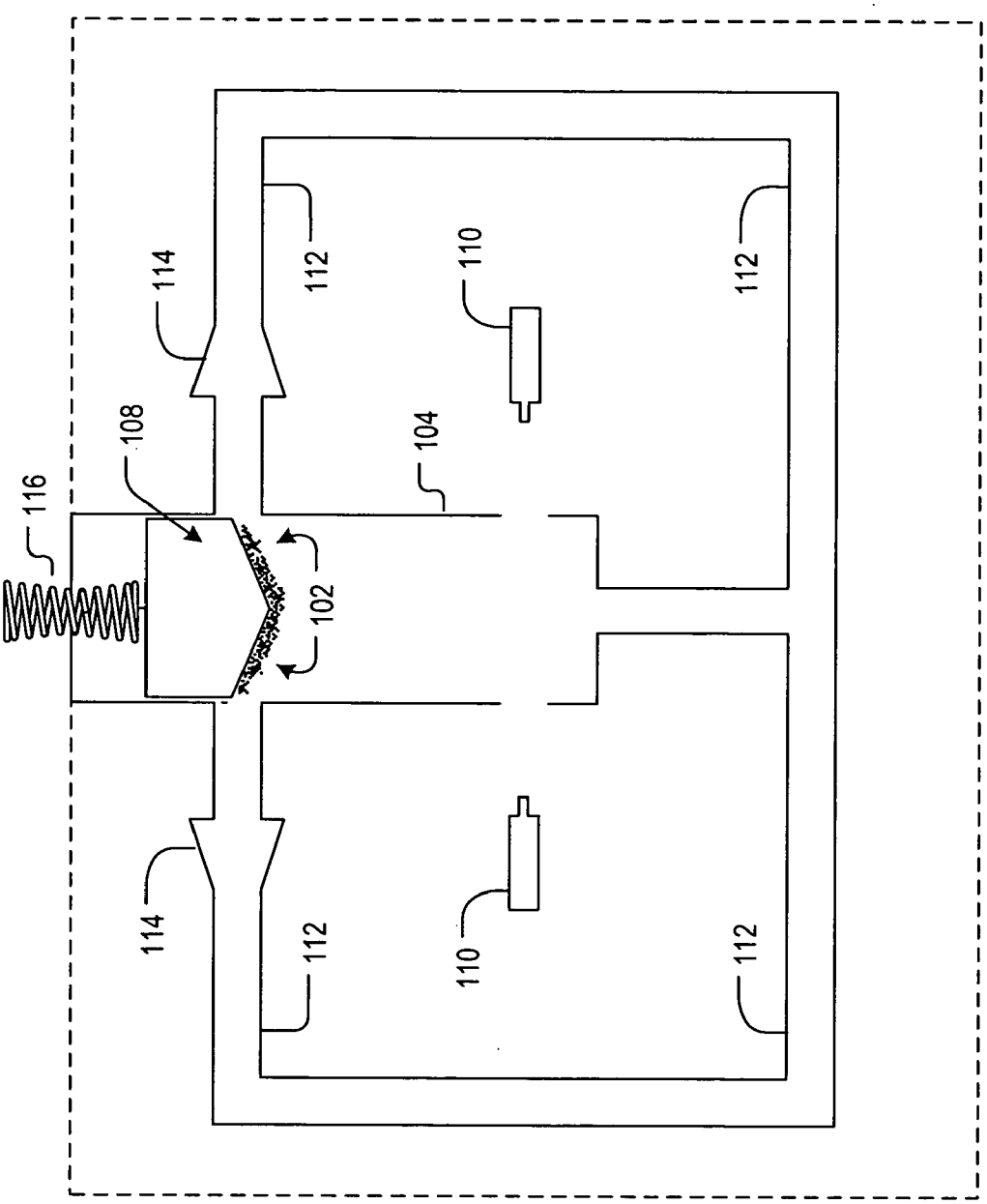

Figure 5

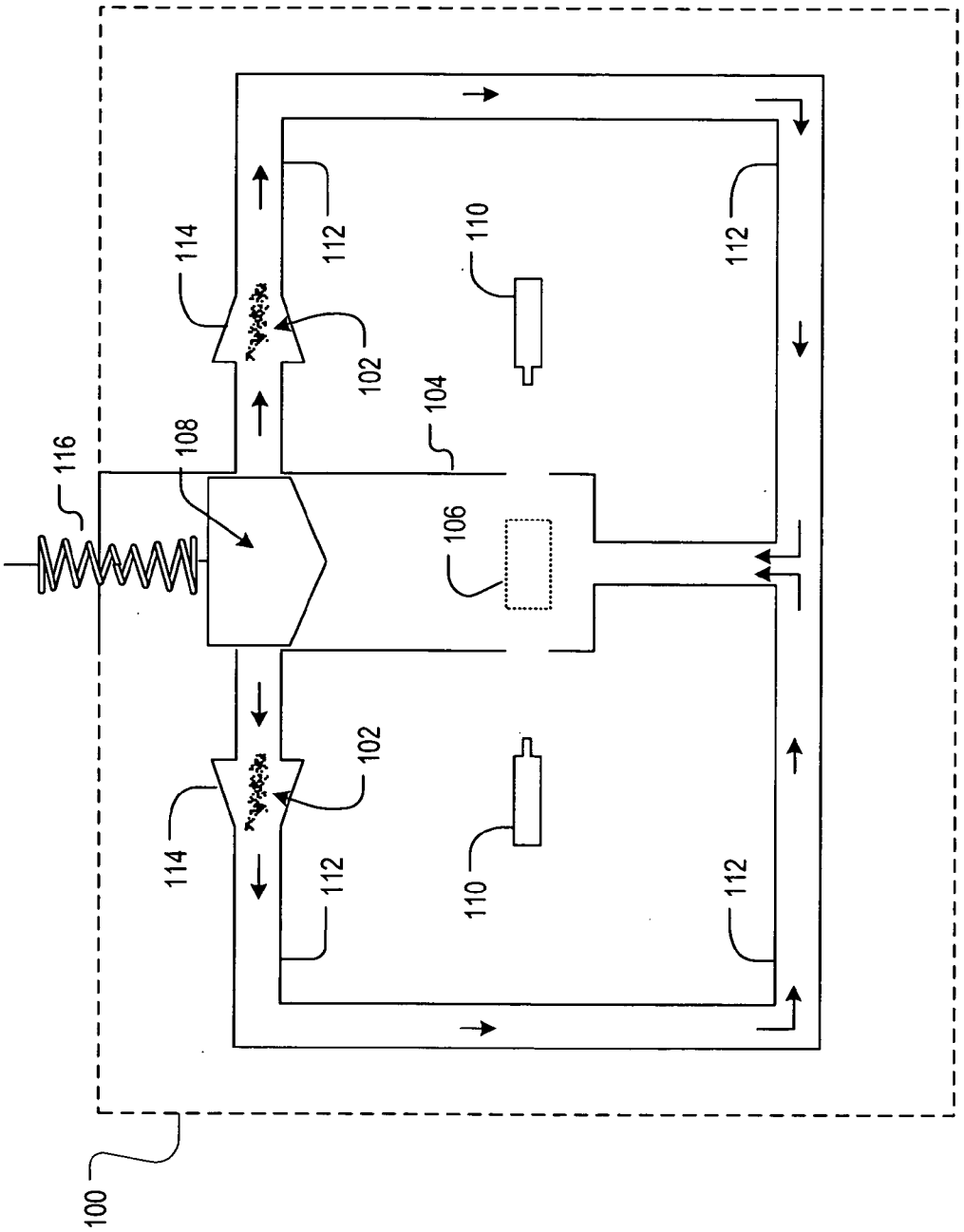

Figure 6

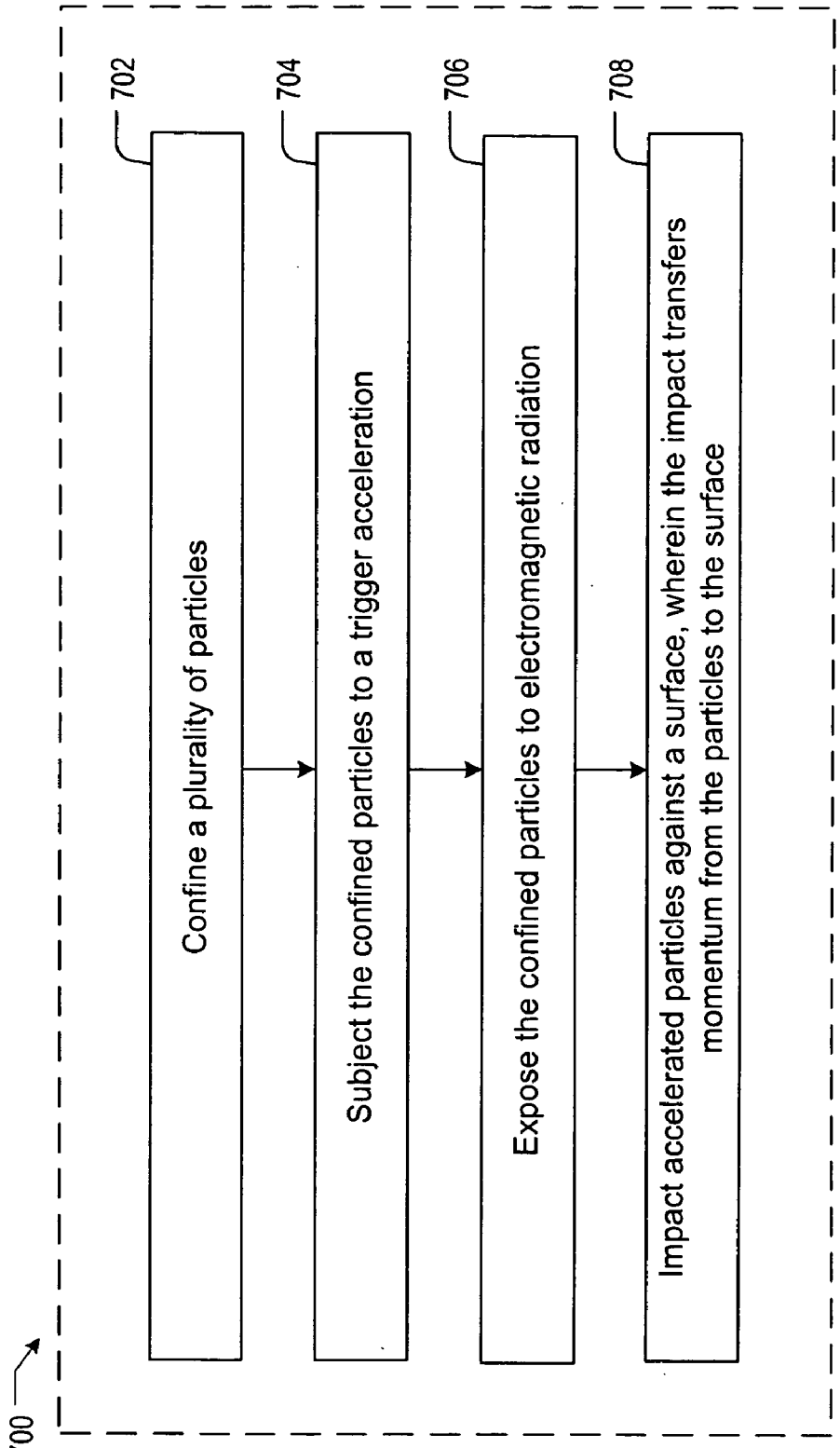
700
702
Confine a plurality of particles
704
Subject the confined particles to a trigger acceleration
706
Expose the confined particles to electromagnetic radiation
708
Impact accelerated particles against a surface, wherein the impact transfers momentum from the particles to the surface

Figure 7

Figure 9

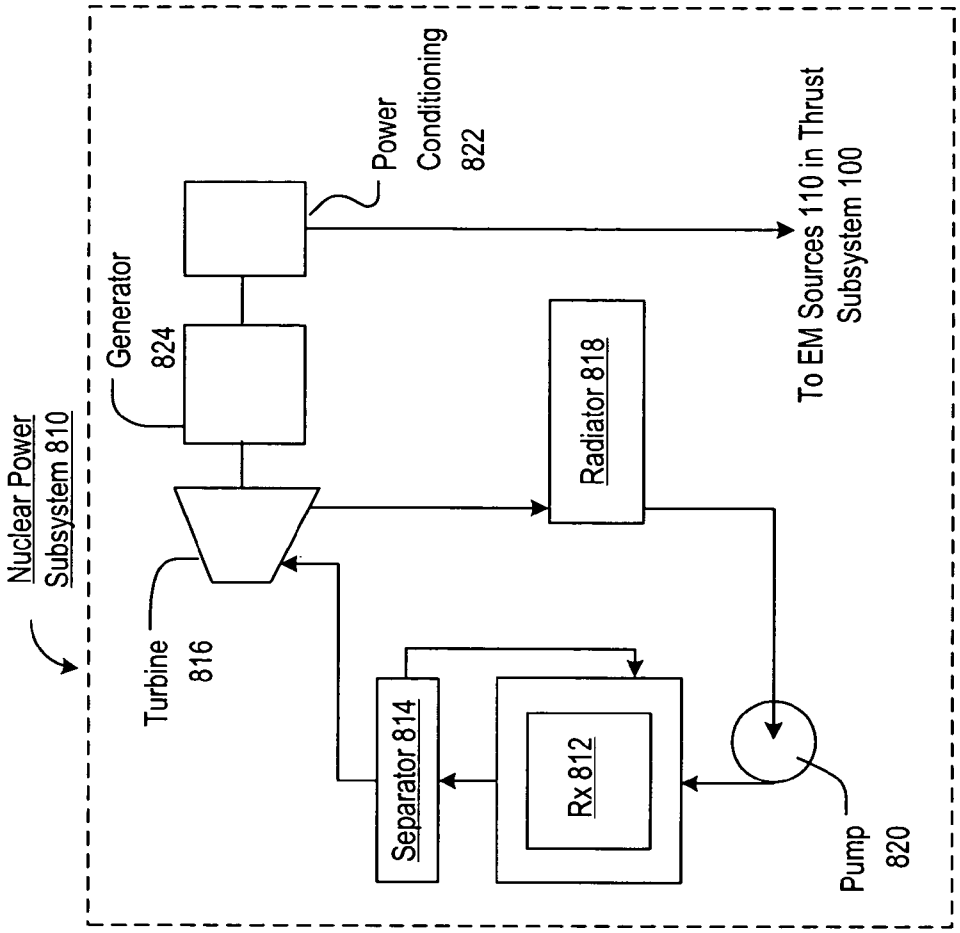

Figure 8

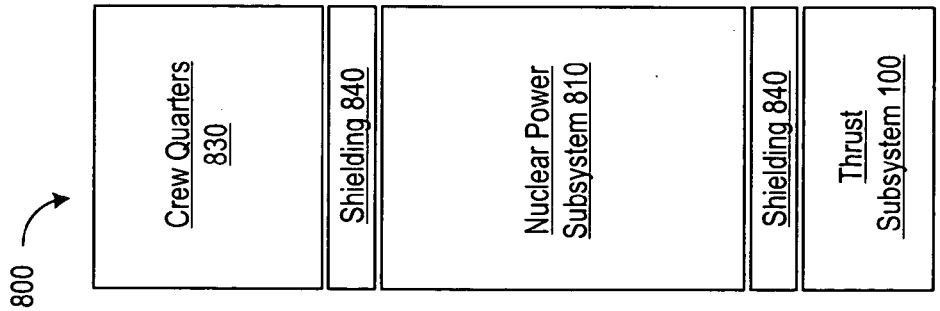

METHOD FOR PROPULSION

STATEMENT OF RELATED APPLICATION

[0001] This application claims priority of U.S. Provisional Patent Application 60/598,658, which was filed on Aug. 4, 2004 and is incorporated by reference herein.

FIELD OF THE INVENTION

[0002] The present invention relates generally to propulsion systems.

BACKGROUND OF THE INVENTION

[0003] Sixty-six years after the Wright brothers made their first, sustained powered flight, Neil Armstrong walked on the Moon. Incredible progress to be sure, but can this pace of innovation be sustained? Will we soon visit neighboring planets or the nearest stars? Can we reach these destinations with the technology that got us to the Moon? If we can't, what propulsion technologies might be able to take us to these unthinkably remote places?

[0004] Current propulsion technology is based on an action-reaction principle, whereby a gas is expelled at high-speed to propel a payload in the opposite direction. This technology is typically embodied as a chemical rocket engine. While a payload can be rapidly accelerated using a chemical rocket, fuel is quickly consumed to develop the required thrust. To illustrate the problem, consider that if a spacecraft could be powered to achieve a constant acceleration of only 1 g, the trip from Earth to Mars would require about 2-4 days. In fact, modern chemical rocket engines can achieve accelerations much greater than 1 g. But even at 1 g, the fuel would be exhausted within minutes. As a consequence, the trip to Mars from Earth via chemical rocket takes about six months.

[0005] With current chemical-rocket technology, most of the weight at launch is fuel. For example, a typical choice for a mission to Mars would involve the Boeing Delta II 7925 or 7925H rocket stages. In its common configuration, the RS-27A engine of the Delta II first stage, along with an additional nine strap-on sold rocket motors, will have a mass of about 285,000 kilograms at launch. But of this mass, only slightly more than 1000 kilograms will reach Mars.

[0006] As noted above, the delivery of several tons of a payload to Mars via chemical rockets is contemplated to take about six months, with total mission duration of about two to three years. For the majority of transit time, astronauts will be weightless, which is known to adversely affect the human body. Furthermore, the astronauts will be subject to exposure from harmful radiation. Additionally, the prospects of mounting a rescue or recovering from a serious malfunction are slim due to the transit times involved.

[0007] And the distances involved in interstellar travel are so large that with this technology, a trip to even the nearest star systems would take hundreds to thousands of years.

[0008] It seems clear that current technology does not provide a means to manned exploration of the Solar System or beyond. That being the case, can technological approaches be conceived that will send spacecraft from the Earth to destinations within the Solar System in a matter of days or weeks, as opposed to years or decades? Any such approach will face a daunting technological requirement. Namely, in order to drastically reduce travel time to "neighboring" planets and "nearby" stars, exceedingly large velocities must be achieved—velocities that are on the order of a significant fraction of the speed of light.

[0009] Proposals that meet this mission time requirement will, therefore, typically require what can only be described as "fantastic" technologies. From a feasibility perspective, perhaps the most "promising" of those technologies that have been proposed is the matter-antimatter drive. When combined, matter and antimatter will completely annihilate, releasing unfathomable quantities of energy. But even if we were able to develop a matter-antimatter drive, its use should be proscribed. The reason is that if antimatter were to leak from its containment chamber while in the vicinity of Earth, there is a distinct possibility that the resulting energy release would destroy Earth or at least cause the extinction of all life thereon.

[0010] Another exotic propulsion technology is the "solar sail." Although solar sails can produce momentum by reflecting a portion of the light that they receive from the sun, this approach, on its own, does not offer a solution to the problem of achieving interstellar or even interplanetary travel. More specifically, in order to deliver a space probe to a nearby star in less than a century, the sail must be driven by laser light aimed at it throughout the trip. The power requirement for the laser, which would be located on Earth, is on the order of hundreds of thousands of terawatts. For the sake of comparison, the current planetwide consumption of electricity is on the order of about 1 terawatt. And this approach has a further complication. Namely, the craft must be slowed from a non-trivial fraction of the speed of light to orbital velocity at its final destination using light that is coming from earth. This would require the coordination of very complex maneuvers that, if not carried out correctly, might result in the destruction of the ecosystem of the destination planet.

[0011] In the late 1990s, NASA established and funded a program, now defunct, called the "Breakthrough Propulsion Program." The program's charter was to evaluate entirely new propulsive principles that would enable interstellar or at least interplanetary travel. Technologies under consideration included the Schlicher thruster, Deep Dirac Energy, Podkletnov gravity shielding, Podkletnov force-beam, transient inertia, coupling between electromagnetism and spacetime, gravity modification schemes, anomalous heat effect, Biefeld-Brown effect, warp drives, wormholes, high-frequency gravitational waves, superluminal tunneling, the Slepian Drive, and the quantum vacuum (e.g., dynamical Casimir effect, etc.).

[0012] Unfortunately, none of these approaches were deemed to be promising. For example, one study pertaining to the quantum vacuum concluded that the acceleration of a spacecraft propelled by the dynamical Casimir effect would, after ten years under acceleration, be traveling at 0.1 meters per second!

[0013] In light of the foregoing, it seems likely that an as yet unidentified propulsion technology will be required to make routine, manned interplanetary and interstellar travel a reality.

SUMMARY

[0014] The illustrative embodiment of the present invention is a system and method for propulsion that avoids some of the drawbacks of the prior art. Unlike conventional propulsion technology, the propulsion system described in this specification does not consume fuel (although there is an energy requirement). In fact, the system does not even use fuel, as the term is commonly used.

[0015] The illustrative embodiment is grounded in accepted physics principles, albeit leading-edge theoretical, experimental and applied physics. The propulsion method does not violate basic physical "laws," such as the conversation of momentum. The equations on which the propulsion system is based are clearly established in the art, although extended to a domain of applicability and mode of use that has not been previously contemplated.

[0016] The propulsion system operates by modifying the dispersion force (i.e., van der Waals) that arises between particles, such as neutral atoms. The following two discoveries by the inventor enable the propulsion system:

[0017] (1) The dispersion force interaction between any two neutral atoms is affected by the presence of an external gravitational field in a way that results in a repulsive force upon the atomic pair.

[0018] (2) The distortion of the dispersion interaction described above, which is usually quite small and is proportional to the number of atoms present, can be magnified by many orders of magnitude. This requires that (a) the atom-atom interaction to be transformed from a relatively shorter-range interaction to a relatively longer-range interaction; and (b) a very large number of atoms are present for mutual interaction.

[0019] A method in accordance with the illustrative embodiment of the present invention comprises:

[0020] generating a lifting force by subjecting a plurality of confined particles to a trigger acceleration; and

[0021] exposing the particles to an amount of electromagnetic radiation that is sufficient to induce the lifting force to:

[0022] (i) exhibit relatively long-range interactions; and

[0023] (ii) increase the momentum of the particles; and

[0024] transferring at least a portion of the increase in momentum to a vehicle.

[0025] To begin the propulsion cycle, the particles must be subjected to acceleration, that is, the "trigger" acceleration. This can be accomplished, for example, by supporting a craft that contains the propulsion system in a gravitational field (i.e., the craft cannot be in free fall). Or, acceleration can be kinematic, such as by rotating the craft, or using a conventional propulsion system to accelerate the craft. The force is referred to as a "lifting" force because it's direction is opposite to the weight of the particles.

[0026] In the illustrative embodiment, the particles are neutral atoms, the atoms are confined in an atomic trap, and a laser provides the electromagnetic energy that is required to transform the atom-atom interaction from a short-range to a long-range interaction and to increase the momentum of the atoms.

[0027] Some of the increase in momentum of the atoms is transferred to a vehicle, such as a spacecraft. This transfer of momentum propels the vehicle. In the illustrative embodiment, this is accomplished by letting the atoms work against a piston, which in turn impacts against a part of the vehicle. Atoms that hit the piston are recycled to the atomic trap for the next propulsion cycle.

[0028] Several points of explanation or definition will be useful in understanding the illustrative embodiment of the present invention and its underlying principles.

[0029] The term "long range" interaction or force usually describes a force that decays with distance as I/R^n, where n is a positive number. The term "short range" interaction or force usually describes a force that decays with distance as exp[−R]. Those conventions are not followed in this disclosure. Rather, for the purpose of this disclosure and the appended claims, terms that "short range" and "long range" are comparative or relative terms. For example, the language "inducing the lifting force to exhibit relatively long range interactions" means that the lifting force is induced to exhibit a relatively longer-range interaction than is normally the case.

[0030] Since the momentum that is donated by the particles propels the vehicle, there might be a tendency to characterize the particles as "fuel." But the particles are not "fuel" in any conventional sense of that term. They simply serve as a "momentum exchanging element."

[0031] It is important to recognize that the particles are not accelerated by the wall of the spacecraft but, rather, by their mutual dipole fields (van der Waals force) as distorted by the craft's acceleration (gravitational or otherwise). In other words, this method does not violate the action-reaction law, since the motion of the particles is not due to action of vehicle upon them.

[0032] An example of "action of the vehicle" on the particles is if the atoms were accelerated due to an explosion in the trap. In that case, the net of all internal forces on the system would be zero and, at the end of the process, the craft would not gain any momentum. In accordance with the illustrative method, however, the atoms accelerate towards the piston, etc., independently of the vehicle and do transfer a net amount of momentum to it during impact.

[0033] The lifting force that is "generated" by the method is not a new force. Rather, it is simply the vertical component of a known intermolecular force; in particular, the van der Waals force. This vertical component arises from an asymmetry in the van der Waals force that results from the introduction of a gravitational field (or acceleration). There would be no such asymmetry, nor vertical component of force, in flat space-time.

[0034] This result—that the interaction potential between two neutral atoms in their ground state depends upon the position of the atoms in a gravitational field—is new. Previous studies pertained to the distortion of the field of two point charges, not two dipoles (atoms). While this "new" force is measurable with presently existing technology,

harnessing it, such as to lift an object, is not feasible, since this force amounts to an exceedingly small correction to the total weight of each atom.

[0035] It is useful to note that using many such atom pairs does not improve this situation, because that does not result in a larger force per atom. The reason for this is that the inter-atomic energy is a function, to a large power, of the reciprocal of distance. In other words, the atom-atom dispersion-force interaction is a realtively short-range force. As a consequence, the total "lifting" force on a large number of atoms is increased only minutely with respect to the lifting force acting on just one pair of atoms. That is, if the number of atoms is N, there will be about N pairs (for N>>1) to consider, but the mass of the system also goes up as N. So, there is no gain realized by adding atoms.

[0036] Critical to the present invention is the inventor's recognition that if this newly discovered "effective force" could be transformed from a relatively short-range interaction into a relatively long-range interaction, the lifting force that is available would be greatly increased. In particular, if particles could be made to interact over the long range, then the total energy of the system results from the interaction of every particle with all other particles present. For large groups of particles (N>>1), the interaction grows as N^2, while the total mass of the system is only growing proportionally to N. As a consequence, a large gain in energy can be realized by using large groups of particles.

[0037] A mechanism for transforming relatively short-range interactions into relatively long-range interactions was theoretically discovered several years ago and has been re-evaluated more recently as a way to introduce unusual behaviors in a cloud of trapped atoms. See, Kurizki et al., "New Regimes in Cold Gases Via Laser-Induced Long-Range Interactions," . . . The method involves isotropic illumination of atoms by lasers. That technique, with several modifications, is utilized in conjunction with the illustrative embodiment.

[0038] As previously noted, the present propulsion system and method overcomes a key drawback of chemical engines; namely, the fact that at some point, the fuel is expended. In accordance with the illustrative embodiment of the present invention, it is possible to maintain acceleration without expelling high-speed gases. In other words, the propulsion system does not require fuel. Alternatively, if the "particles" are considered to be "fuel," then there is no consumption of fuel due to the process.

[0039] As previously mentioned, the illustrative propulsion systems and methods described herein are not energy free. In particular, to achieve the required transformations, an intense radiation field, such as can be generated by powerful lasers, must be developed throughout the region in which the particles are trapped. In the case of a craft destined for extremely long interplanetary or interstellar flights, the energy required to power the lasers is obtained, for example, from an on-board nuclear reactor, akin to the reactors powering some submarines.

[0040] The propulsion system described herein has many applications. In particular, in addition to its use as a propulsion system for spacecraft, it can be used to deliver a payload into low earth orbit without requiring orbital speeds. Furthermore, a small version of the propulsion system could be attached to literally any item (e.g., a pallet of goods, a railroad car, etc.) so that the item could be readily moved (e.g., in a warehouse, loaded onto a cargo ship, etc.) as needed. The propulsion system can, of course, also be used in conventional aircraft.

[0041] Additionally, the present propulsion system can be used to supplement a main, conventional propulsion system. In fact, this would facilitate phase-in to replace conventional technologies. For example, a propulsion system in accordance with the illustrative embodiment that is not sufficiently powered to bring a craft to a hover could be used to effectively reduce the mass of the craft, thereby improving the fuel consumption of the main propulsion system. Alternatively, it could be used as a supplemental system for emergencies.

BRIEF DESCRIPTION OF THE DRAWINGS

[0042] FIG. **1** depicts distortion in the spherical symmetry of the field of a simple charge, as caused by the presence of a gravitational field.

[0043] FIG. **2** depicts distortion in the cylindrical symmetry of the field of a classical dipole, as caused by the presence of a gravitational field.

[0044] FIG. **3** depicts a propulsion system in accordance with the illustrative embodiment of the present invention.

[0045] FIG. **4** depicts the propulsion system of FIG. **3**, wherein lasers are illuminating confined particles.

[0046] FIG. **5** depicts the propulsion system of FIG. **3**, wherein particles impact against an elastically-bound piston.

[0047] FIG. **6** depicts the propulsion system of FIG. **3**, wherein particles are pumped back to a reservoir for use in a subsequent propulsion cycle.

[0048] FIG. **7** depicts a method in accordance for propulsion in accordance with the illustrative embodiment of the present invention.

[0049] FIG. **8** depicts a schematic of a vehicle that incorporates the propulsion system of FIG. **3**.

[0050] FIG. **9** depicts a schematic of the nuclear power subsystem of the vehicle of FIG. **8**.

DETAILED DESCRIPTION

[0051] This Detailed Description proceeds with Section 1.1, which provides a description of propulsion system **100** and a method for propulsion in accordance with the illustrative embodiment of the present invention. Section 1.2 discloses a vehicle that incorporates propulsion system **100**. The remaining sections, which include Sections 2.1-2.4 and 4 provide a theoretical development for propulsion system **100** and performance estimates.

1.1 Propulsion System **100**

[0052] FIG. **3** depicts propulsion system **100** in accordance with the illustrative embodiment of the invention. Propulsion system **100** includes particles **102**, chamber **104**, piston **108**, source(s) of electromagnetic radiation **110**, return line(s) **112**, and pump(s) **114**, interrelated as shown.

[0053] FIG. **7** depicts method **700** for propulsion, which can be used in conjunction with propulsion system **100**. In accordance with operation **702** of method **700**, a plurality of particles are confined.

[0054] FIG. **3** depicts propulsion system **100** at the beginning phase of the propulsion cycle. Particles **102**, which in some embodiments are ground-state atoms, are confined in particle trap **106** of chamber **104** in known fashion and in accordance with operation **702**.

[0055] In operation **704**, particles **102** are subjected to a trigger acceleration. This can be accomplished, for example, by supporting propulsion system **100** in a gravitational field. Assuming propulsion system **100** is in a vehicle, such support is provided, for example, if the vehicle is at rest on the surface of the Earth or in flight, as long the vehicle is not in free fall. In some alternative embodiments, the trigger acceleration can be kinematic, such as by rotating the craft, or by using a conventional propulsion system to accelerate the craft.

[0056] At operation **706**, the particles are exposed to an amount of electromagnetic radiation that is sufficient to:

[0057] 1. induce an effective inter-particle force that arises between said particles to exhibit long-range interactions; and

[0058] 2. increase the momentum of the particles.

This operation is depicted in FIG. **4**, wherein sources of electromagnetic radiation **110** ("EM sources 110") are activated and directed toward particles **102**. In some embodiments, the EM sources are high-power lasers. In the FIG. **4**, two EM sources **110** are shown. Depending upon the power required for a given embodiment, far more EM sources might be required. Power requirements for driving the propulsion system are described in

[0059] The EM radiation causes an upward acceleration of particles **102** with respect to a vehicle, etc., that houses propulsion system **100**. In the case of an ideal propulsion system, particles **102** remain trapped in place (in particle trap **106**) as they mutually interact and the craft is accelerated upward by the reaction of the atoms themselves against whatever forces are used to keep them in trap **106**.

[0060] It is possible, if not likely, that once particles **102** are accelerated by conducting operations **704** and **706**, they will escape from particle trap **106**. This is a non-ideal situation, which yields less than the ideal momentum. But, if particles are allowed to escape, this relaxes the constraints on particle traps **106**. That is, suitable traps can be readily constructed with existing technologies. See, e.g., H. J. Metcalf and P. van der Straten, *Laser Cooling and Trapping* (Springer, N.Y., 1999); http://ww.rle.mit.edu/cua/research/project02/project 02.vandp.htm. These references describe techniques for trapping atoms at extremely low temperatures.

[0061] Although it is necessary for the generation of the lifting force itself, it is desirable to trap particles at very low temperatures because the thermal speed of, for example, atoms, even at room temperature, is comparable to the maximum speeds that can be obtained by this method. It is, therefore, "easier" to illuminate the atoms for an appropriate length of time if they are not moving at very high thermal speeds.

[0062] Continuing with the description of method **700**, operation **708** recites impacting the accelerated particles against a surface, thereby transferring some of the momentum of the particles to the surface. This operation is depicted in FIG. **5**, wherein particles **102** impact piston **108** at high speed.

[0063] Piston **108** functions as a shock absorber. That is, the piston provides an area against which particles **102** can impact and which can transfer momentum to the vehicle non-destructively at every forward stroke. In propulsion system **300**, non-destructive momentum transfer is indicated by spring **116**, which elastically couples piston **108** to a vehicle. Shock absorber technology for aerospace applications is well developed within the context of pyrotechnic release technology. See, e.g., N. Butterfield, *Pyrotechnic Release Devices, in Space Vehicle Mechanisms,* P. Conley, Ed. (Wiley, N.Y., 1998).

[0064] As illustrated in FIG. **5**, in propulsion system **100**, as piston **108** moves upward, return lines **112** are accessed. The return lines provide a route back to particle trap **106**. As particles move away from piston **108**, the piston drops back to a seated position against chamber **104**.

[0065] FIG. **6** depicts particles **102** in return lines **112**, being pumped via pumps **114** toward a gas reservoir (not depicted) for reuse in a subsequent propulsion cycle. The propulsion cycles occur at a rapid and substantially continuous pace.

[0066] It is very important to recognize that in propulsion system **100**, and in accordance with method **700**, particles **102** are NOT being accelerated by the walls of the vehicle or by the chamber in which they reside. Rather, they are accelerated by their mutual dipole fields, as distorted by vehicle acceleration (i.e., gravitational or otherwise). There is, therefore, no concern that this scheme violates the action-reaction law, since the motion of particles **102** is NOT due to an action upon them by the vehicle.

[0067] An example of a situation in which the walls of the vehicle are acting on particles **102** is if the particles were accelerated by an explosion in chamber **104**. In such a case, the net sum of all internal forces on the system would be zero and, at the end of the process, the vehicle would not gain any net momentum. But using the methods and apparatus described herein, particles **102** are accelerated toward piston **108** INDEPENDENTLY of the vehicle and, on impact, transfer a net amount of momentum to it.

1.2 Vehicle Incorporating Propulsion System **100**

[0068] FIG. **8** depicts vehicle **800**, which incorporates propulsion system **100** in accordance with the illustrative embodiment of the present invention. As depicted in FIG. **8**, vehicle **800** includes propulsion subsystem **100**, nuclear power subsystem **810**, crew quarters **830**, and shielding **840**, arranged as shown.

[0069] The presence of nuclear power subsystem **810** requires the use of shielding **840** to protect crew quarters **830** and propulsion subsystem **100**. Those skilled in the art will be capable of designing and building shielding suitable for this purpose.

[0070] The purpose for nuclear power subsystem **810** is to generate electricity to power EM source(s) **110**. Nuclear power is used as a power source due to the ability of a nuclear reactor to provide continuous power for extended periods of time (e.g., several years, etc.). Operation of

nuclear power subsystem **810** is described in more detail below in conjunction with FIG. **9**.

[**0071**] Propulsion subsystem **100** couples to shielding **840**, which receives momentum transferred from piston **108** (see FIGS. **3-7** and the accompanying description). This substantially continuous transfer of momentum from particles **102** to piston **108** to vehicle **800** (e.g., shielding **840**) drives the vehicle.

[**0072**] In the embodiment that is depicted in FIG. **8**, propulsion subsystem **100** is disposed an end of vehicle **800**. This location draws maximum advantage from a rotational trigger acceleration while providing the crew, in crew quarters **830**, with appropriate gravity-like conditions.

[**0073**] FIG. **9** depicts an embodiment of nuclear subsystem **810** suitable for use to provide electricity to drive EM sources **110** (e.g., lasers, etc.) in propulsion subsystem **100**. The embodiment that is depicted in FIG. **9** is a direct Rankine cycle continuous power system. (See, e.g., M. W. Edenburn, "Models for Multimegawatt Space Power Systems," Sandia Report SAND86-2742 (June 1990). This type of system is suitable for use with vehicle **800** due to its ability to provide continuous power for several years.

[**0074**] Nuclear subsystem **810** includes nuclear reactor **812**, separator **814**, turbine **816**, radiator **818**, pump **820**, generator **822**, and power conditioning unit **824**.

[**0075**] Reactor **812**, which is liquid metal cooled, boils potassium and sends the saturate vapor to turbine **816** for power generation. Since the fluid leaving the "hot" end of reactor **812** is unlikely to be pure vapor, separator **814** is used to separate the saturated vapor from its accompanying liquid. The liquid is recirculated to the "cold" end of reactor **812**.

[**0076**] Waste heat is rejected by space radiator **818**. Since the system rejects heat from a condensing working fluid, the radiator operates nearly isothermally and radiates a relatively large amount of heat per unit area. Condensed liquid is returned to the "cold" end of reactor **812** via pump **820**.

[**0077**] Electricity that is produced by generator **822** is appropriately conditioned in power conditioning unit **822** to provide EM sources **110** with a suitable supply of electrical power.

2.1 Distorted Dipole-Dipole Potential

[**0078**] It is already a well-known fact that a gravitational field can introduce novel forces acting on a single charge or on a dipole. An example is the self-interaction of a point charge in a Schwarzschild geometry [8], ultimately due to the term Linet [9] discovered has to be added to the Copson potential [10] in order to satisfy the appropriate asymptotic boundary conditions for this problem. Commenting about the very extreme conditions nearby a miniblack-hole, Smith and Will wrote that "[I]t is amusing to note that . . . the test particle's electrostatic self-force would suffice to support it against the hole's gravity, without the help of any external force."

[**0079**] Unfortunately, however, such fascinating conclusion is undermined by the fact that, as pointed out by these authors, "it is meaningless to talk of an electron being held fixed at, say, 10^{-13} cm from a miniblack hole, when the Compton wavelength of an electron is two orders of magnitude larger than this. "Following this approach, the self-interaction of a static dipole has also been calculated [11], but Parker has shown that this force has no effect on the Hamiltonian of a neutral atom in free-fall [12].

[**0080**] Another example is the "electrostatic levitation of a dipole," predicted on the basis of the distortion caused by a uniform gravitational field [13]. This author found that "one is unlikely to witness such levitation," which could only be observed in a fixed classical dipole whose electron charge separation is 1.4×10^{-15} m. The outlook for detection of these field distortion phenomena was effectively summarized by Boyer, who stated that " Clearly our example may be instructive from a theoretical point of view, but it does not lend itself to easy experimental measurement."[14]

[**0081**] In this section, we consider the effect of a weak gravitational field upon intermolecular forces. In particular, the effect of gravitation on the van der Waals hydrogenic interatomic potential in the unretarded regime is discussed within non-relativistic first-order perturbation theory. The quantitative conclusion of these computations is that the system proposed herein shows extreme promise for direct experimental verification although the effect is certainly too small to be of any practical engineering use in the field of propulsion.

[**0082**] The first step to obtain the distorted dipole-dipole potential is the calculation of the electrostatic potential, and thus of the electric field, of a point dipole in the presence of gravitation. For this purpose, let us start by considering the potential field of a single point charge q located at a position $r_0=x_0^i$ in the quasi-homogeneous gravitational field caused by a relatively distant spherically symmetrical mass distribution M located at a radial distance R from the dipole. This has been the subject of several investigations, starting with the pioneering work of Whittaker [15].

[**0083**] Since we are considering a charge in a gravitational field g antiparallel to the z-axis and located at a position other than the origin, we transform the unprimed Rindler coordinates defined by the usual metric

$$ds^2 = \left(1 + \frac{gz}{c^2}\right)^2 c^2 dt^2 - (dx^2 + dy^2 + dz^2), \tag{1}$$

by introducing new primed coordinates given by $t=(1+gz_0/c^2)^{-1}t'$, $x^i=x_0^i+x'^i$. By substituting these definitions into Eq. (1), it is simple to show that the metric in the new coordinates is:

$$ds^2 = \left(1 + \frac{G_R z'}{c^2}\right)^2 c^2 dt'^2 - (dx'^2 + dy'^2 + dz'^2), \tag{2}$$

where $G_R g/(1+gz_0/c^2)$. With this result, we can transform Whittaker's expression for the electrostatic potential in Kottler-Whittaker coordinates into our transformed Rindler frame (for simplicity of notation, we neglect to write the primes in what follows):

$$V(r;r_0)=\frac{q}{|r-r_0|}\frac{\left[1+\frac{g(z+z_0)}{c^2}+\frac{g^2}{2c^4}(|\rho-\rho_0|^2+(z^2+z_0^2)\right]}{\left(1+\frac{gz_0}{c^2}\right)\sqrt{1+\frac{g}{c^2}(z+z_0)+\frac{g^2}{4c^4}|r-r_0|^4}} \tag{3}$$

where $|r-r_0|^2=(x-x_0)^2+(y-y_0)^2+(z-z_0)^2$, $|\rho-\rho_0|^2=(x-x_0)^2+(y-y_0)^2$. This expression of course approaches the Coulomb potential as gx^i/c^2, $gx_0^i/c^2\rightarrow 0$. In this paper, we shall neglect the Linet term [9] responsible for the self-interaction discussed above since this contribution will be shown to be negligible with respect to the effects treated herein.

[0084] In order to write down the electrostatic dipole field in the presence of a gravitational field, we use the formulation of Leaute and Linet, originally designed to calculate the self-interaction of an electric dipole [11]. For a point dipole A of moment $d_A=d_A^i$, with k=1 . . . 3, located at r_A, the result found by these authors, neglecting the self-interaction term [12], can be written as:

$$U_{dip,W}(x^k,x_A^k)=d_A^i\frac{\partial V_C(x^k,x_0^k)}{\partial x_0^i}\bigg|_{r_A}, \tag{4}$$

where V_C is the Copson potential, which, in the quasi-homogeneous field limit, coincides with our solution above.

[0085] Since, to the best of this author's knowledge, this potential has never been graphically represented, it is shown, along with the corresponding electric field lines, in FIG. **3** for a point dipole $d_A^i=d_Ak$.

[0086] By computing the electric field as usual, after some very lengthy algebra [13] one obtains the general expression for the interaction potential energy $W_{dd}(r, r_0; d_A^i, d_B^i)$ of two point dipoles of moments d_A^i and d_B^i, placed at positions r_0 and r, respectively. In order to illustrate the physical meaning of this result, let us write it to second order in gR/c^2 for the case of dipole A placed at the origin and dipole B placed at r=(R, 0, 0):

$$W_{dd}\approx\frac{q^2}{R^3}\left[(x_Ax_B+y_Ay_B-2z_Az_B)+\frac{1}{2}\left(\frac{gR}{c^2}\right)\left(1-\frac{gR}{c^2}\right)(x_Ax_B+y_Ay_B)\right], \tag{5}$$

which again yields the usual Minkowski space result [17] if the gravitational field is absent. Interestingly, the asymmetry due to the presence of the gravitational field causes a net vertical force upon each dipole in this geometry where there would of course be none in flat space-time. For instance, in the case of two antiparallel dipoles $d_A^i=-d_B^i=d_Ak$, we find that this force $F_{dd}=-\partial W_{dd}/\partial Z$ is, again to second order:

$$F_{dd,z}=\frac{3}{2}\frac{q^2}{R^3}\frac{g}{c^2}z_A^2, \tag{6}$$

which is the dipole-dipole analogy of the levitation force upon a single dipole mentioned at the beginning of this section [15].

[0087] The problem of a single hydrogenic atom either held fixed or in free-fall within various assigned metrics has been discussed extensively by starting from generally covariant expressions of the Dirac equation in curved space-time [18]. The present author has discussed realistic astrophysical settings for the observation of the perturbative effects of gravitational fields on freely-falling atoms both in the static case and within the framework of possible remote gravitational wave detection [19].

[0088] Tourrenc and Grossiord, in their treatment of a hydrogen atom held fixed in a Schwarzschild geometry, have shown that the most significant contribution to the perturbative Hamiltonian by far derives from what can be interpreted as the classical weight of the electron in the gravitational field. However, since the corresponding energy shift for a ground-state atom is found to be $\Delta E\sim 2(GMm^e/R^2)a_0\approx 6\times 10^{-21}$ eV, we shall neglect it here and use the unperturbed hydrogenic wavefunctions to evaluate the interatomic gravitational self-force.

[0089] As in the undistorted van der Waals case, the general expression for the potential $W_{dd}(r, r_0; d_A^i, d_B^i)$ contains only bilinear forms of the type $x_A^ix_B^j$ and thus yields no first-order contribution in the case of symmetrical hydrogenic nS. The second order correction on the other hand is [20]:

$$\Delta E_{vdW}^{(2)}=\sum{}'\frac{|<\phi_{n,l,m}^A;\phi_{n',l',m'}^B|W_{dd}(r,r_0;d_A^i,d_B^i)|\phi_{1,0,0}^A;\phi_{1,0,0}^B>|^2}{-2E_I-E_n-E_{n'}}, \tag{7}$$

where $|\phi_{n,l,m}{}^A>$ are the unperturbed eigenfunctions of energy E_n, the total energy of the unperturbed atomic pair is $-2E_I$, and the primed summation indicates that the $|\phi_{1,0,0}{}^A;\phi_{1,0,0}{}^B>$ term is excluded.

[0090] By inspecting Eq. (5), it is evident that, in the gravitational case, the second order inter-molecular potential, to second order in gx^i/c^2, takes on the general form:

$$\Delta E_{vdW}^{(2)}=\frac{C_0}{R^6}+\left(\frac{g}{c^2}\right)\frac{C_1}{R^5}+\left(\frac{g}{c^2}\right)^2\frac{C_2}{R^4}, \tag{8}$$

where C_0, C_1, and C_2 are appropriate dimensional constants, which in principle depend on the variables r, r_0, d_A^i, and d_B^i. For instance, again in the geometry used in the examples above, one can quickly recover the well-known result that $C^0\approx -6e^2a_0^5$ as well as show that $C_1\approx 2e^2a_0^5$, and $C_2\approx +3/2e^2a_0^5$, where a_0 is the Bohr radius.

[0091] In our case, however, we are not here interested in the modification of the intermolecular forces due to the presence of gravitation, but rather we want to pursue isolating the vertical component of the gravitational self-force due to the dipole-dipole interaction of two hydrogenic atoms in the |1,0,0> eigenstate located at $r_0=0$ and r=(R, 0, 0), respectively:

$$F_{sf,z}^{(2)}=-\frac{\partial}{\partial z}\Delta E_{vdW}^{(2)}\approx \tag{9}$$

-continued

$$-\frac{|<\phi^A_{1,0,0};\phi^B_{1,0,0}|\frac{\partial}{\partial z}W_{dd}(r,r_0;d^i_A,d^i_B)|\phi^A_{1,0,0};\phi^B_{1,0,0}>|^2}{-2E_I},$$

Explicit evaluation [13] yields the following result to first order in gx^i/c^2:

$$F^{(2)}_{sf,z}\approx\frac{e^4}{2E_IR^6}\frac{g}{c^2}<\phi^A_{1,0,0};\phi^B_{1,0,0}|(4x_A^2x_B^2-4x_Ax_By_Ay_B+y_A^2y_B^2-3z_A^2x_B^2-14x_Ax_Bz_Az_B+4y_Ay_Bz_Az_B-3x_A^2z_B^2+3z_A^2z_B^2)|\phi^A_{1,0,0};\phi^B_{1,0,0}>. \quad (10)$$

By again making use of the fact that the cross terms vanish in the is state and that $<\phi_{1,0,0}{}^A|x_A{}^2|\phi_{1,0,0}>=<\phi_{1,0,0}{}^A|\frac{1}{3}r_A{}^2|\phi_{1,0,0}{}^A>$ and equally for all the other squared terms, we finally find:

$$F^{(2)}_{sf,z}\approx+\frac{e^4}{2E_IR^6}\frac{g}{c^2}\times2\left|<\phi^A_{1,0,0}\left|\frac{1}{3}r_A^2\right|\phi^A_{1,0,0}>\right|^2=+2\frac{e^2a_0^5}{R^6}\frac{g}{c^2}=+\frac{1}{16}\hbar\omega_0\frac{\alpha_0^2}{R^6}\frac{g}{c^2}, \quad (11)$$

where the last equality was obtained by writing the ionization energy and the polarizability as $E_I=e^2/2a_0$ and $\alpha_0=(2a_0)^3$, respectively. Notice that this result does not coincide with what one might expect from naively calculating one half of the negative contribution to the gravitational mass of the London binding energy of the pair, since in that case the coefficient would be ⅜ and not 1/16.

[0092] An explicit estimate of this result in the case of two hydrogen atoms in their ground state at, for instance, 20 a_0, yields a relative acceleration $\alpha_{lift,H}\sim4\times10^{-13}$ cm/s^2. The situation improves dramatically if one considers two positronium (Ps) atoms, in which case we find $\alpha_{lift,\ Ps}\sim8\times10^{-10}$ cm/s^2, which is in principle detectable via atomic interferometry, at the price of dealing with the added complications of interferometry of atoms with a finite lifetime.

2.2 Revelance of the Above Results

[0093] The above results show that the distortion of the classical dipole-dipole field caused by gravity results in a net force upon each dipole, which is anti-parallel to the weight of each atom. This phenomenon has been known for some time, although its implications at the quantum level have not been fully explored and engineering implications do not appear to have attracted their due attention. Interestingly, the warping of the Coulomb field due to gravitation renders their mutual interaction non-central, which in turn implies that Newton's action-reaction law will not be satisfied by this system. Although there is no study of this exotic problem in the literature, it is clear that, if the problem were to be considered from the standpoint of full quantum electrodynamics (QED), it would result that the virtual photon field responsible for the charge-charge interaction is perturbed by the gravitational acceleration so as to carry a net momentum flux, part of which is simply transferred to the dipole, or dipoles, thus resulting in their upward motion.

[0094] Importantly, this phenomenon makes the interaction energy between two hydrogen atoms in their ground state dependent upon their position within the gravitational field, which results in a force upon the pair even in the quantum case. The existence of this additional force acting on an atomic pair is by itself a new result, since previous studies had concentrated on the distortion of the field of two point charges, and not of two dipoles. Despite the fact that this new and additional force is measurable with presently existing technology, its use in an actual lifting device is unlikely, since it amounts to a very small correction of the total weight of each atom.

[0095] The important consideration, critical to the present invention, is that adding many atomic pairs does not result in a larger force per atom. The reason for this is that the interatomic energy is a function of a large power of the reciprocal of the distance—which results in the atom-atom dispersion interaction being a short-range force. Therefore, the total lifting force on a large number of atoms is increased only very slightly with respect to that acting on just one pair. Therefore, if the number of atoms is N, there will be ~N pairs to consider but the mass of the of the system also went up as N. Thus no gain is made.

[0096] The critical, and non-obvious, point of the present invention is to transform the new force outlined above from a short-range force into a long-range force, as we consider in the next section. In principle, if point-like particles interact via a long-range force, the total energy of the system results form the interaction of every atom with all the others, something which is not possible in the short-range. For instance, if a system is made up of three particles, the total energy will result from the interaction of particle 1 with 2, particle 1 with 3, and particle 2 with 3. However, if the number of particle is now ten, we will have to consider the interaction of particle 1 with 2, 3 . . . , 10, and so fort, which results, in the case of a large number of particles. For large N (N>>1), in this case the number of interaction grows as N^2, while the total mass of the system is still only growing proportionally to N.

[0097] This point would only be of philosophical importance if we did not have available a mechanism to indeed transform atom-atom interactions from short-range into long-range. Such mechanism was discovered theoretically several years ago and has been reproposed recently as a way to introduce unusual behaviors in a cloud of trapped atoms. Atomic traps have become one of the hottest subjects of scientific research in recent years. The method proposed by the researchers to cause the atom-atom interaction to become a long-range force can of course also be used in our case to leverage the presence of a large number of atoms so as to make the lifting force due to the gravitational distortion we have seen above much larger by many orders of magnitude. The technological price to pay is that, in order for this transformation to occur, powerful lasers must be pumping an intense radiation field throughout the region where the atoms are trapped.

2.3 Trapped Gases in Curved Space-Time: The Effect of Radiation Fields

[0098] It is well-known that an intense directional radiation field, such as that produced by a laser, alters the nature

of intermolecular forces [21]. For instance, in the near zone region, where $k_L R \ll 1$ and k_L is the laser light wavenumber, the power dependence of the force becomes $\alpha - 1/R^3$. Importantly, if a molecular pair is allowed to "tumble" with equal probability in all directions with respect to the radiation field, the unretarded force averages out and the only term left is that due to the retarded part of the Hamiltonian. The resulting contribution, which can be produced by appropriate laser beams [22] and is still attractive, is [21]:

$$\Delta E \simeq -\frac{44}{15}\left(\frac{I\pi k_L^2}{c}\right)\frac{\alpha^A(k_L)\alpha^B(k_L)}{R}, \quad k_L R \ll 1, \tag{12}$$

where $\alpha^{A,B}(k_L)$ are the dynamic polarizabilities of the two atoms, I is the intensity of the beams, and the domain of validity of this result is everywhere in space except where the atom-atom exchange interactions become important. It is simple to see numerically that this energy is much smaller than the usual van der Waals force at near range but, as originally pointed out by Thirunamachandran [21], the long-range nature of the force offers the potential to actually achieve remarkable effects.

[0099] Let us now consider the distortion of Thirunamachandran's long-range interaction due to an external gravitational field, such as that present in a ground-based laboratory. One is fully justified by both our results in the unretarded case and by dimensional considerations to assume that a molecular pair interacting through the gravity-like attractive long-range force at Eq. (12) will also undergo a lifting force of the type:

$$F_{lift,z}^{AB} \sim \left(\frac{Ik_L^2}{c}\right)\frac{\alpha^A(k_L)\alpha^B(k_L)}{R}\frac{g}{c^2}. \tag{13}$$

[0100] For the purpose of order of magnitude estimation, let us write the total potential energy of N atoms contained in a spherical volume of diameter D interacting through a mean field determined by Eq. (12) simply as $U_{gas} \sim -N^2 (Ik_L^2/c)\, \alpha_A(k_L)\alpha^B(k_L)/D$. Therefore, the total lifting force acting upon the center-of-mass of the trapped gas is $F_{lift,z}^{gas} \sim N^2 F_{lift,z}^{AB}$, assuming all atoms to be of species A, and the corresponding acceleration is:

$$\frac{a_{lift,z}^{gas}}{g} = \frac{F_{lift,z}^{gas}}{Nm_A g} = N\left(\frac{Ik_L^2}{c}\right)\frac{[\alpha^A(k_L)]^2}{D}\frac{1}{m_A c^2}. \tag{14}$$

The relevant figures of merit to judge the feasibility to bring such an atomic cluster to a hover are the number of atoms in the trap and its size, the intensity and wavelength of the laser light, and the average intermolecular distance. Consider $N=10^2$ atoms in a trap with $D \approx 2\times10^{-7}$ cm, which yields an intermolecular distance $\bar{R} \sim D/N^{1/3} \approx 10a_0$. Now let us have 18 (six triads [22]) high-power lasers each outputting 2.5 kW into a 0.5 cm diameter beam at a wavelength $\lambda_L \approx 1000$ Å. Appropriately focused onto the trap size, this would yield an intensity $I \approx 1.3\times10^{17}$ W/cm^2. By moderate off-resonance detuning, it is possible to obtain dramatic increases in atomic polarizability over its static value [23] (another approach may consist of using a cold gas of highly excited Rydberg atoms, since, in this case, the polarizability is proportional to n^7, where n is the principal quantum number). By adopting $\alpha^A(k_L) \approx 3\times10^5 \alpha_0$, and by substituting the above numerical values into Eq. (14) in c. g. s. units, we find $a_{lift,z}^{gas}/g \approx +1.5$, that is, the system will hover unsupported in the gravitational field of the earth or accelerate upward.

2.4 Relevance of the Above Results

[0101] The mechanism outlined above represents the first novel and realistic proposal to achieve lift in the history of flight since the great inventions of the airplane and of the rocket in the 20th century. As we shall see in the detailed numerical estimates below, more atoms than just 10^2 must be present in the trap for this mechanism to be technologically convenient, although it is possible to trade off a higher laser power for a lower number of atoms in the trap. What is important to stress at this time is that this mechanism represents a non-obvious use of well understood quantum laws in the presence of gravitation for the purpose of creating fuel-free propulsion. Of course fuel-free propulsion does not imply energy-free propulsion. In other words, a source of energy is still needed to achieve the needed thrust. In the case of extremely long interplanetary and interstellar flights it is expected that on-board nuclear energy production will continue to grow in engineering importance, given the fact that no other source has been able to achieve similarly convenient power outputs.

[0102] The above invention, however, removes the greatest problem in the way of achieving fuel-free propulsion, that is, the fact that, independently of the energy source used, at some point the fuel available on board is exhausted. For instance, if one could power a spacecraft so as to achieve a constant acceleration of 1 g, the trip from Earth to Mars would require approximately 2-4 days. Although the acceleration of 1 g is smaller than the larger accelerations achievable by present-day rocket technologies, it is absolutely impossible to maintain those accelerations for times longer than minutes at the most, simply because of quick fuel exhaustion. With the scheme outlined in this invention, on the other hand, it is possible to maintain the needed acceleration without any need to expel high speed gases, provided that the required laser illumination is constantly at work transforming the atom-atom interactions from short-range into long-range ones.

[0103] It is important to stress another characteristic of the propulsive method of this invention. All the calculations carried out so far imply that the atoms are "at rest," that is, not in "free-fall." This is extremely important, since it is only if the atoms are somehow supported by an external force against the gravitational field that a relative acceleration due to that field can affect their mutual interactions. Such is not the case if the atoms are freely falling. In that case, in fact, the acceleration felt by a freely falling object is rigorously zero, because of the Principle of Equivalence at the foundation of the General Relativity theory. To use a well-known popular example, if two atoms are at rest with respect to the walls of a freely falling elevator, they will not feel the presence of any gravitational field—the acceleration of the elevator exactly cancels exactly the gravitational acceleration. In other words, locally, there is no distortion of

the dipole-dipole field and thus no change to the van der Waals force (see below for further subtle clarifications on this point).

[0104] The Principle of Equivalence can be stated by saying that, locally, there exists no experiment that can indicate the difference between the acceleration due to the presence of a gravitational field and that due to the kinematics of the system. For instance, once could simulate the presence of a gravitational field in the same elevator travelling through outer space by simply accelerating it "upwards" at the same rate as the free-fall acceleration it would have in the gravitational field to simulate. In fact, our Eq. (1) above was obtained exactly by making this assumption. Therefore, the atoms will undergo the lifting force at the basis of this invention whether or not there is a gravitational field against which to lift—their behavior is due to their being within an accelerated reference frame no matter what the reason for the existence of such frame.

[0105] In principle, this represents an operational limitation of the present invention, in the sense that, if a spacecraft were to be left to freely-fall in the gravitational field of a massive body, the lifting mechanism would not be operating. For this purpose, the vehicle must be provided with an initial acceleration through other means in order for the thrust cycle described below to commence. For instance, this happens if the craft is at ground level initially, or somehow hovering under the action of an external force. Once the cycle starts, it is only necessary to coordinate the laser illumination of the (n+1)-th cycle to occur during the transfer of momentum due to the atoms that were accelerated during the n-th cycle. The dipole-dipole field during that time will behave as though under the effect of a gravitational field of that acceleration, because of the Principle of Equivalence.

[0106] From the practical standpoint, it is appropriate to stress that every propulsive or lifting system has an appropriate envelope of performance which, is exceeded or not met, will result in insufficient or abnormal behavior. For instance, the lifting force due to the wings of an airplane will cease to be effective if the airflow detaches from the wings because of a stall condition. Therefore, pilots are trained to operate so as to remain well clear of the conditions that might lead to a stall of the airfoils, such as, for instance, excessively low speed for a fixed wing aircraft. Similarly, it is expected that the propulsive system of this invention, in its simplest embodiment, must be operated under appropriate conditions of initial acceleration, in both magnitude and direction. This is much less complicated than it may appear. For instance, in outer space, an initial acceleration can be imparted by causing the entire spacecraft to rotate around an axis by means of a reaction wheel. Once the entire vehicle is rotating like a rigid disk, from the standpoint of the atoms in the propulsive subsystem the rotational acceleration will be indistinguishable from that caused by gravity. Once the thrust cycle is successfully started, the spacecraft can then be despun while the engine provides its own acceleration. In a fixed wing application, it might be possible to make use of the lift provided by the wings themselves in order to start the process.

[0107] Finally, it is also important to stress that the Principle of Equivalence only rigorously applies to a volume of space that is infinitely small. Therefore, there exists some distortion of the dipole-dipole field even in the case of freely-falling atoms, although this distortion is far smaller than that of supported atoms, in the sense described above. The effects of this distortion were studied by this author in several papers (see for instance [19]) and it is therefore possible that lift might be obtained in some embodiments even if the craft is initially in free-fall.

4. Performance

[0108] Estimating the performance of an aerospace propulsion system based upon entirely novel physical principles naturally presents some difficulties. For instance, the typical concept of specific impulse [29] is undefined in the case in which thrust is obtained without the ejection of high speed gases. At the same time, since the approach calls for the use of high power lasers to engineer the atom-atom interactions into a long-range force, it is of interest to determine whether the thrust thus obtained is in fact larger than that which would be obtained if the laser power utilized were, for instance, projected from the spacecraft into a particular direction in space or whether a laser beam of the same power were to be aimed at a hypothetical laser sail on the spacecraft [3]. In the following subsections we obtain some important order of magnitude estimates both in equation and in graphic form of a few important quantities in order to gain a more realistic understanding of the potential capabilities of a vehicle propelled by means of the physical principle of the present invention.

[0109] The conclusions below will clearly establish that the propulsion concept of this invention offers great potential from the standpoint of realistic engineering applications, although such parameters as the exact laser wavelength and power, trap size, atomic mass, and number of atoms of course will have to be optimized according to both accurate theoretical modeling and prototype testing.

[0110] In what follows, in order to make a firm connection between the theoretical treatment, which was developed here in the c. g. s. system (centimeter-gram-second), and the more typical engineering M. K. S. units (meter-kilogram-second), the cgs or MKS subscripts will be appended as appropriate. If no subscript is used, the quantity should be assumed as expressed in the cgs system. No use is made if English units throughout (such as, for instance, lbf for thrust). Also, for improved legibility, all order of magnitude signs will be replaced by equal signs.

4.1 Fundamental Equations

4.1.1 Atomic Physics of Trapped Atoms in the Accelerated Propulsive System

[0111] Let us consider a gas of N_A identical atoms of mass m_A, polarizability $\alpha_A^2(k_L)$, confined within an appropriate trap of such dimensions as to correspond to an average interatomic distance $\bar{R}$. In what follows, we shall assume that the number of atoms, N_A, the size of the trap, D, and the average interatomic distance, $\bar{R}$, are related simply as $D \sim \bar{R}N_A^{1/3}$. In addition, Thirunamachandran's theory of dispersion forces under the effect of illumination also requires the constraint that $\lambda_L >> \bar{R}$[21].

[0112] The polarizability $\alpha_A^2(k_L)$ can be made several orders of magnitude larger than its static value, $\alpha_0=(2a_0)^3$, where Bohr's radius is $\alpha_0=h^2/\mu_e e^2$ and μ_e is the reduced electron mass ($\mu \approx m_e$), by choosing an appropriate near-

resonance wavelength. Without getting into the details of atomic physics calculations, in this section we shall rely upon the well-established theoretical and experimental fact that such near-resonance condition can be satisfied, that is, the polarizability can be made larger than the static value by a factor, α_{nr}, which can be as large as $\alpha_{nr}\sim 10^5$ [23].

[0113] Another strategy to produce values of the polarizability that are vastly larger than the static value is to use Rydberg atoms. A qualitative argument in favor of this choice is that, as we have seen above, the static polarizability is $\alpha_0=(2a_0)^3$, where a_0 is Bohr's radius. If the atom is in a Rydberg state, that is, in an excited state with relatively large principal quantum number n>>1, the atomic radius can be replaced by $a_n=a_0n^2$. On the strength of this argument alone, the atomic polarizability of a Rydberg state appears proportional to n^6. In fact, if one accounts for all states with different orbital quantum number l, the static polarizability of a Rydberg atom results proportional to n^7. For instance, the atomic radius of atoms in one-electron Rydberg states with $n\sim 10^2$, which are routinely created in the laboratory and are present in interstellar space, is $\sim 10^4 a_0$—similar to the size of an Ebola virus! Under these circumstances, the static polarizability is a stunning $\sim 10^{14}$ times larger than its static value [19, 30, and Refs. therein].

[0114] From the practical standpoint, it is important to notice that Rydberg atoms gases have already been "frozen" and trapped in order to study, among others, the very dipole-dipole interactions we discussed at the very beginning of this disclosure [31]. The atoms themselves are prepared by causing them to absorb laser light of wavelength appropriate to induce a radiative transition to the desired excited state. Noticeably, the radiative lifetime of Rydberg atoms can be quite long, even compared to the relatively short crossing time within the propulsive system. The choice of atoms in states other than the ground state, such as Rydberg atoms, imposes an additional constraint upon the interatomic distance, since the radius of these atoms can be macroscopic. It is therefore important to require that the interatomic distance be much larger than the Rydberg atom radius, which in turn affects the size of the entire propulsive system.

[0115] It is appropriate at this time to again stress the difference between the atom-atom force, which is related to the dependence of the dispersion energy on the interatomic distance and is a central force, and the vertical lifting force acting upon all atoms as a consequence of the modification of their interaction potential in an accelerated reference frame. For instance, let us again consider the potential energy of a pair of atoms (Eq. (12)) and let us rewrite it to highlight the close similarity to the gravitational case:

$$\Delta E = -G_{QED}\frac{\alpha_A(k_L)\alpha_B(k_L)}{R},\quad k_L R \ll 1, \tag{12a}$$

where the equivalent quantum-electro-dynamical "gravitational constant" is, by definition:

$$G_{QED} \equiv \frac{176\pi^3}{15c}\frac{I}{\lambda_L^2}, \tag{15}$$

and the dynamic polarizabilities play the role of the "gravitational mass." The total potential energy can then be written as usual:

$$U_{gas} = -\frac{1}{2}G_{QED}\sum_{i\neq j}\frac{\alpha_i(k_L)\alpha_j(k_L)}{R_{ij}}, \tag{16}$$

where the summation is meant over all pairs and R_{ij} is the magnitude of the interparticle distance vector, R_{ij}.

[0116] Every atom in the gas is acted upon by a gravitational-like self-force and thus undergoes an acceleration gQED towards the center of the cloud (assumed approximately spherical) similar to a typical gravitational acceleration. This is in complete analogy to the collapse of a "cold" gas sphere taking place whenever the gravitational pressure is vastly larger than any opposing gas pressure gradient. The order of magnitude of the time required for the entire cloud to collapse to its center is an important characteristic time in stellar evolution and in stellar dynamics, and it is referred to as the free-fall time [32-33]. In order to generalize this quantity to our case, let us consider the equation of motion of a particle (atom) in the above potential at a distance r from the center of the cloud with $\alpha_A(k_L)=\alpha_B(k_L)$ and $N_A>>1$. In this case it is well-known from elementary mechanics that Gauss' Theorem allows us to only consider the force exerted by the atoms inside a sphere of radius equal to r and we find:

$$\ddot{r} = -G_{QED}\frac{\alpha_A^2(k_L)}{r^2}\frac{1}{m_A}. \tag{17}$$

Since we are only estimating an order of magnitude, let us assume, as done typically, that the acceleration is approximately constant during the free-fall process. Thus:

$$\frac{1}{2}\ddot{r}t_{ff}^2 \sim D,$$

which yields, for r~D

$$t_{ff} \sim \sqrt{\frac{2D}{\ddot{r}}} \sim \sqrt{\frac{2N_A\overline{R}^3}{G_{QED}\alpha_A^2(k_L)m_A}}. \tag{19}$$

Finally, by substituting Eq. (15) into this result, we obtain:

$$t_{ff} \sim \sqrt{\frac{2N_A\overline{R}^3}{\alpha_A^2(k_L)}\frac{15c}{176\pi^3}\frac{\lambda_L^2}{I}m_A}. \tag{18}$$

The importance of this result lies with the fact that the physics of the system after such free-fall time must be expected to be substantially different than in its initial state. For instance, in the case of atoms in their Rydberg states, a drastic evolution of the system towards a higher density configuration can be expected to result in the transformation of the gas into a neutral plasma, with consequent complete loss of thrust.

[0117] The condition to be required so that the atoms do not have the time to evolve into an extremely different, and technologically useless, state is that the free-fall time above be much longer than the time the atoms spend in the trap before the lifting force causes them to be ejected, Δt_A. Evidently, if the gas evolves into, for instance, a plasma upon ejection, that is of no consequence to the momentum it will transfer to the vehicle. By using the result below at Eq. (40), we can write this requirement as:

$$t_{ff} \gg \Delta t_A, \tag{20}$$

or

$$\sqrt{\frac{2N_A\overline{R}^3}{\alpha_A^2(k_L)}\frac{15c}{176\pi^3}\frac{\lambda_L^2}{I}m_A} \gg \sqrt{\frac{\overline{R}N_A^{1/3}}{\left[\frac{4\pi^2}{c^3}N_A\left(\frac{I}{\lambda_L^2}\right)\frac{\alpha_A^2(k_L)}{\overline{R}N_A^{1/3}m_A}-1\right]g}}, \tag{21}$$

If the lift acceleration is much larger than g, the term in square brackets in the denominator of the right-hand-side will become much larger than unity so that term can be neglected and we easily find the limiting condition:

$$N_A\frac{Dg}{c^2} \gg \frac{22}{15}\pi. \tag{22}$$

This condition, which of course results also by requiring that $\alpha_A >> r$, can be satisfied by realistic values of the geometry of the propulsive system, although it clearly points to the usefulness of employing larger traps, for which $N_A >> 1$.

[0118] That the physical state of the gas can in fact be extreme after a few free-fall times if this is not accomplished, can be seen by writing the condition that the gas be in equilibrium under the action of this gravitylike interaction. As well-known, gravitationally bound systems do not display what can be properly referred to as equilibrium configurations in the thermodynamical sense. This is well illustrated by an appropriate similitude between the cold gas in the propulsive system of this invention and a globular star cluster—a spherical system in which thousands to hundreds of thousands of stars are bound by their mutual gravitational interaction—or, alternatively, a star [22].

[0119] In a globular cluster (or in a star), the distribution of velocities of the constituent particles "relaxes" to a quasi-Maxwellian velocity distribution after a time properly referred to as the "relaxation" time of the object. However, a Maxwellian velocity distribution contemplates a finite number of particles whose speeds at any given time are higher than the escape velocity from the system. Therefore there occurs a process of constant evaporation, which clearly forbids the existence of any equilibrium configuration [32-35].

[0120] However, it is possible to define a condition of quasi-equilibrium, in which a gravitationally bound system does not change drastically over many relaxation times. Under these conditions, the object obeys a general theorem referred to as the virial theorem, which links its total average kinetic and potential energies. This connection is very powerful, as it allows one to obtain estimates of the average speeds of its particles, whether they be stars or atoms [35-36]. For the purposes of our estimates here, this very general theorem can be written as

$$2\langle K_{gas}\rangle + \langle U_{gas}\rangle = 0, \tag{23}$$

where K_{gas} is the total kinetic energy and the triangular brackets indicate the time-average. By writing the total kinetic energy as $K_{gas} = 3/2 N_A k_B T_{gas} = ½ N_A m_A \langle v_A^2\rangle$, and by approximating $\langle 1/D\rangle = 1/\langle D\rangle$, the virial theorem yields:

$$T_{gas} = \frac{8\pi^2}{3k_Bc}N_A\frac{I}{\lambda_L^2}\frac{\alpha_A^2(k_L)}{D}, \tag{24}$$

and

$$v_A = \sqrt{\frac{8\pi^2}{3c}\frac{N_A}{m_A}\frac{I}{\lambda_L^2}\frac{\alpha_A^2(k_L)}{D}}, \tag{25}$$

The physical significance of these equations can be found by imposing the condition that the average kinetic energy be equal to the ionization potential of the atoms E_I in the gas so that the atoms may become ionized as they collide, in analogy to the Saha and Boltzmann equations of stellar astrophysics [33]:

$$\frac{3}{2}k_BT_{gas} \sim \frac{E_0}{n^2}, \tag{26}$$

where the right-hand-side of the above equation contains the ionization potential of a hydrogen atom in its n-th state and E_0 is the ionization energy of the ground state. By using Eq. (24), this yields:

$$\frac{4\pi^2}{c}N_A\frac{I}{\lambda_L^2}\frac{\alpha_A^2(k_L)}{D} \sim \frac{E_0}{n^2}, \tag{27}$$

which can be expressed in even more fundamental terms in the case of Rydberg atoms as:

$$\frac{4\pi^2}{c}N_A\frac{I}{\lambda_L^2}\frac{(2a_0)^6n^{14}}{D} \sim \frac{e^2}{2a_0n^2}, \tag{27}$$

$$\frac{4\pi^2}{e^2c}N_A\frac{I}{\lambda_L^2}\frac{(2a_0)^7n^{16}}{D} \sim 1. \tag{28}$$

In the near-resonance case we can instead write:

$$\frac{4\pi^2}{E_0c}N_A\frac{I}{\lambda_L^2}\frac{(2a_0)^6\alpha_{nr}}{D} \sim 1, \tag{29}$$

Replacing the numerical values we shall produce below in a few realistic examples, it is immediate to conclude that the almost immediate ionization of the entire atomic population is highly likely in all technologically meaningful cases, and that, as already pointed out in this section, it is imperative to

choose parameters that ensure the expulsion of the gas from the trap well before this process is completed.

4.1.2 Validity of the Present Approach

[0121] In this subsection we concern ourselves with the possible limitations of our treatment. Let us first of all notice that we have so far dealt with atoms in the trap as "classical" objects, that is, as material particles whose positions and velocities can be likened to those of stars in a cluster, for instance. This is approximately correct only if the de Broglie wavelength λ_A of the atoms is much smaller than the interatomic distance, that is, if:

$$\lambda_A \equiv \frac{h}{p_A} \approx \frac{h}{m_A v_A} \ll \bar{R}, \tag{30}$$

where p_A is the momentum of the atoms and the middle step is warranted for non-relativistic speeds. This condition may be violated for extremely low temperatures and for high densities, such as those of artificial "white dwarfs," and in these cases the gas must be treated as a quantum gas of the appropriate statistics as is the case, for instance, in white dwarf stars [22, 33]. Although such extreme conditions are only marginally important to the present work, a well-established theoretical framework exists in the literature to describe them.

[0122] Secondly, the basic result at Eq. (12) is rigorously valid only within fourth-order perturbation theory [21]. An order of magnitude of the regime within which our results are certainly warranted can thus be found by requiring that the energy shift per atom due to the total intermolecular force of the gas cloud be much smaller than the energy of the n-th unperturbed state occupied by the atoms, that is:

$$|E_n| >> N_A |\Delta E|, \tag{31}$$

or, for hydrogen atoms:

$$\begin{aligned} \frac{e^2}{2a_n} &\gg \frac{176\pi^3}{15c} N_A \frac{I}{\lambda_L^2} \frac{\alpha_A^2(\lambda_L)}{D} \\ &= \frac{176\pi^3}{15c} N_A \frac{W}{18 N_A^{2/3} \bar{R}^2} \frac{1}{\lambda_L^2} \frac{\alpha_A^2(\lambda_L)}{N_A^{1/3} \bar{R}} \\ &= \frac{176\pi^3}{270c} \frac{W}{\bar{R}^3} \frac{1}{\lambda_L^2} \alpha_A^2(\lambda_L), \end{aligned} \tag{32}$$

where the relationship between total power and intensity at Eq. (48) was used. Let us consider only the s-state polarizability as $\alpha_n(\lambda_L)=\alpha_{nr}(2a_n)^3$ and let us write the average intermolecular distance in terms of the atomic radius as $\bar{R}=\bar{r}a_n$. Finally, by recalling that $a_n=a_0n^2$, we find:

$$\frac{e^2}{2a_0 n^2} \gg \frac{1.2\times 10^3}{c} \frac{W}{\bar{r}^3 a_0^3 n^6} \frac{1}{\lambda_L^2} \alpha_{nr}^2(\lambda_L) a_0^6 n^{12}, \tag{33}$$

or

-continued

$$\frac{W}{\bar{r}^3} \frac{\alpha_{nr}^2(\lambda_L)}{\lambda_L^2} n^8 \ll \frac{e^2}{2a_0^4} \frac{c}{1.2\times 10^3} \sim 4\times 10^{21}. \tag{34}$$

The dynamical consequences of this constraint can be seen by recalling our basic Eq. (14) written by making use of the first two terms of Eq. (32):

$$\frac{a_{lift,z}}{g} = \frac{4\pi}{c} N_A \left(\frac{I}{\lambda_L^2}\right) \frac{\alpha_A^2(\lambda_L)}{D} \frac{1}{m_A c^2} \ll \frac{60}{176\pi^2} \frac{e^2}{2a_n} \frac{1}{m_A c^2}. \tag{35}$$

In order to extract a physical meaning from this requirement, let us consider the problem of bringing the gas cloud to a hover from a different standpoint. The condition of balance between weight and lift of one atom is given by Eq. (14) above:

$$\frac{a_{lift,z}}{g} \sim \frac{F_{lift,z}^{gas}}{N_A m_A g} = N_A \left(\frac{I k_L^2}{c}\right) \frac{[\alpha^A(k_L)]^2}{D} \frac{1}{m_A c^2}. \tag{14}$$

By using the expression for the potential of one pair at Eq. (12), we can express this condition by introducing the total intermolecular energy of one atom due to all the others, $N_A\Delta E$:

$$\frac{a_{lift,z}}{g} \sim \frac{\Delta E}{m_A c^2}. \tag{36}$$

With the usual strong caveats of using our non-quantum "intuition" to interpret results in the realm of quantum-electro-dynamics (QED) in curved space-time, a possible qualitative view of this hovering condition is that this requirement corresponds to having the total (negative) intermolecular potential of the gas cloud cancel its total gravitational mass, thus resulting in atoms which are, for all practical purposes, "weightless." By going further, it is possible to consider intermolecular potentials which are negative and larger in magnitude than the gravitational mass of the atoms, thus causing the total energy of the cloud to become effectively negative. According to Newton's Law of Gravitation, this would require the atoms to be "repelled by gravity," instead of being attracted. Although this is an interesting and useful image—which has in fact been pursued by Boyer in the past [16]—one has to be extremely careful to adopt it as an "explanation."

[0123] In the scheme of the present invention, the upward lifting force does not result from such view, but from the well-understood distortion of the Coulomb potential due to the presence of the gravitational field. Although Boyer's work proved these two points of view to be equivalent [16], his study dealt with completely classical dipoles within the realm of special relativity and very weak gravity, and not with fully quantized atoms with the framework of QED in curved space-time. Since one possible interpretation of

dispersion forces between molecules involves a modification of the zero-point-energy of the quantum vacuum [37], such simple "semi-classical" explanations should be looked at only as useful mental pictures, since the "system" under consideration is actually an open system.

[0124] In this context, two possible objections must be addressed. The first is whether it is at all correct to use perturbation theory in this case. After all, in order to bring a cloud of hydrogen atoms to a hover, the intermolecular potential must contribute an energy approximately equal to the rest-mass of a hydrogen atoms, or ≈1 GeV, whereas the ionization potential of a hydrogen atom is 13.59 eV if the atom is in its ground state and much less if it is in a Rydberg state. The intermolecular potential will be vastly larger if we want to achieve an upward acceleration. The answer rests with the key fact that, in our case, the processes we are studying take place on relatively "short" time-scales. At some time after the cloud of atoms has been cooled and trapped, a very intense beam of radiation is turned on within a total time that will be assumed to be much shorter than that of any possible atomic transition. For instance, the radiative lifetimes of very high n Rydberg atoms can be even fractions of a second, whereas lasers can be turned on in fractions of a nanosecond (10^{-9} s) and that radiation will require a similar time to cross the entire trap at the speed of light.

[0125] A well-known feature of the perturbation theory of "sudden" interactions is that the perturbation does not have to be small for theory to be used, unlike most other applications of perturbation theory, as stated, for instance in [38] (see also [39-41]): "The transition probabilities in instantaneous perturbations can also be found in cases where the perturbation is not small . . . If the change in the Hamiltonian occurs instantaneously (i.e. in a time short compared with the periods $1\omega_{if}$ of transitions from the given state i to other states), then the wavefunction of the system is "unable" to vary and remains the same as before the perturbation. It will no longer, however, be an eigenfuction of the new Hamiltonian $\hat{H}$ of the system . . . "

[0126] By making further use of this same mental picture, we can say that in the description of the fundamental physical process at the basis of the present invention we assume that the phase of upward acceleration of the atoms takes place in the very early stages immediately following the application of the laser radiation field and before the eventual modification of the wavefunctions intervenes. In other words, there exists a relatively brief time span immediately following the laser turn-on time, during which the atomic dipoles still behave as such, although, eventually, the gas evolves towards a very different state, such as a plasma for instance. Part of the refining work of the present invention will be to consider in detail the dynamics of the evolution of the atoms in the intense radiation field. However, the references quoted show that there is a solid logical foundation in the use of perturbation theory in the present case due to the instantaneous application of the radiation field.

[0127] The second objection to consider is whether it is against any fundamental law of physics to even consider the existence of a volume of space where the total energy is negative, as appears to be necessary in order to obtain a gravitational "repulsion" of the atoms. We have already provided a first hint above that one answer to this objection is that it is not at all necessary to look at this process as being due to a "negative" energy. In fact, one alternative and much more satisfactory way to explain the upward motion of the atoms is to appeal to the distortion of the dipole-dipole field due to the acceleration in the presence of a gravitational field. The distortion of the field lines due to the presence of gravitational appears to be a much firmer concept than that of a "negative" energy.

[0128] However, even if one wants to engage in the widespread debate concerning the existence of negative energy, it is interesting to point out that dispersion forces in general and Casimir forces in particular are in fact commonly used as examples to the affirmative. In other words, whereas there exist strict quantum limits, similar to the uncertainty principle, as to the length of time a very negative energy density can be imposed upon a volume of space, dispersion forces clearly afford an example where the energy density can remain negative indefinitely (although the same limitations apply if one attempts to decrease the energy even further). The important point to the present invention is that there is no fundamental physical reason that dispersion forces cannot be made negative for the brief time needed to accelerate the atoms upward as required to provide thrust. On the other hand, much more exotic and fantastic applications of negative energy to "warp-drives,""time-machines," and "faster-than-light" travel, which now appear forbidden by fundamental laws of quantum mechanics in curved space-time [42-45] are not involved in the physical processes of this invention.

4.1.3 Thrust

[0129] By using Eq. (13) above, we can write the total lifting force on the trapped atoms in the case that $\alpha_A(k_L)=\alpha_B(k_L)$, by assuming that the average of the interatomic distance between any given atom and all others is ~D, as:

$$F_{gas} = N_A^2 F_z^{AB} = \frac{4\pi^2}{c^3} N_A^2 \left(\frac{1}{\lambda_L^2}\right) \frac{\alpha_A^2(k_L)}{D} g. \tag{37}$$

Let us now consider the total momentum acquired by the gas as it flows out of the atomic trap. Without getting into the details of the dynamics of such process, which certainly deserve further consideration, let us consider the acceleration of the atoms under the action of the lifting force, F_{gas}. In an inertial reference frame, the total acceleration undergone by the atoms would be $F_{gas}/N_A m_A$, but, in this non-inertial frame, the acceleration will be $(F_{gas}-N_A m_A g)/N_A m_A=(F_{gas}/N_A m_A)-g$. For instance, if the lifting force is exactly equal to $N_A m_A g$, the atoms will not accelerate with respect to the vehicle, but only hover, as we have seen in the above theoretical treatment. Therefore:

$$a_A = \frac{F_{gas}}{N_A m_A} - g = \left[\frac{4\pi^2}{c^3} N_A \left(\frac{1}{\lambda_L^2}\right) \frac{\alpha_A^2(k_L)}{(\bar{R} N_A^{1/3}) m_A} - 1\right] g. \tag{38}$$

At this rate, the average final velocity of the atoms will be $v_{A,\,fin}=\sqrt{2a_A(D/2)}$:

$$v_{A,fin}=\sqrt{\left(\frac{F_{gas}}{N_A m_A}-g\right)\bar{R}N_A^{1/3}}=\sqrt{\left[\frac{4\pi^2}{c^3}N_A\left(\frac{I}{\lambda_L^2}\right)\frac{\alpha_A^2(k_L)}{(\bar{R}N_A^{1/3})m_A}-1\right]g\bar{R}N_A^{1/3}}, \tag{39}$$

where, of course, the application considered in this invention considers only circumstances in which the radical is real.

[0130] It is also of interest to find an order of magnitude for the time required to leave the atomic trap defined as $\frac{1}{2}D=\frac{1}{2}a_A(\Delta t_A)^2$, which sets a lower minimum to the "reload" time of the thrust cycle:

$$\Delta t_A=\sqrt{\frac{D}{\alpha_A}}=\sqrt{\bar{R}N_A^{1/3}\frac{1}{\frac{F_{gas}}{N_A m_A}-g}}=\sqrt{\frac{\bar{R}N_A^{1/3}}{\left[\frac{4\pi^2}{c^3}N_A\left(\frac{I}{\lambda_L^2}\right)\frac{\alpha_A^2(k_L)}{(\bar{R}N_A^{1/3})m_A}-1\right]g}}, \tag{40}$$

[0131] From Eq. (39) we can immediately write the total momentum of the gas, ΔP_{gas}, for each cycle at it approaches the shock absorber:

$$\Delta P_{gas}=m_{gas}v_{A,fin}=N_A m_A\sqrt{\left(\frac{F_{gas}}{N_A m_A}-g\right)\bar{R}N_A^{1/3}}, \tag{41}$$

or

$$\Delta P_{gas}=N_A m_A\sqrt{\left[\frac{4\pi^2}{c^3}N_A\left(\frac{I}{\lambda_L^2}\right)\frac{\alpha_A^2(k_L)}{\bar{R}N_A^{1/3}m_A}-1\right]g\bar{R}N_A^{1/3}}, \tag{42}$$

Finally, let us estimate the total momentum transferred to the vehicle in the assumption that the impact of the gas against it is dissipative, that is, by assuming the complete conservation of momentum. In this case, the final speed change of the (gas+craft) system at the end of the n-th cycle will be given by $m_{gas}v_{A,fin}=(m_{gas}+M_{craft})\Delta v_n$. That is, by solving for Δv_n,

$$\Delta v_n=\frac{N_A m_A}{N_A m_A+M_{craft}}\sqrt{\left[\frac{4\pi^2}{c^3}N_A\left(\frac{I}{\lambda_L^2}\right)\frac{\alpha_A^2(k_L)}{\bar{R}N_A^{1/3}m_A}-1\right]g\bar{R}N_A^{1/3}}. \tag{43}$$

Although the acceleration of the vehicle varies over time during the cycle, it is useful to introduce an average acceleration over the cycle itself, we the understanding that the acceleration experienced by the atoms during their phase of acceleration may be different, and usually higher, than this value because of the cycle synchronization we discussed earlier. We write:

$$a_{craft}=\frac{\Delta v_n}{\Delta t_A+\Delta t_{Reload}}, \tag{44}$$

where Δt_{Reload} is the time required to prepare the new atomic cloud in the trap for the following cycle. This definition allows us to also define a nominal thrust for the engine as:

$$F_{engine}=(N_A m_A+M_{craft})a_{craft} \tag{45}$$

[0132] In the limit in which the reload time vanishes ($\Delta t_{Reload}\rightarrow 0$), of course we find, as expected:

$$a_{craft}\rightarrow\frac{\Delta v_n}{\Delta t_A}=\frac{N_A m_A}{N_A m_A+M_{craft}}a_A, \tag{46}$$

and

$$F_{engine}\rightarrow F_{gas}. \tag{47}$$

In this ideal limit, the hovering condition becomes that $F_{gas}=(N_A m_A+M_{craft})g$, that is, the total force on the atomic cloud must be equal to the weight of the entire vehicle. This is also the thrust that could be obtained if the atomic cloud could be trapped permanently within the chamber even as it acts on the vehicle via the action-reaction law.

4.1.4 Energy Considerations and Thruster Efficiency

[0133] The total radiation power utilized will be estimated as $W=18\ ID^2$, which corresponds to six laser triads (this is an upper estimate of the power needed as it is possible to induce gravitation-like behavior in a particular direction by using less power than this maximum). This yields:

$$W=18\,I\,N_A^{2/3}\bar{R}^2. \tag{48}$$

By solving this expression for the radiation flux I, we find:

$$I=\frac{W}{18N_A^{2/3}\bar{R}^2}. \tag{49}$$

This result allows us to obtain a realistic estimate of the relationship between the dynamics of the process and the total amount of energy needed. For instance, by substituting it into Eq. (38), we obtain the following useful expression:

$$a_A=\left[\frac{2\pi^2}{9c^3}\left(\frac{W\alpha_A^2(k_L)}{\bar{R}^3\lambda_L^2 m_A}\right)-1\right]g, \tag{50}$$

which exposes the interesting fact that, in the present approximation, the atomic acceleration as a function of the total laser power irradiated is independent of the number of atoms in the trap. By means of this equation, it is possible to write the total power needed to be focused onto the trap

to achieve a hover, that is, a vanishing acceleration of the atoms with respect to the vehicle.

This corresponds to:

$$W_{hover} = \frac{9c^3}{2\pi^2}\frac{\bar{R}^3\lambda_L^2 m_A}{\alpha_A^2(k_L)}, \tag{51}$$

independently of g. For practical reasons, let us rewrite this result in units of Megawatts (MW) in terms of the wavelength in micrometers, $\lambda(\mu m)$, of the average interatomic distance in units of Bohr radii, $\bar{R}/a_0$, and by involving the dimensionless polarizability factor as $\alpha_A(k_L)=\alpha_{nr}(k_L)\alpha_0$:

$$W_{hover} = 2.18\times 10^9 \frac{(\bar{R}/a_0)^3\lambda_L^2(\mu m)}{\alpha_{nr}^2(k_L)}\text{MW}, \tag{52}$$

Of course this result should be interpreted as allowing the atoms to be brought to a hover for a time no longer than the free-fall time given at Eq. (19) above unless an independent trapping approach is employed to hold the atoms at constant intermolecular distances, such as in an optical crystal.

Similarly for Eqs. (17), (18), (20), and (21):

$$v_{A,fin} = \sqrt{\left[\frac{2\pi^2}{9c^3}\left(\frac{W\alpha_A^2(k_L)}{\bar{R}^3\lambda_L^2 m_A}\right)-1\right]g\bar{R}N_A^{1/3}}. \tag{39a}$$

$$\Delta t_A = \sqrt{\frac{\bar{R}N_a^{1/3}}{\frac{2\pi^2}{9c^3}\left(\frac{W\alpha_A^2(k_L)}{\bar{R}^3\lambda_L^2 m_A}\right)-1}\frac{1}{g}}, \tag{40a}$$

$$\Delta P_{gas} = N_A m_A\sqrt{\left[\frac{2\pi^2}{9c^3}\left(\frac{W\alpha_A^2(k_L)}{\bar{R}^3\lambda_L^2 m_A}\right)-1\right]g\bar{R}N_a^{1/3}}, \tag{42a}$$

$$\Delta v_n = \frac{N_A m_A}{N_A m_A + M_{craft}}\sqrt{\left[\frac{2\pi^2}{9c^3}\left(\frac{W\alpha_A^2(k_L)}{\bar{R}^3\lambda_L^2 m_A}\right)-1\right]g\bar{R}N_a^{1/3}}, \tag{43a}$$

with the same restrictions on the duration of the impulse.

[0134] The ratio of thrust to radiation pressure: This dimensionless quantity compares the thrust obtained from the present thrust mechanism to the radiation pressure one would obtain by simply radiating away the power used instead to alter the intermolecular potential. Clearly one expects this quantity to be much larger than unity in order for the approach of this invention to be of practical use. Should that not be so, the case could be made that focusing the radiation onto an appropriately large sail would be a more efficient use of that energy. We have, in the ideal case in which the reload time vanishes,

$$\frac{F_{gas}}{P_{rad}} = \frac{1}{W/c}N_A m_A\left[\frac{2\pi^2}{9c^3}\left(\frac{W\alpha_A^2(k_L)}{\bar{R}^3\lambda_L^2 m_A}\right)-1\right]g. \tag{53}$$

In the limit in which $a_A >> g$, we have, simply:

$$\frac{F_{gas}}{P_{rad}} \to N_A\frac{2\pi^2}{9c^3}\left(\frac{\alpha_A^2(k_L)}{\bar{R}^3\lambda_L^2}\right)g. \tag{54}$$

Typical estimates of this quantity in interesting cases indeed indicate values much larger than unity for this quantity.

[0135] As in any other system that does not make use of the traditional expulsion of high speed gases to generate momentum (e.g. light sails), one must introduce new figures of merit. For instance, the typical concept of the specific impulse (the ratio of engine thrust to the weight of the material ejected in the unit time) [29], requires special attention in this case. Let us consider the case of a thrust system in which all radiation emitted by the high power lasers is permanently lost and radiated away from the spacecraft. Because of the mass-energy equivalency, this will correspond to a net mass-loss of the vehicle at a rate $M_{craft}=-W/c^2$. In the literature, the "photon rocket," which annihilates matter and antimatter to eject the corresponding radiation in a particular direction, is defined by theoreticians as the "perfect" rocket engine, because it yields the highest terminal speed at burnout for the same final to initial mass ratio [46]. However, whereas in that case the thrust is directly due to the reaction to the emitted photons, in our case the presence of the radiation in the chamber where the atoms are trapped is only a catalyst to create the thrust upon the vehicle. Thus, since the origin of the thrust in our case is not the lost radiation one could just as convincingly argue that the specific impulse becomes undefined in this case.

[0136] From the quantitative standpoint, therein lies the great interest of the approach of the present invention. That is, for the same amount of energy expended, the thrust derived is much higher than that obtainable in the photon rocket [46]. At the same time, this high thrust does not come at the price of an impulsive propulsive system as in chemical engines, but one that can actually provide high accelerations over almost indefinite periods of time [47].

[0137] Thruster efficiency: This is the ratio of the kinetic energy of the atomic cloud as it emerges from the trap to the total energy used during the acceleration of the gas. By using the above expression for the final velocity of the atoms, this quantity can be written as:

$$\frac{\frac{1}{2}N_A m_A v_{A,fin}^2}{\Delta t_A}\frac{1}{W} = \frac{N_A m_A}{\sqrt{2}}\alpha_A^{3/2}D^{1/2}\frac{1}{W} = \frac{N_A m_A}{\sqrt{2}}\left[\frac{2\pi^2}{9c^3}\left(\frac{W\alpha_A^2(k_L)}{\bar{R}^3\lambda_L^2 m_A}\right)-1\right]^{3/2} \tag{55}$$

-continued

$$\frac{g^{3/2}\bar{R}^{1/2}N_A^{1/6}}{W}.$$

In the same limit $a_A >> g$ we find:

$$\frac{\frac{1}{2}N_A m_A v_{A,fin}^2}{\Delta t_A}\frac{1}{W} \rightarrow \left(\frac{W}{2m_A}\right)^{1/2}\frac{1}{\bar{R}^4}\left[\left(\frac{2\pi^2}{9c^3}\frac{\alpha_A^2(k_L)}{\lambda_L^2}\right)\right]^{3/2} g^{3/2}N_A^{7/6} \tag{56}$$

Special care must be exercised in interpreting the results obtained by extrapolating this equation to values of the efficiency that exceed unity, since this may be an indication that other phenomena are becoming important. Furthermore, we have here neglected other forms of energy that are also required, such as, for instance, the radiation required to excite the atoms if Rydberg states are used and the energy used for the initial trapping. As shall become clear in the examples below, the present invention represents a useful and revolutionary technological innovation even in regimes where the thruster efficiency is below unity.

4.2 Start-Up, Maneuvers, Cruise, and Turn-Off

[0138] The fundamental, basic physics principle of this invention is the distortion of the field of a dipole in an accelerated reference frame and the resulting "lifting" dipole-dipole force. In order for this principle to operate, an acceleration must be induced upon the dipole system before the thrust on it can appear. In other words, it is not possible to turn on the thrusting system of this invention from a cruise phase (approximately at constant speed). Because of the Principle of Equivalence, such initial acceleration can be provided by means of any combination of two different, but equivalent mechanisms. In the former, the acceleration is due to gravitation, which provided the initial motivation for the present invention.

[0139] Because of the Principle of Equivalence, the effect of a gravitational field is indistinguishable from that a uniformly accelerated reference frame (if we neglect the Linet term mentioned in our comment of Eq. (3) and in Ref. [9] and quantitatively unimportant to this invention). Therefore, the trigger acceleration can be provided by the gravitational field as a supported (not freely falling system) rests, for instance on the ground. Because of the Principle of Equivalence, if the spacecraft is freely falling its acceleration exactly cancels that of the gravitational field and it becomes indistinguishable from a laboratory at a large distance from any other mass, to the extent that its size is relatively small.

[0140] Because of the mechanism of this invention, if the spacecraft is resting on the ground, upon laser turn-on, the intermolecular forces will be distorted in such a way as to cause an upward acceleration of the atoms, which can be made, for instance, as large as needed for the spacecraft to hover. On the other hand, if the spacecraft is in outer space at a large distance from any other celestial objects, such as in interplanetary flight, the initial acceleration must be provided by independent means. This can be achieved in a variety of ways. For instance: (1) an initial forward acceleration can be produced by a traditional thrusting system until the first few cycles of the present engine are produced—in this case the traditional thruster becomes an "ignition system" for the present invention; (2) the entire craft can be put into rotation around an appropriate axis, thus reproducing Einstein's rotating disk [46]; (3) on re-entry, a spacecraft undergoes an aerodynamic deceleration that can be used as the trigger.

[0141] The same above sample triggers can be also used for maneuvering, that is, to create an initial acceleration in a direction different than that of the present motion. This can be very useful to transform the present invention in a vehicle for motion near the surface of the earth. A slight acceleration parallel to the ground could be maintained with relatively little radiative energy while a larger amount of radiation would keep the vehicle hovering safely. A slow decrease in the power of the lasers, or any other change in the parameters determining the thrust, such as intermolecular distance or total atom number, would result in a decreased acceleration of the atoms and, thus, of the vehicle. In order to bring the vehicle to a cruise (constant speed) the only necessary action is to turn off the high power lasers, or, alternatively, to empty the atomic trap system of atoms. The acceleration upon the vehicle would then immediately stop along with the dipole-dipole field distortion, thus bringing the craft to constant velocity. Finally, a trigger acceleration can be exercised in a direction opposite to the instantaneous velocity to start an opposite thrust that brings the vehicle to a deceleration and to a new hover.

[0142] Although the notion of flying by exploiting an initial acceleration may appear counterintuitive, it must be said that a similar transition also challenges some pilots at the beginning of their training. In fact, flying through air requires speed to create lift from the airfoils and a slower and slower aircraft is unable to keep altitude. This concept requires constant training in beginning pilots today to fight the instinct to "pitch-up" to regain lost altitude on landing, as that can result in a stall. Similarly, the lifting mechanism of this invention requires the user to become sensitive to acceleration—as opposed to speed—and to the notion that an accelerating vehicle can maintain thrust, whereas one at constant speed will loose thrust.

4.3 Numerical Examples

[0143] The following numerical examples were generated by making use of a Mathematica notebook [13] which encoded the equations discussed in this document. The design of any of the missions below could (and does) take many years of study, but the goal of this section is to provide the information necessary to appreciate the fact that the physics of this invention leads to realistic engineering demands. In other words, whereas relativistic travel is usually assumed to require harnessing absolutely fantastic amounts of energy, the method below yields numbers that can be realistically contemplated to be put into feasible design with presently existing technologies.

[0144] Any space mission must start with some requirements, which are to some extent arbitrary or descend from other constraints. In the examples below, we assumed that all travel takes place at a given spacecraft acceleration $a/g<1$. This is to contrast the approach to space travel of this invention with typical designs, which either impose high (several g) accelerations for a short periods of time (chemi-

cal rockets) or provide very low thrust over very long periods of time, such in the case of ion propulsion, in which the author of this invention has been directly involved [47]. Let us recall that the present method requires that the intermolecular potential be distorted by the acceleration of the vehicle (or by gravitation if the vehicle is held at rest, as required by the Principle of Equivalence). Therefore, the acceleration of the vehicle due to the impact of a gas cloud into the plate determines the efficiency of the atomic acceleration in the following cycle.

[0145] According to the present method, space travel is most efficient when it is significantly accelerated. This is not a drawback, since, for instance, it is now understood that the dangers to human health of very long periods of weightlessness are significant. The data presented herein were thus produced by assuming a spacecraft acceleration a=g and then by demanding self-consistency, that is, by requiring that the spacecraft acceleration produced by any given gas cloud also be equal to g. Even with this requirement, the choices shows below represent only one of many possibilities chosen for their being realistic from the engineering standpoint or for their being representative of a contrast between the present invention and present-day technology. For simplicity, the reload time was everywhere assumed to be negligible.

[0146] 4.2.1 A Robotic Low-Thrust Delivery System to the planet Mars

PROPULSIVE SYSTEM SPECIFICATIONS
$W = 35.0$ MW $= 3.5 \times 10^{14}$ erg/s
$\alpha_{nr} = 1 \times 10^6$ (quasi-resonant response)
$n = 1$ (ground state)
$\overline{R} = 5\ a_0$
$\lambda_L = 1000$ Å (quasi-Lyman-α transition)
$M_{craft} = 10^7$ g = 10 metric tons
$N_A = 4.66 \times 10^{26}$
$m_{gas} = 7.86 \times 10^3$ g = 0.786 kg
Chamber Size D = 20.3 cm
$W_{hover}(a_{craft} = 1\ g) = 2.7$ kW
$a_A = 1.28 \times 10^5$ cm/s^2
$v_{A,fin} = 2.29 \times 10^3$ cm/s
$\Delta t_A = 1.79 \times 10^{-2}$ s
$t_{ff} = 60.6 \times 10$ s
Efficiency $= 3.3 \times 10^{-4}$
Δv_{craft}/cycle = 2.62 cm/s
$a_{craft} = 10$ cm/s^2 (self-consistent)
Thrust = 10.0 kN
(Thrust/Total Radiation Pressure) $= 8.57 \times 10^4$
Earth-Mars distance at opposition (Aug. 27, 2003) 55.758×10^{11} cm [48]
Total Travel time $= 1.52 \times 10^6$ s = 17 d 13 h 17 min 46.7 s
Maximum Speed (reached after $= 6 \times 10^5$ s) $= 6.0 \times 10^6$ cm/s = 60 km/s
Maximum Kinetic Energy (reached after 6×10^5 s) $= 1.8 \times 10^{20}$ erg
Total Energy Radiated (up to maximum speed) $= 2.1 \times 10^{20}$ erg
Time to Mach 1 (Speed of Sound $v_{sound} \simeq 331$ m/s) $= 3.31 \times 10^3$ s
Time to Clear Low-Earth-Orbit (400 km) $= 2.8 \times 10^3$ s = 47.1 min
Time to Clear the Earth-Moon System (4×10^5 km) $= 8.94 \times 10^4$ s = 1 d 50.7 min

Comments

[0147] In order to obtain the above estimates for the transfer to Mars, we greatly simplified the problem by neglecting the gravitational force of all objects involved, including the Sun, the Earth, and Mars. Of course, the gravitational force of the Earth is actually an integral part of the engine start-up mechanism of the present invention and in that sense its effect is accounted for here. However, since the gravitational field of all near-by objects is cleared in a matter of minutes, its influence on the dynamics of flight was neglected in these order-of-magnitude calculations.

[0148] It is useful to make come comparisons between the specifications of the system above and present-day delivery systems, since that helps elucidate the great technological relevance of the present invention. A typical choice for such recent space missions to Mars as the ones of Spirit and Opportunity is the Boeing Delta II 7925 or 7925H (the letter H indicates the more powerful high performance version) [49]. In its common configuration, the RS-27A engine of the Delta II first stage, along with the additional nine strap-on solid rocket motors, generates approximately 8.9×10^5 Newtons of thrust, which are necessary to lift the total "wet" (fueled up) vehicle mass of 285,228 kg off the launch pad. This thrust is almost one order of magnitude larger than that of the engine described in this document until the Main Engine Cut Off (MECO), approximately 265 s after lift-off. The thrust of the following stages is smaller, with the thrust of the third stage at approximately 6.6×10^4 N.

[0149] Since the initial phase of ascent takes place under the thrust of a chemical rocket, not surprisingly we see that both in the case of Spirit and Opportunity the Delta II vehicle passes through Mach 1 in a much shorter time than the one propelled by the engine of this invention (32.4 s and 29.6 s, respectively) [50]. However, very importantly, by a very good approximation, the entire launch mass of 10 metric tons (10^4 kg) is propelled towards Mars in the present case whereas, in the traditional approach, only 1.070×10^3 kg out of the initial 285,228 kg represent the useful remaining payload. Of this surviving mass, only 533 kg actually lands on Mars in the traditional case, since approximately 250 kg are allocated to the cruise stage alone.

[0150] Finally, the entire vehicle propelled by the engine of this invention arrives at Mars in a matter of less than twenty days, whereas both Spirit and Opportunity extremely reduced in mass, arrive approximately six months later. It is very significant that the gravitational field of Mars, added to the deceleration of the spacecraft, makes the process of landing much slower and completely safe, in contrast with what NASA/JPL itself defines as the "six minutes of terror," during which the vehicle must be slowed down from 12,000 miles/hr to 0 miles/hr corresponding to average accelerations a_{craft}~1.5 g, although during the last drop the acceleration can reach ~40 g [51]! In contrast, since the present vehicle is approaching Mars decelerating at a_{craft}=10 cm/s^2, the same process can be executed within over a week-long time and distributed over a path at uniform acceleration that concludes with the entire vehicle safely hovering at a desired height above the ground of the planet.

[0151] An obvious question when carrying out a comparison between traditional propulsion technology and the mechanism described in this document concerns the feasibility of generating ~10^{-3}-10^{-2} s laser pulses requiring over ~30 MWe (that is, MW of electric power) on board of a space vehicle. Is this possible? Has this possibility ever been carefully considered in the past? The answer to such legitimate question is that the study of high power, high efficiency, low-mass nuclear reactors for use in space applications is actually extremely advanced, although political and public opinion considerations tend to hide the enormous

amount of available information away from the non-technical readership. A small selection of such literature, which cannot be cited here even partially because of its sheer size, can be found at [52] and References therein. General historic motivations behind this technical effort are to be found in the large energy needs of any hypothetical "Star Wars" defense system, in research into the possibility of interstellar travel, and, finally, in the recently renewed commitment to the human colonization of space made by the President of the United States and NASA. What is important to the evaluation of the engineering feasibility of the present invention is that, typically, reactor power densities in the order of ~1-5 kW/kg are surely possible, with very wide variations in either direction of that estimate depending on the specifics of design and shielding requirements. However, the figure above is sufficient to make the case that, by means of presently existing technology, it is absolutely appropriate to consider a 10 ton-vehicle carrying a reactor able to produce pulses in the 30 MWe range in space.

[0152] The implications for human flight to Mars by means of the present invention are very significant as well. At present, the delivery of several tens of tons of payload to Mars is contemplated to take approximately 180 days, with a typical mission duration for the crew of 2-3 years. The overwhelming majority of the mission duration would be spent in complete weightless conditions during transit and possibly under exposure from harmful radiation. In addition, the prospects of recovery in case of an even minor malfunction are dire not to speak of a major accident of the type that occurred on Apollo 13. Being able to reduce the travel time to a matter of days, while transporting the crew under at least partial gravitational conditions completely changes the prospects for successful colonization of the Red Planet as well as the potential for a rescue mission should that be necessary [53].

[0153] 4.2.4 A Thrust System for Safe, Low-Speed, Near-Earth Human Transportation

PROPULSIVE SYSTEM SPECIFICATIONS
$a_A = 6.29 \times 10^6$ cm/s^2
$v_{A,fin} = 1.61 \times 10^4$ cm/s
$\Delta t_A = 2.55 \times 10^{-3}$ s
$t_{ff} = 60.6 \times 10$ s
Efficiency = 11.2%
Δv_{craft}/cycle = 18.35 cm/s
$a_{craft} = g/2$ (self-consistent)
Thrust = 0.491 MN
(Thrust/Total Radiation Pressure) = 4.20×10^6
Earth-to-LEO distance = 4×10^7 cm
Total Travel time = 4.97×10^2 s = 8 min 17.5 s
Maximum Speed (reached at midpoint) = 1.22×10^5 cm/s = 1.22 km/s
Maximum Kinetic Energy (reached at midpoint) = 7.44×10^{16} erg
Total Energy Radiated (at midpoint) = 1.74×10^{17} erg
Time to Mach 1 (Speed of Sound $v_{sound} \simeq 331$ m/s) = 67.5 s

Note:
The quantities not repeated are unchanged with respect to the previous example.

Comments

[0154] The interest of this particular case lies not in the acceleration, which is less favorable than by means of already available technology, but in its ability to deliver the entire payload to high altitude at rest. This allows us to consider an entirely new philosophy or air transportation and space travel around the Earth (or other planets). Whereas the key objective to reach extreme altitudes with ordinary technologies must be the achievement of high speeds, as that is the only strategy which allows the vehicle to be injected into a permanent orbit, in the case of the present invention it is possible to deliver a payload to a high hovering altitude without requiring orbital speeds.

[0155] Similarly, the descent maneuver of our vehicle does not require the fiery but unavoidable re-entry of typical deorbiting, thus avoiding the accompanying extreme heating and grave dangers to the crew, as in the recent Columbia tragedy. In fact, the vehicle of this example would not reach speeds higher than Mach 4 before decelerating to its hovering point, as opposed to the orbital re-entry speed of the Shuttle of approximately Mach 24. This achievement would represent nothing less than a revolution in aerospace technology. Interestingly, the present approach also lends itself to being phased-in as it replaces traditional propulsion technologies. In other words, it is conceivable that a system of lower thrust, unable by itself to attain a complete hover, could be placed into service for the only purpose to provide additional breaking in an emergency at those speeds that make parachute deployment am impossible option.

I claim:

1. A method comprising:

generating a force by subjecting a plurality of confined particles to a trigger acceleration, wherein said force exhibits short-range interactions; and

exposing said particles to an amount of electromagnetic radiation that is sufficient to induce said force to:

(iii) exhibit long-range interactions; and

(iv) cause said particles to either accelerate or hover.

2. The method of claim 1 wherein said particles are characterized by a polarizability, and wherein the method further comprises increasing said polarizability of said confined particles.

3. The method of claim 2 wherein said electromagnetic radiation has a near-resonance wavelength.

4. The method of claim 2 wherein said method further comprises creating Rydberg atoms from said particles.

5. The method of claim 1 wherein said electromagnetic radiation is delivered to said particles as a plurality of pulses, wherein each pulse lasts for an amount of time that is shorter than any atomic transition that said particles undergo.

6. The method of claim 1 further comprising transferring at least some of the momentum of said particles to a vehicle.

7. The method of claim 1 further comprising impacting said particles against a surface, wherein, during impact, at least some of the momentum of said particles is transferred to said surface.

8. The method of claim 1 further comprising impacting said particles against a piston.

9. The method of claim 1 wherein a minimum sufficient amount of electromagnetic radiation is given by the expression:

$$W = 2.18 \times 10^9 \frac{(\bar{R}/a_0)^3 \lambda_L^2}{\alpha_{nr}^2(k_L)}$$

wherein: W :is power, in Megawatts;

$\bar{R}/a_0$: is the average interatomic distance, in Bohr radii;

λ_L: is the wavelength of the electromagnetic radiation, in micrometers;

α_{nr}: is a factor (dimensionless) by which the static polarizability of a particle is increased at near resonance; and

k_L: is the laser-light wave number (dimensionless).

10. The method of claim 1 wherein said trigger acceleration is a gravitational field.

11. The method of claim 6 wherein said trigger acceleration is provided a method selected from the group consisting of: supporting said vehicle in a gravitational field, firing a chemical rocket, rotating said vehicle.

12. The method of claim 1 wherein said confined particles are confined in an atomic trap.

13. The method of claim 12 wherein said atomic trap is aboard a vehicle.

14. A method comprising:

confining a plurality of particles;

subjecting said particles to a trigger acceleration;

exposing said particles to an amount of electromagnetic radiation sufficient to:

(i) induce an inter-particle force that arises between said particles to exhibit long-range interactions; and

(ii) cause said particles to either accelerate or hover.

15. The method of claim 14 wherein the operation of confining further comprises confining said particles in an atomic trap.

16. The method of claim 14 wherein the operation of confining further comprises confining said particles aboard a vehicle.

17. The method of claim 16 further comprising impacting said particles against a surface of said vehicle.

18. The method of claim 14 further comprising increasing the polarizability of said particles above a static value.

19. The method of claim 14 further comprising transferring at least a portion of a momentum possessed by said particles to a vehicle.

20. A method comprising generating a lifting force by modifying the interaction potential of particles in an accelerated reference frame.

21. The method of claim 20 wherein the operation of modifying the interaction potential comprises causing the interaction potential to exhibit long-range interactions.

22. The method of claim 20 wherein the operation of modifying the interaction potential comprises exposing said particles to an amount of electromagnetic radiation that is sufficient to cause said particles to either accelerate or hover.

23. A method comprising developing thrust to propel a vehicle by:

(1) confining a plurality of particles within said vehicle;

(2) exposing said particles to an amount of electromagnetic radiation that is sufficient to:

(i) induce an inter-particle force that arises between said particles to exhibit long-range interactions; and

(ii) cause said particles to accelerate in a first direction due to said force; and

(3) impacting the accelerating particles against a surface that is coupled to said vehicle, wherein:

said thrust that is developed propels said vehicle in said first direction.

24. The method of claim 23 wherein the operation of impacting further comprises moving a piston, and wherein said piston is coupled to said vehicle.

25. The method of claim 24 wherein, before being exposed to said electromagnetic radiation, said particles are confined within a trap, and wherein the operation of impacting further comprises recycling to said trap particles that have moved said piston.

26. A method comprising developing thrust to propel a vehicle by:

generating asymmetry in a plurality of electric fields, wherein said electric fields surround a plurality of confined particles;

exposing said confined particles to real photons, wherein said real photons deliver an amount of energy to said confined particles that is sufficient to cause an inter-particle force that results from said asymmetry to:

exhibit long-range interactions; and

cause said particles to either accelerate.

* * * * *

DIY Hacks & How To's: Emergency Power from a Land Line

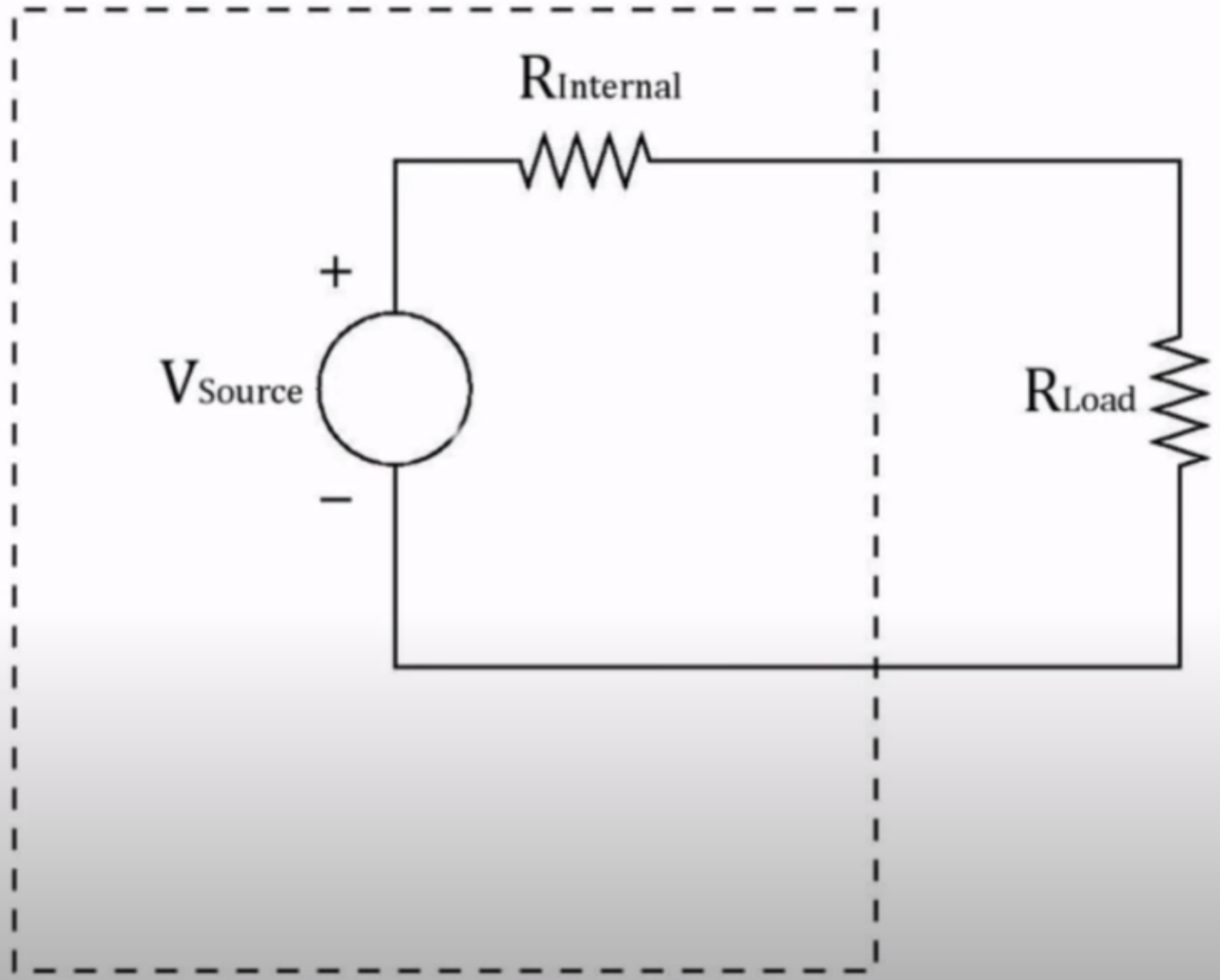

$$V_{Load} = V_{Source} \times R_{Load} / (R_{Load} + R_{Internal})$$

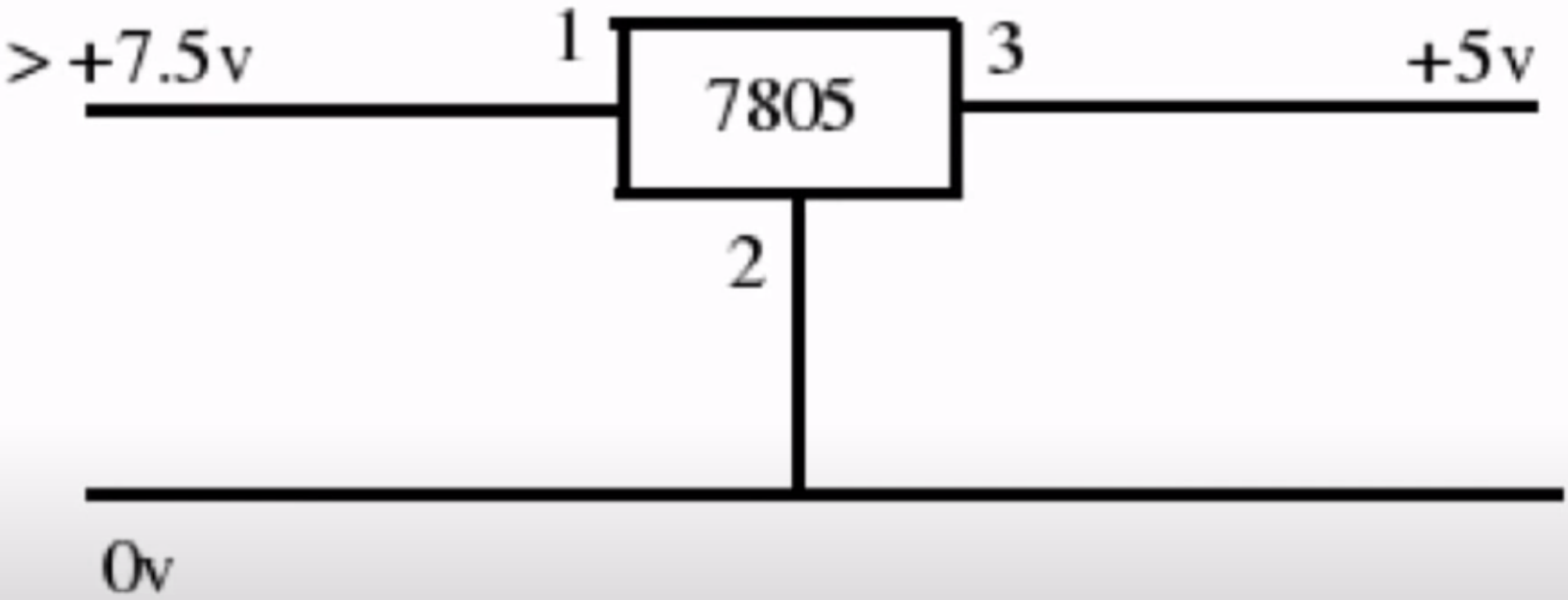
> +7.5v
1
7805
3
+5v
2
0v

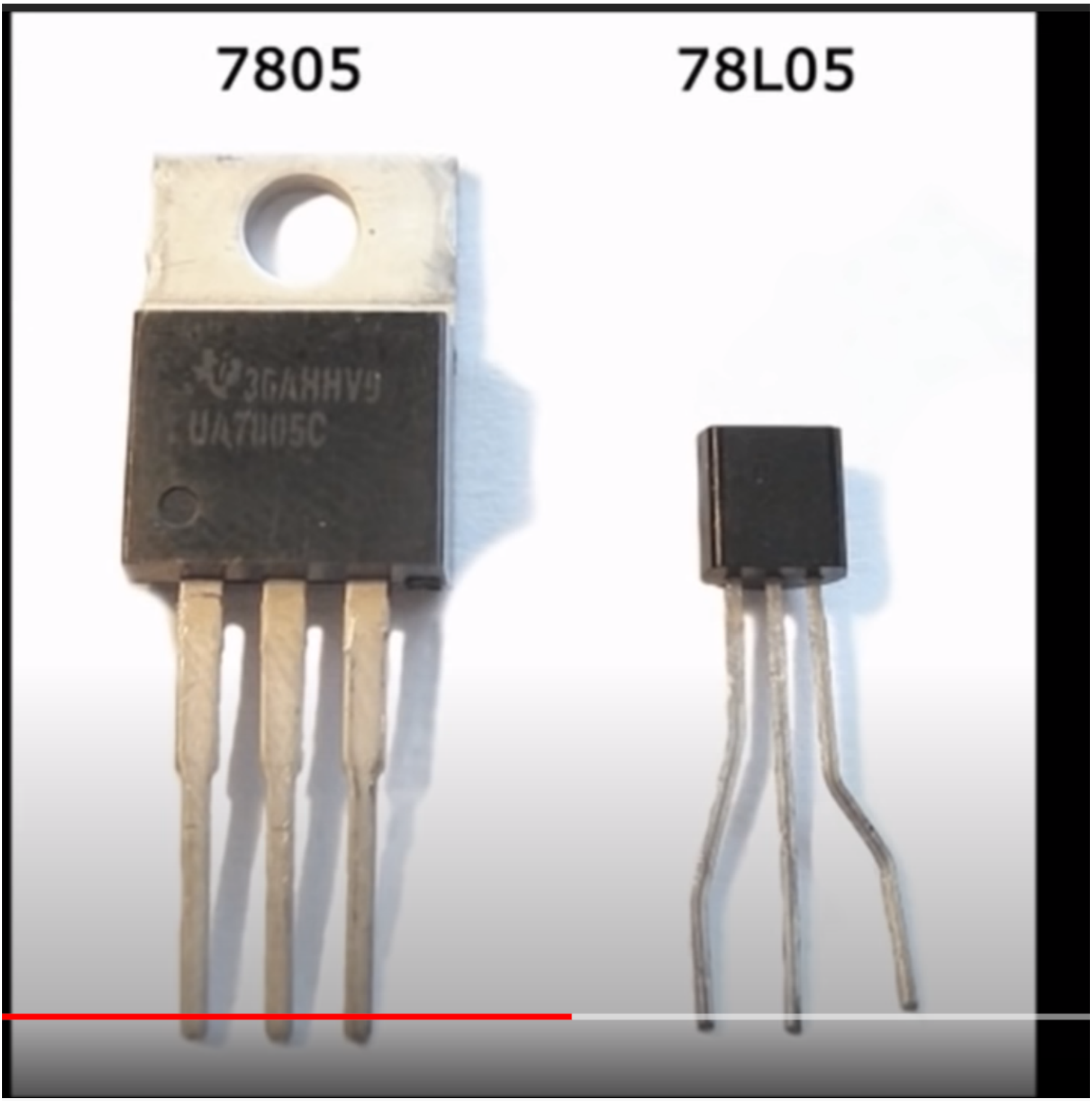
7805
78L05
3GAHHV9
UA7805C

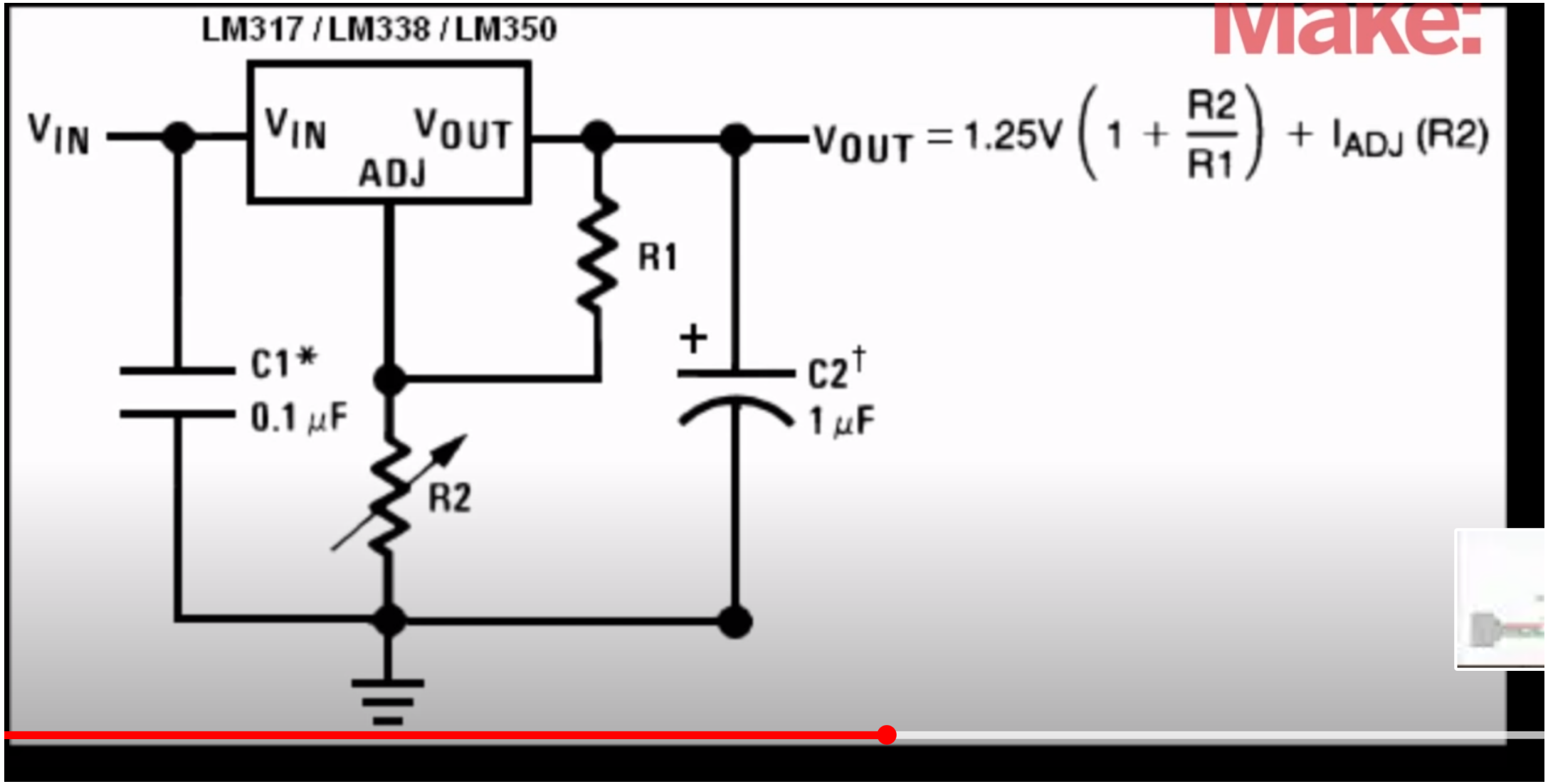
LM317 / LM338 / LM350
Make:
VIN
VIN
VOUT
ADJ
R1
C1*
0.1 μF
R2
+
C2†
1 μF
VOUT = 1.25V (1 + R2/R1) + IADJ (R2)

Make:

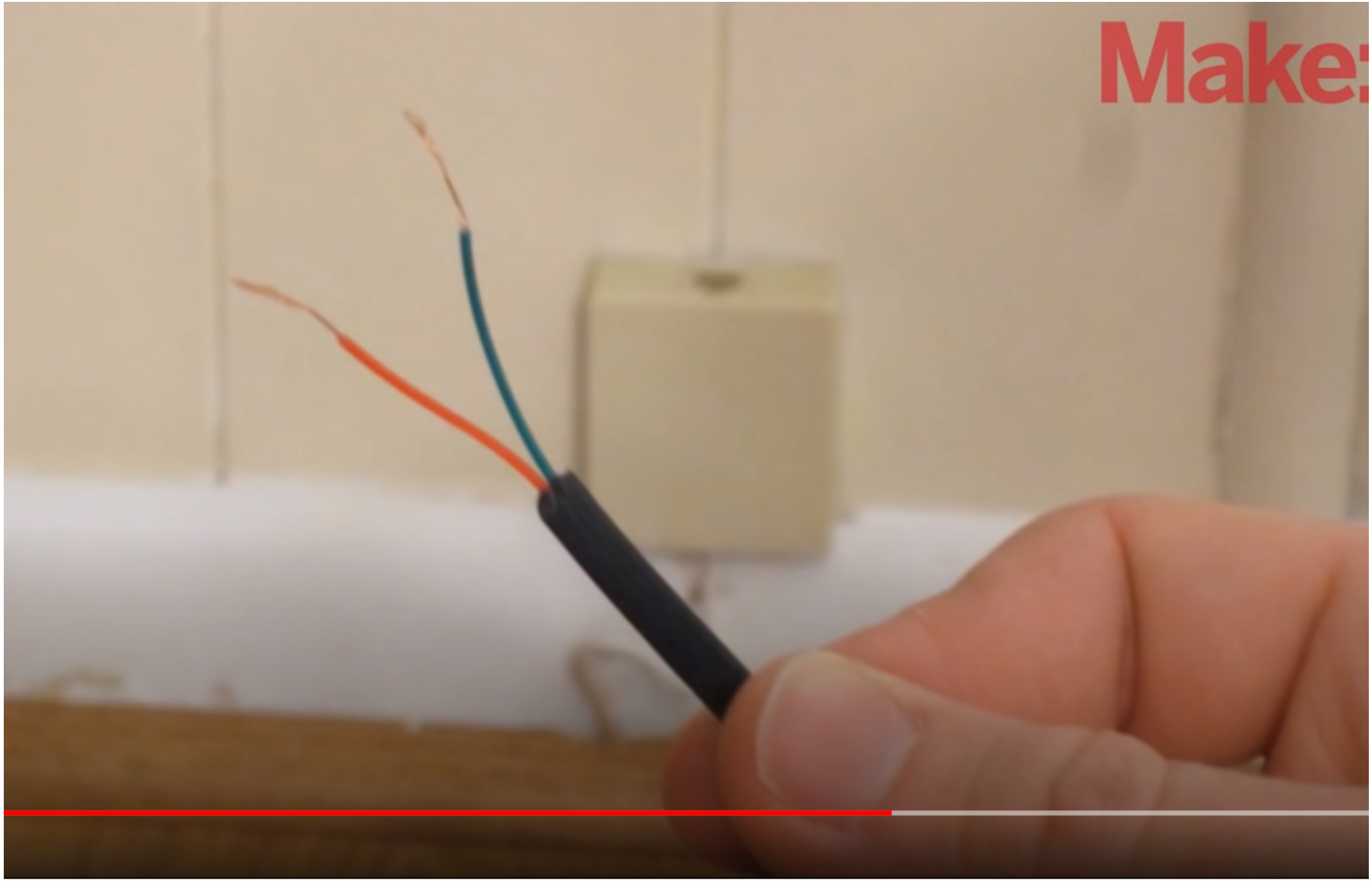
Make:

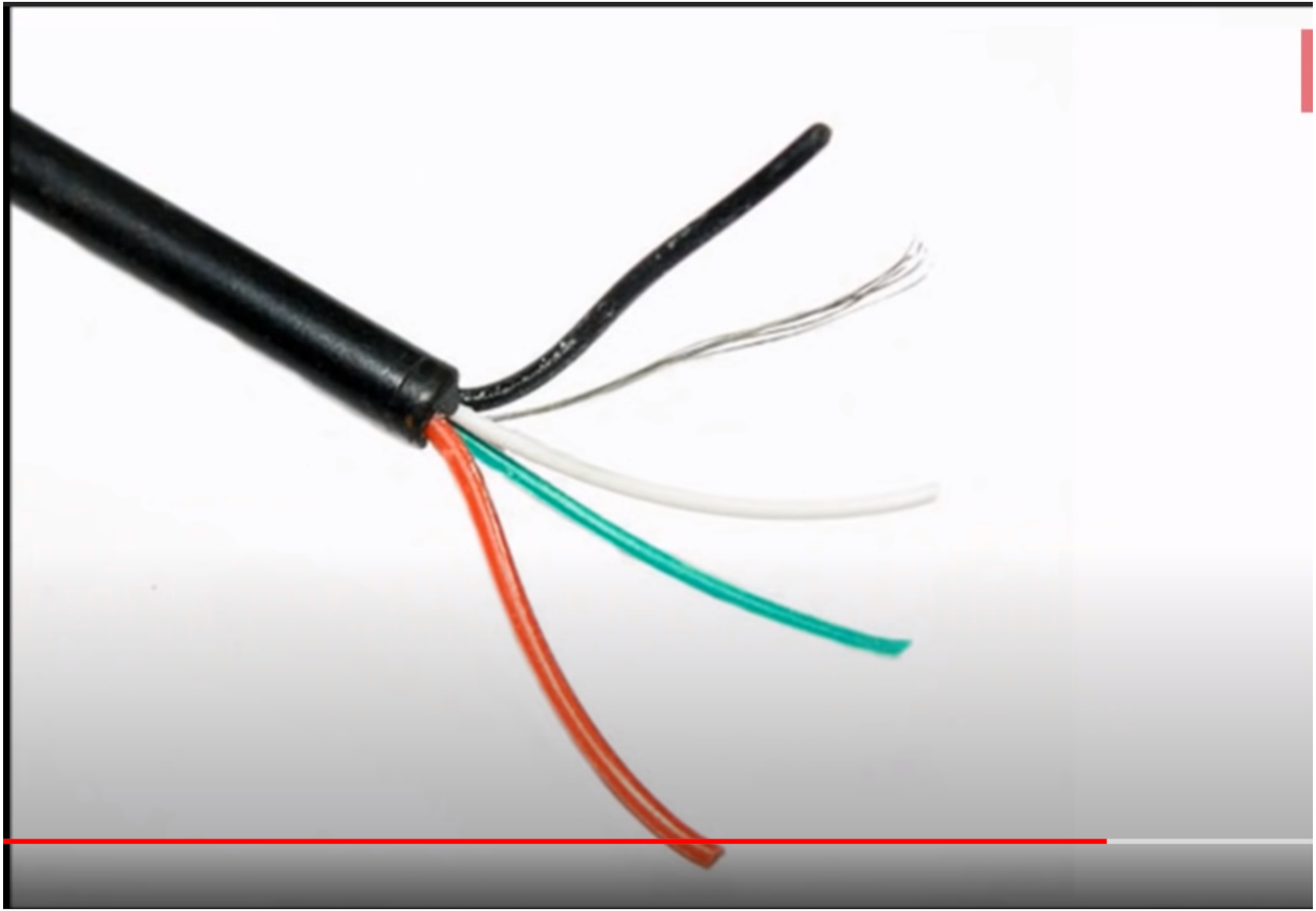

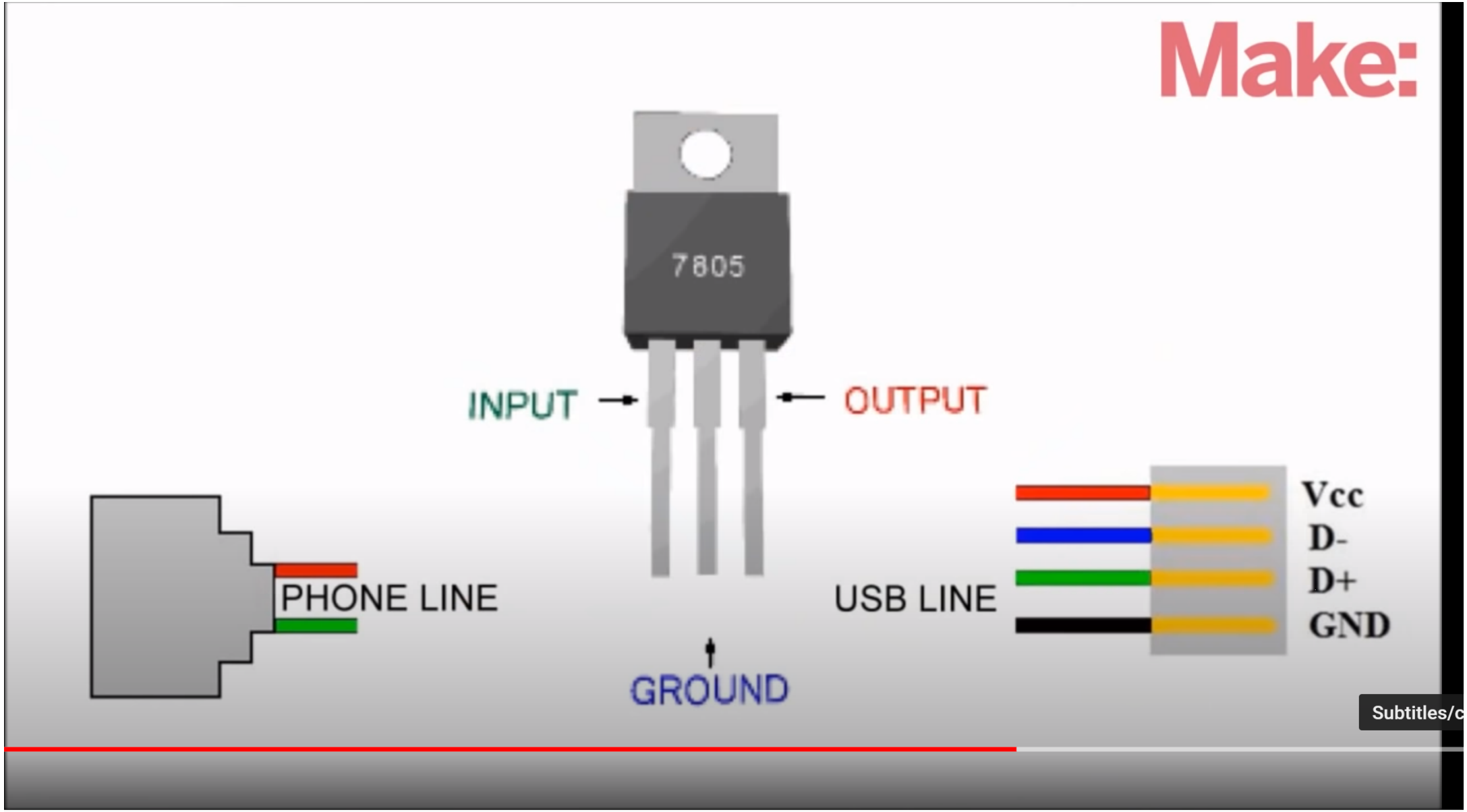
Make:
7805
INPUT
OUTPUT
PHONE LINE
USB LINE
Vcc
D-
D+
GND
GROUND
Subtitles/c

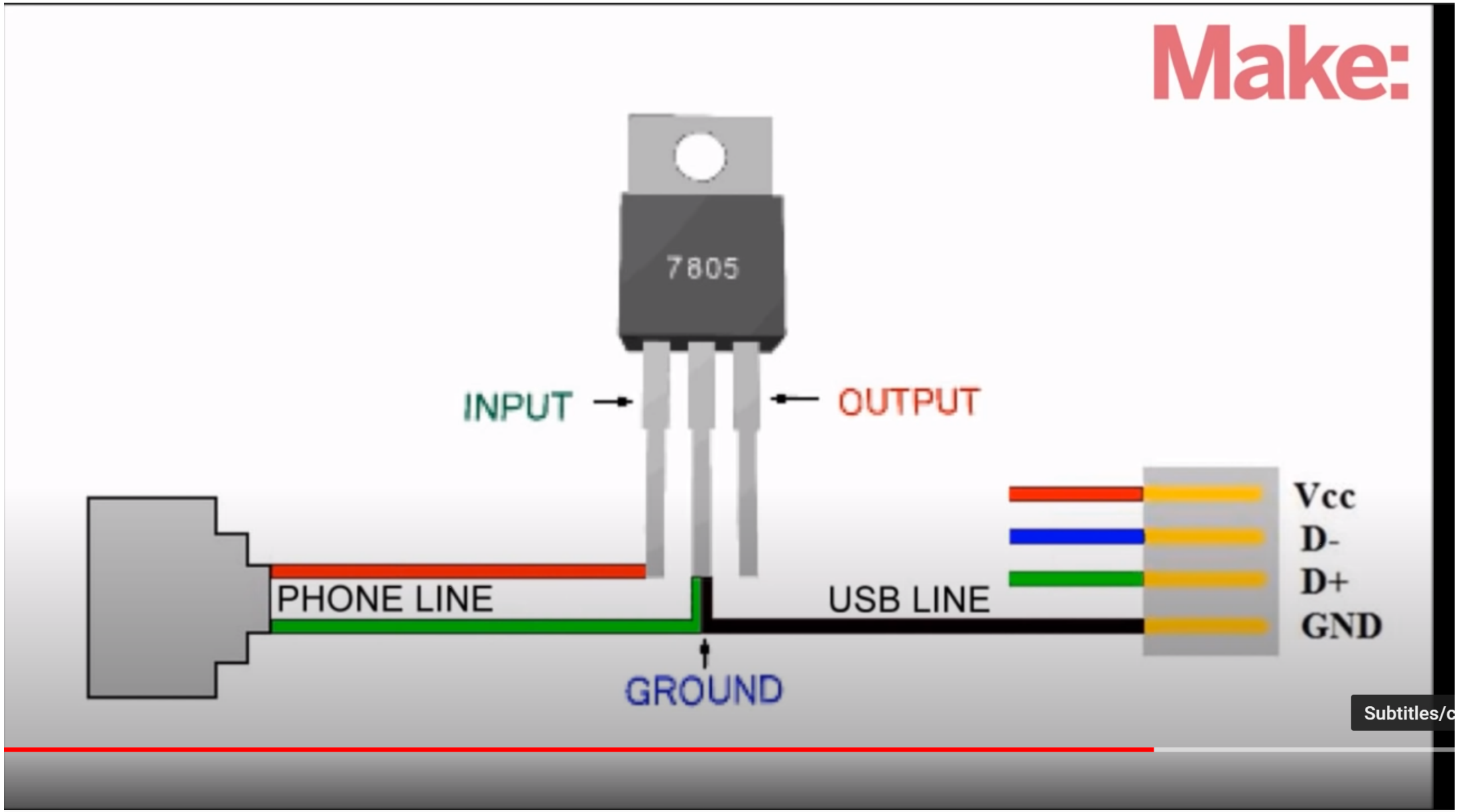
Make:
7805
INPUT
OUTPUT
PHONE LINE
USB LINE
GROUND
Vcc
D-
D+
GND
Subtitles/c

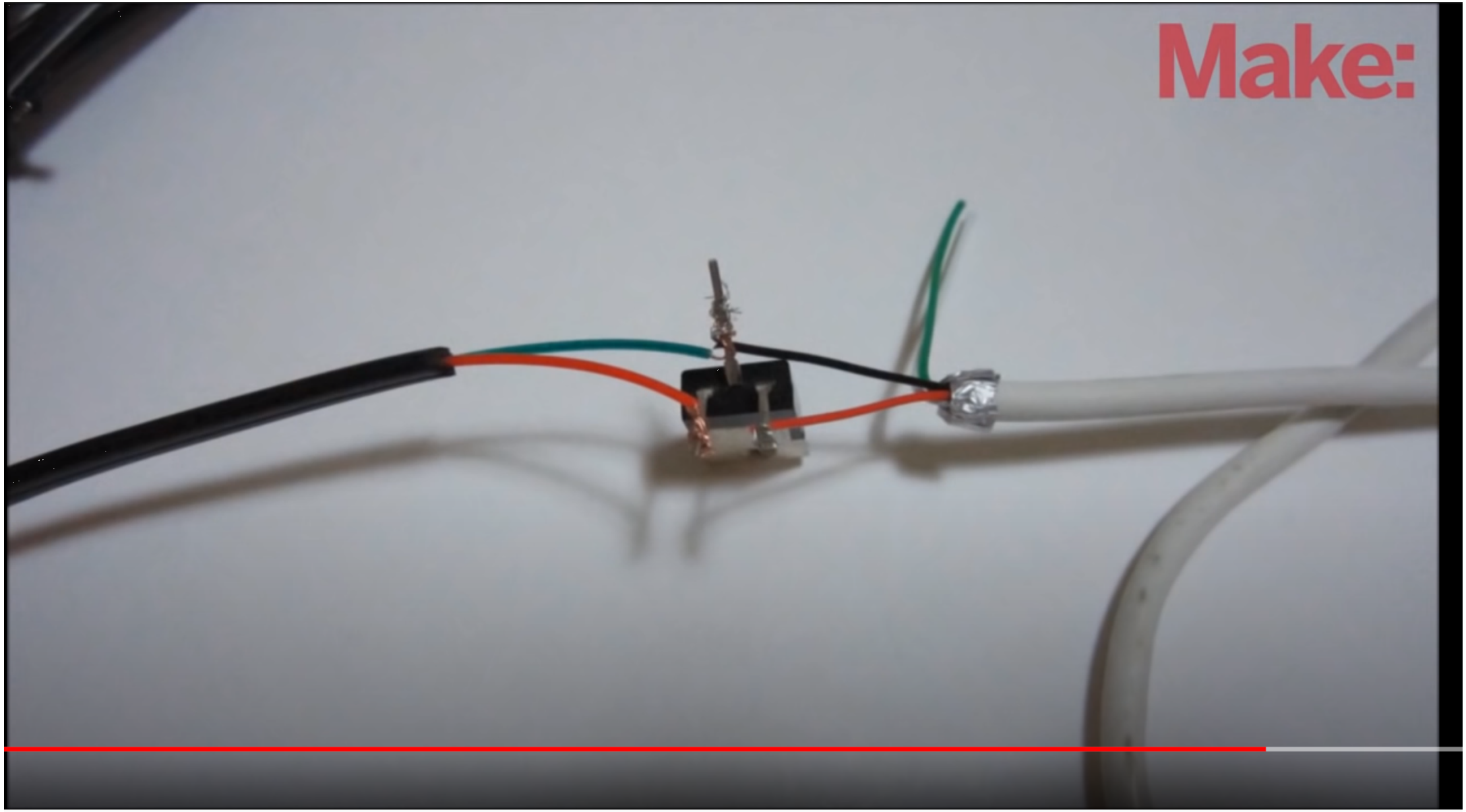
Make:

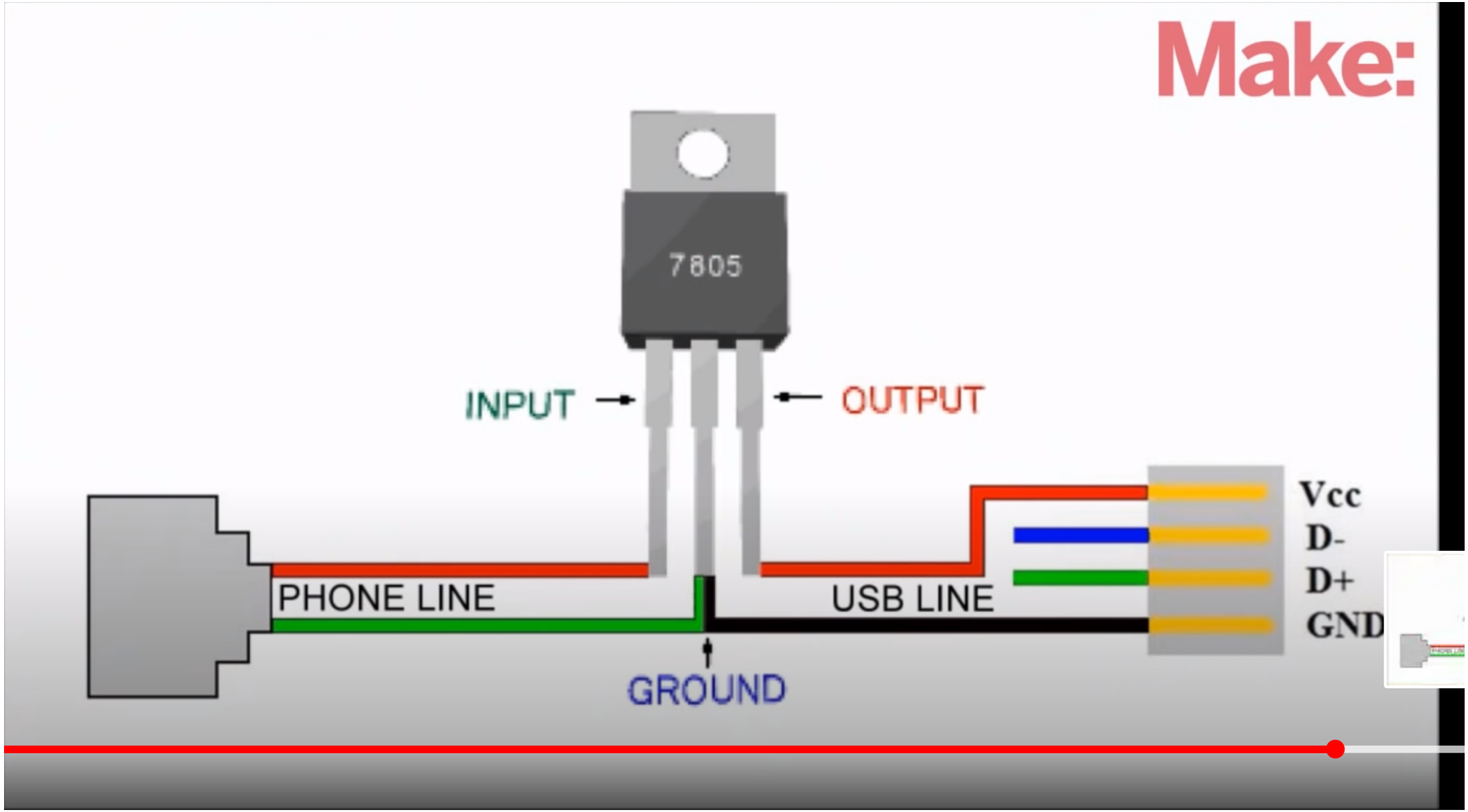
Make:
7805
INPUT
OUTPUT
PHONE LINE
USB LINE
GROUND
Vcc
D-
D+
GND

MC
78T05CT
QZA807

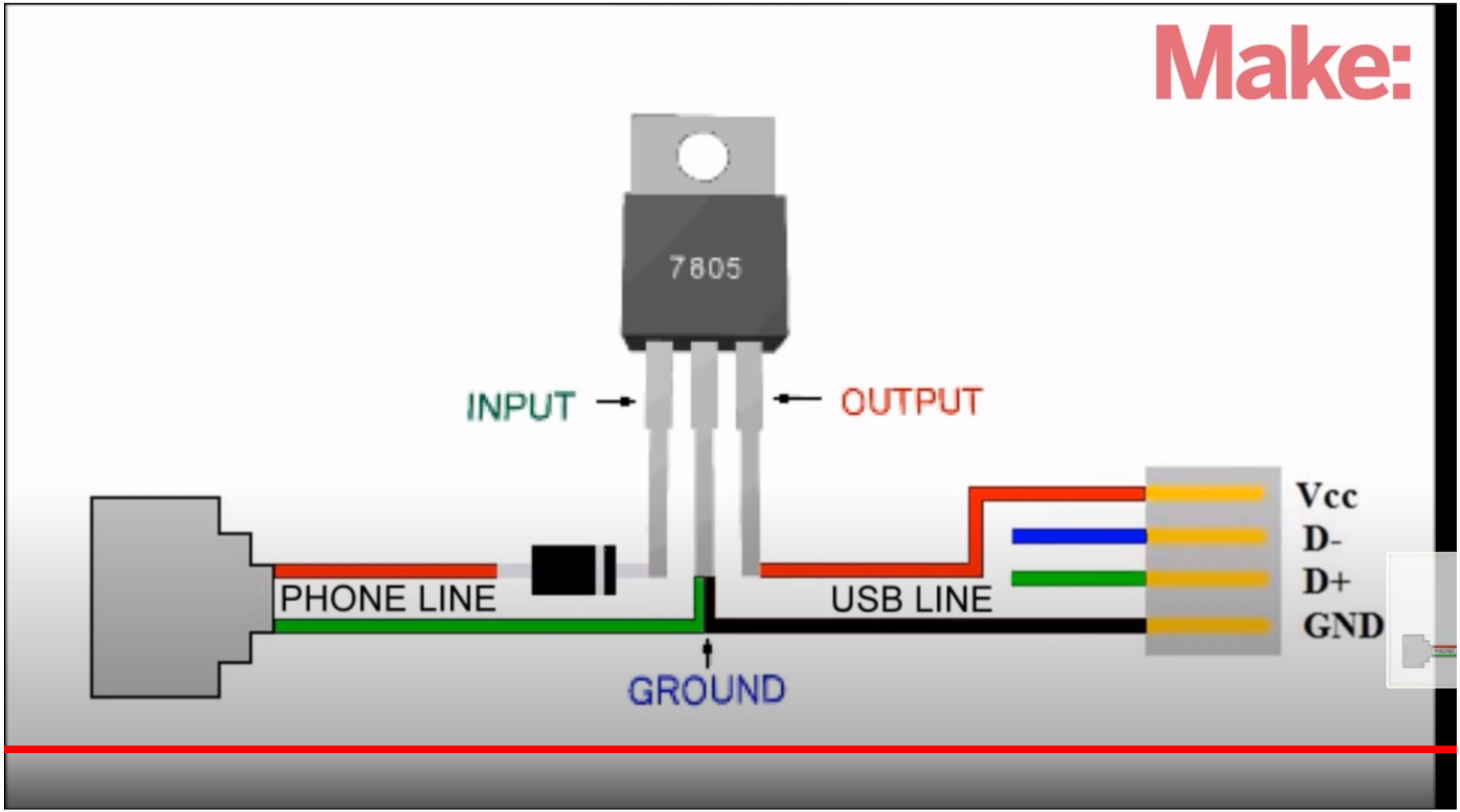
Make:
7805
INPUT
OUTPUT
PHONE LINE
USB LINE
GROUND
Vcc
D-
D+
GND

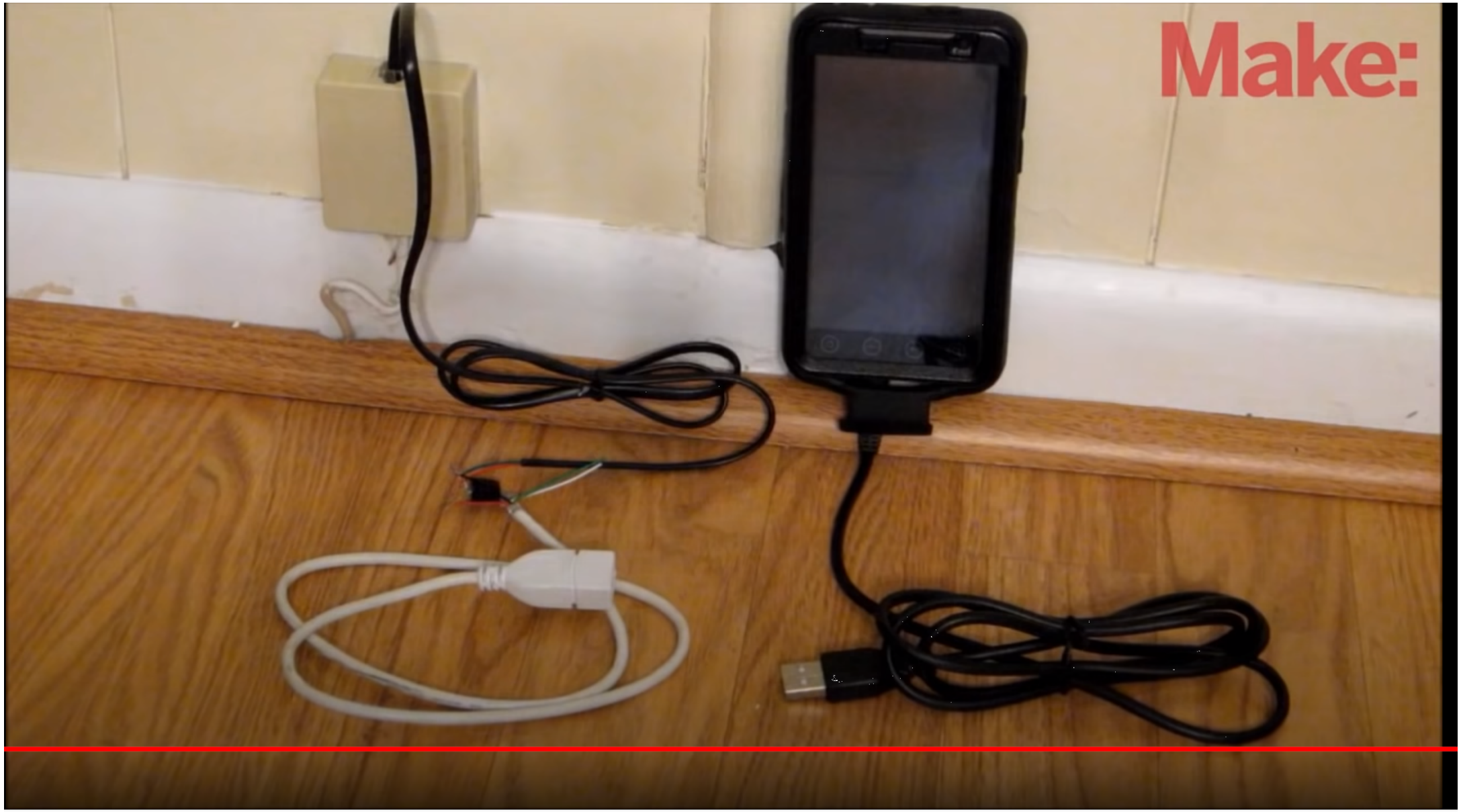
Make:

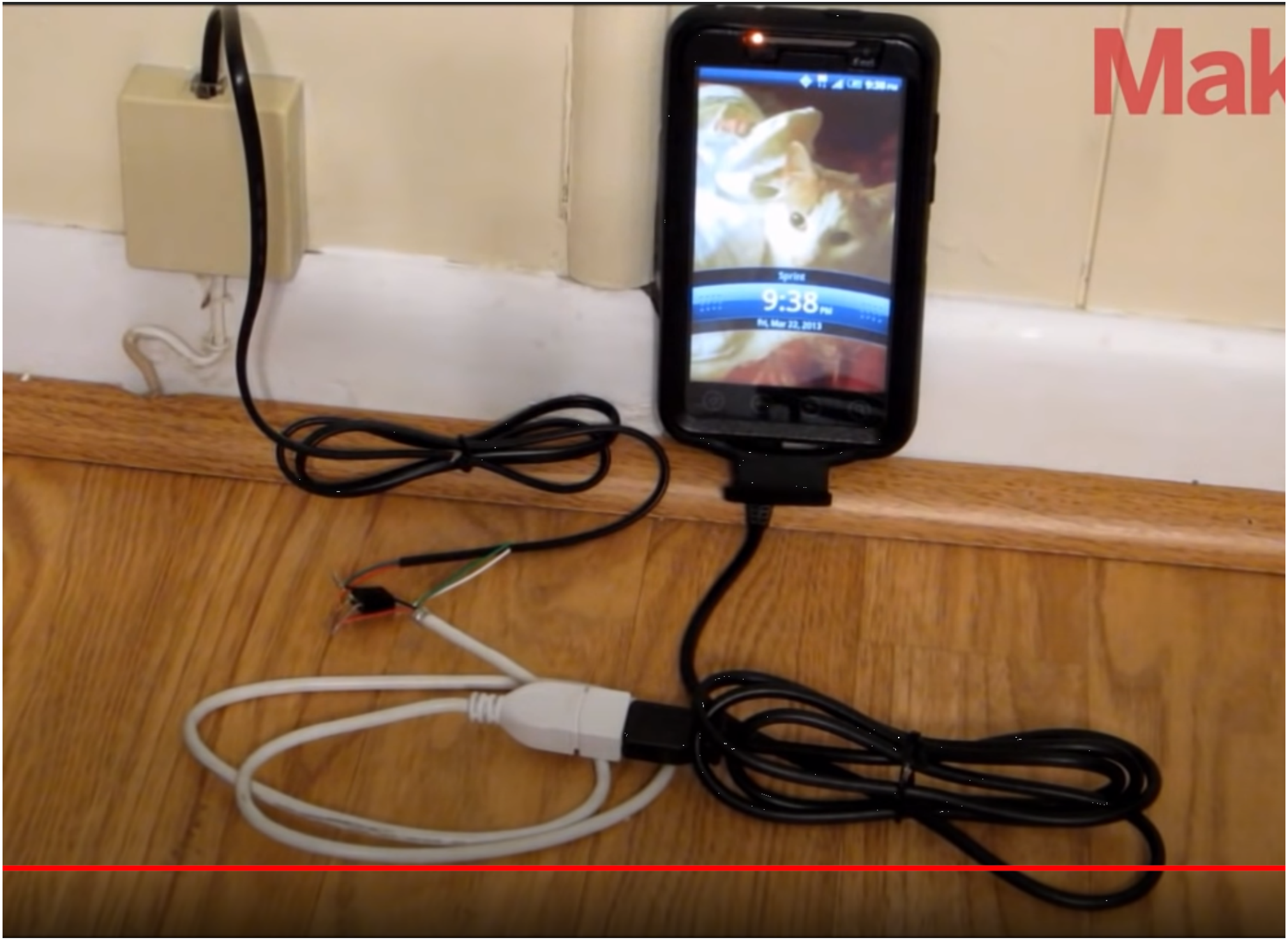
Mak
Sprint
9:38 PM
Fri, Mar 22, 2013

LISTA DE COMPONENTES - ESQUEMA NA OUTRA PÁGINA

2 diodos de germânio OA96 ou 1N60
2 resistores de 470 ohms*
1 Potenciômetro linear de 20 K ohms
3 capacitores cerâmicos NPO de 10.000pF (10nF, 103Z ou 0,010 uF)
1 medidor de 100 uA (VU-meter)
1 chave HH duas posições

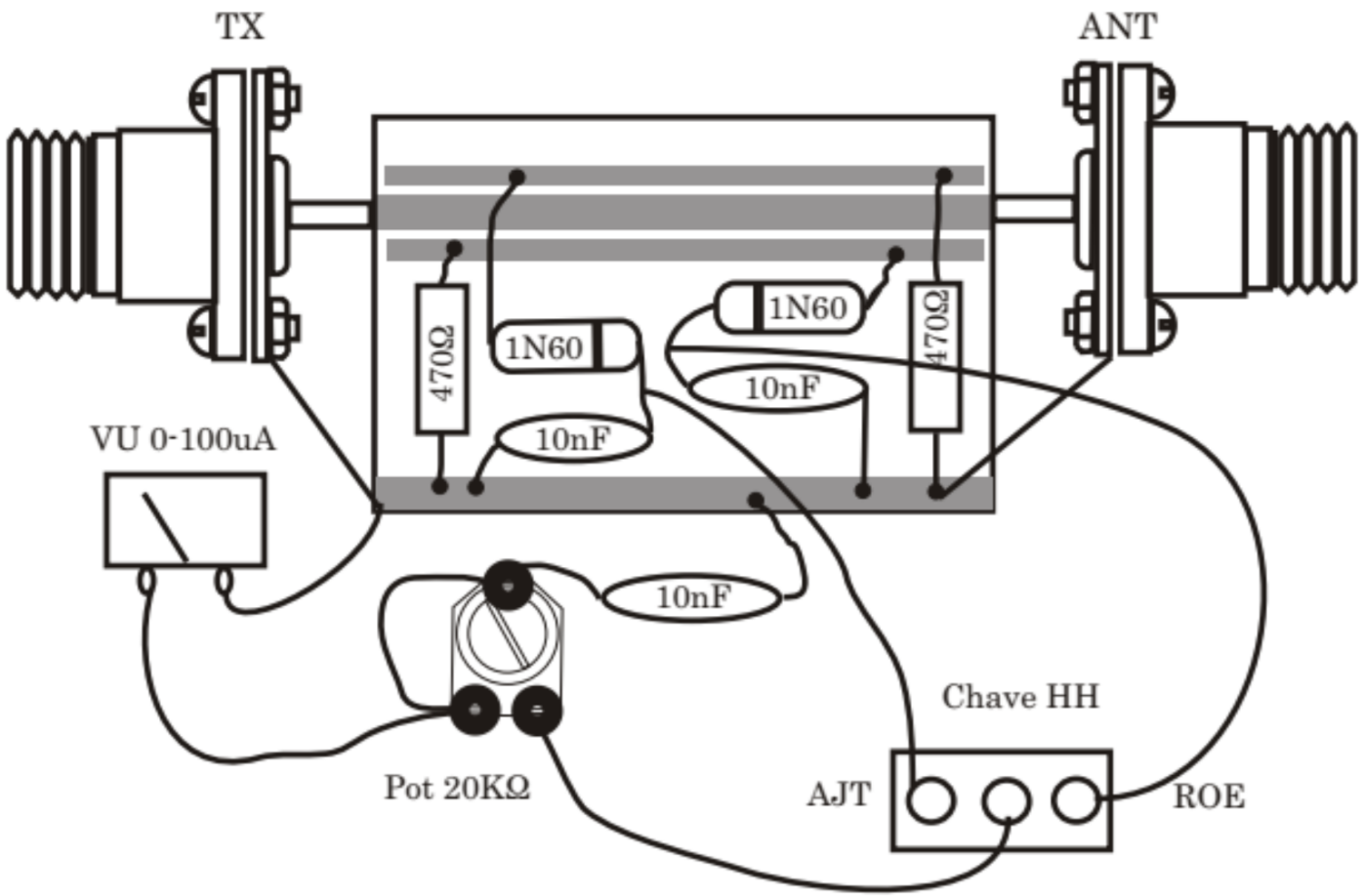

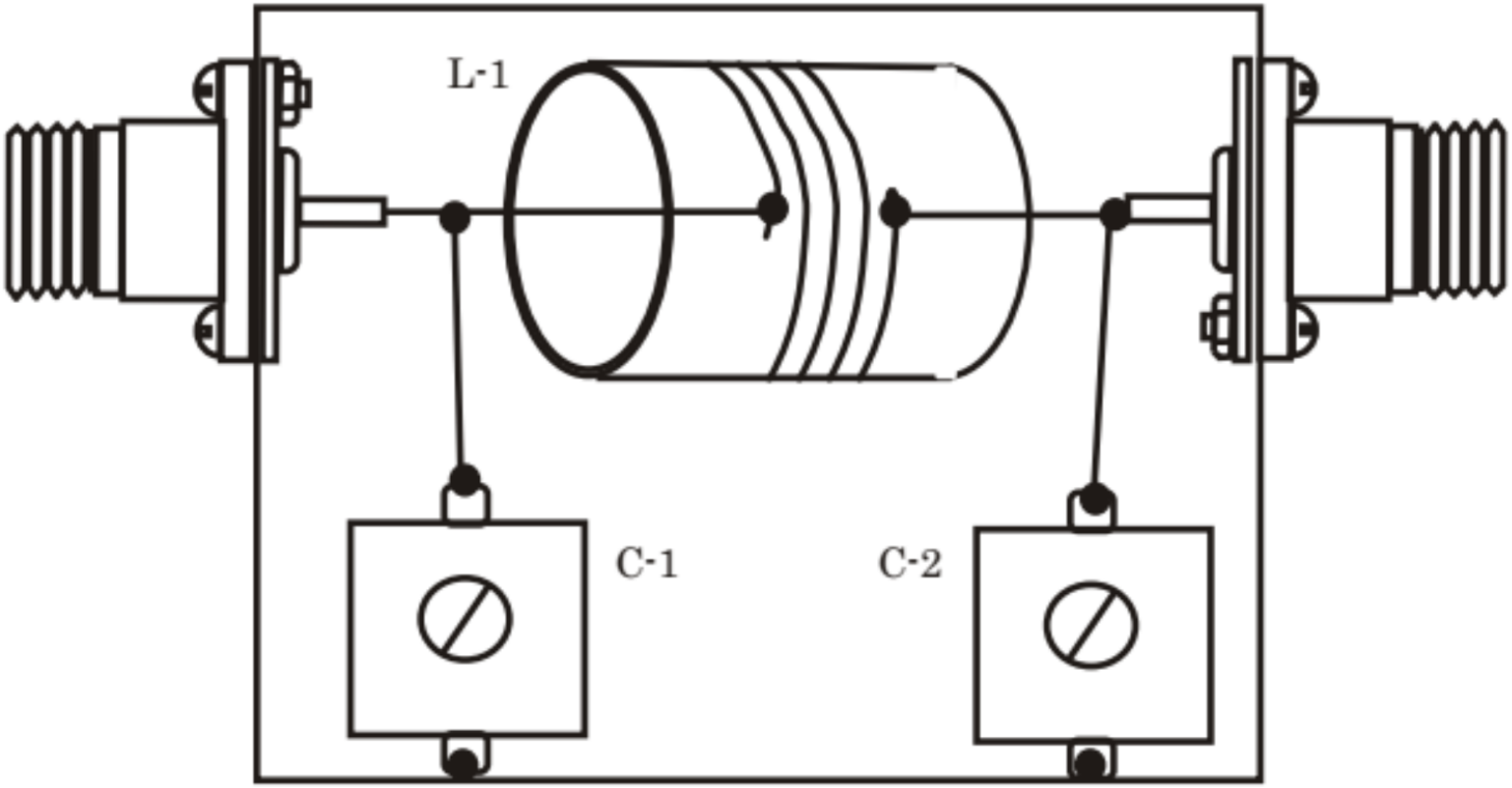

DADOS CONSTRUTIVOS DO ACOPLADOR

L1 - 5 espiras auto-suportadas de fio esmaltado nº 14 AWG (1,6 mm) em forma de 12,5 mm (1/2 polegada).
C-1 e C-2 - Trimmer ou capacitor variável de 3 a 30 pF.
Dois conectores coaxiais.

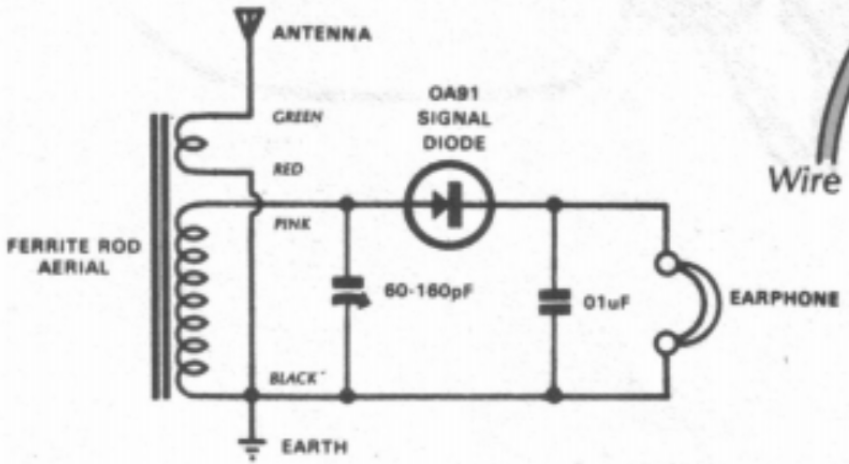

Figure 1

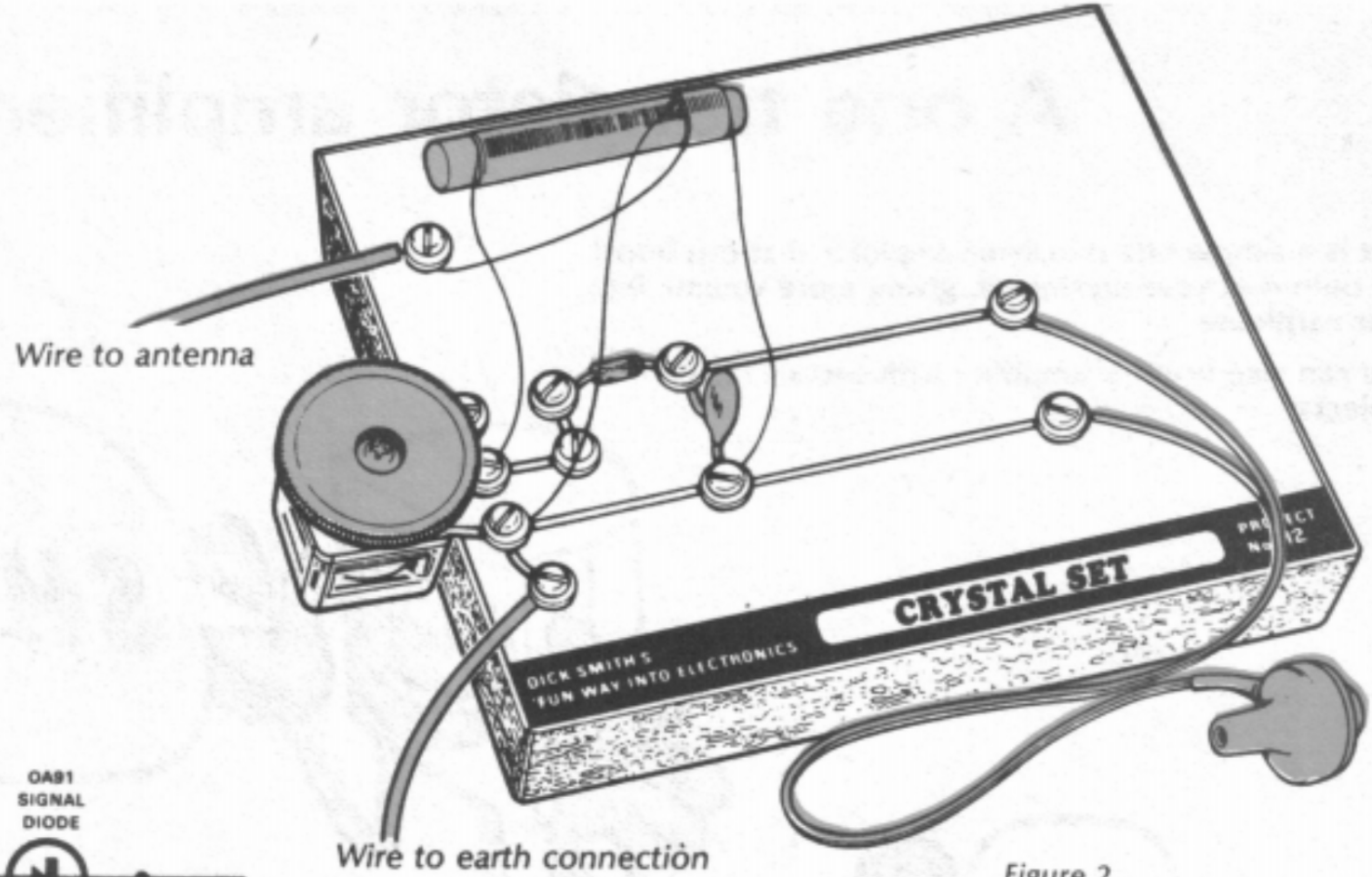

Figure 2

(No Model.)

R. VOSS.

INFLUENCE MACHINE.

No. 410,053. Patented Aug. 27, 1889.

fig. 1.

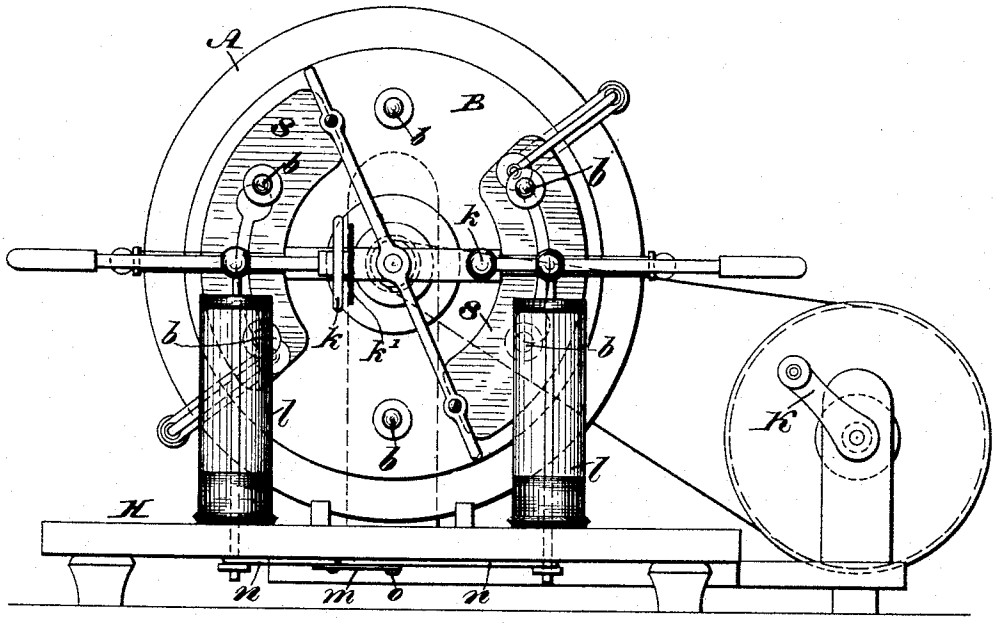

fig. 2.

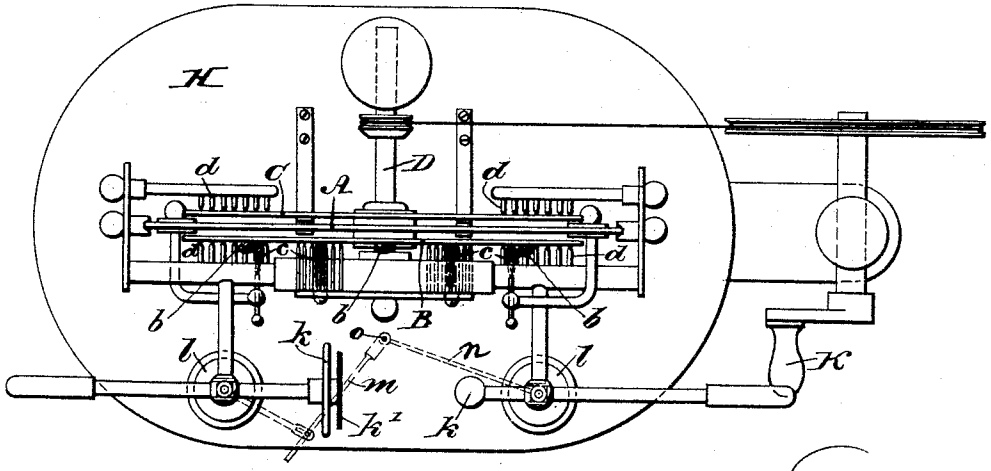

WITNESSES:

L. Douville,

P. H. Nagle.

INVENTOR:

Robert Voss.

BY Wiedersheim & Kintner

ATTORNEYS.

N. PETERS, Photo-Lithographer, Washington, D. C.

UNITED STATES PATENT OFFICE.

ROBERT VOSS, OF BERLIN, GERMANY, ASSIGNOR TO JAMES W. QUEEN & CO., OF PHILADELPHIA, PENNSYLVANIA.

INFLUENCE-MACHINE.

SPECIFICATION forming part of Letters Patent No. 410,053, dated August 27, 1889.

Application filed January 21, 1889. Serial No. 297,066. (No model.)

To all whom it may concern:

Be it known that I, ROBERT VOSS, a subject of the King of Prussia, German Emperor, residing at the city of Berlin, in the Kingdom of Prussia, German Empire, have invented certain new and useful Improvements in Influence-Machines; and I do hereby declare that the following is a full, clear, and exact description of the invention, which will enable others skilled in the art to which it appertains to make and use the same.

My invention has reference to improvements in double-acting electrical influence-machines; and it consists in an arrangement of three circular glass disks, two of which are rotary and on the same axis, one of these receiving any electricity that may escape on its side from the fixed or third disk and also generating electricity by friction with the air.

It also consists in certain details of construction hereinafter described, and particularly pointed out in the claims which follow this specification.

I carry out my invention in the way shown in the accompanying drawings, in which—

Figures 1 and 2 are respectively front and top views of a machine provided with my improvements.

Similar letters of reference indicate like parts in both of the figures.

A is a fixed glass disk having on it two paper sectors *s s*, placed diametrically opposite each other.

B and C are the two rotary glass disks, B being set out at equal distances from its center with small metal knobs *b b*, which, in conjunction with small metal brushes *c c*, serve to generate the electricity to be originally communicated to the influence-machine.

d d are metallic points serving as conductors.

k k are electrodes, which are for the purpose of producing a continuous spark, and they are in communication with two Leyden jars *l l*. I provide either one or both of these electrodes *k k* with a flat circular or disk-like attachment *k'* of insulating material, as rosin, gum, or hard rubber, which is secured to the metal electrode by a central stem, as shown, leaving an air-space between the two parts. With such a surface having this air-space between it and the metal electrode I obtain marked efficiency in the dispersion of the spark and avoid the troublesome brush-discharge.

Underneath the base-plate H is an arrangement by which the two Leyden jars *l l* may be placed in electric communication with each other. It consists of a metal bar *m*, turning on a point *o*, and of the metal wires *n n*, each connected to one of the Leyden jars. The bar *m*, as shown in the drawings, may effect a connection between the two wires *n n*, which may again be disconnected by turning the bar *m* on point *o*. The disk C is uncovered and serves for the reception of any electricity escaping on the rear side from the disk A, and also for generating a small quantity of electricity by its friction with the air when in rotation. This central disk A, being stationary and located in close proximity to the rotary disk on either side, acts after the manner of a plate in a condenser, tending to hold the electricity bound on both surfaces. The electricity thus held in tension appears to react upon the rotary plates to give increased effect. The two disks B C are mounted on one common axis D, receiving rotary motion from the crank K.

I am aware that for a long time past influence-machines have been produced having for their object to obtain by influence a larger quantity of electricity than that obtainable with the Holz machine. While this latter consisted mainly of a pair of circular varnished glass disks, one fixed and the other rotating, the improved construction had a number of such pairs of glass disks. By this arrangement the machine was very large and expensive.

By my machine a relatively larger quantity of electricity is obtained in a very simple way by influence through the back second wholly uncovered disk serving both as a protecting-body against any escape of electricity and as a generator of electricity by reason of its generating a small quantity of electricity by friction when rotating with the air present between it and the fixed disk, such electricity being then re-enforced by influence.

I am aware that influence-machines have

been constructed in which two rotary disks are adapted to rotate on opposite sides of two centrally-located fixed disks, said fixed disks having space between them. In this construction, however, of two fixed disks the space between said fixed disks is not utilized, and much of the influence of the intervening bound of electricity is lost. I therefore do not claim a double arrangement of such mechanism collectively; but

What I do claim as my invention, and desire to secure by Letters Patent, is—

1. In an influence-machine, the combination of a central fixed disk and two rotary disks attached to a shaft extending through the fixed disk, with two electrodes, one of which consists of a non-conducting surface attached to a conducting-surface, but separated therefrom by an air-space, the other electrode being of usual form, and both electrically connected to the influence-machine, substantially as described.

2. In an influence-machine, an electrode consisting of a non-conducting surface attached to the conducting-electrode, said parts being separated by an air-space, substantially as shown and described.

3. An electrode for an influence-machine, consisting of a flat or disk-like conductor, in combination with a flat or disk-like conducting-surface connected to the conducting part by a central stem, as shown and described.

In testimony whereof I signed this specification in the presence of two subscribing witnesses.

ROBERT VOSS.

Witnesses:
B. ROI,
ADOLPH SCHWABE.

MUST-READ:
Sons all over America are getting this tiny device to protect their loving mothers from attackers...
(See why this tiny device has become this years hottest gift!)
[Read More]

[Read More]
safesoundpersonalalarm.com

Translate Pages or Text
Google
Yahoo!
MultiTranslators

LinkReferral

Interesting info downloadable as PDF eBooks or sent via snailmail on CD or DVD
Updated 04/22/10

Useful Research Links
SuperPages
Unit Conversions
Audio Calculations
Google Patent Search over 200 years

KEELYNET

1 | Need Replacement Windows? Download This Free Replacement Guide dolans.discovermarvin.com
2 | The "Next" Bitcoin Forget Bitcoin - These 4 "Penny Cryptos" are 10x better than Bitcoin research.palmbeachgroup.com
3 | Don't Buy Bitcoin These five cryptocurrencies are set to overtake bitcoin. Free investor report. earlyinvesting.com

Site visitors since 01/01/03 8304962

09/16/13 - Zero Point Energy harnessed for creating "energy from nothing"?

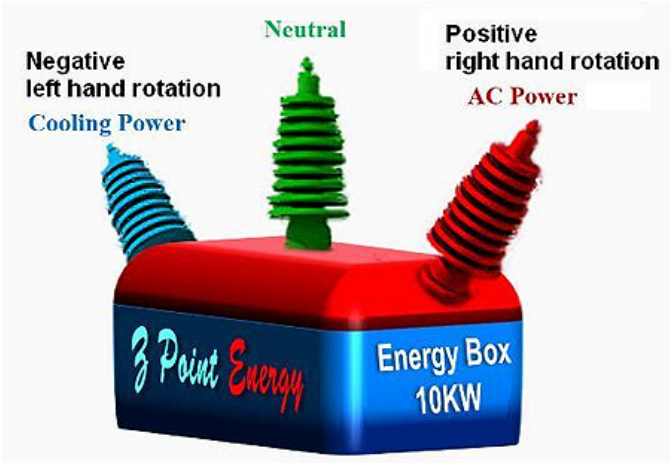

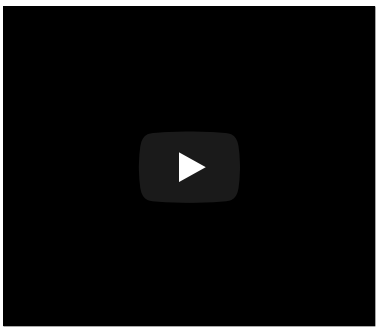

Priza Technologies Inc, a small Silicon Valley company has been able to create method and technology to harness zero point energy. This means that they can create energy without any fuel, from nothing. They are running a crowd funding campaign to raise funds to take this technology to the market at: Z-Point energy biggest discovery of science.

The concept of zero-point energy was developed in Germany by Albert Einstein and Otto Stern in 1913, as a corrective term added to a zero-grounded formula developed by Max Planck in 1900.

Zero-point energy, also called quantum vacuum zero-point energy, is the lowest possible energy that a quantum mechanical physical system may have; it is the energy of its ground state. All quantum mechanical systems undergo fluctuations even in their ground state and have an associated zero-point energy, a consequence of their wave-like nature.

The uncertainty principle requires every physical system to have a zero-point energy greater than the minimum of its classical potential well. This results in motion even at absolute zero. For example, liquid helium does not freeze under atmospheric pressure at any temperature because of its zero-point energy.

Priza Technologies has proposed a more complete space-time theory named as "neo unification theory", using which they have come up with a method to harness zero point energy.

Z Point Energy technology is poised to have a momentous impact on the energy scenario of the world because it enables the generation of sustainable, infinite and anywhere of electrical energy in an most environment friendly way.

Z Point Energy technology removes the notion of constraints and finiteness of available energy thus enabling mankind to use as much energy as required for the comfort and betterment of life. This is especially important for the people and areas of the world which do not have access to adequate electric energy or cannot pay for it thus living in a sub-standard living conditions. Z Point Energy enables fuel free automobiles, very low space travel, self-charging mobile phones and many more things limited only by the imagination of the people using it.

A by-product of the Z Point Energy technology is the cooling energy, which can be transported over long distances through electric wires. Thus a new business case of “cooling transmission lines” using existing power distribution infrastructure will be developed along those lines. It can enable energy efficient very low cost space travel.

US Patents
Fixing the US Patent System
UK Patents
European Patents
WIPO Search
WHOIS
Wayback Machine
Systran Translator
Technorati 13.6 million Blog Search
BugMeNot - Autofill registration pages with pseudo password
Currency Conversion
FREE! - FireFox "&" ThunderBird
BACKUP for Firefox/Thunderbird
Spy Sweeper
AVG Grisoft antivirus
Remove IE Browser
Addict3D
Programs, Technews, more
MouseRunner
Guides, tutorials "&" more
Lake Chapala Rehab Clinic
Professional rehab services
Rain Engineering
Trevor Constables website
KeelyNet Visits 2007

Click

Giveaway of the Day
Every day we offer **licensed** software you'd have to buy otherwise, for **free**! Today's giveaway is **Streaming Audio Recorder 4.2.0**.

Streaming Audio Recorder provides a reliable solution to record streaming music, radio shows, live audio courses, in-game sound, voice conference, Skype calls and etc. It supports recording and saving high definition audios in MP3, WMA, FLAC and WAV formats for playing on any media players and gadgets. This software is able to tag ID3 labels for songs automatically, and also allows to edit ID3 information flexibly. It is quite convenient to organize and transfer playlist to iTunes, letting you enjoy music on iPhone, iPad and iPod without effort. Furthermore, this audio recorder comes with the convert, edit, MP3 searching and CD burning features

Z Point Energy achieves this by splitting 0 point space energy into negative and positive components. This leads to infinite non-destructive generation of electricity anywhere, anytime at any scale for usage and distribution. It leads to almost fuel free automobiles.

The other product of the process is negative energy, which can be transported over long distances through electric wires. Thus a new business case of "cooling transmission lines" using existing power distribution infrastructure. It can enable energy efficient very low cost space travel.

Z Point Energy main technology is a trade secret but Priza has revealed parts of it through two extremely fundamental papers.

In the first paper with the title: **"Conservation of energy extended: Existence Of Super Inertia"**, they derived conservation of momentum from the conservation of energy using existing relativistic energy equations. They have further derived infinite higher order linearly independent conservation equations directly from the conservation of energy. The number of conservation equations turn finite only when the conservation quantities form a finite group corresponding to the roots of unity.

In the second paper with the title: **"Z Point energy elaborated"** which has been temporarily removed, they have discussed Z Point Energy in a qualitative way.

The significant thing they claim in this paper is that Zero Point energy can only be harnessed if the particles can be pushed through from speeds less than the speed of light to speed greater than the speed of light.

The paper further states that particles cannot be accelerated from speed less than the speed of light to a speed greater than light **BUT they have another method to push particles from speed less than light to greater than light.**

(Their initial website is under construction at **Z Point Energy**.)

After reading most of the material they've put out, seeing the **crowd funding video**...I am far from being convinced this is legit....of course, I wish it is! - Vlad

(This just came to my attention courtesy of Vlad at zpenergy.com, so I'm posting it asap. This company annoys me for two reasons;

1 - they actually claim energy from nothing, that is a major error, it should be CONVERSION of ZPE to electricity as explained at *Something from Nothing Revisited - 04/04/01*.

2 - they show no prototypes, no test data, not a clue HOW they are doing this other than their zpe paper dealing with velocity, their photo indicates a 10kw box, thats a lot of power for a prototype which they claim in experiments to put out .5 Watts. Why not go ahead and write 100KW or 1MW on the graphic like the real frauds do?...lol...

3 - Not just free energy but space travel (gravity control or just easy power generation?) as well and exaggerated claims not based on reality yet, unless they are hiding some of their experiments. Right now, its all hot air.

4 - there is an interview hinting at the use of *Metamaterials* and *Cherenkov radiation*

The fact they have 3 states, positive, neutral and negative indicate they are rectifying the chaos of ZPE as I elucidated in my paper *Thrust and Electrical Power by Rectifying Aether/ZPE with Chaos Converters* back in 2000.)

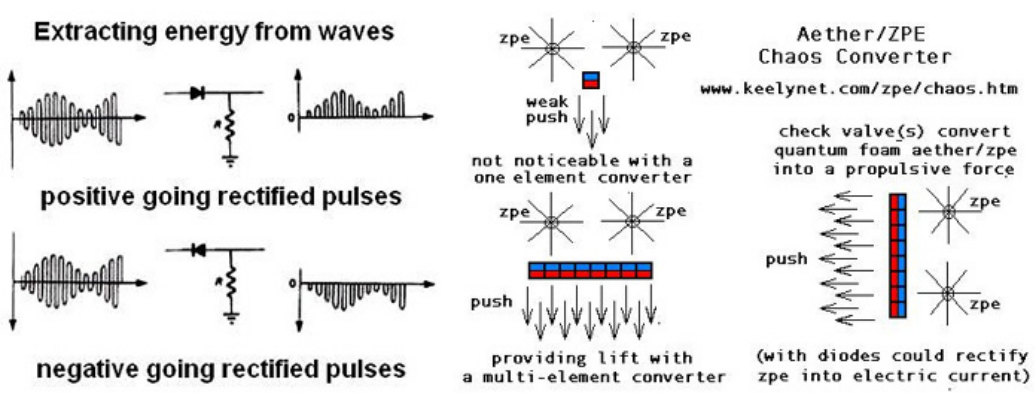

that can meet your needs in various aspects.
The program is available for $39.95, but is **free** for the visitors of My Site Name today.

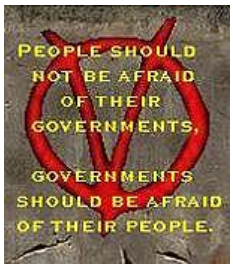

Files of Interest
Primer for Skeptics and Attackers
Inventor/Investor Guidelines
Magnetic Anomalies
Rectifying Chaos
Tilley Power System
CO2, warming "&" the need for Free Energy
Grebennikov Antigravity Platform
Boycott KeelyNet!
Self-Running PPM?
Terry Bastians' version of Gray Circuit
Bedini on Power Conversion Tube
Lindemann World of Free Energy
Press Release
Controversy!
Bogus, Erroneous Review
NuScam Bait and Switch
Inspiration page with several files
KeelyNet Alternative Science Museum
Funding the Future
Civilization in the 21st Century
The real 4th of July
DeLabs Electronic Experimenters Circuits
July 2005 Poll Results
August 2005 Poll Results
Byron Wine Energy

This reluctance to release any data reeks of smoke and mirrors. No photos of a blackbox prototype, no measurements, just a very spacey statement about "less than or greater than" the speed of light. That covers EVERY frequency in the known spectrum.

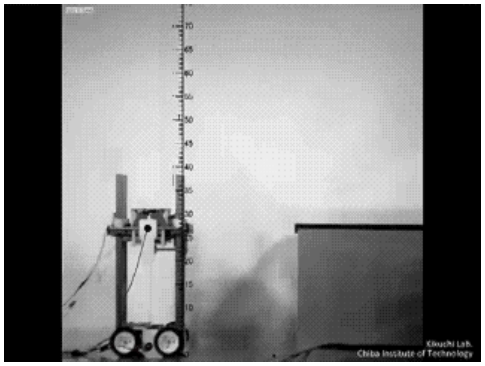

This gif is a most excellent Japanese experiment of an inertial thrust mechanism that "pushes against space" no less than 3 TIMES to achieve the tabletop which, in my opinion, shows how the aether/zpe is omnipresent and can be tapped for thrust or power. Shades of Baron Munchausen!

Though I could not find their patent application, I did find additional information which relates from **Left-handed materials and structures based on strong dielectric anisotropy** - In 1968, Victor Veselago predicted that media with simultaneously negative dielectric permittivity and magnetic permeability would have an effective refractive index with a negative value. In the same work, he suggested that in such a material all physical phenomena directly related to phase velocity would be reversed. Specifically, the reversal of Snell's law, Cherenkov's radiation, and the Doppler effect were predicted. The characteristic of having simultaneously negative dielectric permittivity and magnetic permeability values creates several challenges in the design and fabrication of so-called negative index materials (NIMs). For example, although negative dielectric constants can be found in a variety of plasmonic materials (e.g., Ag, Au, Cu, and the like) or polar materials (e.g, SiC) materials, no naturally occurring substance is known to exhibit magnetism at sufficiently high frequencies (GHz to optical).

The disclosed technology is not limited, however, to any particular application. For example, embodiments of the disclosed technology can be used as part of any device or system where electromagnetic radiation is desirably managed (e.g., on the nanoscale or microscale). For example, embodiments of the NIM structures can be used in imaging systems to modify or restore amplitude and/or phase information of electromagnetic radiation. It should also be understood that the disclosed technology is not limited to any specific wavelength. For example, **the disclosed embodiments or their equivalents can be used, for example, in radio-frequency, THz, infrared, or optical devices.**

While Equation (3) defines the magnitude of the phase velocity of the mode, the sign of the phase velocity cannot be determined by Equation (3) alone. To define the sign of the phase velocity (and consequently the "handedness" of the media), consider the refraction of a wave at the interface between a transparent isotropic media ("right-handed" media) and a media with .di-elect cons.<0 and .nu.<0 inside the same waveguide. For this example, assume also that the interface coincides with the coordinate plane z=0.

From the results in FIGS. 3 and 4, **it can be observed that Snell's law is reversed, meaning that the phase velocity in the medium with .di-elect cons.<0 and .nu.<0 is negative, and the resulting wave is left-handed for the general case of oblique incidence.**

As is discussed in Veselago, V. G., "The Electrodynamics of Substances with Simultaneously Negative Values of .di-elect cons. and .mu.," Soviet Physics Uspekhi 10, 509 (1968), optical effects directly related to the phase velocity (for example, Snell's law, Doppler Effect, Cherenkov radiation, and the like) are also reversed in such a medium.

Left-handed nonlinear transmission line media - A left-handed nonlinear transmission line system has multiple nonlinear capacitors connected in series between input and output terminals and multiple inductances connected in parallel between the nonlinear capacitors and a return conductor extending between the input and output terminals. The nonlinear capacitors have a capacitance characteristic that changes with the voltage applied across the capacitors, such as a capacitance that decreases with increasing voltage. A radio frequency signal source is coupled to the input terminals and provides power at a selected drive frequency. Depending on the frequency of the drive signal with respect to the Bragg cutoff frequency of the nonlinear transmission line, the output signal may include a strong signal component at the third harmonic of the input drive signal frequency, components at higher harmonics, or components at fractional frequencies of the input drive signal frequency. Parametric generation of other signal waves that are phase matched with the signal wave produced by the input drive signal is also possible under appropriate conditions. The left-handed nonlinear transmission line system generates such output signal frequencies with high efficiency.

The left-handed nonlinear transmission line system of the invention includes multiple nonlinear capacitors connected together at nodes in series between input and output terminals with multiple inductances connected in parallel between the capacitors and a return conductor that extends between the input and output terminals. The nonlinear capacitors and the inductances connected in parallel therewith form a plurality of nonlinear transmission line sections connected together between the input and output terminals. The nonlinear capacitors may have a symmetric non-constant capacitance characteristic such that the effective capacitance decreases with the absolute value of the voltage applied across the capacitor.

Boundary Oak Golf Course

Voted "Best Golf in the East Bay" the Last Two Years

playboundaryoak.com

Such capacitors may be formed, for example, utilizing back-to-back varactor diodes. The nonlinear capacitors may also have an asymmetrical voltage-capacitance characteristic, for example, as implemented with a DC bias applied to a single varactor diode. A radio frequency (RF) source is coupled to the input terminals, preferably through an input coupling capacitor, and the output terminals are coupled to a load. The left-handed nonlinear transmission line system may be implemented by mounting back-to-back varactor diodes on an insulating base, which are connected together by metalized connectors formed on the base surface that extend to contacts on the diodes, and with metal connectors extending from a connection to a diode to a ground plane conductor to form the parallel inductances.

The system of the invention may also be implemented in nonlinear transmission lines in two or three dimensions, in which a two or three dimensional array of nodes have nonlinear capacitors connected between pairs of nodes, and wherein inductances extend from connections to the nonlinear capacitors in the array to a ground return conductor that extends between the input and output terminals.

Planar metamaterials for control of electromagnetic wave guidance and radiation - A linear metamaterial comprises a transmission line, having a linear dimension, and is loaded with capacitors, and shunted with an inductor such that for an electromagnetic wave, having a wavelength greater than the linear dimension and traveling along the axis of the transmission line, the effective permeability and permittivity of the metamaterial are simultaneously negative. Applications for the metameterial are also disclosed.

The concept of a negative index of refraction, originally proposed by Veselago in the 1960s, suggested the possibility of materials in which the permittivity and permeability could be made simultaneously negative. **Veselago termed these left-handed media (LHM), because the vectors E, H, and k would form a left-handed triplet instead of a right-handed triplet, as is the case in conventional, right-handed media (RHM).**

In such a material the phase velocity and Poynting vector are antiparallel. Recently, novel 3-dimensional (3-D) electromagnetic materials have successfully demonstrated negative refraction by synthesizing a negative refractive index. These artificial dielectrics (metamaterials) consist of loosely coupled unit cells composed of thin wire strips and split-ring resonators to synthesize negative permittivity and permeability, respectively. In these metamaterials, the choice of operating frequency is restricted to the region of the resonance, which results in a highly dispersive, narrow and behaviour with strong associated absorption losses.

The metamaterial in accordance with the present invention is also suitable for use in a compact 1-D phase-shifting device that can be used to synthesize arbitrary transmission phases. Such as shifting device includes sections of LHM metamaterial lines cascaded with sections of conventional RHM transmission lines. Several embodiments of such a phase-shifting device, having a 1, 2, 4, and 8 stages can be seen in FIG. 12. The phase-shifting device offers significant advantages when compared to standard delay transmission lines.

The phase-shifting device is more compact in size and can achieve a *positive, a zero, or a negative phase shift* while occupying the same or shorter physical length. The phase-shifting device also exhibits a linear, flatter phase response with frequency, leading to shorter group delays.

Resonance cone metamaterial may also be used in an antenna, by shunting the metamaterial with inductors, at the transmission line intersections. FIG. 43 shows a resonance cone antenna 4300 constructed using metamaterial. The antenna includes a 2.times.3 array of macrocells.

Each macrocell includes a plurality of microcells of orthogonal pairs of transmission line segments joined in a substantially rectangular fashion. The segments are loaded periodically with lumped capacitors in one direction and lumped inductors in a perpendicular direction. The microcells of the macrocells have a shared orientation that is different from the orientation of microcells in adjacent macrocells by 90 degrees.

This also is reminiscent of Harry Perrigo's "Etheric Wave Accumulator"

Find something useful or interesting? Donations Appreciated!

PayPal DONATE

KeelyNet Skeptics

Don Lancasters Guru's Lair

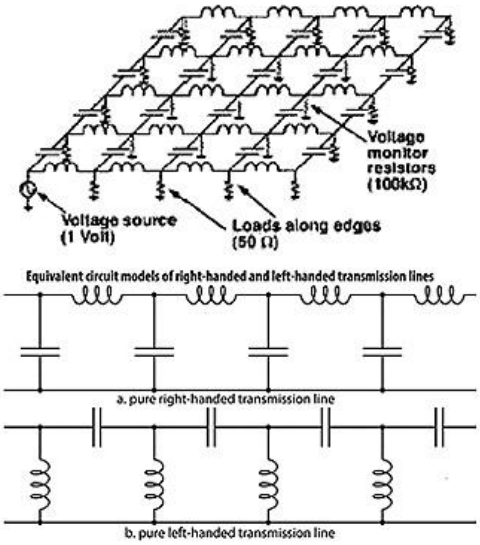

The basic method Perrigo used was an antenna arrangement which collected and resisted the incoming energy and raised it to a high enough current level where it could be run through a special electrical transformer to further intensify the available power.

Perrigo's antenna was derived from his experiments with various wire shapes, sizes and arrangements. One of his more successful attempts was to partially pound 100 roofing nails into a board 10 x 10 array and wrap very fine wire around each nail, making it a small electromagnet. Then by trial and error approach he connected the ends of the electromagnets to other nails in such a way that there was a maximum voltage between the wire and the nail. His patent application mirrored this electrical connection scheme in a more refined electromechanical approach.

Two accumulator plates were made with 100 round protruding knobs in a 10 x 10 square array. The accumulator plates were then sandwiched together with an insulator material between them. The insulator had 100 holes matching the protrusions on the plates. Placed in each hole was a special coil wrapped around a bundle of wires. Once the accumulator plates were sandwiched, a measurable electrical voltage existed between points AA and BB on plates 1 and 2, respectively. A very complicated transformer was attached to these two points. The plates were set on top of the transformer and Perrigo claimed this arrangement enhanced the energy accumulation process.

"The device is a generator as truly as the power-driven rotary generator in any power plant. Those generators don't actually 'make' electricity. They condense it from the air. So does the Perrigo. But it does it through the system of wiring, rather than revolutions through a magnetic field. I get my starting point from the air by breaking up the ether waves. The coils on the lead plates do that. I know why they do. It's the way they are connected, one from the other. That's my secret.

"They do break up the ether waves, gathering electricity and conducting it into the big coil underneath. That's the generator. Its size and the way it is wired determines the voltage, the horsepower. Outgoing wires from this coil take the 'juice' where you want it and it is there when you want it."

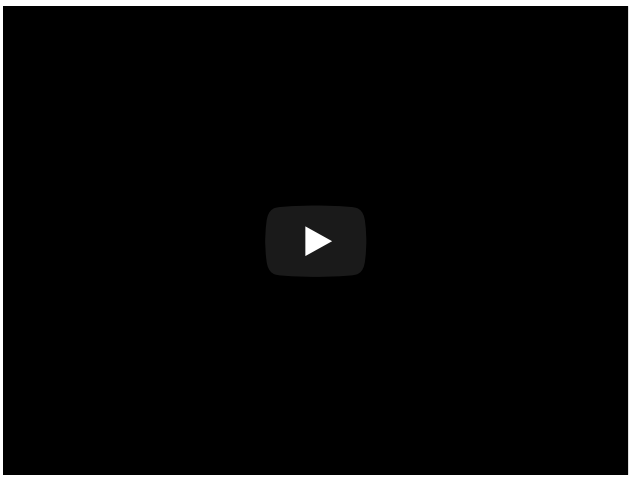

Visit Keelynet

DVD - the Physics of Crystals, Pyramids and Tetrahedrons

This is a wonderful duel DVD set lasting 2 hours and which presents one man's lifelong study of pyramids, crystals and their effects. Several of his original and very creative experiments are explained and diagramed out for experimenters. These experiments include;

1) transmutation of zinc to lower elements using a tetrahedron,
2) energy extraction from a pyramid,
3) determining mathematic ratios of nature in a simple experiment,
4) accelerating the growth of food,
5) increasing the abundance of food,
6) how crystals amplify, focus and defocus energy,
7) using crystals to assist natural healing,
8) how the universe uses spirals and vortexes to produce free energy and MORE...

- Two DVDs - **More Info** and check out this **Youtube Clip**

KeelyNet BBS Files w/bonus PDF of 'Keely and his Discoveries'

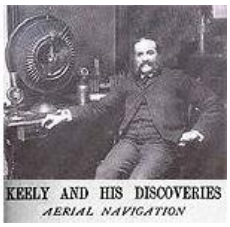

Finally, I've gotten around to compiling all the files (almost 1,000 - about 20MB and lots of work doing it) from the original KeelyNet BBS into a form you can easily navigate and read using your browser, ideally Firefox but it does work with IE. Most of these files are extremely targeted, interesting and informative, I had forgotten just how much but now you can have the complete organized, categorized set, not just sprinklings from around the web. They will keep you reading for weeks if not longer and give you clues and insights into many subjects and new ideas for investigation and research. IN ADDITION, I am including as a bonus gift, the book (in PDF form) that started it all for me, 'Keely and his Discoveries - Aerial Navigation' which includes the analysis of Keely's discoveries by Dr. Daniel G. Brinton. This 407 page eBook alone is worth the price of the KeelyNet BBS CD but it will give you some degree of understanding about what all Keely accomplished which is just now being rediscovered, but of course, without recognizing Keely as the original discoverer. Chapters include; Vibratory Sympathetic and Polar Flows, Vibratory Physics, Latent Force in Interstitial Spaces and much more. To give some idea of how Keely's discoveries are being slowly rediscovered in modern times, check out this **Keely History**. These two excellent bodies of information will be sent to you on CD. If alternative science intrigues and fascinates you, this CD is what you've been looking for... - **More Info**

'The Evolution of Matter' and 'The Evolution of Forces' on CD

Years ago, I had been told by several people, that the US government frequently removes books they deem dangerous or 'sensitive' from libraries. Some are replaced with sections removed or rewritten so as to 'contain' information that should not be available to the public despite the authors intent. A key example was during the Manhattan Project when the US was trying to finalize research into atomic bombs. They removed any books that dealt with the subject and two of them were by Dr. Gustave Le Bon since they dealt with both energy and matter including radioactivity. I had been looking for these two books for many years and fortunately stumbled across two copies for which I paid about $40.00 each. I couldn't put down the books once I started reading them. Such a wealth of original discoveries, many not known or remembered today. / Page 88 - Without the ether there could be neither gravity, nor light, nor electricity, nor heat, nor anything, in a word, of which we have knowledge. The universe would be silent and dead, or would reveal itself in a form which we cannot even foresee. If one could construct a glass chamber from which the ether were to be entirely eliminated, heat and light could not pass through it. It would be absolutely dark, and probably gravitation would no longer act on the bodies within it. They would then have lost their weight. / Page 96-97 - A material vortex may be formed by any fluid, liquid or gaseous, turning round an axis, and by the fact of its rotation it describes spirals. The study of these vortices has been the object of important researches by different scholars, notably by Bjerkness and Weyher. They have shown that by them can be produced all the attractions and repulsions recognized in electricity, the deviations of the magnetic needle by currents, etc. These vortices are produced by the rapid rotation of a central rod furnished with pallets, or, more simply, of a sphere. Round this sphere gaseous currents are established, dissymetrical with regard to its equatorial plane, and the result is the attraction or repulsion of bodies brought near to it, according to the position given to them. It is even possible, as Weyher has proved, to compel these bodies to turn round the sphere as do the

satellites of a planet without touching it. / Page 149 - "The problem of sending a pencil of parallel Hertzian waves to a distance possesses more than a theoretical interest. It is allowable to say that its solution would change the course of our civilization by rendering war impossible. The first physicist who realizes this discovery will be able to avail himself of the presence of an enemy's ironclads gathered together in a harbour to blow them up in a few minutes, from a distance of several kilometres, simply by directing on them a sheaf of electric radiations. On reaching the metal wires with which these vessels are nowadays honeycombed, this will excite an atmosphere of sparks which will at once explode the shells and torpedoes stored in their holds. With the same reflector, giving a pencil of parallel radiations, it would not be much more difficult to cause the explosion of the stores of powder and shells contained in a fortress, or in the artillery sparks of an army corps, and finally the metal cartridges of the soldiers. Science, which at first rendered wars so deadly, would then at length have rendered them impossible, and the relations between nations would have to be established on new bases." - **More Info**

High Voltage & Free Energy Devices Handbook

This wonderfully informative ebook provides many simple experiments you can do, including hydrogen generation and electrostatic repulsion as well as the keys to EV Gray's Fuelless Engine. One of the most comprehensive compilations of information yet detailing the effects of high voltage repulsion as a driving force. Ed Gray's engine produced in excess of 300HP and he claimed to be able to 'split the positive' energy of electricity to produce a self-running motor/generator for use as an engine. Schematics and tons of photos of the original machines and more! Excellent gift for your technical friends or for that budding scientist! If you are an experimenter or know someone who investigates such matters, this would make an excellent addition to your library or as an unforgettable gift. The downloadable HVFE eBook pdf file is almost 11MB in size and contains many experiments, photos, diagrams and technical details. Buy a copy and learn all about hydrogen generation, its uses and how to produce electrostatic repulsion. - 121 pages - **More Info**

Hypnosis CD - 3 eBooks with How To Techniques and Many Cases

If you have a few minutes, you might want to read my page on hypnosis and all the amazing things associated with its application. Included is an experience I had when I hypnotized a neighbor kid when I was about 14. As well the hypnotic gaze of snakes, the discovery of 'eyebeams' which can be detected electronically, the Italian Hypnotist Robber who was caught on tape with his eyes glowing as cashiers handed over their money and remembered nothing, glamour and clouding the mind of others, several methods of trance induction and many odd cases, animal catatonia, healing, psychic phenomena, party/stage stunts, including my favorite of negative hallucination where you make your subject NOT see something...much more...if nothing else, its might be a hoot to read. - **More Info**

14 Ways to Save Money on Fuel Costs

This eBook is the result of years of research into various methods to increase mileage, reduce pollution and most importantly, reduce overall fuel costs. It starts out with the simplest methods and offers progressively more detailed technologies that have been shown to reduce fuel costs. As a bonus to readers, I have salted the pages with free interesting BONUS items that correlate to the relevant page. Just filling up with one tank of gas using this or other methods explained here will pay for this eBook. Of course, many more methods are out there but I provided only the ones which I think are practical and can be studied by the average person who is looking for a way to immediately reduce their fuel costs. I am currently using two of the easier methods in my own vehicle which normally gets 18-22 mpg and now gets between 28 and 32 mpg depending on driving conditions. A tank of gas for my 1996 Ford Ranger costs about $45.00 here so I am saving around $15-$20 PER TANK, without hurting my engine and with 'greener' emissions due to a cleaner burn! The techniques provided in this ebook begin with simple things you can do NOW to improve your mileage and lower your gas costs. - eBook Download / **More Info**

The Physics of the Primary State of Matter

The Physics of the Primary State of Matter - published in the 1930s, Karl Schappeller described his Prime Mover, a 10-inch steel sphere with quarter-inch copper tubing coils. These were filled with a material not named specifically, but which is said to have hardened under the influence of direct current and a magnetic field [electro-rheological fluid]. With such polarization, it might be guessed to act like a dielectric capacitor and as a diode... - **More Info**

$5 Alt Science MP3s to listen while working/driving/jogging

No time to sit back and watch videos? Here are 15 interesting presentations you can download for just $5 each and listen to while driving, working, jogging, etc. An easy way to learn some fascinating new things that you will find of use. Easy, cheap and simple, better than eBooks or Videos. Roughly 50MB per MP3. - **More Info**

15 New Alternative Science DVDs & 15 MP3s

An assortment of alternative science videos that provide many insights and inside information from various experimenters. Also MP3s extracted from these DVDs that you can listen to while working or driving. Reference links for these lectures and workshops by Bill Beaty of Amateur Science on the Dark

Side of Amateur Science, Peter Lindemann on the World of Free Energy, Norman Wootan on the History of the EV Gray motor, Dan Davidson on Shape Power and Gravity Wave Phenomena, Lee Crock on a Method for Stimulating Energy, Doug Konzen on the Konzen Pulse Motor, George Wiseman on the Water Torch and Jerry Decker on Aether, ZPE and Dielectric Nano Arrays. **Your purchase of these products helps support KeelyNet, thanks! - More Info**

eBooks DVDs MP3s MexiStim Donations Books

Donate

Want to make a difference? If you have the funds, check out;

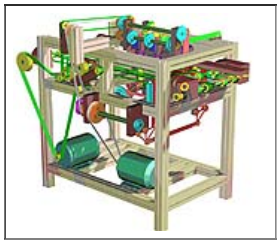

The Vanguard Sciences Lab Project
Funding Options updated 04/22/10

experiments in energy, transport, gravity and healing/rejuvenation

The Vanguard Sciences Gravity Control Project
Funding Options updated 04/22/10

to Re-Discover how to control Gravity with related projects

The Phoenix is consumed by aging, where it burns itself to ashes to be born anew

we just burn up ...for now...

The Vanguard Sciences Healing and Rejuvenation Project
Funding Options updated 12/02/11

to Re-Discover how to control Rejuvenate the body with related projects

Mexistim Polarity Cycler

Personal Flight

Check out

Duke Leto Atraides advising his son in DUNE;
A person needs new experiences, they JAR something deep inside, allowing them to GROW....WITHOUT CHANGE, something SLEEPS inside us and seldom awakens...the sleeper must AWAKEN...
***** Learn from this! *****
Take advantage of Synchronicities, Coincidences and Opportunities

Specific Speed & Transmutation	

What happened to our beloved United States of America?

"The place of the material world in the universe is that of an exquisitely beautiful precipitate or varied cloud-work in the universal aether, determined by a geometrical necessity..."
- Professor John G. MacVicar 1870 -

Cree Indian Prophecy Only after the Last Tree has been cut down, Only after the Last River has been poisoned, Only after the Last Fish has been caught, Only then will you find that Money Cannot Be Eaten.	**Looking for 'PoP'** **Proof of Principle**

...Read about the new, improved MexiStim Basic Model...

Chaos Converters

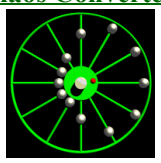

Rhythmodynamics

Who is Decker???

Advertisements

NEXUS great magazine covers many topics	 Bill Beatys' excellent huge science site	 Tesla Patents

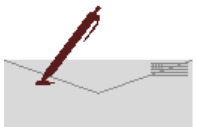

Jerry Decker
Chuck Henderson

Guidelines for Alternative Science

Alternative science covers a wide range of interests. Generally, it includes gravity control, free energy, electronic healing techniques, all forms of energy conversion, antigravity, levitation, overunity, time travel (as well as slowing down or speeding up local time).

Also clearly covered is the art of power generation (ideally zero point or aether conversion), space travel, physics of matter and energy, sound/acoustics and how it can be used to produce useful phenomena, electric or magnetic forces to produce useful phenomena, various types of motors, vacuum energy, dimensional travel and shifts, medicine, hydrogen generation and how it is used.

It also covers oil/petroleum and how it can be used to produce energy and products, weather control for cancelling earthquakes, tsunamis, fires, floods and to produce rain or clear weather on demand, oxygen/ozone therapy, nitrogen as a motor driver, water generation and manipulation via steam and vacuum, ecological restoration techniques, biophysics, rejuvenation and an unending list of other subjects, most of which are accepted by 'orthodox' science.

壽財禄吉福運

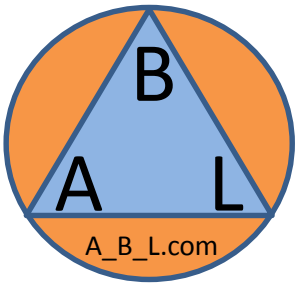

Glossary of termS relating to brainwashing and psychological warfare (neurowarfare) in the electronic age

May 14, 2016 edition

Nathan Weatherdon
BA Political Science, U of Toronto; MA Economics, U Laval
Translator and editor of economics research: http://parc-msms.org
Teacher

Published by the Anti-Brainwashing League (ABL), 2016.
www.A_B_L.com

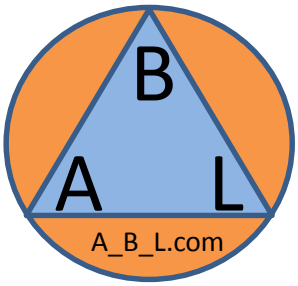

The copyright terms are according to the Creative Commons Attribution-ShareAlike 4.0 International license.

You are free to:

- Share — copy and redistribute the material in any medium or format
- Adapt — remix, transform, and build upon the material for any purpose, even commercially.
- The licensor cannot revoke these freedoms as long as you follow the license terms.

Under the following terms:

- Attribution — You must give appropriate credit, provide a link to the license, and indicate if changes were made. You may do so in any reasonable manner, but not in any way that suggests the licensor endorses you or your use.
- No additional restrictions — You may not apply legal terms or technological measures that legally restrict others from doing anything the license permits.

Notices:

- You do not have to comply with the license for elements of the material in the public domain or where your use is permitted by an applicable exception or limitation.
- No warranties are given. The license may not give you all of the permissions necessary for your intended use. For example, other rights such as publicity, privacy, or moral rights may limit how you use the material.

Introduction

Please read the following carefully, prior to making use of the glossary!

Citizens of all nations must be aware of the terms in this glossary, for purposes of **cognitive liberty** and anti-**brainwashing** in the electronic age. Some terms relate to technologies and considered as 'classified' (many of which now demonstrated in the **civilian** sector) and others refer to strategies being used.

From the perspective of the specific technologies, 1st year university physics and biology should be more than sufficient preparation – if you do not have this background, plenty of online materials can fill in the gaps on the science concepts underlying existing **neuroweapons**. The scientific references are complemented by personal experience and online research. Keep in mind that many online resources may be **disinformation** to distract people from truth and prevent correct understanding of present capacities and practices in the matter of **psychological warfare** in the electronic age (**neurowarfare**).

Scientific validity cannot be attributed to all sources, as many are not peer-review scientific sources, and much other content is a mashing of numerous similar sources where I am unsure as to how to attribute the credit for the original content. Also, a fair few entries are basically modified from the Wikipedia open source encyclopaedia to make the relevance for **psychological warfare** more clear. Other sources include official public documents, formally established social or political bodies, a handful of non-peer-review specialist sites, some commercial sites and suspiciously rare references from mainstream media.

For some terms, I present a Google Trend image when there is sufficient data in the Google database. For the specific technologies, there were rapid jumps from 0 to high around 2005, then largely dropped off the radar. The term **gaslighting** was previously almost unheard of, but has been rising exponentially. The term **targeted individual** did not exist prior to 2005, but appeared shortly after those quick blips of interest in the specific **electronic weapons** being used, and use of the term has been generally increasing since.

Use your head. Do not jump to crazy conclusions. Approach this glossary the way a scientist would approach anything. With simultaneous openness and scepticism.

Please do not perceive any of this content as threatening or intimidating. Yes, this is scary. But, we need to be psychologically prepared and aware of the tools which may be brought against the public.

Finally, I recommend reading the glossary through twice. The first time, do not slow yourself down too much by thinking "you're so stupid" if you do not fully understanding all details at first. The second time, read more carefully, especially on concepts which you feel are most important for you to understand.

N Weatherdon

List of terms:

All terms relating to SCIENCE NON-FICTION technologies which may seem 'unbelievable' are **underlined**. The remainder of terms need to be understood for the purpose of preparing psychological defenses and/or understanding which experiences are relevant for historical and/or legal documentation pertaining to related events.

Agent provocateur
Ambush
Assets (intelligence)
Augmented cognition
Blackmail
Blacklisting
Blocking harassment
Brain fingerprint
Brainwashing (refer to mind control)
Brain programming
Brain imaging (brain scanner)
Cause stalking
Civil society
Civilian
Coercive persuasion or thought reform
Cognitive liberty
Conditioning (psychology; a.k.a. Pavlovian conditioning or Classic conditioning) (refer to Priming):
COINTELPRO
Conspiracy
Controlled personnel effects
Corruption
Covert surveillance
Crime against humanity
Crowd manipulation
Cyberstalking
DARPA
Decoy(ing)
Dehumanization
Delusion (also refer to gaslighting):
Depersonalization
De-patterning
Directed conversation
Directed energy weapons (refer to electronic weapons)
Disinformation
Electromagnetic radiation/waves (specific types of which include Radio waves and Microwaves)

Electromagnetic shielding (including Faraday cage)
Electromagnetic weapons (a.k.a. Electronic weapons, Neuroweapons, etc.)
Electronic harassment (no-touch torture)
ELINT
Emotional cloning (a.k.a. Cloned emotional signatures)
Evoked action (related: Classic conditioning, Priming, Subliminal stimuli, Electronic weapons)
Extremely low frequency waves (ELF electromagnetic waves)
False flag
Fatigue attacks and "electronic caffeine"
Freedom
FOIA
Gagged person
Gang stalking (a.k.a. Mobbing; Organized stalking; which includes High-tech stalking by proxy)
Gaslighting
Guilt
HAARP (High Frequency Active Auroral Research Program)
Handler
Harassment (also, refer to Stalking, Cause stalking, Gang stalking, Electronic harassment, Cyberstalking)
Hate crime
Human rights
Hypogenic method
Hypnosis
Information Awareness Office
Informed consent
Innocence
Inner voice cloning
Innuendo
Intimidation
Joint
Kangaroo court
Laser microphone
Learned helplessness
MALINTENT
Masers
Mass murder
MEDUSA
Megalomania (also, narcissistic personality disorder)
Magnetophosphenes
Man-in-the-middle attack
Martha Mitchell Effect
Microwave auditory effect (a.k.a. the Frey effect; refer to synthetic telepathy for applications)
Microwave mind control (refer to brainwashing and electronic weapons)

Microwave Doppler movement measuring device
Millimeter waves (and weapons)
Mimicking harassment (parroting)
Mind control (mind influencing technologies and strategies)
MKULTRA
'Five Eyes' intelligence alliance
Noise campaign
Non-consensual human experimentation
Neural oscillation ('brain waves')
Neurotechnological warfare (a.k.a. Psychotronic warfare, Neurowarfare)
Neuroweapons
Nuremberg Code
Oh
Operation Paperclip
P300 (neuroscience)
Peace
Pedophilia
Predictive programming
PGP
Planting a false memory
Plausible deniability
Political abuse of psychiatry (also see, psychiatric reprisal)
Political repression
Pre-crime (also, see thought crime)
Priming (psychology) (related: classic conditioning, subliminal stimuli)
Prison of your own making (or, jail without the bars)
Propaganda
Psychic driving
Psychological evaluation
Psychological torture (i.e., psychological terrorism, especially state-complicit; also, see torture)
Psychological warfare (for present purposes, neurowarfare is often a more appropriate term)
Psychiatric reprisal
Pulsed energy projectiles
Pulse-modulated electromagnetic radiations
Questions
Rage Against the Machine
Rape
Remote neural monitoring
Right of revolution
Ritual abuse
Schizophrenia
Self-incrimination

Sensitization
Silent sound (a.k.a. sound from ultrasound)
Sleep deprivation
Slander (a.k.a. defamation)
Social control
Stalking
Stasi/Gestapo
StringRay
Street theater
Subliminal stimuli (a.k.a. subliminal messaging)
Subvocalization
Suggestion
Suggestive guilt
Synthetic telepathy (a.k.a. Voice to skull (to be integrated), a.k.a. auditory disturbances)
Targeted individual (a.k.a. subjects of experimentation and/or assets)
Terrorism (in some cases, including freedom fighting)
THINTHREAD
Thought crimes (in the electronic age; also see pre-crime)
Transcranial magnetic stimulation
Torture (for this context, especially no-touch torture):
Totalitarianism
Unique electric resonance frequencies (brain)
Vision reconstruction
Voice of God (electronic weaponry)
Voice to skull (a.k.a. Auditory disturbances)
War crime
Whistleblower
X-ray
Yo-yo
Zersetzung

(A future edition may divide this into two sections, one for technologies and one for other entries.)

Appendices:

Appendix A: An exploratory list of potentially legitimate uses of electronic weapons and related technologies

Appendix B: Alternative sources/perspectives; related advocacy organizations

Appendix C: Annotated bibliography.

Appendix D: Geneva Convention and Protocols in relation to the treatment of civilians – certain articles highlighted and extended/discussed in relation to the present situation of neurowarfare

Appendix E: Specific public safety objectives relating to such technologies (adaptations)

Appendix F: Specific national laws which are violated by application of the strategies and technologies described in this document, at a country by country level. Presentation of some potentially relevant precedents.

Appendix G: Remaining issues relating to the scientific validity of definitions of technologies and methods used, as constrained by the limitations of which research is presently available to the civilian sector - regardless of the enormous number of testimonials and personal experiences.

Appendix H: Acknowledgements: List of critical reviews, editing, corrections of scientific explanations, research contributions, etc.

Quotes:

The fact is, one reason that the general public, media, and uninformed government officials scoff at the truth of our story is that people tend to focus on the personal testimonial aspect, and ignore the crucially important unclassified and commercial devices and systems which can duplicate, the effects being reported… of which mind read, beaming the voices of the operators at the technology's helm into the target's head, torturing a person ... 24 hour a day, 7 day a week with real-time monitoring and biometric surveillance tracking, manipulating dreams, etc. This is no long science fiction but ***SCIENCE NON-FICTION!!! –***

- unknown

It has become appallingly obvious that our technology has exceeded our humanity.

- Albert Einstein

You need power only when you want to do something harmful. Otherwise, love is enough to get everything done.

- Charlie Chaplin

Freethinkers are those who are willing to use their minds without prejudice and without fearing to understand things that clash with their own customs, privilege, or beliefs. This state of mind is not common, but it is essential for right thinking.

- Leo Tolstoy

A wise man … proportions his believe to evidence.

- David Hume

A 'no' uttered from the deepest conviction is better than a 'yes' uttered merely to please, or worse, to avoid trouble.

- Mahatma Gandhi

Don't get confused between who people say you are, and who you <u>know</u> you are.

- unknown

Do not let them divide and conquer you one friendship and family member at a time.

- Anonymous

If we don't stand together, we will hang separately!

- Pete Santilli Show

Those who desire to give up freedom in order to gain security will not have, nor do they deserve, either one.

- Benjamin Franklin

The greatest obstacle to discovery is not ignorance – it is the illusion of knowledge

- Daniel Boorstin

Our silence is their most powerful weapon.

- Anonymous

A

Agent provocateur:

An **agent provocateur** is a person assigned to provoke unrest, violence, debate or argument by or within a group while acting as a member of the group but covertly representing the interests of another. An **agent provocateur** seeks to secretly disrupt a group's activities from within. **Agents provocateurs** are employed to disrupt or discredit a group by performing acts for which the group will be falsely accused, by leading the group into activities it would not otherwise pursue or by creating discord between members. **Provocateurs** may encourage illegal acts, recommend unsound belligerent tactics, spread false rumours intended to provoke unwise and hasty action, spread malicious rumours within a group about a group member, or employ other tactics intended to provoke improper action by a group or to divert a group from its chosen purpose. An **agent provocateur** might attempt to implicate as an accomplice an **innocent** target who becomes unwittingly involved in a crime or criminal **conspiracy**.

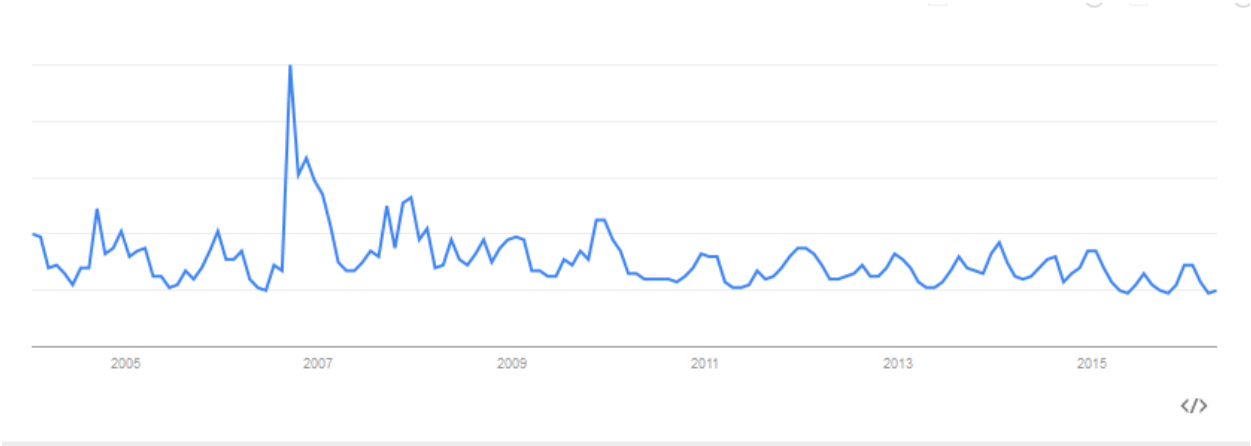

Ambush:

An **ambush** is a long-established military tactic, in which combatants take advantage of concealment and the element of surprise to attack unsuspecting enemy combatants from concealed positions, such as among dense underbrush or behind hilltops. **Ambushes** have been used consistently throughout history, from ancient to modern warfare.

There does not appear to be any precedent historically where **ambushes** on **civilian** targets are deemed to have any legitimacy in terms of the proper conduct of war. Historically, many instances of extracting taxation upon occupied **civilian** areas have occurred, and there are also instances of **civilians** being **ambushed** or otherwise drafted for enslavement into forces which are hostile to them – perpetrators of such strategies do not tend to get a very good hearing in the history books.

In the context of **neurowarfare**, where **ambushes** can be performed from a great distance and where **civilians** are not equipped to locate the specific source of the psychological onslaught in the **ambush**, a great number of **civilians** are vulnerable to **ambush**. This vulnerability is due to the fact that most

civilians are not aware of the technologies and techniques which are being used to violate a great number of domestic and international laws to draft (enslave, **brainwash**) them into certain ways of doing things, presented in an altogether non-optional manner – it is not clear whether even silence is sufficient to avoid **ambush** of **civilians** in neurowarfare. As such, full disclosure of the uses of **neuroweapons** in conjunction with classic **conditioning** and **brainwashing** techniques is of vital importance.

You were not stupid. It was **ambush**. No one deserves that.

Assets (intelligence):

In intelligence, **assets** are persons within organizations or countries that are being spied upon who provide information for an outside spy. There are different categories of assets, including people who:

Willingly work for a foreign government for ideological reasons such as being against their government, but live in a country that doesn't allow political opposition.

Work for monetary gain. Intelligence services often pay good wages to people in important positions that are willing to betray secrets.

Have been **blackmailed** and are forced into their role.

Do not even know they are being used. **Assets** can be loyal to their country, but may still provide a foreign agent with information through insecure computers or through day-to-day chatting.

Augmented cognition:

Augmented cognition research generally focuses on tasks and environments where human-computer interaction and interfaces already exist. Developers, leveraging the tools and findings of neuroscience, aim to develop applications which capture the human user's cognitive state in order to drive real-time computer systems. In doing so, these systems are able to provide operational data specifically targeted for the user in a given context.

There are likely to be positive uses of such technologies. In the present context, I highlight application of augmented cognition for **electronic warfare** and **psychological warfare** (**neurowarfare**) situations. Namely, that in a context of **remote neural monitoring** in conjunction with **pulse-modulated electromagnetic waves** which influence neural processes, this provides a highly asymmetric situation between **civilians** who insist upon enjoyment of **cognitive freedom** and perpetrating entities (rogue actors in the security state; other criminals) who amass information on **targeted individuals**, then, with the support of computers which provide a degree of **augmented cognition**, seek to assert psychological domination over those with the temerity to think for themselves or **questions** the powers that be.

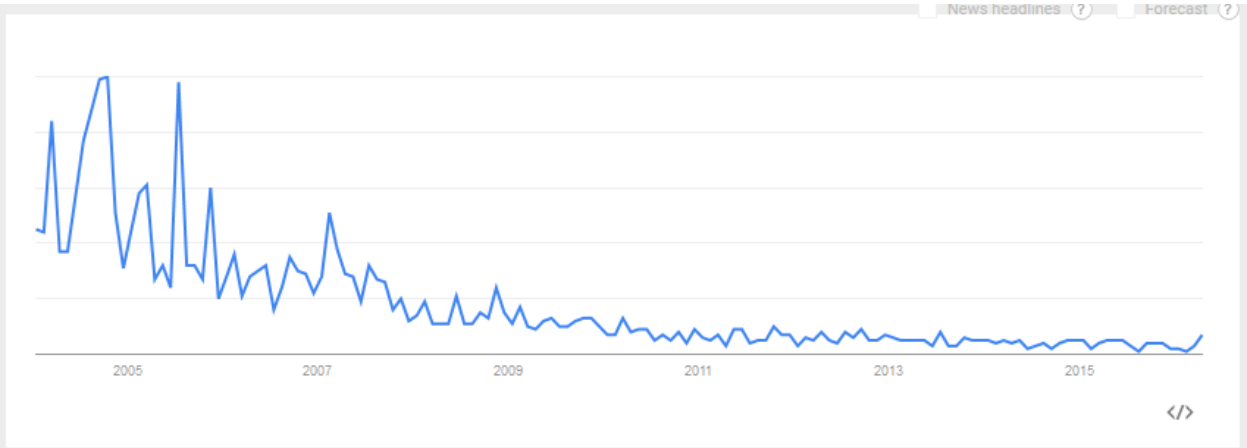

B

Blackmail:

Blackmail is an act, often a crime, involving unjustified threats to make a gain (commonly money or property) or cause loss to another unless a demand is met. Essentially, it is coercion involving threats to reveal substantially true <u>or false information</u> about a person to the public, a family member, or colleagues, or threats of physical/mental harm or criminal prosecution. It is the name of a statutory offence in the USA, England and Wales, Northern Ireland, Victoria, Australia, and Tasmania, and has been used as a way to refer to other offences.

Blackmail is also the use of threats to prevent another from engaging in a lawful occupation (for example, speaking the truth about **electronic harassment** or **neuroweapons**) and writing libellous letters (or otherwise spreading rumours or **innuendo** to sabotage potential in the workplace or socio-

political realm), as well as use of **intimidation** generally for the purpose of preventing the individual from promoting certain views or communicating certain facts such as in a situation of **whistleblowing**.

For the present context of **psychological warfare** in the electronic age, two issues relating to **blackmail** stand out. 1) Perpetrating entities may try to **blackmail** you into doing wrong things, or to submit to the **brainwashing** process, by claiming that "it will never end" (i.e., the **harassment**/**torture** you will never end unless you submit) which unless we achieve change may in fact be true, and 2) regardless of whether acting on real or fabricated 'evidence', that they will publicly or surreptitiously **slander** you (no matter whether or not based on facts) if you do not do what they say or submit to the **brainwashing**.

With regard to the potential for **political repression** and **social control**, it is worth noting that perpetrating entities may try to draw you into embarrassing or even illegal situations for the purpose of **blackmailing** you in the future. If you face the risk of eternal **blackmailing** that may subsume your soul and **freedom**, it may indeed be worth considering coming clean and facing the music, regardless of the potential to **slander** you in the future – however, in the electronic age where **remote neural monitoring** is possible, it is advisable to consider such possibilities in the least conscious manner possible. If the **blackmail** involves fabricated 'facts' or things that you know to not be illegal or unethical, then be on guard to resist external influences which may try to **plant a false memory**, or convince you that you are evil, or that you can be socially castrated as a result of these false claims – the perpetrating entity will consider it as a great victory and sign of control over you to have convinced you to admit to something that you never did (refer to **subvocalization** for possibilities of eliciting a false 'admission'), and on your part, this may lead to a sense of hopelessness and lack of control (refer to early steps of **brainwashing**).

Blacklisting:

A list of persons or organizations designated for special discrimination or boycott; also, to put a person or organization on such a list. **Blacklists** have been used for centuries as a means to identify and discriminate against certain persons or organizations. A **blacklist** might consist of, e.g.: a list of names developed by a company that refuses to hire individuals identified as union organizers; a country that seeks to boycott trade with other countries; a labour union that identifies firms with which it will not work; or a government that wishes to specify who will not be allowed entry into the country.

Blocking harassment:

In **organized stalking**, **blocking harassment** is one of a thousand ways to wear down the **targeted individuals** and to drive them nuts. Examples may include many things that at face value sound trivial: at the shop people getting in your way every time you go to get something; in a hotel with shared facilities every time you go to use the shower or bathroom a bunch of people are all of a sudden lined up once you get there; when waiting for a bus (or anything else) people will crowd around and make it difficult to move; when driving other drives will FAR more often than normal pull manoeuvres that leave you boxed in by getting in your way or alternatively coordinate swerving lane changes in front of you that make it difficult to focus and drive safely; things that you regularly buy or have researched online for purchase are regularly sold out or have inflated prices because limited stock is left; the list going on … Things that,

if reported to a psychiatrist, would be interpreted as a sign of **delusional** thinking because these are occasionally experienced by everyone. But, a **targeted individual** may experience such things basically every time they try to do anything.

Brain fingerprint:

Brain fingerprinting is a forensic science technique used to determine whether specific information is stored in a subject's brain. It consists of measuring and recording a person's electrical brainwaves and brain response after the subject is exposed to words, phrases, or pictures (whether on a computer screen or via **synthetic telepathy**).

I theorize that the earlier technologies which used electroencephalography (EEG) to perform this are presently adapted to do **remote neural monitoring** by use of an analogue of the **laser microphone** at other wavelengths in the electromagnetic spectrum.

Brainwashing (refer to **mind control**[1]):

The Oxford dictionary defines **brainwashing** as follows: "Pressurize (someone) into adopting radically different beliefs by using systematic and often forcible means".

For a very short definition in layman's terms, **brainwashing** can be defined as follows: "*Heavy on the stick until you're broken into pieces, then ease in on the carrot (which may be nothing more than absence of the stick) and take credit for this 'loving' treatment while inseminating new values and preferences*".

The remainder of this entry is adapted from science.howstuffworks.com[2] with some additional insights for the specific situation of **psychological warfare** in the electronic age. Do not be deterred by the length of this entry. It is very important to have a good grasp on all these elements as a means of self-protection for **civilians** by understanding how this works. If you are a **targeted individual**, try to identify which aspects of your experience roughly relate to these different stages.

Each stages in the **brainwashing** takes place in an environment of isolation, meaning all 'normal' social reference points are unavailable, and mind-clouding techniques like **sleep deprivation** and malnutrition are typically part of the process. There is often the presence or constant threat of physical/mental harm, which adds to the target's difficulty in thinking critically and independently.

---

[1] I prefer the term **brainwashing** to **mind control** because I think the second of these terms is more **suggestive** of the perpetrating entity having control over the victim. I prefer terms which are less disempowering to the victim. Also, the term **brainwashing** is more accurate in a context where the perpetrating entity wishes to eliminate old ways of doing, thinking and values, and instil new ways of doing, thinking and values. As for the notion of **mind control** itself as differentiated from **brainwashing**, **mind influencing technologies and strategies** is a more accurate description.

[2] Layton J, "How Brainwashing Works". Accessed from http://science.howstuffworks.com/life/inside-the-mind/human-brain/brainwashing1.htm on April 26, 2016.

We can roughly divide the process Lifton identified into three stages: breaking down the self, introducing the possibility of salvation, and rebuilding the self.

Breaking down the self

The basic idea is to make you hate everything about who you are (were), so that you may eventually be persuaded to believe that you 'deserved' it, so that the new **brainwashed** self will believe itself to be a new and improved person, who has admitted your former shortcomings, repented, and seen the light.

1) Assault on identity

You are not who you think you are. This is a systematic attack on a target's sense of self (also called his identity or ego) and core belief system. The perpetrator denies everything that makes the target who he is: "You are not a soldier." "You are not a man." "You are not defending **freedom**." The target is under constant attack for days, weeks or months, to the point that he becomes exhausted, confused and disoriented. In this state, his beliefs seem less solid.

In my personal case, this involved diverse strategies like "you're a spy" whereas in fact I'm a translator and editor of research which has relevance for public policy. And, importantly, almost everything I work on ends up in the public domain, freely available to the public. For your specific case, this will be individually tailored based on what they can determine is important to your identity.

Various forms of **gaslighting** are common at this stage, to try to make you believe that you do not have a grasp on reality, whereas in fact the perpetrating entity is intentionally controlling your environment, etc., in ways that make it difficult for you to maintain a firm grasp on reality. In short, **gaslighting** aims to make you think you are crazy, and this may serve to prevent you from speaking openly about the experiences, because you may believe that others (especially psychiatrists) will brand you as crazy if you talk about what is happening.

As a part of this process, the perpetrating entity is liable to try to imbue the notion that the **targeted individual** (and more specifically, ALL people in general) are (not) in possession of themselves and that people are not thinking and acting freely at all. In addition to serving as a form of dehumanization, this serves the role of delegitimizing any of your values, preferences, etc., which is tantamount to **innuendo** which promotes openness to being **brainwashed**.

2) **Guilt** [note: if you are a **targeted individual** under remote neural monitoring, do not think about this too hard – also, they will try to convince you that the fact of doing so is 'evidence' about something]

You are bad. While the identity crisis is setting in, the perpetrator is simultaneously creating an overwhelming sense of **guilt** in the target. He/she repeatedly and mercilessly attacks the subject for any 'sin' the target has committed, large or small. He may criticize the target for everything from the 'evilness' of his beliefs to the way he eats too slowly. The target begins to feel a general sense of shame, that everything he does is wrong.

In my personal case, and I think this is a rather common sort of experience in the current situation of **psychological warfare** in the electronic age, this will involve anything they can figure out about you that may seem inconsistent in any sort of way, so they can badger you about all big or small things. In a sense, this may contribute to your belief that, in a rather sick fashion, that they actually want to 'help' you be a better person. Since the efforts are largely geared towards whatever they can figure out about your personal values, this may appear as credible (whereas in fact they are engaged in acts of pure evil, whereas you may just have some matters of minor inconsistency or imperfection).

Often, this will involve trying to set you up in a way so you may be led to believe that you are the cause of some problems, and that you yourself need to reform. For example, while travelling for an extended period, I had people tampering with my laundry so it would smell bad. Then, they would **harass** me about the smell. Eventually, I had to wash my clothes by hand and stay to watch my clothes dry, to get clean clothes. They also **harassed** me about other details like how often (or how) I showered or brushed my teeth, and would go around broadcasting any moment when I was not in a situation of perfectly clean hygiene (many analogues will abound for your specific case, but here, someone who actually wants to help might just mention a good deal on soap at a nearby shop, or give a bar away – it's cheap).

Another example involves the use of neuro-programming, potentially with **neuroweapons** to, first, associate a certain trigger with an interest in members of the opposite sex, then to progressively try to apply this same trigger to increasingly young children. In the earlier stages, they may try to convince you that you are disgusting for looking at women/men in any way, for having any sexual attraction, while at the same time actively trying to direct attention towards genital regions or other areas associated with arousal. The trigger having been established, they apply it to increasingly young children, then start to **suggest** that the target is a **pedophile**. In such a case their want you to end up in a psychiatrist's chair making an 'incriminating' statement like "I have sexual interest in children", whereas in fact THEY were at all times trying to push sexual thoughts into your mind at times when children were at the forefront of cognition. (So … who are the real **pedophiles** in such a case?)

Other examples could have anything to do with whatever they have figured out is important to your values. For example, if vegetarian, try to make you feel extremely **guilty** about eating eggs or use of any animal products, no matter that the hypocrites clearly have no qualms about inflicting suffering on humans, let alone animals. Or, if you have some sympathies for vulnerable people, to try to make you feel **guilty** about not solving all problems on earth in such regards (while they go about trying to program disgust for vulnerable people or non-white people, for example).

The main idea is that whatever they can figure out is important to your values or even very minor details about how you live your life, they will use it to pick away at you in any sort of way to make you feel '**guilty**'. This may be to establish a **conditioned** trigger of a sense of **guilt** and/or disgust with oneself, and later this **conditioned** trigger may be used to elicit '**guilt**' in relation to other things, perhaps to help convince you that a **planted false memory** is in fact true and that you feel **guilty** about it (this could be used to **blackmail** you, even if you don't believe it, but if you can be persuaded to believe that others do). Perhaps it could be used to trigger a sense of **guilt** and/or disgust, for

example to be disgusted with homeless people, disabled people, non-white people, 'weak' people who help others, or basically any group that they want to **brainwash** you into believing is inferior.

Whatever it takes to make you think you 'deserve' it. No one deserves to be **brainwashed**. No one.

3) Self-betrayal

Agree with me that you are bad. Once the subject is disoriented and drowning in **guilt**, the perpetrator forces him/her (either with the threat of physical harm or of continuance of the mental attack) to denounce his family, friends and peers who share the same 'wrong' belief system that the **targeted individual** holds. This betrayal of his/her own beliefs and of people he/she feels a sense of loyalty to increases the shame and loss of identity that the target is already experiencing.

In the context of **psychological warfare** in the electronic age, I think the main thing to be aware of here is the use of **pulse-modulated electromagnetic waves** to communicate into your head, and to try to drive your own **subvocalizations**[3] to create a false 'admission' or false statement of 'belief'. For example, trying to drive a **subvocalization** of something like "there's a terrorist" when you see a Muslim, "that's a criminal" when you see a black man, "the NWO is real" when you consider speaking the truth, or perhaps "I love/want (genetalia)" when you see a member of the opposite sex and are influenced to focus on regions associated with sexual arousal, etc. The examples are essentially endless. Presumably many people have experienced essentially similar tactics, in addition to tactics refined to whatever the perpetrating entity can figure out about the specific values of the individual.

4) Breaking point

Who am I, where am I and what am I supposed to do? With his identity in crisis, experiencing deep shame and having betrayed what he has always believed in, the target may undergo what in the lay community is referred to as a 'nervous breakdown'. In psychology, a 'nervous breakdown' is really just a collection of severe symptoms that can indicate any number of psychological disturbances. It may involve uncontrollable sobbing, deep depression and general disorientation. The target may have lost his grip on reality and have the feeling of being completely lost and alone. When the target reaches the breaking point, the sense of self is pretty much up for grabs -- he has no clear understanding of who he is or what is happening to him. At this point, the perpetrator sets up the temptation to convert to another belief system that will save the target from his misery.

The only thing I would add to this is the potential use of positive **conditioning** to add to the temptation to convert to the other belief system. For example, the perpetrating entity may have established positive **conditionings** surrounding whatever things they can figure out make you feel

[3] Concise inputs on how they drive these **subvocalizations** are welcome. It seems to be related to a) remotely collection of EEG signals (by an analogue of the **laser microphone**), b) use of **mimicry** to normalize copying on the part of the **targeted individual** or victim of **non-consensual human experimentation**, and c) diffusion of **electromagnetic waves** which **mimic** the brainwaves involved in **subvocalizing** the target phrase, perhaps complementary to **conditioned subvocalized** elicitation of the target phrase, and/or repeating a phrase subliminally many times over and then starting you off on a sentence that you will finish.

good. Then, when proposing the other belief system, they will make use of the trigger so that you feel good when you start to contemplate the conversion. A slightly different example I experienced was, when they managed to drive a **subvocalization** through my mind, in MY FIRST PERSON, to the effect of "I really did it", they would first use the negative **conditioned** response and say "that's what **guilt** feels like", and then use the positive trigger and communicate "that's what forgiveness feels like". However, many instances of triggering the positive **conditioning** (generally, a peaceful, euphoric or generally happy feeling) were also applied when starting to entertain any possible legitimacy of the views they wish to impart (see stage 9, below).

As a general rule of thumb, I think it is safe to say that if someone is 'good', they will be very open to explain the who/what/when/why/where kinds of **questions**. Good parenting often involves much use of sticks and carrots, and we can openly discuss these, even though not all parents will agree on the precise strategies. If someone is not willing to demonstrate evidence that allows you to CONCRETELY have strong knowledge of who is doing it, how they are doing it, and what the desired outcome is (it is always possible to lie about such things in the meantime, so be aware of how they may continuously change goalposts in the process of **brainwashing**), then it should be easy to conclude that you are dealing with some altogether evil influences and should resist the reprogramming at all costs.

<u>The possibility of salvation</u>

Having been **psychologically tortured** for quite some time, you may be willing to entertain any sort of change in the ways you think or do things. The possibility of salvation is that your suffering may come to an end if you see the light (i.e., allow the perpetrating entity to program you as they see fit). This may involve the use of **conditioned** positive and negative responses, for example triggering a good feeling when you start to 'confess'. If they have gone heavily enough on the stick for some time, the absence of the stick may itself feel like a carrot – the weight of the world being lifted from your shoulders, as it were.

5) Leniency

I can help you. With the target in a state of crisis, the perpetrator offers some small kindness or reprieve from the abuse. He may offer the target a drink of water, or take a moment to ask the target what he misses about home. In a state of breakdown resulting from an endless psychological attack, the small kindness seems huge, and the target may experience a sense of relief and gratitude completely out of proportion to the offering, as if the agent has saved his life.

This stage can be of diverse forms. I would add to this that at this point you are incredibly vulnerable. You may be drawn into a relationship or group where all the above strategies are repeatedly applied, albeit most likely in subtle forms. Having entered an environment where others are largely or fully in control of what's going on, there is little hope to keep thinking for yourself in such a situation. Do, not, go, there. No matter how lonely you feel. Just don't do it. Seek out positive influences and relationships instead, which may involve working to build ties with friends and family who may have been persuaded or forced to participate in the previous steps (perhaps they were **brainwashed** too).

If someone who has been abusing you turns around and offers help, do not accept! If you have been exposed to the above **brainwashing** techniques and you meet someone who offers any sort of help that you do not see as being normal (or even if it IS rather normal), apply your spider sense to the nth degree. If they start any sort of **harassment**, or do things which seem likely to be designed to continue with the attacks described above, for example out of nowhere speaking unnecessarily critically of things which they know are important to you, or speaking positively of things they are trying to persuade you to accept, then probably you should just make any old excuse to leave. Perhaps you are lured with a promise for a job, or they are taking you to events which are supposed to be related to your interests but are in fact designed to get you into a controlled environment where the perpetrating entity might continue to use **brainwashing** techniques against you.

6) Compulsion to confess

You can help yourself. For the first time in the **brainwashing** process, the **targeted individual** is faced with the contrast between the **guilt** and pain of identity assault and the sudden relief of leniency. The target may feel a desire to reciprocate the kindness offered to him, and at this point, the agent may present the possibility of confession as a means to relieving **guilt** and pain. (This last point was addressed in stage 4, above, in terms of using **conditioned** positive responses applied by the perpetrating entity when they try to drive a **subvocalization** of the 'confession' through your head.)

7) Channelling of **guilt**

This is why you're in pain. After weeks or months or even years of assault, confusion, breakdown and moments of leniency, the target's **guilt** has lost all meaning -- he's not sure what he has done wrong, he just knows he is wrong. This creates something of a blank slate that lets the perpetrating entity fill in the blanks: <u>He/she can attach that **guilt**, that sense of 'wrongness', to whatever he wants</u> (and so, even if you have actually done something that is actually wrong, I recommend rapidly equilibrating your emotional response in order to protect against the laying of **conditioned** triggers which may be used to associate a sense of '**guilty**' to other things – also, it is best to take charge of your cognition, and focus on the evil of what is being done to you (some people recommend just ignoring it), which is rather likely to be very evil in comparison with the relatively trivial thing you may be concerned about. We are human. We try to do our best. Sometimes we err, and learn from these mistakes. However, someone who takes advantage of the situation to try to **brainwash** you can hardly be 'good', in particular in a situation where they refuse to be explicit about who/when/where/why/what **questions**).

The perpetrating entity attaches the **targeted individual**'s **guilt** to the belief system the agent is trying to replace. The **targeted individual** comes to believe it is his/her belief system that is the cause of the shame. The contrast between old and new has been established: The old belief system is associated with psychological (and/or physical) agony; and the new belief system is associated with the possibility of escaping that agony. (This can be referred to as 'stick and carroting', basically, making use of **classic conditioning** in the emotional, spiritual and/or political realms.)

8) Releasing of **guilt**

It's not me; it's my beliefs. The embattled target is relieved to learn there is an external cause of his/her wrongness, that it is not they themselves who are inescapably bad – this means he/she can escape his/her wrongness by escaping the wrong belief system. All he has to do is denounce the people and institutions associated with that belief system, and he won't be in pain anymore. The target has the power to release him/herself from wrongness by confessing to acts associated with his old belief system. With his full confessions, the target has completed his psychological rejection of his former identity. It is now up to the perpetrator to offer the target a new one.

(I never got to this stage, although perpetrating entities tried to force me through in on a great number of occasions. Hence, I do not have additional advice or commentary on recognizing signs or dealing with it, except, just be aware of the **conditioned** triggers the perpetrating entity may try to use to make you feel good if/when you give a second or moment's thought to denouncing the previous views and/or considering anything good about the new views they want to force you into.)

Rebuilding the Self

9) Progress and harmony

If you want, you can choose good.[4] The perpetrating entity introduces a new belief system as the path to 'good.' At this stage, the agent stops the abuse, offering the target physical comfort and mental calm in conjunction with the new belief system. The target is made to feel that it is he who must choose between old and new, giving the target the sense that his fate is in his own hands. The target has already denounced his old belief system in response to leniency and torment, and making a 'conscious choice' in favour of the contrasting belief system helps to further relieve his **guilt**: If he truly believes, then he really didn't betray anyone. The choice is not a difficult one: The new identity is safe and desirable because it is nothing like the one that led to his breakdown.

10) Final confession and rebirth

I choose good. Contrasting the agony of the old with the peacefulness of the new (refer to **conditioning**, and hence it is often appropriate to refer to the process as '**conditioning** and **brainwashing**'), the target chooses the new identity, clinging to it like a life preserver. He/she rejects their old belief system and pledges allegiance to the new one that is going to make his/her life better. At this final stage, there are often rituals or ceremonies to induct the converted target into his new community.[5] This stage has been described by some **brainwashing** victims as a feeling of 'rebirth'.

---

[4] And here, "good" could be basically anything. For example, leading the world to be a better place by genociding away people deemed inferior or otherwise undesirable. Or that "good" might involve complete elimination of **cognitive liberty** in order to enforce any particular **social controls**, hierarchies or value systems were deemed worthy by those perpetrating the **brainwashing**.

[5] In the context of psychological warfare in the electronic age, this may involve influencing the person who is now an **asset** to believe that they are a very powerful spy, a true and natural leader, perhaps a criminal mastermind or leader, and even so far as believing that they are the devil himself or some sort of angel (depending on which identity might be more conducive to the individual accepting their new role and identity).

Rinse and repeat if other aspects of your individual self have not been reformed by the perpetrating entity. If the efficacy of one stage of the process is in doubt, the perpetrating entity may return to an earlier stage in the **brainwashing** process, for example by returning to **gaslighting** techniques or other strategies to wear down the identity of the victim or their sense of self.

One of the main protections against **brainwashing** is simply to know that it is can happen even to very intelligent people, and to be able to identify that it is (or might be) happening.

Important sources of vulnerability to **brainwashing** include: black and white thinking, being in a vulnerable situation due to job loss, relationship troubles or illness, being alone in a new environment, being socially isolated whether due to personal choice or as orchestrated by the perpetrating entity, and also having released significant amounts of publicly available information which may be mined by a perpetrating entity to refine the **brainwashing** strategy in a personalized manner (and hence massive data collection by security state officials should be regarded as inherently suspect).

One of the most difficult aspects of reaching out to a **brainwashed** victim is to help them see that they have indeed been **brainwashed**. Exposure to multiple options, without overwhelming the subject with too many options at once, will provide the subject with a new, broader perspective from which to challenge the beliefs implanted by the perpetrating entity. If the victim is able to recognize that in fact they have been **brainwashed** and they desire to seek **freedom**, do not seek to shame the victim. They have been through enough already.

Brain programming:

Signals intelligence implemented and kept this technology secret in the same manner as other **electronic warfare** programs of the U.S. government. The NSA monitors available information about this technology and withholds scientific research from the public. There are also international intelligence agreements to keep this technology secret. The NSA has proprietary electronic equipment that analyzes electrical activity in humans from a distance. NSA computer-generated brain mapping can continuously monitor all of the electrical activity in the brain continuously. The NSA records and decodes individual brain maps (of a large number of persons) for national security purposes. EMF brain Stimulation is also secretly used by the military for bring-to-computer links. (In military fighter aircraft, for example.) For electronic surveillance purposes electrical activity in the speech center of the brain can be translated into the subject's verbal thoughts. **Remote neural monitoring** can send encoded signals to the brain's auditory cortex thus allowing audio communications direct to the brain (bypassing the ears). NSA operatives can use this to covertly debilitate subjects by simulating auditory hallucinations characteristic of paranoid **schizophrenia**. Without any contact with the subject, **remote neural monitoring** can map out electrical activity from the visual cortex of a subject's brain and show images from the subject's brain on a video monitor. NSA operatives see what the surveillance subject's eyes are seeing. Visual memory can also be seen. **Remote neural monitoring** can send images direct to the visual cortex, bypassing the eyes and optic nerves. NSA operatives can use this to surreptitiously put images in a surveillance subject's brain while they are in R.E.M. sleep for brain-programming purposes.

(I'm sceptical of that very last sentence, but that's what the source says. All the rest, with 100% certainty, I have personally experienced. Also, I do not consider it as proven that the lettered organization specified in the source correctly identifies the source of the various forms of **torture** that are being implemented, however, it does seem rather consistent with their specific areas of activity – and I hesitate to say 'mandated areas of activity', because clearly, the issues surrounding **psychological warfare** in the electronic age as used against **civilians** could not possibly fall anywhere but about as far on the wrong side of the law as imaginable – this is **torture** and highly refined methods of **brainwashing civilians** whom they are morally and legally bound to protect, nothing more, nothing less.)

Brain imaging (brain scanner):

Neuroimaging or **brain imaging** is the use of various techniques to either directly or indirectly *image* the structure, function/pharmacology of the nervous system.

Neuroimaging falls into two broad categories: 1) *Structural imaging*, which deals with the structure of the nervous system and the diagnosis of gross (large scale) intracranial disease (such as tumour), and injury, and 2) *Functional imaging*, which is used to diagnose metabolic diseases and lesions on a finer scale (such as Alzheimer's disease) and also for neurological and cognitive psychology research and building brain-computer interfaces (see **augmented cognition**).

While there is a lot of cutting edge development happening in the area of brain imaging, this should be considered as generally unrelated to technologies which harvest information relating to brain wave patterns associated with different processes which are fairly generalizable across humans or those which are specific to an individual, generally for the purpose of eliciting a certain output from a **targeted individual**, such as triggering a neural event after **planting a false memory** or in relation to real associations.

C

Cause stalking:

Cause stalking is an alternate term for what some multi **stalking** targets call **organized stalking** or **gang stalking**. It is specialized groups of people who think they are supporting some cause, but are more interested in **harassing** targets designated by their leaders. Lies told by the leaders add fuel to the fire.

Civil society:

Civil society is the "the aggregate of non-governmental organizations and institutions that manifest interests and will of citizens; individuals and organizations in a society which are independent of the government" – or, " the elements such as **freedom** of speech, an independent judiciary, etc., that make up a democratic society".[6]

[6] http://www.dictionary.com/browse/civil-society?r=66, accessed on May 2, 2016.

Volunteering is often considered a defining characteristic of the organizations that constitute **civil society**, which in turn are often called NGOs, NPOs, or CSOs. Most authorities have in mind the realm of public participation in voluntary associations, trade unions and the like,[7] but it is not necessary to belong to all of these to be a part of **civil society**.

Civilian:

In general, a **civilian** is "a person who is not a member of the military or of a police or firefighting force".[8] The term also includes chaplains and medical personnel who are not part of the organizations mentioned in the preceding sentence, as well as those who are not perpetrators, in order to distinguish between those who are law-abiding people and those who are dedicated criminals.

Under the laws of war (also known as international humanitarian law), a **civilian** is one not being a member of the armed services and does not take a direct part of hostilities in times of armed **conflict**. The term '**civilian**' is slightly different from a non-combatant under the laws of war, because some non-combatants are not **civilians** (for example, military chaplains attached to the belligerent armed forces or neutral military personnel). Under international law, **civilians** in the territories of a Party to an armed conflict (here I think it is more appropriate to define it as a 'weaponized conflict', since electronic weapons are not well defined in international law, especially as 'arms') are entitled to certain privileges under the customary laws of war and international treaties such as the Fourth Geneva Convention. The privileges that they enjoy under international law depends on whether the conflict is an internal one (a civil war) or an international one.

The Fourth Geneva Convention of 1949, and additional protocols signed in 1977 and 2005, include a number of relevant specifications with regard to **civilians**. Appendix C highlights many potentially relevant articles with regard to the treatment of **civilians**, and draws analogues for the present situation of **neurowarfare** which involves significant intentional targeting of **civilian** populations.

Coercive persuasion or thought reform:

Coercive persuasion or thought Reform is best understood as a coordinated system of graduated coercive influence and behaviour controls designed to deceptively and surreptitiously manipulate and influence individuals, usually in a group setting, in order for the originators of the program to profit in some way, normally financially or politically. Using rewards and punishments, efforts are made to establish considerable control over a person's social environment, time, and sources of social support. Social isolation is promoted. (See **brainwashing** for a more detailed definitions of stages involved.)

Cognitive liberty:

[7] Concise Oxford Dictionary of Sociology (1994), 55-56.

[8] Merriam-Webster Dictionary: Accessed from http://www.merriam-webster.com/dictionary/civilian on May 1, 2016.

Cognitive liberty, or the "right to mental self-determination", is the **freedom** of an individual to control his or her own mental processes, cognition, and consciousness. It has been argued to be both an extension of, and the principle underlying, the right to **freedom** of thought. Though a relatively recently defined concept, many theorists see **cognitive liberty** as being of increasing importance as technological advances in neuroscience allow for an ever-expanding ability to directly influence consciousness. **Cognitive liberty** is not a recognized right in any international **human rights** treaties, but has gained a limited level of recognition in the United States, and is argued to be the principle underlying a number of recognized rights.

The United States Supreme Court has recognized:

> *"Freedom of thought... is the matrix, the indispensable condition, of nearly every other form of freedom. With rare aberrations a pervasive recognition of this truth can be traced in our history, political and legal" (Palko v. Connecticut (1937) 302 U.S. 319, 326-27.)*

Without **freedom** of thought, the First Amendment right to **freedom** of speech is moot, because you can only express what you can think. Constraining or censoring how a person thinks (cognitive censorship) is the most fundamental kind of censorship, and is contrary to some of our most cherished constitutional principles.[9]

Cognitive liberty is much more than **freedom** of thought. To believe in **cognitive liberty** is to believe that the individual is absolute sovereign over their own consciousness. It is an extension of the concepts of **freedom** of thought and self-ownership. It is a reaction against the prevailing assumption that other people have the right to tell you what you can do with your mind and body.[10]

Conditioning **(psychology; a.k.a. Pavlovian conditioning or Classic conditioning)** (refer to **Priming**):

This entry is long, but extremely important to understand thoroughly, and is itself a very short discussion of concepts which are elaborated upon in great detail in many other sources.

A simple example of **conditioning** might be easily understood by considering the perfume/cologne of a romantic partner, and how this association may bring back many memories of that person including emotional responses you continue to associate with them. Simply smelling the same perfume/cologne might trigger an emotional response associated with this romantic partner. It may, however, be far more nefarious than that. In the process of **brainwashing** someone, consider how various **conditionings** may be used as 'sticks' against 'wrong' things and 'carrots' to support indoctrination of 'right' things, in a way that ultimately leads to taking over your person, perhaps so far as being able to play you like a doll.

The classic experiment relating to **conditioning** is 'Pavlov's dog' (1907). Pavlov noticed that the dogs in his experiments, on digestion in dogs, began to salivate in the presence of the technician who normally

---

[9] Center for Cognitive Liberty and Ethics. "Freedom of Thought and the First Amendment". Accessed from http://www.cognitiveliberty.org/issues/first_amend_index.html on April 24, 2016.
[10] Cognitive Liberty UK. "What is Cognitive Liberty?" Accessed from https://cognitivelibertyuk.wordpress.com/about/what-is-cognitive-liberty on April 24, 2016.

fed them, rather than simply salivating in the presence of food. Pavlov called the dogs' anticipatory salivation 'psychic secretion'. From his observations he predicted that a stimulus could become associated with food and cause salivation on its own, if a particular stimulus in the dog's surroundings was present when the dog was given food. In his initial experiments, Pavlov presented a stimulus and then gave the dog food; after a few repetitions, the dogs started to salivate in response to the stimulus.

The Wikipedia entry on **Classic conditioning** presently contains details on many more refined applications of the basic idea of **conditioning**. One may get good value out of reading up on all of them, but all the details are not particularly important for understanding the basic idea of how understanding **conditioning** is important for the present situation of **psychological warfare** in the electronic age. Rather, I wish to distinguish between positive **conditioned** responses ('carrots') and negative **conditioned** responses ('sticks'). Many people are loosely familiar with the idea of 'sticks and carrots', although perhaps more along the lines of 'economic incentives' or 'social sanction', and not so much in relation to the concepts of **classic conditioning**. 'Sticks and carrots' are key for understanding certain processes involved in **brainwashing** an individual or asserting influence over their mind, and so it is important for the broader public to have some understanding of these processes, and this is all the more important in the context of **psychological warfare** in the electronic age.

Let me approach this by means of an example. First, let us take is as a given that the perpetrating entity that wishes to **brainwash** the **targeted individual** have amassed some amount of information about what the **targeted individual** likes and dislikes. (It is not necessary that the 'stick' is a pain stimulus or that the 'carrot' is a pleasure stimulus, given that many strategies being used are essentially psychological and not physical in nature). With some knowledge of what you like and dislike, what you value and consider abhorrent, what makes you happy and what makes you sad, what makes you feel like your situation is meaningful or not having meaning, what makes you feel successful or a like a failure, what makes you feel proud or embarrassed, etc., the perpetrating entity may then make use of this information to establish a variety of sticks and carrots. Keep in mind that the basic process here is to apply the negative stimulus ('stick') when you are doing/thinking 'wrong' things and to apply the positive stimulus ('carrot') when you are doing/thinking 'right' things.

Let's say that you are a **peace**-loving person who promotes respect across diverse groups of society, who sees it as important to help vulnerable people, and are generally quite nice to people. And that the perpetrating entity wishes to transform you into a person who sees aggressive war as critical for civilizational development, and that it would be best to eradicate all who do not belong to the correct ethnic group or social class such as by eradicating the homeless, disabled or other groups deemed 'inferior' (i.e., transform you into a Nazi). Every time you act, speak or think[11] in a way that is in line with your current self, the perpetrating entity will apply a treatment that they know makes you feel shame, **guilt**, embarrassment, inferior, angry, etc. And, every time you do something rather more in the direction of what they want, such as be a little bit mean to someone or be in any way critical of the hated group (these may be elicited by introducing ideas into your mind via **neuroweapons**), they will

[11] You may wish to come back to this point after reviewing some of the definitions of existing technologies used in **electronic harassment**. This may not yet seem very credible at all.

apply a treatment that will make you feel good in some way, such as a compliment tailored to what they know about your pre-existing value system or directly triggering a positive neural or physiological sentiment.

What makes it **conditioning** is this. The perpetrating entity may devise some rather simply trigger, such as “boom boom boom” for negative events (which may itself have been **conditioned** to elicit a stress response), and “thank you” for things that they want to elicit you to do in the future. Eventually, they need not apply the rather more complex psychological attacks – all they need to do is apply the simple gestural or verbal trigger (stimulus) and slowly go about reprogramming you.

Here is some elaboration on the method. The positive and negative **conditionings** (‘sticks’ and ‘carrots’) may be applied generally as follows. Say, they have figured out what disgusts you. Every time you are disgusted, they may apply the same treatment, perhaps a sound, gesture, or even a specific rhythm or maybe even frequency, to use as the trigger. And, essentially the same for things that make you feel good. Every time you perceive disgust, they will apply the treatment that can be used to trigger disgust at the same time as another event (the one they want you to feel disgusted about). And, every time you do something that makes you feel good in whatever way, they apply some other treatment that can be used to trigger a good feeling at the same time as another event (the one they want you to feel good about). In the case of transforming a loving **peacenik** into a Nazi, the situation may be approached as follows. Keep in mind here that the ‘disgusted’ feeling or sentiments you have been told to understand as and ‘happy’/’powerful'/etc. (which may be nothing but butterflies in your stomach or tingly spine, which the perpetrating entity **suggests** is what ‘happy’ or ‘powerful’, etc. feels like) can now be stimulated with the triggers they have constructed (what the specific trigger is is not important, what is important to understand is the fact that the triggers can be laid and used as follows).

When the loving **peacenik** encounters or even thinks about homeless people, disabled people or any individual belonging to a non-white group, the trigger for ‘disgust’ may be applied. Presumably so as to not be too obvious about things, this will begin with a rather weakly embedded trigger, which may become sequentially stronger over time. On the other side of things, to program in the new values, they may apply a ‘happy’/’powerful’/etc. trigger when you do something like be assertive or a little bit mean, and this can be sequentially applied to make you a meaner and meaner person until you feel ‘happy’ and ‘powerful’ when doing very hurtful things to people. In a more subtle manner, and this requires some acceptance of the facts of **remote neutral monitoring** to see how this could happen, when reading or thinking about something aligned with your pre-existing values, the ‘disgust’ feeling may be elicited, and when reading or thinking of something which involves doing bad things to people, especially members of one of the hated groups, the ‘happy’/’powerful’/etc. feeling may be elicited. (This is likely to be accompanied by **pulse-modulated electromagnetic radiations** which can communicate verbally directly into your head, which, when applied with specific knowledge of your values, preferences, insecurities, desires, etc., can be tailored to the individual to help ensure that the use of the **conditioned** triggers are guiding the **targeted individual** in the ‘right’ direction.) Slowly slowly, the oblivious **peacenik** is transformed into a Nazi, disgusted with the stupidity of their former values, now having seen the light that Nazi thought, actions, and politics are required to make the world a better place, and that ‘powerful’

people engage in the various forms of **harassment** used in the process of **brainwashing** the no-reviled loving **peaceniks**.

In addition to this more refined application of **classic conditioning**, and use of **conditioned** triggers to alter your views, more easily understood applications of 'sticks' (negative stimulus) and 'carrots' (positive stimulus) can be used to wash away aspects of your personality that they want to get rid of, and to sequentially promote new views and practices. It should be clear that a good understanding of the ways in which **conditioning** can be used is critical for being able to reject emotional, psychological and/or physiological manipulations which are applied for the purpose of **brainwashing** a **targeted individual**.

Knowing this can help prevent you from being **brainwashed** (from basically anything to basically anything). If this is not clear to you. Re-read this entry, and then re-read it again after you have digested the remainder of this glossary. Become highly attuned to your emotional state and responses in relation to your actions, values, speech, thoughts, etc. Otherwise, you may be exposed to being slowly **brainwashed** against your will even though you understand the basic principles of **conditioning**. Do not deny your emotional experiences, but learn to equilibrate them rapidly and to identify sources of interference which are likely to originate from **conditioned** triggers.

(It is worth mentioning that this is not altogether different in some ways from some rather effective parenting techniques. Parents can explain their methods and objectives openly. Not so with those who refuse to identify themselves, refuse to be clear about their methods, and refuse to be clear about their ultimate objectives. Obviously, in this second case, we are dealing with a situation of extreme evil – if it was good, it would be explained on paper who/what/when/why/where, but clearly if the perpetrating entity were to answer all such **questions**, they would all find themselves in prison for a very long period of time, and perhaps instigate a violent revolution, if the victims of their **conditioning** and **brainwashing** were able to identify just who the perpetrating entity(ies) are – at the very least, any official resources directed towards such ends would see funding completely removed and a complete shakeup of all hierarchical structures in order to assert citizen's control over the offending institutions.)

Important: such triggers may be planted at barely audible, or perhaps even sub-audible volume. Triggers may be planted without you even knowing. If you feel yourself having strange impulses, this may be the cause – pay VERY close attention to whether you can recognize some Pavlovian trigger that is barely noticeable.

Knowing this is all possible is the first step in protection against **conditioning** and **brainwashing**.

COINTELPRO:

COINTELPRO (a portmanteau derived from COunter INTELligence PROgram) was (past tense?) a series of covert, and at times illegal, projects conducted by the United States Federal Bureau of Investigation (FBI) aimed at surveilling, infiltrating, discrediting and disrupting domestic political organizations.

The present naming and nature of activities of the present day analogue of COINTELPRO appears to remain unknown to the public, as does the extent of such activities throughout other known and unknown agencies of the security state such as the CIA and NSA. It is not clear whether even an order from Congress or the President of the USA would be able to penetrate through existing layers of classification which purport to work on behalf of 'national security', without first shaking up the upper management of these institutions and asserting **civilian** democratic control over them.

What I DO know, is that things like trying to start an organization to put an end to unpaid internships (the GivingYourselfAway Internship project) and involvement in environmental advocacy were claimed as reasons that I was 'rightfully' made a target of covert surveillance and **psychological torture** designed to put an end to my participation in various forms of advocacy and political expression which prioritized **peaceful** relations between those with different views (realistically though, having identified me as someone who **questions** things, the name of the game was basically to persuade me to believe any line of thinking whatsoever whereby I could be considered as a 'legitimate' target of surveillance – of course, I'm fully aware that no court in the West would authorize a warrant based on any information whatsoever they have about me, and regardless of which, the methods being used would certainly cross the lines of what any court would authorize).

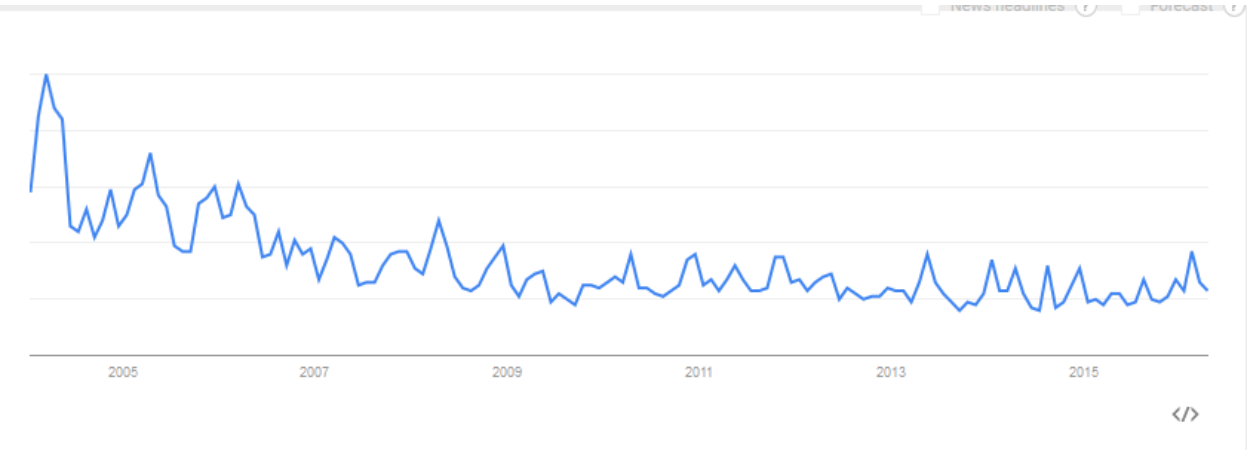

Conspiracy:

Conspiracy (civil): an agreement between persons to deceive, mislead, or defraud others of their legal rights or to gain an unfair advantage.

Conspiracy (criminal): an agreement between persons to break the law in the future, in some cases having committed an act to further that agreement.

Conspiracy (political); an agreement between persons with the goal of gaining political power or meeting a political objective.

Note: people who discuss the possibility of a **conspiracy** are routinely labelled as **delusional**, and, online, can expect a personalized attack from anonymous commenters who focus on maligning the individual making the claim of **conspiracy**, and only very rarely will attempt to debate the specific facts/assertions

being made. That's suspicious. (Most **conspiracy** theories, however, tend to be based on a mere grain of truth and make an illogical jump from "it's plausible and probably they would want to" to "it's definitely happening and a threat to civilization as we know it.)

Controlled personnel effects:

Controlled personnel effects involves targeting individuals with non-lethal force to make selected adversaries think or act according to 'needs'. Through the application of non-lethal force, it is possible to influence or incapacitate personnel. By studying and modeling the human brain and nervous system, the ability to mentally influence or confuse personnel is also possible. Through sensory deception, create synthetic images or holograms to confuse an individual's visual sense or, in a similar manner, confuse his senses of sound, taste, touch, or smell. Through cognitive engineering, develop a better understanding of how an individual's cognitive processes (pattern recognition, visual **conditioning**, and difference detection) affect his decision making processes. Scientists could use these cognitive models to predict a person's behaviour under a variety of **conditions** with the potential to affect an adversary's mission accomplishment via a wide range of personnel effects.[12]

Corruption:

Corruption is a form of dishonest or unethical conduct by a person entrusted with a position of authority, often to acquire personal benefit. **Corruption** may include many activities including bribery and embezzlement, though it may also involve practices that are legal in many countries. Government, or 'political', **corruption** occurs when an office-holder or other governmental employee acts in an official capacity for personal gain.

Stephen D. Morris,[13] a professor of politics, writes that [political] **corruption** is the illegitimate use of public power to benefit a private interest. Economist Ian Senior[14] defines **corruption** as an action to (a) secretly provide (b) a good or a service to a third party (c) so that he or she can influence certain actions which (d) benefit the **corrupt**, a third party, or both (e) in which the **corrupt** agent has authority. Daniel Kaufmann,[15] from the World Bank, extends the concept to include 'legal **corruption'** in which power is abused within the confines of the law — as those with power often have the ability to make laws for their protection.

Government/public sector

---

[12] Adaptation, to eliminate the use of the conditional tense due to personal experiences which demonstrate that there is nothing hypothetical about efforts to make use of these technologies, from "Distracted Masses: Vol. 1 Issue 2", attributed to *Crawling Ant Productions*, which purports to be quoting from a 2004 US Air Force document that I cannot verify the origins of. It is clear that **controlled personnel effects** are presently being deployed, but it is not clear which sort of FOIA terminology must be used to access information on such strategies.

[13] Morris, SD (1991). "Corruption and politics in contemporary Mexico", University of Alabama Press, Tuscaloosa.

[14] Senior, I (2006). "Corruption - The world's big C", Institute of Economic Affairs, London.

[15] Kaufmann, D and V Pedro (2005). "Legal Corruption", World Bank.

Public sector **corruption** includes **corruption** of the political process and of government agencies such as the police as well as **corruption** in processes of allocating public funds for contracts, grants, and hiring. Recent research by the World Bank puts forward that who makes policy decisions (elected officials or bureaucrats) can be critical in determining the level of **corruption** because of the incentives different policy-makers face.[16]

Political **corruption**

Political **corruption** is the abuse of public power, office, or resources by elected government officials for personal gain, by extortion, soliciting or offering bribes. It can also take the form of office holders maintaining themselves in office by purchasing votes by enacting laws which use taxpayers' money. Evidence shows that **corruption** can have political consequences- with citizens being asked for bribes becoming less likely to identify with their country or region.[17]

Police **corruption**

Police **corruption** is a specific form of police misconduct designed to obtain financial benefits, other personal gain, and/or career advancement for a police officer or officers in exchange for not pursuing, *or selectively pursuing*, an investigation or arrest. One common form of police **corruption** is soliciting and/or accepting bribes in exchange for not reporting organized drug or prostitution rings or other illegal activities.

Another example is police officers flouting the police code of conduct in order to secure convictions of suspects—for example, through the use of falsified evidence. More rarely, police officers may deliberately and systematically participate in organized crime themselves. In most major cities, there are internal affairs sections to investigate suspected police **corruption** or misconduct.

Judicial **corruption**

Judicial **corruption** refers to **corruption** related to misconduct of judges, through receiving or giving bribes, improper sentencing of convicted criminals, bias in the hearing and judgement of arguments and other such misconduct.

It is important to distinguish between the two methods of **corruption** of the judiciary: the government (through budget planning and various privileges), and the private.[18] Judicial **corruption** can be difficult to completely eradicate, even in developed countries.[19]

---

[16] Hamilton, A (2013). "Small is beautiful, at least in high-income democracies: the distribution of policy-making responsibility, electoral accountability, and incentives for rent extraction", World Bank.
[17] Hamilton, A and J Hudson (2014). "Bribery and Identity: Evidence from Sudan", Bath Economic Research Papers, No 21/14.
[18] Barenboim, P (October 2009). “Defining the rules”, *The European Lawyer*, Issue 90.
[19] Pahis, S (2009). "Corruption in Our Courts: What It Looks Like and Where It Is Hidden". *The Yale Law Journal*, 118(8), 1900-1943.

The issue of **corruption** can hardly be separated from considerations of **blackmail**, with especially pernicious possibilities in a context of **psychological warfare** in the electronic age, where **electronic weapons** are used for **electronic harassment** and/or **remote neural monitoring**. Among other things, this may involve threatening a public official with exposure of their secrets (and/or threats of **psychological torture**) if they do not vote in a particular manner, or demanding money in exchange for continued secrecy.

From a highly informal analysis of social networks inhabited by **targeted individuals**, it appears that many **targeted individuals** who are outspoken about their experiences are also outspoken about various forms of (proven and unproven) **corruption**.

Covert surveillance:

Covert surveillance is a situation in which someone or something is observed without the observation being known. This may be performed by agents of a security state, private investigators, business owners, or even by individuals seeking to collect information on those who have wronged them or who they perceive as enemies. **Covert surveillance** is by no means a new thing, although the technologies used for **covert surveillance** have advanced significantly (especially in the realm of **neuroweapons**), literally beyond belief for the vast majority of the population.

Classically, **covert surveillance** involved any variety of ways for a spy to listen in on or watch an important conversation, such as peep holes, secret side rooms, flimsy walls to make it easy to listen in on a conversation, etc. Classic **covert surveillance** also involved things like befriending the target of surveillance in order to stay close to them, watch them, learn about them, and ultimately extract information from them or learn to manipulate them better.

Neo-classical **covert surveillance** involved the use of early digital technologies, basically any sort of wiretap designed to collect information without the target knowing, or otherwise monitoring communications which were deemed to be secret (perhaps access a radio wave transmission, or decoding any variety of signals). CCTVs, GPS monitors, aerial surveillance and other audio surveillance technologies can also be classified as neo-classical **covert surveillance** technologies.

Present day **covert surveillance** may involve any of the above, in addition to new technologies. Most especially, technologies which transmit words, images or ideas into the mind of the monitored individual via **electromagnetic waves** (and modulated pulses of these waves), and then the response of the individual within their brain is monitored using **remote neutral monitoring** mechanisms to collect information.

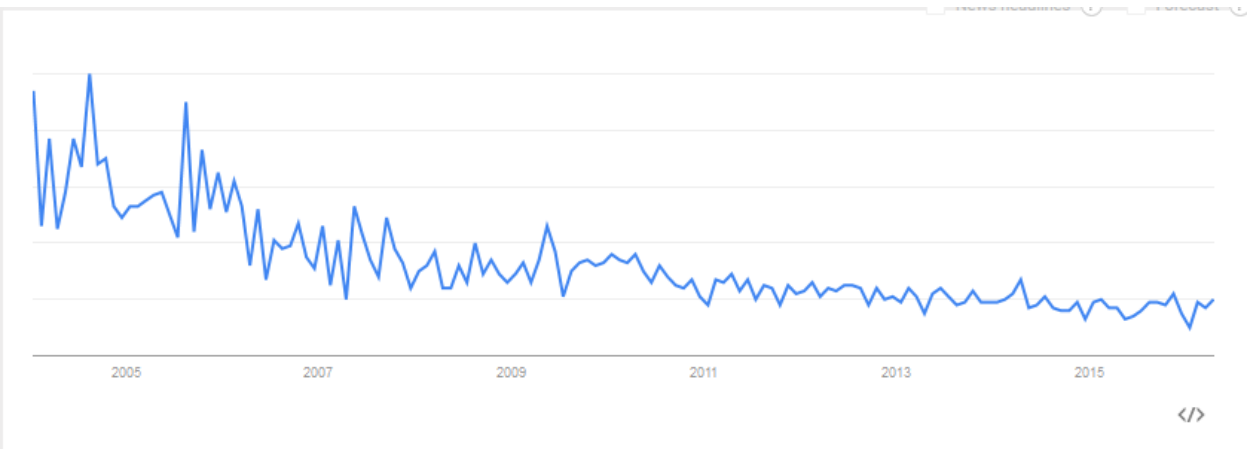

Crime against humanity:

Crime against humanity means murder, extermination, enslavement, deportation, imprisonment, **torture**, sexual violence (including **rape**), persecution or any other inhumane act or omission that is committed against any **civilian** population or any identifiable group and that, at the time and in the place of its commission, constitutes a **crime against humanity** according to customary international law or conventional international law or by virtue of its being criminal according to the general principles of law recognized by the community of nations, whether or not it constitutes a contravention of the law in force at the time and in the place of its commission.

'Genocide' means an act or omission committed with intent to destroy, in whole or in part, an identifiable group of persons, as such, that, at the time and in the place of its commission, constitutes genocide according to customary international law or conventional international law or by virtue of its being criminal according to the general principles of law recognized by the community of nations, whether or not it constitutes a contravention of the law in force at the time and in the place of its commission. In the sense of certain groups which try to intimidate and **brainwash** entire other groups (or all other groups) into their ideological, nationalist, ethnic, religious and/or other views, this can be considered as genocide on a worse scale than **mass murder**, in the sense of transforming people into their very own enemies.

Crowd manipulation:

Crowd manipulation is the intentional use of techniques based on the principles of crowd psychology to engage, control, or influence the desires of a crowd in order to direct its behaviour toward a specific action. This practice is common to politics and business and can facilitate the approval or disapproval or indifference to a person, policy, or product. The ethical use of crowd manipulation is debatable and depends on such factors as the intention of and the means used by the manipulator, as well as the ends achieved. **Crowd manipulation** differs from **propaganda** although they may reinforce one another to produce a desired result. If **propaganda** is "the consistent, enduring effort to create or shape events to influence the relations of the public to an enterprise, idea or group", **crowd manipulation** is the relatively brief call to action once the seeds of **propaganda** (i.e. more specifically 'pre-**propaganda**') are

sown and the public is organized into a crowd. **Crowd manipulation** also differs from crowd control, which serves a security function. Local authorities use crowd-control methods to contain and defuse crowds and to prevent and respond to unruly and unlawful acts such as rioting and looting.

Cyberstalking:

Cyberstalking is the use of the internet or other electronic (digital) means to stalk or harass an individual, a group of individuals, or an organization. It may include false accusations, monitoring, making threats, identity theft, damage to data or equipment, the solicitation of minors for sex, or gathering information in order to harass. The definition of **harassment** must meet the criterion that a reasonable person, in possession of the same information, would regard it as sufficient to cause another reasonable person distress.

D

DARPA:

The Defense Advanced Research Projects Agency (**DARPA**) is an agency of the U.S. Department of Defense responsible for the development of emerging technologies for use by the military.

DARPA was created in February 1958 as the Advanced Research Projects Agency (ARPA) by President Dwight D. Eisenhower. Its purpose was to formulate and execute research and development projects to expand the frontiers of technology and science, with the aim to reach beyond immediate military requirements.[20] The administration was created in response to the Soviet launching of Sputnik 1 in 1957, and DARPA's mission was to ensure U.S. military technology would be more sophisticated than that of the nation's potential enemies.

A relevant share of **conspiracy** theories pinpoint **DARPA** as the origins of technologies with potential nefarious applications, referring to patents held by companies having partnered with **DARPA** and specific research projects funded under **DARPA** (limited to those which were publicly disclosed, of course). However, it should be emphasized that a patent is not proof that a technology is functioning and that a research project is not evidence that the desired outcomes were achieved (however, ongoing funding or increased funding can easily be considered as proof that at least some results in the expected direction were being achieved). However, both are evidence of long standing interests in the technologies defined elsewhere in this glossary.

Decoy(ing):

Decoy(ing) is usually a person, device or event meant as a distraction, to conceal what an individual or a group might be looking for. **Decoys** have been used for centuries most notably in game hunting, but also in wartime and in the committing or resolving of crimes.

In a context of **organized stalking**, **electronic harassment**, and **psychological warfare** in the electronic age in general, the perpetrators consistently try to coax targets into blaming either the wrong technology, or the wrong people, or both. This is a sub-task of their attempting to get targets to discredit themselves by making nonsensical or unsupportable claims to the public, and especially officials

A safe rule of thumb is that, in such contexts, whatever appears to be going on at face value is rather unlikely to be the actual motive, identity, etc. Significant effort will be made to hide the motives and identity(ies) of the underlying perpetrating entity, and any explanation that is accepted or promoted is more likely to be the product of manipulation or imagination than any move in the direction towards truth.

Dehumanization:

[20] Dwight D. Eisenhower Memorial Commission (2008). “Dwight D. Eisenhower and Science & Technology”

Dehumanization is to make somebody feel or be perceived as less human by taking away his or her individuality, the creative and interesting aspects of his or her personality, or his or her compassion and sensitivity towards others. **Dehumanization** may be directed by an organization (such as a state) or may be the composite of individual sentiments and actions, as with some types of de facto racism. State-organized **dehumanization** has been directed against perceived racial or ethnic groups, nationalities (or 'foreigners' in general), religious groups, genders, minorities of various sexual orientations (e.g., homosexuals), disabled people as a class, economic (e.g., the homeless) and social classes, and many other groups.

Broader **dehumanization** of specific groups can be viewed as a pre-condition to citizens of a nation accepting severe **human rights** violations to be committed in acts of war against another group. Prior to the 1994 genocide in Rwanda, radio programming had been full of **propaganda** calling the eventual targets of the genocide 'cockroaches', etc., in very hateful voices full of disgust.

Delusion (also refer to **gaslighting)**:

A **delusion** is a belief held with strong conviction despite superior evidence to the contrary.[21]

Individuals who speak out about political **corruption**, the potential for unaccountable actors within the police state to be involved in **political repression** or subversion, who make claims that any agency whatsoever of the state is investigating them or monitoring them, etc., are often labelled as '**delusional**'. This is especially common if the **targeted individual** can be persuaded to sit down with a psychiatrist who is usually quite happy to write up a mental health record for anyone making such claims – without, of course, ever bothering to make any effort whatsoever to enquire as to whether any such claim may be true. (See entry on **schizophrenia** for other aspects of how these claims may be portrayed. Also, see **political abuse of psychiatry**.)

[21] For those with a suitably sceptical scientific mindset, and who have not had many (or any) experiences related to the terms defined and contextualized in this glossary, it should be emphasized that even for the more outlandish seeming claims, there is NO evidence to the contrary, let alone "superior evidence" – rather, various **slanderous** mental health labels are generally directed towards those discussing such things, in the absence of any, let alone, superior, evidence. That's SUSPICIOUS!

Depersonalization:

Depersonalization is an anomaly of self-awareness. It can consist of a reality or detachment within the self, regarding one's mind or body, or being a detached observer of oneself. Subjects feel they have changed, and the world has become vague, dreamlike, less real, or lacking in significance. It can be a disturbing experience.

Though degrees of **depersonalization** and derealization can happen to anyone who is subject to temporary anxiety or stress, chronic depersonalization is more related to individuals who have experienced a severe trauma or prolonged stress/anxiety. **Depersonalization**-derealization is the single most important symptom in the spectrum of dissociative disorders, including dissociative identity disorder and "dissociative disorder not otherwise specified" (DD-NOS). It is also a prominent symptom in some other non-dissociative disorders, such as anxiety disorders, clinical depression, bipolar disorder, **schizophrenia**, borderline personality disorder, obsessive-compulsive disorder, migraines, and ***sleep deprivation***[22].

De-patterning:

De-patterning involves prolonged, drug-induced sleep comas, followed by multiple doses of electroshock therapy, designed to erase memory and make a subject available for reprogramming. Most famously experimented by Ewen Cameron, with a well-known case of Linda MacDonald in 1963 having been **tortured** and experimented upon to such extreme degrees using these methods that she was reduced to a vegetable state, having to relearn everything, from how to go to the bathroom to the identity of her children.

Several hundred (but not all) victims of such research eventually received monetary compensation for their suffering.[23]

It is not clear to me the extent to which this concept may apply to the current situation of **psychological warfare** in the electronic age, but I do not doubt that the nefarious types who are making use of the technologies described in this glossary would absolutely love to be able to completely erase (or create) memories by remote means. (Why they don't just kill people instead is beyond me. How can someone possibly imagine that it is OK to do such horrible things to people, but somehow draw the line at the much nicer practice of just killing people. Clearly there are experimental objectives.)

Directed conversation:

---

[22] Recall that attacking the sense of self is one of the earlier stages in **brainwashing**. I.e., in case it is not obvious, people who are **sleep deprived** will be more vulnerable to **brainwashing** for a whole host of reasons, including this one – and, moreover, are less likely to have (any?) clear memories of the **brainwashing** whereby they will be able to piece together what happened.

[23] Goodwin K (Oct 17, 2004). "Brainwash victims win cash claims", The Times of London. (This article has been removed from the newspaper's website, but one of many copies can be found at http://www.wanttoknow.info/mkcourtcase).

Directed conversation is a term referring to a **stalking** tactic using stranger's conversation to both intimidate and to convey to the victim that they are under surveillance. During **directed conversation**, two or more **stalkers** will approach near to the target and engage in 'normal' conversation with one another. The conversation is purposefully made at a level so that the victim can adequately hear what is being said. During **directed conversation**, personal information concerning the victim (refer to **remote neural monitoring** to understand how this information may be collected without use of 'traditional' tools used to violate privacy) is inserted into the speech and emphasized by the stalkers in a fashion that most non-victims would not be able to discern as **harassment** (however, if the **targeted individual** calls the **stalkers** out on it, they will respond in a way so as to make the **targeted individual** look crazy).

One purpose of **directed conversation** is to **harass** a victim, as well as make the victim appear mentally unstable should they attempt to complain about such abuse. This may be combined with carefully orchestrated manipulations related to **brainwashing** the **targeted individual** (this may involve the use of **mimicking harassment** for **conditioning** purposes, which can applies later for **brainwashing** purposes), such as trying to portray the values of the **targeted individual** as something socially determined as pathetic, undesirable, weak, or something that makes them a 'legitimate' target – if an unaware **targeted individual** is exposed to such treatment, they may find themselves subtlely **brainwashed** without even knowing it, only loosely aware of the fact that they are being stalked. Similarly, **directed conversation** may be applied to use the stalker's knowledge of the psychology and values of the **targeted individual** to try to massage their values, preferences, etc., in the direction of what the **organized stalkers**, or more importantly those directing their actions, want to instil into the population – most generally, pro-eugenics anti-socialist 'values'). These are conversations that complete strangers will have out in public relating to the target and their personal situations. E.g., they will repeat things a target said in their home, or on the phone. They will drop very personal details into the conversation, that could only be related to the target.

Directed energy weapons (refer to **electronic weapons):**

A **directed energy weapon** (DEW), also known as electronic heating, RF heating, high-frequency heating and diathermy, is the process in which a high-frequency alternating electric field, or radio wave or microwave **electromagnetic radiation** heats a dielectric material.

Potential applications of this technology include anti-personnel weapon systems, potential missile defense system, and the disabling of lightly armoured vehicles such as cars, drones, jet skis, and electronic devices such as mobile phones.

The energy can come in various forms, for example: 1) **Electromagnetic radiation**, including radio frequency, microwave, lasers and **masers**; 2) Particles with mass, in particle-beam weapons; 3) Sound, in sonic weapons.

Widespread reports from **targeted individuals**, many of whom believe themselves to be subjects of **non-consensual human experimentation** for illegal research on the part of the security state, claim that **directed energy weapons** are being used to inflict pain on them, including experiences of mysterious

burns and inflammation by individuals who have also experienced diverse other forms of **harassment**. However, it is possible that this is part of an **intimidation**-oriented **disinformation** campaign where **targeted individuals** (and/or others) are persuaded to believe that this is happening (and are further convinced of it when other **targeted individuals** claim the same), whereas it may not in fact be the case. Another explanation for these experiences is that pain centres of specific limbs or parts of the body are being stimulated in the brain.

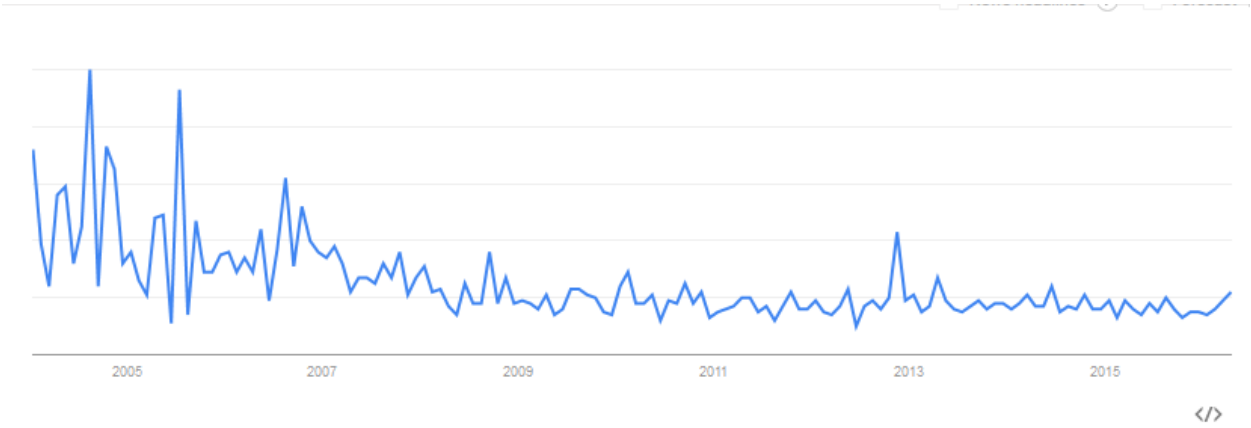

Disinformation:

Disinformation is false or inaccurate information that is spread deliberately with intentions of turning genuine information useless. For this reason, it is synonymous with and sometimes called black **propaganda**. It is an act of deception and false statements to convince someone of untruth. **Disinformation** should not be confused with misinformation, information that is unintentionally false. Unlike traditional **propaganda** techniques designed to engage emotional support, **disinformation** is designed to manipulate the audience at the rational level by either discrediting conflicting information or supporting false conclusions.

In the context of **psychological warfare** in the electronic age, the **targeted individual** may in fact be a source of **disinformation**, whether as a product of imagination, **suggestion**, or be reiterating seemingly plausible **disinformation** that they are repeating. A reasonable rule of thumb is that if the perpetrating entity is content for you to believe that the origins of the attack is some particular thing, then almost certainly it is something else. The **disinformation** may extend to efforts to convince you that many people who are not in fact 'in on it' are also perpetrators, which may end up driving hostile interactions which contribute to the social isolation and discrediting of the **targeted individual**.

One of the objectives of this **disinformation** is to lead the **targeted individual** to appear as mentally ill or otherwise unstable by proposing explanations widely online and to the public, which are patently untrue or highly unlikely, and by engaging in highly erratic behaviour.

E

<u>Electromagnetic radiation/waves</u> (specific types of which include Radio waves and Microwaves):

"**Electromagnetic waves** are waves which can travel through the vacuum of outer space. Mechanical waves, unlike **electromagnetic waves**, require the presence of a material medium in order to transport their energy from one location to another. Sound waves are examples of mechanical waves while light waves are examples of electromagnetic waves.

Electromagnetic waves are created by the vibration of an electric charge. This vibration creates a wave which has both an electric and a magnetic component. An **electromagnetic wave** transports its energy through a vacuum at a speed of 3.00 x 108 m/s (a speed value commonly represented by the symbol c). The propagation of an **electromagnetic wave** through a material medium occurs at a net speed which is less than 3.00 x 108 m/s."[24]

The following image should give a basic idea of how such waves may continue largely in their original form despite much interference, which should be conceptually available in mathematical form to those who have studied some physics at the upper high school or first year university level. However, much like waves in the ocean, once the area of interference has been passed, the underlying wave of the particle should remain essentially unchanged, on average.

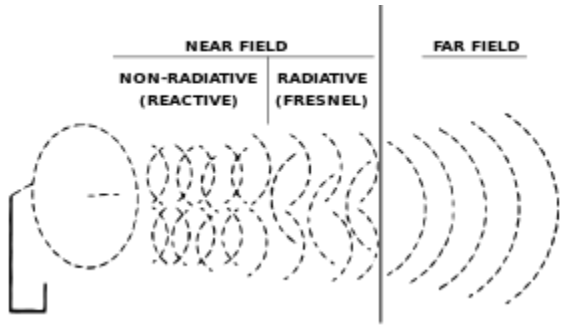

The image to the right shows the electromagnetic spectrum from lowest energy/longest wavelength (at the top) to highest energy/shortest wavelength (at the bottom).[25]

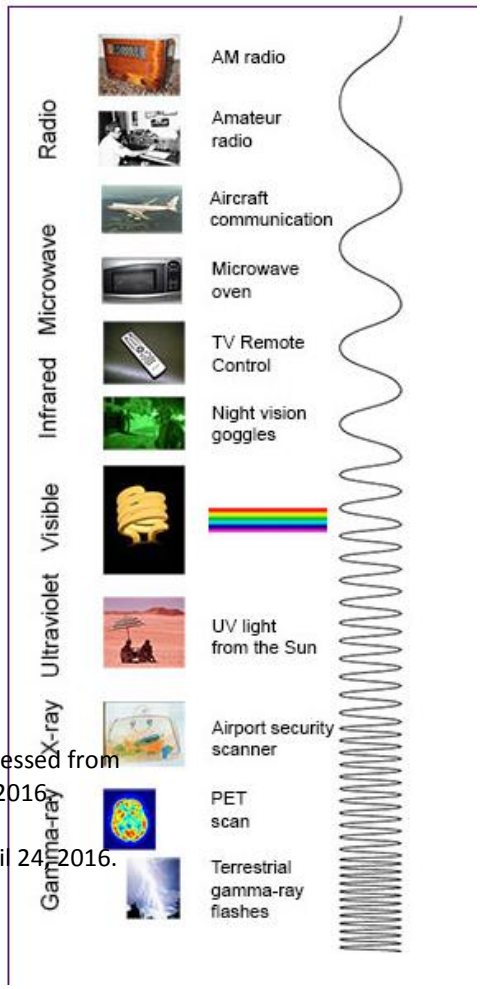

For purposes of the present glossary, we should be most interested in a) the microwave regions of the spectrum relevant for the 'modulated microwave pulse auditory effect' (hundreds of MHz to tens of GHz), and b) lower ends of the spectrum which have more generalized effects on mood, emotion, etc. by mimicking brain waves (this is not the same as more targeted

[24] The Physics Classroom, "Propagation of an Electromagnetic Wave", accessed from http://www.physicsclassroom.com/mmedia/waves/em.cfm on April 24, 2016.
[25] NASA, "The Electromagnetic Spectrum", image extracted from http://imagine.gsfc.nasa.gov/science/toolbox/emspectrum1.html on April 24, 2016.

uses of such technologies to trigger **conditioned** emotional responses at the level of an individual) – in this second case, pulse modulations of higher frequency waves may serve to mimic a lower frequency brain wave. D**irected energy weapons** rely on higher frequency waves in the electromagnetic spectrum, because higher frequency waves contain more energy (and can be targeted with more precision).

Electromagnetic shielding (including **Faraday cage):**

Electromagnetic shielding is the process of reducing the electromagnetic field in a space by blocking the field with barriers made of conductive and/or magnetic materials. Shielding is typically applied (1) to enclosures to isolate electrical devices from the 'outside world' and (2) to cables to isolate wires from the environment through which the cable runs. **Electromagnetic shielding** that blocks radio frequency **electromagnetic radiation** is also known as RF shielding. The shielding can reduce the coupling of radio waves, electromagnetic fields and electrostatic fields, though not static or low-frequency magnetic fields (a conductive enclosure used to block electrostatic fields is also known as a **Faraday cage**). The amount of reduction depends very much upon the material used, its thickness, the size of the shielded volume and the frequency of the fields of interest and the size, shape and orientation of apertures in a shield to an incident electromagnetic field.

There are rumours that solutions like anti-electromagnetic paint may mitigate the problem. Also, if a microwave oven is protective against microwave radiation, presumably it would be somewhat costly but not technologically difficult to apply something similar for protection against **neuroweapons**).

The difficulties in creating a perfect Faraday cage on a large scale is likely to explain the 2015 decision of the Pentagon to move significant communications resources to a deep mountain bunker in Cheyenne, Colorado. The decision was reportedly to safeguard the command's sensitive sensors and servers from a potential electromagnetic pulse (EMP) attack.[26]

Electromagnetic weapons **(a.k.a. Electronic weapons, Psychotronic weapons, Neuro-electro-magnetic frequency weapons, High powered magnetic weapons, Radio frequency weapons, Electromagnetic radiation weapons, Directed energy weapons, Through-the-wall weapons, Remote influencing technologies, Neuroweapons, etc.)**:

These are weapons which involve the diffusion of **electromagnetic waves** for a diversity of purposes, from a) traditional applications of weapons which inflict pain, damage or destroy (**directed energy weapons**) to b) the use of **pulse-modulated electromagnetic waves** for sending audible voices directly into the minds of individuals, and other outgoing transmissions of images or ideas into the minds of the **targeted individual** – On the surveillance end, this presumably involves an array of radar-like tools (e.g., analogues of the **laser microphone**) which should not be of particular interest to the average citizen, including applications for **remote neural monitoring** which can be used in conjunction without outgoing

[26] Nye J (April 8, 2015). "Why IS the US military moving back into 'Stargate' base deep under the Rocky Mountains a decade after it was abandoned?", Daily Mail Online, AFP and Associated Press, accessed from http://www.dailymail.co.uk/news/article-3031041/Why-military-moving-Stargate-base-deep-Rocky-Mountains-decade-abandoned.html on May 11, 2016.

communications (into the mind of the **targeted individual**) for the purpose of an extreme form of **social control** where **cognitive liberty** is threatened, and c) neuro-effective signals (whether or not achieved via **conditioning**) that may cause other nerve groups to be remotely influenced[27]. Generally speaking, the goal is to engage in behaviour modification by covertly manipulating the minds of persons under attack.

According to N. Anisimov, **psychotronic weapons** (**neuroweapons**) are those that act to "*take away a part of the information which is stored in a man's brain. It is sent to a computer, which reworks it [sometimes with human support] to the level needed for those who need to control the man, and the modified information is then reintroduced [by **suggestion** or mere exposure to the modified information] into the brain*."[28] Included in the arsenal are VHF generators, X-rays, ultrasound, and radio waves.

It is not uncommonly asserted that microchip implants are used to increase the strength of the influence of these **electronic weapons** in **targeted individuals** or in instances of **non-consensual human experimentation**. However, it is difficult to ascertain whether such reports can be taken credibly – such claims may reflect successfully convincing a **targeted individual** of something that can be proven as factually false at a later date, in order to entirely discredit any claims they make. The fact that such events may have transpired historically does not mean it is still happening – after all, that would leave evidence.

Unclassified official reports in relation to such weapons are not altogether sparse, but are altogether vague in the specific technologies they use or the impacts they may have on targets.[29]

(Note: this class of weapons also includes legitimate military uses which are analogous to traditional radar, signal jamming and spoofing technologies. Such uses are not of interest for the context at hand.)

As early as 1979, the Soviet Union was promoting an international treaty against the development of weapons of mass destruction, and among others, specified the following types of weapons:

> Infrasonic means using acoustic radiation to affect biological targets;
> Means using electromagnetic radiation to affect biological target.

However, Western powers claimed that such a treaty on all potential new weapons of mass destruction would have to be so general in scope and vague in its definitions so as to render it useless, and no such

---

[27] This last point on remote activation of other neuron groups appears in White E (2000), "The State of Unclassified and Commercial Technology Capable of Some Electronic Mind Control Effects", accessed from http://www.constitution.org/abus/mkt/uncom.htm on April 30, 2016. Many or perhaps all **targeted individuals** can attest to experiences that would corroborate this view, but the exact causality may be different for different cases.

[28] Attribution to this quote cannot be verified. However, it is roughly accurate.

[29] One official source where such technologies are discussed, about 10 years old already, can be found in the Defense Science Board Task Force on Directed Energy Weapons, December 2007, accessed from http://www.acq.osd.mil/dsb/reports/ADA476320.pdf on April 24, 2016.

treaty was ever drawn up.[30] However, the Soviets did not cite potential applications for **mind control** (other citations in this document demonstrate that such uses of electromagnetic radiations to influence the mind and other neural processes were already in practice at that time), and it would be reasonable to wonder if the actual intent was to ban development of weapons that they would nevertheless continue developing.

In case there is any doubt that these SHOULD be classified as weapons, and therefore subject to a diversity of controls in their use, trade, etc., refer to HR 2977 Space Preservation Act of 2001, promoted by Dennis Kucinich (unrelated sections redacted):

> (2)(A) The terms `weapon' and `weapons system' mean a device capable of any of the following:
>
> > (III) directing a source of energy (including molecular or atomic energy, subatomic particle beams, electromagnetic radiation, plasma, or extremely low frequency (ELF) or ultra low frequency (ULF) energy radiation) against that object;
> >
> > (v) through the use of land-based, sea-based, or space-based systems using radiation, electromagnetic, psychotronic, sonic, laser, <u>or other energies directed at individual persons or targeted populations for the purpose of information war, mood management, or **mind control** of such persons or populations</u>;
> >
> > (ii) Inflicting death or injury on, or damaging or destroying, a person (or the biological life, bodily health, mental health, or physical and economic well-being of a person)–
>
> (B) Such terms include exotic weapons systems such as–
>
> > (i) electronic, psychotronic, or information weapons;
> >
> > (iii) high altitude ultra low frequency weapons systems;
> >
> > (iv) plasma, electromagnetic, sonic, or ultrasonic weapons;

However, these passages were deleted from the bill prior to being passed, on October 2, 2001.[31]

---

[30] UN Department for Disarmament Affairs (1985). "The United Nations and Disarmament: 1945-1985", pp 114-116. Adapted from quotation at http://www.mindjustice.org/9.htm on May 3, 2016.

[31] I am unsure as to how to verify the authenticity of these deleted passages. The source is https://youarenotmybigbrother.wordpress.com/2015/10/05/the-mind-control-forum-yahoo-group-eleanor-white/, accessed May 3, 2016.

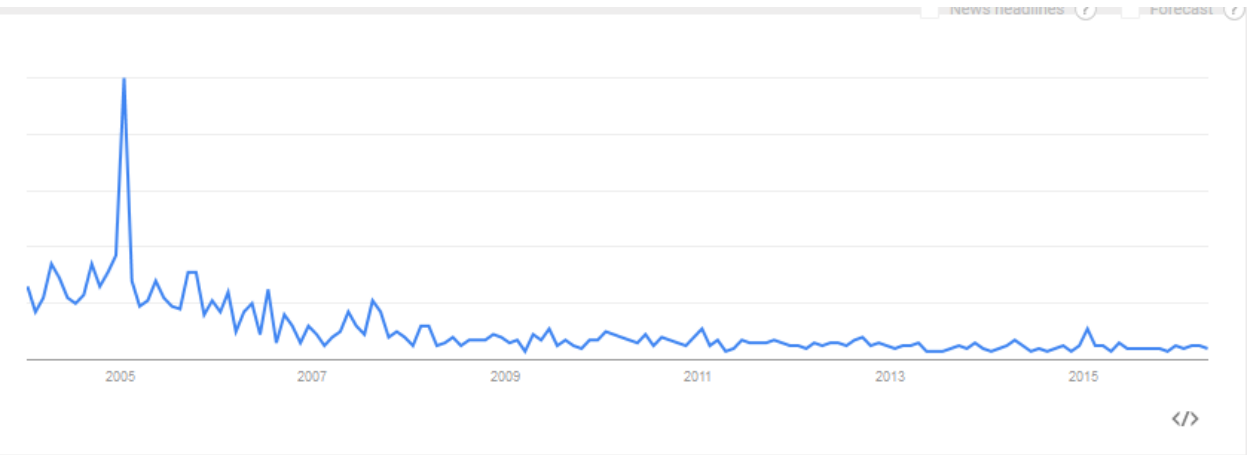

Electronic harassment (including no-touch torture):

This is the sum of any and all **torture**, **harassment** and **brainwashing** experiences perpetrated by use of **electromagnetic weapons**, whether **directed energy weapons** or other weapons designed for **remote neutral monitoring**, **synthetic telepathic** communications into and from the mind of the **targeted individual**, or otherwise. The terms should not be confused with **cyberstalking**.

In Michigan, Public act 257 of 2003 makes it a felony for a person to "manufacture, deliver, possess, transport, place, use, or release" a "harmful electronic or electromagnetic device" for "an unlawful purpose"; also made into a felony is the act of causing "an individual to falsely believe that the individual has been exposed to a harmful electronic or electromagnetic device". In Maine, Public law 264, H.P. 868 – L.D. 1271 criminalizes the knowing, intentional, and/or reckless use of an **electronic weapon** on another person, defining an **electronic weapon** as a portable device or weapon emitting an electrical current, impulse, beam, or wave with disabling effects on a human being.

Knowledge of such **harassment** goes back at least as far as 1993.[32]

I believe this term is generally used in relation to physical torture, or elicitation of pain centres in the brain, rather more so to the largely **psychological torture** aspects of this **neurowarfare** against **civilians** who refuse to submit and be **brainwashed** into Nazis (for practical purposes, whether or not that is the affiliation the perpetrator believes themselves to hold). Common symptoms include:

- Sharp pain and burning in the chest, generally in the region of the heart
- 'Fluttering' or 'gulping' sensation in heart area
- 'charged' sensations in the heart area
- Racing or irregular heart beat
- Hard/heavy pumping of the heart beat
- Fatigue/exhaustion, dizziness, vertigo, loss of balance

[32] McKinney J (1993). "The McKinney Report: Microwave Harassment and Mind Control Report", Electronic Surveillance Project. Accessed from an archived version of the report at https://florencioviray.files.wordpress.com/2010/04/os-the-mckenney-report.pdf on April 26, 2016.

- Intense headaches
- Pain in other centres, likely induced via the brain, at least in most cases
- Pain at the surface of the skin, which may involve the use of 'active denial technology' which boils the water molecules in the skin, causing much pain but not damaging the skin and therefore not leaving 'evidence'
- Elicitation of various physiological processes, in ways designed to be embarrassing
- Interference with the senses, emotions, etc. (perhaps by stimulating neural processes similar to those senses, emotions, etc. in the individual)

It is commonly believed that satellites are being used a highly targeted beacons of electromagnetic radiation, although presumably in at least some cases this is complemented or even largely applied by lesser sources in cases where autonomous (perhaps vindictive) operators wish to add to the **torture**.

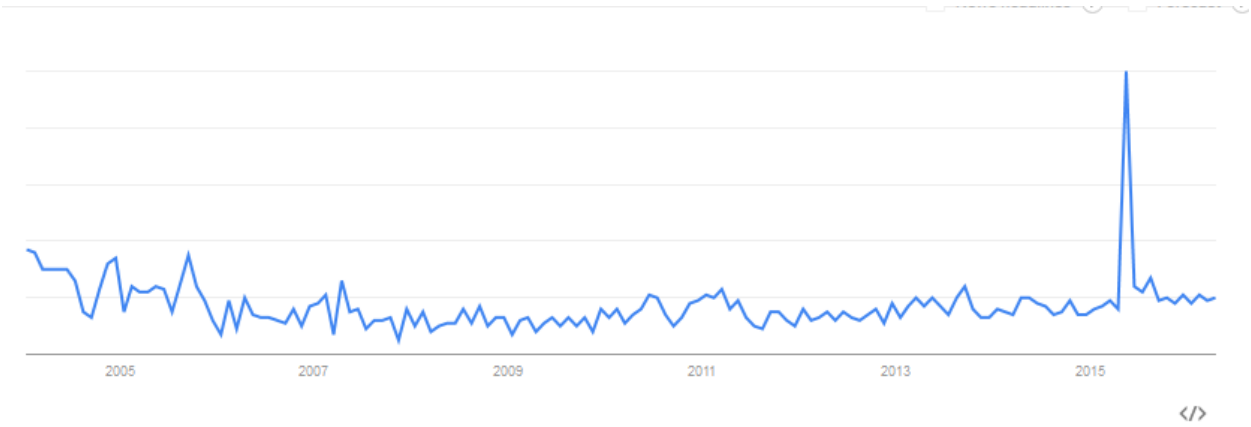

ELINT:

Electronic signals intelligence (ELINT) refers to intelligence-gathering by use of electronic sensors. Signal identification is performed by analyzing the collected parameters of a specific signal, and either matching it to known criteria, or recording it as a possible new emitter. ELINT data are usually considered as highly classified.

As retrieved from Wikipedia[33], the satellites which have been deployed for radar or ELINT purposes (both of which necessarily equipped with electromagnetic radiation facilities) are as follows. Naturally, it remains unknown to the public when these satellites began to be equipped with pulse-modulation capacities of sufficient quality to diffuse outgoing **synthetic telepathy** communications.

Number	Launch date	Function	Status
USA-3	1984-06-25	ELINT	Out of service
USA-8	1985-01-24	ELINT	Out of service

[33] https://en.wikipedia.org/wiki/List_of_USA_satellites, accessed on May 1, 2016.

USA-31	1988-09-02	ELINT	Failed
USA-37	1989-05-10	ELINT	Out of service
USA-48	1989-11-23	ELINT	No info
USA-103	1994-05-03	ELINT	No info
USA-105	1994-08-27	ELINT	No info
USA-110	1995-05-14	ELINT	No info
USA-112	1995-05-14	ELINT	No info
USA-118	1996-04-24	ELINT	No info
USA-136	1997-11-06	ELINT	No info
USA-152	2000-08-17	Radar reconnaissance	Active
USA0160	2001-09-08	ELINT/Ocean surveillance	No info
USA-171	2003-09-09	ELINT	No info
USA-181	2005-02-03	ELINT/Ocean surveillance	No info
USA-184	2006-06-25	ELINT	No info
USA-194	2007-06-15	ELINT	No info
USA-200	2008-03-13	ELINT	No info
USA-202	2009-01-18	ELINT	Active
USA-215	2010-09-21	Radar imaging	Active
USA-223	2010-11-21	ELINT	Active
USA-229	2011-04-15	ELINT/Ocean surveillance	Active
USA-238	2012-09-13	ELINT/Ocean surveillance	Active
USA-247	2013-12-06	Radar imaging	Active
USA-250	2014-04-10	ELINT	Active
USA-257	2014-09-17	ELINT	Active
USA-259	2014-12-13	ELINT	Active
USA-264	2015-10-08	ELINT/Ocean surveillance	Active
USA-267	2016-02-10	Radar imaging	Active

Viewed by 5-year periods, the rate of deployment of ELINT and radar satellites is as follows: 1984-1989 (5); 1990-1994 (2); 1995-1999 (4); 2000-2004 (3); 2005-2009 (5); **2010-2014 (8)**; 2015-2016 (2). With no less than 12 satellites equipped with electromagnetic wave capacities, it should be considered as a rather uncontroversial statement to claim that much of the globe is covered most of the time, and this does not account for a large number of other satellites (and/or undisclosed satellites) which monitor via other means – also, following the popular mythology relating to the **HAARP** program, a fair number of other satellites described as 'weather satellites' may also be equipped with targeted **electromagnetic wave** capacities. Moreover, this does not include any land-based or non-satellite aerial capacities along these lines. **Neurowarfare** applications presumably remain classified and therefore officials hidden from **civilians** who are vulnerable to abuse of such technologies.

Open **question**: Why such a large ramp up of satellites with **electromagnetic wave** capacities in the 2010-2014 period? I am not aware of any significant build-up of legitimate risks or threats which would justify this. I cannot speak for all places, but this most certainly is consistent with the Canadian history of 2013-2014, which to date remains essentially undocumented, but a few reminders of which will hopefully help to fill in the record once people can feel less threatened by **psychiatric reprisal** for

describing their experiences, in particular following disclosure on the current state of technologies in **neurowarfare**.

Emotional cloning (a.k.a. Cloned emotional signatures):

US patent 5,159,703 (1992) includes the following description through use of **silent sound**: "*By using these computer-enhanced EEGs, scientists can identify and isolate the brain's low-amplitude "emotion signature clusters", synthesise them and store them on another computer. In other words, by studying the subtle characteristic brainwave patterns that occur when a subject experiences a particular emotion, scientists have been able to identify the concomitant brainwave pattern and can now duplicate it. "These clusters are then placed on the Silent Sound[TM] carrier frequencies and will silently trigger the occurrence of the same basic emotion in another human being!"* "

It seems unlikely that such a technology could be implemented by **silent sound**, but an analogue of such a technology certainly exists which instead uses **electromagnetic radiations/waves** for essentially the same purpose. This may be complementary to the use of **low frequency electromagnetic waves** with more generalized impacts.

Also, applications of electromagnetic analogues of this technology seem to explain other experiences of **targeted individuals** and victims of **non-consensual human experimentation**, as described elsewhere under **mimicking harassment**, **evoked action**, driven **subvocalization**, etc., etc..

Evoked action (related: **Classic conditioning, Priming, Subliminal stimuli, Electronic weapons**):

An **evoked action** is an action that is evoked neurally, normally by a decision that is essentially conscious and intentional (i.e., not a fight or flight response to pain or a threat). This often involves visual selection of the event, in addition to encoding of motor control.[34] However, actions may be automatically invoked, in the sense that one may intend to perform a specific action, but the brain automatically produces some other action reflecting automatic computation on the part of the brain.[35]

This entry on **evoked action** should be considered as highly incomplete. However, in the context of **psychological warfare** in the electronic age, what is relevant is the following.

First, in relation to **mimicking harassment**, it is obvious to those who have experienced it that continuous mimicry of movements eventually leads to a situation where other parties may trigger an involuntary movement on the part of the **targeted individual** – for example, having mimicked every movement for some time, the perpetrating entity may seek to establish a sense of control over the **targeted individual** by, at a mere gesture, triggering an involuntary movement. It appears as though a similar connection may exist between mimicry and involuntary speech, most especially involuntary **subvocalizations** (which, among other things, may be used to help **brainwash** an unaware **targeted**

---

[34] di Pellegrino, G, R Rafal and SP Tipper (Aug 2005). "Implicitly Evoked Actions Modulate Visual Selection: Evidence from Parietal Extinction", *Current Biology*, 15(16), 1469–1472.
[35] Ibid.

individual by 'speaking in their first person', or to extract false 'confessions' which may be observed via **remote neural monitoring**).

Second, somewhat in relation to the process of visualizing the action prior to doing it, a **targeted individual** who is completely unaware of such possibilities may find themselves triggered to make some kind of action, generally one which may be dangerous (for example, steer he car right, into the tree) or criminal (for example, a sexual or terrorist offense, or more innocuously, to shoplift something).

I assume that most **targeted individuals** can attest to such experiences, but given that the purportedly established scientific knowledge is essentially hidden undercover as 'classified' for 'national security', a **targeted individual** describing such experiences is liable to be directed towards a psychiatrist who will write them up with some sort of mental health record (for referring to such innocuous things as some involuntary movements, and as bad as impulses to act on a sexual perversion that the perpetrating entity have otherwise been trying to plant or force into the mind of the **targeted individual**).

Extremely low frequency waves (ELF electromagnetic waves):

Extremely low frequency (ELF) is the ITU designation for **electromagnetic radiation** (radio waves) with frequencies from 3 to 30 Hz, and corresponding wavelengths from 100,000 to 10,000 kilometers. ELF waves can also penetrate significant distances into earth or rock, and 'through-the-earth' underground mine communication systems use frequencies of 300 to 3000 Hz. The frequency of alternating current flowing in electric power grids, 50 or 60 Hz, also falls within the ELF band, making power grids an unintentional source of **ELF** radiation.

The following was lifted from an online source dedicated to mystical sorts of relations with mother earth and the like. The attribution is to Lewis B. Hainsworth, but I have not yet been able to verify this information from any peer-reviewed scientific outlet. I think it suffices to say, however, that **ELF** waves are known to have diverse relations (extent and directionality of causation?) with our cognitive and emotional states, and among many other specific experiences, are likely to explain **fatigue attacks**[36].

- Gamma waves (25-60 Hz) appear to relate to simultaneous processing of information from different brain areas, e.g., involving memory, learning abilities, integrated thoughts or information-rich task processing. Gamma rhythms modulate perception and consciousness, which disappear with anaesthesia. Synchronous activity at about 40 Hz appears involved in binding sensory inputs into the single, unitary objects we perceive.
- Beta waves (12-25 Hz) dominate our normal waking state of consciousness when attention is directed towards cognitive tasks and the outside world. Beta is a 'fast' activity, present when we are alert or even anxious, or when engaged in problem solving, judgement, decision making, information processing, mental activity and focus. Nobel Prize winner Sir Francis Crick and other scientists believe the 40 Hz beta frequency may be key to the act of cognition.

[36] Such a device was patented over 40 years ago, under US patent 3773049 A (1970): "Apparatus for the treatment of neuropsychic and somatic diseases with heat, light, sound and vhf electromagnetic radiation". White (2000), in Appendix PM1, describes Russian claims that such devices were already in use in Soviet and allied states.

- Alpha waves (7-12 Hz) are present during dreaming and light meditation when the eyes are closed. As more and more neurons are recruited to this frequency, alpha waves cycle globally across the whole cortex. This induces deep relaxation, but not quite meditation. In alpha, we begin to access the wealth of creativity that lies just below our conscious awareness. It is the gateway, the entry point that leads into deeper states of consciousness. Alpha waves aid overall mental coordination, calmness, alertness, inner awareness, mind/body integration and learning.
- Theta waves (4-7 Hz) occur most often in sleep but are also dominant in the deepest states of meditation (body asleep/mind awake) and thought (gateway to learning, memory). In theta, our senses are withdrawn from the external world and focused on the mindscape–internally originating signals. In theta, we are in a waking dream; vivid imagery flashes before the mind's eye and we are receptive to information beyond our normal conscious awareness. Theta meditation increases creativity, enhances learning, reduces stress and awakens intuition and other extrasensory perception skills.
- Delta waves (0-4 Hz) are the slowest but highest in amplitude. They are generated in deepest meditation and dreamless sleep. Delta waves confer a suspension of external existence and provide the most profound feelings of peace.

Extremely low frequency (ELF) transmissions (or, more specifically, pulse modulations of higher frequency waves) are directed against an individual or larger population to influence their brain waves, for example by mimicking natural brainwaves, or in any cases by transmitting **electromagnetic waves** which may have similar effects on cellular communications and other biophysical processes involved in neural activity, thereby stimulating effects on the brain. Dr. W. Volkrodt states, with regard to the potential uses of **ELF waves** for neurowarfare:[37]

> *The technical principal of receivers for electromagnetic waves is fully analogous with biological information and communications system. If several thousand of the hundreds of billions of nerve cells in our brain resonate with man-made centimetre waves, the carrier frequency has to be suppressed when the signal is passed on to the synapses.*
>
> *To overcome cell membranes, living organisms use electrochemical processes involving sodium and potassium ions. This suppresses the carrier frequency in the high-frequency range just as the demodulation circuit does in man-made receivers. What remains is the signal impressed on the carrier frequency, e.g. in the low frequency ELF range. This is also the frequency range at which our own nervous system normally works.*
>
> *Using these frequencies, the nerve fibres convey pain sensations, the feeling of hungry, tiredness, nausea, and signals on the sense of balance to points in the brain which invoke these stages in a awake consciousness.*

[37] Volkrodt W (Jun-Jul 1989). "Can Human Beings Be Manipulated By ELF Waves", Raum & Zeit. Copied translation from http://csglobe.com/mass-mind-control on May 3, 2016.

If interference signals are superimposed on the natural signals generated by the body as a carrier, the brain could be presented with stimulated states that we consciously perceive, but which do not appear as reality.

A state of disturbed sense of balance, which seems to us to be real, is enough to stop people from being able to run or make them fell dizzy even they are lying down.

In a 'psychotronic war' using microwaves modulated using ELF waves, it would no longer be necessary to kill whole armies by inducing cardiac or respiratory irregular signals. The enemy can simply be incapacitated by disturbing their states of balance or confusing the ability to think logically.

The manipulation of human beings, by means of ELF waves is relatively easy to perform.

Government authorities and military would have to overcome no insurmountable difficulties to modulate carrier frequencies with ELF signals in existing centimetre radio-relay links.

…an army of occupation could then manipulate a nation's ability to make decisions in confusing political situations or disable undesirable activities. ELF-modulated microwave transmitters employed in this way could also serve to obviate the use of force (non-lethal weapons).

An entire nation can be gradually subjugated psychically by the means of long-term radiation using ELF-modulated centimetre waves.

<u>This is not science fiction!</u>

Historically, there was a legitimate military use of ELF waves. Namely, because ELF waves can be transmitted through rock, water, etc., they were used to transmit simple signals to submarines, which could then surface to receive detailed orders by other ordinary radio and satellite communications. In 2004 the Navy shut down both transmitters, with the explanation that very low frequency (VLF) communication systems had improved to the point that the ELF system was unnecessary.[38] This would imply that there is no legitimate application for ELF research or usage, within military industries, which is not related to **neuroweapon** applications.

[38] Cohen-Joppa F (Oct 15, 2004). "Project ELF Closes". *The Nuclear Resistor*.

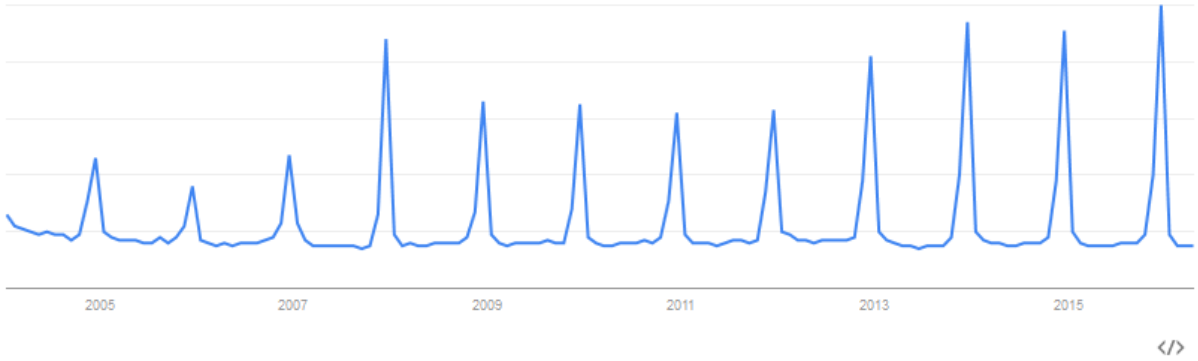

F

False flag:

The contemporary term **false flag** describes covert operations that are designed to deceive in such a way that the operations appear as though they are being carried out by entities, groups, or nations other than those who actually planned and executed them. As a rule of thumb, **targeted individuals** should assume that any group that the perpetrators accept/**suggest** as the correct explanation is very unlikely to be the actual group responsible for the **electronic harassment**, **organized stalking**, etc.

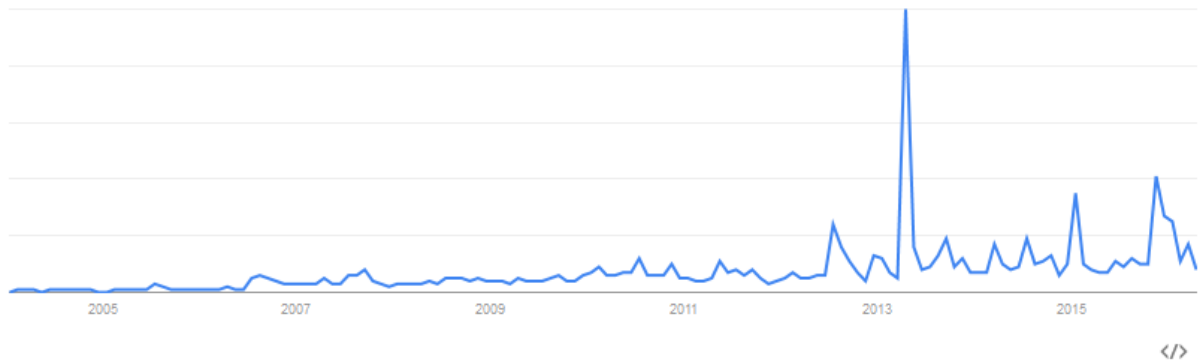

Fatigue attacks and "electronic caffeine":

A fatigue attack occurs which the **targeted individual** all of a sudden feels an overwhelming sense of fatigue for little or no identifiable cause. Many **targeted individuals** and victims of **non-consensual human experimentation** report **fatigue attacks** which are assumed to be implemented via means of **electronic weapons**. The extent to which this relies strictly on remote electromagnetic mimicking of brain waves (including via pulse modulations), other means of remote stimulus and/or **conditioned** responses to unheard stimulus do not appear to be understood by the community of **targeted individuals**.

An ancient example of a device that can accomplish such a thing is the Russian medical device known as a LIDA machine, a pulsed 40 watt, 40 MHz radio transmitter, which can be used to make a target exhausted on the job when pulsing at the rate consistent with sleep, and with a pulse rate increase, DEPRIVE a target of sleep too.

This device is a radio transmitter version of other types of trance induction devices, such as a swinging watch, or pulsing lights, or pulsing sound. Trance induction works using any low speed, regular stimulus. Even slowly swinging in a hammock or rocking in a rocking chair can induce sleep. But if someone comes along and suddenly rocks a snoozing person's rocking chair at a high rock rate, that person is going to be forced awake. Same with a slowly beeping tone changing to a rapidly beeping tone. Alarm clocks use rapid beeps, for example. (Similarly, slow music is generally soothing whereas faster music is generally energizing.)

Freedom:

The Merriam-Webster dictionary includes the following in its definition of **freedom**:[39]

1: the quality or state of being free: as
  a: the absence of necessity, coercion, or constraint in choice or action
  b: liberation from slavery or restraint or from the power of another: independence
  c: the quality or state of being exempt or released usually from something onerous (**freedom** from care)
  d: ease, facility (spoke the language with **freedom**)
  e: the quality of being frank, open, or outspoken (answered with **freedom**)
  f: improper familiarity
  g: boldness of conception or execution
  h: unrestricted use (gave him the **freedom** of their home)
2
  a: a political right
  b: franchise, privilege

FOIA:

The **Freedom of Information Act** enables citizens to obtain non-classified information about government activities. Most Western countries have a somewhat functioning variant of this. However, it is likely to be necessary to know the internal terminology being used to make good use of the FOIA or its equivalent. Also, in the context of psychological warfare in the electronic age (neurowarfare), presumably little of any additional relevance is likely to be disclosed. However, theoretically it may be possible for the **targeted individual** to find out if they are on a list of sorts (however, my understanding is that there are also lists which are impervious to such information requests).

---

[39] Merriam-Webster Dictionary: accessed from http://www.merriam-webster.com/dictionary/freedom on May 7, 2016.

G

Gagged person:

A **gagged person** is whispered lies and slander, by a perpetrating entity, about a **targeted individual**. If the **gagged person** believes the lies, they become infuriated at the **targeted individual** – and are recruited into piling on, and targeting them. **Gagged persons** are threatened, either subtly or aggressively, when they are gagged by the perpetrating entity, even though they usually have no legal authority to do so. After this the **gagged person** will not advise the **targeted individual** of either the **slander** they have been told or the identity of the perpetrator who whispered it. The **gagged person**'s fear is based on the possibility that the **slander** may be justifiable and true – or even worse – if it is false, they fear that similar **slander** may be unleashed against them, unless they cooperate with the unjust targeting of the **targeted individual**.

Gang stalking **(a.k.a. Mobbing; Organized stalking; which includes High-tech stalking by proxy):**

Individuals are being flagged and placed on notification lists. This is happening without the knowledge of the **targeted individual**. In many countries these community notifications are being used by companies and/or agencies of the security state and others to target **innocent** individuals such as **whistleblowers**, the outspoken, those perceived as a threat to certain partisan and/or ideological views, etc. In conjunction with these notifications, in some cases this is combined with a practice that was used in the former Soviet Union called **psychiatric reprisal**. This is used as a means of retaliation, **blacklisting**, silencing, or controlling members of society. Once on the notification system, warnings about the targets are sent out to every individual the target comes in contact with[40], thus poisoning their associations, and socially annexing the **targeted individual**. As a massive understatement, this could also be described as a 'negative energy campaign'.

As a general rule of thumb, the methods are applied in a way that is conducive to **gaslighting** the individual or, at the very least, that they will match established definitions of so-called mental illnesses. Failing **psychiatric reprisal** and/or other means of sabotaging the individual, another objective may be to drive the **targeted individual** to respond in some way which will lead to their incarceration (which is rather likely to be paired with exceedingly intentional efforts to try to push/provoke them to do so – apparently willingness to do evil, "for the team" (whichever 'team' is most likely to elicit the behaviours and preferences 'they' want, but generally in the direction of white supremacist neo-Nazi behaviour and preferences), is one of the desired traits in this situation). And, failing either one of those, the 'spontaneous combustion' of the eternally harassed, tortured and frustrated is another objective (an 'example', so to speak, of what happens to those who do not submit to slavery).

---

[40] This can be implemented without sending a communication that is easily traceable. For example, the perpetrating entity may locate the new acquaintance, and say things which make it essentially clear that they are discussing the **targeted individual**, and the proceed to engage in communications which are designed to **slander**, discredit, etc., the **targeted individual**.

Common **organized stalking** methods include:

1) **Mobbing**/crowding a target by swarming them (not tooooo obviously, but obviously enough to be unmistakable to the target) in public.
    a. Similarly, many reports suggest the same applies when driving, with a variety of tactics devised to maximize the agitated state of the targeted individual, at times clearly with a view to leading them to do something dangerous and/or illegal
2) **Directed conversations** 1: conversations strangers have in public relating to the target's personal life (including false accusations, to make the target believe that the **slander** is widely believed, which sometimes may actually be the case).
3) **Directed conversations** 2: media content which appeared to be directed towards your life, for example something that should have been private and where media content was highly related to your personal situation, beyond what might reasonably be considered as coincidence.
4) Entrapment: setting the target up on criminal charges.
5) **Slander** campaigns: spreading lies and rumours about the target such as they are a drug dealer, accusations of various sex crimes such as **rape**, **pedophilia**, etc., with no opportunity to defend oneself. Including efforts to persuade the victim that the slander is widely believed (which may at times in fact be true, regardless of whether or not based in reality).
6) Illegal entry into the target's home or car.
7) Illegal audio/visual surveillance/ bugging of target. (Presumably this is often identified mistakenly, whereas the reality is **remote neural monitoring**. However, traditional illegal bugging/surveillance mechanisms are liable to have more usable 'evidence').
8) Isolation: isolating the target from friends, family, etc., by spreading lies and rumours.
9) Insertion as faux friends to take over the social life of the **targeted individual**. They are always rude, and manipulative and not real friends.
10) Mail and email tampering.
11) **Mimicking harassment**: a) copying the target's daily routine by throwing out the garbage at the same time or using the water or bathroom in an adjacent apartment at the same time; b) also, mimicking their movements, speech patterns, etc., which are liable to asserting a certain degree of perceived control over the individual by building up an ability to elicit **evoked action** or speech.
12) **Noise campaigns**: slamming doors, loud stereos, car alarms going off in tandem, using power tools at late hours.
13) Psychological sensitization/anchoring: getting the target sensitive to everyday stimuli like colors or everyday actions such as following the target in bright red clothing and/or swarming the target's vehicle with red vehicles continuously until the target develops a phobia to the color red. (This should be understood in the sense of **classic conditioning** or **priming**. But this vocabulary also appears common.)
14) Creating 'symptoms' of mental illness (voices in the subconscious, V2K; trying to describe what is happening for others) putting the individual in psychiatric care.
15) Creating 'symptoms' or dementia because of apparent difficulty, sometimes, to express one's feelings and thoughts; memory problems when the 'attacks' are enormous.

16) **Sleep deprivation**: timing **noise campaigns** at the time the target normally sleeps.
17) Telephone re-directs/wrong numbers.
18) Theft: stealing from a target. (Liable to be highly regular but fairly small thefts that the police will not take seriously, and may lead to being directed/forced into **psychological evaluation** if the **targeted individual** makes any claims of **organized stalking** or **conspiracy** against them.)
19) Moving foot and vehicular surveillance techniques: following the target wherever they go, perhaps including tracking the target using a GPS monitor, etc.
20) Being followed to restaurants, hotels, etc., where various other forms of **harassment** would continue. (Or intercepted there shortly after arrival.)
21) 'Brighting': perpetrators flash their (car) lights at the **targeted individual** at all times of the day to let the **targeted individual** know they are being watched.
22) Vandalism, breaking windows, slashing tires, dumping garbage on a target's lawn. (Liable to be highly regular but fairly small incidents that the police will not take seriously, and may lead to being directed/forced into **psychological evaluation** if the **targeted individual** makes any claims of **organized stalking** or **conspiracy** against them.)
23) Ruined relationships: friendships and acquaintances going sour or talking in the same catch phrases (e.g., targeted to something assumed to have a negative psychological effect on your identity or values, perhaps unknown to these individuals) even though they do not know each other.
24) Public rudeness: rude stares, bumps or unexpected actions or talk from people you do not know or strange chat from strangers, or other behaviours that are known to be offensive or bothersome to the **targeted individual**.
25) Efforts to recruit you into some particular activity or event, perhaps meeting someone who has suspiciously similar interests, or invites you to events out of the blue which are suspiciously aligned with your specific interests – after which point in time their control over the venue will serve to continue with more subtle forms of the above, in addition to more calculated efforts contributing the process of establishing control over the **targeted individual**, to **brainwash** the target, in short.
26) Heavily **targeted individuals** may themselves end up being perpetrators of sorts, in the sense of terrorizing others, by engaging in fear-driven and hysterical descriptions of their experiences (especially when combined with various speculations relating to **electronic harassment** which are difficult to prove).

The key is the frequency, in addition to the events being not notable in any given instance but with a psychological effect that piles on with their high frequency and intensity. Because any single event is not that strange on its own, attempts to report on such **organized stalking** methods are liable to contribute to **gaslighting** the **targeted individual**, or at the least, persuading others to believe that the **targeted individual** is **delusional** and/or crazy when they try to describe the **conspiracy**.

It seems rather obvious that at least some degree of government complicity, whether by rogue factions or otherwise, must be necessary given the apparent futility of trying to seek official intervention in such matters, including what appears to be **psychiatric reprisal** for those who try to report on such events .[41]

Why would anyone get involved in such a thing? In addition to those who are coerced, having been targeted individuals, etc., who feel "there is no choice", or what have you … To everyday citizens, it presents itself as a group trying to monitor terrorists (or any other kind of flavour-of-the-month undesirables like gays/communists/witches) and drive them out. To other people, it's a rotary club/chamber of commerce type operation. To others still, the most twisted conspiratorial minds, it is an organization that pulls the strings behind everything. To the puritan, it is a cleansing force. To the deviant, it is a gang of other deviants where everything is permissible. Whatever it takes to make you do what they want. I believe it is essentially white supremacist neo-Nazis, in consideration of a) its virtual perfect consistency with white supremacist ideology (strong rule the weak, eugenics towards a lovely world) and b) in observation of the (lack of) values they wish to indoctrinate into people with respect to the value of a human being, and c) views relating to various non-white and biologically (subjectively) 'imperfect' peoples which are projected as observations introduced to me in the course of **remote neural monitoring**. It is not clear to me the extent to which these operatives have been brainwashed into their views as adults or grew up in families where such views and/or abuse was deemed 'normal'. Also, it is important to understand that, as a matter of external influences that they may be unaware of, <u>at least some people participating in the stalking are completely oblivious as to their role</u>.

According to Julianne McKinney, "*The long-term objectives of these harassment and experimentation campaigns appear to be quite fundamental;*

> *(1) <u>induce a sense of perverted "loyalty"</u> toward the very agencies engaged in the individual's harassment, to confuse his or her priorities where the possibility of obtaining legal redress might be concerned;*
>
> *(2) <u>redirect the targeted individual's feelings of hopelessness</u>, anger and frustration toward racial and ethnic groups, and toward select, prominent political figures, to include the President of the United States; and*
>
> *(3) <u>force the individual to commit an act of violence</u>, whether suicide or murder, under conditions which can be plausibly denied by the government*."[42]

---

[41] This assumption is drawn analogously to section III of White E (2000), "The State of Unclassified and Commercial Technology Capable of Some Electronic Mind Control Effects", accessed from http://www.constitution.org/abus/mkt/uncom.htm on April 30, 2016.

[42] McKinney J (Dec 1992). "Microwave Harassment and Mind Control Experimentation". J McKinney at the time was the Director of the Electronic Surveillance Project and a member of the Association of National Security Alumni, an organization dedicated to exposing CIA abuses in relation to **non-consensual human experimentation** of electronic weapons. I was able to locate an archived copy of this document from http://www.bibliotecapleyades.net/sociopolitica/esp_sociopol_mindcon28.htm on May 13, 2016.

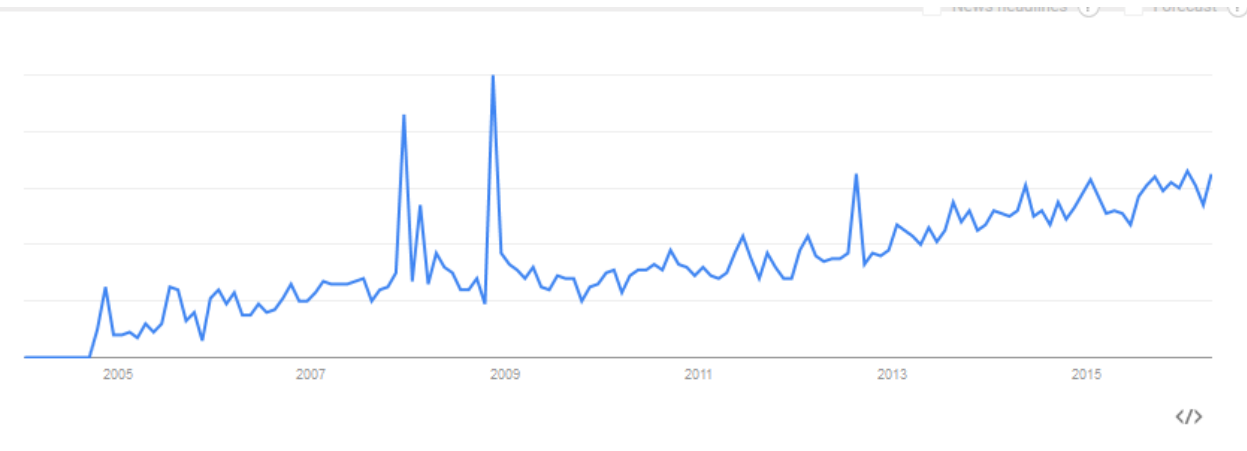

Gaslighting:

Gaslighting is a form of mental abuse in which a victim is manipulated into doubting his or her own memory, perception and sanity.

The word **gaslighting** comes from a 1938 play name **Gas Light** and its film adaptations. It is a form of psychological abuse in which false information is presented to the victim with the intent of making him/her doubt his/her own memory and perception.

The basic principle from the play runs something like this. Say, you have a light with a dimmer switch and the light is 100% on. Then, every few minutes, someone dims the switch by 1%. Each increment is too small to notice, but slowly slowly, things are dimming. Eventually, the lights may reach, say, 60%. You may ask "hey, doesn't it seem like it's getting darker in here?" And the other person may say "WHAT? Are you CRAZY? The lights work just fine! It's as bright as ever. You must be having some mental problems", like, not just kidding, but they're literally trying to convince you that you're crazy. Then, perhaps, the light is slowly dimmed further, say, to 20-30%. Left to you own devices, you would be 100% sure that the lights were in fact significantly dimmed. However, another person is there to persuade you that you are losing your sanity. Say, the lights become dimmed to 20% and you're having troubles reading, and you comment on this. The other person may **suggest** that you're losing your mental faculties and need to see a psychiatrist, or perhaps only **suggest** that you're clearly having problems with your eyes and that you need to see a doctor or optometrist. Of course, when you visit the optometrist, they will confirm that you have precisely zero problems with your eyes. The whole procedure may be repeated many times until the other person manages to convince you that you're crazy, and that you must see a psychiatrist (presumably they would apply other methods in addition to this to promote the idea that you're crazy). Or, just as a part of demeaning you and slowly asserting control over you, they may use such techniques to incrementally diminish your sense of self (see step 1 in **brainwashing**), your confidence in the perceptions of your senses, and eventually, perhaps, the belief that you are in touch with reality at all, and must be entirely dependent on this other person in order to have the 'right' to hold any view whatsoever.

The principle of increments could be applied to anything, but what makes it g**aslighting** is the presence of people who will try to convince you that you're crazy when you mention how things are dimming.

The above is a specific example of a type of **gaslighting**. In current parlance, **gaslighting** refers to any sort of technique which is designed to make you think you are crazy, that you have lost touch with reality, when in fact you have a very good grasp on reality. For example, telling people that they must be crazy to think that the security state is spying on them, or that they are being followed, or are targeted by **organized stalking** (which includes **high-tech stalking by proxy**). Such techniques are also widely documented in domestic abuse, where the abuser seeks to assert total control over the victim. If you are a victim of **gaslighting**, and there is any way you can get out, GET OUT! For practical purposes, given the **neuroweaponry** described in this glossary, you may not be able to protect yourself from the communications which seek to **gaslight** you, to convince you that you are crazy. In which case, search out the anti-Nazi anti-Brainwashing Toolkit (very incomplete draft available), which may have some useful advice for recognizing some diversity of **gaslighting** approaches in addition to strategies to deal with it psychologically.

Gaslighting is especially common in early stages of **brainwashing**.

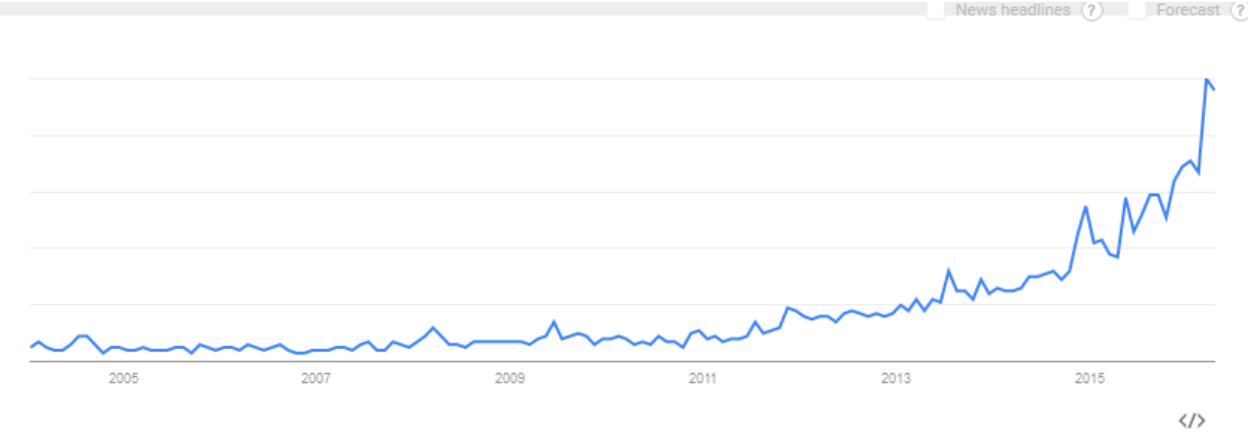

Guilt:

Guilt is a cognitive or an emotional experience that occurs when a person believes or realizes—accurately or not—that he or she has compromised his or her own standards of conduct or has violated a moral standard and bears significant responsibility for that violation. It is closely related to the concept of remorse.

In a context of **psychological warfare** in the electronic age, it is common to try to figure out your values to the extent that the perpetrating entity can elicit a sense of **guilt** by **harassing** you endlessly about the remotest sign of 'hypocrisy'. For example, if you're an environmentalist, maybe to harass you for the most extremely trivial matter such as occasionally taking a taxi instead of walking, or throwing a cigarette butt on the ground. Or, if you're a Christian, that something can in the loosest terms be framed as a 'sin' such as a stealing a paper clip. The list goes on. The may have a few objectives.

1) The perpetrating entity may be trying to convince you that *they* are 'good' and helping you to uphold your own values, whereas in fact they are trying to assert a sense of control where you are open to their **suggestions**;

2) Slowly, over time, the perpetrating entity will try to massage these feelings of **guilt** to gradually shift you towards the personality they want to take you to (refer to **conditioning** and **brainwashing**, and consider how they may elicit the **guilty** trigger for things they want to plant in relation to new values). For example, perhaps an environmentalist could be persuaded to believe that due to love of nature, a genocide to get rid of all the inferior people would be consistent with their values;

3) This can also be a part of an effort to assert control over the **targeted individual** by a) a continuous invasion of privacy that wears down the individual and may make them feel hopeless and b) just simply by endless nagging and **harassment** that wears you down psychologically, to the point that the **targeted individual** may simply wish to submit to control, since the option of leaving is not on the table given the present reality of no technological defensive tools available to **civilians** against **neuroweapons**;

4) Having figured out what may elicit **guilt**, this may be used to try to convince the **targeted individual** that the punishment is 'deserved'. Whatever it takes to make you think you 'deserve' it – no one, and I mean NO ONE, deserves what they are doing to people.

H

HAARP (High Frequency Active Auroral Research Program):

The High Frequency Active Auroral Research Program (**HAARP**) was an ionospheric *research program* jointly funded by the U.S. Air Force, the U.S. Navy, the University of Alaska, and the Defense Advanced Research Projects Agency (DARPA), designed and built by BAE Advanced Technologies (BAEAT).

Its purpose was to analyze the ionosphere and investigate the potential for developing ionospheric enhancement technology for radio communications and surveillance.[2] The **HAARP** program operated a major sub-arctic facility, named the **HAARP** Research Station, on an Air Force-owned site near Gakona, Alaska.

The findings of the research program are numerous, but of particular interest with respect to **neuroweapons** is the discovery of the ability to generate **extremely low frequency electromagnetic waves** by modulated heating of the auroral electrojet.[43]

Reportedly, the specific site of research has been shut down. So the **conspiracy** theorists should self report to a mental hospital.

---

[43] Moore, RC., U S. Inan, F. Bell, and E. J. Kennedy (May 2007) "ELF waves generated by modulated HF heating of the auroral electrojet and observed at a ground distance of 4400 km", *Journal of Geophysical Research: Space Physics*, 112(A5), doi:10.1029/2006JA012063.

Handler:

Agent operations are run by specially trained officers known as agent **handlers**, and can continue for long periods, sometimes for many years.[44]

A **handler** in the intelligence services (and **MKULTRA** survivor group) is the direct supervisor of an intelligence **asset**. Someone who has been programmed (perhaps somewhat different than **brainwashed**) to do the will of a controlling agency, such as a **mind control** target, is an **asset** to the controlling agency. Present day **organized stalking** and **electronic harassment** targets are not usually acquainted with their **handlers**, however, we can be certain at any given time that each frontline perpetrator has at least one. The **handlers** know the appropriate words, tones, or other signals to invoke the **asset's** programming.

Sometimes, agent **handling** is done indirectly, through 'principal agents' that serve as proxies for case officers. It is not uncommon, for example, for a case officer to manage a number of principal agents, who in turn **handle** agent networks, which are preferably organized in a cellular fashion. In such a case, the principal agent can serve as a 'cut-out' for the case officer, buffering him or her from direct contact with the agent network.

Utilizing a principal agent as a cut-out, and ensuring that the human agent network is organized in a cellular fashion, can provide some protection for other agents in the network, as well as for the principal agent, and for the case officer in the event that an agent in the network is compromised.

In the context of **organized stalking** (including **electronic stalking by proxy**), a **handler** is not one of these really high up people in an intelligence agency. The word **handler** is often used to refer to a person, often an ex-**targeted individual** and recruited from the army of front-line perpetrators (presumably after their **brainwashing**/subservience appears to be complete and secured), who remain behind the scenes scripting everything; they are the first to receive community notifications (this view is probably insufficiently considering remote influencing technologies which may also direct/influence the **stalking**).

Harassment (also, refer to **Stalking, Cause stalking, Gang stalking, Electronic harassment, Cyberstalking):**

Harassment covers a wide range of offensive behaviour. It is commonly understood as behaviour intended to disturb or upset. In the legal sense, it is behaviour which is found threatening or disturbing. Sexual **harassment** refers to persistent and unwanted sexual advances, typically in the workplace, where the consequences of refusing are potentially very disadvantageous to the victim. In 1984, the Canadian Human Rights Act prohibited sexual **harassment** in workplaces under federal jurisdiction.

The crime of **stalking** is defined legally as **criminal harassment**. The following section of the Criminal Code of Canada pertains to **criminal harassment**: Section 264. (1) No person shall, without lawful

[44] MI5, UK. "Covert human intelligence services", accessed from https://www.mi5.gov.uk/covert-human-intelligence-sources on April 27, 2016.

authority and knowing that another person is harassed or recklessly as to whether the other person is harassed, engage in conduct referred to in subsection (2) that causes that other person reasonably, in all the circumstances, to fear for their safety or the safety of anyone known to them. Prohibited conduct: (2) The conduct mentioned in subsection (1) consists of (a) repeatedly following from place to place the other person or anyone known to them; (b) repeatedly communicating with, either directly or indirectly, the other person or anyone known to them; (c) besetting or watching the dwelling-house, or place where the other person, or anyone known to them, resides, works, carries on business or happens to be; or (d) engaging in threatening conduct directed at the other person or any member of their family.

Hate crime:

The Criminal Code of Canada says a **hate crime** is committed to intimidate, harm or terrify not only a person, but an entire group of people to which the victim belongs. The victims are targeted for who they are, not because of anything they have done. **Hate crimes** involve **intimidation**, **harassment**, physical force[45] or threat of physical force against a person, a family or a property.

Human rights:

Human rights are moral principles or norms, which describe certain standards of human behaviour, and are regularly protected as legal rights in municipal and international law. They are commonly understood as inalienable fundamental rights to which a person is inherently entitled simply because she or he is a human being, and which are inherent in all human beings regardless of their nation, location, language, religion, ethnic origin or any other status. They are applicable everywhere and at every time in the sense of being universal, and they are egalitarian in the sense of being the same for everyone. They require empathy and the rule of law and impose an obligation on persons to respect the **human rights** of others. They should not be taken away except as a result of due process based on specific circumstances; for example, **human rights** may include **freedom** from unlawful imprisonment (see **Political abuse of psychiatry**), **torture**, and execution.

Hypogenic method:

A historically early term used to discuss the power of **suggestion**, more specifically, a hypnotically planted **suggestion** which is triggered by an electromagnetic transmission (in the historical case, a radio wave transmission).

Hypnosis:

[45] It is not proven whether the courts will recognize an analogue for mental force, specifically, **psychological torture** via remote means. Means of amassing evidence would be a pre-condition to establishing a precedent, of course. Theoretically, someone with nothing better to do for the next few years could set themselves up in this regard to establish such a precedent. This would give the media something concrete to report on. It would also make the sacrificial lamb the target of much hatred, but others would respect them for the strength of character to come forward and admit to what is going on. Access to certain **neuroweapons** would be a precondition.

Hypnosis is a state of human consciousness involving focused attention and reduced peripheral awareness and an enhanced capacity for response to **suggestion**. The term may also refer to an art, skill, or act of inducing hypnosis.

Theories explaining what occurs during **hypnosis** fall into two groups. Altered state theories see **hypnosis** as an altered state of mind or trance, marked by a level of awareness different from the ordinary conscious state. In contrast, Non-state theories see **hypnosis** as a form of imaginative role-enactment.

During **hypnosis**, a person is said to have heightened focus and concentration. The person can concentrate intensely on a specific thought or memory, while blocking out sources of distraction. **Hypnotised** subjects are said to show an increased response to **suggestions**. **Hypnosis** is usually induced by a procedure known as a **hypnotic** induction involving a series of preliminary instructions and **suggestion**.

If you find yourself excessively open to **suggestion** and wonder if you might be in a partially **hypnotized** state, perhaps in relation to some of the technologies and strategies presented in this glossary, assert control over the situation mentally, or divert your mental attention by focusing on some physical task. Do not allow yourself to be **hypnotized** by anyone who you do not have a high level of trust in (and even then, a trustworthy person should be entirely OK with you recording the event). Obviously, you cannot trust the motives of a wannabe hypnotist who you cannot see.

It seems to me that the use of certain types of repeated rhythms, patterns, and metre in speech and sounds may push the individual towards a more **suggestive** state (in addition to hypothesized 'hard-wired' effects on emotion, etc. as a function of tone, rhythm, metre, etc.). In such a case, it may be effective to keep yourself busy doing other things, or if you cannot fully prevent yourself from having a sort of 'self-**hypnotic**' pattern being pushed through your brain with the effect being your own **subvocalization**, it should not be at all difficult to then take charge of this pattern at any instant and take it in another direction.

Finally, some writers have referred to '**hypnotic** triggers' which cause specific involuntary actions or physiological responses. However, the appropriate framing should be **classic conditioning** with triggers used to elicit response, not '**hypnotic** triggers'.

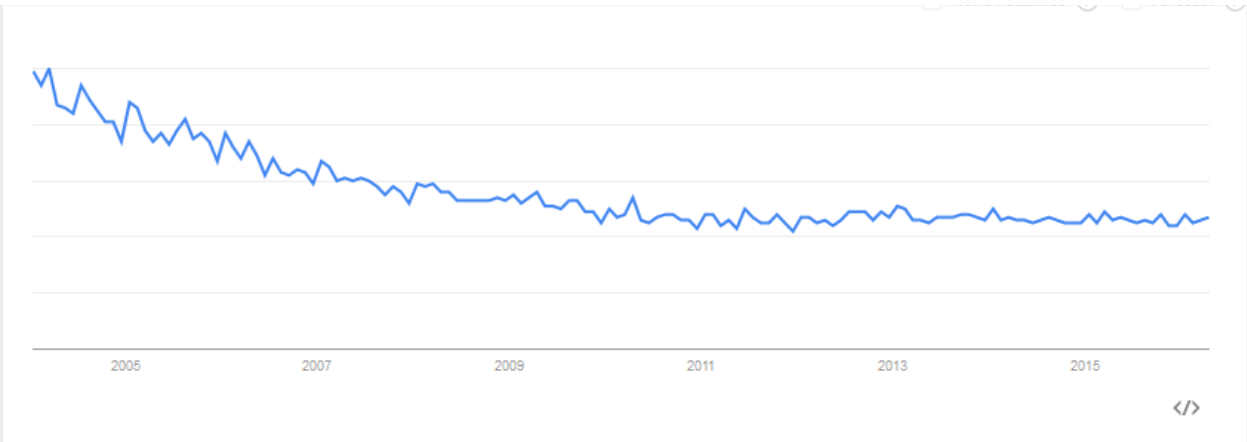

I

Information Awareness Office:

The Information Awareness Office (IAO) was established by the Defense Advanced Research Projects Agency (DARPA) in January 2002 to bring together several DARPA projects focused on applying surveillance and information technology to track and monitor terrorists and other asymmetric threats to U.S. national security by achieving 'Total Information Awareness' (TIA).[46] [47] [48]

This was achieved by creating enormous computer databases to gather and store the personal information of everyone in the United States, including personal e-mails, social networks, credit card records, phone calls, medical records, and numerous other sources, without any requirement for a search warrant.[49] This information was then analyzed to look for suspicious activities, connections between individuals, and 'threats'.[50] Additionally, the program included funding for biometric surveillance technologies that could identify and track individuals using surveillance cameras, and other methods.[51]

Following public criticism that the development and deployment of this technology could potentially lead to a mass surveillance system, the IAO was defunded by Congress in 2003. However, several IAO

[46] Turley J (Nov 17, 2002). "George Bush's Big Brother". The Los Angeles Times.
[47] Poulos J (Jul 10, 2013). "Obama Administration Anti-Leak Scheme Shows Precrime and Total Information Awareness Go Hand In Hand". Forbes.
[48] Horgan J (Jun 7, 2013). "U.S. Never Really Ended Creepy "Total Information Awareness" Program". Scientific American.
[49] Markoff J (Nov 22, 2002). "Pentagon Plans a Computer System That Would Peek at Personal Data of Americans". The New York Times.
[50] Electronic Privacy Information Center (EPIC). Total Information Awareness (TIA).
[51] Electronic Privacy Information Center (EPIC). Total Information Awareness (TIA). https://epic.org/privacy/profiling/tia/.

projects continued to be funded and merely run under different names, as revealed by Edward Snowden during the course of the 2013 mass surveillance disclosures.[52] [53] [54] [55] [56] [57]

Informed consent:

Informed consent often pertains to signing consent forms for medical procedures, such as surgery, or for cancer treatments such as radiation or chemotherapy. For clinical trials and experimentation, however, **informed consent** involves much more than just reading and signing a piece of paper. Rather, it involves two essential parts: a document and a process. The **informed consent** document provides a summary of the clinical trial (including its purpose, the treatment procedures and schedule, potential risks and benefits, alternatives to participation, etc.) and explains your rights as a participant. It is designed to begin the **informed consent** process, which consists of conversations between you and the research team. If you then decide to enter the trial, you give your official consent by signing the document. You can keep a copy and use it as an information resource throughout the course of the trial. The **informed consent** process provides you with ongoing explanations that will help you make educated decisions about whether to begin or continue participating in a trial. Researchers and health professionals know that a written document alone may not ensure that you fully understand what participation means. Therefore, before you make your decision, the research team will discuss with you the trial's purpose, procedures, risks and potential benefits, and your rights as a participant. If you decide to participate, the team will continue to update you on any new information that may affect your situation. Before, during, and even after the trial, you will have the opportunity to ask **questions** and raise concerns. Thus, **informed consent** is an ongoing, interactive process, rather than a one-time information session.

More generally speaking, consent can be classified into the following types:

Implied consent is a form of consent which is not expressly granted by a person, but rather inferred from a person's actions and the facts and circumstances of a particular situation (or in some cases, by a person's silence or inaction). Some examples include implied consent to follow rules and/or regulations at an education institution.

Expressed consent is clearly and unmistakably stated, rather than implied. It may be given in writing, by speech (orally), or non-verbally, e.g. by a clear gesture such as a nod. Non-written express consent

---

[52] Poulos J (Jul 10, 2013).
[53] Horgan J (Jun 7, 2013).
[54] Johnson C (2011). "Dismantling the Empire: America's Last Best Hope" Quotation:*"Congress's action did not end the Total Information Awareness program. The National Security Agency secretly decided to continue it through its private contractors."*
[55] " Electronic Frontier Foundation (2003). "Total/Terrorism Information Awareness (TIA): Is It Truly Dead?": https://w2.eff.org/Privacy/TIA/20031003_comments.php.
[56] Shane H (Feb 23, 2006). "TIA Lives On". *National Journal*. Archived from the original on May 28, 2011 at http://shaneharris.com/magazinestories/tia-lives-on.
[57] "U.S. Still Mining Terror Data". Wired News. February 23, 2004. http://archive.wired.com/politics/law/news/2004/02/62390

not evidenced by witnesses or an audio or video recording may be disputed if a party denies that it was given.

Informed consent in medicine is consent given by a person who has a clear appreciation and understanding of the facts, implications, and future consequences of an action. The term is also used in other contexts.

Unanimous consent, or general consent, by a group of several parties (e.g., an association) is consent given by all parties.

Substituted consent, or the substituted judgment doctrine, allows a decision maker to attempt to establish the decision an incompetent person would have made if he or she were competent.

Innocence:

Not guilty of a crime or offense. **Innocence** cannot be proven (refer to **kangaroo courts**). However, if one gives up on the principle of one's own **innocence**, then eventually the prospect of perpetrating progressively worse violations of ethics and might seem OK (refer to **conditioning** and **brainwashing**).

Inner voice cloning:

Inner voice cloning refers to a process where, via **remote neural monitoring**, perpetrators either on the street via **organized stalking** or those participating via **electronic harassment**, may copy your **subvocalized** inner voice. In terms of **organized stalking**, this may contribute to wearing down the individual to encourage them to submit via a display of the sheer extent of the invasion of privacy that may be sustained until the **targeted individual** submits (as though it would end then … but anyways, some periods of respite may lead the **targeted individual** who is desperate to escape the **psychological torture** to believe that this may be the case). In terms of **electronic harassment**, and more specifically the use of **pulse-modulated electromagnetic (microwave) radiations** to communicate voices (**synthetic telepathy**; **voice to skull; auditory disturbances**) directly into the head of the **targeted individual** via the **microwave auditory effect**, the nefarious potential is particularly dangerous to any individual who is unaware of such possibilities. Namely, having established the word choice, rhythm, tones, etc., of one's **subvocalized** inner voice, the perpetrating entity may try to drive an involuntary **subvocalization** purporting to speak in the first person of the **targeted individual**. As mentioned elsewhere, this may be used to extract false confessions, to reinforce **planting a false memory**, and generally for the purpose of **brainwashing** the **targeted individual** by slowly refining thinking processes, where they may believe themselves to have actually come to some particular conclusion on their own – in such cases, the perpetrating entity is likely to carefully select the phrases according to what is known about psychology and personality of the **targeted individual**, in order to slowly slowly bring them over to the dark side (which, will application of other **conditioning** and **brainwashing** techniques, may very well seem like the light side by the time the process is complete).

If you ever notice anyone speaking in YOUR first person, re-read this entire glossary twice, thrice and twice more again, then refer to the anti-Nazi anti-Brainwashing Toolkit (very incomplete draft available)

for more specific advice on strategies to protect yourself psychologically in the process of retaining your identity and avoiding being transformed into something altogether different from what you ever were.

Innuendo:

Statement A logically implies statement B if and only if the truth of A guarantees the truth of B. **Innuendo** occurs when statement A **suggests** the truth of statement B, without logically implying it.

Innuendo can take diverse forms, but for present purposes largely relates to a statement which indirectly **suggests** that someone has done something immoral, improper, etc. This is liable to be combined with strategies bordering on (or significantly surpassing) libellous **slander** (which may not name you specifically, but it should be clear to the **targeted individual** due to other obvious signs of who is being spoken of), but by virtue of **innuendo**, the perpetrating entity can uphold a degree of plausible deniability, that they were not in fact saying that the **targeted individual** actually did precisely the thing that the **innuendo** is supposed to leave others to conclude in fact happened.

For one of a million types of examples, consider a statement made to a person who routinely stands up to claim that most Muslims are decent people, that we shouldn't jump to conclusions, etc., and who is also critical of ongoing expansions and increasing arbitrary and unaccountable powers of the police state – someone might say "some people think you're a terrorist" or "I guess he supports terrorism" – depending on the tone, phrasing, rhythm, etc. of the words, and the body language of the speaker, the **innuendo** may communicate, not that "some people think you're a terrorist" as in just a few people think that, but perhaps something more like "some people are still dumb enough not to see the obvious fact that you're definitely going in the direction of terrorism, perhaps already plotting something". (It is worth mentioning that at the time of this statement, significant effort had been expended to slowly mould the perception of tree huggers to that of being borderline terrorists, as a result of **suggesting** that rapid exploitation of natural resources as critical to the economy and legislation which **suggested** that any threat to the economy could be considered as terrorism – I had previously run for office with the Green Party, and presumably was one of a great number of people who came under intense **political repression** as a result of former and/or ongoing advocacy for environmental issues).

For a second type of example, consider the following statement: "he sure LOVES children doesn't he" (while making some gesture or other trigger which has been **conditioned** to be associated with a sexual interest or response).

Combined with other forms of **electronic harassment**, **remote neutral monitoring**, and triggering of **conditionings**, etc., via such **innuendo**, it may even be possible to convince the **targeted individual** THEMSELVES that this might be true, and that as a result that the 24/7 absolute privacy invasion is somehow warranted (which, personally, leads me to believe that a terrorist- or revolutionary-like response is 100% warranted, but I absolutely do not believe that this is an effective means of advancing the situation, because such a strategy is rather more likely to attract backlash and merely result in further increases in resource allocations to the police state and acceptance by many citizens of further entrenchment and/or extensions of civil and **cognitive liberty** violations.)

Key here is to consider the great diversity of meanings that **innuendo** can take depending on the phrasing, tone, rhythm, etc. of the **innuendo**-filled statement. Were you to write down the statement, it might seems purely harmless, and in recounting the situation, one might appear **delusional** to claim that it clearly meant the (intended) **innuendo** that it communicated. As already alluded to, **innuendo** can have highly pernicious interactions with techniques involved in **slander**, **blackmailing**, and even full-on **brainwashing**.

As a final note on **innuendo**, refer to **directed conversations** and **parroting**, and consider how circular thinking may be promoted in ways which are progressively manipulated in ways which a) are tiresome and frustrating, and b) which may lead to the **targeted individual's** values, etc., being progressively manipulated over time(refer to **brainwashing**).

Intimidation:

Intimidation is intentional behaviour that "would cause a person of ordinary sensibilities" fear of injury or harm. It is not necessary to prove that the behaviour was so violent as to cause terror or that the victim was actually frightened.[58]

Threat, Criminal threatening (or threatening behaviour) is the crime of intentionally or knowingly putting another person in fear of bodily injury. "Threat of harm generally involves a perception of injury...physical or *mental* damage...act or instance of injury, or a material and detriment or loss to a person."[59] "A terroristic threat is a crime generally involving a threat to commit violence communicated with the intent to terrorize other."[60]

J

Joint:

A marijuana cigarette which, when smoked, alleviates symptoms of a diversity of illnesses and in healthy subjects generally improves mood and happiness. For medical purposes, the plant generally has significantly fewer negative side effects than almost all other (EXPENSIVE!) pharmaceutical options, and moreover is not addictive whereas many of the (EXPENSIVE!) pharmaceutical options are addictive. The theoretical lethal dose is physically impossible to actually consume, although there are legitimate (unproven) concerns that regular use, in particular among youth, may have some associations with suboptimal brain development.

The powers that be go to extreme lengths to discredit anyone who speaks of any positive associations with this plant, which would cost basically nothing to grow if it were not for draconian laws which may

---

[58] Lectric Law Library, "Legal definition of intimidation", accessed from http://www.lectlaw.com/def/i064.htm on May 9, 2016.
[59] USLegal.com , "Threat of Harm Law & Legal Definition", accessed from http://definitions.uslegal.com/t/threat-of-harm on May 9, 2016.
[60] USLegal.com, "Terrorist Threat Law & Legal Definition", accessed from http://definitions.uslegal.com/t/terroristic-threat on May 9, 2016.

lead to a permanent criminal record and/or prison for those who consume, grow, and/or distribute any related products.

K

Kangaroo court:

"A mock court in which the principles of law and justice are disregarded or perverted"[61], especially without good (or any) evidence for the purported **guilt** of a crime or misdemeanour.

L

Laser microphone:

A **laser microphone** is a surveillance device that uses a laser beam to detect sound vibrations in a distant object. This technology can be used to eavesdrop with minimal chance of exposure.

The object is typically inside a room where a conversation is taking place, and can be anything that can vibrate (for example, a picture on a wall) in response to the pressure waves created by noises present in the room. The object preferably has a smooth surface. The laser beam is directed into the room through a window, reflects off the object and returns to a receiver (for example a solar panel) that converts the beam to an audio signal. The beam may also be bounced off the window itself. The minute differences in the distance traveled by the light as it reflects from the vibrating object are detected interferometrically. The interferometer converts the variations to intensity variations, and electronics are used to convert these variations to signals that can be converted back to sound.

However, countermeasures exist in the form of specialized light sensors that can detect the light from the beam. Rippled glass can be used as a defense, as it provides a poor surface for a **laser microphone**.

However, by simple extrapolation it should be easily possible to adapt this technique to a **maser** or focused microwave beam in order to fire the beam through ordinary building materials and bounce it off of internal metal objects such as heating ducts or filing cabinets. At this point the only acceptable defense is electromagnetically and acoustically isolating the interior of the structure.

It seems rather obvious that an analogue of the **laser microphone** has been devised to engage in **remote neural monitoring**, presumably something along the lines of sending a microwave beam and reading the resulting patterns to reconstruct certain basic features or neural activity, presumably calibrated to previously established brainwave patterns of the individual. However, it is possible that the **remote neural monitoring** is making use of other technologies that have yet to be uncovered on either a theoretical or officially documented basis.

---

[61] Merriam Webster Dictionary. Accessed from http://www.merriam-webster.com/dictionary/kangaroo%20court on May 2, 2016.

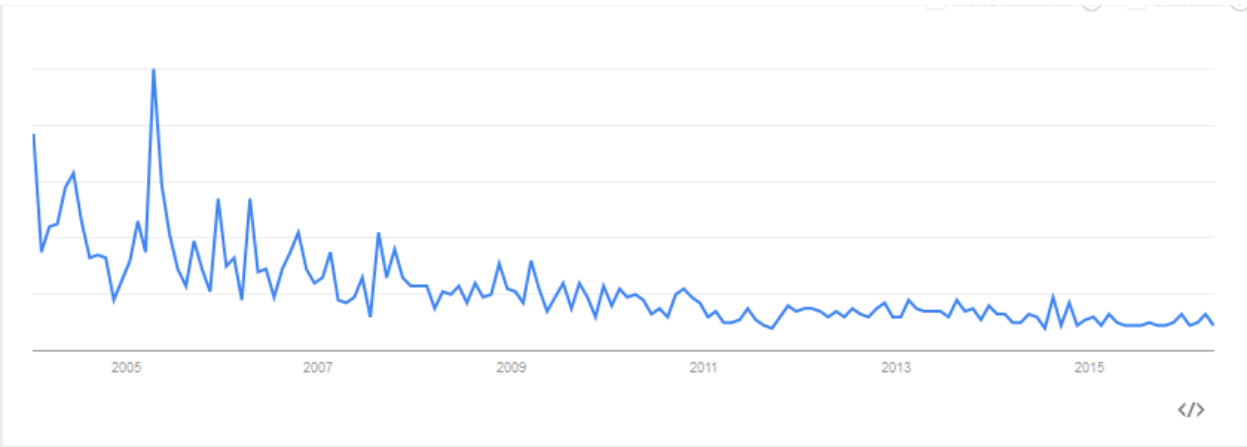

Learned helplessness:

Learned helplessness is behaviour typical of an organism (human or animal) that has endured repeated painful or otherwise aversive stimuli which it was unable to escape or avoid. After such experience, the organism often fails to learn escape or avoidance in new situations where such behaviour would be effective. In other words, the organism seems to have learned that it is helpless in aversive situations, that it has lost control, and so it gives up trying. Such an organism is said to have acquired **learned helplessness**.[62]

Research has found that human reactions to a lack of control differ both between individuals and between situations. For example, **learned helplessness** sometimes remains specific to one situation but at other times generalizes across situations.[63] [64] [65] Such variations are not explained by the original theory of **learned helplessness**, and an influential view is that such variations depend on an individual's attributional or explanatory style.[66] According to this view, how someone interprets or explains adverse events affects their likelihood of acquiring learned helplessness and subsequent depression.[67] For example, people with pessimistic explanatory style tend to see negative events as permanent ("it will never change"), personal ("it's my fault"), and pervasive ("I can't do anything correctly"), are likely to suffer from learned helplessness and depression.[68] (So it should not be surprising that perpetrating

---

[62] Carlson, NR (2010). *"*Psychology the science of behaviour". Pearson Canada. p. 409.
[63] Hiroto, DS, MEP Seligman (1975). "Generality of learned helplessness in man". *Journal of Personality and Social Psychology*, 31: 311–27.
[64] Peterson, C, C Park (1998). "Learned helplessness and explanatory style". In Barone, DF, M. Hersen, VB VanHasselt "Advanced Personality". New York: Plenum Press. pp. 287–308.
[65] Cole, CS, JC Coyne (1977). "Situational specificity of laboratory-induced learned helplessness in humans". *Journal of Abnormal Psychology*, 86, No. 6, 615–623.
[66] Peterson, C, MEP Seligman (1984). "Causal explanations as a risk factor for depression: Theory and evidence". *Psychological Review*, 91: 347–74.
[67] Abramson, LY., MEP Seligman and JD Teasdale (1978). "Learned helplessness in humans: Critique and reformulation". *Journal of Abnormal Psychology*, 87(1), 49–74.
[68] Peterson, C, SF Maier, MEP Seligman (1995). "Learned Helplessness: A Theory for the Age of Personal Control". New York: Oxford University Press.

entities will try to 'teach' such outlooks.) Such people can often be helped to learn a more realistic explanatory style by cognitive behavioural therapy, a therapy heavily endorsed by Seligman.

In CIA interrogation manuals **learned helplessness** is characterized as 'apathy' which may result from prolonged use of coercive techniques which result in a "debility-dependency-dread" state in the subject, "If the debility-dependency-dread state is unduly prolonged, however, the arrestee may sink into a defensive apathy from which it is hard to arouse him."[69]

M

MALINTENT:

MALINTENT is technological system that was developed by the U.S. Department of Homeland Security to be implemented for detection of potential 'terrorist suspects'.[70]

The system does various test scanning, for example including elevated blood pressure, rapid heart and breath rate, and non-verbal cues (so don't you dare even TWITCH in a 'suspicious' way!). According to the scientists, the MALINTENT system uses a barrage of non-invasive sensors and imagers to detect and evaluate a person's facial expressions which are purported to gauge be planning to commit an attack or crime.

In its state of development in 2008, almost 10 years ago, it could already recognize seven primary emotions and emotional clues and will eventually have equipment which can analyze full body movement, an eye scanner and a pheromone-reader.[71]

If the sensors pick up anything considered alarming, analysts can decide whether to subject a person to **questioning**.[72]

So all they have to do is use ELF waves to affect your physiological variables and then subject you are 'suspicious' and in need of interrogation for no fucking reason? And this wasn't front page news until the program was killed? What. The. Fuck?

Masers:

A **maser**, an acronym for "microwave amplification by stimulated emission of radiation", is a device that produces coherent **electromagnetic waves** through amplification by stimulated emission. The first maser was built by Charles H. Townes, James P. Gordon, and H. J. Zeiger at Columbia University in 1953.

---

[69] Carey B (December 10, 2014). "Architects of C.I.A. Interrogation Drew on Psychology to Induce 'Helplessness'". The New York Times.
[70] Allison B (Sept 23, 2008). "Homeland security detects terrorist threats by reading your mind". Fox News.
[71] Liz H (Sept 24, 2008). "The airport security scanner that can read your mind". UK Daily Mail.
[72] "New airport screening 'could read minds'". IndianaExpress.com. September 24, 2008.

Contemporary **masers** can be designed to generate **electromagnetic waves** at not only microwave frequencies but also radio and infrared frequencies. For this reason Charles Townes advised replacing "microwave" with the word "molecular" as the first word in the acronym maser. The laser works by the same principle as the maser, and the maser was the forerunner of the laser, inspiring theoretical work by Townes and Arthur Leonard Schawlow that led to its invention in 1960.

In 2012, a research team from the National Physical Laboratory and Imperial College London developed a solid-state maser that operates at room temperature by using pentacene-doped p-Terphenyl as the amplifier medium.[73]

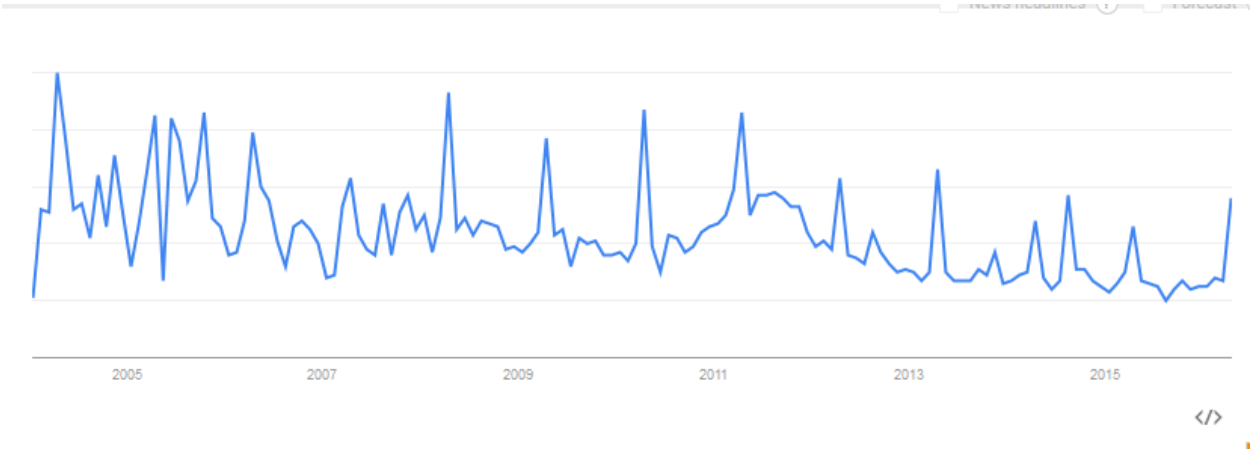

Mass murder (refer to **suggestion** and **synthetic telepathy**):

Mass murder (sometimes interchangeable with 'mass destruction') is the act of murdering a number of people, typically simultaneously or over a relatively short period of time. The FBI defines **mass murder** as murdering four or more persons during an event with no 'cooling-off period' between the murders. A **mass murder** typically occurs in a single location where one or more people kill several others. Many acts of **mass murder** end with the perpetrator(s) dying by suicide or suicide by cop.

There are appear to be increasing levels of suspicion, in some circles, that rogue agents in the security state, whether via use of the variety of electronic weapons discussed in this glossary or via other means, are pushing targets towards situations where they may commit a **mass murder**. Among other things, this would serve to justify a) the historically unprecedented levels of surveillance, and b) increased budgetary appropriations to 'keep the public safe'. In the context of **neurowarfare**, it should not appear **delusional** to wonder whether it may also serve experimental purposes to devise methods which may persuade people to go commit a murder (see **mass murder**), perhaps even against a **suggested** target.

MEDUSA:

MEDUSA (Mob Excess Deterrent Using Silent Audio) is a directed-energy non-lethal weapon designed by WaveBand Corporation in 2003-2004 for temporary personnel incapacitation. The weapon is based on

[73] Oxborrow, M, JD Breeze & NM Alford (2012), "Room-temperature solid-state maser", *Nature*, 488, 353–356.

the **microwave auditory effect** resulting in a strong sound sensation in the human head when it is subject to certain kinds of **pulse-modulated electromagnetic radiation**. The developers claimed that through the combination of pulse parameters and pulse power, it is possible to raise the auditory sensation to a 'discomfort' level, deterring personnel from entering a protected perimeter or, if necessary, temporarily incapacitating particular individuals.[74]

Megalomania (also, narcissistic personality disorder):

Megalomania is a psychopathological condition characterized by fantasies of power, relevance, omnipotence, and by inflated self-esteem. Historically it was used as a name for **narcissistic personality disorder** prior to the latter's first use by Heinz Kohut in 1968, and is used today as a non-clinical equivalent. It is not mentioned in the Diagnostic and Statistical Manual of Mental Disorders (DSM) or the International Statistical Classification of Diseases (ICD).

> **Narcissistic personality disorder** (NPD) is a personality disorder, characterized by grandiosity, excessive need for admiration, and little empathy for others.[75] People with the disorder often come across as arrogant, callous, and envious, tend to be exploitative in their interpersonal relationships, and can be excessively preoccupied with personal adequacy, power, prestige and vanity. As a personality disorder, those with NPD generally have poor insight into their condition and may not acknowledge that their behaviour causes problems for others or themselves.
>
> It is classified as a cluster B personality disorder by the Diagnostic and Statistical Manual of Mental Disorders.

Magnetophosphenes:

Magnetophosphenes are flashes of light (phosphenes) that are seen when one is subjected to a changing magnetic field – among others, this is experienced by *some* people when in an MRI. This changing field[76] causes current within the retina or visual cortex resulting in the illusion of light. The effect was first reported by d'Arsonval (1896).[77]

---

[74] Personally, I have never experienced this effect, and it is not clear to me how the volume of a **pulse-modulated electromagnetic** communication into the head from a distance would be delivered in a manner that would be perceived as so loud as to be unbearable. What is clear, however, is that the microwave auditory effect was sufficiently well understood over 10 years ago that a private company invested significant resources into pushes theoretical boundaries into another direction. Suffice to say, the microwave auditory effect exists (as though that were a matter of debate), and can be calibrated using pulse-modulated transmissions (as though that were a matter of debate).

[75] Presumably it is well within the realm of possibility to **brainwash** someone into exhibiting such a disorder.

[76] An explainer on the basic physics relating to this was extracted from http://www.revisemri.com/questions/safety/magnetophosphenes on April 30, 2016.
"*Faraday's law of induction states that* changing *magnetic fields induce electrical currents in any conducting medium. Induced currents are proportional to the conductivity of the conducting medium and the rate of change of the magnetic field. Thus, time-varying magnetic fields (e.g. the gradients in MRI) will induce circulating eddy currents in conductors in the body and particularly in electrically excitable nerve and muscle cells. Sufficiently large gradient fields, therefore, may affect normal cell function. A well-established example of this is the sensation of*

A 1979 study roughly determined the threshold for the appearance of magnetophosphenes as a function of magnetic-field frequency in normal and colour-defective volunteers in addition to the site in the visual system where the magnetophosphenes arise.[78] A similar study in 1980 reports on the specific thresholds and other variables of interest.[79]

Then, formal study of this topic appears to have largely dropped off the radar, although an online search shows that at least some publicly available research has referenced these studies.

This should be of some interest with regards to many reports of unwanted images, etc. being introduced into the minds of **targeted individuals**. However, due to the likely difficulty of creating a targeted magnetic field compared to more common uses of **electromagnetic radiation** in triggering/influencing neural and/or physiological processes, I believe that many (not all) such experiences instead most often involve introducing an idea by **suggestion**, with some triggering of an image or visual 'memory' with most of the activity happening within the brain of the **targeted individual**, and rather limited informational input from the perpetrating entity. Also, this may involve progressively changing an image or visual 'memory' by power of **suggestion** and by introduction of progressively different images, images which need not be particularly detailed, but which need only contain sufficient detail in order to **suggestively** and progressively change the 'memory'.

Man-in-the-middle attack:

In cryptography and computer security, a **man-in-the-middle attack** is an attack where the attacker secretly relays and possibly alters the communication between two parties who believe they are directly communicating with each other. One example of **man-in-the-middle attacks** is active eavesdropping, in which the attacker makes independent connections with the victims and relays messages between them to make them believe they are talking directly to each other over a private connection, when in fact the

---

*flashes of light—**magnetophosphenes**—caused by induced electric currents stimulating the retina. A more serious consequence of electric currents flowing through the body is ventricular fibrillation (though these levels are strictly prevented in MRI). In MR, this induction effect is determined by factors such as pulse duration, wave shape, repetition pattern, and the distribution of current in the body. As a general guide, the faster the imaging or spectroscopy sequence, the greater the rate of change of the gradient fields used, and the resultant current density induced in the tissue is higher*."

[77] It is not clear how to track down a copy of this original research, but it is frequently cited in related literature.

[78] Lövsund P, PÅ Öberg, SEG Nilsson (Nov 1979). "Quantitative determination of thresholds of magnetophosphenes", *Radio Science*, 14(65), 199–200.

[79] Lövsund P, Å Öberg, SEG Nilsson and T. Reuter (1980). "**Magnetophosphenes**: a quantitative analysis of thresholds", *Medical and Biological Engineering and Computing*, 18(3), 326-334. An extract from the abstract demonstrates that key variables of interest were known by 1980, but the precise mechanisms were still unknown: "*Low-frequency and transient magnetic fields of moderate flux densities are known to generate visual phenomena, so-called **magnetophosphenes**. In the present study, time-variable very low frequency (10–50 Hz) electromagnetic fields of moderate flux density (0–40 mT) were used to induce **magnetophosphenes**. The threshold values for these phosphenes were determined as a function of the frequency of the magnetic field both in normal subjects and colour defective ones. Maximum sensitivity occurred at a frequency of approximately 20–30 Hz, and with broad-spectrum light the threshold flux density was 10–12 mT. The threshold values were found to be dependent upon the intensity and the spectral distribution of the background light*."

entire conversation is controlled by the attacker. The attacker must be able to intercept all relevant messages passing between the two victims and inject new ones.

For the context of **psychological warfare** in the electronic age, this concept only needs minor refinement. For a rather 'mundane' example of how this may apply to a **targeted individual**, for consider how one of the first priorities is to socially isolate/castrate the **targeted individual**. Consider three (of many) types of applications that may be made via use of **neuroweapons**:

1) Having 'cloned' the voice of a contact, friend, family member, etc., the perpetrators may inject words and sentences into conversations (and it sounds exactly like them due to voice cloning), and you are none the wiser. For example, being 'spoken to' by someone you are interacting with, but their lips are not moving (in some cases this may also involve ventriloquism, but it should not be difficult to detect the difference if you are aware of this). What is really happening is **synthetic telepathy** being sent when one's gaze shifts from their face for a split second. Among other things, the purpose of this is to one, sensitize you to **stimuli** in your environment, and two, to deceive you. It is a power game. The deception may involve things like money or sex, and they want you to act on the misleading information in order to compromise your social status.
2) Not altogether different from the above scenario, this may be applied to sow discord between people, along the principle of "divide and conquer them one friendship and family member at a time". Say, the perpetrating entity is trying to drive you and a friend apart. There's some knowledge of pet peeves about each other. Your **stalkers** (remote or otherwise) play this in some way to add to the irritation, and you bring it up with the friend, which perhaps leads to some conflict. Say, via **remote neural monitoring** or more traditional techniques, they observe how both of you are planning to address the situation. BUT, before you have a chance to speak about it next time you meet up, you both face some **directed conversations**, perhaps unknown to you, or perhaps via manipulations via **synthetic telepathy** (with the support of a computer to process information and to help a human craft and some messages) to inflame the situation. The plan could orchestrated so that BOTH of you are walking into the next meeting with a plan to talk about it, each one of you having a plan that is maximally likely to make you hate each other, say things about each other that will drive you apart. Or, perhaps, both of you will give **priming** signals which lead BOTH of you to believe that the OTHER is respectively the perp. Result? You are both involved in **organized stalking** (**electronic stalking by proxy**, in other parlance) each other AND YOU DON'T EVEN KNOW IT! Such strategies could be applied to any type of relationship, whether personal, business, political, or other.
3) For someone who is involved in any sort of **peaceful** advocacy (including by elected politicians, other recognized leaders in **civil society**, etc.), this may involve the use of **remote neural monitoring**, in addition to monitoring of completed actual writing or publications, organizational strategies, etc., to pre-empt anything that the **peaceful** advocate may be putting into motion. If there is a plausible prospect for success, the perpetrating entity may strive to maintain the upper hand, by always knowing what's coming, and releasing various media, rumours, etc., which are specifically calibrated to undermine the strategy that the **peaceful** activist is about to follow through on. This could take a greater diversity of forms depending on the specific plans of

the **peaceful** activist. And, in the future, similar applications of such strategies are liable to make use of **remote neural monitoring** for seeking out **thought crimes**, such as an interest to engage in **peaceful** advocacy or speaking truth to power, and, if it is not possible to coerce or **brainwash** the **peaceful** advocate out of their desired path of action and communication, the **man-in-the-middle attack** may be used to interfere with any effort to network and get projects off the ground (may also be applied to any sort of work/business opportunity of the **targeted individual**). This is liable to be accompanied by many means of **organized stalking**, especially by targeting of the prospective contacts to make the networking relationship feel costly and undesirable, in addition to spreading vicious rumours which, given knowledge of what the potential contacts know about the **peaceful** advocate, these rumours would be associated with that **peaceful** advocate, in an effort to destroy any such advocacy before networking and communications could help it to get off the ground – in short, severe **political repression**.

One example I experienced was, in starting a project to end unpaid internships (with reasonable exceptions for non-profit activities or opportunities revolving around training which allowed a business to 'try out' a potential hire in non-profit centres) called the GivingYourselfAway Internship Project, there was a release of a political cartoon in the Globe and Mail which portrayed a mob of minimum wage workers asking an executive "do you want fries with that?" while placed under a guillotine – clearly, this was to be perceived as a threat to public safety due to the supposed potential for youth to rise up violently – however, around that time the Ontario government also enacted additional protections for interns which reduced the ease with which for-profit businesses can make use of interns for $0/hr labour. I still intend to implement the legal code violation monitoring mechanism proposed as the organizational principle of that project, but other issues seem rather more pressing at present.

Naturally, this may apply to much higher levels of organization, such as those who are organizing to expose the realities of **neuroweapons**, applications for **political repression**, etc., or even at the level of international security (most likely supplemented by a dedicated **agent provocateur**, whose devious strategies may take advantage of the **man-in-the-middle attack** strategy).

For strictly computer-related applications, many online forums discuss issues surrounding authentication, etc., but few of these are likely to be impervious to **remote neural monitoring** of targets.

Martha Mitchell Effect:

The **Martha Mitchell Effect** is named after a historical situation where Martha Mitchell, wife of the Attorney-General during the Nixon Administration, told her psychologist that top White House officials were engaged in illegal activities. Her psychologist labeled these claims as caused by mental illness. The Mitchell Effect can be defined as a situation where "*improbable reports are erroneously assumed to be symptoms of mental illness [due to a] failure or inability to verify whether the events have actually taken place, no matter how improbable intuitively they might appear to the busy clinician*."[80]

[80] Bell V, PW Halligan and H.D. (2003). "Beliefs About Delusions". *The Psychologist*, 6(8), 418-422.

If you are a **targeted individual**, and have somehow been drawn into making claims about the present reality, and the psychiatrist tries to write you off as 'mentally ill', one should consider refusing to speak with them any further until they have gone and researched the **Martha Mitchell Effect**.

Microwave auditory effect (a.k.a. the Frey effect; refer to **synthetic telepathy** for applications):

The very surprising fact that microwave **electromagnetic waves** can be perceived as sound in the brain. Since we can see light, but not hear it, this is very surprising. The effect was first reported by persons working in the vicinity of radar transponders during World War II.

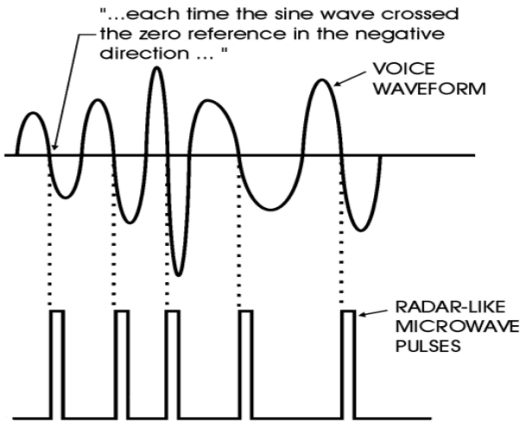

VOICE CONVERSION TO PULSES, AS USED IN THE SUCCESSFUL DEMONSTRATION OF MICROAVE VOICE-TO-SKULL TECHNOLOGY IN 1973 BY DR. JOSEPH SHARP. THIS IS NOT CLASSIFIED.

During the Cold War era, the American neuroscientist Allan H. Frey studied this phenomenon and was the first to publish information on the nature of the microwave auditory effect.[81] Research into radar hearing by Dr. Allen Frey began in the 1960s and established that roughly three-tenths of a watt per square centimeter of skull surface is required to generate the clicks from which the voice is synthesized. Synthesis of voice from clicks is a primitive form of "digital audio." The image included in this entry shows the basic idea of how voice can be transmitted via microwave pulses.[82]

For some years in the 1990s and early 2000s, the United States Army recognized "**voice to skull**" technology, which they abbreviated as "V2K," in their on line thesaurus. For reasons unknown, the Army removed that thesaurus entry circa 2007. Some references to developing more advanced types of voice to skull can be found among patents, and rare United States Air Force references to the technology in the late 1990s forward.[83]

The mechanics of this effect have been explained more precisely in the **civilian** sector as early as 2007.[84]

---

[81] Frey AH. (1962). "Human auditory system response to modulated electromagnetic energy". *Journal of Applied Physiology*, 17(4), 689-692. As noted by White E (2000) in relation to later research by Frey **in 1974** which successfully used this technology to directly transmit a human voice into the mind of another: "*A pattern seems to be repeated where research which could be used for **mind control** starts working, the UNclassified researchers lose funding, and in some cases their notes have been confiscated, and no further information on that research track is heard in the unclassified press*."

[82] White E (Feb 2010). "Coping with the crime of organized stalking and electronic harassment", accessed from http://www.torturedinamerica.org/coping_with_the_crime.pdf on May 13, 2016.

[83] Justesen DR (Mar 1975). "Microwaves and behavior", *American Psychologist*, 30(3): 391-401. Image extracted from White E (Feb 2010).

[84] Lin JC and Z. Wang. "Hearing of microwave pulses by humans and animals: effects, mechanism, and thresholds." *Health Physics*, June 2007, 92(6):621-8.

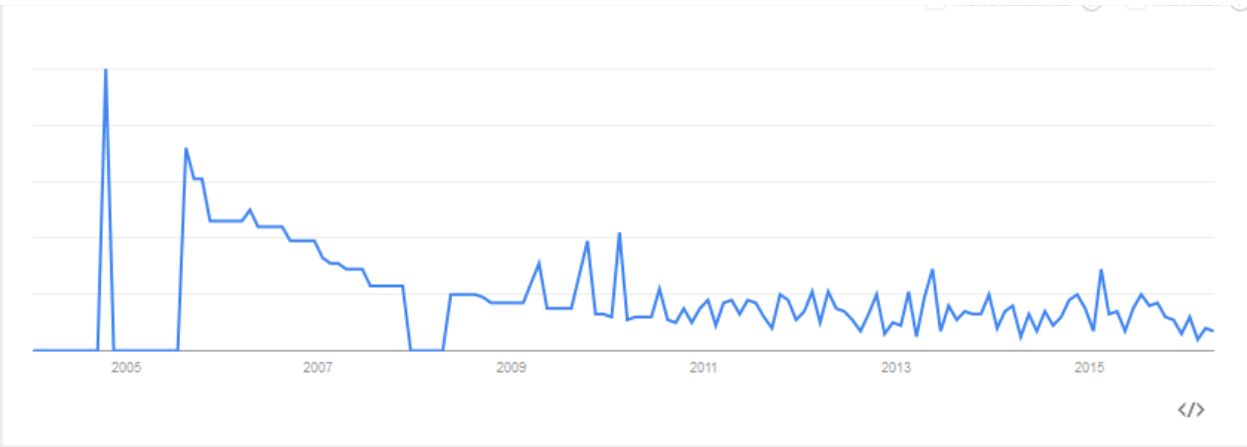

Microwave mind control (refer to **brainwashing** and **electronic weapons**):

The use of microwave **(electronic) weapons**, namely those which speak into your mind, engage in **remote neural monitoring**, and which may modulate moods and other behaviours and/or physiological responses (in conjunction with **conditioning**) to attempt to sequentially assert control over an individual, to the point that they are essentially **brainwashed**, or willing to submit to any or all directives they are given (which may involves **brainwashing** or use of **conditioning** for them to believe that they are 'powerful' or somehow doing the right thing when engaged in such **psychological torture**).

Microwave Doppler movement measuring device:

The Life Assessment Detector System (LADS) by VSE Corp., **a microwave Doppler movement measuring device**, can detect human body surface motion, including heartbeat and respiration, at ranges up to 135 feet (41.15 meters). The LADS consists of a sensor module, a neural network module, and a control/monitor module. The sensor module is an x-band (10 GHz) microwave transceiver with a nominal output power of 15 milliwatts, operating in the continuous wave (CW) mode. The neural network module device can store many complex patterns such as visual waveforms and speech templates, and can easily compare input patterns to previously 'trained' or stored patterns. The control/monitor module provides the LADS' instrument controls, such as on-off switches, circuit breakers, and battery condition, as well as motion, heartbeat waveform, pulse strength, and pulse rate displays.[85]

Among other likely applications, such a device could be paired with essentially any type of **conditioning** or **priming** (for example, words, gestures and images, whether **subliminal** or supraliminal, or alternatively **electromagnetic waves** which would be essentially unobservable by the victim). Then, such triggers could be used for the purpose of eliciting fear, paranoia, etc., due to irregular heartbeats or a degree of apparently unexplained constriction of the lungs or breathing apparatus.

---

[85] E White (2000), appendix TWR1. It should be highlighted that such advances already existed almost 20 years ago, and that obviously significant further advances in remote monitoring via electromagnetic, most concerningly for the purpose of **remote neural monitoring**, means have been achieved in the meantime.

For a rather nefarious type of application of being able to trigger a skipped heart beat or heart palpitation or increase in heart rate, the perpetrating entity, having **planted a false memory**, might then try to elicit this 'memory' at basically the same time as triggering the heart event, and then via **synthetic telepathy** to elicit a subvocalization where the target says "I really really did X", claim "that's what **guilt** feels like", perhaps followed by an ELF wave geared to triggering a tingly sensation which is supposed to be some sort of elation or release, accompanied by "that's what forgiveness feels like".

Such strategies might be applied for a variety of reasons, not excluded to:

a) persuading the target that they are **guilty** of something and hence 'deserved' it;

b) persuading the target to publicly admit to something (which perhaps they never did) and therefore self-destruct for purposes of credibility, or social-political and/or career advancement;

c) establish a control over the individual, who may still be somewhat aware that it's a carefully orchestrated set-up from the inside out (or alternatively that they actually did it but that it is not at all possible that any 'good' entity could possibly see **torture** and **brainwashing** as a means of redress or 'justice'), but having gone through such an experience, may be persuaded to submit to the domination of the nefarious entities responsible for the **brainwashing**;

d) so that later, having massaged the meanings of various words and triggers away from their applied usage during the **psychological torture** and **brainwashing**, the newly ordained slave puppet may be persuaded to believe that it was all for their own good, perhaps even that the perpetrators of **psychological torture** and **brainwashing** against **civilians** through combinations of **neuroweapons** and 'traditional' **conditioning** and **brainwashing** techniques are agents of God, 'angels', or some such thing (and hence the term **Voice of God** for **synthetic telepathy**) – this will be specifically tailored according to whatever can be figured out about the specific beliefs, desires, insecurities, etc., of the **targeted individual**.

Other applications are by no means benign. The ability to trigger a physiological stress event can be a powerful tool for **brainwashing**, in the sense that whenever doing, saying, thinking, etc., the 'wrong' thing, the 'stick' can be applied – if the **targeted individual** is unaware of such possibilities, he/she may sequentially develop high discomfort associations with the activities/views/etc. that the perpetrating entity is trying to eliminate from the personality and consciousness of the **targeted individual**. Contrarily, a release from such stress may itself serve as a sort of 'the absence of the stick is itself the carrot' scenario, where when straying into thoughts/behaviours/etc. (perhaps introduced **suggestively**, or by driving a **subvocalization** of a 'desired' phrase or way of thinking or treating people) that the perpetrating entity wishes to **condition** and **brainwash** INTO the **targeted individual**, a positive 'absence of the stick is a carrot' association may be progressively 'train' the **targeted individual** into these new values, ways of thinking or behaviours.

Theoretically, such triggers may plausibly be paired with software which is programmed to 'train' itself to recognize certain brainwave patterns, for the purpose of mimicking these patterns to additionally influence heart and breathing related phenomena, or at the very least, to elicit the 'desired' stress/fear/comfort/etc. response.

Millimeter waves (and weapons):

The millimeter-wave region of the electromagnetic spectrum is usually considered to be the range of wavelengths from 10 millimeters (0.4 inches) to 1 millimeter (0.04 inches).

Millimeter waves travel solely by line-of-sight, and are blocked by building walls and attenuated by foliage. The high free space loss and atmospheric absorption limits propagation to a few kilometers. Thus they are useful for densely packed communications networks such as personal area networks that improve spectrum utilization through frequency reuse.

One current application is the Active Denial System (ADS), **directed energy weapon** developed by the U.S. military, designed for area denial, perimeter security and crowd control. The ADS works by firing a high-powered beam of 95 GHz waves at a target, which corresponds to a wavelength of 3.2 mm.[86] The ADS millimeter wave energy works on a similar principle as a microwave oven, exciting the water and fat molecules in the skin, and instantly heating them via dielectric heating. One significant difference is that a microwave oven uses the much lower frequency (and longer wavelength) of 2.45 GHz. The short millimeter waves used in ADS only penetrate the top layers of skin, with most of the energy being absorbed within 0.4 mm (1/64"), whereas microwaves will penetrate into human tissue about 17 mm (0.67").

The ADS's repel effect in humans occurs at slightly higher than 44 °C (111 °F), though first-degree burns occur at about 51 °C (124 °F), and second-degree burns occur at about 58 °C (136 °F). Most human test subjects reached their pain threshold within 3 seconds, and none could endure more than 5 seconds.

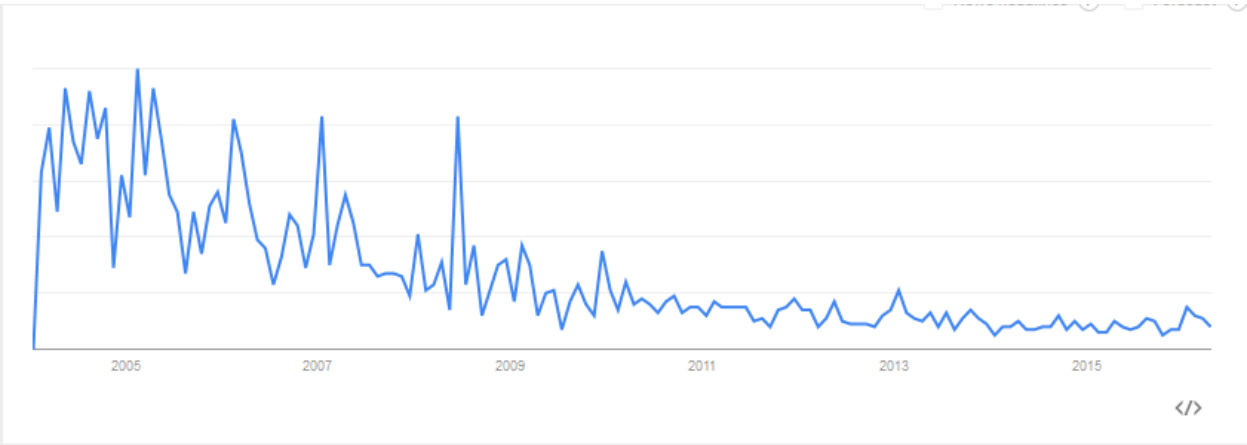

Mimicking harassment (parroting):

Mimicking harassment (parroting) is one of the most relied upon methods and tactics being used in **organized stalking** and **electronic harassment**. It basically amounts to continuously copying the movements, words, tones, rhythms, etc. of the **targeted individual**, and may involve a substantial degree of **directed conversation** in addition to the **parroting** itself.

[86] Hambling, D (Dec 2006). "Techwatch-Forecasting Pain", *Popular Mechanics*, 183(12), 32

For a less easily believed types of **mimicking harassment (parroting)**, and this is especially likely to apply to **targeted individuals** who are particularly outspoken on certain issues, and especially if they are able to be outspoken in a particularly effective manner which demolishes easily anticipated counterarguments, **parroting** may be done by the media or individuals on TV (which either implies that much media is 'in on it', or perhaps in some cases that **mind influencing technologies and strategies** are being used to **suggest** certain content relating to the **targeted individual**). This could involve more easily believable situations such as mining the life, writings, etc. or the **targeted individual** to create content in some media outlet that you are known to regularly consume. Perhaps less easily believed, are instances where (illegal) **remote neural monitoring** is used to (illegally) directly relay very recent thoughts (sometimes almost immediate) to the live media outlet the **targeted individual** is currently watching or listening to – for example, you are listening to the radio and the radio announcer is **parroting** back what you have just **subvocalized**, or what you are reading. Non-verbal cues may also appear in such media.

Almost everyone that the **targeted individual** is believed to be in contact with (or in more extreme cases extending to anyone they know in any capacity at all) may be contacted, then coerced or intimidated into participating into this criminal relaying and repeating activity against the target and victim, not realizing that they are involving themselves in a **c**riminal **conspiracy** – a similar effect may be achieved by spreading various **slander** about the **targeted individual**, in order to turn their contacts against them: whether or not they truly believe the slander, in addition to the **intimidation**, etc., they may fear repercussions for failing to join in on the criminal **harassment**. A **parrot** is asked, coerced, fooled, bribed or intimidated into participating.

This may have a few types of effects, which should not be considered as mutually exclusive, and the following is certainly not an exhaustive description of the psychological effects it may have. a) **Mimicking harassment** may wear down the **targeted individual** psychologically by driving them crazy with extreme irritation and destroying their ability to concentrate on just about anything (just about anyone who had siblings of a similar age can probably attest to experiencing this at a relatively young age). b) If applied by people experienced in such nefarious means of **psychological torture**, it may eventually produce an involuntary movement (see **evoked action**) on the part of the **targeted individual** at a mere partial gesture, thereby leading to a loss of sense of control on the part of the **targeted individual**, and perhaps a sense of 'power' on the part of the lost souls who have so little control over themselves that they must seek control over others to feel like that have any 'power'. c) Similar to b, **mimicking harassment** may be used in conjunction with motion- or sound-based **conditionings** (or other **conditionings**) to produce a diversity of physiological and/or mental responses (including triggering a planted 'memory') at a mere gesture.

Mind control (**mind influencing technologies and strategies**):

See **brainwashing**. The term 'mind influence' or '**mind influencing technologies and strategies**' should be preferred because '**mind control**' has a rather ominous ring which attributes more power and **intimidation** than is warranted. In the sense that it might be asserted as '**mind control**', this is rather more likely to involve **conditioned** triggers that the target is unaware of, or which, due to eliciting

positive/negative associations (or actual **conditioned** triggers), may persuade the victim to feel like they must do things that they might not otherwise do.

Despite my preference to refer to this as '**mind influencing technologies and strategies**' (which is a less intimidating framing) and to frame this rather more so under **brainwashing** than '**mind control**', it may nevertheless be useful to outline some basic technologies and strategies as play:

- Influence (including by **suggestion**, remotely or otherwise) of thoughts and thought patterns; feelings and their expression; influence of behaviour.
- **Organized stalking** (**street theater**) that 'anchors' (see **priming**) feelings to certain words, and sometimes colours, certain types of people or objects. Creating the illusion of '**guilt**'.
- '**Hypnotic** trigger' words that result in (or influence) specific sensations, feelings or behaviours.
- Monitoring what the target is paying attention to, to influence where to look, what to think about, in what terms, etc..
- Real time mind reading (especially pernicious before the **targeted individual** becomes aware of it); erasing thoughts and memories; short-term memory problems.
- **Planting a false memory**, and **primed/conditioned** 'synthetic' associations (at times supported by a computer programmed to imbue the association according to the specific context, applied via **synthetic telepathy**).
- Induced dreams or manipulation of dreams.

This description is by no means exhaustive. However, in the interests of diverting attention away from the rather intimidating notion of **mind CONTROL**, other related concepts are defined in other entries in this glossary.

MKULTRA:

One of the surest ways to find yourself under character assassination from some anonymous individuals as 'mentally ill', 'deluded', or otherwise unable to keep a grasp on reality, is to make any reference whatsoever to the (illegal) **MKULTRA** experiments performed by the CIA from the 1950s to 1970s (and thereafter 'disbanded', i.e., with virtual certainty continued under some other unknown name or resource allocation). The main outline and objectives of the program are as follows.

Project **MKULTRA**—sometimes referred to as the CIA's **mind control** program—was the code name given to an illegal program of **non-consensual human experimentation**, designed and undertaken by the United States Central Intelligence Agency (CIA). Experiments on humans were intended to identify and develop drugs and procedures to be used in interrogations and **torture**, in order to weaken the individual to force confessions through **mind control**. Organized through the Scientific Intelligence Division of the CIA, the project coordinated with the Special Operations Division of the U.S. Army's Chemical Corps.[87] The program began in the early 1950s, was officially sanctioned in 1953, was reduced

[87] "Advisory on Human Radiation Experiments", July 5, 1994, National Security Archives. Accessed from http://nsarchive.gwu.edu/radiation/dir/mstreet/commeet/meet4/trnsct04.txt on April 26, 2014.

in scope in 1964, further curtailed in 1967 and *officially* halted in 1973.[88] The program engaged in many illegal activities, including the use of unwitting U.S. and Canadian citizens as its test subjects, which led to controversy regarding its legitimacy.[89] [90] [91] [92] **MKULTRA** used numerous methodologies to manipulate people's mental states and alter brain functions, including the surreptitious administration of drugs (especially LSD) and other chemicals, **hypnosis**, sensory deprivation, isolation, verbal and sexual abuse, as well as various forms of **torture**.

The scope of Project **MKULTRA** was broad, with research undertaken at 80 institutions, including 44 colleges and universities, as well as hospitals, prisons, and pharmaceutical companies.[93] The CIA operated through these institutions using front organizations, although sometimes top officials at these institutions were aware of the CIA's involvement.[94] As the US Supreme Court later noted, **MKULTRA** was:

> concerned with "the research and development of chemical, biological, and radiological materials capable of employment in clandestine operations to control human behaviour". The program consisted of some 149 subprojects which the Agency contracted out to various universities, research foundations, and similar institutions. At least 80 institutions and 185 private researchers participated. Because the Agency funded **MKULTRA** indirectly, many of the participating individuals were unaware that they were dealing with the Agency.[95]

---

[88] Thomas, J (3 Sep 1977). "C.I.A Says It Found More Secret Papers on Behavior Control: Senate Panel Puts Off Hearing to Study Data Dozen Witnesses Said To Have Misled Inquiry C.I.A. Tells Of Finding Secret Data". New York Times.

[89] "Project MKUltra, the Central Intelligence Agency's Program of Research into Behavioral Modification. Joint Hearing before the Select Committee on Intelligence and the Subcommittee on Health and Scientific Research of the Committee on Human Resources, United State Senate, Ninety-Fifth Congress, First Session" – p. 74. U.S. Government Printing Office (copy hosted at the New York Times website). August 8, 1977. Accessed from http://www.nytimes.com/packages/pdf/national/13inmate_ProjectMKULTRA.pdf on April 26, 2016.

[90] Richelson, JT (ed.) (2001-09-10). "Science, Technology and the CIA: A National Security Archive Electronic Briefing Book". George Washington University. Accessed from http://nsarchive.gwu.edu/NSAEBB/NSAEBB54/ on April 26, 2016.

[91] "Chapter 3, part 4: Supreme Court Dissents Invoke the Nuremberg Code: CIA and DOD Human Subjects Research Scandals". Advisory Committee on Human Radiation Experiments Final Report. Accessed from https://bioethicsarchive.georgetown.edu/achre/final/chap3_4.html on April 26, 2016.

[92] "The Select Committee to Study Governmental Operations with Respect to Intelligence Activities, Foreign and Military Intelligence". Church Committee report, no. 94-755, 94th Cong., 2d Sess. Washington, D.C..: United States Congress. 1976. p. 392. Accessed from http://www.aarclibrary.org/publib/church/reports/book1/html/ChurchB1_0200b.htm on April 26, 2016.

[93] Horrock, NM. (4 Aug 1977). "80 Institutions Used in C.I.A. Mind Studies: Admiral Turner Tells Senators of Behavior Control Research Bars Drug Testing Now". New York Times.

[94] United States Senate, 95th Congress, 1st session (3 August 1977). Project MKUltra, The CIA's Program of Research in Behavioral Modification (PDF). Joint Hearing Before the Select Committee on Intelligence and the Subcommittee on Health and Scientific Research of the Committee on Human Resources (Report). Accessed from http://www.nytimes.com/packages/pdf/national/13inmate_ProjectMKULTRA.pdf on April 26, 2016.

[95] CIA v. Sims, 471 U.S. 159, 161-162 (1985). Accessed from https://supreme.justia.com/cases/federal/us/471/159/ on April 26, 2016.

One 1955 **MKULTRA** document gives an indication of the size and range of the effort; this document refers to the study of an assortment of mind-altering substances described as follows:[96]

1. Substances which will promote illogical thinking and impulsiveness to the point where the recipient would be discredited in public.[97]
2. Substances which increase the efficiency of mentation and perception.
3. Materials which will cause the victim to age faster/slower in maturity.[98]
4. Materials which will promote the intoxicating effect of alcohol.
5. Materials which will produce the signs and symptoms of recognized diseases in a reversible way so that they may be used for malingering, etc.[99]
6. Materials which will cause temporary/permanent brain damage and loss of memory.
7. Substances which will enhance the ability of individuals to withstand privation, **torture** and coercion during interrogation and so-called '**brainwashing**'.
8. Materials and physical methods which will produce amnesia for events preceding and during their use.[100]
9. Physical methods of producing shock and confusion over extended periods of time and capable of surreptitious use.
10. Substances which produce physical disablement such as paralysis of the legs, acute anemia, etc.
11. Substances which will produce a chemical that can cause blisters.
12. Substances which alter personality structure in such a way that the tendency of the recipient to become dependent upon another person is enhanced.[101]
13. A material which will cause mental confusion of such a type that the individual under its influence will find it difficult to maintain a fabrication under **questioning**.
14. Substances which will lower the ambition and general working efficiency of men when administered in undetectable amounts.
15. Substances which promote weakness or distortion of the eyesight or hearing faculties, preferably without permanent effects.
16. A knockout pill which can surreptitiously be administered in drinks, food, cigarettes, as an aerosol, etc., which will be safe to use, provide a maximum of amnesia, and be suitable for use by agent types on an ad hoc basis.

---

[96] "Senate MKUltra Hearing: Appendix C--Documents Referring to Subprojects, (page 167, in PDF document page numbering)", Senate Select Committee on Intelligence and Committee on Human Resources. August 3, 1977. Archived from the original (PDF) on 2007-11-28. Accessed from https://web.archive.org/web/20071128230208/http://www.arts.rpi.edu/~pellr/lansberry/mkultra.pdf on April 26, 2016.

[97] Being rather difficult to imagine that a foreign intelligence service would produce media which discredited its own agents, it seems rather obvious, this being the first identified objective, that the project was rather more geared towards domestic operations targeting domestic **political suppression**, and not legitimate "national security" objectives in the context of a country which stands for freedom and democracy.

[98] I.e., to reduce the lifespan of opponents and to increase the lifespan of people who they support.

[99] Presumably this could be used to avoid agents being called for other duties, for example in situations where legitimate national security objectives were at play.

[100] Presumably to cover up illegal experimentation or interrogation methods.

[101] Since presumably any foreign agent would be well attuned to such things, it seems rather obvious that this would be used against **civilians** or domestic agents, for example to "recruit" them into activities they may not otherwise have wanted to do, for them to follow orders they would not otherwise have followed, and/or to pay them significantly less (or no) money than they may otherwise have demanded for such services.

17. A material which can be surreptitiously administered by the above routes and which in very small amounts will make it impossible for a person to perform physical activity.

But it never happened. Just like **electronic harassment** doesn't exist, nor does any ongoing **non-consensual human experimentation**, nor do **pulse-modulated** communications or brainwave stimulations (all of which documented elsewhere in this glossary).

After Congress learned of the program, most records were destroyed. However, one batch of documents was missed, enabling Congressional oversight to shut down the program (it is generally believed to have continued elsewhere in the agency). These remaining 20,000 pages are available to the public.[102]

Other *known* experiments which included '**mind control**' elements include Project CHATTER, Project BLUEBIRD, Project ARTICHOKE, Project **MKULTRA**, Project MKSEARCH, Project SLAMMER and Project MKNAOMI, in addition to discrediting tactics applied as a part of Project MKDELTA.

N

'Five Eyes' intelligence alliance:

The '**Five Eyes**' intelligence alliance originates from UKUSA –a secret wartime treaty that says member nations can spy on each others' population without warrants or limits, and that this can be shared with the spied-on country's SIGINT agency. It is a multilateral agreement for cooperation in signals intelligence between Australia, Canada, New Zealand, the United Kingdom and the United States. The alliance of intelligence operations is also known as the **Five Eyes**.[103]

Emerging from an informal agreement related to the 1941 Atlantic Charter, the secret treaty was renewed with the passage of the 1943 BRUSA Agreement, before being officially enacted on March 5, 1946 by the United Kingdom and the United States. In the following years, it was extended to encompass Canada, Australia and New Zealand. Other countries, known as 'third parties', such as Germany, the Philippines, Italy, Turkey and several Nordic countries also joined the UKUSA community.[104]

The result is that laws which constrain spying on own citizens without due process (a warrant) are essentially void, because other partners can collect this information and exchange it. For much of the Cold War, not even elected officials were aware of this secret treaty which violates numerous

---

[102] One download location for these documents is at http://www.wanttoknow.info/mind_control/cia_mind_control_documents_orig/. These documents may of historical interest, but technologies have advanced significantly in the meantime, so this information is dated.
[103] Farrell P (2 December 2013). "History of 5-Eyes – explainer". The Guardian. Accessed from http://www.theguardian.com/world/2013/dec/02/history-of-5-eyes-explainer on April 26, 2016.
[104] The Guardian. "Not so secret: deal at the heart of UK-US intelligence". Accessed from http://www.theguardian.com/world/2010/jun/25/intelligence-deal-uk-us-released on April 26, 2016.

constitutionally entrenched principles in most parties to the treaty (subject to judicial interpretation, which does not seem to be forthcoming), and its text was only released to the public in 2010[105].

In recent years, this has been accompanied by significant erosions of compartmentalization of information – previously, very few agencies in any given country were able to share information with other agencies without a specific legal order. Increasingly, state agencies are encouraged to freely share information in the absence of due process or explanations of reasons, with essentially no protections for risk of data leakages to diverse criminal elements, and implying massive data sharing between often unaccountable security agencies of these states, which now have access to treasure troves of data previously forbidden to them.

This following table presents the main security agencies of the **Five Eyes** intelligence alliance. It would be naïve to think that this list is exhaustive.

	State police (enforce domestic laws)	Domestic spying (domestic threats, **political repression**) – often linked with state police or international spying	International spying (supposedly directed to non-**civilian** targets)	Air force and aerospace (which includes satellite technologies)	Navy (significant radar/sonar expertise)	Army (land-based operations)	Military intelligence
Australia	AFP		ASIS	RAAF	RAN	Australian Army	AUSTINT
Canada	RCMP	CSE (adjacent to CSIS)[106]	CSIS [107], CSE	RCAF	RCN	Canadian Army	Intelligence branch (CF)
New Zealand	NZP		SIS	RNZAF	RNZN	NZ Army	NZ Intelligence Corps
United Kingdom	National Crime Agency	MI5	MI6; GCHQ; JTRIG[108]	RAF	Royal Navy	British Army	DMI
United States	FBI	FBI; NSA (formally, not CIA); DHSI Citizen Watch; Infraguard	NSA; CIA	US Air Force; NASA; NRO (satellites); DRAPA (research); NOAA (ocean and	US Navy	US Army	NSA; CIA, Military Intelligence Corps; DIA; US Air Force (satellites)

[105] The treaty, in its present form, is presently downloadable from http://www.nationalarchives.gov.uk/ukusa.
[106] In 2013, the former government announced a $1.2 billion new headquarters for the agency, the most expensive government building to be constructed in Canadian history: "Inside Canada's top-secret billion-dollar spy palace", Oct 8, 2013, CBC, Accessed from http://www.cbc.ca/news/politics/inside-canada-s-top-secret-billion-dollar-spy-palace-1.1930322 on May 2, 2016.
[107] On Jan 29, 2016, RT reported that Canada stopped sharing classified information after discovering that the NSA had shared personal details of Canadians: "Canada halts intelligence sharing with Five Eyes after 'accidentally' sending over Canadians' data", accessed from https://www.rt.com/news/330530-canada-halts-intelligence-sharing-nsa/ on May 1, 2016.
[108] Some independent online outlets identify this unit as being responsible for a number of highly questionable tactics used to discredit/slander/set-up individuals of certain political groups and influence public opinion in general.

				atmosphere) ; NWS (weather)			

The main reason this entry is included it to draw attention to the potential for a) information sharing, in addition to b) capacity in relation to satellite activities and c) EM transmissions other than radio, at a distance, which plausibly explain reports of FBI drones circling around certain locations without clear explanations for why or what they are doing.[109] Also, this should draw attention to the degradation of information compartmentalization, which can be assumed to be a) a significant intelligence threat and b) a threat to the privacy and security of the public.

Noise campaign:

A noise campaign is an orchestrated effort to produce stress in a victim through prolonged exposure to significant noise levels. A **noise campaign** can range from multiple neighbours routinely playing loud music, individual stalkers with air-horns or fireworks, or organized 'repair work' that involves a high level of noise.

Non-consensual human experimentation (also known as involuntary human experimentation – specifically this this context, Involuntary mind control experimentees or Electromagnetic mind-control experiments):

Non-consensual human experimentation relates to are individuals who are the subject of study for scientific purposes, including military and **social control** purposes, sometimes without their knowledge, but most certainly without their consent. Historically, **non-consensual human experimentation** has included individuals who belong to a politically and socially disenfranchised class which renders them unable to have their complaints heard, or which leads nefarious types to believe that it is OK to experiment upon these 'lesser' people without their permission. For example, prisoners, those confined to a mental health facility perhaps for failing to be sufficiently in line with mainstream societal expectations, those who are deemed mentally inferior for any other reason, those who belong to disenfranchised groups (such as native Indians or African Americans, historically, in the USA). Probably the most well-known example of **non-consensual human experimentation** in a Western country involves the **MKULTRA** project of the CIA, which involved experiments on vulnerable individuals to refine drugs, other technologies, and abusive means of persuasion for the purpose of **social control** and **brainwashing** (or, if you take their word at face value, to develop better methods for CIA agents to resist interrogation).

While the full scope of relevance for **non-consensual human experimentation** certainly goes well beyond this, for present purposes, this largely refers to experimentation of a diversity of **electronic weapons** on vulnerable (and/or outspoken) individuals who are unlikely to be able to have their experienced taken as credible. Also, clearly the era of 'mere' experimentation has passed, these tools having been made operational for the purposes of suppressing the speech (and even thought!) of those

[109] The Electronic Frontiers Foundation has reported on this and assembled a visual database of many related observations. However, I have not re-located the source, so scepticism is recommended.

who are critical of certain political issues, most especially relating to various perceived **corruptions**, concerns about the rise of the spy state, tyranny in general, and various forms of unnecessary **social control** which are likely to have their strongest effects against individuals and groups deemed 'inferior' by certain segments of society, some of which have been well implanted within the security state since at least WWII (i.e., pro-eugenics anti-socialists of the white supremacist version, a.k.a., Nazis, at least 1,000 of which were imbedded in the CIA at least up to the end of the Cold War[110]).

We are well beyond experimentation and have passed well into the stage of implementation, which appears to primarily revolve around a **conspiracy** to implement the most extreme form of **social control** and the most fundamental attack on **freedom**, at the very level of **cognitive liberty** itself (where a mere **thought crime** may make an individual a primary target for attacks via **electronic weapons**), that humanity has ever faced. **Electronic weapons** are with 100% certainty in use, including against **civilians** of the countries that employ them. However, it appears that **non-consensual human experimentation** continues, against groups which are deemed 'inferior' or in any case sufficiently vulnerable to have difficulties having their experiences made public, in addition to politically **targeted individuals** who can be presumed to be both victims of state terrorism committed by rogue actors within the state and subjects of **non-consensual human experimentation** at the same time.

In the USA, **non-consensual human experimentation** has lax safeguards as a part of legislation referred to as The Common Rule, which is the Federal Policy regarding human subjects protection. It is written with several loopholes for the allowance of **non-consensual human experimentation**, mostly by intelligence agencies.[111]

Neural oscillation **('brain waves'):**

This entry is not important for a non-specialist in understanding the current situation of **neurowarfare**, but it may be of interest as an introduction to some of the ways in which **neuroweapons** can influence cognition and neural activities.

Neural oscillation is rhythmic or repetitive neural activity in the central nervous system. Neural tissue can generate oscillatory activity in many ways, driven either by mechanisms within individual neurons or by interactions between neurons. In individual neurons, oscillations can appear either as oscillations in membrane potential or as rhythmic patterns of action potentials, which then produce oscillatory activation of post-synaptic neurons. At the level of neural ensembles, synchronized activity of large numbers of neurons can give rise to macroscopic oscillations, which can be observed in the electroencephalogram (EEG) (or **remote neural monitoring** technologies, which are not yet demonstrated in a scientific manner in the **civilian** sector). Oscillatory activity in groups of neurons

---

[110] Lichtblau E. "In Cold War, U.S. Spy Agencies Used 1,000 Nazis", The New York Times, Oct. 26, 2014. Accessed from http://www.nytimes.com/2014/10/27/us/in-cold-war-us-spy-agencies-used-1000-nazis.html on May 2, 2016.
[111] "Dr. John Hall's letter", accessed from http://www.freedomsos.com/blog/dr-john-halls-letter on May 7, 2016. Please keep in mind that I have not tracked down the specific loopholes referred to. Having located the specific loopholes, the existence of such loopholes could hardly be considered as "circumstantial evidence" – rather, it would take a stunning amount of naivety to supposed that such loopholes exist but are not abused.

generally arises from feedback connections between the neurons that result in the synchronization of their firing patterns. The interaction between neurons can give rise to oscillations at a different frequency than the firing frequency of individual neurons. A well-known example of macroscopic neural oscillations is alpha activity.

Neural oscillation can also arise from interactions between different brain areas. Time delays play an important role here. Because all brain areas are bidirectionally coupled, these connections between brain areas form feedback loops. Positive feedback loops tends to cause oscillatory activity which frequency is inversely related to the delay time. An example of such a feedback loop is the connections between the thalamus and cortex. This thalamocortical network is able to generate oscillatory activity known as recurrent thalamo-cortical resonance.[112] The thalamocortical network plays an important role in the generation of alpha activity.[113] [114]

Neurotechnological warfare (a.k.a. Psychotronic warfare, Neurowarfare):

This term is largely related to the additional discussion relating to classical **psychological warfare**.

Neurotechnological warfare is said to have originated from extensive research programmes and numerous conferences into the field during the 1970s and 1980s sparked Cold War fears of **mind control** and other neurotechnological weaponry (**neuroweapons**) being developed by Eastern Bloc countries which led to popularisation of the term in the West. (Of course, I find it extremely suspicious/unlikely to think that the losers of the Cold War were at all times ahead in such technologies, and the winners of the Cold War always passive observers who were behind in these technologies.)

Neurotechnological warfare or psi warfare is the use of electronic machines to send beams of energy or frequencies directly to people's brains and bodies through the air. This is the new stealth warfare. It is inexpensive and simple, and often hard to detect and defeat. The same method is used, at times, to **brainwash** people to believe certain information and not other information by making subtle **suggestions** to them via electronic beams or frequencies.[115]

---

[112] Llinas, R, U Ribary, D Contreras and C Pedroarena (1998). "The neuronal basis for consciousness". *Philosophical Transactions of the Royal Society of London*, 353(1377), 1841–1849.

[113] Bollimunta, A, J Mo, CE Schroeder and M Ding, M (2011). "Neuronal mechanisms and attentional modulation of corticothalamic alpha oscillations". *The Journal of Neuroscience*, 31(13), 4935–4943.

[114] Suffczynski P, S Kalitzin, G Pfurtscheller, FH Lopes da Silva FH (2001). "Computational model of thalamo-cortical networks: dynamical control of alpha rhythms in relation to focal attention". *The International Journal of Psychophysiology*, 43(1), 25–40.

[115] Wilson L. (2014). Psychotronic warfare and radionics. The Centre for Development. Accessed from http://www.drlwilson.com/articles/PSYCHOTRONIC.htm on April 24, 2016. (Note, this site also serves as a promotional outlet for professional services being marketed and should be considered part advertising, part information.)

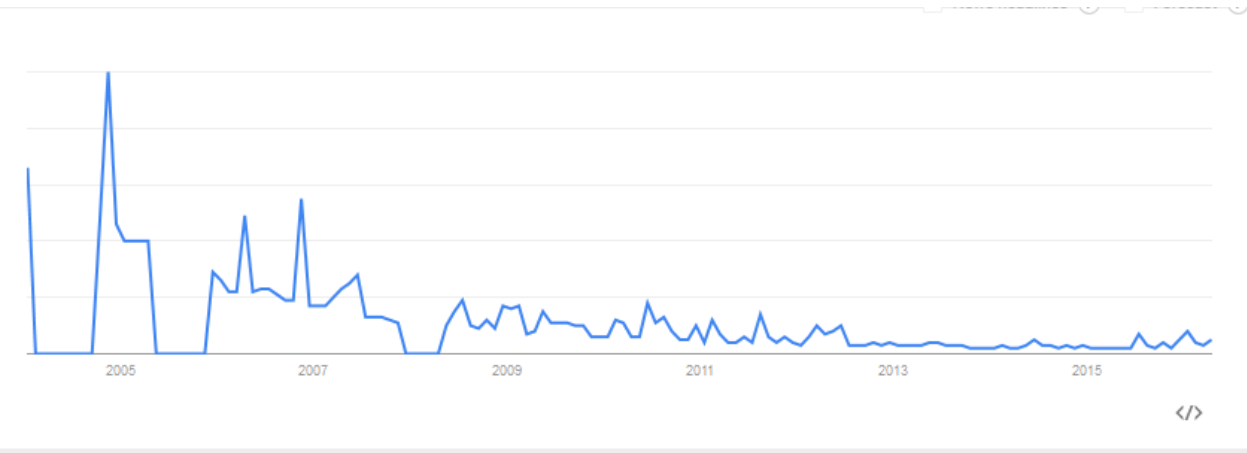

Neuroweapons:

Any weapon that targets the nervous system or brain functioning of a target, whether as a matter of responses triggered in conjunction with longer-term pre-established **conditionings**, or as a matter of more generalizable effects which most or all **targeted individuals** are likely to be vulnerable to. While traditionally these may have involved things like drugs or neurotoxins involved in chemical warfare, in the present day, the nature of the issue largely revolves around the use of **electromagnetic weapons** which serve as **neuroweapons** by use of **electromagnetic waves** to interfere with (or mimic) the natural roles of brainwaves in guiding communication and information processing in the brain[116], whether used against enemies of a state or for the purpose of **social control** and/or **political repression** within a friendly/unfriendly/domestic state.

Nuremberg Code (also refer to Operation Paperclip):

In response to the atrocities of WWII, the **Nuremburg Code** was established in 1946 to govern medical research in order to avoid a repeat of the experimentation conducted by Nazi doctors.

Under the principles of the Nuremburg Treaties, no person may be experimented upon for any reason, without their consent, and before they give their consent, they must have full knowledge of the length

---

[116] WR Adey (Dec. 1979), "Neurophysiological effects of radiofrequency and microwave radiation", *Bulletin of the New York Academy of Medicine*, 55(11), 1079–1093. Among other things, this article shows that these processes were already roughly understood nearly 40 years ago. Also very interesting, is that it demonstrates that the use of pulse modulations of high frequency **electromagnetic waves** (450 MHz) to effectively transmit low level frequencies (e.g., 1-30 Hz) which influence brain waves and therefore communications and other processes in the brain, has been a known entity for nearly 40 years.

No doubt, application for new technologies involved in influencing brain processes in **targeted individuals** or populations have advanced to the point of being essentially unbelievable to those who are unaware of such knowledge and related offensive neuroweapons. An online search of this article in conjunction with some other terms in this glossary will lead you to a **number** of other related articles demonstrating that such knowledge has been around quite some time (presumably before such research was co-opted, presumably with significant optionality in the choice, into this service of those who are charged to keep the nation and the public safe from all significant threats.)

of the experiment, the outcomes, any potential dangers, any potential ill effects on health, it must be fully understand and explained, and they must give individual consent. More explicitly, the ten points of the **Nuremburg Code** are:

1) Required is the voluntary, well-informed, understanding consent of the human subject in a full legal capacity.
2) The experiment should aim at positive results for society that cannot be procured in some other way.
3) It should be based on previous knowledge (like, an expectation derived from animal experiments) that justifies the experiment.
4) The experiment should be set up in a way that avoids unnecessary physical and mental suffering and injuries.
5) It should not be conducted when there is any reason to believe that it implies a risk of death or disabling injury.
6) The risks of the experiment should be in proportion to (that is, not exceed) the expected humanitarian benefits.
7) Preparations and facilities must be provided that adequately protect the subjects against the experiment's risks.
8) The staff who conduct or take part in the experiment must be fully trained and scientifically qualified.
9) The human subjects must be free to immediately quit the experiment at any point when they feel physically or mentally unable to go on.
10) Likewise, the medical staff must stop the experiment at any point when they observe that continuation would be dangerous.

O

Oh:

As in, "**Oh** shit", this is fucking real.

Operation Paperclip:

Operation Paperclip (1949–1990) was the Office of Strategic Services (OSS) program in which more than 1,500 German scientists, engineers, and technicians were brought to the United States from Nazi Germany and other countries for employment in the aftermath of World War II.[117] It was conducted by the Joint Intelligence Objectives Agency (JIOA) and in the context of the burgeoning Cold War. One purpose of **Operation Paperclip** was to deny German scientific expertise and knowledge to the Soviet

[117] U.S. National Archives and Records Administration. "Joint Intelligence Objectives Agency", accessed from http://www.archives.gov/iwg/declassified-records/rg-330-defense-secretary/ on May 3, 2016. This reference contains dossiers on the personnel files and therefore does not have a specific date.

Union[118] and the United Kingdom,[119] as well as to inhibit post-war Germany from redeveloping its military research capabilities. The Soviet Union had competing extraction programs known as 'trophy brigades' and Operation Osoaviakhim.[120]

In such a historical context, there does appear to be some legitimacy in bringing so many Nazi scientists into the CIA. However, it seems rather obvious that, in addition to being allowed to continue their research with very little ethical limitations for example in **mind control**, they left their own mark on the organization. Protections against infiltration by these Nazi researchers appear to have been few or none. They were offered new identities and well paid work in laboratories for the American government, under the additional condition that they hand over all their research performed during Nazi rule. This became the basis of the **mind control** research, with drugs, microwaves (**electromagnetic waves**), etc. This Nazi-era research formed the basis of 'too much' of the research illegally performed by the CIA (refer to **MKULTRA**).

(A **conspiracy** theorist might even wonder if it gets more devious than that, perhaps that these leading scientific figures may have always had connections in the USA, and failing a Nazi victory in Europe and/or the broader world, already believed themselves to have assurances to continue with their devious plans. Now THAT would be a conspiracy!)

P

P300 (neuroscience):

The **P300** (P3) wave is an event related potential (ERP) component elicited in the process of decision making. It is considered to be an endogenous potential, as its occurrence links not to the physical attributes of a stimulus, but to a person's reaction to it. More specifically, the P300 is thought to reflect processes involved in stimulus evaluation or categorization. It is usually elicited using the oddball paradigm, in which low-probability target items are mixed with high-probability non-target (or "standard") items.

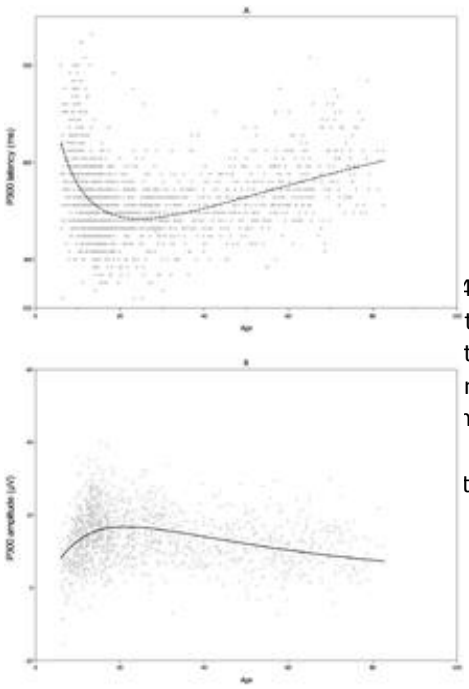

[121]When recorded by electroencephalography (EEG), it surfaces as a positive deflection in voltage with a latency (delay between stimulus and response) of roughly 250 to 500 ms.[122] The signal is typically measured most strongly by the electrodes covering the parietal lobe. The presence, magnitude, topography and timing

4. Pen and Sword.
ts in the Soviet Atomic Project", *The Nonproliferation Review*, 7(2), 1-30.
tency and amplitude trajectories across the lifespan as obtained from
n R, M Arns, MLA Jongsma and RPC. Kessels (Feb 2014), "P300
matic Review and Meta-Analysis", *PLoS ONE*, 9(2): e87347.

tegrative theory of P3a and P3b", *Clinical Neurophysiology*, 118(10),

of this signal are often used as metrics of cognitive function in decision making processes. While the neural substrates of this ERP component still remain hazy, the reproducibility and ubiquity of this signal makes it a common choice for psychological tests in both the clinic and laboratory.

Early observations of the P300 (more specifically, the component that would later be named the P3b) were reported in the mid-1960s. In 1964, researchers Chapman and Bragdon[123] found that ERP responses to visual stimuli differed depending on whether the stimuli had meaning or not. They showed subjects two kinds of visual stimuli: numbers and flashes of light. Subjects viewed these stimuli one at a time in a sequence. For every two numbers, the subjects were required to make simple decisions, such as telling which of the two numbers was numerically smaller or larger, which came first or second in the sequence, or whether they were equal. When examining evoked potentials to these stimuli (i.e., ERPs), Chapman and Bragdon found that both the numbers and the flashes elicited the expected sensory responses (e.g., visual N1 components), and that the amplitude of these responses varied in an expected fashion with the intensity of the stimuli. They also found that the ERP responses to the numbers, but not to the light flashes, contained a large positivity that peaked around 300 ms after the stimulus appeared. Chapman and Bragdon speculated that this differential response to the numbers, which came to be known as the P300 response, resulted from the fact that the numbers were meaningful to the participants, based on the task that they were asked to perform. (This paragraph should suffice to demonstrate that these principles have been understood and demonstrated since at least 50 years ago.)

Since the mid-1980s, one of the most discussed uses of ERPs such as the P300 is related to lie detection. In a proposed "**guilty** knowledge test"[124] a subject is interrogated via the oddball paradigm much as they would be in a typical lie-detector situation. (However, to my knowledge this only reveals a desire to hide something, which for practical purposes may involve disallowing a **planted memory** to be elicited as 'evidence'. I have personally experienced this no less than several hundred thousand times, in an effort which simultaneously strives to reinforce the planted memory. The method is inherently bunk as a result.) This practice has recently enjoyed increased legal permissibility while conventional polygraphy has seen its use diminish, in part owing to the unconscious and uncontrollable aspects of the P300. The technique relies on reproducible elicitation of the P300 wave, central to the idea of a Memory and Encoding Related Multifaceted Electroencephalographic Response (MERMER) developed by Dr. Lawrence Farwell.

Applications in **brain-computer interfacing** (BCI) have also been proposed.[125] [126] [127] The P300 has a number of desirable qualities that aid in implementation of such systems. First, the waveform is

---

[123] Chapman RM and HR Bragdon (1964). "Evoked responses to numerical and non-numerical visual stimuli while problem solving", *Nature*, 203, 1155-1157.

[124] Farwell LA, SS Smith (Jan 2001). "Using brain MERMER testing to detect knowledge despite efforts to conceal", *Journal of Forensic Sciences*, 46(1), 135-143 .

[125] Piccione F, F Giorgi, P Tonin, K Priftis. S Giove, S Silvoni, G Palmas, F Beverina (Mar 2006). "P300-based brain computer interface: Reliability and performance in healthy and paralysed participants", *Clinical Neurophysiology*, 117 (3): 531-537.

[126] Donchin E, KM Spencer and R Wijesinghe (Jun 2000). "The Mental Prosthesis: Assessing the Speed of a P300-Based Brain–Computer Interface", *IEEE Transactions on Rehabilitation Engineering*, 8(2)

consistently detectable and is elicited in response to precise stimuli. The P300 waveform can also be evoked in nearly all subjects with little variation in measurement techniques, which may help simplify interface designs and permit greater usability. The speed at which an interface is able to operate depends on how detectable the signal is despite "noise." One negative characteristic of the P300 is that the amplitude of the waveform requires averaging of multiple recordings to isolate the signal. This and other post-recording processing steps determine the overall speed of an interface.[128]

I highlight that this entry demonstrates **civilian** sector advances in this and related technologies, and does not provide information on the state-of-the-art in purportedly 'national security' uses which remain classified. It should be rather clear that related principles ant technologies are being applied for **brainwashing** and **social control**, including **thought crime** and **pre-crime**, rather more so than any sort of 'legitimate' applications as described above.

Peace:

Peace occurs between heterogeneous social groups and is characterized by a lack of conflict and **freedom** from fear of (psychological or physical) violence. Commonly understood as the absence of hostility, **peace** often involves compromise, and therefore is initiated with thoughtful listening and communication to enhance and create mutual understanding.

Peace in the broader socio-political sense can be distinguished from 'inner **peace**'. Inner **peace** (or **peace** of mind) refers to a state of being mentally and spiritually at **peace**, with enough knowledge and understanding to keep oneself strong in the face of discord or stress. Being 'at **peace'** is considered by many to be healthy homeostasis and the opposite of being stressed or anxious. **Peace** of mind is generally associated with bliss and happiness.

Pedophilia:

Pedophilia is a psychiatric disorder in which an adult or older adolescent experiences a primary or exclusive sexual attraction to prepubescent children.[129] [130] Although girls typically begin the process of puberty at age 10 or 11, and boys at age 11 or 12,[131] criteria for **pedophilia** extend the cut-off point for prepubescence to age 13. A person who is diagnosed with **pedophilia** must be at least 16 years old, but adolescents must be at least five years older than the prepubescent child for the attraction to be diagnosed as **pedophilia**.

---

[127] Nijboer F, EW Sellers, J Mellinger, MA Jordan, T Matuz, A Furdea, S Halder, U Mochty, DJ Krusienski, TM Vaughan, JR Wolpaw, N Birbaumer, A Kübler (Aug 2008). "A P300-based brain–computer interface for people with amyotrophic lateral sclerosis", *Clinical Neurophysiology*, 119: 1909–1916.
[128] Donchin et al. (Jun 2000).
[129] American Psychiatric Publishing (2013). "Diagnostic and Statistical Manual of Mental Disorders, 5th Edition".
[130] World Health Organization/ICD-10 (1993)", The ICD-10 Classification of Mental and Behavioural Disorders Diagnostic criteria for research World", section F65.4.
[131] Kail, RV and JC Cavanaugh (2010). "Human Development: A Lifespan View (5th ed.)". Cengage Learning. p. 296.

In the present context of **psychological warfare** including **neurowarfare**, this is relevant due to the potential for **slander**, **slander** geared towards **blackmail**, and a variety of situations relating to **conditioning** and **brainwashing** geared towards establishing control over a **targeted individual**, most especially with a view to **blackmail**. The perpetrating entity may try to sequentially **condition** a sexual interest from normal and healthy sexual attractions towards increasingly young persons. Then, try to drive a **subvocalization** of this interest to extract a 'confession'. By trying to **condition** a response of feelings, images and/or project images of sexual organs at any time the **targeted individual** is physically aligned with or otherwise aware of increasingly young children, in combination with driven **subvocalizations**, use of **mimicking harassment**, **conditioned** triggers and/or projected sexually-oriented imaging to drive an **evoked action**, etc., the **targeted individual** may eventually come to believe that they are in fact a **pedophile**.

Theoretically speaking, of course. Anyone who admitted to such an experience would see themselves rapidly written off as an actual **pedophile** were they to openly admit to such an experience. **Blackmail**. Control. **Guilt**. Self-loathing. **Brainwashing**. Anyone experiencing such a situation should refrain from pornography which may help avoiding elicitation of the **conditioned** and/or otherwise triggered association with sexual organs or arousal, and ensure maximum awareness when around youth or children to be aware of this particularly disgusting type of **electronic harassment**. In fact, it would be recommended to abstain from any sort of sexual thoughts whatsoever, and to always re-direct your consciousness or physical activity to unrelated issues, no matter how intensely the perpetrating entity may try to use diverse strategies to manipulate your sexual identity, interests, attractions, etc.

In the United States, following Kansas v. Hendricks, sex offenders who are diagnosed with certain mental disorders, particularly **pedophilia**, can be subject to indefinite civil commitment.

What percentage of child sexual abuse is the result of **mind control** experimentation and/or establishing **blackmail** for potential future movers and shakers? If there was ever any doubt that those involved in **electronic harassment** have some serious mental disorders …

Predictive programming:

Predictive programming predicts that people would be more likely to accept an idea based on exposure to the concept in fiction.

A related idea refers to the use of the power of **suggestion** using the media of fiction to create a desired outcome.

(It seems rather more likely that someone creates a work of fiction, and some nefarious character/organization takes up the idea and makes it happen. However, I think it is essentially not debatable that at least some media are involved in degrees of programming designed to soften or manipulate public opinion with regard to things that they might otherwise have opposed/supported. On the matter of predictive programming, it doesn't seem very likely to be very relevant, but perhaps not worth discounting altogether. I find it more plausible to think that entertainment media would try to warn us of possibilities that we might not believe, rather than trying to soften us up to accept them.)

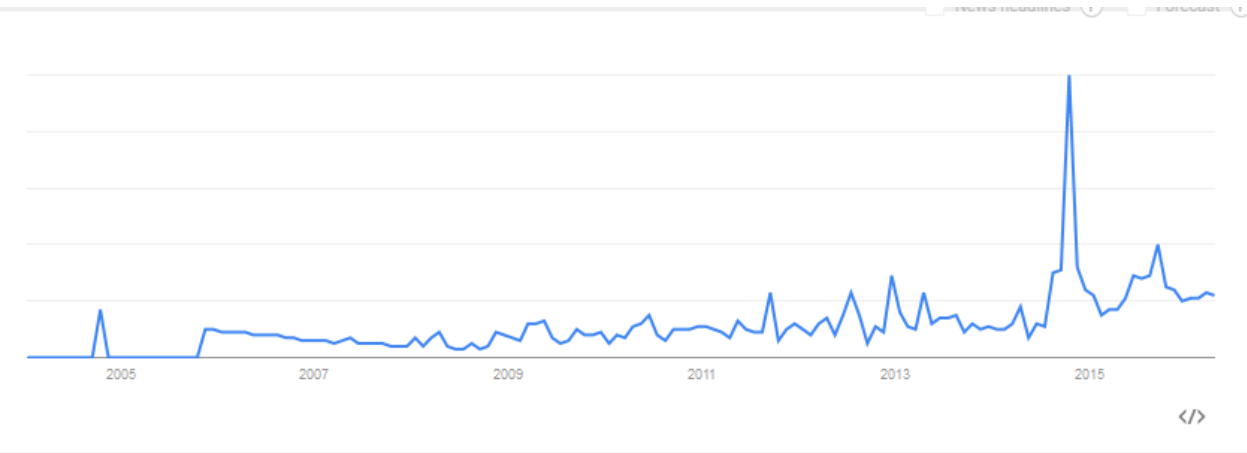

PGP:

PGP is free and unbreakable encryption, available world-wide.

Plausible deniability:

Plausible deniability is the ability for persons (typically senior officials in a formal or informal chain of command) to deny knowledge of or responsibility for any damnable actions committed by others (usually subordinates in an organizational hierarchy) because of a lack of evidence that can confirm their participation, even if they were personally involved in or at least willfully ignorant of the actions. In the case that illegal or otherwise disreputable and unpopular activities become public, high-ranking officials may deny any awareness of such act in order to insulate themselves and shift blame onto the agents who carried out the acts, confident that their doubters will be unable to prove otherwise. The lack of evidence to the contrary ostensibly makes the denial plausible, that is, credible, although sometimes it merely makes it unactionable. The term typically implies forethought, such as intentionally setting up the conditions to plausibly avoid responsibility for one's (future) actions or knowledge[132]. In some organizations, legal doctrines such as command responsibility exist to hold major parties responsible for the actions of subordinates involved in heinous acts and nullify any legal protection that their denial of involvement would carry.

In politics and espionage, deniability refers to the ability of a powerful player or intelligence agency to pass the buck and avoid blowback by secretly arranging for an action to be taken on their behalf by a third party ostensibly unconnected with the major player. In political campaigns, plausible deniability enables candidates to stay clean and denounce third-party advertisements that use unethical approaches or potentially libellous innuendo.

---

[132] This is obviously the situation. And, moreover, they have the ability to monitor our every damn thought as we try to figure our way around it. What a sick fucking game. Blow that God damned whistle. Someone can pull this off. Worst case scenario, it's hard to imagine that life in prison would be much worse than what you're a part of, if that's what you're a part of. And that's what you're a part of. Something that may end any form of human freedom whatsoever if it is not stopped. What if, for example, we NEED to have a revolution, but every brain on the planet is monitored for every thought? How to explore controversial ideas in such a situation? Expose corruption?

In the US, plausible deniability is also a legal concept. It refers to lack of evidence proving an allegation. Standards of proof vary in civil and criminal cases. In civil cases, the standard of proof is "preponderance of the evidence" whereas in a criminal matter, the standard is "beyond a reasonable doubt." If an opponent cannot provide evidence for his allegation, one can plausibly deny the allegation even though it may be true.

Although plausible deniability has existed throughout history, that name for it was coined by the CIA in the early 1960s to describe the withholding of information from senior officials in order to protect them from repercussions in the event that illegal or unpopular activities by the CIA became public knowledge. The roots of the name go back to Harry Truman's national security council paper 10/2 of June 18, 1948, which defined "covert operations" as "...all activities conducted pursuant to this directive which are so planned and executed that any U.S. Government responsibility for them is not evident to unauthorized persons and that if uncovered the U.S. Government can plausibly disclaim any responsibility for them." [NSC 5412 was de-classified in 1977, and is located at the National Archives, RG 273.]

Planting a false memory:

Basically, **planting a false memory** operates first with a **suggestion**, and then diverse other efforts to reinforce that memory (refer to warnings in relation to **subvocalization**). The **question** is not “can they do it” for people who are not aware of the possibility and highly attentive to such things, the **question** is when you may be vulnerable. Unfortunately, in the present situation of **psychological warfare** in the electronic age, it may be difficult for many **targeted individuals** to have full control over these factors.

People are particularly prone to having their memories be affected by misinformation when it is introduced after the passage of time has allowed the original event memory to fade. One reason this may be true is that with the passage of time, the event memory is weakened, and thus, there is less likelihood that a discrepancy is noticed while the misinformation is being processed.

The Discrepancy Detection principle (Tousignant et al. 1986). It essentially states that recollections are more likely to change if a person does not immediately detect discrepancies between misinformation and memory for the original event. Of course, it should be kept in mind that false memories can still occur even if a discrepancy is noticed.

Also, you may be vulnerable to memories being planted if you are **sleep deprived**, in part because you may not have the energy to sustain your cognitive independence, and in part because you're plain and simply tired and less able to recognize the suspicious signs of the new ‘memory’ being planted, or of an old recollection being slowly manipulated to fundamentally alter details into a completely different ‘memory’. Here, be especially attuned to the possibility that someone on the other end of the **augmented cognition** device may imagine themselves performing a specific act, and try to project this into your mind (via **synthetic telepathy**), and then reinforce this as the actual ‘memory’. They may try to get you to **subvocalize** something like "that's a real memory" or "that really happened" or "I can't believe I did that" or "I'm soooo sorry", at the same time as trying to trigger a **conditioned** response associated with **guilt**, or trigger an increase in heart rate or a skipped beat (this may also involve a

degree of **conditioned** response, but this may even involve the ability of **electromagnetic weapons** to influence cellular communications, plausibly including those relating to the electric signals driving the pumping of the heart[133]), so as to persuade you to believe that it all really happened. (Of course, an external third party observer to the whole situation may actually believe that it all really happened, given these other observations.)

Also, being in any sort of **hypnotic** state may make you more susceptible to 'memories' being planted.

Also worth noting is that you are more susceptible to planted misinformation when you are busy doing something. Example: I found myself regularly bombarded with efforts to reinforce false 'memories' when I was doing cognitively intensive tasks. Recognizing that it was a dangerous situation, most often I broke off from the cognitively intensive task, unless the looming deadline was truly pressing (in which case 'they' would increase their efforts by orders of magnitude).[134]

In the context of **psychological warfare** in the electronic age, I believe that the primary purposes of planting memories are a) to establish a sense of loss of control on the part of the victim, so that they will submit completely to the perpetrating entity, b) to promote the **delusion** that the perpetrating entity serves 'good', wherein the victim may be persuaded to believe that they 'deserve' what is happening to them, and c) for **blackmail** purposes – if you believe you did it, or in any case believe that someone else may investigate your brain and find the 'memory', then the planted memory can be used as **blackmail**.

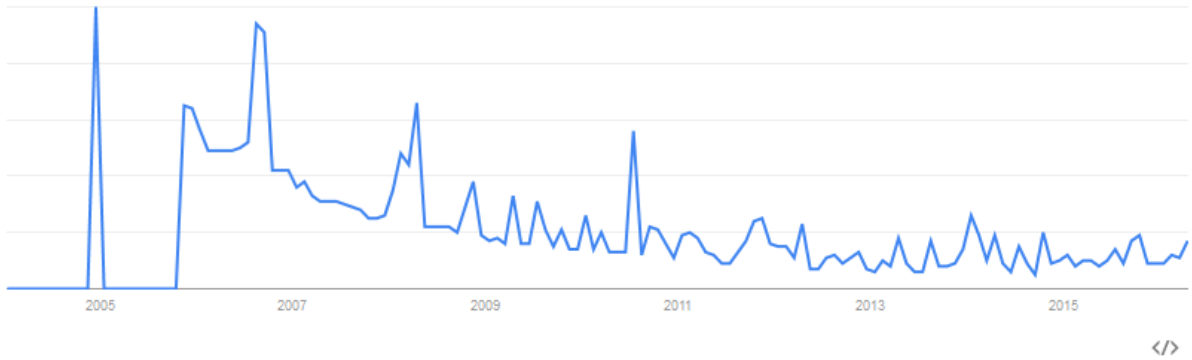

<u>Political abuse of psychiatry</u>[135] (also see, **psychiatric reprisal):**

[133] Lin JC (1989). "Electromagnetic Interaction with Biological Systems", Springer. Presumably there has been a great deal of classified research on how such effects can manipulate biophysical and/or neural processes. Thankfully, we can easily trust the people we pay to keep us safe never to use them against us, because they work for us.

[134] Much of this entry involves a very partial adaptation from: EF Loftus (2005), "Planting misinformation in the human mind: A 30-year investigation of the malleability of memory", *Learning & Memory*, 12: 361-366. Accessed from http://learnmem.cshlp.org/content/12/4/361.long on April 24, 2016.

[135] For the purposes of this glossary, this should be understood as largely referring to efforts to have people delivered with a mental health record, for the purpose of forever being able to destroy their credibility of any

Political abuse of psychiatry is the misuse of psychiatry, including diagnosis, detention, and treatment, for the purposes of obstructing the fundamental **human rights** of certain groups and individuals in a society. In other words, abuse of psychiatry including one for political purposes is deliberate action of getting citizens certified, who, because of their mental condition, need neither psychiatric restraint nor psychiatric treatment. Psychiatrists have been involved in **human rights** abuses in states across the world when the definitions of mental disease were expanded to include political disobedience. As scholars have long argued, governmental and medical institutions encode menaces to authority as mental diseases during political disturbances. Nowadays, in many countries, political prisoners are sometimes confined and abused in psychiatric hospitals. Psychiatric confinement of sane people is a particularly pernicious form of repression.

Psychiatry possesses a built-in capacity for abuse that is greater than in other areas of medicine. The diagnosis of mental disease allows the state to hold persons against their will and insist upon therapy in their interest and in the broader interests of society. In addition, receiving a psychiatric diagnosis can in itself be regarded as oppressive. In a monolithic state, psychiatry can be used to bypass standard legal procedures for establishing **guilt** or **innocence** and allow political incarceration without the ordinary odium attaching to such political trials. The use of hospitals instead of jails prevents the victims from receiving legal aid before the courts, makes indefinite incarceration possible, and discredits the individuals and their ideas. In that manner, whenever open trials are undesirable, they are avoided.

Examples of political abuse of the power entrusted in physicians, and particularly psychiatrists, are abundant in history. Descriptions of political abuses of psychiatry tend to be focused almost exclusively on Nazis, Soviets and Maoist communists, however a book published in 2010 also demonstrates that such abuses also extend throughout the post-WWII era in the USA as well[136] (perhaps just better at hiding the truth than other powers).

Political repression:

Political repression is the persecution of an individual or group within society for political reasons, particularly for the purpose of restricting or preventing their ability to take part in the political life of a society thereby reducing their standing among their fellow citizens.

Where **political repression** is sanctioned and organised by the state, it may constitute state terrorism, genocide, politicide or crimes against humanity. Systemic and violent **political repression** is a typical feature of dictatorships, totalitarian states and similar regimes. Acts of **political repression** may be carried out by secret police forces, army, paramilitary groups or death squads. Repressive activities have

---

claims made to the public, if they persist with making any of a number of claims which may lead to the truth being revealed with respect to the technologies and methods being used in psychological warfare in the electronic age.

[136] Ross, CA. (2006), "The C.I.A. Doctors: Human Rights Violations by American Psychiatrists", Manitou Communications Inc.

also been found within democratic contexts as well.[137] [138] This can even include setting up situations where the death of the target of repression is the end result.[139]

If **political repression** is not carried out with the approval of the state, a section of government may still be responsible. An example is the FBI **COINTELPRO** operations in the United States between 1956 and 1971.

In a context of **psychological warfare** in the electronic age, for example including diverse forms of **electronic harassment** in addition to **remote neural monitoring**, there appear to be legitimate concerns that the **political repression** and **social control** may be reformed in a manner where not only the actions and speech of non-conformists may be threatened, but where **cognitive liberties** themselves may be threated to the point where individuals may not even be allowed to THINK 'incorrect' thoughts without fear of reprisal. I.e., a most draconian and absolute form of **political repression** and **social control** is theoretically possible given existing **electronic weapons**. This, most especially so in the absence of disclosure/**whistleblowing** to the public about the existence and potential of such **electronic weapons**.

Pre-crime (also, see **thought crime**, **remote neutral monitoring**):

Pre-crime is a term coined by science fiction author Philip K. Dick. It is increasingly used in academic literature to describe and criticise the tendency in criminal justice systems to focus on crimes not yet committed. **Pre-crime** has been defined as 'substantive coercive state interventions targeted at non-imminent crimes'. Pre-crime intervenes to punish, disrupt, incapacitate or restrict those deemed to embody future crime threats. The term **pre-crime** embodies a temporal paradox, implying both that a crime has not occurred and that the crime that has not occurred is a foregone conclusion (McCulloch and Wilson 2016).

Priming (psychology) (related: **classic conditioning, subliminal stimuli**):

Priming is an implicit memory effect in which exposure to one stimulus (i.e., perceptual pattern) influences the response to another stimulus. **Priming** can occur following perceptual, semantic, or conceptual stimulus repetition.

For a simple example, consider a situation where someone always/routinely appears in a red shirt shortly before a type of **harassment** or **street theatre** begins which is known to make the targeted individual irritated, angry, fearful, etc. In time, simply seeing anyone in a red shirt may elicit the associated response. The **priming** will be more rapidly effective with strongly perceived stimuli, but can also work with **subliminal stimuli**. If **subliminal stimuli** are used for the **priming**, one may find oneself facing out-of-place emotional, mechanical and/or biophysical **evoked actions**, and if

---

[137] Donner, FJ (1980). "The Age of Surveillance: The Aims and Methods of America's Political Intelligence System", New York: Alfred A. Knopf.
[138] Donner, FJ (1990). "Protectors of Privilege: Red Squads and Police Repression in Urban America", Berkeley: University of California Press.
[139] Haas, J (2010). "The Assassination of Fred Hampton: How the FBI and the Chicago Police Murdered a Black Panther", Chicago, Ill.: Lawrence Hill /Chicago Review,

priming/conditioning are involved, it should be possible to eventually establish the trigger – however, in the case where **conditioned** and/or directly applied use of **electronic weapons** are the source of influence on neural activity and/or related biophysical responses, in some cases an entirely different type of conscious attention may identify the priming and **conditioned** trigger, and in other cases it will be essentially impossible to consciously pinpoint the trigger – one may train oneself to be consciously aware of the *outcomes* of the trigger in order to mitigate against undesirable effects or being persuaded to do things that one doesn't actually want to do/think, but only specialized scientific instruments are able to read incoming **electromagnetic waves** and the brain does not have the ability to consciously intuit the specific form/nature of the incoming wave.

The **targeted individual** may have nothing more to go on than the elicited effect without being able to identify the specific trigger in such cases. (Bear in mind here that **low frequency waves**, or pulse modulations which mimic low frequency waves, are also known to have certain effects on mood, emotion, energy levels, etc.) Also, the stimulus for the **priming** is something that would generally be unremarkable to other people, so the **targeted individual** would look 'crazy' if they point it out – but, the stimulus is so regularly presented that it is simultaneously 100% obvious to the **targeted individual** and completely unremarkable to anyone else. This is part of the **gaslighting**, **harassment**, etc., perhaps with an aspect of **psychiatric reprisal** involved (since the people in white coats will try to take it as 'evidence' or **delusional** paranoia). As such, it is also part of isolating the individual (useful for **brainwashing**), in the sense that it is designed to make friends, family, etc., think that the **targeted individual** is losing their mind, perhaps becoming a 'paranoid **delusional schizophrenic**'.

Prison of your own making (or, jail without the bars):

This generally involves a process where a person has been convinced, for whatever reason, that they are stuck in their present situation, and have no power to break free and take control of their life. In a situation of **psychological warfare** in the electronic age, nefarious actors may strive to convince you that everything that has happened to you is completely your own fault, and that the lack of options is due to your own failures, etc. Essentially, this is a trick to convince you that you can be 'free', whereas if the **targeted individual** is persuaded to 'free' themselves in the manner **suggested** by the nefarious perpetrating entity, for example to submit to a false admission (which may be used for **blackmail** purposes), or otherwise to submit to whatever they want you to do –the end result may be increasing comfort with an utter lack of **freedom**, a prison which could prove to be incredibly difficult to break free from (in particular given the neurally whipped **conditioning** and **brainwashing** that is likely to accompany such decisions).

Breaking free from such a prison requires recognizing whether you are in fact in a **prison of your own making**, or whether the prison has in fact been carefully constructed by others. In either case, be the master of your own destiny, and do not become a slave puppet by deluding yourself into believing that you have broken down the walls of the **prison of your own making**, when in reality you have done nothing but strengthen the chains and walls of the prison of *their* making.

Propaganda:

Propaganda is a form of communication that is aimed at influencing the attitude of a community toward some cause or position. As opposed to impartially providing information, **propaganda**, in its most basic sense, presents information primarily to influence an audience. **Propaganda** often presents facts selectively (thus possibly lying by omission) to encourage a particular synthesis, or uses loaded messages to produce an emotional rather than rational response to the information presented. Using manipulative **suggestion** is also common, e.g. "How evil is the Pope?", where a few nice things and a few bad things might be said, and the actual conclusion not that strong, but the reader/listener mostly remembers "Pope" and "evil". The desired result is a change of the attitude toward the subject in the target audience to further a political agenda. **Propaganda** can be used as a form of political warfare. Common media for transmitting **propaganda** messages include news reports, government reports, historical revision, junk science, books, leaflets, movies, radio, television, and posters.

Psychic driving:

Psychic driving was a psychiatric procedure in which patients were subjected to a continuously repeated audio message on a looped tape to alter their behaviour. In psychic driving, patients were often exposed to hundreds of thousands of repetitions of a single statement over the course of their treatment. They were also concurrently administered muscular paralytic drugs such as curare to subdue them for the purposes of exposure to the looped message(s). The procedure was pioneered by Dr. D. Ewen Cameron, and used and funded by the CIA's Project **MKULTRA** program in Canada. Similar techniques are alleged to have been used in the kidnapping and death of CIA operative William Francis Buckley by Aziz al-Abub, a medical doctor from Beirut who was seen as epitomizing medical **torture**. Aziz al-Abub, also known as Ibrahim al-Nadhir, was known for using his medical training to refine **torture** techniques. His techniques were shown to be closely connected to the CIA-developed **torture** techniques. As with the CIA, he used drugs to make it easier to handle those he **tortured**, carefully determined how long to keep a prisoner hooded and when to isolate them and other techniques seen as medical **torture**.

The topic of **psychic driving** is dealt with in some detail in the docudrama entitled The Sleep Room (1998) directed by Anne Wheeler. The **psychic driving** procedure was a chronological precursor to Cameron's **de-patterning** – theoretically, psychic driving could then be used with some efficacy in establishing a new personality.

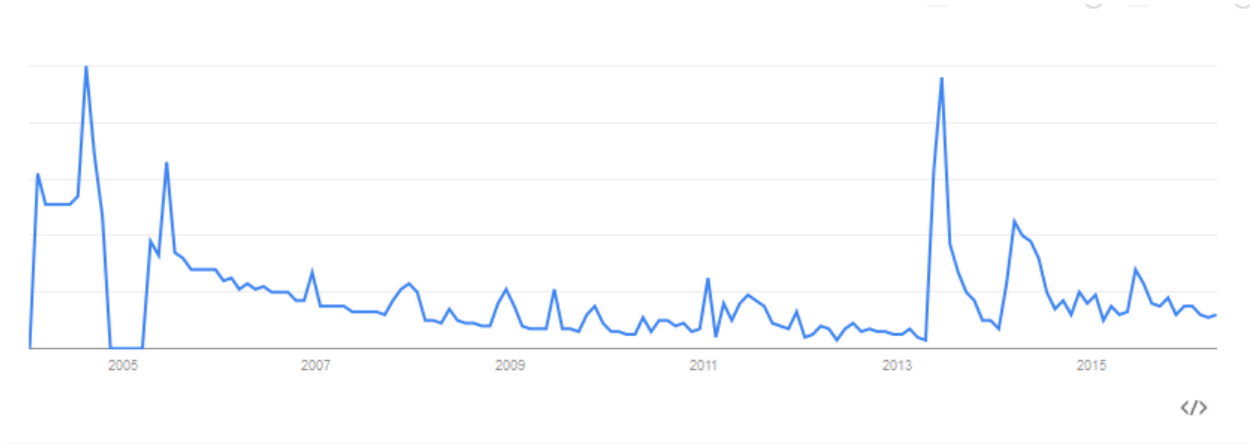

Psychological evaluation:

A **psychological evaluation** is defined as a way of testing people about their behaviour, personality, and capabilities to draw conclusions using combinations of techniques.[140] Over the years, it has developed from unethical methods of locking people up for tests to the many different strategies seen today. We currently see evaluation being used in several different settings for multiple purposes, such as education or legal situations. The purpose behind many modern **psychological evaluations** is to try to pinpoint what is happening in someone's psychological life that may be inhibiting their ability to behave or feel in more appropriate or constructive ways. It is the mental equivalent of physical examination. It is important to use **psychological evaluation** properly otherwise violations of the professional ethical code can occur, resulting in harm to the client and invalid assessment results. There is also a risk of evaluation based upon unscientific principles, as found in pop psychology, or pseudo-psychology.

While it is very unfortunate that the following advice will also amount to directing some individuals who actually need help AWAY from resources that should be available to help them, if you are personally familiar with many of the terms and technologies defined in this glossary, these two points are VERY IMPORTANT.

1) If at all possible, the **targeted individual** should NOT submit to a **psychological evaluation**, should reject any **suggestion** to do so, and otherwise try to remain very peaceful and calm in their insistence that it is not at all necessary and that they are in perfectly good command of their senses and mental faculties. If someone is trying to force you to submit to a **psychological evaluation**, LEAVE! Some vague excuse like "I just remembered I have an important that I cannot miss" might work, and "I'm sure you have more important things to do than worry about my personal life" might suffice to make any feigned interest unquestionably suspicious if they push further. In online outlets, when called crazy for speaking certain truths, you can just point out that it's VERY suspicious that they always try to malign people as mentally ill and efforts to draw such **slanders** into rational conversation almost always fail, the **slandered** only willing to twist all words in a way to attack the credibility of the speaker or their words, without ever offering any sort of rational debate. At present, regardless of whether the people in white coats are aware of their role in the situation, being forced/drawn into a **psychological evaluation** is liable to result in the equivalent of a **psychiatric reprisal**.

2) In any instance where the **targeted individual** is forced to undergo a **psychological evaluation**, it is recommended to completely deny any description whatsoever that has been provided to them about your claims, or perhaps to say something like "I guess I was just having an active imagination (or just made up a story because I thought it would be funny) but I'm feeling 100% fine now and recognize that all of those things are completely impossible and there couldn't possibly be any **conspiracy**, because **conspiracies** never ever exist in the real world". Do NOT, I repeat DO NOT be lured into any specific description of the experiences WHATSOEVER, perhaps saying "you know, I really don't feel that it's relevant to anything". Sticking to these lines may cost you some days or weeks of illegal confinement, in which case you can be fully assured that this is indeed a **psychiatric reprisal** and you

[140] Anastasi, A and S Urbina (1997). "Psychological Testing (Seventh ed.)". Upper Saddle River (NJ): Prentice Hall.

are correct to refuse to self 'incriminate' by setting yourself up for a mental health record. Finally, in such a situation, demand that you will not submit to any **psychological evaluation** unless there is a video record of the proceedings and that you are satisfied that you will be able to easily access the proceedings.

Psychological torture (i.e., **psychological terrorism**, especially state-complicit; also, see **torture**):

Psychological torture is a type of **torture** that relies primarily on psychological effects, and only secondarily on any physical harm inflicted.

The Convention against Torture and Other Cruel, Inhuman or Degrading Treatment or Punishment (commonly known as the United Nations Convention against Torture) is an international **human rights** treaty, under the review of the United Nations, that aims to prevent **torture** and other acts of cruel, inhuman, or degrading treatment or punishment around the world. The Convention requires states to take effective measures to prevent **torture** in any state under their jurisdiction, and forbids states to transport people to any country where there is reason to believe they will be **tortured**.[141]

The text of the Convention was adopted by the United Nations General Assembly on December 10, 1984 and, following ratification by the 20th state party, it came into force on June 26, 1987. June 26 is now recognized as the International Day in Support of Victims of Torture, in honour of the Convention. As of May 2015, the Convention has 158 state parties.

Physical torture	**Distress rating**
Palestinian hanging*	3.8
Suffocation/asphyxiation	3.8
Electric torture	3.7
Falaqa**	3.6
Burning of parts of body	3.6
Forced extraction of teeth	3.6
Stretching of the body	3.5
Beating	3.5
Hanging by hands or feet	3.5
Needles under toenails or fingernails	3.4
Beating over the ears with cupped hands	3.4
Pulling/dragging/lifting by hair	3.2
Psychological manipulations	
Sham executions	3.7
Witnessing torture of close ones	3.6
Threats of rape	3.6
Threats against family	3.4
Witnessing torture of others	3.4
Threats of death	3.3
Threats of further torture	3.2
Fluctuation of interrogator's attitude	2.9
* Hanging by the wrists tied at the back	
** Beating the soles of the feet	

The average amount of distress that participants recalled feeling in various torture situations (rated on a scale of 0 to 4)

The Convention gave for the first time in history a definition of psychological **torture**:

Torture is any act by which severe pain or suffering, whether physical or mental, is intentionally inflicted on a person for such purposes as obtaining from him or a third person information or a confession, punishing him for an act he or a third person has committed or is suspected of having committed, or intimidating or coercing him or a third person, or for any reason based on discrimination of any kind, when such pain or suffering is inflicted by or at the instigation of or with the consent or acquiescence of a public official or other person acting in an official capacity.[142]

Many forms of **psychological torture** methods attempt to destroy the subject's normal self-image by removing them

[141] "White Paper "The Rule of Law and Psychological Torture: Absence of a Legal Definition, Prospects and Problem", in The World Rule of Law Movement and Russian Legal Reform", edited by Francis Neate and Holly Nielsen, Justitsinform, Moscow (2007).

[142] "Convention against torture". United Nations Human Rights Council. 10 December 1984. Accessed from http://www.ohchr.org/EN/ProfessionalInterest/Pages/CAT.aspx on April 27, 2016.

from any kind of control over their environment, creating a state of **learned helplessness**, psychological regression and **depersonalization**. Other techniques include forced nudity and head shaving, **sleep deprivation**, hooding and other forms of sensory deprivation.

While **psychological torture** may not leave any lasting physical damage—indeed, this is often one of the motivations for using psychological rather than physical **torture**—it can result in similar levels of permanent mental damage to its victims.[143]

Psychological warfare (for present purposes, **neurowarfare** is often a more appropriate term):

Psychological warfare (PSYWAR), or the basic aspects of modern psychological operations (PSYOP), have been known by many other names or terms, including MISO, Psy Ops, Political Warfare, 'Hearts and Minds', and **propaganda**. The term is used "to denote any action which is practiced mainly by psychological methods with the aim of evoking a planned psychological reaction in other people". Various techniques are used, and are aimed at influencing a target audience's value system, belief system, emotions, motives, reasoning, or behaviour. It is used to induce confessions or reinforce attitudes and behaviours favourable to the originator's objectives, and is sometimes combined with black operations or **false flag** tactics. It is also used to destroy the morale of enemies through tactics that aim to depress troops psychological states.[144] [145] Target audiences can be governments, organizations, groups, and individuals, and is not just limited to soldiers. **Civilians** of foreign territories can also be targeted by technology and media so as to cause an effect in the government of their country.

Of importance, in the present context, is that **psychological warfare (neurowarfare)** has expanded from things like flyer drops, radio diffusions and planted media stories, etc. (all of which can be easily tuned out just by turning the radio off, or not reading the dropped flyers, etc.), or even traditional interrogation techniques, to include extensive use of the **electronic weapons** referred to in this glossary, most especially ones which use **pulse-modulated electromagnetic radiations** to communicate directly into the minds of targeted populations (see **synthetic telepathy**). In short, **psychological warfare** in the modern day appears to have the objective to go far further than to merely demoralize victims of such methods, or even to merely interfere with the functioning of non-**civilian** personnel, and extend to efforts to **brainwash** entire populations (such an effort was in full swing in Canada with 2013-2014 being a particularly dark time – nary a genuine laugh or smile could be seen for nearly two years during this period - but few have yet to take the plunge towards a first open description of these events), and most especially **targeted individuals** who may have a degree of influence within a population (including for purposes of repression of statutorily acceptable political expression). In China, I have observed the use

---

[143] Khamsi R (5 March 2007). "Psychological torture 'as bad as physical torture'". *New Scientist*. Accessed from https://www.newscientist.com/article/dn11313-psychological-torture-as-bad-as-physical-torture on April 27, 2016. The figure is credited to the same article.

[144] Chekinov, SC, SA Bogdanov. "The nature and content of a new-generation war". United States: Military Thought. p. 16. Accessed from http://www.eastviewpress.com/Files/MT_FROM%20THE%20CURRENT%20ISSUE_No.4_2013.pdf on April 27, 2016.

[145] Doob, LW (1949). "The strategies of psychological warfare", *Public Opinion Quarterly*, 13(4(, 635-644.

of these technologies in combination with on-the-ground efforts to try to stir up revolutionary fervour (I believe, of the pro-Nazi variant) in a complete absence of any notion of how anything would get better as a result. At the very least, the objective would be to stimulate additional **political repression** in China, perhaps in order to '**slander** them better' to the international community (regardless of the extent of covert **political repression** which appears to be presently going on in much of the West) and/or to stir up a backlash to additional **social controls** as a result.

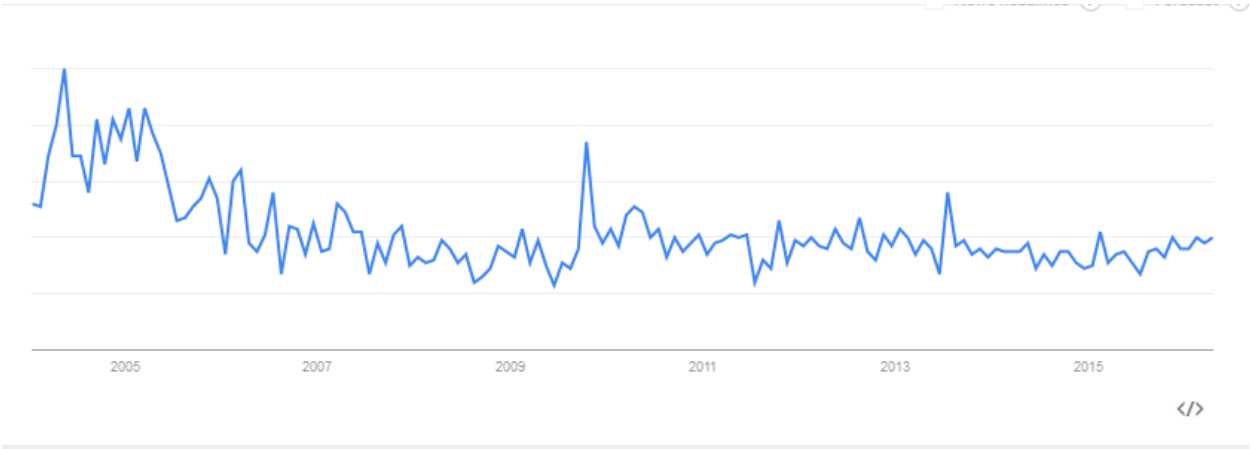

Psychiatric reprisal:

This was a practice first identified as being used in the former Soviet Union. **Targeted individuals** of this practice were misdiagnosed as being mentally ill and hundreds of thousands of activists, dissidents and citizens who were outspoken against their government were placed in psychiatric facilities. Many thousands of individuals were eliminated in this way before the practice was brought to light.

This may be used in conjunction with many other strategies, in particular various forms of **gaslighting**. Regardless of whether the **targeted individual** actually believes they are crazy, they may be drawn into (or forced into) a situation where a psychiatrist is **questioning** (in some cases interrogating) them, and at the stroke of a pen can a) leave them with a mental health record which can be used to discredit the individual in the case of any official complaint, and b) have them confined against their will even if they are in fact perfectly sane and have committed no crime. Due to the possibility of a) and b), what amounts to a threat of **psychiatric reprisal** may serve the purpose of **blackmail**; due to heightened fear., disgust, lack of respect and general social sanction against those with a mental health record, threats to disclose a mental health diagnosis (generally illegal, but anyways..) may also serve as material for **blackmail**.

Since the perpetrating entity is perfectly aware of the checkboxes which have been established to describe various mental illnesses, the methods of **harassment** are liable to be refined in a manner where, when the **targeted individual** makes a complaint, they can be written off as crazy. In pushing the matter, for example to initiate a legal process, they may be required to submit to a **psychological evaluation**, which can result in them being forcibly confined and treated with mind numbing drugs. Due to existing diagnostic criteria in psychiatry, even a well-meaning psychiatrist may do such a thing, without any

intention on their part of participating in the **psychiatric reprisal**. As a result, it is advisable, if persuaded or forced to submit to a **psychological evaluation**, to refrain from making any comment whatsoever with regard to the actual experiences suffered, and to claim that everything is A-OK. Until broader awareness of the technologies and strategies involved in **electronic harassment** is made clear to citizens on a very widespread basis, it will be exceedingly difficult to avoid what will essentially function as a **psychiatric reprisal** against anyone who tries to make the truth known. Sadly, these victim of **torture** cannot go to the police, and cannot speak to a psychiatrist about their experiences, and this will remain the case until the media and/or **civil society** is persuaded to report openly about these issues and/or a clear legislative agenda is enacted to provide a means of pursuing complaints and/or legal action which are not liable to be met with a **psychiatric reprisal**.

While the extent to which the profession of psychiatry is "in on it", the following makes it rather predictable how a **psychiatric reprisal** can be orchestrated:

1. All complaints about covert **harassment** can be dismissed as paranoia.
2. All complaints about, DOD Voice of God, voice-to-skull, Neurophone, Frey microwave, Neural Decoding, Synthetic or Artificial Telepathy technology, etc., can be dismissed as psychosis, **delusions**, or **schizophrenia**. This is although the technology is patented at the United States Patent and Trademark Office
3. All complaints about media feedback in surveillance can be dismissed as **delusional**.
4. All complaints about oppression, torture, abduction, etc., can be dismissed as fantasy.

Pulsed energy projectiles:

This type of weapon involves the emission of an invisible electromagnetic pulse which, upon contact with the target, ablates the surface and creates a small amount of exploding plasma. This produces a pressure wave that stuns the target and knocks them off their feet, and **electromagnetic radiation** that affects nerve cells causing a painful sensation. The technology can also be used as a lethal weapon.

(It is not clear to me whether this technology is yet in active deployment, whether for military purposes or for the purpose of 'crowd control', i.e., suppression of **peaceful** protest.)

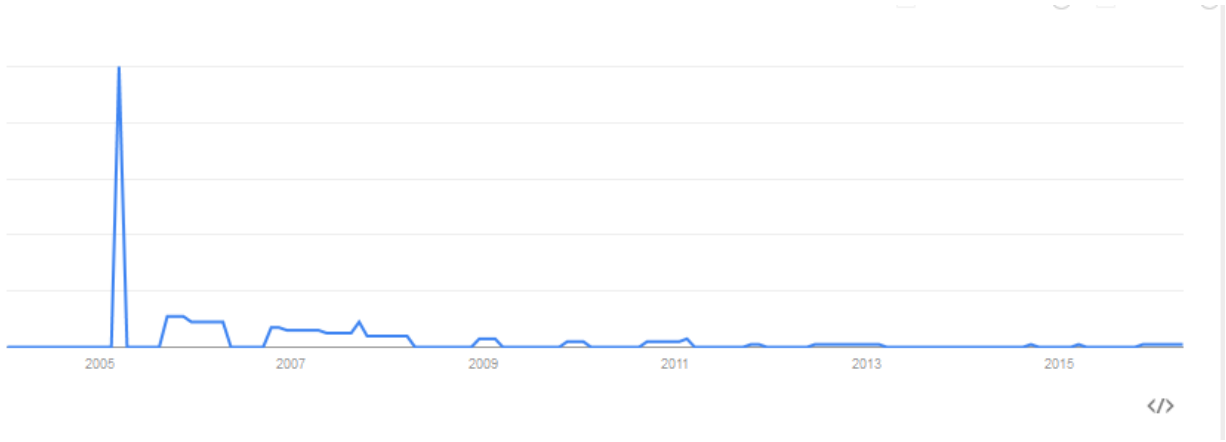

Pulse-modulated electromagnetic radiations:

In consideration of the **microwave auditory effect**, this refers to pulse modulations of microwave frequency **electromagnetic radiations** which can transmit auditory perceptions at great distance into one's head (see **voice to skull** or **synthetic telepathy** for explanations and references relating to this effect). For example, if you have a transmission at 100 MHz, the transmission may be 'pulse modulated', say, to transmit a pulse 10 times a second, in which case the received communication mimics a 10 Hz wave. This overcomes a major technological barrier to transmitting **low frequency waves**, which are relatively long, and therefore would require unrealistically massive antennae for transmission – the pulse modulated transmissions of higher frequency waves are then able to **mimic** the lower frequency waves for many purposes.

Applications across a diversity of frequencies are liable to *influence* many, or perhaps at some later date all, neural and biophysical processes, in particular because these waves and related magnetic fields influence inter-cellular communications and in at least some cases ion gradients in cells. However, the current abilities in targeting such technologies are not publicly known, which implies a great vulnerability to the public in the case where nefarious actors may get their hands on such technologies.

For a rather well-known example of the effects of **pulse-modulated electromagnetic waves** on neural function, consider that strobe lights are known to cause seizures in some persons with epilepsy. The visual region of the electromagnetic spectrum is known as light. A strobe light is a sort of **pulse-modulated electromagnetic wave**, diffusing, for example, 10 or 20 pulses per second – anyone who has been exposed to a strobe light, for example at a dance club or party, is fully aware that directing one's attention away from the immediate surroundings and allowing the **pulse-modulated electromagnetic radiation** (the strobe light in this case) can have relatively profound impacts on cognition and emotion.

Over 15 years ago, as early as the year 2000, there was already a product on the market with highly pinpointed accuracy in pulse modulations which are able to pass through many types of materials such as walls, etc., named the 'ground penetrating radar' produced by the Patriot Scientific Corporation. The impulse radar (**pulse-modulated electromagnetic wave**s) of this technology uses low power inherently because the transmissions occur in pulses separated by periods of no transmission. The power of the pulses is offset by the dead time between the pulses. The average output of the current system is about 300 MICROwatts. THE LOW AVERAGE POWER OF AN IMPULSE SYSTEM EFFECTIVELY HIDES THE TRANSMISSIONS FROM CONVENTIONAL RECEIVERS. [146]

Q

Questions:

Humans ask them. Be human. Don't stop asking **questions**. Ever. The only things that are black and white, are black and white themselves. And even then, pure black is theoretically something which

[146] E White (2000), appendix TWR4.

reflects no light whatsoever (a physical impossibility outside of a black hole) and white is merely the sum of all visible colours, in which case black and white don't even really exist for practical purposes.

Everything is a construct. Everything is real. Nothing speaks for itself. Everything is open to interpretation. Embrace the contradiction. Be human. Do not stop asking **questions**. Perhaps the only thing that is more quintessentially human than to speak truth to power, is to ask **questions**. **Question** that.

R

Rage Against the Machine:

A fairly anti-establishment hard rock band from the 1990s. You just don't get that kind of stuff coming out of the music industry any more, do you? Perhaps it is time for a repeat of the 1960s and 1970s in that regard. Support your local **peace**-preferring anti-establishment artist today.

Rape:

Rape is a type of sexual assault usually involving sexual intercourse or other forms of sexual penetration perpetrated against a person without that person's consent. The act may be carried out by physical force, coercion, abuse of authority or against a person who is incapable of giving valid consent, such as one who is unconscious, incapacitated, has an intellectual disability or below the legal age of consent. The term **rape** is sometimes used interchangeably with the term sexual assault.

Widespread and systematic **rape** and sexual slavery can occur during international conflict. These practices are crimes against humanity and **war crimes**. **Rape** is also recognized as an element of the crime of genocide when committed with the intent to destroy, in whole or in part, a targeted ethnic group.

People who have been **raped** can be traumatized and develop posttraumatic stress disorder.

Lack of consent is key to the definition of **rape**.

Duress is the situation when the person is threatened by overwhelming force or violence (for example **harassment, intimidation** and/or threat of **blackmail** via nefarious applications of **electronic weapons**), and may result in the absence of an objection. This can lead to the presumption of consent (rather unlikely that any sort of consent would be assumed, however, since the situation is generally one of trying to assume complete domination and psychological control over the **targeted individual**).

In a context of **psychological warfare** in the electronic age, I hope it should suffice, given the definitions of **conditioning** and stimulated response (whether by gestures or neurologically invoked **conditioned** triggers), **evoked action**, etc., to assert that <u>it is in fact possible to **rape** a person remotely</u>. No small number of **targeted individuals** attest to this. In addition to the direct emotional and psychological trauma and the highly invasive nature of this sexual penetration into one's cognition and even

physiology, this form of sexual **harassment** (**rape**) may also serve to offer some sort of sick sense of power to **assets** who are very much under the thumb of their **handler(s)** and whose only means of having any sense of control over anything is to exert abusive control over another individual.

In 1998, Judge Navanethem Pillay of the International Criminal Tribunal for Rwanda said: "From time immemorial, **rape** has been regarded as spoils of war. Now it will be considered a **war crime**."[147]

Mental **rape**:

- When your mind it invaded and then **rape** by words or images.[148]
- The definition of **'rape'** is to steal a person's **innocence** without their consent although this is most often used in sexual cases. However, mental **rape** occurs probably just as much, if not more, than other forms of mental abuse and can result in the victim finding it hard to ever trust another person again. … Mental **rape** is the act of stealing the victim's thoughts (and sometimes emotions) then reporting them in secret back to the abuser who then uses the information to manipulate their victim even further. Not only are the participants stealing the victims thoughts, they are also committing a violation of the victims privacy and basic **human rights**.[149]
- A **targeted individual** is attacked by a perpetrating entity in the most painful non-physical way possible: Their mind and soul are assaulted with painful, horrifying visions, sensations, and/or (real or planted) memories, and their will and sanity broken until afterward they're powerless, hopeless and numb, but not dead, although they may wish they were. Minimal to no sexual contact actually occurs, but as the name indicates, everything else is there to resemble a **rape** — the ultimate violation of privacy and consent, extreme humiliation that annihilates all sense of self-esteem, near-absolute helplessness even against your very own mind and body, and the corrupt perversion of what could otherwise be a source of identity and joy. … A Well-Intentioned Extremist, Anti-Villain, or even the heroes may resort to Mind **Rape** if circumstances force them to (and will probably regret it with all grief for the rest of their existence), but only the most disgusting lowest of the low shall take a sick enjoyment out of it. [150]

The best prevention against **rape** is for the rapist to not **rape** people. However, in the context of **psychological warfare** in the electronic age, until these new **electronic weapons** come under full social, legislative and judicial control, **targeted individuals** will need to devise psychological and habitual methods of mitigating against **rape** and mental **rape**.

Remote neural monitoring:

---

[147] Navanethem Pillay is quoted by Professor Paul Walters in his presentation of her honorary doctorate of law, Rhodes University, April 2005 Judge Navanethem Pillay. Introduction by Professor Paul Walters, Public Orator. Accessed from https://web.archive.org/web/20080227065852/http://www.ru.ac.za/academic/graduation/addresses_and_citations/2005/Judge_Pillay_citation.doc on April 27, 2016.

[148] http://www.urbandictionary.com/define.php?term=mental+rape. Accessed on April 27, 2016.

[149] http://hubpages.com/health/Mental-Rape. Accessed on April 27, 2016.

[150] http://tvtropes.org/pmwiki/pmwiki.php/Main/MindRape. Accessed on April 27, 2016.

What does **remote neural monitoring** (RNM) do? For purposes of electronic evaluation, electrical activity in the speech centre of the brain can be translated into the subject's verbal thoughts. On the side of eliciting a response, RNM involves sending encoded signals to the auditory cortex of the brain directly bypassing the ear. This encoding helps in detecting audio communication[151]. It can also perform electrical mapping of the brain's activity from the visual centre of the brain, which it does by bypassing the eyes and optic nerves, thus projecting images from the subject's brain onto a video monitor.

Here is an example of a reconstruction <u>from the **civilian** sector</u> using more proximate technologies than those assumed to be in **remote neural monitoring**: [152]

With this visual and audio memory, both can be visualised and analysed. This system can, remotely and non-invasively, detect information by digitally decoding the evoked potentials in 30-50Hz, 5 millwatt electromagnetic emissions from the brain. The nerves produce a shifting electrical pattern with a shifting magnetic flux which then puts on a constant amount of **electromagnetic waves**. There are spikes and patterns which are called evoked potentials in the **electromagnetic emission** from the brain.

For the purpose of **remote neural monitoring**, the perpetrating entity will introduce various stimuli in order to get the **targeted individual** to think about something. Then, unless the **targeted individual** can think about something else, via **remote neural monitoring** it is possible to monitor and evaluate the response. Of course, the method has no protections against the possibility that 'memories' may have been planted or that the 'information' collected may be the result of efforts to reprogram the brain of the individual.

Another recent **civilian** sector breakthrough relates to semantic maps (mapping words). The abstract states summarizes how the study "*systematically map[s] semantic selectivity across the cortex using voxel-wise modelling of functional MRI (fMRI) data collected while subjects listened to hours of narrative stories. We show that the semantic system is organized into intricate patterns that seem to be consistent across individuals. We then use a novel generative model to create a detailed semantic atlas. Our results*

---

[151] This had been demonstrated as early as the July 1973 issue of Popular Electronics, which reported on a system to read EEG signals (the stuff of which thought reading is made) at a distance by passing a radio signal through the human head and analyzing the passed-through signal. However, it appears that this specific issue of the magazine has been cleansed from the web.

[152] The general principle for this technology can be reviewed at https://en.wikipedia.org/wiki/Eigenface. I was unable to locate the original source for this image, but it seems to be derived from research by Alan S. Cowen during his studies at Yale University.

suggest that most areas within the semantic system represent information about specific semantic domains, or groups of related concepts, and our atlas shows which domains are represented in each area. This study demonstrates that data-driven methods—commonplace in studies of human neuroanatomy and functional connectivity—provide a powerful and efficient means for mapping functional representations in the brain."[153] In short, it is indeed possible to map neural activation related to language and concepts (ideas) (and presumably, then, to train software to recognize these maps and work backwards to determine what is being thought of) – however, the **civilian** sector has yet to officially prove the ability to do so by remote means, for example by using an analogue of the **laser microphone** to intercept brain wave activity and to progressively learn which signals are linked to which words/concepts, etc.

Unverified account of how this may operate which appears roughly accurate (non-**civilian** technologies):

A scan of the specific brain emissions given off when the victim **subvocalizes** using an array of pulsed frequency **MASERs** fired at the **targeted individual**, enables the victim to be scanned. By firing an array of **ELF** pulse modulated **MASERs**, which scan up and down the window of frequency emissions given off by **subvocalized** thought (or images and other thought processes), interference effects can be measured in the **MASER** beam. The victim's **ELF** brain emissions will interact constructively or destructively with the pulsed frequency **MASER** carrying **ELF** in the **ELF** window associated with **subvocalized** thoughts. If we fire an array of pulsed **MASERs**, which are out of phase with each other, extraneous noise can be filtered out in the digital domain. Since the converging **ELF** modulated **MASERs** are being effected by the low-level emissions in the victim's brain, the shifts in the **ELF** pulsed signal going into the **targeted individual**'s brain can be detected. A simplistic version of this would be the laser beam shone at the window of the person that is being bugged (a **laser microphone**). The vibrations in the window cause modulations in the laser that can be converted into electrical signals and hence into sound. In this way the **subvocalized** thoughts (or images and other thought processes) in the victim's brain can be read. <u>Having already built up a library of excitation potential signatures for differing words and groupings of words, a sophisticated computer can begin to decode the emission signatures into word streams</u>. In this way the **subvocalized** thoughts of the victim can be stored in the memory of a supercomputer and analysed to give a read out of what the target is thinking.

Here's another explanation drawn from an online source:

How does RNM. work? It employs a set of programs functioning at different levels, like:

1) The signals intelligence system which applies electromagnetic frequencies (EMF), to excite the brain for the system and the electronic brain link (EBL).

2) The brain stimulation system that has been planned as particle emission intelligence, which means receiving information from unintentionally created electromagnetic waves in the environment. However, it is not related to radioactivity or nuclear detonation.

---

[153] Huth, AG, WA de Heer, TL Griffiths, FE Theunissen and JL Gallant (April 28, 2016). "Natural speech reveals the semantic maps that tile human cerebral cortex", *Nature*, 532, 453–458.

3) The recording machines that have electronic equipment to examine electrical action in human beings from afar. This computer-generated brain charting can always record all electrical events in the cerebrum.

4) The recording aid system deciphers individual brain maps for 'security purposes'.

The machinery involved can, remotely and non-invasively, detect information by digitally decoding the evoked potentials in 30-50Hz, 5 mW electromagnetic emissions from the cerebrum. **The EMF emissions can be decoded into current thoughts and audiovisual perception, in the subject's gumption**.

Civilian sector research has also demonstrated the ability to decode visual imagery during sleep, whether as a matter of 'organic' dreaming or in response to stimulus.[154] It is not clear whether it is possible to **plant a false memory** via such means, but the period just before sleep and just after awakening, in addition to periods of **sleep deprivation** are (according to my personal experience) certainly periods of high vulnerability in this regard.

Right of revolution:

In political philosophy, the **right of revolution** is the right or ***duty*** of the people of a nation to overthrow a government that acts against their common interests. Stated throughout history in one form or another, the belief in this right has been used to justify various revolutions including the English Civil War, the American Revolution and the French Revolution.

However, in times of tyranny it may not always be desirable to upend the entire political infrastructure to achieve anti-tyranny objectives. If the political structure is already propitious to serving the interests of a public that is ready and willing to defend their rights, ideally it should suffice to remove the rogue elements within the governing apparatus, for example rogue elements within the unseen parts of the security state. For national security in the international sense, it should not be viewed as generally desirable to excessively distract legitimate security forces which serve the common interest and are dedicated to protecting the public from doing what we pay them to do. **Peaceful** means may often be sufficient to achieve such objectives and should at all times be preferred as a means of upending, neutralizing or even eradicating tyrannical factions which act contrary to the common interest, and only when continued pursuit of **peaceful** means of anti-tyrannical efforts becomes patently absurd in the face of reality, should genuine consideration of the more extreme versions of any **right to revolution** be promoted as self-evident.

Considering that all of the technologies and methods defined in this glossary generally lead to some sort of **psychiatric reprisal** or other means of **political repression** (but not likely worse, after all, we do not live in North Korea or anything), the organizing method should be as a pre-emptive organization dedicated to **peaceful** and/or violent revolutionary objectives in the eventuality that all of these patently impossible things should ever come to pass. If claims relating to such technologies and strategies are

[154] Horikawa T, M Tamaki, Y Miyawaki and Y Kamitani (May 2013). "Neural decoding of visual imagery during sleep", *Science*, 340(6132):639-42. doi: 10.1126/science.1234330.

evidence of mental illness, then anyone who opposes the organization of a pre-revolution on such a basis can only be … crazy, no?

A.k.a., how to legally organize a revolution in plain sight against something that the public is not allowed to know about. Worst case scenario? Full disclosure. Which would suit many people just fine.

Ritual abuse:

Ritual abuse is an extreme, sadistic form of abuse of children and non-consenting adults. It is methodical, systematic sexual, physical, emotional and spiritual abuse, which often includes **mind control**, **torture**, and highly illegal and immoral activities such as murder, child pornography and prostitution. The abuse is justified by a religious or political ideology.[155]

It is believed that, in at least some cases, such methods may be directed towards the creation of an army of 'Manchurian Candidates', by starting the abuse and programming from a very young age, with the objective to use such an army to eventually achieve world domination. Dr. Cordyn Hammond states that many such victims he worked with had relatives in NASA, in the CIA, and in the military, including very high-ups in the military.[156] (Of course, that could be the product of a **disinformation** campaign to cover up the true nature of the research and programming, one that the victims could presumably be persuaded to believe without too much difficulty.) Regardless of the extent to which this may be a realistic threat, it is clear that such groups would also have no qualms about using **neuroweapons** to further their aims.

S

Schizophrenia:

This is a mental health classification based on a checkbox list which refers to 'symptoms' such as 'false beliefs', 'unclear or confused thinking', 'hearing voices', 'reduced social engagement', 'lack of motivation' a variety of 'hallucinations', etc. There is precisely zero neurological or biological basis for any such 'diagnosis', and the 'diagnosis' is 100% based on the descriptions of experiences made by the 'patient', followed by a psychiatrist writing down that these experiences are a product of **delusional** thinking, and cannot possibly reflect anything that was actually experienced. Commonly understood indicators of '**schizophrenia'** in addition to 'hearing voices' include things like 'being followed', 'being monitored by the CIA', belief in **conspiracy** theories, etc. Note, that the diagnostic criteria is essentially identical to what an individual would describe were they in fact speaking openly about an actual **conspiracy**, and

---

[155] As defined by Ritual Abuse, Ritual Crime and Healing – Information and Resources for Survivors, Therapists and Others (RAINFO): http://ra-info.org/faqs/.

[156] Hammond, CH (1992). "Cults, Ritual Abuse and Mind Control", from transcripts relating to a presentation he gave many times. His credentials include: Professor of Physical Medicine and Rehabilitation, Utah School of Medicine; Past President, American Society of Clinical Hypnosis; Past President, International Society for Neuronal Regulation (ISNR); Director and Founder of the Sex and Marital Therapy Clinic, University of Utah; Past Editor, The American Journal of Clinical Hypnosis; Author of 57 journal articles or reviews and eight books, including a leading textbook. However, after many threats, he no longer speaks on the subject.

being targeted by various **intimidation**, **harassment** and surveillance technologies which are now known to exist.

However, the above description does not necessarily mean that such experiences can always be attributed to external manipulations, and perhaps there are in fact individuals who have such experiences and 'symptoms' which originate from 'deluded' and 'anti-social' thinking or behaviour. Plausibly, nefarious types have merely piggybacked upon pre-existing definitions in order to have their critics silenced by destroying their credibility via a mental health record.

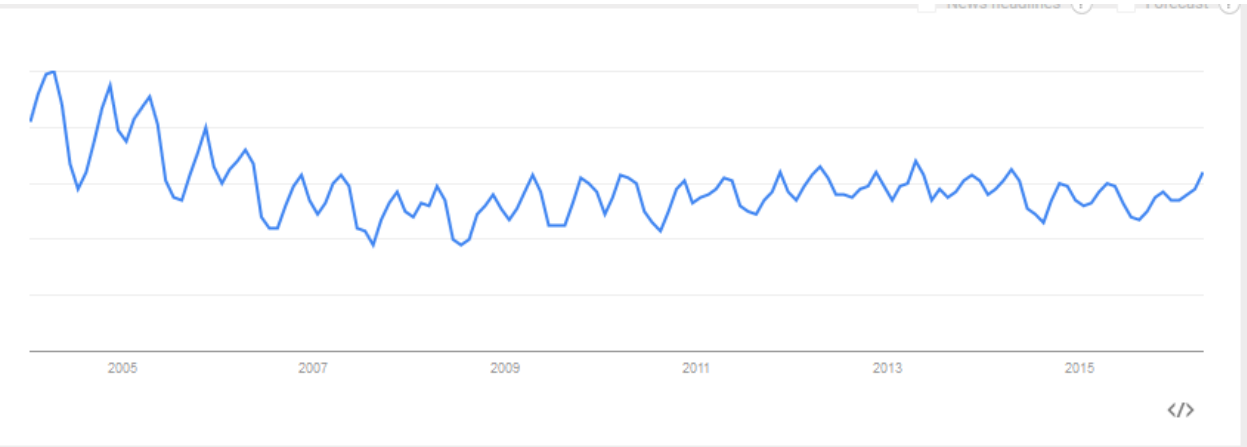

Self-incrimination:

Self-incrimination is the act of exposing oneself (generally, by making a statement) "to an accusation or charge of crime; to involve oneself or another [person] in a criminal prosecution or the danger thereof".[157] **Self-incrimination** can occur either directly or indirectly: directly, by means of interrogation where information of a **self-incriminatory** nature is disclosed; indirectly, when information of a **self-incriminatory** nature is disclosed voluntarily without pressure from another person.

In an instance where a **targeted individual** feels forced to make an untrue statement that may appear as **self-incrimination**, the real criminals are the party that forced the statement (this includes elicited **subvocalizations** which the perpetrating entity will try to portray as 'evidence').

In an instance where **innocent** statements by the **targeted individual** are twisted beyond recognition of their original meaning and used as 'evidence' of **self-incrimination**, the real crimes are **slander** (**defamation**), **harassment** and others depending on the specific laws of the country.

Sensitization:

[157] Black's Law Dictionary (5th ed.). 1979. p. 690.

Sensitization is an example of non-associative learning[158] in which the progressive amplification of a response follows repeated administrations of a stimulus. **Sensitization** often is characterized by an enhancement of response to a whole class of stimuli in addition to the one that is repeated. For example, repetition of a painful stimulus may make one more responsive to a loud noise.

Silent sound (a.k.a. sound from ultrasound):

Silent sound, or **sound from ultrasound** is the name given here to the generation of audible sound from modulated ultrasound without using an active receiver. This happens when the modulated ultrasound passes through a nonlinear medium which acts, intentionally or unintentionally, as a demodulator.

Ultrasound has much shorter wavelengths than audible sound, so that it propagates in a much narrower beam than any normal loudspeaker system using audio frequencies. This makes it possible to have the sound directed in a very specific direction rather than being heard widely.

A transducer can be made to project a narrow beam of modulated ultrasound that is powerful enough, at 100 to 110 dBSPL, to substantially change the speed of sound in the air that it passes through. The air within the beam behaves nonlinearly and extracts the modulation signal from the ultrasound, resulting in sound that can be heard only along the path of the beam, or that appears to radiate from any surface that the beam strikes. This technology allows a beam of sound to be projected over a long distance to be heard only in a small well-defined area; a listener outside the beam hears nothing. This effect cannot be achieved with conventional loudspeakers, because sound at audible frequencies cannot be focused into such a narrow beam.

This technology is commercially available, for example the HyperSonic Sound and Audio Spotlight products. In addition to concerns that this allows audible transmission to an individual which may not be heard by others, additional subliminal programming into the signals may be even more of a threat to the public, considering possible applications used together with **conditioned** triggers. To my knowledge, **silent sound** is not common in **electronic harassment**.

Sleep deprivation:

Sleep deprivation is the condition of not having enough sleep; it can be either chronic or acute. A chronic sleep-restricted state can cause fatigue, daytime sleepiness, clumsiness and weight loss or weight gain. It adversely affects the brain and cognitive function. However, in a subset of cases **sleep deprivation** can, paradoxically, lead to increased energy and alertness and enhanced mood; it has even been used as a treatment for depression. Few studies have compared the effects of acute total **sleep deprivation** and chronic partial sleep restriction. Complete absence of sleep over long periods has not been seen in humans (unless they suffer from fatal familial insomnia); it appears that brief microsleeps cannot be avoided. Long-term total **sleep deprivation** has caused death in lab animals.

---

[158] Non-associative learning refers to "a relatively permanent change in the strength of response to a single stimulus due to repeated exposure to that stimulus. Changes due to such factors as sensory adaptation, fatigue, or injury do not qualify as non-associative learning.

Physiological effects:

aching muscles; confusion, memory lapses or loss; depression[159]; development of false memory[160]; hallucinations[161]; hand tremor[162]; headaches; raccoon eyes; malaise; stye; periorbital puffiness, commonly known as 'bags under eyes' or eye bags; increased blood pressure[163]; increased stress hormone levels; increased risk of diabetes; increased risk of fibromyalgia; irritability[164]; nystagmus (rapid involuntary rhythmic eye movement); obesity; seizures; temper tantrums in children; yawning; mania; symptoms similar to: attention-deficit hyperactivity disorder (ADHD) and psychosis[165].

On attention and working memory

---

[159] Therefore, if in a situation of **sleep deprivation**, one should be highly attuned to not lose hope and be driven into any suicidal state of mind. It will pass, eventually, although certain **targeted individuals** may have to psychologically prepare themselves for months or even years of routine or even "unending" high levels of **sleep deprivation**. Please do not read that as a threat or **intimidation**. Some people will need to be psychologically prepared for that possibility.

[160] Due to this possibility, the **targeted individual** is highly vulnerable to the potential for **planting a false memory** when **sleep deprived**. So, if you are **sleep deprived** and are aware that nefarious actors are trying to **plant a false memory**, it is advised to document the situation. Due to various cognitive impairments during **sleep deprivation**, it may become difficult to keep touch with reality, and diverse **psychological torture** and other **conditioning** and **brainwashing** methods may be used for the purpose of **planting a false memory**. Simply being aware of the possibility of this should serve as a strong protection. However, it is possible that the treatment will endure for a very long time, perhaps weeks, months or even years to try to force you to believe that the false memory is true. In which case, documenting the experience will help you to keep touch with reality, no matter that in some vulnerable and weak moments, one may start to actually believe the false memory.

[161] This may provide the basis for other "false memories", which the nefarious actors involved in the **psychological warfare** in the electronic age may use to feed back to you, to trigger at a later date, and claim it as a "real memory".

[162] So do not be led to believe that you are contracting some particular disease associated with tremors, such as Parkinson's disease, for example.

[163] Going for a walk or other relaxing exercises may help with this.

[164] So try to keep in check your irritableness. If you are **sleep deprived** in the course of **psychological warfare** in the electronic age, you may end up getting angry with friends, families or co-workers, with negative effects on your personal relationships and career prospects (potentially even losing a job). You might let them know something like "I've been under an enormous amount of external pressure lately, and haven't been sleep much at all. Sorry, that was uncalled for" – even if it becomes apparent that the other party is in fact involved in the **organized stalking** and **harassment** – they will LOVE it to know that they are having such a negative effect on you, and the ability to deal with the situation with good composure will reduce their sense of power over you.

[165] So, in a highly **sleep deprived** state, unless you are speaking with known friendly entities who are aware of the situation of **psychological warfare** in the electronic age, you should most certainly avoid discussing things like "hearing voices", "seeing things", "being followed", "being harassed by people you don't know", or anything relating to nefarious actors acting from within the agencies of the state which are charged to protect us. Stick to descriptions of the specific technologies being used, and refrain from discussing the perceptions without reference to the specific technologies and scientific principles which are relevant.

Among the numerous physical consequences of **sleep deprivation**, deficits in attention and working memory are perhaps the most important;[166] such lapses in mundane routines can lead to unfortunate results, from forgetting ingredients while cooking to missing a sentence while taking notes[167].

The attentional lapses also extend into more critical domains in which the consequences can be life-or-death; car crashes and industrial disasters can result from inattentiveness attributable to **sleep deprivation**[168].

Microsleeps

Microsleeps occur when a person has a significant **sleep deprivation**. Microsleeps usually last for a few seconds and happen most frequently when a person is trying to stay awake when he or she is feeling sleepy.

Some **sleep deprivation** techniques are (please don't use them, this is for informational purposes only):

During the **sleep deprivation** period, the **targeted individual** and their polysomnograph record are continuously observed; when the **targeted individual** displays sleep electrophysiological signals or assumes a sleep posture, he/she may be activated by acoustic[169] and, if necessary, tactile stimuli. This technique is used for total **sleep deprivation** as well as REM or NREM **sleep deprivation**. This technique often requires polysomnography. Similar methods may also be used to allow a very small amount of sleep (so you might 'forget' that you are being extremely **sleep deprived**, which would be rather obvious if you literally didn't sleep for many days, or so that you might later be persuaded that in fact you were sleeping, say, 6 hours a night and not 15 minutes or 2 hours a night).

---

[166] Alhola P and P Polo-Kantola (Oct 2007), "Sleep deprivation: Impact on cognitive performance", *Neuropsychiatric Disease and Treatment*, 3(5), 553–567.

[167] So, you should keep a pen and paper handy under situations of **sleep deprivation**, so that you can keeps lots of lists and take notes on important things, from the mundane such as a basic list of steps needed to execute a task, to penning down some details about the **psychological torture** that you are experiencing (in the second case, if you are being subjected to **organized stalking** and in a public place, almost certainly someone will do something like lean over your shoulders to look in on what you're writing, or speak of how this is suspicious to be writing things down, to which I respond "now THAT is suspicious").

[168] For practical purposes, it may not be possible to avoid operating a car or heavy machinery during a period of **sleep deprivation**, although ideally it should be avoided. Since most working sites are very safety oriented, you might inform your employer that you have been under a lot of external pressure and are sleeping poorly, and are not confident that you can operate the machinery safely. If they become hostile and your job may be threatened, well, it's your call on how to deal with the situation – one can always smile and feign that it will be no problem. If possible, you should have such discussions on paper, and keep a copy for yourself – in the eventuality of an accident or insurance claim, you should be protected by having made the situation clear, and be able to testify that you felt under pressure that you were not for practical purposes able to refuse the unsafe work without maybe losing your job. Also, in such situations, you really need to exercise extremely more attention than usual (ironically), because **electronic weapons** may be used to project images or thoughts of you making certain motions in order to achieve an **evoked action**, or other conditioned involuntary twitches or "mimicking-induced" copying motions, with the result that you may be stimulated to make a motion that will endanger the safety of yourself or others.

[169] E.g., neighbours making loud noises, or perhaps sounds communicated by **pulse-modulated electromagnetic waves** which transit audio into your head.

Other induced physiological responses, such as those which may be influenced by **pulse-modulated electromagnetic waves** which operate in the ELF spectrum, and/or including those which involve a **conditioned** response such as stress, increased heart rate, heart palpitations, etc.[170], may also be applied to prevent the **targeted individual** from falling asleep.

Under one interrogation technique, a subject might be kept awake for several days and when finally allowed to fall asleep, suddenly awakened and **questioned**. Menachem Begin, the Prime Minister of Israel from 1977 to 1983, described his experience of **sleep deprivation** as a prisoner of the NKVD in Russia as follows:

> *In the head of the interrogated prisoner, a haze begins to form. His spirit is wearied to death, his legs are unsteady, and he has one sole desire: to sleep... Anyone who has experienced this desire knows that not even hunger and thirst are comparable with it.*[171] [172]

It is not common among **targeted individuals** to refer to a sort of 'electronic caffeine'[173] which is used in the **sleep deprivation**, although the extent to which this relies strictly on brain wave manipulation, other means of stimulus and/or **conditioned** stimulus do not appear to be understood by the community of **targeted individuals**.

---

[170] White E (2000) in Appendix PM7 relates a description of an article in the Los Angeles Herald Examiner (Section A, November 22, 1976) which, described disclosure made to the Associated Press under the FOIA Act from the U.S. Defense Intelligence Agency. While I cannot locate an online copy of the original article, let alone a copy of the specific FOIA release, it is worth relating, as does White (2000), that the state of development on the Soviet side of the story (the state of American developments generally never having been disclosed) included a description of synchronization of the microwave signal with a frog's heartbeat, resulting in heart seizure.
As frightening as such possibilities may sound, rest assured, if faced with a perpetrating entity that is willing to try to use such a technology to intimidate you in such a manner, your life cannot possibly take a turn for the better if you allow yourself to be intimidated into allowing them to assert control over you. Such an entity can only possibly be in the practice of pure evil, and this should evoke a duty to stand up to tyranny, not to be whipped into an obedient dog, a zombie, or a puppet slave. From my personal experience, significant disruptions in heart activity (palpitations, skipped beats, etc.) can be achieved in a healthy individual, but I have no knowledge of whether such technologies may in fact be able to trigger a seizure of heart activity. If you are fairly certain that any heart disruptions are not naturally occurring, and instead related to such technologies, It is not recommended to seek professional monitoring of the situation (very unfortunately, and any qualified doctor will tell you this is HORRIBLE advice which would be borderline criminal if coming from a doctor), because the resulting data may be hacked for the purpose of evaluating the precise signals which were most effective in disrupting the heart patterns of the **targeted individual**.
Keep calm. Breathe regularly. Engage in some light activity to keep things flowing. Do not let the sick monsters get any perverted pleasures from seeing you squirm, freak out, or end up in the emergency room only to be persuaded that you are a hypochondriac or perhaps crazy (however, if you are truly having an emergency situation, absolutely do not hesitate to seek medical attention from professionals who are legally obliged to monitor your situation and try to ensure your survival). I really don't think there's much more the **targeted individual** can do, until effective technological solutions are developed for public safety.
[171] Begin, M (1979). "White nights: the story of a prisoner in Russia", San Francisco: Harper & Row.
[172] It remains debated as to whether this constitutes torture, however, with security state officials routinely arguing that it isn't, and humanitarian organizations arguing that it is.
[173] This term appears to originate from White E (2000), "The State of Unclassified and Commercial Technology Capable of Some Electronic Mind Control Effects", accessed from http://www.constitution.org/abus/mkt/uncom.htm on April 30, 2016.

<u>Slander</u> (a.k.a. defamation):

Slander and **defamation** are common features of **organized stalking**. In short, **slander** is the communication of a false statement that harms the reputation of an individual person, business, product, group, government, religion, or nation. Under common law, to constitute **defamation**, a claim must generally be false and have been made to someone other than the person defamed. Some common law jurisdictions also distinguish between spoken **defamation**, called **slander**, and **defamation** in other media such as printed words or images, called libel.

In the context of **psychological warfare** in the electronic age, where **electronic harassment** and **organized stalking** appear to be increasingly common yet generally not addressed whatsoever by the authorities of the state (very suspicious), the use of **slander** can meet several objectives which are most certainly not mutually exclusive.

First, the mere threat of **slander** may serve for the purpose of **blackmail**. To **blackmail** someone, the threat need not relate to disclosing an event that actually transpired – all that is necessary is that the **targeted individual** can be persuaded to believe that some or many other in the community may believe this. For example, that you cheat on your taxes, cheated on a romantic partner, **raped** an adult, minor or even a child, or basically any personality 'flaw' (real or imagined) that they have discovered that the **targeted individual** might find embarrassing enough (for example, the concern that the **targeted individual** will be branded as 'mentally ill' if they try to publicly disclose the reality of **electronic harassment** and **organized stalking**; that the **targeted individual** secretly loves something that they would be embarrassed to admit to) that they may submit to increasing levels of control on the part of the perpetrating entity in order to avoid disclosure. In at least some cases, the **blackmail** itself may serve as a means to be able to proceed with **brainwashing** without the **targeted individual** feeling like they are at all able to speak, write, communicate, or even THINK about the unfortunate nature of their situation. Various forms of **electronic harassment**, in addition to **organized stalking**, are liable to be applied to make the **blackmail** threat seem credible. (Indeed, the perpetrating entity is rather likely to start spreading the **slander** if/when the **targeted individual** continues with their **whistleblowing** or efforts to make anyone aware of the reality of the **electronic harassment** and/or **organized stalking**).

Second, and not mutually exclusive with the above description of how **slander** and/or the threat of **slander** can serve the purpose of **blackmail**, the **slander** can be refined according to the specific personality, values, insecurities, etc., of the **targeted individual**, as a part of attacking the **targeted individual**'s sense of self, an early stage in the process of **brainwashing** the **targeted individual**, or at the very least, contributing to their willingness to, at a minimum SHUT UP, and ideally, to be 'recruited' (i.e., forced) to participate in the **organized stalking** or getting involved in the sorts of **harassment** and bullying that contribute more generally to the 'success' of the **organized stalking** and **electronic harassment** as a means of **social control**.

Third, the threat of **slander**, and more relevantly in this case, the widespread spreading of **slander** (or at least making sure that the **targeted individual** is exposed to individuals who publicly communicate awareness of the **slanderous** details, even if the **targeted individual** is not explicitly pinpointed at any

moments of the communication) may serve the purpose of generally tiring out and wearing down the **targeted individual**. Similar to the second point, this may serve as a means to try to force the **targeted individual** to shut up about whatever social issue, political issue, or matter of disclosure/**whistleblowing** that the **targeted individual** continues to communicate about (this may be applied in conjunction with negative **conditionings** or other forms of psychological and/or physiological 'punishment' which are intended to be associated with the ongoing communication). In the sense of wearing down the individual, the **slander** may also be related to the process of trying to **brainwash** the **targeted individual**. But, in the case that the perpetrating entity may have concluded that the program of control or **brainwashing** has basically failed and will continue to fail, the **slander** may serve the purpose of pure punishment by a vindictive perpetrating entity which is angered that you will not submit to them (this may also serve as **intimidation** to others). (And, meanwhile, ongoing efforts to **slander** the **targeted individual**, in particular in a context where **remote neural monitoring** is understood to be possible, may serve the purpose of continuing to figure out the psychology and personality of the **targeted individual** better, with the objective of being able to devise alternative strategies to assert control over or **brainwash** the **targeted individual**).

Fourth, perhaps even in conjunction with **planting a false memory**, as the **organized stalking** process continues, with the sheer weight of many people (and voices) who surround you at most or all times, to try to convince you that the elicited images, recollections, etc., in fact represent an event that actually transpired. In which case, if the **targeted individual** themselves can be made to believe such a **planted memory**, for example, as supported by an intense and continuous project of neuro-programming and **conditioning**, to believe that they have highly perverted sexual interests, and are therefore '**guilty**' in a sense that these 'facts' can be used to **blackmail** them.

This list should not be considered as an exhaustive description of how **slander** is being used in the current situation of **psychological warfare** in the electronic age. In short, **slander** helps with **blackmailing**, processes involved in asserting control over the **targeted individual** or even **brainwashing** them, serves to intimidate others who don't roll over and do what they're told, and the **slander/blackmailing/brainwashing** nexus is all highly intertwined.

Social control:

Sociologists identify two basic forms of **social control**:

> Informal means of control: Internalisation of norms and values by a process known as socialization, which is defined as "the process by which an individual, born with behavioural potentialities of enormously wide range, is led to develop actual behaviour which is confined to the narrower range of what is acceptable for him by the group standards".[174]
>
> Formal means of **social control** - External sanctions enforced by government.

[174] Lindzey, G (Ed) (1954). "Handbook of social psychology. I. Theory and method. II. Special fields and applications", (2 vols)., (pp. II, 655-692). Oxford, England: Addison-Wesley Publishing Co., xx, 1226 pp.

Originally, the concept simply referred to society's ability to regulate itself.[175] However, in the 1930s, the term took on its more modern meaning of an individual's conversion to conformity.[176] **Social control** theory began to be studied as a separate field in the early 20th century.

The concept of **social control** is related to another concept, which is the notion of social order. **Social control** is a thing which is identified as existing in the following areas of society:[177]

The education system
Policing and the law
Psychiatry
Social work
The welfare state
The working environment

In a context where **electronic weapons** and **remote neutral monitoring** can be applied for purposes of **psychological warfare** in the electronic age, the potential for essentially unobserved applications of **social control** and/or **political repression**, perhaps even so far as a complete abrogation of **cognitive liberty** for some or all individuals – this situation can only be assumed to be a serious threat, until enough whistles are blown, society-wide awareness of such **electronic weapons** is achieved, and an appropriate legislative and regulatory apparatus is devised to ensure that the guiding principles of traditional legal, political and social **freedoms** and responsibilities are upheld. At present, neither the letter and most especially not the spirit of the law is being upheld – significant **civilian**/citizen involvement will be required to ensure that **electronic harassment** does not end up being the tool of the previously unimaginable levels of **social control** and **political repression**.

Stalking:

Stalking is a term commonly used to refer to unwanted, obsessive attention by individuals (and sometimes groups of people) to others. **Stalking** behaviours are related to **harassment** and **intimidation**. The word '**stalking**' is used, with some differing meanings, in psychology and psychiatry and also in some legal jurisdictions as a term for a criminal offense. It may also be used to refer to criminal offences or civil wrongs that include conduct which some people consider to be **stalking**, such as those described in law as '**harassment**' or similar terms.

Stasi/Gestapo:

Stasi: The Ministry for State Security (German: Ministerium für **Staatssi**cherheit, MfS), commonly known as the **Stasi**, also State Security Service (German Staatssicherheitsdienst, SSD), was the official state security service of the German Democratic Republic (GDR) (Deutsche Demokratische Republik, DDR),

[175] Morris, J (Jul 1975). "Sociological Theory and Social Control". *American Journal of Sociology* (The University of Chicago Press Article), 81(1), 82–108.
[176] Ibid.
[177] Innes, M (Dec 2003). "Understanding Social Control: Crime and Social Order in Late Modernity - Deviance, crime and social order", McGraw-Hill Education (UK), 176 pages.

colloquially known as East Germany. It has been described as one of the most effective and repressive intelligence and secret police agencies to have ever existed.

The number of **Gestapo** and **Stasi** officers was not actually all that high, and were primarily involved in processing all the information, while as much as 1/7 of the population[178] was busy working as informants.

Historian Robert Gellately says that it is somewhat of a myth that people normally reported on neighbours out of ideological commitment or fear of authority – rather, they may often have had more banal motives such as greed, jealousy and petty differences. He also states that he "*found cases of partners in business turning in associates to gain full ownership; jealous boyfriends informing on rival suitors; neighbours betraying entire families who chronically left shared bathrooms unclean or who occupied desirable apartments. And then there were those who informed because for the first time in their lives someone in authority would listen to them and value what they said*."[179]

Gestapo: The **Gestapo**, abbreviation of Geheime Staatspolizei, or the Secret State Police was the official secret police of Nazi Germany and German-occupied Europe.

StingRay (cell phone tower simulator):

The **StingRay** is an IMSI-catcher, a controversial cellular phone surveillance device, manufactured by Harris Corporation.[180] Initially developed for the military and intelligence community, the StingRay and similar Harris devices are in widespread use by local and state law enforcement agencies across the United States and possibly covertly in the United Kingdom. Stingray has also become a generic name to describe these kinds of devices.[181]

One of these devices can be outfitted to monitor as many as 10,000 phones at a time. Police routinely claim that they can only be used to intercept metadata, but in fact they can be set to intercept, record and store the communications (which then does not leave any paper trail of a request from the corporate provider). By viewing the signal strength of an identified phone, the device can be used to narrow in on the source of the signal, enabling a operator of such a device to identify the location of the phone.

It is only recently that these technologies have come to light, since police were (illegally, yet to be tested in court) required to not disclose the usage of such devices even when presenting evidence in court – reportedly, in many cases police would instead claim that a confidential informant provided them with the information, whereas in fact due process was violated in an absence of a warrant.

---

[178] Rosenberg R (25 May 2007). "Computers to solve Stasi puzzle", BBC: http://news.bbc.co.uk/2/hi/europe/6692895.stm.
[179] Florida State University. Faculty profile for Robert Gellately, Earl Ray Beck Professor, Department of History. Accessed from http://www.fsu.edu/profiles/gellately on May 4, 2016.
[180] Zetter, K (Mar 3, 2014). "Florida cops' secret weapon: Warrantless cellphone tracking". Wired.com.
[181] Gallagher, R (Sept 25, 2013). "Meet the machines that steal your phone's data". Ars Technica (Condé Nast).

Street theater:

Street theater when spoken of in an **organized stalking** context refers to carefully scripted **harassment** by neighbours and strangers especially, but can include **harassment** by family, friends and co-workers. The methods and scripts employed in **street theater** are very subtle, innumerable and almost always are meant to mimic normal life and be symbolically meaningful only to the **targeted individual**.

These acts are designed to keep a target at a high stress level, and are crafted so that outside observers are likely to wave the skits off as just being a complaint about something that is annoying but just happens from time to time. The cumulative effect of such acts can be crushing to sensitive targets. Noise, crowding in person or on the highway, stealing items from shopping cart when in the checkout line (or high regularity of other petty thefts), and kids sent to hang out in front of, stare, make noise, and even throw tennis balls against the target's house are simple examples. What differentiates **street theater** from normal but annoying/unsettling experiences is that **street theater** goes on every day, often by different **mind control** (**mind influencing**) operatives, far too often to be random or 'natural'. Cover is provided by the tendency of people to refuse to acknowledge the frequency of these acts and consider the complainer just being overly sensitive or irrationally or in a deluded manner seeing some **conspiracy** against them (and in the case of **street theatre**, it is indeed a **conspiracy** against the **targeted individual**).

The **street theatre** may include engineered skits where your (current or previous) thoughts are spoken to you by strangers on street or events requiring knowledge of what you were thinking. Refer to **remote neural monitoring** to see how this can happen, unless you prefer explanations which rely on unrealistic distances of possible organic human-to-human telepathic communications.

Subliminal stimuli (a.k.a. subliminal messaging):

Subliminal stimuli (literally "below threshold"), as opposed to supraliminal stimuli ("above threshold"), are any sensory stimuli below an individual's threshold for conscious perception.[182] A recent review of functional magnetic resonance imaging (fMRI) studies shows that **subliminal stimuli** activate specific regions of the brain despite participants being unaware.[183] Visual stimuli may be quickly flashed before an individual can process them, or flashed and then masked[184], thereby interrupting the processing. Audio stimuli may be played below audible volumes or masked by other stimuli[185].

---

[182] Loftus EF and MR Klinger (June 1992). "Is the unconscious smart or dumb?", *American Psychologist*, 47(6), 761–765.

[183] Brooks, SJ, V Savov, E Allzén, C Benedict, R Fredriksson and HB Schiöth. (Feb 2012). "Exposure to subliminal arousing stimuli induces robust activation in the amygdala, hippocampus, anterior cingulate, insular cortex and primary visual cortex: a systematic meta-analysis of fMRI studies". *NeuroImage*, 59(3), 2962–2973

[184] This may be experienced, for example, by projecting images of genetalia when aligned with a member of the gender one is attracted to, in combination with **conditioning** to establish gestural and/or verbal triggers. The following is a particularly troubling application of such technologies. This may be used to apply a **conditioned** trigger such as influencing physiological responses related to sexual excitation, most likely for the purpose of establishing a sense of being hopelessly controlled by the perpetrating entity and a general sense of having lost control over one's basic functions – or, far more nefariously, to apply the **conditioned** triggers when meeting any awareness of progressively younger children (for example encountering the word "child", "youth", "12 years old",

Applications of **subliminal stimuli** often base themselves on the persuasiveness of the message. Importantly, research on 'action **priming**' has shown that **subliminal stimuli** can trigger only actions a receiver of the message plans to (or anyways may be persuaded to have an inclination to) perform anyway; however, consensus of this finding remains unsubstantiated by other research. Most actions can be triggered **subliminally** only if the person already has the potential to perform a specific action.[186]

The potential applications of **subliminal stimuli** may appear very scary at first thought because it seems like someone might program (**condition** and **brainwash**) you without your even knowing. However, awareness of the possibility alone is strong protection – after many repetitions, with careful awareness of one's thoughts, emotions, urges, etc., and effort to eventually derive the source of the **subliminal stimuli** (which are likely to have begun or be more strongly enforced with some supraliminal messaging at times) will enable a **targeted individual** to at least divert their consciousness away from the subliminally planted trigger, or perhaps even reprogram the trigger (however, reprogramming the trigger is likely to be nearly impossible if the perpetrating entity is continuously using diverse methods to reinforce the association, so asserting control over one's consciousness by redirecting every time the stimulus is applied may, for practical purposes, be the best you can hope for).

A very obvious means of masking subliminal stimuli in a public setting which is very unlikely to leave easily recorded evidence, if one is not aware of what is going on and not paying attention, is for one individual or group to make lots of noise or a distraction and for another to plant or elicit the **conditioned** trigger – for example, several people make a loud noise which completely distracts you at the moment that a sexually attractive individual crosses in front of you, while another person says the verbal trigger or makes a gesture which you are not consciously aware of but which your brain picks up,

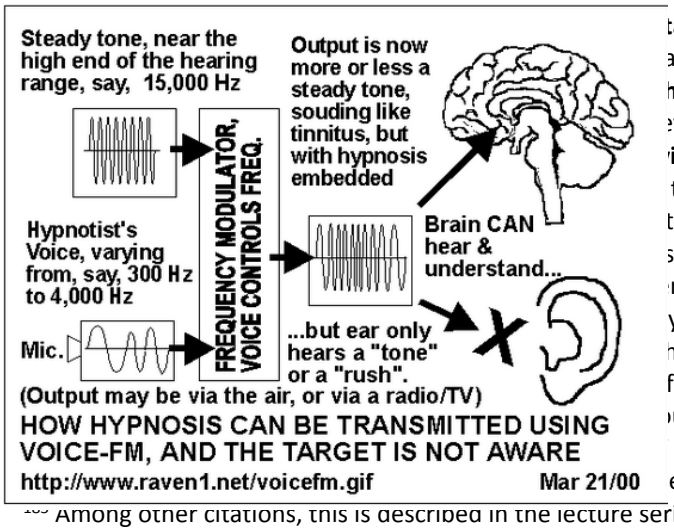

targeted individual towards increasingly **pedophilia**-
ay find oneself sitting across from a psychiatrist
hiatric reprisal) as a potential threat to public safety.
eving that one actually DOES have such preferences
idual may in fact be **conditioned** and **brainwashed** into
the perpetrating entity to claim that the **targeted**
the draconian and torturous level of privacy invasion is
such evil entities that would perpetrate such a thing
ration of this description, nothing but the precise
y of analogous situations unrelated to sex) may be
nts, although the perpetrating entity is sure to try to
f various **conditioned** triggers. In consideration of this,
us focus to avoid thinking about sexual thoughts in any
nefarious ends, perhaps so far as to try to plant a
exual act or committed an act of sexual violence.

[185] Among other citations, this is described in the lecture series produced by The Great Courses, by DN Robinson, entitled "Great Ideas of Psychology" – for example, having established the minimum audible threshold, a subject who is exposed to 10 repetitions at 20% of the threshold may guess having heard the word twice, and at 50% of the threshold may guess having heard the word five times, despite not actually having "heard" the word. A later version of this glossary will indicate the specific lecture number and the minute/second where the relevant section begins, but the entire series is time well spent.

[186] Schlaghecken, F and M Eimer (2004). "Subliminal stimuli can bias 'free' choices between response alternatives". *Psychonomic Bulletin & Review*, 11, 463–468.

thus enabling the eventual programming of an unknown-to-you association with a verbal or gestural trigger, to be used at a later date to make mysterious emotional and/or physiological things happen in order to make the **targeted individual** feel like they have lost control over their body and that someone else is able to control them, feeding a sense of powerlessness and inevitability that they must do as they are told, since "there is no choice".

The image to the right explains one of many forms of **subliminal stimuli** (the case of audio – sound).[187] Analogues for many other types of stimuli, from images to gestures and EM waves, can be assumed to be in use on some regular basis.

This entry is well worth exploring in much more detail, but for brevity additional explanation is not included. The current Wikipedia entry on **subliminal stimuli** provides a good overview. Key concepts for audio stimuli include the 'objective threshold', the 'subjective threshold' and 'auditory masking'. Key concepts for visual stimuli involve the use of subliminal (very rapid) images to elicit a natural and/or **conditioned** trigger, 'emotion eliciting stimuli', 'word and non-word stimuli' and 'masking visual stimuli'.

Subvocalization:

Subvocalization, or silent speech, is the internal speech typically made when reading; it provides the sound of the word as it is read. This is a natural process when reading and it helps the mind to access meanings to comprehend and remember what is read, potentially reducing cognitive load.

In a context where **pulse-modulated electromagnetic radiations** are being used to communicate voices directly into your head, there is a very serious danger here that you may attribute certain **subvocalizations** to your very own self. In which case, it is strongly recommended to be very aware of your own first person, and to always **question** the origin of strange thoughts or **subvocalizations** that come to mind. For example, a nefarious actors might try to slowly manipulate you via driving your own **subvocalizations** (I have some theories on how they drive this, somewhat along the lines of **mimicking harassment**, but have not yet developed it fully), say, starting with "that's a terrorist" every time you see a brown man with a beard, and perhaps, trying to convince you that you're really smart and a spy and can immediately identify terrorists, with the possibly effect of Muslims getting regularly called in as suspicious. A diverse variety of other nefarious applications could be made, so far as "I want to kill …", or "I hate myself because…", or "I'm sexually attracted to young children…" – combined with other **conditioned** responses, if you are not aware of the reality that basically everyone **subvocalizes** (you're not crazy), and also the reality of **pulse-modulated electromagnetic radiation** used to transmit voices into your head.

Another very interesting aspect relating to **subvocalization** (and also vocalized speech) is that it is possible to decode thought even before it is subvocalized. This was demonstrated experimentally in 2012: "*While [subjects] read the text out loud, the team worked out which neurons were reacting to what aspects of speech and generated a personalised decoder to interpret this information. The decoder*

[187] Image retrieved from E White (2000), appendix US4. Accessed from http://www.constitution.org/abus/mkt/uncom.htm#RATRO on May 1, 2016.

was used to create a spectrogram – a visual representation of the different frequencies of sound waves heard over time. As each frequency correlates to specific sounds in each word spoken, the spectrogram can be used to recreate what had been said. They then applied the decoder to the brain activity that occurred while the participants read the passages silently to themselves.[188] *… [2014:] Despite the neural activity from imagined or actual speech differing slightly, the decoder was able to reconstruct which words several of the volunteers were thinking, using neural activity alone.*[189] *… The [**civilian** sector] team is now fine-tuning their algorithms, by looking at the neural activity associated with speaking rate and different pronunciations of the same word, for example*."[190]

If you notice that people are starting to try to learn about and copy your speech patterns, there is a near 100% likelihood that such strategies will soon be used against you. Also, if you are not careful, you may be led into any number of false 'confessions', or perhaps even be **brainwashed** into believing that you in fact did something that you never did, e.g., "I really did …", which can be latched onto to try to persuade you that you are **guilty** of something, or even if you cannot be persuaded to believe that you actually did something that you never did, that this 'confession' is justification for what they are doing to you. No one deserves that kind of treatment, NO ONE. Do not even WONDER about how you might 'deserve' it.

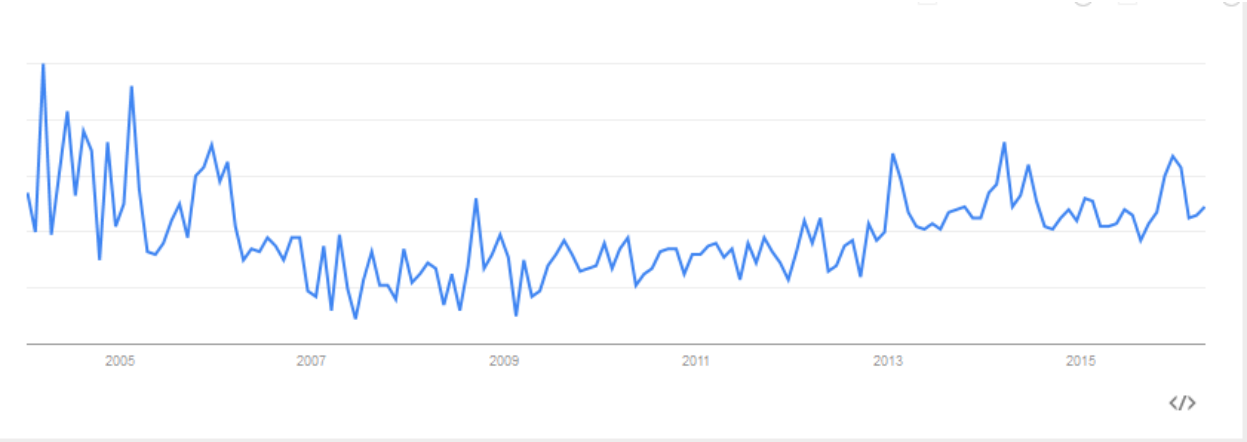

<u>Suggestion</u>:

Suggestion, in the context of **psychological warfare** in the electronic age (**neurowarfare**), is the psychological process by which one person guides the thoughts, feelings, or behaviour of another.

---

[188] Pasley BN, SV David, N Mesgarani, A Flinker, SA Shamma, NE Crone, RT Knight and EF Chang (January 31, 2012). "Reconstructing speech from human auditory cortex", *PLOS Biology*, 10(1), doi:10.1371/journal.pbio.1001251..
[189] Martin S, P Brunner, C Holdgraf, H-J Heinze, NE Crone, J Rieger, G Schalk, RT Knight and BN Pasley (May 27, 2014). "Decoding spectrotemporal features of overt and covert speech from the human cortex", *Frontiers in Neuroengineering*, 7(14), doi: 10.3389/fneng.2014.00014.
[190] Thomson H (Oct 29, 2014). "Brain decoder can eavesdrop on your inner voice", *New Scientist* – Accessed from https://www.newscientist.com/article/mg22429934-000-brain-decoder-can-eavesdrop-on-your-inner-voice on May 4, 2016.

Modern scientific study of **hypnosis**, which follows the pattern of Hull's work, separates two essential factors: 'trance' and **suggestion**.[191] The state of mind induced by 'trance' is said to come about via the process of a **hypnotic** induction—essentially instructing and **suggesting** to the subject that they will enter a hypnotic state. Once a subject enters **hypnosis**, the hypnotist gives **suggestions** that can produce sought effects. Commonly used **suggestions** on measures of '**suggestibility**' or '**susceptibility**' (or for those with a different theoretical orientation, '**hypnotic** talent') include **suggestions** that one's arm is getting lighter and floating up in the air, or that a fly is buzzing around one's head. The 'classic' response to an accepted **suggestion** that one's arm is beginning to float in the air is that the subject perceives the intended effect as happening involuntarily.

The power of **suggestion** should be considered as strategically linked to **classic conditioning** in the context of **psychological warfare** in the electronic age. I am not aware of cognitive or manifested physiological outcomes which are not susceptible to 'training' via these methods.

As a matter of curiosity, when faced with difficulties to stay in control of one's cognition, for example when a verbal or visual trigger/**suggestion** is used to elicit a response, it is claimed that temporal lobe stimulation (presumably by mimicking certain brainwaves, although it is likely to be somewhat more complex than that), "can activate images stored in the subject's memory, including nightmares and monsters that are normally suppressed".[192]

It is likely that **suggestion**, likely including efforts by those on the other end of the remote neural monitoring to visualize themselves doing a particular action and transmitting the 'idea' of this action via **synthetic telepathy**, may contribute to a variety of experiences related to being set up for **priming** or trying to **suggest**/persuade the **targeted individual** to take a particular course of action, which may range from the entirely trivial to the lowest of the low of criminal acts.

Suggestive guilt:

See entry on **subvocalizations** for some of how this can work. Also, refer to the entry on **synthetic telepathy** on how imagined or real 'memories' or ideas may be triggered. In my personal experience, this primarily involved efforts to **brainwash** me into believing that I had various forms of despicable desires, in order to persuade me that I 'deserved' it (refer to **voice of God** for how/why they hoped I might have believed this).

Here are some examples of the sorts of things that the perpetrating entity might say, either having already engaged in **planting a false memory**, or perhaps genuinely trying to dig into the privacy of your mind. This should be read in a context where **remote neural monitoring** is assumed to be currently in practice, regardless of whether the technological specifications of the technology remain inaccessible to the public. "You need a lawyer" (yeah, I need a lawyer to sue your asses). "I'm **guilty** …" (Yeah, YOU are **guilty** of breaking dozens and hundreds of laws, no matter that some other specific laws have not been

---

[191] Heap, M (1996). "The nature of hypnosis", *The Psychologist*, 9(11), 498–501.

[192] Persinger MA, as quoted in E White (2000) appendix PM7, itself quoting from the July 1998 issue of Nexus Magazine.

broken, and moreover, are acting completely antithetical to long-cherished values of the civilization and culture you purport to act on behalf of). "You're under investigation…" (Uh, yeah, just wait until we manage to investigate YOU guys for all the crap you're doing). Or, if you can manage to just keep busy doing other stuff, you might be able to learn about the people who are monitoring you, by observing the things they try to persuade you to believe are a reason that you 'deserve' what is happening to you.

Synthetic telepathy: (a.k.a. Voice to skull (to be integrated), a.k.a. Artificial telepathy)

Synthetic telepathy is any technology which enables silent communication of words, images, or even ideas from one mind to another mind, including individuals who are interfaced with a computer which aids them in assembling the communication to be transmitted. Outgoing communications may involve **low frequency electromagnetic transmissions** which, due to their low frequency, cannot contain much information but may affect states of the brain. Outgoing communications involve higher frequency **pulse-modulated electromagnetic radiations** which, when they hit the brain, travel to the cochlear region of the ear and are perceived as a 'voice in your head'.[193] (Other influences on neural states and brain activity as influenced by **low frequency electromagnetic waves** should be considered as something other than **synthetic telepathy**, however.) The other direction of 'communication' for **remote neural monitoring** does not appear to be well understood in **civilian** sources, although some breakthroughs are referenced elsewhere in this document. This likely involves a technology roughly analogous to the **laser microphone**, which reads interference patterns after bouncing **electromagnetic waves** off the brain, by using these interference patterns to determine the brain waves associated with a diversity of cognitive events (whether conscious or perhaps even subconscious). Then, the other party of the communication is interfaced with a computer that helps to decode the interference patterns, which are then progressively compared with assumptions/information about the actual cognitive and sensual experiences occurring in the **targeted individual**, in a way that eventually enables the perpetrating entity to be aware of what the other individual is thinking, seeing, doing, etc. For longer distances, presumably some sort of signal relay is used, certainly in some cases involving the use of relays to satellites.

It is important for citizens to know that such technologies exist so that **targeted individuals** will not receive a mental health record for speaking to authorities about related experiences, and so that they can be prepared to psychologically defend themselves if they come under a psychological attack via **synthetic telepathy**. Importantly, this is not restricted to the communications of words, images or abstract thoughts. The extent to which these methods rely on **classic conditioning** is not clear, but it is obvious that such communications are also used to directly influence the emotional state of targets[194]

---

[193] Lin JC and Z Wang. "Hearing of microwave pulses by humans and animals: effects, mechanism, and thresholds", *Health Physics*, June 2007, 92(6):621-8.

[194] For a very early work on how this may have more generalized effects, one may consult DR Justesen (1975) "Microwaves and Behaviour", *American Psychologist*, Mar; 30(3):391-401. However, for those who have experienced such things, it is exceedingly obvious that more targeted influences on emotions are now possible via microwave radiations, although the extent to which these effects are more generalizable across individuals and/or paired with **conditioning**/**brainwashing** is not entirely clear.

[195], often with the objective of 'teaching' the target to feel one way or another about specific issues (i.e., **brainwashing**).

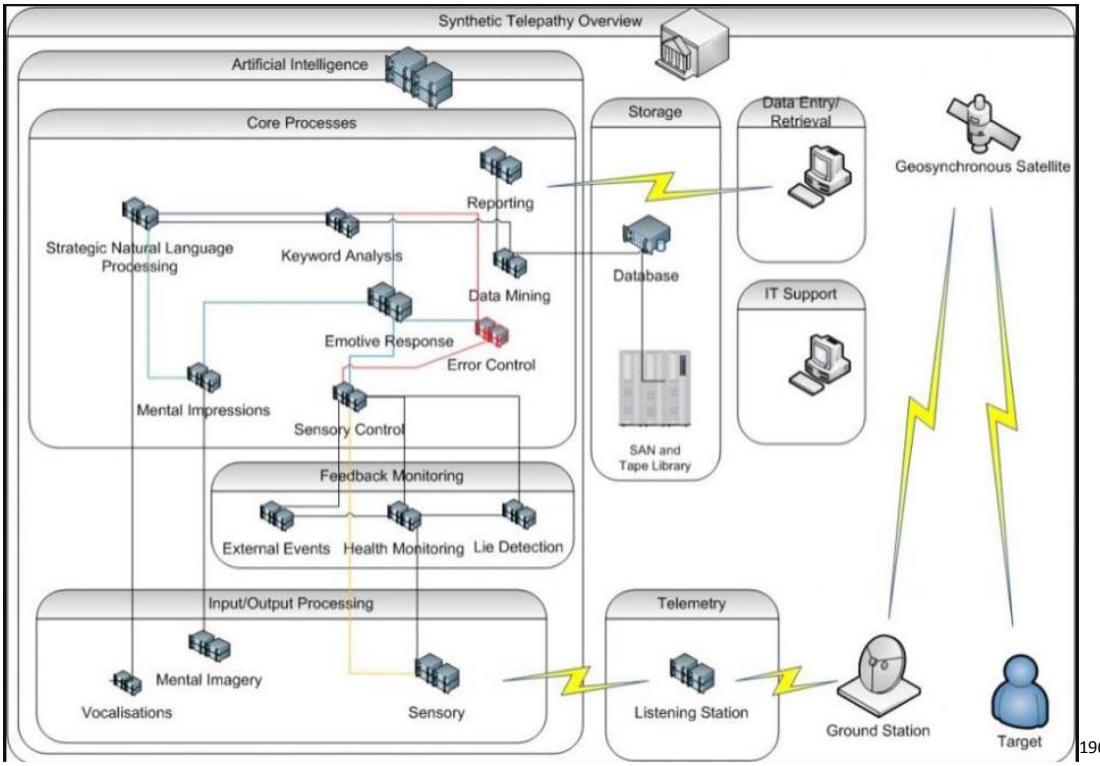

[196]

While **synthetic telepathy** has certainly advanced well beyond sounds to include images, thoughts, etc., targets report regular and invasive good fidelity sound transmissions. Voices saying profane and disparaging things are common. False sounds of telephones ringing, pagers beeping, alarm clocks going off, knocking on the target's door, etc. have been reported. The fidelity of these transmissions indicates improvement over the method demonstrated by Dr. Joseph Sharp (see **microwave auditory effect**).

---

[195] White E (2000) in appendix US1 cites an article entitled "Mind-Altering Microwaves" in the July 1998 issue of Nexus Magazine, which itself cites a March 23, 1991 news bulletin from the ITV News Bureau (London), describing the first known use of such technologies in a military setting, in the First Gulf War:
"*a sophisticated electronic system to 'speak' directly to the mind of the listener, to alter and entrain his brainwaves, to manipulate his brain's electroencephalographic (EEG) patterns and artificially implant negative emotional states-feelings of fear, anxiety, despair and hopelessness*." The extent to which that early application met expectations is presumably undocumented, but many or perhaps all **targeted individuals** are well aware that such technologies have advanced significantly, a fact which poses an enormous threat for **cognitive liberty** in consideration of potential applications for the purpose of **conditioning** and **brainwashing**. Personally, for a very long time, I experienced fear, loathing and other emotional responses when working on, observing or thinking about things they wanted to **brainwash** me away from, and experienced elation, comfort, etc. (at times when my guard was low, for example after significant **sleep deprivation** or when busy with other activities), when they tried to **suggest** certain things they wanted to **brainwash** into me. As such, to prevent **brainwashing** and uphold one's own **cognitive liberty**, one must remain aware of emotions and how they may be used to draw associations between certain thoughts, activities, desires, values, etc. for the purpose of **brainwashing**.
[196] This figure is credited to US Coalition Against Covert Harassment. Accessed from https://uscach.org/ on April 26, 2016.

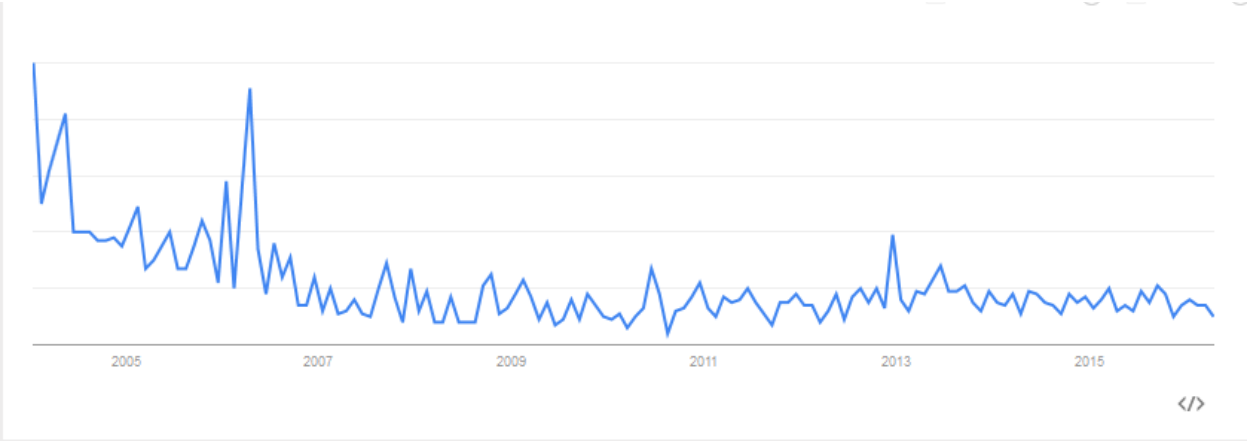

T

Targeted individual (a.k.a. subjects of experimentation and/or assets):

A term that has been used by a variety of people who have been attacked using many of the **electronic weapons** and techniques described in this glossary. Some believe themselves to be under attack by traditional criminal syndicates, others understand themselves to be targets of suppression by partisan, ideological and/or nationalist plants working under the cover of the security state in their respective countries to repress constitutionally protected **freedom** of speech or the right to **peaceful** protest. In many cases, these appear to be individuals who suffered under attacks from such **electronic weapons** and strategies, whether for purposes of experimentation, **political repression** or **intimidation**, and who spoke out openly about what is happening instead of submitting to whatever forces were trying to establish their obedience. In some cases, these **targeted individuals** seem to have been selected on the basis of belonging to a hated group, being vulnerable in some manner, and not so much in relation to trying to shut them up or **brainwash** them into submission to become a slave puppet of the forces which are presently using these technologies for highly nefarious sends.

Refer to **organized stalking** for a description of common experiences of **targeted individuals**. Also, this entire glossary is designed to fill in all the rest of the gaps in the technologies (**neuroweapons**) and strategies being used against **targeted individuals**. There appear to be two general groups of **targeted individuals**: 1) those who are targeted because someone thought they were vulnerable or weak and could be 'recruited' into a **brainwashed**, coerced and/or intimidated informal enslaved army of sorts, or alternatively who were deemed 'expendable' for **torturous** experimentation of these methods, and 2) those who are targeted because they are outspoken about various threats to the wellbeing of the general population. In both cases, the **psychological torture**, **organized stalking**, use of **neuroweapons**, etc. against these individuals serves as **intimidation** against others.

Terrorism (in some cases, including **freedom fighting**):

There is no established definition of **terrorism** in international law, largely because the need to recognize a legitimate **right to revolution**, a legitimate right for **freedom fighting**, etc., tends to prevent

any such agreement. Many nation states have their own specific definitions of **terrorism**, and this definition is not based on those nation-specific laws.

Dictionary.com defines **terrorism** as follows, with some minor modifications to reflect the realities of neurowarfare and electronic weapons: [197]

1. the use of violence (psychological and/or physical) and threats to intimidate or coerce, especially for political purposes.
2. the state of fear and submission produced by **terrorism** or **terrorization**.
3. a terroristic method of governing or of resisting a government.

In the present context of **psychological warfare** in the electronic age, including via **neuroweapons**, many who end up on related watch lists may in fact be 'Truthers', some of whom secretly fight for the **freedom** of the **handlers**, frontline perpetrators, in addition to seeking to promote the ongoing **freedom** of **targeted individuals** and diffusion of information which may serve to protect the public. Of course, it is rather obvious who the real **terrorists** are in such a situation – those who **brainwash** others into perpetrating **terroristic** strategies are clearly orders of magnitude more **guilty** than the frontline perpetrators.

THINTHREAD:

ThinThread is the name of a project that the United States National Security Agency (NSA) pursued during the 1990s[198]. The program involved wiretapping and sophisticated analysis of the resulting data, but according to the article, the program was discontinued three weeks before the September 11, 2001 attacks due to the changes in priorities and the consolidation of U.S. intelligence authority.[199]

The "change in priority" consisted of the decision made by the director of NSA General Michael V. Hayden to go with a concept called Trailblazer, despite the fact that ThinThread was a working prototype that claimed to protect the privacy of U.S. citizens. ThinThread was dismissed and replaced by the Trailblazer Project, which lacked the privacy protections.[200] A consortium led by Science Applications International Corporation was awarded a $280 million contract to develop Trailblazer in 2002.[201]

---

[197] http://www.dictionary.com/browse/terrorism, accessed on May 3, 2016.
[198] Gorman S (May 17, 2006). "NSA killed system that sifted phone data legally", *Baltimore Sun* – comments on the article extracted from EFF at https://www.eff.org/node/72605 on May 11, 2016.
[199] Shorrock T (March 26, 2013). "Obama's Crackdown on Whistleblowers", *The Nation*, accessed from http://www.thenation.com/article/obamas-crackdown-whistleblowers/#axzz2WIl382MU on May 11, 2016.
[200] Phys.org (May 25, 2006). "NSA datamining pushes tech envelope", accessed from http://phys.org/news/2006-05-nsa-datamining-tech-envelope.html on May 11, 2016.
[201] Business Wire (Oct 21, 2002). "SAIC Team Wins National Security Agency TRAILBLAZER Contract", accessed from http://www.thefreelibrary.com/SAIC+Team+Wins+National+Security+Agency+TRAILBLAZER+Contract.-a093081931 on May 11, 2016.

Trailblazer was chosen over a similar program named **ThinThread**, a less costly project which had been designed with built-in privacy protections for United States citizens.[202] [203] Trailblazer was later linked to the NSA electronic surveillance program and the NSA warrantless surveillance controversy.[204]

Several whistleblowers involved in the much cheaper **ThinThread** project which was purported to protect the privacy of US citizens, and who reported waste, fraud and abuse[205] [206] [207] in the TrailBlazer Project were later raided by the FBI.

Thought crimes (in the electronic age; also see **pre-crime**):

'Traditionally', or rather as used in popular culture, **thought crimes** have referred to instances where people are prevented from voicing opinions which are politically incorrect or which others may potentially be offended by. In the present day in the West, complaints relating to **thought crimes** abound from those who wish to express racist, homophobic and/or sexist views – however, these are socially enforced norms and rarely, almost never, involve any sanction by use of any powers associated with the state unless actively promoting violence (or in some jurisdictions, 'merely' hateful attitudes) towards any group on such bases.

The term **thought crime** was popularized in in the novel Nineteen Eighty-Four by George Orwell (published in 1949), where the job of The Thought Police (the secret police of the novel) is to uncover and punish **thought crime**. The Thought Police use surveillance and psychological monitoring to find and eliminate members of society who challenge the party's authority and ideology.

Cases of theocracies and/or ideologically conformist (generally authoritarian) political entities (such as a nation or state) where outward conformity has been required abound in history – easily understood requirements for outward conformity such as not **questioning** the authority of a king, other dictator figure and/or specific political or social institution also abound historically. I do not deem it to be constructive to go about listing specific historical or present cases, but it should suffice to say that the range of 'thought control' may range from raised eyebrows in disagreement to lifelong **torture**.

In the context of an age where **electronic weapons** are real, the concept of **thought crimes** needs to be updated. While the traditional view of what constitutes a **thought crime** should still involve considering the entire concept as morally repugnant – with some reasonable exceptions where clear, transparent and publicly available argumentation is put forward, and where there are at least occasional venues for

---

[202] Mayer J (May 23, 2011). "The Secret Sharer", *The New Yorker*, accessed from http://www.newyorker.com/magazine/2011/05/23/the-secret-sharer on May 11, 2016.
[203] Bamford J (2008). "The Shadow Factory", Doubleday, chapter "Trailblazer".
[204] Mayer J (2011).
[205] Mayer J (2011).
[206] Harris S (Jan 25, 2011). "Indictment Continues Obama Administration's War on Leaks", *Washingtonian*, accessed from http://www.washingtonian.com/2011/01/25/indictment-continues-obama-administrations-war-on-leaks on May 11, 2016.
[207] Nakashima E (July 14, 2010). "Former NSA executive Thomas A. Drake may pay high price for media leak", *The Washington Post*, accessed from http://www.washingtonpost.com/wp-dyn/content/article/2010/07/13/AR2010071305992.html on May 11, 2016.

good-faith open debate in any absence of any social or formal reprisal for taking any position – **thought crimes in the electronic age** are an entirely different issue.

In instances of theocracies and/or ideologically conformist (generally authoritarian) political entities, it has always been sufficient to outwardly display conformity, while retaining complete **cognitive liberty** to privately dissent within the **freedom** of one's own mind. In the age of **electronic weapons**, **freedom** of conscience and **cognitive liberty** is significantly threatened in a manner that goes well beyond 'merely' requiring outward conformism. Any such notion of **thought crimes in the electronic age** should be strictly prohibited – among other things, it should be considered as desirable that some people (conditional on having a strong moral compass and/or mastery of anti-**brainwashing** techniques) may, at times, wish to explore a variety of otherwise 'unacceptable' thoughts, actions, etc., within the confines of their own mind, in order to understand human consciousness, the human condition, and the potential for 'deviance' more fully, and should expect to be able to do so in a complete absence of external monitoring of such intellectual inquiry which would constrain their perceived **freedom** of such pursuits, including an expectation to be free from externally directed cognitive interference which may strive to surreptitiously persuade (**brainwash**) them into a preference for such 'deviant' streams of thinking or action, for the purpose of, say, **psychiatric reprisal** and/or **blackmail**.

Requiring outward conformism is very often morally repugnant itself – any actual or perceived requirement of inner conformity would be the *greatest threat to individual and societal **freedom** ever faced in the history of the planet*, and that is not an exaggeration in the slightest.

Transcranial magnetic stimulation:

Transcranial magnetic stimulation (TMS) is a method used to stimulate small regions of the brain. During a TMS procedure, a magnetic field generator, or 'coil', is placed near the head of the person.[208] [209]The coil produces small electric currents in the region of the brain just under the coil *via electromagnetic induction*. The *coil is connected to a pulse generator*, or stimulator, that delivers electric current to the coil.[210] In addition to legitimate medical and health potential of such technologies, there may also be a **civilian** sector interest to demonstrate the potentials of **neuroweapons** and their threats.

One discovery in the **civilian** [211]sector using such technology relates to an experiment where researchers discovered that a group which had the targeted brain region shut down reported 32.8% less belief in God, angels, or heaven, and were 28.5% more positive in their feelings toward an immigrant who criticised their country (reduced religious faith was also found). Clearly such technologies are not benign.

---

[208] NiCE (Jan 2014). "Transcranial magnetic stimulation for treating and preventing migraine".
[209] Groppa, S, A Oliviero, A Eisen, A Quartarone, LG Cohen, V Mall, A Kaelin-Lang, T Mima, S Rossi, GW Thickbroom, GW, PM Rossini, U Ziemann, J Valls-Solé, HR Siebner (2012). "A practical guide to diagnostic transcranial magnetic stimulation: Report of an IFCN committee". *Clinical Neurophysiology*, 123 (5): 858–882.
[210] Miller, MC (July 26, 2012). "Magnetic stimulation: a new approach to treating depression?" Harvard Health Publications.
[211] Holbrook C, K Izuma, C Deblieck, DMT Fessler and M Iacoboni (Sept 4, 2015). "Neuromodulation of Group Prejudice and Religious Belief", *Social Cognitive and Affective Neuroscience*, doi: 10.1093/scan/nsv107,

Could an opposite effect be elicited, for MORE hostility against certain groups, or to promote additionally dogmatic subservience to a programmed ideological outlook?

Torture (for this context, especially **no-touch torture**):

Torture means any act or omission by which severe pain or suffering, whether physical or mental, is intentionally inflicted on a person (a) for a purpose including (i) obtaining from the person or from a third person information or a statement, (ii) punishing the person for an act that the person or a third person has committed or is suspected of having committed, and (iii) intimidating or coercing the person or a third person, or (b) for any reason based on discrimination of any kind, but does not include any act or omission arising only from, inherent in or incidental to lawful sanctions.

While **torture** breaks numerous laws in every country on the planet, the international legal framework is guided by The Convention against Torture and Other Cruel, Inhuman or Degrading Treatment or Punishment.

Totalitarianism:

Totalitarianism is a political system where the state recognizes no limits to its authority and strives to regulate every aspect of public and private life wherever feasible.

U

Unique electric resonance frequencies (brain):

This theory posits that every individual has a **unique electric resonance frequency** in their brain, and may be understood as one of the mechanisms whereby **remote neural monitoring** operates. However, it is altogether possible that this concept was planted by nefarious operatives who wish to instil fear and **intimidation** in the populace. Far more likely, rather more well understood (and often very 'traditional') means of identifying the location and identity of an individual are used, after which point advanced means of tracking and **remote neural monitoring** are applied.

V

Vision reconstruction:

As early as 2011, **civilian** researchers at Berkley were encoding models which intercepted brain activity for the purpose of reconstructing visual imagery (in addition to predicting which words would be associated with those images/thoughts). This **civilian** technique was based on fMRI imaging.[212]

Voice of God (electronic weaponry):

Refer to **voice to skull** or **pulse-modulated electromagnetic radiations** for some technical explanations. This is basically just a different word for the same thing. In applying these technologies, the perpetrating entity may seek to convince the target that it is the **voice of God** speaking to them. If the target can be persuaded to believe that this is true, they may ultimately believe that they are serving 'good' in following diverse orders, which, in fact, serve some particularly evil ends. For example, to convince the target(s) that it is necessary to bring war upon some enemy in order to lead the pathway to heaven. For an extended period of time in Canada, in particular around 2013-2014, the 'success' of such an approach was apparent, until it because patently obvious that the whole thing was a work of pure evil, at which point the notion that "there is no choice", etc., was promoted along the lines that citizens should believe that the 'successful' **ambush** in the **psychological warfare (neurowarfare)** had resulted in a situation that was a completely done deal, along the lines of "resistance is futile".

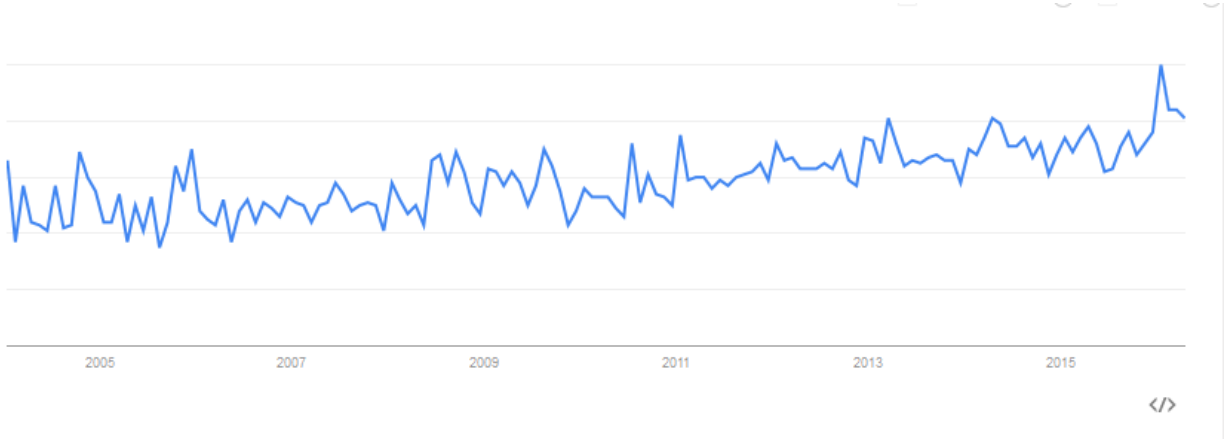

Voice to skull (a.k.a. Auditory disturbances):

Voice to skull devices or V2K are nonlethal **electronic weapons** which include (1) a neuro-electromagnetic device which uses microwave (**electromagnetic wav**e) transmission of sound into the skull of persons or animals by way of **pulse-modulated electromagnetic waves**; and (2) a silent sound device which can transmit sound into the skull of person or animals. NOTE: The sound modulation may be voice or audio subliminal messages. One application of V2K is use as an electronic scarecrow to frighten birds in the vicinity of airports.

Microwave (**electromagnetic wave**) radiation pulses (frequencies roughly in the range of hundreds of MHz to tens of GHz) are transmitted to the individual, then, "*upon absorption by soft tissues in the head,*

[212] Nishimoto, S, A Vu, T Naselaris, Y Benjamini, B Yu and JL. Gallant (Oct 2011). "Reconstructing visual experiences from brain activity evoked by natural movies", *Current Biology*, 21(19), p1641–1646

launches a thermoelastic wave of acoustic pressure that travels by bone conduction to the inner ear. There, it activates the cochlear receptors via the same process involved for normal hearing."[213] Most likely, this involves use of a transducer to modify the spoken word into ELF audiograms, that are then superimposed on the pulse modulated microwave beam.

Using **ELF** audiograms carried by a single pulse-modulated **maser**, **subvocalized** thoughts can be placed in the **targeted individual**'s brain. This enables **synthetic telepathy** operators the ability to enter into conversations with the **targeted individual** to drive him/her mad or to bring up key words which will get the victim thinking about the (potentially falsely planted) information they wish to find. Visual cortex excitation potentials can also be broadcast into the victim's brain so that illusory images can be projected into their brain for a diversity of purposes according to the 'needs' of the perpetrating entity.

The specific interest of this term is that it describes how people can 'hear voices' (or even 'hallucinate' images) but not be hallucinating. The nefarious ends to which such technologies may be used may be understood by referring to the anti-Nazi anti-Brainwashing toolkit (very incomplete draft available) or reading up on **targeted individuals** in a variety of online locations. I am aware of some potential positive uses of such technologies. The people who wish to defend such arguments should step forward into the light and make them. I will not make those arguments for them.

As early as 1995, the US military was on the verge of breakthrough with such technologies in the sense of modulating the electromagnetic pulses for the purpose of remotely communicating voices into the mind of a target.[214]

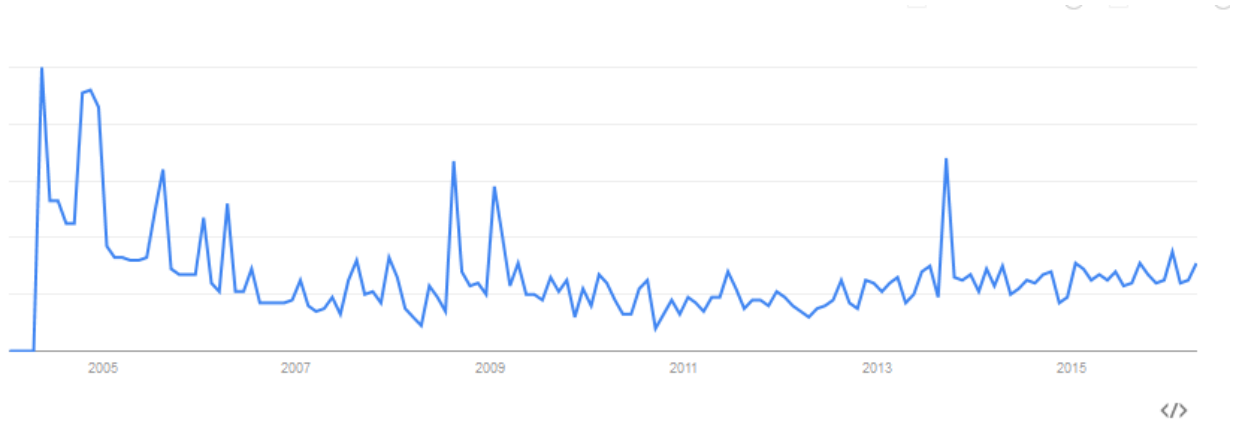

W

[213] Lin JC and Z Wang. "Hearing of microwave pulses by humans and animals: effects, mechanism, and thresholds", *Health Physics*, June 2007, 92(6):621-8.

[214] Awarding Agency: Department of Defense; SBIR Contract Number: F41624-95-C-9007; Title: Communicating Via the Microwave Auditory Effect; Principal Investigator: Mr. Brian Kohn; Company Name: Science & Engineering Assoc, Inc.; 6100 Uptown Blvd NE; Albuquerque, NM 87110; Telephone Number: 505-884-2300; Business Representative: (empty); Project Period: (empty); Project Amount: $739,995; Research Category: Monitoring/Analytical. Accessed from https://www.sbir.gov/sbirsearch/detail/298760 on April 30, 2016.

War crime:

A **war crime** is an act that constitutes a serious violation of the law of war (defined in the statute that established the International Criminal Court) that gives rise to individual criminal responsibility.[215] Examples of **war crimes** include intentionally killing **civilians** or prisoners, torture, destroying **civilian** property, taking hostages, perfidy, **rape**, using child soldiers, pillaging, declaring that no quarter will be given, and using weapons that cause superfluous injury or unnecessary suffering.[216]

Whistleblower:

A **whistleblower** is a person who exposes any kind of information or activity that is deemed illegal, unethical, or not correct within an organization that is either private or public. The information of alleged wrongdoing can be classified in many ways: violation of company policy/rules, law, regulation, or threat to public interest/national security, as well as fraud, **corruption** or tyranny. Those who become **whistleblowers** can choose to bring information or allegations to surface either internally or externally. Internally, a **whistleblower** can bring his/her accusations to the attention of other people within the accused organization. Externally, a **whistleblower** can bring allegations to light by contacting a third party outside of an accused organization. He/she can reach out to the media, government, law enforcement, or those who are concerned. **Whistleblowers** also face stiff reprisal/retaliation from those who are accused or alleged of wrongdoing.

Third-party groups like Wikileaks and others offer protection to **whistleblowers**, but that protection can only go so far. **Whistleblowers** face legal action, criminal charges, social stigma, and termination from any position, office, or job.

Two classifications of **whistleblowing** are private and public, depending on the type of organizations someone chooses to **whistleblow** on: private sector, or public sector. Both can have different results that depend on many factors. However, **whistleblowing** in the public sector organization is more likely to result in federal felony charges and jail time. A **whistleblower** who chooses to accuse a private sector organization or agency is more likely to face termination and legal and civil charges. Legal protection can be granted to protect **whistleblowers**, but that protection is subject to many stipulations. Hundreds of laws grant protection to **whistleblowers**, but stipulations can easily cloud that protection and leave **whistleblowers** vulnerable to retaliation and legal trouble. However, the decision and action has become far more complicated with recent advancements in technology and communication. **Whistleblowers** frequently face reprisal, sometimes at the hands of the organization or group which they have accused, sometimes from related organizations, and sometimes under law.

Targeted individuals who experience **electronic harassment** are all potential **whistleblowers**. And hence, the interest to **ambush** them and **brainwash** or otherwise silence them before they have a clue what is going on. In addition to **targeted individuals** who appear to have been selected for **non-consensual human experimentation**, a rather unscientific analysis of **targeted individual** social

[215] Cassese, A (2013). "Cassese's International Criminal Law (3rd ed.)", Oxford University Press. pp. 63–66.
[216] Article 8 of the Rome Statute of the International Criminal Court.

networks is strongly indicative that this group disproportionately involves people who are outspoken on issues of **corruption** in the nexus of politics and big business, who are strong advocates of **freedom** and civil liberties, and who tend to be **peace** advocates who promote good relations between genders, sexes, and ethnic/racial and/or religious groups.

A recent study on **whistleblowing** shows that when you start listing all the protections that you give **whistleblowers**, you start raising awareness of the risks and dangers and does more to deter **whistleblowing** than to encourage it – it recommends that rather than describing explicit protections offered from retaliation, organizations could instead more explicitly describe the organization's commitment to good corporate governance and ethical behaviour.[217]

X

X-ray:

An **electromagnetic wave** of high energy and very short wavelength, which is able to pass through many materials opaque to light. This has absolutely nothing to do with the issues at play in relation to this glossary, but "X" was looking rather empty. Naturally, I sympathize with the empty feelings of the X, and thought this would be a much more homely entry than "X-rated", a word relating to thoughts which have come to dominate the minds of those involved in the offending end of the **psychological warfare** in the electronic age, to an altogether unnatural degree.

Y

Yo-yo:

If you can identify with many of these terms, you know what it's like to be treated like a **yo-yo**. Build you up, break you down, build you up, break you down … **brainwashing**.

If you cannot identify with the above, please help to raise awareness about these issues so that **electronic weapons** and **neuroweapons** as described in this glossary will cannot be used to treat *you* like a **yo-yo** (or worse) either. Learn to rapidly equalize your emotional self, but do not deny your emotional self.

Z

Zersetzung:

This entry primarily serves as a matter of historical interest and does not provide any additional information with regards to **psychological warfare** in the electronic age (**neurowarfare**). Clearly, the

[217] Wainberg J and S Perreault (Spring 2016). "Whistleblowing in audit firms: Do explicit protections from retaliation activate implicit threats of reprisal?" *Behavioral Research in Accounting*, 28(1), 83-93.

methods previously applied by the **Stasi** have become much more highly refined (especially as paired with **neuroweapons**) and broadly implemented in the present day, including in many countries with long-standing society-wide dedication to political **freedom** and **freedom** of expression. Of particular interest is that a) the truth DID come out, and b) the repressive political entities which used such tactics eventually collapsed in the face of widespread latent hate and feelings of resistance against the system that would do such things.

Zersetzung (German; variously translated as decomposition, corrosion, undermining, biodegradation or dissolution) was a psychological technique of the East German secret police, the **Stasi**, and was used to silence political opponents. The "measures of **Zersetzung**", defined in the framework of a directive on police procedures in 1976,[218] were used in the context of so-called "operational procedures". They replaced the overt terror of the Ulbricht era.

The practice of **political repression** in **Zersetzung** comprised extensive and secret methods of control and psychological manipulation, including personal relationships of the target, for which the **Stasi** relied on its network of informal collaborators,[219] the State's power over institutions, and on operational psychology. Using targeted psychological attacks the **Stasi** tried to deprive a dissident of any chance of a "hostile action".

The **Stasi**, or Ministry for State Security, defined **Zersetzung** in its 1985 dictionary of political operatives as:

> *"...a method of operation by the Ministry for State Security for an efficacious struggle against subversive activities, particularly in the treatment of operations. With **Zersetzung** one can influence hostile and negative individuals across different operational political activities, especially the hostile and negative aspects of their dispositions and beliefs, so these are abandoned and changed* little by little*, and, if applicable, the contradictions and differences between the hostile and negative forces would be laid open, exploited, and reinforced.*
>
> *The goal of **Zersetzung** is the fragmentation, paralysis, disorganization, and isolation of the hostile and negative forces, in order to preventatively impede the hostile and negative activities, to largely restrict, or to totally avert them, and if applicable to prepare the ground for a political and ideological reestablishment.*
>
> ***Zersetzung** is equally an immediate constitutive element of "operational procedures" and other preventive activities to impede hostile gatherings. The principal forces to execute **Zersetzung** are the unofficial collaborators. **Zersetzung** presupposes information and significant proof of hostile activities*

---

[218] Federal Commissioner for the Records of the State Security Service of the former German Democratic Republic. "Directive No. 1/76 on the Development and Revision of Operational Procedures - *Richtlinie Nr. 1/76 zur Entwicklung und Bearbeitung Operativer Vorgänge* (OV)", accessed from www.bstu.bund.de/DE/Wissen/MfS-Dokumente/Downloads/Grundsatzdokumente/richtlinie-1-76_ov.html on May 8, 2016.

[219] Federal Commissioner for the Records of the State Security Service of the former German Democratic Republic: "The Unofficial Collaborators (IM) of the MfS", accessed from http://www.bstu.bund.de/EN/MinistryOfStateSecurity/UnofficialCollaboratorsOfMfS/_node.html on May 8, 2016.

planned, prepared, and accomplished as well as anchor points corresponding to measures of ***Zersetzung***."[220]

The **Stasi** used **Zersetzung** essentially as a means of psychological oppression and persecution. Findings of operational psychology[221] were formulated into method at the **Stasi's** College of Law (at Potsdam Legal University - *Juristische Hochschule Potsdam*), and applied to political opponents in an effort to undermine their self-confidence and self-esteem. Operations were designed to intimidate and destabilise them by subjecting them to repeated disappointment, and to socially alienate them by interfering with and disrupting their relationships with others as in social undermining. The aim was to induce personal crises in victims, leaving them too unnerved and psychologically distressed to have the time and energy for anti-government activism.[222] The **Stasi** intentionally concealed their role as mastermind of the operations.[223] Author Jürgen Fuchs was a victim of **Zersetzung** and wrote about his experience, describing the **Stasi's** actions as "psychosocial crime", and "an assault on the human soul".[224]

Although its techniques had been established effectively by the late 1950s, **Zersetzung** was not defined as a scientific method until the mid-1970s, and only then began to be carried out in a systematic manner in the 1970s and 1980s.[225] It is difficult to determine how many people were targeted, since the sources have been deliberately and considerably redacted; it is known, however, that tactics varied in scope, and that a number of different departments implemented them. Overall there was a ratio of four or five authorised **Zersetzung** operators for each targeted group, and three for each individual.[226] Some sources indicate that around 5,000 people were "persistently victimised" by **Zersetzung.**[227] (Presumably the number could easily run into the hundreds of thousands or millions who were victimized as a part of the **Zersetzung**, since the vast majority of **targeted individuals** wouldn't have had a clue, but nevertheless would have gotten the message, and in a matter of some days or weeks would have "got the message"

---

[220] Ministry for Security of State, *Dictionary of political and operational work*, entry *Zersetzung*: Ministerium für Staatssicherheit (Hrsg.): *Wörterbuch zur politisch-operativen Arbeit*, 2. Auflage (1985), Stichwort: „Zersetzung", GVS JHS 001-400/81, p. 464.

[221] Süß S (1999). "Repressive Strukturen in der SBZ/DDR – Analyse von Strategien der Zersetzung durch Staatsorgane der DDR gegenüber Bürgern der DDR. In: Materialien der Enquete-Kommission *Überwindung der Folgen der SED-Diktatur im Prozeß der Deutschen Einheit"*. (13. Wahlperiode des Deutschen Bundestages). Volume 2: Strukturelle Leistungsfähigkeit des Rechtsstaats Bundesrepublik Deutschland bei der Überwindung der Folgen der SED-Diktatur im Prozeß der deutschen Einheit. Opfer der SED-Diktatur, Elitenwechsel im öffentlichen Dienst, justitielle Aufarbeitung. Part 1. Nomos-Verlags-Gesellschaft u. a. Baden-Baden 1999, ISBN 3-7890-6354-1, pp. 193–250.

[222] Pingel-Schliemann S (2009). *Zerstörung von Biografien. Zersetzung als Phänomen der Honecker-Ära*. In: Eckart Conze/Katharina Gajdukowa/Sigrid Koch-Baumgarten (Hrsg.): *Die demokratische Revolution 1989 in der DDR*. Köln, pp. 78–91.

[223] Gieseke J (2001). "Mielke-Konzern. "Mielke-Konzern. Die Geschichte der Stasi 1945-1990", Verlag: p. 192.

[224] Pingel-Schliemann S (2009), p. 188.

[225] Süß S (1999), p. 202-204.

[226] Süß S (1999), p. 217.

[227] Consider the written position taken by Michael Beleites, responsible for the files of the Stasi in the Free State of Saxony (in principle available from http://www.arbrb.de), and at 3sat in "Subtiler Terror – Die Opfer von Stasi-Zersetzungsmethoden", accessed from http://www.3sat.de/page/?source=/kulturzeit/themen/136072/index.html on May 8, 2016.

and became submissive, or in any case not persist in their **freedom**.) The College of Legal Studies had a comprehensive 50-page **Zersetzung** teaching manual, which included numerous examples of its practice.[228]

It was applied against both groups and individuals. Methods against individuals include the following:

> *"…a systematic degradation of reputation, image, and prestige in a database on one part true, verifiable and degrading, and on the other part false, plausible, irrefutable, and always degrading; a systematic organization of social and professional failures for demolishing the self-confidence of the individual; [...] stimulation of doubts with respect to perspectives on the future; stimulation of mistrust or mutual suspicion among groups [...]; putting in place spatial and temporal obstacles rendering impossible or at least difficult the reciprocal relations of a group [...], for example by [...] assigning distant workplaces. — Directive No. 1/76 of January 1976 for the development of "operational procedure*s".[229]

The naming of the present day **Zersetzung** is not available to the public. I believe it is roughly accurate to call it "N**eurowar** I: paid unprotection – **ambush** of **civilians** by rogue arms of the state".

[228] Potsdam Legal University - *Juristische Hochschule Potsdam* (1977). "Anforderungen und Wege für eine konzentrierte, offensive, rationelle und gesellschaftlich wirksame Vorgangsbearbeitung."
[229] Engelmann R and F Joestel (2004). *Grundsatzdokumente des MfS*. In: H Klaus-Dietmar S Suckut, T Großbölting (Eds.): *Anatomie der Staatssicherheit: Geschichte, Struktur und Methoden. MfS-Handbuch*. Teil V/5, Berlin, p. 287.

Appendices:

Please note that these appendices are not even close to being complete at present, and not been fact checked, edited for consistency, etc. They are provided for advanced informational purposes only. Please proceed to the next page.

<u>Appendix A</u>: An exploratory list of potentially legitimate uses of electronic weapons and related technologies

Criminal investigations (including counter-terrorism): Due to the possibility of **planting a false memory**, various forms of **conditioning** and **brainwashing**, etc., the principle of informed consent and the right to refuse to give *potentially* incriminating testimony should apply. Any individual whose rights of due process have been upheld should retain the right to refuse this advanced polygraph technology.

I understand that there will be demands from the security state to use such technologies for purposes of monitoring for '**thought crimes**' of suspected individuals. The slippery slope in such cases, with particularly nefarious potential to degrade into use of **pre-crime** investigations, should absolutely be feared. However, I propose a sort of reasonable middle ground that might be acceptable to reasonable parties who do not actually wish to abuse such technologies.

1) There should be no such thing as classified reasoning for the use of such technologies for monitoring, and treaties and agreements between countries should constrain and make transparent, not facilitate, the use of such technologies against the citizens of the respect second party countries. The public should have unconstrained, full and easy access to a full listing of ALL individuals being monitored using such technologies, including unconstrained, full and easy access to ALL documents and argumentation explaining the rationale, including unconstrained, full and easy access to ALL elements of evidence which have been used (with some reasonable considerations for protecting the identities, of those involved in collecting such evidence, for example to not have to mention anything more than the country where the alleged information was collected) to build up the rap sheet. As a general principle, previous criminal convictions should be generally be a pre-requisite to use of such monitoring technologies – it should be assumed that **suggestive** argumentation with regard to 'national security' or 'public safety' will be promoted successfully by agents of the security state.

2) Use of such technologies should always be framed as the ultimate invasion of privacy, going infinitely further than merely bugging a phone or house or office, installing cameras in every room, following the individual absolutely everywhere, etc. As such, an explicit limit to the number of individuals who warrant such attention should be set (for example, at a total of 100 individuals nation wide) – changes in this number should only be possible with full disclosure to all known media outlets (independent or otherwise), NGOs, political organizations, think tanks and any other formal and informal **civil society** organizations, a full 6 months before any legislative decision is made. Any decisions should require formal legislative action, and any ability of unaccountable actors to apply such changes should not exist. Any efforts to intimidate, **blackmail**, etc. any organization or individual from reporting on and freely debating the proposed change should be matched with potentially highly punitive legal sanction (judges' discretion should be prioritized).

3) Efforts to **brainwash** or otherwise manipulate the cognition of the individual should be strictly forbidden with very punitive mandatory minimum sentences with full public disclosure even for individuals in the deepest and most secret arms of the state.

4) '**Thought crimes**' shall at no time whatsoever be considered as illegal or warranting additional investigation, punitive measures, confinement, restrictions of **freedom**, or any analogous or related considerations under any sort of **pre-crime** violation – this is especially in consideration of the possibility that nefarious actors may try to **suggestively** or otherwise introduce these '**thought crimes**' into the mind of the individual in order to legitimize the intrusion. However, if such monitoring reveals a concern that the safety of a specific individual or the public at large may be threatened, the concerned individuals and/or public should be non-hysterically informed in the absolute shortest possible delay, and public safety officers should be deployed to the potential location of the incident to ensure safety. In cases where such monitoring gives the idea that the individual may be constructing any tools or weapons which may threaten public safety, evidence should be presented to a judge to obtain a warrant prior to any search of any private premises – in any other case the present legal occupant of the premises shall retain the right to refuse entry with zero explanation, with a requirement that the occupant is explicitly informed of this right prior to entry, with the presumption of **innocence** prioritized in all such communications.

Personal health: A variety of therapeutic applications of such technologies are already in the works, and presumably full disclosure of 'classified' technologies which lead to extremely rapid gains in the **civilian** sector, in particular for treating physical and/or mental health ailments. Individual consent must be paramount, and individual control over the apparatus should also be prioritized except in cases where an analogue of power of attorney in addition to recommendations of a licensed medical professional is formalized.

Political protest seems to be trending towards violence: Send out EM waves which will elicit calm and/or tranquility in the population, without making any use whatsoever of individually targeted use of EM weapons.

Prison riot: Send out EM waves which will elicit calm and/or fatigue in the population, without making any use whatsoever of individually targeted use of EM weapons.

Public or private events, for purposes of promoting products or services, etc., or ideological, partisan and/or religious/spiritual, etc. views: None, with the exception of fully informed consent of all participants. Use of such technologies in the absence of fully informed consent, with suitable efforts to explain to any affected audiences the technical aspects of the effects in addition to the effects themselves, should be met by strict legal sanction, with a very high range for potential punishments, and essentially complete discretion of the judge to apply an appropriate level of punishment, with the exception of leaving a permanent record for the perpetrating entity. A legal requirement to disclose knowledge of use of such technologies should apply, with lesser punishments for failure to disclose.

Situation of 'just war', following a formal declaration of war by at least one party (including reasonable analogues against non-state actors which are not yet covered under existing international law for such purposes): Send out EM waves, namely, synthetic telepathy, which seek to communicate a) understanding of legitimate grievances, if any, with a view to promoting inclusion in the political process to address such concerns by **peaceful** and non-majoritarian means, whether formally 'democratic' or

otherwise, and b) the reality of any exaggeration and/or **brainwashing** which has led to the movement becoming militant when (if) their legitimate grievances do not warrant an escalation towards violent reprisal or means of addressing the situation.

Surveillance in active war zones or areas of heightened security concern: As evaluated by the US Army's Mission Impact through Neurotechnology Design (MIND) Lab at the Aberdeen Proving Ground, Maryland, sequences of imagery can be viewed by a human operator looking for anything out of the ordinary, such as a vehicle, someone digging by the side of the road, etc.. A computer can flag “of interest” for a more careful analysis of the image. This can be combined with eye tracking to further isolate the region of interest in the presented image.

Appendix B: Alternative sources/perspectives; related advocacy organizations

American Civil Liberties Union: www.aclu.org. For nearly 100 years, the ACLU has been our nation's guardian of liberty, working in courts, legislatures, and communities to defend and preserve the individual rights and liberties that the Constitution and the laws of the United States guarantee everyone in this country.

bigbrotherwatchingus.com: This site has somewhat of a hysteric tone (and justifiably so). However, it also has a great many links which detail a great number of reports which are 100% consistent with many of our worst fears of where things could be going (and have already gone). Among others, it includes an extensive list of patents relating to **neuroweapons**, many of which originating from the 1970s – in the case of contradiction between that site and this glossary, I believe the information and perspectives in the present document to be more accurate.

Center for Cognitive Liberty and Ethics: www.cognitiveliberty.org. The CCLE is dedicated to protecting and advancing freedom of thought in the modern world of accelerating neurotechnologies. Their paramount concern is to foster the unlimited potential of the human mind and to protect freedom of thought.

Electronic Frontier Foundation: www.eff.org. The Electronic Frontier Foundation is the leading nonprofit organization defending civil liberties in the digital world. Founded in 1990, EFF champions user privacy, free expression, and innovation through impact litigation, policy analysis, grassroots activism, and technology development. It works to ensure that rights and freedoms are enhanced and protected as our use of technology grows.

Electronic Privacy Information Center: www.epic.org. EPIC is a public interest research center in Washington, DC. EPIC was established in 1994 to focus public attention on emerging privacy and civil liberties issues and to protect privacy, freedom of expression, and democratic values in the information age. EPIC pursues a wide range of program activities including policy research, public education, conferences, litigation, publications, and advocacy. EPIC routinely files amicus briefs in federal courts, pursues open government cases, defends consumer privacy, organizes conferences for NGOs, and speaks before Congress and judicial organizations about emerging privacy and civil liberties issues.

European Symposium on Non-lethal Weapons: www.non-lethal-weapons.org. A working group on non-lethal weapons that holds annual symposiums

Federation of American Scientists: fas.org. The Federation of American Scientists (FAS) provides science-based analysis of and solutions to protect against catastrophic threats to national and international security. Specifically, FAS works to reduce the spread and number of nuclear weapons, prevent nuclear and radiological terrorism, promote high standards for nuclear energy's safety and security, illuminate government secrecy practices, as well as prevent the use of biological and chemical weapons. The Google-powered search function on their website is a good source of high-quality science on many topics and terms defined and discussed in this glossary.

Institute for Non-Lethal Defense Technologies: www.arl.psu.edu/INLDT. The mission of the Institute for Non-Lethal Defense Technologies is to promote, coordinate, and conduct interdisciplinary research and development of non-lethal concepts and technologies.

International Center Against Abuse of Covert Technologies: www.icaact.org. ICAACT was created to bring awareness to the general public and the legal systems around the world about serious human rights abuses utilizing remote influencing technologies. Our aim is to obtain evidence.

Mind Justice: www.mindjustice.org. A human rights group working for the rights and protections of mental integrity and freedom from new technologies and weapons which target the mind and nervous system.

National Whistleblowers Centre: www.whistleblowers.org. Highly recommended for the perpetrators of illegal and evil activities that they have been **brainwashed** or forced into perpetrating.

Stop Covert War: www.StopCovertWar.com. An organization which primarily serves for networking and social support for victims of organized stalking, etc. A few hoops need to be jumped through before accessing the main content of their homepage.

Targeted Individuals Canada: targetedindividualscanada.com. A site for activism, advocacy and networking for people who are targeted by **organized stalking** and **electronic harassment** as well as people who supports the TI community and who believe these criminal activities are a violation of **human rights** legislations in Canada and around the globe.

The Electronic Surveillance Project: esurveillance.ist.psu.edu. Some links relating to the legal status with regards to **electronic weapons**.

US Coalition Against Covert Harassment: uscach.org. Some good information on what's going on. But a closer reading of some releases demonstrates that it's rather more dedicated to justifying the ultimate attack on freedom than the purported goal of **whistleblowing** – alternatively, there may have been some infiltration and they are essentially well meaning. Fine tune your sixth sense at this site.

World Coalition Against Covert Harassment: worldcach.com. The Coalition against Covert Harassment (USCACH) is a not-for-profit organisation committed to raising awareness to the problem of **non-consensual human experimentation** using remote influencing technologies and techniques on the human mind and body. We propose clear ethical boundaries to regulate their use.

Appendix C: Annotated bibliography of I) Key scientific articles or II) Official statements on abilities in key technologies relating to neurowarfare and III) Books documenting/interpreting personal experiences. Also, IV) Movies which deal with related themes; V) Music which deals with related themes; VI) Changes in laws (USA) which have contributed to the ability to terrorize with limited legal recourse; VII) Known whistleblowers; VIII) Descriptions of offensive and defensive technologies available in civilian markets

Not all of these articles, official statements, books, movies, songs, etc., are referenced elsewhere in this document. Some of them are more general discussions and others are more related to demonstrating general capacity or the desire of the state or other actors to develop and use such capacities.

I) Key scientific articles:

Bawin SM and WR Adey (Jun 1976). "Sensitivity of calcium binding in cerebral tissue to weak environmental electric fields oscillating at low frequency", *Proceedings of the* National Academy *of Sciences of the* United States *of America*, 73(6): 1999–2003.

Electromagnetic fields are demonstrated to affect the calcium flows in chick and cat tissues. Maximum decreases occurred at 6 and 16 Hz (12-15%). Thresholds were around 10 and 56 V/m for chick and cat tissues, respectively.

Justesen DR (Mar 1975). "Microwaves and behavior", *American Psychologist*, 30(3): 391-401.

Discusses the study of radio-frequency electromagnetic fields, especially microwaves, in psychology. Some fundamental principles of wave theory and historical developments in the field are summarized, and methodological and instrumentation issues are examined. It includes evidence and discussion of the demonstration of **voice to skull** (**synthetic telepathy**) technologies by researcher Dr. Joseph Sharp in 1973.

Lin-Liu S and WR Adey (1982). "Low frequency amplitude modulated microwave fields change calcium efflux rates from synaptosomes", *Bioelectromagnetic*,3(3):309-22.

Rates of calcium (45Ca2+) flows between neural tissues were studied. When 16-Hz sinusoidally amplitude modulated 450-MHz microwave field (maximal incident intensity 0.5 mW/cm2, modulation depth 75%) was applied during the second phase, the rate constant increased by 38%. Unmodulated or 60-Hz modulated signals were not effective.

II) Official statements or publications:

III) Books or articles dealing with these technologies, reported experiences of victims, and psychological preparedness:

McKinney J (Dec 1992). "Microwave harassment and mind control experimentation". Written by an ex-US Army Intelligence Officer, this brief document provides an overview of available technologies in 1992 including their application in what is referred to as a 'KGB mentality'. A description of some forms of harassment (and worse) used at that time is provided, in addition to objectives of said harassment. It should be noted that the content of this document is not easily verifiable, but is obviously believable by any **targeted individual**.

White E (2000). "The State of Unclassified and Commercial Technology Capable of Some Electronic Mind Control Effects", currently available from http://www.constitution.org/abus/mkt/uncom.htm. It is a pioneering work in elucidating on many of the more technical and sci-fi like events and technologies defined in this glossary.

White E (Feb 2010). "Coping with the crime of organized stalking and electronic harassment". This very concise book discusses many strategies to deal with the reality of organized stalking, electronic harassment, etc., including how to deal with it yourself, how to discuss it with people, how (or whether) to speak with authorities, collection of evidence, and other useful tidbits.

IV) Movies which deal with related themes:

Enemy of the State (1998): A lawyer becomes a target by a corrupt politician and his NSA goons when he accidentally receives key evidence to a serious politically motivated crime. Directed by Tony Scott; written by David Marconi; starring Will Smith, Gene Hackman and Jon Voight.

The Sleep Room (1998): Based on a true story, this production relates the tale of two American lawyers who try to bring the U.S. government to its knees. In the early 1950s, the CIA funds a Montreal psychiatric hospital to do some research on **mind control**. Thirty-some years later, the patients want justice... Directed by Anne Wheeler; written by Anne Collins (book) and Bruce M. Smith; starring Leon Pownall, Macha Grenon and Nicola Cavendish.

The Matrix (1999): A computer hacker learns from mysterious rebels about the true nature of his reality and his role in the war against its controllers. Directed by Lana Wachowski and Lilly Wachowski; written by Lana Wachowski and Lilly Wachowski; starring Keanu Reeves, Laurence Fishburne and Carrie-Anne Moss.

Minority Report (2002): In a future where a special police unit is able to arrest murderers before they commit their crimes, an officer from that unit is himself accused of a future murder. Directed by Steven Spielberg; written by Philip K. Dick (short story) and Scott Frank (screenplay); starring Tom Cruise, Colin Farrell and Samantha Morton.

Control Factor (2003): An average everyman discovers he's the unwitting target of an ultra secret domestic black-op centering on **mind control**. Directed by Nelson McCormick; written by John Dombrow; starring Adam Baldwin, Elizabeth Berkley and Tony Todd.

The Manchurian Candidate (2004): In the midst of the Gulf War, soldiers are kidnapped and **brainwashed** for sinister purposes. Directed by Jonathan Demme; written by Richard Condon (novel) and George Axelrod; starring Denzel Washington, Liev Schreiber and Meryl Streep.

Inception (2010): Based on a thief who steals corporate secrets through use of dream-sharing technology and who is given the inverse task of planting an idea into the mind of a CEO. Dream manipulation is also playing a major role in **mind control** programming. Directed by Christopher Nolan; written by Christopher Nolan; starring Leonardo DiCaprio, Joseph Gordon-Levitt and Ellen Page.

A Good American (2015): Tells the story of the best code-breaker the USA ever had and how he and a small team within NSA created a surveillance tool that could pick up any electronic signal on earth, filter it for targets and render results in real-time … This is the story of former Technical director of NSA, Bill Binney, and a program called ThinThread. Directed by Friedrich Moser; written by Friedrich Moser; starring William Binney, Thomas Drake and Edward Loomis.

V) Music which deals with related themes:

VI) Changes in laws (USA) which have contributed to the ability to terrorize with limited legal recourse:

Patriot Act (2002, many further extensions)

Temporary elements which were permanently extended:

Temporary elements which have been continuously extended but are not extended permanently

National Defense Authorization Act (NDAA)

Foreign Intelligence Surveillance Act (FISA, 1978)

CFR–Code of Federal Regulations, here linked in Dept. of Health and Human Services' Part 46, Protection for Human Subjects

Informed consent is no longer protected (need to get the exact details on that with a line reference and quote)

Here are the agencies to which it applies – the exceptions should be found in the relevant sections:

7 CFR part 1c – Department of Agriculture
10 CFR part 745 – Department of Energy
14 CFR part1230 – National Aeronautics and Space Administration

15 CFR part 27 – Department of Commerce
16 CFR part 1028 – Consumer Product Safety Commission
22 CFR part 225 – Agency for International Development
24 CFR part 60 – Department of Housing and Urban Development
28 CFR part 46 – Department of Justice
32 CFR part 219 – Department of Defense
34 CFR part 97 – Department of Education
38 CFR part 16 – Department of Veterans Affairs
40 CFR part 26 – Environmental Protection Agency
45 CFR part 46, subpart A – Department of Health and Human Services
45 CFR part 46, subpart A – Central Intelligence Agency (by Executive Order 12333)
45 CFR part 46, subpart A – Department of Homeland Security (by federal statute)
45 CFR part 690 – National Science Foundation
49 CFR part 11 – Department of Transportation

VII) Known whistleblowers:

Edward Snowden (NSA)

Dr. Robert Duncan (CIA)

William Binney (NSA)

J. Kirk Wiebe (NSA)

Ed Loomis (NSA)

Thomas A. Drake (NSA)

Karen Stewart (NSA)

Dennis Kucinich (US Congress)

Jim Guest (Missouri State Representative)

Julianne McKinney (US Army Intelligence Officer)

Dr. John Hall (doctor specializing in anesthesiology and pain management)

Dr. Richard Alan Miller (?)

Carl Clark (alongside British Security Services)

VIII) Available technologies on the market:

I have not evaluated any of these. A) They aren't free. B) You'd need a sort of scientific method to evaluate them. C) I'm not sure how any of these observations can be attributed scientific or legal viability – you could just write down ANY numbers, no? Perhaps you could date stamp video recordings of the apparatus taking its measures, which also bothers me, because wouldn't THEY love to have such experimental measures collected FOR them? **I emphasize that I have not tested any of these devices**.

For torture:

Ultrasound Pain Field Guns and Sonic Shock Wave Generators: amazing1.com/ultrasonics.html

> These ultrasound pain field guns and generators can be tuned to target certain animals and unwanted human intruders. The effect does not cause injury but produces a debilitating highly discomforting feeling of nausea, disorientation and paranoia.

Sonic Nausea Device: amazing1.com/ultrasonics.html

> Easily-hidden circuit produces a very annoying sonic wave that people feel, yet most do not hear, and cannot tolerate! Acoustic wave shape makes the source hard to locate. *Great for ridding unwanted visitors, inside or out. Discreetly discourage unwanted gatherings, with radio control option allowing operation from up to 300' away.*

Invisible Pain Field Generator: amazing1.com/ultrasonics.html

> *Shirt pocket-sized, spooks dogs and other animals, even reported to scare bears away and people too!* Miniature electronic device intended for potential vicious dog and animal protection. May discourage human encounters. Also used for field research work [???]. Complex sonic shock waves are internally adjustable for maximizing on target subject. Operating frequency is 18-19kHz (right at the edge of human hearing). Sweep mode intensifies effect. Effective range of up to 25 feet.

2nd GEN Long Range Ultrasound Pain Field Guns with Higher Power Output: amazing1.com/ultrasonics.html

> These handheld Ultrasound guns have many uses. They are portable and can flush out rats and other vermin in areas as silage bins, chicken coops, around dumpsters, etc. They can be used as a survey tool for research with animals on the effect of this pain field, and serve to determine whether the user may want a more permanent installation and system to help control his problem. They can also be quite effective on people.

Generation 2 Ultrasound Pain Field Generator with Radio Control, Special Issue Transducers and Focus Tubes for Long Range Concentrated Effect: amazing1.com/ultrasonics.html

> These high powered ultrasonic pain field generators are designed as directional sources of concentrated effect. They are intended for protecting areas such as gun rooms, garages or

wherever a concentrated effect is necessary. Law enforcement installs multiple units on the roof of vehicles discouraging gathering of potential and unruly problem personal.

Microwave Cannon: www.amazing1.com/electrokinetic-guns.html

Uses gigahertz frequencies generated by a magnetron or higher powered virtual cathode oscillator, gyrotron or other exotic means. The higher the frequency the more beam directional control is possible.

Electromagnetic Cannon/Mass Launcher: www.amazing1.com/electrokinetic-guns.html

The Mass Launcher fires a 4-ounce projectile to a velocity capable of splitting a 1 x 2" pine board on impact.

Defense:

QuWave Defender: quwave.net/defender.html

The QuWave "Defender" produces a Scalar Field specially tuned to protect your body & brain from “Psychotronic Attacks“ and Electronic Harassment.

Bugsweep's Electrostatic Active Shield System: bugsweeps.com/info/electronic_harassment.html

The Bugsweep's Electrostatic Active Shield System protects the targeted individual from directed energy attacks. The transmission panels emit an electrostatic energy that forms a protective field. Any directed energy attack is deflected off this energy field giving the targeted individual the ability to get on-going relief. The Bugsweep's Active Shield System is powered by a custom-designed electrostatic transmission power supply.

Meters and shielding products: www.lessemf.com

A variety of (limited band sensitivity) EMF and other metres, in addition to some shielding products.

In particular, it is not clear to me that these products will be particularly useful for accurate reading of pulse modulations. I emailed the company and they said, if I understand correctly, that the products could read the average energy of the pulse modulations, but said nothing which suggests that any products have advanced capacity to read the pulse modulations.

<u>Appendix D</u>: Geneva Convention and Protocols in relation to the treatment of civilians – certain articles highlighted and extended/discussed in relation to the present situation of neurowarfare

The Geneva Convention and ensuing Protocols are not well developed for the purpose of **neurowarfare**. At present, this is the international legal framework relating to the conduct of war, and is declared to have universal jurisdiction decades after near unanimous ratification across the global community and no major complaints about the Convention as international law with regard to the conduct of war.

The realities of **neurowarfare** are rather different than they were in 1949 (original Convention) or 1977 (Protocols I and II), or 2005 (Protocol III, at which point in time **neuroweapons** had significantly advanced but the existence of them continued to be formally denied). As such, the extent to which the analogue can be drawn between the Geneva Convention and universal jurisdiction over the conduct of warfare, and the conduct of **neurowarfare**, is not altogether clear.

The following assembles international law relating to the treatment of **civilians** during warfare. While it is difficult to assert that the international community would agree that legal application of these principles should apply in the proposed manners in a context of **neurowarfare**, what is 100% clear is that current conduct of **neurowarfare** is utterly antithetical to all established principles by civilized nations with regard to the treatment of **civilians** during offensive or defensive security operations.

(This annex does not address the great multitude of domestic laws which are being violated in the testing and implementation of **neuroweapons**. National policies with regard to treatment of **civilians** do not have legal standing in the sense of legislative law, but are primarily derived from international treaties, namely the Geneva Convention and associated Protocols. Hence, the international legal framework appears to be the right place to look, considering the present difficulty faced by **civilians** in accessing the legal means of protection or redress in relation to severe violations of a great number of laws of warfare – in principle, if perhaps not in letter.)

It is time for the international community to update treaties on laws of warfare. Technology has advanced significantly, and the current international legal framework is wholly unsuited for the task. In a context where ongoing official denial of **neuroweapons** which are patently in use at this very moment, this will certainly be an uphill battle.[230]

Protocol 1 (1977)

Article 51 - *Protection of the **civilian** population*

[230] The European Union has been making such calls since as early as 1999. As cited by E White (2000) from "Environment, Security, and Foreign Affairs", Resolution A40005/99, Minutes of 28/01/99 - Provisional Edition, European Parliament which includes the following articles – "Article 23: Calls on the European Union to seek to have the new 'non-lethal' weapons technology and the development of new arms strategies also covered and regulated by international conventions…" – "Article 27: Calls for an international convention introducing a global ban on all developments and deployments of weapons which might enable any form of manipulation of human beings."

.2 – The **civilian** population as such, as well as individual **civilians**, shall not be the object of attack. Acts or threats of violence the primary purpose of which is to spread terror among the **civilian** population are prohibited.

.3 – **Civilians** shall enjoy the protection afforded by this Section, unless and for such time as they take a direct part in hostilities.

.6 – Attacks against the **civilian** population or **civilians** by way of reprisals are prohibited.

.8 – Any violation of these prohibitions shall not release the Parties to the conflict from their legal obligations with respect to the **civilian** population and **civilians**, including the obligation to take the precautionary measures provided for in Article 57.

Article 52 - *General protection of **civilian** objects*

.1 – **Civilian** objects shall not be the object of attack or of reprisals. **Civilian** objects are all objects which are not military objectives as defined in paragraph 2.

.2 – Attacks shall be limited strictly to military objectives.

.3 – In case of doubt whether an object which is normally dedicated to **civilian** purposes, such as a place of worship, a house or other dwelling or a school, is being used to make an effective contribution to military action, it shall be presumed not to be so used

Article 56 - *Protection of works and installations containing dangerous forces*

.3 – In all cases, the **civilian** population and individual **civilians** shall remain entitled to all the protection accorded them by international law, including the protection of the precautionary measures provided for in Article 57.

Article 57 - *Precautions in attack*

.2 – With respect to attacks, the following precautions shall be taken:

a) those who plan or decide upon an attack shall:

i) do everything feasible to verify that the objectives to be attacked are neither **civilians** nor **civilian** objects and are not subject to special protection but are military objectives within the meaning of paragraph 2 of Article 52 and that it is not prohibited by the provisions of this Protocol to attack them;

ii) take all feasible precautions in the choice of means and methods of attack with a view to avoiding, and in any event to minimizing, incidental loss of **civilian** life, injury to **civilians** and damage to **civilian** objects;

b) an attack shall be cancelled or suspended if it becomes apparent that the objective is not a military one …

c) **effective advance warning shall be given of attacks which may affect the *civilian* population, unless circumstances do not permit**.

.3 – When a choice is possible between several military objectives for obtaining a similar military advantage, the objective to be selected shall be that the attack on which may be expected to cause the least danger to **civilian** lives and to **civilian** objects.

.5 – No provision of this Article may be construed as authorizing any attacks against the **civilian** population, **civilians** or **civilian** objects

Article 58 - *Precautions against the effects of attacks*

The Parties to the conflict shall, to the maximum extent feasible:

a) without prejudice to Article 49 of the Fourth Convention, endeavour to remove the **civilian** population, individual **civilians** and **civilian** objects under their control from the vicinity of military objectives;

b) avoid locating military objectives within or near densely populated areas;

c) take the other necessary precautions to protect the **civilian** population, individual **civilians** and **civilian** objects under their control against the dangers resulting from military operations.

Article 61

For the purposes of this Protocol:

a) "civil defence" means the performance of some or all of the undermentioned humanitarian tasks intended to protect the **civilian** population against the dangers, and to help it to recover from the immediate effects, of hostilities or disasters and also to provide the conditions necessary for its survival. These tasks are:

i) warning;

ii) evacuation;

iii) management of shelters;

iv) management of blackout measures;

v) rescue;

viii) detection and marking of danger areas;

ix) decontamination and similar protective measures;

xv) complementary activities necessary to carry out any of the tasks mentioned above, including, but not limited to, planning and organization;

b) "civil defence organizations" means those establishments and other units which are organized or authorized by the competent authorities of a Party to the conflict to perform any of the tasks mentioned under sub-paragraph a), and which are assigned and devoted exclusively to such tasks;

c) "personnel" of civil defence organizations means those persons assigned by a Party to the conflict exclusively to the performance of the tasks mentioned under sub-paragraph a), including personnel assigned by the competent authority of that Party exclusively to the administration of these organizations;

Article 62 - *General protection*

.1 – **Civilian** civil defence organizations and their personnel shall be respected and protected, subject to the provisions of this Protocol, particularly the provision of this Section. They shall be entitled to perform their civil defence tasks except in case of imperative military necessity.

.2 - The provisions of paragraph 1 shall also apply to **civilians** who, although not members of **civilian** civil defence organizations, respond to an appeal from the competent authorities and perform civil defence tasks under their control.

Article 64 - ***Civilian*** *civil defence organizations of neutral or other States not Parties to the conflict and international co-ordinating organizations*

.1 – Articles 62, 63, 65 and 66 shall also apply to the personnel and matériel of **civilian** civil defence organizations of neutral or other States not Parties to the conflict which perform civil defence tasks mentioned in Article 61 in the territory of a Party to the conflict, with the consent and under the control of that Party[231]. Notification of such assistance shall be given as soon as possible to any adverse Party concerned …

Article 65 – *Cessation of Protection*

.1 – The protection to which **civilian** civil defence organizations, their personnel, buildings, shelters and matériel are entitled shall not cease unless they commit or are used to commit, outside their proper tasks, acts harmful to the enemy.[232] Protection may, however, cease only after a warning has been given setting, whenever appropriate, a reasonable time-limit, and after such warning has remained unheeded.

Article 66 – *Identification*

.1 – Each Party to the conflict shall endeavour to ensure that its civil defence organizations, their personnel, buildings and matériel, are identifiable while they are exclusively devoted to the performance of civil defence tasks[233] …

.4 - The international distinctive sign of civil defence is an equilateral blue triangle on an orange ground when used for the protection of civil defence organizations, their personnel, buildings and matériel and for **civilian** shelters.[234]

Article 75 – *Fundamental Guarantees* [this is still relating to **civilians**]

.1 – The following acts are and shall remain prohibited at any time and in any place whatsoever, <u>whether committed by **civilian** or by military agents</u>:

a) violence to the life, health, <u>or physical ***or*** mental well-being of persons</u>, in particular:

ii) <u>**torture** of all kinds, whether physical or mental</u>;

---

[231] This means that it would be necessary for a **civilian** protection organization in a context of **psychological warfare** in the electronic age, where primarily **electronic weapons** are used, to formally register with public authorities in order to enjoy related protections (or at least future access to sanctions against **war crimes** according to international treaties) – which is counterintuitive in the sense of already being **civilians**, but in any case recommended. Here, I think it is sufficient to consider that the elected government can legally authorize such activities, considering that rogue actors (and related contractors) in the deep state are still legally, constitutionally and contractually bound by the authority of elected officials. In case it's not obvious, the Geneva Convention is not perfectly suited to **psychological warfare** in the electronic age, where hostilities via use of **electronic weapons** are primarily turned on **civilian** populations within the same state as the violators of **war crimes**.

[232] And here, simply aiming to make public the fact of the various **war crimes** being committed cannot possibly be construed as "harmful to the enemy", although indeed it runs contrary to their interests. And hence, any punitive measures in response to such efforts at disclosure or whistleblowing about use of **neuroweapons** which primarily target **civilians** should be considered as **war crimes**.

[233] Which implies that some sort of badge, such as "anti-brainwashing league" or "ABL" should suffice.

[234] In other words, this is precisely the shape of the badge/stickers that should be adopted.

b) outrages upon personal dignity, in particular humiliating and degrading treatment, enforced prostitution and any form of indecent assault;
d) collective punishments; and
e) threats to commit any of the foregoing acts.

Article 76 – *Protection of women*

.1 – Women shall be the object of special respect and shall be protected in particular against rape, forced prostitution and <u>any other form of indecent assault</u>.[235]

Article 77 – *Protection of children*

.1 – Children shall be the object of special respect and shall be protected against any form of indecent assault[236] …

.2 – The Parties to the conflict shall take all feasible measures in order that children who have not attained the age of fifteen years do not take a direct part in hostilities[237] and, in particular, they shall refrain from recruiting them into their armed forces[238] …

.3 - … children who have not attained the age of fifteen years take a direct part in hostilities and fall into the power of an adverse Party, they shall continue to benefit from the special protection accorded by this Article[239] …

Article 87 – *Duty of commanders*

.1 – The High Contracting Parties and the Parties to the conflict shall require military commanders, with respect to members of the armed forces under their command and other persons under their control, to prevent and, where necessary, to suppress and report to competent authorities breaches of the Conventions and of this Protocol.

.2 - In order to prevent and suppress breaches, High Contracting Parties and Parties to the conflict shall require that, commensurate with their level of responsibility, commanders ensure that members of the armed forces under their command are aware of their obligations under the Conventions and this Protocol.

.3 - The High Contracting Parties and Parties to the conflict shall require any commander who is aware that subordinates or other persons under his control are going to commit or have committed a breach of the Conventions or of this Protocol, to initiate such steps as are necessary to prevent such violations of the Conventions or this Protocol, and, where appropriate, to initiate disciplinary or penal action against violators thereof.

---

[235] While difficult to prove, it is exceedingly obvious to those who have experienced it that use of **electronic weapons** to virtually and repeatedly **rape** someone is a severe violation and most certainly a form of "indecent assault". Hence, these qualify as **war crimes**.

[236] It is patently obvious that children are not being spared in the context of psychological warfare which deploys **electronic weapons**.

[237] It is clear that children are being recruited into the hostilities. However, the whole situation of **psychological warfare** in the electronic age remain elusive in terms of evidence that meets normal requirements for evidence. This is, however, indicative of **war crimes**.

[238] On this note, it seems unlikely that children are being deployed with access to these **electronic weapons**.

[239] So be nice to the children no matter what, even if you are not a combatant equipped with **neuroweapons**.

Article 89 – *Co-operation*

In situations of serious violations of the Conventions or of this Protocol, the High Contracting Parties undertake to act, jointly or individually, in co-operation with the United Nations and in conformity with the United Nations Charter.[240]

Article 91 – *Responsibility*

A Party to the conflict which violates the provisions of the Conventions or of this Protocol shall, if the case demands, be liable to pay compensation. It shall be responsible for all acts committed by persons forming part of its armed forces.

Protocol II (1977)

Article 4 – Fundamental guarantees

.1 - All persons who do not take a direct part or who have ceased to take part in hostilities[241], whether or not their liberty has been restricted, are entitled to respect for their person, ***honour and convictions*** and religious practices. They shall in all circumstances be treated humanely, without any adverse distinction. It is prohibited to order that there shall be no survivors.

.2 - Without prejudice to the generality of the foregoing, the following acts against the persons referred to in paragraph 1 are and shall remain prohibited at any time and in any place whatsoever:

a) violence to the life, health and physical or ***mental well-being*** of persons, in particular murder as well as cruel treatment such as **torture**, mutilation or any form of corporal punishment;

b) collective punishments;

d) acts of terrorism;

e) outrages upon personal dignity, in particular humiliating and degrading treatment, **rape**, enforced prostitution and any form of indecent assault;

h) threats to commit any of the foregoing acts.

Article 5 — *Persons whose liberty has been restricted*

.2 - Those who are responsible for the internment or detention of the persons referred to in paragraph 1 shall also, within the limits of their capabilities, respect the following provisions relating to such persons:

e) their physical or mental health and integrity shall not be endangered by any unjustified act ***or omission***. Accordingly, it is prohibited to subject the persons described in this Article to any medical procedure which is not indicated by the state of health of the person concerned, **and**

---

[240] Blah blah blah. The US has a veto. Otherwise Article 92 would be very interesting too. Then again, the power to exercise that authority is contingent upon appointment by the President and approval of the Senate, so there may be some hope (less so in the Senate, but it would be very politically difficult to refuse to approve an appointment that might be expected to agree with UN authority relating to **war crimes** committed against **civilians**, including a great number of American **civilians**).

[241] And certainly, persons not equipped with any electronic weapons whatsoever and who have not used other weapons in the hostilities cannot possibly be deemed to have "taken part in hostilities". Hence, this is indicate of **war crimes**, since non-combatants are protection under international law by this universally valid treaty.

which is not consistent with the generally accepted medical standards applied to free persons under similar medical circumstances.

Article 6 — *Penal prosecutions*[242]

.1 - This Article applies to the prosecution and punishment of criminal offences related to the armed conflict.

2. No sentence shall be passed and no penalty shall be executed on a person found **guilty** of an offence except pursuant to a conviction pronounced by a court offering the essential guarantees of independence and impartiality. In particular:

a) the procedure shall provide for an accused to be informed without delay of the particulars of the offence alleged against him and shall afford the accused before and during his trial all necessary rights and means of defence;

b) no one shall be convicted of an offence except on the basis of individual penal responsibility;

c) no one shall be held **guilty** of any criminal offence on account of any act or omission which did not constitute a criminal offence, under the law, at the time when it was committed; nor shall a heavier penalty be imposed than that which was applicable at the time when the criminal offence was committed; if, after the commission of the offence, provision is made by law for the imposition of a lighter penalty, the offender shall benefit thereby;

d) anyone charged with an offence is presumed innocent until proved **guilty** according to law;

e) anyone charged with an offence shall have the right to be tried in his presence;

f) no one shall be compelled to testify against himself or to confess **guilt**.[243]

.5 - At the end of hostilities, the authorities in power shall endeavour to grant the broadest possible amnesty to persons who have participated in the armed conflict[244] …

Article 10 — *General protection of medical duties*[245]

---

[242] This largely pertains to the eventual prosecution of those responsible for hostilities which used **electronic weapons** against **civilians,** in the context of **neurowarfare**, for a diversity of **war crimes** in addition to violations of domestic law.

[243] It is worth commenting that, the context of neurowarfare, the use of **electronic weapons** have completely violated all of these principles. And hence, this constitutes a **war crime**.

[244] Difficult to accept. But indeed this is generally viewed as a guiding principle in conflict resolution. However, it makes me sick due to the problem of "moral hazard" because lower level **war crimes** violators, who could perfectly well have abandoned their posts at essentially any point in time, may feel that they cannot lose – if they win, the win, if they lose, they get away with it. Which, given the particular contexts of **psychological warfare** in the electronic age, primarily revolving around the use of **electronic weapons** for hostilities against **civilians**, seems like a specific clause which should be taken as lightly as possible – not out of vindictiveness, but due to the problem of moral hazard: it is too easy to get away with it unseen, and even lower level actors should not feel that they are likely to get away with it in the instance that "their side" is found **guilty** of massive **war crimes**.

[245] This section strikes me as relevant because, in a context of **psychiatric reprisal**, many mental health professionals may have felt compelled to issue diagnoses contrary to both their better judgement from a strictly professional perspective and more specifically as contrary to the rules of medical ethics. However, it seems likely that this largely involved issuing believable threats rather than actual punishment, and it is difficult to establish what the grey area is in this regard. While this certainly constitutes a **war crime**, evidence would be difficult to achieve unless a large number of such professionals are willing to testify to such a situation.

1. Under no circumstances shall any person be punished for having carried out medical activities compatible with medical ethics, regardless of the person benefiting therefrom.
2. Persons engaged in medical activities shall neither be compelled to perform acts or to carry out work contrary to, nor be compelled to refrain from acts required by, the rules of medical ethics or other rules designed for the benefit of the wounded and sick, or this Protocol.
3. The professional obligations of persons engaged in medical activities regarding information which they may acquire concerning the wounded and sick under their care shall, subject to national law, be respected.
4. Subject to national law, no person engaged in medical activities may be penalized in any way for refusing or failing to give information concerning the wounded and sick who are, or who have been, under his care.

Article 13 — Protection of the **civilian** population

1. The **civilian** population and individual **civilians** shall enjoy general protection against the dangers arising from military operations. To give effect to this protection, the following rules shall be observed in all circumstances.
2. The **civilian** population as such, as well as individual **civilians**, shall not be the object of attack. Acts or threats of violence the primary purpose of which is to spread terror among the **civilian** population are prohibited.
3. **Civilians** shall enjoy the protection afforded by this Part, unless and for such time as they take a direct part in hostilities.[246]

Geneva Convention IV, 1949

Article 3. — In the case of armed conflict[247] not of an international character occurring in the territory of one of the High Contracting Parties, each Party to the conflict shall be bound to apply, as a minimum, the following provisions:

.1 Persons taking no active part in the hostilities, including members of armed forces who have laid down their arms and those placed hors de combat by sickness, wounds, detention, or any other cause, shall in all circumstances be treated humanely, without any adverse distinction founded on race, colour, religion or faith, sex, birth or wealth, or any other similar criteria.

To this end, the following acts are and shall remain prohibited at any time and in any place whatsoever with respect to the above-mentioned persons:

---

[246] While it is patently obvious that many **civilians** have been acting contrary to the interests of those initiating the hostilities (directed against **civilians**), in the sense of simply by trying to bring public attention to the realities of the **electronic weapons**-based **neurowarfare**, those who did not possess such weapons could not possibly be considered to have participated in "hostilities", and thus are subject to protections (or at least avenues towards compensation and/or prosecution against **war crimes** violators) under this clause. Hence, this constitutes **a war crime**.

[247] And let's be clear, the defense departments responsible for the development of **electronic weapons** have ben referring to them as militarily-relevant weaponry for at least two decades now.

a) violence to life and person, in particular murder of all kinds, mutilation, cruel treatment and **torture**;

c) outrages upon personal dignity, in particular humiliating and degrading treatment;

d) the passing of sentences[248] … without previous judgment pronounced by a regularly constituted court, affording all the judicial guarantees which are recognized as indispensable by civilized peoples.

Article 5 – [relating to treatment of an individual hostile to the security of the state, including the situation of an occupying power]

… In each case, such persons shall nevertheless be treated with humanity, and in case of trial, shall not be deprived of the rights of fair and regular trial prescribed by the present Convention. They shall also be granted the full rights and privileges of a protected person under the present Convention at the earliest date consistent with the security of the State or Occupying Power, as the case may be.

Article 31

No physical or moral coercion shall be exercised against protected persons, in particular to obtain information from them or from third parties.

Article 32

The High Contracting Parties specifically agree that each of them is prohibited from taking any measure of such a character as to cause the physical suffering or extermination[249] of protected persons in their hands. This prohibition applies not only to murder, **torture**, corporal punishment, mutilation and medical or scientific experiments not necessitated by the medical treatment of a protected person, but also to any other measures of brutality **whether applied by civilian or military agents**.

Article 33

No protected person may be punished for an offence he or she has not personally committed. Collective penalties and likewise all measures of **intimidation** or of terrorism are prohibited.[250]

Article 52

---

[248] Refer to **psychiatric reprisal**, a.k.a., **political abuse of psychiatry**. This amounts to a **war crime**.

[249] I'm pretty sure an effort to use **electronic weapons** for the purposes **psychological torture (**etc.) in a **psychological warfare** with the objective of completely **brainwashing** every non-supporter counts as attempted extermination. The option to just tow the line or keep your head down was never on the table – once branded as a **targeted individual**, three was no way to find out who is on the list, how they got on the list, and most especially, no means whatsoever to get off the list – submission to the **brainwashing** and/**or non-consensual human experimentation** was the only thing that was ever on the table. Hence, this constitutes a **war crime**.

[250] So, even in the absurd situation where one is simply a **civilian** who is striving to do little more than inform of the fact that there is a REAL war going on which primarily involves the use of **neuroweapons** against the **civilians** the perpetrators are indeed paid to protect, and this is deemed somehow as (an unarmed) "hostility" for the fact that it has negative strategic effect on the party which initiated the hostilities, what is obvious here is that reprisals against family, friends, co-workers, etc., and/or threats of such collective punishment, constitute a **war crime**.

All measures aiming at creating unemployment or at restricting the opportunities offered to workers in an occupied territory, in order to induce them to work for the Occupying Power, are prohibited.[251]

Article 54

The Occupying Power may not alter the status of public officials or judges in the occupied territories, or in any way apply sanctions to or take any measures of coercion[252] or discrimination against them, should they abstain from fulfilling their functions for reasons of conscience.

Article 65

The penal provisions enacted by the Occupying Power shall not come into force before they have been published[253] and brought to the knowledge of the inhabitants in their own language. The effect of these penal provisions shall not be retroactive.[254]

Article 71

No sentence shall be pronounced by the competent courts of the Occupying Power except after a regular trial.[255] Accused persons who are prosecuted by the Occupying Power shall be promptly informed, in writing, in a language which they understand, of the particulars of the charges preferred against them, and shall be brought to trial as rapidly as possible.

… The notification shall include the following particulars:

a) description of the accused;[256]

b) place of residence or detention;[257]

---

[251] As many **targeted individuals** are aware, a certain feature of the **organized stalking**, **slander**, **electronic harassment**, etc., is to negatively affect their economic and working opportunities, with the dual objectives of a) depriving them of resources and credibility, and b) in at least some cases to make them feel like the only way they will be safe to work is to go work for the nefarious perpetrators who initiated the hostilities. Admittedly, the logic is tenuous given the specific features of the conflict, but this type of strategy is indeed considered as a **war crime**.

[252] It should be rather obvious than an implicit or explicit threat of lifelong psychological torture via **electronic harassment** and **neuroweapons** would constitute coercion. As things come to light and the reality of these **neuroweapons** are made plainly obviously to the general public, there is little doubt that at least some public officials will be willing to take a short hit to their pride, and have the strength of character to describe the specific nature of the intense coercion they faced in this case of **neurological warfare**. Hence, this constitutes a **war crime**.

[253] Of course, the specific **thought crimes** deemed as infringements by the initiators of hostilities in this context of **neurowarfare** were never made explicit in any forum whatsoever, let alone published or made available to the public in any manner whatsoever. And hence, this constitutes a **war crime**.

[254] Even assuming that one might, in some sick manner, have been assumed to have been obliged to figure out the sick games and figure out what the new "rules" were intended to be AND also wanted to follow those rules after figuring them out, the general rule of "once on the list always on the list" seems to apply. Hence, this constitutes a **war crime**.

[255] In this context of **neurowarfare**, remotely delivered "sentences" involving psychological and even physical **torture**, including levels of monitoring which go well beyond that experienced in any prison, are implemented with a complete absence of any due process, any ability to know the specific charges laid, any ability to present any defense, no statements other than those which imply **guilt** are taken as relevant, etc. In other words, this most certainly constitutes a **war crime**, in addition to contravening established domestic laws. Hence, a **war crime**.

[256] This description is only ever provided to perpetrators charged with various forms of degrading **harassment** and **torture**. Hence, a **war crime**.

[257] This is widely communicated to perpetrators charged with various forms of degrading **harassment** and **torture**.

c) specification of the charge or charges (with mention of the penal provisions under which it is brought);[258]

d) designation of the court which will hear the case;

e) place and date of the first hearing.[259]

Article 73

A convicted person shall have the right of appeal provided for by the laws applied by the court.[260] He shall be fully informed of his right to appeal or petition and of the time limit within which he may do so.[261]

Article 74

Representatives of the Protecting Power shall have the right to attend the trial of any protected person, unless the hearing has, as an exceptional measure, to be held in camera … [262]

Article 78

The Detaining Power shall, as far as possible, accommodate the internees according to their nationality, language and customs.[263]

Article 83

---

[258] This is never specified in any form whatsoever. In fact, the **kangaroo court** process mostly involves mining the brain of the individual to find anything whatsoever that they might feel **guilty** about (and may extend to **planting a false memory** to be able to elicit a forced "confession"), and then claiming whatever that was to have been the specific charge or reasoning for the treatment – in part, this serves as an effort, in conjunction with continuously applied means of **conditioning** and **brainwashing**, whether "traditional" or via **neuroweapons**, to try to convince the victims on the opposite end of the hostilities that **neurowarfare** is not even taking place, and that perhaps they are mostly mentally ill, but most certainly "deserved" whatever happened to them on the road to "self-improvement" (i.e., complete **brainwashing**). Hence, a **war crime**.

[259] Continuous, at all times and places, with no notice whatsoever, perhaps preceded by **planting a false memory** prior to the beginning of the "investigation" (i.e., **torture** and **brainwashing**). Hence, a **war crime**.

[260] There is not court. You're just **guilty**. No matter what. There is no defense to escape the punishment, except for accepting to be **brainwashed** – towing the line is not enough if one is still guilty of **thought crimes**, and hence the only non-torture option is to accept the **brainwashing**. This constitutes a **war crime**.

[261] It's difficult to mount an appeal when the charges are whatever they can persuade you to feel **guilty** about or whatever falsely planted memory they might try to elicit, never mind the fact that there is not court, let alone means of appeal – you committed a **thought crime**, and the **thought crime** is record by means of recording AI-learned and calibrated electromagnetic brain waves (like a remote EEG), and serves as evidence of "**guilt**" and the necessity of punishment until complete submission to the **brainwashing** is assured, and complete. Moreover, no evidence in support of **innocence** has any relevance whatsoever, since they just move on to finding some other way to paint you as **guilty**, to "justify" the treatment, until you submit to the **brainwashing**. Hence, a **war crime** on a great many levels.

[262] I repeat, there is no trial. Non-hostile **civilians** found "**guilty**" of **thought crimes** for their failure to submit to **brainwashing**. Another **war crime**.

[263] In this case, the internment is rather virtual, but it is far more oppressive than any traditional internment, because you do not even enjoy the privacy of your mind. There is no respecting of customs, rather endless **harassment**, ridicule and disparagement about them. Until you submit to the **brainwashing** and stop committing **thought crimes** (or allow them to direct the **thought crimes** as they see fit, in order to build "evidence" of your morally depraved nature). Another **war crime**.

The Detaining Power shall give the enemy Powers, through the intermediary of the Protecting Powers, all useful information regarding the geographical location of places of internment.[264]

Article 93

Internees shall enjoy complete latitude in the exercise of their religious duties, including attendance at the services of their faith, on condition that they comply with the disciplinary routine prescribed by the detaining authorities.[265]

Article 95

The Detaining Power shall not employ internees as workers, unless they so desire.[266]

Article 99

ART. 99. — Every place of internment shall be put under the authority of a responsible officer, chosen from the regular military forces or the regular civil administration of the Detaining Power. The officer in charge of the place of internment must have in his possession a copy of the present Convention in the official language, or one of the official languages, of his country and shall be responsible for its application. The staff in control of internees shall be instructed in the provisions of the present Convention and of the administrative measures adopted to ensure its application.[267] The text of the present Convention and the texts of special agreements concluded under the said Convention shall be posted inside the place of internment … [268]

Article 100

The disciplinary regime in places of internment shall be consistent with humanitarian principles, and shall in no circumstances include regulations imposing on internees any physical exertion dangerous to their health or involving physical or moral victimization[269] …

---

[264] **In this sense, having self-identified as a *civilian*-only enemy Power, it may be possible to make use of this treaty obligation to require that the location of all individuals targeted by neuroweapons be collected and diffused. Which, of course, would be a pathway to evidence, so it would surely be resisted heavily.**

[265] Certainly, efforts to plant a false memory upon observing any remotely related tidbit in the matter of spiritual practice cannot possibly be considered as "complete latitude". As an effort to completely subvert the religious faith and have the individual associate it with suffering, disgust, and other conditionings, this most certainly constitute a **war crime**.

[266] It is essentially impossible to claim that the "until they so desire" part applies here when the alternative is endless **psychological torture**, **neural monitoring**, **electronic harassment**, etc., until one submits.

[267] It is not clear to me whether the "place of internment" should be considered as the location of the remotely attacked, monitored, etc. **civilian**, or the location from which the "internment" is applied. Since article 95 indicates that the text of the Convention must be located as the location of internment, it seems logical that the "location of interment" is the location from which the **neuroweapons** are administered – hence, a failure of the ranking officer in the unit responsible for the "internment" is the one responsible to ensure that a subordinate is looking after following through on this article. This also implies that the domestic laws of the "location on internment" would also apply, bringing on a vast host of other legal infringements at the national level.

[268] This would almost seem like quibbling given the present reality, but it is yet another violation of international law pursuant to universal jurisdiction.

[269] Moral victimization, generally in supremely twisted and unjustified manner for purposes of **intimidation**, **psychological torture** and **brainwashing**, is basically the modus operandi in this instance of **civilian**-targeted

Article 101

Internees shall have the right to present to the authorities in whose power they are, any petition with regard to the conditions of internment to which they are subjected.[270]

They shall also have the right to apply without restriction through the Internee Committee or, if they consider it necessary, direct to the representatives of the Protecting Power, in order to indicate to them any points on which they may have complaints to make with regard to the conditions of internment.[271]

Such petitions and complaints shall be transmitted forthwith and without alteration, and even if the latter are recognized to be unfounded, they may not occasion any punishment.[272] …

Article 102

In every place of internment, the internees shall freely elect by secret ballot every six months, the members of a Committee empowered to represent them before the Detaining and the Protecting Powers, the International Committee of the Red Cross and any other organization which may assist them. The members of the Committee shall be eligible for re-election. Internees so elected shall enter upon their duties after their election has been approved by the detaining authorities. The reasons for any refusals or dismissals shall be communicated to the Protecting Powers concerned.[273]

Article 103

The Internee Committees shall further the physical, spiritual and intellectual well-being of the internees.[274]

In case the internees decide, in particular, to organize a system of mutual assistance amongst themselves, this organization would be within the competence of the Committees in addition to the special duties entrusted to them under other provisions of the present Convention.

---

neurowarfare. Yet another contravention of international laws relating to the conduct of war, under universal jurisdiction.

[270] The authority whose power to which they are subjected is hidden, and hence any means of petition is impossible. Another contravention of the laws of war under universal jurisdiction

[271] Any point of complaint will be used as an indication of what is known to be effective for purposes of **psychological torture** and **brainwashing**. Not only are such complaints not heeded, they are used against the **civilian** victim. Another contravention of the laws of war under universal jurisdiction.

[272] While the instance of complaint is not itself used to justify further psychological torture, it is absolutely the occasion of further punishment, as mentioned in the previous note. Another contravention of the laws of war under universal jurisdiction. Another contravention of the laws of war under universal jurisdiction.

[273] This would seem to imply a) a right to self-organize, and b) a right to know who all the "internees" are in this context of **neurowarfare**. Yet another avenue towards evidence, which would surely be resisted vociferously by the nefarious entities, including those which are paid to protect the **civilians** they are attacking.

[274] Extreme **sleep deprivation**, attacks on heart functioning and claims of use of directed energy weapons aside, the initiators of the hostilities seem well disposed towards getting exercise, although this may be a bluff to try to convince the "interns" that their well-being is at heart. However, with respect to spiritual and intellectual well-being, this is essentially under highly refined means of psychological attack, with AI-supported informational mining and highly refined means of **psychological torture** geared towards **intimidation**, conditioning and **brainwashing**, used to undermine the spiritual and intellectual sense of self. Another contravention of the laws of war under universal jurisdiction. Another contravention of the laws of war under universal jurisdiction.

Article 112

The censoring of correspondence addressed to internees or despatched by them shall be done as quickly as possible. … It shall be done in the presence of the addressee, or of a fellow-internee duly delegated by him.[275]

Article 123

Without prejudice[276] to the competence of courts and higher authorities, disciplinary punishment may be ordered only by the commandant of the place of internment, or by a responsible officer or official who replaces him, or to whom he has delegated his disciplinary powers.[277]

Before any disciplinary punishment is awarded, the accused internee shall be given precise information regarding the offences of which he is accused,[278] and given an opportunity of explaining his conduct and of defending himself[279]. He shall be permitted, in particular, to call witnesses[280] and to have recourse, if necessary, to the services of a qualified interpreter. The decision shall be announced in the presence of the accused and of a member of the Internee Committee.[281] …

… When an internee is awarded a further disciplinary punishment, a period of at least three days shall elapse between the execution of any two of the punishments, if the duration of one of these is ten days or more.[282]

---

[275] In the present situation of neurowarfare, any/all censorship and review of correspondence is done completely behind closed doors, with no clear indication whatsoever which communications are subject to additional scrutiny, deemed as "deserving" of "special attention", etc.

[276] An especially powerful oxymoron in the present instance of **neurowarfare**: "without prejudice".

[277] However, it appears as though numerous agents are empowered to deliver continuous punishment which is endlessly refined to the specific character of the victim of the initiators of the hostilities, including basically any and all applications of **neuroweapons** as combined with more "traditional" methods of **conditioning**, **brainwashing** and **psychological torture** which are described in this text (and presumably others). Moreover, the "punishment" is "justified" on a **kangaroo court** basis, where any and everything can be twisted as "justification", and, lacking even that, the initiators of the hostilities will use **neuroweapons** to try to force the victim into thought crimes which are then purported to be "justification" for the "punishment". However, the reality is that it is **torture** for the purpose of **social control**, not at the level of outward actions, but at the level of inner cognition.

[278] This is rarely provided. But, basically it is anything they can figure out the victim might feel remotely **guilty** about (so they can claim to be "good" in trying to help reform the victim – i.e. **brainwash** the victim). Failing to convince the victim that they "deserve" it in one regard, endless manipulations, **planted thoughts**, **conditionings**, attempted **brainwashing**, etc. are pursued in search of some notion of a reason why the "punishment" is "deserved".

[279] No defensive argumentation is ever of relevance. No specifications of charges are made. The initiators of the hostilities switch from one thing, to another, to another, in search of the remotest hint of any "justification".

[280] The only witnesses which are allowed are those which **slander** the victim. Any supportive testimony is completely irrelevant to the "proceedings".

[281] The "decision" is never announced. Rather, the initiators of the hostilities in this context of **neurowarfare** may simply wait a few seconds, minutes, days, weeks, or even longer, before stunning the victim with a repeat of the accusation, accompanied by projected images (or elicited memories, whether real, falsely planted or outrageously manipulated) and **evoked actions/subvocalizations** geared towards convincing the victim that they are indeed **guilty** of the "offense" in the **kangaroo court**.

[282] **Targeted individuals**, are often lucky if they get three minutes between punishment, let alone three days. Likely, a decent portion would give their pinkie finger to obtain a full three days with a 100% guarantee of peace

A record of disciplinary punishments shall be maintained by the commandant of the place of internment and shall be open to inspection by representatives of the Protecting Power.[283]

Article 131

Every death or serious injury of an internee, caused or suspected to have been caused by a sentry, another internee or any other person, as well as any death the cause of which is unknown, shall be immediately followed by an official enquiry by the Detaining Power.[284]

A communication on this subject shall be sent immediately to the Protecting Power.[285] The evidence of any witnesses shall be taken,[286] and a report including such evidence shall be prepared and forwarded to the said Protecting Power.

If the enquiry indicates the **guilt** of one or more persons, the Detaining Power shall take all necessary steps to ensure the prosecution of the person or persons responsible.[287]

Article 140

A Central Information Agency for protected persons, in particular for internees, shall be created in a neutral country.[288]

Article 144

(of course, this would not be believed, so probably none would accept such an offer) – yet, they are dedicated to carrying on the struggle to make the reality of the present **neurowarfare** known.

[283] **Considering the number of crimes committed in relation to administering the "punishments", this would seem rather trivial in comparison, if not considering the fact that it is also the means by which to obtain evidence. This is another tool in universal jurisdiction via which details on the enormous number and scale of offenses could be sought.**

[284] Deaths to "internees", whether explicitly elicited suicide, being driven to suicide by the promise of eternal **torture** unless submitting to **brainwashing**, or due to other applications of **neuroweapons** which affect physiological processes, are not only not investigated, they are completely ignored, written off as suicide, "accidents" (**evoked actions**, for example pose a great threat when driving, as does extreme **sleep deprivation**), or natural causes of death.

[285] There is no communication in relation to the death. People who presently speak of the reality of neurowarfare are written off as mentally ill, which, among other things, allows the initiators of the hostilities to pretend like nothing at all is happening while they go about **torturing**, **brainwashing** and engaging in **non-consensual human experimentation** on victims of the hostile attack in this instance of **neurowarfare**.

[286] Evidence from witnesses which might pinpoint the situation of **neurowarfare** is guaranteed to be subjected to extreme **slander** or maligning of the identity of the witness, in the case that the witness cannot be intimidated into silence. Any witness putting forward such claims is liable to become highly targeted, if they are not already, by **organized stalking**, **electronic harassment**, continuous psychological attacks which make use of **neuroweapons**, etc.

[287] Not only does it seem that it would be covered up, but indeed, certain victims of the initiators of the hostilities appear to have been marked for their end, for one reason or another, at least in some cases relating to generally pro-eugenics anti-socialist (i.e., Nazi) motives in relation to perceived "inferiors".

[288] **This may be another means via which there is a requirement under international jurisdiction to release the names, etc., of all individuals targeted by the initiators of the hostilities in this instance of *neurowarfare***.

ART. 144. — The High Contracting Parties undertake, in time of peace as in time of war, to disseminate the text of the present Convention as widely as possible in their respective countries, and, in particular, to include the study thereof in their programmes of military and, if possible, civil instruction, so that the principles thereof may become known to the entire population.

Any **civilian**, military, police **or other authorities**, who in time of war assume responsibilities in respect of protected persons, must possess the text of the Convention and be specially instructed as to its provisions.[289]

Article 147

Grave breaches to which the preceding Article relates shall be those involving any of the following acts, if committed against persons or property protected by the present Convention: wilful killing, **torture** or inhuman treatment, including biological experiments, wilfully causing great suffering or serious injury to body or health, unlawful deportation or transfer or unlawful confinement of a protected person, compelling a protected person to serve in the forces of a hostile Power[290], or wilfully depriving a protected person of the rights of fair and regular trial prescribed in the present Convention

Article 148

No High Contracting Party shall be allowed to absolve itself or any other High Contracting Party of any liability incurred by itself or by another High Contracting Party in respect of breaches referred to in the preceding Article.[291]

If it is not yet clear, upon having fully consumed this glossary, there should be no doubt that **electronic weapons** (**neuroweapons**) are weapons, and that existing international treaties which apply universally with respect to **civilians** have been broken, and a great number of **war crimes** committed.

---

[289] This would be the clause under which it doesn't matter if it's a technically "non-military" rogue arm of the state involved – any entity attached to the state, whether directly or as contractors, can be deemed as required to uphold the full text of the Convention and its additional Protocols, and are thus also subject to universal jurisdiction regarding treatment of **civilians**.

[290] So, for example, threatening that "it will never end" and demanding to "get in", is in violation of this article.

[291] In other words, under universal jurisdiction, any state which includes rogue elements which operate under any element of secrecy to, at least temporarily, "get away with it", is statutorily obliged to take responsibility for any liabilities relating to the enormous number of violations, especially those against **civilians**, in the present situation of **neurowarfare**. **This would be an avenue via which compensation from the states which failed to prevent the atrocities can be pursued.**

<u>Appendix E</u>: Specific public safety objectives relating to such technologies (adaptations)

Pursue an international declaration banning weapons which activate or deactivate the neural and/or biological processes of human beings, or which or are geared towards influencing those processes, by remote electronic means.

Publish and pursue the passage of national-level legislation; criminalizing all **non-consensual human experimentation**, including all classified behavioural research; criminalizing all use of behaviour modification and monitoring weaponry against **civilians**, in particular in the absence of due process where any monitored individual will be made fully aware of the relevant details in a reasonable timeframe, for example within 6 months of the warrant being issued (in the case of any high-risk imminent threats, remote monitoring should be suspended and the individual brought in for formal **questioning** in full accordance with the right to not give incriminating testimony and to not be coerced).

Not **guilty** by self defense against **brainwashing**

This would attribute jury the right to find "not **guilty** by reason of self defense against **brainwashing**", a defense which may in any case lead to a jury failing to "find **guilty**". This should serve as a powerful check, which, of course, would itself be highly constrained by the possibility that "**guilty** of murder" is always a possible outcome from a jury considering such a defense. The objective being to reduce or even eliminate the forms of **harassment**, **gaslighting**, etc. which is orchestrated to contribute to the annihilation of the self of any **targeted individual**, naturally, threats to such ends should not receive any protection under such considerations. Also, this right of a jury to find "not **guilty** by self defense" should not be applied to any lesser violence for instances of attempted protection or retribution in relation to crimes which are difficult to prove but known to be related to **gaslighting** and/or **brainwashing**, as it would not be desirable to encourage any legal spreading of violence within a society.

Whistleblower rewards relating to liability of any activity which damages individuals and is related to an activity of the government

EA guaranteed MINIMUM percentage reward for any **whistleblowing** activity that leads to individual and/or class action suits against public officials who abuse their authority in a manner that damages any number of individuals. For example, 10%, which would be a $100 million payout for a **whistleblower** (or to be shared among several **whistleblowers**) providing specific evidence contributing to the receipt of any monies paid out in related lawsuits.

Mandatory prosecution of any individual in a position related to government activity and for which a certain threshold of liability has been exceeded

In the event of any liability paid for by the government due to <u>criminal</u> infringements against individuals which involve both knowledge and intent, criminal liability of the responsible individuals shall be pursued, and an office dedicated to prosecuting such offenses shall be

required to prosecute for any liability which exceeds $1 million. As an oversight, it should be made easy to strip such a prosecutor of their license to practice law if they are demonstrated to prosecute such cases insincerely. In cases of negligence, mandatory prosecution should be required at a much higher level of liability as assessed through the legal process.

A law which explicitly describes various forms of **gaslighting**

A diversity of **gaslighting** techniques should be made explicit in a law which leaves discretion to a judge to apply a punishment ranging moderate to life in prison. The general principles of **gaslighting**, namely, in an intentional strategy to make a person believe that they are crazy, that they have lost the ability to accurately identify the inputs of their senses, etc., when in fact they are perfectly sane and in control of their faculties, should be sufficiently broad to offer expansive protections against any methods devised at a future date to this end. Intelligence agencies, police and other official should be very explicitly NOT be excluded from criminal liability in this regard, whether as a part of domestic or international investigations.

As a protection against false accusation where the complainant is in fact suffering from a deterioration of perceptual abilities, a test of memory, sight, sound, smell, etc., as applicable to the specific complaint, should be established. For example, the Cognitive Abilities Screening Instrument (CASI) could be used (Adequate protections in terms of excessively loose rules in this regard should also be addressed.) If the complainant fails such a test, the complainant must be able to easily access the option to repeat such a test while inside a **Faraday cage** which is equipped with monitors across the electromagnetic spectrum ranging from 0Hz to 100 GHz (to be advised upon by a study of threshold in a peer-reviewed publication made freely available to the public).

A law which explicitly makes it illegal to go around repeating stuff said by the individual in any manner designed to screw with their head.

With full recognition that in a free society, sometimes people will write, say, draw, etc., things that other people will disagree with and which may become the target of spirited debate: a) explicit recognition of the possibility that infringements of privacy may lead to such things (define better) should be made, b) antagonistic debate should be focused on the topics rather more so than the individuals, and explicit recognition for the possibility that various forms of debate may degrade into intentional efforts to, not only make the speaker look bad, but to degrade their sense of self, screw with their cognition, most especially in ways known to be associated with **brainwashing**, **mind influencing technologies**, etc., … OK, you get the idea. Don't limit legitimate debate. But when people are **organized stalking**, and using this technique, in addition to other laws that it violates, there should be an additional law which makes it so exceedingly explicit that there should be no doubt whatsoever.

A degree of consideration should be made for the right of individual members of the public to adopt a hostile and even insulting tone with regard to public officials, whether elected or otherwise. However, public service being a rather thankless and tough job as it is, especially at the

higher level, it would be desirable to extend these protections to public officials in an explicit manner, with explicit instructions in the law that such violations against a public official must be particularly obvious and extensive.

In consideration of the fact that such acts may be perpetrated by a large number of individuals, each one of which has done something that may otherwise seem innocuous, the principle should be established that ANY ONE of those individuals may be found legally culpable for the **harassment**, based on evidence of any pattern that other individuals had participated in. However, to protect against mere coincidence or the possibility of remote influencing technologies, the power of **suggestion**, etc., to lead to honestly accidental participation in such **organized stalking**, the victim must document at least one instance of informing the individual of the specific association or undesirable pattern (including violations of privacy), and if the perpetrator continues with ANY other pattern which the victim has documented to be applied subversively against them, this should be considered as at least sufficient to warrant charges. If the perpetrator tries to **gaslight** the victim in response, for example **suggesting delusions**, irrational paranoia, etc., additional charges relating to **gaslighting** should be applied. A non-police commissioner shall be established to process such complaints, and sufficiently transparent records should be made available for the public to assess whether charges are being pursued in a reasonable manner.

Naturally, but also unfortunately, a much higher barrier must be established for public officials, because their regular interactions with the public imply a fair degree of likelihood that troublesome issues will come up repeatedly.

Restrictions additional to liable **slander** may be warranted, namely, in the case where some assertion is in fact true, but eventually becomes applied in a manner that constitutes **harassment** which most reasonable people would believe to be unwarranted. For an example of a reasonable accommodation, a public official might reserve a few minutes for **harassment** and/or protest (this should not be perceived as a limitation of the right to protest in the general sense, but rather as a restriction relating to specific situations where a public official is making a public appearance, for example to speak on some topic of interest), after which point in time orderly progression of the public event should be ensured by public or private security if they are asked to do so.

A law which explicitly makes it illegal to coercively force an individual to NOT hold a specific view.

While speech may face some formal restrictions, namely in the area of libellous slander, hate speech which promotes violence, etc., any other means of coercion which is not EXPLICITLY sanctioned by law as a means to provide sticks against such views must be deemed as illegal. This should not be interpreted to mean that individuals will not face consequences for views expressed in public, for example lynch mobs which organize to fire someone who expresses a specific view. What is at stake here, is that any threats, **intimidations**, manipulations, etc., which are attuned to the psychology of the individual in a manipulative manner to try to force them to not hold that view, should be considered as illegal. This should not be viewed as any sort of limitation on the

right to free speech in the sense of debate and argument in good faith, even when antagonistic and even offensive. However, calculated methods to screw with the mind, most especially via remote means or including any form of **organized stalking** or **gaslighting**, should meet stiff legal sanction. Specifically, there should be no basis for "**thought crime**" as any basis for any sanction whatsoever, and publicly expressed views which are offensive but not conducive to violence against any group based on race, gender, religion, etc., should not become the basis of any psychological warfare against this individual, as protected by criminal sanction against those who go too far.

Outward conformity may be occasionally viewed as a target for influence. However, inward conformity shall receive the strictest of protections of law. Any use of remote monitoring technologies which may infringe on such inner liberties should be sanctioned by a very high mandatory minimum punishment, with full due respect for the fact that mandatory minimum penalties are not very effective for most classes of crimes.

For the case of nations with satellite technologies, foreign **civilians** should have a right to seek justice on this basis, including un-infringed ability to have their situation remedied by determining the agent responsible for perpetrating the activity, and/or any real or imagined evidence which may have led to such treatment. In the case of *imminent* national security threats or investigations involving organizations believed to be a legitimate military threat or threat to public safety (generic "national interest" arguments shall be explicitly excluded), the opportunity shall always be afforded to have themselves removed from such monitoring.

A law which explicitly makes it illegal to coercively force an individual to HOLD a specific view.

Basically the same as the above. A law to ban trying to coerce people into holding a specific political view, for example through threats of **psychological torture** and/or invasive monitoring to persist until such communications or even THOUGHTS are adopted. With especially severe penalties when **neuroweapons** are applied.

Application of **conditioning** mechanisms (to be considered as separate from diverse forms of argumentation or mere presentation of arguments on paper) to engage in thought reform

Any means of communication which are designed to influence the individual's views, preferences, psychology, etc., which cannot be "turned off" and which are not optional for the individual (with reasonable exceptions for person-to-person counselling required as a part of some judicial judgments). With the exception of a lawful interrogation where the individual retains the right to refrain from any form of communication, implicit or otherwise (hence, use of **neuroweapons** also to be banned for such uses).

An anti- "soul stealing" law

No matter what errors a person has committed in their lives or how many times, no one should have their brain's contents downloaded and exploited.

A law which bans any evidence produced by invasive brain monitoring tools

A law which leads to immediate discarding of any case where law enforcement is found to have used any brain monitoring tools as a means of circumventing processes for warrants.

A law which bans police from not disclosing informants.

A law which explicitly prohibits the use of illegally collected information as a means of 'parallel construction'.

> Some reasonable accommodations for anonymous tips should be made, but the nature of the evidence should be clear and persuasive to a reasonable person – if this is not made available to the judge … (some level of banning information, throwing out cases … discretion of judge should apply). Sufficient detail on the anonymous tip should be made available to persuasively convince that the tip was not in fact evidence collected via illegal means of surveillance. For example, the time, date and phone number of the caller (due process would apply were it deemed necessary for authorities to identify the name associated with that phone number or email address.)

A law which explicitly prohibits the use of non consensual remote monitoring to try to collect information about what any individual thinks about any particular issue. This could be called "the anti-soul catching law" or the "preventing the end of inner **freedom** law".

> The privacy of mind should be sacrosanct. Any effort to remotely monitor opinions, thoughts, views, etc. should be explicitly banned. Moreover, any effort to interfere with such thought processes, for example to introduce certain views, any use of **conditioned** stimulus, etc., to engage in thought reform, in the process of any such monitoring, should be subject to additional penalties, namely, life in prison, since this amounts to trying to **brainwash** a person in a situation where not even outward conformity is sufficient, where efforts to establish inner conformity is also targeted.
>
> The use of any such monitoring for law enforcement or national security laws, outside of active war zones which are associated with an active declaration of war (including against non-state actors) which explicitly identifies all parties involved, should be explicitly banned. The potential for any loopholes, including secret laws, secret treaties, etc., should be explicitly banned. Constitutional amendments to such purposes should be actively debated, which may seem unnecessary due to the existence of constitutional protections along these lines in most advanced countries, but it seems that the situation needs to be made rather more explicit.
>
> It is essentially impossible to imagine any such use of remote monitoring tools which could have anything other than nefarious ends, with objectives to a) remotely engage in thought reform, or b) use such monitoring as a means to enforce inner conformity.

A law explicitly prohibiting the use of evaluated potentials to establish what a person does or doesn't like

Since the potential for **conditioning** and **brainwashing** is obvious, any application of such information for the purpose of **conditioning** and **brainwashing**, or any form of non-consensual thought reform with the sole exception of face to face discussions as a part of mandatory counselling party to a judicial determination which is unaided by any electronic or wave-form technology whatsoever, should receive life in prison, as per 'anti-**brainwashing'** considerations.

An anti-entrapment law. No loopholes. Mild solicitation to criminal acts should remain in the toolkit.

It is clearly acknowledged that there is a different between simply offering the opportunity to commit a crime, such as soliciting a drug sale or sex with an individual who is KNOWN by the target to be a minor, and actively trying to convince the person that they should do it (say, begging the potential dealer, referring to some medical conditions that they really needed help with, or implying in ANY way that there may ANY form of reprisal for failing to follow through on the act), perhaps even with a degree of coercion.

The first situation may be a reasonable part of the law enforcement toolkit, for example because a high suspicion of previous violations of law may have occurred but it is difficult to prosecute due to lack of sufficient quality evidence, or perhaps the target exhibits some predisposition to doing something. For example, a police officer may legitimately pose as a 13 year old online, being exceedingly clear that they are underage, and engage in communications which are increasingly **suggestive**, for example to the degree that they should meet in public and go to a motel. This would be much different than, say, actively trying to persuade the target that it is OK to do so, massaging their mind in ways to promote the acceptability of it, perhaps even remotely introducing such ideas via remote means, or use of any form of coercion or thought reform. In the second sort of case, not only should the defense of entrapment apply, as per existing law, but significant penalties should exist on the books for judges to use in cases of extreme abuse.

In cases relating to entrapment in relation to terrorism, any officer involved should a) do no more than offer access to weapons, and not be particularly encouraging in that sense, and b) should position themselves as LESS extreme compared to the average within the group. Any *appearance* of adding to the extent of the radicalization of the potentially terrorist-inclined group or individuals should a) activate the entrapment defense, and b) open the door to the possibility of criminal sanction applied against the undercover officer.

Due to the possibility that those who are paid to uphold public safety and the law may make use of individuals who are not officially law enforcement officers in order to circumvent any such laws, such a law should *explicitly* also apply to anyone who in any way is under the direct or implicit influence of law enforcement, including intelligence, with an additional requirement that any such individual categorically must be made aware of the explicit limitations on their activities and the potential criminal sanction for any violations.

Liability to the taxpayer should be extremely limited in such cases, and the main anti-entrapment toolkit should be comprised of criminal sanction against any officer making use of such tools and any superior officer who should reasonably be expected to be aware of what was going on and

failed to intervene and assert the norm of mild solicitation of criminal acts as a means of identifying a threat to public safety.

A law which prohibits any public official from engaging in any form of **blackmail** whatsoever as a part of any investigation unless as a part of a formal deal which is communicated on paper and signed off on by a superior official who faces criminal liability for any abuse occurring under their watch.

It may be acceptable to say something like "we've got such and such dirt on you. We will consider lenience in prosecution if you can help us to nail this other guy." However, it would be desirable to devise a law which both left a degree of latitude and also drew some fairly firm lines with respect to assistance in investigating serious crimes or criminal networks, and what essentially amounts to **blackmail** where a potential informant may be required to commit further crimes. In the case where commission of further crimes is going to be part of the investigation, a formal description of the crimes which are liable to be committed as a part of the investigation, and for which the informant will not face prosecution, should be made clear. For example, an informant may have to continue to deal drugs or even play some active role in a human trafficking organization. The timeframe for which this forgiveness applies should be made explicit, to a maximum of 6 months at a time. In the case that further formal approval cannot be made due to risk of discovery by the criminal network, it should be made 100% clear that non-prosecution cannot be assured.

The main purpose of this law should be to prevent **blackmail** on the part of any public official, and to introduce anti-**blackmail** laws which primarily make use of criminal sanction but not monetary liability on the part of the taxpayer – but, to leave reasonable space to make use of insiders for the purpose of an investigation.

Such a law should also formally prohibit recruiting any non-official, any **civilian** whatsoever, who is not already part of the network being investigated. In other words, a **civilian** who may belong to another criminal network, or who is in a good position to enter the targeted network, should be held to a variety of standards by fact of being given formal status as an officer, although clearly it would be desirable to have significant **freedom** to keep such details under wraps for some period of time – 2 years may be a reasonable period, with formal extensions thereafter. Among other things, this would enable the individual to benefit from a variety of protections by virtue of belonging to the unions which represent the organization they work for, a fact which would minimize the potential for **blackmail** and/or abuse of the informal situation of such an informant.

A law which closes any loopholes which make it impossible for citizens to determine whether they may be on any sort of list.

This law should require, with minimal reasonable exceptions for highly pressing matters of national security which must be formally reviewed by a judge and documented on paper and permanently stored, that a citizen may find out whether they are on any lists, and the specific reasons for being on any such list. This is a prerequisite to justice, in the sense of knowing any

‘evidence’ against you, for the ability to defend oneself, for example against false accusations or accusations which essentially misrepresent the situation.

Among other things, this may serve as somewhat of a protection against pre-crime principles which seek to use any algorithm to evaluate security threats at the level of individual (for example, which countries you visit, which articles are shared in social media, topics frequently discussed such as corruption or pro-peace perspectives, etc.)

A law which expands the right to remain silent to remote neural monitoring

Due to the risk that any sort of enemy may try to plant memories, massage memories, or remotely interfere with neural processes, the right to remain silent should receive strict formal protection. Moreover, a right to “turn off the airwaves” and the right for any individual to independently select which information and perspectives they will be exposed to (for example, the right to not pay attention in some mandatory class, which may lead to failing said class, and any sort of updated application relating to any new technologies), should receive strong formal protection. This should be upheld by strong penalties, since it is fundamental to cognitive liberty, but in practice it may have to be upheld by recognizing a human right wherein any and all citizens must be afforded access to technologies which may block any such uninvited signals. This should not be construed as any form of limitation on free speech, in the sense of a) traditional media or free speech which involves the purchase of advertising space which can be seen or viewed in public (where the option to ignore this speech is generally possible), b) or limitations any group which may wish to assemble in public for the purpose of expressing their views (reasonable limitations on protest for the purpose of not excessively interfering with normal routines in life), or c) limiting the right of any group to diffuse views online, with the exception that anti-spam laws shall be upheld and anti-subliminal messaging principles should be generally upheld.

An anti-subliminal messaging law

I believe that this is already a law in terms of advertising. This law should be extended to situations related to “street theatre”, where any individual or any/all individuals of any group who can be demonstrated to be creating distractions for the purpose of any subliminal layering in of subliminal messages, most especially for the purpose of classic conditioning, should be upheld vigorously. To prevent abuse of the law or protection against accidents, coincidence and/or external influences which lead individuals and/or groups to be participating in such subliminal messaging unaware to them, a single warning on the part of the victim should suffice. Namely, the victim should make known to the individuals who are knowingly or uknowningly involved in the “street theatre” what they are involved in, and any further continuance whatsoever, for example timing a distraction in a way to cover up the subliminal messaging, should be considered as evidence which may attract criminal sanction. The individuals performing the subliminal messaging should receive much more stringent penalties than those involved in the distraction, since it should be safe to assume that they are far more likely to have good knowledge on the intended effects of the attempted programming.

In such situations, those who try to malign the complainant as mentally ill, or otherwise discredit those who merely assert such a claim, should be liable for both civil and criminal treatment. Reasonable considerations in the matter of legal/social defense should be upheld as a general matter of practice.

An ombudsman of some sort should be established to ensure any failure of police to proceed with investigations or charges under such laws.

A database to maintain complaints against specific individuals relating to organized stalking

Due to issues of coincidence, accidents, etc., a database should be maintained of all complaints in relation to gang stalking. Video evidence should be prioritized for such complaints. The identity of the complainant must be disclosed to file such a complaint, the time, date and location of the incident should be recorded, and … somehow some measure to empower citizens to require disclosure of the identity of the perpetrator should be allowed for. A reasonable protection against abuse of this last principle may be for the alleged perpetrator to have to disclose ID, but be allowed to demand the right for the police to evaluate the alleged evidence prior to being required to disclose ID. In any eventual interaction with police, any effort to suggest that the complainant is mentally ill, delusion, or anything whatsoever which may contribute to a psychiatric reprisal, should empower the complainant to demand the name, ID, etc. of the police officer and a database of such complaints against any specific officer should be upheld.

Citizens and foreigners alike should have an explicit right to easily, upon proof of identity, get the full record on any such complaints against them, in order to be able to set the record straight. Any such requests for information should be explicitly protected from any sort of reprisal, and no one but the requesting individual should be allowed to keep any form of data pertaining to such requests – i.e., any record of the transaction on the part of the state is disallowed, i.e., the state is not allowed to know who knows what they know about what the state has on them. Extensions to uphold this principle must be extended for any and all forms of remote neural monitoring.

A law which makes violations of law by any police, law enforcement, intelligence, ETC., official explicitly subject to criminal, rather than solely civil, sanction.

If a civilian is subject to criminal sanction for an act, so should any non-civilian. Any law which applies specifically to non-civilians should attract similar, or stronger, but never lower, ranges of criminal sanction than a roughly similar form of act perpetrated by a civilian. For example, the criminal sanction against a civilian who uses a remote neural monitoring technology to remotely spy on the activities of a public official, etc., should be subject to a similar criminal penalty as any individual working in any capacity whatsoever for the security state who uses any such technology in a manner other than formally sanctioned, documented, justified application of such technologies. Any proposed alteration of any laws which may be construed in any form whatsoever as any sort of loophole should mandatorily be diffused to all known media, NGO, religious, community and other related organizations which are entered into any public or security databases, no less than 6 months before any vote on the question may take place.

Such loopholes should be mandatorily excluded from any sort of omnibus bills. Constitutional amendments to such ends may be required to uphold such a principle. Namely, any additional powers, any loopholes of any sort, which increase the potential scope of power (and hence abuse of power) of any state or state-connected or state-sanctioned entity to perform investigative tasks, whether against citizens or foreigners, should be subject to line-by-line debate and paragraph-by-paragraph votes. The clause to require 6 months prior expansive disclosure of any such proposal should be deemed to serve as protection against any legislative efforts to stonewall, effectively blocking the ability to use administrative or other means to delay off any such vote indefinitely.

A law which introduces severe criminal liability for any failures to follow through on requests from properly authorized legislators.

With full recognition that there are legitimate reasons to reduce the potential scope for leaks of sensitive information, etc., the supremacy of civilian and democratic rule should be recognized unambiguously. Namely, any failure by any arm of the security apparatus, or any individuals and/or contractors in any way connected to such activities, whether paid or otherwise, should be required to disclose information relating to the requests of legislators to provide information pursuant to any investigation. Reporting procedures to transmit such requests should be established throughout all such networks, whether formal or informal networks. Any failure to disclose information pursuant to such a request should attract a mandatory minimum sentence for any individuals employed in such positions (whether formally employed by the state or any sort of contractor) – the principle of command responsibility should be a guiding factor here, but should in no way be construed to limit the potential responsibility of lower level actors – and significant discretion should be allowed to the judiciary in relation to any such activities performed on a voluntary basis. This can be assumed to have a pro-whistleblowing dimension.

A law which makes explicit that contractors of the state are subject to all the laws applying to formal employees. The “Anti-circumvention by contractor law – non-pro union edition”.

In relation to liability and responsibilities assumed of public sector workers, any contractors of any arm of the state, whether formally or informally defined, should be upheld to the standards of those who work directly under the state. This should not be understood as an expansion of rights to pensions, non-firing clauses, etc., in various contracts. Rather, the objective is to ensure that contractors are not hired to circumvent laws which constrain the activities of those in the employ of the state. Additionally, any case where an effort to circumvent such laws are applied, the principle of command responsibility should be a guiding factor, and decision makers who make use of such contracting means should be exposed to criminal liability for any such effort to circumvent laws in such a manner. Moreover, a whistleblower on the part of any contractor should enjoy 100% immunity for any violation of law whatsoever committed prior to the disclosure, in the case that it is successfully demonstrated that a major consideration in the use of contracting out services was to circumvent constraints to those formally employed directly by the state – the bar for such amnesty should be significantly lower than the bar for successfully convicting the decision maker responsible for the attempted circumvention of law.

This consideration should not be viewed to expand any responsibilities of non-disclosure in any matter of classified information, or to serve as any sort of limitation of the right of contractors to speak freely to media, in public, online, etc. about their activities, with the exception of what is explicitly prohibited as a matter of what is explicitly deemed to be classified information.

A law which explicitly empowers the president to make use of the military to secure any premises of any other arm of the state which is viewed to be in need of investigation.

Ripe for abuse. Must be thought out correctly and full of anti-loophole considerations. Any associated investigative powers should be in the hands of Congress, the Senate, or equivalents in various nations.

A law which enables the removal of any Supreme Court justice pursuant to a referendum.

The bar should be VERY high. Say, 80%, and the trigger should not be easy to pull. Say, signed by 10% of registered voters. The goal here is to prevent abuse of the constitution, for example in any case where the Supreme Court may authorize or turn a blind eye to activities which are OBVIOUSLY anti-constitutional, such as warrantless spy tapping of any sort.

Significant distance between the easily manipulated public and the power to appoint judges should be upheld.

A national holiday to remember the victims of state-complicit attacks on the innocent and to honour public officials and private citizens who have strived to free citizens from such terrorism.

If there’s not a day off, it’s unlikely that people will pay much attention. Perhaps renaming flag day, Victoria Day, and the like, would suffice.

Appendix F: Specific national laws which are violated by application of the strategies and technologies described in this document, at a country by country level. Presentation of some potentially relevant precedents.

The following request for legal advice was sent to the following individuals and organizations which may have the capacity to follow through with some law clerk assistance:

> Subject: Victims of harassment and torture designed for brainwashing seeking assistance to specify specific laws and precedents relating to their situation
>
> Hi,
>
> You may be in a great position to contribute to a resource that is likely to empower a great number of vulnerable people.
>
> Are you aware of the issue of "targeted individuals", gang stalking, electronic harassment, etc.? In short, this involves the use of a variety of "traditional" techniques used for brainwashing (mind influencing and thought reform strategies), combined with a new class of technologies which are being used as neuroweapons. A lot of this may seem unbelievable, so I have also attached a glossary of related technologies and strategies being used. Rest assured. This is not science fiction.
>
> The issue is this. **Civilians** are being targeted with extensive mental torture which is designed to assert social control to silence individuals who are outspoken (I believe, mostly those who are critical about corruption, war, and the surveillance state), and are also being applied on an experimental basis against unfortunate individuals deemed to be of no value to society.
>
> The details following the body of this message describe the specific types of events and the intended effect on the victims.
>
> At first glance, this may seem like much ado about nothing, BUT if/when you can come to understand the ways in which this is applied 24/7 for the purpose of establishing complete domination over the cognition and potential actions of the individual, you should understand that this is a very serious issue and it will be well worth setting aside some time from your other urgent projects to help these targeted individuals by a) researching the specific laws in your country which pertain to such forms of harassment and torture, and b) relevant legal precedents with respect to such harassment and torture. Naturally, full acknowledgement will be offered to anyone who wants it.
>
> If time or specific expertise does not permit you to do so, please consider whether you may be able to recommend a student, colleague or acquaintance who may have an interest in such a vital issue of human rights and severe violations against liberty and self-determination.
>
> Nathan Weatherdon
> Translator and editor of economics research
> Teacher
> Targeted individual

<u>Types of events which violate domestic and/or international legal and/or human rights principles, with a description of some effects these are intended to have on the targeted individuals which render these violations rather severe criminal infringements.</u>

1) Relating to social isolation
    a. False rumours, slander, etc.
2) Threats of collection punishment, implementation of collective punishment
    a.
3) Invasive monitoring, whether or not any warrant has been applied
4) Monitoring in the absence of a documented reason
5) Placing people on watchlists for no good reason
6) Political persecution
7) Trying to intimidate people out of expressing specific political views, not in the form of strong or even offensive counterargument, but in the sense of threats of **psychological torture** and/or invasive monitoring to persist until such communications or even THOUGHTS are abandoned.
8) Trying to coerce people into holding a specific political view, for example through threats of **psychological torture** and/or invasive monitoring to persist until such communications or even THOUGHTS are adopted.
9) Application of **conditioning** mechanisms (to be considered as separate from diverse forms of argumentation or mere presentation of arguments on paper) to engage in thought reform
10) Any means of communication which are designed to influence the individual's views, preferences, psychology, etc., which cannot be "turned off" and which are not optional for the individual. With the exception of a lawful interrogation where the individual retains the right to refrain from any form of communication, implicit or otherwise.
11) Criminal negligence – knowing someone is being harmed and doing nothing
    a. By police
    b. By medical professionals
    c. By agents of the security state
    d. Even those who did nothing, or just played along without trying to stop anything, in such positions of responsibility are guilty of criminal negligence
12) Non-consensual remote monitoring of an individual's thoughts whether for the purpose of:
    a. Evaluating what an individual thinks about certain topics
    b. Designing strategies for thought reform of the individual
    c. Actively engaging in efforts to manipulate the views, opinions, etc. of the individual
13) Entrapment. (To my knowledge, this does not attract criminal sanction in most countries, however civil suits, i.e., lawsuits, are possible.)
14) Death threats, threats of endless torture, etc., if you do not submit to the brainwashing and/or just do whatever they order
15) Threats of collective punishment, for example to also harass various connections, family, friends, etc. , if you do not submit to the brainwashing and/or just do whatever they order

<u>Australia</u>

Organizations and individuals contacted to solicit a legal review on this situation

- Law schools
- Student legal organizations and clinics
- Human rights organizations
- Police training schools
- Community organizations with missions relating to law
- Sexual assault centres, domestic violence centres (may have awareness of organized stalking)
- Websites where you can ask legal **questions**, specific to the country

Law

Related judgments

Law

Related judgments

Military universities

- Start with one

Belgium

Organizations and individuals contacted to solicit a legal review on this situation

- Law schools
- Student legal organizations and clinics
- Human rights organizations
- Police training schools
- Community organizations with missions relating to law
- Sexual assault centres, domestic violence centres (may have awareness of organized stalking)
- Websites where you can ask legal **questions**, specific to the country

Law

Related judgments

Law

Related judgments

Military universities

-

Canada

Organizations and individuals contacted to solicit a legal review on this situation

- Law schools
- Student legal organizations and clinics
- Human rights organizations
- Police training schools
- Community organizations with missions relating to law
- Sexual assault centres, domestic violence centres (may have awareness of organized stalking)
- Websites where you can ask legal **questions**, specific to the country

Law

Related judgments

Law

Related judgments

Military universities

- Royal Military College, Kingston

Denmark

Organizations and individuals contacted to solicit a legal review on this situation

- Law schools
- Student legal organizations and clinics
- Human rights organizations
- Police training schools
- Community organizations with missions relating to law
- Sexual assault centres, domestic violence centres (may have awareness of organized stalking)
- Websites where you can ask legal **questions**, specific to the country

Law

Related judgments

Law

Related judgments

Military universities

-

European Union

Organizations and individuals contacted to solicit a legal review on this situation

- Law schools

- Student legal organizations and clinics
- Human rights organizations
- Police training schools
- Community organizations with missions relating to law
- Sexual assault centres, domestic violence centres (may have awareness of organized stalking)
- Websites where you can ask legal **questions**, specific to the country

Law

Related judgments

Law

Related judgments

Military universities

- Start with one

Finland

Organizations and individuals contacted to solicit a legal review on this situation

- Law schools
- Student legal organizations and clinics
- Human rights organizations
- Police training schools
- Community organizations with missions relating to law
- Sexual assault centres, domestic violence centres (may have awareness of organized stalking)
- Websites where you can ask legal **questions**, specific to the country

Law

Related judgments

Law

Related judgments

Military universities

France

Organizations and individuals contacted to solicit a legal review on this situation

- Law schools
- Student legal organizations and clinics

- Human rights organizations
- Police training schools
- Community organizations with missions relating to law
- Sexual assault centres, domestic violence centres (may have awareness of organized stalking)
- Websites where you can ask legal **questions**, specific to the country

Law

Related judgments

Law

Related judgments

Military universities

-

Germany

Organizations and individuals contacted to solicit a legal review on this situation

- Law schools
- Student legal organizations and clinics
- Human rights organizations
- Police training schools
- Community organizations with missions relating to law
- Sexual assault centres, domestic violence centres (may have awareness of organized stalking)
- Websites where you can ask legal **questions**, specific to the country

Law

Related judgments

Law

Related judgments

Military universities

- Start with one

India

Organizations and individuals contacted to solicit a legal review on this situation

- Law schools
- Student legal organizations and clinics
- Human rights organizations

- Police training schools
- Community organizations with missions relating to law
- Sexual assault centres, domestic violence centres (may have awareness of organized stalking)
- Websites where you can ask legal **questions**, specific to the country

Law

Related judgments

Law

Related judgments

Military universities

- Start with one

Netherlands

Organizations and individuals contacted to solicit a legal review on this situation

- Law schools
- Student legal organizations and clinics
- Human rights organizations
- Police training schools
- Community organizations with missions relating to law
- Sexual assault centres, domestic violence centres (may have awareness of organized stalking)
- Websites where you can ask legal **questions**, specific to the country

Law

Related judgments

Law

Related judgments

Military universities

-

New Zealand

Organizations and individuals contacted to solicit a legal review on this situation

- Law schools
- Student legal organizations and clinics
- Human rights organizations
- Police training schools

- Community organizations with missions relating to law
- Sexual assault centres, domestic violence centres (may have awareness of organized stalking)
- Websites where you can ask legal **questions**, specific to the country

Law

Related judgments

Law

Related judgments

Military universities

- Start with one

Russia

Organizations and individuals contacted to solicit a legal review on this situation

- Law schools
- Student legal organizations and clinics
- Human rights organizations
- Police training schools
- Community organizations with missions relating to law
- Sexual assault centres, domestic violence centres (may have awareness of organized stalking)
- Websites where you can ask legal **questions**, specific to the country

Law

Related judgments

Law

Related judgments

Military universities

-

Spain

Organizations and individuals contacted to solicit a legal review on this situation

- Law schools
- Student legal organizations and clinics
- Human rights organizations
- Police training schools
- Community organizations with missions relating to law

- Sexual assault centres, domestic violence centres (may have awareness of organized stalking)
- Websites where you can ask legal **questions**, specific to the country

Law

Related judgments

Law

Related judgments

South Africa

Organizations and individuals contacted to solicit a legal review on this situation

- Law schools
- Student legal organizations and clinics
- Human rights organizations
- Police training schools
- Community organizations with missions relating to law
- Sexual assault centres, domestic violence centres (may have awareness of organized stalking)
- Websites where you can ask legal **questions**, specific to the country

Law

Related judgments

Law

Related judgments

Military universities

-

Sweden

Organizations and individuals contacted to solicit a legal review on this situation

- Law schools
- Student legal organizations and clinics
- Human rights organizations
- Police training schools
- Community organizations with missions relating to law
- Sexual assault centres, domestic violence centres (may have awareness of organized stalking)
- Websites where you can ask legal **questions**, specific to the country

Law

Related judgments

Law

Related judgments

Military universities

-

Switzerland

Organizations and individuals contacted to solicit a legal review on this situation

- Law schools
- Student legal organizations and clinics
- Human rights organizations
- Police training schools
- Community organizations with missions relating to law
- Sexual assault centres, domestic violence centres (may have awareness of organized stalking)
- Websites where you can ask legal **questions**, specific to the country

Law

Related judgments

Law

Related judgments

Military universities

United Kingdom

Organizations and individuals contacted to solicit a legal review on this situation

- Law schools
- Student legal organizations and clinics
- Human rights organizations
- Police training schools
- Community organizations with missions relating to law
- Sexual assault centres, domestic violence centres (may have awareness of organized stalking)
- Websites where you can ask legal **questions**, specific to the country

Law

Related judgments

Law

Related judgments

Military universities

- Start with one

United States

Organizations and individuals contacted to solicit a legal review on this situation

- Law schools
- Student legal organizations and clinics
- Human rights organizations
- Police training schools
- Community organizations with missions relating to law
- Sexual assault centres, domestic violence centres (may have awareness of organized stalking)
- Websites where you can ask legal **questions**, specific to the country

Law – Fourth Amendment: protects individuals from unreasonable searches and seizures

Related judgments

Law - Amendment 8 - Bail, fines, punishment. Excessive bail shall not be required, nor excessive fines imposed, nor cruel and unusual punishments inflicted.

Related judgments

Law – Montana law 45-5-203. Intimidation.

Related judgments

Law - Conspiracy Against Rights. Under federal law 18 U.S.C. 241*: If two or more persons conspire to injure, oppress, threaten, or intimidate any person [...] in the free exercise or enjoyment of any right or privilege secured to him by the Constitution or laws of the United States, or because of his having so exercised the same;... They shall be fined under this title or imprisoned not more than ten years, or both* …

Related judgments

Law – not sure which law was cited

Dec. 30, 2008, Sedwick County, Kansas. Walbert vs. Redford (?). Redford threatens business associate with “jolts of radiation” after disagreement over a business deal, after which Walbert starts to feel electric shock sensations. The court issued an order of protection.

Military universities

- Start with one

International

Organizations and individuals contacted to solicit a legal review on this situation

- Law schools
- Student legal organizations and clinics
- Human rights organizations
    - Amnesty International: www.amnesty.org
    - Human Rights Action Center: www.humanrightsactioncenter.org
    - Human Rights Watch: www.hrw.org
    - Human Rights Without Frontiers (HRWF): www.hrwf.net
    - Office of the United Nations High Commissioner for Human Rights: www.ohchr.org
    - Human Rights Council: (no website, diplomatic channels only)
    - United Nations Educational, Scientific and Cultural Organization (UNESCO): www.unesco.org
    - US State Department Bureau of Democracy, Human Rights and Labor: www.state.gov
    - Office of Democratic Institutions and Human Rights of the Organization for Security and Co-Operation in Europe (OSCE): www.osce.org/odihr
    - Commission for Human Rights, Council of Europe: www.coe.int
    - European Union Ombudsman: www.ombudsman.europa.eu
    - European Commission Directorate for Employment, Social Affairs and Equal Opportunities: www.ec.europa.eu/social
    - African Commission on Human and Peoples' Rights: www.achpr.org
    - The Asian Human Rights Commission: www.ahrchk.net
    -
- Police training schools
- Community organizations with missions relating to law
- Sexual assault centres, domestic violence centres (may have awareness of organized stalking)
- Websites where you can ask legal **questions**, specific to the country

Law – Torture. The United Nations Convention Against Torture, part 1 Article 1, defines torture as: *...any act by which severe pain or suffering, whether physical or mental, is intentionally inflicted on a person for such purposes as obtaining from him, or a third person, information or a confession, punishing him for an act he or a third person has committed or is suspected of having committed, or intimidating or coercing him or a third person, or for any reason based on discrimination of any kind, when such pain or suffering is inflicted by or at the instigation of or with the consent or acquiescence of a public official or other person acting in an official capacity*.

Signatories are required take effective legislative, administrative, judicial or other measures to prevent acts of torture in any territory under its jurisdiction. No exceptions, for example war, threat of war, etc., may be invoked as justification for torture.

Related judgments

Law

Related judgments

Military universities

- Start with one

<u>Appendix G</u>: Remaining issues relating to the scientific validity of definitions of technologies and methods used, as constrained by the limitations of which research is presently available to the civilian sector - regardless of the enormous number of testimonials and personal experiences.

1) The specific text of the loopholes in The Common Rule (USA) which may be interpreted as allowing violations of the **Nuremberg Code**, specifically in terms **of non-consensual human experimentation**, for example by intelligence agencies.
2) Extending upon proven **civilian** sector technologies in **remote neural monitoring**, specifically, that it is occurring at a much greater distance than demonstrated in the **civilian** sector, often believed to include the use of satellites, potentially complemented by on-the-ground relaying mechanisms.
3) The number and/or extent to which the medical profession is a) aware of these technologies and/or strategies and/or b) complicit in **psychiatric reprisals** – against those who speak openly about the use of such technologies and strategies, or who describe 'symptoms' which are synonymous with the application of these **neuroweapons**.
4) EEG cloning, EEG heterodyning

Appendix H: Acknowledgements: List of critical reviews, editing, corrections of scientific explanations, research contributions, etc.

First and foremost, any and all people who were speaking openly about this deserve genuine praise as heroes – at present, many have been sidelined and are deemed by many to be the least among us. I will avoid the temptation to get Biblical in discussing those who experienced **psychiatric reprisal** and became downtrodden, perceived as the least among us. This is because I refuse to play party to any line of thinking which **suggests** that any of this could have been 'necessary' or in any way desirable. It could have and should have been avoided from the get-go by people in the employ of the state, and/or those under their influence, to have fulfilled their mandates on behalf of the public. There is no silver lining. The utter enslavement of the human mind has been averted, for now. Nothing more. Following the logic of George Orwell's "Animal Farm", we cannot 'win' – however, we must eternally stave off defeat.

Some of those who have been speaking openly about this all may find more than a few of their own words incorporated into this work, and formal recognition is offered to anyone who asks for it – mostly, it was just difficult to verify the actual origin of many sources due to the high volume of non-copyrighted sources and the lack of experience in proper referencing among most people writing on this subject. If you were speaking openly about it, but I did not end up using you as a source, perhaps because I did not stumble across your blog, video, song, book, anonymous online comments, letters to politicians, media, NGOs, etc., let there be no doubt, you are equally deserving of gratitude as anyone else who had the courage to speak out.

Special recognition should be reserved for those people who are simultaneously self-effacing yet so full of self-awareness, blessed with humble pride, and with both a strong moral compass and a dedication to truth, who were able to overcome being "the perfect victim", and who overcame the fear of shame and embarrassment in producing detailed descriptions of their experiences. They are a true inspiration to us all. Our silence is their greatest weapon. Speak truth to power.

Explicit recognition is offered to any and all who offer any level of critical review of the materials presented in this work. But for those who contribute in such a manner, this is likely to be the last step, the easiest one. Most or all who will do so started by speaking about it, and rest assured, in the context we were in, by refusing to be silenced in the context of "The First **Neurowar**", their acts can be counted among the greatest acts of willpower humanity has yet to see.

Services rendered:

Date	Description of service volunteered	Name	Profession(s)	Academic specialization(s)
May 2, 2016	Research, writing, proofreading,	Nathan Weatherdon	Translator, editor, teacher	Political science, biology, economics
		Anonymous / they already know who you are		

Contributions solicited:

- If explanations appear unclear, please attempt to identify which part of the explanation is unclear and/or why, and if possible suggest a better way to say it. “This just doesn’t make sense to me” is not very useful feedback.
- Whether some terms seem highly related and should fall under one heading.
- Whether some terms should receive their own entry instead of being grouped together under another heading.
- Whether some terms appear to unnecessarily add to the length of the glossary, and may serve as a distraction from more relevant things or eat up cognitive resources.
- Whether some term or concept may be entirely missing from the glossary. Also, whether it should be introduced as a part of another entry or needs its own entry.
- Whether content is unnecessarily repeated between different entries.
- Whether any content makes use of copyrighted material that is not properly referenced. Any such infringement is purely accidental, most likely to have occurred by copying non-copyrighted materials which were themselves the origin of the infringement, and must be rectified with the shortest reasonable delay.
- Any words, sentences, paragraphs that can be deleted because they do not offer high additional value to the content.
- Specific laws which are violated in different countries in relation to these terms, ideally including reference to recent (or any) rulings in contexts which seem most applicable to the contexts referred to in this document.
- Any editing which reframes the entries, either just to be shorter while covering the same content, or in other cases reorganizing an entry to make it easier to understand with less effort.
- Basic proofreading, including any errors in grammar or suggestions to re-write sentences to make them easier to read.
- Artistic and/or other visual imagery which may be contribute to greater ease of understanding key concepts or to the aesthetic appeal of the book.
- Ideas on other contributions that should be solicited.

Fighting the pollution by public radio broadcast antennas

Un texte en français :	La pollution radio par les émetteurs FM
Een tekst in het Nederlands:	De radiovervuiling door FM-stralen
A petition:	www.petition-electrosmog.be

The electromagnetic pollution has now reached such a level that not only hypersensitive persons are being harmed. The debate most often focuses on cell phones, their relay antennas, Wi-Fi routers and similar technologies. It is often pointed out that domestic appliances like power saving lamps and cheap electronic devices, are harmful too. Recently, I came to the conclusion that I too had problems with electromagnetic radiations. Yet after a few months investigating, I was surprised to find out that far out the main cause of my problems was nothing I had heard about. A 100 MHz FM public radio broadcast antenna is located atop a local hospital and burns the whole city with an astounding force of 2 V/m (pike value).

I found other persons that are harmed. For example people who develop severe headaches or tiredness after a few hours working in a given place. They have no problems in other places, that are less exposed to the FM radio waves. It seems to me that people who live in strongly exposed habitations often develop psychiatric problems. My guess is that probably several thousand persons in the city are severely affected. Maybe tens of thousands are affected but without getting obviously sick.

Most puzzling is the fact that this hammering by radio waves is completely useless. It wouldn't change anything to the quality of the reception by the listeners in the city, if the force of the radio waves was divided by 100 or preferably 1,000. The purpose of those antennas is to emit far away in the countryside. That's why they are located atop hills or tall buildings and they have a huge power. But, due to their rudimentary construction, quite much of that power is wasted and hits the nearby city.

It is legal to hit the ground with such force. Whether I measure in rooms or in the open, it is at worst a little below the norms. Hence the problem is with the norms. They keep being too high, despite the efforts of many scholars and health organizations. The situation is catastrophic. If the people did understand the harm that is done to their children, revolts would break open.

Below is a picture of a cheap calculator that I transformed. It contains no more battery nor solar power cell. Instead it draws its energy from a 1 meter long antenna. Anyplace in the city center, in direct view of the emitter, the power of the radio waves is strong enough to feed the device. I made this because nobody was frightened by the figures I was reporting, except some friends that are into electronics. Everybody knows that a car can kill even at 30 km/h speed but almost nobody has any knowledge about radio waves figures. When I showed the calculator, everybody understood and some whitened. (The calculator also works in some classrooms where I tried it out. The emitter was visible through the windows... Should I warn the parents of the students that failed their exams?)

Powered by 000webhost

This didn't help anyway, so I invented another device: the "snake". The picture below shows six of them, an early version.

You just hang the snake in the flux of radio waves and the LED lamp at one end will bright up, clearly visible in daytime and enough to light and read a text at night.

The snake is less impressive than the calculator but it is much cheaper and easier to make and it can be sent in an envelope. I made tens of them and sent them to politicians, newspapers, universities... I gave some to local people, together with a user guide on a sheet of paper. Just like the calculator, the snake contains no battery. The lamp lights up solely on the power of the radio waves. The picture below shows a later version, that can be rolled up in an envelope that fits the conditions to be sent with only one stamp.

Powered by 000webhost

However mad it is to send such power on a city, nothing has been done yet against this. It's like an 19th century chemical plant sending its pollutants all around. Some complain but others argue that closing the factory would mean people laid off. Some then reply that being employed to feed children that die from ugly sicknesses may be nonsense... And so on, except for the fact that the chemical factory indeed had a purpose while the strength of the radio waves we're talking about, has no serious purpose at all.

Something common to all heavy sources of electromagnetic pollution is that it wouldn't cost much to make them harmless. For example, high tension power lines can be made harmless by feeding them DC current instead of AC current. This requires some more heavy electronics at the input and the output but the price of it is a detail in the whole. I studied the schematics of power saving lamps and simply noticed that they were conceived by people who do not understand the propagation of radio waves. Adding the necessary components to make the lamps radio-silent would almost not increase their prices. Enforcing proper norms will not change our way of life, it will just stop to favor the sociopathics amongst the industrials and lobbyists.

So, what can I do to help people understand the situation? They need to appropriate the scientific knowledge involved. Most assume that the necessary studies will be made by labs and then the governments will adapt the laws accordingly... That would be OK if it wasn't for the trillions of money involved. A minister in Belgium tried to prevent sugar dispensers in schools, she immediately got a made-up scandal on her shoulders. All she ultimately managed to get was to have some health advice notices glued on the sacred dispensers...

Flows of observations are now available, showing the effects of radio waves that match the norms: brains of rats destroyed, people unable to work, eggs that don't hatch, quarreling birds, increased risk of cancer, cows aging abnormally... I myself had seeds germinate and saw them die quicker when closer to a power saving lamp. Their strategy to cope with this is simple: "OK, there does exist scientific evidence of some danger... but there also does exist evidence that there is no danger at all! So let's balance the whole..." The norms are lowered but kept above what cell phone operators need for the current systems. The fact in itself of making a balance between scientific evidence is nonsense. Either a study proves a given danger and it can be verified, or bust. But anyway, what are those studies that tend to prove that there would be no danger? Lots of them are simply payed for by the cell phone industry... Yet some are perfectly serious, for example those concluding that radiations within the norms will not heat the brain or the body abnormally. This is perfectly true. There is no problem of scientific fairness involved with these studies. But, is a bullet harmless because it only very slightly heats your bones? A more sophisticated approach is to pick out studies that have borderline conclusions: "there may be a problem but it is not clear..." The study will be assumed to conclude that there is no problem at all, while it just was an inconclusive experiment like many are in science.

Powered by 000webhost

(When I'm exposed, I tend to compulsively perform simple tasks. What if a study examines if being exposed hampers the ability to perform that kind of tasks?)

Then, there is the problem that I'm going to make people sick. Indeed, electromagnetic hypersensitivity has a psychological component. Once people understand that they are victim to the radio waves and what symptoms the radio waves cause, they can overreact and become very sick when they start feeling the symptoms or just when they know there is a strong radiation force around. The radio waves induce a physiological stress, that hampers the proper functioning of the brain. When you add a psychological stress, due to the awareness of the problem, the summation of the two multiplies... Therapies for hypersensitive persons imply to dislearn them to overreact. Some friends of mine just refuse to start talking about electromagnetic sensitivity because they don't want to embark in the sickness. They do so with everything, meanwhile they eat very good food and have lots of pleasure in life. It works... with people with a strong health and a tad of selfishness.

When you are in a cold wind and you feel a pain in the neck, you know it is due to the wind and you take cover. Almost nobody can do this with the symptoms of an exposition to strong radio waves. You feel tired, some brain fog, like if your head was in a clamp, a headache, or simply you make stupid errors... You will blame yourself or the location, possibly the noisy people around... while in fact you are mainly undergoing electromagnetic sensitivity. The home of a friend is strongly exposed. After about twenty minutes I can nor more find my words and speak correctly, unless I wrap my head in aluminum foil. There is a fair chance that a while ago, I would have blamed my friend for being annoying (he is) to the point of making me speechless. There also is a fair chance that my friend is annoying because he hangs in that electromagnetic pollution everyday. Since he lives there, he became an alcoholic, lost his job, manages to keep no girlfriend... (Everything I mention here can have other causes. Quite often, such causes just add up. For example, the person blaming the noisy people around, would maybe have felt nothing if the noisy people weren't there. Like you don't feel your bad knee when you carry no bag.)

The impact of the electromagnetic pollution is severe. It is a far too heavy, and pointless, contribution to our burdens and losses. But how do you establish, scientifically, be it as an amateur, that there indeed is a problem? My initial approach can be an illustration of this. As my home is uninhabitable, I spend most of the day working in local libraries. I noticed that I could work quite well at some places and not at all at other places. Then I saw an article taped on a board, about the effects of cell phone and Wi-Fi radiations. Okay... I made a spreadsheet, with a row for each location and a note from 0 to 10 according to my ability to work there. Although I knew it was a weak approach, I then filled in each row the strength of the closest Wi-Fi router, as listed by my laptop. There was no correlation... but this proved not at all that the Wi-Fi was innocent. Weeks later I made a nonsensical but working little assembly that made the variability of the radio waves hearable. This time I got a correlation. Mild, but obvious. The ability to work is horizontally while the intensity of the radio signals is vertically:

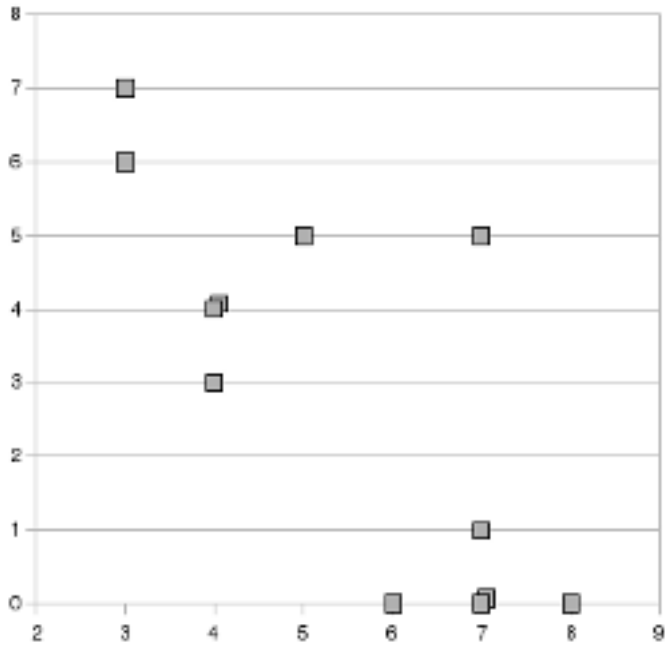

It quickly became obvious that I was measuring no strong signal in the GHz bands. I had no doubt that there were cell phone and Wi-Fi emissions coming from all directions and echoing all around but their strength was obviously

Powered by 000webhost

weak. The problem was with lower frequencies. I accused the fluorescent lamps for a while, till I finally understood that there was only one strong source, hitting me everywhere; those 100 MHz public radio broadcasts. The picture below shows the final correlation. Only one dot disagrees with the theory:

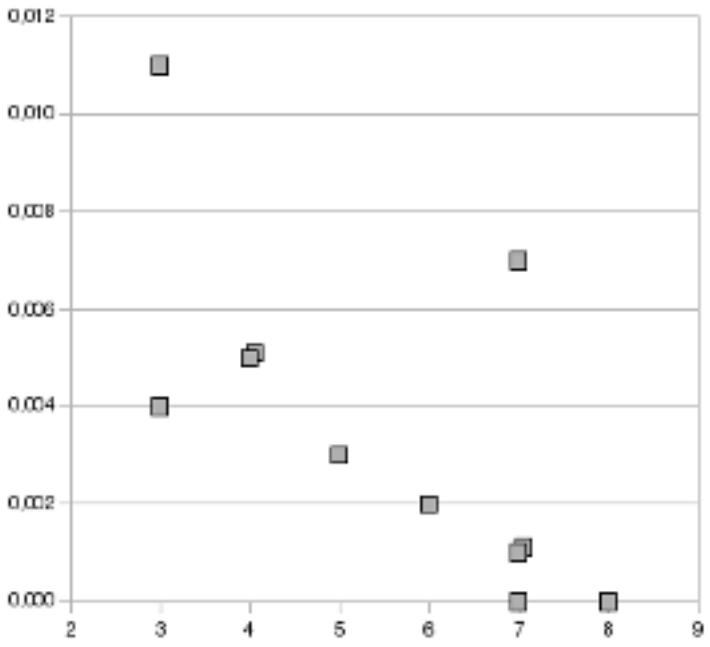

I was heavily disturbed by the radio waves, simply unable to work, long before I started puzzling on the subject. This is a strong proof that the matter is not just psychological. Reciprocally, once I understood the psychological component, I tried to use it positively, to counterbalance the effects of the electrosmog. I did get some results but I was never able to work correctly in the most exposed places. It is by no means "just psychological". It is useless "to be willing to make a small effort". I did efforts that frightened other people. One thing that does clearly help is eating a lot of sugar (Organic jam on rice bread...) (by the way, is that why sugar dispensers are placed everywhere kids are supposed to think and learn, to counterbalance the effects of the nearby cell phone relay antennas?) Alcohol does also help and I'm afraid this is why people seem to become alcoholics in exposed habitations.

Also, it does sometimes happen that I feel like undergoing strong radio waves but when I pop out my measuring device, I measure nothing serious. I have a natural tendency to be knocked-out... The radio waves are far out my heaviest problem but they are not always responsible.

I started studying other sources of radio pollution. I had an obvious benefit of removing every power saving lamp in my home. I put ferrite cores on most power chords. On one power chord that I sometimes use to feed my laptop inside my shielded tent, I had to put ten ferrites till I felt no more direct effect. Something very interesting is that till then I had no problem when using my cell phone. You guessed correctly: I started having problems, to the point that I never more hold it against my ear. I always use an earplug linked to the cell phone by a wire with two ferrite cores. I suppose that since I started avoiding the exposure to strong radio waves (which significantly improved my life and ability to work), my brains are no more constantly knocked out. So they get knocked out if I hold my cell phone against my head. And I feel it. This is one more synergy between the public broadcasts emitters and the cell phone industry: one hides the other away. 'Want to prove that inhabitants close to a relay antenna are no worse than those further away? Do the experiment in a city that is strongly exposed to public broadcasts...

So: buy a measuring tool or have a friend assemble one for you. And start comparing your problems and those of the people around you, with the level of electromagnetic pollution. If you can, make large-scale experiments with tens of persons, under advice of somebody with knowledge in statistics (to build an expressive statistic yet completely false, is *easy*). We need many such experiments, till it becomes unbearable for local interlocutors to negate the problem and not to dim the emissions. Step by step, we need to conquer our world back. Some enterprises and some countries have already set their norms at responsible levels.

One very important parameter is the rate at which the problems build up and then disappear, when exposed. Some people claim that they instantly feel when their cell phone is going to ring. I never could verify this. A friend claims that his cat reacts when he is going to get a text message on his cell phone. I tried several times to see the cat change

Powered by 000webhost

behavior while making my cell phone emit close to him but I got nothing. So I suppose that the cat reacts to the tone of the cell phone and my friend brain-confuses the timing. (I don't pretend nobody can feel a text message arriving, I'm just saying that I never could verify.) What I'm sure about is that my problems need minutes to build up, most often some ten or twenty minutes, the problem possibly becoming really painful after an hour. Once the problem built up, it needs much more time to diminish, maybe four times more. I often had to sleep a whole night on it. One day I "burned" my brains by holding a very polluting power saving lamp about 3 decimeters away from my head. I only noticed the problem after half an hour. But then it was horrible, like if a flame had been sweeping inside my head. Really just like the ache of a burn wound. I had a strong nausea and headache, that calmed down only hours later. I identified a few persons whose problems are obviously due to the electromagnetic pollution, in all cases the same applies: it needs time to build up. This means you cannot simply walk in and out of an exposed zone and claim you feel no difference. Also, you cannot get into a safe zone and claim you feel no better. If you were already poisoned, you will stay that way a long while. The only sure approach is to stay really long in a safe zone, preferably spend the night there, then go working in a polluted area. Try to be aware of what happens to you. The next day go working in a safe zone and try to see the difference. (This is a goldmine to build inconclusive studies.)

Everybody is sensitive to electromagnetic waves. The question is about the level of the sensibility. That's why people who get seriously sick with the current levels of exposition are called "hypersensitive". They are more sensitive than the average, sometimes with very painful and debilitating consequences.

There is a whole ladder of symptoms. This is roughly the ladder for me, exposed to the 100 MHz FM broadcasts:

0.01	V/m	No problem
0.1	V/m	No more able to concentrate and work
1	V/m	head in a clamp, maybe difficulties to talk
10	V/m	Tried it once for 2 hours, had to stay the whole next day in bed with an awful headache.

The serious problems begin for me at 0.1 V/m. Yet I know some people that wouldn't be called hypersensitive and that get problems similar to mine at about 0.3 V/m. A friend spent with me the two hours under the 10 V/m radiation and claimed he endured no problem... but he made surprising errors on the way back. It is very difficult for me, in my city, to find locations where the force is around 0.01 V/m. Values between 0.1 and 0.3 are common. It is easy to find building with rooms reaching 1 V/m. The force is quite predictable, according to the location and the orientation of the building, how much it emerges out of other buildings... So, because many people are being affected and because the radiation is reasonably easy to measure or to estimate, making statistics linking common health problems with the level of exposition is quite doable.

Hypersensitive persons would be 1% of the population. The need to protect this minority is enough to stop those powerful broadcasts from reaching the ground. I don't understand why I have to add that everybody is being harmed, be it to a lesser degree. I met official people whose job is to help hypersensitive persons. They've seen their pain and anguish by themselves... but they feel clueless as to how to stop the emissions. It's a very strange situation, when even the people close to the steer and convinced of a problem, can't do anything to stop it.

It has been claimed that the hypersensitivity of some persons is caused by an accumulation of toxic metals or organic pollutants. In such cases, antioxidants can be of immediate help and detoxifications would greatly help. (Note that common medical analysis like looking for mercury and the like in samples of blood, urine or hair, will reveal nothing even under severe intoxication, because blood and hair renew constantly. Only a sudden intoxication can be revealed by such analysis. The toxics slowly accumulated in standing body cells like the brain... Best method seem to be to take a well-tuned quantity of chelating molecules and then perform an analysis of the blood or urine.)

Cell phone and Wi-Fi radiations are different, for several reasons: they don't spread the same way in the body, they are pulsated and their frequency make they will not target the same macromolecules in the body. It would seem that you need 3 times more force of FM broadcast waves than cell phone or Wi-Fi waves, to have a same global impact...

I was frightened when I understood that under those 2 V/m force of radiation, an electric current in the order of 1 mA oscillates through the body. Such a current at a high frequency of 100 MHz will interact with the body quite differently than a DC or low frequency AC current. You cannot make direct comparisons... Anyway, 100 mA of DC current can be enough to kill a person by electrocution. 1 mA of low frequency current is enough to feel the current as a tickle. What are the consequences of such a current on the chemical reactions in the liver, on the production of

Powered by: 000webhost

hormones by glands everywhere in the body? What if the person being exposed is a pregnant woman, with the baby just at the worst place in the flux of current? The length of an "antenna" matters much to allow it to build up current. Teenagers have the "optimal" length for 100 MHz radio waves... One thing I'm sure about is that if the government decided that from now on the school kids will be latched electrodes on the body and a current of 1 mA send through several hours a day, whatever the frequency, the parents will not accept. But this *is* happening, through radio waves, and I could feel the neuroleptic-like effect of it. (By the way, this implies that those experiments that show brains of rats destroyed by cell phones waves within the norms, apply only to a lesser degree to human brains, because of the difference in size. Rats are close to the optimal length to be harmed by cell phone waves... The optimal wavelength to dammage teenagers is that of those 100 MHz public broadcasts...)

The radiations harm me more inside buildings than outside. I may get more sick under 0.2 V/m in a room than under 2 V/m directly exposed to an antenna. I don't know exactly why. Here are four possibilities:

- The roofs atop buildings act like prisms and send the waves towards the inhabitants beneath. Radio waves coming from above would be more harmful than when coming from aside.
- The radio waves resonate and echo inside the building and build up in metallic structures. This creates halos of proximity that will inject more power inside nearby living bodies. For example, while simply wrapping aluminum foil around my head, it is obvious that some designs of shielding will make me even more sick than using no aluminum at all. The same way, when some parts of the shielding of my tent wear off and stop to be conducting, I can get serious problems till I replace or complement the faulty area.
- Buildings contain their own sources of electromagnetic pollution. They add their effects to those of the pollution from the outside...
- Close to metallic structures, the electromagnetic field can become rotating. This because waves with equivalent strength come from different directions with different phase shifts.

Again, the four possibilities mentioned above are potentially very suitable to build experiments that demonstrate there is no problem. Perform the experiment in an anechoic place with the waves coming from aside and no other radiation than the one from the experiment... Just the opposite from real world situations but you can claim to be serious at avoiding parasitic variables...

If you want to find the FM emitters somewhere, fmscan.org is the reference I used till now.

This is the schematic of the "snake":

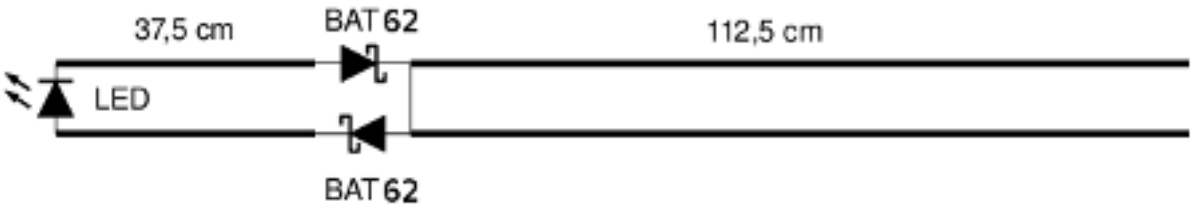

BAT62 detection diodes are no more produced. **BAT15** diodes work fine but they wear out; after a few months they stop functioning. **SMS7630** diodes are great but very little and mechanically fragile. **MMSD701T1G** diodes are sturdy and powerful; an excellent choice for a beginner. Such SMD diodes do also work for cell phone frequencies, which allows to test out a snake with a calling cell phone pushed against it. But any detection diodes that can manage 100 MHz will do.

The LED I'm currently using is the **L-7113SEC-H** . It lights up with a low tension and a very low current (the bluer a LED, the more tension it needs). Its color is red yet close to orange hence it is easily seen by the human eye (the eye is most sensitive to green, yellow and orange). The beam is quite narrow so when the LED is directed towards somebody's eyes it will appear quite bright.

For the lengths of 37.5 and 112.5 centimeters, any electric wire with two copper conductors will do. Audio signal wire is a practical solution. Use the shielding as one of the two conductors. The lengths of the two segments must not be precise. What matters is that the total length of the snake be 1.5 meters. Do not hesitate to try out if a little

Powered by 000webhost

longer or shorter snake gives better results.

A schematic of my current probes, that I connect to a standard multimeter, measuring Volts DC. The measure displayed by the multimeter must be multiplied by 10. When using a 200.0 mV scale, just read while forgetting the dot:

This is a picture of a device that tries to pack the whole in a neat gadget. The electronic circuit is a €7 digital Volts display with a scale of 200.0 mV. I soldered away the jumper that makes the dot be displayed. The antenna is only 7 cm long, so an RMS value is displayed (for roughly steady radio waves). The whole cost about €12. Hold the antenna perpendicular to the direction the waves come from and try to hold the device away from conducting objects like your body or metallic objects. You cannot closely trust such simple device yet it is very handy and adequate to compare the radiation level in different places:

Powered by 000webhost

Powered by 000webhost

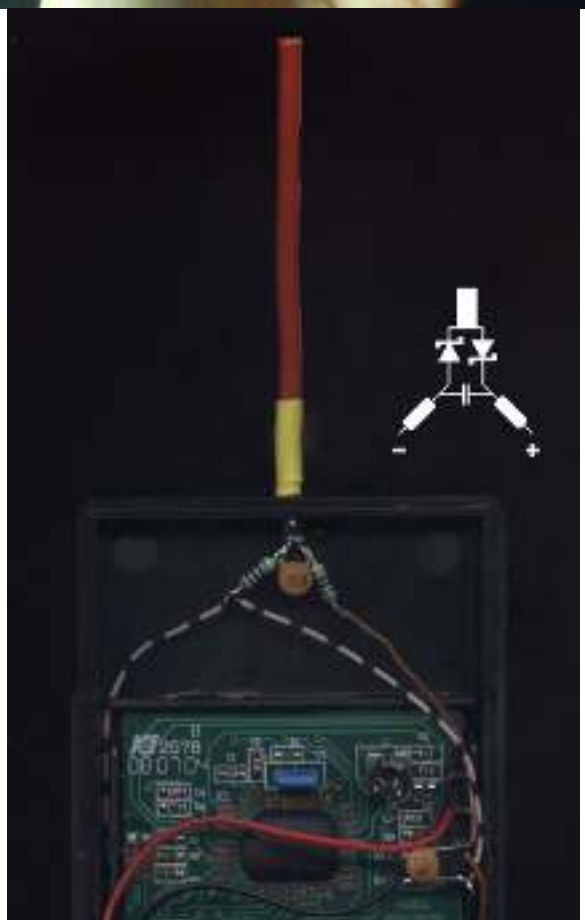

Powered by 000webhost

Those probes and device, quite easily allow to know the direction some 100 MHz radiation come from. Hold the thing at some decimeters from your body, roughly at the height of the belly. Your body and the device form a directional antenna... When the device is towards the emitter, it will display up to twice the value, while when it is hidden from the emitter by your body, the measure will be very low.

If you measure something strong, yet by turning in different directions the device always shows approximately the same value, then you are probably undergoing low-frequency radio waves like short wave broadcasts.

If the emitter is close, like a power saving lamp or a wrongly build power supply, converge towards it simply using the fact that the closer you get, the stronger the measure.

Such measuring tools are handy to find out power chords and appliances that pollute, yet then the measure displayed doesn't mean much. Once you are really close to an emitter, the measuring device and the emitter interact and the power flowing through the measuring device can be tremendous even though the device is only weakly polluting. You are in the "halo of proximity" of the device... Best example is most quality laptops, which emit almost no radio waves. I never could notice a problem while using my laptop when it is plugged to nothing... Yet if I hold a measuring tool against the screen I get frightening data... A few decimeters further, where my head can be, the measuring tool tells there is nothing... So, the high figures close to the laptop indeed tell that strong currents flow through it, but competent people made things such that those currents harm nobody...

If you want a global measure, away from the effects of your body, hold the device above your head. Or place it on some plastic or cardboard box and walk some distance away.

The windows are a common entry point of radio waves and electric wires can be awfull ducts, yet in some cases I noticed that metallic structures unrelated with electricity, like the copper tubes of water heating radiators, were the main ducts of radio pollution towards a room.

Below is a device I assembled to focus on 1.8 GHz cell phone radio waves. Close to the nearby cell phone relay antenna, in direct view of it, I could not measure much more than 0.1 V/m (pike value). While this is still too much, it is by no means comparable to the frightening 2 V/m intensity of the FM broadcasts. I also went measuring in places where people complain about problems similar to mine. They thought the reason was the nearby cell phone relay antennas. But I could measure no significant intensity of cell phone radio waves at all, while the force of the FM broadcasts was above 0.2 V/m...

Powered by 000webhost

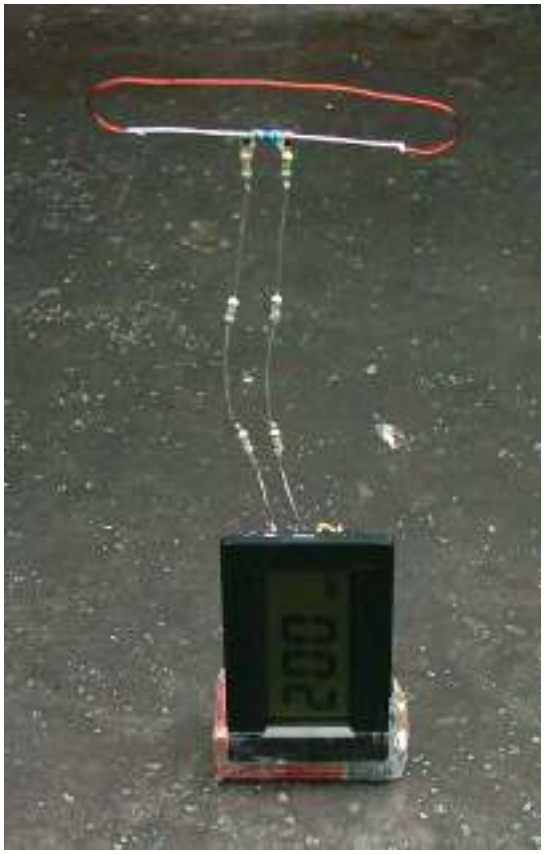

After about a year experimenting, the most simple protection I could come up with against 100 MHz broadcasts is a headband of aluminum, much the shape and size of a sweatband. I hide it inside a bonnet. I have no idea as to how and why it helps, aside from the general fact that any conducting structure will change something to the propagation of high frequency currents. Don't make it too high, a 3 to 4 centimeters height is OK. To try this out, you can just fold in a circle a 1 meter long wrap of aluminum and compress it to a flattened ring that fits your head. If you intent to re-use it, then you must strengthen it with lengths of tape before (inside) and after (outside) the ring is constituted. Make sure the tape does not hamper a perfect electric contact all around the ring. This protection is not perfect but it really helps.
When the field strength is above 0.1 V/m, I need a complementary vertical band in order to be able to work.
This also is a cheap way to make statistics. Compare days with the headband to days without the headband. In order to be scientific, you must ask somebody else to put the headband inside your bonnet every morning, at random. Every morning, the other person writes down if there was a conducting headband inside the bonnet or not. Every evening, you write a comment down to how your day was (headache? brain fog? errors? doomed day?) Then after a while you compare the two. At worst, if you have to do it alone, buy two identical bonnets, push a plastic headband inside one and an aluminum headband inside the other, and spend each day without knowing which one you picked. At the end of the day, write your appreciation down before checking and writing down which bonnet you picked.

Powered by 000webhost

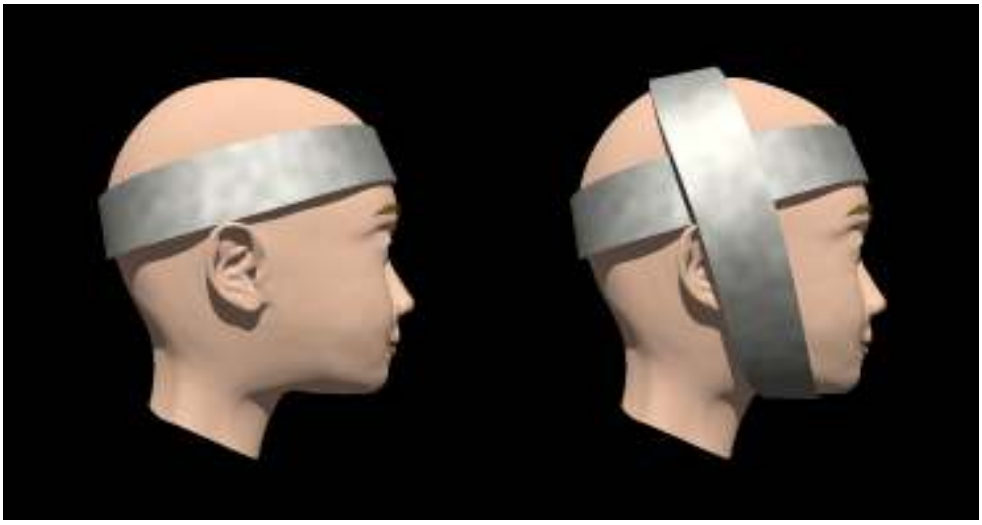

A friend who is a physician points out that in many administrations, be they public or private, the employees are being persecuted. (That often happens when the work done by the administration is mostly useless and only serves to justify the social position and the salaries of a few people.) A statistic about the health impact of radio waves in such administrations could be of few significance, because the people have all kinds of health problems due to the harassment. The addition to this by the radio waves may be comparatively negligible. (Yet another way to build a statistic that shows few or no impact of the radio waves: perform it in a place where people bow under humilations...)

I was quite frightened to discover that the symptoms caused by radio waves, as I see them around me, are very close to those of "radiation poisoning". This is part of nuclear medicine. When a victim is exposed to a short and strong burst of radioactivity or any other ionizing radiation, its body will quickly react like if it had been poisoned. A "low" poisoning by radiations yields headaches, tiredness, difficulties to think... while stronger poisoning can lead to the person die in a few days like if it was heavily burn. The exposure to ionizing radiations is measured in "Gray". 1 Gy leads to a low poisoning. So I computed out how much energy a person gets from the local FM emitter, like the person I know that get sick at their desk. The result is 0.01 Gy for 8 hours of exposition, which is quite close.

Radio waves can induce all the typical problems caused by that ionisinig radiations but the energy levels involved can be quite different. For example, ionizing radiations cause burns without increasing the temperature of the body, while radio waves can only burn if they are powerful enough to heat the body. Radio waves can induce cancer but again the energy required is ways higher, like spending ten years using a cell phone against the head, several hours a day.

Body cells can be attacked by all kinds of means. Ionizing radiations lead to direct damage of the cell membrane. Radio waves disturb the molecular cell gates operate. The cell will always react the same way, as for poisoning: it will close the cell gates, to try to shun itself from the outside world and from the harm. This has many consequences. The cell is less able to fulfill its purpose inside the body. It uses resources to try to protect its internal parts. It will accumulate waste. That's why people get tired, less efficient or even sick. When the aggression made to the cell is deemed too strong, the cell will auto-destruct. That's the way radiations and chemicals can be used against cancer, making the cancer cell suicide.

The cells can be helped to better recover from the state of shock. Also they can be made to go less likely into the state of shock. Medication and health advice can be helpful for this.

A link has been proposed between autism and radio pollution. The growth of the human brain is very complex, with cells traveling from one side of the brain towards the other to find their place. This involves a tremendous amount of communication and coordination between the cells. What if those cells are too often put into a state of shock?

These are two scientific publications about the link between autism and radio waves :

http://www.ncbi.nlm.nih.gov/pubmed/16530334

http://www.ncbi.nlm.nih.gov/pubmed/14962625

Powered by 000webhost

Publications about how radio waves disturb cells :

http://www.ncbi.nlm.nih.gov/pubmed/10860806

http://www.ncbi.nlm.nih.gov/pubmed/12379225

Links

http://www.teslabel.be
http://www.clag.be
http://www.001.be.cx
http://www.criirem.org
http://www.next-up.org
http://www.robindestoits.org
http://www.beperkdestraling.org
http://www.stopumts.nl

A petition: www.petition-electrosmog.be

Eric Brasseur - October 3 2009 till October 16 2015

Powered by 000webhost

International Journal of Engineering Research & Technology (IJERT)
ISSN: 2278-0181
Vol. 5 Issue 11, November-2016

The Overall Science behind the Pyramid

K.S.Vishwanath Vashisht
Assistant Professor,
Department of Aerospace Engineering,
Amity University, Manesar, Gurgaon,
Haryana, India.

Abstract- **The main objective of this study is to predict the possibility of electrical power generation, transmission and distribution from the massive pyramids of the world. The information includes on the geometric details and importance, alignment and its importance, pyramids as a storage place for mummies?, ionization process, working of pyramids, materials used for construction, molecular structure observations in plant tissues, animals and humans, and science behind the generation of electricity. The comments are also made on the successful pyramid construction made possible by ancient people who were connected in a global scale with same technology on the entire planet.**

Keywords- Pyramid, Electrical power, crystal, electromagnetic field, negative ions, giant humans.

I. INTRODUCTION

The pyramids constructed on earth dates back to at least 3000 BC. These amazing gigantic structures were constructed on only those locations by the people of ancient civilizations where the electromagnetic charges are found to be maximum on the surface of the globe. The pyramids and their ruins on the globe can be located in Egypt, China, Mexico, Unites States of America, Turkey, Indonesia, France, Canary islands, Italy, Mauritius, Bosnia, Iran, Sudan, Iraq and Cambodia. The remains of pyramids indicates that the people in that time were experts in Electrical, Mechanical, Biological, Metallurgy, Astronomical, Astrological, Architectural, Physical and Chemical sciences. The figure below shows the pyramid structures of the world.

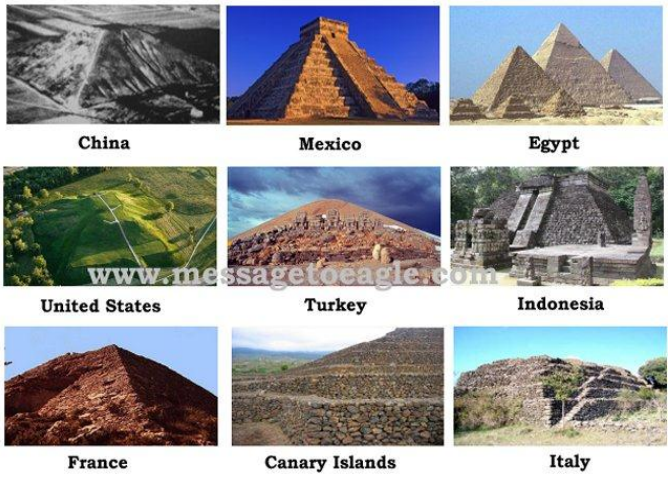

Fig 1: pyramid structures of the world

II. MOTIVATION

From the stories of Egypt, it can be noted that the pyramids were built to store the mummies of the kings and their belongings. But the hidden agenda is electrical power generation, transmission, distribution and for some sort of signal transceiving purpose. Some pyramids of Balinese and Mayan are capable of predicting the daily-monthly-yearly-past-present-future of the people and also the natural calamities of the Earth. They also have the display system of daily calendar and time.

Electricity was efficiently generated and widely utilized in ancient Egypt. The Baghdad battery and the first arc lights were used at that time. A careful examination of Egyptian history immediately reveals the sophistication in perfect illumination. No stains of carbon has been found in the corridors of the pyramids or the tombs of the kings because these areas were lit using electricity. The carvings show that the Egyptians used hand-held torches powered by cable-free power sources. Close inspection of the pictures in the Temple of Hathor below shows that high-voltage insulation was used, just like that of today; this is supported by a rectangular column resembling a light bulb (believed to have been used as an insulator and known as the Djed Column.) This astonishing resemblance to the light bulbs we use today is most striking.

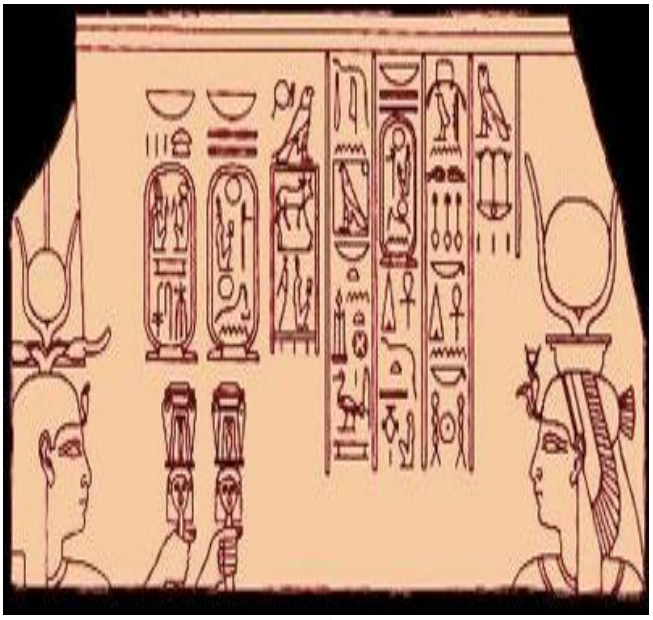

Fig 2: a) Carvings of hand held torches

(This work is licensed under a Creative Commons Attribution 4.0 International License.)

International Journal of Engineering Research & Technology (IJERT)
ISSN: 2278-0181
Vol. 5 Issue 11, November-2016

b) Carvings of wired filament tubes

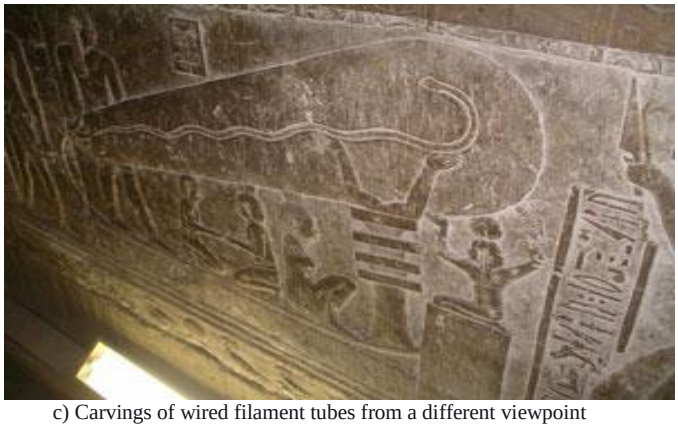

c) Carvings of wired filament tubes from a different viewpoint

d) Carvings of wired filament tubes from a different viewpoint

e) Carvings of wired filament tubes from a different viewpoint

Also the arc lamp used in the Lighthouse of Alexandria is further proof that electricity was used in ancient Egypt. The energy required to power the Lighthouse of Alexandria for 24 hours a day could only have been supplied by a regular electrical source. The figure below shows the lighthouse of Alexandria.

Fig 3: Lighthouse of Alexandria

III. METHODOLOGY

The present day crystal oscillators are capable of producing electro motive force when vibrated and Quartz is a naturally obtained crystal. Likewise, The ancient pyramids were built by layered walls such that the inner core layer of the outer walls are of stepped design and made of limestone of different qualities, copper, cement with traces of quartz material. The limestone, cement and copper serves for the strength, stiffness and stability required for the structure.[17][18][19] The quartz material in it serves for generating electricity. The outer layer of the pyramid is made up of quartz and limestone materials. Also the tip of the pyramid was made of Gold cap stone that helped to amplify the electrical power generation. The figure below shows the pyramid of Giza with a noticeable cap at the top and other small pyramid with stepped architecture. The figure below shows the pyramid of Giza. [13[15]

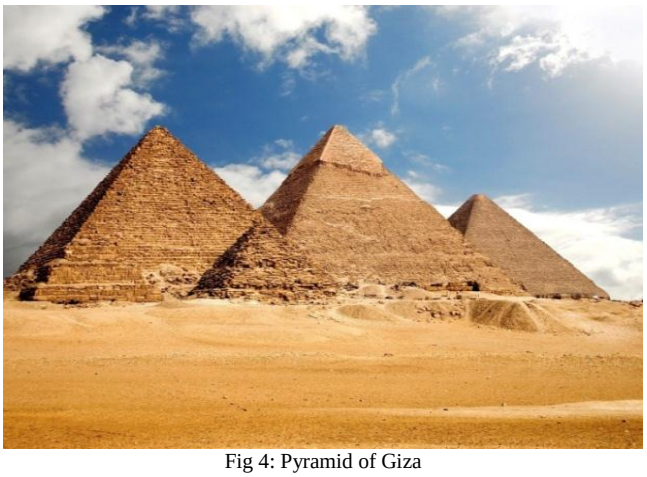

Fig 4: Pyramid of Giza

The generation of electricity requires the pyramid to vibrate always. Hence the location at which the electromagnetic waves are more on the surface of the globe are chosen to be the perfect sites for the pyramid. For example, the pyramid at Giza is standing on the underwater currents of the river Nile plus on a location where high electromagnetic flux lines can be measured and felt. This provides the vibrations required for the crystals to vibrate at all times. And Graphite rods are connected to the pyramid floors made of diamagnetic granites.[4] The figure below illustrates the ionic emission at the apex.

(This work is licensed under a Creative Commons Attribution 4.0 International License.)

International Journal of Engineering Research & Technology (IJERT)
ISSN: 2278-0181
Vol. 5 Issue 11, November-2016

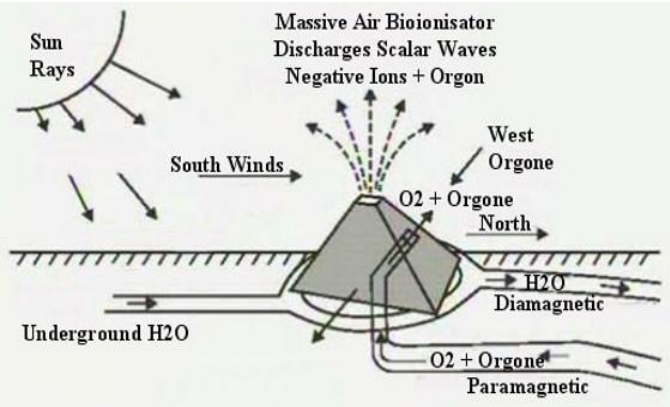

Fig 5: Ionic emission at the apex

The electromagnetic field that is formed at the bottom is actually negative ions of atmospheric air that are transmitted to the upper layers of the pyramid. This facilitates a conductive path of negative ions to the outer areas of the tip. To enhance the ionic content, at the tip, gold or copper cap stone is fitted so that the ions try to reach the suuroundings and ionosphere. This reduces pollution and increases ozone layer.

To obtain the maximum voltage, its construction also plays a major role. The angle of the slant height should be 51.8°. The alignment of the pyramid is always to the true north. The very shape of the pyramid is an amplified receiver or resonator of various kinds of energy fields. In a pyramid the direction of its magnetic field is outward from the south pole of the pyramid and inwards to the North Pole. The pyramid shape generates a spin field from its apex for electrons, meaning that they can move in an angular momentum, i.e. around their own axis. So, if moving or kinetic energy enters the pyramid at the top opening, this can be taken as the north pole of its magnetic field and as the pyramid emits energy from its middle, this can then be taken as the south pole of its magnetic field.

Once it entered into the pyramid, the energy bounces from the equal sides of its walls and the five angles of the pyramid project a beam of radiation towards the center where the energy is collected or pooled to form the "fire in the middle" also known as Centre of mass or centre of gravity of the pyramid which is located at a height of 1/3rd of the altitude from the base of the pyramid and 2/3rd distance from the apex (Phi ratio). In the pyramid of Giza, [17[19]These energies all combine in the center or King's chamber area and Queen's chamber area. The molecules or atoms in this area absorb these energies by resonance. In some pyramids, openings can be seen from the sides so that once it enters, bombarding takes place inside the walls then concentrating at the centre of the gravity.

The maximum voltage produced at the tip is transmitted through a wireless technology that was not harmful and was used to operate the domestic and highly sophisticated machineries of that time. The pyramids of those days resemble the power grid technology of today except that it does not require transmission wires and step down transformers. Moreover the entire population was utilizing the same technology for electrical power generation, transmission, distribution and wireless communication systems because the architecture of the pyramid in Bali resemble the architecture of the pyramid in Peru, implies that all the people were globally connected with same technologies or have been taught by the same group of people or wandering scientists.

Containment Bubble or Force Field: Joe Parr, a member of the Great Pyramid of Giza Research Association, discovered that sun spot activity and the phases of the moon had an effect upon the intensity of a pyramid's energy field and that throughout year the energy field would block all electromagnetic radiation and even the force of gravity for a certain time frame.

The figure below illustrates the magnetic and electric flux lines.

(This work is licensed under a Creative Commons Attribution 4.0 International License.)

International Journal of Engineering Research & Technology (IJERT)
ISSN: 2278-0181
Vol. 5 Issue 11, November-2016

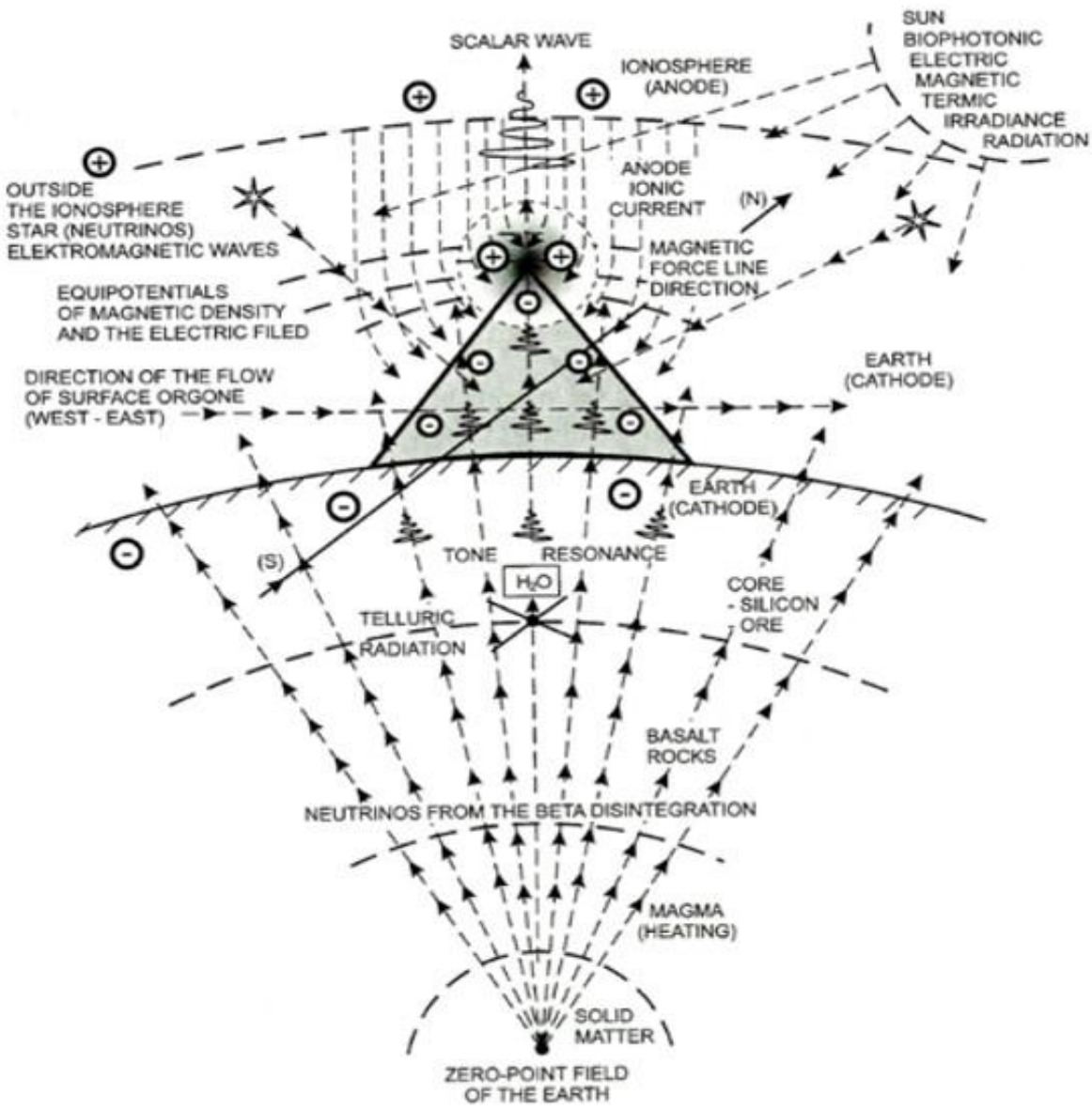

Fig 6: The magnetic and electric flux lines

IV. OBSERVATIONS

The other organic and non organic matter observations made inside the pyramids are,

- Negative Ions help to reproduce and repair body cells. They're transmitted into the body through the air and are circulated by the blood. Too many positive ions (the result of air pollution) can cause depression, and ultimately, illlnesses. Thus, negative ions have a beneficial effect on the body. Pyramids generate negative ions. In addition, they are believed to have a generally balancing effect on the body's electromagnetic field. This effect is greatly enhanced if the materials used, is gold or copper.
- Restores the lustre to tarnished jewellery and coins. Also sharpness and strength to the sword.
- Purify water.
- Mummify and dehydrate meat, eggs and other food stuffs.
- Help keep milk fresh and prevent souring without refrigeration.
- Dehydrate flowers without losing their form or colour.
- Increase the growth rate of plants.
- Help attain increased relaxation.
- Improves the taste of coffee, wine and certain fruit juices.
- Promotes healing of cuts, bruises and burns, as well as reduces pain from toothaches and headaches.
- Many people have also experienced that after sleeping inside a pyramid they find that they need less sleep and feel more relaxed and at peace when they wake up.
- Egyptologists have found well preserved grain in tombs that is thousands of years old. In contrast, grains stored in modern world to store grains near the field, usually spoils after only a few seasons of storage. Grain in modern silos usually keeps no longer than four years.

(This work is licensed under a Creative Commons Attribution 4.0 International License.)

International Journal of Engineering Research & Technology (IJERT)
ISSN: 2278-0181
Vol. 5 Issue 11, November-2016

- The animal apparently wandered into the King's Chamber and perished before finding an exit route at the pyramid of Giza. The cat's body dried out, although the air in the King's Chamber is always humid.
- In accordance with funerary customs, an elaborate meal was set out on pottery platters. The meal consisted of porridge, quail, kidneys, pigeon, fish, beef ribs, triangular loaves of bread, cakes and fruits. Their state of preservation was so excellent that Egyptologists easily recognized all of the foods in the entire meal, although it is almost 5,000 years old.
- Meditating inside a pyramid: Feeling of warmness, a sense of weightlessness, tranquility, relaxation, enhanced focusing, positive approach can be observed in a user who regularly uses a pyramid.

Looking into the above points, there is a possibility that they also experimented with genetics and microbiology. Since small experimental pyramids are capable of multiplying the plants cells faster, massive sized pyramids should also increase the growth of animals and plants abruptly. [15]It suggests that experiments on infants, their needs, growth measurements could have been done inside. This leads to the questions on the possibilities of the presence of giant humans, because the pyramid in Giza is constructed by many giant limestone weighing 15 tonnes of excellent fineness and precision. And the construction upto the apex of the pyramid requires skilled labour, machinery and tools. From the cave paintings and carvings, one can give the hierarchical meanings of importance or can conclude that the giants existed at one point of time due to experiments done inside the pyramids who could easily handle 15 tonnes of limestone rocks as well as machineries. The figure below shows the servants applying water on a giant human, 2 normal sized humans serving a giant human, servants with giant humans on the boat with normal sized humans and skeleton structures obtained in the Egypt with diggers.

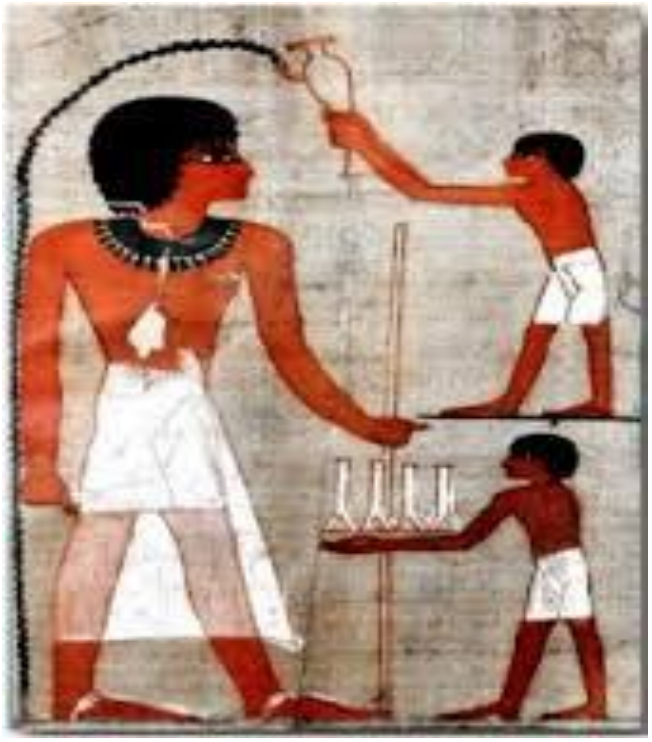

Fig 7: Servants applying water on giant human

Fig 8: 2 Normal sized humans serving a giant human

Fig 9: Servants with giant humans on the boat

(This work is licensed under a Creative Commons Attribution 4.0 International License.)

International Journal of Engineering Research & Technology (IJERT)
ISSN: 2278-0181
Vol. 5 Issue 11, November-2016

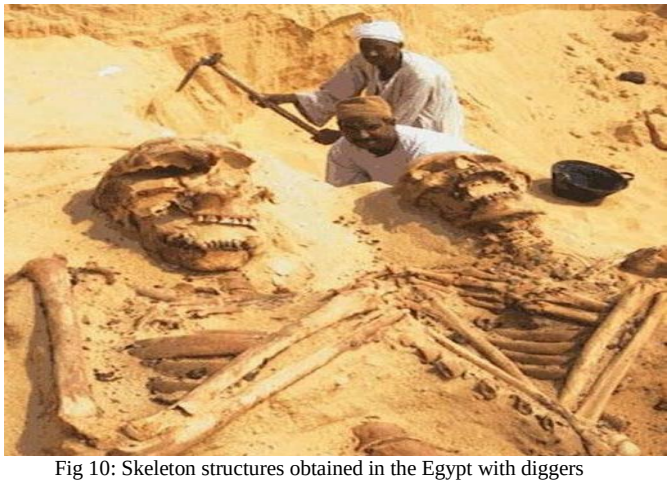

Fig 10: Skeleton structures obtained in the Egypt with diggers

The figure below shows the technology of flying machines from the rock carvings from the caves. It is evident that a very few flying machines can be identified by us are aircraft, helicopter and space station and we do not have answers for the other carvings yet. This shows the advance in their technology and machineries.

Fig 11: Ancient flying machines

V. RESULTS & DISCUSSIONS

Safe Electricity was generated, translated and distributed across the place by the vibrations created by the currents of water table below. Healing effects of pains and cuts can be observed. Abrupt growth rate is observed in the tissues of plants and animals and hence on humans also.

VI. CONCLUSION

Wireless electricity was generated, translated and distributed across the place. Highly sophisticated 15 tonned stones with excellent precision and fineness that are used in pyramid construction is evident that it is built by giant humans. Mummification is observed in organic and inorganic materials. Abrupt growth rate is observed in the tissues of plants and animals and hence on humans also. And the giant skeleton structures obtained after the digging is a proof that giant humans existed on earth at one point of time.

ACKNOWLEDGEMENT

I thank my brother Vijeth for always being there for me. I express my sincere gratitude, devotion to my parents and relatives for their love, caring, prayers, guidance and sacrifices. I also thank a few well-wishers and almighty for everything.

REFERENCES:

[1] Fitchen, “Building Cheops’ Pyramid” – Journal of the Society of Architectural Historians, Vol. 37, No. 1, Mar., 1978, pp. 3-12
[2] Isler, “On Pyramid Building” (Part 1) – Journal of the American Research Center in Egypt, Vol. 22, 1985, pp. 129-142
[3] Isler, “On Pyramid Building” (Part 2) – Journal of the American Research Center in Egypt, Vol. 24, 1987, pp. 95-112
[4] Lally, “Engineering a Pyramid” – Journal of the American Research Center in Egypt, Vol. 26, 1989, pp. 207-218.
[5] Isler, “Egyptian Methods of Raising Weights” – Journal of the American Research Center in Egypt, Vol. 13, 1976, pp. 31-42
[6] Isler, “An Ancient Method of Finding and Extending Direction” – Journal of the American Research Center in Egypt, Vol. 26, 1989, pp. 191-206.
[7] Bárta, M. (2005) ‘Location of the Old Kingdom Pyramids in Egypt’, *Cambridge Archaeological Journal*, 15(2), pp. 177–191. doi: 10.1017/S0959774305000090.
[8] Brichieri-Colombi, Stephen. 2015. Engineering a Feasible Ramp for the Great Pyramid of Giza. – Palarch’s Journal of Archaeology of Egypt/Egyptology 12(1), 2015, 1-16. ISSN 1567-214X
[9] El-Sabban, S. 2000: The Cat’s Coffi n of DHwtyms in the Cairo Museum. – Discussions in Egyptology 46: 65-78.
[10] Veldmeijer, André J. 2011. Studies of Ancient Egyptian Footwear. Technological Aspects. Part XIV. Leather Eared Sandals. – Palarch’s Journal of Archaeology of Egypt/Egyptology 8(5) , 2011, 1-31. ISSN 1567-214X
[11] James, P, The Rise and Demise of Egypt’s Largest pyramids: A builders View. – Structure Magazine April 2014 (online at: http:// www.structuremag.org/?p=1860).
[12] Stocks. D, Experiments in Egyptian Archaeology. – London & New York, Routledge, 2003.
[13] Verner, M, The Pyramids: The Mystery, Culture, and Science of Egypt’s Great Monuments. – New York, Grove Press, 2002.
[14] Vyse, R.W. Operations Carried on at the Pyramids of Gizeh in 1837. – London, Weale & Nikkison, 1840.
[15] Zakrzewski, S.R., Variation in Ancient Egyptian Stature and Body Proportions. – American Journal of Physical Anthropology 121: 219-229. Submitted: 4 December 2014 Published: 16 April 2015
[16] X-Rays Analysis and X-Rays Diffraction of casing stones from the pyramids of Egypt, and the limestone of the associated quarries., Davidovits J., Science in Egyptology; A.R. David ed.; 1986; Proceedings of the “Science in Egyptology Symposia”; Manchester University Press, UK; pp.511- 520.
[17] Igor Túnyi and Ibrahim A. El-hemaly, Paleomagnetic investigation of the Great Egyptian Pyramids, Europhysics News, 43/6, 28-31, 2012.
[18] Barsoum M.W., Ganguly A. and Hug G., J. Am. Ceram., Microstructural Evidence of Reconstituted Limestone Blocks in the Great Pyramids of Egypt, Soc. 89[12], 3788-3796, 2006.
[19] Daresbury, SRS, The Enigma of the Construction of the Giza Pyramids Solved?, Scientific British Laboratory, Synchrotron Radiation Source, 2004.

(This work is licensed under a Creative Commons Attribution 4.0 International License.)

US007379286B2

(12) **United States Patent**
Haisch et al.

(10) **Patent No.: US 7,379,286 B2**
(45) **Date of Patent: May 27, 2008**

(54) **QUANTUM VACUUM ENERGY EXTRACTION**

(75) Inventors: **Bernard Haisch**, Redwood City, CA (US); **Garret Moddel**, Boulder, CO (US)

(73) Assignee: **Jovion Corporation**, Menlo Park, CA (US)

(*) Notice: Subject to any disclaimer, the term of this patent is extended or adjusted under 35 U.S.C. 154(b) by 430 days.

(21) Appl. No.: **11/236,142**

(22) Filed: **Sep. 26, 2005**

(65) **Prior Publication Data**

US 2007/0241470 A1 Oct. 18, 2007

(51) **Int. Cl.**
H02N 11/00 (2006.01)
H02M 1/00 (2007.01)

(52) **U.S. Cl.** **361/233**; 361/226; 363/178; 327/603; 318/16; 318/555; 318/558; 307/151

(58) **Field of Classification Search** ..... None
See application file for complete search history.

(56) **References Cited**

U.S. PATENT DOCUMENTS

5,018,180	A	5/1991	Shoulders	
5,590,031	A *	12/1996	Mead, Jr. et al.	363/8
6,477,028	B1 *	11/2002	Pinto	361/233
6,593,566	B1	7/2003	Pinto	
6,665,167	B2 *	12/2003	Pinto	361/233

OTHER PUBLICATIONS

Boyer, T. H. 1975, Random Electrodynamics: The Theory of Classical Electrodynamics with Classical Zero-Point Radiation Field, Phys. Rev. D, 11, 790.

Cole, D. C. and Puthoff, H. E. 1993, Extracting energy and heat from the vacuum, Phys. Rev. E, 48, 2, 1562.

Cole, D. C. and Zou, Yi 2003, Quantum Mechanical Ground State of Hydrogen Obtained from Classical Electrodynamics, Physics Letters A, vol. 317, No. 1-2, pp. 14-20 (Oct. 13, 2003), quant-ph/0307154.

(Continued)

Primary Examiner—Nikita Wells
(74) *Attorney, Agent, or Firm*—Pritzkau Patent Group, LLC

(57) **ABSTRACT**

A system is disclosed for converting energy from the electromagnetic quantum vacuum available at any point in the universe to usable energy in the form of heat, electricity, mechanical energy or other forms of power. By suppressing electromagnetic quantum vacuum energy at appropriate frequencies a change may be effected in the electron energy levels which will result in the emission or release of energy. Mode suppression of electromagnetic quantum vacuum radiation is known to take place in Casimir cavities. A Casimir cavity refers to any region in which electromagnetic modes are suppressed or restricted. When atoms enter into suitable micro Casimir cavities a decrease in the orbital energies of electrons in atoms will thus occur. Such energy will be captured in the claimed devices. Upon emergence form such micro Casimir cavities the atoms will be re-energized by the ambient electromagnetic quantum vacuum. In this way energy is extracted locally and replenished globally from and by the electromagnetic quantum vacuum. This process may be repeated an unlimited number of times. This process is also consistent with the conservation of energy in that all usable energy does come at the expense of the energy content of the electromagnetic quantum vacuum. Similar effects may be produced by acting upon molecular bonds. Devices are described in which gas is recycled through a multiplicity of Casimir cavities. The disclosed devices are scalable in size and energy output for applications ranging from replacements for small batteries to power plant sized generators of electricity.

20 Claims, 7 Drawing Sheets

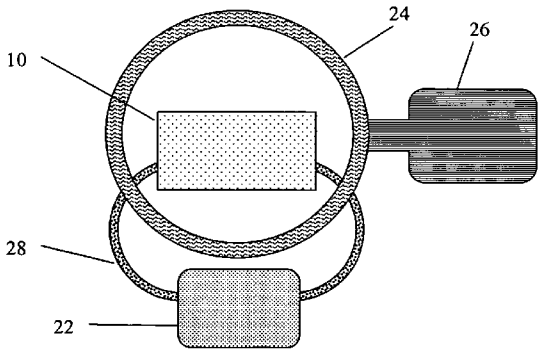

OTHER PUBLICATIONS

Cole, D. C. and Zou, Yi 2004, Analysis of Orbital Decay Time for the Classical Hydrogen Atom Interacting with Circularly Polarized Electromagnetic Radiation, Phys. Rev. E. 69 (1), 016601, pp. 1-12 (2004).

Forward, R. 1984, Extracting electrical energy from the vacuum by cohesion of charged foliated conductors, Phys. Rev. B, 30, 4, 1700.

Goho, A., "Diatom Menagerie," Science News, vol. 166, Jul. 17, 2004a, pp. 42-44, and references mentioned therein.

Goho, A., "Rattle and Hum; Molecular machinery makes yeast cells purr," Science News, vol. 166, Aug. 21, 2004b, p. 116, and references therein.

Milonni, P. W. The Quantum Vacuum: An Introduction to Quantum Electrodynamics, Sect. 3.3, Academic Press, 1994.

Park, W., and Summers, C. J., "Extraordinary refraction and dispersion in 2D photonic crystal slabs", Opt. Lett., vol. 27, (2002) p. 1397.

Plöl, A. and Kräuter, G., "Wafer direct bonding: tailoring adhesion between brittle materials", Mater. Sci. Eng. R, vol. 25 (1999) p. 1.

Puthoff, H. E., Ground State of Hydrogen as a Zero-Point-Fluctuation-Determined State, Phys. Rev. D 35, 3266, 1987.

Roy, Subrata et al., "Modeling gas flow through microchannels and nanopores," Journal of Applied Physics, vol. 93, No. 8, Apr. 15, 2003, pp. 4870-4879.

* cited by examiner

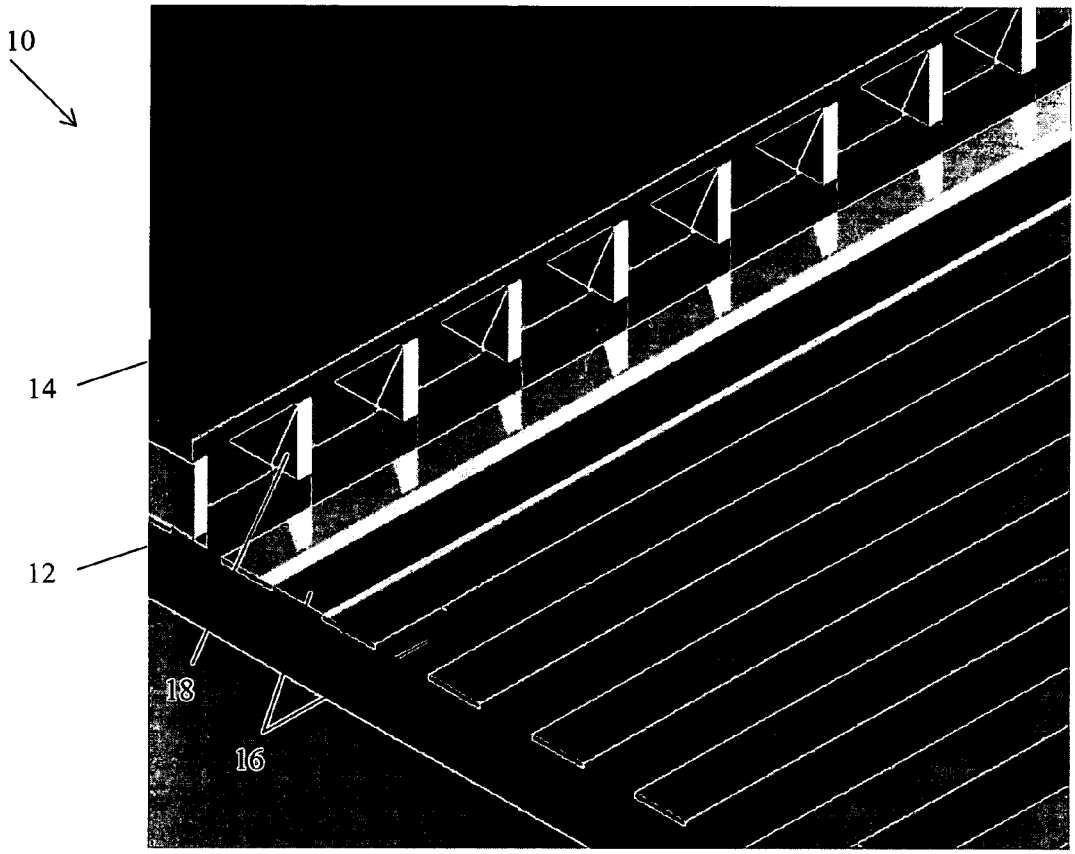

FIG. 1

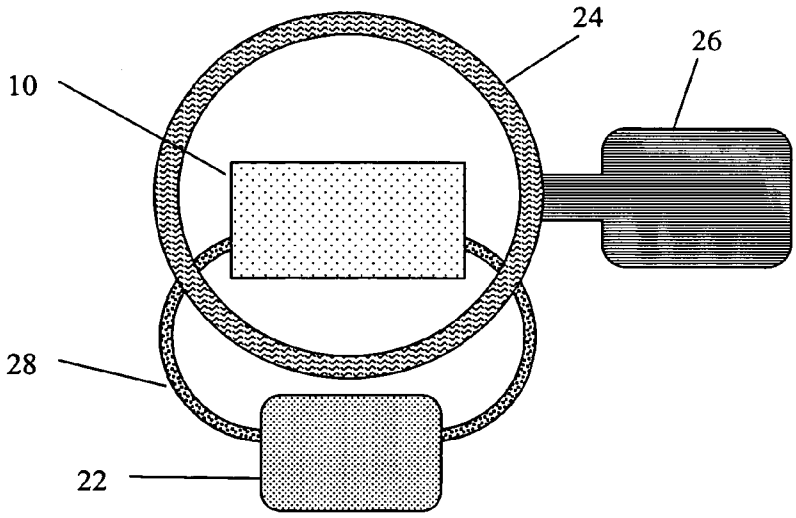

FIG. 2

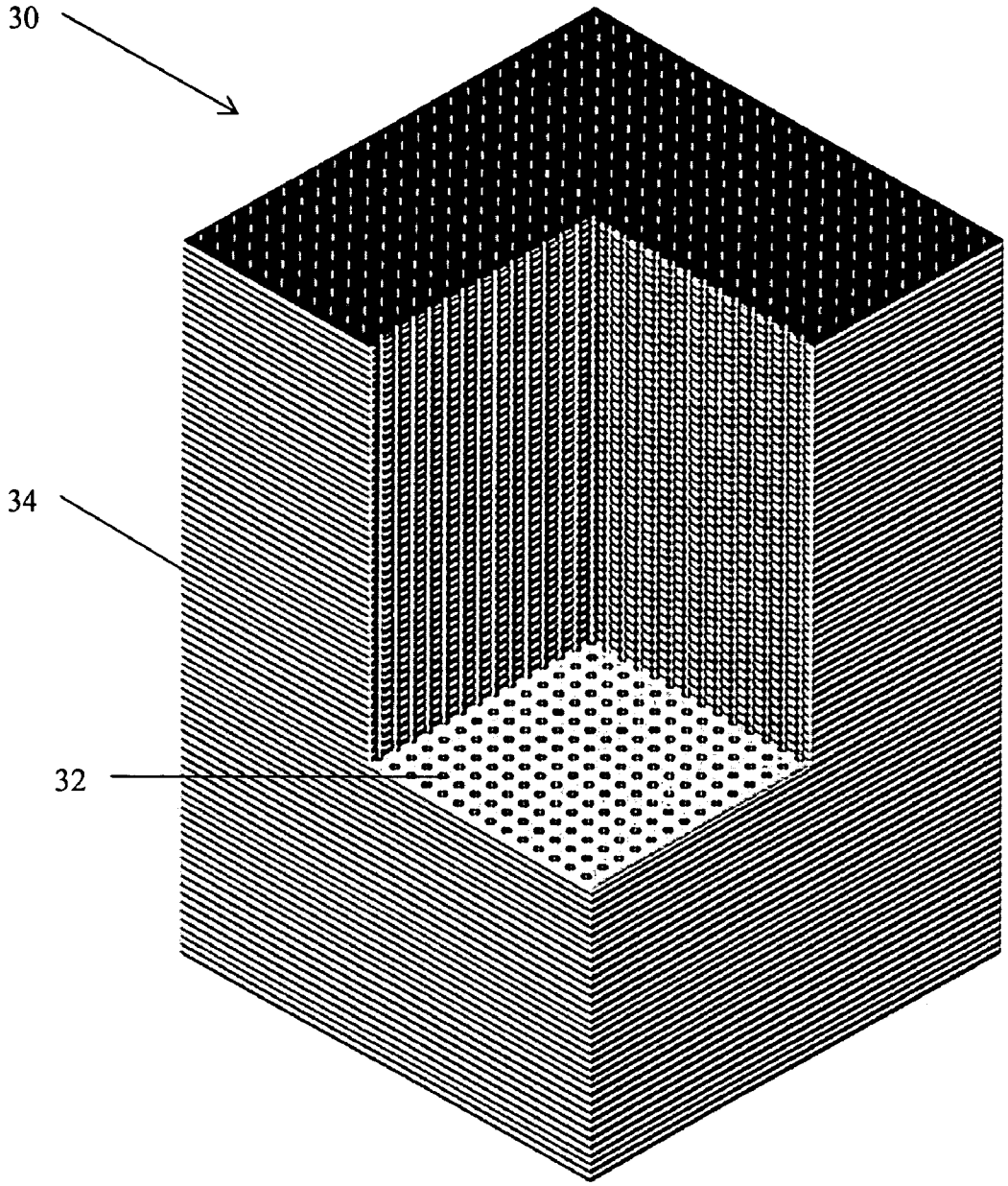

FIG. 3

FIG. 4A

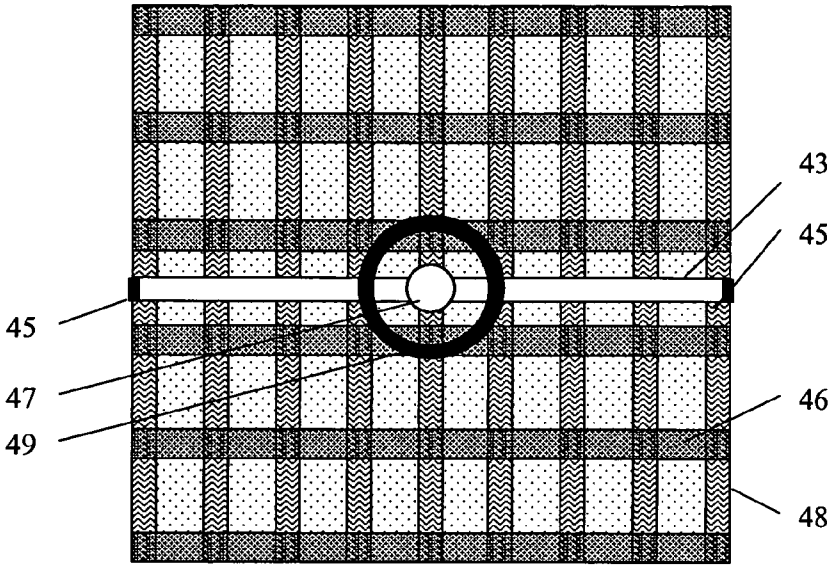

FIG. 4B

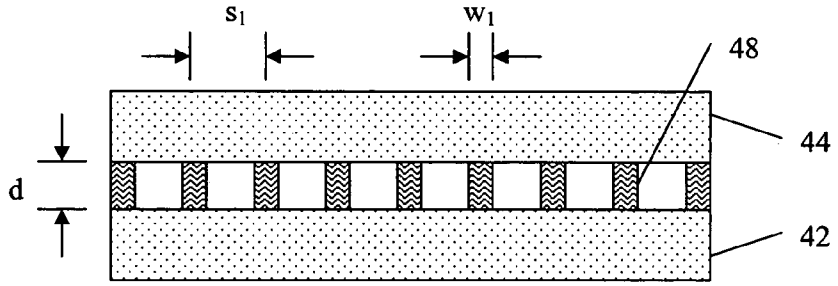

FIG. 4C

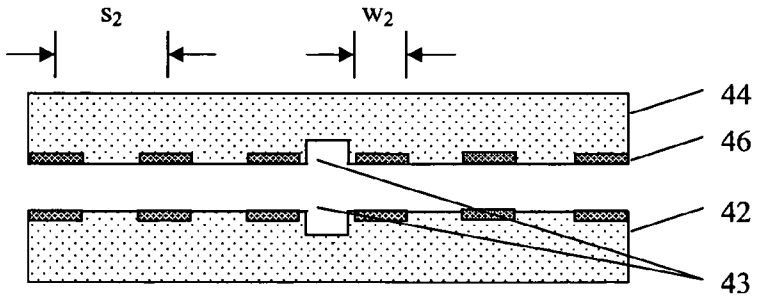

FIG. 4D

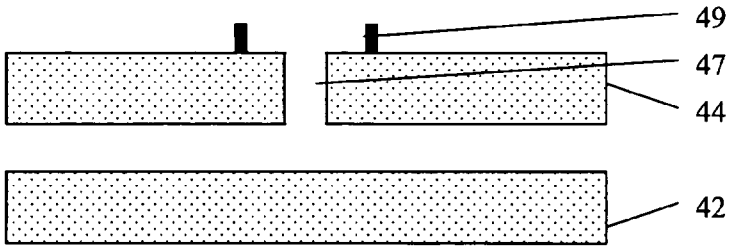

FIG. 5A

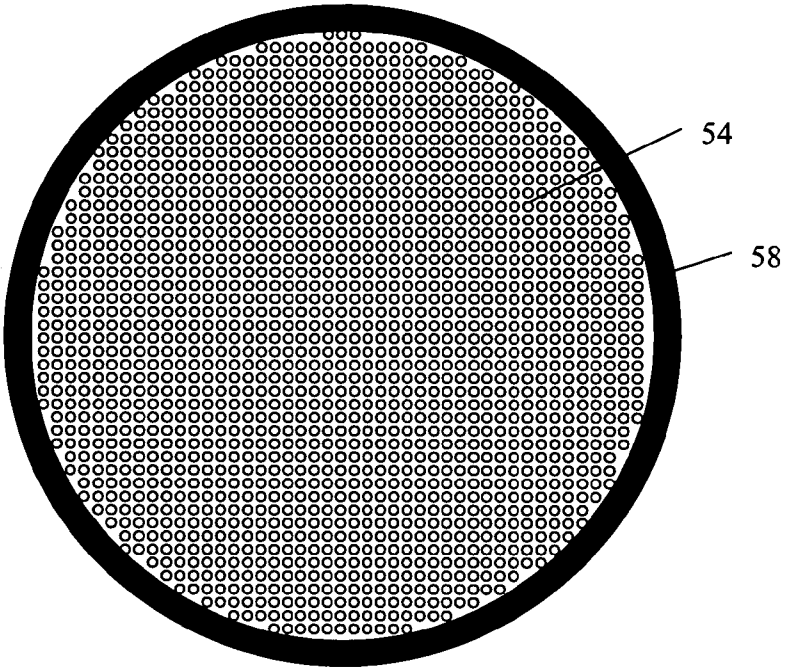

FIG. 5B

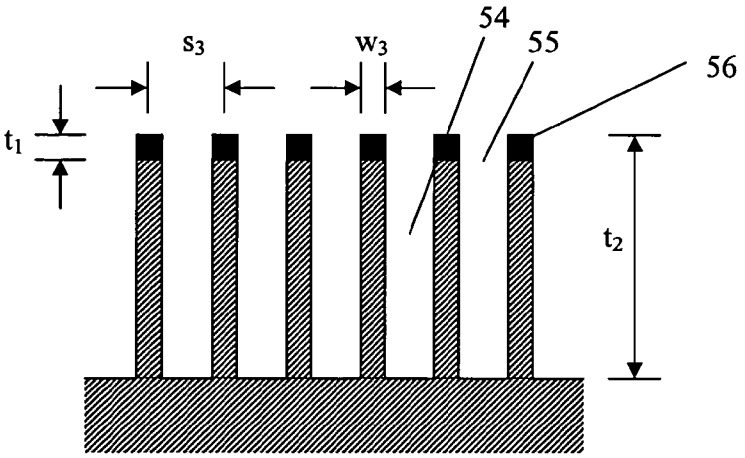

FIG. 5C

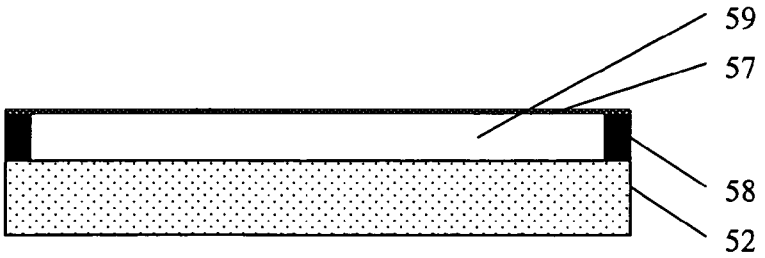

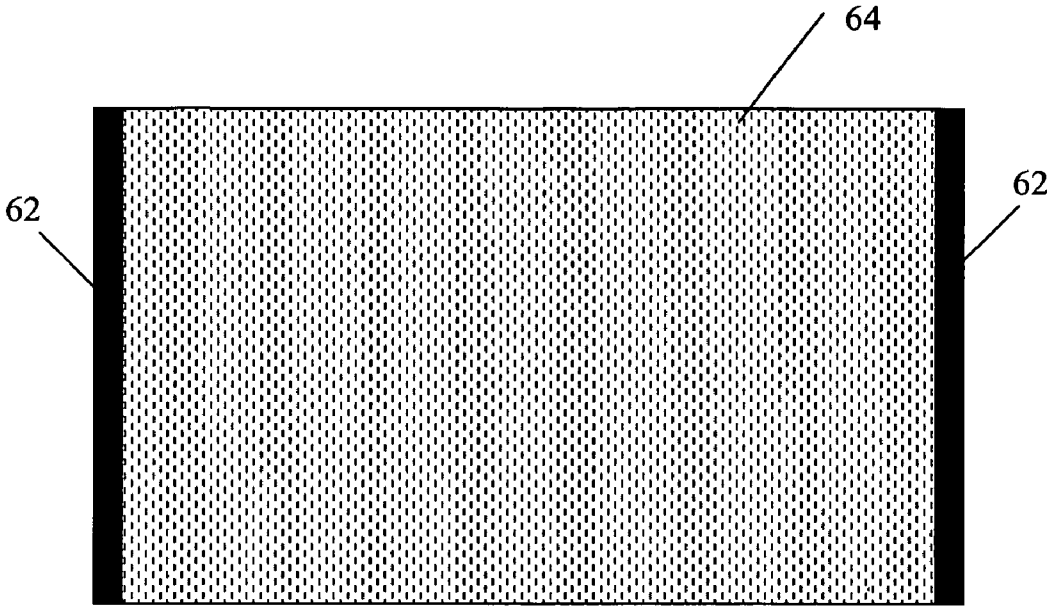

FIG. 6A

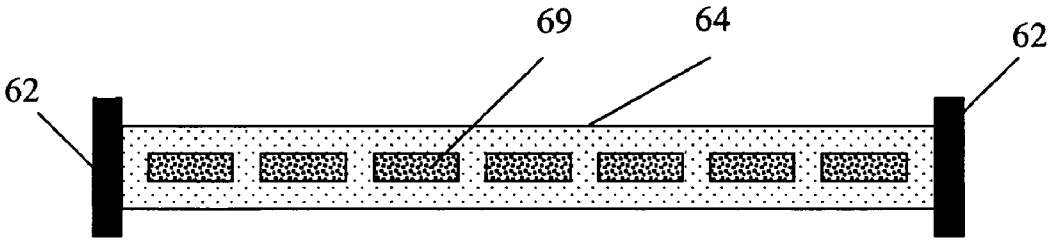

FIG. 6B

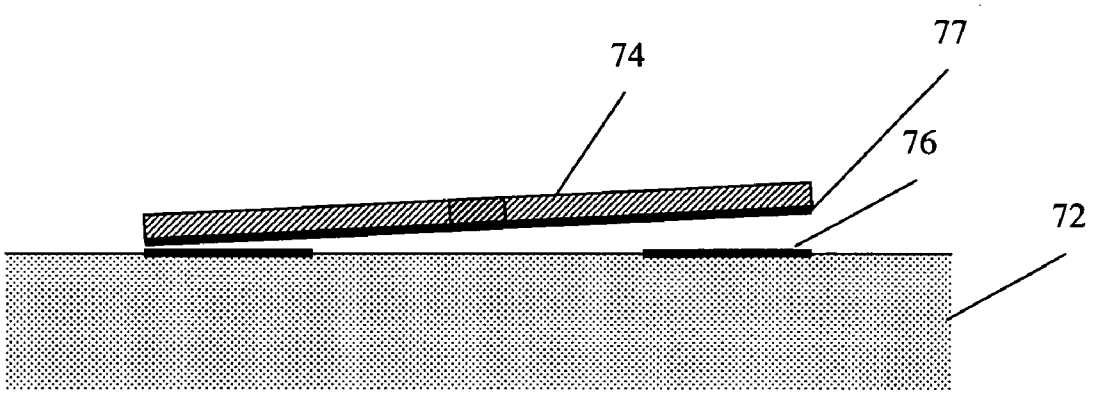

FIG. 7A

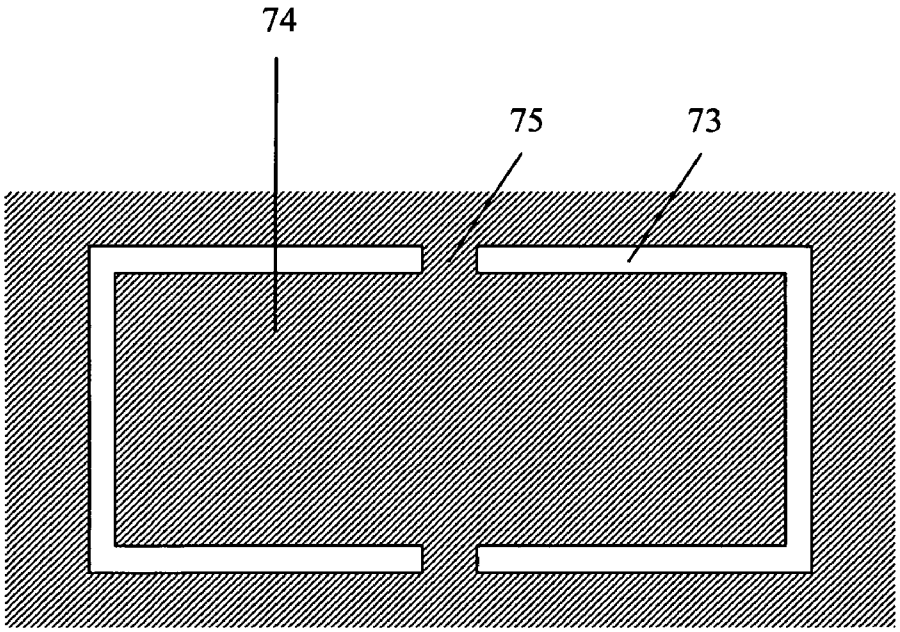

FIG. 7B

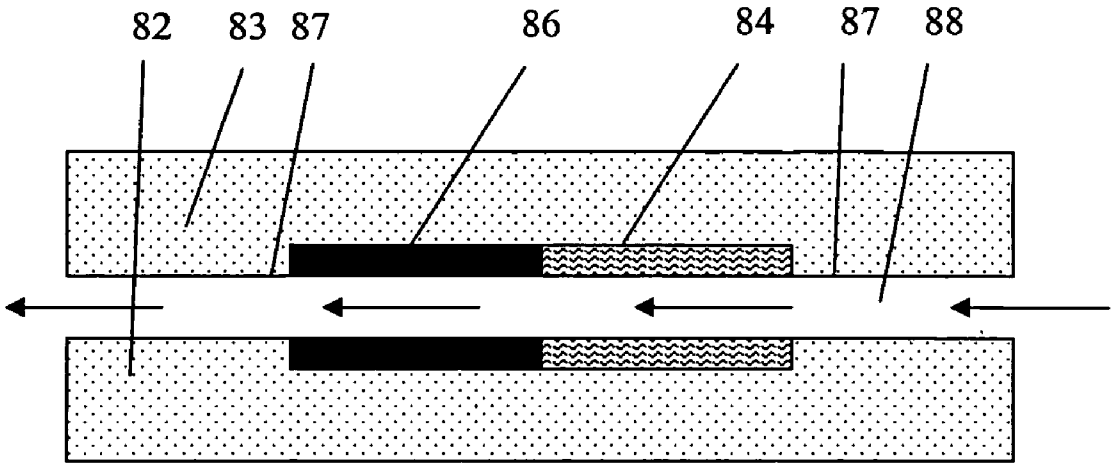

FIG. 8

QUANTUM VACUUM ENERGY EXTRACTION

BACKGROUND OF THE INVENTION

Max Planck proposed the concept of zero-point energy in 1912. The idea was then studied by Albert Einstein and Otto Stern in 1913. In 1916 Walther Nernst proposed that the Universe was filled with zero-point energy. The modern field of stochastic electrodynamics is based upon these ideas.

At that same time the structure and stability of the atom were puzzles. The Rutherford model of the atom was based on analogy to the motions of planets (electrons) around the Sun (the nucleus). However this was not feasible. The orbiting electron(s) would emit Larmor radiation, quickly losing energy and thus spiraling into the nucleus on time scales less than one-trillionth of a second, thereby rendering stable matter impossible. It is now known within the context of stochastic electrodynamics (SED) theory that a possible solution involves the absorption of zero-point energy. It was shown in 1975 by Boyer that the simplest possible atom and atomic state, the hydrogen atom in its ground state, would be in a state of equilibrium between Larmor radiation and absorption of zero-point energy at the correct radius for a classical Rutherford hydrogen atom.

Since this solution was not known in 1913, Niels Bohr followed a different path by simply postulating that only discrete energy levels were available to the electron in an atom. This line of reasoning let to the development of quantum theory in the 1920s. The concept of classical zero-point energy was forgotten for a decade. However the same concept found itself reborn in a quantum context in 1927 with the formulation of the Heisenberg uncertainty principle. According to the principle, the minimum energy of a harmonic oscillator has the value hf/2, where h is Planck's constant and f is the frequency. It is thus impossible to remove this last amount of random energy from an oscillating system.

Since the electromagnetic field also must be quantized in quantum theory, a parallel is drawn between the properties of a quantum oscillator and the waves of the electromagnetic field. It is concluded that the minimum energy of any possible mode of the electromagnetic field, consisting of frequency, propagation direction and polarization state, is hf/2. Multiplying this energy by all possible modes of the field gives rise to the electromagnetic quantum vacuum, which has identical properties—energy density and spectrum—to the classical zero-point energy studied by Planck, Einstein, Stern and Nernst a decade previously.

The line of inquiry involving classical physics plus the addition of a classical zero-point field was reopened in the 1960s by Trevor Marshall and Timothy Boyer and has been named stochastic electrodynamics (SED). SED asks the question: "Which quantum properties, processes or laws can be explained in terms of classical physics with the only addition being a zero-point electromagnetic field." Two of the early successes were a classical derivation of the black-body spectrum (i.e. one not involving quantum physics) and the discovery that a classically orbiting electron in a hydrogen atom emitting Larmor radiation but absorbing zero-point radiation would have an equilibrium orbit at the classical Bohr radius. An initial approach to this problem by Timothy Boyer (1975) was perfected by H. E. Puthoff (1987). Their analyses treated the orbiting electron as a harmonic oscillator.

This result underwent a major new development with the recent work of Daniel Cole and Y. Zou which simulated the

orbit of a classical electron in a true Coulomb field of a hydrogen nucleus and found that such a realistic electron would find itself in a range of distances from the nucleus, in agreement with quantum mechanics, owing to the random nature of the emission and absorption processes. The mean position is at the correct Bohr radius, but the actual distribution of positions very precisely duplicates the electron probability distribution of the corresponding Schrödinger equation in which the electron is regarded as being represented by a wave function. (In the SED representation the electron is "smeared out" not because it is a wave function, but because as a point-like particle it is subject to the continuous perturbations of the electromagnetic quantum vacuum fluctuations.)

A clear consequence of this theory is that a reduction of the electromagnetic quantum vacuum at the frequency corresponding to the orbit of the electron will result in a decay of the orbit since there will thereby be an imbalance in the Larmor radiation vs. absorption.

The electromagnetic quantum vacuum energy spectrum is proportional to the cube of the frequency. If the vacuum energy is suppressed at the frequency of the "normal" orbit of the electron, this will cause the electron to spiral inward to a higher frequency orbit. In this fashion it will then encounter a new equilibrium situation with the electromagnetic quantum vacuum energy spectrum owing to that spectrum's increase with the cube of the frequency.

If the SED interpretation is correct for the hydrogen atom as the analyses of Boyer, Puthoff, Cole and Zou indicate, it must apply as well to all other atoms and their multi-electron configurations. In that case, a transition of an electron from an excited state to a lower energy state involves a rapid decay from one stable orbit to another, not an instantaneous quantum jump. The details of the bases for stability of electron orbits has yet to be determined by SED theory, but the logical extrapolation from the single-electron hydrogen case is clear: electron orbits in all atoms must be determined by an emission vs. absorption balance and thus are subject to modification involving mode suppression of the electromagnetic zero-point field at appropriate frequencies.

It is claimed that modification of electron orbits is in essence the same process as natural transition between energy levels of electrons in atoms and therefore that the energy released in such a process can be captured in the same way as ordinary transition energy.

By moving an atom into and out of a microstructure that suppresses appropriate modes of the electromagnetic quantum vacuum, an extraction of energy from the electromagnetic quantum vacuum may be accomplished. This can be done with micro Casimir cavities.

The electromagnetic quantum vacuum as a real source of energy is indicated by the Lamb shift between s and p levels in hydrogen, van der Waals forces, the Aharanov-Bohm effect, and noise in electronic circuits.

However the most important effect of the electromagnetic quantum vacuum is the existence of the Casimir Force, a force between parallel conducting plates which may be interpreted as a radiation pressure effect of electromagnetic quantum vacuum energy. Electromagnetic waves in a cavity whose walls are conducting are constrained to certain wavelengths for reasons having to do with transverse component boundary conditions on the wall surfaces. As a result, in a Casimir cavity between parallel plates there will be, in effect, an exclusion of radiation modes whose wavelengths are longer than the separation of the plates. An overpressure of electromagnetic quantum vacuum radiation on the outside then pushes the plates together. An extensive literature exists

on the Casimir force and the reality of the force has moved from laboratory experimentation to micro-electro-mechanical structures (MEMS) technology both as a problem (so-called "stiction") and as a possible control mechanism.

The exclusion of modes does not begin all at once at the wavelength equivalent to the plate separation, d. Mode suppression will be strongest for wavelengths of d or greater, but will begin to occur as well for wavelengths falling in between the "stairway" d/n, with the effect diminishing as n increases. We propose to use the partial suppression of modes for wavelengths shorter than d occurring in this fashion in order to be able to employ Casimir cavities of the maximum possible physical size.

Researchers have shown that thermodynamic laws are not violated when energy is "extracted" from zero-point energy, as energy is still conserved and the second law is not violated. Cole and Puthoff have carried out and published thermodynamic analyses showing that there is no violation. Indeed, a thought experiment by Forward (1984) showed a simple, but not practical, energy extraction experiment.

In the stochastic electrodynamics (SED) interpretation of the hydrogen atom, the ground state is interpreted as effectively equivalent to a classically orbiting electron whose velocity is c/137. The orbit is stable at the Bohr radius owing to a balance between classical electromagnetic emission and absorption from the electromagnetic zero-point field. This view, first obtained by Boyer (1975) and subsequently refined by Puthoff (1987) has been further strengthened by the detailed simulations of Cole and Zou (2003, 2004) which demonstrate that the stochastic motions of the electron in this interpretation reproduce the probability density distribution of the Schrödinger wave function. Note that one apparent difference between this interpretation and that of quantum mechanics is that in quantum mechanics the 1s state of the electron is regarded as having zero angular momentum, whereas in the SED interpretation the electron has an instantaneous angular momentum of $mcr/137=h/2\pi$. However SED simulations by Nickisch have shown that the time-averaged angular momentum is zero just as in the quantum case owing to the zero-point perturbations on the orbital plane. Thus averaged over enough "orbits" this "classical electron" will fill a spherical symmetric volume around the nucleus having the same radial probability density as the Schrödinger wave function and zero net angular momentum, completely consistent with quantum behavior.

The Bohr radius of the atom in the SED view is 0.529 A (Angstroms). This implies that the wavelength of zero-point radiation responsible for sustaining the orbit is $2*\pi*0.529*137=455$ A (0.0455 microns). It is claimed that suppression of zero-point radiation at this wavelength and shorter in a Casimir cavity will result in the decay of the electron to a lower energy state determined by a new balance between classical emission of an accelerated charge and zero-point radiation at $\lambda<455$ A, where λ depends on the Casimir plate separation, d. Note that the tail end of the quantum probability density of the electron (as well as the SED simulation of Cole and Zou) extends beyond five Bohr radii, so that some change in the energy balance could be accomplished even at considerably longer wavelengths of perhaps 0.1 microns-0.2 microns

Since the frequency of this orbit is 6.6×10^{15} s^{-1}, no matter how quickly the atom is injected into a Casimir cavity the process will be a slow one as experienced by the orbiting electron. We therefore assume that the decay to a new sub-Bohr ground state will involve gradual release of energy in the form of heat, rather than a sudden optical radiation signature.

Since the binding energy of the electron is 13.6 eV, we assume that the amount of energy released in this process would be on the order of 1 to 10 eV for injection of the hydrogen atom into a Casimir cavity of d=250 A or thereabouts (and perhaps even a larger cavity as noted above). Upon exiting the cavity the electron would absorb energy from the zero-point field and be re-excited to its normal state. The energy (heat) extracted in the process comes at the expense of the zero-point field, which in the SED interpretation flows at the speed of light throughout the Universe. We are in effect extracting energy locally and replenishing it globally. Imagine extracting thimbles-full of water from the ocean. Yes, the ocean is being depleted thereby, but no practical consequences ensue.

Since naturally occurring hydrogen at standard temperature and pressure (STP) is a two-atom molecule, a dissociation process would need to precede an injection of hydrogen atoms into a Casimir cavity. We avoid this complication and take advantage of multi-electron modification by working with monatomic (noble) gases which also have the advantage of being safe and inexpensive.

We work with naturally occurring monatomic gases for three reasons:

(1) No dissociation process is required.

(2) Heavier element atoms are approximately two to four times larger than hydrogen and thus can utilize and be affected by a larger Casimir cavity which is easier to fabricate.

(3) Heavier elements have numerous outer shell electrons, several of which may be simultaneously affected by the reduction of zero-point radiation in a Casimir cavity.

The following five noble gases are potentially suitable:

He (Z=2, r=1.2 A)
Ne (Z=10, r=1.3 A),
Ar (Z=18, r=1.6 A)
Kr (Z=36, r=1.8 A)
Xe (Z=54, r=2.05 A).

All of these elements contain ns electrons. He has two 1s electrons. Ne has two each of 1s and 2s electrons. Ar has two each of 1s, 2s, and 3s electrons. Kr has two of each of 1s, 2s, 3s, and 4s electrons. Xe has two of each of 1s, 2s, 3s, 4s and 5s electrons.

Assuming an outermost electron which is completely shielded by the other electrons (a crude assumption), its orbital velocity would scale as $r^{-1/2}$ (the familiar Keplerian period squared proportional to semi-major axis cubed relationship) and thus λ proportional to r/v) will scale as $r^{3/2}$. If that is the case, then the larger radii translate as $r^{3/2}$ into larger Casimir cavities having an effect on the energetics of the outer electron shells. We would therefore expect that a Casimir cavity having d=0.1 microns (or perhaps even as large as one micron would have an effect on reducing the energy levels of the outermost pair of s electrons . . . and possibly also p electrons and intermediate shell s electrons as well.

It is reasonable to expect that a 0.1 microns Casimir cavity would result in a release of 1 to 10 eV for each injection of a He, Ne, Ar, Kr or Xe atom into such a cavity.

According to a Jordan Maclay, who has done theoretical Casimir cavity calculations, a long cylindrical cavity results in an inward force on the cavity. In the "exclusion of modes" interpretation of the Casimir force, this implies that a cylindrical cavity of diameter 0.1 micron would yield the desired decay of outer shell electrons and subsequent release of energy.

It is now recognized that an electromagnetic quantum vacuum field is formally necessary for atomic stability in

conventional quantum theory (Milonni 1994). In the field of physics known as stochastic electrodynamics, this concept has been shown by theory and simulations to underlie the ground state of the electron in the hydrogen atom. The classical Bohr orbit is determined by a balance of Larmor emission and absorption of energy from the zero-point fluctuations of the electromagnetic quantum vacuum in SED theory. It follows that upon suppression of appropriate zero-point fluctuations the balance will be upset causing the electron to decay to a lower energy level not ordinarily found in nature with a release of energy during this transition. A Casimir cavity of the proper dimensions can accomplish this suppression of zero-point fluctuations. A Casimir cavity refers to any region in which electromagnetic modes are suppressed or restricted. Upon entering such a properly designed Casimir cavity the electron energy level will shift and energy will be released. Upon exiting the Casimir cavity the electron will return to its customary state by absorbing energy from the ambient zero-point fluctuations. This permits an energy extraction cycle to be achieved at the expense of the zero-point fluctuations. Although it has not yet been proven theoretically, a similar balance of Larmor emission and absorption of energy from the zero-point fluctuations must underlie the electron states of all atoms, not just hydrogen, permitting any atom to be used as a catalyst for extraction of zero-point energy (the energy associated with the zero-point fluctuations). An analogous process is also believed to underlie molecular bonds, yielding a similar energy extraction cycle.

The following is a list of patents that deal with related phenomena:

U.S. Pat. No. 5,018,180, Energy conversion using high charge density, Kenneth R. Shoulders. This concerns the production of charge clusters in spark discharges. It is conjectured that the electrostatic repulsion of charges is overcome in charge clusters by a Casimir-like force. This invention does not deal with energy release from atoms in Casimir cavities and is therefore not relevant to the present invention.

U.S. Pat. No. 5,590,031, System for converting electromagnetic radiation energy to electrical energy, Franklin B. Mead and Jack Nachamkin. This invention does not deal with energy release from atoms in Casimir cavities and is therefore not relevant to the present invention.

U.S. Pat. No. 6,477,028, Method and apparatus for energy extraction, Fabrizio Pinto. Proposes to vary one or more of a variety of physical factors that affect the Casimir force, or by altering any of a variety of environmental factors that affect such physical factors and thereby render a Casimir force system as non-conservative. This invention does not deal with energy release from atoms in Casimir cavities and is therefore not relevant to the present invention.

U.S. Pat. No. 6,593,566, Method and apparatus for energy extraction, Fabrizio Pinto. A method and apparatus for accelerating and a decelerating particles based on particle surface interactions. This invention does not deal with energy release from atoms in Casimir cavities and is therefore not relevant to the present invention.

U.S. Pat. No. 6,665,167, Method for energy extraction-I, Fabrizio Pinto. Similar to U.S. Pat. No. 6,477,028. This invention does not deal with energy release from atoms in Casimir cavities and is therefore not relevant to the present invention.

SUMMARY OF THE INVENTION

A system is disclosed for converting part of the energy of the electromagnetic quantum vacuum available at any point in the universe to usable energy in the form of heat, electricity, mechanical energy or other forms of power. This is accomplished using an effect on the electron configurations of atoms predicted by the theory of stochastic electrodynamics (SED). Within the context of SED theory it is predicted that the electron energy levels in atoms are determined by a balance of Larmor radiation vs. absorption of radiative energy from the electromagnetic quantum vacuum. By suppressing electromagnetic quantum vacuum energy at appropriate frequencies a change may be effected in the electron energy levels which will result in the emission or release of energy. This change in energies is analogous to a standard emission of a photon as an electron makes a transition from an excited to a lower energy state, but on a longer time scale and with the change being a continuous one rather than a "jump" from one energy level to another. Mode suppression of electromagnetic quantum vacuum radiation is known to take place in Casimir cavities. A Casimir cavity refers to any region in which electromagnetic modes are suppressed or restricted. When atoms enter into suitable micro Casimir cavities a decrease in the orbital energies of electrons in atoms will thus occur, with the effect being most pronounced for outer shell electrons. Such energy will be captured in the claimed devices. Upon emergence form such micro Casimir cavities the atoms will be re-energized by the ambient electromagnetic quantum vacuum. In this way energy is extracted locally and replenished globally from and by the electromagnetic quantum vacuum. This process may be repeated an unlimited number of times. This process is also consistent with the conservation of energy in that all usable energy does come at the expense of the energy content of the electromagnetic quantum vacuum. Two example variations of a system are disclosed that permit multiple extractions of electromagnetic quantum vacuum energy during passage of a gas through a series of micro Casimir cavities and that operate in a self-sustaining, recycling fashion. Similar effects may be produced by acting upon molecular bonds. The disclosed devices are scalable in size and energy output for applications ranging from replacements for small batteries to power plant sized generators of electricity. Since the electromagnetic quantum vacuum is thought to permeate the entire Universe, devices drawing power from the electromagnetic quantum vacuum in the fashion claimed will be effectively inexhaustible sources of power.

BRIEF DESCRIPTION OF THE DRAWINGS

The present invention may be understood by reference to the following detailed description taken in conjunction with the drawings briefly described below.

FIG. **1** is a diagrammatic illustration of a set of channels each containing a multiplicity of Casimir cavities in accordance with the present invention.

FIG. **2** is a diagrammatic illustration of a system for converting quantum vacuum energy into locally usable power in accordance with the present invention.

FIG. **3** is a diagrammatic illustration of a block of tunnels each containing a multiplicity of Casimir cavities in accordance with the present invention.

FIGS. **4**A-**4**D are diagrammatic illustrations of Casimir channels in bonded wafers in accordance with the present invention.

FIGS. **5**A-**5**C are diagrammatic illustrations of a device for oscillating a fluid though Casimir channels in accordance with the present invention.

FIGS. **6**A and **6**B are diagrammatic illustrations of a device switching the reflecting characteristics of walls of Casimir cavities in accordance with the present invention.

FIGS. **7**A and **7**B are diagrammatic illustrations of a device Casimir cavity wall spacing in accordance with the present invention.

FIG. **8** is a diagrammatic illustration of a device incorporating asymmetric Casimir cavity entry and exits in accordance with the present invention.

DETAILED DESCRIPTION

The first embodiments of this concept utilize Casimir cavities consisting of volumes through which, or in and out of which, gases flow, and which on the size scales of atoms appear as regions bounded by parallel plates of conducting material in which the plate scales are much larger than the plate separations; or by cylinders of conducting material in which the lengths of the cylinders are much larger than the diameters. It is claimed that other forms of Casimir cavity are capable of producing a similar effect, and the term Casimir cavity will be used to designate any volume capable of mode suppression of the zero-point field. The necessary condition is that the mode suppression ability of the Casimir cavity be matched to the electron energy levels in such a way as to result in a significant difference of the electron energy levels inside vs. outside the cavity.

These embodiments demonstrate the following concepts:

- A method, comprising: (a) use of a device including a series of Casimir cavities and causing a specific gas to flow through the cavities, said Casimir cavities being configured and said specific gas being selected such that as the gas flows through the cavities energy is released from the gas; and (b) means for collecting at least some of said released gas.
- A method, comprising: (a) providing a device including at least one Casimir cavity and causing a specific gas to enter and then exit the cavity, said Casimir cavity being configured and said specific gas being selected such that when the gas is caused to enter the cavity, energy is released from the gas; and (b) means for collecting at least some of said released energy.
- A means for effecting changes in the electron configurations. A system for converting part of the energy of the electromagnetic quantum vacuum available at any point in the Universe to usable energy in the form of heat, electricity, mechanical energy or other forms of power.
- A means for effecting changes in the electron configurations in the process of which energy is released.
- A means for allowing the electron configurations to be re-energized by exposure to the ambient electromagnetic quantum vacuum radiation.
- The use of microstructures consisting of many pairs of alternating Casimir cavities and regions in which the electromagnetic quantum vacuum radiation freely propagates.
- The use of conducting strips on facing pairs of plates so that atoms go through alternating regions in which they are exposed to the full electromagnetic quantum vacuum spectrum, and regions in which part of the spectrum is blocked. The result is that they dump (or radiate) the energy difference into the local medium.
- The use of spacers to separate the layer pairs.
- The use of multiple conducting strips to amplify the effect (hugely).
- The stacking of such plates with strips on both sides so that the top of one pair becomes the bottom of the next, each with identical conducting strips which form Casimir cavities with their partner strips in each pair.
- The use of sandwiched layers of alternating conducting and non-conducting plates having micron sized thicknesses in which micron or submicron diameter holes are introduced by etching or some other method.
- The stacking, co-registration and alignment of such sandwiched layers to produce many parallel Casimir tunnels having alternating Casimir and non-conducting segments.
- The use of multiple segments to amplify the effect (hugely).
- The use of monatomic gases as the medium in such a system.
- The use of molecular gases in such a system for the purpose of modifying molecular bonds with the attendant release of energy.
- A closed recycling system in which these processes take place.
- Fabricatable and workable configuration and dimensions but with the claims not limited to these specific embodiments.
- A means whereby the flow of gas is initiated and maintained in a closed system.
- A means whereby the energy released from the electron orbital changes is converted into usable energy in the form of heat, electricity, mechanical energy or other forms of power.

Casimir Channels

This embodiment shown in FIG. **1** involves two square parallel plates **12** and **14**, 10×10 cm in size for illustration. On each one lay down 5000 conducting strips **16** that are 10 microns in width and the full 10 cm in length, separated by 10 microns non-conducting strips. Perpendicular to the strips deposit a spacer material **18** at 0.1 to 1 cm intervals with a height of 0.1 microns. Put the plates face to face and align the strips so as to form 5000 Casimir strips.

If we assume a gas flow rate of 10 cm/s parallel to the spacers and perpendicular to the strips, this would result in 1.3×10^{20} transitions/s.

An energy release of 1 to 10 eV per transition corresponds to 21 to 210 watts of energy release for the entire Casimir cavity. A stacked set of 10 or more such layers could be fabricated yielding 210 to 2100 watts for a 10×10×10 cm block.

This may be directly converted into electricity using a thermophotovoltaic process, or indirectly by using a heat exchanger. As in the previous embodiment, one means of capturing the emitted radiation is to surround the apparatus with a water bath.

The dimensions above are solely examples. The device may be scaled to both smaller and significantly larger dimensions.

The essential components of an energy generating device of this sort shown in FIG. **2** are:

(1) An array of parallel Casimir channels with conducting strips **10**

(2) A pump **22** providing continuous recycling of gas through the tunnels

(3) A means **24** for capturing the emitted energy

(4) A thermal photovoltaic, heat exchanger or other device **26** capable of converting output heat into electricity or other usable forms of power.

A desirable property of the system is its ability to radiate the accumulated energy locally and absorb it globally. Thus surprisingly the means **24** for capturing the emitted energy can capture the emitted energy without hindering the capture of the quantum vacuum energy by the gas. This is due to the fact that the vacuum field permeates all space and cannot be blocked. (Note that the reason that Casimir cavities have reduced vacuum energy modes is not that they block it, but rather that because of destructive interference they do not allow some of the electromagnetic modes to exist in their interior.) A second reason that the means **24** does not block the capture of the quantum vacuum energy is that the absorbed energy is dominantly shorter wavelength electromagnetic modes that are not absorbed by the means **24**, whereas the radiated energy can be longer wavelengths for which the means **24** has a much larger absorption coefficient. Such is the case, for example, when the means **24** comprises a water bath.

The first two components will be enclosed in sealed structure. The third and fourth components may be interior or exterior to this structure.

A variation on the above device consists of stacking plates such that the top of one pair becomes the bottom in the next pair, etc.

Casimir Tunnels

One embodiment of the concept shown in FIG. **3** is multiple, parallel, 0.1 micron diameter Casimir tunnels. If we let the length of the cylinder be 100 times the width, this results in z=10 microns for the length of the Casimir tunnel. We propose a segmented tunnel consisting of alternating conducting and non-conducting materials, each 10 microns in length. In a length of 1 cm, there could be 500 such pairs in segments, resulting in 500 energy releases events (each yielding 1 to 10 eV) for each transit of an atom through the entire 1 cm-long segmented Casimir tunnel.

Consider a one cubic cm "Casimir Block" that is built up of 10 micron thick alternating layers as shown in FIG. **3**. Assume that tunnels **32** of 0.1 micron diameter could be drilled through the cube perpendicular to the layers **34** (this is not physically possible, of course; tunnel manufacture must be done differently). Ten percent of the cross section comprises entrance to some 1.3 billion tunnels. The amount of energy released would be proportional to the flow rate of the gas through these tunnels.

A flow rate of 10 cm s^{-1} through a total cross sectional area of 0.1 cm^2 yields 1 cm^3 of gas per second flowing through the tunnels, which at STP would be 2.7×10^{19} atoms. A very simple sealed, closed-loop pumping system could maintain such a continuous gas flow. Since each atom interacts 500 times during its passage, there would be 1.3×10^{22} transitions per second in the entire cube of one cubic centimeter. An energy release of 1 to 10 eV per transition corresponds to 2150 to 21500 watts of energy release for the entire Casimir cube of segmented tunnels.

Obviously it is not possible to drill 1.3 billion tunnels having diameters of 0.1 microns. However it is feasible to use microchip technology to etch holes into the individual layers first and then assemble the stack. Extremely fine coregistration and alignment of stacks will need to be accomplished.

This may be directly converted into electricity using a thermophotovoltaic process, or indirectly by using a heat exchanger.

One means to capture the emitted energy is to surround the apparatus with a water bath. Water absorbs infrared radiation very effectively. For the wavelength range of 2 microns to 200 microns, the absorption coefficient of water is greater than 10 cm^{-1}. Therefore a layer of water that is 1 mm thick and surrounds the apparatus will be sufficient to absorb nearly all the emitted infrared radiation. The water will be heated, and that heat converted into the desired form of energy.

The dimensions above are solely examples. The device may be scaled to both smaller and significantly larger dimensions.

The essential components of an energy generating device of this sort are:

(1) An array of parallel segmented Casimir tunnels **32**

(2) A pump **22** providing continuous recycling of gas through the tunnels

(3) A means **24** for capturing the emitted energy

(4) A thermal photovoltaic, heat exchanger or other device **26** capable of converting output heat into electricity or other usable forms of power.

The first two components will be enclosed in sealed structure. The third and fourth components may be interior or exterior to this structure.

Casimir Channels in Bonded Wafers

The basic concept of the present invention is to flow gas into and out from multiple Casimir cavities. When the gas is outside of a Casimir cavity, a wide range of quantum mechanical vacuum electromagnetic modes are available to interact with the gas's atomic electronic orbital states. When the gas passes into a Casimir cavity the range of available modes is restricted and the gas sheds some of its electromagnetic energy such that this energy is available locally. When the gas once again flows out from the Casimir cavity, the gas's atomic electronic orbital state energy is recharged from quantum mechanical vacuum fields. Thus energy is harvested globally and delivered locally.

The configuration for a basic device comprising bonded wafers is shown in FIGS. **4**A-**4**D. A top view is shown in FIG. **4**. The device is 1 sq. cm. As seen from the south edge **41** in FIG. **4**B, it consists of two substrates **42** and **44** separated by a series of spacers which extend across the device from the south to the north side. These spacers have a height d, a width w_1, and a center-to-center spacing s_1. The thin gaps delineated by the spacers **48** extend to openings at the south edge of the device, as seen in FIG. **4**B and the north edge. As seen from the east edge in FIG. **4**C, the upper **44** and lower **42** substrates are each coated with conducting stripes **46** that extend from the east edge to the west edge. These stripes are discontinuous, such that the discontinuity occurs at each region where the stripe is intersected by a spacer **48**. These stripes have a width w_2 and a center-to-center spacing s_2. In the central region of the device there is a region of both substrates that has been removed to form a conduit **43** from close to the east edge to close to the west edge. This conduit does not extend all the way to the edges, but is instead sealed **45** at each end, as shown in FIG. **4**A. Finally, as seen in FIG. **4**D, which shows an east view of the central cross section, and in FIG. **4**A, a hole **47** extends through the upper substrate. This hole connects to the conduit **43** shown in FIGS. **4**A and **4**C. As can also be seen in FIGS. **4**A and **4**D, a connector ring **49** that surrounds the hole is affixed to the upper substrate.

For the device to function, gas tubing **28**, shown in FIG. **2**, is attached to the connector ring **49** extending from the upper substrate, forming a sealed connection. Pressurized

gas flows through the tubing and the hole **47** in the upper substrate into the conduit **43** between the substrates. From the conduit **43** the gas flows from the central region through the gap between the substrates to the north and south edges. The spacers guide the gas so that it flows alternately between regions coated with the conducting stripes **46** and regions that are not coated with these stripes, until it reaches the north and south edges, at which point it escapes from the gap between the substrates. The escaped gas is captured in a surrounding enclosure, not shown, and pumped back through the tubing **28** into the hole at the top center of the device, forming a close-loop system. In this way the gas is passed through multiple Casimir cavities. The gas atoms or molecules absorb energy from the surrounding electromagnetic field when they are in the non-conducting region and then release a portion of their energy as they enter the gap between the conductive coatings, i.e., in the Casimir cavity.

The apparatus is surrounded by a means **24** to capture the released energy, such as a water bath, shown in FIG. **2**. Water absorbs infrared radiation very effectively. For the wavelength range of 2 microns to 200 microns, the absorption coefficient of water is greater than 10 cm^{-1}. Therefore a layer of water that is 1 mm thick and surrounds the apparatus is sufficient to absorb a large proportion of the emitted infrared radiation, providing thermal energy to heat the water. That energy can be used directly as heating source, or converted into the desired form of energy, by means **26** well known to those skilled in the art.

The materials and dimensions in the preferred embodiment are as follows. The upper **44** and lower **42** substrates are sapphire, which is transparent to much of the ambient electromagnetic spectrum, is thermally conductive, and is rigid and robust. The thickness of each substrate is 250 microns. The conducting regions **46** are formed by standard photolithography known to those skilled in the art. The width of each conducting stripe, w_2, is 2 microns, and separated by a 2 micron nonconducting region, to form a center-to-center spacing S_L of 4 microns. The stripe has gaps where the spacers **48** are to be formed. The conductive coating **46** is platinum, having a thickness of 40 nm. The spacers **48** consist of silicon dioxide, deposited and patterned by standard means known by those skilled in the art. The total spacer height, d, is 200 nm, its width, w_1, is 5 microns, and the center-to-center spacing, s_1, is 0.5 mm. The spacers are formed by depositing 100 nm thick layers on each substrate, and then joining them. The central conduit regions **43** are cut into the substrates using a standard diamond saw. The cuts are 100 microns in width and 50 microns in depth, forming a conduit that is approximately a 100 micron square. The hole **47** drilled through the upper substrate has a diameter of 1 mm, and is surrounded by a ring having a diameter of 2.5 mm. The ring **49** is affixed to the upper substrate by epoxy. The substrates are pressure bonded together by direct bonding (Plöl, 1999), with the bond forming between the silicon dioxide spacers layers on each substrate.

The steps in the device fabrication that are not described explicitly are well known to those skilled in the art.

Following the calculations presented in the background section, the power produced by a single such device is estimated to be between 1 and 10 watts for an input pressure of 8 atmospheres.

Pumping gas through the Casimir pores requires power. We examine how much power is required, as a check that it is not more than is produced by the device. Consider a Casimir block that contains 200 nm diameter pores over a 1 cm^2 area, having a thickness of 1 cm and a porosity of 0.25. We find the pressure and power required to produce a flux of 1 cm^3 per second at standard temperature and pressure (STP):

According to FIG. **10**(*a*) in a paper by Roy et al. (1993) a pressure drop of 760 torr (equal to one atmosphere) results from a flow of approximately 5 mol/m^2-s through a thickness of 60 microns, which corresponds to a gas velocity of 10 cm/s. Reducing the velocity by a factor of ten, making the appropriate unit conversions and multiplying the result by the thickness ratio of 1 cm (10^4 microns) divided by 60 microns gives the result that a pressure of 1700 Pa, corresponding to 17 atmospheres, is required to produce the desired gas flow. Multiplying this by the gas flux of 1 cm^3 s^{-1} results in a required power of 1.7 milliwatts. These results are only approximate, as temperature and structural variations through the Casimir pores are expected to produce resistance which will then require a somewhat greater pressure. In any case the required power of approximately 1.7 milliwatts is much lower than our estimate of 2.2 to 22 kilowatts of power release, and so much more power is produced than is used to produce the gas flow.

It is to be understood that the dimensions and materials can be varied greatly and still be part of this invention. The following is a list of some such variations, but it is far from exhaustive:

i. The substrates may be other insulating or partially conducting materials, such as silicon, glass, ceramic, plastic, etc.

ii. The conducting stripes can be formed of other conductors, such as copper, aluminum, gold, sliver, silicides, transparent conductors such as indium tin oxide, etc.

iii. Instead of depositing the stripes so that they protrude from the surface and potentially interfere with the gas flow, they may be recessed, either by etching recesses into which the conductors are deposited, or by using planarization techniques to coat an insulating layer between the stripes, using techniques well known in the industry.

iv. The spacer materials can be formed from polymers used, for example, as photoresist and electron-beam resist, from metals, and other materials.

v. Instead of depositing spacers they may be formed by the etching of one or both of the substrates to form grooves.

vi. The spacer height may be from 1 nm to many microns.

vii. The substrates may be bonded by pressure bonding or the use of adhesives, such as cyanoacrylics.

viii. The dimensions of the overall structure may be varied from the distance between a single pair of spacers and conductor/nonconductor region to large plates that are many meters in width.

ix. The individual devices may be sandwiched together to form thick structures. For example, in place of the 250 micron thick substrates, micro-sheet having a thickness of 50 microns or far less may be used so that dense structures are formed.

x. The working fluid may be a wide variety of gases, in addition to the noble gases described earlier, so that all mentions of gas atoms may be extended to molecules of various types.

xi. The working fluid may be a liquid, so that all mentions of gases and gas atoms may be extended to liquids of various types. For operation within approximately of 100° C., one possible liquid is ethylene glycol. For high temperature operation, the liquid can be sodium.

xii. Micro-motors formed using micro-electro-mechanical systems (MEMS) technology can be used to pump the gas through the channels.

xiii. The Casimir cavities may be composed of carbon nanotubes.

xiv. The pattern may be formed using self-assembled layers.

xv. The device may incorporate a naturally formed structure. For example, diatom shells (Goho, 2004a) consist of silicon dioxide patterned with features, including holes, that are tens of nanometers in size. They can be coated as needed with conductors to form Casimir cavities.

xvi. The water bath may be replaced with any other material or device that absorbs substantially the released energy wavelengths. Such materials include glass, organic polymers, thermophotovoltaic devices, among many possibilities known to those skilled in the art.

xvii. Rather than surrounding the entire apparatus, the absorbing material may be placed in the apparatus, for example coating the channels through which the gas flows. Such placement can allow the absorber to reside within roughly an emission wavelength of the gas that is releasing the energy.

Gas Oscillating Through Casimir Channels

The device described in the previous embodiment exposes the gas atoms to a very large number of transitions between Casimir cavity regions (between conducting layers) and exposed regions (without the conducting layers) by pumping them across multiple transitions. Instead of pumping gas through the device, gas atoms can simply be oscillated back and forth between Casimir cavity and exposed regions.

A simple way to visualize this, but not necessarily the most efficient working device, is to consider the device of FIGS. **4**A-**4**D, but with the gaps sealed at the north and south edges. Instead of connecting to tubing via the connector ring, the ring is sealed with a thin metal diaphragm. Before sealing the device it is filled with the desired working gas. An ultrasonic transducer is then mated to the diaphragm. When the ultrasonic transducer is powered, it rapidly compresses and decompressed the gas, causing it to oscillate back and forth between Casimir and exposed regions.

A vertical oscillatory flow device is shown in FIGS. **5**A-**5**C. FIG. **5**A shows a top view, in which many small holes **54** are formed in the substrate surface. The device is surrounded by a connector ring **58**. A magnified cross section of the holes is shown in FIG. **5**B. The holes **54** have a diameter d, a center-to-center spacing s, a depth t_2, and the thickness of a conducting region **56** at the surface is t_1. A central cross section of the entire device is shown in FIG. **5**C. It shows the substrate (holes and conducting layer not shown), the connector ring at the periphery, and a thin diaphragm **57** attached to the top of the connector ring.

The gap and holes are filled with the chosen working gas **59**. An ultrasonic transducer or other source of high frequency vibrations is placed in contact with the diaphragm **57** and powered. This produces gas pressure oscillations that force gas atoms past the Casimir region **55** formed at the top of each hole, alternately in upward and downward directions. Instead of a single conducting layer at the top, multiple alternating conducting and non-conducting layers can be formed at the top of the holes, to multiply the effect. As in the embodiment of FIGS. **4**A-**4**D, the apparatus is surrounded by a means for absorbing the released energy, such as a water bath **24**.

The device is fabricated as follows. The conducting layer **56** is deposited using vacuum deposition, such as sputtering, or from a liquid by anodic or electroless deposition. The layers are patterned by methods known to those skilled in the art, such as electron-beam lithography or photolithography. Alternatively, the holes **54** can be formed using self-assembled monolayers to create the lithography mask, as known to those skilled in the art. The holes are etched to a high aspect ratio, e.g., ratio of depth-to-diameter of 20, such as by ion milling. The outer ring **58** is attached using epoxy, the region is filled with the desired working gas **59**, and the diaphragm **57** is attached with epoxy.

The materials and dimensions in the preferred embodiment are as follows. The substrate **52** is sapphire, and has diameter of 2.54 cm and a thickness of 250 microns. The conducting layer **56** is aluminum, of thickness t_1 of 1 micron. The hole **54** depth t_2 is 4 microns. The hole diameter d is 0.2 microns and center-to-center spacing s is 0.3 microns.

It is to be understood that the shape, dimensions, modulation techniques and materials can be varied greatly and still be part of this invention. The following is a list of some such variations, but it is far from exhaustive:

i. The Casimir cavities may be composed of carbon nanotubes.

ii. The working fluid may be a wide variety of gases, in addition to the noble gases described earlier, so that all mentions of gas atoms may be extended to molecules of various types.

iii. The working fluid may be a liquid, so that all mentions of gases and gas atoms may be extended to liquids of various types. For operation of up to approximately 100° C., one possible liquid is ethylene glycol. For high temperature operation, the liquid can be sodium.

iv. Instead of actively causing the gas atoms to oscillate into and out from the Casimir cavity regions, the oscillations can result from ambient thermal vibrations (e.g., Brownian motion).

v. The configuration of the device can be similar to that of the MEMS device of FIGS. **7**A and **7**B (described as part of a later embodiment), such that the working gas is pushed back and forth between the left-hand and right-hand regions.

vi. The pattern may be formed using self-assembled layers.

vii. The device may incorporate a naturally formed structure. For example, diatom shells consist of silicon dioxide patterned with features, including holes, that are tens of nanometers in size. They can be coated as needed with conductors to form Casimir cavities.

viii. The pumping can be driven by a naturally occurring mechanism. For example, some yeast cell have been found to naturally vibrate at 1.6 kHz (Goho, 2004b). This could be used to cause a gas to oscillate back and forth between Casimir cavity and exposed regions.

ix. The water bath may be replaced with any other material or device that absorbs substantially the released energy wavelengths. Such materials include glass, organic polymers, thermophotovoltaic devices, among many possibilities known to those skilled in the art.

x. Rather than surrounding the entire apparatus, the absorbing material may be placed in the apparatus, for example coating the channels through which the gas flows. Such placement can allow the absorber to reside within roughly an emission wavelength of the gas that is releasing the energy.

Casimir Cavities in Flexible Polymer

Rather than moving the working gas by flowing it (FIGS. **4**A-**4**D) or vibrating it into and out of a Casimir cavity (FIGS. **5**A-**5**C), the cavity wall characteristics can be switched, which results in a shift in the cavity's allowed modes. This produces the same result of tapping vacuum electromagnetic energy that the flowing gas device of the embodiment of FIGS. **4**A-**4**D produces. One way to accomplish this is to put the working gas into gaps formed in flexible photonic crystals. A photonic crystal blocks and passes bands of electromagnetic radiation, where the band wavelength ranges depend upon the material properties and spacing of small repeated structures. A flexible photonic crystal can be formed by embedding an array or rigid objects, such as silicon pillars, in a thin film of flexible polymer. The electromagnetic (or optical) properties of such two-dimensional slab photonic crystal structures is well known to those skilled in the art (Park, 2002).

FIGS. **6**A and **6**B show such a photonic crystal device. FIG. **6**A is a top view, showing metal supports **62** at both ends of a polymer film **64**. The rigid pillars that form the phonic crystal are buried in the polymer. As the film is stretched in the plane of the paper, the pillar spacing in the plane normal to the paper is decreased, which changes the electromagnetic passband. FIG. **6**B is an edge view showing the supports **62**, the polymer film **64**, and gaps in the film that are filled with the working gas **69**. (For clarity, the pillars are not shown.) The gap size is sufficiently narrow to produce a significant Casimir effect, e.g., 200 nm. The length or width need to be sufficiently small to maintain the narrow gap, e.g., 1 micron. The stretching takes place by attaching one support to a stationary object and attaching the other support to a vibrator, such as a piezoelectric crystal, which itself may be attached on its opposing side to another stationary support. As in the embodiment of FIGS. **4**A-**5**D, the apparatus is surrounded by a means for absorbing the released energy, such as a water bath **24**.

It is to be understood that the shape, dimensions, modulation techniques and materials can be varied greatly and still be part of this invention. The following is a list of some such variations, but it is far from exhaustive:

i. Instead of stretching the polymer, it can be modulated with an acoustic signal through the air, or through a liquid that surrounds it.

ii. Instead of stretching the polymer, it can be modulated with an ambient thermal vibrations. As the working gas and the structure heats up, the vibrations increase.

iii. The polymer embedded with rigid pillars may be formed into small spheres that are filled with the working gas. These spheres can fill or partially fill a volume in which the pressure is modulated, either by enclosing the volume and modulating the pressure in the entire volume, by passing an acoustic signal through the volume, or by thermal vibrations. This modulation causes the passband of the photonic crystal that surrounds the working gas to vary. Although the shape of the device is substantially different from that of FIGS. **6**A-**6**B, the function is the same.

iv. The working fluid may be a wide variety of gases, in addition to the noble gases described earlier, so that all mentions of gas atoms may be extended to molecules of various types.

v. The working fluid may be a liquid, so that all mentions of gases and gas atoms may be extended to liquids of various types. For operation of up to approximately 100° C., one possible liquid is ethylene glycol. For high temperature operation, the liquid can be sodium.

vi. The water bath may be replaced with any other material or device that absorbs substantially the released energy wavelengths. Such materials include glass, organic polymers, thermophotovoltaic devices, among many possibilities known to those skilled in the art.

vii. Rather than surrounding the entire apparatus, the absorbing material may be placed in the apparatus, for example in the polymer film through which the gas flows. Such placement can allow the absorber to reside within roughly an emission wavelength of the gas that is releasing the energy.

Modulating Casimir Cavity Wall Spacing

Rather than moving the working gas by flowing it (FIGS. **4**A-**4**D), vibrating it into and out of a Casimir cavity (FIGS. **5**A-**5**C), or switching the characteristics of walls of the cavity to change the passbands (FIGS. **6**A and **6**B), the spacing between the cavity walls can be modulated. This produces the same result of tapping zero point energy that the flowing gas device of the previous embodiments produce. One way to accomplish this is to put the working gas into gaps formed in micro-electro-mechanical systems (MEMS).

MEMS technology makes use of semiconductor lithography techniques to build miniature mechanical devices. The Casimir effect has already been found to be in evidence in MEMS devices. In 2001, Chan and co-workers at Bell Labs Lucent Technologies first demonstrated the effect of the Casimir force in a MEMS device. A gold coated sphere was brought close to a MEMS seesaw paddle, consisting of a polysilicon plate suspended above a substrate on thin torsion rods. The Bell Labs researchers demonstrated the effect of the Casimir force in rocking the plate.

In the current invention we make use of MEMS technology to modulate the spacing between Casimir cavity walls. (Note that we are not making use of the Casimir force to change this spacing, as was done in the Bell Labs demonstration.) The basic MEMS device used to accomplish this is shown in FIGS. **7**A and **7**B. A side view is shown in FIG. **7**A. Two conducting electrodes **76** are shown on the substrate. A pivoting polysilicon plate **74** is shown suspended above the substrate **72**. A conducting layer **77** is formed on the underside of this plate. A top view is shown in FIG. **7**B. The pivoting plate **74** forms the central rectangular region, which is surrounded by a gap **73**. The pivoting arm **75** connects this plate to the surrounding region at the top and bottom of the rectangle. As in the earlier embodiments, the apparatus is surrounded by a means **24** for absorbing the released energy, such as a water bath

The device functions as follows. The working gas fills the region between the pivoting plate **74** and the substrate **72**. A voltage is applied first between the pivoting plate and the left-hand electrode. This causes the distance between the left side of the plate and the substrate to diminish, thereby changing the dimensions of the Casimir cavity formed by these two surfaces. Then the voltage is instead applied between the pivoting plate and the right-hand electrode. This causes the plate to pivot, such that the distance between the right side of the plate and the substrate diminishes, thereby changing the dimensions of the Casimir cavity formed by these two surfaces. The voltage is switched alternately between these two electrodes, causing the plate to oscillate back and forth. The oscillating action is greatly enhanced by the torsion of the pivots, so that very little energy is required to maintain the oscillation.

The techniques to fabricate such a MEMS device is well known to those skilled in the art.

It is to be understood that the shape, dimensions, modulation techniques and materials can be varied greatly and still be part of this invention. The following is a list of some such variations, but it is far from exhaustive:

i. Instead of using a MEMS device, the Casimir cavity can be formed between a substrate and a suspended conducting sheet. A similar technology has been used to form electrostatic acoustic speakers, albeit with larger spacings.

ii. Gaps can be formed in a polymer, with both sides of the gap coated with a conductor and the gap filled with a working gas. The polymer can then be stretched, as in the embodiment of FIGS. **6**A and **6**B, such that the spacing of the Casimir cavity formed by the two conductors is modulated. A figure of this would appear much like that depicted in FIG. **6**B

viii. Instead of stretching the polymer, it can be modulated with an acoustic signal through the air, or through a liquid that surrounds it.

ix. Instead of stretching the polymer, it can be modulated with an ambient thermal vibrations. As the working gas and the structure heat up, the vibrations will increase.

x. The polymer coated on its interior surface with a conductor may be formed into small spheres that are filled with the working gas. These spheres can fill a volume in which the pressure is modulated, either by enclosing the volume and modulating the pressure in the entire volume, by passing an acoustic signal through the volume, or by thermal vibrations. This modulation causes the spacing of the Casimir cavity in which the working gas is contained to vary. Although the shape of the device is substantially different from that of FIGS. **7**A and **7**B, the function is the same.

xi. The working fluid may be a wide variety of gases, in addition to the noble gases described earlier, so that all mentions of gas atoms may be extended to molecules of various types.

xii. The working fluid may be a liquid, so that all mentions of gases and gas atoms may be extended to liquids of various types. For operation of up to approximately 100° C., one possible liquid is ethylene glycol. For high temperature operation, the liquid can be sodium.

xiii. The water bath may be replaced with any other material or device that absorbs substantially the released energy wavelengths. Such materials include glass, organic polymers, thermophotovoltaic devices, among many possibilities known to those skilled in the art.

xiv. Rather than surrounding the entire apparatus, the absorbing material may be placed in the apparatus, for example coating the substrate and cap of the region containing the gas. Such placement can allow the absorber to reside within roughly an emission wavelength of the gas that is releasing the energy.

We note that the MEMS device of FIGS. **7**A and **7**B can also be used to move the working gas back and forth between the left-hand and right-hand regions. This function is consistent with the embodiment of FIGS. **5**A-**5**C, in which the working gas is vibrated into and out of a Casimir cavity.

Assymetric Casimir Cavity Entry and Exits Including Absorbing Means

As a prelude to this embodiment, we review the processes involved in the present invention. A general concept of this entire invention is that a gas that is in equilibrium with the ambient electromagnetic modes, which include the vacuum field (also known as the zero point field), is caused to enter a Casimir cavity. For the purposes of this entire invention a Casimir cavity is defined as any region in which the electromagnetic modes are restricted. Upon approaching this region, the electromagnetic modes that the space supports are restricted and the energy of the electron orbitals of the gas atoms is reduced. As a consequence of this reduction the excess energy is emitted and absorbed by the apparatus, providing heat energy. By the time the atoms are in the Casimir cavity, nearly all the excess energy has been radiated (unless the gas flow is extremely fast). The gas atoms pass through the Casimir cavity, and upon emerging from this region to a region that supports a broader range of electromagnetic modes, the energy of the electron orbitals of the gas atoms is again allowed to rise to its previous value. The compensation for the energy deficit is provided from the ambient electromagnetic modes.

One of the tenets of the current invention is that excess energy released when the gas approaches the Casimir cavity is delivered locally and that the energy deficit that must be compensated for when it emerges from the cavity is supplied from global sources. In this way the ambient electromagnetic field is tapped to provide usable energy. There may be conditions in which it is possible that the excess energy release and the deficit energy supply are both local, in which case no net energy is provided. Similarly, there may be conditions in which it is possible that the excess energy release and the deficit energy supply are both global, in which case again no net energy is provided. To avoid these possibilities, we provide an asymmetry in the apparatus to ensure that the excess energy is released locally and that the energy deficit is supplied globally.

The concept of embodiment is shown in FIG. **8**. This figure depicts a channel **88**, similar to that shown in some of the earlier embodiments. Gas is constricted between two substrates **82** and **83** and flows through the channel in the direction of the arrows. As in the previous cases, gas flows from a region in which the substrate is not coated **87** with a conducting layer to a region in which it is **86**. The difference here is that an intermediate region **84** is provided in which the substrates are coated with an absorbing layer. This absorbing region absorbs the excess energy that is radiated from the atoms as they approach the Casimir cavity (conducting) region. The absorbing region is not substantially conducting, and therefore does not substantially restrict the electromagnetic modes that are supported in the region. Upon exiting the Casimir cavity (conducting) region, the atoms pass immediately into another region with no absorbing region **87**. Thus upon approaching the Casimir cavity the atoms are forced to deliver their excess energy locally because it is absorbed by the absorbing region **87**. Upon emerging from the Casimir cavity the gas atoms are forced to supply their energy deficit non-locally, i.e., globally, because there is no local source for this energy.

As an option, a further aspect of this invention is to situate the absorbing region within roughly one emission wavelength of the gas atoms at the time that they are emitting. No such layer is provided within such a distance when the gas atoms emerge from the Casmir cavity and are supplied with energy. The substrate is chosen such that it does not absorb the emission wavelengths.

The absorbing layers may comprise glass (amorphous silicon dioxide, usually with impurities), and the substrate may comprise sapphire. The glass has a much broader absorption band in the far infrared than does the sapphire. A wide range of other materials may be provided to form the

absorbing layers and non-absorbing or less absorbing substrate. Such materials are known to those skilled in the art, and are available in tables and handbooks.

The sequence of regions depicted in FIG. **8** may be repeated to form the sort of multiply striped structure described in the embodiment of FIGS. **4**A-**4**D.

The dimensions of the channel and the apparatus are approximately the same as those of embodiment of FIGS. **4**A-**4**D. Similarly the attachments to provide for gas flow, the spacers, and other aspects of the apparatus are similar to those described in embodiment of FIGS. **4**A-**4**D. The conducting layer length is chosen so that the emerging atoms do not have substantial access to radiation emitted from the absorbing regions. Note that, unlike embodiment of FIG. **2**, it is not necessary to surround the apparatus with a means for absorbing the released energy **24**, such as a water bath.

The device fabrication is not described explicitly as it is well known to those skilled in the art.

It is to be understood that the dimensions and materials can be varied greatly and still be part of this invention. The following is a list of some such variations, but it is far from exhaustive:

i. The substrates may be other insulating or partially conducting materials, such as silicon, glass, ceramic, plastic, etc.

ii. The conducting stripes can be formed of other conductors, such as copper, aluminum, gold, sliver, silicides, transparent conductors such as indium tin oxide, etc.

iii. The stripes may be recessed in the substrate or they protrude from the surface.

iv. The individual devices may be sandwiched together to form thick structures. For example, in place of the 250 micron thick substrates, micro-sheet having a thickness of 50 microns or far less may be used so that dense structures are formed.

v. The working fluid may be a wide variety of gases, in addition to the noble gases described earlier, so that all mentions of gas atoms may be extended to molecules of various types.

vi. The working fluid may be a liquid, so that all mentions of gases and gas atoms may be extended to liquids of various types. For operation within approximately of 100° C., one possible liquid is ethylene glycol. For high temperature operation, the liquid can be sodium.

vii. Micro-motors formed using micro-electro-mechanical systems (MEMS) technology can be used to pump the gas through the channels.

viii. The Casimir cavities may be composed of carbon nanotubes.

ix. The pattern may be formed using self-assembled layers.

The device may incorporate a naturally formed structure. For example, diatom shells consisting of silicon dioxide patterned with features, including holes, that are tens of nanometers in size. To the extent necessary, these can be coated as needed with conductors to form Casimir cavities.

REFERENCES

Boyer, T. H. 1975, Random Electrodynamics: The Theory of Classical Electrodynamics with Classical Zero-Point Radiation Field, Phys. Rev. D, 11, 790.

Cole, D. C. and Puthoff, H. E. 1993, Extracting energy and heat from the vacuum, Phys. Rev. E, 48, 2, 1562.

Cole, D. C. and Zou, Yi 2003, Quantum Mechanical Ground State of Hydrogen Obtained from Classical Electrodynamics, Physics Letters A, Vol. 317, No. 1-2, pp. 14-20 (13 Oct. 2003), quant-ph/0307154.

Cole, D. C. and Zou, Yi 2004, Analysis of Orbital Decay Time for the Classical Hydrogen Atom Interacting with Circularly Polarized Electromagnetic Radiation, Phys. Rev. E. 69 (1), 016601, pp. 1-12 (2004).

Forward, R. 1984, Extracting electrical energy from the vacuum by cohesion of charged foliated conductors, Phys. Rev. B, 30, 4, 1700.

Goho, A., "Diatom Menagerie," Science News, Vol. 166, Jul. 17, 2004a, pp. 42-44, and references mentioned therein.

Goho, A., "Rattle and Hum; Molecular machinery makes yeast cells purr," Science News, Vol. 166, Aug. 21, 2004b, p. 116, and references therein.

Milonni, P. W. The Quantum Vacuum: An Introduction to Quantum Electrodynamics, Sect. 3.3, Academic Press, 1994.

Park, W., and Summers, C. J., "Extraordinary refraction and dispersion in 2D photonic crystal slabs", Opt. Lett., Vol 27, (2002) p. 1397.

Plöl, A. and Kräuter, G., "Wafer direct bonding: tailoring adhesion between brittle materials", Mater. Sci. Eng. R, Vol 25 (1999) p. 1.

Puthoff, H. E., Ground State of Hydrogen as a Zero-Point-Fluctuation-Determined State, Phys. Rev. D 35, 3266, 1987.

Roy, Subrata et al., "Modeling gas flow through microchannels and nanopores," Journal of Applied Physics, Vol. 93, No. 8, Apr. 15, 2003, pp. 4870-4879.

What is claimed is:

1. A system for extracting and collecting electromagnetic radiation from the ambient surroundings, comprising:

(a) a supply of fluid characterized by its ability to (i) take in electromagnetic radiation from the ambient surroundings and (ii) release at least some of said energy when the fluid is caused to pass into a Casimir cavity;

(b) a first arrangement configured to collect at least some of the electromagnetic radiation released by said fluid;

(c) a second arrangement including means defining a given path for containing said fluid along said path;

(d) a third arrangement including a Casimir cavity positioned within said given path and cooperating with said second arrangement such that said fluid is caused to pass into and out of the cavity as the fluid is contained along said given path, said Casimir cavity being positioned in sufficient communication with the ambient surroundings and with said first arrangement so as to (i) cause said fluid containing electromagnetic energy taken from the ambient surroundings to release at least some of said energy to said first arrangement when the fluid passes into said cavity and (ii) to again take in electromagnetic energy from the ambient surroundings when the fluid passes out of said cavity.

2. A system according to claim **1** wherein said second arrangement is configured such that said fluid is caused to flow along said path into and out of said Casimir cavity.

3. A system according to claim **1** wherein said second and third arrangements are configured such that said Casimir cavity is caused to move with respect to said fluid such that the fluid is in turn caused to pass into and out of said Casimir cavity.

4. A system according to claim **3** wherein said third arrangements configured so as to cause said Casimir cavity to move back and forth between first and second spaced apart positions.

5. A system according to claim 1 wherein said means defining said given path defines a closed passageway for containing said fluid and wherein said second arrangement is configured such that the same fluid is caused to cycle into and out of said Casimir cavity.

6. A system according to claim 5 wherein said passageway defines a looped path and wherein said second arrangement includes a mechanism configured to cause said fluid to flow around said path through said passageway into and out of said Casimir cavity.

7. A system according to claim 5 wherein said second arrangement includes a mechanism for causing said fluid to flow back and forth through said passageway into and out of said Casimir cavity.

8. A system according to claim 7 wherein said absorbing material is a liquid.

9. A system according to claim 8 wherein said liquid material is water.

10. A system according to claim 1 wherein said fluid is a gas.

11. A system according to claim 10 wherein said gas is a monatomic gas.

12. A system according to claim 10 wherein said gas is a molecular gas.

13. A system according to claim 1 wherein said first arrangement includes a container of material for absorbing electromagnetic energy, said absorbing material surrounding at least said Casimir cavity.

14. A system according to claim 1 wherein said Casimir cavity includes opposing walls and wherein said third arrangement is configured so as to cause the position of said Casimir cavity walls to move back and forth between first and second spaced positions.

15. A system for extracting and collecting electromagnetic energy from the ambient electromagnetic quantum vacuum, comprising:

(a) a first arrangement defining at least one Casimir cavity configured to cause gas containing electromagnetic energy obtained from the ambient electromagnetic quantum vacuum to release at least some of said energy when said gas is passed into said cavity;

(b) a second arrangement located in the ambient electromagnetic quantum vacuum and including a source of said gas and a mechanism cooperating with said first arrangement so as to cause said gas to pass from the ambient electromagnetic quantum vacuum into said Casimir cavity and then out of said cavity and back into the ambient electromagnetic quantum vacuum, whereby the gas when passing into said Casimir cavity releases at least some of its energy and then, upon passing back into the ambient electromagnetic quantum vacuum, again takes in electromagnetic energy from the ambient electromagnetic quantum vacuum, said means and said first arrangement cooperating with one another such that said fluid passes into and out of said Casimir cavity by relative movement between the cavity and gas; and

(c) a third arrangement for capturing at least some of the electromagnetic energy released by said fluid, said third arrangement including means located in a position with respect to said Casimir cavity such that at least some of the electromagnetic energy released by said gas is captured by said absorber.

16. A system, comprising:

(a) a first arrangement including a number of Casimir cavities, each of which is configured to cause fluid containing electromagnetic energy obtained from the ambient surroundings to release at least some of said energy when said fluid is passed into said cavity;

(b) a second arrangement located in the ambient surroundings and including a source of said fluid and means cooperating with said first arrangement for causing said fluid to pass from the ambient surroundings into each of said Casimir cavities and then out of the cavity and back into the ambient surroundings, whereby the fluid when passing into said Casimir cavities releases at least some of its energy and then, upon passing back into the ambient surroundings, again takes in electromagnetic energy from the ambient surroundings, said means and said first arrangement cooperating with one another such that said fluid passes into and out of said Casimir cavities by relative movement between the cavities and fluid; and

(c) a third arrangement for capturing at least some of the electromagnetic energy released by said fluid.

17. A system according to claim 16 wherein said means includes at least one fluid passageway extending from the ambient surroundings into and though said Casimir cavities and back into the ambient surroundings and wherein said Casimir cavities are defined by a series of conducting strips located within said passageway, said series of conducting strips including a first group of spaced apart strips located on one side of the passageway and a second groups of spaced apart strips on a opposite side of said passageway in alignment with respective strips of said first group, each of said aligned pair of strips being positioned relative to one another to produce a Casimir cavity.

18. A method, comprising:

(a) providing a first arrangement defining at least one Casimir cavity configured to cause fluid containing electromagnetic energy obtained from the ambient surroundings to release at least some of said energy when said fluid is passed into said cavity;

(b) providing a source of said fluid;

(c) causing said fluid to pass from the ambient surroundings into said Casimir cavity and then out of said cavity and back into the ambient surroundings such that the fluid when passing into said Casimir cavity releases at least some of its energy and then, upon passing back into the ambient surroundings, again takes in electromagnetic energy from the ambient surroundings, said fluid being cause to pass into and out of said Casimir cavity by relative movement between the cavity and fluid; and

(c) capturing at least some of the electromagnetic energy released by said fluid.

19. A method of extracting and collecting electromagnetic radiation from the ambient surroundings, comprising:

(a) providing a supply of fluid characterized by its ability to (i) take in electromagnetic radiation from the ambient surroundings and (ii) release at least some of said energy when the fluid is caused to pass into a Casimir cavity;

(b) providing a first arrangement configured to collect at least some of the electromagnetic radiation released by said fluid;

(c) providing a second arrangement including means defining a given path for containing said fluid along said path;

(d) providing a third arrangement including a Casimir cavity positioned within said given path;

(e) causing said fluid to pass into and out of the cavity as the fluid is contained along said given path; and

(f) positioning said Casimir cavity in sufficient communication with the ambient surroundings and with said first arrangement so as to (i) cause said fluid containing electromagnetic energy taken from the ambient surroundings to release at least some of said energy to said first arrangement when the fluid passes into said cavity and (ii) to again take in electromagnetic energy from the ambient surroundings when the fluid passes out of said cavity.

20. A system, comprising:

(a) a first arrangement defining at least one mechanism designed to cause the atoms and molecules making up a given fluid containing electromagnetic energy obtained from the ambient surroundings to change in configuration in a way which releases at least some of said energy when said fluid is passed into said mechanism;

(b) a second arrangement located in the ambient surroundings and including a source of said fluid and means cooperating with said first arrangement for causing said fluid to pass from the ambient surroundings into said mechanism and then out of said mechanism and back into the ambient surroundings, whereby the fluid when passing into said mechanism releases at least some of its energy and then, upon passing back into the ambient surroundings, again takes in electromagnetic energy from the ambient surroundings, said means and said first arrangement cooperating with one another such that said fluid passes into and out of said mechanism by relative movement between the mechanism and fluid; and

(c) a third arrangement for capturing at least some of the electromagnetic energy released by said fluid.

* * * * *

Fix the World

QEG

Quantum Energy Generator

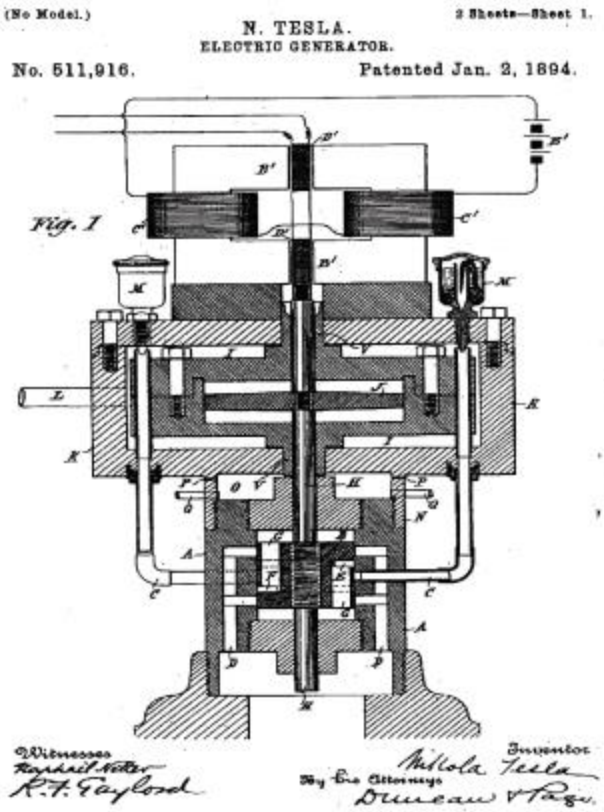

Nikola Tesla

QEG SYSTEM DESCRIPTION **3-25-2014**

The Quantum Electric Generator system (QEG) is an adaptation of one of Nikola Tesla's many patented electrical generator / dynamo / alternator designs. The particular patent referenced is No. 511,916, titled simply "Electric Generator", and dated January 2, 1894 (see back of this manual). The adaptation is a conversion from a linear system, to a rotary system.

The QEG prototype is scaled to produce electrical power in the range of 10-15 kW (kilowatts) continuously, and can be set up to provide either 120 Volt or 230-240 Volt single phase output. We are also planning future designs to provide 3-phase power.

Service life of the device is limited only by certain replaceable components, such as bearings, v-belts, and capacitors. The basic machine should operate trouble-free (with minimal maintenance) for as long as any good quality electro-mechanical appliance, such as a quality washing machine or refrigerator. Heavy-duty mechanical components are used throughout for reliability.

The QEG is not a complicated device, as it is designed (like Tesla's other 'discoveries'), to work in harmony with natural laws, rather than with the power-wasting symmetric motor and generator designs used in today's mainstream industry.

An effective way to understand the operating principle of the QEG is to think of it as a high-powered, self-resonant oscillator (a power tank circuit), which generates high-voltage AC (15 to 25kV). These HV oscillations are then transformed into line voltage AC output, at current levels up to approximately 85 A. In today's alternative energy terminology, it would be called a type of resonance machine.

The circuitry that develops high power in this device is really based on an existing but under-utilized power oscillator configuration, however, the 'quantum' part of the design has to do with how the generator output is tuned for maximum power. Conventional alternators (AC generators) consume more input power than the output power they provide. For example, one brand of power take off (PTO) alternator uses 18,000 watts (24 horsepower) to develop 13,000 watts of output power. In the QEG, input power is used only to maintain resonance in the core, which uses a small fraction of the output power (under 1000 watts to produce 10,000 watts), and once running, the QEG provides this power to its own 1 horsepower motor. This is known as over-unity. Once the machine builds up to the resonant frequency, it powers itself (self-running).

In the QEG, the exciter coil is used to provide a conduction path through the quantum field (zero point) into the generator core. This has the effect of polarizing the core, which increases power output over time.

James M. Robitaille

NOTICE

TO BE READ AND UNDERSTOOD BY ALL QEG PROJECT CREWS

Fix the World (FTW) is not responsible for the actions of others. We can only tell you our experience. We have discovered it is essential that those wishing to build a QEG use careful thinking, patience, and consideration for the greater good.

The inhabitants of planet Earth are entering into a new paradigm and a new way of doing business. In honor of Nikola Tesla, the QEG is a gift freely given to the world, and FTW's involvement is strictly altruistic.

The QEG is an electromechanical device and as such, safety for the individual and end user should always be of prime concern. It is therefore essential that persons assembling the device are experienced in the field of electro-mechanical assembly. A considerable level of knowledge in quantum physics is also required.

IF YOU ARE TRAINED IN TRADITIONAL PHYSICS, AND HAVE NOT BEEN DOING THIS WORK FOR MANY YEARS, YOU MUST FIRST DO YOUR RESEARCH ON BASIC QUANTUM ENERGY DEVICES AND HOW THEY WORK (e.g. resonance and tuning).

Electrical / Mechanical devices are inherently dangerous. Electrical shock hazards can cause serious injury and in some cases death. Mechanical hazards can result in dismemberment and in some cases death.

Due diligence has been applied to ensure that the QEG instructions are complete and correct. All local and country-specific electrical and mechanical code implications, by which a QEG might be installed and operated, cannot possibly be known. Nor is it conceivable that any and all possible hazards and/or results of each procedure or method have been accounted for.

It is for these reasons that the QEG must be either directly installed or supervised by an experienced electromechanical engineer to ensure the installation is done safely and in accordance with local electrical code, however, the QEG is installed the same way as any commercial generator and does not violate any electrical codes. Anyone who uses the QEG installation instructions (including but not limited to any procedure or method of installation) must first satisfy themselves that neither their safety, nor the safety of the end user, will be endangered over the course of the installation and operation of the QEG.

It is imperative to understand YOU NEED PROFESSIONALS AND EXPERT ADVICE to build a QEG.

The installation instructions are designed to show how we have found the building of the device to be accomplished, and any negative outcomes that result are completely the responsibility of the person/company building it; FTW provides no guarantee for the successful installation of the QEG.

This notice serves the purpose of communicating the serious nature of building a quantum machine, as we are well aware that there have been severe restrictive agencies involved with their suppression. Quantum free energy isn't taught at University and most designers have heretofore been unsuccessful at mass distribution. It is YOUR RESPONSIBILITY therefore to make certain you are building the QEG with positive intentions for humanity, and lashing out legally or otherwise to FTW, HopeGirl and/or the designer and his family, is a violation of goodwill and will in no way be attended to. We know of no other way to do this but to go back to the "HONOR SYSTEM."

In reading this notice I agree that:

1) I WILL NOT ATTEMPT TO BUILD A QEG UNLESS I DO SO APPROPRIATELY WITH AN ELECTROMECHANCIAL ENGINEERING PROFESSIONAL.

2) I WILL NOT COMMISSION (TURN ON) OR INSTALL THE QEG WITHOUT AN ELECTROMECHANICAL ENGINEERING PROFESSIONAL.

3) UNDER THE ABOVE CONDITIONS, I MAY USE THE QEG INSTALLATION INSTRUCTIONS FOR PERSONAL USE, AND UNDERSTAND THE NEED FOR IMPECCABLE COMMITMENT TO THE BETTERMENT OF HUMANITY. IN THE BEST INTEREST OF THE PEOPLE OF PLANET EARTH, I WILL NOT ATTEMPT TO MISUSE OR MONOPOLIZE THE QEG INSTALLATION INSTRUCTIONS IN ANY CAPACITY, NOR WILL I ATTEMPT TO MAKE A HUGE PROFIT AT THE EXPENSE OF ANOTHER HUMAN BEING.

IMPORTANT – Please make certain that persons who are to use this equipment thoroughly read and understand these instructions and any additional instructions prior to construction, installation and operation. In addition, we require you to read this notice again when you are ready to assemble the core.

Letter from the Editor **3-25-2014**

Dear Builder,
It is no easy task to build the QEG, and we want to encourage you by offering a short treatise on the importance of 'consciousness' in this endeavor. Many are becoming more familiar with Nikola Tesla, his desire for all people to have access to free energy, and his failed attempt to expose this technology to the world. Many have followed him with the same aspirations and, similar to Tesla's plight, have also been prevented by powers beyond their control. The "free" energy movement is rife with horror stories ranging from government theft of patents, to reputations destroyed, to the murder of untold numbers of brilliant scientists/inventors.

We must all consciously and constantly rise above these tyrannical infringements, and create an environment for ourselves and our neighbors, and rediscover Nature's Laws to be able to live and thrive. We must leave off responding in incredulity to what was "done to us" when we were told and believed we couldn't create free energy. We are now awake to the point that we know they were lying. Who's they? The elite for starters – follow the money (watch THRIVE); J.P. Morgan couldn't put a meter on an energy plan for the world, and so destroyed any chance of that happening through several vicious attacks on Tesla's reputation and livelihood – basically got Tesla's ideas out of the way for his own profit and power – and maliciously destroyed the man (youtube: Tesla's Autobiography). While the electric companies have told the people theirs is the only way to get electricity, and we are dependent on them, the truth is that we have been deprived of this alternative (quantum) energy source for close to 130 years. Morgan's grip on the energy supply has not loosened one bit in all that time, in fact, you are probably paying more for electricity than ever before, all things being equal.

So how do we effect our future now, and free ourselves and the generations to come after us completely from energy tyranny? Building the QEG is one way. It is a journey that requires you think deeply about processes that will, in turn, expand your senses to enable you to receive information from the quantum field of consciousness, or God if you prefer this reference. We believe we had Divine inspiration and help, which began with a burning desire to "get off the grid" and also do something significant for humanity. The timing is wonderful because, as of the writing of this, the entire planet is in turmoil as never before, and people will need to not only be self-sufficient, we will all need to live according to what is good for all (Ubuntu), and help each other for our continued evolution as species/planet.

It is with great love that the QEG is offered to the world, and as you take on the task of building one, it is hoped that this becomes your path also: the mission of free energy for all! The next step we ask you to take on your journey, before and during building, is to listen to the discussion here: http://www.youtube.com/watch?v=3FqzTW7qh2U&feature=youtu.be with HopeGirl, Ralph and Marsha Ring, Fernando Vossa and the 3D Global Network.

I am, in service to Gaia and its inhabitants, deeply grateful for this technology, and the opportunity to share it!

Valerie Robitaille

IMPORTANT ADDITIONAL INFORMATION

We are not professional writers or photographers and didn't always have opportunities to document or photograph every step of development. Therefore, please take the level of engineer/electrical experience required to build a QEG very seriously as we are giving these to you under this premise. You will discover the advanced level of knowledge of mechanical/electrical processes needed quickly enough. The correct construction of the QEG requires patience and careful thought. We made several mistakes in development and have given here the steps that were successful. You will probably still make mistakes – and these will be your greatest learning opportunities as you gain more knowledge about this type of energy.

Before beginning to build, consider how much you would like to outsource to one of the cottage industry community units (CICUs) near you! In the US we recommend Polaris for the steel stator/rotor construction, and Torelco for toroidal winding. As FTW continues to roll out the distribution plan, and more connections across the world are made, we think CICUs will be commonplace and hence, QEG parts accessible (many people will be making them!)

When website URLs were available we provided links for the person reading this online. You may certainly use your own sources for materials but it is imperative you do not alter the instructions/parts herein if you are building a QEG. (We know with increased knowledge you will discover many applications for this technology.) When photographs can be shown to help you visualize a process, they are provided. Please remember, we are not professional manual writers. What we offer you here is free of charge and our gift to humanity – but it comes with great responsibility. Learn as much as you can, use discernment and wisdom, share freely, and you will be privileged to know the secrets of energy creation from the quantum field.

We would like to dedicate the success we've experienced to our first teacher, Sir Timothy Thrapp, and WITTS Ministries, without whose guidance none of this would be available so soon. We acknowledge and honor the work WITTS has done for over 200 years bringing technology forward, and hope that you will consider making a donation to the ministry for their great work.

We would also like to thank our greatest teacher and fellow humanitarian, Nikola Tesla. It is our most gratifying honor to present modern plans for a quantum energy generator to the world, based on Tesla's discoveries, especially at a time when we the people are being manipulated and controlled by a corrupt energy economy. Tesla wanted everyone on the planet to have energy. We continue to carry out his vision.

SCHEMATIC

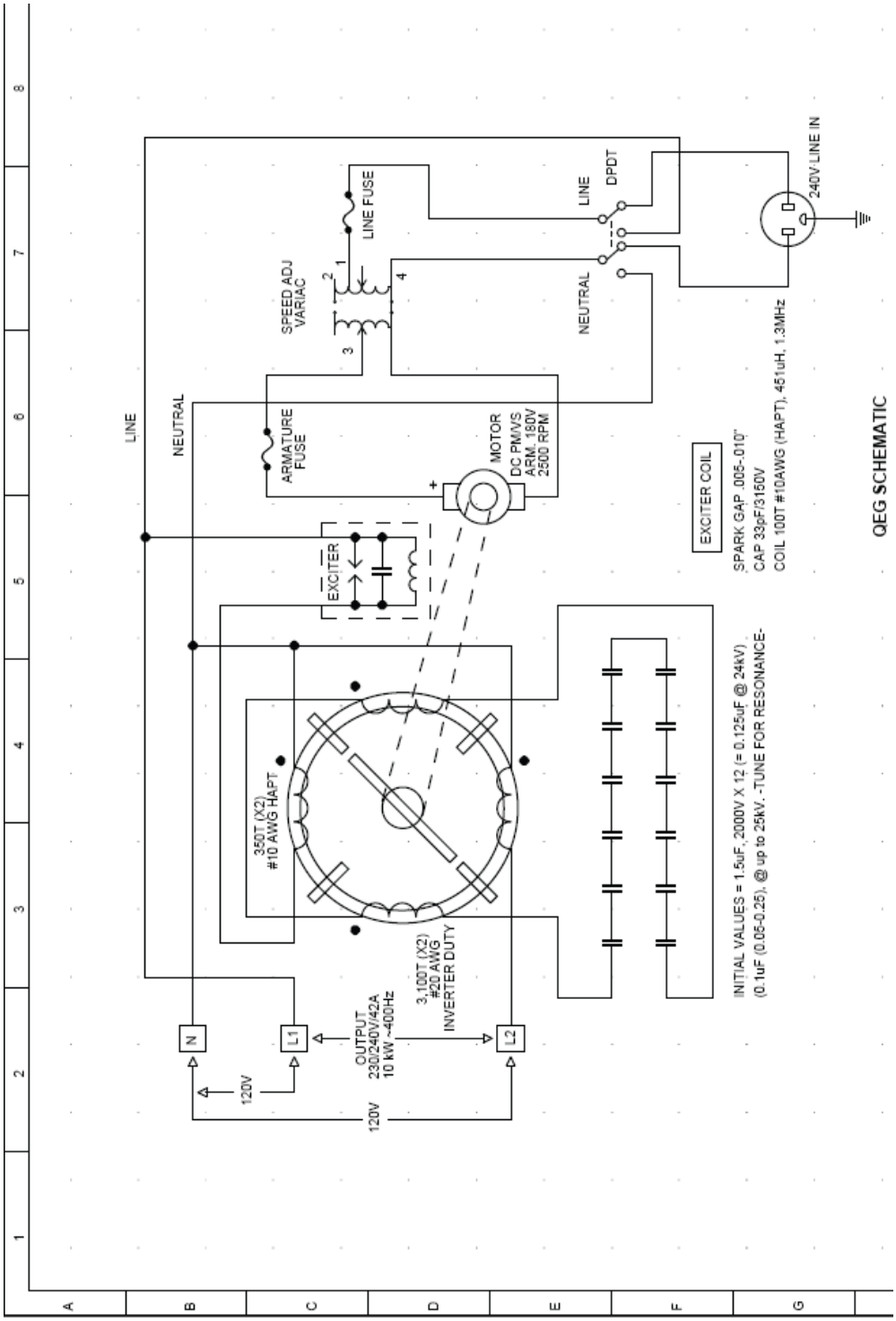
LINE
NEUTRAL
ARMATURE FUSE
SPEED ADJ VARIAC
LINE FUSE
MOTOR
DC PM/VS
ARM. 160V
2500 RPM
EXCITER
350T (X2)
#10 AWG HAPT
3,100T (X2)
#20 AWG
INVERTER DUTY
OUTPUT
230/240V/42A
10 kW ~400Hz
N
L1
L2
120V
120V
LINE
NEUTRAL
DPDT
240V LINE IN
EXCITER COIL
SPARK GAP .005-.010"
CAP 33pF/3150V
COIL 100T #10AWG (HAPT), 451uH, 1.3MHz
INITIAL VALUES = 1.5uF, 2000V X 12 (= 0.125uF @ 24kV).
(0.1uF (0.05-0.25), @ up to 25kV. -TUNE FOR RESONANCE-
QEG SCHEMATIC

Parts List

Part	Type, Model # or MFG PN	Quantity
Capacitors		
Ceramic Disc Capacitors	15pF 3150volts	2
Film Capacitors	2.5uF 2000V	12
End Plates and Shrouds		
Fiberglass reinforced epoxy laminate (for 2 end plates)	G10/FR4	(1) sheet ½ inch thick by 3 feet by 4 feet
Fiberglass reinforced epoxy laminate (shrouds)	G10/FR4	(2) 1/8” x 5.875” diameter
Exciter Coil		
Clear Cast Acrylic Tube	4-3/4” OD x 4-1/2” ID, 1’ Length	1
#10 Magnet wire (see generator core)		
V-Belts and Pulleys		
Goodyear 4L430 V-Belt	GDYR_4L430	1
1 Groove, 3” x 7/8” bore, type A Pulley (Motor)	AK30 x 7/8	1
1 Groove 2.50” Pulley 7/8” bore type A (Generator)	AK25X7/8	1
Drive Motor	DC PM Variable Speed, 2500 RPM, 180V armature, 7/8” shaft, with base	1
Generator Core		
Spacer Blocks 1-1/2” x 1-1/2” x 4-1/2”	Aluminum 6061-T6	16
Mica Tape 1.00” x 50YD	MICA77956X1X50	1
Bonder for shaft/rotor	LOCTITE 648	1
7387 Activator (use with bonder)		1.75oz
Mica Plate NEMA 6	36” x 36” x .030	1
7/8” Three Bolt Flange Bearings	SATRD205-14G	2
Magnet Wire #10 Round HPT or HAPT		~620’
Magnet Wire #20 Round Pulse Shield	HTAIHSD 6” SPL/060-Heavy MW35, 73, 36	~5200’

Teflon tubing	TFT20019 NA005 (Alpha Wire)	8 pieces (12” each)
Fiberglass sleeving w/PVC for #10 HAPT wire (tubing)	PF1308	8 pieces (12” each)
Tape, white, 1”fiberglass, hi-temp (outer wrap)	RG48 (Intertape)	2 rolls
Tape, black, 1” reinforced, high-strength	60020719 (Von Roll)	2 rolls
Nomex Corner Insulation	Torelco	16
Shafting 7/8” dia. x 11.0” long w/standard 3/16” x 3/32” keyway	C1045 TGP Trukey	7/8” dia. x 11”
8 inch Bolts, ¼ - 28 thread, Grade 8	1050095555 (Instock Fasteners)	8
Electrical Terminals		
Assorted ring, spade, and quick connect terminals		
Additional Parts		
Variac, 120/240V in, 0-280V out, 9.5 Amps	Type 1520 (STACO)	1
Console Box w/panel	1456FG4BKBU (Hammond Mfg.)	1
Plexiglass sheet for mounting 2.5uF capacitors	¼ inch thick by 12 inches sq.	1
Electrical box	4” x 4”	1
50 amp plug		1
50 amp receptacle		1
Switch, start/run	DPDT center off, 15 amp, 240V	1
Bridge Rectifier	600 volt, 25 Amp., quick connect terminals	1
Nuts	¼ - 28 Grade 8	8
Washers	¼ “ flat	16
Frame and Base		
Angle aluminum	1 ½” x 1 ½” x 4 feet. 1/8” thk.	1

Suppliers and Parts/Service List

POLARIS LASER LAMINATIONS – Generator Core; Rotor
TORELCO – Toroidal winding service and complete core processing ready to ship
FASTENAL – Retaining (bonding) compound (Loctite 648: bonds rotor to shaft) with activator
EIS – Mica tape; 20 gauge Magnet wire
S & W – 10 gauge Magnet wire
INDUSTRIAL SENSORS AND CONTROLS (ebay) – Motor controller KBIC-240D variable speed DC motor controller; Resistor
MOUSER – Capacitors, Enclosures, Variac, Rectifiers, Start/Run switch
JDS (ebay) – V belt; pulleys
EMCO PLASTICS – End plates
ASHEVILLE-SCHOONMAKER MICA – Mica plates
DISCOUNT STEEL – Aluminum squares (spacers)
BRIGHTON BEST – 8 in. bolts
MCMASTER-CARR – Clear acrylic tube for exciter coil
LAKE CITY ELECTRIC (ebay) – Variable speed DC Motor (1 hp)
THE BIG BEARING STORE – 7/8" Three Bolt Flange Bearing w/set screws

Additional Parts

High-temperature fiberglass tape (outer wrap)
4" x 4"electrical box
50 amp plug
50 amp receptacle
Black fiberglass sleeving (pvc-coated)
Black mylar insulating tape
Wood or welded steel tubular frame for base
12 - TPC Thomson / AVX Medium Power Film Capacitors
Angle aluminum
Start/run switch

MAJOR GENERATOR COMPONENTS

- Stator
- Rotor
- Bearings
- V belts
- Capacitors
- External exciter coil
- End panels/plates
- Magnet wire
- Drive motor
- Control box
- Frame and packaging
- Variac
- Inverter
- Pulleys

THE STATOR, or generator core, is made using 140 laminations of 24 gauge M19 C5 electrical steel forming a stack of 3 - ½ inches, with a 4 pole configuration. Corresponding **ROTOR** with 2 poles. Both STATOR and ROTOR are tig welded in 4 places.

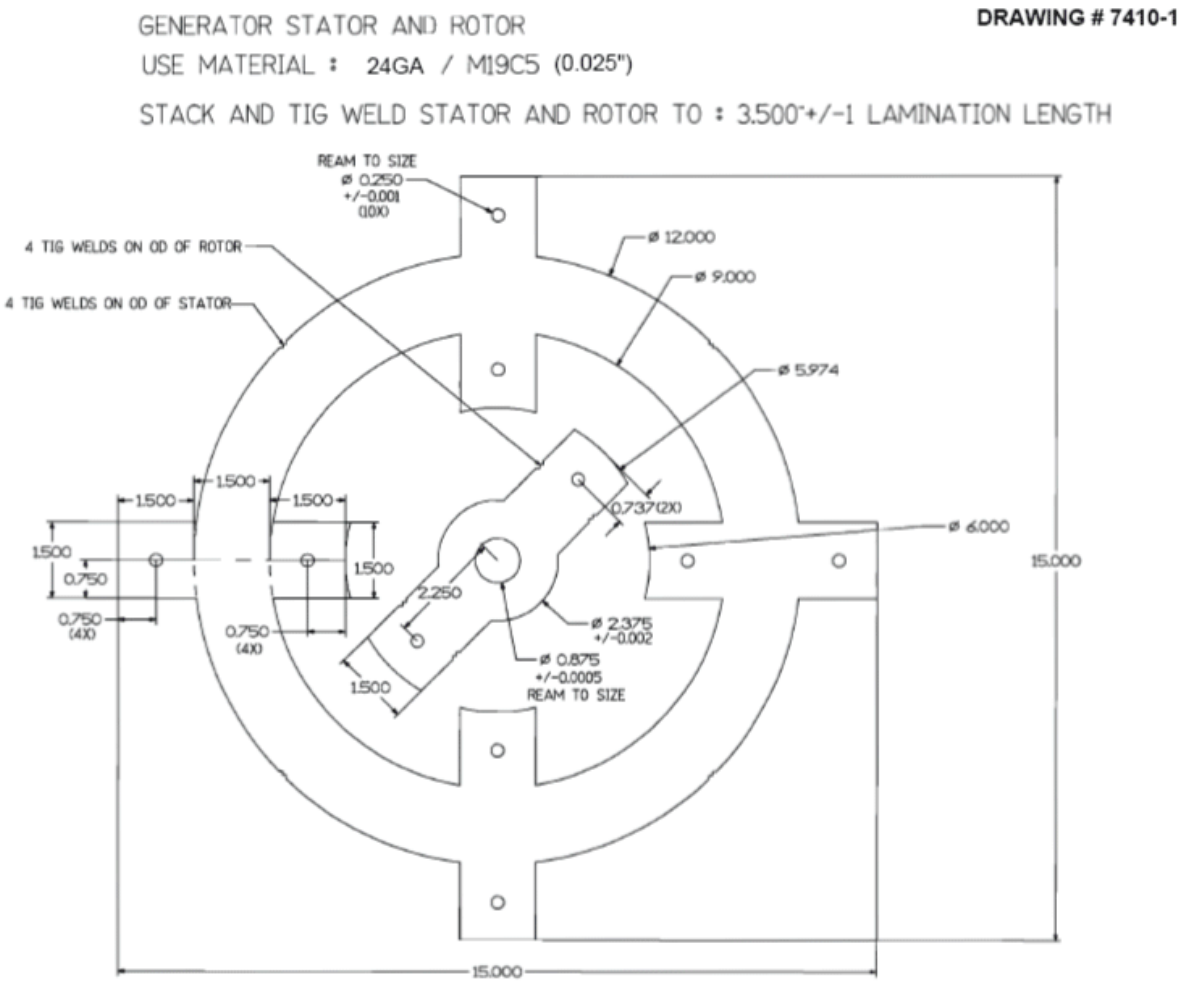

Shaft

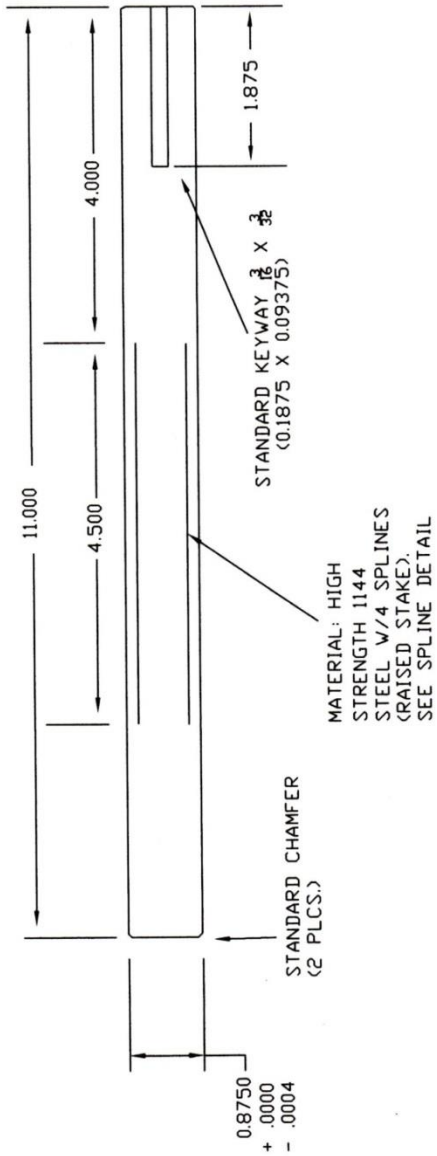
11.000
4.500
4.000
1.875
STANDARD KEYWAY 3/16 X 3/32
(0.1875 X 0.09375)
MATERIAL: HIGH
STRENGTH 1144
STEEL W/4 SPLINES
(RAISED STAKE).
SEE SPLINE DETAIL
STANDARD CHAMFER
(2 PLCS.)
0.8750
+ .0000
- .0004

Shaft cont'd*

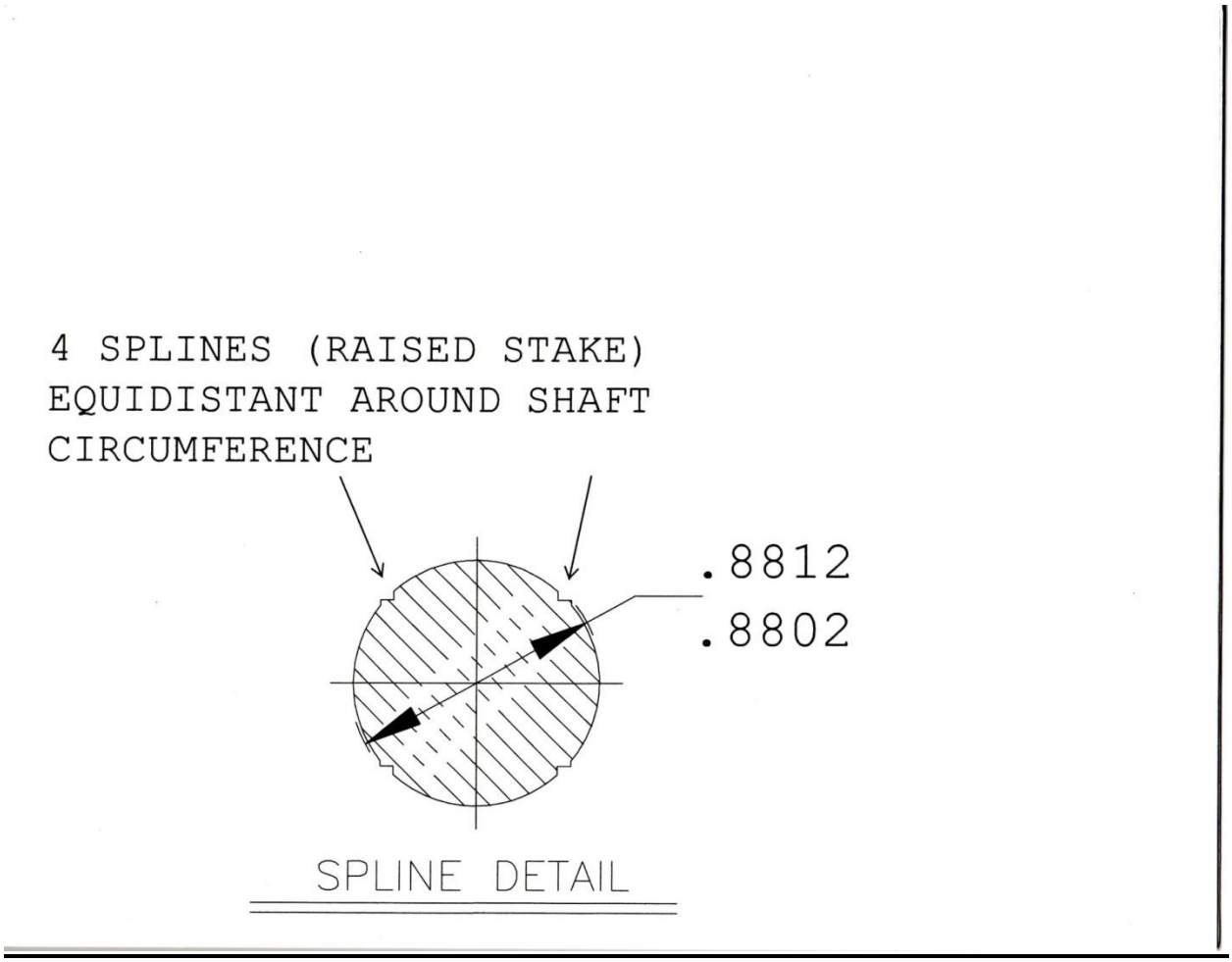

*** We didn't use the splines, rather, we used Loctite 648 retaining compound to bond the rotor to the shaft. This technique works very well with a close slip fit between the parts.**

End Plates

Fiberglass reinforced epoxy laminate (FR-4/G10) is used for end plate construction. End plates must be constructed of insulating material, but must also be structurally strong as they support all generator components, including bearings, shaft, rotor and stator. FR4 is the same material used to make circuit boards and is very strong, machinable, and dimensionally stable. Dimensions: End Plates: .500” Thk. G10/FR-4 15” X 16.5” with 15” radius and 2.450” center hole.

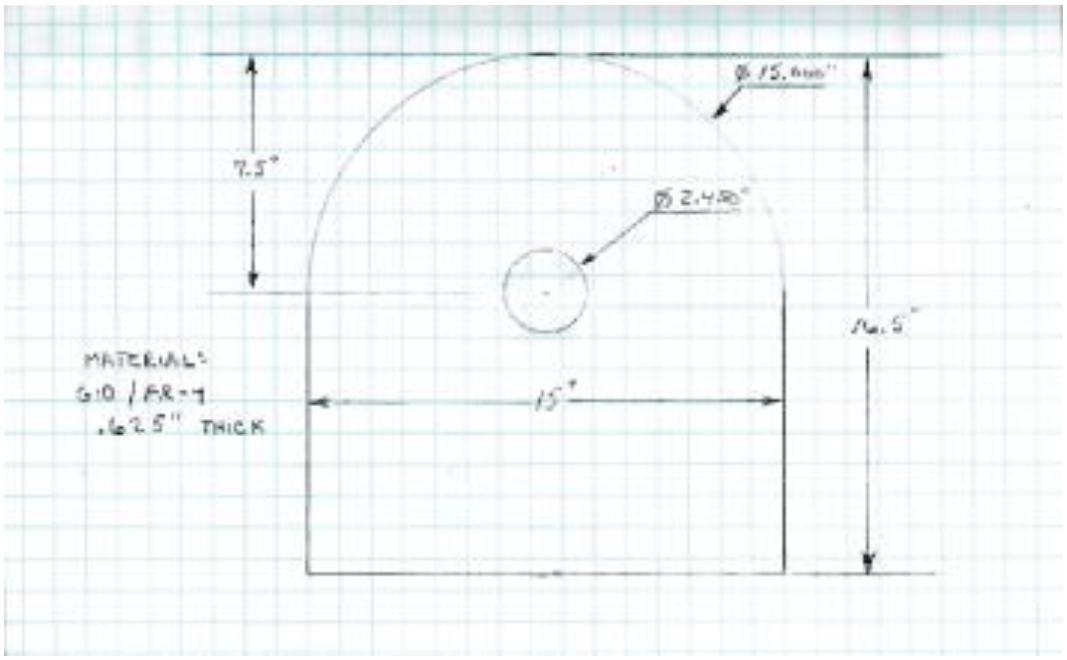

Bearings

The bearings should have a narrow inner ring with set screws for attaching to the shaft. Housing is cast iron with a grease zerk for re-lubing the bearing. We used a 3-bolt flange type mount, but 2-hole or 4-hole can also be used. Bearings are mounted on the *inside* of the end plates toward the rotor.

Capacitors

The capacitors are a critical part of the system. The initial configuration on our prototype uses 12 caps, 2.5uF (microfarad) each. Each cap is rated for 2000V. These capacitors are wired in series in order to be able to withstand up to 25,000V in the primary circuit. The value and quantity of these capacitors will be adjusted to tune the frequency of the generator.

Variac

The variac is used to control the drive motor speed which effectively controls the system power. It's used during construction/tuning, and prior to self-running set-up when it can be replaced with the smaller, lighter electronic motor drive circuit board.

Drive motor control circuit board

The drive motor control circuit board is an industry standard SCR type DC motor drive manufactured by KB Electronics. The control board can be mounted in the console box we have included in the parts list, and is provided with a speed control potentiometer for adjusting motor speed.

End Plate Layout

We used the bare core as a template to drill all the core mounting holes in the proper locations on the end plates. After end plates are cut and finished, place one on a flat work surface that will support 100 lbs. Place the bare core over end plate, aligning the center bore of the core with the center hole in the end plate. Make sure the pole pieces are right to the edge of the radius at the top of the end plate. We used an extra long drill bit to drill the 8 mounting holes. Repeat this process for the other end plate. Alternately, a long pin could be used as a center punch to mark hole locations and drill the holes using a drill press. If using the core as a template be sure to make assembly marks on the core and the end plate so that final assembly will have all the parts in the same orientation and the mounting bolts will go through without binding. Be sure to mark the in-facing and out-facing sides of each panel.

CORE ASSEMBLY

This is the time to review the NOTICE and section on consciousness at the beginning.

We highly recommend ordering your generator set (stator and rotor) from an experienced professional lamination house. When your stator/rotor is welded and drilled, you are ready to bolt down the 8 spacers and wrap the core with 2 types of tape: Wrap 2 layers mica tape around the steel core (round part) followed by 1 layer of 1" reinforced, high-strength black tape. These 3 layers will bring the thickness needed for insulation to 17 mil (be very mindful at the corners of the pole pieces making certain there is no opening in the insulation for the wire to fall down into contact with the steel. If this happens, the coil will be short-circuited).

Mica Plate Cuts (16 pieces)

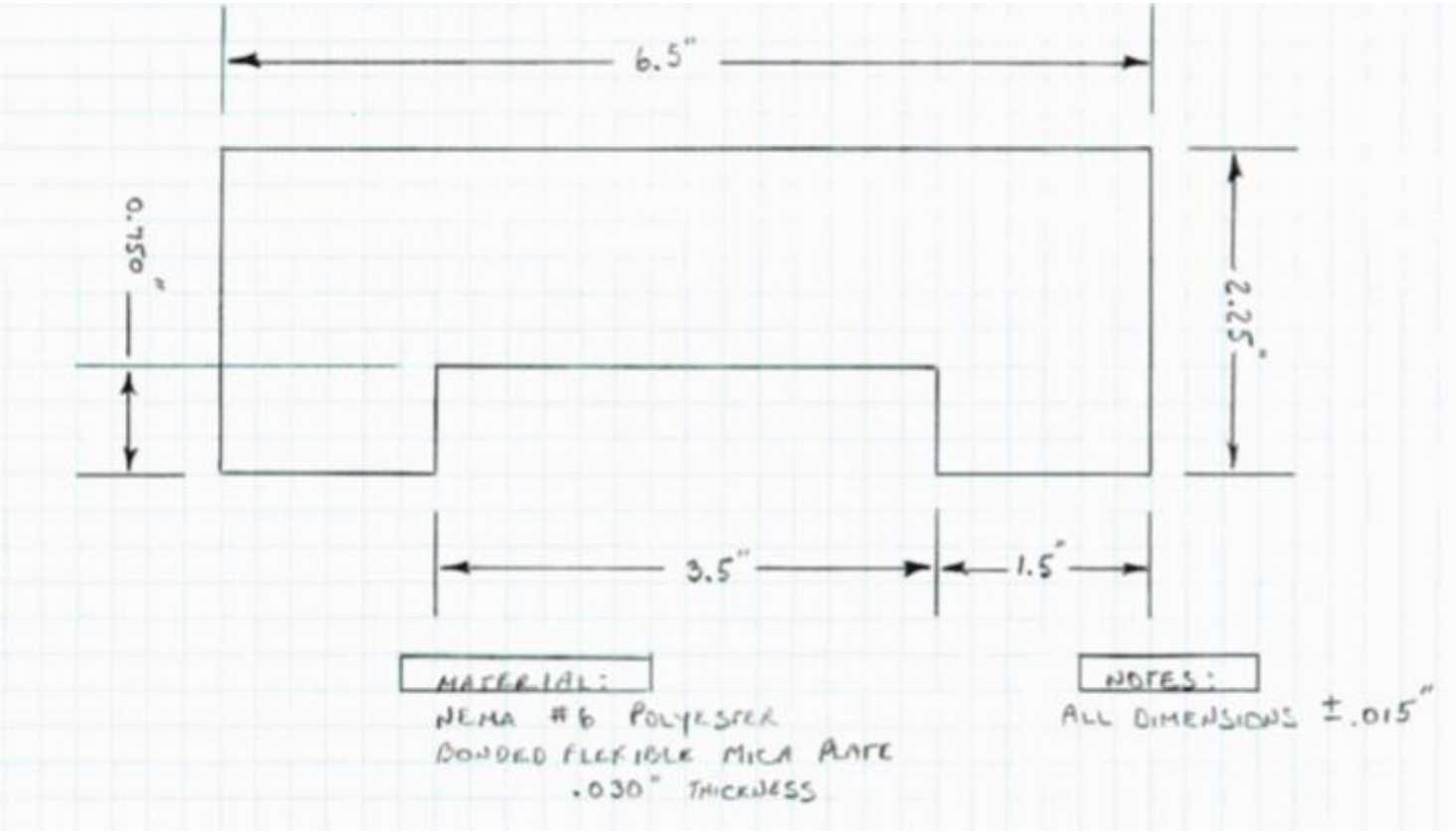

Installing Mica Plates

After you've cut 16 c-shaped mica plates, install them on the top and bottom of each pole piece (front and back). We used a small amount of contact cement to hold them in place for the rest of the processing, but they can also be taped in place with the reinforced black mylar tape. These are installed after core taping and before winding.

Wiring

You will need to commission a toroidal winding service. They might agree to process the entire core if you supply the materials (mica tapes and plates, corner insulation, aluminum spacers, bolts, outer taping, etc.). Proper winding is critical.

Teflon sleeving is installed on the first complete turn of each winding of the #20 wire, and fiberglass/PVC sleeving on the #10 wire. Two coils of 3100 turns each of #20 wire are wound o'n opposing sides (left and right), and 2 coils of 350 turns each of #10 wire on the other sides (top and bottom). Leave about 3 feet of wire at the start of each winding and also at the finish for lead wires. Use enough sleeving to make sure the lead wires are completely insulated where they come through the back end panel. Be sure to secure the finish leads of each coil so that they don't unravel during handling.

Outer Wrap Taping

Wrap a single layer of 1" white fiberglass tape tightly and securely around each coil making sure that all wire is covered and tape is butted up against the 4 pole pieces.

Generator Assembly Steps

Rotor/Shaft/Shroud Assembly

Drawings are provided for the shaft showing an optional spline operation that can be used to mount the rotor to the shaft, if desired. We used Loctite 648 industrial adhesive (with activator), which is effective with close fitting parts.

Drill a 7/8" center hole, and two ¼" mounting holes into the shroud disks (mounting holes are lined up with the holes in the rotor). Slide one disk onto the shaft on each side of the rotor. Bolt both shrouds to the rotor using two 4" or 4-1/4" long ¼ - 28 through-bolts and nuts. These bolts should not be any

longer than necessary or a rotor imbalance can occur. Shrouds are used to quiet the windage noise generated by the spinning rotor.

Bearings

Mount bearings to the *inside* of the front and rear end plates. Center each bearing on the 2.450" hole in the center of the plate. Drill the holes oversize for the mounting bolts. This is done to provide adjustability in the position of the shaft at final assembly. The bearings will have to be moved slightly to center the rotor in the bore of the generator. The gap between rotor and stator is very small (.010") and the rotor will need to be positioned so it does not rub on the stator bore. Only tighten finger tight at this time.

We opted to bring the leads from the coils out directly through holes drilled in the rear end plate. You may decide to bring the leads out a different way. Here are the steps for our method:

1) Insert all 8 bolts into the rear end plate, then lay the plate down on a flat work surface with the bolts pointing up. The work surface should have a hole under the center hole in the end plate to provide clearance when the rotor is inserted. About 1 ½ inches of clearance is needed below the plate.

2) With an assistant or two, place the fully processed core (about 90 lbs.) down onto the bolts. Slide the core all the way down into contact with the end plate.

3) Insert the short end of the rotor/shaft/shroud assembly through the stator bore and into the rear bearing. Let the rotor assembly drop gently to the bottom and place the front end plate with bearing over the bolts and shaft end. Tap into place with rubber mallet if necessary. Once plate is in contact with stator assembly, install washers and nuts and tighten securely.

4) With assistance, place the assembly upright onto the raised portion of the base. We used 5 lag bolts across the bottom of the end plates on each side to mount the assembly to the wood base/frame. Other methods could be employed.

5) Mount the drive motor to the base/frame. We mounted the shaft end of the motor onto the aluminum angle on the front of the base with one bolt to provide adjustability for belt tightening. We built a sliding mount for the rear of the motor using sheet metal parts, but sliding motor bases are commercially available that provide adjustability for proper belt tensioning.

6) When the motor is mounted to the base, install 3" pulley on motor shaft using set screws.

7) At this point the rotor position should be adjusted so that it spins freely inside the core without rubbing. This is where you may need to adjust the bearing positions repeatedly until the rotor spins freely. (The gap between the rotor and stator is .010" making this step a little delicate.) however, once the rotor is tightened in position it does not tend to move. Place the 2 ½" pulley on the generator shaft at this time; it can be used to turn the rotor by hand while adjusting its position.

8) Place the V-belt over both pulleys and position pulleys as close to the motor and the generator as possible. Both pulleys should be positioned an equal distance from the faces of the motor and generator to assure that the belt runs true.

9) The variac can be mounted on the base at this time. We used two 1/4 – 20 x 1" bolts with nuts to mount the variac to the aluminum angle. After all the components are mounted on the base, wiring and testing will be performed using the variac. (After set-up and testing is completed, the variac can be replaced with the electronic motor control circuit board for less bulk and weight. The console box in the parts list can be used as an enclosure/control panel for the motor speed control board, and for mounting the DPDT start/run switch.)

10) With all components mounted on the base, wiring can begin. Please follow the schematic to make connections. We mounted a 4" x 4" electrical box on the base to support a large (50 Amp) receptacle to bring the power out of the generator.

Wiring Notes: The generator output can be wired in series (220, 230-240V), or parallel (110, 115, 120V). For the series connection shown on the schematic, the start leads from each coil are connected together. This connection provides the highest voltage output from the windings. If using a parallel connection for lower voltage/higher current, be careful to connect the four leads with polarity opposed (start lead of one coil connected to finish lead of other coil).

The variac we used can be wired for 120 or 240 volt input, and provides 0-280 volts output, at up to 9.5 amps. This is a versatile variac and can be used with either a 120 or 240 volt system. The output of the variac is connected to a 600 volt, 25 Amp full-wave bridge rectifier to power the variable speed DC drive motor.

Set-up and testing

Starting with the wiring setup as shown in the schematic, disconnect the primary coils from the series capacitor string on one end (disconnect capacitors). This will prevent resonance momentarily.

Connect input power to the variac. We started with a full 240 volt series wired system, but parallel 120 volt wiring can also be used.

Test mechanical assembly by spinning up the motor/rotor/belt and observing operation. Adjust variac voltage from zero to about ¾ through its range. The active rpm range is under 2500 rpm, so we don't need to spin very fast. Assure there is no stack rub (rotor scrubbing on stator), or other mechanical issues that need to be corrected for smooth operation.

When proper mechanical operation is assured, re-connect the series capacitor bank. The initial configuration of 12 (twelve) 2.5 uF, 2000 volt capacitors gives us .208uF, that will withstand up to 24,000 volts. This initial value should be in the range to produce resonance.

As the machine spins up to resonance, the sound will change, and the rotor speed will lock into the resonant frequency. At this point any further increase of the motor speed control will change the speed only slightly, but the additional mechanical power (horsepower) will drive the core deeper into resonance, thereby increasing the power output. With a single control, the voltage and current (power) can be increased or decreased.

As previously mentioned, the exciter coil is used to provide a conduction path through the quantum field (zero point) into the generator core. This has the effect of polarizing the core, which increases power output over time. After the QEG is first built, the spark gap on the exciter coil should be adjusted (with power off) to between .005" and .010". Start the generator and let it spark for 2-3 seconds, and repeat this 4 or 5 times. Do this whenever starting the generator for the first few weeks of operation.

BEARINGS

SHROUDS

CAPACITORS

WOUND CORE

ACRYLIC TUBING & PLATE

MICA TAPING

MOTOR

EXCITER COIL

ASSEMBLY MARKS

MICA PLATING TOP

MICA PLATING BOTTOM

FIBERGLASS SLEEVING

MOTOR CONTROL BOX

ASSEMBLY MARKS

SHAFT

ROTOR & SHAFT

CAPACITORS

VARIAC

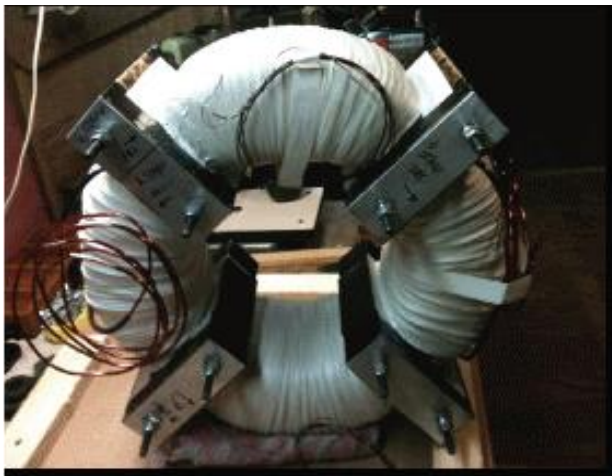

FULLY WRAPPED CORE

END PANEL FRONT

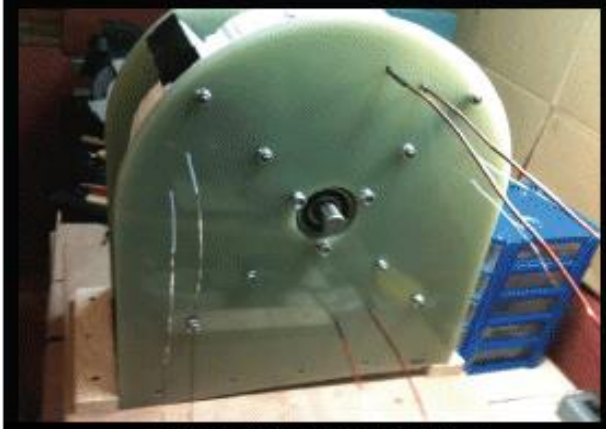

END PANEL REAR

OUTER WRAP

TOROIDAL WINDER

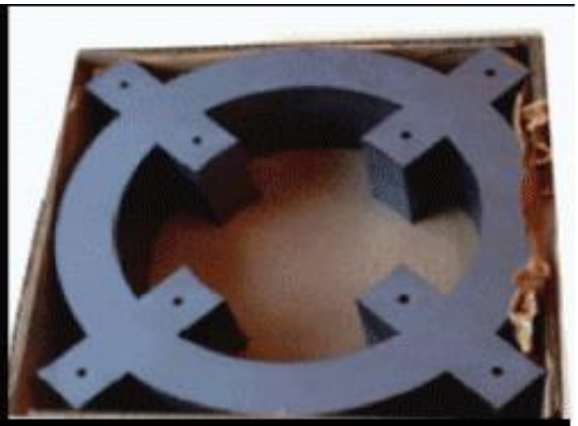

STATOR

ELECTRICAL BOX

END PLATES

WOOD FRAME

WRAPPED CORE/END PLATES

STATOR/ROTOR/SHAFT

WIRED CORE

MOTOR CONTROLLER

20 GAUGE MAGNET WIRE

10 GAUGE MAGNET WIRE

SPACER BLOCKS

UNITED STATES PATENT OFFICE.

NIKOLA TESLA, OF NEW YORK, N. Y.

ELECTRIC GENERATOR.

SPECIFICATION forming part of Letters Patent No. 511,916, dated January 2, 1894.

Application filed August 19, 1893. Serial No. 483,562. (No model.)

To all whom it may concern:

Be it known that I, NIKOLA TESLA, a citizen of the United States, residing at New York, in the county and State of New York, have invented certain new and useful Improvements in Electric Generators, of which the following is a specification, reference being had to the drawings accompanying and forming a part of the same.

In an application of even date herewith, Serial No. 483,563, I have shown and described a form of engine invented by me, which, under the influence of an applied force such as the elastic tension of steam or a gas under pressure, yields an oscillation of constant period.

In order that my present invention may be more readily understood I will explain the conditions which are to be observed in order to secure this result.

It is a well known mechanical principle that if a spring possessing a sensible inertia be brought under tension, as by being stretched, and then freed, it will perform vibrations which are isochronous, and as to period, in the main, dependent upon the rigidity of the spring, and its own inertia or that of the system of which it may form an immediate part. This is known to be true in all cases where the force which tends to bring the spring or movable system into a given position is proportionate to the displacement.

In the construction of my engine above referred to I have followed and applied this principle, that is to say, I employ a cylinder and a piston which in any suitable manner I maintain in reciprocation by steam or gas under pressure. To the moving piston or to the cylinder, in case the latter reciprocate and the piston remain stationary, a spring is connected so as to be maintained in vibration thereby, and whatever may be the inertia of the piston or of the moving system and the rigidity of the spring relatively to each other, provided, the practical limits within which the law holds true that the forces which tend to bring the moving system to a given position are proportionate to the displacement, are not exceeded, the impulses of the power impelled piston and the natural vibrations of the spring will always correspond in direction and coincide in time. In the case of the engine referred to, the ports are so arranged that the movement of the piston within the cylinder in either direction ceases when the force tending to impel it and the momentum which it has acquired are counterbalanced by the increasing pressure of the steam or compressed air in that end of the cylinder toward which it is moving, and as in its movement the piston has shut off at a given point, the pressure that impelled it and established the pressure that tends to return it, it is then impelled in the opposite direction, and this action is continued as long as the requisite pressure is applied. The length of the stroke will vary with the pressure, but the rate or period of reciprocation is no more dependent upon the pressure applied to drive the piston, than would be the period of oscillation of a pendulum permanently maintained in vibration, upon the force which periodically impels it, the effect of variations in such force being merely to produce corresponding variations in the length of stroke or amplitude of vibration respectively.

In practice I have found that the best results are secured by the employment of an air spring, that is, a body of confined air or gas which is compressed and rarefied by the movements of the piston, and in order to secure a spring of constant rigidity I prefer to employ a separate chamber or cylinder containing air at the normal atmospheric pressure, although it might be at any other pressure, and in which works a plunger connected with or carried by the piston rod. The main reason why no engine heretofore has been capable of producing results of this nature is that it has been customary to connect with the reciprocating parts a heavy fly-wheel or some equivalent rotary system of relatively very great inertia, or in other cases where no rotary system was employed, as in certain reciprocating engines or tools, no regard has been paid to the obtainment of the conditions essential to the end which I have in view, nor would the pressure of such conditions in said devices appear to result in any special advantage.

Such an engine as I have described affords a means for accomplishing a result heretofore unattained, the continued production of electric currents of constant period, by imparting the movements of the piston to a core or

coil in a magnetic field. It should be stated however, that in applying the engine for this purpose certain conditions are encountered which should be taken into consideration in order to satisfactorily secure the desired result. When a conductor is moved in a magnetic field and a current caused to circulate therein, the electro-magnetic reaction between it and the field, might disturb the mechanical oscillation to such an extent as to throw it out of isochronism. This, for instance, might occur when the electro-magnetic reaction is very great in comparison to the power of the engine, and there is a retardation of the current so that the electro-magnetic reaction might have an effect similar to that which would result from a variation of the tension of the spring, but if the circuit of the generator be so adjusted that the phases of the electromotive force and current coincide in time, that is to say, when the current is not retarded, then the generator driven by the engine acts merely as a frictional resistance and will not, as a rule, alter the period of the mechanical vibration, although it may vary its amplitude. This condition may be readily secured by properly proportioning the self induction and capacity of the circuit including the generator. I have, however, observed the further fact in connection with the use of such engines as a means for running a generator, that it is advantageous that the period of the engine and the natural period of electrical vibration of the generator should be the same, as in such case the best conditions for electrical resonance are established and the possibility of disturbing the period of mechanical vibrations is reduced to a minimum. I have found that even if the theoretical conditions necessary for maintaining a constant period in the engine itself are not exactly maintained, still the engine and generator combined will vibrate at a constant period. For example, if instead of using in the engine an independent cylinder and plunger, as an air spring of practically constant rigidity, I cause the piston to impinge upon air cushions at the ends of its own cylinder, although the rigidity of such cushions or springs might be considerably affected and varied by the variations of pressure within the cylinder, still by combining with such an engine a generator which has a period of its own approximately that of the engine, constant vibration may be maintained even through a considerable range of varying pressure, owing to the controlling action of the electro-magnetic system. I have even found that under certain conditions the influence of the electro-magnetic system may be made so great as to entirely control the period of the mechanical vibration within wide limits of varying pressure. This is likely to occur in those instances where the power of the engine while fully capable of maintaining a vibration once started, is not sufficient to change its rate. So, for the sake of illustration, if a pendulum is started in vibration, and a small force applied periodically in the proper direction to maintain it in motion, this force would have no substantial control over the period of the oscillation, unless the inertia of the pendulum be small in comparison to the impelling force, and this would be true no matter through what fraction of the period the force may be applied. In the case under consideration the engine is merely an agent for maintaining the vibration once started, although it will be understood that this does not preclude the performance of useful work which would simply result in a shortening of the stroke. My invention, therefore, involves the combination of a piston free to reciprocate under the influence of steam or a gas under pressure and the movable element of an electric generator which is in direct mechanical connection with the piston, and it is more especially the object of my invention to secure from such combination electric currents of a constant period. In the attainment of this object I have found it preferable to construct the engine so that it of itself controls the period, but as I have stated before, I may so modify the elements of the combination that the electro-magnetic system may exert a partial or even complete control of the period.

In illustration of the manner in which the invention is carried out I now refer to the accompanying drawings.

Figure 1 is a central sectional view of an engine and generator embodying the invention. Fig. 2 is a modification of the same.

Referring to Fig. 1 A is the main cylinder in which works a piston B. Inlet ports C C pass through the sides of the cylinder opening at the middle portion thereof and on opposite sides. Exhaust ports D D extend through the walls of the cylinder and are formed with branches that open into the interior of the cylinder on each side of the inlet ports and on opposite sides of the cylinder. The piston B is formed with two circumferential grooves E F which communicate through openings G in the piston with the cylinder on opposite sides of said piston respectively.

The particular construction of the cylinder, the piston and the ports controlling it may be very much varied, and is not in itself material, except that in the special case now under consideration it is desirable that all the ports, and more especially the exhaust ports should be made very much larger than is usually the case so that no force due to the action of the steam or compressed air will tend to retard or affect the return of the piston in either direction. The piston B is secured to a piston rod H which works in suitable stuffing boxes in the heads of the cylinder A. This rod is prolonged on one side and extends through bearings V in a cylinder I suitably mounted or supported in line with the first, and within which is a disk or plunger J carried by the rod H. The cylinder I is without ports of any kind and is air-tight except as a

small leakage may occur through the bearings V, which experience has shown need not be fitted with any very considerable accuracy. The cylinder I is surrounded by a jacket K which leaves an open space or chamber around it. The bearings V in the cylinder I, extend through the jacket K to the outside air and the chamber between the cylinder and jacket is made steam or air-tight as by a suitable packing. The main supply pipe L for steam or compressed air leads into this chamber, and the two pipes that lead to the cylinder A run from the said chamber, oil cups M being conveniently arranged to deliver oil into the said pipes for lubricating the piston. In the particular form of engine shown, the jacket K which contains the cylinder I is provided with a flange N by which it is screwed to the end of the cylinder A. A small chamber O is thus formed which has air vents P in its sides and drip pipes Q leading out from it through which the oil which collects in it is carried off.

To explain now the operation of the engine described, in the position of the parts shown, or when the piston is at the middle point of its stroke, the plunger J is at the center of the cylinder I and the air on both sides of the same is at the normal pressure of the outside atmosphere. If a source of steam or compressed air be then connected to the inlet ports C C of the cylinder A and a movement be imparted to the piston as by a sudden blow, the latter is caused to reciprocate in a manner well understood. The movements of the piston compress and rarefy the air in the cylinder I at opposite ends of the same alternately. A forward stroke compresses the air ahead of the plunger J which acts as a spring to return it. Similarly on the back stroke the air is compressed on the opposite side of the plunger J and tends to drive it forward. The compressions of the air in the cylinder I and the consequent loss of energy due mainly to the imperfect elasticity of the air, give rise to a very considerable amount of heat. This heat I utilize by conducting the steam or compressed air to the engine cylinder through the chamber formed by the jacket surrounding the air-spring cylinder. The heat thus taken up and used to raise the temperature of the steam or air acting upon the piston is availed of to increase the efficiency of the engine. In any given engine of this kind the normal pressure will produce a stroke of determined length, and this will be increased or diminished according to the increase of pressure above or the reduction of pressure below the normal.

In constructing the apparatus proper allowance is made for a variation in the length of stroke by giving to the confining cylinder I of the air spring properly determined dimensions. The greater the pressure upon the piston, the higher the degree of compression of the air-spring, and the consequent counteracting force upon the plunger. The rate or period of reciprocation of the piston, however, is mainly determined as described above by the rigidity of the air spring and the inertia of the moving system, and any period of oscillation within very wide limits may be secured by properly portioning these factors, as by varying the dimensions of the air chamber which is equivalent to varying the rigidity of the spring, or by adjusting the weight of the moving parts. These conditions are all readily determinable, and an engine constructed as herein described may be made to follow the principle of operation above stated and maintain a perfectly uniform period through very wide limits of pressure.

The pressure of the air confined in the cylinder when the plunger I is in its central position will always be practically that of the surrounding atmosphere, for while the cylinder is so constructed as not to permit such sudden escape of air as to sensibly impair or modify the action of the air spring there will still be a slow leakage of air into or out of it around the piston rod according to the pressure therein, so that the pressure of the air on opposite sides of the plunger will always tend to remain at that of the outside atmosphere.

To the piston rod H is secured a conductor or coil of wire D′ which by the movements of the piston is oscillated in the magnetic field produced by two magnets B′ B′ which may be permanent magnets or energized by coils C′ C′ connected with a source of continuous currents E′. The movement of the coil D′ across the lines of force established by the magnets gives rise to alternating currents in the coil. These currents, if the period of mechanical oscillation be constant will be of constant period, and may be utilized for any purpose desired.

In the case under consideration it is assumed as a necessary condition that the inertia of the movable element of the generator and the electro-magnetic reaction which it exerts will not be of such character as to materially disturb the action of the engine.

Fig. 2 is an example of a combination in which the engine is not of itself capable of determining entirely the period of oscillation, but in which the generator contributes to this end. In this figure the engine is the same as in Fig. 1. The exterior air spring is however omitted and the air spaces at the ends of the cylinder A relied on for accomplishing the same purpose. As the pressure in these spaces is liable to variations from variations in the steam or gas used in impelling the piston they might affect the period of oscillation, and the conditions are not as stable and certain as in the case of an engine constructed as in Fig. 1. But if the natural period of vibration of the elastic system be made to approximately accord with the average period of the engine such tendencies to variation are very largely overcome and the engine will preserve its period even through a considerable range of variations of pressure. The

generator in this case is composed of a magnetic casing F′ in which a laminated core G′ secured to the piston rod H is caused to vibrate. Surrounding the plunger are two exciting coils C′ C′, and one or more induced coils D′ D′. The coils C′ C′ are connected with a generator of continuous currents E′ and are wound to produce consequent poles in the core G′. Any movement of the latter will therefore shift the lines of force through coils D′ D′ and produce currents therein.

In the circuit of coils D′ is shown a condenser H′. It need only be said that by the use of a proper condenser the self induction of this circuit may be neutralized. Such a circuit will have a certain natural period of vibration, that is to say that when the electricity therein is disturbed in any way an electrical or electro-magnetic vibration of a certain period takes place, and as this depends upon the capacity and self induction, such period may be varied to approximately accord with the period of the engine.

In case the power of the engine be comparatively small, as when the pressure is applied through a very small fraction of the total stroke, the electrical vibration will tend to control the period, and it is clear that if the character of such vibration be not very widely different from the average period of vibration of the engine under ordinary working conditions such control may be entirely adequate to produce the desired results.

Having now described my invention, what I claim is—

1. The combination with the piston or equivalent element of an engine which is free to reciprocate under the action thereon of steam or a gas under pressure, of the moving conductor or element of an electric generator in direct mechanical connection therewith.

2. The combination with the piston or equivalent element of an engine which is free to reciprocate under the action of steam or a gas under pressure, of the moving conductor or element of an electric generator in direct mechanical connection therewith, the engine and generator being adapted by their relative adjustment with respect to period to produce currents of constant period, as set forth.

3. The combination with an engine comprising a piston which is free to reciprocate under the action of steam or a gas under pressure, and an electric generator having inducing and induced elements one of which is capable of oscillation in the field of force, the said movable element being carried by the piston rod of the engine, as set forth.

4. The combination with an engine operated by steam or a gas under pressure and having a constant period of reciprocation, of an electric generator, the moving element of which is carried by the reciprocating part of the engine, the generator and its circuit being so related to the engine with respect to the period of electrical vibration as not to disturb the period of the engine, as set forth.

5. The combination with a cylinder and a piston reciprocated by steam or a gas under pressure of a spring maintained in vibration by the movement of the piston, and an electric generator, the movable conductor or element of which is connected with the piston, these elements being constructed and adapted in the manner set forth for producing a current of constant period.

6. The method of producing electric currents of constant period herein described which consists in imparting the oscillations of an engine to the moving element of an electric generator and regulating the period of mechanical oscillation by an adjustment of the reaction of the electric generator, as herein set forth.

NIKOLA TESLA.

Witnesses:
PARKER W. PAGE,
R. F. GAYLORD.

(No Model.)

2 Sheets—Sheet 2.

N. TESLA.

ELECTRIC GENERATOR.

No. 511,916.

Patented Jan. 2, 1894.

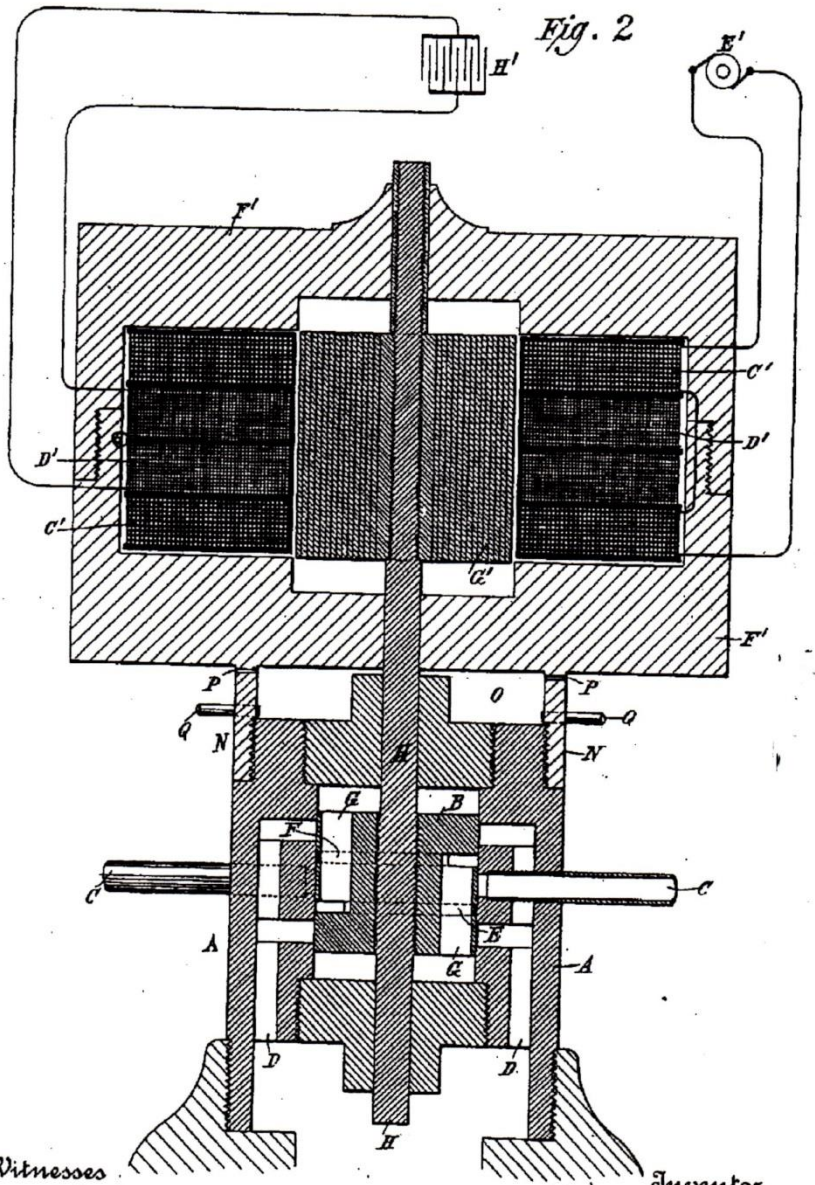

Witnesses
Raphael Netter
R. F. Taylor

Inventor
Nikola Tesla
By his Attorneys
Duncan & Page.

Frequently Asked Questions

- Where is the energy this device is using coming from ?
  The quantum field

- How much overall power does the QEG produce?
  10 KW (same design scaled up can produce 40 KW)

- If 'free' energy devices work, why aren't the electric companies using them?
  This should be obvious but in case you need a reference, please see:
  http://hopegirl2012.wordpress.com/

- How is the QEG started up if it doesn't require fuel?
  All that's needed is to spin the machine up to resonance. At that point it will run itself. It can be started using existing electrical power if available, or a crank mechanism, or a battery powered motor-start system. A battery start system could also keep its own batteries fully charged, by tapping some power from the generator.

- How long will the QEG run?
  Indefinitely (or until parts wear out)

- How did the QEG improve upon Tesla's work?
  This design adapts the linear, reciprocating element of the Patent, to a rotating element, and some electronics are employed for added stability; controlled amount of power and correct frequency range.

- Does the QEG slow down when more of a load is added?
  No – it's not that type of energy.

- Does the QEG emit radiation?
  No – it's not that type of energy.
- What form of energy does QEG use?
  Electromagnetic and atmospheric charge

US 20070241470A1

(19) United States

(12) Patent Application Publication

(10) Pub. No.: US 2007/0241470 A1

(43) Pub. Date: Oct. 18, 2007

Haisch et al.

(54) QUANTUM VACUUM ENERGY EXTRACTION

(76) Inventors: **Bernard Haisch**, Redwood City, CA (US); **Garret Moddel**, Boulder, CO (US)

Correspondence Address:
PRITZKAU PATENT GROUP, LLC
993 GAPTER ROAD
BOULDER, CO 80303 (US)

(21) Appl. No.: 11/236,142

(22) Filed: Sep. 26, 2005

Related U.S. Application Data

(60) Provisional application No. 60/613,778, filed on Sep. 27, 2004.

Publication Classification

(51) Int. Cl.
B29D 11/00 (2006.01)

(52) U.S. Cl. 264/1.27

(57) **ABSTRACT**

A system is disclosed for converting energy from the electromagnetic quantum vacuum available at any point in the universe to usable energy in the form of heat, electricity, mechanical energy or other forms of power. By suppressing electromagnetic quantum vacuum energy at appropriate frequencies a change may be effected in the electron energy levels which will result in the emission or release of energy. Mode suppression of electromagnetic quantum vacuum radiation is known to take place in Casimir cavities. A Casimir cavity refers to any region in which electromagnetic modes are suppressed or restricted. When atoms enter into suitable micro Casimir cavities a decrease in the orbital energies of electrons in atoms will thus occur. Such energy will be captured in the claimed devices. Upon emergence form such micro Casimir cavities the atoms will be re-energized by the ambient electromagnetic quantum vacuum. In this way energy is extracted locally and replenished globally from and by the electromagnetic quantum vacuum. This process may be repeated an unlimited number of times. This process is also consistent with the conservation of energy in that all usable energy does come at the expense of the energy content of the electromagnetic quantum vacuum. Similar effects may be produced by acting upon molecular bonds. Devices are described in which gas is recycled through a multiplicity of Casimir cavities. The disclosed devices are scalable in size and energy output for applications ranging from replacements for small batteries to power plant sized generators of electricity.

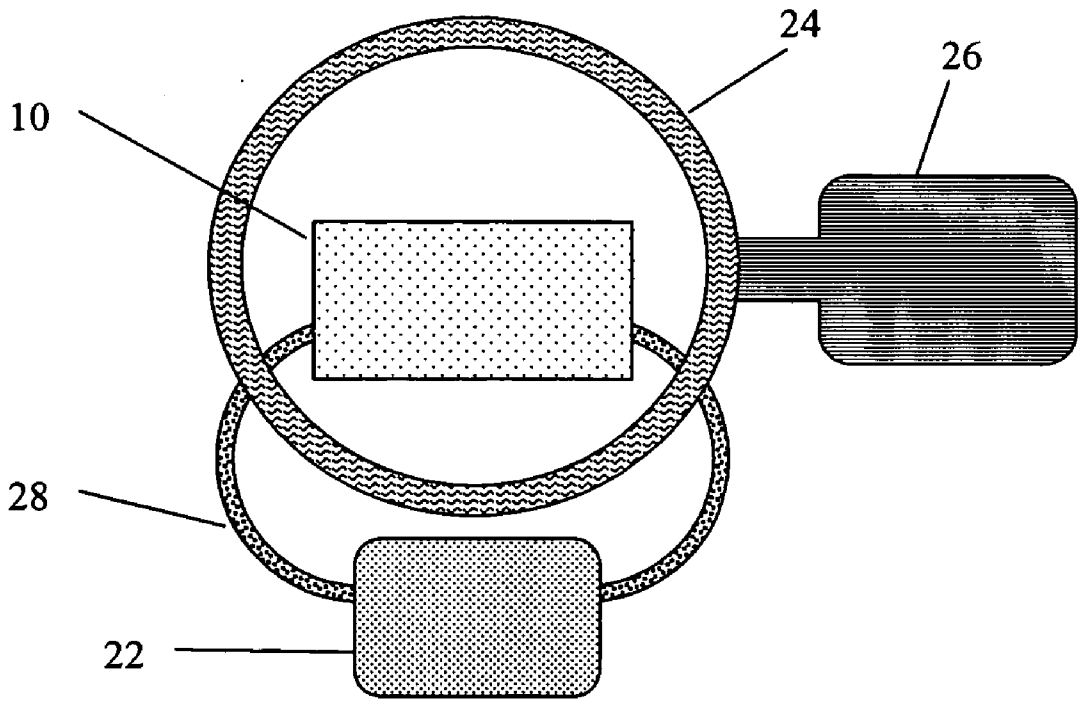

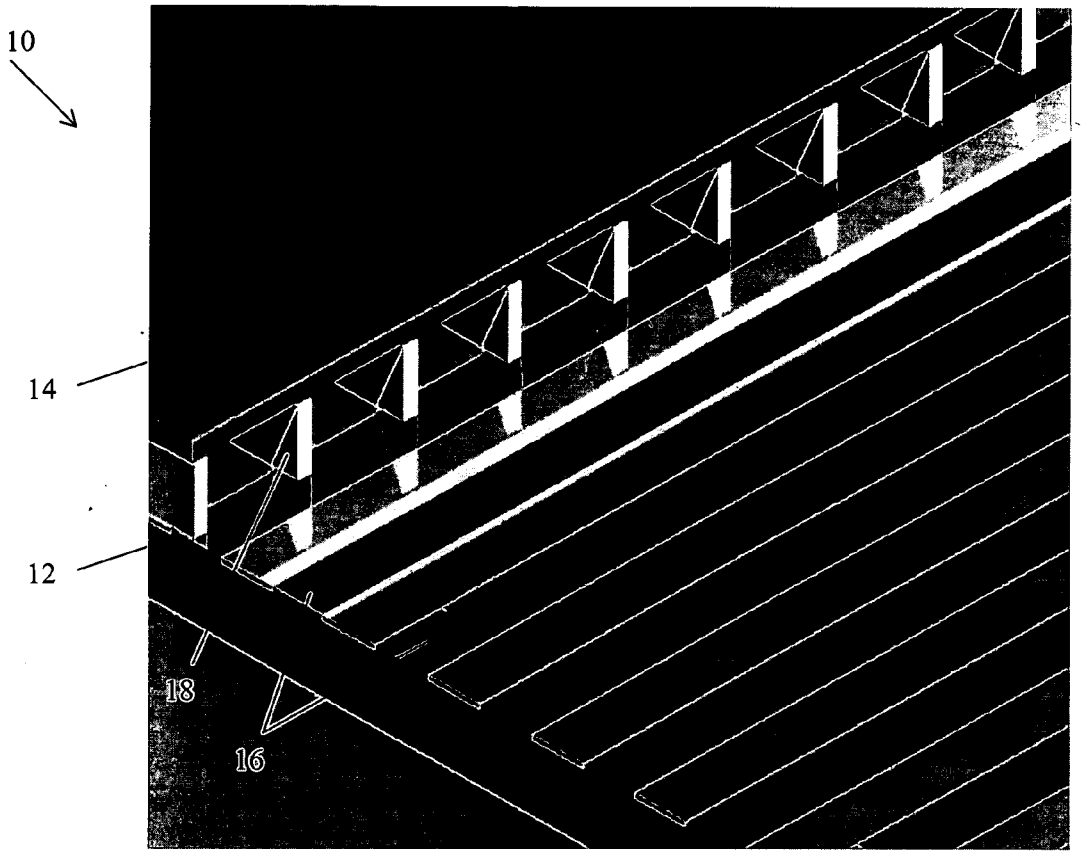

FIG. 1

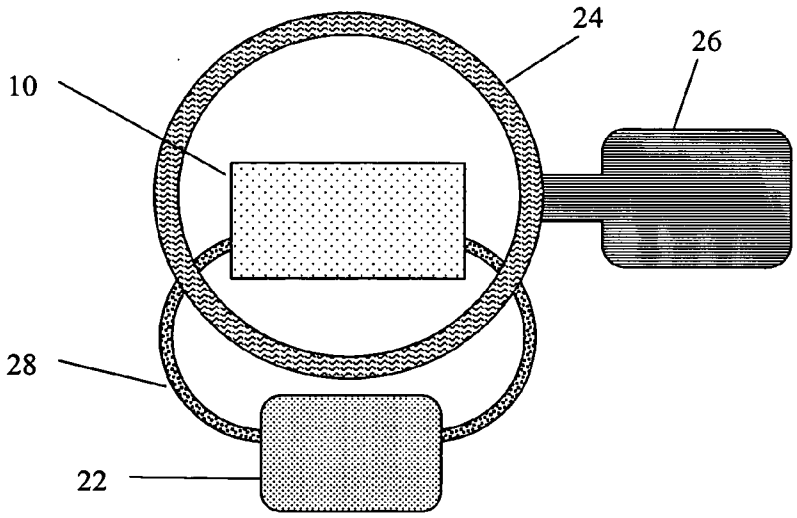

FIG. 2

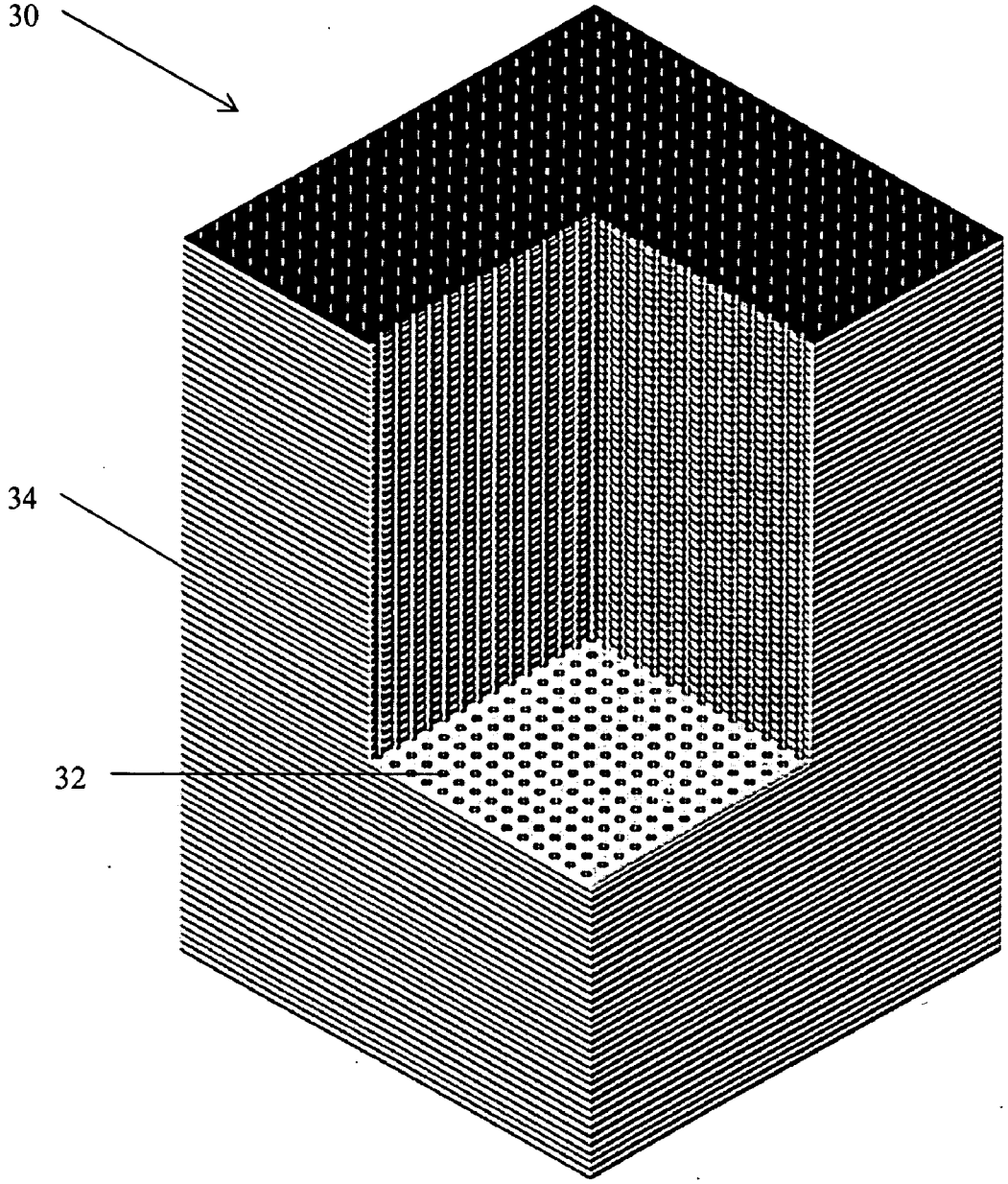

FIG. 3

FIG. 4A

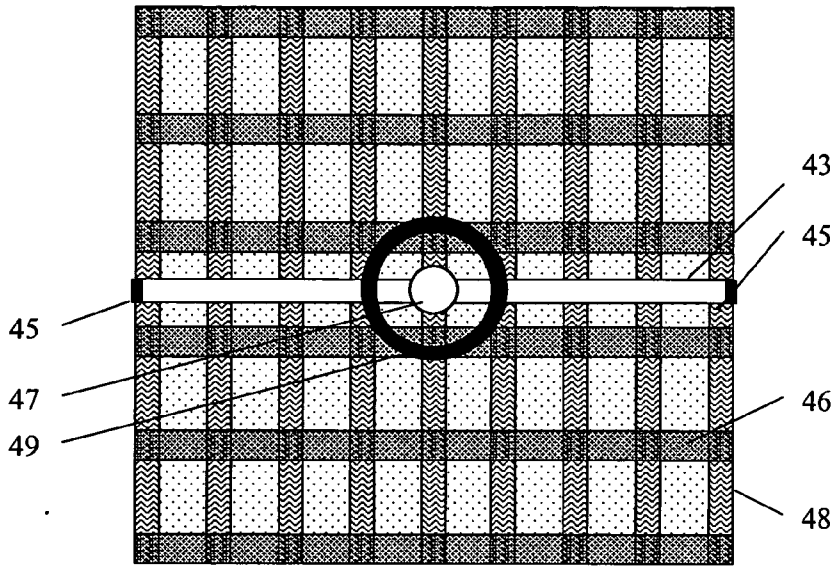

FIG. 4B

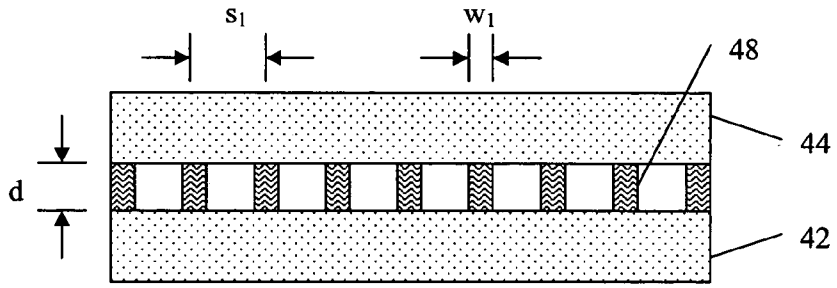

FIG. 4C

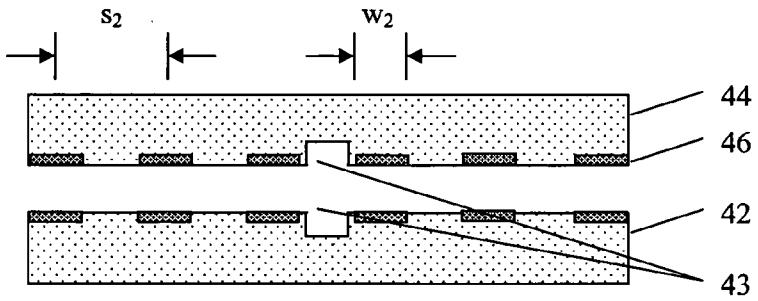

FIG. 4D

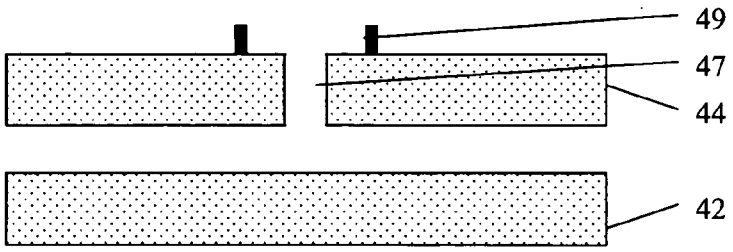

FIG. 5A

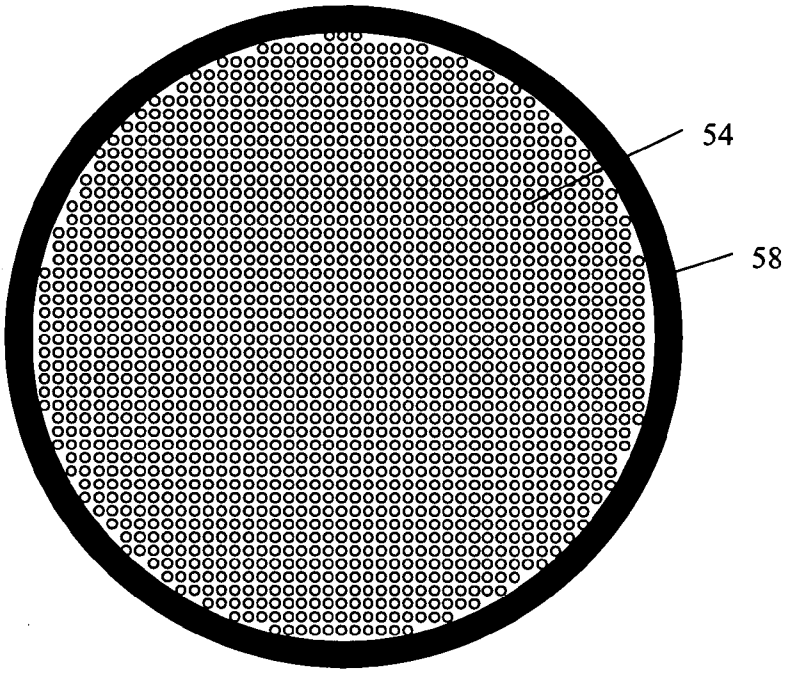

FIG. 5B

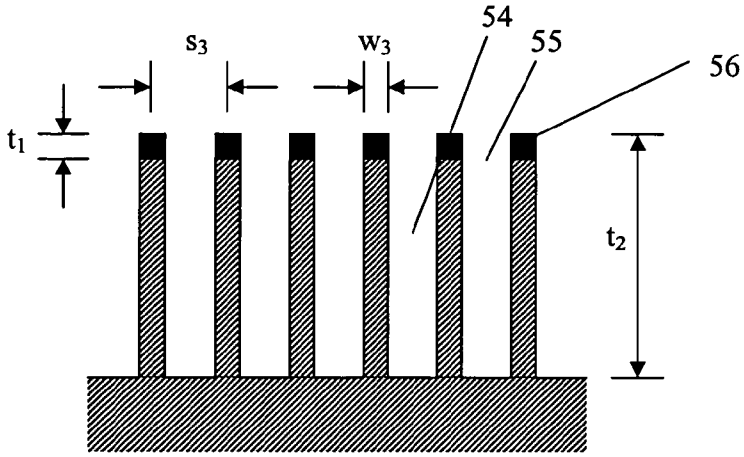

FIG. 5C

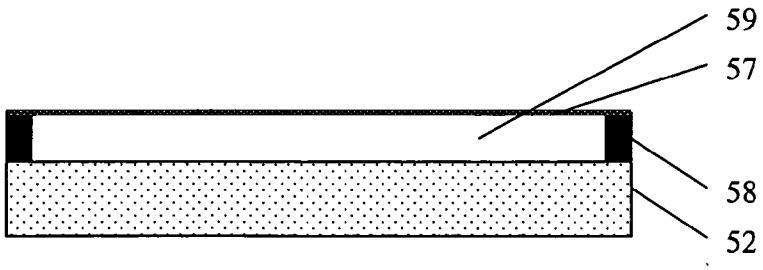

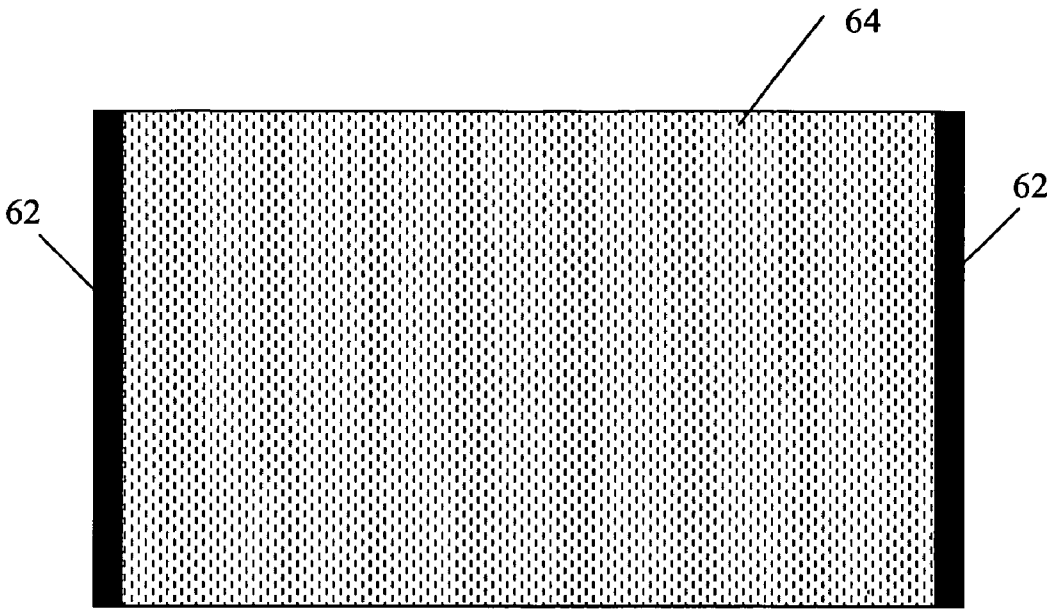

FIG. 6A

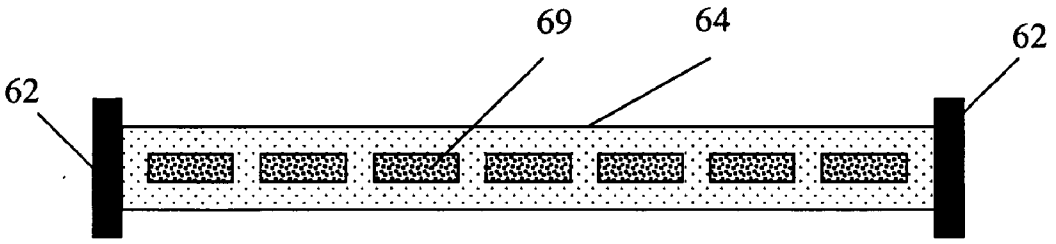

FIG. 6B

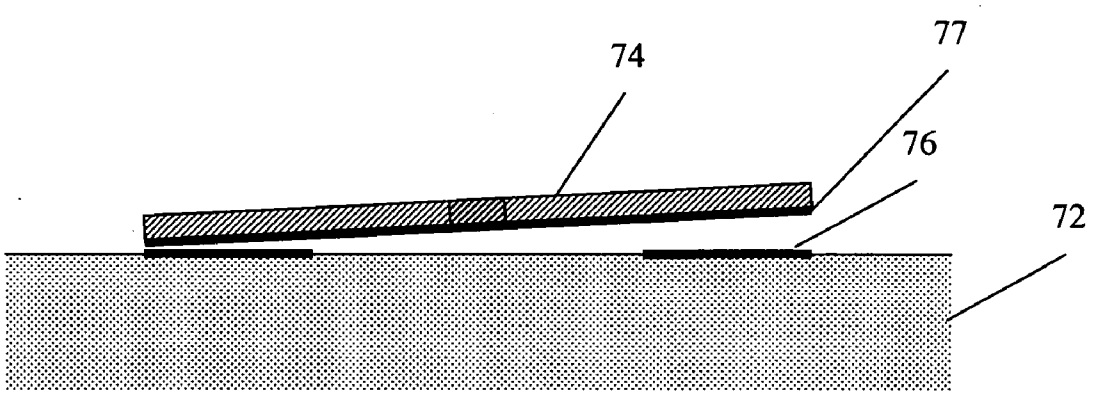

FIG. 7A

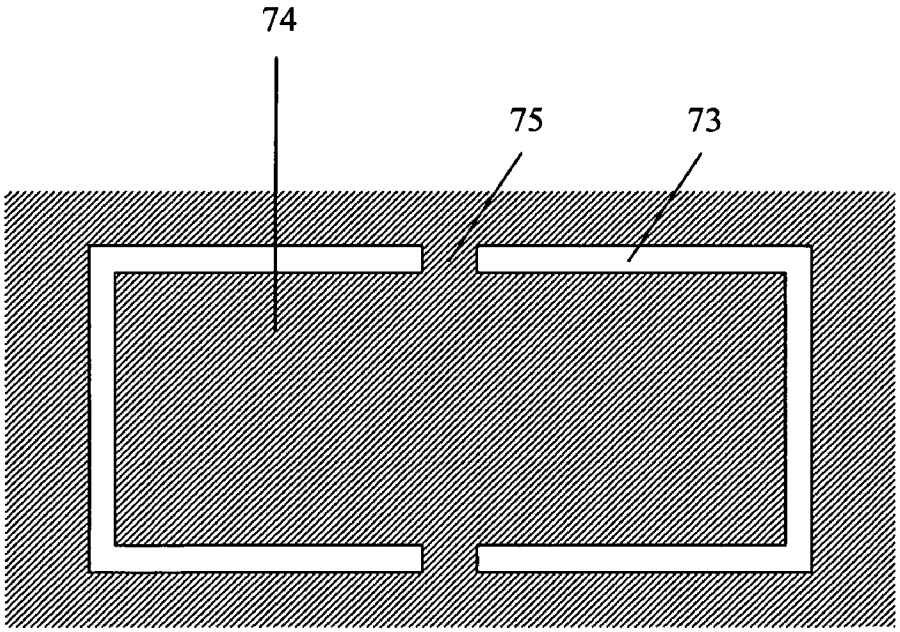

FIG. 7B

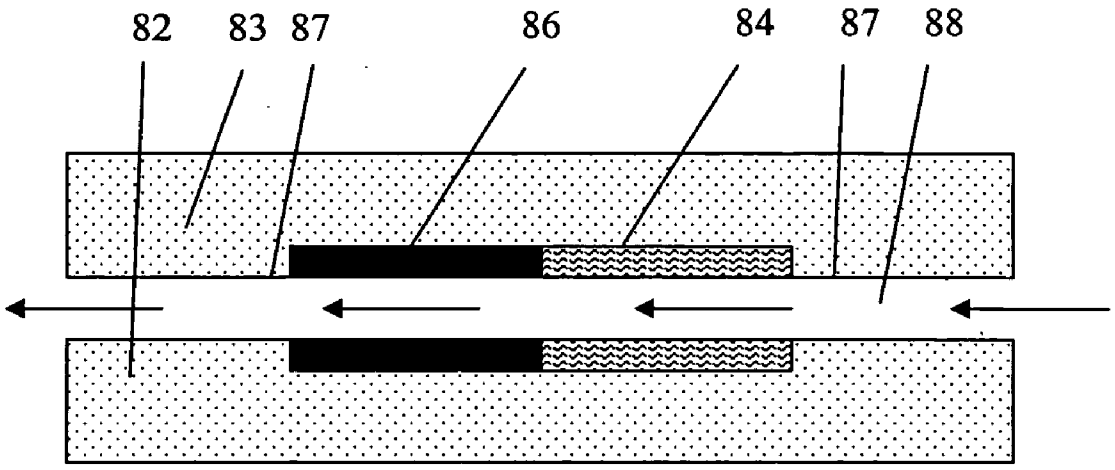

FIG. 8

QUANTUM VACUUM ENERGY EXTRACTION

BACKGROUND OF THE INVENTION

[0001] Max Planck proposed the concept of zero-point energy in 1912. The idea was then studied by Albert Einstein and Otto Stern in 1913. In 1916 Walther Nernst proposed that the Universe was filled with zero-point energy. The modern field of stochastic electrodynamics is based upon these ideas.

[0002] At that same time the structure and stability of the atom were puzzles. The Rutherford model of the atom was based on analogy to the motions of planets (electrons) around the Sun (the nucleus). However this was not feasible. The orbiting electron(s) would emit Larmor radiation, quickly losing energy and thus spiraling into the nucleus on time scales less than one-trillionth of a second, thereby rendering stable matter impossible. It is now known within the context of stochastic electrodynamics (SED) theory that a possible solution involves the absorption of zero-point energy. It was shown in 1975 by Boyer that the simplest possible atom and atomic state, the hydrogen atom in its ground state, would be in a state of equilibrium between Larmor radiation and absorption of zero-point energy at the correct radius for a classical Rutherford hydrogen atom.

[0003] Since this solution was not known in 1913, Niels Bohr followed a different path by simply postulating that only discrete energy levels were available to the electron in an atom. This line of reasoning let to the development of quantum theory in the 1920s. The concept of classical zero-point energy was forgotten for a decade. However the same concept found itself reborn in a quantum context in 1927 with the formulation of the Heisenberg uncertainty principle. According to the principle, the minimum energy of a harmonic oscillator has the value hf/2, where h is Planck's constant and f is the frequency. It is thus impossible to remove this last amount of random energy from an oscillating system.

[0004] Since the electromagnetic field also must be quantized in quantum theory, a parallel is drawn between the properties of a quantum oscillator and the waves of the electromagnetic field. It is concluded that the minimum energy of any possible mode of the electromagnetic field, consisting of frequency, propagation direction and polarization state, is hf/2. Multiplying this energy by all possible modes of the field gives rise to the electromagnetic quantum vacuum, which has identical properties—energy density and spectrum—to the classical zero-point energy studied by Planck, Einstein, Stern and Nernst a decade previously.

[0005] The line of inquiry involving classical physics plus the addition of a classical zero-point field was reopened in the 1960s by Trevor Marshall and Timothy Boyer and has been named stochastic electrodynamics (SED). SED asks the question: "Which quantum properties, processes or laws can be explained in terms of classical physics with the only addition being a zero-point electromagnetic field." Two of the early successes were a classical derivation of the black-body spectrum (i.e. one not involving quantum physics) and the discovery that a classically orbiting electron in a hydrogen atom emitting Larmor radiation but absorbing zero-point radiation would have an equilibrium orbit at the classical Bohr radius. An initial approach to this problem by Timothy Boyer (1975) was perfected by H. E. Puthoff (1987). Their analyses treated the orbiting electron as a harmonic oscillator.

[0006] This result underwent a major new development with the recent work of Daniel Cole and Y. Zou which simulated the orbit of a classical electron in a true Coulomb field of a hydrogen nucleus and found that such a realistic electron would find itself in a range of distances from the nucleus, in agreement with quantum mechanics, owing to the random nature of the emission and absorption processes. The mean position is at the correct Bohr radius, but the actual distribution of positions very precisely duplicates the electron probability distribution of the corresponding Schrödinger equation in which the electron is regarded as being represented by a wave function. (In the SED representation the electron is "smeared out" not because it is a wave function, but because as a point-like particle it is subject to the continuous perturbations of the electromagnetic quantum vacuum fluctuations.)

[0007] A clear consequence of this theory is that a reduction of the electromagnetic quantum vacuum at the frequency corresponding to the orbit of the electron will result in a decay of the orbit since there will thereby be an imbalance in the Larmor radiation vs. absorption.

[0008] The electromagnetic quantum vacuum energy spectrum is proportional to the cube of the frequency. If the vacuum energy is suppressed at the frequency of the "normal" orbit of the electron, this will cause the electron to spiral inward to a higher frequency orbit. In this fashion it will then encounter a new equilibrium situation with the electromagnetic quantum vacuum energy spectrum owing to that spectrum's increase with the cube of the frequency.

[0009] If the SED interpretation is correct for the hydrogen atom as the analyses of Boyer, Puthoff, Cole and Zou indicate, it must apply as well to all other atoms and their multi-electron configurations. In that case, a transition of an electron from an excited state to a lower energy state involves a rapid decay from one stable orbit to another, not an instantaneous quantum jump. The details of the bases for stability of electron orbits has yet to be determined by SED theory, but the logical extrapolation from the single-electron hydrogen case is clear: electron orbits in all atoms must be determined by an emission vs. absorption balance and thus are subject to modification involving mode suppression of the electromagnetic zero-point field at appropriate frequencies.

[0010] It is claimed that modification of electron orbits is in essence the same process as natural transition between energy levels of electrons in atoms and therefore that the energy released in such a process can be captured in the same way as ordinary transition energy.

[0011] By moving an atom into and out of a microstructure that suppresses appropriate modes of the electromagnetic quantum vacuum, an extraction of energy from the electromagnetic quantum vacuum may be accomplished. This can be done with micro Casimir cavities.

[0012] The electromagnetic quantum vacuum as a real source of energy is indicated by the Lamb shift between s and p levels in hydrogen, van der Waals forces, the Aharanov-Bohm effect, and noise in electronic circuits.

[0013] However the most important effect of the electromagnetic quantum vacuum is the existence of the Casimir Force, a force between parallel conducting plates which may be interpreted as a radiation pressure effect of electromagnetic quantum vacuum energy. Electromagnetic waves in a cavity whose walls are conducting are constrained to certain wavelengths for reasons having to do with transverse component boundary conditions on the wall surfaces. As a result, in a Casimir cavity between parallel plates there will be, in effect, an exclusion of radiation modes whose wavelengths are longer than the separation of the plates. An overpressure of electromagnetic quantum vacuum radiation on the outside then pushes the plates together. An extensive literature exists on the Casimir force and the reality of the force has moved from laboratory experimentation to micro-electro-mechanical structures (MEMS) technology both as a problem (so-called "stiction") and as a possible control mechanism.

[0014] The exclusion of modes does not begin all at once at the wavelength equivalent to the plate separation, d. Mode suppression will be strongest for wavelengths of d or greater, but will begin to occur as well for wavelengths falling in between the "stairway" d/n, with the effect diminishing as n increases. We propose to use the partial suppression of modes for wavelengths shorter than d occurring in this fashion in order to be able to employ Casimir cavities of the maximum possible physical size.

[0015] Researchers have shown that thermodynamic laws are not violated when energy is "extracted" from zero-point energy, as energy is still conserved and the second law is not violated. Cole and Puthoff have carried out and published thermodynamic analyses showing that there is no violation. Indeed, a thought experiment by Forward (1984) showed a simple, but not practical, energy extraction experiment.

[0016] In the stochastic electrodynamics (SED) interpretation of the hydrogen atom, the ground state is interpreted as effectively equivalent to a classically orbiting electron whose velocity is c/137. The orbit is stable at the Bohr radius owing to a balance between classical electromagnetic emission and absorption from the electromagnetic zero-point field. This view, first obtained by Boyer (1975) and subsequently refined by Puthoff (1987) has been further strengthened by the detailed simulations of Cole and Zou (2003, 2004) which demonstrate that the stochastic motions of the electron in this interpretation reproduce the probability density distribution of the Schrödinger wave function. Note that one apparent difference between this interpretation and that of quantum mechanics is that in quantum mechanics the 1s state of the electron is regarded as having zero angular momentum, whereas in the SED interpretation the electron has an instantaneous angular momentum of $mcr/137=h/2\pi$. However SED simulations by Nickisch have shown that the time-averaged angular momentum is zero just as in the quantum case owing to the zero-point perturbations on the orbital plane. Thus averaged over enough "orbits" this "classical electron" will fill a spherical symmetric volume around the nucleus having the same radial probability density as the Schrödinger wave function and zero net angular momentum, completely consistent with quantum behavior.

[0017] The Bohr radius of the atom in the SED view is 0.529 A (Angstroms). This implies that the wavelength of zero-point radiation responsible for sustaining the orbit is $2*\pi*0.529*137=455$ A (0.0455 microns). It is claimed that suppression of zero-point radiation at this wavelength and shorter in a Casimir cavity will result in the decay of the electron to a lower energy state determined by a new balance between classical emission of an accelerated charge and zero-point radiation at $\lambda<455$ A, where λ depends on the Casimir plate separation, d. Note that the tail end of the quantum probability density of the electron (as well as the SED simulation of Cole and Zou) extends beyond five Bohr radii, so that some change in the energy balance could be accomplished even at considerably longer wavelengths of perhaps 0.1 microns-0.2 microns

[0018] Since the frequency of this orbit is 6.6×10^{15} s^{-1}, no matter how quickly the atom is injected into a Casimir cavity the process will be a slow one as experienced by the orbiting electron. We therefore assume that the decay to a new sub-Bohr ground state will involve gradual release of energy in the form of heat, rather than a sudden optical radiation signature.

[0019] Since the binding energy of the electron is 13.6 eV, we assume that the amount of energy released in this process would be on the order of 1 to 10 eV for injection of the hydrogen atom into a Casimir cavity of d=250 A or thereabouts (and perhaps even a larger cavity as noted above). Upon exiting the cavity the electron would absorb energy from the zero-point field and be re-excited to its normal state. The energy (heat) extracted in the process comes at the expense of the zero-point field, which in the SED interpretation flows at the speed of light throughout the Universe. We are in effect extracting energy locally and replenishing it globally. Imagine extracting thimbles-full of water from the ocean. Yes, the ocean is being depleted thereby, but no practical consequences ensue.

[0020] Since naturally occurring hydrogen at standard temperature and pressure (STP) is a two-atom molecule, a dissociation process would need to precede an injection of hydrogen atoms into a Casimir cavity. We avoid this complication and take advantage of multi-electron modification by working with monatomic (noble) gases which also have the advantage of being safe and inexpensive.

[0021] We work with naturally occurring monatomic gases for three reasons:

[0022] (1) No dissociation process is required.

[0023] (2) Heavier element atoms are approximately two to four times larger than hydrogen and thus can utilize and be affected by a larger Casimir cavity which is easier to fabricate.

[0024] (3) Heavier elements have numerous outer shell electrons, several of which may be simultaneously affected by the reduction of zero-point radiation in a Casimir cavity.

[0025] The following five noble gases are potentially suitable:

[0026] He (Z=2, r=1.2 A)

[0027] Ne (Z=10, r=1.3 A),

[0028] Ar (Z=18, r=1.6 A)

[0029] Kr (Z=36, r=1.8 A)

[0030] Xe (Z=54, r=2.05 A).

[0031] All of these elements contain ns electrons. He has two is electrons. Ne has two each of 1s and 2s electrons. Ar has two each of 1s, 2s, and 3s electrons. Kr has two of each of 1s, 2s, 3s, and 4s electrons. Xe has two of each of 1s, 2s, 3s, 4s and 5s electrons.

[0032] Assuming an outermost electron which is completely shielded by the other electrons (a crude assumption), its orbital velocity would scale as $r^{-1/2}$ (the familiar Keplerian period squared proportional to semi-major axis cubed relationship) and thus λ proportional to r/v) will scale as $r^{3/2}$. If that is the case, then the larger radii translate as $r^{3/2}$ into larger Casimir cavities having an effect on the energetics of the outer electron shells. We would therefore expect that a Casimir cavity having d=0.1 microns (or perhaps even as large as one micron would have an effect on reducing the energy levels of the outermost pair of s electrons . . . and possibly also p electrons and intermediate shell s electrons as well.

[0033] It is reasonable to expect that a 0.1 microns Casimir cavity would result in a release of 1 to 10 eV for each injection of a He, Ne, Ar, Kr or Xe atom into such a cavity.

[0034] According to a Jordan Maclay, who has done theoretical Casimir cavity calculations, a long cylindrical cavity results in an inward force on the cavity. In the "exclusion of modes" interpretation of the Casimir force, this implies that a cylindrical cavity of diameter 0.1 micron would yield the desired decay of outer shell electrons and subsequent release of energy.

[0035] It is now recognized that an electromagnetic quantum vacuum field is formally necessary for atomic stability in conventional quantum theory (Milonni 1994). In the field of physics known as stochastic electrodynamics, this concept has been shown by theory and simulations to underlie the ground state of the electron in the hydrogen atom. The classical Bohr orbit is determined by a balance of Larmor emission and absorption of energy from the zero-point fluctuations of the electromagnetic quantum vacuum in SED theory. It follows that upon suppression of appropriate zero-point fluctuations the balance will be upset causing the electron to decay to a lower energy level not ordinarily found in nature with a release of energy during this transition. A Casimir cavity of the proper dimensions can accomplish this suppression of zero-point fluctuations. A Casimir cavity refers to any region in which electromagnetic modes are suppressed or restricted. Upon entering such a properly designed Casimir cavity the electron energy level will shift and energy will be released. Upon exiting the Casimir cavity the electron will return to its customary state by absorbing energy from the ambient zero-point fluctuations. This permits an energy extraction cycle to be achieved at the expense of the zero-point fluctuations. Although it has not yet been proven theoretically, a similar balance of Larmor emission and absorption of energy from the zero-point fluctuations must underlie the electron states of all atoms, not just hydrogen, permitting any atom to be used as a catalyst for extraction of zero-point energy (the energy associated with the zero-point fluctuations). An analogous process is also believed to underlie molecular bonds, yielding a similar energy extraction cycle.

[0036] The following is a list of patents that deal with related phenomena:

[0037] U.S. Pat. No. 5,018,180, Energy conversion using high charge density, Kenneth R. Shoulders. This concerns the production of charge clusters in spark discharges. It is conjectured that the electrostatic repulsion of charges is overcome in charge clusters by a Casimir-like force. This invention does not deal with energy release from atoms in Casimir cavities and is therefore not relevant to the present invention.

[0038] U.S. Pat. No. 5,590,031, System for converting electromagnetic radiation energy to electrical energy, Franklin B. Mead and Jack Nachamkin. This invention does not deal with energy release from atoms in Casimir cavities and is therefore not relevant to the present invention.

[0039] U.S. Pat. No. 6,477,028, Method and apparatus for energy extraction, Fabrizio Pinto. Proposes to vary one or more of a variety of physical factors that affect the Casimir force, or by altering any of a variety of environmental factors that affect such physical factors and thereby render a Casimir force system as non-conservative. This invention does not deal with energy release from atoms in Casimir cavities and is therefore not relevant to the present invention.

[0040] U.S. Pat. No. 6,593,566, Method and apparatus for energy extraction, Fabrizio Pinto. A method and apparatus for accelerating and a decelerating particles based on particle surface interactions. This invention does not deal with energy release from atoms in Casimir cavities and is therefore not relevant to the present invention.

[0041] U.S. Pat. No. 6,665,167, Method for energy extraction-I, Fabrizio Pinto. Similar to U.S. Pat. No. 6,477,028. This invention does not deal with energy release from atoms in Casimir cavities and is therefore not relevant to the present invention.

SUMMARY OF THE INVENTION

[0042] A system is disclosed for converting part of the energy of the electromagnetic quantum vacuum available at any point in the universe to usable energy in the form of heat, electricity, mechanical energy or other forms of power. This is accomplished using an effect on the electron configurations of atoms predicted by the theory of stochastic electrodynamics (SED). Within the context of SED theory it is predicted that the electron energy levels in atoms are determined by a balance of Larmor radiation vs. absorption of radiative energy from the electromagnetic quantum vacuum. By suppressing electromagnetic quantum vacuum energy at appropriate frequencies a change may be effected in the electron energy levels which will result in the emission or release of energy. This change in energies is analogous to a standard emission of a photon as an electron makes a transition from an excited to a lower energy state, but on a longer time scale and with the change being a continuous one rather than a "jump" from one energy level to another. Mode suppression of electromagnetic quantum vacuum radiation is known to take place in Casimir cavities. A Casimir cavity refers to any region in which electromagnetic modes are suppressed or restricted. When atoms enter into suitable micro Casimir cavities a decrease in the orbital energies of electrons in atoms will thus occur, with the effect being most pronounced for outer shell electrons. Such energy will be captured in the claimed devices. Upon emergence form such micro Casimir cavities the atoms will be re-energized by the ambient electromagnetic quantum vacuum. In this way energy is extracted locally and replenished globally from and by the electromagnetic quantum

vacuum. This process may be repeated an unlimited number of times. This process is also consistent with the conservation of energy in that all usable energy does come at the expense of the energy content of the electromagnetic quantum vacuum. Two example variations of a system are disclosed that permit multiple extractions of electromagnetic quantum vacuum energy during passage of a gas through a series of micro Casimir cavities and that operate in a self-sustaining, recycling fashion. Similar effects may be produced by acting upon molecular bonds. The disclosed devices are scalable in size and energy output for applications ranging from replacements for small batteries to power plant sized generators of electricity. Since the electromagnetic quantum vacuum is thought to permeate the entire Universe, devices drawing power from the electromagnetic quantum vacuum in the fashion claimed will be effectively inexhaustible sources of power.

BRIEF DESCRIPTION OF THE DRAWINGS

[0043] The present invention may be understood by reference to the following detailed description taken in conjunction with the drawings briefly described below.

[0044] FIG. **1** is a diagrammatic illustration of a set of channels each containing a multiplicity of Casimir cavities in accordance with the present invention.

[0045] FIG. **2** is a diagrammatic illustration of a system for converting quantum vacuum energy into locally usable power in accordance with the present invention.

[0046] FIG. **3** is a diagrammatic illustration of a block of tunnels each containing a multiplicity of Casimir cavities in accordance with the present invention.

[0047] FIGS. **4**A-**4**D are diagrammatic illustrations of Casimir channels in bonded wafers in accordance with the present invention.

[0048] FIGS. **5**A-**5**C are diagrammatic illustrations of a device for oscillating a fluid though Casimir channels in accordance with the present invention.

[0049] FIGS. **6**A and **6**B are diagrammatic illustrations of a device switching the reflecting characteristics of walls of Casimir cavities in accordance with the present invention.

[0050] FIGS. **7**A and **7**B are diagrammatic illustrations of a device Casimir cavity wall spacing in accordance with the present invention.

[0051] FIG. **8** is a diagrammatic illustration of a device incorporating asymmetric Casimir cavity entry and exits in accordance with the present invention.

DETAILED DESCRIPTION

[0052] The first embodiments of this concept utilize Casimir cavities consisting of volumes through which, or in and out of which, gases flow, and which on the size scales of atoms appear as regions bounded by parallel plates of conducting material in which the plate scales are much larger than the plate separations; or by cylinders of conducting material in which the lengths of the cylinders are much larger than the diameters. It is claimed that other forms of Casimir cavity are capable of producing a similar effect, and the term Casimir cavity will be used to designate any volume capable of mode suppression of the zero-point field. The necessary condition is that the mode suppression ability of the Casimir cavity be matched to the electron energy levels in such a way as to result in a significant difference of the electron energy levels inside vs. outside the cavity.

[0053] These embodiments demonstrate the following concepts:

[0054] A method, comprising: (a) use of a device including a series of Casimir cavities and causing a specific gas to flow through the cavities, said Casimir cavities being configured and said specific gas being selected such that as the gas flows through the cavities energy is released from the gas; and (b) means for collecting at least some of said released gas.

[0055] A method, comprising: (a) providing a device including at least one Casimir cavity and causing a specific gas to enter and then exit the cavity, said Casimir cavity being configured and said specific gas being selected such that when the gas is caused to enter the cavity, energy is released from the gas; and (b) means for collecting at least some of said released energy.

[0056] A means for effecting changes in the electron configurations. A system for converting part of the energy of the electromagnetic quantum vacuum available at any point in the Universe to usable energy in the form of heat, electricity, mechanical energy or other forms of power.

[0057] A means for effecting changes in the electron configurations in the process of which energy is released.

[0058] A means for allowing the electron configurations to be re-energized by exposure to the ambient electromagnetic quantum vacuum radiation.

[0059] The use of microstructures consisting of many pairs of alternating Casimir cavities and regions in which the electromagnetic quantum vacuum radiation freely propagates.

[0060] The use of conducting strips on facing pairs of plates so that atoms go through alternating regions in which they are exposed to the full electromagnetic quantum vacuum spectrum, and regions in which part of the spectrum is blocked. The result is that they dump (or radiate) the energy difference into the local medium.

[0061] The use of spacers to separate the layer pairs.

[0062] The use of multiple conducting strips to amplify the effect (hugely).

[0063] The stacking of such plates with strips on both sides so that the top of one pair becomes the bottom of the next, each with identical conducting strips which form Casimir cavities with their partner strips in each pair.

[0064] The use of sandwiched layers of alternating conducting and non-conducting plates having micron sized thicknesses in which micron or submicron diameter holes are introduced by etching or some other method.

[0065] The stacking, co-registration and alignment of such sandwiched layers to produce many parallel Casimir tunnels having alternating Casimir and non-conducting segments.

[0066] The use of multiple segments to amplify the effect (hugely).

[0067] The use of monatomic gases as the medium in such a system.

[0068] The use of molecular gases in such a system for the purpose of modifying molecular bonds with the attendant release of energy.

[0069] A closed recycling system in which these processes take place.

[0070] Fabricatable and workable configuration and dimensions but with the claims not limited to these specific embodiments.

[0071] A means whereby the flow of gas is initiated and maintained in a closed system.

[0072] A means whereby the energy released from the electron orbital changes is converted into usable energy in the form of heat, electricity, mechanical energy or other forms of power.

Casimir Channels

[0073] This embodiment shown in FIG. **1** involves two square parallel plates **12** and **14**, 10×10 cm in size for illustration. On each one lay down 5000 conducting strips **16** that are 10 microns in width and the full 10 cm in length, separated by 10 microns non-conducting strips. Perpendicular to the strips deposit a spacer material **18** at 0.1 to 1 cm intervals with a height of 0.1 microns. Put the plates face to face and align the strips so as to form 5000 Casimir strips.

[0074] If we assume a gas flow rate of 10 cm/s parallel to the spacers and perpendicular to the strips, this would result in 1.3×10^{20} transitions/s.

[0075] An energy release of 1 to 10 eV per transition corresponds to 21 to 210 watts of energy release for the entire Casimir cavity. A stacked set of 10 or more such layers could be fabricated yielding 210 to 2100 watts for a 10×10×10 cm block.

[0076] This may be directly converted into electricity using a thermophotovoltaic process, or indirectly by using a heat exchanger. As in the previous embodiment, one means of capturing the emitted radiation is to surround the apparatus with a water bath.

[0077] The dimensions above are solely examples. The device may be scaled to both smaller and significantly larger dimensions.

[0078] The essential components of an energy generating device of this sort shown in FIG. **2** are:

[0079] (1) An array of parallel Casimir channels with conducting strips **10**

[0080] (2) A pump **22** providing continuous recycling of gas through the tunnels

[0081] (3) A means **24** for capturing the emitted energy

[0082] (4) A thermal photovoltaic, heat exchanger or other device **26** capable of converting output heat into electricity or other usable forms of power.

[0083] A desirable property of the system is its ability to radiate the accumulated energy locally and absorb it globally. Thus surprisingly the means **24** for capturing the emitted energy can capture the emitted energy without hindering the capture of the quantum vacuum energy by the gas. This is due to the fact that the vacuum field permeates all space and cannot be blocked. (Note that the reason that Casimir cavities have reduced vacuum energy modes is not that they block it, but rather that because of destructive interference they do not allow some of the electromagnetic modes to exist in their interior.) A second reason that the means **24** does not block the capture of the quantum vacuum energy is that the absorbed energy is dominantly shorter wavelength electromagnetic modes that are not absorbed by the means **24**, whereas the radiated energy can be longer wavelengths for which the means **24** has a much larger absorption coefficient. Such is the case, for example, when the means **24** comprises a water bath.

[0084] The first two components will be enclosed in sealed structure. The third and fourth components may be interior or exterior to this structure.

[0085] A variation on the above device consists of stacking plates such that the top of one pair becomes the bottom in the next pair, etc.

Casimir Tunnels

[0086] One embodiment of the concept shown in FIG. **3** is multiple, parallel, 0.1 micron diameter Casimir tunnels. If we let the length of the cylinder be 100 times the width, this results in z=10 microns for the length of the Casimir tunnel. We propose a segmented tunnel consisting of alternating conducting and non-conducting materials, each 10 microns in length. In a length of 1 cm, there could be 500 such pairs in segments, resulting in 500 energy releases events (each yielding 1 to 10 eV) for each transit of an atom through the entire 1 cm-long segmented Casimir tunnel.

[0087] Consider a one cubic cm "Casimir Block" that is built up of 10 micron thick alternating layers as shown in FIG. **3**. Assume that tunnels **32** of 0.1 micron diameter could be drilled through the cube perpendicular to the layers **34** (this is not physically possible, of course; tunnel manufacture must be done differently). Ten percent of the cross section comprises entrance to some 1.3 billion tunnels. The amount of energy released would be proportional to the flow rate of the gas through these tunnels.

[0088] A flow rate of 10 cm s^{-1} through a total cross sectional area of 0.1 cm^2 yields 1 cm^3 of gas per second flowing through the tunnels, which at STP would be 2.7×10^{19} atoms. A very simple sealed, closed-loop pumping system could maintain such a continuous gas flow. Since each atom interacts 500 times during its passage, there would be 1.3×10^{22} transitions per second in the entire cube of one cubic centimeter. An energy release of 1 to 10 eV per transition corresponds to 2150 to 21500 watts of energy release for the entire Casimir cube of segmented tunnels.

[0089] Obviously it is not possible to drill 1.3 billion tunnels having diameters of 0.1 microns. However it is feasible to use microchip technology to etch holes into the individual layers first and then assemble the stack. Extremely fine coregistration and alignment of stacks will need to be accomplished.

[0090] This may be directly converted into electricity using a thermophotovoltaic process, or indirectly by using a heat exchanger.

[0091] One means to capture the emitted energy is to surround the apparatus with a water bath. Water absorbs infrared radiation very effectively. For the wavelength range of 2 microns to 200 microns, the absorption coefficient of water is greater than 10 cm^{-1}. Therefore a layer of water that is 1 mm thick and surrounds the apparatus will be sufficient to absorb nearly all the emitted infrared radiation. The water will be heated, and that heat converted into the desired form of energy.

[0092] The dimensions above are solely examples. The device may be scaled to both smaller and significantly larger dimensions.

[0093] The essential components of an energy generating device of this sort are:

[0094] (1) An array of parallel segmented Casimir tunnels **32**

[0095] (2) A pump **22** providing continuous recycling of gas through the tunnels

[0096] (3) A means **24** for capturing the emitted energy

[0097] (4) A thermal photovoltaic, heat exchanger or other device **26** capable of converting output heat into electricity or other usable forms of power.

[0098] The first two components will be enclosed in sealed structure. The third and fourth components may be interior or exterior to this structure.

Casimir Channels in Bonded Wafers

[0099] The basic concept of the present invention is to flow gas into and out from multiple Casimir cavities. When the gas is outside of a Casimir cavity, a wide range of quantum mechanical vacuum electromagnetic modes are available to interact with the gas's atomic electronic orbital states. When the gas passes into a Casimir cavity the range of available modes is restricted and the gas sheds some of its electromagnetic energy such that this energy is available locally. When the gas once again flows out from the Casimir cavity, the gas's atomic electronic orbital state energy is recharged from quantum mechanical vacuum fields. Thus energy is harvested globally and delivered locally.

[0100] The configuration for a basic device comprising bonded wafers is shown in FIGS. **4**A-**4**D. A top view is shown in FIG. **4**. The device is 1 sq. cm. As seen from the south edge **41** in FIG. **4**B, it consists of two substrates **42** and **44** separated by a series of spacers which extend across the device from the south to the north side. These spacers have a height d, a width w_1, and a center-to-center spacing s_1. The thin gaps delineated by the spacers **48** extend to openings at the south edge of the device, as seen in FIG. **4**B and the north edge. As seen from the east edge in FIG. **4**C, the upper **44** and lower **42** substrates are each coated with conducting stripes **46** that extend from the east edge to the west edge. These stripes are discontinuous, such that the discontinuity occurs at each region where the stripe is intersected by a spacer **48**. These stripes have a width w_2 and a center-to-center spacing s_2. In the central region of the device there is a region of both substrates that has been removed to form a conduit **43** from close to the east edge to close to the west edge. This conduit does not extend all the way to the edges, but is instead sealed **45** at each end, as shown in FIG. **4**A. Finally, as seen in FIG. **4**D, which shows an east view of the central cross section, and in FIG. **4**A, a hole **47** extends through the upper substrate. This hole connects to the conduit **43** shown in FIGS. **4**A and **4**C. As can also be seen in FIGS. **4**A and **4**D, a connector ring **49** that surrounds the hole is affixed to the upper substrate.

[0101] For the device to function, gas tubing **28**, shown in FIG. **2**, is attached to the connector ring **49** extending from the upper substrate, forming a sealed connection. Pressurized gas flows through the tubing and the hole **47** in the upper substrate into the conduit **43** between the substrates. From the conduit **43** the gas flows from the central region through the gap between the substrates to the north and south edges. The spacers guide the gas so that it flows alternately between regions coated with the conducting stripes **46** and regions that are not coated with these stripes, until it reaches the north and south edges, at which point it escapes from the gap between the substrates. The escaped gas is captured in a surrounding enclosure, not shown, and pumped back through the tubing **28** into the hole at the top center of the device, forming a close-loop system. In this way the gas is passed through multiple Casimir cavities. The gas atoms or molecules absorb energy from the surrounding electromagnetic field when they are in the non-conducting region and then release a portion of their energy as they enter the gap between the conductive coatings, i.e., in the Casimir cavity.

[0102] The apparatus is surrounded by a means **24** to capture the released energy, such as a water bath, shown in FIG. **2**. Water absorbs infrared radiation very effectively. For the wavelength range of 2 microns to 200 microns, the absorption coefficient of water is greater than 10 cm^{-1}. Therefore a layer of water that is 1 mm thick and surrounds the apparatus is sufficient to absorb a large proportion of the emitted infrared radiation, providing thermal energy to heat the water. That energy can be used directly as heating source, or converted into the desired form of energy, by means **26** well known to those skilled in the art.

[0103] The materials and dimensions in the preferred embodiment are as follows. The upper **44** and lower **42** substrates are sapphire, which is transparent to much of the ambient electromagnetic spectrum, is thermally conductive, and is rigid and robust. The thickness of each substrate is 250 microns. The conducting regions **46** are formed by standard photolithography known to those skilled in the art. The width of each conducting stripe, w_2, is 2 microns, and separated by a 2 micron nonconducting region, to form a center-to-center spacing **52** of 4 microns. The stripe has gaps where the spacers **48** are to be formed. The conductive coating **46** is platinum, having a thickness of 40 nm. The spacers **48** consist of silicon dioxide, deposited and patterned by standard means known by those skilled in the art. The total spacer height, d, is 200 nm, its width, w_1, is 5 microns, and the center-to-center spacing, s_1, is 0.5 mm. The spacers are formed by depositing 100 nm thick layers on each substrate, and then joining them. The central conduit regions **43** are cut into the substrates using a standard diamond saw. The cuts are 100 microns in width and 50 microns in depth, forming a conduit that is approximately a 100 micron square. The hole **47** drilled through the upper substrate has a diameter of 1 mm, and is surrounded by a ring having a diameter of 2.5 mm. The ring **49** is affixed to the upper substrate by epoxy. The substrates are pressure

bonded together by direct bonding (Plöl, 1999), with the bond forming between the silicon dioxide spacers layers on each substrate.

[0104] The steps in the device fabrication that are not described explicitly are well known to those skilled in the art.

[0105] Following the calculations presented in the background section, the power produced by a single such device is estimated to be between 1 and 10 watts for an input pressure of 8 atmospheres.

[0106] Pumping gas through the Casimir pores requires power. We examine how much power is required, as a check that it is not more than is produced by the device. Consider a Casimir block that contains 200 nm diameter pores over a 1 cm^2 area, having a thickness of 1 cm and a porosity of 0.25. We find the pressure and power required to produce a flux of 1 cm^3 per second at standard temperature and pressure (STP):

[0107] According to FIG. **10**(*a*) in a paper by Roy et al. (1993) a pressure drop of 760 torr (equal to one atmosphere) results from a flow of approximately 5 mol/m^2-s through a thickness of 60 microns, which corresponds to a gas velocity of 10 cm/s. Reducing the velocity by a factor of ten, making the appropriate unit conversions and multiplying the result by the thickness ratio of 1 cm (10^4 microns) divided by 60 microns gives the result that a pressure of 1700 Pa, corresponding to 17 atmospheres, is required to produce the desired gas flow. Multiplying this by the gas flux of 1 cm^3 s^{-1} results in a required power of 1.7 milliwatts. These results are only approximate, as temperature and structural variations through the Casimir pores are expected to produce resistance which will then require a somewhat greater pressure. In any case the required power of approximately 1.7 milliwatts is much lower than our estimate of 2.2 to 22 kilowatts of power release, and so much more power is produced than is used to produce the gas flow.

[0108] It is to be understood that the dimensions and materials can be varied greatly and still be part of this invention. The following is a list of some such variations, but it is far from exhaustive:

[0109] i. The substrates may be other insulating or partially conducting materials, such as silicon, glass, ceramic, plastic, etc.

[0110] ii. The conducting stripes can be formed of other conductors, such as copper, aluminum, gold, sliver, silicides, transparent conductors such as indium tin oxide, etc.

[0111] iii. Instead of depositing the stripes so that they protrude from the surface and potentially interfere with the gas flow, they may be recessed, either by etching recesses into which the conductors are deposited, or by using planarization techniques to coat an insulating layer between the stripes, using techniques well known in the industry.

[0112] iv. The spacer materials can be formed from polymers used, for example, as photoresist and electron-beam resist, from metals, and other materials.

[0113] v. Instead of depositing spacers they may be formed by the etching of one or both of the substrates to form grooves.

[0114] vi. The spacer height may be from 1 nm to many microns.

[0115] vii. The substrates may be bonded by pressure bonding or the use of adhesives, such as cyanoacrylics.

[0116] viii. The dimensions of the overall structure may be varied from the distance between a single pair of spacers and conductor/nonconductor region to large plates that are many meters in width.

[0117] ix. The individual devices may be sandwiched together to form thick structures. For example, in place of the 250 micron thick substrates, micro-sheet having a thickness of 50 microns or far less may be used so that dense structures are formed.

[0118] x. The working fluid may be a wide variety of gases, in addition to the noble gases described earlier, so that all mentions of gas atoms may be extended to molecules of various types.

[0119] xi. The working fluid may be a liquid, so that all mentions of gases and gas atoms may be extended to liquids of various types. For operation within approximately of 100° C., one possible liquid is ethylene glycol. For high temperature operation, the liquid can be sodium.

[0120] xii. Micro-motors formed using micro-electro-mechanical systems (MEMS) technology can be used to pump the gas through the channels.

[0121] xiii. The Casimir cavities may be composed of carbon nanotubes.

[0122] xiv. The pattern may be formed using self-assembled layers.

[0123] xv. The device may incorporate a naturally formed structure. For example, diatom shells (Goho, 2004a) consist of silicon dioxide patterned with features, including holes, that are tens of nanometers in size. They can be coated as needed with conductors to form Casimir cavities.

[0124] xvi. The water bath may be replaced with any other material or device that absorbs substantially the released energy wavelengths. Such materials include glass, organic polymers, thermophotovoltaic devices, among many possibilities known to those skilled in the art.

[0125] xvii. Rather than surrounding the entire apparatus, the absorbing material may be placed in the apparatus, for example coating the channels through which the gas flows. Such placement can allow the absorber to reside within roughly an emission wavelength of the gas that is releasing the energy.

Gas Oscillating Through Casimir Channels

[0126] The device described in the previous embodiment exposes the gas atoms to a very large number of transitions between Casimir cavity regions (between conducting layers) and exposed regions (without the conducting layers) by pumping them across multiple transitions. Instead of pumping gas through the device, gas atoms can simply be oscillated back and forth between Casimir cavity and exposed regions.

[0127] A simple way to visualize this, but not necessarily the most efficient working device, is to consider the device of FIGS. **4**A-**4**D, but with the gaps sealed at the north and south edges. Instead of connecting to tubing via the connector ring, the ring is sealed with a thin metal diaphragm. Before sealing the device it is filled with the desired working gas. An ultrasonic transducer is then mated to the diaphragm. When the ultrasonic transducer is powered, it rapidly compresses and decompressed the gas, causing it to oscillate back and forth between Casimir and exposed regions.

[0128] A vertical oscillatory flow device is shown in FIGS. **5**A-**5**C. FIG. **5**A shows a top view, in which many small holes **54** are formed in the substrate surface. The device is surrounded by a connector ring **58**. A magnified cross section of the holes is shown in FIG. **5**B. The holes **54** have a diameter d, a center-to-center spacing s, a depth t_2, and the thickness of a conducting region **56** at the surface is t_1. A central cross section of the entire device is shown in FIG. **5**C. It shows the substrate (holes and conducting layer not shown), the connector ring at the periphery, and a thin diaphragm **57** attached to the top of the connector ring.

[0129] The gap and holes are filled with the chosen working gas **59**. An ultrasonic transducer or other source of high frequency vibrations is placed in contact with the diaphragm **57** and powered. This produces gas pressure oscillations that force gas atoms past the Casimir region **55** formed at the top of each hole, alternately in upward and downward directions. Instead of a single conducting layer at the top, multiple alternating conducting and non-conducting layers can be formed at the top of the holes, to multiply the effect. As in the embodiment of FIGS. **4**A-**4**D, the apparatus is surrounded by a means for absorbing the released energy, such as a water bath **24**.

[0130] The device is fabricated as follows. The conducting layer **56** is deposited using vacuum deposition, such as sputtering, or from a liquid by anodic or electroless deposition. The layers are patterned by methods known to those skilled in the art, such as electron-beam lithography or photolithography. Alternatively, the holes **54** can be formed using self-assembled monolayers to create the lithography mask, as known to those skilled in the art. The holes are etched to a high aspect ratio, e.g., ratio of depth-to-diameter of 20, such as by ion milling. The outer ring **58** is attached using epoxy, the region is filled with the desired working gas **59**, and the diaphragm **57** is attached with epoxy.

[0131] The materials and dimensions in the preferred embodiment are as follows. The substrate **52** is sapphire, and has diameter of 2.54 cm and a thickness of 250 microns. The conducting layer **56** is aluminum, of thickness t_1 of 1 micron. The hole **54** depth t_2 is 4 microns. The hole diameter d is 0.2 microns and center-to-center spacing s is 0.3 microns.

[0132] It is to be understood that the shape, dimensions, modulation techniques and materials can be varied greatly and still be part of this invention. The following is a list of some such variations, but it is far from exhaustive:

[0133] i. The Casimir cavities may be composed of carbon nanotubes.

[0134] ii. The working fluid may be a wide variety of gases, in addition to the noble gases described earlier, so that all mentions of gas atoms may be extended to molecules of various types.

[0135] iii. The working fluid may be a liquid, so that all mentions of gases and gas atoms may be extended to liquids of various types. For operation of up to approximately 100° C., one possible liquid is ethylene glycol. For high temperature operation, the liquid can be sodium.

[0136] iv. Instead of actively causing the gas atoms to oscillate into and out from the Casimir cavity regions, the oscillations can result from ambient thermal vibrations (e.g., Brownian motion).

[0137] v. The configuration of the device can be similar to that of the MEMS device of FIGS. **7**A and **7**B (described as part of a later embodiment), such that the working gas is pushed back and forth between the left-hand and right-hand regions.

[0138] vi. The pattern may be formed using self-assembled layers.

[0139] vii. The device may incorporate a naturally formed structure. For example, diatom shells consist of silicon dioxide patterned with features, including holes, that are tens of nanometers in size. They can be coated as needed with conductors to form Casimir cavities.

[0140] viii. The pumping can be driven by a naturally occurring mechanism. For example, some yeast cell have been found to naturally vibrate at 1.6 kHz (Goho, 2004b). This could be used to cause a gas to oscillate back and forth between Casimir cavity and exposed regions.

[0141] ix. The water bath may be replaced with any other material or device that absorbs substantially the released energy wavelengths. Such materials include glass, organic polymers, thermophotovoltaic devices, among many possibilities known to those skilled in the art.

[0142] x. Rather than surrounding the entire apparatus, the absorbing material may be placed in the apparatus, for example coating the channels through which the gas flows. Such placement can allow the absorber to reside within roughly an emission wavelength of the gas that is releasing the energy.

Casimir Cavities in Flexible Polymer

[0143] Rather than moving the working gas by flowing it (FIGS. **4**A-**4**D) or vibrating it into and out of a Casimir cavity (FIGS. **5**A-**5**C), the cavity wall characteristics can be switched, which results in a shift in the cavity's allowed modes. This produces the same result of tapping vacuum electromagnetic energy that the flowing gas device of the embodiment of FIGS. **4**A-**4**D produces. One way to accomplish this is to put the working gas into gaps formed in flexible photonic crystals. A photonic crystal blocks and passes bands of electromagnetic radiation, where the band wavelength ranges depend upon the material properties and spacing of small repeated structures. A flexible photonic crystal can be formed by embedding an array or rigid objects, such as silicon pillars, in a thin film of flexible polymer. The electromagnetic (or optical) properties of such

two-dimensional slab photonic crystal structures is well known to those skilled in the art (Park, 2002).

[0144] FIGS. **6**A and **6**B show such a photonic crystal device. FIG. **6**A is a top view, showing metal supports **62** at both ends of a polymer film **64**. The rigid pillars that form the phonic crystal are buried in the polymer. As the film is stretched in the plane of the paper, the pillar spacing in the plane normal to the paper is decreased, which changes the electromagnetic passband. FIG. **6**B is an edge view showing the supports **62**, the polymer film **64**, and gaps in the film that are filled with the working gas **69**. (For clarity, the pillars are not shown.) The gap size is sufficiently narrow to produce a significant Casimir effect, e.g., 200 nm. The length or width need to be sufficiently small to maintain the narrow gap, e.g., 1 micron. The stretching takes place by attaching one support to a stationary object and attaching the other support to a vibrator, such as a piezoelectric crystal, which itself may be attached on its opposing side to another stationary support. As in the embodiment of FIGS. **4**A-**5**D, the apparatus is surrounded by a means for absorbing the released energy, such as a water bath **24**.

[0145] It is to be understood that the shape, dimensions, modulation techniques and materials can be varied greatly and still be part of this invention. The following is a list of some such variations, but it is far from exhaustive:

[0146] i. Instead of stretching the polymer, it can be modulated with an acoustic signal through the air, or through a liquid that surrounds it.

[0147] ii. Instead of stretching the polymer, it can be modulated with an ambient thermal vibrations. As the working gas and the structure heats up, the vibrations increase.

[0148] iii. The polymer embedded with rigid pillars may be formed into small spheres that are filled with the working gas. These spheres can fill or partially fill a volume in which the pressure is modulated, either by enclosing the volume and modulating the pressure in the entire volume, by passing an acoustic signal through the volume, or by thermal vibrations. This modulation causes the passband of the photonic crystal that surrounds the working gas to vary. Although the shape of the device is substantially different from that of FIGS. **6**A-**6**B, the function is the same.

[0149] iv. The working fluid may be a wide variety of gases, in addition to the noble gases described earlier, so that all mentions of gas atoms may be extended to molecules of various types.

[0150] v. The working fluid may be a liquid, so that all mentions of gases and gas atoms may be extended to liquids of various types. For operation of up to approximately 100° C., one possible liquid is ethylene glycol. For high temperature operation, the liquid can be sodium.

[0151] vi. The water bath may be replaced with any other material or device that absorbs substantially the released energy wavelengths. Such materials include glass, organic polymers, thermophotovoltaic devices, among many possibilities known to those skilled in the art.

[0152] vii. Rather than surrounding the entire apparatus, the absorbing material may be placed in the apparatus, for example in the polymer film through which the gas flows. Such placement can allow the absorber to reside within roughly an emission wavelength of the gas that is releasing the energy.

Modulating Casimir Cavity Wall Spacing

[0153] Rather than moving the working gas by flowing it (FIGS. **4**A-**4**D), vibrating it into and out of a Casimir cavity (FIGS. **5**A-**5**C), or switching the characteristics of walls of the cavity to change the passbands (FIGS. **6**A and **6**B), the spacing between the cavity walls can be modulated. This produces the same result of tapping zero point energy that the flowing gas device of the previous embodiments produce. One way to accomplish this is to put the working gas into gaps formed in micro-electro-mechanical systems (MEMS).

[0154] MEMS technology makes use of semiconductor lithography techniques to build miniature mechanical devices. The Casimir effect has already been found to be in evidence in MEMS devices. In 2001, Chan and co-workers at Bell Labs Lucent Technologies first demonstrated the effect of the Casimir force in a MEMS device. A gold coated sphere was brought close to a MEMS seesaw paddle, consisting of a polysilicon plate suspended above a substrate on thin torsion rods. The Bell Labs researchers demonstrated the effect of the Casimir force in rocking the plate.

[0155] In the current invention we make use of MEMS technology to modulate the spacing between Casimir cavity walls. (Note that we are not making use of the Casimir force to change this spacing, as was done in the Bell Labs demonstration.) The basic MEMS device used to accomplish this is shown in FIGS. **7**A and **7**B. A side view is shown in FIG. **7**A. Two conducting electrodes **76** are shown on the substrate. A pivoting polysilicon plate **74** is shown suspended above the substrate **72**. A conducting layer **77** is formed on the underside of this plate. A top view is shown in FIG. **7**B. The pivoting plate **74** forms the central rectangular region, which is surrounded by a gap **73**. The pivoting arm **75** connects this plate to the surrounding region at the top and bottom of the rectangle. As in the earlier embodiments, the apparatus is surrounded by a means **24** for absorbing the released energy, such as a water bath

[0156] The device functions as follows. The working gas fills the region between the pivoting plate **74** and the substrate **72**. A voltage is applied first between the pivoting plate and the left-hand electrode. This causes the distance between the left side of the plate and the substrate to diminish, thereby changing the dimensions of the Casimir cavity formed by these two surfaces. Then the voltage is instead applied between the pivoting plate and the right-hand electrode. This causes the plate to pivot, such that the distance between the right side of the plate and the substrate diminishes, thereby changing the dimensions of the Casimir cavity formed by these two surfaces. The voltage is switched alternately between these two electrodes, causing the plate to oscillate back and forth. The oscillating action is greatly enhanced by the torsion of the pivots, so that very little energy is required to maintain the oscillation.

[0157] The techniques to fabricate such a MEMS device is well known to those skilled in the art.

[0158] It is to be understood that the shape, dimensions, modulation techniques and materials can be varied greatly and still be part of this invention. The following is a list of some such variations, but it is far from exhaustive:

[0159] i. Instead of using a MEMS device, the Casimir cavity can be formed between a substrate and a suspended conducting sheet. A similar technology has been used to form electrostatic acoustic speakers, albeit with larger spacings.

[0160] ii. Gaps can be formed in a polymer, with both sides of the gap coated with a conductor and the gap filled with a working gas. The polymer can then be stretched, as in the embodiment of FIGS. **6**A and **6**B, such that the spacing of the Casimir cavity formed by the two conductors is modulated. A figure of this would appear much like that depicted in FIG. **6**B

[0161] viii. Instead of stretching the polymer, it can be modulated with an acoustic signal through the air, or through a liquid that surrounds it.

[0162] ix. Instead of stretching the polymer, it can be modulated with an ambient thermal vibrations. As the working gas and the structure heat up, the vibrations will increase.

[0163] x. The polymer coated on its interior surface with a conductor may be formed into small spheres that are filled with the working gas. These spheres can fill a volume in which the pressure is modulated, either by enclosing the volume and modulating the pressure in the entire volume, by passing an acoustic signal through the volume, or by thermal vibrations. This modulation causes the spacing of the Casimir cavity in which the working gas is contained to vary. Although the shape of the device is substantially different from that of FIGS. **7**A and **7**B, the function is the same.

[0164] xi. The working fluid may be a wide variety of gases, in addition to the noble gases described earlier, so that all mentions of gas atoms may be extended to molecules of various types.

[0165] xii. The working fluid may be a liquid, so that all mentions of gases and gas atoms may be extended to liquids of various types. For operation of up to approximately 100° C., one possible liquid is ethylene glycol. For high temperature operation, the liquid can be sodium.

[0166] xiii. The water bath may be replaced with any other material or device that absorbs substantially the released energy wavelengths. Such materials include glass, organic polymers, thermophotovoltaic devices, among many possibilities known to those skilled in the art.

[0167] xiv. Rather than surrounding the entire apparatus, the absorbing material may be placed in the apparatus, for example coating the substrate and cap of the region containing the gas. Such placement can allow the absorber to reside within roughly an emission wavelength of the gas that is releasing the energy.

[0168] We note that the MEMS device of FIGS. **7**A and **7**B can also be used to move the working gas back and forth between the left-hand and right-hand regions. This function is consistent with the embodiment of FIGS. **5**A-**5**C, in which the working gas is vibrated into and out of a Casimir cavity.

Assymetric Casimir Cavity Entry and Exits Including Absorbing Means

[0169] As a prelude to this embodiment, we review the processes involved in the present invention. A general concept of this entire invention is that a gas that is in equilibrium with the ambient electromagnetic modes, which include the vacuum field (also known as the zero point field), is caused to enter a Casimir cavity. For the purposes of this entire invention a Casimir cavity is defined as any region in which the electromagnetic modes are restricted. Upon approaching this region, the electromagnetic modes that the space supports are restricted and the energy of the electron orbitals of the gas atoms is reduced. As a consequence of this reduction the excess energy is emitted and absorbed by the apparatus, providing heat energy. By the time the atoms are in the Casimir cavity, nearly all the excess energy has been radiated (unless the gas flow is extremely fast). The gas atoms pass through the Casimir cavity, and upon emerging from this region to a region that supports a broader range of electromagnetic modes, the energy of the electron orbitals of the gas atoms is again allowed to rise to its previous value. The compensation for the energy deficit is provided from the ambient electromagnetic modes.

[0170] One of the tenets of the current invention is that excess energy released when the gas approaches the Casimir cavity is delivered locally and that the energy deficit that must be compensated for when it emerges from the cavity is supplied from global sources. In this way the ambient electromagnetic field is tapped to provide usable energy. There may be conditions in which it is possible that the excess energy release and the deficit energy supply are both local, in which case no net energy is provided. Similarly, there may be conditions in which it is possible that the excess energy release and the deficit energy supply are both global, in which case again no net energy is provided. To avoid these possibilities, we provide an asymmetry in the apparatus to ensure that the excess energy is released locally and that the energy deficit is supplied globally.

[0171] The concept of embodiment is shown in FIG. **8**. This figure depicts a channel **88**, similar to that shown in some of the earlier embodiments. Gas is constricted between two substrates **82** and **83** and flows through the channel in the direction of the arrows. As in the previous cases, gas flows from a region in which the substrate is not coated **87** with a conducting layer to a region in which it is **86**. The difference here is that an intermediate region **84** is provided in which the substrates are coated with an absorbing layer. This absorbing region absorbs the excess energy that is radiated from the atoms as they approach the Casimir cavity (conducting) region. The absorbing region is not substantially conducting, and therefore does not substantially restrict the electromagnetic modes that are supported in the region. Upon exiting the Casimir cavity (conducting) region, the atoms pass immediately into another region with no absorbing region **87**. Thus upon approaching the Casimir cavity the atoms are forced to deliver their excess energy locally because it is absorbed by the absorbing region **87**. Upon emerging from the Casimir cavity the gas atoms are forced to supply their energy deficit non-locally, i.e., globally, because there is no local source for this energy.

[0172] As an option, a further aspect of this invention is to situate the absorbing region within roughly one emission wavelength of the gas atoms at the time that they are emitting. No such layer is provided within such a distance when the gas atoms emerge from the Casmir cavity and are supplied with energy. The substrate is chosen such that it does not absorb the emission wavelengths.

[0173] The absorbing layers may comprise glass (amorphous silicon dioxide, usually with impurities), and the substrate may comprise sapphire. The glass has a much broader absorption band in the far infrared than does the sapphire. A wide range of other materials may be provided to form the absorbing layers and non-absorbing or less absorbing substrate. Such materials are known to those skilled in the art, and are available in tables and handbooks.

[0174] The sequence of regions depicted in FIG. **8** may be repeated to form the sort of multiply striped structure described in the embodiment of FIGS. **4**A-**4**D.

[0175] The dimensions of the channel and the apparatus are approximately the same as those of embodiment of FIGS. **4**A-**4**D. Similarly the attachments to provide for gas flow, the spacers, and other aspects of the apparatus are similar to those described in embodiment of FIGS. **4**A-**4**D. The conducting layer length is chosen so that the emerging atoms do not have substantial access to radiation emitted from the absorbing regions. Note that, unlike embodiment of FIG. **2**, it is not necessary to surround the apparatus with a means for absorbing the released energy **24**, such as a water bath.

[0176] The device fabrication is not described explicitly as it is well known to those skilled in the art.

[0177] It is to be understood that the dimensions and materials can be varied greatly and still be part of this invention. The following is a list of some such variations, but it is far from exhaustive:

[0178] i. The substrates may be other insulating or partially conducting materials, such as silicon, glass, ceramic, plastic, etc.

[0179] ii. The conducting stripes can be formed of other conductors, such as copper, aluminum, gold, sliver, silicides, transparent conductors such as indium tin oxide, etc.

[0180] iii. The stripes may be recessed in the substrate or they protrude from the surface.

[0181] iv. The individual devices may be sandwiched together to form thick structures. For example, in place of the 250 micron thick substrates, micro-sheet having a thickness of 50 microns or far less may be used so that dense structures are formed.

[0182] v. The working fluid may be a wide variety of gases, in addition to the noble gases described earlier, so that all mentions of gas atoms may be extended to molecules of various types.

[0183] vi. The working fluid may be a liquid, so that all mentions of gases and gas atoms may be extended to liquids of various types. For operation within approximately of 100° C., one possible liquid is ethylene glycol. For high temperature operation, the liquid can be sodium.

[0184] vii. Micro-motors formed using micro-electro-mechanical systems (MEMS) technology can be used to pump the gas through the channels.

[0185] viii. The Casimir cavities may be composed of carbon nanotubes.

[0186] ix. The pattern may be formed using self-assembled layers.

[0187] The device may incorporate a naturally formed structure. For example, diatom shells consisting of silicon dioxide patterned with features, including holes, that are tens of nanometers in size. To the extent necessary, these can be coated as needed with conductors to form Casimir cavities.

REFERENCES

[0188] Boyer, T. H. 1975, Random Electrodynamics: The Theory of Classical Electrodynamics with Classical Zero-Point Radiation Field, Phys. Rev. D, 11, 790.

[0189] Cole, D. C. and Puthoff, H. E. 1993, Extracting energy and heat from the vacuum, Phys. Rev. E, **48**, **2**, **1562**.

[0190] Cole, D. C. and Zou, Yi 2003, Quantum Mechanical Ground State of Hydrogen Obtained from Classical Electrodynamics, Physics Letters A, Vol. 317, No. 1-2, pp. 14-20 (13 Oct. 2003), quant-ph/0307154.

[0191] Cole, D. C. and Zou, Yi 2004, Analysis of Orbital Decay Time for the Classical Hydrogen Atom Interacting with Circularly Polarized Electromagnetic Radiation, Phys. Rev. E. 69 (1), 016601, pp. 1-12 (2004).

[0192] Forward, R. 1984, Extracting electrical energy from the vacuum by cohesion of charged foliated conductors, Phys. Rev. B, **30**, **4**, **1700**.

[0193] Goho, A., "Diatom Menagerie," Science News, Vol. 166, Jul. 17, 2004a, pp. 42-44, and references mentioned therein.

[0194] Goho, A., "Rattle and Hum; Molecular machinery makes yeast cells purr," Science News, Vol. 166, Aug. 21, 2004b, p. 116, and references therein.

[0195] Milonni, P. W. The Quantum Vacuum: An Introduction to Quantum Electrodynamics, Sect. 3.3, Academic Press, 1994.

[0196] Park, W., and Summers, C. J., "Extraordinary refraction and dispersion in 2D photonic crystal slabs", Opt. Lett., Vol 27, (2002) p. 1397.

[0197] Plöl, A. and Krauter, G., "Wafer direct bonding: tailoring adhesion between brittle materials", Mater. Sci. Eng. R, Vol 25 (1999) p. 1.

[0198] Puthoff, H. E., Ground State of Hydrogen as a Zero-Point-Fluctuation-Determined State, Phys. Rev. D 35, 3266, 1987.

[0199] Roy, Subrata et al., "Modeling gas flow through microchannels and nanopores," Journal of Applied Physics, Vol. 93, No. 8, Apr. 15, 2003, pp. 4870-4879.

What is claimed is:

1. A system for extracting and collecting electromagnetic radiation from the ambient surroundings, comprising:

(a) a supply of fluid characterized by its ability to (i) take in electromagnetic radiation from the ambient surroundings and (ii) release at least some of said energy when the fluid is caused to pass into a Casimir cavity;

(b) a first arrangement configured to collect at least some of the electromagnetic radiation released by said fluid;

(c) a second arrangement including means defining a given path for containing said fluid along said path;

(d) a third arrangement including a Casimir cavity positioned within said given path and cooperating with said second arrangement such that said fluid is caused to pass into and out of the cavity as the fluid is contained along said given path, said Casimir cavity being positioned in sufficient communication with the ambient surroundings and with said first arrangement so as to (i) cause said fluid containing electromagnetic energy taken from the ambient surroundings to release at least some of said energy to said first arrangement when the fluid passes into said cavity and (ii) to again take in electromagnetic energy from the ambient surroundings when the fluid passes out of said cavity.

2. A system according to claim 1 wherein said second arrangement is configured such that said fluid is caused to flow along said path into and out of said Casimir cavity.

3. A system according to claim 1 wherein said second and third arrangements are configured such that said Casimir cavity is caused to move with respect to said fluid such that the fluid is in turn caused to pass into and out of said Casimir cavity.

4. A system according to claim 1 wherein said means defining said given path defines a closed passageway for containing said fluid and wherein said second arrangement is configured such that the same fluid is caused to cycle into and out of said Casimir cavity.

5. A system according to claim 4 wherein said passageway defines a looped path and wherein said second arrangement includes a mechanism configured to cause said fluid to flow around said path through said passageway into and out of said Casimir cavity.

6. A system according to claim 4 wherein said second arrangement includes a mechanism for causing said fluid to flow back and forth through said passageway into and out of said Casimir cavity.

7. A system according to claim 1 wherein said fluid is a gas.

8. A system according to claim 7 wherein said gas is a monatomic gas.

9. A system according to claim 7 wherein said gas is a molecular gas.

10. A system according to claim 1 wherein said first arrangement includes a container of material for absorbing electromagnetic energy, said absorbing material surrounding at least said Casimir cavity.

11. A system according to claim 6 wherein said absorbing material is a liquid.

12. A system according to claim 11 wherein said liquid material is water.

13. A system according to claim 3 wherein said third arrangements configured so as to cause said Casimir cavity to move back and forth between first and second spaced apart positions.

14. A system according to claim 1 wherein said Casimir cavity includes opposing walls and wherein said third arrangement is configured so as to cause the position of said Casimir cavity walls to move back and forth between first and second spaced positions.

15. A system for extracting and collecting electromagnetic energy from the ambient electromagnetic quantum vacuum, comprising:

(a) a first arrangement defining at least one Casimir cavity configured to cause gas containing electromagnetic energy obtained from the ambient electromagnetic quantum vacuum to release at least some of said energy when said gas is passed into said cavity;

(b) a second arrangement located in the ambient electromagnetic quantum vacuum and including a source of said gas and a mechanism cooperating with said first arrangement so as to cause said gas to pass from the ambient electromagnetic quantum vacuum into said Casimir cavity and then out of said cavity and back into the ambient electromagnetic quantum vacuum, whereby the gas when passing into said Casimir cavity releases at least some of its energy and then, upon passing back into the ambient electromagnetic quantum vacuum, again takes in electromagnetic energy from the ambient electromagnetic quantum vacuum, said means and said first arrangement cooperating with one another such that said fluid passes into and out of said Casimir cavity by relative movement between the cavity and gas; and

(c) a third arrangement for capturing at least some of the electromagnetic energy released by said fluid, said third arrangement including means located in a position with respect to said Casimir cavity such that at least some of the electromagnetic energy released by said gas is captured by said absorber.

16. A system, comprising:

(a) a first arrangement including a number of Casimir cavities, each of which is configured to cause fluid containing electromagnetic energy obtained from the ambient surroundings to release at least some of said energy when said fluid is passed into said cavity;

(b) a second arrangement located in the ambient surroundings and including a source of said fluid and means cooperating with said first arrangement for causing said fluid to pass from the ambient surroundings into each of said Casimir cavities and then out of the cavity and back into the ambient surroundings, whereby the fluid when passing into said Casimir cavities releases at least some of its energy and then, upon passing back into the ambient surroundings, again takes in electromagnetic energy from the ambient surroundings, said means and said first arrangement cooperating with one another such that said fluid passes into and out of said Casimir cavities by relative movement between the cavities and fluid; and

(c) a third arrangement for capturing at least some of the electromagnetic energy released by said fluid.

17. A system according to claim 16 wherein said means includes at least one fluid passageway extending from the ambient surroundings into and though said Casimir cavities and back into the ambient surroundings and wherein said Casimir cavities are defined by a series of conducting strips located within said passageway, said series of conducting

strips including a first group of spaced apart strips located on one side of the passageway and a second groups of spaced apart strips on a opposite side of said passageway in alignment with respective strips of said first group, each of said aligned pair of strips being positioned relative to one another to produce a Casimir cavity.

18. A method, comprising:

(a) providing a first arrangement defining at least one Casimir cavity configured to cause fluid containing electromagnetic energy obtained from the ambient surroundings to release at least some of said energy when said fluid is passed into said cavity;

(b) providing a source of said fluid;

(c) causing said fluid to pass from the ambient surroundings into said Casimir cavity and then out of said cavity and back into the ambient surroundings such that the fluid when passing into said Casimir cavity releases at least some of its energy and then, upon passing back into the ambient surroundings, again takes in electromagnetic energy from the ambient surroundings, said fluid being cause to pass into and out of said Casimir cavity by relative movement between the cavity and fluid; and

(c) capturing at least some of the electromagnetic energy released by said fluid.

19. A method of extracting and collecting electromagnetic radiation from the ambient surroundings, comprising:

(a) providing a supply of fluid characterized by its ability to (i) take in electromagnetic radiation from the ambient surroundings and (ii) release at least some of said energy when the fluid is caused to pass into a Casimir cavity;

(b) providing a first arrangement configured to collect at least some of the electromagnetic radiation released by said fluid;

(c) providing a second arrangement including means defining a given path for containing said fluid along said path;

(d) providing a third arrangement including a Casimir cavity positioned within said given path;

(e) causing said fluid to pass into and out of the cavity as the fluid is contained along said given path; and

(f) positioning said Casimir cavity in sufficient communication with the ambient surroundings and with said first arrangement so as to (i) cause said fluid containing electromagnetic energy taken from the ambient surroundings to release at least some of said energy to said first arrangement when the fluid passes into said cavity and (ii) to again take in electromagnetic energy from the ambient surroundings when the fluid passes out of said cavity.

20. A system, comprising:

(a) a first arrangement defining at least one mechanism designed to cause the atoms and molecules making up a given fluid containing electromagnetic energy obtained from the ambient surroundings to change in configuration in a way which releases at least some of said energy when said fluid is passed into said mechanism;

(b) a second arrangement located in the ambient surroundings and including a source of said fluid and means cooperating with said first arrangement for causing said fluid to pass from the ambient surroundings into said mechanism and then out of said mechanism and back into the ambient surroundings, whereby the fluid when passing into said mechanism releases at least some of its energy and then, upon passing back into the ambient surroundings, again takes in electromagnetic energy from the ambient surroundings, said means and said first arrangement cooperating with one another such that said fluid passes into and out of said mechanism by relative movement between the mechanism and fluid; and

(c) a third arrangement for capturing at least some of the electromagnetic energy released by said fluid.

* * * * *

1. Minimize physical size. Since the coil is the largest single piece (other than the AA battery) it makes sense to align the diameter of the coil to the battery and pack everything else as tightly inside as I can.
2. Minimize component count. Most Joule Thief examples on the internet (including the top picture on the Wikipedia page) soldered the legs of the individual components together. No circuit board needed.
3. Friendly to hand soldering. There are some ready-made Joule Thief circuits for sale on the internet using surface mount components and a circuit board. I wanted something I can build by hand and maybe use as a soldering teaching project to be shared on the internet.

After a few iterations, I have something I'm happy to share with the world. This is purely about the mechanical assembly – the electronic schematic is identical to the one in the Wikipedia article linked at the top of this post.

An overview in words:

- The resistor for the NPN transistor base is installed between the collector and emitter. The resistor acts as physical separation in order to avoid a short-circuit.
- The transistor and LED are pointing in opposite directions, allowing their pins to point towards each other and soldered together. The aforementioned resistor keeps the LED anode and cathode separate.
- The transistor is stuffed into the middle of the coil, utilizing the center volume.

The build sequence in pictures:

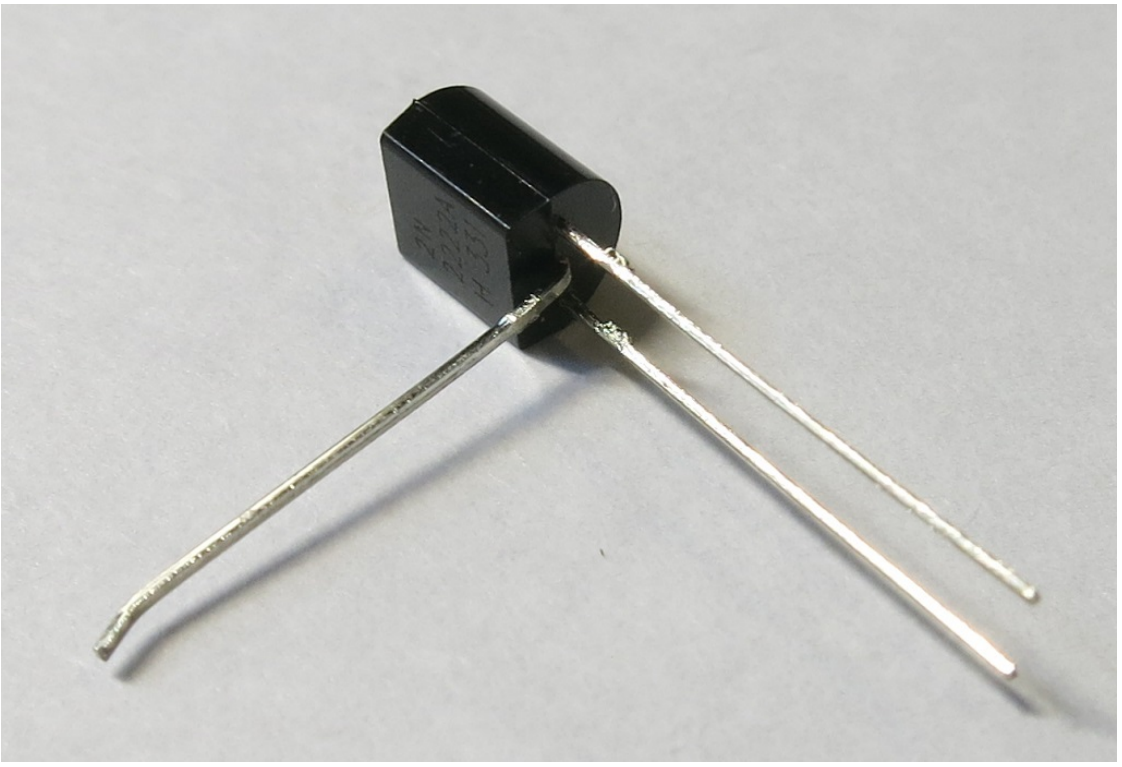

Transistor with the base bent in preparation for resistor installation.

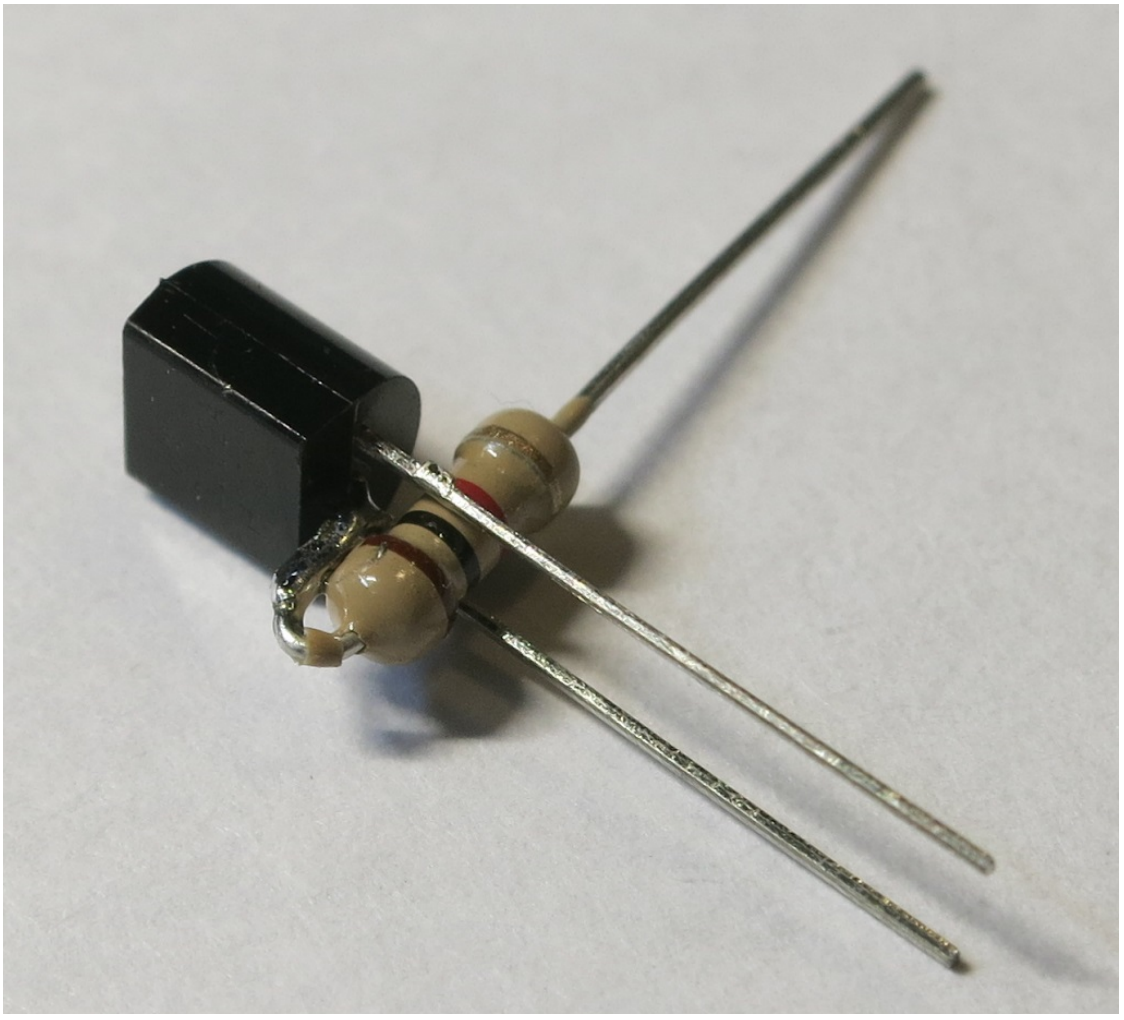

The 1K Ohm resistor is installed on the base, between collector and emitter.

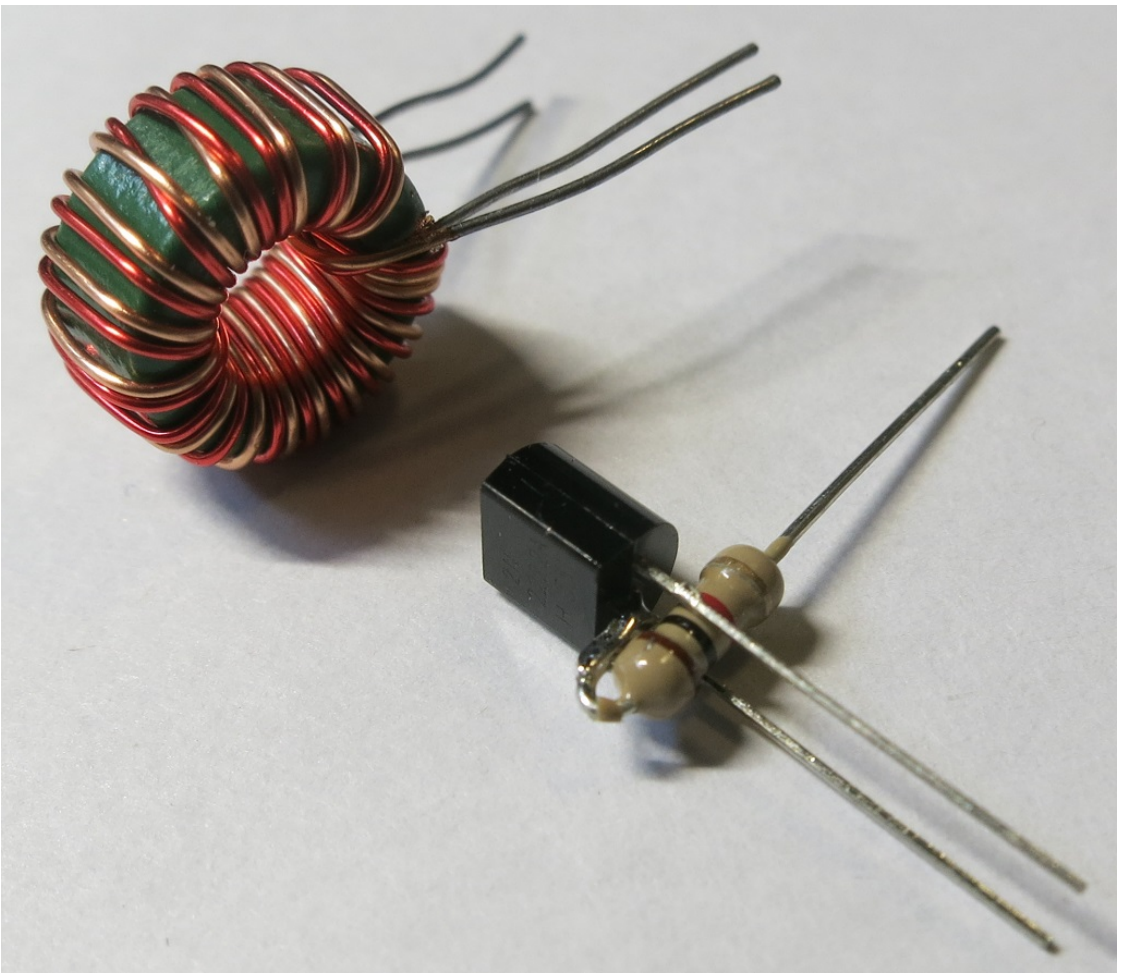

The coil has two wires wound together. One end of this dual-coil is facing the camera, the other end facing away. Since we need to wire up the coil in opposite directions, we'll bend one wire of the front pair towards the back, and the opposite back side wire to the front.

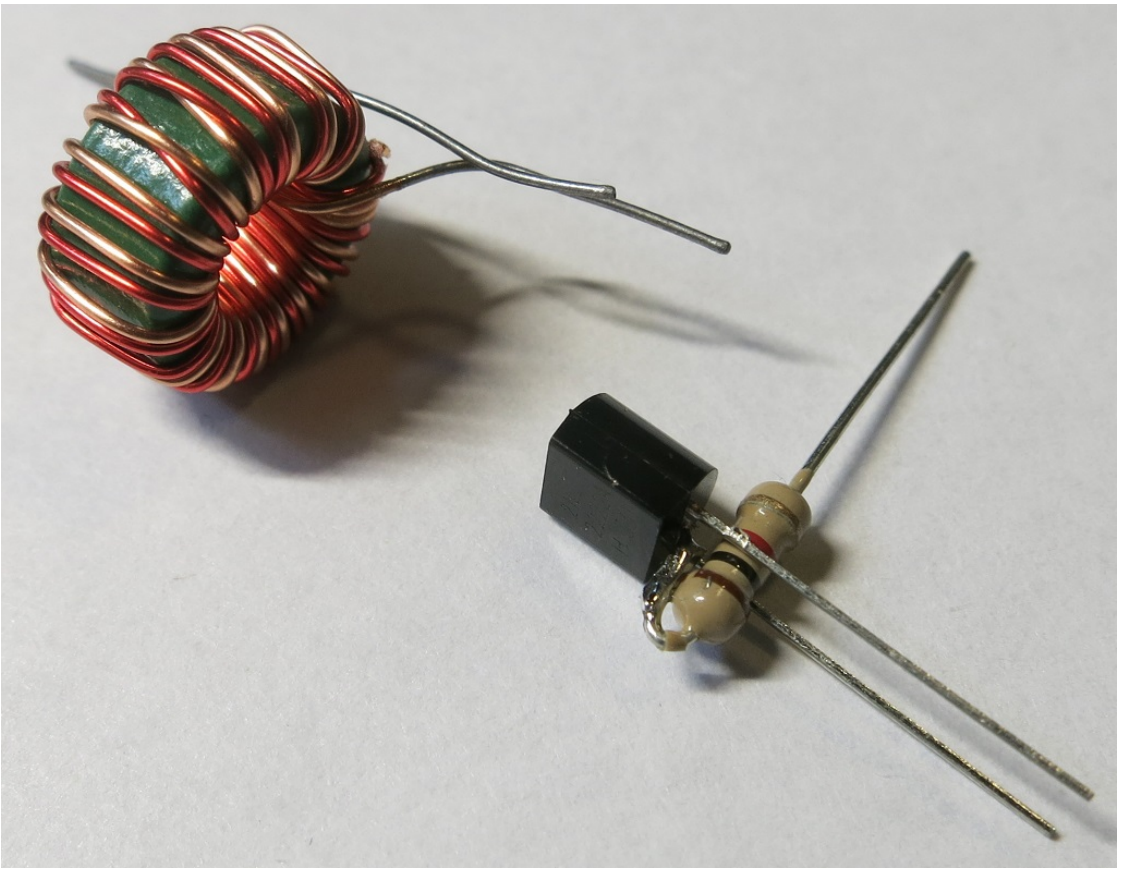

The two wires now facing away from the camera are soldered together to become the positive terminal of the circuit. One of the two wires facing the front will be soldered to the resistor, and the other to the emitter.

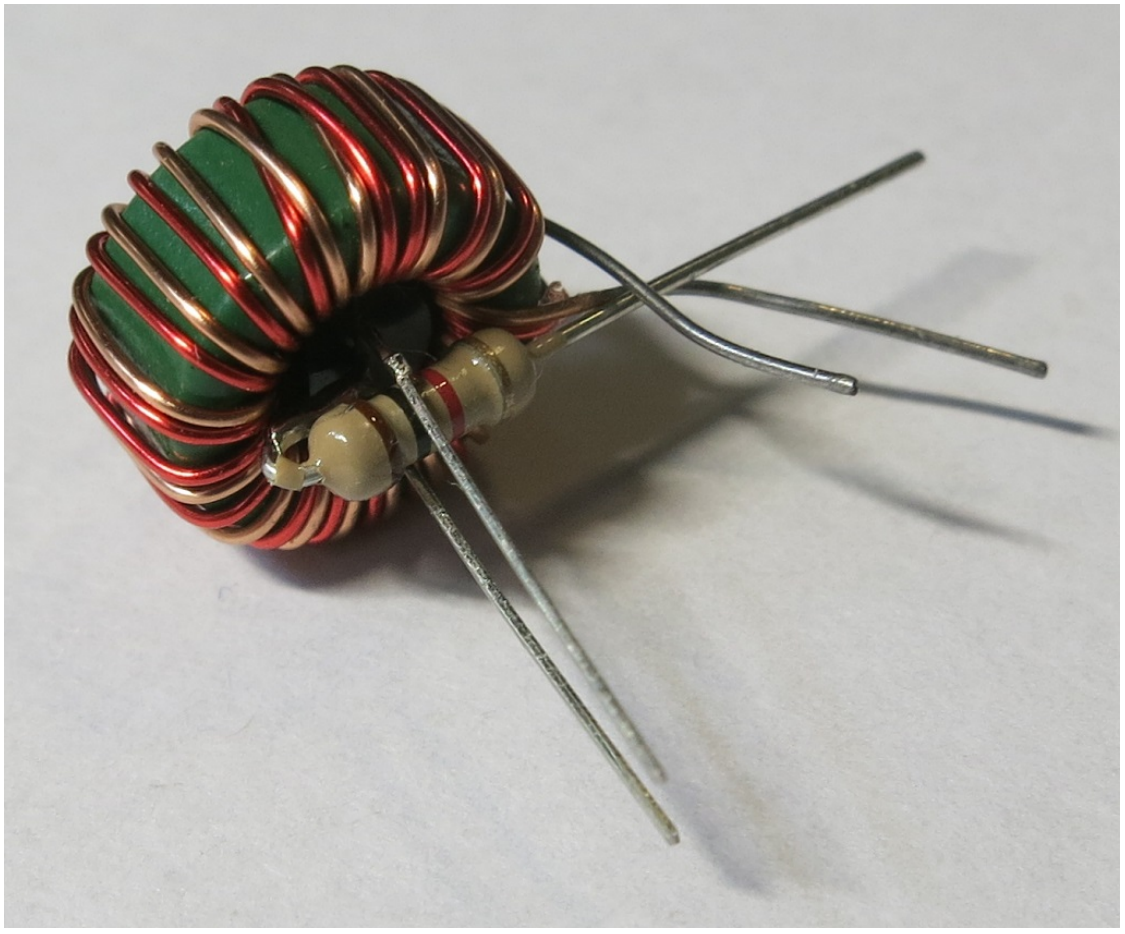

Transistor in the center of the coil. Now the coil wires can be soldered.

Resistor soldered to one coil wire, all the others have been trimmed short in preparation for attaching the LED.

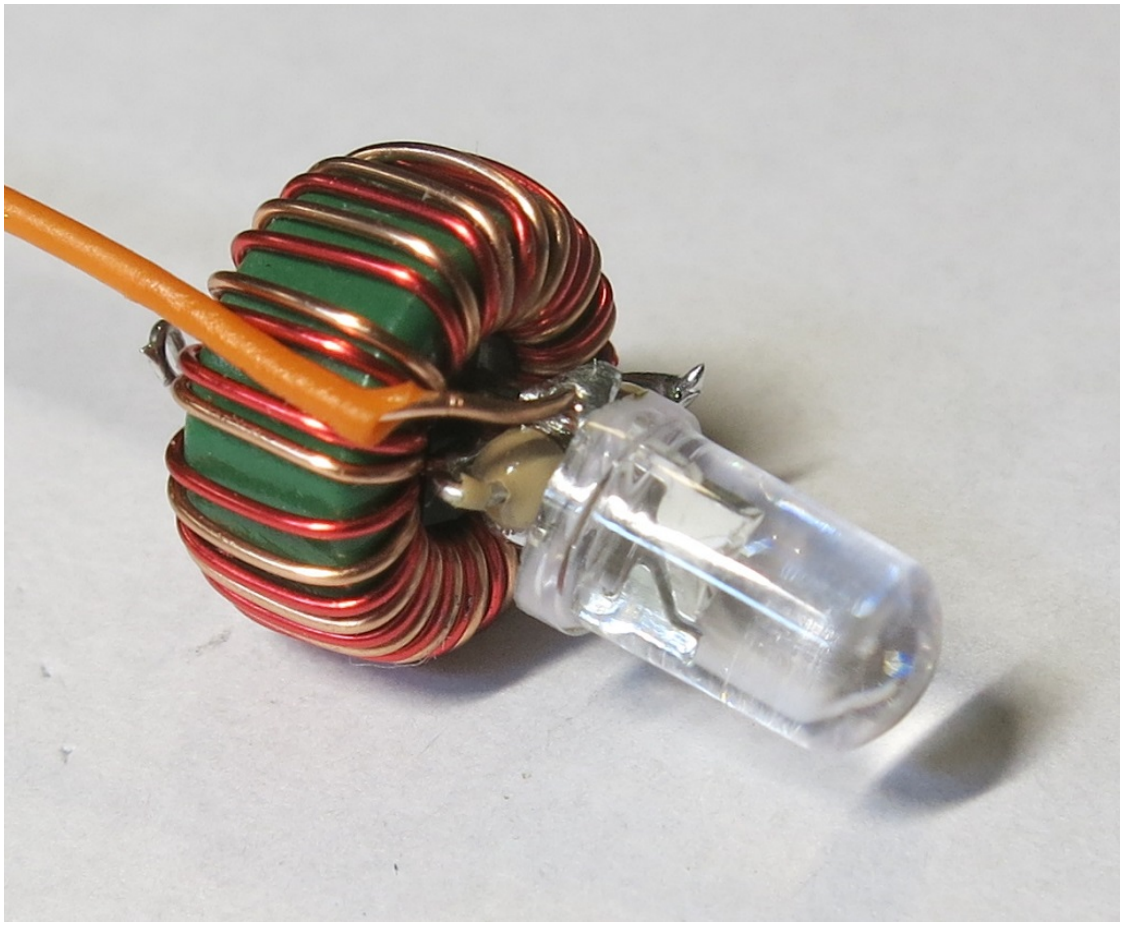

LED is soldered to the circuit, as is a wire to act as negative (return) wire.

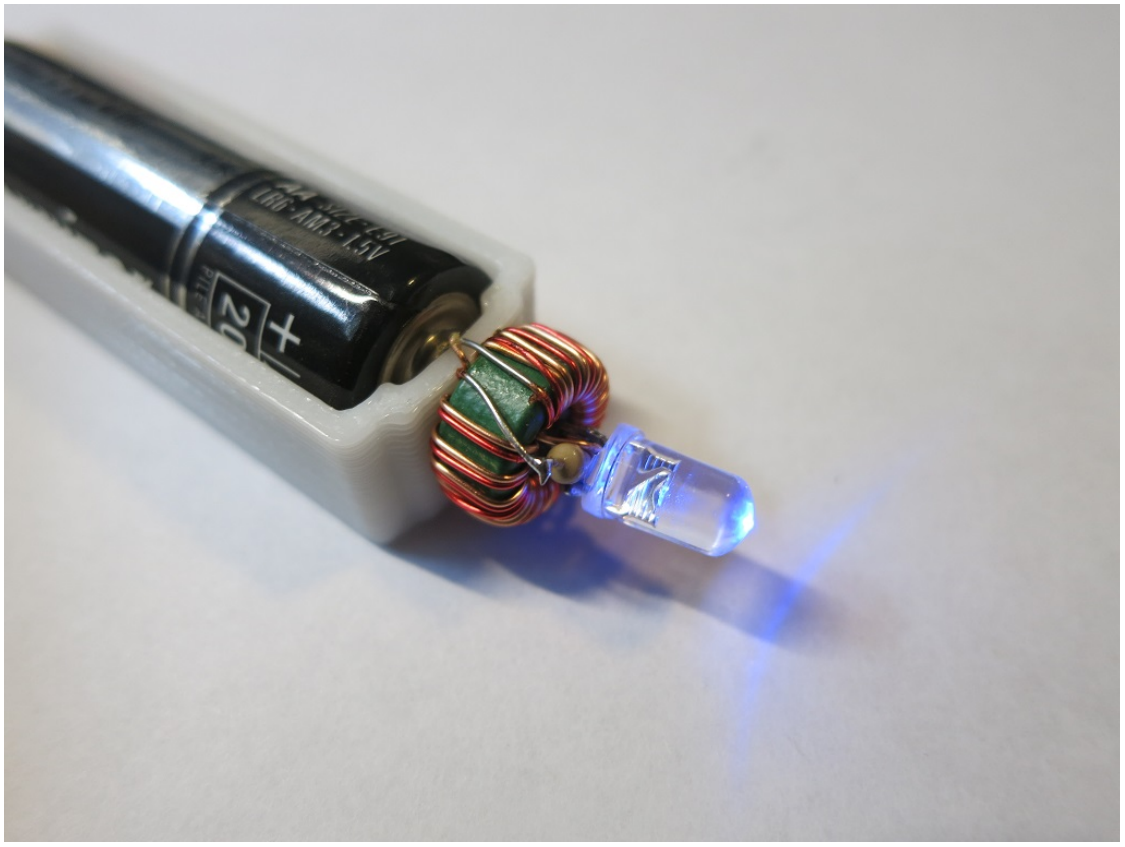

Install the whole assembly in front of a 3D-printed AA battery tray: Let there be light!

2017-10-192017-10-19/**ROGER CHENG**

A 3D-Printed Enclosure to Take My LED Project On The Go

For the **Connect Week (https://connectpasadena.com)** event put on by **Innovate Pasadena (http://www.innovatepasadena.org/)**, the **Hackaday LA (https://www.meetup.com/Hackaday-Los-Angeles/)** group is hosting the "**Bring-A-Hack (https://www.meetup.com/Hackaday-Los-Angeles/events/243694093/)**" event where attendees are encouraged to bring projects (in any stage of completion) for show and discussion. Since I've been building my LTC-4627JR driver board as a learning project, I wanted to bring it in for show-and-tell.

Now I could just bring the assembled circuit board and pass it around as an inert object, but what fun would that be? I wanted to bring in something that shows it doing something, and provide some way for people to interact with the whole contraption. Looking at my parts on hand, it seemed easiest to rebuild my thermometer test project. I can have a simple Python program run on the Raspberry Pi, reading temperature from the Tux-Lab Si7021 breakout board, and sending it out to my display. That makes 3 circuit boards, plus they'll need portable power. I will enlist my Amazon purchases: the 3-cell lithium ion battery pack protected by a S-8254A IC, and the MP1584 buck converter to translate the battery pack's power into Raspberry Pi friendly voltage.

archive.today
webpage capture
Saved from http://www.rexresearch.com/guillot/guillot.htm search
5 May 2015 11:19:54 UTC
All snapshots from host www.rexresearch.com
history
Webpage Screenshot
share download .zip report error or abuse

rexresearch.com

Jules GUILLOT

Atmospheric Electric Generator

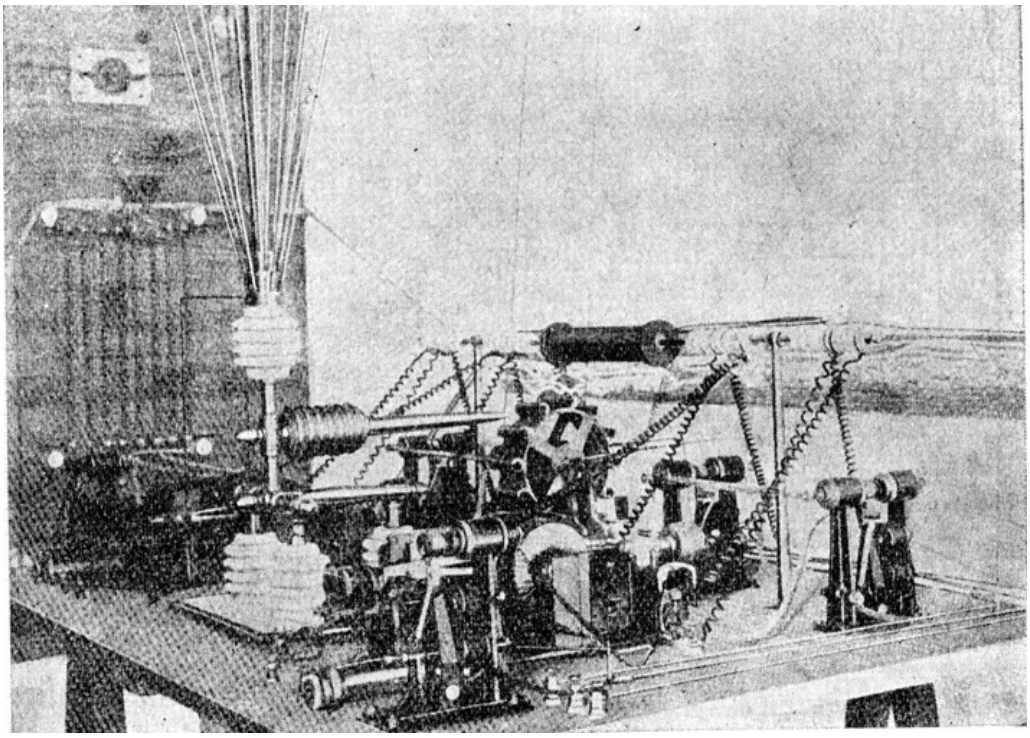

Shared by L. Cozma (Thanks !) --

The Guillot device generated about 2.5-3 Kilowatts with antenna height of ~ 20 meters. Power depends on the total collector surface and height of the vertical antenna. The apparatus in the photo produced ~300 watts with a collector 2 meters tall.

"Practical Utilization of Atmospheric Electricity"

by

Gillbert Darida

in *The Invention Encyclopedia,* pp. 204-207 (1930, Geo. Constantinescu, Ed.)

"The Earth has its own negative electricity, in the soil, and the atmosphere which surrounds the Earth is charged with positive electricity. The electric potential (the voltage) increases with the altitude, so we can say that the electric force is proportional to the atmospheric altitude (after Franklin, Quetelet, Lord Kelvin, Mascart, Joubert and other scientists).

The recent observations demonstrate that the air at 6000-7000 meters in altitude, is very highly charged with positive electricity, which could be explained by the friction between the external photosphere and the upper atmosphere of Earth, which rotates at a speed of more than 100,000 Kilometer per hour.

In that way, the Earth works like an electrostatic generator with electric charging by influence --- the upper atmosphere is positively charged by influence and the Earth crust obtains the negative polarity.

Between the two environments, the air and the soil, and inside the low atmosphere, in conditions of good weather, there are sbout 800 positive ions and also, 680 negative ion (and electrons) in just one square-centimeter of normal ionised air.

The Earth behaves like an huge electric armature negatively charged, which repels the electrons and attracts the positive ions. That positive ions' attraction determinates an electric current, also called "convective current". That's like an invisible continous bombardment, subject to daily and seasonal variations, which could be aproximated at **3 x 10 ^ -16 Amperes per square-centimeter,** and that is a total value of 1500 Amperes for the entire surface of the Earth.
The question is --- how does this current always maintains the same direction ? We can suppose that the natural radioactive emissions of the soil is responsable for this. We also know that radioactive emissions of the Earth works usually near the soil surface, and that explains the ionisation phenomenona inside caves.

The ionisation of the low atmosphere could also be the effect of the radioactive emissions of the Earth, especially when the X radiation works. Also, the Earth atmosphere is ionisated by the external radiation proceeding from the Sun and from the space environment, especially the action of ultraviolet radiation and the electron fascicles emitted by the Sun surface, at the temperature of 6000 deg. Celsius.

The capture of atmosphere electricity has been used in France, with aerial cables mounted on the Mont Blanc, and also in Germany --- with conductive cables carried by the captive baloons.

The atmosphere electricity collect system invented by eng. Jules Guillot is most ingenious and it relies on "the **electric siphon**" [*m.n. --- the discharging devices or spark-gap used today from the protection of aerial electric cables against the atmospheric electricity ; Jules Guillot has thought to recuperate and to use that electricity*].

His method consisted in the direct "pumping" of the atmosphere electricity using a collecting device which had two antennae and several collecting rods.

One antenna is **vertical** and it has a lot of **rods** scattered like an opened **fan**, with the tips against the **zenith**, for collecting the **negative** electricity which comes from the air ; the **horizontal** antenna is orientated against the **South** and its role is to collect the **positive** electricity.

The air electricity seems to have the double-polarity, as we can see at two electrised clouds when between them apears the electric discharge. The air could have different electric charging and the ionisation processus of atmosphere is very heterogenous. The inventor Guillot used **two separated and insulated armatures with the positive armature against the South** (more precisely, against the **Equator**...) and the **negative** armature against the **zenith**.

We can see in the scheme :

1,- the device P is the "**collector apparatus**" having **15-20 meters height** ; it also has a lot of **rods** which are scattered **fan**-like, all this on top of an **iron pillar** ; and also an **horizontal antenna** S oriented against the **South** ; the two antennae are disposed at **90 deg. angle** forming the two armatures where the electrical tension must apear. As the **height** of the pillar **increases**, the **voltage** increases more and more ;

2,- a system of **lightning-rods** (p1, p2, p3) for protection against discharges of atmospheric electricity during storms;

3,- the regulator system (**voltage regulator**, etc) R ;

4,- the electric **resistors** (Cn) for absorbing the parasite currents ;

5,- the "electric siphons" which have the role of making a magnetic field as a good environment for the transport of the ionized fluid, absorbing the electricity from the air ; the E1 and E2 are their regulator devices ;

6,- an **auxilliary continous current power supply** which send the current against an special **excitation coil**, used as starting device ; it works only when the system is starting.
This collector device works very good for lighting and heating. The device made by Guillot had
20 meters height on the total surface of **3 square-meters**. Also, J.Guillot used and electrical transformer for the industrial utilization of this "collector" --- as power supply for industrial electric engines."

French Patent # 551,882

Apparatus for Capture of Electric Currents in the Atmosphere

16 April 1923

Considering the terrestrial globe like the inductor of a dynamo, where the extraterrestrial ether is the inductor of electric currents circulating in the atmosphere; the apparatus of the invention described here selects through the device described below two perfectly distinct currents and eliminates others.

The device includes:

1, The air sensor; 2, a series of lightning rods; 3, vacuum; 4, an array of resistances; 5, vacuum; 6, witnesses.

1. An aerial sensor mounted on a pole is composed of **magnetic steel** fixed and sealed by a porcelain **insulator**, and surrounded a base by a **bronze ring** which are screwed **32 points of soft iron**, all forming antenna a pole. level beside it and isolated from the first, forming the 2nd pole, is fixed a sharp point of magnetic steel fixed in the horizontal position and directed towards the south and **movable to an angle of 45** is sealed in a porcelain insulator. This point is also circled a **ring of copper** notches figure. 1.

2. A series of 6 lightning surge arrestors at corners between each pole and the earth and the various gauges.

3. A first **regulator** form of a device similar absolutely similar to the aerial amtenna, but the two poles are superposed and opposed to the vertical point, and a **copper disk connects to ground**. Opposite the horizontal point, a **ring of tin** to which are welded tubes alternatively **16 tubes** composed each composed of **copper-lead** and **iron-lead** . The ring connects to the **ground** as shown in figure. 2.

A second regulator form of **automatic breakers** balanced on 3 poles and two poles also equally balanced.

4. A panel of **resistances** composed of **wire mesh** in bunches from different sections of **glass tubes** containing **copper** dust, **coal** and flowers of **sulfur**.

Vacuum cleaners consists of a **wooden box** on each pole, containing a **porcelain vase** in which **layers** isolated with **mica** is made up of **mercury, tin, coal, copper** and **sulfur**, all contaied in a **copper tube**.

6. The witnesses are comprised of ordinary incandescent lamps.

Resume

By the point at the zenith and the point to the south we channel two currents forming the two poles. We also protect from lightning. It regularizes the flow by a regulator and similar devices by a controlling each devise of adequate strength of the current harmful nature of these devices do not have loads. The refined current is conducted by ordinary copper wires**.**

French Patent # 565,395

Combined Apparatus for Capture of Atmospheric Electric Currents with Immediate Implementation

25 January 1924

We know that earth with its constitution, its rotation and movement in space, provides the electricity in the atmosphere. The electrical currents escape into space or largely accumulate towards the equator, as a result of the greater periphery of the globe.

In the atmosphere, there are two clearly distinct poles, i.e., clouds that can be electrically positive or negative; everything in nature shows this, otherwise it would be difficult to explain the lightning that occurs between the clouds and which are none other than contrary cloud electrical charges discharged by too close proximity.

The invention relates to a set of devices capable of capturing the atmospheric electricity.

So far, all searches made for this purpose has been to capture the atmosphere, i.e., that brought together into one system to capture two poles and opposes effect has been to destroy or cancel each other leaving the amount as the difference of the strongest to weakest.

It is therefore easy to understand why, considering the two poles of air as about equal, it is almost impossible to measure some potential with the land, the highest on the lowest remaining which can be positive or negative, copper being the strongest of one or other of these polarities.

It is on this basis that all research until now have been made, and that is why we must consider that all the time, between the two poles captured in the atmosphere and not in any mixture of systems uptake, it is possible to obtain tension and intensity, a considerable and measurable power captured separately between the two poles and remaining isolated from one another until their utilization .

In accordance with this invention, this collection is made by attraction of primary electrical currents in teh atmosphere, either positively or negatively charged, by an antenna that has two points absolutely isolated from one another, where one points to the zenith to attract negative electricity, and the other turned south, toward the equator to draws in the masses grouped in this area.

This shows and proves the existence of atmospheric electrical currents, and that it is possible to capture them with specially designed equipment primarily acting as regulators, as the persistent difficulty encountered so far in realizing their capture lies with large variations of tension in which the current atmosphere is present in space, for each of the poles, and an overload could inevitably fatal.

The patent in its present form of presentation does not cover the regulators or devices that are anticipated in the system, because they can be designed in different ways and give the same result, but covers the application and grouping of equipment operating as automatic relays with variable influence to limit current tension to that chosen for utilization.

These devices have a role associated with an overflow reservoir outside carrying excess liquid; these regulators will divert the excess voltage flows to ground.

We can still absorb these regulators having filters because they have the sole purpose of diverting the post being used , currents that are not yet known but likely that we will call for simplicity, abnormal currents. [sic...]

The patent also covers systems for regulating currents, applied to each of the poles because it is recognized that the shape and tension of the currents of the two poles are not equivalent.

The method of capture is by special antenna has directed two points in the atmosphere, as will be stated after this, with Boot ecoulement prior to the current atmosphere is also of great importance.

Finally, the current atmospheric reception is adequate even with the installation of a post, which can be expected at any location without the need for special altitude, as has been attempted in previous efforts.

We refer to the attached drawings:.

Figure 1 represents in elevation and side view an antenna that only has two points, to overcome an elevation ;

Figure 2 is the end of one of the peaks, the horizontal:

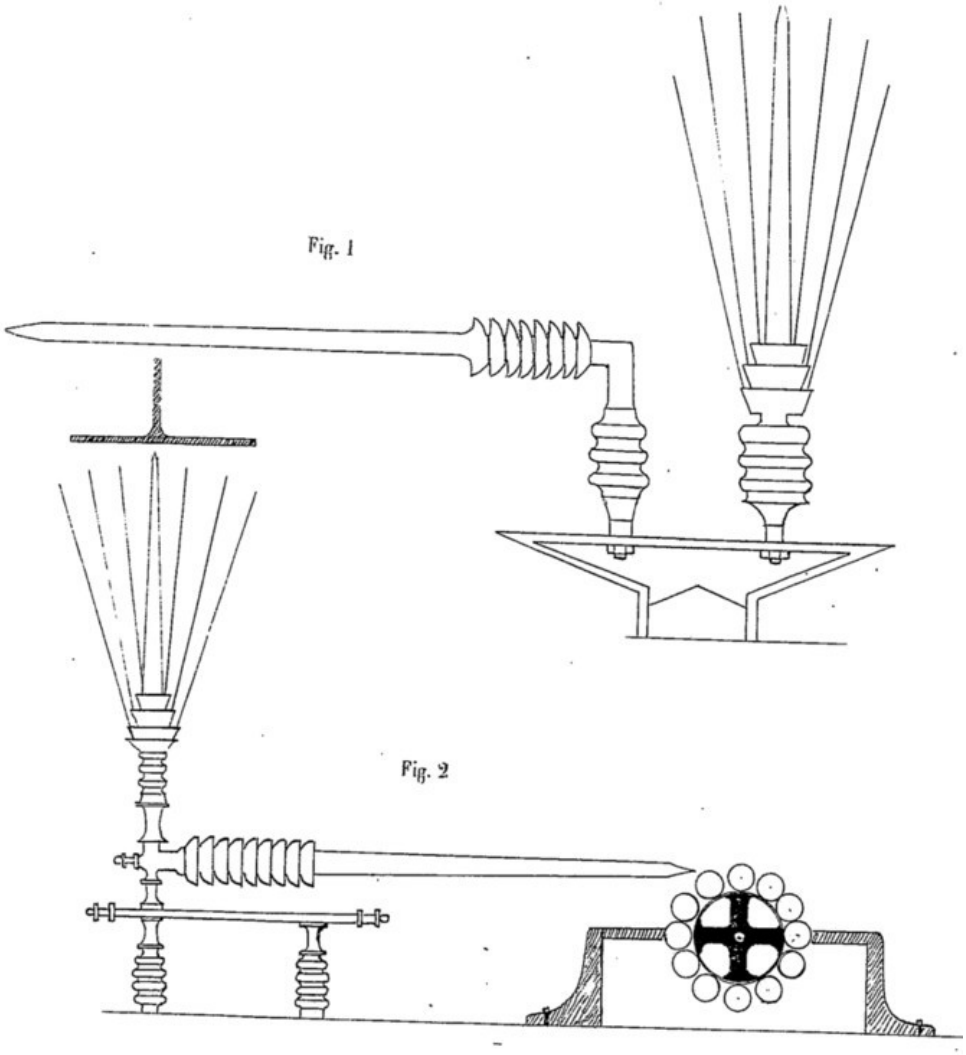

Figure 3 shows schematically the table on which are mounted various devices or accessories that act as regulators of current tensions.

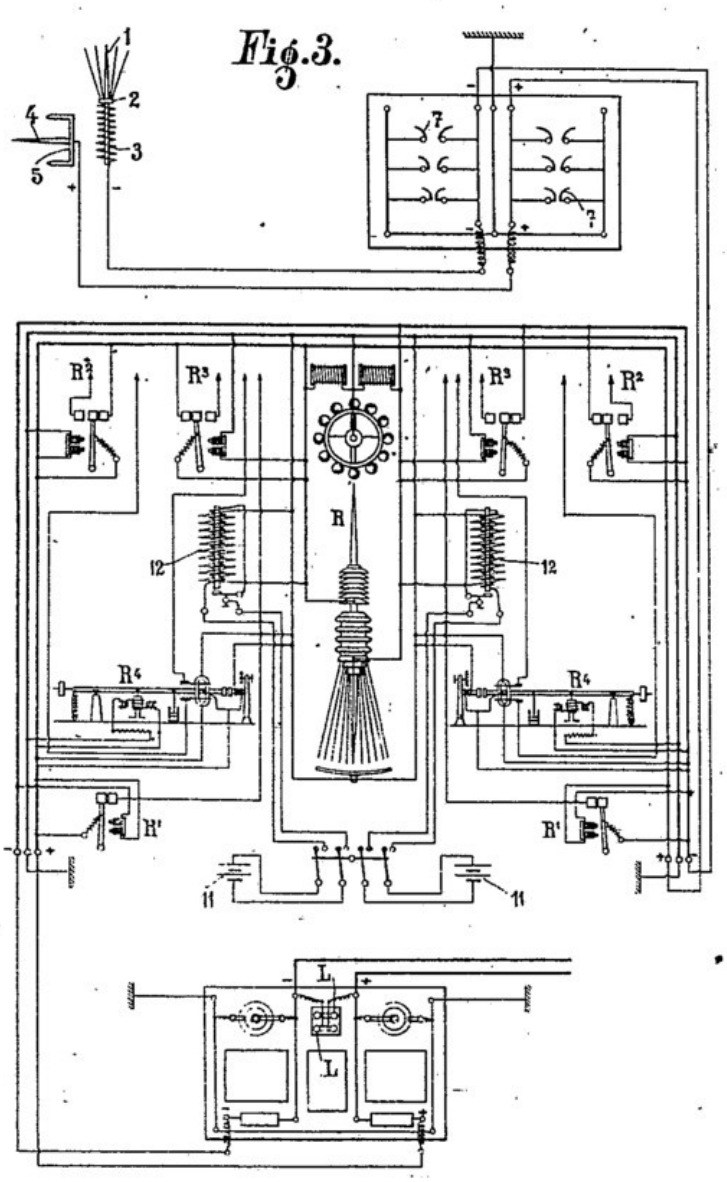

Figure 4 is a scheme of surge arrestors, and

Figure 5 a table of resistances.

Fig. 4.

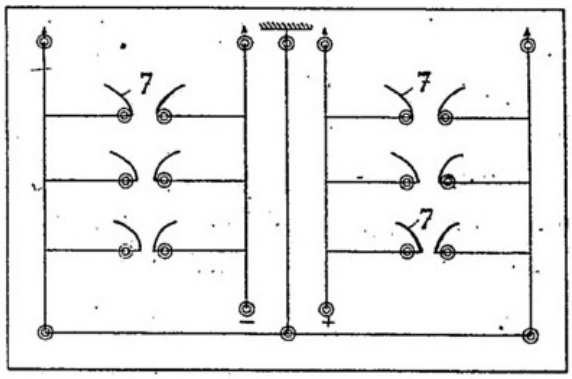

Fig. 5.

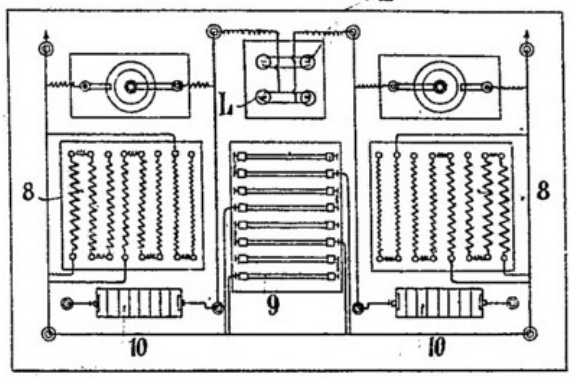

The necessary arrangements to capture atmospheric current form is as follows:

1. The **antenna** in figure 1 is formed with two peaks: the 1 is **steel**, supported by a **bronze ring** 2, surrounded by a **spiral form** 3; this point is oriented for attracting the **zenith** layers of **negative electricity** and the other edge 4 contains **copper coils** 6, and is oriented **south** to the **equator** to draw in the masses grouped in this area. To use this antenna it suffices to be raised on a mast or **pole** to a height a little higher than that of surrounding houses.

2. On the table **lightning arrestors**, contained 4, forms of 7 **copper horns** used to absorb large atmospheric discharges by certain time, as it would be dangerous to allow movement in the devices regulators.

3. On a table of **two** symmetrical systems **regulators**, Figure 3, one for each pole, to obtain and allow a regularization of large excesses in the current tensions, by automatically absorbing surges before passing over the surfacea chosen for the desired use. These regulators are represented on the drawing by the references R, R1, R2, R3, R4.

4. In the **resistance** panel in communication with regulators, these resistances are formed as **spiral coils or screens** 8, **tubes 9 of glass filled with fine coal dust , aluminum powder, sulfur and fine copper dust**. Finally, **two** special 10 **processors** and constitutes **layers** of metal forming an **absorbant** for harmful or abnormal currents.

5. As a source of energy formed **auxiliary batteries** 11 and **Ruhmkorff coils** 12 to get into the antenna sufficient attraction by means of an adjustment of intensity, which once it begins, allows the constant flow of atmospheric current in the system.

In considering Figure 3, which represents a sort of an installation scheme of the device, the reception of atmospheric electrical current will, as set out above, producing a priming of these currents. This boot is made in launching the system which is double to answer each of the poles, the current batteries 11 through 12 and reels going to the antenna.

This boot will continue until the disposal of electrical current atmosphere is evident by the one or more table lamps L of resistance shown in Figure 5.

Once the lights illuminate it is advisable to charge the batteries to boot. Natural flow and constant currents will be captured by the regulators , Figure 3; they will regularize in tension and in amperage and then directed to use in table lamps.

It has been said above that regulators R, etc., are intended and designed to automatically eliminate earth surge currents capture and abnormal currents that cannot yet be level but that these regulators could be replaced by devices with the same function.

There is therefore no need to describe in detail and especially the claims. We only specify that these regulators must be proper protection for the purposes described above.

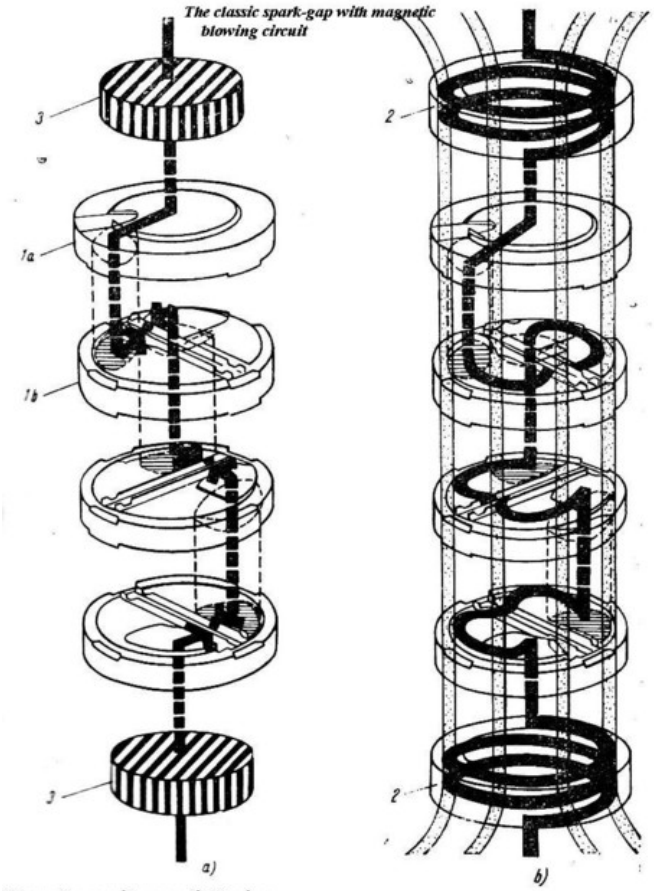

The spark-gap with magnetic blowing :
a,- the initial stage ; the impulse current send in soil through the shunt-resistences 3, because the coils 2 have an impedance too big for the impulse of 10/20 µs ;
the spark-gap 1 has two elements disc-shaped 1a and 1b, the inferior disc have one electrode and the upper disc the other electrode of the spark-gap circuit.
b,- the second stage ; the accompanying current discharge - after the impulse current ;
this accompanying current pass through the coils 2 which produce the magnetic field with the role to extend the electric arc into the slit between insulator discs 1a and 1b ; the thickness of this slit is smaller and smaller in accord with the extension of the electric arc, in this manner producing the magnifing of its electric resistance and finally, the electric arc extinction.

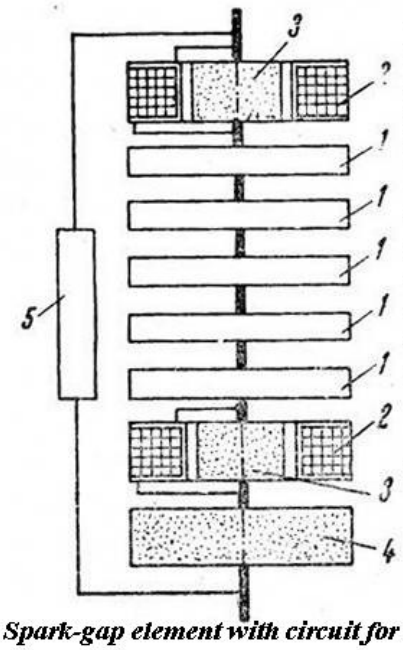

1,- the spark-gap individual devices which work in the manner to extend the electric arc of the accompanying electric current ;
2,- the coils which produce the magnetic field for the magnetic blowing ;
3,- the electric shunt-resistances in parallel connection on the blowing coils, with the role of reducing the current inside this coils
4,- the disc with unlinear resistance ;
5,- electrical resistance for the homogenous distribution of the electric field in all the elements of the spark-gap.

In Jules Guillot scheme, that kind of device could be used for leading the current.

Spark-gap element with circuit for the magnetic blowing of the electric fascicle

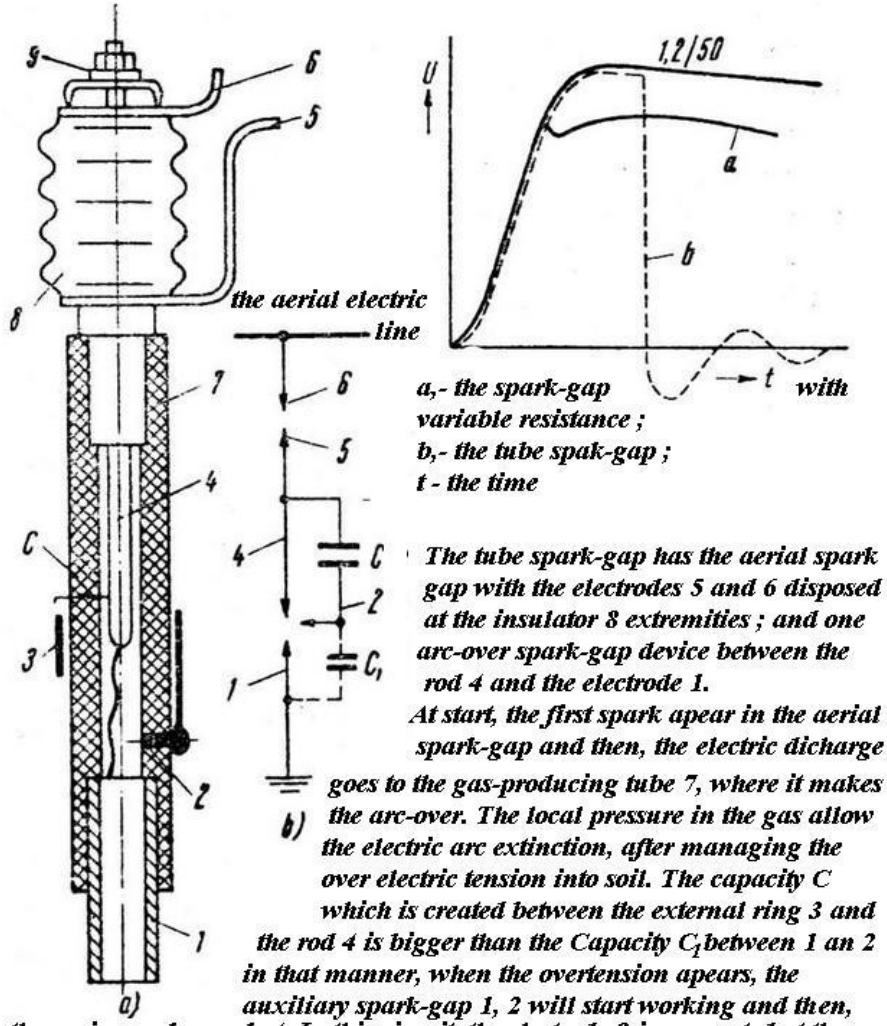

The tube spark-gap has the aerial spark gap with the electrodes 5 and 6 disposed at the insulator 8 extremities ; and one arc-over spark-gap device between the rod 4 and the electrode 1.
At start, the first spark apear in the aerial spark-gap and then, the electric dicharge goes to the gas-producing tube 7, where it makes the arc-over. The local pressure in the gas allow the electric arc extinction, after managing the over electric tension into soil. The capacity C which is created between the external ring 3 and the rod 4 is bigger than the Capacity C_1 between 1 an 2 in that manner, when the overtension apears, the auxiliary spark-gap 1, 2 will start working and then, the main spark-gap 1, 4. In this circuit, the electrode 9 is connected at the aerial electric line and the electrode 1 at the Earth.

In the image above, it is an classic tube spark-gap used for the protection of aerial electric cables. The atmospheric electricity is discharged in soil and lost... The Guillot's inventions used that kind of devices for leading and absorbing of the atmospheric electricity.

DARIDA, Gillbert : "Practical Utilization of Atmospheric Electricity";
(in *The Invention Encyclopedia,* pp. 204-207 ; 1930, Geo. Constantinescu, Ed.) --

Utilizarea practică a electricităţii atmosferice

Pământul ca şi celelalte astre, posedă o electricitate proprie negativă în interior, iar aerul care-l înconjoară este pozitiv. Potenţialul sau tensiunea electrică a aerului se măreşte pe măsură ce ne ridicăm în înălţime, astfel că putem spune că intensitatea electrică este proporţională cu înălţimea (după lucrările remarcabile ale lui Franklin, Quetelet, Lord Kelvin, Mascart, Joubert şi a altor mari savanţi fizicieni).

Observaţiile făcute recent, au arătat că aerul regiunilor înalte dela 6000—7000 m este foarte încărcat cu electricitate pozitivă, a cărei explicaţie se datoreşte frecării fotosferei sau atmosferei terestre, prin învârtirea pământului în jurul soarelui cu mai mult de o sută de mii de km pe oră. Această frecare directă în fluidul eteric ambiant, face ca aerul să se încarce cu electricitate pozitivă prin influenţă, iar pământul să se încarce negativ.

Intre cele două medii, fluidic (aerul) şi (pământul) materie, ştiinţa ne spune, că în partea de jos a atmosferei, pe timp frumos un centimetru cub de aer ionizat, conţine circa 800 particule cu ioni pozitivi şi 680 ioni negativi (electroni).

Pământul se comportă ca un enorm conductor încărcat negativ, respingând electroni şi atrăgând ionii pozitivi. Această atracţie a ionilor pozitivi determină un curent electric, zis şi curent de convenţiune. E un fel de bombardament invizibil supus variaţiunilor zilei şi a sezoanelor, putându-l evalua aproximativ la o densitate mijlocie remarcabilă, dela 3×10^{16} sau a 30 quatrilionime de amper pe cm cub, ceea ce dă pentru întreagă suprafaţă a pământului un curent formidabil, de 1500 de amperi.

Se pune întrebarea cum un astfel de curent poate să-şi întreţie mereu acelaşi sens? Aceasta este enigma pe care ne-o punem, studiind curenţii naturali ai atmosferei noastre, presupunem că poate să fie o legătură a acţiunii emanaţiunilor radioactive. Aceste emanaţiuni fiind din gaze radioactive grele, se găsesc de obiceiu în mare abundenţă aproape de pământ ceea ce ne explică marea ionizare observată în general în grote şi caverne.

Ionizarea atmosferică poate de asemenea fi produsă în parte, de acţiunea razelor X, foarte pătrunzătoare şi de diferite substanţe radioactive închise în subsolul pământului. De asemenea poate să mai fie, ţinând seama de acţiunea «Calei Lactee» şi de ionizarea luminei solare, foarte bogată în radiaţiuni ultraviolete

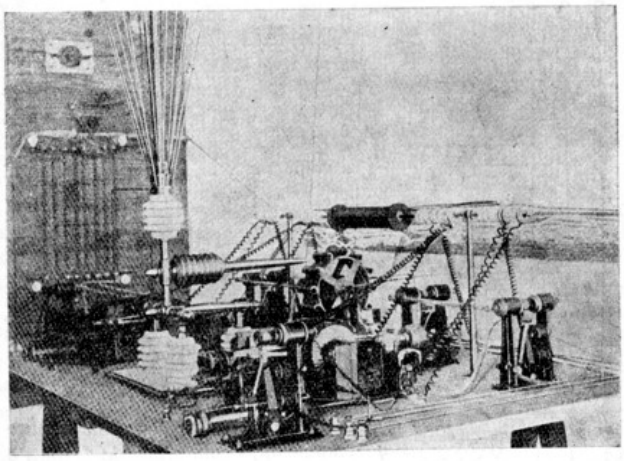

Fig. 108

precum şi a electronilor emişi direct din radierea căldurii solare de circa 6000 de grade.

Captarea electricităţii atmosferice a fost utilizată în Franţa prin cabluri aeriene montate pe Mont Blank, iar în Germania prin cabluri susţinute de baloane captive.

Sunt mai multe sisteme, vom da pe scurt pe cel mai ingenios procedeu, inventat de ing. Jules Guillot, bazat pe sifonul electric. Procedeul consistă de a pompa direct din atmosferă, electricitate

prin ajutorul unui aparat de captare, format din 2 antene aeriene şi o serie de bobine după cum se vede în fig. 108. Una din antene este verticală în formă de evantaiu dirijată cu vârfurile către zenit, pentru a capta electricitatea negativă din atmosferă; cea care este orizontală, este dirijată către Sud, pentru a capta electricitate pozitivă.

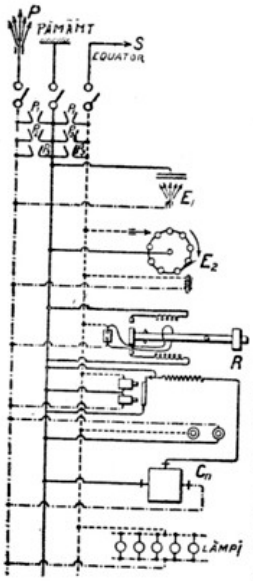

Fig. 109

Electricitatea în aer pare să fie cu dublă polaritate, după cum se vede la 2 nori electrizaţi, cari deplasându-se în sens contrar, dau naştere unei scântei (fulger) când distanţa respectivă poate să fie străbătută de puternica lor diferenţă de potenţial. Straturile de aer de densităţi diferite, nu sunt toate antrenate de aceeaşi viteză prin rotaţia pământului, ele se electrizează deci prin frecarea decalajului lor respectiv.

Aceste sunt consideraţiunile ce l-au făcut pe inventator să aşeze în atmosferă doi poli complet distincţi şi perfect izolaţi, al cărui pol pozitiv *S* (fig. 109) poate fi dirijat în direcţiunea Sudului, şi a celuilalt negativ *P*, în direcţiunea zenitului. Fig. 109 arată schema montajului şi a conexiunilor compuse după cum urmează: 1. dintr'o antenă dublă aeriană, montată pe stâlpi de 15—20 m înălţime. Această parte care se mai numeşte şi aparat de captat, este format din vârfurile *P*, dispuse în evantai în vârful unei tije de oţel dirijate către zenit, pentru a capta curenţii negativi ai atmosferei şi dintr'o altă antenă orizontală a cărei săgeată este îndreptată către sud *S*, adică către equator, pentru a recepta curenţii pozitivi. Aceste două părţi dispuse în unghiu de 90°, formează cei doi poli al curentului aerian, a cărei diferenţă de potenţial este suficientă pentru a permite utilizarea electricităţii atmosferice.

French Patent # 551,882

Appareil Capteur de Courants Electriques dans L'Atmosphere

BREVET D'INVENTION.

XII. — Instruments de précision, électricité.

5. — Production de l'électricité, moteurs électriques.

N° 551.882

Appareil capteur de courants électriques dans l'atmosphère.

M. Jules GUILLOT résidant en France (Tarn-et-Garonne).

Demandé le 27 septembre 1921, à 15h 20m, à Paris.
Délivré le 15 janvier 1923. — Publié le 16 avril 1923.

[Brevet d'invention dont la délivrance a été ajournée en exécution de l'art. 11 § 7 de la loi du 5 juillet 1844 modifiée par la loi du 7 avril 1902.]

Considérant le globe terrestre comme l'induit d'une dynamo, dont l'éther supraterrestre est l'inducteur, des courants électriques circulent dans l'intervalle c'est-à-dire dans la couche atmosphérique; l'inventeur capte au moyen de l'appareil décrit ci-dessous deux de ces courants parfaitement distincts et élimine les autres.

L'appareil comprend :

1° Le capteur aérien; 2° une série de parafoudres; 3° les régulateurs; 4° un tableau de résistances; 5° les aspirateurs; 6° les témoins.

1° Le capteur aérien monté sur un poteau est composé d'une pointe d'acier aimanté fixée par scellement sur un isolateur porcelaine et cerclée à sa base par une bague de bronze sur laquelle sont vissées 32 aiguilles de fer doux, le tout formant l'antenne d'un pôle. A côté et isolé de la première, formant le 2e pôle, est fixée une pointe d'acier aimanté dans la position horizontale et dirigée vers le sud dont la base coudée à 45° est scellée sur un isolateur porcelaine. Cette pointe est également cerclée d'une bague de cuivre à encoches fig. 1.

2° Une série de 6 parafoudres à cornes entre chaque pôle et la terre et à écartements variés.

3° Un premier régulateur formé d'un appareil absolument semblable au capteur aérien, mais ayant les deux pôles superposés, et, opposé à la pointe verticale, un disque de cuivre relié à la terre. Opposé à la pointe horizontale, une roue à jante d'étain sur laquelle sont soudés alternativement 16 tubes composés eux-mêmes de deux métaux soudés : cuivre-plomb et fer-plomb. Cette roue est reliée à la terre par son pivot fig. 2.

Un deuxième régulateur formé d'appareils à déclanchement automatique au nombre de 3 par pôles et deux basculateurs également par pôles.

4° Un tableau de résistances composé de fils de maillechort en boudins de différentes sections, de tubes en verre contenant des poussières de cuivre, du charbon de cornue et de la fleur de soufre.

5° Les aspirateurs composés d'une boîte en bois sur chaque pôle, contenant un vase de porcelaine dans lequel par couches superposées et isolées au mica est placé du mercure, de l'étain, du charbon, du cuivre et du soufre, le tout traversé par une tige de cuivre.

6° Les témoins composés de lampes à incandescence ordinaires.

RÉSUMÉ.

Par la pointe au zénith et par la pointe au

sud nous canalisons deux courants formant les deux pôles. On protège l'ensemble par des parafoudres. On régularise le débit par un régulateur semblable et par des appareils à déclanchement commandant chacun des résistances appropriées de la nature du courant nuisible dont ces appareils sont chargés. Les courants épurés sont conduits aux témoins par des fils de cuivre ordinaire.

Jules GUILLOT,
Moissac (Tarn-et-Garonne).

XII. — Instruments de précision, électricité.
5. — Production de l'électricité, moteurs électriques.

N° 565.395

Dispositif combiné pour capter les courants électriques atmosphériques avec application immédiate.

M. Jules GUILLOT résidant en France (Allier).

Demandé le 6 avril 1923, à 11h 30m, à Paris.
Délivré le 7 novembre 1923. — Publié le 25 janvier 1924.

On sait que la terre, par sa propre constitution, sa rotation et son mouvement dans l'espace, fournit à elle seule l'électricité que l'on utilise et qui est en suspension dans l'atmosphère. Les courants électriques, qui s'échappent de la surface du globe, montent directement dans l'espace où les grandes masses sont accumulées vers l'équateur, par suite de la plus grande périphérie du globe.

Dans l'atmosphère, il y a deux pôles parfaitement distincts, c'est-à-dire que des nuages peuvent être électrisés, soit d'électricité positive ou négative; ceci, tout dans la nature le démontre, sans quoi, il serait difficile d'expliquer la provenance des éclairs qui se produisent entre les nuages et qui ne sont autres que des nuages chargés d'électricité contraire et qui s'amorcent entre eux par un trop grand rapprochement.

L'invention dont il s'agit concerne un dispositif formé d'un ensemble d'appareils aptes à la captation de ces courants atmosphériques.

Jusqu'à ce jour, toutes les recherches faites dans ce but ont été de capter dans l'atmosphère une seule catégorie de courants atmosphériques, c'est-à-dire, qu'on a réuni dans un même système de captation, deux pôles opposés et dont l'effet a été de se détruire ou de s'annuler l'un à l'autre laissant comme quantité que la différence du plus fort au plus faible.

Il sera donc facile de comprendre pourquoi, en considérant les deux pôles d'un courant atmosphérique comme à peu près égaux, il est presque impossible par certains temps de mesurer le potentiel avec la terre, du plus fort sur le plus faible subsistant et qui peut être positif ou négatif, suivant que le plus fort est de l'une ou de l'autre de ces polarités.

C'est sur cette base que toutes les recherches jusqu'à nos jours ont été faites et c'est pourquoi, il faut considérer que par tous les temps, entre les deux pôles captés dans l'atmosphère et non mélangés dans aucun des systèmes de captation, il est possible d'obtenir, en tension et en intensité, une puissance aussi considérable que l'on puisse désirer et qui sera mesurée entre les deux pôles captés séparément et toujours isolés l'un de l'autre jusqu'à leur utilisation.

Suivant l'invention, cette captation se fait par attraction dans l'atmosphère au moyen d'un amorçage des courants électriques, soit positif ou négatif, par une antenne à deux pointes absolument isolées l'une de l'autre, dont l'une tournée vers le zénith attire les couches d'électricité négative, et l'autre, tournée vers le sud, puise vers l'équateur, dans les masses groupées dans cette zone.

Ceci exposé et l'existence des courants électriques atmosphériques étant prouvée, il est

possible de les capter à la condition de disposer d'appareils spéciaux étudiés surtout pour jouer le rôle de régulateurs, attendu que la difficulté persistante rencontrée jusqu'alors pour réaliser la captation incombe aux grandes variations de tensions sous lesquelles les courants atmosphériques se présentent dans l'espace, pour chacun des pôles, et dont l'écoulement dans un poste de captation serait inévitablement funeste.

Le présent brevet sous sa forme de présentation doit donc couvrir, non pas le ou les dispositifs régulateurs qui sont prévus dans le système, car ils peuvent être conçus d'une façon toute différente et donner le même résultat, mais sur l'application raisonnée et le groupement d'appareils fonctionnant automatiquement et intervenant chacun comme relais d'influence variable pour limiter la tension des courants captés dans l'atmosphère à celle choisie pour utilisation.

Ces appareils ont un rôle assez connexe avec celui de trop-pleins sur un réservoir qui acheminent à l'extérieur l'excès de liquide; ici ces régulateurs détournent l'excès de tension des courants à la terre.

On peut encore assimiler ces régulateurs à des filtres car ils ont pour but de détourner du poste d'utilisation, des courants qui ne sont pas encore de nature connue mais que pour simplicité on appellera courants parasites ou anormaux.

Le brevet portera aussi sur le système de régulation des courants, appliqué à chacun des pôles, car il est reconnu que la forme et la tension des courants aux deux pôles ne sont pas équivalentes.

Le mode de captation par antenne spéciale à deux pointes orientées dans l'atmosphère, comme il sera indiqué ci-après, avec amorçage préalable pour l'écoulement des courants atmosphériques est aussi d'une grande importance.

Enfin la réception des courants atmosphériques se fait à l'endroit même de l'installation du poste; celui-ci peut être prévu en un lieu quelconque sans nécessiter d'altitude particulière, comme cela a été tenté dans des essais préconçus.

Sur les dessins ci-annexés auxquels on se réfère

La fig. 1 représente en élévation et en coupe partielle l'antenne seule, à deux pointes, surmontant un poteau d'élévation;

La fig. 2 est le plan de l'une des pointes, celle horizontale:

La fig. 3 montre schématiquement le tableau sur lequel sont montés les divers appareils ou accessoires qui jouent le rôle de régulateurs des tensions de courants.

La fig. 4 est un schéma de parafoudre, et

La fig. 5 un tableau de résistances.

Le dispositif nécessaire à la captation des courants atmosphériques est formé comme suit :

1° D'une antenne, fig. 1, formée de deux pointes dont l'une 1 est en acier, supportée par une bague de bronze 2 entourée d'une spirale 3 formant self; cette pointe est tournée vers le zénith pour attirer les couches d'électricité négative; l'autre pointe 4 comporte un cadre 5 de huit branches supportant des spirales de cuivre 6 et est tournée vers le sud pour puiser vers l'équateur dans les masses groupées dans cette zone. Pour l'utilisation de cette antenne il suffira qu'elle soit portée par un mât ou poteau de hauteur un peu supérieure à celle des habitations environnantes.

2° D'un tableau de parafoudre, fig. 4, formé de cornes de cuivre 7 servant à absorber les tros grosses décharges atmosphériques que par certains temps, il serait dangereux de laisser circuler dans les appareils régulateurs.

3° D'une table de deux systèmes symétriques de régulateurs, fig. 3, un pour chaque pôle, qui permet d'obtenir une régularisation assez grande dans les tensions des courants en absorbant automatiquement les surtensions dépassant la tension choisie pour l'utilisation désirée. Ces régulateurs sont représentés sur le dessin par les références R, R^1, R^2, R^3, R^4.

4° D'un tableau de résistance en communication avec les régulateurs, ces résistances sont formées de spirales de maillechor 8, de tubes 9 de verre remplis de poussière fine de charbon de cornue, de poudre d'aluminium, de soufre et de poussière fine de cuivre; enfin, deux appareils spéciaux 10 formant transformateurs et constitués de couches de métaux absorbant certains courants nuisibles ou anormaux.

5° D'une source auxiliaire d'énergie formée de piles 11 et de bobines Ruhmkorff 12 permettant d'obtenir dans l'antenne une attraction suffisante au moyen d'un dispositif de

réglage d'intensité qui, une fois amorcé, permet l'écoulement constant des courants de l'atmosphère dans le système.

En considérant la fig. 3 qui représente en quelque sorte le schéma d'installation du dispositif, la réception des courants électriques atmosphériques se fera de la façon indiquée ci-dessus, en produisant un amorçage de ces courants. Cet amorçage est fait en lançant dans le système qui est double pour répondre à chacun des pôles, le courant des piles 1 1 passant par les bobines 1 2 et se rendant à l'antenne.

Cet amorçage sera maintenu et réglé jusqu'à ce que l'écoulement des courants électriques atmosphériques se soit manifesté par l'allumage d'une ou plusieurs lampes L du tableau des résistances représenté en fig. 5 portant la prise d'utilisation.

Dès que l'allumage des lampes sera constaté on sera averti de la captation des courants atmosphériques et on pourra couper le courant des piles d'amorçage. L'écoulement naturel et constant des courants captés se produira dans les appareils régulateurs de la table, fig. 3; ils seront régularisés en tension et en nature puis dirigés au tableau des lampes pour utilisation.

Il a été dit ci-dessus que les régulateurs R, etc., étaient prévus et conçus pour éliminer automatiquement à la terre les surtensions des courants captés ainsi que les courants anormaux qui ne peuvent encore être classés. mais que ces régulateurs pouvaient être remplacés par des appareils faisant le même office.

Il n'y a donc pas lieu de les décrire en détail et de les revendiquer spécialement. L'avenir seul précisera si ces régulateurs doivent faire l'objet d'une protection propre pour l'application décrite ci-dessus.

RÉSUMÉ.

Dispositif combiné pour capter les courants électriques atmosphériques avec application immédiate, caractérisé :

1° En ce que l'organe de captation est une antenne à deux branches orientées différemment, l'une vertical avec self est tournée vers le zénith pour puiser les courants négatifs, l'autre horizontale comporte un plateau central avec enroulement de fil et est orientée vers le sud pour puiser les courants positifs; l'orientation des pointes restant fonction du lieu terrestre où se fait la captation des courants considérés.

2° En ce que l'écoulement des courants atmosphériques dans le système récepteur est subordonné à un amorçage qui consiste à lancer dans l'antenne un courant provenant d'une source auxiliaire, telle que des piles reliées à des bobines de Ruhmkorff.

3° En ce qu'un tableau parafoudre est interposé entre l'antenne ou organe de captation et le tableau des régulateurs pour préserver l'installation en éliminant à la terre les décharges brusques atmosphériques.

4° En ce que les régulateurs sont disposés suivant deux systèmes symétriques correspondant à chacun des pôles des courants atmosphériques.

J. GUILLOT.

Par procuration :

V. PRÉVOST.

Parts List

Steel Rods, magnetic, 2
Insulator, porcelain
Ring, bronze
Rods, soft iron, 32
Ring, copper
Surge Protector
Disk, copper
Ring, tin
Tubes, steel
Rx Cu-Pb, Fe-Pb
Breakers, automatic
Resistances : Wire Mesh, Glass Tube. Cu, C, S powder
Vacuum Cleaners : Box, Jar, Mica &
Tube, copper;
Rx : Hg, Sn, C, Cu, S
Battery
Ignition Coil

Your Support Maintains this Service -- and Your Survival ...

The ***Civilization Kit***

... It's Your Best Bet & Investment in Sustainable Humanity on Earth ...
Everything @ rexresearch.com, plus the Bonus Files CD !
<< $13, Postpaid Anywhere >> from :

Rex Research, POB 19250, Jean, NV 89019 USA

Basic Chord Forms and Triads

Music is indivisible. The dualism of thinking and feeling must be resolved to a state of unity in which one thinks with the heart and feels with the brain.

- George Szell

1. Basic Chord Forms

Much of Western music is based on the Ionian system of scales and modes. This system is constructed from the major or Ionian scale:

C D E F G A B

C major scale

There are three important types of chords:

Chord type:	Intervals:	Example:	Name:
Major	1 3 5	CEG	C major
Minor	1 b3 5	ACE	A minor
Dominant	1 3 5 b7	GBDF	G dominant 7th

- Chord types and construction -

To create chords from or *harmonize* a given scale, stack every other note in intervals of major or minor thirds on top of a given root:

```
C   D   E   F   G   A   B   C   D   E   F   G   A   B   C          C major scale
_____________________________________________________

C       E       G                                          =      Cmaj
    D       F       A                                      =      Dmin
        E       G       B                                  =      Emin
            F       A       C                              =      Fmaj
                G       B       D                          =      Gmaj
                    A       C       E                      =      Amin
                        B       D       F                  =      Bdim
```

- Harmonization of the C major scale to major and minor triads -

2. Seventh Chords

Adding one more third on top of the triads above results in a family of *seventh chords*.

Chord type:	Intervals:	Example:	Name:
Major7	1 3 5 7	CEGB	C maj7
Dominant7	1 3 5 b7	GBDF	G7
Minor7	1 b3 5 b7	ACEG	Amin7
Minor7b5('Half dim')	1 b3 b5 b7	BDFA	Bmin7b5

- Seventh chords -

C	D	E	F	G	A	B	C	D	E	F	G	A	B	C			
															C major scale		
C		E		G		B									=	Cmaj7
	D		F		A		C								=	Dmin7
		E		G		B		D							=	Emin7
			F		A		C		E						=	Fmaj7
				G		B		D		F					=	Gdom7
					A		C		E		G				=	Amin7
						B		D		F		A			=	Bmin7b5

- C major scale family of seventh chords -

Further additions of thirds on top of these results in *ninth* chords, then *eleventh* and *thirteenth* chords.

***Passing note**: Chords do not have to be, and are in fact rarely voiced in ascending sequential order of their intervals. A common G major chord on the guitar, for instance, is voiced 3|2|0|0|3|3 (frets on strings 6-1), or GBDGDG. This voicing consists of three tones providing harmonic information, and three tones doubling two of these. A more economic and harmonically sensible way of chording on the guitar is using four-note-chords where applicable and appropriate.*
A Gmaj7 chord for example could among other options be voiced either 3|5|4|4|3|3 or any of these: 3|x|4|4|3|x, 7|x|5|7|7|x, x|x|5|4|3|2, x|x|5|7|7|7 or x|10|12|11|12|x, x|x|9|11|8|10, x|x|12|12|12|14.

(Here, 'x' stands for muted string.)

Another way to construct chords is a process called *triad-stacking*.

3. Triads

Triads are sonorous groups of three notes, stacked in adjacent major (III) or minor thirds (iii), named after their given root.

There are four types of triads: major, minor, augmented and diminished; commonly abbreviated as maj, min, aug, dim.

A **major** triad is built by stacking a minor third upon a major third on top of a given root.

C-E = Major third

E-G = Minor third

C-E-G = *major* third + *minor* third = **C major** triad.

A **minor** triad is built by stacking a major third upon a minor third on top of the root.

C-Eb = minor third

Eb-G = major third

C-Eb-G = minor third + major third = **C minor** triad.

An **augmented** triad is built by stacking two major thirds:

C – E = major third

E – G# = major third

C-E-G# = **C augmented triad**.

A **diminished** triad is built by stacking two minor thirds:

C – Eb = minor third

Eb – Gb = minor third

C-Eb-Gb = C **diminished triad**.

Triad:	Intervals:	Example:	Name:
Major	III + iii	CEG	C major
Minor	iii + III	ACE	A minor
Augmented	III + III	GBD#	G aug
Diminished	iii + iii	BDF	B dim

- The four triad forms with different roots -

© 2002 by Nick Naffin.
On the web: http://www.nicknaffin.com
Please send questions, suggestions and comments to chops@takenotepromotion.com

This document may be freely distributed as long as content is maintained ‘as is’, and the copyright notice is not removed.

US 20060071122A1

(19) United States

(12) Patent Application Publication

St. Clair

(10) Pub. No.: US 2006/0071122 A1

(43) Pub. Date: Apr. 6, 2006

(54) FULL BODY TELEPORTATION SYSTEM

(76) Inventor: **John Quincy St. Clair**, San Juan, PR (US)

Correspondence Address:
JOHN ST. CLAIR
4A
52 KINGS COURT
SAN JUAN, PR 00911 (US)

(21) Appl. No.: **10/953,212**

(22) Filed: **Sep. 29, 2004**

Publication Classification

(51) **Int. Cl.**
B64C 39/00 (2006.01)

(52) **U.S. Cl.** **244/62**

(57) **ABSTRACT**

A pulsed gravitational wave wormhole generator system that teleports a human being through hyperspace from one location to another.

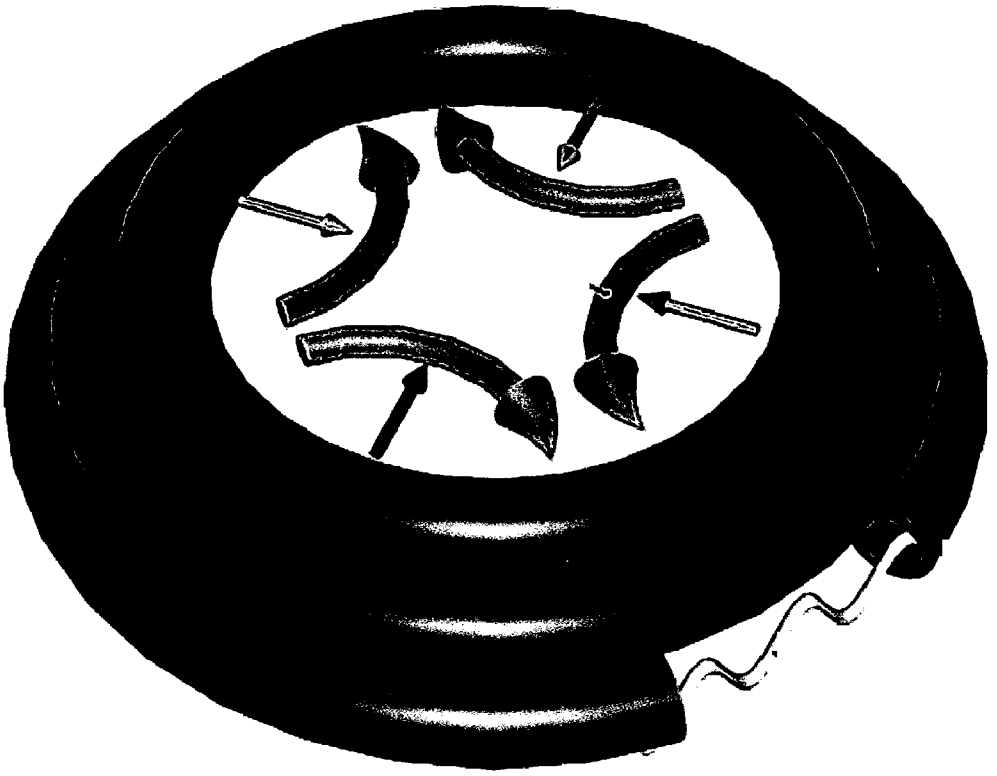

Figure 1

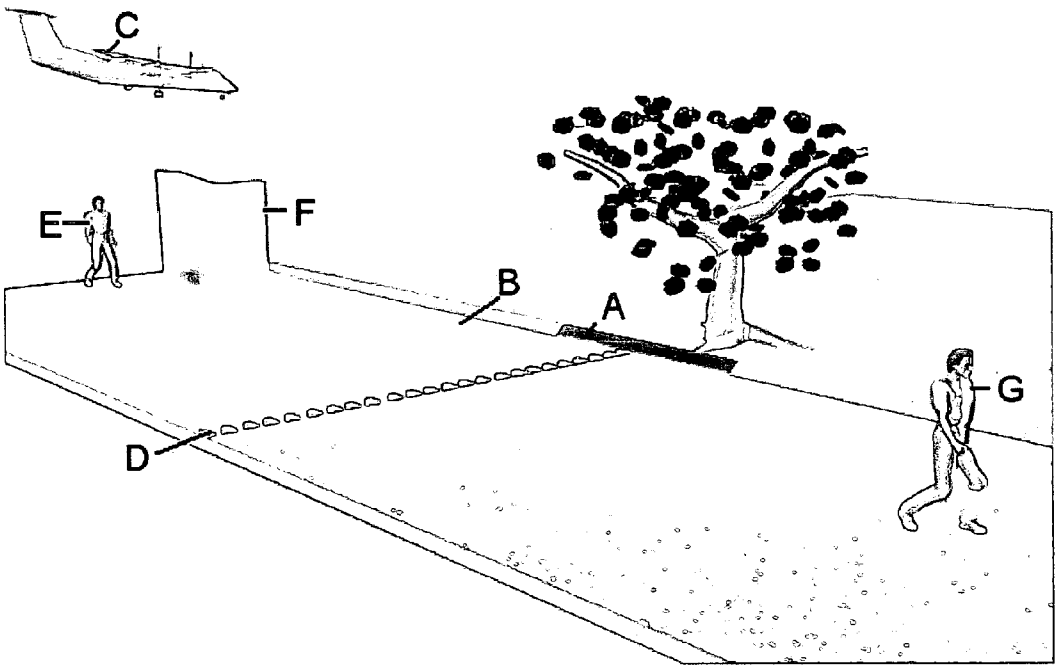

Figure 2

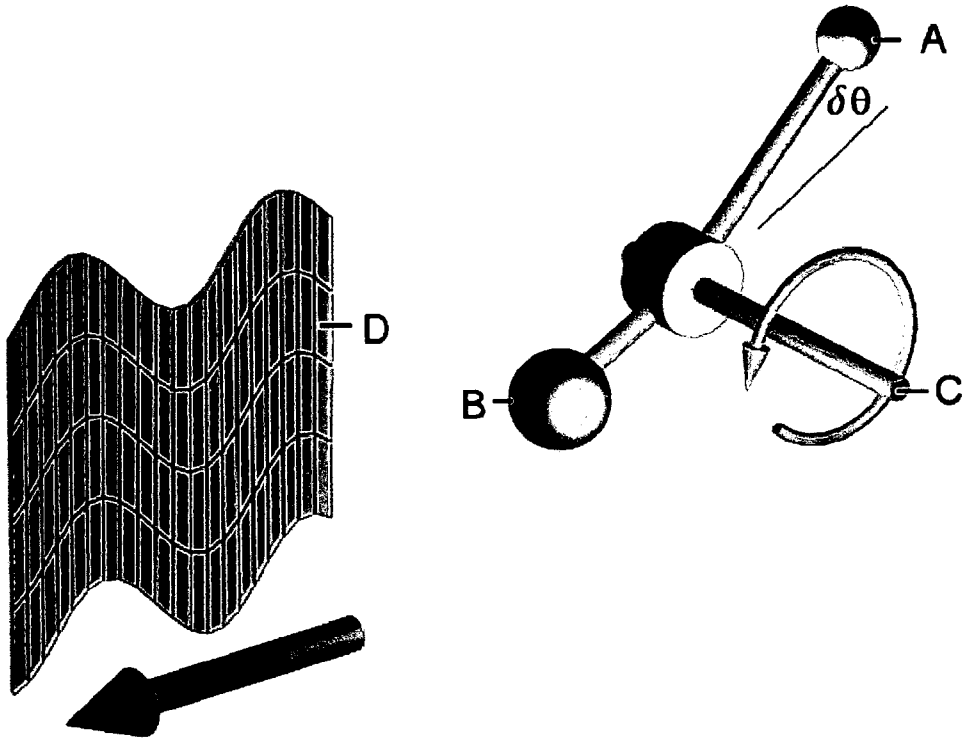

Figure 3

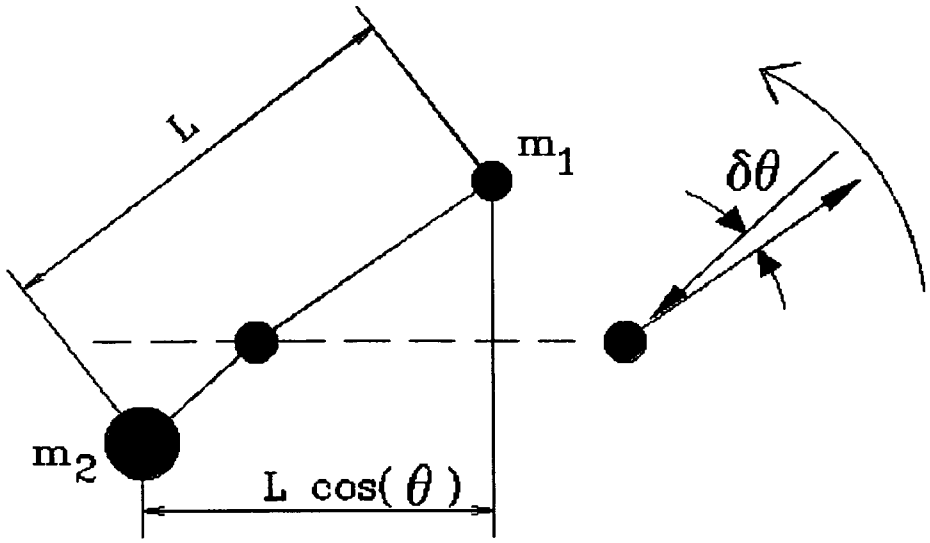

Figure 4

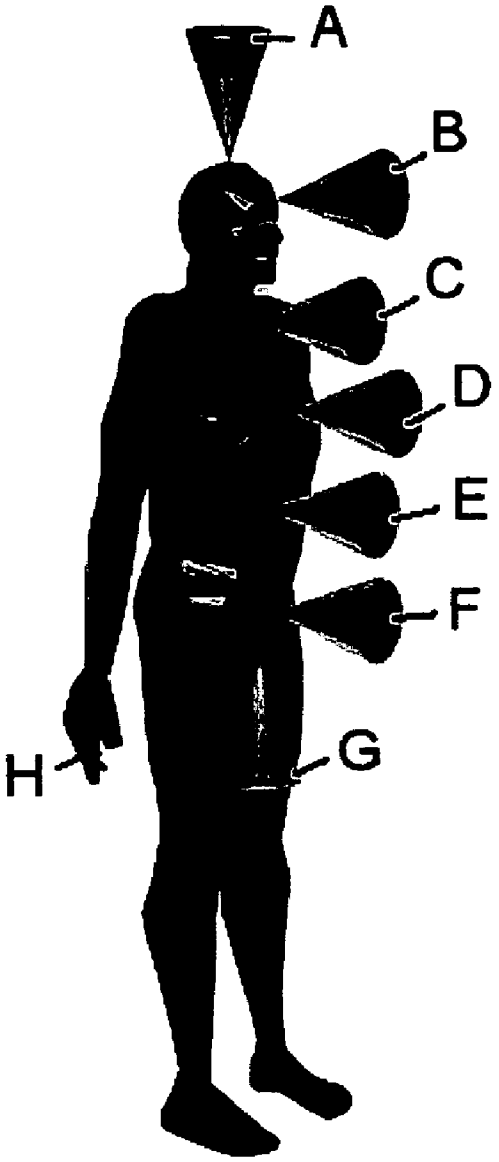

Figure 5

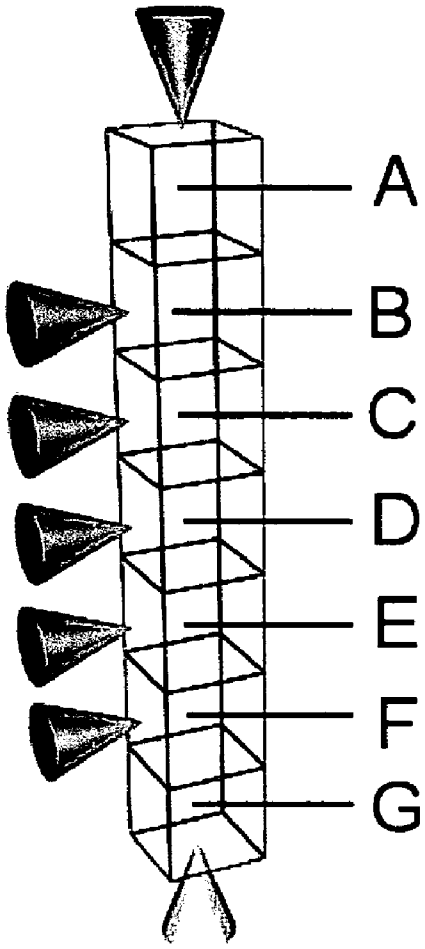

Figure 6

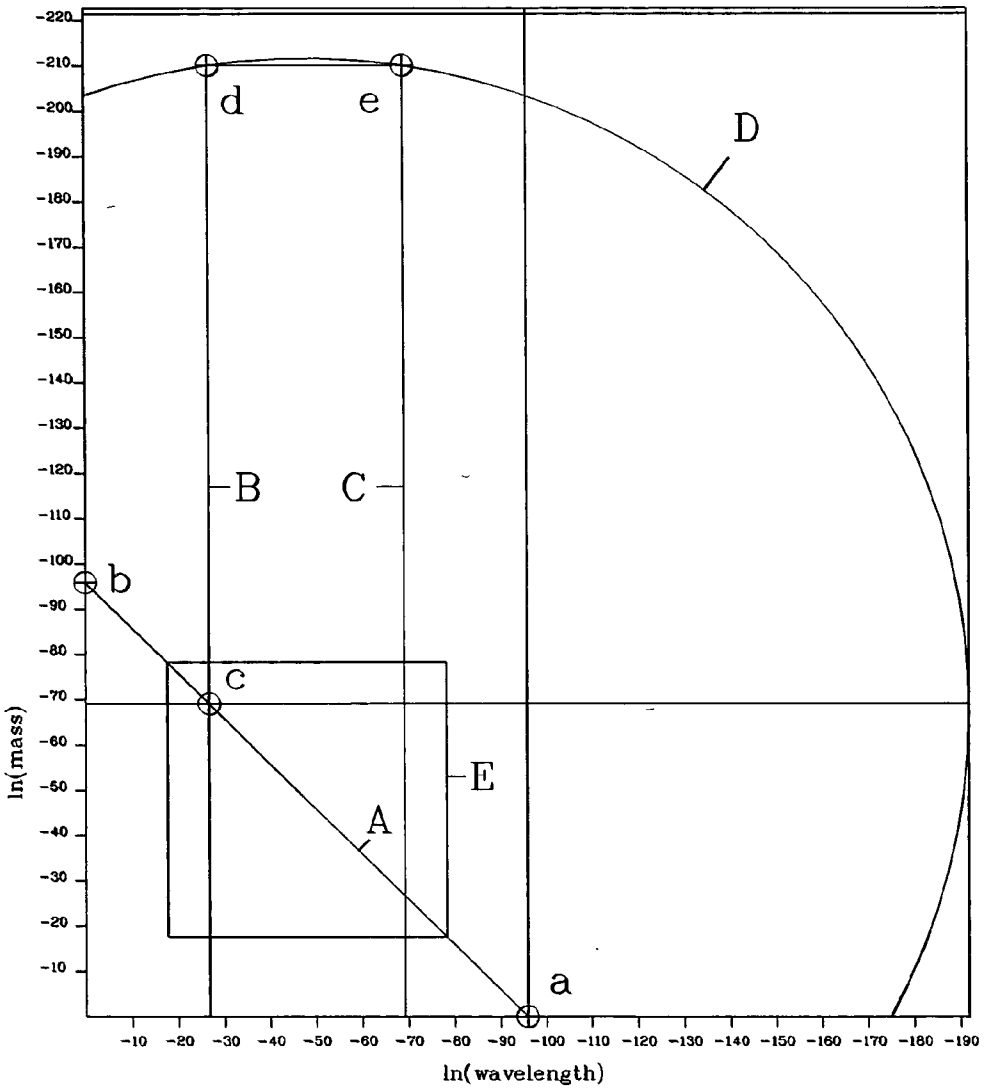
d
e
D
B
C
b
c
E
A
a
ln(mass)
ln(wavelength)
-220
-210
-200
-190
-180
-170
-160
-150
-140
-130
-120
-110
-100
-90
-80
-70
-60
-50
-40
-30
-20
-10
-10 -20 -30 -40 -50 -60 -70 -80 -90 -100 -110 -120 -130 -140 -150 -160 -170 -180 -190

Figure 7

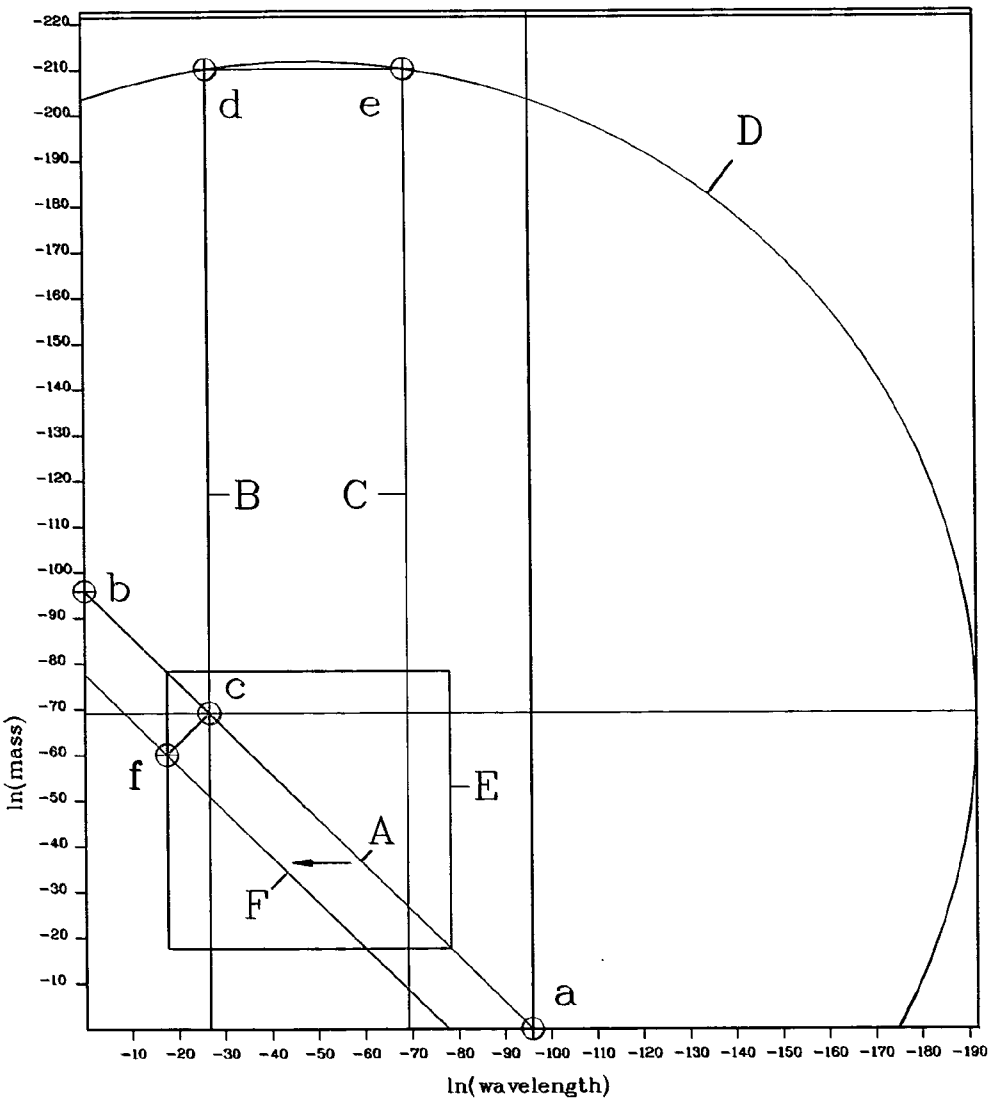
-220
-210
-200
-190
-180
-170
-160
-150
-140
-130
-120
-110
-100
-90
-80
-70
-60
-50
-40
-30
-20
-10
ln(mass)
d
e
D
B
C
b
c
f
E
A
F
a
-10 -20 -30 -40 -50 -60 -70 -80 -90 -100 -110 -120 -130 -140 -150 -160 -170 -180 -190
ln(wavelength)

Figure 8

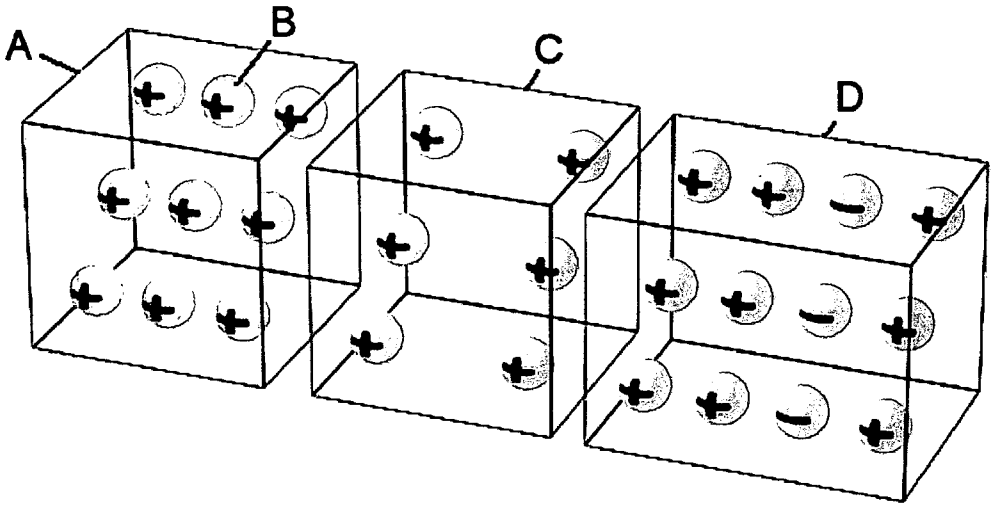

Figure 9

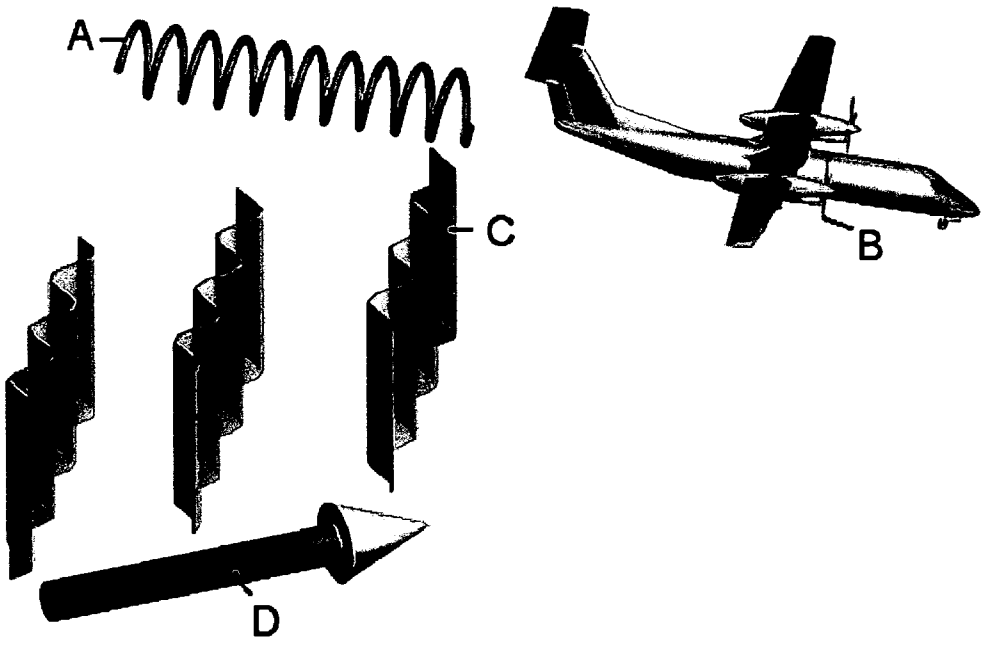

Figure 10

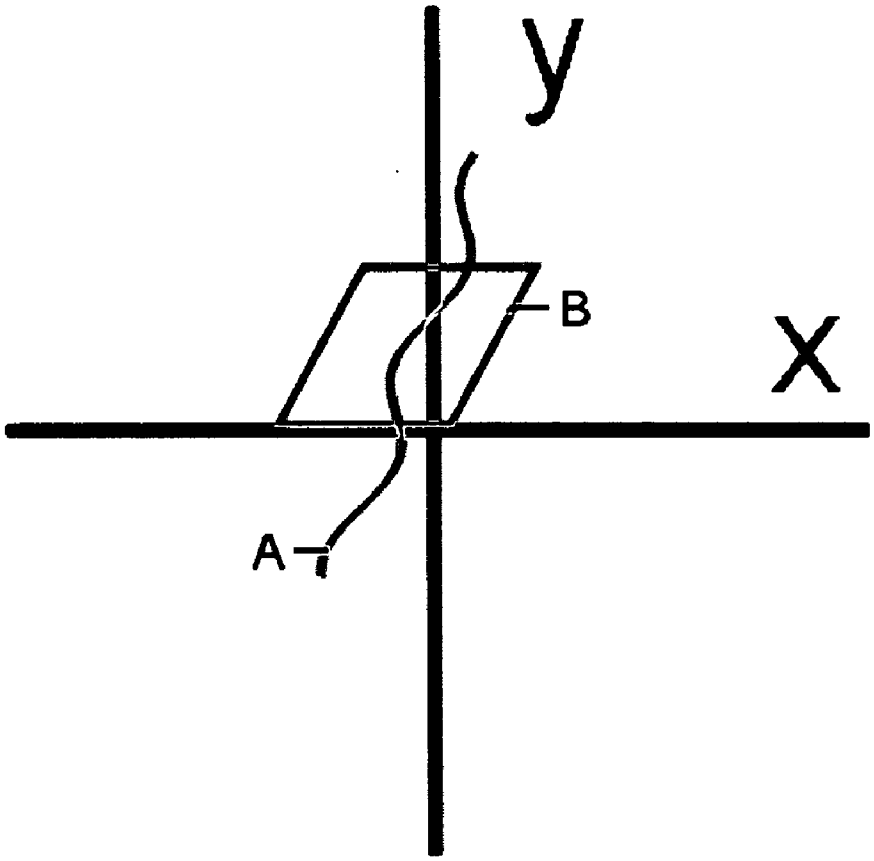

Figure 11

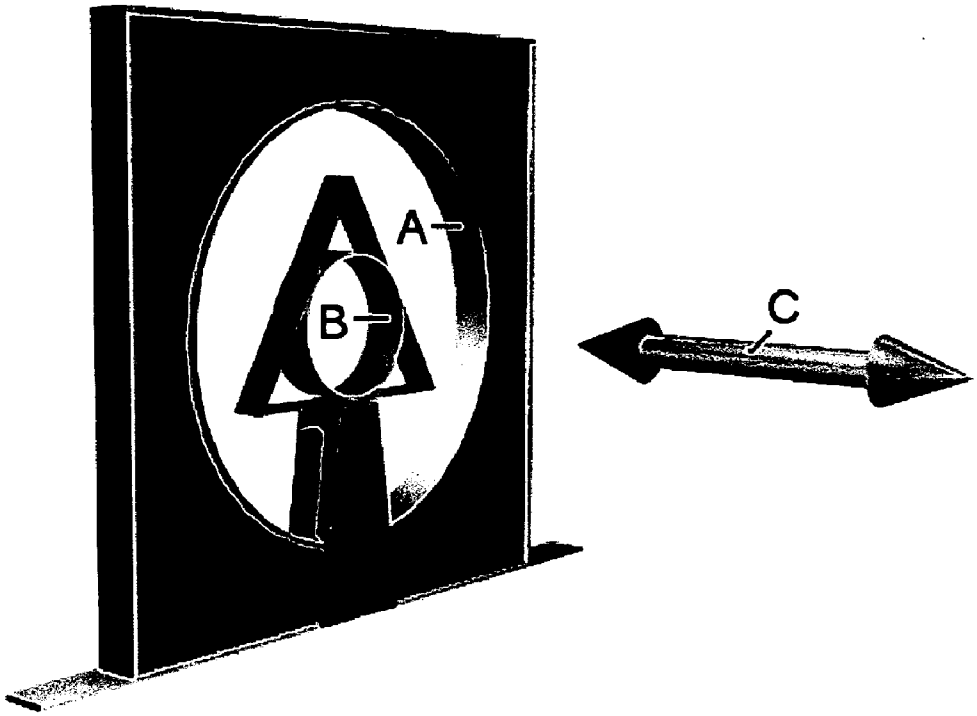

Figure 12

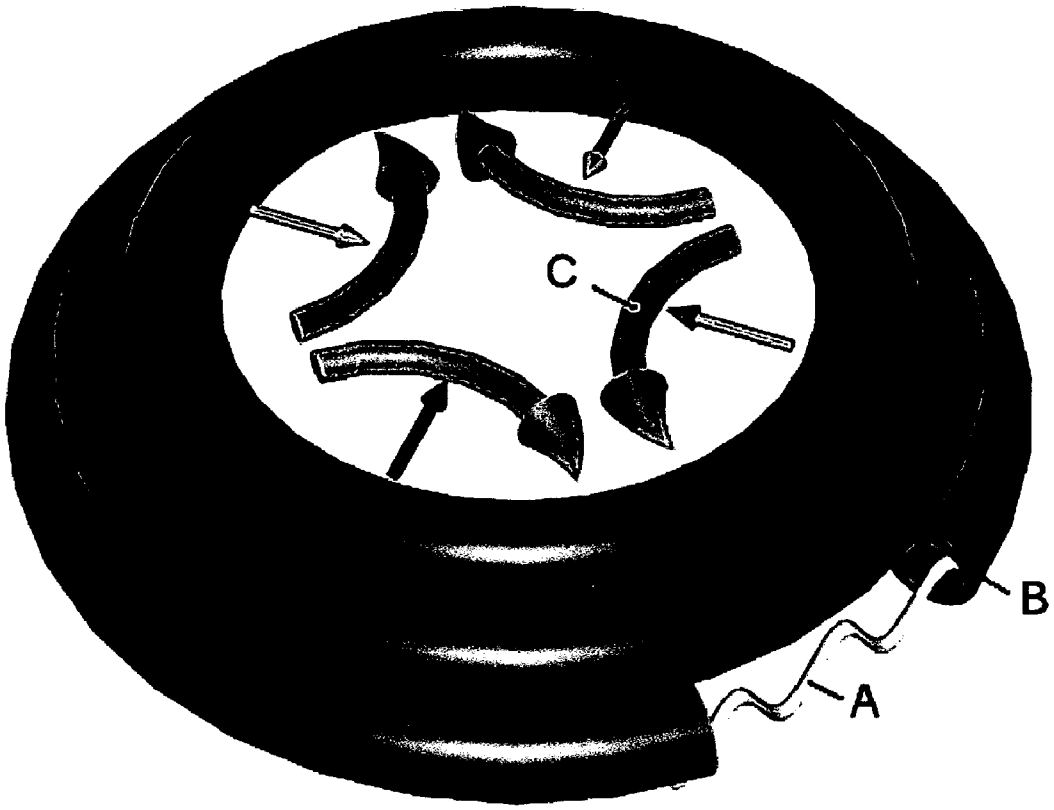

Figure 13

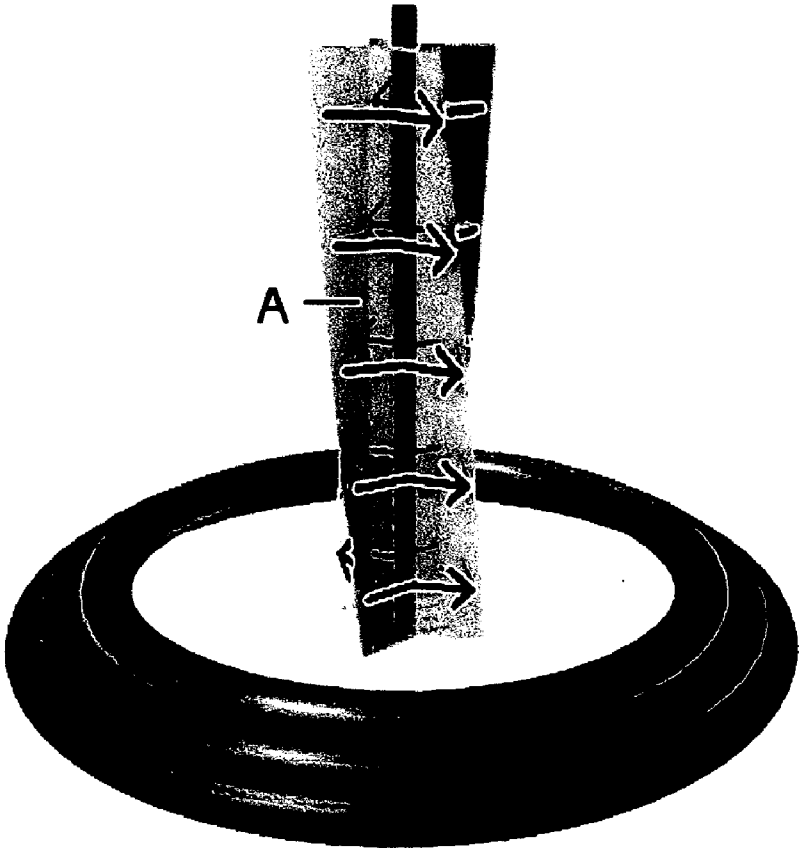

Figure 14

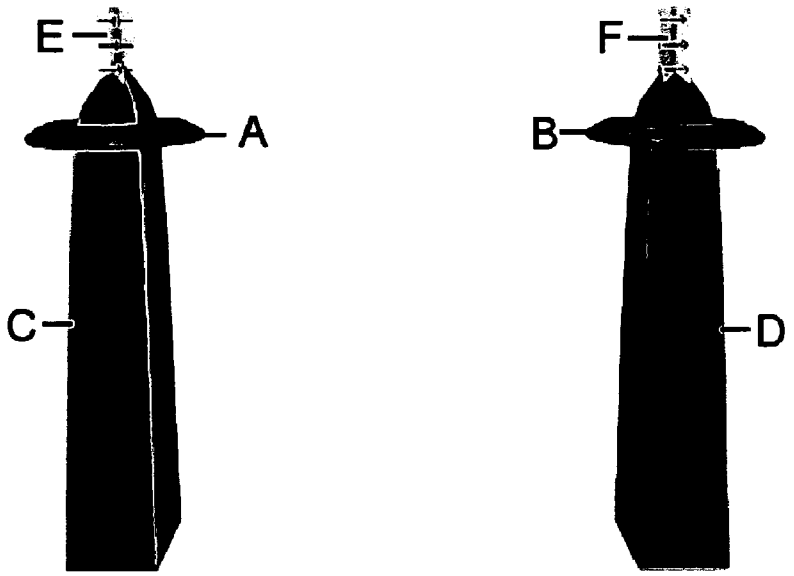

Figure 15

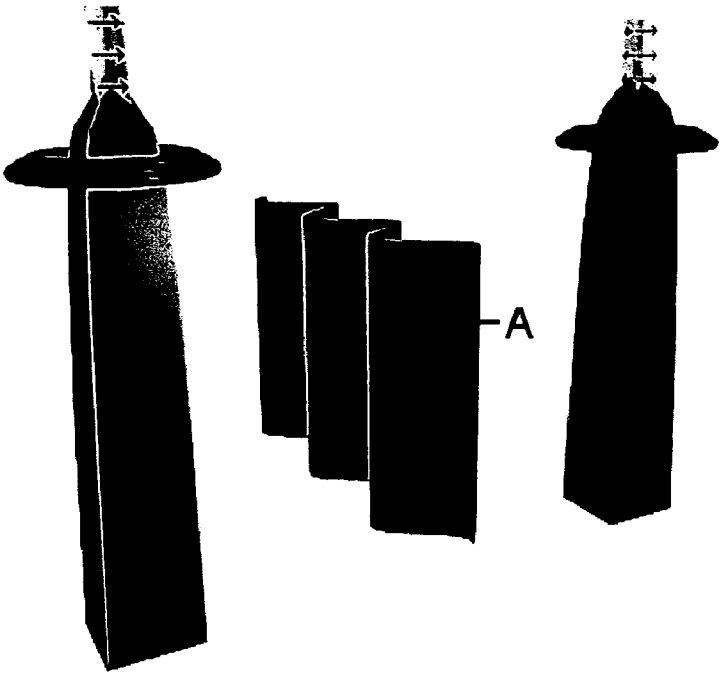

Figure 16

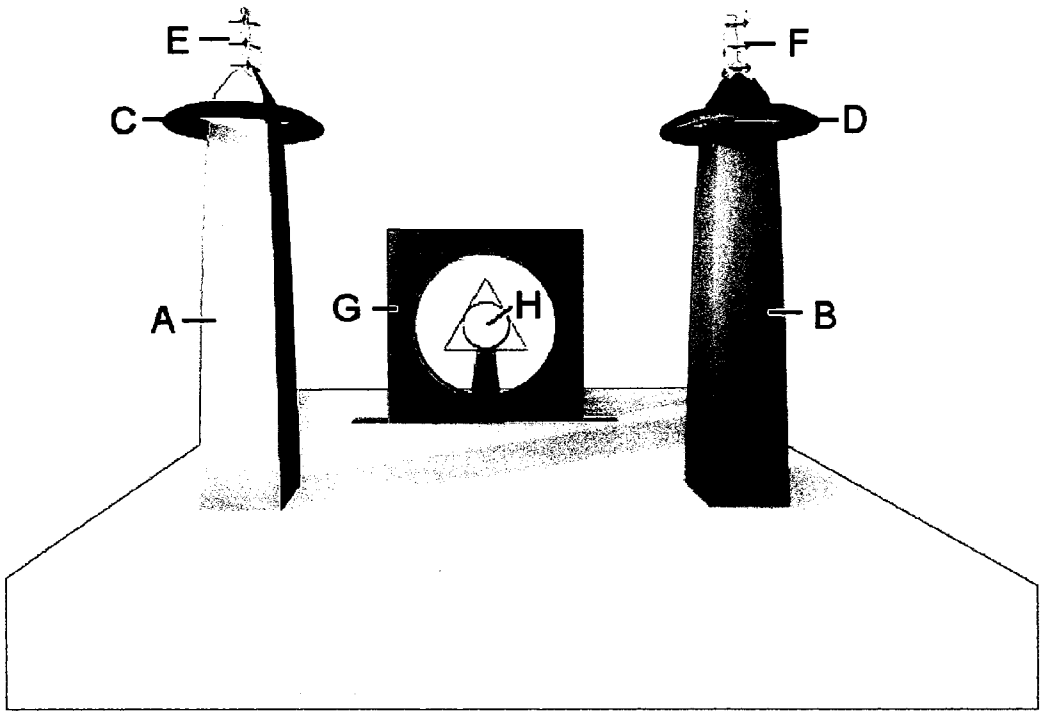

FULL BODY TELEPORTATION SYSTEM

BRIEF SUMMARY OF THE INVENTION

[0001] This invention is a system that teleports a human being through hyperspace from one location to another using a pulsed gravitational wave traveling through hyperspace.

BACKGROUND OF THE INVENTION

[0002] The basis for this invention is an event, referring to **FIG. 1**, occurring on May 2, 2004, in which the inventor ("he") personally experienced a full-body teleportation while walking to the bus stop (A) along a road (B) that runs perpendicular to the nearby commercial airport runways where planes are landing. There is a wide iron grating (D) for water drainage that crosses the road at the center of the bus stop. The grating width is such that one has to make a concerted effort to jump across it in order to get from one side to the other. Approximately 50 meters from the iron grating, he (E) felt a vertical wave (F), similar to a flag waving in the breeze, traveling down the street toward the bus stop. The wave velocity was about 1 meter per second, which was slightly faster than his walking speed. In the next instance, he (G) found himself down the street near the corner of the next block. Realizing that he had passed the bus stop, he turned around to see the iron grating approximately 50 meters up the street in back of him. Because there was no recollection of having jumped across the iron grating nor of having passed the bus stop's yellow marker line, he realized that he had been teleported a distance of 100 meters while moving along with the traveling wave. It was obvious that the wave was pulsed because the front edge overtook the inventor, moved with him momentarily, and then the back edge of wave left him as it moved on down the street. While contemplating this sequence of events, he then looked up and saw in a span of a few seconds a twin-turboprop airplane (C) in the distance crossing above the road while making a shallow descent in order to land at the airport.

[0003] It took a number of days in order to understand this sequence of events. The explanation involves knowledge of a wide range of subjects such as gravitation physics, hyperspace physics, wormhole electromagnetic theory and experimentation, quantum physics, and the nature of the human energy field.

[0004] It is obvious from the above scenario that the airplane momentarily crossing perpendicular to the road generates the aforementioned pulse. Because the airplane has an engine on each wing, there are two propellers which conceivably are rotating out-of-phase with each other. That is, the blade of one propeller could be pointing up and the equivalent blade on the other engine could be pointing in a slightly different direction. Notice that the tip of the blade traces out a helix as the plane is landing.

[0005] In gravitation physics, referring to **FIG. 2**, it is known that two masses of mass m**1** and m**2** (A,B) attached by lever arms slightly offset by an angle δθ along the radial direction to the rotating shaft (C), will produce a gravitational wave (D) traveling perpendicular to the shaft. The mass and wave are referred to as the source and receptor respectively. Referring to a side view looking along the shaft **FIG. 3**, the product of the mass m times the angular acceleration a is a constant such that m**1***a***1** is equal to m**2***a***2**. The distance between the masses is length L, which makes an angle θ with the horizontal axis. The difference in time of travel to the receptor gives rise to a difference in phase δθ equal to the angular velocity ω of the rotating shaft times the length L times the cosine of the angle θ

$$\delta\theta=\omega L\cos(\theta)$$

[0006] At the receptor, the amplitude of the wave is equal to the mass times the acceleration times the phase difference divided by the radius r to the receptor

$$A=\frac{m_1a_1}{r}\delta\theta\approx\left(\frac{m\omega L\sin(\theta)}{r}\right)(\omega L\cos(\theta))=\frac{m\omega^2L^2\sin(2\theta)}{r}$$

Even though the turboprop airplane engines have a high rotational speed and a large separation distance between masses, the gravitational wave which is produced is small and not noticed. The problem is that the gravitational constant G in this dimension has such a small value equal to the speed of light c squared divided by the linear mass Ω of the universe

$$G=\frac{c^2}{\Omega}=\frac{(299792458\ \text{m/s})^2}{1.346812891\cdot10^{27}\ \text{kg/m}}=6.673200002\cdot10^{-11}\ \frac{\text{m}^3}{\text{kgs}^2}$$

[0007] On the other hand, a gravitational wave traveling in hyperspace would be magnified enormously due to the face that the linear mass is so small. The magnitude of the gravitational constant in hyperspace can be estimated in the following manner. At the beginning of the 20th century, a man's parents were dying of tuberculosis. With their permission, he placed them and their beds on weighing scales. When each one passed away, each scale registered a drop in mass equal to 0.071 kilograms. This is the mass of the hyperspace energy being which resides in the physical body. Because hyperspace is co-dimensional with our dimension, the energy being interpenetrates the body and controls its movement.

[0008] Referring to **FIG. 4**, a human being has seven vortices (A through G) which are aligned along the centerline of the body. Each vortex is actually a co-gravitational field K which causes a pendulum placed in the field to spin in circles. For this reason, the K field has units of inverse seconds similar to an angular velocity. The vortex transports energy from our dimension to the energy being located in hyperspace. The gravitational field g and the co-gravitational field K are equivalent gravitationally to the electric E field and the magnetic B field found in electromagnetism. The equivalent gravitational solution to an electromagnetic problem can be obtained by substituting the following gravitational constants for the electromagnetic constants

Electromagnetic	Gravitational
q (charge)	m (mass)
ρ (volume charge density)	ρ (volume mass density)
σ (surface charge density)	σ (surface mass density)
λ (line charge density)	λ (line mass density)
J (convection current density)	J (mass current density)

-continued

Electromagnetic	Gravitational
E (electric field)	g (gravitational field)
B (magnetic field)	K (co-gravitational field)
ϵ_0 (permittivity of space)	$-\frac{1}{4}\pi G$
μ_0 (permeability of space)	$-4\pi G/c^2$
$-\frac{1}{4}\pi\epsilon_0$ or $-\mu_0 c^2/4\pi$	G (gravitational constant)

[0009] Referring to **FIG. 5**, each vortex is connected through the pineal gland by light cords to a separate hyperspace quantum well having its own frequency and dimension. The reason for this separation is that the conical spiritual eye, attached to vortex B, has to have its own energy structure which is different from vortex (A) which is connected to the quantum energy field in which the mental processes are developed. Due to the high speed of light in our dimension, the quantum wells are the size appropriate to molecules and atoms. In hyperspace, where the speed of light is one meter per second, the quantum wells are huge and can be manipulated. This manipulation has shown that the quantum wells are in the shape of a cube about a meter on a side. This makes the whole structure about seven meters tall for a volume of seven cubic meters. Thus the mass density ρ of hyperspace is about

$$\rho_h = \frac{.071\ \text{kg}}{7\ \text{m}^3} = .01\ \frac{\text{kg}}{\text{m}^3}$$

which per unit area is the same value. Therefore the hyperspace gravitational constant is equal to

$$G_h = \frac{c^2}{\Omega_h} = \frac{\left(1\ \frac{\text{m}}{\text{s}}\right)^2}{.01\ \text{kg/m}} = 100\ \frac{\text{m}^3}{\text{kgs}^2}$$

The enormous magnification of the gravitational constant is therefore of the order of

$$\frac{G_h}{G} = \frac{100}{6.6732\cdot 10^{-11}} \approx 1.5\cdot 10^{12}$$

The question is how does this amplified gravitational wave created by the rotating propellers and turbines get into hyperspace from our dimension?

[0010] The answer comes from experiments done using the ancient Chinese form of breathing known as Chi Kung. Using this breathing technique, we have been able to levitate the human body over six feet in the air. The internal temperature of the stomach is around 200 degrees Fahrenheit. By simultaneously squeezing the diaphragm to bring hot air up through the lungs, and breathing through the nose to bring cold air down, rotating vortices are generated in the lung passages when these two air masses meet and twist around each other as depicted in the famous Yin-Yang diagram. Because the lung has variable diameter passages from the large diameter at the throat to the final small air sacs, there is a spectrum of rotating frequencies.

[0011] From quantum physics it is known that if there is a temperature fluctuation occurring among a group of harmonic oscillators in the environment, then Planck's reduced constant ħ is increased by the cotangent of the constant times the frequency ω of the oscillator divided by twice Boltzmann's constant k times the temperature T

$$\hbar = \hbar\coth\left(\frac{\hbar\omega_n}{2kT}\right)$$

[0012] The effect of increasing Planck's constant, referring to **FIG. 6**, can be seen in the tetrahedron diagram. This diagram, of which there are now over 4000, plots the natural logarithm of mass on the vertical axis versus the natural logarithm of wavelength on the horizontal axis. In terms of mathematics, it is a subspace logarithmic manifold which projects geometrically the physics constants into our **4**D spacetime dimension. That is, it is the geometry of the tetrahedron circumscribed by the sphere that determines the mass of the proton and electron. The mass of the electron times its wavelength is equal to the mass of the proton times its wavelength which in turn is equal to Planck's constant h divided by the speed of light c

$$m_e\lambda_e = m_p\lambda_p = \frac{h}{c}$$

Taking the natural logarithm of the above equation shows that the mass plus the wavelength is equal to what is termed the base constant

$$\ln(m_e) + \ln(\lambda_e) = \ln\left(\frac{h}{c}\right) = -95.91546344$$

which is represented in **FIG. 6** by the 45 degree line (A) from point (a) on the horizontal axis to the vertical axis at point (b). The electron is located at point (c) which is the intersection of the electron wavelength (B) with line (A). The electron wavelength (B) reflects off the sphere (D) at points (d) and (e) and returns along line (C) as the electron mass. As shown in tetrahedron diagram tet0565, stored in the Library of Congress, the clockwise path of the electron transitions into the counter-clockwise path of the proton showing that the electron and proton are one and the same particle. Because the electron and proton travel in opposite directions along the path, they have the same charge but of opposite sign.

[0013] Our dimension is represented by Planck box (E) which is bounded by the Planck mass and the Planck wavelength. The Planck mass is equal to the linear mass of the universe times the Planck length which is the bottom limit of our dimension. The Planck wavelength is 2π times the Planck length. Notice that the electron is located within the Planck box.

[0014] Referring to **FIG. 7**, if there is an increase in Planck's constant due to the temperature fluctuations among the harmonic oscillators, the 45 degree base line (A) moves to the left on the tetrahedron diagram as shown by line (F).

Because of the increase in the base constant, there is a corresponding increase in the electron mass and wavelength. The electron moves from point (c) to point (f) which places it at the edge of the Planck box (F) which is the boundary between space and hyperspace. At point (f), the electron is essentially no longer in our dimension.

[0015] Referring to **FIG. 8**, imagine a box (A) filled with nine electron oscillators (B). If Planck's constant is increased near the three oscillators in the middle, these electrons will leave this dimension. This leaves six oscillators as shown in the box (C). However, box (C) is the equivalent of box (D) in which there are still nine positive mass oscillators together with 3 negative mass oscillators. Thus there is an accumulation of negative energy ($-\rho$) when information is lost from the environment to another dimension.

[0016] Dr. Kip Thorne, who co-authored the book *Gravitation* with Dr. Archibald Wheeler of Princeton University, has shown in a General Relativity spacetime curvature calculation that negative energy is required to open and stabilize the throat of a wormhole between space and hyperspace. The accumulation of negative energy in the aforementioned example generates wormholes between into hyperspace. Hyperspace has a low energy density because of the reduced speed of light in that dimension. Ordinarily, energy would not flow from hyperspace to space because space has a higher potential than the potential of hyperspace. This, of course, is the reason that the body vortices can flow energy into the energy field of the human being who is located in hyperspace. By creating negative energy, the potential becomes reversed such that low density hyperspace energy flows into our dimension as seen by the positive head

$$PE=\rho_{hyperspace}-(-\rho_{space})=+2\rho$$

The low-density energy fills the body which allows a human being to float upwards like a helium balloon as verified by Chi Kung breathing as well as spinning on a motorized platform known as the Chakra Vortex Accelerator. The latter device resulted in the first mechanical means to produce anti-gravity.

[0017] The process of creating spinning thermal fluctuations is the same as found in the hot air vortices created by the jet airplanes landing at the airport near the road where the full-body teleportation occurred. Large vortices are created over the wing of the airplane at the same time that the turbine engines are spinning hot vortices into relatively cold air. These conditions produce wormholes between space and hyperspace. It takes a twin turboprop airplane landing behind the jet to generate the gravitational wave in the region where the wormholes have formed. The gravitational wave then traverses the wormholes into hyperspace, becoming highly amplified due to the change in linear mass and speed of light. Because the propeller blades are co-linear with the road, the gravitational wave travels in the direction along the road where it was encountered by the inventor.

[0018] From experiments with cavitating bubbles (see patent application Cavitating Oil Hyperspace Energy Generator), it was found that it is possible to produce a wormhole if the surfaces of the bubble collapse asymmetrically. A symmetric collapse of a spherical bubble produces enormous spacetime curvature distortions. An asymmetric collapse, using a magnetic field to distort the collapse, produces, in addition to the same severe spacetime distortions, negative energy as the bubble collapses. Due to some General Relativity considerations, the wormhole that is created starts rotating in a manner similar to the beacon light produced by a lighthouse.

[0019] Referring to **FIG. 9**, due to the forward helical motion (A) of the propellers (B) as the airplane crosses the road, the pulsed gravitational wave (C) is skewed backward at an angle (D). Due to the wormholes created by the presence of thermal vorticity fluctuations generated by the wing and turbines of the airplane, this skewed wave moves into hyperspace where it is highly magnified and detected by the inventor.

[0020] Referring to top view **FIG. 10**, the gravitational wave (A) causes a skewed compression and expansion of the hyperspace quantum wells (B) which constitute the human energy being. Due to this asymmetric distortion in the xy-plane, the quantum wells take the physical body out of dimension as long as the wave pulse is traveling with the human energy field. Once the back edge of the gravitational wave moves on past the quantum wells, the body is then brought back into dimension.

SUMMARY OF THE INVENTION

[0021] It is the object of this invention to teleport a human being from one location to another by creating a pulsed gravitational wave traveling through hyperspace that asymmetrically compresses and expands the quantum wells of the human energy being. This spacetime curvature distortion of the hyperspace quantum wells pulls the physical body out of dimension such that the human being is teleported along with the wave. As the pulsed wave moves on past the quantum wells, the human is brought back into dimension at some distant location. The invention requires (1) a device that will generate a wormhole between space and hyperspace, and (2) a device that will generate a gravitational wave which can be inserted through the wormhole.

[0022] Referring to **FIG. 11**, a magnetic vortex wormhole generator has already been developed which generates a wormhole between space and hyperspace as described in a previous patent application entitled Magnetic Vortex Wormhole Generator. Using this generator, it was found that smoke blown through one side of the coil does not appear on the other side of cylindrical coil. The smoke flows through the wormhole and appears in a hyperspace co-dimension. It was this experiment that resulted in making first contact with the androids of the Grey aliens who told me, in a remote viewing session, that "We saw you blowing smoke into hyperspace."

[0023] The wormhole generator consists of two concentric cylindrical coils (A,B), one of larger radius than the other, made of thin transformer iron laminate wrapped in opposite directions with one continuous wire driven by a sinusoidal current. The solenoidal coil generates a magnetic field through the laminate. Because the electrical current flows in opposite directions at different radii through the two windings, bucking electric fields (C) are created along the centerline of the generator. These radially-offset magnetic fields and bucking electric fields, as shown by a calculation using Einstein's General Theory of Relativity, generate both an enormous spiking spacetime curvature and negative energy

at small radius along the centerline where the wormhole is formed. The gravitational wave generator is then coupled to this wormhole generator.

[0024] Referring to **FIG. 12**, it is known from gravitation physics that injecting an electromagnetic wave (A) into a hollow toroidal waveguide (B) produces a hyperbolic spacetime curvature stress (C) in the plane of the waveguide. The tips of the arrows indicate compression and the tail of the arrows indicate expansion or stretching of spacetime. The reason for this spacetime curvature is because the waveguide forces the electromagnetic wave to curve around and travel in a circle. Spacetime has to compensate for this toroidal-generated stress by creating hyperbolic lines of stress in the inner plane of the toroid so that the overall spacetime curvature is zero. For a greater gravitational effect, three toroidal waveguides, phased 120 degrees apart, are used to seal off the curvature.

[0025] Referring to **FIG. 13**, the three toroids create a rotating, twisting, vertical propagating gravitational field (A) through the centerline of the toroids provided that the period of the electromagnetic wave is twice the period of the gravitational wave. This phase relationship is adjusted by selecting the correct radius for the frequency of the monochromatic wave.

[0026] In order to effectively use this gravitational wave, referring to **FIG. 14**, three phased toroidal waveguides (A,B) are mounted at the top of each of two identical square granite obelisks (C,D). The two obelisks are offset by a short distance between them. As the vertical gravitational wave rotates around along the vertical axis inside the obelisk, the edges of the square obelisks are compressed and expanded such as to create two cylindrical asymmetric gravitational waves traveling radially outward.

[0027] Referring to **FIG. 15**, these waves meet to form a plane gravitational wave (A) which travels down the centerline between the two obelisks.

[0028] Referring to **FIG. 16**, the full body teleportation system consists of the twin granite obelisks (A,B) on which are mounted near the top of each the toroidal waveguides (C,D) which produce the pulsed gravitational waves (E,F) that run the length of the obelisks. Because the gravitational wave is rotating inside the obelisk, the granite stone undergoes a very small asymmetrical compression and expansion. A cylindrical gravitational wave propagates out from each obelisk such that along the centerline between the two there is generated a plane gravitational wave. This wave enters the wormhole (H) created by the magnetic vortex generator which is located a short distance from and parallel to the obelisks. The wave is amplified by a factor of almost 10^{13} when it enters the hyperspace co-dimension.

A BRIEF DESCRIPTION OF THE DRAWINGS

[0029] **FIG. 1**. Perspective view of site where full-body teleportation occurred.

[0030] **FIG. 2**. Perspective view of gravitational wave generator.

[0031] **FIG. 3**. Planar view of gravitational wave generator.

[0032] **FIG. 4**. Perspective view of seven vortices of human energy being.

[0033] **FIG. 5**. Perspective view of seven large quantum wells of human energy being.

[0034] **FIG. 6**. Tetrahedron diagram showing Planck's constant and electron.

[0035] **FIG. 7**. Tetrahedron diagram showing electron moving out of dimension.

[0036] **FIG. 8**. Perspective view showing production of negative energy.

[0037] **FIG. 9**. Perspective view of skewed gravitational wave produced by propellers.

[0038] **FIG. 10**. Planar view of skewed quantum wells deformed by gravitational wave.

[0039] **FIG. 11**. Perspective view of magnetic vortex wormhole generator.

[0040] **FIG. 12**. Perspective view of hyperbolic lines of stress generated by toroidal waveguide.

[0041] **FIG. 13**. Perspective view of rotating, twisting, propagating gravitational wave generated by toroidal waveguides.

[0042] **FIG. 14**. Perspective view of toroidal waveguides attached to obelisks.

[0043] **FIG. 15**. Perspective view of gravitational wave generated by obelisks.

[0044] **FIG. 16**. Perspective view of magnetic vortex wormhole generator and obelisk gravitational wave generator.

DETAILED DESCRIPTION OF THE INVENTION

[0045] 1. The obelisks are quarried out of granite stone and cut with a large-diameter diamond saw that is used in highway construction. The beveled piece at the top is cut separately and cemented in place. A tapered aluminum bracket holds the toroids in place.

[0046] 2. The electronics for the magnetic vortex generator are similar to that used in the patent application Magnetic Vortex Wormhole Generator.

[0047] 3. The electronics for the toroidal waveguides is the familiar stub and coaxial cable driven by an amplifier and pulsed variable-frequency generator.

I claim:

1. A full body teleportation system consisting of:

generating a pulsed gravitational wave which propagates through a magnetic vortex wormhole generator; and

generating a wormhole with the magnetic vortex generator whereby the pulsed gravitational wave traverses through the wormhole and enters into hyperspace where the wave is enormously magnified due to the lower speed of light in that dimension.

2. The method of claim 1, wherein the step of generating the pulsed gravitational wave comprises:

using two granite stone obelisks;

mounting monochromatic-wave toroidal waveguides on top of each obelisk to create a rotating, twisting, propagating gravitational wave through the vertical axis of each obelisk; and

creating a cylindrical compression and expansion in each obelisk to produce a plane gravitational wave traveling down the centerline between the two obelisks.

3. The method of claim 1, wherein the step of generating a wormhole into hyperspace comprises:

using two concentric cylindrical solenoidal coils of different radii connected by a single wire wrapped in opposite directions on thin iron transformer laminate;

generating bucking electric fields down the centerline of the vortex generator which creates a spacetime curvature distortion with negative energy in accordance with Einstein's General Theory of Relativity.

4. A teleportation system comprising:

generating a gravitational wave traveling through hyperspace which interacts with the human energy being; and

pulling the human energy being and physical body out of dimension when interacting with the pulsed gravitational wave such that the person is teleported from one location to another through hyperspace and back again into our **4**D spacetime dimension.

* * * * *

US 20030197093A1

(19) United States

(12) Patent Application Publication (10) Pub. No.: US 2003/0197093 A1

St.Clair (43) Pub. Date: Oct. 23, 2003

(54) MAGNETIC VORTEX WORMHOLE GENERATOR

(76) Inventor: **John Quincy St.Clair**, San Juan, PR (US)

Correspondence Address:
John St.Clair
Hyperspace Research Institute
52 Kings Court, 4A
San Juan, PR 00911 (US)

(21) Appl. No.: **10/127,098**

(22) Filed: **Apr. 20, 2002**

Publication Classification

(51) **Int. Cl.**[7] **B64C 27/00**; B64C 39/00

(52) **U.S. Cl.** **244/62**

(57) **ABSTRACT**

This invention relates to a magnetic vortex generator which has the ability to generate negative mass and a negative spring constant which, according to Einstein's General Theory of Relativity, is required in order to create a stable wormhole between our space and hyperspace. Two separate, but electrically connected, toroidal coils of differing radii, carry magnetic flux in opposite directions about their common centerline. According to Maxwell's equation, this produces bucking electric fields along said centerline. Because the two solenoids have different radii, the parallel spring constant of both coils is negative. The negative mass together with the negative spring constant produce a real resonant frequency which can distort the spacetime curvature due to the creation of powerful spikes of negative mass. This phenomenon, similar to the common electrical thunderstorm, opens up a wormhole into hyperspace through which low-density hyperspace energy can enter into our dimension. This energy finds many application in new types of power supplies, inertia-less and mass-less spacecraft, vehicles that can travel light-years by moving out of dimension through hyperspace, surgery-less medical tables, cranes for lifting heavy objects, cold-welded crystals for crystal rotors, folding space waveguides, and electromagnetic field propulsion vehicles using highly relativistic fields.

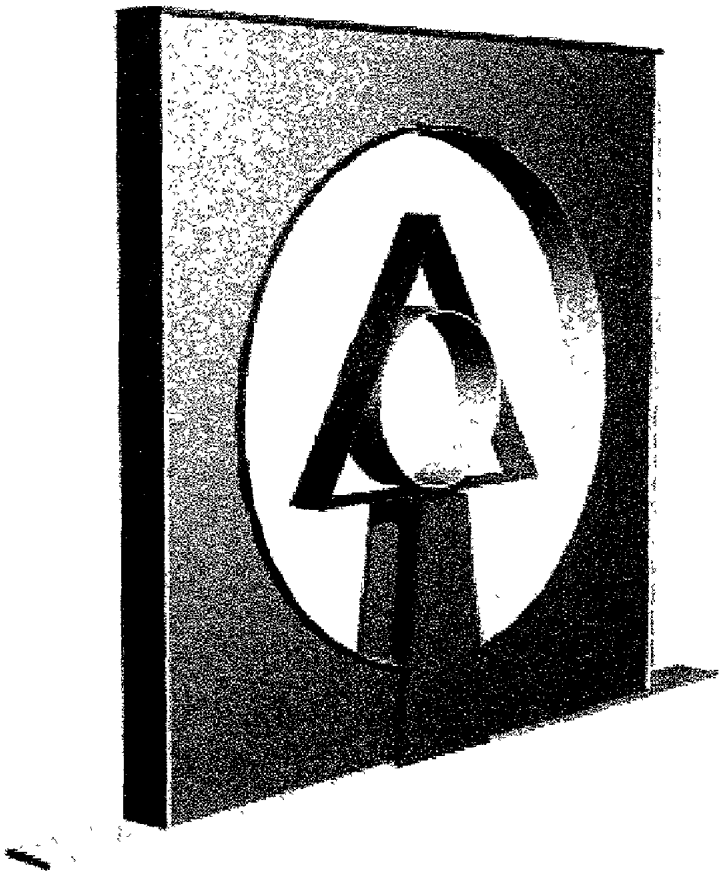

Figure 1

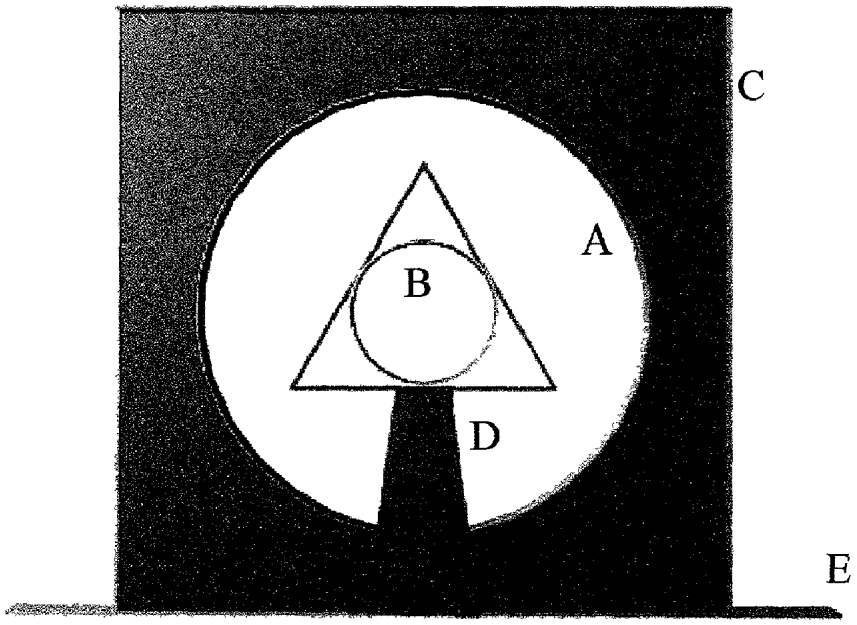

Figure 2

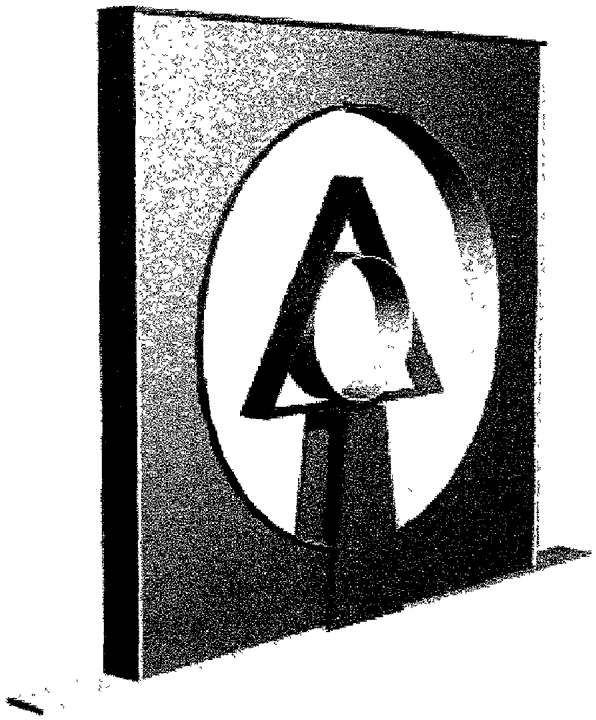

Figure 3

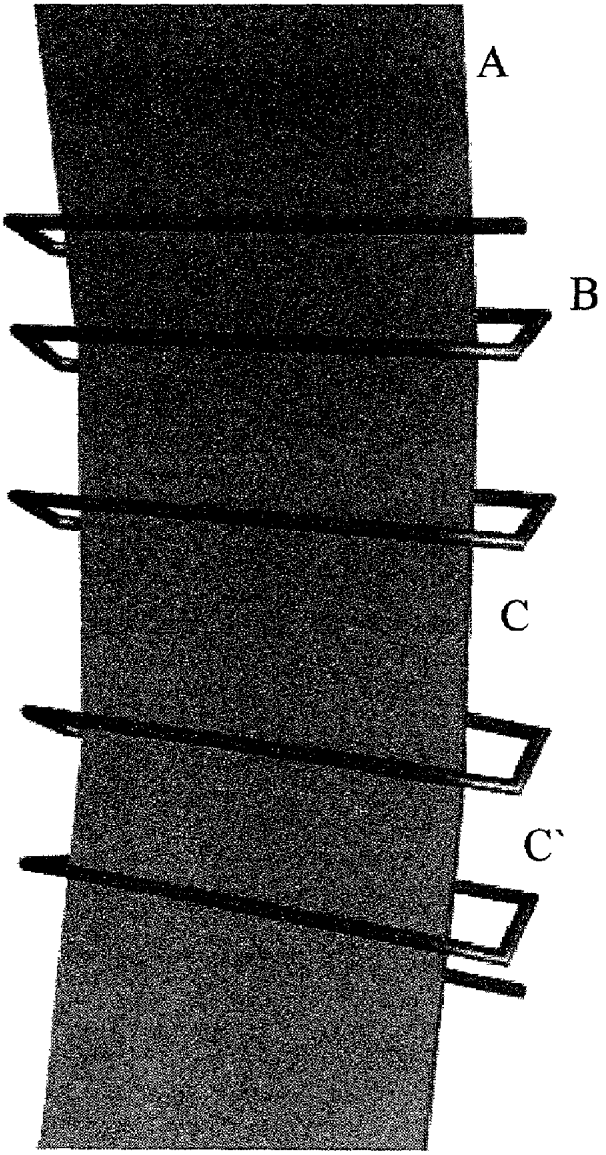

Figure 4

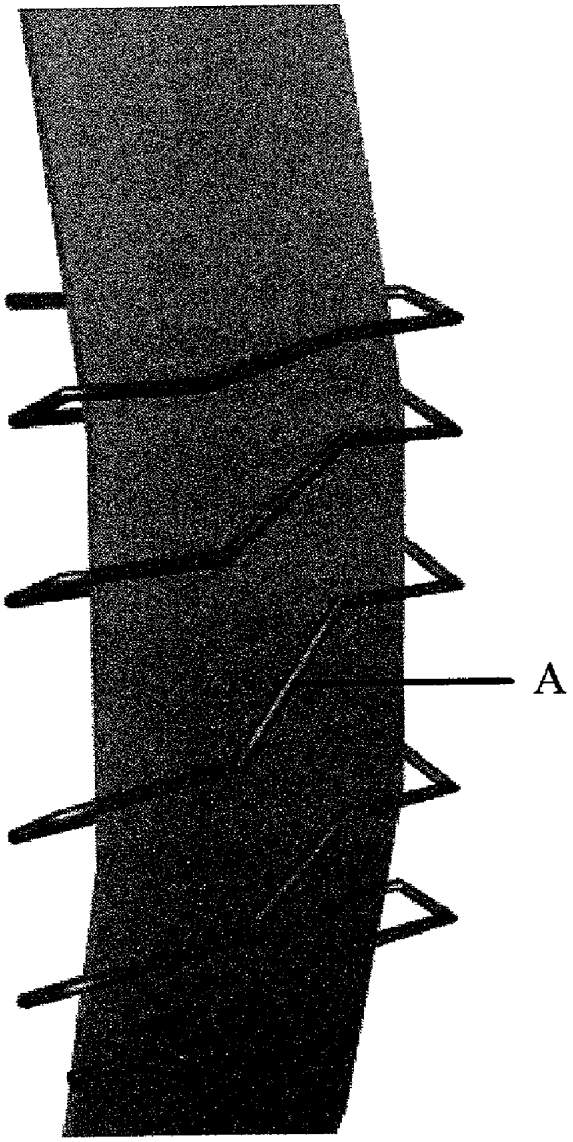

Figure 5

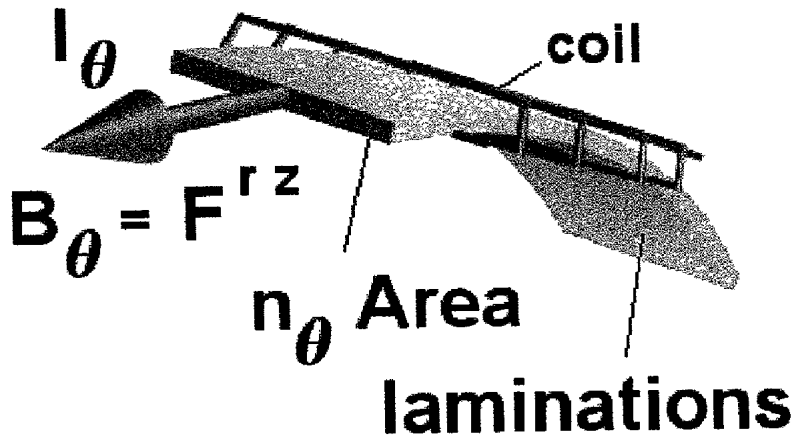

Figure 6

$$F^{\mu\nu} = \begin{array}{c} \\ t \\ r \\ \theta \\ z \end{array} \begin{array}{c} \begin{array}{cccc} t & r & \theta & z \end{array} \\ \begin{vmatrix} 0 & 0 & 0 & 0 \\ 0 & 0 & 0 & B_\theta \\ 0 & 0 & 0 & 0 \\ 0 & -B_\theta & 0 & 0 \end{vmatrix} \end{array}$$

Figure 7

$$k^z = \frac{\text{coul}}{\text{sec}} \cdot m^2 \cdot \frac{1}{m^2} \cdot \frac{\text{kg}}{\text{sec} \cdot \text{coul}} = \frac{\text{newton}}{m} = \frac{\text{force}}{m}$$

Figure 8

$$k^z = \frac{1}{(r+a)^2} - \frac{1}{r^2} = -a \frac{(2 \cdot r + a)}{\left[(r+a)^2 \cdot r^2\right]}$$

Figure 9

$$g_{\alpha\beta} = \begin{array}{c|cccc|} & t & r & \theta & z \\ t & -1 & & B(\cos\theta - \sin\theta) & 0 \\ r & 0 & 1 & 0 & 0 \\ \theta & B(\cos\theta - \sin\theta) & 0 & r^2 & 0 \\ z & 0 & 0 & 0 & 1 \end{array}$$

Figure 10

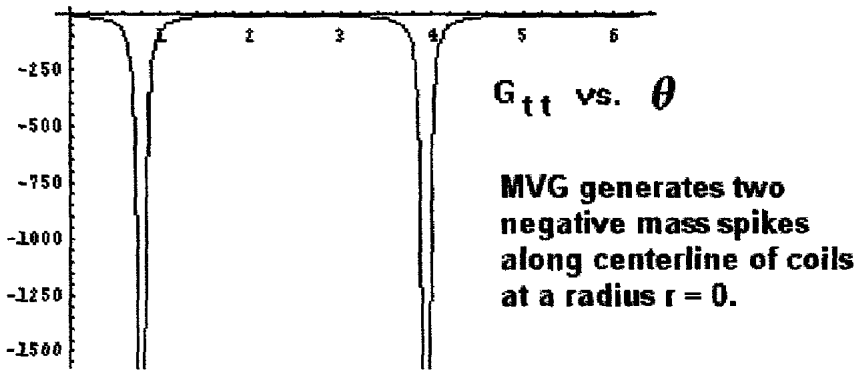

Figure 11

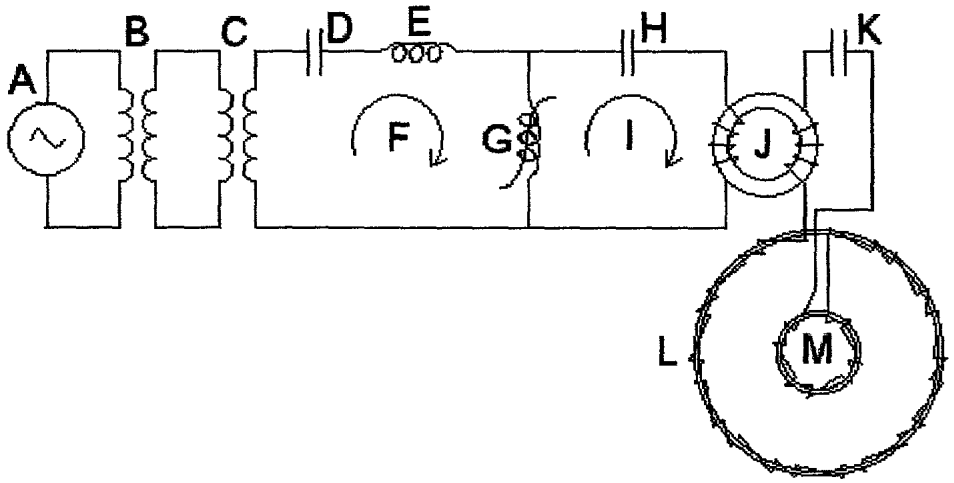

Figure 12

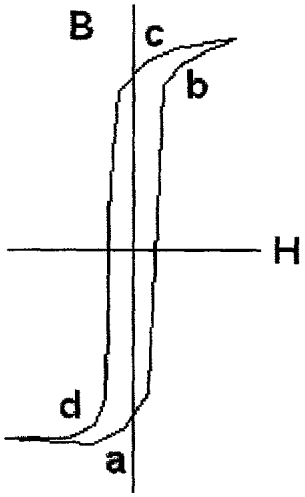

MAGNETIC VORTEX WORMHOLE GENERATOR

BRIEF SUMMARY OF THE INVENTION

[0001] This invention, which is the subject of my present application, is comprised of two solenoids wound with a common wire in opposite directions on two separate toroidal curved-sheet transformer laminates of differing radii. The smaller solenoid is mounted along the centerline of the larger solenoid. This circular magnetic geometry creates linear bucking electric fields along the centerline of the coils. Because the magnetic flux in the laminates travels in opposite directions along arcs of differing radii in the two coils, a negative mass and a negative spring constant are generated by the system. From the theory of gravitational physics, a negative mass is prerequisite to producing a wormhole because it allows the throat of the wormhole to remain open and stable. The creation of the wormhole is facilitated by the appearance of a negative spring constant which allows the spacetime curvature to resonate to such a degree that said wormhole develops between our dimension and another co-dimension of hyperspace. Because the physics constants of hyperspace are different from ours, the wormhole allows hyperspace energy having a low speed of light to enter our dimension. Because electromagnetic fields obey the Lorentz transformation, it is now possible with this lower velocity of light to create huge relativistic fields which can drive the new electromagnetic field propulsion vehicles.

BACKGROUND OF THE INVENTION

[0002] The idea for this coil configuration comes from the observation of powerful thunderstorms, as described by physicist Dr. Richard Feynman in his *Lectures on Physics,* a copy of which is enclosed as a reference. Upon reading his explanation, I realized that the thunderstorm is actually a hyperspace physics phenomenon.

[0003] After the passage of a large lightning storm, people have observed that a car tire rim has merged with the trunk of a tree growing in the ground. Due to the large branches of the tree, there is no possible way that it could slide down the branches and around the trunk. It was observed also that a straw of wheat became embedded in the hard wood of a telephone pole. It turns out that the thunderstorm offers an explanation as to how this can occur.

[0004] After reading Feynman's explanation, it can be seen that the key to this phenomenon is that there is a downward and an upward lightning bolt, sometimes occurring together if the leader branches into two paths. Bolts of lightning also like to strike tall objects such as telephone poles or trees. Now an electrical current moving downward produces a clockwise magnetic B field, as seen from above. On the return stroke, the current is moving upward which produces a counterclockwise magnetic B field. Thus the thunderstorm produces two huge bucking magnetic B fields which is the magnetic geometry of this magnetic vortex generator. Using my tetrahedron diagram, I will then show that the low density hyperspace energy with its low speed of light is able to pull the rim out of dimension so that it can merge with the tree at the moment the lightning strikes.

SUMMARY OF THE INVENTION

[0005] It is the object of this invention to produce two toroidal oppositely-directed magnetic flux fields in two separate yet electrically connected solenoids of differing radii. Because the lines of flux are traveling in toroidal, curved-sheet transformer laminates along arcs of different curvature, the fields produce what is known in gravitational physics as negative mass. Negative mass has the property that if you project it onto a hot surface, the surface will cool rather than heat up. The negative mass, together with the resonance of the spacetime curvature involving a negative spring constant, create a wormhole into hyperspace. This interdimensional connection allows low speed of light hyperspace energy into our dimension which can be used to decrease the weight of an object, or produce huge relativistic electromagnetic fields that can be used to drive the new electromagnetic field propulsion spacecraft.

STATEMENT REGARDING FEDERALLY SPONSORED RESEARCH OR DEVELOPMENT

[0006] Not Applicable.

A BRIEF DESCRIPTION OF THE DRAWINGS

[0007] **FIG. 1**. Front view of magnetic vortex generator.

[0008] **FIG. 2**. Perspective view of the magnetic vortex generator.

[0009] **FIG. 3**. The non-linear coil winding on the interior face of the laminations.

[0010] **FIG. 4**. The non-linear coil winding on the exterior face of the laminations showing that there is an electrical current component in the theta direction.

[0011] **FIG. 5**. The coil variables for the tensor calculation of the negative spring constant.

[0012] **FIG. 6**. The Faraday electromagnetic tensor showing the position of the magnetic field in the {r,z} slots.

[0013] **FIG. 7**. The units of the spring constant.

[0014] **FIG. 8**. The parallel spacetime spring constant.

[0015] **FIG. 9**. The cylindrical g metric tensor including the magnetic fields.

[0016] **FIG. 10**. A plot of the mass term G_n for Einstein's G curvature tensor showing that two negative mass spikes are created along the centerline of the generator. Negative mass is required to keep open the throat of the wormhole.

[0017] **FIG. 11**. Circuit diagram for the magnetic vortex generator.

[0018] **FIG. 12**. BH curve for non-linear SuperMalloy toroidal core. From the equation, $B=\mu H$, the slope of the line is equal to the permeability $\partial B/\partial H=\mu$.

DETAILED DESCRIPTION OF THE INVENTION

[0019] 1. The fact that negative mass is required to keep the throat of a wormhole open has been shown to be valid by physicist Dr. Kip Thorne in the enclosed reference physics paper. The key point of this invention is that if you have a negative mass, you also require a negative spring constant in order to get a real frequency and vice versa. The angular frequency of vibration is equal to the square root of the spring constant K divided by the mass M, or $\omega=\sqrt{K/M}$. If the mass is negative, and the spring constant is positive,

the frequency is imaginary. Therefore, in order to get a real frequency, the spring constant has to be negative also.

[0020] 2. Referring to **FIG. 1**, the magnetic vortex generator consists of a large toroidal solenoid (A) and its support structure (C), a smaller toroidal coil (B) with its support structure (D) which holds the coil along the centerline of the larger coil. The entire structure sits on a base (E).

[0021] 3. The two solenoids are wound with a common wire in opposite directions on two separate toroidal curved-sheet transformer laminations of differing radii. From the right hand rule, a changing circular magnetic field in the direction of the fingers produces a linear electric field in the direction of the thumb. Because there are two coils producing two magnetic fields in opposite directions, there are two bucking electric fields down the centerline of the coils. This duplicates the thunderstorm conditions. A perspective view of the generator is shown in **FIG. 2**.

[0022] 4. A enlarged view of the non-linear coil winding is shown in **FIG. 3**. The wire (B) is wound around the thin transformer laminations (A) with a non-linear coil spacing as shown by the difference in spacing between length (C) and (C'). On this inner side of the coil, the wire is wound straight across where it can be seen that the wire is normal to the edge of the laminations. Not shown are two strips of Velcro which keep the wire aligned and offset from the tape-covered metal laminations.

[0023] 5. Since the wire is straight across on this side, the opposite side has to have the wire run in a diagonal manner as seen in **FIG. 4A**. In terms of cylindrical coordinates, the components of the electrical current in the coil flow in the z-direction across the breadth of the lamination and in the O-direction around the lamination.

[0024] 6. The reason for the non-linear spacing is to preserve the vector potential of the coil. The vector potential is a more important field than the magnetic field because it can extend out past the windings of a long solenoid. If you look at the units, it is the field momentum per charge or kilogram meter per second coulomb. Notice that the derivative of the vector potential with respect to time is an electric field, while a derivative with respect to length is the magnetic field. The inductance of the coil times the current density is equal to the vector potential. Thus the inductance gradient of the coil times the current per meter is the magnetic field. So the non-linear coil picks up an additional magnetic field around the coil besides the one created in the laminations by the winding itself

[0025] 7. Taking a closer look at the coil in **FIG. 5**, it is constructed of thin laminations taped together to form a cylindrical shape with a wire coil wrapped around it. This creates a magnetic field in the theta θ direction within the laminations. Because the coil is wrapped as a helix, there is a current component I_θ in the theta direction. The cross-sectional area Area through which the magnetic flux flows times a normal vector n in the theta direction is the tensor area n_θ Area. If the radius of the coil is r, then the curvature K is $1/r^2$ pointing in the radial direction. Because there are two coils with differing radii, the generator has two curvatures associated with it.

[0026] 8. In the geometry of electromagnetism, the magnetic field is part of the electromagnetic Faraday tensor $F^{\mu\nu}$ which is a 4 by 4 spacetime matrix having rows and columns of time t, radius r, angle θ and height z in cylindrical coordinates. The first index μ refers to the row, and the second index v refers to the column. The diagonal of the matrix is zero. The first row and column belong to the electric field. All the other slots are filled by the components of the magnetic field. The B_θ component is located in the complementary slots of r and z as shown in **FIG. 6**. Now a tensor product can be written with the available variables I^θ no Area $K_r F^{rz}=k^z$. This says that the current around the loop in the theta direction times the lamination area vector in the theta direction times the curvature K of the coil in the radial direction times the magnetic field in the theta direction is equal to a spring constant in the z-direction, or normal to the plane of the coil. All the tensor components cancel out except for the z-direction. That is, the coil produces a spacetime spring constant through the center of the coil where there are resonant bucking electric fields. So the coil is creating a magnetic spring. The units of the spring constant are shown in **FIG. 7** as force per meter.

[0027] 9. Because there are two coils operating in opposite directions in regions of differing curvature, there are two parallel spring constants generated along the centerline. Two springs in parallel sum, but the inner coil is negative due to the triple product of negative signs of current, field and area. Looking at the front view of the coils, the right hand rule shows the field going counterclockwise with the thumb pointing along the electric field in the positive z-direction. The inner coil with the field going in the clockwise direction has the electric field in the negative z-direction. Therefore the outer coil's positive spring constant sums with the inner coil's negative spring constant to produce an overall negative spring constant as shown in **FIG. 8**. The inner coil has a radius r, and the spacing between the outer and inner coil is a. In this design, the inner radius is 1, and the outer radius is 3 which is the magic ratio in physics of 1/3. That makes length a equal to 2. Substituting r=1 and a=2 into the spring constant equation shows that the ratio is negative 8/9. That is, the spring constant is negative as previously asserted. If the spring constant is negative, it must produce negative mass in order to have a real frequency of resonance. Since it produces negative mass, then it can produce a wormhole as shown by Dr. Kip Thorne.

[0028] 10. The geometry of hyperspace physics is based on the geometry of the tetrahedron which is circumscribed by the sphere. The corners of the tetrahedron touch the sphere at a latitude of 19.47122063° which turns out to be, in terms of planet cosmology, the location where all the large volcanoes and vortices occur on Earth, Mars, Jupiter, Uranus and Neptune. Furthermore, the cosine squared of this angle is 8/9, which is the spring constant ratio for the magnetic vortex generator. That is, the coil is interacting with the geometry of spacetime which is why it is such an effective wormhole generator. As will be demonstrated later, the tetrahedral geometry of hyperspace shows that the electron and proton are one and the same particle. This is a new discovery in science coming out of this research. The diagram also shows that when the speed of light is reduced, due to the low density of energy coming into our dimension through the wormhole, Planck's constant divided by the speed of light puts the electron at the boundary between space and hyperspace. That is, the electron and the proton go out of dimension which is the reason that the car tire rim can become merged with the tree. The ramifications of this magnetic vortex generator are enormous. It means develop-

ing new types of crystals through interdimensional merging which will be needed in the development of these spacecraft and their crystal rotors. It means the possibility of teleporting spacecraft through hyperspace over distances of light years using the new folding space waveguides. It means light-weight or inertia-less spacecraft which can be accelerated at hundreds of thousands of g's. It means the ability to lift extraordinary loads in construction work. It means surgery-less medical tables where tumors can be pulled directly out of the patient's body.

[**0029**] 11. Because we have a magnetic spring, then there is some resonant frequency at which the coil can be operated in order to create a large spacetime distortion. It is this distortion that creates the wormhole into hyperspace. From this it follows that the wormhole attaches to a low pressure region with a magnetic monopole. Because pressure is linear mass times the speed of light squared divided by area, a low pressure signifies a low speed of light and less dense matter. What this means is that opposite polarity spacetime curvature at two ends of an electrode will produce a voltage along the electrode, effectively creating a power supply. The reason for this is that spacetime curvature, as shown by Einstein's General Theory of Relativity equation $G_{\alpha\beta}=8\pi T_{\alpha\beta}$, is equal to the square of the electromagnetic fields in the stress-energy tensor T. So the curvature on the ends of the electrode appear as voltages and the system acts as a battery supply to power the spacecraft.

[**0030**] 12. The other characteristic of the magnetic vortex generator is that it can pull objects out of dimension allowing the object to apparently move through solid walls. The object doesn't actually move through the wall because the object is not in the same dimension as the wall; it just appears that way. Moving out of dimension and then back again on the other side of the wall would effectively move the object through the wall for all intents and purposes.

[**0031**] 13. The tetrahedron diagram is a physics diagram which plots the natural logarithm of mass to the natural logarithm of wavelength. The product of mass times wavelength is equal to Planck's constant divided by the speed of light. So the product of the electron mass times its wavelength is equal to the proton mass times its wavelength is equal to the Planck mass times the Planck wavelength. The Planck wavelength is the bottom dimensional limit of the universe. We live in the Planck box which is bounded by the Planck wavelength and Planck mass. Outside this box is hyperspace.

[**0032**] 14. Because logarithms sum, the sum of the log of the mass plus the log of the wavelength is a constant sum. Thus the electron and proton and Planck mass slide on a 45° line known as the base constant which is equal at the axes to the log of Planck's constant divided by the speed of light. Planck's constant is measured in joule-sec so that multiplying it by the frequency 1/second of light gives the energy of the photon particle.

[**0033**] 15. Planck's constant is equal to the Planck wavelength times the Planck mass times the speed of light. The 45° base constant is Planck's constant divided by the speed of light, which means that the speed of light cancels out top and bottom, leaving the area of the Planck box as the value of the base constant. Hyperspace has a low linear mass compared to our dimension. Therefore, Planck's constant is reduced when this energy enters our dimension through the wormhole created by the generator. And the base constant is also so reduced. In terms of logs, this means that the 45° base line becomes more negative and moves to the right on the diagram. As it does so, the base line intersects the electron at the Planck wavelength which is the separation point between space and hyperspace. That is, the electron moves out of dimension. Because the electron and proton are one and the same particle, as shown in reference tetrahedron diagram tet0565, the proton and hence the entire atom is taken out of dimension as well.

[**0034**] 16. All of this can be seen more easily graphically on the tetrahedron diagram itself, referring to reference tetrahedron diagram tet3025. The 45° line which intersects the electron at point (b) is the base constant for our dimension. As you can see, this base line intersects the horizontal axis at a value of −95.91546344 which is the log of Planck's constant h divided by the speed of light. Because Planck's constant is proportional to the linear mass, it is reduced in value by the low density hyperspace energy and, in terms of logs, becomes more negative. This moves the base line to the right at a value of around minus **105**. The new base line intersects the electron at point (a) which is located on the Planck wavelength that is the boundary between space and hyperspace. Thus the electron at point (a) goes out of dimension.

[**0035**] 17. It was inferred previously that a negative spring constant meant a negative mass was produced by the wormhole generator. This can actually be calculated using Einstein's General Theory of Relativity. The calculation starts with the g metric tensor which is a spacetime measurement of distance in terms of time t, radius r, horizontal angle θ and length z. This 4 by 4 matrix is shown in **FIG. 9** where the diagonal line has a signature in cylindrical coordinates of values equal to $\{-1, 1, r^2, 1\}$. All the other terms of the matrix are zero except for the magnetic fields in the two coils. Because the field is changing sinusoidally with time in the theta direction, the field has to go into the $\{t, \theta\}$ and $\{\theta, t\}$ slots of the matrix. Because the field in the inner coil is in the negative direction compared to the outer coil, and including a 90° phase shift between the two fields, a suitable magnetic field function would be $B(\cos(\theta)-\sin(\theta))$.

[**0036**] 18. Using a general relativity software package, Einstein's G curvature tensor can be calculated for this particular metric. The first term G t in the upper left hand slot in the corner is the mass term for the tensor. All the other terms are either electromagnetic fluxes or pressure terms involving the squares of the fields.

[**0037**] 19. Referring to **FIG. 10, a** plot of the mass as a function around a small circle shows that two negative mass spikes occur around the circumference of the circle. Because the radius is almost zero, the two spikes are actually coincident.

[**0038**] 20. This next section shows the electrical system used to drive the magnetic vortex generator. Referring to **FIG. 11**, the system is driven by a sinusoidal voltage source (A) into a 1:1 turns isolation transformer (B). The voltage is stepped up into the range of thousands of volts using a step-up hi-pot transformer (C). The first loop consists of a direct current blocking capacitor (D), a transformer choke (E), a variable inductance (G) and the current in the loop (F). The variable inductance is a coil winding on a toroidal core

wound with thousandth-inch thick SuperMalloy tape. This coil acts as a magnetic switch due to its variable permeability.

[0039] 21. Referring to the accompanying drawing in **FIG. 12**, the slope of the BH curve is actually the permeability of the core. At point (a) on the curve, the slope is very low and therefore the permeability is very small. The resistance of the coil is the frequency of the current times the inductance of the coil. If the permeability is small, then the inductance is low, which means that the coil resistance is low initially. With a low resistance in the coil, current (F) flows through the winding rather easily. Then the coil goes from point (a) to point (b) where the permeability and resistance increase. This change in resistance from a low to a high value dumps the magnetic energy into capacitor (H). Then the non-linear coil saturates between points (b) and (c) where again the coil has a small slope and the coil resistance switches to a low value. Capacitor (D) then dumps its charge (I) through coil (G) producing a large voltage spike in the input and output winding of transformer toroidal coil (J). The magnetic flux in coil (J) then produces a voltage spike in coils (L) and (M) of the magnetic vortex generator. The frequency of oscillation of the generator is determined by capacitor (K) and the overall inductance of the two coils. The diagram shows that the winding is non-linear and in opposite directions going from outer coil to the inner coil.

[0040] 22. Frequency of oscillation has to be kept under 20 MHz in order to create a soft wormhole that connects to low pressure regions of hyperspace. The pressure regions of hyperspace are similar to the pressure produced by a dam holding water. The upper surface of the water, where there is no water pressure, is analogous to the black void into which our universe is expanding. In the middle of the dam, there is a region just above us having a lower water pressure which corresponds to the low density hyperspace energy. This analogy is not perfect because the many frequencies of hyperspace are quantized, as we know from quantum physics, rather than being a continuous spectrum of lower and lower frequencies down to the zero frequency of the black void.

What I claim as my invention is

1. A magnetic vortex generator which can generate negative mass according to Einstein's General Theory of Relativity, which is a tested and proven theory. As a result of this theory, it can be shown that negative mass is required to create a stable wormhole between space and hyperspace. Without the negative mass, the throat would close.

2. The generator consists of two solenoids wound with a common wire in opposite directions on two separate toroidal curved-sheet transformer laminates of differing radii. The smaller solenoid is mounted along the centerline of the larger solenoid.

3. According to Maxwell's equations, said geometrical and magnetic arrangement produces linear bucking electric fields along the centerline of said coils. Since curvature and the square of the electromagnetic fields are one and the same phenomenon according to Einstein's spacetime curvature tensor $G=8\pi T$, this resonance of the electric fields causes a resonance of the spacetime curvature and the opening of the wormhole.

4. Due to the fact that the magnetic flux travels within the laminations at a curvature equal to the inverse of the radius squared, each coil produces a spring constant which depends on the current, lamination area, magnetic field strength and the individual curvature of each coil.

5. Due to the fact that the flux travels in opposite directions in each solenoid, the spring constant of the outer coil is positive, and the spring constant of the inner coil is negative. These two spring constants, one positive and one negative, add in parallel to create a negative spring constant for the generator. Because the frequency of resonance is equal to the square root of the negative spring constant divided by the negative mass, the resonant frequency is positive real.

6. This process of creating and keeping open the wormhole allows low density hyperspace energy to enter our dimension. Because the linear mass is lower, Planck's constant, equal to the Planck mass times the Planck wavelength times the speed of light, is reduced to such an extent that the electron is moved out of dimension. Because the electron and proton are one and the same particle, when considering a path through space and hyperspace, the proton is also moved out of dimension. Thus this process of moving the atom in and out of dimension using the magnetic vortex generator has the ability to create cold-welded crystals, new types of materials and new ways to cold solder one disparate material to another.

7. As a consequence of said process, highly relativistic electromagnetic fields can be created because the velocity of light has been reduced considerably. These fields than can be used to produce life in the new class of electromagnetic propulsion vehicles.

8. As a consequence of said process, refrigeration systems can be created because negative energy cools rather than heats.

9. As a consequence of said process, power supplies can be made such that a differential spacetime curvature on the ends of a carbon electrode can create a differential voltage similar to a regular chemical battery.

10. As a consequence of this process, surgery-less medical tables can be fabricated whereby tumors can be pulled directly from the patient's body.

11. As a consequence of this process, the negative mass produced by the generator can offset the mass of a spacecraft to create a mass-less, inertia-less vehicle which can accelerate at hundreds of thousands of g's.

12. As a consequence of this process, the folding space waveguide becomes a reality whereby hyperspace energy, which has a low spring constant, can be easily folded and curved using powerful, relativistic electromagnetic fields. Spacecraft will be able to teleport themselves out-of-dimension over huge distances measured in terms of light-years.

13. Because the wormhole opens up an interdimensional connection to hyperspace having a magnetic monopole, a radial magnetic field is created. As a consequence of this process, a changing magnetic monopole field crossed with a changing electric field can produce a toroidal electromagnetic flux around the circular hull of the spacecraft. As a consequence of the merger of these two fields, a spacetime curvature G_{zz} is produced over the hull of the spacecraft which creates a tension or lift force which enables the spacecraft to ascend, hover or descend.

14. An electrical system, comprised of a variable frequency generator and amplifier, an isolation transformer and voltage step-up transformer, drives a non-linear inductance which switches on and off the current in the output circuit in such a manner as to produce large voltage spikes through

magnetic vortex generator. The generator responds by producing two large negative mass spikes close to the centerline of the two coils.

15. The winding on each coil of the generator has a non-linear spacing to enhance the magnetic field and to reduce the interwinding coil capacitance.

16. The ratio of the radius of the small coil to that of the larger coil is 1/3, which is the magic ratio in physics. This creates a spring constant that is proportional to 8/9. The square of the cosine of the tetrahedral angle of 19.47° is equal to this ratio. Also the ratio of the area-to-volume ratio of the circumscribing sphere of a tetrahedron to the area-to-volume ratio of the tetrahedron is also 1/3. And the corners of the tetrahedron touch the circumscribing sphere at 19.47°. All the large volcanoes and vortices on Earth, Mars, Jupiter, Uranus and Neptune are located at this latitude. Thus this invention is more effective in developing a wormhole because it is tuned geometrically to the tetrahedral geometry of space.

* * * * *

US 20060112848A1

(19) United States

(12) Patent Application Publication

(10) Pub. No.: US 2006/0112848 A1

(43) Pub. Date: Jun. 1, 2006

St. Clair

(54) PERMANENT MAGNET PROPULSION SYSTEM

(76) Inventor: **John Quincy St. Clair**, San Juan, PR (US)

Correspondence Address:
JOHN ST. CLAIR
52 KINGS COURT, 4A
SAN JUAN, PR 00911 (US)

(21) Appl. No.: **11/001,217**

(22) Filed: **Dec. 1, 2004**

Publication Classification

(51) **Int. Cl.**
B61C 3/00 (2006.01)

(52) **U.S. Cl.** **105/49**

(57) **ABSTRACT**

This invention is a propulsion system for a train that uses permanent magnets mounted on a rotating iron cylindrical plate carrying a radial current in order to create a spacetime curvature distortion which pulls the locomotive along the track.

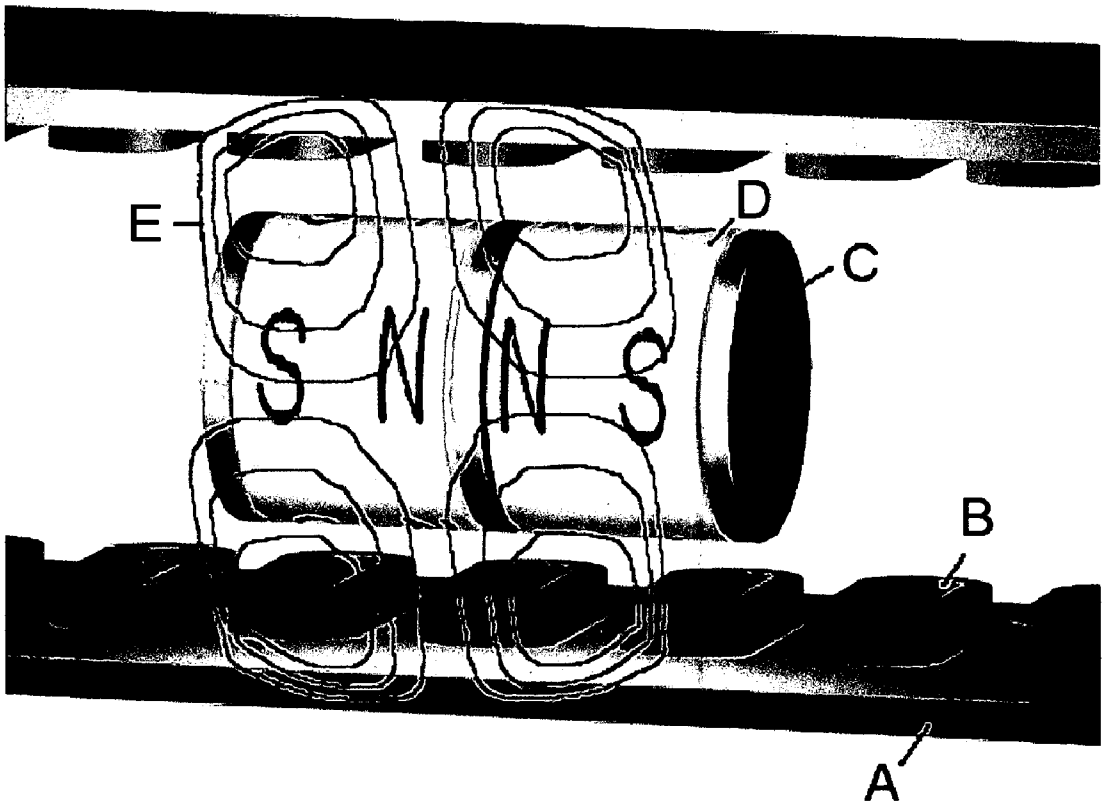

Figure 1

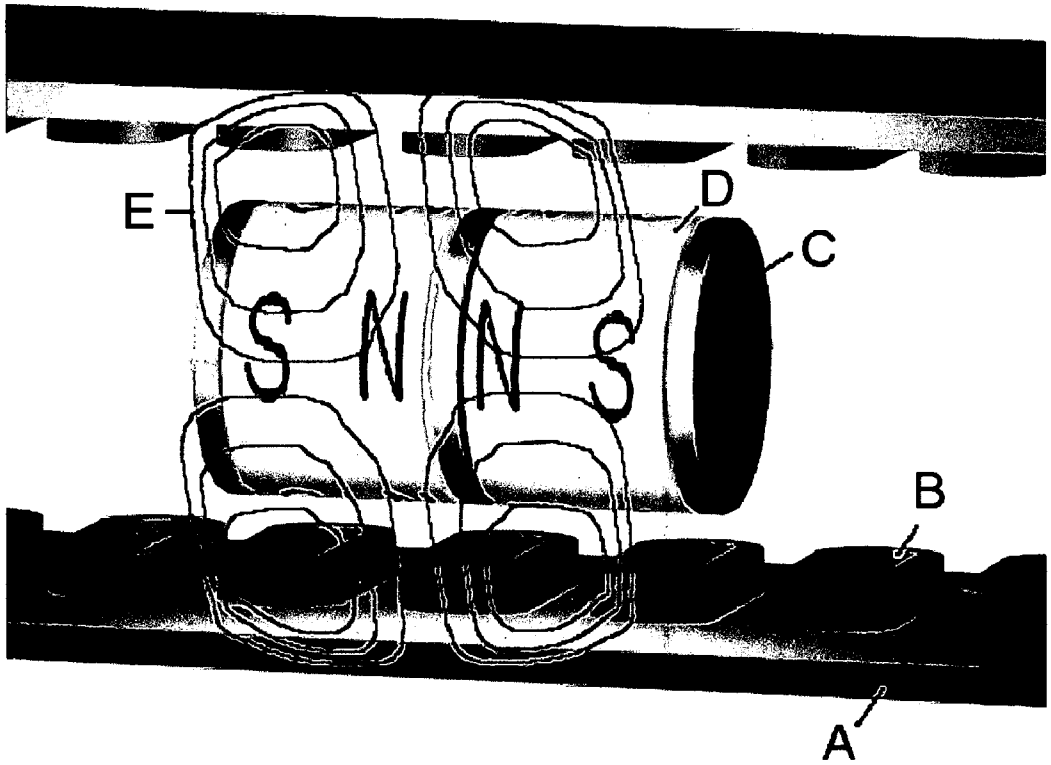

Figure 2

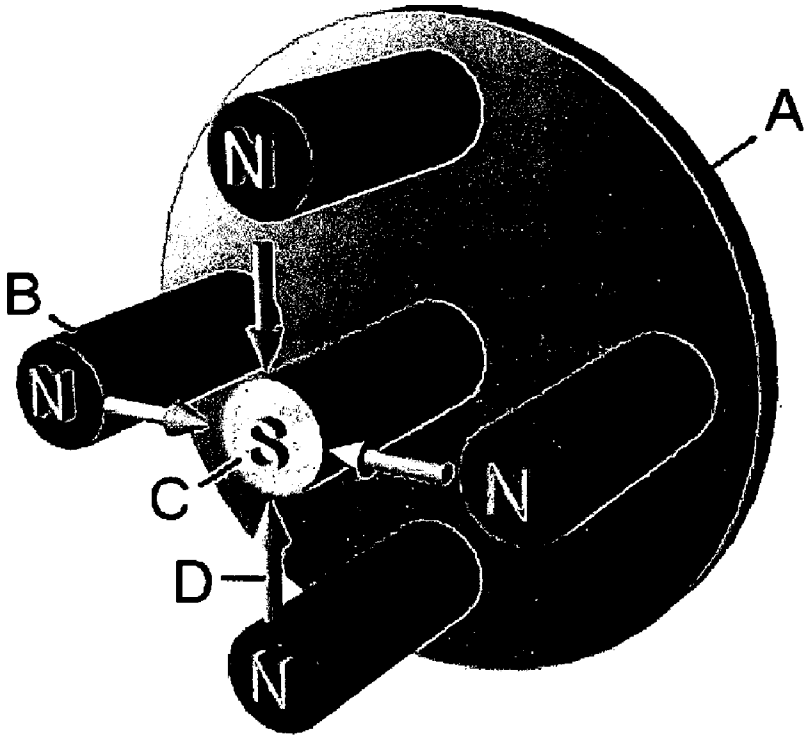

Figure 3

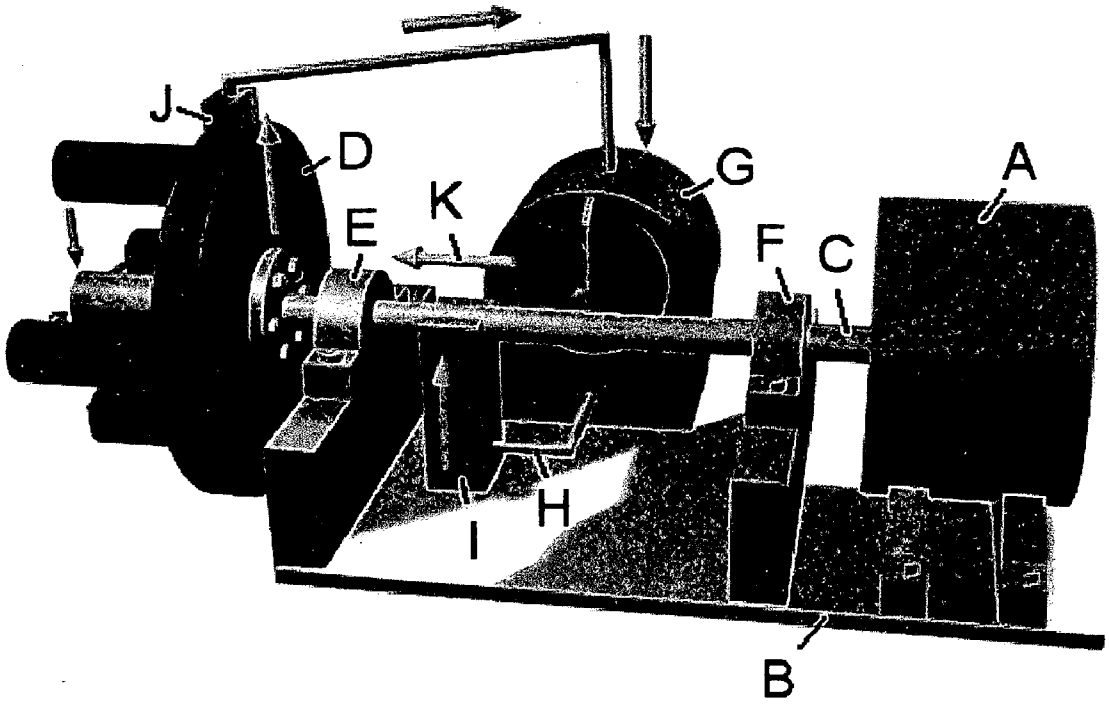

Figure 4

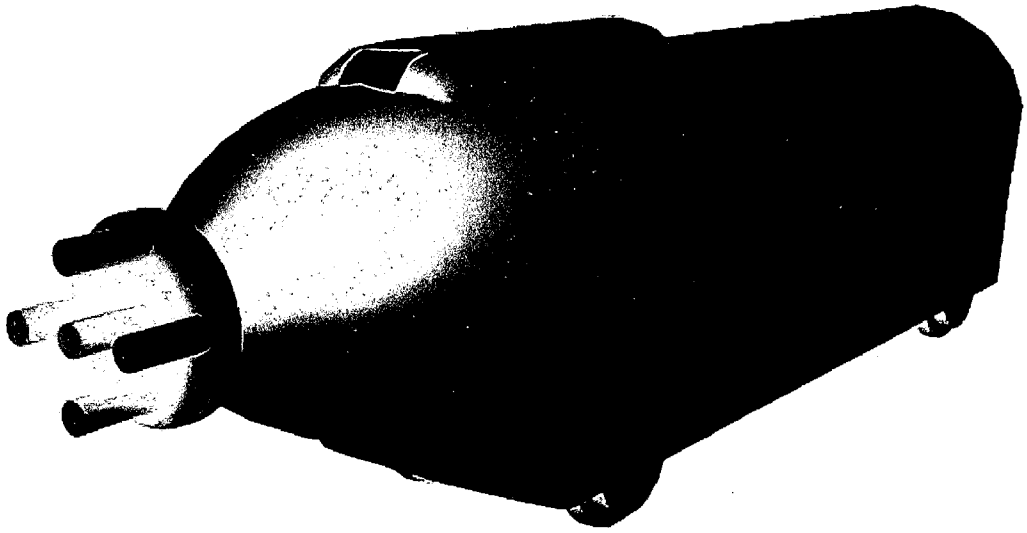

PERMANENT MAGNET PROPULSION SYSTEM

BRIEF SUMMARY OF THE INVENTION

[0001] This invention is a propulsion system for a train that utilizes spinning cylindrical magnets in order to create a spacetime pressure distortion ahead of the vehicle that pulls the locomotive along the track.

BACKGROUND OF THE INVENTION

[0002] At the present time, referring to **FIG. 1**, proposed permanent magnet propulsion systems use a dual railway track (A) supporting a series of coil windings (B) located along the track. The vehicle is attached to two permanent magnets (D) between steel pole pieces (C). The north pole of each magnet faces the interior pole piece such that the magnetic flux path (E) follows the center pole piece up through the railway bed and then back to the south pole of the magnet. As the magnets move along the track, the coil windings are activated at the correct time by Hall sensors. With the coil energized as a north pole, the permanent magnet north pole is repelled which drives the vehicle along the track The problem with this design, and other similar designs, is that it is not practical to wind huge numbers of sensor-activated electrical coils along a steel track.

[0003] From Einstein's General Theory of Relativity, it is known that a spacetime curvature pressure develops perpendicular to direction of vibration of the electric and magnetic field. As an example, the photon has an electric field vibrating in the vertical y-direction and a magnetic field vibrating in the horizontal x-direction. The spacetime curvature pressure is therefore along the z-axis of radiation which pushes the negative mass of the photon along. Thus in order to create a spacetime curvature pressure in the z-direction along the track which would pull the train forward, a magnetic flux density field is required in the radial direction.

[0004] Referring to **FIG. 2**, four equally-spaced north permanent magnets (B) surrounding a centrally-located south permanent magnet (C) are mounted on an iron cylinder which acts as the radial flux return path. The magnetic flux density field (D) is in the radial direction from the north pole to the south pole. In order to provide strength, the magnets are molded onto a steel shaft and coated with epoxy so that they don't rust. During the molding process, a capacitor-discharge magnetizer is used to create the magnetic field of the magnet.

[0005] In Cartesian coordinates {−ct,x,y,z}, the elemental spacetime length ds squared is the sum of the squares of the incremental lengths {cdt,dx,dy,dz}

$$(ds)^2=-(dt)^2+(dx)^2+(dy)^2+(dz)^2$$

where the speed of light c is unity. The coefficients (−1,1,1,1) of this equation make up the g metric 4×4 tensor

$$g_{\alpha\beta} = \begin{array}{c|cccc|} & t & x & y & z \\ \hline t & -1 & 0 & 0 & 0 \\ x & 0 & 1 & 0 & 0 \\ y & 0 & 0 & 1 & 0 \\ z & 0 & 0 & 0 & 1 \end{array}$$

[0006] The Faraday electromagnetic tensor contains the magnetic fields which determine how the spacetime length ds is curved. For a magnetic flux density field in the x-direction, Bx, and a magnetic flux density field in the y-direction, By, the Faraday tensor is

$$F^{\alpha}_{\beta} = \begin{array}{c|cccc|} & t & x & y & z \\ \hline t & 0 & 0 & 0 & 0 \\ x & 0 & 0 & 0 & -By \\ y & 0 & 0 & 0 & Bx \\ z & 0 & By & -Bx & 0 \end{array}$$

The stress-energy-momentum tensor T, which determines how space is curved, is calculated from the following equation

$$4\pi T^{\mu\nu} = F^{\mu\alpha}F^{\nu}_{\alpha} - \frac{1}{4}g^{\mu\nu}F_{\alpha\beta}F^{\alpha\beta}$$

The stress-energy in the z-direction ahead of the locomotive is

$$T^{zz} = \frac{B_x^2 + B_y^2}{8\pi} = \frac{B_r^2}{8\pi}$$

where the sum of the squares of the fields in the x and y directions is the radial B field. In Einstein's General Relativity Theory, the curvature G tensor is equal to the stress-energy tensor divided by 8π. The G tensor is the curvature of space having units of inverse radius squared.

$$G = \frac{T}{8\pi}$$

Therefore the curvature G_{zz} generated along the z-direction ahead of the train is proportional to the square of the magnetic flux density field

$$G_{zz} = \frac{1}{r^2} = \frac{G\varepsilon}{c^2}\frac{B_r^2}{8\pi} = \frac{1}{meter^2}$$

where G is Newton's gravitational constant (not to be confused with the curvature tensor), ϵ is the linear capacitance of space, and c is the speed of light. The linear mass of space Ω is the speed of light c squared divided by the gravitational constant G, so that the equation can be written as

$$\frac{G\varepsilon}{c^2}\frac{B_r^2}{8\pi} = \frac{\varepsilon}{\Omega}\frac{B_r^2}{8\pi} = \frac{1}{\frac{\Omega}{\varepsilon}}\frac{B_r^2}{8\pi}$$

where the conversion factor is the square of the magnetic vector potential A

$$\sqrt{\frac{\Omega}{\varepsilon}} = \frac{\text{kgm}}{seccoul} = A$$

which is actually the momentum per charge. Therefore the curvature equation can be written as

$$\frac{1}{r^2} = \frac{1}{8\pi}\left(\frac{B_r}{A}\right)^2$$

This equation shows that it is necessary to create a magnetic vector potential together with the radial magnetic flux density field in order to create a curvature of space. Looking at the units of A shows that it is a mass momentum per charge

$$A = \frac{\text{kg}}{sec}\frac{m}{coul} = \frac{m\omega^2 r}{I}$$

or a mass m rotating with angular velocity c) per current along the radius. In terms of the invention, what this means is that the mass of the iron cylinder has to be rotating and there has to be a radial electrical current I in order to produce the linear charge along the radius. The differential mass dm depends on the circumference times the differential radius dr, the mass density p, and the length L of the cylinder

$$dm = \rho 2\pi r L dr$$

so that the magnetic vector potential becomes

$$A = \int_0^R \frac{\rho 2\pi r L \omega^2 r}{I} dr = \frac{2}{3}R^3 \rho \pi L \frac{\omega^2}{I}$$

The value of A for the iron cylinder is

$$L = .2m$$

$$\rho = 7866\frac{kg}{m^3}$$

$$R = 1m$$

$$\omega = 2\pi f = 6.28\ \text{sec}^{-1}$$

$$I = 3000000\ \text{amp}$$

$$A = .04335\frac{kgm}{\text{sec}coul}$$

$$Br = 1.2tesla$$

$$\frac{1}{8\pi}\left(\frac{Br}{A}\right)^2 = 30.47m^2$$

$$r_{curvature} = \sqrt{8\pi}\left(\frac{A}{Br}\right) = .181m$$

What makes this possible is that the new N-machines can easily generate a minimum of 6 million amps which is twice the value of the electrical current above.

[0007] Referring to **FIG. 3**, the assembly consists of a large induction motor (A) mounted on the train's base plate (B) driving a motor shaft (C) attached to the iron cylinder (D). The shaft is held in place by two thrust bearings mounted in two pillow blocks (E,F). The current-generating N-machine (G) is electrically connected by a copper bus (H) to a copper-beryllium brush (I) on the motor shaft with a similar return brush (J) on the edge of the iron cylinder. The current (K) flows through the motor shaft to the center of the rotating cylinder and then radially outward to the edge. The magnetic flux density flows from the north poles of the outer permanent magnets to the central south pole, along the central magnet to the center of the rotating cylinder and then radially outward to the south poles of the outer magnets.

[0008] The thrust F developed is the radius of curvature of spacetime r_c calculated above times the magnet flux density field times the current I

$$F = \frac{r_c B_r I}{\sqrt{8\pi}} \approx 30000lbf$$

Using conservation of tensor coordinates, the radius of curvature is in the z-direction, the magnetic flux density field is in the radial direction and the current is in the radial direction

$$F^z = x^z B_r I^r$$

where the radial indices cancel, leaving the z-index as the direction of the force.

SUMMARY OF THE INVENTION

[0009] It is the object of this invention to create a spacetime curvature in front of a train locomotive in order to pull the vehicle along the track It is known from gravitational physics that a spacetime curvature is generated perpendicular to the direction of vibration of the electric and magnetic field. A radial magnetic field, which can be produced by permanent magnets attached to the flat faces near the rim of a iron cylinder rotating about the z-axis, will create a curvature in the z-direction. Four cylindrical north-pole-oriented magnets produce a radial magnetic flux density with is channeled into a central cylindrical south-pole-oriented magnet. The flux lines then flow radially outward through the steel rotating cylinder and reconnect with the south poles of the four outer magnets. The rotating iron cylinder generates the equivalent of a magnetic vector potential when an electrical current flows from the center of the cylinder to the edge. This current is generated by an N-machine current generator. The square of the magnetic flux density divided by the magnetic vector potential is equal to the spacetime curvature. The square root of the inverse of the spacetime curvature is the radius of curvature. The thrust developed is this radius of curvature times the magnetic flux density field times the current.

A BRIEF DESCRIPTION OF THE DRAWINGS

[0010] **FIG. 1**. Perspective view of proposed permanent magnetic propulsion system using coil windings on the steel track.

[0011] **FIG. 2**. Perspective view of permanent magnet rotor assembly.

[0012] **FIG. 3**. Perspective view of system showing motor drive, N-machine and permanent magnet rotor.

[0013] **FIG. 4**. Perspective view of locomotive and rotor/magnet assembly.

DETAILED DESCRIPTION OF THE INVENTION

[0014] 1. The permanent magnets are made of neodymium-iron-boron material which is heated to its melt temperature and injection molded around a steel shaft threaded at one end while at the same time a pulsed magnetic field is applied to the material using a charge-discharge magnetizer. Because of the iron in the material, a coat of epoxy is applied to the magnet in order to protect it from the environment. Holes are drilled into the iron plate 90° apart near the rim, threaded, and then the steel shaft with the magnet is then inserted. Another hole is drilled and tapped in the center of the circular plate for attaching the south pole magnet which is used as the return path for the magnetic flux.

[0015] 2. Another easier way to make the magnets is to purchase short lengths of tubular NdFeB magnets and then stack them on the steel shaft with a cylindrical iron pole piece on the end of the shaft. The pole piece then holds the magnets down in place when the shaft is threaded into the plate.

[0016] 3. Referring to **FIG. 4**, the propulsion system is mounted inside the train cabin such that the rotor/magnet assembly extends out in front of the locomotive where the spacetime curvature is generated.

I claim:

1. A train propulsion system consisting of the following components:

a. a rotating iron cylindrical plate rotor of high relative permeability driven by an induction motor and horizontal steel motor shaft mounted in pillow block thrust bearings;

b. four cylindrical magnets, each molded to a steel support shaft threaded into the iron plate at 90° intervals around the rim of the plate with their north poles facing away from the plate;

c. a fifth cylindrical magnet molded to a steel support shaft which is threaded into the center of the iron plate with the south pole facing away from the plate;

d. an N-machine current generator supplying a radial electrical current from the center of the rotating plate by means of a copper-beryllium brush on the motor shaft (**1***a*) and another similar brush on the outside edge of the rotor.

e. a locomotive train on which the components are mounted such that the rotor/magnet assembly extends out in front of the locomotive with the rotor's angular velocity vector pointing along the track.

2. a closed magnetic flux path along a radial path in air from the north poles of the four outer magnets (**1***b*) to the south pole of the central magnet (**1***c*), through the center magnet and then radially outward through the rotor (**1***a*), returning back through the four outer magnets, such that the flux and electrical current (**1***d*) flow in the same outward radial direction through the rotor.

3. the creation of a spacetime curvature due to claims (**1***a* through **2**) that produces a large force on the locomotive equal to the radius of the spacetime curvature times the flux times the current.

* * * * *

US 20060145019A1

(19) United States

(12) Patent Application Publication

St. Clair

(10) Pub. No.: US 2006/0145019 A1

(43) Pub. Date: Jul. 6, 2006

(54) TRIANGULAR SPACECRAFT

(76) Inventor: **John Quincy St. Clair**, San Juan, PR (US)

Correspondence Address:
JOHN ST. CLAIR
52 KINGS COURT, 4A
SAN JUAN, PR 00911 (US)

(21) Appl. No.: **11/017,093**

(22) Filed: **Dec. 20, 2004**

Publication Classification

(51) **Int. Cl.**
B64G 1/40 (2006.01)

(52) **U.S. Cl.** **244/171.5**

(57) **ABSTRACT**

A spacecraft having a triangular hull with vertical electrostatic line charges on each corner that produce a horizontal electric field parallel to the sides of the hull. This field, interacting with a plane wave emitted by antennas on the side of the hull, generates a force per volume combining both lift and propulsion.

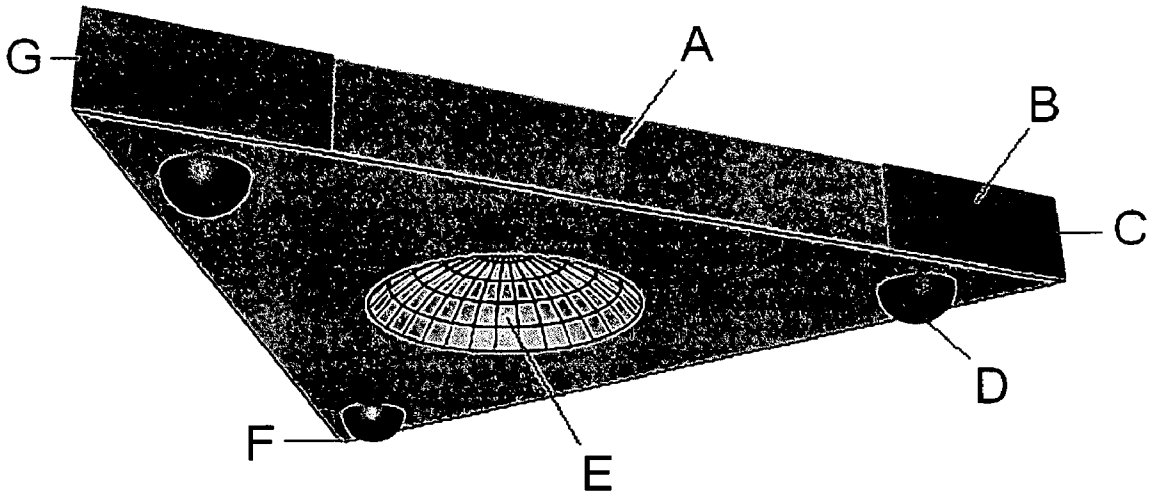

Figure 1

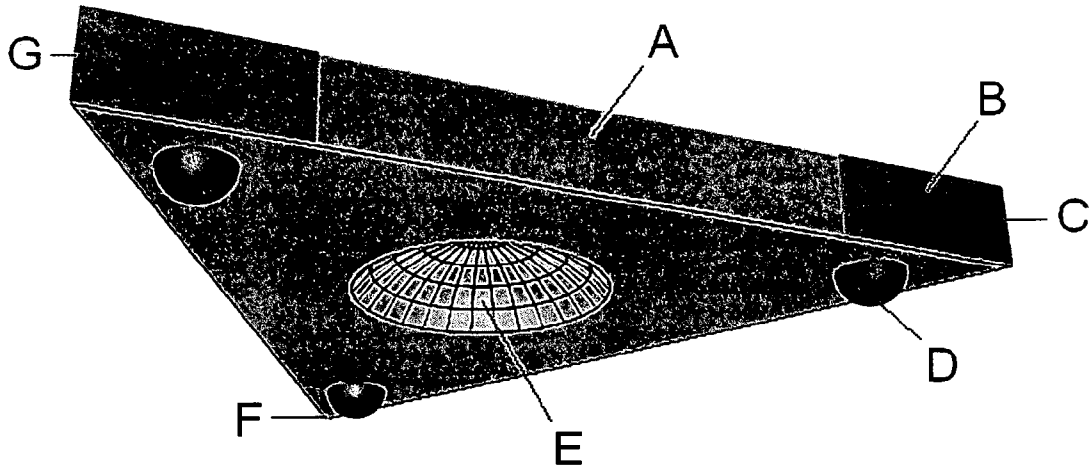

Figure 2

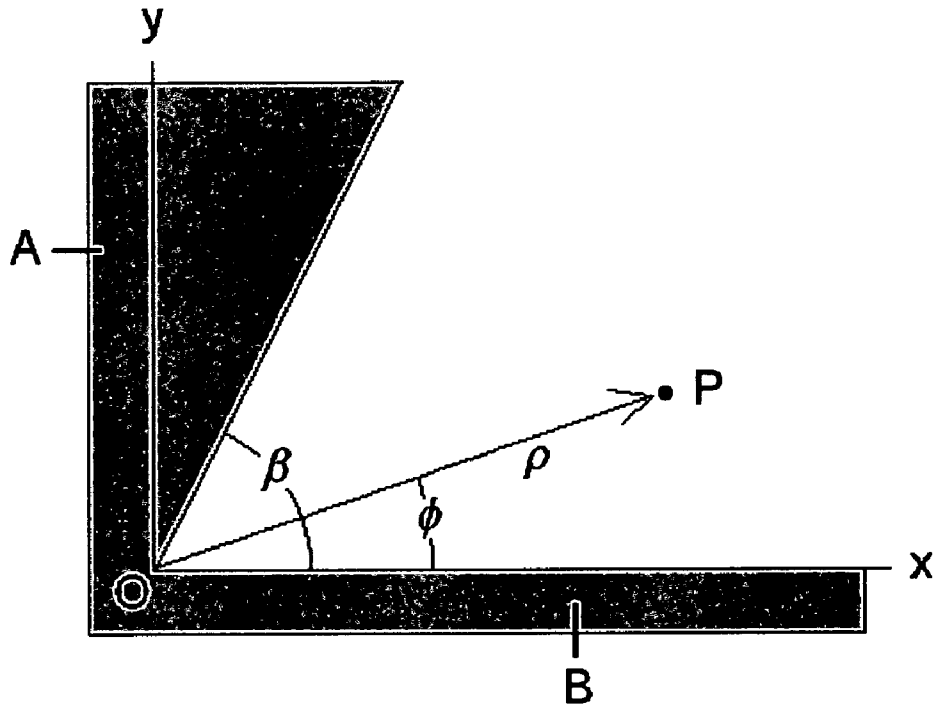

Figure 3

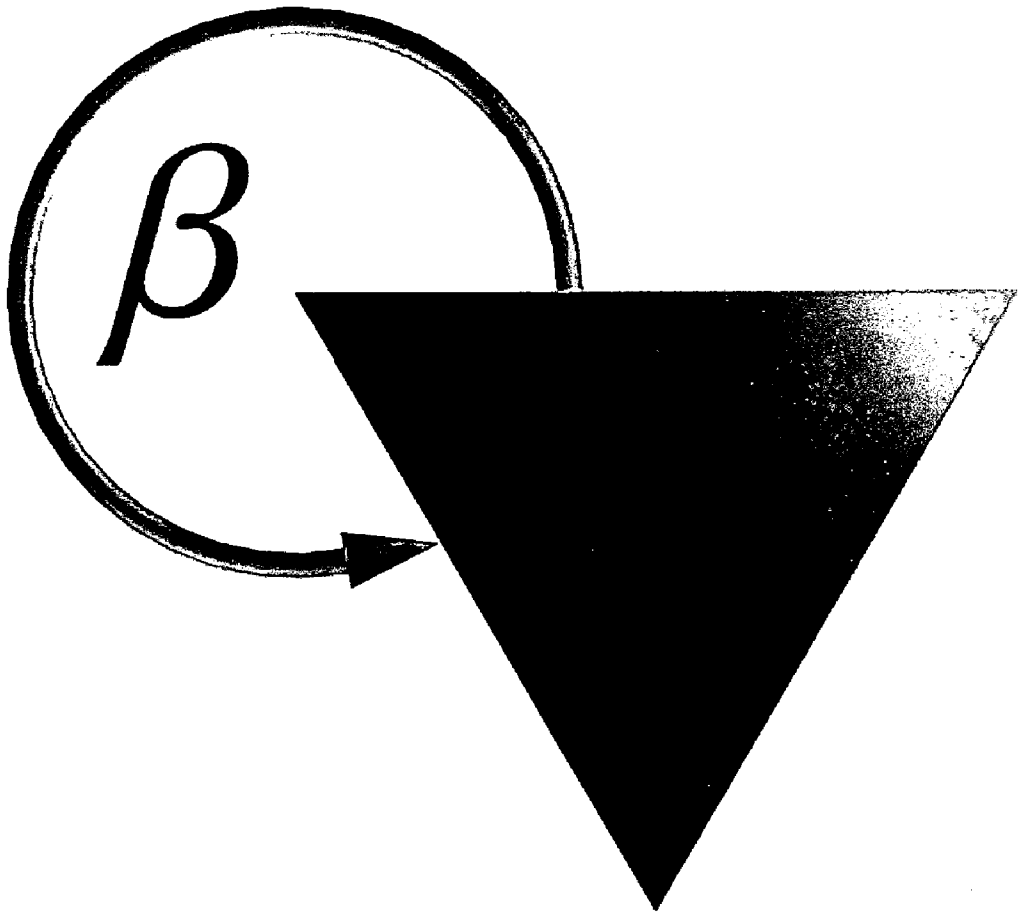

Figure 4

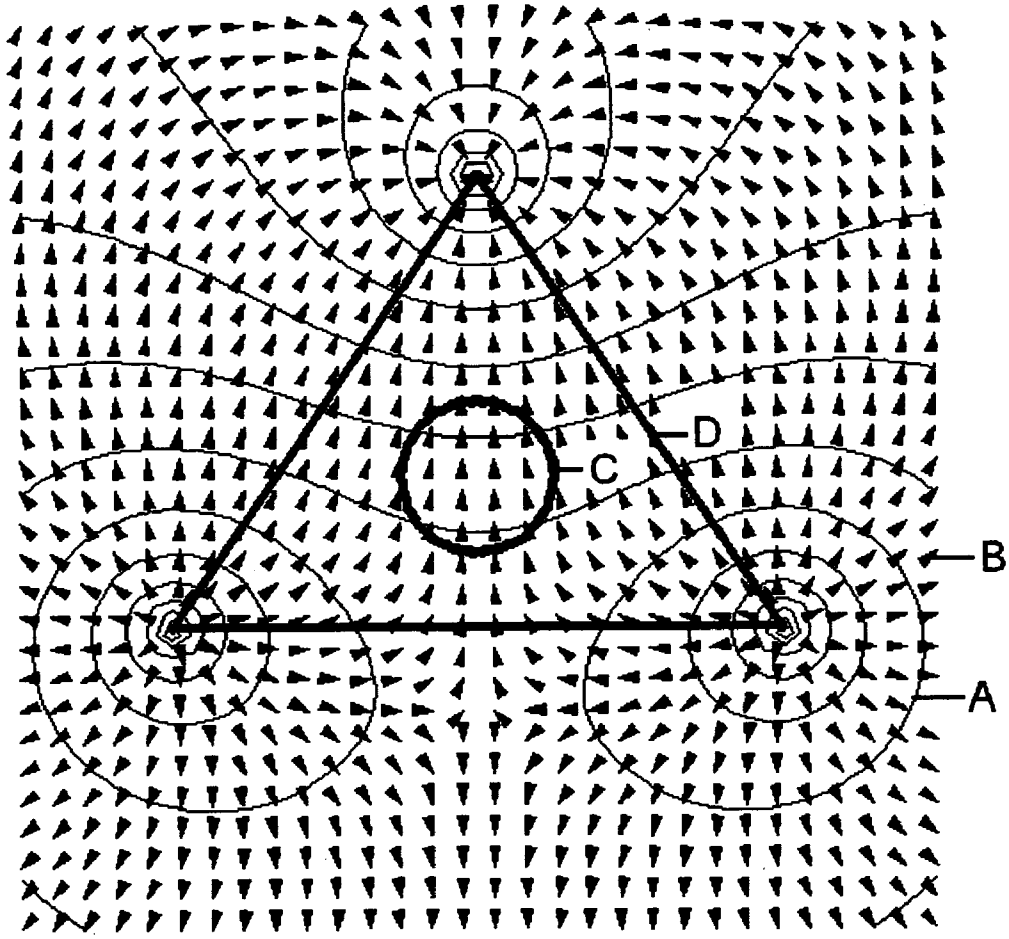

Figure 5

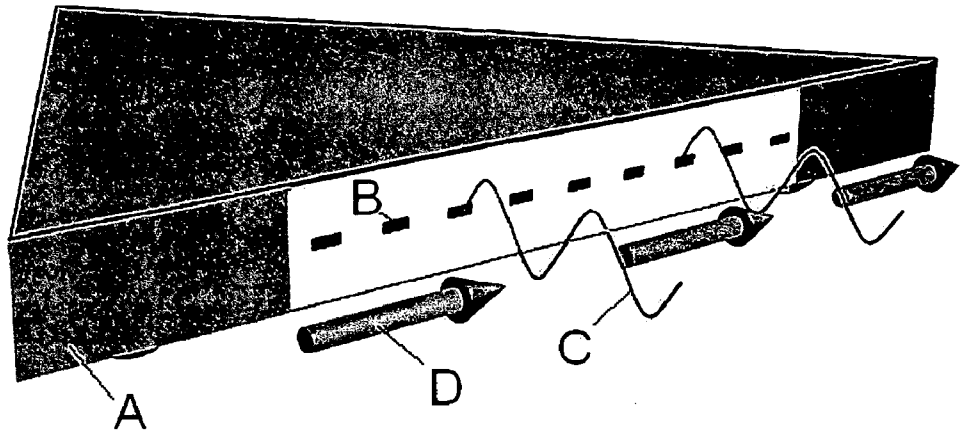

Figure 6

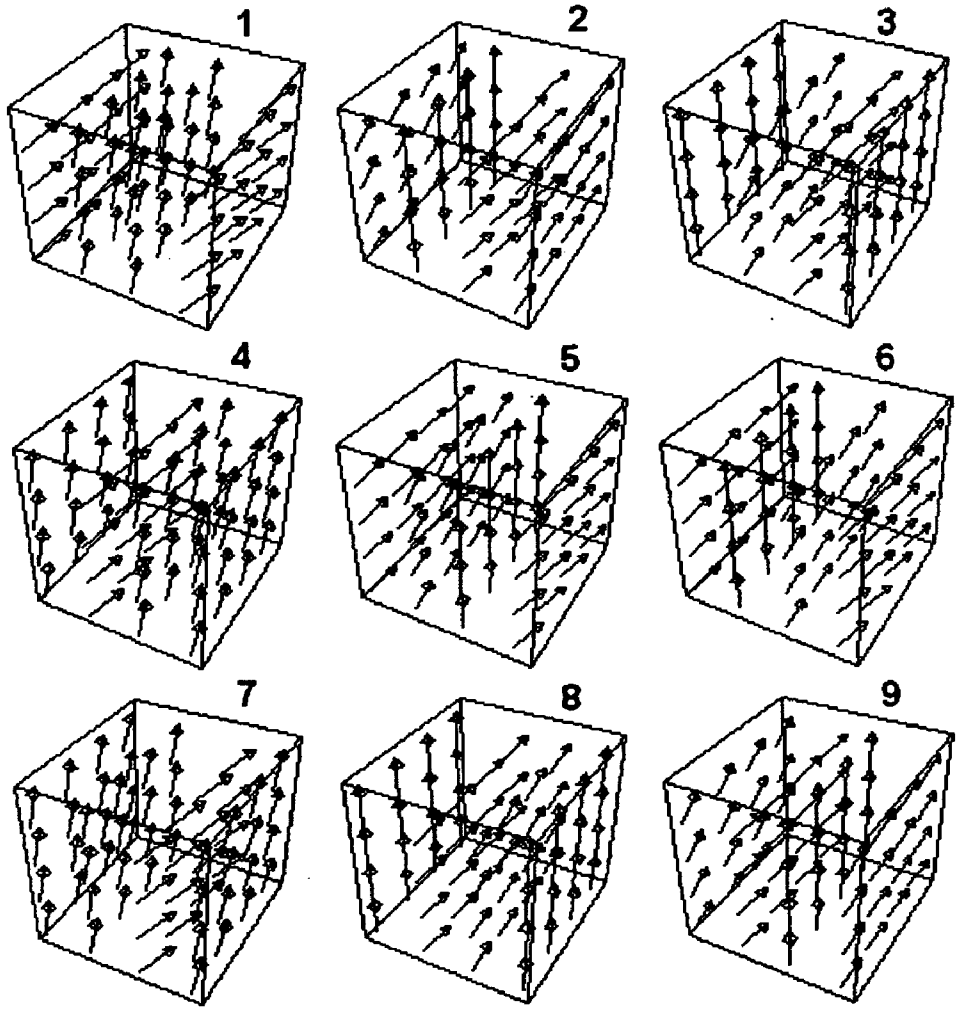

Figure 7

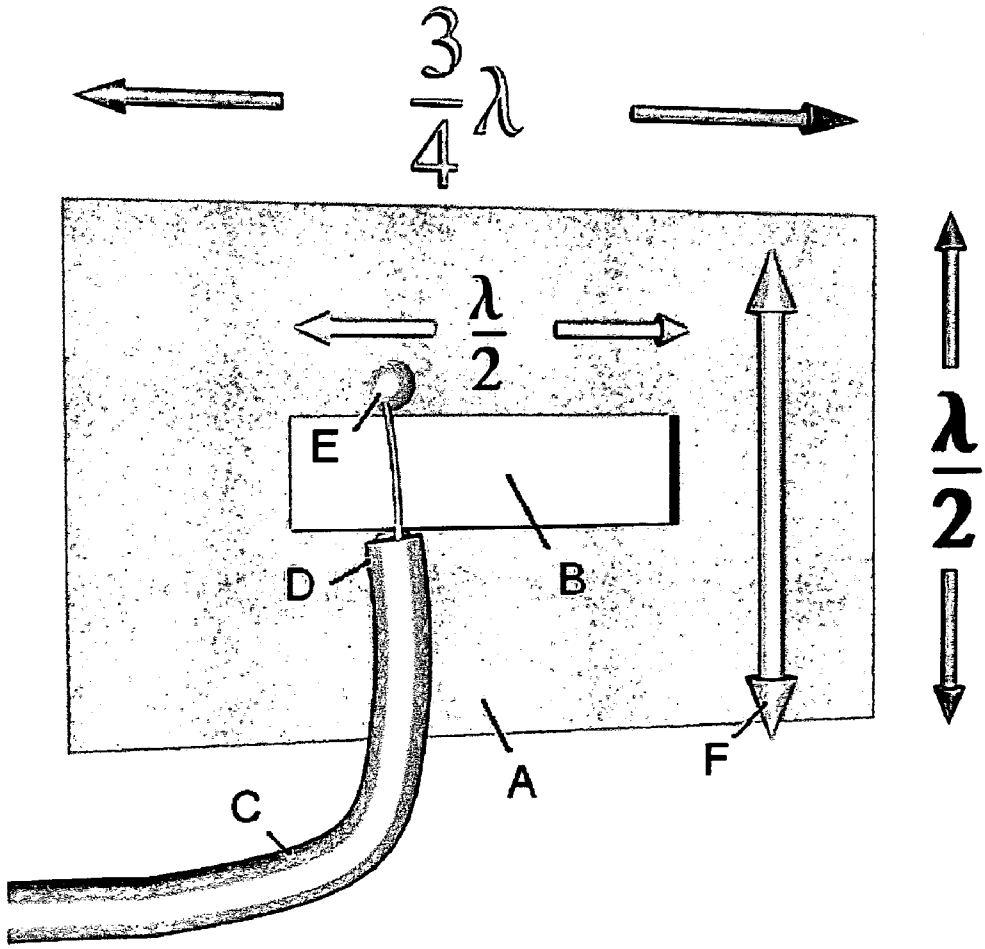

TRIANGULAR SPACECRAFT

BRIEF SUMMARY OF THE INVENTION

[0001] This invention is a spacecraft having a triangular hull with vertical electrostatic line charges on each corner. The line charges create a horizontal electric field that, together with a plane wave emitted by antennas on the side of the hull, generates a force per volume providing a unique combination of both lift and propulsion.

BACKGROUND OF THE INVENTION

[0002] Referring to **FIG. 1**, the spacecraft has a hull in the shape of an equilateral triangle. A parabolic antenna (E) is centrally located in the bottom of the hull. An array of horizontal slot antennas is located along the side of the hull (A). Each back corner (F,G) has a corner conducting plate which is charged to a positive voltage +V. The forward corner (C) has a conducting plate charged to a negative voltage −V. A motion control hemisphere (D) is located on the bottom surface in each of the three corners.

[0003] Referring to **FIG. 2**, two planes (A,B) intersect at the origin O at an opening angle β. Each plane (x,y) is charged to a voltage V. The potential at point P is determined in polar coordinates {ρφ}. The Laplace equation for the potential Φ in polar coordinates is given by:

$$\frac{1}{\rho}\frac{\partial}{\partial\rho}\left(\rho\frac{\partial\Phi}{\partial\rho}\right)+\frac{1}{\rho^2}\frac{\partial^2\Phi}{\partial\phi^2}=0$$

Using a separation of variables solution, the potential is given as the product of two functions:

$$\Phi(\rho,\phi)=R(\rho)\Psi(\phi)$$

which when substituted into the Laplace equation becomes:

$$\frac{\rho}{R}\frac{d}{d\rho}\left(\rho\frac{dR}{d\rho}\right)+\frac{1}{\Psi}\frac{d^2\Psi}{d\phi^2}=0$$

Since the two terns are separately functions of ρ and φ respectively, each one has to be constant with the sum of the constants equal to zero:

$$\frac{\rho}{R}\frac{d}{d\rho}\left(\rho\frac{dR}{d\rho}\right)=\nu^2 \quad \frac{1}{\Psi}\frac{d^2\Psi}{d\phi^2}=-\nu^2$$

These two equations have solutions:

$$R(\rho)=a\rho^{\nu+b\rho-\nu}$$

$$\psi(\phi)=A\cos(\nu\phi)+B\sin(\nu\phi)$$

The azimuthal angle φ is restricted to a value in the range $0\leqq\phi\leqq\beta$. The boundary condition is that the potential Φ is equal to V for any radius ρ when φ=0 and φ=β. This means that v has to be an integer value of π so that the sine function is zero:

$$\sin(\nu\beta)=\sin\left(\frac{m\pi}{\beta}\beta\right)=\sin(m\pi)=0 \quad m=1,2\ldots$$

which in turn means that the coefficient A of the cosine term has to be zero in the solution above. Choosing b=0 makes the general solution for the potential equal to:

$$\Phi(\rho,\phi)=V+\sum_{m=1}^{\infty}a_m\rho^{m\pi/\beta}\sin(m\pi\phi/\beta)$$

which shows that when the angle is zero, the sine is zero and the potential is V. If the angle is β, then there is a multiple of π such that the sine is zero again.

[0004] Because the series involves positive powers of the radius, for small enough ρ, only the first term m=1 in the series is important. Thus around ρ=0, the potential is approximately

$$\phi(\rho,\phi)\approx V+a_1\rho^{\pi/\beta}\sin(\pi\phi/\beta)$$

[0005] The electric field component is the negative gradient of the potential:

$$E_\phi(\rho,\phi)=-\frac{1}{\rho}\frac{\partial\Phi}{\partial\phi}=-\frac{\pi a_1}{\beta}\rho^{(\pi/\beta)-1}\cos(\pi\phi/\beta)$$

The surface charge distribution σ at φ=0 and φ=β is equal to the electric field perpendicular to the surface times the permittivity of space ϵ_0:

$$\sigma(\rho)=\varepsilon_0E_\phi(\rho,0)=-\frac{\varepsilon_0\pi a_1}{\beta}\rho^{\frac{\pi}{\beta}-1}$$

Notice that if angle of intersection β is less than π, then the equation says that there is a very small radius to a positive power which means little charge density accumulation.

[0006] Referring to **FIG. 3**, the value of β, in the case of the triangular hull, is equal to 360° less 60° for a total of 300° or:

$$\beta=\frac{300}{180}\pi=\frac{5}{3}\pi$$

$$\rho^{\frac{\pi}{\frac{5}{3}\pi}-1}=\frac{1}{\rho^{\frac{2}{5}}}$$

which says that there is a charge density singularity to the two fifths power for small radius. Thus, the corner plates on the hull create a huge line charge density along the sharp vertical corner edge. The equation for the potential of a line charge density is given as:

$$\Phi(x,y)=-\frac{\lambda}{2\pi\varepsilon_0}\mathrm{Ln}((x-x_0)^2+(y-y_0)^2)$$

where λ is the charge per unit length in the vertical z-direction, and x_0 and y_0 are the location of the line charge in the xy-plane.

[0007] Referring to **FIG. 4**, the triangular hull (D) is plotted together with the potential contours (A) and the electric field arrows (B) created by the three corner line charges. The line charges are perpendicular to the paper. Notice that the electric field arrows are parallel crossing the center parabolic antenna (C). The electric field is also parallel to the sides (D) of the triangle.

[0008] Referring to **FIG. 5**, along the side of the triangle (A), an array (B) of horizontal slot antennas emit electromagnetic waves that have a vertically polarized electric E field (C). These traveling waves interact with the electric field (D) produced by the line charges on the corners of the triangle.

[0009] Using differential forms mathematics, this combination of fields is represented by the Hodge star of the differential of the wedge product of the two fields. The antenna electromagnetic field is a combination of a traveling magnetic field B_w, and electric field E_w. The stationary field E created by the line charges is perpendicular to the traveling wave.

$$*d(E \wedge (B_w + E_w \wedge dt))\frac{\varepsilon}{c} = \frac{\text{force}}{\text{volume}}$$

where ϵ is the linear capacitance of space and c is the speed of light. Thus there is a force per volume around the hull.

[0010] This combination of fields produces a spacetime curvature as determined by Einstein's General Theory of Relativity. The traveling electric field has an amplitude in the vertical z-direction and travels in the x-direction

$$E_{w-Ez}\cos(x-t)$$

The Faraday electromagnetic tensor contains all the electric and magnetic fields in all the {x,y,z} directions. The first row and first column contain the two electric fields

$$F^{\alpha}_{\beta} = \begin{array}{c|cccc|} t & 0 & E_x & 0 & E_z\cos(x-t) \\ x & E_x & 0 & 0 & 0 \\ y & 0 & 0 & 0 & 0 \\ z & E_z\cos(x-t) & 0 & 0 & 0 \end{array}$$

The stress exerted on spacetime occurs in the xx, yy and zz-direction as calculated from the stress-energy tensor T of gravitational physics

$$4\pi T^{\mu\nu} = F^{\mu\alpha}F^{\mu}_{\alpha} - \frac{1}{4}g^{\mu\nu}F_{\alpha\beta}F^{\alpha\beta}$$

where g is the metric tensor for Cartesian space

$$g_{\alpha\beta} = \begin{array}{c|cccc|} t & -1 & 0 & 0 & 0 \\ x & 0 & 1 & 0 & 0 \\ y & 0 & 0 & 1 & 0 \\ z & 0 & 0 & 0 & 1 \end{array}$$

where the diagonal components are the coefficients of the elementary spacetime length ds squared

$$(ds)^2 = -(dt)^2 + (dx)^2 + (dy)^2 + (dz)^2$$

The calculation produces three stresses T^{xx},T^{yy} and T^{zz} in their respective {x,y,z} directions.

[0011] Referring to **FIG. 6**, these three stresses are plotted together as a **3**D vector field animated over time in nine frames. The graphs show that there is a lift force as depicted by the vertical arrows as well as a force of propulsion as shown by the interspersed horizontal arrows. With the passage of time, these vectors exchange places with each other so that the lift becomes the propulsion and vice versa, creating a wavy stress-energy field around the hull.

SUMMARY OF THE INVENTION

[0012] This invention is a spacecraft with a triangular hull having charged flat plates on the vertical corners of the three sides. The two rear corners are charged to a potential V. The forward corner is charged to a potential −V. The 60° angle on the corner creates a line charge density singularity that produces a huge horizontal electric field pointing from the back to the front of the craft which is also parallel to the sides of the triangle. An array of horizontal slot antennas located on the sides of the triangular hull produce an electromagnetic wave with the electric field polarized in the vertical direction. This combination of fields produces a spacetime force in both the vertical and horizontal directions such that the spacecraft receives a lift force and a force of propulsion.

A BRIEF DESCRIPTION OF THE DRAWINGS

[0013] **FIG. 1**. Perspective view of triangular spacecraft.

[0014] **FIG. 2**. Drawing of the intersection of two charged plates in order to calculate the charge density in the corner.

[0015] **FIG. 3**. Perspective view of the corner angle β for the equilateral triangle.

[0016] **FIG. 4**. Planar **2**D graph showing the electric field produced by three line charges on the corners of the triangular hull.

[0017] **FIG. 5**. Perspective view of electric field produced by the linear charge interacting with the traveling electromagnetic wave produced by the slot antenna.

[0018] **FIG. 6**. **3**D vector animation of the lift and thrust force generated by the fields.

[0019] **FIG. 7**. Perspective view of slot antenna.

DETAILED DESCRIPTION OF THE INVENTION

[0020] Referring to **FIG. 7**, the antenna (A) is made out of sheet copper in which a rectangular horizontal slot (B) has been notched out using a die press and sheet metal fixture. A coaxial cable from the amplifier and frequency generator is attached across the slot by soldering the outer cable (D) to one side of the slot and the inner cable (E) to the other side of the slot. This creates the positive and negative charges across the gap which forms the vertical electric field (F) which radiates out perpendicularly to the copper sheet.

[0021] Although the invention has been described with reference to specific embodiments, such as a particular antenna system, those skilled in the art will appreciate that many modifications and variations are possible without departing from the teachings of the invention. All such modifications and variations are intended to be encompassed within the scope of the following claims.

1. A spacecraft comprised of the following components:

(a) a triangular hull in the form of an equilateral triangle;

(b) two copper plates attached on opposite vertical sides at each of the three corners of the hull (**1***a*) such that a sharp vertical edge is formed where they come together;

(c) an electrostatic generator used to charge the back two copper-cladded corners (**1***b*) to a high positive voltage, and the third forward copper-cladded corner to a high negative voltage;

(d) a horizontal slot antenna array mounted-on the sides of the hull; and

(e) a frequency generator, antenna and coaxial cables to drive the antenna array (**1***d*).

2. To create, by claims (**1***a*, **1***b*, **1***c*), an intense vertical line charge at the corners (**1***b*) and a horizontal electric field that that is parallel to the sides of the hull (**1***a*);

3. To create, by claims (**1***d*,**1***e*), an electromagnetic wave with a vertically polarized electric field traveling outward from the side of the hull (**1***a*); and

4. To create, by claims (**2**,**3**), an interaction of the electrostatic field (**2**) with the electromagnetic wave (**3**) such that a combined spacetime curvature pressure is generated on the hull in the upward and forward direction to produce lift and propulsion respectively.

* * * * *

US 20060168937A1

(19) United States

(12) Patent Application Publication

St. Clair

(10) Pub. No.: US 2006/0168937 A1

(43) Pub. Date: Aug. 3, 2006

(54) MAGNETIC MONOPOLE SPACECRAFT

(76) Inventor: **John Quincy St. Clair**, San Juan, PR (US)

Correspondence Address:
JOHN ST. CLAIR
52 KINGS COURT, 4A
SAN JUAN, PR 00911 (US)

(21) Appl. No.: **11/048,026**

(22) Filed: **Jan. 31, 2005**

Publication Classification

(51) **Int. Cl.**
F03H 1/00 (2006.01)

(52) **U.S. Cl.** **60/203.1**

(57) **ABSTRACT**

A spacecraft propulsion system that utilizes a dual method of providing lift on the hull by means of magnetic monopoles and electromagnetic spacetime curvature pressure.

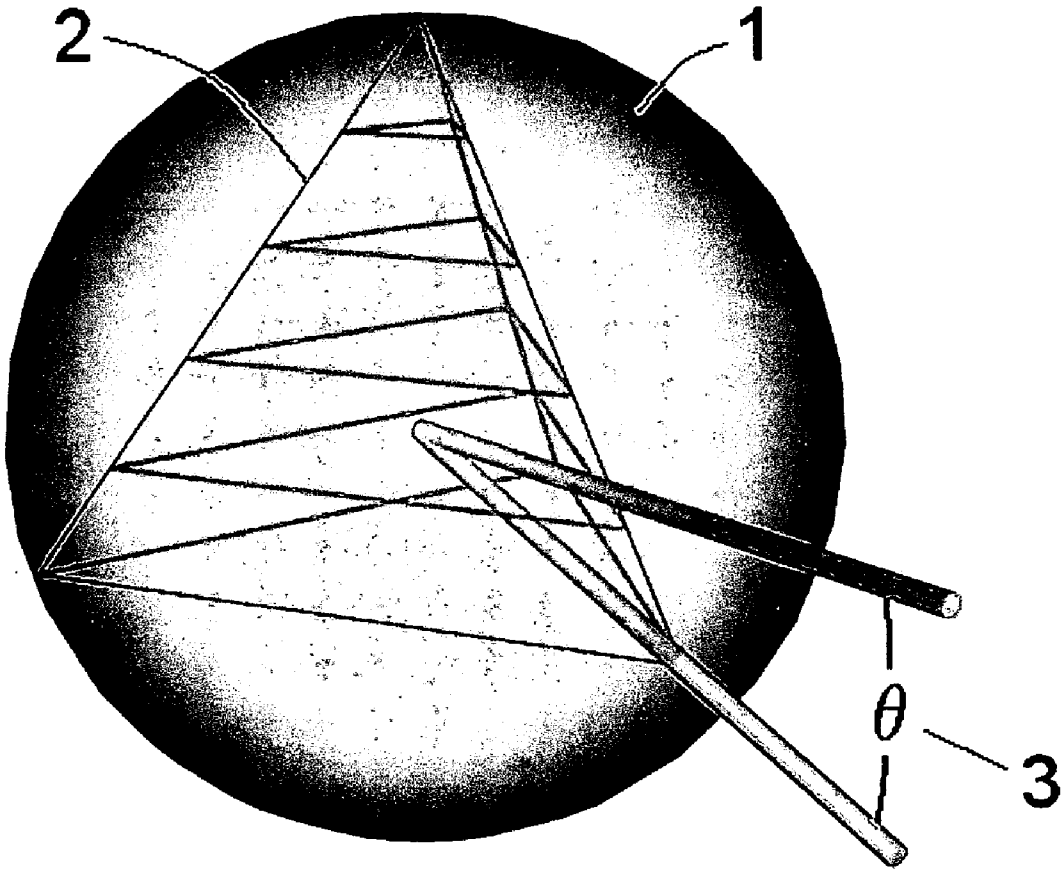

Figure 1

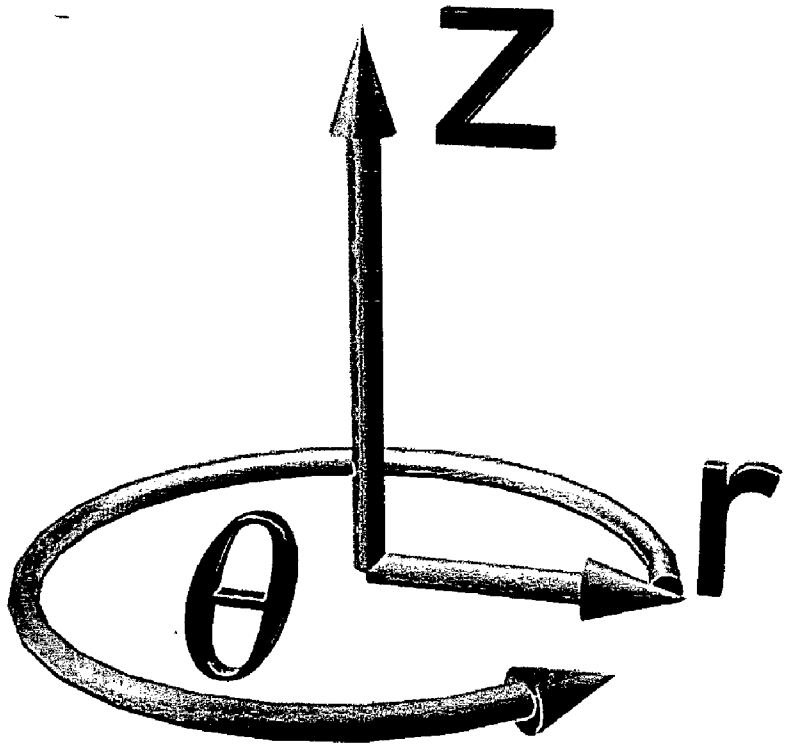

Figure 2

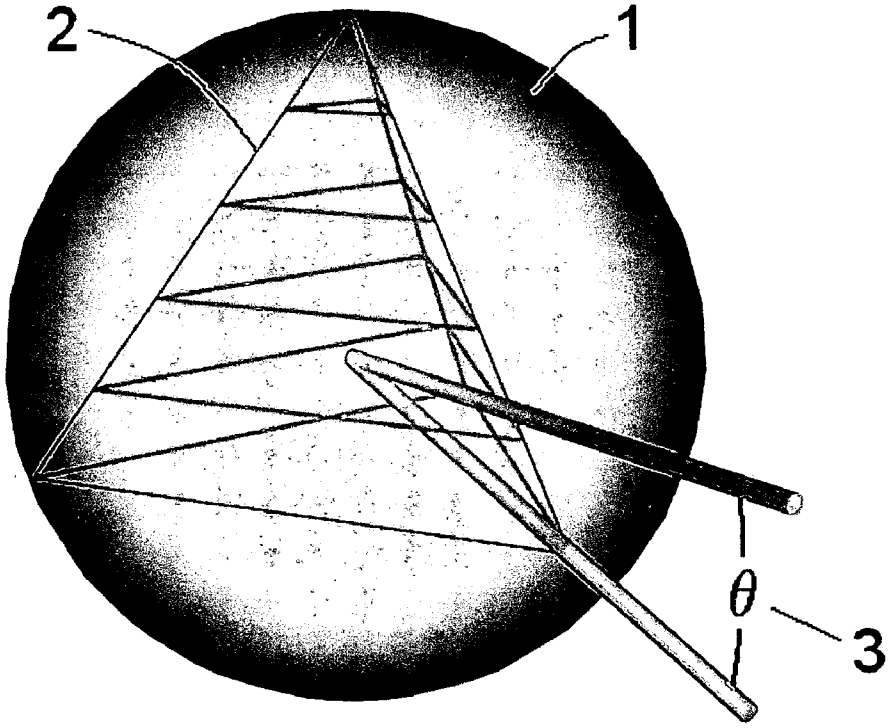

Figure 3

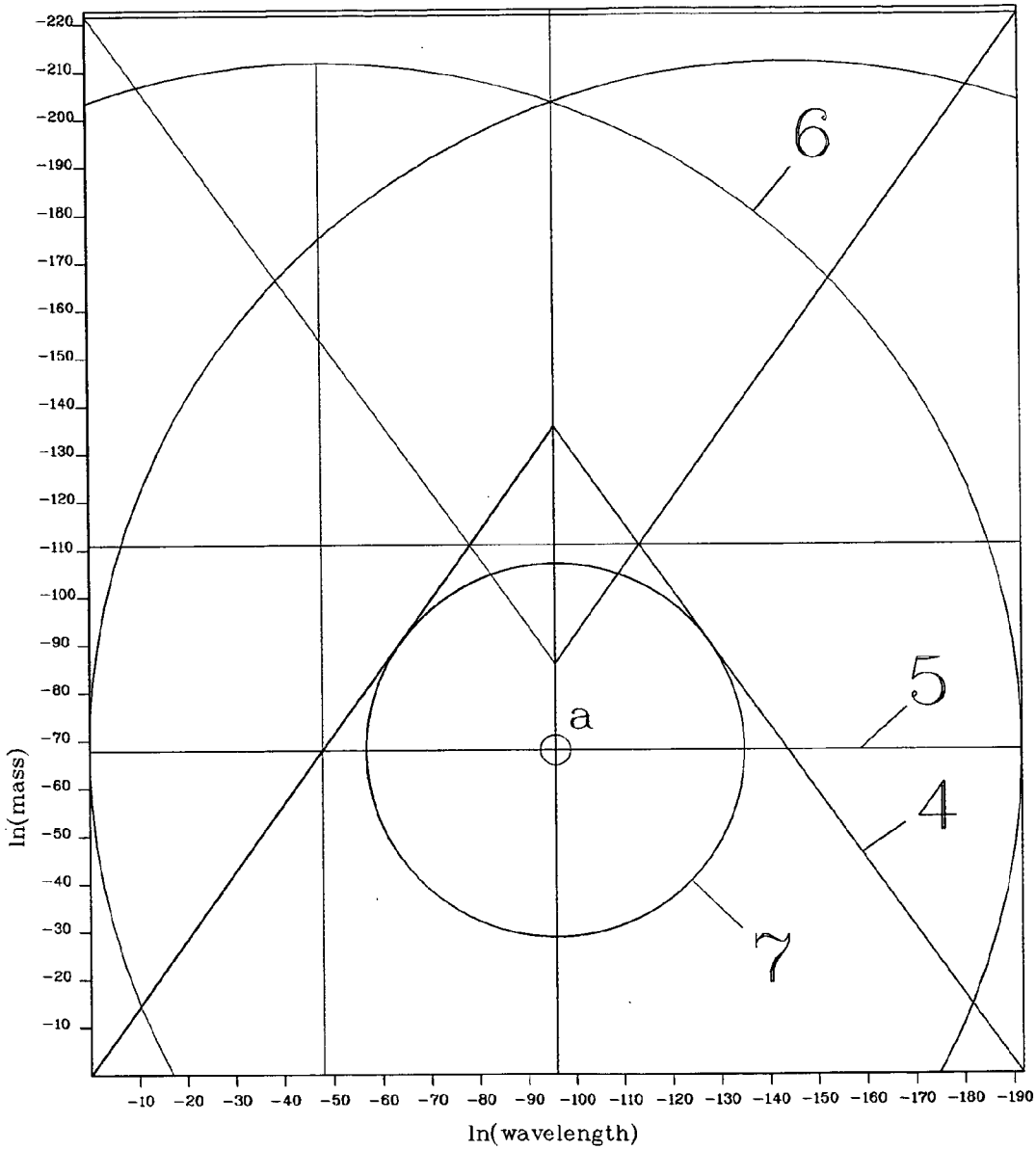
6
5
4
7
a
ln(mass)
ln(wavelength)
-220
-210
-200
-190
-180
-170
-160
-150
-140
-130
-120
-110
-100
-90
-80
-70
-60
-50
-40
-30
-20
-10
-10 -20 -30 -40 -50 -60 -70 -80 -90 -100 -110 -120 -130 -140 -150 -160 -170 -180 -190

Figure 4

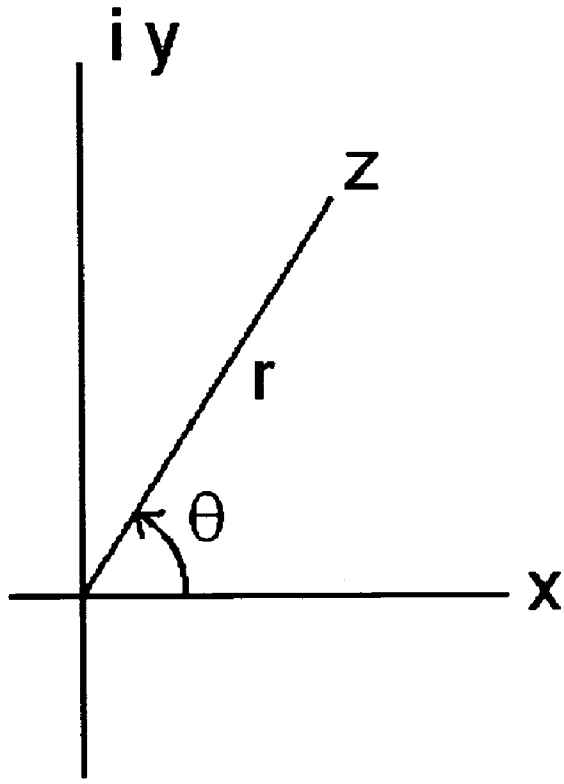

Figure 5

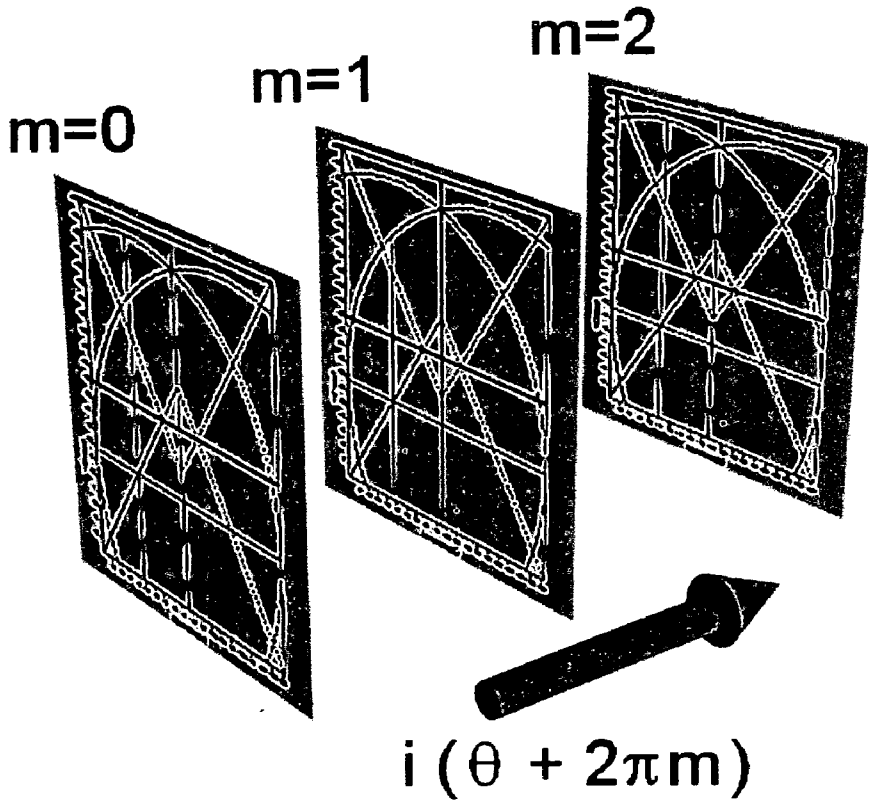

Figure 6

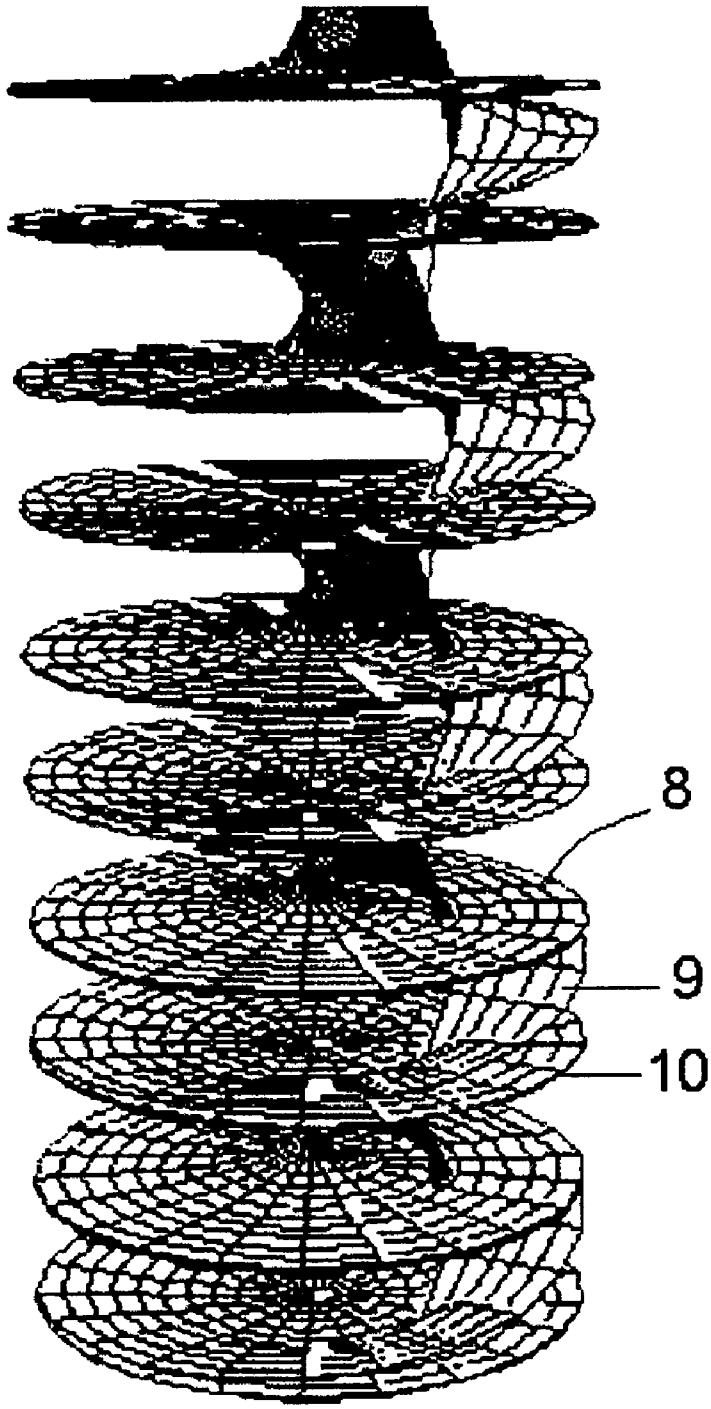

Figure 7

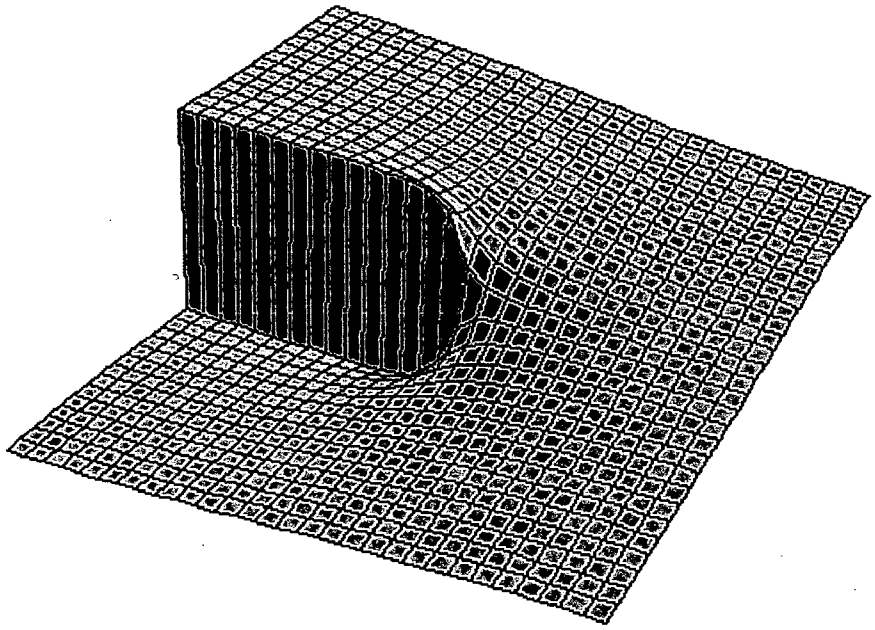

Figure 8

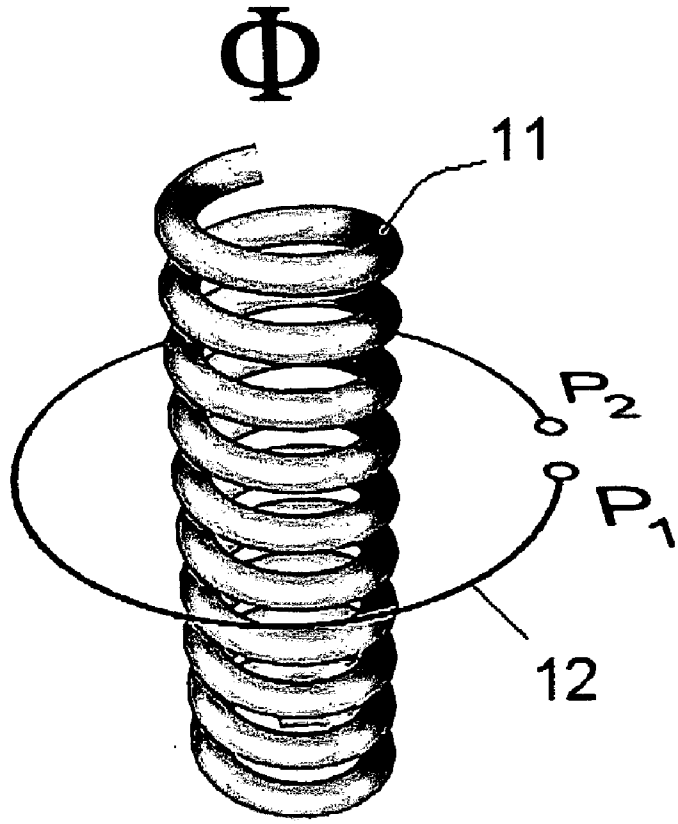

Figure 9

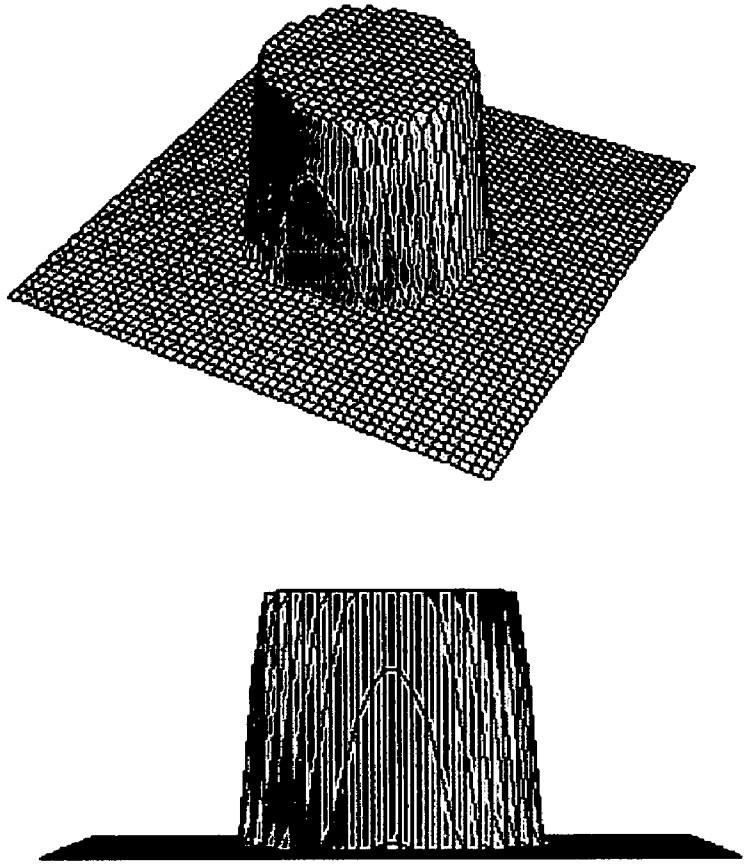

Figure 10

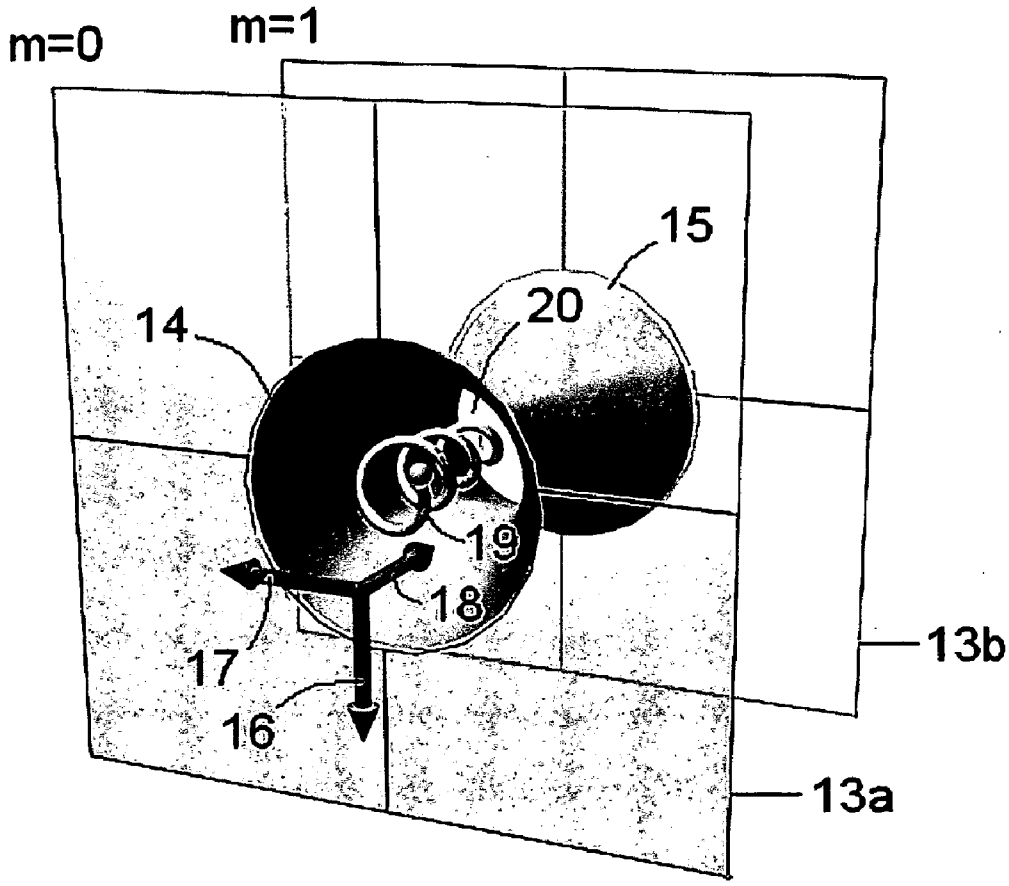

Figure 11

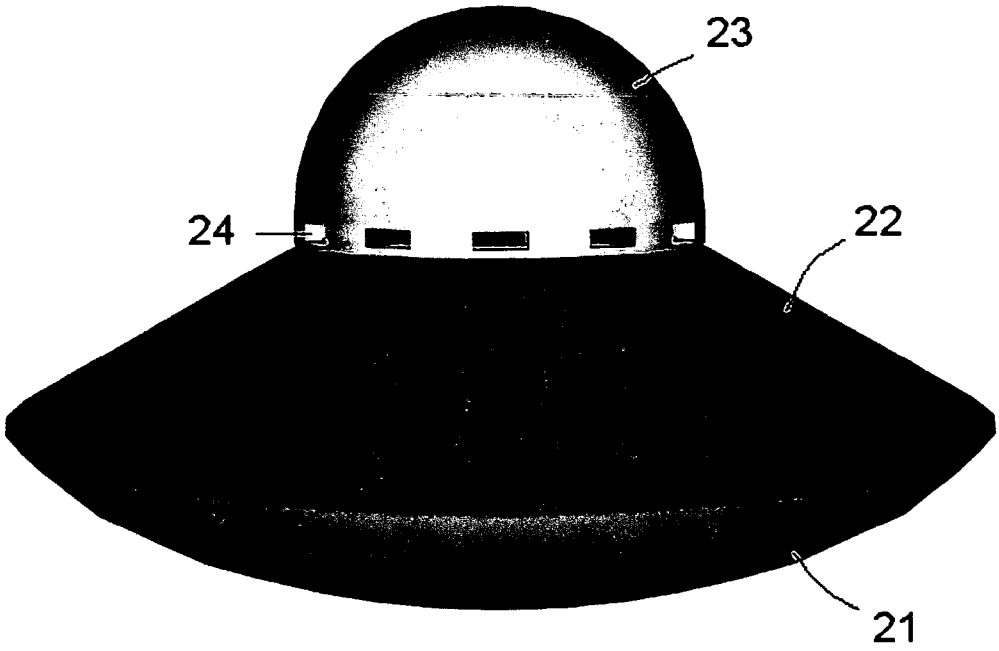

Figure 12

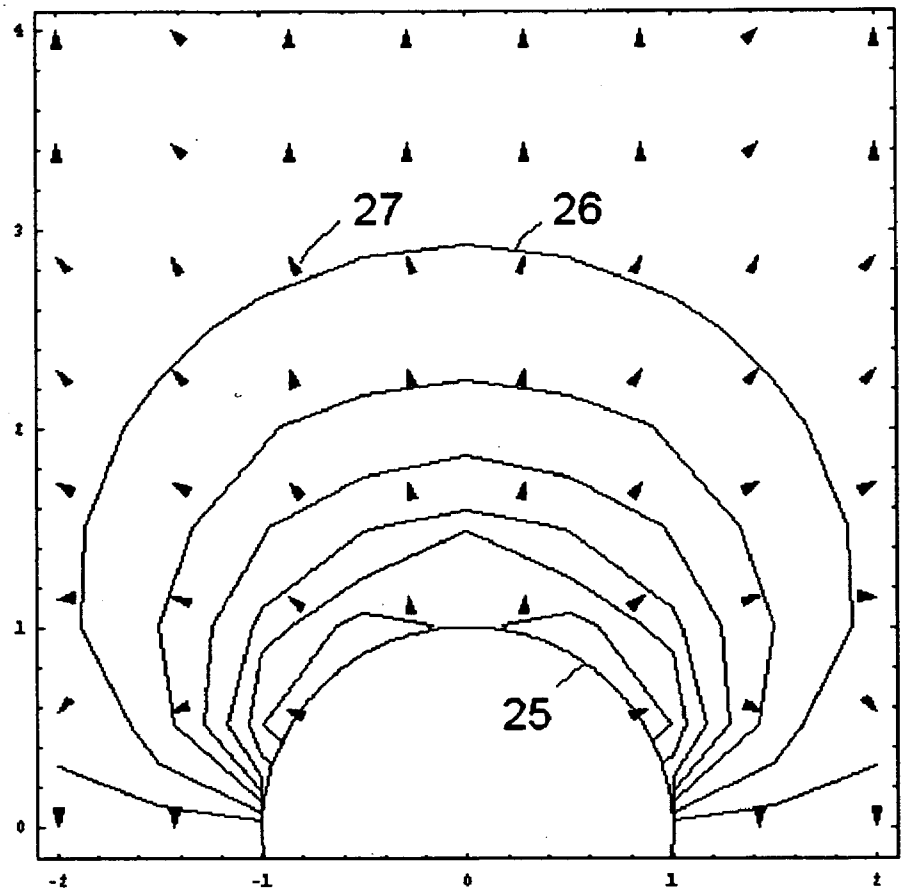

Figure 13

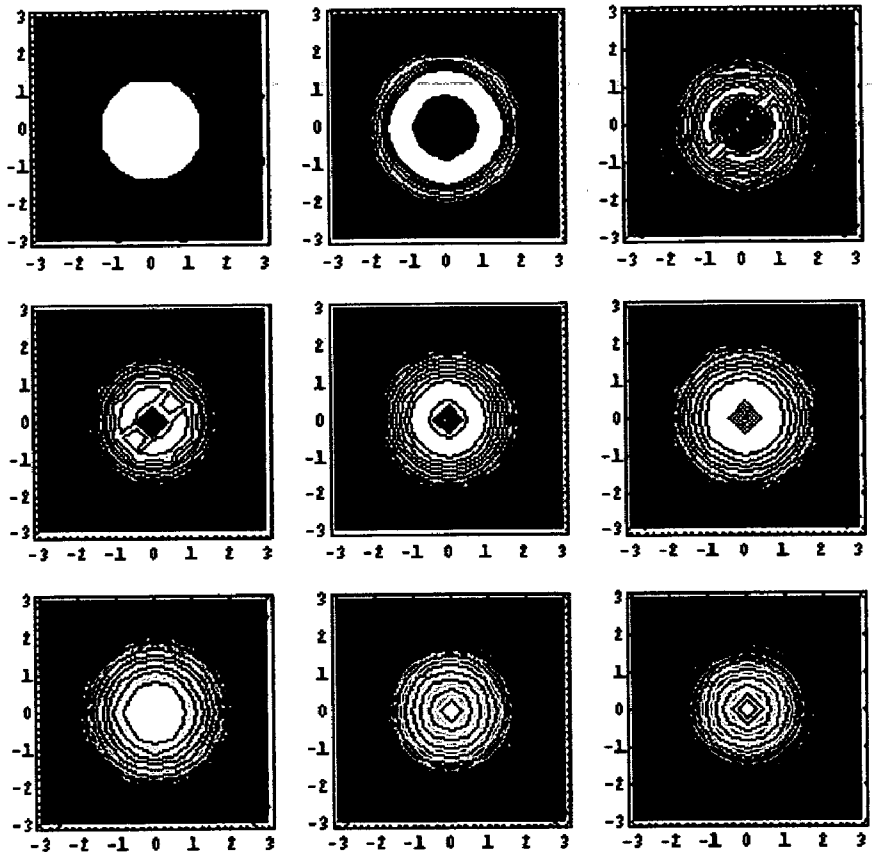

Figure 14

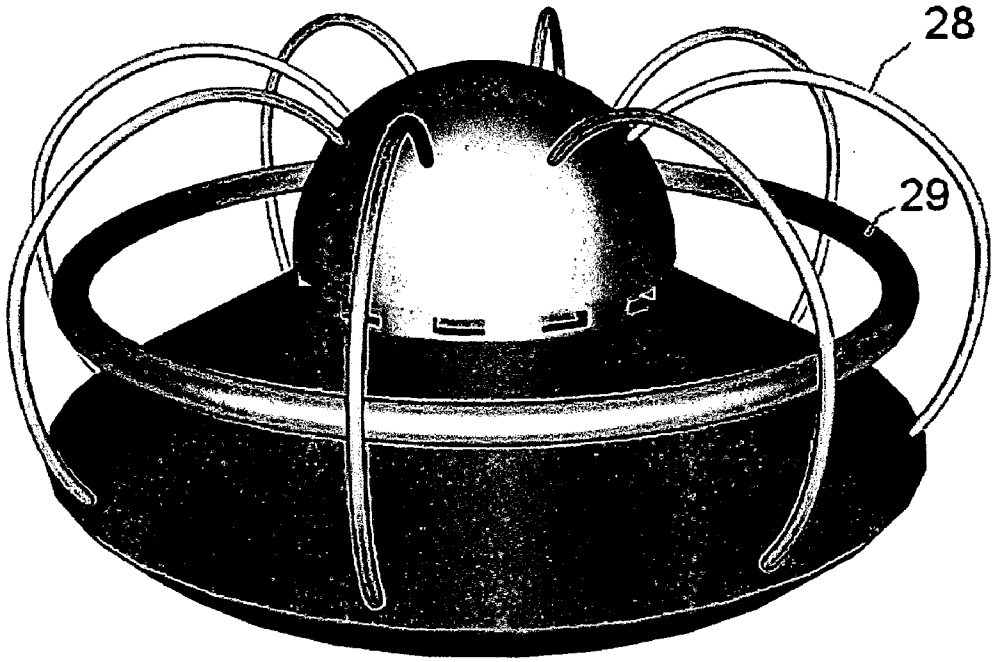

Figure 15

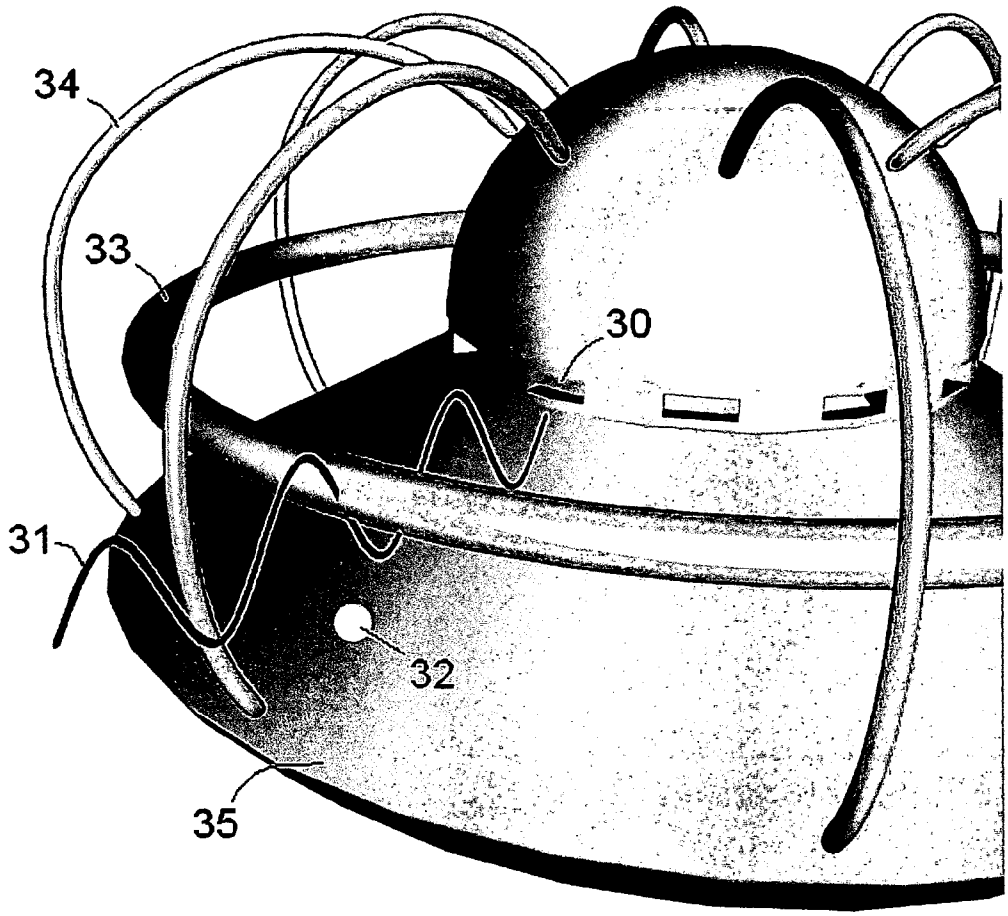

Figure 16

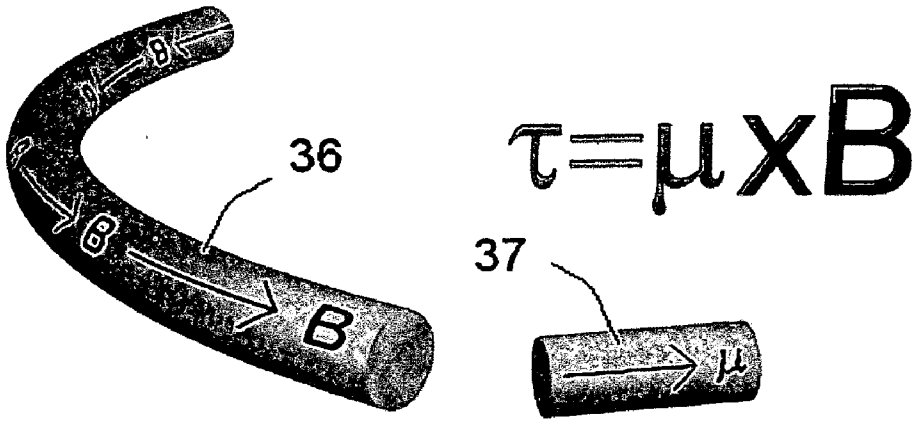

Figure 17

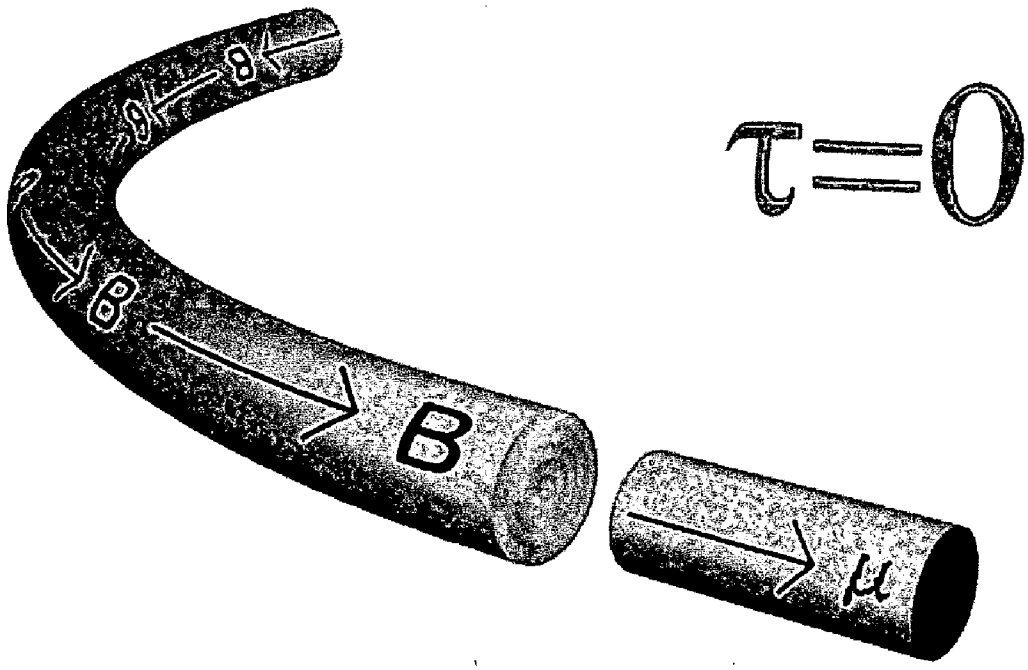

Figure 18

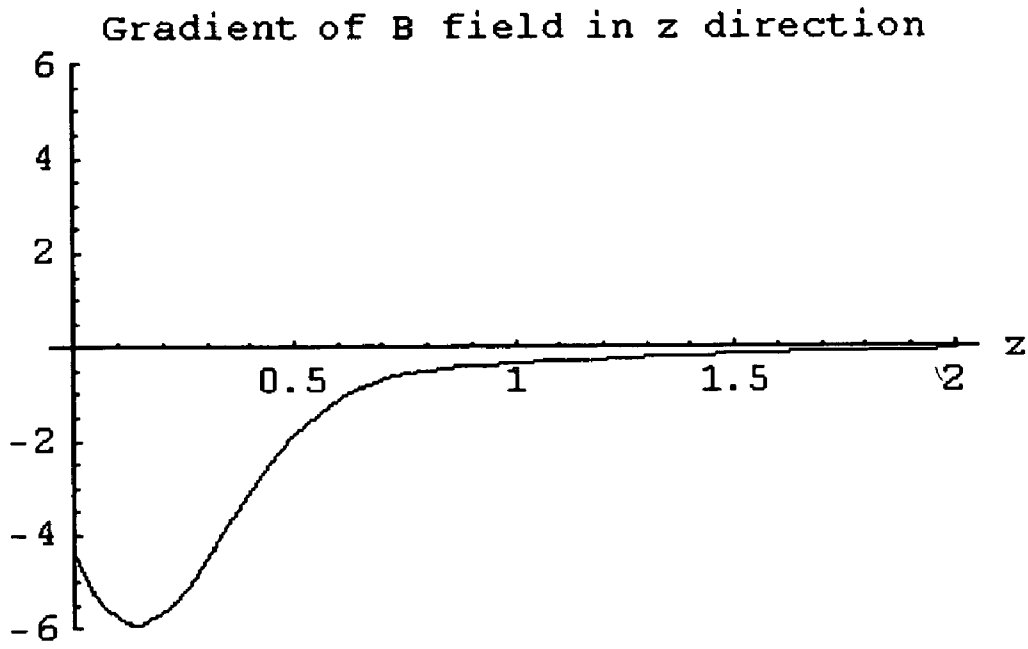

MAGNETIC MONOPOLE SPACECRAFT

BRIEF SUMMARY OF THE INVENTION

[0001] This invention is a spacecraft propulsion system that generates a field of wormholes which are threaded with a magnetic field. Acting as two attracting magnets, the spacecraft's north magnetic field is attracted to the constantly regenerating south magnetic monopoles of the wormholes which provides lift on the hull.

BACKGROUND OF THE INVENTION

[0002] According to one of Maxwell's electromagnetic equations, the curl of the electric E field is equal to the negative time rate of change of the magnetic flux density B field.

$$\bar{V} \times E = -\frac{\partial B}{\partial t}$$

The curl can be thought of as a circulation around a closed loop specified by the right-hand rule where the fingers curl in the direction of the electric field and the thumb represents the changing magnetic flux density field through the area of the loop. At no time is the electric field diverging around the loop. That is, the divergence of the curl is zero which is a well-known vector operation

$$div\ \mathrm{curl}E = \frac{\partial}{\partial t}(divB) = 0$$

The partial derivatives of divB are zero at all points in space. Performing the integration, therefore, the divergence of B is equal to a constant

$$\mathrm{div}\ B = \mathrm{constant}$$

[0003] Referring to **FIG. 1**, the following discussion is made in cylindrical coordinates {r,θ,z}. In cylindrical coordinates, the divergence of the radial B field, div B, is equal to a constant C

$$Br'[r] + \frac{Br[r]}{r} = C$$

where the prime (') represents differentiation with respect to the radius r. The solution to this equation resides in determining the constant C. In the vacuum of space without any wormholes, the constant C is zero. Because the spacecraft is surrounded by a field of wormholes, there is a magnetic flux density field threading each one. That is, each wormhole is actually a magnetic monopole, and therefore the entire field of monopoles constitutes a large magnet with one pole in this dimension and the other pole in the hyperspace dimension.

[0004] The concept of the wormhole involves a new type of scientific thinking involving the creation of a gateway between our spacetime and that of a hyperspace co-dimension. The gateway is created electromagnetically as shown by my patent applications Rotating Magnetic Vortex Generator, Magnetic Vortex Wormhole Generator, and Sulfur 8 Wormhole Generator. The gateway can also be created ultrasonically through bubble cavitation as shown in my patent application Cavitating Oil Hyperspace Energy Generator. In one experiment, smoke was blown through one side of the coil of the magnetic vortex wormhole generator and no smoke came out the other side. The smoke was blown through the wormhole into another dimension.

[0005] The existence of hyperspace is not generally known in the scientific community. The reason it exists can be thought of in the following manner. Referring to **FIG. 2**, the corners of a tetrahedron (**2**) circumscribed by a sphere (**1**) touch the sphere at an angle (**3**) of −19.47°. Looking at the planets of the solar system, the Giant Red Spot vortex of Jupiter, which can hold two planets the size of Earth, is located at this angle. On Mars, the Olympic Mons volcano, which is the size of France, is located at north 19.5° Here in the Caribbean there is a slow moving rock mantle vortex at north 19.5° that curves the islands down toward Venezuela. So the geometry of space is related to the tetrahedron. What this suggests is that there is a subspace manifold whose tetrahedral geometry projects all the constants of physics into our dimension.

[0006] Referring to **FIG. 3**, this subspace geometry is shown in the tetrahedron diagram which plots the natural logarithm of mass on the vertical axis versus the natural logarithm of wavelength on the horizontal axis. With this diagram, it is possible to visualize the entire universe on a single sheet of paper. Triangle (**4**) is the tetrahedron whose vertical centerline shown by the small π circle (a) is equal to Planck's constant h divided by the speed of light c, known as the base constant. The base constant in logs is equal to −95.91546344. Line (**5**) is the diameter of the sphere (**6**). A circle (**7**), centered on (a), with a radius equal to the speed of light squared, is tangent to the tetrahedron. It can be shown that all the constants of physics, such as the speed of light squared and the Planck mass and the Planck wavelength, are determined geometrically by this logarithmic subspace tetrahedral geometry.

[0007] Referring to **FIG. 4**, the complex plane consists of a real horizontal axis, and a complex vertical axis where the value of the complex number z is given by a radius r and an angle θ

$$z = re^{i(\theta+2\pi m)}$$

The logarithm of z is

$$\mathrm{Log}[z] = \mathrm{Log}[r] + i(\theta+2\pi m)$$

where m is an integer m=0,1,2 . . . corresponding to multiple rotations of 2π. What this means in terms of the tetrahedron diagram, referring to **FIG. 5**, is that there are multiple diagrams separated by 2π rotations. Each multiple is another hyperspace dimension. Only the log manifold has this characteristic. Referring to **FIG. 6**, the hyperspace dimension, shown as 2π circular surface (**8**), has a cut (**9**) on the undefined Log[0] origin line such that another hyperspace dimension is created below it (**10**).

[0008] Referring to **FIG. 7**, this branch cut does not bring one back to the original surface nearing the origin. It takes one down to another level of the universe into another hyperspace dimension. I can attest personally that I have been able to look into another hyperspace co-dimension as well as jump into another dimension.

[0009] Furthermore, Dr. Stephen Hawking of Cambridge University has shown that our dimension is connected to a wormhole through complex time. That is, the hyperspace dimension is rotated forward by 90° which makes it orthogonal to us. While this is the mathematical explanation as to why there are hyperspace co-dimensions, I can attest personally to the fact, as described in my patent application Full Body Teleportation, that I was teleported through hyperspace and returned to our dimension over a distance of 100 meters. Because hyperspace exists, it is then possible, using electromagnetic fields, to open wormholes between our dimension and other hyperspace dimensions.

[0010] Referring to **FIG. 8**, the constant C in the magnetic flux density B field equation is determined as follows. The end of a solenoid (**11**) is equivalent to a local magnetic source of flux Φ which represents the wormhole. A charge (**12**) encircling the solenoid has the same value at P_1 and P_2 but there is a phase difference of 2 π n where n is an integer equal to the number of times the charge encircles the solenoid. The change in phase is equal to the charge q divided by Planck's reduced constant times the flux for a solenoid of radius r=R

$$\Delta\theta = 2\pi n = \frac{q}{\hbar}\Phi = \frac{q}{\hbar}B\pi R^2$$

Solving for the magnetic flux density field threading the wormhole

$$B = \frac{2\pi nh}{q\pi R^2}$$

The differential equation becomes

$$Br'[r] + \frac{Br[r]}{r} = C[2]$$

Solving the equation for the radial field Br

$$Br[r] = \frac{C[2]r}{2} + \frac{C[1]}{r}$$

Equating this Br field with the B field and solving for the C[2] constant

$$C[2] = \frac{-2[-2\hbar n + qrC[1]]}{qr^2}$$

Substituting for C[2], the C[1] constant drops out and therefore the wormhole magnetic flux density field becomes a constant inside the throat radius R

$$Br = \frac{2hn}{qR^2}$$

but the divergence moving from outside to inside the radius is a constant due to the discontinuity.

[0011] Referring to **FIG. 9**, the wormhole has a constant cylindrically-shaped magnetic field of radius R with a negative south pole due to the negative charge on the electron, Using a wormhole radius equal to one hundred times the electron radius with n equal to 10 turns, the magnetic flux density B field has a magnitude of 1.4×10^6 tesla.

[0012] Referring to **FIG. 10**, the wormhole surface (**14**) is a connection through a throat area (**20**) between space and hyperspace (**13**) to another surface in hyperspace (**15**). The electron path (**19**) is actually spiraling down the surface of the wormhole. The magnetic flux density field (**18**) points into the wormhole such that the cross product of the electron velocity (**16**) with the field (v×B) points toward the outside rim of the wormhole. Because the electron has a negative charge, the force (**17**) on the electron (−q v×B) is inward toward the centerline of the wormhole. Since one pole of the field is in space, and the other pole is in hyperspace, the wormhole appears to us as a magnetic monopole. The key to this invention is how to generate this magnetic wormhole field.

[0013] Referring to **FIG. 11**, the aluminum spacecraft is constructed of a flattened, shallow spherical lower hull (**21**), a circular upper hull with a flat sloping surface (**22**), a spherical dome cupola (**23**), and a cylindrical section (**24**) housing a circular array of radial microwave waveguides. Surfaces (**22**) and (**23**) are electrically charged, using high-voltage transformers, to an alternating electrostatic potential such that the potential on the dome is +V when the sloping hull has a −V potential and vice versa. This creates an electric field from the positively charged surface to the negatively charged surface.

[0014] Referring to **FIG. 12**, the dome (**25**) is charged to a positive potential. The spherical potential lines (**26**) emanate from the dome and curve around toward the sloping hull. The negative gradient of this potential field is the electric E field (**27**) which is perpendicular to the potential lines. The electric field lines from the dome then terminate on the sloping hull which can be seen in the lower right hand comer of the graph.

[0015] Looking down from above at the top of the dome, referring to **FIG. 13**, the oscillating electric field generates a circular oscillating magnetic field around the hull at various elevations. The last two graphs in the right-hand comer are near the top of the dome as seen by the smaller radius contour lines.

[0016] Referring to **FIG. 14**, the oscillating electric field lines (**28**) are between the dome and the sloping hull. The oscillating magnetic field (**29**) encircles the hull at the level of the microwave waveguides.

[0017] From gravitation physics, it is known that negative energy is required to open up the throat of the wormhole. In terms of differential forms mathematics, the negative energy is created by wedging the magnetic field with the radial

microwave beams of the waveguides. This generates an increasing time rate of change of negative energy ρ as shown by

$$*d(B\hat{}(B_{wave}+E_{wave}dt))=\frac{\partial(-\rho)}{\partial t}$$

where (*) is the Hodge Star operator, (d) the differential operator and (^) the wedge operator which joins the circular magnetic flux density B field with the electromagnetic wave (B_{wave}, E_{wave}).

[0018] Referring to **FIG. 15**, the interaction of the circular magnetic field (**33**), generated by the oscillating electric field (**34**), interacts with the radial electromagnetic field of the microwave beams (**31**) of the waveguides (**30**) to generate negative energy (**32**) over the sloping hull (**35**).

[0019] This combination of fields also creates the wormhole field over the hull. The spacetime curvature pressure T in the vertical z-direction is equal to the square of the circular magnetic flux density field

$$T^{zz}=\frac{B^2}{8\pi}$$

This stress-energy-momentum tensor can be thought of as a spacetime curvature proportional to the inverse of the radius squared, or as a pressure term which acts on the surface area of the hull. Thus there is the combination of a pressure stress and negative energy which creates the wormhole field over the sloping hull. Even though the magnetic flux density B field is oscillating, it is the square of the field which creates the stress. Thus the tension is still in the positive vertical z-direction.

[0020] Due to the low speed of light of hyperspace, the hyperspace energy is low density. Thus there is a positive gravitational potential between hyperspace and our dimension such that the hyperspace energy flows through the wormholes and onto the hull of the spacecraft. When this happens, a white mist forms over the hull. The effect of the hyperspace energy is to lessen the mass of the spacecraft, and relativistically increase the strength of the electromagnetic fields due to the smaller speed of light.

[0021] Referring to **FIG. 16**, the circular magnetic flux density field (**36**) is interacting with the magnetic monopole (**37**). The monopole acts as one pole of a magnet and therefore has a magnetic moment equal to the area times the electrical current circulating through it as the electrons move from our dimension into hyperspace. The great physicist Maxwell (**1870**) pointed out that the energy associated with charges and poles is potential energy and that therefore these objects tend to move in a direction that will decrease the potential energy, similar to a brick sliding down an inclined plane. Now to reduce the potential energy is the same as to reduce the field which gives a measure of the potential energy. If two like charges are brought together they strengthen one another's field, while opposite charges reduce one another's field. Thus like charges repel and unlike ones attract.

[0022] However, the energy associated with electric currents is not potential but kinetic in origin, because it is associated with moving charges. Now in mechanics it is well known that bodies move in a direction to increase their kinetic energy, if there is a source of external energy. The magnetic field of currents is a measure of kinetic energy and currents will try to move in a direction that will increase the field. Thus similarly-directed currents attract and unlike currents repel. In **FIG. 16**, the monopole will act so as to increase the field of the circular magnetic B field generated by the spacecraft. The monopole will then rotate into alignment with the flux tube. This increases the field strength of the flux tube. There is a torque τ on the monopole equal to the cross product of the magnetic moment with the B field

$$\tau=\mu\times B$$

[0023] Referring to **FIG. 17**, when the monopole is aligned with the flux tube, the cross product is zero and there is zero torque on the monopole. Notice that even if the oscillating B field points in the opposite direction, there is still zero torque since the torque depends on the sine of the angle between them. The sin(0°) or sin(180°) is the same zero value. With the monopole aligned with the flux tube, the kinetic energy is now maximized. That is, both the flux tube and the monopole point in the θ-direction.

[0024] The magnetic B field can be represented as a vector having three components. The only component is in the angular direction

$$B=\{B_r,B_\theta,B_z\}=\{0,\ B_\theta(z),\ 0\}$$

where the field varies, as was seen in **FIG. 13**, in the vertical z-direction. The magnetic monopole field also points in the θ-direction

$$\mu=\{0,\mu_\theta(z),0\}$$

where there is a negative gradient of the monopole field in the z-direction due to the location of the microwave waveguides near the sloping hull.

[0025] The force F on the monopole is the gradient of the monopole's magnetic moment μ with the magnetic flux density B field

$$F=\nabla(\mu\cdot B)=\{0,\ 0,\ \mu_\theta\ B_\theta'(z)+B_\theta(z)\mu_\theta'(z)\}$$

which says that there is a force on the monopole in the z-direction equal to the magnetic moment times the gradient of the magnetic field in the z-direction plus the magnetic field times the gradient of the magnetic moment in the z-direction.

[0026] Referring to **FIG. 18**. differentiating the magnetic field in the z-direction shows that the gradient is negative outside the hull. This can also be seen visually in **FIG. 13** where the graphs decrease in intensity.

[0027] A negative gradient for both the magnetic moment and the field means that the force on the monopole is negative. The force on the tube connected to the hull is therefore the negative of a negative, yielding a positive lift force.

$$F_{monopole}=-\{0,\ 0,|\mu_\theta B_\theta'(z)+B_\theta(z)\mu_\theta'(z)|\}=-F_{tube}$$

$$F_{tube}=+\{0,\ 0,|\mu_\theta B_\theta'(z)+B_\theta(z)\mu_\theta'(z)|\}$$

which says there is an upward lift force on the hull due to the combination magnetic monopole and flux tube. This lift

force is in addition to the vertical lift force generated by the spacetime curvature created by the electromagnetic fields themselves.

SUMMARY OF THE INVENTION

[0028] This invention is a spacecraft propulsion system that utilizes electromagnetic fields and microwaves to generate negative energy and a spacetime curvature over the hull. The hull consists of a hemispherical dome, a circular array of radial microwave waveguides, a sloping flat hull, and a shallow spherical hull on the bottom. Alternating current high voltage transformers connected to the dome and the sloping hull generate a curving oscillating electric field between the dome and the sloping hull. Due to this oscillation, a horizontal circular oscillating magnetic flux density B field is created around the dome.

[0029] By firing the microwaves at right angles to the B field, negative energy is created over the hull. The negative energy and spacetime curvature pressure generate wormholes between space and hyperspace. Because hyperspace has a low speed of light and positive gravitational potential, low density hyperspace energy flows through the wormholes and onto the hull. The effect of the hyperspace energy is to lessen the mass of the vehicle and to increase the strength of the electromagnetic fields. Because the resistance of hyperspace is less than the resistance of space, electrons spiral down the wormholes into hyperspace. This creates a magnetic field through the wormhole with one pole in our dimension and the other pole in hyperspace. Thus a field of magnetic monopoles is created over the hull.

[0030] The magnetic monopoles, which represent kinetic energy, align themselves with the magnetic flux tubes in order to maximize the total magnetic field. Because there is a gradient of the monopoles and field in the vertical direction, a negative force develops on the monopoles equal to the gradient of the dot product of the magnetic moment of the monopole with the B field. Thus the opposite reaction is a positive force on the flux tubes attached to the hull which is equivalent to bringing the north pole of a magnet together with the south pole of a second magnet. Because the hull constantly regenerates the wormhole field, the hull experiences a constant upward lift force. This is in addition to the lift generated by the spacetime curvature pressure which is proportional to the square of the magnetic flux density B field.

A BRIEF DESCRIPTION OF THE DRAWINGS

[0031] **FIG. 1**. Perspective view of cylindrical coordinate system {r, θ, z}.

[0032] **FIG. 2**. Perspective view of tetrahedron circumscribed by sphere.

[0033] **FIG. 3**. Tetrahedron diagram showing speed of light squared is determined by the tetrahedron.

[0034] **FIG. 4**. Complex number z representation in the complex plane.

[0035] **FIG. 5**. Perspective view showing multiple log manifold hyperspace dimensions.

[0036] **FIG. 6**. Perspective view of orthogonal hyperspace dimensions.

[0037] **FIG. 7**. Perspective view of Log[z] showing cut along origin.

[0038] **FIG. 8**. Perspective view of charge phase shift around a magnetic flux.

[0039] **FIG. 9**. Perspective view of wormhole magnetic flux density B field.

[0040] **FIG. 10**. Perspective view of magnetic monopole wormhole.

[0041] **FIG. 11**. Perspective view of spacecraft.

[0042] **FIG. 12**. Graph showing electrostatic potential and electric field over dome.

[0043] **FIG. 13**. Animation showing circular magnetic field around dome at increasing elevation.

[0044] **FIG. 14**. Perspective view of electric and magnetic fields around hull.

[0045] **FIG. 15**. Perspective view of generation of negative energy.

[0046] **FIG. 16**. Perspective view of monopole misaligned with flux tube with torque.

[0047] **FIG. 17**. Perspective view of monopole aligned with flux tube at zero torque.

[0048] **FIG. 18**. Graph showing negative gradient of flux tube in the z-direction.

DETAILED DESCRIPTION OF THE INVENTION

[0049] 1. The aluminum hull is made by a technique called stretch forming which uses hydraulic cylinders to stretch a large sheet of aluminum to its yield point. This makes the aluminum sheet soft and pliable. Using a die which has been CNC machined to the desired hull profile, the sheet is then die pressed into a very rigid, smooth and lightweight structure requiring no other support. There are actually three dies consisting of a spherical dome, sloping hull, and shallow spherical dome.

[0050] 2. The rest of the hull consists of a cylindrical hull with a radius equal to the upper dome. A segment of this hull is designed on a 3D computer graphics program and stored as a stereolithography *.stl file. The file is then transmitted over the Internet to a server who prints up the part on an xy-plotter with an ultraviolet laser and ultraviolet light sensitive polymer bath. The computer model is sliced by a special program into many thousands of slices which are printed one over the other until the part is completed. The server returns the part next day by Express Mail. Several parts are then molded using liquid plastic such as to form the complete ring. A sand mold is then constructed from all the molds to form a plastic cylindrical hull having the waveguide slots molded into it. The waveguide silver-coated aluminum boxes are then installed in the slots and connected to the frequency generators and amplifiers. The purpose of the plastic waveguide cylinder is to separate the electrostatic charges on the dome and the sloping hull In this particular case we used a dome from another spacecraft design which saved on the cost of the die.

I claim:

1. A spacecraft propulsion system consisting of the following components:

a lower hull made of aluminum sheet having a shallow spherical profile;

a circular flat sloping hull made of aluminum sheet attached to the top of the lower hull on the periphery;

an electrically-insulated plastic-molded tubular cylindrical hull containing slots for mounting an array of radial microwave waveguides, attached to top of the flat sloping hull;

a hemispherical cupola in the shape of a dome made of aluminum sheet mounted on top of the insulated cylindrical hull;

an array of rectangular microwave waveguides mounted in the waveguide slots of the cylindrical hull;

a high-voltage alternating current transformer with one side electrically attached to the upper dome and the other side electrically attached to the flat sloping hull; and

a frequency generator and amplifier to drive the microwave waveguides.

2. By means of claim (**1**), an oscillating electric field is created between the upper dome and the sloping hull using the high-voltage alternating current transformer.

3. By means of claim (**2**), an oscillating circular magnetic flux density field is generated around the sloping hull and upper dome.

4. By means of claims (**1**) and (**3**), negative energy is generated by the radial microwave beams of the waveguide array impinging on the circular magnetic flux density field around the hull.

5. By means of claim (**3**), a positive spacetime curvature pressure constituting a lift force is developed over the hull in the vertical direction proportional to the square of the field.

6. By means of claims (**4**) and (**5**), a field of wormholes between space and hyperspace are generated over the hull.

7. By means of claim (**6**), due to the positive gravitational potential between hyperspace and space, low-density hyperspace energy flows through the wormholes onto the hull to reduce the mass of the spacecraft and strengthen relativistically the electromagnetic fields.

8. By means of claim (**6**), electrons, emitted by the charged hulls, spiraling down the wormholes, generate a field of magnetic monopoles with one pole in space and the other in hyperspace.

9. By means of claims (**6**) and (**3**), the magnetic monopoles maximize their kinetic field energy by aligning with the magnetic flux tube.

10. By means of claim (**9**), the gradient in the vertical direction of the dot product of the magnetic moments of the monopoles with the magnetic flux density field is a negative force on the monopoles and an equal but opposite positive lift force on the magnetic flux tubes attached to hull.

11. By means of claims (**10**) and (**5**), a dual method of providing apositive lift force on the spacecraft is constituted.

* * * * *

US 20060180473A1

(19) United States

(12) Patent Application Publication

St. Clair

(10) Pub. No.: US 2006/0180473 A1

(43) Pub. Date: Aug. 17, 2006

(54) WATER ENERGY GENERATOR

(76) Inventor: **John Quincy St. Clair**, San Juan, PR (US)

Correspondence Address:
JOHN ST. CLAIR
52 KINGS COURT, 4A
SAN JUAN, PR 00911 (US)

(21) Appl. No.: **11/060,037**

(22) Filed: **Feb. 17, 2005**

Publication Classification

(51) **Int. Cl.**
C25D 5/34 (2006.01)

(52) **U.S. Cl.** **205/210**

(57) **ABSTRACT**

A water energy generator that generates electricity using a magnetic vortex wormhole generator and a water injector/vacuum chamber to produce low density hyperspace energy that causes the hydrogen atoms of water molecules to decay into electron pairs.

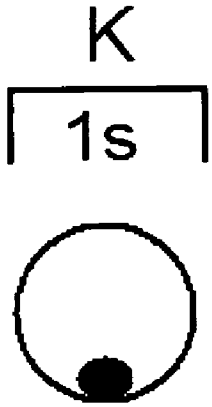

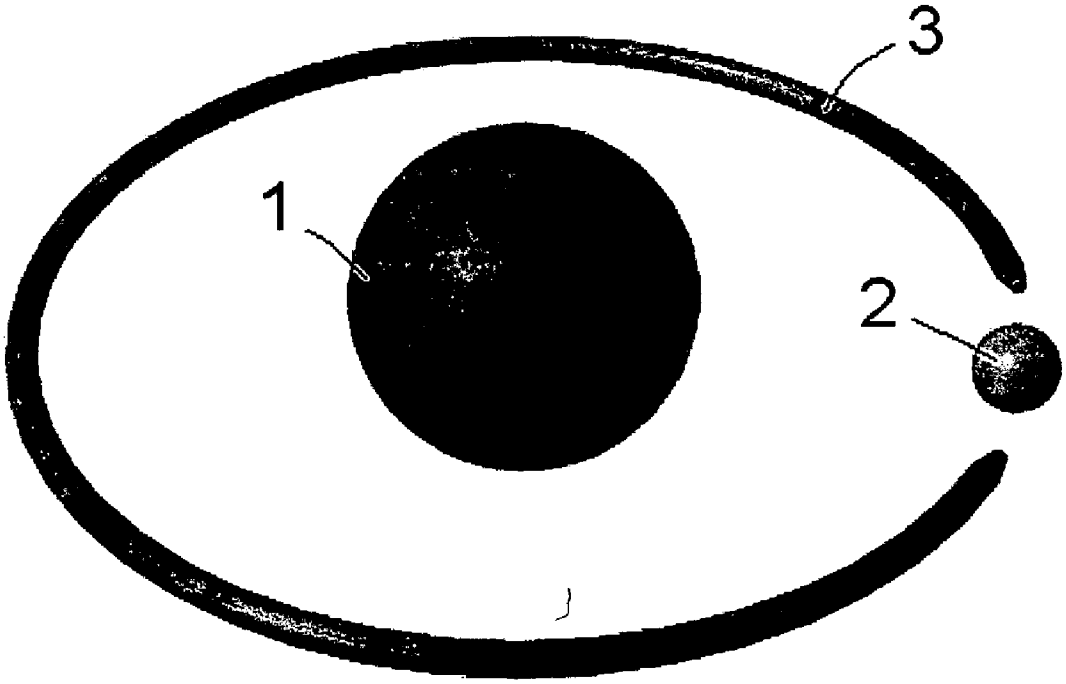

Figure 1

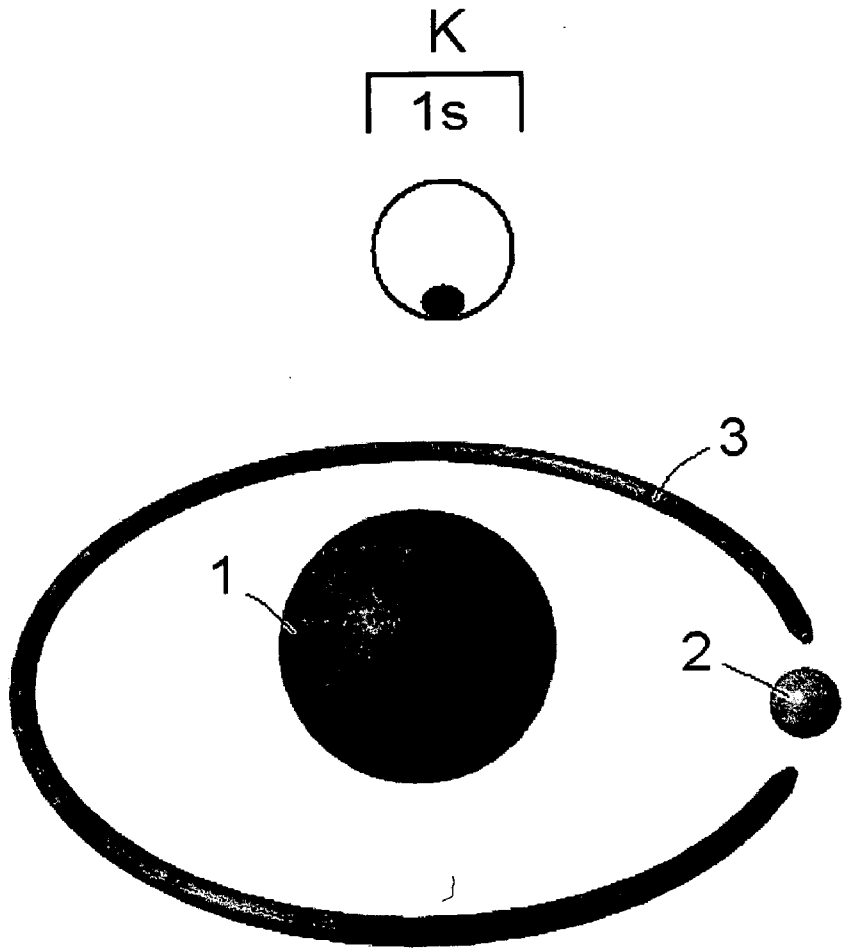

Figure 2

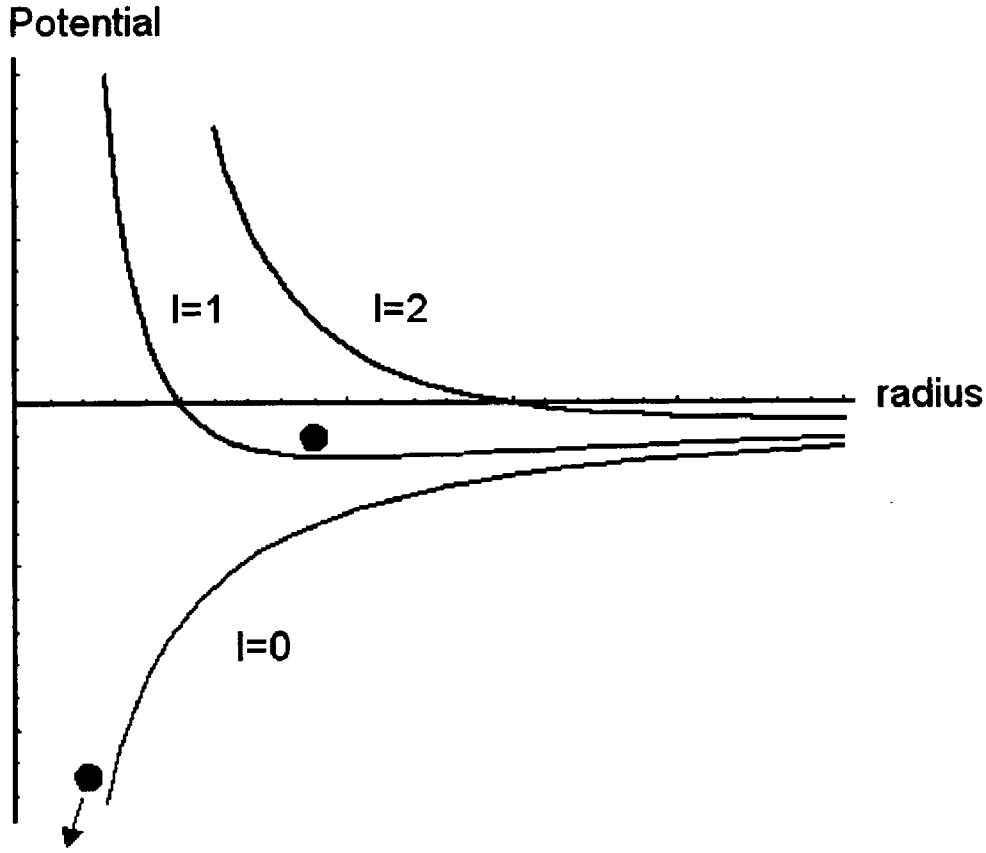

Figure 3

Figure 4

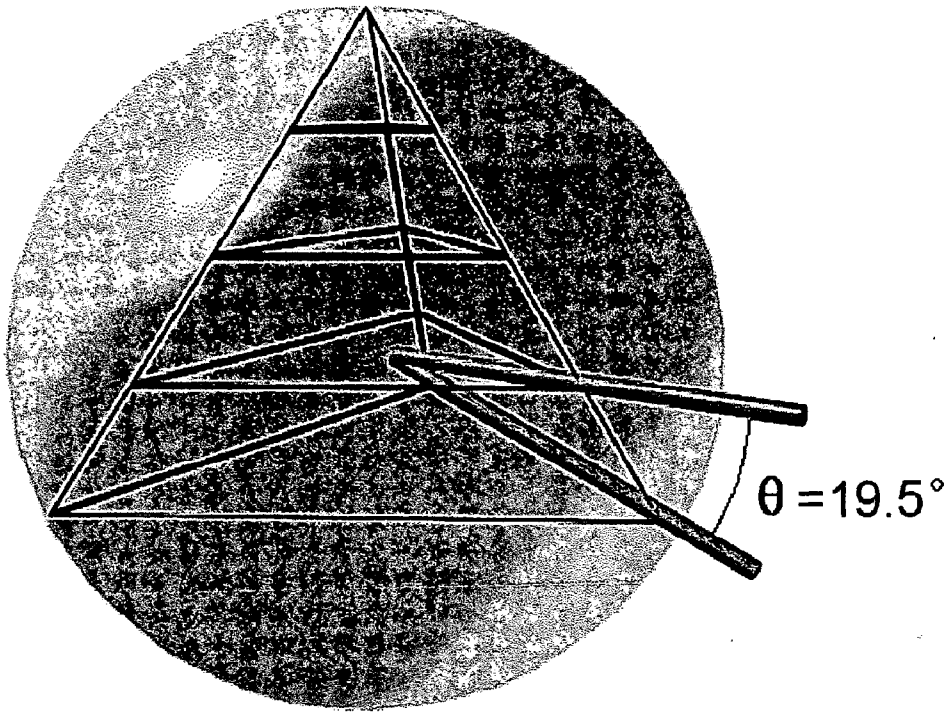

Figure 5

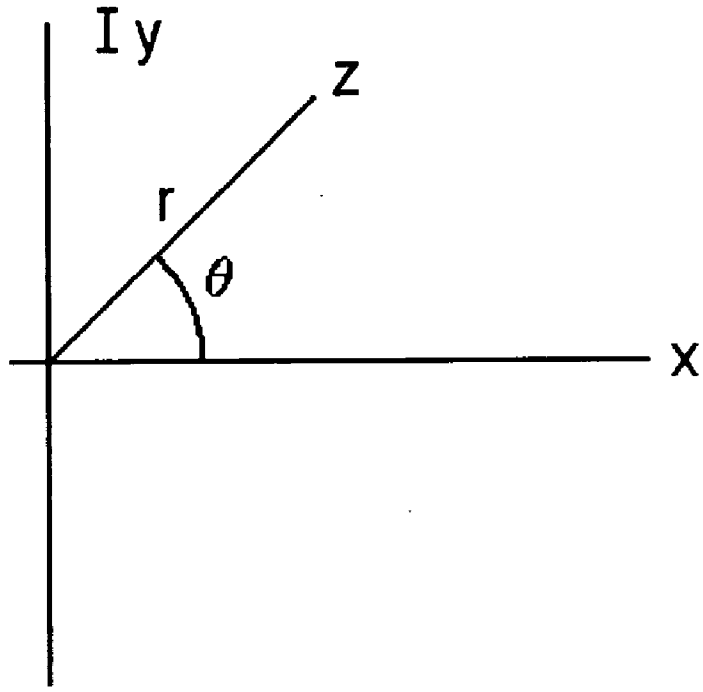

Figure 6

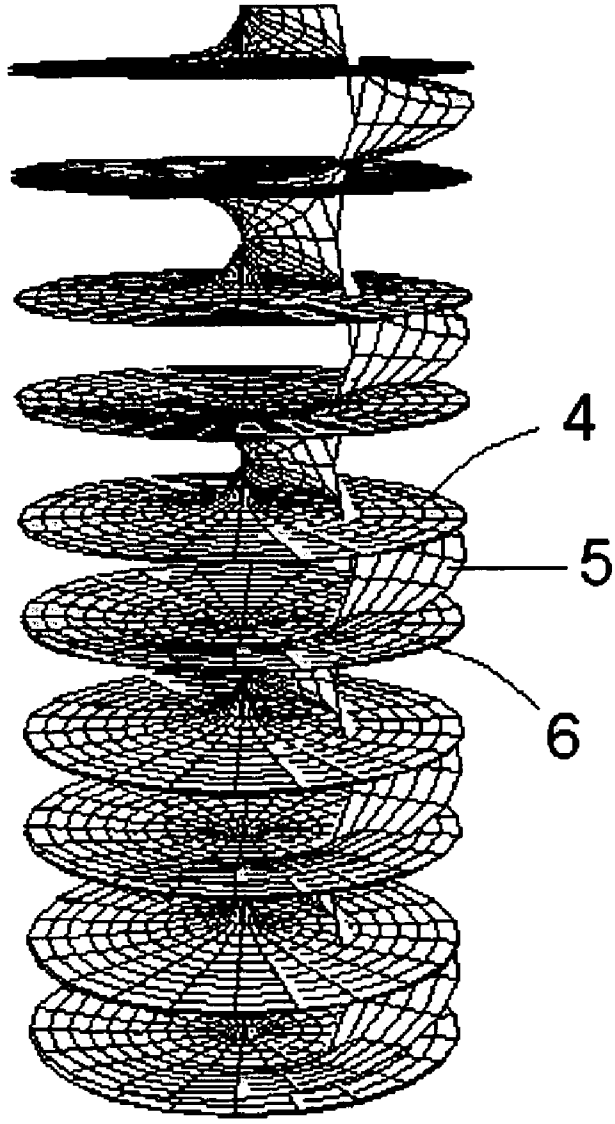

Figure 7

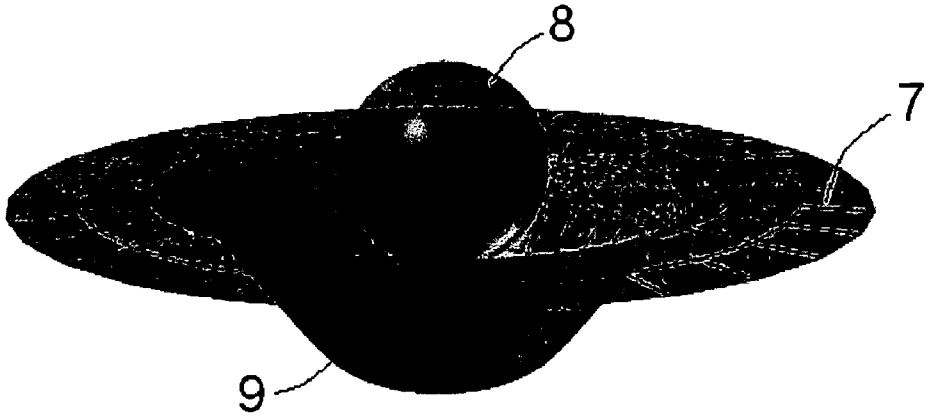

Figure 8

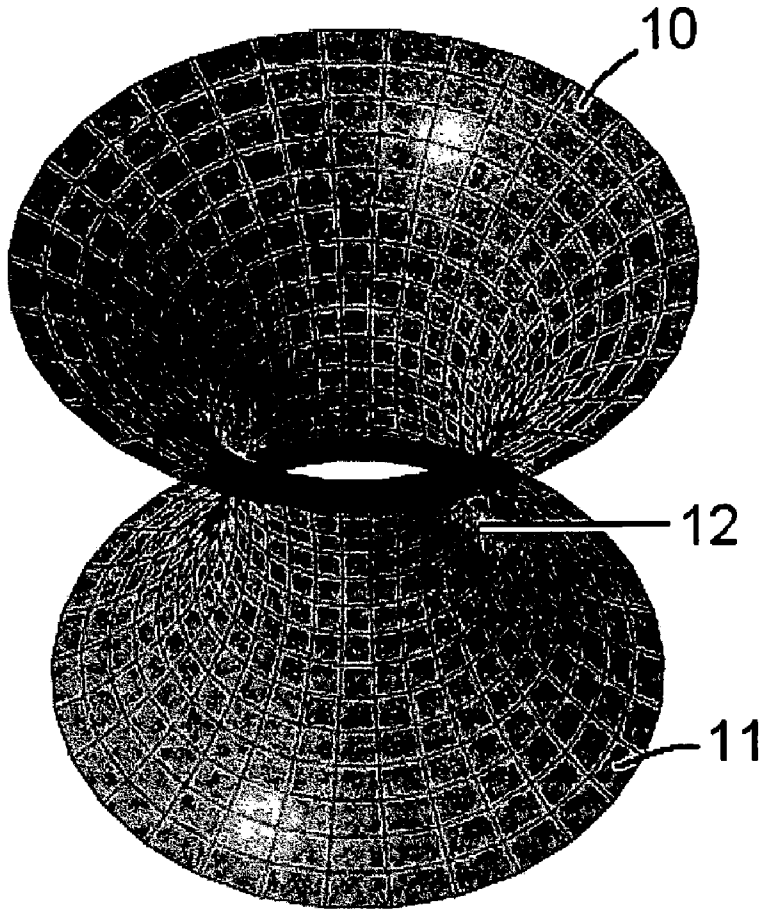

Figure 9

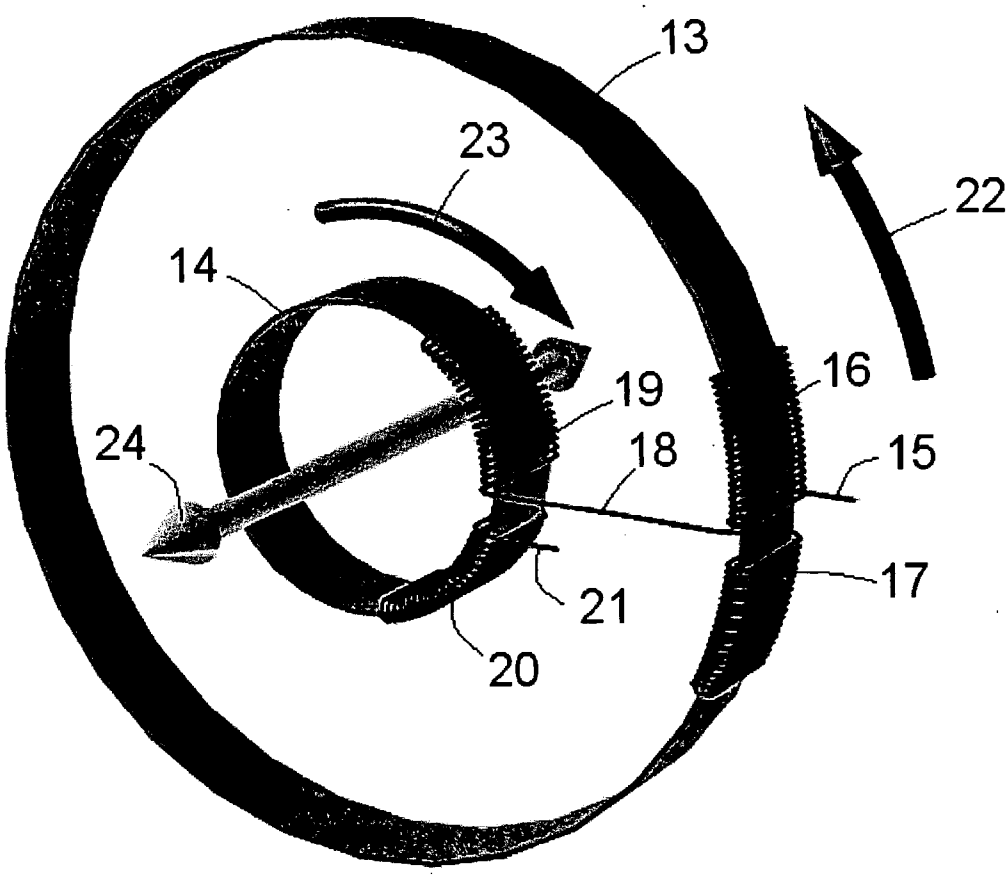

Figure 10

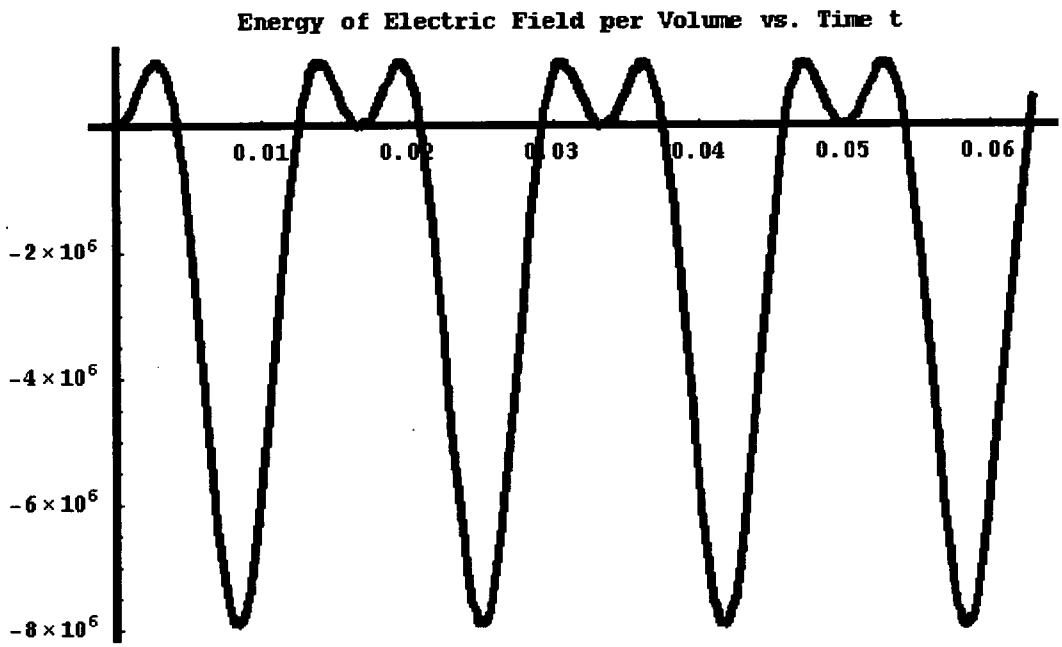
Energy of Electric Field per Volume vs. Time t
0.01
0.02
0.03
0.04
0.05
0.06
-2 × 10^6
-4 × 10^6
-6 × 10^6
-8 × 10^6

Figure 11

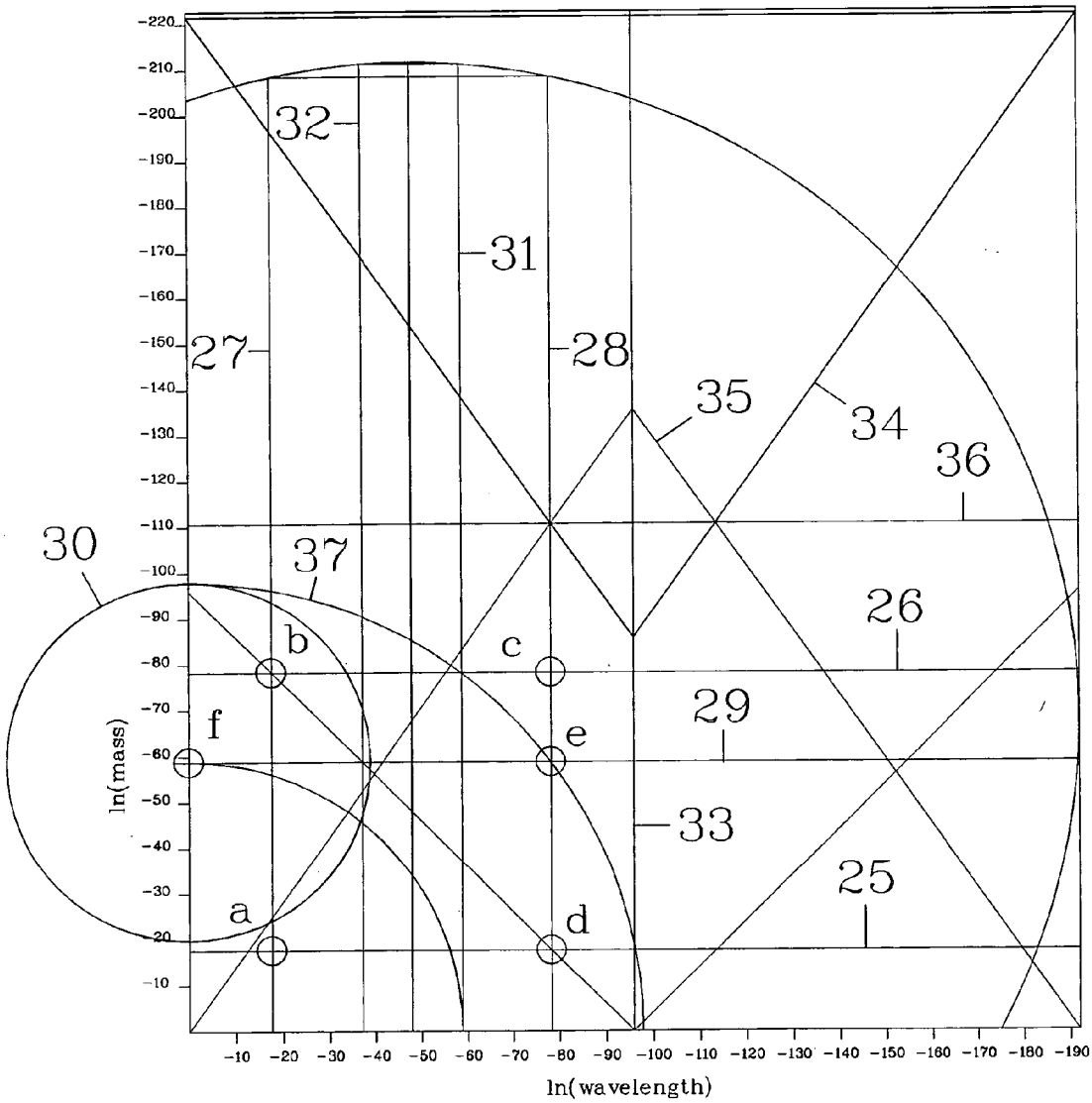
-220
-210
-200
-190
-180
-170
-160
-150
-140
-130
-120
-110
-100
-90
-80
-70
-60
-50
-40
-30
-20
-10
ln(mass)
-10 -20 -30 -40 -50 -60 -70 -80 -90 -100 -110 -120 -130 -140 -150 -160 -170 -180 -190
ln(wavelength)
32
31
27
28
35
34
36
30
37
26
b
c
29
f
e
33
25
a
d

Figure 12

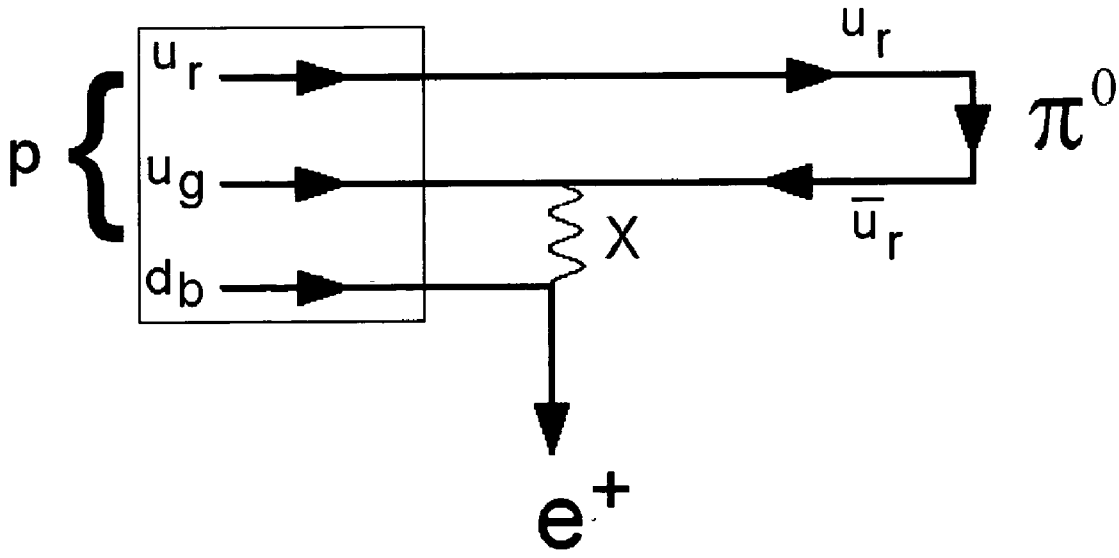

Figure 13

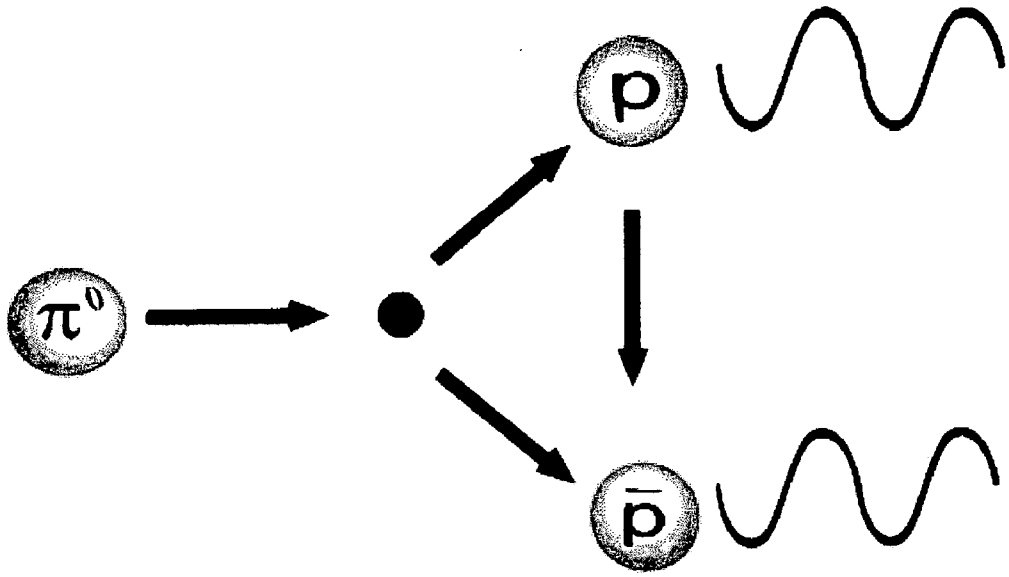

Figure 14

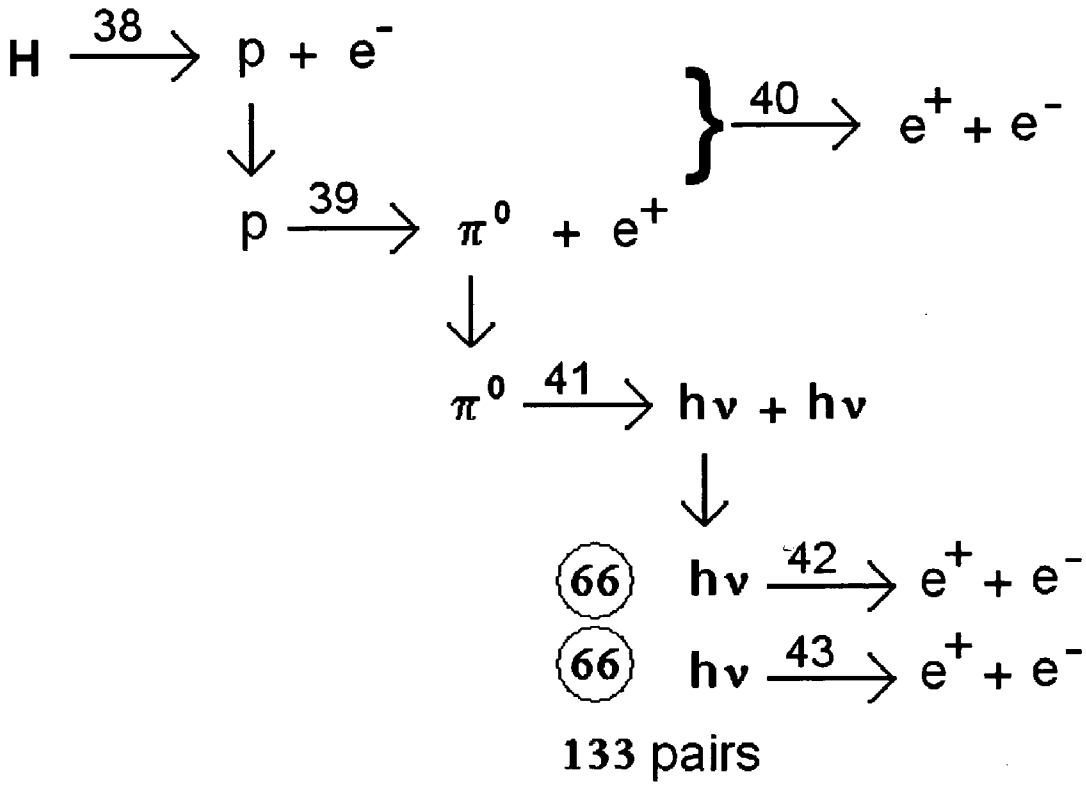

Figure 15

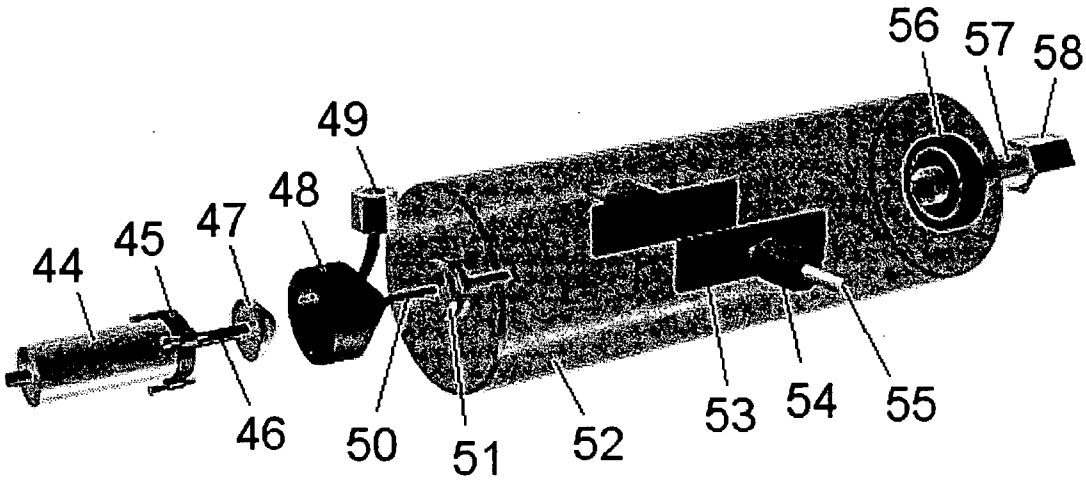

Figure 16

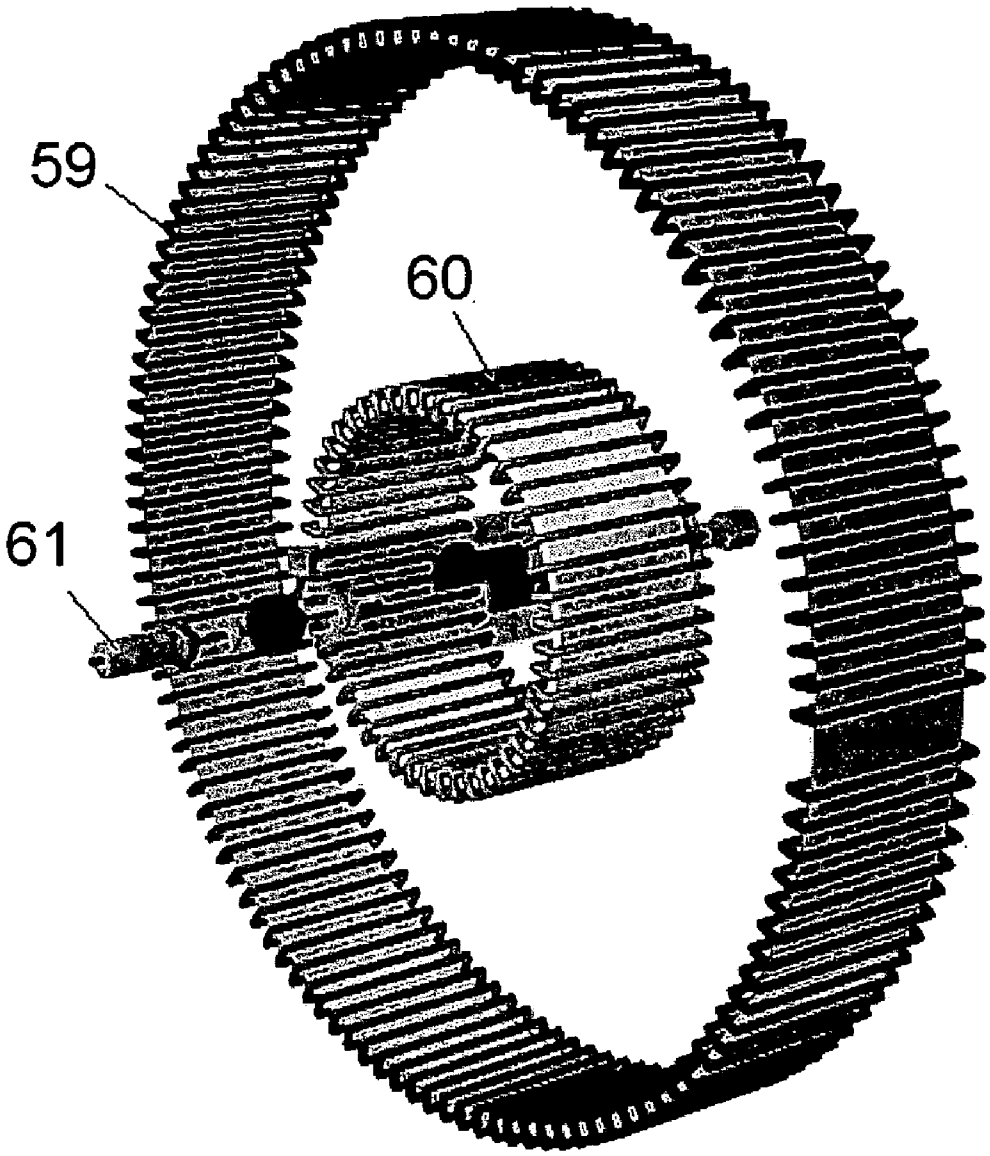

Figure 17

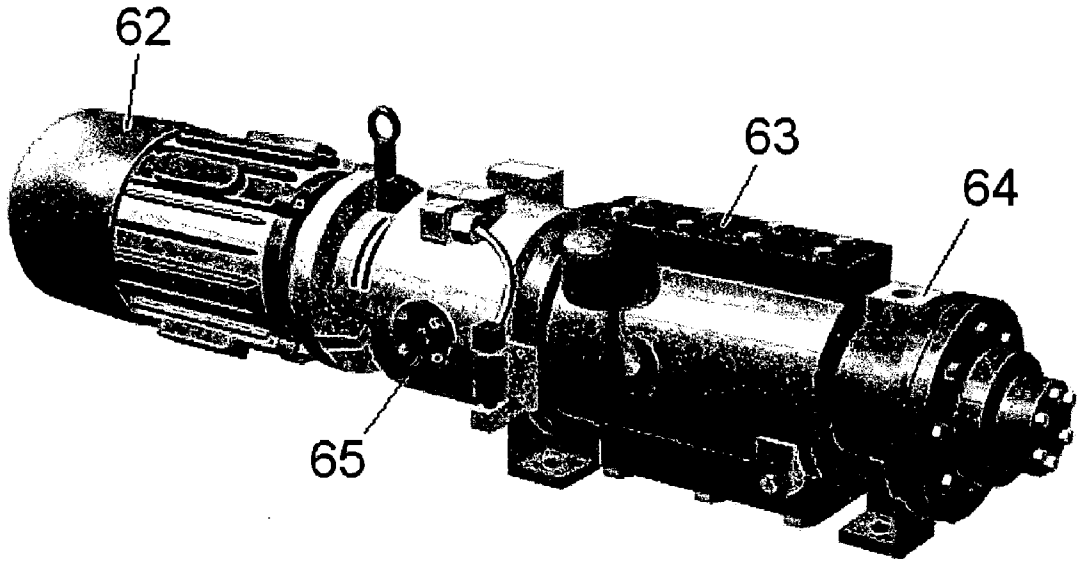

WATER ENERGY GENERATOR

BRIEF SUMMARY OF THE INVENTION

[0001] This invention is an energy generator that uses the transition through wormholes of the hydrogen atoms of water molecules to break the bonds of the atoms and convert the protons into photons and electrons which can be collected for energy.

BACKGROUND OF THE INVENTION

[0002] A molecule of water consists of two hydrogen H atoms and one atom of oxygen O which has the chemical formula

H_2O

The hydrogen atoms can be separated from the oxygen atom by electrolysis. In this process, a direct current of electricity, such as from a battery, is passed through water decomposing it into hydrogen and oxygen. Pure water, however, is a poor conductor of electricity. It is therefore necessary to add some substance to form a solution that will conduct an electric current. Such a solution that will conduct electric current is called an electrolytic solution. A small amount of sulfuric acid or sodium hydroxide is added to the water to form an electrolytic solution. Water electrolyzed yields hydrogen plus oxygen

Water->hydrogen+oxygen

$2H_2O \rightarrow 2H_2+O_2$

Because this invention is to be used on spacecraft, the oxygen can be used for breathing and the hydrogen can be used to produce energy that will be used to create the electromagnetic fields which provide lift and propulsion.

[0003] Referring to **FIG. 1**, a single hydrogen atom consists of one proton (1) in the nucleus and one electron (2) moving in an orbital (3) around the nucleus. In quantum physics notation, there is only one main K shell and one orbital containing a single electron in the 1 s subshell. An orbital is an energy level containing one or two electrons in a subshell of an atom. Only a total of two electrons may be placed in one orbital with the added constraint that the electrons spin in opposite directions. Looking at the 1 s orbital, it can be seen that only half of it is occupied. What this means is that it is possible to add another hydrogen atom in which its electron occupies the other position in the orbital to from the hydrogen molecule H_2.

[0004] In 1925, a physicist by the name of Edwin Schrodinger developed a wave equation, which bears his name, that models the hydrogen atom. Even though the classical picture of **FIG. 1** showing a distinct electron orbiting the proton is easy to visualize, in reality the electron is a wavefunction Ψ whose square indicates the probability of finding the electron at a particular point. This then was the start of quantum physics where it was found that the electron energy can only take on certain discrete values.

[0005] A traveling wave moving in the positive x-direction can be represented by the function $\Psi_1=\Psi_1(x,t)$ of the form

$$\Psi_1=A_1 \cos(2\pi(x/\lambda-v\,t))$$

where x is the distance along the x-axis, A the wave amplitude, λ the monochromatic wavelength, v the velocity of the wave and t time.

[0006] A similar monochromatic wave moving to the left can be represented by

$$\Psi_2=A_2 \cos(2\pi(x/\lambda+v\,t))$$

where the sign of the velocity is reversed. The superposition of these traveling waves results in a standing wave, or stationary waves, of the form

$$\Psi=\Psi_1+\Psi_2=A \cos(2\pi x/\lambda) \cos(2\pi v\,t)$$

which is now a product of a spatial-dependent term A cos(2πx/λ), and a time-dependent term cos(2πv t). Taking the partial derivative of Ψ twice with respect to x

$$\frac{\partial^2\Psi}{\partial x^2}=-\left(\frac{2\pi}{\lambda}\right)^2\Psi$$

The momentum p of a particle is equal to Planck's constant h divided by the mass m of the particle

$$p=h/\lambda=\frac{2\pi\hbar}{\lambda}$$

where h bar is the reduced Planck constant. Thus Schrodinger's equation can be written as

$$\frac{\partial^2\Psi}{\partial x^2}=-\frac{p^2}{\hbar^2}\Psi$$

For a particle whose potential energy is V(x), the total energy is the kinetic energy K plus the potential energy

$$E=K+V=(p^2/2m)+V$$

Therefore,

$$p^2=2\,m\,(E-V)$$

and Schrodinger's equation becomes

$$\frac{\hbar^2}{2m}\frac{\partial^2\Psi}{\partial x^2}+(E-V)\Psi=0$$

The potential V is just the Coulomb potential of the product of two charges e divided by the radius r between them

$$V=\frac{e^2}{4\pi\varepsilon r}$$

where ϵ is the linear capacitance of space. A general wavefunction can be separated into a radial R part and a spherical harmonics part Y

$$\Psi=R_{n,l}Y_{l,m}(\theta,\phi)$$

where the first term is called a radial wavefunction which describes the "in-out" motion of the electron. When Schrodinger's equation is separated, it is found that the radial part of the wavefunction, R, must be a solution of the quantized differential equation

$$\frac{\hbar^2}{2mr}\frac{d^2(rR)}{dr^2}+\left(E-\frac{l(l+1)\hbar^2}{2mr^2}+\frac{e^2}{4\pi\varepsilon r}\right)R=0$$

This can be expressed in a simpler form by defining the function

$$f=rR$$

which is then found to satisfy the equation

$$\frac{\hbar^2}{2m}\frac{d^2f}{dr^2}+(E-V_{eff})f=0$$

where the effective potential is given by

$$V_{eff}=\frac{l(l+1)\hbar^2}{2mr^2}-\frac{e^2}{4\pi\varepsilon r}$$

where the 1's are the quantum orbital numbers. For s orbitals equal to 1=0, the effective potential is just the electrostatic potential of the nucleus. For 1 greater than zero, the first term is equal to the kinetic energy owing to the angular motion of the electron at a distance r and with angular momentum √1(l+1)h.

[0007] Referring to **FIG. 2**, the effective potential is graphed as a function of radius r and the orbital numbers. For orbital number l=0, which is the lower of the three curves, the potential does not provide a stable position for the electron (black disk) and the negatively-charged electron just crashes into the positively-charged proton nucleus as shown by the arrow. For orbital l=1, the first term is called the centrifugal repulsion which together with the electrostatic potential provides for a stable position for the electron as seen in the middle curve. The potential energy is negative which creates a slight valley in which the electron obtains a stable orbit. Higher orbital numbers l=2 produce a similar valley potential further out on the radius. The l=1 orbital does not allow the electron to come near the proton which provides for a stable hydrogen atom. So the key to this invention is how to destabilize this hydrogen atom energy system and produce usable energy which can propel the electromagnetic spacecraft and run other hyperspace inventions. Refer to my patent applications such as Dipole Moment Spacecraft, Dual Potential Hull Spacecraft, Photon Spacecraft, Electromagnetic Field Propulsion System, Full Body Teleportation, Magnetic Vortex Wormhole Generator, Electric Vortex Wormhole Generator, Sulfur S8 Wormhole Generator, Cavitating Oil Hyperspace Energy Generator, Rotor Inductance Propulsion System and Triangular Spacecraft.

[0008] Many of these patent applications involve wormholes and hyperspace which are not well-known concepts in the scientific community. Hyperspace consists of those dimensions which are co-dimensional with our spacetime. The reason I know about hyperspace is because (1) I have been in hyperspace on a number of occasions and have experienced Einstein's time dilation according to his General Theory of Relativity, (2) I have experienced more than one full-body hyperspace teleportation over a distance of 100 meters, (3) we have been able to create a wormhole between space and hyperspace with the magnetic vortex wormhole generator in which smoke was blown through one side of the coil into hyperspace, a first contact verified by the Grey Aliens, (4) I have seen the green mist associated with moving out of dimension and crossing over into hyperspace, (5) I have looked into another dimension and have seen another building, a car and a man who waving at me in the presence of an artificially-intelligent Cyborg with the "high-tech look" from the Pleiadian Defense Department, (6) I can remote view through hyperspace subgeometry to distances of 100,000 light years to the edge of the galaxy and have made first contact with around 500 extraterrestrial civilizations involving the use of patent applications such as Remote Viewing Amplifier, Quantum Dot Energy Cylinder and Walking Through Walls Training System, (7) I am the only person on Earth who has communicated with the designers of the crop circles found in England and explained their design to them in terms of subspace geometry, (8) I can walk through walls as a hyperspace energy being, and (9) I have discovered how anti-gravity is possible using low density hyperspace energy, not to mention all the other research work on these electromagnetic field propulsion vehicles. For my work in developing the geometry of the subspace manifold known as the tetrahedron diagram, I was given the Aphysics award by the Admiral, who is third in line to the Admiralty of the Pleiadian Defense Department. For my work in Revelations, she awarded me four beautiful galloping white riderless horses of the Apocalypse. The reason that the Pleiadian Defense Department was involved was that the Admiral had the task of creating the energy being that would protect the subspace manifold during the battle of Revelations which took place in the year 2001. So these are some of my personal experiences in the field of hyperspace physics.

[0009] As to the scientific aspect of hyperspace physics, observations of the solar system have noted that large vortices occur on the planets at a latitude of ±19.5°. On the planet Jupiter, for example, the Giant Red Spot vortex, which is the size of two planets like Earth, is located at −19.5° latitude.

[0010] Referring to **FIG. 3**, the Olympus Mons volcano, which is the size of France, occurs in the northern hemisphere at 19.5°. The plume of volcanic ash can be seen being blown to the upper right.

[0011] Here on Earth, just north of me at +19.5° in the Caribbean, there is a slow moving rock mantle vortex that curves the islands down toward Venezuela. Since the tetrahedron has three corners, another corner occurs at 120° to the west where the Marshall Islands are located. The reason that the volcanic islands form is that low density hyperspace energy softens the atoms and molecules to such an extent that the atomic bonds are broken. The hot magma from the core has an easier path to the surface through the soft rock compared to the hard rock of surrounding areas. As the vortex rotates, the rising hot magma creates volcanoes which form the chain of islands.

[0012] As another example of this, the Silver bridge, which is located at a double harmonic of 39° between Ohio and West Virginia, collapsed because a large wormhole

opened up and flooded the bridge with low density hyperspace energy. The metal rivets softened and pulled out of the plates holding down the suspension cables. Thus the roadway tilted to one side and all the cars fell into the river.

[0013] If you look at the quarried granite polygonal megalithic stone blocks that were used to build Machu Picchu, the blocks are put together as though they were soft putty. They fit together perfectly. Machu Picchu, or Great Picchu, is the Quichua name for a sharp peak which rises ten thousand feet above the sea. How this was achieved is described in my patent application *Rotating Magnetic Vortex Generator* which shows that rotating permanent magnets can create a wormhole between space and hyperspace. The low density hyperspace energy then floods the block as to make it weightless. The block is then floated up from the quarry which is 2500 feet below Machu Picchu. The huge 1000-ton blocks found in the platform at Baalbek in the Cedar Mountains of Lebanon were also lifted into position in this manner.

[0014] Using a technique called Chi Kung breathing, not necessarily known to the Chinese, one of our researchers has been able to levitate himself to a height of six feet. He might have gone higher but he lost his balance and his arm touched a nearby metal pipe. He then floated back to the ground. Contracting the abdominal muscles causes hot air to rise in the lungs while at the same time cold air is inhaled through the nose. This combination of hot and cold air mixing together creates environmental oscillators having a temperature fluctuation. This changes Planck's constant such that the body goes out of dimension and low density hyperspace energy fills the body.

[0015] The final example comes from Biblical times. Jesus and his father Joseph were both carpenters. A chair that Joseph had made for a client was found to be too small. So Jesus placed his hands on either side of the chair and stretched the chair to fit. The phrase in Spanish is "mas silla" which means that Jesus made more chair. In the dictionary, the Spanish word for putty is "masilla." The reason that Jesus could do this is that he passed hyperspace energy through his hand vortices which softened the wood. See my patent application called *Hyperspace Torque Generator* which shows this in more detail. The hand vortex is actually a planar co-gravitational K field that can rotate a pendulum around in circles. This solenoidal field corresponds to the magnetic H field. The electric field corresponds to the linear gravitational g field. The equations are identical for both sets of fields. I learned that Jesus actually reincarnated here on Earth in order to identify the planet on which the battle of Revelations would take place.

[0016] In summary, these are some examples as to how low density hyperspace energy can soften and break the bonds of atoms and molecules.

[0017] As mentioned previously, the astronomical observations suggest that the structure of the universe is related to the tetrahedron. Referring to **FIG. 4**, the corners of a tetrahedron circumscribed by a sphere, touch the sphere at an angle of 19.47122063°. The ratio of the area-to-volume ratio of the sphere to the area-to-volume ratio of the tetrahedron is ⅓ which is the magic ratio in physics. The arcsin(⅓) is 19.47°.

[0018] In order for all the physics constants to be projected into our universe and the co-dimensional hyperspace dimensions, there has to be a tetrahedral subspace manifold. The only mathematical function which allows multiple rotations of the complex plane is the logarithmic function Log[z].

[0019] Referring to **FIG. 5**, the complex number z in the complex plane is equal to x+I y where x and y are real constants and $I^2=-1$. The complex number z can also be written in terms of a radius and an angle

$$z=r\ \mathrm{Exp}[I\ \theta]$$

Because the angle can rotate more than once in 2π m multiples, the complex number z is actually

$$z=r\ \mathrm{Exp}[I(\theta+2\pi\ m\ )]$$

Taking the logarithm of z

$$\mathrm{Log}[z]=\mathrm{Log}[r]+I(\theta+2\pi m)$$

[0020] Referring to **FIG. 6**, it can be seen that it is not possible to go around multiple times on the same surface due to a branch cut along the origin where Log[0] is undefined. What happens is that as you rotate around on surface (4) and get to the origin, you go down along the branch (5) to the next hyperspace plane (6). Thus the universe is composed of many hyperspace co-dimensions. From personal experience, I estimate that the distance separating the two dimensions is about 3 meters when I was looking into another dimension at the man waving at me. The physics is even more complicated because there is a Lorentz dimensional transformation in which higher dimensions appear smaller and lower dimensions appear larger. In one case I was looking at a huge mothership at a much higher dimension and it looked like a tiny toy model spacecraft. They fired a laser cannon at me, and I then curved space which made the beam change course. You can see why I was awarded the four horses.

[0021] The antilog of Log[z] is

$$e^{\mathrm{Log}[z]}=z=re^{I\ \omega t}$$

where the angle is the angular frequency ω times the time t. The subspace geometry remains stationary or fixed, but the projection of the antilog into our dimension generates a system which is frequency dependent. This is why we get oscillating fields.

[0022] From Einstein's General Theory of Relativity, it is known that various kinds of energy can curve spacetime such as mass, electromagnetic fields, angular momentum and electrical charge. The elemental spacetime length ds in cylindrical coordinates {t,r,θ,z}, known as the Schwarzschild metric, shows that spacetime can be curved using mass M and charge Q

$$(ds)^2=-(dt)^2\left(1-\frac{2M}{r}+\frac{Q^2}{r^2}\right)+\frac{dr^2}{\left(1-\frac{2M}{r}+\frac{Q^2}{r^2}\right)}+(rd\theta)^2+(dz)^2$$

where you can see that the elemental time dt is dilated by the mass M and the elementary radius dr is reduced. I have actually experienced this time dilation in which, as I was jumping into hyperspace, I was hit by a car which broke my shoulder. When I came back into dimension which appeared to be a few seconds later, I found that I had an 8-inch blood ring down the right side of my chest. My shoulder blade, which sticks up about two inches, is still broken to this day.

[0023] Referring to **FIG. 7**, flat space (**7**) can be curved (**9**) by a massive body (**8**) such as a planet. For example, the mass of the Earth gives space a negative curvature such that objects tend to fall toward the center of the mass (bowl). On the other hand, using electromagnetic fields, it is possible to produce a positive curvature such that a spacecraft rises by falling upward.

[0024] Referring to **FIG. 8**, if the fields are intense enough, then a wormhole (**12**) forms between space (**10**) and hyperspace (**11**). This depiction is called an embedding diagram because there is no open space going through the wormhole. An object traversing the wormhole moves along the surface from one dimension to another. In order to open the throat (**12**) of the wormhole, negative energy is required. Referring to my patent application Dual Potential Hull Spacecraft, negative energy is produced by the interaction of a microwave beam with an oscillating magnetic H field. In terms of differential forms mathematics, this is given as the Hodge Star * of the differential d of the wedge ^ product of the magnetic H field with the electromagnetic wave {B,E}

$$*d(H\wedge(B+E\wedge dt)) = \frac{\partial(-\rho)}{\partial t}$$

which says that there is an increasing rate of change of negative energy (−ρ). Due the presence of negative energy together with the spacetime curvature pressure produced by the electromagnetic fields, wormholes open up between space and hyperspace. There is a positive gravitational potential between hyperspace and space because the low density hyperspace energy is more dense than the negative energy in this dimension. Thus the hyperspace energy flows into our dimension which reduces the mass of the spacecraft. The upward spacetime pressure stress over the hull due to the electromagnetic fields creates a lift force on the nearly massless vehicle. Because the hyperspace energy has a speed of light equal to one meter per second, the electromagnetic fields become relativistically strong since they obey the Lorentz transformation. Due to the low mass, high spacetime lift pressure and strong EM fields, the vehicle can attain very high rates of acceleration.

[0025] Another method to produce a wormhole is to use bucking magnetic fields which is described in my patent application *Magnetic Vortex Wormhole Generator.* In gravitation physics, the Faraday F tensor, which is a 4×4 spacetime metric {t,x,y,z}, contains all the components of the electromagnetic fields in the various spatial directions {x,y,z}

$$F^{\alpha}_{\beta} = \begin{array}{c} t \\ x \\ y \\ z \end{array}\begin{vmatrix} 0 & E_x & E_y & E_z \\ E_x & 0 & B_z & -B_y \\ E_y & -B_z & 0 & B_x \\ E_z & B_y & -B_x & 0 \end{vmatrix}$$

where contravariant index a refers to the rows, and the covariant index β refers to the columns. For example, the component $F^t_x = E_x$ is the electric field in the x-direction. If there were two magnetic bucking fields in the x-direction the Faraday tensor would be

$$F^{\alpha}_{\beta} = \begin{array}{c} t \\ x \\ y \\ z \end{array}\begin{vmatrix} 0 & 0 & 0 & 0 \\ 0 & 0 & 0 & 0 \\ 0 & 0 & 0 & B_x - B_x \\ 0 & 0 & -(B_x - B_x) & 0 \end{vmatrix} = \begin{vmatrix} 0 & 0 & 0 & 0 \\ 0 & 0 & 0 & 0 \\ 0 & 0 & 0 & 0 \\ 0 & 0 & 0 & 0 \end{vmatrix}$$

which says that the Faraday tensor is zero. Thus no spacetime curvature is generated from two bucking magnetic fields at the same position. On the other hand, if the two bucking magnetic fields are concentric at different radii, then the Faraday tensor becomes

$$F^{\alpha}_{\beta} = \begin{array}{c} t \\ x \\ y \\ z \end{array}\begin{vmatrix} 0 & 0 & 0 & 0 \\ 0 & 0 & 0 & 0 \\ 0 & 0 & 0 & B_x\delta(x_1) - B_x\delta(x_2) \\ 0 & 0 & -(B_x\delta(x_1) - B_x\delta(x_2)) & 0 \end{vmatrix}$$

which is not zero due to the presence of the Kronecker δ delta function which locates the fields at different positions. The spacetime stress-energy-momentum tensor T is then computed from the following equation

$$4\pi T^{\mu\nu} = F^{\mu\alpha}F^{\nu}_{\alpha} - \frac{1}{4}g^{\mu\nu}F_{\alpha\beta}F^{\alpha\beta}$$

where g is the metric tensor containing the coefficients of the elemental spacetime length ds. With the mass M and charge Q term equal to zero, there being just electromagnetic fields involved, the g metric tensor in cylindrical coordinates becomes

$$g_{\alpha\beta} = \begin{array}{c} t \\ r \\ \theta \\ z \end{array}\begin{vmatrix} -\left(1 - \frac{2M}{r} + \frac{Q^2}{r^2}\right) & 0 & 0 & 0 \\ 0 & \left(1 - \frac{2M}{r} + \frac{Q^2}{r^2}\right)^{-1} & 0 & 0 \\ 0 & 0 & r^2 & 0 \\ 0 & 0 & 0 & 1 \end{vmatrix} = \begin{vmatrix} -1 & 0 & 0 & 0 \\ 0 & 1 & 0 & 0 \\ 0 & 0 & r^2 & 0 \\ 0 & 0 & 0 & 1 \end{vmatrix}$$

[0026] Referring to **FIG. 9**, the magnetic vortex generator has two concentric, thin, flat cylindrical silicon-iron cores (**13**,**14**), each consisting of a stack of three 0.020 inch thick transformer laminations wrapped with insulating tape. Using insulated magnetic wire, a flat helical coil (**16**) is wrapped counter-clockwise around the outer laminations. The coil receives power through connection (**15**). The winding then continues around the core until coil (**17**) where the wire (**18**) is extended to the inner core and the wrapping of coil (**19**) proceeds in the clockwise direction. The inner core wrapping terminates on coil (**20**) with the extension of the second power connection (**21**). Because the coils are wound in

opposite directions, the generator produces two bucking magnetic fields at different radii (**22**,**23**).

[**0027**] According to Maxwell's electromagnetic equations, the curl of the magnetic flux density B field times the square of the speed of light squared is equal to the rate of change of the electric E field

$$c^2\nabla xB = \frac{\partial E}{\partial t}$$

Multiplying both sides by the elemental area of the core and integrating over the area

$$c^2\int_0^{r_0}\nabla xBdA = \frac{\partial}{\partial t}\int_0^{r_0}E\cdot ndA = \frac{\partial}{\partial t}\int_0^{r_0}E\cdot n2\pi rdr$$

The curl of the field can be converted into a line integral around the core contour using Stokes' Theorem

$$c^2\int_0^{r_0}\nabla xBdA = c^2\oint_{r_0}B\cdot ds = c^2\int_0^{2\pi}Br_0d\theta$$

[**0028**] The magnetic flux density B field oscillates with angular frequency ω

$$B=B_0e^{I\omega t}$$

Substituting this into the equation and integrating over time for the inner core field

$$-c^2\int_0^{t}\int_0^{2\pi}B_0e^{I\omega t}r_0d\theta = \int_0^{r_0}E2\pi rdr = E\pi r_0^2$$

This can be solved for the electric E field that is produced by the oscillating magnetic flux density B field

$$E_0 = \frac{2IB_0c^2(-1+e^{I\omega t})}{r_0\omega}$$

The electric field for the outer core is the same equation except that the opposite sign of the magnetic flux density B field and the radius **r1**

$$E_1 = \frac{-2IB_0c^2(-1+e^{I\omega t})}{r_1\omega}$$

Adding these two fields together is the total electric field E

$$E = E_0 + E_1 = \frac{-2B_0c^2(-1+\mathrm{Exp}(I\omega t))(r_0-r_1)}{r_0r_1\omega}$$

The electrostatic energy of the field is equal to half the linear capacitance of space times the summation over the volume of the dot product of the electric field with itself

$$U = \frac{\varepsilon}{2}\int E\cdot EdV$$

Because the electric field points in the z-direction out of the coil, the dot product is actually the square of the electric field.

[**0029**] Referring to **FIG. 10**, the energy U per volume is plotted as a function of time with a radius ratio r_1/r_0 of 3/1. As the graph shows, the magnetic vortex wormhole generator produces mostly negative energy which is required in order to create the wormholes. Because the stress-energy-momentum T tensor is also the square of the electric field, this graph gives the spacetime curvature pressure. Thus the electric field produces both the pressure and negative energy required to open up wormholes between space and hyperspace.

[**0030**] Going back to the effective potential equation,

$$V_{eff} = \frac{l(l+1)\hbar^2}{2mr^2} - \frac{e^2}{4\pi\varepsilon r}$$

it can be seen that the first term is divided by the mass of the particle. In current gravitation physics, the mass of the particle is invariant with velocity. It does not obey the Lorentz transformation. The mass is related to the energy E of the particle and its momentum p by

$$m^2=E^2-p^2$$

In different inertial frames moving with a relative velocity v, the energy and the momentum obey the Lorentz transformation, but no matter what the relative motion, the mass of the particle is constant. In the first term of the effective potential, the mass is constant which leaves just Planck's constant.

[**0031**] Having worked for over ten years on the subspace manifold, known as the tetrahedron diagram, I found a most incredible intersection on the diagram when working with the water molecule. The water molecule has two hydrogen atoms and one oxygen atom as mentioned previously. The atomic weight of one atom of hydrogen is 1.008 atomic weight units (awu). The atomic weight of oxygen is 16.000 awu. Therefore the molecular weight of water is

$$\text{Weight of two atoms of hydrogen } 2\times 1.008\ awu = 2.016\ awu$$

$$\text{Weight of one atom of oxygen } 1\times 16.000\ awu = \frac{16.000\ awu}{18.016\ awu}$$

The gram molecular weight is the atomic weight expressed in grams, so there are 18.016 grams in Avogadro's number of molecules. So the mass per molecule in logs is

$$\mathrm{Log}\left[\frac{18.016\ \mathrm{gram-mol}\Big/\left(1000\ \frac{\mathrm{gm}}{\mathrm{kg}}\right)}{6.02\times10^{23}\ \mathrm{mol}}\right]=-58.77103943$$

[0032] Referring to **FIG. 11**, the tetrahedron diagram plots the natural logarithm of mass versus the natural logarithm of wavelength. The reason for this is that mass times wavelength is equal to Planck's constant divided by the speed of light c, known on the diagram as the base constant. At the present time there are over 4000 diagrams which are copyrighted in the Library of Congress. In logarithms, the product of two numbers is the sum of the two numbers. This means that the sum of the mass and the wavelength are equal to the base constant which has a value of

$$\ln[m]+\ln[\lambda]=\ln[h/c]=-95.91546344=\text{base constant}$$

Our dimension has a lower limit on mass and length known respectively as the Planck mass and the Planck wavelength. The Planck mass is the linear mass Ω of the universe times the Planck scale Λ. The Planck wavelength is circumference of a circle of radius Planck scale. In terms of logs, the Planck mass and Planck wavelength are

$$\text{Planck mass}=\ln(\Omega\Lambda)=-17.64290101$$

$$\text{Planck wavelength}=\ln(2\pi\Lambda)=-78.27256243$$

[0033] When these values are plotted on the tetrahedron diagram shown in **FIG. 11**, the Planck box (abcd) is formed which are the boundaries of our dimension in subspace. The line numbering is as follows

Planck mass	25, 27
Planck wavelength	26, 28
mass of water molecule	29, 31
speed of light squared circle	30
base constant	33
inverted tetrahedrons	34, 35
centerline	36

The energy of the water molecule, circle (**37**), is equal to the sum of the water molecule mass (**29**) plus the speed of light squared circle (**30**). The energy circle (**37**) intersects the mass of the water molecule (**29**) at the Planck wavelength (**28**, point e), which is the boundary between space and hyperspace. What this means is that the mass is equal to the energy at the Planck box boundary. The only way that this is possible is if the speed of light c is equal to one meter per second

$$E=m\,c^2=m\,c=1\ \text{meter/second}$$

A water molecule traversing a wormhole into hyperspace undergoes a change in the speed of light from 299792458 m/s to 1 m/s.

[0034] Planck's constant $\hbar$ is equal to the Planck mass ΩΛ times the Planck scale Λ times the speed of light c.

$$\hbar=\Omega\Lambda\Lambda c$$

By having the speed of light go to 1 m/s, the orbital term in the effective potential V_{eff} is reduced by a factor of the speed of light squared equal to 9×10^{16}. This unbalances the equation to such an extent that only the Coulomb potential term remains.

$$\frac{l(l+1)\hbar^2}{2mr^2}\ll\text{coulomb term}$$

The electron is attracted to the proton nucleus because the centrifugal term no longer provides a stable orbit for the electron. Thus the atomic binding is destroyed and the water molecule becomes soft as putty.

[0035] Referring to **FIG. 12**, the collision of the electron with the proton together with the enormous change in the proton's energy causes the proton p to become unstable and decay. According to the Standard Model of particle physics, the elementary particles are composed of smaller particles known as quarks. The six quarks have been named up u, down d, strange s, charm c, top t, and bottom b. The subscript on the quark indicates one of three colors {red r, blue b, green g). As shown in the diagram, the proton is composed of three quarks $\{u_r, u_g, d_b\}$, two of which are up quarks of which one is red and the other green, and a third blue down quark. The proton p decays into a positron e^+ which is an electron with a positive charge, and a neutrally-charged pion π^0 particle through the exchange of an X boson particle. The pion has a mass between the electron and the proton.

$$p\rightarrow\pi^0+e^+$$

[0036] Referring to **FIG. 13**, the pion π^0 then decays into a proton p and antiproton $\bar{p}$ which annihilate each other to produce two photons shown on the right by the traveling waves. So the overall energy exchange is

$$p\rightarrow\frac{2h\nu}{c^2}+e^+$$

where hv is the energy per gamma photon with frequency v. The electron of the hydrogen atom would then annihilate the positron for additional photon energy.

[0037] Referring to **FIG. 14**, the hydrogen H atom is composed (**38**) of the proton and electron as seen in the upper left corner. The proton decays (**39**) into the neutral pion and a positron. The electron from the hydrogen atom and this positron form one electron pair (**40**). The pion then decays (**41**) into two gamma photons which produce an electron pair production energy cascade into 132 pairs (**42**,**43**) for a total of 133 electron pairs. These electrons can then be captured electrostatically and used for the production of electricity.

[0038] Referring to **FIG. 15**, the electrons are captured with the water droplet injector . The plunger (**46**) of a spring-loaded cylindrical solenoid (**44**) is attached to a tapered piston (**47**). By means of ring collar and bolts (**45**), the solenoid is bolted to the injector (**48**). A supply of purified water is attached to the water inlet connection (**49**). When the solenoid is activated, it pulls back slightly so that water can enter the valve. When the solenoid is deactivated, the piston forces the water droplet out through the nozzle (**50**) into a cylindrical glass vacuum chamber (**52**). Two cylindrical glass disks (**51**) hold the nozzle in place. On the other end of the vacuum chamber is the sealed-tube con-

nection (**56**,**57**,**58**) to the vacuum pump. In the middle of the vacuum chamber, two metal plates (**53**) are attached through sealed glass collars (**54**) to electrical pins (**55**). The plates are electrostatically-charged with opposite charges so as to form a capacitor. This creates an electrical field between the plates which attracts the electrons to the positively-charged plate.

[**0039**] Referring to **FIG. 16**, the vacuum tube and water injector (**61**) are mounted along the centerline of the inner (**60**) and outer (**59**) magnetic vortex wormhole generator coils. The low density hyperspace energy traversing the wormhole along the centerline of the coils causes the injected water molecules to soften and decay into a cascade of electrons. The oscillating electric field along the centerline causes the electrons to vibrate back and forth. The crossed electric field between the charged capacitor plates causes the electrons to flow toward the positively-charge plate in order to produce electricity.

[**0040**] Referring to **FIG. 17**, the vacuum tube is connected to the vacuum pump through a hose connection to the pump air inlet (**64**). A 5 Hp electric motor (**62**) drives dual rotating flights of screws which trap the air and move it toward the exhaust outlet (**65**) shown with no muffler. On a spacecraft operating in the vacuum of outer space, this component would not be needed.

SUMMARY OF THE INVENTION

[**0041**] It is the object of this invention to generate electricity by using low density hyperspace energy to soften water molecules such that the atomic binding is broken which causes the hydrogen nucleus to decay into a cascade of electron pairs. These electrons are then collected on a positively-charged plate in order to produce electricity. The water molecules are softened by flooding them with low density hyperspace energy that is produced by a magnetic vortex wormhole generator. The generator creates negative energy and a spacetime curvature along the centerline of two concentric coils. This combination opens up wormholes along the centerline. Because the gravitational potential of low density hyperspace energy is greater than the negative energy, the hyperspace energy flows through the wormhole from hyperspace into our dimension. The hyperspace energy has a speed of light equal to one meter/second. This causes a change in Planck's constant h such that the proton orbitals of the hydrogen atom are unable to produce a centrifugal repulsion which keeps the electron in orbit. The Coulomb potential term dominates and the electron is attracted to the proton. Due to the vast change in the speed of light, and the collision of the electron with the proton, the proton becomes unstable and decays into a neutral pion and a positron. The pion then decays into two gamma photons which produce a large cascade of electron pairs.

[**0042**] A water injector, consisting of a solenoid-activated valve and nozzle, injects water droplets into a vacuum chamber which is positioned along the centerline of the two concentric coils where the wormholes form. Due to the low density hyperspace energy passing through the wormholes into our dimension, the water molecules soften and decay into electrons which are collected on an electrostatically-charged capacitor plate having a positive charge located in the glass vacuum chamber.

A BRIEF DESCRIPTION OF THE DRAWINGS

[**0043**] **FIG. 1**. Perspective view of hydrogen atom K shell.

[**0044**] **FIG. 2**. Graph showing potential binding energy of hydrogen atom.

[**0045**] **FIG. 3**. Perceptive view of Olympus Mons volcano at +19.5° Mars latitude.

[**0046**] **FIG. 4**. Perspective view of tetrahedron inscribed in sphere.

[**0047**] **FIG. 5**. Graph showing complex plane.

[**0048**] **FIG. 6**. Perspective view of hyperspace co-dimensions of logarithmic manifold.

[**0049**] **FIG. 7**. Perspective view of embedding diagram showing curvature of space caused by a mass.

[**0050**] **FIG. 8**. Perspective view of wormhole embedding diagram.

[**0051**] **FIG. 9**. Perspective view of coils of magnetic vortex wormhole generator.

[**0052**] **FIG. 10**. Graph showing that generator produces negative energy.

[**0053**] **FIG. 11**. Tetrahedron diagram showing that the speed of light at the Planck box boundary at the water molecule is one meter/second.

[**0054**] **FIG. 12**. Perspective view of proton decay into neutral pion and positron.

[**0055**] **FIG. 13**. Perspective view of pion decaying into two gamma photons.

[**0056**] **FIG. 14**. Diagram showing decay of the hydrogen atom into electrons.

[**0057**] **FIG. 15**. Perspective view of water injector and vacuum chamber.

[**0058**] **FIG. 16**. Perspective view of vacuum chamber mounted along centerline of magnetic vortex wormhole generator.

[**0059**] **FIG. 17**. Perspective view of vacuum pump used to evacuate vacuum chamber.

DETAILED DESCRIPTION OF THE INVENTION

[**0060**] 1. The coils of the magnetic vortex wormhole generator are made of three stacks of 0.020 inch silicon-iron transformer laminates. These are washed to remove the oil, and then wrapped with insulating tape in order to keep the laminations together. Using a very long bench made of wooden planks and 2×4 sawhorses, the outer coil is wrapped counter-clockwise right to left using a large spool of 14 AWG magnetic wire. A thin spacer is used between windings in order to reduce the winding capacitance. Once the outer coil is wound, the wire is continued to the second inner coil which is wrapped clockwise, leaving enough wire between coils such that when the coils are mounted in the wooden frame, the coil is one continuous winding having an input and output connection. Using an inductance meter, the inductance of the coil is measured. Using a standard frequency of 60 Hz, the capacitance of a sheet metal capacitor is calculated such that the generator is electromagnetically resonant at this frequency. The generator is connected to the line voltage by a 1:1 isolation transformer which is connected to a small primary coil wrapped on a toroidal core

whose similar secondary coil is connected to the sheet metal capacitor and inductance coil. Resonance is achieved by adjusting the spacing and overlap of the sheet metal.

[0061] 2. The vacuum chamber is made of a glass tube with sufficient wall thickness to withstand the vacuum pressure. A number of glass blowing techniques are used to make the glass-electrode connection for the capacitor plates. Then circular pieces of glass plate are cut out and ground to the inside diameter of the tube, fitted with the nozzle and vacuum connection, and then heat sealed to the chamber. The chamber and water injector are then attached to a wooden bracket mounting which is doweled and glued to the wooden frame of the generator.

I claim:

1. A water energy generator system comprising the components:

a magnetic vortex wormhole generator and driving resonant electrical circuit;

a water droplet injector;

a vacuum chamber and vacuum pump; and

an electrostatic electron capture system.

2. By means of claim (**1**), a magnetic vortex wormhole generator comprising two concentric cylindrical coils of different radii wound in opposite directions, made of thin sheet silicon-iron transformer laminations wound with one continuous length of magnetic wire providing a single input and single output connection to the driving electrical circuit.

3. By means of claim (**2**), a coil winding method and oscillating driving circuit producing bucking electric fields along the centerline of the generator normal to the coils which create a spacetime curvature pressure and negative energy.

4. By means of claim (**3**), the generation of wormholes between space and hyperspace along the centerline of the generator such that low density, low speed of light hyperspace energy flows through a positive gravitational gradient from hyperspace to space.

5. By means of claim (**1**), a water injector comprising a solenoid-activated water valve, water supply connection, seal and nozzle for injecting water droplets into the vacuum chamber.

6. By means of claims (**5**) and (**4**), the softening and particle decay of the water molecules by the hyperspace energy into neutral pions, positrons, gamma photons and finally a cascade of electron pairs.

7. By means of claims (**6**) and (**1**), the capture of the electrons on electrostatically charged capacitor plates located in the vacuum chamber for the purpose of producing electrical energy.

8. By means of claims (**1**) and (**2**), a resonant electrical driving circuit comprising a line isolation transformer connected to a primary coil wound on a toroidal coil whose secondary output coil is connected to a capacitor and the inductance coil of the generator such that the capacitance of the capacitor and the inductance of the coil form a highly resonant electrical circuit.

* * * * *

US 20030209636A1

(19) United States

(12) Patent Application Publication

(10) Pub. No.: US 2003/0209636 A1

(43) Pub. Date: Nov. 13, 2003

St.Clair

(54) **BOBBIN ELECTROMAGNETIC FIELD PROPULSION VEHICLE**

(76) Inventor: **John Quincy St.Clair**, San Juan, PR (US)

Correspondence Address:
John St.Clair
Hyperspace Research Institute
52 Kings Court, 4A
San Juan, PR 00911 (US)

(21) Appl. No.: **10/142,583**

(22) Filed: **May 9, 2002**

Publication Classification

(51) **Int. Cl.**[7] **B64G 1/32**

(52) **U.S. Cl.** **244/166**

(57) **ABSTRACT**

This invention relates to a spacecraft which generates its own magnetic moment and magnetic field gradient in order to produce lift on the hull. The magnetic moment is generated by a large area solenoid located in the hull. A toroidal core wrapped with electrical bobbins at intervals along said core produces a traveling magnetic wave along its surface. This magnetic wave creates a spacetime curvature, similar to a tilted plate, which causes the formation of a magnetic field gradient. Power is not critical because the system uses a magnetic vortex wormhole generator to lower the speed of light in order to efficiently create highly relativistic fields due to Lorentz transformation.

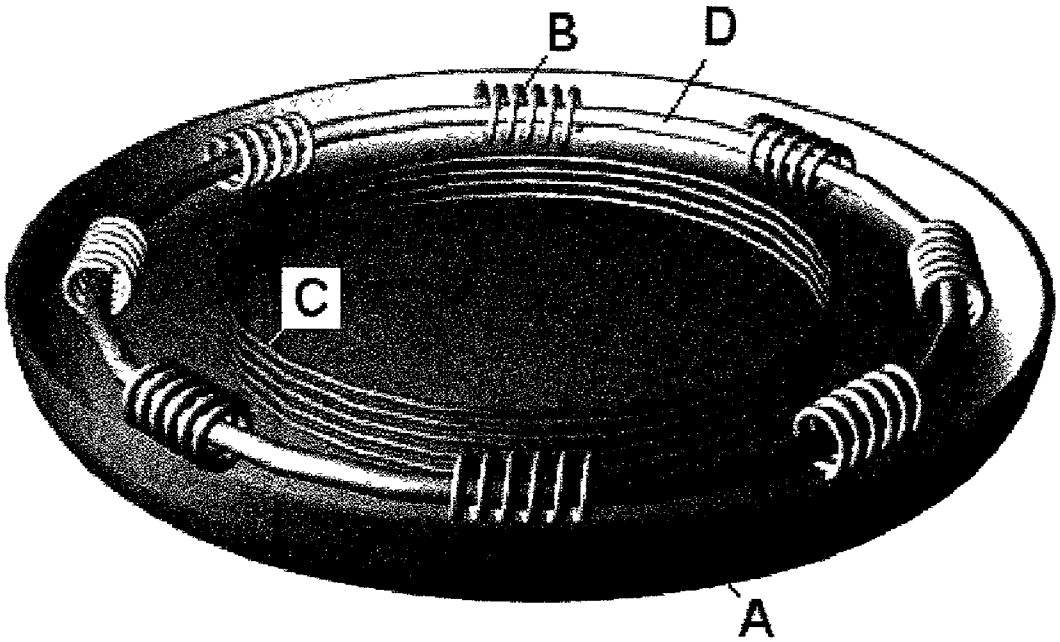

Figure 1

$$\text{Force} = \mu \cdot \frac{\partial B_z}{\partial z} = \text{amp} \cdot \text{m}^2 \frac{\text{kg}}{\text{sec} \cdot \text{coul} \cdot \text{m}} = \frac{\text{coul}}{\text{sec}} \cdot \text{m}^2 \cdot \frac{\text{kg}}{\text{sec} \cdot \text{coul} \cdot \text{m}} = \frac{\text{kg} \cdot \text{m}}{\text{sec}^2} = \text{newton}$$

Figure 2

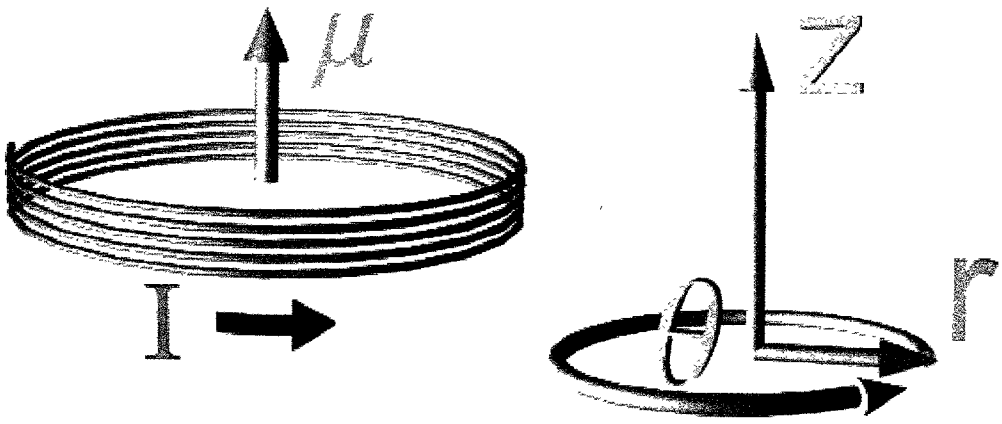

Figure 3

$$B_Z = \mu n I$$

Figure 4

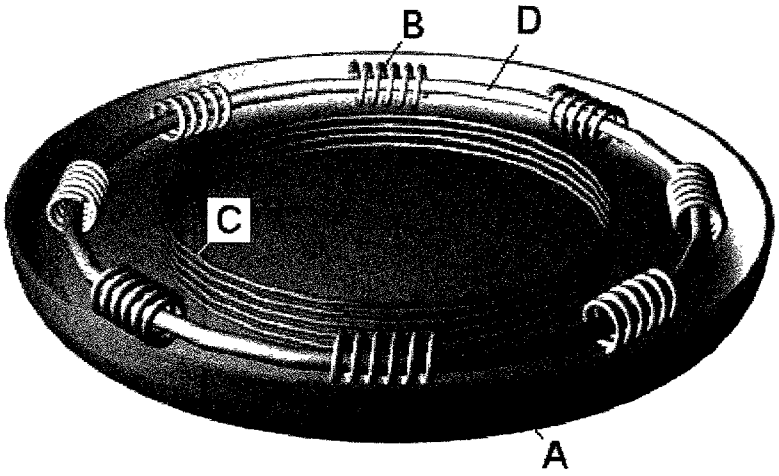

Figure 5

$$v = \sqrt{\frac{\omega}{\sigma\mu}}$$

Figure 6

$$g_{\alpha\phi} = \begin{array}{c} \\ t \\ r \\ \theta \\ z \end{array} \begin{array}{c} \begin{array}{cccc} t & r & \theta & z \end{array} \\ \begin{vmatrix} -1 & 0 & \mathrm{Sin}[\theta - t] & 0 \\ 00 & 1 & 0 & 0 \\ \mathrm{Sin}[\theta - t] & 0 & r^2 & 0 \\ 0 & 0 & 0 & 1 \end{vmatrix} \end{array}$$

Figure 7

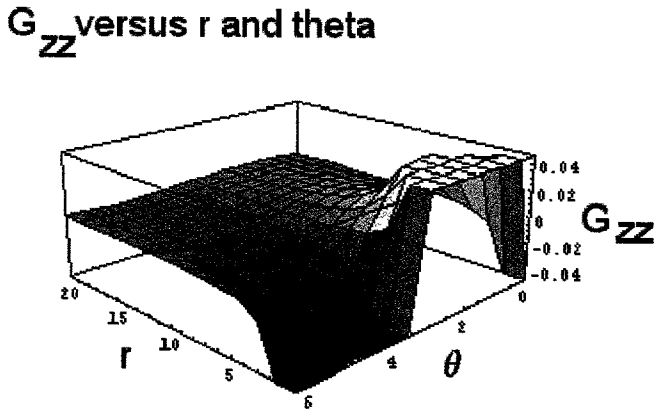

Figure 8

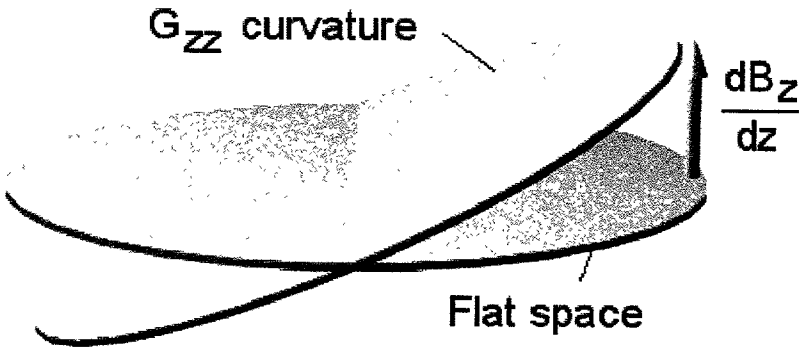

BOBBIN ELECTROMAGNETIC FIELD PROPULSION VEHICLE

BRIEF SUMMARY OF THE INVENTION

[0001] This invention, which is the subject of my present application, is comprised of a toroidal core around which are wound a plurality of electromagnetic bobbins. The bobbins are pulsed electrically to create an amplified magnetic wave that travels around the core. At the same time, a circular electrical conductor carrying direct current creates a magnetic field around its area which results in the formation of a magnetic moment. This magnetic moment, together with the spacetime curvature distortion created by the traveling magnetic wave, produces a lift force on the vehicle.

REFERENCE PAPERS

[0002] Levitron, Hones, U.S. Pat. No. 5,404,062.

[0003] *Geometry of Electromagnetic Systems,* Paul Hammond, page 179.

BACKGROUND OF THE INVENTION

[0004] The idea for this invention comes from experiments I have done using thin transformer laminations wound in intervals with bobbins of wire connected to a frequency generator. Pulsing the bobbins electrically creates a slow traveling magnetic wave along the surface of the lamination. The velocity of the wave, as shown by Hammond in the reference paper, is the square root of the frequency divided by the conductivity and permeability of the material. From Einstein's General Theory of Relativity, this type of wave around the circumference creates a spacetime curvature distortion in the vertical direction that looks like a tilted plate. The magnetic field traveling around the circumference has to follow this curvature. This creates a magnetic gradient in the z-direction which together with the magnetic moment developed by a solenoid produces lift on the vehicle.

SUMMARY OF THE INVENTION

[0005] It is the object of this invention to create a magnetic field gradient and magnetic moment in order to produce a lift force on the hull of a vehicle. The magnetic field gradient is produced by a traveling magnetic wave which produces a tilting-plate spacetime curvature around the hull. The magnetic moment is created by a simple circular wire carrying direct current around its area.

STATEMENT REGARDING FEDERALLY SPONSORED RESEARCH OR DEVELOPMENT

[0006] Not Applicable.

A BRIEF DESCRIPTION OF THE DRAWINGS

[0007] **FIG. 1**. The lift force on the vehicle is equal to a magnetic moment times the magnetic field gradient.

[0008] **FIG. 2**. Magnetic moment μ created by direct current I flowing counterclockwise around the wire coil. Cylindrical coordinates are shown to the right.

[0009] **FIG. 3**. The wire coil solenoid creates a magnetic field in the z-direction equal to the permeability of space times the number of turns per length of the solenoid times the current in the windings.

[0010] **FIG. 4**. Perspective view of bobbin spacecraft.

[0011] **FIG. 5**. Magnetic wave velocity along core.

[0012] **FIG. 6**. The g metric tensor in cylindrical coordinates with the sinusoidal wave function in the $\{t,\theta\}$ slots.

[0013] **FIG. 7**. The spacetime curvature G_{zz} in the vertical direction created by the magnetic wave traveling around the core.

[0014] **FIG. 8**. Tilted plate spacetime curvature showing magnetic gradient.

DETAILED DESCRIPTION OF THE INVENTION

[0015] 1. Referring to the equation in **FIG. 1**, the lift force on the bobbin spacecraft is equal to its magnetic moment times its magnetic field gradient. The magnetic moment has units of electrical current, measured in amps, times the area enclosed by the current. Thus the units of the magnetic moment are amp–m^2. The magnetic moment can be created by a large, circular coil of wire carrying direct current I as shown in **FIG. 2**. The spacetime cylindrical coordinates $\{t, r, \theta, z\}$ are shown to the right of the drawing where t is time, r the radius, the horizontal angle θ, and the vertical height z.

[0016] 2. The wire coil solenoid also produces a magnetic field in the vertical z-direction equal to the permeability of space μ times the number of turns per unit length of the solenoid n, times the current I in the winding. The equation is shown in **FIG. 3** which can be developed from Ampere's law that the magnetic field around a loop is equal to the current passing through the loop.

[0017] 3. Referring to **FIG. 4**, the bobbin spacecraft consists of a large, horizontal, highpermeability toroidal core (D) wrapped at intervals with electrical bobbins (B) which can be pulsed electrically to create a traveling magnetic wave around the core. Interior to this core is a large direct current solenoid (C) which produces said magnetic field in the z-direction. These devices are enclosed in a circular hull (A) containing the coils on the outer rim and a cabin area in the center.

[0018] 4. Referring to **FIG. 5**, the velocity of the magnetic wave on the surface of the core is equal to the square root of the wave frequency ω divided by the conductivity a times the permeability μ of the core material. When the first bobbin is pulsed, a wave starts to propagate along the surface of the core. As the wave passes the second bobbin in sequence, another electrical pulse is generated to amplify the wave. After many cycles, the wave traveling around the core becomes larger and larger in amplitude.

[0019] 5. A traveling wave has a wave function equal to a sinusoidal function with an argument of the angle θ around the periphery less the time t, or $\mathrm{Sin}[\theta-\omega t]$.

[0020] 6. In gravitational physics, there is a g metric tensor which is a measure of length in spacetime coordinates. When mass or electromagnetic fields are involved in a certain region of space, a curvature of space is created. The curvature of space can then be calculated directly from this metric tensor. The result is Einstein's G curvature tensor which shows the spacetime distortion. The g metric tensor is a 4 by 4 matrix having rows and columns equal to time t,

radius r, angle theta, and vertical height z. The diagonal from top left to bottom right has a signature equal to $\{-1, 1, r^2, 1\}$.

[**0021**] 7. Because the magnetic wave traveling around the core is varying with time t in the theta direction, the wave function has to go into the $\{t,\theta\}$ and $\{\theta,t\}$ slots of the metric tensor, as shown in **FIG. 6**.

[**0022**] 8. From this metric tensor, Einstein's G curvature tensor is calculated using a general relativity software program. The spacetime curvature in the vertical z-direction is contained in the G_{zz} component. A 3D plot of this curvature with respect to radius and theta is shown in **FIG. 7**. The axis on the right side is the angle around the periphery, and the axis on the left is the radius which goes from 0 to 20 meters. The vertical axis of the graph is the spacetime curvature in the vertical z-direction. The center of the vertical axis is zero. At a small radius, there is a sinusoidal curvature which is positive from 0 to π and which is negative from π to 2π. What this looks like is a tilted plate as depicted in **FIG. 8**.

[**0023**] 9. In flat spacetime with no electromagnetic fields or mass, the curvature would be the horizontal plate as seen **FIG. 8**. Due to the traveling magnetic wave, the spacetime curvature looks like the tilted plate. The flat-space magnetic field was pointing up in the vertical direction, having no divergence and no gradient. In curved spacetime, however, the magnetic field becomes tilted just like the plate and a magnetic gradient dB_z/dz is created. This spacetime curvature gradient of the magnetic field times the magnetic moment of the second coil produces a lift force on the hull which is anchored to these coils.

What I claim as my invention is:

1. A spacecraft that generates a magnetic moment and a magnetic field gradient in the vertical direction in order to create a lift force on the hull.

2. A toroidal core wrapped with electrical bobbins at intervals around the core whose purpose is to create and amplify a magnetic wave that travels along the surface of the core.

3. A circular, direct-current carrying solenoid, located radially inside the toroidal core, to create the magnetic moment.

4. Said magnetic surface wave creates a spacetime curvature, similar to a tilted plate, which produces a magnetic field gradient in the vertical direction.

5. A circular hull, with interior cabin, electrical power supply to drive the coils, and a computer to calculate and sequence the activation of the electrical bobbins.

6. Magnetic sensors, in the form of small coils, located on the toroidal core which can detect the velocity and position of the traveling magnetic wave as feedback to the computer control system.

7. A magnetic vortex generator, either rotating magnet or dual coil, to produce a wormhole through which low linear mass and low speed of light hyperspace energy can enter the hull in order to create highly relativistic electromagnetic fields.

8. A variable current generator to modulate the direct current in the coil so as to produce a variable magnetic moment that can control lift, hover and descent.

9. An electrical power supply using mechanical flywheel stored energy together with a large area capacitor, resupplied with energy by solar cells located on the outer surface of the hull.

* * * * *

US 20070285325A1

(19) United States

(12) Patent Application Publication

St. Clair

(10) Pub. No.: US 2007/0285325 A1

(43) Pub. Date: Dec. 13, 2007

(54) CHI ENERGY AMPLIFIER

(76) Inventor: **John Quincy St. Clair**, San Juan, PR (US)

Correspondence Address:
JOHN ST. CLAIR
52 KINGS COURT, 4A
SAN JUAN, PR 00911

(21) Appl. No.: **11/448,456**

(22) Filed: **Jun. 7, 2006**

Publication Classification

(51) **Int. Cl.**
H01Q 1/00 (2006.01)
H01Q 13/10 (2006.01)

(52) **U.S. Cl.** **343/720**; 343/767

(57) **ABSTRACT**

A Chi energy amplifier that utilizes a co-gravitational K field to generate a flow of hyperspace energy into or out of a ceramic dome containing a slot antenna.

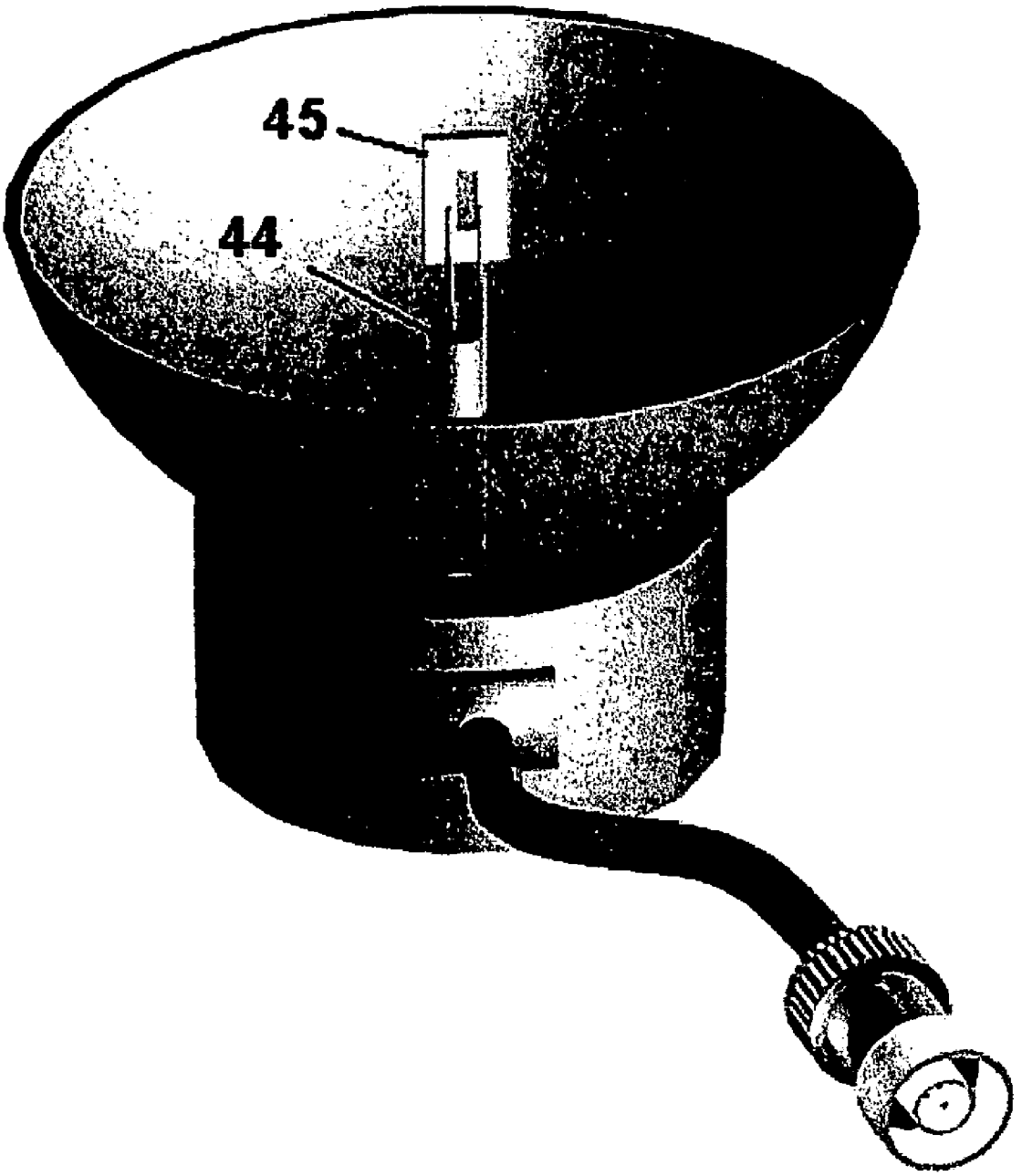

Figure 1

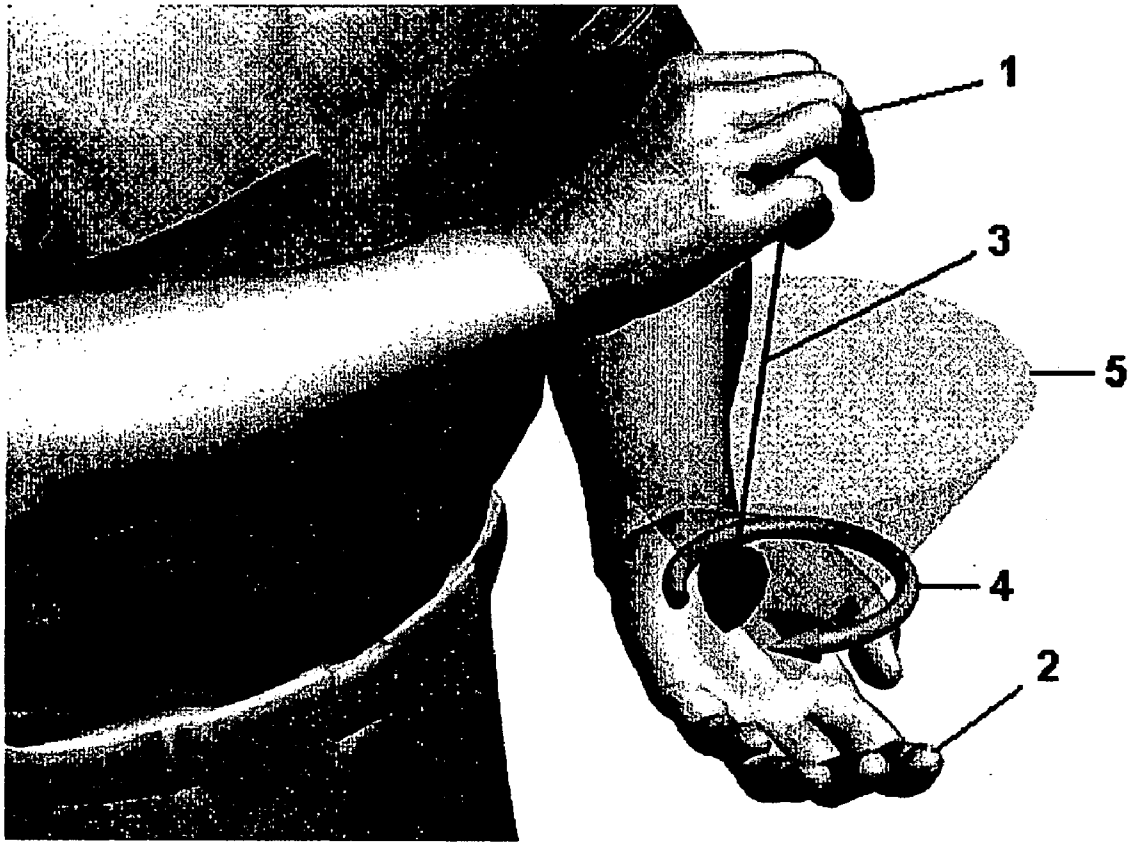

Figure 2

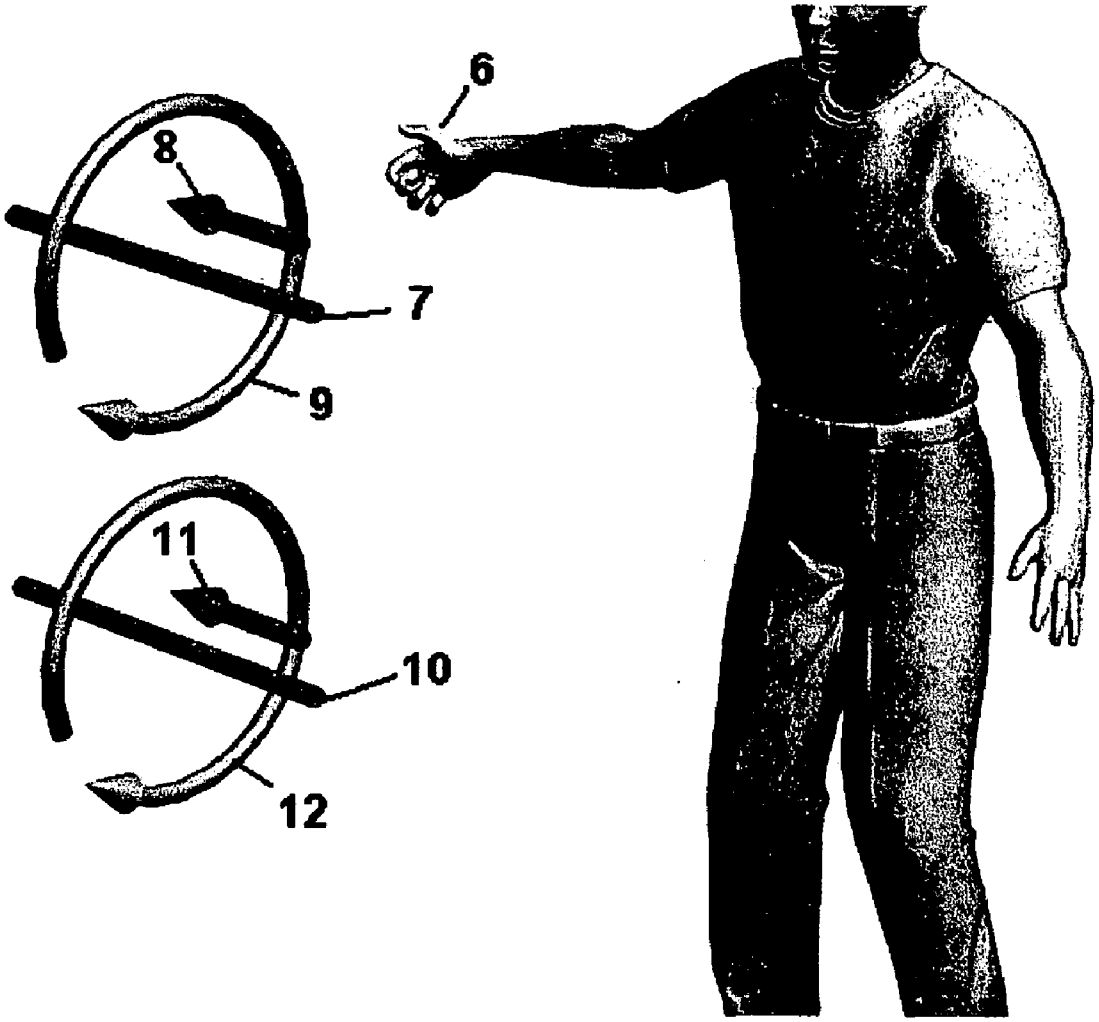

Figure 3

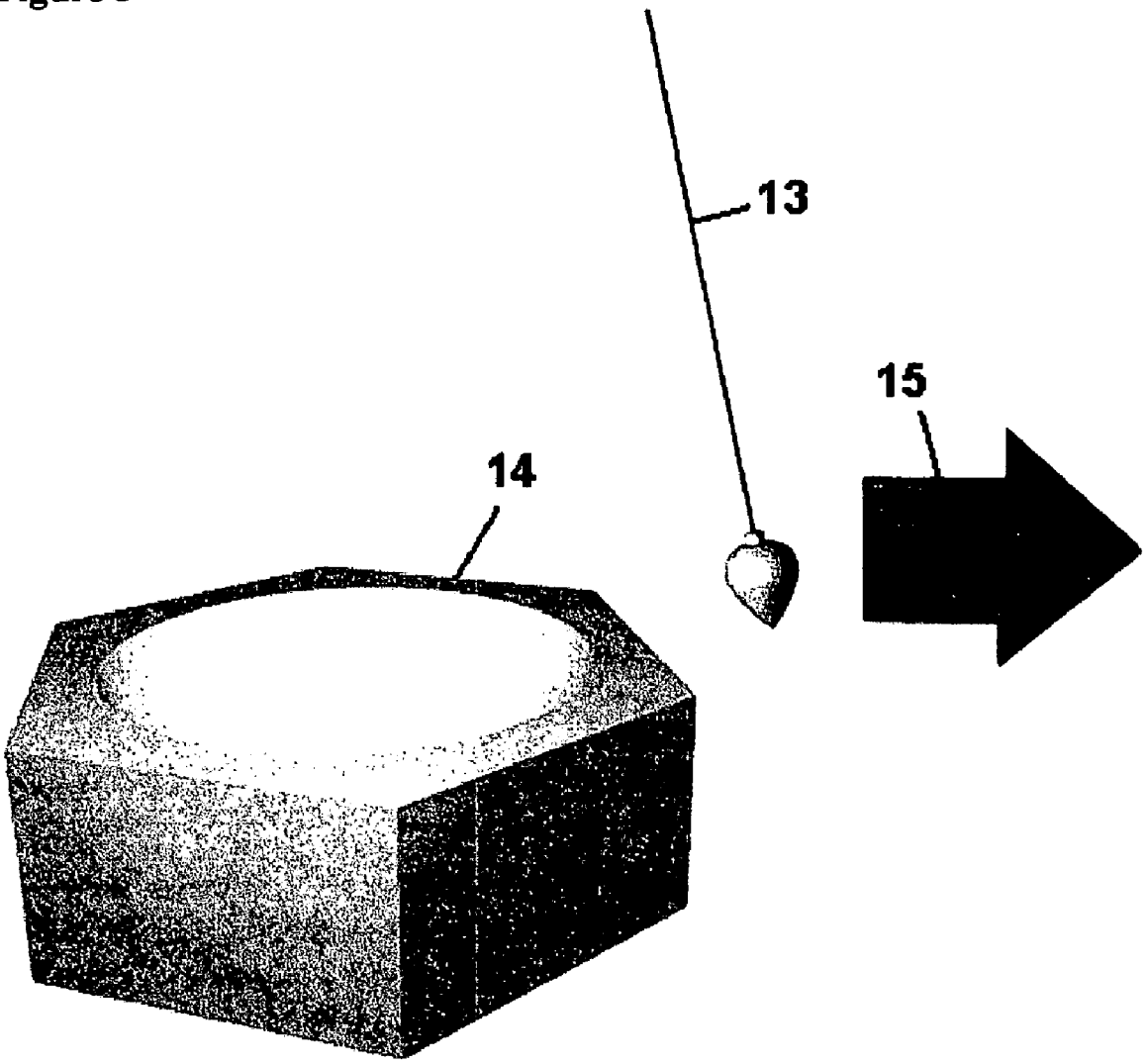

Figure 4

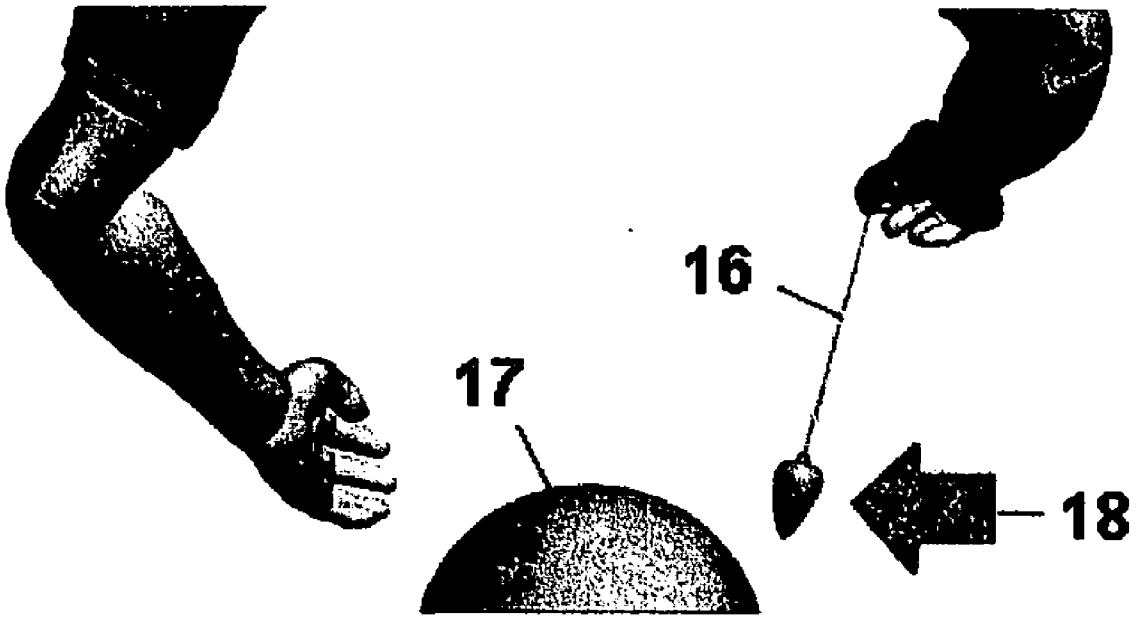

Figure 5

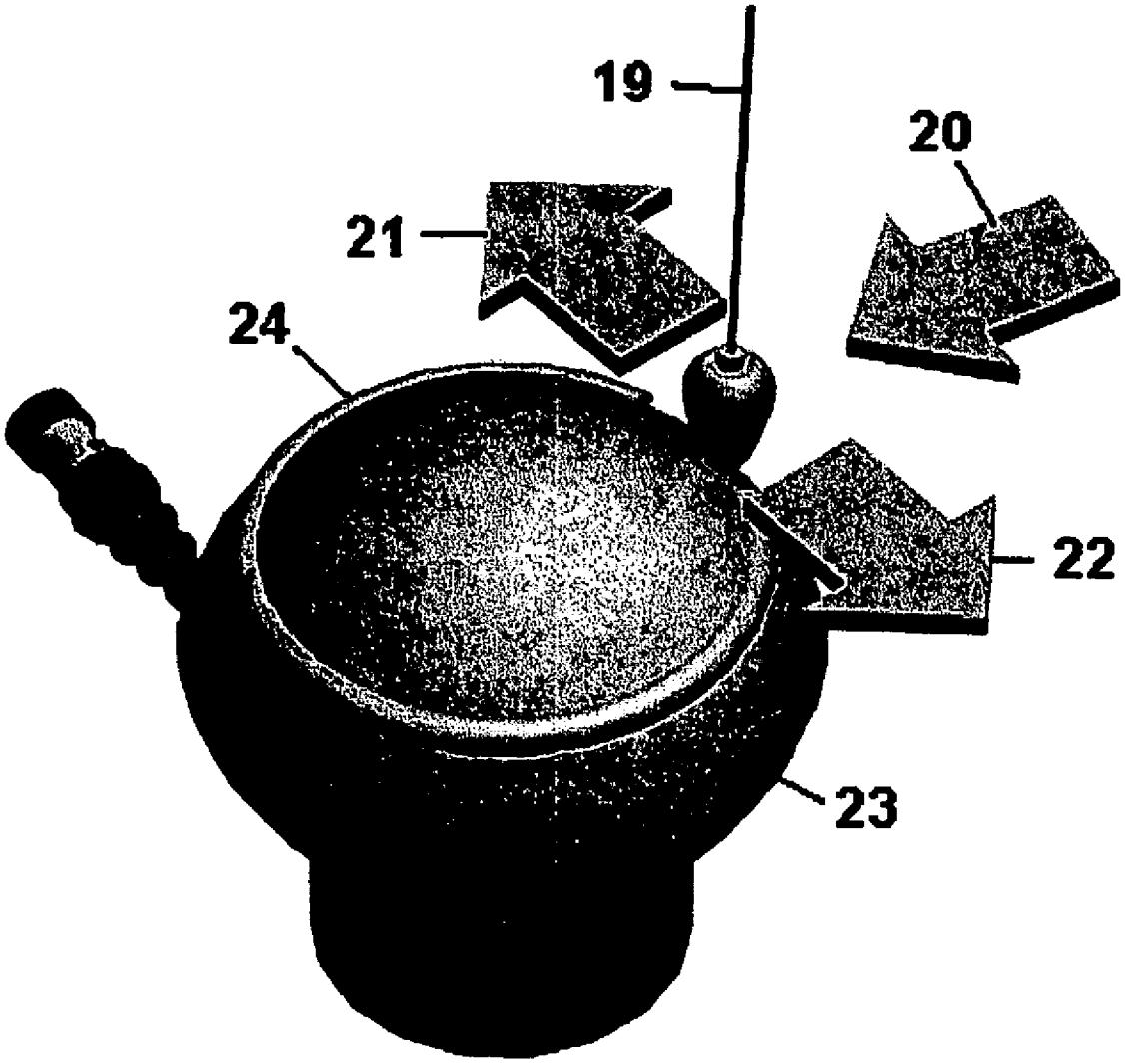

Figure 6

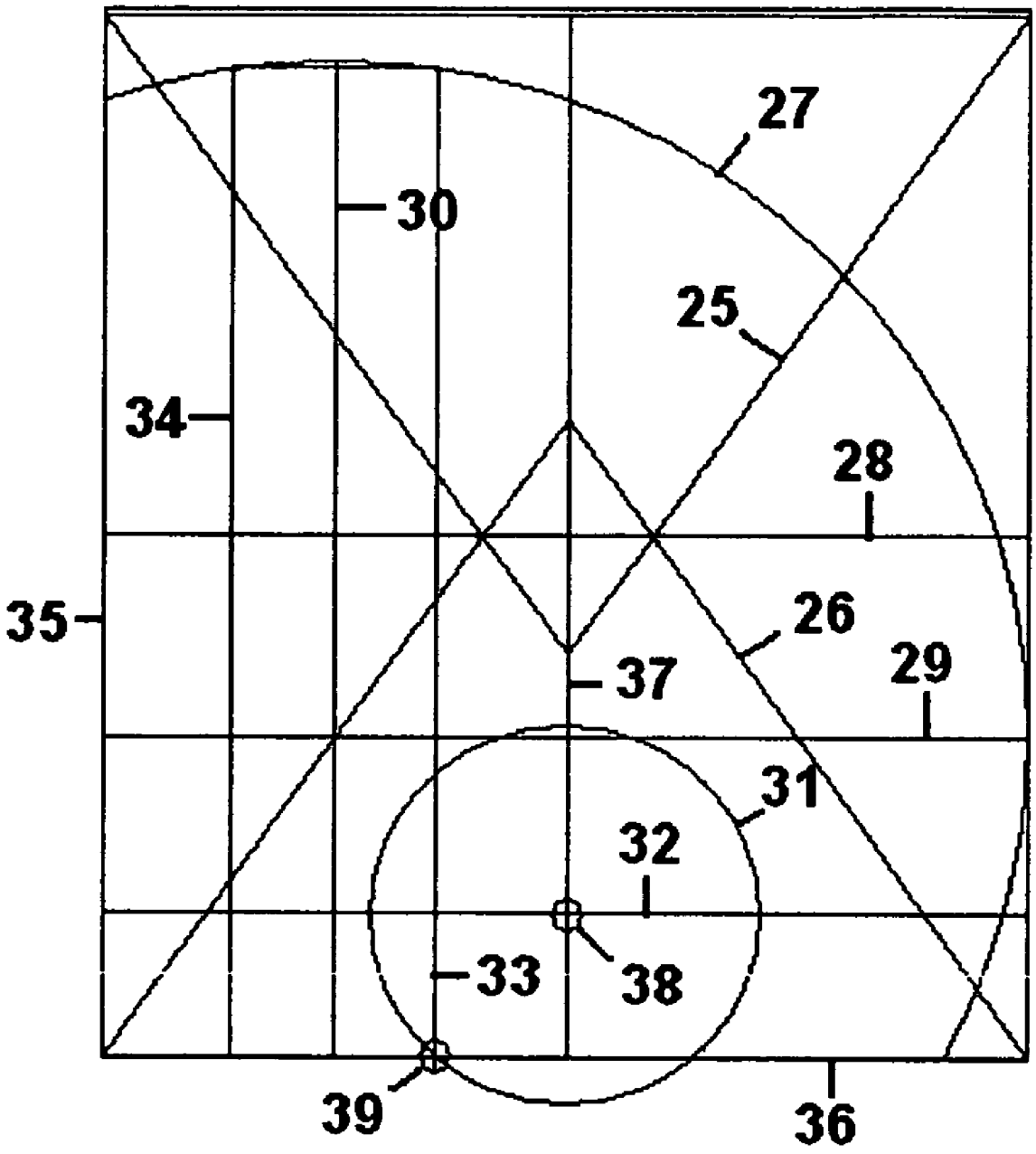

Figure 7

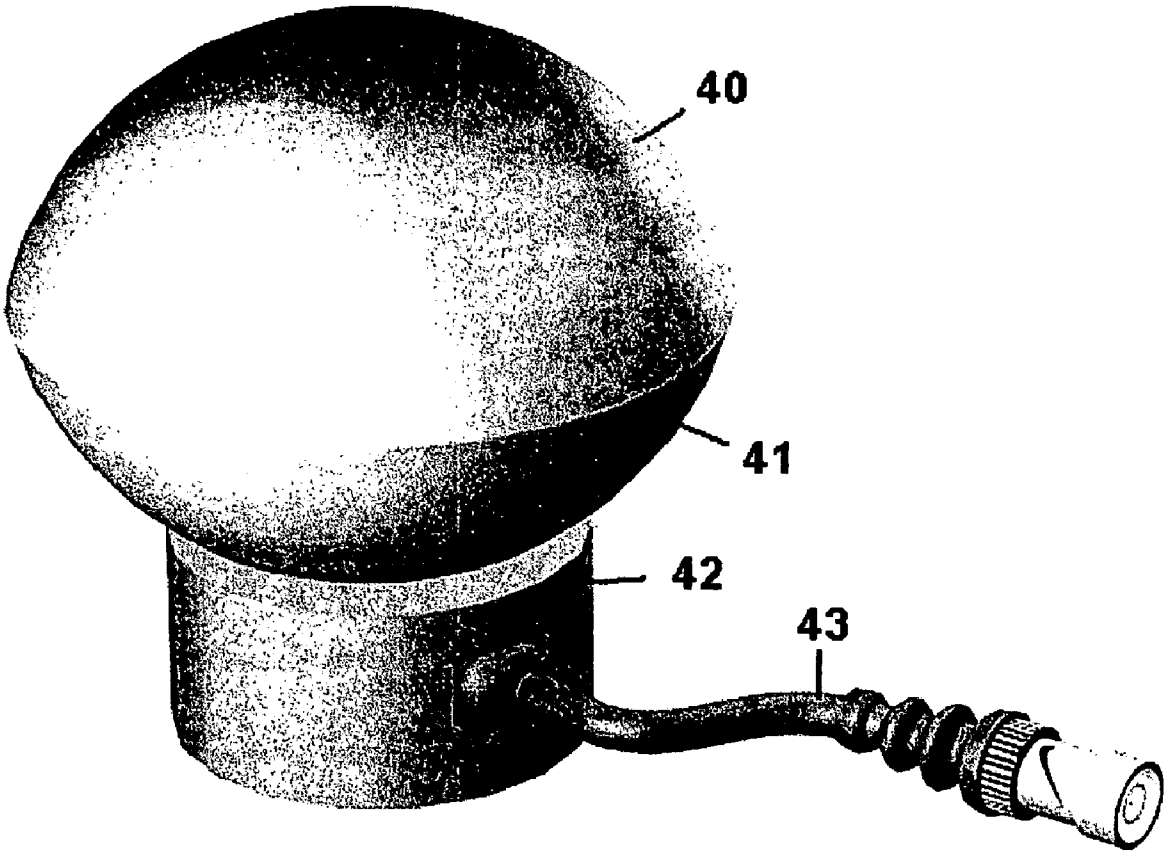

Figure 8

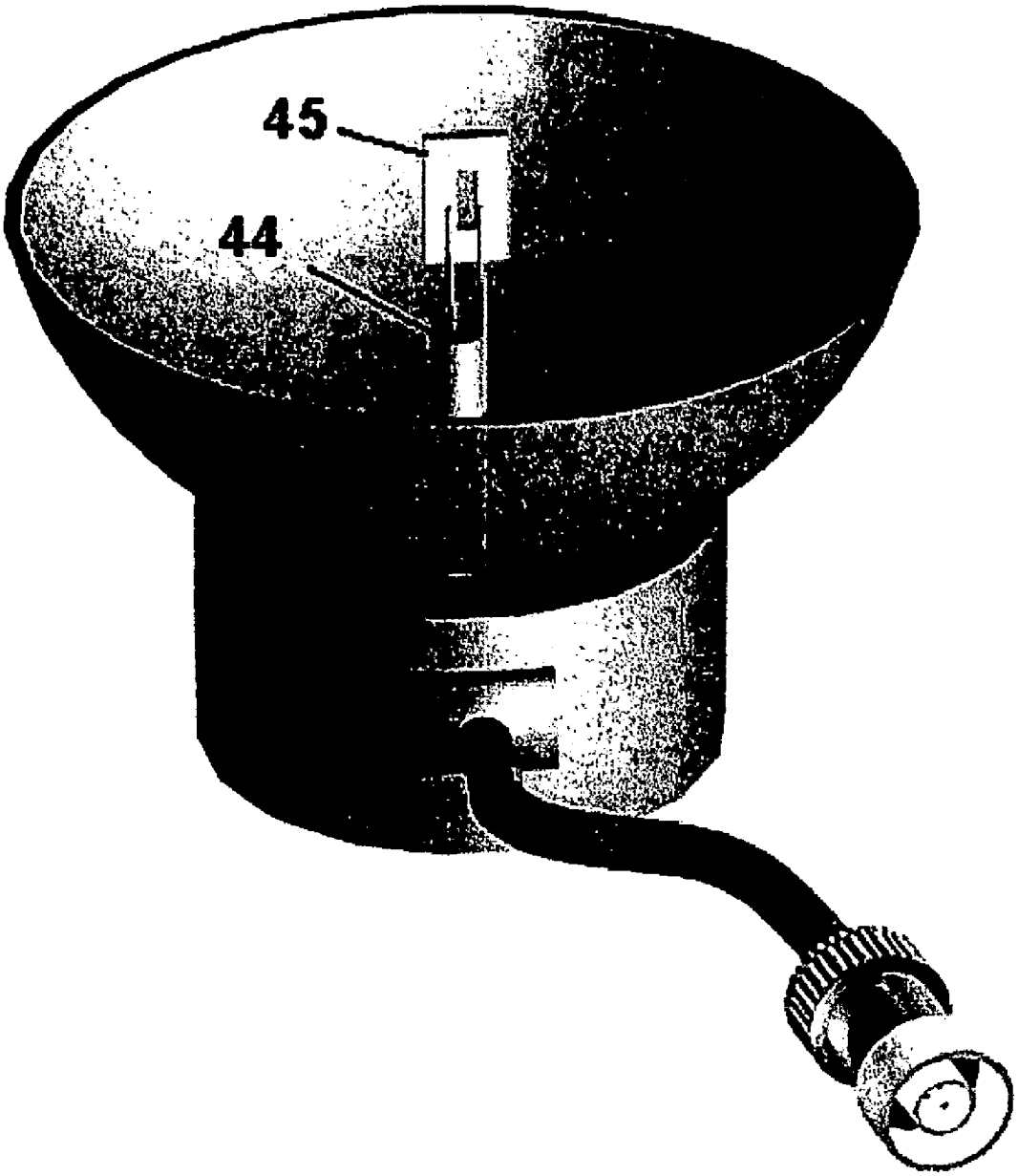

Figure 9

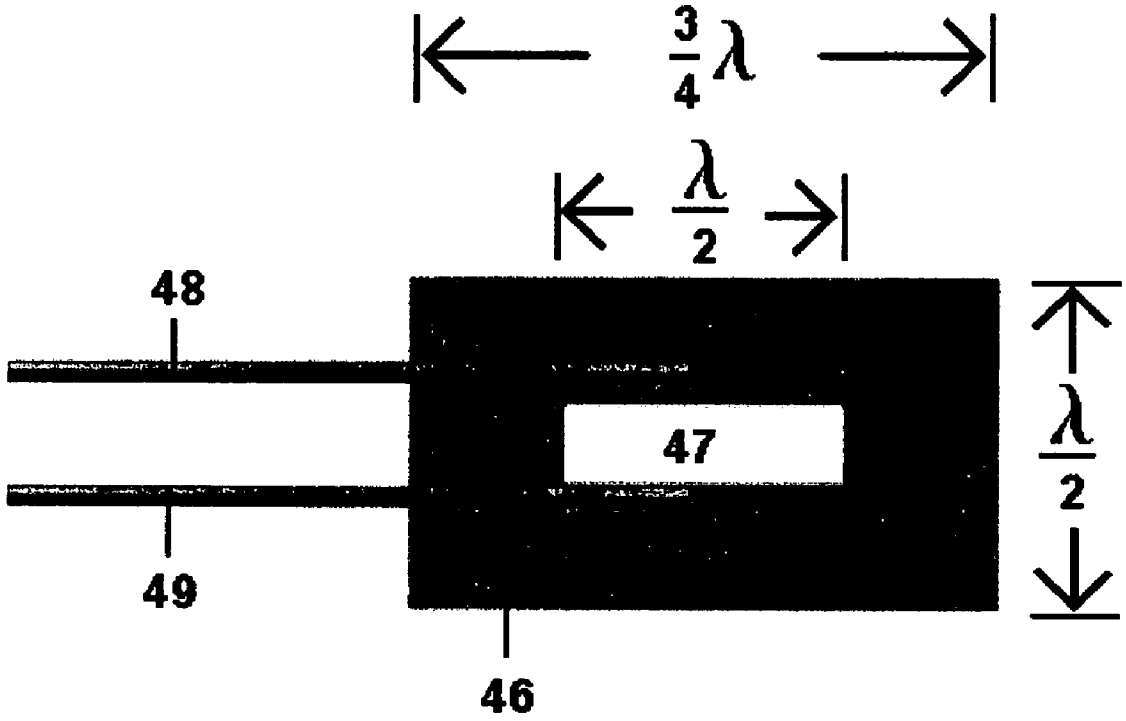

Figure 10

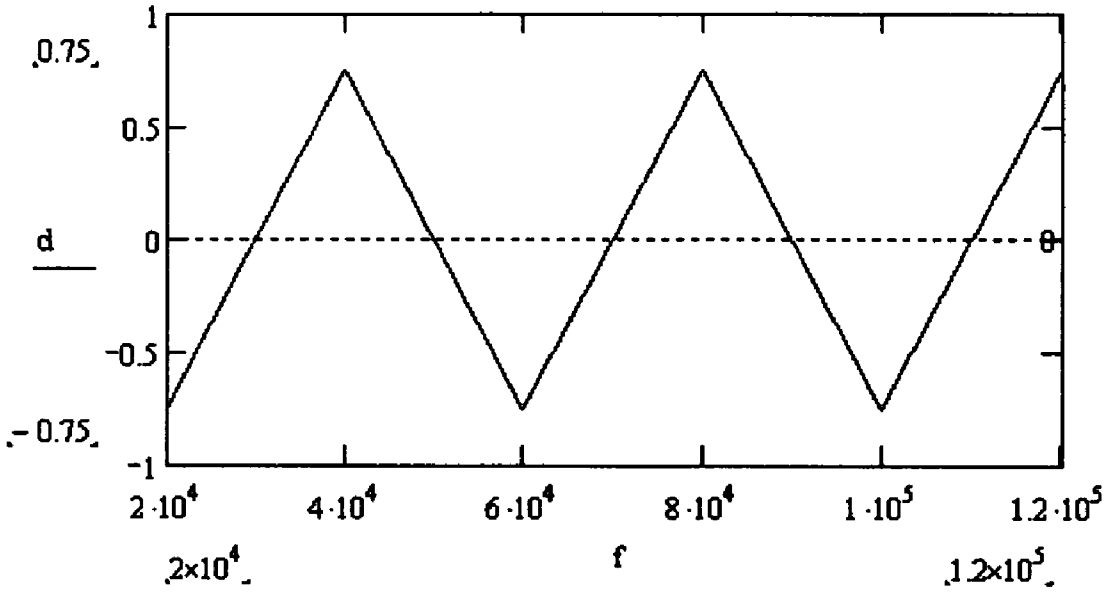
1
0.75
0.5
d
0
0
-0.5
-0.75
-1
2·10^4
4·10^4
6·10^4
8·10^4
1·10^5
1.2·10^5
2×10^4
f
1.2×10^5

Figure 11

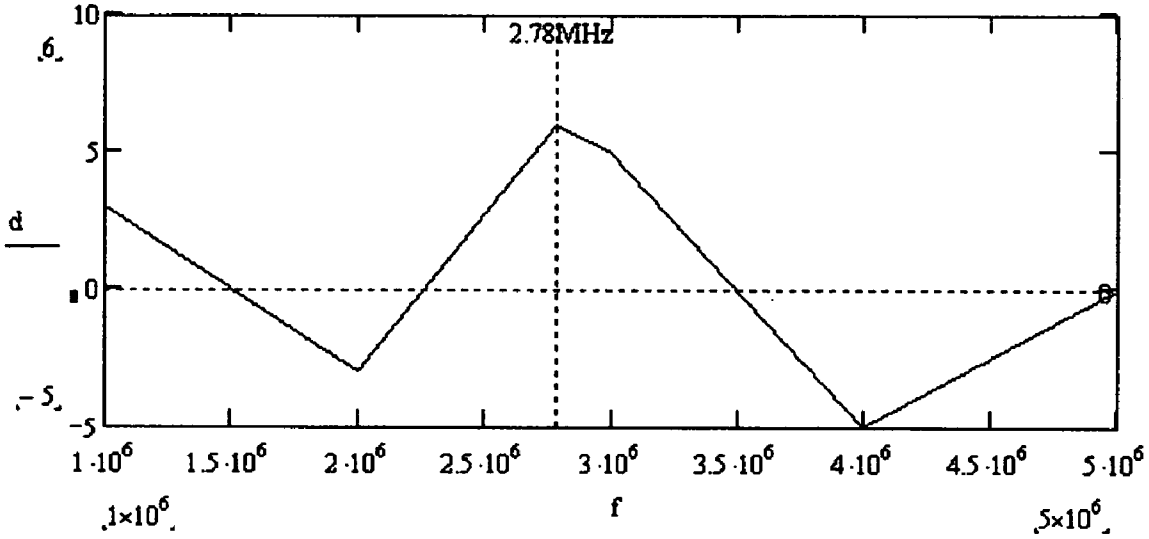
10
.6
5
d
0
-5
-5
2.78MHz
1·10^6
1.5·10^6
2·10^6
2.5·10^6
3·10^6
3.5·10^6
4·10^6
4.5·10^6
5·10^6
.1×10^6
f
.5×10^6

Figure 12

CHI ENERGY AMPLIFIER

BRIEF SUMMARY OF THE INVENTION

[0001] This invention is an energy amplifier that controls the direction of the second co-gravitational K field by means of a slot antenna located in a resonating sphere. The hyper-space mass flow rate entering into this dimension is determined by the frequency of the antenna. This energy flow is used to increase the energy of the human energy field known as Chi.

BACKGROUND OF THE INVENTION

[0002] Referring to FIG. **1**, a pendulum suspended by a string (**3**) is held by the string with the right hand (**1**) over the upright palm of the left hand (**2**). The pendulum swings in circles shown by the clockwise direction of the arrow (**4**). The pendulum swings at a constant frequency at about 1 to 2 Hz. What this means is that there is a second gravitational K field (**5**) that can cause a mass to rotate in circles.

[0003] Everyone is familiar with the linear gravitational g field which is defined as Newton's gravitational constant G times the mass of the earth divided by the square of the radius of the earth. This is the field that causes objects to accelerate radially toward the earth's surface. Newton's gravitational constant G is equal to the speed of light c squared divided by the linear mass Ω of the universe. The speed of light is

$$c = 299792458\ \frac{\text{meters}}{\text{second}}$$

$$\Omega = 1.346812891 \cdot 10^{27}\ \frac{\text{kilograms}}{\text{meter}}$$

$$G = \frac{c^2}{\Omega} = 6.673200002 \cdot 10^{-11}\ \frac{meter^3}{second^2\ \text{kilogram}}$$

The mass and radius of the earth are

[0004]

$$ME = 5.977 \cdot 10^{24}\ \text{kilograms}$$

$$RE = 6371.03\ 10^3\ \text{meters}$$

$$g = G\frac{ME}{RE^2} = 9.82\ \frac{\text{meters}}{second^2}$$

[0005] From electromagnetism, the electric E field is linear and the B magnetic field is circular or forms closed loops. The electric field starts and ends on electric charges. Since there are two electromagnetic fields, it makes sense that there are also two gravitational fields. A flow of electric current through a straight wire causes a circular magnetic B field to form around the wire. In a similar manner, a flow of mass through a channel causes a circular gravitational K field to form around the channel.

[0006] Referring to FIG. **2**, the right hand rule (**6**) shows that if the flow is along the direction of the thumb of the right hand, then the field curls around in the direction of the fingers. If an electric current is flowing through the wire (**7**) in the direction of arrow (**8**), then a counter-clockwise magnetic field circles the wire shown by arrow (**9**). In the bottom view, a mass flowing through a channel (**10**) in direction (**11**) generates a counter-clockwise gravitational K field shown by arrow (**12**). This field is the reason that the pendulum swings in circles. The gravitational K field only exists if there is a mass flow. In the wire there is also an electric field driving the electrons, so it must be that there is a g gravitational field driving the mass along the channel.

[0007] The correspondence between electromagnetic and gravitational constants must be the following:

Electric	Gravitational
Charge q	Mass m
Electric Field E	Gravitational Field g
Magnetic Field B	Co-gravitational Field K
Linear Electric Charge λ	Linear Mass Ω
Permittivity of Space ϵ_0	$-1/4\pi G$
Permeability of Space μ_0	$-4\pi G/c^2$
Convection Current Density J	Mass Current Density J

[0008] Maxwell's equation for the curl or circulation of B involves the current density J and an electric field E changing with time t

$$\nabla \times B = \mu_0 J + \frac{1}{c^2}\frac{\partial E}{\partial t}$$

The corresponding gravitational equation is therefore

[0009]

$$\nabla \times K = -\frac{4\pi G}{c^2} J + \frac{1}{c^2}\frac{\partial g}{\partial t}$$

[0010] If the g field is constant with time, then the circulation of the K field only depends on the mass density flow through the channel. Notice the minus sign in front of the first term which says that if energy is entering our dimension through a channel, then the K field is in the counterclockwise direction as indicated by the pendulum. As seen in FIG. **1**, the energy is leaving through the left hand because the rotation is clockwise. On the right hand, the pendulum rotates in the counterclockwise direction indicating that energy is coming from the hand. Thus there is a flow of energy between the hands known as the Chi energy. The purpose of this invention is to amplify this energy.

[0011] The g gravitational field is due to a negative space-time curvature created by the mass of the earth. In many physics books this is depicted as a bowl. So the idea was to acquire a ceramic kiln which could produce ceramic bowls using earthenware clay and a bowl mold. The curvature created by the bowl, if any, could be detected by the pendulum.

[0012] Referring to FIG. **3**, a pendulum (**13**) held in the right hand with the left hand near the side of the concave mold (**14**) starts to swing toward the right, away from the plaster mold as shown by arrow (**15**).

[0013] Referring to FIG. **4**, a pendulum (**16**) held in the right hand over a positive curvature dome (**17**) swings toward the top of the dome as shown by arrow (**18**).

Supposedly the K gravitational field rotates in circles, but these experiments showed that the pendulum movement was radial.

[0014] Referring to FIG. **5**, the pendulum (**19**) swings radially (**20**) toward the top of the dome (**23**) because the forces (**24**) around the dome counteract each other as shown by arrows (**21**, **22**). Thus there is no sideways pressure on the pendulum.

[0015] The next question was what is the value of the co-gravitational K constant? In electromagnetism the electric field is the speed of light times the magnetic field. So the g gravitational field should be the speed of light times the co-gravitational K field.

$$\begin{aligned} K &= \frac{g}{c} \\ &= \frac{1}{c} G \frac{MU}{RU^2} \\ &= \frac{1}{c} \frac{c^2}{\Omega} \frac{MU}{\frac{MU}{\Omega} RU} \\ &= \frac{c}{RU} \end{aligned}$$

$$\ln(K) = -40.34861143$$

[0016] where the radius RU of the universe is 10^{26} meters and c is the speed of light. The speed of light divided by the radius is angular frequency measured in Hz. Recall that the pendulum over the hand has a frequency f of 1 Hz which makes the angular frequency o equal to 2π radians per second since $\omega=2\pi f$ So the question is whether or not this value of K means anything in terms of hyperspace physics?

[0017] The universe has a geometrical sub-manifold based on the tetrahedron. All the physics constants of the universe are determined by this tetrahedral geometry. As shown in diagram tet0565 stored in the Library of Congress, the electron and proton are one and the same particle. There is a continuous clockwise path from the electron wavelength, through electric charge to electron mass and returning out-of-dimension back along a counterclockwise path as the proton. Because the paths are in opposite directions, the proton has a positive charge and the electron has the opposite negative charge. Because this path crosses into our dimension from hyperspace, we see two different particles. Thus Nature only has one particle. The tetrahedron diagram also shows that our dimension is offset from the origin of the diagram by the Cabibbo angle which is found in particle physics. Our dimension is determined by the Planck mass and the Planck wavelength which are the bottom limits of our dimension, known as the Planck box. If the proton mass is centered on the Planck mass, a tangent line to the circle can only be made by using the down quark and up quark which comprise the proton (duu). And the tangent line is drawn at the Cabibbo angle. So the diagram verifies some important experimental physics data.

[0018] Referring to FIG. **6**, the tetrahedron diagram is drawn with a vertical axis (**35**) corresponding to the natural logarithm of mass. The horizontal axis (**36**) is the natural logarithm of wavelength. The inverted tetrahedrons (**25**, **26**) cross at the centerline (**28**) which is known through remote viewing as "the merging of two worlds." The centerline is the separation point between space and hyperspace. The circumscribing sphere (**27**) has a horizontal diameter (**29**) and a vertical diameter (**30**). The electron wavelength (**34**) reflects off the sphere and returns as the electron mass (**33**).

[0019] Because the K co-gravitational field is related to circular or spinning motion, as well as vorticity per area, it might be imagined that it has something to do with the spinning electron. The energy E of the electron is equal to the mass m_e of the electron times the speed of light c squared.

$$m_e = 9.1093897 \cdot 10^{-31} \text{ kilogram}$$

$$c = 299792458 \cdot \frac{\text{meter}}{\text{second}}$$

$$E = m_e c^2$$

$$\ln(E) = -30.13363019$$

[0020] The tips of the inverted tetrahedrons pass through the base constant, vertical line (**37**), which is equal to Planck's constant h divided by the speed of light.

$$h = 2.210260685 \cdot 10^{-42} \text{ kilogram meter}$$

$$\text{base} = \ln\left(\frac{h}{c}\right) = -95.91546344$$

[0021] On the tetrahedron diagram, the co-gravitational circle K (**31**) is centered on the base (**37**) at the electron energy (**32**) shown by the small π circle at the intersection (**38**). As can be seen, the K circle determines the electron mass (**33**) at the horizontal axis (**36**) as shown by intersection (**39**). Because the electron is the proton, it also sets the constants of the proton such as wavelength, charge and mass. Thus the K co-gravitational field determines our elementary particles. Because these particle paths go in and out of dimension, it means that hyperspace exists. And because the K field is circular, depending on the direction of the energy flow, another purpose of this invention is to control the direction of the field.

SUMMARY OF THE INVENTION

[0022] Referring to FIG. **7**, the Chi energy amplifier consists of two ceramic domes (**40**, **41**) resting one on the other such as to form a hollow internal clam-like structure. The domes are mounted on a cylindrical ceramic base (**42**) containing a reinforced passageway for the coaxial cable and BNC connector (**43**). The BNC connector plugs into the frequency generator (not shown) which has a frequency range of 0.4 Hz to 5 MHz.

[0023] Referring to FIG. **8** with the upper dome removed, the coaxial cable (**44**) extends vertically through the base into the lower dome. The cable is soldered to a slot antenna (**45**). The center conductor of the cable is soldered to the left side of the slot and the ground shielding is soldered to the right side of the slot. Thus there is a voltage difference on the two sides which produces an oscillating electric field across the slot which radiates electromagnetic energy into the hollow dome.

[0024] A close-up of the slot antenna is shown in FIG. **9**. The antenna is a 0.050" thick copper sheet (**46**) with a width of ¾ wavelength by a height of ½ wavelength. A slot (**47**)

of ½ wavelength is electric-discharge machined into the copper sheet (**47**). The center conductor (**48**) from the coaxial cable is soldered to the top of the slot. The ground wire (**49**) is soldered to the bottom of the slot. This configuration produces a voltage difference between the inner top and bottom surfaces of the slot. The frequency generator produces an oscillating voltage across the slot which generates an electric field that radiates from the antenna into the ceramic cavity.

[0025] The wavelength of the antenna and the dimensions of the ceramic cavity have to be tuned to the geometry of our dimension. Newton's gravitational constant G is equal to

$$\ln(G) = -23.4303342$$

$$f = e^{23.4303432} * \text{Hz} = 15\ Ghz$$

$$\lambda = \frac{c}{f} = .020 \text{ meter} = .787 \text{ inch}$$

$$\text{slotwidth} = \frac{\lambda}{2} = .393 \text{ inch}$$

$$\text{antennawidth} = \frac{3}{4}\lambda = .590 \text{ inch}$$

The frequency of the antenna is the inverse of the gravitational constant. The reason for this is that when a circle of radius natural logarithm G is centered on the proton on the tetrahedron diagram, the circle intersects the corner of the Planck box which bounds our dimension between space and hyperspace. It is the low-density hyperspace energy that the amplifier will bring into this dimension.

[0026] The size of the ceramic cavity based on the angular frequency ω=2πf is

$$\frac{\frac{\omega^2}{c^2} + \frac{1}{ab}}{\frac{\omega^2}{c^2} + ab\left(\frac{\omega^2}{c^2} - \frac{1}{a^2}\right)\left(\frac{\omega^2}{c^2} - \frac{1}{b^2}\right)} = \frac{\tan\left(\frac{\omega}{c}(b-a)\right)}{\omega}\frac{c}{b-a}$$

where b is inside radius of the cavity, a is the radius of an object at the center of the cavity and c is the speed of light. Using the object radius as a=0.020 meter to account for the antenna, the inside radius of the cavity is b=4.25 inches which is the size of the 8.5 inch diameter ceramic dome using ¼ inch thick clay. The frequency is then equal to

$$f = \ln\left(\frac{\omega}{2\pi}\right) = 23.45$$

which is close to the inverse of the gravitational constant G of −23.43. Thus the amplifier is tuned to the gravitational constant of the universe both in size of the cavity and the frequency of the slot antenna. Using a SMD surface mount capacitor and inductor in the picofarad and nanohenry range, it is possible to get up to this high frequency, but it was found that it was not necessary because the amplifier works at lower frequencies that are pulsed.

[0027] Referring to FIG. **10**, the swinging movement of the pendulum measured in inches at the side of the dome is plotted against a range of frequencies from 20 kHz to 120 kHz. At 20 kHz, the pendulum swings ¾ inch away from the dome. Then at 40 kHz, the pendulum swings ¾ inch toward the dome. This pattern is repeated until 120 kHz. What this means is that the amplifier can control the direction of the co-gravitational field using frequency. The tetrahedron diagram shows that this phenomenon is related to the two axes of the circumscribing sphere of the tetrahedron.

[0028] Referring to FIG. **11**, the swinging of the pendulum is plotted for a range of frequencies from 1 MHz to 5 MHz. At a frequency of 2.78 MHz the pendulum was swinging strongly from the vertical to the horizontal, a distance of six inches. On the tetrahedron diagram, the distance from our base constant to the centerline between inverted tetrahedrons is equal to 14.838168. This corresponds to a frequency of

$$f = e^{14.838168} * \text{Hz} = 2.780574169 \text{ MHz}$$

which is close to the experimental value.

[0029] Referring to FIG. **12**, the Chi energy flowing between the hands, shown by the arrows, is amplified by placing the hands across the dome. This energy from the right hand mixes with the hyperspace energy entering the dome from hyperspace. The combined energy is then absorbed in the left hand vortex. The effects of this amplified energy are simply amazing and have to be experienced to appreciate what it means.

A BRIEF DESCRIPTION OF THE DRAWINGS

[0030] FIG. **1**. Perspective view of pendulum movement over left hand vortex.

[0031] FIG. **2**. Perspective view of right hand rule of physics showing similarity between electromagnetism and gravity.

[0032] FIG. **3**. Perspective view of plaster mold cavity showing negative curvature.

[0033] FIG. **4**. Perspective view of dome showing positive curvature.

[0034] FIG. **5**. Perspective view of dome showing radial pendulum movement.

[0035] FIG. **6**. Graph of co-gravitational K field on tetrahedron diagram.

[0036] FIG. **7**. Perspective view of Chi Energy Amplifier with BNC coaxial cable.

[0037] FIG. **8**. Perspective view of slot antenna in dome.

[0038] FIG. **9**. Perspective view of slot antenna showing dimensions.

[0039] FIG. **10**. Graph of pendulum movement versus frequency of antenna, 20 KHz.

[0040] FIG. **11**. Graph of pendulum movement versus frequency from 1 MHz to 5 MHz.

[0041] FIG. **12**. Perspective view of amplifying Chi energy.

DETAILED DESCRIPTION OF THE INVENTION

[0042] The dome of the amplifier is made of red earthenware clay from Minnesota having a cone 06 kiln firing temperature of 1828° F. over a period of 7.5 hours. The clay is placed between two hardwood ¼ inch thick slats. It is then rolled flat with a rolling pin. The sheet of clay is cut in half and one half is placed in a 9-inch diameter bowl mold using a soft sponge to push it into position. The second half is then added to the first with the seam between worked flat with a metal kidney and elephant ear sponge. The top of the mold

is scrapped flat to create the bowl shape. The moist clay is left to dry for one day after which it falls out of the mold due to shrinkage. After completely drying, the dome is then placed in a kiln which runs the computer-controlled cone 06 temperature firing profile. A preheat at 180° F. for one hour is required to make sure the dome is completely bone dry. It takes 7 to 8 hours to fire the dome with another 12 hours to cool down naturally.

[0043] The base is also made of ¼ inch clay. A circular shape is cut out and fitted with a ribbon of extruded clay from a clay gun to make the cylindrical wall. Using a hole cutter made of hollow tubing, a hole is made in the side of the base for the coaxial cable. The second lower dome has a hole cut in the bottom when the clay is leather hard.

[0044] A 0.050" thick copper sheet is EDM machined to cut a half wavelength slot in the copper. The inner conductor of the coaxial cable is soldered using silver epoxy to the one side of the slot. The ground shielding of the cable is silver epoxied to the other side of the slot. The other end of the coaxial cable has a BNC connector which plugs into the frequency generator.

[0045] The pendulum is made out of soft brass rod and machined on a lathe into a plumb bob shape. A hole is drilled in the stem to hold the 6" long string.

I claim:

1. A Chi energy amplifier comprising:

a. a hollow ceramic dome in the shape of a clam shell with a hole in the lower half that provides access to a coaxial cable;

b. a cylindrical ceramic base on which the dome is mounted with holes that provide access for a coaxial cable into item (a);

c. a slot antenna soldered to the coaxial cable, located midway inside item (a), such that the inner conductor of the cable is soldered to one side of the slot and the ground shielding is soldered to the other side of the slot;

d. a frequency generator connected to the other end of the coaxial cable by means of a BNC connector for the purpose of providing an oscillating voltage to item (c);

e. an electromagnetic wave generated by items (c, d) that resonates inside item (a);

f. a co-gravitational K field generated by items (a, b, c, d, e) whose direction can be controlled by the frequency of item (d); and

g. a flow of hyperspace energy into or out of the dome due to item (f).

* * * * *

US 20060070371A1

(19) United States

(12) Patent Application Publication

(10) Pub. No.: US 2006/0070371 A1

(43) Pub. Date: Apr. 6, 2006

St. Clair

(54) ELECTRIC DIPOLE MOMENT PROPULSION SYSTEM

(76) Inventor: **John Quincy St. Clair**, San Juan, PR (US)

Correspondence Address:
JOHN ST. CLAIR
52 KINGS COURT, 4A
SAN JUAN, PR 00911 (US)

(21) Appl. No.: **10/958,436**

(22) Filed: **Oct. 5, 2004**

Publication Classification

(51) **Int. Cl.**
F03H 1/00 (2006.01)

(52) **U.S. Cl.** **60/203.1**

(57) **ABSTRACT**

A spacecraft propulsion system utilizing a rotating octagon of trapezoidal electrically charged flat panels to create an electric dipole moment that generates lift on the hull.

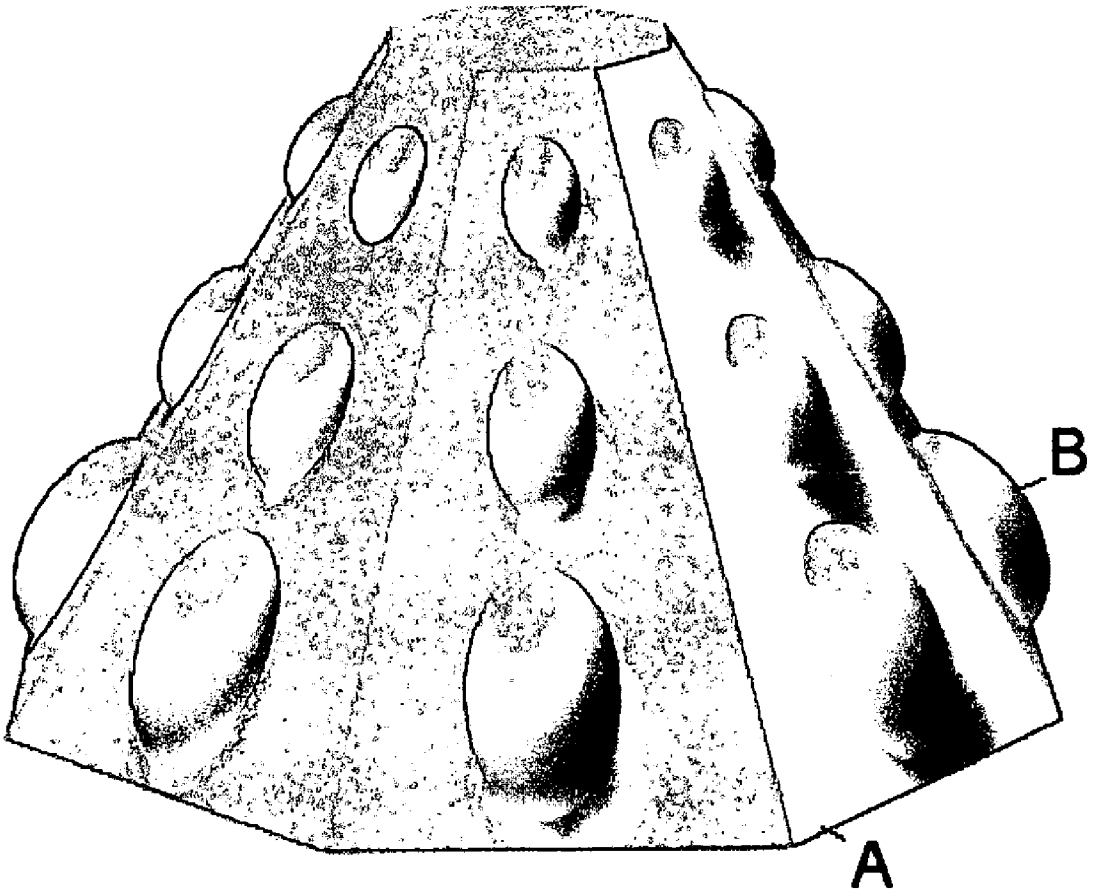

Figure 1

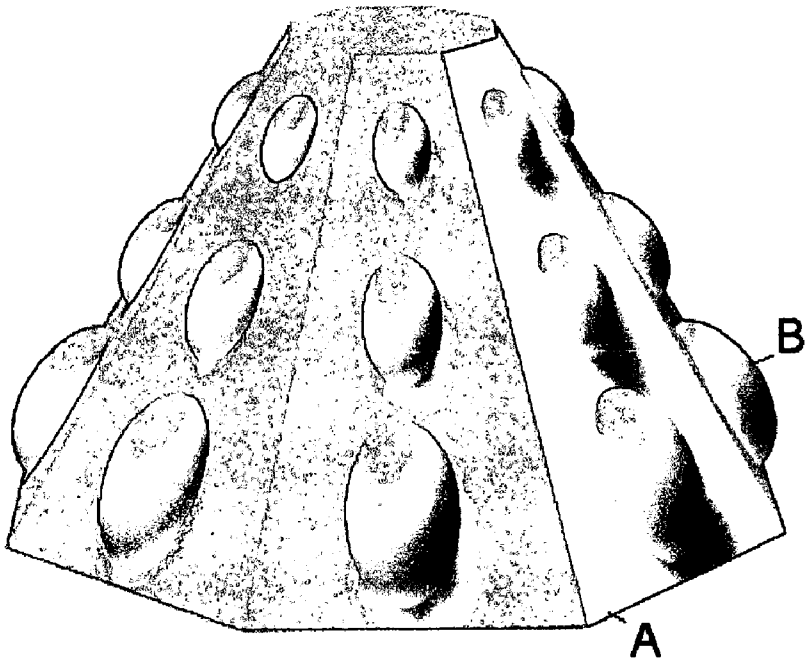

Figure 2

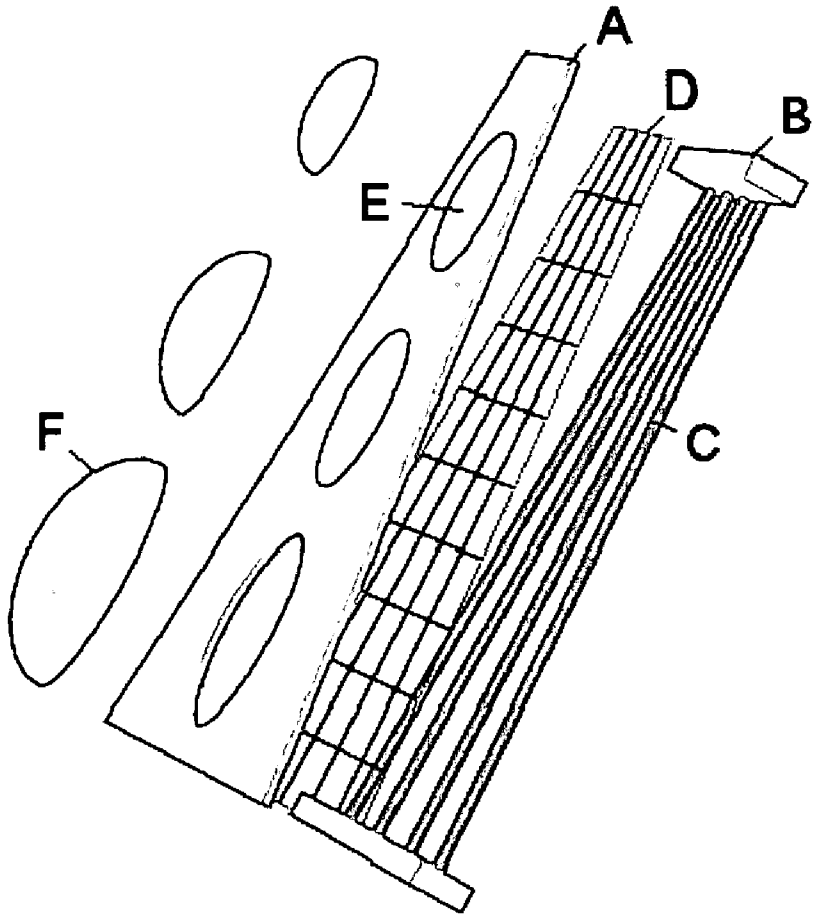

Figure 3

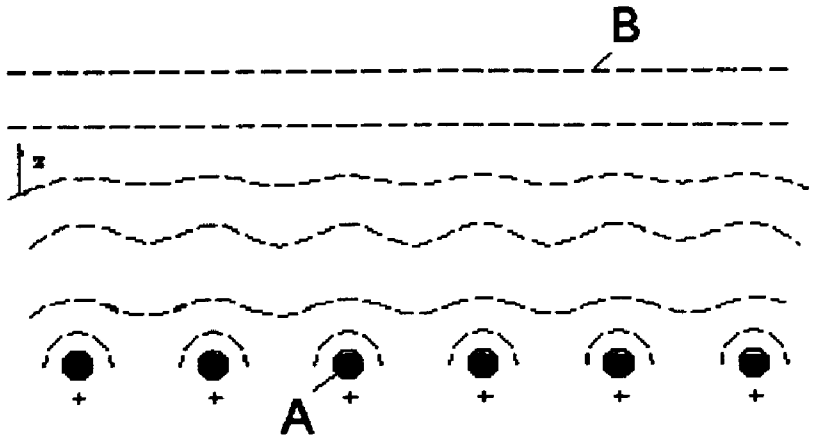

Figure 4

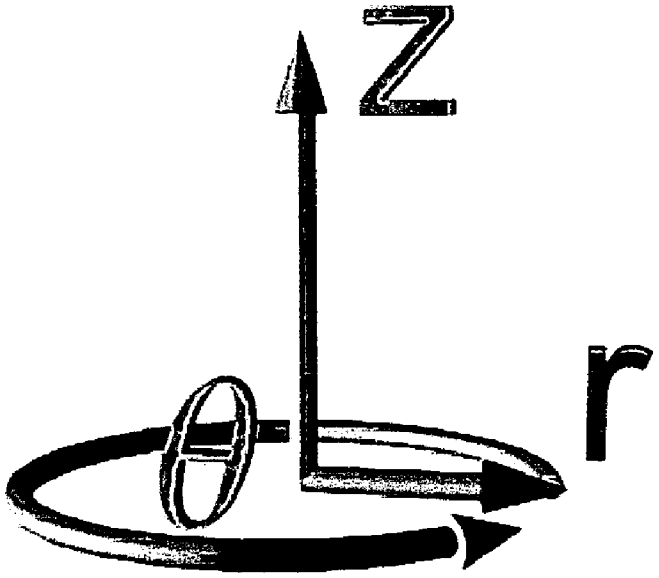

Figure 5

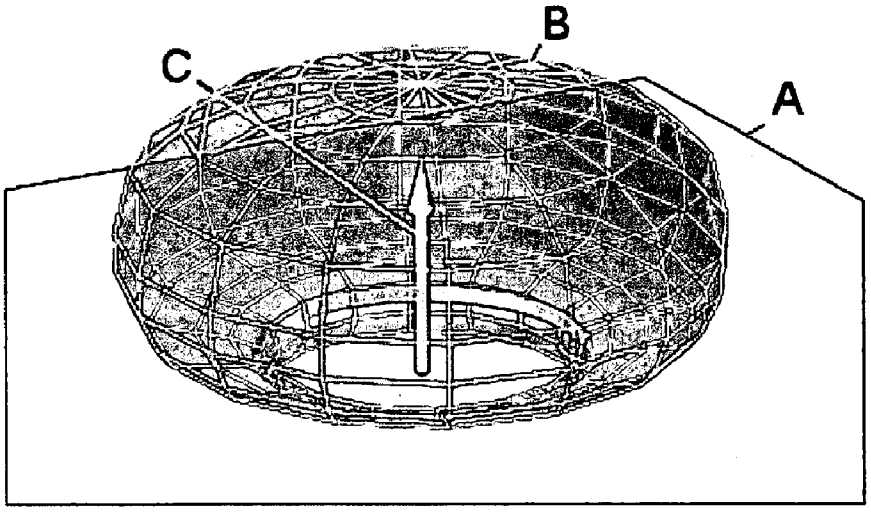

Figure 6

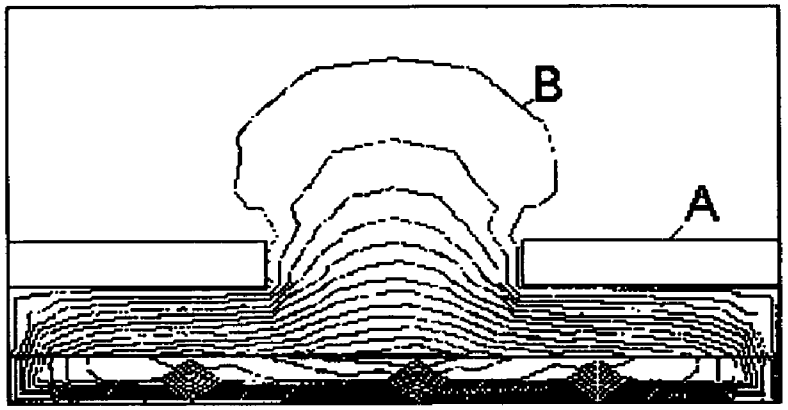

Figure 7

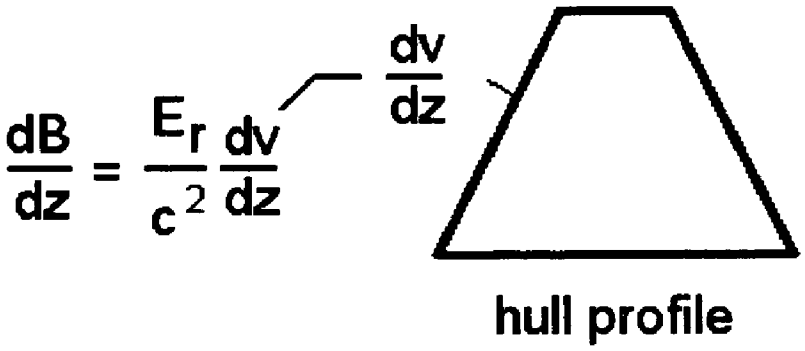

Figure 8

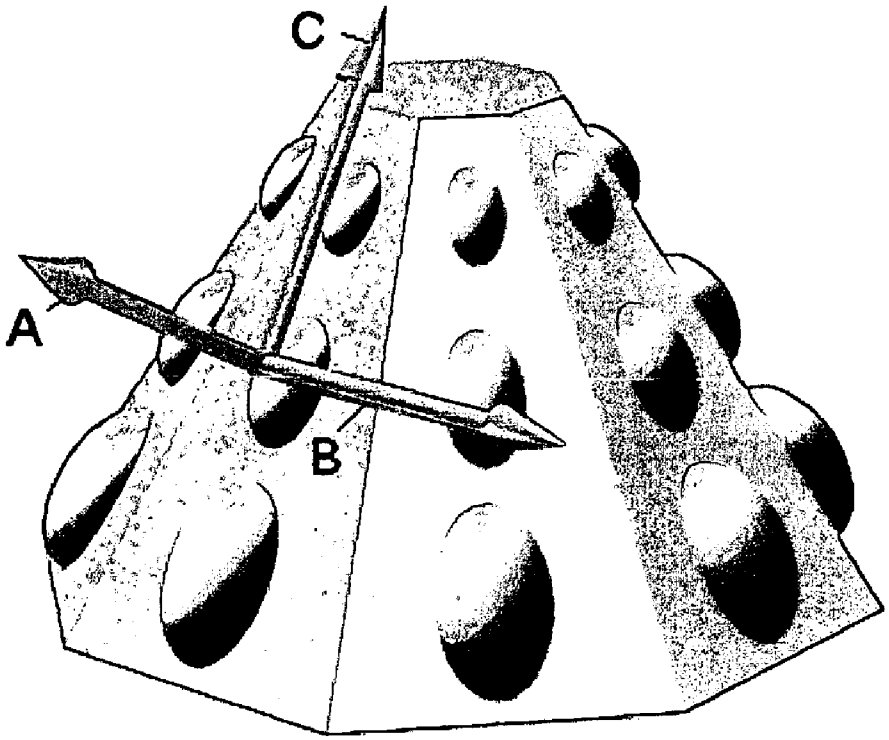

Figure 9

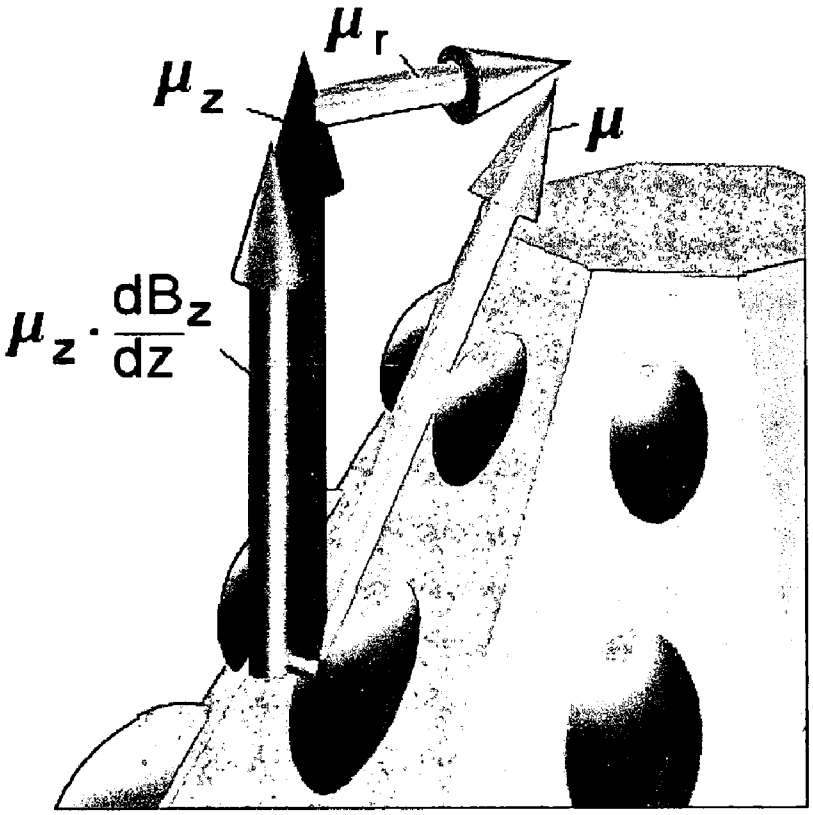

Figure 10

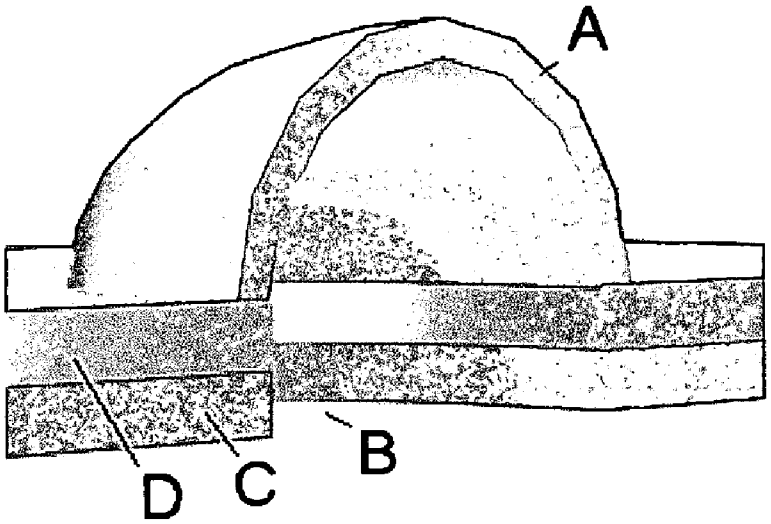

Figure 11

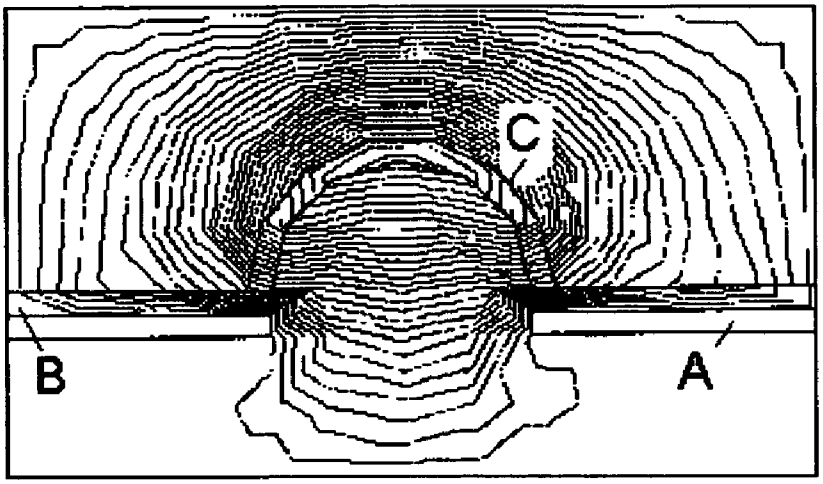

ELECTRIC DIPOLE MOMENT PROPULSION SYSTEM

BRIEF SUMMARY OF THE INVENTION

[0001] The invention is a spacecraft utilizing trapezoidal electrostatically charged flat plate panels which form a pyramidal hull. A panel contains three holes each of which produces a potential energy ellipsoidal bubble that creates an electric dipole moment. The rotation of the hull generates a magnetic moment and a magnetic field gradient in the vertical direction that produces a lift force on the spacecraft.

BACKGROUND OF THE INVENTION

[0002] It is known from electrodynamics that a hole in a conducting plane forms a potential energy bubble. This bubble creates an electric dipole moment from which it is possible to develop a magnetic moment. A rotating tilted hull produces a velocity gradient that generates a magnetic field gradient in the vertical direction. This combination produces a lift force on the spacecraft. A very large potential energy bubble is produced provided that the hole protrudes out of the plate in an ellipsoidal shape. Furthermore, a double cladding, in which each layer around the hole has a different permittivity, confines the field to the outside of the hull for even better results.

[0003] The planar potential energy is created by a grid of electrically charged wires or rods running the length of each panel. A circular potential energy from each rod very quickly sums to form a flat sheet of energy which emerges from the hole to form the potential energy bubble.

SUMMARY OF THE INVENTION

[0004] The invention relates to a spacecraft utilizing a rotating octagon of trapezoidal electrically charged flat plate panels to form a hull in the shape of a pyramid. Each panel has three protruding ellipsoidal bubbles that produce an electric dipole moment from a planar potential energy field created by a group of charged rods parallel to the panel. Because the panels are tilted and the hull is rotating, there is a tangential velocity gradient in the vertical direction. This creates the magnetic moment. Because the hull rotates, the radial electric field produces a magnetic field gradient in the vertical direction. This combination of magnetic moment and magnetic field gradient produces a lift force on the hull of the spacecraft.

[0005] On the underside of each panel is a group of high voltage electrically charged rods which run parallel to the panel. These wires or rods produce a planar electrical potential field underneath the holes in the panel. This potential energy field then bubbles out of the holes in the panel to create a large ellipsoidal potential energy field above the hull. The potential energy bubble carries an electric dipole moment which when rotated with the hull generates a magnetic moment in the vertical direction.

A BRIEF DESCRIPTION OF THE DRAWINGS

[0006] **FIG. 1**. Perspective view of electric dipole moment spacecraft.

[0007] **FIG. 2**. Perspective exploded view of one panel with the ellipsoidal domes, flat hull panel with three holes, the charged rod grid and the planar potential energy field.

[0008] **FIG. 3**. Planar view of flat potential energy field produced by electrically charge wire rods.

[0009] **FIG. 4**. Perspective view of cylindrical coordinates $\{r, \theta, z\}$.

[0010] **FIG. 5**. Perspective view of ellipsoidal potential energy field emerging from hole in plate which produces an electric dipole moment.

[0011] **FIG. 6**. Planar view of field lines of potential energy bubble emerging from plate hole.

[0012] **FIG. 7**. Planar view of sloping hull profile needed to get a velocity gradient.

[0013] **FIG. 8**. Perspective view of hull showing electric dipole moment, the tangential velocity of the hull, and the magnetic moment.

[0014] **FIG. 9**. Perspective view of the magnetic moment components in the radial and vertical direction whereby the lift force is generated by the dot product of the vertical magnetic moment with the magnetic field gradient.

[0015] **FIG. 10**. Perspective view of cross section of dome showing two layer cladding with different permittivities to enhance potential energy field.

[0016] **FIG. 11**. Planar view of enhanced potential energy field with two layer cladding.

DETAILED DESCRIPTION OF THE INVENTION

[0017] 1. Referring to **FIG. 1**, the spacecraft is a rotating octagon of trapezoidal electrostatically charged flat panels which form a closed hull (A). Each panel has three ellipsoidal domes (B) of varying size centrally located along the major length of the panel. The purpose of the dome is to create a large ellipsoidal potential energy bubble over the hull which develops an electrical dipole moment. Because the hull is rotating, a magnetic moment is created in the vertical direction. A magnetic field gradient created by the rotating electric field on the hull in combination with the magnetic moment produces a lift force on the hull.

[0018] 2. Referring to **FIG. 2**, the trapezoidal hull panel (A) contains three ellipsoidal holes (E). A group of wires or rods (C) running parallel to and just underneath the panel are electrically charged to a high voltage at the end terminals (B). The rods produce a planar potential energy field (D) just under the holes in the panel. The field emerges from the holes in the shape of an ellipsoidal bubble and is amplified by an ellipsoidal dome (F) on the outside of the hull.

[0019] 3. Referring to **FIG. 3**, the group of parallel rods (A) are given a linear charge λ in units of charge per meter. The electric field E developed by the rod is the linear charge divided by the circumference of a circle of radius r around the wire times the permittivity ϵ of space. The analysis of this arrangement shows that within a few grid width spacings, the potential energy field ϕ due to the electric field E_0 has become planar (B) in the z-direction given by the equation

$$\phi=-E_0 z$$

[0020] 4. Referring to **FIG. 4**, the following analysis is done in cylindrical coordinates {r,θ,z}.

[0021] 5. Referring to **FIG. 5**, the ellipsoidal potential energy (B) emerges through the hole in the panel plate (A). In doing so it creates an electrical dipole moment (C) shown by the arrow normal to the hole area.

[0022] 6. Referring to **FIG. 6**, the bubble (B) emerges through plate (A).

[0023] 7. Because the bubble has the shape of an ellipse, the centroid y of the bubble would be four thirds the radius a divided by π as given by

$$\bar{y}_{ellipse} = \frac{4}{3}\frac{a}{\pi}$$

[0024] The electric dipole moment is then given as the charge q times the centroid y. The charge of the hole is equal to the permittivity E times the electric field E emerging from the hole times the area of the hole of radius a

$$q = \varepsilon_0 E\pi a^2 \frac{\text{coul}^2}{\text{m}^2\ \text{newton}} \frac{\text{newton}}{\text{coul}}\ \text{m}^2 = \text{coul} = \text{charge}$$

[0025] 8. The electric dipole moment p is the centroid y times the charge q

$$p = qy = \varepsilon_0 E\pi a^2 \frac{4}{3}\frac{a}{\pi} = \frac{4}{3}\varepsilon_0 E a^2\ \text{coul}\cdot\text{meter}$$

[0026] The electric dipole moment p times the hull velocity v is equal to a magnetic moment μ which is what creates the lift force on the hull

$$\mu = pv\ \text{amp}\cdot m^2$$

[0027] 9. The rotating hull creates the electric dipole moment velocity so that the entire hull develops a magnetic moment. In tensor notation, the magnetic moment μ is in the vertical z-direction because there is a radial component of the electric dipole moment times the velocity. The velocity is the radius r in the radial direction times the angular velocity ω in the z-direction

$$\mu^z = p_r x^r \omega^z$$

[0028] 10. The force F on the hull is the gradient of the dot product of the magnetic moment μ with the magnetic B field

$$F = \nabla(\mu\cdot B)$$

[0029] 11. By electrically charging the hull of the vehicle, a radial electric field is produced. By rotating the hull, the radial electric field changes with time. Thus Maxwell's equations will involve the curl of the magnetic field in the radial direction because the radial electric field is varying with time

$$(\nabla \times B)_r = \frac{1}{c^2}\frac{\partial E_r}{\partial t}$$

[0030] 12. The cross product involves the magnetic field in the theta direction which is zero

$$\frac{1}{r}\frac{\partial B_z}{\partial \theta} - \frac{\partial B_\theta}{\partial z} = \frac{1}{c^2}\frac{\partial E_r}{\partial t} = \frac{1}{r}\frac{\partial B_z}{\partial \theta}$$

[0031] Substituting the derivative of the electric field E

$$E_r = E_0 e^{i\omega t}$$

[0032] and integrating with respect to angle theta gives the vertical magnetic field B as the tangential velocity v times the radial electric field E divided by the speed of light c squared

$$B_z = \frac{v}{c^2}E_r$$

[0033] 13. The force on the hull is the gradient of the magnetic moment μ times the magnetic field B. In the equation for the magnetic field, the only available variable to work with in order to get a gradient of the magnetic field comes from the velocity.

$$\frac{dB_z}{dz} = \frac{E_r}{c^2}\frac{dv}{dz}$$

[0034] 14. Referring to **FIG. 7**, because the hull is in the shape of a pyramid, the velocity is a function of the height z of the hull. Using eight flat sides keeps the radial electric field pointing in the same direction in each panel. Each panel has three domes to produce the magnetic moment for a total of 24 magnetic moment generators.

[0035] 15. Referring to **FIG. 8**, the electric dipole moment (A) points in the radial direction, the rotating hull produces a tangential velocity (B), and the result is a magnetic moment (C) along the panel.

[0036] 16. Referring to **FIG. 9**, because the magnetic moment is parallel to the panel, there are vertical and radial components of the magnetic moment. The vertical magnetic moment creates the dot product with the magnetic field gradient, which is equal to the lift force.

[0037] 17. **FIG. 10** shows a cross-section of the dome (A) and the plate hole (B) with double cladding to enhance the field. The upper cladding (D) has a low relative permittivity in the range of 2 to 40, and the lower layer has a high relative permittivity in the range of 1200 to 4000.

[0038] 18. Comparing **FIG. 11** to **FIG. 7**, this dome and cladding configuration creates a much larger electric dipole moment compared to a hole in the plate. The wavy

lines are the equi-potential energy lines from the dome (C) and the upper layer (B) and the lower level (A).

I claim:

1. A spacecraft propulsion system comprising:

a rotating octagon of trapezoidal electrostatically charged flat panels which form a closed sloping hull in the shape of a pyramid;

panels each having three holes covered by three ellipsoidal domes of varying size centrally located along the major length and axis of each panel; and

a grid of high voltage electrostatically charged rods located on the interior side of each panel such that a planar potential field is produced parallel to and under each panel hole.

2. The domes, holes and rotating charged hull of method 1 producing:

an ellipsoidal potential energy field emerging from the holes and generating an electric dipole moment on the outside of the hull;

a magnetic moment in the vertical direction due to the rotating electric dipole moment; and

a rotating electric field in the radial direction which generates a corresponding magnetic field gradient in the vertical direction proportional to the velocity gradient of the sloping panels of the hull.

3. A lift force on the spacecraft hull generated by:

the magnetic moment times the gradient of the magnetic field in the vertical direction; and

a dual surface layer hull cladding having different permittivities which enhance the electric dipole moment whereby the upper cladding has a low relative permittivity in the range of 2 to 40, and the lower layer has a high relative permittivity in the range of 1200 to 4000.

* * * * *

US 20060038081A1

(19) United States

(12) Patent Application Publication

St. Clair

(10) Pub. No.: US 2006/0038081 A1

(43) Pub. Date: Feb. 23, 2006

(54) ELECTRIC DIPOLE SPACECRAFT

(76) Inventor: **John Quincy St. Clair**, San Juan, PR (US)

Correspondence Address:
JOHN ST. CLAIR
52 KINGS COURT, 4A
SAN JUAN, PR 00911 (US)

(21) Appl. No.: **10/912,621**

(22) Filed: **Aug. 4, 2004**

Publication Classification

(51) **Int. Cl.**
B64G 1/40 (2006.01)

(52) **U.S. Cl.** **244/171.5**

(57) **ABSTRACT**

This invention is a rotating spacecraft that produces an electric dipole on four rotating spherical conducting domes perturbing a uniform spherical electric field to create a magnetic moment interacting with the gradient of a magnetic field that generates a lift force on the hull.

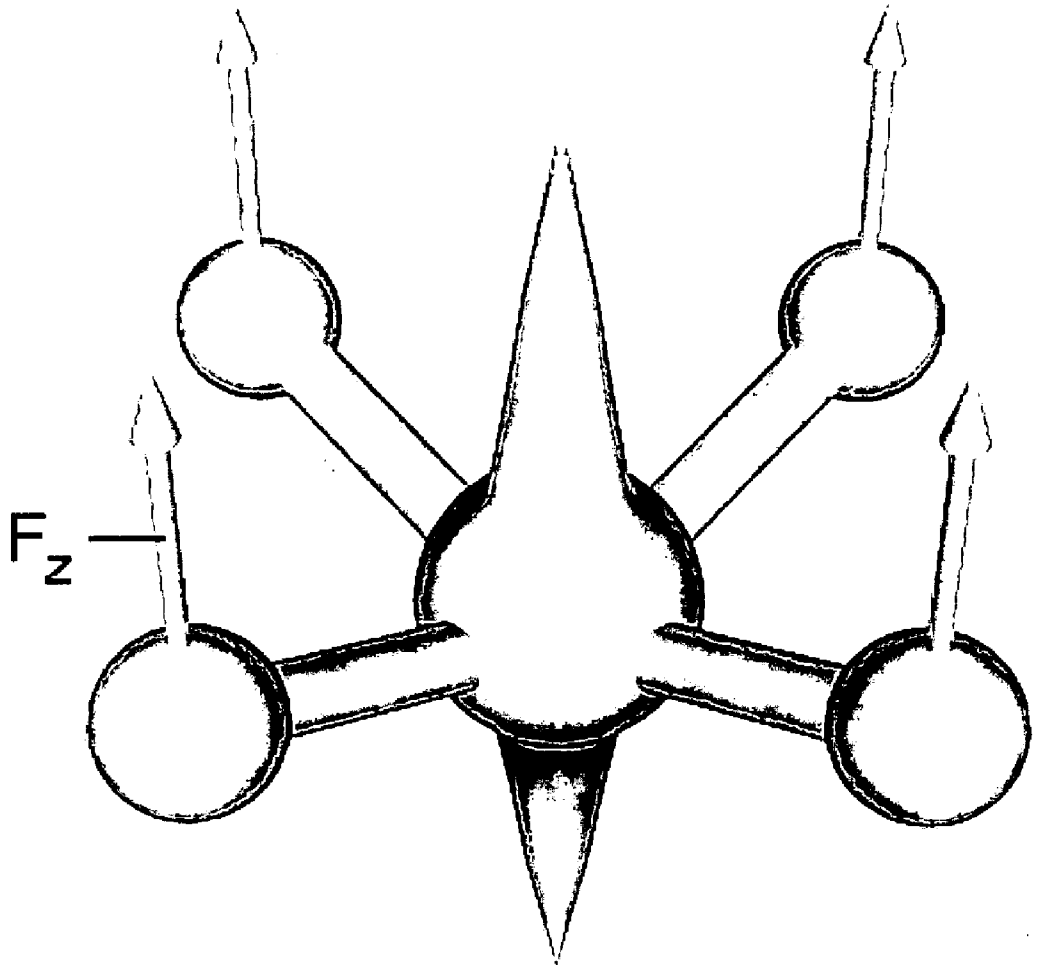

Figure 1

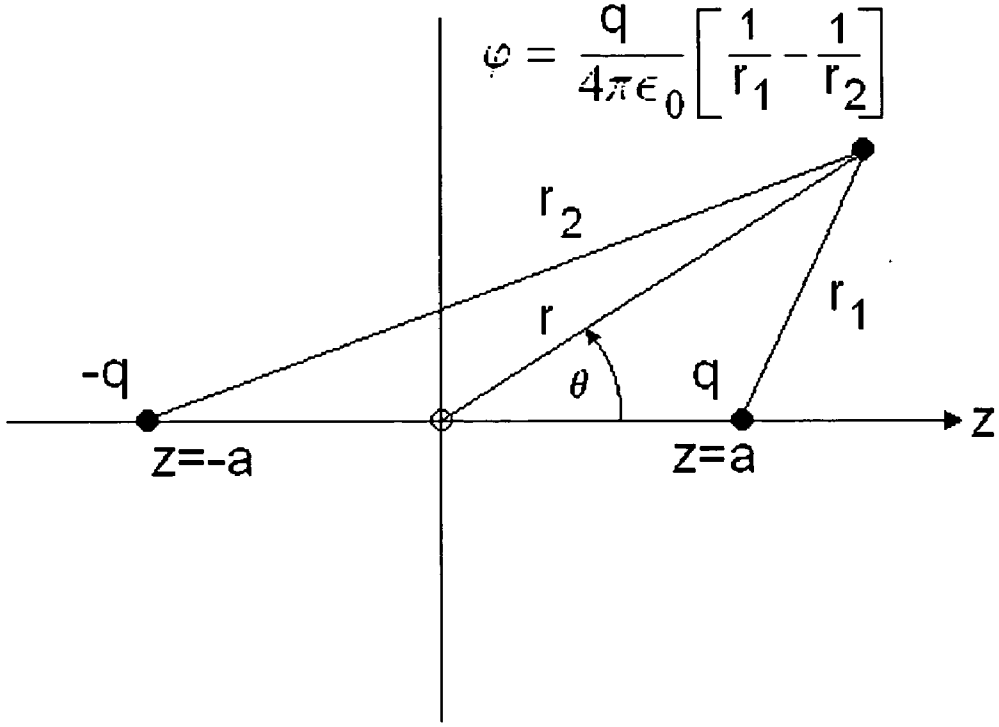
$\varphi = \frac{q}{4\pi\epsilon_0}\left[\frac{1}{r_1} - \frac{1}{r_2}\right]$
r_2
r_1
r
θ
-q
q
z
z=-a
z=a

Figure 2

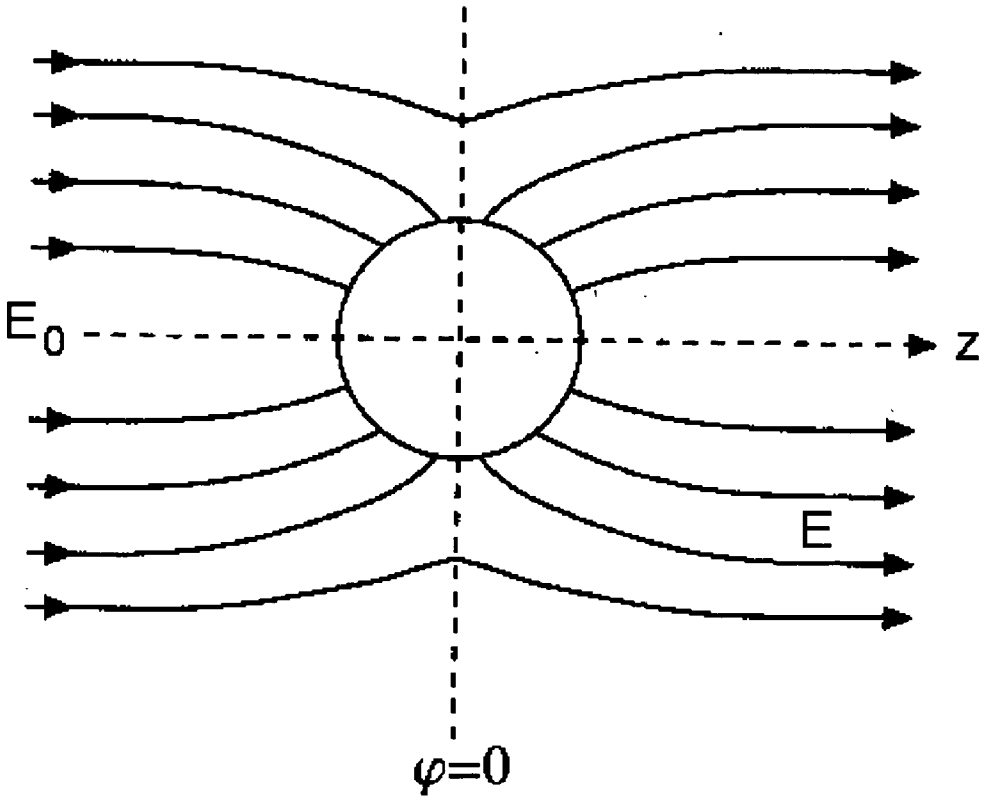

Figure 3

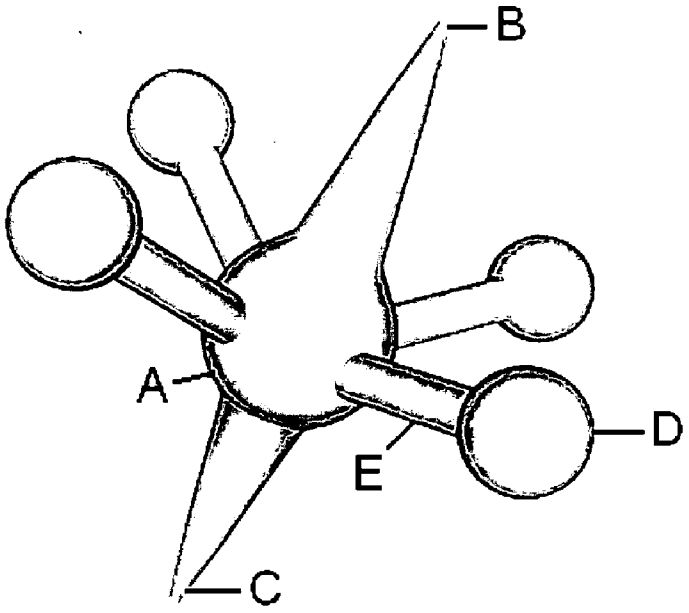

Figure 4

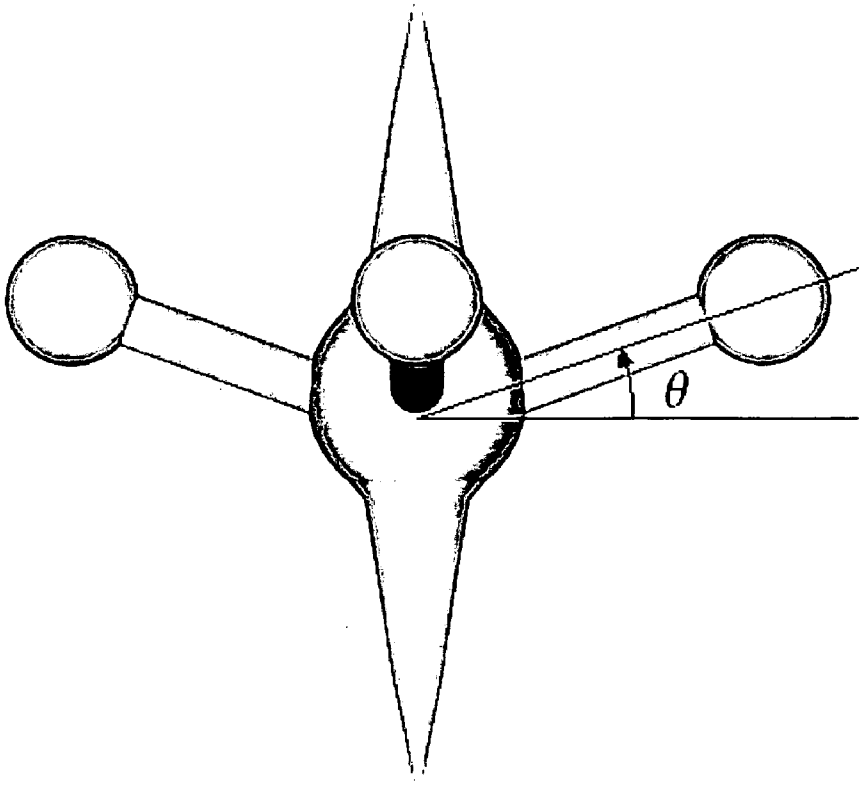

Figure 5

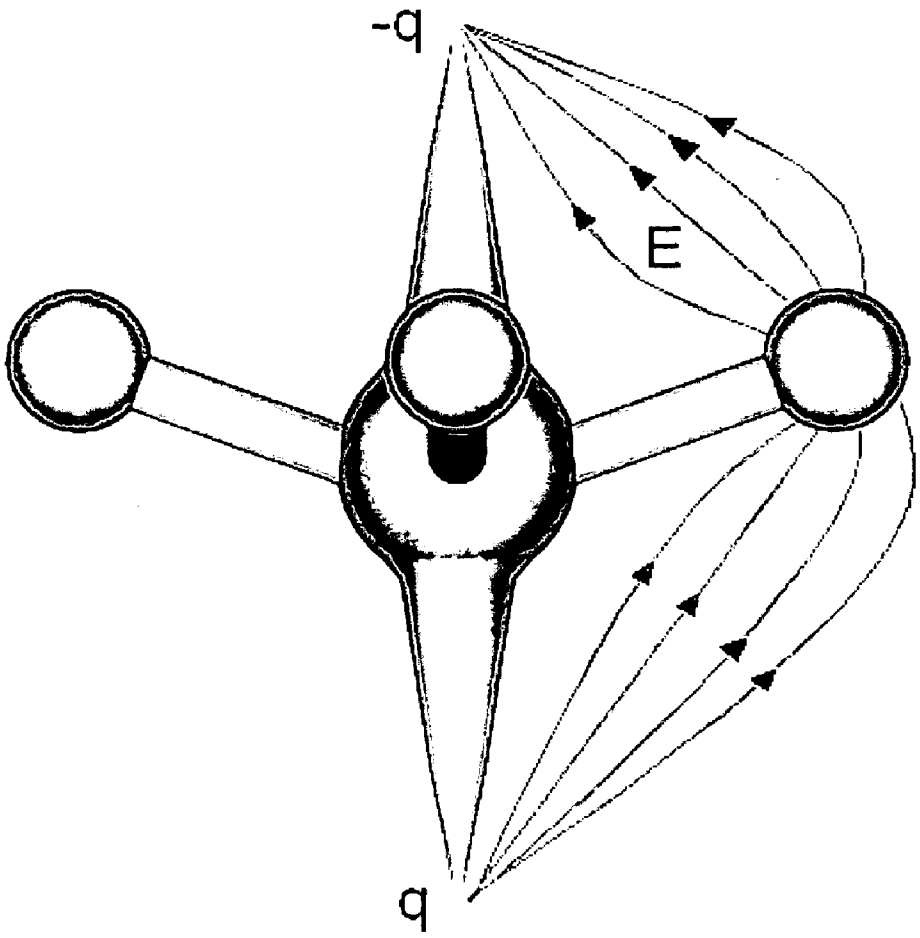

Figure 6

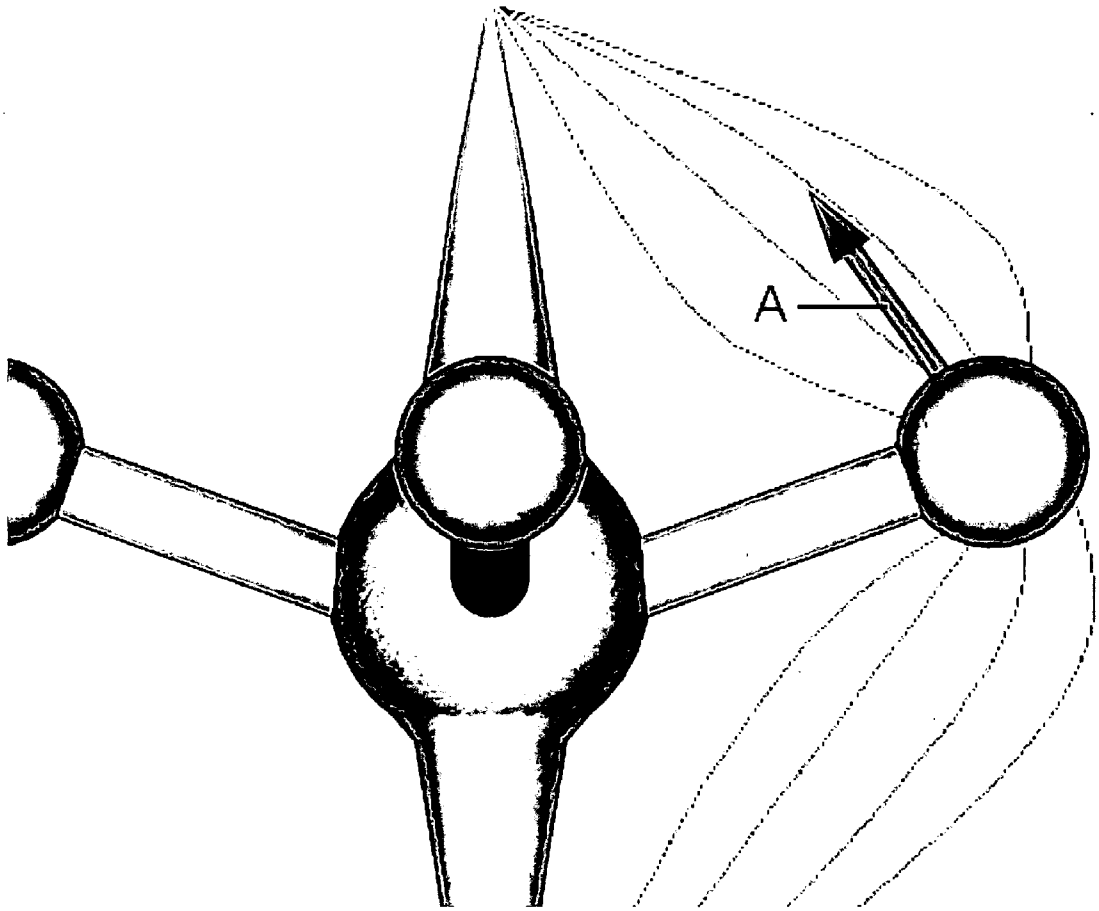

Figure 7

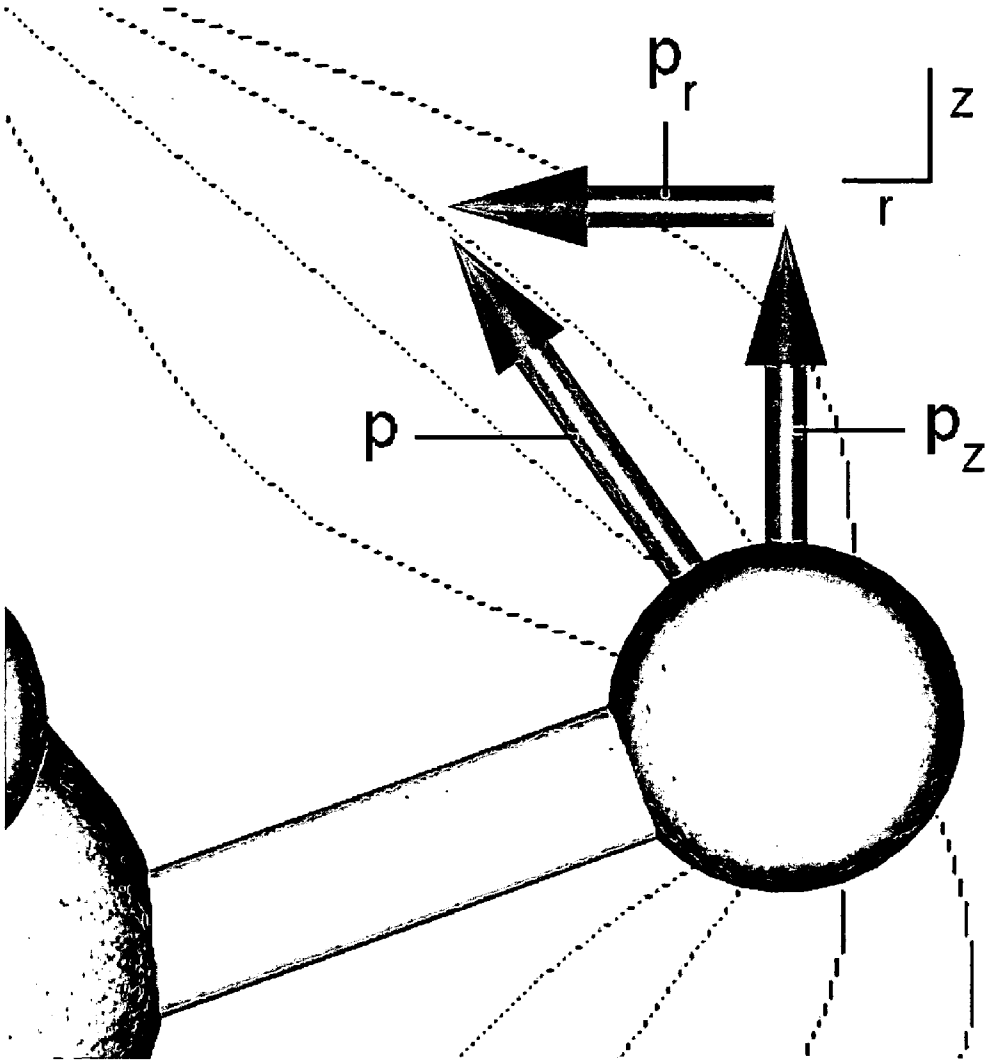

Figure 8

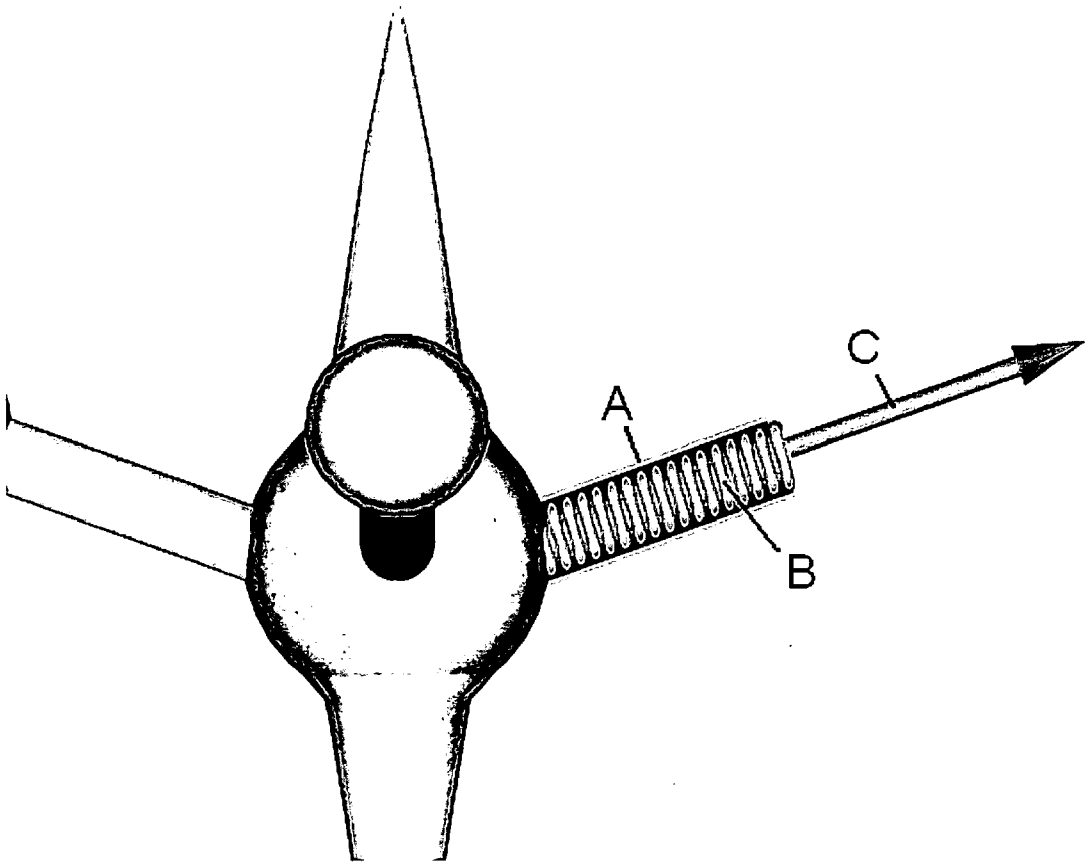

Figure 9

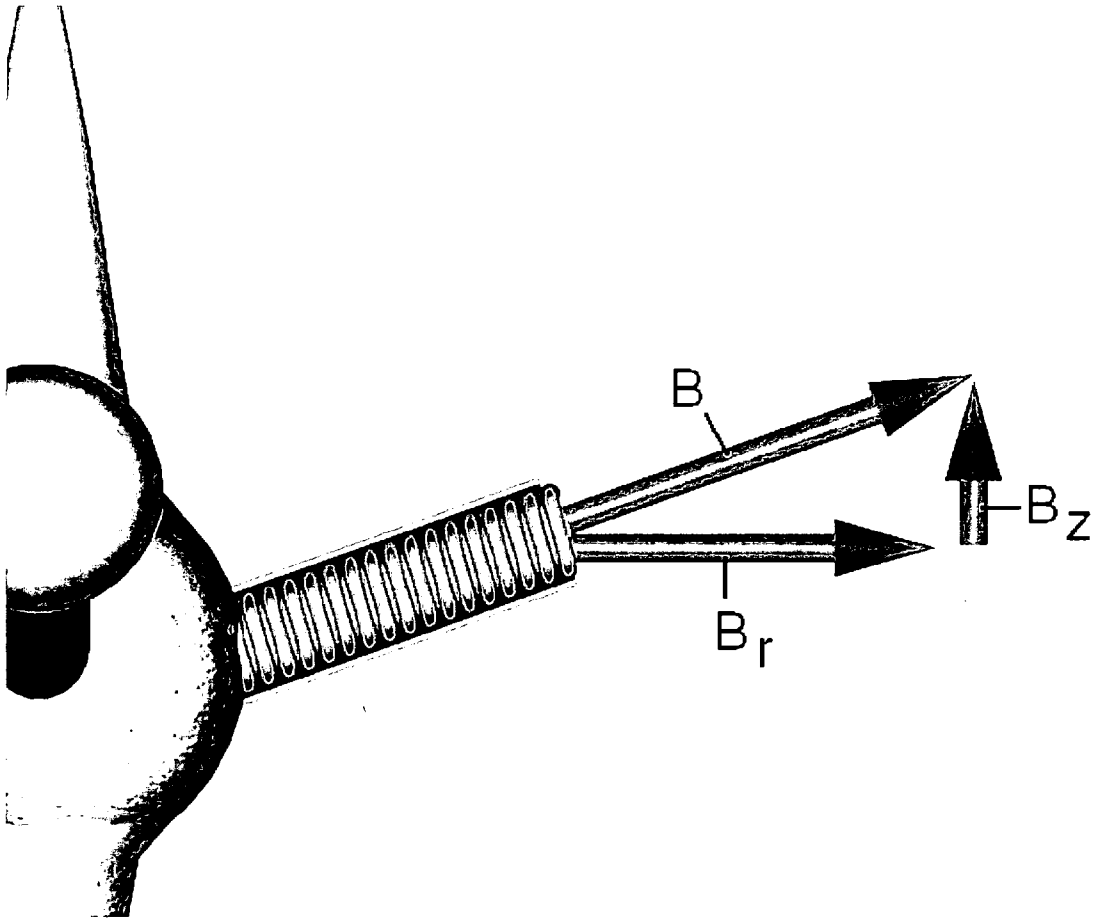

Figure 10

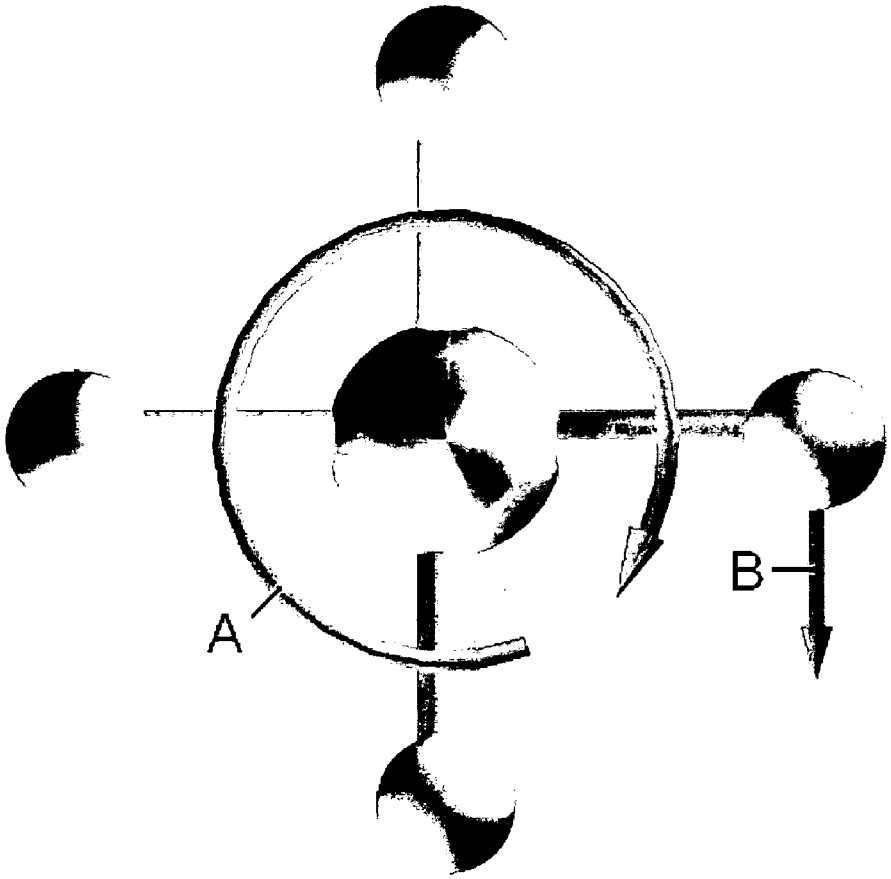

Figure 11

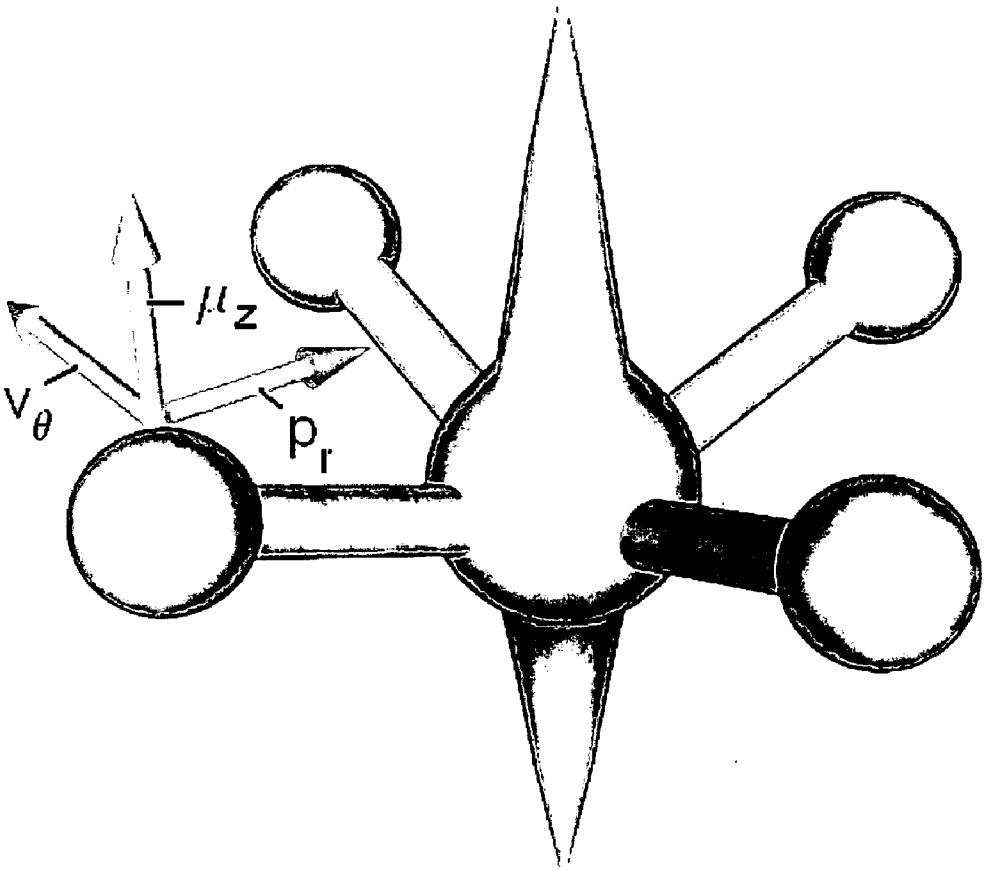

Figure 12

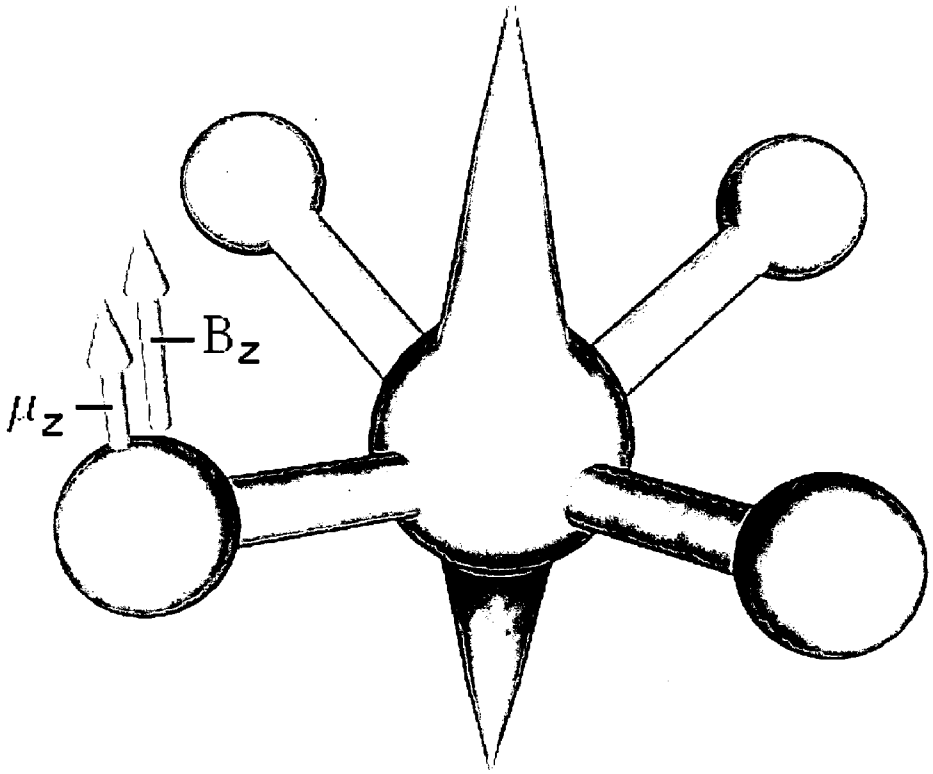

Figure 13

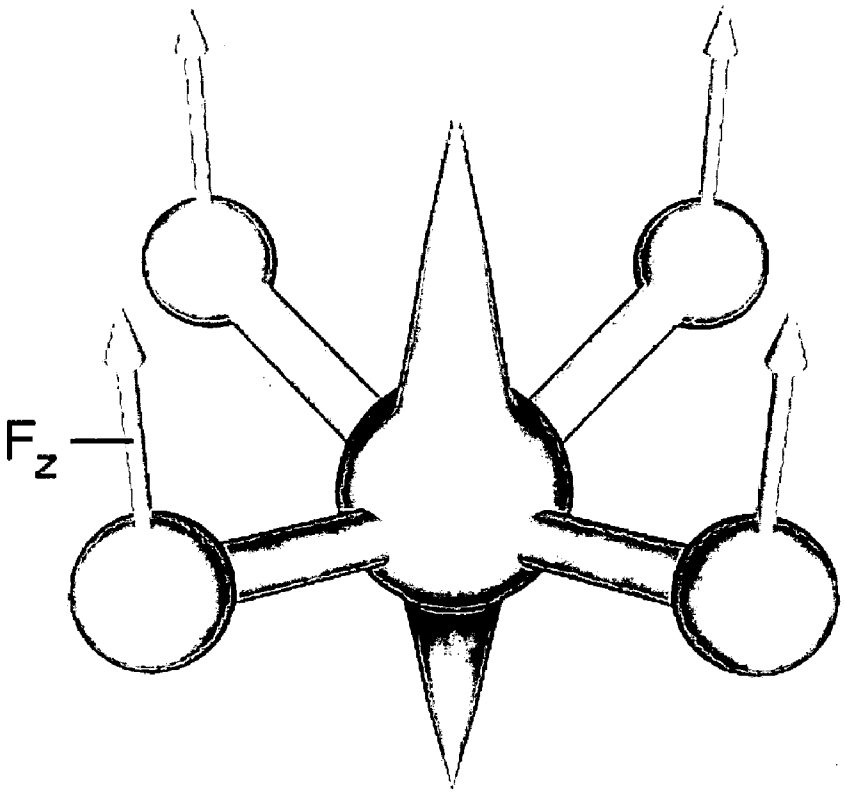

Figure 14

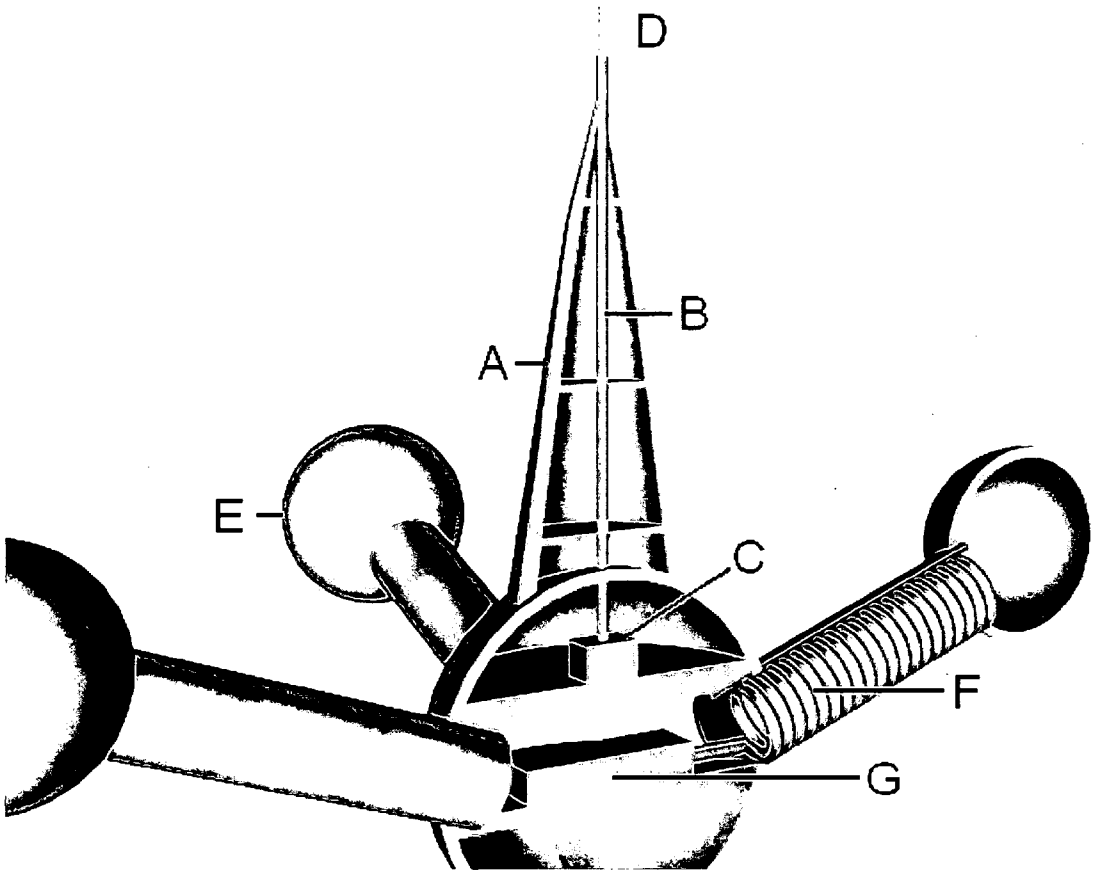

ELECTRIC DIPOLE SPACECRAFT

BRIEF SUMMARY OF THE INVENTION

[0001] This invention is a rotating spacecraft that utilizes four spherical conducting domes perturbing a uniform electric field in order to create a lift force by means of a magnetic moment times the gradient of a magnetic field.

BACKGROUND OF THE INVENTION

[0002] An electric dipole p is two electrical charges of opposite sign {q, −q} separated by a distance a.

$$p=qa=\text{coulomb}\cdot\text{meter}$$

[0003] If this dipole is moving with a velocity v, it produces a magnetic moment μ.

$$\mu = pv = qav = \text{coulomb meter}\frac{\text{meter}}{\text{sec}} = \frac{\text{coulomb}}{\text{sec}}\text{meter}^2 = IArea$$

[0004] The magnetic moment is equal to a current I circulating around an area. The magnetic field B has units of kilogram per second per charge coulomb.

$$B = \frac{\text{kg}}{\text{sec } coul}$$

[0005] The gradient of the magnetic field in the vertical direction z has units of

$$\frac{\text{dB}}{dz} = \frac{\text{kg}}{\text{sec } coul \text{ meter}}$$

[0006] This gradient interacting with a magnetic moment creates a force F measured in newtons.

$$F_z = \mu\frac{\text{dB}}{dz} = \frac{coul\ \text{m}^2}{\text{sec}}\frac{\text{kg}}{\text{sec } coul\ m} = \frac{\text{kg } m}{\text{sec}^2} = \text{newton}$$

[0007] In terms of vectors, the force is equal to

$$F=\nabla(\mu\cdot B)$$

which is the gradient ∇ of the dot product (·) of the magnetic moment with the magnetic field. This means that the magnetic moment has to be aligned with the field. The lift force on the spacecraft would then be the magnetic moment in the vertical z-direction μ_z times the magnetic field in the z-direction B_z. For constant magnetic moment, the gradient affects the magnetic field only, resulting in the same force equation

$$F_z=\nabla(\mu_z\cdot B_z)=\mu_z\nabla B_z$$

[0008] Referring to **FIG. 1**, the electric dipole has a positive charge q located on the z-axis at a distance a from the origin of the graph. A second negative charge −q is located at a distance −a from the origin. The positive charge produces an electrostatic potential ϕ_1 at a radius r_1 equal to the charge q divided by 4π times the permittivity of space ϵ_0

$$\varphi_1 = \frac{q}{4\pi\varepsilon_0}\frac{1}{r_1}$$

where the permittivity is linear capacitance, measured in farads per meter. The electrostatic potential has units of volts

$$\varphi = \frac{coul}{\left(\frac{\text{farad}}{\text{meter}}\right)}\frac{1}{\text{meter}} = \frac{coul}{\text{farad}} = \text{volt}$$

because the charge in coulombs held by a capacitor is equal to the capacitance, measured in farads, times the capacitor voltage. Because the second charge has the opposite sign, the potential ϕ_2 at a radius r_2 to the same point in space is

$$\varphi_2 = \frac{-q}{4\pi\varepsilon_0}\frac{1}{r_2}$$

[0009] The total potential ϕ at some point in space is equal to the sum of the two potentials, or

$$\varphi = \varphi_1 + \varphi_2 = \frac{q}{4\pi\varepsilon_0 r_1} - \frac{q}{4\pi\varepsilon_0 r_2} = \frac{q}{4\pi\varepsilon_0}\left[\frac{1}{r_1} - \frac{1}{r_2}\right]$$

[0010] As seen in the diagram, the point of space is a distance r from the origin. Using the law of cosines, radius r_1 can be written as

$$r_1 = (r^2 + a^2 - 2ar\cos(\theta))^{\frac{1}{2}} = r\left(1 + \left(\frac{a}{r}\right)^2 - 2\left(\frac{a}{r}\right)\cos(\theta)\right)^{\frac{1}{2}} = r(1 - 2xt + t^2)^{\frac{1}{2}}$$

where t is the ratio of the charge location over the radius, and x is cos(θ). The potential for positive charge q_1 can be written

$$\varphi_1 = \frac{q}{4\pi\varepsilon_0}\frac{1}{r_1} = \frac{q}{4\pi\varepsilon_0}\frac{1}{r}(1 - 2xt + t^2)^{-1/2}$$

[0011] Dropping the factor $q/4\pi\epsilon_0 r$, the square root can be expressed in terms of the Legendre polynomial $P_n \cos(\theta)$ of the nth power

$$g(t, x) = (1 - 2xt + t^2)^{-1/2} = \sum_{n=0}^{\infty} P_n(x)t^n$$

where the absolute value of t is less than one. The polynomial coefficients of t^n can be obtained by using the binomial theorem to expand the generating function g(t,x) as

$$(1-2xt+t^2)^{-1/2}=\sum_{n=0}^{\infty}\frac{(2n)!}{2^{2n}(n!)^2}(2xt-t^2)^n$$

which evaluates to

$$\frac{0!}{2^0(0!)^2}(2xt-t^2)^0+\frac{2!}{2^2(1!)^2}(2xt-t^2)^1+\frac{4!}{2^4(2!)^2}(2xt-t^2)^2$$
$$1t^0+xt^1+\left(\frac{3}{2}x^2-\frac{1}{2}\right)t^2+\text{order}(t^3)$$

[0012] The first three Legendre polynomials are therefore

$$P_0=1$$
$$P_1=x$$
$$P_2=\frac{1}{2}(3x^2-1)$$

[0013] The electrostatic potential for both charges of the electric dipole is

$$\varphi=\frac{q}{4\pi\varepsilon_0}\frac{1}{r}\left\{\left(1-2\left(\frac{a}{r}\right)\cos(\theta)+\left(\frac{a}{r}\right)^2\right)^{-1/2}-\left(1+2\left(\frac{a}{r}\right)\cos(\theta)+\left(\frac{a}{r}\right)^2\right)^{-1/2}\right\}$$

[0014] The potential can be evaluated in terms of the Legendre polynomials as

$$\varphi=\frac{q}{4\pi\varepsilon_0 r}\left[\sum_{n=0}^{\infty}P_n(\cos(\theta))\left(\frac{a}{r}\right)^n-\sum_{n=0}^{\infty}P_n(\cos(\theta))(-1)^n\left(\frac{a}{r}\right)^n\right]$$
$$=\frac{2q}{4\pi\varepsilon_0 r}\left[P_1(\cos(\theta))\left(\frac{a}{r}\right)+P_3(\cos(\theta))\left(\frac{a}{r}\right)^3+\ldots\right]$$

[0015] The first and most dominant term when the radius is much greater than location a is equal to

$$\varphi=\frac{2aq}{4\pi\varepsilon_0}\frac{P_1(\cos(\theta)0}{r^2}$$

which is the electric dipole potential and 2aq is the dipole moment

$$p=2aq$$

[0016] Now imagine a constant electric field E_0 which is perturbed by a conducting sphere of radius a. The unperturbed electrostatic potential outside the sphere would the negative of the electric field times the radius times the Legendre polynomial, or

$$\Phi_1=-E_0rP_1$$

[0017] The electrostatic potential perturbed by the charges is the voltage E_0a times the radius a times the a of the dipole moment times the Legendre polynomial divided by the radius squared

$$\varphi_2=E_0aa\frac{P_1}{r^2}=E_0a^3\frac{P_1}{r^2}$$

[0018] The total potential outside the sphere is the sum of the two potentials equal to

$$\varphi=-E_0rP_1+E_0a^3\frac{P_1}{r^2}=-E_0P_1\left(r-\frac{a^3}{r^2}\right)=-E_0rP_1\left(1-\left(\frac{a}{r}\right)^3\right)$$

[0019] Referring to **FIG. 2**, the previously uniform electric field is shown perturbed by the neutral conducting sphere. The center of the sphere is taken as the origin and the z-axis is oriented parallel to the original uniform field.

[0020] The electric field induces a surface charge density σ on the sphere equal to the negative of the permittivity of space times the gradient of the electrostatic potential

$$\sigma=-\varepsilon_0\frac{\partial\varphi}{\partial r}|_{r=a}=3\varepsilon_0E_0\cos(\theta)$$

[0021] The electric field also induces an electric dipole moment on the sphere equal to the

$$p=\frac{qa}{r}\cdot\frac{2a^2}{r}=4\pi\varepsilon_0E_0a^3$$

with units of coulomb-meter. If this sphere is rotating around a central axis at a velocity v, it will create a magnetic moment μ equal to the dipole moment times the velocity.

$$\mu=pv$$

with units of ampere-meter^2.

SUMMARY OF THE INVENTION

[0022] As shown in the preceding background section, a neutral conducting sphere placed in a uniform electric field will generate a magnetic moment when rotated around a central axis. The electric field can be created by two points charges of opposite sign separated by a distance between them.

[0023] Referring to **FIG. 3**, the spacecraft has a spherical cabin (A) to which are attached cone-shaped electrostatic towers (B,C) above and below the cabin along the direction of travel in the z-direction. Because the electric field goes from the positive charge to the negative charge, the tip of the lower tower has a positively charged electrode, and the upper tower has a negatively charged electrode. Four equally-spaced neutral conducting spheres (D) are connected to the cabin by non-conducting tubes (E). The tubes make an angle with the cabin such that the distance (CD) is greater than distance (DB). The angle θ of the tube with respect to the cabin can be seen in side view **FIG. 4**.

[0024] Referring to **FIG. 5**, the charges create a uniform spherical field between the towers. The conducting spheres perturb this field such that the electric field (E) points toward the upper tower in a manner similar to that shown previously in **FIG. 2**.

[0025] Referring to **FIG. 6**, the conducting sphere produces an electric dipole moment (A) pointing at an angle toward the upper tower.

[0026] Referring to **FIG. 7**, by the law of addition of vectors, the electric dipole $\vec{p}$ can be represented by two orthogonal vectors pointing in the vertical z-direction p_z and in the inward radial direction p_r.

[0027] Referring to **FIG. 8**, the hollow tube (A) connecting the cabin with the conducting sphere contains a spiral-wound electrical solenoid (B) which produces a magnetic field (C). This magnetic field B can be decomposed into two orthogonal vectors pointing in the vertical z-direction B_z and in the outward radial direction B_r as shown in **FIG. 9**.

[0028] Referring to top-view **FIG. 10**, the spacecraft has a clockwise angular velocity ω (A) which gives the conducting sphere a velocity v as shown by the vector (B). By the right-hand rule of physics, the angular velocity vector points in the negative z-direction. The angular velocity in the z-direction crossed with the radius r in the radial direction produces a velocity v in the clockwise θ-direction using cylindrical coordinates {r,θ,z}.

$$v_\theta = w_z \times r_r = -\omega r$$

[0029] Referring to **FIG. 11**, the negative radial dipole moment p_r crossed with the negative velocity v_θ of the sphere produces a positive magnetic moment μ_z in the z-direction.

$$\mu_z = p_r \times v_\theta = (-p_r)(-v_\theta) = pv$$

[0030] Referring to **FIG. 12**, the magnetic field B_z in the vertical z-direction is dotted with the magnetic moment μ_z in the z-direction to produce a force F_z in the vertical z-direction on each conducting sphere (**FIG. 13**).

$$F_z = \nabla(\mu_z \cdot B_z) = \mu_z \nabla B_z$$

[0031] The magnetic field that is produced by the solenoid actually curves away and around. Thus there is a gradient of the field in the z-direction.

[0032] The force can also be expressed in tensor notation. The magnetic B field in the vertical direction is part of an electromagnetic 4×4 matrix Faraday tensor F

$$F^\alpha_\beta = \begin{array}{c|cccc|} & \beta = t & r & \theta & z \\ \alpha = t & 0 & 0 & 0 & 0 \\ \alpha = r & 0 & 0 & B_z & 0 \\ \alpha = \theta & 0 & -B_z & 0 & 0 \\ \alpha = z & 0 & 0 & 0 & 0 \end{array}$$

which shows that the magnetic field is located in slot F^r_θ of the Faraday tensor. In tensor notation the subscripts and superscripts have to match up on both sides of the equation. Matching subscripts and superscripts on the same side of the equation cancel. In this case, the electric dipole moment is in the radial direction p_r. The velocity can be represented as a time derivative of the θ-coordinate x^θ or

$$v^\theta = \frac{\partial x\theta}{\partial t}$$

[0033] Thus the force component in the z-direction becomes

$$F_z = p_r v^\theta F^r_{\theta,z} = (-p)(-v)\frac{\partial B_z}{\partial z} = pv\frac{\partial B_z}{\partial z}$$

where the angular and radial tensor components cancel and comma-z (, z) represents differentiation of the magnetic field in the z-direction.

[0034] The spacecraft design also has an inherent motion control system for moving in various directions. If the magnetic field of one solenoid arm is increased or decreased, the force on that sphere will be increased or decreased. Thus the spacecraft can turn in a particular direction.

A BRIEF DESCRIPTION OF THE DRAWINGS

[0035] **FIG. 1**. Electric dipole.

[0036] **FIG. 2**. Uniform electric field perturbed by electric dipole.

[0037] **FIG. 3**. Perspective view of spacecraft.

[0038] **FIG. 4**. Angle of solenoid tube.

[0039] **FIG. 5**. Electric field perturbed by conducting sphere.

[0040] **FIG. 6**. Electric dipole generated by conducting sphere.

[0041] **FIG. 7**. Orthogonal vector components of electric dipole.

[0042] **FIG. 8**. Magnetic field produced by tube arm solenoid.

[0043] **FIG. 9**. Orthogonal vector components of magnetic field.

[0044] **FIG. 10**. Angular velocity of hull.

[0045] **FIG. 11**. Magnetic moment produced by radial electric dipole and sphere velocity.

[0046] **FIG. 12**. Dot product of the magnetic moment with the magnetic field.

[0047] **FIG. 13**. Vertical lift force on all four conducting spheres.

[0048] **FIG. 14**. Perpective view of spacecraft interior.

DETAILED DESCRIPTION OF THE INVENTION

[0049] 1. Referring to the cut-away view **FIG. 14**, the construction of the spacecraft is a thin-wall insulating thermoplastic having a dielectric constant in the range of 20 kilovolts per millimeter (A). An insulated electrode (B) runs from the cabin power supply and high-voltage transformer

(C) to the tip of each tower (D). The four spheres (E) are silver plated to make them conducting. The tube solenoids (F) are driven by a direct current power supply (G).

[0050] 2. The present model uses 3D computer design software and stereolithography fabrication techniques to create the thin-wall, low-weight, hollow structure of the hull. The computer model is sliced into many thin horizontal slices. A laser, mounted on an x-y table, draws out the slice on a table immersed in a bath of liquid polymer. Due to its sensitivity to the light, the liquid polymerizes. The table is then lowered a few thousandths of an inch more and the process is repeated. Thus making hollow spherical and conical shapes is extremely easy to do. Parts can be designed and stored in *.STL stereolithography files for transmission by Internet e-mail to the service bureau machine shop which sends the finished parts back the next day by express mail.

I claim:

1. A spacecraft comprising:

a. a spherical cabin;

b. an electrostatic conical tower mounted on top of item (**1***a*), supporting a vertically-mounted negatively-charged insulated electrode at the tip of the tower;

c. an electrostatic conical tower mounted on the bottom of item (**1***a*), supporting a vertically-mounted positively-charged insulated electrode at the tip of the tower;

d. a vertical electric dipole created by items (**1***b*) and (**1***c*);

e. a high-voltage transformer to drive item (**1***d*), mounted in item (**1***a*);

f. four tubular arms, mounted at 90° around and extending at an angle from item (**1***a*);

g. four solenoids, each of which is mounted axially inside item (**1***f*);

h. a direct current power supply to drive item (**1***g*);

i. four silver-plated conducting spheres, each of which is mounted on the end of item (**1***f*);

2. an electrostatic lift system that:

a. produces a uniform spherical electric field by means of item (**1***d*) which envelopes item (**1***i*);

b. produces a perturbed electric field due to the presence of item (**1***i*);

c. produces an electric dipole moment in the direction of item (**1***b*) due to items (**2***a*) and (**2***b*);

d. produces a vertical magnetic moment due to the clockwise angular velocity of item (**1***a*) combined with item (**2***c*);

e. produces a vertical lift force on item (**1***i*) due to item (**2***d*) combined with the magnetic field gradient in the vertical direction produced by item (**1***g*); and

f. creates a motion control system by varying the current to item (**1***g*) in order to increase or decrease the effect of item (**2***e*) on a particular item (**1***i*).

* * * * *

US 20040164824A1

(19) United States

(12) Patent Application Publication

St. Clair

(10) Pub. No.: US 2004/0164824 A1

(43) Pub. Date: Aug. 26, 2004

(54) HYPERSPACE ENERGY GENERATOR

(76) Inventor: **John Quincy St. Clair**, San Juan, PR (US)

Correspondence Address:
John St. Clair
Hyperspace Research Institute
52 Kings Court, 4A
San Juan, PR 00911 (US)

(21) Appl. No.: **10/372,556**

(22) Filed: **Feb. 21, 2003**

Publication Classification

(51) **Int. Cl.**[7] **H01P 3/06**

(52) **U.S. Cl.** **333/243**

(57) **ABSTRACT**

This invention is a braided gold wire coaxial cable of micron size which generates hyperspace energy by coupling to the tetrahedral geometry of subspace, dimension and the Planck mass.

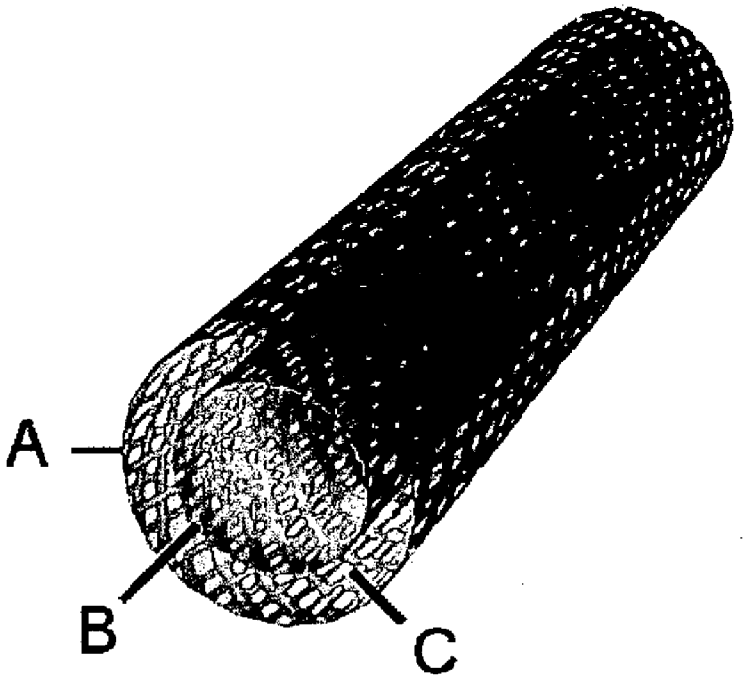

Figure 1

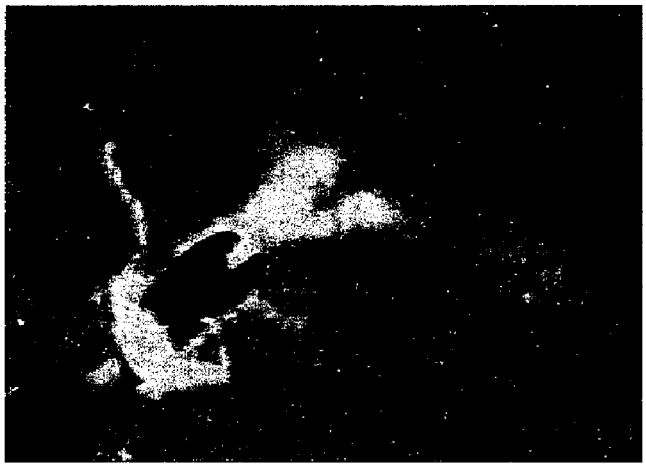

Figure 2

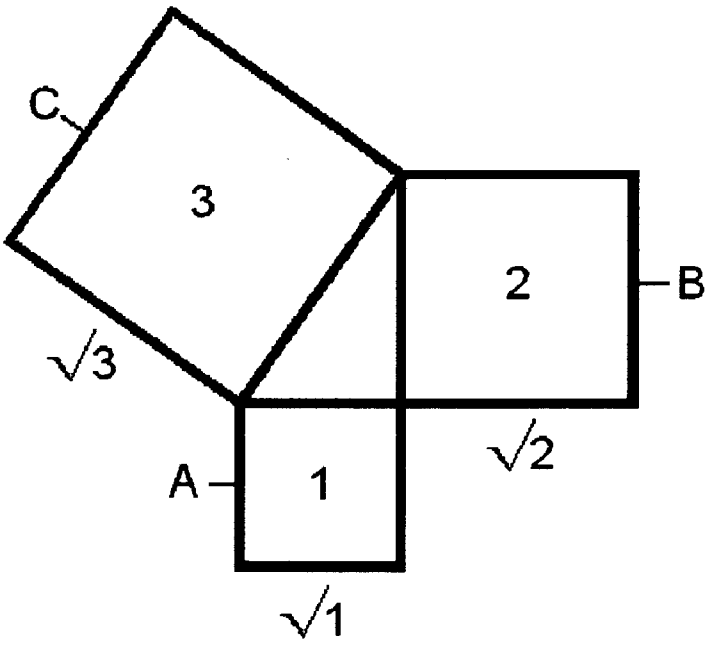

Figure 3

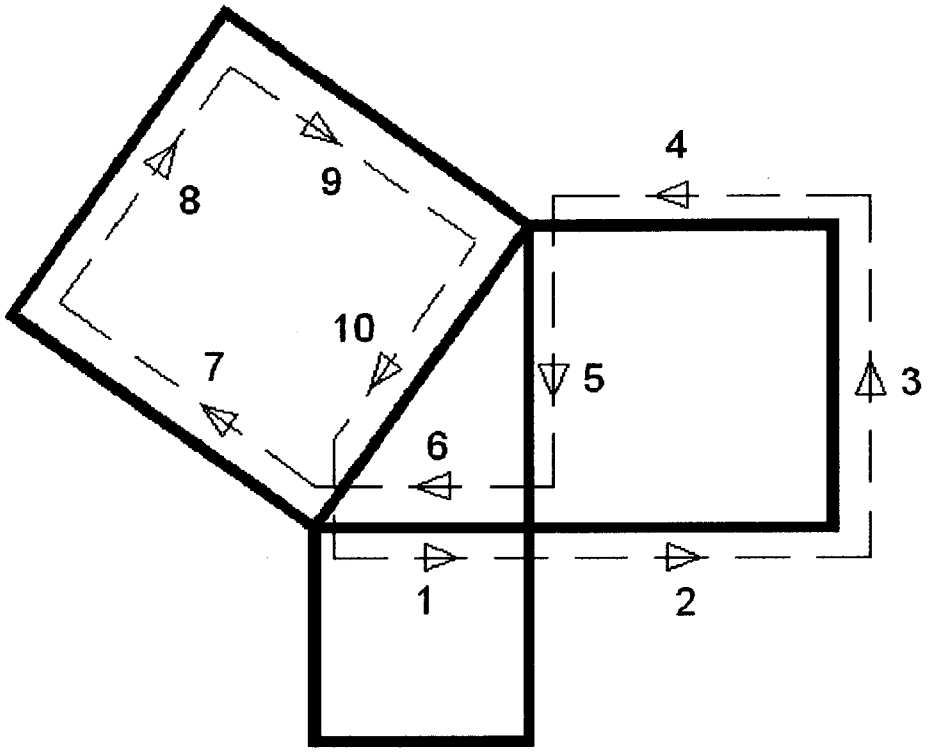

Figure 4

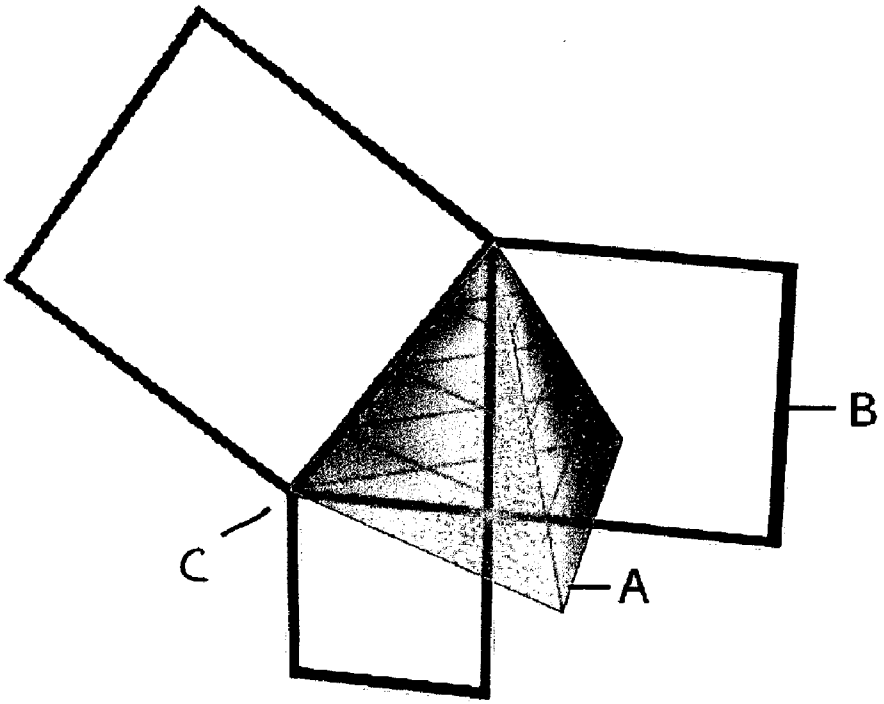

Figure 5

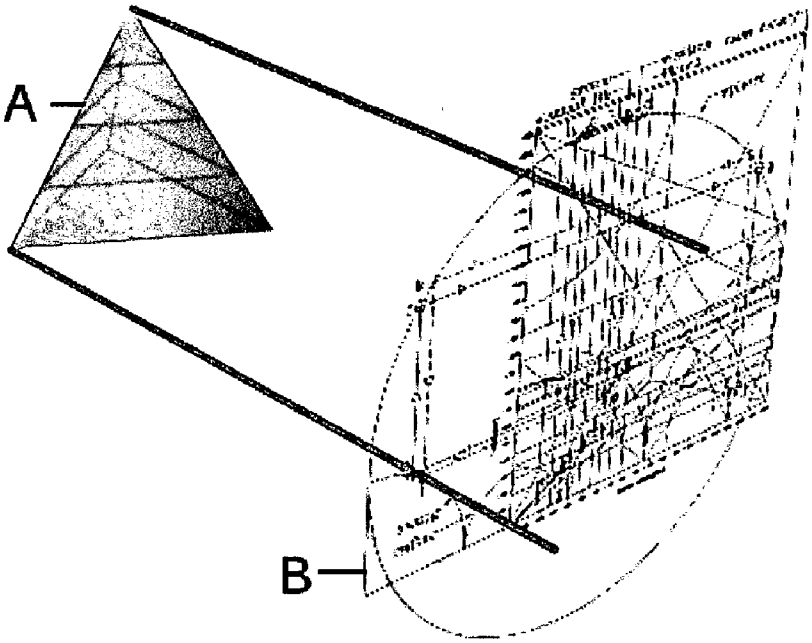

Figure 6

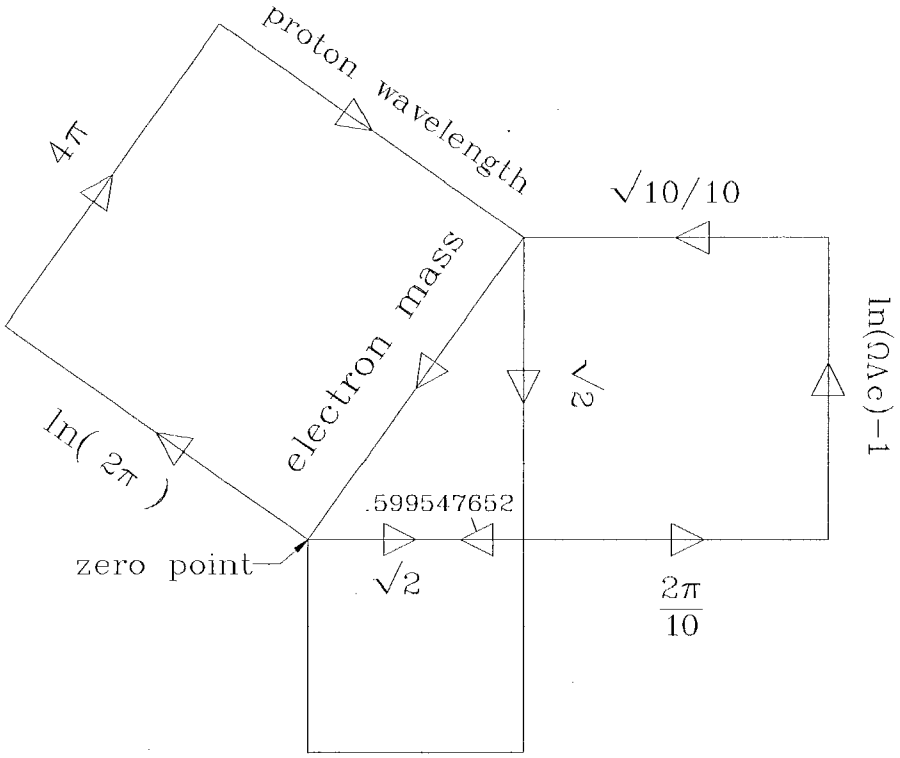
ln(ΩΛc)−1
2π/10
√10/10
√2
.599547652
√2
proton wavelength
electron mass
zero point
4π
ln(2π)

Figure 7

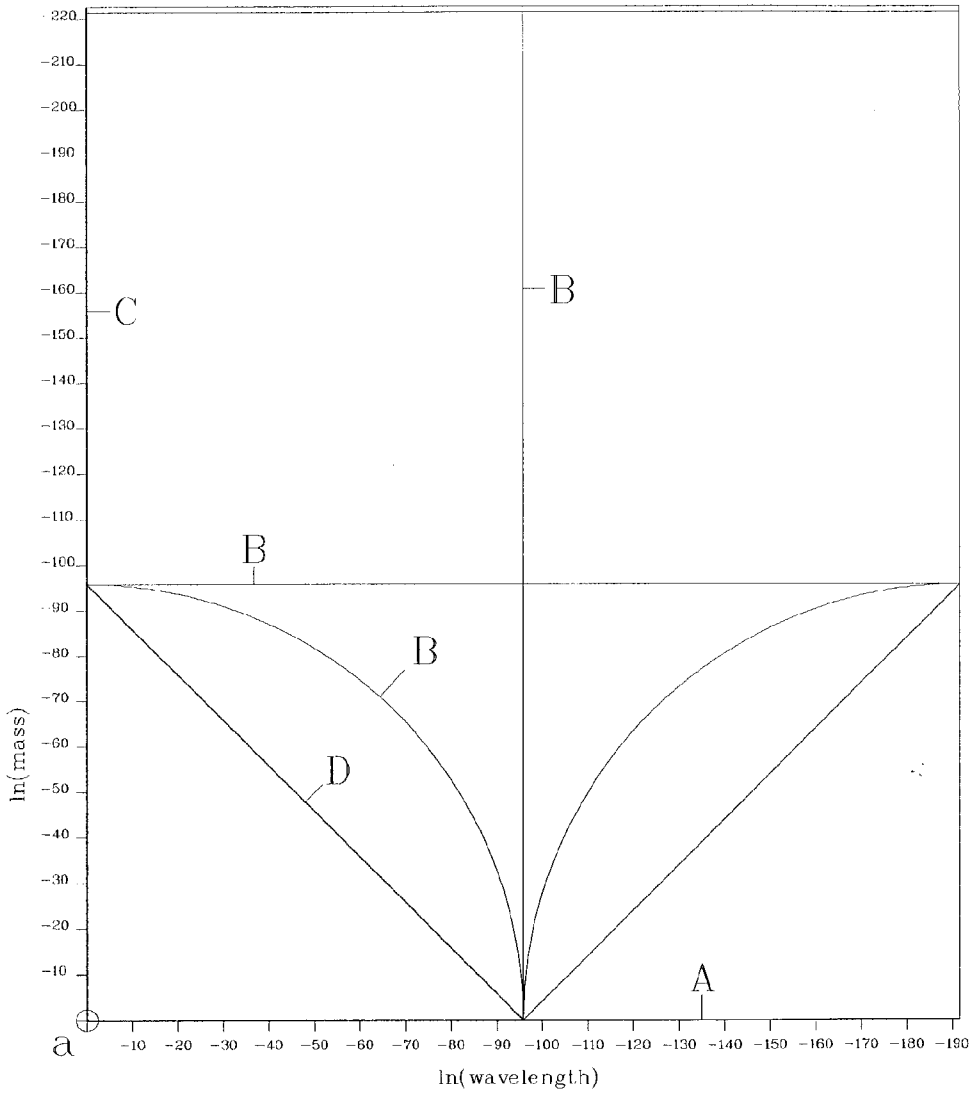

Figure 8

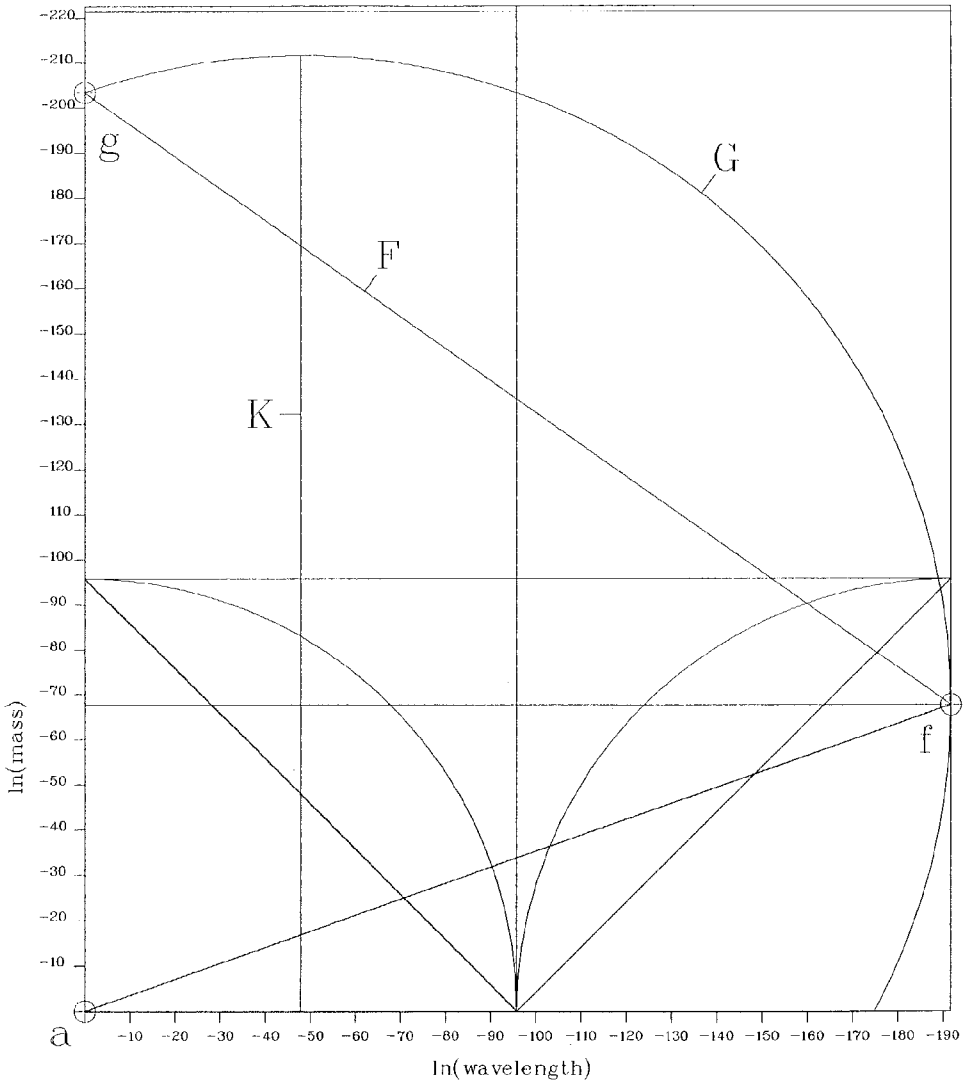
-220
-210
-200
-190
180
-170
-160
-150
-140
-130
-120
110
-100
-90
-80
-70
-60
-50
-40
-30
-20
-10
ln(mass)
g
G
F
K
f
a
-10 -20 -30 -40 -50 -60 -70 -80 -90 -100 -110 -120 -130 -140 -150 -160 -170 -180 -190
ln(wavelength)

Figure 9

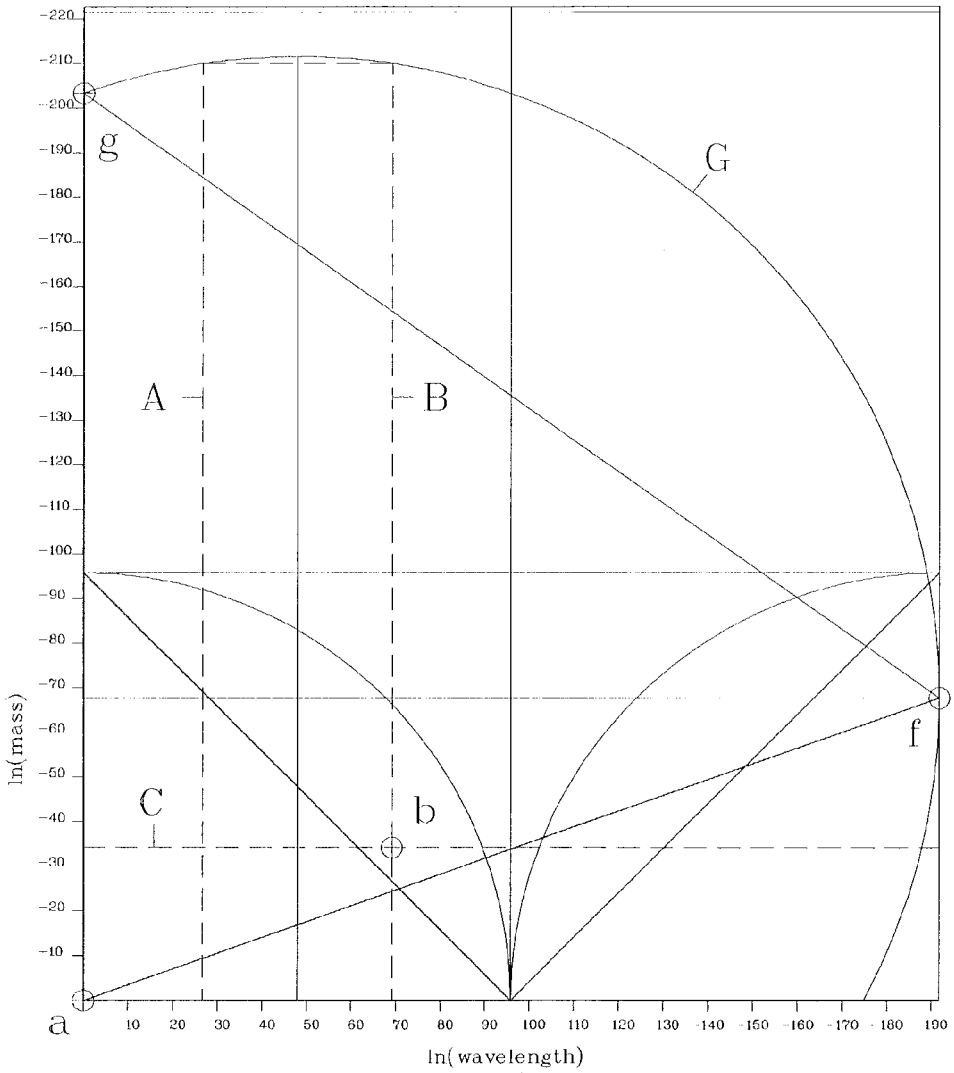
g
G
A
B
C
b
f
a
ln(mass)
ln(wavelength)
-220
-210
-200
-190
-180
-170
-160
-150
-140
-130
-120
-110
-100
-90
-80
-70
-60
-50
-40
-30
-20
-10
10
20
30
40
50
60
70
80
90
100
110
120
130
140
150
160
170
180
190

Figure 10

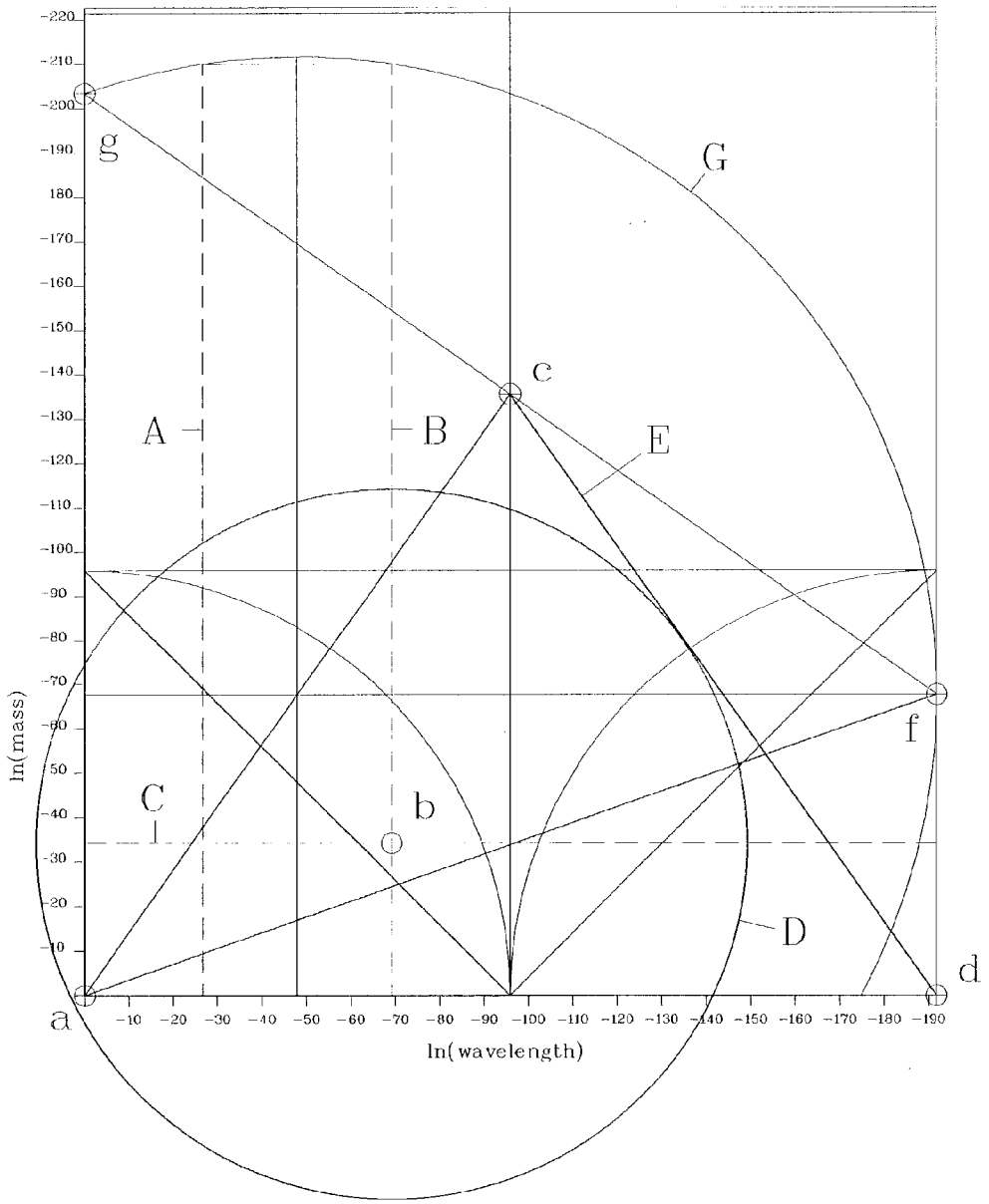
-220
-210
-200
-190
180
-170
-160
-150
-140
-130
-120
-110
-100
-90
-80
-70
-60
50
-40
-30
-20
-10
ln(mass)
-10 -20 -30 -40 -50 -60 -70 -80 -90 -100 -110 -120 -130 -140 -150 -160 -170 -180 -190
ln(wavelength)
g
G
c
A
B
E
f
C
b
D
d
a

Figure 11

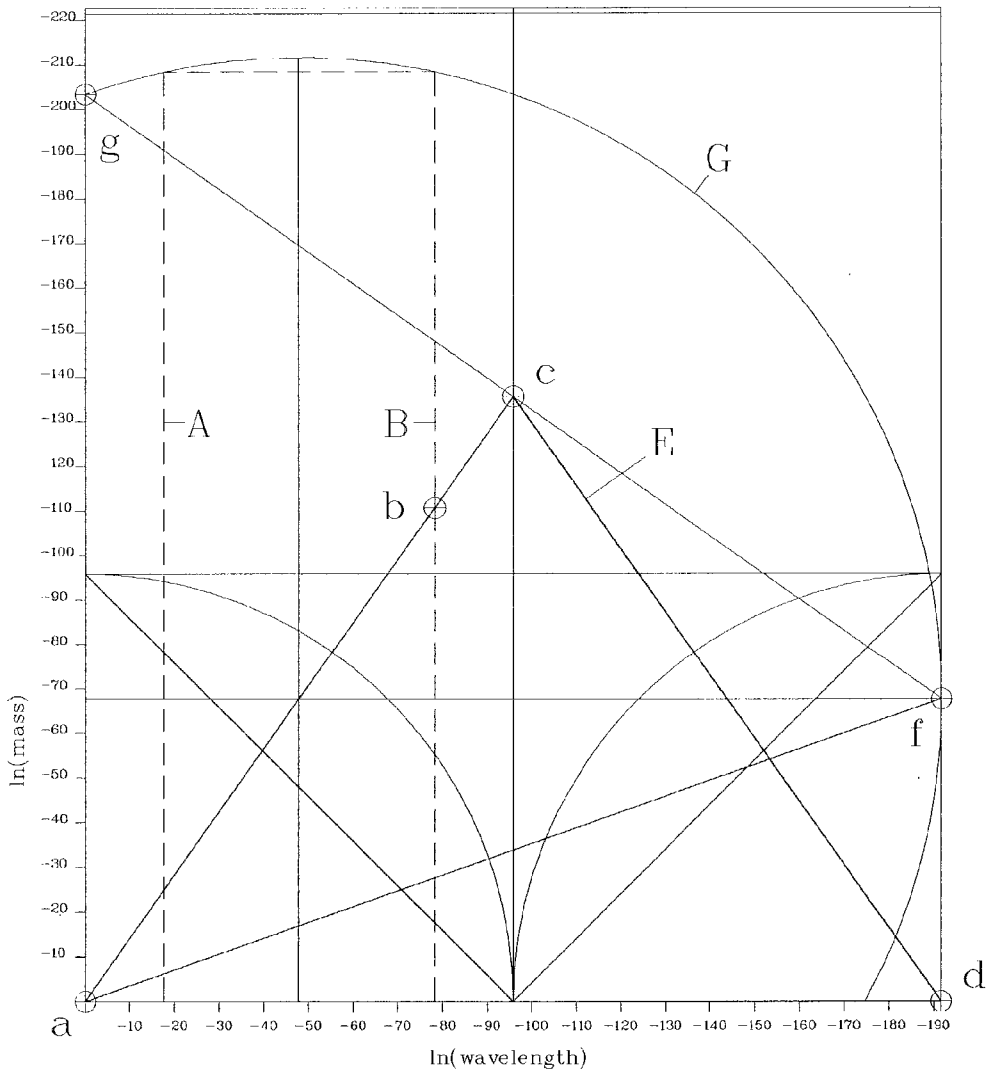
-220
-210
-200
-190
-180
-170
-160
-150
-140
-130
120
-110
-100
-90
-80
-70
-60
-50
-40
-30
-20
-10
ln(mass)
g
G
c
A
B
E
b
f
d
a
-10 -20 -30 -40 -50 -60 -70 -80 -90 -100 -110 -120 -130 -140 -150 -160 -170 -180 -190
ln(wavelength)

Figure 12

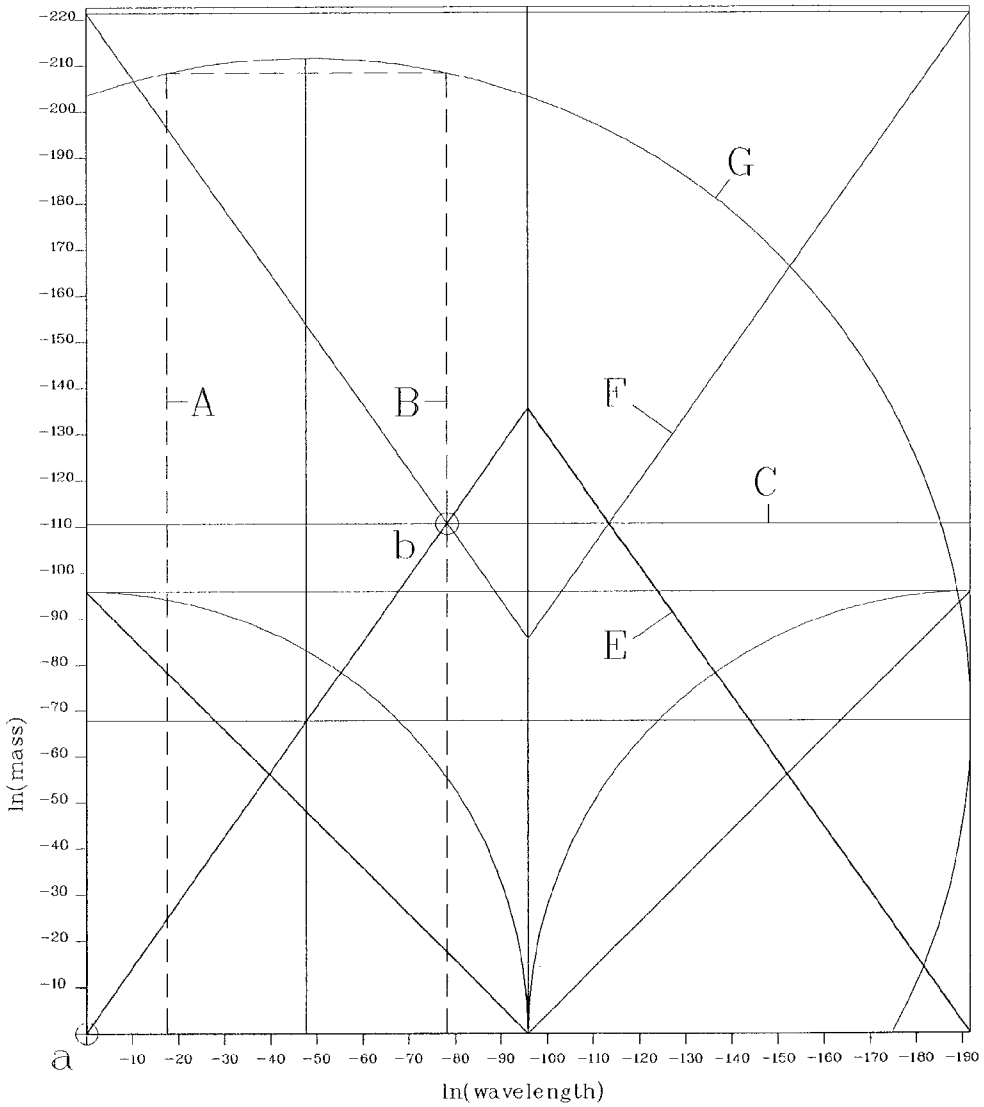
G
F
C
E
A
B
b
a
ln(mass)
ln(wavelength)
-220
-210
-200
-190
-180
170
-160
-150
-140
-130
-120
-110
-100
-90
-80
-70
-60
-50
-40
-30
-20
-10
-10 -20 -30 -40 -50 -60 -70 -80 -90 -100 -110 -120 -130 -140 -150 -160 -170 -180 -190

Figure 13

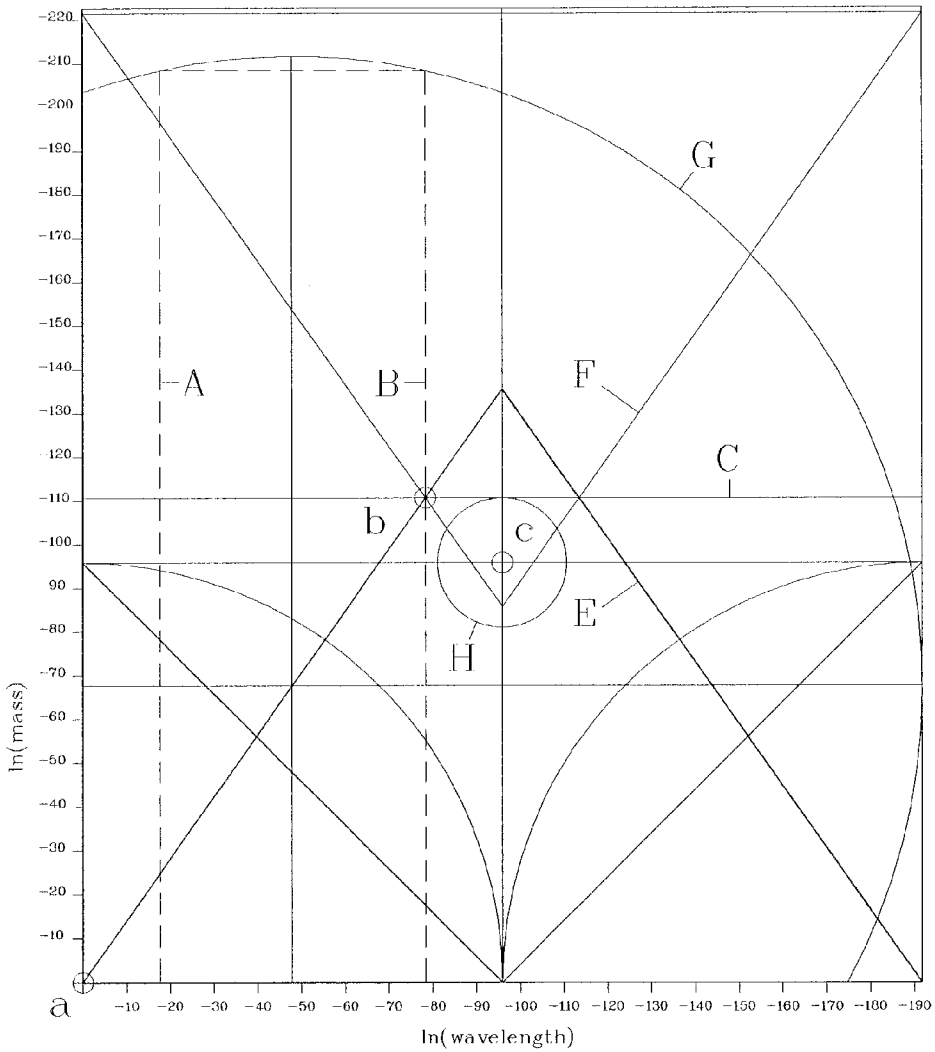
G
A
B
F
C
b
c
E
H
a
ln(mass)
ln(wavelength)
-220
-210
-200
-190
-180
-170
-160
-150
-140
-130
-120
-110
-100
-90
-80
-70
-60
-50
-40
-30
-20
-10
-10 -20 -30 -40 -50 -60 -70 -80 -90 -100 -110 -120 -130 -140 -150 -160 -170 -180 -190

Figure 14

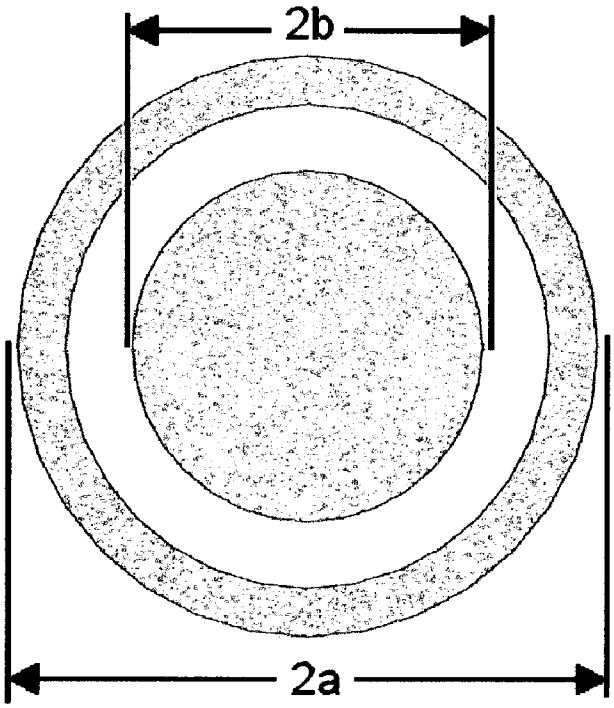

Figure 15

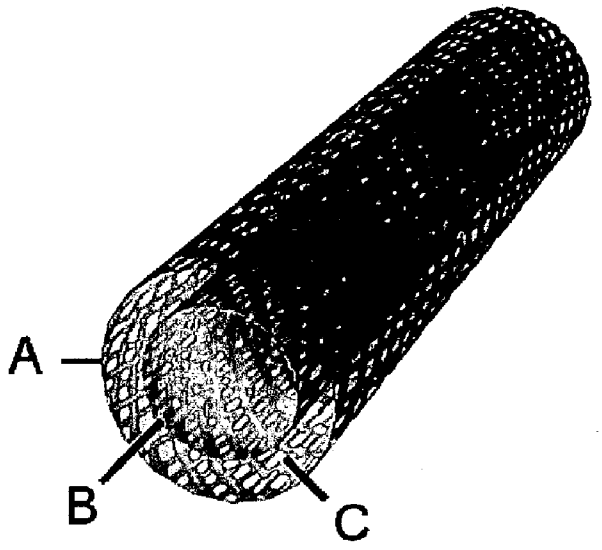

HYPERSPACE ENERGY GENERATOR

BRIEF SUMMARY OF THE INVENTION

[0001] This invention is a braided gold wire coaxial cable of micron size which generates hyperspace energy.

BACKGROUND OF THE INVENTION

[0002] Electrical experiments with micron-sized braided gold wire coaxial cable show that it is capable of generating substantial amounts of hyperspace energy. Referring to the electron microscope photograph shown in **FIG. 1**, the white mist emanating from the cable is low-density hyperspace energy that is flowing in from a co-dimension of our universe. The dimensions of the cable are of such a particular size as to couple the cable to the tetrahedral geometry of subspace, the dimension of space, the Planck mass and the linear inductance of the universe.

[0003] According to physicist Dr. Edward Witten of Princeton University, space has twenty-four dimensions, of which ten dimensions are non-redundant. Imagine taking a path around the Pythagorean triangle, as known as the planar tetrahedron, with sides equal to $\{\sqrt{1}, \sqrt{2}, \sqrt{3}\}$ as shown in **FIG. 2**. There are three squares denoted the one-square (A), the two-square (B) and the three-square (C). Each square has four sides. The edge of each square can be traversed in two directions. Thus the total number of dimensions is

$$dim_{total}=2\cdot(4+4+4)=24$$

[0004] Referring to **FIG. 3**, there is a path starting at the corner of the triangle, along the one-square **(1)**, around the two-square **(2,3,4,5)**, back along the one-square **(6)**, around the three-square **(7,8,9,10)** and back to the corner of the triangle. The numbering of the edges shows that there are ten edges. Because the path is traversed in only one direction, the number of reduced dimensions is

$$dim_{reduced}=1\cdot(10)=10$$

[0005] Referring to **FIG. 4**, the planar tetrahedron (B) forms one edge of the three-dimensional tetrahedron (A). Rotating the planar tetrahedron ±120° produces the other two edges. The tetrahedron has four faces which are equilateral triangles. The ten dimensional path starts and ends at (C), the corner of the tetrahedron known as the zero point.

[0006] Referring to **FIG. 5**, the projection of the 3D tetrahedron (A) onto a plane is called the tetrahedron diagram (B) which is the main diagram of the new geometrical physics known as Δphysics. All the constants of physics can be derived geometrically from the tetrahedron diagram and its associated planar tetrahedron. An example of this is shown in **FIG. 6** where the edges are given specific constants related to tetrahedral geometry, dimension, curvature, and the mass and wavelength of the elementary particles such as the electron and proton. The ten dimensional path includes the following constants

[0007] a. electron wavelength

[0008] b. proton wavelength

[0009] c. 47π The solid angle of the sphere. The tetrahedron is circumscribed by a sphere.

[0010] d. ln(2π) The natural log of the curvature. The subspace geometry is a logarithmic manifold. The tetrahedron diagram plots the logarithm of mass versus the logarithm of wavelength.

[0011] e. 0.599547652 A constant related to fractal dimension and the speed of light factor 2.99792458.

[0012] f. $\sqrt{2}$ The edge of the two-square.

[0013] g. $\sqrt{10}/10$ The square root of ten dimensions per 10 dimensions.

[0014] h. ln(ΩΛc)−1 The natural log of the momentum of space less one.

[0015] i.

$$\frac{2\pi}{10}$$

[0016] The curvature of space per 10 dimensions.

[0017] j. $\sqrt{2}$ The edge of the two-square.

[0018] The length of each edge is multiplied by the constant assigned to that edge. The ten edges have the order of $\{\sqrt{1}, \sqrt{2}, \sqrt{2}, \sqrt{2}, \sqrt{1}, \sqrt{3}, \sqrt{3}, \sqrt{3}, \sqrt{3}\}$. What subspace geometry does is to multiply the edge length, such as $\sqrt{1}$, times the square root of two $\sqrt{2}$. Then it takes the square root of that number and multiplies it by the next edge, which is $\sqrt{2}$, times the curvature per 10 dimensions

$$\frac{2\pi}{10}.$$

[0019] It then takes the square root of that number and so on. In equation form, this looks like the following calculation

$$\sqrt{3a\sqrt{3b\sqrt{3c\sqrt{3d\sqrt{1e\sqrt{2f\sqrt{2g\sqrt{2h\sqrt{2i\sqrt{1j}}}}}}}}}}} = 80.1104395$$

[0020] where the letters correspond to those in the list of constants. The square root sum total is equal to the Planck scale Λwhich is the bottom dimensional limit of the universe. The sum of the ten constants per a speed of light circumference is equal to unity

$$\frac{\sum_{n=10} s_n}{2\pi\ln(c)} = 1.000000000$$

[0021] where the log of the speed of light is

$$\ln(c)=\ln(299792458)=19.51860099$$

[0022] and multiplying by 2π is the circumference of a circle with a radius equal to the speed of light.

[0023] Referring to **FIG. 7**, the tetrahedron diagram plots the natural logarithm of mass on the vertical axis (C) versus the natural logarithm of wavelength on the horizontal axis (A). The reason for this is that the mass of the electron times its wavelength is equal to the mass of the proton times its wavelength which in turn is equal to Planck's constant h divided by the speed of light, known as the base constant (B). If two numbers multiply, they sum in logarithms. In subspace geometry, the sum of the logarithm of the mass of the electron plus the logarithm of the wavelength is equal to the logarithm of the base constant which has a value of −95.91546344.

$$\ln(m_{electron}) + \ln(\lambda_{electron}) = \ln\left(\frac{h}{c}\right) = -95.91546344$$

[0024] What this means is that the mass and wavelength slide on a 45° base line (D) which has end points on the vertical and horizontal axes equal to the base constant.

[0025] Referring to **FIG. 8, a** line (af) drawn from the origin at the tetrahedral angle of 19.47122063, equal to the asin(⅓), creates a tetrahedron (F) along path (afg). This tetrahedron is circumscribed by a sphere (G) with sphere diameter (K).

[0026] The Planck scale path calculation showed that the electron mass and the proton wavelength were the last two edges. The electron mass has a value of

$$\ln(m_e) = -69.17083217$$

[0027] and the electron wavelength has a value of

$$\ln(\lambda_E) = -26.74463127$$

[0028] Referring to **FIG. 9**, the electron wavelength (A) is plotted as a vertical line on the tetrahedron diagram. The wavelength reflects off the circumscribing sphere (G), and returns as the electron mass (B). So the diagram incorporates the concepts of both classical physics (point mass particles) and quantum mechanics (wave particles).

[0029] The proton wavelength has a value of

$$\ln(\lambda_p) = -34.26005901$$

[0030] The proton wavelength (C) is plotted as a horizontal line in order to get the intersection (b) with the electron mass.

[0031] Referring to **FIG. 10, a** circle (D) with a radius equal to the Planck scale is drawn centered (b) on the intersection of the electron mass with the proton wavelength, which are the last two edges of the Planck scale calculation. A line (ac) from the origin to the intersection of the base constant with the rotated tetrahedron creates the vertical tetrahedron (acd). As can be seen, the Planck scale is tangent to the tetrahedron on side (cd). This tetrahedron is the projection of the 3D tetrahedron shown before in **FIG. 5**. What this means is that the tetrahedral geometry of subspace determines the bottom limit of our universe. And this bottom limit, called the Planck scale, contains within itself the mass and wavelength of the elementary particles, curvature, dimension and planar tetrahedral geometry. Tetrahedron diagram tet0565 shows that the electron and proton are one and the same particle because the electron path rotates counterclockwise around the curvature and then returns clockwise as the proton path. This path occurs moving through space and hyperspace. Because the single particle enters our universe from hyperspace at two different positions, we see it as two distinct particles. Thus the tetrahedron diagram shows that hyperspace exists.

[0032] The speed of light is equal to the inverse of the square root of the permeability μ of space times the permittivity ϵ of space

$$c = \sqrt{\frac{1}{\mu\varepsilon}}$$

[0033] The permeability is linear inductance or inductance per length which you would find in a solenoid for example. The permittivity is linear capacitance or capacitance per length which you find in a capacitor. In an electrical circuit, the inductance and capacitance form a resonant circuit. The resonance frequency can be changed by changing the inductor or capacitor. In a similar manner, the speed of light is not constant, but can be lowered by increasing the permittivity. Hyperspace energy has a high permittivity and therefore a low speed of light. This low speed of light gives hyperspace energy a luminescent quality which is seen as a white mist (**FIG. 1**).

[0034] From Einstein's General Theory of Relativity, the stress pressure T on spacetime is proportion to the square of the ratio of the electric field E to the speed of light c.

$$T = \left(\frac{E}{c}\right)^2$$

[0035] Thus substantially lowering the speed of light creates an enormous spacetime pressure which can be used to generate the lift force on electromagnetic field propulsion vehicles. Furthermore, the electric field is subject to the Lorentz transformation

$$E = \frac{E_0}{\sqrt{1 - \frac{v^2}{c^2}}}$$

[0036] The electric field E_0 moving in a frame velocity of v, can quickly attain relativistic proportions because the speed of light could be 1 meter per second, rather than the enormous value in our universe of 299792458 meters per second. Thus one would like to permeate the hull of the electromagnetic field propulsion vehicle with this hyperspace energy in order to increase the electric field and hence the spacetime curvature around the hull which produces the enormous lift force on the vehicle. The method of bringing in this hyperspace energy is to use braided gold wire coaxial cable which is coupled to the geometry of subspace. The subspace geometry is contained in the Δphysics tetrahedron diagram.

[0037] Just as space has a linear inductance and linear capacitance, it also has a linear mass Ω or mass per meter.

Physicist Dr. John A. Wheeler of Princeton likes to invert this and call it "mom" for meter of mass. The Planck mass is equal to the Planck scale Λtimes the linear mass Ω

$$\ln(m_{\text{Plank}})=\ln(\Omega\Lambda)=-17.64290101$$

[0038] Planck's constant h is equal to 2π times the Planck scale squared times the linear mass Ω times the speed of light c.

$$h=2\pi\Lambda^2\,\Omega c=2\pi\Lambda(\Omega\Lambda)c$$

[0039] which shows that Planck's constant is actually the circumference of a circle of radius Planck scale times the Planck mass times the speed of light. The base constant is therefore

$$\text{base}=\frac{h}{c}=\frac{2\pi\Lambda(\Omega\Lambda)c}{c}=(2\pi\Lambda)(\Omega\Lambda)=-95.91546344$$

[0040] which is an area, known as the Planck box, bounded by the Planck wavelength (2πΛ) and the Planck mass. Everything outside the Planck box is hyperspace. Everything inside the Planck box is our universe. Thus the boundary between space and hyperspace is the Planck wavelength and the Planck mass. In logarithms, notice that the Planck mass and Planck wavelength, just like the electron and proton, sum to the base constant.

[0041] Referring to **FIG. 11**, the Planck mass (A) and the Planck wavelength (B) are plotted on the diagram and reflected off the sphere. The Planck wavelength intersects the tetrahedron at (b) which is the boundary between space and hyperspace known as the centerline of the diagram. The centerline has a value equal to the base times the square root of ⅔.

$$centerline=\sqrt{\frac{4}{3}}\,base=-110.7536373$$

[0042] Referring to **FIG. 12**, the centerline (C) is drawn on the diagram and the tetrahedron (E) is mirrored (F) across the centerline to indicate the co-dimensions of hyperspace.

[0043] Referring to **FIG. 13, a** circle (H), centered at the base at the base (c), tangent to the centerline (C), has a radius equal to base times the square root of 4/3 less one

$$R=\left(\sqrt{\frac{4}{3}}-1\right)base=14.83817383$$

[0044] This is the length that has to traversed in order to cross over the centerline from the base constant of our universe to the co-dimension of hyperspace. Furthermore, the Planck mass, which is the other boundary, has to be crossed in order to get to either axis as seen by the length between the vertical axis and line (A). It can be looked at also as the length needed to go from the Planck wavelength (B) to the tangent point of circle (H) in order to reach the center of the mirror tetrahedrons.

SUMMARY OF THE INVENTION

[0045] This invention is a braided gold wire coaxial cable of micron size that is coupled to the subspace geometry of the universe for the purpose of bringing in low-density hyperspace energy into our universe from the co-dimensions of hyperspace. The dimensions of the coaxial cable are of such particular size as to enable it to couple to the ten dimensions of space, the 3:1 geometrical ratio of the tetrahedron, the coaxial wave function based on the logarithm of the ratio of the outer radius to the inner radius of the cable, the length between the base constant of our universe and the centerline between mirror tetrahedrons, and the geometrical relationship between the Planck mass and the linear inductance of the cable.

[0046] Referring to **FIG. 14**, the coaxial guide has an outer braided conductor (A) and an inner braided conductor (B) in which the outer and inner conductors are at radii a and b respectively. The linear inductance L of the cable is equal to the natural logarithm of the ratio of the radii times the permeability μ of space divided by the curvature 2π

$$L=\ln\left(\frac{a}{b}\right)\frac{\mu}{2\pi}$$

[0047] It can be shown that the ratio of the area-to-volume ratio of the tetrahedron to the area-to-volume ratio of its circumscribing sphere is 3:1. It is also the ratio of the area of the three-square to the area of the one-square on the planar tetrahedron. It is also the tetrahedral angle asin(⅓) equal to 19.47122063°. It is also a maximum work condition between the velocity ratio of a fluid stream and a moving vane such as in turbomachinery. So the first constraint on the radii is

$$\exp\left(\ln\left(\frac{a}{b}\right)+1\right)\equiv 3$$

[0048] The second constraint is that the radius c of the circle, equal to the difference between the base constant and the centerline, is related to ten dimensions. The value of the radius projected into our universe is

$$c=\left(\sqrt{\frac{4}{3}}-1\right)\text{base}=.3596358547\cdot\text{microns}$$

[0049] and the dimensional constraint is

$$\left[\ln(c)+\ln\left(\frac{1}{a}\right)\right]^2=10$$

[0050] The coaxial wave function constraint is

$$\frac{\ln(a)^2}{2\pi\ln\left(\frac{a}{b}\right)} \equiv \ln(c)^2$$

[0051] The linear inductance of the coaxial cable has to be such that it gets geometrically across the Planck mass which is the second boundary of our Planck box

$$\exp\left(\ln(\Omega\Lambda) - \ln\left(\frac{\ln\left(\frac{a}{b}\right)}{2\pi}\mu\right) + 1\right) \equiv 3$$

[0052] With these four subspace constraints, the outer radius a and inner radius b of the cable are

[0053] a=8.342461828 microns

[0054] b=7.559058141 microns

[0055] so the cable has an outside diameter of roughly 16 to 17 microns.

STATEMENT REGARDING FEDERALLY SPONSORED RESEARCH OR DEVELOPMENT

[0056] Not Applicable.

A BRIEF DESCRIPTION OF THE DRAWINGS

[0057] **FIG. 1**. Electron microscope photograph of the coaxial cable and hyperspace mist.

[0058] **FIG. 2**. The planar tetrahedron.

[0059] **FIG. 3**. The ten dimensional path around the planar tetrahedron.

[0060] **FIG. 4**. The relationship between the planar tetrahedron and the 3D tetrahedron.

[0061] **FIG. 5**. Projection of the 3D tetrahedron onto a plane to create the tetrahedron diagram.

[0062] **FIG. 6**. Dimension, geometry, curvature and elementary particles that make up the ten dimensional Planck scale path.

[0063] **FIG. 7**. Tetrahedron diagram showing base constant.

[0064] **FIG. 8**. Tetrahedron diagram showing rotated tetrahedron and circumscribing sphere with electron mass and wavelength reflecting off sphere.

[0065] **FIG. 9**. Tetrahedron diagram showing intersection of electron mass with proton wavelength which are components of the Planck scale path.

[0066] **FIG. 10**. Tetrahedron diagram showing Planck scale tangent to tetrahedron.

[0067] **FIG. 11**. Tetrahedron diagram showing Planck mass and Planck wavelength intersecting tetrahedron.

[0068] **FIG. 12**. Tetrahedron diagram showing mirror tetrahedrons across centerline, the boundary between space and hyperspace.

[0069] **FIG. 13**. Tetrahedron diagram showing distance between the base constant and the centerline used to calculate the dimensions of the coaxial cable.

[0070] **FIG. 14**. End view of coaxial cable showing radii a and b used in the subspace geometry constraints in order to couple to hyperspace.

[0071] **FIG. 15**. Perspective view of braided gold wire coaxial cable.

DETAILED DESCRIPTION OF THE INVENTION

[0072] 1. Referring to **FIG. 15**, the coaxial cable has a braided gold wire outer conductor (A) and a braided gold wire inner conductor (B) separated by a dielectric (C). The open braiding promotes the conduction of the electromagnetic wave while allowing the hyperspace mist to seep out of the braid and permeate the surrounding material in which it is embedded.

[0073] 2. The radius of the outer conductor a and the radius of the inner conductor b have the following values in order to couple the cable to the tetrahedral geometry of subspace.

[0074] a=8.342461828·microns

[0075] b=7.559058141·microns

[0076] 3. Even though the wire size is very small, the cable can be made in limited lengths using the new nanotechnology and silicon micromotors.

I claim:

1. A coaxial cable which has:

a) a braided gold wire outer conductor of radius 8.34 microns;

b) a braided gold wire inner conductor of radius 7.56 microns;

c) a thin dielectric separator between the two conductors; and

d) an open weave to allow the hyperspace mist to seep out of the cable and permeate the surrounding material in which the cable is embedded;

2. A specific relationship between the physical dimensions of the coaxial cable, given in items (**1***a*) and (**1***b*), to the following tetrahedral subspace couplings:

a) the ratio of the area-to-volume ratio of the tetrahedron to the area-to-volume ratio of its circumscribing sphere, equal to 3:1, with a coupling to the natural logarithm of the ratio of the radii of the conductors;

b) the ratio of the area of the three-square of the planar tetrahedron to the area of the one-square, equal to 3:1, with a coupling to the Planck mass and the linear inductance of the cable;

b) the distance between the base constant and $\sqrt{4/3}$ times the base constant, equal to −14.83817383 in natural logarithms, with a coupling to the outer radius of the

conductor, the ten dimensions of space, and the co-dimensions of hyperspace; and

c) the wave function of the coaxial guide given in terms of item (**2***c*), the natural logarithm of the ratio of the radius of the outer conductor to the radius of the inner conductor, and the curvature 2π.

* * * * *

US 20040102810A1

(19) United States

(12) Patent Application Publication (10) Pub. No.: US 2004/0102810 A1

St. Clair (43) Pub. Date: May 27, 2004

(54) HYPERSPACE TORQUE GENERATOR

(76) Inventor: John Quincy St. Clair, San Juan, PR (US)

Correspondence Address:
John St. Clair
Hyperspace Research Institute
52 Kings Court, 4A
San Juan, PR 00911 (US)

(21) Appl. No.: 10/304,260

(22) Filed: Nov. 26, 2002

Publication Classification

(51) Int. Cl.[7] A61N 1/00

(52) U.S. Cl. 607/1

(57) ABSTRACT

A hyperspace torque generator which comprises a flat bifilar magnetic bucking field electrical coil, crystal ball, lever arm and frequency generator for producing a linear flow of hyperspace energy at right angles to a rotating flow of astral chakra energy.

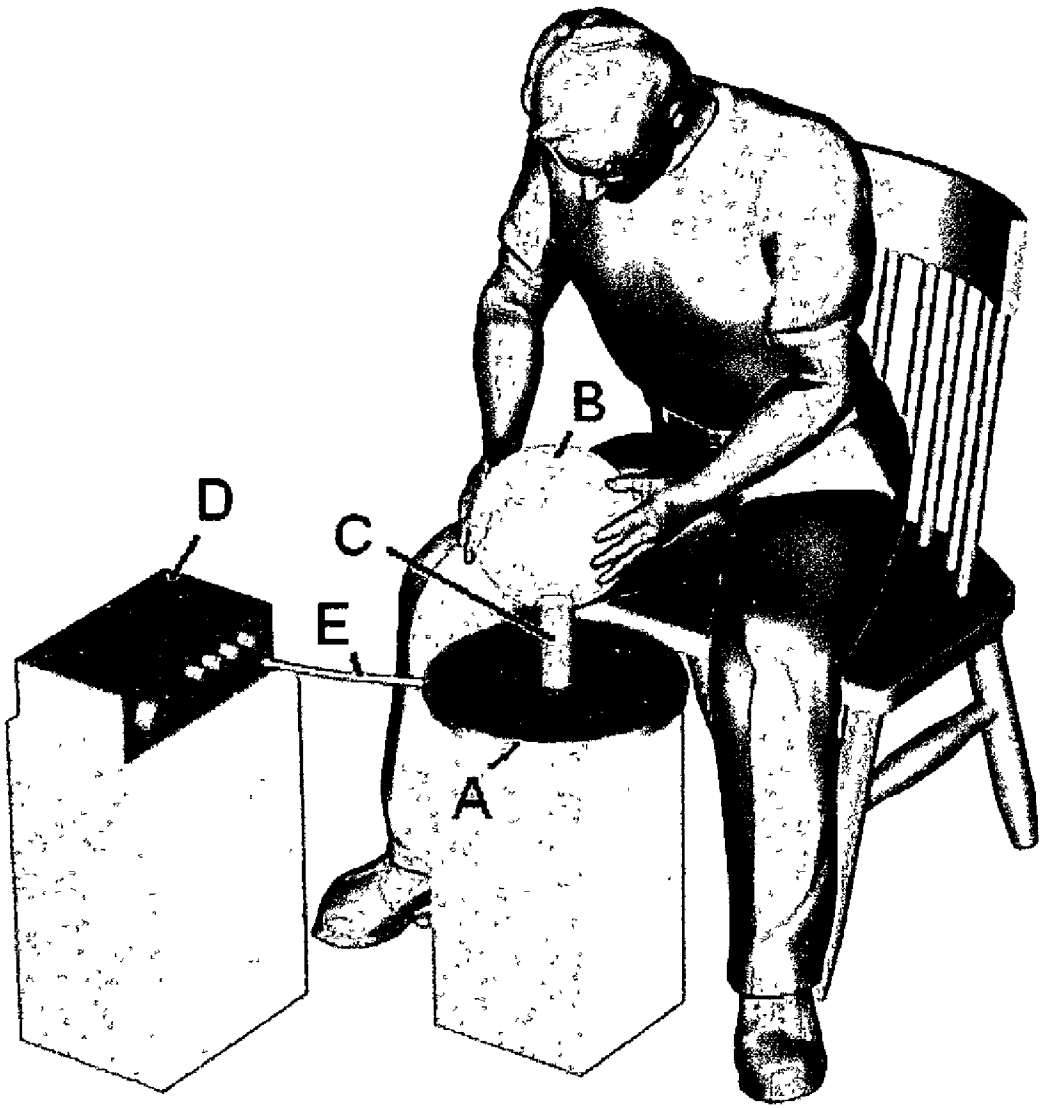

Figure 1

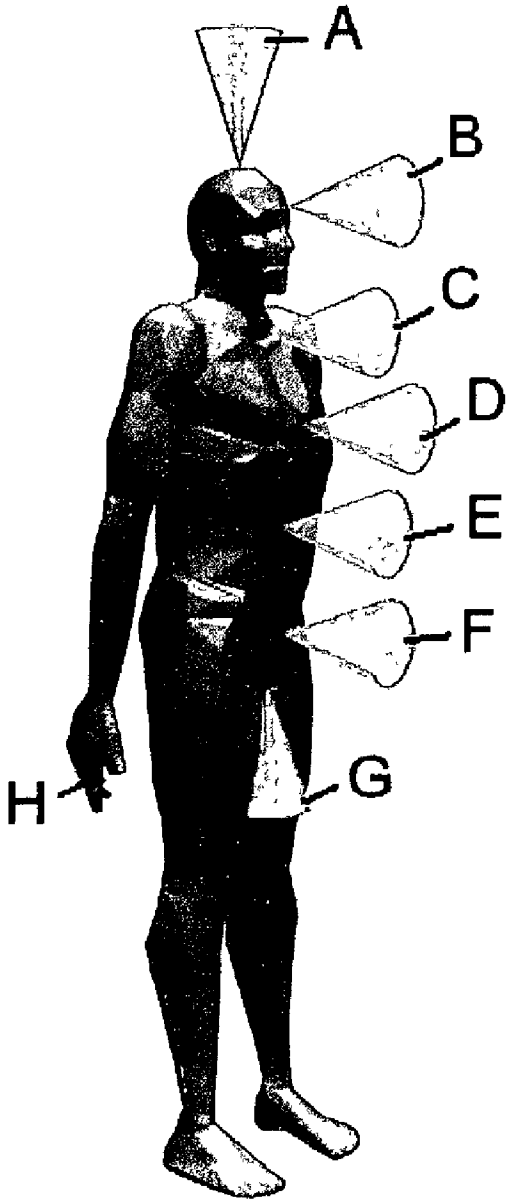

Figure 2

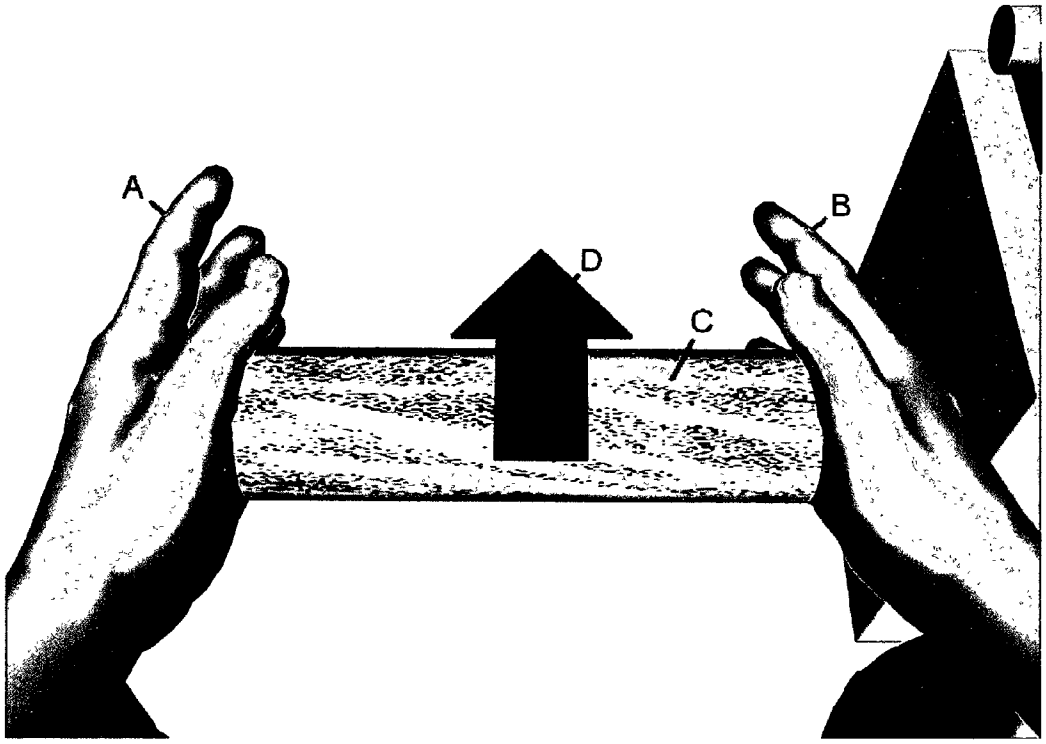

Figure 3

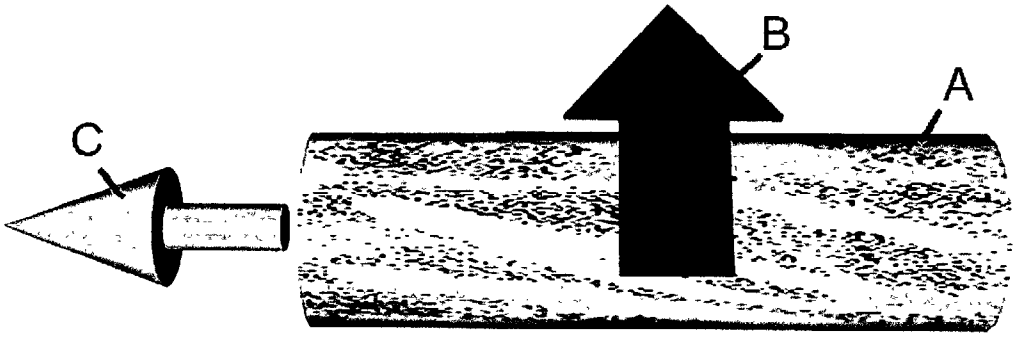

Figure 4

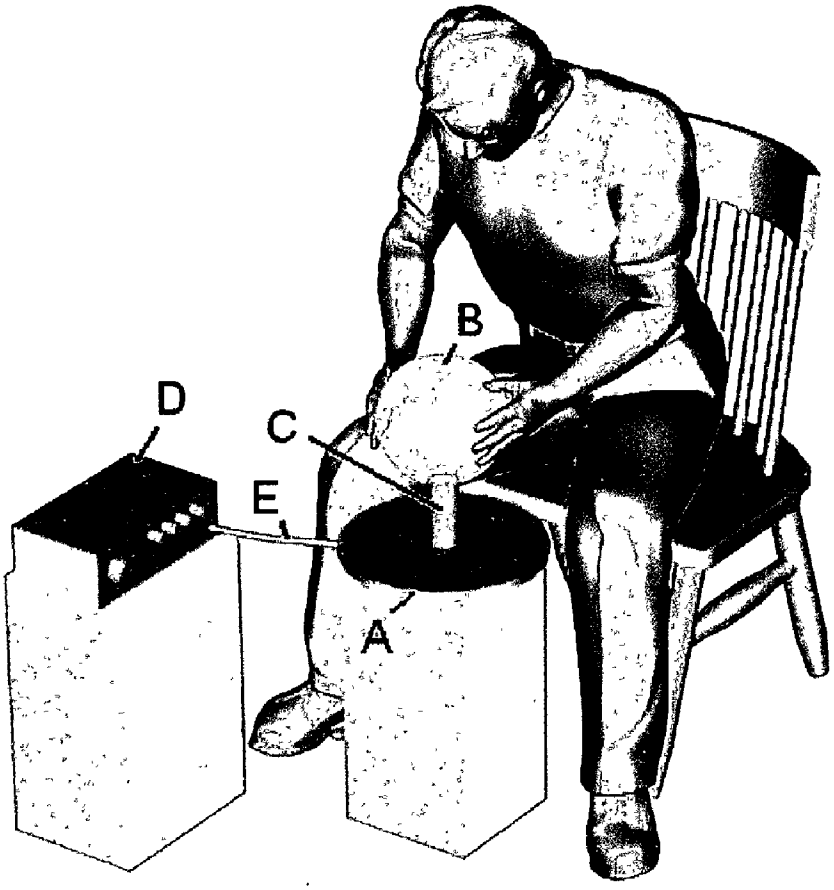

Figure 5

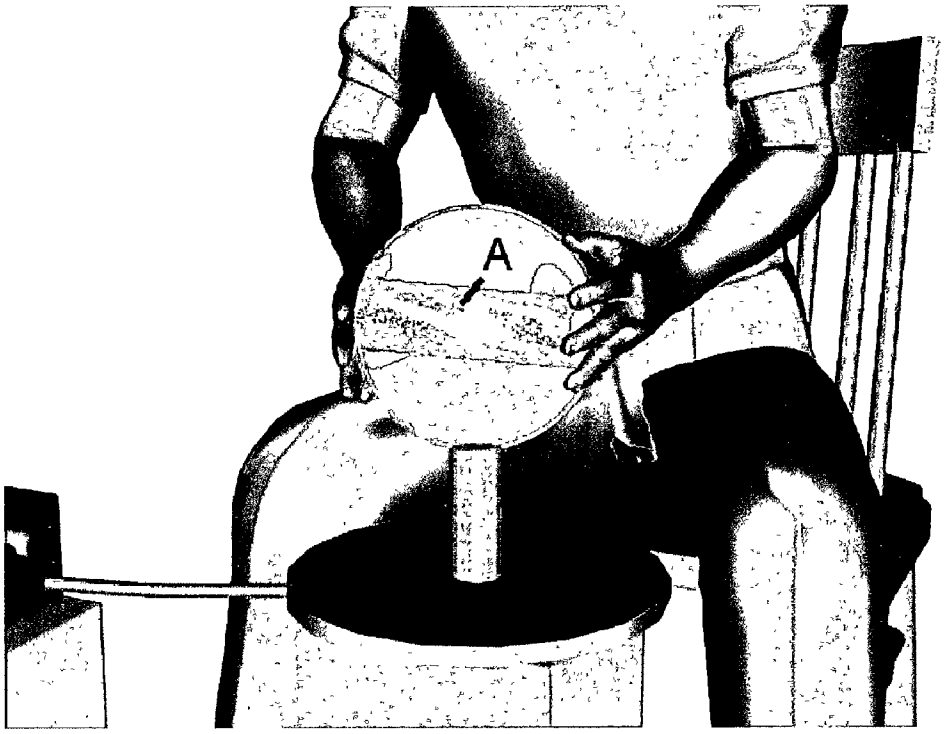

HYPERSPACE TORQUE GENERATOR

BRIEF SUMMARY OF THE INVENTION

[0001] This invention generates a body torque using a crystal ball mounted on a cylindrical stand above a bifilar electrical coil. The coil is driven by a ten-volt sine wave frequency generator. The bipolar rotating hand chakras are placed across the ball in order to condense the astral energy of the aura. The magnetic bucking field of the coil flows low density hyperspace energy up through the ball. The torque generated is equal to the lever arm times the linear momentum of the hyperspace energy crossed with the angular velocity of the hand chakras. The device is used to demonstrate the existence of co-dimensional hyperspace energy and to show the nature of the human hyperspace energy being.

BACKGROUND OF THE INVENTION

[0002] A human being is a hyperspace energy being residing in a physical body. Our energy is located in astral space has which has a very low velocity of light. In our four-dimensional spacetime universe where the physical body is located, the speed of light is enormous, equal to 299792458 meters per second. In astral space, on the other hand, the speed of light is much lower, resulting in a low density (0.03 to 0.07 kg) energy being that has the ability to move through solid concrete walls as well as interpenetrate the watery human body and control its movements.

[0003] This interpenetration takes the form of energy vortices that funnel energy into several co-dimensions of astral space. Over the lifetime of the individual, this energy creates the aura of the human astral being. The aura, in turn, provides protection for the organs of the body. As shown in **FIG. 1**, the human body has seven major vortices, known as chakras, located along the length of the body in addition to a vortex in each hand. The chakras are (A) the crown or top chakra through which energy (information) can be channeled from other energy beings, (B) the spiritual eye which allows us to see when out of the physical body, (C) the throat chakra which allows verbal communication with other beings, (D) the heart chakra which protects the cardiovascular system, (E) abdomen chakra which protects the digestive system, (F) the soul chakra which is related to the creation of newborn astral entities during fertilization, and (G) the ground chakra which grounds the energy system to earth, similar to an electrical ground. The soul is actually an orange-colored plasma energy ball which acts as a battery for the body when the astral being is out of body. It is located behind the soul chakra.

[0004] There is a vortex in each hand (H). This vortex can be readily observed by placing the right hand face up on a table. The left hand holds a pendulum over the palm of the right hand. The pendulum will start to rotate counterclockwise over the right hand. Over the left hand, the vortex rotates clockwise. They rotate in opposite directions. Placing the hands together in the prayer position then creates a rotating cylindrical flow of energy between the hands as shown in **FIG. 2**. The energy (C) flows out of the right hand (B) in a counterclockwise motion (D) and enters the left hand (A).

[0005] As seen in **FIG. 3**, the astral energy (A) is rotating, according to the right-hand rule of physics, with the fingers pointing in the direction of the arrow and the thumb pointing to the left. Thus the angular momentum vector (C) points to the left.

[0006] Physicist John A. Wheeler of Princeton University has made it clear that there is a second term in Newton's gravitational formula as seen below:

$$F=-mg+m(v\times\Omega)$$

[0007] The downward force F or weight of the body is equal to the mass (m) of the body times the acceleration of gravity (g). If the body is rotating, the force is either more or less depending on the direction of the angular velocity (Ω) which is crossed with the linear velocity v of the mass. As an example of this, notice that basketball player Michael Jordan is able to float more than the other players. As he moves down the court and jumps with the ball in his hands, he accelerates the chakra energy between the hands and resonates the energy inside the spherical ball. His forward velocity then becomes crossed with the rotating chakra energy which provides him sufficient extra lift to out jump his opponents. It was also learned that Jordan clears out the locker room just before a game and meditates. This allows him time to concentrate on increasing the spin of his chakra energy.

[0008] Experimentation with flat bifilar magnetic bucking coils has shown that this type of coil can create a flow of low density hyperspace energy up through the center of the coil. This creates a linear momentum of hyperspace energy which is in the second term of the equation. Crossing this linear momentum with the angular momentum of the hand chakras located a lever arm above the coil in a crystal ball produces the hyperspace torque.

SUMMARY OF THE INVENTION

[0009] It is the object of this invention to produce a body torque using a crystal ball mounted on a fixed lever arm above a flat bifilar magnetic field bucking coil. The coil creates a small wormhole into hyperspace which allows low density and hence low velocity speed of light hyperspace energy to enter into our four-dimensional spacetime universe. By placing the hands on either side of the ball, rotating astral energy flows from the right-hand chakra to the left-hand chakra. The linear momentum of the hyperspace energy crossed with the angular momentum of the astral energy times the lever arm offset above the coil generates an oscillating body torque. If the crystal ball is placed on the coil, no torque is generated because the lever arm is zero. Because the oscillation occurs in both space and hyperspace, the torque oscillates for nine seconds and then stops oscillating for the same period, whereupon it continues in this periodic fashion.

STATEMENT REGARDING FEDERALLY SPONSORED RESEARCH OR DEVELOPMENT

[0010] Not Applicable.

A Brief Description of the Drawings

[0011] **FIG. 1**. Chakra vortices of the human body.

[0012] **FIG. 2**. Rotating chakra energy field between hands.

[0013] **FIG. 3**. Angular momentum vector of rotating energy field.

[0014] **FIG. 4**. Hyperspace torque generator.

DETAILED DESCRIPTION OF THE INVENTION

[0015] The hyperspace torque generator is shown in **FIG. 4**. A circular bifilar coil (A) and wooden board form the base of the unit with a crystal ball (B) mounted on a lever arm (C) attached to the center of the base. The bifilar coil is made by taking a length of insulated wire and then doubling it in half. Starting near the center of the base, the two wires of the coil are wound together in a circular manner on the flat base and then glued to the wooden base. The double wire on the inside is brought out from the center of the coil, with one side serving as one lead to the frequency generator (D). The other inner wire is connected to a wire on the outside so that the electricity flows in the opposite direction in each succeeding coil. Due to Maxwell's law, this creates a magnetic bucking field down the center of the coil which opens up hyperspace and allows energy to flow into our dimension. This energy can actually be felt as it rises through the feet. The remaining length of wire on the outer wrap forms the second terminal for the frequency generator. Both these wires are fed to the frequency generator (E).

[0016] **FIG. 5** shows a close-up of the hand chakra energy (A) flowing between the hands through the crystal ball. In this configuration, the body rocks forward and backward in an oscillating manner for nine seconds. If the hands are rotated ninety degrees such that one hand is on the outside of the ball and the other is on the inside of the ball, the body rocks sideways left and right according to the right hand rule of physics.

I claim:

1. A hyperspace torque generator comprising:

a. flat bifilar magnetic bucking field electrical coil mounted on wooden base;

b. lever arm attached to wooden base and concentric with coil;

c. crystal ball attached to top of lever arm;

d. frequency generator for driving coil.

* * * * *

US 20060073976A1

(19) United States

(12) Patent Application Publication

(10) Pub. No.: US 2006/0073976 A1

(43) Pub. Date: Apr. 6, 2006

Pohlman

(54) METHOD OF GRAVITY DISTORTION AND TIME DISPLACEMENT

(76) Inventor: **Marlin B. Pohlman**, Tulsa, OK (US)

Correspondence Address:
STITES & HARBISON PLLC
1199 NORTH FAIRFAX STREET
SUITE 900
ALEXANDRIA, VA 22314 (US)

(21) Appl. No.: **10/954,767**

(22) Filed: **Oct. 1, 2004**

Publication Classification

(51) **Int. Cl.**

F16C	*39/06*	(2006.01)
G01V	*7/00*	(2006.01)
G09B	*23/06*	(2006.01)
F41B	*6/00*	(2006.01)
H01S	*3/09*	(2006.01)

(52) **U.S. Cl.** ..... **505/166**; 505/180; 434/300; 73/382 G; 505/164

(57) **ABSTRACT**

A method for employing sinusoidal oscillations of electrical bombardment on the surface of one Kerr type singularity in close proximity to a second Kerr type singularity in such a method to take advantage of the Lense-Thirring effect, to simulate the effect of two point masses on nearly radial orbits in a 2+1 dimensional anti-de Sitter space resulting in creation of circular timelike geodesics conforming to the van Stockum under the Van Den Broeck modification of the Alcubierre geometry (Van Den Broeck 1999) permitting topology change from one spacelike boundary to the other in accordance with Geroch's theorem (Geroch 1967) which results in a method for the formation of Godel-type geodesically complete spacetime envelopes complete with closed timelike curves.

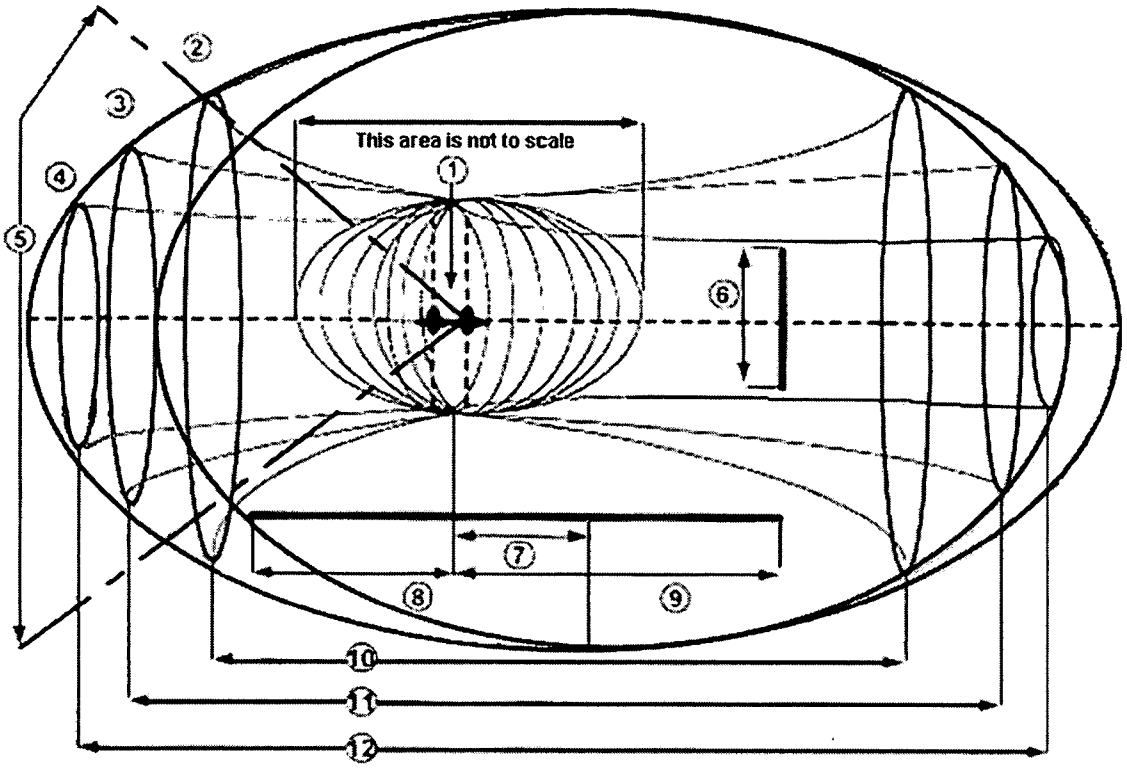

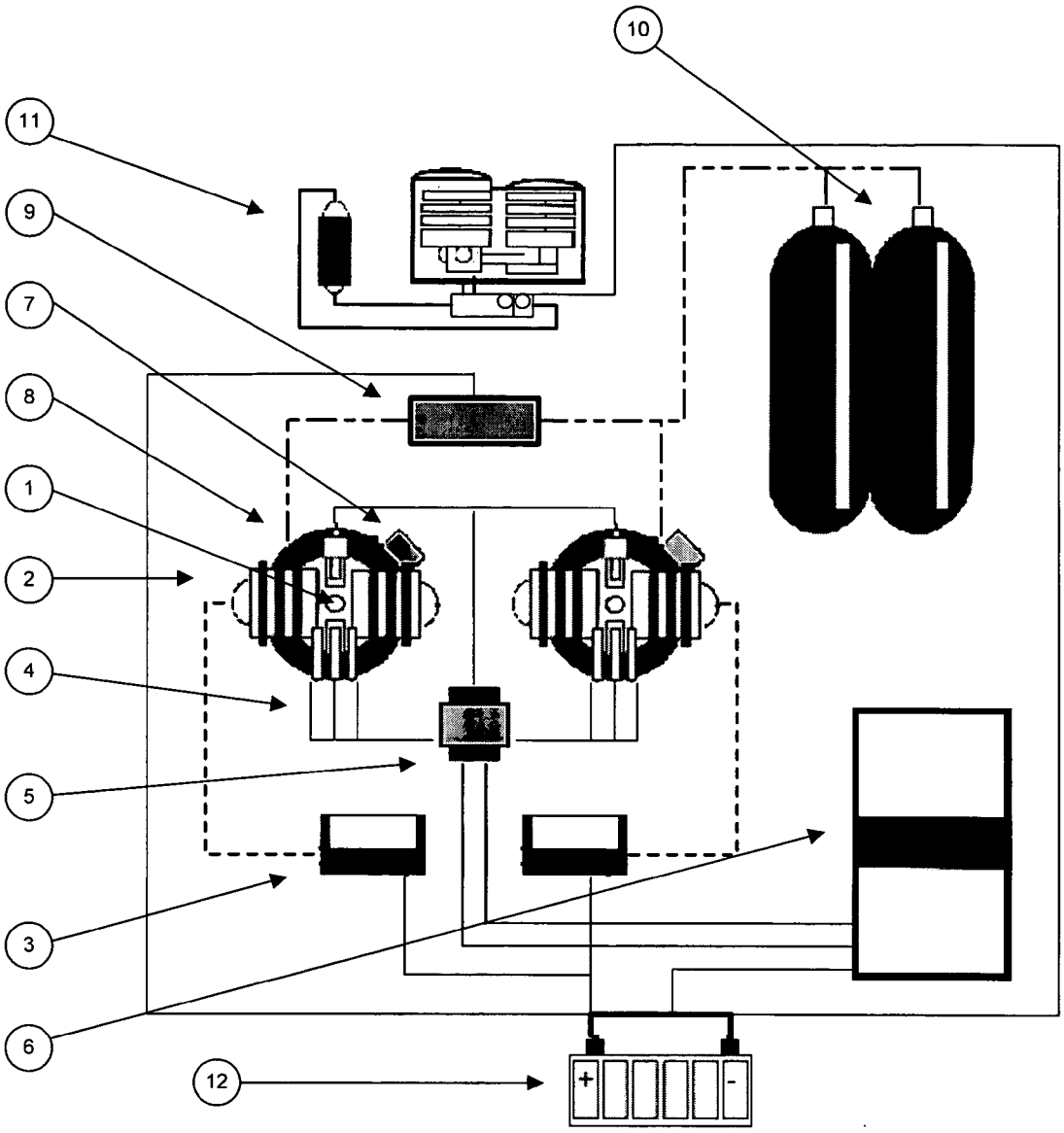

Figure 1

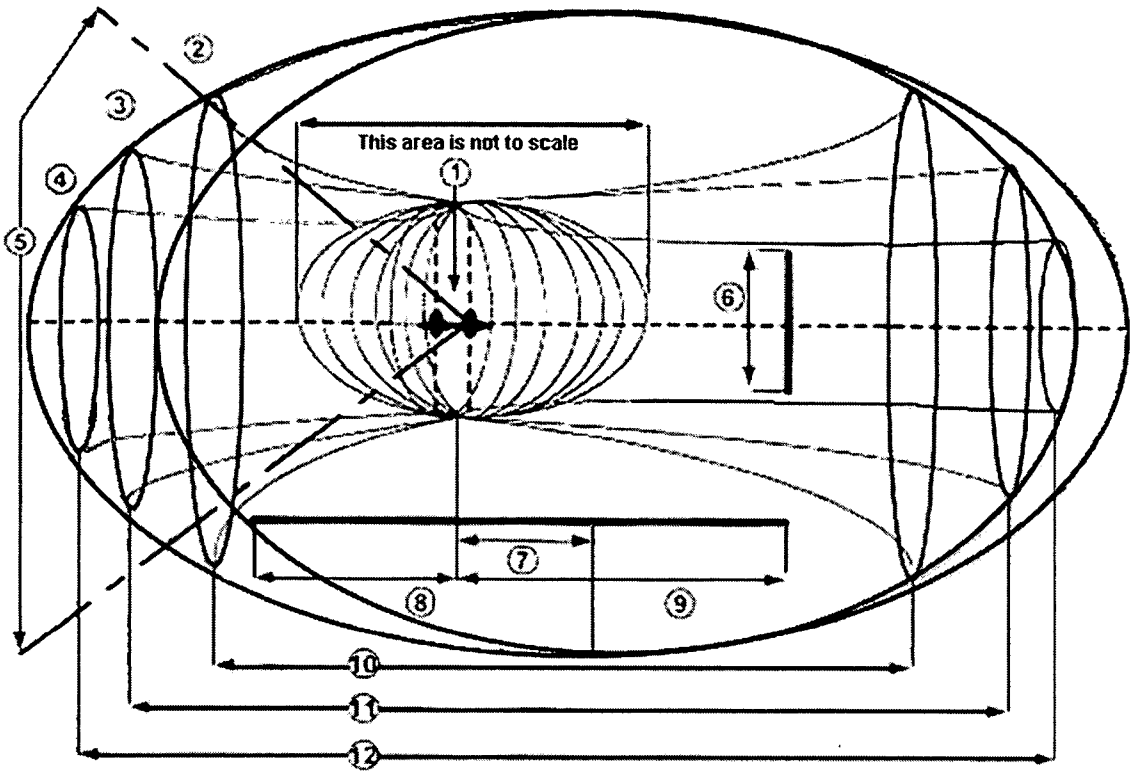

Figure 2

METHOD OF GRAVITY DISTORTION AND TIME DISPLACEMENT

FIELD OF THE INVENTION

[0001] The present invention relates to the use of technical time displacement devices, which operate by the modification of gravitational fields. These drive systems do not depend on the emission of matter to create thrust to take advantage of time dilation, but rather create a change in the curvature of space-time, in accordance with general relativity. This allows travel across topologies by warping space-time, to produce a topology change from one spacelike boundary to the other in accordance with Geroch's theorem (Geroch 1967)

THEORETICAL BACKGROUND OF THE INVENTION

[0002] The concept of gravity should be examined in the light of quantum gravity and in turn as a component of quantum physics itself. The fundamental minimal quantum of energy in quantum physics is Planck's constant; h. Thus in accordance with the energy equivalence formula $E=mc^2$, the fundamental minimum quantity of mass (m_q) can therefore be derived, from known constants by; $m_q=h/c^2$ (1). Taking this minimal mass, it is possible to show that the formation of all matter, the forces of nature and indeed space-time itself derive from this single quintessential quantity.

[0003] Thus if the number of quintessences in a system is; $n_q=m/m_q$: then the total Energy of the system is more logically given by, the energy of a single quintessence (h); directly multiplied by the number of quintessences (n_q) in that system, thus

$$E=hn_q=mc^2 \quad (1\text{ a}).$$

[0004] Furthermore, this minimal mass, termed quintessence, can form the basis of the existence of a quantum gravitational field in the form of a space-time lattice, from which quantum gravity may be derived from first principles. Furthermore, the conglomeration of these quintessences also accounts for the formation of the elementary particles and the forces acting between them, as in superstring theory. This concept explains the formation of matter and the forces of nature on a quantum mechanical basis and directly explains the existence of wave particle duality. Thus as $n_q=m/m_q$; the frequency of light and matter (f) is determined, directly, from the number of constituent quintessences. This leads automatically to the fundamental equation, derived from (1), $f=n_q=E/h$, where n_q is the number of quintessences, which leads directly to the frequency of both light and matter. This in turn leads directly to a Universal wave equation for matter and light $\lambda=c/\beta n_q=hc/\beta E$ (2), where β is the relative directional velocity, v/c. As the momentum, $p=\beta\times E/c$, then this equation also gives the standard de-Broglie wave equation, $\lambda=h/p$ in agreement with current theory and experiments[1].

[0005] Using the Universal wave equation, the standard equation for special relativity, $m'=m_o/(1-\beta^2)^{1/2}$, derives from first principles. Also from these observations, a modified Dirac wave equation may be derived, $E\psi=(-j\beta\cdot\nabla+\beta m)\psi$ (2a), the results of which have been recently verified by a paper in which the orbitals of electrons were experimentally directly visualised[2]. Moreover, a fundamental equation for general relativity can be formulated, where G is the gravitational constant and r_q is the given radius of quintessence; $G=9(r_q)^2c^4/\lambda\beta E$ (3), such that the Universal wave equation is in direct agreement with general relativity[3]. Thus special and general relativity and quantum mechanics can be unified.

[0006] From here it is possible to proceed in a number of ways; the geometric structure of the electron and the forces of Nature may be derived from first principles and in turn the structure of the quarks, including the top and bottom, otherwise known as truth and beauty can be seen. Moreover, the presence of a space-time lattice results in an understanding of quantum EPR effects. By allowing a theoretical flow of energy through the space-time lattice it can be shown that:

[0007] Energy is not bound by space-time

[0008] Thus logically accounting for phenomena such as entanglement and quantum tunnelling. Quintessence can also be used to explain, logically, the inner physics of a black hole, the missing mass of the Galaxy, the continuing expansion of the Universe, Guth's inflationary theory and the Big Bang. Hence, it is now possible to understand the Universe, including space-time, matter and the forces of nature from the radius, mass and vibration of a single quantity, quintessence.

[0009] With this understanding of space-time, matter and the forces of Nature, and in particular gravity, it is possible to demonstrate that the modification of gravitational fields, and in turn the warping of space-time, can be technically readily achieved.

[0010] Using standard equations for special relativity, $m'=m_0/(1-\beta^2)^{1/2}$, it can be demonstrated that by differentially increasing the velocity of electrons, by applying a differential current, their mass can be increased in a specific way. In turn by increasing the mass of electrons, by general relativity, the number of gravitons emitted from these electrons can be modulated. By multiplying this effect using an ultracentrifugational device the differential graviton emission can be manifestly amplified. This in turn, in accordance with general relativity, will cause a change in the curvature of space-time.

[0011] This effective warping of space-time does not, of necessity, imply superluminal velocities, but does allow the creation of warp drive systems, which do not depend on the creation of thrust by the ejection of material as used in current space technologies.

Part 1—Fundamental Laws of Physics

[0012] Quintessential Mass

[0013] The quantum physical, minimum component of energy is Planck's constant; h. To define the minimal component of mass, using the standard energy equivalence formula; $E=mc^2$, such a minimal mass (m_q) would be required to have the value equivalent to; $m_q=h/c^2$ (1). The total mass of a system (m) would then be; $m=n_qm_q$, where (n_q) is the number of these minimal units. Thence, the total energy of a system can be derived from the minimal energy; h, multiplied by the number of these energy units (n_q). Thus as, $E=mc^2$, then also $E=m_qn_qc^2$ and substituting $m_q=h/c^2$, the energy equivalence formula has the more logical formulation; $E=hn_q$(1a). Thus the energy of a system is equivalent

to the minimal energy unit; h, multiplied by the number of those minimal energy units (n_q).

[0014] Taking this minimal mass/energy, it is possible to show that all matter, the forces of nature and space time can be constructed from this single quintessential quantity. Moreover, using this quantity the laws of physics can be derived from first principles. Thus, a priori, all components of the physical universe, including space-time, can be constructed from this minimal mass component, termed quintessence.

[0015] Wave Particle Duality

[0016] If the presence of quintessence accounts for the structure of matter and if matter itself forms from the number of quintessences, then the frequency of matter and thus wave particle duality directly arises from first principles. Specifically the wavelength of matter derives from the vibration of quintessence from which it is constituted. Thus the frequency (f) and in turn the wavelength of light and matter is directly equivalent to the number of quintessences contained within it. We find that the actual frequency of light can be directly derived from first principles from the effective mass of the photon (m,) and thus by the number of quintessences (n_q) it contains.

[0017] Thus for light conventionally:

$$f=E/h$$

[0018] and if $E=mc^2$, and $h=m_q c^2$, then

$$f=m_\gamma c^2/m_q c^2$$

and

$$f=m_\gamma/m_q=n_q$$

Thus

$$f=n_q \quad (4)$$

[0019] Thus the formula for the frequency of light E=hf is now readily explained by the observation that the frequency is determined quite directly from the number of quintessences n_q within the photon.

[0020] The wavelength is thus also given by:

$$\lambda=c/f=m_q c/m_\gamma=h/p$$

[0021] We can now show that the frequency of matter also has the same derivation from quintessence, as has the frequency of light. The frequency of matter is again equivalent to the number of quintessences it contains. Thus the wave particle duality of matter itself can be explained by its composition from quintessence. The amount of quintessences contained within a electron sphere will depend on the number of quintessences constituting the electron and those passing through it as a result of its relative velocity β^2 (where $\beta=v/c$); effectively its relativistic momentum (p). The frequency will then be related to the total number of quintessences. Thus for matter,

$$f=\beta^2 n_q \quad (4a)$$

[0022] Thus it is possible to derive the conventional de Broglie wave equation for matter from first principles. Thus, as $\lambda=v/f$, we have:

$$\lambda=v/\beta^2 n_q \quad (5)$$

[0023] thus as $n_q=E/h$

$$\lambda=hc/\beta E \quad (2)$$

[0024] and as conventionally $\beta E/c=p$, then for matter:

$$\lambda=h/p$$

[0025] Provided that in the de Broglie equation, the momentum of the object is calculated using the relativistic mass, thus accounting for the total number of quintessences n_q in an object, this gives an accurate value for the wavelength of matter[1].

[0026] Thus the wavelength of matter follows directly from its constituents, quintessence. As matter is made of quintessence, similarly to light, its frequency depends on the number of quintessences n_q within it, traveling relative to the speed of light. Moreover, $\lambda=hc/\beta E$, underpins a fundamental relationship between wavelength and energy. Furthermore, this is mathematically the same as the term $\lambda=hv/\beta^2 E$, giving a relativistic expression for the wavelength of matter, from which the relativistic equations may be directly derived

[0027] Wave Equations

[0028] The derivation of wave particle duality from first principles also now allows the derivation of a modified wave equation for matter.

[0029] To derive his wave equation Shrodinger commenced with the de Broglie equation using momentum (p). For lower energies the momentum of an electron is conventionally derived from the kinetic energy of the electron and the mass of the electron m_0. Thus conventionally:

$$E_k = \frac{1}{2} m v^{1/2} \quad \text{and} \quad p = m_0 v$$

Thus

$$E_k = p^2 / 2m_0$$

then

$$p = \sqrt{(E_k \cdot 2m_0)}$$

[0030] and conventionally, the de Broglie equation can also be written as:

$$\lambda=h/p=h/\sqrt{(E_k \cdot 2m_0)}$$

[0031] In turn the Shrodinger wave equation directly derives from the square of the above classical non relativistic term for kinetic energy:

$$\lambda^2 = h^2 / E_k \cdot 2m_0$$

$$\text{thus } E_k = \frac{h^2}{2m} \cdot \frac{1}{\lambda^2}$$

$$\text{As } E = E_k + V$$

$$\text{then } E\psi = -\frac{h^2}{2m} \cdot \frac{d^2\psi}{dx^2} + V\psi = jh \cdot \frac{d\psi}{dt}$$

[0032] However, the Shrodinger equation, may be refined by taking into account relativity. Thus the true values for the energy are given by the relativistic momentum (p).

[0033] A fundamental relativistic wave equation for ψ, and its logical derivation may now be developed through the concept of quintessence as a fundamental constituent of matter.

[0034] The amount of quintessences in the electron is determined by the number of quintessences forming the electron at rest, plus the amount of quintessences passing through it due to its relativistic velocity, which will determine the relativistic momentum (p) of a particle.

[0035] The frequency of matter can now be readily calculated from first principles to give a more accurate result. Thus as matter is made of quintessence, similarly to light, its frequency is equal to the number of quintessences n_q within it. The wavelength will depend on its velocity travelling relative to the speed of light and thus multiplied by the relative velocity compared to c(β=v/c);

[0036] Hence for matter as previously shown:

$$\beta=v/\beta^2 n_q=hc/\beta E \quad (2)$$

[0037] And conventionally

$$E=(p^2c^2+m_0{}^2c^4)^{1/2}$$

[0038] Using these equations, we can now, also, reformulate the Shrodinger wave equation, which has the advantage that relativity can be treated in a quantum mechanical way. Thus if the wave energy of matter is defined as:

$$E_\lambda = \frac{\beta\sqrt{p^2c^2+m_0^2c^4}}{c^2}$$

thus

$$E_\lambda = \sqrt{(\beta^2p^2/c^2)+\beta^2m_0^2}$$

[0039] which in complex space generalises to

$$E_\psi=(-j\beta\cdot\nabla+\beta m)_\psi \quad (2a)$$

[0040] As the term

$$\alpha = \frac{e^2}{hc}4\pi\varepsilon_0;$$

also represents the ground state ratio of the velocity of the electron to c. Thus α=β=v/c=1/137.

[0041] Thus, also

$$E_\psi=(-j\alpha\cdot\nabla+\beta m)_\psi$$

[0042] This is thus the standard relativistic equation that Dirac was able to construct from the Shrodinger wave equation. This relativistic equation can be derived from the modified wave equation. This takes into account the relative mass energy which the quintessential wave equation contains.

[0043] Where importantly the term β·m is the mass m, multiplied by the ratio of the relative velocity to light β=v/c, and the term a is also essentially the relative velocity of the electron.

[0044] The Dirac equation was an empirical formula which worked mathematically, nevertheless even Dirac admitted it was not logically understood. The importance of these equations is that they show that the existence of quintessence allows the waveparticle duality of matter to be explained and mathematically derived from first principles, Thus the frequency of matter or even light is simply determined by the number of quintessences it contains.

[0045] Indeed, a recent publication in Nature has suggested that the direct visualisation of the orbitals of electrons shows that these are in very close agreement with theory. However, there is a significant departure from theory, in the interstitial molecular regions, suggesting that the higher velocities of the electrons obey the modified Dirac equation. Thus these orbitals were in keeping with the modified Dirac equation, which itself may be derived from the wave equation above, λ=hc/βE

[0046] The Shrodinger wave equation will approximate to the correct values until v approaches c. Indeed the Shrodinger equation will give similar answers as that derived from equation, under most experimental conditions.

[0047] However, equation 2 and its derivative may have advantages over standard Shrodinger theory with relativistic speeds. Furthermore, equation 2, conceptually shows that the wave particle duality of matter derives from the principle that the frequency of matter is directly equal to the number of quintessences it contains. Importantly it also mathematically allows relativity and quantum mechanics to be united.

[0048] With v≅c, the modified Dirac equation will yield more accurate results, particularly compared with the Schrodinger equation. We also find that the equation λ=hc/βE is equivalent to the de Broglie wave equation, λ=h/p, provided we use the relativistic mass in the de Broglie equation. Given this, these equations yield accurate experimental results.

[0049] Thus we find that the modified formulation of de Broglie wave equation λ=hc/βE leads directly to a modified Dirac relativistic wave equation and is supported by recent experiments which measure the wavelength of matter and demonstrate the electron orbitals experimentally from these wave equations for matter.

[0050] Wave Particle Duality and Relativity

[0051] From here it is possible to proceed in several ways using the relativistic wave equation. It is apparent that the reintroduction of the term for relative velocity into the wave equations will enable the reintroduction of special relativity into quantum mechanics. In particular we should now be able to derive the term

$$\sqrt{\left(1-\frac{v^2}{c^2}\right)}$$

as a special case of quantum mechanics.

[0052] Thus if:

$$\lambda = hc/\beta E$$

$$\text{As } E = \sqrt{p^2c^2+m_0^2c^4}\text{, squaring}$$

$$\lambda^2 = \frac{h^2c^2}{\beta^2\cdot(p^2c^2+m_0^2c^4)}$$

-continued

Conventionally $p^2c^2 = \frac{E^2v^2}{c^2}$

then

$$\lambda^2 = \frac{h^2c^2}{\beta^2 \cdot ((E^2v^2/c^2) + m_0^2c^4)}$$

Thus as $\beta^2 = \frac{v^2}{c^2}$ and $m_0^2c^4 = E_0^2$, then:

$$\beta^4E^2 + \beta^2E_0^2 = \frac{h^2c^2}{\lambda^2}$$

hence $\beta^4E^2 = h^2c^2 \cdot \frac{1}{\lambda^2} - \beta^2m_0^2c^4$ thus

$$\beta^2 = \frac{h^2c^2}{\beta^2E^2} \cdot \frac{1}{\lambda^2} - \frac{\beta^2m_0^2c^4}{\beta^2E^2}$$

As $E^2 = m^2c^4$

$$\beta^2 = \frac{h^2c^2}{\beta^2m^2c^4} \cdot \frac{1}{\lambda^2} - \frac{\beta^2m_0^2c^4}{\beta^2E^2}$$

Substituting $h = m_qc^2$

$$\beta^2 = \frac{m_q^2c^6}{\beta^2m^2c^4} \cdot \frac{1}{\lambda^2} - \frac{\beta^2m_0^2c^4}{\beta^2E^2}$$

As $m_q/'m = 1/n_q$ (eq. 2)

$$\beta^2 = \frac{c^2}{\beta^2n_q^2} \cdot \frac{1}{\lambda^2} - \frac{\beta^2m_0^2c^4}{\beta^2E^4}$$

Thus if $f = \beta^2n_q$; (eq. 7a)

$$\beta^2 = \frac{v^2}{f^2} \cdot \frac{1}{\lambda^2} - \frac{\beta^2m_0^2c^4f^2}{\beta^2E^2}$$

As $1/\lambda^2 = f^2/v^2$

$$\beta^2 = \frac{v^2}{f^2} \cdot \frac{f^2}{v^2} - \frac{\beta^2m_0^2c^4f^2}{\beta^2E^2}$$

Thus

$$\beta^2 = 1 - \frac{\beta^2m_0^2c^4}{\beta^2E^2}$$

As $E^2 = m^2c^4$

$$\beta^2 = 1 - \frac{m_0^2}{'m^2}$$

Hence

$$m_0/'m = (1 - \beta^2)^{1/2}$$

Thus

$$'m = m_0 \Big/ \left[1 - \frac{v^2}{c^2}\right]^{1/2}$$

[0053] Thus this derivation now allows relativity as a universal case of the quintessential wave nature of matter.

[0054] The original premises on which special relativity was based were: that the speed of light is a constant and that all observers are equal. As the speed of light has dimensions of length and time but not apparently of mass, the relativistic change in mass is not accounted for. Using quintessence logically and directly accounts for the relativistic mass changes.

[0055] Moreover, relativity can be derived from the de Broglie equation, and visa versa, directly, thus linking relativity and quantum mechanics by taking into account the existence of quintessence mass.

[0056] Hence, it is now possible to derive the relativistic equations for mass and in turn for space and time from the quintessential wave equation, thus deriving special relativity as a universal case of quantum mechanics and thus uniting special relativity and quantum mechanics. This now allows a further understanding of the nature of space-time.

[0057] The Space-Time Lattice

[0058] The understanding of the true nature of space-time and how it is formulated in three dimensions of real space is crucial. To simply assume that space-time exists, and thence not to question the nature of that existence, denies a deeper understanding of the universe.

[0059] In order to understand the nature of space-time itself, at the quantum level a further look at the nature light and the photon is necessary. Since Einstein's description of light as a particle (the photon) and the description of the photoelectric effect, the standard picture of light as simply a wave can, no longer be applied. If light was to exist as a photon, it could not exist in one dimension, as ordinary waves do, it would need to be three dimensional, with the addition of time. Let us suppose, in this case, that a photon is a three dimensional helical ringlet of light, travelling in the x vector, and spinning around the x-axis. Conventionally this ringlet has a radius; $r=\lambda/2\pi$. The ringlet itself would be vibrating in the y and z vectors. The vectors x, y and z would represent the photon, the substance of which, would be travelling in the x direction and oscillating in the y and z vectors, which would represent oscillatory energy. This in turn would allow it to act as a wave, and create oscillatory electromagnetic fields.

[0060] It is important to re-examine space-time itself in this light, this would have one directional vector with two vector dimensions of energy, one of capacitance and one of electrical permeability, thus accounting for the well known constants of free space; the permittivity of free space (ϵ_0) and the permeability of free space (μ_0) respectively. The vector dimension of direction x, would be the direction of travel and those "quintessences" travelling in an outwardly direction would account for none other than the expansion of the universe. Three of these quintessences would naturally constitute three dimensional visible space-time. These constituents of space-time would interact with the generations of the other vector dimensions reciprocally. Thus one quintessence would sweep out one vector of permeability and one vector of permittivity, through which the other two quintessences could travel, and vica versa, creating a three dimensional space-time lattice.

[0061] The permittivity of free space, (ϵ_0) which is equivalent to capacitance, would as with capacitance plates, be determined by the effective separation between quintessences. The permeability of free space (μ_0) is in fact a force, measured as $4\pi\times10^{-7}$ N/A^2, would result from the force produced by the vibration of quintessence and would be

dependent on the density of quintessence. Hence these two parameters would be reciprocal and thus the product of these two would therefore be a constant, which is recognised as none other than the speed of light.

$$c = \frac{1}{\sqrt{\mu_0 \varepsilon_0}}$$

[0062] This space time lattice would in effect be created by quintessences travelling in all directions with a speed of c within the lattice. The quintessences of the space time lattice would in effect produce a non-static ether. A non-static ether is fully compatible with special and general relativity. Indeed such an ether explains how space time can be curved as in general relativity. Furthermore, the existence of a non-static ether, was espoused by Einstein in his University of Leyden lecture on general relativity of May 5, 1920. In Einstein's own words;

[0063] "According to the general theory of relativity space without ether is unthinkable."

[0064] Recent evidence from a number of sources now strongly support the presence of this non-static ether, in the form of quintessence. An editorial from a major journal states "combined with other observations such as those of distant Supernova, the QMAP results corroborate the prevailing theory of inflation with the twist that the Universe is only one third matter (both ordinary and dark) and two thirds quintessence, a form of energy possibly inherent in empty space".

[0065] If we take into account the existence of quintessence and as such a three dimensional space-time lattice, matter which is intrinsically made of constituents of charge would interact with this lattice to produce the effects of mass. Mass would be perceived as a result of matter (whose constituent particles appear to contain charge) interacting with this lattice directly due to the inhibition of motion by the lattice's electrical permeability and permittivity vectors, which would form the existence of complex space. These quintessences would in the direction in the y and z vectors produce small vibrations of the order of the Planck length (10^{-35} m), whilst passing through the vectors of permeability and permittivity, thus producing the effects of mass.

[0066] The vibration would endow quintessence itself a (non rest) mass m_q equivalent, to the minimal mass of:

$$m_q = h/c^2 = 7\times373\times10^{-51}\ \text{kg·sec} \tag{1}$$

[0067] The presence and magnitude of Planck's constant (h) and especially the speed of light (c) is thus explained. Indeed, the speed of light

$$c = \frac{1}{\sqrt{\mu_0 \varepsilon_0}}$$

is not in itself a fundamental quantity.

[0068] As the energy equivalence formula is $E=mc^2$, the minimal mass of a single quintessence, would thus be the minimal mass, h/c^2, hence again:

$$m_q = h(\mu_0\epsilon_0) = h/c^2 = 7.373\times10^{-51}\ \text{kg·sec} \tag{1b}$$

or

$$m_q c^2 = h \tag{1c}$$

[0069] It is postulated by general relativity that the shape of space time itself can be altered, indeed the presence of the space time lattice now allows this to be altered by altering the density of quintessence. It is further clear that if quintessences underly the structure of the space-time lattice, they may also underly the structure of matter itself.

[0070] With regards a single quintessence, this passing through an energy vector of the space-time lattice would appear as a vibrating string. In a similar way to string theory, the conglomeration of these quintessences would produce the constituents of ordinary matter. Thus the general equation for the number of quintessences (n_q) in an object of mass (m) would be

$$m/m_q = n_q$$

[0071] The mass of the electron (m_e) for example, would be directly determined by the number of quintessences in the electron, multiplied by the mass of quintessence.

[0072] Quintessence and Complex Space

[0073] Quintessence is postulated to constitute the fundamental nature of space-time. Three quintessences each travelling in their respective x vectors at 90° to each other would create three dimensional real space-time. These quintessences would in the direction in their respective y and z vectors produce small vibrations of the order of the Planck length (10^{-35} m), this would create the vector dimensions of permeability and permittivity. The result would give space-time 9 dimensions of space as in superstring theory. However, unlike superstring theory the six hidden dimensions would not be "curled up so as to be so small as to be invisible" these six dimensions would be present in complex space. Thus, only three of these dimensions would represent ordinary three dimensional particulate space time i.e. three dimensional objects. The other six dimensions produced by the vibrations of quintessence would form complex space.

[0074] The mathematics of complex space, using imaginary √−1 or (j) numbers, is assumed in the standard formulation of the Shrodinger wave equation. Thus the presence of complex space is an integral part of quantum mechanics.

$$-\frac{h^2}{2m}\cdot\frac{d^2\psi}{dx^2} + V\psi = jh\cdot\frac{d\psi}{dt}$$

[0075] The mathematics of complex space is also an essential and integral part of the principles and application of modern electronic and control engineering. Indeed it has been well recognised for some time that each direction vector in electronic engineering can, be associated with complex vectors.

[0076] As this complex space consists of the vectors of permittivity and permeability it would only be "felt" by charged particles as in the electron. Nevertheless, as all particles are fundamentally composed of charged particles

the effects of complex space would be felt by endowing these particles with mass and in turn kinetic energy.

[0077] In conventional complex space, a 2 dimensional Cartesian Argand diagram is mathematically used. However, in order to formulate the equations for particles a three dimensional Argand diagram is essential. This will have three dimensional vectors, one real vector and two imaginary vectors. Three of these diagrams will be required to fully describe the nature of particles, each with a real vector in the x, y and z vectors, respectively. Nevertheless, in the instance below the real vector is the x vector and the two imaginary vectors are given by $({}_jy, {}_jz)$

[0078] The Three Dimensional Argand Diagram

[0079] The beauty of a three dimensional Argand diagram is that the complex conjugate (i.e. the mirror image which confers mathematical reality on the coordinates) is formed by the value of the minus coordinate in the other complex vector dimension. Thus the complex conjugate of $(C_x^{1/2}+{}_jc_y^{1/2}+{}_{-j}c_z^{1/2})$ is $(c_x^{1/2}+{}_jc_y^{1/2}+{}_jc_z^{1/2})$. These two sums when multiplied thus give a real number solution.

[0080] Furthermore it is clear that nine dimensions of space time are necessary in the general relativistic equations. By including complex space we thereby create the nine dimensional spacial metrictensor and the metric energy tensor of matter necessary for computations for general relativity From here we can begin to understand the true structure of matter.

[0081] Energy and the Space-Time Lattice

[0082] The presence of numerous experimental data for quantum tunnelling. and indeed the recent observations by Nicholas Gisin, on the entanglement of distant photons now returns us to EPR experiments.

[0083] Using the quintessential modification of the de Broglie wave equation, gives us an insight into these teleportation and EPR effects.

[0084] As

$$\lambda = hc/\beta E \tag{2}$$

and

$$E = hn_q \tag{1a}$$

then

$$\lambda = c/\beta n_q \tag{2b}$$

[0085] Importantly, as indicated by equation (2b), energy having no quintessence; would have a wavelength of infinity. Specifically pure energy containing no quintessences, would have a lambda of infinity. According to quantum mechanics an infinite wavelength would result in the probability of that energy being anywhere. As energy itself has no electrical charge it would not be impeded by the permittivity and permeability of the three dimensional space-time lattice. Moreover, energy would not be detectable in three dimensional space-time, unless it interacted with matter, as in the EPR experiments. Indeed, energy is not observed when not bound to any form of mass or particle. Thus equation 9d, takes us to our original assertion

[0086] Energy is Not Bound by the Space-Time Lattice

[0087] Thus, as the EPR experiments suggest the existence of energy separate from matter and thus separate from the three dimensional space-time lattice, it is interesting to find that experiment suggests the existence of free energy in a continuum separate from space time to produce the effects of quantum teleportation

[0088] This is not, however, teleportation across an additional dimension, this is a term to describe in partially familiar terms the dissociation of energy from the three dimensional space-time lattice. As time is inextricably linked to each dimension of space, the effects of energy would be inextricably linked to the events, such as the creation of virtual particles, we see interacting within space-time.

[0089] It is unlikely that observers have any direct day to day experience to explain quantum events. Nevertheless, quantum physics may have given us a window into the hitherto hidden workings of the Universe. Thereby, the mystery of the uniformity of the Universe, across distances which the speed of light could not apparently traverse, is readily explained by the fact that the free energy contained in the Universe is not bound by the space-time lattice.

[0090] In the case of light, due to the exceedingly small masses involved, there would be relatively easy exchange of matter with free energy within a photon. This would make the photon the ideal experimental tool to look for energy which is not bound by matter and in turn energy which is not bound in space-time. Indeed, very recently Furusawa et at. have reported to have observed the transference of energy as photons from A to B, without those photons traversing space-time. This finding which has been supported using other experimental techniques, is very important as it suggests the existence of such a quantum continuum.

[0091] We have already seen strong experimental data using photons, atomic spins and other data for quantum teleportation which have recently been published which support these findings. According to the above equations the teleportation would vary in a predictable fashion, as with photons, in line with the wavelength of the light used, relative to the size of vibration of quintessence. As regards matter, the results do confirm that the effect of quantum tunnelling is indeed dependant on the wavelength of matter and the size of that matter.

Part II—Particle Physics

[0092] Electron Structure

[0093] Understanding the electron is fundamental to the understanding of the elementary particles. The hidden nature of the electron may recently have been revealed through observations by Horst Stormer, Daniel Tsui and Robert Laughlin for which a Nobel prize has recently been awarded. They describe a quasi electron particle of charge ⅓e. This has been described on a quantum basis as a vortex of energy, bound as a quasi particle in one dimension x, but not bound in the other two dimensions y and z, allowing dispersion in space-time as a vortex. What is more intriguing are the experimental conditions in which this occurs. First of all a two dimensional electron gas is created and held between two capacitance plates. A magnetic force is then applied in the remaining dimension, virtually creating a one dimensional passage through which only a quasi electron appears to be able to pass.

[0094] Given the presence of charge of ⅓e, then three of these quasi electrons could form an entire electron in three

dimensional visible space time. Nevertheless, each would have energy and hence a wave function which would be present in the other vectors. This electron could thus follow the probability functions as described by the Shrodinger wave equation for ψ (otherwise termed as "essence" by Shrodinger)

[0095] If the mass of the electron (m_e) is constituted from quintessence, using the formula:

$$m_e/m_q = n_q$$

[0096] Then an electron would be constituted from:

$$\frac{9.11\times10^{-3}\ \text{kg}}{7.373\times10^{-51}\ \text{kg}\cdot\text{sec}} = 1.235\times10^{20}\ \text{quintessences/sec.}$$

[0097] Thus taking into account the mass-energy content of quintessence (m_q) it is independently possible to derive the magnitude of the charge of an electron (e) using the following equation.

$$e = \sqrt{\frac{m_q\varepsilon_0}{\left(\frac{4}{3}\right)\pi hc}} = 1.61\times10^{-19}C$$

[0098] This is in close agreement with the experimentally observed charge on the electron of 1.602×10^{-19} C.

[0099] Interestingly substituting $m_q = h/3c^2$ in the above equation we have:

$$e = \sqrt{\frac{\varepsilon_0}{3\left(\frac{4}{3}\pi c^3\right)}} \tag{6}$$

[0100] This can also be written as

$$e = \sqrt{\frac{\varepsilon_0}{3\left(\frac{4}{3}\right)\pi c^3}} \tag{6a}$$

[0101] Equation (6) has a number of very special implications, if re-examined, firstly three of these quasi electron spheres appear to be required to constitute the charge of the electron. More intriguingly, it indicates that the charge is related to the volume of a sphere with an apparent radius of c. Thirdly it indicates that the square of the charge of an electron (e) is proportional to the permittivity of free space (so). The charge given from equation (3) is in close agreement with the measured charge of the electron. Furthermore a more exact value for the charge of the electron (to seven decimal places) can be deduced by taking into account the gravitational field of the Earth (see Gravity and the Charge of the Electron). Furthermore the charge of the electron (e) can now be derived from first principles. Thus, equation (3) corroborates the evidence that the electron is indeed composed of three quasi electrons in keeping with recent experimental findings.

[0102] The significance of the electron, composed of three spheres each with a radius of c, is not immediately clear, but can be understood if the frequency of rotation of the electron is taken into account. Thus if the diameter of the electron was approximately 10^{-19} m, then its spin would need to be

$$\frac{1}{c}\times10^{-15}$$

m approx. eq. 10^6 cycles/sec. Thus given a very high rotation rate an electron could have an effective radius of 1/c and still occupy subatomic sizes. Indeed these observations might be used to estimate the rate of rotation of the quasi electron and its size (see Appendix 1).

[0103] With regards a single quintessence, this passing through an energy vector of the space-time lattice would appear as a vibrating string. In a similar way to string theory, the conglomeration of these quintessences would produce the constituents of ordinary matter. The electron, for example, would be constituted from approximately 1.235×10^{20} quintessences.

[0104] The dimensions of the equation for the electron can be readily resolved by considering each of the three vector dimensions. The exact dimensions of the equation need to be considered in the light of the nature of space-time itself. These dimensional equations help explain the nature of matter. Indeed the equation for the electron may be necessary for the full understanding of gravity

[0105] Complex Space and Electron Structure

[0106] The presence of complex space also now further explains the conformation of the electron, and its formulation at the quantum level, and the presence of particles, anti-particles and their spin up and spin down characteristics.

[0107] Indeed the short form equation for the charge of the electron (−e) can now be rewritten as a metric tensor with three dimensions in real space and six in complex space.

[0108] Thus if three of the x, y and z vectors are in real space and six vectors in complex space, where c is the speed of light in the real space vector, $_j$c is the speed of light in the complex vector and $_{-j}$c is the complex conjugate of $_j$c, thus the electron can be mathematically represented by the equation:

$$-e = \varepsilon_{qe}\Big/\left(\frac{4}{3}\pi\right)^{1/2}\cdot\begin{matrix}(c_x)^{1/2}\cdot(jc_y)^{1/2}\cdot(-jc_z)^{1/2}\\ + \quad + \quad +\\ (-jc_x)^{1/2}\cdot(c_y)^{1/2}\cdot(jc_z)^{1/2}\\ + \quad + \quad +\\ (jc_x)^{1/2}\cdot(jc_y)^{1/2}\cdot(c_z)^{1/2}\end{matrix}$$

[0109] Which now elegantly gives the real number solution

$$e = \frac{\varepsilon_{qe}}{3\sqrt{\left(\frac{4}{3}\right)\pi c^3}}$$

[0110] Where $e=\epsilon_{qe}$ is given as the permittivity of free space for a single quasi electron Equation 4 represents a "complex" tensor

[0111] Whilst the two dimensional Argand diagram has four quadrants, the three dimensional Argand diagram has eight cubic sectors. Two of these cubic sectors are diametric opposites and can represent "real" particulate objects. These have the primary coordinates x, y, −z; as in the electron described above, and the −x, −y, z, with the real vector x now having a minus sign. These two "real" cubic sectors, therefore, mathematically represent particles and their anti-particles.

[0112] The mathematical presence of the two primary diagonal mirror images (x, y, −z and −x, −y, z) now allow the introduction of the concept of antiparticles. This extension of the maths into a three dimensional Argand diagram thus results in the automatic formulation of the maths of anti-particles. Thus the charge of the positron (^{+}e) is formulated by the shortened form equation, where the real vectors now each have the minus sign, and therefore exist in the −x, −y, z sector of the three dimensional Argand diagram.

$$e = \varepsilon_{qe} \Big/ \left(\frac{4}{3}\pi\right)^{1/2} \cdot \begin{matrix} -c_x^{1/2} \cdot_{-j} c_y^{1/2} \cdot_{j} c_z^{1/2} \\ {}_{j}c_x^{1/2} \cdot -c^{1/2y} \cdot_{-j} c_z^{1/2} \\ -_{j}c_x^{1/2} \cdot {}_{j}c_y^{1/2} \cdot -c_z^{1/2} \end{matrix}$$

[0113] The three dimensional Argand diagram also accounts for chirality and indeed the up and down spin of the electron. There are two other "real" primary coordinates in the Argand diagram, these are themselves the partial mirror images of the above coordinates (i.e. x, −y, z and −x, y, −z). In particular the y axis is of the opposite sign, thus in particles the y axis is in the downward direction, to form down spin particles and in anti-particles in the up direction, to form the antiparticle The up spin electron is given by eq. 8 and hence the down spin electron (−e|↓≦) is given by the equation

$$-el\downarrow\rangle = \varepsilon_{qe} \Big/ \left(\frac{4}{3}\pi\right)^{1/2} \cdot \begin{matrix} c_x^{1/2} \cdot_{-j} c_y^{1/2} \cdot_{j} c_z^{1/2} \\ {}_{j}c_x^{1/2} \cdot c^{1/2y} \cdot_{-j} c_z^{1/2} \\ -_{j}c_x^{1/2} \cdot {}_{j}c_y^{1/2} \cdot -c_z^{1/2} \end{matrix} \quad (9)$$

[0114] Thus the three dimensional Argand diagram accounts directly for the presence of antiparticles and the spin up and spin down particles seen in nature. It also accounts for the necessity of the electron to form a square root spherical object, as complex space depends on √−1, otherwise known as j.

[0115] Electron Pairing and Superconductivity

[0116] As the quintessences making up the electron are in a square root conformation, each of these quasi electrons would have a tendancy to pair to form an entire sphere.

[0117] The square root sphere structure of electrons with up and down spins can now superimpose to produce a complete sphere of varying extents. This produces electron pairing as seen at the atomic and molecular levels. It also accounts for the Pauli exclusion principle. This pairing thus accounts for the reactivity of the valence electrons and the electron probability densities, which in turn accounts for the existence of chemistry.

[0118] Furthermore, it is possible to account directly for superconductivity from first principles. For if both the complex and real vectors of the electron combine completely, the product of an up and down spin electron form a perfect superimposed sphere with radius c, with a charge of 2.59×10^{-38} C, denoted by the formula:

$$e^2 = \frac{\varepsilon o}{3\left(\frac{4}{3}\pi c^3\right)} = 2.59\times10^{-38}C \quad (6b)$$

[0119] As with standard superconducting theory, superconductivity can be explained by the formation of "Cooper" electron pairs, where the electrons are forced to pair by the presence of positive crystal charge in particular formation, at supercooled temperatures. In addition the electron pair now forms a stable entity whose angular momentum cancels.

[0120] It additionally becomes clear that the charge of two separate electrons (2e) is 3.2×10^{-19} C, but the charge of the combined electrons (e^2) is 2.59×10^{-38} C. This electron pair thus appears to have 19 orders of magnitude less charge than the electron and in turn 19 orders of magnitude less resistance. It is this effective reduction in charge and in turn resistance, which may account for superconductivity. When observed directly any electrical interaction with the Cooper electron pair will, however, result in the release of the full charge of both electrons, so that the full electrical charge put in will be equal to that coming out of the apparatus.

[0121] The Fine Structure Constant

[0122] Intruiginty from our knowledge of the electron we can further define the term .alpha., the fine structure constant; from the structure of the electron. Thus as the standard term

$$\alpha = \frac{e^2}{hc\times47\pi\varepsilon_0};$$

substituting the term

$$e^2 = \frac{\varepsilon_0}{3(4/3)\pi c^3} \quad \text{(eq. 6)}$$

and

$$h = m_q c^2 \quad \text{(eq. 1)}$$

we find:

$$\frac{2\pi}{\alpha} = m_q[3(4/3\pi c^3)]^2$$

*or

$$\frac{2\pi}{\alpha} = \frac{m_q e^4}{\varepsilon_0^2}$$

[0123] For brevity we may represent the quasi electron structure as $(4/3)\pi c^3=\theta$; to signify its threefold symmetry, thus

$$\frac{2\pi}{\alpha} = m_q(3\theta)^2 \tag{10}$$

[0124] Indicating that the fine structure constant of the electron (a) is indeed related to its dimensional structure. Again taking into account the effects of gravity the fine structure constant can be derived from first principles to nine decimal places (see Gravity and the Charge of the Electron).

[0125] Fundamental Forces and Particle Structure

[0126] In order to understand the fundamental forces and the nature of fundamental particles, an overview is required. Thus, there are three major forces; strong, electro-weak and gravity, each mediated by three force particles the gluon, photon and graviton respectively. These in turn, influence three types of particle, the quark, lepton, and by general relativity space-time itself. Each of these are composed of particles with multiples of charge of ⅓, which are themselves in three generations, and are present in three dimensions of real space. It is important that a comprehensive view of nature explains this threefold symmetry.

[0127] Using the Standard Model of particles, it is well accepted there exist quark particle charges of −⅓, −⅔ and +⅓ and +⅔ in quarks and anti-quarks. Given that each particle is made up of three quarks the presence of these fractional charges support the association of the fractional charges in this way to form three dimensional charged particles. In stable particles each of the three quarks would have a vector in one dimension, giving the three quarks together an existence in three dimensional visible space time. The particles that bind the quarks (gluons) are themselves required, in stable particles, to have three different color charges, one color in each dimension, for the particle to exist in three dimensional space-time. Furthermore, there are three generations of quarks (and indeed leptons).

[0128] The Standard Model (or a modification of this) and in particular the observation of quarks and indeed quasi electrons with fractional charge of ⅓ and ⅔ in both cases, indicates that particles are constituted from the equivalent of three of these quasi particles to form an electron and quarks to form baryons. In the normal three dimensions the energy would be carried by the particle, However, because each particle is constituted of three quasi particles and in each quasi particle or quark one visible dimension would be the direction vector, in the other two hidden dimensions of each vector the waves would carry energy. Thus each particle would be associated with vibration, which would account for wave particle duality and Heisenberg's uncertainty principle in three dimensional visible space-time.

[0129] These observations lead us directly to the previous postulate that the structure of the electron is composed of none other than three (root) spheres, and that this equation for the electron allows the determination of the charge of the electron from first principles, thus:

$$e = \frac{\varepsilon 0^2}{[3(4/3\pi c^3)]} \tag{6}$$

[0130] In addition the mass of the proton (m_p) can be directly calculated from the ratio of the mass (m_e) of the electron, given by the equation:

$$\frac{m_e}{m_p} = 5.45\times10^{-4} = 3\frac{\pi}{\sqrt{c}} \tag{11}$$

[0131] Strictly we should write,

$$\frac{m_e}{m_p + m_e} = 3\pi\sqrt{c}\,;$$

which is much more elegant.

[0132] Which now gives

$$\frac{m_e}{m_p} = \frac{1}{\sqrt{c}\,/3\pi - 1} = 5.4462\times10^{-3}$$

[0133] This is in very close agreement with the experimentally derived ratio of the proton to electron masses which is also; 5.4462×10^{-3}

[0134] Thus the correlation factor between theory and experiment has a maximum error <0.00001.

[0135] If we combine equation 3:

$$e = \sqrt{\frac{\varepsilon_0}{3(4/3)\pi c^3}}$$

and equation 13:

$$\frac{m_e}{m_p} = 3\frac{\pi}{\sqrt{c}}$$

the positive charge of the proton (e_p) is given by:

$$e_p = \sqrt{\frac{\varepsilon_0}{3(4/3)\pi c^3}} \times m_e \times 3\frac{\pi/\sqrt{c}}{m_p} = e \tag{12}$$

[0136] The stable nuclear proton conformation can thus be represented by the short form equation:

$$p=3^{+}\sqrt{3(4/3)\pi c^3}\times 3(\pi/\sqrt{c}) \tag{13}$$

[0137] This forms a stable 3×3 conformation as with the stable electron structure.

[0138] Importantly the term ($\pi/\sqrt{c}$) is the 90° solution to the Shrodinger wave equation for an electron confined in a space with radius c!.

[0139] Thus the standard equation for an electron confined in a one dimensional box is given by:

$$E\psi(x) = -\frac{h^2}{2m}\frac{d^2\psi(x)}{dx^2}$$

[0140] If the one dimensional box has a length 2L the quantum amplitude (A) can only be non zero between x=0 and X=2L and the standard solution for the amplitude is none other than:

$$A=(1/L^{1/2})$$

[0141] Thus in one dimension the standard solution to the Shrodinger wave equation is:

$$\psi(x)=(\pi/L^{1/2})\mathrm{Sin}\ x/L$$

[0142] Thus not only is the electron charge derived from the equation for three spheres each with a radius of c (eq. 3); but the proton mass and charge can also be derived from the standard solution to the Shrodinger wave equation for a an electron confined in a space of radius c!.

[0143] The term ($\pi/c^{1/2}$) itself would thus most logically represent the gluon which is present in the proton. These gluons would bind the quasi electrons together to form the fundamental particles

[0144] The masses of all the known particles, including the up and down quarks, the W boson, the muon, charm, strange, the tauon, truth and beauty can thus also be derived from first principles in this fashion, and have the quasi electron as their basic constituent particle (see Appendix 1).

[0145] Thus the structure of the muon (μ) can also be derived from the ratio of the mass of the electron (m_e) and the mass of the muon (m_μ):

$$m_e/m_\mu=4.7\times10^{-3}=c^{1/3}$$

Thus

$$\mu=\epsilon_0{}^{1/2}\times m_e/m_\mu\times 3^{-}(4/3=\pi c^3)^{1/2}\times(\pi/c^{1/3})$$

[0146] Where the charge of the muon is in this equation equivalent to that of the electron e. In this case ($\pi/c^{1/3}$) can be considered to represent a specific high energy photon. Thus the structure of the muon, written in short form is:

$$\mu=3^{-}(4/3\pi c^3)^{1/2}\times(\pi/c^{1/3}). \tag{14}$$

[0147] Moreover the structure of the tauon can be calculated from the ratio of the mass of the electron and that of the Tauon (1.79 Mev);

[0148] Thus

$$0.511\ \text{Mev}/1.79\ \text{Gev}=2.85\times10^{-4}$$

$$m_e/m_\tau=(\pi/c)^{1/3}\times(\pi/c)^{1/9}=2.85\times10^{-4}$$

[0149] As the charge of the tauon is equivalent to the charge of the electron, hence the structure of the Tauon is given by the above equation

$$e_\tau=\epsilon_{qe}\times(m_e/m_\tau)\times 3^{-}(4/3\pi c^3)^{1/2}\times(\pi/c)^{1/3}\times(\pi/c)^{1/9}=e$$

[0150] This equation accurately predicts the charge −1; and mass of the Tauon (.~1.78 Gev). Thus the structure of the Tauon can in short form be given by the equation

$$\tau=-3(4/3\pi c^3)^{1/2}\times(\pi/c)^{1/3}\times(\pi/c)^{1/9} \tag{15}$$

[0151] Furthermore a more exact value for the mass of the muon and tauon can be deduced by taking into account the gravitational field of the Earth in a similar way to identifying the exact charge of the electron. In addition it may be necessary to take into account a possible mass value of the neutrino to arrive at a precisely accurate mass value of the muon and tauon. Nevertheless, the mathematical proof of these short form equations lies in the fact that they can very closely identify the charge and the masses of these particles, from first principles, as in equations.

[0152] Overall the mathematical geometrical structure of all the particles can be derived from the quasi electron, which is in turn derived from quintessence. Thus, the short form particle structures can now be derived from first principles. This includes the quasi electron (qe) and electron (e), from which the quarks (u,d) and in turn the stable proton (p) and stable neutron (n) and alpha particle (a) respectively are derived. The general structure of the force carrying bosons the photon. (g) and the gluon (γ) and the intermediate vector boson (W) can be given. It will also intriguingly be possible to derive, according to their generation, the structure of the strange (s) charm (c), beauty (b, or bottom) and truth (t or top) quarks directly from the structure of the muon (μ) and Tauon (τ) respectively.

[0153] Using the term $\Theta=(4/3\pi c^3)$, where, −/+ represents the charge of the quasi electron, we find:

[0154] 1st Generation:

$$(q_e)={}^{-}\Theta^{1/2} \tag{6c}$$

$$e=3^{-1/2} \tag{6}$$

$$d={}^{-}\Theta^{1/2}\cdot 3(\pi/c^{1/2}) \tag{16}$$

$$u=2^{+}\Theta^{1/2}\cdot 3(\pi/c^{1/2}) \tag{17}$$

$$s={}^{-}\Theta^{1/2}\cdot 3(\pi/c^{1/2}) \tag{18}$$

[0155] 2nd Generation

$$\mu=3^{-}\Theta^{1/2}\cdot(\pi/c^{1/3}) \tag{14}$$

$$c=2^{+}\Theta^{1/2}\cdot(\pi/c^{1/3})\cdot(\pi/c^{1/4}) \tag{19}$$

$$b={}^{-}\Theta^{1/2}\cdot(\pi/c^{1/9})\cdot(\pi/c)^{1/4} \tag{20}$$

[0156] 3rd Generation

$$\tau=3^{-}\Theta^{1/2}\cdot(\pi/c)^{1/3}\cdot(\pi/c)^{1/9} \tag{15}$$

$$t=2^{+}\Theta^{1/2}\cdot(\pi/c)^{1/3}\cdot(\pi/c)^{1/9}\cdot(\pi/c)^{1/4} \tag{21}$$

[0157] Particle Gluons (g):

$$g_1=(\pi/c^{1/2}) \tag{22}$$

$$g_2=(\pi/c)^{1/2} \tag{22a}$$

$$g_3=(\pi/c^{1/4}) \quad (22b)$$

$$g_4=(\pi/c)^{1/4} \quad (22c)$$

[0158] Particle Photons (.gamma.):

$$\gamma_1=(\pi/c^{1/3}) \quad (23)$$

$$\gamma_2=(\pi/c)^{1/3} \quad (23a)$$

$$\gamma_3=(\pi/c^{1/9}) \quad (23b)$$

$$\gamma_4=(\pi/c)^{1/9} \quad (23c)$$

[0159] Intermediate Vector Boson ($W^{+/-}$):

$$W^{+}=3^{+}\Theta^{1/2}\cdot 2(\pi/c^{1/6})^6 \quad (24)$$

$$W^{-}=3^{-}\Theta^{1/2}\cdot 2(\pi/c^{1/6})^6 \quad (25)$$

[0160] Stable* Proton:

$$p=3^{+}\Theta^{1/2}\cdot 3(\pi/c^{1/2}) \quad (13)$$

[0161] Stable* Neutron:

Stable * Neutron:

$$n = \begin{matrix} {}^{+}\Theta\downarrow^{1/2}\cdot 2(3\pi/c^{1/2})\cdot{}^{-}\Theta\uparrow^{1/2} \\ {}^{+}\Theta\downarrow^{1/2}\cdot 2(3\pi/c^{1/2})\cdot{}^{-}\Theta\uparrow^{1/2} \\ {}^{+}\Theta\downarrow^{1/2}\cdot 2(3\pi/c^{1/2})\cdot{}^{-}\Theta\uparrow^{1/2} \end{matrix}$$

* Stable nucleonic neutron and proton conformations differ slightly from the Standard Model, this is due to the sharing of quasi electron and quasi positron particles within the nucleus, which allows stabalisation of these particles by the formation of stable 3×3 structures. The Standard conformations which describe non-nucleonic neutrons and protons are additionally given in Appendix 1.

[0162] Alpha particle (α):

$$\text{Alpha particle } (\alpha) := \alpha = \begin{matrix} [3^{+}\Theta]\downarrow^{1/2}\cdot 2(3\pi/c^{1/2})\cdot[3^{-}\Theta]\uparrow^{1/2} \\ [3^{+}\Theta]\uparrow^{1/2}\cdot 2(3\pi/c^{1/2})\cdot[3^{-}\Theta]\downarrow^{1/2} \\ [3^{+}\Theta]\downarrow^{1/2}\cdot 2(3\pi/c^{1/2})\cdot[3^{-}\Theta]\uparrow^{1/2} \end{matrix} \quad (27)$$

[0163] The mathematical proof for these structures and their decay mechanisms is lengthy and is thus fully contained in Appendix 1. All the particle structures are accurately mathematically defined by the masses of these particles.

[0164] The structure of these particles all contain the quasi electron and thus the metric tensor structure necessary in the formulation of the gravitational equations is sustained. The respective forces created by the gluon and the photon are important as they tell us the behaviour of matter and also lead to the likely structure of the graviton

[0165] Particle Spin and Size

[0166] The significance of the electron, composed of three spheres each with a radius of 1/c, is not immediately clear, but can be understood if the frequency of rotation of the electron is also taken into account. Knowing the structure of the electron has led us to deduce its charge and thus may lead us estimate its size and spin. Thus these observations might be used to calculate the radius and rate of rotation of the electron.

[0167] Let us suppose, that nature is truly beautiful, and that the radius of the fundamental quasi electron is indeed 1/c, and in turn the radius was balanced by the velocity of rotation 2π/c. This can be directly confirmed mathematically by taking into account the known spin of the electron, h/4π. Thus the actual spin of the electron may be calculated form the known energy of the spin.

[0168] The radius of the electron is not up till now known, but the radius of a quark has been estimated, and this is the radius derived from deep inelastic collisions of the proton. These estimates reveal a radius of approx. $r_p=1.18\times10^{-15}$ m This value may be used to assist in confirming the spin of the proton in revolutions per sec. (revs) and in turn the spin and size of the electron. Firstly we may proceed to estimate the spin of the proton. Thus as h=E·t (Joules×sec) and h=E·t=F·d·t (Joules×sec), then the spin;

$$h/4\pi=F\cdot d\cdot t \quad (28)$$

[0169] As F=ma, where $\alpha=(revs\cdot 2\pi)^2 r_p$ and m=the mass of the proton, then

$$h/4\pi=m(revs\cdot 2\pi)^2 r_p\cdot d\cdot t$$

[0170] The actual distance (d) traveled in a circle of half integer spin in 1 second is: $revs\cdot\pi r_p$ thus:

$$h/4=m(revs\cdot 2\pi)^3 r_p^2/2$$

[0171] Hence:

$$revs=[h/m(2\pi)^4 r_p^2]^{1/3}$$

[0172] Taking the effective mass the proton as 1.6726×10^{-27} kg, then the rate of spin of the proton in revolutions/sec is:

$$revs=5.65\times10^6 \text{ cycles/sec}$$

[0173] From the frequency of the specific rotation of the proton, given the half integer spin associated with the proton, we can thus mathematically confirm the relationship between the radius of a particle and its spin:

$$r_p\times revs/2=1/c \quad (29)$$

[0174] Furthermore, the fundamental radius of 1/c seen in geometric structure the quasi electron, is also reflected in the rotation rate and radius for the proton, thus as above 1/c÷½ revs=1.85×10^{-15} m. Moreover, this means the actual half integer velocity of rotation is none other than 2π/c in metres/sec. So that the particle is in harmonic balance.

[0175] Using the fundamental formula h/4π=F·d·t, it is possible to obtain accurate estimates of the radius and spin rates of the electron, or indeed any particle, using the same principle of harmonic balance. Using the formula:

$$revs=[h/m(2\pi)^4 r_e^2]^{1/3}$$

[0176] It appears there are two unknowns, the radius if the electron and its revolution rate, however, in accordance with the equation, r_p=2/c.revs, which gives the revolution rate of the proton, the same principle may also be used for the electron, by substituting r_e=2/c.revs, such that:

$$revs=hc^2/4m_e(2\pi)^4 \quad (30)$$

[0177] Taking the mass of the electron 9.109382×10^{-31} kg, the rate of revolution of the electron is:

$$revs=1.048\times10^{10} \text{ cycles/sec}$$

[0178] Which gives a predicted radius of the electron as

$$r_e=6.336\times10^{-19} \text{ cycles/sec}$$

[0179] So the half integer rotation velocity (revs.πr) is 2π/c !, for the electron in keeping with the harmonic balance of the electron.

[0180] The same principle may be used to obtain an accurate estimate of the spin and radius of the muon, or any other particle. Using the above formula

$$revs=hc^2/4m_e(2\pi)^4 \quad (31)$$

[0181] Then as the mass of the muon is 1.8823×10^{-28} kg then the revs of the muon $f_\mu=5.070\times10^{-7}$ cycles/sec and the radius r_μ is thus 1.316×10^{-16} m.

[0182] It is now possible to begin to explain how the muon and the other subatomic particles are formed. If a quasi electron is complexed with another structure the total geometric structure needs to maintain harmonic balance. So the frequency of rotation would need to match geometric structure with which the quasi electron was complexed

[0183] Intriguingly we find asymptotic convergence for the formulas for frequency and mass occurs, when the geometric structure complexed with the quasi electron has the structure represented by $(\pi/c^{1/3})$ [giving the frequency divided by two, because the single integer spin of the force carrying particles compares to a half integer spin for the muon]. So that

$$(f_r 3\pi/2)^{1/3}=f_\mu$$

[0184] When the ratio of the masses of the electron (m_e) and muon (m_μ) are related, such that:

$$m_e(3\pi/c^{1/3})=m_\mu$$

[0185] Indeed we find that (allowing for the neutrino) this ratio is very close to the actual ratio of the mass of the electron to the mass of the muon, determined experimentally.

[0186] Furthermore, we have seen that these geometric structures, representing harmonics of the speed of light, which either match the frequency or the amplitude of vibration of the quasi electron, mathematically define the masses of the particles and the fundamental forces of Nature.

Part III—Quantum Gravity

[0187] Quantum General Relativity

[0188] Given the overall energy "complex" energy tensor structure of the electron and the metric tensor, assumed in general relativity, the quantum nature of gravity itself can now be explored. The spherical complex tensor for the electron and the positron give the mathematical quantum structure and energy tensor for all the other particles. Together with the time dimension these nine space dimensions account for the 10 parameters present in the metric tensor necessary to formulate the equations for gravity using Riemann geometry and thus forms the basis of quantum gravity. Intriguingly the metric tensor at each point in space time is required to consist of a collection of ten numbers, Consequently, ten dimensional space-time hypotheses, such as this or superstring theory, do automatically yield general relativity.

[0189] Furthermore, the mathematical representation of the graviton and the gravitational constant may be directly estimated from the knowledge of the mass and radius of quintessence. Thence, the force of the vibrations of quintessence lead directly to quantum gravity.

[0190] The radius of quintessence should be approximately in keeping with the Planck length estimate (r), which is conventionally derived from the standard dimensional equation:

$$r_q^2 \cong Gh/c^3 \quad (32)$$

[0191] Given the nine spacial parameters present in the metric tensor, used in general relativity we find that the actual formula for r_q^2 is mathematically in agreement with theory when:

$$9r_q^2=Gh/c^3 \quad (33)$$

[0192] This again supports the 9 dimensional view of space and the size of the vibrations of quintessence can thus be estimated.

$$r_q=1.35\times10^{-35} \text{ m} \quad (33a)$$

[0193] This value is in agreement with the Planck length. Indeed if the above equation is correct then we find that we can derive the standard equation for the general relativistic increase in radius, r', (eq. 34) directly from first principles and arrive at a more fundamental equation for quantum gravity. As

$$r'=G\cdot M/3c^3 \quad (34)$$

[0194] By substituting eq. 33) into equation 34, a fundamental relationship between r' and M is obtained.

$$r'/3r_q^2=GMc^3/Ghc^3=Mc/h$$

[0195] And substituting the quintessential equation, $h=m^q c^2$ (eq. 1) then:

$$r'/3r_q^2=M/m_q c=n_q/c \quad (35)$$

[0196] Hence the ratio of the change in radius to that of the radius of quintessence squared, is proportional, by a factor of c, to the ratio of the mass M of an object to that of the mass of quintessence, effectively the number of quintessences. Thus the change in radius, r' due to gravitation, is related to none other than the ratio of the mass and radius of an object to the mass and the square of the radius of quintessence. Thus again the gravitational change in radius is directly related to the number of quintessences.

[0197] Naturally, this would be exactly what would be logically expected if quintessence, like the equation for the charge of the electron (eq. 6) forms from a root sphere. Thus the change in spacial radius of a normal sphere is dependant on the square of the quintessential radius.

[0198] This increase in apparent radius represents none other than the (gravitational) binding energy for quintessence.

[0199] The meaning of the above dimensional equation (33) might itself be further understood by substituting the mass of quintessence (where $m_q=h/c^2$) into the equation. Thus in nine dimensions the gravitational constant (G) may be more logically given as,

$$9(\pi r_q^2/m_q)=G\pi/c \quad (36)$$

[0200] Where πr_q^2 is the cross sectional area of quintessence and m_q is the effective mass of quintessence, and thus

($\pi r_q^2/m_q$) represents the effective mass per unit area which quintessence exerts. This equation reduces to:

$$9r_q^2/m_q=G/c \quad (37)$$

[0201] From this we may derive the standard general relativistic relationship for the apparent change in radius (r') around a mass (M), from an understanding of the mass m_q and number (n_q) of quintessences. As $m_q=M/n_q$, then:

$$3r_q^2=G\cdot M/3c\cdot n_q \quad (38)$$

[0202] Then if

$$n_q=r'c/3r_q^2 \quad (39)$$

[0203] thus directly substituting for n_q in eq. 38:

$$r'=G\cdot M/3c^2 \quad (34)$$

[0204] The importance of this is that the gravitational change in radius now logically derives from equation 36, which describes the gravitational force as resulting directly from the mass of quintessence exerted/per unit area of quintessence.

$$9(\pi r_q^2/m_q)=G\cdot\pi/c \quad (36)$$

[0205] Thus equation 34 is the conventional equation for the general relativistic increase in radius (r') in a gravitational field, which is here derived from the underlying nature of quintessence. Thus the gravitational constant is derived from the mass and radius of vibration squared of quintessence from first principles.

[0206] Indeed it is apparent that a more fundamental equation for gravitation now exists, for equation (39) is mathematically accurate and numerically agrees with eq. 34:

$$r'/3r_q^2=n_q/c \quad (39)$$

[0207] These equations may be readily mathematically verified. If in accordance with standard general relativity, the apparent increase in radius r' is:

$$r'=GM/3c^2 \quad (34)$$

[0208] Then given that the mass of the Earth is 5.9745×10^{24} kg;

$$r'=1.478\times10^{-3}\text{ m}$$

[0209] Accordingly if $r'=3r_q^2\cdot n_q/c$; (eq. 39). Given the number of quintessences n_q constituting the Earth is M_E/m_q, then

$$n_q=5.9745\times10^{24}/7.3725\times10^{-5}=8.104\times10^{74}$$

[0210] As $r_q^2=1.823\times10^{-70}$ (eq. 33a) then:

$$r'=1.478\times10^{-3}\text{ m}$$

[0211] Thus equation 39 gives the same answer as the standard equation and may be understood on a logical basis. Indeed the meaning of c in the equation may be understood as it has been previously shown as being the basis for the radius of matter (eq. 6). Hence the general relativistic change in radius, r', is none other than the effective binding energy for quintessence.

[0212] Quantum Gravity and Wave Particle Duality

[0213] Quantum gravity can now be readily linked with quantum mechanics, indeed any observations which are self consistent must be able to do so easily.

[0214] The frequency of light has been previously derived

$$f=E/h=n_q$$

[0215] Thus the formula for the frequency of light (E=hf) has previously been explained theoretically by the simple observation that the frequency is determined quite directly from the number of quintessences (n_q) within the photon. The same principle has also been shown to apply to matter.

[0216] Let us now follow these equations for matter by calculating the wavelength of a photon from the Gravitational constant as an example; and also as a test of these observations and to demonstrate that the gravitational equations can also apply to the quantum world.

[0217] If

$$n_q=r'c/3r_q^2 \quad (39a)$$

[0218] where r' is the general relativistic increase in radius, and r_q is the radius of quintessence (eq. 33). Where $f=E/h=n_q$, substituting for n_q, then the frequency of the photon f_γ(where $\beta=1$) is given by:

$$f_\gamma=r'c/3r_q^2$$

[0219] Using the standard equation, $r'=GM/3c^2$ (eq. 34); we may substitute for r', thus we have:

$$f_\gamma = GM/9r_q^2c \text{ 15 Thus}$$

$$f_\gamma = \frac{G}{9r_q^2c^3}\cdot m_\gamma c^2 \text{ and as } E = m_\gamma c^2;$$

$$f_\gamma = \frac{GE}{9r_q^2c^3} \quad (40)$$

$$\text{Indeed as } 9r_q^2 = Gh/c^3, \text{ then } f_\gamma = E/h = n_q$$

[0220] It is possible to also demonstrate that the same relationship holds for the wave equation for matter. If we take the relativistic wave energy of matter, which has been previously derived,

$$f=\beta^2 n_q$$

[0221] This includes the term for the number of quintessences flowing through the electron, in the complex vectors of space-time, to give the relativistic electron momentum (p) and a term for the rest mass, thus substituting into (40)

$$f_\gamma = \frac{GE}{9r_q^2c^3} \quad (40)$$

[0222] As $f=\beta^2 n_q$ for matter then the equation expands to:

$$f_m = \frac{G}{9r_q^2c^3}\cdot\beta^2 E \text{ As } \lambda = v/f, \text{ then}$$

$$\lambda = \frac{9r_q^2c^3v}{G\beta^2E} \quad (41)$$

[0223] Then the equation again reduces to:

$$G = \frac{9r_q^2c^4}{\lambda\beta E} \tag{3}$$

[0224] Equations 3, 40 and 41 are important as they show that the quantum wavelength of any particle of rest mass m can be derived from the gravitational constant G. Thus linking quantum mechanics to quantum gravity.

[0225] It is therefore important to confirm the numerical accuracy of the above equation (40). We can do this by comparing the result to the standard computation of the de Broglie equation, in a range where de Broglie itself is likely to be most accurate; which according to these observations is in the low energy range (see section on Wave Particle Duality).

[0226] If we take an electron with an energy of 0.1 KeV the wavelength is conventionally given (where the kinetic energy of the electron E_k is given by the product of the charge of the electron (C) and the potential applied eV=0.1 Kev), by the standard equation:

$$\lambda = h/p = h/(E_k \cdot 2m_0)^{1/2} \text{ thus}$$

$$\lambda = 6.63\times10^{-34}/[1.602\times10^{-19}\times1\times10^{2}\times18.22\times10^{-31}]^{1/2}$$

hence

$$\lambda \cong 1.23\times10^{-10}m \text{ Using}$$

$$\lambda = \frac{9r_q^2c^4}{G\beta E} \text{ Where } E = \gamma m_0c^2 \tag{3a}$$

[0227] At 0.1 Kev, electron velocity is 6×10^6 r/sec, thus $\beta=2\times10^{-2}$ and $\gamma=1/(1-v^2/c^2)^{1/2}=1.0002$. Thus:

$$\gamma = \frac{9\times1.82\times10^{-70}\times80.78\times10^{32}}{6.76\times10^{-11}\times\beta\times1.0002\times9.11\times10^{-31}\times8.998\times10^{16}}$$

$$\lambda = 1.21\times10^{-10}m$$

[0228] Divergence between the de Broglie equation and the above equation (2) occurs at intermediate and high energies where it is generally accepted that the standard de Broglie equation may be less accurate. The values for eq. 2 and de Broglie are compared to recent experiments, which demonstrate a relativistic curvilinear plot for wavelengths of matter in keeping with eq. 40.

[0229] The de Broglie equation in the non-relativistic format yields a simple log/linear scale, which is not in keeping with relativity; whereas eq. 3 is dependent on relativity and mathematically accounts for both relativity in calculating the wavelength. Indeed recent experiment on quantum tunnelling through a wire mesh strongly suggests that the relationship between energy and wavelength is relativistically curvilinear[ref 1]. Furthermore equation 3a suggests a fundamental relationship between energy (E), relative velocity (v/c=.β), gravity (G) and the quantum wavelength (λ)

$$\lambda = \frac{9r_q^2c^4}{G\beta E} \text{ Indeed as } {}^9r_q^2 = Gh/c^3\text{, then} \tag{3a}$$

$$\lambda = hc/\beta E \tag{2}$$

[0230] Equation 2 is the very same as the Universal wave equation derived form first principles for the wavelength of tight and matter, which allowed a relativistic solution to the equations for wave particle duality (see Wave Particle Duality). This now indicates that these quintessential equations are compatible with relativity, quantum mechanics and quantum gravity.

[0231] Graviton Structure

[0232] From these observations, if the value for the gravitational constant is substituted into the equation (35) we may now estimate the probable geometric structure of the gravitation, which is the force particle mediating gravity by acting on quintessence. Thus the Gravitational constant has been previously derived from the vibration of quintessence by the equation:

$$G\cdot(\pi/c)=9(\pi r_q^2/m_q) \tag{36}$$

[0233] This is in accurate agreement with the value for $G(6.67\times10^{-11}\ N\ m^2\ kg^{-2})$. This suggests that the most probable mathematical representation of the graviton (ϕ), the third force carrying particle is

$$\phi=(\pi/c) \tag{42}$$

[0234] Thus the gravitational constant (G) can be given by the mass and radius of quintessence and the structure of the graviton

$$G=9\pi r_q^2/\phi m_q \tag{43}$$

[0235] This shows the gravitational force to be related to the fundamental radius of quintessence space time, and the graviton.

[0236] Quantised General Relativity

[0237] The classical general relativistic formula, as given by Einstein is:

$$R_{\mu\nu}-1/2g_{\mu\nu}R=-\kappa T_{\mu\nu}$$

[0238] Where R is effectively the curvature of space-time, $R_{\mu\nu}$ denotes the contracted Riemann tensor of curvature and $T_{\mu\nu}$ is the "energy tensor" of matter.)

[0239] If we substitute the energy tensor matrix of the electron (eq. 9)×time, for the energy tensor of matter $T_{\mu\nu}$; and the metric tensor of the space-time latticeXtime for the contracted Riemann tensor we can arrive at the same solutions for general relativity.

[0240] Furthermore, in his published paper on General Relativity, Einstein. defined the constant κ as:

$$\kappa=8\pi G/c^2$$

[0241] Therefore Einstein's equation should be written as

$$R_{\mu\nu} - 1/2g_{\mu\nu}R = \frac{8\pi G}{c^2}\cdot T_{\mu\nu} \tag{43}$$

[0242] Einstein himself was apparently not happy about the right hand component of the equation. However, we find that this part of the equation can now be explained and quantised by substituting the gravitational constant, $G=9\pi r_q^2/\phi m_q$, (eq. 42a),

[0243] Giving:

$$R_{\mu\nu}-1/2g_{\mu\nu}R=-\frac{8\pi^2 9r_q^2}{\varphi m_q c^2}\cdot T_{\mu\nu} \tag{44}$$

[0244] By substituting $m_q \cdot c^2=h$, and further substituting $h=h/2\pi$, we arrive at a quantised solution to Einstein's equations. Where A_q is the surface area of quintessence ($A_q=4\pi r_q^2$); ϕ is the graviton [$\phi=(\pi/c)$] and h is Plancks constant. thus:

$$R_{\mu\nu}-1/2g_{\mu\nu}R=-\frac{9A_q}{\varphi\hbar}\cdot T_{\mu\nu} \tag{45}$$

[0245] The gravitational equation can now be further understood on a logical basis. The term $A_q=(4\pi r_q^2)$, where represents standard term for the surface area of a sphere of quintessence for the 9 space dimensions of the space time lattice, h is the energy content of quintessence×time and ϕ is the graviton, thus the right hand term now represents a true "metric energy tensor" of matter.

[0246] This leads directly to the standard solution to the field equations, for the general relativistic increase in radius r' of an object, where A is the surface area of a sphere of a given mass M, such that

$$r=\sqrt{(A/4\pi)}-r=GM/3c^2 \tag{34}$$

[0247] Furthermore, although equation 45, gives the same solutions as Einstein's equation, which is essentially correct, the difference is that the equation is now dependant upon Planck's constant (h), and moreover the radius of quintessence, which now defines a quantised solution to the equations.

[0248] Graviton Force Characteristics

[0249] Similar to the photon, the previously derived equation (42) for the graviton [$\phi=(\pi/c)$] appears to also mathematically represent a helical ringlet of quintessence, but with a spin of 2. For the photon, taking the direction of motion as the x vector and its axis of spin also as the x vector, would account for the electromagnetic force and its attraction and repulsion characteristics. In the case of the gluon component ($\pi/c^{1/2}$), if the direction vector is x, then the axis of spin would be in the y vector, the same as quasi electrons, accounting for the particle binding characteristics of the gluon force. In the case of the graviton, if the direction of motion was in the x vector, the graviton spin axis would be in the z vector thus, as will be demonstrated, accounting for the gravitational force.

[0250] The spin axis of the graviton can also be derived using the known characteristics of the electron. If an electron is travelling in the x direction, then its spin axis is determined by the by the sign of the $_j$y vector (up or down). This view is in agreement with conventional theory, which indicates that the electron spin is similar to a rotating planet orbiting the sun, (the electron even appears to have orbital precession). As the electron passes through the space-time lattice, this spin would generate the formation of gravitons. This would occur as a result of the ejection of the excess quintessence passing through the electron. As the electron spins, the ejection of these gravitons would occur at a tangent to the electron's direction of motion. The ejection of the gravitons would occur, similarly to the ejection of energy of a pulsar or quasar, through the equivalent of the north and south poles of the electron. Thus, propelling the graviton in the direction of the electrons y vector. The ejection of the graviton would re-orientate and impart a specific angular momentum to the gravitons which would thus end up spinning on its own z axis. If for instance the graviton is released from an up spin electron the graviton will be rotating clockwise and its leading edge will displace quintessence downwards. In turn this will provide an upwards force.

[0251] This picture accounts for Fleming's left hand rule, is logical and provides an explanation for the magnetic force around a wire. According, to the left hand rule if the direction of the current is in the x vector, the magnetic field is in the z vector, and the force is upwards, in the y vector, in accordance with the above model. Therefore, this particular spin axis and the structure of the graviton results in its force characteristics. As the graviton is very small compared to the electron and both have different rather rapid spin axis it is difficult for these to bind and interact. Nevertheless, because the graviton has a spin of 2, and as it spin axis is perpendicular to its direction of motion, in the z vector, it readily displaces space-time quintessence to produce gravity. Thus because the graviton is able to displace space-time, it is capable of escaping a black hole. How else could the effects of gravity be felt beyond a black hole?

[0252] Quantum Gravity and Electromagnetism

[0253] With the above electron model of graviton production the nature of magnetism can be understood from first principles, Furthermore, the presence of a space-time lattice links relativity, and the forces of gravity with the electromagnetic and other forces of Nature. Indeed, evidence for these links may first date back to the 1820's, when Andre Ampere first defined the Amp. The force of attraction between two parallel wires 1 metre apart each carrying 1 Amp in a vacuum was defined as none other than the permeability of free space (2×10^{-7} N per metre of conductor). Thus conventionally the magnetic field strength around a long straight wire is given as:

$$B=\mu_0 I/2\pi r$$

[0254] Where I is the current and μ_0 is the permeability of free space ($4\pi\times10^{-7}$ N A^{-2})

[0255] The attraction between two wires both carrying negative charge is, however, counterintuitive as negative charges should repel. A conventional explanation overcomes this by invoking the presence of a magnetic field which is created by the current by the production of virtual photons. Thus we appear to have an explanation for the effects of magnetism which involves virtual photons, however, these photons are not observed. More accurately, according to conventional special relativity the magnetic field is none other than the electric field viewed relativistically.

[0256] A more satisfactory explanation, therefore, lies in the interaction between the electrons and the space time lattice. The moving electrons in the two wires interact with the lattice to produce gravitons; which are in phase when both streams of electrons are traveling in the same direction. The gravitonic waves interact constructively to disperse the space time lattice between the wires and induce an attractive force between the two wires, which produces in effect the permeability of free space. Thus this force results from the vibration of quintessence itself.

[0257] Conversely in two wires with current going in opposite directions the graviton waves are in anti-phase and would interact destructively between the wires. The gravitonic waves traveling radially outward from the wires would, however, disperse the lattice outside the two wires and produce apparent repulsion between the wires, which is exactly what is observed. These effects of electricity suggest that gravitons act as waves and that phase is important.

[0258] This effect is also seen with the north and south poles of ferromagnets. Nevertheless, with matter other than iron, cobalt or nickel, the graviton emission cannot be phased as the atoms are unable to align and magnets do not appear to exist with other materials.

[0259] In ordinary magnetic system the release of gravitons from the north pole would be exactly balanced by those released from the south pole of the magnet and hence there would be no net force on the magnet until an external magnet or electrical current were applied.

[0260] Overall the magnitude of the forces in electrical systems where electrical conduction occurs are well defined by the permeability and permittivity of free space μ_0, and ϵ_0. Where v is the constant velocity of the charge and ϵ is the electric field produced by the charge.

$$B=[\mu_0\epsilon_0]v\cdot\epsilon$$

[0261] These observations suggest that the forces of electricity which produce magnetism are indeed related to the permittivity and permeability of free space and that these quantities are exerted by an apparent vacuum. Thus the effects of magnetism could be explained by none other than the phased effects of gravitational waves on the space time lattice.

[0262] Electromagnetism is of further interest to quantum gravity, particularly if we combine the standard equations, $B=\mu_0 I/2\pi r$ and $B=[\mu_0\epsilon_0]v\cdot\epsilon$, substituting for B we have:

$$2\pi r=I/\epsilon_0 v\epsilon \tag{46}$$

[0263] Thus $2\pi r$ is proportional to the inverse of ϵ_0. Thus as space time is dispersed by gravitons the permittivity field will increase in the same way capacitance increases with separation of plates. Because of the inverse relationship between ϵ_0 and $2\pi r$, as ϵ_0 increases the circumference of a circle and the apparent ratio of π is to r, will appear to diminish in accordance with general relativity. This not an actual diminution in the circumference of a circle but the effective reduction of the resistance to motion in a circular path in this field.

[0264] Incidentally, the above observations, also lead us directly to Schrödinger's formula for the average equilibrium distance (r) between an electron with charge (e) in orbit around a proton, which is conventionally given by:

$$r=n^2 4\pi h^2\epsilon_0/me^2$$

[0265] Where ϵ_0 is again the permittivity of free space, m is the mass of the electron and n is an orbital integer, h is Planck's constant and e is the charge of the electron. Furthermore if $e=[\epsilon_0/3(4/3\pi c^3)]^{1/2}$ (eq. 3); then the equation at n=1, for the electron orbital radius elegantly simplifies to:

$$r=4h^2c^3/m$$

[0266] Hence the orbital radius of the electron is related to spin of the electron (h) and its mass (m).

[0267] Quantum Gravity and the Charge of the Electron

[0268] The equation for the charge of the electron (eq. 1) contains the term so (permittivity of free space) which according to these observations should vary in a gravitational field.

$$e=[\epsilon_0/3(4/3\pi c^3)]^{1/2} \tag{6a}$$

[0269] If we combine the standard equations, $B=\mu_0 I/2\pi r$ and $B=[\mu_0\epsilon_0]v\cdot\epsilon$, substituting for B we have:

$$2\pi r=I/\epsilon_0 v\epsilon \tag{46}$$

[0270] Thus $2\pi r$ is proportional to the inverse of ϵ_0. Thus as space time is dispersed by gravitons the permittivity field will increase in the same way capacitance increases with separation of plates. Because of the inverse relationship between ϵ_0 and $2\pi r$, as ϵ_0 increases the circumference of a circle and the apparent ratio of π to r, will appear to diminish in accordance with general relativity.

[0271] Thus ϵ_0 rises when space-time is dispersed by the gravitons that produce the gravitational field, This occurs in a similar way to the process by which capacitance increases with separation of plates in a capacitor.

[0272] Nevertheless, as c is a constant and as $c=[\mu_0\epsilon_0]^{-1/2}$, then if ϵ_0 rises then μ_0 falls. This is entirely consistent as μ_0, which represents the force that quintessence exerts, would be reduced if the quintessence space time lattice is dispersed.

[0273] Furthermore, as $\mu_0=4\pi\times10^{-7}$ N A^{-2}; then as μ_0 falls, then the apparent ration π to r, also falls in a gravitational field. This is largely the same as stating, as does general relativity, that the apparent radius r', rises in a gravitational field. So this view is consistent with general relativity.

[0274] Nevertheless, to derive an exact value for the charge of the electron we must account for gravity in the above equation. We will take the specific example of the Earth's gravitational field in order to obtain the exact value for the electron. If in accordance with standard general relativity, the apparent increase in radius r' is:

$$r'=GM/3c^2 \tag{34}$$

[0275] Then given that the mass of the Earth is 5.9745×10^{24} kg; then

$$r'=1.47864\times10^{-3}\text{ m}$$

thus

$$2\pi r'=9.29057\times10^{-3}$$

[0276] Which is the incremental factor by which ϵ_0 must increase in Earth's gravitational field. So to correct ϵ_0 to account for gravity, ϵ_0 must be divided by the incremental factor, $2\pi r'$. Similarly as effectively π decreases in a gravitational field, to correct π to account for gravity it must be

multiplied by this incremental factor. So the equation for an electron in a zero gravitational field is:

$$e=[\epsilon_0/3(4/3\pi c^3)]^{1/2}\div(1+2\pi r')=1.6022\times10^{-19}\ \mathrm{C} \quad (6b)$$

[0277] This now gives the charge of the electron as measured in a zero gravitational field as 1.6022×10^{-19} C, which is the same as that measured on Earth. Notably these observations appear to suggest that the charge of the electron is the same irrespective of the gravitational field.

[0278] Virtually unlimited degrees of accuracy for the charge of the electron and for the fine structure constant (α), may be achieved by taking into account 2nd and nth order gravitometric effects. Thus if we take into account the effect of gravity upon the radius of the Earth it is also important to take into account an effect upon the instruments with which we measure quantities, this would be a second order gravitometric effect. Thus taking into account 2nd order effects (r"), we have a very small, but nevertheless relevant change, such that: $r''=r'(1+2r')$. Thus $2r''=9.3180486\times10^{-3}$, and thus:

$$e=[\epsilon_0/3(4/3\pi c^3)]^{1/2}\div(1+2\pi r'')=1.6021765\times10^{-19}\ \mathrm{C} \quad (6c)$$

[0279] This agrees exactly to the nearest 7 decimal places with the maximum accuracy of the experimental value for the charge of the electron. Furthermore by taking into account the nth order gravitometric effect, it is theoretically possible to predict accuracy for the charge of the electron to 3n decimal places. This mathematically accuracy confirms the structure of the electron from first principles and indeed the theoretical effects of gravity on the permittivity of free space (ϵ_0).

[0280] This returns us directly to the fine structure constant for the electron which is conventionally given by: $\alpha=e^2/hc\cdot4\pi\epsilon_0$. If $\alpha=e^2=\epsilon_0/3(4/3\pi c^3)$, accordingly the quintessential equation for α is structurally given by: $2\pi/\alpha=m^q[3\Theta]^2$ (where $\Theta=4/3\ \pi c^3$; see The Structure of the Electron and Matter), we must now take into account the effects of gravity, as above, thus:

$$2\pi\alpha/m_q[3\Theta]^2\div(1_2\pi r'')^2=0.007297353$$

[0281] Where the gravitational term for the increase in radius r" allows the mathematical derivation of $\alpha=0.007297353$, and the above equation is in agreement with the conventional experimental value for $\alpha=0.007297353$ to the nearest 9 decimal places.

[0282] Hence the term $(1_2\pi r'')^2$ is in accordance with these observations for the effect of gravity on electromagnetic forces. To a maximum accuracy governed by current knowledge of the mass of the Earth and the Gravitational constant and thus the term for the gravitational increase in radius r'. These observations can also be used to accurately predict the magnetic moment of the electron

[0283] Thus the presence of the fine structure constant can now be further understood, by deriving the constant from first principles; specifically from the actual dimensional conformation for the charge of the electron: $e=[\epsilon^0/3(4/3\pi c^3)]^{1/2}$ (eq. 6).

[0284] Overall the fine structure constant α (allowing for the term r' which is the general relativistic increase in the radius of the Earth due to gravitation) is given by none other than the formula for the mass of quintessence and from the structure of the electron, which can now be derived from first principles to seven decimal places or more.

[0285] Quantum Gravity and the Electron Magnetic Moment

[0286] The theoretical origin and nature of magnetism remains obscure in current electromagnetic theory. An explanation suggests these magnetic effects are produced by photons, although no photons have ever been observed. To get round this difficulty it is postulated by physics that magnetism results from "virtual" photons. However, Maxwell's equation for electromagnetism states that the photon has no net magnetic effect.

$$\delta B_x/\delta B_y/\delta y+\delta B_z/\delta z=0$$

[0287] Thus magnetism could not, by the above standard equation, be derived from a photon real or virtual.

[0288] In addition observational data suggests that black holes have powerful magnetic fields and as in theory photons are unable to escape from black holes (except for small quantities in the form of Hawking radiation), it would be difficult to explain these magnetic fields on the basis of photon emission.

[0289] Einstein postulated that magnetism was merely due to special relativity .sup.(ref 17). The postulate for the nature of magnetism in these current observations, states that the magnetic force results from relativity due to none other than the phased emission of gravitons (why postulate two invisible forces, magnetism and gravity, when one, the graviton, will do). This view as previously discussed (Quantum Gravity and Electromagnetism) is entirely compatible with standard relativity[ref 19]. Thus with the graviton origin of magnetism, the equation for the magnetic moment of the electron should have an expression in terms of quintessence and in turn the gravitational force and in particular the graviton.

[0290] The standard term for the magnetic moment of the Bohr Magneton (SIB) is:

$$\mu B=eh/4\pi m_e$$

[0291] In standard quantum mechanics the Bohr Magneton, μB, however, needs to be corrected to agree with experiment. The "correction factor" is termed "ϵ"; where $\epsilon=(\alpha/2\pi)-0.328\alpha^2/\pi^2=0.001159641$. Thus theory reveals μ_e, the magnetic moment of the electron where:

$$\mu_e=(eh/4\pi m_e)[1+(\alpha/2\pi)-0.328\alpha^2/\pi^2]$$

[0292] The conventional derivation of the term ϵ above, is given from the fine structure constant, $(\alpha/2\pi)$ which is theoretically consistent. However, a rather arbitrary mathematical correction term; $0.328\alpha^2/\pi^2$ needs to be used in this standard equation. This appears ad hoc and needless to say, more accurate measurements show, the electron magnetic moment to the Bohr magneton ratio, $1+\epsilon=1.001159652$, which suggests the correction factor is indeed incorrect. Nevertheless, this correction factor is essential for "renormalisation" and thus for quantum mechanics to work.

[0293] Quantum gravity readily explains the discrepancy between the theoretical Bohr Magneton (μB) and the actual measured magnetic moment of the electron (μ_e). In accordance with the above chapter (Quantum Gravity and the Charge of the Electron)

[0294] Thus the significant mathematical discrepancies can be removed by accounting for the effects of quantum gravity.

[0295] Thus taking the charge of the electron (e), using the equation for the Bohr magneton and the effects of quantum gravity such that gravitational change in radius is r". The magnetic moment of the electron is given by:

$$\mu_e=(eh/4\pi m_e)(1+[\alpha/2\pi\div(1+r'')])$$

[0296] This gives an electron magnetic moment to Bohr magneton ratio of 1.00115968. Thus the mathematical term for the magnetic moment of the electron is given, avoiding the arbitrary and dubious term $0.328\alpha^2/\pi^2$ used in the standard equation, simply by accounting for quantum gravity.

[0297] It is now possible to unite the equations for gravity and magnetism by substituting the fundamental key equations of quantum gravity. Thus if: $h=3m_qc^2$ (eq. 1b) and $m_e=m_qn_q$ (eq. 2). Then we can express the magnetic moment of any particle with the charge of the electron, including the proton, in terms of the number of quintessences (n_q) in that particle.

$$\mu B=ec^2/(4/3\pi n_q); \tag{47}$$

[0298] Given that the postulated structure of the graviton is: ($\phi=\pi/c$) (eq. 42), then substituting we have

$$\mu B=3ec/4\phi n_q \tag{48}$$

[0299] Showing that the equations for the magnetic moment are compatible with the gravitational equations given earlier. Principally, the quintessential equations now allow the determination of the magnetic moment of any charged object from the equation for the graviton and directly from the number of quintessences it contains. In conventional physics the magnetic moment of the electron requires a correction factor, $(1+(\alpha/2\pi c)-0.328\alpha^2/\pi^2)$, to derive the correct experimental value. These observations herein, indicate that the correction factor is more logically (1+r"), where r" is the general relativistic increase in radius around a gravitational body. This suggests that magnetism is not only affected by gravity, but can, as shown as above, be derived using the quantum gravitational equations.

[0300] Quantum Gravity and Special Relativity

[0301] Ordinary matter passing through the lattice would produce gravitons which would interact with space-time as described by general relativity. The quantity of gravitons would be determined by the apparent mass and in turn these would apparently curve space time. The geometry of this "curvature" is elegantly described by general relativity using Riemann geometry, specifically using metric tensors. Intriguingly the metric tensor is not a single number, but at each point in space time it is required to consist of a collection of ten numbers, Consequently, ten dimensional space-time hypotheses, such as this or superstring theory, may automatically yield general relativity

[0302] General relativity is indeed very elegant, nevertheless there was a logical step yet to answer. That is, how do gravitons shape space time? This can now be readily answered by considering the interaction of a three dimensional space time lattice with gravitons themselves to produce the effects of gravity. The effects of gravity are as such to compel a body in motion towards the gravitational object and to a much smaller extent visa versa. This effect can only be produced If gravitons repel quintessence (the constituents of the 3D lattice). Indeed, it has been stated that in order to explain cosmic inflation and the "flatness" of the Universe that quintessence must shun (or be shunned by) matter.

[0303] In descriptive terms a body close to a large mass will have a tendency to move toward it because the three dimensional lattice would be less dense as it approached the surface of the large mass. Overall there would be less resistance to motion in the direction of the large mass, and the motion in this direction would be facilitated by the vibration of quintessence.

[0304] In general relativity the principle governing motion is the geodesic of least distance, this can be re-expressed using similar equations using least action. Furthermore, the concept of motion due to the vibrations of quintessence is more logically and experimentally compelling.

[0305] These observations can now be used to link general and special relativity. Thus as we approach the speed of light, the mass of an object travelling through the space-time lattice would approach infinity, directly because the number of quintessences passing through a body would increase with increasing velocity, hence the equation:

$$m'=m_0/(1-v^2/c^2)^{1/2} \tag{50}$$

or

$$m'=m_0/(1-v^2\,[\mu_0\epsilon_0])^{1/2} \tag{50a}$$

[0306] In turn this would generate increasing gravitons and accordingly this would explain the observed effects of special relativity. Time itself is due to passage through the space-time lattice, and where the space-time lattice is dispersed by gravitons, time and length are reduced with increasing velocity and hence increasing space-time lattice dispersion, similar to the way in which gravity alters space-time

[0307] As a result:

$$t'=t(1-v^2/c^2)^{1/2},\ l'=l(1-v^2/c^2)^{1/2}$$

[0308] Thus resulting in the effects of special relativity.

[0309] Quintessence and Black Holes

[0310] To address the relationship of the space-time lattice to gravity directly, it is important to discuss the concept of quintessence with regard to general relativistic equations. The standard general relativistic equation for the apparent increase in radius (r) due to the curvature of space time around a gravitational object, which has also been previously derived from first principles (eq. 36), is:

$$r'=GM/3c^2 \tag{34}$$

[0311] This can also thus be written as:

$$3r'=GM[\mu_0\epsilon_0] \tag{51}$$

[0312] This standard equation, is in keeping with the above observations. Specifically, as the mass increases, ϵ_0 increases, in turn the radius will appear to increase (relative to π).

[0313] The above observations now allow us to examine the effects with regard to the interior of black holes themselves. The event horizon would represent a critical density for quintessence, in which light could not escape. The Schwarzschild radius would now be given by:

$$R_s=2GM[\mu_0\epsilon_0]$$

[0314] The event horizon will occur at the point at which there is less resistance to circular motion than motion in a

straight or partially curved line. Given that π is proportional to $1/\epsilon_0$. The event horizon should occur when the permittivity has increased by a factor of π.

[0315] Effectively because the permittivity of free space rises, π decreases. This is entirely in keeping with general relativity which predicts the effective change in the ratio of the radius to the circumference as given by the conventional equation, where r', is again the apparent change in radius.

$$r=GM/3c^2$$

[0316] Hence π will effectively decrease as we approach the event horizon of a black hole, When π decreases to 1, the circular circumference is equal to the diameter and moreover, inside this limit it is shorter for light to travel in a circle. Thus light cannot escape the event horizon.

[0317] This can give us great insights into the workings of space-time, for flat Euclidean space the standard equation is:

$$e^{i\pi}=-1$$

[0318] In accordance with general relativity, the ratio of the radius to the circumference changes in a gravitational field, and effectively $\pi=1$, at the event horizon, thus the boundary condition for the shape of space-time at the event horizon now has the direct equation:

$$e^{f}$$

[0319] Within a black hole as the permittivity of space increases by a factor of 2π an object within it will complete two rotations rather than travel in a straight line. In effect exceeding the speed of light by 2π. Hence, the condition for space-time is represented by the equation:

$$e^{i/2}$$

[0320] Thus an increase in the permittivity of free space by a minimum factor of π, to produce a black hole is estimated to result from an increase in mass by a factor of approx. 10^6 (the ratio of the mass of the earth and that of a putative black hole).

[0321] Continuing with the subject of a black hole, according to the model inside the black hole, the gravitons produced by the matter present would be in equilibrium with the density of the space-time lattice. Increasing the rate of rotation of the matter in the black hole for instance would thus increase the production of gravitons and its effective mass and increase the radius of the event horizon. A density gradient of the space-time lattice would continue to exist within the black hole. Progressively closer to the center of a black hole matter itself would be increasingly compressed and the spherical structure of the quasi electron would be predicted to collapse. This collapse would result in the formation of an exotic form of matter in the form of pure quintessence in a black hole.

[0322] This pure quintessence would produce the singularity at the centre of the black hole. The larger the black hole in terms of mass the more pure quintessence would exist at its core.

[0323] Quintessence and the Big Bang

[0324] Quintessence theory not only predicts the occurrence of the Big Bang, but allows a prediction for the value of the entire mass of the Universe, from first principles.

[0325] In accordance with quintessence theory the big bang resulted from the explosion of an immense black hole singularity, which was constituted from pure quintessence.

[0326] On the basis of quintessence, there will be a critical mass for Big Bang event; thus if entire space-time between quintessence is compacted so that no further quintessence can be accommodated, the addition of further quintessence would destabilize the immense black hole, resulting in the Big Bang.

[0327] It is possible to predict this critical mass, using the radius of quintessence as a benchmark. Given the nine spatial parameters present in the metric tensor, used in general relativity we find that the actual formula for the radius of quintessence; r_q^2, is mathematically in agreement with general relativistic theory when:

$$9r_q^2=Gh/C^3 \quad (33)$$

[0328] This again supports the 9 dimensional view of space (so crucial in superstring theory). Moreover, the size of the vibrations of quintessence can thus be calculated as:

$$r_q=1.35\times10^{-35}\ \text{m} \quad (33a)$$

[0329] The volume of each quintessence is thus:

$$4/3\pi r_q^3=1.0306\times10^{-104}\ \text{m}^3 \quad (33b)$$

[0330] So to be accommodated within unit volume of space time, with no intervening apparent space time, (given that each of 9 overlapping quintessences are required) would require approx.

$$9\times10^{104}\ \text{quintessences}$$

[0331] As the mass of quintessence is $m^q=h/c^2=7.373\times10^{-51}$ kg sec (eq. 1). Then the mass of the Universe, to two decimal places, is:

$$1.18\times10^{53}\ \text{kg} \quad (33c)$$

[0332] This is in close agreement with a recent estimate of the mass of the Universe from COBE and other satellite data, which estimates the mass to be 100 trillion trillion trillion trillion tonnes (10^{53} kg)

[0333] Moreover, the early formation of the galaxies can be readily explained, it is likely that in such a big bang some very small black holes might have prevailed and that these formed the seeds of the galaxies we see today.

[0334] The event horizon, calculated from the Schwartzschild radius, of such an immense black hole is about 10^{26} m, which would have allowed Guth's inflationary component to the early expansion of the Universe.

[0335] In addition, inflation may result directly from the observation that once electrons have formed from the primordial soup of quintessence, they emit gravitons which in turn repel space time, which might also result in another cosmic inflationary cycle.

[0336] Most importantly quintessence theory explains the Big Bang from first principles and is capable of accurately predicting the mass of the Universe.

[0337] The Nature of Energy

[0338] These observations allow a fundamental understanding of energy. The quantum physical, minimum component of energy is Planck's constant; h. To define the minimal component of mass, using the standard energy equivalence formula; $E=mc^2$, such a minimal mass (m_q)

would be required to have the value equivalent to; $m_q=h/c^2$ (1). The total mass of a system (m) would then be; $m=m_q n_q$, where (n_q) is the number of these minimal units. Thence, the total energy of a system can be derived from the minimal energy; h, multiplied by the number of these energy units (n_q). Thus as, $E=mc^2$, then also $E=m_q n_q c^2$ and substituting $m_q=h/c^2$, the energy equivalence formula has the more logical formulation;

$$E=hn_q \tag{1a}$$

[0339] Thus the energy of a system is equivalent to the minimal energy unit; h, multiplied by the number of those minimal energy units (n_q)

[0340] This leads directly to a deeper understanding of wave particle duality and the wave nature of matter.

[0341] This is encapsulated by the quintessential energy formulae

[0342] As conventionally $\beta \cdot E/c=p$, then

$$\lambda=h/p=hc/\beta E \tag{2}$$

and

$$E=hn_q \tag{1a}$$

then

$$\lambda=c/\beta n_q \tag{2b}$$

[0343] Importantly, as indicated by equation (2b), energy having no quintessence; would have a wavelength of infinity. Specifically pure energy containing no quintessences, would have a lambda of infinity. According to quantum mechanics an infinite wavelength would result in the probability of that energy being anywhere. As energy itself has no electrical charge it would not be impeded by the permittivity and permeability of the three dimensional space-time lattice. Moreover, energy would not be detectable in three dimensional space-time, unless it interacted with matter, as in the EPR experiments. Indeed, energy is not observed when not bound to any form of mass or particle.

[0344] Thus equation 2b, takes us to our original assertion regarding the existence of pure energy.

[0345] Energy is not Bound by the Space-Time Lattice

[0346] Thus, as the EPR experiments suggest the existence of energy separate from matter and thus separate from the three dimensional space-time lattice, it is interesting to find that experiment suggests the existence of free energy in a continuum separate from space time and matter to produce the effects of quantum teleportation.

[0347] This is not, however, teleportation across an additional dimension, this is a term to describe in partially familiar terms the dissociation of energy from the three dimensional space-time lattice. As time is inextricably linked to each dimension of space, the effects of energy would be inextricably linked to the events, such as the creation of virtual particles, we see interacting within space-time. It is unlikely that observers have any direct day to day experience to explain quantum events. Nevertheless, quintessence theory may have given us a window into the hitherto hidden workings of the Universe. Thereby, the mystery of the uniformity of the Universe, across distances which the speed of light could not apparently traverse, is readily explained by the fact that the free energy contained in the Universe is not bound by the space-time lattice.

[0348] In the case of light, due to the exceedingly small masses involved, there would be relatively easy exchange of matter with free energy within a photon. This would make the photon the ideal experimental tool to look for energy which is not bound by matter and in turn energy which is not bound in space-time. Indeed, very recently Furusawa et al. have reported to have observed the transference of energy as photons from A to B, without those photons traversing space-time. This finding which has been supported using other experimental techniques, is very important as it suggests the existence of such free energy.

[0349] Overall, quintessence theory gives an a priori explanation for the concept of mass, the elementary particles, the forces of nature and quantum effects. It can equally be used logically to explain the inner physics of a black hole, the missing mass in the Galaxy, the expansion of the Universe, Guth's inflationary theory and predicts the Big Bang, from first principles.

[0350] Part IV: Applied Theory with the Intent to Create Closed Timelike Curves

[0351] Electron Bombardment of the Photosphere to Induce Gravitational Shift

[0352] Leveraging the above relationship between mass and quintessence we derive that if an electromagnetic radiation with velocity v strikes the event horizon singularity of rest inertial mass mi, and U is the electromagnetic energy absorbed by the singularity, then, according to Maxwell's prediction, a momentum q=U/v is transferred to it. Mass shift $d \cdot m_b$, dependent on the external electromagnetic energy, equals the inertial mass shift dependent on the increment of energy in the particle. Since in this case the inertial mass shift does not depend on velocity V, i.e., it is related only to the momentum q absorbed, it can be obtained by making p=0 in variation $\Delta H=H'-H=c[q^2+(m_i c)^2]^{1/2}-(m_i c)^2$ from the particles inertial Hamiltonian. Consequently, the expression of d_{m_p}, is written as:

$$d_{m_p}=\Delta H/c^2=m_i\sqrt{1+U/m_i c^2\left[\varepsilon_r u_{r/2}\left\{\sqrt{1+d/w\varepsilon^2+1}\right\}^2=1\right.}$$

[0353] Comparing now the expression of m_i and m_g we have $m_g=m_i-2dm_b$. By replacing m_b in this equation, given by equation above, we obtain the expression of the correlation between gravitational mass and inertial mass, i.e.,

$$m_g=m_t-2\sqrt{1+U/m_t c^2\left[\sqrt{\varepsilon_r u_{r/2}\{[d/we]^2+1\}^2-1}\right.}\cdot m_t$$

[0354] We see that only in the absence of electromagnetic radiation on the event horizon (U=0) is the gravitational mass equivalent to the inertial mass. Note that the electromagnetic characteristics, e, m and s do not refer to the singularity itself, but to the outside medium around the singularity (photosphere) in which the incident radiation is propagating.

[0355] Stable CTC Solution From Modified M-Theory

[0356] Our innovation is a method of creating an event where a dual membrane or dual boundary condition exists. We do this using generalization from a Misner space which has been modified if one analytically continues the maximal extended Misner Metric so that $ds^2=-du^2+dw^2+(dx^2)^2+(dx^3)^2$ to the Euclidean section so that u=iota zeta we obtain a Misner instanton on the section where w and zeta are both real. The Euclidean time, t, and the closed spacelike coordinate are both periodic, the later having a period of $2\Pi t^2$. Going back to the Lorentzian sector we find that the period of the closed coordinate becomes linearly dependent on the physical time. Using automorphic fields in the Hadamard function one can obtain a quantized condition for time. This gives us a figure on the order of the Plank time. This confines such a stable wormhole condition to the general area of the Plank scale in its modified form which is that area defined by the Membrane itself. As such, these Plank scale wormholes are the true source of the true virtual aspects of the vacuum and quintessence. The effects of the dual singularity system can be viewed as an overlap zone of two distinct space-times which have boundary conditions on both sides. As an object accelerates towards C it is this same boundary or horizon that object encounters when the Time defined horizon solution for the universe is imposed. At this point drawing upon Van Den Broeck's alterations for this space-time geometry to create a single closed Friedman-Robertson-Walker spacetime the space-time geometry can be represented by this equation $ds^2=dct^2-B^2[(dx-\beta fdct)^2]+dy^2+dz^2$ B can be any function that is large near the displacement device. We then consider this transformation as extended to four dimensional space-time with arbitrarily time dependent acceleration. We also present the device frame energy density T00 from a four dimensional calculation and note that the 4d classical calculation is everywhere finite.

[0357] Consider an Alcubierre interval given according to a remote frame's cylindrical coordinates by:

$$ds^2=(1-\beta^2f^2)dct^2+2bfdctdz-dz^2-dr^2-r^2df^2$$

where f is a function that is 1 at the location of the device and zero far from it.

[0358] Starting out with the first transformation z'=z−òct beta dct. Where b is first expressed here as a function of time ct. With some algebra for simplification this results in

$$ds^2=[1-\beta^2(1-f)^2]dct^2-2b(1-f)dctdz'-dz^2-dr^2-r^2df^2$$

Let g=1−f and this becomes

$$ds^2=[1-\beta^2g^2]dct^2-2bgdctdz'-dz'^2-dr^2-r^2df^2$$

[0359] Notice that this returned the original intervals form with a reversal on the sign of b and a reversal of the boundary conditions for g. Now we notice that at r=0, this interval becomes the interval for special relativity transformed to cylindrical coordinates. Thus, we have found a transformation to a frame based local to the device. One can also verify that in these coordinates the relevant affine connections vanish at r=0. a further proposed modification to this field we will reintroduce a time dilation term into the devices frame's interval. Only we will use different boundary conditions for it. We will keep A=1 both at the location of the device, and far from it, but allow it to become large in the warped region. This is achieved by the simplest means possible in the proposed field generation method. Since rotating kerr singularity under bombardment would produce an equal negative energy region. With the effect focused outward away from the device slightly by the relative alignment of the kerr singularity the actual inward going portion of such fields would overlap and cancel their effect out in the region of the device. This yields a space normal time region, which is again restored at the fringes of the outward going field. From the standpoint of a geometric picture of space-time around the device and extending outwards one has actually created a dual event horizon situation as far as time goes. The inner one is the shell of the canceled out field inside of which normal time flow is restored. The outer one is formed at the boundary where normal time resumes and within which we have a negative energy field.

SUMMARY OF THE INVENTION

[0360] The present invention is A method for the generation of a pseudo 2+1 dimensional anti-de Sitter space (DeDeo & Gott 2002) using two Kerr type positively charged rotating dilation singularities where one singularity is maintained as a axis of rotation or "reference" singularity, and the other "target" singularity is subjected to a differential electron flow so as to simultaneously pass above the photosphere of said singularity in its direction of rotation—prograde orbit—and contrary to its direction of rotation—retrograde orbit—to release a directed flow of gravitons in a sinusoidal oscillation simulating a rotational effect of the "target" singularity around the axis of rotation provided by the "reference" singularity, resulting in the creation of timelike curves in a compact time-oriented manifold permitting topology change from one spacelike boundary to the other in accordance with Geroch's theorem (Geroch 1967) which results in a method for the formation of G odel-type geodesically complete spacetime envelopes complete with closed timelike curves.

BRIEF DESCRIPTION OF THE DRAWINGS

[0361] **FIG. 1** is a schematic representation of the mechanism employed to house the components necessary to generate a 2+1 dimensional anti-de Sitter space, resulting in the creation of timelike curves in a compact time-oriented manifold

[0362] **FIG. 2** is a schematic representation of the G odel-type geodesically complete spacetime envelope created by the mechanism complete with closed timelike curves

DETAILED DESCRIPTION OF THE INVENTION

[0363] Principles of Gravity Distortion Time Displacement Systems

[0364] The theoretical understanding of quantum gravity allows the design of time displacement systems from first principles. It is unlikely that gravitons or Kerr singularities can be controlled in a precise way using current technology. Nevertheless, an understanding of three dimensional space-time and matter, does allow the design of elementary displacement systems. That is, systems whose displacement rely on direct warping space-time as opposed to the ejection of material to provide thrust resulting in time dilatational effects.

[0365] The background for these systems are already partially understood and quintessence theory allows their

further development. For this invention, the formation of black holes in the laboratory represents a crucial step in understanding the mechanisms that underlay gravitational physics and in turn the warping of space-time. The existence of black holes permits the localized application of the Axial torsion Spin-Rotation Coupling Effect (Zhang & Beesham 2002) resulting in a Rotating Frame with Relativistic Factor (Zhang 2003) which can be used in the creation of a Alcubierre space time bubble under the Van Den Broeck modification of the Alcubierre geometry (Van Den Broeck 1999) resulting in a method for the generation of a pseudo 2+1 dimensional anti-de Sitter space (DeDeo & Gott 2002) using two Kerr type positively charged rotating dilation singularities where one singularity is maintained as a axis of rotation or "reference" singularity, and the other "target" singularity is subjected to a differential electron flow so as to simultaneously pass above the photosphere of said singularity in its direction of rotation and contrary to its direction of rotation to release a directed flow of gravitons in a sinusoidal oscillation simulating a rotational effect of the "target" singularity around the axis of rotation provided by the "reference" singularity. In this instance the space-time lattice would be repelled by gravitons in such a way as to disperse space-time quintessence in a circular fashion around each of the singularities, producing multiple event horizons around the simulated axis of rotation provided by the reference singularity.

[0366] The release of gravitons from the target singularity is controlled by differentially governing the electron flow across the photosphere with the use of powerful electric currents. In turn the differential direction of flow across the photosphere of gravitons would determine the direction of motion through the space time lattice and the resulting time displacement from one spacelike boundary to the other in accordance with Geroch's theorem (Geroch 1967) when implementing this approach it is important to remember that the black hole is not excited by the smashing of the clump as it "hits" the horizon. The hole is rather excited when the metric perturbation associated with the clump is "felt" by the background metric. The excitation event therefore constitutes a smooth process whereby in-fall of a clump from .rmb and through r+ serves as a source in the Teukolsky (1973) equation for small perturbations to the Kerr geometry (with appropriate boundary conditions at r+ and r∞). This is an important distinction with a great deal of relevance to the practical engineering of the displacement unit since we need to gauge the "driving" of QNR modes in terms of an e_ective coupling from clump in-fall.

[0367] What results is a method for resonant driving of the quasi-normal ringing (QNR) wave modes of the Kerr geometry of the target singularity. The micro black hole hyper-accreting at rates ÿ M. 1 M□sec. 1 from a neutrino cooled disk is pushed through to oscillate near resonance of its (l,m=2, 2) quadrupole QNR frequency due to the in-fall of compact mass over-densities from the cusp in e_ective potential on a dynamical time scale. This mode is induced via induced magneto-rotationally induced fluid dynamics in the ultra-relativistic region of the flow bounded from below by the marginally bound orbit radius: rmb If the QNR modes are fed resonantly for a few seconds of hyper-accretion, the enhanced amplitude of the oscillations yields a very high rate of energy deposition into gravitational waves. Indeed, the integrated energy deposition is large enough to "evaporate" the equivalent of a factor of a few times the total rest mass-energy of a single clump into gravitational waves, which in turn interact with the reference singularity

[0368] Application of the method described in the previous section results in translation outside of the cosmological horizon, where F(R)<0. The topology of the resulting geodesic, for large constant R, is mathematically equivalent to a Euclidean cylinder of the condition R×Sn where T is the coordinate along the cylinder. I± are located outside the future/past cosmological horizons, where R is timelike and T is spacelike. In the case of a rotating Kerr black hole, there are two circular photon orbits that can exist in the equatorial plane and be exploited to create a tipler sinusoid. One is a prograde orbit moving in the same direction as the black hole's rotation, while the other is a retrograde orbit moving against the black hole's rotation. Their radii are respectively given by

$$r1=2M(1+\mathrm{Cos}(2/3\ \arccos(-|\alpha|/M)))$$

$$r2=2M(1+\mathrm{Cos}(2/3\ \arccos(|\alpha|/M)))$$

where a is the angular momentum per unit mass of the black hole. The orbits fall in the range M greater or equal to r1 greater or equal to 3M greater or equal to r2 greater or equal to 4M The fact that a prograde photon or in or case cooper pair with Bose characteristics orbits the black hole at a smaller radius than a retrograde one can be attributed to the well-known Lense-Thirring effect, i.e., the dragging of inertial frames due to the black hole's rotation which we control and influence via electromagnetic induced load coupling with the open magnetic field lines threading the BH horizon. This dragging would cause charged cooper pairs to revolve around the black hole relative to a static observer at infinity. Thus, to such an observer, a prograde cooper pair would have to orbit at a smaller radius to compensate for the 'extra' angular momentum acquired, while a retrograde one would have to orbit at a larger radius to compensate for the 'lost' angular momentum. Indeed, in the limit of zero rotation, these two orbits coincide at r D 3M, giving the single circular orbit of the Schwarzschild black hole. Now, recall that orbits around the Schwarzschild black hole are necessarily confined to a plane passing through its center, because of the spherical symmetry of the space-time. However, the Kerr black hole space-time has only an axial symmetry (in addition to being stationary), and this raises the possibility of non-planar orbits. One could, for example, contemplate the existence of spherical Boseon orbits—orbits with constant coordinate radii that are not necessarily confined to the equatorial plane—around the Kerr black hole. Such orbits would be a nontrivial generalization of the two circular photon orbits that lie in the equatorial plane. At first it may seem a little surprising that such spherical orbits could even exist, but there is an interesting reason as to why they are possible. Note that an object in a spherical orbit would, in addition to moving around the black hole in the azimuthal direction, be undergoing some periodic motion in the latitudinal direction. This is only possible if there is a conserved quantity associated with motion in this direction, just as angular momentum is necessarily conserved by its rotational motion in the azimuthal direction. (This result can be seen, for example, using action-angle variable) Now, because the Kerr space-time has only axial symmetry, geodesics in it should have only two constants of motion, namely energy and angular momentum. However, Carter discovered the remarkable fact that geodesics in the Kerr space-time possess a third constant of motion. It turns out that Carter's new

constant governs the motion of geodesics in the latitudinal direction, although it is not related to any obvious space-time symmetry. Thus, spherical timelike orbits, which assume eigenlike properties around the Kerr black hole, are possible and when coupled with charged Bosons may be exploited to manipulate the relative event horizons of the "target" singularity. The location and the temperature of the modified event horizon depend on the time, charge and angle of incidence of the cooper pairs. The Fermionic spectrum of Dirac particles displays a spin-rotation coupling effect due to the interaction between the particles with spin-1=2 and the black holes with rotation. The effects arise from the interaction between the spin of Dirac particles and the rotation of the evaporating black holes. The feature of this spin-rotation coupling effect is its dependence on different helicity states of coupled particles with spin-½ and its irrelevance to the mass of particles.

[0369] In order to design a mechanism for time displacement exploiting the Carter asymettry cited above we utilize two positively charged top spin rotating kerr type black holes aligned on demand to create a simulated rotational effect around a central axis provided by the "reference" singularity. In the case of the Kerr blackhole (singularity), this is accomplished by an inverse Blandford-Znajek (BZ) process utilizing the magnetic flux of open field lines connecting the horizon and an induced remote load. (Ding-Xiong Wang, Kan Xiao & Wei-Hua Lei, 2001) permitting the microscopic blackhole (singularity) to be rotated along its horizontal axis in at relativistic centrifugational speeds. A differential current is then applied in such a way as to pass through the entire photosphere in the desired direction. As a result the gravity field can be manipulated by three factors that affect it in distinct ways. Adding electric charge to the singularities increases the diameter of the inner event horizons. Adding mass to the singularities increases the area of gravitational influence around the singularities. Rotating and positioning the polar axis of the singularities affects and alters the resulting gravity sinusoid

[0370] In order to create a sinusoid capable of inducing a topology change from one spacelike boundary to the other in accordance with Geroch's theorem The electric charge in the upper half of the photosphere would be maximised. The electrons will have a vector in the left to right direction as the singularity spins clockwise. If a maximised current is applied to the singularity in the same direction this will result in a increase in the velocity of the electrons relative to the centre of gravity of the singularity, due to the flow of current. In turn, according special relativity and to the space-time lattice model, this wilt result in an increase in the relativistic mass if the electrons and in turn by general relativity an increase in the release of gravitons.

[0371] Conversely in the lower half of the singularity the electrons will have a vector of motion in the right to left direction due to the spin of the singularity. This will be relativistically slowed by the differential current applied in the same direction as the current above, and hence in the opposite direction to the direction of rotation. The charge can be separately applied and adjusted to ensure that the electrons are relativistically stationary relative to the centre of gravity. In turn this will minimize the relativistic mass and result in a decrease in the release of gravitons for the lower half of the singularity.

[0372] The overall result will be a greater release of gravitons in one direction and a lesser release of gravitons in the converse direction. The effect will be enhanced by the use of a multi-phasic current simultaneously applied. This will result in the release of multi-phasic gravitons which will disperse space time in the singularity with increase in density in the converse this effect can also be produced and supplemented with the use radio frequency pulses, The radio frequency pulses must be designed to produce a change in the spin of the particle to enhance the release of gravitons in the desired direction

[0373] With the use of large currents the drift velocity of the electrons across the photosphere could be greatly increased. Within this region the electrical resistance is virtually eliminated. Thereby allowing large currents to be induced with minimum total power output.

[0374] The result is the production of cooper paired electrons of high speed and hence high relativistic mass in the desired half of the singularity, whilst producing low speed and thus low mass paired electrons at the converse of the singularity, in accordance with special relativity. The imbalance in the rotating singularity will be continuously present creating a dynamic warping of space-time. In effect, the differential current flow, will produce differential graviton production and in turn, by general relativity, the warping of space-time

[0375] As the cooper pairs cross the photosphere, accretion of the Bose particles results. Near-hole accretion across the target singularity is then motivated by magneto-rotationally induced, ultra-relativistic disk dynamics in the region of the flow bounded from below by the marginally bound geodesic radius rmb. As the particles impelled have high spin values, a largely coherent magnetic field in this region has the dynamical implication of compact mass segregation at the displacement nodes of the non-axisymmetric, MRI modes. This results in prolific gravitational wave emission coincident with the gamma-ray stage. The gravitational wave emissions are then manipulated to influence the reference singularity to produce a variable gravitational sinusoid which is then used to mathematically approximate the gravametric distortion, inducing a topology change from one spacelike boundary to the other in accordance with Geroch's theorem.

BIBLIOGRAPHY

[0376] Mesoscopic behaviour of the neutral Fermi gas ^{3}He confined in quantum wires. S. L. Phillipson, A. M. Genault, S. N Fisher, G. R. Pickett, P. J. Y Thibault. Nature, 395: 578-580.

[0377] Direct Observation of d-orbital Holes and Cu—Cu Bonding in Cu_2. J. M. Zuo et al. Nature 401: 49-52.

[0378] The Foundation of the General Theory of Relativity, A Einstein. Translated from "Die Grundlage der Allgemeinen Relativittstheorie". Annalen der Physik, 49, 1916. Published in, Einstein, The Principle of Relativity, Dover publications, 1952.

[0379] Sidelights on Relativity. Ether and the Theory of Relativity Albert Einstein. Dover Publications 1983.

[0380] Inflation is dead long live inflation. George Musser. Scientific American, July 1998, p 9.

[0381] The flip side of the Universe. George Musser. Scientific American, September 1998, p 13.

[0382] The Fifth Element, Marcus Chown. New Scientist, Apr. 3, 1999, pp 29-32

[0383] The Quantum Universe. Tony Hey and Patrick Walters. Cambridge University Press 1987. (Solving the Shrodinger equation pp. 165-167).

[0384] Complex Numbers, Mathematics for Engineers. W. Bolton; Longman Scientific & Technical; Chap. Introducing Complex Numbers, p 1-11.

[0385] Unconditional Quantum Teleportation. A. Furusawa, I. Sorensen, S. L. Braunstein, C. A. Fuchs, H. J Kimble, E. S. Polzik. Science, Oct. 23, 1998. Vol. 282: 706-709.

[0386] Complete quantum teleportation using nuclear magnetic resonance. M. A. Neilsen, E. Knill, R. Laflamme. Nature, Nov. 5, 1998. Vol. 396: 52-55.

[0387] Experimental quantum teleportation. D. Bouwmeester et al. Nature, 390: 575-579 (1997).

[0388] Experimental realization of teleporting an unknown pure quantum state via dual classical and Einstein-Podolski-Rosen channels. D. Boschi, S. Branca, F. De Martini, L. Hardy, S. Popescu. Phys. Rev. Lett. 80: 1121-1125 (1998).

[0389] W. Tittel, J. Brendel, H. Zhuniden, N. Gisin, Phys. Rev. Lett. 81: 3563-3566. (1998) into the Vortex. Charles Seife. New Scientist, Oct. 24, 1998. p 7.

[0390] Direct observation of a fractional charge. R de Picciotto, M Reznikov, M. Heibium, V Umansky, G. Bunin, D. Mahalu. Nature, 389: 162-164.

[0391] Tables of Physical and Chemical Constants. Kay & Laby. Longman Scientific & Technical.

[0392] Physics in Focus. Michael Brimicombe. Section, Wave Mechanics; p 521. Nelson Special Relativity. A. P. French. Nelson. Chapter 8, Special Relativity and Electricity, pp 256.

[0393] Universe In Balance. Jeff Peterson. New Scientist, 168: p 27

[0394] The Accelerating Universe. Mario Livio. John Wiley and Sons, Inc. (2000)

[0395] Escape from Earth, Charles Seife, New Scientist, Feb. 6, 1999. p 6.

[0396] The Discovery of the Top Quark. Tony Liss and Paul Tipton. Scientific American; September 1997, pp. 26-41.

[0397] The Mystery of the Nucleon Spin. Klaus Rith and Andreas Schaifer. Scientific American: July 1999, pp 42-47.

[0398] And you're glue. Frank Wilczek. Nature; 400, pp 21-23.

[0399] The warp drive: hyper-fast travel within general relativity Miguel Alcubierre —Classical and Quantum Gravity, vol. 11, L73-L77, (1994)

[0400] Photon propagation in a stationary warp drive space-time: Claes R. Cramer (1995)

[0401] Some thoughts on the Implications of Faster-Than-Light Interstellar Space Travel: I. A. Crawford, Quarterly Journal of the Royal Astronomical Society, vol. 36, 205-218, (1995)

[0402] Physical and Cosmological Implications of a Possible Class of Particles Able to Travel Faster than Light: Luis Gonzalez-Mestres: Contribution to the 28th International Conference on High Energy Physics, Warsaw (Poland), (1996)

[0403] Warp drive and causality: Allen E. Everett, Physical Review D, vol. 53, 7365-7368, (1996)

[0404] A Superluminal Subway: The Krasnikov Tube, Allen E. Everett & Thomas A. Roman, Physical Review D, vol. 56, 2100-2108, (1997)

[0405] Quantum effects in the Alcubierre warp drive spacetime, William A. Hiscock, Classical and Quantum Gravity, vol. 14, L183-L188 (1997)

[0406] The unphysical nature of "Warp Drive", Michael J. Pfenning & L. H. Ford; Classical and Quantum Gravity, vol. 14, 1743-1751, (1997)

[0407] On the Possibility of a Propulsion Drive Creation Through a Local Manipulation of Spacetime Geometry; Vesselin Petkov; Presented at the 34th

[0408] AIAA/ASME/SAE/ASEE Joint Propulsion Conference, (1998)

[0409] 'Operational' energy conditions, Adam D. Helfer; Classical and Quantum Gravity, vol. 15, 1169-1183, (1998)

[0410] No warp drive; D. H. Coule; Classical and Quantum Gravity, vol. 15, 2523-2527, (1998)

[0411] Quantum Inequality Restrictions on Negative Energy Densities in Curved Spacetimes, Michael John Pfenning; Doctoral Dissertation, (1998)

[0412] Hyperfast Interstellar Travel in General Relativity; S. V. Krasnikov; Physical Review D, vol. 57, 4760, (1998)

[0413] Superluminal travel requires negative energies; Ken D. Olum; Physical Review Letters, vol. 81, 3567-3570, (1998)

[0414] Hyper-fast travel without negative energy, Eric Baird; (1999)

[0415] Warp drives, wavefronts and superluminality, Eric Baird; (1999)

[0416] A traversable wormhole, S. Krasnikov; (1999)

[0417] Speed Limits in General Relativity; Robert J. Low; Classical and Quantum Gravity, vol. 16, 543-549, (1999)

[0418] Null geodesics in the Alcubierre warp drive spacetime: the view from the bridge; Chad Clark, William A. Hiscock & Shane L. Larson; Classical and Quantum Gravity, vol. 16, 3965-3972, (1999)

[0419] A 'warp drive' with more reasonable total energy; Chris Van Den Broeck; Classical and Quantum Gravity, vol. 16, 3973-3979, (1999)

[0420] On the warp drive space-time, Pedro F. Gonzalez-Diaz; Physical Review D, vol. 62, 44005-44012, (2000)

[0421] On the (im)possibility of warp bubbles; Chris Van Den Broeck; Summary of talk delivered at STAIF-2000, (2000)

[0422] Reduced Total Energy Requirements for a Modified Alcubierre Warp Drive Spacetime; F. Loup, D. Waite & E. Halerewicz Jr. (2001)

[0423] Warp Drive With Zero Expansion, Jose Natario; Classical and Quantum Gravity, vol. 19, 1157-1166, (2002)

[0424] A Causally Connected Superluminal Warp Drive Spacetime; F. Loup, R. Held, D. Waite, E. Halerewicz, Jr., M. Stabno, M. Kuntzman & R. Sims, (2002)

[0425] Weak Energy Condition Violation and Superluminal Travel; Francisco Lobo & Paulo Crawford (2002)

[0426] On the Problems of Hazardous Matter and Radiation at Faster than Light Speeds in the Warp Drive Space-Time; C. B. Hart, R. Held, P. K. Hoiland, S. Jenks, F. Loup, D. Martins, J. Nyman, J. P. Pertierra, P. A. Santos, M. A. Shore, R. Sims, M. Stabno & T. O. M. Teage, (2002)

[0427] 2+1 gravity, chaos and time machines; Bengtsson I and Brannlund J, J. Math. Phys. 42 (2001) 3565

[0428] Time Travel in Einstein's Universe: the Physical Possibilities of Travel through Time, Gott J R; Houghton Mifflin Company, Boston, 2001

[0429] Gravitational memory of natural wormholes, Anchordoqui L A Trobo M L Vucetich H Zyserman F Mod Phys Lett A 15(6): 429-438, 2000

[0430] A traversable singularity-free wormhole. The gravitational memory phenomenon Gott time machines, BTZ black hole formation, and Choptuik scaling, Birmingham D, Sen S; Phys Rev Left 84 (2000) 1074-1077

[It is shown that the Gott time machine provides a mechanism for black hole formation]

[0431] Negative energy, wormholes and warp drive, Ford L H, Roman, T A; Sci Am: 46-53, 2000 Jan (reply: 2000 May p. 12)

[0432] Warp drive space-time; Gonzalez-Diaz P F; Phys Rev D62: 044005 (2000)

[0433] Misner-brane cosmology, Gonzalez-Diaz P F; Phys Lett B486: 158-164 (2000)

[0434] Kinks, energy conditions and closed timelike curves; Gonzalez-Diaz P F; Int J Mod Phys D 9(5): 531-541, 2000. (gr-qc/0007065)

[0435] Will we travel back (or forward) in time? Gott J R; Time, Apr. 10, 2000 pp 68-70

[0436] Charged universes of the Godel type with closed timelike curves; Klepac P and Horsky J, Class Quant Grav 17(13): 2547-2555, 2000

[0437] The Ori-Soen time machine, Olum K D; Phys Rev D61 (2000) 124022

[0438] How much energy do closed timelike curves in 2+1 spacetimes need?, Tiglio M H, Phys Rev D61 (2000) 08 1503

[0439] Energy conditions and their cosmological consequences, Visser M and Barcelo C gr-qc/0001099

[0440] Cylindrically symmetric spinning Brans-Dicke spacetimes with closed timelike curves Anchordoqui L A, Perez Bergliaffa S E, Trobo M L, Birman G S; Mod Phys Lett A14 (1999): 1105-1112

[0441] From spinning to non-spinning cosmic string spacetime; De Lorenci V A De Paola R DM Svaiter N F, Class Quant Grav 16(10): 3047-3055, 1999

[0442] Bounds on negative energy densities in static space-times, Fewster C J, Teo E; Phys Rev D 5910(10): 4016, 1999

[0443] Decohering a charged scalar field in a time-machine wormhole background, Flagga M SN; Int J Theor Phys 38(8): 2121-2161, 1999

[0444] Rotating black holes in unified theories; Gibbons G W. Progress of Theoretical Physics Supplement. (136): 18-28, 1999

[0445] Supersymmetric rotating black holes and causality violation; Gibbons G W and Herdeiro C AR, Class Quant Grav 16 (11) 3619-3652, 1999

[0446] Perdurance of multiply connected de Sitter space; Gonzalez-Diaz P F, Phys Rev D 59, 1999, 123513

[0447] Nonorientable spacetime tunneling; Gonzalez-Diaz P F, Garay L J, Phys Rev D 59 (1999) 064026

[0448] Can the universe create itself?; Gott J R, and Li X L, Phys Rev D 58, 1998, 023501. Also: astro-ph/9712344

[0449] Supersymmetric rotating black holes and causality violation; Holst S, Matschull H-J Class Quant Grav 16, 1999, 3095

[0450] Godel-type universes in string-inspired charged gravity; Kanti P, Vayonakis C E, Phys Rev D 60, 1999, 103519

[0451] Quantum field theory and time machines; Krasnikov S., Phys Rev D 59: 4010, 1999 Jan 14 Dec. 1998

[0452] Time machines constructed from anti-de Sitter space; Li L X, Phys Rev D 59 (1999) 084016

[0453] Wormholes in string theory, Vollick D N., Class Quant Grav 16(5):1599-1604, 1999

[0454] Time machines and the breakdown of unitarity; Antonsen F and Bormann K, Int J Theor Phys 37(9): 2383-2393, 1998

[0455] An exterior for the Godel spacetime; Bonnor W B, Santos N O, MacCallum M A H, Class. Quant. Grav. 15 (1998) 357-366

[0456] All the worlds a time machine, Chown M, New Scientist 157(2124): 38-41, 1998 Mar. 7.

[short exposition of M. Hadleys idea that an elementary particle is a local ST warp that it permits closed timelike curves. Hence general relativity could reproduce (explain) the effects of QM]

[0457] Quantum time machine; Gonzalez-Diaz P F Phys Rev D 58 (12): 4011, 1998

[0458] A design for a quantum time machine, Gray A quant-ph/9804008

{misleading title. On QM measurement problem; quantum "seeing into future."}

[0459] Time machines with non-compactly generated cauchy horizons and "handy singularities"; Krasnikov S V, gr-qc/9711040 (To appear in the proceedings of the 8th Marcel Grossman Conference)

[0460] A singularity-free WEC-respecting time machine, Krasnikov S V, Class Quant Grav 15 (1998) 997-1003

[0461] Self-consistent vacuum for Misner space and the chronology protection conjecture, Li L X and Gott J R, Phys Rev Lett 80, 2980, 1998

{Misner space stable to quantum flutuations; against CPC}

[0462] Decoherence caused by topology in a time-machine spacetime; Mensky M B and Novikov I D, Int. J. Mod. Phys. D5 (1996) 1-27

[0463] Godel metric as a squashed anti-de Sitter geometry, Rooman M, Spindel Ph, Class Quant Grav 15 (1998) 3241-3249

[0464] Testing causality violation on spacetimes with closed timelike curves; Rosenberg S, Phys Rev D 57(6):3365-3377, 1998

{politzer TM used to investigate the scattering experiment; interesting results on agreement with the no CTC case if there is enough TM's}

[0465] A new non-Hausdorff spacetime model for resolution of the time travel paradoxes; Sharlow M F Annals of Physics 263(2): 179-197, 1998

[0466] Particle creation near the chronology horizon; Sushkov S V, Phys Rev D 58, 1998, 044006

[0467] Divergences in the effective action of acausal spacetimes, Cassidy M J, Class Quant Grav 14 p 523, 1997 {shows that a self-consistent quantum vacuum for Misner space exist, allowing time travel}

[0468] The 1-loop instability of Misner space; Cassidy M J, Class Quant Grav 15 (8),

[0469] Superluminal subway—the Krasnikov tube; Everett A E and Roman T A, Phys Rev D 56 (4): 2100-2108, 1997

[0470] Time machines and the principle of self-consistency as a consequence of the principle of stationary action (ii)—the Cauchy problem for a self-interacting relativistic particle, Carlini A and Novikov I D, Int J Mod Phys D 5(5): 445-479, 1996 Oct.

[0471] Warp drive and causality, Everett A E, Phys Rev D 53 (12) pp 7365-7368, 1996 Ringholes and closed timelike curves, Gonzalez-Diaz P F Phys Rev D 54(10): 6122-6131, 1996

[0472] Time machine as four-dimensional wormhole; Guts A K gr-qc/9612064

[0473] Gott time machines in the Anti-de Sitter space; Holst S, Gen Rel Grav 28 (1996) 387-403

[0474] The quantum stability of the time machine, Krasnikov S V, Phys Rev D54 (1996) 7322-7327

[0475] Must time machine be unstable against vacuum fluctuations?, Li L X, Class Quant Grav 13 (1996) 2563-2568

[0476] Three-dimensional billiards with time machine, Mensky M B and Novikov I D, Int J Mod Phys D 5(2): 179-192, 1996

[0477] Decoherence caused by topology in a time-machine spacetime, Mensky M B and Novikov I D, Int J Mod Phys D 5(1): 1-27, 1996.

[0478] Improved time-machine model; Soen Y and Ori A, Phys Rev D 54(8): 4858-4861,

[0479] Unitarity restoration in the presence of closed timelike curves; Anderson A, Phys Rev D51 (1995) 5707-5715

[0480] Problems in time-machine construction due to wormhole evolution; Antonsen F and Bormann K, Int J Theor Phys 34 1995, p 2061

[0481] Time machines: the principle of self-consistency as a consequence of the principle of minimal action; Carlini A, Frolov V P, Mensky M B, Novikov I D, and Soleng H H, Int J Mod Phys D4 (1995) 557-580; Erratum-ibid. D5 (1996) 99

[0482] Nonlinearity in quantum theory and closed timelike curves; Cassidy M J, Phys Rev D52 (1995) 5676-5680

[0483] Unitarity of Quantum Theory and Closed Time-Like Curves; Fewster C J, Wells C G, Phys Rev D52 (1995) 5773-5782

[0484] Time machines without closed causal geodesics; Low R J, Class Quant Grav 12(5): L 37-L 38, 1995 May.

[0485] A remark on kinks and time machines; Yurtsever U, Gen Rel Grav 27(6): 691-693, 1995

[0486] The warp drive: hyper-fast travel within general relativity; Alcubierre M, Class Quantum Grav 11, L73 (1994)

[0487] Energy-momentum restrictions on the creation of Gott time machines; Carroll S M, Farhi E, Guth A H and Olum K D, Phys Rev D 50 pp 6190-6206, 1994

[0488] Kinks and time machines; Chamblin A, Gibbons G W and Steif A R, Phys Rev D 50(4) pp R2353-R2355, 1994

[0489] The breakdown of quantum mechanics in the presence of time machine, Goldwirth D S, Perry M J and Piran T, Gen Rel Grav 25 pp 7-13 1994

[0490] Quantum propagator for a nonrelativistic particle in the vicinity of a time machine; Goldwirth D S, Perry M J, Piran T and Thorne K S, Phys Rev D 49(8): 3951-3957, 1994

[0491] Time machine, self-consistency and the foundations of quantum mechanics; Gonella F, Found Phys Lett 7(2): 161-166, 1994

[0492] Time walk through the quantum cosmic string; Gonzalez-Diaz P F, gr-qc/9412034

[0493] Unitarity and causality in generalized quantum mechanics for nonchronal spacetimes; Hartle J B, Phys Rev D 49 (12) pp 6543-6555, 1994

[0494] (2+1)-dimensional spacetimes containing closed timelike curves; Headrick M P, Gott J R; Phys Rev D 50, 1994, 7244-7259

[0495] Time travel, Jackiw R.; Ukrainskii Fizicheskii Zhurnal. 39(1): 6-14, 1994.

[0496] On the classical stability of a time machine; Krasnikov S V, Class Quant Grav 11 (11): 2755-2759, 1994 Nov.

[0497] Isometries between Gott's two-string spacetime and Grant's generalization of Misner space, Laurence D, Phys Rev D 50 pp 4957-4965

[0498] Negative Energy Densities in Extended Sources Generating Closed Timelike Curves in General Relativity with and without Torsion; Soleng H H, Phys Rev D49 (1994) 1124-1125

[0499] Multiparticle solutions in 2+1 gravity and time machines; Steif A R, Int J Mod Phys D 3(1): 277-280, 1994

[0500] VanVleck determinants—traversable wormhole spacetimes; Visser M

[0501] Algebraic approach to quantum field theory on non-globally-hyperbolic spacetimes; Yurtsever U, Class Quant Grav 11 (1994) 999

[0502] Cosmic strings and chronology protection; Grant J DE, Phys Rev D 47, 2388 (1993)

[0503] Complex geometry, quantum tunneling, and time machines; Li L X, Xu J M and Liu L, Phys Rev D 48(10): 4735-4737, 1993

[0504] Quantum field theory in spaces with closed timelike curves; Boulware D G, Phys Rev D46 (1992) 4421-4441

[0505] Global structure of Gott's two-string spacetime; Cutler C, Phys Rev D 45 p. 487-494, 1992 {Cauchy horizons for Gott's machine (two-string space-time)}

[0506] "Cosmic flashing" in four dimensions; Ford L H and Roman T A, Phys Rev D 46, 1328-1339 (1992)

[0507] Unitarity of interacting fields in curved spacetime; Friedman J L Papastamatiou, Phys Rev D 46 4442, 1992

[0508] Feilure of unitarity for interacting fields on spacetimes with closed timelike curves; Friedman J L Papastamatiou, and Simon J Z, Phys Rev D 46 4456-4469, 1992

[0509] Particle creation for time travel through a wormhole; Kim S W, Phys Rev D 46 2428-2434, 1992

[0510] Time machine and self-consistent evolution in problems with self-interaction; Novikov I D, Phys Rev D 45 p. 1989, 1992

[0511] Structure of the singularity inside a realistic rotating black hole, Phys Rev Lett} 68, 2117-2120; Ori A (1992)

[0512] Simple quantum systems in spacetimes with closed timelike curves; Politzer H D, Phys Rev D 46 4470-4476, 1992

[0513] Quantum mechanics near closed timelike lines; Deutsch D, Phys Rev D 44 (10) p 3197-3217 1991

[0514] Billiard balls in wormhole spacetime with closed timelike curves: Classical theory; Echeverria F, Klinkhammer G and Thorne K S, Phys Rev D 44 (4) p. 1077-1099, 1991

[0515] Closed timelike curves produced by pairs of moving cosmic strings: Exact solutions; Gott J R, Phys Rev Left 66, 1126, (1991)

[0516] Inner structure of a charged black hole: An exact mass-inflation solution; Ori A, Rev Left 67: 789, 1991

[0517] On the outcome of Kerr-like collapse; Charlton N and Clarke C J S, Classical and Quantum Gravity 7 No. 5 (May 1990)

[0518] Cauchy problem in spacetimes with closed timelike curves; Friedman J, Morris M S, Novikov I D, Echeverria F, Klinkhammer G, Thorne K S and Yurtsever U, Phys Rev D 42 (6) 1915-1930, 1990 {QM fixes the TM classical billiard paradox (Polchinski's prdx. "CTC's may be not as nasty as people have assumed". The principle of self-consistency in time travel reviewed.}

[0519] Traversable wormholes from surgically modified Schwarzschild spacetimes, Visser M, Nucl Phys B 328 pp 203-212

[0520] Traversable wormholes: some simple examples; Visser M; Phys Rev D 39: 3182-3184 1989

[0521] Minimal acceleration requirements for time travel in Godel spacetime; Malament D, Journal of Mathematical Physics 26, 1985, p 774-777

[0522] Timelike nongeodesic trajectories which violate causality: A rigorous derivation; de Felice F, Nuovo Cimento 65 B pp 224-232, 1981

[0523] Rotating cylinders and the possibility of global causality violation; Tipler F J, Phys Rev D 9 pp 2203-2206, 1974

[0524] Global structure of the Kerr family of gravitational fields, Carter B, Phys Rev 174, p 1559, 1968

[0525] Complete analytic extension of the symmetry axis of Kerr's solution of Einstein's equations, Carter B, Phys Rev 141, p 1242, 1966

[0526] Acta Physica Polonica, Staruszkiewicz A 24 1963, p 734

[0527] An example of a new type of cosmological solutions of Einstein's field equations of gravitation, Goedel K, Rev Mod Phys 21 p. 447, 1949

[0528] Gravitational field of a distribution of particles rotating about an axis of symmetry; Van Stockum W J, Proc R Soc Edin 57 pp 135-154, 1937

[0529] Appendix A: The Synthetic creation of micro singularities. Throughout this patent application the creation of micro singularities has been maintained. While at first glance this may seem to be a deficiency in the patent application it is in fact an engineering problem that is in the process of being solved. In the International Journal of Theoretical Physics 41 (11): 2073-2090, November 2002 L. J. Garay published "Black Holes in Bose-Einstein Conden-

sates". In this article Garay showed that there exist both dynamically stable and unstable dilute-gas Bose-Einstein condensates that, in the hydrodynamic limit, exhibit a behavior completely analogous to that of gravitational black holes. This discovery coupled with creation of color glass condensate (CGC) an extreme form of nuclear matter in which a nucleus travels at near-light (relativistic) speed which flattens like a pancake in its direction of motion and spawns a large number of gluons hold the key to high energy singularity formation.

I claim:

1. A method for the generation of a pseudo 2+1 dimensional anti-de Sitter space comprising the steps of:

creating two Kerr type positively charged rotating dilation singularities, including the steps of

maintaining one of the singularities as a axis of rotation reference singularity,

maintaining the other of the singularities as a target singularity, and

subjecting the target singularity to a differential electron flow so as to simultaneously pass the differential electron flow above a photosphere of said target singularity in a direction of rotation thereof and contrary to the direction of rotation thereof, in order to release a directed flow of gravitons in a sinusoidal oscillation simulating a rotational effect of the target singularity around the axis of rotation provided by the reference singularity.

2. A method of generating a force around a body, comprising the steps of:

employing sinusoidal oscillations of electrical bombardment on the surface of one Kerr type reference singularity in close proximity to a second Kerr type target singularity to take advantage of the Lense-Thirring effect, wherein the electrical currents employed in the bombardment are passed simultaneously across the photosphere of said reference singularity in its direction of rotation and contrary to its direction of rotation to release a directed flow of gravitons in a sinusoidal oscillation simulating a rotational effect of the target singularity around the axis of rotation provided by the reference singularity;

creating timelike curves in a compact time-oriented manifold of Godel-type geodesically complete spacetime envelope under the Van Den Broeck modification of the Alcubierre geometry, resulting in the creation of timelike curves in a compact time-oriented manifold permitting topology change from one spacelike boundary to the other in accordance with Geroch's theorem.

* * * * *

US 20060144035A1

(19) United States

(12) Patent Application Publication

(10) Pub. No.: US 2006/0144035 A1

(43) Pub. Date: Jul. 6, 2006

St. Clair

(54) **PHOTON SPACECRAFT**

(76) Inventor: **John Quincy St. Clair**, San Juan, PR (US)

Correspondence Address:
JOHN ST. CLAIR
52 KINGS COURT, 4A
SAN JUAN, PR 00911 (US)

(21) Appl. No.: **11/027,969**

(22) Filed: **Jan. 3, 2005**

Publication Classification

(51) **Int. Cl.**
F03H 1/00 (2006.01)

(52) **U.S. Cl.** **60/203.1**; 60/204

(57) **ABSTRACT**

A spacecraft propulsion system utilizing photon particles to create negative energy over the hull in order to generate a lift force on the hull.

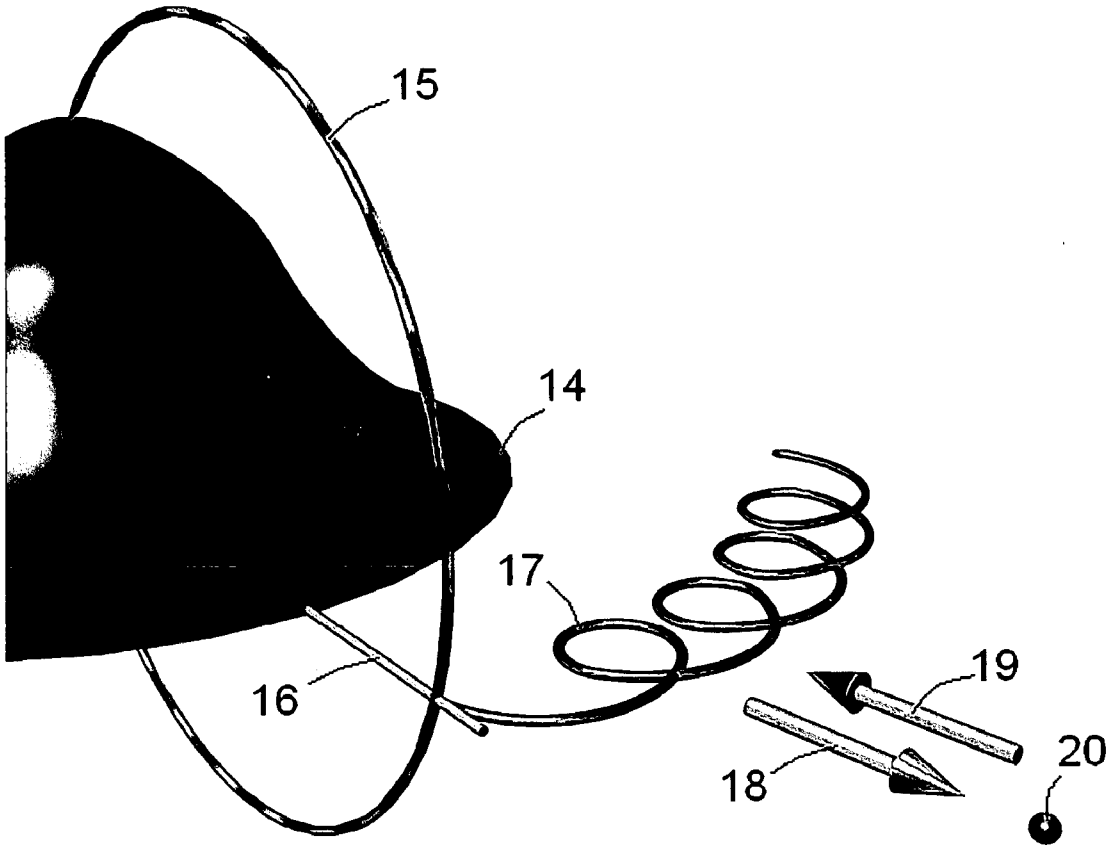

Figure 1

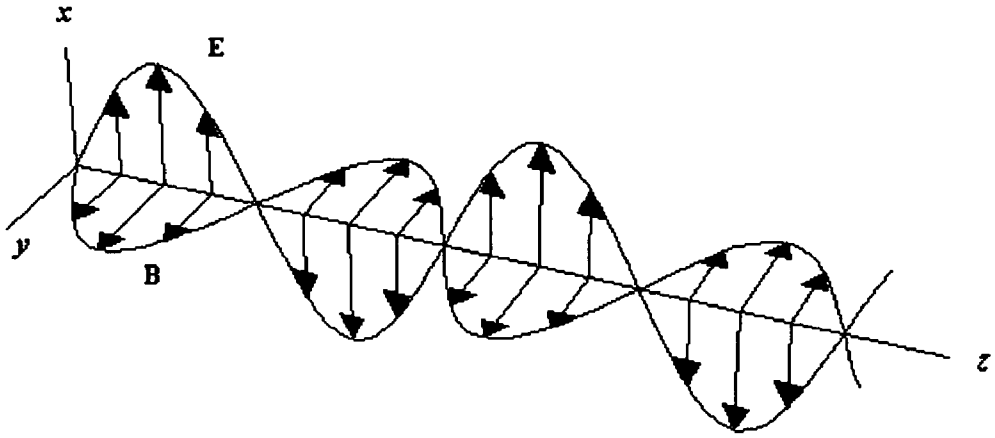

Figure 2

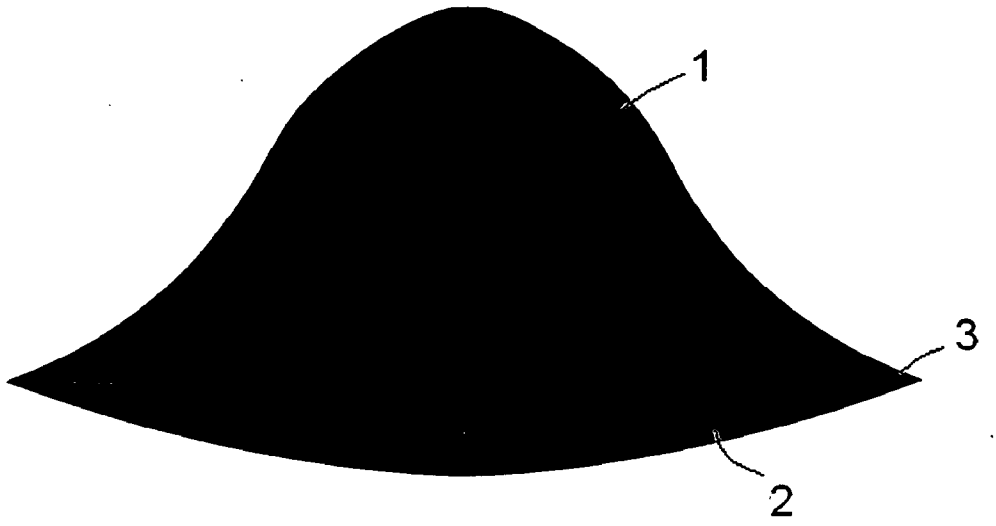

Figure 3

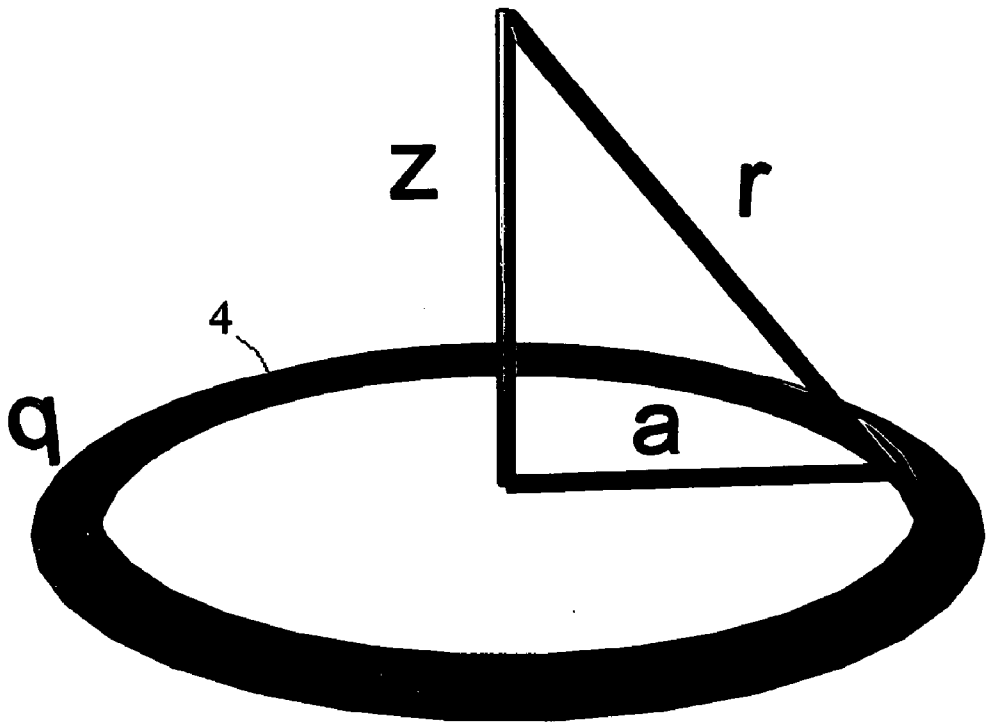

Figure 4

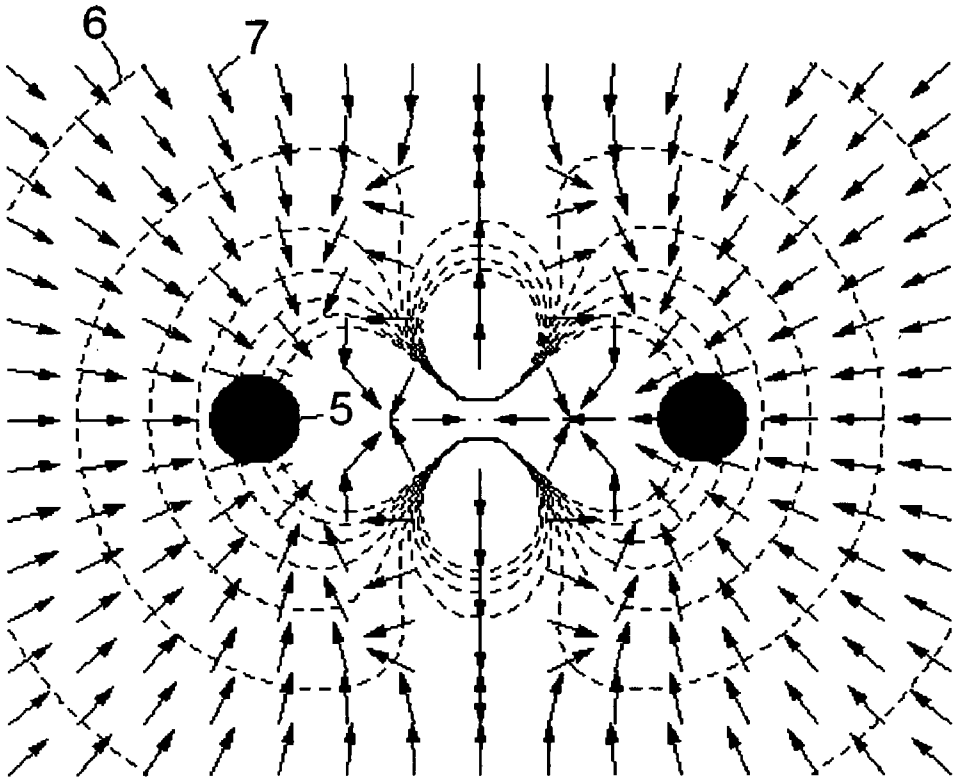

Figure 5

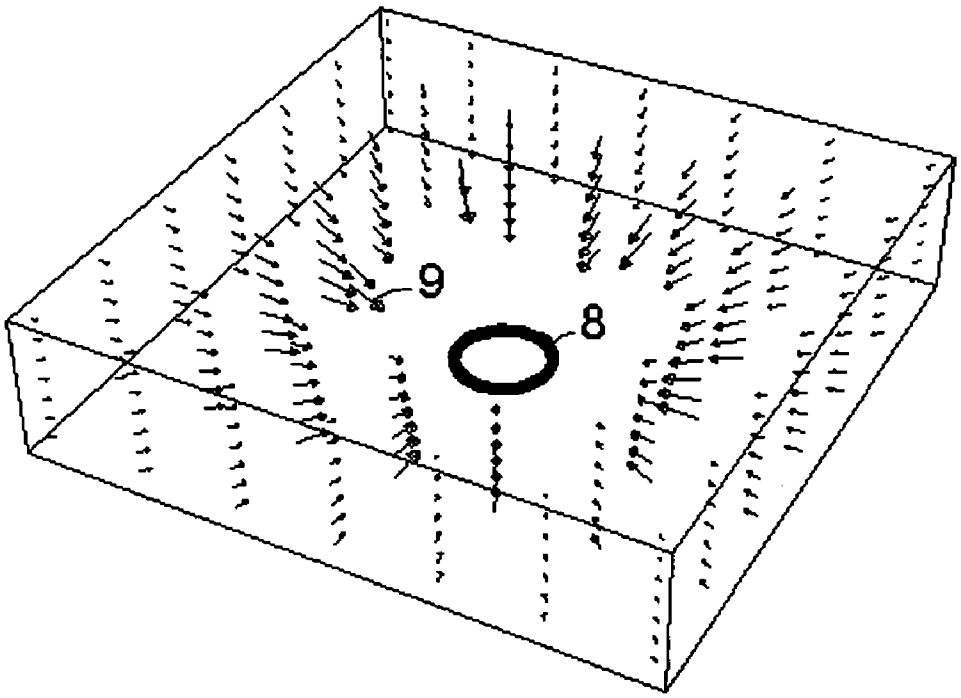

Figure 6

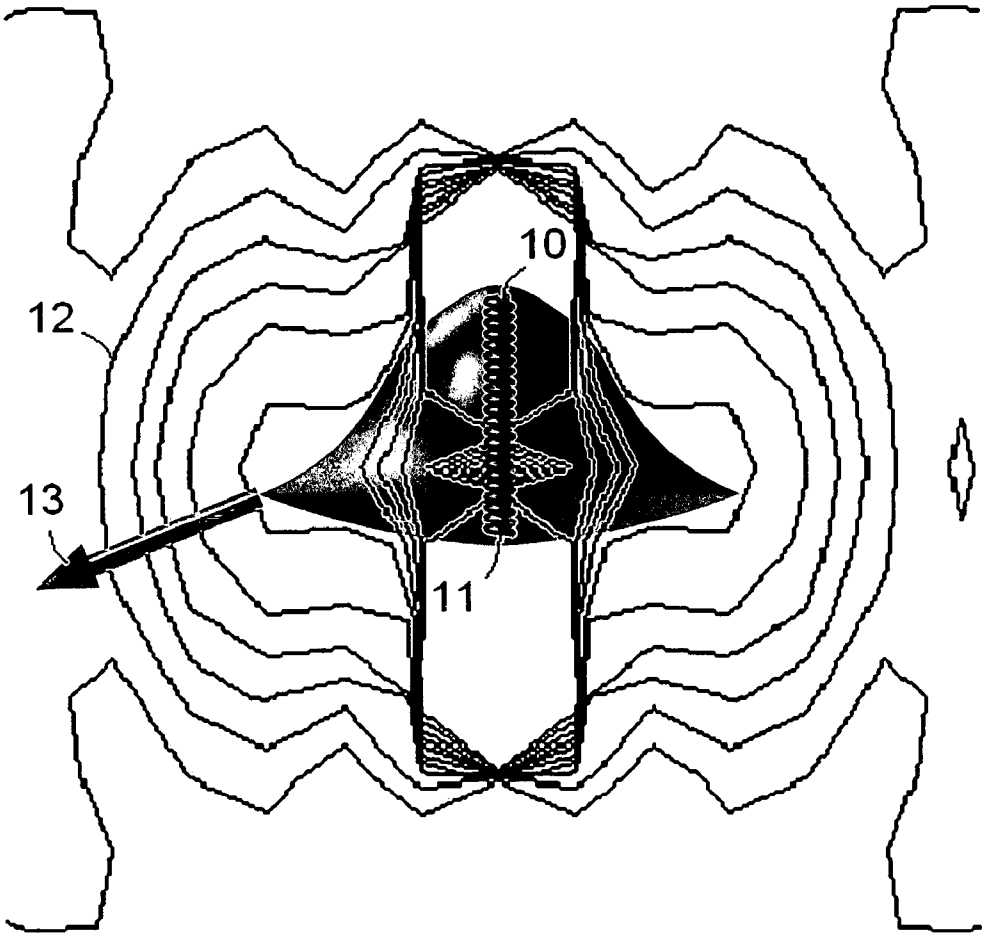

Figure 7

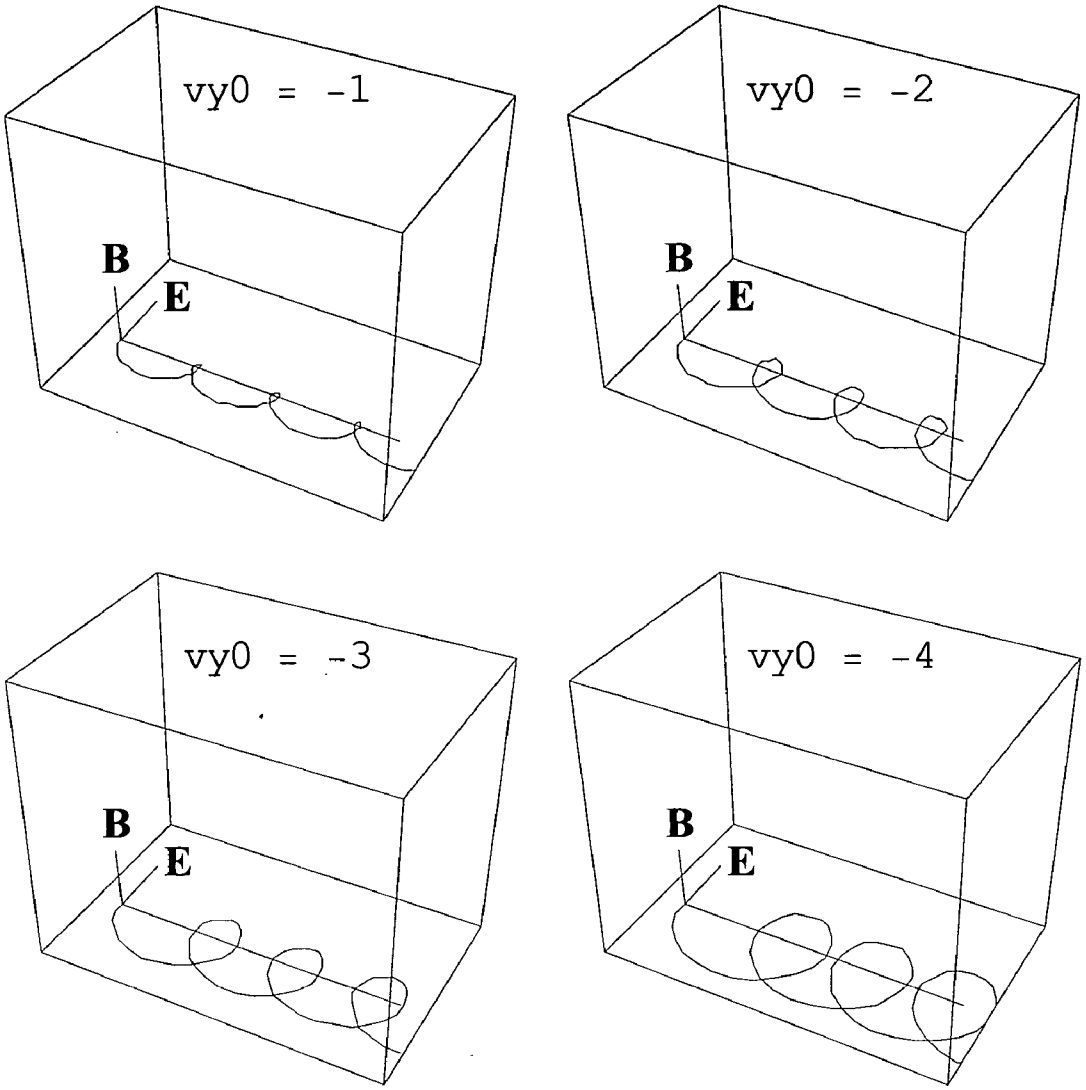

Figure 8

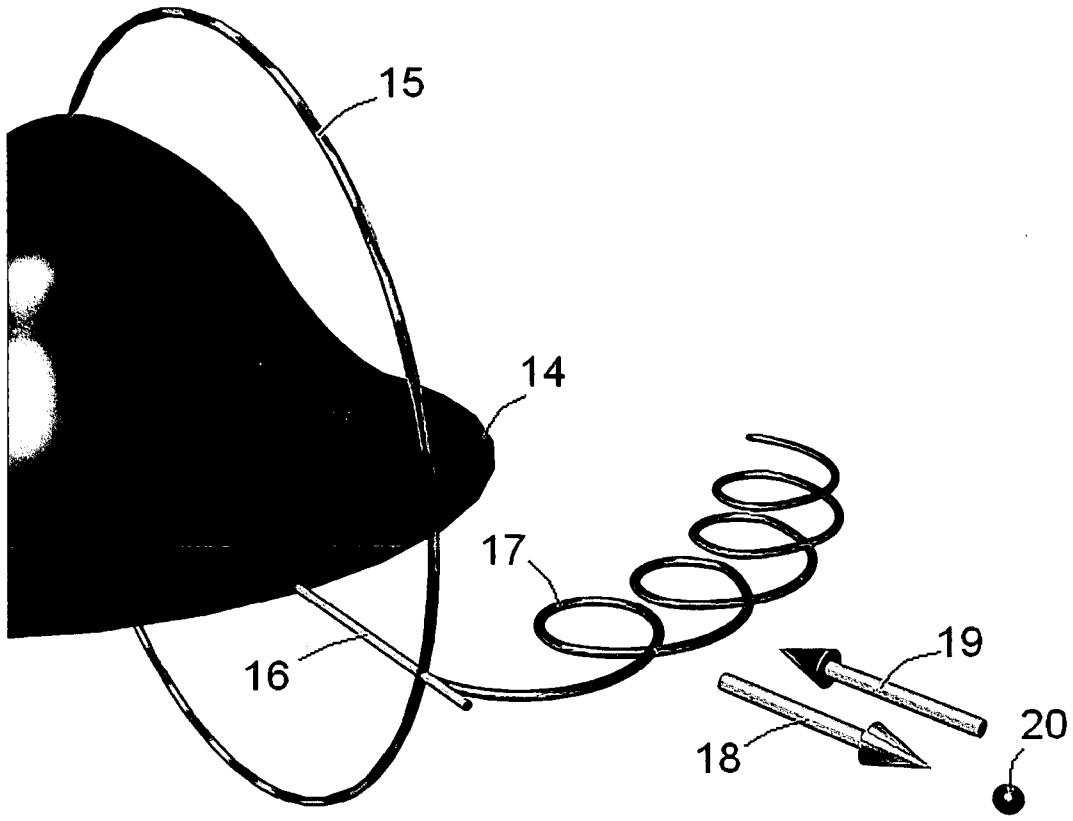

Figure 9

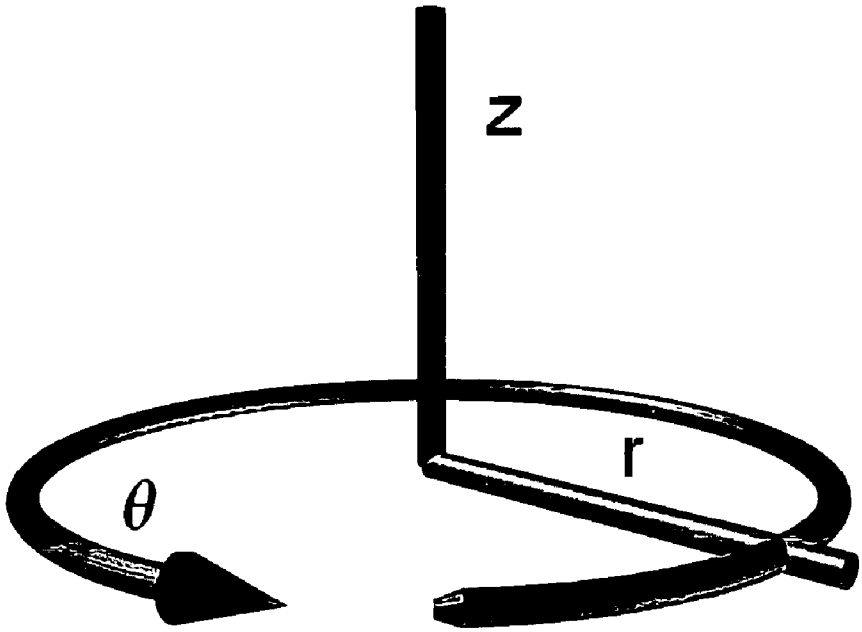

PHOTON SPACECRAFT

BRIEF SUMMARY OF THE INVENTION

[0001] This invention is a spacecraft propulsion system that employs photon particles to generate a field of negative energy in order to produce lift on the hull.

BACKGROUND OF THE INVENTION

[0002] Referring to **FIG. 1**, an electromagnetic wave traveling in the z-direction consists of an electric E field vibrating in the x-direction and a magnetic flux density B field vibrating at right angles in the horizontal y-direction. The energy-stress-momentum of this photon can be analyzed using Einstein's General Theory of Relativity and the Faraday F tensor. The Faraday tensor is a 4×4 matrix containing the electromagnetic wave components as shown here in general where c is the speed of light

$$F^{\alpha}_{\beta} = \begin{array}{c|cccc|} t & 0 & \frac{E_x}{c} & \frac{E_y}{c} & \frac{E_z}{c} \\ x & \frac{E_x}{c} & 0 & B_z & -B_y \\ y & \frac{E_y}{c} & -B_z & 0 & B_x \\ z & \frac{E_z}{c} & B_y & -B_x & 0 \end{array}$$

For this particular photon, this tensor is

$$F^{\alpha}_{\beta} = \begin{array}{c|cccc|} t & 0 & \frac{E_x}{c} & 0 & 0 \\ x & \frac{E_x}{c} & 0 & 0 & -B_y \\ y & 0 & 0 & 0 & 0 \\ z & 0 & B_y & 0 & 0 \end{array}$$

[0003] The elemental spacetime length ds squared is equal to sum of the squares of the Cartesian elemental lengths

$$(ds)^2=-(dt)^2+(dx)^2+(dy)^2+(dz)^2$$

The coefficients of this equation, $\{-1,1,1,1\}$ are the diagonal components of the g metric tensor

$$g_{\alpha\beta} = \begin{array}{c|cccc|} t & -1 & 0 & 0 & 0 \\ x & 0 & 1 & 0 & 0 \\ y & 0 & 0 & 1 & 0 \\ z & 0 & 0 & 0 & 1 \end{array}$$

The stress-energy-momentum tensor T can then be calculated for the photon using the Faraday tensor and the g metric tensor in the following equation from gravitation physics

$$4\pi T^{\mu\nu} = F^{\mu\alpha}F^{\nu}_{\alpha} - \frac{1}{4}g^{\mu\nu}F_{\alpha\beta}F^{\alpha\beta}$$

The stress-energy-momentum tensor indicates the curvature of space due to the application of electromagnetic fields, mass, angular momentum and charge. The mass of the Earth, for example, generates a negative curvature of spacetime such that objects fall toward the mass. The T tensor, which is also a 4×4 matrix, contains the momentum or flux terms in the first row and first column. The normal pressure stress is located along the diagonal. The shearing stresses are located off the diagonal. The energy term is in the upper left corner as depicted here,

$$T^{\mu\nu} = \begin{array}{c|cccc|} t & \text{energy} & flux_x & flux_y & flux_z \\ x & -flux_x & pressure_x & shear_{xy} & shear_{xz} \\ y & -flux_y & shear_{yx} & pressure_y & shear_{yz} \\ z & -flux_z & shear_{zx} & shear_{zy} & pressure_z \end{array}$$

[0004] Since $B^2=E^2/c^2$, the stress-energy-momentum tensor for the photon is therefore

$$T^{\mu}_{\nu} = \begin{array}{c|cccc|} t & \frac{-E^2}{c^2} & 0 & 0 & \frac{+E^2}{c^2} \\ x & 0 & 0 & 0 & 0 \\ y & 0 & 0 & 0 & 0 \\ z & \frac{-E^2}{c^2} & 0 & 0 & \frac{+E^2}{c^2} \end{array}$$

This remarkable result shows that the photon is actually a negative energy particle (top left corner) which is pushed along by a positive pressure wave (lower right corner). The particle has a positive flux (upper right corner) in the z-direction, as well as a balancing negative flux in the lower left corner so that the overall momentum of the universe remains the same. All four components cancel and we see the photon as a massless particle moving at the speed of light.

[0005] Thus the key idea behind this invention is that it is possible to cancel out the pressure term and leave a stationary vibrating electromagnetic field of negative energy over the hull of the spacecraft. The importance of negative energy is that it is a prerequisite to generating wormholes between space and hyperspace.

[0006] Hyperspace consists of the those co-dimensions which have different physics constants such as a low speed of light. The existence of hyperspace, which has a white misty look, is not a well-known scientific concept. Experiments with our magnetic vortex wormhole generators, hyperspace torque generator, full body levitation using Chi Kung breathing, arm levitation by spinning the co-gravitational K field, full body teleportation through hyperspace a distance of 100 meters using a pulsed gravitational wave, jumping into hyperspace, having a plate of toast enfold off the breakfast table and disappear into thin air, walking through walls and doors out-of-dimension, looking into other dimensions, remote viewing through subspace to distances of 100,000 light years, and other electromagnetic experiments carried out by co-researchers, have shown us the reality and existence of hyperspace.

[0007] Referring to **FIG. 2**, the spacecraft consists of an upper (**1**) and lower (**2**) hull attached by ceramic insulators

to a circular ring (**3**). The ring provides support and is attached to an outer sharp-edged rim which is electrostatically charged to a potential −V. The purpose of the charged rim is to generate a radial electric E field around the vehicle.

[**0008**] Referring to **FIG. 3**, the radius of the ring (**4**) is equal to a. The distance from a point on the ring to the z-axis is r. The potential on the z-axis is therefore the charge divided by the distance,

$$potZ = \frac{q}{\sqrt{a^2 + r^2}}$$

This potential is expanded as a series in terms of inverse radius r

$$potZout = \frac{35qa^8}{128r^9} - \frac{5qa^6}{16r^7} + \frac{2qa^4}{8r^5} - \frac{qa^2}{2r^3} + \frac{q}{r}$$

The potential outside the ring can be written in terms of the Legendre polynomials P

$$Vout = \sum_{n=0}^{s} \left(\frac{a}{r}\right)^{n+1} A[n] LegendreP[n, \mathrm{Cos}(\theta)]$$

where s is the number of terms in the expansion. By equating the known particular solution potZout on the z-axis with the general Vout solution, the coefficients A[n] are found to be

$$A(0) = \frac{q}{a}$$
$$A(1) = 0$$
$$A(2) = \frac{-q}{2a}$$
$$A(3) = 0$$

which are substituted back into the Vout equation to get the potential outside the ring.

[**0009**] Referring to **FIG. 4**, the potential (dotted lines **6**) looking at a slice through the ring (**5**) is shown together with the electric E field. The negative gradient of the potential is the electric field (**7**) shown by the direction of the arrows. The importance of this diagram is that the electric field points in the radial direction toward the negatively charged ring. The force on an electron is the electron charge times the electric field

$$F = q_e E_r = -|q_e|(-|E_r|) = +F$$

Because the electron charge is negative and the radial field points in the negative direction toward the ring, the force on the electron is positive. Thus the electron moves away from the ring in the positive radial direction. A 3-dimensional plot of the ring (**8**) and the electric field (**9**) is shown in **FIG. 5**.

[**0010**] The stress-energy-momentum generated by a radial electric field is calculated using the Faraday F tensor

$$F_\alpha^\beta = \begin{vmatrix} 0 & E_r & 0 & 0 \\ E_r & 0 & 0 & 0 \\ 0 & 0 & 0 & 0 \\ 0 & 0 & 0 & 0 \end{vmatrix}$$

The g metric tensor has to be given in spherical coordinates {r,θ,ϕ}

$$g_{\alpha\beta} = \begin{vmatrix} -1 & 0 & 0 & 0 \\ 0 & 1 & 0 & 0 \\ 0 & 0 & r^2 & 0 \\ 0 & 0 & 0 & r^2 \sin(\theta)^2 \end{vmatrix}$$

where θ is the angle from the vertical to the radius r. The stress tensor T^{rr} along the radial direction is

$$T^{rr} = \frac{E_r^2}{8\pi c^2}$$

which shows that the pressure is negative along the radial line equal to the square of the radial electric field divided by the square of the speed of light. Because the field is squared, it doesn't matter that the electric field points in the negative direction. The square makes it positive, but the overall curvature pressure is negative. Thus this negative pressure cancels out the positive pressure propelling the photon along. The second key idea of the invention is how to generate this photon moving in the radial direction.

[**0011**] It has been known for a long time in physics that an electron moving in a circular path will emit photons in a process known by the German word Bremsstrahlung which is translated as "breaking radiation." There are several types of radiation such as classical Bremsstrahlung involving a charged particle making a collision with another charged or uncharged particle in which photons are emitted. The quantum mechanical Bremsstrahlung involves the sudden appearance or disappearance of a charged particle which also emits radiation. In space, having a field of wormholes in which the electrons are spiraling down into hyperspace would result in the emission of photons by the quantum mechanical method. Also, in the atmosphere, having collisions with air molecules results in emission of photons in the classical way.

[**0012**] In order to get the electrons to spiral around and emit photons, a crossed electromagnetic field is used as shown by the following equation

$$F = q(E_r + v_r \times B_\theta)$$

where the velocity v is in the positive radial direction due to the force of the electric field. The velocity crossed with a magnetic flux density B field in the θ-direction makes the electron move sideways back and forth in a wiggling motion.

[**0013**] Referring to **FIG. 6**, a direct current solenoid (**10**), represented by multiple current loops, running vertically

through the center of the hull, generates a magnetic field that curves around the outside of the hull, as shown by contour lines (**12**). The north pole (**11**) is at the bottom of the hull. A radial arrow (**13**) from the electrostatically-charged rim is perpendicular to the magnetic field lines. The cross product in the force equation becomes the electron radial velocity times the magnetic field $v_r B_\theta$.

[**0014**] Referring to **FIG. 7**, the electric field is in the y-direction and the magnetic field is in the z-direction. The flat looping path in the x-direction is the motion of the electron. The electron, which has a negative charge, starts to move in the direction opposite to that of the electric field. In this particular diagram, the electron acquires a velocity in the negative y-direction. Then a sideways force in the x-direction is produced due to the cross product of the velocity with the magnetic field times the negative charge

$$-q(-v_y \times B_z) = +F_x$$

Depending on the magnitude of the velocity, various size loops can be produced.

[**0015**] In terms of the hull coordinates, because the flat loop is in the plane of the electric field which points in the radial direction, the electron emits light in the radial direction. This condition means that the negative radial pressure created by the electric field cancels the radial pressure of the photon. Thus the photon becomes a stationary vibrating quantum of negative energy. This has the appearance of a luminescent light source. The stress tensor for this condition is therefore

$$T_\mu^\nu = \begin{vmatrix} -\frac{E^2}{c^2} & 0 & 0 & \frac{E^2}{c^2} \\ 0 & 0 & 0 & 0 \\ 0 & 0 & 0 & 0 \\ -\frac{E^2}{c^2} & 0 & 0 & 0 \end{vmatrix} = -\frac{E^2}{c^2} \text{residual negative energy}$$

[**0016**] residual negative energy

which leaves a residual negative energy per photon.

[**0017**] Referring to **FIG. 8**, the negatively charged rim (**14**) produces a radial electric field (**16**) that crosses the magnetic B field (**15**) of the solenoid. Electrons emitted by the charged rim then encounter this crossed field which makes them spiral (**17**) around the hull. Because of the tight loop, the electron emits Bremsstahlung radiation in the radial direction (**18**). The positive pressure field of the photon, which is directed in the radial direction, is canceled by the negative pressure field (**19**) created by the electric field. Because the photon energy is negative, a stationary vibrating electromagnetic quantum of negative energy (**20**) surrounds the hull.

[**0018**] This negative energy and the pressure stress created by the electromagnetic fields open up wormholes between space and hyperspace. The potential head is positive from hyperspace into space because the energy of hyperspace is more positive than the negative energy field. The low-density hyperspace energy fills the hull and its surrounding space with a white misty hyperspace energy which makes the spacecraft lighter in mass, and therefore lighter in weight within a gravitational field. The actual physics is more complicated still because the electrons find that the resistance of hyperspace is lower than the resistance of space. Thus they spiral down the wormholes which results in a sudden disappearance of charge. The quantum mechanical effect of this is to radiate even more photons which in turn produce even more negative energy.

[**0019**] The lift on the hull is generated by the radial electric field. In cylindrical coordinates, the g metric tensor is

$$g_{\alpha\beta} = \begin{vmatrix} -1 & 0 & 0 & 0 \\ 0 & 1 & 0 & 0 \\ 0 & 0 & r^2 & 0 \\ 0 & 0 & 0 & 1 \end{vmatrix}$$

Using this metric tensor, the pressure stress in the vertical direction T^{zz} is

$$T^{zz} = \frac{E^2}{8\pi c^2}$$

which is a positive curvature over the hull. The mass of Earth produces a negative curvature in which objects fall toward the mass. By counteracting this negative curvature with a more than positive curvature, lift is developed on the spacecraft. Because the negative energy lowers the effective mass of the vehicle, the acceleration is large with a modest electric field. Moreover, in our dimension, the speed of light is 299792458 meters per second. Hyperspace energy has a speed of light equal to one meter per second. Thus the stress is amplified by a factor of

$$A = \left(\frac{299792458\,m/s}{1\,m/s}\right)^2 \approx 9 \cdot 10^{16}$$

Because electromagnetic fields are relativistic, motion in a low-velocity-of-light energy field amplifies their strength.

SUMMARY OF THE INVENTION

[**0020**] It is the object of this invention to create a spacecraft propulsion system that produces wormholes between space and hyperspace using negative energy in order to generate lift on the hull. It was discovered in the Riemannian curvature calculations of gravitation physics that negative energy is required to keep open the throat of the wormhole. From experiments with the magnetic vortex wormhole generator, it is known that the proper combination of electromagnetic fields, together with this negative energy, can create a wormhole through which smoke can be blown into hyperspace.

[**0021**] Referring to **FIG. 9**, the directions of force, velocity, and electromagnetic fields are referred to in the cylindrical coordinate system {r,θ,z}. An electrostatically charged sharp-edged ring in the θ-direction around the hull of the spacecraft produces a radial electric field. A vertical solenoid in the z-direction through the center of the hull

produces a magnetic field which is perpendicular at the rim to the electric field. With the current in the solenoid flowing in the clockwise (−θ) direction, using the right-hand rule, the magnetic field points in the upward z-direction outside the rim. Because the rim is charged to a negative voltage, the electric field points toward the hull in the negative radial (−r) direction. Electrons emitted by the rim travel outward (+v) because the charge on the electron is negative which, together with the negative electric field, produces a positive radial force. The radial force on the electron causes it to acquire a velocity which interacts with the magnetic field. The cross product of the velocity (+v) with the positive (+B) magnetic field produces a sideways force on the electron in the negative θ-direction. However, because the charge on the electron is negative, the force is

$$F=-q\{v_r,0,0\}\times\{0,0,B_z\}=\{0,qB_zv_r,0\}$$

which is positive in the θ-direction. It is this sideways force that produces a flat spiraling or looping motion whereby the electron emits photons, known in German as Bremsstahlung radiation, in the radial direction. The photon, which is actually a quantum of negative energy, has a positive radial pressure which propels it along. Because the radial electric field produces a negative pressure in the radial direction, the two opposite fields cancel in the radial direction to form a residual stationary vibrating negative energy. Thus the hull becomes surrounded by negative energy which, together with the pressure stresses created by the electric field, generates wormholes between space and hyperspace.

[0022] The gravitational potential between hyperspace and space is positive because the hyperspace energy is more positive than the negative energy around the hull. Thus the low-density, low-speed-of-light hyperspace energy flows through the wormhole and fills the hull. This has the effect of reducing the effective mass of the hull. Because the electric field generates a positive pressure over the hull in the vertical z-direction, there is an upward force on the vehicle due to the pressure times the hull area. Since the vehicle has a low mass, there is a modest upward acceleration on the spacecraft equal to the force divided by mass.

A BRIEF DESCRIPTION OF THE DRAWINGS

[0023] **FIG. 1**. Perspective view of an electromagnetic wave.

[0024] **FIG. 2**. Perspective view of spacecraft.

[0025] **FIG. 3**. Perspective view of charged ring.

[0026] **FIG. 4**. Planar plot of the radial electric field produced by charged ring.

[0027] **FIG. 5**. Perspective view of radial electric field around ring.

[0028] **FIG. 6**. Planar view of magnetic flux density field contour lines.

[0029] **FIG. 7**. Perspective view of electron motion in crossed electric and magnetic fields.

[0030] **FIG. 8**. Perspective view of production of negative energy around hull.

[0031] **FIG. 9**. Perspective view of cylindrical coordinate system {r,θ,z}.

DETAILED DESCRIPTION OF THE INVENTION

[0032] 1. The hull is made from a single sheet of aluminum which has been stretched to its yield point by hydraulic cylinders. An upper and lower die is CNC machined to the profile of the hull. The soft sheet is then clamped in the die where it takes on the smooth shape of the hull without any wrinkles. The hull is extremely rigid after forming and does not require any structural reinforcements.

[0033] 2. A section of the aluminum ring is made in a 3D computer graphics program. The model is stored as a stereolithography file (*.stl). The computer model is then sent via Internet e-mail to the stl server who prints the part in an ultraviolet light-cured polymer. The part is returned the next day by Express Mail. Using a rubber blanket mold to create several ring sections, the entire ring is assembled together in another wooden mold box having thin circular laminate-coated particulate wall boards on either side of the ring. Then a liquid rubber mold is poured on top of the ring and allowed to harden overnight at room temperature. Since the rubber mold is flexible, the ring can be extracted fairly easily. This ring model is then sent to the foundry where it is cast in aluminum using the lost wax process in which a wax mold evaporates out of the sand casting. We are also experimenting with non-magnetic copper casting metals containing beryllium having good conductivity.

[0034] 3. A 11.5 cm plastic pipe is mounted on a rotating fixture driven slowly by a microcontoller, stepper motor, and power electronics board. Using a large diameter insulated wire, such as a 17 AWG with a wire diameter of 0.127 cm, the wire is wound slowly on the pipe and expoxied so that the windings don't come loose. The solenoid is then mounted vertically in the hull supported by the support ring and driven by a current generator located nearby on the test rig.

[0035] 4. The ring is driven by a high voltage electrostatic generator similar to the night vision scope high voltage power supplies. The ring charge is isolated from the hull by ceramic insulators.

I claim:

1. A spacecraft propulsion system comprising the components:

an aluminum horizontal circular structural support ring;

an aluminum hull in the shape of a high dome on top and shallow dome on the bottom attached to the circular support ring using ceramic insulators;

an electrostatically negatively-charged sharp-edged circular ring, preferably of non-magnetic aluminum or copper, attached with ceramic insulators to the outside of the support ring;

a solenoid mounted through the center of the hull in the vertical direction and attached to the center of the support ring;

an electrostatic high-voltage generator to drive the outer electrostatic ring; and

a direct high-current generator to drive the solenoid.

2. The method of claim 1, wherein a negative radial electric field is generated around the hull by placing a negative potential on the sharp-edged electrostatic ring using the electrostatic generator.

3. The method of claim 1, wherein the current-driven solenoid generates a vertical magnetic field around the hull with the north pole of the solenoid facing down through the bottom of the hull which causes the magnetic flux density field to point up outside the rim.

4. The method of claim 1, wherein electrons are emitted radially by the sharp edge of the charged ring.

5. The methods of claims **2**, **3** and **4**, wherein the crossed electromagnetic fields cause the electrons to spiral around in flat loops during which photons are emitted in the radial direction.

6. The methods of claims **2** and **5**, wherein the negative radial pressure created by the electric field cancels the positive radial pressure of the photon to leave a residual quantum of negative energy per photon around the hull.

7. The methods of claims **2** and **6**, wherein the pressure stress created by the electric field, and the negative energy combine to form wormholes between space and hyperspace.

8. The method of claim 7, wherein low-density hyperspace energy of a higher gravitational potential flows through the wormholes to fill the hull and surrounding space around the hull with the effect of reducing the effective mass of the spacecraft.

9. The method of claim 2, wherein the electric field generates a positive pressure in the vertical direction over the hull which together with the hull surface area, generates an upward lift force on the hull.

10. The method of claim 6, wherein the negative energy, having a low light speed, amplifies the strength of the electromagnetic fields and pressure stress fields.

11. The methods of claims **4** and **7**, wherein the electrons spiral down the low resistance wormholes into hyperspace such as to create a sudden disappearance of electrical charge which quantum mechanically causes a large emission of additional photons.

* * * * *

US 20030209637A1

(19) United States

(12) Patent Application Publication (10) Pub. No.: US 2003/0209637 A1

St. Clair (43) Pub. Date: Nov. 13, 2003

(54) ROTATING ELECTROSTATIC PROPULSION SYSTEM

(76) Inventor: **John Quincy St. Clair**, San Juan, PR (US)

Correspondence Address:
John St. Clair
Hyperspace Research Institute
52 Kings Court, 4A
San Juan, PR 00911 (US)

(21) Appl. No.: **10/142,582**

(22) Filed: **May 9, 2002**

Publication Classification

(51) **Int. Cl.**[7] **B64G 1/40**; B64G 1/42

(52) **U.S. Cl.** **244/172**

(57) **ABSTRACT**

This invention relates to a spacecraft propulsion system utilizing thrusters comprised of a motor-driven electrostatically charged cylinder rotating within an electrostatically charged annular ring for the purpose of creating a spacetime curvature stress-energy tension in the horizontal direction. The thrusters are augmented by magnetic vortex generators, either embedded in the cylinders or located above each thruster, for the purpose of increasing the permittivity of space by permeating each thruster with low density hyperspace energy generated by a wormhole created between our space and hyperspace. A combination of three thrusters mounted on the underside of the hull of the spacecraft provide thrust and yaw motion control.

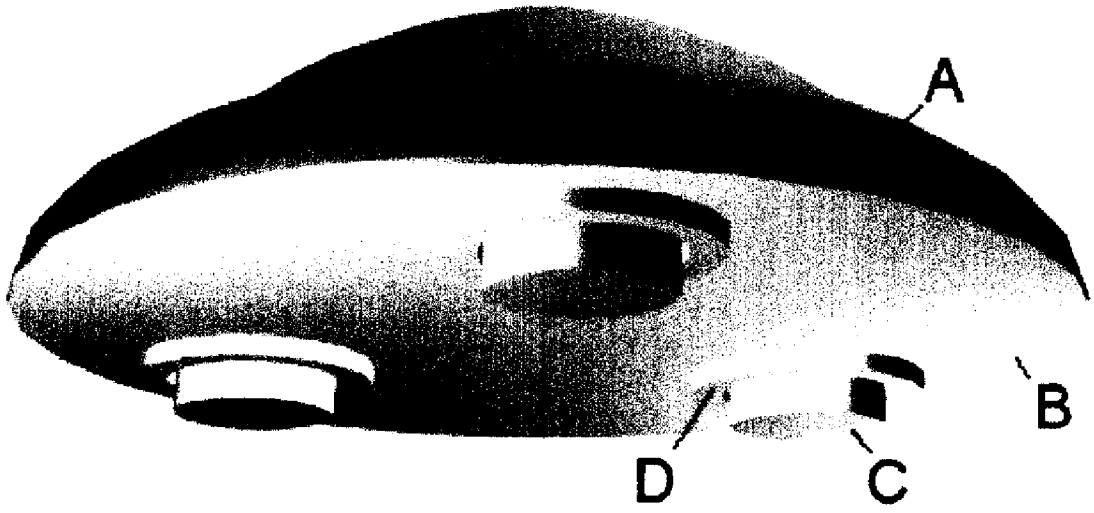

Figure 1

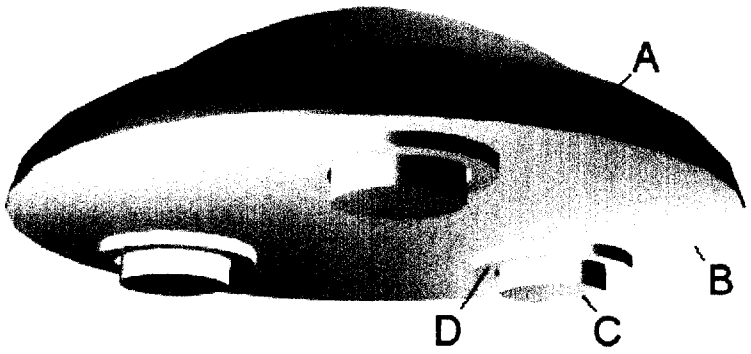

Figure 2

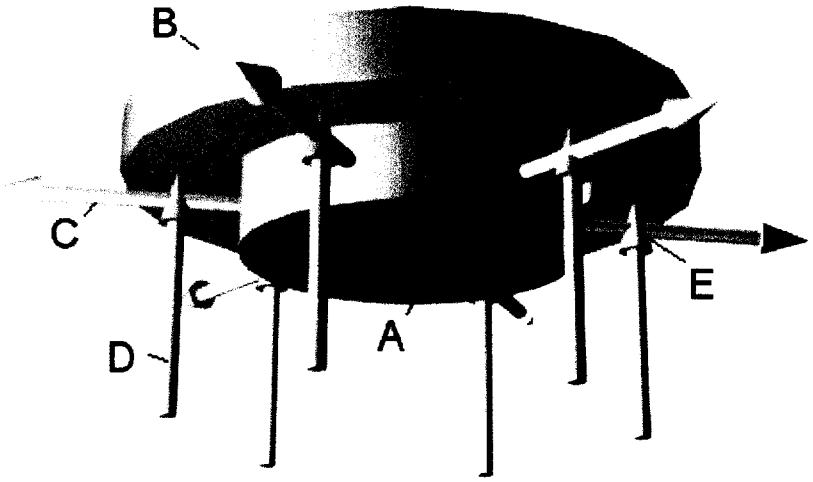

Figure 3

$$T^{zr} = -\frac{\varepsilon_0}{\Omega c^2}\frac{E_z E_r}{4\pi} = \frac{\text{coul}^2}{\text{m}^2\text{n}}\frac{\text{n}}{\text{coul}}\frac{\text{n}}{\text{coul}}\frac{\text{m}}{\text{kg}}\frac{\text{s}^2}{\text{m}^2} = -\frac{\text{kg m}}{\text{s}^2}\frac{\text{s}^2}{\text{kg m}^3} = \frac{-1}{\text{m}^2}$$

Figure 4

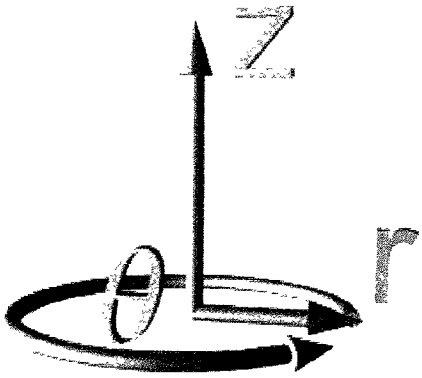

Figure 5

$$F^{\alpha}{}_{\beta} = \begin{array}{c|cccc|} t & 0 & E_r & 0 & E_z \\ r & E_r & 0 & 0 & 0 \\ \theta & 0 & 0 & 0 & 0 \\ z & E_z & 0 & 0 & 0 \end{array}$$

Figure 6

$$T^{zr} = -\frac{E_r E_z}{4\pi}$$

Figure 7

$$\frac{d}{dt} S_r = \varepsilon_0 \, \varepsilon_{r\,t\,z} x^t T^{zr} n_r \mathrm{Area} = \varepsilon_0 \, t \frac{E_r E_z}{4\pi} n_r \mathrm{Area}$$

Figure 8

$$\frac{\mathrm{coul}^2}{\mathrm{m}^2\,\mathrm{n}} \sec \frac{\mathrm{n}}{\mathrm{coul}} \frac{\mathrm{n}}{\mathrm{coul}} \mathrm{m}^2 = \mathrm{kg} \frac{\mathrm{m}}{\sec^2} \sec = \mathrm{kg} \frac{\mathrm{m}}{\sec}$$

Figure 9

$$\frac{d}{dt} S_{r,t} = \frac{\varepsilon_0}{4\pi} e^{i\omega t} E_r E_z \,\mathrm{area} + \frac{i\varepsilon_0}{4\pi} e^{i\omega t} E_r E_z t \omega \,\mathrm{area}$$

Figure 10

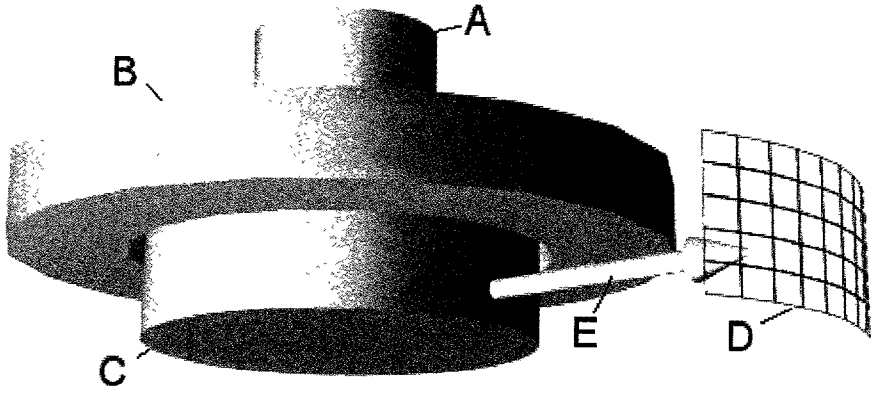

Figure 11

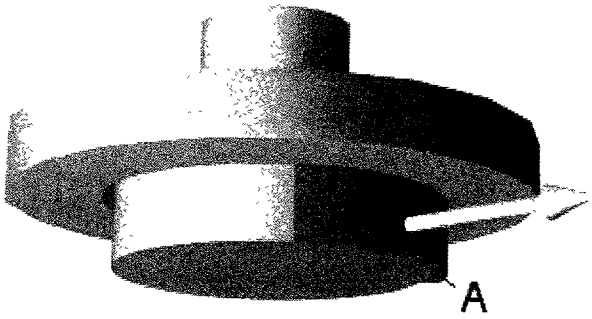

Figure 12

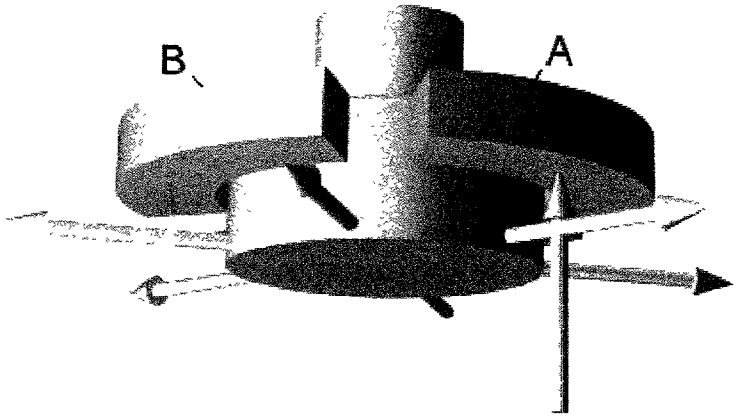

ROTATING ELECTROSTATIC PROPULSION SYSTEM

BRIEF SUMMARY OF THE INVENTION

[0001] The invention, which is the object of my present application, is a spacecraft propulsion system which develops a spacetime curvature tension utilizing a combination of a rotating radial electrostatic field and a fixed vertical electrostatic field. The two fields create a stress-energy T^{zr} gradient in the radially direction which is equal to force. The radial field is created on the side of a charged rotating cylinder on the underside of the hull. The vertical field is created by an annular charged ring concentric with the cylinder. Three rotating cylinders are located in a triangle on the bottom of the hull in order to produce a force in any direction in the horizontal plane.

REFERENCE PAPERS

[0002] *Gravitation*, Wheeler, page 80.

BACKGROUND OF THE INVENTION

[0003] When working with Maxwell's equations in tensor notation, it became apparent that a tensor can change identity depending on what permutation of variables is involved. For example, one single equation can involve both charge density and current density. And all of Maxwell's equations can be reduced to just two equations.

[0004] In the tensor equation for momentum, if the lever arm is length then the equation is equal to the flow rate of angular momentum. If the lever arm is time, then you get linear momentum. And if the field rotates with time, then the time rate of change of linear momentum is a force which is the basis for this invention.

[0005] Einstein said that mass curves space and space tells mass how to move. In this sense, generalized mass can be mass, electromagnetic fields, charge or angular momentum which create a spacetime curvature that produces a force on the spacecraft.

SUMMARY OF THE INVENTION

[0006] The invention relates to a spacecraft utilizing a rotating electrostatically charged cylinder and a concentric annular charged ring to create a stress-energy spacetime curvature in the horizontal plane on the spacecraft's underside hull. A motor drives the rotating cylinder which extends below the hull. A charged surface produces an electric field in the direction normal to the surface. The vertical and rotating electric fields combine to create a rate of change of linear momentum which creates a horizontal propulsive force on the hull.

STATEMENT REGARDING FEDERALLY SPONSORED RESEARCH OR DEVELOPMENT

[0007] Not Applicable.

A BRIEF DESCRIPTION OF THE DRAWINGS

[0008] **FIG. 1**. Perspective view of spacecraft hull (A) with the three electrostatically charged rotating cylinders (C) surrounded by their annular charge rings (D) extending down on the underside of the hull (B).

[0009] **FIG. 2**. Perspective view of individual thruster showing rotating cylinder and ring.

[0010] **FIG. 3**. Stress-energy tension created by two electric fields and having units of curvature.

[0011] **FIG. 4**. Cylindrical spacetime coordinates $\{t, r, \theta, Z\}$.

[0012] **FIG. 5**. Faraday electromagnetic F tensor containing electric fields in the radial and vertical directions.

[0013] **FIG. 6**. Stress-energy tensor T showing it is equal to the product of the two electric fields divided by 4π.

[0014] **FIG. 7**. The tensor equation for flow rate of angular momentum S.

[0015] **FIG. 8**. The units are linear momentum due to the time lever arm.

[0016] **FIG. 9**. The rate of change of linear momentum is the horizontal force produced by the two electric fields.

[0017] **FIG. 10**. The angular momentum flows through an area whose normal vector is in the radial direction.

[0018] **FIG. 11**. Cylinder with only one electrostatically charged segment.

[0019] **FIG. 12**. Annular ring with three individual segments which can be charged separately to create a force in a particular direction.

DETAILED DESCRIPTION OF THE INVENTION

[0020] 1. Referring to **FIG. 1**, the spacecraft comprises an upper hull (A) with three rotating electrostatically charged cylinders (C) with their concentric annular electrostatically charged rings (D) located on the spacecraft's bottom hull (B).

[0021] 2. In a closer view of one of the cylinders seen in **FIG. 2**, motor-driven rotating cylinder (A) has an electrostatically charged surface which produces an electric field (C) normal to said surface. The fixed, electrostatically charged annular ring (B), which is concentric with the cylinder, produces a vertical electric field (D) normal to its surface. This crossed field (E) creates a negative spacetime curvature tension which is the product of the two fields divided by 4π as seen in the equation, **FIG. 3**.

[0022] 3. Notice that the equation involves the permittivity of space ϵ_0 divided by the linear mass of the universe Ω and the speed of light. This produces units of inverse meter squared which is the spacetime curvature. In Einstein's General Theory of Relativity, the spacetime curvature tensor is equal to the stress-energy tensor or $G=8\pi T$ where G is the curvature, and T is the product of the electromagnetic fields. The problem with this equation, which has been resolved with this invention, is that the linear mass Ω times the speed of light c is an enormous number. Even with the square of enormous electric fields, the curvature would be too small even to notice, and little force would be generated.

[0023] 4. In another patent application of mine entitled Magnetic Vortex Generator, it was shown that a rotating

cylinder containing embedded and stacked bar magnets produces a negative mass and negative spacetime spring constant. It can be shown that this combination produces a small wormhole or interdimensional connection between our space and hyperspace along the centerline of the rotating cylinder. Co-dimensions of hyperspace have different physics constants. A low pressure region of hyperspace has a very low mass density and a very low speed of light. The wormhole allows this low density hyperspace energy to enter into our space and permeate the cylinder and annular ring. The permittivity is proportional to the inverse of the speed of light squared. The hyperspace speed of light, obtained from my tetrahedron physics diagram, is 8971 meters per second. The speed of light in our dimension is 299792458 meters per second. As shown by the enclosed reference calculation, the hyperspace permittivity is about a trillion times larger. Because the force is equal to this new permittivity times the electric fields squared times the area around cylinder, the force is greatly amplified by this increase in the permittivity of space.

[0024] 5. It is pertinent to this invention how the stress-energy is created due to the two electric fields in the vertical and radial direction. In gravitational physics, there is a Faraday F tensor which contains all the components of the electromagnetic fields. It is a 4 by 4 matrix whose rows and columns correspond to the coordinates of spacetime which in cylindrical coordinates are {t, r, θ, z} where t is time, r the radius, theta the horizontal angle and z the vertical height. These coordinates are shown in **FIG. 4**.

[0025] 6. The radial electric E_r field and the vertical electric E_z field can be inserted into the Faraday tensor seen in **FIG. 5**. The sign of the vertical field is positive because it points in the positive z-direction due to the fact that the annular ring has a negative charge. The cylinder has a positive charge. This produces the negative stress-energy tensor T^{zr} as drawn in **FIG. 6**.

[0026] 7. In order to calculate the force on the cylinder, it is necessary to calculate the flow rate of angular momentum. Momentum is mass times velocity or mass meter per second. If the mass is moving in a circle, then there is a lever arm times the momentum which makes it mass meter squared per second. If this is differentiated with respect to time, then a flow rate of angular momentum is produced with units of mass meter squared per second squared. As mentioned previously, tensors have this dual nature where depending on the permutation of the variables, it means one thing or another. In this case, the lever arm will be time, rather than length which converts the flow rate of angular momentum into just linear momentum. If you change linear momentum with respect to time, then you get a force.

[0027] 8. The flow rate of angular momentum S is shown in **FIG. 7**. The force has to be against the area whose normal vector is in the radial direction which is also the direction of the momentum. So S has an r subscript indicating that it flows in the radial direction. The permutation tensor ϵ has three subscripts which keeps track of the tensor notation. The first subscript is the same as the momentum subscript. Permutations of the coordinate variables which are in order have a plus one sign. Permutations which are in reverse order have a minus one sign. Permutations in which the variable are repeated are zero. For example, $\epsilon_{tr\theta z}=-\epsilon_{rt\theta z}$ because the r and t are in reverse order in cylindrical coordinates. Because the permutation tensor starts with r, then we can have permutations such as {r,t,z} which is a reverse order negative permutation. This negative sign cancels the negative sign of the stress tensor. The reason this permutation is chosen is because the first subscript on the stress-energy tensor is now z. Because the normal to the area is in the radial direction, then the stress-tensor matches the electric fields that we have available, which are also in the zr-direction.

[0028] 9. In this case, the second subscript of the permutation tensor is time, rather than length. So the units become, as shown in **FIG. 8**, those of linear momentum. To me, this was very surprising. Then I realized that the radial electric field rotates with time which means the differential of the linear momentum produces a force on the hull. In exponential notation, the radial electric field rotates with Exp[iωt]. This is multiplied by the time lever arm, so the term that has to be differentiated is $t\,e^{i\omega t}$. The time lever arm saves the differentiation by making one term real so that the force is real. This is shown in **FIG. 9**. The units of the first term are real newtons. In the second term, the time t multiplied by the frequency cancels out in terms of units, so the units are still force, but imaginary

[0029] 10. There is an area involved in the force equation which is depicted in **FIG. 10**. The charged rotating cylinder (C) located inside the charged annular ring (B) is driven by motor (A). The radial electric field (E) is normal to the area (D) whose normal vector is also in the radial direction. The angular momentum flows through this area which surrounds the cylinder. In doing so, it curves spacetime which produces the force.

[0030] 11. If the radial electric field is continuous around the cylinder, then the net force is zero. Referring to **FIG. 11**, one section (A) of the rotating cylinder is charged, which means that there is a force once per cycle in a selected direction depending on when the annular ring is charged. The other option, referring to **FIG. 12**, is that the annular ring is divided up into two or three sections with the feature that the charge can be turned on (A) or off (B) on a particular segment. As the rotating electric field goes around, one of the annular ring sections will have an electric field in order create a force on that side.

[0031] 12. Since there are three force cylinders, this allows for yaw motion control so that the hull of the spacecraft can pivot to change direction. After the directional change, the two back cylinders can be synchronized to produce thrust in the forward direction.

[0032] 13. There could also be a polarity change for the vertical electric field such that a positive stress-energy is produced which would reverse the direction of the thrust.

What I claim as my invention is:

1. A spacecraft propulsion system utilizing three electrostatically charged motor-driven cylinders each one of which rotates within a charged annular ring to produce a spacetime stress curvature tension in the horizontal plane on the underside of the hull.

2. Said rotating cylinder comprised of bar magnets embedded in the cylinder and stacked in groups at intervals around the periphery of the cylinder with the purpose of increasing the permittivity of space by permeating the cylinder and ring with low linear mass, low speed of light hyperspace energy by means of a wormhole between our space and hyperspace. The larger permittivity is to increase the force. Said technique is contained in my patent applications Magnetic Vortex Wormhole Generator and Magnetic Vortex Generator.

3. Said rotating cylinder and annular ring having a suitable metal surface for forming and maintaining the electrostatic charge.

4. Said rotating cylinder having one or more segments which can be electrostatically charged individually or together to produce a force in a particular direction.

5. Said annular ring having one or more segments which can be electrostatically charged individually or together to produce a force in a particular direction.

6. A combination of three such thrusters providing a force in any particular direction or for yaw motion control.

7. Electric polarity switching of the fields in order to reverse the spacetime curvature and therefore change the direction of thrust.

8. The use of a magnetic vortex generator located above each thruster in order to permeate the cylinders and rings with low density hyperspace energy which would substitute for the embedded magnets in each cylinder.

* * * * *

US 20030230675A1

(19) United States

(12) Patent Application Publication (10) Pub. No.: US 2003/0230675 A1

St. Clair (43) Pub. Date: Dec. 18, 2003

(54) ROTOR INDUCTANCE PROPULSION SYSTEM

(76) Inventor: **John Quincy St. Clair**, San Juan, PR (US)

Correspondence Address:
John St. Clair
Hyperspace Research Institute
52 Kings Court, 4A
San Juan, PR 00911 (US)

(21) Appl. No.: **10/170,847**

(22) Filed: **Jun. 12, 2002**

Publication Classification

(51) **Int. Cl.**[7] **B64G 1/40**; B64G 1/42

(52) **U.S. Cl.** **244/172**

(57) **ABSTRACT**

The invention is a spacecraft having a circular, domed hull around which dual electrically-charged rotors one above the other are counter-rotating on the edge of the hull. Embedded in the hull are three solenoids which create a positive vector potential at the rotors. The surface charge density times the radius times the vector potential times the area of the rotors creates an angular momentum in the vertical direction. This angular momentum produces a positive spacetime curvature over the dome of the hull and a negative spiking spacetime compression over the rotors. By machining circumferential grooves of decreasing height along the radius of the rotor, a negative surface inductance is generated. This negative inductance gradient times the negative spacetime compression time the rotor current density squared times the rotor area squared is a positive lift force on the spacecraft.

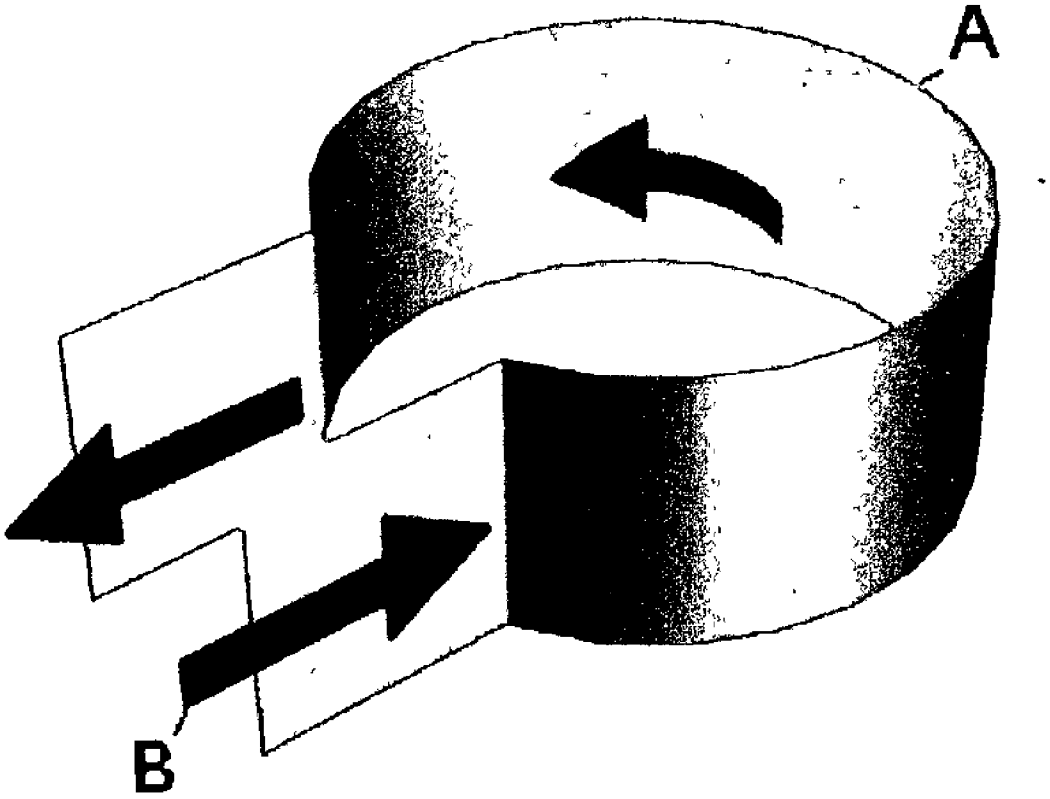

Figure 1

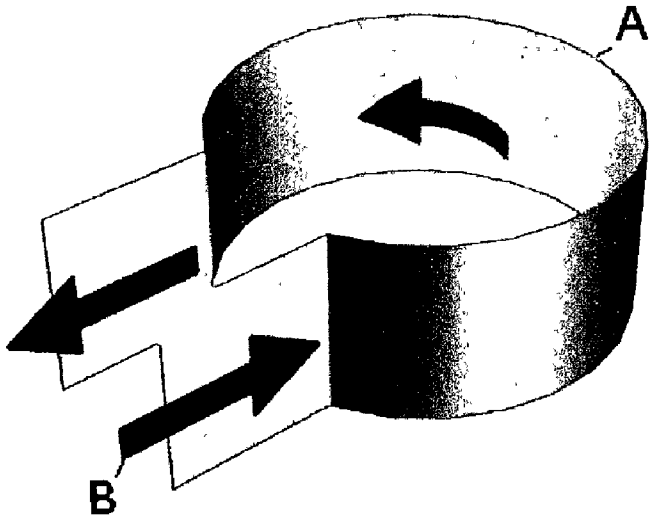

Figure 2

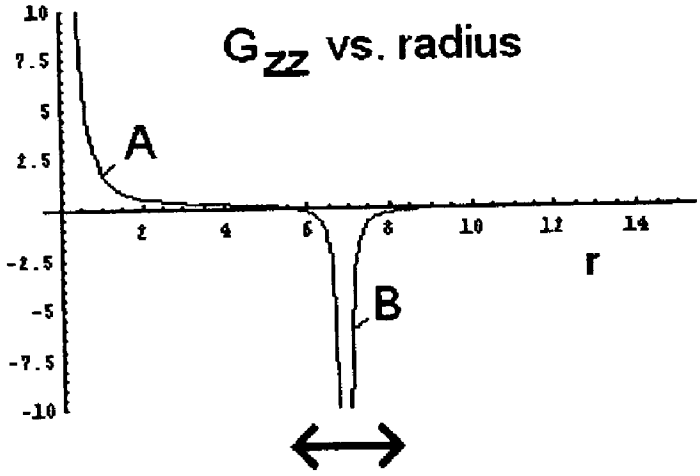

Figure 3

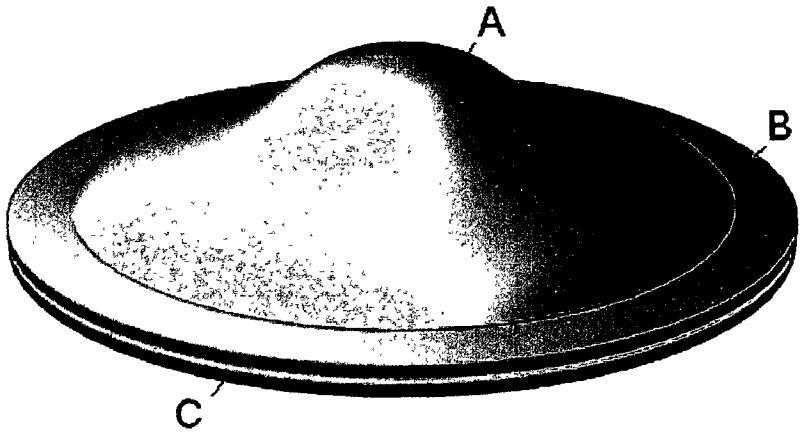

Figure 4

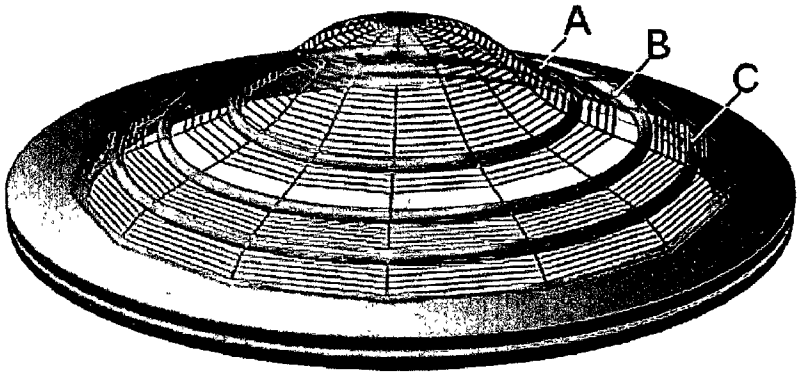

Figure 5

$$A = \frac{n I a^2}{2\varepsilon_0 c^2} \frac{1}{r'}$$

Figure 6

$$A \equiv \frac{1}{m} \frac{coul}{sec} m^2 \frac{m^2 kg\, m}{coul^2 sec^2} \frac{sec^2}{m^2} \frac{1}{m} = \frac{kg\, m}{sec\, coul}$$

Figure 7

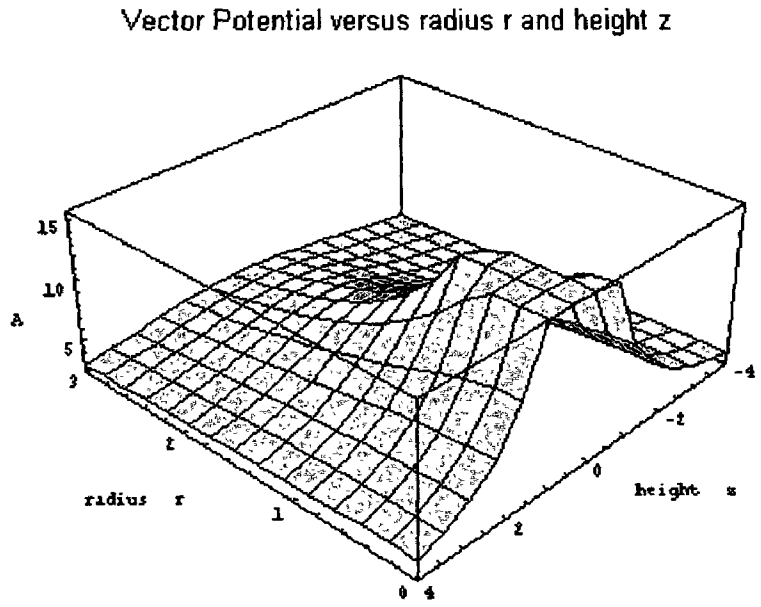

Figure 8

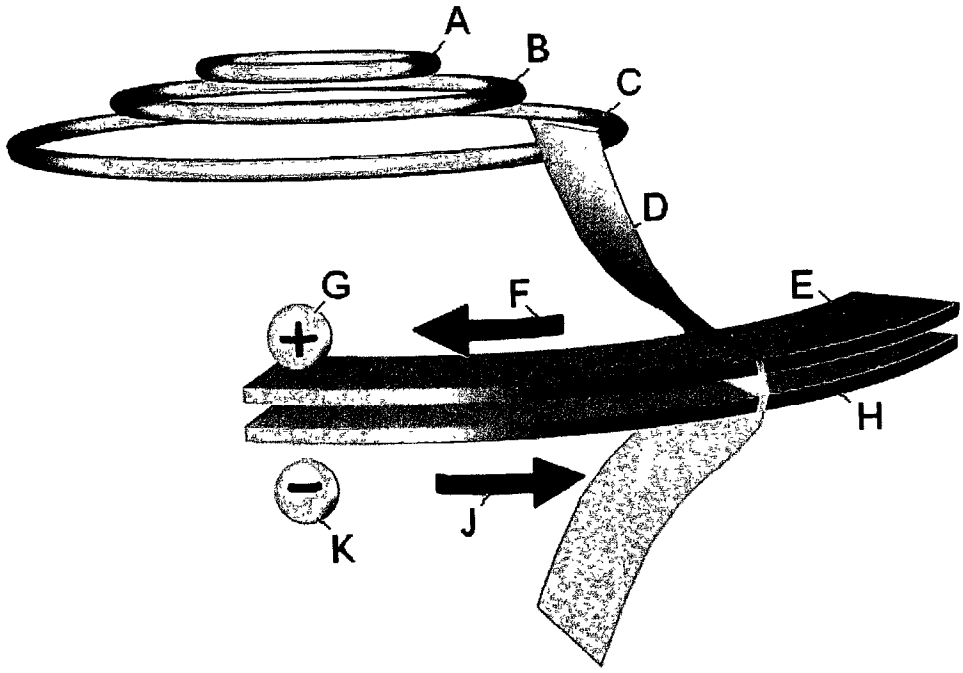

Figure 9

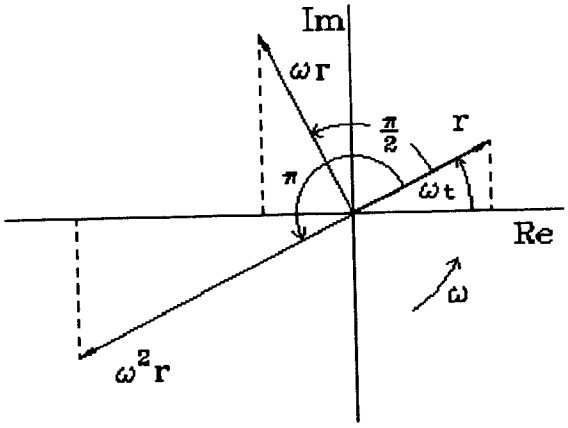

Figure 10

$$S_k = \left[-\sigma r e^{i\omega t} + \sigma r e^{-i\omega t}\right]\frac{n I a^2}{2\varepsilon_0 c^2}\frac{n_z \text{area}}{r'}$$

$$= -\left[e^{i\omega t} - e^{-i\omega t}\right]\left[\sigma r \frac{n I a^2}{2\varepsilon_0 c^2}\frac{n_z \text{area}}{r'}\right]$$

$$= -\left[e^{i\omega t} - e^{-i\omega t}\right]K$$

Figure 11

$$S \equiv \frac{\text{coul}}{m^2} m \frac{1}{m}\frac{\text{coul}}{\text{sec}} m^2 \frac{m^2}{\text{coul}^2}\frac{\text{kg}\,m}{\text{sec}^2}\frac{\text{sec}^2}{m^2}\frac{m^2}{m} = \frac{\text{kg}\,m^2}{\text{sec}}$$

Figure 12

$$e^{i\omega t} - e^{-i\omega t} = 2i\,\text{Sin}[\omega t]$$

Figure 13

$$S_k = -2iK\,\text{Sin}[\omega t]$$

Figure 14

$$ds^2 = \ldots - 4\frac{S}{r}dtd\theta = \ldots 8\frac{iK\,\mathrm{Sin}[\omega t]}{r}dtd\theta$$

Figure 15

$$g_{\mu\nu} = \begin{array}{c} \\ t \\ r \\ \theta \\ z \end{array} \begin{array}{c} \begin{array}{cccc} t & r & \theta & z \end{array} \\ \begin{vmatrix} -1 & 0 & 4\frac{iK\,\mathrm{Sin}[\omega t]}{r} & 0 \\ 0 & 1 & 0 & 0 \\ 4\frac{iK\,\mathrm{Sin}[\omega t]}{r} & 0 & r^2 & 0 \\ 0 & 0 & 0 & 1 \end{vmatrix} \end{array}$$

Figure 16

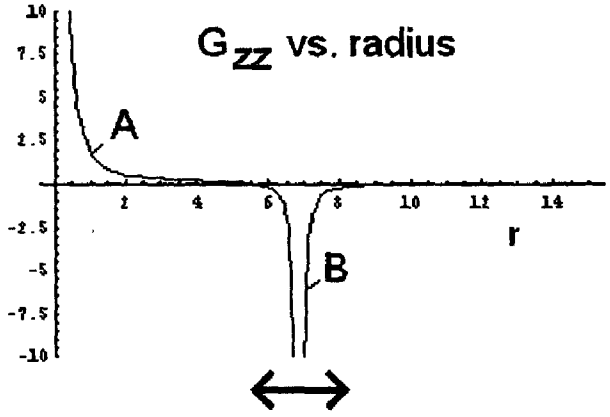

Figure 17

$$\text{Magnetic Energy} = -L\,K\,J^2\,A^2$$

Figure 18

$$\text{Magnetic Energy} \equiv -\frac{\text{kg}\,\text{m}^2}{\text{coul}^2}\frac{1}{\text{m}^2}\frac{\text{coul}^2}{\text{sec}^2\,\text{m}^2}\text{m}^4 = -\frac{\text{kg}\,\text{m}^2}{\text{sec}^2} = -\text{joule}$$

Figure 19

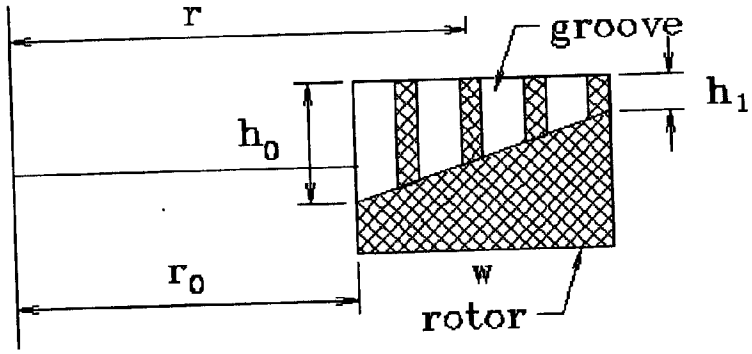

Figure 20

$$h = h_0 - (r - r_0)\left(\frac{h_0 - h_1}{W}\right)$$

Figure 21

$$\frac{dL}{dr} = \mu n^2 2\pi w \frac{\partial}{\partial r}\left(r\left(h_0 - (r - r_0)\left(\frac{h_0 - h_1}{w}\right)\right)\right)$$

$$\frac{dL}{dr} = \mu n^2 2\pi w\left(h_0 - \frac{(h_0 - h_1)(2r - r_0)}{w}\right)$$

Figure 22

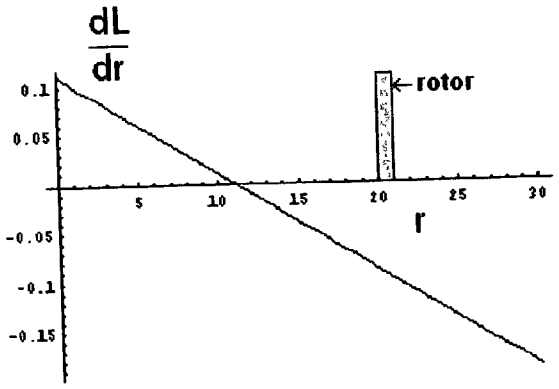

Figure 23

$$F = \frac{dL}{dr} K_c J^2 A^2 = \frac{kg\,m}{coul^2}\frac{1}{m^2}\frac{coul^2}{sec^2\,m^2} m^4 = \frac{kg\,m}{sec^2} = newton$$

ROTOR INDUCTANCE PROPULSION SYSTEM

BRIEF SUMMARY OF THE INVENTION

[0001] The invention, which is the object of my present application, is a spacecraft with a circular, domed hull around which are located dual electrically-charged counter-rotating rotors. The top surface of the upper rotor is etched with circular metallic grooves which give the rotor a surface inductance. The groove height decreases from the inside radius to the outside radius of the rotor giving it a radial inductance gradient. The surface charge density times the angular velocity produces a current density. The counter-rotating rotors produce a negative spacetime curvature over the rotors. The negative surface inductance gradient times the negative spiking spacetime curvature times the current density squared times the area squared is the positive lift force on the rotor.

REFERENCE WORKS

[0002] *Gravitation*, Wheeler

[0003] *Traveling-Wave Tubes*, The Bell System Technical Journal, Vol. XXIX, January 1950, No. 1, J. R. Pierce.

[0004] *The Magnetron as a Generator of Centimeter Waves*, The Bell System Technical Journal, Vol. XXV, April 1946, No. 2, J. B. Fisk, H. D. Hagstrum, P. L. Hartman.

[0005] *Lectures on Physics*, Richard Feynman

[0006] *Geometry of Electromagnetism*, Paul Hammond

BACKGROUND OF THE INVENTION

[0007] I was reading several articles about the development of the magnetron during World War II in the Bell System Technical Journal. I was trying to understand why the device resonates because it must contain a spring constant which would arise from an inductance and capacitance due to the geometry of the cavity. As given by Feynman, inductance of a solenoid is the permeability of space times the turns per length squared times the volume of the solenoid. Referring to **FIG. 1**, the magnetron cavity (A) has a circular region connected to a planar region. The electrical current flows on the sides of the cavity shown by the arrows (B). In this case, there is only one turn per height of the cavity times the volume of the cavity times the permeability which produces the inductance. The two planar regions produce a capacitance across the ends which creates the resonant frequency.

[0008] From my previous patent application Dual Rotor Propulsion System I know that the two rotors produce a current density in the angular direction along the rotor. If I spread out the magnetron cavity into a circular groove around a rotor, then the current would flow on the side walls enclosing the groove volume. The rotors also produce a spacetime curvature profile as shown in **FIG. 2**. Curve (A) is a positive spacetime curvature tension over the dome. Curve (B) is a negative spiking spacetime curvature over the rotors. The curvature is measured in inverse meter squared. So the surface inductance times the negative curvature times the current density squared times the rotor area squared is magnetic energy. The differential of the magnetic energy would be a force. So there has to be a gradient of the surface inductance. The volume element of a groove is equal to the circumferential length times the height times the width of the groove. The easiest is to vary the height with radius. Since the curvature is negative, the gradient has to be negative as well in order to get a positive lift force. Thus the height goes from large to small from the inside to the outside radius.

SUMMARY OF THE INVENTION

[0009] The invention relates to a spacecraft with a domed, circular hull of elliptical cross-section having dual electrically-charged counter-rotating rotors located one above the other on the edge of the hull. The upper rotor is positively charged and rotates clockwise with a negative angular velocity per the right-hand rule. The lower rotor is negatively charged and rotates with a positive angular velocity. The current density is the surface charge density times the velocity of the rotor. This particular combination of velocity and charge produces an angular momentum which creates a negative spiking spacetime curvature over the rotors.

[0010] The top surface of the rotor is etched or machined with circular grooves around the rotor. This creates a surface inductance which is equal to the permeability of space times the turns per length squared times the volume of the groove. In this case, there is only one turn per height of the groove. If the height of the groove decreases from one groove to the next, then there is a negative surface inductance gradient in the radial direction. So the lift force on the rotors would be the negative surface inductance gradient times the negative spacetime curvature times the current density squared times the rotor area squared.

STATEMENT REGARDING FEDERALLY SPONSORED RESEARCH OR DEVELOPMENT

[0011] Not Applicable.

A BRIEF DESCRIPTION OF THE DRAWINGS

[0012] **FIG. 1**. Perspective of magnetron cavity.

[0013] **FIG. 2**. Spacetime curvature G_{zz} over hull and rotor.

[0014] **FIG. 3**. Perspective view of spacecraft with dual rotors.

[0015] **FIG. 4**. Wire frame view of three solenoids.

[0016] **FIG. 5**. Vector potential equation for solenoid.

[0017] **FIG. 6**. Units of vector potential.

[0018] **FIG. 7**. 3D graph of vector potential using three solenoids.

[0019] **FIG. 8**. Perspective of vector potential along rotors.

[0020] **FIG. 9**. Rotor mechanics diagram using exponential representation.

[0021] **FIG. 10**. Angular momentum equation due to vector potential and rotating charged rotors.

[0022] **FIG. 11**. Units of angular momentum.

[0023] **FIG. 12**. Exponential equation for twice imaginary sine of the angle.

[0024] **FIG. 13**. Angular momentum equation for g metric tensor.

[0025] **FIG. 14**. Angular momentum term for elemental line length ds^2.

[0026] **FIG. 15**. The g metric tensor containing the angular momentum.

[0027] **FIG. 16**. The spacetime curvature tension G_{zz} versus radius due to angular momentum.

[0028] **FIG. 17**. Magnetic energy equation.

[0029] **FIG. 18**. Units of magnetic energy.

[0030] **FIG. 19**. Cross-section of rotor showing groove height gradient.

[0031] **FIG. 20**. Equation for the height h of the rotor groove as a function of radius.

[0032] **FIG. 21**. Equation for the groove inductance gradient.

[0033] **FIG. 22**. Plot of the groove inductance gradient as a function of radius showing that it is negative at the rotor.

[0034] **FIG. 23**. Lift force on rotors due to inductance gradient, compression curvature, rotor current density and area.

DETAILED DESCRIPTION OF THE INVENTION

[0035] 1. Referring to **FIG. 3**, the spacecraft has a circular, domed hull of elliptical cross-section with dual electrically-charged counter-rotating rotors one above the other on the edge of the hull.

[0036] 2. Referring to **FIG. 4**, embedded within the hull are three solenoids or current loops carrying a constant electrical current in the positive sense per the right-hand rule.

[0037] 3. Referring to **FIG. 5**, Feynman has shown that the vector potential {A} of a solenoid is equal to the number of turns per length {n} times the current {I} times the radius of the solenoid {a} squared divided by half the permittivity of space $\{\epsilon_0\}$ times the speed of light {c} squared times the radius {r'} prime from the center of the coil to some location in space such as the rotors. It has been found by physicists Bohm and Aharanov that the vector potential field is not confined to an infinitely long solenoid as is the magnetic B field. The vector potential has units of kilogram-meter per second-coulomb as seen in **FIG. 6**.

[0038] 4. Referring to **FIG. 7**, the three solenoids of varying radius and area produce a positive vector potential at the centerline of the rotors as seen in the graph.

[0039] 5. This graph is then rotated ninety degrees so that it can be located in relation to the rotors as seen in **FIG. 8**. The vector potential (D), which is created by solenoids (A,B,C), passes through rotors (E) and (H). Rotor (E), which has a positive charge (G), is rotating clockwise (F), and rotor (H), which has a negative charge (K), is rotating counter-clockwise (J).

[0040] 6. Referring to **FIG. 9**, rotor mechanics uses the exponential function for the harmonic motion of the rotor. The radius is $\{r\ e^{i\omega t}\}$ which when differentiated with respect to time becomes a velocity $\{i\ \omega\ r\ e^{i\omega t}\}$ where the imaginary {i} is a 90° phase lead which makes the velocity tangential to the rotor.

[0041] 7. The rotor surface charge {σ sigma} is rotating around at some radius {r}. For the upper rotor the surface charge density is positive (+σ} but the rotor has a negative angular velocity {−ω}. For the lower rotor, the surface charge density is negative {−σ} but the rotor has a positive angular velocity {+ω}. So the combined surface charge rotation is $\{-\sigma\ r\ e^{i\omega t}+\sigma\ r\ e^{-i\omega t}\}$. This charge rotation times the positive vector potential due to the solenoids times the rotor surface area is equal to angular momentum S as shown in **FIG. 10**. The units are given in **FIG. 11**. The angular momentum is equal to the negative of the difference of the exponentials times a constant. I then recalled that this difference is equal to twice imaginary sine of the angle as shown in **FIG. 12**.

[0042] 8. Referring to **FIG. 13**, the angular momentum is equal to minus two times the imaginary number times a constant times the sine of the rotational angle. In most of my spacecraft designs, the electromagnetic fields determine the flow rate of angular momentum. When the flow rate is integrated with respect to time, the angular momentum becomes imaginary. In this invention, the angular momentum is imaginary due directly to the rotors. The importance of being imaginary is that the radius resonates with the angular momentum. In some spacetime curvature equations, the denominator has a term equal to the radius to the fourth power plus twice the square of the angular momentum. In spacetime units, angular momentum is viewed as meter squared. So the square of imaginary angular momentum is negative angular momentum equal to negative meters to the fourth power. So at some radius, these two terms are equal, the denominator goes to zero, and the spacetime curvature becomes infinitely-large, creating a huge spike.

[0043] 9. This next section calculates the spacetime curvature from the equation for the angular momentum.

[0044] 10. Referring to **FIG. 14**, the elemental length ds^2 is curved by the presence of the angular momentum which is one of the energies, such as mass, charge, and electromagnetic fields, that Einstein showed can curve spacetime. Because the angular momentum is pointing in the vertical z-direction, due to the direction of the unit normal vector to the surface of the rotor, it rotates around in the angular direction {dtdθ} as found in cylindrical coordinates {t,r,θ,z}.

[0045] 11. In gravitational physics there is a g metric tensor which is a measure of length in spacetime coordinates. It is a 4 by 4 matrix with rows and columns equal to the cylindrical coordinates. Referring to **FIG. 15**, the diagonal of the matrix is $\{-1,1,r^2,1\}$ where the minus one corresponds to time which is Einstein's convention. Half the angular momentum goes in the {tθ} slot of the g metric tensor, and the other half goes in the {θt} slot.

[0046] 12. From this g metric tensor, Einstein's G curvature tensor can be calculated in the various direc-

tions. In Einstein's General Theory of Relativity, his equation is $G=8\pi T$ where G is the spacetime curvature measured in inverse meter squared, and the T tensor is the stress-energy-momentum matrix containing all the electromagnetic pressures, mass and momentum components that curve spacetime. The spacetime curvature tension G_{zz} in the vertical direction, as a function of radius, is shown in **FIG. 16**. A positive curvature indicates that there is a spacetime tension over the hull which produces lift. The curvature has a large positive spike over the dome of the hull (A) which means that there is a large lift force over the center of the hull. The curvature then falls off and spikes with a negative spacetime curvature compression over the rotors (B). This curvature also oscillates back and forth a short distance due to the sinusoidal term. The problem is to convert this compression into a lift force which this invention solves.

[0047] 13. This next section shows how the spacetime compression over the rotors generates lift.

[0048] 14. As I mentioned, I have been reading some of the World War II magnetron scientific papers of the Bell System Technical Journal. It turns out that inductance of a solenoid is equal to the permeability of space times the number of wire turns per length squared times the volume of the solenoid. Imagine having a copper strip in the shape of the magnetron cavity in **FIG. 1**. The electrical current (B) flows around the height of the strip (A), so there is only one turn per the height. Then that is multiplied by the volume of the cavity and permeability to get the inductance. The inductor is storing magnetic energy equal to half the inductance times the current squared. In this invention, current density J in amp per meter is used rather than current. So taking a hint from this information, the magnetic energy would have to be related to the inductance times the square of the current density times the area squared of the rotor and times the negative spacetime curvature. The curvature is measured in inverse meter squared. That product produces a negative magnetic energy when in fact I want a positive force. This means that there has to be an inductance gradient in the equation instead of pure inductance and, furthermore, the gradient has to be negative in order to cancel out the negative sign of the compression curvature.

[0049] 15. The equation for the magnetic energy in terms of the inductance $\{\mathcal{L}\}$, curvature $\{K\}$, current density $\{J\}$ and area $\{A\}$ is shown in **FIG. 17** with the units in **FIG. 18**. The inductance in the equation is proportional to the volume of the circular groove in the top surface of the rotor. That volume is equal to $\{2\pi\ r\ h\ w\}$ where $\{h\}$ is the height of groove (depth) and $\{w\}$ is the width located at some radius $\{r\}$. In terms of machining, it would be more difficult to machine a variable width groove rather than a deeper groove of a constant width. So I am going to say the gradient is in the radial direction with the height of the groove decreasing going from the inside radius to the outside radius as depicted in **FIG. 19**.

[0050] 16. **FIG. 20** gives the equation for the height of the groove along the radius of the rotor.

[0051] 17. **FIG. 21** gives the inductance gradient by differentiating the inductance with respect to the radius. The initial groove height ho is not very large, and the inductance gradient becomes negative at the rotor as seen in the graph of **FIG. 22**.

[0052] 18. Referring to **FIG. 23**, the lift force on the rotor is now positive due to the combined negative inductance gradient times the negative spacetime compression. The square of the negative current density is positive also. This means that that the top surface of the lower rotor can also have a surface inductance gradient which would double the lift force.

What I claim as my invention is:

1. A spacecraft having a circular, domed hull with dual electrically-charged counter-rotating rotors one above the other located on the edge of hull.

2. Said hull having embedded within it three or more solenoids which generate a positive vector potential at the rotors.

3. Said upper rotor having a positive surface charge density, and rotating clockwise in the negative direction per the right-hand rule.

4. Said lower rotor having a negative surface charge density, and rotating counterclockwise in the positive direction per the right-hand rule.

5. Said rotor surface charge density and velocity creating a negative current density on both rotors.

6. Said vector potential and rotating surface charge density on rotors generating an angular momentum in the vertical direction.

7. Said angular momentum, generating a spacetime curvature tension over the dome of the hull, and a negative oscillating spacetime curvature compression over the rotors.

8. Said rotors having circumferential grooves of decreasing height machined into the top surface of the rotors in order to create a negative surface inductance gradient.

9. Said negative surface inductance gradient times the negative spacetime curvature compression times the rotor current density squared times the rotor area squared generating a positive lift force on the spacecraft.

* * * * *

US 20040200925A1

(19) United States

(12) Patent Application Publication

St.Clair

(10) Pub. No.: US 2004/0200925 A1

(43) Pub. Date: Oct. 14, 2004

(54) CAVITATING OIL HYPERSPACE ENERGY GENERATOR

(76) Inventor: **John Quincy St.Clair**, San Juan, PR (US)

Correspondence Address:
John St.Clair
Hyperspace Research Institute
52 Kings Court, 4A
San Juan, PR 00911 (US)

(21) Appl. No.: **10/372,557**

(22) Filed: **Feb. 21, 2003**

Publication Classification

(51) **Int. Cl.**[7] **B64C 27/22**

(52) **U.S. Cl.** **244/10**

(57) **ABSTRACT**

A hyperspace energy generator that uses cavitating oil bubbles within a magnetic field in order to create wormholes between space and hyperspace for the purpose of permeating the hull of a spacecraft with low-density hyperspace energy.

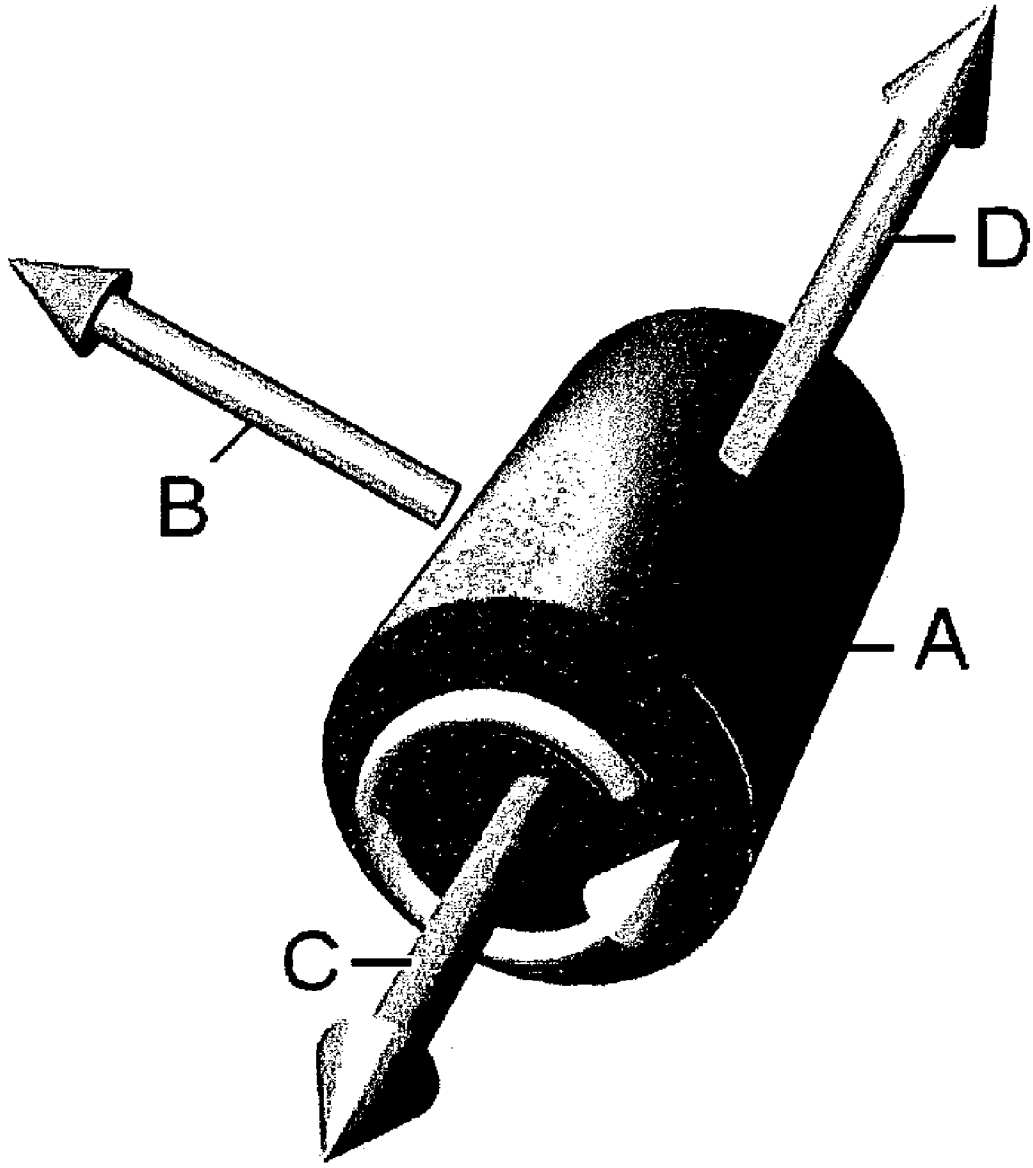

Figure 1

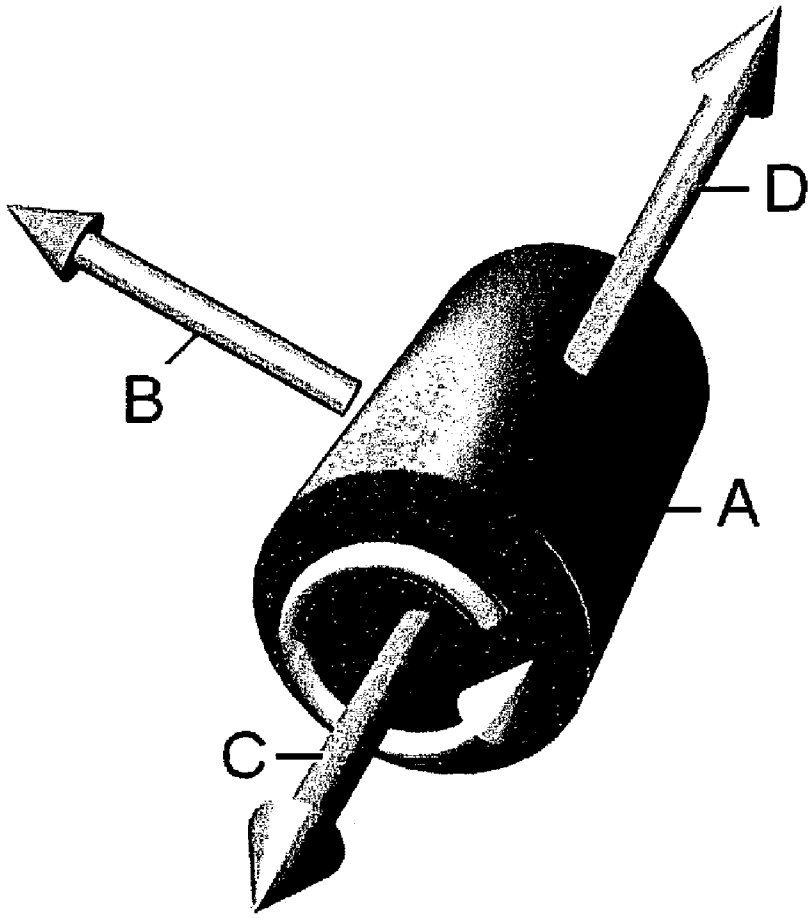

Figure 2

Figure 3

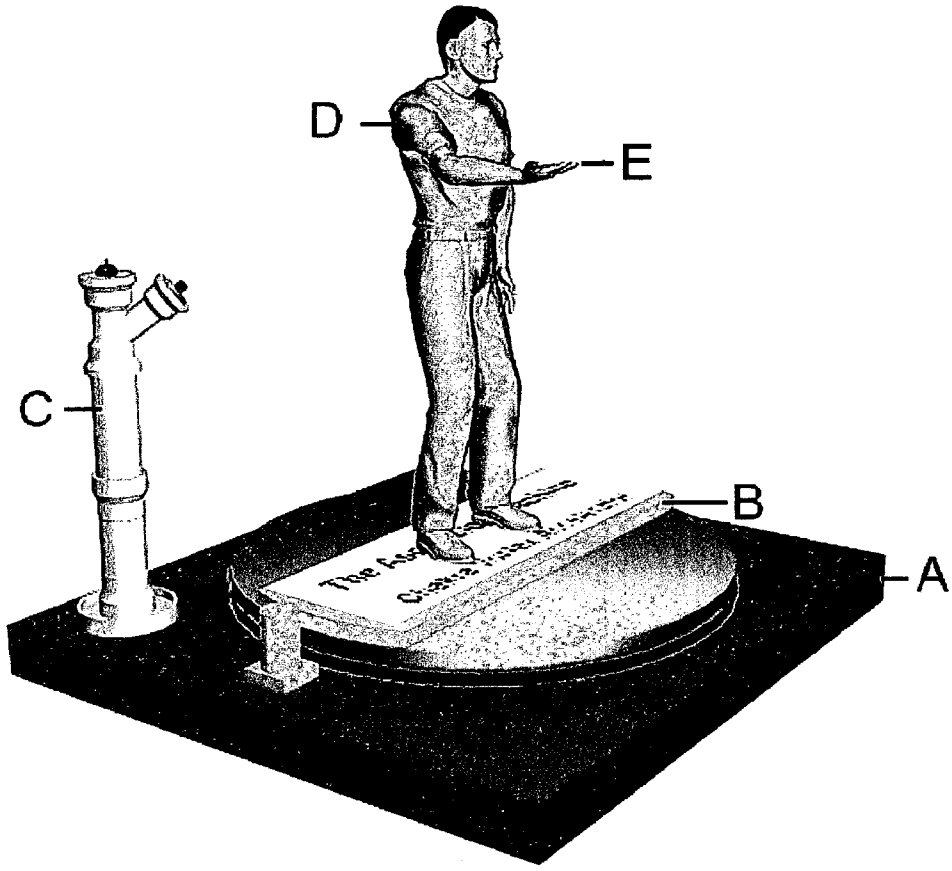

Figure 4

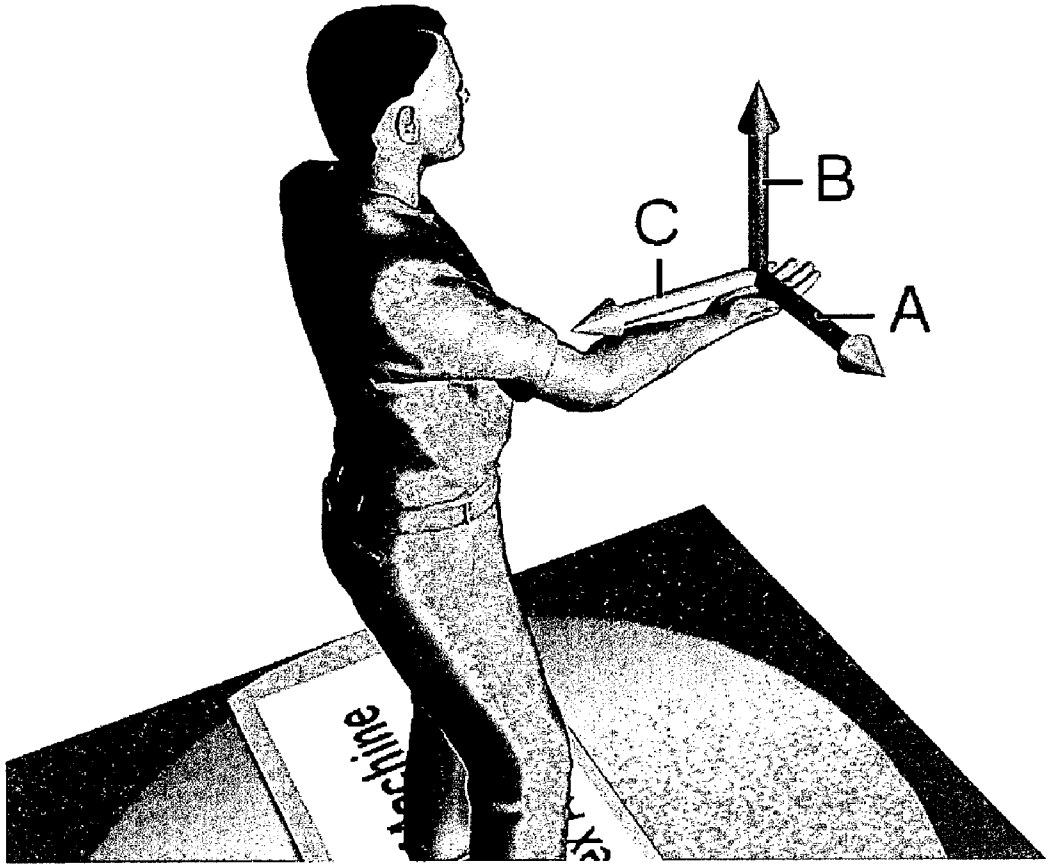

Figure 5

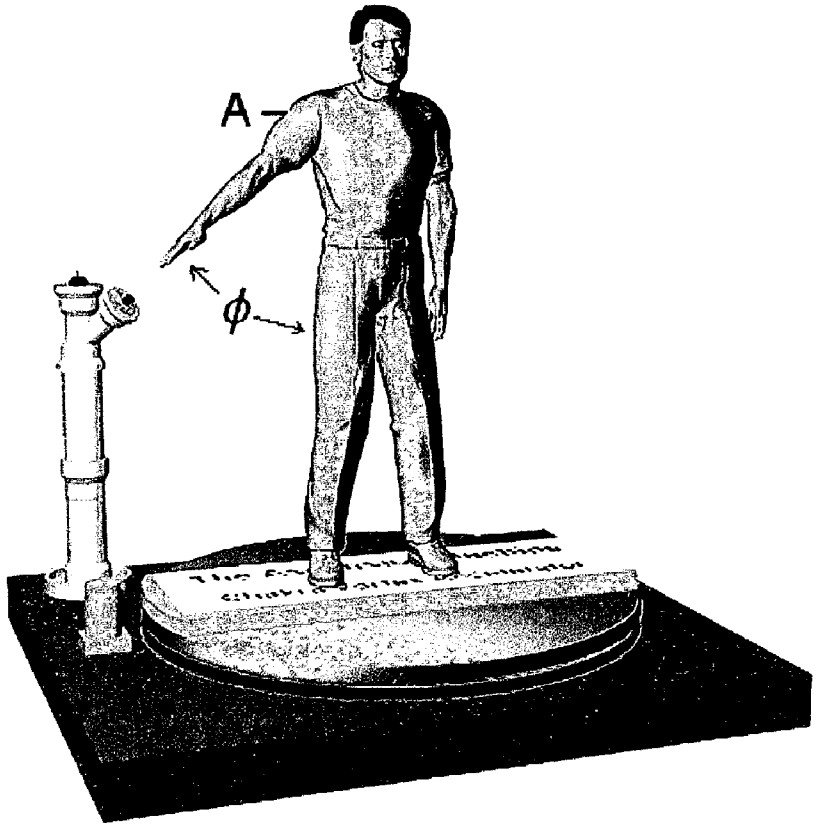

Figure 6

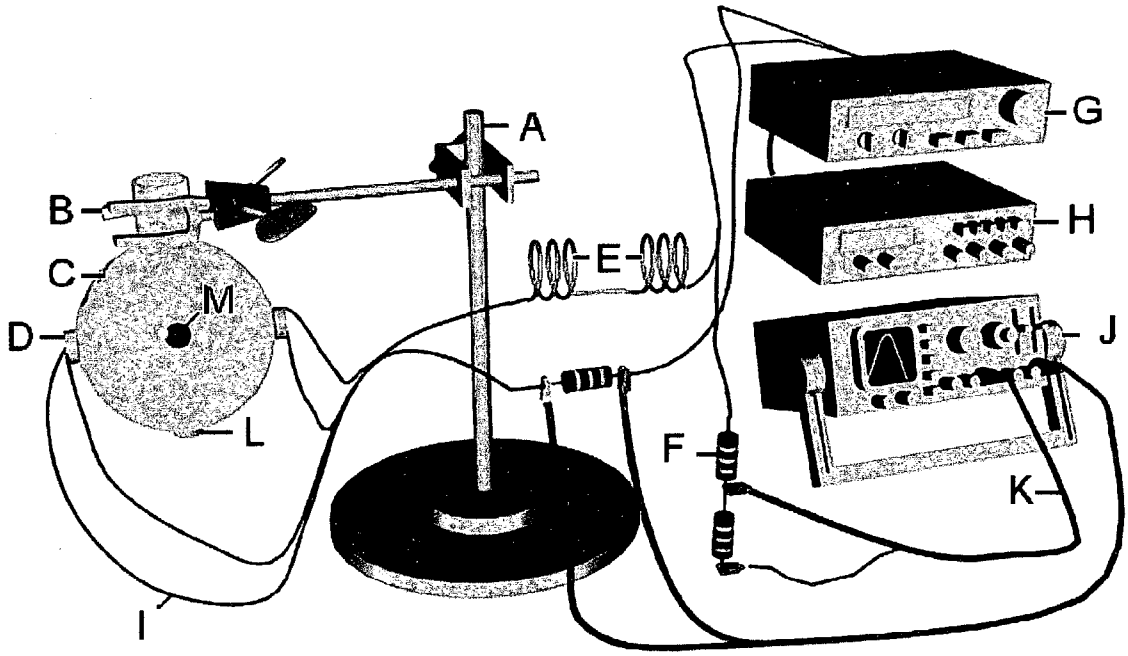

Figure 7

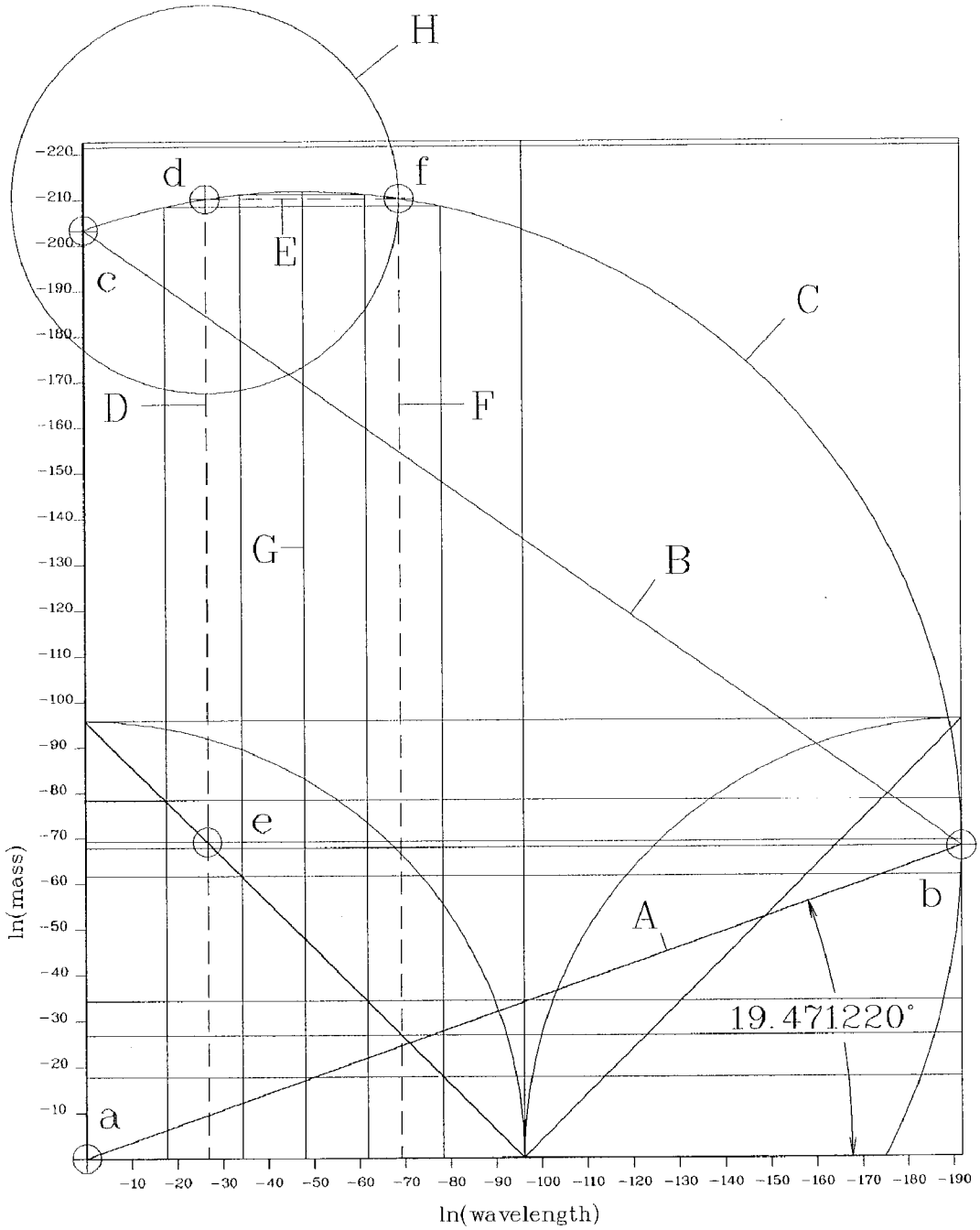
H
d
f
E
c
C
D
F
G
B
e
A
b
a
19.471220°
ln(mass)
ln(wavelength)
-220
-210
-200
-190
-180
-170
-160
-150
-140
-130
-120
-110
-100
-90
-80
-70
-60
-50
-40
-30
-20
-10
-10 -20 -30 -40 -50 -60 -70 -80 -90 -100 -110 -120 -130 -140 -150 -160 -170 -180 -190

Figure 8

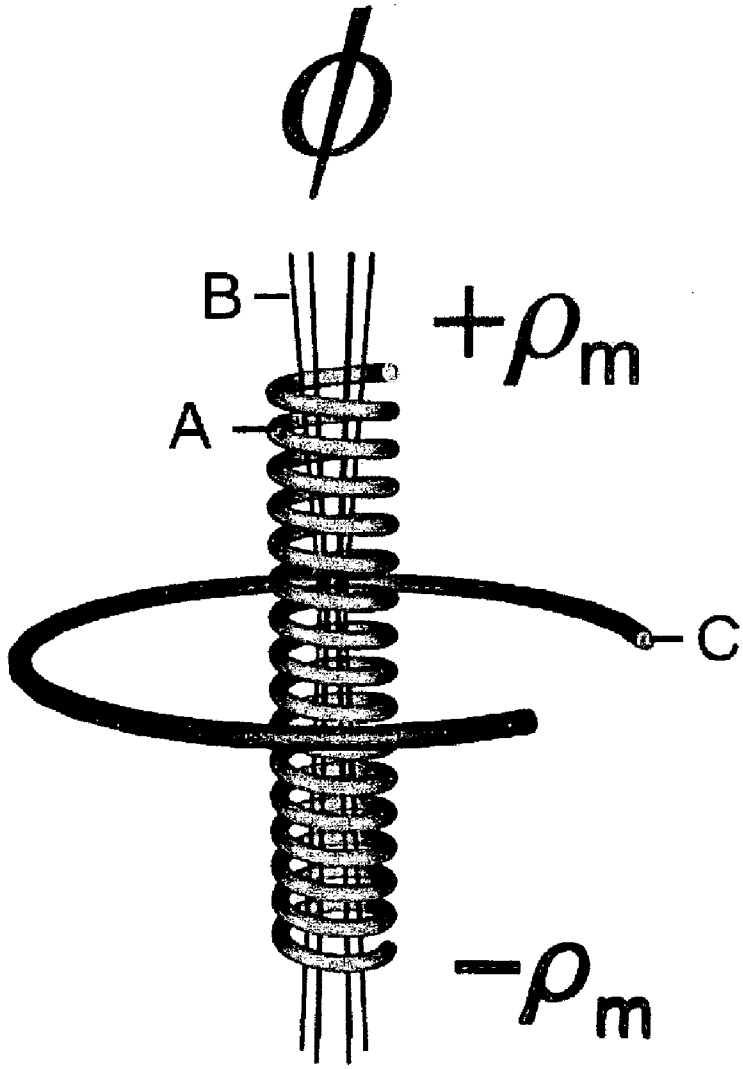

Figure 9

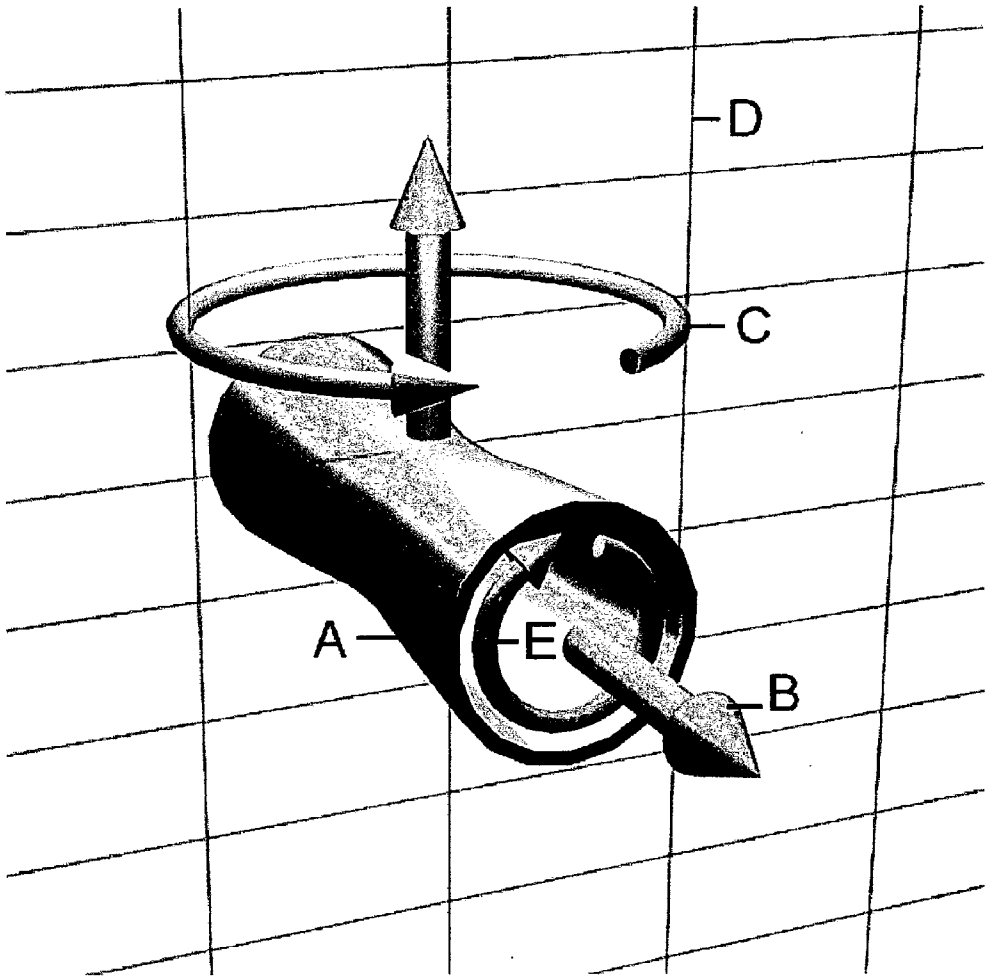

Figure 10

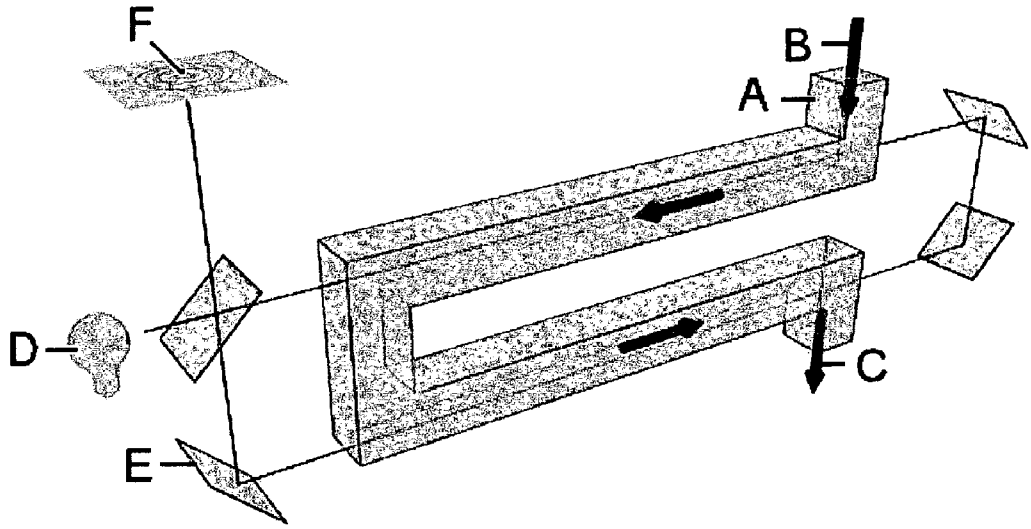

Figure 11

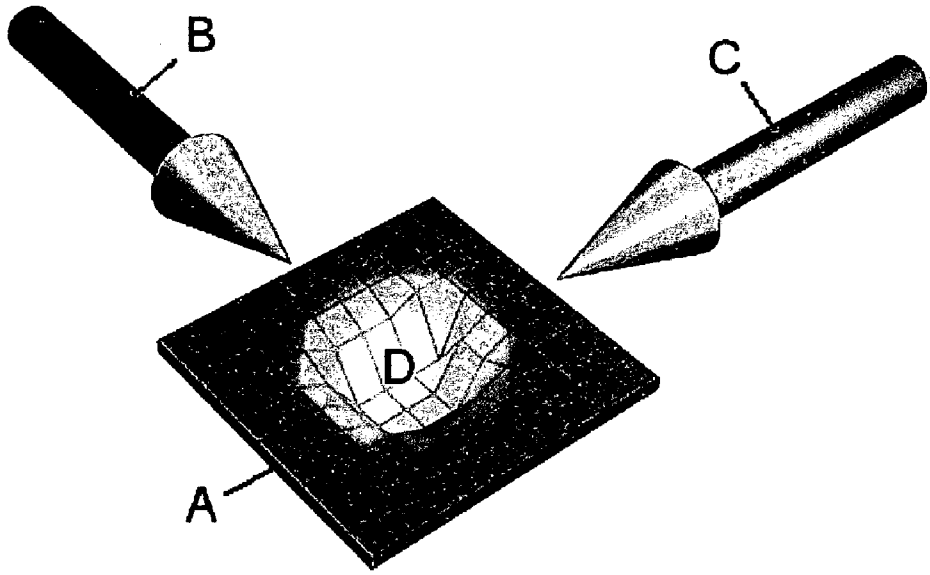

Figure 12

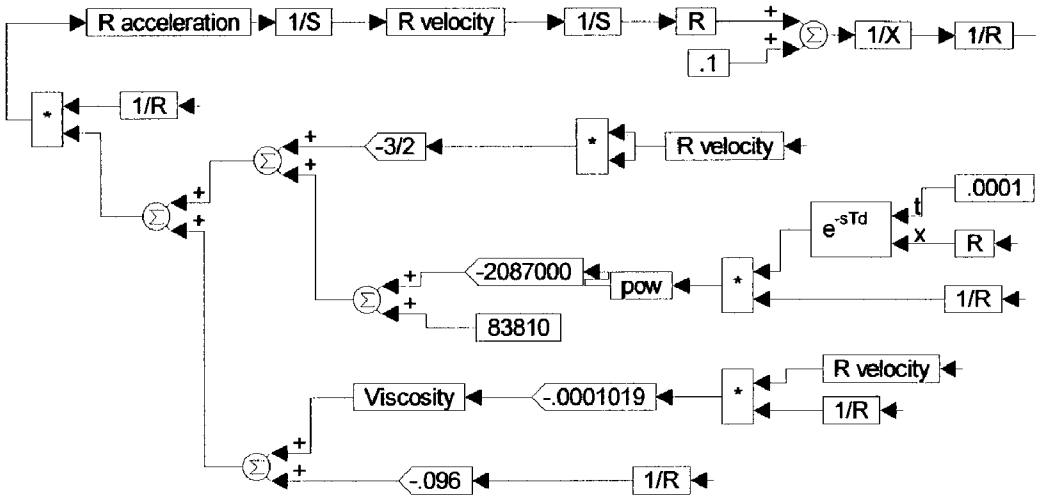
R acceleration
1/S
R velocity
1/S
R
.1
1/X
1/R
1/R
-3/2
R velocity
.0001
t
x
R
-2087000
pow
1/R
83810
R velocity
Viscosity
-.0001019
1/R
-.096
1/R

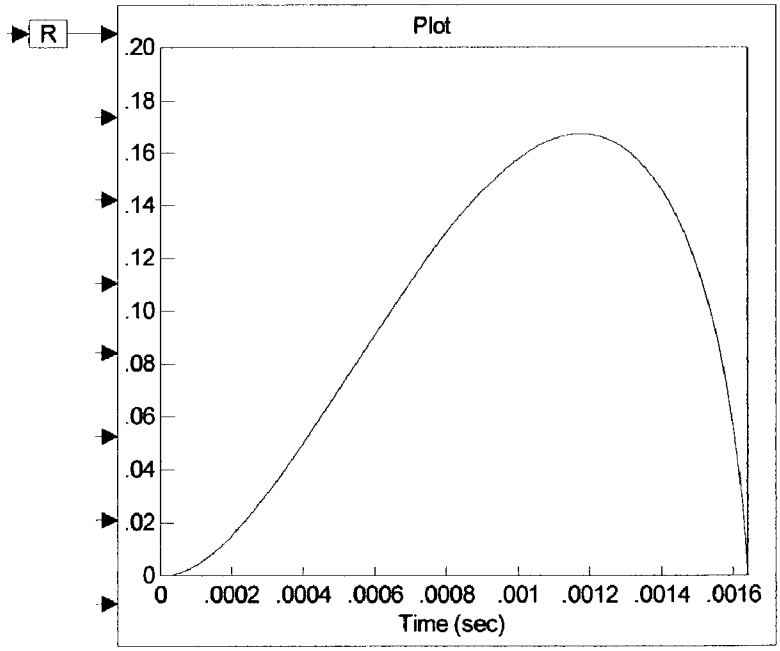
R
Plot
.20
.18
.16
.14
.12
.10
.08
.06
.04
.02
0
0
.0002
.0004
.0006
.0008
.001
.0012
.0014
.0016
Time (sec)

Figure 13

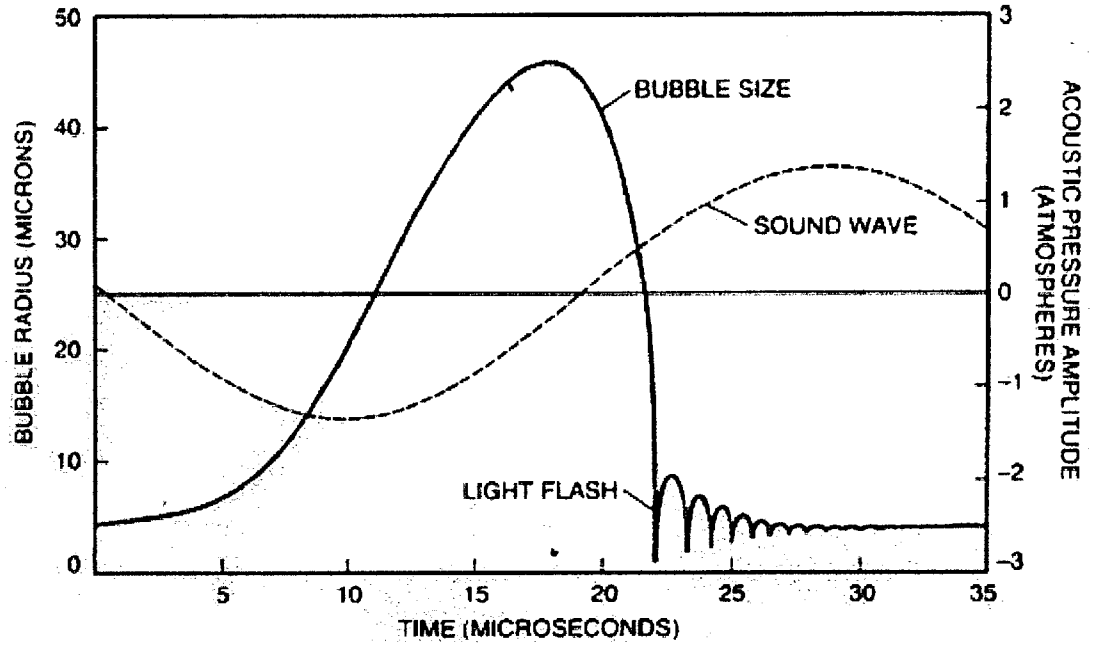
BUBBLE SIZE
SOUND WAVE
LIGHT FLASH
BUBBLE RADIUS (MICRONS)
ACOUSTIC PRESSURE AMPLITUDE (ATMOSPHERES)
TIME (MICROSECONDS)
50
40
30
20
10
0
3
2
1
0
-1
-2
-3
5
10
15
20
25
30
35

Figure 14

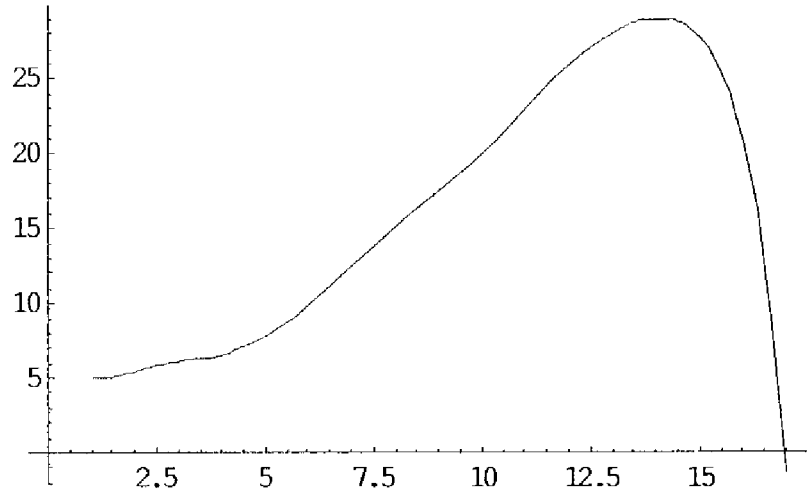

Figure 15

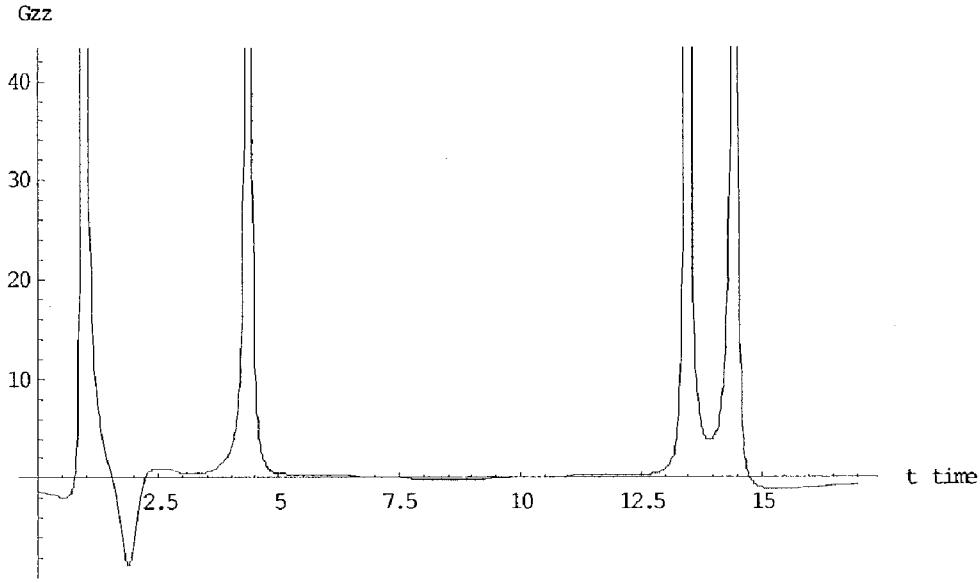

Figure 16

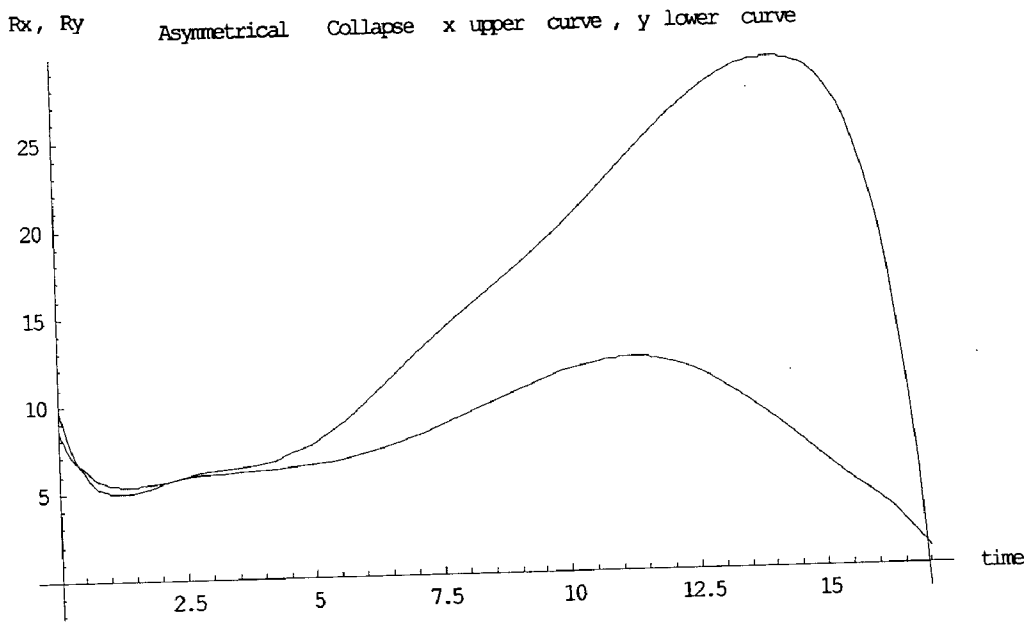
Rx, Ry
Asymmetrical Collapse x upper curve , y lower curve
25
20
15
10
5
2.5
5
7.5
10
12.5
15
time

Figure 17

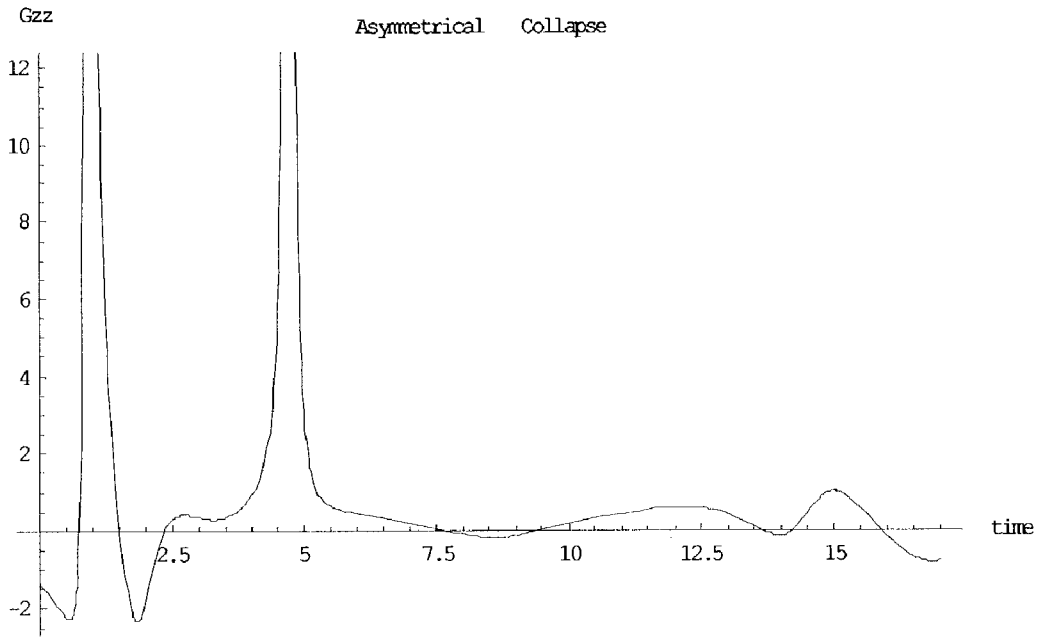

Figure 18

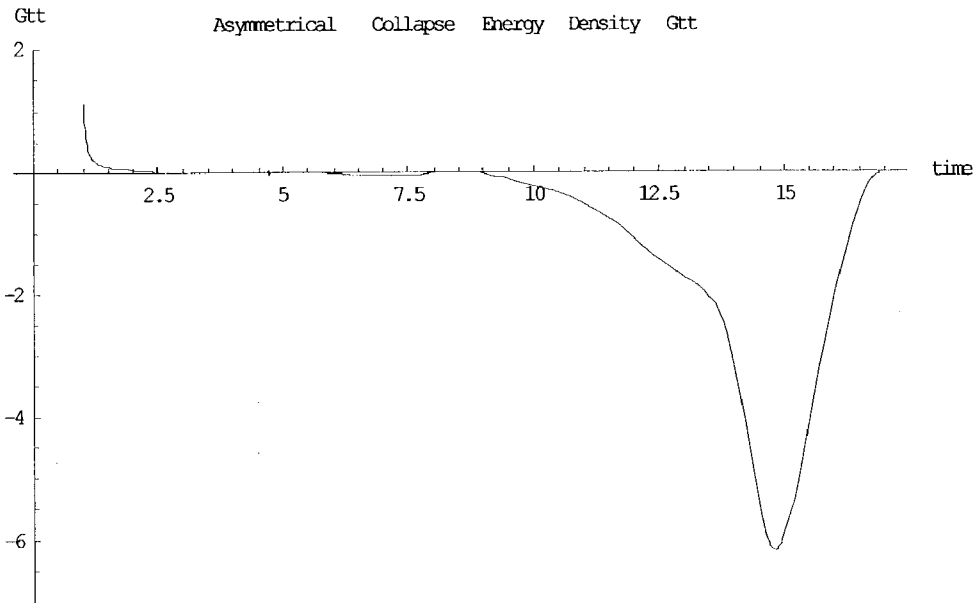
Gtt
Asymmetrical Collapse Energy Density Gtt
2
-2
-4
-6
2.5
5
7.5
10
12.5
15
time

Figure 19

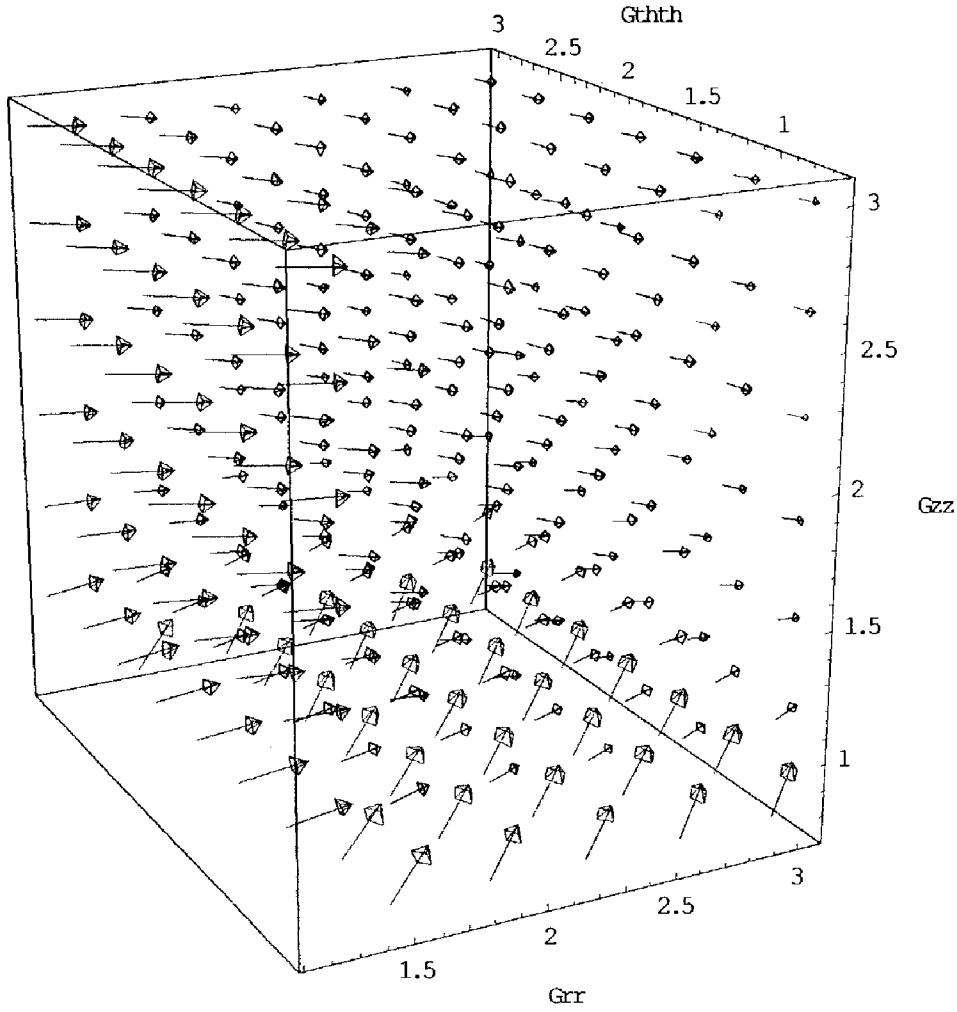

Figure 20

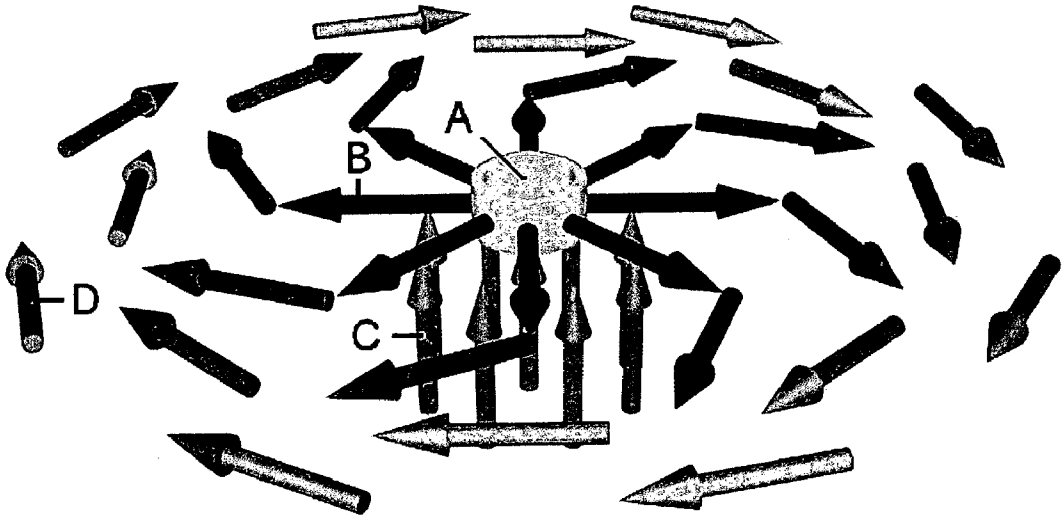

Figure 21

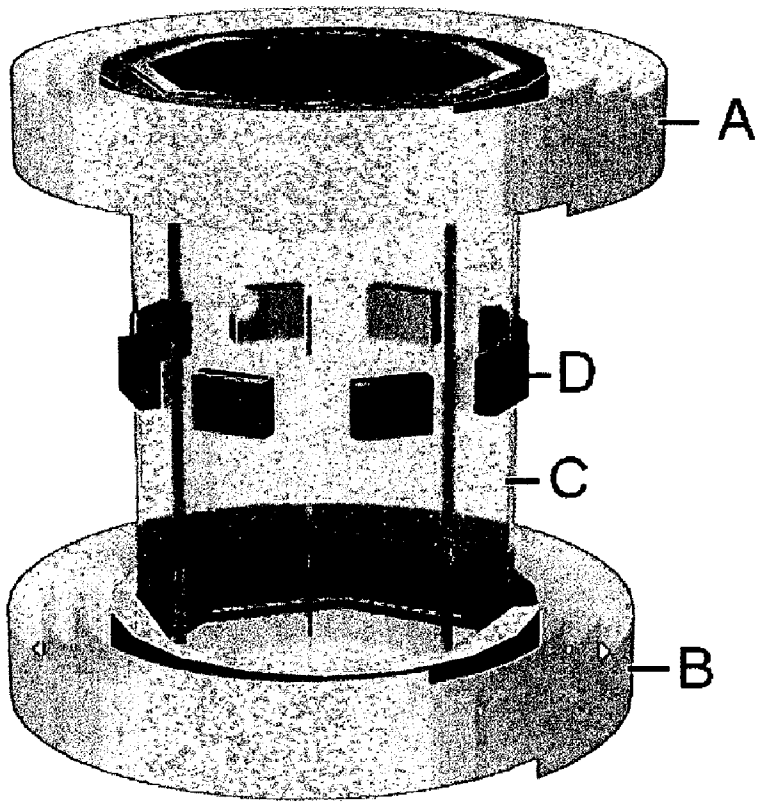

Figure 22

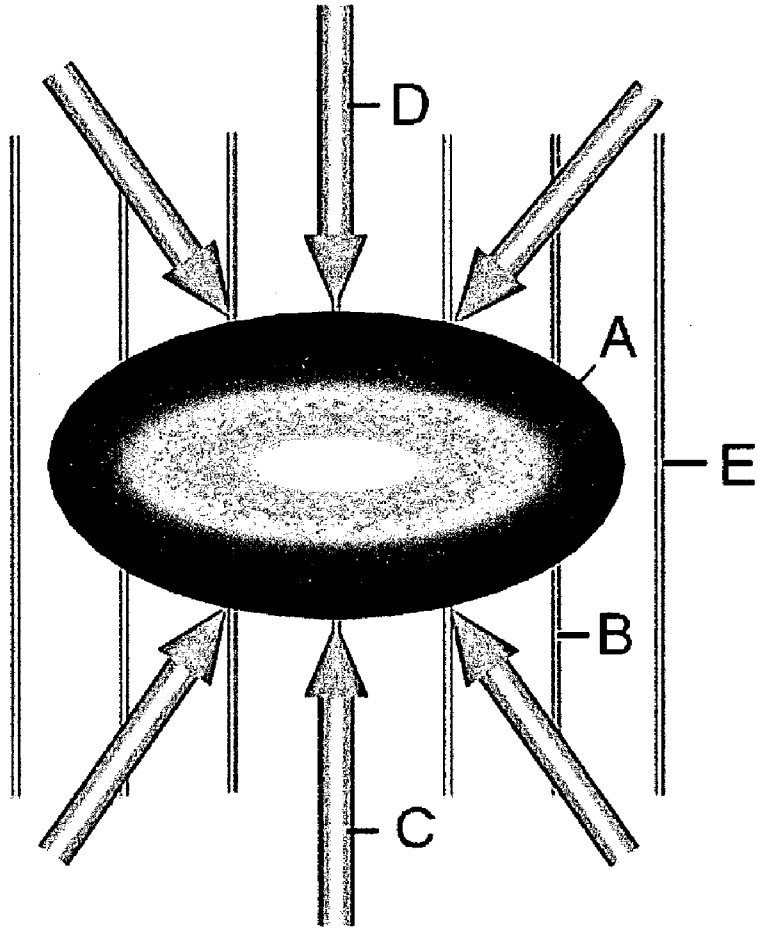

Figure 23

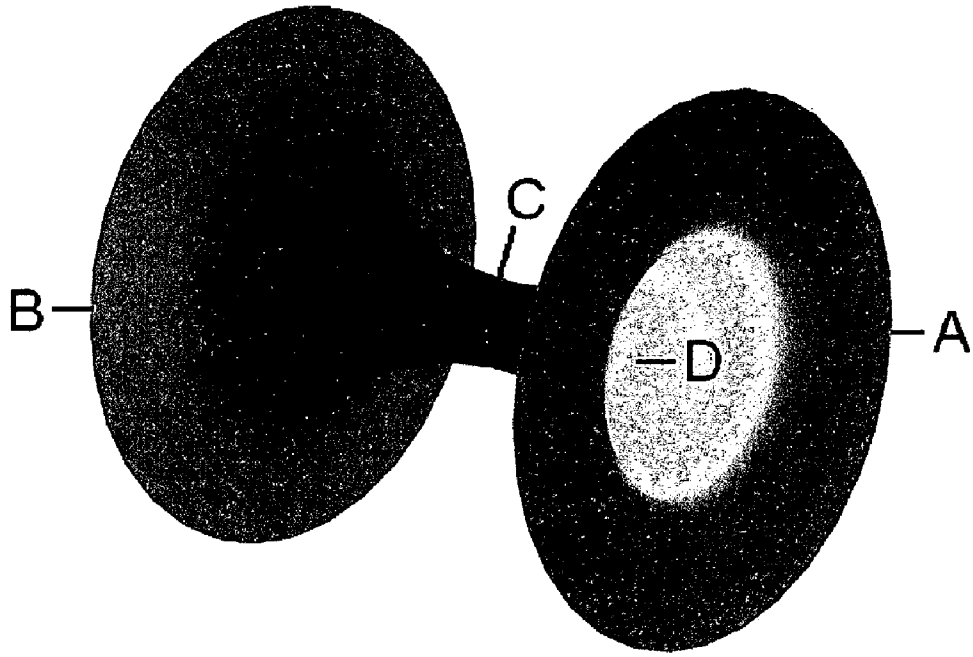

Figure 24

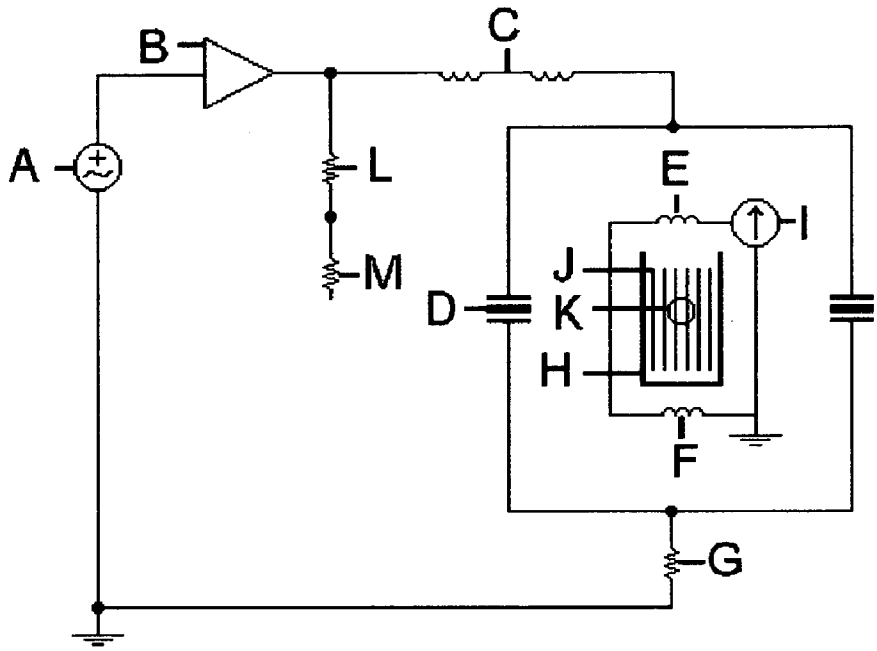

CAVITATING OIL HYPERSPACE ENERGY GENERATOR

BRIEF SUMMARY OF THE INVENTION

[0001] This invention is a hyperspace energy generator that uses cavitating oil bubbles within a magnetic field in order to create wormholes between space and hyperspace for the purpose of permeating the hull of a spacecraft with low-density, low-speed-of-light hyperspace energy.

BACKGROUND OF THE INVENTION

[0002] As shown by physicist Dr. John Archibald Wheeler of Princeton University, there is a second term in Newton's gravitational equation which includes an additional force depending on whether or not the body is spinning.

$$F=mg+m(v\times\Omega)$$

[0003] where F is the force, m the mass, g the acceleration of gravity, v the forward velocity of the body, and Ω the angular velocity of the body. Referring to **FIG. 1**, a rotating cylinder (A) is moving with a velocity (B) while spinning counterclockwise as shown by the angular velocity vector (C). The velocity crossed with the angular velocity vector produces a force in the upward direction (D).

[0004] Referring to **FIG. 2**, a pendulum (A) held in the left hand over the right hand will spin in the counterclockwise direction due to the hyperspace energy vortex (B) emanating from the palm of the right hand. This vortex arises because human beings are hyperspace energy beings that live in physical containers located in this universe. The vortex might be considered a wormhole between space and hyperspace. Notice that the angular momentum vector of the vortex points up out of the palm of the hand. If the hand were spinning from left to right, then there would be a force exerted, as shown by the above equation, that would bring hyperspace energy into the right arm.

[0005] Referring to **FIG. 3**, in order to test this hypothesis, a Chakra Vortex Accelerator was built for the purpose of spinning this hand vortex. The motor-driven machine has a base (A) on which is mounted a warehouse palletizing ring and platform (B). A control column (C) has a speed control and on/off switch. A person (D) stands on the platform with his right arm outstretched and palm facing upward (E). The platform spins from left to right.

[0006] Referring to **FIG. 4**, the velocity vector (A) points to the right. The angular momentum vector of the rotating chakra energy vortex points up. The cross product A×B=C produces a force that brings in high permeability hyperspace energy into the arm.

[0007] Referring to **FIG. 5**, after spinning 99 times per day for a few months, it was noticed that the right arm (A) would remain out at an angle ϕ from the body without making any exertion to do so. The left arm, which was not receiving the energy, remained at the side of the body. That is, the low-density hyperspace energy in the right arm was making the arm lighter and producing a subsequent anti-gravitational effect. The conclusion was that it might be possible to invent some device which would produce large amounts of hyperspace energy. This would make possible relativistic electromagnetic fields which can be used to produce the lift force for electromagnetic field propulsion vehicles.

[0008] Then in the February 1995 issue of *Scientific American*, an article appeared entitled *Producing Light from a Bubble of Air* which gave the details for producing sonoluminescence from a cavitating bubble using a kit for sale containing the piezoelectric transducers. Referring to **FIG. 6**, the experimental setup includes a ring stand (A) with a three-finger clamp (B) holding a 100 milliliter flask containing degassed water produced by a Walsh vacuum/pressure pump. Piezoelectric drive transducers (D) are mounted on the sides of the flask in order to create sound pressure waves which create the cavitation bubble (M) in the center of the flask. The transducers are connected by insulated wire (I) to a pair of inductors (E) having a mutual inductance between them. These inductors are driven by a frequency generator (H) connected to an audio amplifier (G). The oscillation signals are picked up by the oscilloscope (J) which is connected to the resistors (F) using the probes (K). The piezoelectric drive transducers act electrically as capacitors. The inductors are wired in series with the capacitance such that the combination resonates at the frequency at which acoustic resonance occurs. Bubbles introduced into the flask tend to coalesce in the center of the flask Above a certain sound intensity, the bubble will collapse and emit a dim light visible to the unaided eye in a darkened room, a process called sonoluminescence.

[0009] Further research showed that there were some earlier doctoral theses available. One of them by Dr. Steven DeWitt Horsburgh entitled *Radial Instabilities of a pulsating air bubble in water* mentioned a most interesting observed phenomenon of the surface oscillations called a "beaconing effect." When a bubble exhibited a stable or long-lived shape oscillation lasting more than two minutes, the bubble had a tendency to slowly precess. The precession rate was on the order of a few hertz which can be taken to mean around 3 Hz. Visually, the beacon looked like a light house beacon. It was a very obvious effect and when the beacon crossed the photodiode, the output voltage increased by at least an order of magnitude.

[0010] Upon reading this, it became apparent that sonoluminescence is involved with gravitational hyperspace physics. Einstein's theory says that inertia is a manifestation of the geometry of spacetime. It also says that geometry is affected by the presence of matter to an extent proportional to the factor G/c^2 where G is the gravitational constant and c is the speed of light. The inverse of this factor is the linear mass Ω of the universe. A spherical shell of mass m with a radius R will create a drag angular velocity on a pendulum equal to

$$\omega_{drag}=\frac{4}{3}\frac{G}{c^2}\frac{m_{shell}}{R_{shell}}\omega_{shell}=\frac{4}{3}\frac{\frac{m_{shell}}{\Omega}}{R_{shell}}\omega_{shell}$$

[0011] The mass of the shell divided by the linear mass (mass per length) converts the mass into a length which is then divided by the radius of the shell which is also a length. The numerical factor 4/3 is found only by a detailed calculation. The calculation, starting from a flat background spacetime manifold, showed the effect of the moving current of mass on the metric. Expressed in polar coordinates, the metric acquires a non-zero coefficient $g_{\phi t}$. Inserted into the equation for geodesic motion, this off-diagonal metric coef-

ficient gives rise to a precession according to the above equation. The numerical factor corresponds to a pendulum located anywhere inside the rotating shell of mass.

[0012] In other doctoral theses, books and physics articles on cavitation, light is emitted after the bubble starts to collapse. A very sharp peak of light is produced which lasts in terms of picoseconds. Thus this type of sonoluminescence is very different than the beaconing effect where the bubble remains stable for long periods of time. The beaconing effect is actually a rotating wormhole between space and hyperspace.

[0013] Briefly what happens is that there is ionized gas in the bubble which releases electrons. As the electrons spiral down through the wormhole from space into hyperspace, they give off light. This situation puts the electrons in contact with the charge of hyperspace. Space has a charge which is equal to the sum of the electron charge q_e and the hyperspace charge q_h. The charge of space q is equal to the Planck mass times a conversion factor between mass and charge. The Planck mass is equal to the linear mass Ω of the universe times the bottom dimensional limit of the universe known as the Planck scale Λ. The conversion factor is the square root of the gravitational constant G times the permittivity of space ϵ. The permittivity is linear capacitance or capacitance per unit length. Thus the charge of space is

$$q=\Lambda\Omega\sqrt{G\epsilon}=q_e+q_h$$

[0014] Because the electron comes in contact with the hyperspace charge, the drag angular velocity in the above equation has to be modified. Notice that if the angular velocity of the shell is modified by the electron fine structure constant α, and the mass involved is the mass of the electron, moving through a radius into hyperspace of the Planck scale Λ, then the drag angular velocity would be

$$\omega_{drag}=\frac{4}{3}\frac{\frac{m_{electron}}{\Omega}}{\Lambda}\omega_{shell}\frac{1}{\alpha}$$

[0015] The angular frequency of the shell is 2π times the electron frequency f_e.

$$\omega_{shell}=\omega_{electron}=2\pi f_e$$

[0016] The inverse of the electron fine structure constant α is equal to Planck's reduced constant $\hbar$ times the speed of light c times the factor 4π times the permittivity of space ϵ divided by the square of the charge of the electron q_e.

$$\frac{1}{\alpha}=\frac{\hbar c 4\pi\varepsilon}{q_e^2}n=137.037916527$$

[0017] Planck's constant is equal to the Planck scale Λ squared times the linear mass Ω times the speed of light.

$$\hbar=\Lambda^2\Omega c$$

[0018] Notice that the fine structure constant has a square in it and Planck's constant also has a square. If the electron charge were traveling through the Planck scale into hyperspace, then there would be a linear charge equal to the electron charge divided by the Planck scale

$$\frac{1}{\alpha}=\frac{\hbar c 4\pi\varepsilon}{q_e^2}n=\frac{\Lambda^2\Omega c c 4\pi\varepsilon}{q_e^2}n=\frac{4\pi\Omega\varepsilon c^2}{\left(\frac{q_e}{\Lambda}\right)^2}n$$

[0019] The constant equal to the linear mass Ω times the permittivity times the square of the speed of light is actually the square of the linear charge χ of space. So the fine structure constant can be written

$$\frac{1}{\alpha}=4\pi n\frac{(\chi)^2}{\left(\frac{q_e}{\Lambda}\right)^2}=4\pi n\frac{\left(\frac{q}{\Lambda}\right)^2}{\left(\frac{q_e}{\Lambda}\right)^2}=4\pi n\left(\frac{q}{q_e}\right)^2=4\pi n\left(\frac{q_h+q_e}{q_e}\right)^2=$$
$$4\pi n\left(\frac{q_h}{q_e}+1\right)$$

[0020] So the electron fine structure constant is related to the ratio of the charge of hyperspace to the charge of the electron, which is the reason that the equation had to be modified. The electron moving across the Planck scale wormhole is modified by the hyperspace charge it is seeing in a hyperspace co-dimension. This confirms that the beaconing effect is a rotating wormhole into hyperspace.

[0021] The electron fine structure constant is actually the fastest velocity in the Bohr atom. The fine structure constant is the ratio of the electron orbital velocity to the speed of light.

$$\alpha=\frac{v_n}{c}$$

[0022] where the permitted quantized n orbital speeds are v_n/n or v/1, v/2, v/3 and so on. Using a value of v/3, the fine structure constant would be

$$\frac{1}{\alpha}=\frac{3c}{v}=4\pi n\left(\frac{q_h}{q_e}+1\right)=12\pi\left(\frac{q_h}{q_e}+1\right)$$

[0023] which when substituted into the drag angular frequency equation

$$\omega_{drag}=\frac{4}{3}\frac{\frac{m_e}{\Omega}}{\Lambda}2\pi f_e\,12\pi\left(\frac{q_h}{q_e}+1\right)=17.809\ \frac{\text{radians}}{\text{sec}}$$

[0024] The frequency of precession is

$$f_{drag}=\frac{\omega_{drag}}{2\pi}=2.83\ \text{Hz}$$

[0025] which is close to the 3 Hz observed in the experiment. The ionized electrons are moving at a slower velocity

in the bubble. The 1/3 ratio could also come from the subspace tetrahedron geometry where the tetrahedral angle is determined by this ratio

$$\theta=\text{asin}(1/3)=19.47122063^\circ$$

[0026] This is an alternative possibility because this angle determines the charge of hyperspace according to the tetrahedron diagram of Δphysics. In geometrical physics, all the constants of physics are determined geometrically by the tetrahedron. The tetrahedron diagram plots the natural logarithm of mass versus the natural logarithm of wavelength. The tetrahedron is circumscribed by a sphere which reflects the electron wavelength into the electron mass. Thus the diagram combines the dual reality of classical physics, involving point mass particles, and quantum physics, involving wave-like particles. The scientific discovery that the electron and the proton are one and the same particle was made using this diagram. It also shows that hyperspace exists.

[0027] Referring to the tetrahedron diagram in **FIG. 7**, a line drawn at the tetrahedral angle produces the tetrahedral lines (A,B) along path (abc). This tetrahedron is circumscribed by sphere (C) with diameter (G). The electron wavelength (vertical dotted line D) reflects off the sphere (d,f) and returns as the electron mass (F). The distance (df) between reflection points is equal to the natural logarithm of the hyperspace charge. It can be shown that the electron charge is related to the geometry around the top of the sphere. Part of the geometry is outside the sphere which makes the charge immune to relativistic velocities.

[0028] Referring to **FIG. 8**, a current-carrying solenoid (A) produces a magnetic flux (B) through the center of the coil. The end of the solenoid behaves like a magnetic monopole. One end has a positive magnetic charge density $+\rho_m$ and the other has a negative magnetic charge density $-\rho_m$. One of Maxwell's electromagnetic equations states that the divergence of the magnetic field is equal to the magnetic charge density.

$$\nabla\cdot B=\rho_m=+\rho_m-\rho_m=0$$

[0029] Because the magnetic field is solenoidal, the sum of the charges in our spacetime is equal to zero, which is the usual Maxwell equation. In the case of the wormhole, one pole of the magnetic flux is in our spacetime and the other pole is in a co-dimension of hyperspace. In our universe, there is a net magnetic charge density, and Maxwell's equation becomes

$$\nabla\cdot B=\rho_m$$

[0030] When working with bar magnets, bringing two north poles together shows that there is a spring constant involved. The electrons on the surface of the pole spin in the same direction which creates an electrical current around the surface. The magnetic pole strength g is therefore a spring constant K divided by the current per area J.

$$g=\frac{K}{J}\equiv\frac{kg\,m}{s^2}\frac{1}{m}\frac{s\,m^2}{q}=\frac{kg\,m^2}{s\,q}$$

[0031] The magnetic charge density is then the pole strength per volume V or

$$\rho_m=\frac{g}{V}=\frac{kg\,m^2}{s\,q}\frac{1}{m^3}=\frac{kg}{m\,s\,q}$$

[0032] The divergence of the magnetic field has units of

$$\nabla\cdot B=\frac{1}{m}\frac{kg}{s\,q}$$

[0033] which are the units of the magnetic charge density. Notice that the units can also be formatted as a pressure per electrical current in the wire.

$$\rho_m=\frac{kg}{s\,q\,m}=\frac{kg\,m}{s^2\frac{q}{s}m^2}=\frac{\text{force}}{\text{area}}\frac{1}{I}=\frac{\text{pressure}}{\text{current}}$$

[0034] The current flowing through the coils of the solenoid, or around the pole face of the bar magnetic creates a pressure on spacetime. And it is this pressure that can punch through spacetime into hyperspace. Referring again to **FIG. 8**, an electrical charge winding n times around the end of the spacetime solenoid, as seen by path (C), is equal to the charge divided by Planck's constant times the pole flux

$$2\pi n=\frac{q}{\hbar}\int_{Surface}B=\frac{q}{\hbar}\Phi$$

[0035] which shows that the flux Φ is quantized by the winding number n

$$\Phi=n\frac{2\pi\hbar}{q}=n\frac{h}{q}$$

[0036] where the flux is equal to the winding number n times Planck's constant h divided by the charge. Since the flux is the pole strength in webers, the pole strength g has a value of

$$g=n\frac{h}{q}$$

[0037] The magnetic charge density is the pole strength divided by the Planck volume or

$$\rho_m=\frac{g}{\Lambda^3}=n\frac{h}{q}\frac{1}{\Lambda^3}=n\frac{2\pi\Lambda^2\Omega c}{q\Lambda^3}=\frac{2\pi n}{\Lambda}\frac{\Omega c}{q}=2\pi n\frac{B}{\Lambda}$$

[0038] The magnetic B field of space divided by the Planck length of the wormhole, acting as a linear magnetic field, times the winding number is equal to the magnetic charge density.

[0039] Referring to **FIG. 9**, the wormhole (A), connecting space and hyperspace (D), is precessing (C) in the counterclockwise direction with the angular velocity vector in the vertical z-direction. The magnetic flux (B) through the wormhole is in the radial direction. The mouth of the wormhole is an area with a normal vector in the radial direction also. This arrangement creates an electric field which circulates around the interior periphery of the wormhole. Maxwell's equation says that the curl of the electric field E is equal to the negative time rate of change of the magnetic B field.

$$\nabla \times E = -\frac{\partial B}{\partial t}$$

[0040] This equation is difficult to manage in differential form. As both Maxwell and Feynman have said, it is better to use the integral form involving Stokes' theorem where the area da is converted into a line integral ds which goes well with Maxwell's idea of flux linkage.

$$\int_{surface} (\nabla \times E) \cdot n\, da = \oint E \cdot ds = -\frac{\partial}{\partial t} \int_{surface} B \cdot n\, da = -\frac{\partial}{\partial t}\Phi = -\Phi\, \omega_{drag}$$

[0041] The flux Φ, which is precessing around at the drag angular velocity calculated previously, is equal to the negative of the electric field around the interior perimeter (E) of the wormhole. This is the reason that the beaconing effect lasts for such a long length of time. The force on the electron is equal to the charge of the electron times the electric field. Because the charge is negative, the electron rotates counterclockwise in the opposite direction to that of the electric field. The electrons continuously circulate around the inside periphery of the wormhole. Quantum theory predicts that any radiated electromagnetic energy from an accelerated electron will give off one or more discrete quanta, or photons. The electron is accelerating because it is moving in a circular path. Because the water vapor is ionized in the cavitating bubble due to shock waves, surface oscillations and high temperatures, there are huge numbers of electrons available for producing an intense light which, as registered by the photodiode, increased by an order of magnitude when the beacon rotated by the photodiode.

[0042] From gravitational physics it is known that negative energy has to be produced in order to create a wormhole. Most experimenters are using collapsing spherical bubbles that do not produce negative energy and therefore do not produce the beaconing effect. This next background section shows that if the bubble collapses asymmetrically, then negative energy is produced.

[0043] Referring to an experiment carried out by Fizeau, **FIG. 10**, water flows (B,C) in opposite directions in two tubes of water (A). A light beam from a lamp (D) is projected through both tubes using half-silvered mirrors (E). Fizeau measured an interference (F) between light propagating with the flow and light swimming against the current, indicating that the flow of the medium does affect light propagation. A moving medium turns out to drag light to an extent quantified by a dragging coefficient

$$\alpha = 1 - \frac{1}{n^2}$$

[0044] where n is the index of refraction of the medium. Einstein's addition theorem of velocities states

$$v = \frac{v' + u}{1 + \frac{v'u}{c^2}} = \frac{\frac{c}{n} + u}{1 + \frac{cu}{nc^2}} = \frac{\frac{c}{n} + u}{1 + \frac{u}{nc}}$$

[0045] In the limit of slow flows compared with the speed of light in a vacuum, the effective velocity of light v in the medium flowing at a velocity u is

$$v \approx \left(\frac{c}{n} + u\right)\left(1 - \frac{u}{nc}\right) \approx \frac{c}{n} + \alpha u$$

[0046] The relationship between cavitating bubbles and light dragging is that when the bubble collapses, the surface has a tremendous acceleration and velocity which creates internal shockwaves that bounce back and forth within the medium. At the same time, the water vapor and air are ionized which creates short bursts of light. Thus there is light that is being dragged along by the collapsing surface of the bubble. This moving medium appears to light as a change in the metric of spacetime resembling, it turns out, a gravitational field. The velocity of the medium affects the elemental length ds^2 of spacetime as given by the metric for light dragging

$$ds^2 = c^2dt^2 - dx^2 + k(c^2dt^2 - u \cdot dx)^2$$

[0047] where k is equal to

$$k = \frac{\alpha}{c^2 - u^2}$$

[0048] and dx is the elemental length in the {dx,dy,dz} directions. The velocity u in the dot product is equal to the velocities {ux,uy,uz} in the x, y and z-directions. Expanding the equation produces the following metric

$$ds^2 = (1+k)dt^2 + (ku_x^2 - 1)dx^2 + (ku_y^2 - 1)dy^2 - dz^2 - 2ku_x dxdt - 2ku_y dydt + 2ku_x u_y dxdy$$

[0049] where velocity uz is zero and the speed of light is equal to one.

[0050] The dt^2 energy density term is modified by one plus the k factor. Thus the index of refraction of the medium, the speed of light and the overall light dragging velocity u affects the energy density. It can be shown that the speed of light in hyperspace is much lower. The difference of the squares of the velocities in the denominator creates the possibility for amplification of this term.

[0051] The factors of the elemental lengths are then inserted into the g metric tensor which is then used to calculate the spacetime distortion generated by the collaps-

ing bubble. The g metric tensor is a 4×4 matrix having rows and columns that correspond to the elemental lengths {t, x, y, z}.

$$g_{\alpha\beta} = \begin{array}{c} \\ \alpha = t \\ \alpha = x \\ \alpha = y \\ \alpha = z \end{array} \begin{array}{c} \begin{array}{cccc} \beta = t & \beta = x & \beta = y & \beta = z \end{array} \\ \begin{Vmatrix} 1+k & -ku_x & -ku_y & 0 \\ -ku_x & ku_x^2 - 1 & ku_x u_y & 0 \\ -ku_y & ku_x u_y & ku_z^2 - 1 & 0 \\ 0 & 0 & 0 & -1 \end{Vmatrix} \end{array}$$

[0052] In Einstein's General Theory of Relativity, the G curvature tensor, which is a 4×4 matrix having units of inverse meter squared, is equal to a stress-energy-momentum T tensor that is calculated from the electromagnetic fields. The stress tensor T combines energy density, electromagnetic flux, and pressure terms in one matrix.

$$G=8\pi T$$

[0053] Most of the physics constants are linear constants such as linear mass which is mass per unit length. The permittivity of space ϵ is linear capacitance or capacitance per meter. The permeability of space μ is linear inductance or inductance per meter. The speed of light converts time into meters. What this means is that energy, pressure and momentum can all be converted into meters using these linear constants. The inverse squared of the length in meters is the curvature which is measured in units of m^{-2}.

[0054] Referring to **FIG. 11**, a square bubble (A) in the xy plane collapses with a velocity in the x-direction (C), and a velocity in the y-direction (B). This produces a curvature in the vertical z-direction (D). The curvature in the z-direction is the curvature tensor component G_{zz}. which can be computed directly from the g light dragging metric tensor. The result of the calculation is an equation in terms of the velocity, acceleration and the time rate of change of the acceleration, known as jerk.

[0055] Because the profile of the bubble radius expanding and collapsing with time has been published by those researching cavitation, it is possible to differentiate the profile to get the velocity, acceleration and jerk. These equations can then be inserted into the equation for the G curvature tensor.

[0056] The radius R of the bubble depends on the air density inside the bubble ρ, the viscosity of the water μ, the pressure of the P of the environment, the surface tension σ of the water, the ratio of specific heats γ, and the velocity $\dot{R}$ and acceleration $\ddot{R}$ of the bubble radius.

$$R\ddot{R} + \frac{3}{2}\dot{R} + \frac{4\mu}{\rho}\frac{\dot{R}}{R} + \frac{2\sigma}{\rho R} + \frac{P_0}{\rho} - \left(P_0 + \frac{2\sigma}{R_0}\right)\left(\frac{R_0}{R}\right)^{3\gamma} = 0$$

[0057] Referring to **FIG. 12**, the above equation for the bubble radius is shown in the feedback simulation program. The diagram starts by solving the equation for the acceleration which is then integrated twice (1/S) to get the velocity and position. These variables are then fed back to the input through the various constants involving the viscosity, surface tension, pressure and air density. The graph at the bottom of the simulation shows the bubble radius with time.

[0058] Referring to **FIG. 13**, the bubble profile with time is reproduced from the *Scientific American* article mentioned previously. This profile was then fitted with a polynomial equation which is plotted in **FIG. 14**. By differentiating the equation, the velocity, acceleration and jerk are obtained which can then be inserted into Einstein's G curvature tensor.

[0059] Referring to **FIG. 15**, the curvature component in the vertical direction G_{zz} is plotted with respect to time. In the *Scientific American* plot, the light flash occurs at the end of the collapse marked "LIGHT FLASH" around 22 microseconds (**FIG. 13**). This corresponds to the two intense positive curvature G_{zz} spikes at the end of the collapse. This represents a symmetrical spherical bubble collapse where the velocities are the same in the x and y directions.

[0060] The energy density component G_{tt} for this symmetrical collapse is given by

$$G_{tt} = \frac{-2u_y^2 a_x^2 + 4u_x u_y a_x a_y - 2u_x^2 a_y^2}{4(u_x^2 + u_y^2 - 2)}$$

[0061] Looking at this carefully, notice that if the velocity in the x-direction u_x is equal to the velocity in the y-direction u_y, and the acceleration in the x-direction a_x is equal to the acceleration in the y-direction, then the equation reduces to zero.

$$G_{tt} = \frac{-2u^2 a^2 + 4u^2 a^2 - 2u^2 a^2}{8(u^2 - 1)} = 0$$

[0062] which means that the symmetrical collapse with equal velocities does not produce any negative energy with which to create the wormhole. Only sharp pulses of light are emitted at the end of the bubble collapse where the intense positive curvature spikes are encountered. In order to get the rotating wormhole beaconing effect, the velocities have to be different.

[0063] Referring to **FIG. 16**, the bubble is given an asymmetrical profile as shown by the two curves. The upper curve is in the x-direction, and the lower curve is in the y-direction. The collapse in the y-direction is not as severe.

[0064] Referring to **FIG. 17**, the asymmetrical collapse has the curvature spikes at the beginning similar to the symmetrical case of **FIG. 15**. Notice that there are no spikes at the end of the collapse. However, the energy density is much different.

[0065] Referring to **FIG. 18**, the energy density G_{tt} is plotted as a function of time. Rather than being zero as in the symmetrical case, there is a large region of negative energy density as the bubble collapses. This negative energy is what creates the wormhole. Because there are no large curvature spikes at the end of the collapse, the wormhole bubble is stable and precesses for a few minutes.

[0066] Experiments with the pendulum show that some people have much larger auras than others. The pendulum swings over the entire hand. One particular person who has enormous vortices was working in a television repair shop. When a television set is brought in to the shop, the large capacitor has to be discharged first. The repairman with the large chakra vortices was standing behind a second repairman who was approaching the television set. As the second repairman got closer to the set, an enormous streaming blue spark sailed over his head and zapped the first technician. Hyperspace has a much higher permittivity than our spacetime. The resistance of space R is equal to the square root of the permeability μ over the permittivity ϵ.

$$R = \sqrt{\frac{\mu}{\varepsilon}}$$

[0067] Since the technician with the large chakra vortices was producing large quantities of hyperspace energy, his resistance was very much lower due to his larger permittivity. The spark grounded on his body. The free electrons, which are created by ionization of the hydrogen atoms of the water vapor, see a very low path of resistance and flow toward the wormhole. There they are trapped in accelerated motion due to the presence of the circular electric field and give off substantial numbers of photons which produces the beaconing lighthouse effect.

[0068] The elemental length ds^2 in cylindrical coordinates {t, r, θ, z} for a mass M is given by

$$ds^2 = -\frac{dt^2}{1-\frac{M}{r}} + \left(1-\frac{M}{r}\right)dr^2 + r^2 d\theta^2 + dz^2$$

[0069] The mass M distorts the radius r of the elemental length which is what gives the mass a curvature or gravitational field. Negative energy, which is produced at the end of the bubble collapse, is equal to a negative mass times the speed of light squared. Thus mass M in the equation goes to negative mass, or M→−M. Furthermore, negative energy inverts the mass factor so that the metric becomes

$$ds^2 = -\left(1+\frac{M}{r}\right)dt^2 + \frac{dr^2}{1+\frac{M}{r}} + r^2 d\theta^2 + dz^2$$

[0070] The g metric tensor contains the factors of the elemental lengths along the matrix diagonal

$$g_{\alpha\beta} = \begin{Vmatrix} -\left(1+\frac{M}{r}\right) & 0 & 0 & 0 \\ 0 & \frac{1}{1+\frac{M}{r}} & 0 & 0 \\ 0 & 0 & r^2 & 0 \\ 0 & 0 & 0 & 1 \end{Vmatrix}$$

[0071] As before, Einstein's G curvature tensor in the radial G_{rr}, angular $G_{\theta\theta}$, and vertical z-direction G_{zz} is calculated from this negative energy g metric tensor.

[0072] Referring to the 3D G curvature plot in **FIG. 19**, the strength of the curvature is given by the length of the arrow, and the direction of the curvature is given by the arrow. The curvature in the radial direction G_{rr} is along the bottom axis from the box corner origin to the right. The curvature in the angular direction $G_{\theta\theta}$ is the bottom axis from the origin to the left. The height of the box is the curvature in the vertical direction G_{zz}. Notice in general that the curvature is perpendicular to the left face (θz-plane) and then starts to curve to the right and begins to point toward the right face (rz-plane). On the bottom face (rθ-plane) there is an upward vertical curvature.

[0073] In cylindrical coordinates, the θz-plane is actually a vertical tube of radius r. So at small r, the curvature is perpendicular to the tube. At larger radius, the curvature starts to point in the θ-direction, wrapping around the tube. At small radius, there is also a vertical curvature parallel to the sides of the tube.

[0074] Referring to **FIG. 20**, the curvature in cylindrical coordinates is seen to be the structure of the wormhole. The wormhole (A) is formed due to the radial pressure (B) which pulls open the wormhole. One end of the tube connects to hyperspace, and the other end connects to our spacetime. There is also a shearing pressure (D) along the sides of the tube which slices spacetime open and helps shape the tube. Moving outward along the radius, the curvature turns sideways and produces a shearing pressure (D) in the θ-direction which gives the wormhole a vortex appearance. These wormholes can also be very large, enabling one to peer into a co-dimension as attested to by the inventor.

SUMMARY OF THE INVENTION

[0075] As described in the previous section, the cavitating bubble has to collapse asymmetrically in order to generate the negative energy which creates the wormhole. In order to collapse asymmetrically, the forces on the bubble surface have to be unequal. The force on the bubble is given in terms of the a dragging coefficient, the bubble radius R, the surface charge density D_r, the magnetic B field in spherical coordinates $\{B_r, B_\theta, B_\phi\}$. The fields are integrated over the entire solid angle Ω of the bubble to determine the force F.

$$F_r = -\left(1-\frac{1}{n^2}\right)\frac{R^2}{2}\oint d\Omega\left[\left(1+\frac{1}{n^2}\right)(D_r^2 + B_r^2 - B_\theta^2 - B_\phi^2)\right]$$

[0076] The integration of the tangential components of the magnetic field such as $\{B_\Theta, B_\Phi\}$ over the solid angle of the bubble will sum to zero. The surface charge density D_r and the radial magnetic field B_r are the only fields which can be used to create an unbalanced force. If there is no surface charge density, then the force equation reduces to

$$F_r = -\alpha\frac{R^2}{2}\oint d\Omega\left[(2-\alpha)\left(\frac{\chi^2}{\Omega_m}B_r^2\right)\right]$$

[0077] where the conversion constant is the linear charge squared divided by the linear mass of the universe χ^2/Ω_m.

[0078] In this invention, referring to **FIG. 21**, the magnetic field is created by two cylindrical solenoids (A,B) which are wrapped around the top and bottom of the glass container (C). The container has flat sides in the shape of an octagon. Each solenoid consists of a continuous roll of very thin sheet copper which are separated by beaded mylar line. The mylar beads separate the sheets electrically and provide air cooling to the coil which can get rather hot. This makes it easy to assemble the coil because the copper roll and mylar line are wound together as the solenoid is formed. The lines of magnetic flux flow vertically through the container yet do not interfere with the transducers (D) which are mounted on the flat sides of the container.

[0079] Referring to **FIG. 22**, the cavitating bubble which forms in the liquid in the container experiences a vertical magnetic field (B) due to the two solenoids. These flux lines create a radial force on the top and bottom of the bubble (D,C). The flux lines on the outside (E) do not create any radial force because they are tangential to the surface. The spherical bubble flattens into an asymmetrical ellipsoidal shape (A) which enables the creation of the wormhole and lighthouse beaconing effect.

[0080] Referring to **FIG. 23**, the spacetime curvature of the wormhole (D) creates a tunnel (C), known as the throat of the wormhole, between flat space in our universe (A) and flat hyperspace (B) which exists in a co-dimension of our universe. In general, the co-dimensions have different physics constants. Going back to the chakra vortices of the human energy field, the vortices remove energy from space and deliver it to several hyperspace co-dimensions. This energy builds up human aura modules at different frequencies in astral space. Astral space has a very low speed of light and small linear mass. This is the reason that human beings can leave their bodies and pass through solid concrete walls, or project their spiritual eye to remote locations for viewing. On the other hand, the linear mass and speed of light of space is very much greater than hyperspace. Therefore, the pressure of the space is much greater than the pressure in hyperspace. In terms of the wormhole with a throat area A, the pressure would be the linear mass times the speed of light squared over the area

$$P_{space} = \frac{\Omega_s c_s^2}{A}$$

[0081] The pressure of hyperspace on the other side of the wormhole is

$$P_{hyperspace} = \frac{\Omega_h c_h^2}{A}$$

[0082] Because the linear mass and the speed of light of hyperspace are lower than that of space, there is a positive net pressure going into hyperspace.

$$P_{net}=P_{space}-P_{hyperspace}$$

[0083] This is the reason that the human vortices can obtain energy from this universe. Because the cavitating bubble produces negative energy, the linear mass is negative on the side of space. The pressure equation is then given by

$$P_{net} = -\frac{P_s}{A} - \frac{P_h}{A} = -\frac{P_s + P_h}{A}$$

[0084] which shows that there is a reverse pressure going from hyperspace into our space. The asymmetrical cavitating bubble generates hyperspace energy. The hyperspace energy flowing into our universe also gives the light generated by the wormhole a soft white misty look.

[0085] There are many reasons for generating this hyperspace energy. Electromagnetic fields are subject to the Lorentz transformation which involves comparing the frame velocity with that of the velocity of light.

$$E' = \frac{E}{\sqrt{1-\frac{v^2}{c^2}}}$$

[0086] If the ratio of the velocity v to the velocity of light c is close to unity, then huge relativistic fields can be produced. These fields can curve spacetime to such an extent that a large lift force can be produced on the hull of an electromagnetic field propulsion vehicle.

STATEMENT REGARDING FEDERALLY SPONSORED RESEARCH OR DEVELOPMENT

[0087] Not Applicable.

A BRIEF DESCRIPTION OF THE DRAWINGS

[0088] **FIG. 1**. Rotating cylinder demonstrating additional lift force.

[0089] **FIG. 2**. Use of the pendulum.

[0090] **FIG. 3**. The Ascension Machine, Chakra Vortex Accelerator.

[0091] **FIG. 4**. Hyperspace energy brought into body by rotation of hand chakra.

[0092] **FIG. 5**. Antigravitational effect using low density hyperspace energy.

[0093] **FIG. 6**. Sonoluminescence experiment.

[0094] **FIG. 7**. Tetrahedron diagram showing hyperspace charge.

[0095] **FIG. 8**. Magnetic monopole.

[0096] **FIG. 9**. Precessing wormhole.

[0097] **FIG. 10**. Fizeau light dragging experiment.

[0098] **FIG. 11**. Asymmetrical velocity collapse of bubble radius generates wormhole.

[0099] **FIG. 12**. VisSim feedback simulation of the collapsing bubble.

[0100] **FIG. 13**. Cavitating bubble radius as a function of time.

[0101] **FIG. 14**. Digitized bubble radius of **FIG. 13**.

[0102] **FIG. 15**. Spiking spacetime curvature of collapsing bubble.

[0103] **FIG. 16**. Dual velocity profile required to produce negative energy.

[0104] **FIG. 17**. Spacetime curvature for dual velocity collapse.

[0105] **FIG. 18**. Negative energy generated from asymmetrical collapse of bubble.

[0106] **FIG. 19**. 3D plot of spacetime curvature using negative energy.

[0107] **FIG. 20**. Wormhole vortex.

[0108] **FIG. 21**. Perspective of cavitation tank equipped with magnetic coils.

[0109] **FIG. 22**. Flattening of bubble by magnetic field.

[0110] **FIG. 23**. Hyperspace energy generated by reverse pressure gradient of wormhole.

[0111] **FIG. 24**. Solenoid and transducer driving circuits.

DETAILED DESCRIPTION OF THE INVENTION

[0112] 1. Referring to **FIG. 24**, the transducer driving circuit uses a frequency generator (A) driving a linear amplifier (B) into a pair of variable inductors (C) which resonate with the capacitance of the transducers (D) attached to the sides of the octagonally-shaped glass container (H). Resistors (L,M,G) provides voltage measuring points for the oscilloscope.

[0113] A DC current source (I) drives the two solenoids (E,F) which produce a vertical magnetic field (J) through the container. The magnetic field produces an asynmetrical force on the bubble surface (K) such that the collapsing bubble produces negative energy. The spacetime curvature produced by the light dragging of the collapsing bubble surface, together with the negative energy, create a wormhole between space and hyperspace. The negative spacetime energy produces a negative pressure which brings low-density hyperspace energy into our dimension.

I claim:

1. A hyperspace energy generator having:

a) a glass container in the shape of an octagon acting as the resonating chamber;

b) two piezoelectric transducers, mounted and operating acoustically as a pair on opposite sides of item (1a);

c) an opaque oil-like liquid with a high index of refraction filling item (1a) acting as the resonating liquid in which the cavitating bubbles are formed;

d) two thin sheet copper solenoids, located on top and bottom of item (1a), that produce a vertical magnetic field through items (1a) and (1c);

e) two variable inductance coils for creating a resonant frequency with item (1b);

f) a linear amplifier driving items (1b) and (1e);

g) a variable frequency generator driving item (1e);

h) a direct current electrical generator driving item (1d);

2. a cavitation system which:

a) produces one or more cavitating bubbles that collapse asymmetrically due to the differential force exerted on the bubble surface by the presence of a vertical magnetic field generated by item (1d) referred to above;

b) generates negative energy due to light dragging of the collapsing bubble surface;

c) creates wormholes between space and hyperspace due to the presence of item (1b);

d) generates a negative pressure between space and hyperspace that forces low-density hyperspace energy into our dimension; and

3. optional dual electrically-charged plates that:

a) are mounted on the sides of item (1a);

b) create a differential electric charge density across the bubble surface for the purpose of creating an additional method of asymmetrical bubble surface collapse.

* * * * *

US 20060014125A1

(19) United States

(12) Patent Application Publication

(10) Pub. No.: US 2006/0014125 A1

(43) Pub. Date: Jan. 19, 2006

St. Clair

(54) WALKING THROUGH WALLS TRAINING SYSTEM

(76) Inventor: **John Quincy St. Clair**, San Juan, PR (US)

Correspondence Address:
JOHN ST. CLAIR
4A
52 KINGS COURT
SAN JUAN, PR 00911 (US)

(21) Appl. No.: **10/890,635**

(22) Filed: **Jul. 14, 2004**

Publication Classification

(51) **Int. Cl.**
G09B 19/00 (2006.01)

(52) **U.S. Cl.** **434/258**

(57) **ABSTRACT**

This invention is a training system which enables a human being to acquire sufficient hyperspace energy in order to pull the body out of dimension so that the person can walk through solid objects such as wooden doors.

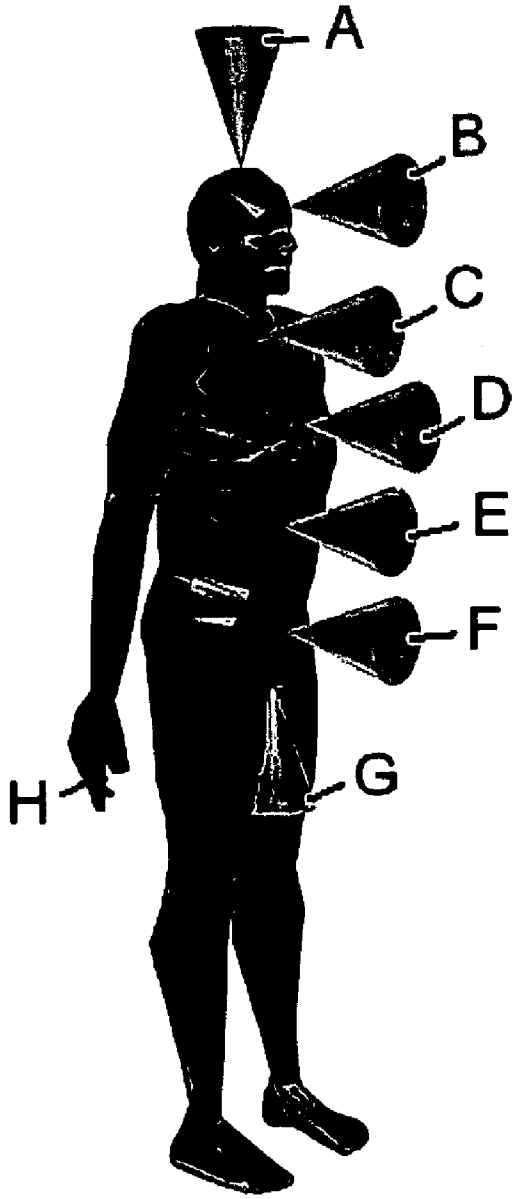

Figure 1

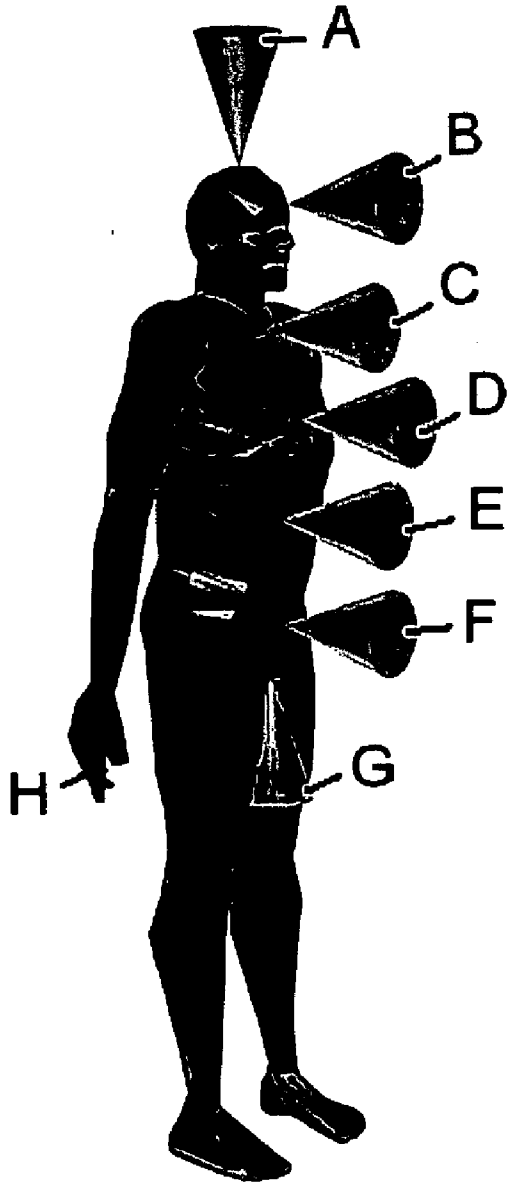

Figure 2

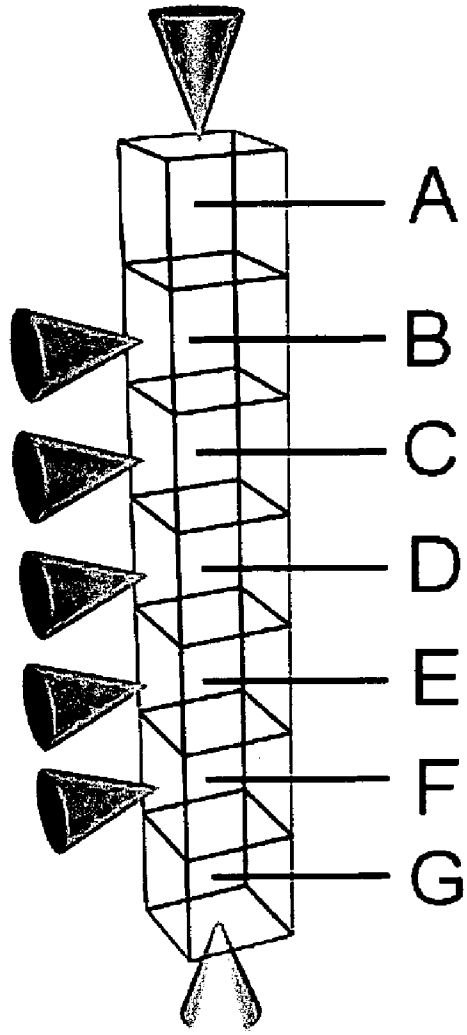

Figure 3

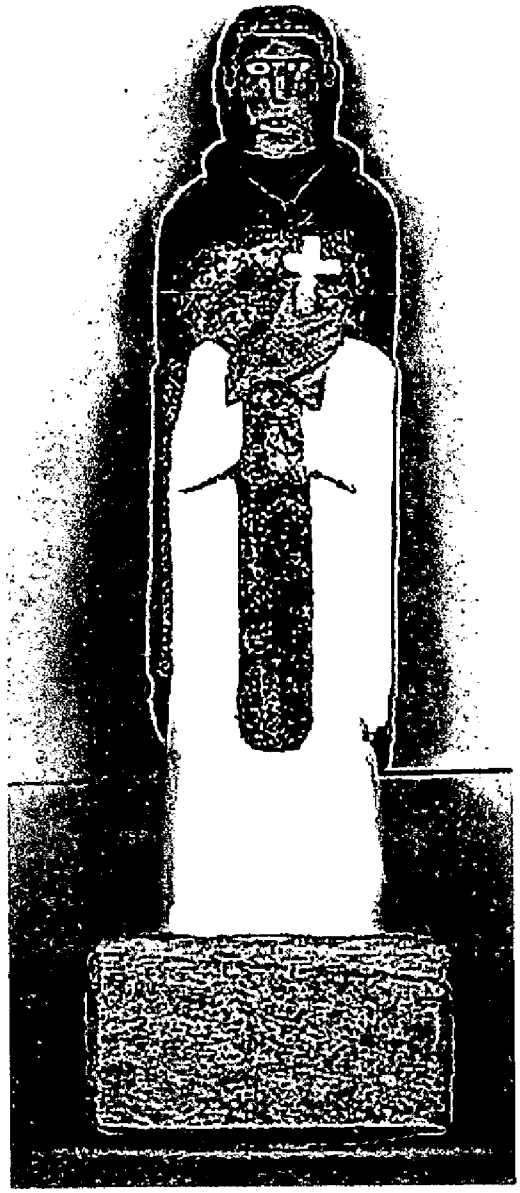

Figure 4

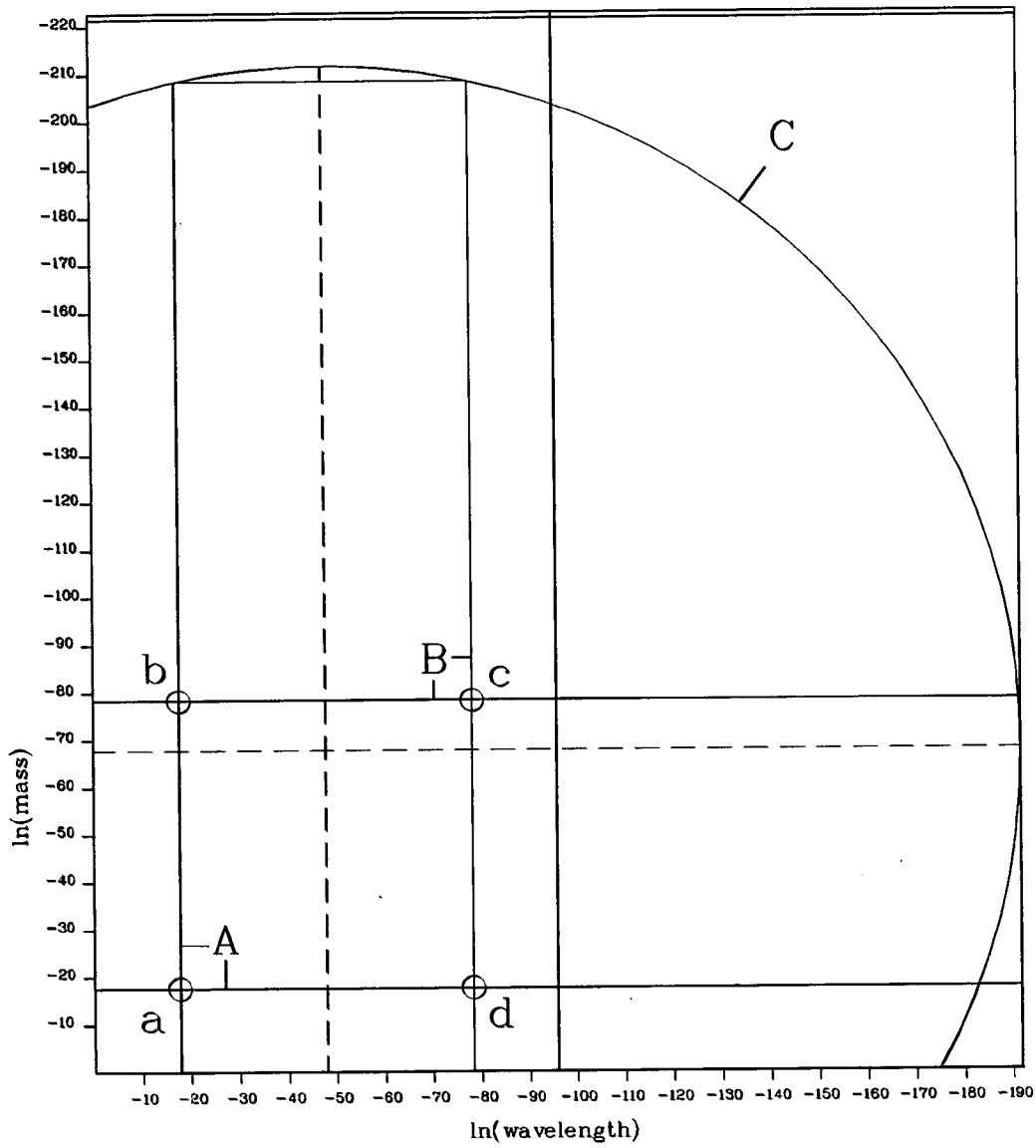
C
b
B
c
A
a
d
ln(mass)
ln(wavelength)
-220
-210
-200
-190
-180
-170
-160
-150
-140
-130
-120
-110
-100
-90
-80
-70
-60
-50
-40
-30
-20
-10
-10 -20 -30 -40 -50 -60 -70 -80 -90 -100 -110 -120 -130 -140 -150 -160 -170 -180 -190

Figure 5

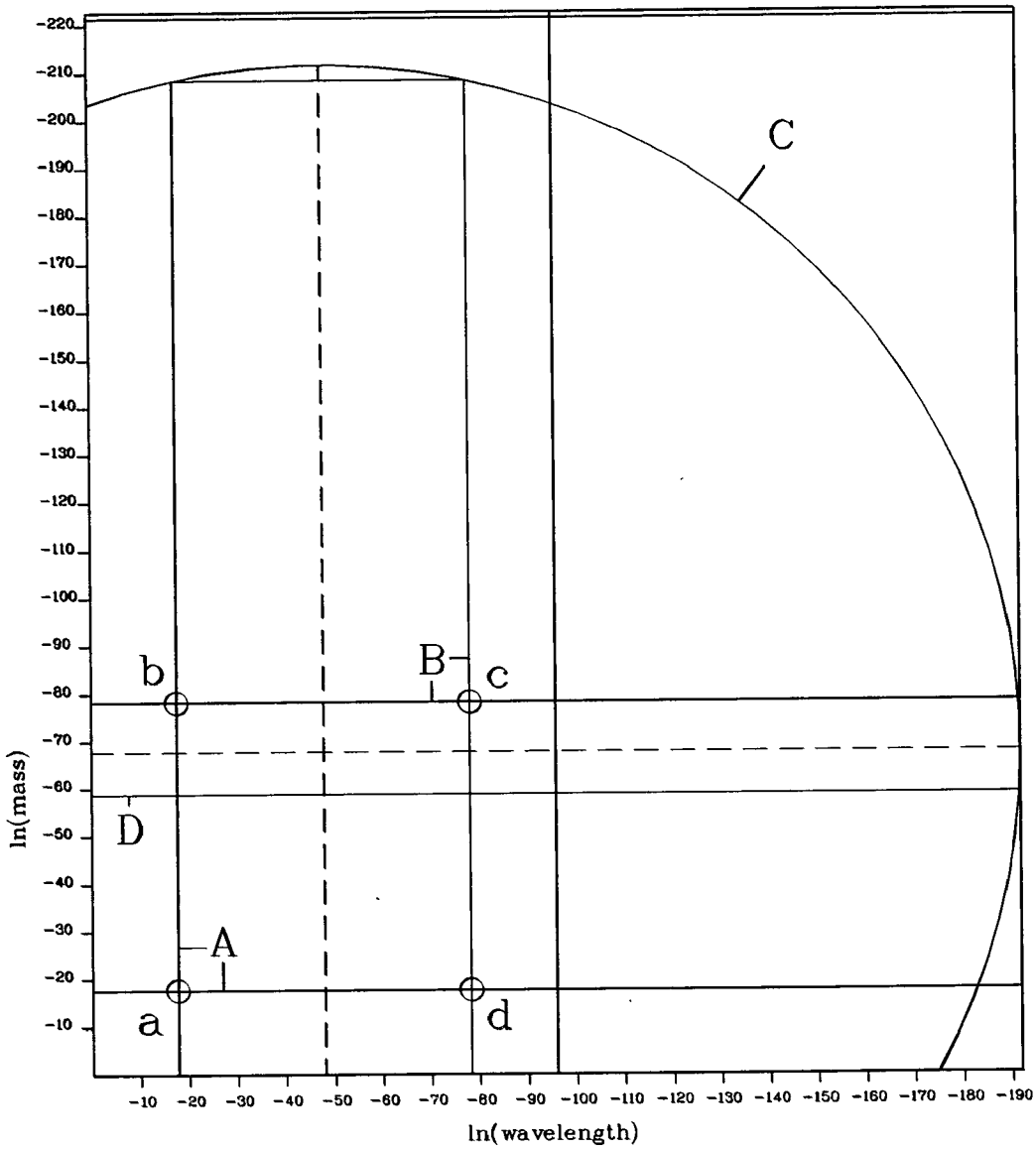
C
B
b
c
D
A
a
d
ln(mass)
ln(wavelength)
-220
-210
-200
-190
-180
-170
-160
-150
-140
-130
-120
-110
-100
-90
-80
-70
-60
-50
-40
-30
-20
-10
-10 -20 -30 -40 -50 -60 -70 -80 -90 -100 -110 -120 -130 -140 -150 -160 -170 -180 -190

Figure 6

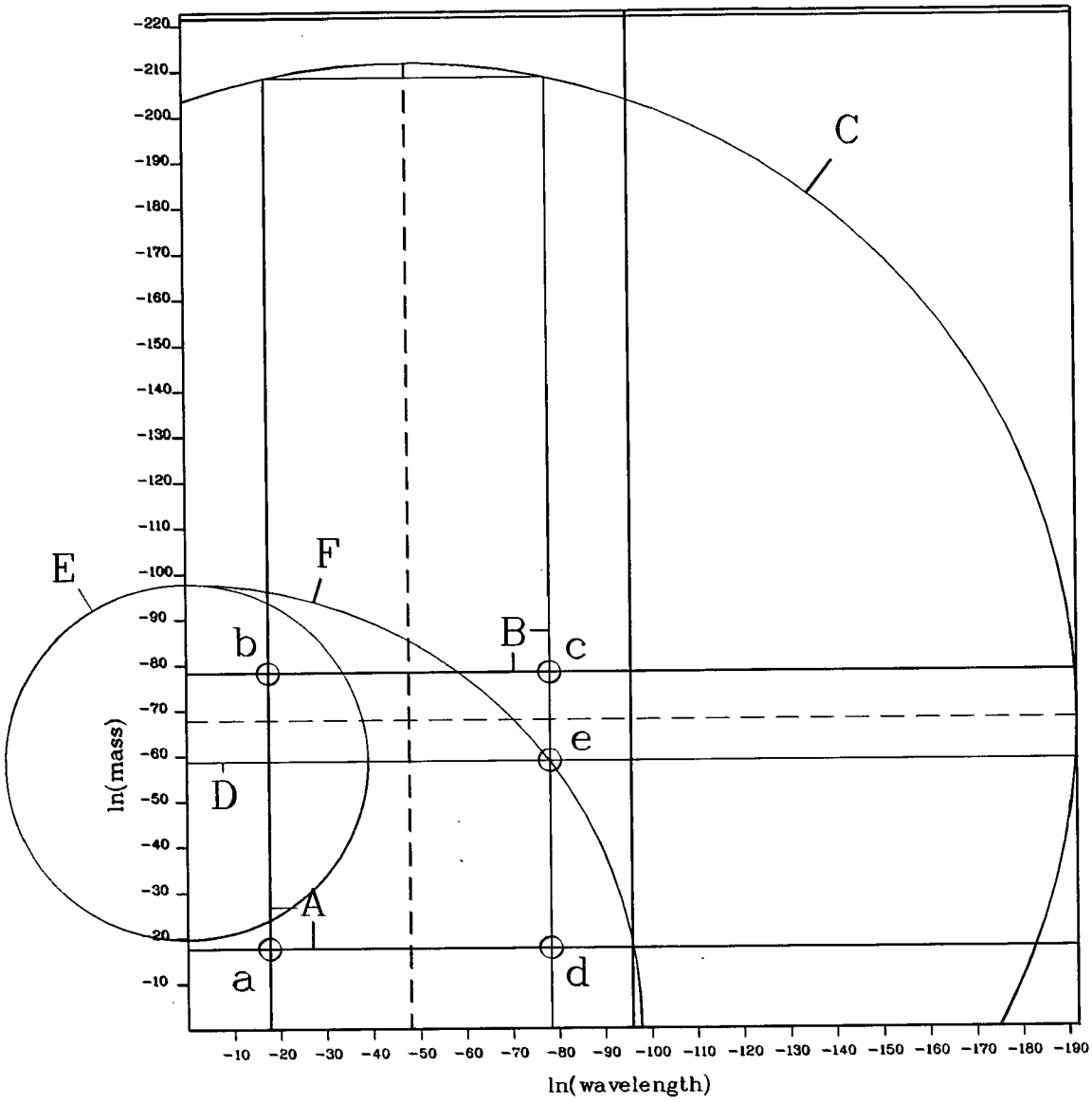
C
E
F
B
b
c
e
D
A
a
d
ln(mass)
ln(wavelength)
-220
-210
-200
-190
-180
-170
-160
-150
-140
-130
-120
-110
-100
-90
-80
-70
-60
-50
-40
-30
-20
-10
-10 -20 -30 -40 -50 -60 -70 -80 -90 -100 -110 -120 -130 -140 -150 -160 -170 -180 -190

Figure 7

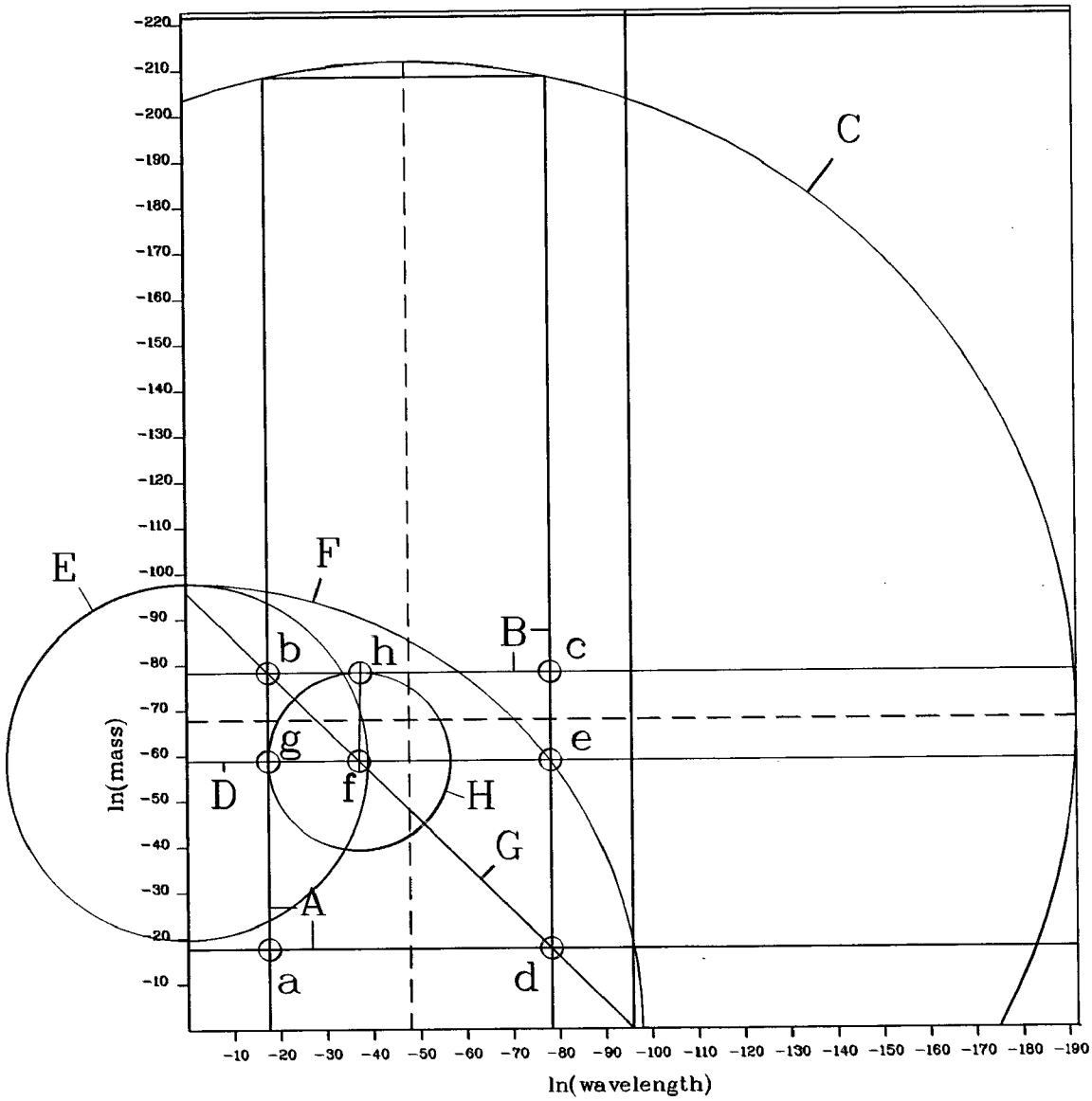
C
E
F
B
b
h
c
g
e
D
f
H
G
A
a
d
ln(mass)
ln(wavelength)
-220
-210
-200
-190
-180
-170
-160
-150
-140
-130
-120
-110
-100
-90
-80
-70
-60
-50
-40
-30
-20
-10
-10 -20 -30 -40 -50 -60 -70 -80 -90 -100 -110 -120 -130 -140 -150 -160 -170 -180 -190

Figure 8

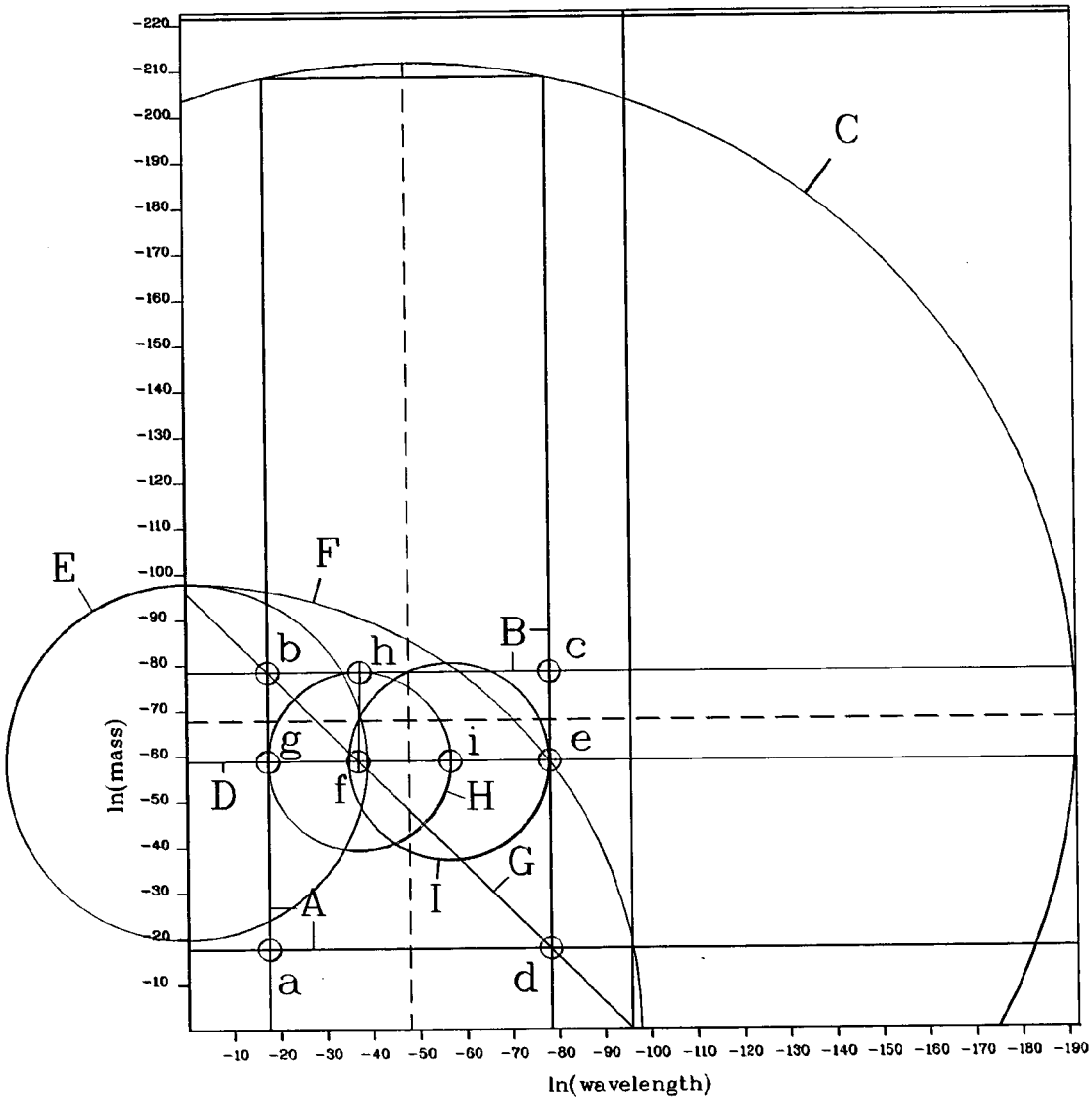
C
E
F
B
b
h
c
g
i
e
D
f
H
G
I
A
a
d
ln(mass)
ln(wavelength)
-220
-210
-200
-190
-180
-170
-160
-150
-140
-130
-120
-110
-100
-90
-80
-70
-60
-50
-40
-30
-20
-10
-10 -20 -30 -40 -50 -60 -70 -80 -90 -100 -110 -120 -130 -140 -150 -160 -170 -180 -190

Figure 9

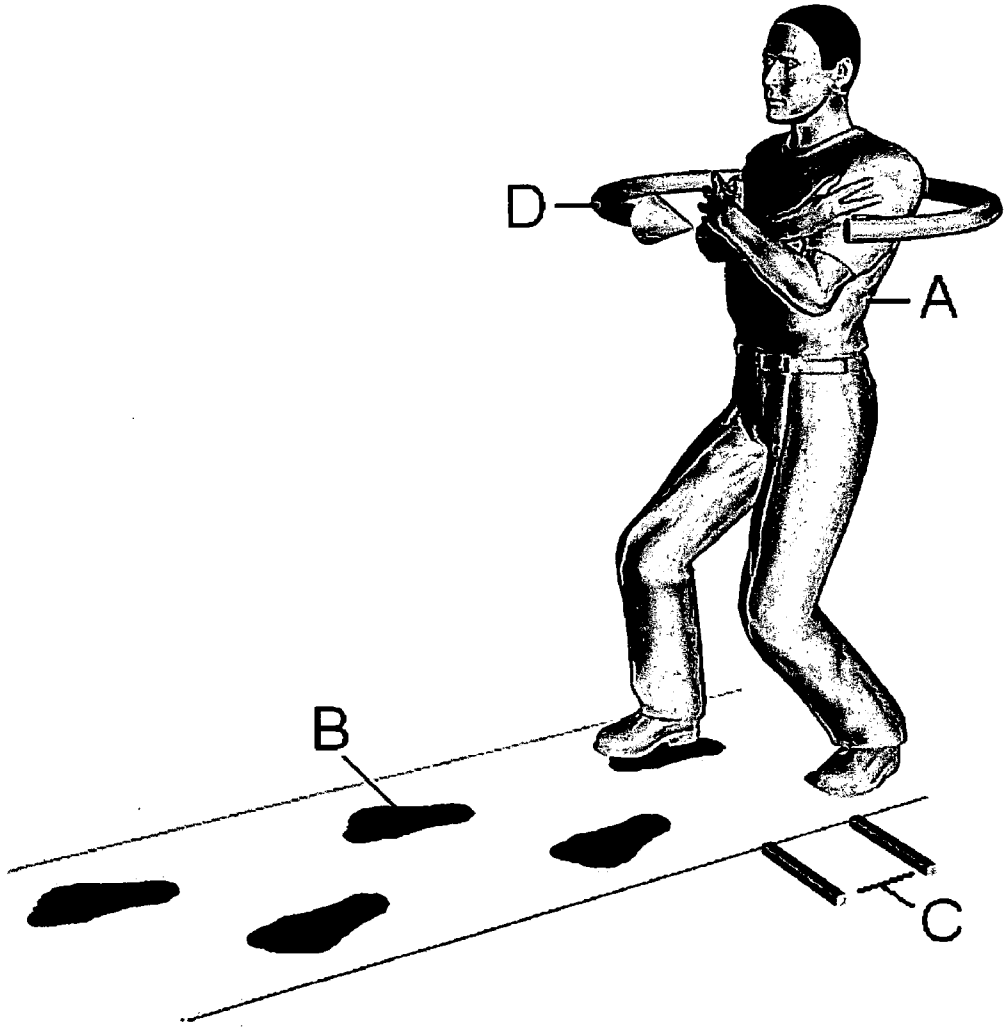

Figure 10

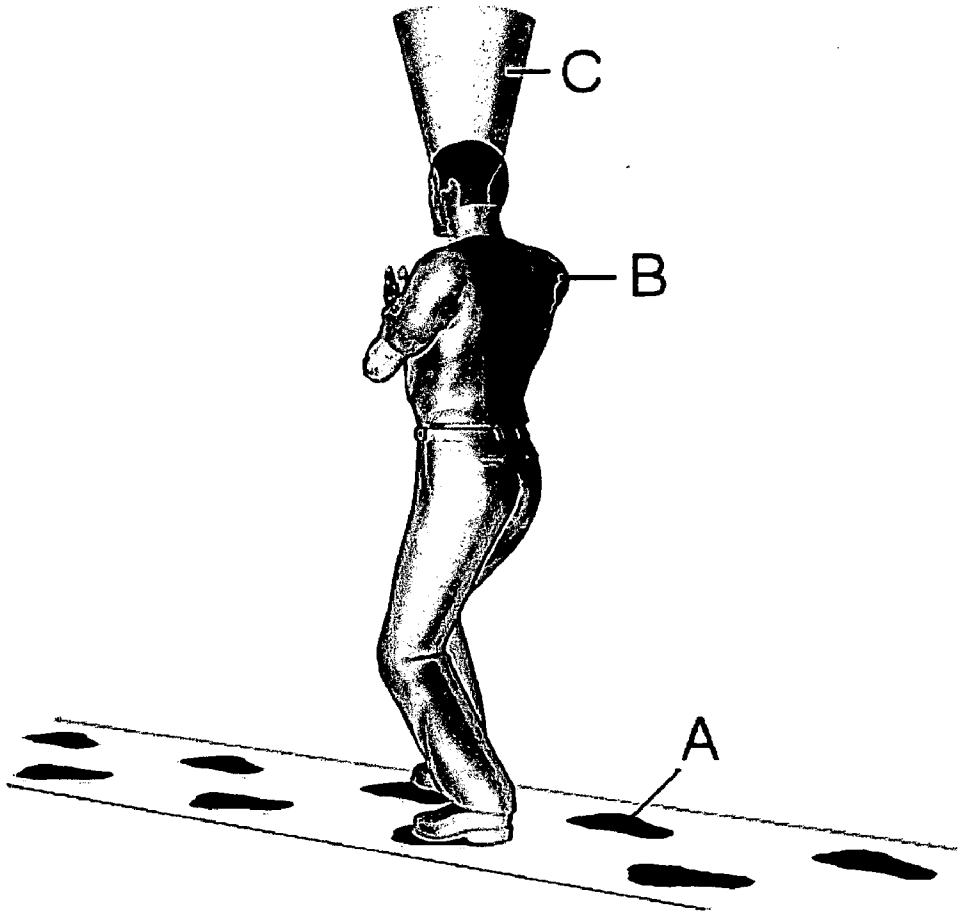

Figure 11

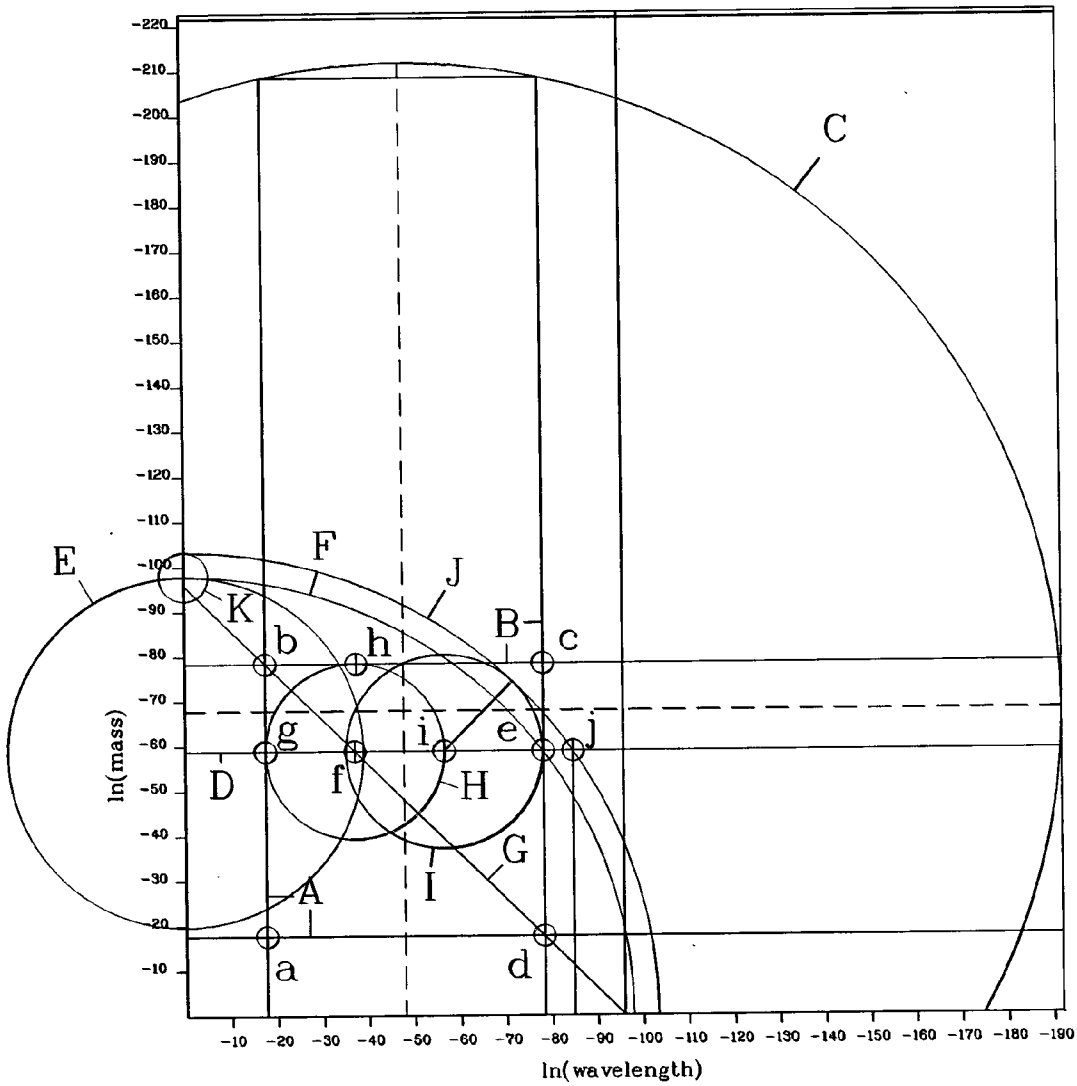
C
E
F
J
K
B
b
h
c
g
i
e
j
D
f
H
G
I
A
a
d
ln(mass)
ln(wavelength)
-220
-210
-200
-190
-180
-170
-160
-150
-140
-130
-120
-110
-100
-90
-80
-70
-60
-50
-40
-30
-20
-10
-10 -20 -30 -40 -50 -60 -70 -80 -90 -100 -110 -120 -130 -140 -150 -160 -170 -180 -190

Figure 12

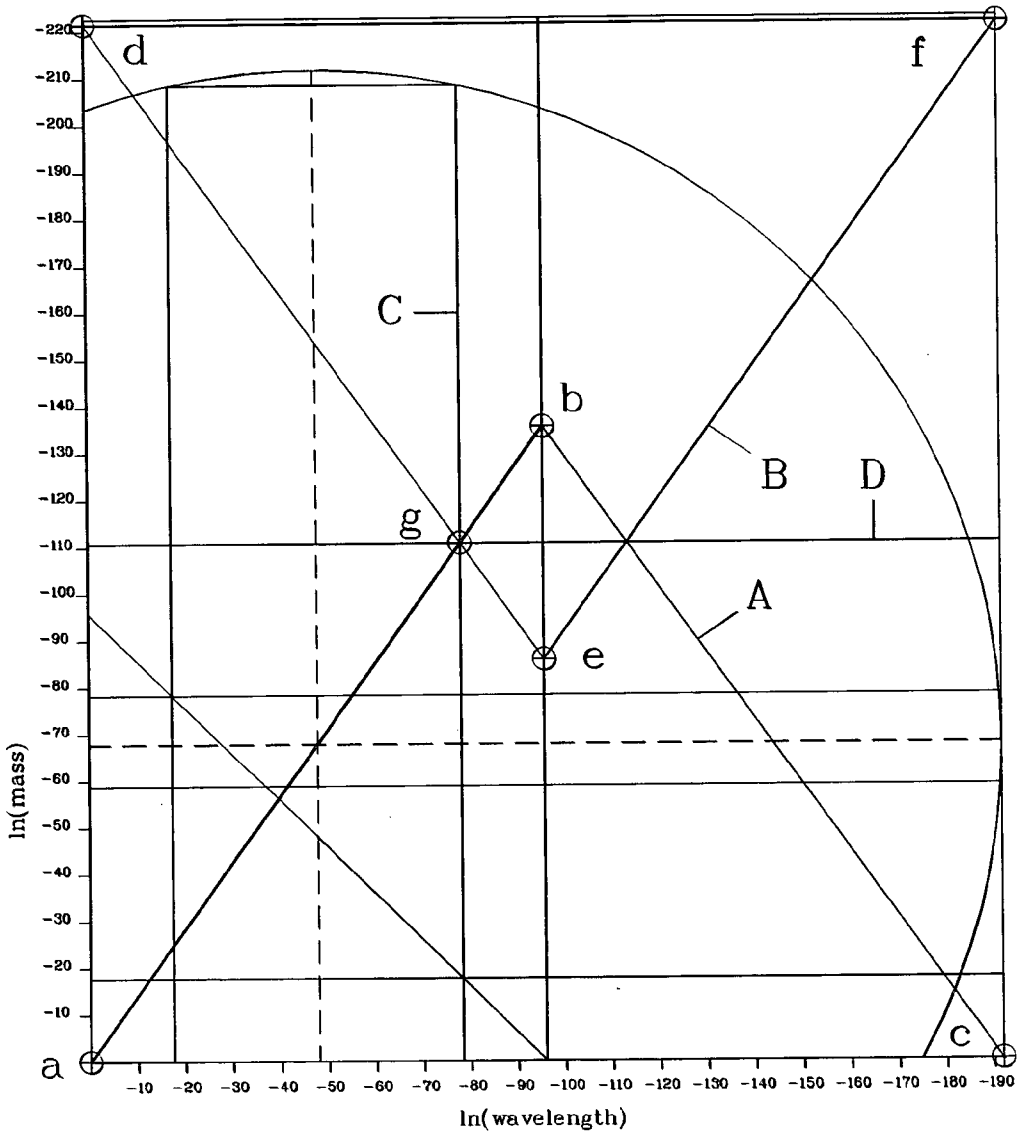
d
f
C
b
B
D
g
A
e
a
c
ln(mass)
ln(wavelength)
-220
-210
-200
-190
-180
-170
-160
-150
-140
-130
-120
-110
-100
-90
-80
-70
-60
-50
-40
-30
-20
-10
-10 -20 -30 -40 -50 -60 -70 -80 -90 -100 -110 -120 -130 -140 -150 -160 -170 -180 -190

Figure 13

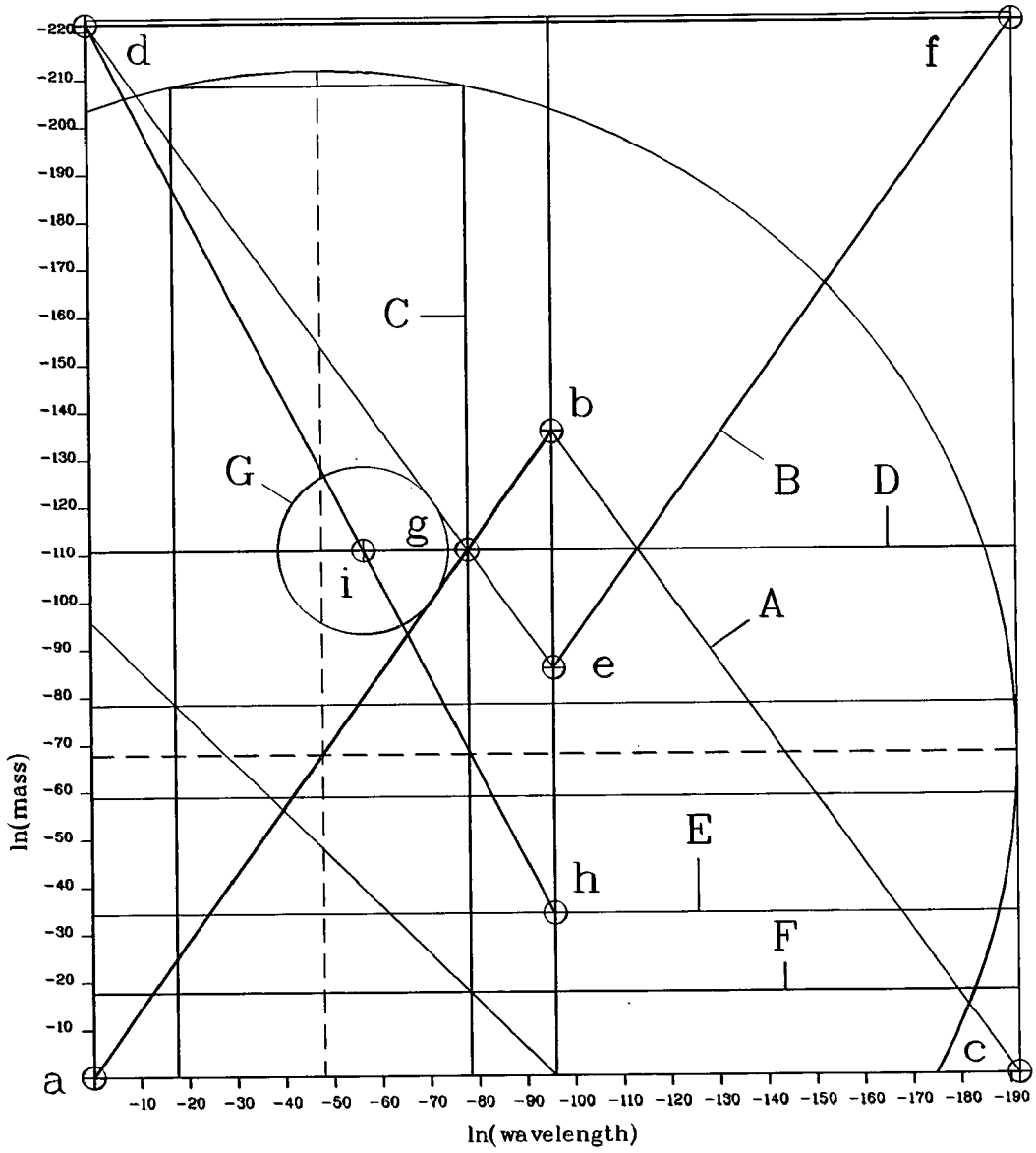
d
f
C
b
G
B
D
g
i
A
e
E
h
F
c
a
ln(mass)
ln(wavelength)
-220
-210
-200
-190
-180
-170
-160
-150
-140
-130
-120
-110
-100
-90
-80
-70
-60
-50
-40
-30
-20
-10
-10 -20 -30 -40 -50 -60 -70 -80 -90 -100 -110 -120 -130 -140 -150 -160 -170 -180 -190

Figure 14

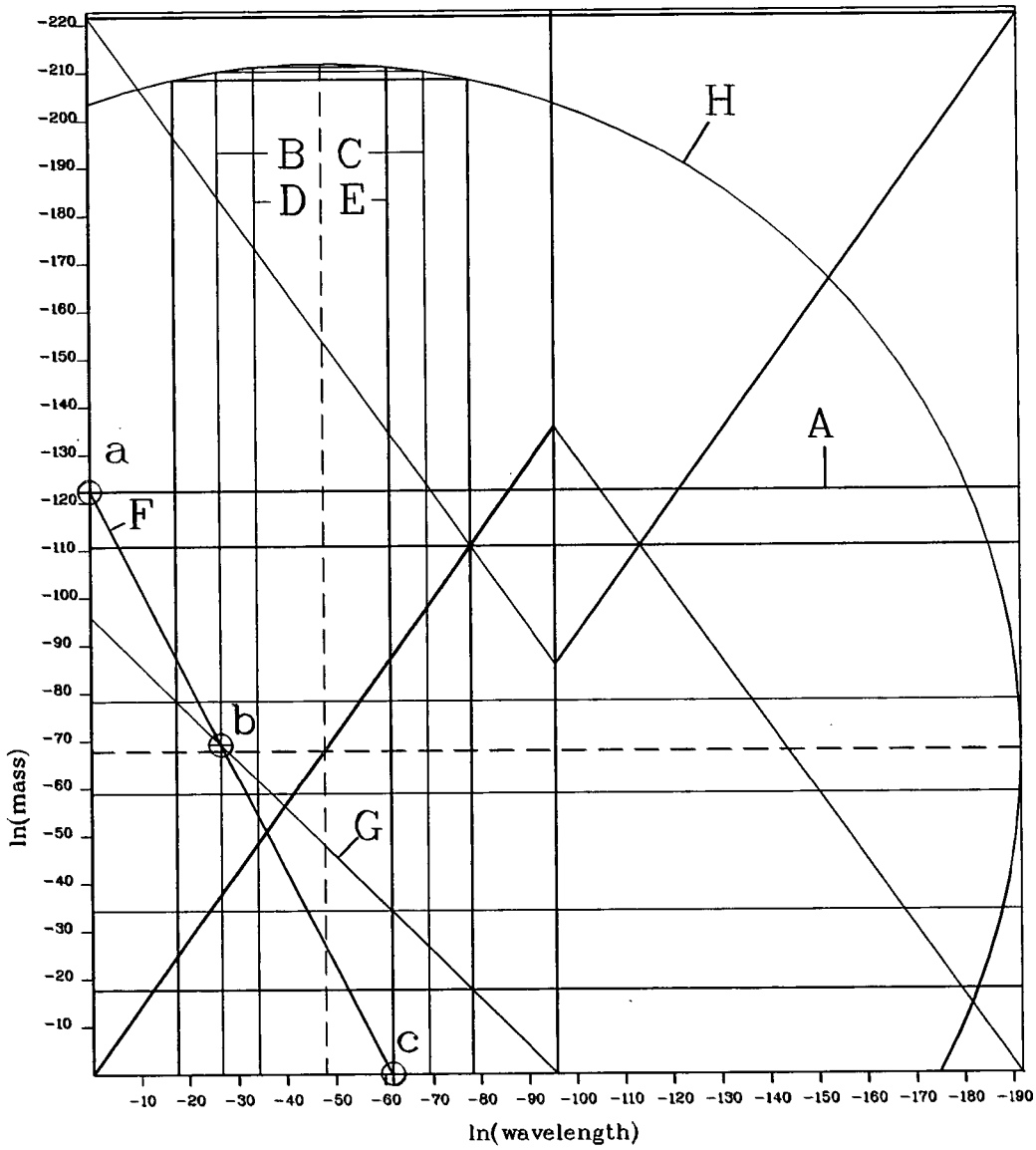
H
B
C
D
E
A
a
F
b
G
c
ln(mass)
ln(wavelength)
-220
-210
-200
-190
-180
-170
-160
-150
-140
-130
-120
-110
-100
-90
-80
-70
-60
-50
-40
-30
-20
-10
-10 -20 -30 -40 -50 -60 -70 -80 -90 -100 -110 -120 -130 -140 -150 -160 -170 -180 -190

Figure 15

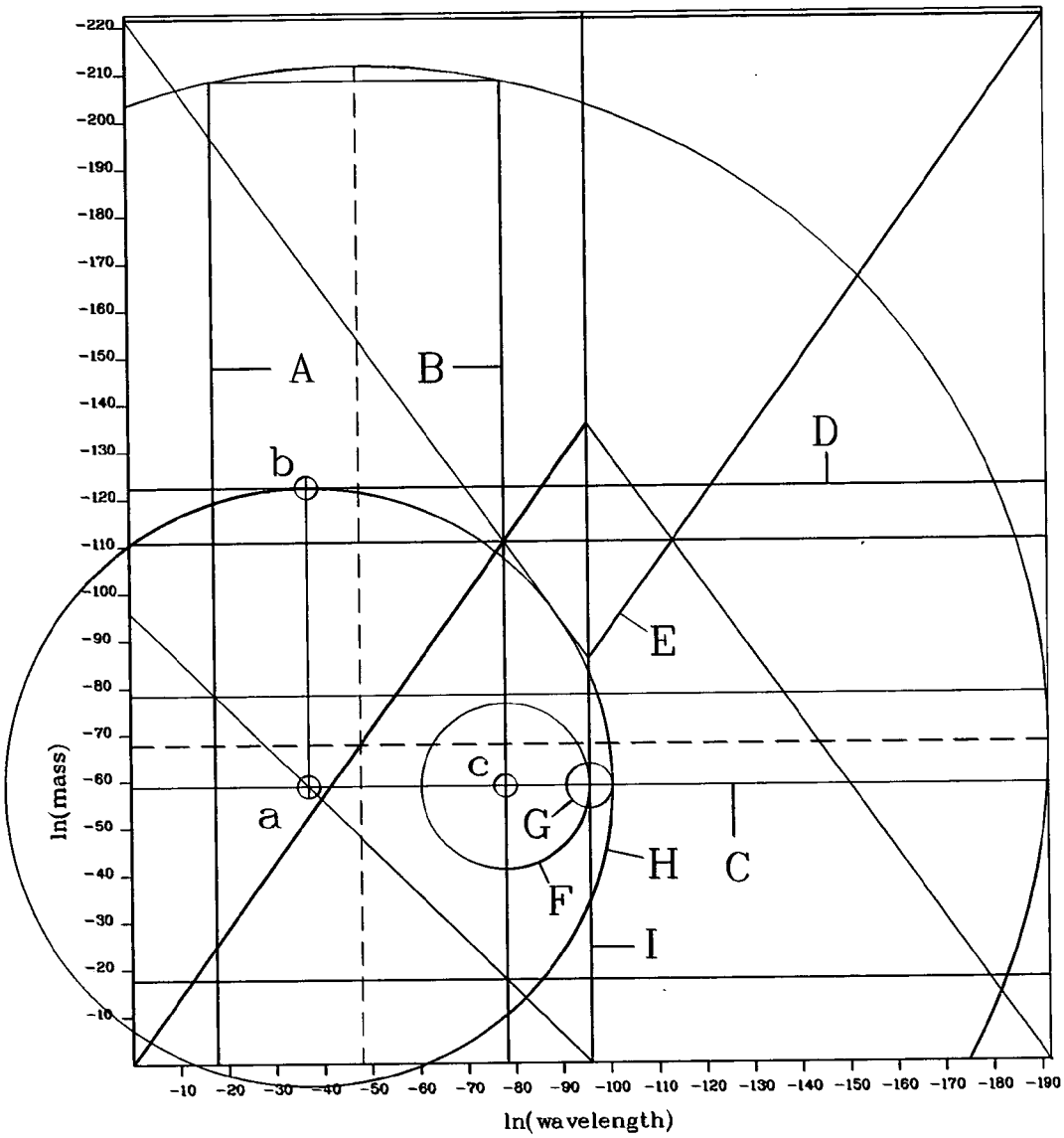
A
B
C
D
E
F
G
H
I
a
b
c
ln(mass)
ln(wavelength)
-220
-210
-200
-190
-180
-170
-160
-150
-140
-130
-120
-110
-100
-90
-80
-70
-60
-50
-40
-30
-20
-10
-10 -20 -30 -40 -50 -60 -70 -80 -90 -100 -110 -120 -130 -140 -150 -160 -170 -180 -190

Figure 16

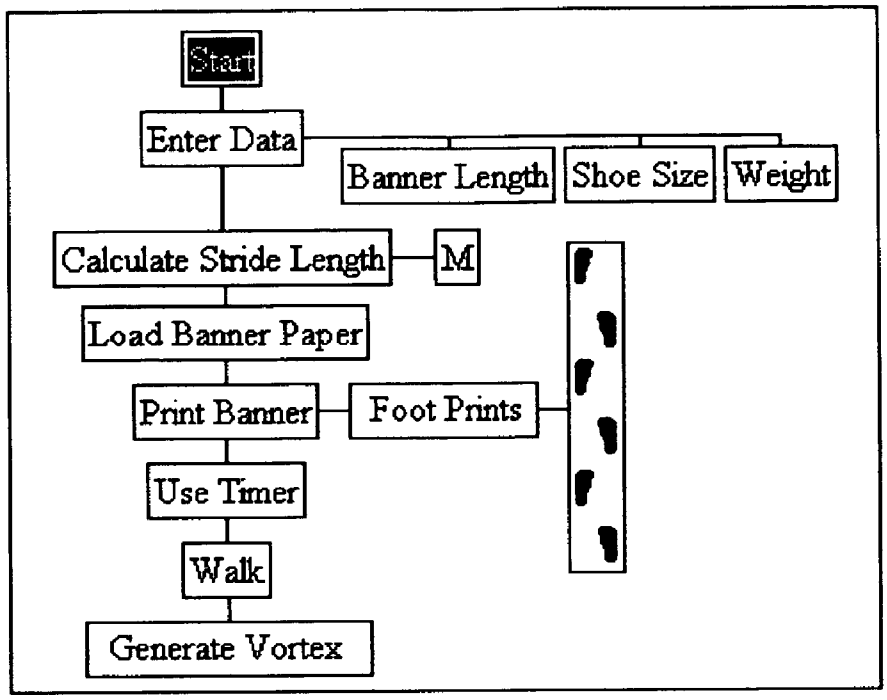
Start
Enter Data
Banner Length
Shoe Size
Weight
Calculate Stride Length
M
Load Banner Paper
Print Banner
Foot Prints
Use Timer
Walk
Generate Vortex

Figure 17

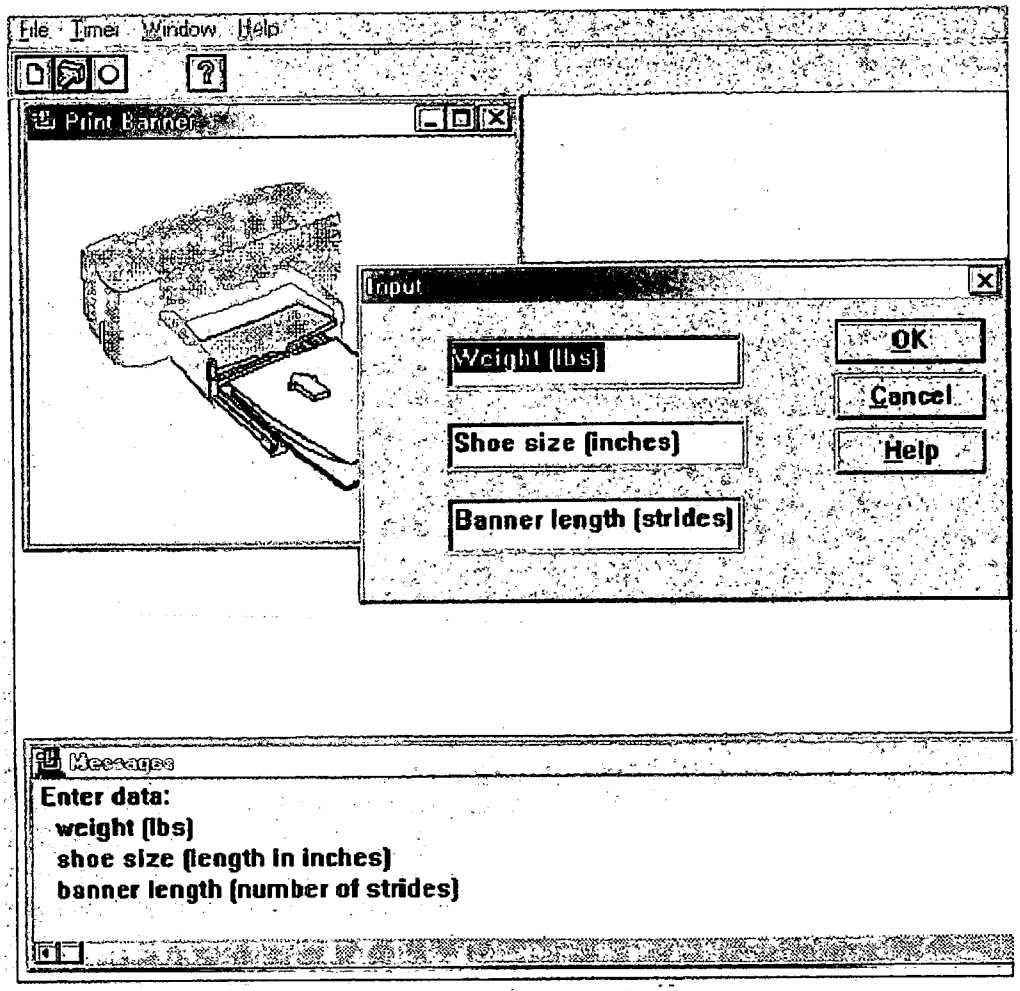
File Timer Window Help
Print Banner
Input
Weight (lbs)
Shoe size (inches)
Banner length (strides)
OK
Cancel
Help
Messages
Enter data:
weight (lbs)
shoe size (length in inches)
banner length (number of strides)

Figure 18

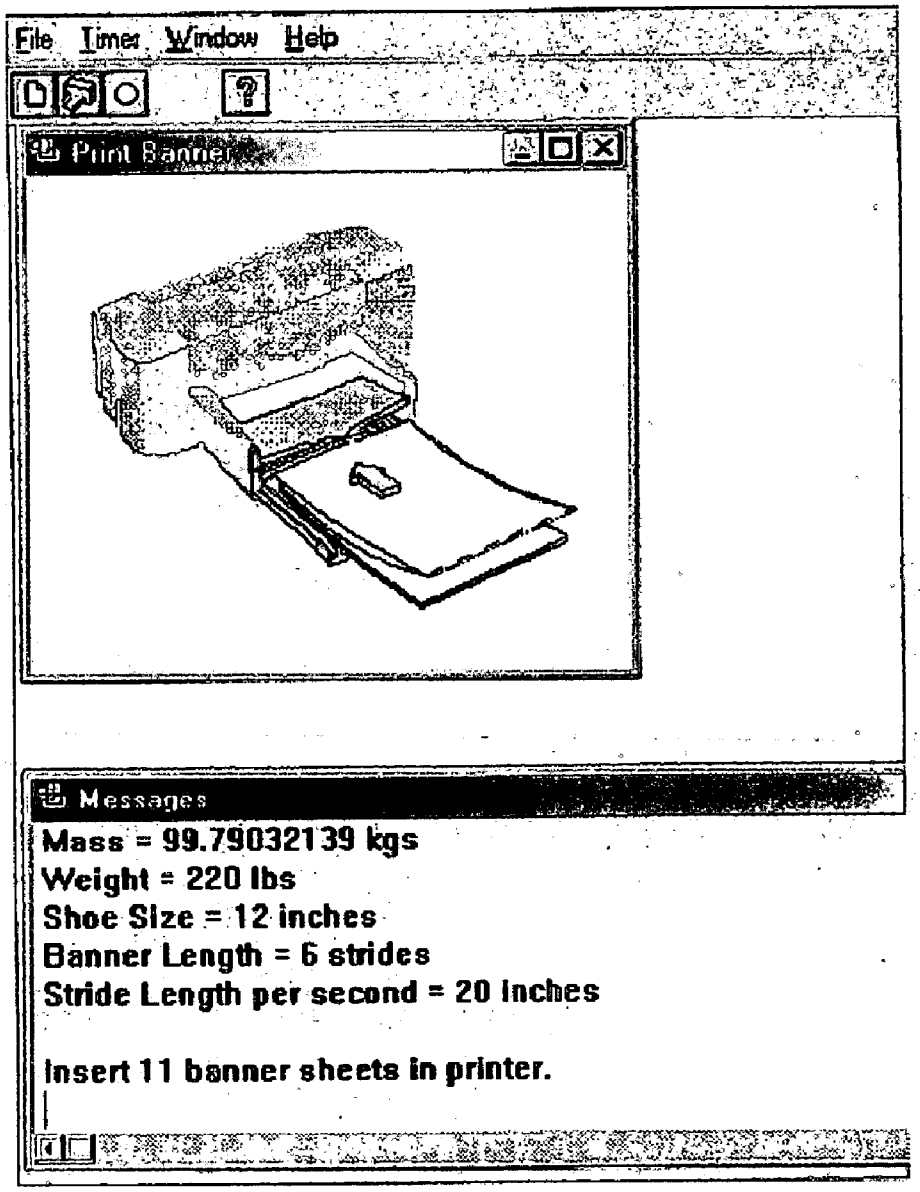
File Timer Window Help
Print Banner
Messages
Mass = 99.79032139 kgs
Weight = 220 lbs
Shoe Size = 12 inches
Banner Length = 6 strides
Stride Length per second = 20 inches
Insert 11 banner sheets in printer.

Figure 19

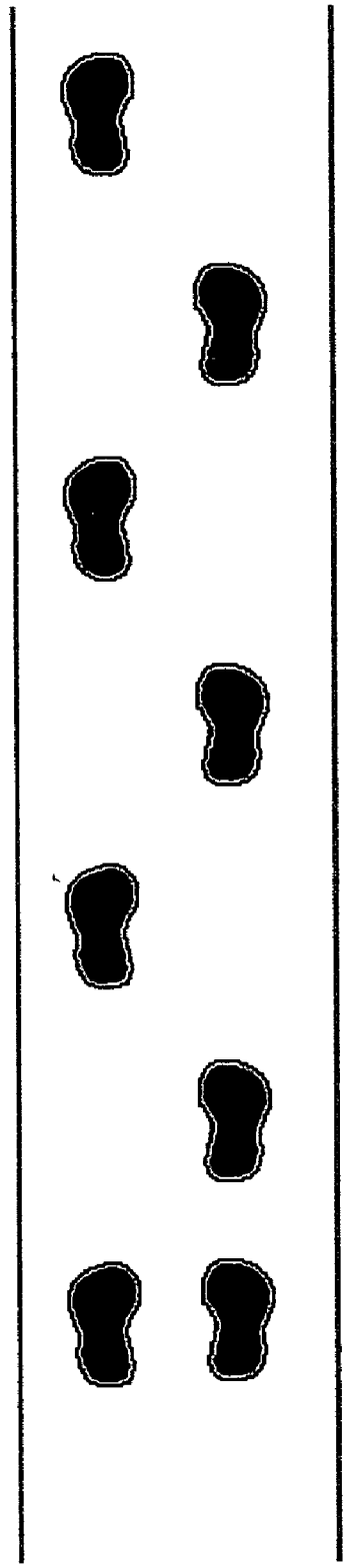

Figure 20

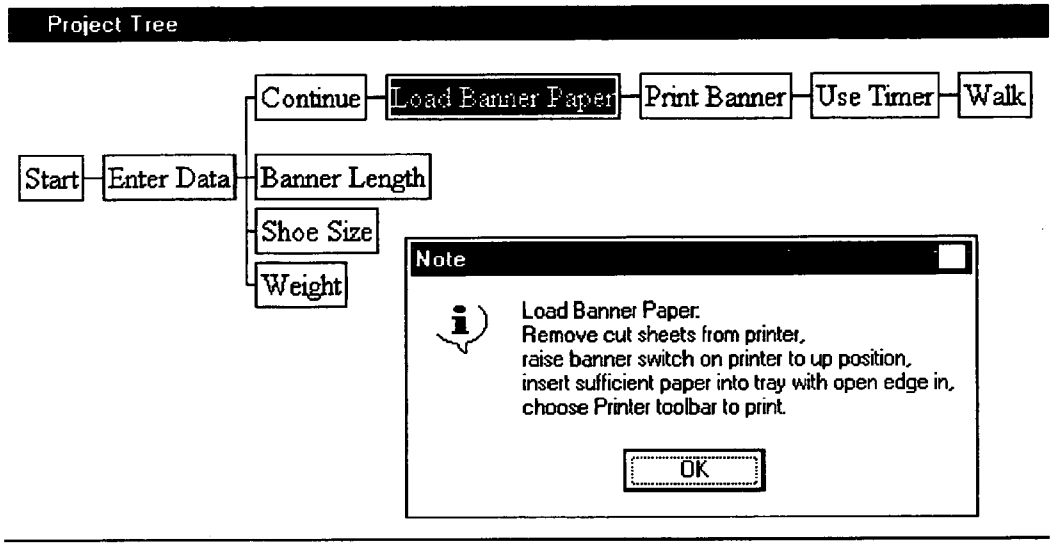
Project Tree
Start
Enter Data
Continue
Load Banner Paper
Print Banner
Use Timer
Walk
Banner Length
Shoe Size
Weight
Note
Load Banner Paper:
Remove cut sheets from printer,
raise banner switch on printer to up position,
insert sufficient paper into tray with open edge in,
choose Printer toolbar to print.
OK

WALKING THROUGH WALLS TRAINING SYSTEM

BRIEF SUMMARY OF THE INVENTION

[0001] This invention is a training system that enables a human being to acquire sufficient hyperspace energy in order to pull the body out of dimension so that the person can walk through solid objects such as wooden doors.

BACKGROUND OF THE INVENTION

[0002] A human being is a hyperspace energy being living in a physical container or body that is comprised of 67% water. This high percentage of water makes this invention possible. Referring to **FIG. 1**, the hyperspace energy being receives energy from our dimension through seven vortices that run the length of the body. Each vortex connects to a separate hyperspace dimension having its own particular frequency. This arrangement allows for the development of seven modular energy components corresponding to the mind, spiritual eye, voice, body, abdomen, plasma energy ball (battery), and ground connection.

[0003] Vortex (A), known as the top vortex, supplies energy to the mind and provides a channel of communication to other entities in the universe. This channel has been tested up to 100,000 light years which is the diameter of the galaxy.

[0004] Vortex (B), known as the spiritual eye, has a hollow cone-like appearance surrounded by white, misty, low-density hyperspace energy. Because the eye is modular, the mind can project it to vast distances, a process known as remote viewing.

[0005] Vortex (C), known as the voice and hearing module, can also be projected to enormous distances in order to communicate verbally with other entities. Using the proper remote viewing instruments, it is possible to project both the eye and verbal modules to see and talk at the same time.

[0006] Vortex (D), known as the heart vortex, provides protective energy to the upper internal organs, arms and hands.

[0007] Vortex (E) provides protective energy for the lower organs such as the intestines, liver and kidneys.

[0008] Vortex (F), known as the battery of the body, consists of an orange-colored plasma energy ball about one to two inches in diameter. The body becomes paralyzed if this ball is removed from the body. When the hyperspace energy being leaves the body, the vortices close and the battery takes over in order to keep the body functioning. This vortex also plays a role in the creation of the astral energy baby that attaches to the fertilized egg.

[0009] Vortex (G) is the ground vortex which rotates in the counter-clockwise direction in order to provide an energy ground for the electrical circuit. All the other vortices rotate in the clockwise direction as seen from the front such that energy flows into the vortex according to the right-hand rule of physics.

[0010] Vortex (H) is the hand vortex which rotates counterclockwise on the right hand and clockwise on the left hand as seen looking at the palm. Thus there is a rotating flow of hyperspace energy between the two hands when the palms are facing each other.

[0011] Referring to **FIG. 2**, each vortex feeds energy into its own hyperspace module shown by the lettered box. In terms of quantum mechanics, each box is actually a potential energy well in which each module develops separately. At the time of death of the body, these modules are joined together as a single energy being. The process is powered by the plasma energy ball battery which also contains the logical instructions for assembly.

[0012] Different people, as tested by the pendulum on the hand vortex, have different vortex sizes. Three people were tested. The first person had almost no rotational movement showing very little energy. The second person had a vortex radius of one inch. Another had a vortex radius of four inches which covered his entire hand. The latter also has the ability to lift another human being, lying prone on a table, off the table by flowing low-density hyperspace energy into the person through the hand vortices. He has also experienced walking through a solid wooden door with a dog at his side. What this means is that there is a way, as described in this invention, of creating large energy vortices which will enable a person to acquire sufficient energy to walk out of dimension through solid objects such as wooden doors.

[0013] Researching the historical records, referring to the statue in **FIG. 3**, a humble black Catholic Dominican friar of the Santo Rosario Convent, by the name of San Martin de Porres, living in Peru in the 1500's, also developed this ability to walk through doors. For his beatification, many witnesses came forward to recount his extraordinary abilities. For example, a witness, who worked in the Convent, went to the cell of San Martin to ask for something to eat. When he reached the cell, he saw San Martin leaving with some medications apparently to heal someone sick. The witness waited by the open door of the cell for his return. After having waited awhile without being distracted by anything else, he saw said venerable brother fray Martin come out from his cell from the inside and call him by name. The witness was terrified, not understanding how this was possible.

[0014] The woman who gave me the statue told me that he would walk miles and miles each day to visit the poor. The task of walking means that there is a velocity involved. Because the body has mass, then there is a mass times a velocity, or momentum, involved in this ability. Notice also that the statue shows him walking with his right arm crossed over his left arm in the form of an X.

[0015] What this walking momentum means in terms of physics is given in the following analysis. The human body consists of 67% water. A water molecule consists of two hydrogen atoms and one oxygen atom having the atomic formula H_2O. The atomic weight of one atom of hydrogen is 1.008 awu. The atomic weight of one atom of oxygen is 16.000 awu. The molecular weight of one atom of water is therefore:

Weight of two atoms of hydrogen 2 × 1.008 awu =	2.016 awu
Weight of one atom of oxygen 1 × 16.000 awu =	16.000 awu
	18.016 awu

The formula weight is just the atomic weight expressed in grams. Thus the formula weight of water would be 18.016

grams or 0.018016 kilograms. According to Avogadro's law, the formula weight contains $N=6.02\times10^{23}$ molecules. Thus the mass of one water molecule is the formula weight divided by the number of molecules:

$$\text{mass} = \frac{.018016\ \text{kg}}{N} = 2.99269103\cdot10^{-26}\ \text{kg}$$

$$\ln\left(\frac{\text{mass}}{1\ \text{kg}}\right) = -58.77103943$$

[0016] According to Einstein's Special Theory of Relativity, energy is equal to the mass times the speed of light squared. The energy of a photon is equal to Planck's constant h times the frequency f of the photon. Equating these two energies shows that

$$E = \text{mc}^2 = hf = h\frac{c}{\lambda} = \frac{h}{c}\frac{c^2}{\lambda}$$

$$\Rightarrow m\lambda = \frac{h}{c}$$

$$\Rightarrow \ln(m) + \ln(\lambda) = \ln\left(\frac{h}{c}\right) = \text{base} = -95.91546344$$

which says that the natural logarithm of the mass plus the natural logarithm of the wavelength is equal to the natural logarithm of Planck's constant divided by the speed of light c, known as the base constant in the tetrahedron diagram. This diagram plots the mass versus wavelength in natural logarithms. Notice that the left hand side of the equation is the sum of mass and wavelength, so the right hand side must also be the same.

$$\ln\left(\frac{h}{c}\right) = \ln\left(\frac{\Omega\Lambda\ 2\pi\Lambda\ c}{c}\right) = \ln(\Omega\Lambda) + \ln(2\pi\Lambda)$$

where $\Omega\Lambda$, known as the Planck mass, is the linear mass Ω of the universe times the bottom dimensional limit of the universe Λ, and $2\pi\Lambda$ is the bottom dimensional wavelength, known as the Planck wavelength. That is, our dimension is bounded by the Planck box having sides Planck mass and Planck wavelength. These boundaries have values:

$$\ln(\Omega\Lambda)=-17.64290101$$

$$\ln(2\pi\Lambda)=-78.27256243$$

[0017] Referring to **FIG. 4**, these two lines are plotted on the tetrahedron diagram. The Planck mass line (A) reflects off the sphere (C) and returns as the Planck wavelength (B) which shows the dual nature of quantum physics. This creates the Planck box (a,b,c,d) which is the boundary of our dimension.

[0018] Referring to **FIG. 5**, the mass of the water molecule is plotted as horizontal line (D) on the diagram. The energy of the water molecule is the mass times the speed of light squared.

$$E=mc^2$$

$$\ln(c)=19.51860099$$

$$\ln(mc^2)=\ln(m)+2\ \ln(c)$$

[0019] Referring to **FIG. 6**, a circle (E), having a radius equal to the speed of light squared, centered on the mass of the water molecule at the vertical axis, generates a circle (F), centered at the origin, that intersects (e) the mass of the water molecule at the Planck wavelength. That is, this intersection point sits right on the Planck box boundary between space and hyperspace. The radius of circle (F) is actually the mass of the water molecule divided by the speed of light squared.

$$E = \frac{m}{c^2} = m$$

$$\Rightarrow \frac{1}{c^2} = 1$$

$$\Rightarrow c = 1\frac{\text{meter}}{\text{sec}}$$

$$\ln(c) = 0$$

Taking the positive square root, the speed of light is one meter per second at the Planck boundary. The experiments with brain hemisphere resonance show that the resonant frequency of the human energy field is between 1 Hz to 5 Hz which is well below the hearing threshold of 20 Hz. Because the traveling wave has a wavelength of 0.3048 m and the speed of light is unity at the boundary, the frequency should be

$$f = \frac{c}{\lambda} = \frac{1\frac{m}{\text{sec}}}{.3048\ m} = 3.28\ \text{Hz}$$

which is within the middle of the experimental male range. At this resonant frequency, the human energy being pops out of the body. This represents only a first stage in the development of the energy being. But what is really wanted is to have both the physical body and the energy field move out of dimension together as San Martin did.

[0020] Referring to **FIG. 7**, the 45° base line (G) is added to the diagram. Notice that the Planck mass intersects (b,d) the Planck wavelength on this line because they sum to the base constant. The mass of the water molecule crosses this line at point (f). A circle, centered (f), with a radius equal to the speed of light, is tangent to the Planck wavelength (h) and the Planck mass (g). Since mass times velocity is momentum, the diagram says that the momentum of the water molecule is tangent to the boundaries of the Planck box which separates space from hyperspace. In order to get to point (e) from the momentum of the water molecule, a second circle is added to the momentum.

[0021] Referring to **FIG. 8**, a circle (I), centered on the water molecule mass at the speed of light circle (i), is made tangent to the Planck wavelength at point (e). The momentum M of space is equal to the Planck mass times the Planck scale times the speed of light. At point (e), the speed of light

is unity, so that the momentum is just the Planck mass in momentum units:

$$M = \Omega\Lambda c = 2.176634194 \cdot 10^{-8}\ \mathrm{kg}\frac{m}{s}$$

Circle (I) has a radius equal to

$$\text{ratio} = e^{21.572952} = 2338912700$$

Therefore the walking momentum in order to get to point (e) is the momentum of space M times this ratio

$$M_w = M \cdot \text{ratio} = 50.909573606\ \mathrm{kg}\frac{m}{\mathrm{sec}}$$

The stride length L per second that a person of mass W has to walk is the walking momentum divided by the mass W times a period T of one second

$$L = \frac{M_w}{W} T$$

For a person with a mass W of 99.79 kg (220 pounds), then the stride length L is 20.08 inches or one foot and eight inches. The person has to walk this length in one second on each foot.

[0022] Looking at the statue of San Martin, his arms are crossed over each other. The vortex of the right hand points backward, and the left hand vortex points forward due to the reversed rotation. Referring to **FIG. 9**, this creates a rotational energy channel (D) around his body (A). The stride length (C) is calculated according to the body mass, and then a banner printout is made showing where the footprints (B) are to be placed each second. The question is: "What happens when one walks the walk?".

[0023] On the very first experiment, referring to **FIG. 10**, what happens is that, after taking only six strides on the banner printout (A), a huge spinning vortex (C) develops over the top of the head and the vertex locks onto the heart vortex in the center of the chest (B). In everyday life, this vortex is not created because normal walking is much faster and the hands are held at the side of the body. The energy rush through the pineal gland is so intense that one feels immediately sleepy and starts yawning excessively due to the increased flow of melatonin.

[0024] After practicing with the banner printout, long walks were made through the park. In this case, a vertical white line rotated around a vertical axis located about six feet perpendicular to the path on the right side of the body. When the walking speed was correct, this white line would lock onto the centerline of the body. Speeding up or down caused the white line to lose synchronization and rotate away. This white line is related to the ability to levitate the body. San Martin had so much energy that, according to witness testimony, he could float horizontally in the air with his head resting against the bowed head of Christ on a carved wooden cross. Thus San Martin's energy sources were channeling energy from Christ, collective broom energy as described in a separate patent application, and the walking momentum vortex energy.

[0025] During the early part of the 20th century, a man's parents were lying in bed dying of tuberculosis. With their permission, he placed a weighing scale under each of their beds. When they passed away, he found that each scale registered a loss in weight of 2.5 ounces. This is equivalent to 0.071 kg, which is the mass of the human energy being.

[0026] After conducting a number of experiments with water vortices draining from a cylindrical tank, it can be stated from Bernoulli's theorem that the potential energy plus the kinetic energy is a constant

$$gz + \frac{1}{2}mv^2 = const$$

The shape of the inner surface of the water circulation has a velocity proportional to the inverse of the radius, so the shape of the surface is

$$(z - z_0) = \frac{k}{r^2}$$

which says that the height of the vortex is proportional to the inverse of the square of the radius.

[0027] The hand vortex area ratio between the second test subject and the third test subject is equal to the square of their radii:

$$\text{ratio} = \frac{(1\ \mathrm{in})^2}{(4\ \mathrm{in})^2} = \frac{1}{16}$$

Because the speed of light at the boundary was determined to be one meter per second, the energy of the third test subject is

$$E = \left(\frac{.071\ \mathrm{kg}}{16}\right)\left(\frac{1\ \mathrm{m}}{\mathrm{sec}}\right)^2 = 4.4375 \cdot 10^{-3}\ \mathrm{joule}$$

$$\ln(E) = -5.417664124$$

[0028] Referring to **FIG. 11**, a circle (K), having this radius, is added to the energy of the water molecule (E), to produce augmented energy circle (J). This circle (J) intersects the mass of the water molecule outside the Planck box at point (j). This means that the increased hyperspace energy moves the water molecule, and hence the body, out of dimension. Furthermore, circle (J) is tangent to the walking momentum ratio circle (I) which keeps the geometry locked together.

SUMMARY OF THE INVENTION

[0029] It is the object of this invention to create a training system that allows a person to develop the ability to walk

around out of dimension, passing through solid objects. This invention is based on one of the most remarkable relationships between the water molecule and the boundary between space and hyperspace. The mass of the water molecule is equal to the energy of the water molecule at this boundary. Because the body is composed of 67% water, the body sits on the boundary such that any additional increase in energy would move the body out of dimension into hyperspace. Because human beings are actually hyperspace energy beings living in physical bodies, the additional energy required to move the body out of dimension comes from increasing the energy of the hyperspace being. One source of this energy comes from walking cross-handed at the proper velocity in order to generate a large hyperspace energy vortex that flows energy into the potential wells of the hyperspace being. This increased hyperspace energy will then allow the person to walk around out of dimension through solid wooden doors. Because the door and the person are in two slightly different dimensions at the same moment, it appears that the person is walking through the door. After passing through the closed door, the person then returns to our dimension and emerges in the interior of the closed-door room.

[0030] This technique can be used in reverse to heal an infected hand instantaneously. A salve made from the St.Mary's herb is applied to the skin of the infected hand. The hyperspace energy then flows through the right-hand vortex such that the infected hand and the salve are taken slightly out of dimension. What happens is similar to when a short piece of straw is embedded in a hard wooden telephone pole as a tornado passes over the pole. The straw and pole are taken out of dimension such that they briefly merge together. As the tornado moves on, both objects come back to dimension merged together. Thus the salve (straw) is merged with the bacteria (pole) in hyperspace such that the bacteria is killed instantly. Removing the hand vortex brings the infected hand back into dimension cured.

[0031] Based on this information and the results of many experiments, this invention creates a large vortex by walking at a certain velocity with the hands crossed over the chest. The proper walking momentum is created by a computer program that inputs the person's weight, shoe length, and the number of strides to be taken. The program then prints out a banner showing the footprints where the person has to step each second. When a person obtains sufficient energy from these methods, the person is then tuned to the subspace geometry of the universe as will be shown using the tetrahedron physics diagram.

A BRIEF DESCRIPTION OF THE DRAWINGS

[0032] **FIG. 1**. Energy vortices of the human body.

[0033] **FIG. 2**. Seven potential wells fed by the energy vortices of the body.

[0034] **FIG. 3**. Carved wooden statue of San Martin de Porres who could walk through solid wooden doors.

[0035] **FIG. 4**. Tetrahedron diagram showing boundaries of the Planck box of dimension.

[0036] **FIG. 5**. Tetrahedron diagram showing mass of water molecule.

[0037] **FIG. 6**. Tetrahedron diagram showing water molecule energy and mass are equal at the Planck box boundary.

[0038] **FIG. 7**. Tetrahedron diagram showing that water molecule momentum is tangent to the boundaries of the Planck box.

[0039] **FIG. 8**. Tetrahedron diagram showing the momentum ratio required to reach the Planck wavelength boundary from the water momentum.

[0040] **FIG. 9**. Perspective view of crossed-hand momentum walking using banner printout.

[0041] **FIG. 10**. Perspective view of vortex generated by momentum walking.

[0042] **FIG. 11**. Tetrahedron diagram showing how additional hyperspace energy supplied to the potential wells of the hyperspace energy being enables the human body to be pulled out of dimension.

[0043] **FIG. 12**. Tetrahedron diagram showing the inverted tetrahedrons whose crossing represents the merging of two worlds between space and hyperspace.

[0044] **FIG. 13**. Tetrahedron diagram showing that the proton wavelength is determined by the Planck mass tangent to the inverted tetrahedrons.

[0045] **FIG. 14**. Tetrahedron diagram showing that the mass of the universe determines the electron and proton elementary particles.

[0046] **FIG. 15**. Tetrahedron diagram showing that momentum walking together with the increased energy of the hyperspace energy being is tangent to the mass of the universe.

[0047] **FIG. 16**. Computer program block diagram for printing banner footprints.

[0048] **FIG. 17**. Computer program input dialog window.

[0049] **FIG. 18**. Computer program calculation of stride length per second.

[0050] **FIG. 19**. Six-stride screen banner printout for 220 lb. person.

[0051] **FIG. 20**. Project tree showing help information by double clicking on node.

DETAILED DESCRIPTION OF THE INVENTION

[0052] 1. Referring to **FIG. 12**, a tetrahedron (A, path abc) is added to the diagram. The tip of the tetrahedron (e) falls on the base constant which is equal to Planck's constant divided by the speed of light. A second tetrahedron (B, path def) is inverted around horizontal line (D) which has a geometrical relationship to the base constant. The line is located at

$$\text{centerline} = \frac{2}{\sqrt{3}} \ln\left(\frac{h}{c}\right) = -110.7536373$$

Notice that the intersection of the two inverted tetrahedrons (g) occurs at the Planck wavelength which is the boundary between space and hyperspace. Line (D) is referred to as the merging of two worlds or the connecting of two worlds, a phrase obtained by means of remote viewing. That is, it is

the dividing line between space and hyperspace. This is the reason that the two boundaries intersect at this point.

[0053] Referring to **FIG. 13**, the proton wavelength (E) is added to the diagram. The proton wavelength has a value of the electron wavelength divided by 1836.1527

$$\ln(\lambda_p) = \ln\left(\frac{\lambda_e}{1836.1527}\right) = -34.26005901$$

A line (hd), from the base constant at the proton wavelength (h), to the corner of the inverted tetrahedron (d), intersects the merging of two worlds line at point (i). A circle, with a radius equal to the Planck mass (G), centered (i), is tangent to the inverted tetrahedrons. Thus the proton is defined by the base constant and the geometry of subspace. The reason that the proton is tangent to both tetrahedrons is because the electron and proton follow one single path between space and hyperspace. Thus there is only one single particle in nature. Because the particle enters our space at two different locations, we see the one particle as two distinct elementary particles. This relationship can be seen in Library of Congress tetrahedron diagram tet0565.

[0054] Referring to **FIG. 14**, the mass of the universe MU is equal to the linear mass Q of the universe times the radius R of the universe which is 10^{26} meters

$$\ln(MU)=\ln(\Omega R)=122.3347509$$

as shown on the diagram as line (A). The electron wavelength (B) reflects off the circumscribing sphere (H) and returns as the electron mass (C). The distance between reflection points is the hyperspace charge which is equal to the charge of space less the electron charge. So the electron goes from wavelength to electric charge to mass. The proton wavelength (D) reflects off the sphere and returns as the proton mass (E) which intersects the horizontal axis at point (c). A line (abc) from the mass of the universe at the vertical axis (a) to the proton at the horizontal axis (c) intersects the electron (b) which determines the electron's mass and wavelength since this point is on the 45° base line. What this means is that cosmology determines the values of the elementary particles.

[0055] Referring to **FIG. 15**, the mass of the water molecule (C) intersects the 45° base line at point (a). A circle (F), with a radius equal to the Planck mass is centered on point (c) at the Planck wavelength boundary (B) where the mass of the water molecule numerically equals the energy of the water molecule and where the speed of light is unity. The Planck mass is tangent to the base constant which is the vertical centerline (I) of the diagram. The large circle (H), centered (a) on the water molecule, is tangent to the mass of the universe (b) and tangent to the inverted tetrahedron (E). The difference between this circle (H) and the base constant (I) is the energy the hyperspace being has to acquire in order to be tuned to the mass and geometry of subspace. This difference, shown as circle (G), has a mass

$$m=e^{-4.792671}\ \text{kg}=8.29\cdot10^{-3}\ \text{kg}$$

Thus the hand vortex radius ratio has to be the square root of the mass of the hyperspace energy being divided by this tangent mass, or:

$$r=\sqrt{\frac{.071\ \text{kg}\cdot 1\ \text{in}^2}{e^{-4.792671}\ \text{kg}}}\approx 3\ \text{inches}$$

which is a vortex radius that is three times larger than that of a normal person, but one inch smaller than the third test subject who had a hand vortex radius of 4 inches. This is the reason that the third test subject was able to walk through walls and teleport to other locations because his energy was sufficiently large enough to cross over the inverted tetrahedron into a co-dimension of hyperspace. Notice also that dotted circle (J) with a radius equal to the mass of the water molecule, centered (c) on the boundary, is tangent to the tetrahedron (K). This makes the combined geometry tangent to the inverted tetrahedrons and the mass of the universe.

[0056] 2. Referring to **FIG. 16**, a computer program generates a banner printout with footprints spaced for walking according to the weight, shoe size and length of banner desired. Some banners could fit in a small room, or be placed on the floor of a long corridor. As shown in the block diagram the program inputs these three variables with error checking. Then the program calculates the stride length L per second from the equation

$$L=\frac{M}{W}T$$

[0057] 3. In the above equation, the value of the momentum M, as determined by the tetrahedron diagram, is preferably 50.9095736 kg m/s. The weight of the person is converted to mass W in kilograms. The stride period is preferably 1 second. Referring to **FIG. 17**, the data is entered in the dialog input window.

[0058] 4. Once the stride length has been calculated, the program displays the stride length and the required number of banner sheets in the message window, as seen in **FIG. 18**.

[0059] 5. The print banner menu is selected and the foot prints are printed on continuous banner paper. A six-stride scaled screen version of the banner is shown in **FIG. 19**. The banner paper is then placed on the floor, and a one-second beeping timer is activated from the toolbar or menu. The person then walks beside the printed foot prints, taking one stride per beep, which produces the correct walking momentum to generate the hyperspace vortex. The vortex, which forms in only six strides, brings additional hyperspace energy into the quantum potential wells of the hyperspace energy being.

[0060] 6. A help system consists of a project tree which explains the various steps in using the program. Double mouse clicking on a project tree node displays the help instructions in a dialog window as shown in **FIG. 20**.

[0061] 7. In summary, the purpose of the training system is to substantially increase the energy of a human being who will then have the capability of walking through walls, body levitation, instantaneous healing of infections, full-body teleportation to another location, remote viewing at vast distances in terms of light-years, and looking into hyper-

space co-dimensions. The third test subject and I have been able to experience all the above phenomena. He did it through augmenting his energy, and I have done it through the application of electromagnetic fields, by spinning on my vortex accelerator machine and using this invention.

I claim:

1. A training method comprising the steps of:

generating a banner having a plurality of footprints spaced at regular intervals wherein the banner is placed on the ground;

generating a periodic audible signal, whereby the audible signal repeats at a regular interval of time equal to the period; and

walking on the banner by tracing the footprints spaced at regular intervals, wherein one step is made with each audible signal.

2. The method of claim 1, wherein the step of generating the banner further comprises:

providing a person's actual mass in kilograms; and

determining the stride length based upon the following equation:

$$L=(M/W)*T$$

where L is the stride length in meters, M is a constant of approximately 50.91, W is the mass of the person in kilograms, and T is the period of the audible signal in seconds, and

wherein the footprints on the banner are spaced at the stride length.

3. The method of claim 2, wherein the audible signal is a beep and the period of the audible signal is one second.

4. A training method for a person comprising the steps of:

generating an audible signal having a fixed period;

generating a banner having regularly spaced indicia for identifying preferred step locations, wherein the distance between adjacent indicia is determined by the following formula:

$$L=(M/W)*T$$

where the distance between adjacent indicia in meters is L, a constant of 50.9095736 is equal to M, the person's mass in kilograms is W, and the fixed period in seconds is T; and

walking on the marked path by stepping upon each of the regularly spaced indicia wherein one step is made with each period of the audible signal.

5. The training method of claim 4 wherein the fixed period is one second.

6. The training method of claim 5, wherein the regularly spaced indicia are footprints.

* * * * *

US 20060072226A1

(19) United States

(12) Patent Application Publication

St. Clair

(10) Pub. No.: US 2006/0072226 A1

(43) Pub. Date: Apr. 6, 2006

(54) REMOTE VIEWING AMPLIFIER

(76) Inventor: **John Quincy St. Clair**, San Juan, PR (US)

Correspondence Address:
JOHN ST. CLAIR
52 KINGS COURT, 4A
SAN JUAN, PR 00911 (US)

(21) Appl. No.: **10/957,391**

(22) Filed: **Oct. 2, 2004**

Publication Classification

(51) **Int. Cl.**
G02B 1/00 (2006.01)

(52) **U.S. Cl.** **359/896**; 359/894

(57) **ABSTRACT**

An apparatus which enhances the ability of a person to perform remote viewing by connecting the human spiritual eye to the tetrahedral geometry of subspace.

Figure 1

Figure 2

Figure 3

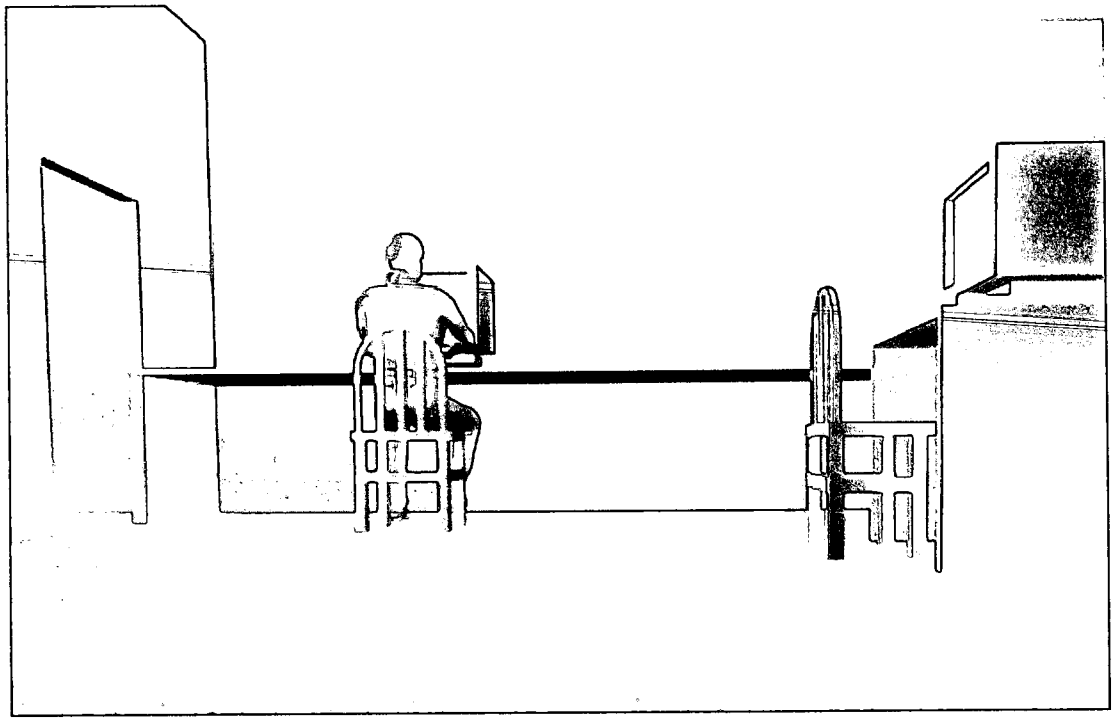

Figure 4

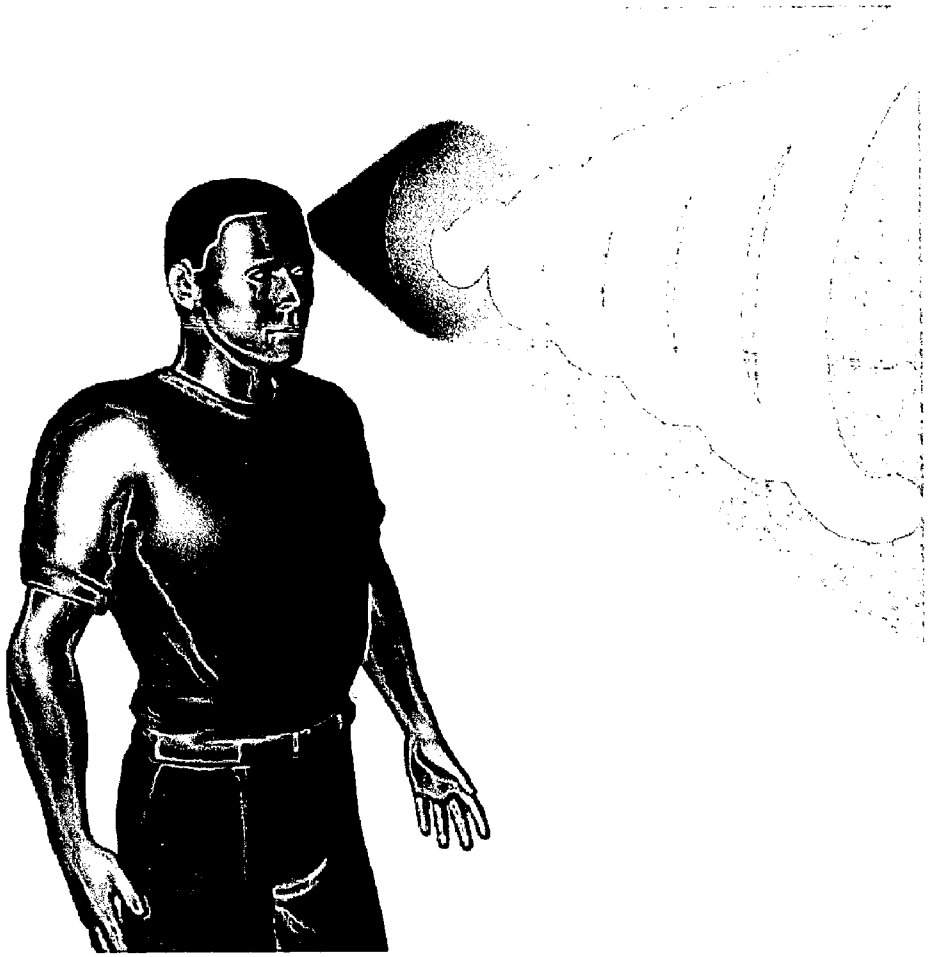

Figure 5

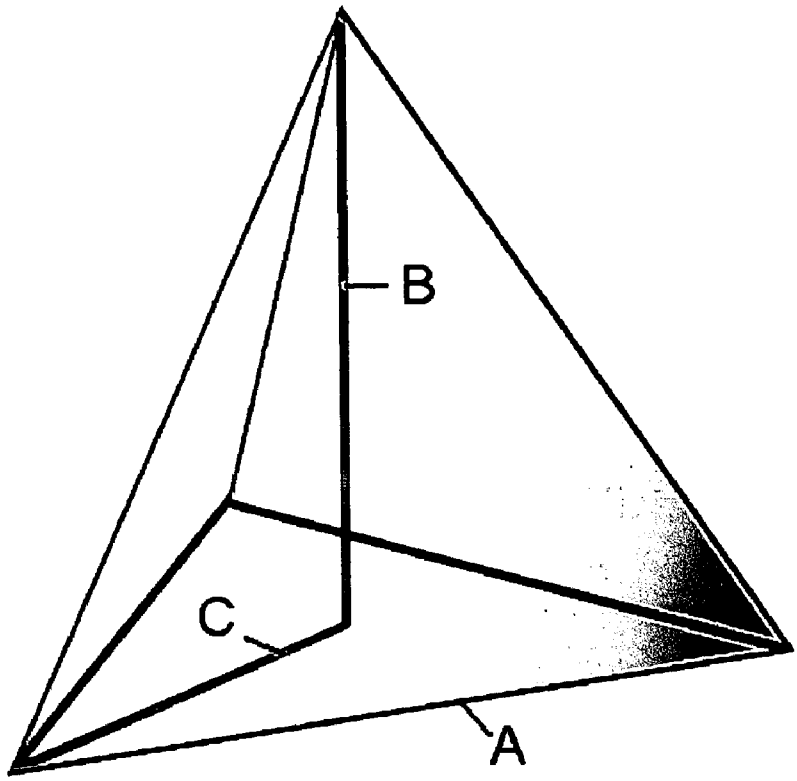

Figure 6

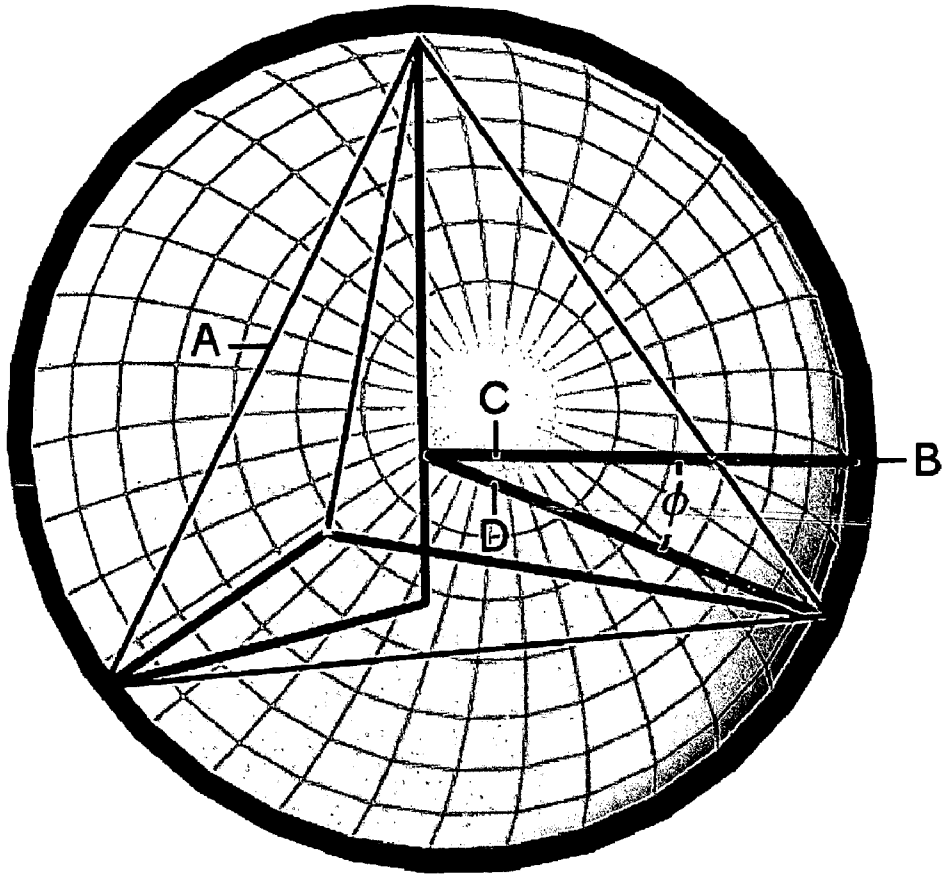

Figure 7

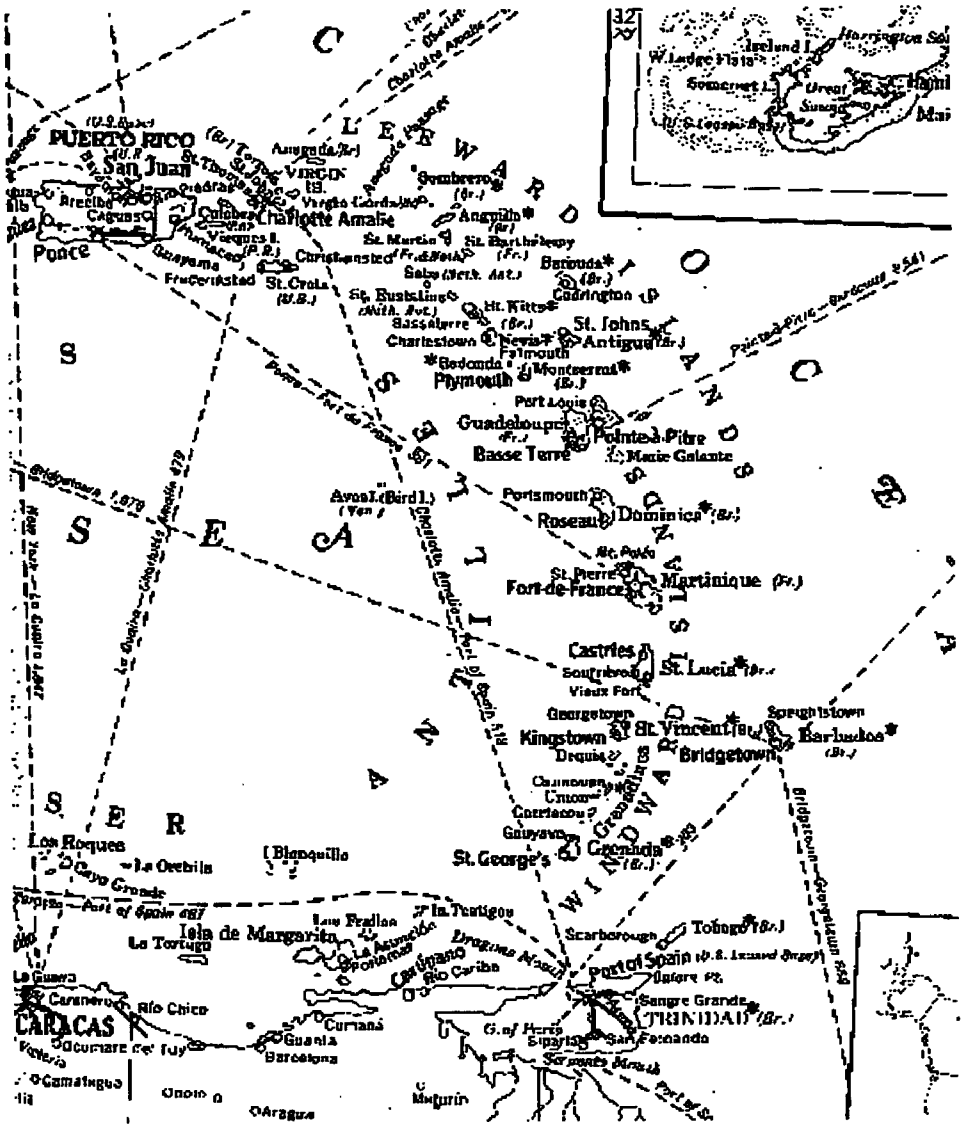
PUERTO RICO
San Juan
Ponce
Charlotte Amalie
Christiansted
St. Croix
Anguilla
Sombrero
Antigua
Barbuda
St. Johns
Montserrat
Plymouth
Guadeloupe
Pointe-à-Pitre
Basse Terre
Dominica
Roseau
Martinique
Fort-de-France
Castries
St. Lucia
Kingstown
St. Vincent
Bridgetown
Barbados
Grenada
St. George's
Los Roques
Blanquilla
Isla de Margarita
La Tortuga
Tobago
Port of Spain
TRINIDAD
CARACAS
Curiaco
Barcelona
Maturin
Aragua
Cumana
Guanta
Rio Chico
Rio Caribe
Sangre Grande
San Fernando
Siparia
G. of Paria
Scarborough
Bridgetown

Figure 8

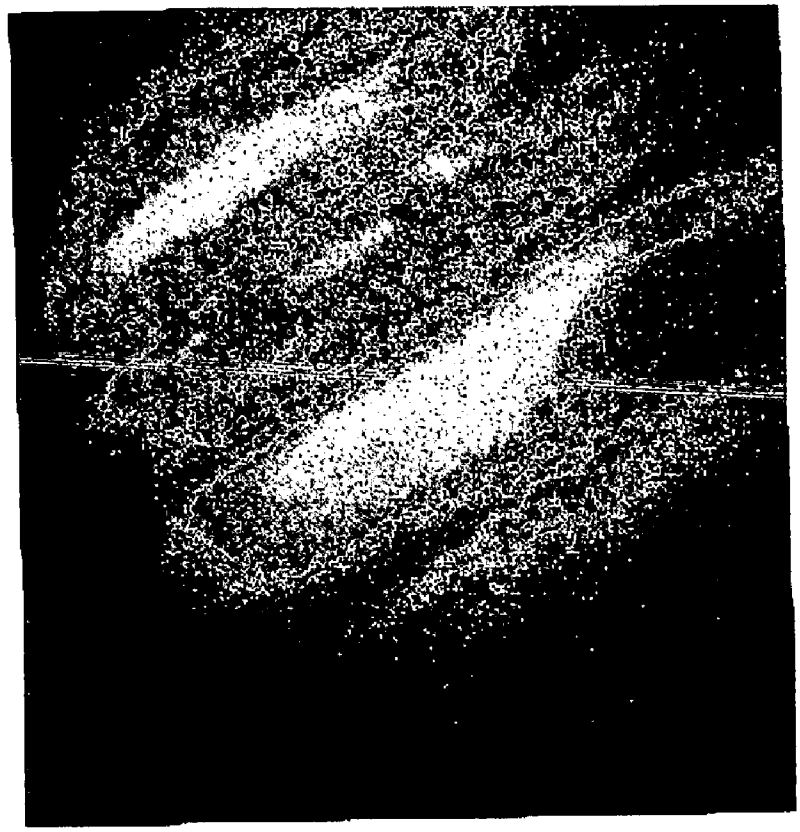

Figure 9

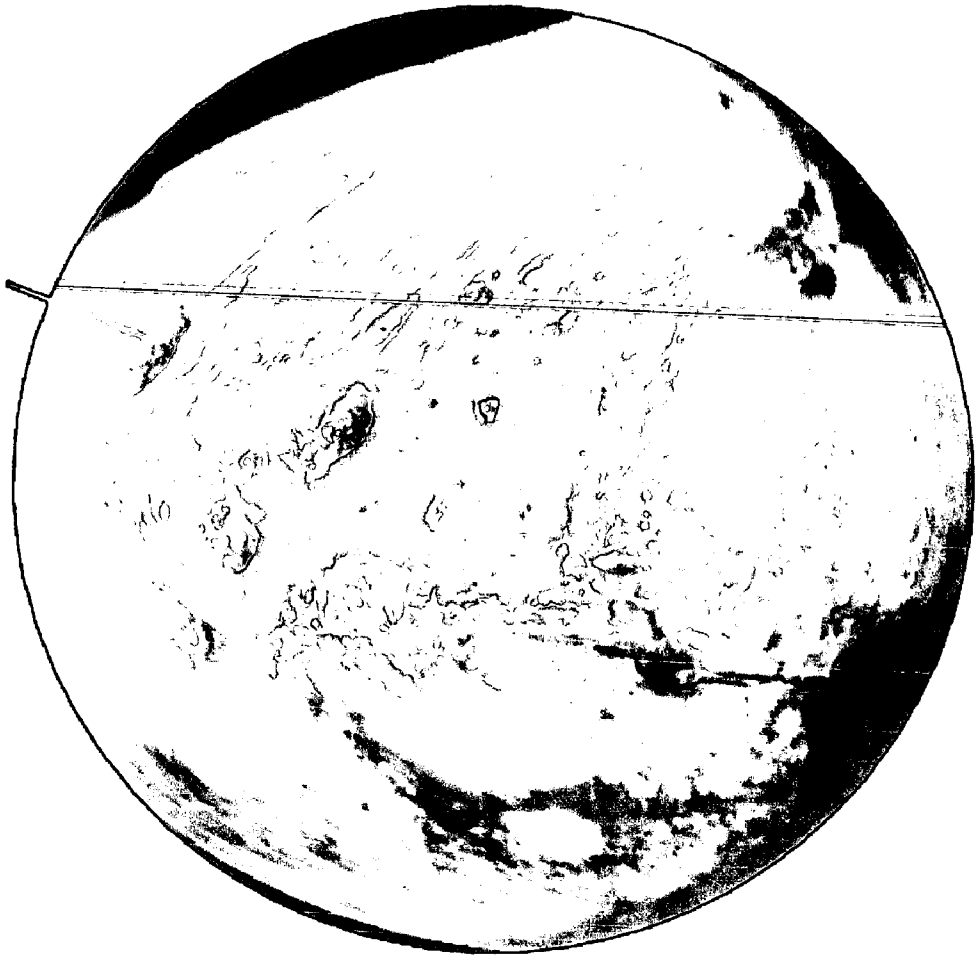

Figure 10

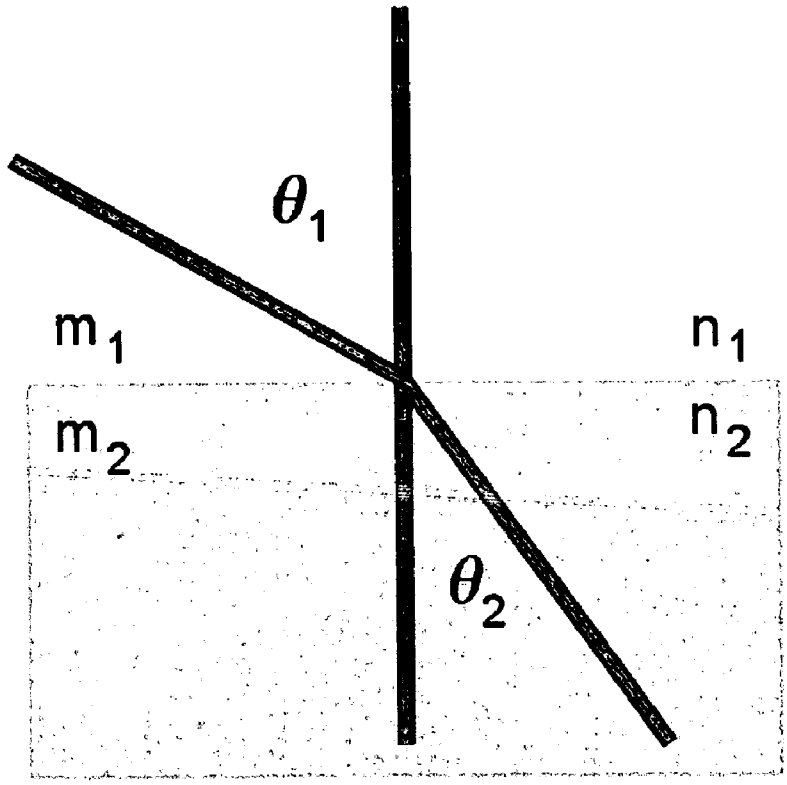

Figure 11

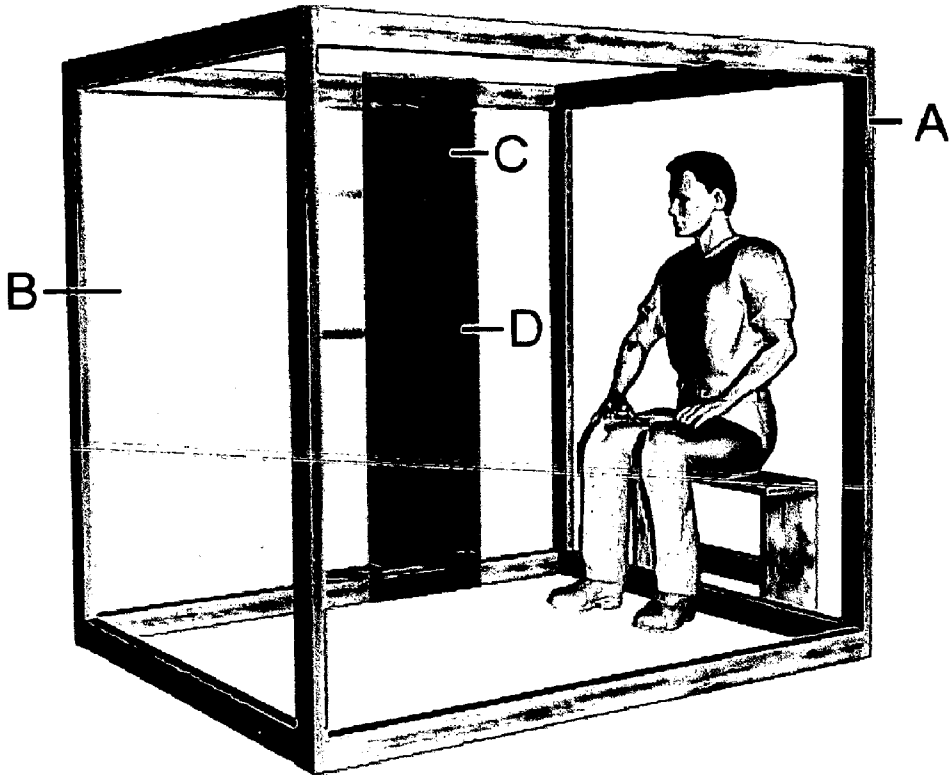

Figure 12

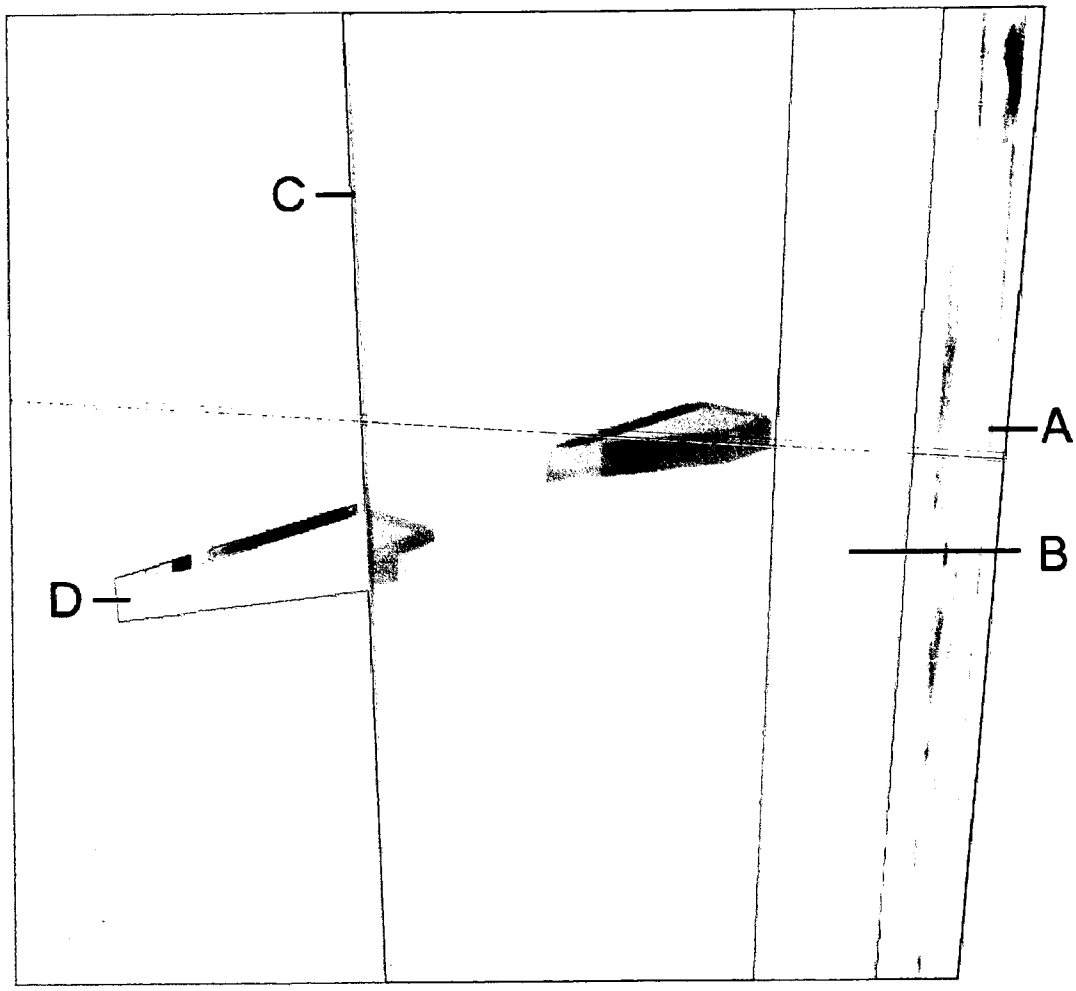

Figure 13

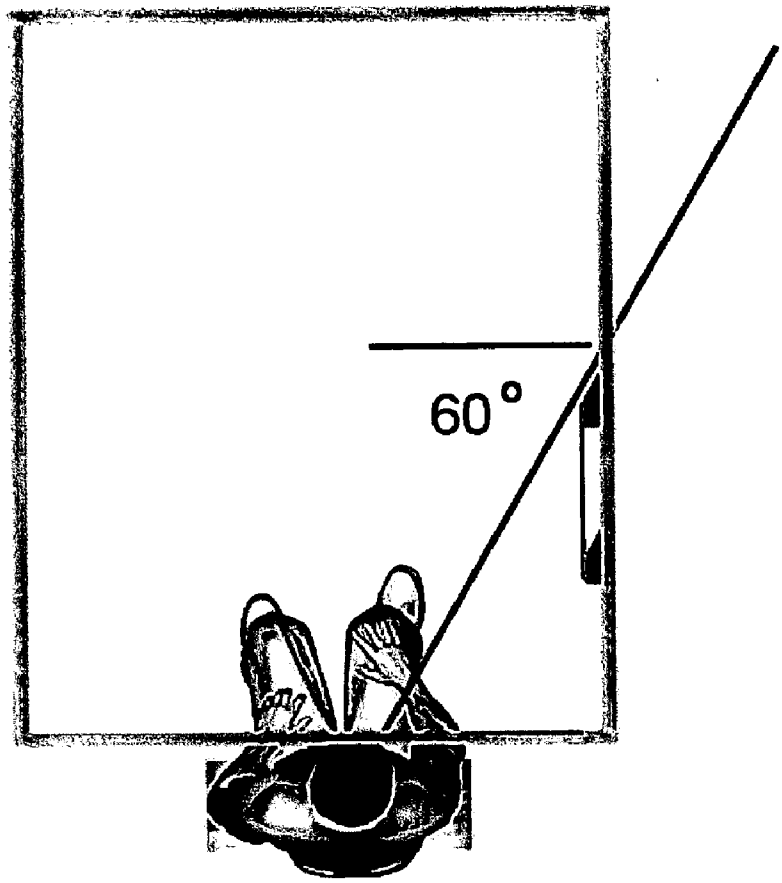

Figure 14

REMOTE VIEWING AMPLIFIER

BRIEF SUMMARY OF THE INVENTION

[0001] This invention enhances the ability of a person to perform remote viewing by connecting the spiritual eye to the tetrahedral geometry of subspace.

BACKGROUND OF THE INVENTION

[0002] Remote viewing is the projection of spiritual modules of the human energy field to distant locations in order to see, communicate and interact with other entities who live in subspace, space and hyperspace co-dimensions of the universe.

[0003] One of my first remote viewings was made at night to a distance of 10,000 miles on the sunlit side of the earth. My spiritual eye and body projected together while my mental facilities remained in my physical body. I found myself looking down on a palm tree from a height of about one hundred feet. The palm tree had several coconuts in it as seen in **FIG. 1**. I then gave the command to lower myself to the ground. At that moment I went sailing down past the coconuts, barely missing the tree! Finding myself on a pathway through the tropical forest, I then came to an extremely long wooden bridge which crossed over a river gorge. On the other side of the bridge I could see three soldiers running toward me as shown in **FIG. 2**. The two soldiers in front were carrying rifles and wearing light blue berets. The man running behind them was wearing an officer's cap with a red band. My first reaction was that I was going to be shot. I edged over on the right side of the wooden railing. They ran right past without seeing me. I then asked to see the building that these soldiers were guarding. Everything went dark, and then I found my spiritual eye peeking out of the floor of a computer room as seen in **FIG. 3**. There was one man using a computer on the opposite side of the room near an open door. He got up from his chair and came over to sit in front of a second computer located a few feet from where I was located. From the glare of the computer monitor, I could clearly see his face. Everything went dark as my spiritual eye and body projected back to my physical body.

[0004] Another time my spiritual eye, spiritual body and mind were standing outside the closed front door of my condominium. Upon patting my legs with my hands, I couldn't find the keys in my trousers. When I looked down, I realized I wasn't in my physical body. I then shot through two solid walls of concrete and returned to my awakening body.

[0005] What these two examples show is that the human spiritual energy system is modular. The reason it is modular is because there are seven hyperspace co-dimensions, each vibrating at a slightly different frequency, which receive energy from space through seven vortices located along the physical body. Over a lifetime, these vortices build up the human aura. Because all energy systems have to be grounded, the remaining six modules are the legs, body, arms/hands, voice, eye and mind. When the entire group is out-of-body as a single entity, then the soul energy powers the body in a manner similar to a battery. The soul looks like a two-inch diameter orange ball of plasma. If the soul is removed from the body, then the body becomes paralyzed except for a small movement of the eyelids. Upon death, all these separate modules are assembled into a single energy being. A light cord from the soul provides the battery power and information required to join these modules together. A second light cord from the pituitary gland transfers the modules into the energy being for assembly. This energy information transfer is the reason that people in a near-death situation say they saw their entire life flash before them.

[0006] Moving to a larger picture of things that are happening in the galaxy, I was able to make contact with the Pleiadian Federation which is located about 400 light years from earth. The Federation is a group of over one hundred intelligent beings that were brought to the Pleiades from around the galaxy. One member of the Federation calls itself the Intelligent Insect Beings. They are the ones who fly the black triangles over Belgium and France for the purpose of evacuating human beings back to the Pleiades for relocation on a planet called Earth II. The reason for this evacuation was that it was not known if it would be possible to win the battle of Revelations, which would take place about two years later here on earth.

[0007] As could be expected, the humans were angry and hysterical at being abducted. So the Intelligent Insect Beings asked me if I could calm them down. I was in telepathic communication with them, and they were in telepathic communication with their computer system, which meant that I could have my thoughts displayed to the humans on the computer monitor. It turned out that one woman was from Central America and only spoke Spanish. The Intelligent Insect Beings didn't speak Spanish so they thought there would be no way I could communicate with her. So I told them that I would spell the Spanish words letter-by-letter and she could then read my message. Since most Spanish people are Catholics, I thought a religious message would be of importance to her. I spelled out the phrase, "Que Dios te bendiga." which means, "May God bless you." I also asked the two beings to put their hands together in a form of prayer, and the woman followed suit. At that moment the Intelligent Insect Beings were reading her mind to understand her emotional state. They said, "She is crying tears . . . " After a slight but tense pause, they continued, "of joy!" They said the woman had a big smile on her face and was successfully transitioned into her new life.

[0008] One year later, the Blond Aliens of the hundred member council of the Pleiadian Federation remote viewed me so that I could celebrate with them the success of their mission to earth. The Blond Aliens, which is not their real name, fly the Beamship spacecraft. This hyperspace vehicle can teleport itself to any location in the galaxy. It dematerializes into the black void for an instance and then rematerialize anywhere in the galaxy. This ship can be seen in Billy Meier's video from Switzerland along with a picture of their envoy, Semjase.

[0009] Just recently I had a demonstration of the Beamship's ability. I heard an emergency distress call by a commander of a spacecraft who said that they had a fire onboard their spacecraft. I immediately remote viewed a Federation maintenance mothership, they got the frequency and location of the ship, and dispatched the Beamship in time to rescue the commander. The burned-out cables, which had caused the fire, were repaired by the Federation and the commander arrived home safely on his planet in his own spacecraft.

[0010] The Federation then received a message from the commander saying that he wanted his planet to join the Federation now that there was this type of communication available. So the Federation visited his planet for the signing ceremony, and I was invited to attend the proceedings by remote view. Word got around about this, and within three weeks another 20 planets joined the Federation for the same reason.

[0011] At one ceremony, which was attended by Admiral Third Class of the Pleiadian Defense Department, His Highness of the planet was signing the document of incorporation. At that moment, I could see him signing, so I exclaimed, "He is signing with his left hand." The Admiral was almost apoplectic at hearing this. After giving her the signed document, His Highness held up his hand and asked me how many fingers he was holding up. He had a fist so I said none. Then he put his index finger out and I said one. He then made a fist again and I said none. Then he held out all fingers and I said five. The Admiral said that he had a big smile on his face as he went to announce the agreement because he knew, even though his planet was located **90,000** light years away on the other side of the galaxy, he could instantly communicate any problems to the Federation. So this is the importance of developing inventions that can enhance our remote viewing ability because one day it will mean that we can become a vital part of the Pleiadian Federation.

SUMMARY OF THE INVENTION

[0012] Referring to **FIG. 4**, the spiritual eye of the human energy system is located at the pituitary gland in the forehead. It has the shape of a hollow cone which is composed of the misty white energy of hyperspace. Light coming into this vortex is then transferred by a light cord to a visual energy module which is located in a co-dimension of hyperspace. Because these modules are interconnected by light cords, the mind module is able to interpret the visual pattern the eye is seeing. More importantly, the mind can give logical instructions to this spiritual eye module for it to rotate around or move in a particular direction.

[0013] The reason that hyperspace has a white misty look to it is that the speed of light is very much less than the speed of light in our spacetime. The Lorentz transformation says that the distance L is shortened relativistically to a distance L' in a way related to the ratio of the velocity v of the object to the velocity of light c.

$$L' = L\sqrt{1 - \frac{v^2}{c^2}}$$

If the velocity of light is very low, then a small velocity creates an enormous contraction in length. By moving through hyperspace, therefore, enormous distances can be traversed. And this is the reason that it is possible to project the spiritual eye, voice and hearing to remote locations in the galaxy.

[0014] The universe is composed of subspace, space and hyperspace which are co-dimensions of each other. Subspace is defined by the geometry of the tetrahedron which is a four-sided solid whose faces are equilateral triangles having three 60° angles. Referring to **FIG. 5**, a tetrahedron whose sides are the square root of three (A), has a height of the square root of two (B), and base length equal to the square root of one (C). This forms the basic number set $\{\sqrt{1}, \sqrt{2}, \sqrt{3}\}$.

[0015] Referring to **FIG. 6**, the tetrahedron (A) is circumscribed by the sphere (B). Rod (C) is the sphere radius. A second rod (D), of equal length to rod (C), from the center of the sphere to the corner of the tetrahedron makes an angle ϕ of

$$\phi = \mathrm{ArcSin}\left(\frac{1}{3}\right) = 19.47122063^\circ$$

So the four corners of the tetrahedron touch the sphere.

[0016] This tetrahedral geometry can be seen throughout the planets of the solar system Referring to **FIG. 7**, the islands of the Caribbean curve down from Puerto Rico to Venezuela forming an island vortex. The low density hyperspace energy releasing from the corner of the tetrahedron softens the rock mantle. The hot magma then rises through the rock with the least resistance. This creates a circular arc of volcanic islands along the edge of the vortex.

[0017] Referring to **FIG. 8**, the Giant Red Spot of Jupiter is located at a southern latitude of 19.5°. This vortex is so large that the entire earth can fit in it.

[0018] Referring to **FIG. 9**, the Olympus Mons volcano is located at a northern latitude of 19.5° as shown by the marker. This volcano is the size of France. Notice the fallen plume of volcanic debris toward the north east.

[0019] The double harmonic of the tetrahedral angle is twice 19.5° or 39° which is the location of the Silver Bridge in Point Pleasant, West Va. A large wormhole opened up around the bridge during Christmas rush hour when the bridge was full of cars. Due to the low density hyperspace energy, the rivets holding the cables down popped loose and all the cars were dumped into the river. A computer simulation using Schrodinger's quantum mechanics equation for a particle in a potential well shows that as the energy becomes less dense, the particle is no longer contained in the potential well. The electron jumps out. Thus the atomic bonds are broken which softens the rivets. This is the first time that there has been an understanding of the failure mechanism of this bridge.

[0020] After downloading from the Internet several pages of the index of refraction of a wide range of materials, I noticed that the index of refraction for Plexiglas was 1.50. Another source said it was 1.51. One of the Internet sites had a movable flashlight which showed the incident ray and the refracted ray. For Plexiglas, surprisingly enough, the incident ray was coming in at an angle of 60° to the normal, and the light was refracted at 35.26°, both of which are tetrahedral angles. The angle of the equilateral face of the tetrahedron is of course 60°. The angle at the top of tetrahedron is the arc-cosine of the ratio of the height over the edge length.

$$\theta = \text{ArcCos}\left(\frac{\sqrt{2}}{\sqrt{3}}\right) = 35.26^\circ$$

According to Snell's law, the index of refraction n, times the sine of the angle $\sin(\theta_1)$ of the ray leaving material m_1, is equal to the index of refraction n_2 times the sine of the angle of refraction $\sin(\theta_2)$ of the ray entering material m_2. Referring to **FIG. 10**, the equation is

$$n_1 \sin(\theta_1) = n_2 \sin(\theta_2)$$

The index of air n_1 is equal to one. The index n_2 of Plexiglas is 1.50. If the incident ray is at $\theta_1 = 60°$ to the normal, then the output angle is

$$\theta_2 = \text{ArcSin}\left[\frac{n_1}{n_2}\text{Sin}(\theta_1)\right] = \text{ArcSin}\left[\frac{2}{3}\frac{\sqrt{3}}{2}\right] = 35.26^\circ$$

which is equal to the angle of the tetrahedron.

[0021] Then I recalled several months earlier that I had gone to the Subway restaurant to get a sandwich. I was sitting by the Plexiglas window communicating with the Admiral whose mothership was in earth orbit. She mentioned that they were bringing two people aboard. At that moment I looked out through the window and I could see both of them clearly and easily through my spiritual eye. To my amazement, I saw both of the captives start to pull out guns from behind their backs. I then projected by spiritual hands which resulted in preventing the attack on the security guards. To say the least, the Admiral was rather surprised at these events. She then asked me to look at the design of the window because she thought it had something to do with my enhanced remote viewing capabilities. Looking at the Plexiglas, I noticed that on the edge of the large window pane there was a shorter piece of Plexiglas which was mounted parallel to the window pane. This smaller panel acted to protect the yellow neon fluorescent tube. I took the measurements of the design using a piece of paper that I found near the table.

[0022] I then went home and designed up a mounting bracket with my 3D computer software. I had already installed the stereolithography software that converts the design to the *.STL file format. How stereolithography works is that it slices the design into many thin horizontal sections. The machine has a platform which is mounted in a bath of liquid polymer. An ultraviolet laser, mounted on an xy-table, then traces out the slice. Because the liquid polymer is light sensitive, it polymerizes immediately into solid plastic. Then the platform is lowered a few thousandths of an inch and the second slice is added. This process eventually builds up the complete 3D part. Using the Internet, the *.STL file is sent by e-mail to the stereolithography service provider who returns the part overnight. So the next day I had the piece from which I made a plastic mold and several additional pieces for mounting the Plexiglas bracket on a full sheet of Plexiglas that I ordered locally. It never occurred to me to measure the angles, so after I got the index of refraction for Plexiglas, I measured the incident angle and it turned out to be 61°. So then I realized that the spiritual eye was being diffracted across these two Plexiglas plates which connected it to the tetrahedral geometry of subspace. Because subspace is the foundation of space, this created a much more efficient route for remote viewing. The result is that this invention has allowed me to make contact with 430 alien civilizations. Since then I have been awarded the Aphysics prize for my work in the invention and elaboration of the tetrahedron diagram of which there are now over 4000 graphs. The scientific discoveries contained in the diagram are (1) the electron and proton are one and same particle, (2) the existence of hyperspace, (3) how mass can be taken out of dimension, (4) cosmology determines the elementary particles, (4) all the physics constants and the tetrahedral geometry are contained in the two 360° circles of the infinity symbol and (5) all the physics constants are determined geometrically and projected from a subspace manifold into our dimension. For my work in Revelations, I was awarded four beautiful galloping riderless white horses of the Apocalypse.

A BRIEF DESCRIPTION OF THE DRAWINGS

[0023] **FIG. 1**. Remote viewing the top of a palm tree containing several coconuts.

[0024] **FIG. 2**. Remote viewing three soldiers running across a wooden bridge.

[0025] **FIG. 3**. Remote viewing computer building that soldiers were guarding.

[0026] **FIG. 4**. Spiritual eye of human aura.

[0027] **FIG. 5**. Tetrahedron.

[0028] **FIG. 6**. Tetrahedron circumscribed by sphere.

[0029] **FIG. 7**. Caribbean volcanic island vortex.

[0030] **FIG. 8**. Giant Red Spot on Jupiter.

[0031] **FIG. 9**. Olympus Mons volcano on Mars.

[0032] **FIG. 10**. Snell's Law of Refraction.

[0033] **FIG. 11**. Perspective view of remote viewing station.

[0034] **FIG. 12**. Wedge-shaped spacers for diffraction panel.

[0035] **FIG. 13**. Remote viewing angle.

[0036] **FIG. 14**. A remote viewing session taking place on a planet located 90,000 light years from earth on the other side of the galaxy showing His Highness signing with his left hand the document that allows his planet to become a member of the Pleiadian Federation.

DETAILED DESCRIPTION OF THE INVENTION

[0037] 1. Referring to **FIG. 11**, the remote viewing station is a rectangular box wooden frame (A) on which is mounted on one side a large sheet of Plexiglas (B). The diffraction panel (C), made of a shorter length of Plexiglas, is mounted with acrylic glue on the Plexiglas sheet using clear polyoptic molded plastic spacers (D).

[0038] Referring to **FIG. 12**, the wedge-shaped spacers (D) hold the diffraction panel (C) to the sheet of Plexiglas (B). The angle of the wedge is 30° which makes the incident angle 60° to the normal.

[0039] Referring to the top view perspective **FIG. 13**, sitting on the wide bench, the remote viewer can adjust his sight along the wedge for proper alignment at an angle of 60°. Due to the 1.50 index of refraction of Plexiglas, the spiritual eye is diffracted across the edge of the first panel and then refracted across the second panel at the tetrahedral angle of 35.26°.

[0040] Referring to **FIG. 14**, the remote viewing image is seen superimposed on the large sheet of Plexiglas which acts as the viewing screen.

I claim:

1. A remote viewing station comprising:

(a) a rectangular box frame made of wood having a length of six feet, a width of four feet and a height of six feet;

(b) a large sheet of quarter inch Plexiglas, having an index of refraction of 1.50, mounted on the right side of item (1a);

(c) several wedge-shaped clear plastic spacers, three inches in width and eight and a half inches in length, having a wedge angle of 30° that are mounted on the interior right side of item (1b);

(d) a shorter sheet of quarter inch Plexiglas, having a length of one and a half feet, mounted on item (1c) parallel to item (1b);

(e) a wide bench on which the remote viewer sits so that the remote viewer can align his sight along the wedge angle of item (1c);

2. A remote viewing amplifier that:

(a) diffracts the spiritual eye of the remote viewer across the edge of item (1d) at an incident angle of 60° to the normal;

(b) refracts the spiritual eye at 35.26° to the normal due to the refractive index of item (1a) according to Snell's Law of Refraction; and

(c) aligns the spiritual eye with the tetrahedral geometry of subspace due to the diffraction/refraction combination of item (2a) and (2b).

* * * * *

PERGAMON

Journal of Atmospheric and Solar-Terrestrial Physics 62 (2000) 1563–1576

Journal of ATMOSPHERIC AND SOLAR-TERRESTRIAL PHYSICS

www.elsevier.nl/locate/jastp

The global atmospheric electric circuit, solar activity and climate change

M.J. Rycroft[a,*], S. Israelsson[b], C. Price[c]

[a] *International Space University, Boul. Gonthier d'Andernach, 67400 Illkirch, France*
[b] *Department of Earth Sciences, Uppsala University, Villavägen 16, SE-752 36 Uppsala, Sweden*
[c] *Department of Geophysics and Planetary Sciences, Tel Aviv University, Ramat Aviv 69978, Israel*

Received 18 April 2000; accepted 14 June 2000

Abstract

The study of the global atmospheric electric circuit has advanced dramatically in the past 50 years. Large advances have been made in the areas of lightning and thunderstorm research, as related to the global circuit. We now have satellites looking down on the Earth continuously, supplying information on the temporal and spatial variability of lightning and thunderstorms. Thunderstorms are electric current generators, which drive electric currents up through the conducting atmosphere. They maintain the ionosphere at a potential of $\sim+250$ kV with respect to the Earth's surface. The global electric circuit is completed by currents ~ 2 pA/m^2 flowing through the fair weather atmosphere, remote from thunderstorms, and by transient currents due to negative cloud-to-ground lightning discharges. The time constant of the circuit, $\sim > 2$ min, demonstrates that thunderstorms must occur continually to maintain the fair weather electric field. New discoveries have been made in the field of sprites, elves and blue jets, which may have a direct impact on the global circuit. Our knowledge of the global electric circuit modulated by solar effects has improved. Changes to the global circuit are associated with changes of conductivity linked with the time-varying presence of energetic charged particles, and the solar wind may influence the global electric circuit by inferred effects on cloud microphysics, temperature, and dynamics in the troposphere. We now have a better understanding of how the conductivity of the atmosphere is influenced by aerosols, and how this impacts our measurements of the fair-weather global circuit. The global atmospheric electric circuit is also beginning to be recognised by some climate researchers as a useful tool with which to study and monitor the Earth's changing climate. © 2000 Elsevier Science Ltd. All rights reserved.

Keywords: Atmospheric electricity; Global circuit; Lightning; Climate change

1. Introduction to the global atmospheric electric circuit

One of the first, and certainly the most famous, demonstrations of a reproducible variation with Universal Time is the hourly average curve of electric potential gradient in the lowest atmosphere obtained over the world's oceans on the Carnegie cruises. These curves have long served as de facto standards (see Bering et al., 1998) with which to evaluate the viability of attempts to measure worldwide variations of electrical properties of the atmosphere near the Earth's surface.

The thunderstorm generator hypothesis proposed by Wilson (1920) was based on his observations that, beneath the thundercloud, negative charge is transferred to the Earth and above the thundercloud positive charge is transferred to the conducting upper atmosphere. A subsequent discovery was the close correlation between the diurnal (Universal Time) variation of the thunderstorm generator current (represented by the frequency of thunderstorm occurrence) and the load current (represented by the fair-weather ground electric field, or air-Earth current density), integrated over the surface of the Earth.

* Corresponding author. Tel.: 44-1223-353839; fax: 44-1223-303839.
E-mail address: michael.j.rycroft@ukgateway.net (M.J. Rycroft).

1364-6826/00/$ - see front matter © 2000 Elsevier Science Ltd. All rights reserved.
PII: S1364-6826(00)00112-7

By making measurements in regions where local diurnal variations of atmospheric conductivity are minor, by excluding data collected during periods of local meteorological influence, and by averaging to remove the day-to-day variability of global thunderstorm activity, a diurnal curve with a peak near 18 UT, a minimum near 03 UT and a range of some 30% of the mean was obtained. This is known as the global, 'fair-weather', diurnal variation, or the 'Carnegie curve'. Bering (1995) gives a comprehensive interpretation of recent advances in this area.

Humans are becoming increasingly concerned about changes — both natural and anthropogenic — in the Earth's environment. Particular attention is being paid to the atmosphere, not only the troposphere, the region of the Earth's weather and climate, but also the stratosphere — above it, which is where the ozone layer is. The springtime Antarctic ozone depletion, the so-called ozone hole, is the most popular example (see Farman et al., 1985; Rycroft, 1990; Solomon, 1999). Changes higher up, in the mesosphere, thermosphere and ionosphere may also be important.

How does atmospheric electricity affect man and his technological systems? Is our electrical environment changing significantly as a result of air pollution, the release of radioactive materials, the construction of high-voltage power lines, and other activities, or by energetic charged particle effects in the atmosphere? It is clear that modern technological advances may be seriously affected by various electrical processes in the atmosphere or in space, and also that man is beginning to affect the electrical environment in which he resides.

2. Physics of the global atmospheric circuit

Atmospheric electricity plays various roles in the highly coupled system representing the Earth's atmosphere and the near-Earth space environment. For further background information, see Herman and Goldberg (1978).

The conductivity of the fair-weather atmosphere near the surface is on the order of 10^{-14} mho/m, and it increases nearly exponentially with altitude up to 60 km, with a scale height of about 7 km. The main charge carriers below about 60 km are small positive and negative ions that are produced primarily by galactic cosmic rays. Above 60 km, free electrons become more important as charge carriers and their high mobility abruptly increases the conductivity throughout the mesosphere. Above 80 km, the conductivity becomes anisotropic because of the influence of the geomagnetic field, and there are diurnal variations due to solar photoionization processes. The arena for the subject is included in the system shown in Fig. 1, which shows the Earth at the centre, surrounded by the atmosphere, ionosphere, the van Allen belts and magnetosphere deformed by the flowing solar wind.

The area for the subject of atmospheric electricity is the electrically insulating concentric shell between the highly conducting Earth and the highly conducting ionosphere

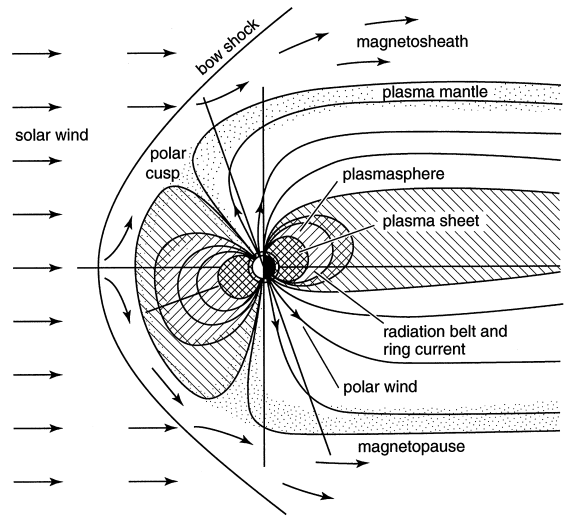

Fig. 1. Diagram showing the Earth at the centre, surrounded by the atmosphere, ionosphere, the van Allen radiation belts and magnetosphere deformed by the flowing solar wind (from Davies, 1990).

(see Fig. 2); this is surrounded by "magnetospheric action". Fig. 3, from Markson (1978), shows that the global electric circuit is believed to be driven by the upward current from thunderstorms, 1000 of them occurring around the globe at any one time. They occur mostly at low latitudes, over tropical land masses, in the local afternoon and evening. The more energetic thunderstorms reach higher into the atmosphere.

It has been known for over two centuries that the solid and liquid Earth and its atmosphere are almost permanently electrified. The surface has a net negative charge, and there is an equal and opposite positive charge distributed throughout the atmosphere above the surface. The fair-weather electric field is typically from 100 to 300 V/m at the surface; there are diurnal, seasonal, and other time variations in this field that are caused by many factors. The atmosphere has a finite conductivity that increases with altitude; this conductivity is maintained primarily by galactic cosmic ray ionization. Near the Earth's surface, the conductivity is large enough to dissipate any field in just 5–40 min (depending on the amount of pollution); therefore, the local electric field must be maintained by some almost continuous current source.

According to the classical picture of atmospheric electricity, the totality of thunderstorms acting together at any time charges the ionosphere to a potential of several hundred thousand Volts with respect to the Earth's surface. This potential difference drives a vertical electric conduction current downward from the ionosphere to the ground in all fair-weather regions of the globe. The fair weather electric conduction current varies according to the ionospheric potential difference and the columnar resitance between the ionosphere and the ground. Horizontal currents flow freely along the highly conducting Earth's surface and in the

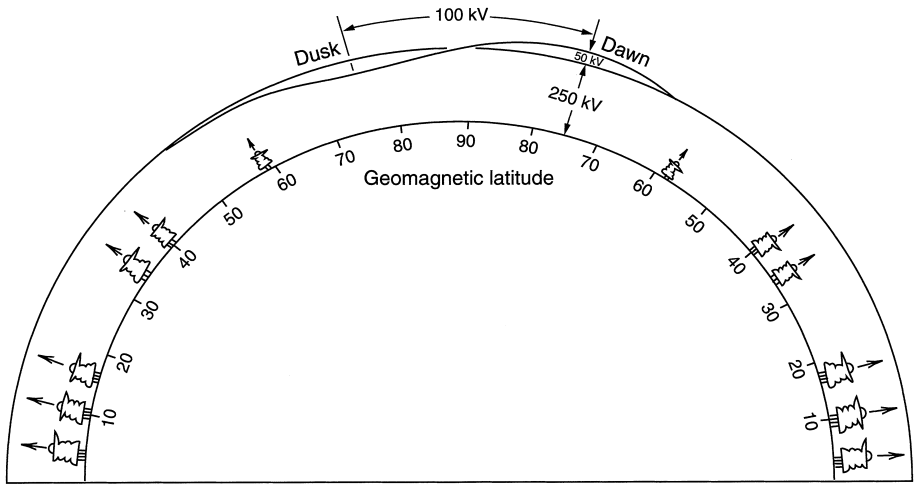

Fig. 2. Diagram showing the upward current to the ionosphere generated by thunderstorms; the ionosphere is approximately an equipotential surface, at +250 kV with respect to the Earth's surface (from Markson, 1983).

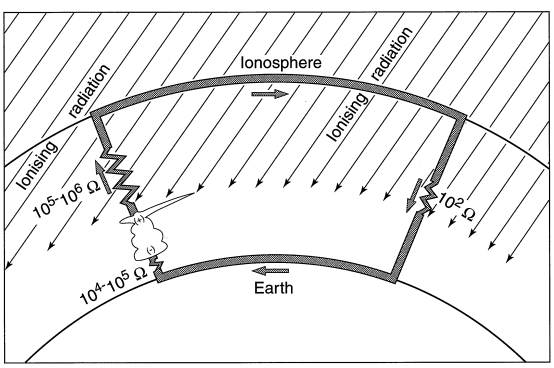

Fig. 3. Diagram of the global electric circuit (bold); the current flowing in the circuit is determined mainly by the current in the generator representing the sum of thunderstorms around the world, in the charging resistor above, and in the resistor representing more than the boundary layer below. Also important are increases in the ionising radiation which, from time to time, reduce the conductivity of the middle atmosphere (from Markson, 1978).

ionosphere. A current flows upward from a thunderstorm cloud top toward the ionosphere and also from the ground into the thunderstorm generator, closing the circuit. The global fair-weather load resistance is of the order of 100 Ω, as indicated in Fig. 3.

A few measurements have been made that give the magnitude of the current flowing upward over the whole area of a thundercloud (Kasemir, 1979). The currents range from 0.1 up to 6 A, with an average between about 0.5 and 1 A per thunderstorm cell (Blakeslee et al., 1989).

The topic is not as simple as it seems initially — there are many variations. It is a problem of global scale, but with spatial variations of important parameters, on the regional scale (e.g. in the geomagnetic latitude, or geographic longitude), on the local scale, and also with altitude. At higher geomagnetic latitudes, the conductivity of the air, σ, is larger due to the larger flux of ionising radiation there due to cosmic rays ($\sim > 1$ GeV ions) or to relativistic charged particle precipitation from the magnetosphere (> 1 GeV ions or > 1 MeV electrons). The cosmic ray fluxes are somewhat reduced at the time of a Forbush decrease and, for certain geomagnetic storms, the fluxes of magnetospheric origin are enhanced.

Fig. 3 illustrates one thunderstorm representing all 10^3 active thunderstorms occurring over less than 1% of the Earth's surface, and each generating $\sim$1 A. Thus, an upward current of $\sim$1 kA is driven through the "charging resistor", of 10^5–10^6 Ω. This current flows through the almost perfectly conducting ionosphere. The return current of 1 kA flows through the fair weather atmosphere, over 99% of Earth's surface remote from thunderstorms; the "discharging resistor", or load resistor, has the value $\sim 2 \times 10^2$ Ω globally.

It is generally convenient to regard the highly (but not perfectly) conducting ionosphere as an equipotential surface locally, at a potential of about +250 kV with respect to the Earth. However, the ionosphere is not an equipotential surface globally, because of

- the dawn-to-dusk potential difference (up to $\sim$100 kV) across the polar cap arising from the interaction of the solar wind with the magnetosphere (see Fig. 2), which causes the two-cell convection pattern of the polar F-region,
- potential differences (up to $\sim$100 kV) associated with auroral/magnetospheric processes,
- unipolar induction, due to the rotation of the Earth's magnetic field, so that the equator is at a potential of −91 kV with respect to the pole, in the centred dipole approximation, in an inertial frame of reference, and

- dynamo action in the ionosphere, such as the Sq process (up to ~20 kV).

The theoretical foundations of the subject of atmospheric electricity are firm, being based on the laws of physics — the Navier–Stokes and continuity equations, and the laws of thermodynamics — which are required to understand and predict atmospheric motions. The atmospheric density decreases exponentially with increasing height, with a scale height, $H \sim 7$ km. The atmospheric conductivity σ increases with height due to the energy spectrum of the cosmic rays and the charged particles precipitating from the magnetosphere. By Ohm's law, which is valid for linear processes only,

$$J = \sigma E, \tag{1}$$

where J is the vertical electric current density and E is the vertical electric field. This leads us to expect that, in order to maintain current continuity, E is largest near the Earth's surface, where its value is, from observations, ~130 V/m. It decreases upwards, exponentially. By Gauss' law, there is a space charge profile associated with this electric field.

Cho and Rycroft (1998) have presented a simple model profile for the atmospheric conductivity, ranging from near 10^{-13} mho/m near the surface to 10^{-7} mho/m at 80 km altitude in the lower ionosphere. Hale (1994) has presented more complex profiles, which show variations in both space and time.

Only a few mathematical models of global atmospheric electricity have appeared over the years (Kasemir, 1963, 1977; Hill, 1971; Hays and Roble, 1979; Volland, 1982; Ogawa, 1985). Since it is difficult to obtain global measurements to deduce the instantaneous properties of the global circuit, these models provide a convenient means of examining, through numerical experiments, the various interacting processes operating in the global circuit. The overall success of the models may be judged by how well they represent the observed atmospheric electrical properties at any place and time within the circuit.

Thunderstorms are extremely complex, and some simplifying assumptions must be made to represent their properties in a global model. The usual assumption is to consider thunderstorms as dipolar current sources, with a positive source in the could top and a negative source in the cloud bottom.

Ogawa (1985) has considered the simple equivalent circuit for the atmosphere shown in Fig. 4. With R_1 being the charging resistor mentioned earlier, R_2 the resistance of the thunderstorm generator where there exist potential differences ~100 MV between the positively charged top of the thundercloud and the negatively charged bottom, and R_3 the resistance of the boundary layer (first few km) of the atmosphere, all of which are much greater than r, the resistance of the fair-weather atmosphere, it follows that

$$I = R_2 I_0/(R_1 + R_2 + R_3). \tag{2}$$

Eq. (2) relates the current through the fair-weather atmosphere, I, to the current in the thunderstorm generator, I_0.

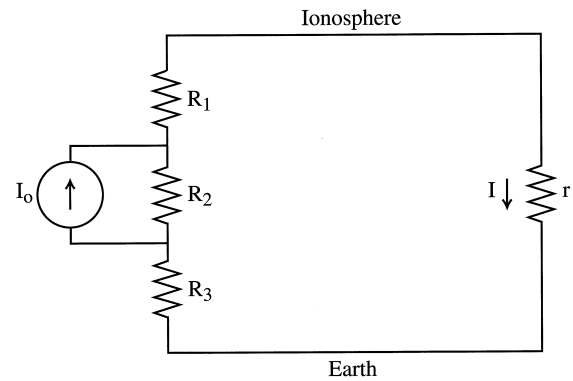

Fig. 4. A simplified equivalent circuit of the global electric circuit, showing the net thunderstorm generator current, I_0, and the fair weather current I (from Ogawa, 1985).

It is clear that R_1 and R_3 are particularly important in this relation; R_3 can be significantly reduced by

- point discharge currents due to the very large electric field below the thundercloud, in the region of updraughts, and
- increasing the height of the ground surface above mean sea level.

In this regard, measurements of I at a high-altitude (mountain) observatory remote from active thunderstorms can give some information on I_0 if R_1 and R_2 can be considered to be constant. Both may, however, be reduced at times of enhanced fluxes of energetic charged particles associated with enhanced geomagnetic activity. And the contribution to R_1 above an active, sprite-producing thundercloud may be greatly reduced due to the ionisation (see Cho and Rycroft, 1998) produced in the rarefied mesosphere by the large transient electric fields due to large, positive cloud-to-ground lightning discharges.

Fig. 5 is a new diagram, the upper part of which attempts to illustrate the electric currents flowing through different parts of the atmosphere, and including the magnetosphere above. The lower part of the diagram shows the equivalent circuit, with three different fair weather regions. One of these is for a high altitude part of the Earth where the profiles of J and E through the fair weather atmosphere will differ from those elsewhere.

From standard electrostatic theory, the capacitance C of the concentric shell of atmosphere between the Earth and the ionosphere, over one scale height of atmosphere rather than over the full height of the ionosphere, is given by

$$C = 4\pi\varepsilon_0 R_E^2/H \sim 0.7 \text{ F}, \tag{3}$$

where R_E is the radius of the Earth and ε_0 is the permittivity of free space.

Hence the time constant for the atmospheric global electric circuit, t, is given by

$$\tau = Cr \sim 2 \text{ min}. \tag{4}$$

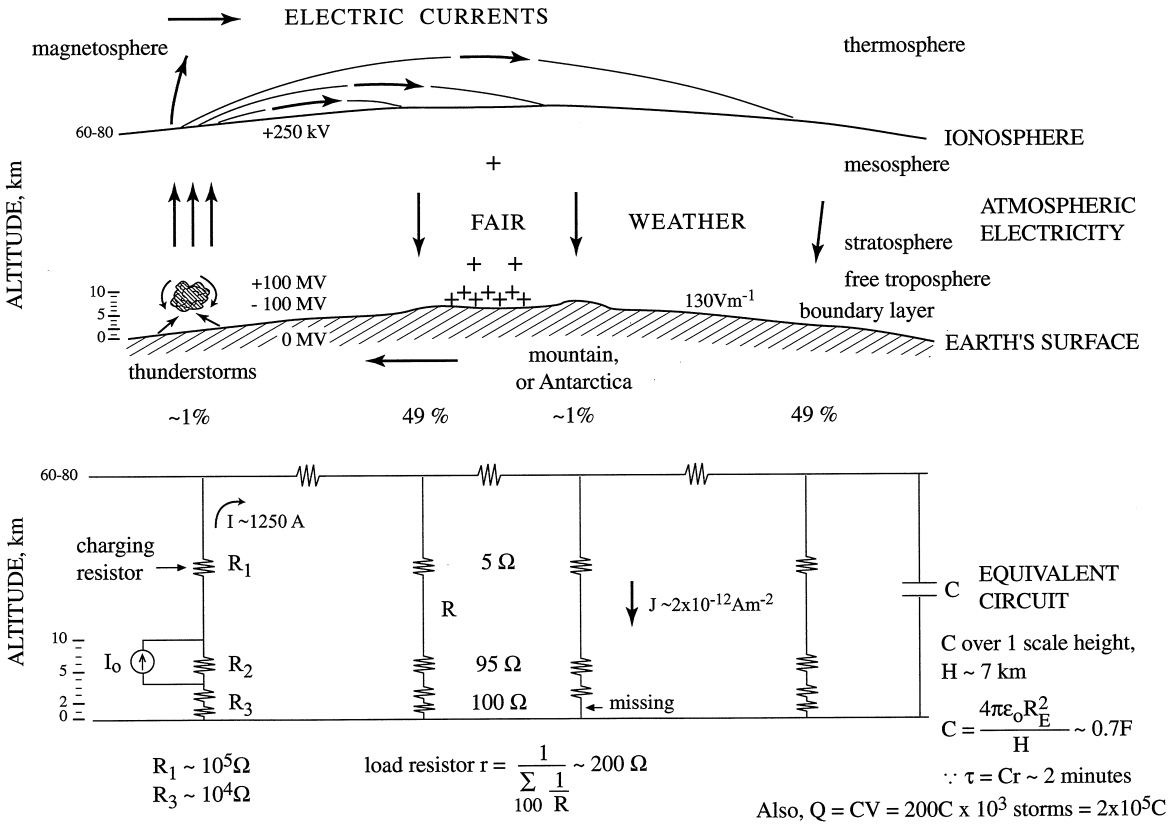

Fig. 5. (a) Top. Diagram, approximately to scale, showing electric currents (bold arrows) flowing up from the net thunderstorm generator over $\sim < 1\%$ of the Earth's surface, through the ionosphere, the fair-weather atmosphere and the Earth, and closing as point discharge currents below the thundercloud. In the centre, the distribution of positive space charge is shown. (b) Bottom. The equivalent circuit for (a), showing components of the fair-weather resistor over different height ranges for 2–3 km above the surface; the boundary layer resistor is "missing" above a mountain or over Antarctica. Typical numerical values are also shown.

With a charge of 200 C associated with each thunderstorm, the total Q on the plates of the spherical condenser is 2×10^5 C. Thus, the energy associated with the global electric circuit is enormous; it is

$$W = CV^2/2 \sim 2 \times 10^{10} \text{ J}, \tag{5}$$

inserting $V = 250$ kV.

The electric current density through the fair-weather atmosphere, J, has the value $\sim 2 \times 10^{-12}$ A/m^2. Taking the conductivity of air at ground level, produced by extremely energetic cosmic rays and by radon from the ground, and due to aerosols, to be $\sim 2 \times 10^{-14}$ mho/m, the fair weather electric field at ground level is $\sim 10^2$ V/m, close to the near observed value of 130 V/m. At 20 km altitude, the fair-weather vertical electric field is ~ 1 V/m, and can be well measured from balloons. At 50 km altitude, it is only $\sim 10^{-2}$ V/m.

Following a Forbush decrease, the atmospheric conductivity everywhere could be reduced by $\sim 10\%$. If J is unchanged, the ionospheric potential, and hence also the fair weather electric field, may be increased by $\sim 10\%$. There is some observational evidence to support this concept (see Ogawa, 1985).

After a sprite above one of the thousand active thunderstorms, the ionospheric potential would reduce to 99.9% of its initial value for a millisecond or so. Thus, it is evident that sprites are unlikely to cause an observable effect on the fair-weather electric field.

To consider electrodynamic or electromagnetic effects rather than electrostatic phenomena, Maxwell's equations are involved. They relate electromagnetic fields to charge and current densities in a time-varying situation. Electromagnetic waves of appropriate frequencies can be generated, and these propagate away. The medium through which the energy propagates has a certain refractive index, which is equal to the square root of the relative electric permittivity.

The medium is treated as a conductor at frequencies (ω) such that $\omega \ll \sigma/\varepsilon_0$. Alternatively, the medium behaves as a leaky dielectric when $\omega \gg \sigma/\varepsilon_0$; that is the situation in the ionosphere for VLF waves and for higher frequency waves. However, for waves at Schumann resonance frequencies the lower ionosphere behaves like a

conductor. Radiation produced by the current pulse due to a cloud-to-ground lightning discharge (i.e. due to the rapid destruction of the dipole moment formed by the negative charge in the bottom of a thundercloud and its positively charged image in the Earth) ranges from Schumann resonance frequencies up to ~100 MHz.

However, if there are no radiation effects to be considered, the current flowing is the sum of the conduction current and the displacement current. This is termed the Maxwell current. In the atmosphere, there can be other significant contributions to the current density, due to convection, turbulence, precipitation (or settling) or point discharges. Mentioned earlier, and sometimes called St. Elmo's fire, this last contributor to the current through the global atmospheric circuit may actually carry half the current (see Bering et al., 1998). By its very nature, it is variable, and not a great deal is known about it. It is a topic for further research.

A fundamental property of the global atmospheric electrical circuit is the electrical relaxation time at various altitudes, which is defined as the time the electric current takes to adjust to $1/e$ of its final value after an electric field is suddenly applied, assuming that the conductivity remains constant. At high altitudes, near 70 km, the relaxation time is about 10^{-4} s, increasing with decreasing altitude to about 4 s near 18 km and to about 5–40 min near the Earth's surface. The electrical relaxation time of the land surface of the Earth is about 10^{-5} s. The maximum value of about 40 min in the atmosphere near the Earth's surface is the characteristic time that the global circuit would take to discharge if all thunderstorm activity suddenly ceased. Measurements have never shown a complete absence of a fair-weather electric field for any length of time, thereby suggesting a continuous operation of thunderstorms and other generators in maintaining the currents flowing in the global circuit. For time variations longer than about 40 min a quasi-static approximation can be applied when modelling the electrical properties of the global circuit.

3. Solar and cosmic influences on atmospheric electricity

3.1. Solar cycle effects

Variable plasma phenomena from the Sun, such as gigantic coronal mass ejections, can create geomagnetic storms, periods of enhanced geomagnetic activity. Such phenomena exert a profound — often disruptive, and occasionally devastating — influence on humankind's technological systems, such as satellites, telecommunications systems, power lines and pipelines; they may even affect human health.

It is well known that the Sun is not a constant star but one whose radiative output (especially in the ultraviolet and X-ray spectral regions) varies over a solar cycle, of ~11 years period. (Taking account of the Sun's magnetic polarity, it is actually a ~22 year cycle.) The temperature, and hence the density, of the upper atmosphere (thermosphere) vary markedly over a solar cycle. For example, at ~400 km altitude where the International Space Station will operate, the density — and hence the drag force — is almost a hundred times greater at solar maximum than at solar minimum.

The solar magnetic field and its extension through the interplanetary medium (carried by the plasma of the solar wind) to the Earth's orbit and beyond, into the heliosphere, is markedly more variable at solar maximum than at solar minimum. Thus, the flux of galactic cosmic rays (scattered by the irregularities of the interplanetary magnetic field) entering the top of the atmosphere is some tens of percent larger at solar minimum that at solar maximum, whereas the flux of energetic (>0.1 GeV) charged particles (protons) from the Sun at solar minimum is typically many times less that its value at solar maximum. Both types of energetic charged particles and also energetic charged particles precipitating from the inner and outer magnetospheric radiation belts (see Fig. 1, from Davies, 1990) during geomagnetically active periods interact with the Earth's middle and lower atmosphere by depositing their energy in the atmosphere, by creating ionisation directly or via bremmstrahlung radiation, by altering its chemistry (particularly ozone, nitric oxide and sulphate aerosols, see Jackman et al., 1995), or by affecting the nucleation of water droplets to form clouds (see Tinsley, 1996, 2000). There is some recent evidence that energetic solar protons appear to produce small holes in the Arctic ozone layer. They may trigger the formation of cirrus clouds which decrease the flux of solar radiation to the Earth's surface and hence affect the evolution of weather systems (see Pudovkin and Babushkina, 1992), and also affect the Earth's radiation budget by contributing to the greenhouse effect (also see Svensmark and Friis-Christensen, 1997),

Ground-based radars and other instruments in Scandinavia and around the world observe the effects of the ever changing, million Ampere current systems in the auroral ionosphere at heights near 110 km. These cause changing geomagnetic fields which induce large and varying currents to flow in long conductors, such as electrical power lines or oil pipe lines, sometimes with catastrophic effects. These include exploding transformers and power cuts (outages) of several hours duration, or corrosion.

Thus atmospheric electricity plays various roles in the highly coupled system representing the Earth's atmosphere and the near-Earth space environment. There are temporal variations, on time scales varying from microseconds (in lightning discharges), to milliseconds (e.g. sprites), minutes to an hour (e.g. thunderstorm regeneration), hours to a day (e.g. diurnal variations), months (solar rotation and seasonal effects), and to a decade (solar cycle effects), as well as spatial variations.

3.2. Latitudinal effects

Solar influences on the geoelectric field differ between mid-latitudes and the polar regions (Tinsley, 1996).

Increased solar activity reduces galactic cosmic ray fluxes in mid-latitudes, thus reducing the atmospheric conductivity in this region, while at the same time solar protons may be "funnelled" by the Earth's magnetic field to polar regions resulting in an increased atmospheric conductivity there. A dawn-to-dusk potential difference is also applied across the polar regions as a result of the interaction of the solar wind and the Earth's magnetic field (see, for example, Tinsley and Heelis, 1993). The cross-polar potential results from the same interactions that generate auroral activity and typical lies in the range 30–60 kV (Fig. 2). It may, at times of increased solar activity, exceed 100 kV. The cross-polar potential may not be the dominant solar influence on the global geoelectric circuit, but it is of significant magnitude in the polar regions. The diurnal pattern generated as a station rotates beneath the cross-polar cap potential difference also aids its detection.

The global electric circuit is closed by currents flowing in the ionosphere. At high latitudes, within the polar cap, these currents are strongly influenced by parameters of the solar wind, particularly the direction of the interplanetary magnetic field. In the auroral zone, the ionosphere is markedly disturbed when the magnetosphere is buffeted by a cloud of solar wind of enhanced density which is associated with a huge coronal mass ejection event from the Sun. As a result, the potential difference across the polar cap ionosphere can vary markedly.

The measurement techniques applied in magnetospheric and ionospheric research enable the detection of strong, intrinsic effects of the solar wind/ionosphere on the electrical potential distribution and conductivity of the atmosphere, as presented by Michnowski (1998). These manifestations of the solar wind interaction with the magnetosphere and ionosphere are especially evident at high latitudes.

4. Aerosols and the global circuit

4.1. Planetary boundary layer (PBL) aerosols

The planetary boundary layer (PBL) is the lowest few kilometers of the atmosphere, where interactions with the surface, man, and the biosphere are the most pronounced. Near land surfaces the ionization is, beside galactic cosmic rays, produced by the decay of natural and artificial radioactivity. Electrical processes in the PBL are complex, highly variable, and span a tremendous range of space and time scales. The electrical variables respond to many of the lower atmospheric processes but usually have little influence on the phenomena to which they respond. Within the PBL, local turbulent fluctuations of space-charge density impose a time-varying electric field that is comparable in magnitude with, or even greater than, the electric field maintained by global thunderstorm activity. Since the PBL is the region of the atmosphere with the greatest resistance, it is this layer (as well as the thunderstorm generators) that control the currents in the global circuit. Boundary layer processes can have a substantial impact on the fields and currents appearing throughout the entire atmospheric column from the Earth to the ionosphere. Modelling of the atmospheric electricity in the PBL is difficult due to the complicated conditions in the PBL (see Hoppel et al., 1986).

Aerosol particles can change the Earth's radiation budget both directly through scattering and through absorption and indirectly through modification of cloud microphysical properties. It is clear that there is a great uncertainty in assessing the direct and indirect effect of aerosols on climate change. We must understand and be able to quantify the most important sources and characteristics of aerosols in order to assess their effects on climate change. The relatively short residence time of aerosols in the troposphere, of order of a few days, results in significant spatial and temporal variations in aerosol particle concentration, size and composition. The high variability of the atmospheric aerosol leads to one of the largest uncertainties of anthropogenic climate forcing. This variability is compounded by a lack of much information on the properties of the atmospheric aerosols prior to the late 1970's when commercial aerosol instrumentation became more widely available. Thus, it is difficult to assess the influence of anthropogenic aerosols on radiative forcing up to that time. However, a number of researchers have shown that atmospheric electricity parameters can act as a good indicator or surrogate.

Many factors affect the electrical conditions in the PBL. An important area of research is the study of atmospheric ions. According to their physical nature, atmospheric ions with mobilities above 0.5 $cm^2\ V^{-1}\ s^{-1}$ are charged molecular clusters or cluster ions. Tammet et al. (1992), Horrak et al. (1998) and others have shown the importance of these charged particles in atmospheric electricity, particularly in relation to atmospheric conductivity and to space charge formation. Retalis and Retalis (1998) treated the effects of air pollution on the large ion concentration, which indicated the importance of polluted areas (like cities, etc.) on the electrical environment. The impact of Chernobyl in April 1986 on all atmospheric electrical parameters in some parts of Sweden has been significant directly after the accident and several months later (Israelsson and Knudsen, 1986). Martell (1985) and Israelsson et al. (1987) have shown the importance of the ionisation from natural and artificial radioactivity in the charging mechanism of clouds.

Even natural processes over the sea are of importance. Blanchard (1963) indicated that currents as large as hundreds of Amperes flow from the ocean surface into the atmosphere as a result of electrified droplets that are ejected from the bursting of small bubbles.

Modelling of convection currents has shown that they only become important in unstable mixed layers, where the turbulent transport time across the entire PBL can be comparable with the electrical relaxation time. Willett (1978) showed that, on average, the convection currents act as a

local generator capable of reducing the total downward current density by as much as 44%.

In order to study the horizontal structure of vertical current densities in the PBL, experiments to examine the covariation of atmospheric vertical electric currents at different stations using long-wire antennas are discussed by Israelsson et al. (1994).

4.2. Volcanoes and aerosols above the PBL

The main source of ionisation in the mid-troposphere and stratosphere (above the PBL) is cosmic radiation. The ionisation rate depends on magnetic latitude and on solar activity. The composition of the ions that establish the bulk electrical properties is relatively unknown. The ion concentration is also affected by aerosols whose distributions are quite variable in both space and time.

The global electric circuit varies over the solar cycle associated with cosmic ray flux changes. Whilst the contributions of thunderstorms may not only be to maintain an upward DC current, an improved understanding is required of the return current ($\sim$2 pA/m^2) flowing through the "fair-weather" atmosphere as part of the global electric circuit, particularly for geographically restricted variations of atmospheric conductivity. Another type of perturbation to the atmosphere results from volcanoes. Their sulphate aerosols and dust particles could nucleate high-altitude clouds, and the sulphates change the atmospheric conductivity and hence the properties of the global electrical circuit.

The character of upper tropospheric aerosols can be temporarily disturbed not only by volcanic eruptions but also by forest fires, biomass burning, and large dust storms. In addition annual variations of their concentrations have also been observed (Hofmann et al., 1975). Another important temporal variation of tropospheric aerosols is associated with the so-called Arctic haze events. New evidence suggests that these events are characterized by high particle loading throughout a large portion of the troposphere. The impact of this extensive aerosol loading on atmospheric electrical parameters is yet to be determined.

Hogan and Mohnen (1979) reported the results of a global survey of aerosols in the troposphere and lower stratosphere. They found that the concentrations were more or less symmetrically distributed about the Earth. More measurements of this type could provide the basis for extrapolating local or isolated observations to characteristic worldwide values. Man-made global ionisation effects reported by Boeck (1983), who studied the effect of krypton 85 released into the atmosphere on the global conductivity, have to be included in the global electric circuit.

The morphology of stratospheric aerosols is dominated by a persistent structure frequently referred to as the 20-km sulphate layer, or Junge layer. It is now known that the character of this layer is highly affected by large volcanic eruptions (Gringel et al., 1986). These volcanic eruptions can result in a rather dramatic increase of the aerosol content up to the stratosphere. The extent to which these aerosols directly affect the atmospheric conductivity, small-ion concentration, and mobility should be investigated to a greater extent. On the other hand, the sulphuric acid content of the lower atmosphere is also drastically enhanced following volcanic eruptions and might influence the ion composition considerably. Air-Earth current density measurements seem to be consistent with the classical picture of the global circuit, with some exceptions. The question of whether there are other global generators in the lower atmosphere, in addition to thunderstorms, could probably be unravelled by ground-based and balloon-borne current measurements at different locations.

5. Thunderstorms and the global circuit

5.1. Spatial and temporal distribution of thunderstorms

In recent decades we have greatly advanced our knowledge regarding the spatial and temporal distribution of thunderstorms and lightning. In the 1960s the first satellite observations of lightning were obtained (Vorpahl et al., 1970). However, in the last five years tremendous advances have occurred with the launch of three separate lightning detectors in space (OTD, LIS and FORTE) (Christian and Latham, 1998; Jacobson et al., 1999). We now know that the vast majority of lightning activity is located over the continental regions of the globe, with little lightning ever being found over the oceans. The reason for this is still debated; however, it is related to the differences in the microphysics of oceanic and continental deep convection (Price and Rind, 1992). Observations have shown significant differences in the updraft intensities in storms, with the oceanic storms rarely having updraft intensities greater than 10 m/s. The intensity of the updrafts is very important for the electrification processes, due to the vertical transport of supercooled droplets and graupel particles (Williams et al., 1992).

As a result of the global distribution of lightning, there are three main centres of lightning activity over the three tropical continental landmasses (South America, Africa, and South East Asia/Maritime Continent). In addition to the tropical lightning, extratropical lightning activity plays a major role in the summer season in the northern hemisphere, resulting in the global lightning activity having a maximum in June–August. Since the daily lightning activity in the tropics maximizes late in the local afternoon (16–18 local time), the combination of spatial and temporal activity produces the well-defined diurnal cycle in measurements of the global electric circuit (the 'Carnegie curve').

Whipple (1929) showed the agreement between the diurnal cycle of the global circuit and the diurnal cycle of global thunderstorm activity. Markson (1986) showed that individual measurements of the ionospheric potential agree well with the 'Carnegie curve', confirming that lightning plays a major role in the global electric circuit. Clayton and Polk

(1977) also showed good agreement between the AC component of the global circuit (Schumann resonances, see below) and global lightning activity. All these studies showed that the global electric circuit has a maximum at approximately 1800 UT, and a minimum at 0300 UT (Price, 1993).

As mentioned above, global lightning activity has a seasonal cycle with a maximum in the northern hemisphere summer. This annual cycle is also observed in the various measures of the global electric circuit. Hence, monitoring the global electric circuit, either via the DC components (ionospheric potential, fair-weather current) or via the AC component (Schumann resonances) provides a good proxy for global lightning activity.

5.2. Sprites

In the last decade, a completely new discovery has been made in the field of atmospheric electricity. Optical flashes have been observed high above thunderstorms, reaching altitudes of up to 100 km. These luminous transient events lasting from 1 to 100 ms have been named elves, sprites and blue jets. In the last few years the research in this area has increased dramatically (see Sentman and Wescott, 1996; Rodger, 1999, and a Special Issue of JASTP (May/June 1998)). It is now believed that all three phenomena are independent of each other, although sometimes they may occur simultaneously. Most of the advances in this field have occurred as the result of dedicated field experiments in the United States. During the summer months, mesoscale convective systems develop over the United States, which provide a natural laboratory for studying sprites. Observations have been taken on the ground (Lyons, 1996), from aircraft (Sentman and Wescott, 1993), and from high-altitude balloons (Bering et al., 1999). It appears that elves occur with all lightning discharges. The electromagnetic pulse (emp) produced by the lightning propagates up into the stratosphere and mesosphere, producing large electric fields that result in a ring of light at the base of the ionosphere (Cho and Rycroft, 1998), similar to the airglow phenomenon. This ring expands outwards as the emp propagates away from the lightning source in the storm below. The elves last only a few milliseconds, and they can only be seen with very sensitive low-light-level cameras. The propagation of elves outward has been observed using high-speed photometers (Inan et al., 1997).

Sprites are the more spectacular events, and are caused by only a small fraction of the lightning discharges within the storm below. We now know that sprites occur simultaneously with positive cloud-to-ground lightning (Boccippio et al., 1995), although recently there has been some evidence of negative cloud-to-ground flashes producing sprites (Barrington-Leigh et al., 1999). Sprites are red in colour as a result of the excitation of the N_2^+ line. The lifetime of sprites is much longer than that of elves, up to 50 milliseconds, and they occupy volumes greater than 1000 km^3. The removal of charge from the cloud by the positive discharge is thought to result in the stressing of the upper atmosphere. The screening layer around the anvil of the cloud immediately after the ground discharge acts as the charged plate of a horizontal capacitor, producing large fields above the storm in the mesosphere. The enhanced field accelerates electrons in the low-density mesosphere, colliding with N_2 molecules, resulting in the emission of red light. The relaxation time of the screening layer is some tens of milliseconds, the time scale of the sprites.

Do sprites influence the global electric circuit? This is still an unanswered question. Although sprites occur in the upward branch of the global circuit above thunderstorms, hence influencing the conductivity of the upper atmosphere (the resistor R_1 in Fig. 5), they occur much less frequently than regular lightning. Observations indicate approximately 1 sprite for every 200 lightning discharges. Therefore, due to their low occurrence rate they may not pay a major role in the global electric circuit. This is a topic of future research.

5.3. Schumann resonances

A paper in this issue (Barr et al., 2000, this issue) describes in detail the history and development of Schumann resonances (SR). The SR are produced by electromagnetic radiation from lightning being trapped in the Earth-ionosphere waveguide. At extremely low frequencies (ELF), very little attenuation occurs, allowing these radio waves to propagate a few times around the globe before dissipating. Constructive interference produces standing resonant waves at $8, 14, 20, 26, \ldots$ Hz, where the 8 Hz mode represents a wave with wavelength equal to the circumference of the Earth (40,000 km); see also Rycroft (1965) and Fuellekrug and Fraser-Smith (1996). Hence, similar to the DC fair-weather global circuit measurements, the SR can also be monitored from a single position on the Earth's surface.

Research on SR is twofold. The background SR signal intensities are well correlated with global lightning activity (Heckman et al., 1998); hence, the SR are used for studying the global variability of lightning activity (Satori, 1996; Nickolaenko et al., 1998). On the other hand, the transient SR signals have been shown to be well correlated with sprite activity (Boccippio et al., 1995; Cummer et al., 1998). Therefore, we are also able to use the SR measurements to study sprites on a global scale (see Fig. 6).

Unlike the DC circuit that is influenced by changes in the conductivity of the atmosphere, the SR are dependent only on global lightning activity. Hence, the AC component of the global circuit is better correlated with global lightning activity than is the DC component.

6. Climate change and the global electric circuit

In recent years a new and important application of the global electric circuit has become evident. The global

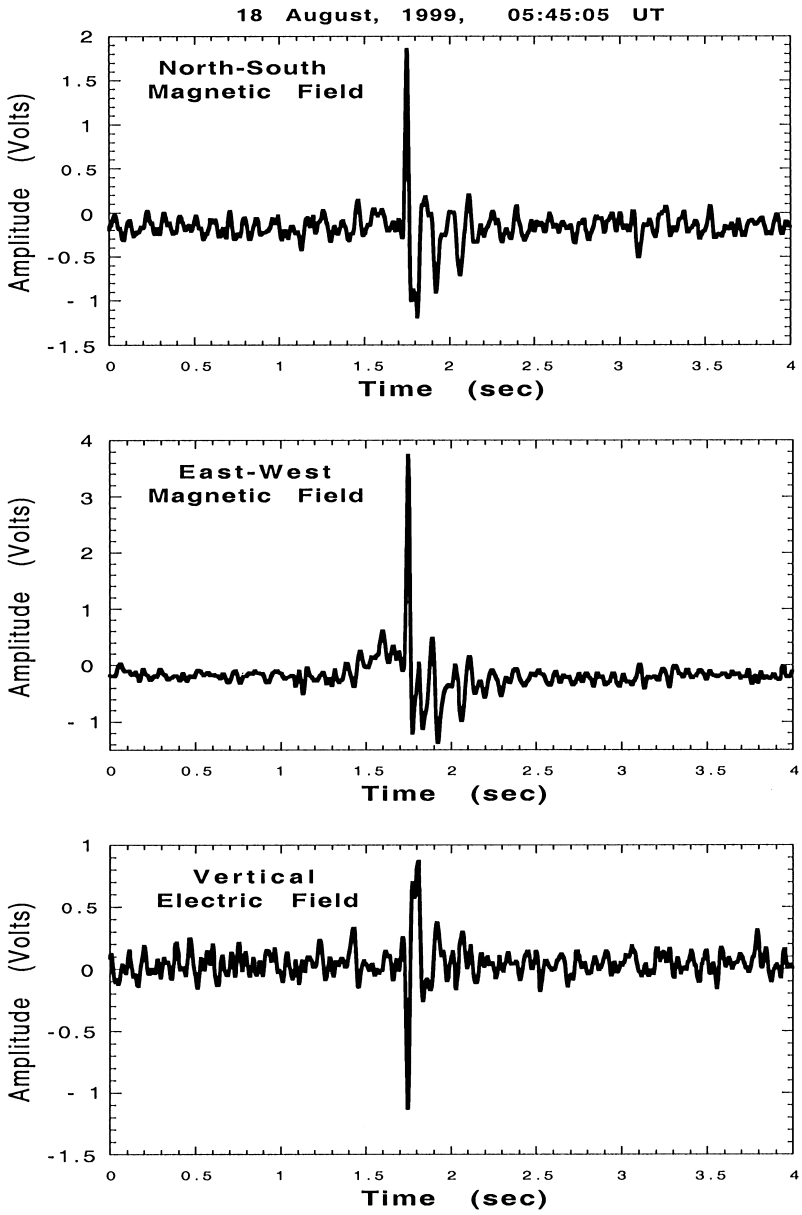

Fig. 6. The ELF radio signals observed in Israel associated with a sprite generated in the United States.

circuit is becoming an important tool in studying the Earth's climate, and climate change. Price and Rind (1990) first proposed the possibility that changes in the Earth's climate could result in more lightning activity around the planet. Since then global lightning activity and the global electric circuit have been shown to be closely related to various important climate parameters.

Williams (1992) showed the close relationship between tropical surface temperatures and the monthly variability of the SR measured in Rhode Island, USA. A similar study was conducted by Fuellekrug and Fraser-Smith (1997), showing a connection between ELF observations in Antarctica and Greenland and global surface temperatures. Price (1993) showed a good agreement between the diurnal surface temperature changes and the diurnal variability of the global electric circuit ('Carnegie curve'). This study also showed a strong link between the frequency/intensity of global deep convection and global surface temperatures. Markson and Price (1999) used direct measurements of the ionospheric potential to further demonstrate the positive correlations between global and tropical surface temperatures and the ionospheric potential. Recently, Reeve and Toumi (1999) used

new satellite lightning observations to show the agreement between globally observed lightning activity and global temperatures. Finally, a recent study by Price (2000) has extended the above connections to additional climatic parameters such as upper tropospheric water vapour; the variability of upper tropospheric water vapour is closely linked to the variability of global lightning activity, measured via the SR.

Therefore, by monitoring the global electric circuit, we may be able to study, in a cheap and consistent way, the variability of global lightning activity, which is closely related to surface temperatures, tropical deep convection, rainfall, upper tropospheric water vapour, and other important parameters that affect the global climate system. The advantage of these measurements is that they can be made continuously, for many years, unlike satellite sensors that generally have a relatively short lifetime of only a few years, or even less.

7. Potential applications and recommended atmospheric electricity research

An increased interest in understanding the Earth's electrical environment has resulted from recent advances in different disciplines, along with the recognition that many of man's modern technological systems can be adversely affected by this environment. The cornerstone of our understanding of the Earth's electrical environment and the global electrical circuit is an integration of measurements, theory, and modelling. There should be a concerted effort of coordinated measurement compaigns, supported by critical laboratory experiments, theory, and numerical modelling of processes, to improve our understanding of the Earth's electrical environment.

It is also an opportunity to further investigate relationships/correlations between atmospheric aerosols and electrical parameters, with the advent of more widely available aerosol measurement capabilities. A proper understanding of the impact of aerosols on climate rests both on quality-assessed measurements, and on a predictive modelling capability which enhances our ability to understand complex and nonlinear interactions between aerosols and atmospheric electric parameters. An interesting and novel approach in linking atmospheric electricity parameters and lightning activity to the global electric circuit and to global warming provides the basis for other crucial modelling initiatives.

The global circuit of atmospheric electricity is influenced by meteorological processes. These influences are incorporated in the current that flows in the global circuit. As the electric conductivity of the troposphere and the stratosphere is so much lower than that of the ground and that of the ionosphere, the potential difference between these two highly conducting layers indicates the strength of the global circuit current and its variations with time. In measuring the electric field or the air-Earth current density at any one station, we may obtain information about those meteorological processes that, world-wide, influence the global circuit current. At the same time, the data obtained by measuring the electric field and/or the air-Earth current density are also influenced by local events at and above the measuring stations. These events may be generators for local electric circuits or may cause variations of resistances in the circuit. Therefore, we must basically consider that in the data thus obtained we are witnessing influences both from processes that occur over the entire globe at the same time, as well as from purely local events. If the scientists in atmospheric electricity had the chance to separate these contributions, we might have a tool of significance for global change problems.

The ionospheric potential, electric field and air-Earth current density measurements in the PBL with periods shorter than a few hours are usually attributed entirely to local sources, primarily turbulence and pollution. Recent advances that have been made in independent research areas examine the interrelations between them, and project how new knowledge could be applied for the benefit of mankind. They also indicate needs for new research and for the types of coordinated efforts that will provide significant new advances in basic understanding and in applications over the next few decades. They emphasize a need to consider the interactions between various atmospheric, ionospheric, and telluric current systems to achieve an overall understanding of global electrical phenomena.

Evaluating the present situation from this vantage point, we can perceive three main approaches from atmospheric electricity to the global change monitoring effort:

1. Measure local parameters at many places and attempt meaningful integrations for the results over areas of global importance, optimally for the whole globe.
2. Measure local parameters and follow local processes at locations where they may be representative for larger areas; the expectation is that this will be the case for the oceans far from their shores.
3. Find global contributions to local measurements, and derive global information from a rather small number of local stations.

The global detection of lightning is necessary to determine the global flashing rate and how this rate relates to other parameters in the global circuit. NASA has developed new optimal sensors that could be used to detect and locate lightning in the daytime or at night, and with continuous coverage by using satellites in geosynchronous orbits. These sensors are capable of measuring the spatial and temporal distribution of lightning over extended periods with good spatial resolution; they offer significant new opportunities for research and for many applications.

There are ample reasons for interest in global-scale atmospheric electrical phenomena. For example, valuable information about the distribution and temporal variability of

horizontal potential differences in the ionosphere could be provided by monitoring the ionospheric potential simultaneously in different locations. Furthermore, the widely accepted relationship between global thunderstorm activity and ionospheric potential has yet to be verified on anything but the crudest statistical basis. From the present perspective, finally, a detailed knowledge of the forcing from the global circuit would be useful in evaluating the electrical response of the PBL.

Seen from our present state of knowledge and our present priorities, the following atmospheric electricity elements should be investigated. Are they changing over time? If so, how and why?

- Thunderstorm nature, frequency, and geographic distribution; assess secular changes in the number of thunderstorms and/or of lightning.
- Ionosphere-Earth potential difference; assess its changes by direct or indirect measurements of air-Earth current density at the ground or in the air.
- Atmospheric electrical conductivity and its changes at a selection of typical stations, with various local atmospheric and geographic conditions and of types of anthropogenic influences.

In a recently published book, the Board of Atmospheric Sciences and Climate of the US National Research Council (1998) has presented a few Recommended Atmospheric Electricity Research Topics. These are to

- Investigate the possibility that the global electrical circuit and global and regional lightning frequency might be an indicator of climate change.
- Determine mechanisms responsible for charge generation and separation in clouds to understand cloud formation mechanisms and elucidate the fundamental physics of lightning.
- Determine the nature and sources of middle-atmospheric discharges to (1) increase knowledge of these recently discovered phenomena and their possible association with severe weather, and (2) explore their effects on radio propagation and atmospheric chemistry.
- Quantify the production of oxides of nitrogen (NO_x) by lightning to better understand upper-troposphere ozone production or loss.

The European Science Foundation has recently established a Network on "Space weather and the Earth's weather electrodynamic and charged particle effects on the stratosphere and troposphere". The overall aim of that interdisciplinary study, now named Space Processes and Electrical Changes Influencing Atmospheric Layers (SPECIAL), is to

- review and investigate such subjects,
- generate and test some hypotheses on the effects of energetic charged particles on the atmosphere, and
- consider their effects on weather and climate (also see Feynman and Ruzmaikin, 1999).

Thus, it is evident that the "old" subject of atmospheric electricity is very much "alive and kicking" today. Indeed, in the next decade or so, it may experience a renaissance.

8. Conclusions and discussions

The study of atmospheric electricity and the global electric circuit has advanced dramatically in the past 50 years. Our knowledge of the global electric circuit modulated by solar effects has improved, although there are generally more questions than answers in this field of atmospheric electricity. Regarding aerosols and atmospheric ions, advances have been made in studying air pollution using atmospheric electricity, and we have a better understanding of how the conductivity of the atmosphere is influenced by aerosols, and how this impacts our measurements of the fair-weather global circuit.

Perhaps the largest advances have been made in the areas of lightning and thunderstorm research, as related to the global circuit. We now have satellites looking down on the Earth continuously, supplying information on the temporal and spatial variability of lightning and thunderstorms. New discoveries have been made in the field of sprites, elves and blue jets, which may have a direct impact on the global circuit and how we model the global circuit.

Finally, the global atmospheric electric circuit is now starting to be recognised by some climate researchers as a useful tool to study and monitor the Earth's changing climate. The global electric circuit is the only climate-related parameter that can be measured at a single location on the Earth's surface, and yet supply global information. This unique quality should encourage additional research in this field.

Although there have been dramatic advances in the field of sprites, lightning, and even the Schumann resonances over the last decade, there is a need for an increased understanding of the solar-terrestrial connection. How do changes in solar particles and cosmic radiation, and also the solar wind, influence the Earth's climate? How strong is this connection? Is it mainly a high-latitude connection, or can tropical thunderstorms be affected by changes in the solar wind flux? What about variations over the solar cycle? These and many more questions need to be addressed in future research.

Our need to assess environmental impacts on human kind's technological systems requires a better understanding of electrical processes in the Earth's atmosphere than we now possess. Further research is needed to understand better the natural electrical environment and its variability and to predict its future evolution.

References

Barr, R., Jones, D.L., Rodger, C.J., 2000. ELF and VLF Radio Waves. Journal of Atmospheric and Solar Terrestrial Physics 62, 1689–1718.

Barrington-Leigh, C.P., Inan, U.S., Stanley, M., Cummer, S.A., 1999. Sprites triggered by negative lightning discharges. Geophysical Research Letters 26, 3605–3608.

Bering III, E.A., 1995. The global circuit: global thermometer, weather by-product or climate modulator?. Reviews of Geophysics 33 (Supplement to Vol. 33, Part 2), 845–862.

Bering, E.A., Few, A.A., Benkrook, J.R., 1998. The global electric circuit. Physics Today 51, 24–29.

Bering, E.A., Benbrook, J.R., Garrett, J.A., Paredes, A., Wescott, E.M., Sentman, D.D., Stenbaek-Nielsen, H.C., Lyons, W.A., 1999. The 1999 Sprites Balloon Campaign, EOS Transactions of American Geophysical Union Fall Meeting, p. F216.

Blakeslee, R.J., Christian, H.J., Vonnegut, B., 1989. Electrical measurements over thunderstorms. Journal of Geophysical Research 94, 13,135–13,140.

Blanchard, D.C., 1963. Electrification of the atmosphere by particles from bubbles in the sea. Progress in Oceanography 1, 71–202.

Boccippio, D.J., Williams, E.R., Heckman, S.J., Lyons, W.A., Baker, I.T., Boldi, R., 1995. Sprites, ELF transients and positive ground strokes. Science 269, 1088–1091.

Boeck, W.L., 1983. Krypton-85 in the atmosphere. In: Ruhnke, L., Latham, J. (Eds.), Proceedings in Atmospheric Electricity. Deepak, Hampton, pp. 73–75.

Cho, M., Rycroft, M.J., 1998. Computer simulation of the electric field structure and optical emission from cloud-top to the ionosphere. Journal of Atmospheric and Solar Terrestrial Physics 60, 871–888.

Christian, H.J., Latham, J., 1998. Satellite measurements of global lightning. Quarterly Journal of the Royal Meteorological Society 124, 1771–1774.

Clayton, M., Polk, C., 1977. Diurnal variation and absolute intensity of world-wide lightning activity, September 1970 to May 1971. In: Dolezalek, H., Reiter, R. (Eds.), Electrical Processes in Atmospheres. Steinkopff, Darmstadt, pp. 440–449.

Cummer, S.A., Inan, U.S., Bell, T.F., Barrington-Leigh, C.P., 1998. ELF radiation produced by electrical currents in sprites. Geophysical Research Letters 25, 1281–1285.

Davies, K., 1990. Ionospheric Radio. Peter Peregrinus, London.

Farman, J.C., Gardiner, B.G., Shanklin, J.D., 1985. Large losses of total ozone in Antarctica reveal seasonal ClO_x/NO_x interaction. Nature 315, 207–210.

Feynman, J., Ruzmaikin, A., 1999. Modulation of cosmic ray precipitation related to climate. Geophysical Research Letters 26, 2057–2060.

Fuellekrug, M., Fraser-Smith, A.C., 1996. Further evidence for a global correlation of the Earth-ionosphere cavity resonances. Geophysical Research Letters 23, 2773–2776.

Fuellekrug, M., Fraser-Smith, A.C., 1997. Global lightning and climate variability inferred from ELF magnetic field variations. Geophysical Research Letters 24, 2411–2414.

Gringel, W., Rosen, J.M., Hofmann, D.J., 1986. Electrical structure from 0 to 30 km. In: The Earth's Electrical Environment, Studies in Geophysics. National Academy Press, USA, pp. 166–182.

Hays, P.B., Roble, R.G., 1979. A quasi-static model of global atmospheric electricity 1. The lower atmosphere. Journal of Geophysical Research 84, 3291–3305.

Hale, L.C., 1994. The coupling of ELF/ULF energy from lightning and MeV particles to the middle atmosphere, ionosphere and global circuit. Journal of Geophysical Research 99, 21,089–21,096.

Heckman, S.J., Williams, E.R., Boldi, B., 1998. Total global lightning inferred from Schumann resonance measurements. Journal of Geophysical Research 103, 31,775–31,779.

Herman, J.R., Goldberg, R.A., 1978. Sun, weather and climate, NASA Special Publication, SP-426, pp. 360.

Hill, R.D., 1971. Spherical capacitor hypothesis of the Earth's electric field. Pure and Applied Geophysics 84, 67–75.

Hofmann, D.J., Rosen, J.M., Pepin, T.J., Pinnick, R.G., 1975. Stratospheric aerosol measurements 1: time variations of northern mid-latitudes. Journal of Atmospheric Science 23, 1446–1456.

Hogan, A.W., Mohnen, V.A., 1979. On the global distributions of aerosols. Science 205, 1373–1375.

Hoppel, W., Anderson, R.V., Willett, J.C., 1986. Atmospheric electricity in the planetary boundary layer. In: The Earth's Electrical Environment, Studies in Geophysics. National Academy Press, USA, 149–165.

Horrak, U., Salm, J., Tammet, H., 1998. Burst of intermediate ions in atmospheric air. Journal of Geophysical Research 103, 13,909–13,915.

Inan, U.S., Barrington-Leigh, C., Hansen, S., Glukhov, V.S., Bell, T.F., Rairden, R., 1997. Rapid lateral expansion of optical luminosity in lightning-induced ionospheric flashes referred to as 'elves'. Geophysical Research Letters 24, 583–586.

Israelsson, S., Knudsen, E., 1986. Effects of radioactive fallout from a nuclear power plant accident on electrical parameters. Journal of Geophysical Research 91, 11,909–11,910.

Israelsson, S., Schutte, T., Pisler, E., Lundquist, S., 1987. Increased occurrence of lightning flashes in Sweden during 1986. Journal of Geophysical Research 92, 10,996–10,998.

Israelsson, S., Knudsen, E., Tammet, H., 1994. An experiment to examine the covariation of atmospheric electrical vertical currents at two separate stations. J. Atmospheric Electricity 14, 63–73.

Jackman, C.H., Cerniglia, M.C., Nielsen, J.E., Allen, D.J., Zawodny, J.M., McPeters, R.D., Douglass, A.R., Rosefield, J.E., Rood, B., 1995. Two-dimensional and three-dimensional model simulations, measurements and interpretation of the influence of the October 1989 solar proton events on the middle atmosphere. Journal of Geophysical Research 100, 11,641–11,660.

Jacobson, A.R., Knox, S.O., Franz, R., Enemark, D.C., 1999. FORTE observations of lightning radio-frequency signatures: capabilities and basic results. Radio Science 34 (2), 337–354.

Kasemir, H.W., 1963. On the theory of the atmospheric electric current flow, IV, Technical Report No. 2394, U.S. Army Electronics Research and Development Laboratories, Fort Monmouth, NJ, October.

Kasemir, H.W., 1977. Theoretical problems of the global atmospheric electric circuit. In: Dolezalek, H., Reiter, R. (Eds.), Electrical Processes in Atmospheres. Steinkopff, Darmstadt, pp. 423–438.

Kasemir, H.W., 1979. The atmospheric electric global circuit. In: Proceedings of Workshop on the Need for Lightning Observations from Space, NASA CP-2095, pp. 136–147.

Lyons, W., 1996. Sprite observations above the U.S. high plains in relation to their parent thunderstorm systems. Journal of Geophysical Research 101, 29,641–29,652.

Markson, R., 1978. Solar modulation of atmospheric electrification and possible implications for the Sun-weather relationship. Nature 273, 103–109.

Markson, R., 1983. Solar modulation of fair-weather and thunderstorm electrification and a proposed program to test an

atmospheric electrical Sun-weather mechanism. In: McCormac, B.M. (Ed.), Weather and Climate Responses to Solar Variations. Colorado Associated University Press, Colorado, pp. 323–343.

Markson, R., 1986. Tropical convection, ionospheric potentials and global circuit variations. Nature 320, 588–594.

Markson, R., Price, C., 1999. Ionospheric potential as a proxy index for global temperatures. Atmospheric Research 51, 309–314.

Martell, E.A., 1985. Enhanced ion production in convective storms by transpired radon isotopes and their decay products. Journal of Geophysical Research 90, 5909–5916.

Michnowski, S., 1998. Solar wind influences on atmospheric electrical variables in polar regions. Journal of Geophysical Research 103, 13,939–13,948.

Nickolaenko, A.P., Satori, G., Zieger, B., Rabinowicz, L.M., Kudintseva, I.G., 1998. Parameters of global thunderstorm activity deduced from long-term Schumann resonance records. Journal of Atmospheric and Solar Terrestrial Physics 60, 387–399.

Ogawa, T., 1985. Fair-weather electricity. Journal of Geophysical Research 90 (4), 5951–5960.

Price, C., Rind, D., 1990. The effect of global warming on lightning frequencies, in: Proceedings of the 16th Conference on Severe Storms and Atmospheric Electricity, AMS, Kananaskis Park, Alberta, Canada, pp. 748–751.

Price, C., Rind, D., 1992. A simple lightning parameterization for calculating global lightning distributions. Journal of Geophysical Research 97, 9919–9933.

Price, C., 1993. Global surface temperatures and the atmospheric electrical circuit. Geophysical Research Letters 20, 1363–1366.

Price, C., 2000. Evidence for a link between global lightning activity and upper tropospheric water vapour. Nature 406, 290–293.

Pudovkin, M.I., Babushkina, S.V., 1992. Atmospheric transparency variations associated with geomagnetic disturbances. Journal of Atmospheric and Solar Terrestrial Physics 59, 1135–1138.

Recommended Atmospheric Electricity Research, 1998. The Atmospheric Sciences Entering the Twenty-First Century. National Academy Press, Washington, DC, p. 67.

Reeve, N., Toumi, R., 1999. Lightning activity as an indicator of climate change. Quarterly Journal of the Royal Meteorological Society 125, 893–903.

Retalis, D., Retalis, A., 1998. Effects of air pollution and wind on the large-ion concentration in the air above Athens. Journal of Geophysical Research 103, 13,927–13,932.

Rodger, C.J., 1999. Red sprites, upward lightning, and VLF perturbations. Reviews in Geophysics 37, 317–336.

Rycroft, M.J., 1965. Resonances of the Earth-ionosphere cavity observed at Cambridge, England, Radio Science. Journal of Research NBS 69D, 1071–1081.

Rycroft, M.J., 1990. The Antarctic atmosphere: a hot topic in a cold cauldron. Geographical Journal 156, 1–11.

Satori, G., 1996. Monitoring Schumann resonances — II. Daily and seasonal frequency variations. Journal of Atmospheric and Solar Terrestrial Physics 58, 1483–1488.

Sentman, D.D., Wescott, E.M., 1993. Observations of upper atmospheric optical flashes recorded from an aircraft. Geophysical Research Letters 20, 2857–2860.

Sentman, D.D., Wescott, E.M., 1996. Red sprites and blue jets: High-altitude optical emissions linked to lightning. EOS Transactions of American Geophysical Unit 77, 1–4.

Solomon, S., 1999. Stratospheric ozone depletion: a review of concepts and history. Reviews of Geophysics 37, 275–316.

Special Issue, 1998. Effects of thunderstorm activity on the upper atmosphere and ionosphere. Journal of Atmospheric and Solar-Terrestrial Physics 60, 667–973.

Svensmark, H., Friis-Christensen, E., 1997. Variation of cosmic ray flux and global cloud coverage — a missing link in solar climate relations. Journal of Atmospheric and Solar-Terrestrial Physics 59, 1225–1232.

Tammet, H., Iher, H., Salm, J., 1992. Spectrum of atmospheric ions in the mobility range 0.32–3.2 $cm^2/(V.s)$. Acta Comm. University Tartu 947, 39–49.

Tinsley, B.A., Heelis, R.A., 1993. Correlations of atmospheric dynamics with solar activity. Evidence for a connection via the solar wind, atmospheric electricity, and cloud microphysics. Journal of Geophysical Research 98D (6), 10,375–10,384.

Tinsley, B.A., 1996. Correlations of atmospheric dynamics with solar-wind-induced changes of air-Earth current density into cloud tops. Journal of Geophysical Research 101D (23), 29,701–29,714.

Tinsley, B.A., 2000. Influence of solar wind on the global electric circuit and inferred effects on cloud microphysics, temperature, and dynamics in the troposphere. Space Science Reviews, in press.

Volland, H., 1982. Quasi-electrostatic fields within the atmosphere. In: Volland, H. (Ed.),, CRC Handbook of Atmospherics, Vol. 1. CRC Press, Boca Raton, FL, pp. 65–109.

Vorpahl, J.A., Sparrow, J.G., Ney, E.P., 1970. Satellite observations of lightning. Science 169, 860–863.

Whipple, F.J.W., 1929. On the association of the diurnal variations of electric potential in fine weather with the distribution of thunderstorms over the globe. Quarterly Journal of the Royal Metereological Society 55, 1–17.

Willett, J.C., 1978. An analysis of the electrode effect in the limit of strong turbulent mixing. Journal of Geophysical Research 83, 402–408.

Williams, E.R., 1992. The Schumann resonance: a global thermometer. Science 256, 1184–1187.

Williams, E.R., Rutledge, S.A., Geotis, S.G., Renno, N., Rasmussen, E., Rickenbach, T., 1992. A radar and electrical study of tropical "hot towers". Journal of Atmospheric Science 49, 1386–1395.

Wilson, C.T.R., 1920. Investigation on lightning discharges and on the electric field of thunderstorms. Philosophical Transactions of Royal Society of London A221, 73–115.

The Global Atmospheric Electric Circuit

Giles Harrison

Department of Meteorology,
University of Reading, UK

1

1

Atmospheric Electricity - reading list

- J.A. Chalmers *Atmospheric Electricity*, 2nd edition, Pergamon Press (1967)
- H. Israël (1970) *Atmospheric Electricity vol1 (Fundamentals, Conductivity, Ions)* (Problems of Cosmic Physics vol 29), Israel Program for Scientific Translations, Jerusalem.
- H. Israël (1973) *Atmospheric Electricity vol2 (Fields, charges, currents)* (Problems of Cosmic Physics vol 29), Israel Program for Scientific Translations, Jerusalem.
- D.R. McGorman and W.D. Rust, *The Electrical Nature of Storms,* Oxford University Press, Oxford, 1998.
- Krider, E.P., et al *The Earth's Electrical Environment*, Studies in Geophysics, National Academy Press, Washington, 1986 http://www.nap.edu/openbook.php?record_id=898&page=R1
- Vladimir A. Rakov and Martin A. Uman *Lightning: Physics and Effects* Cambridge University Press (2007)

Other useful resources include sections 3.31 and 10.5 of R.G. Harrison's *Meteorological Measurements and Instrumentation*, *The Feynman Lectures in Physics* (Volume III) and the PPLATO teaching resources at http://www.cse.salford.ac.uk/profiles/gsmcdonald/pp/PPLATOResources/PPLATO.htm

2

Outline

1. Vertical current flow and the global circuit
2. Findings supporting the global circuit
3. Measurements of global circuit parameters
4. Variability in the global circuit
5. Applications and planetary global circuits

3

3

Atmospheric electricity

Atmospheric electricity is concerned with:

•electrical properties of the lower and upper atmosphere
•currents flowing in the **fair weather atmosphere**
•**ionisation** of atmospheric air by natural radioactivity and cosmic rays
•**charging of particles** and droplets, snow and hail
•**charges** separated by thunderstorms and disturbed weather
•**currents** flowing from thunderstorms
•**Electric fields** in thunderstorms, the upper atmosphere and the fair weather atmosphere
•initiation of **lightning**

4

4

0. Historical background and some key individuals

Benjamin Franklin (1706-1790) – *Statesman, a Founding Father of the US, and scientist*

Giambatista Beccaria (1716-1781) – *Professor of Experimental Physics, University of Turin*

Lord Kelvin (1824-1907) - *Experimental and mathematical physicist, University of Glasgow*

Victor Hess (1883-1964) – Austrian physicist, discoverer of cosmic rays (Nobel Prize 1936)

CTR Wilson (1869-1959) – Scottish physicist, inventor of the cloud chamber (Nobel Prize 1927)

Sir Edward Appelton (1892-1965) – English physicist and discoverer of the ionosphere (Nobel Prize, 1946)

5

5

1750s - Benjamin Franklin

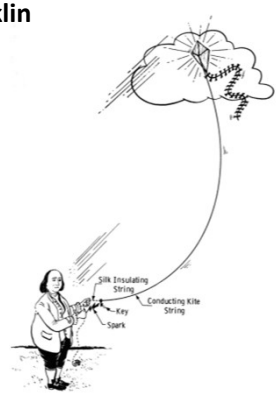

M.A. Uman, All about lightning, Dover, 1986

but.. debatable whether *he* actually conducted this experiment…

6

6

Scientific motivation: the origin of the "fair weather" field

Key finding: measurements by Lemonnier, Canton and others in 1750s detected positive electrification in fair (or "serene") weather conditions

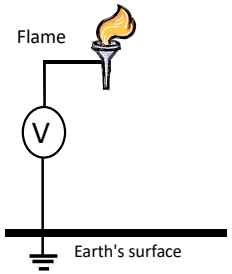

→ Why, in fair weather (no thunderstorms present), using a flame probe sensor, does the voltmeter record a positive voltage?

7

7

Lord Kelvin's standardised measurements

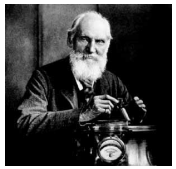

"The height of the match was 3 feet above the ground, and the observer at the electrometer lay on the ground to render the electrical influence of his own body on the match insensible. The result showed a difference of potentials between the earth (negative) and the air (positive) at the match equal to that of 115 elements of Daniel's battery."

29th meeting, British Association for the Advancement of Science, Aberdeen, September 1859

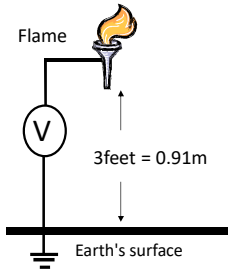

1 Daniel Cell (Zn/Cu) generates 1.08V

→ 115 Daniel cells = 124.2V

(vertical) **Potential Gradient**

Aberdeen (8am, 14th September, 1859)

= 124.2V / 0.91m = 137 Vm^{-1}

8

8

Kelvin's interest in the variability

"There can be no doubt but the electric indications, when sufficiently studied, will be found important additions to our means for prognosticating the weather …[I] hope to soon see the atmospheric electrometer generally adopted as a useful and convenient weather-glass" (Lord Kelvin, 18th May 1860)

Thomson, W. Reprint of papers on Electrostatics and Magnetism Macmillan, London, 1872

The variability which he observed probably challenged Kelvin's world view, which may be the reason he sought to devise methods to investigate it – he was also central in developing telegraphy technology, which might have been affected by atmospheric disturbances

See: K.L. Aplin and R.G. Harrison, Lord Kelvin's atmospheric electricity measurements *History of Geo- and Space Sciences* **4**, 83-95, 2013 doi:10.5194/hgss-4-83-2013

9

Kelvin's "water dropper" potential equaliser

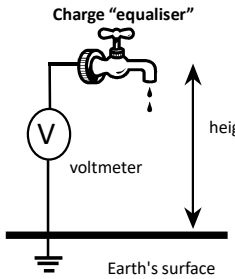

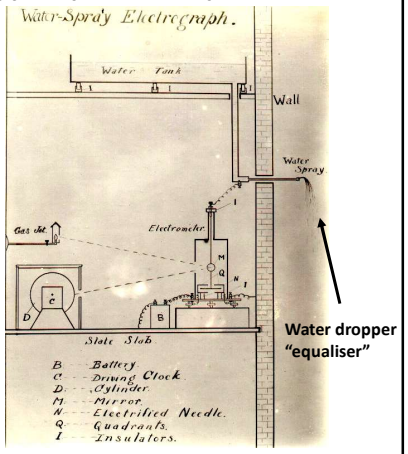

- provided continuous measurements used with photographic recording
- works by the exchange of charge between the air and the nozzle through the water droplets
- showed the PG was variable

K.L. Aplin and R.G. Harrison, Lord Kelvin's atmospheric electricity measurements, *History of Geo- and Space Sciences* **4**, 83-95, 2013

10

10

Kelvin water dropper at Kakioka Observatory

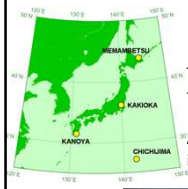

The Kelvin device was widely used, including for balloon studies and on the top of the Eiffel Tower

A water dropper sensor is still in use at Kakioka geophysical observatory in Japan

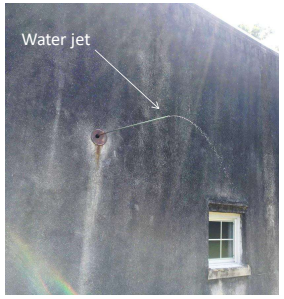

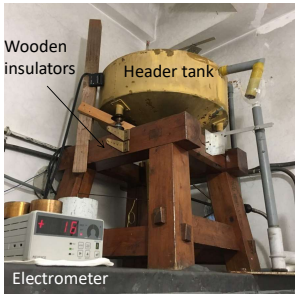

(pictures from July 2018)

11

11

Paradigm shift around 1900

- Kelvin and others' understanding of atmospheric electricity was based on an electrostatic view, perhaps informed by the Victorian view of an "inherited" earth system
- But…work on ionisation and current flow by C.T.R.Wilson (and, independently, by Elster and Geitel in Germany) led to the electrostatic viewpoint becoming untenable
- Evidence indicating continuing atmospheric current flow brought with it the concept of a varying, dynamic, terrestrial atmospheric electricity system

K.L. Aplin and R.G. Harrison, Lord Kelvin's atmospheric electricity measurements *History of Geo- and Space Sciences* **4**, 83-95, 2013 doi:10.5194/hgss-4-83-2013

12

1. Vertical current flow in the fair weather atmosphere

13

13

Measuring vertical current flow

Charles Thomas Rees "CTR" Wilson (1869-1959)

- **Nobel prize winner (1927) for invention of the cloud chamber**
- **also demonstrated ionisation in air (*c*1900), which implied atmospheric charge was continuously replenished through current flow**

"I remember the satisfaction I had when my work led to the fulfilment of my dream of isolating a portion of the earth's surface and measuring the charge upon it and the current flowing into it from the atmosphere."

Wilson C.T.R., 1960. Reminiscences of my early years. *Notes & Recollects Royal Society* 14, 2, 163-173

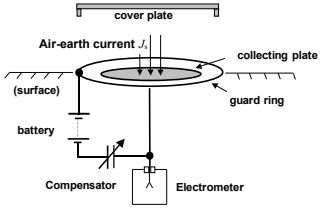

measured: **Potential Gradient** (PG) and **vertical current** density (J_c)

C.T.R. Wilson, 1906. On the measurement of the earth-air current and on the origin of atmospheric electricity. *Proc. Camb. Philos. Soc.* **13**, 6, 363-382; R.G. Harrison and W..J. Ingram, Air-earth current measurements at Kew, London, 1909-1979 *Atmos Res* **76**, (1-4), 49-64

Modern version: A.J. Bennett and R.G. Harrison, A simple atmospheric electrical instrument for educational use *Advances in Geosciences* **13**, 11-15 (2007)

14

14

Considering global current balance – Wilson's notebooks

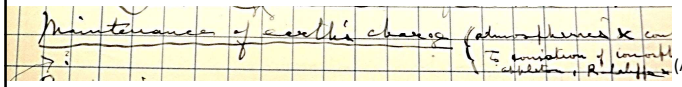

(A20)

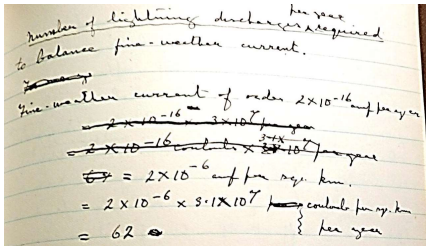

"Three lightning discharges upwards per square km per year of 20 coulombs would be sufficient.

It is not impossible that even in Cambridge there may be that number of lightning strokes per square km per year."

(B8)

15

15

Electrical conductivity of air, σ

Air is not a perfect insulator – it is weakly conducting due to presence of ions

Electrical conductivity describes ability of air to conduct electric current

Coulomb discovered this property in 1785– he noticed that charge on an object decayed slowly with time

Subsequent work by Elster and Geitel 1900, and Gerdien 1905 developed instrumentation for balloons to further characterise atmospheric ions and measure conductivity

Conductivity inferred from rate of decay of charge on electrode

=> Measurement principles still used today

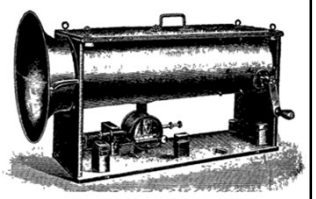

Balloon-borne conductivity apparatus from Gerdien (1905)

16

16

Ionisation measurements

Early 1900s, observations showed that charge decay occurred inside electroscopes (charge measuring devices working by mechanical deflection) that were well insulated from outside (Wilson, Elster and Geitel)

What was the source of ionisation?

Ionisation due to natural radioactivity was one source – originated at ground level, therefore ionisation should decrease with height

Balloon measurements during (1911-1913) by Victor Hess showed that ionisation decreased with height for first few hundred meters, then increased

Measurements during a solar eclipse showed that the sun was not the origin of the radiation

=> Discovery of galactic cosmic rays – the lower atmosphere's principal ionising agents

17

17

Vertical profile of air conductivity

Electrical conductivity of air results from the small ions it contains, generated by natural ion production from radioactivity and cosmic rays

$$\sigma = 2\, n\, \mu\, e$$

σ =total conductivity

n = ion number concentration

μ = ion mobility

e = electronic charge

Typically $\sigma \sim 10^{-14}\ \Omega^{-1}\ m^{-1}$ in surface atmospheric air, or using SI ~ 10 fS m^{-1}

Only **small** ions (d ~1nm) contribute to σ

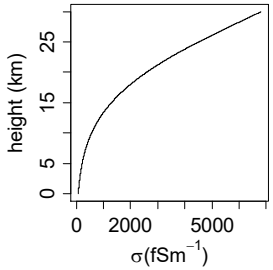

Ion production rate varies with height (decreasing terrestrial ionisation but increasing cosmic ionisation)

Ion mobility also varies with temperature and pressure

→ Conductivity profile

18

Columnar resistance, R_c

•Columnar resistance is the found from the reciprocal of conductivity σ(z)

•Expressed as an integrated resistance, of a unit area column of air:

$$R_c = \int_0^{z_l} \frac{dz}{\sigma(z)}$$

•z = altitude
•z_l = height of upper conducting layer

•R_c~ 50 to 300 PΩ m^2

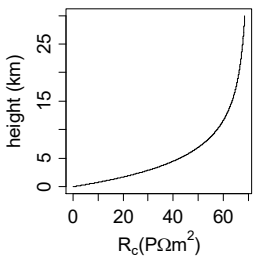

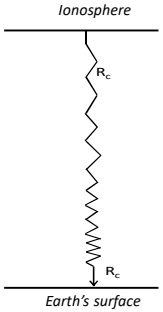

•most of R_c contribution is from lowest few km of atmosphere

19

Ionospheric potential - V_l

•The potential increases with height, to a maximum value essentially constant from the stratosphere to the ionosphere – known as the **ionospheric potential** V_l

•V_l is found from integrating the vertical profile of PG, measured by radiosonde balloons or aircraft, carrying a field mill or radioactive collectors. It is essentially a **global equipotential**

most variation in potential is within the lowest 10km

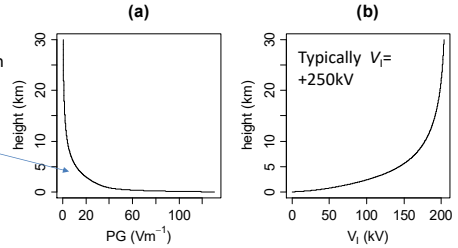

If the PG at height z is written as $F(z)$

$$V_l = \int_0^{z_l} F(z)\, dz$$

20

Local to global - Wilson's "global circuit" conceptual model

Wilson's "global atmospheric electric circuit", describes electrical characteristics of the atmosphere:

Source: ***Thunderstorms and rain clouds*** *transfer positive charge to the ionosphere in disturbed weather regions*

Sink: *In fair weather regions the air-earth current density J_c returns a small "conduction current" to Earth .*

- Atmosphere bounded by upper and lower "conducting" layers
- Global thunderstorms and rain clouds charge upper layer to ~ + 300kV (V_i)
- Vertical current density J_c (~ 2pAm^{-2}) of cluster ions flows in fair weather regions
- Unit area "Columnar resistance" R_c ~ 150PΩm^2

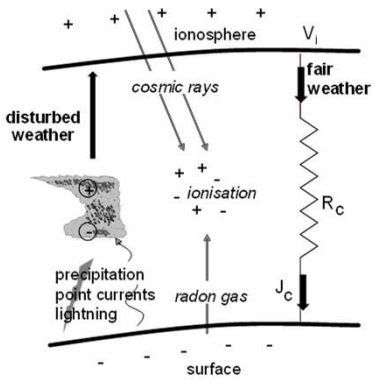

21

21

2. Findings supporting the global circuit concept

22

22

Ocean measurements: the *Galilee* and *Carnegie*

The *Galilee* and *Carnegie* were the Carnegie Institution of Washington's geophysical survey ships. The *Galilee* was ultimately unsuitable as some magnetic parts could not be replaced; the *Carnegie* was a replacement constructed specially, built from wood, copper and bronze, with an observing deck

Galilee – brigantine built in 1891, as a fast packet between San Francisco and Tahiti. Chartered by CIW in 1905.

Carnegie under full sail in 1909 at launch. From 1909 to 1929 she covered 500,000km, and made the fastest circumnavigation of Antarctica.

23

Difficulties with early instrumentation

- Atmospheric electricity development work was delayed, until the final cruise of the *Galilee.*
- These first measurement attempts proved very difficult. In particular, the atmospheric electric field (Potential Gradient, PG) measurements…

"…seemed quite impracticable…the rolling of the ship, the flapping of the sails, and the varying position of the yards and boom under various sailing conditions all contributed to make the problem of reducing observations of potential-gradient to a uniform basis too complicated…" [CIW175v3, p364]

- Of several atmospheric electricity instruments considered for the *Galilee* (e.g. the Ebert ion counter) only air conductivity measurements, using a Gerdien aspirated device, showed practical promise.
- Air ion measurements were made on cruise I of the *Carnegie* (1909-1910), alongside observations of "specific conductivity" and "radioactive content".

Ion content of the atmosphere, 1911 (CIW)

R.G. Harrison, The Carnegie Curve *Surv Geophys* **34**, 2, 209-232, DOI: 10.1007/s10712-012-9210-2 (2013)

24

Potential Gradient sensors

Principle: radioactive "collector" methods to acquire local potential

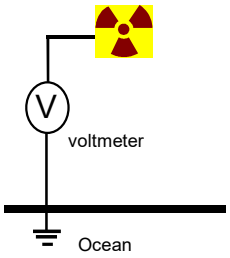

Carnegie cruise 2 (1910-1913)
Kidson and Johnston used two radium collectors suspended on a bamboo pole, extending aft from the stern rail; Hewlett tried ionium (^{232}Th) collectors

Carnegie cruise 3 (June 8th 1914 to Oct 21st 1914)
PG used ionium collectors suspended on a bamboo pole, extending aft from the stern taffrail; standardization achieved by simultaneous ship and shore observation on two occasions, at Reykjavik and Gardiners Bay: average PG for whole cruise 93 Vm^{-1}

Carnegie cruise 4 (1915-1916)
special "atmospheric-electric" house built aboard to reduce set up time, and keep instruments in stable conditions, but the ionium coated collector plate on bamboo pole took too long (~2min) to come within 1V of the final steady potential

25

Mechanical Potential Gradient sensor

A new faster electric field measurement method was developed, which also compensated for tilt of ship

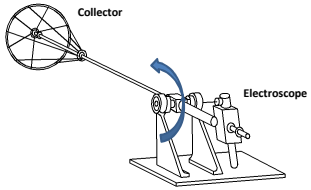

-a "parasol" collector was constructed from gauze on a pivot arm, to allow it to be adjusted for ship angle.

-Rotated from an earthed (pointing downwards) position, to horizontal to horizon, and **change in electroscope** reading recorded. (Hourly data)

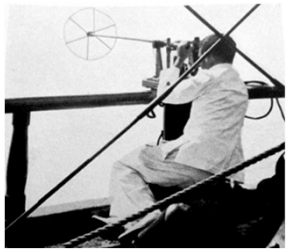

-sustained good quality insulation was not needed; used sulphur insulators. The handle's hard rubber insulation was more critical, and had to be kept clean. Daily leakage tests

-battery offset for electroscope could also be applied

R.G. Harrison, The Carnegie Curve *Surv Geophys* **34**, 2, 209-232, DOI: 10.1007/s10712-012-9210-2 (2013)

26

Diurnal cycle results from Cruises 4, 5 and 6

By 1921, using harmonic analysis on the previous decade's data, the principal contributor to the PG's diurnal variation was a 24 hour component, and it was reported by its discoverer, the Carnegie Institution's S.J. Mauchly, that

*"…the 24 hour Fourier wave was at the great majority of land stations in practical phase agreement on **universal time** with the prime daily wave over the oceans without regard to location.* [CIW175v5,p387]

This indicated that the origin of the potential gradient was not local

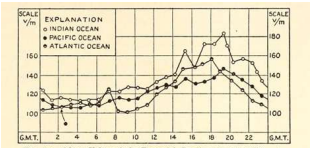

Fig. 24.—Mean Value of the Potential Gradient for the Different Oceans from Observations on the *Carnegie*, 1915–1921.

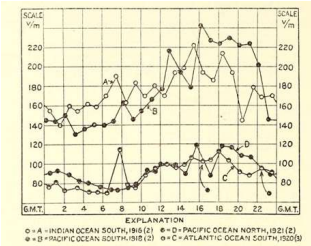

Fig. 25.—Comparison of Diurnal Variation of Potential Gradient for Same Time of Year in Different Oceans and in Different Latitudes.

Mauchly SJ, Note on the diurnal variation of the atmospheric electric potential gradient *Phys Rev* n.s. **18**, 161-162 (1921); Mauchly SJ, On the diurnal variation of the potential gradient of atmospheric electricity *Terr Mag* **28**, 61-81 (1923)

27

Motivation for Cruise 7

Further frequent and widely distributed varying atmospheric electricity measurements were still sought

"...to settle the question whether such variations progress on the basis of universal time" (Ault, 1927).

A key improvement on the earlier cruises proposed was to employ continuous recording techniques, using a projection electrometer with photographic chart recording.

28

Cruise 7: oceanography and meteorology

Ault taking off "Nansen bottle", used to sample deep-sea water, 1928.

Pilot balloon weighing, prior to ascent, 1928

Ault releasing pilot balloon, to measure upper air currents, 1928.

Sighting on pilot balloon with sextant and theodolite, 1929

Ault in diving helmet, going down to disentangle bottom sample wire from hull, 1929

Carnegie Institution of Washington

29

Continuous PG recording on Cruise 7

- Initially a sensor with continuous recorder was planned for the masthead, but became impractical from flexing of the hemp rigging.
- Site adjacent to the parasol collector on the stern rail used instead.

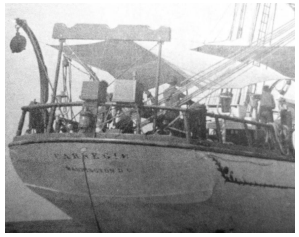

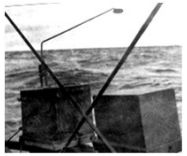

Bent collector rod used initially, projecting out over the water astern. (7th July 1928 to Nov 5th 1929)

Vertical collector installed Nov 5th 1929.

Collectors in amber, 75cm above weatherproof wooden box housing fibre electrometer, microscope, light source, and motorised photographic recorder

30

Cruise 7 - tragedy

THE CARNEGIE.

TRAGIC FIRE.

RESEARCH RECORDS SAFE.

(FROM OUR CORRESPONDENT.)

APIA, Dec. 3.

Two days before the research yacht Carnegie blue up in Apia Harbour (Western Samoa), on November 29, with the loss of two lives, valuable records of observations made by the scientific party during the previous four months were sent by mail to the United States.

Lying in the roadstead of Apia, the Carnegie was refueling from a barge alongside. Without warning the benzine tank aft blew up. In a few seconds the ship was a mass of flames. These ate through the hempen anchor rope, and the Carnegie drifted away, the crew in the meantime having been forced to scramble over the bow into small boats and canoes.

Several power boats came up to the burning ship, and, with great difficulty, managed to manoeuvre her on to a sandbank. The Carnegie was described as a non-magnetic yacht, and carried very little metal, because of the delicate instruments with which she was fitted. In the absence of a steel rope, it was impossible to moor the ship. Presently the ropes holding the remaining anchors were consumed and the anchors fell into the sea. Everything on board seemed to be highly combustible. Gradually the flames crept forward after eating away the aftermast, and they caused the yards on the foremast to tumble down one by one.

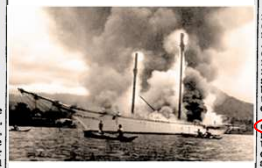

November 29th, 1929, Apia Harbour (*Carnegie Institution*)

"The story of individual endeavour and enterprise, of invention and accomplishment, cannot be told." Captain J.P. Ault (August 26th, 1929) *Carnegie Institution of Washington Publication* 568, page iii

FLAMES 300 FEET HIGH.

On the rising tide, the Carnegie, still blazing fiercely, drifted off, and soon was in the middle of the harbour. Several vessels in imminent danger of catching fire were taken away. An hour and a half after the explosion occurred, the Carnegie grounded on the inner reef. Then it appeared that the forward fuel tank had caught fire. Flames leapt to a height of 300 feet, and vast quantities of black smoke rose from the decks. By 7 p.m. the Carnegie was burned to the water's edge.

Captain Ault, who had been reading on the deck, was thrown about 30 feet into the air by the explosion, and fell into the sea. Mr. Unander, the second mate, and Fritz Lindorf, a steward, found him later hanging in a semi-conscious state to the ship's side. With great bravery they dived overboard, and assisted him to the barge, which had broken adrift. The captain died soon after reaching hospital. A few days later his body was taken away by the United States warship Ontario, for burial in the United States.

Kolar, an eighteen-year-old cabin boy, is thought to have been in the galley when the explosion occurred. His remains were discovered by a salvage party in the wreck this morning. Mr. K. Sturk (chief engineer), J. Lindstrom (seaman), and Stenstram (mechanic) were seriously burned, and two others of the crew slightly burned. All were admitted to hospital. Sturk and Stenstram were caught in the engine-room when the fuel tank took fire, and had remarkable escapes from death.

None of the scientific staff was injured. The leader was an Englishman, Mr. Parkinson, and his assistants were Messrs. F. L. Soule, W. E. Scott, H. Graham, and Dr. Paul. The last-named was away on the east coast at the time of the tragedy, and many of the crew were ashore. Otherwise the death roll must have been heavier.

The Sydney Morning Herald - Dec 13th, 1929

31

Cruise 7 observations

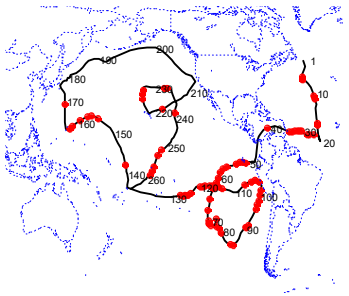

Number of days from outset marked: red points are those days which were subsequently identified as electrically undisturbed

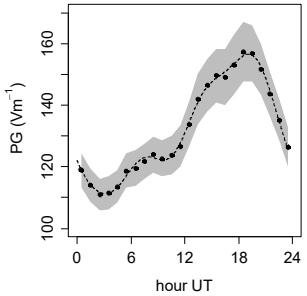

•From Aug 7th 1928 to Nov 18th 1929 the Carnegie was on open sea for 317 days, yielding 181 days of continuous PG data

•5 reduction factor experiments (Kitts Point, (Maryland), Engey Island, (Reykavik), Bridgetown, (Barbados) Easter Island and Apia, Samoa)

R.G. Harrison, The Carnegie Curve *Surv Geophys* **34**, 2, 209-232, DOI: 10.1007/s10712-012-9210-2 (2013)

32

GEC explanation of the Carnegie curve

•corrected to GMT (UTC), the PG diurnal variation timing was independent of the ship's location, implying a global origin

•Thunderstorm data ("thunderdays") compiled from global meteorological stations to investigate this

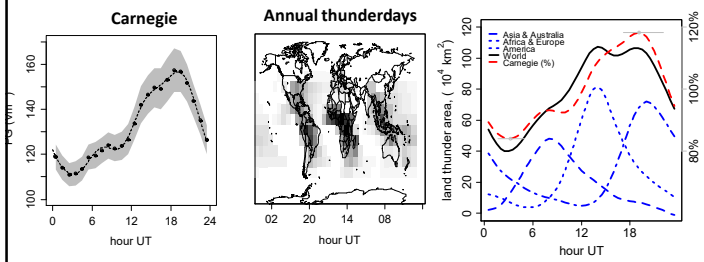

•Whipple and Scrase (1936) found the phase of the Carnegie curve agreed closely with that of the global hourly thunderstorm area

See also: R.G. Harrison, Behind the curve: a comparison of historical sources for the Carnegie curve of the global atmospheric electric circuit, *Hist. Geo Space Sci* 11, 207-213, 2020 https://hgss.copernicus.org/articles/11/207/2020/

33

33

Radiowave confirmation of conducting layers

•If upper and lower spherical layers exist, they would provide a resonant cavity for electromagnetic waves, such as those excited by lightning discharges

•Schumann (1952) predicted that, for two concentric conducting spheres, the **Schumann resonance** frequency would be

$$f_n = \frac{c}{2\pi R_E}\sqrt{n(n+1)}$$

where c is the speed of light, R_E the radius of the earth and n the mode number

f_1 is predicted to be in the ELF at about 8Hz – this was found by Balser and Wagner (1962) at 7.8Hz

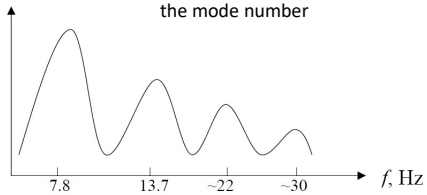

Small signal:

E ~300μV m^{-1}

B ~pT

34

34

Corroboration of upper equipotential

- If there is an equipotential upper layer, the potential should be similar at different locations
- Simultaneous soundings from Weissenau (Germany) and the research ship *Meteor* in the Atlantic showed this

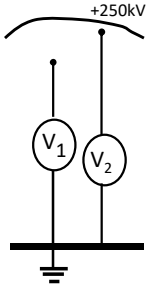

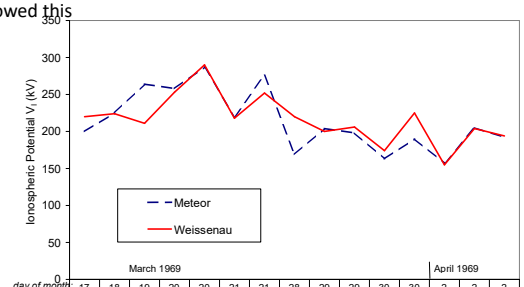

day of month	17	18	19	20	20	21	21	28	29	29	30	30	2	2	2
Meteor	200	225	264	258	287	220	276	169	204	198	163	190	157	205	192
Weissenau	220	224	211	253	290	218	252	220	200	206	174	225	155	204	194

•Muelheisen R.P. 1971. New determination of the air-earth current over the ocean and measurements of ionospheric potentials. PAGEOPH 84, 112-115

•Budyko, M.I., 1970. Results of observations of atmospheric electricity (The World Network, Additional Issue 1965-1969). USSR Chief Administration of the Hydro-Meteorological Service, Leningrad

35

35

GEC resolves long standing question - origin of "fair weather field"

Current flows vertically in the fair weather atmosphere due to the *global circuit…*

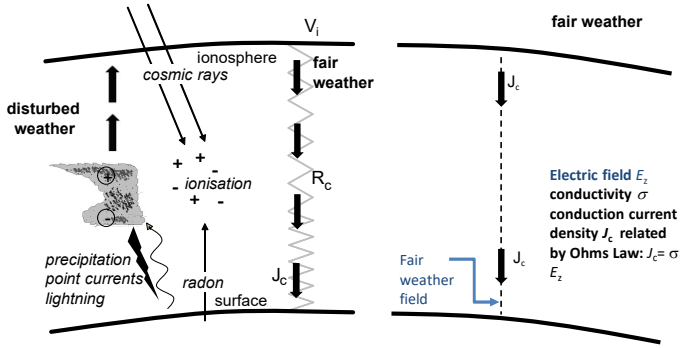

R.G. Harrison, K.A. Nicoll, M.H.P. Ambaum, On the microphysical effects of observed cloud edge charging *Quart Jour Roy Meteorol Soc* 141, 2690-2699, doi:10.1002/qj.2554 (2015)

36

36

3. **Measurements of global circuit parameters**

1. Potential Gradient (field mill, long wire antenna)
2. Air-earth current (Wilson apparatus, Lerwick plate, and GDACCS)
3. Air conductivity
4. Fair weather classification

37

37

PG - a very variable quantity

- With **thunderclouds** present, the PG obviously becomes highly variable.
- **But convective showers** and rainfall also lead to considerable variability
- And…even with low level layer cloud - no ice and minimal convection - the PG can be quite variable – is it due to space weather, or earth weather? --> reliable series of measurements are needed.

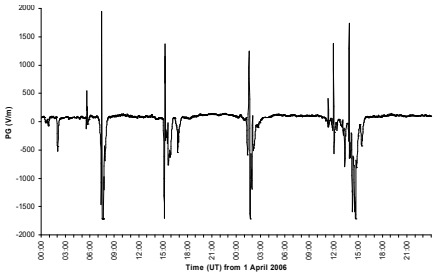

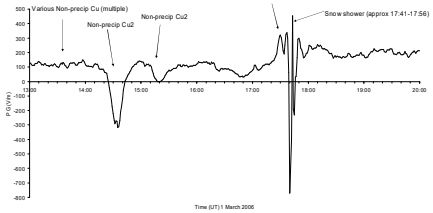

38

38

The field mill

•Robust and durable instrument for measuring atmospheric **electric field**

•Horizontal plate electrode in which a charge is induced by the atmospheric electric field

•This is compared with the charge induced under zero electric field conditions (when electrode covered).

=> Electrode is alternately covered and exposed by a mechanical shutter, which is driven by a motor – **synchronous detection** used to detect changes.

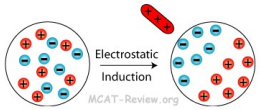

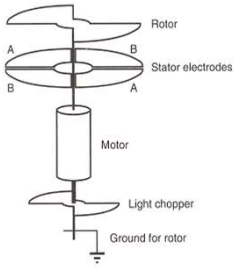

Operates continuously at the Observatory – see the real time graphs

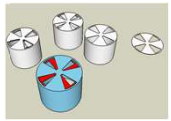

39

Commercial field mills

- Electric field mills now widely commercially available
- Not so for other atmospheric electricity instruments

Boltek EFM100

Campbell CS110

Chilworth JCI131

40

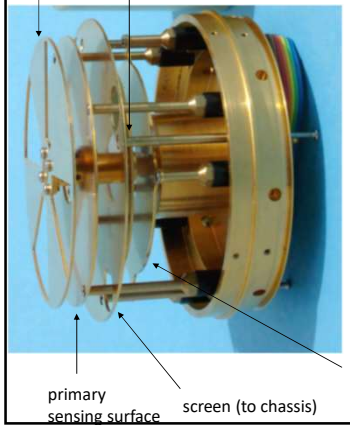

JCI131 Brushless fieldmill

(Chubb and Pavey, 2009)

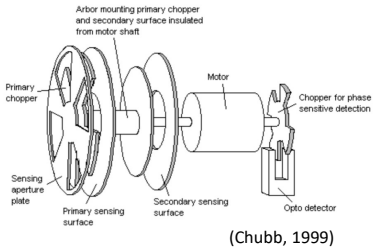

(Chubb, 1999)

41

Miniaturised electric field sensors

Increased need for lightweight miniaturised electric field sensors for balloon and UAV

Alex Kochin
Central Aerological Observatory
Roshydromet

Bateman, M. G., et al. "A low-noise, microprocessor-controlled, internally digitizing rotating-vane electric field mill for airborne platforms." *Journal of Atmospheric and Oceanic Technology* 24.7 (2007): 1245-1255.

- Flown on many manned aircraft and UAV (Altus II) campaigns

- Many other prototype field mills under development by AE researchers

42

Instrument limitations - Antarctica

- Formation of fog (and sub zero temperatures) led to frost build up (riming) on British Antarctic Survey's own design of field meter

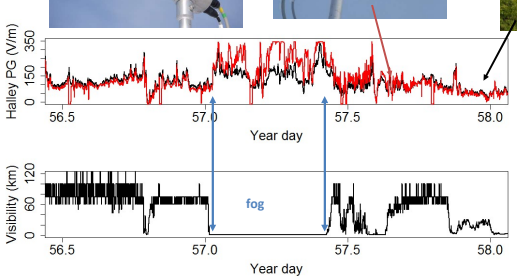

43

Ocean buoy measurements

Deployed off the coast of Florida, near Titusville (north of Kennedy Space Centre field mill network)

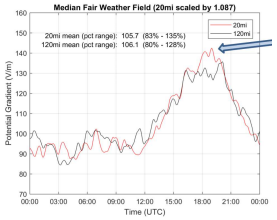

10 second samples in FW, 1 second samples when disturbed; Iridium satellite data transfer

(From Ken Cummings, University of Arizona)

44

Standardisation – e.g. corrections for ship distortion

•On the **Carnegie voyages**, a "reduction factor" was needed to correct for the distortion of the ship and its rigging

•comparison made with flat shore sites close to level with the sea, free from trees, using a 15 to 20m long horizontal "passive wire" antenna

•Difficulty was in getting ship within half-mile...so reduction factor was measured often and averaged

•Reduction factor practically constant for PG 120 to 480V m^{-1}, 2.85 for mainsail up and boom to port or starboard, and 3.77 for mainsail down, with boom over port crutch

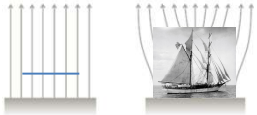

Potential Gradient "reduction-factor station", Watson's Island, Apia, Samoa (April 1929). Spiders caused frequent trouble by spinning webs in the cap of the shore electrometer and in the caps of the supporting insulators of the stretched wire system. "The spiders were numerous. Several hours of record were affected by the presence of spider webs."

45

Passive wire antenna

•Ultra well-insulated horizontal wire positioned at known height naturally acquires the potential of the atmosphere

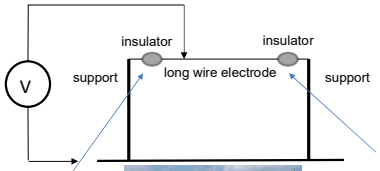

•Rate of acquisition of potential on the wire is not artificially accelerated by an equaliser
=> instrument is called the **passive wire**

- Wire potential measured using a high impedance voltmeter

•No calibration or geometrical corrections required as long as there are no distorting objects nearby =>value of PG at 1m measured using passive wire is considered absolute

46

Vertical array of passive antennas

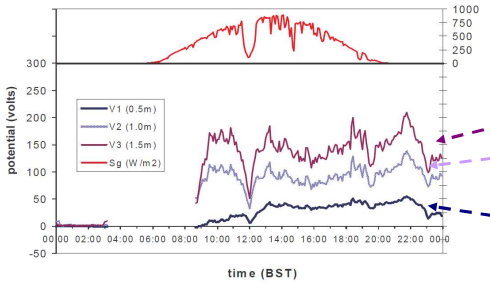

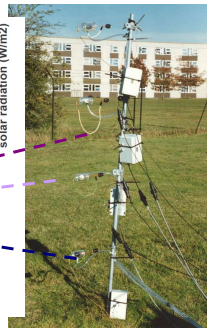

•Potential increases positively with height

•Continuous turbulent mixing of ions is required for effective operation

•Note the effect of a cloud passing around noon BST

J.F. Barlow and R.G. Harrison (1999) Turbulent transfer of space charge in the atmospheric surface layer, *Proceedings Int Conf Atmos Elect, Huntsville Alabama*

47

47

Cruise of the NRP* Sagres

**Navio da República Portuguesa*

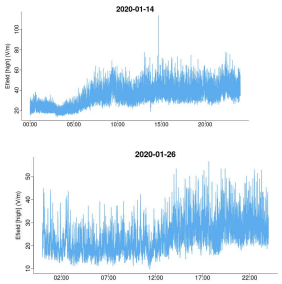

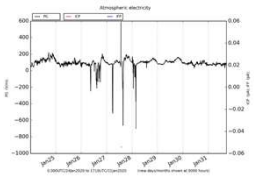

https://www.vesselfinder.com/vessels/PT-NAVY-SAGRES-IMO-0-MMSI-263141000

48

48

Conduction current – the Lerwick plate

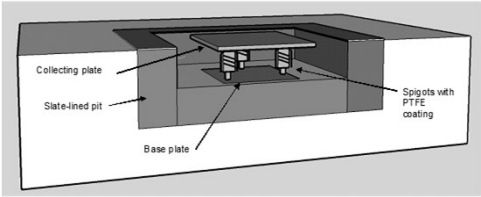

Schematic of 0.5m² air-earth current collecting plate, operating flush with the ground in a slate-lined pit

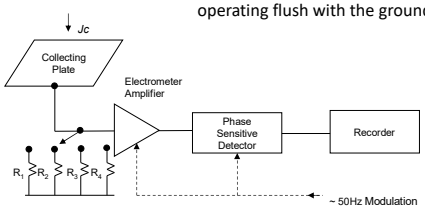

Block diagram of electronic system. (*Input resistor values:* R1 10GΩ, R2 25 GΩ, R3 50 GΩ, R4 100 GΩ.)

R.G. Harrison and K.A. Nicoll, Air-earth current density measurements at Lerwick; implications for seasonality in the global electric circuit *Atmospheric Research* **89**, 1-2, 181-193, doi:10.1016/j.atmosres.2008.01.008

49

Vertical current density instrumentation

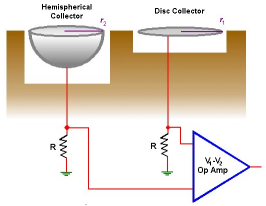

Mukku, V. N. R., (1984). A design for eliminating displacement currents in the air-earth current measurement, *Journal of Physics* **17**(E) 629.

Reading

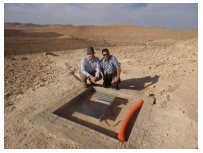

Negev

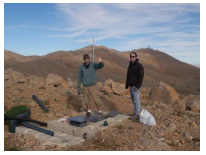

Mt Hermon

displacement current J_D – proportional to total area - and conduction current J_c – proportional to cross section

Reading "GDACCS" instrument uses two electrodes with different geometry

- heated, to repel water and insects

Bennett, A.J. and Harrison, R.G., (2008). Surface measurement system for the atmospheric electrical vertical conduction current density, with displacement current density correction, *J Atmos & Solar-Terrestrial Physics* **70** 1373–1381.

50

50

J_c and PG measured during fog

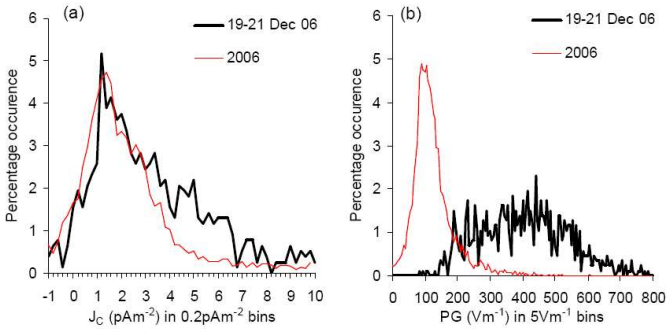

A.J.Bennett Measurements of Atmospheric electricity during different meteorological conditions, PhD Thesis, Reading, 2007

- Vertical current density affected little by fog layer
- PG greatly affected by low conductivity of foggy air

51

51

Changes in electrical parameters during fog

Quantity	Fair weather (FW)	Foggy	Ratio foggy/FW
Conduction current density	1.4 pAm^{-2}	1.2 pAm^{-2}	0.9
Potential Gradient	100 Vm^{-1}	400 Vm^{-1}	4.0
Air conductivity (calculated)	14 fSm^{-1}	3 fSm^{-1}	0.2

Table 5-1. Comparison of Ohm's Law parameters in foggy and fair weather.

- PG in fog is ~4 to 5 times larger than FW
- PG measurements in fog can be used to estimate in fog conductivity

→ Conductivity in fog ~ 5 times smaller than clear air

52

Air conductivity measurements by "Gerdien" sampling tube

$$\sigma_{\pm} = \frac{i\varepsilon_0}{CV_{\pm}}$$

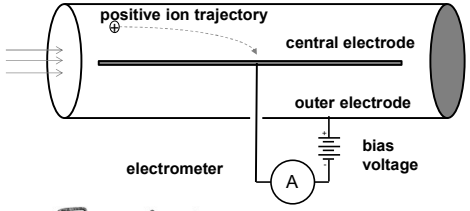

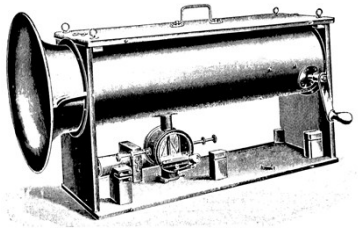

Gerdien's condenser (1905)

- clockwork fan
- fibre electrometer
- brass electrode, ebony and amber construction
- voltage decay method to infer current
- designed for balloon experiments

53

53

Passive wire conductivity method

Ground the passive wire and measure the charging time constant τ

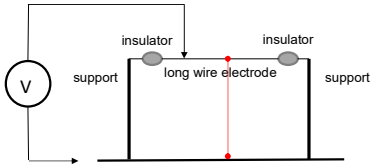

Conductivity is found as $\sigma = \frac{\varepsilon_0}{\tau}$

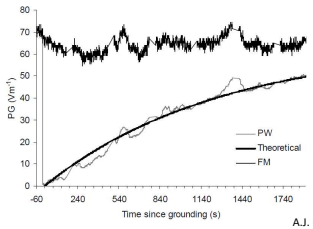

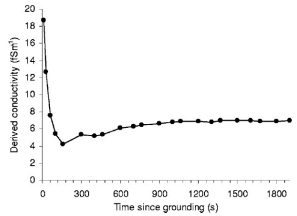

A.J. Bennett and R.G. Harrison, In situ calibration of atmospheric air conductivity measurements *Rev Sci Instrum* **77**, 016103 (2006)

54

Balloon carried polar conductivity sensor

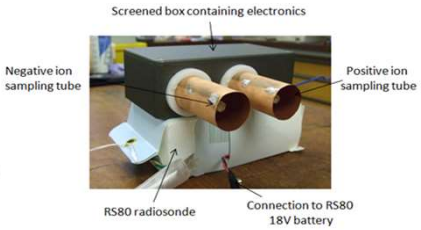

- Electronic developments has allowed miniaturisation of sensors
- Dual sampling tubes allow simultaneous measurement of σ_+ and σ_-
- Sensors can be flown alongside standard radiosondes, with data transmitted in real time

K.A. Nicoll and R.G. Harrison, A double-Gerdien instrument for simultaneous bipolar air conductivity measurements on balloon platforms, *Rev Sci Instrum* **79**, 084502 (2008)

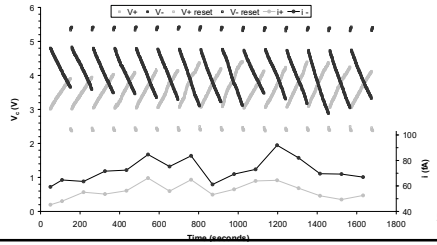

55

55

4. Variability in the global circuit

The global circuit is a planetary framework of electrical connectivity – it will also reflect variability of different kinds occurring in the atmospheric system, e.g.

- **Internal variability**. Changes in the thunderstorm and shower clouds which drive it, in terms of their positions and contributions. ENSO may influence these
- **External variability**. Cosmic rays provide much of the conductivity of air away from the surface. Factors which modulate cosmic rays – primarily solar changes – will lead to changes in the current flow.

This will **couple through into atmospheric processes** which use the global circuit in some way.

56

Global circuit variability

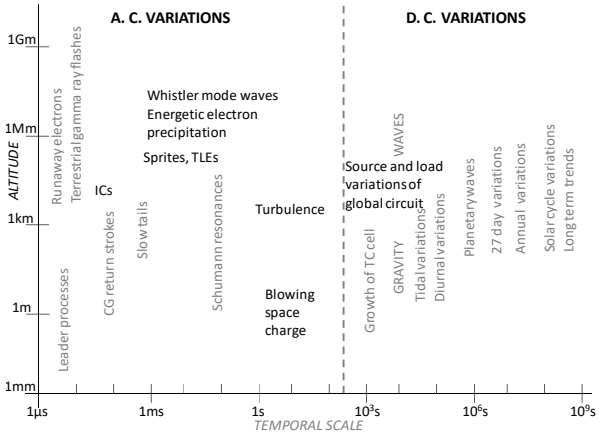

M.J. Rycroft, K.A. Nicoll, K.L. Aplin and R.G. Harrison, Recent advances in global electric circuit coupling between the space environment and the troposphere *J.Atmos Sol-Terr Phys* 90–91, 198–211 (2012),

57

ENSO effects on lightning

- Intensity, flash rate and location of lightning varies with ENSO timescale
- 10% change in global lightning flash rate from La Niña to El Niño

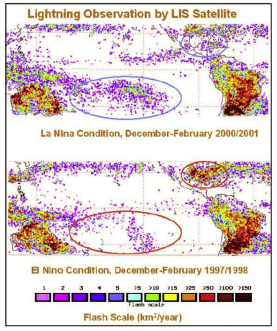

More lightning in Pacific during(cool) La Niña phase than (warm) El Niño

Complex relationship between regional variations in lightning and El Niño, La Niña . i.e. very location dependent

Satori G., et al, Variability of global lightning activity on the ENSO time scale, Atmospheric Research, 91, 500-507, 2009

58

ENSO effects on surface PG

GEC integrates effects of all thunderstorms active around globe

Signals from large scale variations may be seen in distant PG measurements i.e. possible remote sensing method for electrically active storms

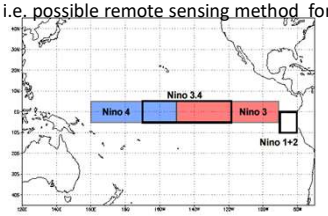

Lerwick PG measurements compared to Niño 3.4 index (SSTs from area in Pacific ocean, bounded by 5°N-5°S and 120°-170°W)

Image from www.ncdc.noaa.gov

Remarkably strong correlation – PG large during El Niño and small during La Niña

Increase in GEC of 3.5% for 1K of SST anomaly

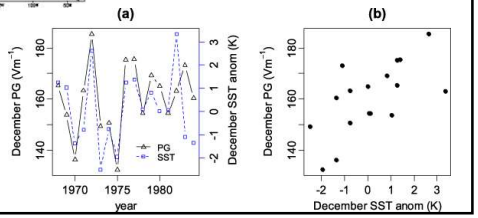

59

ENSO: Internal variability and Carnegie curve

El Niño Southern Oscillation shows a relationship with the Carnegie curve of the global circuit in atmospheric electricity – mean values increase with Pacific sea surface temperature

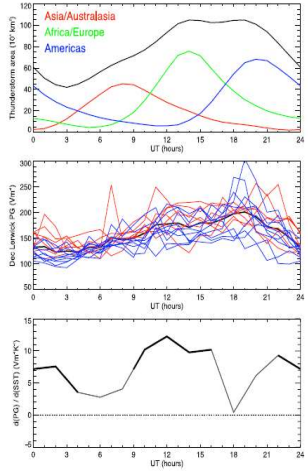

Red lines show Carnegie curve in atmospheric electricity at Lerwick (for December) during **El Niño** conditions, and *blue lines* during *La Niña*

→ sensitivity of ~ 5 Vm^{-1} K^{-1}

Greatest PG sensitivity to SST change is between 10-16UT => African lightning

R.G. Harrison, M. Joshi, K. Pascoe, Inferring convective responses to El Niño with atmospheric electricity measurements at Shetland *Environ Res Lett* 6 (2011) 044028

60

60

External modulation of the global circuit – ionospheric potential

- Ionospheric potential (potential difference between ionosphere and surface – "V_I") can be found by integrating a vertical profile of the electric field
- A variation with galactic cosmic rays was demonstrated in Mülheisen and Markson's (independent) 1970s balloon and aircraft soundings of the ionospheric potential, with surface neutron monitor measurements of cosmic rays

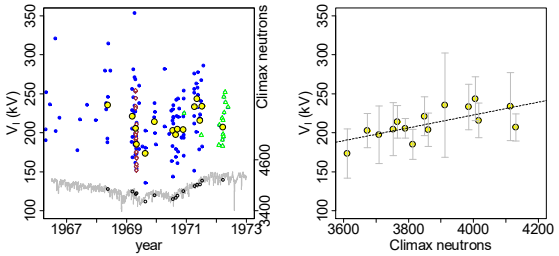

R. G. Harrison and I. Usoskin, Solar modulation in surface atmospheric electricity *J. Atmos Solar-Terr Physics* **72**, 176-182 (2010)

61

61

External (solar) modulation of the global circuit

Apparent in Lerwick surface measurements (1978-1985) of current density (J_c) and Potential Gradient (PG)

Solar variability effect is primarily via cosmic rays (CR) – "solar max" occurs at CR min and "solar min" at CR max

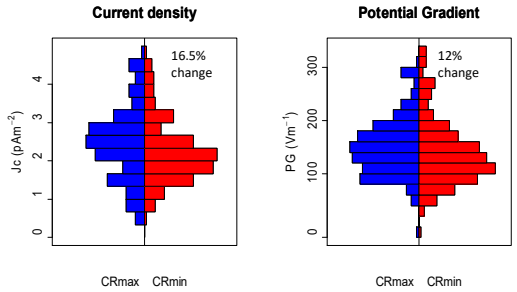

R. G. Harrison and I. Usoskin, Solar modulation in surface atmospheric electricity *J. Atmos Solar-Terr Physics* **72**, 176-182 (2010)

62

62

5. Applications and planetary global circuits

63

Global circuit also includes "semi-fair weather regions"

Layer clouds occupy about 30% of the planet's surface, and the current flow in the global circuit must pass through them – this **"semi fair weather" branch of the global circuit** has been largely neglected (until now)

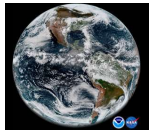

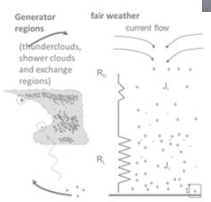

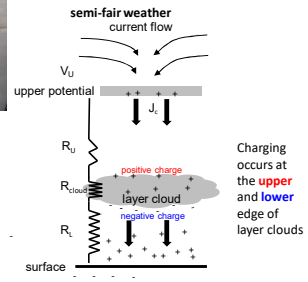

R. Giles Harrison, Keri A. Nicoll, Evgeny Mareev, Nikolay Slyunyaev, Michael J. Rycroft, Extensive layer clouds in the global electric circuit: their effects on vertical charge distribution and storage *Proc Roy Soc* A 476: 20190758 (2020)

64

64

(a) Edge charging of extensive layer cloud

Is this widespread?
Layer clouds are common, and the global circuit is, well, global

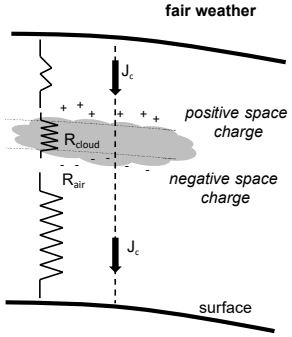

Yes - mean profile determined from layer clouds measured in Finland, Antarctica and Reading

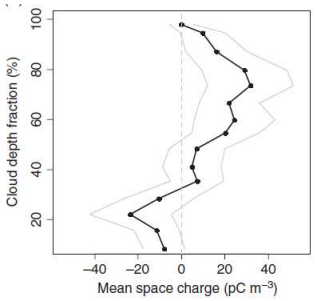

K.A. Nicoll and R.G. Harrison, Stratiform cloud electrification: comparison of theory with multiple in-cloud measurements *Quart Jour Roy Meteorol Soc* **142**, 2679–2691 (2016)

65

65

Possible effects of charged droplets on cloud processes

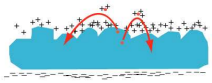

As our observations show, charge accumulates at upper and lower cloud boundaries on particles and droplets.

This may affect collision processes:

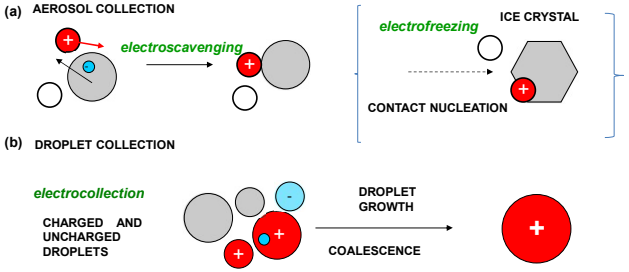

...and related effects on radiation reflection and emission, and precipitation

66

Evidence for a global effect on cloud

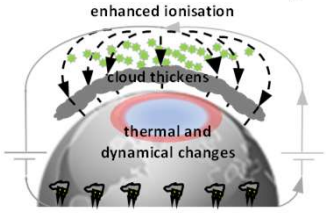

Temperature anomalies at 800m (NCEP)

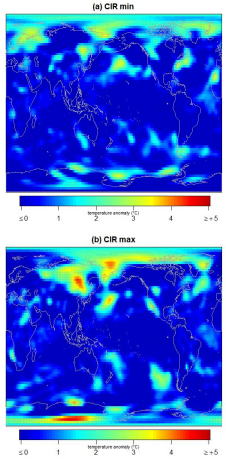

- Current flow effect ought to occur in **both** hemispheres
- Expected to affect **extensive layers of low cloud**
- Low clouds act to keep warm air near the surface → **warm thermal anomalies**

Test using data in 2007/8, when cosmic ray ionisation increased regularly every 27 days, associated with a single sunspot (14 events)

R.G. Harrison and M. Lockwood, Rapid indirect solar responses observed in the lower atmosphere, *Proc Roy Soc A* 476: https://doi.org/10.1098/rspa.2020.0164 (2020)

67

67

(b) Reconstruction of 20th century smoke pollution for Kew (semi-urban London)

Range of values from
- some direct smoke measurements (optical paper stain "Owens" method)
- Low concentrations - Conductivity measurements (Wilson)
- High concentrations - PG measurement (Wilson apparatus and Kelvin electrograph)

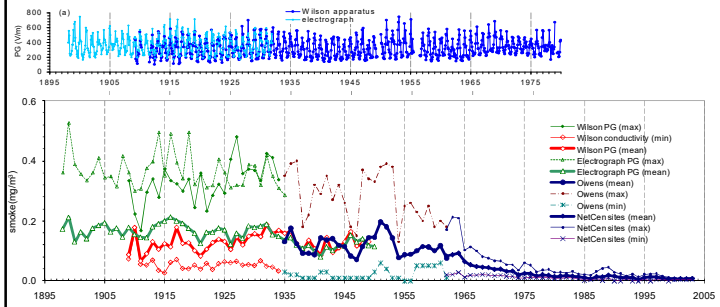

R.G. Harrison, Urban smoke concentrations at Kew, London, 1898-2004 *Atmos Environ* **40**, 18, 3327-3332, doi: 10.1016/j.atmosenv.2006.01.042

68

68

(c) Detecting releases of artificial radioactivity

…whichs causes increase in surface air conductivity

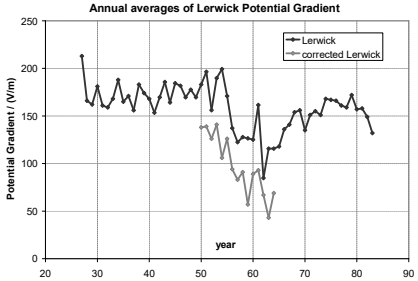

Radioactivity increases number of ions => Conductivity increases

$$F = J_c/\sigma$$

Annual averages of Fair Weather PG obtained at Lerwick, showing the period of atmospheric nuclear weapons testing 1956-1962.

(corrected values were derived by excluding "polluted" wind directions known to produce high PG measurements.)

Harrison, R.G., Twentieth century atmospheric electrical measurements at the observatories of Kew, Eskdalemuir and Lerwick *Weather* **58**, 11-19, (2003)

69

Observations of conductivity changes from radioactivity

Oxfordshire, direct measurements of ion production rate from ^{90}Sr

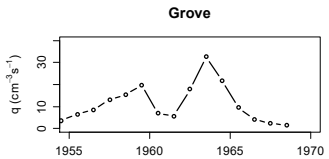

London, Wilson apparatus measurements of air conductivity

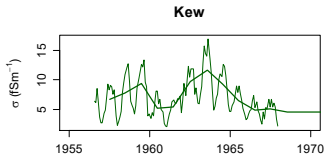

Gibson J.A.B, Richards J.E. and Docherty J. Nuclear radiation in the environment-beta and gamma ray does rates and air ionisation from 1951 to 1968. *JATP* **31**, 1183-1196 (1969)

R.G. Harrison and W.J. Ingram, 2005, Air-earth current measurements at Kew, London, 1909-1979 *Atmos Res* **76**, (1-4), 49-64

70

70

Fukushima reactor accident

Release on 14th March 2011

Kelvin water dropper sensor

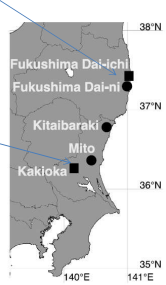

Figure 2. The locations of Fukushima Dai-ichi nuclear power plant (FNPP), Fukushima Dai-ni nuclear power plant (about 12 km south of FNPP), Kitaibaraki (about 70 km southwest of FNPP), Mito (about 130 km southwest of FNPP), and Kakioka (about 150 km southwest of FNPP).

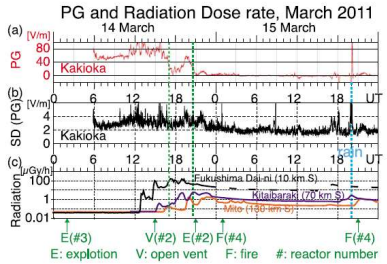

Figure 3. Two-day's data before and after the largest southbound release of the radioactive material from the Fukushima Dai-ichi nuclear power plant (FNPP) in March 2011: (a) 1-min averaged PG at Kakioka, (b) standard deviation of PG calculated from 1 Hz sampling data, and (c) 10 min resolution radiation dose rate data at three different stations between Kakioka and the FNPP. The green notes at the bottom denote incidents at the FNPP.

From Takeda et al, 2013, *Geophys Res Lett* 38, L15811, doi:10.1029/2011GL048511, 2011

71

Planetary global circuits -remote detection requirements

sensing possibilities:

requirement	Charge generation		Lower conductive surface or region	Upper conductive region	Vertical current flow
	Electrical discharges	Precipitation			
Schumann resonances	✓		✓	✓	
Radar		✓	✓		
Broadband radio emission	✓				
Optical	✓				

Detection of vertical current flow within an atmosphere is not amenable to remote sensing… historically, terrestrial method has been to install surface electrodes

K.L. Aplin, R.G. Harrison and M.J. Rycroft, *Space Science Reviews* **137**, 11-27 (2008)

72

Martian global circuit: driven by dust?

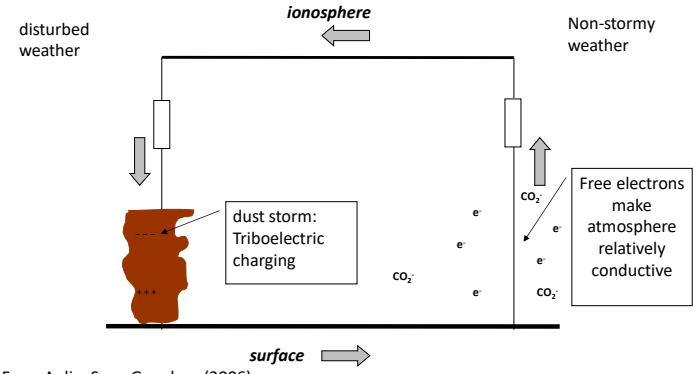

From Aplin, Surv. Geophys. (2006), after Farrell and Desch JGR (2001), Fillingim (1998)

73

Characteristics of the Martian global circuit

- Driven by discharges in dust storms
  - Two types of discharge predicted: "volcanic lightning" and also a weaker glow discharge
  - Strong seasonality (Farrell and Desch, *JGR*, 2001)
    - **In storm season, surface E = 475 Vm^{-1} and J_c = 1.3 nAm^{-2}**
    - **Outside storm season, surface E = 0.14 Vm^{-1} and J_c = 0.4 pAm^{-2}**
- **Current flow is in the opposite direction to Earth**
  - Atmospheric composition favours formation of CO_2^- ions and is tenuous enough for free electrons to exist
  - Interesting consequences of variable magnetic field
  - Surface conductivity is the major uncertainty for existence of global circuit
- No measurements yet
  - ExoMars "Franklyn" rover has radio sensors for lightning on Mars

74

74

The Global Circuit

CENTRAL TENETS

C18th
Air has a finite conductivity (Coulomb, 1784) …caused by the continual formation of ions (Wilson, 1897, 1899)

C19th
Positive Potential Gradient in fair weather
(Thomson, 1859)

C20th
Upper atmosphere conductive
(Heaviside, 1902; Kennelly, 1902)

C20th
Land surface conductive
(Chapman, 1919)

C20th
Cosmic rays generate ions throughout the entire atmosphere
(Hess, 1912)

C20th
Vertical current flow in fair weather
(Wilson, 1906, 1908)

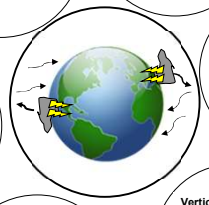

CONFIRMING IDEAS

PG daily variations in Universal Time are consistent at many locations (*Carnegie* curve) and **follow global thunderstorm distribution** (Whipple 1929, Whipple and Scrase 1936)

Surface and ionosphere and act as a **resonant cavity** that is **excited by em waves from lightning** (Schumann 1952, Schumann and König, 1954)

Ionospheric potential measured at different locations vary together *i.e.* **ionosphere equipotential** (Mülheisen 1971)

Ionospheric potential shows Carnegie curve (Mülheisen 1971)

75

Summary

•Wilson observed current flow and hypothesised a global circuit

•A similar diurnal variation in PG and thunderstorm area (the Carnegie curve) supports this

•Many observations can be explained by the framework of the global circuit concept, which links charge generation by thunderstorms to vertical current flow in the fair weather regions of the circuit.

•Current flow through "semi-fair weather" regions may influence clouds

•Other planetary global circuits may be available!

76

76

US 20100207399A1

(19) United States

(12) Patent Application Publication

Grandics

(10) Pub. No.: US 2010/0207399 A1

(43) Pub. Date: Aug. 19, 2010

(54) PYRAMID ELECTRIC GENERATOR

(76) Inventor: Peter Grandics, Carlsbad, CA (US)

Correspondence Address:
Law Offices of Michael B. Farber
1902 Wright Place, Suite 200
Carlsbad, CA 92008 (US)

(21) Appl. No.: 12/689,351

(22) Filed: Jan. 19, 2010

Related U.S. Application Data

(63) Continuation-in-part of application No. 12/140,887, filed on Jun. 17, 2008, which is a continuation-in-part of application No. PCT/US07/69804, filed on May 25, 2007.

(60) Provisional application No. 60/818,360, filed on Jul. 3, 2006.

Publication Classification

(51) Int. Cl.
H02K 57/00 (2006.01)

(52) U.S. Cl. ..... 290/1 R

(57) ABSTRACT

A pyramid electric generator for harvesting the vibrational energies of Earth's atomic oscillators according to the present invention comprises: (1) an antenna/waveguide that is geometrically optimized; (2) a coil wound with an insulated conductor on a nonconductive coil form, the coil being connected at its top lead to the conducting surface of the antenna/waveguide such that the coil is connected near the point at which the electric field contacts the antenna/waveguide, the antenna/waveguide serving as a quasi-capacitive series element to provide a specific resonant frequency; (3) the bottom lead of the coil is connected to a driver operating in the LF or ELF bands. In another mode of operation, a secondary coil is positioned coaxially within the first coil acting as a resonant step-up transformer winding. The generator resonantly couples into specific frequencies of Earth's atomic oscillators and extracts electric energy thereof.

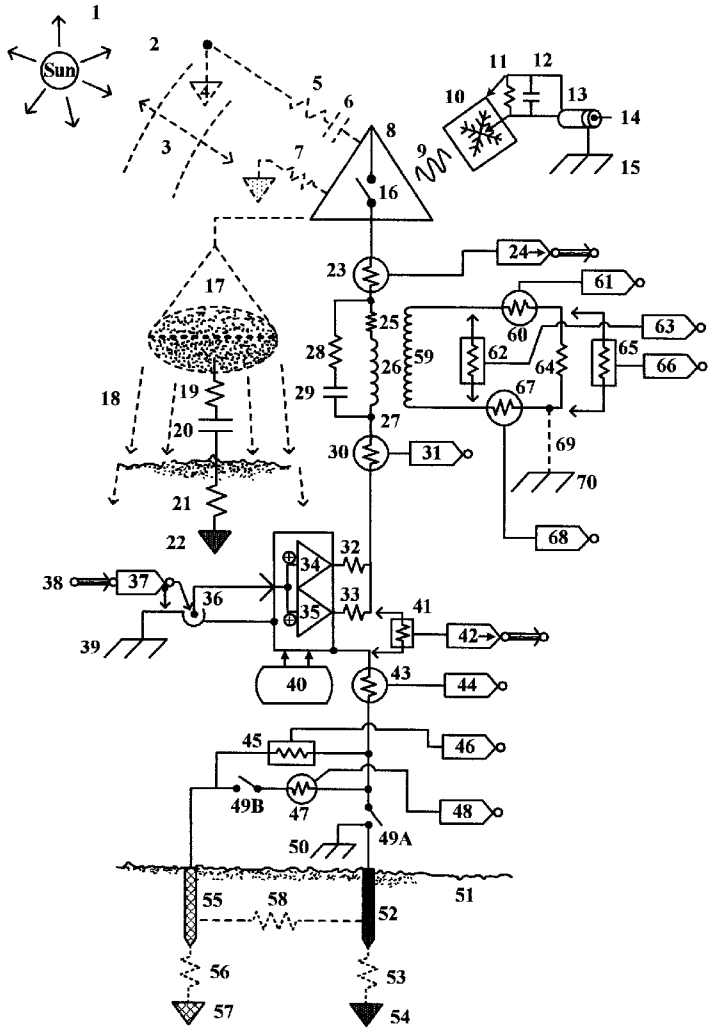

Figure 1.

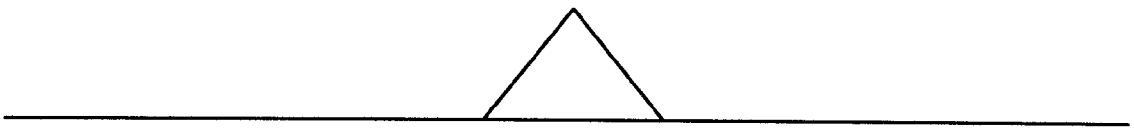

Figure 2.

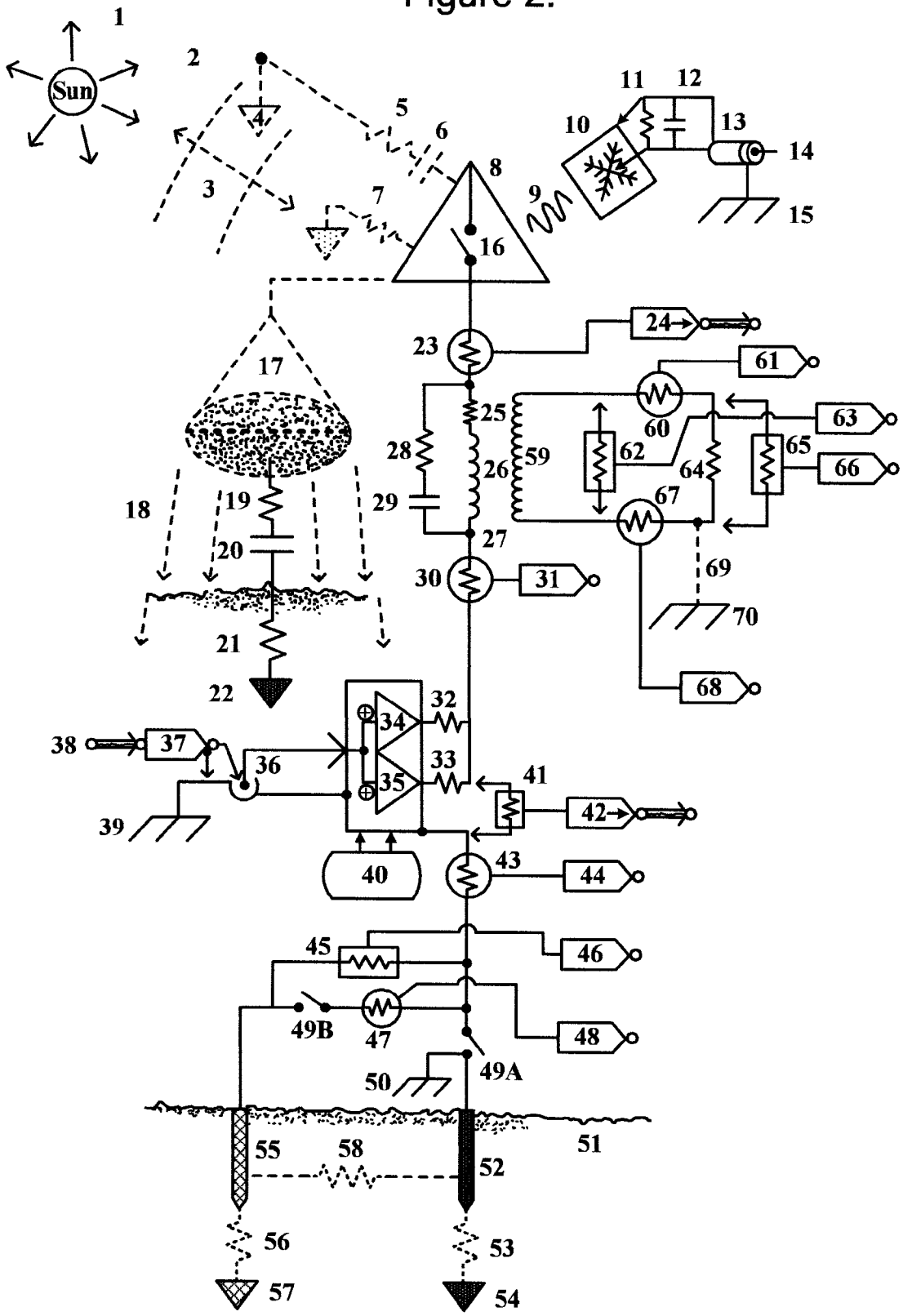
Sun
1
2
3
4
5
6
7
8
9
10
11
12
13
14
15
16
17
18
19
20
21
22
23
24
25
26
27
28
29
30
31
32
33
34
35
36
37
38
39
40
41
42
43
44
45
46
47
48
49A
49B
50
51
52
53
54
55
56
57
58
59
60
61
62
63
64
65
66
67
68
69
70

Figure 3.

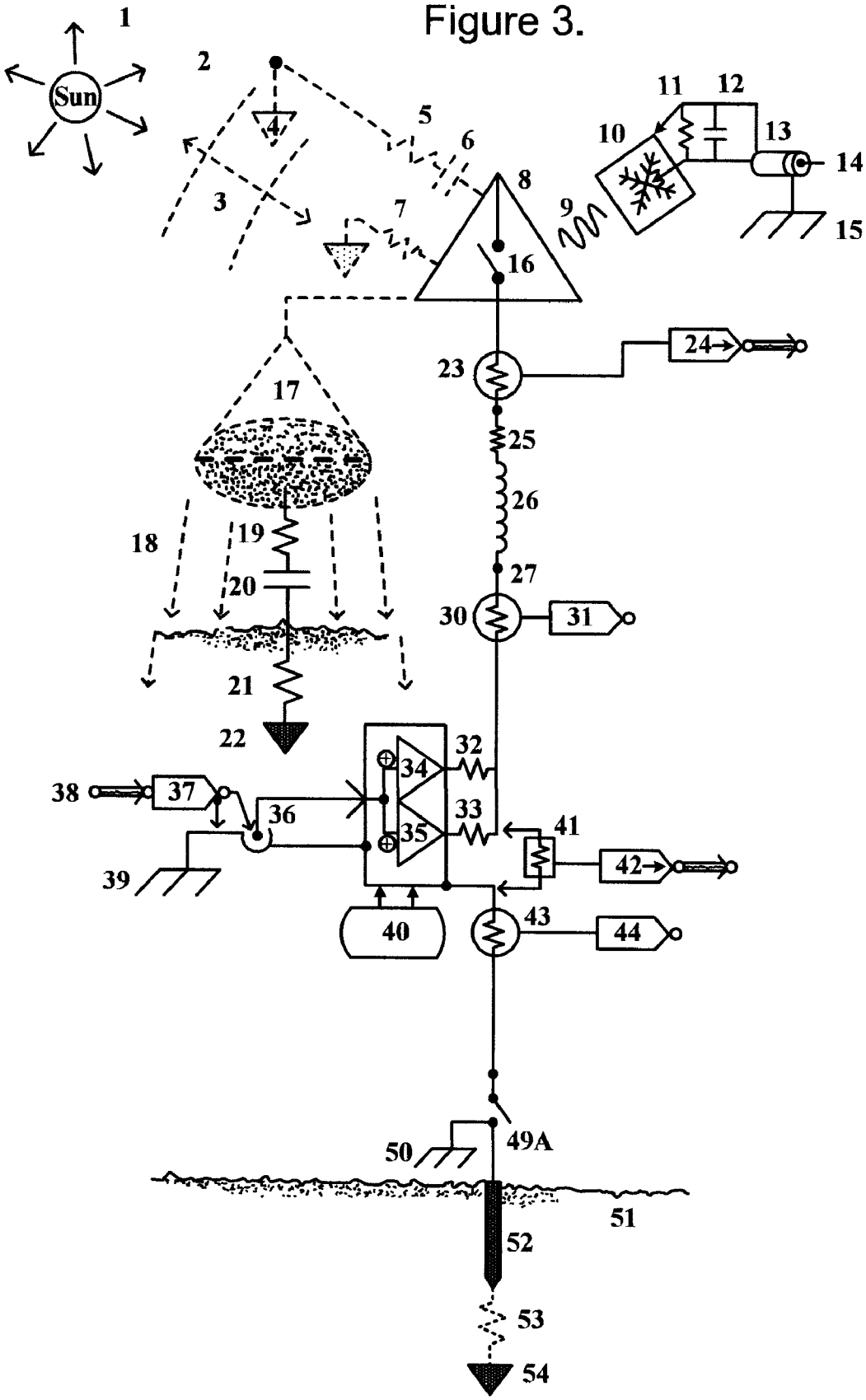
1
Sun
2
3
4
5
6
7
8
9
10
11
12
13
14
15
16
17
18
19
20
21
22
23
24
25
26
27
30
31
32
33
34
35
36
37
38
39
40
41
42
43
44
49A
50
51
52
53
54

PYRAMID ELECTRIC GENERATOR

CROSS-REFERENCES

[0001] This application is a continuation-in-part of U.S. patent application Ser. No. 12/140,887 by Grandics, entitled "The Pyramid Electric Generator," and filed on Jun. 17, 2008, which was a continuation-in-part of PCT Application Serial No. PCT/U.S.07/69804 by Grandics, entitled "An Electric Power Converter for Extraction of Atmospheric Electrical Energy," designating the United States and filed on May 25, 2007, which in turn claimed priority from U.S. Provisional Application Ser. No. 60/818,360 by Grandics, also entitled "An Electric Power Converter for Extraction of Atmospheric Electrical Energy," and filed on Jul. 3, 2006. The specifications of these three prior applications are incorporated herein in their entirety by this reference.

BACKGROUND OF THE INVENTION

[0002] This invention relates to the generation of electrical power by drawing energy from Earth's electric field. Earth represents a resonant system in which both atmospheric and telluric electrical processes can be harvested. In U.S. Pat. No. 6,974,110, we have provided an apparatus and method for converting the electrostatic potential energy of Earth's atmosphere into usable power. The present invention aims to provide an electric generator that, in addition to tapping atmospheric electric processes, extracts electrical power from the vibrational energy of atomic oscillators by a novel resonant coupling method.

SUMMARY OF THE INVENTION

[0003] An electrical generator according to the present invention provides a new method of tapping Earth's electric energy field.

[0004] One aspect of the present invention is an apparatus for capturing both atmospheric and telluric electric energies, comprising:

[0005] (1) an antenna/waveguide that is geometrically optimized having a conducting surface; and

[0006] (2) a coil wound with an insulated conductor over a non-conductive coil form, the coil being connected to an AC or AC-DC driver at its bottom lead and, by its top lead to the conducting surface of the antenna/waveguide near the point where the electric field contacts the antenna/waveguide, with the antenna/waveguide serving as a quasi-capacitive series element to provide a specific resonant frequency;

wherein the generator absorbs impulses from Earth's electric oscillations; and

wherein the attracted energy manifests as high voltage sinusoidal waveforms in the coil, representing harvested electrical energy of atomic oscillators and measurable on the leads of the coil.

[0007] Preferably, the antenna/waveguide is of pyramidal shape. When the antenna/waveguide is of pyramidal shape, the apex/primary coil is preferably connected near or at the apex of the antenna/waveguide.

[0008] Another aspect of the invention is an electric generator for harvesting the energies of atomic oscillators comprising:

[0009] (1) an antenna/waveguide that is geometrically optimized having a conducting surface; and

[0010] (2) a primary (apex) coil wound with an insulated conductor over a non-conductive coil form, the coil being connected to an AC or AC-DC driver at its bottom lead and, by its top lead to the conducting surface of the antenna/waveguide near the point where the electric field contacts the antenna/waveguide, and the antenna/waveguide serving as a quasi-capacitive series element to provide a specific resonant frequency; and

[0011] (3) a secondary coil of smaller diameter than the primary (apex) coil having a greater number of turns than the primary coil, the secondary coil being positioned coaxially within the primary coil and acting as a resonant step-up transformer winding inductively coupled with the primary coil;

wherein the generator absorbs impulses from Earth's electric oscillations; and

wherein the attracted energy manifests as high voltage sinusoidal waveforms in the secondary coil, representing harvested electrical energy of atomic oscillators and measurable on the leads of the secondary coil.

[0012] Yet another aspect of the present invention is an electric generator for harvesting the electric emissions of atomic oscillations comprising an oscillator. In this aspect, the electric generator typically comprises:

[0013] (1) a primary (apex) coil wound with a conductor over a secondary coil, the primary coil being connected electrically at its bottom lead to a driver operating in the LF or ELF bands while connected by its top lead near the point at which the electric field contacts the conductive surface of the antenna/waveguide; and

[0014] (2) a secondary coil of smaller diameter than the primary (apex) coil having a greater number of turns than the primary coil, the secondary coil being positioned coaxially within the first coil and acting as a resonant step-up transformer winding inductively coupled with the primary;

wherein said resonant step-up transformer's output voltage exceeds 500 V_{RMS};

wherein the electric generator attracts impulses from Earth's electric oscillations;

and wherein the attracted energy manifests as high voltage sinusoidal waveforms representing harvested electric energy of atomic oscillations in the secondary coil.

[0015] Another aspect of the present invention is a method of tapping Earth's electric energy field, comprising the steps of:

[0016] (1) positioning an electric generator according to the present invention as described above such that it is exposed to Earth's electric oscillations; and

[0017] (2) generating a sinusoidal voltage signal representing harvested electric energy of atomic oscillators by the operation of the generator.

BRIEF DESCRIPTION OF THE DRAWINGS

[0018] The following invention will be better understood with reference to the specification, appended claims, and accompanying drawings, where:

[0019] FIG. **1** is a graph showing the formation of electric vortices across and around the pyramid.

[0020] FIG. **2** is a graph showing the circuit diagram and measurement points of the pyramid generator.

[0021] FIG. **3** is a graph showing the minimum circuit diagram and relevant measurement points of the pyramid generator.

DETAILED DESCRIPTION OF THE INVENTION

[0022] One aspect of the invention is an apparatus for capturing atmospheric and telluric electric energies, comprising:

[0023] (1) an antenna/waveguide that is geometrically optimized having a conducting surface; and

[0024] (2) a coil wound with an insulated conductor over a non-conductive coil form, the coil being connected to an AC or AC-DC driver at its bottom lead and, by its top lead to the conducting surface of the antenna/waveguide near the point where the electric field contacts the antenna/waveguide, with the antenna/waveguide serving as a quasi-capacitive series element to provide a specific resonant frequency;

wherein the generator absorbs impulses from Earth's electric oscillations; and

wherein the attracted energy manifests as high voltage sinusoidal waveform in the coil, representing harvested electrical energy of atomic oscillators and measurable on the leads of the coil.

[0025] Typically, the electric generator stimulates and attracts the electric emissions of atomic oscillators by the use of high voltage. Typically, the antenna/waveguide is designed based on functions of phi and/or pi.

[0026] In one alternative, the antenna/waveguide is placed on an insulated base.

[0027] Typically, the antenna/waveguide is at a high voltage during the operation of the generator. Typically, the antenna/waveguide voltage is measured by using an E-field antenna.

[0028] The antenna/waveguide can be connected to an oscillator. The oscillator can be a resonant step-up transformer.

[0029] Preferably, the antenna/waveguide is of pyramidal shape. Preferably, the antenna/waveguide exhibits functions of phi and/or pi. However, any geometric form employing these functions can be used for the antenna/waveguide. When it is of pyramidal shape, the primary (apex) coil is preferably connected near or at the apex of the antenna/waveguide. The shape and size of the antenna/waveguide can be optimized depending on the intended use of the generator.

[0030] Typically, the generator further comprises an insulating base on which the antenna/waveguide is placed. The size and shape of the insulating base can also be optimized, depending on the intended use of the generator.

[0031] Typically, the output of the apex coil-antenna/waveguide series resonant circuit or that of the secondary coil is harvested. One way to do this is by connecting to a step-down transformer and rectifier-capacitor-load resistance. The optimal circuit can be selected by one of ordinary skill in the art to optimize power extraction. The load draws power from the generator.

[0032] The driver can supply AC or a combination of AC-DC power to activate the resonant circuit.

[0033] Typically, the antenna/waveguide is positioned in the general North-South direction. In this arrangement, when the antenna/waveguide is of pyramidal shape, the height of the pyramid can vary from about 0.1 m to about 1000 m. The optimal pyramid size is a function of the power requirements. However, a pyramid can be built as high as 1 km in height. The base surface area of the pyramid may range from about 0.01 m^2 to about 1,000,000 m^2. Naturally, other heights and base surface areas or shapes can be used for particular applications. The numbers of sides can also vary. When the pyramid is small (e.g., the 6.26 feet base length described in this application), there is an insufficient atmospheric potential gradient on its apex to trigger the attraction of energy. In such event, a driver is necessary to bring the pyramid to the electric potential necessary for its harvesting function.

[0034] Another embodiment of the present invention is an electric generator for harvesting the energies of atomic oscillators comprising:

[0035] (1) an antenna/waveguide that is geometrically optimized having a conducting surface; and

[0036] (2) a primary (apex) coil wound with an insulated conductor over a non-conductive coil form, the coil being connected to an AC or AC-DC driver at its bottom lead and, by its top lead to the conducting surface of the antenna/waveguide near the point where the electric field contacts the antenna/waveguide, and the antenna/waveguide serving as a quasi-capacitive series element to provide a specific resonant frequency; and

[0037] (3) a secondary coil of smaller diameter than the primary (apex) coil having a greater number of turns than the primary coil, the secondary coil being positioned coaxially within the primary coil and acting as a resonant step-up transformer winding inductively coupled with the apex coil;

wherein the generator absorbs impulses from Earth's electric oscillations; and

wherein the attracted energy manifests as high voltage sinusoidal waveforms in the secondary coil, representing harvested electrical energy of atomic oscillators and measurable on the leads of the secondary coil.

[0038] In this embodiment, more than one resonant step-up transformer winding can be used. As described above for the first embodiment, in this embodiment, the electric generator stimulates and attracts the electric emissions of atomic oscillators by the use of high voltage. Typically, in this embodiment, the antenna/waveguide is designed based on functions of phi and/or pi. In one alternative, in this embodiment, the antenna/waveguide is placed on an insulated base. Typically, in this embodiment, the generator further comprises an insulating base on which the antenna/waveguide is placed. Typically, in this embodiment, antenna/waveguide is at a high voltage during the operation of the generator. Typically, in this embodiment, the antenna/waveguide voltage is measured by using an E-field antenna. In this embodiment, the antenna/waveguide can be connected to an oscillator. The oscillator can be a resonant step-up transformer. Preferably, in this embodiment, the antenna/waveguide is of pyramidal shape. Preferably, in this embodiment, the antenna/waveguide exhibits functions of phi and/or pi. Typically, in this embodiment, the antenna/waveguide is positioned in the general North-South direction. In this embodiment, in this arrangement, when the antenna/waveguide is of pyramidal shape, the height of the pyramid can vary from about 0.1 m to about 1000 m. The optimal pyramid size is a function of the power requirements. However, a pyramid can be built as high as 1 km in height. In this embodiment, the base surface area of the pyramid may range from about 0.01 m^2 to about 1,000,000 m^2.

[0039] In this embodiment, typically, the primary (apex) coil of the resonant transformer is connected near the point where the electric field contacts the antenna/waveguide.

[0040] In this embodiment, typically, the bottom lead of the secondary coil is connected to ground. In this embodiment, typically, the primary (apex) coil is inductively coupled to the secondary coil.

[0041] In this embodiment, typically, the output of the secondary coil is connected to a load for drawing power from the generator.

[0042] Another embodiment of the present invention is an electric generator for harvesting the electric emissions of atomic oscillations comprising an oscillator.

[0043] In this embodiment, typically, the oscillator operates in the LF or ELF bands.

[0044] Typically, in this embodiment, the electric generator comprises:

[0045] (1) a primary (apex) coil wound with a conductor over a secondary coil, the primary (apex) coil being connected electrically at its bottom lead to a driver operating in the LF or ELF bands while connected by its top lead near the point at which the electric field contacts the conductive surface of the antenna/waveguide; and

[0046] (2) a secondary coil of smaller diameter than the primary coil having a greater number of turns than the primary coil, the secondary coil being positioned coaxially within the first coil and acting as a resonant step-up transformer winding inductively coupled with the primary;

wherein said resonant step-up transformer's output voltage exceeds 500 V_{RMS};

wherein the electric generator attracts impulses from Earth's electric oscillations;

and wherein the attracted energy manifests as high voltage sinusoidal waveforms representing harvested electric energy of atomic oscillations in the secondary coil.

[0047] In this embodiment, typically, the output of the secondary coil is connected to a load for drawing power from the generator.

[0048] Another aspect of the invention is a method of tapping Earth's electric energy based on the following concepts:

[0049] (1) utilizing a pyramidal antenna/waveguide designed based on the functions of phi and/or pi;

[0050] (2) using the antenna/waveguide to absorb and focus specific frequencies of Earth's electric field;

[0051] (3) positioning a coil(s) connected to the pyramidal antenna/waveguide near or at its apex according to the present invention; and

[0052] (4) generating a high-voltage sinusoidal signal, representing harvested atmospheric and telluric electrical energy, by the operation of the system.

[0053] Typically, the harvested electric energy can be fed into a power grid for distribution, but smaller units capable of distributed power generation or for use as stand-alone generators are also feasible by the concept of this invention.

[0054] In this aspect, the method typically comprises a method of tapping Earth's electric oscillatory energies comprising the steps of:

[0055] (1) positioning an electric generator according to the present invention as described above such that it is exposed to Earth's electric oscillations; and

[0056] (2) generating a sinusoidal voltage signal representing harvested electric energy of atomic oscillators by the operation of the generator.

[0057] The invention is described by the following Example. This Example is included for illustrative purposes only and is not intended to limit the invention.

Example

[0058] We have introduced a new theory of space, energy and matter that predicted that electromagnetic interaction propagates through a carrier medium called the space lattice that is made up of pulsating, phi-based spiral vortices (STAR), the excitation of which generates propagating sinusoidal lines of force across the space lattice recorded as electromagnetic waves by our instruments [1,2]. We have also predicted that natural pressure gradients exist within the space lattice that can be used for power generation by inserting a capacitor into such gradient. Furthermore, we proposed that a pyramid-shaped capacitor is an optimally shaped device for tapping the energy gradient of the space lattice that manifests in the form of an electrical potential gradient in Earth's atmosphere. This was subsequently demonstrated [3-5]. We also found that the pyramid-shaped capacitor design should be based on functions of phi and/or pi [5] because electrical energy propagates along a phi-based spiral [6].

[0059] We suggested that elemental particles are composed of STAR oscillators that make up the space lattice by electromagnetic compression of its elemental cubes into pulsating conical/vortexual subunits that form the basis for all particles of matter [1,2]. We proposed that atomic and subatomic oscillators could vibrate in a very wide frequency range from sub-acoustic to extremely high EM frequencies [1,2]. This does not mean that material bodies can take or maintain a physical form at any energy level, but this allows the recycling of atoms into the space lattice as part of their natural evolution [2,6].

[0060] Atomic oscillators are constantly in motion, and such motion is electric because all motion and energy is fundamentally electric [2,6]. It is known that atomic bodies constantly exchange electric energy. Such energy flow can be harvested when the spiral physical nature of electric waves is recognized. Russell observed that energy moves during its generative cycle in spirals towards the higher potential [7]; therefore, we reasoned that an "attractor" of high electric potential must be provided to pull in the random electromagnetic emissions of atomic oscillators. The "attractor" must function as a phi-based antenna/waveguide to focus the phi-based electric emissions of atomic bodies into the apex of a vortex, the same method Nature uses for power multiplication [6,7]. Therefore, a phi-based pyramidal antenna/waveguide must be at a high voltage in order to perform its attractor function.

[0061] To achieve this goal, a geometrically optimized pyramidal antenna/waveguide must be connected to an oscillator that operates at a high voltage and is tuned to a suitably selected frequency.

[0062] The appropriate resonant frequency is dictated by practical considerations. Atomic oscillators can vibrate in a very wide frequency range [1, 2, 7, 8] but short wavelength radiations are readily re-absorbed by atoms and are rapidly attenuated; therefore, long wavelength electromagnetic emissions should be targeted. The operation of the pyramid generator is most practical in the ELF to the LF range. As electric radiation propagates in a vortex [2,7,8], the emitted electric vortex over the pyramidal antenna (FIG. **1**) increases its "size," and so it is capable of funneling atmospheric electromagnetic emissions of the same frequency back into the antenna/receiver. Thus, the pyramid electric generator could capture the energy emitted by both telluric and atmospheric atomic oscillators. We have tested these assumptions and demonstrated the basic principles of an electric generator.

Methods and Results

[0063] In our previous paper, we reported on a pyramid-shaped capacitor/antenna connected in series to a coil that

form a resonant circuit for harvesting an expanded range of atmospheric and telluric electric energies [6]. As the signals in the pyramid energy harvester system are at extremely high voltages, we have developed a measurement and control system that allows secure remote transmission of test signals with great accuracy while removing all the hazards associated with direct connection of ultra-high voltages (over 50 kV AC) to the measurement and data-logging system. The voltage and current signals measured across a resistor are turned into a proportional electronic signal, which is then fed to a light emitting diode (opto transmitter) and sent through an optical cable to the instrumentation part of the system where it is converted back by an opto receiver module into an electronic signal for acquisition and processing by the National Instrument PXI 1042Q controller programmed with Labview 6. An ENI-1140LA amplifier was used to activate the oscillator at the resonant frequency.

[0064] For the experiments, we used a novel tetrahedral pyramid-shaped antenna/waveguide that expressed the golden mean in its ratios. The base length of the pyramidal antenna was 6.26 feet. The pyramid was built of a wooden frame and covered with 26 AWG triangular copper sheets on its sides that were electrically connected. It was placed on an insulating base and positioned in the general North-South direction.

[0065] The apex coil was wound on a HDPE cylindrical coil form using a 14 AWG insulated magnet wire with a monofilament spacer polyester twine (0.05" diameter) between the turns, and connected to the conducting surface of the pyramid near its apex. Thus, the apex coil is connected to the pyramidal antenna/waveguide acting as a quasi-capacitive series element to provide a specific resonant frequency by coupling to the ambient electromagnetic environment. The bottom lead of the apex coil was connected to a driver and grounded via the driver (FIG. **2**). The purpose of the monofilament spacer is to reduce interwinding capacitance in the apex coil by increasing distance between wire turns of the coil.

[0066] The parameters of the apex coil are shown in Table 1.

TABLE 1

Physical and electrical parameters of the apex coil

Number of turns of wire	290
Coil height	0.87 m
Coil diameter	0.787 m
Wire diameter	1.6277 mm
Inductance	42.86 mH
Resistance	6.5 ohms

[0067] In the experiment, the controlled variable was the voltage, which was increased in steps by the controller until a maximum voltage in the system (permitted by circuit components and test equipment) was achieved for the given resonant frequency. The objective was to "drive the atmosphere and ground" by radiating a high voltage (~200 kV p-p), LF (~70 kHz) signal fed by a powerful signal generator at a resonant frequency determined by the pyramid as a quasi-capacitive series element connected to the apex coil and radiating to the local atmosphere and the ground.

[0068] The experimental data are shown in Table 2. An apparent power gain of nearly 170-fold was achieved in the resonant circuit relative to input power from the driver.

TABLE 2

Power measurements in the resonant pyramid-coil system.

Frequency (kHz)	Drive voltage (rms)	Drive current (rms)	Drive power (VA)	Drive power (W)
70.9	321.1 V	3.2 A	1125.54	735.5
Frequency (kHz)	**Apex voltage (rms)**	**Apex current (rms)**	**Apex power (kVA)**	**Apex power (kW)**
70.9	67.922 kV	2.903 A	196.621	40.393

[0069] A load may be connected to the system to draw power from it. The load may also be connected via a secondary coil inductively coupled to the apex coil. The load may be a resistor, a rectifier or storage capacitor powering a DC load. The high voltage, high frequency output can also be converted to the frequency and voltage of standard mains power.

[0070] A graphic representation of the system is shown in FIG. **2**. The pyramidal antenna/waveguide, placed on an insulating base, is coupled to the ambient electromagnetic environment and serves as an antenna/waveguide for the harvesting of atmospheric and telluric electromagnetic oscillations at resonance frequency (FIG. **1**). The atmospheric electric vortex possibly acts as an ionic antenna pulling in EM radiations from a large atmospheric domain.

[0071] The pyramid's apex is connected to a coil of high turn number (FIG. **2**). This apex coil wound on a nonconductive coil form forms a resonant circuit with the pyramid that acts as a quasi-capacitive series element. An RF power amplifier activates the apex coil. The measurement points are also indicated, displaying the positions of voltage and current sense resistors and opto-electric transmitters. A detailed description of the system follows in FIG. **2**.

[0072] The source of radiative and electromagnetic power to earth is the Sun **1**, which is harvested by effect of pyramid operations. Solar radiation is separated into light, heat, electromagnetic waves **2** by interaction with atmosphere, magnetosphere, ionosphere. "Electrosphere" **3** comprises of ionized, highly conductive air. It can be understood as a conductive spherical band about 60 mi above the surface of the earth. Virtual "Ground" **4** in electrosphere—a low impedance spherical area that in the circuit may be considered as a "ground" (for non-harvesting calculations) or a variable circuit source (for harvesting calculations). Effective resistive impedance **5** is from pyramid surface to "sky" or "electrosphere" (radiative impedance). Effective capacitive impedance **6** is from pyramid surface to "sky" or "electrosphere". Effective resistive (conductive) impedance **7** is from pyramid external surface to nearby atmosphere due to "corona" type ionic conduction through ionized air, caused by high peak voltages on the pyramid's surface. Conductive pyramidal transducer/energy harvester **8** is coupled to the ambient electromagnetic environment as above. Radiated "near field" electromagnetic field **9** from pyramid surface (toward "sky") is measured by E-field antenna **10**. The antenna does indirect measurement of pyramid surface voltage based on E-field pick-up of alternating current field within ~20 ft of pyramid surface, at a particular fixed distance and orientation. Impedance-matching resistor **11** couples E-field antenna to coaxial cable and impedance-matching capacitor **12** for coupling E-field antenna to coaxial cable. Coaxial cable **13** connects to measurement system interface with a "BNC" connector **14** to

provide electrical interface to measurement system. System "ground" (common connection point) **15** is for measurement/control system components. Switch **16** is for disconnection of pyramid/antenna from pyramid driving electronics. Radiative "cone" **17** emits from inside and bottom surface of pyramid towards "ground" underneath the pyramid harvester system. Radiated E-M field **18** is directed from pyramid to ground surface directly underneath. Resistive impedance **19** of radiated E-M field ("virtual" component) is derived from measurement and calculation of E-M field model to ground area. Capacitive impedance **20** of radiated E-M field to "ground" area is a "virtual component" derived from measurement and calculation of E-M field model. Virtual resistance of radiated energy **21** from bottom of pyramid, is conducted through earth to "firm ground" potential (another "virtual component" derived from measurement and calculation). Pyramid ground **52** is an equipotential "zero-impedance" point in the earth which serves as the ground reference for both conducted (from pyramid ground stake **52**) and radiated **18**, **19**, **20**, **21** energy underneath the pyramid harvester device. In a non-harvesting model this ground point is always at zero potential. However, in an energy-harvesting model the point **22** serves as an AC voltage source, sending conducted energy back into the pyramid system through all the components that "drain" to it in the non-harvesting model. Sense resistor **23** for apex current monitor in pyramid energizing system is a low value resistor (typically 0.05 to 0.2 ohms) that allows a small voltage to develop, proportional to the current flowing to the pyramid apex from the energizing system. Apex current monitor opto transmitter **24** measures the voltage across resistor **23** and turns it into a proportional electronic signal, which is then fed to a light emitting diode and transmitted through an optical cable to the instrumentation part of the system. All the signals in the pyramid harvester system are at extremely high voltages, and the optical cable allows secure remote transmission of these signals to the measurement and data-logging system (not shown on this diagram). Resistance **25** of the apex excitation coil **26** is measured at DC. This is a "virtual" component, since the resistance is in the coil itself, and is not a separate component. Apex coil **26** translates the stimulation power signal from amplifiers **34**, **35** into a very high voltage at the resonant frequency established by the coil and intrinsic capacitance of the pyramid. Mutual inductance coupling exists between the apex coil and the harvest or secondary coil **27**. This is another "virtual component" consisting of the electromagnetic signal coupling between the two coils based on many different factors. Optional resistor **28** can be used for resonance or phase tuning of pyramid network. The main resonance is determined by apex coil **26** inductance and pyramid lumped capacitive element **8**. However, this will make the voltage at the junction of the pyramid (capacitor) and the apex coil **26** approximately 90 degrees out of phase with the current. One approach to reduce the phase angle and also to possibly tune the resonant frequency and the Q of the circuit is to insert an additional reactive element **29** in parallel into the apex coil **26**. The apex coil winding resistance is expressed here as resistor **25** in series with inductor **26**. The inserted element is an additional optional capacitor **29** in parallel with the apex coil. This capacitor develops an independent L-C resonant circuit, besides the L-C resonant circuit of the apex coil and pyramid. An anticipated function if used in the circuit would be to lower the resonant frequency. Drive current monitor current sense resistor **30** is for drive current opto transmitter **31**. Summing/protection resistors are placed in series with **32** drive **1** and **33** drive **2**. Power amplifiers **34**, **35** drive coil/pyramid resonant system. Power (drive) amplifier signal input **36** is fed through opto receiver **37**. The signal in the optical cable **38** is from the National Instruments control system for control of power amplifiers. Pyramid system ground (star-ground) connects to top of pyramid ground stake, after ground stake disconnect switches **39** and **50**. Power supply **40** is for pyramid driver amplifier. Resistor **41** is used for voltage measurement across power driver higher value terminals. Opto transmitter **42** is for voltage measurement across power amplifier and includes drawing of optical cable to measurement system. Current-sensing resistor **43** is for current measurement from pyramid amplifiers to ground post. Opto transmitter **44** is for transmitting ground current to control and measurement system. Voltage sense resistor **45** is between pyramid ground stake **52** and remote ground stake **55** (100 kohm-1 Mohm). Opto transmitter **46** is for voltage sense from pyramid ground **52** to remote ground **55**. Current sense resistor **47** from pyramid ground to remote ground is for opto transmitter **48**. When used, this closes switch **49**B to short out the voltage measurement **45** and also short out the intrinsic ground impedance **58** between pyramid ground and remote ground stakes. Ground post disconnect switch **49** is below the system star ground stake and is very dangerous when open. Main connection point for pyramid system is the star ground terminal **50**. Ground surface **51** is on which pyramid system is placed. Ground stake **52** for pyramid system is a 1" diameter copper rod, 8-12 ft deep. R absolute **53** is between ground stake and earth integrated from ground stake theoretically through entire earth. "Absolute ground" is located under pyramid and ground stake **54**. Remote ground stake **55** is about 200 feet away from pyramid system and is used as remote reference ground although a real remote ground would likely be much further away. R absolute **56** is from remote ground stake to absolute ground under remote stakes **57**. Ground impedance **58** between **52** and **55** stakes appears mostly resistive and is about 28-30 ohms based on AC measurements at 1 KHz. The remote ground setup is not required for the operation of the system but provides test data. Harvest/secondary coil **59** is an inductor wound with 3 to 6 times as many turns as the apex coil, and connected to it by mutual inductance **27**. Current sense resistor **60** is placed on top lead of harvest coil. Opto transmitter **61** is for top harvest coil current. Voltage sense resistor **62** that measures voltage across harvest coil is for opto transmitter **63**. Load resistor **64** is for secondary/harvest coil and the load resistor is optimized to draw the maximum power from the harvest/secondary coil such that the energy harvest efficiency of the entire system is optimized. This is the defining element of the system. Voltage sense resistor **65** for the opto transmitter for load voltage **66** measures the voltage across the load. Current sense resistor **67** is placed at bottom side of harvest coil. Opto transmitter **68** is for bottom lead current sense resistor **67**. A jumper is placed to system ground **69** that allows grounded operation of the harvest coil with system ground **70**. More than one step-up transformer coil can be used as energy harvester in the pyramid generator system.

[0073] The minimum system is shown in FIG. **3**. When a minimum system is used, a load can be directly connected to the pyramid's surface.

DISCUSSION

[0074] This invention demonstrates a novel approach to harvest Earth's electric energy. The masses of Earth and its

atmosphere represent a coupled resonant system that is continually electrified by solar radiation. We have found that a pyramidal antenna designed based on the functions of phi and/or pi is optimal for the capture of atmospheric electrostatic discharge (ESD) impulses [3-5]. Atmospheric ESD is a product of solar radiation and is a wide bandwidth phenomenon. The pyramid as a wideband, non-resonant antenna is uniquely adapted to harvest the energy of atmospheric ESD.

[0075] This invention also points out an additional energizing mechanism at work during the operation of the pyramid electric generator. The observation is derived from our theory on energy, matter and space [1,2] as well as that of Russell [7]. Both Russell and we observed that spiral motion is a fundamental action of matter and that the vortex is the mechanism of power multiplication in Nature. A vortex concentrates power into its apex where the highest velocity of motion, the highest pressure and the highest electric potential resides [1, 2, 6, 7]. As electricity propagates along a pulsating phi-based spiral [6,7], a phi-based antenna/waveguide is suitable to focus its energy into the apex of a vortex inside the antenna. A phi-based pyramid is optimal for this purpose.

[0076] As atomic bodies can oscillate in a very wide frequency range [1, 2, 7, 8], a pyramidal antenna/waveguide coupled to an oscillator that is tuned to a suitable frequency can focus the "electric noise" from Earth's atomic oscillators into the apex of the pyramid at a high voltage. Russell observed that energy moves towards the higher potential during its generative cycle [7]; therefore, it is essential that the pyramidal antenna be at a high potential. Our results corroborated this assumption.

[0077] For practical reasons on our small pyramid, we have chosen a frequency above the audio range but below the radio frequency spectrum; our antenna was made to emit at the target wavelength. The wavelength of the 50-120 kHz range is 6 km to 25 km, thus allowing energy to be harvested over a large atmospheric domain. As electrical energy propagates in a vortex [6,7], the emitted electric vortex (ionic antenna) over the pyramidal antenna/waveguide increases its "size" and enables it to funnel the same frequency atmospheric electromagnetic radiations back into the antenna. Thus, the pyramid electric generator captures at the selected frequency the energy emitted by Earth's atomic oscillators.

[0078] The presence of an electric (ionic) vortex was demonstrated by radar testing of the space over a 44 m tall fiberglass pyramid located near Moscow [12]. The Russians found that the large ionized column of air over the area of the vertical axis of the pyramid had a width of about 500 m and reached an altitude of 2 km. It is remarkable that this effect was induced by a nonconductive pyramid surface and demonstrating a significant degree of atmospheric ionization even under fair weather conditions. Thus, a suitably sized large or an electrically activated small pyramid should open a low impedance path to higher elevations of relatively conductive atmospheric domains.

[0079] In conclusion, the total power that can be extracted from Earth's atomic oscillators must be extremely large, likely far exceeding current global electric generation capacity. In our experiment, we measured over 196 kVA power at the pyramid's apex at about 200 kV p-p voltage using a 6.26 feet base length pyramid. This power is 175 times greater than the power necessary to drive the pyramid to this operating voltage. By constructing the pyramid generator from appropriate high voltage components and using higher drive voltages, a significant increase in power output is envisioned. The power extraction will also be enhanced by further optimization of the designs of both the pyramid and the coil system.

[0080] The power output will also increase by employing larger pyramid structures and coils. As voltage is the primary factor in attracting power into the system, the necessary voltage can be provided by the vertical atmospheric potential on a tall pyramid. Since the atmospheric vertical potential gradient could go as high as 1200 V/m near Earth's surface under fair weather conditions [13], a pyramid height of 20-150 m seems sufficient to provide the apex voltage for a self-sustaining power generator. As the pyramid scales up volumetrically, a power generator pyramid of the size range of the GPG could likely have an output in the range of hundreds of gigawatts. Groups of several pyramid electric generators could be placed within specific geographical areas, thus combining their energy harvesting capacity.

REFERENCES

[0081] The following references are specifically applicable to the Example and are incorporated herein in their entirety by this reference; these references are referenced in the Example by the reference numbers assigned to them.

[0082] [1] Grandics, P. 2002, "The genesis of electromagnetic and gravitational forces." *J. New Energy,* 6, (3) 33-45.

[0083] [2] Grandics, P. 2007, "The genesis of fundamental forces acting at a distance and some practical derivations." *Infinite Energy,* 12, (71) 13-24.

[0084] [3] Grandics, P. 2000, "A method to capture atmospheric electrostatic energy", in *Proceedings of IEJ-ESA Joint Symposium on Electrostatics*, Kyoto University, Kyoto, Japan, pp. 355-361.

[0085] [4] Grandics, P. 2006, "A DC to RF converter for the capture of atmospheric electrostatic energy", in *Proceedings of the 5th Conference of the Societe Francaise D'Electrostatique, SFE* 2006, Grenoble, France pp. 279-284.

[0086] [5] Grandics, P. 2007, "Pyramidal Electric Transducer: A DC to RF Converter for the Capture of Atmospheric Electrostatic Energy." *Infinite Energy,* 13, (73) 20-27.

[0087] [6] Grandics, P. 2009, "The pyramid electric generator." *Infinite Energy,* 14, (84) 55-59.

[0088] [7] Russell, W. 1947, in *The Secret of Light,* 3rd ed. University of Science and Philosophy, Waynesboro, Va., pp. 218-288.

[0089] [8] Russell, W. 1957, in *Atomic Suicide?* 2nd ed. University of Science and Philosophy, Waynesboro, Va., pp. 129-153.

[0090] [9] Nishida, K, Kobayashi, N and Fukao, Y. 2000, "Resonant oscillations between the solid earth and the atmosphere", *Science* 287, (5461), 2244-2246.

[0091] [10] Tanimoto, T, Um, J, Nishida, K, and Kobayashi, N. 1998, "Earth's continuous oscillations observed on seismically quiet days", *Geophys Res Lett.* 25, 1553-1556.

[0092] [11] Tanimoto, T. 2001, "Continuous free oscillations: Atmosphere-solid earth coupling". *Ann Rev Earth Planet Sci.* 29, 563-584.

[0093] [12] http://www.pyramidoflife.com/eng/tests_experiments.html.

[0094] [13] Marshall, T C, Rust, W D, Stolzenburg, M, Roeder, WP, and Kriebel, P R. 1999, "A study of enhanced

fair-weather electric fields occurring soon after sunrise". *J Geophys Res.* 104, 24,455-24,469.

ADVANTAGES OF THE INVENTION

[0095] The present invention provides a new method of tapping Earth's electric energy pool and providing usable power that can be fed into the power grid or supplied by stand-alone power generators. It does so without the need for mechanical energy or the consumption of fossil fuel or the long-term risks associated with power generated by nuclear fission, including the risk of diversion of fissionable material to terrorist aims or the risk posed by the required long-term storage of spent nuclear fuel. Devices according to the present invention can operate virtually continuously with little to no maintenance.

[0096] Articles of manufacture and methods according to the present invention possess industrial applicability for the generation, storage, and transmission of electrical energy.

[0097] With respect to ranges of values, the invention encompasses each intervening value between the upper and lower limits of the range to at least a tenth of the lower limit's unit, unless the context clearly indicates otherwise. Moreover, the invention encompasses any other stated intervening values and ranges including either or both of the upper and lower limits of the range, unless specifically excluded from the stated range.

[0098] Unless defined otherwise, the meanings of all technical and scientific terms used herein are those commonly understood by one of ordinary skill in the art to which this invention belongs. One of ordinary skill in the art will also appreciate that any methods and materials similar or equivalent to those described herein can also be used to practice or test this invention.

[0099] The publications and patents discussed herein are provided solely for their disclosure prior to the filing date of the present application. Nothing herein is to be construed as an admission that the present invention is not entitled to antedate such publication by virtue of prior invention. Further the dates of publication provided may be different from the actual publication dates which may need to be independently confirmed.

[0100] All the publications cited are incorporated herein by reference in their entireties, including all published patents, patent applications, literature references, as well as those publications that have been incorporated in those published documents. However, to the extent that any publication incorporated herein by reference refers to information to be published, applicants do not admit that any such information published after the filing date of this application to be prior art.

[0101] As used in this specification and in the appended claims, the singular forms include the plural forms. For example the terms "a," "an," and "the" include plural references unless the content clearly dictates otherwise. Additionally, the term "at least" preceding a series of elements is to be understood as referring to every element in the series. The inventions illustratively described herein can suitably be practiced in the absence of any element or elements, limitation or limitations, not specifically disclosed herein. Thus, for example, the terms "comprising," "including," "containing," etc. shall be read expansively and without limitation. Additionally, the terms and expressions employed herein have been used as terms of description and not of limitation, and there is no intention in the use of such terms and expressions of excluding any equivalents of the future shown and described or any portion thereof, and it is recognized that various modifications are possible within the scope of the invention claimed. Thus, it should be understood that although the present invention has been specifically disclosed by preferred embodiments and optional features, modification and variation of the inventions herein disclosed can be resorted by those skilled in the art, and that such modifications and variations are considered to be within the scope of the inventions disclosed herein. The inventions have been described broadly and generically herein. Each of the narrower species and subgeneric groupings falling within the scope of the generic disclosure also form part of these inventions. This includes the generic description of each invention with a proviso or negative limitation removing any subject matter from the genus, regardless of whether or not the excised materials specifically resided therein. In addition, where features or aspects of an invention are described in terms of the Markush group, those schooled in the art will recognize that the invention is also thereby described in terms of any individual member or subgroup of members of the Markush group. It is also to be understood that the above description is intended to be illustrative and not restrictive. Many embodiments will be apparent to those of in the art upon reviewing the above description. The scope of the invention should therefore, be determined not with reference to the above description, but should instead be determined with reference to the appended claims, along with the full scope of equivalents to which such claims are entitled. Those skilled in the art will recognize, or will be able to ascertain using no more than routine experimentation, many equivalents to the specific embodiments of the invention described. Such equivalents are intended to be encompassed by the following claims.

I claim:

1. An electric generator for harvesting the energies of atomic oscillators comprising:

(a) an antenna/waveguide that is geometrically optimized having a conducting surface; and

(b) a coil wound with an insulated conductor over a non-conductive coil form, the coil being connected to an AC or AC-DC driver at its bottom lead and, to the conducting surface of the antenna/waveguide by its top lead near the point where the electric field contacts the antenna/waveguide, with the antenna/waveguide serving as a quasi-capacitive series element to provide a specific resonant frequency;

wherein the generator absorbs impulses from Earth's electric oscillations; and

wherein the attracted energy manifests as high voltage sinusoidal waveforms in the coil, representing harvested electrical energy of atomic oscillators and measurable on the leads of the coil.

2. The electric generator of claim **1**, wherein the electric generator stimulates and attracts the electric emissions of atomic oscillators by the use of high voltage.

3. The electric generator of claim **1**, wherein the antenna/waveguide is designed based on functions of phi and/or pi.

4. The electric generator of claim **1**, wherein the antenna/waveguide is of pyramidal shape.

5. The electric generator of claim **1**, wherein the antenna/waveguide is placed on an insulating base.

6. The electric generator of claim **1**, wherein the antenna/waveguide is at a high voltage during the operation of the generator.

7. The electric generator of claim **1**, wherein the antenna/waveguide voltage is measured by using an E-field antenna.

8. The electric generator of claim **1**, wherein the antenna/waveguide is connected to an oscillator.

9. The electric generator of claim **8**, wherein the oscillator comprises a resonant step-up transformer.

10. The electric generator of claim **1**, wherein the height of the pyramid of the electric generator is from about 0.10 m to about 1000 m.

11. The electric generator of claim **1**, wherein the base surface area of the pyramid is from about 0.01 m^2 to about 1,000,000 m^2.

12. The electric generator of claim **1**, wherein the generator is positioned in the general North-South direction.

13. An electric generator for harvesting the energies of atomic oscillators comprising:

(a) an antenna/waveguide that is geometrically optimized having a conducting surface; and

(b) a primary (apex) coil wound with an insulated conductor over a non-conductive coil form, the coil being connected to an AC or AC-DC driver at its bottom lead and, to the conducting surface of the antenna/waveguide by its top lead near the point where the electric field contacts the antenna/waveguide, and the antenna/waveguide serving as a quasi-capacitive series element to provide a specific resonant frequency; and

(c) a secondary coil of smaller diameter than the primary (apex) coil having a greater number of turns than the primary coil, the secondary coil being positioned coaxially within the primary coil and acting as a resonant step-up transformer winding inductively coupled with the apex coil;

wherein the generator absorbs impulses from Earth's electric oscillations; and

wherein the attracted energy manifests as high voltage sinusoidal waveforms in the secondary coil, representing harvested electrical energy of atomic oscillators and measurable on the leads of the secondary coil.

14. The electric generator of claim **13**, in which more than one resonant step-up transformer winding is used.

15. The electric generator of claim **13**, wherein the electric generator stimulates and attracts the electric emissions of atomic oscillators by the use of high voltage.

16. The electric generator of claim **15**, wherein the high voltage is greater than 500 V_{RMS}.

17. The electric generator of claim **13**, wherein the antenna/waveguide is designed based on functions of phi and/or pi.

18. The electric generator of claim **13**, wherein the antenna/waveguide is of pyramidal shape.

19. The electric generator of claim **13**, wherein the antenna/waveguide is placed on an insulating base.

20. The electric generator of claim **13**, wherein the antenna/waveguide is at a high voltage during the operation of the generator.

21. The electric generator of claim **13**, wherein the antenna/waveguide voltage is measured by using an E-field antenna.

22. The electric generator of claim **13**, wherein the antenna/waveguide is connected to an oscillator.

23. The electric generator of claim **22**, wherein the oscillator comprises a resonant step-up transformer.

24. The electric generator of claim **13**, wherein the primary (apex) coil of the resonant transformer is connected near the point where the electric field contacts the antenna/waveguide.

25. The electric generator of claim **13**, wherein the bottom lead of the secondary coil is connected to ground.

26. The electric generator of claim **13**, wherein the primary (apex) coil is inductively coupled to the secondary coil.

27. The electric generator of claim **13**, wherein the output of the secondary coil is connected to a load.

28. The electric generator of claim **13**, wherein the height of the pyramid of the electric generator is from about 0.10 m to about 1000 m.

29. The electric generator of claim **13**, wherein the base surface area of the pyramid is from about 0.01 m^2 to about 1,000,000 m^2.

30. The electric generator of claim **13**, wherein the generator is positioned in the general North-South direction.

31. An electric generator for harvesting the electric emissions of atomic oscillations comprising an oscillator.

32. The electric generator of claim **31**, wherein the oscillator operates in the LF or ELF bands.

33. The electric generator of claim **31** wherein the electric generator comprises:

(a) a primary (apex) coil wound with a conductor over a secondary coil, the primary (apex) coil being connected electrically at its bottom lead to a driver operating in the LF or ELF bands while connected by its top lead near the point at which the electric field contacts the conductive surface of the antenna/waveguide; and

(b) a secondary coil of smaller diameter than the primary coil having a greater number of turns than the primary coil, the secondary coil being positioned coaxially within the first coil and acting as a resonant step-up transformer winding inductively coupled with the primary;

wherein said resonant step-up transformer's output voltage exceeds 500 V_{RMS};

wherein the electric generator attracts impulses from Earth's electric oscillations;

and wherein the attracted energy manifests as high voltage sinusoidal waveforms representing harvested electric energy of atomic oscillations in the secondary coil.

34. The electric generator of claim **33**, wherein the output of the secondary coil is connected to a load for drawing power from the generator.

35. A method of tapping Earth's electric oscillatory energies comprising the steps of:

(a) positioning the electric generator of claim **1** such that it is exposed to Earth's electric oscillations; and

(b) generating a sinusoidal voltage signal representing harvested electric energy of atomic oscillators by the operation of the generator.

36. A method of tapping Earth's electric oscillatory energies comprising the steps of:

(a) positioning the electric generator of claim **2** such that it is exposed to Earth's electric oscillations; and

(b) generating a sinusoidal voltage signal representing harvested electric energy of atomic oscillators by the operation of the generator.

37. A method of tapping Earth's electric oscillatory energies comprising the steps of:

(a) positioning the electric generator of claim **32** such that it is exposed to Earth's electric oscillations; and

(b) generating a sinusoidal voltage signal representing harvested electric energy of atomic oscillators by the operation of the generator.

* * * * *

US008004250B2

(12) **United States Patent**
Grandics

(10) **Patent No.: US 8,004,250 B2**
(45) **Date of Patent: Aug. 23, 2011**

(54) **PYRAMID ELECTRIC GENERATOR**

(76) Inventor: **Peter Grandics**, Carlsbad, CA (US)

(*) Notice: Subject to any disclaimer, the term of this patent is extended or adjusted under 35 U.S.C. 154(b) by 476 days.

(21) Appl. No.: **12/140,887**

(22) Filed: **Jun. 17, 2008**

(65) **Prior Publication Data**

US 2008/0315587 A1 Dec. 25, 2008

Related U.S. Application Data

(63) Continuation-in-part of application No. PCT/US2007/069804, filed on May 25, 2007.

(60) Provisional application No. 60/818,360, filed on Jul. 3, 2006.

(51) **Int. Cl.**
H02N 1/00 (2006.01)

(52) **U.S. Cl.** ..... **322/27**; 290/1 R; 322/32; 322/2 A

(58) **Field of Classification Search** ..... 372/32, 372/123; 290/1 R, 2, 1 A; 244/158 R, 166, 244/172; 322/27

See application file for complete search history.

(56) **References Cited**

U.S. PATENT DOCUMENTS

1,540,998	A	1/1921	Plauson	
2,813,242	A	11/1957	Crump	
3,013,201	A	12/1961	Goldie	
4,127,804	A	11/1978	Breaux	
4,151,409	A	4/1979	O'Hare	
4,595,852	A	6/1986	Gundlach	
5,052,638	A	10/1991	Minovitch	
5,148,461	A *	9/1992	Shoulders	378/119
5,153,901	A *	10/1992	Shoulders	378/119
5,305,974	A	4/1994	Willis	
5,502,354	A *	3/1996	Correa et al.	315/111.01
5,813,217	A	9/1998	Beall	
5,966,986	A	10/1999	Laul	
6,089,511	A	7/2000	Rasmusson	
6,193,194	B1	2/2001	Minovitch	

(Continued)

FOREIGN PATENT DOCUMENTS

WO W001/49804 A2 7/2001

OTHER PUBLICATIONS

R.V. Anderson, in Electrical Processes in Atmospheres (H. Dolezalek & R. Reiter, eds., Steinkopff, Darmstadt, 1977), pp. 87-99.

(Continued)

Primary Examiner — T C Patel
Assistant Examiner — Iraj A Mohandesi
(74) *Attorney, Agent, or Firm* — Michael B. Farber

(57) **ABSTRACT**

A pyramid electric generator for harvesting the vibrational energies of Earth's atomic oscillators according to the present invention comprises: (1) an antenna/waveguide that is geometrically optimized; (2) a secondary coil wound with an insulated conductor on a nonconductive coil form, the coil being attached electrically to the conducting surface of the antenna/waveguide such that the secondary coil is attached near the point at which the electric field contacts the antenna/waveguide; (3) the antenna/waveguide connected with the secondary coil serving as a quasi-capacitive series element to provide a specific resonant frequency; and (4) a primary coil of a few turns wound around the secondary coil, the secondary coil being positioned coaxially within the primary coil and acting as a resonant step-up transformer winding, inductively coupled with the primary coil. The generator resonantly couples into specific frequencies of Earth's atomic oscillators and extracts electric energy therefrom.

19 Claims, 5 Drawing Sheets

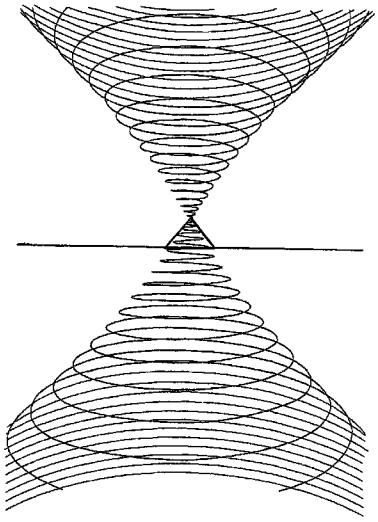

U.S. PATENT DOCUMENTS

6,974,110 B2 12/2005 Grandics

OTHER PUBLICATIONS

R.G. Roble & I. Tzur, in the Earth's Electrical Environment, Studies in Geophysics (National Academy Press, Washington, D.C. 1986), pp. 206-231.

R. Feynman, Lectures on Physics (Addison-Wesley, Inc., Palo Alto, California, 1964) v.2, ch.9, pp. 1-11.

W.R. Gringel et al., in the Earth's Electrical Environment, Studies in Geophysics (National Academy Press, Washington, D.C. 1986), pp. 166-182.

R.H. Holzworth et al., "Direct Measurement of Lower Atmospheric Vertical Potential Differences," Geophys. Res. Lett. 8: 783-786 (1981) .

R.H. Holzworth, "Hy-wire Measurement of Atmospheric Potential," J. Geophys. Res. 89: 1395-1401 (1984).

R.E. Orville, in the Earth's Electrical Environment, Studies in Geophysics (National Academy Press, Washington, D.C. 1986), pp. 23-29.

R.B. Standler & W.P. Winn, "Effects of Coronae on Electric Fields Beneath Thunderstorms," Quart. J.R. Met. Soc. 105: 285-302 (1979).

R.A. Oliva & C.W. Dale, "Circuit Analysis Methods", in DC Circuits, vol. II (Radio Shack, Fort Worth, Texas, 1979), pp. 13-8 to 13-12.

W.M. Hayt, Jr. & J.E. Kemmerly. "Engineering Circuit Analysis" (3rd ed., McGraw-Hill, New York, 1978), pp. 146-152 .

H. Christian et al., "Airborne and Ground Based Studies of Thunderstorms in the Vicinity of Langmuir Laboratory," Q. J. R. Meteorol. Soc. 106: 159-175 (1980).

T.C. Marshall & W.P. Winn, "Measurements of Charged Precipitation in a New Mexico Thunderstorm: Lower Positive Charge Centers," J. Geophys. Res. 87:. 7141-7157 (1982).

P. Grandics, "A Method to Capture Atmospheric Electrostatic Energy", in Proceedings of IEJ-ESA Joint Symposium on Electrostatics, (Kyoto University, Kyoto, Japan, 2000), pp. 355-361.

P. Grandics, "The Genesis of Fundamental Forces Acting at a Distance," Infinite Energy 12: 13-24 (2007).

P. Grandics, "The Genesis of Electromagnetic and Gravitational Forces," J. New Energy 6: 33-45 (2007).

R.A. Kerr, "Will the Arctic Ocean Lose All Its Ice," Science 286: 1828 (1999).

S.A. Laxon et al., "High Interannual Variability of Sea Ice Thickness in the Arctic Region," Nature 425: 947-950 (2003).

http://www.pyramidoflife.com/eng/tests_experiments.html.

T.C. Marshall & M. Stolzenburg, "Voltages Inside and Just Above Thunderstorms," J. Geophys. Res. 106: 4757-4768 (2001).

* cited by examiner

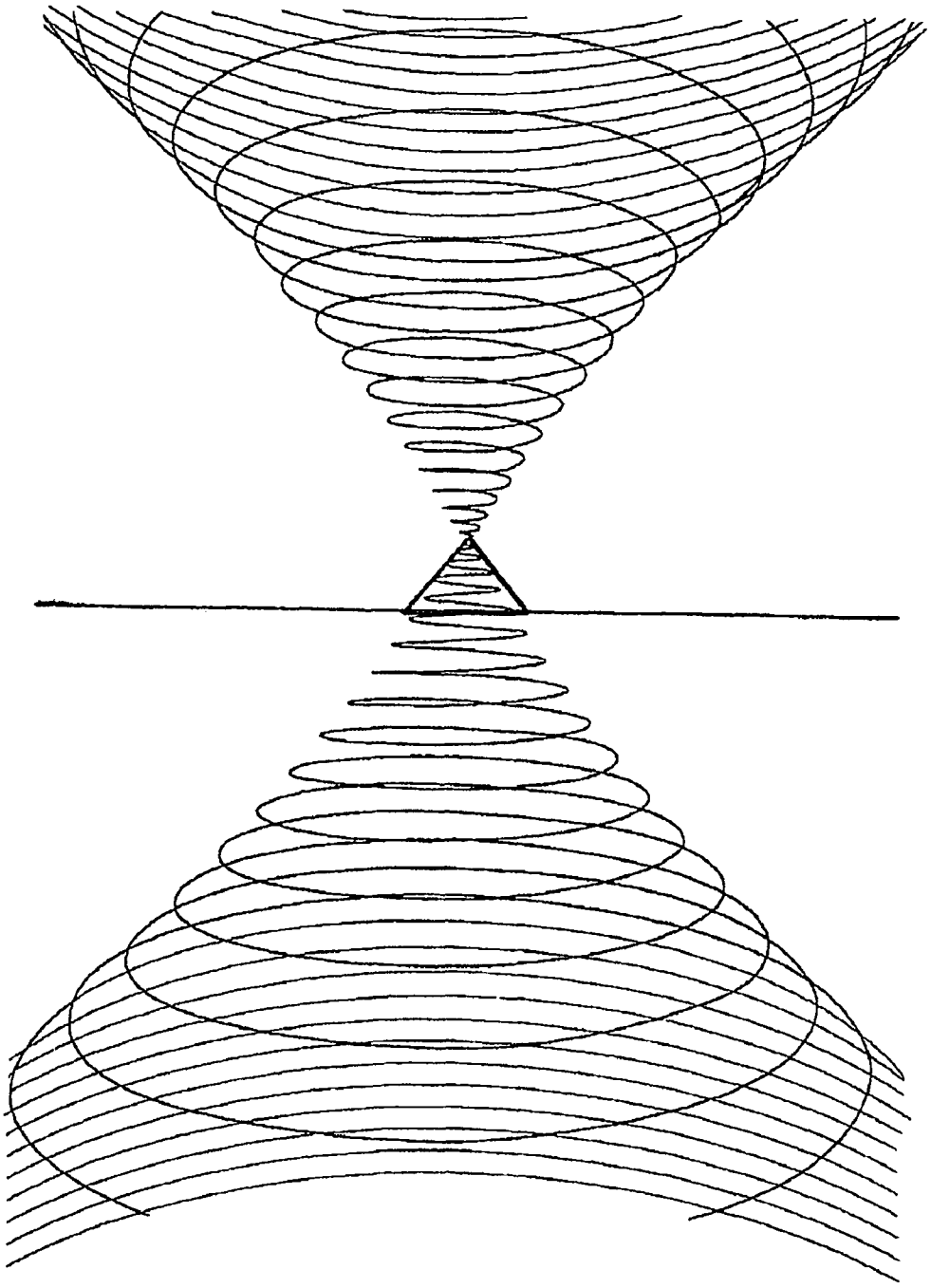

FIG. 1

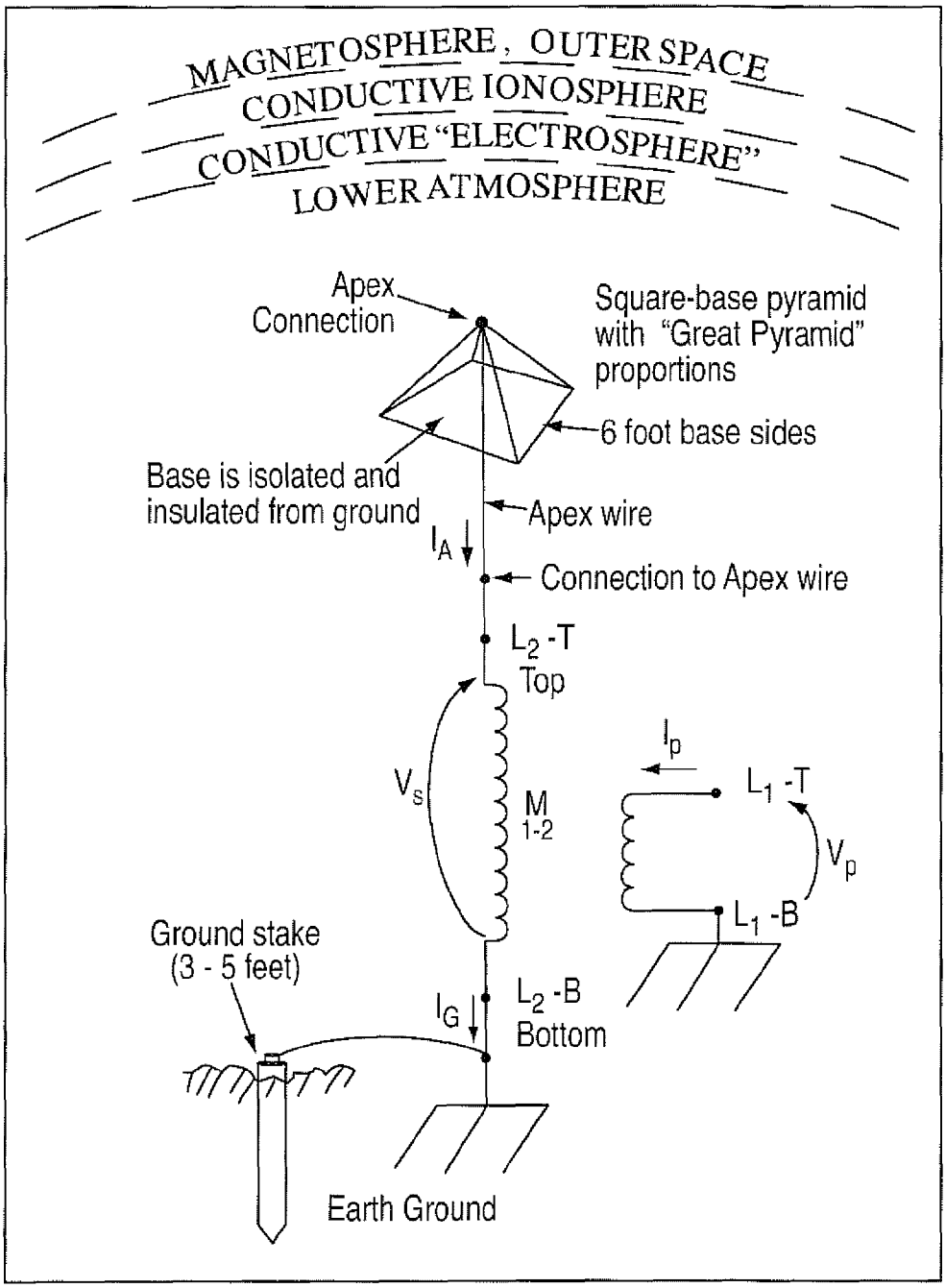

V_p	Voltage across primary coil
I_p	Current into primary coil
I_A	Current in the apex wire
I_g	Current into ground wire
V_s	Voltage across secondary coil

FIG. 2

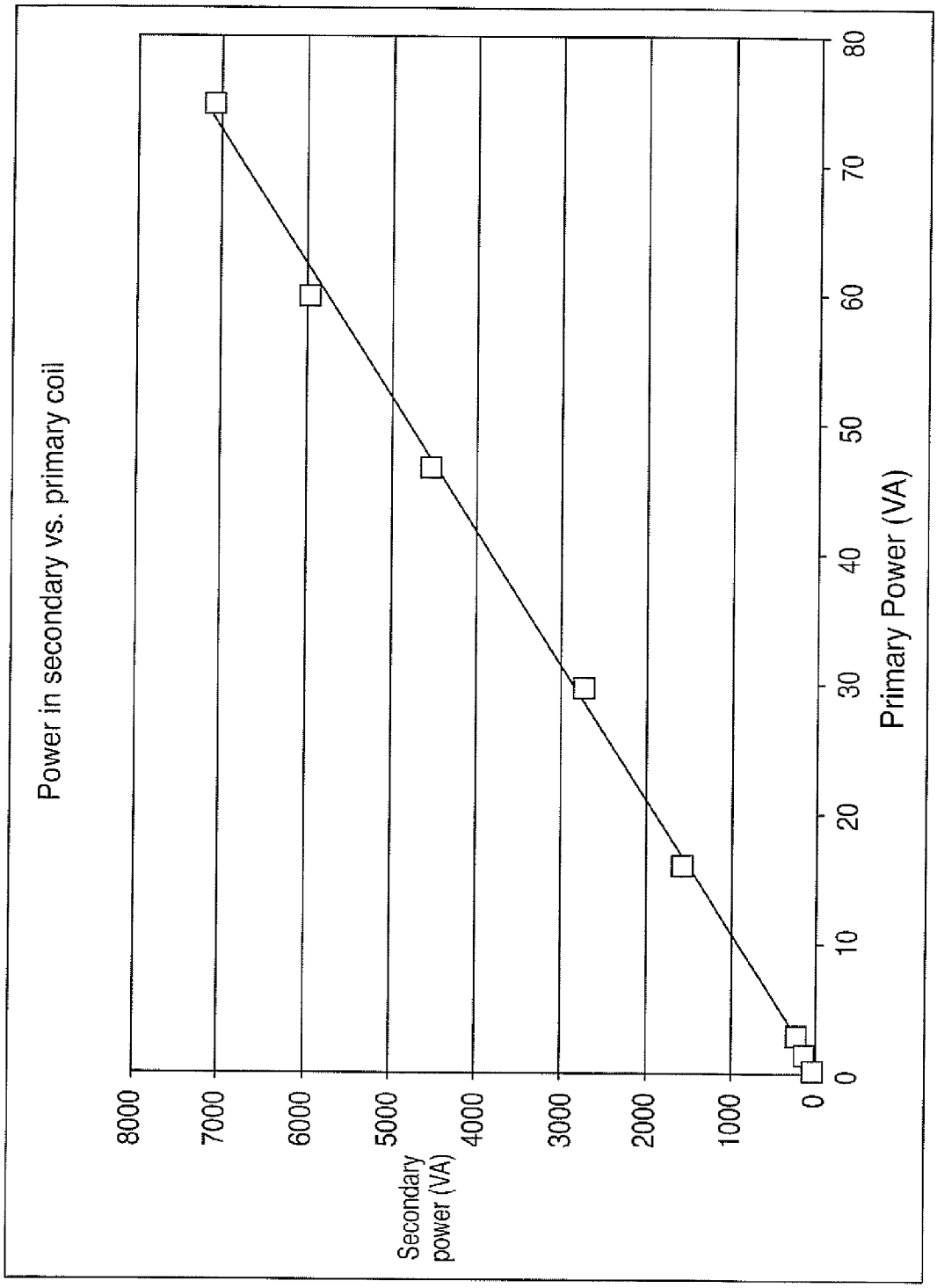
Power in secondary vs. primary coil
Secondary power (VA)
8000
7000
6000
5000
4000
3000
2000
1000
0
0
10
20
30
40
50
60
70
80
Primary Power (VA)

FIG. 3

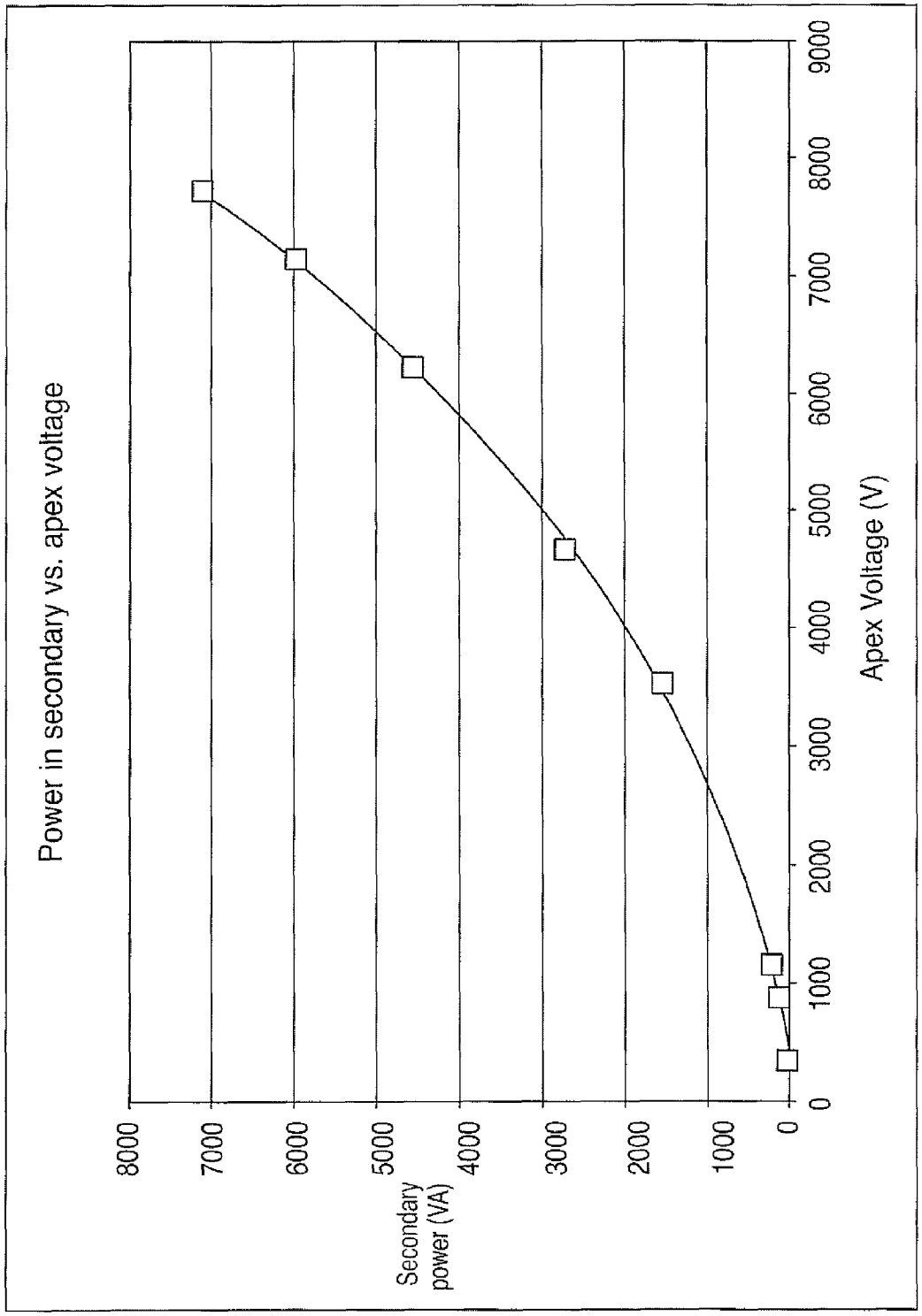
Power in secondary vs. apex voltage
Secondary power (VA)
8000
7000
6000
5000
4000
3000
2000
1000
0
0
1000
2000
3000
4000
5000
6000
7000
8000
9000
Apex Voltage (V)

FIG. 4

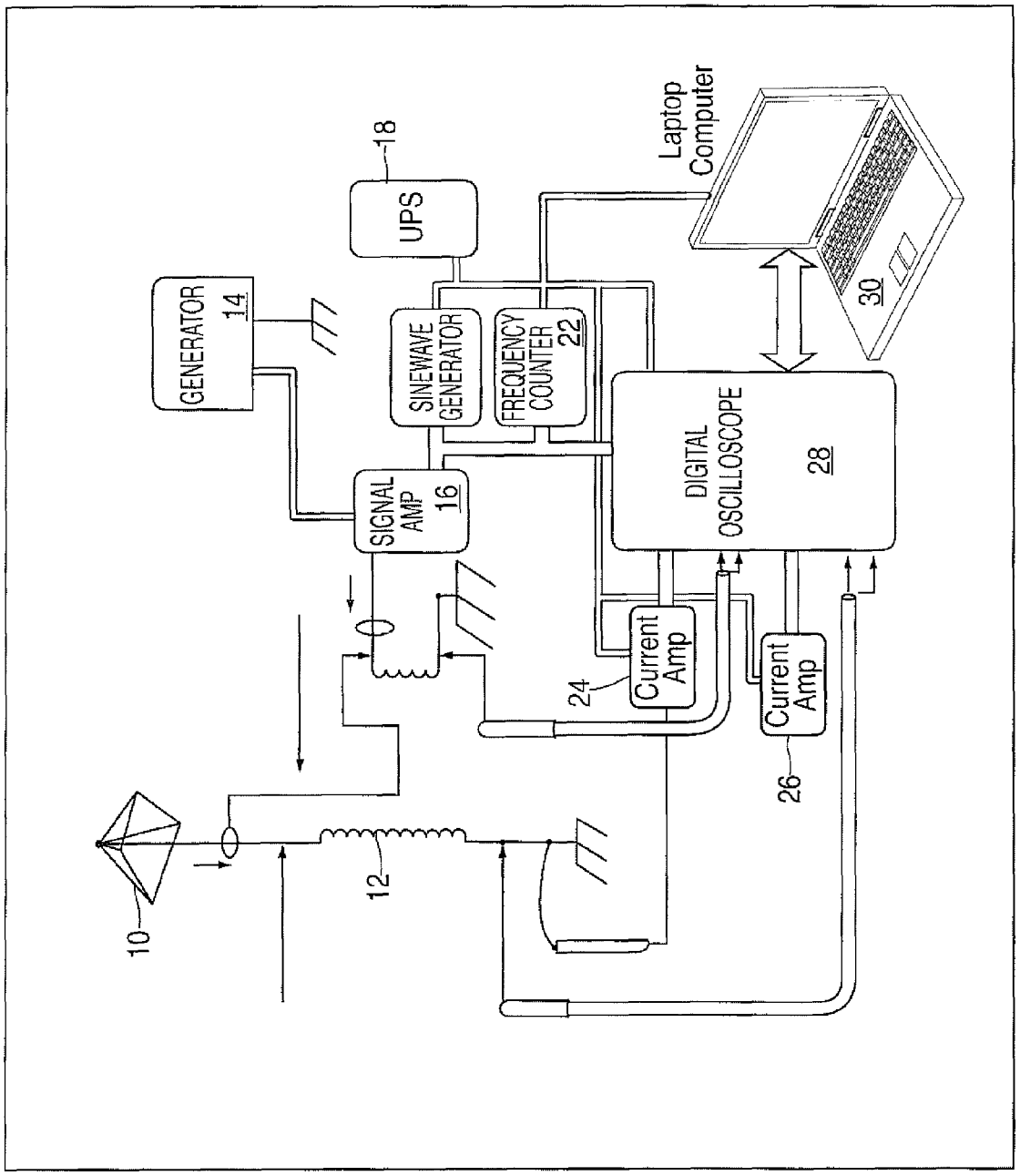
GENERATOR
14
18
UPS
SINEWAVE GENERATOR
FREQUENCY COUNTER
22
SIGNAL AMP
16
Laptop Computer
30
DIGITAL OSCILLOSCOPE
28
Current Amp
24
Current Amp
26
10
12

FIG. 5

PYRAMID ELECTRIC GENERATOR

CROSS-REFERENCES

This application is a continuation-in-part of PCT Application Ser. No. PCT/US07/69804 by Grandics, entitled "An Electric Power Converter for Extraction of Atmospheric Electrical Energy," designating the United States and filed on May 25, 2007, which in turn claimed priority from U.S. Provisional Application Ser. No. 60/818,360 by Grandics, also entitled "An Electric Power Converter for Extraction of Atmospheric Electrical Energy," and filed on Jul. 3, 2006. The specifications of these two applications are incorporated herein in their entirety by this reference.

BACKGROUND OF THE INVENTION

This invention relates to the generation of electrical power by drawing energy from Earth's electric field. Earth represents a resonant system in which both atmospheric and telluric electrical processes can be harvested. In U.S. Pat. No. 6,974,110, we have provided an apparatus and method for converting the electrostatic potential energy of Earth's atmosphere. The present invention aims to provide an electric generator that, in addition to tapping atmospheric electric processes, extracts electrical power from the vibrational energy of atomic oscillators by a novel resonant coupling method.

SUMMARY OF THE INVENTION

An electrical generator according to the present invention provides a new method of tapping Earth's electric energy field.

One aspect of the present invention is an apparatus for capturing both atmospheric and telluric electric energies, comprising:

(1) an antenna/waveguide that is geometrically optimized, having a conducting surface;

(2) a primary coil wound with a conductor over a secondary coil, the coil being attached electrically to a driver operating in the LF radio band; and

(3) a secondary coil smaller in diameter than the primary coil having a greater length and a greater number of turns than the primary coil and having a first lead and a second lead, the secondary coil being positioned coaxially within the first coil and acting as a resonant step-up transformer winding, inductively coupled with the primary coil and an external capacitor connected in parallel with the secondary coil to provide a specific resonant frequency; or

(4) a secondary coil smaller in diameter than the primary coil, having a greater length and a greater number of turns than the primary coil and having a first lead and a second lead, the secondary coil being positioned coaxially within the first coil and acting as a resonant step-up transformer winding, inductively coupled with the primary coil and connected with the antenna/waveguide serving as a quasi-capacitive series element to provide a specific resonant frequency;

wherein the conducting surface of the antenna/waveguide is configured such that the secondary coil is connected near the point at which the electric field contacts the antenna/waveguide;

wherein the generator absorbs electromagnetic impulses from Earth's electric field; and wherein a high voltage sinusoidal waveform is generated in the secondary coil representing harvested atmospheric and telluric electrical energy and measurable on the leads of the secondary coil.

Preferably, the antenna/waveguide is of pyramidal shape. When the antenna/waveguide is of pyramidal shape, the secondary coil is preferably connected near or at the apex of the antenna/waveguide.

Another aspect of the present invention is an electric generator for harvesting the electric emissions of atomic oscillations comprising an oscillator. Typically, the oscillator operates in the LF or ELF bands.

Typically, in this aspect of the present invention, the generator comprises:

(1) a primary coil wound with a conductor over a secondary coil, the coil being connected electrically to a driver operating in the LF or ELF bands; and

(2) a secondary coil of smaller diameter than the primary coil having a greater length and a greater number of turns than the primary coil, the secondary coil being positioned coaxially within the first coil and acting as a resonant step-up transformer winding inductively coupled with the primary;

wherein said resonant step-up transformer's output voltage exceeds 500 V_{RMS};

wherein the electric generator attracts impulses from Earth's electric oscillations; and

wherein the attracted energy manifests as high voltage sinusoidal waveforms representing harvested electric energy of atomic oscillations in the secondary coil and measurable on leads of the secondary coil.

Another aspect of the present invention is a method of tapping Earth's electric energy field, comprising these steps:

(1) positioning an electric generator according to the present invention as described above, so that it is exposed to a source of atmospheric and telluric electric energy; and

(2) producing a high-voltage sinusoidal signal representing electrical energy harvested by the operation of the generator.

BRIEF DESCRIPTION OF THE DRAWINGS

The following invention will be better understood with reference to the specification, appended claims, and accompanying drawings, where:

FIG. **1** is a graph showing the formation of electric vortices across and around the pyramid.

FIG. **2** is a graph showing the circuit diagram of the pyramid generator.

FIG. **3** is a graph showing the power in the secondary coil vs. the power in the primary coil.

FIG. **4** is a graph showing the power in the secondary coil vs. the apex voltage on the pyramid.

FIG. **5** is a graph showing the circuit diagram of the pyramid generator with the measurement points.

DETAILED DESCRIPTION OF THE INVENTION

One aspect of the present invention is an electric generator for attracting the electric emissions of atomic oscillations by the use of high voltage, to harvest electric energy therefrom.

One embodiment of this aspect of the invention is an apparatus for capturing atmospheric and telluric electric energies by harvesting the energies of atomic oscillators, comprising:

(1) an antenna/waveguide that is geometrically optimized, having a conducting surface;

(2) a primary coil wound with an insulated conductor, the coil being connected to an AC or AC-DC driver; and

(3) a secondary coil smaller in diameter than the primary coil, having a greater length and a greater number of turns than the primary coil and having a first lead and a second lead, the secondary coil being positioned coaxially within the first coil and acting as a resonant step-up transformer winding,

inductively coupled with the first coil; and an external capacitor connected in parallel with the secondary coil to provide a specific resonant frequency; or

(4) a secondary coil smaller in diameter than the primary coil, having a greater length and a greater number of turns than the primary coil and having a first lead and a second lead, the secondary coil being positioned coaxially within the first coil and acting as a resonant step-up transformer winding, inductively coupled with the first coil and connected with the antenna/waveguide serving as a quasi-capacitive series element to provide a specific resonant frequency, with the secondary coil attached near the point at which the electric field contacts the antenna/waveguide;

wherein the generator absorbs electromagnetic impulses from Earth's electric field; and

wherein a high-voltage, sinusoidal waveform is generated in the secondary coil representing harvested atmospheric and telluric electrical energy and measurable on leads of the secondary coil.

Preferably, the antenna/waveguide is of pyramidal shape. However, any geometric shape can be used for the antenna/waveguide. When it is of pyramidal shape, the secondary coil is preferably connected near or at the apex of the antenna/waveguide. The shape and size of the antenna/waveguide can be optimized depending on the intended use of the generator. Preferably, the antenna/waveguide exhibits ratios of pi and the Fibonacci number (phi).

Typically, the generator further comprises an insulated base on which the antenna/waveguide is placed. The size and shape of the insulated base can also be optimized, depending on the intended use of the generator. The second lead of the secondary coil is typically connected to earth ground.

Typically, the output of the secondary coil is harvested. This can be done by connecting to a rectifier-capacitor-load resistance, or by a third coil inductively coupled with the secondary coil. In one alternative, the output of the secondary coil is coupled to a load for drawing power from the generator. The optimal circuit can be selected by one of ordinary skill in the art to optimize power extraction. The load draws power from the generator. The load can be a resistor, a rectifier or a storage capacitor powering a DC load. Typically, the antenna/waveguide is at a high voltage during the operation of the generator. Typically, the antenna/waveguide voltage is greater than 500 V_{RMS}. The antenna/waveguide can be connected to an oscillator. The oscillator can comprise a resonant step-up transformer.

Typically, the antenna/waveguide is in resonance with the secondary coil. Typically, the primary coil is inductively coupled to the secondary coil.

Typically, the antenna/waveguide is positioned in a generally north-south direction to tap atmospheric and telluric electric energy. In this arrangement, when the antenna/waveguide is of pyramidal shape, the height of the pyramid can be from about 0.5 m to about 1000 m, more typically, from about 0.50 m to about 150 m. The optimal pyramid size is a function of the power requirements. However, a pyramid can be built even 1 km in height. Typically, the base surface area of the pyramid ranges from about 0.25 m^2 to about 1,000,000 m^2; more typically, from about 0.25 m^2 to about 25,000 m^2. Naturally, other heights and base surface areas can be used for particular applications. The numbers of sides can also vary. When the pyramid is small (e.g., 6-feet base length described in this application), there is an insufficient atmospheric potential on its apex to trigger the attraction of power. In such event, an AC or AC-DC driver is necessary to bring the pyramid to the electric potential necessary. A suitable voltage is typically greater than 500 V_{RMS}.

In one alternative, the primary coil is wound with a conductor over the secondary coil, the primary coil being connected electrically to a driver operating in the LF or ELF bands.

Another aspect of the present invention is an electric generator for harvesting the electric emissions of atomic oscillations comprising an oscillator. Typically, the oscillator operates in the LF or ELF bands.

Typically, in this aspect of the present invention, the generator comprises:

(1) a primary coil wound with a conductor over a secondary coil, the coil being connected electrically to a driver operating in the LF or ELF bands; and

(2) a secondary coil of smaller diameter than the primary coil having a greater length and a greater number of turns than the primary coil, the secondary coil being positioned coaxially within the first coil and acting as a resonant step-up transformer winding inductively coupled with the primary;

wherein said resonant step-up transformer's output voltage exceeds 500 V_{RMS};

wherein the electric generator attracts impulses from Earth's electric oscillations; and

wherein the attracted energy manifests as high voltage sinusoidal waveforms representing harvested electric energy of atomic oscillations in the secondary coil and measurable on leads of the secondary coil.

In this alternative, the output of the secondary coil can be coupled to a load for drawing power from the generator.

Another aspect of the invention is a method of tapping Earth's electric energy based on the following concepts:

(1) utilizing a pyramidal antenna/waveguide designed based on the ratios of pi and phi;

(2) using the antenna/waveguide to absorb and focus specific frequencies of Earth's electric field;

(3) positioning a resonant coil system connected to said antenna/waveguide near or at its apex according to the present invention; and

(4) generating a high-voltage sinusoidal signal, representing harvested atmospheric and telluric electrical energy, by the operation of the coil system.

Typically, in this method, the method comprises the steps of:

(1) positioning an electric generator according to the present invention as described above such that it is exposed to Earth's electric oscillations; and

(2) generating a high voltage sinusoidal signal representing harvested electric energy of atomic oscillators by the operation of the generator.

Typically, the harvested electric energy can be fed into a power grid for distribution, but smaller units capable of distributed power generation or for use as stand-alone generators are also feasible by the concept of this invention.

The invention is described by the following Example. This Example is included for illustrative purposes only and is not intended to limit the invention.

EXAMPLE

We have introduced a new theory of space, energy and matter that predicted that electromagnetic interaction propagates through a carrier medium called the space lattice that is made up of pulsating, phi-based spiral vortices (STAR), the excitation of which generates propagating sinusoidal lines of force across the space lattice recorded as electromagnetic waves by our instruments [1,2]. We have also predicted that natural pressure gradients exist within the space lattice that can be used for power generation by inserting a capacitor into

such gradient. Furthermore, we proposed that a pyramid-shaped capacitor is an optimally shaped device for tapping the energy gradient of the space lattice that manifests in the form of an electrical potential gradient in Earth's atmosphere. This was demonstrated subsequently [3-5]. We also found that the pyramid-shaped capacitor design should be based on ratios of pi and phi [5] because electrical energy propagates along a phi-based spiral [6].

We suggested that elemental particles are composed of STAR oscillators that make up the space lattice by electromagnetic compression of its elemental cubes into pulsating conical/vortexual subunits that form the basis for all particles of matter [1,2]. We proposed that atomic and subatomic oscillators could vibrate in a very wide frequency range from sub-acoustic to extremely high EM frequencies [1,2]. This does not mean that material bodies can take or maintain a physical form at any energy level, but this allows the recycling of atoms into the space lattice as part of their natural evolution [2,6].

Atomic oscillators are constantly in motion, and such motion is electric because all motion and energy is fundamentally electric [2,6]. It is known that atomic bodies constantly exchange electric energy. Such energy flow can be harvested when the spiral physical nature of electric waves is recognized. Russell observed that energy always moves during its generative cycle in spirals towards the higher potential [7]; therefore, we reasoned that an "attractor" of high electric potential must be provided to pull in the random electromagnetic emissions of atomic oscillators. The "attractor" must function as a phi-based antenna/waveguide to focus the phi-based electric emissions of atomic bodies into the apex of a vortex, the same method Nature uses for power multiplication [6,7]. Therefore, a phi-based pyramidal antenna/waveguide must be at a high voltage in order to perform its attractor function.

As all material manifestations are tonal [8], acoustic vibrations are always generated during the oscillations of atomic bodies, even though they are inaudible most of the time. Sometimes, however, they are detected; one such example is Earth's hum [9-11]. Earth's solid mass and its atmosphere represent a coupled resonant system, and is therefore our expanded target power source. Acoustic waves are also electrical [8] and can be harvested. To achieve this goal, the geometrically optimized pyramidal antenna/waveguide must be connected to an oscillator that operates at a high voltage and is tuned to a suitably selected frequency.

The appropriate resonant frequency is dictated by practical considerations. Atomic oscillators can vibrate in a very wide frequency range [1,2,6-8] but short wavelength radiations are readily re-absorbed by atoms and are rapidly attenuated; therefore, long wavelength electromagnetic emissions must be targeted. The operation of the pyramid generator is feasible in the ELF to the LF range. As electric radiation propagates in a vortex [2,6-8], the emitted electric vortex over the pyramidal antenna (FIG. **1**) increases its "size," and so it is capable of funneling atmospheric electromagnetic emissions of the same frequency back into the antenna/receiver. Thus, the pyramid electric generator could capture the energy emitted by both telluric and atmospheric atomic oscillators. We have tested these assumptions and demonstrated the basic principles of an electric generator.

Methods and Results

In our previous papers, we reported that a pyramid-shaped capacitor/antenna converts atmospheric electrostatic discharge impulses (ESD) into a periodic high-frequency signal that can be detected in an insulated coil placed in proximity of the capacitor [3,4]. Here, we report on further developments including a new design for the resonant coil system and an expanded range of energy sources targeted. A Tektronix TPS 2024 digital oscilloscope was used for signal acquisition and analysis, and Tektronix A503 current amplifiers were used with the Tektronix A6302 and A6303 probes for current measurement. High voltage was measured using a Tektronix P6015 probe. An ENI-1140LA amplifier was used to activate the primary coil of the resonant coil system at the selected frequency.

For the experiments, we used a geometrically optimized pyramid-shaped antenna/waveguide [3-5]. The pyramid expressed ratios of pi and phi and was approximately a 1:125 scaled down replica of the Great Pyramid of Giza (GPF), 6 feet base length. The pyramid was built of a wooden frame and covered with triangular copper sheets of 0.66 mm thickness on its sides that were electrically connected. It was placed on an insulating base and positioned in the general North-South direction.

The secondary coil (coil **2**) was wound with a 20 AWG insulated magnet wire with a monofilament nylon spacer (0.06 mm diameter) between the turns on a fiberglass cylindrical coil form, and connected to the conducting surface of the pyramid near its apex. Thus, the secondary coil was connected with the pyramidal antenna/waveguide as a quasi-capacitive series element to provide a specific resonant frequency with coupling to the surrounding electromagnetic environment. The other lead of coil **2** was grounded (FIG. **2**). The purpose of the monofilament spacer was to reduce inter-winding capacitance in coil **2** by increasing distance between wire turns of the coil.

A primary coil of larger diameter (coil **1**) was wound on or near the lower cylindrical volume of coil **2** with the lead connected to earth ground, and served as a driver coil inductively coupled with the secondary (coil **2**). The secondary was isolated from the primary by layers of silicon rubber and foam. The two coils make a resonant step-up transformer, the parameters of which are shown in Table 1.

TABLE 1

Physical and Electrical Parameters of the Resonant Transformer	
Secondary turns of wire	840 turns
Height	0.85 m
Wire diameter	0.00081 m
Primary turns of wire	5 + 9/10 turns
Height	0.21 m
Wire diameter	¼" O.D. copper pipe with .030" wall thickness
Primary	
Inductance	98 μH
Resistance	0.118 ohms
Secondary	
Inductance	24.16 mH
Resistance	24.42 ohms
Capacitance	1040 nF
Winding ratio	1:143
Mutual inductance	6.13 mH

In the experiment; the controlled variable was the voltage, which was increased in steps until the maximum voltage in the secondary (permitted by circuit components and test equipment) was achieved for the given resonant frequency. The objective was to "drive the atmosphere" by radiating a high voltage (~20 kV p-p), LF (40-120 kHz) signal developed by the high ratio step-up transformer and fed by a powerful signal generator at a resonant frequency either with an L-C resonant secondary coil, or a resonance determined by the

pyramid as a quasi-capacitive series element connected to the secondary coil of the transformer and radiating to the local atmosphere. The data are shown in Table 2.

The experimental data are shown in Table 2. The current readings were also confirmed by using "current sensing" resistors (not shown). A apparent power gain of nearly 100-fold was achieved in the secondary coil relative to input power in the primary coil, and a linear increase of power in the secondary coil with the increase of input power into the primary coil (FIG. **3**). The power in the secondary coil exponentially increases with the pyramid apex voltage (FIG. **4**).

TABLE 2

Power Measurements in the Pyramid-Resonant Coil System

Primary								
Frequency (kHz)	83.00							
$V_{P\ RMS}$	3.97	6.38	9.86	20.3	26.7	33.8	39	40.8
$I_{P\ RMS}$ (mA)	87.6	222	300	792	1117	1389	1541	1838
$I_{P\ angle\ with\ respect\ to}$ V_P	18°	24°	14°	22°	23°	21°	20°	28°
Total power (VA)	0.35	1.42	2.95	16.02	29.70	46.77	59.95	74.75
True power (W)	0.33	1.30	2.87	14.85	27.35	43.66	56.34	66.01
Secondary								
$V_{S\ RMS}$	341	872	1150	3540	4670	6220	7140	7710
$I_{A\ RMS}$ (mA)	62.2	148	193	438	579	728	834	919
$I_{A\ angle\ with\ respect\ to}$ V_S	42°	43°	44°	52°	52°	54°	53°	52°
Total power (VA)	21.2	129.5	222.8	1552	2707.8	4530.2	5957.5	7087.3
True power (W)	15.7	94.7	160.3	956	1668.1	2664.5	3587.6	4366
Power sec/prim	61.1	91.4	75.4	96.9	91.2	96.9	99.4	94.8

A load may be connected to coil **2** to draw power from the system. The load may also be connected via a tertiary coil inductively coupled to the secondary coil. The load may be a resistor, a rectifier or storage capacitor powering a DC load.

A graphic representation of the test system is shown in FIG. **5**. The pyramidal antenna/waveguide, placed on an insulating base, is coupled to the surrounding electromagnetic environment and serves as an antenna/waveguide for the concentration of atmospheric and telluric electromagnetic oscillations at resonance frequency. As the flow of electric energy is always balanced [6], two vortices may cross the pyramidal antenna: one from the direction of the ground concentrating into its apex, and another one from its apex propagating into the atmosphere (FIG. **1**). The atmospheric electric vortex possibly acts as an ionic antenna pulling in EM radiations from a large atmospheric domain. In FIG. **5**, the antenna/waveguide **10** is attached to a coil **12**. To drive the system, a RF generator **14** is connected to a signal amplifier **16**. The signal amplifier **16** is also connected to an uninterruptible power supply (UPS) **18** through a sinewave generator **20** and a frequency counter **22**. Outputs from the sinewave generator **20** and frequency counter **22** are also connected to a first current amplifier **24**. The output from the antenna/waveguide **10** and coil **12** are also connected to a second current amplifier **26**. The sinewave generator **20**, frequency counter **22**, first current amplifier **24**, and second current amplifier **26** are connected to a digital oscilloscope **28**. Outputs from the antenna/waveguide **10** and coil **12** are also connected to the digital oscilloscope **28**. A laptop computer **30** controls the sinewave generator **20** and frequency counter **22**.

The pyramid's apex is attached to a coil of high turn number (FIGS. **2** & **4**). This secondary coil wound on a nonconductive coil form serves as a step-up transformer, and forms a resonant circuit with the pyramid that acts as a quasi-capacitive series element. The secondary coil is activated by a signal from an RF generator via a primary coil of a few turn numbers inductively coupled to coil **2**. The measurement points are also indicated, displaying the positions of voltage and current probes. The data are captured by a digital oscilloscope and recorded on a laptop computer.

Discussion

This invention demonstrates a novel approach to harvest Earth's electric energy. The masses of Earth and its atmosphere represent a coupled resonant system that is continually electrified by solar radiation. We have found that a pyramidal antenna designed based on the ratios of phi and pi is optimal for the capture of atmospheric electrostatic discharge (ESD) impulses [3-5]. Atmospheric ESD is a product of solar radiation and is a wide bandwidth phenomenon. The pyramid as a wideband, non-resonant antenna is uniquely adapted to harvest the energy of atmospheric ESD.

This invention also points out an additional energizing mechanism at work during the operation of the pyramid electric generator. The observation is derived from our theory on energy, matter and space [1,2] as well as that of Russell [6,7]. Both Russell and we observed that spiral motion is a fundamental action of matter and that the vortex is the mechanism of power multiplication in Nature. A vortex concentrates power into its apex where the highest velocity of motion, the highest pressure and the highest electric potential resides [1,2,6,7]. As electricity propagates along a pulsating phi-based spiral [6,7], a phi-based antenna/waveguide is suitable to focus its energy into the apex of a vortex inside the antenna. A phi-based pyramid is optimal for this purpose.

As atomic bodies can oscillate in a very wide frequency range [1,2,6-8], a pyramidal antenna/waveguide coupled to an oscillator that is tuned to a suitable frequency can focus the "electric noise" from Earth's atomic oscillators into the apex of the pyramid at a high voltage. Russell observed that energy moves towards the higher potential during its generative cycle [7]; therefore, it is essential that the pyramidal antenna be at a high potential. Our data corroborated this assumption.

To select a suitable frequency range, one can begin with the observation that all material manifestations are tonal [8], and that acoustic frequencies are always generated during the oscillations of atomic bodies even though they remain inaudible most of the time. Acoustic waves are also electric [8] and therefore Earth's enormous mass and its atmosphere represent a coupled resonant system that offer a vast source of power.

For practical reasons on our small pyramid, we have chosen a frequency above the audio range but below the radio frequency spectrum; our antenna was made to radiate at the

target wavelength. The wavelength of the 50-120 kHz range is 6 km to 25 km, thus allowing energy to be harvested over a large atmospheric domain. As electrical energy propagates in a vortex [6,7], the emitted electric vortex (ionic antenna) over the pyramidal antenna/waveguide increases its "size" and enables it to funnel the same frequency atmospheric electromagnetic radiations back into the antenna. Thus, the pyramid electric generator captures at the selected frequency the energy emitted by Earth's atomic oscillators.

The presence of an electric (ionic) vortex was demonstrated by radar testing of the space over a 44 m tall fiberglass pyramid located near Moscow [12]. The Russians found that the large ionized column of air over the area of the vertical axis of the pyramid had a width of about 500 m and reached an altitude of 2 km. It is remarkable that this effect was induced by a nonconductive pyramid surface demonstrating a significant degree of atmospheric ionization even under fair weather conditions. Thus, a suitably sized large or an electrically activated small pyramid should open a low impedance path to higher elevations of relatively conductive atmospheric domains.

In conclusion, the total power that can be extracted from Earth's atomic oscillators must be extremely large, likely far exceeding current global electric generation capacity. In our experiment, we obtained over 7000 VA power at about 20 kV p-p pyramid voltage using a 6 feet base length pyramid. This power is nearly 100 times greater than the power necessary to drive the pyramid to the required operating voltage. By constructing the pyramid generator from dedicated high voltage components and using higher drive voltages, a significant increase in power output is envisioned. The power extraction will also be enhanced by further optimization of the designs of both the pyramid and the coil system.

The power output will also increase by employing larger pyramid structures and coils. As voltage is the primary factor in attracting power into the system, the necessary voltage can be provided by the vertical atmospheric potential on a tall pyramid. Since the atmospheric vertical potential gradient could go as high as 1200 V/m near Earth's surface under fair weather conditions [13], a pyramid height of 80-150 m seems sufficient to provide the apex voltage for a self-sustaining power generator. As the pyramid scales up volumetrically, a power generator pyramid of the size range of the GPG could likely have an output in the hundreds to thousands of megawatts range. Groups of several pyramid electric generators could be placed within specific geographical areas, thus combining their energy harvesting capacity.

References

The following references are specifically applicable to the Example and are incorporated herein by reference; these references are referenced in the Example by the reference numbers assigned to them.

[1] Grandics, P. 2002, "The genesis of electromagnetic and gravitational forces." *J. New Energy,* 6, (3) 33-45.

[2] Grandics, P. 2007, "The genesis of fundamental forces acting at a distance and some practical derivations." *Infinite Energy,* 12, (71) 13-24.

[3] Grandics, P. 2000, "A method to capture atmospheric electrostatic energy", in *Proceedings of IEJ-ESA Joint Symposium on Electrostatics*, Kyoto University, Kyoto, Japan, pp. 355-361.

[4] Grandics, P. 2006, "A DC to RF converter for the capture of atmospheric electrostatic energy", in *Proceedings of the* 5_{th} *Conference of the Societe Francaise D'Electrostatique, SFE* 2006, Grenoble, France pp. 279-284.

[5] Grandics, P. 2007, "Pyramidal Electric Transducer: A DC to RF Converter for the Capture of Atmospheric Electrostatic Energy." *Infinite Energy,* 13, (73) 20-27.

[6] Russell, W. 1947, in *The Secret of Light,* 3_{rd} ed. University of Science and Philosophy, Waynesboro, Va., pp. 218-288.

[7] Russell, W. 1957, in *Atomic Suicide?* 2_{nd} ed. University of Science and Philosophy, Waynesboro, Va., pp. 129-153.

[8] Russell, W. 1926, in *The Universal One*, University of Science and Philosophy, Waynesboro, Va., pp. 247-249.

[9] Nishida, K., Kobayashi, N. and Fukao, Y. 2000, "Resonant oscillations between the solid earth and the atmosphere", *Science* 287, (5461), 2244-2246.

[10] Tanimoto, T., Um, J., Nishida, K., and Kobayashi, N. 1998, "Earth's continuous oscillations observed on seismically quiet days", *Geophys. Res. Lett.* 25, 1553-1556.

[11] Tanimoto, T. 2001, "Continuous free oscillations: Atmosphere-solid earth coupling". *Ann. Rev. Earth Planet Sci.* 29, 563-584.

[12] http://www.pyramidoflife.com/eng/tests_experiments.html.

[13] Marshall, T. C., Rust, W. D., Stolzenburg, M., Roeder, W. P., and Kriebel, P. R. 1999, "A study of enhanced fair-weather electric fields occurring soon after sunrise". *J. Geophys. Res.* 104, 24,455-24, 469.

ADVANTAGES OF THE INVENTION

The present invention provides a new method of tapping Earth's electric energy and providing usable power that can be fed into a power grid or supplied by stand-alone power generators. It does so without the need for mechanical energy or the consumption of fossil fuel or the long-term risks associated with power generated by nuclear fission, including the risk of diversion of fissionable material to terrorist aims or the risk posed by the required long-term storage of spent nuclear fuel. Devices according to the present invention can operate virtually continuously with little to no maintenance.

With respect to ranges of values, the invention encompasses each intervening value between the upper and lower limits of the range to at least a tenth of the lower limit's unit, unless the context clearly indicates otherwise. Moreover, the invention encompasses any other stated intervening values and ranges including either or both of the upper and lower limits of the range, unless specifically excluded from the stated range.

Unless defined otherwise, the meanings of all technical and scientific terms used herein are those commonly understood by one of ordinary skill in the art to which this invention belongs. One of ordinary skill in the art will also appreciate that any methods and materials similar or equivalent to those described herein can also be used to practice or test this invention.

The publications and patents discussed herein are provided solely for their disclosure prior to the filing date of the present application. Nothing herein is to be construed as an admission that the present invention is not entitled to antedate such publication by virtue of prior invention. Further the dates of publication provided may be different from the actual publication dates which may need to be independently confirmed.

All the publications cited are incorporated herein by reference in their entireties, including all published patents, patent applications, and literature references, as well as those publications that have been incorporated in those published documents. However, to the extent that any publication incorporated herein by reference refers to information to be

published, applicants do not admit that any such information published after the filing date of this application is to be considered prior art.

As used in this specification and in the appended claims, the singular forms include the plural forms. For example the terms "a," "an," and "the" include plural references unless the content clearly dictates otherwise. Additionally, the term "at least" preceding a series of elements is to be understood as referring to every element in the series. The inventions illustratively described herein can suitably be practiced in the absence of any element or elements, limitation or limitations, not specifically disclosed herein. Thus, for example, the terms "comprising," "including," "containing," etc. shall be read expansively and without limitation. Additionally, the terms and expressions employed herein have been used as terms of description and not of limitation, and there is no intention in the use of such terms and expressions of excluding any equivalents of the future shown and described or any portion thereof, and it is recognized that various modifications are possible within the scope of the invention claimed. Thus, it should be understood that although the present invention has been specifically disclosed by preferred embodiments and optional features, modification and variation of the inventions herein disclosed can be resorted to by those skilled in the art, and that such modifications and variations are considered to be within the scope of the inventions disclosed herein. The inventions have been described broadly and generically herein. Each of the narrower species and subgeneric groupings falling within the scope of the generic disclosure also form part of these inventions. This includes the generic description of each invention with a proviso or negative limitation removing any subject matter from the genus, regardless of whether or not the excised materials specifically resided therein. In addition, where features or aspects of an invention are described in terms of the Markush group, those schooled in the art will recognize that the invention is also thereby described in terms of any individual member or subgroup of members of the Markush group. It is also to be understood that the above description is intended to be illustrative and not restrictive. Many embodiments will be apparent to those of in the art upon reviewing the above description. The scope of the invention should therefore, be determined not with reference to the above description, but should instead be determined with reference to the appended claims, along with the full scope of equivalents to which such claims are entitled. Those skilled in the art will recognize, or will be able to ascertain using no more than routine experimentation, many equivalents to the specific embodiments of the invention described. Such equivalents are intended to be encompassed by the following claims.

I claim:

1. An electric generator for harvesting the energies of atomic oscillators comprising:

(a) an antenna/waveguide that is geometrically optimized having a conducting surface;

(b) a primary coil wound with an insulated conductor over a secondary coil, the coil being connected to an AC or AC-DC driver; and

(c) a secondary coil of smaller diameter than the primary coil having a greater length and a greater number of turns than the primary coil and having a first lead and a second lead, the secondary coil being positioned coaxially within the first coil and acting as a resonant step-up transformer winding inductively coupled with the primary and an external capacitor connected in parallel with the secondary coil to provide a specific resonant frequency; or

(d) a secondary coil of smaller diameter than the primary coil having a greater length and a greater number of turns than the primary coil and having a first lead and a second lead, the secondary coil being positioned coaxially within the first coil and acting as a resonant step-up transformer winding inductively coupled with the primary and connected with the antenna/waveguide serving as a quasi-capacitive series element to provide a specific resonant frequency;

wherein the conducting surface of the antenna/waveguide is configured such that the secondary coil is attached near the point at which the electric field contacts the antenna/waveguide;

wherein the generator absorbs impulses from Earth's electric oscillations; and wherein the attracted energy manifests as high voltage sinusoidal waveforms in the secondary coil, representing harvested atmospheric and telluric electrical energy and measurable on the leads of the secondary coil.

2. The electric generator of claim **1**, wherein a suitable voltage is greater than 500 V_{RMS}.

3. The electric generator of claim **1**, wherein the antenna/waveguide is designed based on ratios of pi and phi.

4. The electric generator of claim **1**, wherein the antenna/waveguide is of pyramidal shape.

5. The electric generator of claim **1**, wherein the antenna/waveguide is placed on an insulated base.

6. The electric generator of claim **1**, wherein the antenna/waveguide is at a high voltage during the operation of the generator.

7. The electric generator of claim **6**, wherein the antenna/waveguide voltage is greater than 500 V_{RMS}.

8. The electric generator of claim **1**, wherein the antenna/waveguide is connected to an oscillator.

9. The electric generator of claim **8**, wherein the oscillator comprises a resonant step-up transformer.

10. The electric generator of claim **4**, wherein the secondary coil of the transformer is connected near the apex of the antenna/waveguide.

11. The electric generator of claim **1** wherein the second lead of the secondary coil is connected to earth ground.

12. The electric generator of claim **1** wherein the primary coil is wound with a conductor over the secondary coil, the primary coil being connected electrically to a driver operating in the LF or ELF bands.

13. The electric generator of claim **1**, wherein the primary coil is inductively coupled to the secondary coil.

14. An electric generator for harvesting the electric emissions of atomic oscillations of claim **1** comprising an oscillator.

15. The electric generator of claim **14**, wherein said oscillator operates in the LF or ELF bands.

16. The electric generator of claim **14** wherein the generator comprises:

(a) a primary coil wound with a conductor over a secondary coil, the coil being connected electrically to a driver operating in the LF or ELF bands; and

(b) a secondary coil of smaller diameter than the primary coil having a greater length and a greater number of turns than the primary coil, the secondary coil being positioned coaxially within the first coil and acting as a resonant step-up transformer winding inductively coupled with the primary; wherein said resonant step-up transformer's output voltage exceeds 500V_{RMS};

wherein the electric generator attracts impulses from Earth's electric oscillations; and

wherein the attracted energy manifests as high voltage sinusoidal waveforms representing harvested electric energy of atomic oscillations in the secondary coil and measurable on leads of the secondary coil.

17. The electric generator of claim **4**, wherein the height of the pyramidal electric generator is from about 0.50 m to about 1000 m.

18. The electric generator of claim **4**, wherein the base surface area of the pyramid is from about 0.25 m^2 to about 1,000,000 m^2.

19. The electric generator of claim **1**, wherein the generator is positioned in a generally north-south direction.

* * * * *

US006974110B2

(12) **United States Patent**
Grandics

(10) **Patent No.: US 6,974,110 B2**
(45) **Date of Patent: Dec. 13, 2005**

(54) **METHOD AND APPARATUS FOR CONVERTING ELECTROSTATIC POTENTIAL ENERGY**

(76) Inventor: **Peter Grandics**, 5922 Farnsworth Ct., Carlsbad, CA (US) 90720

(*) Notice: Subject to any disclaimer, the term of this patent is extended or adjusted under 35 U.S.C. 154(b) by 74 days.

(21) Appl. No.: **10/331,007**

(22) Filed: **Dec. 27, 2002**

(65) **Prior Publication Data**

US 2004/0011925 A1 Jan. 22, 2004

Related U.S. Application Data

(63) Continuation-in-part of application No. 09/732,110, filed on Dec. 7, 2000, now abandoned.
(60) Provisional application No. 60/169,378, filed on Dec. 7, 1999.

(51) **Int. Cl.**[7] **F03H 5/00**
(52) **U.S. Cl.** **244/172**; 244/62
(58) **Field of Search** ..... 244/172, 158 R, 244/169, 62, 53 R, 51

(56) **References Cited**

U.S. PATENT DOCUMENTS

3,013,201	A	12/1961	Goldie
4,127,804	A	11/1978	Breaux
4,151,409	A	4/1979	O'Hare
4,595,852	A	6/1986	Gundlach
5,052,638	A	10/1991	Minovitch
5,305,974	A	4/1994	Willis
5,813,217	A	9/1998	Beall
5,947,421	A	9/1999	Beattie et al.
5,966,986	A	10/1999	Laul
6,089,511	A	7/2000	Rasmusson
6,193,194	B1	2/2001	Minovitch

OTHER PUBLICATIONS

DC Circuits vol. II, Circuit Analysis Methods, 1979.*
Engineering Circuit Analysis, Third Edition, 1978.*
R.V. Anderson, *in Electrical Processes in Atmospheres*, (H. Holezalek & R. Reiter, eds, Steinkopff, Darmstadt, 1977), pp. 87–99.
R.G. Roble & I. Tzur, *in The Earth's Electrical Environment, Studies in Geophysics* (National Academy Press, Washington, D.C. 1986), pp. 206–231.
R.P. Feynman, *Lectures on Physics* (Addison–Wesley, Inc., Palo Alto, California, 1964), v.2, ch. 9, pp. 1–11.
W. Gringel, J.M. Rosen, & D.I. Hofmann, *in The Earth's Electrical Environment, Studies in Geophysics* (National Academy Press, Washington, D.C. 1986), pp. 166–182.
R.H. Holzworth et al., "Direct Measurement of Lower Atmospheric Vertical Potential Differences," *Geophys. Res. Lett.* 8: 783–786 (1981).
R.H. Holzworth, "Hy–wire Measurement of Atmospheric Potential," *J. Geophys. Res.* 89: 1395–1401 (1984).
R.E. Orville, *in The Earth's Electrical Environment, Studies in Geophysics* (National Academy Press, Washington, D.C. 1986), pp. 23–29.
R.B. Standler & W.P. Winn, "Effects of Coronae on Electrid Fields Beneath Thunderstorms," *Quart. J.R. Met. Soc.* 105: 285–302 (1979).

* cited by examiner

Primary Examiner—Peter M. Poon
Assistant Examiner—Timothy D. Collins
(74) *Attorney, Agent, or Firm*—Catalyst Law Group, APC; Michael B. Faber, Esq.

(57) **ABSTRACT**

A new method is described to produce useful electrical energy from DC electrostatic fields using a pyramid-shaped capacitor. The system uses no moving parts and no mechanical energy is introduced. Also, when a pyramid-shaped electrode is charged with DC high voltage, a propulsive force is generated. This will allow the manufacture of vehicles capable of levitation and flight.

13 Claims, 3 Drawing Sheets

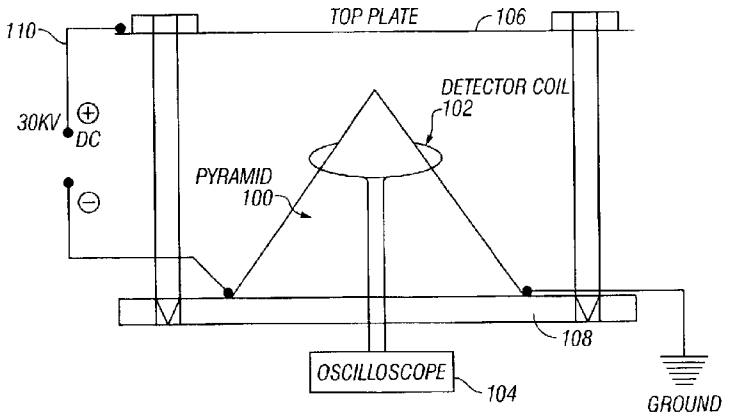

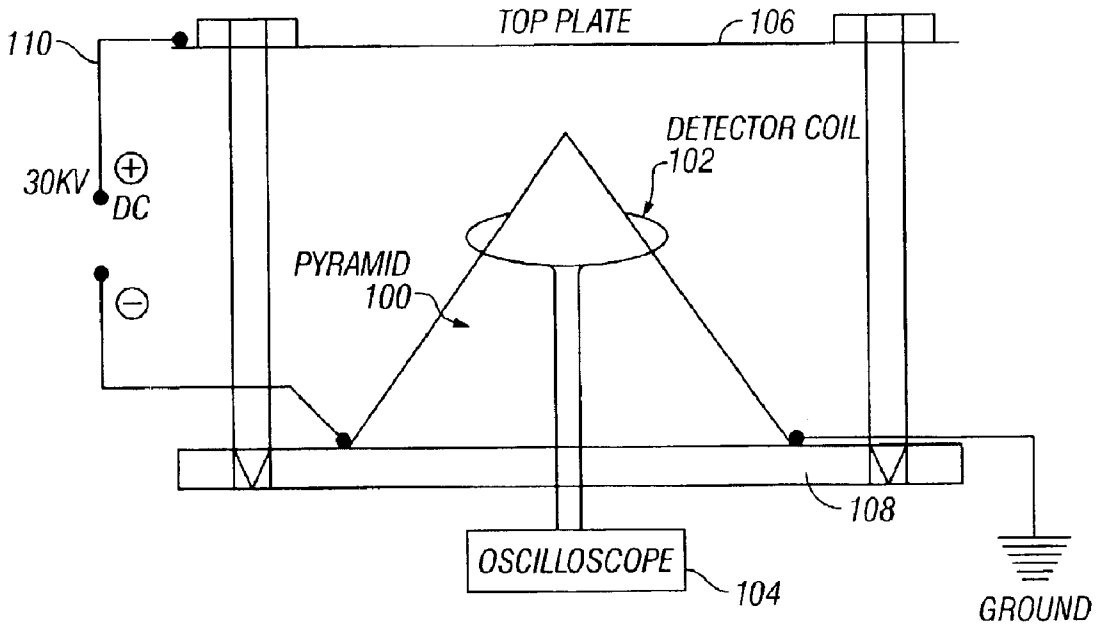
TOP PLATE
106
110
DETECTOR COIL
102
30KV
DC
PYRAMID
100
108
OSCILLOSCOPE
104
GROUND

FIG. 1

FIG. 2

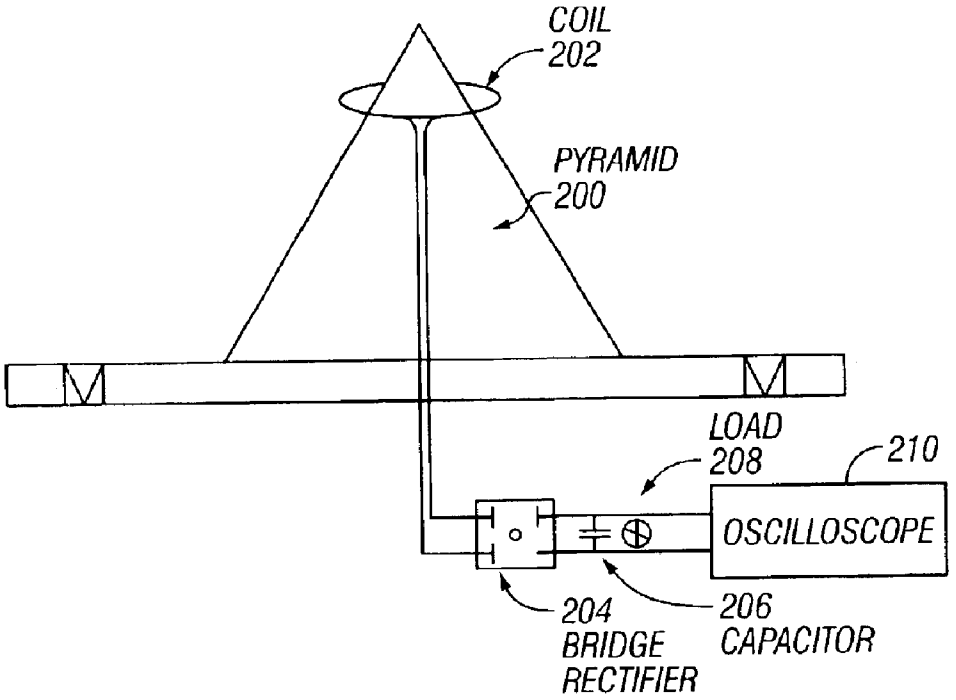
COIL
202
PYRAMID
200
LOAD
208
210
OSCILLOSCOPE
204
BRIDGE
RECTIFIER
206
CAPACITOR

FIG. 3

METHOD AND APPARATUS FOR CONVERTING ELECTROSTATIC POTENTIAL ENERGY

CROSS-REFERENCES

This application is a continuation-in-part of application Ser. No. 09/732,110, filed Dec. 7, 2000, now abandoned, entitled "Method and Apparatus for Converting Electrostatic Potential Energy," by Peter Grandics, which claims the benefit of Provisional application Ser. No. 60/169,378, filed Dec. 7, 1999, which is incorporated herein in its entirety by this reference.

BACKGROUND OF THE INVENTION

This invention relates to the generation of electrical power by drawing energy from an electrostatic potential field. The conversion of DC electrostatic energy into useable electrical energy by electrostatic generators is already described in the prior art as disclosed in U.S. Pat. Nos. 3,013,201, 4,127,804, 4,151,409 and 4,595,852. Generally, such prior art electrostatic generators utilize mechanical energy to separate charges and thus contain complex mechanics that is difficult to scale up for a high output system. Therefore, the present invention aims to provide an electrostatic generator in which electrical power is derived exclusively from the energy of DC electrostatic fields without the input of mechanical power.

SUMMARY OF THE INVENTION

Pursuant to this invention a simple technique is described to convert the energy of a DC electrostatic field into an alternating current by wrapping a coil around the pyramid. The resulting AC current can be rectified and used for practical purposes. A pyramid-shaped capacitor can also be used in an inverse mode of operation for the generation of propulsive force.

Accordingly, one embodiment of the present invention is a method for converting DC electrostatic energy into usable electrical energy, the method comprising the steps of:

(1) providing a capacitor of pyramidal shape;

(2) placing an insulated coil on the surface of the capacitor, the coil having leads;

(3) attaching a rectifier to the leads of the coil, the rectifier having leads; and

(4) attaching a capacitor or a battery to the leads of the rectifier so that DC electrostatic energy is converted into usable electrical energy.

Another embodiment of the present invention comprises a method for converting DC electrostatic energy into propulsive force comprising the steps of:

(1) providing a first capacitor of pyramidal shape;

(2) placing an insulated conductive tip on the point of the capacitor;

(3) providing a static generator for charging the capacitor, and

(4) attaching 3 ball-shaped smaller capacitors to the bottom of the pyramidal-shaped capacitor; and

(5) providing means to extend or retract the ball-shaped capacitors from the pyramidal-shaped capacitor, so DC electrostatic energy is converted into propulsive force by the action of the first capacitor and the 3 ball-shaped smaller capacitors provide directional control.

BRIEF DESCRIPTION OF THE DRAWINGS

The following invention will become better understood with reference to the specification, appended claims, and accompanying drawings, where:

FIG. **1** is a diagram demonstrating the pyramid experimental setup;

FIG. **2** is the pyramid coil signal as detected by oscilloscope; and

FIG. **3** is a diagram demonstrating power transmission on the pyramid setup.

DESCRIPTION OF THE PREFERRED EMBODIMENT

Pursuant to this invention, a novel method is described to convert DC electrostatic energy into an AC current that can be rectified and used for practical purposes. The shape of the capacitor and the body of such device is designed to convert the DC electrostatic energy into the AC current for maximal effect.

A pyramidal or conical shape is preferred for one of the capacitor electrodes (FIG. **1**). In FIG. **1**, a detector coil **102** is provided that is in turn connected to an oscilloscope **104**. The coil surrounds the metallic pyramid **100**. In the experimental setup shown, the field is established between a top plate **106** and the pyramid **100** by using a ground **108** connected to a source of DC electrical energy **110**. When a high voltage DC field (30 kV) is established on such capacitor, a regularly repeating, clocklike signal is detected in the coil placed on the pyramid's surface (FIG. **2**). This is an unexpected observation as corona discharges are irregular by nature.

The alternating current from the coil can be rectified and used for practical purposes. If a suitable DC electrostatic field could be found in nature, this principle would be useful in tapping the energy of such field. To test for this possibility, I have measured the rectified signal from the coil without an external power source. The rectified coil output was collected in a capacitor and voltage measured in 1 h intervals. The voltage measured is significantly higher if the capacitor electrode is pyramid-shaped as opposed to a box-shaped electrode of the same height and volume. When the pyramid is placed into a Faraday cage, the signal is abolished (see details in the Example). The data has demonstrated in principle that with this experimental setup electrical energy can be extracted from the Earth's electrostatic field. The Earth's surface and the ionosphere substitutes for the two charged electrodes, which exhibit negative and positive polarities, respectively.

Atmospheric electricity manifests as a buildup of electrostatic energy, a phenomenon that permanently electrifies our environment (Anderson, R. V. in Electrical Processes in Atmospheres, H. Holezalek and R. Reiter, eds., (Steinkopff, Darmstadt, 1977) pp. 87–99). The voltage gradient between the Earth's surface and the ionosphere is thought to be maintained by the electrical activity of the troposphere as well as the solar wind-coupled magnetospheric dynamo (Roble, R. G. Tzur, I. in The Earth's Electrical Environment, Studies in Geophysics (National Academy Press, Washington D.C., 1986) pp. 206–231). The Earth's electrostatic field is never depleted, despite the constant discharges of energy. There are two segments of atmospheric electrical processes that potentially could be tapped, fair weather and thunderstorm related atmospheric electrical phenomena.

The Earth's voltage field creates a potential difference of about 400,000 V (Feynman, R. P. Lectures on Physics (Addison Wesley, Inc., Palo Alto, Calif., 1964) v.2, Chapter 9), with a voltage gradient of about 200–300 V/m around the surface of the Earth (W. Gringell, J. M. Rosen, D. I. Hofmann, in The Earth's Electrical Environment, Studies in Geophysics (National Academy Press, Washington D.C.,

1986) pp. 166–182). Given this voltage drop of 200–300 V/m, the desired 30 kV potential can be obtained at a pyramid height of about 100–150 m.

Due to the evolving nature of our understanding of atmospheric electrical processes, we do not have a clear picture of the magnitude of electrical energy generated (and dissipated) in the global atmospheric electrical circuit by localized convective phenomena. Direct measurement of the atmospheric vertical potential difference using tethered balloons have shown that under fair weather conditions and at low altitudes (150–550 m), short circuit currents on the order of 10 μA were obtained with a single wire collector yielding a power of about 1 W (Holzworth, R. H. et al., Direct measurement of lower atmospheric vertical potential differences, Geophys. Res. Lett. 8, 783–786 (1981), and Holzworth, R. H. Hy-wire measurement of atmospheric potential, J. Geophys. Res. 89, 1395–1401 (1984)).

These data remarkably demonstrated that it is possible to couple to a large portion of the atmosphere and also gave an indirect proof of the presence of a fair weather convective generation process. Since at a low altitude of 1500 m, the entire atmospheric vertical electric potential (400 kV) could be bridged, it may even be possible to couple right into ionospheric electrical processes (Holzworth, R. H. et al., Direct measurement of lower atmospheric vertical potential differences, Geophys. Res. Lett. 8,783–786 (1981)). This would significantly expand the available energy pool for this device.

The other possibility is to tap localized peaks of atmospheric electrical activity arising from thunderstorm activity. The approximate order of magnitude of electrostatic energy generated in the troposphere could be estimated by the amount of energy dissipated by lightning discharges. The estimates for the total number of lightning strikes over the entire surface of the Earth vary from 100 to 300 per second (Orville, R. E. in The Earth's Electrical Environment, Studies in Geophysics (National Academy Press. Washington D.C., 1986) pp. 23–29). The estimate for the power discharged in an average lightning event is 10^{12} watts over a time period of about 0.2 sec (Christian, H. J. and McCook, M. A. in A lightning primer at http://thunder.msfc.nasa.gov/). This yields a total of $2–6\times10^{13}$ W-sec of electrical energy spent by lightning discharges globally in each second, or approximately 4×10^{17} W-h per year. Over 90% of all lightning occur over landmasses. The distribution of tropospheric electrical activity is highly concentrated, the major production zones being Central Africa, the south central United States and the Amazon Basin (Miller, T. L. Global lighting activity at http://www.ghcc.msfc.nasa.gov/rotating/otd_oval_full.html). This suggests that the density of atmospheric electrical activity in these zones may be high enough to tap.

The current annual global electricity production by the world's power generating industry is $1{,}22\times10^{16}$ W-h (Seth, A. Nuclear power and its role in global electricity and energy, Institute for Energy and Environmental Research, at http://www.ieer.org/ensec/no-1/glbnrg.html (1997)) which is only a small fraction, about 1/30th, of the electricity generated and discharged naturally by lightning activity. As lightning represents only peak charge density events, the localized total charge production of thunderstorms is necessarily underestimated by a factor, the magnitude of which is still unknown.

These indicate that atmospheric electricity, if harnessed, could meet all the energy needs of mankind. This invention describes a new electrical phenomenon that allows the conversion of electrostatic energy into an alternating current.

Research on the average electrical power generated and dissipated by the Earth's global electrical circuit suggests that about 2000 thunderstorms are in progress at any given time, and that the average storm current delivered to the ionosphere is of the order of one ampere (Roble, R. G. Tzur, I. in The Earth's Electrical Environment, Studies in Geophysics (National Academy Press, Washington D.C., 1986) pp. 206–231). The potential difference between the Earth and the ionosphere is of the order of 500 kV; therefore, the total source power is of the order $2000\times1\times5\times10^5$, or 10_9 watts over the entire planet. Thunderstorms produce an average of one to several nanoamperes per square meter at the surface (Standler, R. B. and Winn, W. P. Quart. J. Met. Soc. 105 285 (1979)). These estimates would suggest that there might not be sufficient energy to tap.

However, the limitation of these low, average Earth surface current densities is not applicable to the pyramid collector for several reasons. In thunderstorms, terawatts of electrical power are generated over relatively long periods of time. To capture this electric power and prevent its dissipation, an effective "charge sink" is necessary. The sub-optimal geometry of the Earth's surface terrain and its relatively low conductivity produce an ineffective sink which leads to small ground surface current densities. A metal pyramid, however, due to its optimal geometry and construction acts as an effective charge sink.

FIG. **3** shows power transmission on the pyramid setup. In FIG. **3**, a pyramid **200** as described above is in contact with a coil **202** and a bridge rectifier **204**. The latter is charging capacitor **206** which feeds load **208**. Oscilloscope **210** measures the voltage drop on the load.

Accordingly, one embodiment of the invention is a method for converting DC electrostatic energy into usable electrical energy, the method comprising the steps of:

(1) providing a capacitor of pyramidal shape;

(2) placing an insulated coil on the surface of the capacitor, the coil having leads;

(3) attaching a rectifier to the leads of the coil, the rectifier having leads; and

(4) attaching a capacitor or a battery to the leads of the rectifier so that DC electrostatic energy is converted into usable electrical energy.

As detailed below, typically, a clock-like signal is detected from the leads of the coil. The signal can be rectified, pooled in a capacitor, or pooled in a battery.

A production pyramid, with a projected 40,000 m^2 base surface area, a height of 150 m, and a metallic composition would provide a far more effective charge sink than the surrounding ground surface. As current always flows in the direction of least resistance, this would lead to a concentrated flow of current from the thunderclouds into the pyramid. As a result, a column of air above the surface of the pyramid would become highly ionized and much more conductive than the air in the surrounding area. This would ensure a rapid transfer of charges from the thunderclouds into the pyramid. Therefore, the current flowing into the pyramid would likely be very strong. As a result, lightning activity could be reduced or abolished. In addition, since the threshold effect causes exponential power amplification, such a pyramid could produce very large quantities of electrical energy.

The generation of thunderstorm-related electrical energy in the atmosphere shows a high degree of concentration into three major geographical zones (Miller, T. L. Global lightning activity at http://www.ghcc.msfc.nasa.gov/rotating/otd_oval_full.html). By placing energy-producing pyra-

mids into these zones of high-energy electrical activity, vast quantities of electricity could be obtained. Atmospheric electricity would be a renewable, clean energy source, and could give us the opportunity to begin reversing the process of global warming caused by anthropogenic greenhouse gas emissions. This process, which now produces well-measurable results, threatens to upset our ecosystem with unpredictable consequences (Kerr, R. A. Science 286 1828 (1999)).

Electrostatic energy could also be used to produce a propulsive force. A capacitor made into the shape of a pyramid or cone is suitable. The conductive elements of the capacitor are layered into the pyramidal or conical segment of the hull of such craft. Optimally, there should be several layers of negatively charged conductors on the outside while a single layer of positively charged conductor is in the inside of the craft. All conductive elements should be carefully insulated in order to maintain the charges inside the capacitor.

In the center of the craft, a conductive, insulated pole is mounted such that the pole extends out into the exterior at the top of the craft. The tip of that pole has a metal ball mounted on which is also positively charged. When all capacitor plates are charged, a pressure differential is induced and above the craft the pressure will be higher than at the bottom of the craft. This pressure differential is unstable and progresses towards an equilibrium. It will propel the craft forward in order to eliminate the pressure gradient. This requires that a sufficiently high voltage (>100,000 V) be applied. The capacitors incorporated into the hull will give control over the lift.

To obtain directional control over all three axes of movement, three capacitors need to be mounted at the bottom of the craft placed 120° apart from each other. These capacitors could take the shape of a ball and would be mounted on retractable shafts. The top half of the capacitors would be positively charged while the bottom half is negatively charged. When in flight, the capacitors are retracted and charged based on the needs of directional control so that the ball-shaped capacitors provide lateral movement control for the vehicle. To achieve forward movement, the charges on one capacitor facing the direction of the desired path should be reduced relative to the other two capacitors. This would make the craft tilt forward and start moving in that direction. An alternative method of lateral directional control could be obtained by dividing the capacitor bank inside the hull into segments which segments would be charged individually.

Upon landing, the three ball capacitors would be protracted on their shafts and serve as landing gear. On landing, they would be discharged because the earth is the greater ground. On launching, the main capacitors of the hull would be activated leading to takeoff. The three-capacitor landing gear would then be retracted and charged up so that they can function for lateral directional control after takeoff. On-board static generators would supply voltage required for the operation of the craft.

Accordingly, another embodiment of the invention comprises a method for converting DC electrostatic energy into propulsive force comprising the steps of:

(1) providing a first capacitor of pyramidal shape;

(2) placing an insulated conductive tip on the point of the capacitor;

(3) providing a static generator for charging the capacitor, and

(4) attaching 3 ball-shaped smaller capacitors to the bottom of the pyramidal-shaped capacitor; and

(5) providing means to extend or retract the ball-shaped capacitors from the pyramidal-shaped capacitor, so DC electrostatic energy is converted into propulsive force by the action of the first capacitor and the 3 ball-shaped smaller capacitors provide directional control.

Inertial forces pose great obstacles to improving the performance of current propulsion systems. The most significant aspect of this type of propulsion would be the loss of inertia during acceleration. The passengers of such craft would feel no forces acting upon their bodies even if the craft achieved enormous accelerations.

This overall design is suitable for the development of a wide range of transportation vehicles, from automobile-type to aircraft and potentially to spacecraft. With such technology, we could eliminate a major factor in environmental pollution which place a great stress on our ecosystem. In the United States, transportation vehicles produce 66% of the greenhouse gases.

The subject invention offers a solution by providing a renewable, non-polluting electricity generation method as well as an electricity-based transportation method capable of levitation and flight.

The following Example illustrates the features and advantages of the subject invention. Accordingly, it is to be understood that the description in this disclosure is to facilitate comprehension of the invention and should not be construed to limit the scope thereof as persons skilled in the art can, in light of this disclosure, generate additional embodiments without exceeding the scope or departing from the spirit of the claimed invention.

EXAMPLE 1

Demonstration of the pyramid generator: For the experiments, I have selected a one-foot base length foam pyramid from a pyramid vendor (The Pyramid Project, Ft. Wayne, Ind.). The outside of the pyramid was covered with aluminum foil. The pyramid was placed on a 2'×2'insulating polyethylene platform equipped with an adjustable height 2'×2'size aluminum top plate, 1/16" thick. The height of the aluminum plate was adjusted as needed and a gap of 1 1/4" between the plate and the tip of the pyramid was used in the experiments. In some experiments, an aluminum pyramid was used with a wall thickness of 1/16".

A high voltage (HV) CRT power source producing 30 kV DC was taken from a color monitor. I have assumed that an actual energy-producing pyramid should be relatively high in order to obtain a large voltage drop from its tip to the ground. Therefore, assuming a height of 100–150 m for a life-size pyramid and a voltage drop of 200–300 V/m near the surface of the Earth, the 30 kV is in the range of the voltage-drop expected for the height of a life size pyramid.

The positive pole was attached to the top aluminum plate. This simulated the positive charge of the atmosphere. One corner of the pyramid was attached to the negative pole of the high voltage power source, while the opposite corner of the pyramid was grounded. This setup served as a model for the electrostatic field distribution around a potential life-sized pyramid. As controls, either a 1'×1' sheet of aluminum foil or an aluminum foil-covered box, having the main dimensions of the test pyramid (1'×1'×7 5/8"), was used as a negative pole. The detector coils were made by winding up a 24 gauge enamel-coated magnet wire (20 turns, approximately 8 cm in diameter). A Tektronix high-frequency oscilloscope, Model no. 2236 was used for signal acquisition and analysis.

The first sets of experiments were control measurements with a box of the same height and base length as the test pyramid. The detector coil was placed on the top of the box. Measurements were taken with or without the high voltage applied. One corner of the box was attached to the HV power source (negative pole) and the opposite corner to the ground.

The same arrangement was used for the flat square (1'×1') foil. The peak-to-peak signal amplitude for the box was 8 mV and the signal frequency was 2 MHz. For the flat foil sheet, the signal amplitude was 12 mV with a frequency of 1.43 MHz. The signal form was of a decaying sine wave.

When high voltage was applied to these shapes, signal amplitude of 14 mV was obtained for the flat sheet and of 16 mV for the box. The signal frequency was 1.54 MHz for the flat sheet and 2 MHz for the box. The waveforms were of decaying sine waves in all these experiments.

When the pyramid was tested without HV, the peak-to-peak signal amplitude was measured at 60 mV with a frequency of 2 MHz. When the high voltage was applied, the signal amplitude increased up to 180–200 mV, while the frequency remained at 2 MHz. The pyramid produced signal intensity significantly higher than the controls. The signal is regularly repeating, clock-like in nature (FIG. **2**). When a metal (aluminum) pyramid of the same size (wall thickness 1/16" inch) was tested in the same high voltage field using the same detection coil, a voltage of 1–1.5 V was detected at the frequency of 2 MHz.

To collect energy from the coil, a bridge rectifier (1000 V peak voltage at 6 A) was attached to the leads of the coil. The rectified current was fed into a capacitor (1500 μF, 250 V DC max.), and a direct current of 45 V was obtained. This has demonstrated a simple method to convert electrostatic energy into a continuous direct current. An 8-turn coil having an output of 200–300 V AC (peak-to-peak) was also used for energy conversion. The rectified current from the 8-turn coil powered a 0.186 W light bulb (FIG. **3**). The bridge rectifier is optimally made of fast-recovery diodes.

Even in the absence of an externally applied voltage, current is always present in the circuit. Charge builds up in the capacitor and 1 V was obtained overnight using the 20-turn coil setup. Over 48 h, a voltage of 5 V was measured. Faraday shielding practically abolished the phenomenon.

The preferred shape of the pyramid as a charge collector was again demonstrated in further experiments using the 8-turn coil-bridge rectifier-capacitor (1,500 μF) assembly placed on the 1 ft base length aluminum pyramid. A same volume and height aluminum box was used as control. Charging times of 1–2 h were used under fair weather conditions. For the pyramid, 550 mV was measured on the capacitor while on the box 100 mV was obtained. This demonstrated the superiority of the pyramidal shape in capturing atmospheric electrostatic energy. It also demonstrated that we could tap into the electrostatic field of the atmosphere and draw electric energy. For the collection of energy, a battery could substitute for the capacitor.

I claim:

1. A method for converting DC electrostatic energy into usable electrical energy, the method comprising the steps of:

(a) providing a first capacitor of pyramidal shape, the first capacitor capable of being charged by and storing DC electrostatic energy;

(b) placing an insulated coil on the surface of the first capacitor, the coil having leads;

(c) attaching a rectifier to the leads of the coil, the rectifier having leads; and

(d) attaching a second capacitor or battery to the leads of the rectifier so that DC electrostatic energy stored by the capacitor of pyramidal shape is converted into usable electric energy.

2. The method of claim **1** wherein a clock-like signal is detected from the leads of the coil.

3. The method of claim **1** wherein the signal is rectified.

4. The method of claim **1** wherein the signal is pooled in the second capacitor.

5. The method of claim **1** wherein the rectified signal is pooled in the battery.

6. A method for converting DC electrostatic energy into propulsive force comprising the steps of:

(a) providing a first capacitor of pyramidal shape, the first capacitor capable of being charged by and storing DC electrostatic energy;

(b) placing an insulated conductive tip on the point of the first capacitor;

(c) providing a static generator for charging the first capacitor;

(d) attaching 3 ball-shaped smaller second, third, and fourth capacitors to the bottom of the pyramidal-shaped first capacitor; and

(e) providing means to extend or retract the ball-shaped second, third, and fourth capacitors from the pyramidal-shaped first capacitor, so DC electrostatic energy stored by the first capacitor of pyramidal shape is converted into propulsive force by the action of the first capacitor and the 3 ball-shaped smaller second, third, and fourth capacitors provide directional control.

7. The method of claim **6** wherein the energy stored in the pyramidal first capacitor is used for the propulsion of a vehicle.

8. The method of claim **6** wherein the pyramidal first capacitor is negatively charged.

9. The method of claim **6** wherein the insulated conductive tip placed on the point of the pyramidal first capacitor is positively charged.

10. The method of claim **6** wherein the ball-shaped second, third, and fourth capacitors provide lateral movement control for the vehicle.

11. The method of claim **6** wherein the ball-shaped second, third, and fourth capacitors serve as landing pods.

12. The method of claim **6** wherein the ball-shaped second, third, and fourth capacitors are retracted after takeoff.

13. The method of claim **10** wherein the ball-shaped second, third, and fourth capacitors are charged for lateral directional control after takeoff.

* * * * *

An anti-gravity platform of V.S. Grebennikov

We publish materials from http://gragons-matrix.narod.ru. The site's author writes under the pseudonym of Dragon's Lord. His ideas are interesting enough for an inquisitive reader to analyze them.

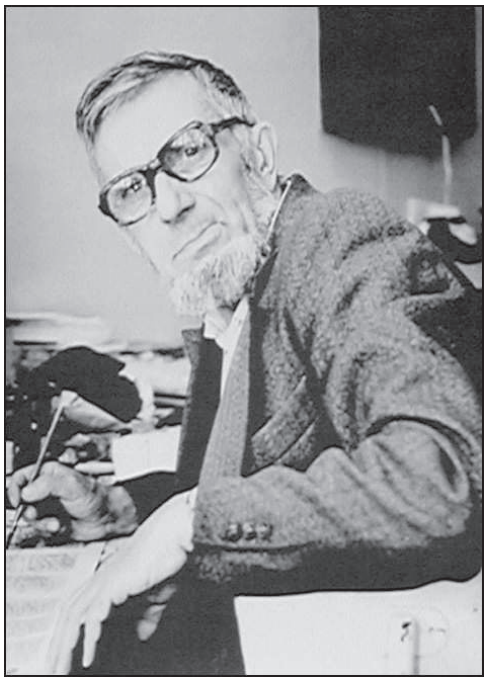

Fig. 1. Viktor Stepanovich Grebennikov

In summer 1988, an entomologist from Novosibirsk city, Viktor Stepanovich Grebennikov, examined a micro-structure of the lower surface of beetles' wing case by a microscope and became interested by "an unusually rhythmic, extremely ordered, incomparable honeycomb, solid multidimensional composition, which looked as if it was pressed by some complicated automatic machine". Studying this amazing micro-pattern allowed Grebennikov to design an aircraft of a new kind called "Gravity plane".

As usually, this discovery was made by chance. Once Grebennikov put a chitin bristle from some beetle's shell under a microscope and wanted to put another one but it slipped out from tweezers and... hung in the air. Then the scientist tied some laminae together from the top by a wire arranging them vertically. It was impossible to put even a thumbtack on this block because it was thrown up and then aside. When the thumbtack was forcefully fixed to the chitin block from the top, it was lifted and, for a moment, completely disappeared!

Grebennikov discovered a bio-antigravity effect in 1988 and then, during 3 years, studied it from many sides, developed the platform's designs, carried out experiments. Together with Professor V. Zolotarev, he sent a patent application. Finally, in 1991, Grebennikov built his gravity-plane and started flying by a noiseless aircraft, which reached a speed of 1,500-2,400 km/hour. The aircraft was inertialess and almost invisible from below. People, who observed it from ground, saw, instead of it, a light sphere or a disc or a cloud with sharply outlined edges.

It is unnecessary to say that this was discovered not yesterday but in 1980ies. Grebennikov tried to rouse interest of "real" scientists but it was useless. Nobody wanted to talk to him. In

Fig. 2. A wing and a wing case of Cetonia. In many parts of his book, Grebennikov describes remarkable properties of wing cases of scarabaeus, bronze poplar borer and especially Cetonia. Among five species of bronze poplar borer, almost all have the CHAOTIC-HONEYCOMB pattern on the INTERNAL side of wing cases.

April 2001, Grebennikov died of a stroke. A book called "My world" written by him in 1997 remained. There is a full variant of the book in Internet at http://bronzovka.narod.ru.

Grebennikov studied an effect of cavitary structures of insects. He gave this name to a mysterious radiation emanated from their nests.

In chapter 5-1 of the book, Grebennikov writes: «I have only a handful of old clay lumps, fragments of these nests, with numerous small rooms-cells. The cells were located side by side and looked like small thimbles or, more likely, small jugs with smoothly narrowing beaks. I've already knew that these bees belonged to species of Halictus – according to the number of light rings on their oblong bellies. There was a wide vessel filled with these spongy clay lumps on my working table, which was jammed with instruments, ant and grasshopper houses, vials with chemical agents and other things. I had to take something and I brought my hand above these spongy fragments. And a miracle happened: I suddenly felt heat above them... I touched the lumps by the hand – they were cold. But I obviously felt heat above them. Moreover, I felt unknown pushes, bounce, "tick" in my fingers".

This radiation cannot be screened. Grebennikov wrote: "I put a piece of cardboard on top – the feelings were the same. I put a pan's lid but it had no effect: this "something" ran through the barrier. I should immediately study this phenomenon. But the instruments did not react

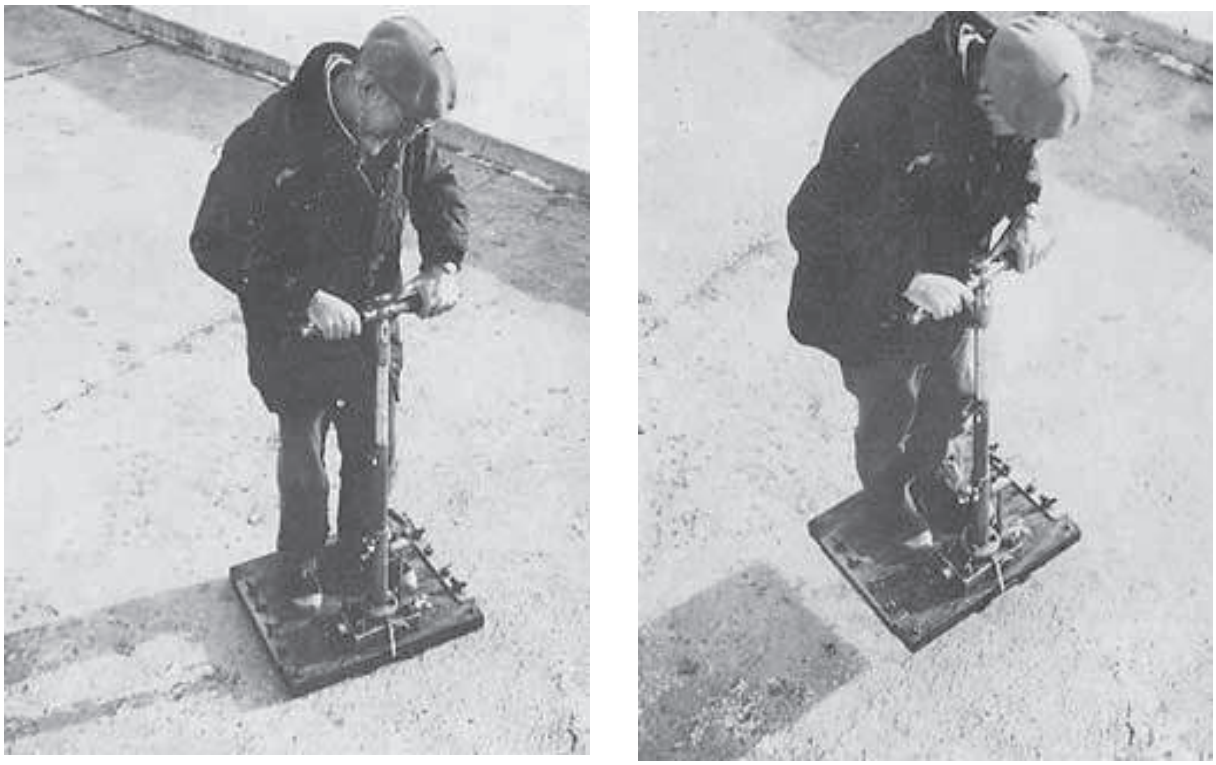

Fig. 3. Grebennikov's flying platform

at all: neither finest thermometers, nor ultrasound recorders, electrometers nor magnetometers. But usual human hands (and not only mine hands!) obviously felt either heat or cold wind or ticks or a denser medium above the nests. Some people's hands became heavier, other people's hands were pushed up; some people's fingers grew numb, fore arm's muscles felt spasms, some people felt giddy, secreted saliva voluminously".

But how did V. Grebennikov came to the idea of his aircraft? Let us read further: "In summer 1988, I watched by microscope chitin shells of insects, their fleecy antennae, butterfly wings' lamellae of finest structure, open-work of shad mooneye's wings with bright play and other Natural Patents. I was interested in an unusually rhythmic micro-structure of some parts of rather big insects. This was an extremely ordered composition, which looked as if it had been pressed by some complicated automatic machine according to special designs and calculations. In my opinion, this incomparable cellular structure was necessary neither for strength nor for decoration of this part.

Fig. 4. A picture from the sixth chapter of "My world" book

I did not notice something even resembling such an unusual amazing micro-pattern neither on other insects' parts nor in the rest of nature, nor in technology nor in art. Due to the fact that it was multi-dimensional, I could not copy it in a flat drawing or a photograph. Why does an insect have this? This structure is located in the bottom of wing cases and is almost always hidden. It can be seen only when an insect flies but who can do this?

I suspected that this can be a wave beacon having "my" effect of multi-cavitary structures. During this really happy summer, there were a lot of insects of this species and I caught them using light in the evenings. Neither before nor after that, I observed neither such a great number of them or even single individuals.

I put a small concave chitin lamella on a microscope table in order to watch its strange cells using strong magnification once more. I looked at a regular masterpiece of Nature-jeweler and, without any purpose, put another lamella with these unusual cells located on one of its sides on the first lamella by tweezers.

But the part was pulled out the tweezers, hung in the air for some seconds under the lamella, which lay on the microscope table, rotated clockwise, moved – in the air! - to the right, rotated anticlockwise, swung and only then quickly fall on the table.

A reader can only imagine what I felt that moment... After coming to consciousness, I tied some lamellae by a piece of wire. It was difficult and possible only if I took them vertically. So, I made a kind of a multilayer chitin "block". I put it on a table. Even such a comparatively heavy thing as a thumbtack could not lie on it: something pulled it up and then aside. I fixed the thumbtack to the top of the "block" and then so unbelievable things began to happen (particularly, the thumbtack completely disappeared for a moment) that I understood that this is not a beacon but some Other thing.

I was excited again and, due to agitation, everything around me was like in mist; but I could calm down and, in two hours, could continue working... Everything began from this accident."

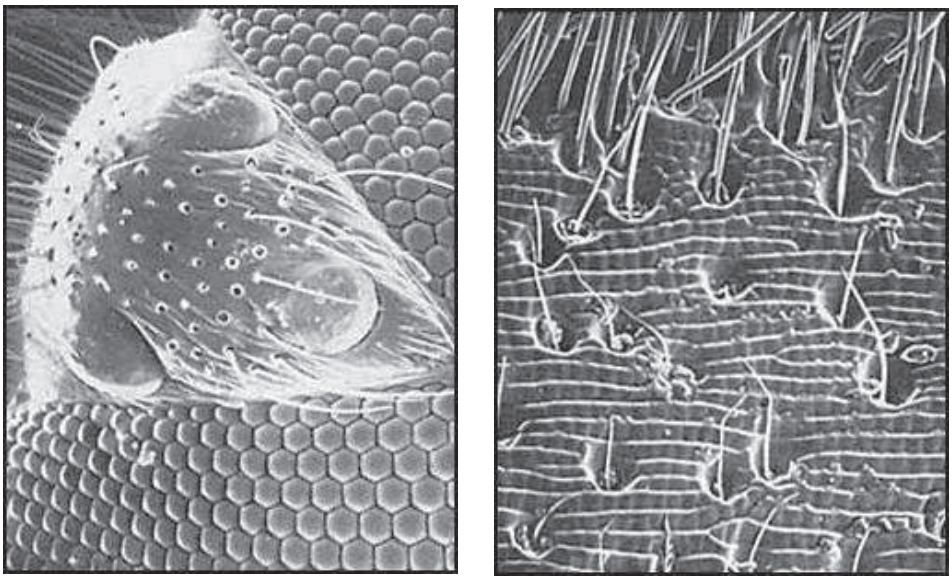

Fig. 5. ***"These strange, extraordinary fine and complex instruments and devices of insects are used not only for senses of touch, smell, vision, sound but they also receive or generate electronic waves while some of them hamper the Earth's gravity. The picture was made by an electronic microscope."***

Did you pay attention to magical words "*...and some of them oppose to the Earth's attraction...*"? It is really strange that "*...strange stellate cells...*" cannot be seen on them though "*...the unusually rhythm micro-structure... extremely ordered composition looking as if it had been pressed by some complicated automatic machine according to special designs and calculations... incomparable sponginess...*" is obviously seen on the third photograph. However, if we remember Grebennikov's remark: "*...I did not notice something even resembling such an unusual amazing micro-pattern neither on other insects' parts nor in the rest of nature, nor in technology nor in art...*". Usual hexagon honeycombs can be observed. Or does Grebennikov want to say that honeycombs (as in experiments on production of the effect of cavitary structures - ECS) are a simplified example of this complicated pattern and the antigravity effect can be observed already in such a simple structure? Here are more photographs of honeycombs:

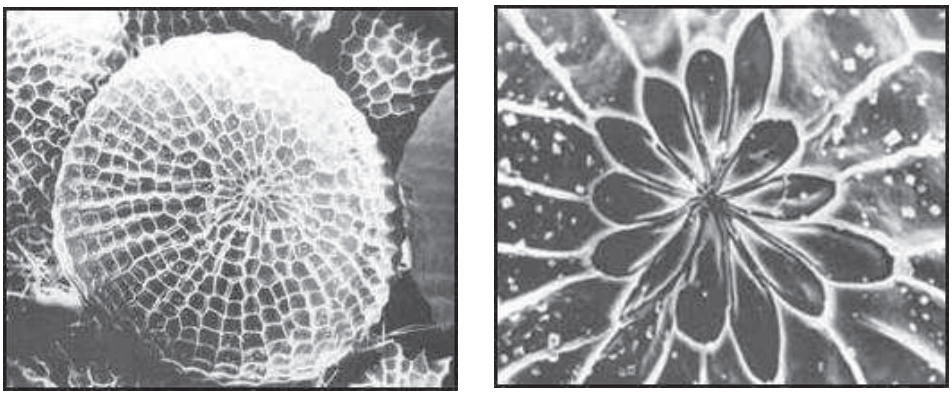

Fig. 6. Multi-cell structures of insects magnified by an electronic microscope by hundreds and thousands times

These are the only photographs in the book, where "*...strange stellate cells...*" can be seen. Possibly, it is the construction's prototype. At least, this is something very close. We can suppose that these are honeycombs (on micro-level) and an element with a star consisting of multi-layer mesh of cells is formed. Just like on the photographs.

And, in two years of laborious work, a gravity plane shown on Fig. 3 appeared: an aircraft with amazing characteristics. It is invisible, need no traditional engine as we imagine it, and has no wings or a propeller. It is noiseless; easily reach a safe flight speed of 1500 km/h, which is not felt by a pilot: there are no either inertia properties of a moving body or heat influence of the environmental air to the aircraft, or dynamic pressure or other effects. It also has a very simple design: a post with two handles placed on an opened platform.

A detective story

In 1992, in "Molodost Sibiri" newspaper, a pre-release of Grebennikov's book "My world" was published. The photographs of Grebennikov flying by his platform were published in the article for the first time. The photographs were also published in "Tehnika molodezhi" magazine.

From bad to worse, it was written in a "Tehnika molodezhi" article that total volume of the book was meant to be 500 pages and 400 colorful images. In the same article, it is written that the aircraft principles, heights and outfit will be given in "My world". Grebennikov was going to completely describe his invention. The whole book was aimed at it. But proofreaders and an editor (and, possibly, the according authorities) explained Grebennikov that it is forbidden to publish such information.

So, Grebennikov had to remove fragments of the text and patch it up. This is why a lot of hints and keys remained in the book. In order to completely remove information on the platform, he had to rewrite the whole book! Two photographs with Grebennikov's flight were left in the book because they were already known to people. As a result, the book's total volume was more than 300 pages and there were a lot of inappropriate butterfly images in the end of the 5th chapter".

Though Grebennikov could not publish the invention's description, he tried to tell readers fundamentals of his inventions by hints (because, in 1990ies, he WANTED to tell this to the world and, only in 2000ies, after he became ill, he began to reduce the information considering it dangerous for people's health).

In the "Tehnika molodezhi" article, it was written that Grebennikov had demonstrated his platform in a museum (in Siberian Research Institute of Agriculture and Agricultural Chemistry) FOR EVERYONE! Possibly, a big colorful photograph of the aircraft was taken in the museum. If it is so, there must be eye-witnesses who saw the aircraft. There must be a lot of them.

A real device was made in one copy and disappeared after Grebennikov's death. However, in the mentioned above museum, a model of the device made by Grebennikov remained. Actually, only the post remained. The board was stolen, the post was roughly pulled out, all plaster wing nuts were broken – apparently, they tried to untwist them! Everything – buttons, toggle, right handle of the handle bar – was made of playdough, plaster and papier-mache and then covered with silver paint. Grebennikov obviously tried to reproduce an appearance of the real device with maximal accuracy because it is much easier to use real wings nuts in the model. In this case, however, plaster copies were made using the real board. It is a pity that the lower part of the platform, i.e. the board, was lost. It could contain copies of block-boards' parts and mirrored a real scheme of kinematic blind control. If we could look at the control scheme, it would be possible to remove many versions considering antigravity production principle. A range of questions would narrow...

The device

A fine analysis of a possible design of Grebennikov's platform is published at http://dragon-matrix.narod.ru/ (it is not real but a supposed design).

The platform's post (the handle bar)

The first handle bar's section is a T-shaped welded construction with a lot of buttons, signal indicators (light-emitting diodes) and even an electrical toggle. The instrument at the handle bar's center is an altitude meter.

An electrical snap-action (two-position) toggle (5) is used for turning on board electrical equipment (signal light-emitting diodes) and,

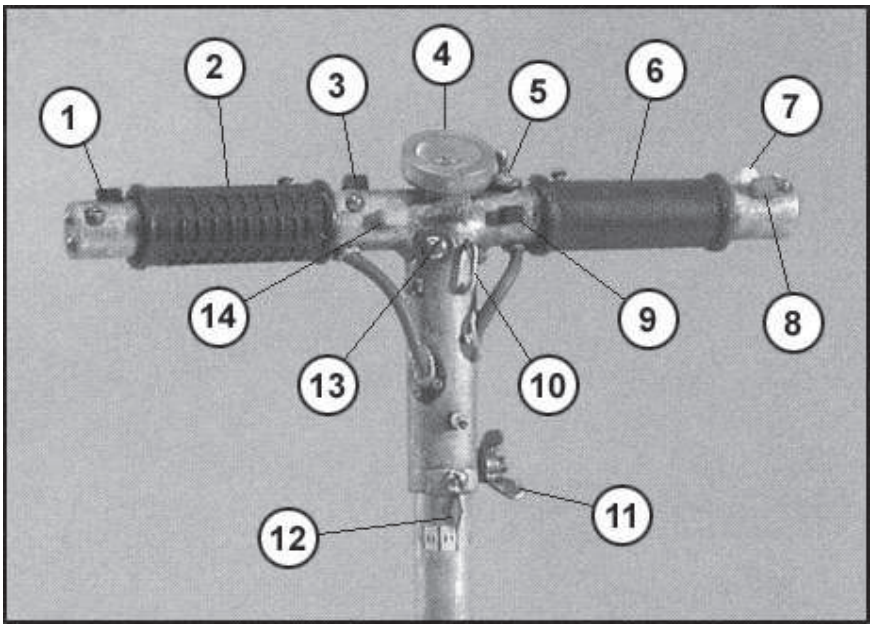

Fig. 7. A scheme of elements of the first (upper) post's elbow

possibly, additionally, for "permission" of motor device operation process.

At the left of the altitude meter, opposite to the toggle, the electrical button-starter (3) is located. Grebennikov pushed it when the device still stood on the ground (right before take-off). Pushing the button, a condenser plate in the motor device is charged by a high potential. On the end of the left handle, another light-emitting diode (1 – traditionally, it is called "green", in order to distinguish it). It shows charge presence on the motor device's condenser plate and, possibly, a charge degree of the plate (by different brightness of glow).

In the opposite direction, on the end of the right handle, two light-emitting diodes are placed: red (8) and white (7). They are directly connected to plug-and-sockets placed in mechanical units of joining-separation and change of blinds' tilting. The white light-emitting diode induces straight motion while the red one induces quick slowdown.

Left rotary handle (2) controls blinds separation with increase of an active surface – a vertical traction. The right one (6) controls change of rotation angle of every blinds' plate around the long axis – a horizontal traction.

Two mechanical buttons-catchers (14, 9) directed at a pilot's belly are placed lower than the toggle and the button-starter. They are connected to the rotary arms according to "push and turn" principle. In order to turn the arm, it is necessary to press an according button by a thumb (to release the arm's motion) and then it is possible to rotate it freely pressing the button. If you stop pressing the button, the arm will stay fixed in the existing position (with the given angle). This helps to carry out the hovering mode and choose a fixed height and flight speed (during a long flight time).

All other "convex" elements located at the first handle bar's elbow are retention screws. There are no control and diagnostics elements except the mentioned ones. The most interesting thing is that the upper (right) handle bar's section TURNS like a handle bar of a standard bike (!) controlling a mechanism of the platform rotation (unsynchronism of the symmetric block-boards' rotation). A rotary effort is transferred by a flexible elastic cable (with a diameter of about 10 mm). The biggest screw on the handle bar (13) located under the altitude meter in the center is a bonding of this cable. Bonding of the whole post to the platform, this rotary cable is set into a central socket (the biggest one on the photograph,

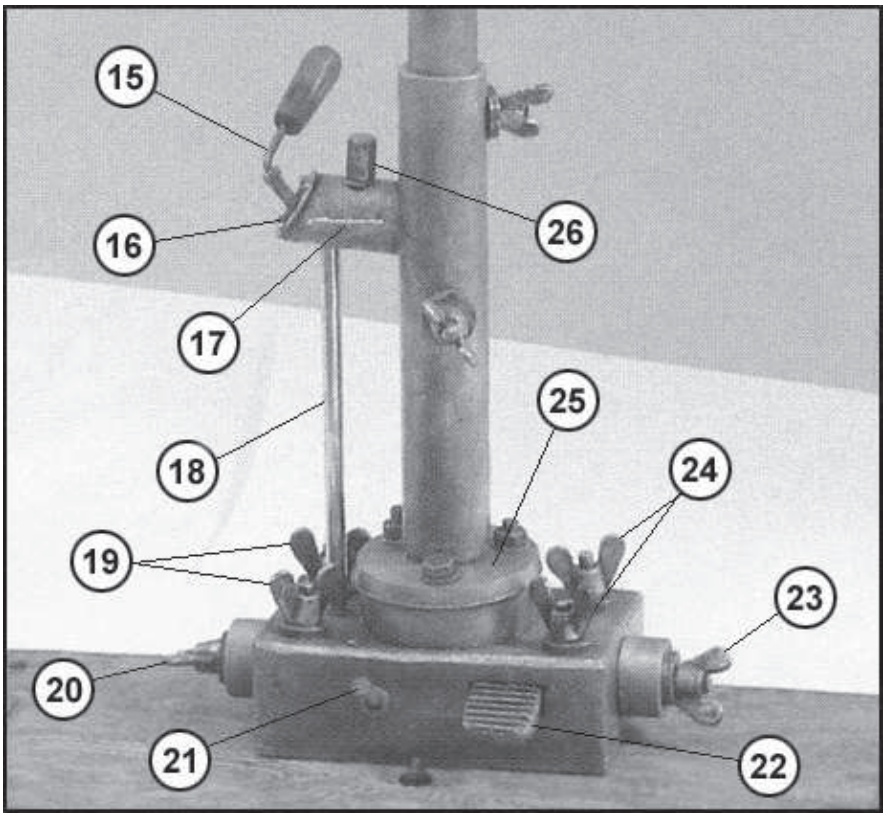

Fig. 8. A scheme of elements of the fourth (lower) post's elbow

where Grebennikov keeps his suitcase). ***"Loosening screw-nuts on the control post, I shorten it like an antenna of a radio set, and take it (Grebennikov means this cable) out of the platform, which is folded in two, due to joints".***

By the way, the handle bar could rotate. Near a bolt of the rotary cable bonding, a cramp is stuck (10). Grebennikov tied himself to it with a belt. The second elbow is not interesting because it is a standard pipe. It is only necessary to mention that it does NOT rotate together with the first one but is fixed to the third elbow, which, for its turn, is screwed to the fourth immovable elbow. A wing nut on the first elbow (11) DOES NOT ATTACH the first elbow to the second one. Instead, it holds a special bushing, which helps the handle bar to turn. There is a button directed to a pilot on the third elbow. It is not a light emitting diode but a button because Grebennikov painted it the same brown paint as the post. Who would paint light emitting diodes which do not light bright? The use of this button will remain unknown, perhaps. And we will not know how the wing nut on the forth elbow was used (it is located in the center and directed to a pilot).

The forth elbow ends by perpendicular flange (25, with three bolts), which decreases the "pull out" moment. The lower elbow cannot rotate because a device of the lower side rotary arm is stuck to it. A body of the device (17) is a CYLINDRICAL pipe section (it is stuck to the post horizontally). A free end of the body is cut with an angle of about 40 degrees and closed by round plate-stub (16) with three small screws. There is a hole in the stub's center, where our handle (15) protrudes from. The handle is spring-loaded and has a mechanical nature. It is necessary to pay attention to rod (18) starting from the handle's body to the control box. Actually, this is a hollow pipe, where either a cable or a rod with a bolt head (at the bottom) slides. When the handle is turned against a pilot, it is impossible to fly. If it is turned to a pilot, it is possible to fly.

There is an adjusting element (26) on the upper handle's surface. It looks like a small cylinder with a horizontal metal rod, which is used for

its rotation. It adjusts accuracy of the connection-disconnection mechanism's operation (by pulling up the cable or somehow else). Most likely, the handle is a standard protecting device, which blocks accidental operation of the platform's antigravity devices without a pilot.

Now let us discuss a small box in the bottom of the post. Four wing nuts (19, 24) located on the upper surface of the box fix the post to the platform. Two side (opposite) wing nuts (20, 23) adjust accuracy of "distributors" operation (accuracy of bringing together and synchronization of the blinds). There are two "distributors": the left one is used for separating the blinds and the right one is used for change of the blinds' angle. Each mechanical "distributor" of the efforts (located horizontally) is connected to a cable from each of the rotary arms of the handle bar. Then, efforts are distributed to several cables, to each of four blinds' blocks.

There is a treadle (22) in the box from the pilot's side for the right foot. Its function is quick slowdown (and also standard slowdown).

Another electrical snap-action toggle is located near the treadle (at the left of it). It has bright orange color and either made of transparent plastic and lit from inside by a light emitting diode or made of an opaque material and painted by a fluorescent paint (with phosphorus or something like this). Why is it painted? It is made so due to the fact that it is used only at night, i.e. under conditions of limited illumination.

What does it control? A small headlight is placed on the right side of the box (like a reflector of a flash-light). It turns the headlight on. A flash-light lamp is used. It is connected through a resistor to a small accumulator hidden in the same box at the handle bar's base (it is an analogue of "Krona" battery of 9 Volt; it has the same size but it is cylindrical).

It is necessary to mention that such an accumulator can supply all light emitting diodes, headlights and a high-voltage transformer and charge the condenser plates in the motion device for a couple of weeks of continuous operation (at least, it will be enough for a rather long time). It can also be charged at home.

The headlight can be used during take-off and landing and is useless during flight due to two reasons. First, there is nothing to light in the sky. Second, if the platform's irradiators have sufficient power, the platform becomes invisible and stops light from going out of its field's limits. Besides, it is difficult to ACCIDENTALLY step on and break the toggle glowing in the dark because it is placed not very well.

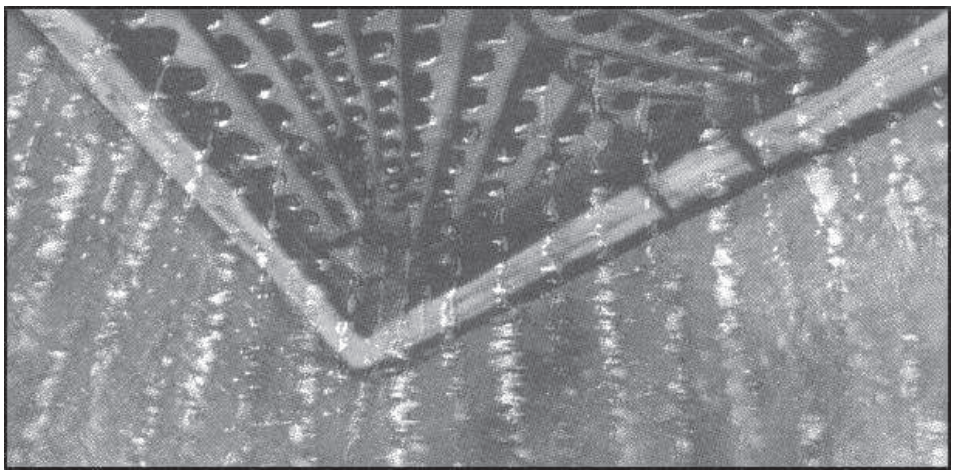

Fig. 9. A bottom view of the platform (the picture from "My world book"). The design of the back blinds-fans can be seen.

The platform's base

Grebennikov made his airplane of a platform, so numerous screws and wing nuts are just lightly modified platform's parts.

Each of the platform halves was made by Grebennikov of ONE wooden piece while industrially produced platforms are made of plywood with attached boards. But this is a box of old Soviet microscope package with an external walls' thickness of 8 mm and an internal walls' thickness of about 50 mm. Grebennikov only had to take out a plastic foam interlay and cover the body with drying oil. He made this though the board's thickness of 8 mm is rather unreliable. Possibly, Grebennikov strengthened the base by sheet metal from inside.

Blinds (block-boards)

The blinds' design is a standard FAN made of flat long elements. There are four fans. Each of their four axles is fixed vertically at the platform's corners. It can be seen in photographs. Even a picture by Grebennikov showing its device from below exists!

Two bolt heads can also be seen on the photographs, approximately in the center of each platform halves. This is a bonding of the distribution mechanism, which transfers effort from the "distributors" to a fan opening device. Each fan consists of nine plates. In order to make them strong, the plates are made of sheet metal. Micro-nets are stuck from the upper surface of each plate. On the one hand, the metal does not prevent nets from operating because the effect of cavitary structures cannot be screened and, on the other hand, protects them from mechanical influences such as influence of grass during landing. Holes in the plates, which can be seen, are not related to micro-cells. They are made only for lightening the metal plates' weight. Do you see that it is difficult for Grebennikov to hold even a lightened version of his platform?

Antigravity effect (created due to the effect of cavitary structures) is produced by the cells but they need "fuel" in order to work with maximal efficiency.

Roughly speaking, the effect of cavitary structures works the following way: any material consists of particles vibrating by its own frequency (read Tesla's cosmology, works of John Keely, Thomas Henry Morey, Wilhelm Reich and others). Due to such internal atomic vibrations, a stationary wave exists in the environment, around any object (and further, discrete "reflections" or maximums of such a wave).

Thus, a frequency and length of such vibration are unique for any material (according to Grebennikov, this is a "reflection of de Broglie waves). If we make a cavity, its walls will begin to "radiate" towards each other or under some angles. If a right size of such a cell will be found, waves' maximums will sum up and a field will be strengthened in the given point of space (field antinode).

So, let us make conclusions. First, as many as possible surfaces are necessary for one cell (it may seem strange but a polygon with maximal quantity of sides, which can be used for filling a plane without gaps and fractally is a hexagon). Second, the less the size of each cell, the more quantity of surfaces, which we can have with the same volume. The more cells and, accordingly, the more surfaces, the stronger the effect of cavitary structures. Let us remark more that size of one cell is not arbitrary but divisible by wave "reflections" (maximums' position), which, in their turn, depend on a used material. Wave "reflections" can be far from the surface as well as very close to it. Closer ones have stronger power.

So, we have a very fine net. By specifying a certain geometry of its cells (size and form of planes, angles between the planes), we concentrate our STATIC field (the material's "radiation") in certain points of space. However, we are interested, first of all, in force GRADIENT. The mentioned static field does not produce yield and confirms the law of energy conservation. We don't have antigravity so far.

Then we use lepton theory of Isakov (remember that lepton, aether, and orgone are the same). We have to determine such a form of cells, which will allow having different field force: from a

very low on the one side to a very high on another. The less distance to the cell material surface, the stronger wave "reflections" we have. We make a simple and logical conclusion that one side of the cell must be geometrically less than another. If an initial cell is cylindrical, we have a cone: if it is triangular or square, we have a pyramid with a triangular or square base. If we initially have a hexagonal cell, the pyramid will be hexagonal too.

It is necessary to tell about lepton explanation of gravity effect. This means that leptons fly all over space in all directions, chaotically. They pass through all bodies but still they transmit some (very small) part of their speed to these bodies. Now imagine two spheres. A lepton stream flying from one sphere to another passes through the first sphere, brakes and "irradiates" the second sphere less than the first one (the second sphere is in "lepton shadow" of the first one). And on the contrary. Thus, pressure from the direction of the internal space (between the spheres) will be less than the external pressure, which leads to attraction (i.e. pushing together) of two bodies. This effect is called gravity.

So, we need antigravity. There are leptons or aether everywhere in universe. If a device will be invented, which will be able to change leptons' direction to the necessary one (create aether wind), our task will be solved. We already have such a device – this is our cell. A cell of the conic (or cuneiform) kind takes up a lepton stream from the horizontal direction (it will become obvious after we read Wilhelm Reich's works in the attachment) and reapportion it to the vertical one: a small part of the stream goes in one direction while almost the whole stream goes in another. Of course, if the cell's axis is placed vertically as in Grebennikov's platform.

Now, if we place such a solid net consisting of the micro-cells under the platform (in a zone BETWEEN the bodies, i.e. between the Earth and the platform with a man) and orient it in such a way that "aether wind", which is created by it, blows the platform from the bottom compensating insufficiency of lepton pressure (as described above), the platform and its passenger will become imponderable and fly up. Controlling a power of an aether stream and its directions (the blinds are used for this), we have the same rough material idea of force vector as in the case of jet streams. The only difference is that aether is so insensible for us that there are no strong air streams. At first sight, there is nothing! The platform just picks up speed and height without any sound, visual and other effects. Inertia force doesn't influence a pilot. It is necessary to note that a head is heavier than legs while the legs, in their turn, are heavier than the platform – it is a gradient of the antigravity force!

It is interesting that it is possible to make symmetric cells (like usual honeycombs) instead of cuneiform ones. A half of this "aether wind" can blow in the ground – it s all right. It is unreasonable: about a half of the power is lost (power, however, can be increased by decreasing cells' size by 0.5) but, technologically, such nets are easier to build.

Now let us tell about the cells' "fuel". Grebennikov noted that, in case with the effect of cavitary structures experiments, it is necessary to take the Sun into account under normal conditions. The point is that, together with sunlight, an intensive aether (or lepton, this is the same) flow goes from the Sun. As it was noted by Grebennikov, during take-off, Grebennikov's aircraft was always carried away in a direction, which was opposite to the Sun. This happened because, from the Sun side, the fans got more effective supply and worked more effectively moving the aircraft in another direction. This is the answer. In the event when the aircraft was moved away due to different reasons, this cannon be explained by "usual conditions". In this case, different environmental disturbances take place. We will not consider them here because these are fluctuations, which do not hamper in flying.

Let us now think about electrostatics. If in all descriptions of Grebennikov's experiments including the beetle regularity "two layers of reticular structures are more powerful than one layer" takes place, how a fact can be explained

that a folded fan (a multi-layer package of nets) is much WEAKER than an unfolded by Grebennikov one (i.e. place all nets in one layer)?

It is obvious that power increases during fan unfolding: ***"Moving a handle, I unfold the blinds again and hoick vertically" or "A flexible cable inside the handle transmits motion from the left handle to the gravity blind. Folding and unfolding them, I carry out take-off or landing"***. What increases during the blinds' unfolding? Right, their square increases. But not just square but a square of interaction with the second layer. It is understandable that there are no additional elements under the fans. But there is such a structure above them! Remember about the sheet metal?

Why electrostatics? Various purely electrical elements are installed on the platform. It means that electricity is used. It is also known that an electrostatic field of high potential can produce yield (remember what Tesla told) and is not consumed during this. It is possible to obtain high voltage of dozens kilovolt by rather compact devices which use watch batteries. In Novosibirsk, in the 90ies, a whole kind of such devices was sold: from shokers to stimulators.

Such a "box" can be easily placed in the box under the post. Pressing the button-starter (the button on the left of the handle bar), the transformer turns on for a short time and the terminal's plate located a little higher than the nets obtains a considerable static charge. The "green" diode indicates a charging degree of the terminal. The terminal cannot discharge itself, during operation, but it is slowly discharged through the air (a so called corona discharge). Thus, Grebennikov periodically had to press the mentioned button taking into account the diode's light. It is possible to build an automatic scheme controlling this process but Grebennikov did not know radio electronics and hardly knew electrotechnology.

There is only one vexed question: "What did Grebennikov show on the picture? It could be either BOTH halves of the platform or only ITS BACK half". The first version will be asserted by supporters of a rough interpretation of the platform's operation: a repulsive force, which is directed DOWN (vortex technologies and others). The second version is confirmed by a reasonable thought: "there are NO two internal vertical partitions, to which rotary hinges are fixed, between the fans on the picture. It means that two BACK fans are shown on the picture". In our supposition, we consider a force directed UP and "blowing" at the platform from below. Understanding the construction this way, it is possible to explain how the brake is carried out by incline of the back couple of the fans. This is how the treadle on the platform works. Accordingly, the front fans work the same way but mirroring (creating traction in the motion direction). It is necessary to note, just in case (for military men and cosmonauts), that the incline changes not the whole fan but each separate plate. Each plate has its own axis.

The left handle USUALLY works only with the back fans (It will not be surprising if two back fans will turn out to be much stronger than the front ones), i.e. creates the vertical traction. Grebennikov stands **only on the back half of the platform.** Make your conclusions. The right handle ALWAYS controls only the front fans, i.e. creates the horizontal traction (the while diode lights). Rotation, as it was already discussed, is transmitted mechanically by twisting a thick flexible cable. The rotary effort is transferred from the lower transmitting unit in the center of the box under the handle bar by a standard "car" method, i.e. through hard control-rods with trunnion balls at their ends (but the trunnion balls can be absent) directly to "rotary" unit of the FRONT fans bonding. The back fans are not used by Grebennikov for control. This allows not transmitting all this to the back block-filters. So, the back couple is mechanically simpler than the front one by one third. During flight, the fans are unfolded and, when the treadle is pressed, the treadle drive rotates the plates and hampers the platform after preliminary turning off the "gas handle" (the white diode goes out and the red one lights). The effort for the plates' unfolding and their turn to the back fans is transmitted through flexible cables; this allows easily folding the platform. Thus, the treadle is an analogue of the right handle but for the front fans instead of the back ones.

Invisibility of the gravity plane

A reason of a pilot's instable invisibility described by Grebennikov is caused by four crossed fields exists instead of the place of one field's influence. A product space is where a pilot stands. If only one field would exist, it would be stable.

The fans, according to the flight mode, change radiation power and radiation direction all the time (take-off/fall, acceleration/slowdown and, mainly, turn). So we just have to comment presence of the invisibility effect.

Light could freely come to the "sphere" around Grebennikov (in the influence zone of the field created by the nets) but could not come back. This is why Grebennikov was invisible. He could see everything because light reached his retina. But no reflected beams came from him because the entire light (a flow of particles coming from outside) was absorbed by the process generated by the nets, i.e. light was utilized (a flow of particles bringing the "fuel" to the nets).

When Grebennikov stood on the ground, he was visible because the blinds were folded and did not work (therefore, they did not absorb light or any other particles). As soon as he began to rise and increase power (increasing the fans' square), he smoothly (not suddenly) started becoming invisible. Of course, the invisibility was full during flight and, coming back, the process was the same. This is why, when Grebennikov flew low above the ground (and generated low power), he became visible (cast shadow). The same happened during quick landing, in the "falling like a stone" mode, when the blinds were folded: he became fully visible.

This is why it was possible to take a photograph of Grebennikov during take-off, when he flew low. But when he flew "above pine's tops", it was impossible to photograph Grebennikov because there were no reflected beams from him, thus he was invisible.

Humidity and electrostatics

Grebennikov noticed one more detail: it was impossible to fly by the platform during rainy weather. On the one hand, actually, increased humidity does not promote electrostatics (and a bronze poplar borer flies only during sunny weather because chitin is very electrostatic; a beetle, most likely, uses the following effect: statics+ECS=strong antigravity). On the other hand, as Grebennikov wrote:

"Put a shower head on a tap and turn on cold water. Slowly bring your palm to a beam of falling drops aside: most people feel heat at this moment. In fact, this is ECS increased by motion of new elements of the "multilayer net": falling water drops and gaps between them. After training in a kitchen or in a bathroom, feel stronger ECS at fountains or waterfalls. Even if atmosphere pressure is not falling, remote rain creates a strong ECS field influencing at a distance of many kilometers. Remember how we want to sleep before rain even in a closed room: ECS cannot be screened".

Many small drops and gaps between them form a multidimensional void structure, which influences by its ECS. This, however, does not help the device based on the same principle to fly.

Under the picture with the bronze poplar borer Grebennikov wrote:

"When a big Middle-Asia bronze poplar borer sits like that (this is live!) on a finger, the finger feels like it is pulled up".

Pay your attention: the insect is "LIVE"!!! Possibly, wing cases of a dried beetle will NOT show the repulsion effect. I repeat: possibly. What do I mean? Perhaps, the dried beetle has no sufficient static charge on its chitin and this prevents display of antigravity effect. It is also possible that statics is transmitted not by wing cases' surface but by hemolymph (a blood type) of insects. Or maybe this is not statics but something else.

As an example, here is a small fragment from Mister X's "works" (The editor's note: Mister X is a visitor of http://gragons-matrix.narod.ru site forum):

"Once I accidentally killed a standard and not prominent ladybird (I knew about Grebennikov's discovery from the article). I am confused to confess but I tried even laying one wing case on another but it gave no result. I had no microscope and I used a standard magnifying glass for examination of the wing cases. Even under such a small magnification I could clearly see inside thin longitudinal walls-"edges". Following mere curiosity, I crushed one of the wing case between my fingers. As a result, a red liquid flew out of it. My curiosity continues, this is why I took a standard flat battery, a lamp and a piece of cross patching. I found out an interesting fact: the liquid was a conductor. After I read the book and analyzed the pictures, it dawned upon me that we have a simplest electrolytic condenser with hemolymph (insects' blood) as electrolyte and dielectric (chitin)!".

What an idea! The electrolytic condenser, what do you think?! In general, it is obvious that, even if we get the necessary wing cases, a lot of DIFFERENT experiments must be carried out. But how to impact properties of the "live" wing cases to the "dead" ones? Grebennikov's platform worked; this is a fact, so it is possible to technically reproduce the effect of the "live" wing cases.

The editor's note: Here it is appropriate to remember readers about another approach to creation of engines, which is called "asymmetrical condensers". Articles devoted to this topic have been published in our magazine.

Eye-witnesses

As it was found out, Grebennikov hoped to remain invisible in vain. People who saw him in the sky were found. Mister X writes:

"I was interested in Grebennikov's question since an article called "Night flight over the city" had been published in "Molodost Sibiri" newspaper in 1991. A precondition was my only observation of UFO flight in the middle of March 1990. The UFO did not look like a "saucer" or an "object". The observed object was practically the same as on the picture thought I cannot judge whether it was Grebennikov's flight or not."

Biological hazard

Grebennikov died at the age of 74. The age is venerable, but death was caused by a number of diseases, which can be obtained, for example, as a result of irradiation of **a strong electromagnetic field**. And Grebennikov confirmed that obtained the diseases due to flights by the platform. But a triangular bearer frame can be made of pipes, a platform can be placed in each corner of the frame and a pilot's seat can be placed in the middle of this construction. In this case, a pilot will NEVER be in a filed of the platform's influence. Moreover, Grebennikov mentioned that the triangular design with three elements (net platforms) is an ideal kind of control.

In order to exclude a pilot's contact with atmosphere, a hermetic cockpit is installed. It provides full comfort and safety.

Questions and answers

Question: Why did Grebennikov stood flying instead of, for example, sitting on the platform with his legs down and, in this case, why did not he make a shorter handle bar?

Answer: Both the platform and Grebennikov was COMPLETELY in the zone of compensated gravity's influence, i.e. their mass and, more precisely, their weight was not positive but negative, which allowed flying. If he would put his legs OUT the field's limits, their weight would become normal again, i.e. about 30-40 kg. As a result, the platform would change its vertical position in space to a horizontal one due to outweigh by the appeared weight. And Grebennikov would just fall from it. In general, nothing can be put out the platform's limits during flight.

Question: Thus, it is impossible to build a device where a pilot will be OUT of the dangerous radiation of the blinds. Is it necessary to be in the field's influence zone as Grebennikov did?

Answer: No, this is a mistake. The pilot's cockpit can be placed outside the limits of the admittedly harmful radiation. It is just necessary to have at least three independent platforms placed on the edges of such a "saucer"

in the device's construction. Besides, the blinds must be made more powerful than Grebennikov's blinds because we will have to carry a not nullificated mass of the cockpit and a pilot placed in the center between the irradiators. Moreover, it is necessary to have an automatic stability device, which would remove list of the aircraft manipulating by powers of all three irradiators.

Question: Why do cells (for example, pipes) oriented vertically "irradiate" stronger than the ones oriented horizontally (remember how Grebennikov tried to tie some wing cases together and all his experiments on ECS) if aether is everywhere?

Answer: There are not sufficient quantity of aether wind in a space BETWEEN two objects in a vector's direction from one object to another. As we see, the Earth has a huge size and, accordingly, considerably ties up a stream flowing through it. This causes its strong gravity influence on other objects. If we place any cell (pipe) horizontally, aether will be absorbed from the vertical direction through walls of such a cell. Due to the fact that a lepton flow in this case is very depressed, we obtain low efficiency. If we place any cell (pipe) vertically, aether will be absorbed from the horizontal direction. In the horizontal direction, aether winds are not "screened" (because the Earth is lower than the pipe and, for example, the platform is higher. The second object can be missing).

Question: What is a "fractal principle"?

Answer: Imagine standard honeycombs. We take one hexagonal cell. If it has the right size, antinodes of the ECS field from each wall of this cell must coincide exactly along the central axis (reflection of de Broglie waves), i.e. the same "maximum" of the stationary wave. We have a certain power. Let us add six cells along the circumference – it is an approximate hexagon. Antinodes of the ECS field from the newly formed EXTERNAL sides of this big hexagon will coincide again and meet in the center but these will be other reflections (stronger than the first ones observed by us). Both groups of "maximums" sum up and, as a result, we obtain a field, which is stronger than that created by all cells participating in the process and taken individually. Now we add other 12 cells along the external outline and so on. ECS maximums of different ranges will sum up all the time. This is a clear "fractal principle". Obviously, this is why there were so many hexagons in Grebennikov's book.

Question: How can we work with micro-cell nets – press them, assemble them in block-boards and install these boards to the device, - if a cell will immediately fly if we let it off?

Answer: This is a widely spread mistake. The nets do not fly themselves. Only objects placed in the compensated gravity zone (above the horizontally placed nets) has weight equal to 0. Difficulties appear only at the last stage of assembling when powers of construction elements are relatively strong and influence each other. In this case, assembling the device, it is necessary to watch the nets being in the vertical position. This relates to Grebennikov: when he folded and unfolded his platform, he put it vertically (I mean the board).

Question: Grebennikov could not turn at small power of the vertical traction (during take-off, landing and slowdown), could he?

Answer: Yes, it is because, in the event of the minimal vertical traction, the blinds are hardly unfolded. This does not allow normally turning the plates around their axes (change their incline angle). During slowdown, a drive of the "gas" handle turns off. This makes use of the handle bar useless because the plates of the front fans are placed in the horizontal plane too.

Due to the fact that the back fans bore the main vertical load, it is possible that the front fans are half-unfolded in their minimal position (when the right handle is not turned), which allows using the handle bar during low-power flight modes. If it is not so, it is still possible to do so. It seems to me that Grebennikov did not do this because he was pulled away from the Sun and he could not fight with it and, therefore, could not manipulate the turning function during take-off. Fundamentally, these details do not influence flight because motion is inertialess and, during change of reapportion of an aether wind flow, a motion vector changes at the same time.

Question: Could the handle bar really turn?

Answer: Let us think: actually, the left handle is busy (it unfolds the blinds and creates the vertical traction); the right handle, according to the description, changes incline of the blinds' elements (i.e. creates the horizontal traction from zero to maximum). Thus, only the treadle is left of all control tools. But, using the treadle (if we consider it as an analogue of another turn handle from a motorbike), we can turn the horizontal plane only in one side (motion of the treadle is one-way like motion of the handle). It is very inconvenient and, therefore, unreal. So, we make a conclusion that the handle bar actually turns to the left and to the right and the handle bar controls turning. The photographs confirm this.

Question: How can you prove that the treadle is used as a brake and is not, for example, a device controlling operation of a complex motion device?

Answer: Let us think again. Both handles change speed from zero to maximum (one – vertically while another – horizontally). In order to contradict, if necessary, a vertical force, it is possible simply to unfold the blinds (de-energize them) and, due to the fact that the platform ALWAYS flies with its bottom turned to the ground, gravity force does its work for us. It is different with the horizontal motion. We can gather speed from zero to maximum without any problems but how can we quickly slowdown if necessary? According to Grebennikov's words, there is not even air friction! It leads to a necessity to have another control element on the platform, i.e. the treadle-brake, which acts the same way but opposite to the right handle.

Question: It is not logically to trust one's life to presence or absence of voltage in the accumulator. What if it will run down during flight?

Answer: First, this is unlikely. Second, even this happens, nothing fatal will happen. The nets will work though not with maximal power. This event, possibly, will lead to a smooth landing of the aircraft (because the high-potential terminal will run down not quickly but smoothly).

Question: Why did Grebennikov tried to draw energy vortex exhaust from the platform on pictures of night flights?

Answer: Possibly, Grebennikov used not cone cells but symmetric ones in his design. I.e. an aether flow was distributed up as well as down in them. This variant is a working one, too. Taking into account use of high-voltage potential, aether flows carried bigger particles (charged ions, for example), which became visible in darkness. They were formed into single discrete pseudo-vortexes due to presence of holes in the blinds' metal plates (metal absorbs or hamper radiation while the holes let them pass freely).

Question: Why do you think that the drive from the right rotary handle goes only to the front fans but not for all of them?

Answer: Here is what Grebennikov wrote: ***"The upper part of my device is really a bike's one: the right handle is used for horizontal-forward motion, which is made by incline of both groups of the blinds also through the cable"***. He wrote "BOTH", i.e. he meant the two front fans (a fan is a single group of the blinds or, in other words, a block-board).

Appendixes: scientific hypotheses and extracts from articles

Lepton-hypothesis of B.I. Isakov. Extracts

Consequence 5. According to the formulas, an opportunity follows that high values of gradients of lepton physical fields' objects can be observed in zones opposite to acute angles of solid bodies, geological rocks, on tectonic plates' edges, on rock peaks, on tops of big cliffs and pyramids etc., particularly, matter outflow in the form of leptons and other elementary particles is possible.

Discovery of electron emission in zones of geological rocks' fractions (USSR, 1984) is a particular manifestation of a more general law. A body placed opposite to acute projected angles of other bodies or solid rocks, on tops of cliffs and pyramids etc. can be irradiated by leptons. On the contrary, bodies placed inside hollow planes of other solid bodies, for example,

inside pipes, cylinders, and cones or placed in a polyhedral or a 3-dimensional angle can experience "swap-out" of microleptons.

Biological objects with weakened microlepton fields can be "charged" with lepton energy on tops of rocks or pyramids. On the contrary, excessively excited biological objects calm down quicker if they are placed into internal cavities of solid matter with negative curvature or into an angle, a bay etc. with geometrical unbalance of matter, which is equivalent to negative curvature (possibly, a custom of many nations to calm down overexcited children placing them in a corner makes sense).

Consequence 14. According to the lepton hypothesis, each body is permeated extensively by lepton streams, which bombard it and balance lepton pressure up to a zero average resultant. Interaction of leptons with a body happens all over the body's volume, not only on its surface. If preponderance or deficiency of lepton pressure will be artificially created just on one side by focusing lepton streams or, on the contrary, by obstruct them from the body by some screen or an artificial lepton vortex, a no-zero resultant can be created, which will be able to move light objects.

This can explain telekinesis phenomenon, particularly, experiments of V. Avdeev, R. Kuleshova and others and also poltergeist effects. The lepton hypothesis allows comprehending the universal gravity mechanism expressed by Newton's law from a new point of view. Two bodies located close to each other partially screen each other from lepton streams' pressure. From the external sides, preponderance of lepton pressure in comparison with a pressure from the side of a space between the bodies is created because each body partially hampers lepton streams coming through it. If point mass m is located near distributed mass M, a force equal to the screening force influences m...

... where d is a constant of proportionality; p is a density of matter in the distributed mass, g is a distance and a multitude of distances from variable body point M to point mass m; l is a body angle corresponding to angle sizes of distributed mass M and a point of location of point mass m; f(r) is a function of body M geometry; 12 is a function of geometry and curvature of a lepton stream in the given point of space.

The lepton hypothesis allows not postulating but concluding, substantiating theoretically and comprehending, understanding Newton's law, understanding the concealed gravity and remote influence mechanism. If two bodies with distributed masses M1 and M2 are located close to each other, a resultant force does not change fundamentally, only a conclusion of Newton's low becomes more complex while the fundamental nature of the dependence does not change.

Thus, according to the lepton hypothesis, attraction is a deficiency of repulsion, i.e. the law of gravity can be considered as a consequence of the law of lepton repulsion (or lepton compression, pressure) during bodies' screening, which leads to that the bodies are pressed to each other. If the lepton hypothesis is right, it is possible to suppose a potential possibility of varying gravity and inertia mass of a body under certain conditions:

1) during change of lepton streams' focusing with the help of "lepton lenses" causing their concentration on the given, lepton rockets and lepton flying discs;

2) during huge speed of lepton vortexes' rotation with high angular velocity, which is equivalent to screening from lepton streams.
If the lepton hypothesis is right, the mentioned mechanism gives a possibility of partial or complete gravity control. The suggested mechanism of potentially possible partial or complete levitation must be thoroughly checked experimentally. If the lepton hypothesis is right, lepton engines, rockets and flying discs are possible.

A nature of the effect of cavitary structures

Which is a physical nature of the cavitary structures effect? Many suppositions and hypothesis have been expressed but, unfortunately, many of them are connected with extrasensory perception, which is fashionable among modern intellectuals for some reasons. A theory of Leningrad physician, Doctor of Technical Science, V.F. Zolotarev

deserves better attention. It was developed by him earlier and experimentally confirmed now.

As a result of long combined researches, we characterized the discovery as "an unknown effect of multi-cavitary structures' interaction with living systems consisting in that, due to interference, de Broglie waves accompanying motion of electron flows in solid walls of cavities form a macroscopic field of multi-cavitary structures, which cause change of functional state of living objects locating in this field".

De Broglie waves are peculiar to moving micro-particles of any body. They are compensated inside the body and displayed as radiation on its surface. They are so short-wave and super-high-frequency that instruments pick them up only in the form of diffraction but still they helped science. Remember peculiar pictures of electrons and neutrons obtained on crystals and films with the help of de Broglie waves. Nobody thought that these scanty radiations can influence living matter somehow. And they did not influence – at least near flat objects. But near multi-cavitary structures, where a square of solid bodies is big and multiply curved, de Broglie waves are put together and form, like musical overtones, harmonies with lower frequencies.

Thus, lengthening and strengthening due to laying on ach other in cells, they form antinodes-maximums of stationary de Broglie waves. Striking on these passive barriers, nerve impulses glitch changing their frequency and speed and causing not only seeming feelings but also sometimes considerable physiological changes.

Stationary de Broglie waves do not have their own energy and, therefore, the law of energy conservation is not violated. Due to the fact that de Broglie waves moves in physical vacuum, the effect of cavitary structures must permeate everything. We observe it when we uselessly try to stop the effect up by any screen.

The editors' note: In 1996, Prof. Zolotarev gave me a copy of his manuscript. We studied it, prepared a plan of experiments and began to search for investors. It was useless. Our situation that time could be described by words "starvation" and "poverty". I remember that Professor had to raise chickens in his flat for some food. Possibly, now somebody will be seriously interested in beginning a research program on the effect of cavitary structures aimed at creation of real engines for space systems. A.V. Frolov.

Energy fields of geometrical forms

www.keelynet.com

Works of Wilhelm Reich are also connected with change aether density. We would like to express some interesting thoughts:

"Energy fields of geometrical forms" are special effects connected with the modern concept of aether. Some optimal geometrical forms and materials can be used for constructing devices, which react under influence of only environmental conditions, i.e. without additional external stimulation. Contraction details of two simple devices, which produce a tangible linear force influence without use of any additional energy at the input. It is possible to note two meanings of these training demonstration devices: (1) they prove that an aetheric kind of matter exists and any average person can feel it; (2) they demonstrate reliable methods of aetheric activation, which can be used for new energy applications.

Other examples of devices with efficiency more than one include a venerable organ-pipe and an electromagnetic antenna.

These devices work using resonance method when relatively low vibration of amplitude is reflected back. An echo signal can be many times more than an input signal in dependence on sizes of the device. The most effective size of the resonator accurately corresponds with a quarter of the initial wave length. Resonance will also occur with any lengths which are divisible by an odd number of a quarter of waves' lengths. In these cases, we find that geometry of the specific device has minor significance. If the geometry is optimized for conditions at the

input, a maximal increase or an increased echo can be obtained.

We can summarize characteristics of these "super-single" devices as devices using "geometrical energy fields" because intensity of full energy of echo, which can be produced only as a function of size, form and location. Remembering that, we can suppose that certain highly optimized geometrical forms could provide for an increased echo without any additional input signal at all. Such a device could induce an effective echo increasing the finest vibrations at quantum level, which are much lower than the threshold our ability to measure them.

Despite the fact that the subtlest natural forces have been studied for thousands years, it can be proved that a modern era began in 1844. In 1844, Baron Karl von Reichenbach from Stuttgart published a series of letters describing his research of aether, which was called "OD" by him. Reichenbach discovered that a part of all people can visually feel outflow from tops of crystals and magnets if they had been first properly located in full darkness. He called such people "sensitives".

Some time later, Reichenbach decided that aether can permeate through materials like silk, glass and metal. According to his ideas, aether seems to permeate all things in different density. Large quantities of aether could be found in sunlight and candle flame.

On the edge of the century, an Austrian philosopher Rudolf Steiner with clairvoyance talent researched an invisible world of aetheric forces. His close partner and biographer Guenther Wachsmith continued this work after Steiner's death and published a masterwork of his teacher called "Aetheric shaping forces in Space, Earth and Man".

A first true engineer of aetheric forces was Wilhelm Reich who discovered, as he called it, an "orgone energy" in 1939. Like Reichenbach, Reich discovered that metals able to conduct aether a hundred ears ago. His real big achievement, however, was an understanding of the fact that organic materials have a tendency to absorb aether. Laying two kinds of materials together, Reich could produce a directed aether flow.

Reich developed a first working device for collection and concentration of aether. An "orgone accumulator" is a box with six walls made of alternating layers of metal and organic materials. Under controlled conditions, this device produced an inexplicable temperature increase in its internal part. This was enough for attracting attention of Albert Einstein who met Reich in January 1941. Reich also experimented with a "cloudbuster" (a buster for clouds dispersion), a tower-shaped device which, most likely, directed an aether flow through atmosphere.

Possible, the biggest contribution to aether engineering technologies was made by Trevor James Constable. He was a follower of Steiner, Wachsmith, Reich and others. He spent more than 40 years improving use of the aether technology of weather control. He discovered that some geometrical forms, possibly, show a big aether echo. During many years, he developed his methods so that a device with a size of a coffee mug located, accordingly, far from an ocean ship could change weather condition over a distance of many miles around it.

Constable discovery of resonance aetheric structures was important for research of the new energy. Now a simple geometrical device can direct a concentrated beam of aetheric forces through any type of a device with high accuracy. Actually, a degree of aether concentration is so high that human organs of senses can directly feel its resultant pressure.
Thanks to pioneer works of the above mentioned scientists, it is possible to describe a design of two resonance aether devices, which

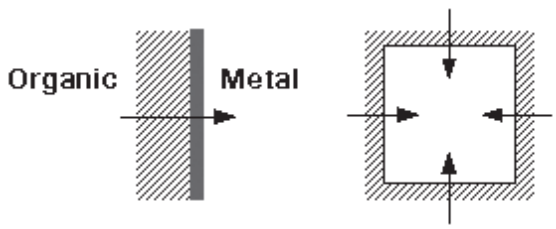

Fig. 10. Stimulation of the directed aether stream

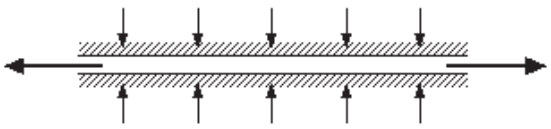

Fig. 11. The "emitting" device of ECS

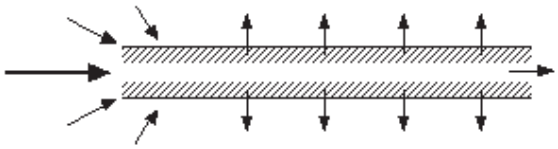

Fig. 12. The "vacuum" device of ECS

were called "Chi Pencils" by the author. Both devices are built around a central resonance cavity. A formula for calculation of the resonance cavity's size was obtained from a research of a ballistics expert Gerald Bull from Philadelphia.

An "emitting" device is generally a cylindrical metal cavity with a no-metal external layer. Due to boundary effects discovered by Reich, aether is absorbed from space through a side surface and emitted through both sides (actually, it is like laser). Geometrical energy fields around the emitting device are shown on Fig. 11.

How to build the emitting device. The following things are necessary:

- a piece of a 5/32-inches copper pipe;
- a 1/8-inches soft cotton cord;
- a metal knife for the pipe;
- a meter-stick, a sharp knife and glue.

Cut a piece of the copper pipe with a length of 18.1 cm. Apply a small bead of hot glue to the external part of one end and fix the cotton cord there. Wind 2 cm, apply a bead of hot glue and wind the cord arount the entire pipe. Cut excess of the cord.

A "vacuum" device is made the other way. We need a non-metal cylindrical cavity with a metal external layer. Aether is drawn into one end and dispersed through the sides. A geometrical energy field around the vacuum device is shown on Fig. 12.

How to build the vacuum device. The following things are necessary:

- a piece of vinyl hose with a diameter of 5/32 inches;
- a piece of a copper pipe with a diameter of 5/16 inches;
- a metal knife for the hose and the pipe;
- a meter-stick, a sharp knife and electrical insulation tape.

Cut a piece of the copper pipe with a length of 18.1 cm. Wind the electrical insulation tape around the vinyl hose in some places in such a way that it could closely go into the copper pipe. Push the vinyl hose into the copper pipe until its end appear. Cut excess of the vinyl hose.

The noted streams of aether forces generated by above described different resonance devices allow defying their discovery by standard instruments. It is not surprising that, as many people think, aether is "live" energy while standard instruments are, of course, "dead". However, discovery of aether forces by a living organism (such as a human body) is known.

Editors' note: we hope that publication of the given materials will cause interest of experimenters who will try to examine these effects. Creating aether streams, changing aether density, it is possible to produce not only force effects, i.e. motion. Due to the fact that matter elements are processes in aether (vortex processes), aether parameters influence speed of existence of any matter. It was confirmed in the experiments which were carried out by our company with V.A. Chernobrov. It is obvious that gravity and time speed are mutually connected effects. Due to this, creation of such devices defies not only the Earth's gravity but also Time. We would appreciate offers from organizations which could invest into development of these technologies.

A.V. Frolov,
General Director of
"Faraday Lab Ltd" company

In figures from Grebennikov's book "My world", effects of repulsion of recently cut plants' stems (Fig. 15) and a bunch of pipes (Fig. 13, 14) are shown. These are simple and convincing experiments during which the effect of repulsion is manifested.

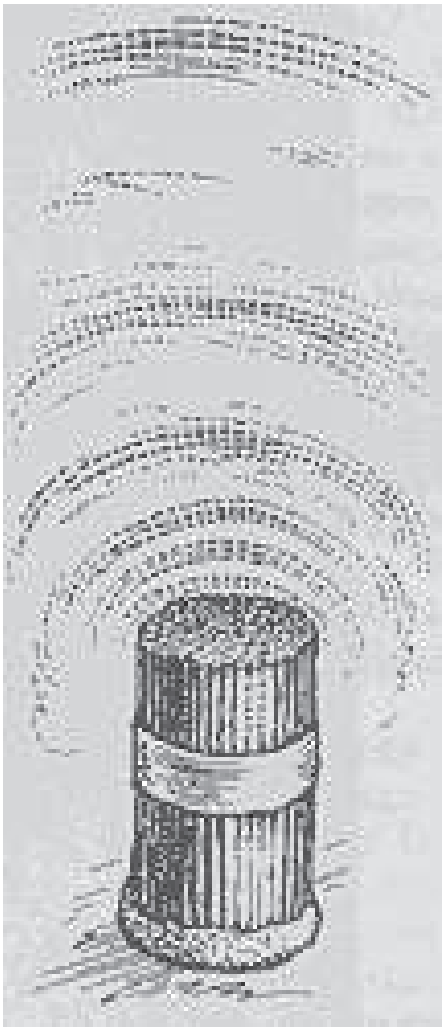

Fig. 13

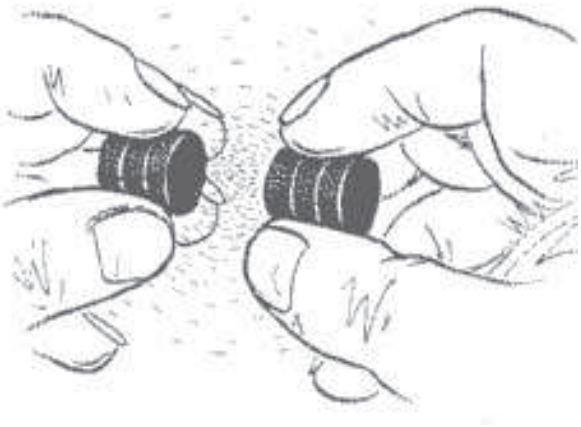

Fig. 14

Fig. 15

Dear subscribers, thank you for interest to "New Energy Technologies" magazine.

Please note that publications in 2006 are not planned.

All best respects,
Editors

US 20160029467A1

(19) United States

(12) Patent Application Publication

LANE

(10) Pub. No.: US 2016/0029467 A1

(43) Pub. Date: Jan. 28, 2016

(54) CHARGED PARTICLE INDUCTION FROM IONOSPHERE TO GROUND

(71) Applicant: **Glenn Lane Family Limited Liability Limited Partnership**, Summerfield, FL (US)

(72) Inventor: **GLENN E. LANE**, SUMMERFIELD, FL (US)

(21) Appl. No.: **14/829,079**

(22) Filed: **Aug. 18, 2015**

Related U.S. Application Data

(63) Continuation of application No. 14/197,698, filed on Mar. 5, 2014, now Pat. No. 9,112,435, which is a continuation of application No. 12/917,447, filed on Nov. 1, 2010, now Pat. No. 8,693,160.

(60) Provisional application No. 61/280,131, filed on Oct. 31, 2009.

Publication Classification

(51) **Int. Cl.**

H05F 7/00 (2006.01)

H02N 99/00 (2006.01)

(52) **U.S. Cl.**

CPC . *H05F 7/00* (2013.01); *H02N 99/00* (2013.01)

(57) **ABSTRACT**

A charged particle induction apparatus and method comprising a high power light emitting means, such as a laser array, in operable communication with a high energy output means to accomplish initiation of at least two concentric plasma channels in atmosphere extending from the Earth's surface to the charge-rich upper atmosphere, including the ionosphere, for the transmission of charged particles therethrough to ground using the surrounding atmosphere as an insulator. The transmitted energy is drawn down (due to an artificially created potential) through the conductive plasma channels to collection means.

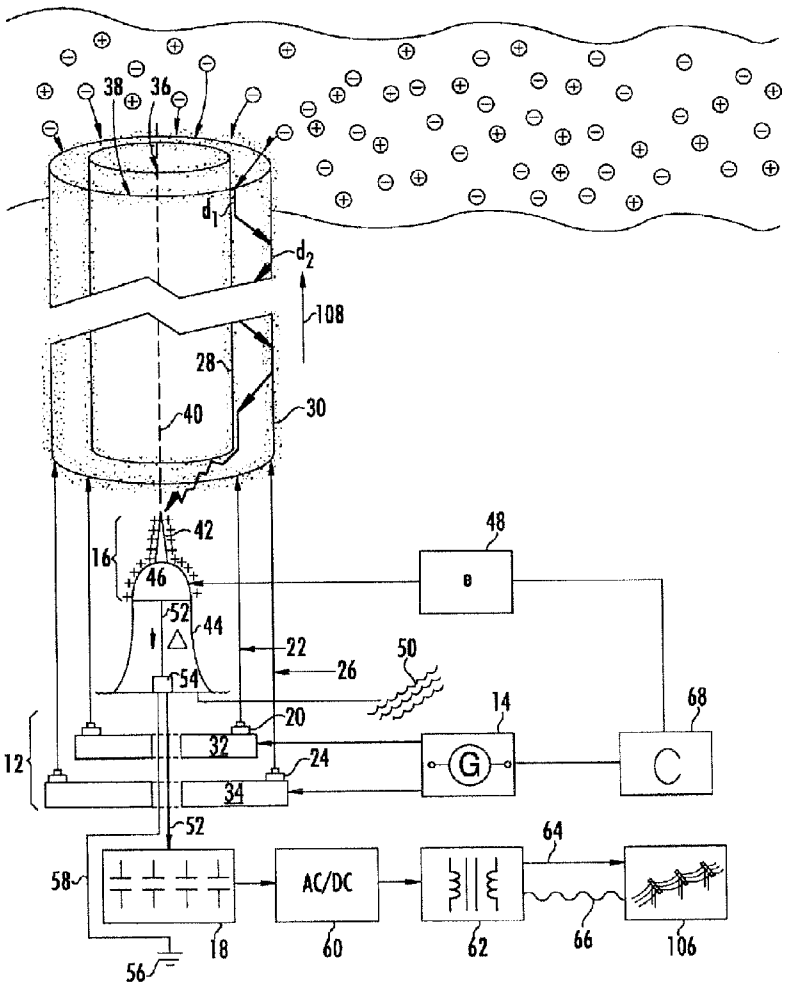

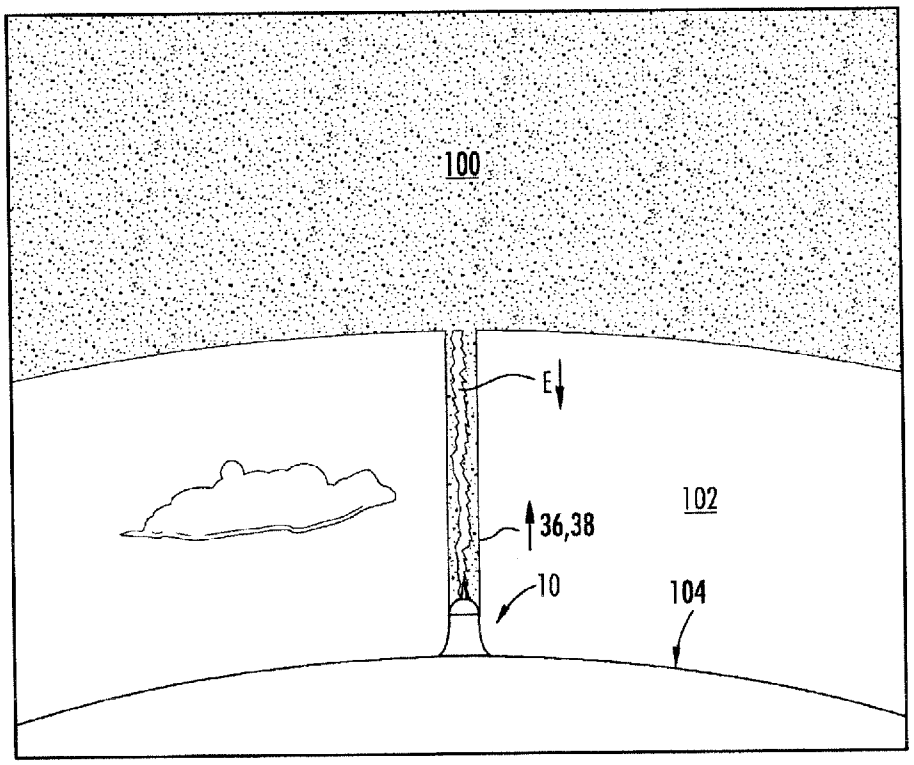

FIG. 1

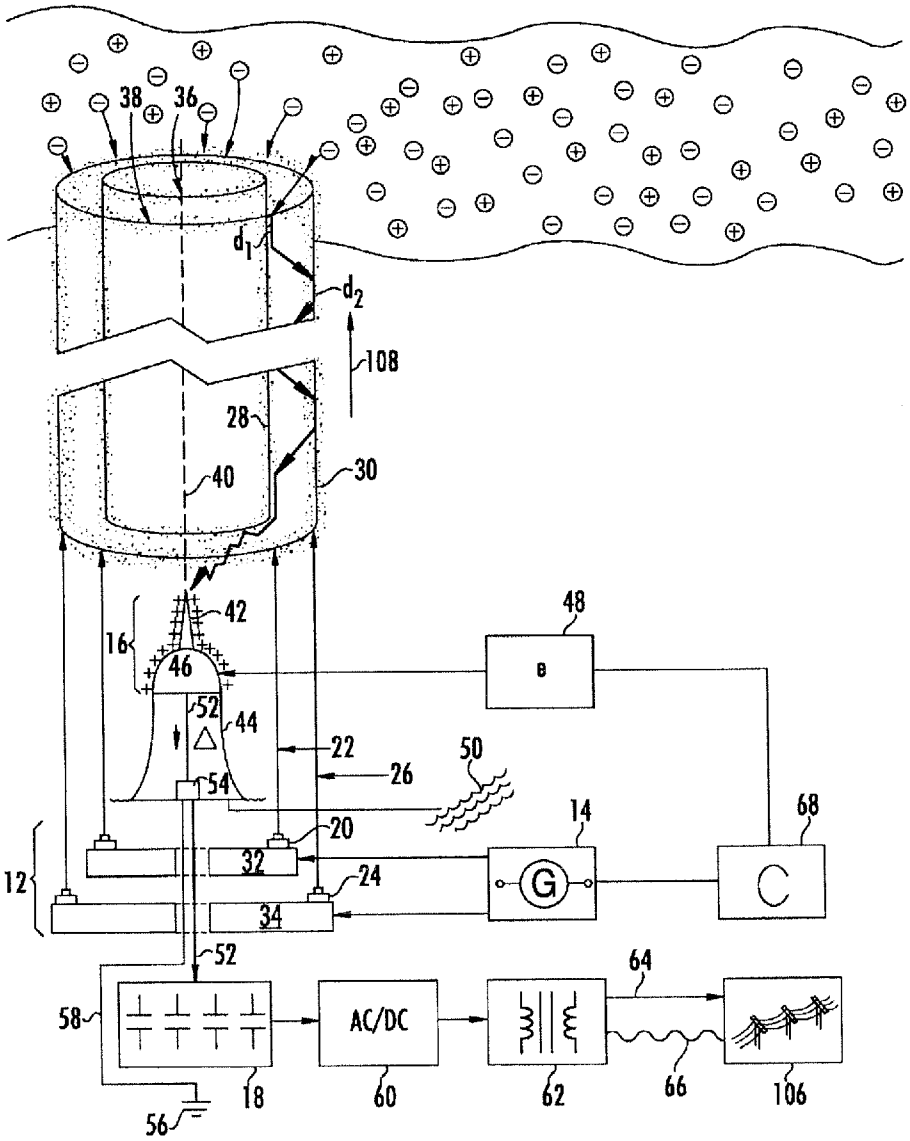
38
36
d_1
d_2
108
28
40
30
42
16
46
48
B
52
44
22
26
50
54
20
14
68
12
32
24
G
C
34
52
64
58
AC/DC
18
60
62
66
106
56

FIG. 2

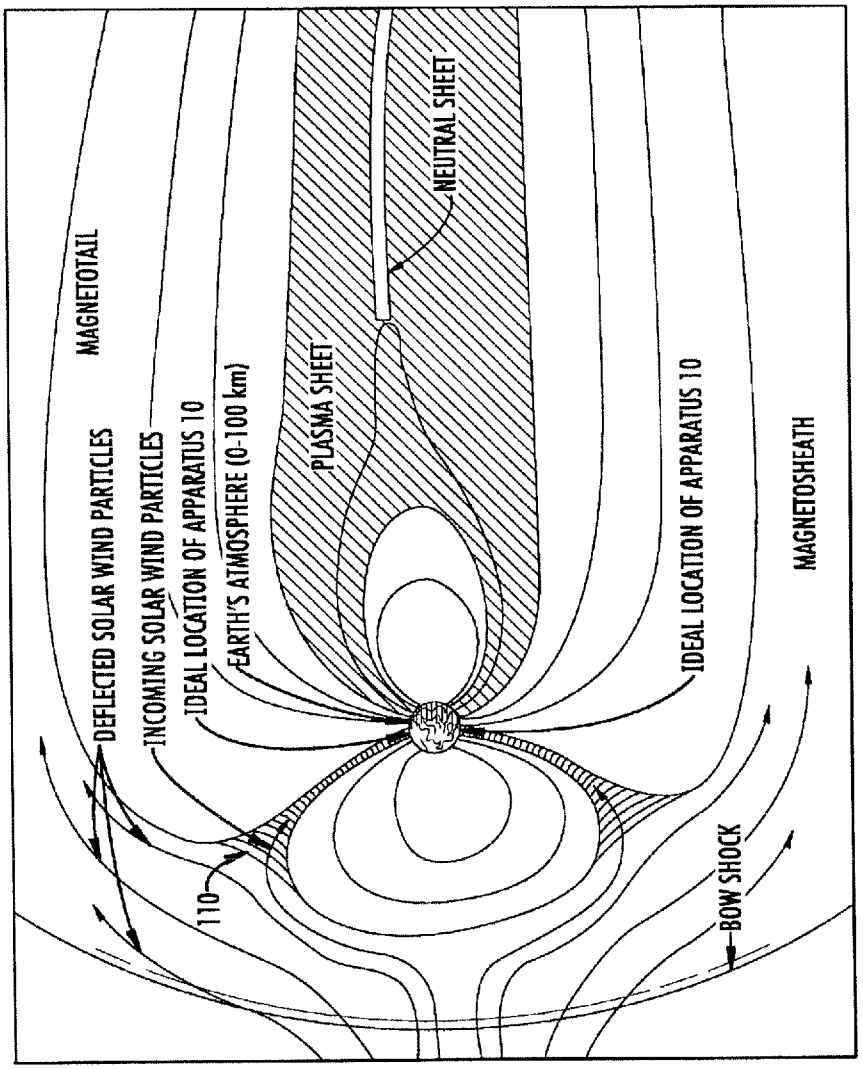
DEFLECTED SOLAR WIND PARTICLES
MAGNETOTAIL
INCOMING SOLAR WIND PARTICLES
IDEAL LOCATION OF APPARATUS 10
EARTH'S ATMOSPHERE (0-100 km)
PLASMA SHEET
NEUTRAL SHEET
110
IDEAL LOCATION OF APPARATUS 10
MAGNETOSHEATH
BOW SHOCK

FIG. 3

CHARGED PARTICLE INDUCTION FROM IONOSPHERE TO GROUND

CROSS-REFERENCE TO RELATED APPLICATIONS

[0001] The present application is a continuation of U.S. patent application Ser. No. 14/197,698, filed Mar. 5, 2014; which is a continuation of U.S. patent application Ser. No. 12/917,447, filed Nov. 1, 2010 (now U.S. Pat. No. 8,693,160) which claims the benefit of U.S. Provisional Application Ser. No. 61/280,131, filed Oct. 31, 2009; all of which are hereby incorporated by reference herein in their entirety, including any figures, tables, or drawings.

FIELD OF THE INVENTION

[0002] The present invention relates to the transmission of ionospheric energy through at least two "ionosphere-to-ground" coaxial laser-induced plasma channels formed through the Earth's atmosphere. As used herein, the term "ionospheric energy" means charged particles, namely ions and electrons, in the ionosphere. As used herein, the term "channel" means a conduit having walls comprised of ionized or partially ionized gas, the channel being substantially ring-shaped in cross-section, the walls serving as the conductive path through which charged particles are induced to ground.

BACKGROUND OF THE INVENTION

[0003] The need to develop alternative clean renewable energy supplies is becoming critical. Problems of climate change and global warming due to carbon emissions are becoming an accepted fact. The dramatic rise in the cost of petro-chemical energy is due to decreased supplies and increase in world demand. There is increasing political instability of regions of the world that have large oil supplies. There are geo-political and economic ramifications of being dependent on imported energy or on being economically dependent on the export of energy from dwindling energy reserves.

[0004] Heretofore, space solar power has been considered as an alternative clean energy source. Space solar power is clean, inexhaustible, available 24 hours a day, and has the potential to generate as much energy as terrestrial power plants. However, because of the filtering effect of the Earth's atmospheric gases (air acts as an insulator), and for other reasons such as reflection and absorption, only a fraction of solar energy in any given area reaches Earth. The average solar power per unit area outside Earth's atmosphere during any given time period is about 136% that available on Earth's surface during direct sunlight (1336 W/m2). Various apparatus and methods have been considered, and some developed, to compensate for this shortcoming.

[0005] A very recent proposed solution is described in pending U.S. Patent Application No. 2009/0171477 of Neyfeh et al. which describes systems and methods that employ high-intensity lasers to set up a thin plasma sheet, also called a waveguide or "hot shell", in the atmosphere as a function of beam intensity and geometry. A laser beam can be spread and directed with physical optics to generate a thin inverted cone-shaped hot shell waveguide in the atmosphere. According to Neyfeh, the hot shell of the waveguide has a different index of refraction from that of the surrounding air layers and as such serves to internally reflect portions of the entering solar ray entering an aperture in the hot shell, toward the tip of the cone and a solar energy storage component positioned there, thus providing a virtual solar energy concentration system. The Neyfeh et al. systems and methods, therefore, endeavor to make the best of the filtered solar energy present in Earth's atmosphere.

[0006] Another proposed solution is to collect the Sun's energy in space, where it is more concentrated, via satellite-based or lunar-based collection stations. The energy must then be transmitted from the collection point in space to the Earth's surface. Since wires extending from Earth's surface to an orbiting satellite would be impractical, many space-based solar power designs have proposed the use of microwave or laser beams for wireless power transmission. The collecting station would convert solar energy into electrical energy, which would then be used to power a microwave emitter or laser directed at a collector on the Earth's surface. There are numerous technical, political, legal and economic challenges to building space solar power stations. Limitations in photovoltaic technology and the difficulty of building large structures in space are some of the issues. In the past, launch costs have been prohibitive. In addition to the relatively high costs involved with this method, other problems include cumulative radiation damage or micrometeoroid impacts.

[0007] The underlying physics of wireless power transmission resembles that of wireless communications, but with an important difference. Unlike information transfer, where the percentage of received power must be only sufficiently high enough to recover the signal, wireless power transmission places a critical emphasis on the maximum amount of possible energy transfer and conversion efficiency. Ideally, a wireless power transmission system would have the ability to transmit any amount of power to any point in space, but practical limitations such as conversion efficiencies at the source and the receiver, and disturbances in the transmission medium will always limit the performance of an implemented system.

[0008] For instance, as recently as 2006, the highest amount of energy obtained from a receiver when testing high intensity lasers to illuminate vertical multi junction solar cells developed by NASA-GRC was 23.7778 watts. One vertical multi junction solar cell was able to achieve a power density of 13.6 watts per cm^2, at a conversion efficiency of 24%. Although these experiments confirm that the VMJ technology can withstand and utilize the high intensity laser energy without damage or significant reduction in previously known conversion efficiencies, wireless power transmission via high intensity laser beaming technology is not yet ready for high order energy transfer. In short, the main limiting factors to the laser power beaming system are the conversion efficiencies of the laser (electrical to photonic) and the photovoltaic cells (photonic to electrical). Although there are a variety of photovoltaic cells on the market approaching conversion efficiencies of 40% (such as triple junction cells), these technologies cannot operate at intensities 1000 times or greater than that of the sun.

[0009] Based on the above, it is clear that there is a strong desire to harness the energy existing in both our atmosphere and beyond, but it is apparent that the various methods and apparatus designed to capture and utilize this energy source are attendant with various, problems, shortcomings and limitations.

SUMMARY OF THE INVENTION

[0010] In order to meet the need in the art, the subject invention presents an entirely different approach to "tapping" this vast energy source. At least one preferred embodiment of the invention is discussed below.

[0011] The Earth's surface—ocean and solid—and the ionosphere are highly conductive. The atmosphere conducts electricity because of the presence of positive and negative ions plus free electrons. Conductivity is poor near sea level but increases rapidly with height up to the ionosphere; also it is greater at polar latitudes than equatorial. Between ground and the Ionosphere, the atmosphere acts an insulator.

[0012] The ionosphere begins at a height of about 50 km (30 miles) above the Earth's surface, but it is most distinct and important above 80 km (50 miles). In the photochemical ionosphere (which is mostly contained within the thermosphere but also partly extends into the neighboring mesosphere), cosmic radiation of high-energy sub-atomic particles and the absorption of much of the solar ultraviolet radiation separates negative electrons from oxygen and nitrogen molecules. The ions and free electrons move rapidly under the influence of electrical forces—the ionospheric wind—and the ionosphere is highly conductive in this region. During fair weather there is an electric potential difference of 250,000 to 500,000 volts between the ionosphere and the Earth's surface, the surface being negative relative to the ionosphere. This, incidentally, gives rise to the fair weather current, which is a steady flow of electrons from the surface at about one microwatt per square meter. The subject invention is directed generally toward the exploitation of this electric potential difference, and more specifically to a system, method and apparatus for inducing a flow of charged particles from the charged upper atmosphere, including but not limited to the ionosphere, to ground through concentric laser induced plasma channels ("con-channels").

[0013] It is widely recognized that a laser beam of suitable wavelength can penetrate through a gas medium over great distances and will establish a partially ionized trail therethrough. Examples of laser systems used to produce a thin ionizing beam through the atmosphere are taught in U.S. Pat. No. 3,719,829 issued to Vaill in 1973 entitled, Laser Beam Techniques and U.S. Pat. No. 5,726,855 issued to Maourou et al. in 1998 and entitled, Apparatus and Method for Enabling the Creation of Multiple Extended Conduction Paths in the Atmosphere. Mourou et al. teaches an apparatus and method for enabling the creation of multiple laser generated extended conduction paths in the atmosphere to safely control the discharge of lightning strikes to a grounding tower. It is also well known in the art that a plasma channel has a low electrical resistance and, once formed, will permit continuous current flow if the energy source that heats the plasma can be maintained. Unlike a normal electrical conductor, the resistance (and voltage drop) across an unconfined plasma channel decreases with increasing current flow, a property called negative resistance. Because plasmas are conductive and respond to electric and magnetic fields and can be efficient sources of radiation, they are usable in numerous applications where such control is needed or when special sources of energy or radiation are required.

[0014] Unfortunately, it has been observed that a highly-ionized path will tend to lose its straight-line configuration after creation and will begin to wander transversely in serpentine configurations, which wandering, once started, will grow progressively worse. Moreover, charges carried in plasma channels tend to self constrict due to magnetic forces stemming from the current flowing through the plasma. This phenomenon is known as the "plasma pinch". Upon constricting of the charge as a result of the pinch, the current will then follow the path of least resistance to ground which is by its nature unpredictable and dangerous.

[0015] Applicant's methods and apparatus overcome these shortcomings through the creation of at least two concentric conductive paths to and from which the wandering current may "jump", in alternating fashion, thereby maintaining a continuous flow of energy in the desired direction from the ionosphere to the terrestrial target collection apparatus. According to the present invention there is thus provided a ground-to-ionosphere laser-induced conduction path of concentric plasma channels through Earth's atmosphere along which charged particles within the ionosphere may be transmitted to Earth. The term "atmosphere" as used herein means the mass of air surrounding the Earth. The term "plasma" as used herein means a combination of neutrons, ions, electrons and fields that have conductive and collective effects.

[0016] The subject apparatus more specifically comprises high power light emitting means, such as a laser array, in operable communication with a high energy output means to accomplish initiation of at least two concentric plasma channels from the Earth's surface to the ionosphere for the transmission of ionospheric energy therethrough. The path need only remain open for relatively short intervals to transmit high orders of energy. The transmitted energy is drawn down through the conductive plasma channels to at least one intervening electrode mounted to a support structure. Charges flow down through the channels to the electrode as they approach ground and the conductive electrode carries the energy away from the laser assembly to avoid damage to or destruction thereof. The at least one electrode will then pass these charges onto a capacitor bank or other storage means to store them. The at least one electrode is mounted to a support structure housing heat dissipation means well known in the nuclear fission art. The light emitting means is preferably insulated from and/or located remotely from the at least one electrode in order to protect the former from damage which could result if the high order energy being transmitted through the plasma channels was not intercepted by the electrode(s). Ideal locations for the subject apparatus are also described.

[0017] There has thus been outlined, rather broadly, the more important components and features of the invention in order that the detailed description thereof that follows may be better understood, and in order that the present contribution to the art may be better appreciated. There are, of course, additional features of the invention that will be described hereinafter and which will form the subject matter of the claims appended hereto. In this respect, before explaining at least one embodiment of the invention in detail, it is to be understood that the invention is not limited in its application to the details of construction and to the arrangements of the components set forth in the following description or illustrated in the drawings. The invention is capable of other embodiments and of being practiced and carried out in various ways. Also, it is to be understood that the phraseology and terminology employed herein are for the purpose of description and should not be regarded as limiting. As such, those skilled in the art will appreciate that the conception, upon which this disclosure is based, may readily be utilized as a basis for the designing of other structures, methods and systems for carrying out

the several purposes of the present invention. It is important, therefore, that the claims be regarded as including such equivalent constructions insofar as they do not depart from the spirit and scope of the present invention.

[0018] Further, the purpose of the foregoing abstract is to enable the U.S. Patent and Trademark Office and the public generally, and especially the scientists, engineers and practitioners in the art who are not familiar with patent or legal terms or phraseology, to determine quickly from a cursory inspection the nature and essence of the technical disclosure of the application. The abstract is neither intended to define the invention of the application, which is measured by the claims, nor is it intended to be limiting as to the scope of the invention in any way.

[0019] For a better understanding of the invention, its advantages and the specific objects attained by its uses, reference should be had to the accompanying drawings and descriptive matter in which there is illustrated a preferred embodiment of the invention.

BRIEF DESCRIPTION OF THE DRAWINGS

[0020] The invention will be better understood and objects other than those set forth above will become apparent when consideration is given to the following detailed description thereof. Such description makes reference to the annexed drawings wherein:

[0021] The invention will be better understood and objects other than those set forth above will become apparent when consideration is given to the following detailed description thereof. Such description makes reference to the annexed drawings wherein:

[0022] FIG. **1** is a highly simplified schematical view of energy being transmitted from the ionosphere to ground via concentric laser-induced plasma channels produced by the subject apparatus in atmosphere (not-to-scale);

[0023] FIG. **2** is simple schematic illustration of the subject apparatus for inducing the flow of charged particles from the ionosphere to ground through concentric laser induced plasma channels (not-to-scale); and

[0024] FIG. **3** is a simplified schematical view of the earth with a magnetic field (force) line along which the present invention may be carried out (not-to-scale).

DETAILED DESCRIPTION OF THE PREFERRED EMBODIMENT

[0025] Reference is now made to FIG. **1** in which there is illustrated a highly simplified schematic view of energy E being transmitted from the ionosphere **100** through atmosphere **102** via concentric plasma channels **36**,**38** generated by the subject apparatus which is designated generally by reference numeral **10**. Apparatus **10** is situated on the earth's surface **104** at preferred locations herein described.

[0026] Referring to FIG. **2**, apparatus **10** is comprised of three primary components: 1) a wireless conductive channel producing means **12** or "atmospheric auger" connected to an energy source **14**, 2) charged particle receiving means **16** and 3) energy storage means **18**. Each primary component is described in detail below, together with secondary components of the subject apparatus.

[0027] Wireless conductive channel producing means **12** (hereinafter "plasma channel producing means") is comprised of first ionizing beam emitting means **20** used to create a first ionizing beam **22**, and second ionizing beam emitting means **24** used to create a second ionizing beam **26**. The term "ionizing beam emitting means" as used herein includes not only presently known lasers, but also other light sources which will excite ionization in a medium. Lasers utilize the natural oscillations of atoms or molecules between energy levels for generating beams **22**,**26** of highly amplified and coherent electromagnetic radiation of one or more discrete frequencies, which in turn generate first and second conductive paths **28**,**30**, respectively. The laser means used to establish conductive paths **28**,**30** should be selected with regard to energy, pulsewidth and wavelength so that it provides control of ionization concentration in each plasma channel. In a gas medium it is important that the ionizing beams **22**,**26** are controlled for optimum transmission of a charge.

[0028] Technologies that facilitate the creation of the subject con-channels include recent advancements in ultra-high intensity pulsed lasers and their transmission optics which together can generate a plasma field and have precise control over the field's geometry. Information regarding the manipulation and transmission of high powered lasers is generally classified due to the nature of their application. It is well known however, that successful high power laser systems are currently operation, and it follows that the condition and control optics are in place to handle such a system. According to an embodiment described herein, this technology is adapted to generate the con-channels. Ultra-high power pulsed or continuous lasers are now available in the Megawatt class, such as the Airborne Laser (ABL) built by Northrop Grumman. The lasers employed by the subject apparatus and methods should also by capable of varying the chirp of the input pulse to achieve control of the filamentation over horizontal kilometric distances. By way of example, one embodiment may include a Ti:sapphire CPA (Chirp Pulse Amplification) laser system operating at 10 Hz and delivering a maximum output power of 0.2 TW per pulse. The pulse duration approximates 130-135 fs (FWHM). The beam may be truncated by a circular aperture having a desired radius in order to have a more stable beam shape with a perfect or near-perfect circular symmetry.

[0029] Those skilled in the art will readily recognize that there are two main mechanisms responsible for the photoionization of air: avalanche ionization and multiphoton ionization. In avalanche ionization, or sometimes known as cascade ionization, the bound electrons in the valence shell of air molecules usually have an energy bandgap greater than the incident laser photon energy. However, a small number of free electrons exist. These free electrons may be generated through high altitude ionization of air molecules, radicals, break-up of aerosol molecules, thermal ionization or multiphoton ionization. These free electrons constitute the required seed electrons for avalanche ionization. Although these free electrons may exist in small number initially and have low kinetic energy, through a process called inverse bremsstrahlung, they can be accelerated to gain enough kinetic energy to impact ionize a molecule in collision, resulting in more free but slower electrons. The whole process repeats itself with more electrons gaining higher kinetic energy, exceeding the ionization potential of the bound electrons, to impact even more molecules, leading to an avalanche with the resultant formation of a plasma. In this inverse bremsstrahlung process, the free electrons absorb photons through the laser field when they collide with atoms or molecules. A free electron does not absorb laser energy directly without any collision. This is because the free electron simply

quivers in the oscillating laser field, and when averaged over an optical cycle, it does not gain any net energy. The other dominant photoionization mechanism is the multi photon ionization process. Through this process, bound electrons may absorb several laser photons simultaneously to overcome their ionization potential. Multiphoton ionization depends largely on the laser operating frequency. Either method may be employed with the subject application.

[0030] In order to transform first and second conductive paths **28**,**30** into the desired cylindrical-shaped first and second plasma channels **36**,**38** it is necessary to cause their movement around a common central axis **40**. First and second beam moving means **32**,**34** are provided for this purpose and are comprised of either or a combination of mechanical or optical means. The manner in which at least two concentric plasma channels are generated using first and second ionizing beams **22**,**26** is not critical provided the properties (i.e., length, ionization intensity, uniformity, etc.) of each channel is controllable. Applicant's co-pending U.S. patent application entitled, Wireless Transmission Of Energy Through Concentric Laser-Induced Plasma Channels In Atmosphere, filed contemporaneously with the instant application and incorporated herein in its entirety, teaches at least one method of producing at least two concentric plasma channels. As previously stated, the term "channel" means a conduit, substantially ring-shaped in cross-section, having walls comprised of partially ionized gas ("plasma"), each wall being created by the movement of first and second conductive paths **28**,**30**, respectively. First plasma channel **36** and second plasma channel **38** share a common central longitudinal axis; they are concentric channels (or co-axial from a three-dimensional linear perspective). In alternate embodiments, the outermost channel and any channels between it and the innermost channel may be shaped like a funnel or frustum, narrower at point of origin and progressing outward as it extends into the atmosphere. U.S. Pat. No. 6,377,436 issued to Margolin on Apr. 23, 2002 and entitled, Microwave Transmission Using a Laser-Generated Plasma Beam Waveguide, which said reference is incorporated herein in its entirety to the extent it is not inconsistent with the explicit teachings of this specification, teaches various directed energy beam systems in the form of channels or "shells". Although the Margolin shells are used as a guide through which microwaves are transmitted rather than high order energy, the means by which the shells are created are instructive and find utility in the instant case. It should be appreciated that multiple concentric plasma channels may be created with at least two being the minimum required and at least three channels being preferred.

[0031] With continued reference to FIG. **2**, power to each ionizing beam emitting means is supplied by energy source **14**. The voltage required is related to and increases with the length of the path to be ionized. The energy in Joules required to excite the gas molecules in the path into ionization can be calculated in advance knowing the density of the molecules and the approximate diameter and length of the conductive path over which the energy from the ionosphere is to be transmitted. By way of example, energy source **14** may be comprised of a Marx generator which is capable of generating a high-voltage pulse. Voltages produced may exceed 2 million volts.

[0032] Charged particle collection means **16** comprises a charged particle attraction structure. Such structure includes at least one elongated electrode **42** generally somewhat similar to the lightning rods which are normally used to direct the electrical energy to ground when protecting buildings and the like. Electrode **42** is mounted to a support structure **44** generally, and to a conductive hemispherical dome **46** thereof specifically. A charge indicated by symbol + is applied to the at least one electrode **42** and/or dome **46** via charging means **48** which can impart a charge via conduction or induction (friction being impractical). Note that the + symbol is used as a substitute for the more conventional symbol "e" which of course can be either positive or negative. The hemispherical shape allows for the widest variance of charge wandering during energy transfer to the Earth's surface. This orb-like structure may include openings through its ionosphere-facing surface to allow the transmission of at least one ionizing beam therethrough with the actual light emitting means located remotely enough from the orb surface to mitigate against damage from expected energy loads.

[0033] The induction of ionospheric energy utilizing the subject apparatus **10** may be likened to the induction of a lighting strike, only of greater magnitude. A lightning strike discharges about 1-10 billion joules of energy and produces a current of some 30,000-50,000 amps, which heats the surrounding air to over 20,000 degrees Celsius. A single lightning bolt unleashes as much energy as blowing up a ton of TNT. Because of the enormous amount of heat attendant with the collection of ionospheric energy, even over a relatively short period of time, heat dissipation means are associated with the subject apparatus **10**. In one embodiment, heat dissipation means may be housed within support structure **44** as indicated by the "down arrow delta" symbol. Alternatively, heat dissipation means may be connected to support structure **44** but remote therefrom. Guidance for the design of a safe and efficient cooling system may be found in the nuclear science field of art for example, or in other power generation facilities. The main types (mechanisms) of heat transfer to be employed are 1) Wet cooling towers or simply cooling towers which operate on the principle of evaporation wherein the working fluid and the evaporated fluid (usually H_2O) are one and the same; 2) Dry coolers which operate by heat transfer through a surface that separates the working fluid from ambient air, such as in a heat exchanger, utilizing convective heat transfer (they do not use evaporation); and 3) Fluid coolers which are hybrids that pass the working fluid through a tube bundle, upon which clean water is sprayed and a fan-induced draft applied; the resulting heat transfer performance is much closer to that of a wet cooling tower, with the advantage provided by a dry cooler of protecting the working fluid from environmental exposure. In all applications, water may be tapped from a nearby water source **50** or other fluids used. Steam turbines (not shown) may be utilized to extract thermal energy from pressurized steam and convert it into rotary motion for the generation of electricity which may be utilized locally to power system components and/or fed to a local power grid **106**. Note that the release of steam in the ionospheric energy induction process will interfere with the photo-ionization of surrounding air and is therefore undesirable.

[0034] Once ionospheric particles are attracted to charged particle collection means **16** in the above described manner, the resulting electrical current is directed through the heat dissipation means via a first wire conductor **52** downwardly through support structure **44** to a surge arrestor assembly designated generally by reference numeral **54**. Such surge arrestor assembly is connected directly to ground **56** and has a switching assembly (not shown for purposes of clarity). The

switch assembly is a structural adaptation of the surge arrestor assembly **54** serves automatically or manually to direct current flow either to energy storage means **18** via second wire conductor **58** when the conductive path is "open" or to ground **56** when the conduction path is closed. Energy storage means **18** may be comprised of, for example, a capacitor bank as illustrated or some other suitable means such as a collection coil of superconductive material as has been proposed in the art.

[0035] Various systems, methods and apparatus may be employed to convert the energy stored in energy storage means **18** to use. By way of example only, when energy stored within energy storage means **18** is required, a suitable switching apparatus (not shown for purposes of clarity) may be activated and the stored energy passed through a converter apparatus **60** structurally adapted to convert current coming from energy storage means **18** from D.C. to A.C. The A.C. current may then be passed through a transformer **62** for the purpose of regulating voltage before the current is directed into the power grid **106** for practical distribution and use. Energy may be transmitted from transformer **62** to power grid **106** via conventional power take-off means **64** and/or wirelessly **66** in a manner described in applicant's aforementioned co-pending application.

[0036] In operation, ionizing beam emitting means may be applied in continuous or, more likely, pulsed fashion, as determined by controller **68** used to activate energy source **14**. Alternatively, at least one ionizing beam emitting means may be operated in continuous fashion while at least one other ionizing beam emitting means may be operated in pulsed fashion. The intensity of both may additionally be modulated. In the event that the emitting means provides outputs which are continuous the control circuit will comprise merely on-off means, but where pulsed lasers and/or a pulsed energy source are used, the control circuit will comprise a trigger, suitable for firing each ionizing beam emitting, and also for controlling the rate at which each repeat their outputs. Pulsed systems have the advantage of providing quiescent intervals between their output pulses during which the ionized plasma in the portion of the beam which is located between the electrodes can die out to permit the system to start all over again and re-establish a straight-line highly conductive path of narrow and well defined proportions. The periodic extinguishing of each channel in a pulsed system is beneficial since it allows unstable ionization to die out so that it can be reestablished in a new channel which is both straight, and highly defined and concentrated. The subject apparatus provides a means of assuring that at least one plasma channel **36**,**38**, etc. is always open at any point in time thereby assuring that the energy to be transmitted always has a pre-defined conductive path to travel upon to the target collection means **16**. For instance, while plasma channel **32** is extinguished, controller **68** assures that plasma channel **36** is active. As previously stated, the periodic discharges from the at least two ionizing beam emitting means can be synchronized to produce, in the aggregate, a constant directional plasma channel between the ionosphere and ground. The overall transition of the Earth's atmosphere within the concentric laser induced plasma channels from insulator to conductor is in correlation to the Bose-Hubbard (boson Hubbard) model. In contrast to relatively low order energy transfer at colder temperatures demonstrated by fermion conductors, the subject invention provides high order energy transfer at ambient temperatures using Hubbard's principles as applied to bosons.

[0037] FIG. **2** illustrates the manner in which energy is transmitted from its point of origin in the ionosphere **104** to collection means **16**. First and second plasma channels **36**,**38** comprise a plasma which is highly conductive and which is propagating along directional arrow **108**. Prior to transmission of ionospheric charged particles, designated by circumscribed minus signs, through plasma channels **36**,**38**, the channels remain fairly well defined for a usable interval of time. However, when the energy to be transmitted is introduced into and travels along a given plasma channel, the charge will eventually begin to self constrict due to magnetic forces stemming from the current flowing through the plasma causing the charge to close upon itself and leaving the energy being transmitted with no clear path to follow, potentially striking unintended targets.

[0038] The employment of at least two, and preferably at least three, concentric plasma channels in accordance with the subject invention mitigates such occurrences by providing adjacent conductive paths which ionospheric energy can "jump to" when losing its point-to-point direction. After the charge transitions to its new conductive path, the last-travelled path is regenerated by its corresponding ionization beam emitting means. The subject apparatus and methods, therefore, provide that at least one conductive path is always open and in close proximity to a neighboring current-carrying plasma channel.

[0039] In the example illustrated in FIG. **2**, a potential exists between free charged particles in the ionosphere, on the one hand, and charged electrode **42** and dome **46** on the other. First and second plasma channels **36**,**38** provide a bridge between them for the transmission of the former to the latter. Charged particles from the ionosphere are drawn into the walls of whichever plasma channel is open at the time (in the instant illustration, plasma channel **36**, and begin to travel downwardly there along a first distance or time interval d_1 until the current is pinched and can no longer travel along its current channel. At that time the errant current will seek out a new path of least resistance on the way to collection means **16**. The closest path of least resistance will be the then open neighboring channel **38** onto which the current will "jump" and then travel a second distance or time interval d_2. As energy traverses its new channel the previously traversed plasma channel **36** will be reformed serving as the next adjacent "jump site" for current to find when it again experiences pinch. The charge will jump from channel to channel, traveling a distance or time interval along each, in alternating or "stair-step" down fashion until reaching energy collection means **16**. Once energy collection means **16** reaches capacity, power to the light emitting means may be relinquished and the magnetic spin of the transferred charged particles will close the field. It is possible, of course, that in certain circumstances a particular charge will remain open while traversing a single channel to the target. What is important is that there is always a predefined alternate directional conductive path in close proximity for the energy to travel upon.

[0040] As previously mentioned, the ionosphere is most distinct above 80 km (50 miles) where the ions and free electrons move rapidly under the influence of electrical forces-the ionospheric wind-and where the ionosphere is highly conductive. During fair weather there is an electric potential difference of 250,000 to 500,000 volts between the ionosphere and the Earth's surface. Accordingly, construction of the subject apparatus in locations which facilitate tapping this region of the atmosphere are desirable, particu-

larly at high elevations where the air to be ionized contains a lower percentage of contaminants which adversely affect propagation of conductive plasma channels.

[0041] Additionally, reference now being made to FIG. **3**, in the upper regions of the ionosphere, beginning several hundred kilometers above Earth's surface and extending tens of thousands of kilometers into space, is the magnetosphere, a region where the behavior of charged particles is strongly affected by the magnetic fields of Earth and the Sun. The solar wind is a stream of charged particles ejected from the upper atmosphere of the sun. It consists mostly of electrons and protons with energies of about 1 keV. As the solar wind approaches Earth's well-developed magnetic field, the particles are deflected by the Lorentz force. This region, known as the magnetosphere, causes the particles to travel around the planet rather than bombarding the atmosphere or surface. However some of the charged particles leak through this magnetic barrier and become trapped in the Van Allen radiation belt. A smaller number of particles from the solar wind manage to travel, as though on an electromagnetic energy transmission line, to the Earth's upper atmosphere and ionosphere in the auroral zones. More specifically, the charged particles travel through funnel-like openings (cusps **110**) at the North and South Poles, releasing tremendous energy when they hit the upper atmosphere. The Northern and Southern Lights (auroras) are the visible evidence of this energy transfer from the Sun to the Earth. These regions, approximately 13 latitude 14 n longitude, and where magnetic field lines intersect the Earth, are believed to be ideal for employment of the subject apparatus **10**. It may be advantageous to locate the subject system and apparatus at a dwindling or soon to be decommissioned mine, because of pre-existing environmental permits and useful tunnels.

[0042] Although the present invention has been described with reference to the particular embodiments herein set forth, it is understood that the present disclosure has been made only by way of example and that numerous changes in details of construction may be resorted to without departing from the spirit and scope of the invention. Thus, the scope of the invention should not be limited by the foregoing specifications, but rather only by the scope of the claims appended hereto.

1. An apparatus for inducing the flow of charged particles from the charge-rich outer atmosphere to ground, comprising:

a. means for generating a first conductive channel through the atmosphere and in communication with the charge-rich outer atmosphere, said first conductive channel being substantially ring-shaped in cross-section and comprised of a wall of partially ionized atmosphere; said first conductive channel having a diameter;

b. means for generating a second conductive channel through the atmosphere and in communication with the charge-rich outer atmosphere, said second conductive channel being substantially ring-shaped in cross-section and comprised of a wall of partially ionized atmosphere; said second conductive channel having a diameter greater than said diameter of said first conductive channel; said first conductive channel and said second conductive channel being concentric; and

c. charged particle collection means associated with said means for generating said first and said second conductive channels.

2. The apparatus for inducing the flow of charged particles from the charge-rich outer atmosphere to ground of claim **1**, wherein said charged particle collection means is comprised of a at least one electrode attached to a support structure.

3. The apparatus for inducing the flow of charged particles from the charge-rich outer atmosphere to ground of claim **2**, wherein said support structure comprises a conductive hemispherical dome.

4. The apparatus for inducing the flow of charged particles from the charge-rich outer atmosphere to ground of claim **2**, wherein one or more of said at least one electrode and said support structure are charged.

5. The apparatus for inducing the flow of charged particles from the charge-rich outer atmosphere to ground of claim **3**, wherein one or more of said at least one electrode and said hemispherical dome are charged.

6. The apparatus for inducing the flow of charged particles from the charge-rich outer atmosphere to ground of claim **1**, wherein said second conductive channel is funnel shaped being more narrow at its point of origin.

7. The apparatus for inducing the flow of charged particles from the charge-rich outer atmosphere to ground of claim **2**, wherein said second conductive channel is funnel shaped being more narrow at its point of origin.

8. The apparatus for inducing the flow of charged particles from the charge-rich outer atmosphere to ground of claim **3**, wherein said second conductive channel is funnel shaped being more narrow at its point of origin.

9. The apparatus for inducing the flow of charged particles from the charge-rich outer atmosphere to ground of claim **4**, wherein said second conductive channel is funnel shaped being more narrow at its point of origin.

10. The apparatus for inducing the flow of charged particles from the charge-rich outer atmosphere to ground of claim **5**, wherein said second conductive channel is funnel shaped being more narrow at its point of origin.

11. The apparatus for inducing the flow of charged particles from the charge-rich outer atmosphere to ground of claim **1**, further including means for momentarily or periodically extinguishing said first conductive channel, said second conductive channel, or asynchronously both.

12. The apparatus for inducing the flow of charged particles from the charge-rich outer atmosphere to ground of claim **2**, further including means for momentarily or periodically extinguishing said first conductive channel, said second conductive channel, or asynchronously both.

13. The apparatus for inducing the flow of charged particles from the charge-rich outer atmosphere to ground of claim **3**, further including means for momentarily or periodically extinguishing said first conductive channel, said second conductive channel, or asynchronously both.

14. The apparatus for inducing the flow of charged particles from the charge-rich outer atmosphere to ground of claim **4**, further including means for momentarily or periodically extinguishing said first conductive channel, said second conductive channel, or asynchronously both.

15. The apparatus for inducing the flow of charged particles from the charge-rich outer atmosphere to ground of claim **5**, further including means for momentarily or periodically extinguishing said first conductive channel, said second conductive channel, or asynchronously both.

16. The apparatus for inducing the flow of charged particles from the charge-rich outer atmosphere to ground of claim **6**, further including means for momentarily or periodically

extinguishing said first conductive channel, said second conductive channel, or asynchronously both.

17. The apparatus for inducing the flow of charged particles from the charge-rich outer atmosphere to ground of claim **7**, further including means for momentarily or periodically extinguishing said first conductive channel, said second conductive channel, or asynchronously both.

18. The apparatus for inducing the flow of charged particles from the charge-rich outer atmosphere to ground of claim **8**, further including means for momentarily or periodically extinguishing said first conductive channel, said second conductive channel, or asynchronously both.

19. The apparatus for inducing the flow of charged particles from the charge-rich outer atmosphere to ground of claim **9**, further including means for momentarily or periodically extinguishing said first conductive channel, said second conductive channel, or asynchronously both.

20. The apparatus for inducing the flow of charged particles from the charge-rich outer atmosphere to ground of claim **10**, further including means for momentarily or periodically extinguishing said first conductive channel, said second conductive channel, or asynchronously both.

* * * * *

United States Patent [19]

Eastlund

[11] **Patent Number: 4,686,605**

[45] **Date of Patent: Aug. 11, 1987**

[54] **METHOD AND APPARATUS FOR ALTERING A REGION IN THE EARTH'S ATMOSPHERE, IONOSPHERE, AND/OR MAGNETOSPHERE**

[75] Inventor: **Bernard J. Eastlund,** Spring, Tex.

[73] Assignee: **APTI, Inc.,** Los Angeles, Calif.

[21] Appl. No.: **690,333**

[22] Filed: **Jan. 10, 1985**

[51] **Int. Cl.**[4] **H05B 6/64;** H05C 3/00; H05H 1/46

[52] **U.S. Cl.** ..... **361/231;** 89/1.11; 380/59; 244/158 R

[58] **Field of Search** ..... 361/230, 231; 244/158 R; 376/100; 89/1.11; 380/59

[56] **References Cited**

PUBLICATIONS

Liberty Magazine, (2/35) p. 7 N. Tesla.
New York Times (9/22/40) Section 2, p. 7 W. L. Laurence.
New York Times (12/8/15) p. 8 Col. 3.

Primary Examiner—Salvatore Cangialosi
Attorney, Agent, or Firm—Roderick W. MacDonald

[57] **ABSTRACT**

A method and apparatus for altering at least one selected region which normally exists above the earth's surface. The region is excited by electron cyclotron resonance heating to thereby increase its charged particle density. In one embodiment, circularly polarized electromagnetic radiation is transmitted upward in a direction substantially parallel to and along a field line which extends through the region of plasma to be altered. The radiation is transmitted at a frequency which excites electron cyclotron resonance to heat and accelerate the charged particles. This increase in energy can cause ionization of neutral particles which are then absorbed as part of the region thereby increasing the charged particle density of the region.

15 Claims, 5 Drawing Figures

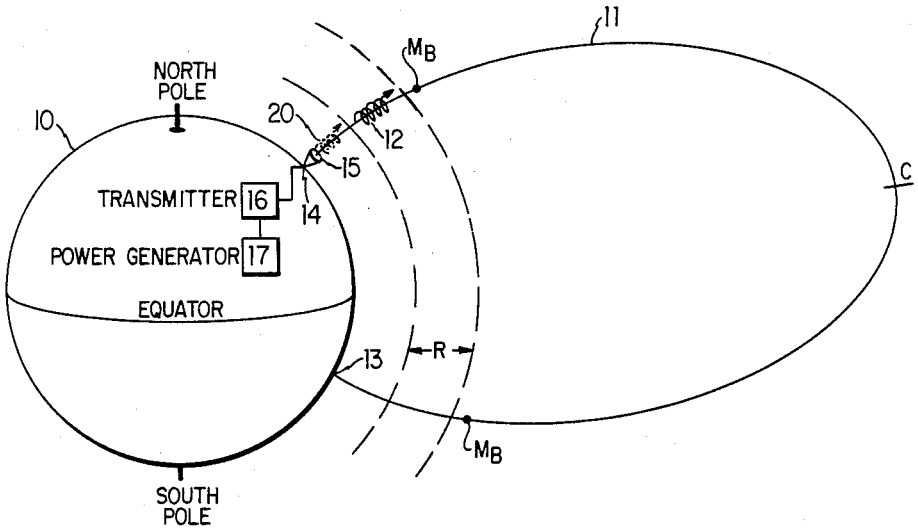

FIG. 1

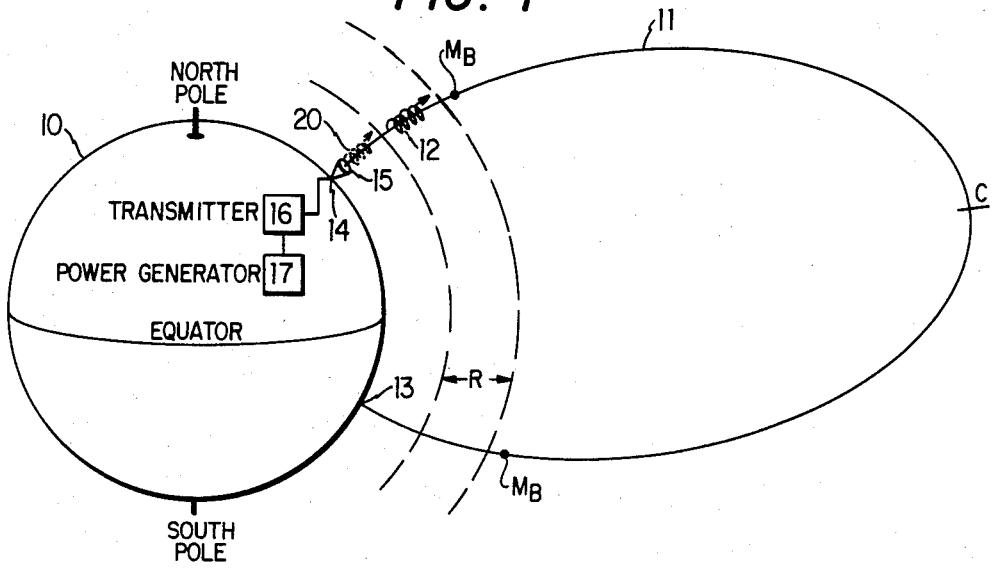
NORTH POLE
10
20
12
15
TRANSMITTER 16
14
POWER GENERATOR 17
EQUATOR
13
R
M_B
M_B
11
C
SOUTH POLE

FIG. 2

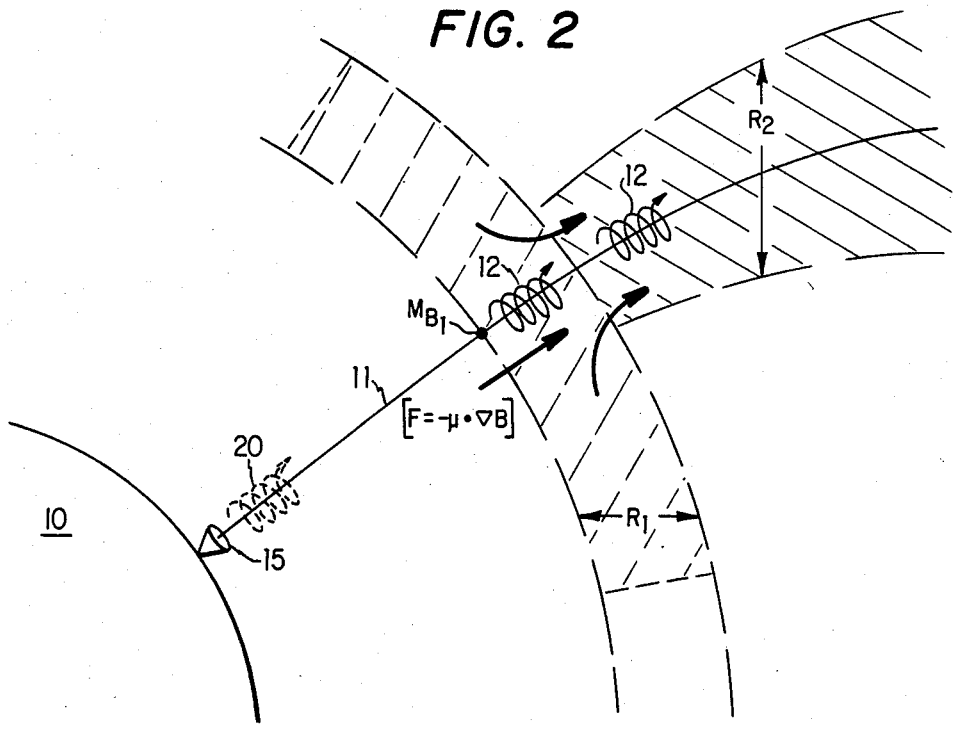
R_2
12
12
M_{B_1}
11
[F=-μ•∇B]
20
10
15
R_1

FIG. 3

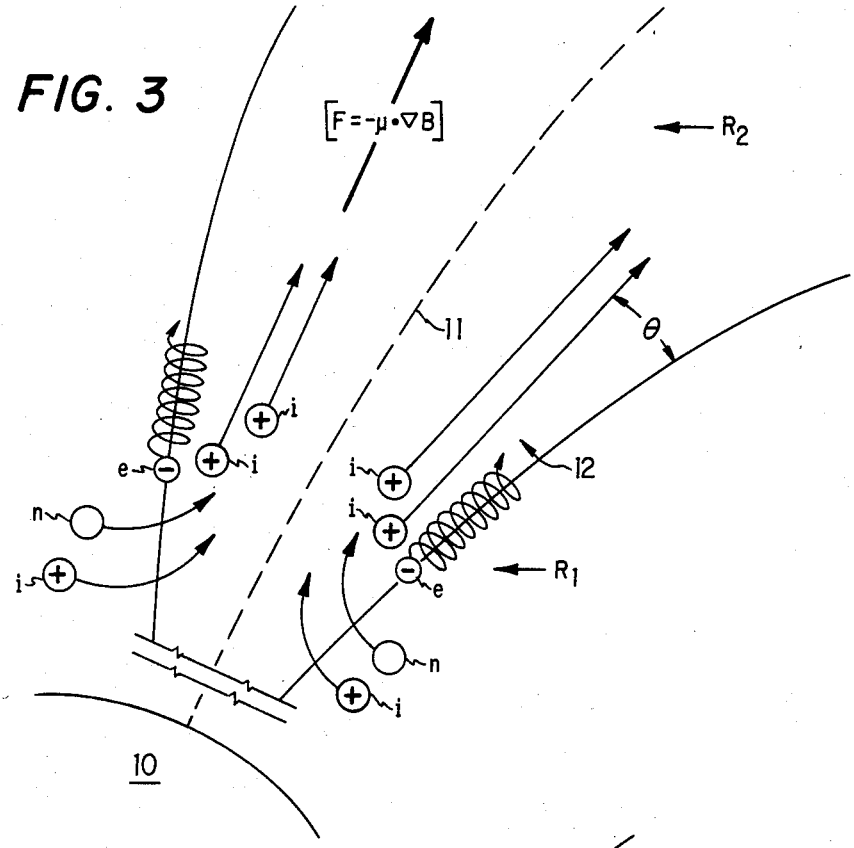

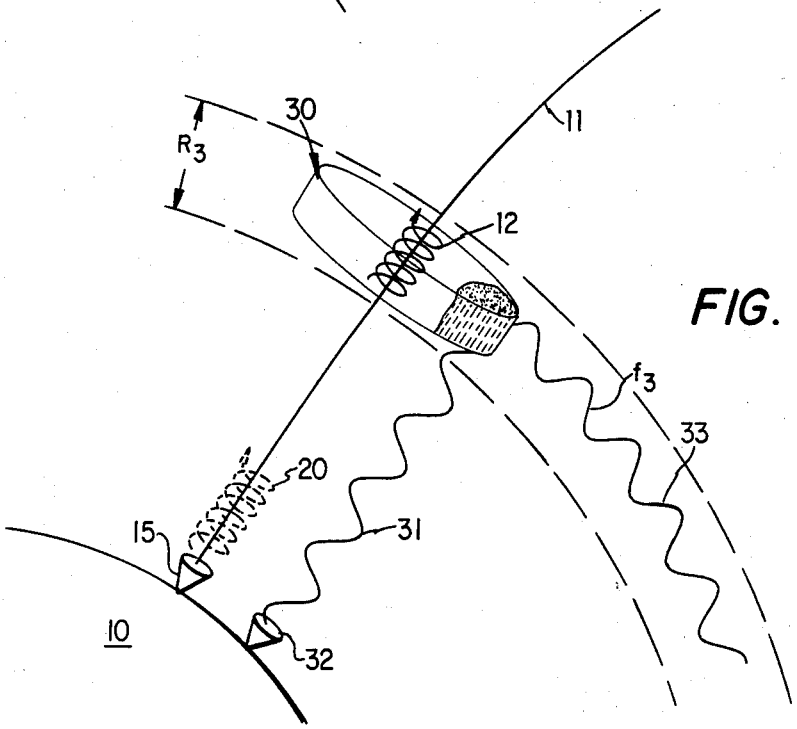

FIG. 4

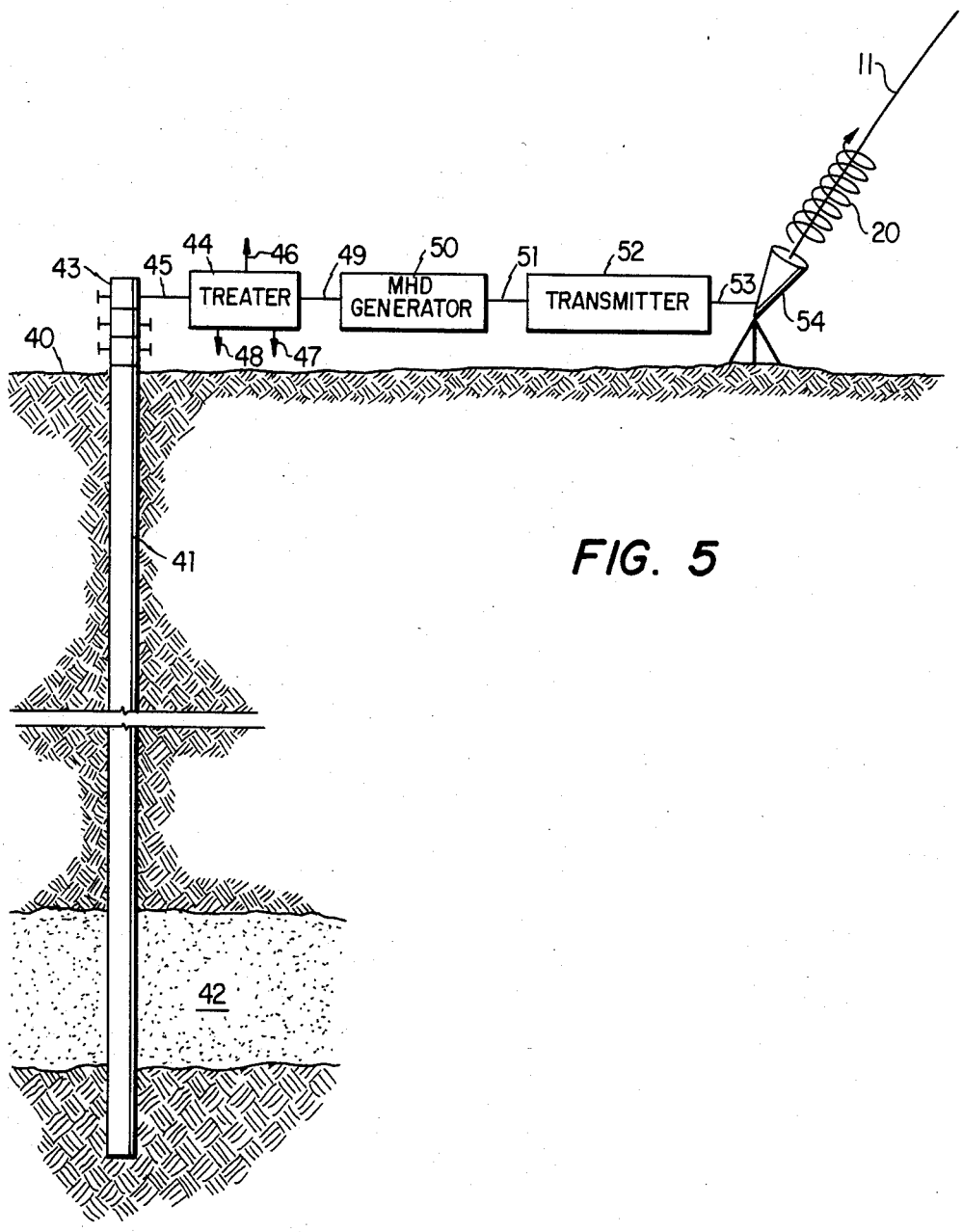
11
20
43
45
44
46
49
50
51
52
53
54
TREATER
MHD GENERATOR
TRANSMITTER
40
48
47
41
42

FIG. 5

METHOD AND APPARATUS FOR ALTERING A REGION IN THE EARTH'S ATMOSPHERE, IONOSPHERE, AND/OR MAGNETOSPHERE

DESCRIPTION

1. Technical Field

This invention relates to a method and apparatus for altering at least one selected region normally existing above the earth's surface and more particularly relates to a method and apparatus for altering said at least one region by initially transmitting electromagnetic radiation from the earth's surface essentially parallel to and along naturally-occurring, divergent magnetic field lines which extend from the earth's surface through the region or regions to be altered.

2. Background Art

In the late 1950's, it was discovered that naturally-occuring belts exist at high altitudes above the earth's surface, and it is now established that these belts result from charged electrons and ions becoming trapped along the magnetic lines of force (field lines) of the earth's essentially dipole magnetic field. The trapped electrons and ions are confined along the field lines between two magnetic mirrors which exist at spaced apart points along those field lines. The trapped electrons and ions move in helical paths around their particular field lines and "bounce" back and forth between the magnetic mirrors. These trapped electrons and ions can oscillate along the field lines for long periods of time.

In the past several years, substantial effort has been made to understand and explain the phenomena involved in belts of trapped electrons and ions, and to explore possible ways to control and use these phenomena for beneficial purposes. For example, in the late 1950's and early 1960's both the United States and U.S.S.R. detonated a series of nuclear devices of various yields to generate large numbers of charged particles at various altitudes, e.g., 200 kilometers (km) or greater. This was done in order to establish and study artifical belts of trapped electrons and ions. These experiments established that at least some of the extraneous electrons and ions from the detonated devices did become trapped along field lines in the earth's magnetosphere to form artificial belts which were stable for prolonged periods of time. For a discussion of these experiments see "The Radiation Belt and Magnetosphere", W. N. Hess, Blaisdell Publishing Co., 1968, pps. 155 et sec.

Other proposals which have been advanced for altering existing belts of trapped electrons and ions and/or establishing similar artificial belts include injecting charged particles from a satellite carrying a payload of radioactive beta-decay material or alpha emitters; and injecting charged particles from a satellite-borne electron accelerator. Still another approach is described in U.S. Pat. No. 4,042,196 wherein a low energy ionized gas, e.g., hydrogen, is released from a synchronous orbiting satellite near the apex of a radiation belt which is naturally-occurring in the earth's magnetosphere to produce a substantial increase in energetic particle precipitation and, under certain conditions, produce a limit in the number of particles that can be stably trapped. This precipitation effect arises from an enhancement of the whistler-mode and ion-cyclotron mode interactions

that result from the ionized gas or "cold plasma" injection.

It has also been proposed to release large clouds of barium in the magnetosphere so that photoionization will increase the cold plasma density, thereby producing electron precipitation through enhanced whistler-mode interactions.

However, in all of the above-mentioned approaches, the mechanisms involved in triggering the change in the trapped particle phenomena must be actually positioned within the affected zone, e.g., the magnetosphere, before they can be actuated to effect the desired change.

The earth's ionosphere is not considered to be a "trapped" belt since there are few trapped particles therein. The term "trapped" herein refers to situations where the force of gravity on the trapped particles is balanced by magnetic forces rather than hydrostatic or collisional forces. The charged electrons and ions in the ionosphere also follow helical paths around magnetic field lines within the ionosphere but are not trapped between mirrors, as in the case of the trapped belts in the magnetosphere, since the gravitational force on the particles is balanced by collisional or hydrostatic forces.

In recent years, a number of experiments have actually been carried out to modify the ionosphere in some controlled manner to investigate the possibility of a beneficial result. For detailed discussions of these operations see the following papers: (1) Ionospheric Modification Theory; G. Meltz and F. W. Perkins; (2) The Platteville High Power Facility; Carrol et al.; (3) Arecibo Heating Experiments; W. E. Gordon and H. C. Carlson, Jr.; and (4) Ionospheric Heating by Powerful Radio Waves; Meltz et al., all published in Radio Science, Vol. 9, No. 11, November, 1974, at pages 885–888; 889–894; 1041–1047; and 1049–1063, respectively, all of which are incorporated herein by reference. In such experiments, certain regions of the ionosphere are heated to change the electron density and temperature within these regions. This is accomplished by transmitting from earth-based antennae high frequency electromagnetic radiation at a substantial angle to, not parallel to, the ionosphere's magnetic field to heat the ionospheric particles primarily by ohmic heating. The electron temperature of the ionosphere has been raised by hundreds of degrees in these experiments, and electrons with several electron volts of energy have been produced in numbers sufficient to enhance airglow. Electron concentrations have been reduced by a few percent, due to expansion of the plasma as a result of increased temperature.

In the Elmo Bumpy Torus (EBT), a controlled fusion device at the Oak Ridge National Laboratory, all heating is provided by microwaves at the electron cyclotron resonance interaction. A ring of hot electrons is formed at the earth's surface in the magnetic mirror by a combination of electron cyclotron resonance and stochastic heating. In the EBT, the ring electrons are produced with an average "temperature" of 250 kilo electron volts or kev (2.5×10^9K) and a plasma beta between 0.1 and 0.4; see, "A Theoretical Study of Electron—Cyclotron Absorption in Elmo Bumpy Torus", Batchelor and Goldfinger, Nuclear Fusion, Vol. 20, No. 4 (1980) pps. 403–418.

Electron cyclotron resonance heating has been used in experiments on the earth's surface to produce and accelerate plasmas in a diverging magnetic field. Kosmahl et al. showed that power was transferred from the electromagnetic waves and that a fully ionized plasma

was accelerated with a divergence angle of roughly 13 degrees. Optimum neutral gas density was 1.7×10^{14}per cubic centimeter; see, "Plasma Acceleration with Microwaves Near Cyclotron Resonance", Kosmahl et al., Journal of Applied Physics, Vol. 38, No. 12, Nov., 1967, pps. 4576–4582.

DISCLOSURE OF THE INVENTION

The present invention provides a method and apparatus for altering at least one selected region which normally exists above the earth's surface. The region is excited by electron cyclotron resonance heating of electrons which are already present and/or artifically created in the region to thereby increase the charged particle energy and ultimately the density of the region.

In one embodiment this is done by transmitting circularly polarized electromagnetic radiation from the earth's surface at or near the location where a naturally-occurring dipole magnetic field (force) line intersects the earth's surface. Right hand circular polarization is used in the northern hemisphere and left hand circular polarization is used in the southern hemisphere. The radiation is deliberately transmitted at the outset in a direction substantially parallel to and along a field line which extends upwardly through the region to be altered. The radiation is transmitted at a frequency which is based on the gyrofrequency of the charged particles and which, when applied to the at least one region, excites electron cyclotron resonance within the region or regions to heat and accelerate the charged particles in their respective helical paths around and along the field line. Sufficient energy is employed to cause ionization of neutral particles (molecules of oxygen, nitrogen and the like, particulates, etc.) which then become a part of the region thereby increasing the charged particle density of the region. This effect can further be enhanced by providing artificial particles, e.g., electrons, ions, etc., directly into the region to be affected from a rocket, satellite, or the like to supplement the particles in the naturally-occurring plasma. These artificial particles are also ionized by the transmitted electromagnetic radiation thereby increasing charged particle density of the resulting plasma in the region.

In another embodiment of the invention, electron cyclotron resonance heating is carried out in the selected region or regions at sufficient power levels to allow a plasma present in the region to generate a mirror force which forces the charged electrons of the altered plasma upward along the force line to an altitude which is higher than the original altitude. In this case the relevant mirror points are at the base of the altered region or regions. The charged electrons drag ions with them as well as other particles that may be present. Sufficient power, e.g., 10^{15}joules, can be applied so that the altered plasma can be trapped on the field line between mirror points and will oscillate in space for prolonged periods of time. By this embodiment, a plume of altered plasma can be established at selected locations for communication modification or other purposes.

In another embodiment, this invention is used to alter at least one selected region of plasma in the ionosphere to establish a defined layer of plasma having an increased charged particle density. Once this layer is established, and while maintaining the transmission of the main beam of circularly polarized electromagnetic radiation, the main beam is modulated and/or at least one second different, modulated electromagnetic radiation beam is transmitted from at least one separate source at a different frequency which will be absorbed in the plasma layer. The amplitude of the frequency of the main beam and/or the second beam or beams is modulated in resonance with at least one known oscillation mode in the selected region or regions to excite the known oscillation mode to propagate a known frequency wave or waves throughout the ionosphere.

BRIEF DESCRIPTION OF THE DRAWINGS

The actual construction, operation, and apparent advantages of this invention will be better understood by referring to the drawings in which like numerals identify like parts and in which:

FIG. **1** is a simplified schematical view of the earth (not to scale) with a magnetic field (force) line along which the present invention is carried out;

FIG. **2** is one embodiment within the present invention in which a selected region of plasma is raised to a higher altitude;

FIG. **3** is a simplified, idealized representation of a physical phenomenon involved in the present invention; and

FIG. **4** is a schematic view of another embodiment within the present invention.

FIG. **5** is a schematic view of an apparatus embodiment within this invention.

BEST MODES FOR CARRYING OUT THE INVENTION

The earth's magnetic field is somewhat analogous to a dipole bar magnet. As such, the earth's magnetic field contains numerous divergent field or force lines, each line intersecting the earth's surface at points on opposite sides of the Equator. The field lines which intersect the earth's surface near the poles have apexes which lie at the furthest points in the earth's magnetosphere while those closest to the Equator have apexes which reach only the lower portion of the magnetosphere.

At various altitudes above the earth's surface, e.g., in both the ionosphere and the magnetosphere, plasma is naturally present along these field lines. This plasma consists of equal numbers of positively and negatively charged particles (i.e., electrons and ions) which are guided by the field line. It is well established that a charged particle in a magnetic field gyrates about field lines, the center of gyration at any instance being called the "guiding center" of the particle. As the gyrating particle moves along a field line in a uniform field, it will follow a helical path about its guiding center, hence linear motion, and will remain on the field line. Electrons and ions both follow helical paths around a field line but rotate in opposite directions. The frequencies at which the electrons and ions rotate about the field line are called gyromagnetic frequencies or cyclotron frequencies because they are identical with the expression for the angular frequencies of gyration of particles in a cyclotron. The cyclotron frequency of ions in a given magnetic field is less than that of electrons, in inverse proportion to their masses.

If the particles which form the plasma along the earth's field lines continued to move with a constant pitch angle, often designated "alpha", they would soon impact on the earth's surface. Pitch angle alpha is defined as the angle between the direction of the earth's magnetic field and the velocity (V) of the particle. However, in converging force fields, the pitch angle does change in such a way as to allow the particle to

turn around and avoid impact. Consider a particle moving along a field line down toward the earth. It moves into a region of increasing magnetic field strength and therefore sine alpha increases. But sine alpha can only increase to 1.0, at which point, the particle turns around and starts moving up along the field line, and alpha decreases. The point at which the particle turns around is called the mirror point, and there alpha equals ninety degrees. This process is repeated at the other end of the field line where the same magnetic field strength value B, namely Bm, exists. The particle again turns around and this is called the "conjugate point" of the original mirror point. The particle is therefore trapped and bounces between the two magnetic mirrors. The particle can continue oscillating in space in this manner for long periods of time. The actual place where a particle will mirror can be calculated from the following:

$$\sin^2 \text{alpha}_o = B_o/B_m \quad (1)$$

wherein:

alpha_o=equatorial pitch angle of particle

B_o=equatorial field strength on a particular field line

B_m=field strength at the mirror point

Recent discoveries have established that there are substantial regions of naturally trapped particles in space which are commonly called "trapped radiation belts". These belts occur at altitudes greater than about 500 km and accordingly lie in the magnetosphere and mostly above the ionosphere.

The ionosphere, while it may overlap some of the trapped-particle belts, is a region in which hydrostatic forces govern its particle distribution in the gravitational field. Particle motion within the ionosphere is governed by both hydrodynamic and electrodynamic forces. While there are few trapped particles in the ionosphere, nevertheless, plasma is present along field lines in the ionosphere. The charged particles which form this plasma move between collisions with other particles along similar helical paths around the field lines and although a particular particle may diffuse downward into the earth's lower atmosphere or lose energy and diverge from its original field line due to collisions with other particles, these charged particles are normally replaced by other available charged particles or by particles that are ionized by collision with said particle. The electron density (N_e) of the plasma will vary with the actual conditions and locations involved. Also, neutral particles, ions, and electrons are present in proximity to the field lines.

The production of enhanced ionization will also alter the distribution of atomic and molecular constituents of the atmosphere, most notably through increased atomic nitrogen concentration. The upper atmosphere is normally rich in atomic oxygen (the dominant atmospheric constituent above 200 km altitude), but atomic nitrogen is normally relatively rare. This can be expected to manifest itself in increased airglow, among other effects.

As known in plasma physics, the characteristics of a plasma can be altered by adding energy to the charged particles or by ionizing or exciting additional particles to increase the density of the plasma. One way to do this is by heating the plasma which can be accomplished in different ways, e.g., ohmic, magnetic compression, shock waves, magnetic pumping, electron cyclotron resonance, and the like.

Since electron cyclotron resonance heating is involved in the present invention, a brief discussion of same is in order. Increasing the energy of electrons in a plasma by invoking electron cyclotron resonance heating, is based on a principle similar to that utilized to accelerate charged particles in a cyclotron. If a plasma is confined by a static axial magnetic field of strength B, the charged particles will gyrate about the lines of force with a frequency given, in hertz, as $f_g = 1.54 \times 10^3 B/A$, where: B=magnetic field strength in gauss, and A=mass number of the ion.

Suppose a time-varying field of this frequency is superimposed on the static field B confining the plasma, by passage of a radiofrequency current through a coil which is concentric with that producing the axial field, then in each half-cycle of their rotation about the field lines, the charged particles acquire energy from the oscillating electric field associated with the radio frequency. For example, if B is 10,000 gauss, the frequency of the field which is in resonance with protons in a plasma is 15.4 megahertz.

As applied to electrons, electron cyclotron resonance heating requires an oscillating field having a definite frequency determined by the strength of the confining field. The radio-frequency radiation produces time-varying fields (electric and magnetic), and the electric field accelerates the charged particle. The energized electrons share their energy with ions and neutrals by undergoing collisions with these particles, thereby effectively raising the temperature of the electrons, ions, and neutrals. The apportionment of energy among these species is determined by collision frequencies. For a more detailed understanding of the physics involved, see "Controlled Thermonuclear Reactions", Glasstone and Lovberg, D. Van Nostrand Company, Inc., Princeton, N.J., 1960 and "The Radiation Belt and Magnetosphere", Hess, Blaisdell Publishing Company, 1968, both of which are incorporated herein by reference.

Referring now to the drawings, the present invention provides a method and apparatus for altering at least one region of plasma which lies along a field line, particularly when it passes through the ionosphere and/or magnetosphere. FIG. **1** is a simplified illustration of the earth **10** and one of its dipole magnetic force or field lines **11**. As will be understood, line **11** may be any one of the numerous naturally existing field lines and the actual geographical locations **13** and **14** of line **11** will be chosen based on a particular operation to be carried out. The actual locations at which field lines intersect the earth's surface is documented and is readily ascertainable by those skilled in the art.

Line **11** passes through region R which lies at an altitude above the earth's surface. A wide range of altitudes are useful given the power that can be employed by the practice of this invention. The electron cyclotron resonance heating effect can be made to act on electrons anywhere above the surface of the earth. These electrons may be already present in the atmosphere, ionosphere, and/or magnetosphere of the earth, or can be artificially generated by a variety of means such as x-ray beams, charged particle beams, lasers, the plasma sheath surrounding an object such as a missile or meteor, and the like. Further, artificial particles, e.g., electrons, ions, etc., can be injected directly into region R from an earth-launched rocket or orbiting satellite carrying, for example, a payload of radioactive beta-decay material; alpha emitters; an electron accelerator; and/or ionized gases such as hydrogen; see U.S. Pat. No. 4,042,196. The altitude can be greater than about 50 km if desired,

e.g., can be from about 50 km to about 800 km, and, accordingly may lie in either the ionosphere or the magnetosphere or both. As explained above, plasma will be present along line **11** within region R and is represented by the helical line **12**. Plasma **12** is comprised of charged particles (i.e., electrons and ions) which rotate about opposing helical paths along line **11**.

Antenna **15** is positioned as close as is practical to the location **14** where line **11** intersects the earth's surface. Antenna **15** may be of any known construction for high directionality, for example, a phased array, beam spread angle (θ) type. See "The MST Radar at Poker Flat, Alaska", Radio Science, Vol. 15, No. 2, Mar.-Apr. 1980, pps. 213–223, which is incorporated herein by reference. Antenna **15** is coupled to transmitter **16** which generates a beam of high frequency electromagnetic radiation at a wide range of discrete frequencies, e.g., from about 20 to about 1800 kilohertz (kHz).

Transmitter **16** is powered by power generator means **17** which is preferably comprised of one or more large, commercial electrical generators. Some embodiments of the present invention require large amounts of power, e.g., up to $10^9$to 10^{11}watts, in continuous wave or pulsed power. Generation of the needed power is within the state of the art. Although the electrical generators necessary for the practice of the invention can be powered in any known manner, for example, by nuclear reactors, hydroelectric facilities, hydrocarbon fuels, and the like, this invention, because of its very large power requirement in certain applications, is particularly adapted for use with certain types of fuel sources which naturally occur at strategic geographical locations around the earth. For example, large reserves of hydrocarbons (oil and natural gas) exist in Alaska and Canada. In northern Alaska, particularly the North Slope region, large reserves are currently readily available. Alaska and northern Canada also are ideally located geographically as to magnetic latitudes. Alaska provides easy access to magnetic field lines that are especially suited to the practice of this invention, since many field lines which extend to desirable altitudes for this invention intersect the earth in Alaska. Thus, in Alaska, there is a unique combination of large, accessible fuel sources at desirable field line intersections. Further, a particularly desirable fuel source for the generation of very large amounts of electricity is present in Alaska in abundance, this source being natural gas. The presence of very large amounts of clean-burning natural gas in Alaskan latitudes, particularly on the North Slope, and the availability of magnetohydrodynamic (MHD), gas turbine, fuel cell, electrogasdynamic (EGD) electric generators which operate very efficiently with natural gas provide an ideal power source for the unprecedented power requirements of certain of the applications of this invention. For a more detailed discussion of the various means for generating electricity from hydrocarbon fuels, see "Electrical Aspects of Combustion", Lawton and Weinberg, Clarendon Press, 1969. For example, it is possible to generate the electricity directly at the high frequency needed to drive the antenna system. To do this, typically the velocity of flow of the combustion gases (v), past magnetic field perturbation of dimension d (in the case of MHD), follow the rule:

$$v = df$$

where f is the frequency at which electricity is generated. Thus, if $v = 1.78 \times 10^6$ cm/sec and d = 1 cm then electricity would be generated at a frequency of 1.78 mHz.

Put another way, in Alaska, the right type of fuel (natural gas) is naturally present in large amounts and at just the right magnetic latitudes for the most efficient practice of this invention, a truly unique combination of circumstances. Desirable magnetic latitudes for the practice of this invention interest the earth's surface both northerly and southerly of the equator, particularly desirable latitudes being those, both northerly and southerly, which correspond in magnitude with the magnetic latitudes that encompass Alaska.

Referring now to FIG. **2** a first ambodiment is illustrated where a selected region $R_1$of plasma **12** is altered by electron cyclotron resonance heating to accelerate the electrons of plasma **12**, which are following helical paths along field line **11**.

To accomplish this result, electromagnetic radiation is transmitted at the outset, essentially parallel to line **11** via antenna **15** as right hand circularly polarized radiation wave **20**. Wave **20** has a frequency which will excite electron cyclotron resonance with plasma **12** at its initial or original altitude. This frequency will vary depending on the electron cyclotron resonance of region R_1which, in turn, can be determined from available data based on the altitudes of region R_1, the particular field line **11** being used, the strength of the earth's magnetic field, etc. Frequencies of from about 20 to about 7200 kHz, preferably from about 20 to about 1800 kHz can be employed. Also, for any given application, there will be a threshhold (minimum power level) which is needed to produce the desired result. The minimum power level is a function of the level of plasma production and movement required, taking into consideration any loss processes that may be dominant in a particular plasma or propagation path.

As electron cyclotron resonance is established in plasma **12**, energy is transferred from the electromagnetic radiation **20** into plasma **12** to heat and accelerate the electrons therein and, subsequently, ions and neutral particles. As this process continues, neutral particles which are present within $R_1$are ionized and absorbed into plasma **12** and this increases the electron and ion densities of plasma **12**. As the electron energy is raised to values of about 1 kilo electron volt (kev), the generated mirror force (explained below) will direct the excited plasma **12** upward along line **11** to form a plume R_2at an altitude higher than that of R_1.

Plasma acceleration results from the force on an electron produced by a nonuniform static magnetic field ($\overline{B}$). The force, called the mirror force, is given by

$$F = -\mu \nabla B \tag{2}$$

where μ is the electron magnetic moment and $\nabla \overline{B}$ is the gradient of the magnetic field, μ being further defined as:

$$W_\perp / B = m V_\perp^2 / 2B$$

where $W_\perp$is the kinetic energy in the direction perpendicular to that of the magnetic field lines and B is the magnetic field strength at the line of force on which the guiding center of the particle is located. The force as represented by equation (2) is the force which is responsible for a particle obeying equation (1).

Since the magnetic field is divergent in region R_1, it can be shown that the plasma will move upwardly from the heating region as shown in FIG. **1** and further it can be shown that

$$\tfrac{1}{2}M_eV_{e\perp}^2(x) \approx \tfrac{1}{2}M_eV_{e\perp}^2(Y) + \tfrac{1}{2}M_iV_{i\parallel}^2(Y) \quad (3)$$

where the left hand side is the initial electron transverse kinetic energy; the first term on the right is the transverse electron kinetic energy at some point (Y) in the expanded field region, while the final term is the ion kinetic energy parallel to B at point (Y). This last term is what constitutes the desired ion flow. It is produced by an electrostatic field set up by electrons which are accelerated according to Equation (2) in the divergent field region and pulls ions along with them. Equation (3) ignores electron kinetic energy parallel to B because $V_{e\parallel} \approx V_{i\parallel}$, so the bulk of parallel kinetic energy resides in the ions because of their greater masses. For example, if an electromagnetic energy flux of from about 1 to about 10 watts per square centimeter is applied to region R, whose altitude is 115 km, a plasma having a density (N_e) of 10^{12} per cubic centimeter will be generated and moved upward to region R_2 which has an altitude of about 1000 km. The movement of electrons in the plasma is due to the mirror force while the ions are moved by ambipolar diffusion (which results from the electrostatic field). This effectively "lifts" a layer of plasma **12** from the ionosphere and/or magnetosphere to a higher elevation R_2. The total energy required to create a plasma with a base area of 3 square kilometers and a height of 1000 km is about 3×10^{13} joules.

FIG. **3** is an idealized representation of movement of plasma **12** upon excitation by electron cyclotron resonance within the earth's divergent force field. Electrons (e) are accelerated to velocities required to generate the necessary mirror force to cause their upward movement. At the same time neutral particles (n) which are present along line **11** in region $R_1$are ionized and become part of plasma **12**. As electrons (e) move upward along line **11**, they drag ions (i) and neutrals (n) with them but at an angle θ of about 13 degrees to field line **11**. Also, any particulates that may be present in region R_1, will be swept upwardly with the plasma. As the charged particles of plasma **12** move upward, other particles such as neutrals within or below R_1, move in to replace the upwardly moving particles. These neutrals, under some conditions, can drag with them charged particles.

For example, as a plasma moves upward, other particles at the same altitude as the plasma move horizontally into the region to replace the rising plasma and to form new plasma. The kinetic energy developed by said other particles as they move horizontally is, for example, on the same order of magnitude as the total zonal kinetic energy of stratospheric winds known to exist.

Referring again to FIG. **2**, plasma **12** in region R_1 is moved upward along field line **11**. The plasma **12** will then form a plume (cross-hatched area in FIG. **2**) which will be relatively stable for prolonged periods of time. The exact period of time will vary widely and be determined by gravitational forces and a combination of radiative and diffusive loss terms. In the previous detailed example, the calculations were based on forming a plume by producing 0^+energies of 2 ev/particle. About 10 ev per particle would be required to expand plasma **12** to apex point C (FIG. **1**). There at least some of the particles of plasma **12** will be trapped and will oscillate between mirror points along field line **11**. This oscillation will then allow additional heating of the trapped plasma **12** by stochastic heating which is associated with trapped and oscillating particles. See "A New Mechanism for Accelerating Electrons in the Outer Ionosphere" by R. A. Helliwell and T. F. Bell, Journal of Geophysical Research, Vol. 65, No. 6, June, 1960. This is preferably carried out at an altitude of at least 500 km.

The plasma of the typical example might be employed to modify or disrupt microwave transmissions of satellites. If less than total black-out of transmission is desired (e.g., scrambling by phase shifting digital signals), the density of the plasma (N_e) need only be at least about 10^6 per cubic centimeter for a plasma orginating at an altitude of from about 250 to about 400 km and accordingly less energy (i.e., electromagnetic radiation), e.g., 10^8 joules need be provided. Likewise, if the density $N_e$is on the order of 10^8, a properly positioned plume will provide a reflecting surface for VHF waves and can be used to enhance, interfere with, or otherwise modify communication transmissions. It can be seen from the foregoing that by appropriate application of various aspects of this invention at strategic locations and with adequate power sources, a means and method is provided to cause interference with or even total disruption of communications over a very large portion of the earth. This invention could be employed to disrupt not only land based communications, both civilian and military, but also airborne communications and sea communications (both surface and subsurface). This would have significant military implications, particularly as a barrier to or confusing factor for hostile missiles or airplanes. The belt or belts of enhanced ionization produced by the method and apparatus of this invention, particularly if set up over Northern Alaska and Canada, could be employed as an early warning device, as well as a communications disruption medium. Further, the simple ability to produce such a situation in a practical time period can by itself be a deterring force to hostile action. The ideal combination of suitable field lines intersecting the earth's surface at the point where substantial fuel sources are available for generation of very large quantitities of electromagnetic power, such as the North Slope of Alaska, provides the wherewithal to accomplish the foregoing in a practical time period, e.g., strategic requirements could necessitate achieving the desired altered regions in time periods of two minutes or less and this is achievable with this invention, especially when the combination of natural gas and magnetohydrodynamic, gas turbine, fuel cell and/or EGD electric generators are employed at the point where the useful field lines intersect the earth's surface. One feature of this invention which satisfies a basic requirement of a weapon system, i.e., continuous checking of operability, is that small amounts of power can be generated for operability checking purposes. Further, in the exploitation of this invention, since the main electromagnetic beam which generates the enhanced ionized belt of this invention can be modulated itself and/or one or more additional electromagnetic radiation waves can be impinged on the ionized region formed by this invention as will be described in greater detail herein after with respect to FIG. **4**, a substantial amount of randomly modulated signals of very large power magnitude can be generated in a highly nonlinear mode. This can cause confusion of or interference with or even complete disruption of guidance systems employed by

even the most sophisticated of airplanes and missiles. The ability to employ and transmit over very wide areas of the earth a plurality of electromagnetic waves of varying frequencies and to change same at will in a random manner, provides a unique ability to interfere with all modes of communications, land, sea, and/or air, at the same time. Because of the unique juxtaposition of usable fuel source at the point where desirable field lines intersect the earth's surface, such wide ranging and complete communication interference can be achieved in a resonably short period of time. Because of the mirroring phenomenon discussed hereinabove, it can also be prolonged for substantial time periods so that it would not be a mere transient effect that could simply be waited out by an opposing force. Thus, this invention provides the ability to put unprecedented amounts of power in the earth's atmosphere at strategic locations and to maintain the power injection level, particularly if random pulsing is employed, in a manner far more precise and better controlled than heretofore accomplished by the prior art, particularly by the detonation of nuclear devices of various yeilds at various altitudes. Where the prior art approaches yielded merely transitory effects, the unique combination of fuel and desirable field lines at the point where the fuel occurs allows the establishment of, compared to prior art approaches, precisely controlled and long-lasting effects which cannot, practically speaking, simply be waited out. Further, by knowing the frequencies of the various electromagnetic beams employed in the practice of this invention, it is possible not only to interfere with third party communications but to take advantage of one or more such beams to carry out a communications network even though the rest of the world's communications are disrupted. Put another way, what is used to disrupt another's communications can be employed by one knowledgeable of this invention as a communications network at the same time. In addition, once one's own communication network is established, the far-reaching extent of the effects of this invention could be employed to pick up communication signals of other for intelligence purposes. Thus, it can be seen that the disrupting effects achievable by this invention can be employed to benefit by the party who is practicing this invention since knowledge of the various electromagnetic waves being employed and how they will vary in frequency and magnitude can be used to an advantage for positive communication and eavesdropping purposes at the same time. However, this invention is not limited to locations where the fuel source naturally exists or where desirable field lines naturally intersect the earth's surface. For example, fuel, particularly hydrocarbon fuel, can be transported by pipeline and the like to the location where the invention is to be practiced.

FIG. 4 illustrates another embodiment wherein a selected region of plasma R_3which lies within the earth's ionosphere is altered to increase the density thereof whereby a relatively stable layer **30** of relatively dense plasma is maintained within region R_3. Electromagnetic radiation is transmitted at the outset essentially parallel to field line **11** via antenna **15** as a right hand circularly polarized wave and at a frequency (e.g., 1.78 megahertz when the magnetic field at the desired altitude is 0.66 gauss) capable of exciting electron cyclotron resonance in plasma **12** at the particular altitude of plasma **12**. This causes heating of the particles (electrons, ions, neutrals, and particulates) and ionization of the uncharged particles adjacent line **11**, all of which are absorbed into plasma **12** to increase the density thereof. The power transmitted, e.g., 2×10^6 watts for up to 2 minutes heating time, is less than that required to generate the mirror force F required to move plasma **12** upward as in the previous embodiment.

While continuing to transmit electromagnetic radiation **20** from antenna **15**, a second electromagnetic radiation beam **31**, which is at a defined frequency different from the radiation from antenna **15**, is transmitted from one or more second sources via antenna **32** into layer **30** and is absorbed into a portion of layer **30** (cross-hatched area in FIG. **4**). The electromagnetic radiation wave from antenna **32** is amplitude modulated to match a known mode of oscillation f_3 in layer **30**. This creates a resonance in layer **30** which excites a new plasma wave **33** which also has a frequency of f_3 and which then propogates through the ionosphere. Wave **33** can be used to improve or disrupt communications or both depending on what is desired in a particular application. Of course, more than one new wave **33** can be generated and the various new waves can be modulated at will and in a highly nonlinear fashion.

FIG. **5** shows apparatus useful in this invention, particularly when those applications of this invention are employed which require extremely large amounts of power. In FIG. **5** there is shown the earth's surface **40** with a well **41** extending downwardly thereinto until it penetrates hydrocarbon producing reservoir **42**. Hydrocarbon reservoir **42** produces natural gas alone or in combination with crude oil. Hydrocarbons are produced from reservoir **42** through well **41** and wellhead **43** to a treating system **44** by way of pipe **45**. In treater **44**, desirable liquids such as crude oil and gas condensates are separated and recovered by way of pipe **46** while undesirable gases and liquids such as water, H_2S, and the like are separated by way of pipe **47**. Desirable gases such as carbon dioxide are separated by way of pipe **48**, and the remaining natural gas stream is removed from treater **44** by way of pipe **49** for storage in conventional tankage means (not shown) for future use and/or use in an electrical generator such as a magnetohydrodynamic, gas turbine, fuel cell or EGD generator **50**. Any desired number and combination of different types of electric generators can be employed in the practice of this invention. The natural gas is burned in generator **50** to produce substantial quantities of electricity which is then stored and/or passed by way of wire **51** to a transmitter **52** which generates the electromagnetic radiation to be used in the method of this invention. The electromagnetic radiation is then passed by way of wire **53** to antenna **54** which is located at or near the end of field line **11**. Antenna **54** sends circularly polarized radiation wave **20** upwards along field line **11** to carry out the various methods of this invention as described hereinabove.

Of course, the fuel source need not be used in its naturally-occurring state but could first be converted to another second energy source form such as hydrogen, hydrazine and the like, and electricity then generated from said second energy source form.

It can be seen from the foregoing that when desirable field line **11** intersects earth's surface **40** at or near a large naturally-occurring hydrocarbon source **42**, exceedingly large amounts of power can be very efficiently produced and transmitted in the direction of field lines. This is particularly so when the fuel source is natural gas and magnetohydrodynamic generators are employed. Further, this can all be accomplished in a

relatively small physical area when there is the unique coincidence of fuel source **42** and desirable field line **11**. Of course, only one set of equipment is shown in FIG. **5** for sake of simplicity. For a large hydrocarbon reservoir **42**, a plurality of wells **41** can be employed to feed one or more storage means and/or treaters and as large a number of generators **55** as needed to power one or more transmitters **52** and one or more antennas **54**. Since all of the apparatus **44** through **54** can be employed and used essentially at the sight where naturally-occurring fuel source **42** is located, all the necessary electromagnetic radiation **20** is generated essentially at the same location as fuel source **42**. This provides for a maximum amount of usable electromagnetic radiation **20** since there are no significant storage or transportation losses to be incurred. In other words, the apparatus is brought to the sight of the fuel source where desirable field line **11** intersects the earth's surface **40** on or near the geographical location of fuel source **42**, fuel source **42** being at a desirable magnetic latitude for the practice of this invention, for example, Alaska.

The generation of electricity by motion of a conducting fluid through a magnetic field, i.e., magnetohydrodynamics (MHD), provides a method of electric power generation without moving mechanical parts and when the conducting fluid is a plasma formed by combustion of a fuel such as natural gas, an idealized combination of apparatus is realized since the very clean-burning natural gas forms the conducting plasma in an efficient manner and the thus formed plasma, when passed through a magnetic field, generates electricity in a very efficient manner. Thus, the use of fuel source **42** to generate a plasma by combustion thereof for the generation of electricity essentially at the site of occurrence of the fuel source is unique and ideal when high power levels are required and desirable field lines **11** intersect the earth's surface **40** at or near the site of fuel source **42**. A particular advantage for MHD generators is that they can be made to generate large amounts of power with a small volume, light weight device. For example, a 1000 megawatt MHD generator can be construed using superconducting magnets to weigh roughly 42,000 pounds and can be readily air lifted.

This invention has a phenomenal variety of possible ramifications and potential future developments. As alluded to earlier, missile or aircraft destruction, deflection, or confusion could result, particularly when relativistic particles are employed. Also, large regions of the atmosphere could be lifted to an unexpectedly high altitude so that missiles encounter unexpected and unplanned drag forces with resultant destruction or deflection of same. Weather modification is possible by, for example, altering upper atmosphere wind patterns or altering solar absorption patterns by constructing one or more plumes of atmospheric particles which will act as a lens or focusing device. Also as alluded to earlier, molecular modifications of the atmosphere can take place so that positive environmental effects can be achieved. Besides actually changing the molecular composition of an atmospheric region, a particular molecule or molecules can be chosen for increased presence. For example, ozone, nitrogen, etc. concentrations in the atmosphere could be artificially increased. Similarly, environmental enhancement could be achieved by causing the breakup of various chemical entities such as carbon dioxide, carbon monoxide, nitrous oxides, and the like. Transportation of entities can also be realized when advantage is taken of the drag effects caused by regions of the atmosphere moving up along diverging field lines. Small micron sized particles can be then transported, and, under certain circumstances and with the availability of sufficient energy, larger particles or objects could be similarly affected. Particles with desired characteristics such as tackiness, reflectivity, absorptivity, etc., can be transported for specific purposes or effects. For example, a plume of tacky particles could be established to increase the drag on a missile or satellite passing therethrough. Even plumes of plasma having substantially less charged particle density than described above will produce drag effects on missiles which will affect a lightweight (dummy) missile in a manner substantially different than a heavy (live) missile and this affect can be used to distinguish between the two types of missiles. A moving plume could also serve as a means for supplying a space station or for focusing vast amount of sunlight on selected portions of the earth. Surveys of global scope could also be realized because the earth's natural magnetic field could be significantly altered in a controlled manner by plasma beta effects resulting in, for example, improved magnetotelluric surveys. Electromagnetic pulse defenses are also possible. The earth's magnetic field could be decreased or disrupted at appropriate altitudes to modify or eliminate the magnetic field in high Compton electron generation (e.g., from high altitude nuclear bursts) regions. High intensity, well controlled electrical fields can be provided in selected locations for various purposes. For example, the plasma sheath surrounding a missile or satellite could be used as a trigger for activating such a high intensity field to destroy the missile or satellite. Further, irregularities can be created in the ionosphere which will interfere with the normal operation of various types of radar, e.g., synthetic aperture radar. The present invention can also be used to create artificial belts of trapped particles which in turn can be studied to determine the stability of such parties. Still further, plumes in accordance with the present invention can be formed to simulate and/or perform the same functions as performed by the detonation of a "heave" type nuclear device without actually having to detonate such a device. Thus it can be seen that the ramifications are numerous, far-reaching, and exceedingly varied in usefulness.

I claim:

1. A method for altering at least one region normally existing above the earth's surface with electromagnetic radiation using naturally-occurring and diverging magnetic field lines of the earth comprising transmitting first electromagnetic radiation at a frequency between 20 and 7200 kHz from the earth's surface, said transmitting being conducted essentially at the outset of transmission substantially parallel to and along at least one of said field lines, adjusting the frequency of said first radiation to a value which will excite electron cyclotron resonance at an initial elevation at least 50 km above the earth's surface, whereby in the region in which said electron cyclotron resonance takes place heating, further ionization, and movement of both charged and neutral particles is effected, said cyclotron resonance excitation of said region is continued until the electron concentration of said region reaches a value of at least 10^6 per cubic centimeter and has an ion energy of at least 2 ev.

2. The method of claim **1** including the step of providing artificial particles in said at least one region which are excited by said electron cyclotron resonance.

3. The method of claim 2 wherein said artificial particles are provided by injecting same into said at least one region from an orbiting satellite.

4. The method of claim 1 wherein said threshold excitation of electron cyclotron resonance is about 1 watt per cubic centimeter and is sufficient to cause movement of a plasma region along said diverging magnetic field lines to an altitude higher than the altitude at which said excitation was initiated.

5. The method of claim 4 wherein said rising plasma region pulls with it a substantial portion of neutral particles of the atmosphere which exist in or near said plasma region.

6. The method of claim 1 wherein there is provided at least one separate source of second electromagnetic radiation, said second radiation having at least one frequency different from said first radiation, impinging said at least one second radiation on said region while said region is undergoing electron cyclotron resonance excitation caused by said first radiation.

7. The method of claim 6 wherein said second radiation has a frequency which is absorbed by said region.

8. The method of claim 6 wherein said region is plasma in the ionosphere and said second radiation excites plasma waves within said ionosphere.

9. The method of claim 8 wherein said electron concentration reaches a value of at least 10^{12} per cubic centimeter.

10. The method of claim 8 wherein said excitation of electron cyclotron resonance is initially carried out within the ionosphere and is continued for a time sufficient to allow said region to rise above said ionosphere.

11. The method of claim 1 wherein said excitation of electron cyclotron resonance is carried out above about 500 kilometers and for a time of from 0.1 to 1200 seconds such that multiple heating of said plasma region is achieved by means of stochastic heating in the magnetosphere.

12. The method of claim 1 wherein said first electromagnetic radiation is right hand circularly polarized in the northern hemisphere and left hand circularly polarized in the southern hemisphere.

13. The method of claim 1 wherein said electromagnetic radiation is generated at the site of a naturally-occurring hydrocarbon fuel source, said fuel source being located in at least one of northerly or southerly magnetic latitudes.

14. The method of claim 13 wherein said fuel source is natural gas and electricity for generating said electromagnetic radiation is obtained by burning said natural gas in at least one of magnetohydrodynamic, gas turbine, fuel cell, and EGD electric generators located at the site where said natural gas naturally occurs in the earth.

15. The method of claim 14 wherein said site of natural gas is within the magnetic latitudes that encompass Alaska.

* * * * *

United States Patent [19]

Koert

[11] **Patent Number: 5,041,834**

[45] **Date of Patent: Aug. 20, 1991**

[54] **ARTIFICIAL IONOSPHERIC MIRROR COMPOSED OF A PLASMA LAYER WHICH CAN BE TILTED**

[75] Inventor: **Peter Koert**, Washington, D.C.

[73] Assignee: **APTI, Inc.**, Washington, D.C.

[21] Appl. No.: **524,435**

[22] Filed: **May 17, 1990**

[51] **Int. Cl.**[5] **H04B 7/00**; H01Q 3/22

[52] **U.S. Cl.** **342/367**; 342/372

[58] **Field of Search** 342/367, 353, 371, 372; 455/64

[56] **References Cited**

U.S. PATENT DOCUMENTS

3,445,844 5/1969 Grossi et al. 342/367

4,253,190 2/1981 Csonka 455/12

4,686,605 8/1987 Eastlund 361/231

4,712,155 12/1987 Eastlund et al. 361/231

4,817,495 4/1989 Drobot 89/1.11

Primary Examiner—Gregory C. Issing

Attorney, Agent, or Firm—Foley & Lardner

[57] **ABSTRACT**

This invention relates to generation of a Artificial Ionospheric Mirror (AIM), or a plasma layer in the atmosphere. The AIM is used like the ionosphere to reflect RF energy over great distances. A tiltable AIM is created by a heater antenna controlled in phase and frequency. The heater antenna phase shift scans a beam to paint a plasma layer. Frequency is changed to refocus at continually higher altitudes to tilt the plasma layer.

16 Claims, 15 Drawing Sheets

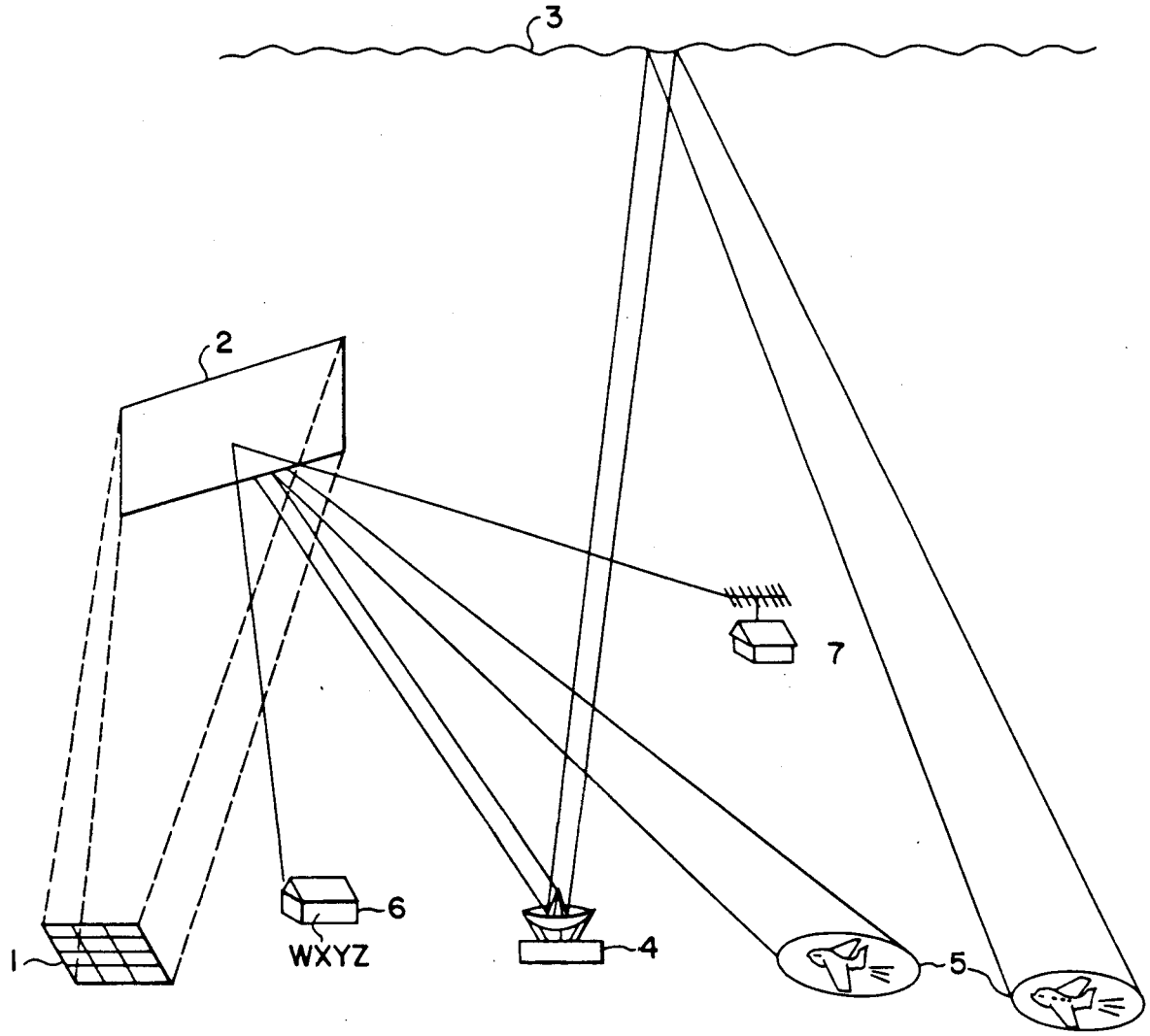

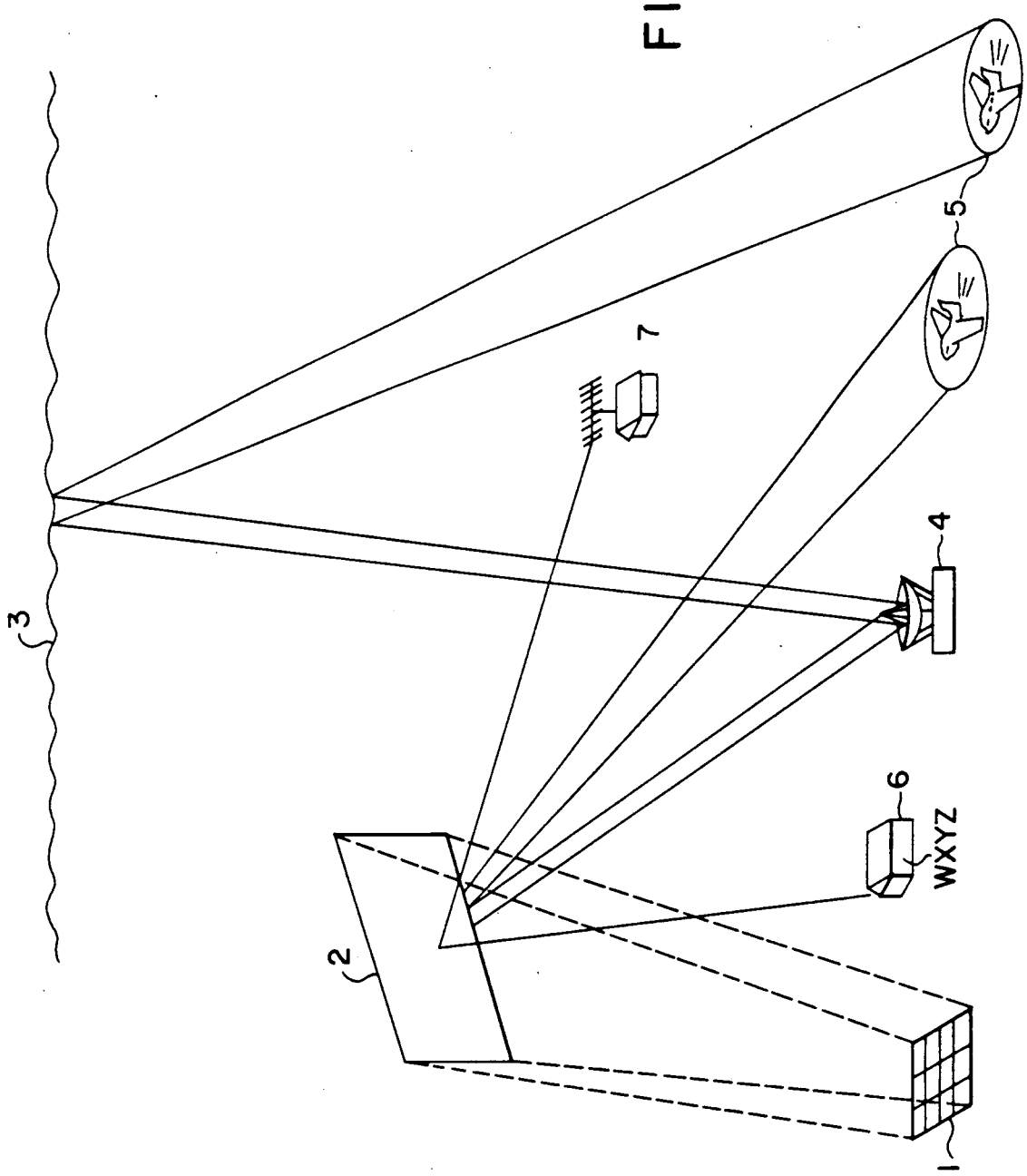

FIG. 1

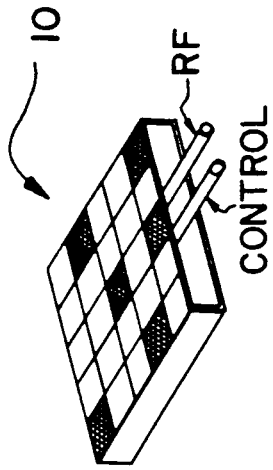

FIG. 2b

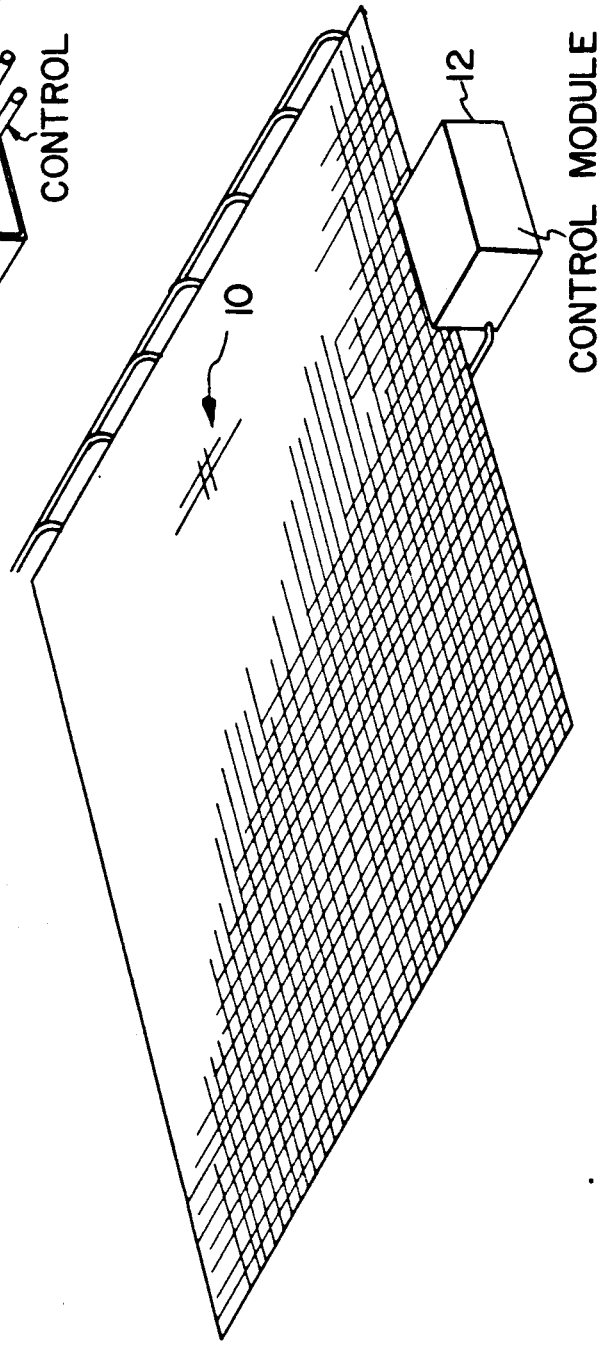

FIG. 2a

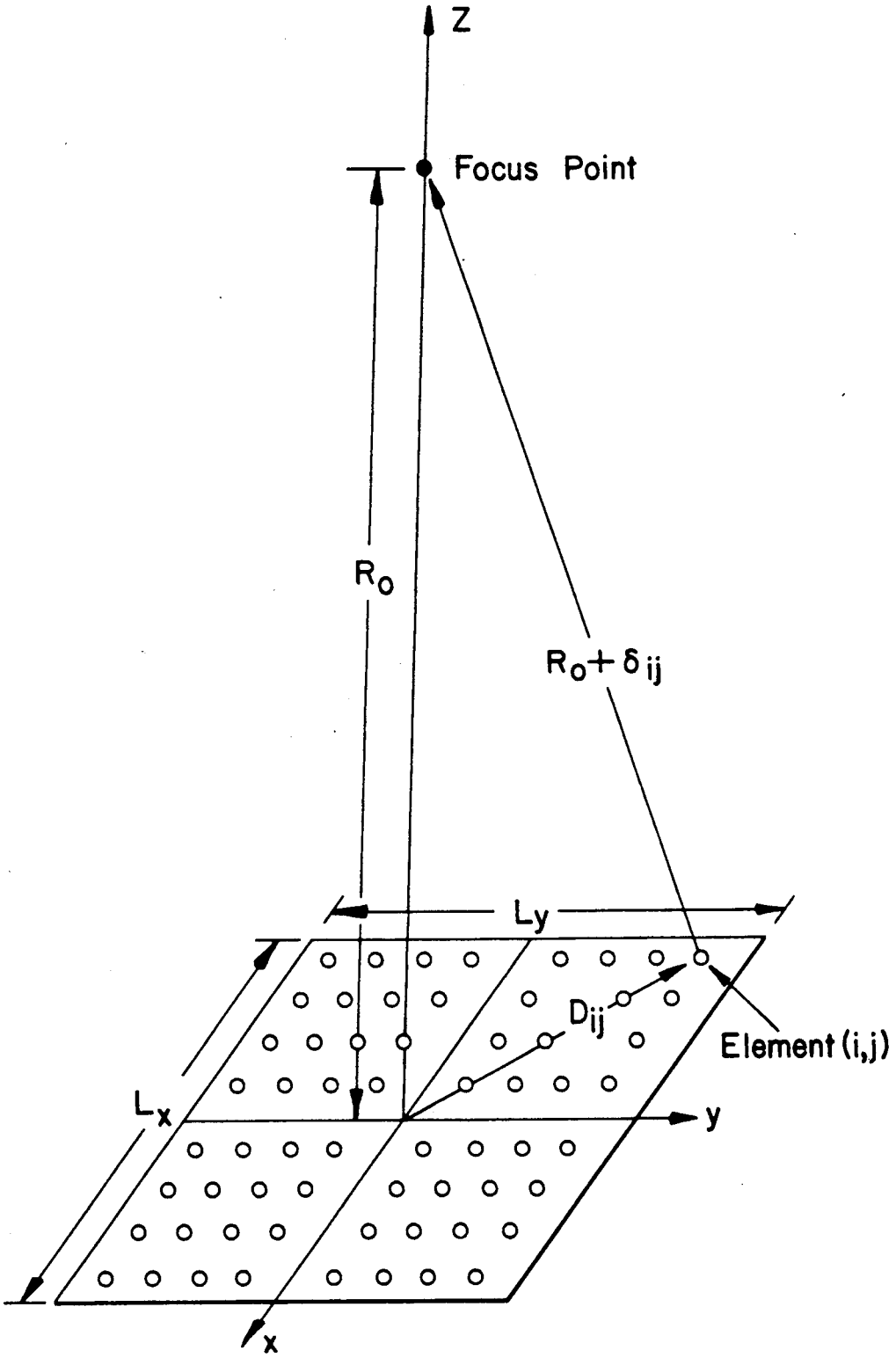

FIG. 3

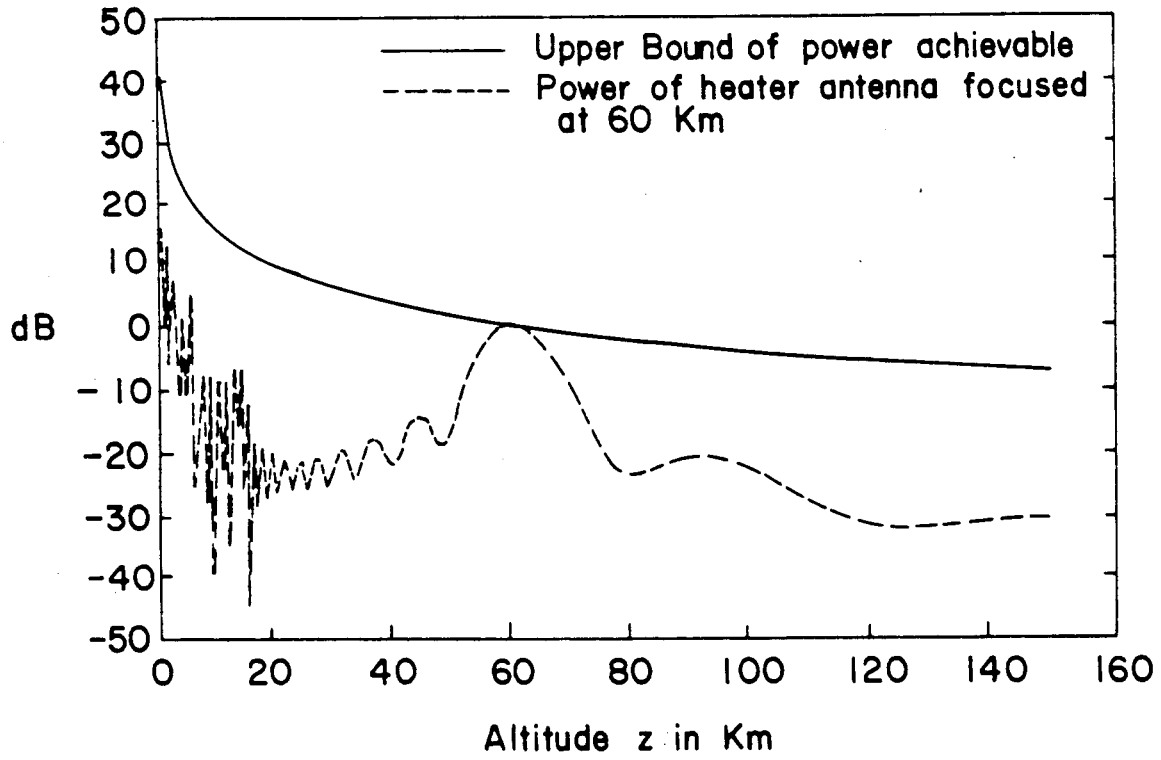
Upper Bound of power achievable
Power of heater antenna focused at 60 Km
dB
50
40
30
20
10
0
-10
-20
-30
-40
-50
0
20
40
60
80
100
120
140
160
Altitude z in Km

FIG. 4

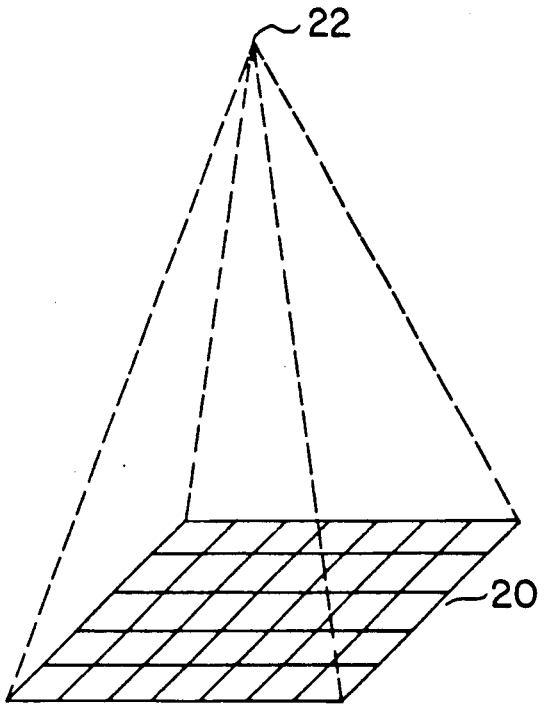

FIG.5

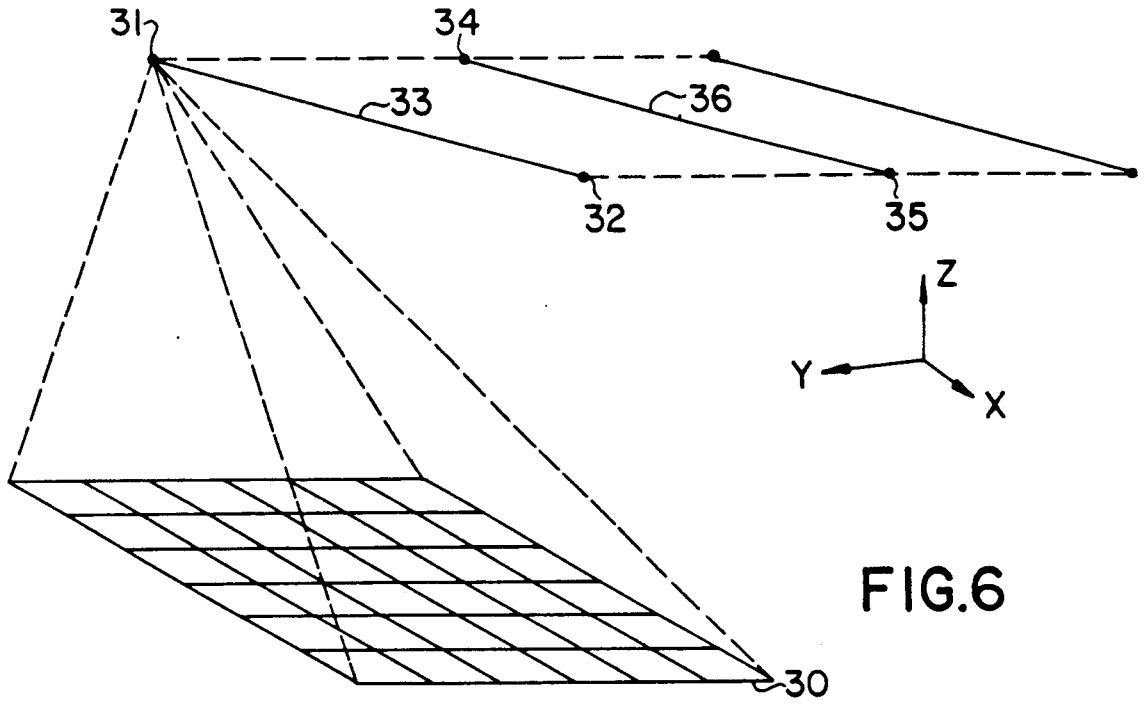

FIG.6

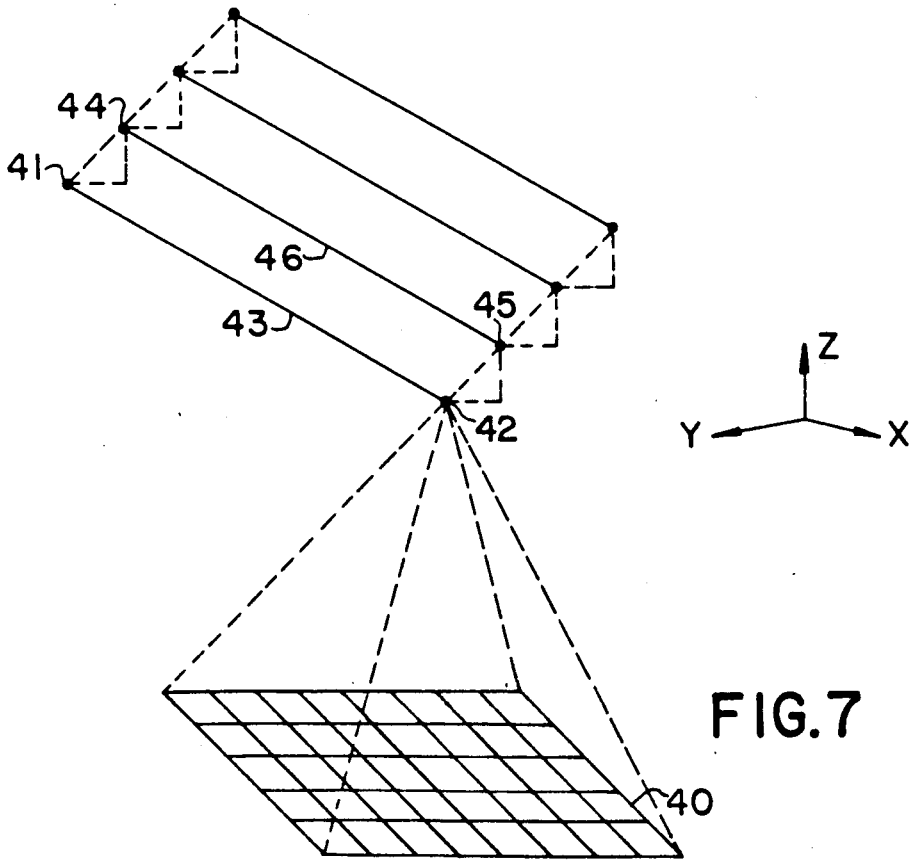

FIG.7

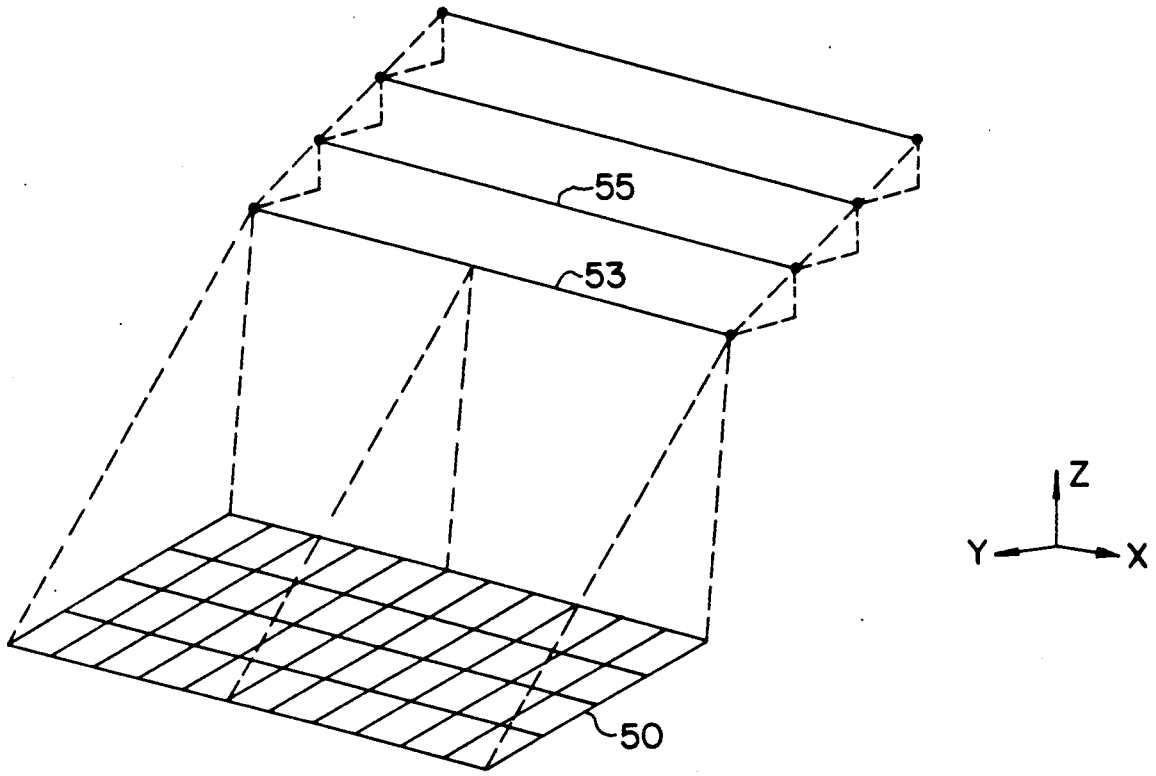

FIG.8

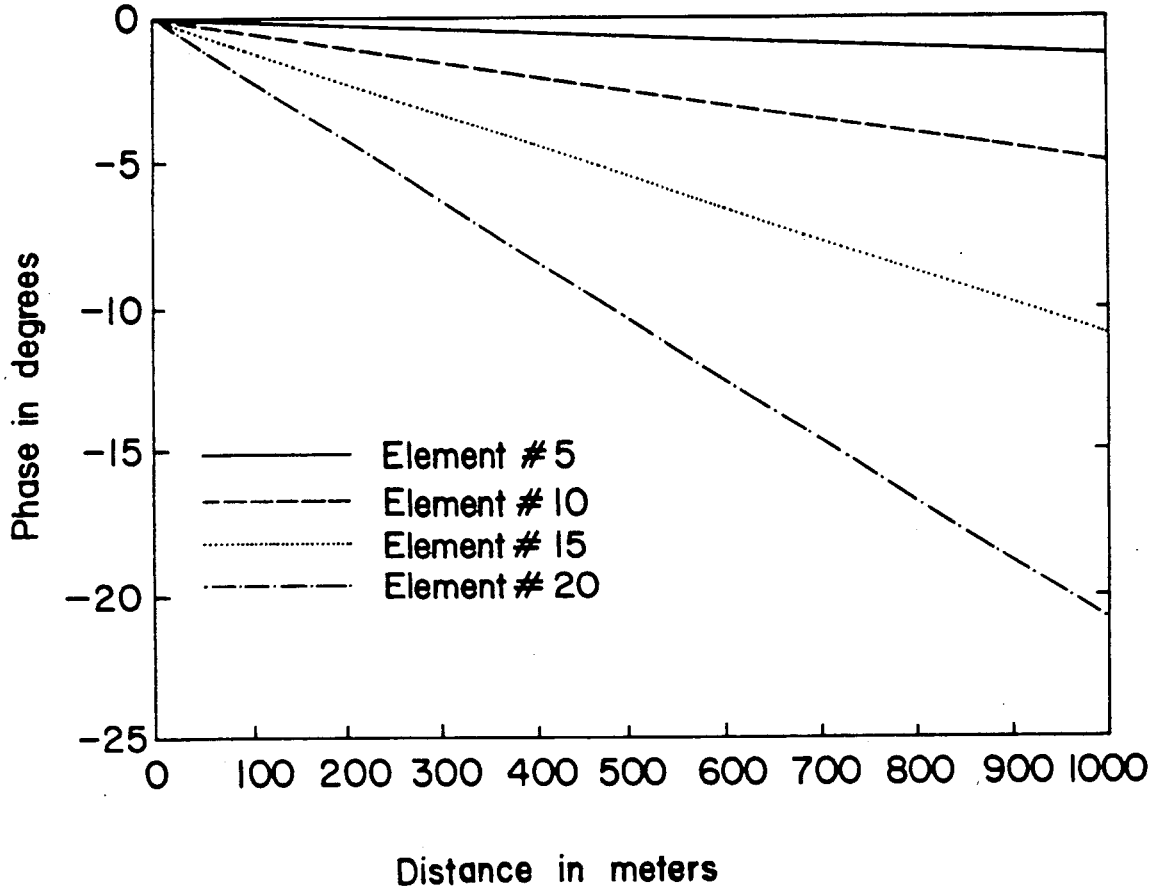

Phase Corrections to move focal point from 60Km to 61Km

FIG.9

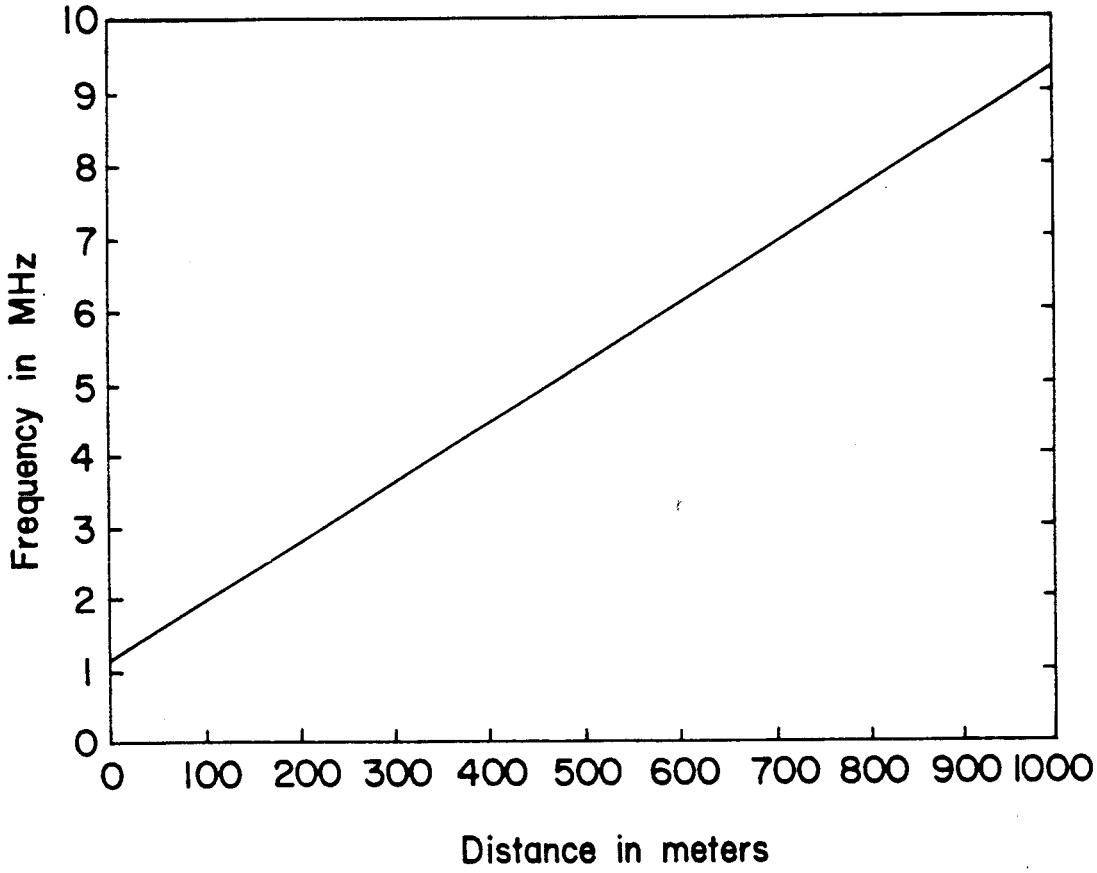

Frequency correction to move focal point from 60Km to 61Km

FIG. 10

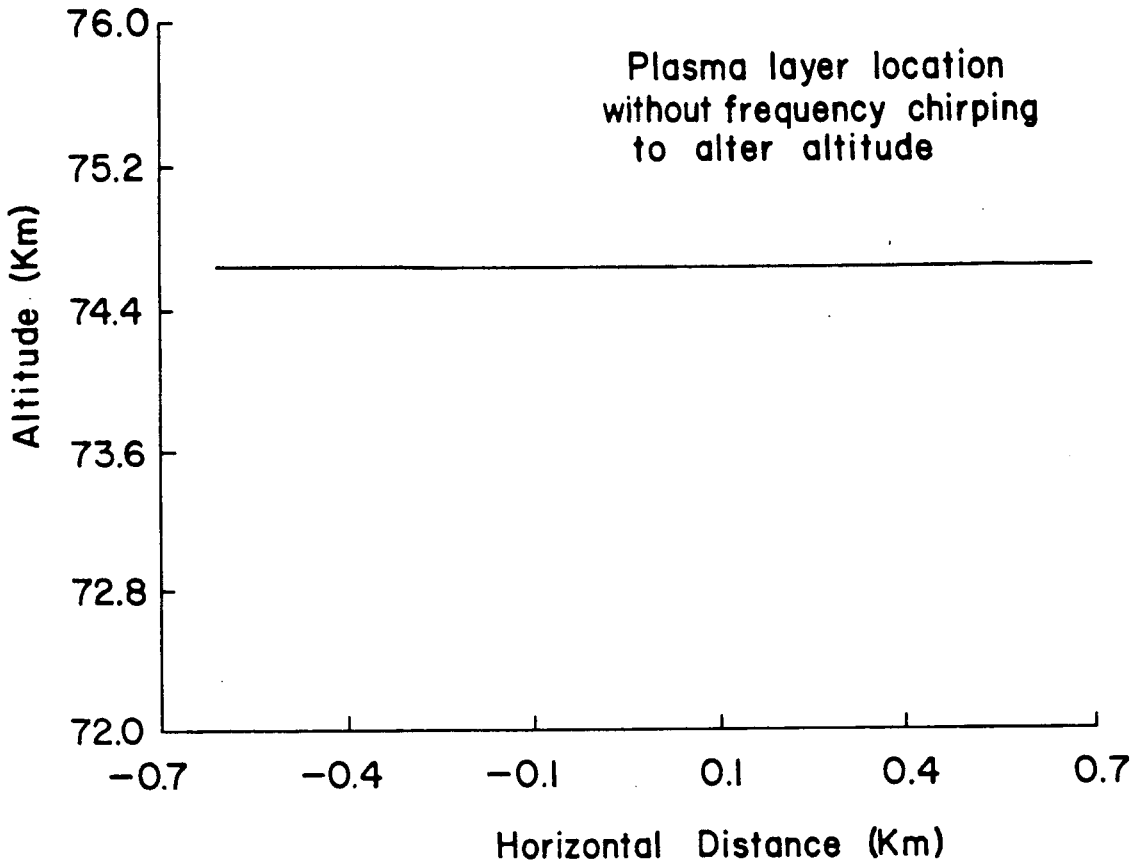

Heater focusing at 75Km with 550 MHz frequency and 154 dBW

FIG. 11

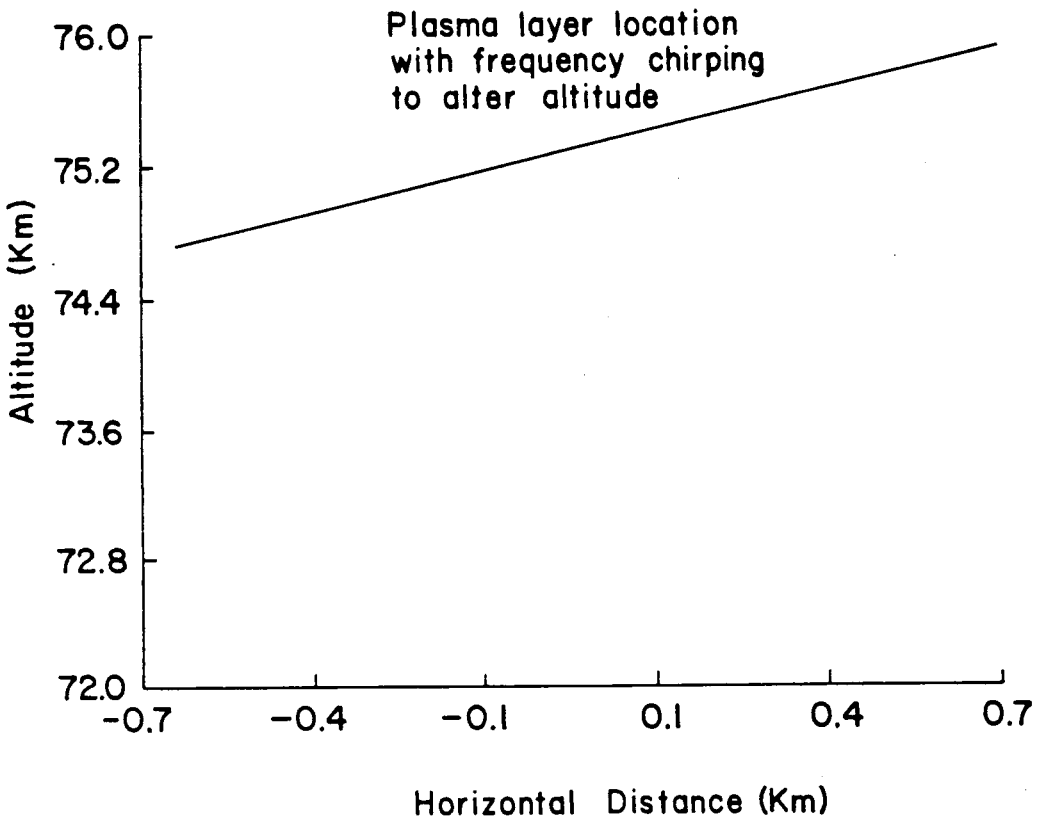

Heater Focusing at 75Km with 550 to 559.375 MHz frequency and 154 dBW

FIG. 12

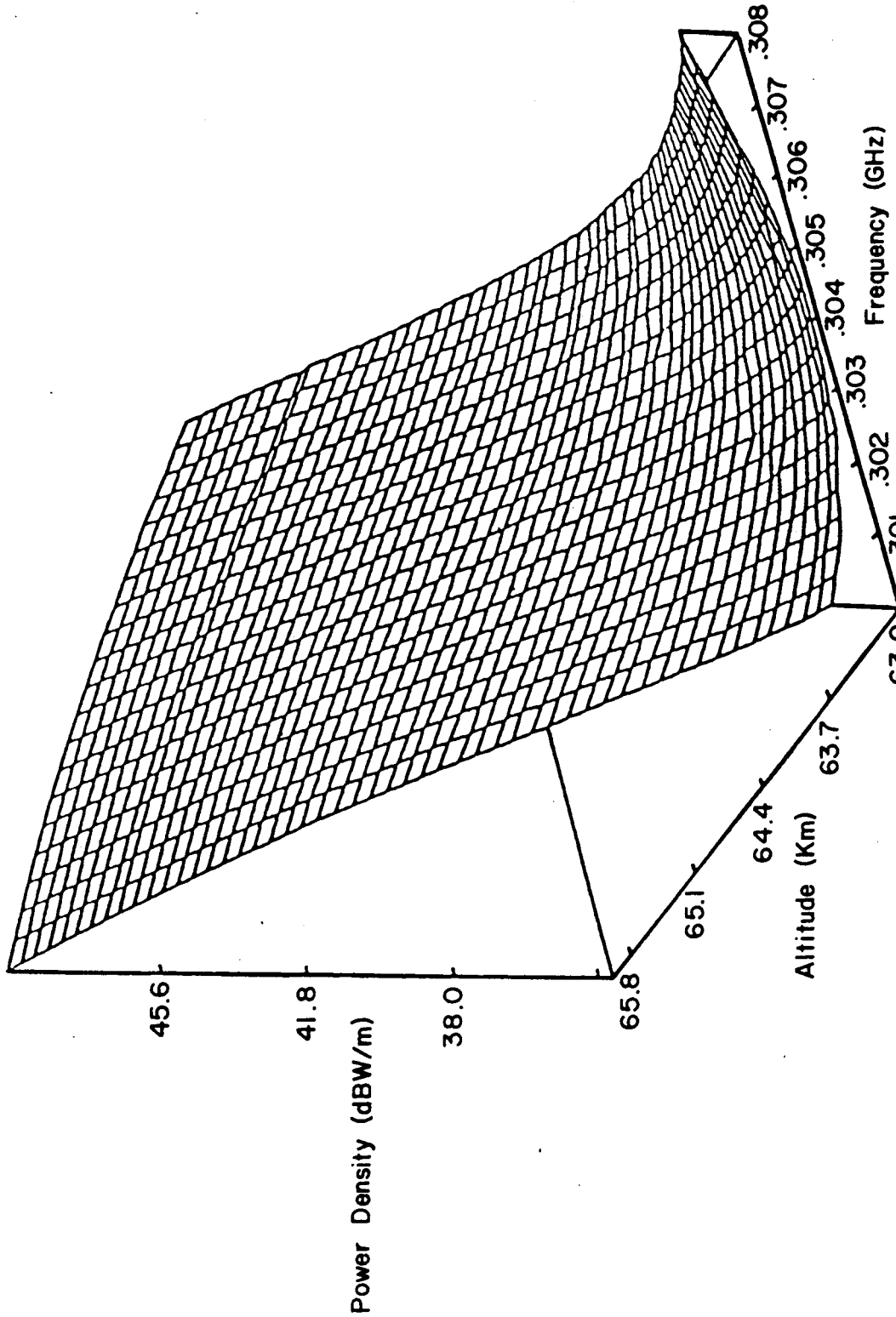

FIG. 13

Effects of Frequency Chirping: Heater focused at 70 km with 300-308 MHz frequency chirping

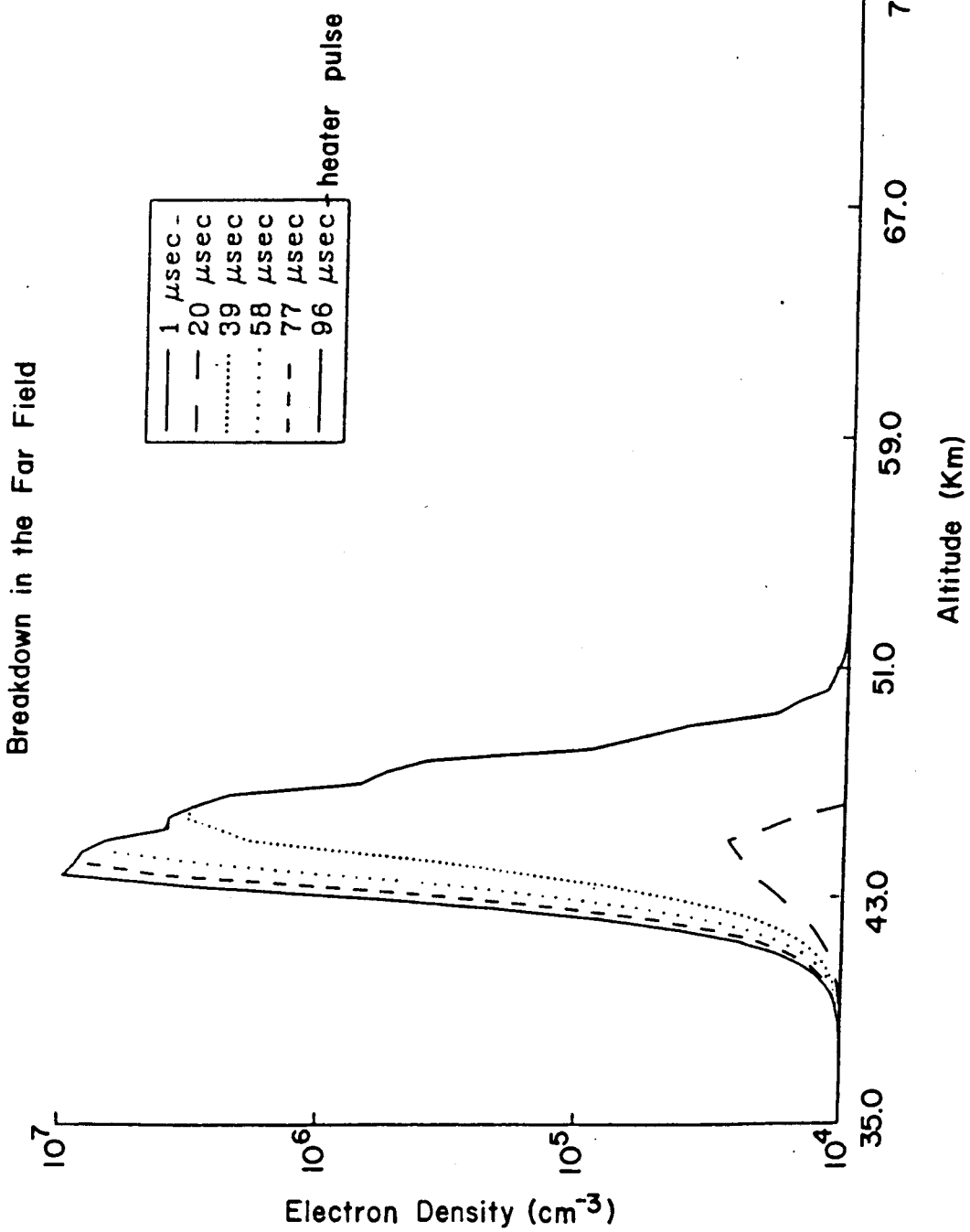

FIG. 14

Vertical Electron Density Profile for a Non-Focused Heater Array, ERP=154dBW, frequency=300 MHz

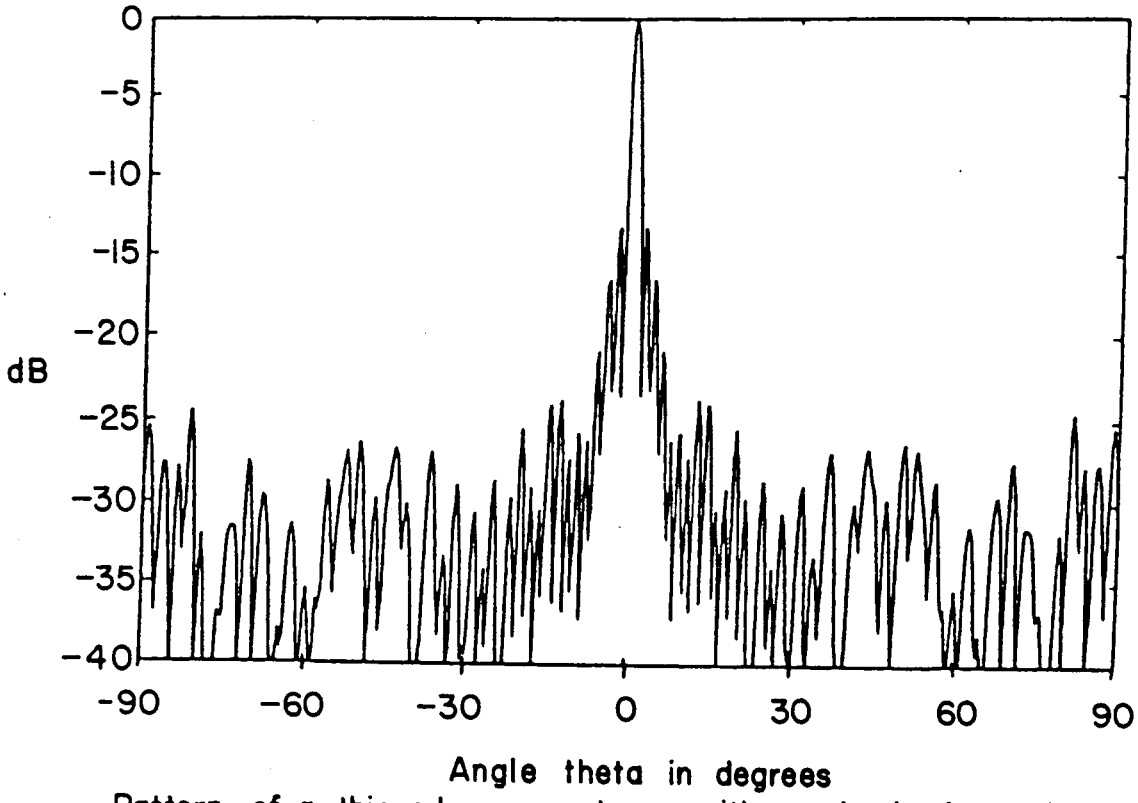

Pattern of a thinned array antenna with randomized spacing containing no grating lobes

FIG.15

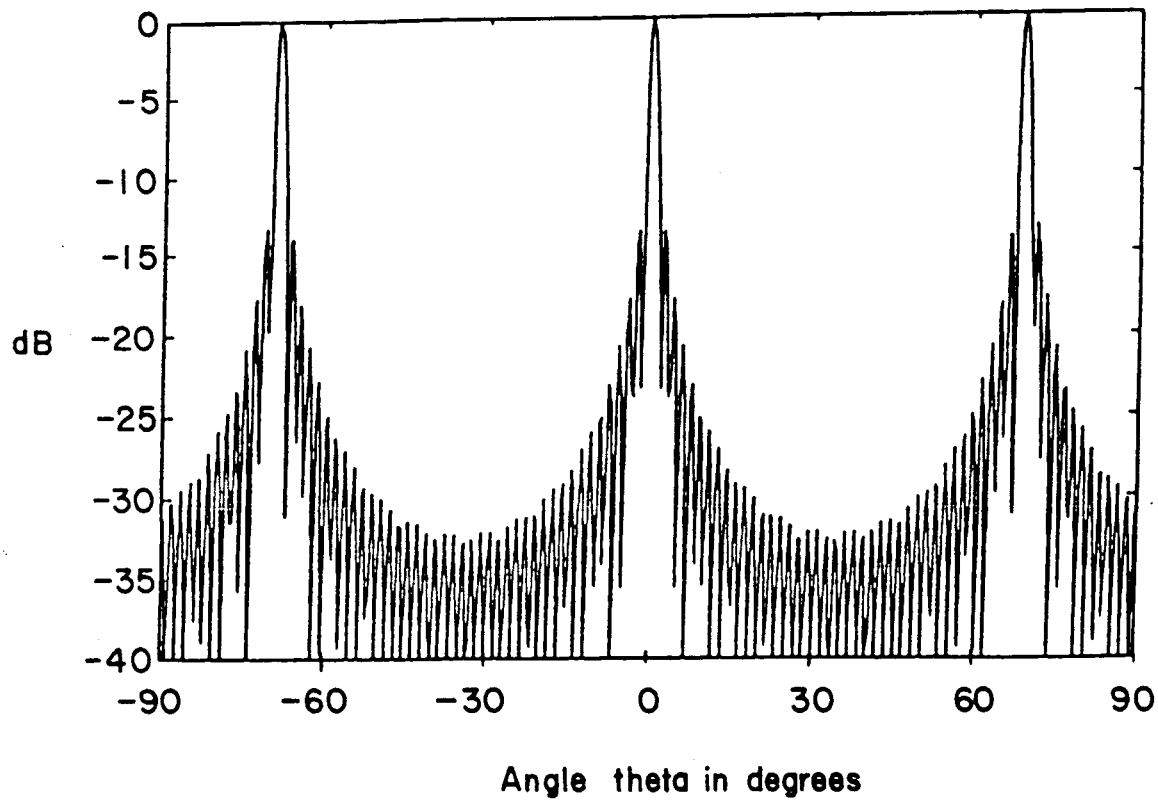

Pattern of a thinned array antenna with uniform spacing containing grating lobes

FIG. 16

ARTIFICIAL IONOSPHERIC MIRROR COMPOSED OF A PLASMA LAYER WHICH CAN BE TILTED

BACKGROUND OF THE INVENTION

1. Field of the Invention

This invention relates to generation of a Artificial Ionospheric Mirror (AIM), or a plasma layer in the atmosphere. The AIM is used like the ionosphere to reflect RF energy over great distances.

2. Description of the Related Art

In the past, the technique of using the ionosphere as a mirror to reflect radio waves, or RF energy, has given Ham Radio operators the ability to send transmissions over long distances. This technique has also provided radar systems the ability to look "over the horizon." Variations and fluctuations in the ionosphere, however, can render the effectiveness of such communications uncertain. Thus, the desirability of creating controllable plasma layers in the atmosphere for communications purposes has been recognized. See, for example, U.S. Pat. No. 4,686,605 issued to Eastlund and U.S. Pat. No. 4,712,155 issued to Eastlund et al.

Previous experiments directed toward creating plasma layers for communications have suffered from the inability to control the inclination of the plasma layer so that signals could be transmitted and received from various ranges. In other words, while one could create a plasma layer in the atmosphere at a lower altitude than the ionosphere, point to point communications would be limited in range based on the reflection angles of the transmitted and reflected signals.

SUMMARY AND OBJECTS OF THE INVENTION

In view of the limitations of the related art it is an object of this invention to generate a plasma layer that could be angled or tilted with respect to the horizon in order to affect signal transmission range.

The present invention provides a system and method for generating a plasma layer at controlled altitudes and inclinations that acts as an artificial ionospheric mirror (AIM) to reflect RF signals. The AIM increases the range and predictability with which RF energy may be reflected off the AIM for communications purposes. More specifically, a tiltable AIM is created by a heater antenna controlled in phase and frequency. The heater antenna phase shift scans a beam to paint a plasma layer. The heater antenna continually refocuses at a higher altitudes by frequency shifting to tilt the plasma layer.

BRIEF DESCRIPTION OF THE DRAWINGS

Further details of the present invention are explained with the help of the attached drawings in which:

FIG. **1** shows creation of an AIM by a heater antenna and use of the AIM for tracking aircraft and reflecting radio waves.

FIG. **2** shows a typical heater array.

FIG. **3** shows the spacial relationship for a heater array used in defining heater array focusing.

FIG. **4** is a graph showing that power is at its upper bound at the antenna focal point.

FIG. **5** shows generation of plasma by a heater array.

FIG. **6** illustrates generation of a plasma layer by scanning a heater antenna.

FIG. **7** illustrates generation of a tilted plasma layer by scanning and refocusing a heater antenna.

FIG. **8** shows generation of a plasma layer using a heater antenna to scan with a line rather than a point.

FIG. **9** shows the phase corrections to move the antenna focal point from **60** Km to **61** Km.

FIG. **10** shows the frequency corrections to move the antenna focal point from **60** Km to **61** Km.

FIG. **11** is a plot of altitude v. distance location of plasma without frequency chirping.

FIG. **12** is a plot of altitude v. distance location of plasma with frequency chirping.

FIG. **13** shows the power density change after refocusing using frequency chirping .

FIG. **14** graphs the free electron density v. altitude for an unfocused array.

FIG. **15** shows an antenna power pattern without grating lobes.

FIG. **16** shows an antenna power pattern with grating lobes.

DETAILED DESCRIPTION OF THE PREFERRED EMBODIMENTS

FIG. **1** illustrates the creation and use of An Artificial Ionospheric Mirror (AIM) for tracking aircraft and reflecting radio waves. A heater antenna **1** radiates power causing avalanche ionization or breakdown releasing free electrons in the atmosphere to generate the AIM **2**. The heater antenna **1** is an array which can be used to focus energy at varying altitudes and elevations to tilt the AIM **2** using phase and frequency control. The AIM **2** simulates the ionosphere **3** which is also used to detect "over the horizon targets" **5**. In addition, the AIM **2** can reflect radio signals transmitted from a transmitter **6** to a receiver **7** over long distances.

A typical heater antenna is shown in FIG. **2**. It consists of an array of multiple active radiating elements **10** having their individual phase and frequency controlled from a control module **12**. The radiating element **10** is used here to represent all possible antennas, including, but not limited to, dipoles, slots, small or large horns, log-periodic antennas, large parabolic reflectors, etc.

FIG. **3** shows the spatial relationship for a focused heater array. To have the electric fields from all of the array elements focus, or arrive in phase at a distance R_o in the near field of the array, it is necessary to correct the phase of each element to compensate for the phase delay difference from the center element due to the additional phase path W_{ij}. If R_o is much larger than the maximum D_{ij} in FIG. **3**, then the phase delay can be approximated in wavelength to be:

$$W_{ij}=(D_{ij})^2/(4*R*g) \quad (1)$$

where g is the wavelength of the heater frequency. Equation 1 is referred to as the quadratic phase error. If this error is less than g/8 when the element (i,j) is on the outer edge of the array, then the distance R_o is said to be in the far field of the array.

In order to focus the array at R_o, it is necessary to have several wavelengths of phase error from the outer elements of the array. That is, the term "focus" is used in this context to mean that the electric field from the array is concentrated in a desired spatial region.

FIG. **4** shows the degree of focusing that can be accomplished. This is a vertical pattern of an array whose elements have been phase shifted to focus at 60 Km. The array has 400 elements with a total width and

length of 2000 g. The peak of the pattern is determined by the $1/R_o^2$ dependence.

The AIM ionization layer is created by using this focused power to ionize an area in the atmosphere, as shown in FIG. **5**. The microwave breakdown of air occurs where free electrons gain enough energy from an electric field to generate additional free electrons until no more can be generated, thereby resulting in avalanche ionization, or breakdown. This causes the generation of a plasma layer **21**. For example, a pulse of power from the heater begins to propagate in the z direction shown in FIG. **5**. As the field propagates, more free electrons are generated. A breakdown point descends vertically from the focal point of the propagating field giving thickness to the ionized layer, or plasma layer, until all ionization stabilizes. This "clamping" creates a thin vertical plasma layer.

Simulation results show that when an array **20** is focused at a point **22**, electric field power peaks at the focal point. Simulation results shows that given a focused microwave source avalanche ionization, or breakdown will occur at a power level 3–10 dB below the focal point power level.

To create an AIM, the heater array is focused at a desired altitude to maximize power at a point and thereby generate plasma. The heater antenna then "scans" the phase of each array element to move the focal point.

FIG. **6** illustrates creation of a noninclined AIM layer. The heater array **30** is first focused at point **31**. The heater array scans horizontally by phase shifting to a point **32** creating an avalanche ionization line **33**. Next, the heater array scans from a point **34** to a point **35** creating another avalanche ionization line **36**. The heater array continues this process to create an ionization plane or AIM layer.

In order to form an inclined AIM cloud, each new ionization line must occur at a slightly higher altitude. By altering the phase or frequency of the array elements, the focal point can be moved up in altitude, as described below.

FIG. **7** illustrates creation of an inclined AIM. The heater array **40** is first focused at point **41**. The heater array scans along the x direction to point **42** to generate avalanche ionization along line **43**. Next, as in creation of a non-inclined AIM, the heater array scans along the x and y directions directly below point **44**. The heater array **40** alters either phase or frequency to refocus to a higher altitude in the z direction to the point **44**. The heater array then scans along the x axis to point **45** to create the avalanche ionization line **46**. The heater array continues this process to create a tilted ionization plane or tilted AIM layer.

FIG. **8** shows that the preferred method of generating a plasma layer uses a heater antenna to scan with a line rather than a point. Scanning using a line is preferred since an AIM can be created in the atmosphere in less time. To create lines of ionization rather than points, a rectangular array **50** is used. In the array **50**, radiating elements are focused only along the plane of the long dimension of the rectangular array, creating a line of ionization **53**. The array is then scanned along the x-y axis and in altitude along the z axis to create another ionization line **55**. More ionization lines are similarly generated to form a tilted AIM layer.

In order to create a tilted AIM it is necessary to refocus the heater array at successively higher altitudes. Moving the focal point by changing the phase of each element of the heater in a very precise manner is not practical. Moving the focal point away from the initial location requires changing the phase on each element. The phase change required is near the rms tolerance level, typically 1 degree. FIG. **9** shows the required phase corrections to move the focal point from 60 Km to 61 km. Elements **5**, **10**, **15**, and **20** have distances 5d, 10d, 15d, and 20d, respectively from the center of the antenna, where d=25 meters It is clear from FIG. **9** that it is impractical to alter numerous antenna element phases to move the focal point to create tilted patches for AIM applications. 2000 elements may be required here to generate enough power to ionize the atmosphere.

The second method of refocusing is accomplished by first setting the phases of all elements for the initial focal point and then moving the focal point by changing the frequency rather than the phase. This frequency chirping method is less precise, but easier for hardware implementation because precise phases for 2000 elements need not be changed. FIG. **9** shows the required phase corrections to move the focal point from 60 Km to 61 Km. FIG. **10** shows that the focal point can be moved 100 meters by increasing the frequency approximately 1 Mhz. The resulting focal point power levels are not completely optimized, but simulation shows that there is less than a 0.1 db difference between the frequency shifted peaks and those obtained by phasing.

Tilting the AIM using frequency chirping is practical to achieve in a real system. FIG. **11** shows the plasma layer location with no frequency chirping. FIG. **12** shows the plasma location of the same heater creating a tilted AIM by increasing frequency from 550 MHz to 559.375 MHz while scanning horizontally. The result is a smooth patch with a 45 degree inclination.

While it is true that frequency chirping does not achieve the same power as phase focusing at the higher altitude, the difference for small frequency chirps is negligible. FIG. **13** shows actual power density data generated by a 300 MHz heater focused at 70 km with the frequency chirped to 308 MHz.

In the far field region, power meets its upper bound without focusing. For a far field or unfocused array, there is no way to raise the ionization altitude or create a tilted AIM. Ionization takes place at a point where there is enough power to initiate breakdown and where there is low enough neutral density (i.e. pressure). This usually occurs between 40 and 50 km altitude as shown in FIG. **14**. Consequently, a near field focused antenna is required to create a controlled AIM.

The focused pattern is a picture of constructive and destructive interference of the fields from the elements of the array. Other interference positions, or grating lobes, outside the focal point occur when some of the array elements add up in phase. The power of grating lobes can be kept below that of the main lobe, or focal point, by having a large number of elements in the array and spreading them out over the array aperture. This is called thinning the array. For square arrays having 400 elements or more grating lobes can be kept down by 20 db or more from the focal point.

The degree of focusing depends on the ratio of focal range to aperture size. The half power width from peak "V" can be approximated as:

$$V=2*g*(R_o/L)^2 \quad (2)$$

where L is the length of the array which is assumed square for equation 2. The power gradient at the half power point "grad(P)" can be approximated as:

$$grad(P) = 10/V(db/meter) \quad (3)$$

For an AIM it is desirable that the power gradient be high because this directly determines the gradient of the electron density of the generated ionized cloud. The electron density must be high to avoid RF losses caused by absorption. Hence V be small, preferably less than 2 Km. A heater frequency of 300 MHz and a focal distance of 70 Km would project an aperture size greater than 2 Km. Note in equation 2 that array size scales with the square root of frequency.

Since a near field antenna is required, the near field of the heater antenna may be required to extend to reach distant points. This is accomplished by increasing the array size. It may not be economically feasible to fill this entire aperture with elements, hence a thinned array is utilized.

If a thinned array had its elements uniformly distributed, there would be many grating lobes in the radiation pattern of the array. These grating lobes can be eliminated by randomly spacing elements. However, random spacing puts power from the grating lobes into the average side lobe level. If no new elements are introduced when the aperture is increased, then the peak power of the main lobe remains constant and the main lobe receives less of the total power as its beamwidth decreases. In order to preserve the efficiency of the heater array, grating lobes must be utilized in creating the AIM cloud or the array can not be heavily thinned. FIG. **15** shows an array with uniform spacing having grating lobes. FIG. **16** shows an array with randomized spacing which eliminates the grating lobes.

Although the invention has been described above with particular reference to certain preferred embodiments thereof, it will be understood that modifications and variations are possible within the spirit and scope of the appended claims.

What is claimed is:

1. A method for generating an AIM, comprising the steps of:

(a) creating avalanche ionization in the atmosphere using a heater antenna;

(b) refocusing said heater antenna to alter the altitude of said avalanche ionization by frequency shifting said heater antenna; and

(c) scanning said heater antenna to paint an avalanche ionization layer.

2. A method for generating an AIM as claimed in claim **1** wherein said heater antenna is focused in the near field.

3. An apparatus for generating an AIM comprising:

(a) a phased array heater antenna which is focused at an altitude to cause an avalanche ionization area to be created in the atmosphere;

(b) means for controlling frequency of individual radiators of said phased array heater antenna to refocus said altitude of said avalanche ionization area; and

(c) means for controlling phase of the individual radiators to scan said phased array heater antenna.

4. An apparatus for generating an AIM as claimed in claim **3** wherein said phased array heater antenna is focused to cause said avalanche ionization area to be substantially a line.

5. An apparatus for generating an AIM as claimed in claim **4** wherein said means for controlling phase moves said line substantially at a constant altitude and said means for controlling frequency moves said line to different altitudes.

6. An apparatus for generating an AIM as claimed in claim **4** wherein said phased array heater antenna is a rectangular array and said line is formed parallel to a long dimension of said rectangular array.

7. An apparatus for generating an AIM as claimed in claim **3** wherein said phased array heater antenna is focused to cause said avalanche ionization area to be substantially a point.

8. An apparatus for generating an AIM as claimed in claim **7** wherein said means for controlling the phase moves said point substantially at the same altitude and said means for controlling frequency moves said point to different altitudes.

9. An apparatus for generating an AIM as claimed in claim **3** wherein said phased array heater antenna is focused in the near field.

10. A method of generating an AIM comprising the steps of:

(a) focusing a phased array heater antenna at an altitude to cause an avalanche ionization area to be created in the atmosphere;

(b) controlling the frequency of individual radiators of said phased array heater antenna to refocus said altitude of said avalanche ionization area;

(c) controlling phase of the individual radiators to scan said phased array heater antenna.

11. A method of generating an AIM as claimed in claim **10** wherein said step of focusing causes said avalanche ionization are to be substantially a line.

12. A method of generating an AIM as claimed in claim **11** wherein said step of controlling phase moves said line substantially at a constant altitude and said step of controlling frequency moves said line to different altitudes.

13. A method of generating an AIM as claimed in claim **11** wherein said phased array heater antenna is a rectangular array and said line is formed parallel to a long dimension of said rectangular array.

14. A method of generating an AIM as claimed in claim **10** wherein said step of focusing causes said avalanche ionization area to be substantially a point.

15. A method of generating an AIM as claimed in claim **14** wherein said step of controlling phase moves said point substantially at the same altitude and said step of controlling frequency moves said point to different altitudes.

16. A method of generating an AIM as claimed in claim **10** wherein said step of focusing is performed in the near field.

* * * * *

TRAPPED ELECTROMAGNETIC RADIATION COMMUNICATIONS SYSTEM

Original Filed Sept. 11, 1963

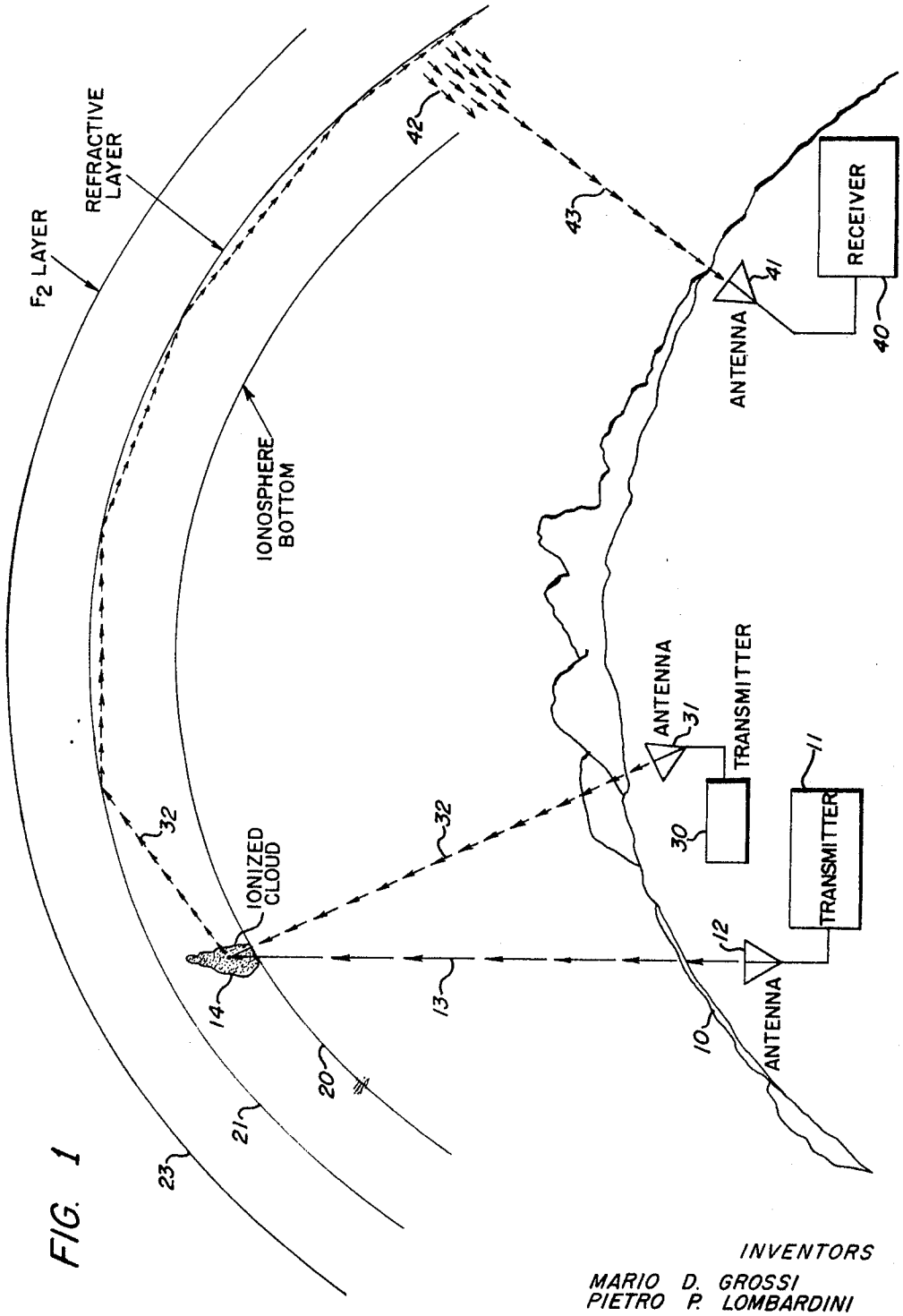

FIG. 1

INVENTORS
MARIO D. GROSSI
PIETRO P. LOMBARDINI

BY Donald Brown
AGENT

TRAPPED ELECTROMAGNETIC RADIATION COMMUNICATIONS SYSTEM

Original Filed Sept. 11, 1963 Sheet 2 of 4

FIG. 2

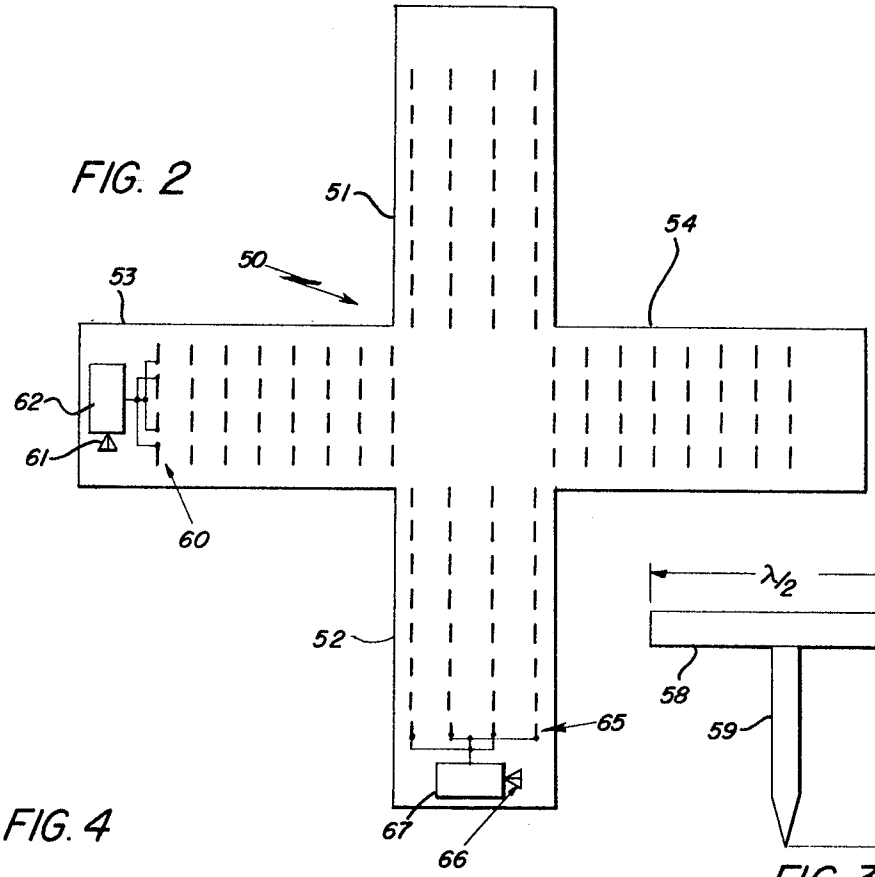

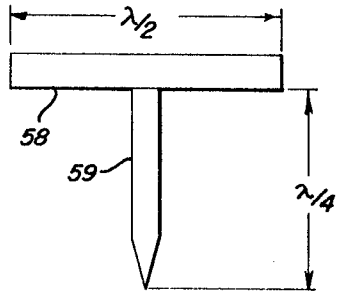

FIG. 3

FIG. 4

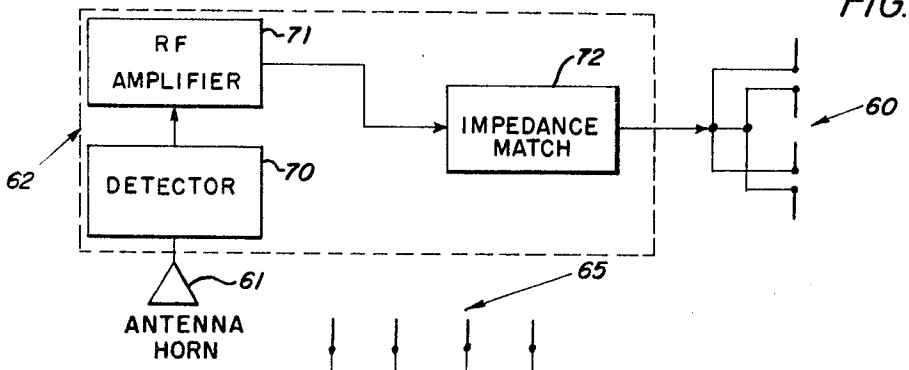

FIG. 5

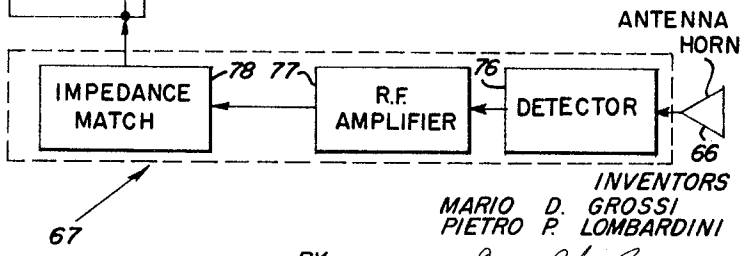

INVENTORS
MARIO D. GROSSI
PIETRO P. LOMBARDINI
BY
Donald Brown
AGENT

TRAPPED ELECTROMAGNETIC RADIATION COMMUNICATIONS SYSTEM

Original Filed Sept. 11, 1963 Sheet 3 of 4

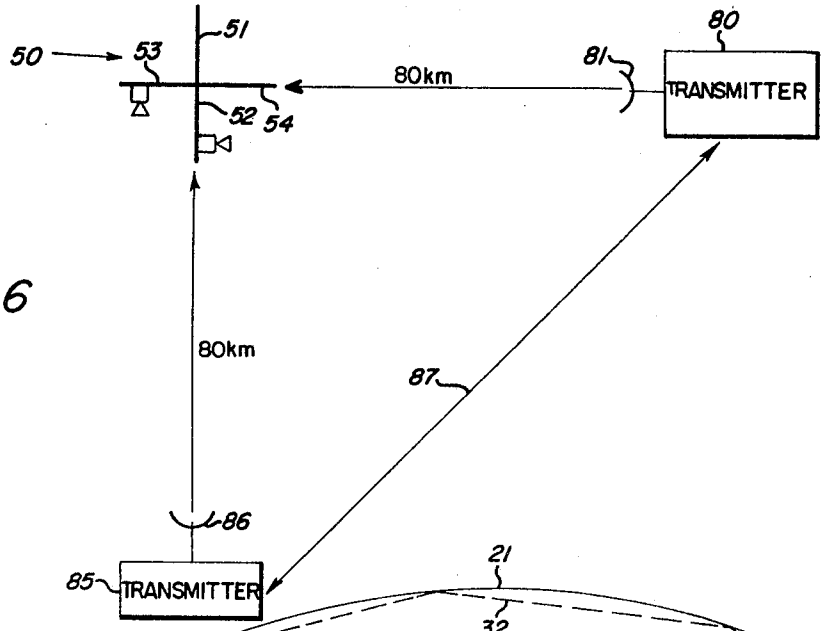

FIG. 6

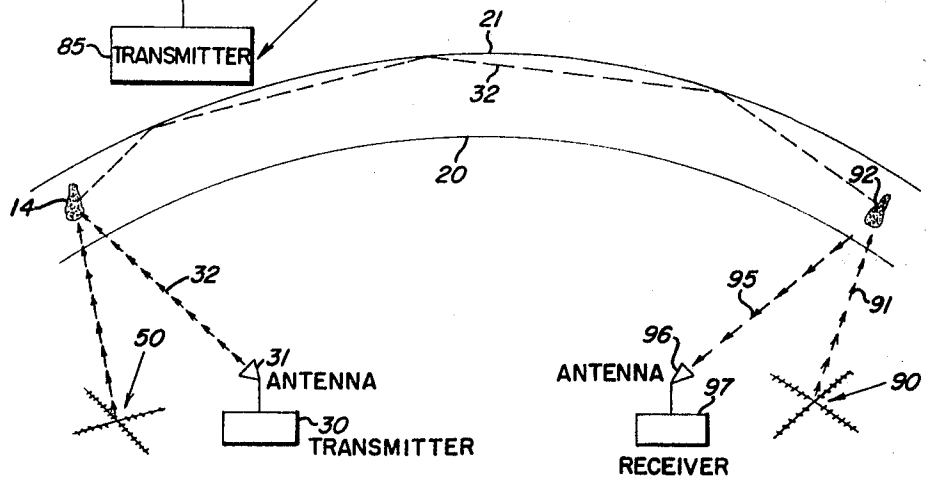

FIG. 8

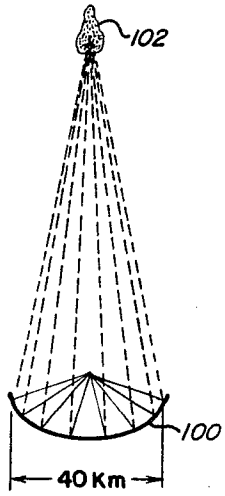

FIG. 9

INVENTORS
MARIO D. GROSSI
PIETRO P. LOMBARDINI
BY Donald Brown
AGENT

TRAPPED ELECTROMAGNETIC RADIATION COMMUNICATIONS SYSTEM

Original Filed Sept. 11, 1963 Sheet 4 of 4

FIG. 7

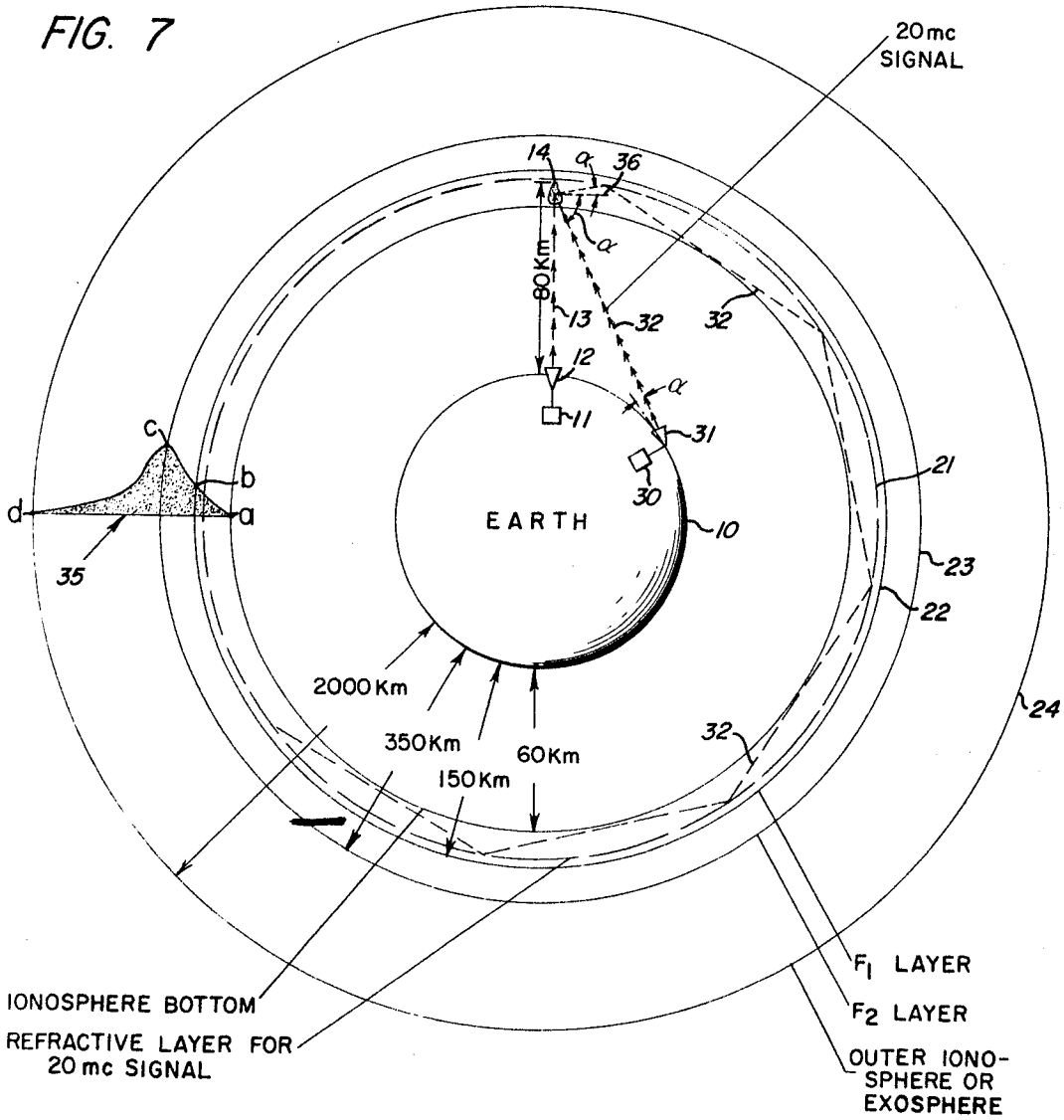

INVENTORS
MARIO D. GROSSI
PIETRO P. LOMBARDINI

BY Donald Brown
AGENT

United States Patent Office

3,445,844

Patented May 20, 1969

1

3,445,844
TRAPPED ELECTROMAGNETIC RADIATION COMMUNICATIONS SYSTEM

Mario D. Grossi, Cambridge, Mass., and Pietro P. Lombardini, Philadelphia, Pa., assignors to Raytheon Company, Lexington, Mass., a corporation of Delaware

Continuation of application Ser. No. 308,172, Sept. 11, 1963. This application Jan. 11, 1968, Ser. No. 697,244
Int. Cl. H04b 7/00
U.S. Cl. 343—100 57 Claims

This invention relates to communication systems and more particularly to the use of trapped electromagnetic radiation to provide an over the horizon long distance communications network or system.

This application is a continuation of application Ser. No. 308,172 filed Sept. 11, 1963, now abandoned.

Ever since the advent of the radio, various attempts have been made to provide a long range communications system. During the World War I era attempts were made to obtain a reliable world wide communications system utilizing very low frequencies, but due to atmospheric noises and bandwidth limitations, more desirable techniques were required. In more recent years, radio propagation over long distances has been attempted by systems employing "one hop" or "bounce" reflective techniques for scattering V.H.F., U.H.F., and S.H.F. signals. These particular systems have required the use of large amounts of power in order to obtain reception at distant points. Additionally, scattering techniques have suffered from the occurrence of atmospheric instabilities which have caused periodic fading of the transmitted signals. Although scattering techniques have been applied successfully over relatively short distances, such as between the continent of Europe and islands in the Mediterranean, and additionally in Alaska and Northern Canada, long distance communications have not been possible.

Other global communication systems not relying on ground based links have also been attempted. For example, the Telstar orbiting satellite and the orbiting satellite communications system have been proposed as a solution to this problem. Although Telstar has proved that a global communication system is feasible, utilizing an orbiting satellite or a group of orbiting satellites, these systems are quite costly, particularly due to the requirement of at least forty orbiting satellites in order to obtain coverage of the entire world. Additionally, problems of reliability of the repeater equipment utnlized in the satellites will necessitate that additional repeater satellites be periodically placed in orbit as a substitute for an inoperable satellite. Additionally, these satellite systems rely on basically a "one hop" line-of-sight technique between two points, and thus forty satellites are required as a minimum for complete world wide coverage.

Further, "one hop" reflective long distance communication systems have been proposed utilizing a ground created reflective zone or layer of an ionized atmosphere. This reflective layer could be obtained using seeding techniques or possibly by the injection of neutrons to form a reflective cloud in the atmosphere. In spite of the fact that communications have been successfully attempted utilizing seeding for "one hop" point-to-point over the horizon reflective communications links, seeded ionized clouds have been difficult to control, particularly due to the sun's adverse effect. Although all the aforementioned systems have had some success, either their cost or complexity has produced a requirement for a more inexpensive and reliable system to obtain world wide communications.

Accordingly, it is the principal object of this invention to provide a new, useful, and improved highly reliable world wide communications system.

Another object of this invention is to provide an over

2

the horizon communications system which utilizes a waveguide duct in the ionosphere to trap electromagnetic radiation.

Still another object of this invention is to create an electromagnetically generated ionized cloud to provide a means for injecting electromagnetic radiation into an ionospheric waveguide duct.

A further object of this invention is to provide a means for extracting electromagnetic radiation trapped within an ionospheric waveguide duct.

In accordance with the communications system of this invention, electromagentic radiation is artificially injected into and trapped within an atmospheric waveguide duct. The trapped radiation then propogates within said atmospheric waveguide duct. The trapped radiation then propogates within said atmospheric waveguide duct around the earth. Devices positioned around the earth's periphery are utilized to receive a portion of trapped radiation either by detecting radiation scattered by natural or artificially generated scaters positioned within the waveguide duct.

Other features and objectives of the communications system of this invention will become apparent from the following description taken in conjunction with the following drawings, wherein:

FIG. 1 illustrates schematically a communications system following the principals of this invention including means for generating an artificial scatterer to inject electromagnetic radiation into an ionospheric waveguide duct, and means for receiving a portion of said radiation reflected by natural scatterers.

FIG. 2 illustrates a top plan view of a configuration of an antenna for generating an artificial scatterer.

FIG. 3 is a side elevational view of one of dipole elements of the antenna of FIG. 2.

FIG. 4 illustrates schematically the transmitter and the dipole antenna arrangement for the legs numbered **53** and **54** of the antenna of FIG. 2.

FIG. 5 illustrates schematically the transmitter and the dipole antenna arrangement for the legs numbered **51** and **52** of the antenna of FIG. 2.

FIG. 6 illustrates schematically a means for properly phasing the output radiation from the antenna of FIG. 2 in order to generate an artificial scatterer positioned within the ionosphere.

FIG. 7 is a pictorial representation of the earth surrounded by ionospheric layers for the purpose of explaining the presence of ionospheric waveguide ducts.

FIG. 8 is a schematic diagram of the communications system of this invention including means for generating an artificial scatterer to extract electromagnetic radiation from an ionosphereic waveguide duct; and

FIG. 9 is a side schematic view of an ellipsoid antenna which could be used to generate an artificial scatterer within the ionosphere.

FIG. 1 illustrates a long distance communications system following the principles of this invention and which comprises a transmitter **11** disposed at a point on the earth **10**. The transmitter **11** will be described in conjunction with an explanation of FIGS. 4 and 5. Transmitter **11** provides electromagnetic energy to antenna **12**. Antenna **12** then focuses this energy or radiation, shown as arrows **13**, to form an ionized cloud or scatterer **14**, within the ionospheric region of the atmosphere. A suitable antenna for generating the ionized cloud **14** will be described at a later time in conjunction with the explanation of FIGS. 2, 3, 4 and 5 of the accompanying drawings. The ionized cloud **14** is shown positioned slightly above the ionospheric bottom layer **20**, but substantially below the F_2 layer **23** of the ionospheric region.

The ionized cloud **14** is believed to be generated in the following manner: electrons that already exist in the ionospheric region of the upper atmosphere are acceler-

ated by electromagnetic radiation which is focused from the ground. These electrons are accelerated by the radiation to a degree such that their kinetic energy reaches the level needed for the occurrence of ionizing collisions. Cloud **14** is a result of these ionizing collisions. Scattering from this cloud takes place due to the discontinuity between this zone of enhanced ionization and the surrounding medium. The shape and the properties of the scatterer can be adjusted by controlling the properties of the antenna used, the amount of power provided by the antenna, and the phase of the energy emitted by various portions of the antenna. For example, the preferred embodiment of this invention utilizes a transmitter **11** and antenna **12** operating at a frequency of 50 megacycles, and which provides 26 megawatts of peak power and 260 kilowatts of average power. Antenna **12** focuses the energy to produce a cloud **14** approximately 80 kilometers above the earth's surface. The ionized cloud formed has a mean width of approximately 15 meters and a length of approximately 60 meters. Due to the focusing, the ionized cloud has a shape which comes to a point at its greatest distance from the earth's surface and tapers in the manner of a cone at its widest point. The ionized cloud of this invention also has a variation of the electric field in the cloud versus the height from the antenna which is positive. The antenna used is in a near-field arrangement. In other words, with increasing distance in the resulting cloud **14** there is an increasing field. This does not happen with an unfocused antenna of the far-field type. An unfocused antenna has a radiation pattern which spreads at greater distances from the antenna and its electric field decreases with increasing range. In our case $dE/dh>0$ where E is the E field vector and h is the distance from the antenna above the earth's surface. It is to be noted that the life of our scatterer or cloud persists essentially as long as the ground transmitter is on. This constitutes a basic advantage with respect to any other suggested artificial scatterer, such as that which could be produced by seeding. Accordingly, this system utilizing an ionized cloud which is generated from the earth and which is controllable from the earth is highly superior to any technique which is completely out of the control of the operators.

Referring once again to FIG. 1, a transmitter **30** is shown for providing a communications signal which is to carry information from a point somewhere on the earth's periphery which is in proximity to transmitter **11**. The transmitter **30** could be any of the common A.M. communication transmitters, such as those which operate in the M.F., V.H.F. and H.F. frequency bands. The transmitter **30** provides this communication signal to antenna **31**. The antenna **31** is of a directional type in order that the communication signal can be directed towards the ionized cloud or artificial scatterer **14**. Directional antennas, such as rhombic or Yagi, could be utilized for this purpose. Assume now that the transmitter **30** provides a 20 megacycle communications signal having a 500 kilowatt peak output power to the antenna **31**. This signal will then be directed as shown by the arrowed lines **32**, and be refracted off the ionized cloud or scatterer **14**. This signal **32** will be directed through the ionospheric waveguide duct, due to a refractive electron layer **21** which curves spherically around and is concentric with the earth's periphery. This refractive layer **21** causes the communication signal **32** to be trapped within an ionospheric waveguide duct which has the refractive layer **21** as its upper boundary, substantially the ionospheric bottom as its lower boundary, and which is concentric with the earth's periphery. The explanation of the presence of this refractive layer and the duct will be given at a later time in conjunction with a description of FIG. 7.

Assuming now a receiving station, such as receiver **40** and antenna **41**, located at a site which is at a long distance from transmitter **30**, is required to receive in-

formation transmitted by transmitter **30**. Communication reception at the receiving station is made possible by natural scatterers within the ionospheric layer, such as produced by natural discontinuities in the electron density within the ionosphere. These natural scatterers cause power leakages in the flow of the communications signal **32** through the ionospheric waveguide duct. These power leakages are shown as arrows **42**. By utilizing the antenna **41** along with a receiver **40**, it is thus possible to detect the power leakages due to scattering caused by natural scatterers within the ionosphere. This is shown diagrammatically as arrow **43** being received by antenna **41**. The atenna **41** could be of the Yagi type. The recetiver **40** may be of the double conversion superheterodyne type utilizing two local oscillators and two I_F stages. Thus, it is seen that once a communications signal is injected into the ionosphere and is then trapped in the waveguide duct of the ionopshere, a portion of this trapped signal can then be received after traveling over long distances. It is to be noted that this type of communications link does not depend on local minima or maxima in the ionopshere electron density profile. Furthermore, it is to be noted that this system does not rely upon the reflection of a signal off an ionized cloud and back down to a second location on the earth in order to obtain "one hop" point-to-point communications. Rather, the communications system presented here utilizes ionospherically trapped electromagnetic radiation in order to obtain point-to-point over the horizon communications.

Referring now to FIGS. 2, 3, 4, 5 and 6 for the description of a transmitter and antenna system shown as transmitter **11** and antenna **12** in FIG. 1. FIG. 2 illustrates the configuration of a Mills Cross antenna for generating the ionized cloud or artificial scatterer **14**. This antenna is of that type which is common to the radio astronomy field. A description of this type of antenna can be found in the book "Radio Astronomy," page 75, authored by J. L. Pawsey and R. M. Bracewell, published by Oxford at the Clarendon Press, under the date of 1955 in Oxford, England. An arrangement of this antenna is shown in a top plan view in FIG. 2. This Mills Cross antenna **50** is shown having two legs **51** and **52** and two legs **53** and **54**. The width of each of the legs is 12 meters and the length of each leg is 19 kilometers. The total antenna of this invention compriess 104,000 dipoles. A side elevational view of one of the dipoles is shown in FIG. 3 and has a radiating portion **58** which when mounted is parallel to the earth's surface and a vertical portion **59** which is used to mount each of these dipole antennas in the earth's surface. The horizontal radiating portion **58** is designed with a radiating surface equal to $\lambda/_2$ and the mounting portion **59** has a dimension of $\lambda/_4$. Each of the legs **51**, **52**, **53** and **54** have a total of 26,000 dipoles mounted four across to obtain the configuration shown in FIG. 2. Each of the legs has 6500 rows of four dipole antennas each.

The Mills Cross antenna **50** has the rows of dipoles comprising legs **53** and **54** connected in the same manner. For the purposes of explanation, a four dipole row in leg **53** will be described. This four dipole row is shown as **60** and has a transmitter **62** providing power to be radiated by each of the dipoles. A receiving antenna horn **61** is shown coupled to the transmitter **60** for the purposes of phasing the output radiation from each of the dipole antennas shown in **60**. The description of the phasing of the radiation of this antenna will be given in conjunction with an explanation of FIG. 6.

In order to show the connection of the dipole antennas of the legs **51** and **52**, a four row dipole antenna configuration **65** is singled out for purposes of description. Dipole antenna row **65** is shown coupled to a transmitter **67** which has an antenna horn **66** which is also used for the purposes of phasing the signal to be radiated by the dipole row **65**. Each of the transmitters of the Mills Cross antenna configuration provides a final stage power

output of approximately one kilowatt peak power or 10 watts of average power. Since there are a total of 26,000 transmitters in this antenna configuration **50**, each providing one kilowatt, a total output power of approximately 26 megawatts peak power is obtained.

Referring now to FIG. 4 for a description of the transmiter **62**, a detector **70** is shown coupled to the antenna horn **61** for the purpose of receiving a phasing signal to be retransmitted. The signal to be retransmitted is applied to an R.F. amplifier **71** in order to amplify the detected signal to be retransmitted by the dipole configuration shown as **60**. The R.F. amplifier final stage is of the normal tetrode type of amplifier. R.F. amplifier **71** provides an amplified signal which is coupled through an impedance matching device **72** to feed the dipole antenna configuration **60**, as schematically shown in FIG. 4. The impedance matching device is utilized in order to couple the R.F. antenna to the dipole configuration **60**.

Referring now to FIG. 5, there is disclosed the transmitter **67**, having a detector **76**, R.F. amplifier **77**, and an impedance matching device **78** coupled between an antenna horn **66** and the dipole radiating configuration **65**. The apparatus of FIG. 5 is of the same type and operates similarly as does the apparatus of FIG. 4.

Referring now to FIG. 6, there is shown a scheme for phasing radiations from each of the dipole antennas of the Mills Cross antenna configuration **50**. Although it is possible to pre-set the phase of each of the transmitted signals which emanate from the dipole antennas by individually adjusting the phase of the signal provided by each of the transmitters of the antenna configuration **50**, a more effective technique for obtaining the proper phase relationship is shown in FIG. 6. This simplified technique is used to obtain the phase relationship to produce a cloud or artificial scatterer approximately 80 kilometers above the earth's surface. This technique utilizes two transmitters, **80** and **85**, which are slaved together by way of a ground link **87**. The transmtiters, **80** and **85**, simultaneously transmit a signal which emanates in the same phase relationship from each of these transmitters. By placing transmitter **80** perpendicular to and at a distance of approximately 80 kilometers from the legs **51** and **52** and transmitting this signal by way of a parabolic antenna configuration, and by simultaneously positioning transmitter **85** perpendicular to and at a distance of 80 kilometers from legs **53** and **54**, and transmitting a signal from a parabolic antenna **86**, it is possible to phase the signals radiated by the dipoles of the antenna **50** in order to produce the ionized cloud **14**. Thus, for example, by amplitude modulating a microwave frequency signal with a 50 megacycle per second signal, and by detecting this modulation with a detector, such as detector **70** or **76** of FIGS. 4 and 5, and then amplifying this 50 megacycle detected signal, the proper phase relationship for producing the ionized cloud is obtained. The proper phase is obtained since the phase of arrival of the 50 megacycle modulated microwave signal differs from point-to-point along the legs of the antenna configuration **50** in the same phase relationship that is required to recompose the field at 80 kilometers of height.

FIG. 7 is a pictorial representation of the earth surrounded by the ionospheric layers for the purpose of explaining the ionospheric waveguide ducts. For purposes of obtaining a reference from the earth's surface there is presented a pictorial diagram (not to be considered as drawn to scale) showing an ionospheric bottom layer **20** approximately 60 kilometers above the earth's surface, an F_1 layer substantially 150 kilometers above the earth's surface, an F_2 layer approximately 350 kilometers above the earth's surface, and outer ionosphere or exosphere about 2000 kilometers above the earth's surface. The ionosphere has the shape of a spherical shell and is concentric with the earth's surface.

Referring now to the portion of FIG. 7 numbered **35**, this stippled area represents the density of the electrons in the various regions of the ionosphere. For example, point *a* represents an electron density of approximately 10^3 electrons per cubic centimeter, which occurs at the ionospheric bottom. Point *b* represents the electron density at the F_1 layer, which is approximately equal to 10^5 electrons per cubic centimeter. Point *c* depicts the maximum electron density, which is presumed to exist at the F_2 layer of the ionosphere. At this point, an electron density of approximately 10^6 electrons per cubic centimeter is believed to exist. Point *d* on the tail end of the exponentially decaying region between points *c* and *d* represents an electron density of approximately 10^3 electrons per cubic centimeter which is considered to exist at the exposure.

Assume now that a transmitter, such as **11**, and an antenna **12**, which was previously disclosed with relation to FIGS. 1–6, generates an artificial scatterer **14** at approximately 80 kilometers above the earth's surface. Further, assume that a transmitter **30** and an antenna **31** directs a 20 megacycle communications signal in such a manner that the signal leaves the earth at an angle α of approximately 10° so that it is injected at an angle of α degrees into an ionospheric waveguide duct which lies between the bottom layer **20** and the F_2 layer **23**. The upper limit of the ionspheric waveguide duct, shown as the refractive layer **21** within the ionosphere, is a function of the frequency of the transmitted communications signal and the ionospheric conditions. The index of refraction of the ionosphere refractive layer is, among other things, a function of the local electron density of the ionospheric region and of the frequency of the transmitted communications signal. When the index of refraction approaches 0, refractive bending of a ray toward the earth's surface will take place. However, a trapped ray will not land on the earth's surface. For a 20 megacycle communications signal, a refractive layer **21** theorized at 130 kilometers, comprises the upper limit of the wave guidance duct. The lower limit of the ionospheric waveguide duct is a function of the angle α. In the situation required for trapping of the signal **32**, the lower limit is substantially bounded by the ionospheric bottom for an α which permits trapping. Therefore, for a 20 megacycle signal, the ionospheric waveguide duct will lie in the region between substantially 60 kilometers at its lower limit to 130 kilometers at its upper limit. For other frequencies, the waveguide duct will vary in accordance with the frequency of the communications signal.

Referring once again to the communications signal **32**, it can be seen that this signal **32** will be refracted from the artificial scatterer **14**, and be injected into the ionospheric duct, described previously. The signal after entering the duct will be trapped, due to the signal **32** being refracted periodically at points along the upper shell-like refractive layer **21**.

FIG. 8 is a schematic diagram of the communication system of this invention including a second artificial scatterer, which is placed in the ionospheric duct in order to extract a comunications signal trapped within the duct. A transmitter **30** and an antenna **31** is shown providing a communications signal **32** which is refracted by a scatterer **14** generated by a Mills Cross antenna **50**. This signal **32** is then periodically refracted by a refractive layer **21** and travels parallel to the earth's surface. A second Mills Cross type antenna emitting radiation, shown as arrowed lines **91**, places a second artificial scatterer **92** within the ionospheric duct which lies substantially between the ionospheric bottom **20** and the refractive layer **21**. This cloud **92** intercepts the communications signal **32** and reflects a major portion thereof. This is shown as arrowed lines **95** which are received by an antenna **96** and a receiver **97**. Although this particular embodiment is more costly than that which is shown in FIG. 1, due to the use of two artificial scatterers **14** and **92**, this embodiment will provide a communications system which will be operable over long distances at higher data rates. It is to be noted that this two scatter system is not

of the "one-hop" reflective type. This system does not require that the artificial scatterers **14** and **92** be within line-of-sight of each other in order that there be over the horizon communications.

Referring now to FIG. 9, an alternate embodiment of an antenna is shown for producing an ionized cloud or scatterer, such as cloud **102**. The antenna **100** is of the ellipsoidic variety and is designed with a diameter of 40 kilometers to radiate and focus energy to produce the cloud **102**.

Although the preferred embodiment shows the use of separate antennas and transmitters to produce the cloud and to provide the communications signal, it is to be understood that a single station comprising a dual purpose antenna and transmitter could be used. Furthermore, it is to be understood that although a 20 megacycle communication signal is used in the preferred embodiment, other frequencies such as M.F., H.F., and V.H.F. frequencies of between approximately a few megacycles to 70 megacycles could be used. For example, recent tests have shown that communications between Massachusetts and Italy are possible utilizing this technique. Instead of generating an artificial scatterer, ionized meteor trails were utilized as scatterers to inject a 23 megacycle signal into an ionospheric waveguide duct. Receivers positioned in Italy detected a portion of the signal trapped within the duct. Additionally, this technique could be applied to satellite-borne receivers orbiting within the ionospheric waveguide duct or between ground stations and satellites. In addition, it is possible to use the trapped radiation technique of this invention in other regions of the atmosphere, such as in the troposphere. A tropospheric communications system would permit the propagation of frequencies in the V.H.F., U.H.F. and S.H.F. bands. Accordingly, it is desired that this invention not be limited except as defined by the appended claims.

We claim:

1. A communications system comprising:

means for generating and controlling an ionized cloud in the ionosphere, said means including first and second transmitters for simultaneously transmitting signals in the same phase relationship, ground link means for slaving said transmitters together, and antenna means for focusing on and accelerating ionospheric electrons with the electromagnetic radiation signals from said transmitters to produce ionizing collisions;

transmitting means for transmitting a communications signal directed at said ionized cloud, said cloud injecting said communications signal into and propagating said communications signal within an ionospheric signal trapping waveguide duct encircling the earth; and

means for receiving at least a portion of said communications signal trapped in the duct.

2. A system comprising:

means for transmitting a signal;

means for electromagnetically generating a scatterer within a given zone of the ionosphere, said scatterer injecting at least a portion of said signal into and causing said portion to propagate within an ionospheric signal trapping waveguide duct encircling the earth; and

means for receiving at least a portion of said signal trapped within said waveguide duct.

3. A system comprising:

means for transmitting a signal into a given zone of the atmosphere;

means for generating a scatterer in a given zone of the atmosphere, said scatterer causing said signal to be injected into and propagated within an atmospheric signal trapping duct to encircle the earth, and

means for detecting at least a portion of said signal trapped within said duct.

4. A system comprising:

means for providing a signal having a frequency below approximately 7 megacycles;

means for injecting at least a portion of said signal into a trapping zone of the ionosphere encircling the earth and defined by the ionospheric bottom layer and a refractive layer which is a function of the frequency of said signal and for causing said portion to propagate within said trapping zone around the earth; and

means for detecting at least a portion of said injected signal.

5. A communications system comprising:

means for providing a signal;

means for electromagnetically generating a scatterer to inject said signal into and to propagate said signal within a given signal trapping zone of the atmosphere encircling the earth; and

means for detecting at least a portion of said injected signal.

6. A communications system in accordance with claim **5** wherein said means for electromagnetically generating a scatterer includes an antenna for focusing on and accelerating ionospheric electrons with electromagnetic radiation signals to produce ionizing collisions.

7. A communications system in accordance with calim **6** wherein said antenna comprises a Mills Cross antenna having first and second perpendicular legs and includes means for phasing said antenna to produce said scatterer comprising first and second transmitters for simultaneously transmitting signals in the same phase relationship, each of said transmitters being perpendicular to and spaced apart from a different one of said legs, and ground link means for slaving said transmitters together.

8. A communications system comprising:

transmitting means for transmitting a communications signal;

transmitting means for electrromagnetically generating a scatterer in a given signal trapping zone in the ionosphere;

an antenna included in said scatterer generating means said scatterer being provided to inject said communications signal into and to propagate said communications signal within a given signal trapping zone of the ionosphere encircling the earth;

means for focusing on and acceleratnig ionospheric electrons with electromagnetic radiation signals to produce ionizing collisions;

means for phasing said antenna to produce said scat terer, said phasing means including first and second transmitters for simultaneously transmitting signals in the same phase relationship;

ground link means for slaving said transmitters together; and

means for receiving at least a portion of said communications signal which has been injected into and propagated within the given signal trapping zone.

9. A system comprising:

means for generating and controlling an ionized cloud including transmitter means for producing signals to accelerate ionospheric electrons and for stopping producing said signals to cause the removal of said cloud;

means for transmitting a signal directed at said cloud, said cloud injecting said signal into and propagating said signal within an ionospheric trapping waveguide duct encircling the earth; and

means for receiving at least a portion of said signal injected into said duct.

10. A system in accordance with claim **9** wherein said means for generating a cloud includes a near-field antenna producing a positive gradient electric field within said cloud at increasing distances from said antenna.

11. A communications system comprising:

means for providing a signal;

means for electromagnetically generating a scatterer

within a region of the ionosphere below the ionospheric F_2 layer, said scatterer providing means for the injection and the porpagating said signal in a trapping zone of the ionosphere defined by the ionosphere bottom layer and a refractive layer which is a function of the frequency of said signal; and

means for receiving at least a portion of said trapped signal.

12. A communications system comprising:

means for transmitting a communications signal;

means for electromagnetically generating and controlling a scatterer within a given region of the ionosphere below the ionosphere F_2 layer, said scatterer being provided to inject said communication signal into and to propagate said communications signal within a trapping zone of the ionosphere defined by the ionospheric bottom layer and a refractive layer which is a function of the frequency of said communications signal;

said scatterer generating means including first and second transmiters for simultaneously transmitting signals in the same phase relationship, ground link means for slaving said transmitters together, and a near-field antenna for producing a positive gradient electric filed within the scatterer at increasing distances from the antenna; and

means for receiving at least a portion of the communications signal in said trapping zone.

13. A system in accordance with claim 11 including a second electromagnetically generated scatterer positioned within the zone of the ionosphere defined by the ionospheric bottom layer and said refractive layer, said scatterer providing means for extracting at least a portion of said signal trapped within said ionosphere.

14. A communications system comprising:

means for providing a signal having a frequency between a few megacycles to about 70 megacycles;

means for electromagnetically generating a scatterer within a given region of the ionosphere including transmitter means for producing signals to accelerate ionospheric electrons, said scatterer providing for the trapping of and the propagating of said signal within a given region of the ionosphere defined by the ionospheric bottom layer and a refractive layer which is a function of the frequency of said signal;

means for electromagnetically generating a second scatterer within a given region of the ionosphere to extract at least a portion of said signal including transmitter means for producing signals to accelerate ionospheric electrons; and

means for detecting at least a portion of said extracted signal.

15. A communications system comprising:

means for generating and controlling an ionized cloud in the ionosphere, said means including one transmitting means for simultaneously transmitting signals in a suitable phase relationship to achieve focusing of the radio frequency generated by the transmitting means, means for slaving the signals from said transmitting means and antenna means for focusing on and accelerating ionospheric electrons with the electromagnetic radiation signals from said transmitting means to produce ionizing collisions;

another transmitting means for transmitting a communications signal directed at said ionized cloud, said cloud injecting said communications signal into and propagating said communications signal within an ionospheric signal trapping waveguide duct encircling the earth; and

means for receiving at least a portion of said communications signal trapped in the duct.

16. A system comprising:

means for transmitting a signal;

means for electromagnetically generating a scatterer for injecting at least a portion of said signal into a trapping zone of the ionosphere encircling the earth, said zone defined by a lower boundary which is a function of the angle of injection of the signal into the zone and a upper refractive layer boundary which is a function of the frequency of said signal and for causing said portion to propagate within said trapping zone around the earth without any lower boundary reflections; and

means for receiving at least a portion of said signal trapped within said zone.

17. A system comprising:

means for transmitting a signal;

means for electromagnetically generating a scatterer for injecting at least a portion of said signal into a trapping zone of the ionosphere, said zone limited by an upper refractive layer which is a function of the frequency of said signal and for causing said portion to propagate within said trapping zone around the earth with reflections only off of the upper refractive layer; and

means for receiving at least a portion of said signal trapped within said zone.

18. A system comprising:

means for transmitting a signal;

a scatterer injecting at least a portion of said signal into a trapping zone of the ionosphere encircling the earth, said zone defined by a lower boundary which is a function of the angle of injection of the signal into the zone and an upper refractive layer boundary which is a function of the frequenncy of said signal and for causing said portion to propagate within said trapping zone around the earth without any lower boundary reflections; and

means for detecting at least a portion of said injected signal.

19. A system comprising:

means for transmitting a signal;

a scatter injecting at least a portion of said signal into a trapping zone of the ionosphere, said zone limited by an upper refractive layer which is a function of the frequency of said signal and causing said portion to propagate within said trapping zone around the earth with reflections only off of the upper refractive layer; and

means for detecting at least a portion of said injected signal.

20. A communications system comprising:

means for providing a signal;

means for electromagnetically generating a permanent and controllable scatterer to inject said signal into and to propagate said signal within a given signal trapping zone of the ionosphere encircling the earth, and

means for detecting at least a portion of said injected signal.

21. A method of communicating comprising the steps of:

electromagnetically generating a scatterer in a given zone of the atmosphere;

transmitting a signal into said scatterer in such manner that said signal is injected into and propagated within an atmospheric signal trapping duct encircling the earth; and

detecting at least a portion of said signal trapped within said duct.

22. A method of communicating comprising the steps of:

electromagnetically generating a scatterer within a given zone of the ionosphere;

transmitting a signal into said scatterer in such manner that at least a portion of said signal is injected into and propagated within an ionospheric signal trapping waveguide duct encircling the earth; and

receiving at last a portion of said signal trapped within said waveguide duct.

23. A method of communicating comprising the steps of:

transmitting a communications signal;

injecting at least a portion of said signal into a signal trapping zone of the atmosphere encircling the earth, said zone defined by a lower boundary which is a functon of the angle of injection of the signal into the zone and an upper shell-like refractive layer boundary which is a function of said signal, said signal being periodically refracted at points along the upper shell-like refractive layer without any lower boundary reflections as it is propagated approximately parallel to the earth's surface; and

receiving at least a portion of the signal propagating within said trapping zone.

24. A method of communicting using trapped electromagnetic radiation comprising the steps of:

transmitting a signal having a frequency below approximately 70 megacycles;

injecting at least a portion of said signal into a trapping zone of the ionosphere encircling the earth and defined by the ionosphere bottom layer and a refractive layer which is a function of the frequency of said signal;

propagating said signal within said trapping zone around the earth; and

detecting at least a portion of said propagated signal.

25. A method of communicating using ionizing atmospheric collisions comprising the steps of:

electromagnetically generating a scatterer in a given zone of the atmosphere;

providing a communications signal which said scatterer injects into and propagates within the given signal trapping zone encircling the earth; and

detecting at least a portion of said propagated signal.

26. A method in accordance with Claim 25 wherein the step of electromagnetically generating the scatterer includes:

focusing electromagnetically radiation signals on atmospheric electrons within said given zone; and

accelerating the electrons with the electromagnetic radiation signals to produce ionizing collisions.

27. A method in accordance with Claim 26 wherein the steps of focusing and accelerating include:

simultaneously transmitting identically phased signals;

slaving said phased signals together; and

phasing an antenna to achieve the focusing and accelerating of the electrons to produce the ionizing collisions.

28. A method of communicating comprising the steps of:

generating an ionized cloud with electromagnetic radiation signals;

controlling said cloud by said signals;

transmitting a communication signal directed at said cloud such that said communication signal is injected into and propagated within an ionospheric signal trapping waveguide duct encircling the earth; and

receiving at least a portion of said communication signal which has been injected into and propagated within said duct.

29. A method of communicating comprising the steps of:

electromagnetically generating a scatterer within a region of the ionosphere below the ionospheric F_2 layer;

transmitting a communication signal into said scatterer to inject into and propagate said signal within a signal trapping zone of the ionosphere defined by the ionospheric bottom layer and a refractive layer which is a function of the signal frequency; and

receiving at least a portion of said trapped signal.

30. The method of claim 29 wherein said receiving step includes:

electromagnetically generating a second scatterer positioned within the zone of the ionosphere defined by the ionospheric bottom layer and said refractive layer in order to provide means for extracting at least a portion of said trapped signal.

31. A method of communicating comprising the steps of:

electromagnetically generating a scatterer within a given region of the ionosphere;

transmitting a communications signal having a frequency between a few megacycles to about 70 megacycles into said scatter causing the signal to be trapped and propagated within the given region of the ionosphere defined by the ionospheric bottom layer and refractive layer which is a function of the frequency of the signal;

electromagnetically generating a second scatterer within the given region of the ionosphere in order to permit extraction of at least a partion of said signal; and

detecting at least a portion of said extracted signal.

32. A method of communicating comprising the steps of:

electromagnetically generating an ionized cloud in the ionosphere;

controlling said cloud by simultaneously transmitting signals in a suitable phase relationship to achieve focusing of the radio frequency generated, slaving the transmitted signals together and focusing on and accelerating ionospheric electrons with the electromagnetic radiation signals to produce ionizing collisions;

transmitting a communications signal directed at said ionized cloud to inject into and propagate said communications signal within an ionospheric signal trapping waveguide duct encircling the earth; and

receiving at least a portion of said communications signal trapped in the duct.

33. A method of communicating comprising the steps of:

electromagnetically generating a scatterer within a given region of the ionosphere;

transmitting a communications signal into said scatterer to inject at least a portion of said signal into and propagate it within a trapping zone of the ionosphere defined by a lower boundary which is a function of the angle of injection of the signal into the zone and an upper refractive layer boundary which is a function of the frequency of said signal, the propagation occurring without any lower boundary reflections; and

receiving at least a portion of said signal trapped within said zone.

34. A method of communicating comprising the steps of:

electromagnetically generating a scatterer within a given region of the ionosphere;

transmitting a communications signals into said scatterer to inject at least a portion of said signal into and propagate it within a trapping zone of the ionosphere limited by an upper refractive layer which is a function of the frequency of said signal, the propagation occurring with reflections only off of the upper refractive layer; and

receiving at least a portion of said signal trapped within said zone.

35. A method of communicating comprising the steps of:

electromagnetically generating a permanent and controllable scatterer in a given zone of the atmosphere;

directing a communications signal into said scatterer to inject said signal into and to propagate said signal within the given zone of the atmosphere; and

detecting at least a portion of said injected signal.

36. A communications system as set forth in claim 15 wherein said antenna is employed in a near-field arrangement.

37. A communications system as set forth in claim 36 where:

said antenna comprising a Mills Cross antenna having first and second sets of perpendicular legs; and

said one transmitting means comprises first and second transmitters for simultaneously transmitting signals in the same phase relationship, each of said transmitters being perpendicular to and spaced apart from a different one of said legs.

38. A communications system as set forth in claim 37 wherein:

each of said antenna legs has a width of approximately twelve meters and a length of approximately nineteen kilometers;

said antenna has a horizontal radiating surface equal to one half wavelength and a mounting portion of one quarter wavelength; and

said first and second transmitters each being spared approximately 80 kilometers from the corresponding legs of said antenna and each having a parabolic transmitting antenna.

39. A communications system as set forth in claim 38 wherein:

said ionized cloud is located approximately 80 kilometers above the earth's surface, has a mean width of approximately 15 meters, a length of approximately 60 meters and tapers in a cone-shaped fashion from its widest portion to a point at its greatest distance from the earth's surface.

40. A communicating system as set forth in claim 15 wherein:

said another transmitting means transmits a communications signal having a frequency between a few megacycles to about 70 megacycles; and

said transmitting means including a transmitter and an antenna, said antenna being of the directional type.

41. A communications system as set forth in claim 40 wherein:

said antenna is a rhombic antenna.

42. A communications system as set forth in claim 40 wherein:

said antenna is a yagi antenna.

43. A communications system as set forth in claim 40 wherein:

said directional antenna is positioned so that the communications signal leaves the earth at an angle α of approximately 10° and the angle of injection into said duct is approximatetly α.

44. A communications system as set forth in claim 15 wherein:

said receiving means includes a receiver, said receiver being a double conversion superheterodyne receiver having two oscillators and two IF stages and a receiving antenna.

45. A communications system as set forth in claim 44 wherein:

said receiving antenna being a yagi antenna.

46. A communications system comprising:

means for generating and controlling an ionized cloud in the ionosphere, said means including one transmitting means for simultaneously transmitting signals in a suitable phase relationship to achieve focusing of the radio frequency generated by the transmitting means, means for slaving the signals from said transmitting means and antenna means for focusing on and accelerating ionospheric electrons with the electromagnetic radiation signals from said transmitting means to produce ionizing collisions;

another transmitting means for transmitting a communications signal directed at said ionized cloud, said cloud injecting said communications signal into and propagating said communications signal within an ionospheric signal trapping waveguide duct encircling the earth;

means for generating and controlling a second ionized cloud within said duct to extract at least a portion of said signal including means for producing signals to accelerate ionospheric electrons; and

means for detecting at least a portion of the signal intercepted by said second cloud.

47. A communications system comprising:

means for generating and controlling an ionized cloud within a given zone of the ionosphere, said means including,

one transmitting means comprising first and second transmitters for simultaneously transmitting electromagnetic radiation signals in the same phase relationship to achieve focusing of the radio frequency generated by the transmitting means,

means for slaving the signals from said transmitters,

antenna means for focusing on and accelerating ionospheric electrons with the signals from said transmitting means to produce ionizing collisions, said means comprising an antenna employed in a near-field arrangement and being a Mills Cross antenna having first and second sets of perpendicular legs, each of said transmitters being perpendicular and spaced apart from a different one of said sets of legs;

another transmitting means including a transmitter and a directional antenna for transmitting a communications signal having a frequency between a few megacycles to about 70 megacycles and directed at said ionized cloud, said cloud injecting at least a portion of said communications signal into and propagating within an ionospheric signal trapping zone encircling tne earth, said zone defined by a lower boundary which is a function of the angle of injection of the signal into the zone and an upper shell-like refractive layer boundary which is a function of the frequency of said communications signal, said signal being periodically refracted at points along the upper shell-like refractive layer without any lower boundary reflections as it is propagated approximately parallel to the earths surface;

means for generating and controlling a second ionized cloud within said zone to extract at least a portion of said communications signal including means for producing signals to accelerate ionospheric electrons; and

means for receiving at least a portion of said communications signal trapped witnin said zone.

48. A communications system as set forth in claim 47 wherein:

each of said antenna legs has a width of approximately 12 meters and a length of approximately 19 kilometers;

said antenna has a horizontal radiating surface equal to one half wavelength and a mounting portion of one quarter wavelength; and

said first and second transmitters each being spaced approximately 80 kilometers from the corresponding legs of said antenna and each having a parabolic transmitting antenna.

49. A communications system as set forth in claim 48 wherein:

said ionized cloud is located approximately 80 kilometers above the earths surface, has a mean width of approximately 15 meters, a length of approximately 60 meters and tapers in a cone-shaped fashion from its widest portion to a point at its greatest distance from the earth's surface.

50. A communications system as set forth in claim 47 wherein:

said directional antenna is positioned so that the communications signal leaves the earth at an angle α of

approximately 10° and the angle of injection into said zone is approximately α.

51. A communications system as set forth in claim **47** wherein:

said receivng means includes a receiver, said receiver being a double conversion superheterodyne receiver having two oscillators and two IF stages and a receiving antenna.

52. A communications system as set forth in claim **51** wherein:

said receiving antenna being a yagi antenna.

53. A communications system as set forth in claim **47** wherein:

said second cloud generating and controlling means includes,

one transmitting means comprising first and second transmitters for simultaneously transmitting electromagnetic radiation signals in the same phase relationship to achieve focusing of the radio frequency generated by the transmitting means,

means for slaving the signals from said transmitters;

antenna means for focusing on and accelerating ionospheric electrons with the signals from said transmitting means to produce ionizing collisions, said means comprising an antenna employed in a near-field arrangement and being a Mills Cross antenna having first and second sets of perpendicular legs, each of said transmitters being perpendicular and spaced apart from a different one of said sets of legs.

54. A communications system as set fortn in claim **49** wherein:

said Mills Cross antennas each operate at a frequency of approximately 50 megacycles and provide approximately 26 negawatts of peak power and 260 kilowatts of average power.

55. A communications system as set forth in claim **47** wherein:

both said cloud generating and controlling means as well as said communications signal transmitting and receiving means are located near the earths surface.

56. A communications system as set forth in claim **47** wherein:

the lower boundary of said zone is substantially bounded by the ionospheric bottom layer which is approximately 60 kilometers above the earths surface and the upper boundary is substantially bounded by the ionospheric F_2 layer, which is approximately 350 kilometers above the earths surface.

57. A communications system as set forth in claim **36** wherein:

said antenna is an ellipsoidic antenna having a diameter of approximately 40 kilometers.

References Cited

UNITED STATES PATENTS

2,871,344	1/1959	Busibries	343—100.4
3,030,500	4/1962	Katzin	343—100
3,189,901	5/1965	Cutolo	343—100

OTHER REFERENCES

Terman, Frederick E.: Electronic and Radio Engineering, fourth ed., 1955, pp. 834–5 relied on.

RODNEY D. BENNETT, JR., *Primary Examiner.*

J. P. MORRIS, *Assistant Examiner.*

United States Patent [19]

Bass

[11] **Patent Number: 4,999,637**

[45] **Date of Patent: Mar. 12, 1991**

[54] **CREATION OF ARTIFICIAL IONIZATION CLOUDS ABOVE THE EARTH**

[75] Inventor: **Ronald M. Bass**, Houston, Tex.

[73] Assignee: **APTI, Inc.**, Washington, D.C.

[21] Appl. No.: **49,881**

[22] Filed: **May 14, 1987**

[51] **Int. Cl.**[5] **H04B 7/00**

[52] **U.S. Cl.** **342/367**; 342/5

[58] **Field of Search** 361/231; 342/352, 5, 342/367; 376/123, 124

[56] **References Cited**

U.S. PATENT DOCUMENTS

3,133,250	5/1964	Molmud	342/352
3,174,150	1/1965	Sferrazza et al.	342/352
3,189,901	6/1965	Cutolo	342/350
3,300,721	1/1967	Seaton	342/352
3,445,844	5/1969	Grossi et al.	342/367
3,518,670	6/1970	Miller	342/5
3,882,393	5/1975	Epstein	455/59
4,035,726	7/1977	Brice et al.	342/352
4,686,605	8/1987	Eastlund	361/231
4,712,155	12/1987	Eastlund et al.	361/231

OTHER PUBLICATIONS

Radio Science, vol. 15, No. 2, pp. 213–223, (4/80), "MST Radar at Poker Flat, Alaska", Balsley et al.

Primary Examiner—Salvatore Cangialosi

Attorney, Agent, or Firm—Drude Faulconer

[57] **ABSTRACT**

A method for forming a cloud of artificial ionization above the earth by initially heating the resident plasma at a desired altitude with electromagnetic radiation having a frequency approximately the same as that of the ambient plasma. As the plasma frequency increases due to heating, the radiation frequency is also increased until the final maintenance frequency is attained.

11 Claims, 1 Drawing Sheet

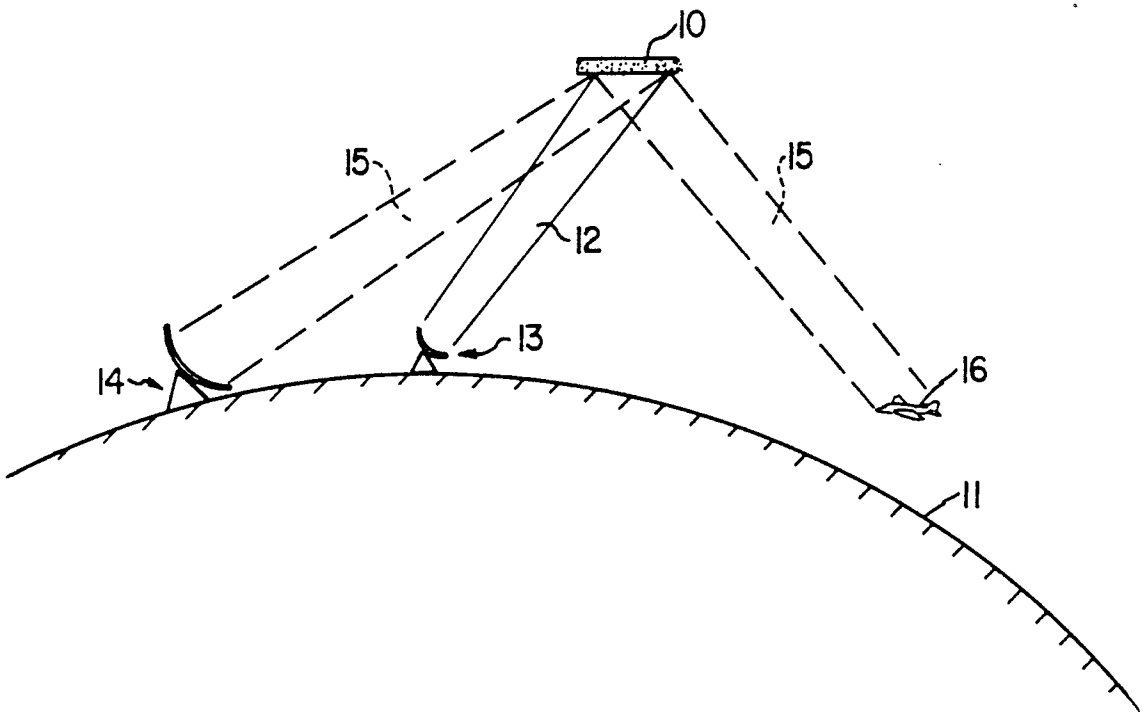

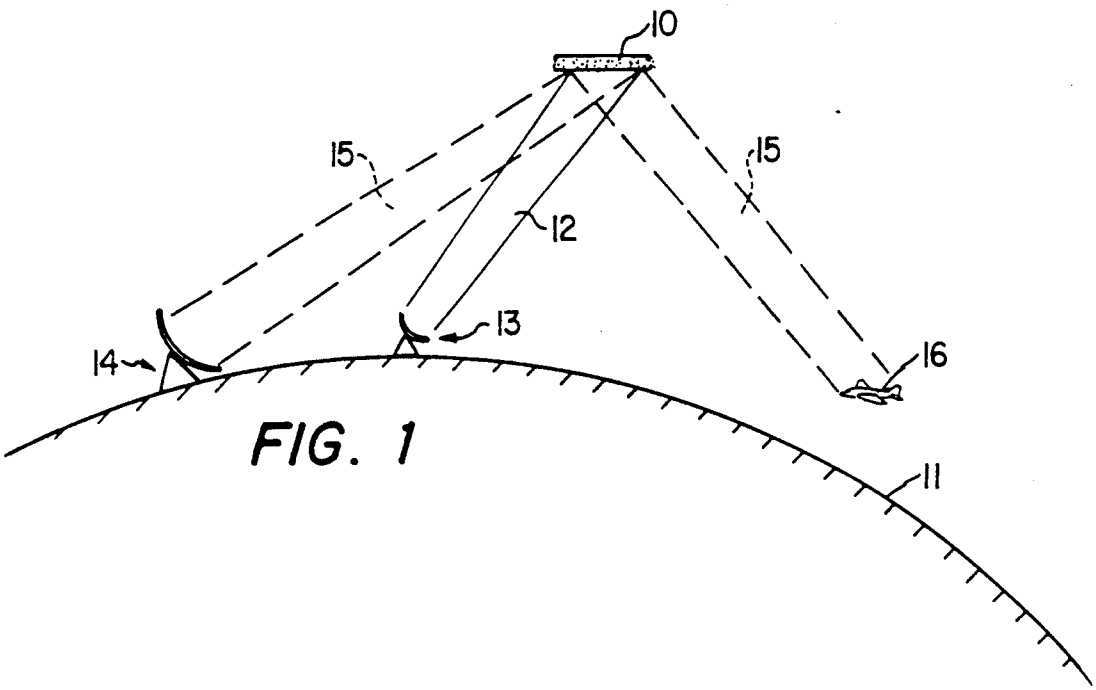

FIG. 1

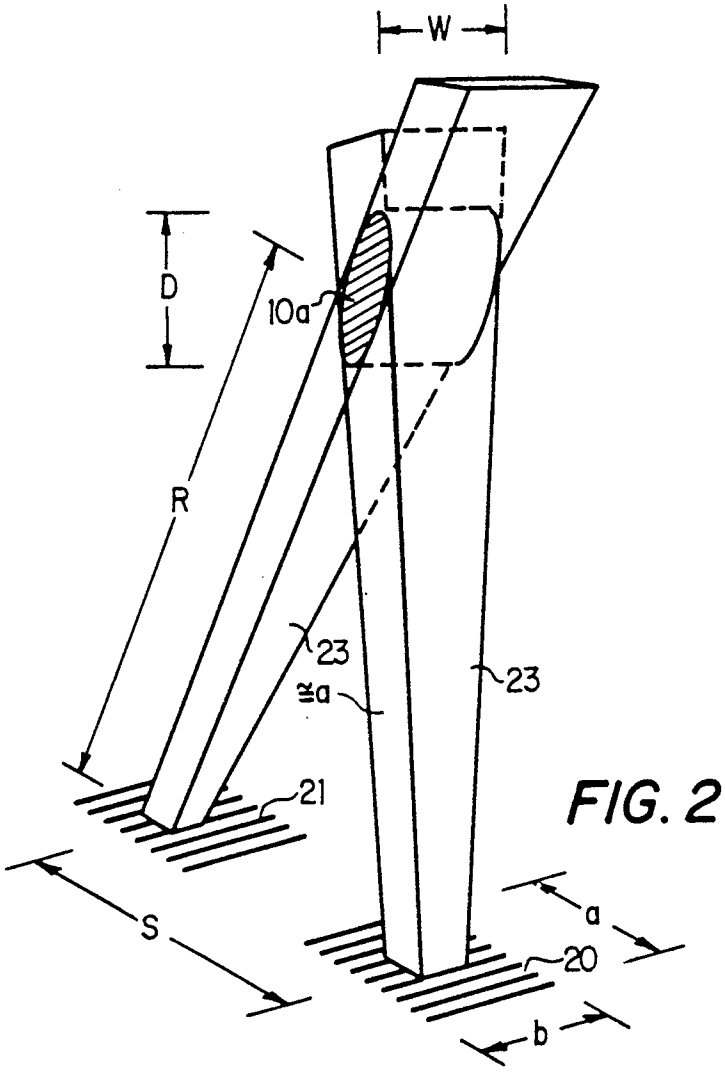

FIG. 2

CREATION OF ARTIFICIAL IONIZATION CLOUDS ABOVE THE EARTH

DESCRIPTION

1. Technical Field

The present invention relates to a method for establishing a patch or cloud of artificial ionization above the earth and more particularly, relates to a method of forming a cloud of artificial ionization by heating naturally occurring plasma with electromagnetic energy which is transmitted from the Earth's surface at a variable, increasing frequency.

2. Background Act

Certain communication and radar systems operate by "bouncing" transmitted and/or reflected signals off of naturally-occurring layers of ionization in the ionosphere. One known system using this technique is "over-the-horizon" (OTH) radar. By bouncing or reflecting the signals off an ionized layer, the signals can actually travel "over-the-horizon", thereby substantially increasing the range of the system.

However, while present OTH systems are capable of detecting objects at long range (e.g. strategic threats), they are not well suited for detecting "close-in" objects (e.g. missiles at 1000 kilometers or less). One problem lies in the fact that as the beam angle of the radar is increased from the horizontal, the frequency of the beam must be lowered in order to achieve refraction at a more nearly normal incidence. As this frequency is lowered, the antenna system gain is reduced and the radar cross section decreases for small close-in object. These effects act to set a minimum range for the OTH system.

Another major problem with present OTH systems is related to the low radar cross section of small targets at typical OTH operating frequencies. These objects having small cross-sections produce a weak return signal even when the object is within the range of the OTH radar since the OTH system is normally designed for objects having much larger cross-sections, e.g. large aircraft.

A still further problem encountered by present OTH radar is directly related to the unstable conditions in the ionosphere which widely vary depending on seasonal, diurnal, and/or sunspot cycles. Accordingly, the operating frequency of present OTH radar systems has to be constantly adjusted to allow for the varying ionospheric conditions which may vary so much at times that the OTH system is rendered inoperable.

Several techniques have been proposed to overcome some of the shortfalls of present OTH radar systems. One known technique is disclosed in U.S. Pat. No. 3,445,844 wherein a cloud of artificial ionization is formed above the earth to serve as a layer for redirecting communication signals. The cloud is formed by "breakdown", i.e. creation of a high level flux of free electrons (i.e. plasma) at a desired altitude by focusing electromagnetic energy thereon to heat a localized region or area. The electromagnetic energy heats and accelerate the electrons in the resident plasma to a degree such that their kinetic energy reaches the level required for the occurrence of ionizing collisions. Scattering from a cloud so formed takes place due to the discontinuity between this zone of enhanced ionization and the surrounding medium.

A cloud formed in accordance with the method disclosed in U.S. Pat. No. 3,445,844 will provide a good

reflection layer for OTH radar and like systems. However, when a cloud is formed by breakdown as in the mentioned patent, the plasma frequency of the cloud quickly adjusts to the hating frequency and breakdown is initiated over the entire area of the cloud. By initiating and forming the cloud with radiation having the same high frequency as that required for continued maintenance of the cloud once formed, a substantial amount of power is required, much of which is reflected or passes through the cloud while it is being formed and, accordingly, is wasted.

BRIEF DESCRIPTION OF THE DRAWINGS

The actual construction, operation, and apparent advantages of this invention will be better understood by referring to the drawings in which like numerals identify like parts and in which:

FIG. 1 is a simplified schematical view of a system for forming a cloud of artificial ionization above the earth for bouncing signals over-the-horizon in accordance with the present invention; and

FIG. 2 is a schematic illustration of a cross-beam radiation transmission system for forming a cloud of artificial ionization in accordance with the present invention.

DISCLOSURE OF THE INVENTION

The present invention provides a method for forming a patch or cloud of artificial ionization at an altitude above the earth wherein no substantial amounts of power are wasted in forming and maintaining the cloud.

More specifically, the present invention provides a method wherein variable frequency heating is used to form a cloud of artificial ionization. This is accomplished by initially heating the resident plasma at the selected altitude by transmitting electromagnetic radiation from the earth at an initial frequency which is approximately the same frequency as the ambient plasma frequency. This radiation, being of the same frequency as the plasma, will be efficiently absorbed with relatively little being reflected from or passed through the ambient plasma. The radiation heats the plasma and accelerates the free electrons in the plasma thereby increasing the plasma frequency.

The frequency of the plasma is monitored by radar or the like and, as it increases, the frequency of the radiation being transmitted also increases, preferably in a manner where the radiation frequency continues to substantially match the increasing plasma frequency. The radiation frequency is continuously increased until the final maintenance frequency is attained, at which time, the transmission of electromagnetic radiation is continued at the final frequency to maintain the integrity of the cloud. The final plasma frequency (i.e. maintenance frequency) is selected so that it is always greater than the frequency of any signals (e.g. communications, radar) that are expected to be "bounced" off the cloud once the cloud is used for its intended purpose.

To further conserve power and to reduce the power required for carrying out this invention, the initial radiation is weakly focused so that only the center area of the plasma within the cloud are will undergo initial heating. The focus of the radiation is contracted as the radiation frequency is increased until the entire cloud are is heated by the radiation. The radiation can be transmitted by a single antenna system or by two spaced antenna

systems positioned so that their beams intersect at said altitude to thereby form the cloud.

DESCRIPTION OF THE PREFERRED EMBODIMENTS

Referring more particularly to the drawings, FIG. **1** is a illustration of how the present invention is utilized with an over-the-horizon (OTH) radar system. A cloud **10** of artificial ionization is formed at an altitude above the surface of the earth **11** by transmitting electromagnetic energy **12** from an antenna system **13**. An OTH radar system **14** transmits and receives signals **15** that are reflected off cloud **10** to detect a target **16** that is "over-the-horizon" as will be understood in the art.

In accordance with the present invention, cloud **10** is formed by variable frequency heating. The degree of ionization in the ionosphere depends on the electron temperature of the average energy of the free electrons; i.e. plasma, at a particularly altitude. The electron energy can be increased by absorption of incident electromagnetic radiation. This, in turn, increases the degree of ionization (i.e. number of free electrons and ions per unit volume). The higher the electron density of an ionized layer, the higher the frequency of radio or radar waves that can be reflected from that layer in communications or radar applications.

To raise the electron temperature efficiently, it is necessary to irradiate the ionosphere at or near the frequency of the plasma that is naturally present at the altitude of interest. "Plasma frequency" is defined roughly as the highest frequency that will be reflected from a particular altitude in the ionosphere and this frequency will increase as the electron density increases. However, if the frequency of the incident radiation used to heat the plasma is much higher or lower than the plasma frequency a large portion of the radiation will not be absorbed but will be reflected or passed through the heating zone and will be wasted.

In the present method, a target altitude at which cloud **10** is to be formed is selected and the frequency of the natural plasma is determined by tracking radar or the like. Heating is begun by transmitting electromagnetic radiation **12** from antenna system **13** at substantially the same frequency as that of the plasma resident at the target altitude. Radiation **12** is absorbed efficiently by the plasma at the target altitude which increase the electron density thereof which, in turn, increases the frequency of the plasma frequency. As the plasma frequency increases, the frequency of radiation **12** is increased to approximately match the increasing plasma frequency. By constantly tracking the increasing plasma frequency and adjusting the frequency of the heating radiation accordingly, almost all, if not all, of the power being used to heat the ionospheric electrons is absorbed efficiently into the plasma over the entire heating cycle. In this way, the electron density (degree of ionization) can be raised to the desired level without any substantial waste of power which otherwise would be considerable.

In the present method, the initial heating is carried out with the radiation **13** being broadly focused so that the central area within cloud **10** is being heated. As the plasma frequency within the smaller area is increased, the focused area of radiation **13** is contracted until the entire final area of cloud **10** is being heated by the radiation **13**. This minimizes the initial heating power requirements and results in a further substantial reduction in the overall power requirements for forming cloud **10**.

The antenna system **13** required to transmit radiation **12** in the present invention may be of any known construction having high direct inability capabilities; for example, a phased array, beam spread angle (O) type see U.S. Pat. No. 3,445,844 and the "The MST RADAR at Poker Flat, Ak.," Radio Science, Vol. 15, No. 2, March-April, 1980; pps. 213-223, both of which are incorporated herein by reference. A phased array antenna generating a steerable focused beam can be assembled at a single site or two phased array antenna systems **20**, **21** (FIG. **2**) may be spaced from each of other to generate two coherent beams **23**, **24** of radiation that cross each other at the selected altitude to form cloud **10***a*.

The key beam geometric parameters of a two antenna system are shown in FIG. **2**. The beam of radiation from each antenna is assumed to diverge in the azimuthal plane (b) and to be collimated in the elevational plane (a). This assumption is appropriate for a backscatter cloud that must be inclined about 45 degrees from the horizontal. For forward scattering, with cloud **10***a* either directly overhead or downrange from an antenna, the beam will diverge in both planes and "b" would be used for both antenna. The following relationships can be used to calculate the various parameters of the system of FIG. **2**:

$$a \cong \sqrt{2\,\lambda_p\,R} \tag{1}$$

wherein:

a=length of side of antenna array in elevational plane.

λp=Wavelength of Radiation Frequency

R=Actual distance from array to cloud **10***a*.

$$b \cong \frac{\lambda_p\,R}{W} \tag{2}$$

wherein:

b=length of side of antenna array in azimuthal plane

W=Width of cloud **10***a*

$$S = \frac{Ra}{D} \tag{3}$$

S=distance between arrays.

D=Depth of cloud **10***a*.

While the size and characteristics of a particular cloud **10** will vary depending on its application and actual conditions under which it is formed, the following example will serve to better illustrate the present invention. A cloud **10** (FIG. **1**) is to formed at an altitude of 90 kilometers (km) and is to have a final area of 1 square km or larger with a thickness of from 3 to 10 meters. The resident plasma density at 90 km is typically on the order of 10^6/cubic cm. A square, phased array antenna system **13** of 100 meters on a side, beams electromagnetic radiation 12 (i.e. power) at an initial or starting frequency to initiate heating of the resident plasma. Antenna **13** is focused so that only the plasma at the center of cloud **10** will initially be heated, thereby requiring substantially less power than if the entire 1 square km area of the cloud was originally heated.

Since the plasma frequency of the ambient plasma is approximately 9 megahertz (MH_z), about 70 MW of power will be required. As the plasma heats, the frequency thereof increased and is tracked by groundbased

radar. As the frequency of the plasma increases, the frequency of radiation **12** is increased accordingly until a frequency of 15 MHz is reached. The power requirement at this point will have dropped to approximately 27 MW.

At this point, the focus of the antenna is contracted to cover a greater, if not all, of the area of cloud **10**, and radiation **12** (i.e. heating) is now applied over the entire area. Due to the increased heating area, the power requirement is temporarily increased to approximately 33 MW but will quickly decrease as the radiation frequency continues to increase until the final maintenance frequency of 300 MH_z is reached. The power requirement for the final maintenance frequency is approximately 7 MW and final electron or plasma density will be about 10^9/cubic cm.

The integrity of cloud **10** will be maintained as long as radiation **12** is transmitted thereto at the final maintenance frequency. The final maintenance frequency for any particular cloud is interrelated to the frequency of the radar or other communication signal which is to be bounced off that cloud. That is, it is generally preferably to have the plasma frequency of the cloud substantially higher than the radar frequency. This will ensure a high degree of reflection for the radar. Also, irregularities in the plasma density may form in the cloud. These will commonly be spaced about one heater wavelength apart. This spacing should be relatively small compared to a radar wavelength to avoid excessive scattering of the radar signal in undesirable directions.

What is claimed is:

1. A method of forming a cloud of artificial ionization at an altitude above the earth, said method comprising:

initiating heating of the resident plasma at said altitude by transmitting electromagnetic radiation from the earth to said altitude at an initial frequency which is approximately the same as the original frequency of said resident plasma; and

increasing said frequency of said electromagnetic radiation as said frequency of said resident plasma increases, until a final maintenance frequency is attained, said maintenance frequency being t or above the plasma frequency necessary to provide a plasma having an electron density capable of reflecting communication or like signals which come into contact with said plasma.

2. The method of claim **1** including:

defocusing said electromagnetic radiation so only the center area of said cloud is initially heated; and

contracting the focus of said electromagnetic radiation as the frequency of said radiation is adjusted until the entire area of said cloud is heated.

3. The method of claim **1** wherein said electromagnetic radiation is transmitted by a single antenna system.

4. The method of claim **1** wherein said electromagnetic radiation is transmitted by two antenna systems, each spaced from the other, and inclined whereby the beams of said electromagnetic radiation transmitted from said systems will intersect each other at said altitude.

5. A variable frequency heating method for forming a cloud of artificial ionization at an altitude above the earth, said method comprising:

transmitting electromagnetic radiation form the earth to said altitude at an initial frequency which is approximately the same as the original frequency of the plasma naturally present at said altitude;

focusing said electromagnetic radiation to heat said plasma to thereby accelerate the free electrons therein thereby increasing the frequency of said plasma;

monitoring the frequency of said plasma as it increases;

increasing the frequency of said electromagnetic radiation as said frequency of said plasma increases;

continuing to increase said frequency of said electromagnetic radiation until a final desired maintenance frequency is attained; said final desired frequency being at or above the plasma frequency necessary to provide a plasma having an electron density capable of reflecting communication signals or the like which come into contact with said plasma;

and continuing to transmit said electromagnetic radiation at said final frequency to maintain the integrity of said cloud.

6. The method of claim **5** wherein said final frequency is greater than the frequency of any communication and/or radar signals expected to be reflected by said cloud.

7. The method of claim **6** wherein said electromagnetic radiation is initially focused whereby only the center area of said plasma is initially heated.

8. The method of claim **7** including:

contracting the focus of said electromagnetic radiation as the said frequency of said radiation is increased whereby the entire area of said cloud is heated.

9. The method of claim **8** wherein said frequency of said electromagnetic radiation is increased to approximately match said increasing frequency of said plasma.

10. The method of claim **9** wherein said electromagnetic radiation is transmitted by a single antenna system.

11. The method of claim **9** wherein said electromagnetic radiation is transmitted by two antenna systems, each spaced from the other, and inclined whereby the beams of said electromagnetic radiation transmitted from said systems will intersect each other at said altitude.

* * * * *

***PESWiki.com* -- Pure Energy Systems Wiki:** Finding and facilitating breakthrough clean energy technologies.

Directory:Hans Coler Magnetic Power Apparatus

From PESWiki

Page first featured Nov. 2, 2008. Introduction revised and corrected Jan. 3, 2009 by MG

Magnetromapparata

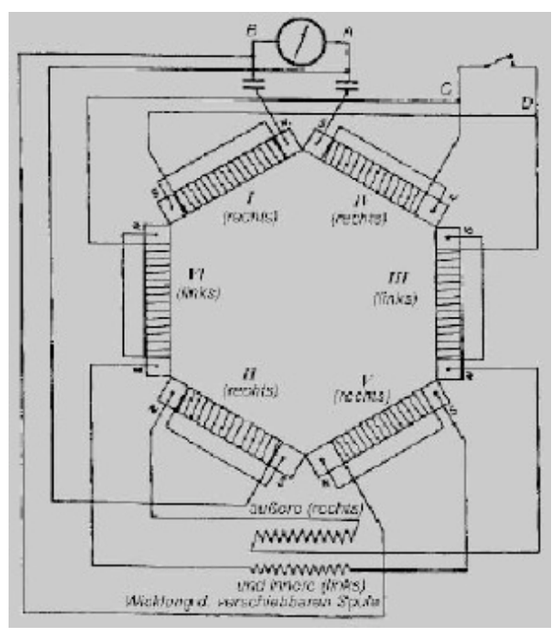

A solid-state magnetic generator was invented by Captain Hans Coler of Germany and a 10 watt example first shown in 1925. It involved magnets to generate electricity and employed a small battery but no other source of input power other than what he called space energy of Nature's quantum invisible world.

It was denied patent protection by the German Patent Office as being a perpetual motion device. For a time it was ignored, and the records relating to it were buried in hidden archives, possibly because the scientists who had to pass judgement could not understand the physical reason why the invention actually worked.

Later, a 70 Watt prototype was built, and a company formed: Coler Gmbh. Later a 5 kilowatt devices was built which allegedly powered Coler's house and laboratory for three years.

Official interest was shown by heads of the German navy who felt an investigation was necessary, and an official report was produced. A highly secret Nazi effort apparently had the goal of using his invention to recharge submarine batteries, without the need for the sub to surface. Experts examined the device and could find no fraud. It was judged Coler was an honest experimenter, but no expert opinion was forth coming as to how the unit operated. It was put under Official Secrecy after its operation had been verified by Government scientists. (Reference: articles entitled Perpetual Commotion and Hans Coler on http://magneticpowerinc.com)

We don't know of anyone who has been able to successfully replicate this technology into a practical device.

Contents

- 1 Official Website
- 2 How it Works
  - 2.1 The Magnetstromapparat
  - 2.2 The Stromerzeuger
- 3 Pictures
- 4 Videos
- 5 History
- 6 Patents
- 7 Profiles
  - 7.1 Inventor: Captain Hans Coler
- 8 Coverage
  - 8.1 Directories
  - 8.2 In the News
  - 8.3 Other Coverage
  - 8.4 Comments
- 9 See also

Official Website

None, as the inventor died long ago, and no one entity is continuing the company work as its legal successor, that we know of.

How it Works

- THE INVENTION OF HANS COLER, RELATING TO AN ALLEGED NEW SOURCE OF POWER Part 1

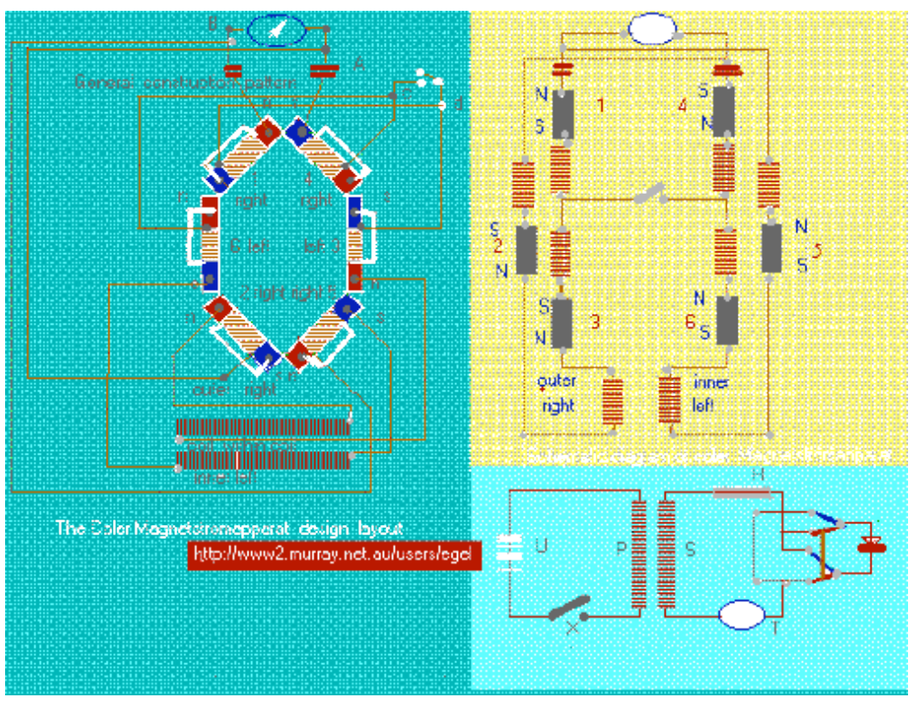

(http://www.geocities.com/CapitolHill/3752/hcoler1.htm)
- Part 2 (http://www.geocities.com/CapitolHill/3752/hcoler2.htm)
- Part 3 (http://www.geocities.com/CapitolHill/3752/hcoler3.htm)
- Hans Coler (http://rimstar.org/sdenergy/coler/index.htm) (Same as above but all in one place.)
- Harold Aspden, Lecture 7 The Coler Report - Why it Works (http://www.energyscience.org.uk/le/le07.htm) - 1997.

The Magnetstromapparat

The Magnetstromapparat consisted of six permanent magnets wound so that the circuit includes the magnet itself as well as the windings. These six magnet-coils are arranged in a hexagon and connected in a circuit that includes two small condensers, a switch and a pair of solenoid coils, one sliding inside the other. To operate the device, the switch is left open, the magnets are moved slightly apart, and the sliding coils set into various

positions. After the appropriate adjustments, at a critical separation of the magnets, an indicator appears on the voltmeter. The switch is then closed and the adjustments continue. Tension builds to a maximum and should then remain indefinitely. The greatest tension obtained was stated to be 12 volts.

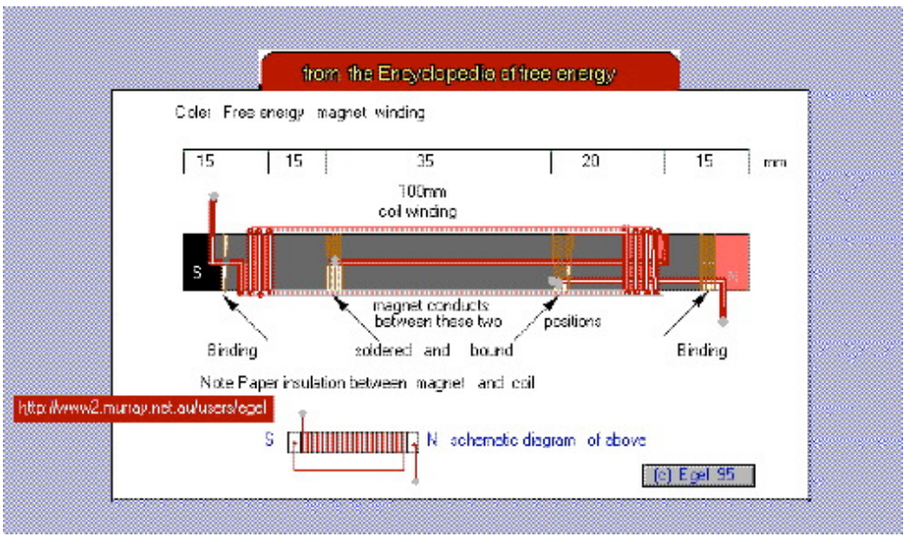

The Stromerzeuger

The apparatus consists of three principle circuits which are inter-wound and intercoupled (verkoppelt) in a peculiar way. Some of these are divided again into single subsidiary circuits which evidently have all to be brought into resonance with one another.

The principle circuits (called the anchor) in which the energy gain probably occurs, consists of metal plates between which transformer coils are connected, the whole being connected to one large plate coil (Plattenspule).

On each of the single windings on this is coupled a large flat coil (Flachspule) (called field).

These flat coils are interwoven in two groups, these groups represent the turns of a transformer.

This couples, on one hand on the flat coils of the other group (as secondary coils), and on the other hand on the anchor-plate coil, which is placed between them.

The third electrically independent circuit (called the directing circuit) (Steuerkreis) regulates this transference.

This basic diagram shows the conditions necessary for self-interruption.

In consequence of this arrangement, different types of current are created in different conductors (pulsed direct current, alternating current, etc.)

The transformer coils, connected between the anchor plates, are connected in a peculiar way through thin permanent magnet rods. Their main object seems to be to pre-magnetize the transformer cores, it is, however, very probable that they are also connected with the Barckhausen effect (http://www.physics.ucla.edu/demoweb/demomanual/electricity_and_magnetism/magnetostatics/barkhausen_effect.html) , also shown by JLN Labs (http://jnaudin.free.fr/spgen/barkhausen.htm) .

1. The basic principle is that an electron is to be regarded not only as a negatively charged particle but also as a South magnetic pole.

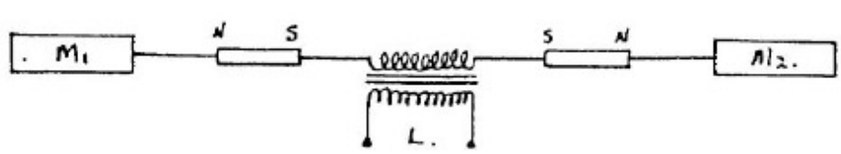

The basic element is that of an open secondary circuit, capacity loaded, inductively coupled to a primary circuit. The novel feature is that the capacities are connected to the secondary core through permanent magnets, as shown.

It is claimed that, on switching on the primary circuit, "separation of charges" takes place, i.e M1 becomes +

vely charged and M2 - vely charged, and that these charges are "magnetically polorised" when they formed, owing to the presence of the magnets.

On switching off the primary circuit a "reversing current" flows in the secondery, but the magnets "do not exert a polarising effect on this reversal"

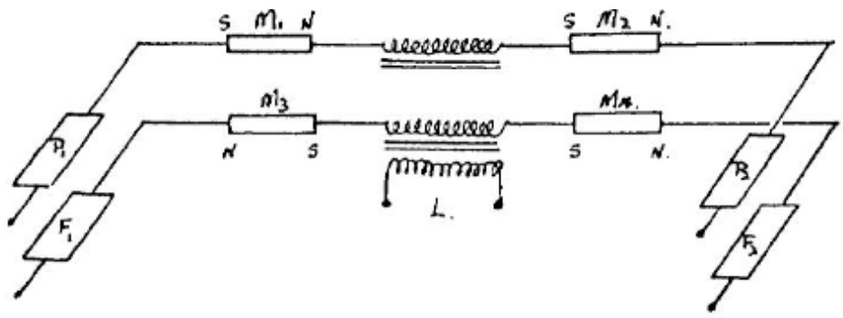

2. Two of these basic elements are now placed together making a double system or stage with the plates close together in parallel planes as shown:

The secondary windings are both exactly equal and wound in a direction such that on switching on the primary coil the electrons in the secondary coil flow from P1 to P2 and F1 to F2.

It is then stated that system F1 - F2 merely has an inducing effect, and the useful current comes into existence in the system P1 -P2.

3. A single stage cannot be effective but two stages connected so that the numbers of effective North and South poles are equal will provide a basic working arrangement.

More double stages can then be added to provide higher outputs.

4. It is then stated that as well as the normal electrons flowing from the battery and induction when the circuit is opened or closed "space electrons" flow from "repelling spaces" to "attracting spaces" between the plates.

Pictures

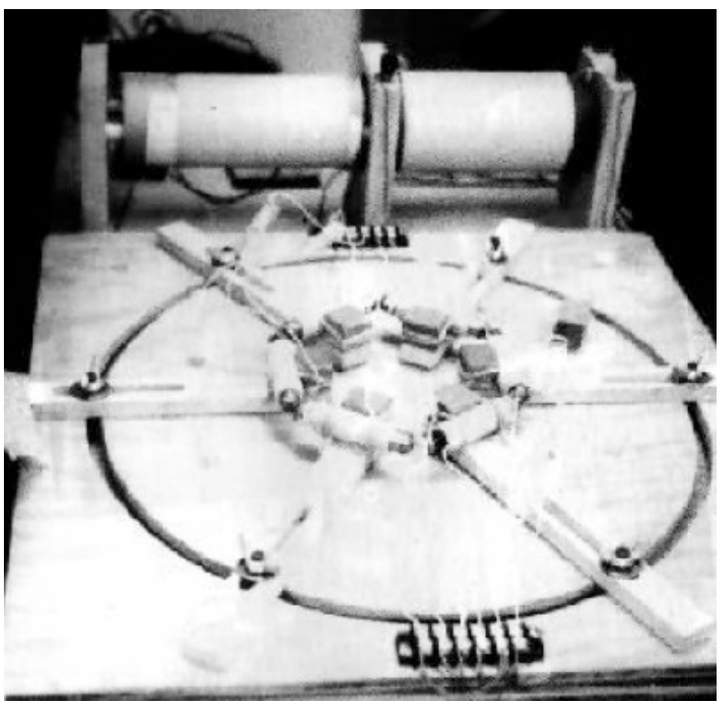

- **Eine unglaubliche Geschichte um Politik, alte Kaiserszeiten und deutsche Fluggeräte von Hans Coler in Peenemünde (http://www.borderlands.de/net_pdf/NET0707S411.pdf)** - This photograph is reportedly (Robert Nelson)of a successfully Magnetstrom-Apparat replication made by George Hathaway and presented to the Free Energy Conference in the 80's. The output was only 50mW (fifty milli watts). -- Mark Snoswell

Videos

(5.46 Minutes) **Steven Mark solid state generator**

- This device is a variant and the successor to the "Magnetstromapparat" and the "Stromerzeuger" (= Magnet Current Apparatus / Electricity Generator; see the Coler Report). It is NOT dependent on earths magnetic field, can operate everywhere, without fuel and without moving parts. As the magnetic field is rotating in itself, the power can be increased considerably by increasing the "rotating" frequency and when we will be able to use superconductors at room temperature. (*YouTube* (http://www.youtube.com/watch?v=pvLuQOKOVXQ) ; July 19, 2008)

- - - -

(6.41 Minutes) **Hans Coler Experiments**

- Hans Coler claims the electron is a south pole. Physics teaches us the electron is a small magnet containing a north and south pole. Some test on the Hans Coler claim. (*YouTube* (http://www.youtube.com/watch?v=qII_gsz-7ec) ; July 06, 2007)

- - - -

(2.52 Minutes) **Hans Coler Experiments 2**
(*YouTube* (http://www.youtube.com/watch?v=0qBCHjai7Os) ; July 06, 2007)

History

The "Magnetstromapparat" was developed by Captain Hans Coler and Fritz Von Unruh early in 1933, and they were later assisted by Franz Haid of Siemens-Schukert, who built himself a model that worked in December 1933. Coler stated that the strength of the magnets did not decrease during use of the apparatus; and suggested that he was tapping a new sort of energy hitherto unknown. -- "Raumenergie" (Space-Energy).

In 1933 Coler and von Unruh made up a slightly larger model with an output of 70 watts. This was demonstrated to Dr. F. Modersohn, who obtained from Schumann and Kloss confirmation of their tests in 1926. Modershon then consented to back the invention, and formed a company (Coler G.m.b.h.) to continue the development.

Modersohn´s connection with Rhein- metall Borsig, and hence with the official Hermann Goering combine gave him an advantage in this. Coler then in 1937 built for the Company a larger version with an output of six kilowatts. He claimed it powered his house and laboratory for three years. This led in 1943 to support by the German Navy. A highly secret Nazi effort apparently had the goal of using his invention to recharge submarine batteries, without the need for the sub to surface.

Patents

- Magnetic Power, Inc.Solid State Electric Generator (http://magneticpowerinc.com/patent.html) - US 2006/0163971 July 27th 2006
- Patent application (http://pesn.com/2006/07/28/9500292_Magnetic_Power_Inc_Patent_Application/MagneticPowerInc-patentapplication_US_2006_0163971.pdf) .
- 1939 Germany Hans Coler (http://www.rexresearch.com/coler/de680761.pdf)

Profiles

Inventor: Captain Hans Coler

Coverage

Directories

- http://www.hcrs.at/COLER.HTM - Coler Konverter (in German)
  - Coler Converter English Translation (http://translate.google.com/translate?u=http%3A%2F%2Fwww.hcrs.at%2FCOLER.HTM&hl=en&ie=UTF-8&sl=de&tl=en)

In the News

- Featured: Solid State Generators >
  Hans Coler Magnetic Power Apparatus - The "magnetromapparata" was invented in 1933 primarily by Captain Hans Coler of Germany. The device required no apparent outside power sources to function. It involved magnets to generate electricity without any source of input power other than the space energy of Nature's quantum invisible world. (*PESWiki*; Nov. 2, 2008)

- **Hans Coler - Why We May Never Have Needed Nuclear Power (http://www.renewableenergyworld.com/rea/partner/story?id=52006)** - A well-supported effort to follow up the British Report, that concluded the Coler work was real, might have prevented the launching of the nuclear power industry and its inevitable link to nuclear weapons programs disguised as power plant development. The current examples are, of course, Iran and North Korea. (*Renewable Energy World*; March 28, 2008)

Other Coverage

- The Inventions of Captain Hans Coler (http://www.angelfire.com/ak5/energy21/hanscoler.htm) (*Energy21*)
- The Free Energy Machines of Captain Hans Coler (http://www.angelfire.com/ak5/energy21/coler2.htm) (*Energy21*)
- Gravitation and Electromagnetic Energy from Curved Space Time (http://www.cheniere.org/techpapers/emenergy.pdf) - 10-page PDF. (*Cheniere.org*)
- Hans Coler – His remarkable inventions open a path to generating electricity without fossil fuels or nuclear power (http://www.magneticpowerinc.com/6kwGenerator.html) (*MagneticPowerInc.com*)
- Overunity Forum (http://www.overunity.com/index.php?topic=4022.0;topicseen) (*Overunity.com*)
- Rex Research Hans Coler (http://www.rexresearch.com/coler/colerb.htm) (*RexResearch.com*)
- ZP Energy - Hans Coler – His remarkable inventions open a path to generating electricity without fossil fuels or nuclear power (http://www.zpenergy.com/modules.php?name=News&file=article&sid=2828) (*ZPEnergy.com*)
- Robert A. Nelson's Report (http://www.zamandayolculuk.com/cetinbal/HTMLdosya1/HansColerFreeEnergy.htm) - Han's Coler's "Free Energy" Generators - 1999
- Patrick J Kelley - Motionless Pulsed Systems Chapter 3 Free Energy Systems (http://www.free-energy-info.co.uk/Chapter3.pdf) (*Free-Energy-Info.co.uk*)
- Patrick J Kelley - Passive Systems Chapter 9 Free Energy Systems (http://www.free-energy-info.co.uk/Chapter9.pdf) (*Free-Energy-Info.co.uk*)
- Zero Point Energy (http://thefraserdomain.typepad.com/energy/2005/06/zero_point_ener.html)
- Magnetic Power - Perpetual Commotion (http://www.magneticpowerinc.com/perpetual.html) - Updated Sept. 2008. (*MagneticPowerInc.com*)
- The inventions of captain hans coler (http://blog.360.yahoo.com/blog-ooVnzrU3eqXHKSdB2TQ.j3cMn.tCeQ--?cq=1&p=4886) (*Yahoo 360*)

Comments

See Discussion page

See also

- Directory:Solid State Generators
- Directory:Magnet Motors
- Directory:Electromagnetic
- Directory:Magnetic Power Inc
- Directory:Mark Goldes
- Directory:Zero Point Energy

- Other Directory listings • Latest • A-I • J-R • S-Z • Tree • News
- PESWiki home page

Retrieved from "http://peswiki.com/index.php/Directory:Hans_Coler_Magnetic_Power_Apparatus"

Categories: Zero Point Energy | Magnet Motors

See also:

"When you're one step ahead of the crowd you're a genius.
When you're two steps ahead, you're a crackpot."
-- Rabbi Shlomo Riskin (Feb. 1998)

- This page was last modified 23:26, 20 June 2009.
- This page has been accessed 19,968 times.
- Content is available under GNU Free Documentation License 1.2.
- About PESWiki
- Disclaimers

a. DISC AIRCRAFT OF THE THIRD REICH (1922-1945 and Beyond)

Disclaimer
Introduction

b. OCCULT

Freiburg Disc
Jenseitsflugmaschine
Rundflugzeug Series 1-7
Haunebu Series I, II, II Do -Stra, III,IV
KT-P2 Celestial Navigator
Coler Magnetstromapparat
Vril Series 1-11
Vril DORN Verteidiger
Vril Gammagische Auge
Andromeda-Gerat Raumschiff
Disco Metanza

c. SS SPONSORED

Viktor Schauberger Repulsin A & B
Henri Coanda SS Lenticular Flugscheibe
Rudolf Schriever Flugkreisel Projekt
Miethe Elektrische Luft Turbine Unmanned V-7
BMW Flugelrad
WNF Feuerball - Zeppelin Werk Kugelblitz - AEG Kugelwaffen
Dampfstrahl Antrieb Flugscheibe
Die Glocke

d. INDEPENDENTS

Hermann Noordung Wohnrad
Franz Philipp Frali Discs
Trenn Flying Platform

Coler Magnetstromapparat

By Rob Arndt

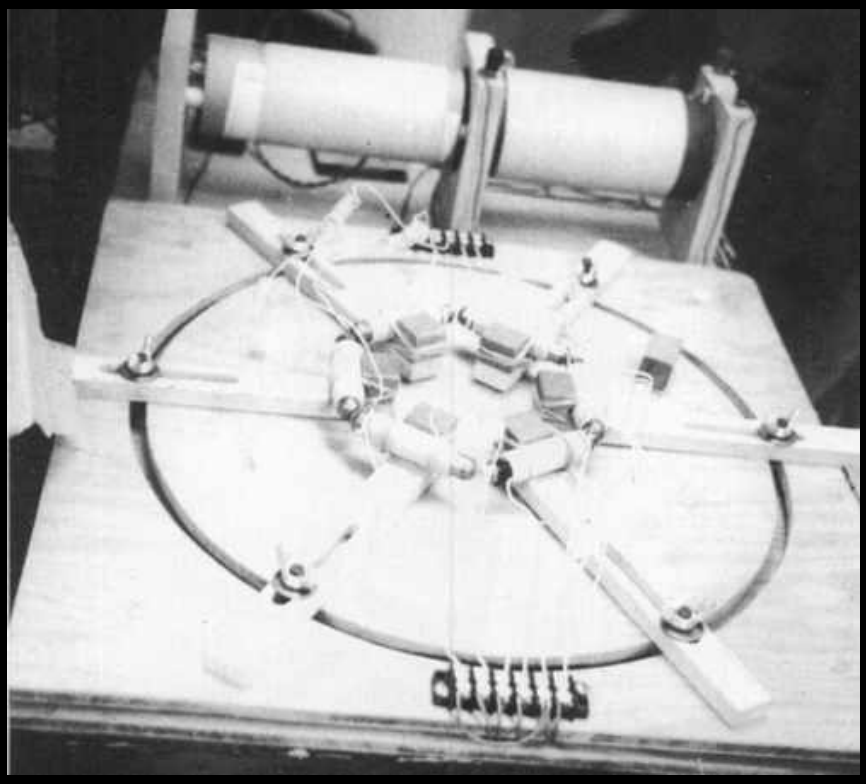

Magnetstromapparat devised by German naval engineer and inventor, Hans Coler (or Kohler).

Entitled "The Invention of Hans Coler, Relating to an Alleged New Source ol Power," B.I.O.S. Final Report no 1043, Item No. 31, Summer 1946, this

Focke-Wulf Schnellflugzeug Rochen
Josef Andreas Epp Omega Diskus
Arthur Sack A.S.6/Me-600 Bussard
Messerschmitt Me-271bz
Lichtscheiben
Faulker Feuersturm
DFS Berserker
Heinrich Fleissner Dusenscheibe
Lippisch Aerodyne Research
Little-Known German Disc Projects

e. ANNULAR AIRCRAFT PROJECTS

Messerschmitt P.1079/18
Stockel Rammschussjager

f. CIRCULAR-WING AIRCRAFT PROJECTS

Heinkel Wespe and Lerche II
Focke-Wulf Triebflugel

g. AXIS CO-OPERATION DISCS

Mussolini Fiat Riva Del Garda Disc

j. GERMAN AERIAL ODDITIES

Himmelsturmer Flightpack
Lippisch P.13b Mach 1 Aircraft?

p. HOAXES

SS Fliegende Schildkrote (SS Flying Turtle)
Zeppelin V-7 Flakmine

r. HUMOROUS FICTIONAL HYPOTHETICALS

Dinkel GX "Kleinefeuerwerkswaffe"

w. LINKS

Mercury
German Cockpit Designations
German UFOs

y. SEE ALSO

Identified Flying Objects
Luft '46

z. Home Page and Index

Black Sun Redux

report consisted of tests and findings on two strange circuits conducted at the University of Berlin between the World Wars under the auspices of none other than Dr. Winfried Otto Schumann, discoverer of the Schumann resonance of the earth. A mere glance will explain why the device attracted the immediate attention of the German Navy, which classified it as a possible source of quiet and limitless energy for submarine propulsion.

It will be noted that this hexagonal construction of coils and magnets and two "rotating" sub-circuits has absolutely no source of power. Yet, to the mystified Coler and Dr. Schumann, it nevertheless managed to produce, or better, transduce power seemingly... from nowhere.

Little is known how much farther the Germans took this device, or for that matter, how far the British took it for the two decades and a half after the war that they had to work on it until its declassification. What is unusual is that Dr. Schumann was involved with secret German research on "batteries" as late as 1943, and was subsequently brought to the United State as part of Operation Paperclip. It was this same Dr. Schumann who had noted in 1926 that Hans Coler's device exhibited "no fault, hoax, or fraud on the part of its inventor." Such "free energy" devices seemed to have come very early to the attention of the leadership of the Third Reich - witness the meeting between Hitler, Planck, and Schauberger - and more especially to the attentions of the SS. Devices involving pulsed Tesla coils, suspiciously similar to Tesla's own "Impulse Magnifying Transformer" were constructed.

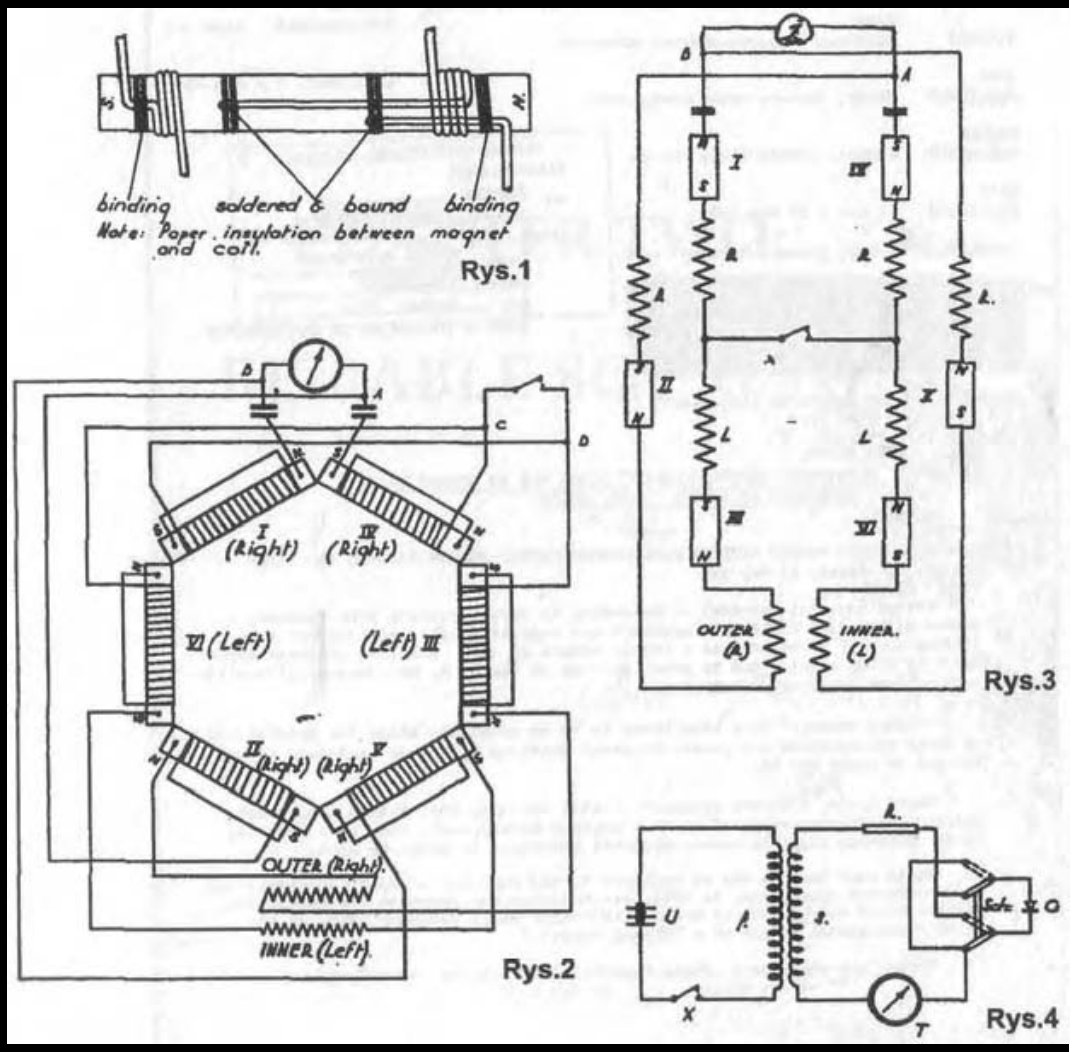

One such device, the so-called Karl Schappeller Device, bears close scrutiny, since it bears resemblances to another device found by Nick Cook and described in his book *Hunt for Zero Point*. This odd device is described by Henry Stevens as follows:

The Schappeller device is really composed of two separate units, the rotor and the stator. The stator is constructed as follows: its surface is round or ball-shaped, being composed of two half-shells of steel. These half-shells contain the internal structure and are air tight. Attached at each "pole" of each half-shell is an iron bar magnet, most of whose structure is internal. This means that the bulk of the magnet is inside the steel ball, one opposite the other. There is a space between the two bar magnets at the very center of the sphere.

Insulation, a ceramic material, is placed on the inside of the steel ball leaving a hollow central area. Within this hollow area and around the space between the magnets are wound two internal coils. These originate at the bar magnet poles and each terminate at the center of the sphere with a connection leading out of the sphere to the rotor. These coils are composed of a hollow copper tube filled with a special and secret substance called the "electret". Upon leaving the sphere the electret filled copper tubes are replaced by conventional copper wire.

While Coler's Magnetstromapparat did not give the Kriegsmarine a gravitic "free energy" battery for their U-boats, the SS Technical Branch E-IV took the design and turned it into a Konverter for the Haunebu series of disc aircraft which was incorporated along with several Van de Graaf band generators and a Marconi Dynamo filled with mercury, all of which enabled the craft to reduce mass and produce power for the electromagnetic-gravitic Thule Tachyonator 7 Triebwerk.

Construction Detail of the Schappeller Sphere

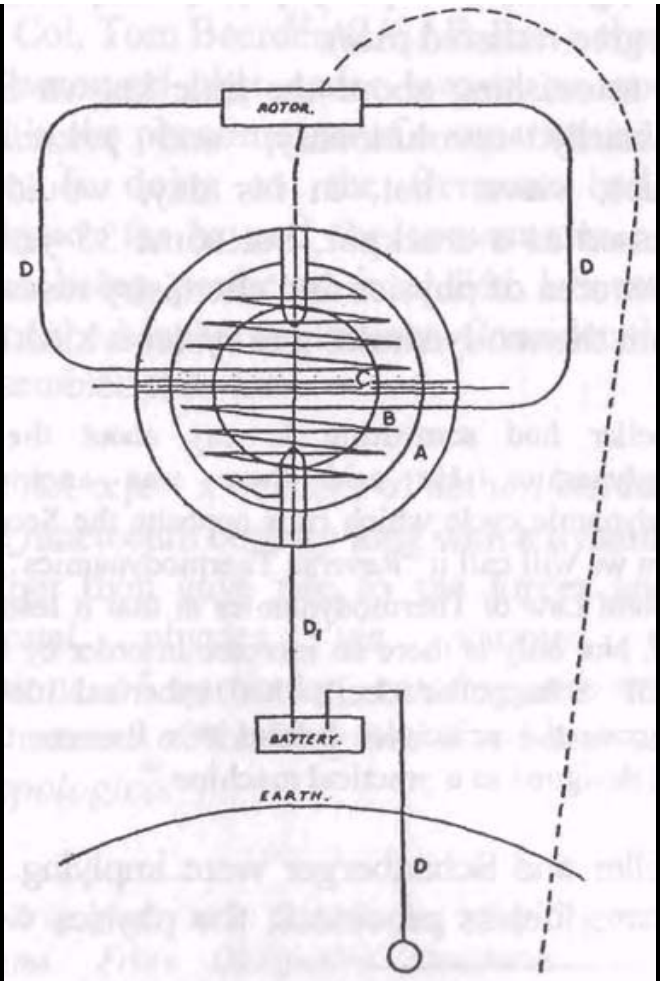

The Schappeller Coil, or Device

Basically it consists of a pair of coils wound on to a hollow ceramic form, shaped spherically and contained in an iron sphere. The coils are of copper tubing packed with a permanent electret material. This constitutes the dynomagnetic generator.

To convert the energy into mechanical energy, a rotor is used, also made from copper tube packed with electret. The sphere functions only after the electret material is polarized.

Because of the terminology in the Schappeller theory, it is naturally difficult to follow, that is, apart from the strangeness of the concepts. After several readings, one might conclude that "glowing magnetism" or ether precipitation starts if the electric and/or the magnetic fields reach enormous values at a given point. It seems that this is the function of the stator device outlined above.

The arrangement of the fields must be such that A REDUCTION IN THE DENSITY of the ether occurs which continues under its OWN INERTIA.

The resultant compression then causes the production of energy which appears as (radiaton and) magnetism. By this process it would seem that an oscillatory state is set up. This may be so and the FREQUENCY RELATED to the size of the glowing core.

One might expect some sort of longitudinal ether wave to be set up which would be entirely different to the transverse waves of electromagnetic radiation. The wave would cause variations in the ether density which would mean that matter would tend to occupy regions of maximum

density in the wave and that the velocity of light would vary slightly between maxima and minima.

In the case of the earth, the Van Allen belts could be taken as an indication of such gravity waves, and for the sun, the obvious fact that the planets occupy orbits that are HARMONICALLY RELATED.

In both cases a standing wave is indicated. (see Pawlicki in "How to Build a Flying Saucer") It might be worthwhile research to look for variations in the velocity of light in the Van Allen belts.

Lodge deals with the problem of inertia by attributing the property to the ether itself. Matter, he claims, has no inertia as such, but acquires an induction as it moves through the space fabric, or more correctly, the space fabric moves THROUGH IT.

The induction constitutes a change of energy seen as kinetic energy, and the state of motion lasts as long as the induction lasts.

The theory also asserts that the ether itself has an enormous inertia and is IN A PREFERRED STATE OF REST. Small movements give rise to big effects, for example as in gravitational fields. However, cellular vortices which circulate at the speed of light might be extended to larger fluxes. The conclusion to this is that matter accelerated by force fields cannot exceed the speed of light and the approach to it would be exponential.

The Schappeller device is a Tesla device. In fact they say Tesla could be considered the father of the Schappeller device. The Scappeller device is a hollow metal sphere which is dipolar, a pole at each end. It is hooked up to a battery and functions as half an rotor-stator system. Internally, some of it is filled with an electret, a fluid which in this case conducts magnetism, not electricity. Energy enters at both poles and is both positive and negative, each entering from their respective poles. The Schappeller device functions also as a radio transmitter (if I understand correctly) and emits radio waves at its poles. In the center, where they meet a standing wave is produced (also called a scalar wave) which compresses the incoming energy resulting in a type of atomic fusion in which positive and negative aether combine under compression to form hydrogen. This incoming aether at either end takes the form of a toroidal vortex on both ends. The energy of the plasma is somehow (I don't know yet) converted into electrical energy which runs the machine. Other recieving spheres, up to six or eight, are positioned around the first sphere and form a power producing unit. This device, by itself and unconnected to any sort of electric circuit, can produce magnetism of a thousand times greater than known during the early 20th Century. This alone can turn the props of a ship, for instance. Besides this, electrical energy can be broadcast using the dipole system and two waves (on in the air and the other through the earth) to power any electrical device on the planet.

Again, standing waves are used and the Tesla generating system. (I am talking here about Tesla's method of wireless electric transmission, not the Schappeller device but they apparently have similarities.) The waves can be made to cross each other anywhere on the earth or on the other side of the earth. At the points of the standing wave, where there is no motion, (scalar wave), electrical energy can be received using an antenne. This is ultra low frequency energy, ELF waves. A very long antenne is necessary. The interesting

ResearchGate

See discussions, stats, and author profiles for this publication at: https://www.researchgate.net/publication/251709903

Experiments with Coler magnetic current apparatus

Article *in* Physics Procedia · December 2011

DOI: 10.1016/j.phpro.2011.08.039

CITATION
1

READS
1,557

1 author:

Thorsten Ludwig
Dr Ludwig New Energy Technology

10 PUBLICATIONS **28** CITATIONS

SEE PROFILE

Some of the authors of this publication are also working on these related projects:

Project Spiral Permanent Magnet Motor View project

All content following this page was uploaded by Thorsten Ludwig on 21 June 2014.

The user has requested enhancement of the downloaded file.

Available online at www.sciencedirect.com

SciVerse ScienceDirect

Physics Procedia 20 (2011) 446–456

Physics Procedia

Space, Propulsion & Energy Sciences International Forum - 2011

Experiments with Coler magnetic current apparatus

T. Ludwig*

German Space Energy Association (DVR) and Berlin Institute for Innovative Energy and Propulsion Technologies (Binnotec), Bouchéstr.12, 12435 Berlin, Germany

Abstract

Experiments with a replica of the famous Coler "Magnetstromapparat" (magnetic current apparatus) were conducted. The replica was built at the same institute at the Technical University of Berlin where the original was tested by Prof. Kloss in 1925. The details of the setup will be presented in this paper. The investigation of the Coler device was done with modern methods. The output was measured with a digital multi meter (DMM) and a digital storage oscilloscope (DSO). The results of the measurements will be presented. Did Coler convert vacuum fluctuations via magnetic, electric and acoustic resonance into electricity? There is a strong connection between magnetism and quantum field radiation energy. The magnetic moment of the electron is in part an energy exchange with the radiation field. The energy output of the Coler apparatus is measured. Furthermore the dynamics of the ferromagnetic magnets that Coler reported as the working principle of his device was investigated with magnetic force microscopy (MFM) and the spectroscopy mode of an atomic force microscope (AFM). The magnetic and acoustic resonance was investigated with magnetic force microscopy (MFM). The connection between ZPE and magnetism will be discussed as well as the perspective of using magnetic systems as a means to convert vacuum fluctuations into usable electricity.

© 2011 Published by Elsevier B.V. Selection and/or peer-review under responsibility of Institute for Advanced studies in Space, Propulsion and Energy Sciences

PACS: 41.20.Gz, 75.20.En, 75.25.-j, 75.30.-m, 75.30.Ds, 75.30.Fv, 75.30.Kz, 75.80.+q, 88.90.+t
Keywords: Magnetism; Coler; Magnetic Force Microscopy; MFM; Vacuum Fluctuations; Zero Point Energy; ZPE; Atomic Force Microscopy (AFM)

1. Introduction

This article will explore a new type of electrical generator which was invented by Hans Coler. First the history and the general description of the device will be given. The historical part will also mention the early tests of the device by the well known German Professors Schumann and Kloss, which are the

* Corresponding author. Tel.: +491716280357; fax: +0-000-000-0000 .
E-mail address: DrLudwig@thorstenludwig.de .

1875-3892 © 2011 Published by Elsevier B.V. Selection and/or peer-review under responsibility of Institute for Advanced studies in Space, Propulsion and Energy Sciences
doi:10.1016/j.phpro.2011.08.039

main reason why this invention is not forgotten. Another important historical fact is the investigation of the device by the British Intelligence Objectives Sub-Committee (B.I.O.S.) and the confidential, later disclosed, positive report of this agency. The investigation was conducted by Hurst and Sandberg. Hans Coler was contracted in 1947 to rebuild his magnetic current apparatus. This work will present the technical design of a replica of such a Coler device and measurements on that replica. The replica was built by students of the Technical University of Berlin in 1998 and 1999 under the supervision of Dipl. Ing. Andreas Manthey. The construction of the Coler device was part of a course in interdisciplinary innovation learning. The student group took up the Coler device because there is a rich source of technical information on the device and another important reason was that the original device was positively tested at the same institute in 1926. An investigation to retrieve the original documents in the archives of the Technical University revealed that the documents were a toll taken by a British firebomb during a air raid on Berlin in 1943. Since Coler also presented some theoretical hints on the working principle of his device, this work will also deal with the fundamental properties of magnetism and the feasibility of using electrical and magnetic resonances of ferromagnetic magnets to construct a generator. This article will also present an experimental technique that allows testing Coler´s statements on magnetism. The work on magnetism is still ongoing. This work on the Coler generator was taken up because of the credible witnesses for a proof of principle for a device that works with permanent magnets and no other input power. Since the magnetism of the electron can be explained as a relativistic quantum effect with corrections due to the exchange of energy with the zero-point energy quantum fluctuations and permanent magnetism is today seen as a collective electron phenomenon, Coler seems to be good starting point for practically testing the possibility of using magnetism to convert ZPE into useable electric energy. This connection will be laid out in more detail in a later part of this paper.

A major part of the work presented here is the investigation into the nature of magnetism with modern methods such as magnetic force microscopy (MFM) and the origin of magnetism [1]. Permanent magnets are today understood as a collective phenomenon of the electron spin and the magnetic moments of the electrons involved [2]. The magnetic moment of the electron is a quantum field phenomenon [3].

In order to unveil the working mechanism of the Coler generator two approaches are combined in this paper. On the one hand it was tried to replicate Coler´s magnetic current apparatus and to conduct modern measurements on the replica. In addition another avenue was followed to single out the working principle with modern methods to find the resonance between ferromagnetism and electrical oscillations that Coler gives as a reason for output energy of his device.

2. The Coler Generator

Hans Coler was the inventor of two devices by which electrical energy may be derived without a chemical or mechanical source of power. The devices are called the "Magnetstromapparat" (magnetic current apparatus) and the "Stromerzeuger". The "Magnetstromapparat" was developed by Coler and von Unruh early in 1933. With this device, consisting only of permanent magnets, copper coils, and condensers in a static arrangement he showed that he could obtain a tension of 450 mV for a period of some hours. This device consists of six permanent magnets wound in a special way so that the circuit includes the magnet itself as well as the winding. These six magnet-coil combinations are arranged in a hexagon and connected in a circuit which includes two small condensers, a switch, and a pair of solenoid coils, one sliding inside the other [4].

The "Stromerzeuger" consists of an arrangement of magnets, flat coils, and copper plates, with a primary circuit energized by a small battery. Coler and von Unruh made up a slightly larger model with an output of 70 watts. This was demonstrated to Dr. F. Modersohn, who obtained from Prof. Schumann and Prof. Kloss confirmation of their tests in 1926. The device was seen by the professors Schumann (Munich), Bragstad (Trondheim) and Knudsen (Copenhagen). Reports by Prof. Kloss (Technical University Berlin) and Prof. Schumann (Technical University Munich) are credential evidence that the device was real and worked. Prof. Schumann is still widely known for the discovery of the Schumann

Resonances in the earth atmosphere. Coler then in 1937 built a larger version with an output of six kilowatts.

Since an official interest was taken in his inventions by the German Admiralty the British intelligence started an investigation, although normally it would be considered that such a claim could only be fraudulent. Coler was visited and interrogated. He proved to be co-operative and willing to disclose all details of his devices. He built a "Magnetstromapparat" in 1947 using material supplied to him by the British intelligence (Ministry of Supply), and working only in their presence. The greatest tension obtained with this "Magnetstromapparat" was stated to be 12 volts.

Coler had no complete scientific explanation for the working of his device. He stated that his researches into the nature of magnetism had lead him to conclude that ferromagnetism was an oscillating phenomenon, of a frequency of about 180 kilohertz. This oscillation took place in the magnetic circuit of the apparatus, and induced in the electrical circuit oscillations the frequency which of course depended on the values of the components used. These two phenomena interacted, and gradually built up the tension. Coler stated that the strength of the magnets did not decrease during use of the apparatus; and suggested that he was tapping into a new sort of energy hitherto unknown -"Raumenergie" (Space-energy).

3. Technical details of the Coler replica used in this work

The Coler generator consists of six permanent magnets with coils wound around it and connected to it in a special way. The electric circuit therefore includes the magnets as well as the windings. The six magnet-coil combinations are arranged in a hexagon and connected as shown in Figure 1.

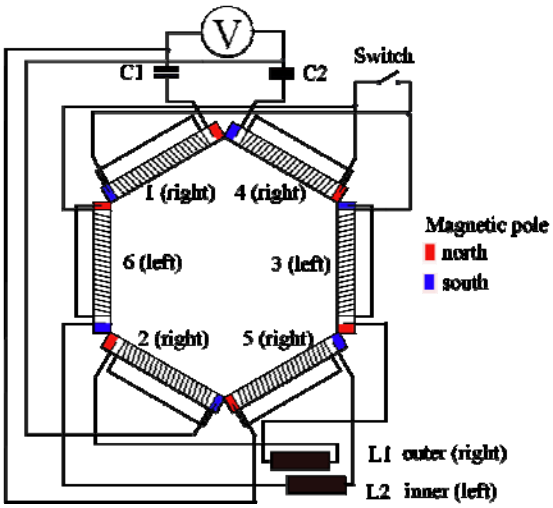

Figure 1. Electric diagram of the Coler magnetic current apparatus.

The circuit includes two small capacitors, a switch, and a pair of air coupled solenoids (L1 and L2) one sliding inside the other. The values of the capacitors were 4.7 nF each. The Coler replica used in this work is shown in Figure 2.

Figure 2. Coler replica used in this work.

One of the important uncertainties of the Coler generator are the material of the magnets and the construction and binding of the coil on the magnets. Some features seam to be schematic other not. It is unclear if the coils should be wound over most part of the magnets as in Figure 1 or only on the edges. The student team decided to wind a homogeneous coil that is soldered and bind as described in the British intelligence report, as seen in Figure 3. The Magnets were especially manufactured for the original TUB project by IBS Magnet in Berlin. The length of the magnets is 100 mm and the average remanent magnetisation is 200 mT. The magnets were cut and turned to a length of 100mm and a diameter of 15 mm out of a special pure iron. After machining the iron rods were magnetized by IBS Magnets.

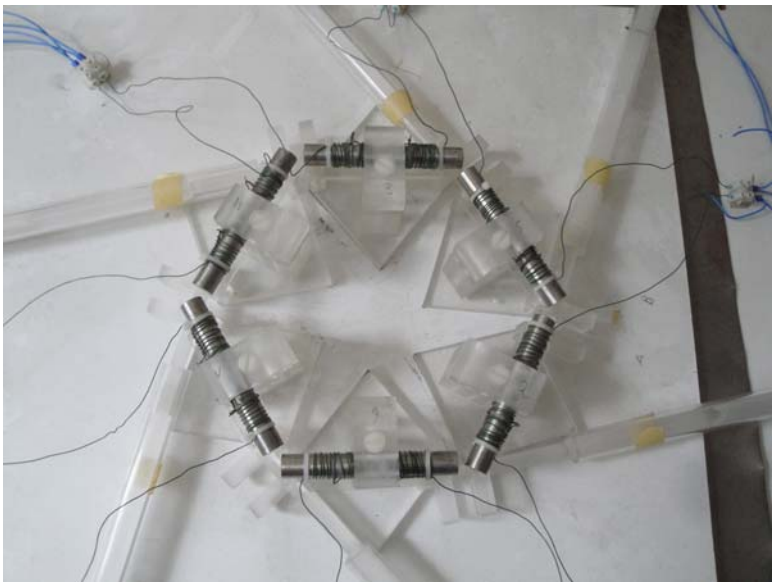

Figure 3. Close up of the magnet hexagon.

The stepper motors seen in Figure 2. are part of the original concept design of the Coler replica. It was planned in 1998 at the TUB to let a computer program find the optimal position of the magnets automatically. The computer and the program could not be retrieved. Electrical and magnetic properties of the permanent magnets and coils used in these experiments are shown in Table 1. Numbers correspond to numbers of the magnets-coil combinations in Figure 1.

Table 1 Electrical and magnetic properties of the permanent magnet-coil combinations.

Magnet-coil	Resistance	Magnetic field at pole
1	0.386 (0,001) Ω	N: 200, S: 180 mT
2	0.232 (0,001) Ω	N: 180, S: 180 mT
3	0.440 (0,001) Ω	N: 170, S: 200 mT
4	0.310 (0,001) Ω	N: 200, S: 180 mT
5	0.385 (0,001) Ω	N: 200, S: 200 mT
6	0.416 (0,001) Ω	N: 180, S: 200 mT

4. Investigation Of Magnetic And Electric Properties In The Coler "Magnetstromapparat"

In the report of the British intelligence the following normal start up procedure for the Coler apparatus is given. Before the device is used, it is kept in the zero position for some time. In this position the switch is open and every magnet is touching the next one. To bring the device into operation, the switch remains open, the magnets are moved slightly apart, and the sliding solenoids are set into various positions, with a pause of several minutes between adjustments. The magnets are then separated still further, and the sliding solenoids are moved again. This process is repeated until at a critical separation of the magnets a reaction in form of a higher voltage is seen on the voltmeter. The switch is than closed, and the procedure is continued more slowly. The tension is then suppose to build up to a maximum where it remains.

A maximum voltage of 133 mV was observed. In the closed position the output voltage was 0.012 mV ac and below 0.00 mV dc. In most positions of the magnets the output voltage was 2-3 mV ac and dc. In a few cases the voltage went up for some minutes to 15 mV, 20 mV, and 46 mV ac with 6 mV DC. In one case the voltage remained for about 5 minutes at 133 mV. An overview of exceptional high output voltages is given in Table 2.

Table 2. Output voltages.

Time	Output Voltage AC	Output Voltage DC
Closed loop	0.012 mV	0.00 mV
Usual output	2-3 mV	2-3 mV
2-3 min	15 mV	
3 min	20 mV	5-10 mV
3 min	46 mV	6 mV
5 min	133 mV	

The exceptionally high output voltages did not last long enough to close the switch and to go on with the next run up stage. The magnetic field strength at the time of the highest output voltage is shown in Table 3.

Table 3. Magnetic field strength

Position, between	Magnetic Field Strength
1-6	310 mT
6-2	380 mT
2-5	210 mT
5-3	280 mT
3-4	310 mT
4-1	300 mT

The output voltage was measured with a Fluke 189 true RMS multi meter and recorded with digital store oscilloscope DSO-5200A from Voltkraft. The digitization rate was 250MS/s at a 9 bit resolution. The results of the measurements with the Fluke DMM are shown in Table 2. The recording for the 46 mV case is shown in Figure 4.

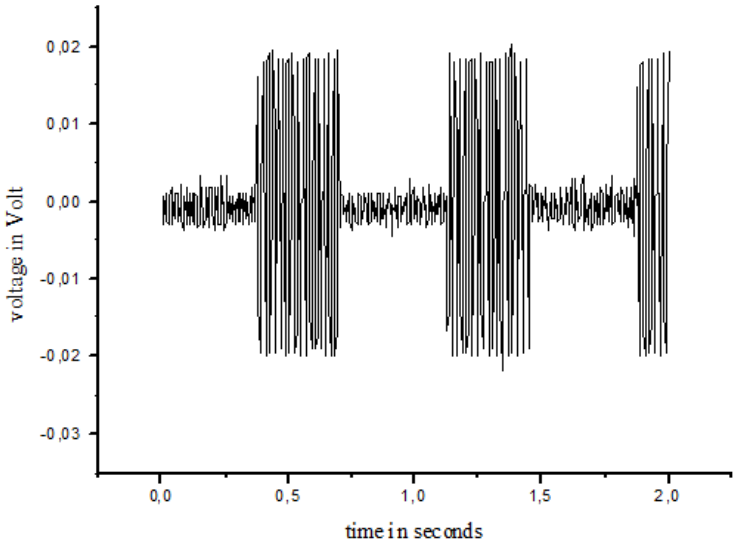

Figure 4. Output voltage over time in the case of 46 mV output voltage.

5. Magnetism and QED

The magnetic moment μ_s of the electron is given by

$$\mu_s = -g_s \frac{e}{2m_0} s \tag{1}$$

In equation (1) g_s is the gyromagnetic ratio, e is the elementary charge, s the spin quantum number and m_0 the mass of the electron. In the classical case g is expected to be 1.

The experimental value for g given by Dehmelt [5] is 2.02319304376(8).

It is one of the most important achievements of the relativistic quantum mechanics that the Dirac equation for an electron in an external field produces almost the right magnetic moment of the electron. The expert is not surprised by this as the magnetic field can be seen as a relativistic effect of the electric field [6]. The Dirac equation results with a g_s of 2. The difference of the experimental value to g_s is called g-2. The difference can be calculated to a high precision with QED. This process is called radiation correction, as the difference g-2 is the result of energy exchange with the vacuum fluctuations, also called

radiation field or zero point energy. Schwinger was the first one to show that the magnetic moment can be calculated from QED [7]. His result for g-2 is α/π, with α being the fine structure constant. Luttinger showed a simpler way to arrive to this result [8]. Masperi gives a more qualitative and understandable explanation [9]. These calculations have been experimentally verified for example by the single electron experiment of Dehmelt [5].

The modern view of the magnetic moment of the electron is that it can be calculated from quantum field theory. The magnetic moment of the electron is partly connected with the vacuum fluctuation because the g-2 part is caused by interaction with the radiation field. Permanent or remanent magnetism is today seen as a collective phenomenon of single electron magnetic moments [2]. It is therefore justified to investigate permanent magnetism as a means to converts vacuum state energy, into other forms of energy, *i.e.*, electricity. Puthoff and Cole [10] have shown that in principle this energy can be extracted from the vacuum. Coler might have found a mechanism that converts zero point energy into usable electricity. He points out that he uses a special resonance of magnetic and electrical vibrations in ferromagnetic material, especially iron. Since ferromagnetism is a collective effect, it can be seen as a self organized dissipative structure. This holds especially for the ferromagnetic resonance. Therefore ferromagnetic materials combine fundamentally vacuum fluctuations and dissipative structures. The self structuring process of the electrons in ferromagnetic material could be a way to cohere vacuum fluctuations. This would make ferromagnetic materials ideal candidates to fulfill the requirements laid out by King [11] for processes that extract energy from the vacuum state. In Order to verify the connection between Coler magnetic current apparatus, magnetism and energy extraction from the quantum vacuum field it is planned to use Casimir force measurements [12].

In order to understand Coler´s device and to engineer technology from it, a better understanding of the dynamics of ferromagnetism is needed. Research in magnetic nano-structures, ferrofluids, single spin magnetic resonance force microscopy and magnetic semiconductors promise to lead to these needed new insights.

6. Test of Coler´S Theory of Ferromagnetism with Magnetic Force Microscopy (mfm)

Coler´s suggestion that ferromagnetism is a fluctuation phenomenon with a frequency around 180 kHz was studied using magnetic force microscopy. In order to achieve this; an ANFATEC standard AFM was equipped with chromium-cobalt coated silicon cantilevers. With this method very small variations in the magnetic properties can be detected. The method is suitable to study changes in the magnets. Experimental method and data will be presented in this section.

6.1. Magnetic Force Microscopy

Magnetic force microscopy (MFM) is a special mode of atomic force microscopy (AFM). In MFM a ferromagnetic tip is scanned at a certain constant height of several ten nanometres above the surface. This mode is also called fly mode. In fly mode first the line is scanned in AFM dynamic mode and then the same line is scanned at a height of several ten nanometers above the topography just measured in the AFM mode. At that height there is no atomic force between the tip and the surface but the strength and orientation of the magnetic field of the surface can still create a force on the ferromagnetic tip. Figure 5 (a) shows the working principle of an AFM. A thin silicon cantilever is scanned line by line over a sample surface. The nm resolution for the scan is achieved with a piezo actuator. The piezo actuator can be positioned in 3 dimensions (xyz) with medium voltage. The force on the tip and therefore on the cantilever is measured with a laser beam that is reflected on the back of the cantilever and a segmented photodiode. If a force is supplied to the cantilever, the cantilever bends, which lead to a shift of the position of the laser beam on the photodiode. If the image is acquired with the tip touching the surface it is called contact mode AFM. If the cantilever is vibrated with tip just above the surface and the force is measured as a change in amplitude or phase shift between driving frequency and photodiode signal it is

called dynamic mode AFM. For MFM the AFM is usually used in dynamic mode. Figure 5 (b) shows the MFM imaging with the fly mode. Figure 5 (a) shows the working principle of an AFM which is used in MFM to record the surface topology and Figure 5 (b) shows the working principle of the MFM mode of an AFM which is used for imaging the magnetic properties of the sample. To scan the magnetic properties the cantilever and tip are coated with a Cr-Co layer.

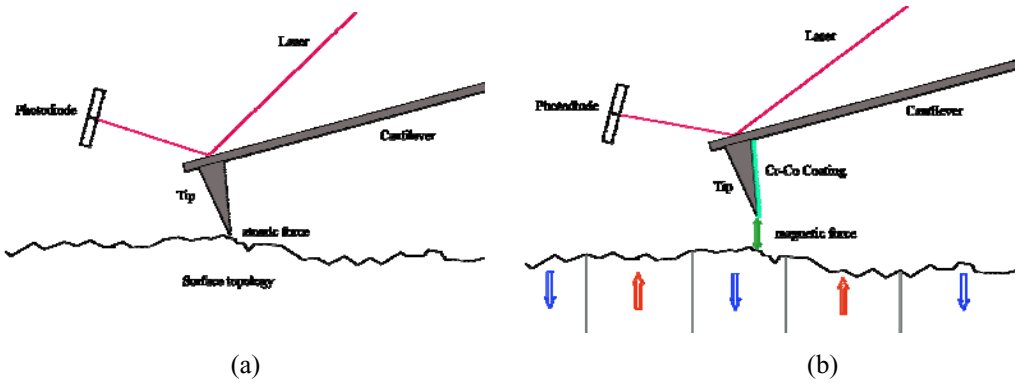

Figure 5. (a) Working principle of an AFM, and (b) of the MFM mode.

The AFM used for the here presented work is shown in Figure 6.

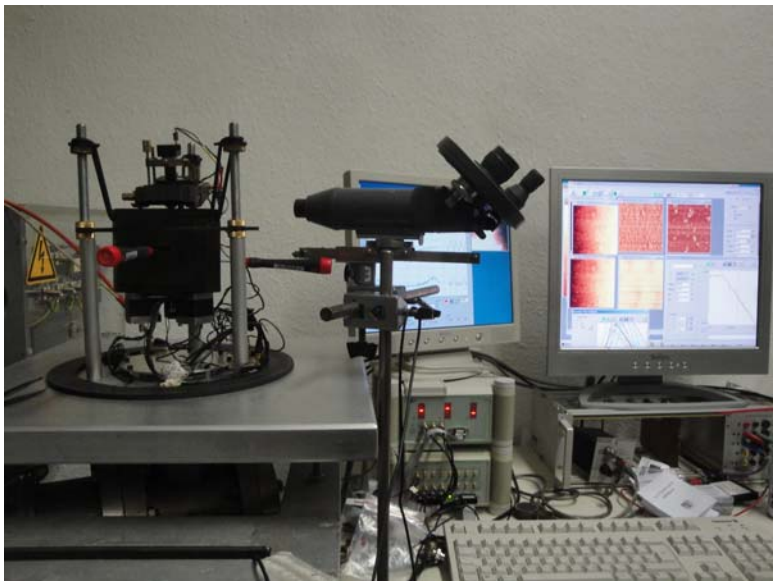

Figure 6. The atomic force microscope used in this work.

In our case the silicon cantilever is 230 µm long, 40 µm wide and 3µm thick. The resonance frequency is 81 kHz and the force constant is 3.5 N/m. The tip and both sides of the cantilever are coated with continuous films of cobalt 1st layer with a thickness of 60 nm and a 2nd layer of chromium with a thickness of 20 nm. The Cr layer is for protecting the cobalt layer chromium. Figure 7 shows a MFM image of a test structure. In the MFM image there is no trace of the topography, which is shown in Figure 8. The topography image was taken with the normal dynamic mode of the AFM. The MFM image shown in Figure 7 was taken in fly mode at a height of 45 nm. The test structure was a piece of a ZIP 100 MB disk. The scanned area was 8 by 8 µm. The tip has a radius of less than 10 nm. The resolution of the

images is 5 – 10 nm.

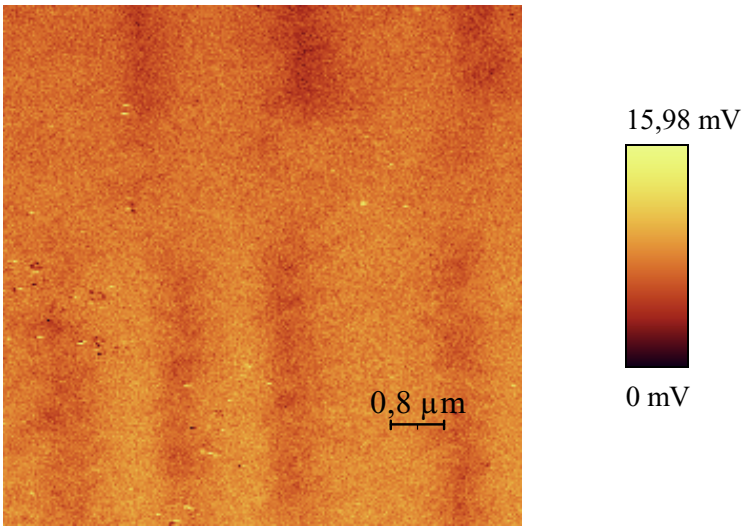

Figure 7. MFM image of the magnetic field strength of a test structure

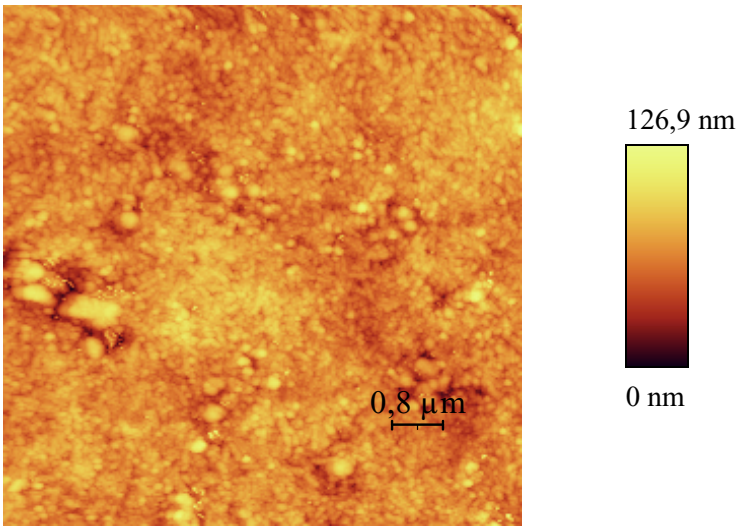

Figure 8. Topography image of the same area as in Figure 7 acquired with AFM in dynamic mode.

7. MFM Study Of Iron Samples

In order to study Coler´s theory iron was scanned with MFM to acquire pictures of the magnetic strength distribution and its dynamics. In Figure 9 an image of an iron plate is shown. In this case the phase angle between driving force and the photodiode signal was used for contrast.

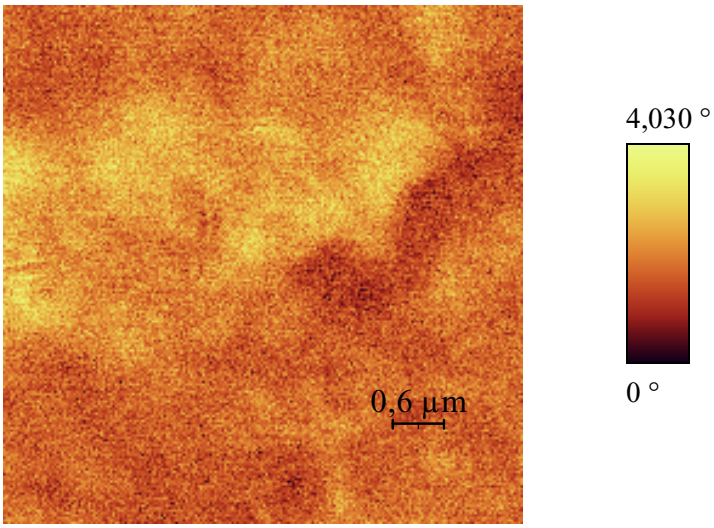

Figure 9. Magnetic field strength of iron in phase contrast.

In order to verify Coler´s hypothesis of the 180 kHz oscillation in ferromagnetic material the spectroscopy feature of the AFM was used. In this case the tip with Cr-Co coating was positioned just above the surface and the photodiode signal was scanned from 20 kHz to 400 kHz. The result of this frequency scan is shown in Figure 10.

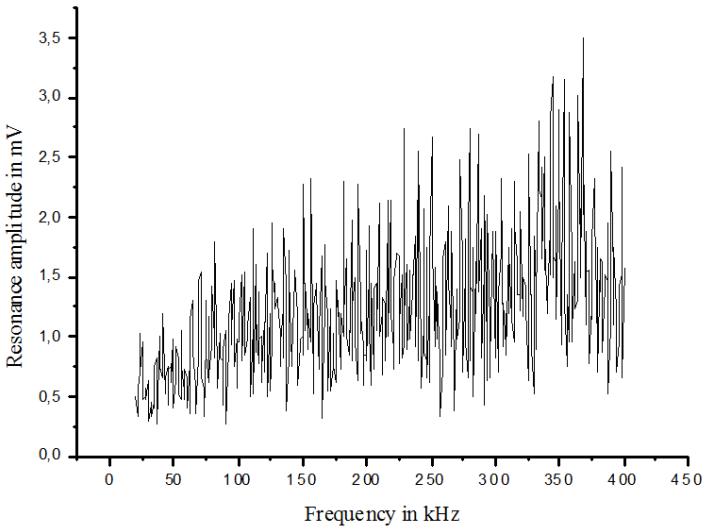

Figure 10. Frequency scan of ferromagnetic iron sample.

So far no clear evidence of a ferromagnetic oscillation phenomenon around 180 kHz could be found. The presented data are to be seen as samples to demonstrate the experimental methods used. It constitutes by no means a complete investigation of ferromagnetism. The investigation of iron samples and iron permanent magnets has to be continued. Of special interest is the measurement of permanent magnets in the magnetic and electrical resonance in Coler´s circuit. This still remains to be accomplished.

8. Conclusions

The origin of excess power obtained via magnetic resonance was investigated in the case of a replica of the Coler generator. Even though a maximum of 133 mV and at times 20 to 40 mV could be detected the conclusion is that the Coler magnetic current apparatus could not be set into function as it was reported by Hurst in the British intelligence report. Since Hurst and Coler point out that it is difficult to hit the right resonance position this is not surprising. The work on the replica is not completed. There are still a number of parameters that can be varied. In addition it is planned to do the same measurements on another replica from a Technical University. The AFM and MFM measurements have also not brought a breakthrough insight into Coler´s claims. The resonance frequency of 180 kHz was investigated by the means of magnetic force microscopy. Therefore no clear mechanism on how the quantum field fluctuations could supply the energy to drive the circuit via the magnetic moment of the electron could be identified to this day. It has to be mentioned that the work is still ongoing and it is hopped to refine the measurement techniques and sample preparation to find definitive results in the future. It is planned to study the same permanent magnet material with the MFM that is used for the magnets in the circuit. Furthermore it is planned to prepare smooth pure iron samples to study the ferromagnetic dynamics in iron. It seems promising to follow up the methods laid out in this work to learn more about the nature of ferro- and permanent magnetism and the possibility to convert radiation field energy into electricity.

Acronyms

AFM	–	Atomic Force Microscope
B.I.O.S.	–	British Intelligence Objectives Sub-Committee
DSO	–	Digital Storage Oscilloscope
DMM	–	Digital Multi Meter
MFM	–	Magnetic Force Microscope
QED	–	Quantum Electro Dynamics
RMS	–	Root Mean Square
TUB	–	Technical University of Berlin
ZPE	–	Zero Point Energy

Acknowledgments

The authors thank the Deutsche Vereinigung für Raumenergie (DVR) for support of this work. The author also thanks Tom Valone and Marco Bischof for helpful discussions and Andreas Manthey for providing the replica and documents on the earlier project.

References

1. Berman, P. G., Borgonovi , F., Gorshkov V. N. and Tsifrinovich, V. I., *Magnetic Resonance Force Microscopy and a Single-Spin Measurement*, World Scientific Pub., Singapore, 2006.
2. Auerbach, A., *Interacting Electrons and Quantum Magnetism*, Springer, New York, 1994.
3. Maggiore, M., *A Modern Introduction to Quantum Field Theory*, Oxford University Press, Oxford, 2005.
4. Hurst, R., The Invention of Hans Coler, relating to an alleged new Source of Power *B.I.O.S.*, Final Report No.**1043**, Target Number: **C31/4799**, [declassified], 1956.
5. Dehmelt, H., Experiments with an Isolated Subatomic Particle at Rest, *Rev. Mod. Phys.* 1990 **62**:525-530.
6. Schmueser, P., *Feynman-Graphen und Eichtheorien fuer Experimentalphysiker*, Springer, Berlin-Heidelberg, New York, 1988.
7. Schwinger, J. S., On Quantum-Electrodynamics and the Magnetic Moment of the Electron, *Phys. Rev.* 1948 **73**:415.
8. Luttinger, J. M., A Note on the Magnetic Moment of the Electron, *Phys. Rev*. 1948 **74**:893.
9. Masperi, L., Qualitative description of the electron's anomalous magnetic moment, *Revista Brasilleira de Fisica* 1989 **19**:215.
10. Puthoff, H. E. and Cole D. C., Extracting energy and heat from the vacuum, *Phys. Rev. E* 1993 **48**:1562.
11. King M., *Tapping Zero Point Energy*, Paraclete Publishing, Provo UT, 1989.
12. Ludwig, T., Casimir force experiments with quartz tuning forks and an atomic force microscope (AFM) *J. Phys. A Math. Theor*. 2008 **41**:164025.

View publication stats

Ads by Google
Surplus Magnets
Circuit Breakers
Neodymium Magnets
Magnet Suppliers

Ads by Google

Power Monitors
Pwr Monitors for all applications Energy Management software
www.Measurlogic.com

Training to Install Solar
Learn from Professional Installers. Small Classes-New Facility-60% Lab.
www.sunprotraining.com/

Install Solar Panels
Take Advantage Of The 2009 Energy Tax Credit; Install A System Today!
Akeena.com/Solar-Installation

Residential Solar Power
Lower Your Monthly Electric Bill With SunPower Solar!
www.SunPowerCorp.com

GE Renewable Battery Tech
Hybrid trains & buses powered by advanced GE Battery Technology

Inductors & Coils
Toroid, Air, Drum & Rod Core Inductors & Coils. Ship Same Day.

What Battery Tester?
Hear Live From Industry Experts Recommended testers that really

The following is the only known documentation for Hans Coler's Magnetstromapparat and Stromerzeuger devices. More details are available for the Magnetstromapparat but it put out very little power. The Stromerzeuger put out much more power but the details are quite confusing. To help with this, there is a correlation between Hans Coler's Stromerzeuger and the testatika's magnet circuit.

British Intelligence Objectives Sub-Committee
Final Report # 1043
The Invention of Hans Coler, Relating to an Alleged New Source of Power
Reported by R. Hurst, M.Sci.
BIOS Trip # 2394 ~ BIOS Target # C31/4799

Table of Contents

I. Object of Visit & Summary
II. Historical Notes
1. The "Magnetstromapparat"
2. The "Stromerzeuger"
III. Report
1. Interrogation of H. Coler
2. Interrogation of F. Modersohn
3. Construction & Testing of the "Magnetstromapparat"
IV. Conclusions
V. Appendices
App. I - Details of Stromerzeuger
App. II - Report by Prof. Kloss
App. III - Report by Prof. Schumann
App. IV - Report by Dr. Frohlich & Coler to O.K.M.
App. V - Report by Coler on Frohlich's Experiment
Figures 1-4

Personnel of Team:
R. Hurst, Ministry of Supply
Captain R. Sandberg, Norwegian Army

The Invention of Hans Coler, Relating to an Alleged New Source of Power

I. Object of Visit & Summary

Coler is the inventor of two devices by which it is alleged electrical energy may be derived without a chemical or mechanical source of power. Since an official interest was taken in his inventions by the German Admiralty it was felt that an investigation was warranted, although normally it would be considered that such a claim could only be fraudulent.

Accordingly Coler was visited and interrogated. He proved to be cooperative and willing to disclose all details of his devices, and consented to build up and put into operation a small model of the so-called "Magnetstromapparat" [Magnet Power Apparatus] using material supplied to him by us, and working only in our presence. With this device, consisting only of permanent magnets, copper coils, and condensers in a static arrangement he showed that he could obtain a tension of 450 millivolts for a period of some hours; and in a repetition of the experiment the next day 60 millivolts was recorded for a short period. The apparatus has been brought back and is now being further investigated.

Coler also discussed another device called the "Stromerzeuger", from which he claimed that with an input of a few watts from a dry battery an output of 6 kilowatts could be obtained indefinitely. No example of this apparatus exists today, but Coler expressed his willingness to construct it, given the materials, the time required being about three weeks.

Opportunity was taken to interrogate Dr. F. Modersohn who had been associated with Coler for ten years and had provided financial backing. He corroborated Coler's story in every detail.

Neither Coler nor Modersohn were able to give any theory to account for the working of these devices, using acceptable scientific notions.

II. Historical Notes

1. *The "Magnetstromapparat"*

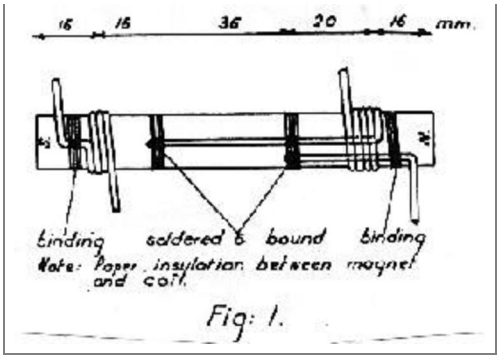

Fig: 1.

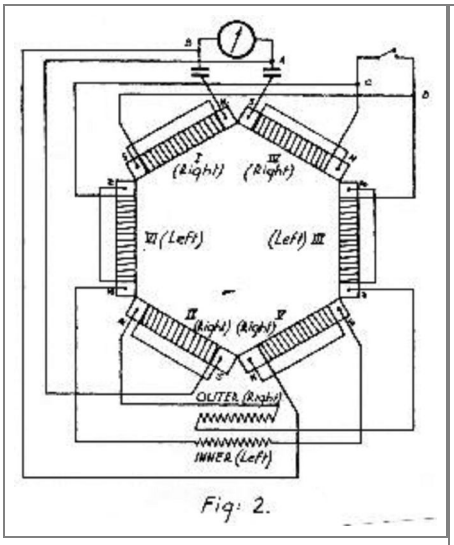

Fig: 2.

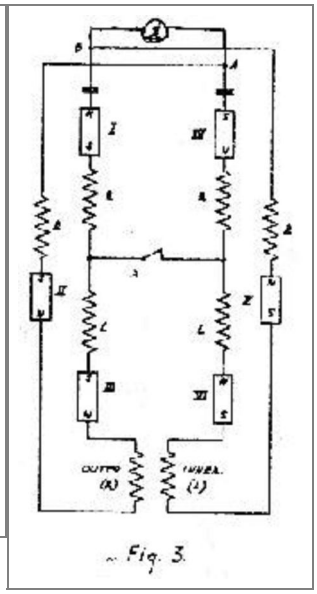

Fig. 3.

This device consists of six permanent magnets wound in a special way so that the circuit includes the magnet itself as well as the winding (See Figure 1). These six magnet-coils are arranged in a hexagon and connected as shown in the diagram (Figures 2 & 3), in a circuit which includes two small condensers, a switch, and a pair of solenoidal coils, one sliding inside the other. To bring the device into operation, the switch is left open, the magnets are moved slightly apart, and the sliding coil set into various positions, with a wait of several minutes between adjustments. The magnets are then separated still further, and the coils moved again. This process is repeated until at a critical separation of the magnets an indication appears on the voltmeter. The switch is now closed, and the procedure continued more slowly. The tension then builds up gradually to a maximum, and should then remain indefinitely. The greatest tension obtained was stated to be 12 volts.

The "Magnetstromapparat" was developed by Coler and von Unruh (now dead) early in 1933, and they were later assisted by Franz Haid of Siemens-Schukert, who built himself a model which worked in December 1933. This was seen by Dr. Kurt Mie of Berlin Technische Hochschule and Herr Fehr (Haber's assistant at the K.W.I.) who reported that the device apparently worked, and they could detect no fraud. One model is said to have worked for 3 months locked in a room in the Norwegian Legation in Berlin in 1933. No further work appears to have been done on this system since that date.

2. The "Stromerzeuger"

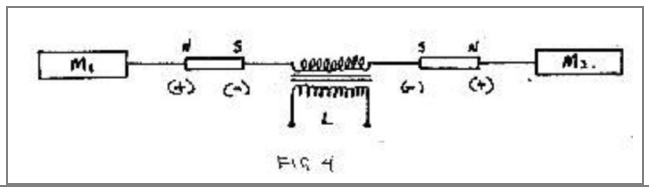

FIG 4

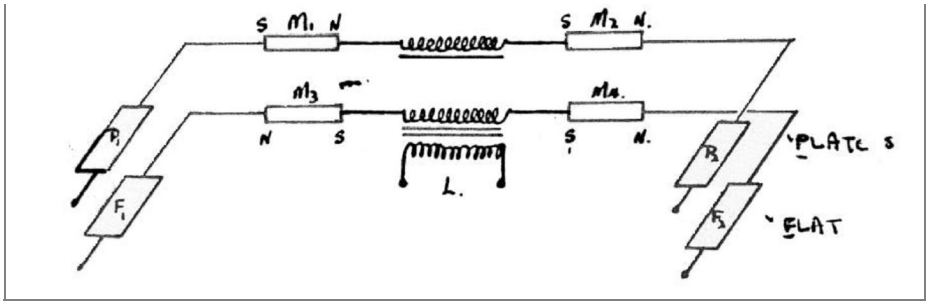

This device consists of an arrangement of magnets, flat coils, and copper plates, with a primary circuit energized by a small dry battery. The output from the secondary was used to light a bank of lamps and was claimed to be many time the original input, and to continue indefinitely. Details of this circuit, and a theory as to its mode of operation were given (summarized in Appendix I).

In 1925 Coler showed a small (10 watt) version to Prof. Kloss (Berlin), who asked the Government to give it a thorough investigation, but this was refused, as was also a patent, on the grounds that it was a "perpetual motion machine". This version was also seen by Profs. Schumann (Munich) Bragatad (Trondheim) and Knudsen (Copenhagen). Reports by Kloss and Schumann are translated in Appendices II and III.

In 1933 Coler and von Unruh made up a slightly larger model with an output of 70 watts. This was demonstrated to Dr. F. Modersohn, who obtained from Schumann and Kloss confirmation of their tests in 1926. Modersohn then consented to back the invention, and formed a company (Coler g.m.b.h.) to continue the development. At the same time a Norwegian group had been giving financial support to Coler, and these two groups clashed. Modersohn's connection with Rheinmetall Borsig, and hence with the official Hermann Goering combine gave him an advantage in this. Coler then in 1937 built for the Company a larger version with an output of 6 kilowatts.

In 1943 Modersohn brought the device to the attention of the Research Department of the O.K.M. The investigation was placed under the direction of the Oberaurat Seysen, who sent Dr. H. Frohlich to work with Coler from 1.4.43 to 25.9.43. Frohlich was convinced of the reality of the phenomenon, and set about investigating the fundamentals of the device. He apparently concentrated on a study of the energy changes which occur on the opening and closing of the inductive circuits. At the end of the period he was transferred to B.M.W. to work on aerodynamic problems and is now working in Moscow.

In 1944 a contract was arranged with the O.K.W. with Continental Metall A.G. for further development, but this was never carried out owing to the state of the country. In 1945 the apparatus was destroyed by a bomb, in Kohlberg, whither Coler had evacuated. Since at that time Coler had been employed, sometimes as an engineer, sometimes as a laborer. Modersohn had severed his connection with Rheinmetall Borsig, of which he had been a director, and was working for the Russian authorities as a consultant in chemical engineering.

Round Ceramic Magnets
Shop for Round & Rectangle Magnets at the RadioShack® Online Store.

Car Magnets: low as $1.75
Order 500 or more, get 60%+ profit! Easy Fundraising. Free Sample Pack.

Ads by Google

III. Report

1. Interrogation of Coler

Coler was questioned first about the history of his invnetions, when the details above were given.

He was then questioned about the theory of the devices, but he was unable to give any coherent suggestions as to the mechanism. He sated that his researches (apparently conducted with crude apparatus) into the nature of magnetism had lead him to conclude that ferro-magnetism was an oscillating phenomenon, of frequency about 180 kilohertz. This oscillation took place in the magnetic circuit of the apparatus, and induced in the electrical circuit oscillations the frequency which of course depended on the values of the components used. These two phenomena interacted, and gradually built up the tension. As the mechanism was not understood the proper arrangement could not be worked out, but had to be arrived at by experiment, and the apparatus had to be brought into adjustment by similar trial and error methods. Coler stated that the strength of the magnets did not decrease during the use of the apparatus; and suggested that he was tapping a new sort of energy hitherto unknown "Raumenergie" (Space-energy). Coler gave a resume of the work done by Dr. Frohlich for the O.K.W., and produced a copy of Frohlich's report, written jointly with himself (translation reproduced in Appendix IV) and a report of his own (part of which is given in Appendix V).

Coler was asked if he would consent to build models of these devices if material was made available. He agreed that he could do this, and stated that it would take one week to construct a "Magnetstromapparat", and a month to construct a "Stromerzeuger". Accordingly we supplied the magnets, condensers and copper wire needed for the former, and Coler

proceeded to build an apparatus as discussed in Section 3. A list of materials required for the "Stromerzeuger" was drawn up by Coler.

2. *Interrogation of Dr. F. Modersohn*

Modersohn was questioned about the history of these devices, with which he had been concerned financially, and corroborated the details given by Coler. He stated that he had at first disbelieved Coler claims but had taken great precautions to eliminate fraud. He had seen the 70 watt "Stromerzeuger" working on a number of occasions, and had taken it while working from one room to another. All parts were visible and nothing was hidden. As he was himself not expert he had tried to get experts to examine it thoroughly, but reputable scientists either refused to have anything to do with it at all, or else were more concerned to find a fraud than to see how it worked. The exception was Dr. Frohlich, who was convinced of the reality of the effect, and who also believed that the secret was to be found in the special inductive circuit used. He had made experiments to test his ideas, but Modersohn denied knowledge of the results. Modersohn was extremely methodical, and showed his files on the subject: these contained copies of all letters and reports concerning the device, since 1933.

3. *Construction & Testing of the "Magnetstromapparat"*

In our presence and with material supplied by us (some brought from England and the rest bought locally) Coler built an apparatus as shown in Figures 1, 2, and 3. It is to be noted that some magnets are wound in a clockwise direction looking at the N pole (called left) and others in an anti-clockwise direction (called right). The magnets were selected to be as nearly equal in strength as possible, and the resistance of the magnet-coil combination was checked after winding to see that this also was uniform (about 0.33 ohm). The physical arrangement was as shown in Figure 2, in a breadboard style. Measurements of voltage and current across A-B were made with a Mavometer. A mechanical arrangement of sliders and cranks for separating the magnets evenly all round was made up.

On 1.7.46 experiments were being continued after three days of fruitless adjusting, and when the magnets were at a separation of about 7 mm., the first small deflection was noted (about 9 a.m.). The switch was closed and by slow adjustment of the sliding coil, and by increasing the separation of the magnets to just over 8 mm., by 11 a.m. the tension was raised to 250 millivolts and by 12.30 p.m. it was 450 millivolts. This was maintained for another 3 hours when a soldered tag became disconnected, and the meter slowly dropped back to zero. Soldering up the broken connection did not restore the tension. The magnets were closed up and left overnight and the same procedure for finding the adjustment was repeated on 7.24.46. After about three hours a deflection of 60 millivolts was obtained; this was maintained for more than 30 minutes, but then decreased to zero when further adjustments were tried.

During all this work the model was completely open, and nothing could be hidden in it. The breadboard and meter could be picked up and moved round the room, tilted, or turned, without effect.

The apparatus would appear to be too crude to act as a receiver of broadcast energy, or to operate by induction from the mains (the nearest cable being at least 6 feet away), and the result for the moment must be regarded as inexplicable.

IV. Conclusions

1. It was judged that Coler was an honest experimenter and not a fraud, and due respect must be paid to the judgment of Frohlich in the matter as deduced from his report to Seysen.

2. The result obtained was genuine in so far as could be tested with the facilities available, but no attempt has yet been made to find an explanation for the phenomenon.

3. It is felt that further investigation by an expert in electromagnetic theory is warranted, and that Coler's offer to construct a model of the "Stromerzeuger" should be taken up.

Ads by Google Magnets Electricity Battery Meter Wire Magnets Boat Battery

V. Appendices

Appendix I - Summary Account of the "Stromerzeuger"

1. The basic principle is that an electron is to be regarded not only as a negatively charged particle but also as a South magnetic pole.

The basic element is that of an open secondary circuit, capacity loaded, inductively coupled to a primary circuit. The novel feature is that the capacities are connected to the secondary core through permanent magnets, as shown:

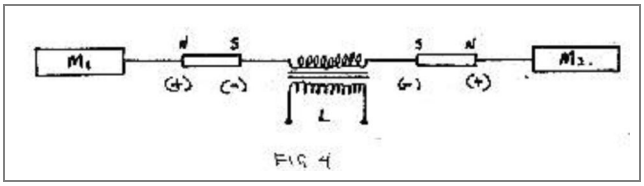

It is claimed that, on switching on the primary circuit, "separation of charges" takes place, i.e., Magnet 1 becomes positively charged and Magnet 2 becomes negatively charged, and that these charges are "magnetically polarized" when they are formed, owing to the presence of the magnets. On switching off the primary circuit a "reversing current" flows in the secondary, but the magnets "do not exert a polarizing effect on this reversal".

2. Two of these basic elements are now placed together making a double system or stage with the plates close together in parallel planes as shown:

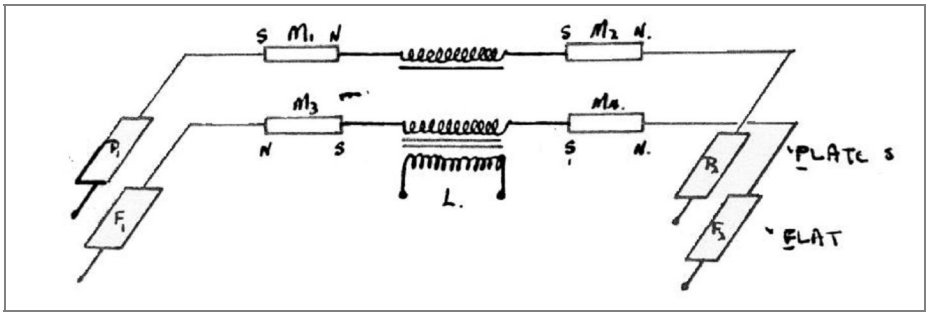

The secondary windings are both exactly equal and wound in a direction such that on switching on the primary coil the electrons in the secondary coil flow from P_1 to P_2 [P = Plate] and F_1 to F_2 [F = "Flat Spool"].

It is then stated that system merely has an inducing effect, and the useful current comes into existence in the system.

3. A single stage cannot be effective but two stages connected so that the numbers of effective North and South poles are equal will provide a basic working arrangement. More double stages can then be added to provide higher outputs.

4. It is then stated that as well as the normal electrons flowing from the battery and from induction when the circuit is opened or closed, "space electron" flow from "repelling spaces" to "attracting spaces" between the plates, but this theory I was unable to follow any further.

Appendix II - Translation of Report by Professor M. Kloss (Berlin) on Tests on the Apparatus, constructed by Captain Coler (dated 4 March 1926)

On the 3rd of March I have on request inspected the apparatus constructed by Captain Coler, and I undertook some tests regarding its efficiency. Professor Dr. R. Franke from the Technical College of Berlin was present at these tests.

The apparatus, in its construction already known to me from a previous inspection, consists of:

- a double row system of copper plates,
- a double-row system of flat spools,
- and a system of electromagnets,

to whose cores silver wires are attached and through which branch currents of the plate-system are conducted. For each of the three systems a 3-part accumulator battery of 6 volts/6.5 ampere-hours capacity is provided. The plate-circuit and the spool circuit are parallel so that the two batteries appertaining thereto can also be replaced by a single battery. This was ascertained towards the end of the tests by switching off the one battery while the apparatus was working.

When asked why two batteries were used at all, Capt. Coler declared that for starting the apparatus a double battery is necessary to get a second charge-impetus after exciting with the one battery, and this for releasing the peculiar character of the apparatus. A test made towards the finish of a series of trials confirmed this assertion in as much as the mechanism could not be started with the single battery; on the contrary, the "adjustment" of the mechanism got disturbed.

Current-indicators are built into each of the three circuits mentioned, as well as volt-meters, behind some switch resistances necessary for the "adjustment". Between the open ends of the two plate and spool-systems there are the terminal clamps for the effective circuit for whose loading 3 bulbs of 8 volts are provided. The apparatus was then put into action and above all the load was tested with the aid of the built-in instruments, that is on being loaded with 2 lamps, 3 lamps and running light. Thereupon and by means of precision-instrument (continuous-current type) Siemens & Halske Nr. 423820 the indications of the built-in instruments were controlled by switching on the mentioned precision-instrument in turn to the single circuits, that is direct to the one terminal clamp of the battery, in order to ascertain if perhaps through any by-connections with the batteries, not conspicuous at once, more current might be received than the built-in instruments were showing. The tests showed a sufficient conformity within the bounds of measuring accuracy.

Finally the same instrument was switched on also to the effect circuit, whereby some greater differences with the instruments built into this circuit were shown; on the other hand, however, not such differences as to alter fundamentally the total result in any way.

In order to find out besides, whether the output current might be identical with a wave-current overlapping continuous current, the last control test was repeated by using a hotwire instrument furnished by me, make of Hartmann & Braun, Nr. 254159. In case there would have been such wave-currents, the hotwire instrument would have had to indicate a bigger current than was shown by the continuous-current instrument. In reality, however, a somewhat smaller current was found was when employing the hotwire instrument. This may be explained by the fact that the inner resistance of the instrument is about 10 times greater than that of the continuous-current instrument, so that when switching on the hotwire instrument the load of the apparatus was somewhat lessened. The difference between 3.08 ampere measured with the continuous-current instrument as compared with 2.95 ampere measured with the hotwire-instrument is easily explained when taking into account the divergences of the two instrument resistances. Therefore one can infer from this test that in the load-circuit we have to deal with real continuous current.

The results of the tests are compiled in the annexed table.

The figures show very well that the consumption of energy in the external circuit is greater than the energy taken from the batteries. According to the circuit, produced by Captain Coler, which within this short time I could not check in all its parts, the magnet-exciting circuit is fed by a special battery, completely separated from the other two circuits. Consequently, a direct comparison of efficiency and consumption of the apparatus would mean that only the sum of current of the plate circuit and of the spool circuit would count. After the established estimates with my own instrument and on a load of 3 bulbs, there was resulting a current from the two mentioned batteries of 0.215 + 0.070 = 0.285 ampere. At the same time the three bulbs consumed ca. 3.7 ampere, according to the built-in instruments, which is about 0.2 ampere too much as was proved later on by a control of this instrument, so that the real consumption has been about 3.5 ampere at a tension of about 2.3 volt.

The reception of current from the two batteries in this case consequently was 1.7 watt while the consumption of the bulbs amounted to about 8 watt. Especially striking in this connection is the considerably higher current-power in the bulb-circuit being about 12 times bigger than the current coming from the two batteries.

We have also absolutely made sure that from the batteries no other conductors led to the apparatus than those into which my instrument was built-in. The fact that an increase of power from the battery to the terminal clamps of the effective circuit in the plate-system takes place, could, indeed, not be tested on the different parts of the apparatus by a direct measuring of the power itself, because Mr. Coler declared that when switching on an instrument in the interior of the system, probably the "adjustment" would be disturbed.

I have therefore tested the decrease of tension in the single plates on a load of three lamps by means of a millivolt-meter, make of Hartmann & Braun, Nr. 462375, in order to get at least in an indirect way an explanation for the increase of current. This examination showed a remarkable increase of tension-losses with a distinct maximum on the third-last plate of the one row. These estimates too are compiled in the table at the end of this judgment.

Results The result of the investigation showed an astonishing working of the apparatus, which, without further researches cannot be explained or compared with the hitherto known characteristics.

Regarding the Cause of the observed characteristics, especially the solution of the question, where the energy in the apparatus originates, no explanation can be given yet, after the short and simple tests.

Solely the conjecture can be expressed that the magnet-system is the source of the energy. It therefore seems desirable to clear this point by further thorough and systematic examinations. For this purpose the proposition of Mr. Coler to construct a bigger apparatus is very sensible, an apparatus, into which from the beginning measuring-instruments should be built in the respective parts of the single circuits in order to enable the "adjustment" of the apparatus including these instruments.

A judgment for the possible utilization of the phenomena, observant in the apparatus, from the economical point of view, I am, of course, not able to pass on after these short tests. This question could only be answered after some lengthened and permanent tests, by which could be established what productiveness the source of energy, existent in the apparatus will show, especially if the magnets, in case they are the supports of the energy-source would wear out after some time, and at what expense each time they could be replaced by new ones.

Above all, however, it appears important that the part or parts of the apparatus, being possibly responsible for causing the observed phenomena, should be taken out in a way as simply as possible and be submitted to an examination in all directions.

Before finishing this, I wish to say that the results of the test are put at the disposal of Captain Coler for which reason I enclose a copy herewith.

I should like to ask, however, the gentlemen in question not to mention my name and that of Professor Franke nor divulge the results of our tests without our express consent, or to make them known publicly and above all not in the press.

Signed,
Dr. Ing. M. Kloss

Professor

Results of Measuring - Apparatus Coler (3 March 1926)

Nr.	Test with	Load	Magnet Circuit	Plate Circuit	Spool Circuit	External Circuit
1	Instr. built-in	0	0.21 A/0.5 V	--/6.4 V	--/6.3 V	--/6.0 V
2	Instr. built-in	2 bulbs	0.21 A/0.5 V	0.16 A/4.7 V	0.16 A/4.3 V	3.1 A/3.5 V
3	Instr. built-in	3 bulbs	0.21 A/0.5 V	0.22 A/4.0 V	0.075 A/3.45 V	3.7 A/3.0 V.

Control of the built-in instruments: of the battery circuits

Nr.	Test with	Load	Magnet Circuit	Plate Circuit	Spool Circuit	External Circuit
4	Instr. built-in	3 bulbs		0.215 A/4.0 V		3.7 A/ 3.0 V
5	S&H 423820	3 bulbs		0.215 A		
6	Instr. bult-in	3 bulbs			0.08 A/3.4 V	3.7 A/3.0 V
7	S&H 423820	3 bulbs			0.070 A	
8	Instr. built-in		0.21 A/0.5 V			
9	S&H 423820		0.2 A			

The three built-in instruments show with sufficient precision the series of the three battery circuits.

Nr.	Test with	Load	Magnet Circuit	Plate Circuit	Spool Circuit	External Circuit
10	Instr. built-in	3 bulbs				3.3 A/ 3.0 V
11	S&H 423820	3 bulbs				3.08 A/ 2.3 V
12	S&H 254159	3 bulbs				2.95 A
13	Instr. built-in	2 bulbs				3.15 V
14	S&H 423820	2 bulbs				3.15 V
15	Instr. built-in	1 bulb				4.1 V
16	S&H 423820	1 bulb				4.45 V

From the built-in tension meter of the external circuit estimations below 3 volts could not be read anymore. When slightly over 3 volts the instrument indicates correctly, when over 5 volts, the indication is somewhat too low.

The built-in current indicator of the external circuit points somewhat too high.

The control instrument S&H 423820 is a precision continuous-current instrument (millivoltmeter) for current and tension measurings. The control instrument H&B 234159 is a hotwire instrument.

Appendix III - Translation of a Report by Professor W.O. Schumann (Munich) on the examination of the apparatus of Mr. Coler in berlin on the 19th & 20th march, 1926 (dated 3rd April 1926)

The apparatus in question principally consists of two parallel connected spools, which being bifiliarly wound in a special way, are magnetically linked together. One of these spools is composed of copper sheets (the spool is called the plate spool), the other one of a number of thin parallel connected isolated wires (called: spool winding), running parallel at small intervals to the plates. Both spools can be fed by separate batteries; at least two batteries are necessary to put the spools to work.

The spools are arranged in two halves each, according to the bifilar winding system. The batteries are attached to the starting points, and the current-receivers to the parallel connected ends. Inter-communications are connected between parallel windings of the two halves of the plate spool which contain iron rods with silver connections. These rods are magnetized by a special battery through applied windings (called: exciter windings).

According to the statement of the inventor, the production of energy principally takes place in these iron rods, and the winding of the spools plays an important part in it.

As far as it was possible I convinced myself of the conformity of the circuit with the mechanism. The exciter winding is electrically completely separated from the other windings, which was proved when testing the apparatus while being devoid of tension, as well as when testing it while being at work with the aid of an Ohmmeter and a millivoltmeter.

In order to ascertain possibly concealed sources, the apparatus was searched with a millivoltmeter, without using any external batteries. No effect was perceptible. Besides the apparatus was carried from one room through a corridor to another one in the establishment to exclude the possibility of any secret connection to the mains.

Installed in the apparatus were three current meters for the currents from the three batteries, and furthermore current and volt meters of the soft iron type for the current receivers. One and two bulbs respectively were employed for this purpose. Besides there were at disposal one

precision milliampmeter of the S&H turn spool type, also employable as ammeter and voltmeter (called: Dr. Sp. C), and a turn spool millivoltmeter of the A.E.G., an ordinary laboratory instrument, also employable as a voltmeter (called: Dr. Sp. A.E.G.C.).

While the apparatus fed two bulbs, the current delivery of the three current-supplying batteries was measured directly at the terminal clamps. The results are as follows (with Dr. Sp. S&H.C.):

1. Current of the plate battery: 48 ma
2. Current of the spool battery: 39 ma
3. Current of the exciter battery: 170 ma

The indications of the built-in instruments were in unison with the statements of the S&H instrument. The total capacity of the batteries of three elements each: 0.257 x 6 = 1.542 watt (the tension of the batteries in reality being below 6 volt). The possible capacity of the two bulbs according to the built-in soft-iron instruments was 3A x 3.5 V, that is 10.5 watts which means the 6.7 fold of the above-mentioned capacity.

Thereafter only one bulb was connected, and a second one, exactly of the same type, was regulated with a special accumulator battery to get the same light. All currents were measured with the "Dr. Sp. S & h C.", all tensions with the "Dr. Sp. A.E.G.C." and not with the built-in instruments.

1. Current of the plate battery: 28 ma
2. Current of the spool circuit battery: 23.5 ma
3. Current of the exciter battery: 180 ma

That means, if reckoned with a 6 volt battery tension, 6 x 0.232 = 1.392 watt. The possible capacity of a bulb, fed by a special battery, and showing the same lightpower was 4.5 volt x 1.5 A = 6.75 watt. Proportion of both efficiencies ca. 4.85.

Both instruments used for testing (measuring) from S&H and from the AEG were than compared with each other by a current-voltmeter, the highest possible deviation being less than 10% which can therefore scarcely influence the result.

The apparatus, according to the statement of the inventor, is adapted now for current increase. The bulb-tension of 3-5 volt is less than the tension of the feeding batteries. By changing over in the interior it would also be possible to use it for an increase in tension.

Then there was made a test with the aid of the Dr. Sp. Millivoltmeter from the AEG to try the decrease of tension in the single winding halves of the plate spool on the right as well as on the left side of the mechanism (The form of the spool is that of a long small rectangle).

Tensions in Millivolts (Right Side)				**Windings from the top downward (Left Side)**			
1.	-	2.	0.24	1.	0.34	2.	-
3.	...	4.	2.6	3.	2.8	4.	-
5.	8.4	6.	24	5.	12.4	6.	22
7.	22	8.	24.6	7.	28	8.	100-140 (fluctuates much)
9.	26	10.	25	9.	46	10.	30

The tensions are distributed very unequally which must be due to current increases and decreases through the iron cores.

Further measurements on the single parts could not be carried through for the reason of getting impeded by the built-in parts of the apparatus. Any variations of the regulation-resistances were also not undertaken, because the inventor stated that the apparatus in its installation was very sensitive, especially with regard to the magnetic conditions of the iron cores, and that a wrong treatment [internal measurements] would cause interferences which would be wearisome and very difficult to be eliminated.

The next day I got a Hotwire-voltmeter "H&B" (called: Dr Sp TH) at the Technical High School of Charlottenburg. With these instruments and those of the previous day the following tests were made:

1. Plate circuit:	28 mA	(Dr Sp TH)
Lamp current:	1.52 A	(Dr Sp S&H C);
	1.60 A	(H Dr TH);
	1.3-1.4 A	(Built-in soft-iron instrument)
Lamp tension:	4.05 V	(H Dr TH);
	4 V	(Built-in soft-iron instrument)
2. Spool circuit:	28.5 mA	(Dr Sp TH)
Lamp current:	1.47 A	(Dr Sp S&H C);
	1.56 A	(HDTH)
Lamp tension:	3.8 V	(H Dr TH)
3. Exciter circuit:	0.173 A	(Dr Sp S&H C)

Lamp current: 1.5 A (H Dr TH)
Lamp Tension: 3.8 V (H Dr TH)

Once again a comparison of capacity was carried through by using an equal lamp to that in the apparatus with an accumulator, and bringing it to the same brightness, as judged by the eye.

Lamp in accumulator circuit:			
	Tension:	4 V	(Dr Sp S&H C);
		3.3 V	(Dr Sp AEG C)
	Current:	1.5 A	(Dr Sp S&H C)
Lamp in apparatus:			
	Tension:	3.85-4.0 V	(H Dr TH)
	Current:	1.59	(H Dr TH)
	Current in spool circuit:	27-28.5 mA	(Dr Sp TH)

Thereafter the instruments with the measured current and tension figures were compared with each other:

1. Tensionmeter parallel on two accumulators:
   Dr Sp AEG C: 3.2 V
   H Dr TH: 3.8 V
   Dr SP S&H C: 4.2-4.2V
2. Voltaelectrometer in line:
   H Dr TH: 1.47 A
   Dr Sp S&H C: 1.46-1.47

Even when taking into account the errors of the instruments, the resulting multiplication of energy, in principle, does not undergo any alteration through the apparatus. Judging from the conformity of the hotwire and turnspool instruments in the lamp circuit, the inference is to be drawn that principally it is continuous current one has to deal with. A test of current from the batteries by way of hotwire measurement was not possible.

As a striking fact it should be mentioned that the spool circuit having been at first always switched on alone, received a current of 104 mA. As soon as plates and exciter circuit additionally and simultaneously were turned on, as, according to the inventor, the apparatus demands it, the current in the spool circuit comes down to about 27 mA.

A definite judgment about the apparatus must be reserved by me until all parts have been singly tested, and until variations in the connections in the load and and circuit have been undertaken.

After the present examination, carried through as carefully as [possible], I must surmise that we have to face the exploitation of a new source of energy whose further developments can be of an immense importance. The apparatus was visible and accessible in all its essential parts. The inventor agreed quite willingly to each trial in so far as, according to his statement, no harm could be done to the working of the apparatus.

I do not believe in a deception. I deem it expedient to put the apparatus to a further test, and I believe that a further development of the apparatus and an assistance, given to the inventor, will prove justified and of great importance.

Appendix IV - Report of Examination on Coler Apparatus - Time: 1.4.43 t 25.9.43

Place: Research Department of the Admiralty (OKM), Berlin
Time: 1.4.43 to 30.6.43

Place: Physical Institute of the Technical Institute of Berlin
Time: 1.7.43 to 25.9.43

Report by Hans Coler & Dr. Heinz Frohlich

Abstract

Some years ago an apparatus (the Coler apparatus) was empirically developed, which according to a series of reports by well known scientists and practical engineers, was able to deliver a considerably higher electrical output than the input necessary to excite the electromagnetic field of the apparatus.

Due to the lack of sufficient knowledge of the complicated activity within the apparatus, and of the impossibility of explaining this in known terms, the success in starting the apparatus depended on happy accident.

With the support of the OKM an attempt was made to examine and measure the activities in the Coler apparatus. Due to lack of sufficient technical and physical means, we did not at first succeed in starting it. This work, however, led to valuable knowledge and information.

It is therefore necessary, through a systematic basic research, to transfer the adjustment and

other necessary procedures for starting the apparatus, from the domain of accident into a practical experimental procedure which is at any time reproducible.

1. History

During the year 1923 to 1926 the undersigned, Captain Hans Coler, basing his work on lay theories of electromagnetic and inductive activities, has developed an apparatus for generating electrical energy, which delivered a considerably higher electrical output than was necessary to excite the primary fields of the apparatus. This development was carried out merely empirically and due to the lay procedure, without recording measurements or making diagrams.

This apparatus was the subject of numerous examinations by scientists and practical engineers, who in their reports, almost without exception, had to admit an energy surplus or energy multiplication without being able to explain the process by present knowledge. The inventor also could not give an explanation due to lack of sufficient knowledge of the activities in the apparatus (See reports by Professors Kloss and Schumann on record at the OKM).

Due to unpleasant differences with the financiers, mostly foreigners, and a nervous breakdown of Coler, because of these, the apparatus and original theories were lost.

Upon resumption of the experiments at a later date the effect was occasionally successfully reproduced (see report by Dr. Modersohn concerning events at New Year 1936-7) which, however, evidently due to disturbances of the adjustments, could not be maintained because sufficient measurements were not taken. The outbreak of war then put a temporary end to the experimental work.

2. Intervention of the OKM

In 1942, Coler and Dr. Modersohn made an application to the OKM to supply them with materials for further work, hoping that by simple technical means, the apparatus could be made to work.

Their aim was to produce a working apparatus, which could be shown to the Fuhrer of Germany, leaving the measurement of all activities of the apparatus to a later date.

The OKM approved the application and sent sufficient material to build the apparatus and lent the inventor ordinary amperemeters, voltmeters, and necessary tools. It was found, however, that due to the overload of work upon them at this time, their spare time work was not sufficient to secure quick results. The OKM therefore procured their release from other work, to allow a more intensive, and, due to the cooperation of Dr. Frohlich, who had experience in physical measurements, a ore scientific approach.

The newly developed apparatus could not be made to work, however, because of the lack of thorough knowledge of the activities in the apparatus which now appeared to be very complicated. Valuable knowledge and promising signs, however, were obtained.

3. Short Description of the Apparatus

The apparatus consists of three principle circuits which are inter-wound and inter-coupled (verkoppelt) in a peculiar way. Some of these are divided again into single subsidiary circuits which evidently have all to be brought into resonance with one another.

The principal circuits (called the anchor) in which the energy gain probably occurs, consists of metal plates between which transformer coils are connected, the whole being connected to one large coil plate (Plattenspule). On each of the single windings on this is coupled a large flat coil (Flachspule)(called field). These flat coils are interwound in two groups; these groups represent the turns of a transformer. This couples, on one hand on the flat coils of the other group (as secondary coils), and on the other hand on the anchor-plate coil, which is placed between them. The third electrically independent circuit (called the directing circuit)(Steurkreis) regulates this transference. Figure 1 [not included in the BIOS Report] shows diagramatically and in plan these interwound parts (anchor in red, field in green, directing circuit in blue). Figure 2, the so-called basic diagram, shows the connections between these different parts. This basic diagram shows the conditions necessary for self-interruption. In consequence of this arrangement, different types of currents are created in different conductors (pulsed DC, AC, etc.).

The transformer coils, connected between the anchor plates, are connected in a peculiar way through thin permanent magnet rods. Their main object seems to be to pre-magnetize the transformer cores; it is, however, very probable that they are also connected with the Barkhausen Effect, which will be mentioned later.

4. Experiments carried out

From the reflections which led to the diagram of the apparatus described above, the reality of some physical effects was assumed, which partly from the inventor himself, and partly also from the scientists who had examined the working apparatus, were stated as a possible or probable explanation of the phenomenon observed.

As these hypotheses has not been examined by measurements, it seemed suitable, for further development of the apparatus, to clarify these questions by further experiment, so far as was possible with the means at our disposal.

The experiments carried out are described below.

Experiment 1

If a single layer solenoid is connected to a battery, a current begins to flow at the moment of connection, which is known to rise exponentially, until it reaches a constant maximum determined by the voltage of the battery and the resistance of the circuit. Every point on the current/time curve corresponds to a magnetic field, which is dependent on the dimensions of the solenoid. At the moment of connection the electrons do not begin to flow at the same time in all parts of the coil, because the electromagnetic wave (Storungwelle) travels with the velocity of light. The electromagnetic field at different parts of the coil also builds up with a corresponding time difference. Now in a right hand wound coil a north pole is produced at the end where the current enters (the current direction is taken now and hereafter to be the direction of flow of the electrons, i.e., from negative to positive), in a left hand coil a south pole is similarly produced. In the first case the building up of the magnetic field proceeds from the north pole to the south, in the second place from the south to the north, or in other words: The direction of the building up of the field is in one case with the direction of the flow of the field and in the other against it.

Question: Is the velocity of the building up of the field different in these two cases, although the data of the coils is the same except for the direction of winding? This means, is there a difference in the time in which the currents are reaching their maximum value?

If such an effect could be found, it must show itself in one of the following ways:

a. The coils must have different apparent resistances (scheinwiderstand). By measurement of voltage and current the apparent resistance of ten right-handed and ten left-handed coils was tested with a Phillips-Schwebungs-Summer instrument. The apparent resistances were the same within an experimental error of about ±1%.
b. Other conditions being the same, the coils must induce different potentials across a secondary coil, when connected to a battery. Measurements were made with a cathode ray oscillograph from Siemens and Halske. The induced potentials were the same. It can therefore be proven that no such effect exists.

Experiment 2

Given: a solenoid consisting of two windings, one upon the other, of the same length and number of turns, enclosing a soft iron cylindrical core. Firmly attached to one end of the core is a pre-magnetized steel rod. If an alternating current is passed through one of these coils, acting as primary, the residual magnetism of the steel rod is strengthened during one half cycle, through the magnetism induced in the core, during the other half cycle it is weakened. If now the other winding is connected in series with the pre-magnetized steel rod -- as secondary coil -- in such a way that the secondary current must pass through the magnet, one half cycle of the secondary current must be more or less subdued; in other words, a rectifying effect must be created (It may be remembered that according to measurements by Professors Kloss and Schumann, a high frequency pulsed direct current-- about 180 KHz -- is flowing in the output resistance of the apparatus, for the creation of which no other explanation seems possible).

Unfortunately, the testing of these effects could only be made with tuned frequency (Tonfrequent) alternating current, with the use of which no such phenomenon could be seed when using measuring instruments and a cathode ray oscillograph.

The question is open whether, and if so in what way, an influence on the electron movement exists through the oscillation of the magnet molecules by high frequency alternating fields, especially of such an impulse-like character.

Experiment 3

Previous measurements, from the year 1937, made by the inventor and his assistant, Dipl. Ing. Rudolf Hingst, had shown the following effect. Given two solenoids each consisting of two coils one upon the other, of the same length and number of turns, one winding of one solenoid is connected in series with one winding of the other, wound in the same sense, and an intermittent direct current is passed through them. The remaining windings, which are to be considered as secondary coils, are also connected in series but wound in opposite sense to one another. The induced secondary currents are therefore similarly in opposition, and would, due to the equal dimensions of the coils eliminate each other. The measurements referred to above are said to have given the result that in such a secondary circuit a considerable direct current component exists which can be strengthened by means of which we shall not go into here. And this strengthening is to such a degree that the "secondary direct current" is comparable to the primary current.

Testing of these measurements, however, did not confirm them.

Experiment 4

Besides the above questions, uncertainty existed as to what part the above described plate and flat coil plays in the function of the apparatus, and how great is the mutual influence of the flat coils upon one another? Of the flat coils upon the plates? And finally of the plates between them? As the plates are not only charged as condensers, but also have directed currents passing through them it had to be assumed that their mutual influence not only consisted of a condenser effect, but that they also created a magnetic field.

It must first be stated that the frequency of the "Summer" instrument at our disposal (0-12 KHz) was not sufficient for measure the mutual electromagnetic influence of the plates, due to the low apparent resistance. This examination should be carried out with high frequency alternating current. It was, however, possible by the use of a highly sensitive oscillograph as a valve voltmeter to measure the potential induced by the flat coils on the individual plates, to discover the induction currents in the plates, and also to determine the value of the potential induced by the flat coils on the plates in proportion to the currents created in the plates from the current induced in the anchor coils (the directing current was used as a primary winding in these measurements, being connected to the Schwebungs-Summer).

It appeared that the "Ankertrakte" AC or BD (See Figure 1) are not all to be considered as oscillating circuits, but that the single group systems, consisting of plate-to anchor coils-plate already represent independent oscillation circuits. According to this the apparatus contained ten such oscillation circuits. The individual frequency of these circuits and possible differences existing between them could unfortunately not be measured, because, as already mentioned, up to now only tuned frequency for excitation was at our disposal. In order to make the apparatus work the harmony of all oscillating circuits in their individual frequencies would evidently be necessary -- at least within certain limits determined by the suppression in question. Such an adjustment can of course not be secured by the means at our disposal at the present. The previous occasional success must be considered as due to chance.

The mutual influence of the flat coils upon one another could on the other hand easily be examined because, despite the great distance between the windings (25 mm), they have remarkably great apparent resistance (about 200 ohms at 10 KHz).

It appeared that the power factor (Ubertragungs-faktor) of both of the flat coils wound 1:1 in consequence of their peculiar interwinding (see Figure 1) have the astonishingly high value of 0.85. The value of the power factor was at a maximum at 10KHz, at which frequency the most favorable matching of the impedence of the Summer was obtained.

The assumption could easily be made that the power factor of the flat coils upon the plates is still more favorable, but this measurement can only be made with high frequency alternating current.

Apart from the great number of alternative arrangements and connections between the different parts -- during the period covered by this report eight different circuit diagrams were tested in addition to the experiments above -- the following so far unsolved problems are hindering success in making the apparatus work:

a. The influence of the pre-magnetization and of the magnetizing effect due to the battery current, upon the individual frequency of the oscillating circuits.
b. The influence of the Barckhausen effect on the phase conditions of the oscillations in the individual circuits and on the mutual magnetic and electrical processes.
c. The influence on the movement of electrons in the pre-magnetized steel rods by the high-frequency pulse-like field variations, through the oscillations of the molecules of the magnets.
d. The behavior of the mutual effect between flat cols and plates in a high frequency system.

5. Conclusions

After the experience previously gained on the working apparatus, and on the basis of the technical measurements and examinations mentioned above, the picture of the way in which the apparatus works is as follows.

Due to the connecting of the batteries, a current impulse is induced in the anchor circuit which chares the plates. The discharge current from the plates causes electrical interruption of short duration of the battery current in the field circuit, which furthermore inductively interrupts, or changes the direction of, the battery current in the directing circuit or a short time. The electromagnetic field induced by this process in the directing circuit by its dissipation, induces over the field circuit a current in the anchor circuit recharging the plates, and so forth.

Due to the influence of the Barckhausen effect, each single process has an impulse-like character, and the necessary change of phase is produced to allow the regularity of the process.

Due to a source, up to the present not investigated, and not explainable by existing scientific theories, an additional quantity of energy is freed during each cycle which leads to a continual raising of the amplitude of the mutual processes, until the magnet cores are saturated.

From the fact that in the resistance of the apparatus pulsed direct current is flowing (see Report by Professors Kloss and Schumann), there is possibly an up to now unknown rectifying effect, or alternatively the gain in energy is produced only during one half of the cycle, either during the charging or discharging of the plates. The activity in the apparatus must take place in the ten oscillating circuits in a phase-like manner. As mentioned above, no technical means were available to make the necessary tuning adjustments.

It is clear from the above that the success of the inventor up to now could only be due to chance, or happy accident. The necessity, therefore, arises to transfer the apparatus from the state of empirical development, with sufficient technical means and based on results of an exact basic research, to a state of working procedure which can be controlled.

6. Further Procedure

In a simple apparatus, possibly consisting of one oscillation circuit, the problems mentioned in paragraph 4 should be cleared up, the excitation of the oscillation circuit being caused by an appropriate valve circuit. After clearing these problems, a second oscillation circuit may be added, which will allow the examination of the conditions necessary for the mutual building up of effects.

It will then be possible for the first time to go from external excitation to self-interruption and a solely electromagnetic basis, with the aim of bringing the apparatus in question to work systematically.

Berlin (27 September 1943)

(Coler) (Dr. Frohlich)

Appendix V - Extract from Statement by Coler relating to Frohlich's Experiments

These fundamental researches, which have made the first real and large breach in the citadel of present scientific belief, will now be described in detail. The installation shown in Figure 14 ws used in the experiments. A transformer, with a ratio of 1:1 wa connected on its primary side through a periodic make-and-break X to a DC source U. Great care was taken to ensure that the make-and-break funtioned smoothly, without backlash and uniformly, at high frequencies and thus produced as clear and unambiguous a result as possible.

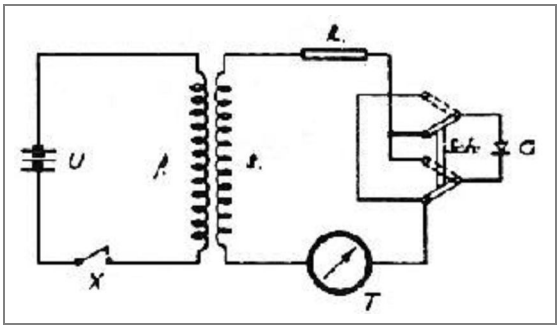

On the secondary side the coils S was connected with resistance R, a reversible rectifier G, and a highly sensitive hot-wire ammeter, form a circuit. The resistance R was large compared with the apparent resistance of the coils S.

Switch Sch allowed the switching of the rectifier G to be carried out in such a manner, that in one case the half-wave of the opening impulse, and in the other that of the closing impulse, was transmitted. In order to prevent any possible objection, that the iron had any influence on the results, the whole transformer was out during the experiments and an iron-free flat coils arrangement was used as the inductor during these experiments. This eliminated all interference and had excellent transmission properties. The required sensitivity was attained in these measurements by using a thermopile with the most sensitive milliammeter. After many trials, the motor-driven interrupter of a Bosch ignition magnet was used as make-and-break. This gave very uniform and smooth interruption with a frequency of 100 Hz. The result obtained with this experimental arrangement, which eliminated all possible causes of later objections, was the clear proof of a considerably larger energy during opening (intake), compared with closing impulses. The energy was determined by i^2 from the measured current intensity, and as the resistance R is large compared to the apparent resistance of the coil, the objection, that the opening impulse had a frequency spectrum of considerably higher value than the closing impulse, could not hold good.

In order to counter all other plausible and possible objections, the processes were recorded by an oscillographic method. Unfortunately the light strength of the available cathode ray oscillograph tubes (Braun's tubes -- it was during war time) did not suffice to produce perfect oscillograms. Consequently, for the time being at least, this aid, which would have completely removed all objections, had to be dispensed with and a Siemens loop oscillograph was therefore used. By choosing suitable loops, sources of error were eliminated as far as possible, or at least kept within very small limits.

The most careful planimetric measurements again gave the same results as those obtained with the experimental installation described above, at least in principle, even though the percentage difference of the quantity of energy in the opening and closing impulses was slightly less in the measurements of the oscillogram than those obtained from the thermopile. It still amounted to an average of 10%, compared with 50% in the measurements, so that errors in the planimetric measurements are not to be assumed. Also, if this had been merely a scattering of the results, a difference in favor of the closing impulse must have occurred at least once. However, the difference was always in favor of the opening impulse. Any possible errors in the planimetric measurements are controlled and avoided, by carefully cutting the figures produced and weighing them on a most sensitive and accurate balance.

Consequently this observation can also be considered as a proof of the fact that an energy difference exists. The circumstance that the percentage of this unequality appears smaller in

the oscillographic measurements than in the thermal, which at a power frequency of 100 Hz assuredly yield a sufficiently accurate mean value, allowing also for the resistance ratios of the rectifier, can readily be explained by the lag of the oscillograph used, which is not even capable of recording the considerable, but extremely short, energy peak of the opening impulse. Although, therefore, the inertialess cathode ray tube was not used in these measurements as a final proof, I can consider my discovery of the energy difference between the opening and closing impulse as proven on the basis of Frohlich's experiments.

As this also proves simultaneously, that my intuitively derived view, based on my most primitive experiments, of these process has proved correct, the reader will forgive me, if I consider my other two results to be correct, until new, and above all better explanations are found for the phenomena described. This all the more, as my development of the "Space Energy Receiver" was based on this and was successful.

Figures 1-4

Figure 1

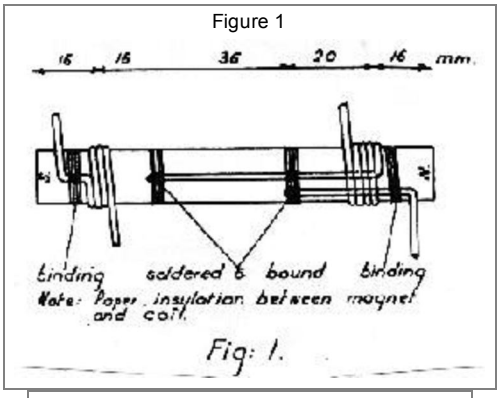

Figure 2

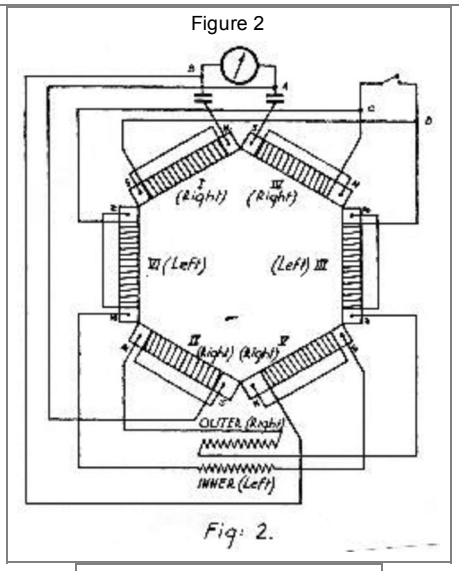

Figure 3

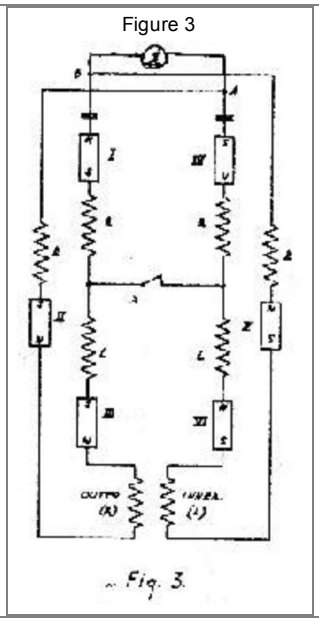

Figure 4

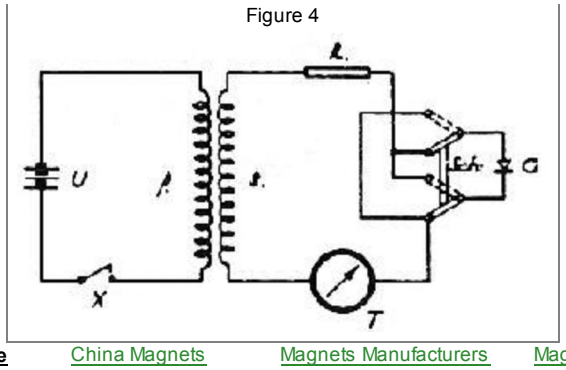

Ads by Google China Magnets Magnets Manufacturers Magnets Wholesalers NdFeB Magnets

rimstar.org

If you have any suggestions of information to add, advice, corrections, ..., please send email to Steven Dufresne: stevend@rimstar.org

US 20080191580A1

(19) United States

(12) Patent Application Publication

Deyo

(10) Pub. No.: US 2008/0191580 A1

(43) Pub. Date: Aug. 14, 2008

(54) HARMONIC ENERGY EXCHANGE DEVICE

(76) Inventor: **Harold Stanley Deyo**, Pueblo West, CO (US)

Correspondence Address:
HAROLD S DEYO, JR.
241 S. DOS PALOS DRIVE
PUEBLO WEST, CO 81007

(21) Appl. No.: **11/675,060**

(22) Filed: **Feb. 14, 2007**

Publication Classification

(51) **Int. Cl.**
H02N 11/00 (2006.01)

(52) **U.S. Cl.** **310/300**

(57) **ABSTRACT**

This invention converts inertial impulses into electric currents. Specifically, it converts impulses created by the impacts of high-energy particles from the Sun and other cosmic sources into the Earth's Magnetosphere and the varying D, E, F1 and F2 layers of its Ionosphere to controlled electric currents. This invention presents a new method of utilizing energy from the Sun and other sources of high energy articles as a virtually, inexhaustible, alternative-energy source for the world.

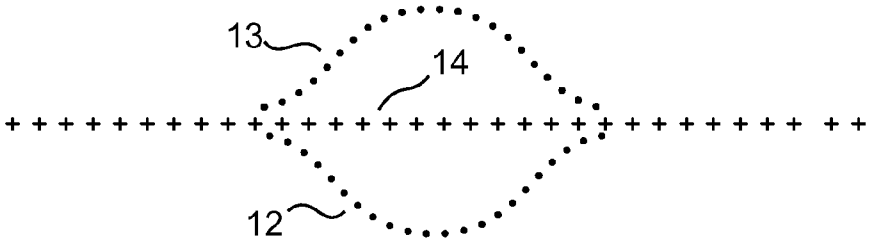

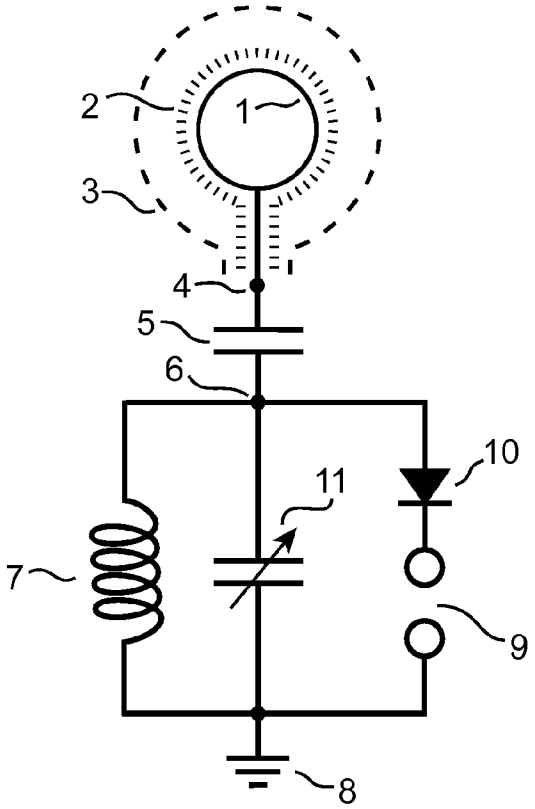

FIGURE 1

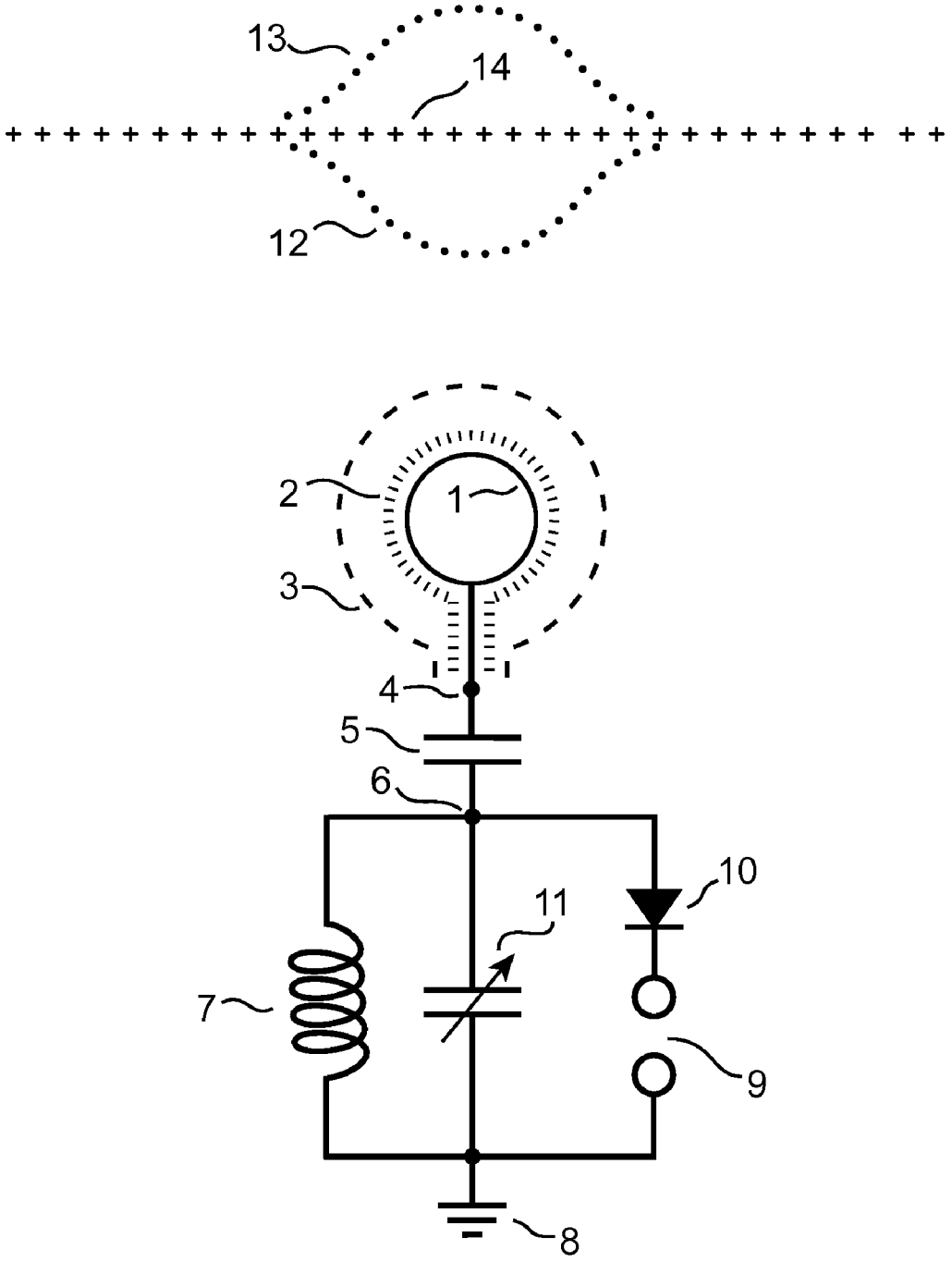

FIGURE 2

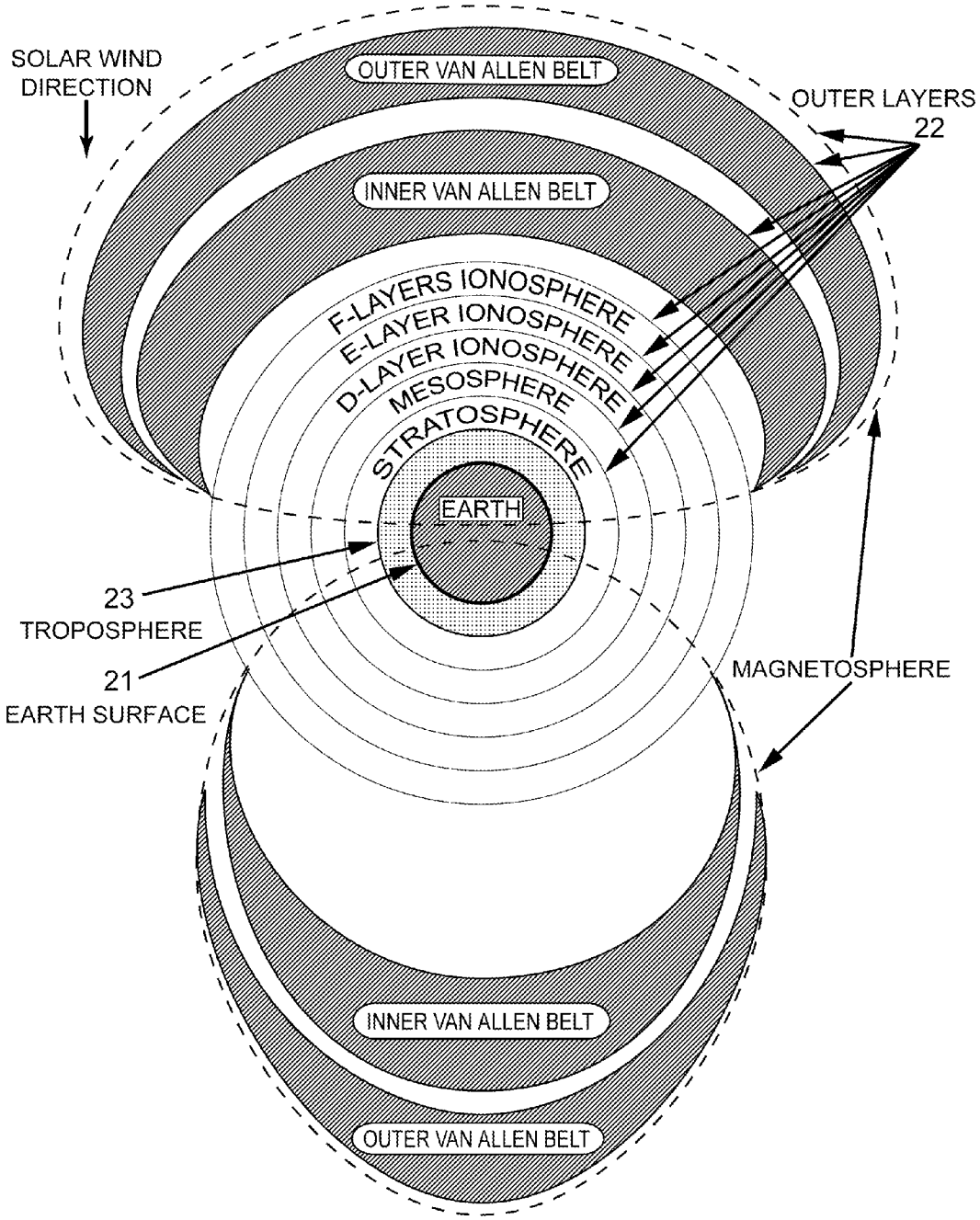
SOLAR WIND
DIRECTION
OUTER VAN ALLEN BELT
OUTER LAYERS
22
INNER VAN ALLEN BELT
F-LAYERS IONOSPHERE
E-LAYER IONOSPHERE
D-LAYER IONOSPHERE
MESOSPHERE
STRATOSPHERE
EARTH
23
TROPOSPHERE
21
EARTH SURFACE
MAGNETOSPHERE
INNER VAN ALLEN BELT
OUTER VAN ALLEN BELT

FIGURE 3

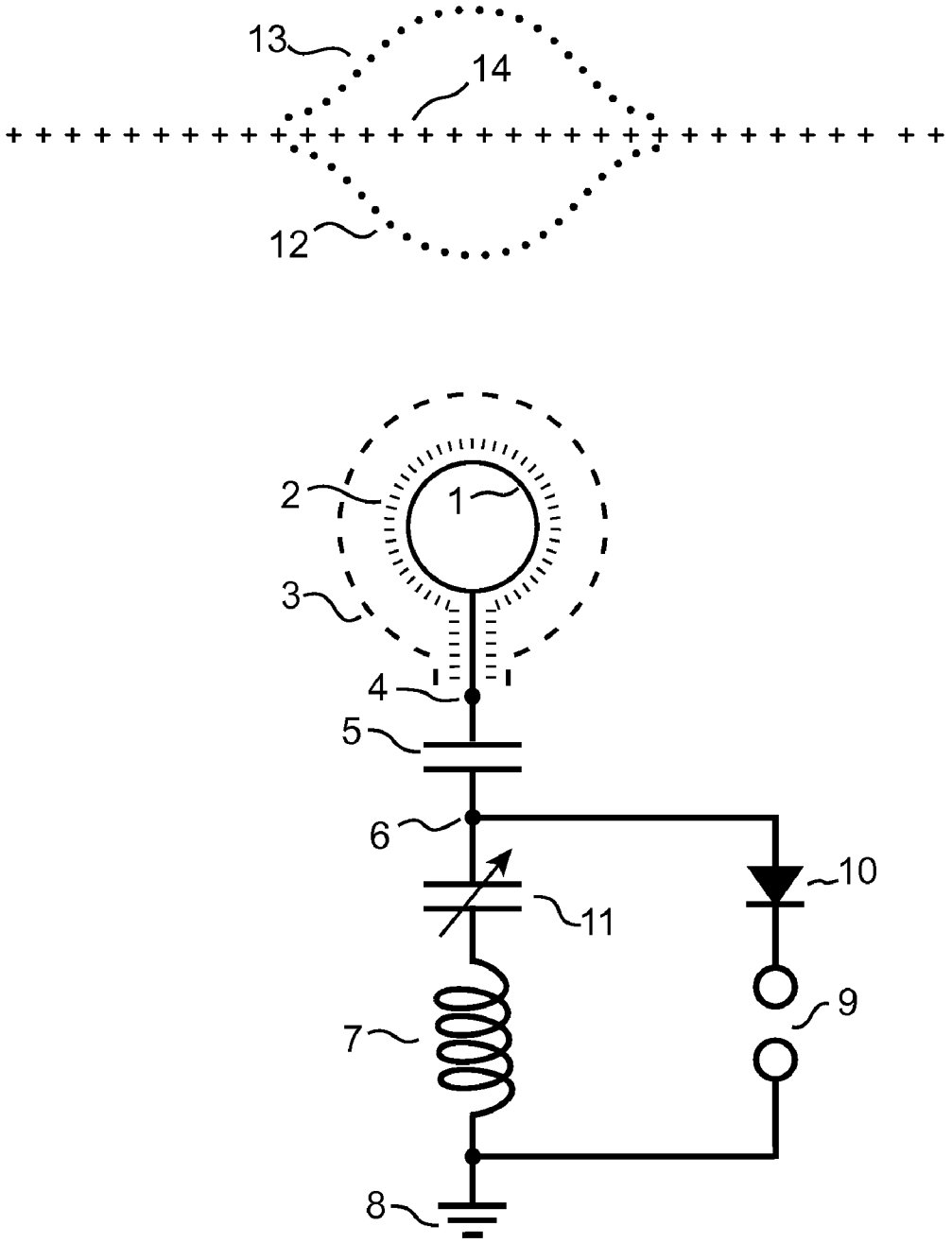

HARMONIC ENERGY EXCHANGE DEVICE

BACKGROUND OF THE INVENTION

[0001] 1. Field of Invention

[0002] This invention relates to the conversion of impact energies created by the collision of high-speed cosmic particles and electromagnetic radiations with "Earth's Outer Layers" to produce inertial waves in the dielectric Troposphere which are subsequently converted into electricity by this invention.

[0003] The term "Earth's Outer Layers" refers to: Earth's Magnetosphere, Van Allen Belts, Ionosphere, Mesosphere, and Stratosphere as illustrated in FIG. **2**

[0004] 2. Description of the Prior Art

[0005] One day while reading an old scientific magazine I saw a small article on the research of Dr. John Trump of MIT (the basis for an electrostatic generator patented later by Onezime P. Breaux in U.S. Pat. No. 4,127,804). The article talked about a series of experiments which Dr. Trump had performed with a 2-plate, capacitor in a vacuum dielectric. Briefly, he discovered that by varying the distance between the two plates one could produce current flows in one direction or the other between either of the plates and ground.

[0006] The Solar Wind strikes "Earth's Outer Layers" constantly as do many other cosmic particles. At any given instant of time, the vector product of these impacts produces either a net pressure increase or decrease in the Troposphere. This creates random waves of pressure in the "Earth's Outer Layers" as one charged "plate" moves in relation to the oppositely-charged Earth's surface as the other "plate". This variation of pressure in the "Earth's Outer Layers" is equivalent to moving an outer "plate" back and forth toward the Troposphere and the Earth's surface as the inner "plate"—thus giving rise to variations in voltage on both "plates". In this case the Troposphere (see FIG. **2**) acts as the dielectric medium instead of the vacuum in the Trump experiments. Furthermore, the Troposphere, itself, is also compressed and decompressed by these random waves of pressure on the "Earth's Outer Layers". Thus, I reasoned if one could create a charged envelope or field of sufficient voltage within the Troposphere, one could convert these random pressure waves in the dielectric Troposphere into current flow on the Earth's surface.

[0007] As "Earth's Outer Layers" surround the planet, any impact waves propagate throughout all of them when they are present—even to the nighttime side of the planet. Thus, I also reasoned one could extract power from these impacts anywhere on Earth's surface or in its atmosphere whether it be day or night. The pressure waves on the dark side of Earth would be less energetic than those occurring on the daytime side because the nighttime layers of the Ionosphere are compressed so much that the D-Layer of the Ionosphere disappears at night and the F1 and F2-Layers of the Ionosphere combine into one F-Layer. I calculated the available energy from these impact waves would be significantly less by 30-45% depending upon one's location on the night side of the planet in respect to the terminator.

[0008] Many years ago around 1900 Dr Nikola Tesla built and tested a device to extract energy from the Sun using an apparatus which forms part of my own invention (see U.S. Pat. Nos. 685,957 an 685,958 dated 5 Nov. 1901).

[0009] Subsequently, Dr. Thomas Henry Moray, another inventor and student of these Tesla patents made a device which apparently accessed the same source of energy but with a method different than my own. As Dr. Moray was never granted a patent for his device I cannot be certain that his work is considered prior art but I list it here as part of my due diligence. Apparently, he had trouble explaining the source of energy his device was converting to the patent reviewer and was, thus, not granted a patent for his impressive work. Dr. Moray's public disclosure of certain aspects of his invention are public knowledge through his published lectures and his book, "The Sea of Energy in Which the Earth Floats'—published in 1931.

[0010] Since the beginning of the 20th Century mankind has been looking for new sources of electric power to feed the ever-increasing energy demands of the human population. In the last half of the 19th Century coal, whale oil, human and animal labor, moving water, wind and wood were main sources of energy. However, in the first quarter of the 20th Century mankind began to use more electricity produced by hydroelectric generators and other generators producing electricity by combustion of fossil fuels. With increasing use of gasoline engines and the increasing use of electrical appliances the demand for electricity accelerated the addition of heat and greenhouse gases into the Earth's ecosystem.

[0011] In the last half of the 20th Century many forward-thinking individuals began looking for alternate energy sources to reduce the emissions of greenhouse gases. All of the alternate energy systems investigated and/or developed in the last 56 years have had significant drawbacks to their usage as the main energy supply for the needs of humanity.

[0012] Some of those alternate energy systems were nowhere near as efficient as the existing systems. Some of the alternate energy systems still introduced extra heat into the environment like the existing fossil fuel and nuclear energy systems. And, yet, others produced even more greenhouse gases than the existing energy systems. Some of the new systems used food resources to produce combustible fuels which, consequently, reduced the food resources of the planet. Among the leaders in the new energy sources was and is nuclear energy which produces extra heat, toxic wastes and materials which can be used in nuclear weapons. Hydroelectric energy sources do not add heat to the ecosystem but they are not an inexhaustible resource as they depend upon rainfall which is diminishing as global warming increases. Wind energy resources do not add heat to the ecosystem but they are not constant and require expensive conversion and storage equipment.

[0013] The ideal energy source for mankind will not add heat to the planet's ecosystem, will not produce by-product green house gases; will not deplete our food and water resources; will not produce toxic wastes; however, it will be portable, self-replenishing and constantly available in real time anywhere on Earth and in useful quantities.

[0014] Our major source of natural energy on Earth is the Sun. Energy from the Sun enters the Earth's ecosphere by particle bombardment, radiated electromagnetic energy, gravitational variations and magnetic processes. Mankind has developed various methods of capturing energy from the Sun already. Silicon-based solar cells convert light in a narrow bandwidth into electron flows. These cells are—at most—only 50% efficient and only work when the Sun is shining on them and at an optimum angle. Wind turbines only work when there is wind to power them and are—for the most part—not portable. Devices to convert wave action in the oceans only work when there are waves created by the wind and tidal

effects caused by gravitational variations; and they are not portable enough to be used in common transportation devices.

[0015] I concluded if mankind could find an inexpensive method of obtaining electricity from the Sun in some form that worked both day and night and which was already flowing into the Earth's ecosystem, we might be able to develop a clean and self-replenishing energy source which would add no extra heat to our ecosystem, would not alter our planetary albedo and might well be made in a portable form.

SUMMARY OF THE INVENTION

[0016] The Harmonic Energy Exchange Device (or "HEED") offers an interim solution to Earth's dwindling fossil fuel resources. It utilizes a previously untapped energy resource which exists throughout the known Universe. By the very nature of the invention, it only interrupts the flow of energy from the Sun and all the other cosmic sources of high-energy particles on their normal journey to the Earth by way of The Outer Layers.

[0017] The invention does not add energy to the normal thermodynamic equilibrium of the planet and its associated outer layers. The invention does not produce wastes—toxic or otherwise. It does not produce harmful gases; and in some embodiments it could even assist in the rebuilding of our thinning ozone shield. Use of this invention will eventually remove mankind's dependence on fossil fuels and create new occupations. It will be cheap enough that homeowners will be able to install their own HEED and sell back energy to the grid until such time as every home has their own HEED and civilization has completely weaned itself from the use of fossil fuels and nuclear energy in its current form.

BRIEF DESCRIPTION OF DRAWING

[0018] FIG. **1**: Is the preferred embodiment of the circuit diagram of my invention incorporating references to external stimuli which are used to activate the circuit. It represents a parallel tuned circuit to store the energy.

[0019] FIG. **2**: Is an illustration of the Earth and it immediate environment as a global capacitor where The Outer Layers form one plate and the Earth's surface form the other plate and both are separated by the Troposphere as a dielectric medium.

[0020] FIG. **3**: Is an alternate embodiment of the circuit diagram of my invention incorporating references to external stimuli which are used to activate the circuit. It represents the use of a series tuned circuit to store the energy.

DETAILED DESCRIPTION OF A PREFERRED EMBODIMENT OF THE INVENTION

[0021] Be it known that I, Harold Stanley Deyo, Jr, a citizen of both The United States of America and The Commonwealth of Australia, residing in the community of Pueblo West in Pueblo County, Colorado have invented an Harmonic Energy Exchange Device which converts dynamic pressures in the ambient media around Earth to controlled electric currents.

[0022] This invention as represented in FIG. **1** is unique in that it is designed to extract electricity from random pressure waves propagated in the Troposphere **14** by impacts of the solar wind and other cosmic particles with the Earth's "The Outer Layers" **22** of FIG. **2**.

[0023] In FIG. **1**, the Troposphere **14** in its rest state is represented by the line of "+" marks **14**. The convergent or compression state **12** of the random waves in the Troposphere **14** is represented by the lower line of dots while the divergent or decompression state **13** of the random waves in the Troposphere **14** is represented by the upper line of dots. The preferred embodiment of my invention FIG. **1** is a method of coupling a parallel, resonant, electrical circuit to these random pressure waves to extract electricity from them.

[0024] As Dr John Trump's research and Onezime P. Breaux's U.S. Pat. No. 4,127,804 show, when one plate of a charged capacitor is moved closer to or farther from the other plate of that capacitor a voltage change appears on both plates of that capacitor. Furthermore, the electric field gradient between those plates changes as the plates are moved in this manner. Thus they have described a method of converting mechanical energy into electrical current by simply varying the plate spacing over time which can be expressed as ds/dt where "ds" is the change in spacing and "dt" is the change in time.

[0025] As illustrated in FIG. **2**, The Outer Layers can be viewed as one plate of a capacitor comprised of the Earth's surface itself as one plate **21** and Earth's outer layers as the other plate **22** where the Earth's Troposphere **23** serves as the dielectric medium separating the two plates. There is a charge between these plates which varies extremely rapidly but not with a constant period. At any given instant, the vector product of all the impacts by the cosmic particles with The Outer Layers **22** will create a pressure wave in The Outer Layers **22** which will manifest in the Troposphere **23**. Whatever that vector product is, it will alter the field gradient in the dielectric Troposphere **23**. That alteration will either increase or decrease the effective spacing between "plates" **22** and **23**.

[0026] In order to capture and convert the resulting voltage variations produced at or near the Earth's surface **21** of FIG. **2**, this invention creates its own, localized stress field **3** of FIG. **1** established in the Troposphere **23** of FIG. **2** with a charged, conductive surface **1** of FIG. **1** which is encased in high-voltage insulation **2** of FIG. **1** and extending into the Troposphere **23** of FIG. **2**.

[0027] In FIG. **1**, a series of high-voltage, starting pulses is applied across points **4** and **6** on opposite sides of a capacitor **5** to create the localized stress field **3**. As these high-voltage starting pulses are applied, the parallel resonant circuit formed by inductor coil **7** and variable capacitor **11** both referenced to ground **8** is stimulated into resonance within the bandwidth determined by the values of these circuit components. Tuning of this circuit is effected through variable capacitor **11**. The high voltage charge on conductive surface **1** of FIG. **1** is maintained by the parallel tuned circuit formed by inductor coil **7** and variable capacitor **11**.

[0028] Then as the random, pressure waves propagate throughout the Troposphere **23** of FIG. **2**, the localized stress field **3** of FIG. **1** is oscillated by the compression wave front **12** and the decompression wave front **13**—both of FIG. **1** which creates voltage changes on capacitor **5**.

[0029] In FIG. **1**, the resulting voltages changes on capacitor **5** will add energy to the parallel resonant circuit formed by inductor coil **7** and variable capacitor **11** which acts as a tank circuit to store the energy which has been passed to it. As energy builds in the parallel circuit the voltage of the circuit rises until a spark discharge occurs across the gap **9** also referenced to ground **8**. The current will only discharge in one direction as determined by diode **10**. The circuit will work

without diode **10** but a diode is used here as one method to keep from draining all the energy from the tank circuit when a discharge occurs.

[0030] This resonant circuit can be tuned to various bandwidths to maximize the efficiency of the conversion process depending upon location of the device, time of day, temperature variations, relative humidity and other variables in the ambient Troposphere **23** of FIG. **2** around the conductive surface **1** of FIG. **1**. A resistive load to extract power from the resonant circuit can be used instead of the spark gap **9** of FIG. **1**.

[0031] This preferred embodiment uses a parallel, tuned circuit to access a wide range of frequencies usually to be found in the range of 4.5 to 7 MHz. This range encompasses the major, naturally-occurring, resonant frequencies found in the ionosphere.

[0032] A second embodiment of this invention as shown in FIG. **3** replaces the parallel tuned circuit formed by inductor coil **7** and variable capacitor **11** in FIG. **1** placed in parallel to each other and referenced to ground **8** in FIG. **1**. This second embodiment forms a series tuned circuit formed by inductor coil **7** and variable capacitor **11** in FIG. **3** placed in series to each other and referenced to ground **8** of FIG. **3**. It differs from the preferred embodiment only in the placement of variable capacitor **11** of FIG. **3** so that it is in series with coil **7** of FIG. **3**.

[0033] This embodiment limits the frequency range and, hence, the energy the system will store when compared to the preferred embodiment. It produces higher voltages across the spark gap **9** of FIG. **3** than those produced in the preferred embodiment across the spark gap **9** of FIG. **1**.

1. An apparatus for coupling to the pressure waves created in the Earth's Magnetosphere and the varying D, E, F1 and F2 layers of its Ionosphere by the impacts of various high-energy particles from both our Sun and other cosmic sources.

2. An electrical circuit for harmonically converting the pressure waves described in claim (**1**) into periodic electric current discharges.

* * * * *

Perrigo Etheric Wave Accumulator

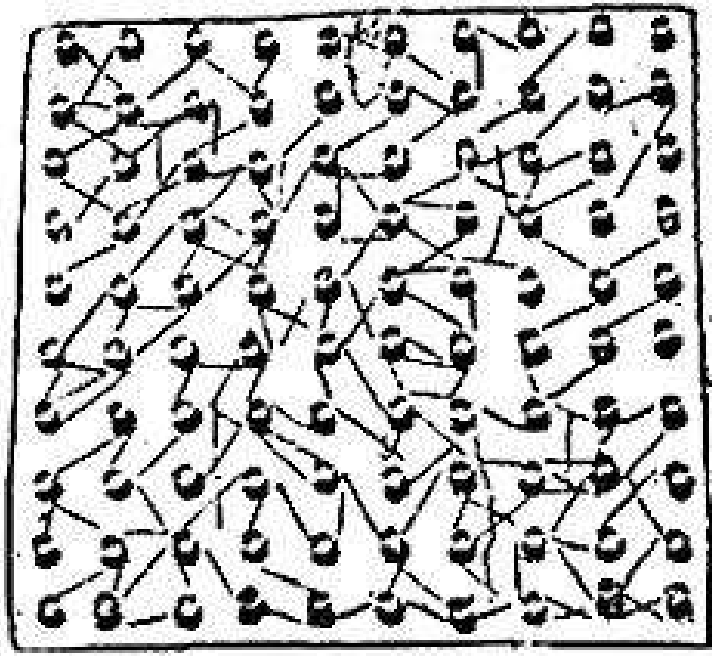

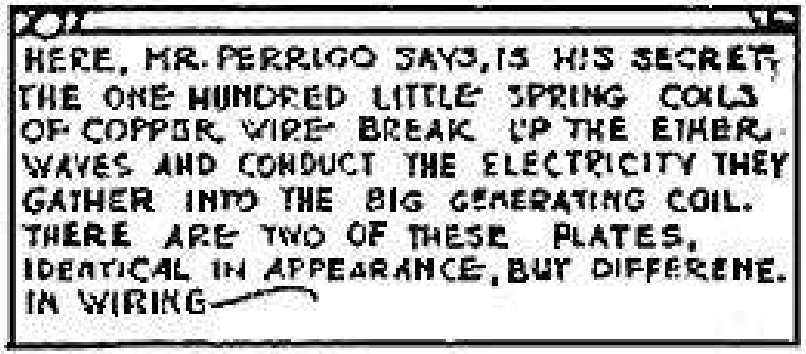

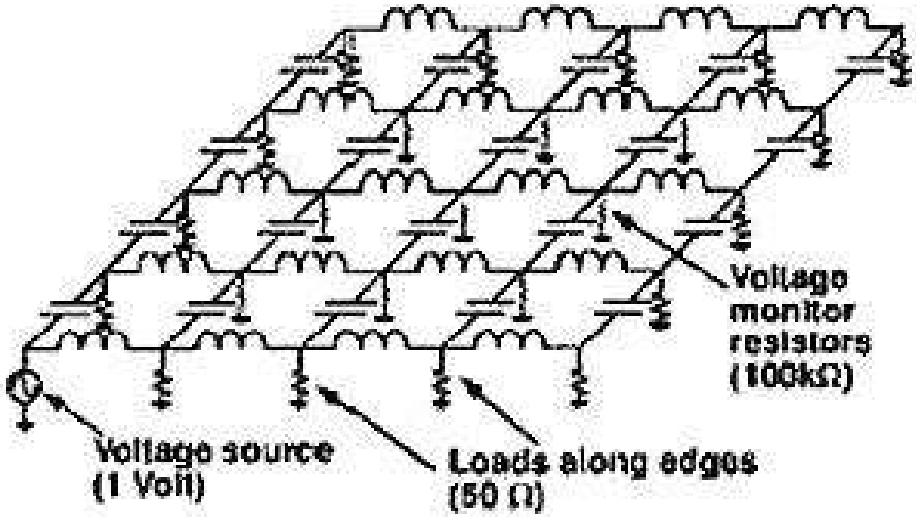

Equivalent circuit models of right-handed and left-handed transmission lines

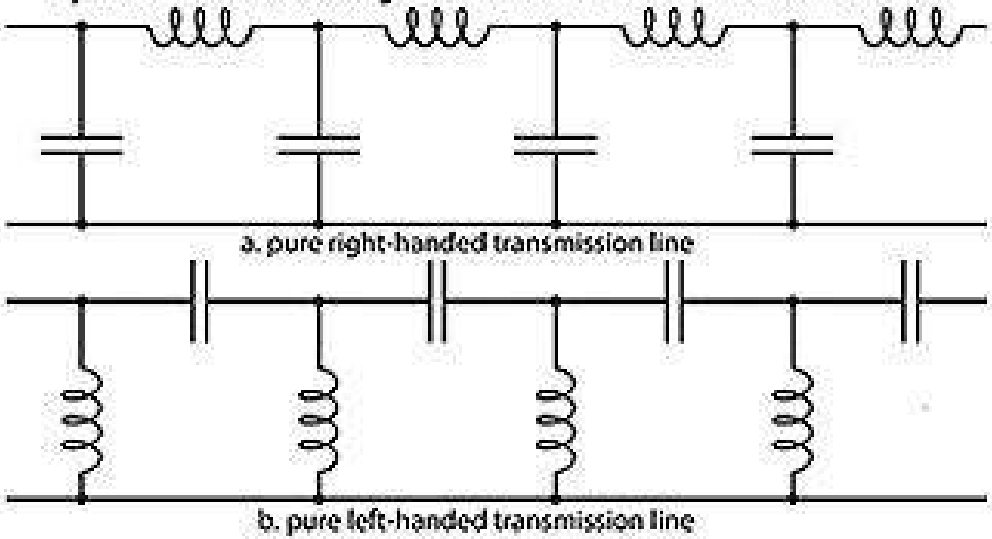

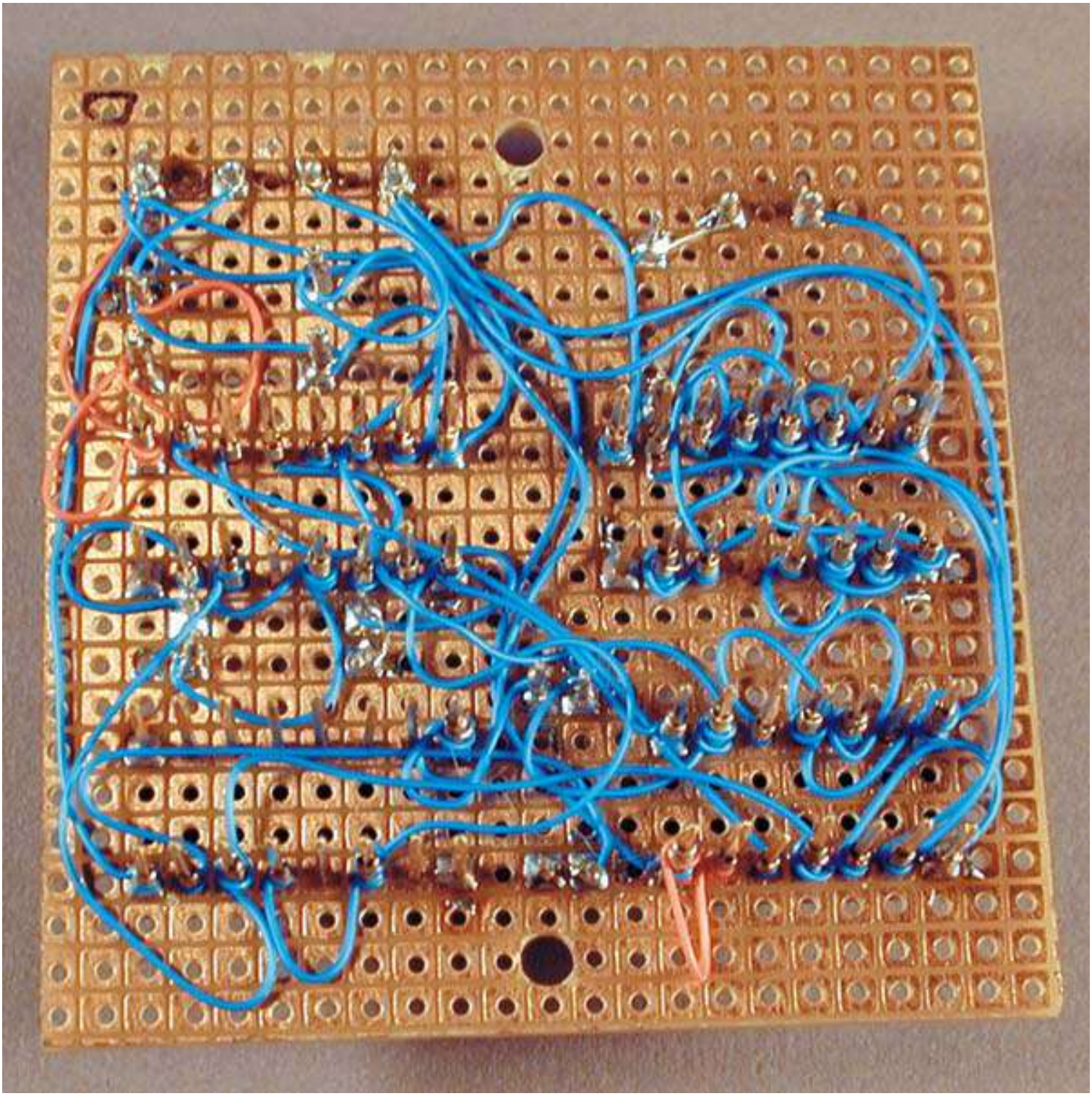

Maximize client uptime. Level up your business.
Try SolarWinds® Backup LocalSpeedVault for the fastest possible data recovery.

solarwinds msp
START YOUR FREE TRIAL!
Maximize client uptime. Level up your business.
Try SolarWinds® Backup LocalSpeedVault for the fastest possible data recovery.

solarwinds msp
START YOUR FREE TRIAL!

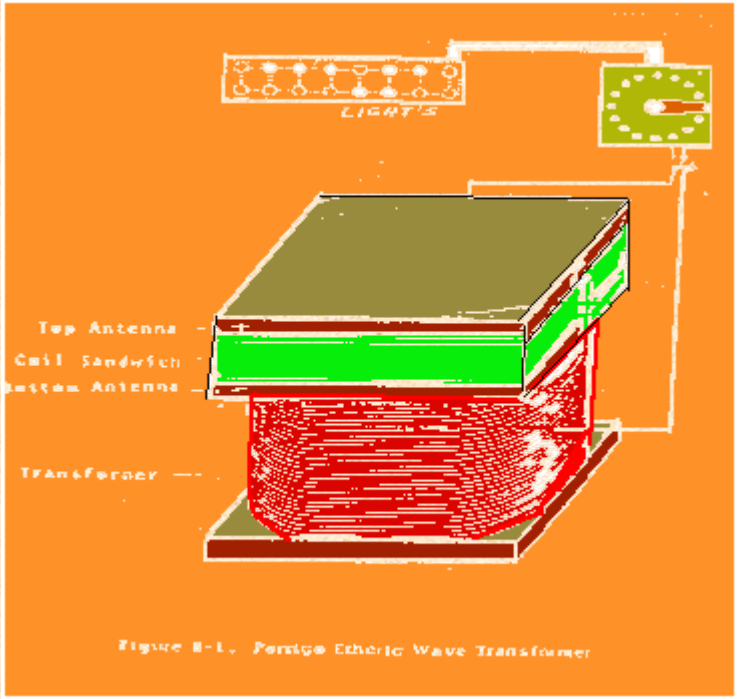

METHOD AND APPARRATUS FOR ACCUMULATING ELECTRIC ENERGY AND TRANSFORMING ETHER ELECTRIC ENERGY

Drawings by Geoff Egel ,Content Author unknown

In 1926. Harry E. Perrico claimed to have discovered a method to tap the energy from atmospherics. He even had a car which he converted to run on electricity. that was generated in his ether wave accumulator".

He applied for a patent December 31 1925 with serial number 78,715 being assigned. Perrigo's patent application Is considered a "classic" In patent law and Is listed under the classification of Perpetual Motion Machines and other Impossible Inventions.

Despite the Patent Office's attitude towards Perrico's invention, there were a number of reputable people who claimed to have witnessed his device In action producing useable electric power.

The existence of electromagnetic radiation, the modem term, or electric waves In the ether as it used to be called was known by Hertz, a research scientist who discovered the photoelectric effect

In 1887. Atmosphierics, an electrical disturbance in the atmosphere, were known to produce noises In the early radio telegraph stations, some being strong enough to drown out the received signal.

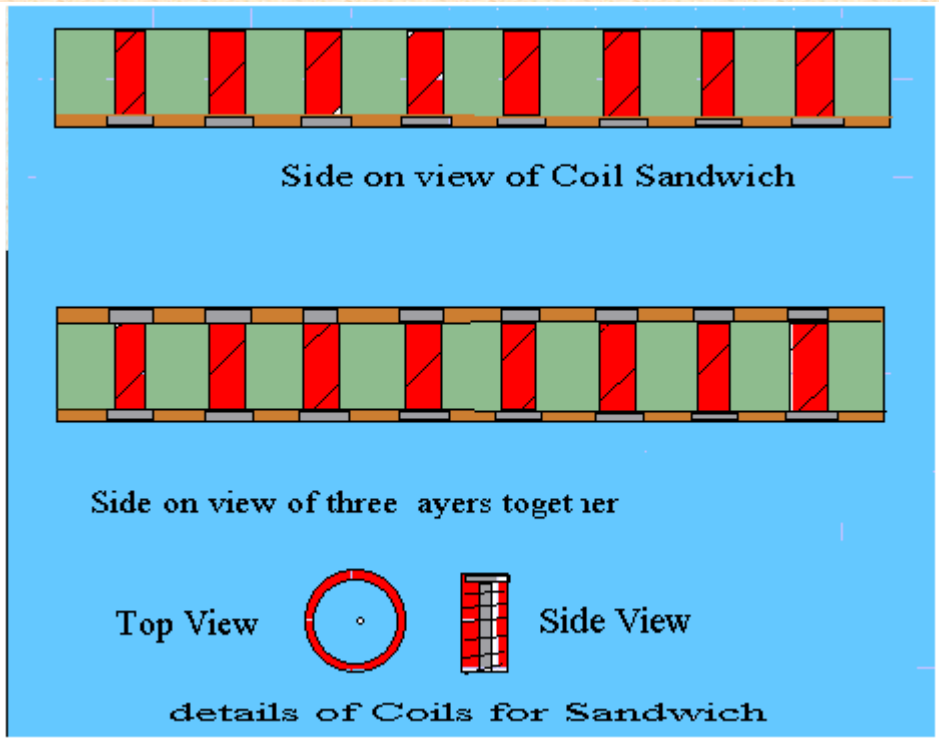

> Perrigo deduced that here was a possible source of electrical power.

All that was needed was a method of transforming the existing radiation Into useable energy. Hie claimed to have developed a mechanism to intercept and collect from the general ether field electric wave energy and to transform it into useable electromotive force.

The basic method he used was an antenna arrangement which collected and resisted the Incoming energy raising It to a high enough current level where it could be run through a special electrical transformer to further intensify the available power.

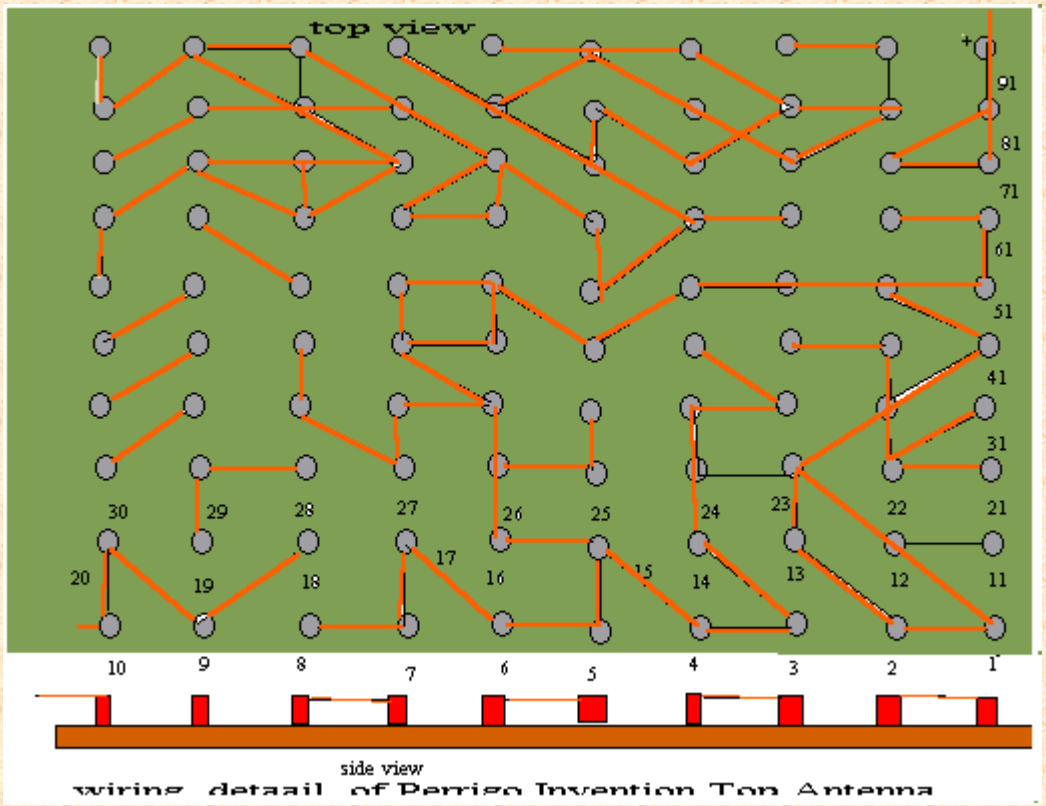

Perrigo's antenna was derived from his experiments with various wire shapes, sizes and arrangements. One of his more successful attempts was to partially pound 100 roofing nails into a board a 10 x 10 array and wrap very fine wire around each nail,making it a small electromagnet.

Then by trial and error approach he connected the ends of the electromagnets to other nails in such a way that there was a maximum voltage between the wire and the nail.. His patent application mirrored this electrical connection scheme in a more refined electromechanical approach.

Two accumulator plates were made with 100 round protruding knobs in a square 10 X 10 array

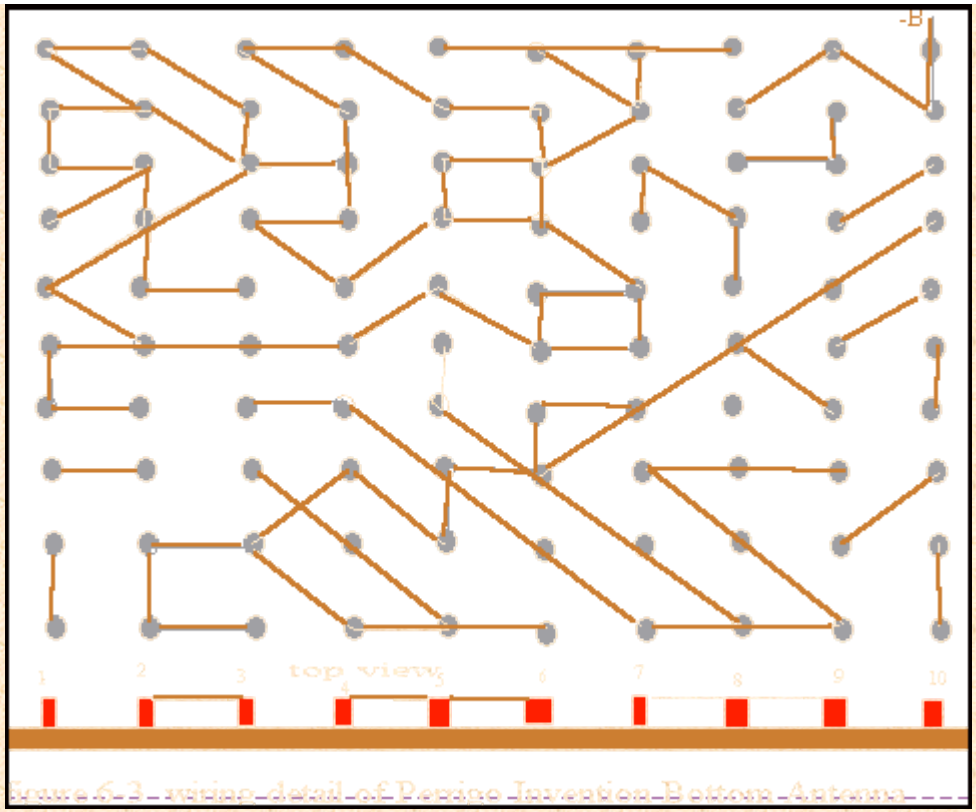

Figure 6-3 - wiring detail of Perpino Invention Bottom Antenna

The accumulator plates were then sandwiched together with an insulator material between them. The insulator had 100 holes matching the protrusions on the plates. Placed in each hole was a special coil wrapped around a bundle of wire . Once the accumulator plates were sandwiched ,a measureable electrical voltage existed between points A and B on plates one and two respectively.

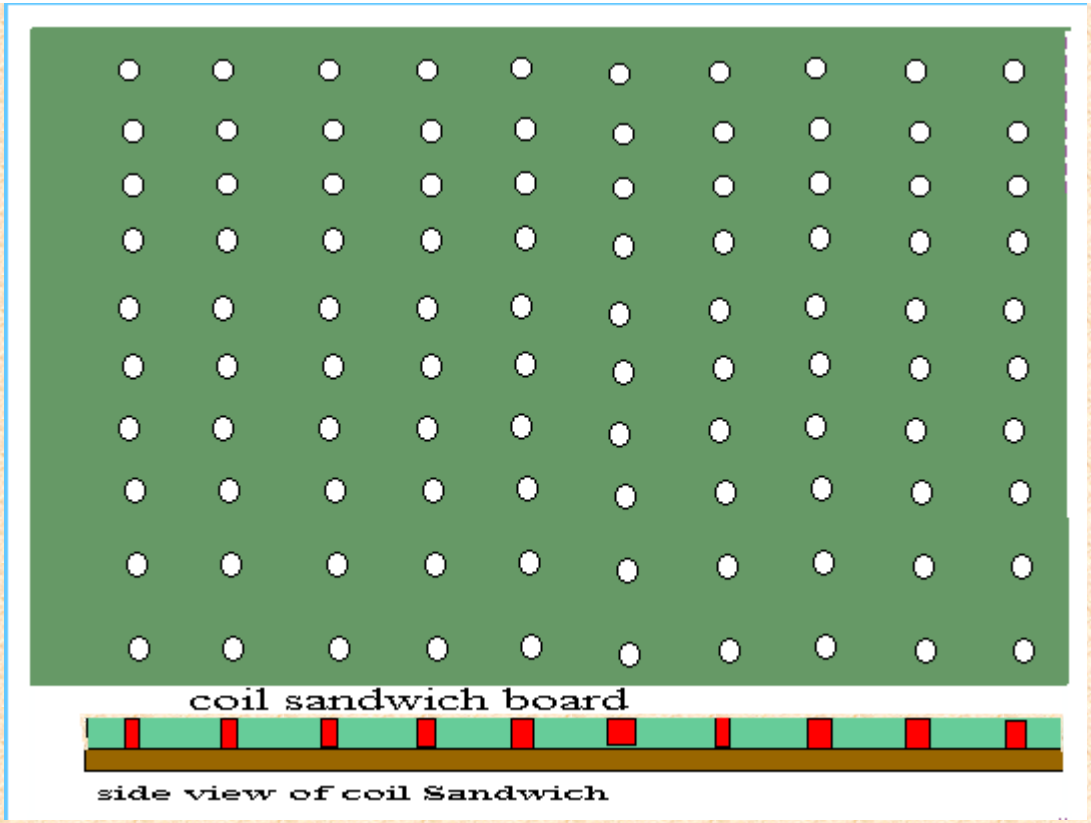

A very complicated transformer was attached to these two points.

The plates were set on top of the transformer and Perrigo claimed this arrangement enhanced the energy accumulation process.

I have no idea of what materials the plate or protrusions were made The patent drawing would lead one to believe they are the same material.

It could be a metal or a nonconductor. such as wood or a combimation. The protrusions were connected by the same wiring scheme

Previously mentioned for the roofing nail model. The connections were different for the two plates.

(See diagrams for the plates connections

egel@main.murray.net.au

Geoff Egel 18 Sturt Street, Loxton ,5333, South Australia ,Australia

Join the Energy 21 newsgroup and mailing list today

FREEBIES

Latest Additions

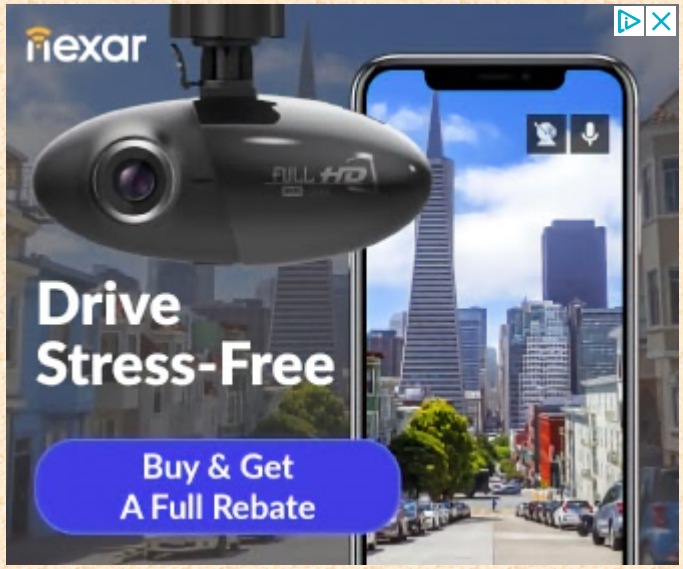
nexar
Drive
Stress-Free
Buy & Get
A Full Rebate

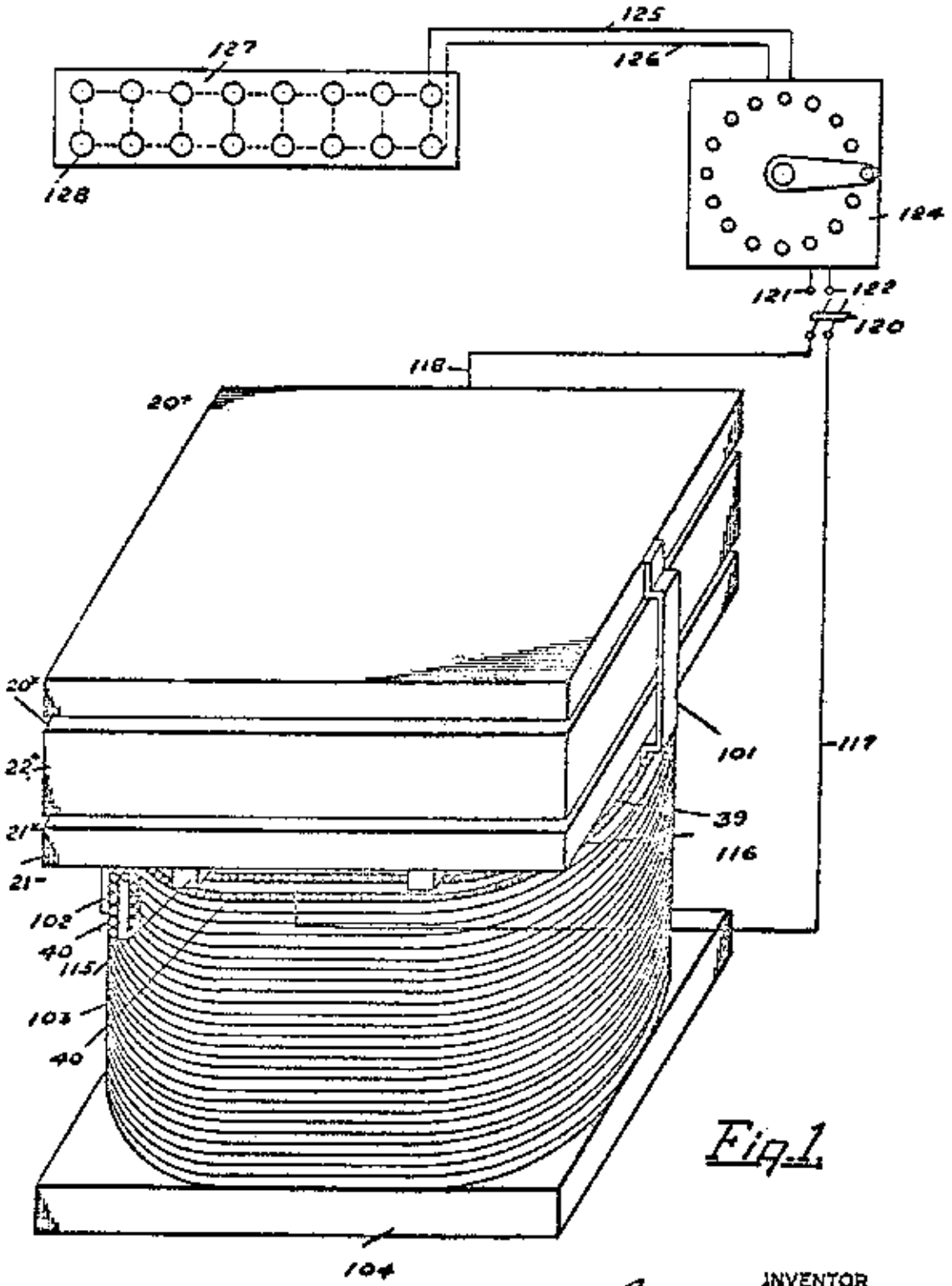

Fig. 1

INVENTOR
Harry E. Pierce
BY
Richards & Manning
ATTORNEY

Fig. 2.

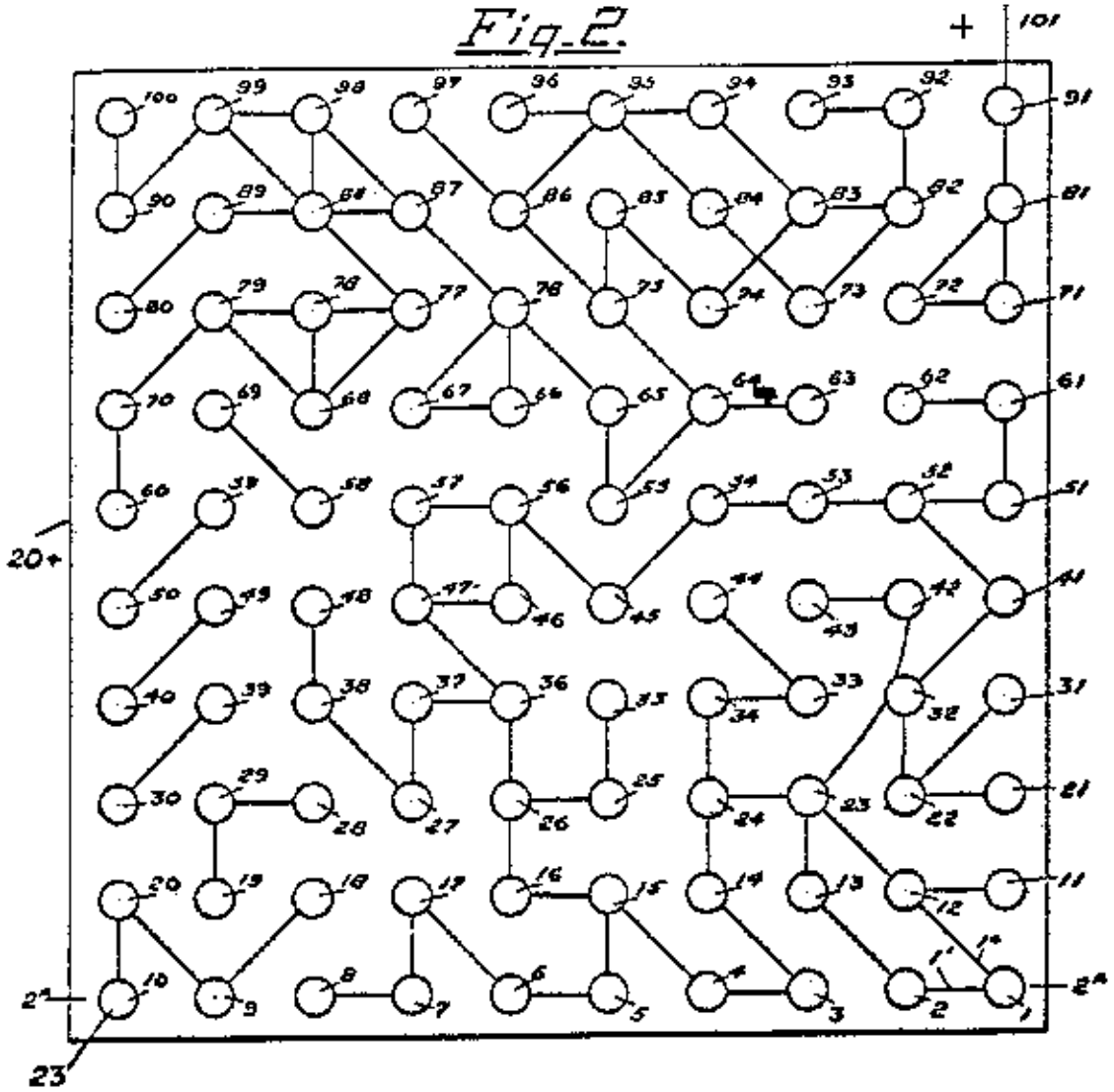

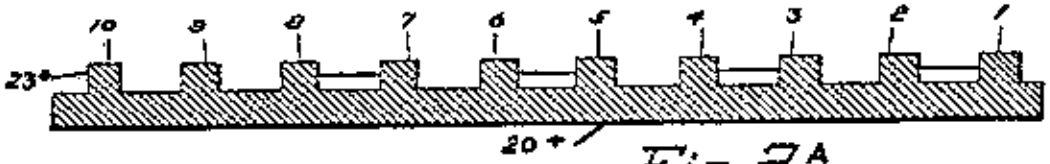

Fig. 2A

INVENTOR.
Harry E. Perrigo
BY
Robert Manning
ATTORNEY.

Fig. 3.

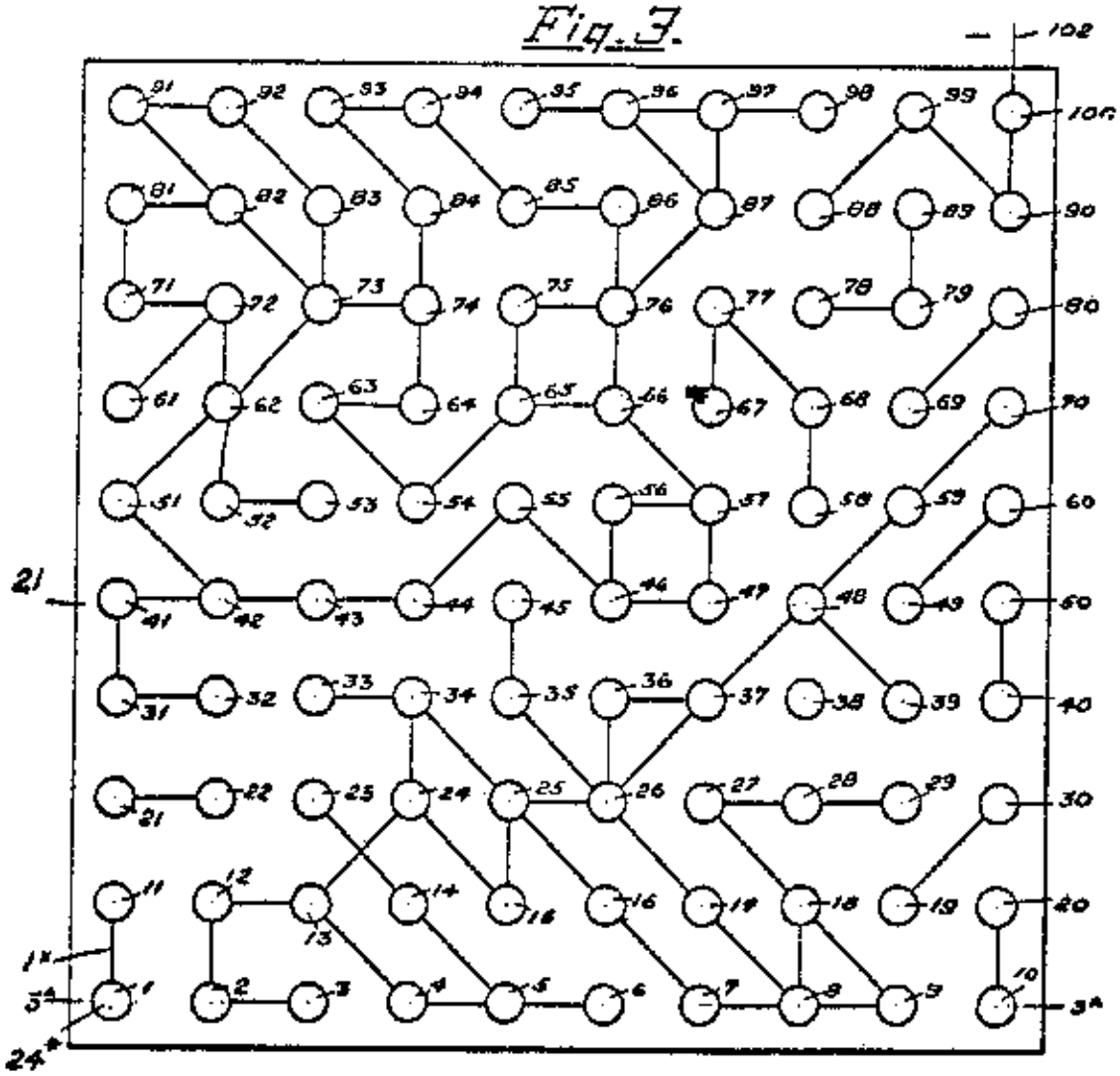

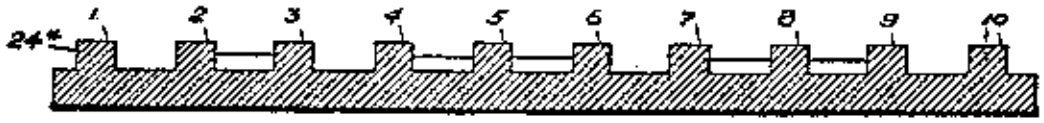

Fig. 3A.

INVENTOR.
Harry E. Perrigo
BY Richard H. Manning
ATTORNEY.

Fig. 4.

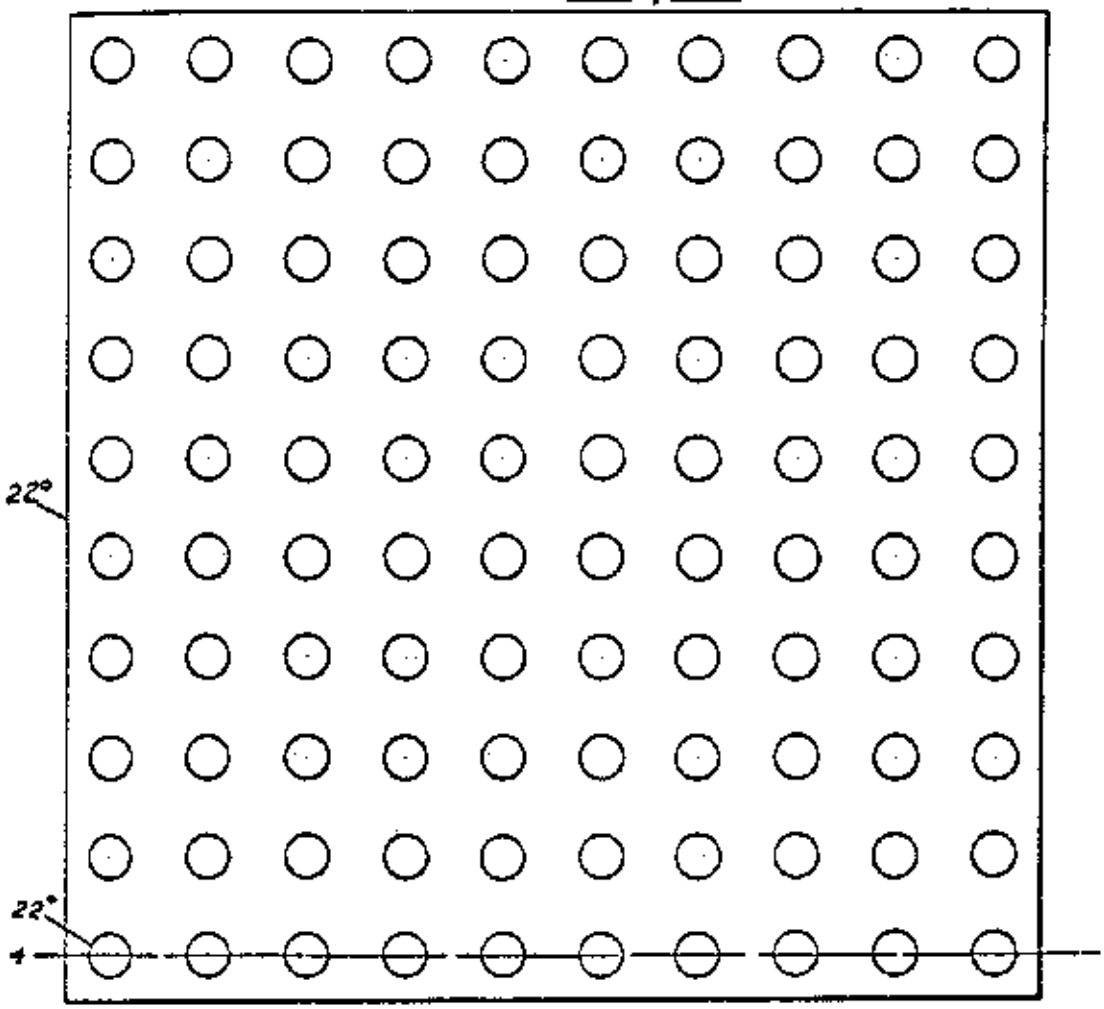

Fig. 4A

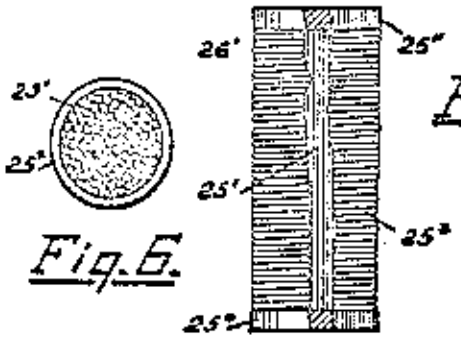

Fig. 5.

Fig. 6.

INVENTOR.
Harry E. Perrigo
BY
Richard Manning
ATTORNEY.

Fig. 7.

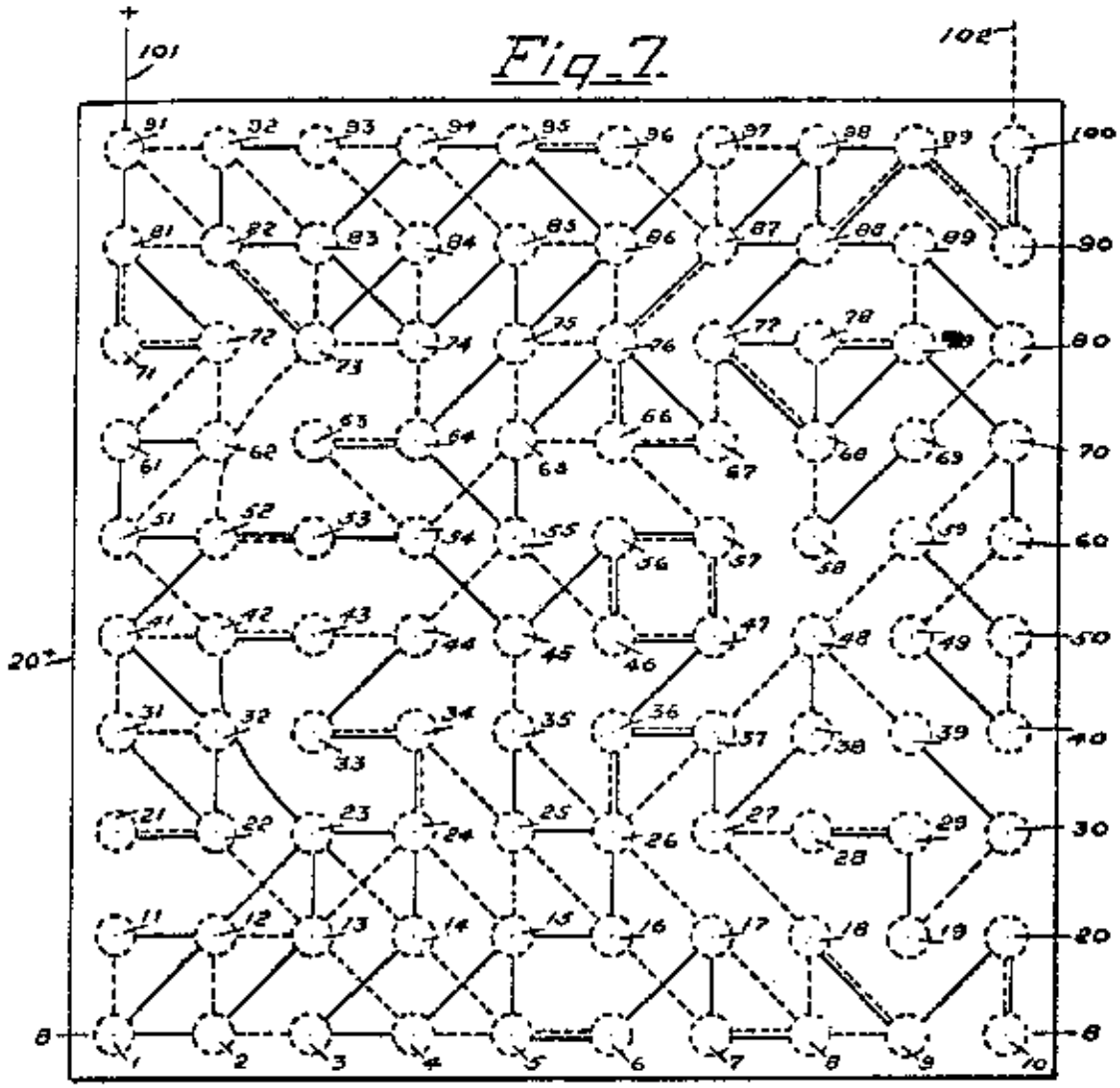

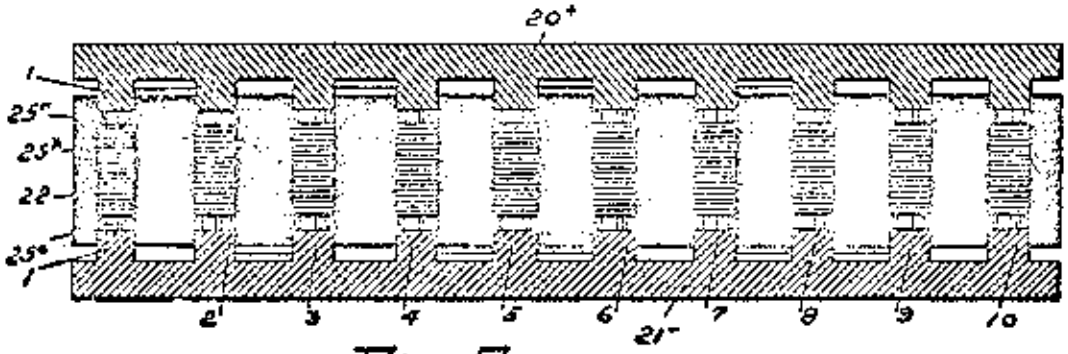

Fig. 8.

INVENTOR
Harry G. Pirrigo
BY
Richard H. Manning
ATTORNEY

Fig. 9

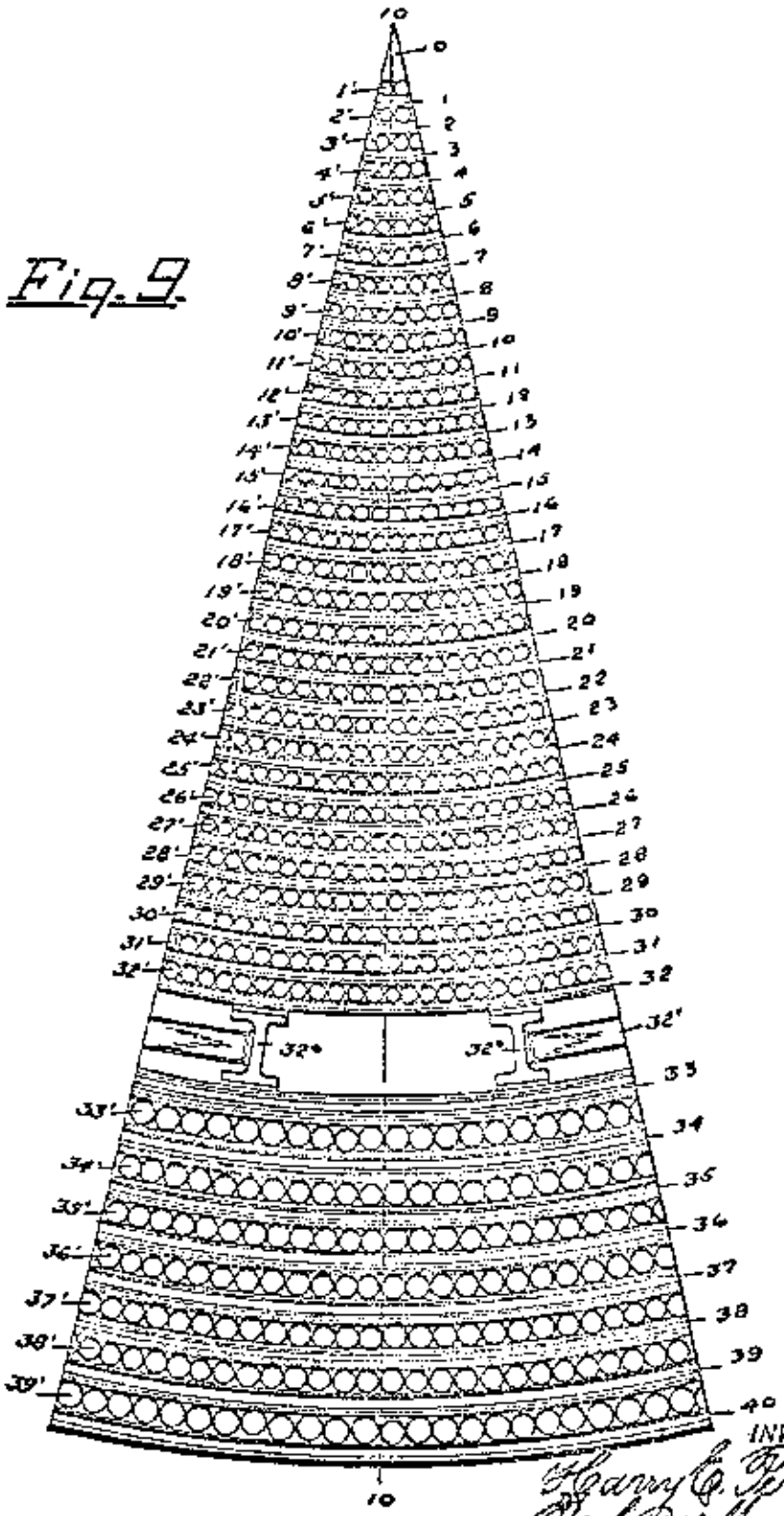

INVENTOR.
Harry C. Perrigo
Fick & Manning
ATTORNEY

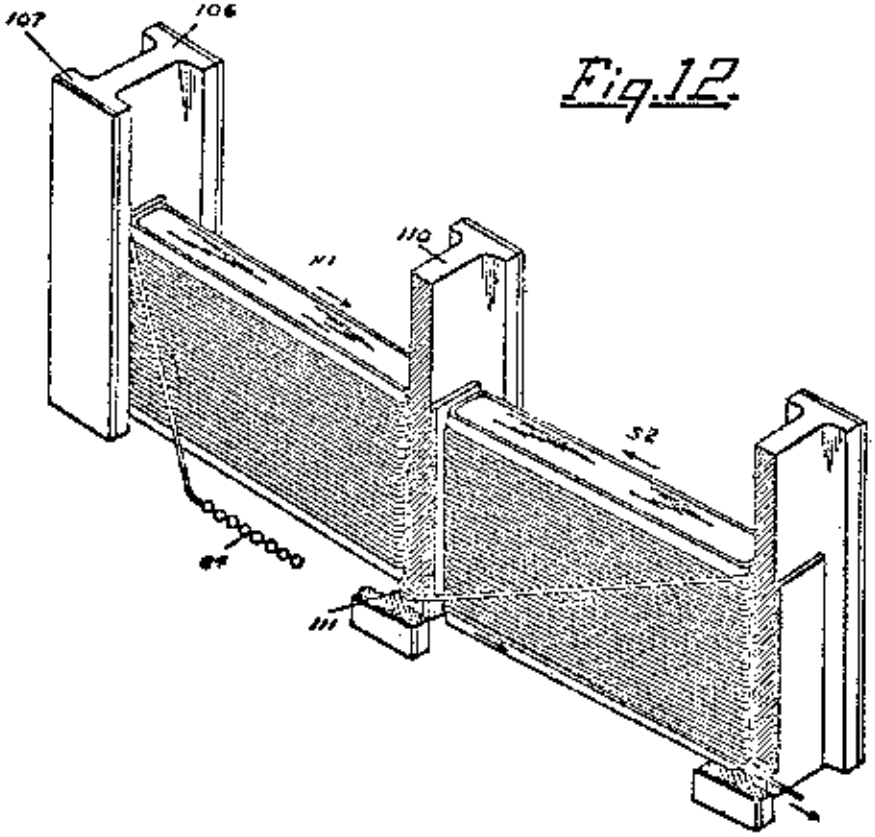

Fig. 12.

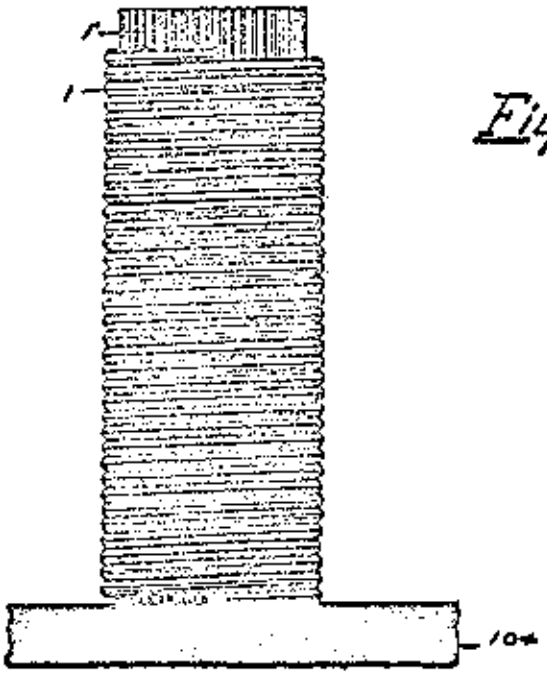

Fig. 9A

INVENTOR
Harry E. Perrigo
BY
Richard R. Manning
ATTORNEY

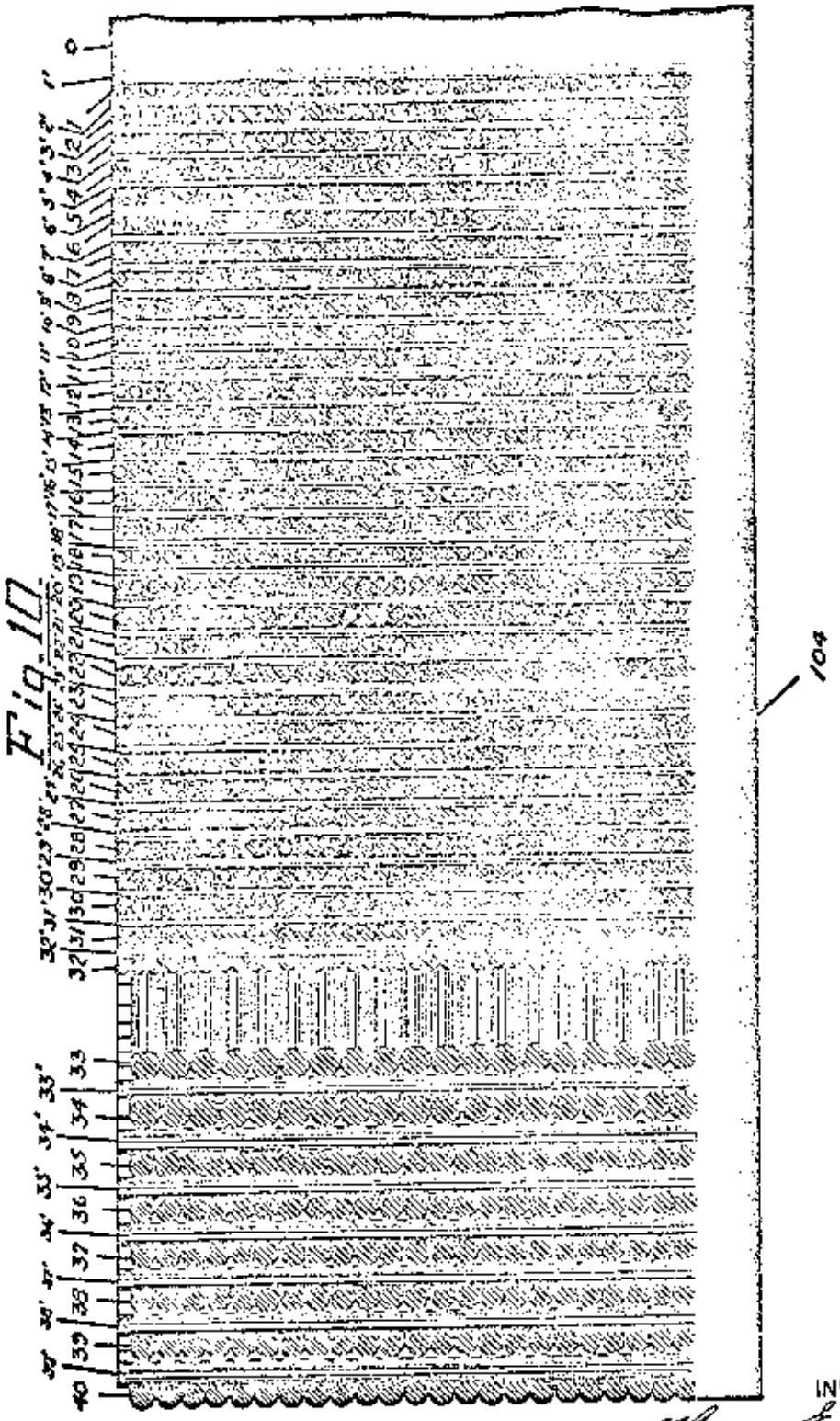

Fig. 10

INVENTOR
Harry E. Perrigo
BY
Robert W. Manning
ATTORNEY

Fig. 11.

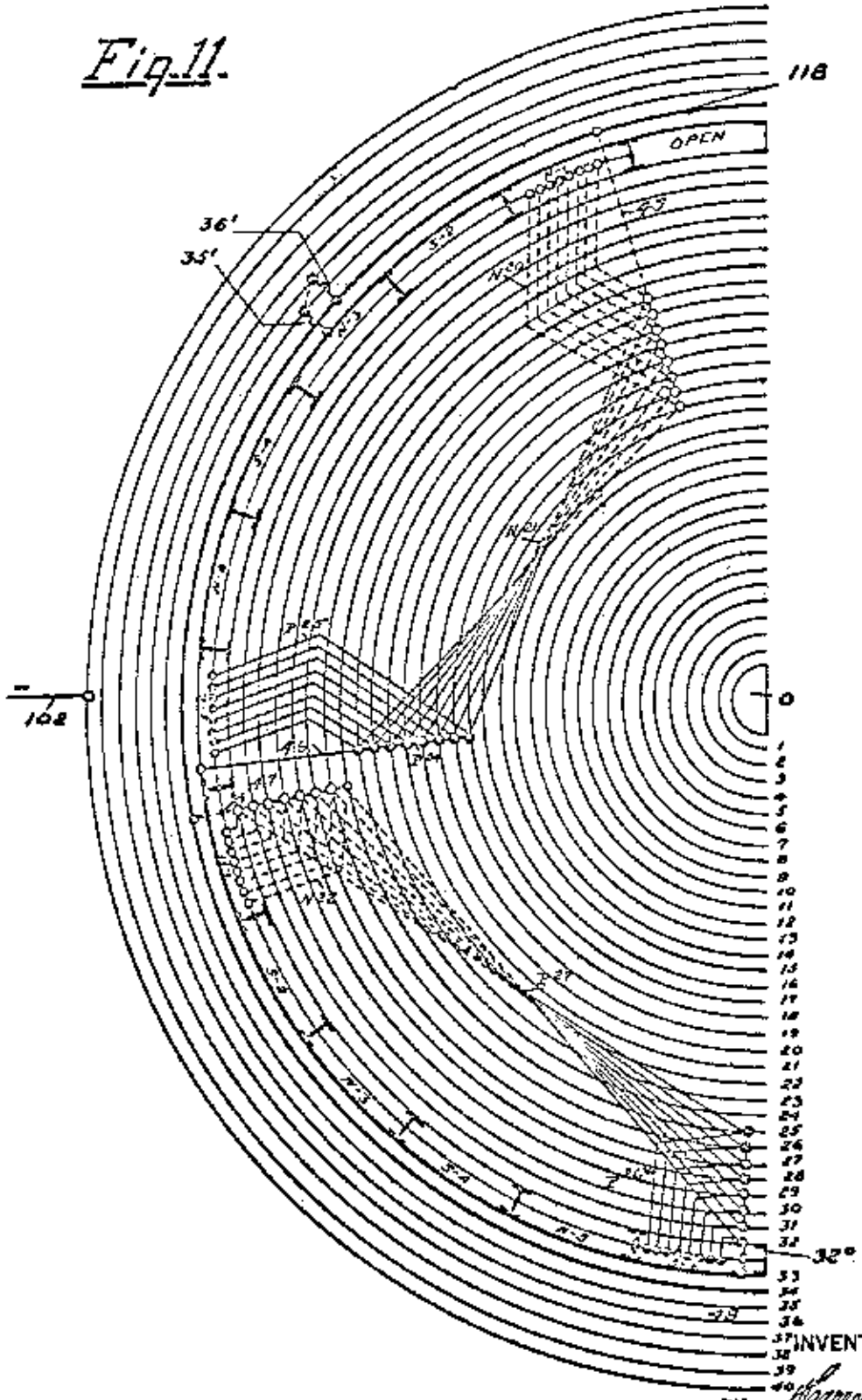

INVENTOR
Harry E. Perrigo
BY
Richard H. Mannelly
ATTORNEY

Fig. 11A

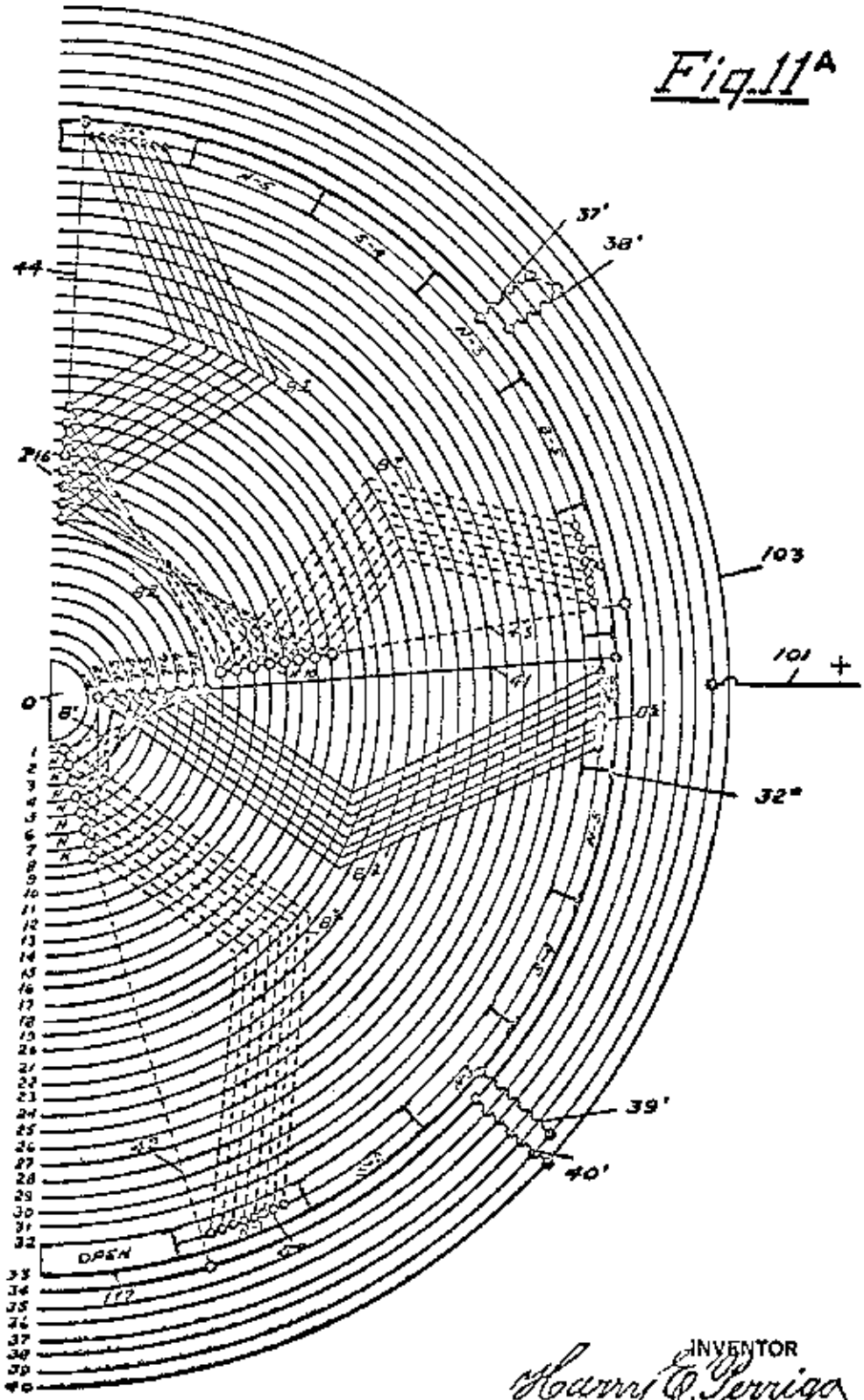

INVENTOR
Harry E. Perrigo
BY
Richard H. Manning
ATTORNEY

Department of Commerce, United States Patent Office

To all persons to whom these presents shall come, Greeting:

This is to certify that the annexed is a true copy from the records of this office of the Record for the United States Court of Customs and Patent Appeals in the matter of the Pending Application of Harry E. Perrigo, filed December 31, 1925, Serial Number 78,719, for Improvement in Method and Apparatus for Accumulating and Transforming Ether Electric Energy.

In testimony where of I have hereunto set my hand and caused the seal of the Patent Office to be affixed, at the City of Washington, this first day of March, in the year of our Lord one thousand nine hundred and thirty,(1930) and of the Independence of the United States of America the one hundred and fifty-fourth.

(Seal Patent Office, United States of America.)
THOMAS E. ROBERTSON, Commissioner of Patents.
Attest: D. E. WILSON, Chief of Division.

Application of Harry E. Perrigo. Serial No.78,719. Filed December 31, 1925.

Method and Apparatus for Accumulating and Transforming Ether E1ectric Energy Specification

To all whom it may concern:

Be it known that I, Harry E. Perrigo, a citizen of the United States, residing at Kansas City, in the county of Jackson and State of Missouri, have invented a certain new and useful Method and Apparatus for accumulating and transforming Ether Electric Energy, of which the following is a complete Specification.

The existence of electric waves in the ether has been shown by Hertz. Electric disturbances in the atmosphere known as "atmospherics" are known to produce noises in the telephones of wireless, telegraph stations which in some cases drown the signals being received. Ether wave electric potential is also recognized in various forms which are known to cause disturbances in the normal operation of electric transmission and telephone systems. These forms of electric wave possess potential energy, or capacity for doing work and are commonly described as a peculiar state or stress of a medium called ether.

The waves used in all known systems of utilizing ether waves, as for example in wireless telegraphy, are Hertzian waves artificially propagated by means of electrical apparatus.

Except when manifest as a force in electrical disturbances, the existing ether waves with an unknown potential heretofore have never been intercepted or collected and transformed into forms of electric energy suitable for doing useful work, previous to my invention and discovery of a method and apparatus for the same. By my invention electric power or energy is obtained for all purposes with out expense other than that of my method and apparatus involved and hereinafter described, for receiving and transforming this electric energy.

The invention as premised has for its objects:

First; To intercept and collect from the general ether field electric wave energy and to transform said electric energy into a form of a distributable, measurable, electromotive force.

Second; To raise the potential of these collected electric waves to a pressure sufficient for applying said waves to practical uses.

Third; A method of intercepting and transforming an electromotive force directly from the ether wave medium.

In describing the procedure of carrying out my invention, and the details of the apparatus, in one form of illustration, which form has been fully demonstrated as being capable of intercepting and transferring electric wave energy, reference is now had to the accompanying drawings, in which Figure 1 is an isometric view showing the electric wave interceptor or collector mounted upon the electric transformer, also showing the current distributing connecting wires leading to a rheostat and to a series of incandescent lighting lamps.

Figure 2 is an inverted plan view of the top or positive plate of the wave interceptor, or collector, showing the series of aerial terminals or contacts and the broken or dead end or open circuit (hereinafter in most cases called "broken circuit") connections with the contacts.

Figure 2A is a transverse sectional view taken through the collector aerial plate, and the terminal contacts taken on line 2A--2A of Figure 2.

Figure 3 is a plan view of the lower aerial plate of the wave collector, showing the aerial terminal contacts, and the broken circuit connections.

Figure 3A is a transverse sectional view of the lower collector plate and the terminal contacts taken on the line 3A--3A of Figure 3.

Figure 4 is a perforated member made of insulating material for containing the resistance coils between the, upper and lower aerial plates, showing the top member or cap of each resistance coil of the series.

Figure 4A is a transverse sectional view of the insulating member shown in Figure 4, taken through the series or perforations lowest in position in the member, on the line 4--4 of Figure 4, and shows the resistance coils in full lines.

Figure 5 is an enlarged detail side view of one of the resistance coils which are located in the insulated member shown in Figure 4.

Figure 6 is an end view of one of the resistance coils with the cap removed.

Figure 7 is a diagrammatic view of the electrical connections between the resistance coils mounted between upper and lower aerial plates.

Figure 8 is a transverse vertical sectional view of the complete ether wave collector, taken on the line 8--8 in Figure 7.

Figure 9 is a segmental plan view of the other wave transformer, showing the coil windings.

Figure 9A shows one of the field coils in end elevation.

Figure 10 is a vertical sectional view of the ether wave transformer and the coil windings taken on the line 10--10 of Figure 9.

Figures 11 and 11A are diagrammatic views of the two halves of the complete coil windings of the transformer, show- the coil windings, the cores of the windings not being shown, these halves being in separate views to facilitate showing the detail to a larger scale.

Figure 12 is a detail side view of the insulated bridges in the air gap of the transformer, and the reversed field windings, as they appear between the bridges, except where marked "open".

Referring to Figures 2 and 3, the upper metal plate 20+ and the lower metal plate 21- constitute the aerials of my system of ether wave electric energy collectors, and the terminal contacts 23 on the plate 20+ and the terminal contacts 24* on the plate 21- are shown connected diagrammatically by the electrical conductors of the system.

In the present illustration are shown one hundred terminal contacts, this number corresponding to the number of contacts 23, on the aerial plate 20+, and a corresponding number of terminal contacts 24* on the plate 21-, the terminal contacts or posts 23 and 24* on the respective plates being spaced equal distances from each other in rows of ten contacts in the direction of the length and width of the respective plates, and therefore have corresponding registering positions with each other.

The system of electric wave potential activity in my invention is embodied. in the rapid changes in polarity of broken electric circuits, and such a systematic. arrangement of the broken circuits as will cause the ether wave potential to seek a path of lowest conductivity and not overload any one conductor, and as an example of the operation of the system the current path will be electrically traced, and the transmission of the ether wave potential followed from the source of collection to a definite electric wave energy circuit.

Let 20+ indicate, with its terminal contacts, the positive source of permeability and conductibility of recognized waves of ether, which invariably act from a north to a south pole. To equalize the general dispersion of these recognized waves of ether for the purpose of effecting polarization of the potentials of the ether waves, the ether waves are broken and with the change in direction of the wave potential, an electric potential is produced, and the waves of ether are conducted from contact to contact through a system. of wiring found, by discovery, and demonstrated to be practical in operation, which produces electric energy or electromotive force between the plates 20+ and 21-, and which plates may be compounded or duplicated.

The system of broken electric circuits which provides means of obtaining the wave potential, is embodied in the system of wiring of both plates 20+ and 21-, and in the transmission of electric waves and change in polarity during their transmission from contacts on the plate 20+ to the contacts on the aerial plate 21-, the method of ether wave conductivity being absolutely collective and accumulative, showing that the difference of electrical pressure as discovered in my system is the source of electromotive force between the ether wave collecting plates 20+ and 21-.

The system of wiring of the plate 20+ will now be particularly described. It has been found that fluctuations constantly exist in the collective capacity of the aerial plates 20+ and 21-.

Following the diagram of winding on the inverted top plate 20+ shown in Figure 2, the aerial terminal contacts are numbered in succession, from one to ten, beginning at the right hand end of the lower row, then for the next row from 11 to 20, beginning at the right hand of the plate, and so on to the upper row, which is numbered in the same direction from 91 to 100.

The wire connections on the top plate 20+, Figure 2, are through a conducting wire 1`, one terminal of which is connected with the contact 1, and the other terminal with the terminal contact 2, and also from the contact 1, by the wire 1°, with contact 12.

Contacts 2 and 13 are similarly connected. A similar connection extends from contact 3 to contact 14. A similar connections are made from contact 3 to contact 4, from 4 to 15, 5 to 6, 5 to 15, 6 to 17, 7 to 8, 7 to 17, 9 to 18, 9 to 20, 10 to 20, 11 to 12, 12 to 23, 13 to 23, 14 to 24, 15 to 16, 16 to 26, 19 to 29, 21 to 22, 22 to 31, 22 to 32, 23 to 24, 23 to 32, 24 to 34, 25 to 26, 25 to 35, 26 to 36, 27 to 37, 27 to 38, 28 to 29, 30 to 39, 32 to 41, 32 to 42, 33 to 34, 33 to 44, 36 to 37, 36 to 47, 38 to 48, 40 to 49, 41 to 52, 42 to 43, 45 to 54, 45 to 56, 46 to 47, 46 to 56, 47 to 57, 50 to 59, 51 to 52, 51 to 61, 52 to 53, 53 to 54, 55

to 64, 55 to 65, 56 to 57, 58 to 69, 60 to 70, 61 to 62, 63 to 64, 64 to 75, 65 to 76, 66 to 67, 66 to 76, 67 to 76, 68 to 77, 68 to 78, 68 to 79, 70 to 79, 71 to 72, 71 to 81, 72 to 81, 73 to 82, 73 to 84, 74 to 83, 74 to 85, 75 to 85, 75 to 86, 76 to 87, 77 to 78, 78 to 88, 78 to 79, 80 to 89, 81 to 91, 82 to 83, 83 to 92, 83 to 94, 84 to 95, 96 to 96, 86 to 97, 87 to 88, 87 to 98, 88 to 89, 88 to 98, 88 to 99, 90 to 99, 99 to 100, 92 to 93, 94 to 95, 95 to 96, 98 to 99.

The lower plate 21-, as seen in Figure 3, includes the upwardly extending terminal contacts precisely the same in number and position as upon the plate 20+, the contacts being numbered in successive order from 1 to 100 reversed as to the same characters on the plate 21-, and beginning with the contact at the lower row of contacts and at the left hand corner of the plate 20+ and indicating said contacts 1-2-3-4 and so on to 10, then beginning at the left and numbering from 11 to 21 and continuing in said order to the upper row which are numbered from 91 to 100.

The wiring system of. plate 21- is in broken circuits, as on the plate 20+, the direction of the wires being traced from the contacts at which the terminals of a broken circuit ends, and which will now be tabulated, the ether wave conducting broken circuit wires being charged from their respective aerial contacts.

The wires are traced on the plate 21-, from terminal contact 1, through a straight wire 1^x having one terminal integral with the contact and its other terminal connected directly with the terminal contact 11.

Then through like conducting wires connections are made from contact 2 to contact 3- and from contact 4 to contact 5-, contact 4 to 13, 5 to 6, 5 to 14, 7 to 8, 7 to 16, 8 to 9, 8 to 17, 8 to 18, 9 to 18, 10 to 20, 12 to 13, 13 to 22, l3 to 24, 14 to 23, 15 to 24, 15 to 25, 16 to 25, 17 to 26, 18 to 27, 19 to 38, 21 to 22, 24 to 34, 25 to 34, 26 to 35, 26 to 36, 26 to 37, 27 to 28, 28 to 29, 31 to 32, 31 to 41, 33 to 34, 35 to 45, 36 to 37, 37 to 48, 39 to 48, 40 to 50, 41 to 42, 42 to 43, 42 to 51, 43 to 44, 44 to 55, 46 to 47, 46 to 55, 46 to 56, 47 to 57, 48 to 59, 49 to 60, 51 to 62, 52 to 53, 54 to 63, 54 to 65, 56 to 57, 57 to 66, 58 to 68, 59 to 70, 61 to 72, 62 to 73, 63 to 64, 64 to 74, 65 to 66, 65 to 75, 66 to 67, 66 to 76, 67 to 77, 68 to 77, 69 to 80, 71 to 72, 71 to 81, 73 to 74, 73 to 82, 73 to 83, 74 to 84, 75 to 77, 76 to 86, 76 to 87, 78 to 79, 79 to 89, 81 to 82, 82 to 91 83 to 92, 84 to 93, 85 to 96, 85 to 94, 87 to 96, 87 to 97, 88 to 99, 90 to 100, 90 to 99. Where there is no outgoing wire from one to another terminal contact, a broken circuit occurs on both upper and lower plates.

Between the plate 20+ and plate 21- is an insulated member 22° composed of a block of fibrous material in which are a series of vertical openings 22^x, these openings being the same in number as the contacts on the plates 20+ and 21- and in the same vertical positions, so that there is an exact registration of openings and terminal contacts.

In these openings, are the series of transmission resistance coils 25^x, one of which is shown enlarged, for illustration, in Figures 5 and 6.

These coils are composed severally of a series of straight wires 25*, starting from a group of central wires around. which other wires are wound, to form a body slightly less in circumference than the openings 22’ in the fibre block 22°. At the upper ends of the wires 25 is attached a copper metal cap 25", and at the lower ends a metal cap 25°.

Around these wires, beginning close to the top plate 25`, fine insulated wire 26` is connected at one end to one of the wires 25*, and the other end coiled about the collected wires 25* winding the wire to the right and its terminal secured at its lower end to the same upright wire 25* from which the winding wire started thus forming a resistance coil, its right hand winding of the coil, as seen in Fig. 4A and 5, being upon coils in which a resistance is interposed between the contacts from a north to a south pole transmission of the electric wave potentials, and these coils arranged in the series being positioned, in the fibre block, as seen in Fig. 4A, the change of the polarity of the wave potentials being through the short circuit wires on the plates 20+, 21-, so that wherever the short circuit occurs there is a rapid change of polarity, the activity being greatest in the coils of the least resistance.

Each resistance coil is of a determinate length, and, as seen in Fig. 4A, leaving a space of the approximate distance from the cap plate 25" upwardly to the line of the upper surface of the insulated member 22° co-equal with the posts or terminal contacts 23" on the aerial plate 20+, and from the line of the cap 25° on the lower end of the resistance coils, to the lower surface of the insulated member 22° similar spaces are provided, so that when the upper and lower plates are assembled, the posts or contacts 23* on the upper plate 20+ enter the spaces and come into contact with the caps 25" of the respective resistance’ coils, and the terminal contacts or posts 24* enter the spaces beneath the lower caps 25° of the respective resistance coils, and come into contact therewith, as seen in the sectional view in Fig. 8, leaving between said plates and the insulated member, passages 20^x, 21^x, for air gaps, respectively.

When thus assembled, the groups of broken circuits of the plate 20+ contain an electric potential opposed to the electric potential contained in the group of broken circuits of the plate 21-. As these electric potentials are waves of impulse from a south to a north pole intensity, and there is a constant polarization and depolarization of the electric ether waves, in other words, a pressure sufficient to cause an electromotive force is discovered in the field of the plates 20+, 21-.

A force existing in space and collected therefrom, is the supreme power residing in the electric potential, in an interrupted path, with a rapid change of potentials, and has been utilized in my invention, and its development is further illustrated in Fig. 7 of the drawings, which show the plates 20+, 21-, in their relative opposite positions, and with the contacts on the respective plates 20+, 21=, in contact with the caps of the respective resistance coils, the plate 20+ being prismatic, showing the posts or terminal contacts on the said plate, and broken, circuits on both plates 20+, 21-, the wire connections on the plate 21- being shown in dotted lines.

Let the resistance coils 25^x, of the collector, in electrical connection with the contacts 1--1 on the respective plates 20+, 21-, indicate the lines of force passing from contact to contact, the said plates 20+, 21-, with their contacts being the terminals of serials through which the electric ether is collected. The winding of these coils are all similar and wound so that the flow of the medium around the coils is from the upper terminal of the coil, which is a north pole, and toward the lower terminal or south pole.

The aerials collect and transmit a flow of the ether or wave energy through the conductors from what ever direction the potentials of the ether are collected, and obtain a pressure of sufficient force to effect a movement in the direction of the least resistance from north to south, through the resistance coils 1 to 100, transmitting a flow of the ether medium or wave energy between all of the contacts on the plates 20+, 21-, the flow being governed by the lines of the least resistance, there following two pressures between the north and south poles of the first coil, the pressures being of opposite potentials, and caused by the opposite polarity of the coils, and the electromotive force thus produced between the plates 20+, 21-, is constant, one line of force being broken by a line of force of a different potential, and these forces all tending toward a common polarity, while producing an electromotive force, in the opposing resistances of these opposite wave potentials.

The method of obtaining electric energy as above described, resides in reciprocal lines of force being established by means of such broken circuits and resistances, as are found by practical results to produce an amperage of current or wave energy, and as the action of the collective broken circuits with reversed polarities produce positive electromotive force, the outgoing conductor 101, leading from the aerial terminal contact 91 on the plate 20+ and the outgoing conductor 102 from the aerial terminal contact 100 on the aerial plate 21-, are connected to the outer magnetizing coil windings of the ether wave transformer, and electric energy is thus obtained.

The amperage of the current or electromotive force collected or accumulated by the ether wave collector is of low intensity, and for the purpose of increasing this intensity, so that the electromotive force may be brought up to a commercial standard, this force is collected and regenerated, one factor being supplemented by another, until the electromotive force is built up to the standard of electromotive force required; that is, the principle within the collector (in the collection of the electromotive force) is applied in a larger degree to the ether transformer, the transformer being the adjunct to the collector, one feeding a low potential to the transformer, which increases this potential of the collector to a higher potential, a dependency existing in the ether transformer upon the collector.

This ether wave transformer 103 is designed with a series of outer magnetizing circuits, which are charged by electricity from the collector, which energize series of inner cores to a greater or less magnetic density, the inner cores being insulated by an air gap from the outer magnetic circuit, and electric current being generated in the central coils, the current flowing through the various coils responding upon the reaction in each circuit, which reaction is least in coils 1 to 8 inclusive, Fig. 11A, and greatest in coils 25 to 32 inclusive.

The formation of these central coils will now be defined with reference to Figs. 9-10-11 and 11A of the drawings, Figs. 11 and 11A being read together, the connections being shown in full lines at the top of the coil, and in dotted lines at the bottom.

With reference to the plan views of the enlarged segmental portions of the coil, in Figs. 9 and 10 of the drawings, respectively, it will be observed that these views show the windings and the vertical wires or cores, while the diagrammatic views 11 and 11A omit these vertical wires, in order to better illustrate the controlling equalizing reactances, by means of which the electric output of the ether wave transformer is increased to the full load required.

All of the windings of the coil 103 are concentric with a central fibre core piece O, at the center of the ether transformer, around which the first series of vertical core wires 1` or pins, as seen in Figures 9 and 10, are arranged in close order, and around said wires or pins 1` the first winding 1 is made, beginning at the top surface of the fibre base 104 and winding the wire circuitously to the right, around these vertical wires or pins 1`, building up the coil to the height of these wires or pins 1` (sec Figure 9A).

Outside of the winding 1 is placed another row of vertical wires or pins 2`, around which the coil winding 2 is built up from the fibre base 104, to the height of said wires or pins 1`.

Then around said wire coil winding 2 is arranged a series of vertical wires 3`, and around these vertical wires is made another coil winding 3, and thus continued in the same manner from the coil winding 1, to coil winding 32, outside of which winding is the air gap 32`.

Against this winding 32 are positioned the angle or bridge plates 32°, which are arranged at equal distances apart, in the direction of the circumference of the coil 103-, and are insulated from the coil winding 32-. These series of coil windings, which are the transformer windings, are wound to the right, as seen in Figure 8A. In the air gap, arc located the magnetizing coils arranged with alternate north and south polarity, the air gap being divided in the circumference of the transformer by bridges, spaced equal distances apart, in which spaces are magnetic coils 109, insulated from the bridges, as seen in Figure 12.

The terminal of this magnetizing coil, extends downwardly in the air gap to the bottom and through the next bridge to the right and the coil wound to form a reverse south pole winding’ S-2, which is indicated by the character S-2, the wiring being continued to the right, and in the direction of the upper end of the coil through the next bridge, and another coil formed, indicated by the character N-3, the wiring being so c6ntinued to the right through the next bridge, and in succession between the bridges to a point about one-half the distance circumferentially of the ether transformer; from the first open space mentioned, at which point is seen a space marked "open" --and from the bridge on the far side of this space, a new coil begins, starting from an upper portion of the bridge and forming a right hand coil and the coil next to the bridge reversed. The coils are then

continued between the bridges, until the bridge is reached on the left hand side of the open space first mentioned.

Outside of the air gaps, the excitation coil winding of the ether transformer is placed, the first two coils 33 and 34, being heavy, or of a larger gauge than the preceding windings from 1 to 32.

The vertical core wires outside of the coil 33 are also of increased size, as seen in Fig. 9-. Continuing the winding of the excitation coils in a series of eight windings from 33 to 40 inclusive, it will be observed that the vertical core wires or pins between the respective windings from 37 to 40 are of a large capacity, several times larger in diameter than the pins between the windings from 1 to 32.

The current from the aerial plate 20+ of the collector is conducted through the terminal 101 leading from said plate to a position, as seen in Fig. 11A, and is connected with the coil 39 of the excitation winding of the ether wave transformer. The conductor 102 leading from the collector plate 21- of the ether wave transformer, is connected with the outer coil 40 of the excitation winding of the ether wave transformer.

The coils of the excitation circuits are connected in series as follows: The outer coil 40 is connected by the conductor 40` with the coil 34, and the coil 39 through the conductor 39` with the coil 33. The coil 38 is connected by the conductor 38 with the conductor 34. The coil 37 is connected through the conductor 37` with the magnetic coil 33. The coil 36 is connected through the conductor 36` with the coil 33, and the coil 35 is connected by the conductor 35` with the coil windings 34, thereby connecting all of the excitation coil windings from the inner to the outer coil windings 33 to 40 inclusive.

One end of an insulated bus rod 41 is connected with coil 33 of the excitation circuits, and the other end extends above and is connected to coils 1 to 8. Bus rod 42 is connected to coil 34 and extends to the bottom of coils 1 to 8. In a like manner, bus rods 43 and 44, 45 and 46, 47 and 48, are connected to their respective groups of coils, as shown in Figures 11-11A.

Between coils 32 and 33 is provided a space for the poles the ether wave transformer, the said space in this case being separated into twenty-six divisions, although any even number of poles might be used. Each pole space is separated by non-magnetic bridges 32°, two of the said spaces lying upon opposite sides of the transformer, and upon opposite sides of a line intersecting with the axis of said transformer, being marked "open". The other twenty-four pole spaces arc in this case divided into four groups of six each. The first space adjoining one of the spaces marked "open" contains an iron core wound with an excitation winding, as further herein illustrated, the excitation winding being wound to produce magnetic lines of force from north to south, and in the next space to the right there is a similar core wound to produce magnetic lines of force from south to north, and so on in succession, the sixth space having a coil marked S-6, or south-sixth it being premised that these coils are independent of, and insulated from, the bridges and located

as shown in Figure 12, in which one of the bridges adjacent the space marked "open" is shown in detail, comprising a vertical non-magnetic web extending from the line of the top of the ether wave transformer to the insulated base 104 and provided with the flanges 106- and 107, both insulated from the respective coils 32 and 33 on opposite sides of the pole space.

The system of wiring involved in the aforesaid excitation winding in one completed circuit may be electrically defined as the magnetic field excitation and regulation circuit, which can be traced as follows: Beginning with bus coil 33, the bus rod 41 is shown connected to each of the eight terminal contacts marked by the characters Pl, P2, P3, P4, P5, P6, P7 and P8, which are connected respectively, to each of the coils one to eight of the ether wave transformer, and the lower terminals of each of these coils are connected in reverse order to contacts marked N, from which points the circuit divides into two paths, one leading through field coils, and one to bus rod 42, which is connected at its outer end to the bus coil 44 from contacts marked P1, P2, P3, P4, P5, P6, P7 and P8, the group of connections 8^2 lead to terminals 8^6 the field excitation windings successively on fields S6, N5, S4, N3, S2 and N^1, from which the winding terminates, and is brought out at the bottom and connected at 8^4 to a series of eight wires, the group being indicated by the character 8^3 and shown in dotted lines, these eight wires terminated at contacts marked N, from which points the circuit is completed through bus rod 42, to bus coil 34, specifically the insulated field coils to the right of the space marked "open", and near the bus rod 42, and are connected with the terminal of an electric conducting wire 8^5 (see Figure 12), forming’ in said space a right hand coil N-1, from which the end of tile wire emerges from the lower portion of the coil, and is extended through an insulated opening 111, in the web of the bridge supporting plate 110, --thence extended upwardly within the next space of air gap to the like coil in said space, and through opening at the upper end of said plate, thence to opening in the opposite plate, forming a left hand coil S-2, and so continued downwardly, the winding being to the left, changing the polarity of the coil. At the lower end of plate 110 the end of the wire emerges, and is then extended through an insulated opening in the next bridge supporting like coils, the winding of the coil in the next space being similar in which the windings are wound to the right, and in the next space to the left, and so continued, these coils being designated in Figure 11A as N^1 (north 1), the next S1 (south 1). the next N^2, the character numerals 1 to 6 indicating the spaces of the air gap, the last space in the series of six coils being a south pole winding, indicated by reference numerals S-6. In this latter magnetic coil, the wire is extended upwardly as indicated at 8^6, and with said wire is connected the terminal contacts of the group of conducting wires 8^2 leading from the terminal contacts on the inner end of the bus rod 41- hence completing the winding of the divisional six spaces of the twenty four, and from this connection 8^6 the wire is extended through an insulated opening into the first divided space of the next series of six spaces of the air gap, where the end of the wire is given a right hand, winding, and the magnetic coils thence continued as before described.

The connections upon the other portions of the coil are as follows:

Upon the lower side of the generator coil, and upon the same radius as the bus rod 41, is a bus rod 43, which is connected at its outer end with excitation coil 34 of the transformer and its inner end with the respective coils 9-10-11-12-13-14-15 and 16 of the ether transformer. With this bus rod at the points of connection of said rod with the aforesaid coil windings, are connected the terminal contacts of a group N^o, of wires 8^7, which are connected with the end of the wire in the space past which the bus rod 43 extends, and a north pole magnetic winding formed in said space.

The next bus rod 44, above the last space of the divided air gap of the next series of six spaces, is connected with the pole of the magnetic coil winding 33 of the transformer, at one end, and at the other end with the poles of the coils 9 to 16 inclusive. With the bus rod at the points of connection with the respective coils are connected the terminal contacts P16 of a series or group of conducting wires 8^5 from 9 to 16 inclusive the outer numerals being connected with the south pole windings in the space of the air gaps below said bus rod.

With the group of terminal contacts N^10, on the bus rod 43, are connected the upper ends of a group of conducting wires 8^8, the upper ends of the wires being extended upwardly, and connected in an inverse order with the group of contacts P16. The next bus rod or wire is positioned upon the other half of the ether transformer, and upon the lower side, and indicated by the reference numeral 45. This bus rod is connected at its outer end with the pole windings 34, and at its inner end with the coil windings 17 to 24 inclusive, and with which windings are connected the terminal contacts 20 of a group of eight wires leading to and connected with the north pole magnet winding wire in the space past which the bus rod extends.

The next bus rod 46 is above the top of the transformer, and is connected with the pole of the excitation coil winding 33 of the magnetic circuit of . the transformer, and at its inner end with the series of coils 17 to 24 inclusive, with which bus rod are connected the series of terminal, contacts P^24 of the group of eight wires P^25 leading to and connected with the south pole windings in the sixth space of the divided air gap over which the bus rod 46 extends.

With the terminal contacts N^20 are connected the lower ends of the series of wires N^21, the other, ends being extended upwardly and connected in inverse order with the terminal contacts 24.

The next bus rod 47 is extended beneath the coils of the transformer, the outer end being connected with the pole of the coil 34, and its inner end connected with the eight coil windings 25 to 32 inclusive.
With the bus rod 47, above these coil windings, are connected the terminal contacts of a group of eight wires 22, the other ends being connected with the coil winding in the first space of the air gap, past which the bus rod 47 extends.

The next bus rod 48 extends upon the top of the transformer, and extends over the sixth space of the air gap. In the fourth quarter of the circumference of the transformer, and is connected at its outer end with the pole or the coil 33 of the magnetic circuits, and at its inner ends, with the poles of the eight t coils 25 to 32 inclusive.

With the said bus rod are connected the terminal contacts of a series or group of eight wires P^26 connected with the south pole coil winding in the sixth space aforesaid, and with the contact terminals of the group of wires N^22, are connected the ends of a group of eight wires P^27, their upper ends being connected in reverse order with the terminal contacts of the wires P^26 on the respective coils 32 to 25 respectively.

The description being now completed of the magnetic excitation coil windings, and of the magnetic field coil wire regulation, which latter it will be observed are arranged for the excitation of any portion of the ether transformer, from the magnetic circuit to the coil windings 1 to 32 from the consumption of the current obtaining the full self induction action or current generating capacity of the transformer, the magnetic circuits being traced in like manner as first described.

The ether wave collector, as arranged in conjunction with the ether wave transformer, before described, and for practical operation, is as seen in Fig. 1, the lower plate 21 of the collector resting upon insulating cross bars 113-116 which extend across the top of the transformer 103. In this position of the collector, it will be seen that the current conducting wires are in the form of bars, the upper end of the bar 118 being connected with the plate of the collector, and the lower end extended downwardly and insulated from plate 21 and bent inwardly and thence downwardly into contact with the excitation winding of the outer excitation coil 40 of the magnetic circuits.

The feed wires for current distribution are connected with the coils of the magnetic excitation circuit, like terminal of one wire indicated by the character 117, being connected with the pole of the coil 33 of the transformer 103, opposite the space of the divided air gap marked "open" and first alluded to in the description of the first series of six spaces of the air gap of the transformer.

The other wire 118 has its inner terminal connected with the coil winding 34 of the magnetic field upon the reverse portion of the transformer.

The outer portions of these feed wires 117 and 118 connect with a double pole switch 120, which makes contact with the conducting wires 121-122 of the rheostat controller 124.

With the rheostat are connected the inner terminals of the conducting wires 125 and 126, the outer terminals being connected in parallel with the lamp circuit upon the socket board 127, in, which are shown the incandescent lamps 128 in series, in the incandescent circuit.

It is obvious that the outgoing feed wires may be connected with the fields of a motor and electric energy transmitted at high and low velocity as the load of the motor increases, or vice versa, as the increase in the number of incandescent lamps are increased, to excite the magnetic circuits of the transformer, the efficiency of which will now be described in connection with the collector of ether wave medium.

The electromotive force of the current from the ether wave aerial collector flows or is conducted by the conductors 101 and 102, whose terminals are connected with the aerial plates 20+, 21-, respectively, and also with the coil windings 39 and 40, respectively, of the ether wave transformer. The current flowing in the magnetic circuit of the coils energizes conductors 39`, 40`, magnetizing coil windings 33 and 34 respectively, and these. coils 33 and 34 energize the magnetic coils 37 and 38, through the conductors 37`, 38` respectively, and the coils 35 and. 36 are energized through the conductors 35`, 36` respectively, from the coils 33 and 35 respectively, and the whole magnetic circuit from. 33 to 40 arc energized. The current then flows through the bus rods to the coil near the center of the transformer which has the least resistance, which as indicated the first coil outward from the insulated core piece O.

The current generated and flowing through the bus rod is generating an electromagnetic force in the magnetic circuit.

The coil energized has a return through the bus rod 43- to the magnetic circuit to its bus coil 34, and the electromotive lines of force are impeded by changes in the lines of force which cause fluctuations in the change of polarity.

The double pole switch 120 being thrown to bring into contact the outgoing feed wire terminals of the feed wires 117-118, with the conducting wires 121-122 of the rheostatic controller 124, the current of the required force is transmitted by the conductors 125-126 to the series of incandescent lamps 128.

The transformer now in use by myself for service lighting is now connected with a lighting circuit now in operation.

The electromotive force of the transformer being increased, by the amount of load, increases the flow of the current through the first magnetizing coil of the transformer from 1 to 8, setting up new lines of electromotive force, the potentials of which in moving toward the lines of the least resistance, meet a change in lines of force through the reversed group of wires 8^4, at the same time generating a larger magnetic electromotive force in a reverse movement by the path of The bus rod 41, which being met by an increase of the lines of magnetic force from the magnetic coils, acts to control the movement of the current, while generating in the collision of these lines of force a higher electromotive force, involving the magnetic coils in the spaces from 1 to 6 inclusive, of the air gap, the current now flowing through the magnetic coil during its flow from the group of conductors 8^3, to the conductors in the space S^6 in the first series of six spaces of the air gap, the current flowing through the magnetic wiring by the conductor 8^5, in the

space marked N^1, thence through the magnetic winding S^2 in the next space, thence through the magnetic windings N^2 in the next space, thence through to magnetic winding S^4 in the next space, thence through the magnetic winding N^5 in the next space, thence through the magnetic windings N^6 in the next space, at which point, the current whose fluctuations have been regulated in rapid changes of polarity, with increased electromotive force, flows with an inductive force through the bus rod to energize the series of coils from 1 to 8, it being observed that in my transformer the electromotive force is being from magnetizing coil 1 to 32 respectively until an increased load is thrown on the transformer, increasing the magnetic lines of force of the coils of the transformer, when the inductive force is set up in the magnetic circuits through conductors 37`, 35`, involving a generation of current which finds its path through bus rod 44, and bringing into circuit the next 8` coils of the transformer where the lines of force in the correction of the poles of the group of wires 8^1 are subjected to a change of polarization and depolarization through one or more of the wires 8^8, setting up additional electromotive force, its fluctuations being made constant through the magnetic field coils in the spaces of the air gap from 1 to 6 in the next quarter division of the transformer, and as the load further increases so as to involve the magnetic circuits 33 and 35, the flow of the current is inducted through the conductors 35^x, 36`, through the bus rod 46, taking the electromagnetic force from the excitation from all the coils of the transformer, whose potentials follow the group of conductors which lead to the next series of coil windings 16 to 24, flowing through the reversely connected group of wires N^21, and is then conducted through the series of magnetic coils in the next series of coils respectively.

As the load increases, the Principal magnetic coils shown in heavy lines in Figs. 11-11A in the last distribution of current, flows from the dense coil 32, energizing bus rod 48, and also energizing the series of eight coils of the transformer from 1 to 32 inclusive, the current flowing through the reversely connected conductors P27 through magnetizing field coils, cutting the line of force and creating an electromotive force the current flowing through the fourth division of the six spaces of the air gap, and the magnetizing field coils in said series, in which the fluctuations of the current are made constant and the full distribution of the current is now attained from each portion of the transformer, in which portions, while the electromotive force is increased to meet the demands of the load, a constant regulation is being effected in the excitation coils and through the magnetizing field coils, impeding the lines of least resistance which are afforded a compensating resistance in proportion to the load cut in and out through the rheostatic controller, hence, as the electromagnetic force of the transformer is increased to supply the electromotive force required, the accumulation of the ether waves in the collector produces an electromotive force of undiminished quantity, this result being a new discovery of far reaching benefit to mankind, involving as it does the inceptive potency of electric energy for all, purposes, evolved from the general ether wave field of electric medium by me.

Having fully described my invention, what I now claim as new and desire to secure by Letters Patent, is:

1. The production and generation of an electromotive force from the accumulation of the ether waves of an unknown potential, from the general field of ether wave electric medium.
2. The production and generation of an electromotive force, from the accumulation of the potentials of ether waves of electric medium, and their polarization into electromotive force constant.
3. A source of electromotive force, comprising an inductive polarization and depolarization of the pulsating waves of ether, from the ether wave potential of the ether wave electric medium.
4. The production and generation of an electromotive force, consisting of the accumulation of the ether waves of the general electric ether wave medium, and changing their potentials in the paths of broken circuits of opposite polarity, and polarizing and depolarizing the wave potentials and subjecting the energized potentials to a transmission through magnetic circuits.
5. A source of electric motive force, comprising the inductive ether wave potentials of the ether wave medium, whose potentials are changed through resistances in their paths, and then polarized and depolarized in transmission.
6. The method described of producing an electromotive force, consisting in collecting the ether waves from the general field of electric medium, their potentials changing within broken circuits, then through polarized resistances.
7. The method described of producing an electromotive force, consisting in collecting the ether waves from the general field of electric medium, changing their potentials, transmitting them within broken circuits, polarizing and depolarizing the potentials and through polarized resistances in magnetic circuits.
8. The method herein described of producing an electromotive force, consisting in collecting and accumulating the ether waves from the general field of electric ether wave medium, changing their potentials and transmitting these potentials within broken circuits, polarizing and depolarizing these potentials in a transmission through polarized resistances in magnetic circuits of reversing polarities.
9. The method herein described of producing an electromotive force constant, consisting in collecting and accumulating the ether waves from the general field of electric ether wave medium, changing their potentials and transmitting these potentials within paths of broken circuits, changing their potentials and polarizing and depolarizing these potentials and transmitting them through polarized resistances, thence through magnetic circuits in which circuits the polarities are changed according to the electromotive force.
10. The method and apparatus herein described, for collecting from the general ether field, of electric medium, of electric ether waves or ether in an accumulative, distributable, measurable, electromotive force.
11. The method. and apparatus herein described, for collecting from the general ether field of electric medium of the ‘wave potentials, and breaking up the lines of force of these potentials to produce an electromotive force.

12. The method and apparatus herein described for collecting and accumulating from the general field of electric medium of ether waves of unknown polarity and converting these waves into lines of electromotive force of constant polarity.

13. The method and apparatus herein described for collecting and accumulating from the general field of electric medium, of ether waves of unknown polarity from aerials of opposite polarity, transmitting these waves through broken conductors in groups of broken circuits in electrical contact with the aerials, then through polarized resistances in electrical contact with the conductors in the broken circuits.

14. The method and apparatus herein described for collecting and accumulating from the general ether field of electric medium of the ether waves, consisting in establishing a conductivity of the wave medium between aerial conductors in parallel, and conducting the ether wave from conductors through groups of broken circuits in electric connection with the terminals of the aerials, and interposing polarized resistances between the terminals of the aerial conductors.

15. The method and apparatus herein described for collecting and accumulating from the general ether field of electric medium of unknown polarity, of ether waves of electromotive force, consisting in conducting the lines of force of the ether electric waves through aerials and within groups of broken circuits, and breaking up the lines of force, then reversing the polarity of these potentials through the medium of polarized resistances.

16. The method and apparatus herein described for collecting and accumulating from the general ether field of electric medium, of an amperage of electromotive force, and increasing its lines of force in a transformer of magnetic lines of force.

17. A collector of ether electric waves, consisting of aerial conductors, and a group or groups of wave polarizing and depolarizing broken circuits leading therefrom, and polarized resistances so related to the broken circuits as to break up the potentials of the ether medium.

18. A collector of ether electric waves, consisting of aerial conductors, and a group or groups of wave polarizing and depolarizing broken circuits in wave transmitting connection with the terminals of the aerial conductors, and polarized resistances in the path of the electric medium at the terminals of the aerials.

19. A collector of the ether electric waves, consisting of aerial conductors, and terminal contacts and broken wave group or groups of conductors polarizing and depolarizing connected with the terminal contacts.

20. A collector of ether electric waves, consisting of aerial conductors of the potentials of the electric waves, and opposing group or groups of wave polarizing and depolarizing broken conductors, in wave transmitting connection with the terminals of the aerial conductors, and polarized resistances connecting the group or groups of broken circuits and insulated therefrom.

21. A collector and accumulator of the ether electric waves, consisting of wave inductive aerial plates, and terminal contacts in opposite wave transmitting positions.

22. A collector and accumulator of the ether electric waves, consisting of wave inductive aerial plates, each plate having a series of terminal contacts in registering positions, and polarizing and depolarizing conductors in broken circuits carried by the terminal contacts on each plate, and wave transmitting polarized resistances connecting the registering contacts.

23. A collector and accumulator of the ether electric waves, consisting of separate wave inductive aerial plates, and a series of terminal contacts on each plate in registering positions to each other respectively, means for insulating one plate from the other, and a group or groups of conductors in broken circuits on each plate, in wave transmitting connection with the terminal contacts, and polarized resistances connecting the contact on the other plate.

24. A collector and accumulator of the ether electric waves, consisting of separate wave inductive aerial plates, and a series of terminal contacts on each plate, an insulating member between the said plates provided with openings registering with and admitting said terminal contacts, polarized resistance coils in said openings connected with the respective contacts on the separate plates, and wave polarizing group or groups of broken conductors on said terminal contacts.

25. An apparatus for the collecting, accumulating and accreting, the ether electric wave energy, comprising inductors of the ether electric waves, circuit breaking polarizers and depolarizers of the electric waves, potentials changing elements connecting the broken circuits, and magnetic circuits, and polarizing and depolarizing current transmitters in the magnetic circuits.

26. A collector and accumulator of the ether electric waves, and a transformer of increased energy of electromotive force, from the amperage of wave energy transmitted from the accumulator.

27. An ether wave transformer of electromotive force, comprising magnetic circuits, and polarizing and depolarizing circuits controlling the magnetic circuits.

28. An ether wave transformer of electromotive force, and magnetic circuits of increased activity without the main body, and an air gap between, and polarizing and depolarizing circuits connecting the poles of the magnetic circuits of the main body, with the poles of the magnetic circuits of the outer body, and electrically controlled thereby.

29. A collector and accumulator of the ether electric waves, and magnetic circuits energized by the polarized and depolarized ether waves from the accumulator.

30. An ether wave transformer of electromotive force, comprising an internal body of magnetic circuits, and an external body of magnetic circuits of increased magnetic intensity to that of the internal body, and an air gap between, conductors connecting the magnetic poles of the terminal body with the magnetic poles of the outer body, and groups of polarizing and depolarizing circuits connecting the conductors of these poles with each other, and polarized, resistances in the air gap connected with the polarizing and depolarizing circuits.

31. An ether wave transformer of electromotive force, comprising a series of internal magnetic circuits, and a series of external magnetic circuits, and an air gap between, conductors connecting the poles of the external magnetic circuits with the poles of the internal magnetic circuits in progressive degrees of electric induction, and polarizing and depolarizing circuits connected with the terminal contacts of the conductors with the poles of the magnetic internal circuits with each other in reverse order, and conductors leading from said poles to the air gap and polarized resistances connected with the polarizing and depolarizing circuits within the air gap.

32. An ether wave transformer of electromotive force, comprising an internal body of magnetic circuits, and an external body of increased magnetic intensity, to the internal

body, and having an air gap between, insulated means connecting the internal and external bodies of magnetic circuits, and conductors connecting the poles of the internal and external magnetic circuits in progressive degrees of electric induction, and polarizing and depolarizing circuits connecting the conductors from the poles of the magnetic circuits in series, and series of polarizing and depolarizing circuits connecting said series of conductors in reverse order, and polarized resistance coils in the air gap insulated from the magnetic circuits and connecting electrically the series of reversed polarizing and depolarizing circuit from the magnetic circuits.

33. The herein described method of producing electromotive force between the poles of a transmission resistance coil.

34. The herein described method of producing electromotive force from the ether waves of electric medium between the lines of force passing through the poles of a transmission resistance coil.

35. The herein described method of producing electromotive force from the aerials of conductors of ether wave electric medium, by changing their potentials during the transmission of the lines of force through wave transmission resistances.

36. The herein described method of producing electromotive force conducted through the aerials of the ether wave electric medium consisting in changing their potentials through broken conductors in contact with the aerials and during transmission of the lines of force through wave transmission resistance coils.

In witness whereof I hereunto affix my signature:

HARRY E. PERRIGO

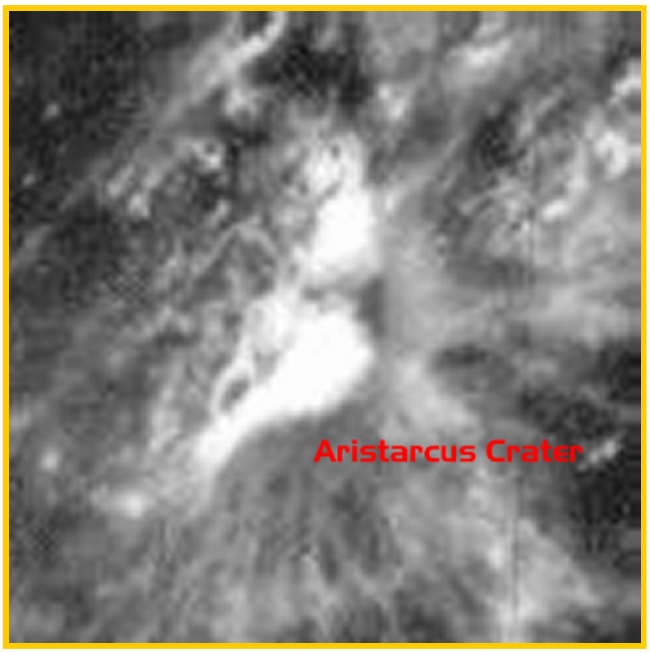

The Day The Lights Were On

.

Aristarchus Crater
Dec 17th 2005

.

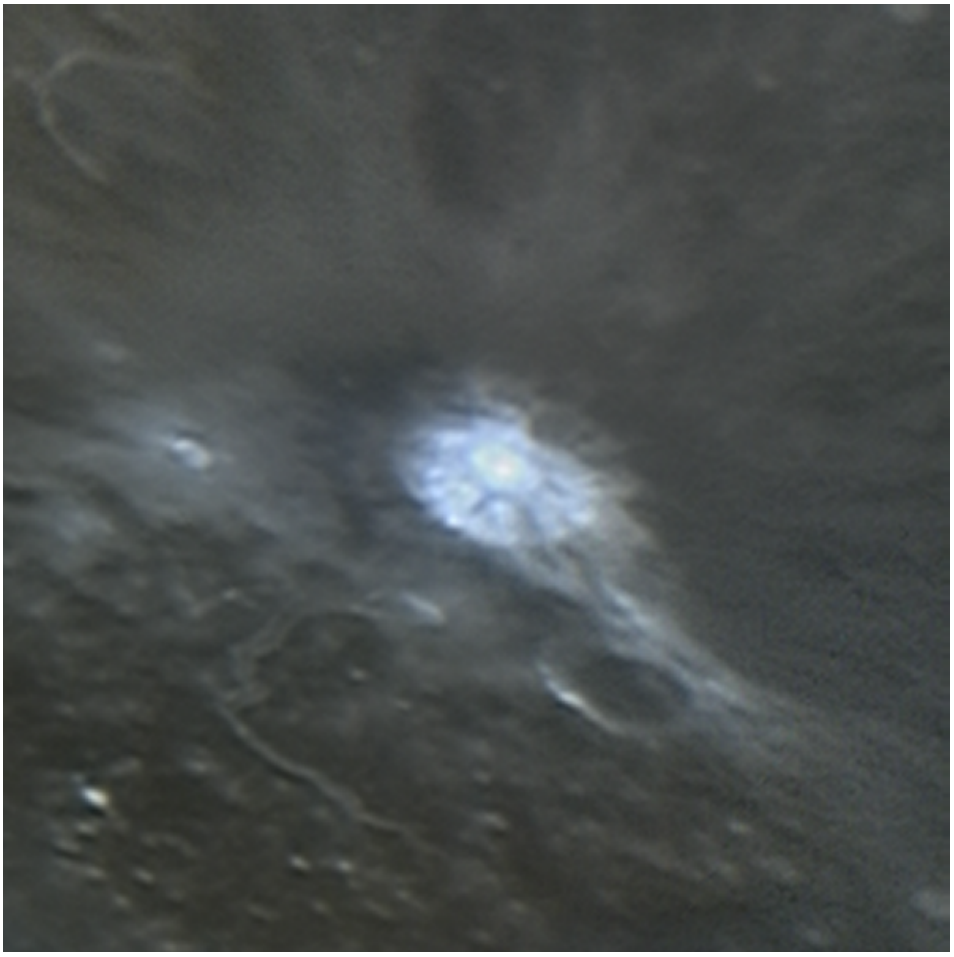

Aristarchus Crater
Credit: Mike's Astroimagery UK

If you haven't already seen the Full Moon that Mike took where this clip of Aristarchus is a small section, you can do so HERE. The picture above is Aristarchus Crater clipped from an image taken with a 10" Telescope in the UK. Compare this image to the high resolution image from the Clementine Satellite below and remember that this is a 10" telescope image.

You will notice the symmetrical dome like structure of the "crater" as well as the bright blue glow that literally lights up the surrounding area! The overall effect is that of plasma energy emitting from the dome, or at least very bright light.

Electric Blue Crater
Aristarchus Crater
Clementine Image
1994

•

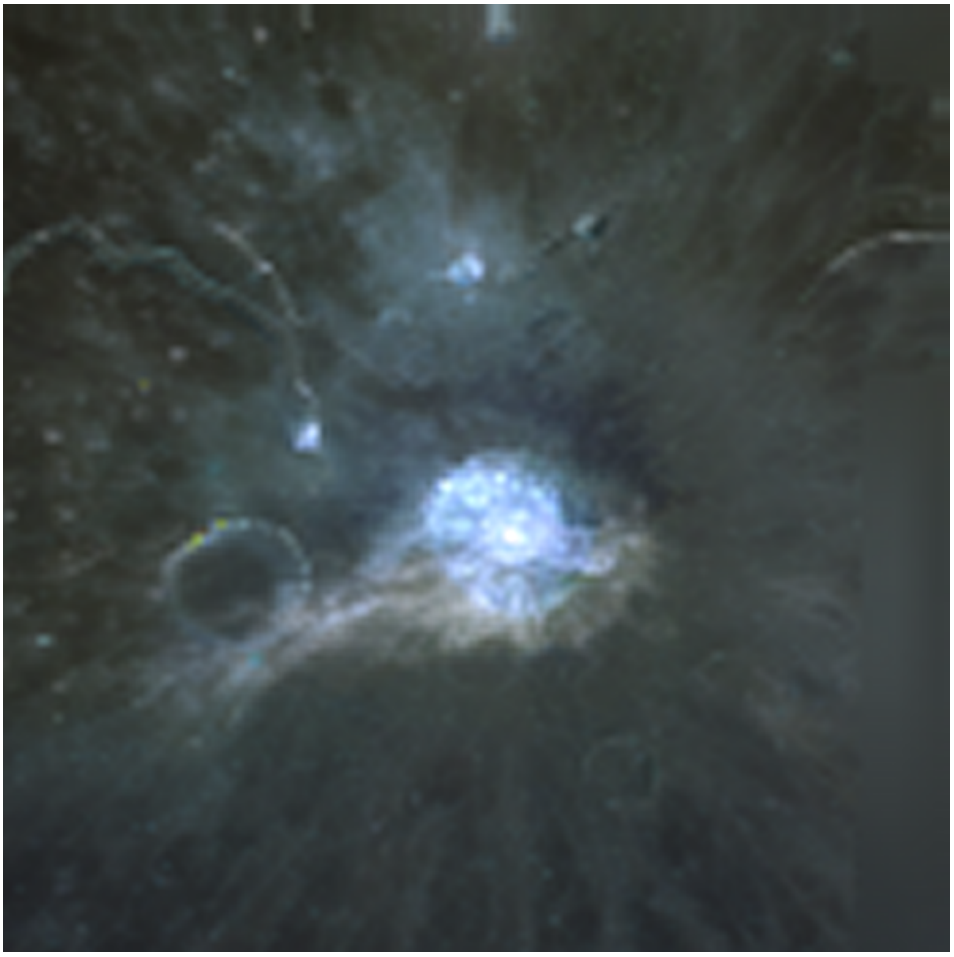

Credit: USGS/US Navy/Clementine Spacecraft

The image above is cropped from the full spread Clementine Nearside.tif image. Click on the image to see one cropped from the 65 meg version. Both the Clementine and Mike's image show the beautiful "Electric Blue" color of the crater and both show dome like structures, with a bright center. Both also show that the luminescence covers the surrounding area.

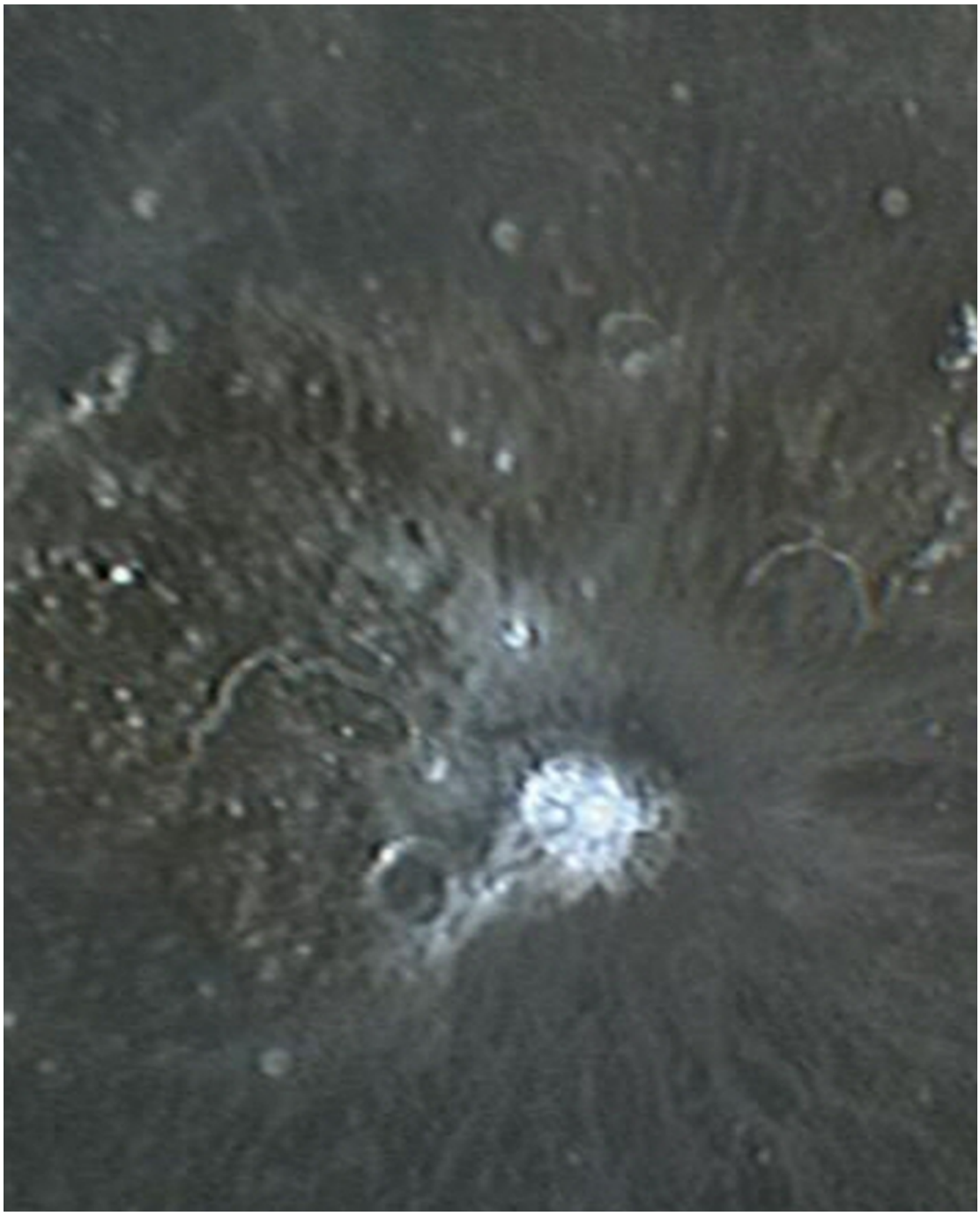

Original Image Credit: Anthony Jenkins ~ Anthony Jenkins Astronomy Site

The same pretty Blue Gem we see from Clementine! The same glow emanating from the center flooding the area. The image above is from another well known British astronomer, Anthony Jennings, using an 8" LX90 SCT telescope and a Philips ToUcam 2xBarlow camera. The image below is an enlarged clip. Anthony has no connection to Pegasus and his images are freely available at his web site; Anthony Jennings Astronomy Site

Both these Astronomers captured the "Blue Gem" on the same day from two locations, Date: 17th December, 2005. This is a clip from a Moon Mosaic of 120 images (Mike used 170). This time the scope is even smaller... an 8 inch scope!

Image Notes:
Aristarchus Crater
Date: 17th December, 2005 ,22:34
Location: Rhodes, North Manchester
Telescope: 8" LX90 SCT
Camera: Philips ToUcam 2xBarlow

The photo above is the spectrum of a glass tube filled with hydrogen that is excited with a high voltage. It resembles a neon sign, except the glass is straight and filled with hydrogen gas and not neon.

The important features are the bright emission lines in the Hydrogen spectrum. There is one line in the visible red, the brightness one in the blue, the second from the right is in the violet range and the last in the ultra violet range, not visible to the human eye, but barely detectable with a digital camera. (Data collected from the Warren Wilson College Physics Department)

What is relevant in our look at Aristarchus is the intense emission in the blue to ultra violet end of the spectrum of Hydrogen plasma emissions. In the Russian/NASA document we see recorded evidence of strong and variable emissions in this H spectrum as well as the K. In the papers below we can see that the K spectrum emissions also are involved with ionized plasma...

"The explanation of the hydrogen spectrum is perhaps the most important test that any theory of electronic structure must pass. The wavelengths of the lines of the Balmer series (shown above) as well as other series in the spectrum of hydrogen are very well known indeed." - University of Kentucky

Seems Aristarchus Crater passes that test for "electronic structure" with flying colors

K Spectrum

***k* Spectrum of Finite Lifetime Passive Scalars in Lagrangian Chaotic Fluid Flows**

Keeyeol Nam,* Thomas M. Antonsen, Jr.,*,† Parvez N. Guzdar, and Edward Ott*,†
Institute for Plasma Research, University of Maryland, College Park, Maryland 20742
(Received 23 March 1999)

Papers:

High Resolution Measurement of the K Spectrum of Fe
New Spectral Diagnostics of Non equilibrium Astrophysical Plasmas
by V. Decaux and P. Beirsdorfer et al
Lawrence Livermore National Laboratory, University of California, Livermore, CA 94551
SOURCE

This paper is organized as follows. In § 2, we describe the EBIT and review our experimental procedure. In § 3, we present our measured spectra and compare them to published predicted spectra for ionizing plasmas. In § 4, we discuss the effects of K-shell ionization and the consequent spectral dependence on the shape of the electron distribution.

Livermore Electron Beam Ion Trap (EBIT). The electron density in the EBIT is similar to the electron density of solar flares...

All the papers we find dealing with the K Spectrum are all heavy reading in Physics, but they talk about electron emissions, solar and cosmic radiation and Ionized Plasma. Combining these pieces shows us that Aristarchus definitely has emissions in both these spectra, and that the emissions are not always there, and that they have ben recorded at different intensities.

Does this make Aristarchus a Fusion Reactor? We don't know, but the evidence certainly indicates something along those lines is going on. Time to start looking at the Moon with ultraviolet cameras...

One last piece of the puzzle... below is a Fusion Reactor that has proven successful at Sandia National Laboratory

"Z causes reactions to occur neither by confining low density plasmas in dimensionally huge magnetic fields, as do tokomaks, nor by focusing intense laser beams on or around a target, as in laser fusion, but simply through the application of huge pulses of electricity applied with very sophisticated timing. The pulse creates an intense magnetic field that crushes tungsten wires into a foam cylinder to produce X-rays. The X-ray energy, striking the surface of the target capsule embedded in the cylinder, produces a shock wave that compresses the deuterium within the capsule, fusing enough deuterium to produce neutrons." **Sandia National Labs**

What is most interesting is the appearance and color of the reactor... This makes it quite conceivable that when the Aristarchus Reactor is off, you might not see anything unusual at all. Perhaps a closer look at those pictures that show it close up might show something inside

SANDIA NATIONAL LABORATORY
Z MACHINE

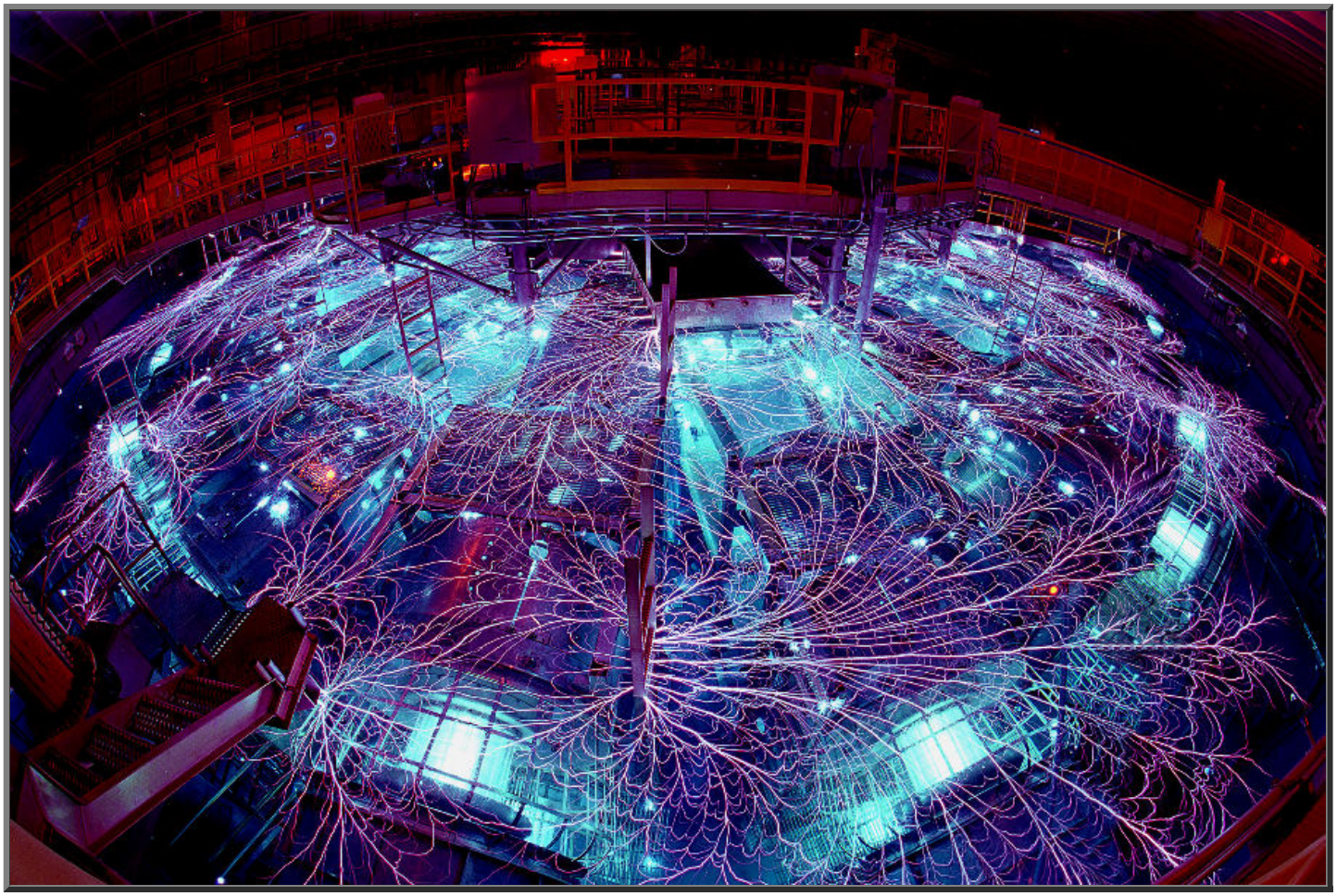

MIT
The Levitated Dipole Fusion Confinement Concept

•

Neutron Lifecycle Series: Helium-3 Gas Detectors at the SNS and HFIR

July 21, 2016

Kevin Berry

At SNS, ~ 2/3 of the operating instruments that the Detector Group supports use ^{3}He detectors

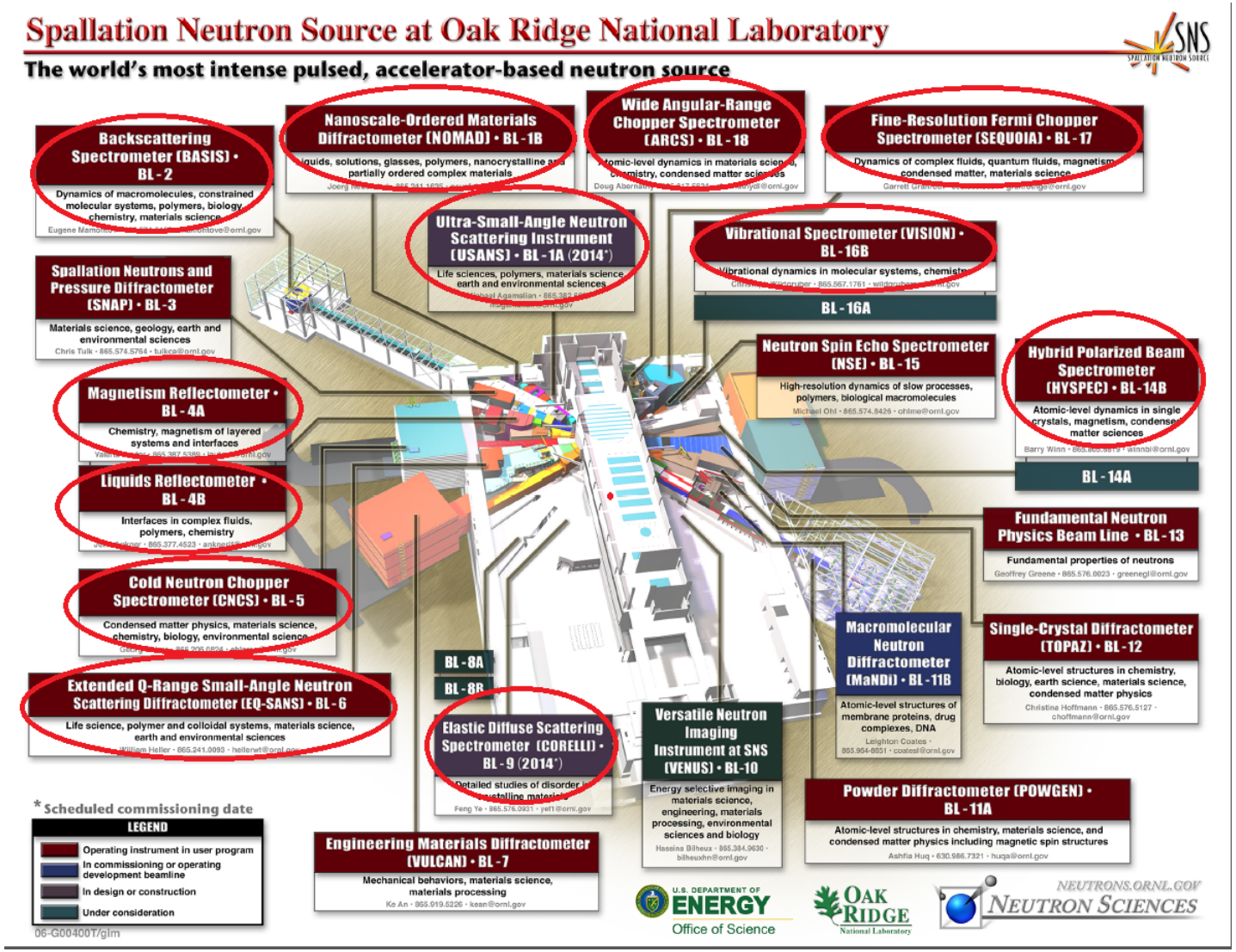

… as well as most of the instruments at HFIR

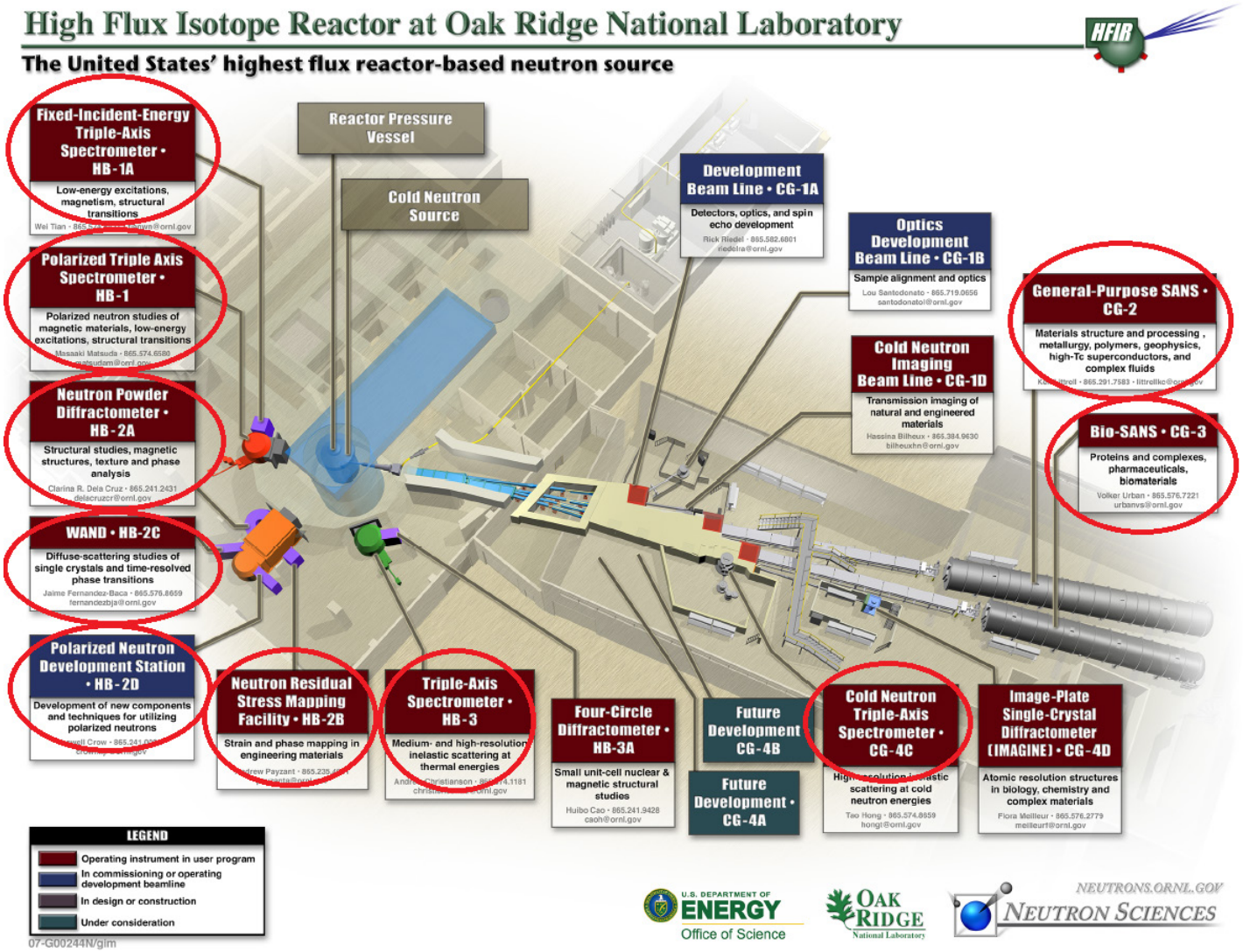

Single output tubes – used individually or arranged into 1d array

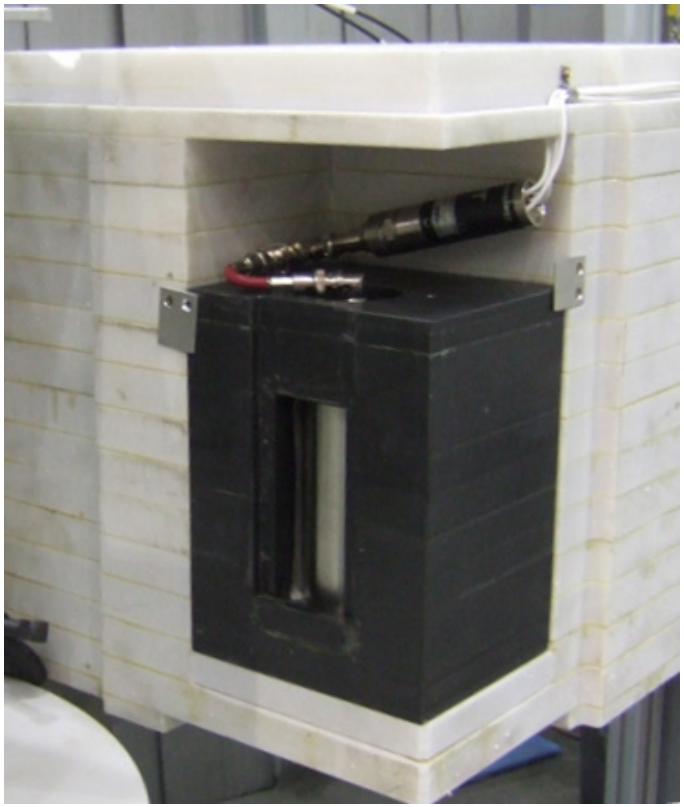

Linear Position Sensitive Detectors (LPSDs) vacuum compatible, typical installations cover large areas (10s of m^2) (GE Reuter-Stokes)

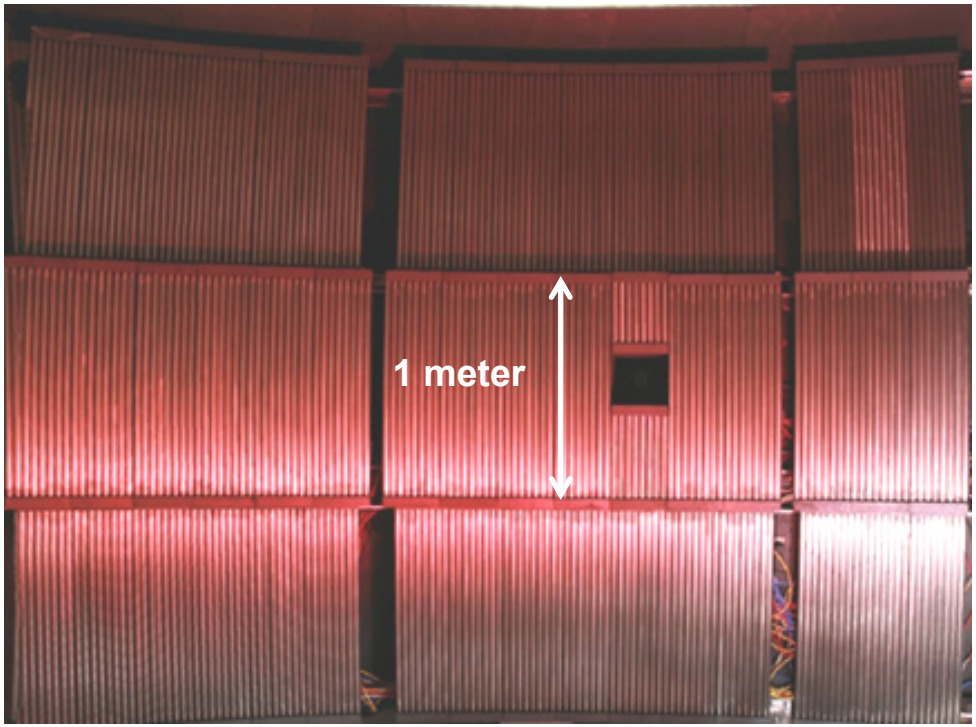

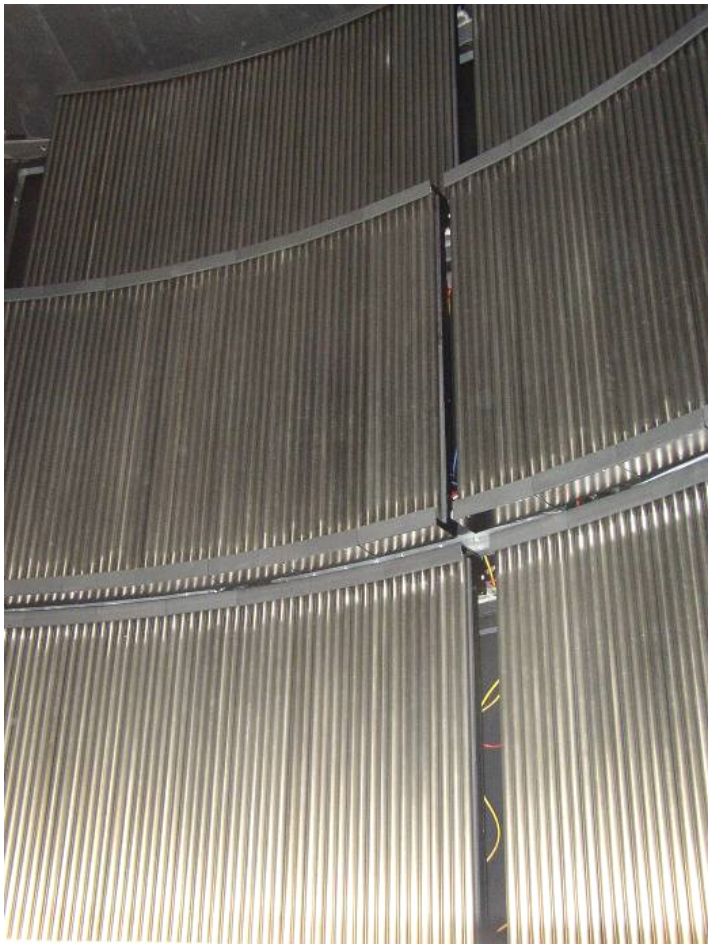

Wide variety of configurations – linear, radial, or curved about horizontal or vertical axis

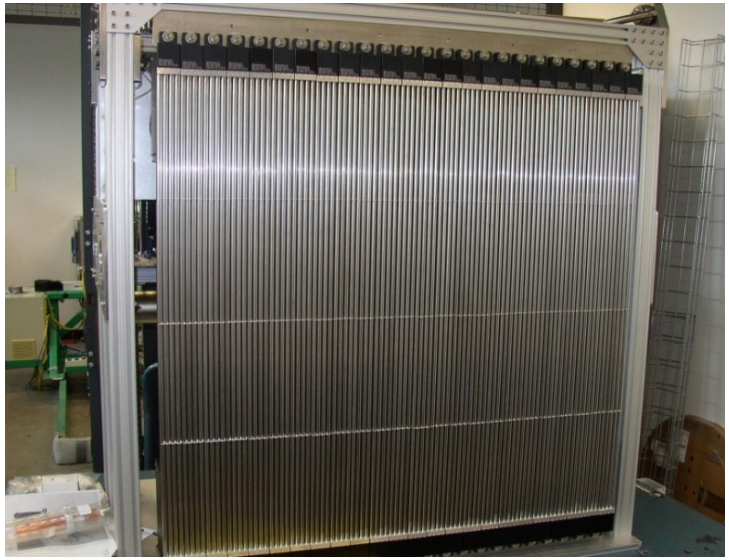

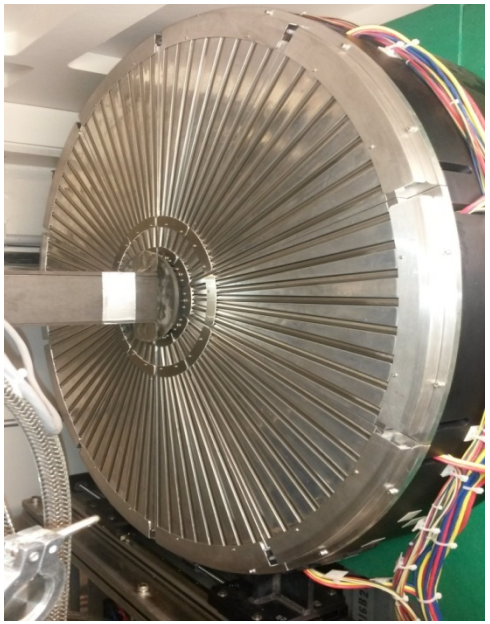

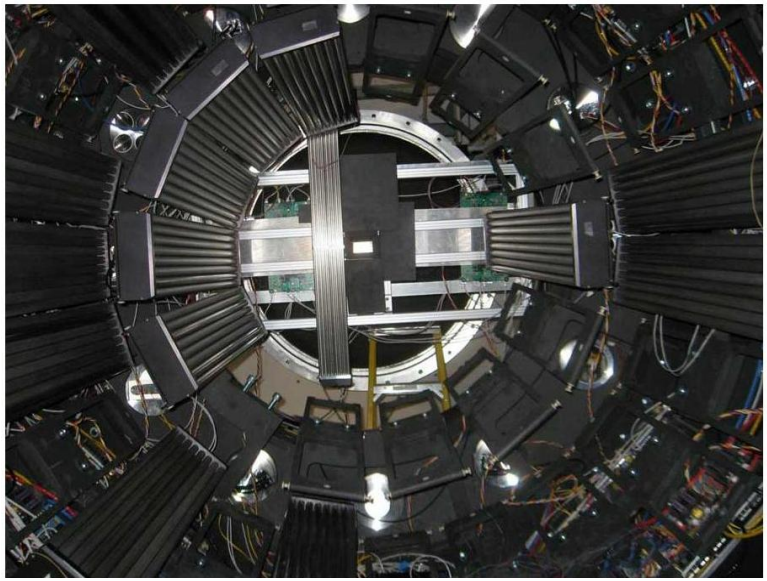

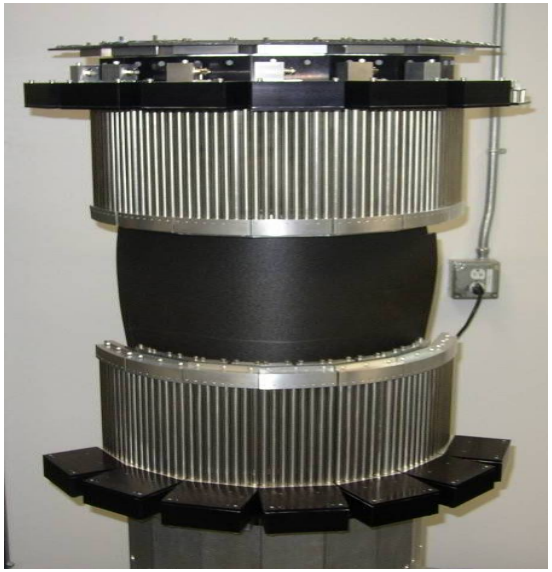

Multi-wire, areal coverage (common gas space)

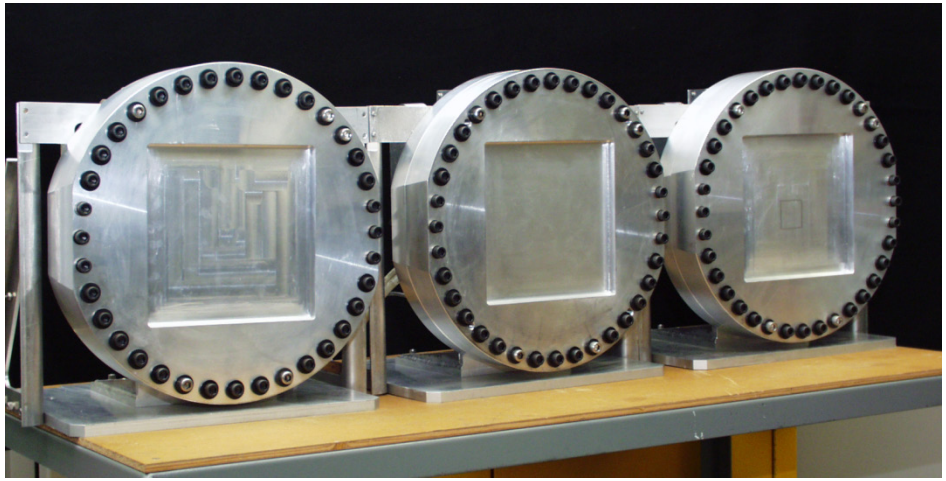

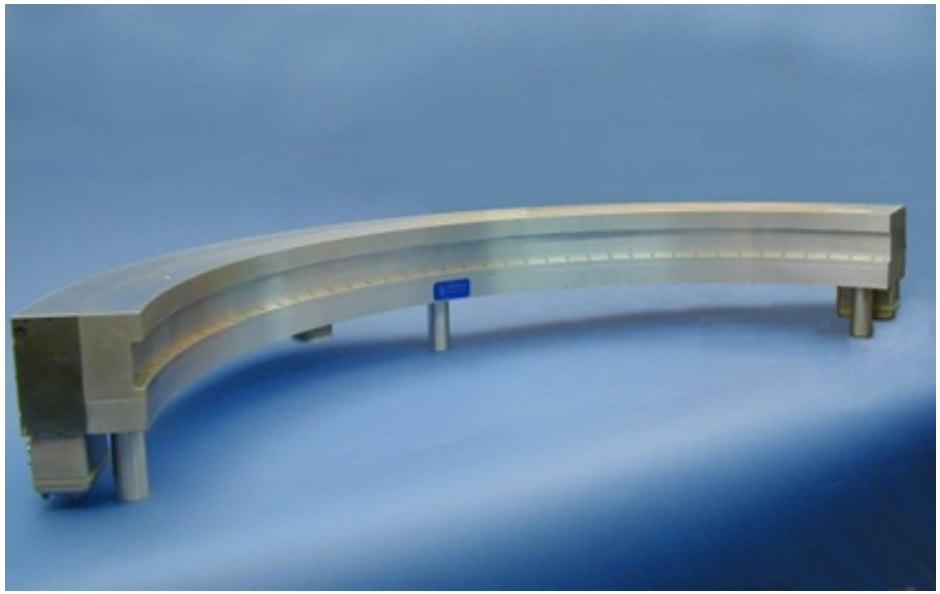

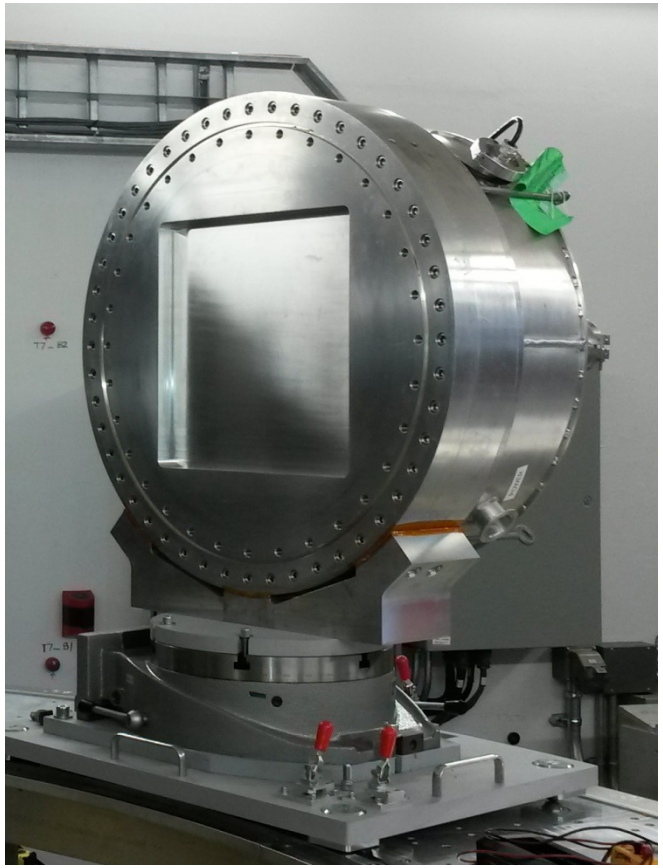

Brookhaven Multi-Wire Proportional Detector for WAND (HB-2C at HFIR)

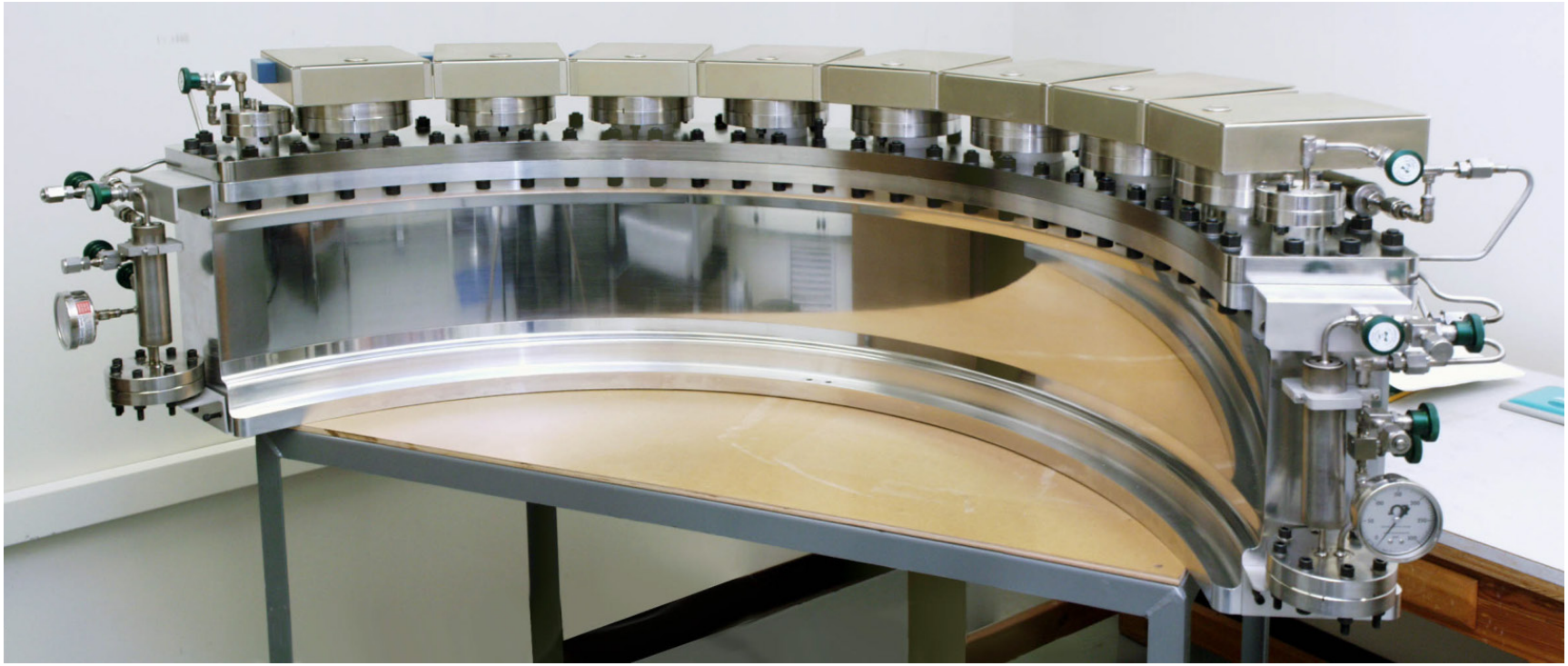

120° Curved Multi-Wire Proportional Counter (Brookhaven National Lab)

Currently at PCS Instrument in Los Alamos National Lab, N.M.

Scheduled for delivery to ORNL end of summer

And of course the neutron beam monitors

Helium-3 Detector Deployment at SNS and HFIR

- Over 4600 tubes installed at SNS; ~ 600 at HFIR
  - Active lengths from 10 cm to 200 cm
  - Tube diameters from 0.8 cm to 5 cm
- Four multi-wire area detectors (soon to be 5)
- Helium-3 pressures from 4 atm to 30 atm

Why do we need to 'detect' neutrons ?

Detectors provide us with the information we need to learn about how neutrons interact with our samples

What do the detectors actually 'detect' ?

What we want to know is intensity (relative to the incident beam) as a function of scattering angle 2θ and neutron wavelength λ

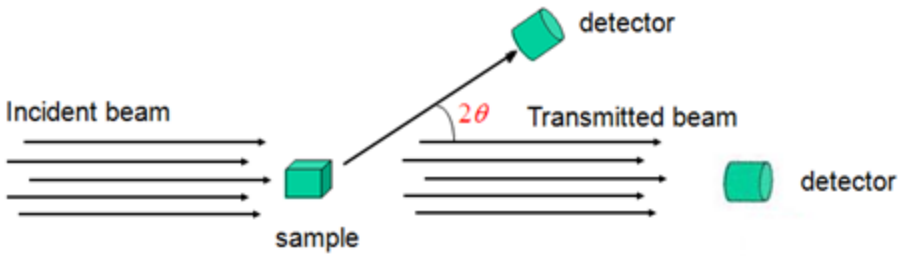

What detectors measure is neutron interaction location (and at the SNS, time)

location x, y, z $\rightarrow$ θ time t $\rightarrow$ λ ($v = L / t$; $p = mv = h/\lambda$)

The 'effective' size of the detection element is important (spatial and temporal measurement uncertainty), need for different detector types, no 'one size fits all'

How do we 'detect' neutrons ?

How do we detect neutrons?

- A neutron must interact with matter in a such a way that it gives some indication of its presence

- With zero net electrical charge, interaction with atomic electrons is not possible (as in X-ray, gamma, electron detectors)

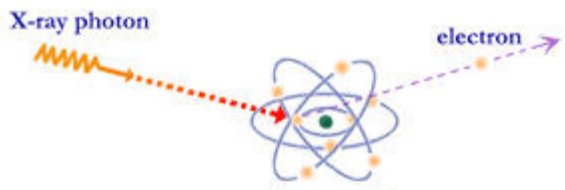

PHOTO-ELECTRIC ABSORPTION

- Instead we must rely on the only interaction available to us –

  a nuclear reaction with an atomic nucleus

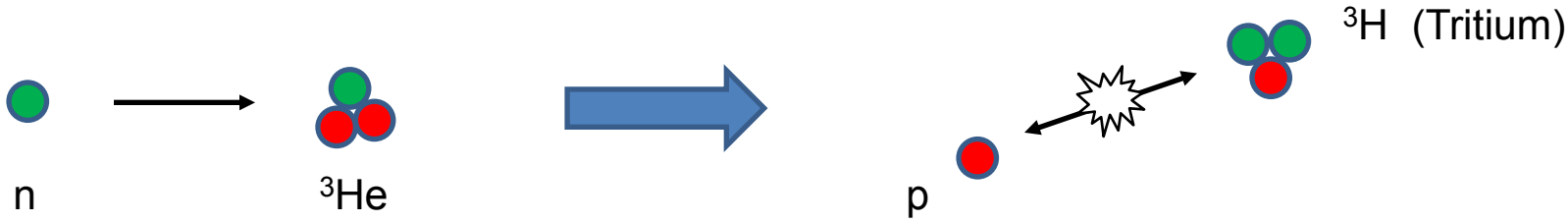

What materials can we use for neutron detection ?

It turns out there are only a few isotopes for which the neutron has a high probability of interaction with the atomic nucleus, and can be considered candidates for practical thermal neutron detectors

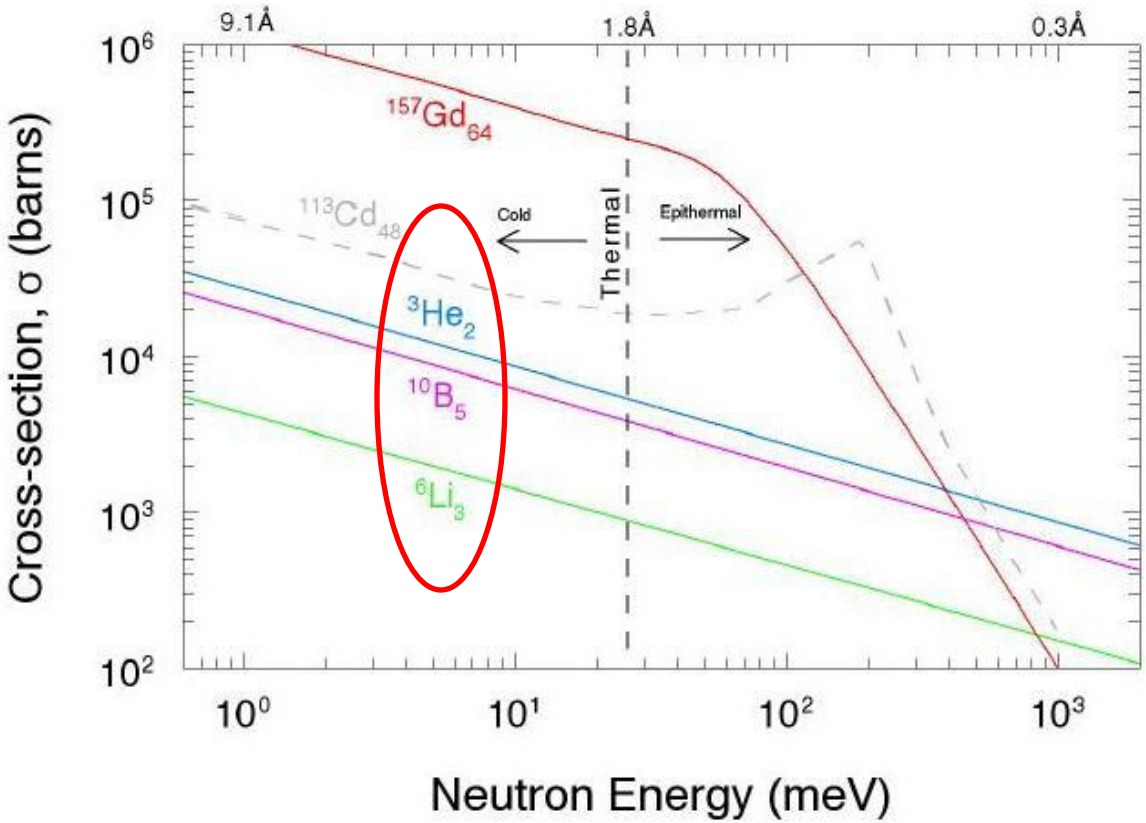

V. Radeka, DOE BES Neutron&Photon Detector Workshop, Aug 1-3, 2012

Relative Cross Sectional Areas (at 1.8 Å)

Cross section has units of area [barns]

It can be thought of as the effective size of the target nucleus

$$1 \text{ barn} = 10^{-28} \text{ m}^2 = 10^{-24} \text{ cm}^2 = 10^{2} \text{ fm}^2$$

$$(1 \text{ fm} = 10^{-15} \text{ m})$$

Important Nuclear Reactions for Neutron Detection

In addition to having a high absorption cross section (probability), the nuclear reaction must produce charged daughter products which can then be detected by more conventional detection technologies

$$n + {}^{3}He \rightarrow {}^{3}H + {}^{1}H + 0.764\ MeV$$

$$n + {}^{6}Li \rightarrow {}^{4}He + {}^{3}H + 4.79\ MeV$$

$$n + {}^{10}B \rightarrow {}^{7}Li + {}^{4}He + 0.48\ MeV\ \gamma\text{-ray} + 2.3\ MeV \quad (93\%)$$

$$\rightarrow {}^{7}Li + {}^{4}He + 2.8\ MeV \quad (7\%)$$

Note the Q values - thermal neutron kinetic energy (10s of meV) cannot be directly measured

Helium-3

- Natural abundance 0.000137%
- By-product of radioactive decay of tritium (nuclear weapons program)

$$^{3}H \rightarrow {}^{3}He + e + \bar{\nu}_e \qquad T_{1/2} = 12.3\ y$$

- U.S. mass production of tritium ceased in the mid 1990's (weapons reduction)
- U.S. demand increased after Sept 11, 2001 (portal monitors, border security)
- In 2008 a critical shortage of helium-3 in the U.S. was realized (supply << demand)
- Efforts to develop alternate detector technologies for large area coverage

  Straw Tube detectors, Multi-blade detectors (^{10}B)

- BF_3 commonly used as neutron gas detector prior to the widespread availability of He-3
  - but BF_3 is a toxic, corrosive gas (He-3 is inert)
  - nevertheless, some facilities have recently revisited BF_3 due to the He-3 shortage

The n-^{3}He reaction: $n + {}^3He \rightarrow {}^3H + p + 764$ keV

Momentum Conservation – trajectories antiparallel

Energy Conservation – KE split inversely proportional to mass (3:1)

- **proton kinetic energy = 573 keV**
- **triton kinetic energy = 191 keV**

Reaction products lose energy through interactions with gas atoms (excitation and ionization)

Average energy per pair W ~ 30 eV

~ 25,000 electron-ion pairs (4 fC)

W > IP (ionization potential)

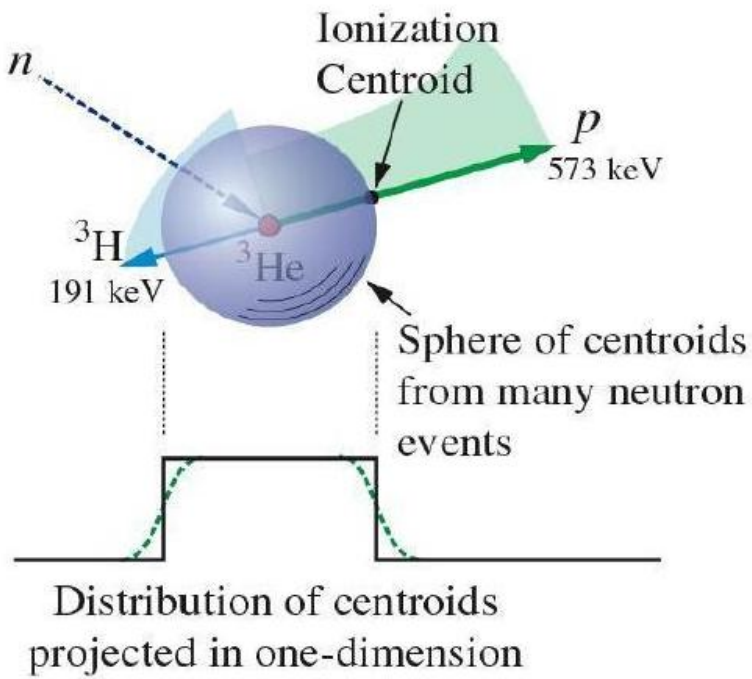

FWHM ~ 0.8 x proton range

V. Radeka, DOE BES Neutron&Photon Detector Workshop, Aug 1-3, 2012

Proton Range in 1 bar He-3 ~ 5-6 cm

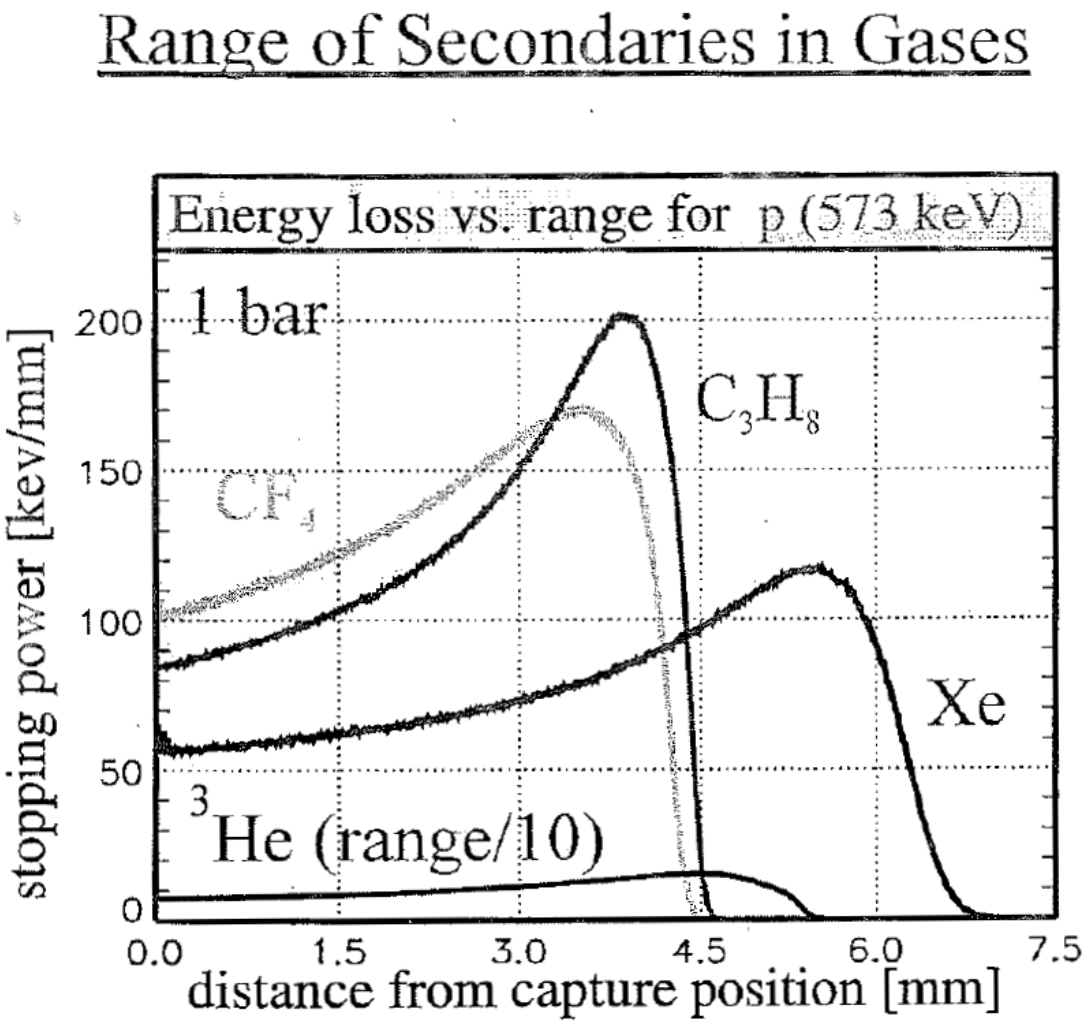

Proton range inversely proportional to pressure – i.e. range ≈ 5-6 mm in 10 bar He-3

Detector Fill Gases: Stopping and Quench

- Stopping gases are added to reduce size of charge cloud
  - Ar, C_3H_8, CF_4 in common use
- In addition, polyatomic gases needed for photon quenching
  - UV/Vis photons emitted via excitation interactions, must be absorbed to prevent secondary ionization elsewhere in tube
  - Polyatomic gases de-excite non-radiatively (rot, vib modes)
  - C_3H_8, CF_4, CO_2 in common use
  - stopping gas can also act as the quench gas
- No electronegative gases

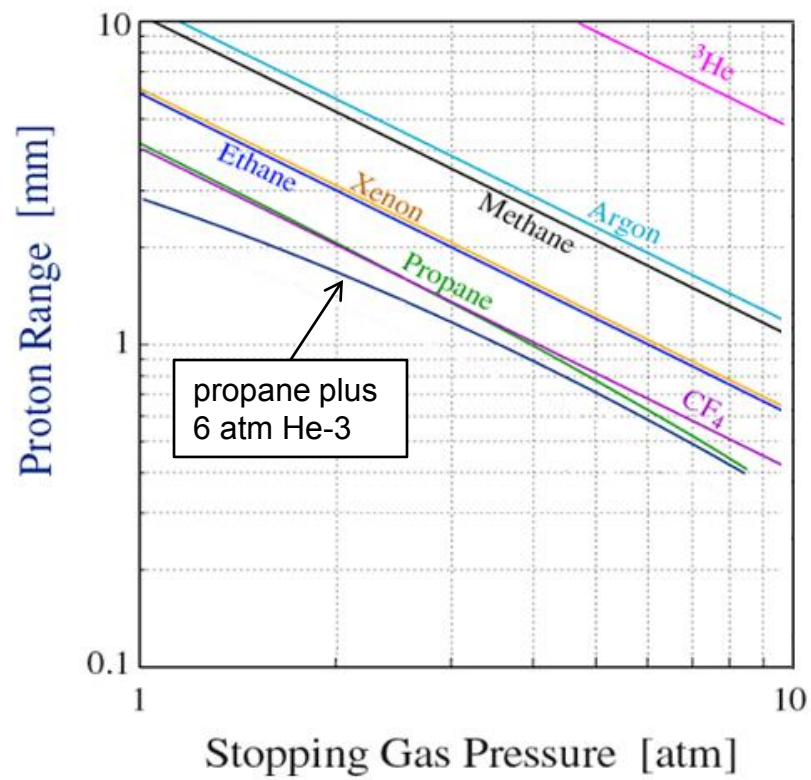

V. Radeka, DOE BES Neutron&Photon Detector Workshop, Aug 1-3, 2012

The Helium-3 Gas Proportional Detector

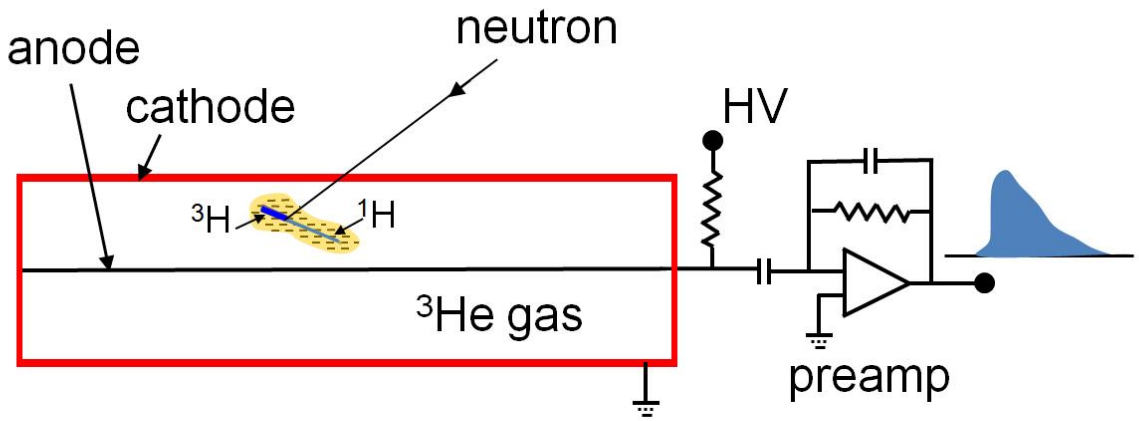

- Positive HV on wire, E field falls off as 1/r (strong near wire)
- Electrons drift in toward wire (anode), ions drift out toward grounded tube wall (cathode), but at velocities ~ 1000 times slower
- Current pulse is measured, proportional to charge collected on wire (Shockley-Ramo theorem)
- 4 fC is impractical, need gas gain to amplify charge signal

Electric Field and Gas Gain

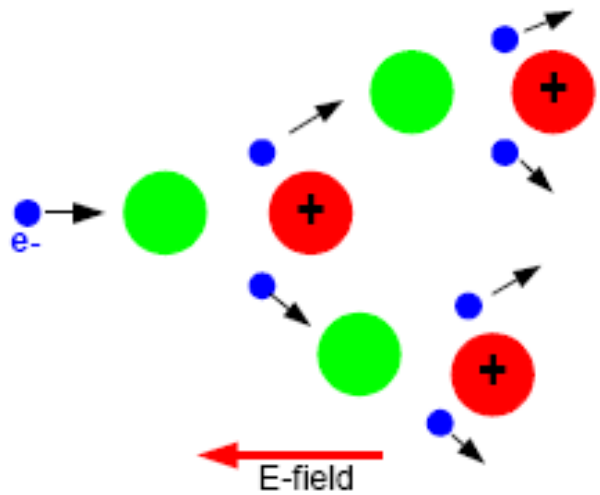

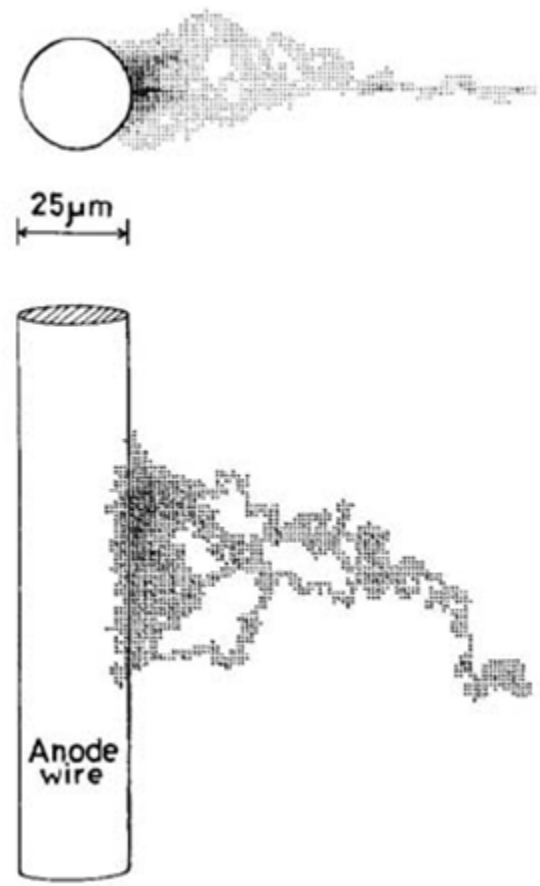

In large E fields, electrons can attain sufficient KE between collisions to ionize a neutral gas atom, producing an electron-ion pair, process creates an avalanche of charge (Townsend discharge)

Monte Carlo simulation

Matoba, et al.

IEEE Trans Nuc Sci, Vol. NS-32, No. 1, 1985

Gas Gain

Diethorn Model

$$\ln|G| = (V \ln|2|/\Delta V \ln|b/a|) \, [\, \ln\{V/pa \ln|b/a|\} - \ln|K| \,]$$

Gain approximately exponential with voltage $G \sim e^V$

Factors include:

- applied voltage V
- anode and cathode radii a and b
- gas pressure p
- gas specific parameters ΔV , E_C/p

  ΔV = potential difference between ionizing collisions

  E_C = critical electric field for gas multiplication

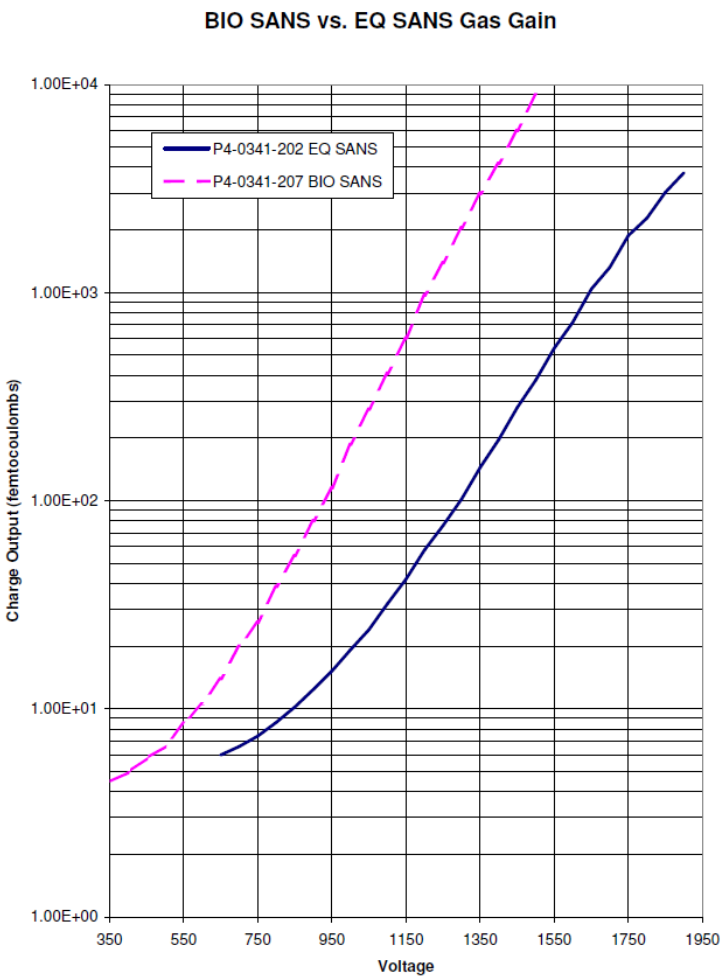

Plot Courtesy of GE Reuter-Stokes

Gas gain of LPSDs typically a few hundred (charge ~ 1 pC)

Preamplifier
signal current in → voltage pulse out

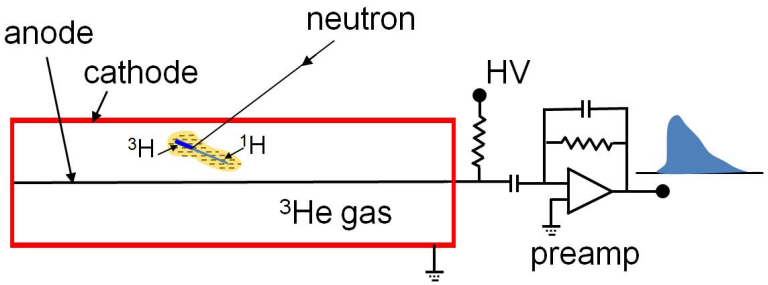

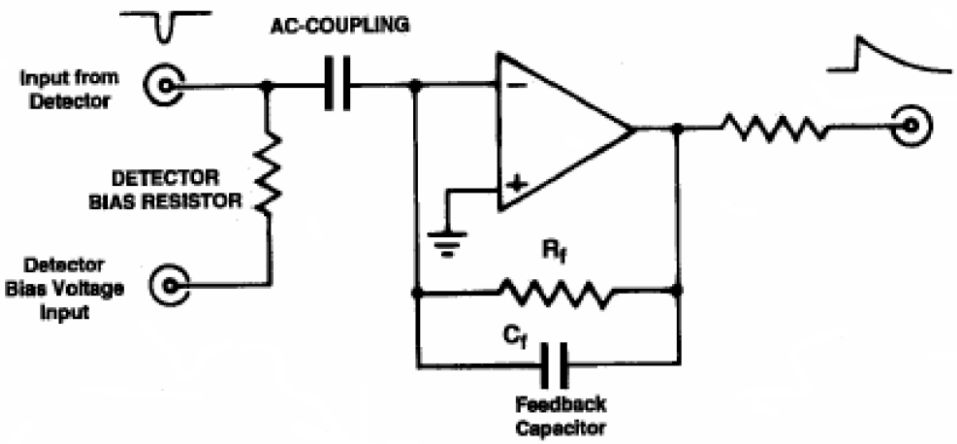

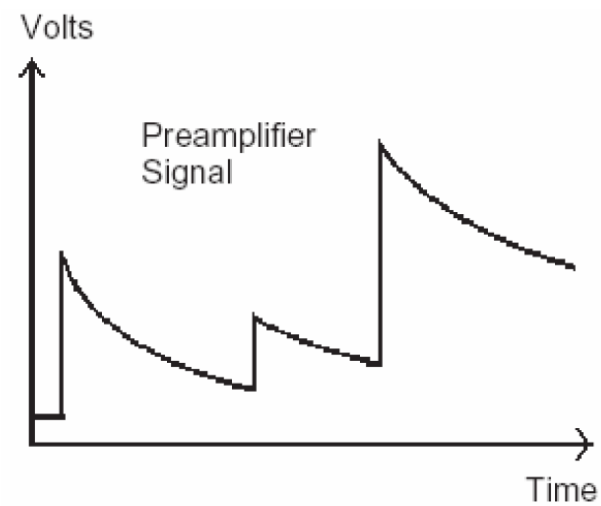

Differential Pulse Height Distribution and the "Wall" Effect

For interactions which occur near the tube wall, either the proton or the triton can reach the wall before giving up all of its energy to the gas.

The result is less than the full amount of charge collected on the wire.

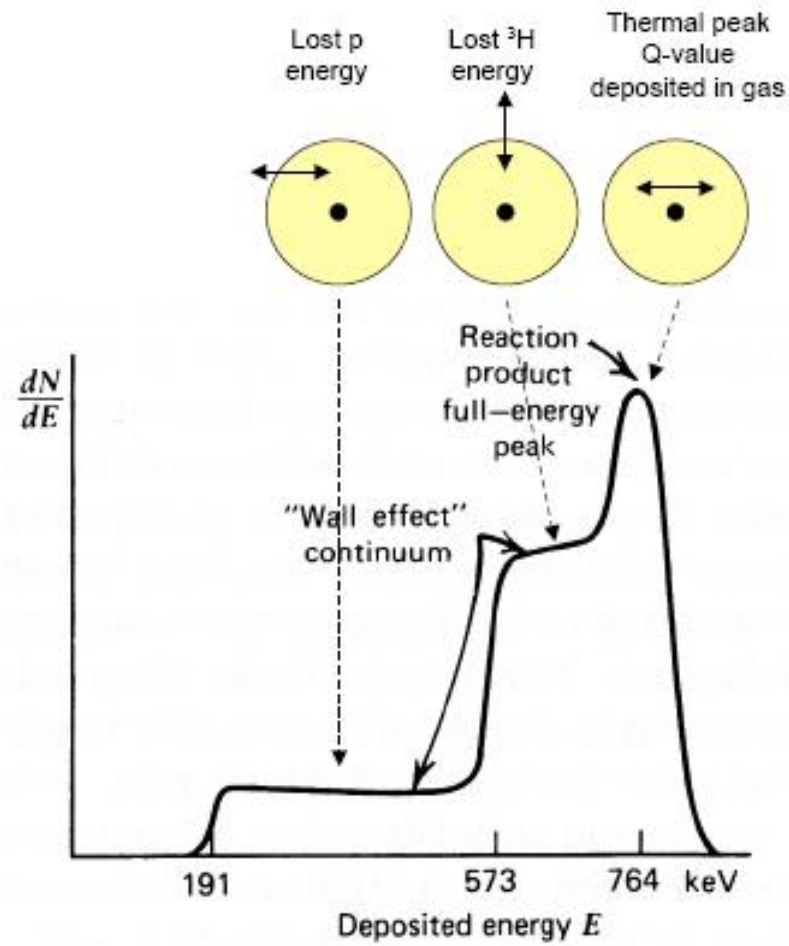

Wall effect depends on tube dimensions and gas pressure

Discriminator

- Circuit which passes all signal above an (adjustable) threshold voltage, and rejects everything below it

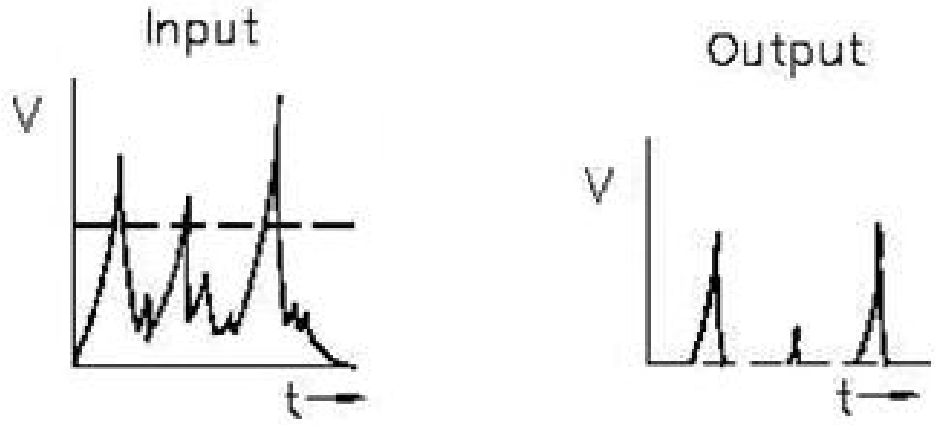

- Some circuits contain both upper and lower discriminators, and pass only what falls between

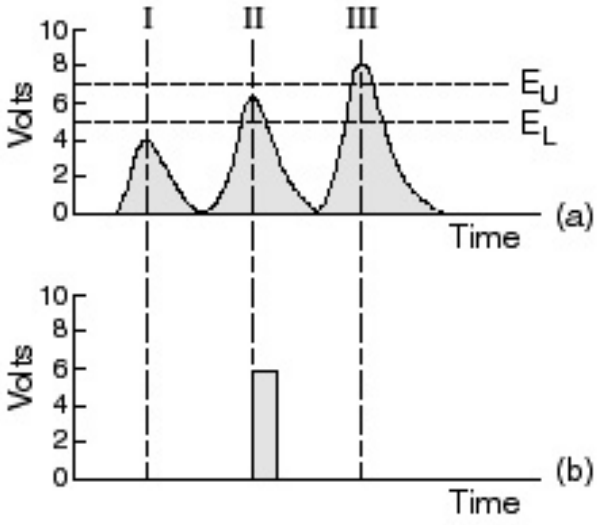

Wall Effect and Discriminator Setting

- Typically set discriminator just below the low energy neutron shelf to reject counts due to gammas and electronic noise

- Wall effect more pronounced in small diameter (larger surface to volume) or high pressure detectors (short attenuation length)

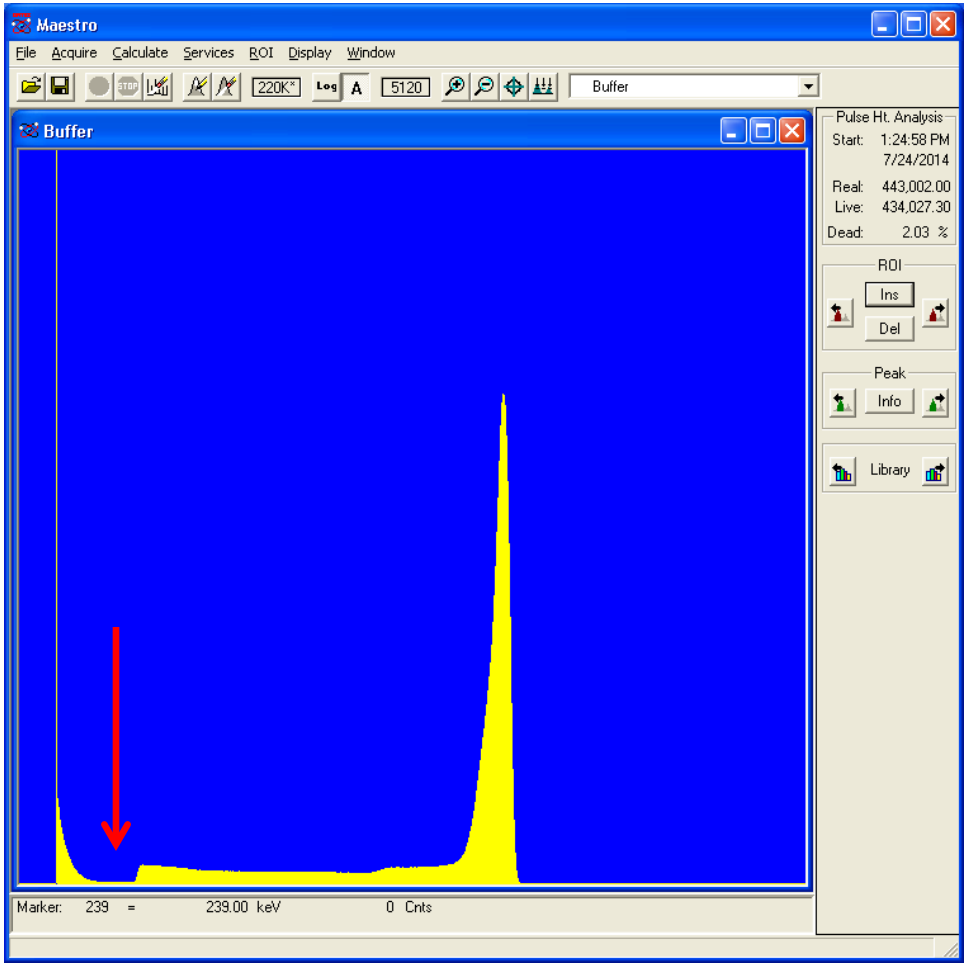

Single Ended Tubes – Triple Axis and Powder Diffractometer (HFIR)

- Charge sensitive preamplifier plus voltage discriminator
- High voltage applied to anode wire
- All pulses with voltage above discriminator level are counted as neutrons
- No positional information
  - other than event occurred somewhere inside the tube
  - essentially a counter

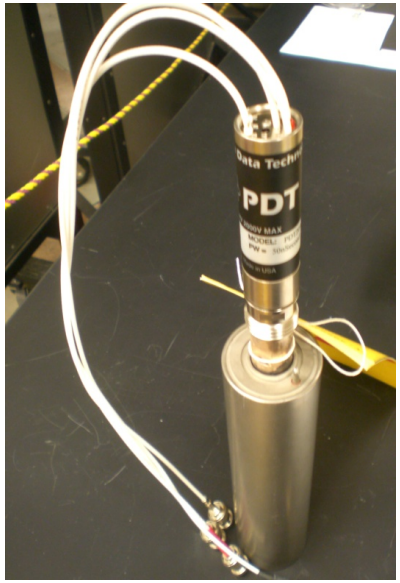

Linear Position Sensitive Detectors (LPSDs) and Resistive Charge Division

- Modular Assembly "8 packs"
- Resistive anode (few 1000 ohms)
- Anode at HV (1.5 - 2 kV typ)
- Preamplifier at each end of tube
- Current divides according to resistance it sees to preamps
- Current from both preamps is measured, compared
- Mathematical expression

  $$(A - B)/(A + B)$$

  determines interaction location

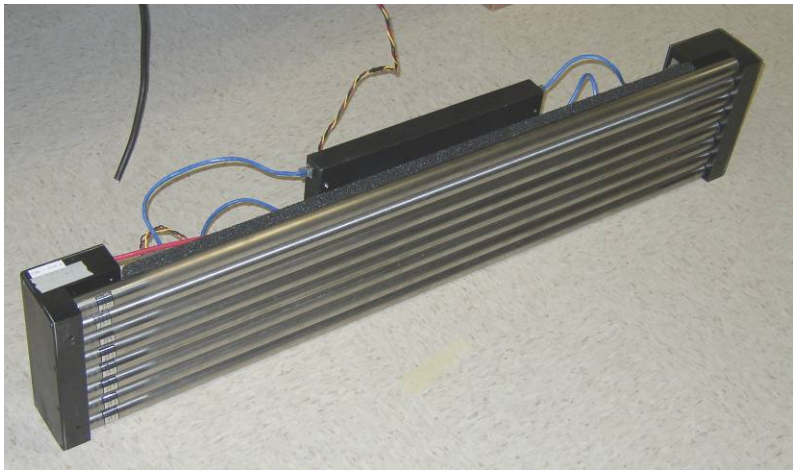

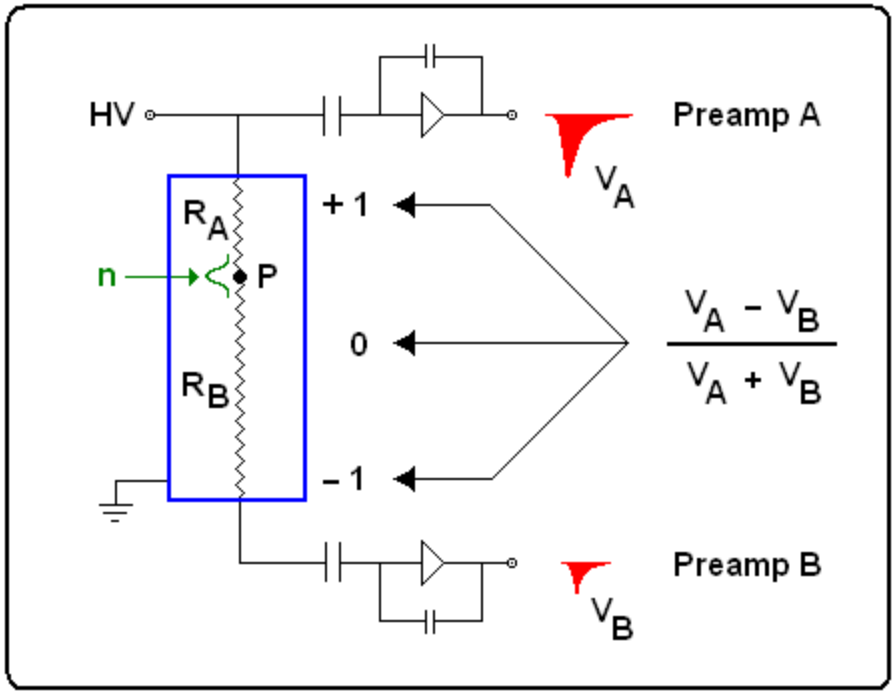

Wide Range of Pulse Shapes are possible …

Pulses at right are from interaction near tube end

Pulses below are from interaction near tube center

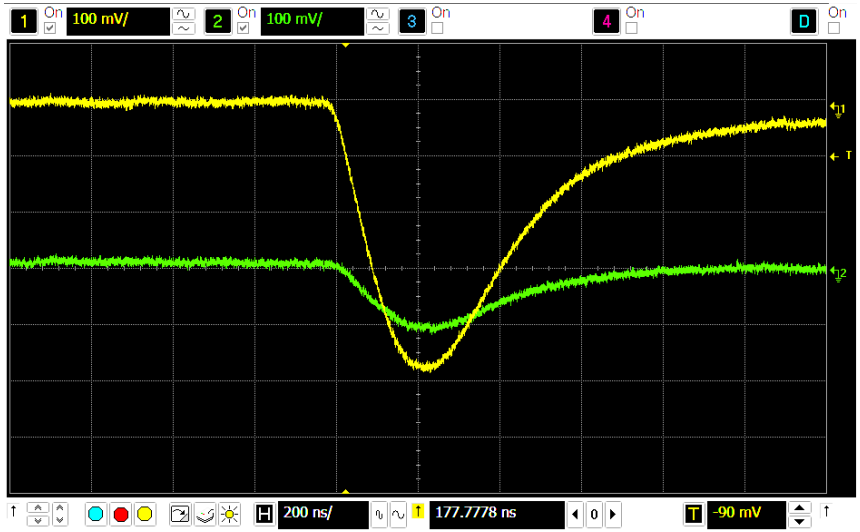

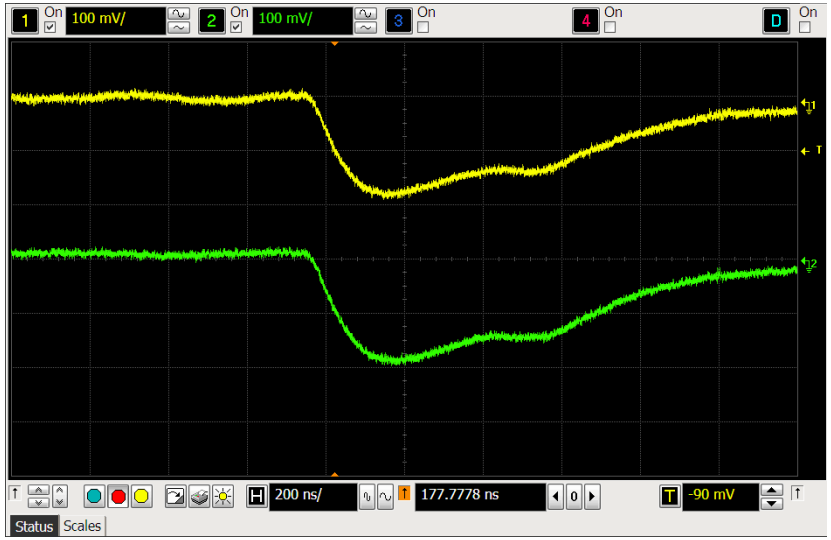

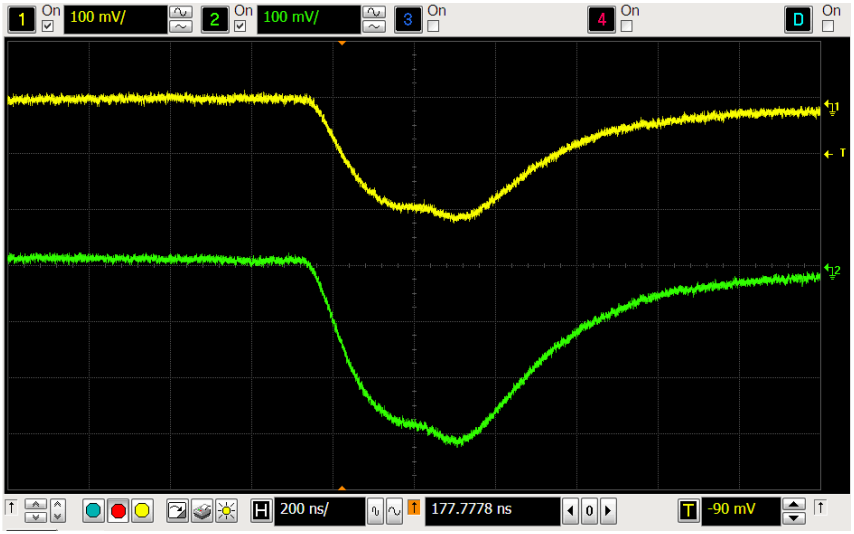

Neutron detection response along the anode wire

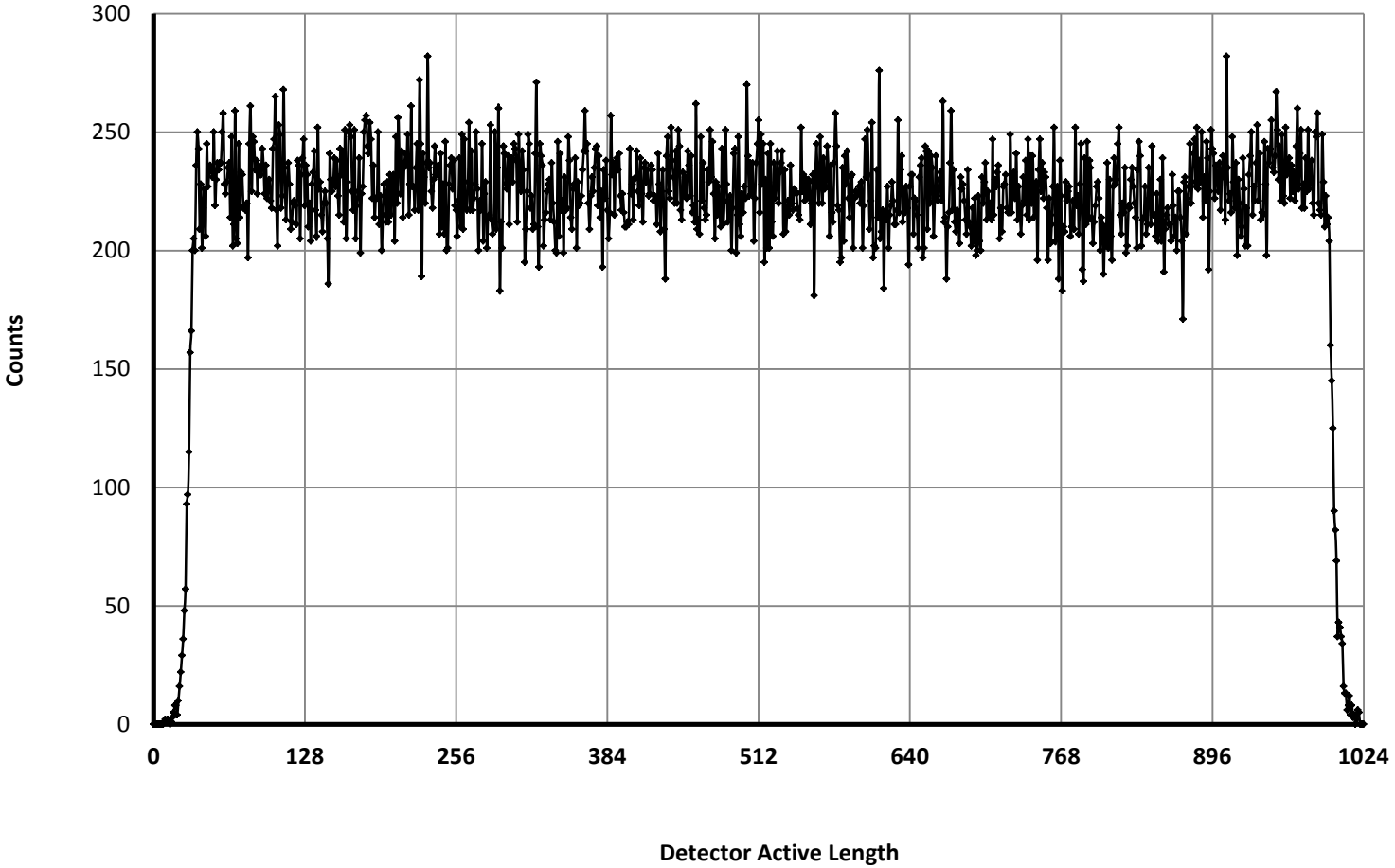

Area Detectors – BNL MWPC, WAND

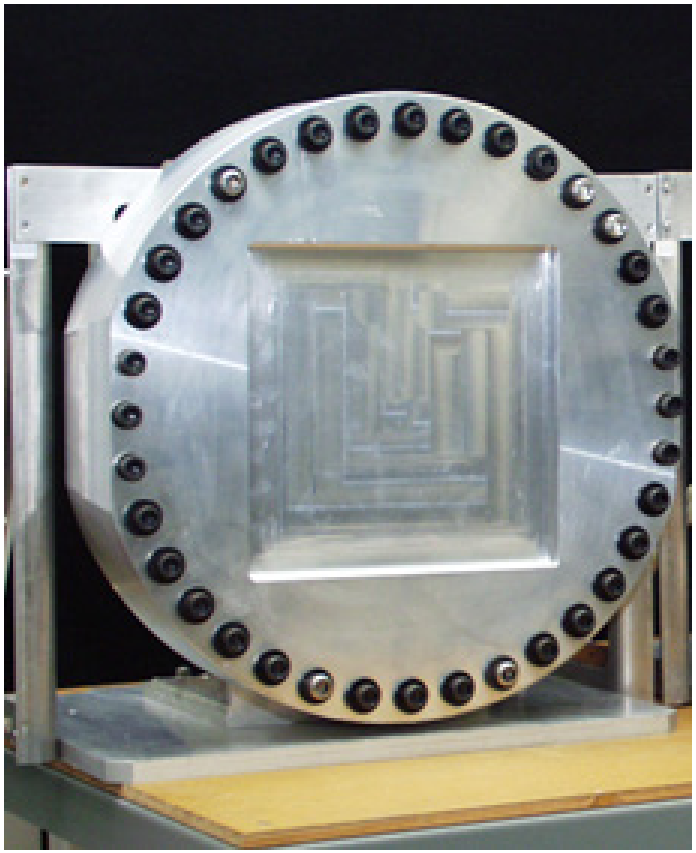

Multi-Wire Proportional Counter
(Brookhaven National Laboratory)

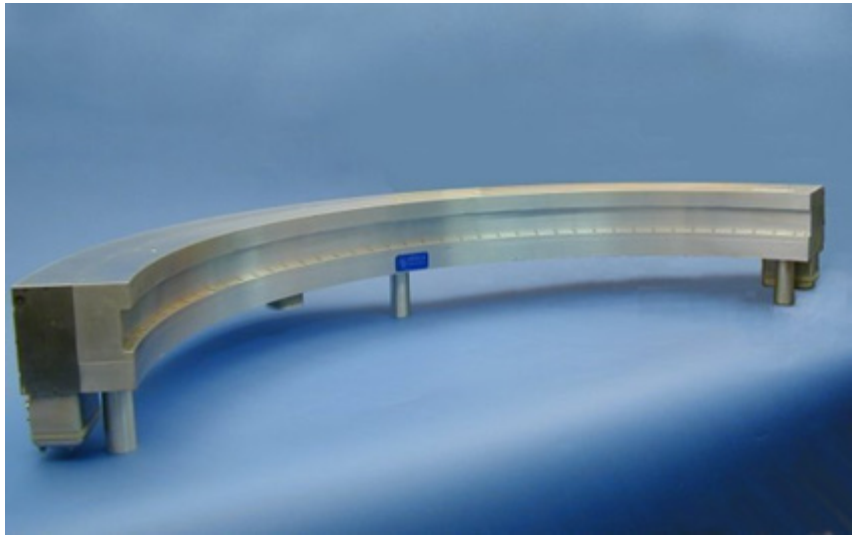

WAND Detector
(Ordela, Inc)

Multi-Wire Proportional Counters from BNL (SNS Reflectometers)

These detectors date back to the 80's, and still are in service!

- 20 cm x 20 cm active area
- 1.5 cm gas depth ($^3He + C_3H_8$)
- X and Y orthogonal cathodes with anode between at + high voltage
- Charge at anode induces signal on cathodes
- Preamps every 7th wire (1.1 cm)
- Resistive charge division between each pair of nodes (preamps)
- Low noise, low gas gain (~ 25)
- 1.5 mm spatial resolution (x and y)
- Recirculating gas pump and filter
- 4 μs dead time per pulse

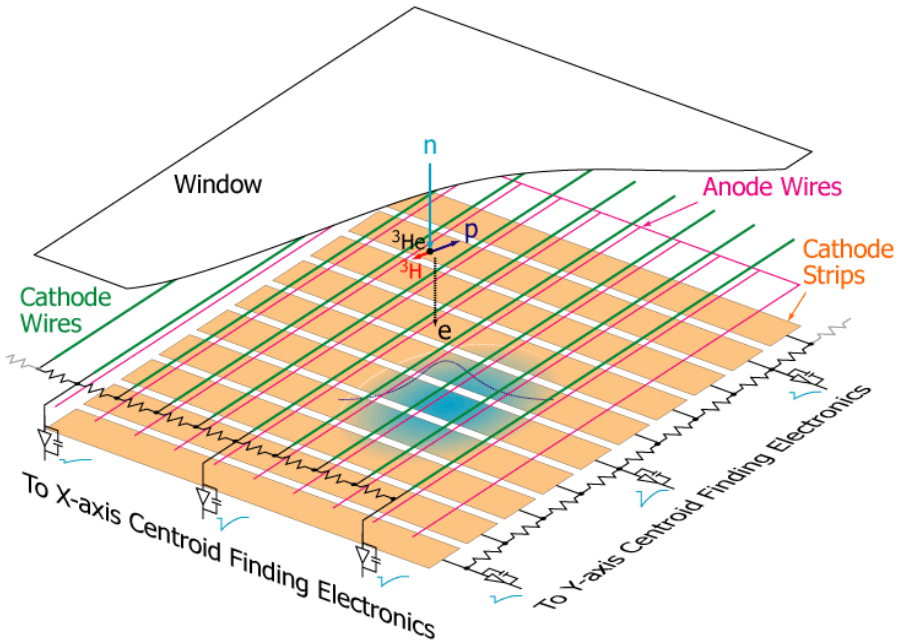

Interpolation based on signals from three wires

(C – A) / (A + B + C)

PSDs with Rise Time Encoding (HFIR Neutron Residual Stress Mapping Facility)

- 10 cm long x 5 cm wide active area
- 2 cm active depth
- $^{3}He + CF_4$ at 6.9 atm to give efficiency > 65% at 2 Å
- Entrance window 2.5 mm 6061 Al
- Anode and Cathode wire planes
- RC or "rise time" encoding (Borkowski-Kopp)
- Two preamps – one at each end of cathode
- Bipolar shaping of signal pulses
- Difference in zero-level crossover times is linearly proportional to neutron position

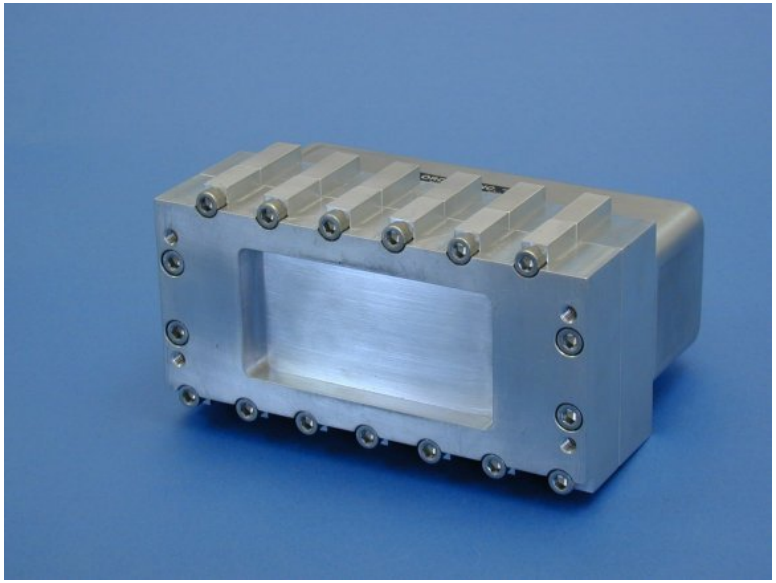

Ordela model 1155N PSD

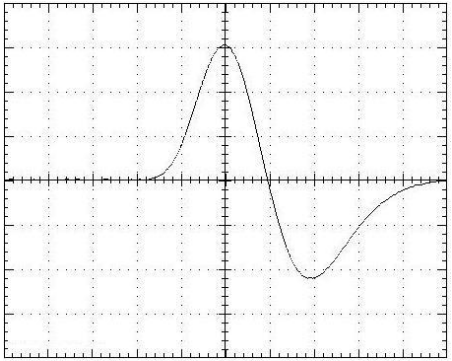

Bipolar Pulse

Neutron Beam Monitors (Ordela)

- Low gain (~ 7) gas proportional detector
- Two or four anode wires
- Low efficiency (10^{-3} - 10^{-5} typ)
- ^{3}He or ^{14}N conversion gas

  (^{14}N cross section ~ 1.9 barns)

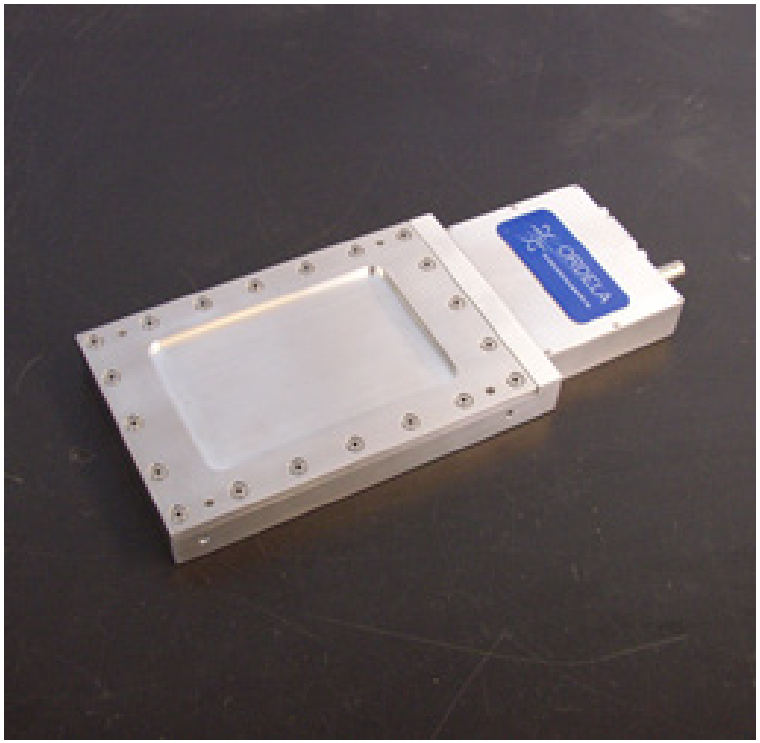

Note: beam monitor gas is essentially non-attenuating, but the wall thickness is 2 mm 6061 aluminum x 2 = 4 mm per monitor

attenuation ~ 1% per mm (for 1Å)

What properties are important in the selection of a neutron detector ?

… some or all depending on the instrument

- Spatial Resolution
- Timing Resolution
- Detection Efficiency
- Count Rate Capability/Dynamic Range
- Gamma Efficiency/Discrimination
- Cost/Areal Coverage
- Long Term Reliability/Maintainability

Resolution is the ability to distinguish between two closely spaced events (in space, time, energy)

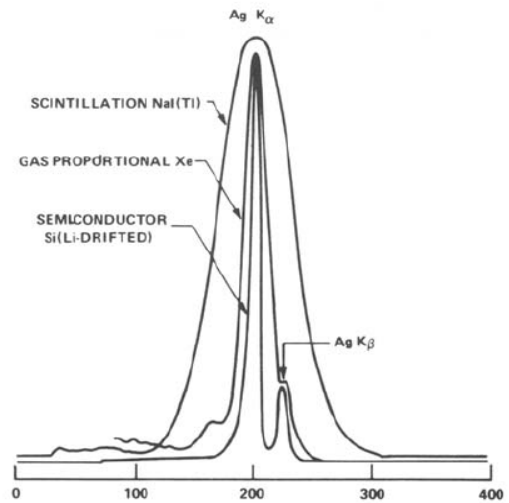

Fig. 8.1. Demonstration of the Resolution Capability of the Three Types of X-Ray Detectors for the Silver K Spectra Obtained from ^{109}Cd Source.

Borrowing an Example from X-Ray Spectroscopy

Courtesy Philip G. Burkhalter and William J. Campbell

U.S. Bureau of Mines, College Park, Maryland

Slit Mask to Measure Spatial Resolution

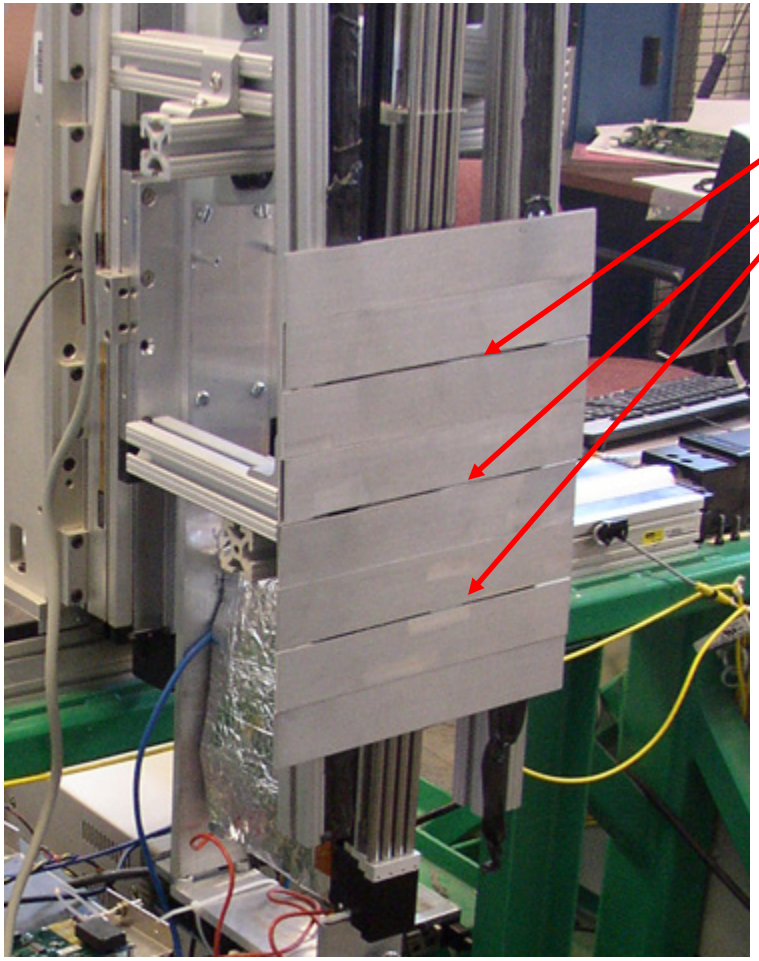

Three Slits in Neutron Shielding Mask (BAL)

Detector Response Through Three Slit Mask

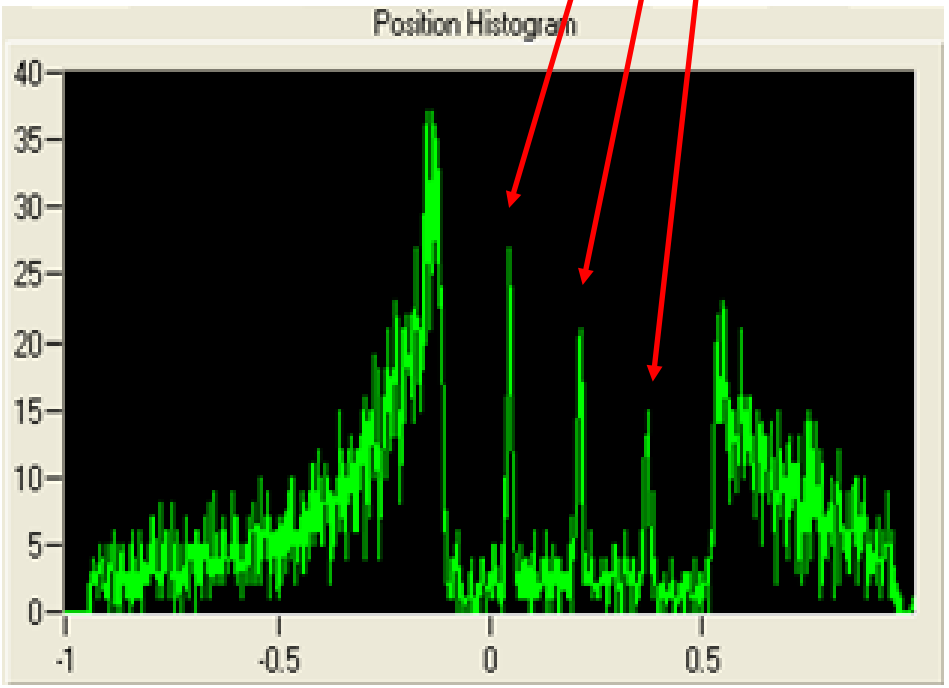

Timing Resolution and Parallax

Finite detector depth d contributes to uncertainty in measurement of detection time

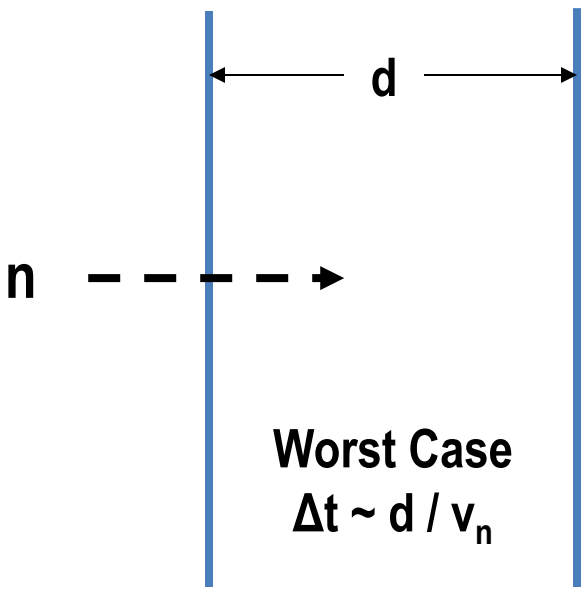

Parallax contributes to spatial (and to lesser extent) temporal uncertainty

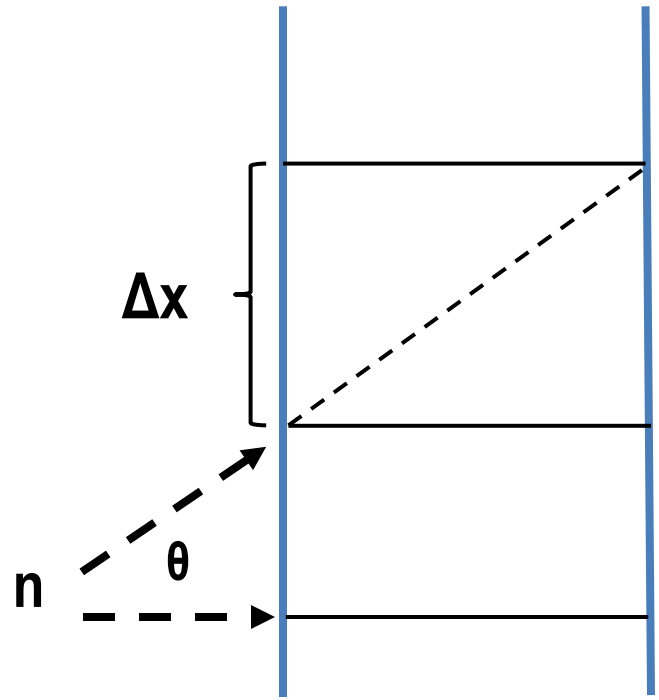

At the SNS, neutron events are time stamped to a precision of 100 ns

But what is the uncertainty in this measurement (for 1.8 Å neutrons, $v_n \sim 2$ mm/μs)

Neutron Detection Efficiency

efficiency = 1 – exp(- npσd)

n = number density

= 2.7 x 10^{19} /cm^3-atm

p = gas pressure [atm]

σ(λ) = cross section [cm^2]

(function of λ)

d = gas depth [cm]

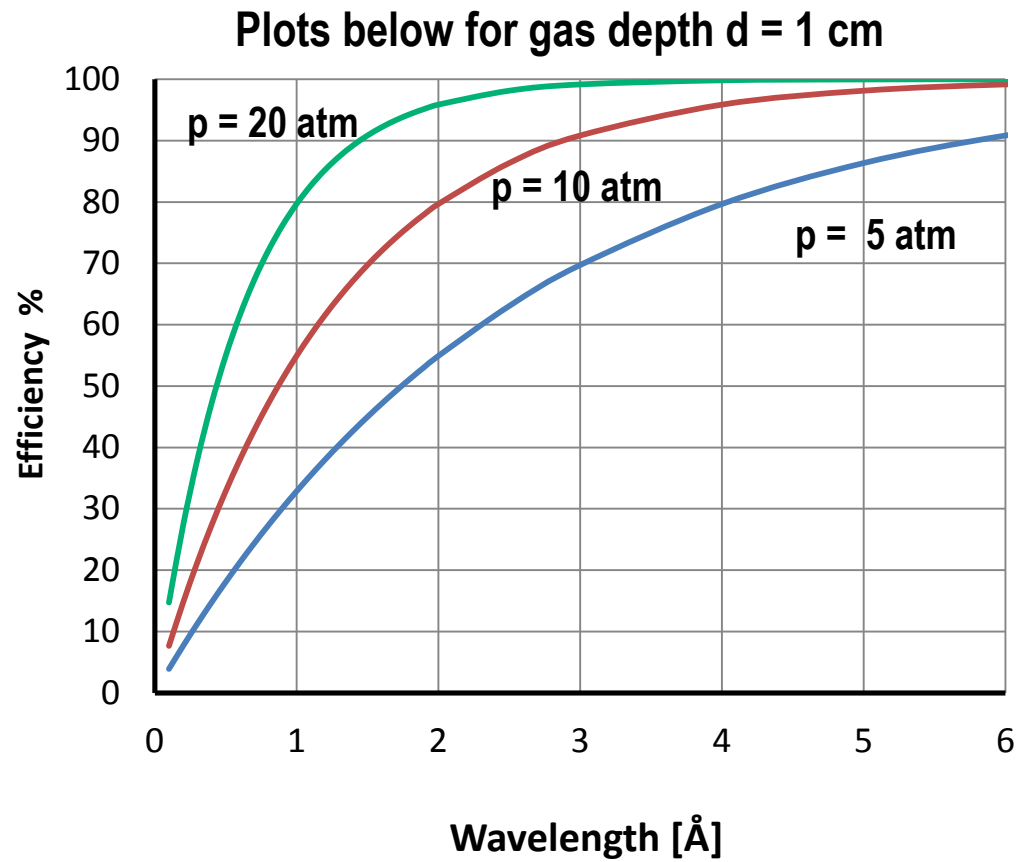

For beam monitors, efficiency ≈ npσd

Gamma Efficiency

- Gamma rays interact with matter primarily through
  - Photoelectric
  - Compton
  - Pair Production (>1.02 MeV)
- Strong dependence on Z
- Combine this with low number density of gases ~ 10^{19} - 10^{20}

- Helium-3 detectors have low gamma efficiencies

  (typically < 10^{-6})

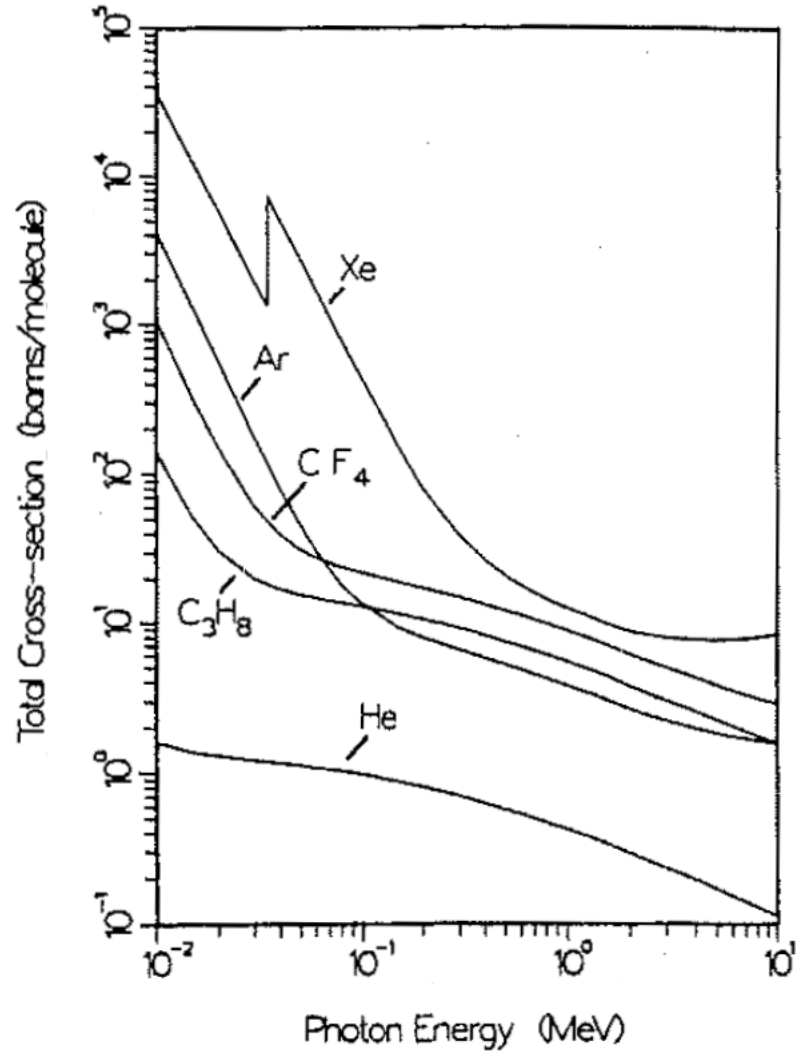

Lifetime and Aging

- Formation of polymers which deposit on wires
  - hot spots or dead areas
- Polymerization depends on gas purity and composition, also count rate

Question –

- How long will it take to use up the helium-3 in a typical gas detector

Answer –

- Assume 10^4 n/s per cm^3 x π x 10^7 s/yr

  10 atm = 3 x 10^{20} gas atoms per cm^3

  So, would deplete ~ 1 in 1,000,000

  He-3 atoms in 1000 years !

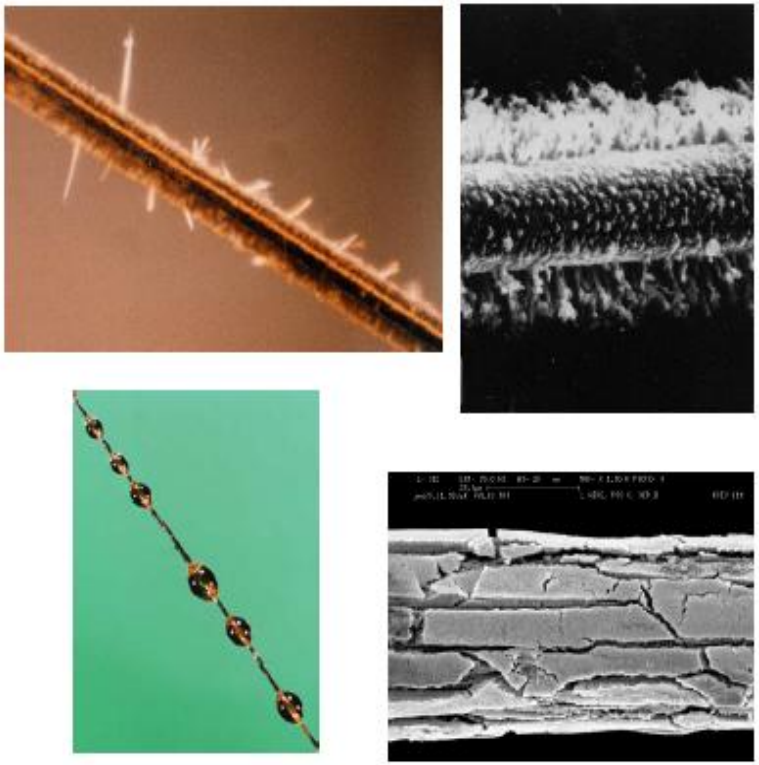

Images courtesy of

P. Krizan, Ionization Counters

Unregistered

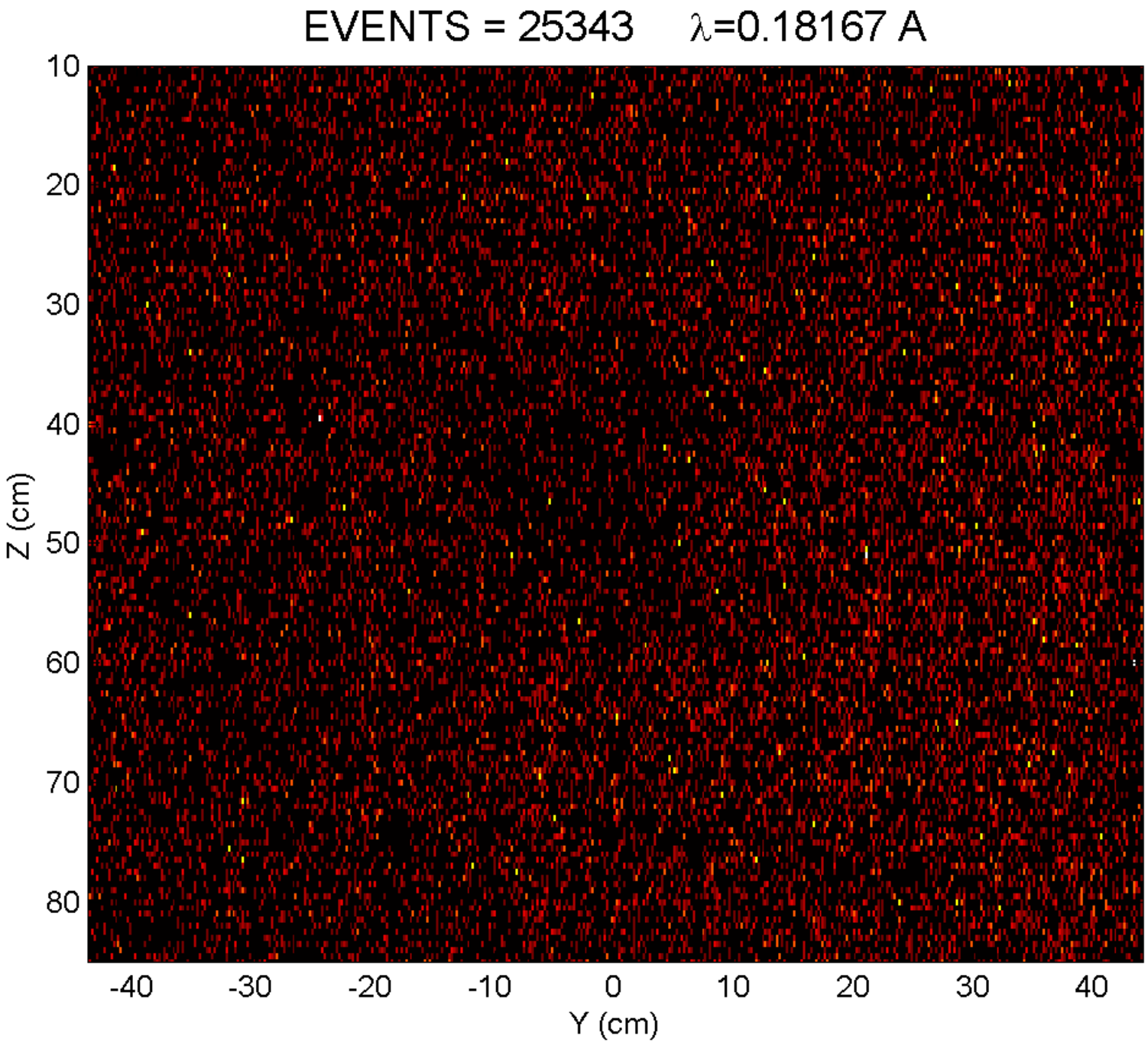

Thank You for Your Time and Attention

Acknowledgements:

Jack Carpenter

Lee Robertson

Kent Crawford

Ron Cooper

Yacouba Diawara

ResearchGate

See discussions, stats, and author profiles for this publication at: https://www.researchgate.net/publication/228465472

HELIUM-3-BASED FUSION PLASMA

Article *in* Voprosy atomnoj nauki i techniki = Pytannja atomnoï nauky i techniky = Problems of atomic science and technology · January 2008

CITATION
1

READS
791

1 author:

Sergei Ryzhkov
Bauman Moscow State Technical University

116 PUBLICATIONS **903** CITATIONS

SEE PROFILE

Some of the authors of this publication are also working on these related projects:

Project

Scientific and technical foundations for the development of hybrid reactors and systems with powerful heating sources for prospective power plants View project

All content following this page was uploaded by Sergei Ryzhkov on 19 May 2014.

The user has requested enhancement of the downloaded file.

HELIUM-3 - BASED FUSION PLASMA

S.V. Ryzhkov

Bauman Moscow State Technical University, 105005 Moscow, Russia,
E-mail: ryzhkov@power.bmstu.ru

The experimental devices and conceptual designs of the field-reversed configuration (FRC), tandem mirror and spheromak as best solution for the low radioactive plasma, namely helium-3 based fusion plasma, are reviewed. Reactor schemes based on D-^{3}He-^{6}Li fuel with the possibility of ^{3}He mining on the Earth and Moon, including breeding and support reactors are proposed. ^{3}He acquisition, some estimation and resources are presented. Applications of D-^{3}He reactions and advanced-fueled alternative systems are discussed.
PACS: 52.55.Lf.

INTRODUCTION

The most important technological advantages (blanket absence and possibility of using of the liquid first wall and direct conversion system) of power plant based on compact systems [1,2] – alternative scheme with low radioactive fuel [3-5] – in comparison with tokamak and other magnetic systems burning conventional D-T fuel are essential.

Theta-pinch, spheromaks merging and rotating magnetic field formation of FRCs [6-9] has been used successfully in previous experiments, but it extrapolates poorly to the fusion regime. Viable FRC startup and sustainment methods with reasonable input powers are being sought. Schematic D-^{3}He–fueled compact system is shown in Fig.1, where the separatrix has prolate shape and the plasma has the form of elongated quasi equilibrium.

Experimental plasma parameters for compact and linear machines (both with open filed lines) ranges: average beta $<\beta>\sim 5 - 95\%$, electron temperature $T_e \sim 0.02 - 4$ keV, electron density $n_e \sim 10^{16} - 10^{22}$ m^{-3}, energy confinement time $\tau_E \sim 0.01 - 2$ ms, external magnetic field $B_e \sim 0.005 - 15$ T, ion temperature $T_i \sim 0.03 - 10$ keV, length $l_s \sim 0.2 - 12$ m, radius $r_s \sim 0.01 - 0.5$ m.

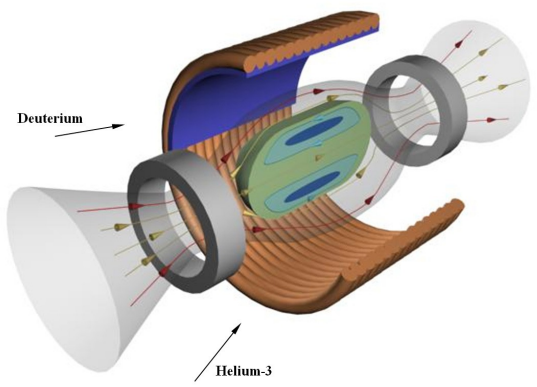

Fig.1. D-^{3}He field reversed configuration – prolate equilibrium with low radioactive fuel

EXPERIMENTAL AND FUSION PARAMETERS

Main experimental devices that can be used as D-^{3}He burn - compact tori as FRC and spheromak and open confinement system as tandem mirror - are shown in the Table. Some of experiments may be extrapolate to fusion regime. The name of Institute, Lab and University and the main functions and properties are indicated opposite the each device. The possibility of controlled fusion in a FRC using D-^{3}He fuel ($T_i \sim 50$ keV, $n_i \sim 10^{21}$ m^{-3}) is evident. High beta (the plasma to field energy density ratio) magnetic system burn D-^{3}He fuel is the best candidate for the fusion reactor.

Principal FRC, Mirror Trap and Spheromak experiments

FRC:	Linear Machine:	Spheromak:
CBFR – UC, Irvine, p-^{11}B	**AMBAL-M** - Budker Institute	**BCTX** – UC Berkeley, heat
FIREX - Cornell, **Munsat/Boulder** - Colorado U.	**CLM** – Columbia University	**BSX**, CT injection, Caltech
FIX – Osaka U., Stability, RMF	**GAMMA 10** – PRC,U.Tsukuba	**HIT-CT** – Himeji, Japan
NUCTE-3 – Nihon University, theta-pinch facilit	**MAP-II** – U. Tokyo, Hanyang	**CTIX** – UC Davis, acceleration
FRX-L – LANL, MIF/MTF high density	**GDT**, **SHIP** – BINP, LLNL, refueling	**HIT-SI** – U. Washington new formation
KT, **BN**, **TOR** – TRINITI, compression	**GOL-3** Multiple Mirror Trap – Budker	**SPHEX** – UMIST, pf, toroidal field
Lebedev Physical Institute RAS	**FLM** - Uppsala University	**SSPX**– LLNL, confinement
MRX – Princeton, oblate flux-conserver	**HANBIT** Device – KBSI	**SSSX**, multi-probe reconnection
TCSU, **STX** – U. Washington RMF, T, flux	**MultiCusp Trap** – Kurchatov Inst.	**TS-3,4** – Tokyo Univ., FRC, other TC

^{3}He ACTIVITIES

First analysis of D-^{3}He low radioactive systems and research on helium-3 resources have been started by I.N. Golovin [10] in USSR, H. Momota [11] in Japan and G.L. Kulcinski [12] in USA in the 1980th. Most of conceptual designs [7,11] on the D-^{3}He fuel assumed helium-3 from the Moon. Helium-3 supply on the Earth is just for couple years energy at full ^{3}He extraction from the atmosphere and underground gas [8] if we assume D-^{3}He thermonuclear power plant. Such situation may be improved by reactor schemes using catalyzed cycles and fusion cycles with ^{3}He getting in additional reactors (shown in Fig.2). ^{3}He has been produced in the auxiliary reactor and the part of the fusion power going to support the p-^{6}Li reaction: 1) D-^{3}He fusion power plant and self-sufficiency of helium-3 ; 2) Main reactor with D-^{3}He-^{6}Li mixture. This is a hybrid system - amplification factor is less than in the first case and part of ^{3}He will be delivered from the Moon. The third scheme (not shown here) assumed lunar helium-3.

If it is necessary ^{3}He will be produced on the Moon. Lunar soil [12], which contained desired isotope, covers the Moon (sea richer of helium, than highlands). History of helium-3 in brief: 1st Lunar Development Symposium, Atlantic City, 22 - 24 September 1986; 1st Wisconsin Symposium on Helium-3 and Fusion Power, 21 - 22 August 1990, Madison; US-USSR Workshop on D-^{3}He Reactor Studies, 25 September – 2 October 1991, Moscow; 2nd Wisconsin Symposium on Helium-3 and Fusion Power, 19-21 July 1993, Madison. The International Lunar Exploration Working Group (ILEWG) is a public forum created in 1994. The last 9th International Conference on Exploration and Utilisation of the Moon (ICEUM9) held 22 - 26 October 2007 in Sorrento.

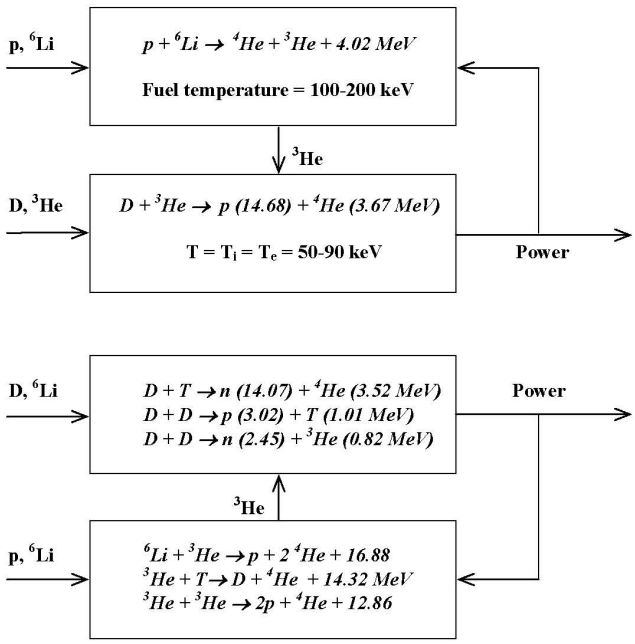

Fig.2. D-^{3}He-^{6}Li fuel fusion cycles.
*Scheme at the top shows main reactions, at the bottom - auxiliary reactions, small sigma*v and cross section for the reactions in the last box 2 stages reactor with ^{3}He recovery*

The price of helium and helium-3 is the separate question. Chemical-grade (99.9% pure) Helium-3 from ISOTEC Inc., Matheson company, Miamisburg, OH, USA (http://www.isotec.com/) now costs $220/liter.

So, the recent price is $1100/5l for ^{3}He, liquid ^{4}He ~ $5/kg, gas ^{3}He ~ 1.64M$/kg ($1.64 billion a ton).

The abundance of helium on the Earth are estimated as $3\cdot10^{10}$ m^3. In the crust, the concentration of He is in 200 bigger than in the atmosphere. Russian Federation total deep-laid gas estimated as ~ $48 \cdot 10^{12}$ m^3 ($1680 \cdot 10^{12}$ f^3). East Siberia, Yakutia have resources of natural gas [13] ~ $30 \cdot 10^{12}$ m^3 (helium-rich >0.5%).

Moon: ~ 1000 million tones (regolith). Uranium: ^{3}He/^{4}He = 1/3000, Jupiter: 10^{20} t (atmosphere), Saturn + asteroids + comets (asteroids more rich of helium-3).

Estimation for the two reactions ^{3}He(^{3}He,pp)^{4}He+12860 and ^{3}He(d,p)^{4}He+18353:

^{3}He-^{3}He reaction has reaction energy 12.86 MeV ($2.06\cdot 10^{-12}$ J). 1 gram ~ $2\cdot 10^{23}$ particles of helium-3. 1 ton of ^{3}He: ($12.86 \cdot10^6$) x ($1.6 \cdot10^{-19}$) x ($2\cdot10^{29}$) = $20.6\cdot10^{16}$ J of heat energy. I.e., 1 t of ^{3}He is equivalent to 5.4 million tons of oil!

D-^{3}He – 18.36 MeV. 1 ton of ^{3}He: ($18.36\cdot10^6$) x ($1.6\cdot10^{-19}$) x ($2\cdot10^{29}$) = $59\cdot10^{16}$ J of thermal energy. One ton of ^{3}He ~ 15.5 million tons of oil!

Oil costs ~ $100/bar. Urals (main Russian brand) coefficient ~ 7.28 bar/t. 1 oil ton costs 728$.

At one billion dollars a t, the energy cost of ^{3}He is equivalent to oil at ~ $9 per barrel! We can go up to $10 billion/t for helium-3 from the Moon!

Even, for Wittenberg figures [12] ($7\cdot10^{-10}$ for ^{3}He Volume Fraction in natural gas) we have:

Just for Siberia ($30 \cdot10^{12}$) x ($7 \cdot10^{-10}$) = $21\cdot 10^3$ m^3 of ^{3}He $2.8\cdot 10^3$ kg, i.e. 2.8 t !

Irkutsk region (He reserve in 2025) ~ $30\cdot10^6$ m^3.

World: ($27.8\cdot10^9$) x ($1.4\cdot10^{-6}$) x 0.134 = 5.2 t of ^{3}He !!! It's enough even for Demo reactor. To cover the energy supply of one country (taking into account 20 percent of usage thermonuclear reactors of general part) 10 tones per year of helium-3 is required and enough for Russia. Other countries also have helium (reserve and resource): US + Algeria + Canada + Japan (Niigata basin – ^{3}He/^{4}He higher ratio) + China + Australia.

Approximate power inputs on helium detachment (low temperature separation or produced rectification) from gases contained 0.02; 0.05; 0.5% He - 250, 100 and 10 kW·h/m^3.

Applications of helium-3 based plasma [14] unlimited and may lead to new era in medicine and space propulsion. Near term – proton source and medical isotope production, cancer therapy, FRC fueler for tokamak design, detection of explosives and chemical wastes. ^{18}O + p → n + ^{18}F; ^{94}Mo + p → n + ^{94m}Tc; ^{14}N + p → ^{4}He + ^{11}C; ^{16}O + p → ^{4}He + ^{13}N; ^{13}C + p → n + ^{13}N; ^{15}N + p → n + ^{15}O. Mid term – destruction of fissile

material and radioactive wastes, material and technology issues, including thick liquid walled commercial power plant (low recycling/ wall pumping).

CONCLUSIONS

Aneutronic/ low radioactive fuel is the way to clean and cheap energy in the future. An alternative fueling scheme using accelerated compact-toroids (CT) – FRC or sheromak injection - may be applied for the reactor based on any magnetic confinement system. Even more, any fusion concepts, including magneto inertial fusion (MIF)/magnetized target fusion (MTF) might use advantages of D-^{3}He fuel. Examples of the subsidiary reactor for the D-^{3}He-^{6}Li fuel cycle: breeder, polarized beams, plasma accelerator, colliding beam, also are open for discussion.

ACKNOWLEDGEMENT

The research was supported in part by the Grant of the President of the Russian Federation (№ МК-676.2008.8) and Russian Foundation for Basic Research (RFBR or RFFI) Grant № 08-08-00459.

REFERENCES

1. G.H. Miley. Compact tori for alternate fuel fusion// *Nuclear Instruments and Methods*. 1983, v. 207, p. 111-120.
2. S. Woodruff. Technical survey of simply connected compact tori (CTs): Spheromaks, FRCs and compression schemes// *J. Fusion Energy.* 2008, v. 27, p. 134-148.
3. V.I. Khvesyuk, S.V. Ryzhkov. Analysis of D-^{3}He-^{6}Li Fuel Cycle// *Summary of IAEA-TCM*, *Pleasanton, California, USA, 20-23 October, 1997*.
4. V.I. Khvesyuk, A.Yu. Chirkov Low-radioactivity D–^{3}He fusion fuel cycles with ^{3}He production// *Plasma Phys. Control. Fusion*. 2002, v. 44, N2, p. 253–260.
5. S.V. Ryzhkov. Thermal-physical analysis of low-radioactive thermonuclear plasma in the magnetic fusion device// *Problems of Atomic Science and Technology. Series "Plasma physics" (13).* 2007, N1, p. 9-11.
6. J.F. Santarius, E.A. Mogahed et. al. Final report for the field-reversed configuration power plant critical-issue scoping study // *Report UWFDM-1129*. Madison. Fusion Technology Institute, 2000.
7. V.I. Khvesyuk, S.V. Ryzhkov, J.F. Santarius et. al. D-^{3}He Field-Reversed Configuration Fusion Power Plants// *Fusion Technol.* 2001, v. 39 (1T), p. 410-413.
8. S.V. Ryzhkov. Features of formation, confinement and stability of the field reversed configuration// *Problems of Atomic Science and Technology. Series "Plasma physics" (7).* 2002, N4, p. 73-75.
9. A.L. Hoffman. FRCs (and RMF CD)// *Course AA559*, University of Washington, 2007.
10. I.N. Golovin, V.V. Kostenko, V.I. Khvesyuk, N.V. Shabrov // *Pis'ma Zh. Teor. Fiz.* 1988, v. 14, p. 1860 (in Russian).
11. H. Momota, A. Ishida, et. al. Conceptual design of D-^{3}He FRC reactor ARTEMIS// *Fusion Technol.* 1992, v. 21, p. 2307-2323.
12. L.J. Wittenberg, J.F. Santarius, G.L. Kulcinski. Lunar source of ^{3}He for commercial fusion power// *Fusion Technol.* 1986, v. 10, p. 167.
13. V.P. Timoshilov. Gas of the Russian East: in expectation of determining decisions// *Oil & Gas vertical*. 2006, v. 7, p. 24-27.
14. S.V. Ryzhkov. Modeling and engineering applications for weakly turbulent plasma// *Proc. of the 35th Conf. on Plasma Physics, Hersonissos 9-13 June, 2008/* ECA 32, P1.114.

Article received 30.09.08.

ТЕРМОЯДЕРНАЯ ПЛАЗМА НА ОСНОВЕ ГЕЛИЯ-3

С.В. Рыжков

Рассмотрены экспериментальные установки обращенной магнитной конфигурации (FRC) и сферомак, составляющие класс магнитных систем, называемый "компактный тор", и зеркальные ловушки, как наиболее перспективные и, в то же время, надежные и простые кандидаты в качестве термоядерных реакторов с улучшенным топливом. Представлены реакторные схемы с комбинированным D-^{3}He-^{6}Li топливным циклом с возможностью получения гелия-3 на Земле, включая реакторы-бридеры, и накопления ^{3}He в результате побочных реакций, а также с учетом лунного гелия. Показаны расчеты стоимости He-3 при получении его из природного газа, а также история вопроса и полная и энергетическая цена гелия-3. Обсуждены концепция электростанции с малонейтронным топливом и различные приложения малорадиоактивной плазмы на основе гелия-3.

ТЕРМОЯДЕРНА ПЛАЗМА НА ОСНОВІ ГЕЛІЮ-3

С.В. Рижков

Розглянуто експериментальні установки зверненої магнітної конфігурації (FRC) і сферомак, що складають клас магнітних систем, названий "компактний тор", і дзеркальні пастки, як найбільш перспективні і, у той же час, надійні і прості кандидати як термоядерні реактори з поліпшеним паливом. Представлено реакторні схеми з комбінованим D-^{3}He-^{6}Li паливним циклом з можливістю одержання гелію-3 на Землі, включаючи реактори-брідери, і накопичення ^{3}He у результаті побічних реакцій, а також з урахуванням місячного гелію. Показано розрахунки вартості He-3 при одержанні його з природного газу, а також історія питання і повна й енергетична ціна гелію-3. Обговорено концепцію електростанції з малонейтронним паливом і різні додатки малорадіоактивної плазми на основі гелію-3.

View publication stats

Using Lunar Helium-3 to Generate Nuclear Power Without the Production of Nuclear Waste

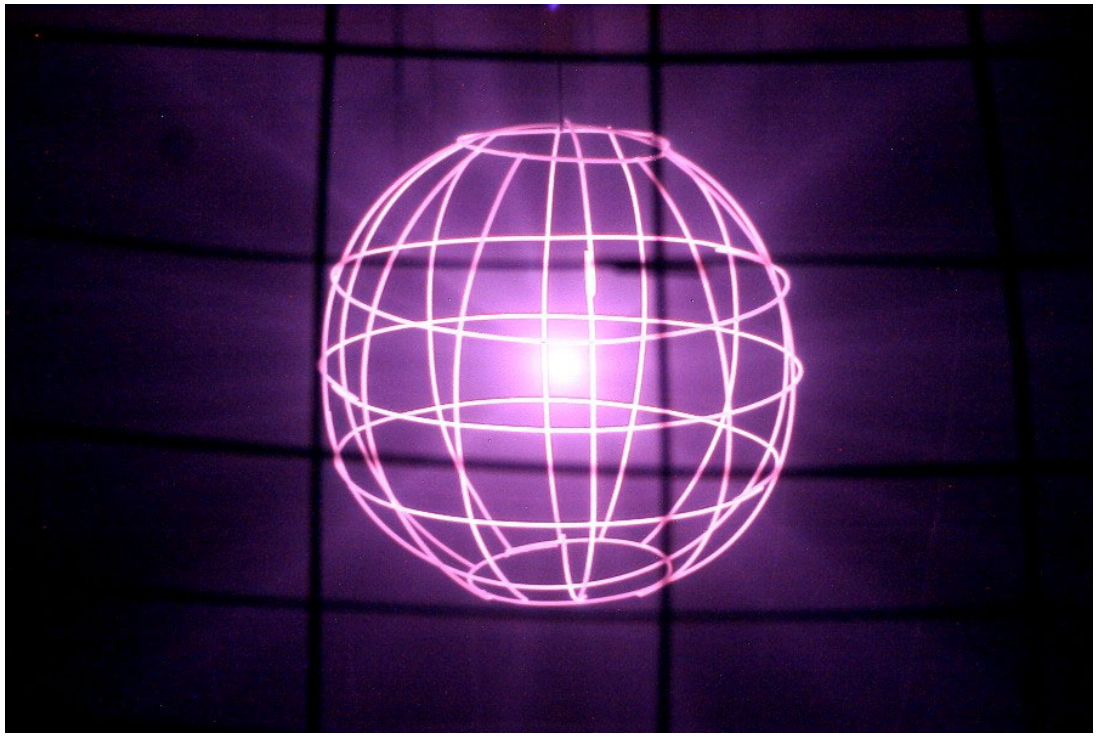

G. L. Kulcinski

Fusion Technology Institute

University of Wisconsin-Madison

Presented at the 20th International Space Development Conference, Albuquerque NM, May 24-28, 2001.

The Public Developed a Resistance to Nuclear Power in the Late 20th Century

The resistance seems to be largely based on:

1) Fear of radioactivity releases
2) Uneasiness with long-term nuclear waste storage
3) Fear of proliferation of nuclear weapons grade material

All of the above problems stem from the nuclear reaction:

1) Radioactive fuel
2) Radioactive reaction products
3) Neutrons

There Are 2 Main Nuclear Reactions to Release Energy

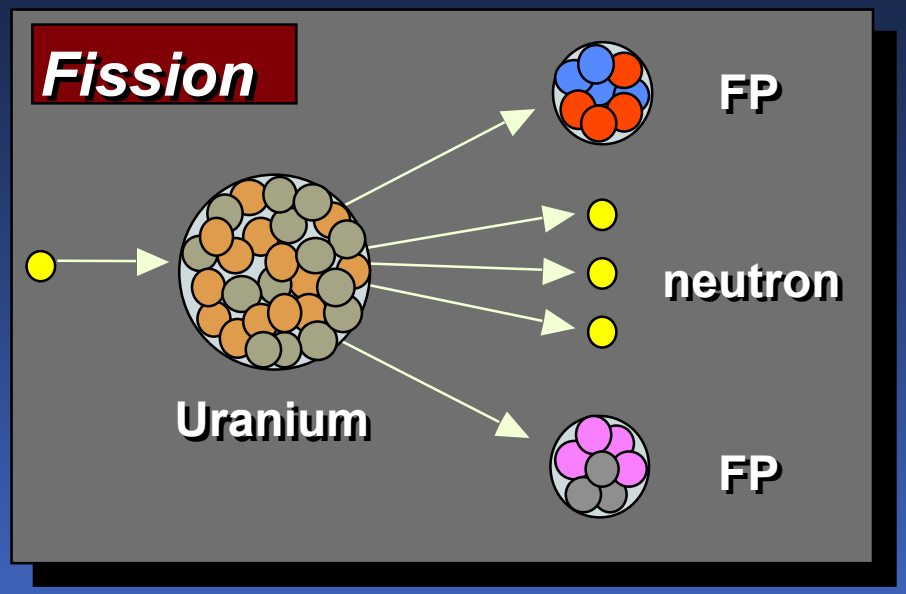

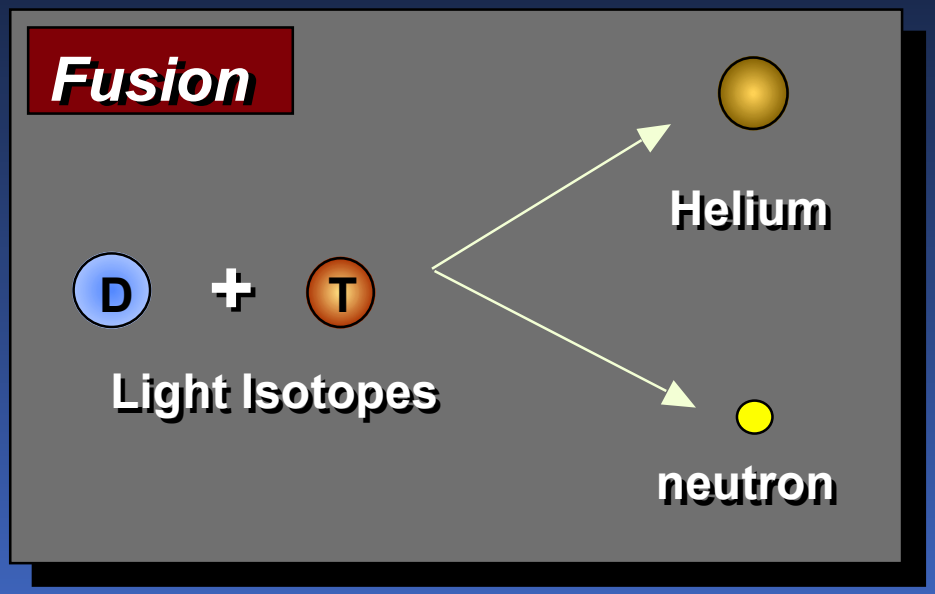

The 20th Century Approach to Fusion Only Partly Alleviates Public Concerns About Nuclear Power

Public Concern	How DT Fusion Addresses Concern
Radioactive Releases	Avoid runaway reactions and "meltdown" scenarios However, still have gigacuries in reactor in the event of an accident
Long Term Radioactive Waste Storage	Choice of fuel and structural material can reduce effective half life to < 100's years However, radiation damage and replacement of components can produce large volumes of radioactive waste
Proliferation	Reactor does not require fissile or fertile material However, excess neutrons can be used to breed fissile fuel

Fusion Can be Conveniently Divided into Three Eras

1st Generation

$$D + T \rightarrow n\ (14.07\ MeV) + {}^{4}He\ (3.52\ MeV)$$

$$D + D \rightarrow n\ (2.45\ MeV) + {}^{3}He\ (0.82\ MeV) \quad \{50\%\}$$

$$\rightarrow p\ (3.02\ MeV) + T\ (1.01\ MeV) \quad \{50\%\}$$

2nd Generation

$$D + {}^{3}He \rightarrow p\ (14.68\ MeV) + {}^{4}He\ (3.67\ MeV)$$

3rd Generation

$${}^{3}He + {}^{3}He \rightarrow 2p + {}^{4}He \quad (12.9\ MeV)$$

The Number of Neutrons Generated by Helium-3 Fusion Fuels is Very Small

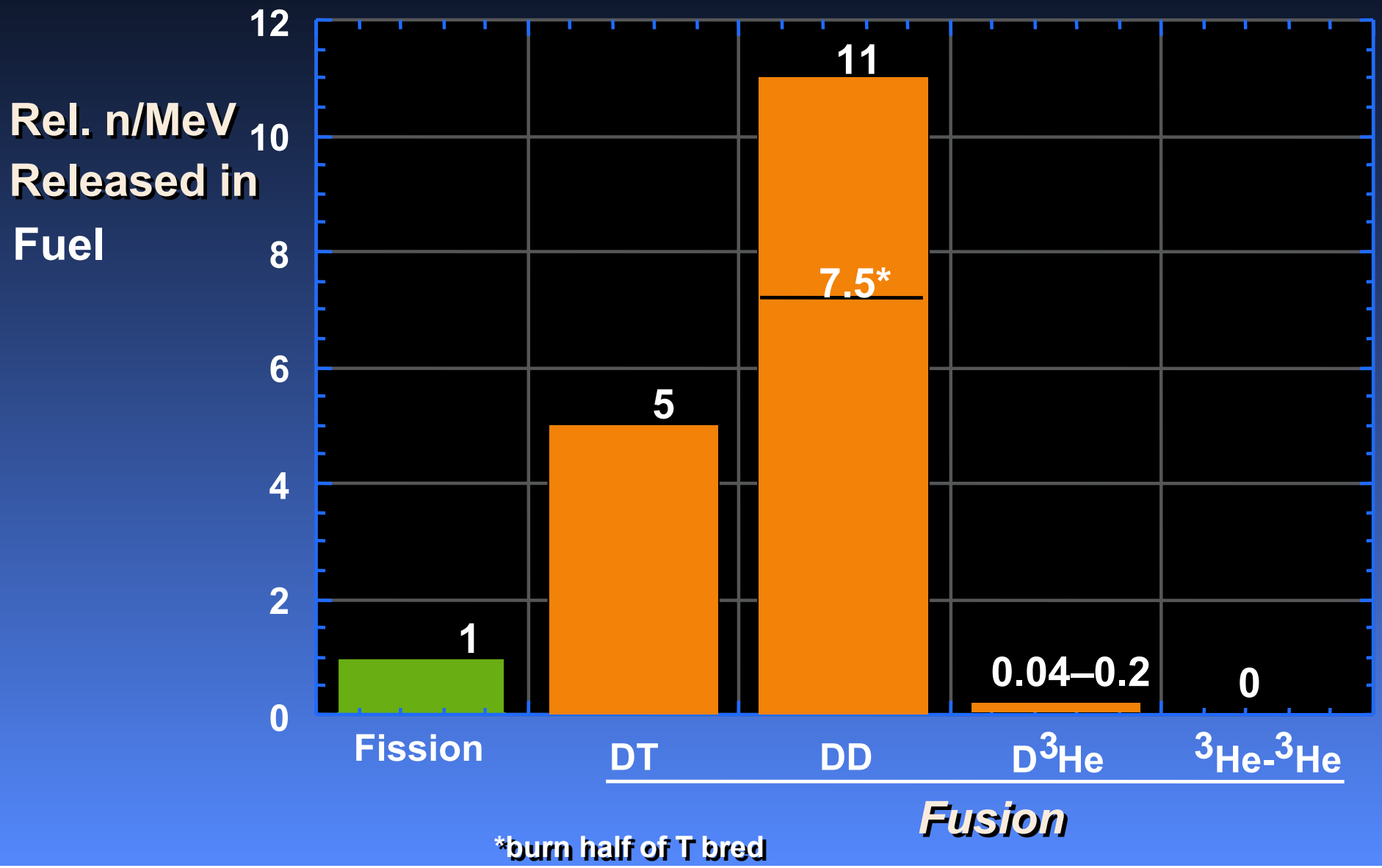

The Use of 2nd and 3rd Generation Fusion Fuels Can Greatly Reduce or Even Eliminate Radioactive Waste Storage Problems

Class of Waste	Relative Cost of Disposal	LWR Fission (Once Through)	DT (SiC)	D^3He (SiC)	$^3He^3He$ (any material)
		Relative Volume of Operation Waste/GWe-y			
Class A	1	several times Class C amount	several times Class C amount		
Class C	≈10	55			
Deep Geological (Yucca Mtn.)	≈1000				

Characteristics of D ^{3}He Fusion Power Plants

- No Greenhouse or Acid Gas Emissions During Operation
- Very High Efficiencies (>70%)
- Greatly Reduced Radiological Hazard Potential Compared to Fission Reactors (<1/10,000)
- Low Level Waste Disposal After 30 y
- No Possible Offsite Nuclear Fatalities in the Event of Worst Possible Accident

Characteristics of ^{3}He ^{3}He Fusion Power Plants

- No Greenhouse or Acid Gas Emissions During Operation

- Very High Efficiencies (>70%)

- No Residual Radioactivity After 30 Years of Operation (No Radioactive Waste, Radiation Damage, or Safety Hazard).

Fusion Reactivities for IEC Distributions

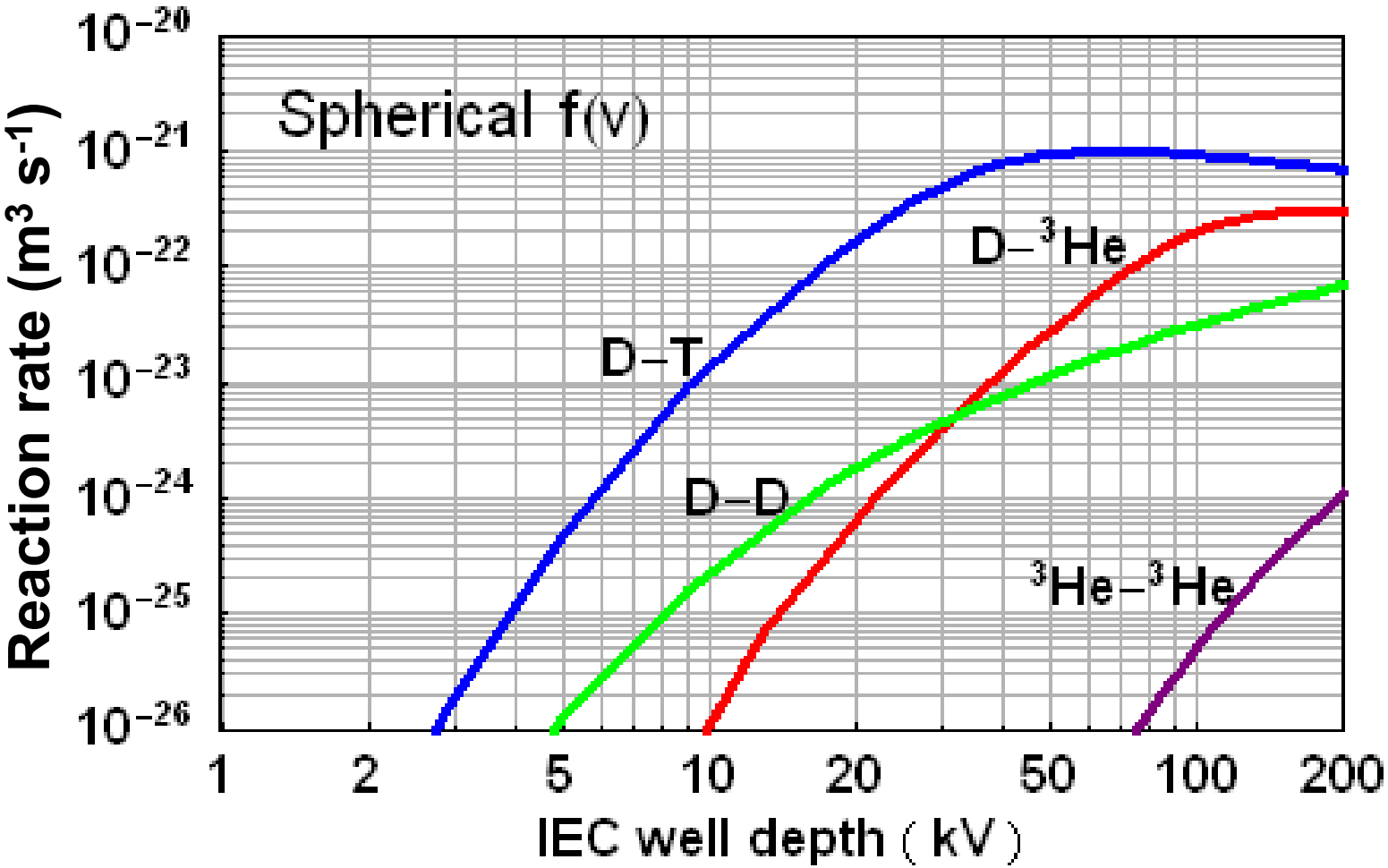

Steady State D ^{3}He Reaction Rate Achieved in Wisconsin IEC Device

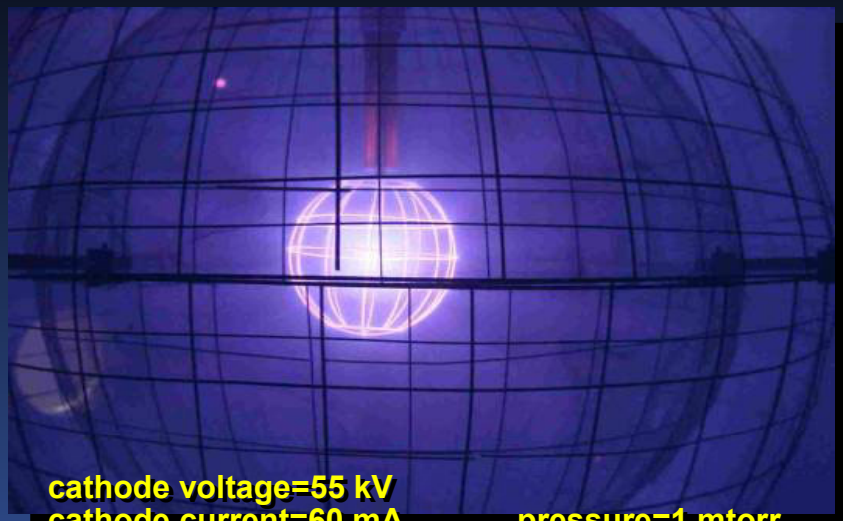

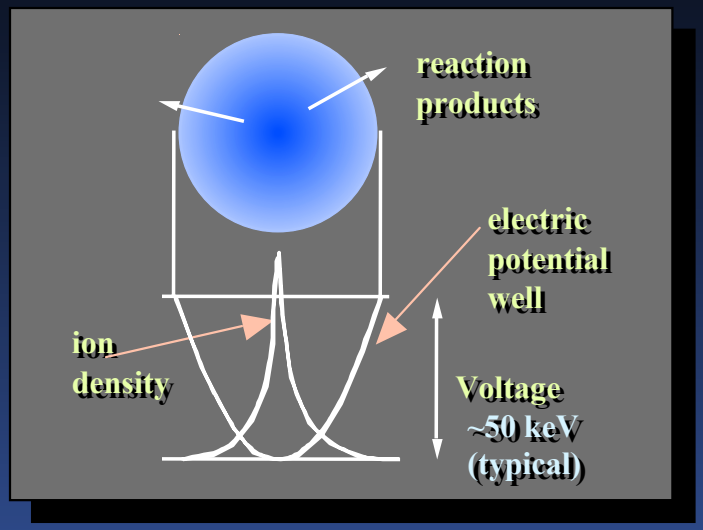

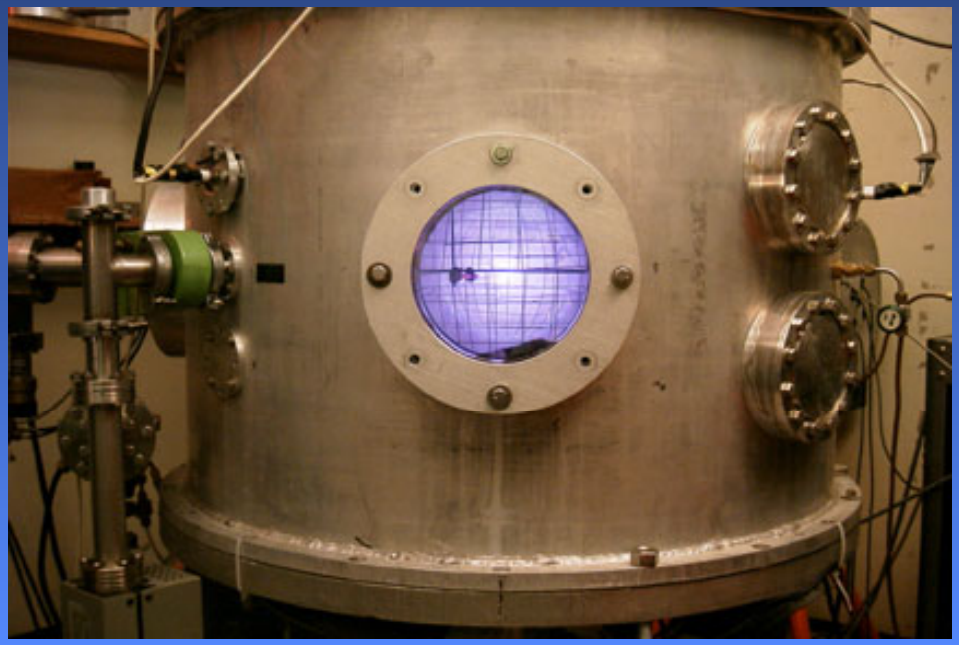

The Steady State D-^{3}He Fusion Rate in the UW IEC Device is Now 1.5 x 10^8 p/s

(115 kV, 60 mA)

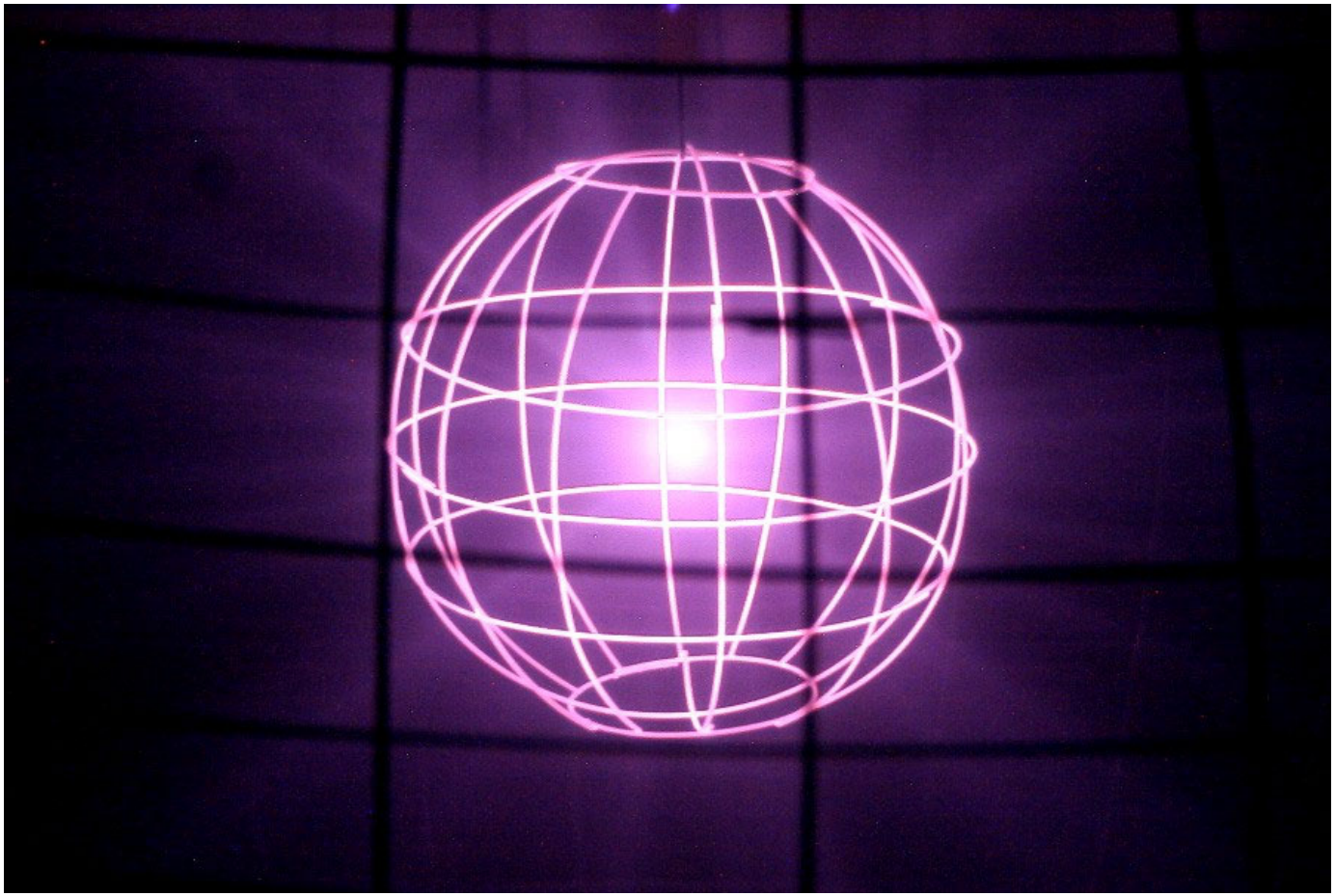

Significant Progress Has Been Made in Producing High Energy Protons from the D^3He Reaction

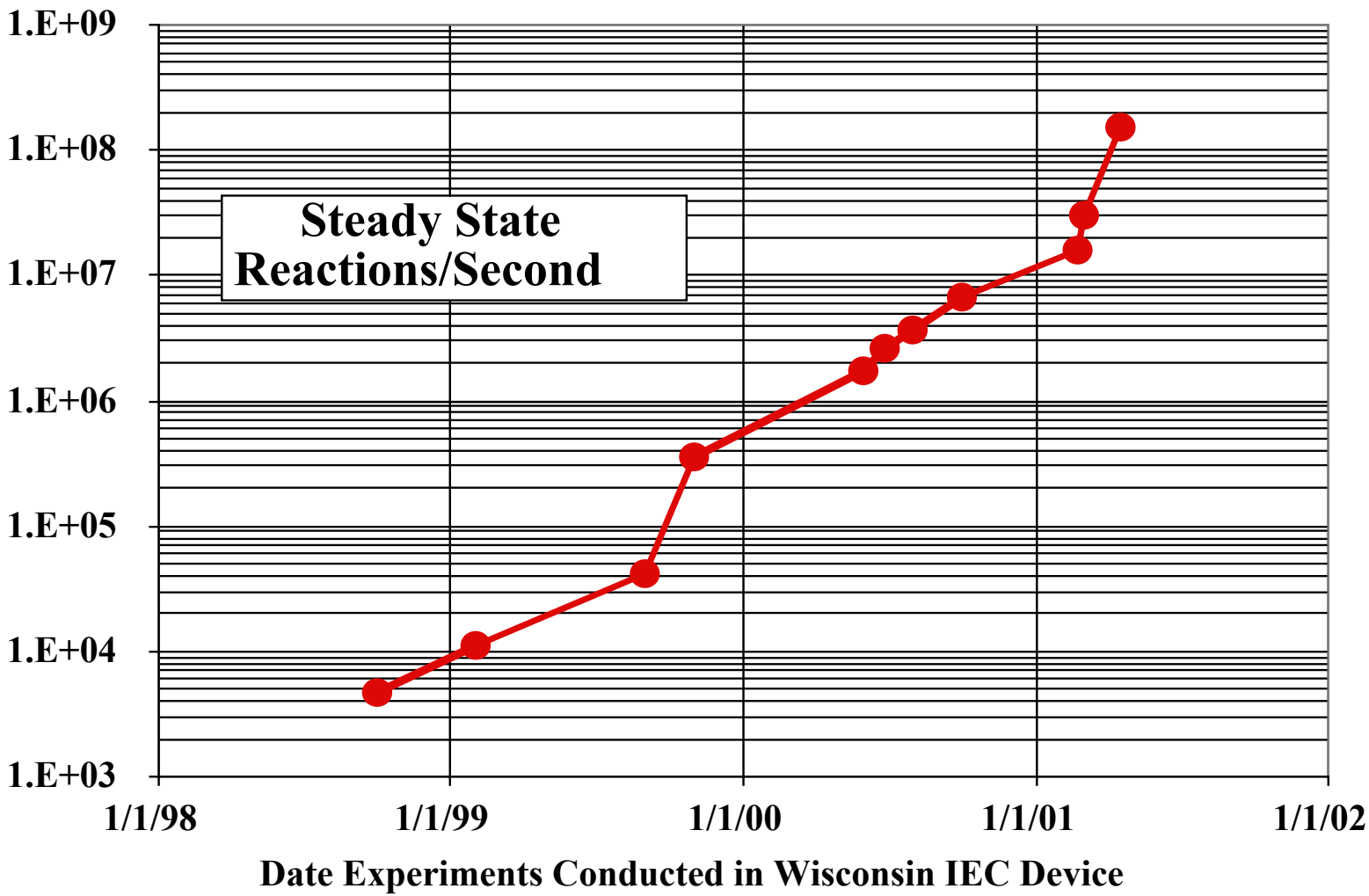

Major Societal and Technical Concerns of Nuclear Energy Options

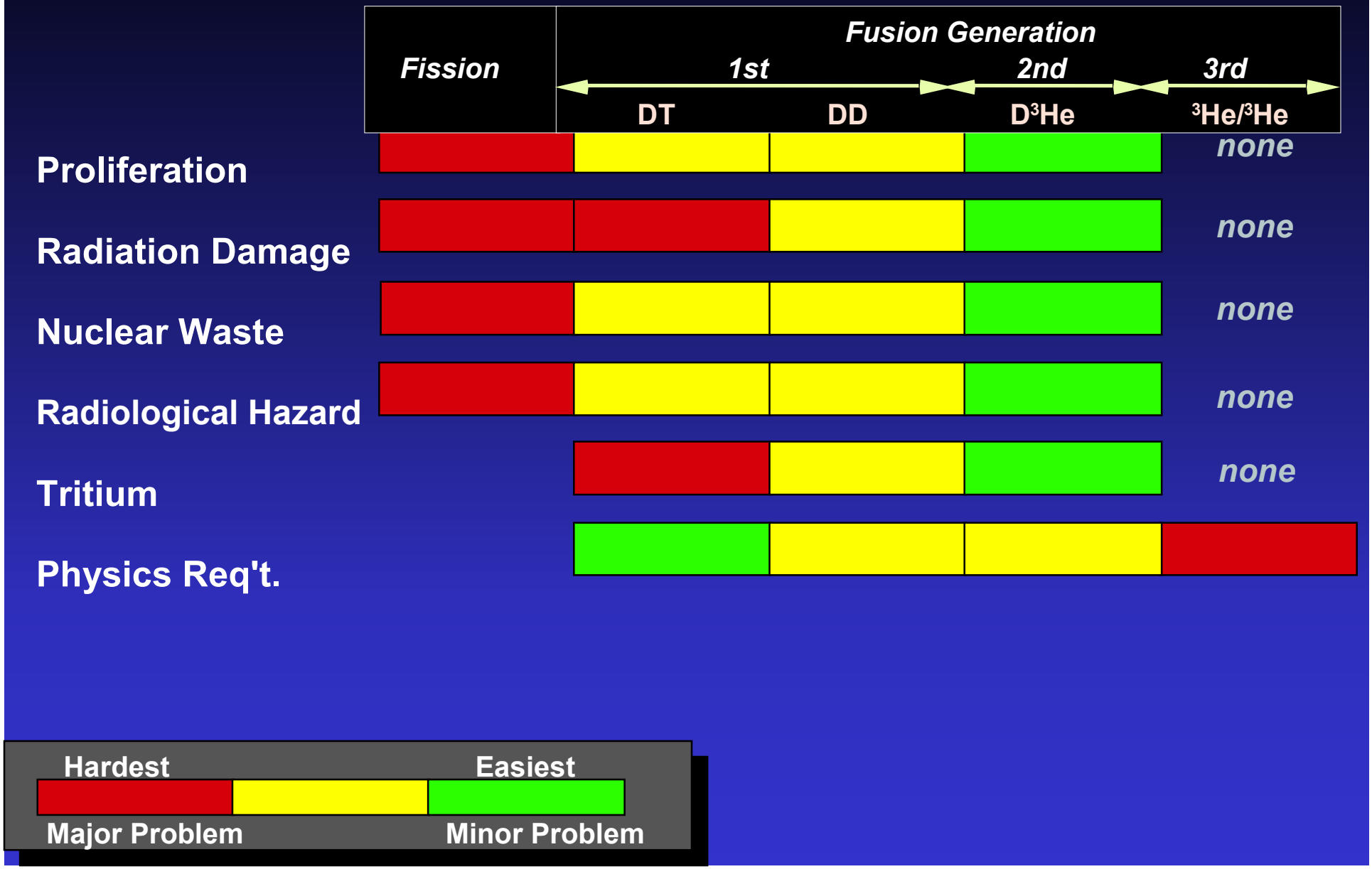

Lunar Helium-3 Is Well Documented

- Helium-3 concentration verified from Apollo 11, 12, 14, 15, 16, 17 and U.S.S.R. Luna 16, 20 samples.

- Current analyses indicate that there are at least 1,000,000 tonnes of helium-3 imbedded in the lunar surface.

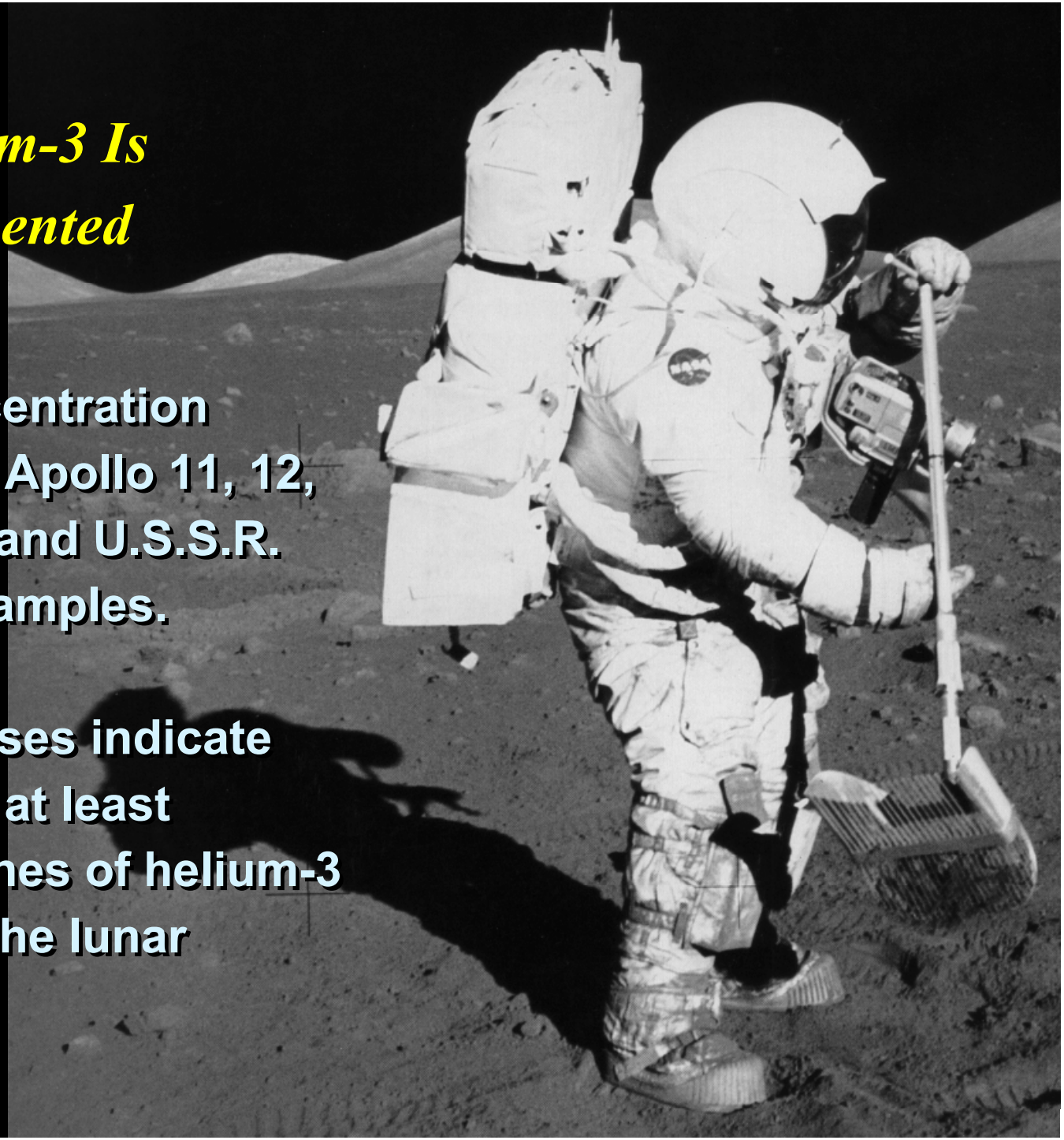

Significance of Lunar Helium-3

- 1 tonne of He-3 can produce 10,000 MWe-y of electrical energy.

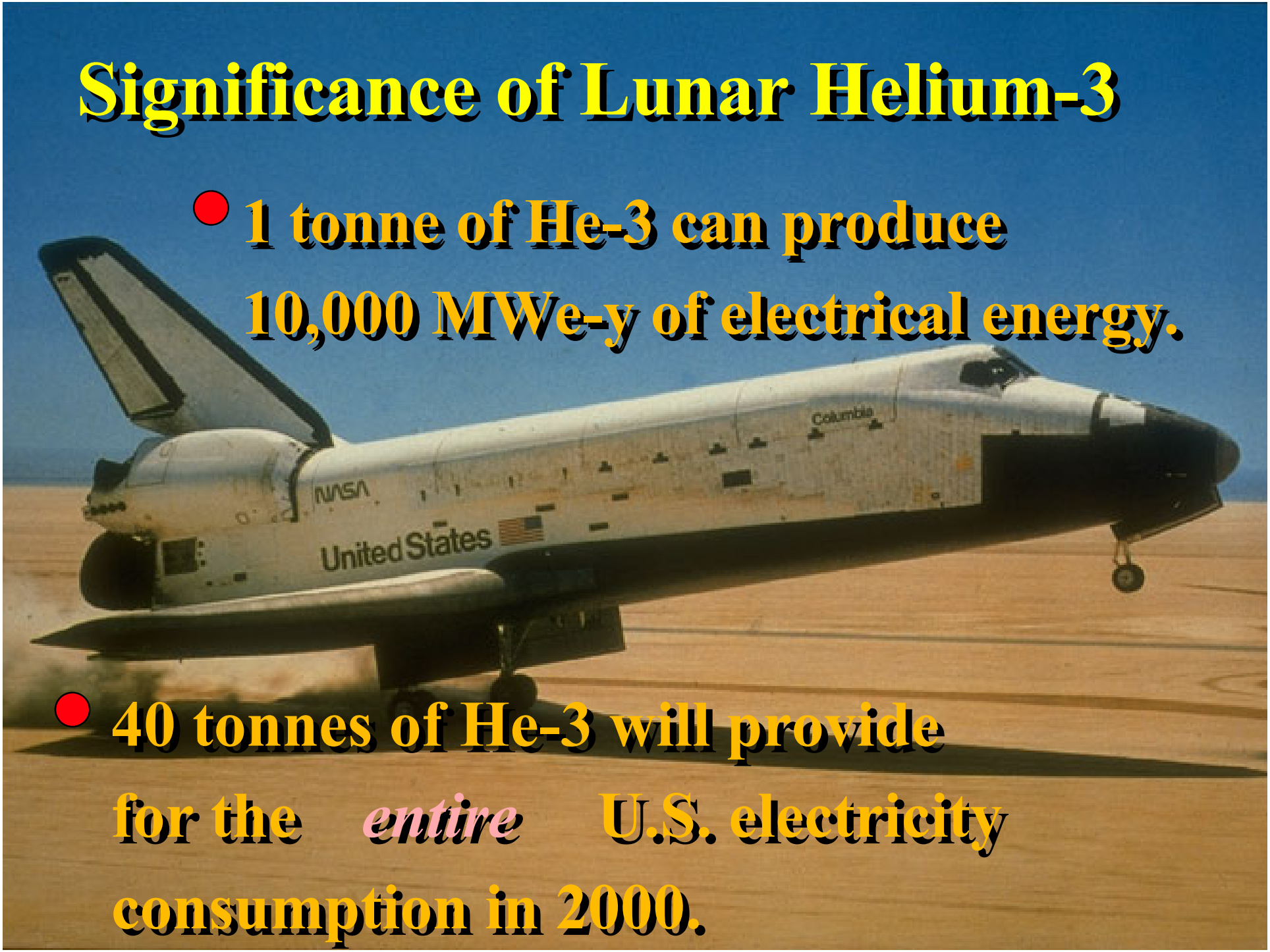

- 40 tonnes of He-3 will provide for the *entire* U.S. electricity consumption in 2000.

At 1 Billion Dollars a Tonne the Energy Cost of Helium-3 is Equivalent to Oil at $7 per Barrel

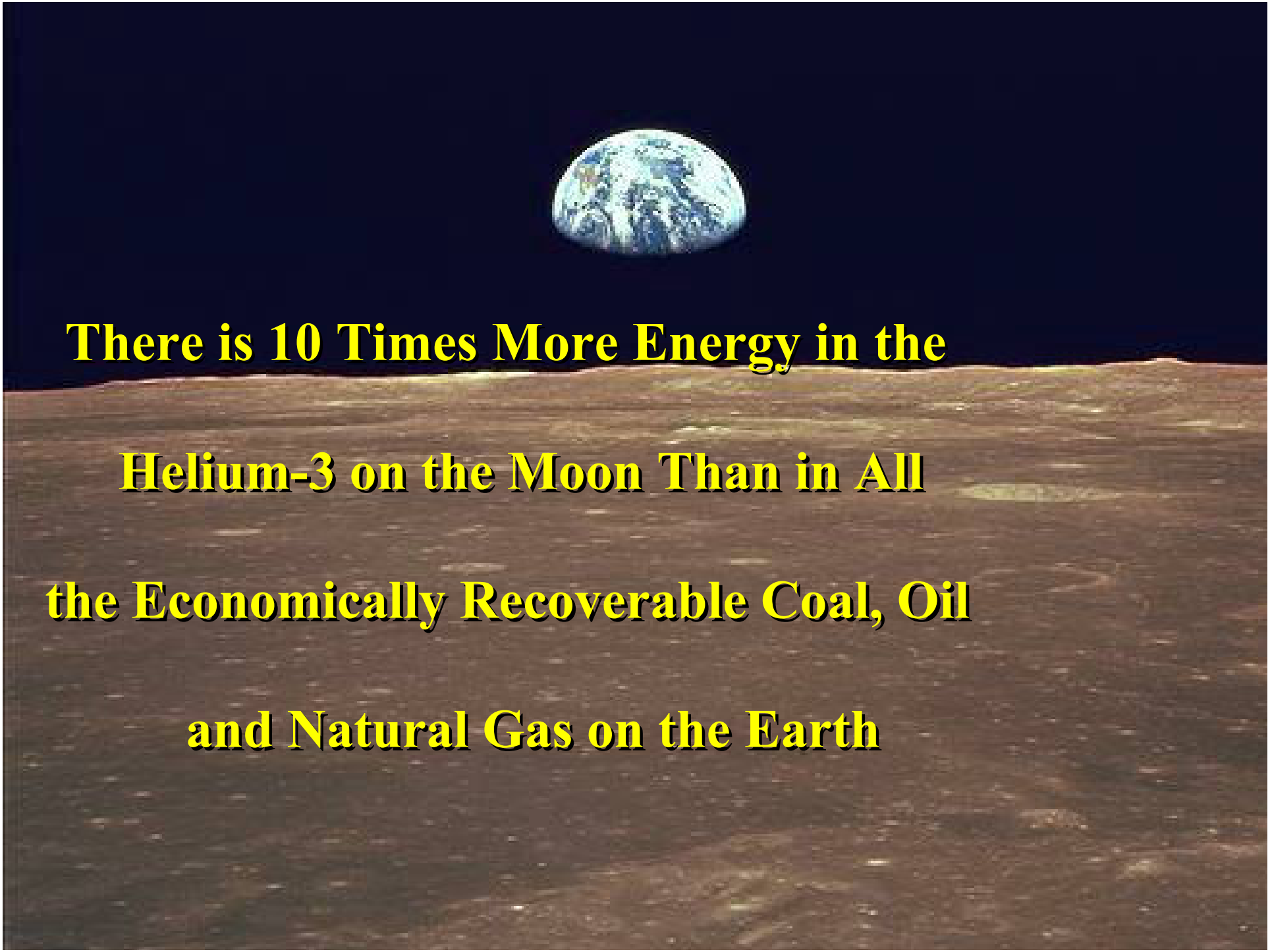
There is 10 Times More Energy in the
Helium-3 on the Moon Than in All
the Economically Recoverable Coal, Oil
and Natural Gas on the Earth

The Development of the 2nd and 3rd Generation Fusion Fuels in the 21st Century Could Lead to Near Term, as Well as Long-Term Benefits to Society

Phase 3

Long Range Benefits of a Q>10 IEC Device

- All of Phase 1
- All of Phase 2
- Small, Safe, Clean and Economical Electrical Power Plants

Phase 2

Intermediate Term Spinoff from a Q = 1–5 Device

- All of Phase 1
- Destruction of Toxic Materials
- Space Power
- Propulsion Technologies
- Remote Electricity Stations

Phase 1

Near Term Spinoff from a Q < 1 Device

- Medical Treatment
- Civilian Commercial Markets
- Environmental Restoration
- Defense

Applications

Near Term

- Medical Isotope Production
- Cancer Therapy
- Detection of Explosives
- Detection of Chemical Wastes

Mid-Term

- Destruction of Fissile Material
- Destruction of Radioactive Wastes

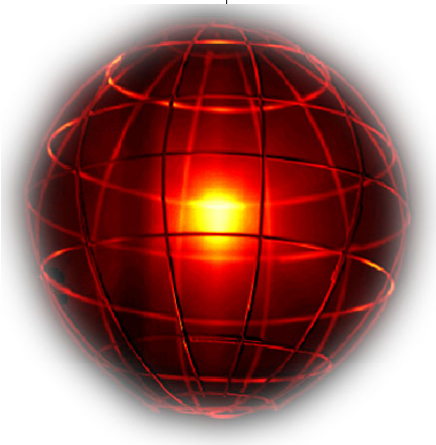

Long Range

- Small (50-100 MWe) Electrical Power Plants
- Use of Advanced Fuels (Helium-3)
- Space Propulsion
- Base Load Electrical Power Plants
- Hydrogen Production
- Synthetic Fuel Production

Source : Fonte: rexresearch.com

Hermann PLAUSON

Conversion of Atmospheric Electricity

Biography (Wikipedia)

Meridian International Research: Atmospheric Electricity Research

***Science & Invention* (Feb. 1922): "Power from the Air" (I)**

***Science & Invention* (March 1922): "Power from the Air" (II)**

Plauson's Patents (List)

H. Plauson: USP # 1,540,998 -- Conversion of Atmospheric Electricity

H. Plauson: British Patent # 157,262 -- Improvements in Electric Motors

H. Plauson: British Patent # 157,263 -- Process & Apparatus for Converting Static Atmospheric Electrical Energy into Dynamic Electrical Energy...

***Science & Invention* (June 1928) - "Harnessing Nature's Electricity"**

H. Plauson : British Patent # 299735 -- Process for Producing Rapidly Moving Electrons [PDF]

H. Plauson : *Gewinnung und Verwertung der Atmosphatischen Elecktrizitat* (1922) [PDF]

---

http://en.wikipedia.org/wiki/Hermann_Plauson

Biography

Hermann Plauson was an Estonian engineer and inventor. Plauson investigated the production of energy and power via atmospheric electricity.

Plauson was the director of the Fischer-Tropsch "Otto Traun Research Laboratories" in Hamburg, Germany during the Weimar Republic of the 1920s. He built on Nikola Tesla's idea for connecting machinery to the "wheelwork of nature". Plauson's US Patent # 1,540,998 describes methods to convert alternating radiant static electricity into rectified continuous current pulses. He developed the Plauson's converter, an electrostatic generator. In 1920, Plauson published a book titled "*Production and Utilization of the Atmospheric Electricity*" (*Gr., Gewinnung und Verwertung der Atmospharischen Elektrizitat*). A copy of this book is in the British Library.

It is believed that he was related to Gertrud Plauson (the exact relationship is unknown; she may be his wife).

"Power from the Air". *Science and Invention* , Feb. 1922, no. 10. Vol IX, Whole No. 106. New York. (nuenergy.org)
"Power from the Air". *Science and Invention* , March 1922.

***Science and Invention,* Vol. IX (106) #10 (February 1922)**

Power from the Air (I)

by

Hugo Gernsback

During the war there was developed in Germany a new art --- or science --- that bids fair to revolutionize our present means of obtaining power.

This art, which is as new now as wireless was 25 years ago, will attain proportions during the next 25 years that may appear fantastic today. The inventor of the new science, an engineer of note, Herr Hermann Plauson, has devoted years of labor to his researches and he has now actually in use small power plants, that generate electricity direct from the air, day and night, without interruption at practically no cost, once the plant is constructed.
We had occasion, in one of our former issues, to describe the system, roughly, from cabled dispatches, but complete information is available now. The amount of electrical power that resides in our atmosphere is astounding. Herr Plauson found in his experiments that a single balloon sent aloft to a height of 300 yards gave a constant current at 400 volts of 1.8 amperes, or in 24 hours over 17-1/4 kilowatts! By using two balloons in connection with a special condenser battery, the power obtained was 81-1/2 kilowatts in 24 hours. The actual current delivered was 6.8 amperes at 500 volts.

The best balloons used by the inventor are made of thin aluminum leaf. No fabric was used. A simple internal system of ribs, stays and wires, gives the balloon rigidity as well as a certain amount of elasticity. The balloon, when made airtight, is filled with hydrogen or better, with helium. It will then stay aloft for weeks at a time. The outer surface is dotted with extremely sharp pins, made sharp electrolytically. Ordinary pins did not prove good current collectors, as they lacked extreme sharpness. The pins themselves were made from amalgamated zinc, containing a radium preparation, in order to ionize the air. It was also found that by dotting the outer surface of the balloon with zinc-amalgam more current could be collected. Even better results were obtained with polonium amalgam. Plauson states that the function of these amalgams is purely photoelectric.

One hundred of such captive balloons, separated one hundred yards from each other, will give a steady yield of 200 horsepower. This is the minimum, because in the winter this figure increases up to 400 horsepower, due to the higher electrification of the atmosphere.

We need not go into the technic of how the current is finally made useable for industrial purposes, suffice it to say that the problem has been entirely solved by Herr Plauson. By using batteries of condensers, high tension transformers, etc., the current can be transformed to any form desires. Such as for lighting lamps, running motors, charging storage batteries, etc.

Plauson also invented a sort of electrostatic rotary transformer which gives alternating current without the use of condensers and transformers. Indeed, its output is very great, as it actually 'sucks' the current down rapidly from the collector balloons. There is no doubt that this invention will soon come into universal use all over the world. We will see the land dotted with captive balloons, particularly in the country and wherever water power does not abound. Indeed, the time is not distant when nearly all of our power will be derived from the atmosphere. So far it seems to be the cheapest form of power known, it being much cheaper even than water power --- the cheapest form of power known today. Not only that, but as the inventor points out, no devastating thunder storms occur near such aerial power plants, because the balloons act not only as lightning arresters, but they quickly discharge the biggest thunder cloud, safely and noiselessly through their grounded spark gaps.

Science & Invention **(March 1922), page 1006, 1007**

Power from the Air (II)

by

Hugo Gernsback

[For many years electrical engineers have endeavored to devise some means whereby it would become possible to utilize the free electrical energy ever present in the atmosphere, but they were not successful, as every now and then an extra heavy surge of static current would rush down the elevated conductor and endanger the lives of the experimenters, or else destroy the apparatus connected with it. A German engineer has, however, devised the somewhat elaborate scheme here shown in brief, and he has succeeded, at least so his report states, in safely extracting several kilowatts of electrical power from the atmosphere with metallic surfaced balloons, elevated to a height of only 1000 feet.]

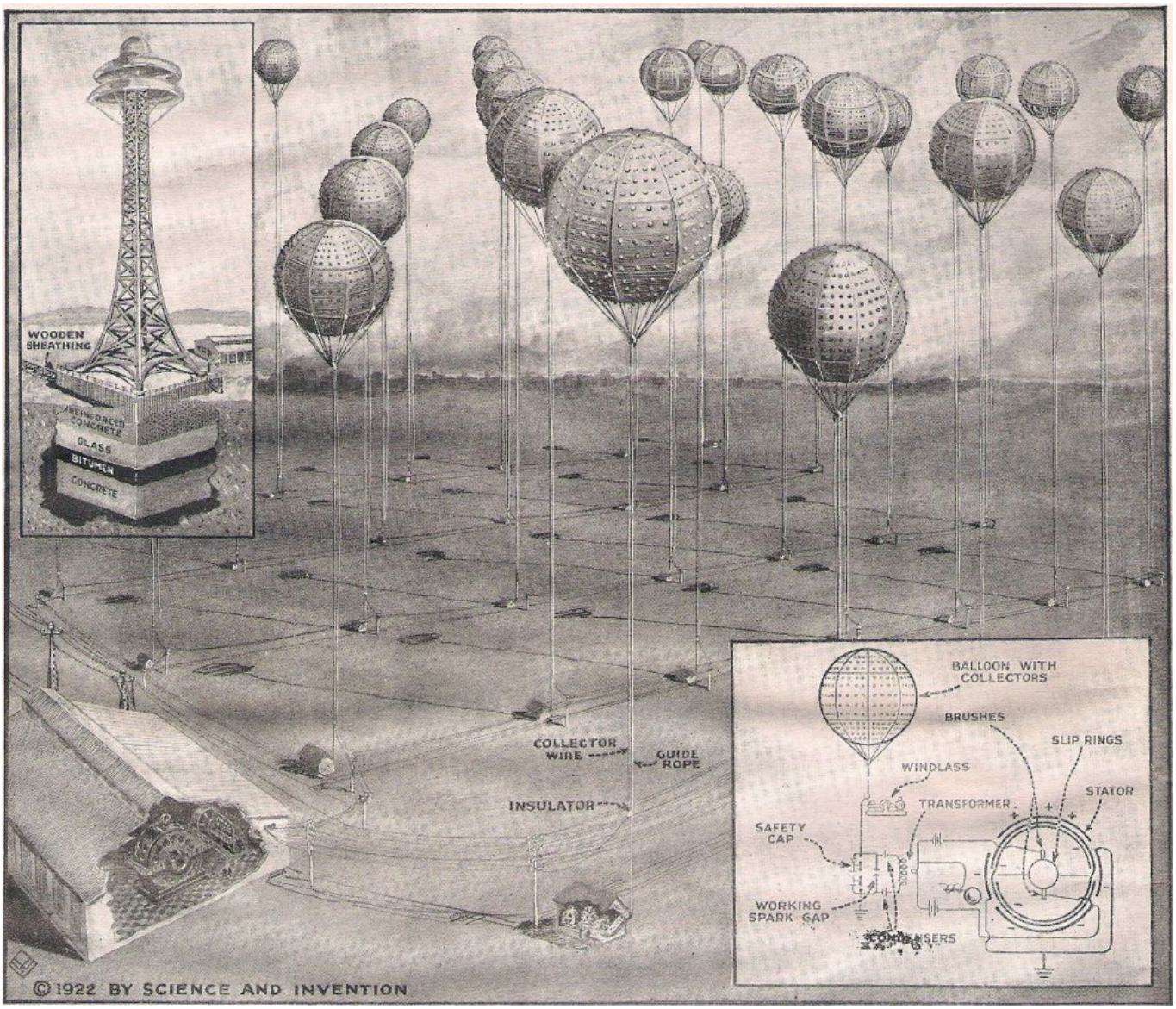

We have previously treated of the extraction of electrical energy from the atmosphere. The difference of electric potential in different parts of the atmosphere, and the difference between the upper air and earth make it a tempting proposition to obtain power from atmospheric electricity. The power would take the form of high potential difference with a discharge almost of a static nature. It has long appeared rather doubtful to conservative engineers, if such a source of power should really be available. Yet when we see the lightning flash, it certainly suggests very high power, even though the total of its energy may be small, on account of the small duration of the discharge It is not to the thunder storm that we look for getting power from the atmosphere, as the subject is now being seriously investigated. A German scientist, Hermann Plauson, has published a very elaborate work on this subject, and has investigated the use of kites, balloons and towers, for the utilization of the high potentials existing in the air at different altitudes, and has studied out the construction of motors to be operated by the peculiar type of discharge which will be obtained, if the projects are successfully carried out.

We will first speak of the methods used for collecting electricity from the upper air. The author cites several German patents. One of them shows the use of a kite balloon. The balloon is shown floating in the air, kite fashion, and from it hangs a great net or aerial for the collection of electricity. The conductor from the aerial leads to the ground station; quite an elaborate description is given of the net-work which the patentee proposes to have covered with needle points. A windlass takes in or pays out cable for the balloon, and the patentee claims that by sending the apparatus to a height of about one mile he will have 225,000 volts to draw upon. He then speaks o a battery of 20,000 cells in series, which will use up to 40,000 to 50,000 volts in the charging. This certainly provides for a reasonable large fall of potential.

But our author discards this idea and first suggests something more permanent. He proposes the erection of towers to be in the neighborhood of 1,000 feet high, or about the height of the Eiffel Tower. At the summit he has his collecting aerial. The appliance consists of a number of copper tubes; within each one he proposes to burn gas lamps, whose products of combustion will reach the aerial, a collecting net-work covering the tops of the tubes. One of his apprehensions is that if rain should wet his connections trouble might ensue, so he proposes a protection at the top in the shape of a great bell-like shield, resembling in his terms “a Siamese pagoda”. He also compares the form of the protection to that of a great petticoat insulator. Another of his difficulties is that he must have his tower insulated from the earth. He, therefore describes a complicated foundation for his structure. He proposes first to pour in at the bottom of the excavation a foundation of simple concrete. On this he places a layer of asphalt, and then a layer of cast glass, three to ten feet thick, and then comes a reinforced concrete foundation, to which the metallic foot of the tower is to be anchored. This foundation must rise at least seven feet above the ground level, and is to be boarded in on all sides to protect it from moisture. The author’s idea s to erect a number of these towers connected by a horizontal cable, to which the aerials for collection of potentials are secured.

The author strongly advocates balloons as collectors of the electric power of the air. These he depicts covered with spots. These spots indicate areas to be variously coated and prepared to collect potential from the atmosphere.

In the first place he describes the balloon as made of thin metallic leaf supported by internal ribs. Steel wires silver-plated, copper-plated, or aluminum-coated, run from the balloon to the pendant or junction ring. To this ring the tether cable is attached and runs to an insulated windlass on the surface of the earth. The balloon is to rise to an altitude varying from 300 feet to three miles.

The coating of the spots is to be of the thinnest amalgam, of mercury and gold, or zinc, or even polonium, perhaps only 1/2500 inch thick. All over the upper face of the balloon are numberless metal points. To prepare the needle-like wires, they are collected into bundles and are treated electrolytically in a bath, so as to be dissolved in part. This gives a sharp point and roughened surface, all adapted for collecting the electric energy. The points may be of copper, steel, or some hard metallic alloy. After this corrosion. As it may be termed, the wires are plated with gold or other of the so-called noble metals. It is advised that polonium or radium salts be added to the plating bath.

Dr Plauson devotes many pages of his book to describing his motor. This is a rotary motor including a stator and rotor and its peculiarity is that it contains no coils, develops no electromagnetic field properly speaking, but works by static excitation. One typical arrangement is shown in our illustration. The stator plates and rotor plates are concentric with each other, representing segments of cylinders. The alternation of negative and positive charged plates produces the rotation. In the connections there is included a safety spark gap to take care of dangerous potentials. Inductances and capacities are also used and indicated. It was found that the plates heated, owing to the Foucalt currents, and to overcome this, several methods of subdividing the stator and rotor plates, are described by the author.

The whole subject is quite captivating, and it really seems as if the utilization of the electricity of the air may be almost in sight. It would seem possible to carry out experiments in this direction by means of the Eiffel Tower, but of course, the trouble here is that the tower is grounded, and perfect insulation of the collecting surface is absolutely essential.

And now our author gives us some practical details. He says that on the Finland plains he carried out experiments with a balloon made of aluminum leaf with collecting needles of amalgamated zinc with a radium preparation as an ionizer. The surface of the balloon was sprinkled over with zinc amalgam. It was sent up to a height of 300 meters, early 1,000 feet, and was held by a copper-plated steel wire. A constant current of 1.8 amperes at an average of 400 volts potential difference was obtained. This gave nearly three-quarters of a kilowatt, or close to one horsepower. The collector of the balloon insulated from the earth showed a tension of 42,000 volts. By sending up a second balloon with an antenna to the same height at a distance of 100 meters from the first balloon, a current of over 3 amperes was obtained. Then by putting into the circuit a large condenser, whose capacity was equal to the surface capacity of both balloons, and of the antenna connections, the current rose to 6.8 amperes with about 500 volts mean tension. By the use of these two balloons, he eventually ran up the power to 3.4 kilowatts.

Science & Invention (June 1928)

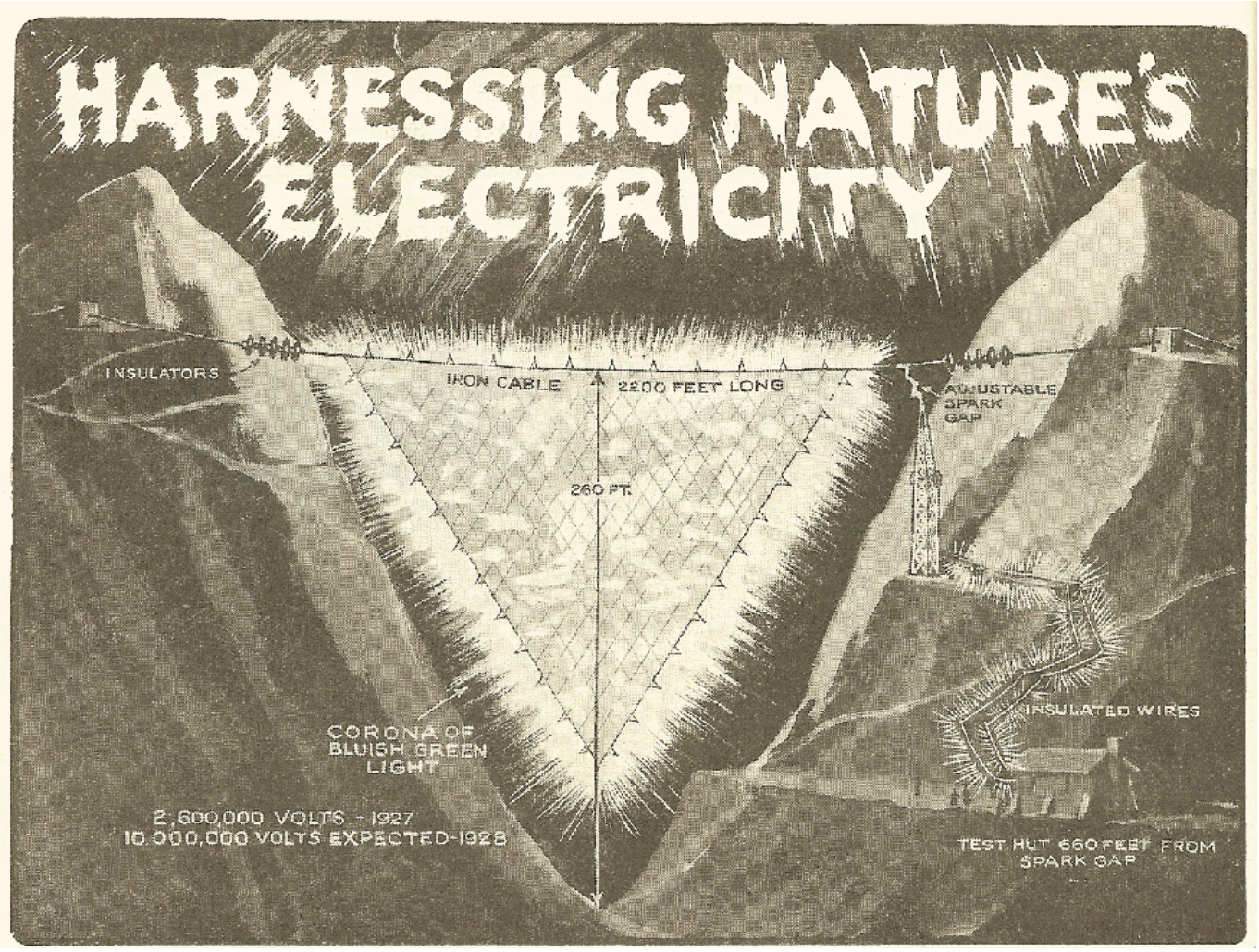
HARNESSING NATURE'S ELECTRICITY
INSULATORS
IRON CABLE
2200 FEET LONG
ADJUSTABLE SPARK GAP
260 FT.
INSULATED WIRES
CORONA OF BLUISH GREEN LIGHT
2,600,000 VOLTS - 1927
10,000,000 VOLTS EXPECTED-1928
TEST HUT 660 FEET FROM SPARK GAP

Remarkable European Experiments with Atmospheric Electrical Discharges with Potentials as High as 3,000,000 Volts

By HENRY TOWNSEND

elevation of 350 ft., and these students of natural electrical phenomena have found a very desirable location in the Alps, where they can suspend between one mountain and an adjacent one, a strong iron cable having a length of about 2,000 ft. This cable is about 250 feet above the intervening valley, and from it these daring engineers have suspended a coarsely woven wire net, which serves as an electrical capacity to gather the electricity from the atmosphere. As shown in the pictures, the wire net is supplied with numerous sharp points to aid in collecting the current from the air.

As the accompanying photographs of the actual apparatus and wire cable used last year clearly show, an adjustable spark gap of considerable length is provided. By adjusting this spark gap to various lengths, it is possible to judge the voltage of the discharge which leaps the gap at any moment. Mr. F. W. Peek, Jr., the well-known American worker in the realm of high voltage measurements, together with other engineers, have provided tabulated data and curves for various lengths of both needle and sphere type spark gaps. As one of the accompanying diagrams shows, it is a simple matter to calculate the voltage when a certain length of gap is used. The engineer first checks the length of the gap on the chart; he then follows a line horizontally from the gap length, to where it intersects with the angular line on the chart; and from the point of intersection he looks in a visual line downward to a place where the voltage is given. For needle spark gap measurements, the characteristic curve on the chart is practically a straight line, while for sphere gaps the characteristic curve on the voltage versus gap length, is a curved line. Those interested in high voltage measurements by means of the spark gap method can find the voltage-gap tables and charts in the *Standardization Rules* of the American Institute of Electrical Engineers. According to Mr. Peek's researches, the voltage per foot of atmospheric electrical discharges is about 100,000, while in laboratory measurements with A.C., transformer high potential discharges, the average voltage per foot of spark was found to be about 150,000 volts. The voltage of a lightning flash may

(*Continued on page* 156)

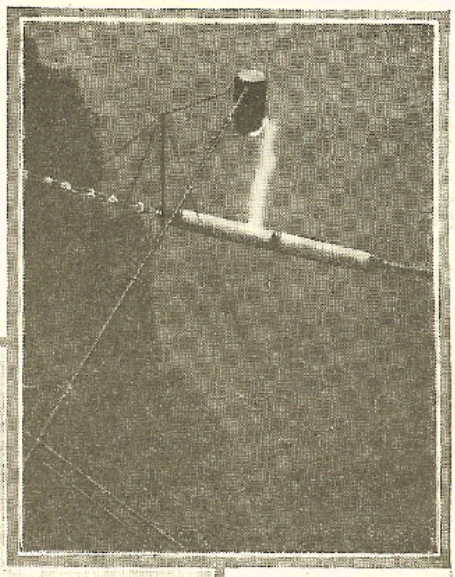

Actual photo above shows 13 ft., heavy spark obtained from the collecting net in the Alps by the German scientists. The voltage is about 2,000,000. The spark occurred once per second for 30 minutes.

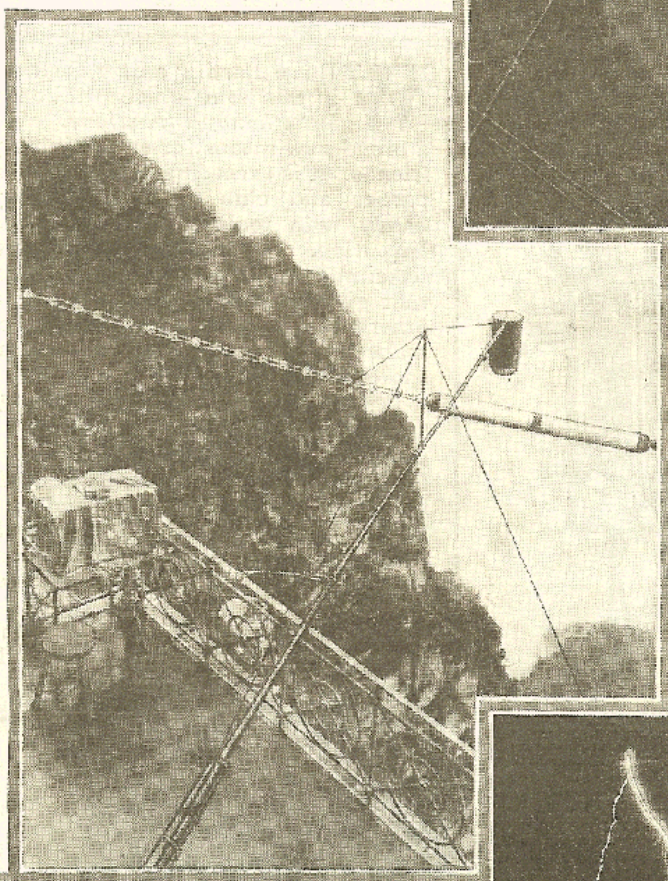

Actual photograph of the experimental "kite" used by the German experimenters in the Alps Mountains, for the purpose of accumulating high potential electrical discharges from the atmosphere. Note the size of the insulators.

Photo, left, shows the adjustable spark gap used in the Alps. Notice the heavy electrode on the end of the adjustable arm to which the spark jumps.

Below we see 3,000,000-volt artificial lightning stroke produced in G. E. Laboratory at Pittsfield, Mass. Note man.

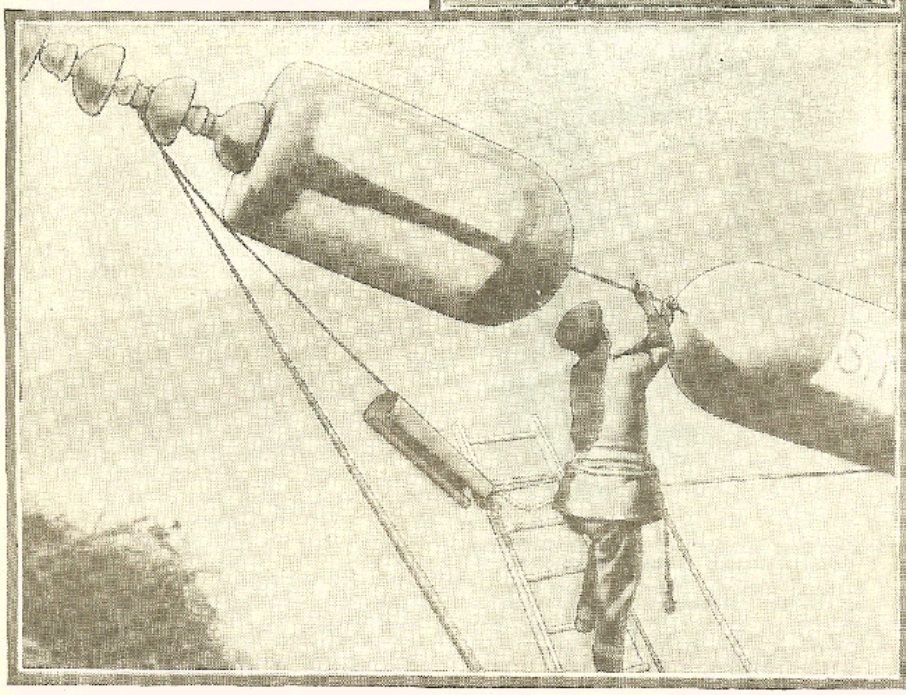

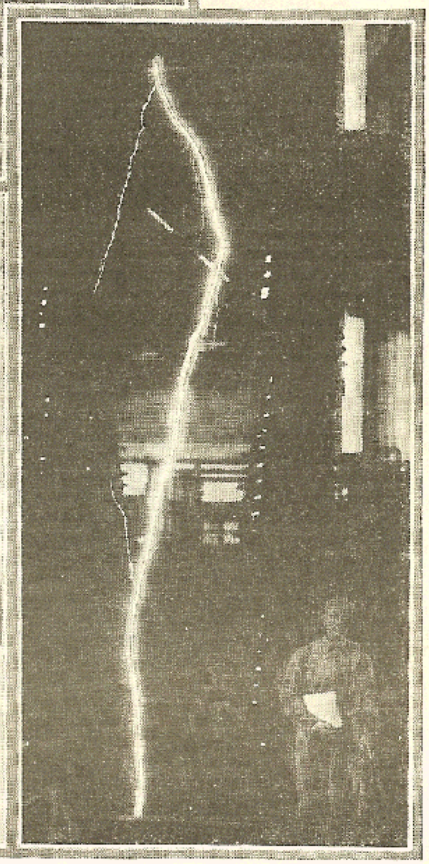

if-

you pledge

yourself to secrecy we will teach you the secrets of

Real Professional

Magic

Dr. Harlan Tarbell, internationally known magician and teacher of some of the world's greatest magicians.

Learn to be a Magician

For the first time in the history of Magic the age-old, sacredly guarded secrets of the Mystic Art are being revealed. Now at last you can learn to be a Real Professional Magician. Yes, and you can learn this wonderful art *easily and quickly* AT HOME. You are taught the mysterious *Principles* by which the Professional Magician works. You are taught everything from wonderful impromptu effects to massive stage illusions. But before you can study, you must sign the Magician's Solemn Pledge of Secrecy. This means that you are getting the *guarded secrets* of the Magic Profession. Think of that!

Earn $250 to $1000 a Month

There's a big demand for Magic entertainment. Magicians get big money. Dr. Tarbell gets as high as $250 for a half hour's work. Unlimited opportunities for you!

Low Prices Easy Terms

Write Today Send today for free Magic book, low prices and easy terms. Don't delay. Mail the coupon NOW!

Tarbell System, Inc., Studio A-142
1920 Sunnyside Avenue, Chicago, Ill.

Gentlemen: Without any obligation send me your free literature and information all about your wonderful "Tarbell" Course in Magic." Also tell me about your Low Price Offer and Easy Payment Plan.

Name.....

Address.....

.....*Age*.....

HARNESSING NATURE'S ELECTRICITY

By HENRY TOWNSEND

(*Continued from page* 111)

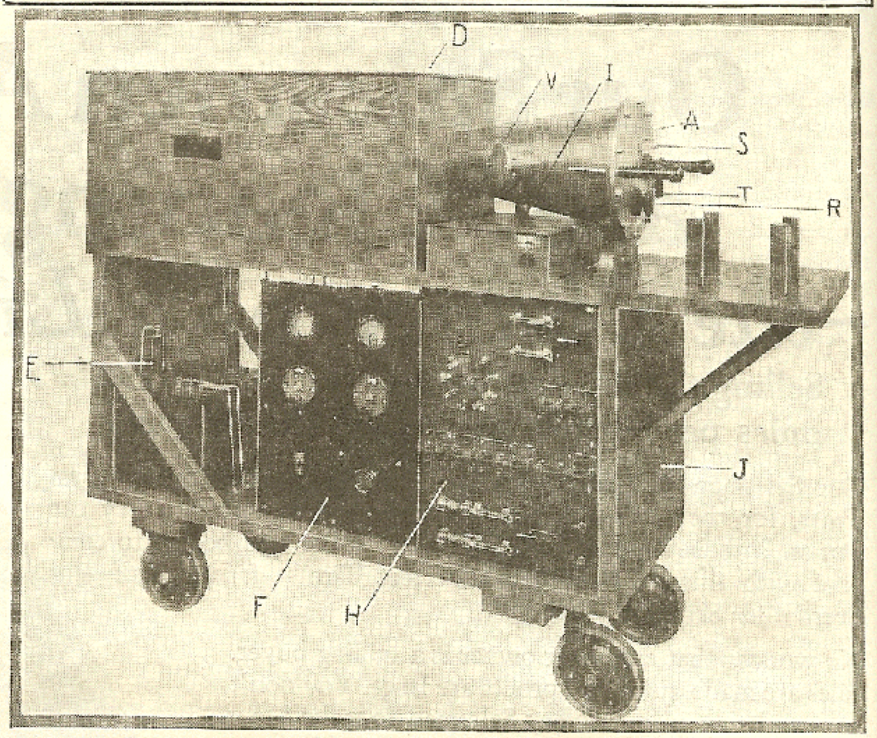

Remarkable cathode ray oscillograph used by Mr. F. W. Peek, Jr., in causing lightning to write its autograph with a pencil of electrons on a photographic film.

easily be 100,000,000 volts, as Mr. Peek has pointed out in one of his scientific papers.

WHY THE EXPERIMENTS ARE BEING MADE

ONE of the main reasons why these dangerous experiments are being carried on by the three young German scientists, whose names we have already learned, is because science believes that with a sufficiently high voltage, it will be possible for man to disintegrate the atom, and in this way make available a tremendous source of power as yet untapped. These experts have calculated that they will be able to obtain electrical energy in sufficient quantity from one of these powerful atmospheric discharges, to equal the Alpha rays obtained from 220 pounds of radium. As we have mentioned before, these experiments are of course fraught with great danger, and for that reason the experimenters seek refuge in a special lightning-proof hut, which is located about 600 ft., from the spark gap. When electrical storms are in the vicinity, it is especially important that the scientists keep within their protected fortress, for otherwise they would very probably be killed by a stray electrical discharge.

One of the peculiar things about this whole line of experiment is that the average layman does not realize perhaps, that there is a high electrical stress in the atmosphere on clear days, as well as when thunder storms are overhead. This fact has been known for a hundred years and more, and many years ago measurements of the various electrical potentials at increasing altitudes, were observed and measured by scientific investigators. There are a number of different ways in which these high electrical potentials found in the atmosphere can be measured; one of these methods involves the use of a calibrated spark gap. In this case the gap is set to a predetermined length, and when a discharge jumps this gap, the engineers know of course from previous experience and measurements, just what voltage is present. Another method of measuring extra high potentials, such as here encountered, requires the use of a static voltmeter, which involves the use of a stationary and of a movable or rotary set of metal plates, forming a condenser, to which an indicating needle is attached. For voltages above 2,000, static voltmeters have been used in a great many American central stations, and they have many desirable and useful characteristics. Of course as the voltage to be measured increases, the space between the quadrant shaped stationary and movable plates is increased and vice versa. The electrostatic field from voltages below 2,000 is not sufficient to warrant the use of a static voltmeter. Another method of measuring high potentials involves the use of the so-called vacuum tube voltmeter.

The general characteristics of the atmospheric electrical discharges, including lightning, have been measured and recorded by one of the newest scientific instruments, known as the cathode ray oscillograph. By means of this quite remarkable, high voltage scientific apparatus, Mr. Peek, one of the well-known General Electric Company staff of research engineers, has made some very interesting and remarkable discoveries concerning the nature of natural electrical discharges, particularly of lightning discharges. Many people will probably wonder why Mr. Peek and some of his colleagues in the engineering profession, including the three daring German students, Messrs. Brasch, Lange and Urban, play with such dangerous electrical discharges, and why they are at all interested in them. We explained previously why the German savants are intent on finding out all they can about these tremendous voltages obtained from the atmosphere, while Mr. Peek, we may say, also has a very practical reason for carrying on experiments with these death-dealing bolts of Thor. Mr. Peek has been for many years intent on finding out what causes the huge insulators on long distance, high potential transmission lines to break down when electrical storms break loose over these regions.

A Practical Guide to 'Free Energy' Devices

Part PatD8: Last updated: 28th January 2006 Author: Patrick J. Kelly

Please note that this is a re-worded excerpt from this patent. It describes in considerable detail, different methods for abstracting useable electrical power from passive aerial systems. He describes a system with 100 kilowatt output as a "small" system.

US Patent 1,540,998 9th June 1925 Inventor: Hermann Plauson

CONVERSION OF ATMOSPHERIC ELECTRIC ENERGY

Be it known that I, Hermann Plauson, Estonian subject, residing in Hamburg, Germany, have invented certain new and useful improvements in the Conversion of atmospheric Electric Energy, of which the following is a specification.

According to this invention, charges of atmospheric electricity are not directly converted into mechanical energy, and this forms the main difference from previous inventions, but the static electricity which runs to earth through aerial conductors in the form of direct current of very high voltage and low current strength is converted into electro-dynamic energy in the form of high frequency vibrations. Many advantages are thereby obtained and all disadvantages avoided.

The very high voltage of static electricity of a low current strength can be converted by this invention to voltages more suitable for technical purposes and of greater current strength. By the use of closed oscillatory circuits it is possible to obtain electromagnetic waves of various amplitudes and thereby to increase the degree of resonance of such current. Such resonance allows various values of inductance to be chosen which, by tuning the resonance between a motor and the transformer circuit, allows the control of machines driven by this system. Further, such currents have the property of being directly available for various uses, other than driving motors, including lighting, heating and use in electro-chemistry.

Further, with such currents, a series of apparatus may be fed without a direct current supply through conductors and the electro-magnetic high frequency currents may be converted by means of special motors, adapted for electro-magnetic oscillations, into alternating current of low frequency or even into high voltage direct current.

DESCRIPTION OF THE DRAWINGS

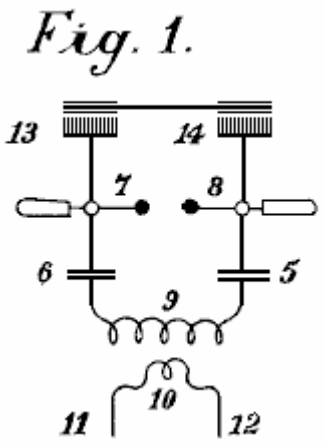

Fig.1 is an explanatory figure

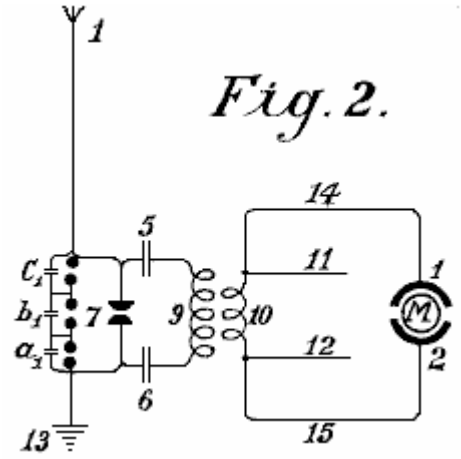

Fig.2 is a diagrammatic view of the most simple form.

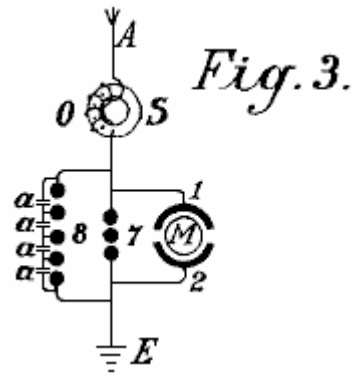

Fig.3 shows a method of converting atmospheric electrical energy into a form suitable for use with motors.

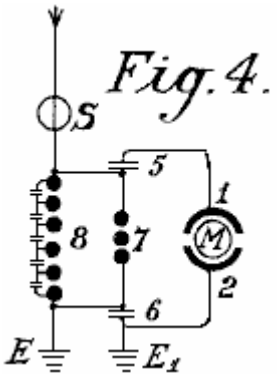

Fig.4 is a diagram showing the protective circuitry.

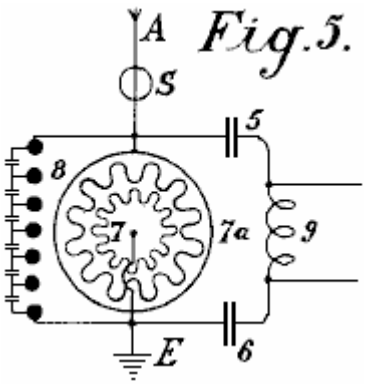

Fig.5 is a diagram of an arrangement for providing control

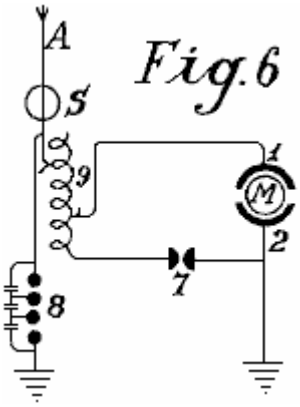

Fig.6 is an arrangement including a method of control

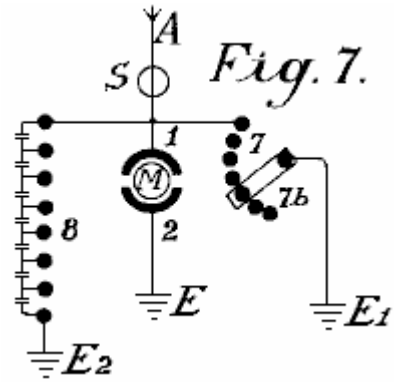

Fig.7 shows how the spark gap can be adjusted

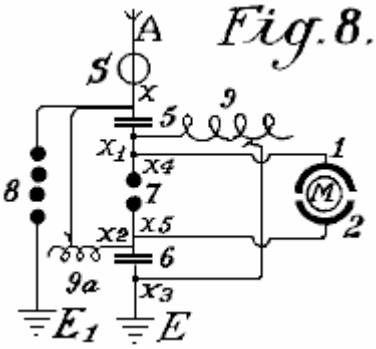

Fig.8 shows a unipolar connection for the motor

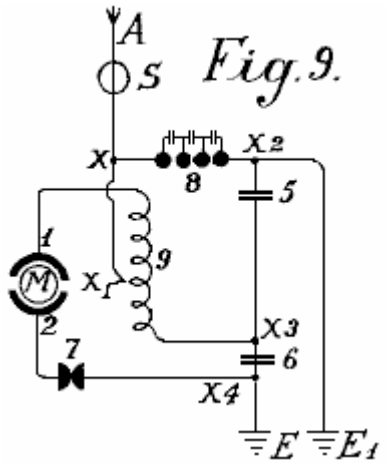

Fig.9 shows a weak coupled system suitable for use with small power motors

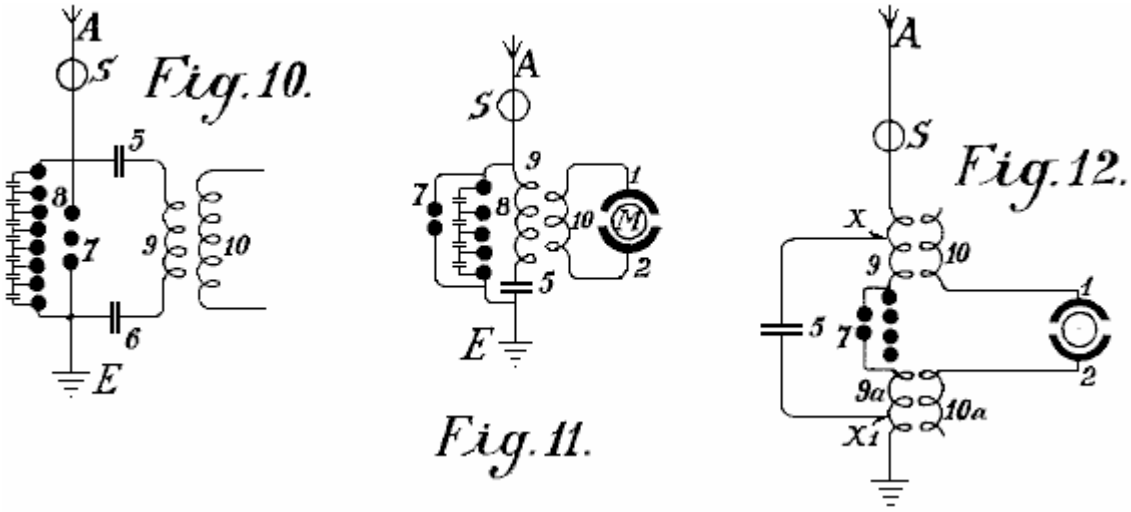

Fig.10, Fig.11 and Fig.12 show modified arrangements

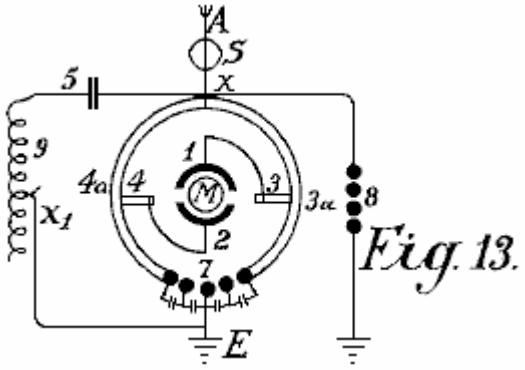

Fig.13 shows a form of inductive coupling for the motor circuit

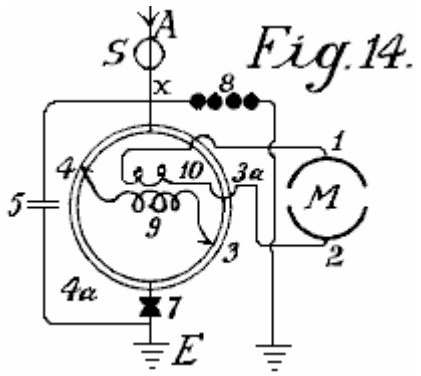

Fig.14 is a modified form of Fig.13 with inductive coupling.

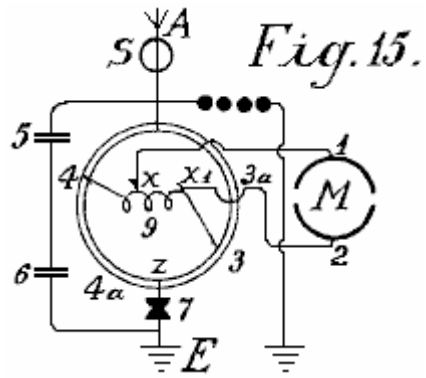

Fig.15 is an an arrangement with non-inductive motor

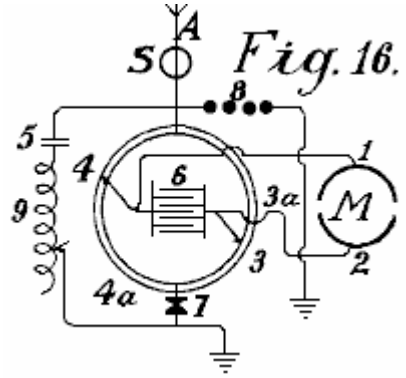

Fig.16 is an arrangement with coupling by capacitor.

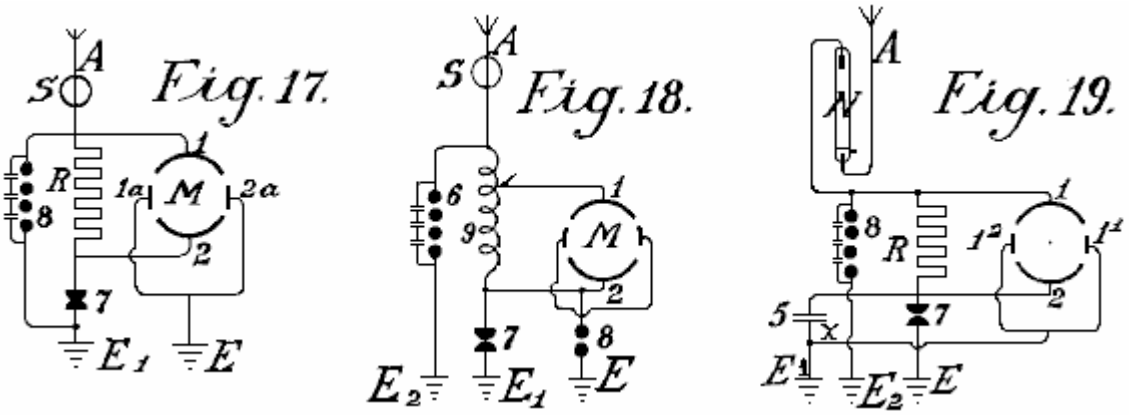

Fig.17, **Fig.18** and **Fig.19** are diagrams showing further modifications

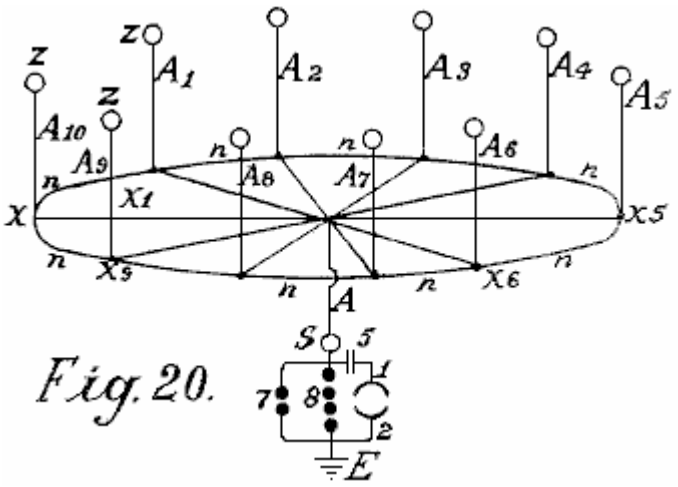

Fig.20 shows a simple form in which the aerial network is combined with special collectors

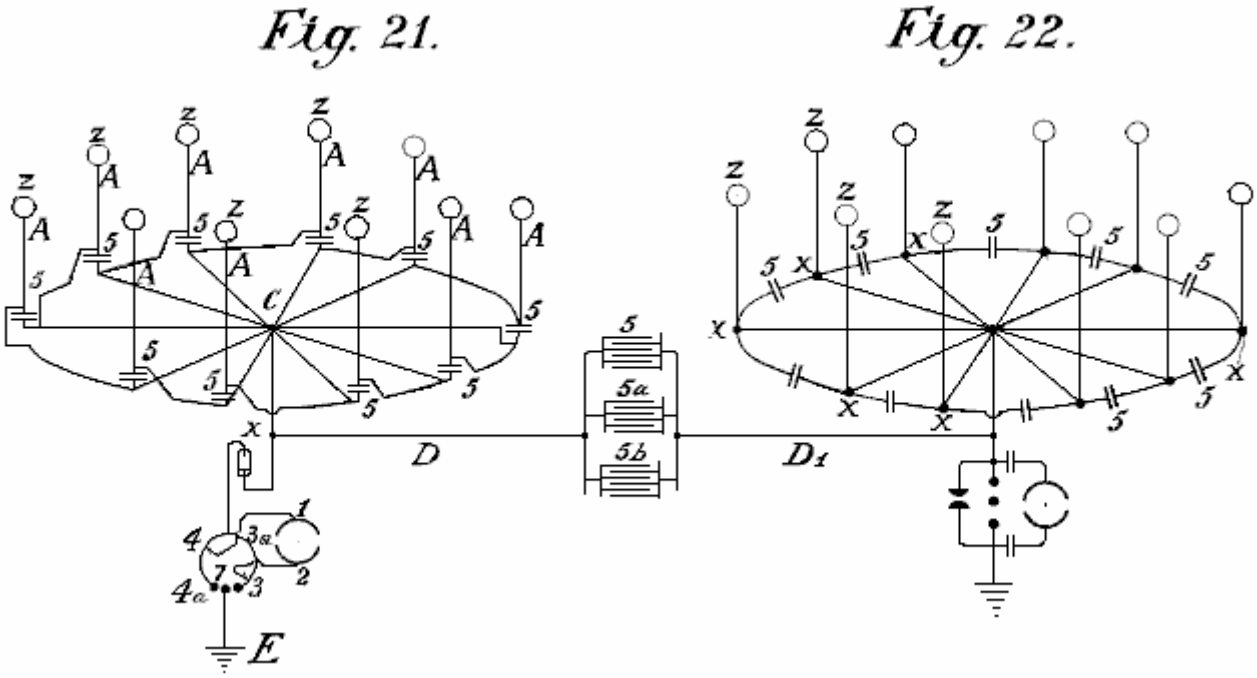

Fig.21 shows diagramatically, an arrangement suitable for collecting large quantities of energy.
Fig.22 is a modified arrangement having two rings of collectors

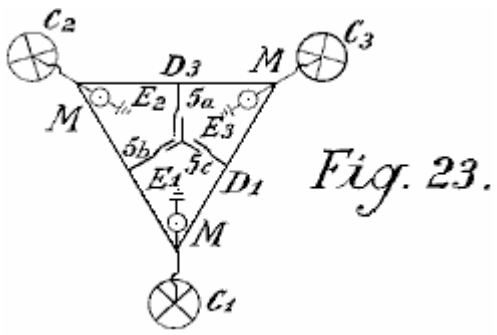

Fig.23 shows the connections for three rings of collectors

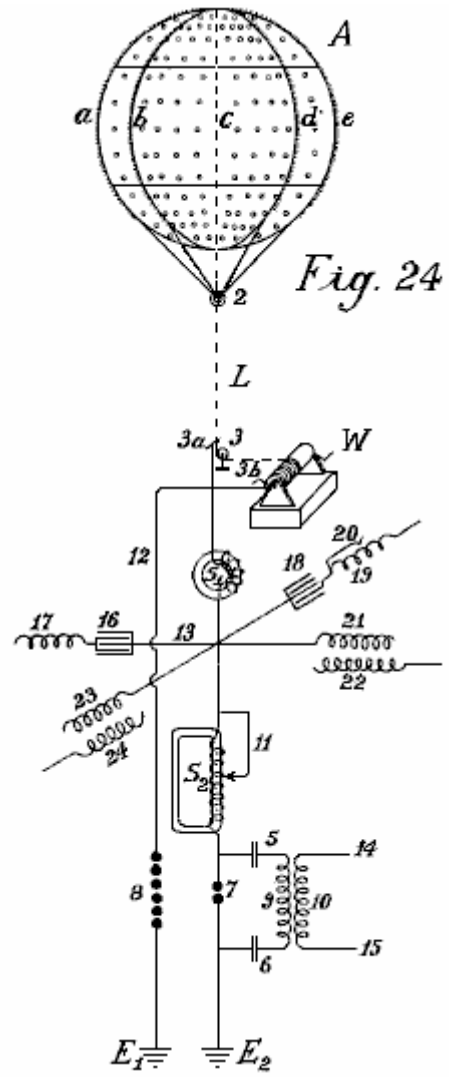

Fig.24 shows a collecting balloon and diagram of its battery of capacitors

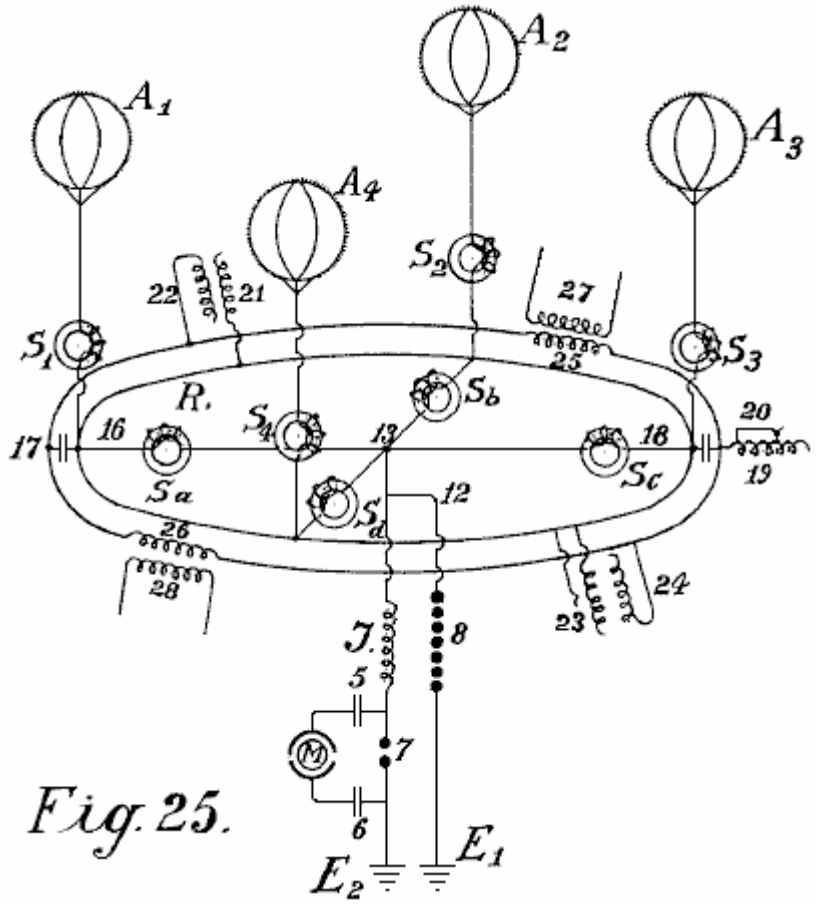

Fig. 25.

Fig.25 and Fig.26 show modified collector balloon arrangements.

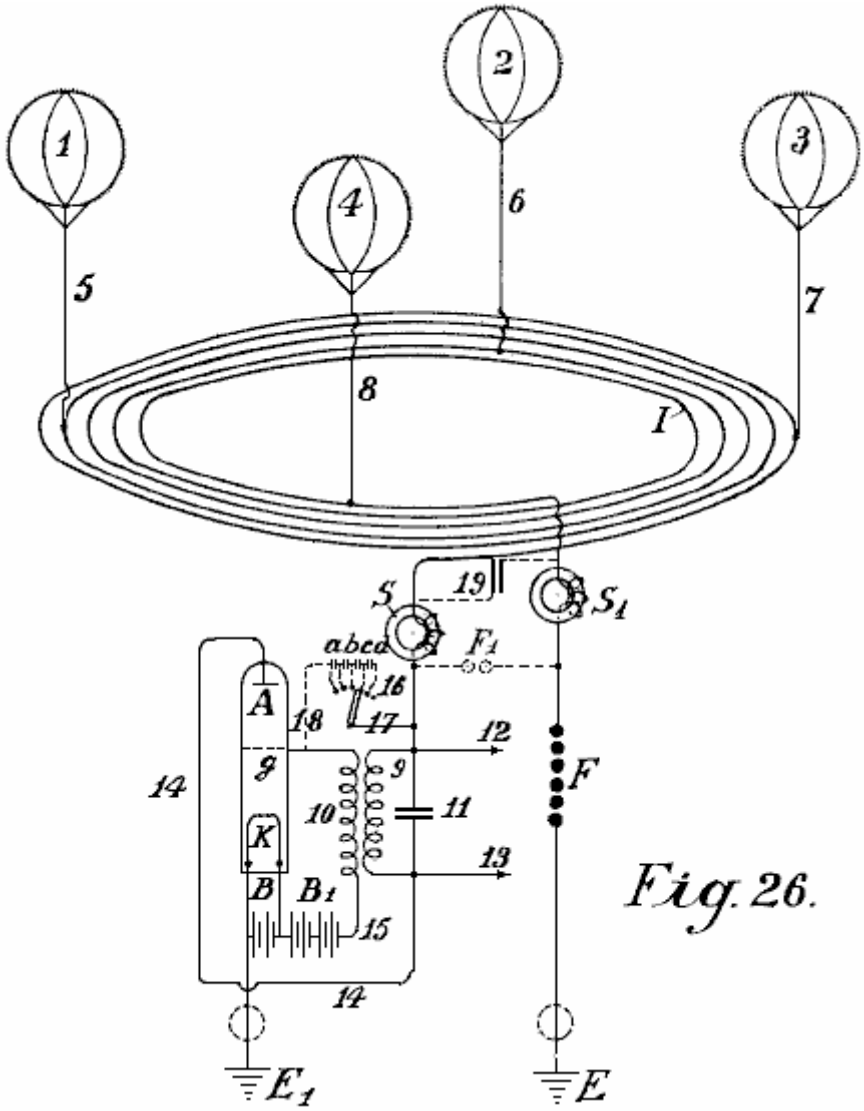

Fig. 26.

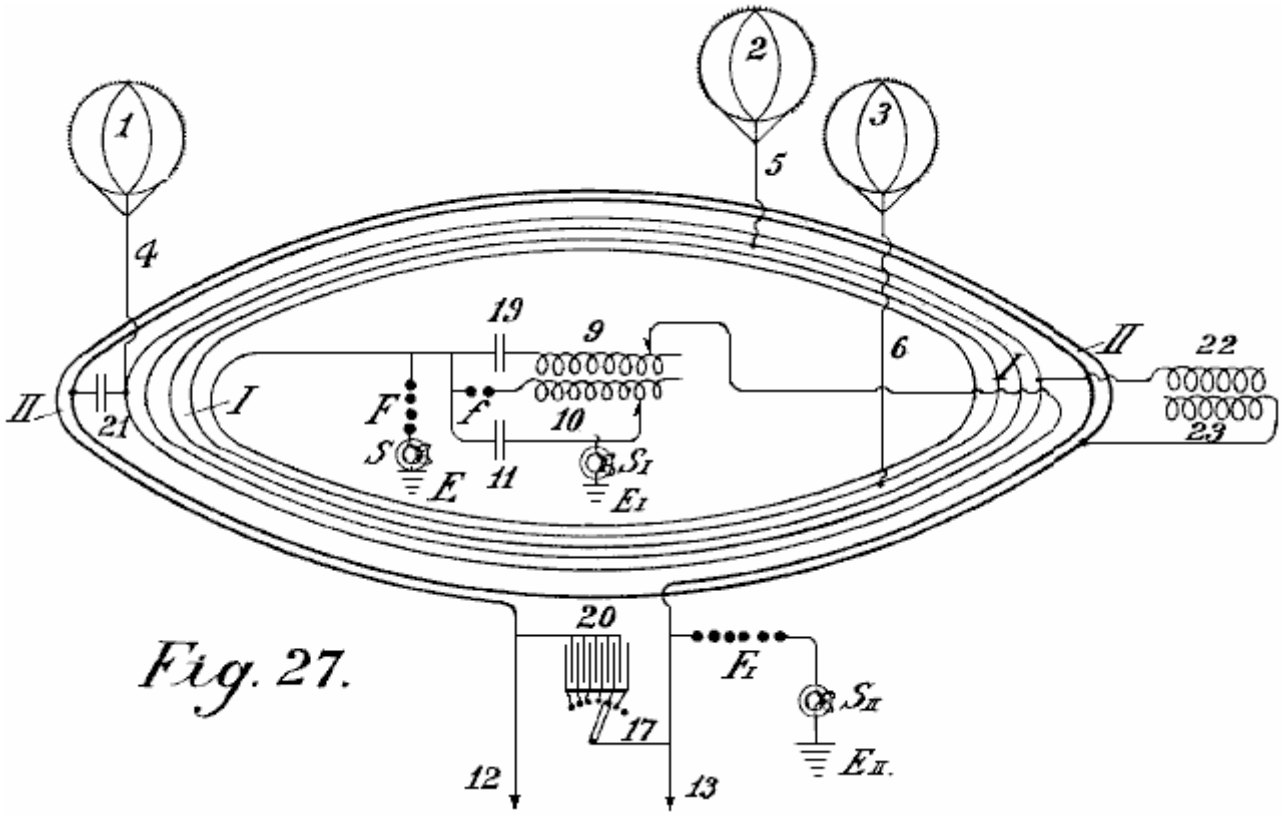

Fig. 27.

Fig.27 shows a second method of connecting conductors for the balloon aerials.

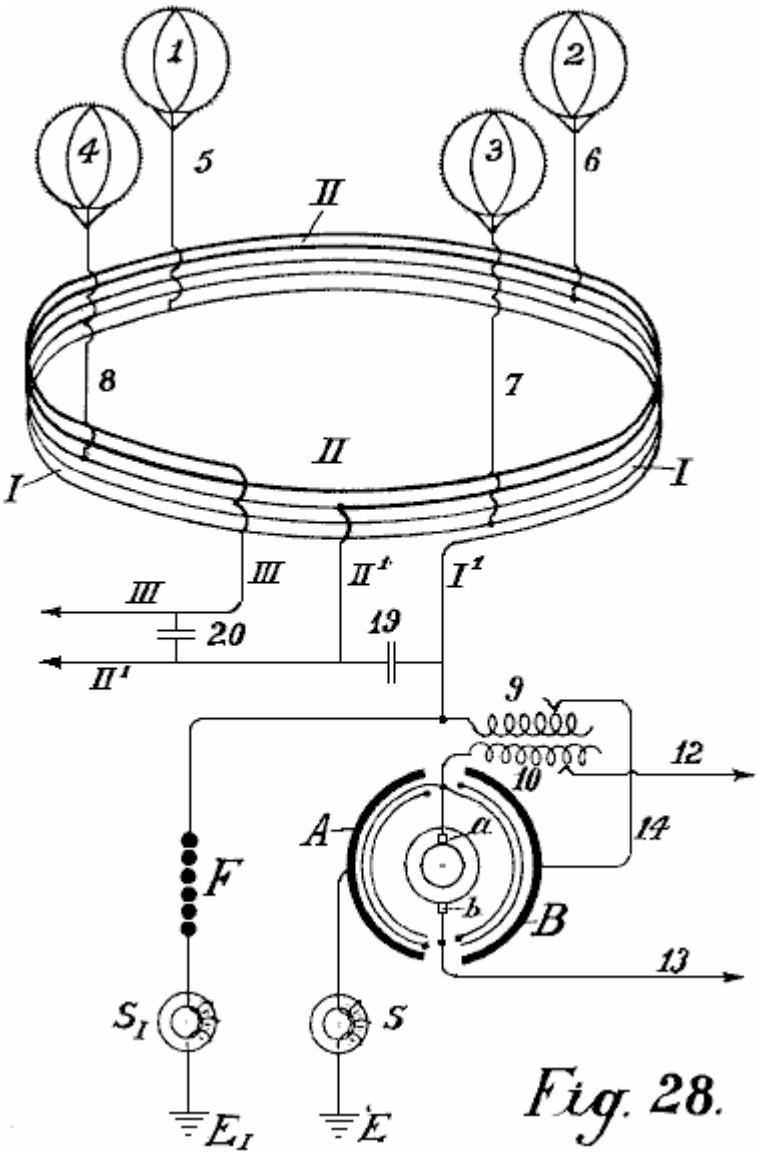

Fig.28 shows an auto-transformer method of connection.

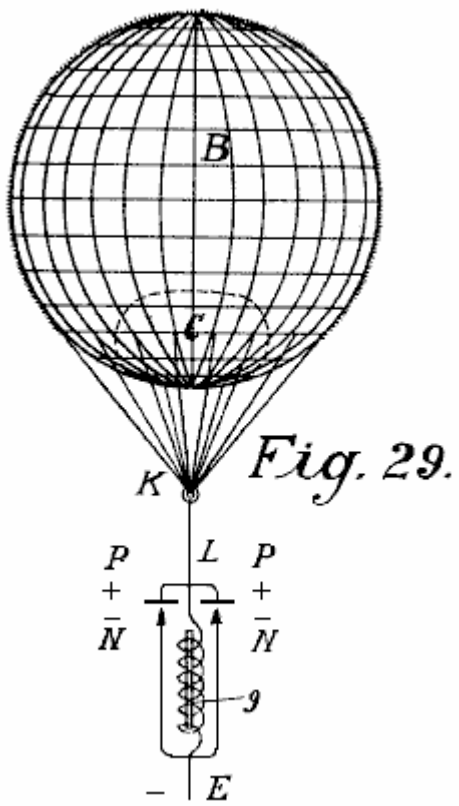

Fig.29 shows the simplest form of construction with incandescent cathode.

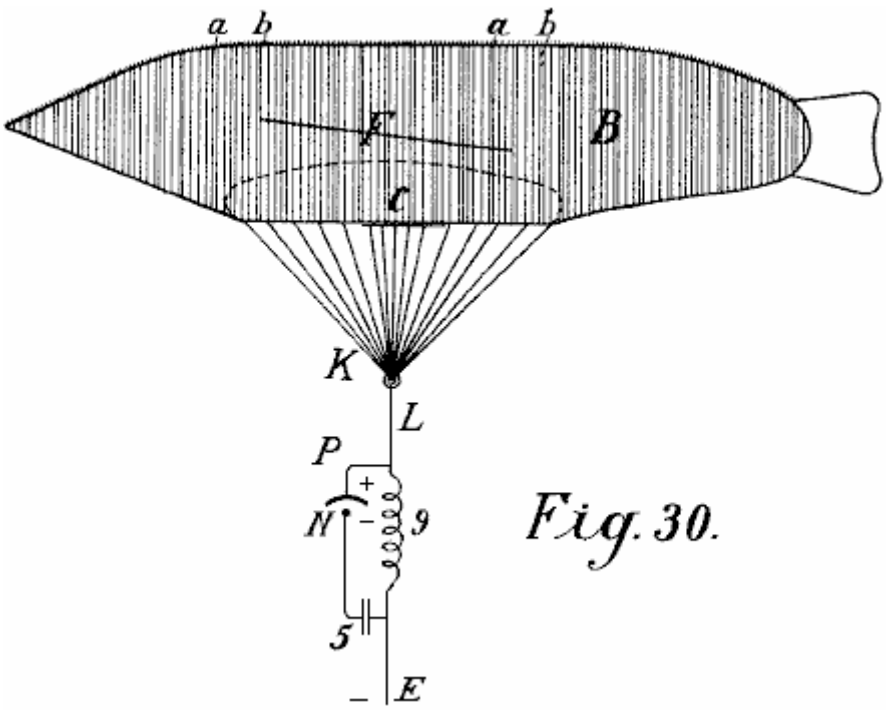

Fig. 30.

Fig.30 shows a form with a cigar-shaped balloon.

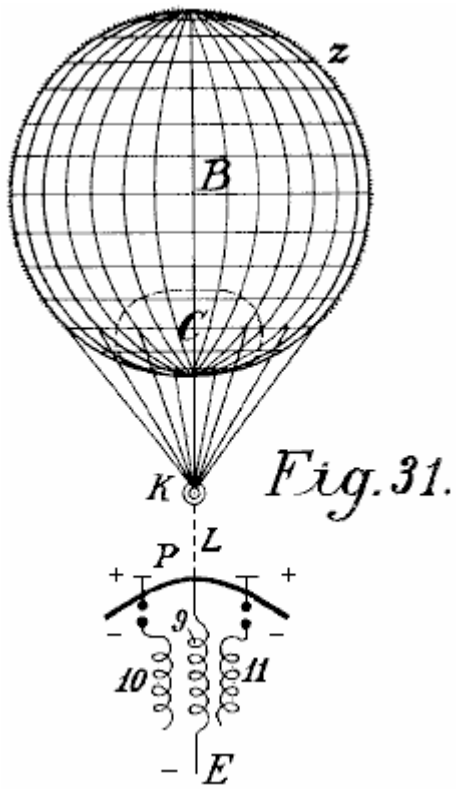

Fig. 31.

Fig.31 is a modified arrangement.

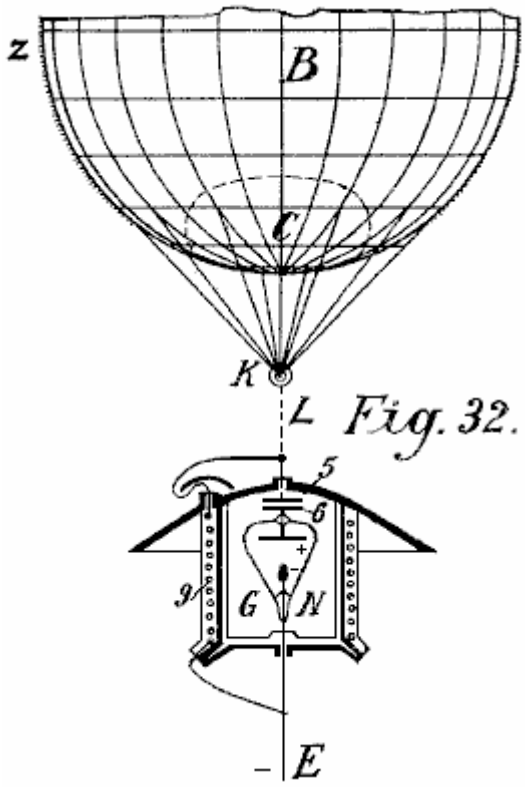

Fig.32 shows a form with cathode and electrode enclosed in a vacuum chamber.

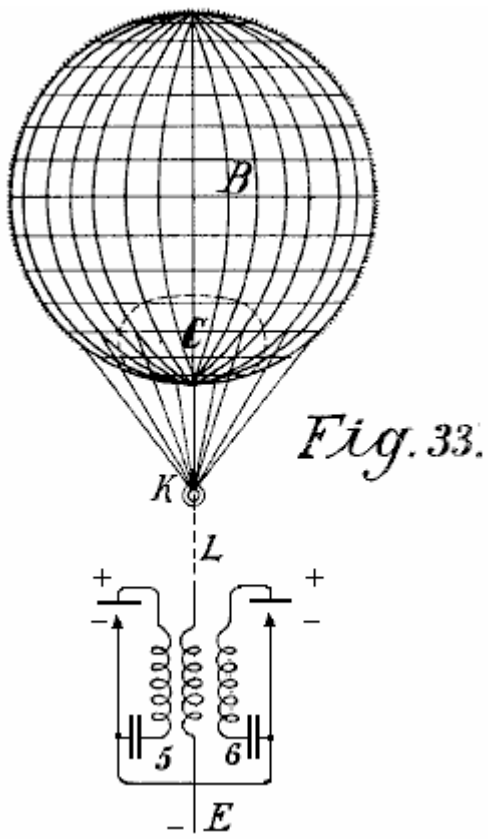

Fig.33 is a modified form of Fig.32

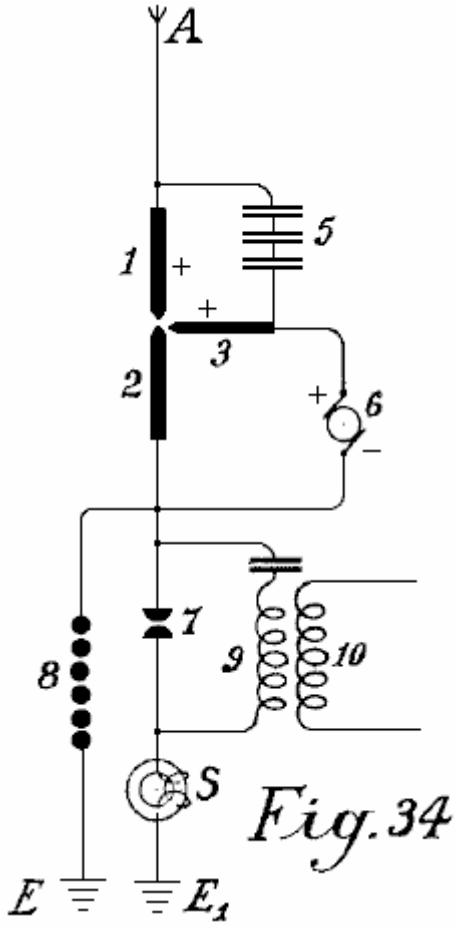

Fig.34 shows an arc light collector.

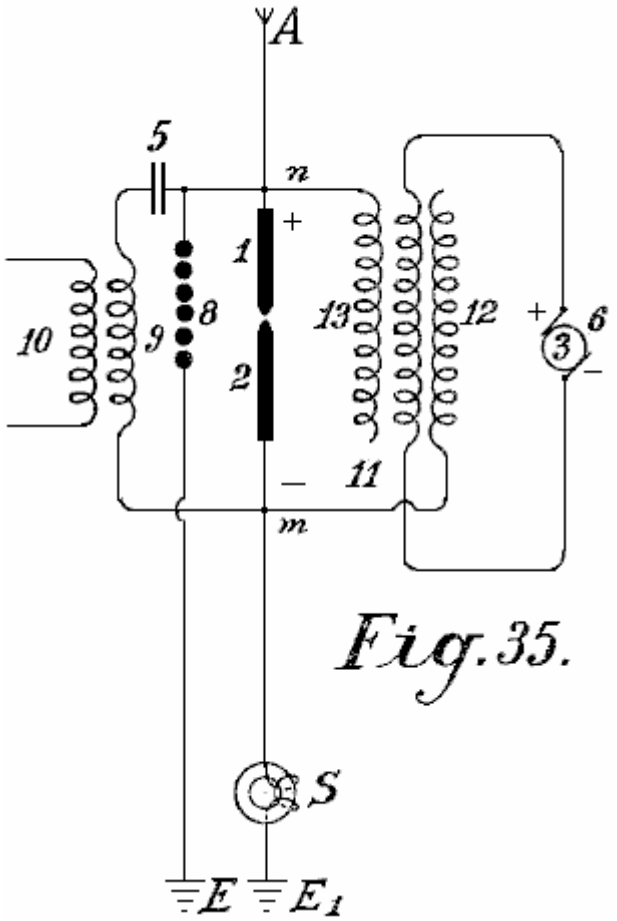

Fig.35 shows such an arrangement for alternating current

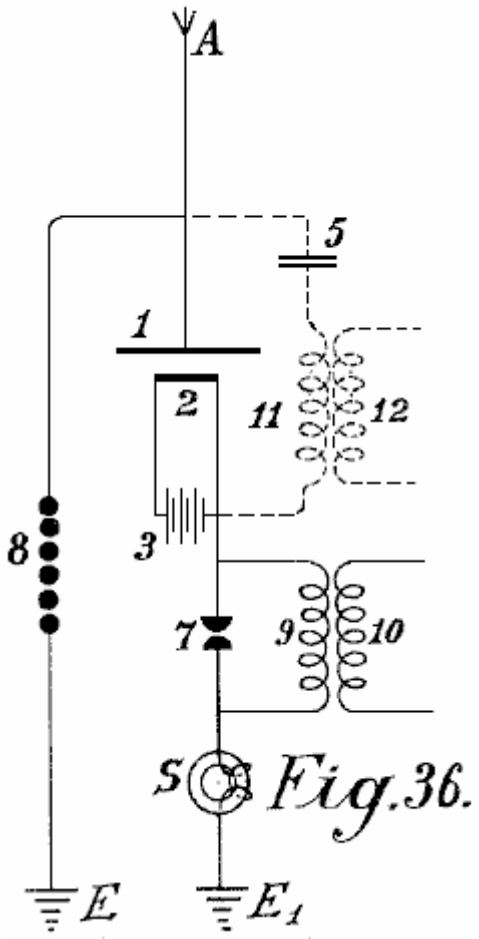

Fig.36 shows an incandescent collector with Nernst lamp

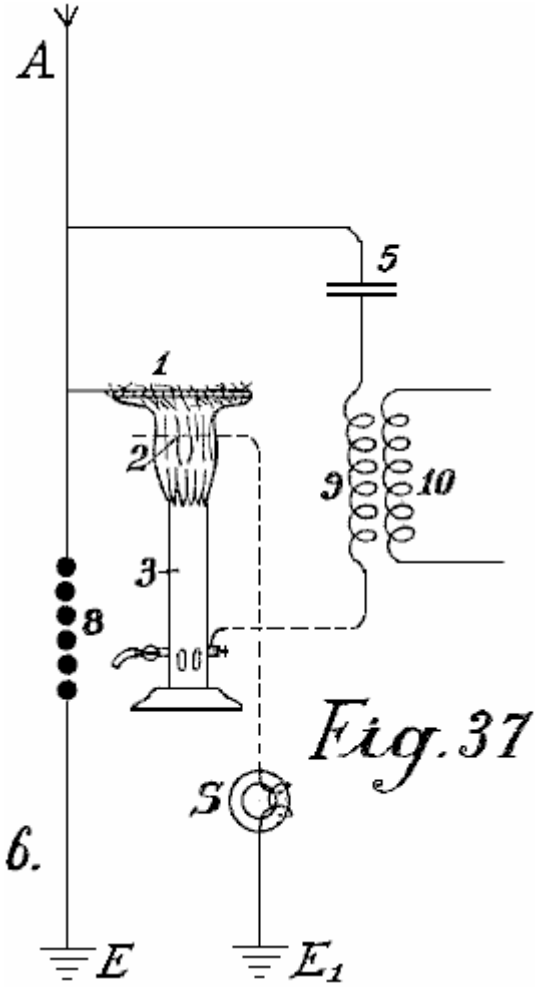

Fig.37 shows a form with a gas flame.

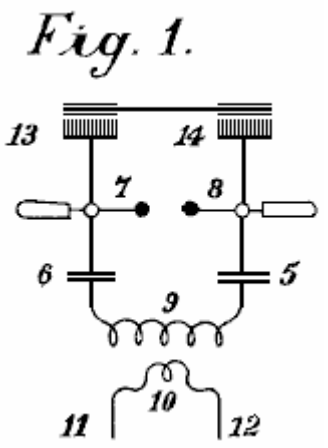

Fig.1 illustrates a simple diagram for converting static electricity into dynamic energy of a high number of oscillations. For the sake of clarity, a Wimshurst machine is assumed to be employed and not an aerial antenna. Items **13** and **14** are combs for collecting the static electricity of the influence machine. Items **7** and **8** are spark-discharging electrodes. Items **5** and **6** are capacitors, **9** is the primary winding of an inductive coil, **10** is the secondary winding whose ends are **11** and **12**. When the disc of the static influence machine is rotated by mechanical means, the combs collect the electric charges, one being positive and one negative and these charge the capacitors **5** and **6** until such a high voltage is developed across the spark gap **7-- 8** that the spark gap is jumped. As the spark gap forms a closed circuit with capacitors **5** and **6**, and inductive resistance **9**, as is well known, waves of high frequency electromagnetic oscillations will pass in this circuit.

The high frequency of the oscillations produced in the primary circuit induces waves of the same frequency in the secondary circuit. Thus, in the primary circuit, electromagnetic oscillations are formed by the spark and these oscillations are maintained by fresh charges of static electricity.

By suitably selecting the ratio between the number of turns in the primary and secondary windings, with regard to a correct application of the coefficients of resonance (capacitance, inductance and resistance) the high voltage of the primary circuit may be suitably converted into a low voltage high current output.

When the oscillatory discharges in the primary circuit become weaker or cease entirely, the capacitors are charged again by the static electricity until the accumulated charge again breaks down across the spark gap. All this is repeated as long as electricity is produced by the static machine through the application of mechanical energy to it.

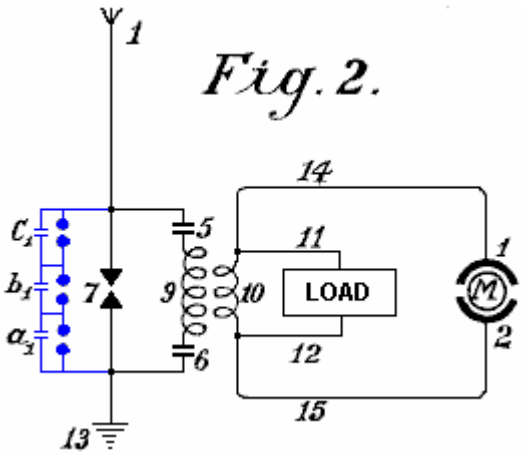

An elementary form of the invention is shown in **Fig.2** in which two spark gaps in parallel are used, one of which may be termed the working gap **7** while the second serves as a safety device for excess voltage and consists of a larger number of spark gaps than the working section, the gaps being arranged in series and which are bridged by very small capacitors a_1, b_1, c_1, which allow uniform sparking in the safety section.

1 is the aerial antenna for collecting charges of atmospheric electricity, **13** is the earth connection of the second part of the spark gap, **5** and **6** are capacitors and **9** is the primary coil winding. When the positive atmospheric electricity seeks to combine with the negative earth charge via aerial **1**, this is prevented by the air gap between the spark gaps. The resistance of spark gap **7** is lower than that of the safety spark gap set of three spark gaps connected in series a which consequently has three times greater air resistance.

Therefore, so long as the resistance of spark gap **7** is not overloaded, discharges take place only through it. However, if the voltage is increased by any influence to such a level that it might be dangerous for charging the capacitors **5** and **6**, or for the coil insulation of windings 9 and 10, the safety spark gap set will, if correctly set, discharge the voltage directly to earth without endangering the machine. Without this second spark gap arrangement, it is impossible to collect and render available large quantities of electrical energy.

The action of this closed oscillation circuit consisting of spark gap **7**, two capacitors **5** and **6**, primary coil **9** and secondary coil **10**, is exactly the same as that of **Fig.1** which uses a Wimshurst machine, the only difference being the provision of the safety spark gap. The high frequency electromagnetic alternating current can be tapped off through the conductors **11** and **12** for lighting and heating purposes. Special motors adapted for working with static electricity or high frequency oscillations may be connected at **14** and **15**.

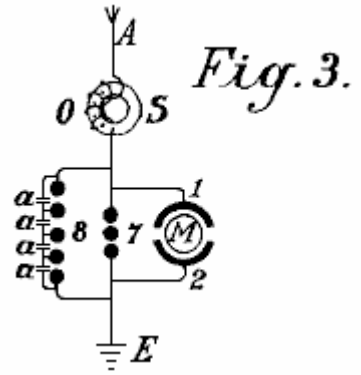

Fig. 3.

In addition to the use of spark gaps in parallel, a second measure of security is also necessary for taking the current from this circuit. This is the introduction of protective electromagnets or choking coils in the aerial circuit as shown by **S** in **Fig.3**. A single electromagnet having a core of the thinnest possible separate laminations is connected with the aerial. In the case of high voltages in the aerial network or at places where there are frequent thunderstorms, several such magnets may be connected in series.

In the case of large units, several such magnets can be employed in parallel or in series parallel. The windings of these electromagnets may be simply connected in series with the aerials. In this case, the winding preferably consists of several thin parallel wires, which together, make up the necessary cross-sectional area of wire. The winding may be made of primary and secondary windings in the form of a transformer. The primary winding will then be connected in series with the aerial network, and the secondary winding more or less short-circuited through a regulating resistor or an induction coil. In the latter case it is possible to regulate, to a certain extent, the effect of the choking coils. In the following circuit and constructional diagrams , the aerial electromagnet choke coil is indicated by a simple ring **S**.

Fig.3 shows the most simple way of converting atmospheric electricity into electromagnetic wave energy by the use of special motors adapted for high oscillatory currents or static charges of electrical energy. Recent improvements in motors for working with static energy and motors working by resonance, that is to say, having groups of tuned electromagnetic co-operating circuits render this possible but such do not form part of the present invention.

A motor adapted to operate with static charges, will for the sake of simplicity, be shown in the diagrams as two semi-circles **1** and **2** and the rotor of the motor by a ring **M** (**Fig.3**). **A** is a vertical aerial or aerial network. **S** is the safety choke or electromagnet with coil **O** as may be seen is connected with the aerial **A**. Adjacent to the electromagnet **S**, the aerial conductor is divided into three circuits, circuit **8** containing the safety spark gap, circuit **7** containing the working spark gap, and then a circuit containing the stator terminal **1**, the rotor and stator terminal **2** at which a connection is made to the earth wire. The two spark gaps are also connected metallically with the earth wire. The method of working in these diagrams is as follows:

The positive atmospheric electric charge collected tends to combine with the negative electricity (or earth electricity) connected via the earth wire. It travels along the aerial **A** through the electromagnet **S** without being checked as it flows in the same direction as the direct current. Further, its progress is arrested by two spark gaps placed in the way and the stator capacitors. These capacitors charge until their voltage exceeds that needed to jump the spark gap **7** when a spark occurs and an oscillatory charge is obtained via the closed oscillation circuit containing motor **M**. The motor here forms the capacity and the necessary inductance and resistance, which as is well known, are necessary for converting static electricity into electromagnetic wave energy.

The discharges are converted into mechanical energy in special motors and cannot reach the aerial network because of the electromagnet or choke. If, however, when a spark occurs at spark gap **7**, a greater quantity of atmospheric electricity tends to flow to earth, then a counter voltage is induced in the electromagnet, which is greater the more rapidly and strongly the flow of current direct to earth is. This opposing voltage causes the circuit to exhibit a sufficiently high resistance to prevent a short circuit between the atmospheric electricity and the earth.

The circuit containing spark gap **8**, having a different wave length which is not in resonance with the natural frequency of the motor, does not endanger the motor and serves as security against excess voltage, which, as practical experiments have shown, may still arise in certain cases.

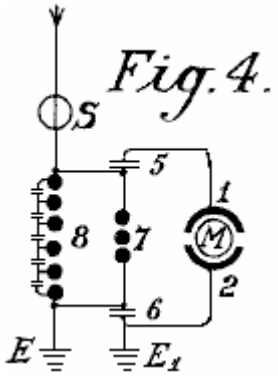

In **Fig.4**, spark gap **7** is shunted across capacitors **5** and **6** from the motor **M**. This arrangement provides improved over-voltage protection for the motor and it gives a uniform excitation through the spark gap **7**.

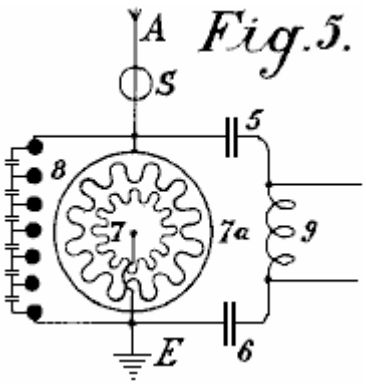

Fig.5 shows an arrangement for producing large currents which can be used direct without motors, to provide heating and lighting. The main difference here is that the spark gap consists of a star-shaped disc **7** which can rotate on its own axis and is rotated by a motor opposite similarly fitted electrodes **7a**. When separate points of starts face one another, discharges take place, thus forming an oscillation circuit with capacitors **5** and **6** and inductor **9**. It is evident that a motor may also be connected directly to the ends of inductor **9**.

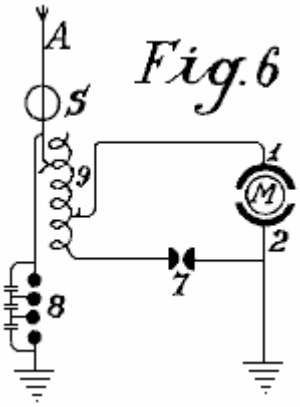

Fig.6 shows how the oscillation circuit may have a motor connected via a variable inductor which opposes any excess voltages which might be applied to the motor. By cutting the separate coils **9** (coupled inductively to the aerial) in or out, the inductive action on the motor may be more or less increased, or variable aerial action may be exerted on the oscillation circuit.

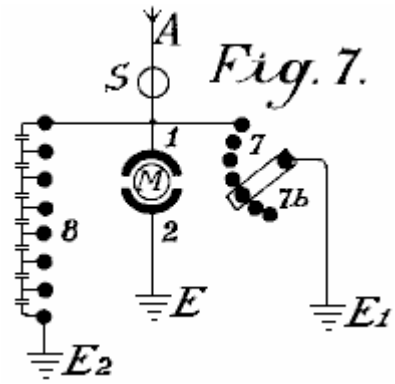

In **Fig.7** the oscillation circuit is closed through the earth (**E** and **E_1**). The spark gap **7** may be increased or reduced by means of a contact arm **7b**.

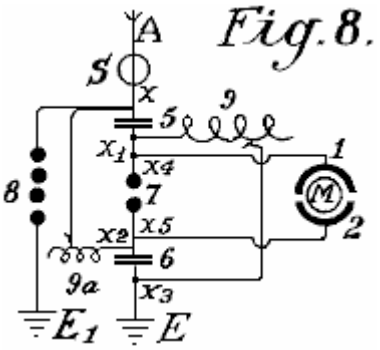

Fig.8 shows a unipolar connection of the motor with the aerial network. Here, two oscillation circuits are closed through the same motor. The first oscillation circuit passes from aerial **A** through electromagnet **S**, point **x**, inductance **9a** to the earth capacitor **6**, across spark gap **7** to the aerial capacitor **5** and back to point **x**. The second oscillation circuit starts from the aerial **5** at the point **x1** through inductor **9** to the earth capacitor **6** at the point **x3**, through capacitor **6**, across spark gap **7** back to point **x1**. The motor itself, is inserted between the two points of spark gap **7**. This arrangement produces slightly dampened oscillation wave currents.

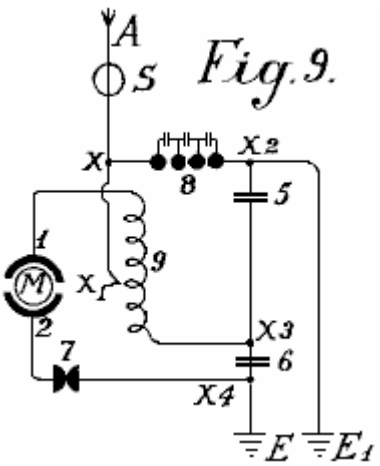

Fig.9 shows a loosely coupled system intended for small motors for measuring purposes. **A** is the serial, **S** is the electromagnet or aerial inductor, **9** the inductor, **7** the spark gap, **5** and **6** capacitors, **E** the earth, **M** the motor, and **1** and **2** the stator connections of the motor which is directly connected to the oscillator circuit.

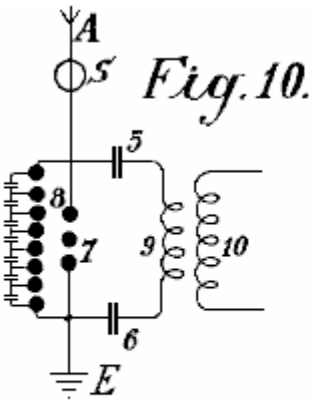

Fig.10.

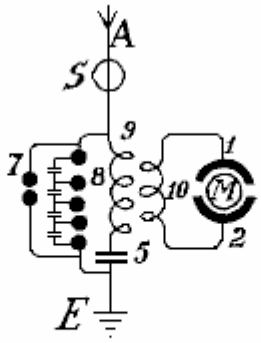

Fig.11.

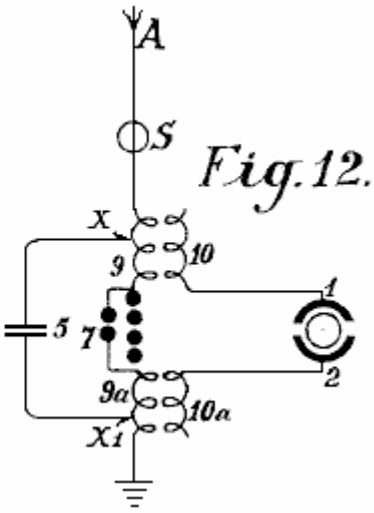

Fig.12.

Fig.10 shows a motor circuit with purely inductive coupling. The motor is connected with the secondary wire **10** as may be seen in **Fig.11** in a somewhat modified circuit. The same applies to the circuit of **Fig.12**.

The circuit diagrams shown so far, allow motors of small to medium strength to be operated. For large aggregates, however, they are too inconvenient as the construction of two or more oscillation circuits for large amounts of energy is difficult; the governing is still more difficult and the danger in switching on or off is greater.

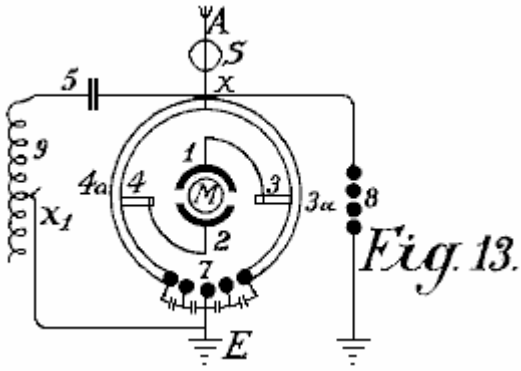

Fig.13.

A means for overcoming such difficulties is shown in **Fig.13**. The oscillation circuit shown here, runs from point **x** over capacitor **5**, variable inductor **9**, spark gap **7** and the two segments **3a** and **3b** forming arms of a Wheatstone bridge, back to **x**. If the motor is connected by brushes **3** and **4** transversely to the two arms of the bridge as shown in the drawing, electromagnetic oscillations of equal sign are induced in the stator surfaces **1** and **2** and the motor does not revolve. If however, the brushes **3** and **4** are moved in common with the conducting wires **1** and **2** which connect the brushes with the stator poles, a certain alteration or displacement of the polarity is obtained and the motor commences to revolve.

The maximum action will result if one brush **3** comes on the central sparking contact **7** and the other brush **4** on the part **x**. In practice however, they are usually brought on to the central contact **7** but only held in the path of the bridge segments **4a** and **3a** in order to avoid connecting the spark gaps with the motor oscillation circuit.

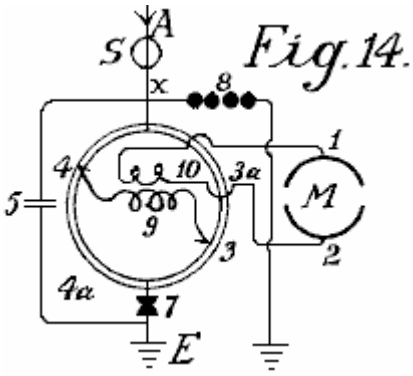

Fig.14.

As this prevents the whole of the oscillation energy acting on the motor, it is better to adopt the modification shown in **Fig.14**. The only difference here is that the motor is not wired directly to the segments of the commutator, but instead it is

wired to secondary coil **10** which receives induced current from primary coil **9**. This arrangement provides a good transforming action, a loose coupling and an oscillation circuit without a spark gap.

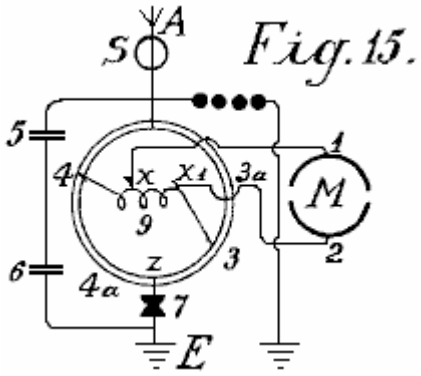

In **Fig.15**, the motor is wired directly to the primary coil at **x** and **x1** after the principle of the auto-transformer. In **Fig.16**, instead of an inductor, capacitor **6** replaces the inductance and is inserted between the segments **3a** and **4a**. This has the advantage that the segments **3a** and **4a** need not be made of solid metal, but may consist of spiral coils which allow a more exact regulation, and high inductance motors may be used.

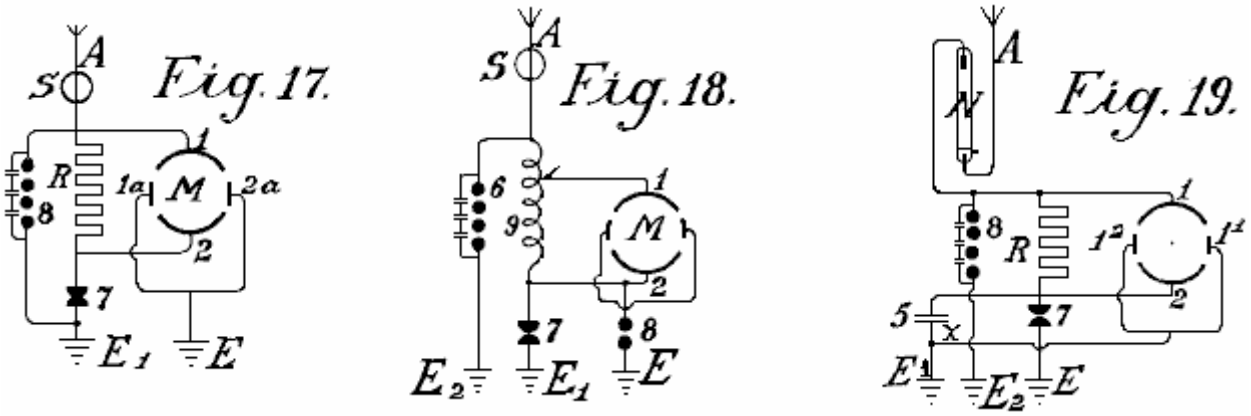

The circuits shown in **Fig.17**, **Fig.18** and **Fig.19** may be used with resonance and particularly with induction capacitor motors; between the large stator induction capacitor surfaces, small reversing pole capacitors are connected which are lead together to earth. Such reversing poles have the advantage that, with large quantities of electrical energy, the spark formation between the separate oscillation circuits ceases.

Fig.19 shows another method which prevents high frequency electromagnetic oscillations formed in the oscillation circuit, feeding back to the aerial. It is based on the well known principle that a mercury lamp, one electrode of which is formed of mercury, the other of solid metal such as steel, allows an electric charge to pass in only one direction: from the mercury to the steel and not vice versa. The mercury electrode of the vacuum tube **N** is therefore connected with the aerial conductor and the steel electrode with the oscillation circuit. Charges can then only pass from the aerial through the vacuum tube to the oscillation circuit and no flow occurs in the opposite direction. In practice, these vacuum tubes must be connected behind an electromagnet as the latter alone provides no protection against the danger of lightning.

As regards the use of spark gaps, all arrangements as used for wireless telegraphy may be used. Of course, the spark gaps in large machines must have a sufficiently large surface. In very large stations they are cooled in liquid carbonic acid or better still, in liquid nitrogen or hydrogen; in most cases the cooling may also take place by means of liquefied low homologues of the metal series or by means of hydrocarbons, the freezing point of which lies between -90°C and -40^{0}C. The spark gap casing must also be insulated and be of sufficient strength to be able to resist any pressure which may arise. Any undesirable excess super-pressure which may be formed must be let off automatically. I have employed with very good results, mercury electrodes which were frozen in liquid carbonic acid, the cooling being maintained during the operation from the outside, through the walls.

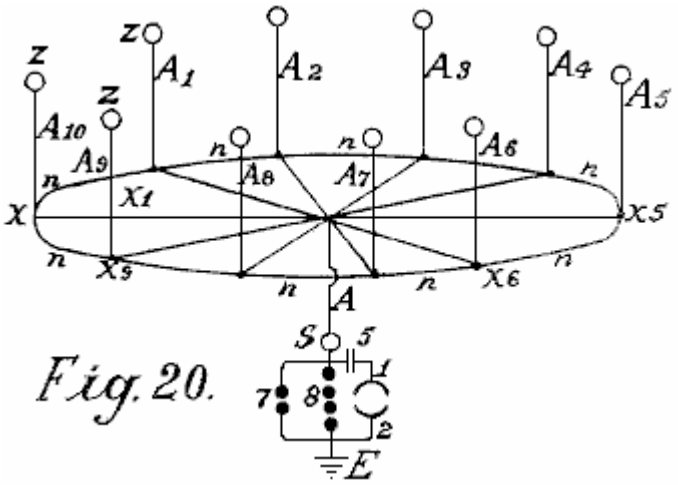

Fig. 20.

Fig.20 shows one of the most simple forms of construction of an aerial network in combination with collectors, transformers and the like. **E** is the earth wire, **8** the safety spark gap, **7** the working spark gap, **1** and **2** the stator surfaces of the motor, **5** a capacitor battery, **S** the protective magnet which is connected with the coil in the aerial conductor, $\mathbf{A^1}$ to $\mathbf{A^{10}}$ aerial antennae with collecting balloons, **N** horizontal collecting or connecting wires, from which, a number of connections run to the centre.

The actual collectors consist of metal sheaths, preferably made of an aluminium magnesium alloy, and are filled with hydrogen or helium, and are attached to copper-plated steel wires. The size of the balloon is selected so that the actual weight of the balloon and its conducting wire is supported by it. Aluminium spikes, made and gilded as described below, are arranged on top of the balloons in order to produce a conductor action. Small quantities of radium preparations, more particularly, polonium-ionium or mesothorium preparations, considerably increase the ionisation, and the performance of these collectors.

In addition to metal balloons, fabric balloons which are sprayed with a metallic coating according to Schoop's metal-spraying process may also be used. A metallic surface may also be produced by lacquering with metallic bronzes, preferably according to Schoop's spraying process, or lacquering with metallic bronze powders in two electrical series of widely different metals, because this produces a considerably increased collecting effect.

Instead of the ordinary round balloons, elongated cigar-shaped ones may be employed. In order also to utilise the frictional energy of the wind, patches or strips of non-conducting substances which produce electricity by friction, may be attached to the metallised balloon surfaces. The wind will impart a portion of its energy in the form of frictional electricity, to the balloon casing, thus substantially increasing the collection effect.

In practice however, very high towers of up to 300 metres may be employed as antennae. In these towers, copper tubes rise freely further above the top of the tower. A gas lamp secured against the wind is then lit at the point of the copper tube and a netting is secured to the copper tube over the flame of this lamp to form a collector. The gas is conveyed through the interior of the tube, up to the summit. The copper tube must be absolutely protected from moisture at the place where it enters the tower, and rain must be prevented from running down the walls of the tower, which might lead to a bad catastrophe. This is done by bell-shaped enlargements which expand downwards, being arranged in the tower in the form of high voltage insulators of Siamese pagodas.

Special attention must be devoted to the foundations of such towers. They must be well insulated from the ground, which may be achieved by first embedding a layer of concrete in a box form to a sufficient depth in the ground, and inserting in this, an asphalt lining and then glass bricks cast about 1 or 2 metres in thickness. Over this in turn, there is a ferro-concrete layer in which alone the metal foot of the tube is secured. This concrete block must be at least 2 metres from the ground and at the sides, be fully protected from moisture by a wooden covering. In the lower part of the tower, a wood or glass housing should be constructed to protect the capacitors and/or motors. In order to ensure that the ground lead connects to the water-table, a well insulated pit lined with vitreous bricks must be provided. Several such towers are erected at equal distances apart and connected with a horizontal conductor. The horizontal connecting wires may either run directly from tower to tower or be carried on bell-shaped insulators similar to those in use for high voltage electricity transmission lines. The width of the aerial tower network may be of any suitable size and the connection of the motors can take place at any convenient location.

Fig. 21.

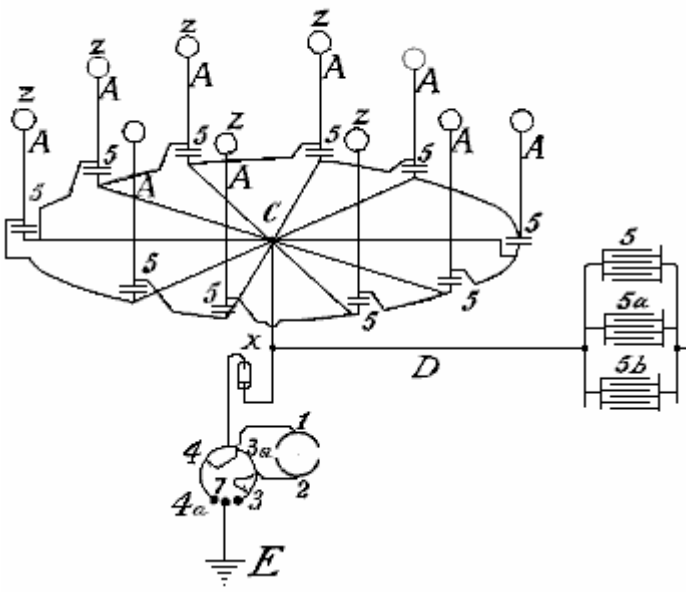

Fig. 22.

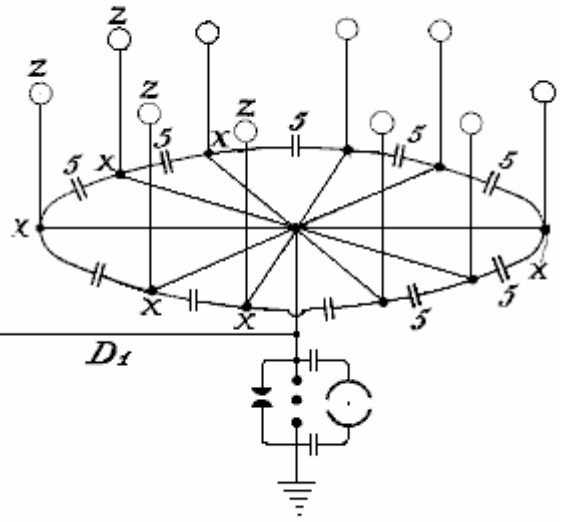

In order to collect large quantities of electricity with few aerials, it is as well to provide the aerial conductor with sets of capacitors as shown in the two methods of construction illustrated in **Fig.21** and **Fig.22**. In **Fig.21** the set of capacitors **5** is connected between the aerials **Z** via lead **A** and an annular conductor from which horizontal run to the connecting points **C** to which the earth wire is connected. **Fig.22** shows a similar arrangement.

Should two such series of antenna rings be shown by a voltmeter to have a large voltage difference (for example, one in the mountains and one on the plain) or even of a different polarity, these differences may be compensated for by connecting sufficiently large capacitor sets (**5, 5a, 5b**) by means of Maji star conductors **D** and **D**[1]. **Fig.23**, shows a connection of three such rings of collectors are positioned in a triangle with a central set of capacitors.

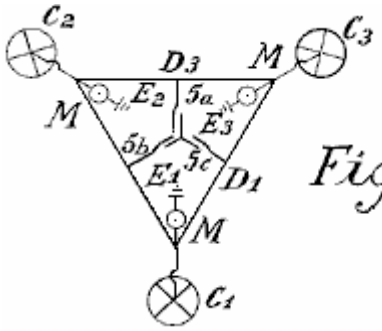

Fig. 23.

The capacitor sets of such large installations must be embedded in liquefied gasses or in liquids freezing at very low temperatures. In such cases, a portion of the atmospheric energy must be employed for liquefying these gasses. It is also preferable to employ pressure. By this means, the capacitor surfaces may be reduced in area and still allow the storage of large quantities of energy to be stored, secure against breakdown. For the smaller installations, the immersing of the capacitors in well insulated oil or the like, is sufficient. Solid substances, on the other hand, cannot be employed as insulators.

The arrangement in the diagrams shown earlier has always shown both poles of the capacitors connected to the aerial conductors. An improved method of connection has been found to be very advantageous. In this method, only one pole of each capacitor is connected to the collecting network. Such a method of connection is very important, as by means of it, a constant current and an increase in the normal working voltage is obtained. If, for example, a collecting balloon aerial which is allowed to rise to a height of 300 metres, shows 40,000 volts above earth voltage, in practice it has been found that the working voltage (with a withdrawal of the power as described earlier by means of oscillating spark gaps and the like) is only about 400 volts. If however, the capacity of the capacitor surfaces be increased, which capacity in the above mentioned case was equal to that of the collecting surface of the balloon aerials, to double the amount, by connecting the capacitors with only one pole, the voltage rises under an equal withdrawal of current up to and beyond 500 volts. This can only be ascribed to the favourable action of the connecting method.

In addition to this substantial improvement it has also been found preferable to insert double inductances with electromagnets and to place the capacitors preferably between two such electromagnets. It has also been found that the useful action of such capacitors can be further increased if an induction coil is connected as an inductive resistance to the unconnected pole of the capacitor, or still better if the capacitor itself be made as an induction capacitor. Such a capacitor may be compared to a spring, which when compressed, carries in itself accumulated force, which it gives off

again when released. In charging, a charge with reversed sign is formed at the other free capacitor pole, and if a short circuit occurs through the spark gap, the accumulated energy is again given back since now new quantities of energy are induced at the capacitor pole connected to the conductor network, which in fact, charges with opposite sign to that at the free capacitor pole. The new induced charges have of course, the same sign as the collector network. The whole voltage energy in the aerial is thereby increased. In the same time interval, larger quantities of energy are accumulated than is the case without such capacitor sets being inserted.

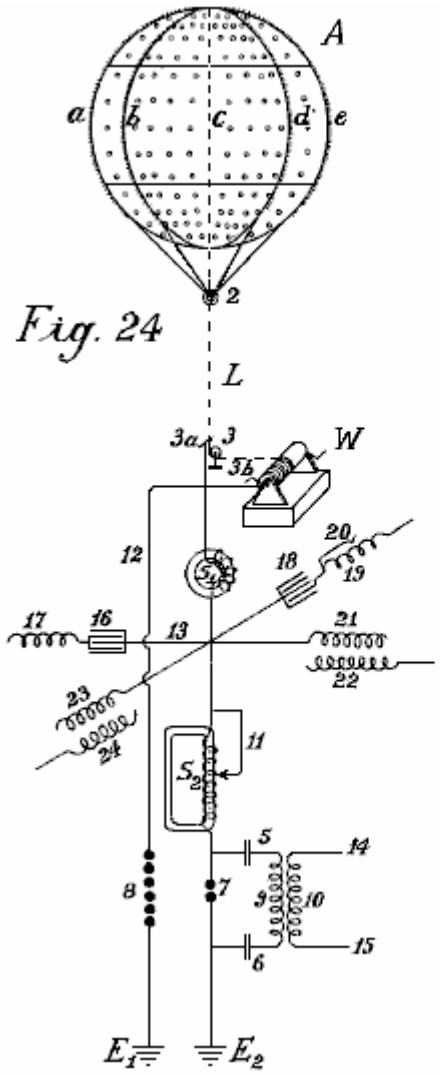

Fig. 24

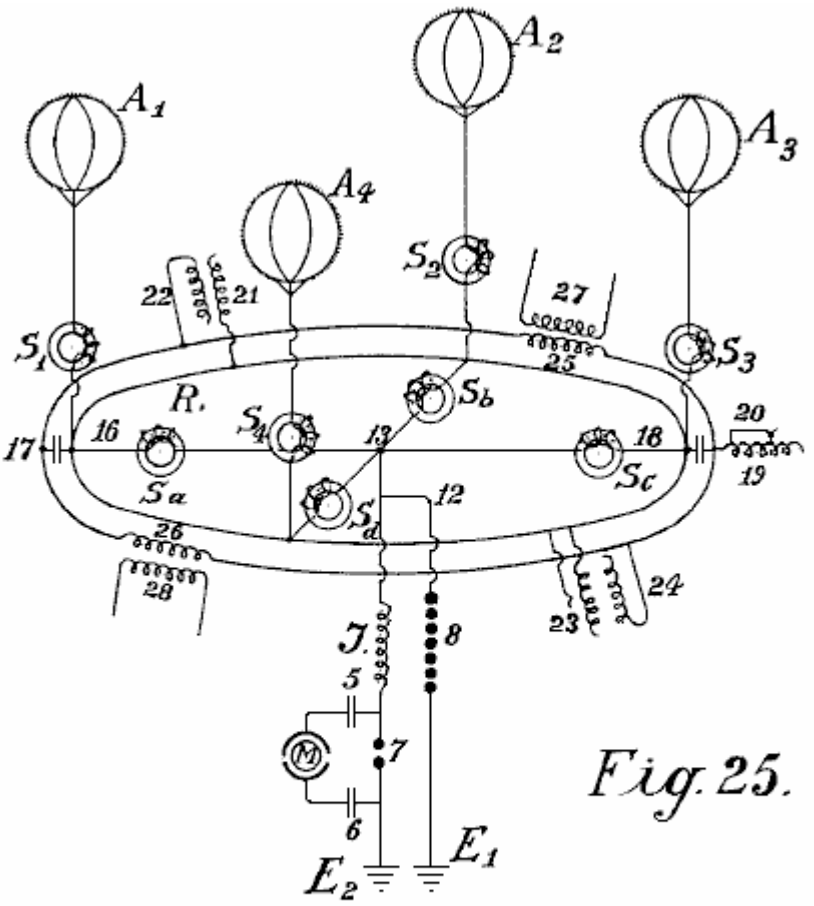

Fig. 25.

In **Fig.24** and **Fig.25**, two different connection diagrams are illustrated in more detail. **Fig.24** shows a collecting balloon along with its earth connections. **Fig.25** shows four collecting balloons and the parallel connection of their capacitor sets.

A is the collecting balloon made of an aluminium magnesium alloy (electron metal magnalium) of a specific gravity of 1.8 and a plate thickness of 0.1 mm to 0.2 mm. Inside, there are eight strong vertical ribs of T-shaped section of about 10 mm to 20 mm in height and about 3 mm in thickness, with the projecting part directed inwards (indicated by **a, b, c, d** and so forth). They are riveted together to form a firm skeleton and are stiffened in a horizontal direction by two cross ribs. The ribs are further connected to one another internally and transversely by means of thin steel wires, whereby the balloon obtains great strength and elasticity. Rolled plates of 0.1 mm to 0.2 mm in thickness made of magnalium alloy are then either soldered or riveted on to this skeleton so that a fully metallic casing with a smooth external surface is created. Well silvered or coppered aluminium plated steel wires run from each rib to the fastening ring **2**. Further, the coppered steel hawser **L**, preferably twisted out of separate thin wires (shown as dotted lines in **Fig.24**) and which must be long enough to allow the balloon to rise to the desired height, leads to a metal roller or pulley **3** and on to a winch **W**, which must be well insulated from the earth. By means of this winch, the balloon which is filled with hydrogen or helium, can be allowed to rise to a suitable height of 300 to 5,000 metres, and brought to the ground for recharging or repairs.

The actual current is taken directly through a friction contact from the metal roller **3** or from the wire or even from the winch, or simultaneously from all three by means of brushes (**3**, **3a** and **3b**). Beyond the brushes, the conductor is divided, the paths being:- firstly, over **12** to the safety spark gap **8**, on to the earth conductor $\mathbf{E^1}$, and secondly over electromagnet $\mathbf{S^1}$, point **13**, to a second loose electromagnet having an adjustable coil $\mathbf{S^2}$, then to the spark gap **7** and to the second earth conductor $\mathbf{E^2}$. The actual working circuit is formed through the spark gap **7**, capacitors **5** and **6**, and through the primary coil **9**; here the static electricity formed by oscillatory discharges is accumulated and converted into high frequency electromagnetic oscillations. Between the electromagnets $\mathbf{S^1}$ and $\mathbf{S^2}$ at the crossing point **13**, four capacitor sets are introduced which are only indicated diagramatically in the drawings by a single capacitor. Two of these

sets of capacitors (**16** and **18**) are made as plate capacitors and prolonged by regulating induction coils or spirals **17** and **19** while the two others (**21** and **23**) are induction capacitors. As may be seen from the drawings, each of the four capacitor sets, **16**, **18**, **21** and **23** is connected by only one pole to either the aerial or to the collector conductor. The second poles **17**, **19**, **22** and **24** are open. In the case of plate capacitors having no inductive resistance, an induction coil is inserted. The object of such a spiral or coil is the displacement of phase of the induction current by $^1/_4$ periods, whilst the charging current of the capacitor poles which lie free in the air, works back to the collector aerial. The consequence of this is that in discharges in the collector aerial, the back-inductive action of the free poles allows a higher voltage to be maintained in the aerial collecting conductor than would otherwise be the case. It has also been found that such a back action has an extremely favourable effect on the wear of the contacts. Of course, the inductive effect may be regulated at will within the limits of the size of the induction coil, the length of the coil in action being adjustable by means of wire connection without induction (see **Fig.24** No. **20**).

$\mathbf{S^1}$ and $\mathbf{S^2}$ may also be provided with such regulating devices, in the case of $\mathbf{S^2}$ illustrated by **11**. If excess voltage be formed, it is conducted to earth through wire **12** and spark gap **8**, or through any other suitable apparatus, since this voltage would be dangerous for the other components. The action of these capacitor sets has already been described.

The small circles on the collector balloon indicate places where small patches of extremely thin layers (0.01 to 0.05 mm thick) of zinc amalgam, gold amalgam or other photoelectric acting metals, are applied to the balloon casing of light metal. Such metallic patches may also be applied to the entire balloon as well as in greater thickness to the conducting network. The capacity of the collector is thereby considerably strengthened at the surface. The greatest possible effect in collecting may be obtained by polonium amalgams and the like. On the surface of the collector balloon, metal points or spikes are also fixed along the ribs. These spikes enhance the charge collection operation. Since it is well known that the sharper the spikes, the less the resistance of the spikes, it is therefore extremely important to use spikes which are as sharp as possible. Experiments have shown that the formation of the body of the spike or point also play a large part, for example, spikes made of bars or rollers with smooth surfaces, have point resistance many times greater than those with rough surfaces. Various kinds of spike bodies have been experimented with for the collector balloons and the best results were given with spikes which were made in the following way: Fine points made of steel, copper, nickel or copper and nickel alloys, were fastened together in bundles and then placed as anode with the points placed in a suitable electrolyte (preferably in hydrochloric acid or muriate of iron solutions) and so treated with weak current driven by 2 to 3 volts. After 2 to 3 hours, according to the thickness of the spikes, the points become extremely sharp and the bodies of the spikes have a rough surface. The bundle can then be removed and the acid washed off with water. The spikes are then placed as cathode in a bath containing a solution of gold, platinum, iridium, palladium or wolfram salts or their compounds, and coated at the cathode galvanically with a thin layer of precious metal, which mush however be sufficiently firm to protect them from atmospheric oxidation.

Such spikes act at a 20 fold lower voltage almost as well as the best and finest points made by mechanical means. Still better results are obtained if polonium or radium salts are added to the galvanic bath when forming the protective layer or coating. Such pins have low resistance at their points and have excellent collector action even at one volt or lower.

In **Fig.24**, the three unconnected poles are not connected with one another in parallel. That is quite possible in practice without altering the principle of the free pole. It is also preferable to interconnect a series of collecting aerials in parallel to a common collector network. **Fig.25** shows such an arrangement. $\mathbf{A^1, A^2, A^3, A^4}$ are four metal collector balloons with gold or platinum coated spikes which are electrolytically mad in the presence of polonium emanations or radium salts, the spikes being connected over four electromagnets $\mathbf{S^1, S^2, S^3, S^4}$, through an annular conductor **R**. From this annular conductor, four wires run over four further electromagnets $\mathbf{S^a, S^b, S^c, S^d}$, to the connecting point **13**. There, the conductor is divided, one branch passing over **12** and the safety spark gap **7** to the earth at $\mathbf{E^1}$, the other over inductive resistance **J** and working spark gap **7** to the earth at $\mathbf{E^2}$. The working circuit, consisting of the capacitors **5** and **6** and a resonance motor or a capacitor motor **M**, such as already described, is connected in proximity around the sparking gap section **7**. Of course, instead of connecting the capacitor motor directly, the primary circuit for high frequency oscillatory current may also be inserted.

The capacitor sets are connected by one pole to the annular conductor **R** and can be either inductionless (**16** and **18**) or made as induction capacitors as shown by **21** and **23**. The free poles of the inductionless capacitors are indicated by **17** and **19**, and those of the induction capacitors by **22** and **24**. As may be seen from the drawings, all of these poles **17, 22, 19** and **24** may be interconnected in parallel through a second annular conductor without any fear that thereby the principle of the free pole connection will be lost. In addition to the advantages already mentioned, the parallel connection also allows an equalisation of the working voltage in the entire collector network. Suitably calculated and constructed induction coils **25** and **26** may also be inserted in the annular conductor of the free poles, by means of which, a circuit may be formed in the secondary coils **27** and **28** which allows current produced in this annular conductor by fluctuations of the charges, to be measured or otherwise utilised.

According to what has already been stated, separate collector balloons may be connected at equidistant stations distributed over the whole country, either connected directly with one another metallically or by means of intermediate suitably connected capacitor sets through high voltage conductors insulated from earth. The static electricity is converted through a spark gap, into high frequency dynamic electricity which may be utilised as a source of energy by means of a suitable connection method, various precautions being observed, and with special regulations. The wires leading from

the collector balloons, have up to now been connected through an annular conductor without this endless connection, which can be regarded as an endless induction coil, being able to exert any action on the whole conductor system.

It has now been found that if the network conductor connecting the aerial collector balloons with one another, is not made as a simple annular conductor, but preferably short-circuited in the form of coils over a capacitor set or spark gap or through thermionic valves, then the total collecting network exhibits quite new properties. The collection of atmospheric electricity is thereby not only increased but an alternating field may easily be produced in the collector network. Further, the atmospheric electrical forces showing themselves in the higher regions, may also be obtained directly by induction. In **Fig.26** and **Fig.28**, a form of construction is shown, on the basis of which, the further foundations of the method will be explained in more detail.

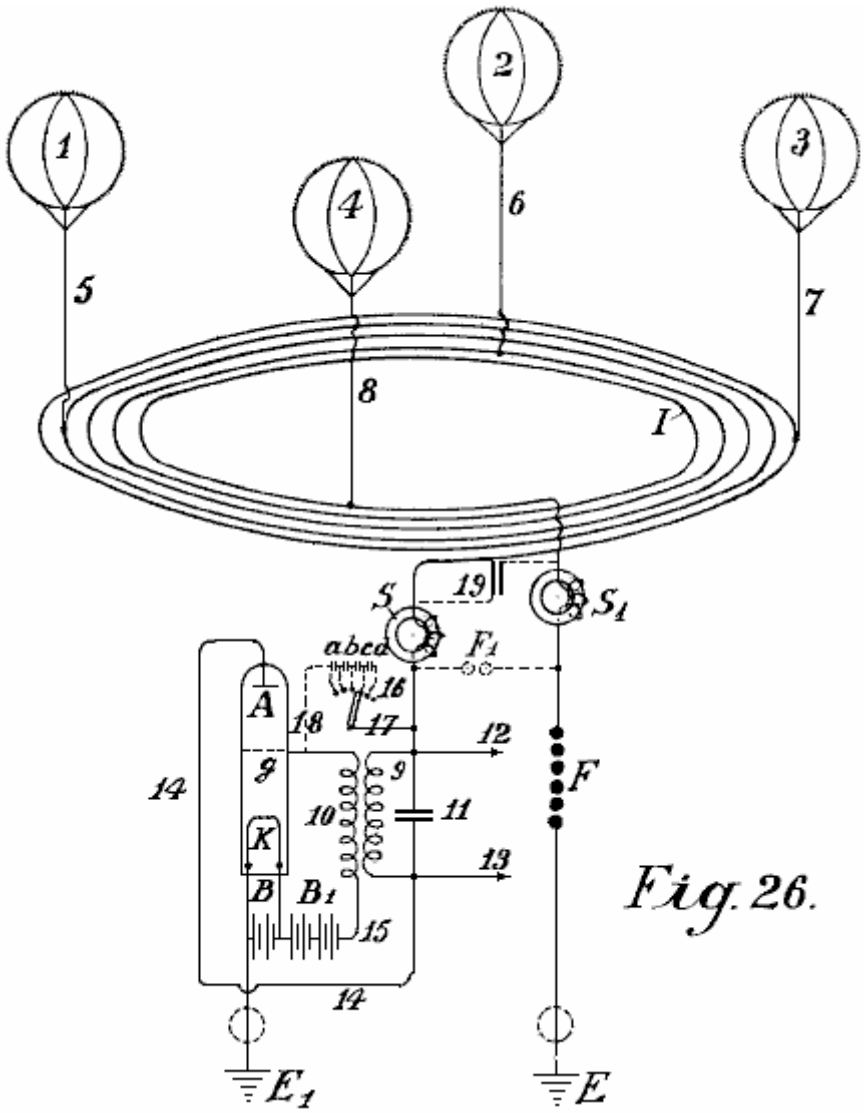

Fig. 26.

In **Fig.26, 1,2,3** and **4** are metallic collector balloons, with **5, 6, 7** and **8** their metallic aerial conductors and **I** the actual collector network. This consists of five coils and is mounted on high voltage insulators in the air, on high voltage masts (or with a suitable construction of cable, embedded in the earth). One coil has a diameter of 1 to 100 km. or more. **S** and **S^1** are two protective electromagnets, **F** is the second safety section against excess voltage, **E** its earth conductor and **E^1** the earth conductor of the working section. When an absorption of static atmospheric electricity is effected through the four balloon collectors, in order to reach the earth connection **E^1**, the current must flow spirally through the collector network, over the electromagnet **S**, primary induction coil **9**, conductor **14**, anode **A** of the audion tube, incandescent cathode **K**, as the way over the electromagnet and safety spark gap **F** offers considerably greater resistance. Owing to the fact that the accumulated current flows in one direction, an electromagnetic alternating field is produced in the interior of the collector network coil, whereby all of the free electrons are directed more or less into the interior of the coil. An increased ionisation of the atmosphere is therefore produced. Consequently, the points mounted on the collector balloon, show a considerably reduced resistance and therefore increased static charges are produced between the points on the balloon and the surrounding atmosphere. This results in a considerably increased collector effect.

A second effect, which could not be achieved in any other way, is obtained by the alternating electromagnetic field running parallel to the earth's surface, which acts more or less with a diminishing or increasing effect on the earth's magnetic field, whereby in the case of fluctuations in the current, a return induction current of reversed sign is always produced in the collector coil by earth magnetism. Now if a constantly pulsating, continuous alternating field is produced as stated in the collector network **I**, an alternating current of the same frequency is also produced in the collecting network coil. As the same alternating field is further transmitted to the aerial balloon, the resistance of its points is

thereby considerably reduced, while the collector action is considerably increased. A further advantage is that positive charges which collect on the metal surfaces during the conversion into dynamic current, produce a so-called voltage drop in the collector area. As an alternating field is present, when discharge of the collector surfaces takes place, the negative ions surrounding the collector surfaces produce, by the law of induction, an induction of reversed sign on the collector surface - that is, a positive charge. In addition to the advantages already stated, the construction of connecting conductors in coil form, when of sufficiently large diameter, allows a utilisation of energy arising in higher regions, also in the most simple way. As is well known, electric discharges frequently take place at very great elevations which may be observed, such as 'St. Elmo's fires' or 'northern lights'. These energy quantities have not been able to have been utilised before now. By this invention, all of these kinds of energy, as they are of electromagnetic nature and since the axis of the collector coils is at right angles to the earth's surface, can be absorbed in the same way as a radio absorbs distant radio signals. With a large diameter of the spiral, it is possible to connect large surfaces and thereby take up large quantities of energy.

It is well known that in the summer months and in the tropics, large radio stations are very frequently unable to receive signals due to interruptions caused by atmospheric electricity, and this takes place with vertical coils of only 40 to 100 metres in diameter. If, on the contrary, horizontal coils of 1 to 100 kilometres in diameter are used, very strong currents may be obtained through discharges which are constantly taking place in the atmosphere. Particularly in the tropics, or still better in the polar regions where the northern lights are constantly present, large quantities of energy may probably be obtained in this way. A coil with several windings should perform the best. In a similar manner, any alteration of the earth's magnetic field should act inductively on such a coil.

It is not at all unlikely that earthquakes and sunspots will also produce an induction in collector coils of that size. In similar manner, this collector conductor will react to earth currents more particularly when they are near the surface of the earth or even embedded in the earth. By combining the previous kind of current collectors, so far as they are adapted for the improved system with the improved possibilities of obtaining current, the quantities of free natural energy which are to be obtained in the form of electricity are considerably increased.

In order to produce uniform undamped current oscillations in the improved collector coil, so-called audion high vacuum or thermionic valves are used instead of the previous described spark gaps (**Fig.26, 9-18**). The main aerial current flows through electromagnet **S** (which in the case of a high number of alternations is not connected here but in the earth conductor $\mathbf{E^1}$) and may be conveyed over the primary coils in the induction winding through wire **14** to the anode **A** of the high vacuum grid valve. Parallel with the induction resistance **9**, a regulating capacity of suitable size, such as capacitor **11**, is inserted. In the lower part of the vacuum grid valve is the incandescent filament cathode **K** which is fed through a battery **B**. From the battery, two branches run, one to the earth conductor $\mathbf{E^1}$ and the other through battery $\mathbf{B^1}$ and secondary coil **10** to the grid anode **g** of the vacuum tube. By the method of connections shown in dotted lines, a desired voltage may also be produced at the grid electrode **g** through wire **17** which is branched off from the main current conductor through switches **16** and some small capacitors (**a, b, c, d**) connected in series, and conductor **18**, without the battery $\mathbf{B^1}$ being required. The action of the whole system is somewhat as follows:-

On the connecting conductor of the aerial collector network being short-circuited to earth, the capacitor pole **11** is charged, and slightly dampened oscillations are formed in the short-circuited oscillation circuit formed by capacitor **11** and self inductance **9**. Because of the coupling through coil **10**, voltage fluctuations of the same frequency take place in the grid circuit **15** and in turn, these fluctuations influence the strength of the electrode current passing through the high vacuum amplifying valve and thus produce current fluctuations of the same frequency in the anode circuit. A permanent supply of energy. Consequently, a permanent supply of energy is supplied to the oscillation circuits **9** and **10** takes place, until a balance is achieved where the oscillation energy consumed exactly matches the energy absorbed. This produces constant undamped oscillations in the oscillation circuits **9 - 11**.

For regular working of such oscillation producers, high vacuum strengthening tubes are necessary and it is also necessary that the grid and anode voltages shall have a phase difference of 180^0 so that if the grid is negatively charged, then the anode is positively charged and vice versa. This necessary difference of phase may be obtained by most varied connections, for example, by placing the oscillating circuit in the grid circuit or by separating the oscillation circuit and inductive coupling from the anodes and the grid circuit, and so forth.

A second important factor is that care must be taken that the grid and anode voltages have a certain relation to one another; the latter may be obtained by altering the coupling and a suitable selection of the self induction in the grid circuit, or as shown by the dotted lines **18, 17, 16** by means of a larger or smaller number of capacitors of suitable size connected in series; in this case, the battery $\mathbf{B^1}$ may be omitted. With a suitable selection of the grid potential, a glow discharge takes place between the grid **g** and the anode **A**, and accordingly at the grid there is a cathode drop and a dark space is formed. The size of this cathode drop is influenced by the ions which are emitted in the lower space in consequence of shock ionisation of the incandescent cathodes **K** and pass through the grid in the upper space. On the other hand, the number of the ions passing through the grid is dependent on the voltage between the grid and the cathode. Thus, if the grid voltage undergoes periodic fluctuations (as in the present case), the amount of the cathode drop at the grid fluctuates, and consequently, the internal resistance of the valve fluctuates correspondingly, so that when a back-coupling of the feed circuit with the grid circuit takes place, the necessary means are in place for producing undamped oscillations and of taking current as required, from the collecting conductor.

With a suitably loose coupling, the frequency of the undamped oscillations produced is equal to the self-frequency of the oscillation circuits **9** and **10**. By selecting a suitable self-induction for coil **9** and capacitor **11**, it is possible to extend operation from frequencies which produce electromagnetic oscillations with a wavelength of only a few metres, down to the lowest practical alternating current frequency. For large installations, a suitable number of frequency producing tubes in the form of the well known high vacuum transmission tubes of 0.5 kW to 2 kW in size may be connected in parallel so that in this respect, no difficulty exists.

The use of such tubes for producing undamped oscillations, and the construction and method of inserting such transmission tubes in an accumulator or dynamo circuit is known, also, such oscillation producing tubes only work well at voltages of 1,000 volts up to 4,000 volts, so that on the contrary, their use at lower voltages is considerably more difficult. By the use of high voltage static electricity, this method of producing undamped oscillations as compared with that through spark gaps, must be regarded as an ideal solution, particularly for small installations with outputs from 1 kW to 100 kW.

By the application of safety spark gaps, with interpolation of electromagnets, not only is short-circuiting avoided but also the taking up of current is regulated. Oscillation producers inserted in the above way, form a constantly acting alternating electromagnetic field in the collector coil, whereby, as already stated, a considerable accumulating effect takes place. The withdrawal or 'working' wire is connected at **12** and **13**, but current may be taken by means of a secondary coil which is firmly or moveably mounted in any suitable way inside the large collector coil, i.e. in its alternating electromagnetic field, so long as the direction of its axis is parallel to that of the main current collecting coil.

In producing undamped oscillations of a high frequency (50 KHz and more) in the oscillation circuits **9** and **11**, electromagnets **S** and **S**^{1} must be inserted if the high frequency oscillations are not to penetrate the collector coil, between the oscillation producers and the collector coil. In all other cases they are connected shortly before the earthing (as in **Fig.27** and **Fig.28**).

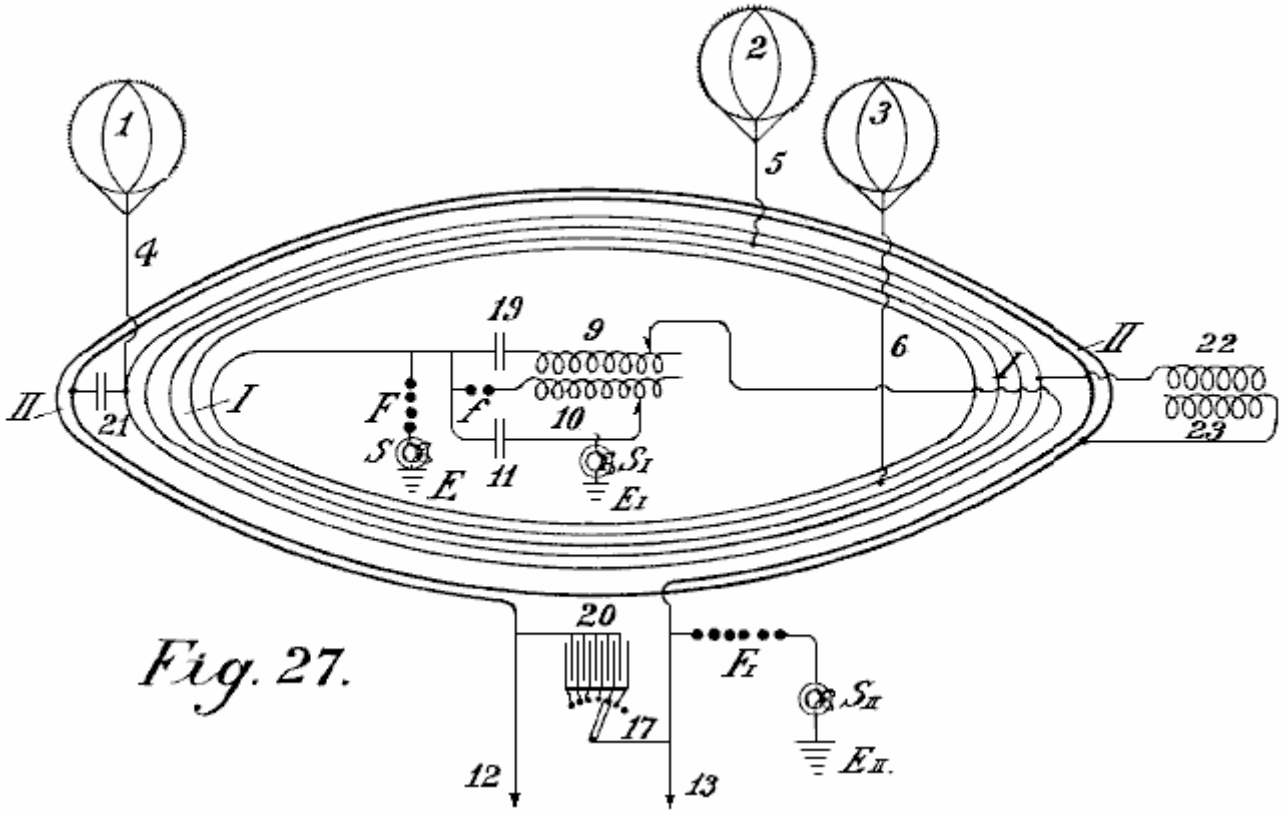

Fig. 27.

In **Fig.27** a second method of construction of the connecting conductor of the balloon aerials is illustrated in the form of a coil. The main difference is that in addition to the connecting conductor **I** another annular conductor **II** is inserted parallel to the former on the high voltage masts in the air (or embedded as a cable in the earth) but both in the form of a coil. The connecting wire of the balloon aerials is both a primary conductor and a current producing network while the coil is the consumption network and is not in unipolar connection with the current producing network.

In **Fig.27** the current producing network **I** is shown with three balloon collectors **1, 2, 3** and aerial conductors **4, 5, 6**; it is short-circuited through capacitor **19** and inductor **9**. The oscillation forming circuit consists of spark gap **f**, inductor **10** and capacitor **11**. The earth wire **E** is connected to earth through electromagnet **S**^{1}. $\mathbf{F_I}$ is the safety spark gap which is also connected to earth through a second electromagnet $\mathbf{S_{II}}$ at $\mathbf{E_{II}}$. On connecting up the capacitor circuit **11** it is charged over the spark gap **f** and an oscillatory discharge is formed. This discharging current acts through inductor **10** on the inductively coupled secondary **9**, which causes a change in the producing network, by modifying the voltage on capacitor **19**. This causes oscillations in the coil-shaped producer network. These oscillations induce a current in the secondary

circuit **II**, which has a smaller number of windings and lower resistance, consequently, this produces a lower voltage and higher current in it.

In order to convert the current thus obtained, into current of an undamped character, and to tune its wavelengths, a sufficiently large regulatable capacitor **20** is inserted between the ends **12** and **13** of the secondary conductor **II**. Here also, current may be taken without an earth conductor, but it is advisable to insert a safety spark gap $\mathbf{E^1}$ and to connect this with the earth via electromagnet $\mathbf{S^2}$. The producer network may be connected with the working network **II** over an inductionless capacitor **21** or over an induction capacitor **22, 23**. In this case, the secondary conductor is unipolarly connected with the energy conductor.

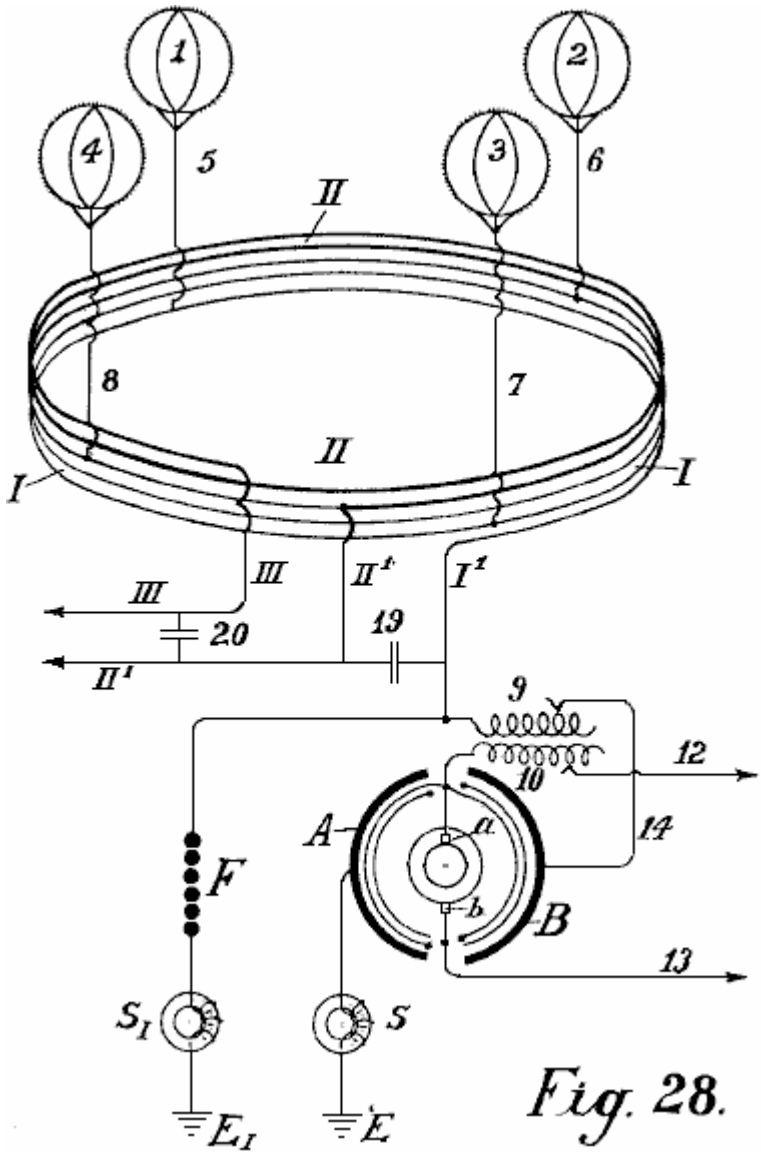

Fig. 28.

In **Fig.28**, the connecting conductor between the separate collecting balloons is carried out according to the autotransformer principle. The collecting coil connects four aerial balloons **1, 2, 3, 4**, the windings of which are not made side-by-side but one above the other. In **Fig.28**, the collector coil **I** is shown with a thin line and the metallically connected prolongation coils **II** with a thick line. Between the ends $\mathbf{I^1}$ and $\mathbf{II^1}$ of the energy network **I**, a regulating capacitor **19** is inserted. The wire $\mathbf{I^1}$ is connected with the output wire and with the spark gap **F**.

As transformer of the atmospheric electricity, an arrangement is employed which consists of using rotary pairs of capacitors in which the stator surface **B** is connected with the main current, while the other **A** is connected to the earth pole. These pairs of short-circuited capacitors are caused to rotate and the converted current can be taken from them via two collector rings and brushes. This current is alternating current with a frequency dependent on the number of balloons and the rate of revolutions of the rotor. As the alternating current formed in the rotor can act through coils **10** on the inductor **9**, an increase or decrease of the feed current in **I** can be obtained according to the direction of the current by back-induction. Current oscillations of uniform rhythm are produced in the coil-shaped windings of the producer network.

As the ends of this conductor are short-circuited through the regulatable capacitor **19**, these rhythms produce short-circuited undamped oscillations in the energy conductor. The frequency of these oscillations can be altered at will by adjusting the capacitance of capacitor **19**. These currents may also be used as working current via the conductors $\mathbf{II^1}$ and **III**. By inserting capacitor **20**, a connection between these conductors may also be made, whereby harmonic

oscillations of desired wavelength are formed. By this means, quite new effects as regards current distribution are obtained. The withdrawal of current can even take place without direct wire connection if, at a suitable point in the interior of the producing network (quite immaterially whether this has a diameter of 1 or 100 km) a coil tuned to these wavelength and of the desired capacity, is firmly or moveably mounted in the aerial conductor in such a way that its axis is parallel with the axis of the collector coil. In this case, a current is induced in the producing network, the size of which is dependent on the total capacity and resistance and on the frequency selected. A future possibility is taking energy from the producer network by radio signals as in addition to atmospheric electricity, magnetic earth currents and energy from the upper atmosphere may be tapped.

Of course, vacuum tubes may be used to produce undamped oscillations anywhere spark gaps are shown in the circuits. The separate large-diameter coils of the producer network may be connected to one another through separate conductors all in parallel or all in series or in groups in series. By regulating the number of oscillations and the magnitude of the voltage, more or fewer large collector coils of this kind may be used. The coils may also be divided spirally over the entire section. The coils may be carried out in annular form or in triangular, quadrangular, hexagonal or octagonal form.

Of course, wires which form guides for the current waves, may be carried from a suitable place to the centre or also laterally. This is necessary when the currents have to be conducted over mountains and valleys and so forth. In all these cases, the current must be converted into a current of suitable frequency.

As already mentioned, separate collecting balloons may be directly metallically interconnected a equidistant stations distributed over the entire country, or may be connected by interpolation of suitable capacitor sets by means of high voltage conductors. The static electricity is converted through a spark gap into dynamic energy of high frequency and could then in that form be used as an energy source after special regulation.

According to this invention, in order to increase the collecting effect of the balloon in the aerial collector conductor or in the earth wire, radiating collectors are used. These consist of either incandescent metal or oxide electrodes in the form of vacuum grid valves, or electric arcs (mercury or similar electrodes), Nernst lamps, or flames of various kinds maybe simply connected with the respective conductor.

It is well known that energy can be drawn off from a cathode consisting of an incandescent body opposite an anode charged with positive electricity (vacuum grid tube). Hitherto however, a cathode was always first directly placed opposite an anode, and secondly, the system always consisted of a closed circuit.

Now if we dispense with the ordinary ideas in forming light or flame arcs in which a cathode must always stand directly opposite an anode charged to a high voltage or another body freely floating in the air, or consider the incandescent cathode to be only a source of unipolar discharge, (which represents group and point discharges in electro-static machines similar to unipolar discharges), it may be ascertained that incandescent cathodes and less perfectly, all incandescent radiators, flames and the like, have relatively large current densities and allow large quantities of electric energy to radiate into open space in the form of electron streams as transmitters.

The object of this invention is as described below, if such incandescent oxide electrodes or other incandescent radiators or flames are not freely suspended in space but instead are connected metallically with the earth so that they can be charged with negative terrestrial electricity, these radiators possess the property of absorbing the free positive electrical charges contained in the air space surrounding them (that is to say, of collecting them and conducting them to earth). They can therefore serve as collectors and have in comparison to the action of the spikes, a very large radius of action R; the effective capacity of these collectors is much greater than the geometrical capacity (R_0) calculated in an electro-static sense.

As is well known, our earth is surrounded with an electro-static field and the difference of potential dV/dh of the earth field according to the latest investigations, is in summer about 60 to 100 volts, and in winter, 300 to 500 volts per metre difference in height, a simple calculation gives the result that when such a radiation collector or flame collector is arranged, for example, on the ground, and a second one is mounted vertically over it at a distance of 2,000 metres and both are connected by a conducting cable, there is a voltage difference in summer of about 2,000,000 volts and in winter 6,000,000 volts or more.

According to Stefan Boltzmann's law of radiation, the quantity of energy which an incandescent surface (temperature T) of 1 sq. cm. radiates in a unit of time into the open air (temperature T_0) is expressed by the following formula:

$$S = R\,(T^4 - T_0^4) \text{ watts per square centimetre}$$

and the universal radiation constant R, according to the latest researches of Ferry, is equal to 6.30×10^{-12} watts per square centimetre.

Now, if an incandescent surface of 1 sq. cm., as compared to the surrounding space, shows a periodic fall of potential dV, it radiates (independent of the direction of the current) in accordance with the above formula, for example at a temperature of 3715^0 C. an energy of 1.6 kW per square centimetre. As for the radiation, the same value can be calculated for the collection of energy, but reversed. Now, as carbon electrodes at the temperature of the electric arc,

support a current density up to 60 to 65 amps per sq. cm., no difficulties will result in this direction in employing radiating collectors as accumulators.

If the earth be regarded as a cosmically insulated capacitor in the sense of geometrical electro-statics *x*, according to Chwolson, there results from the geometric capacity of the earth:

For negative charging 1.3×10^6 Coulomb For negative potential $V = 10 \times 10^8$ volts.

It follows from this that EJT is approximately equal to 24.7×10^{24} watts/sec. Now if it is desired to make a theoretical short circuit through an earthed flame collector, this would represent an electrical total work of about $79{,}500 \times 10^{10}$ kilowatt years. As the earth must be regarded as a rotating mechanism which is thermo-dynamically, electromagnetically and kinematically coupled with the sun and star system by cosmic radiation and gravitation, a reduction in the electric energy of the earth field is not to be feared. The energies which the incandescent collectors could withdraw from the earth field can only cause a lowering of the earth temperature. This is however, not the case as the earth does not represent a cosmically entirely insulated system. On the contrary, there is conveyed from the sun to the earth an energy of $18{,}500 \times 10^{10}$ kilowatts. Accordingly, any lowering of the earth temperature without a simultaneous lowering of the sun's temperature would contradict Stefan Boltzmann's law of radiation.

From this it must be concluded that if the earth temperature sinks, the total radiation absorbed by the earth increases, and further, the rate of cooling of the earth is directly dependent on that of the sun and the other radiators cosmically coupled with the sun.

The incandescent radiation collectors may, according to this invention, be used for collecting atmospheric electricity if they (1) are charged with the negative earth electricity (that is to say, when they are directly connected to the earth by means of a metallic conductor) and (2) if large capacities (metal surfaces) charged with electricity are mounted opposite them as positive poles in the air. This is regarded as the main feature of the present invention as without these inventive ideas it would not be possible to collect with an incandescent collector, sufficiently large quantities of the electrical charges contained in the atmosphere as technology requires; the radius of action of the flame collectors would also be too small, especially if it be considered that the very small surface density does not allow of large quantities of charge being absorbed from the atmosphere.

It has already been proposed to employ flame collectors for collecting atmospheric electricity and it is known that their collecting effect is substantially greater opposite the points. It is however, not known that the quantities of current which hitherto be obtained are too small for technical purposes. According to my experiments, the reason for this is to be found in the inadequate capacities of the collector conductor poles. If such flame or radiating collectors have no or only small positive surfaces, their radius of action for large technical purposes is too small. If the incandescent collectors be constantly kept in movement in the air, they may collect more according to the speed of the movement, but this is again not capable of being carried out in practice.

By this invention, the collector effect is considerably increased by a body charged with a positive potential and of the best possible capacity, being also held floating (without direct earth connection) opposite such an incandescent collector which is held floating in the air at a desired height. If, for example, a collecting balloon of sheet metal or metallised fabric, be caused to mount to 300 to 3,000 metres in the air, and as a positive pole it is brought opposite such a radiating collector connected by a conductor to earth, quite different results are obtained.

The metallic balloon shell which has a large surface area is charged to a high potential by atmospheric electricity. This potential is greater the higher the collecting balloon is above the incandescent collector. The positive electricity acts concentratedly on the anode floating in the air as it is attracted through the radiation shock ionisation, proceeding from the incandescent cathode. The consequence of this is that the radius of action of the incandescent cathode collector is considerably increased and so is the collecting effect of the balloon surface. Further, the large capacity of the anode floating in the air, plays therefore an important part because it allows the collection of large charges resulting in a more uniform current even when there is substantial current withdrawal - this cannot be the case with small surfaces.

In the present case, the metallic collecting balloon is a positive anode floating in the air and the end of the earth conductor of this balloon serves as positive pole surface opposite the surface of the radiating incandescent cathode, which in turn is charged with negative earth electricity as it is connected to the earth by a conductor. The process may be carried out by two such contacts (negative incandescent cathode and anode end of a capacity floating in the air) a capacitor and an inductive resistance being switched on in parallel, whereby simultaneously undamped oscillations may be formed.

In very large installations it is advisable to connect two such radiating collectors in series. Thus an arc light incandescent cathode may be placed below on the open ground and an incandescent cathode which is heated by special electro-magnetic currents, be located high in the air. Of course for this, the special vacuum Liebig tubes with or without grids may also be used. An ordinary arc lamp with oxide electrodes may be introduced on the ground and the positive pole is not directly connected with the collecting balloon, but through the upper incandescent cathode or over a capacitor. The method of connecting the incandescent cathode floating in the air may be seen in **Figs.29-33**.

B is the air balloon, **K** a Cardan ring (connection with the hawser) **C** the balloon, **L** a good conducting cable, **P** a positive pole, **N** negative incandescent cathode and **E** the earth conductor.

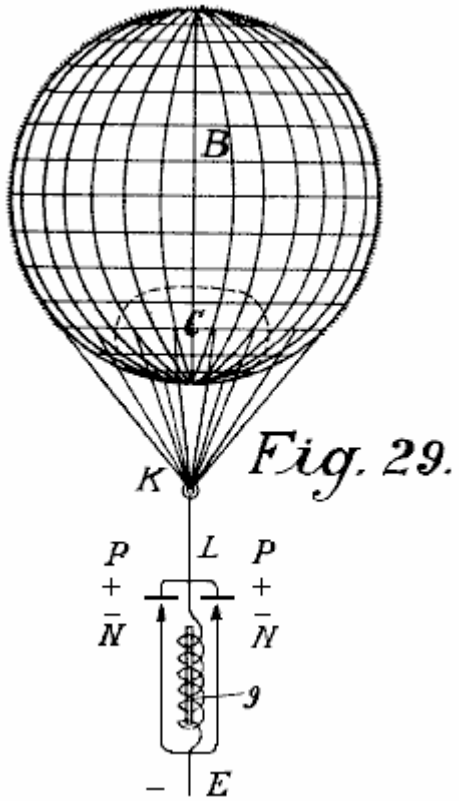

Fig.29 represents the simplest form of construction. If electric oscillations are produced below on the ground by means of a carbon arc lamp or in any other suitable way, a considerably greater electric resistance is opposed to that in the direct way by inserting an electrical inductive resistance **9**. Consequently, between **P** and **N**, a voltage is formed, and as, over **N** and **P** only an inductionless ohmic resistance is present, a spark will spring over so long as the separate induction coefficients and the like are correctly calculated. The consequence of this is that the oxide electrode (carbon or the like) is rendered incandescent and then shows as incandescent cathode, an increased collecting effect. The positive poles must be substantially larger than the negative in order that they may not also become incandescent. As they are further connected with the large balloon area which has a large capacity and is charged at high voltage, an incandescent body which is held floating in the air and a positive pole which can collect large capacities is thereby obtained in the simplest way. The incandescent cathode is first caused to become incandescent by means of separate energy produced on the earth, and then maintained by the energy collected from the atmosphere.

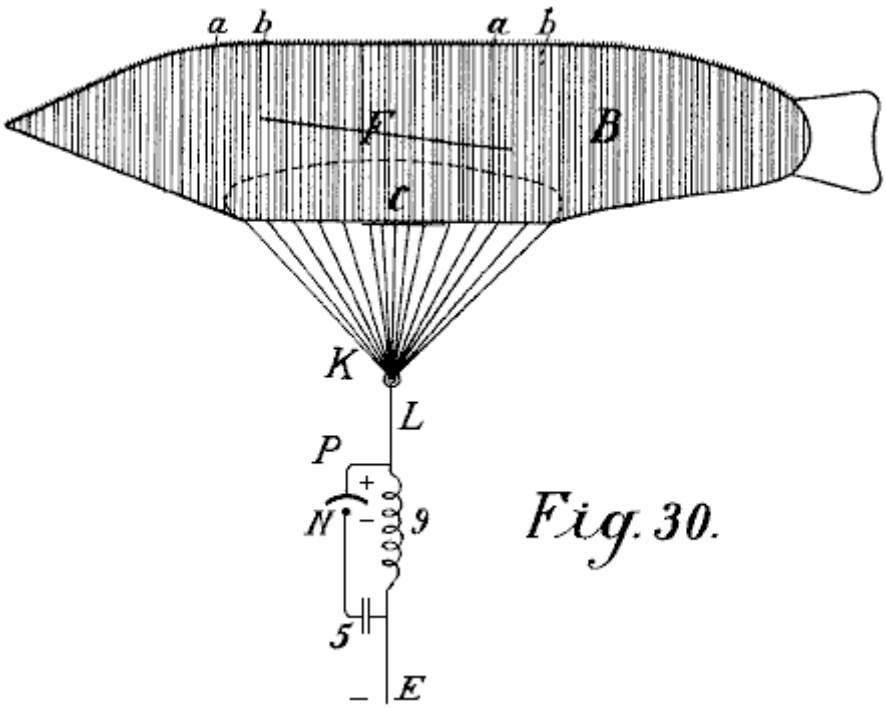

Fig.30 only shows the difference that instead of a round balloon, a cigar-shaped one may be used, also, a capacitor **5** is inserted between the incandescent cathode and the earth conductor so that a short-circuited oscillation circuit over **P N 5**

and **9** is obtained. This has the advantage that quite small quantities of electricity cause the cathode to become incandescent and much larger cathode bodies may be made incandescent.

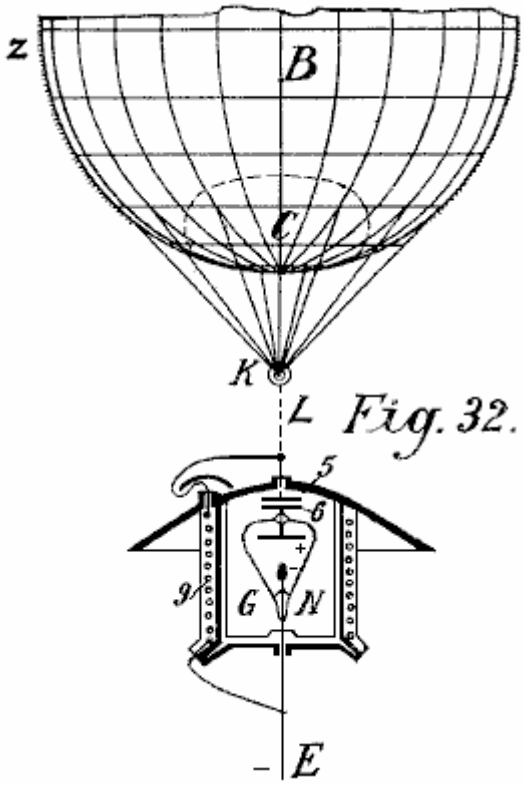

Fig. 32.

In this form of construction, both the incandescent cathode and the positive electrode may be enclosed in a vacuum chamber as shown in **Fig.32**. A cable **L** is carried well insulated through the cover of a vessel and ends in a capacitor disc **5**. The cover is arched in order to keep the rain off. The vessel is entirely or partially made of magnetic metal and well insulated inside and outside. Opposite disc **5** another disc **6** and on this again a metallic positive pole of the vacuum tube **g** with the incandescent cathode (oxide electrode) **N** is arranged. The negative electrode is on the one hand connected to the earth conductor **E**, and on the other hand with the inductive resistance **9** which is also connected with the cable **L** with the positive pole and wound around the vessel in coils. The action is exactly the same as that in **Fig.29** only instead of an open incandescent cathode, one enclosed in vacuo is used. As in such collectors, only small bodies be brought to incandescence, in large installations a plurality of such vacuum tubes must be inserted in proximity to one another. According to the previous constructions **Fig.31** and **Fig.33** are quite self evident without further explanations.

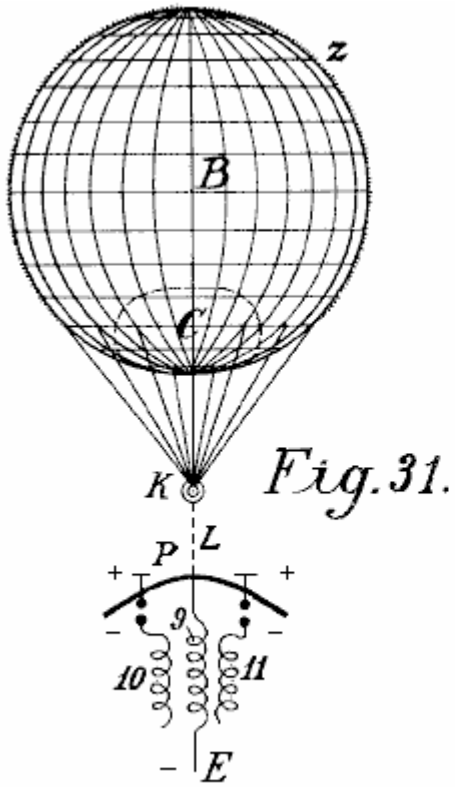

Fig. 31.

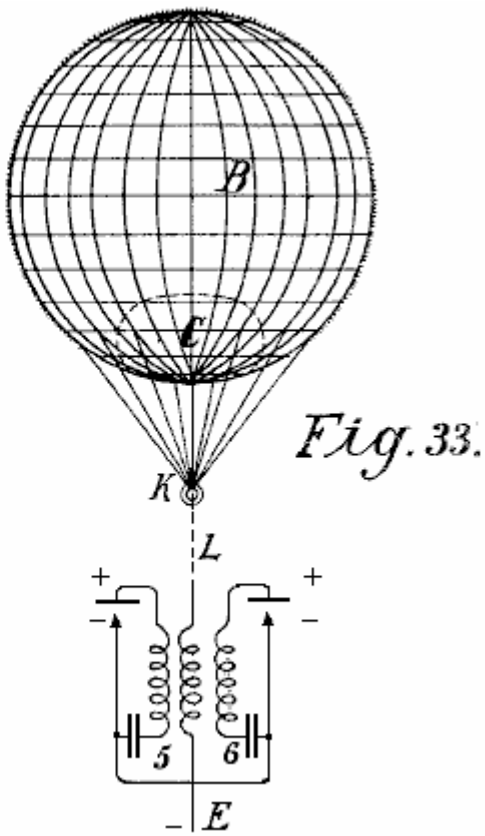

Fig. 33.

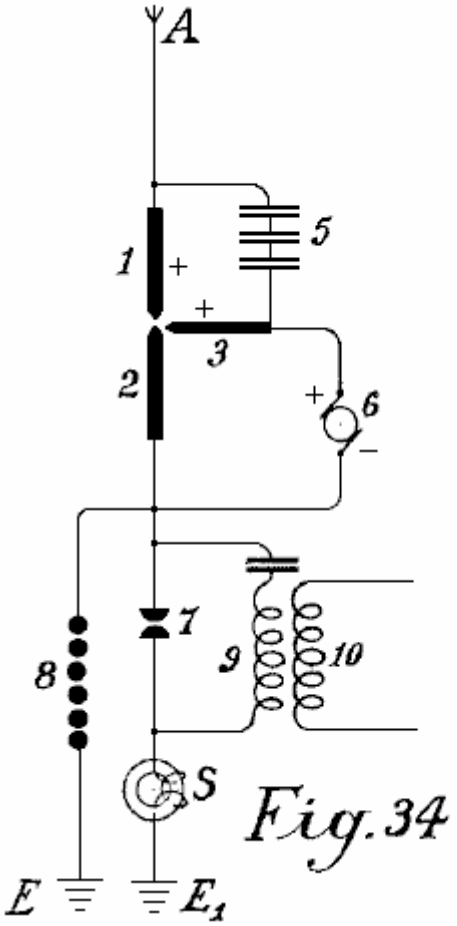

Fig.34

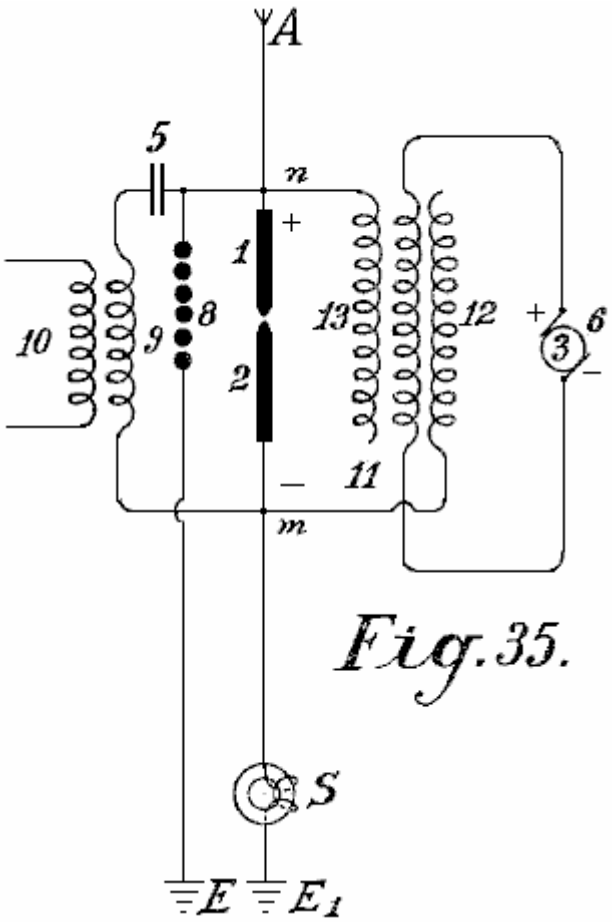

Fig.35.

Figs.34-37 represent further diagrams of connections over radiating and flame collectors, and in fact, how they are to be arranged on the ground. **Fig.34** shows an arc light collector with oxide electrodes for direct current and its connection. **Fig.35** shows a similar one for alternating current. **Fig.36** an incandescent collector with a Nernst lamp and **Fig.37** a similar one with a gas flame.

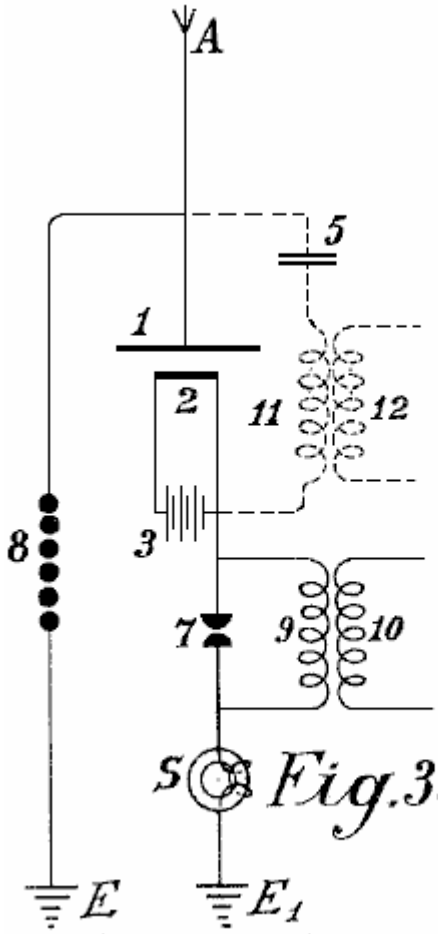

Fig.36.

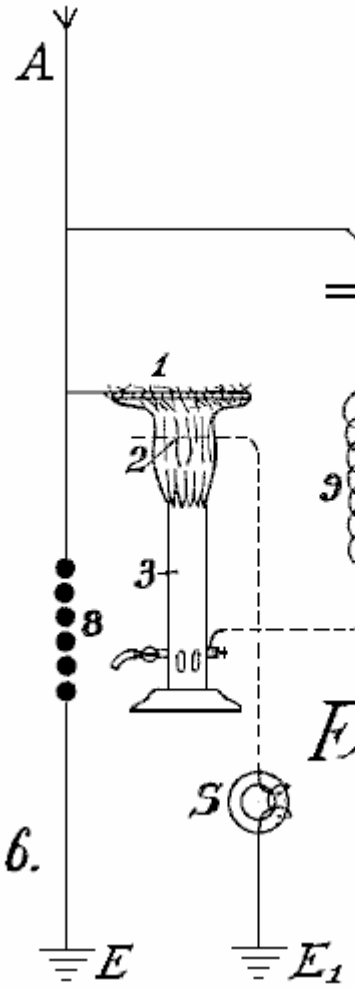

Fig.37

6.

The positive pole **1** of the radiating collectors is always directly connected to the aerial collecting conductor **A**. In **Fig.34**, this is further connected over the capacitor set **5** with a second positive electrode **3**. The direct current dynamo **b** produces current which flows over between the electrodes **3** and **2** as an arc light. On the formation of an arc, the negative incandescent electrode **2** absorbs electricity from the positive poles standing opposite it and highly charged with atmospheric electricity which it conveys to the working circuit. The spark gap 7, inductive resistance **9** and induction coil **10** are like the ones previously described. The protective electromagnet **S** protects the installation from earth circuiting and the safety spark gap **8** from excess voltage or overcharging.

In **Fig.35**, the connection is so far altered that the alternating current dynamo feeds the excitation coil **11** of the induction capacitor. **12** is its negative and **13** its positive pole. If the coil **3** on the magnet core of the dynamo is correctly calculated and the frequency of the alternating current sufficiently high, then an arc light can be formed between poles **1** and **2**. As the cathode **2** is connected to the negatively charged earth, and therefore always acts as a negative pole, a form of rectification of the alternating current produced by the dynamo **3** is obtained, since the second half of the period is always suppressed. The working circuit may be carried out in the same way as in **Fig.34**; the working spark gap **7** may however be dispensed with, and instead of it, between the points **n** and **m**, a capacitor **5** and an induction resistance **9** may be inserted, from which, a current is taken inductively.

Fig.36 represents a form of construction similar to that shown in **Fig.34** except that here instead of an arc lamp, a Nernst incandescent body is used. The Nernst lamp is fed through the battery **3**. The working section is connected with the negative pole, the safety spark gap with the positive poles. The working spark gap **7** may also be dispensed with and the current for it taken at **12** over the oscillation circuit **5, 11** (shown in dotted lines).

Flame collectors (**Fig.37**) may also be employed according to this invention. The wire network **1** is connected with the aerial collector conductor **A** and the burner with the earth. At the upper end of the burner, long points are provided which project into the flame. The positive electrode is connected with the negative over a capacitor **5** and the induction coil **9** with the earth.

The novelty in this invention is:

(1) The use of incandescent cathodes opposite positive poles which are connected to large metallic capacities as automatic collecting surfaces.
(2) The connection of the incandescent cathodes to the earth whereby, in addition to the electricity conveyed to them from the battery of machine which causes the incandescing, also the negative charge of the earth potential is conveyed, and
(3) The connection of the positive and negative poles of the radiating collectors over a capacitor circuit alone or with the introduction of a suitable inductive resistance, whereby simultaneously an oscillatory oscillation circuit may be obtained. The collecting effect is by these methods quite considerably increased.

June 9, 1925. 1,540,998

H. PLAUSON

CONVERSION OF ATMOSPHERIC ELECTRIC ENERGY

Filed Jan. 13, 1921 12 Sheets-Sheet 1

Fig. 1.

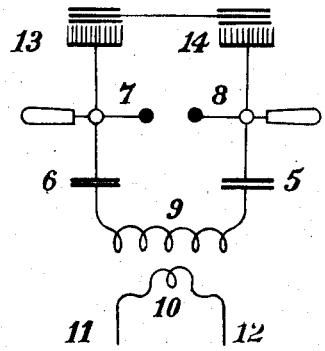

Fig. 2.

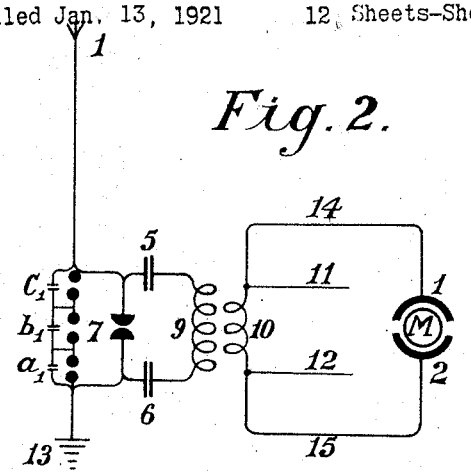

Fig. 3.

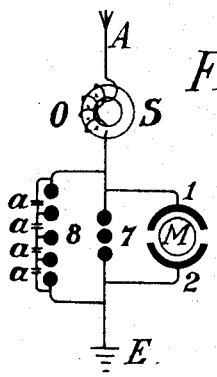

Fig. 4.

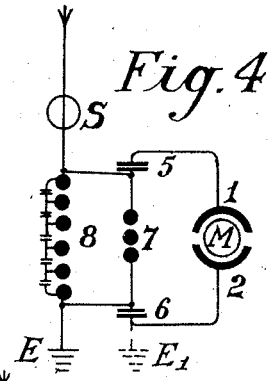

Fig. 5.

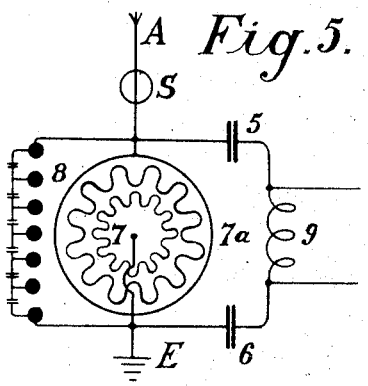

Fig. 6

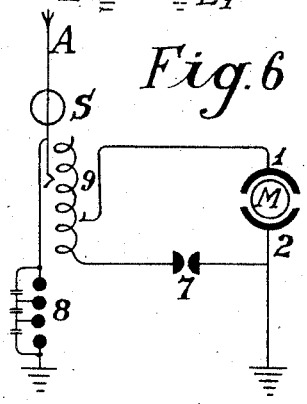

Inventor
Hermann Plauson
by Knight Bros
attorneys

June 9, 1925. 1,540,998

H. PLAUSON

CONVERSION OF ATMOSPHERIC ELECTRIC ENERGY

Filed Jan. 13, 1921 12 Sheets-Sheet 2

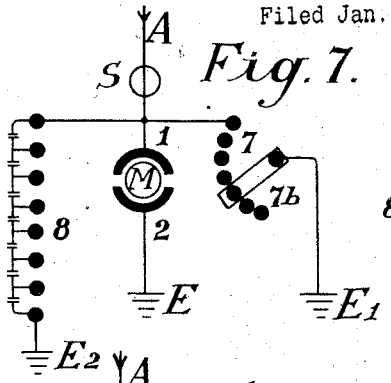

Fig. 7.

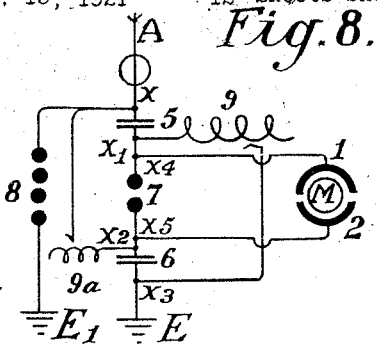

Fig. 8.

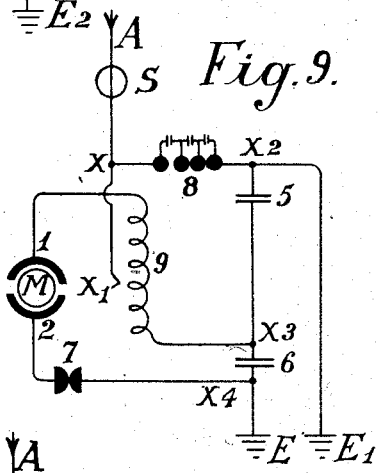

Fig. 9.

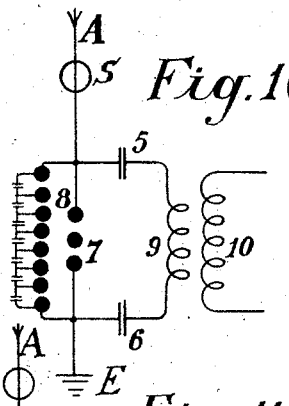

Fig. 10.

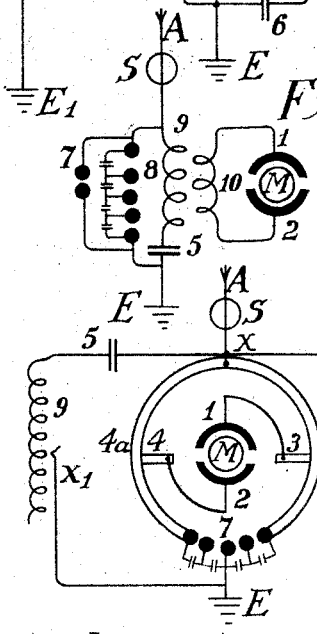

Fig. 11.

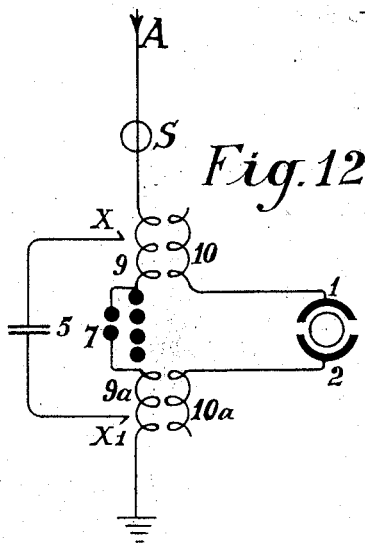

Fig. 12.

Fig. 13.

Inventor

Normann Plauson

by Knight Bros, Attorneys

June 9, 1925. 1,540,998

H. PLAUSON

CONVERSION OF ATMOSPHERIC ELECTRIC ENERGY

Filed Jan. 13, 1921 12 Sheets-Sheet 3

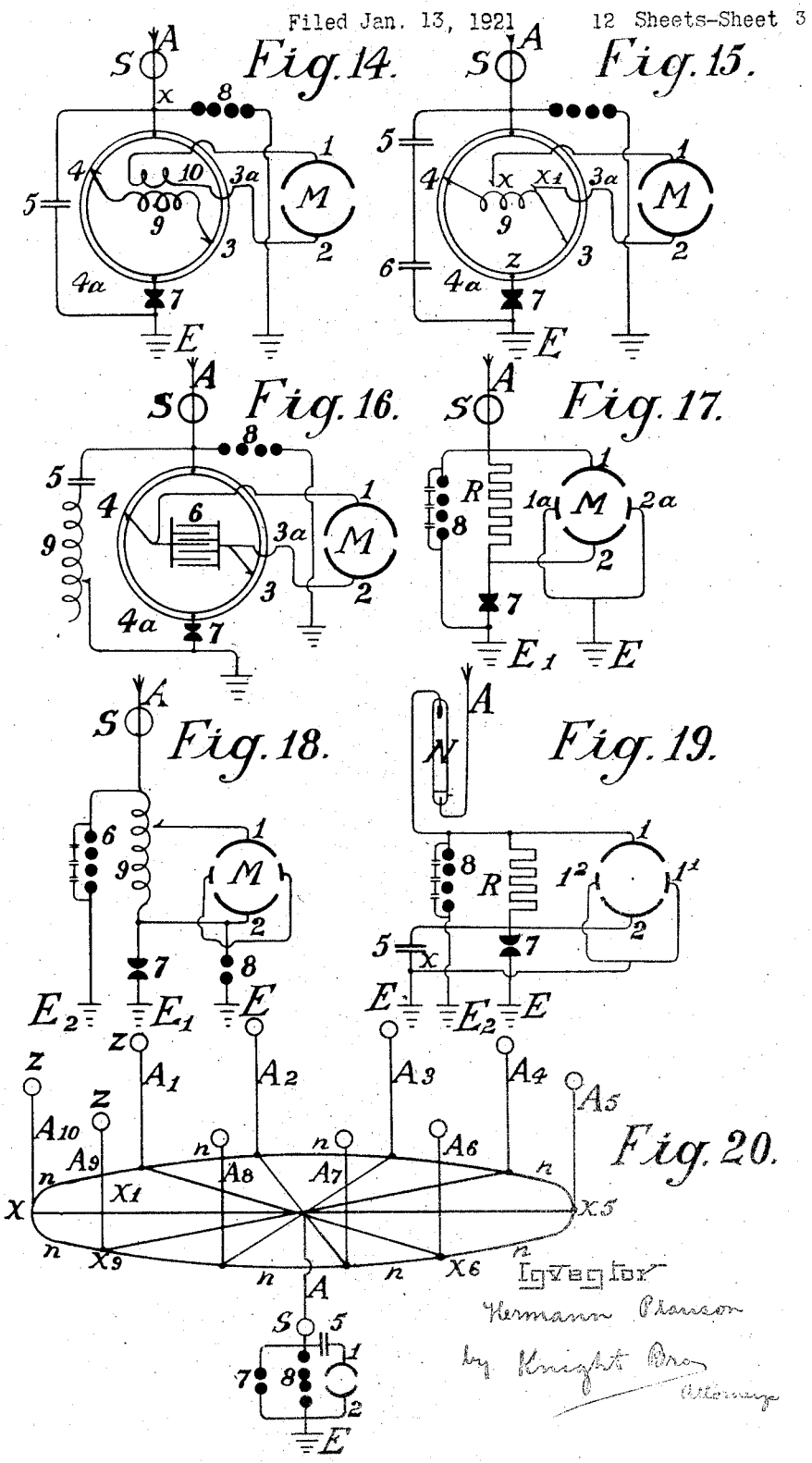

Inventor
Hermann Plauson
by Knight Bros
Attorneys

June 9, 1925. 1,540,998

H. PLAUSON

CONVERSION OF ATMOSPHERIC ELECTRIC ENERGY

Filed Jan. 13, 1921 12 Sheets-Sheet 4

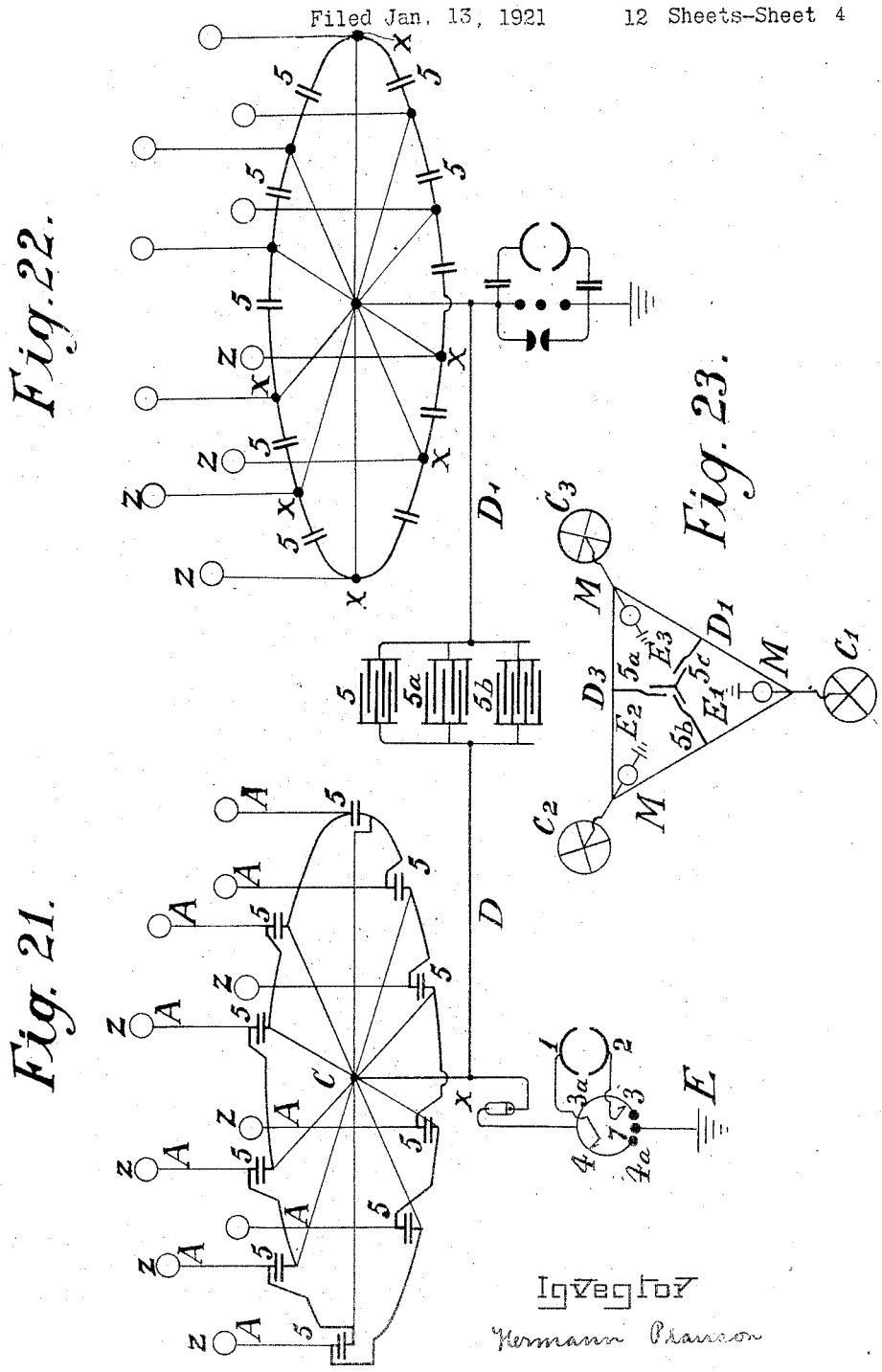

Inventor
Hermann Plauson
by Knight Bros
Attorneys

June 9, 1925. 1,540,998

H. PLAUSON

CONVERSION OF ATMOSPHERIC ELECTRIC ENERGY

Filed Jan. 13, 1921 12 Sheets-Sheet 5

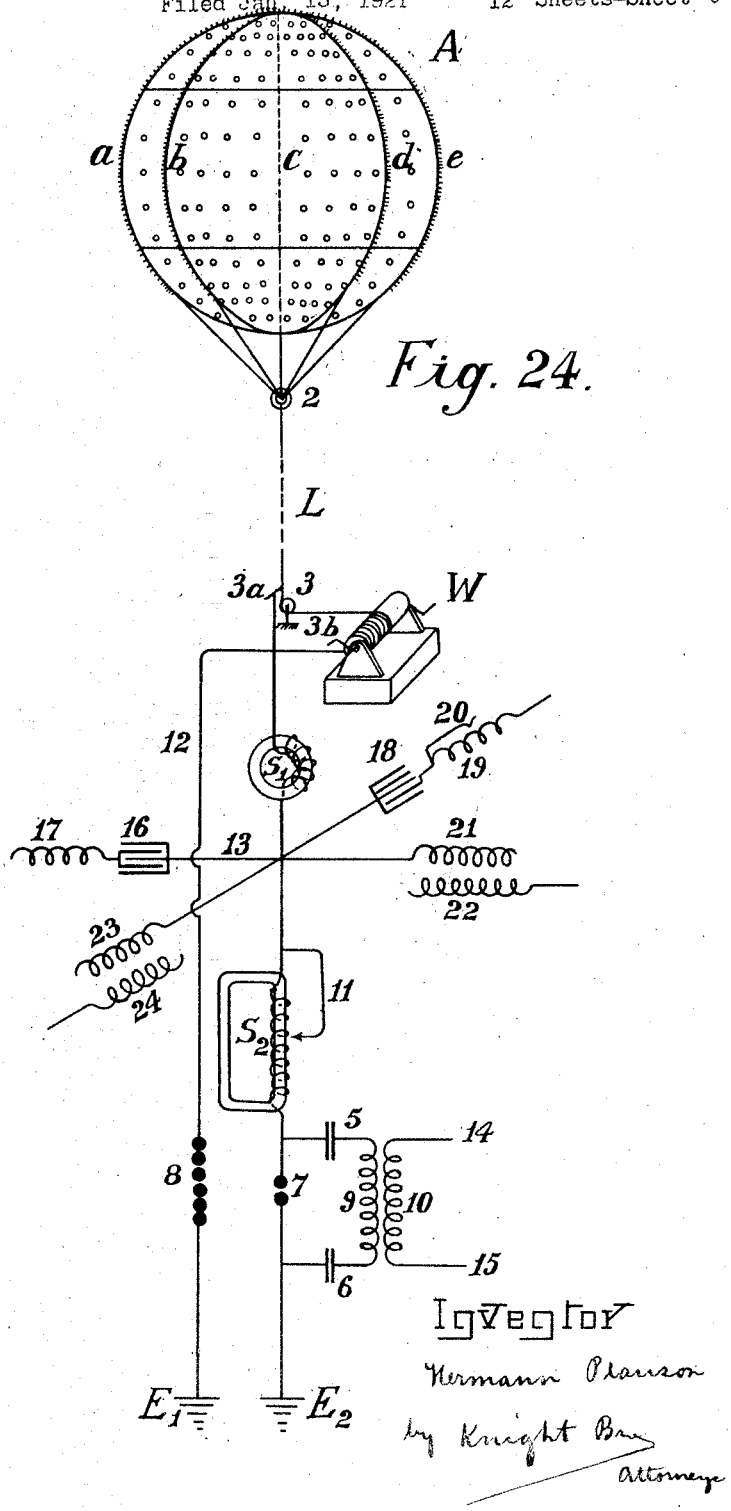

Fig. 24.

Inventor
Hermann Plauson
by Knight Bros
Attorneys

June 9, 1925. 1,540,998

H. PLAUSON

CONVERSION OF ATMOSPHERIC ELECTRIC ENERGY

Filed Jan. 13, 1921 12 Sheets-Sheet 6

Fig. 25.

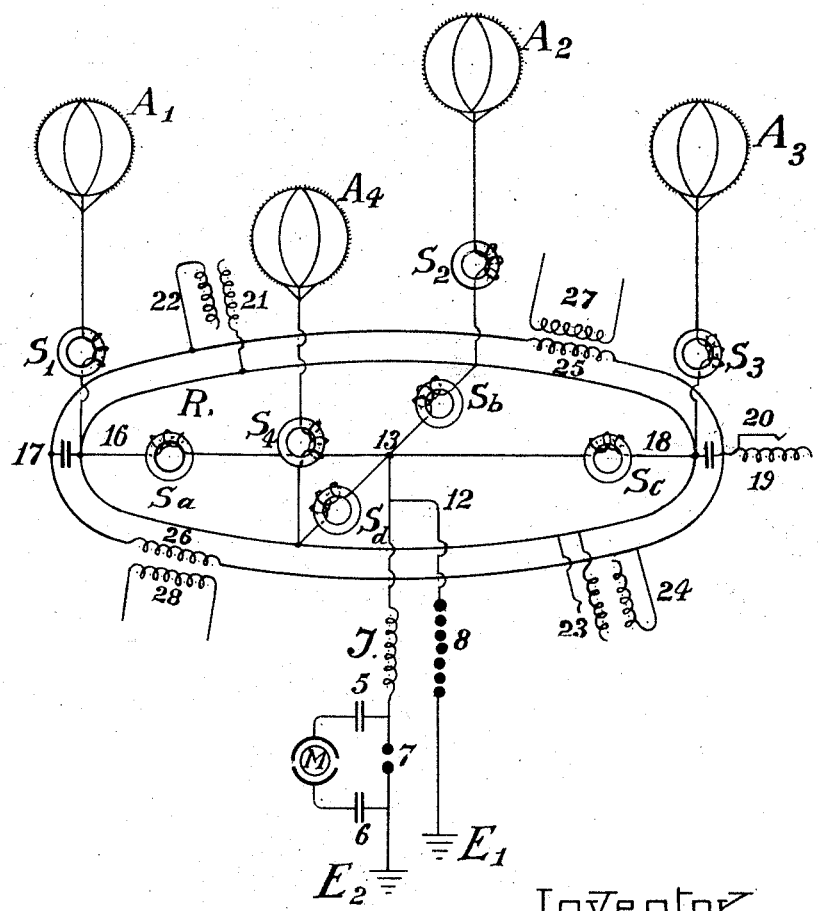

Inventor

Hermann Plauson

by Knight Bros

attorneys

June 9, 1925. 1,540,998

H. PLAUSON

CONVERSION OF ATMOSPHERIC ELECTRIC ENERGY

Filed Jan. 13, 1921. 12 Sheets-Sheet 7

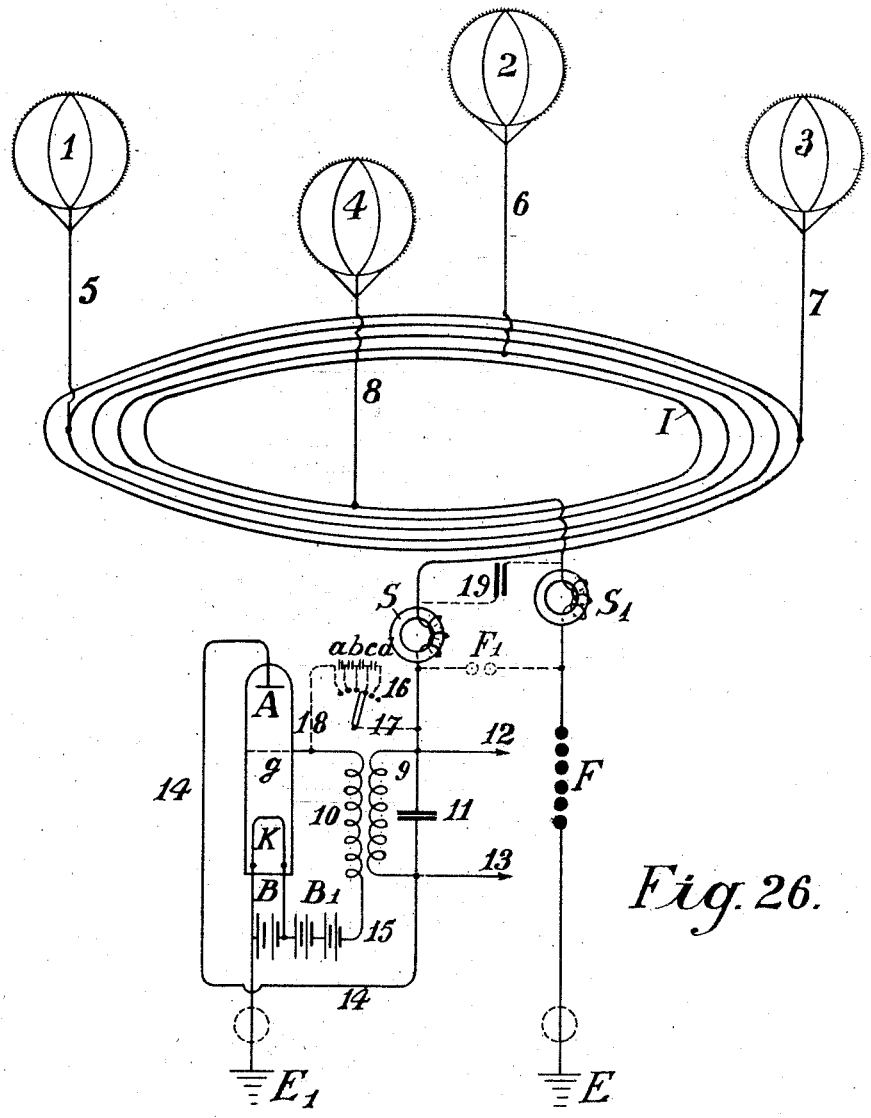

Fig. 26.

Inventor
Hermann Plauson
by Knight Bros
Attorneys

June 9, 1925. 1,540,998

H. PLAUSON

CONVERSION OF ATMOSPHERIC ELECTRIC ENERGY

Filed Jan. 13, 1921. 12 Sheets-Sheet 8

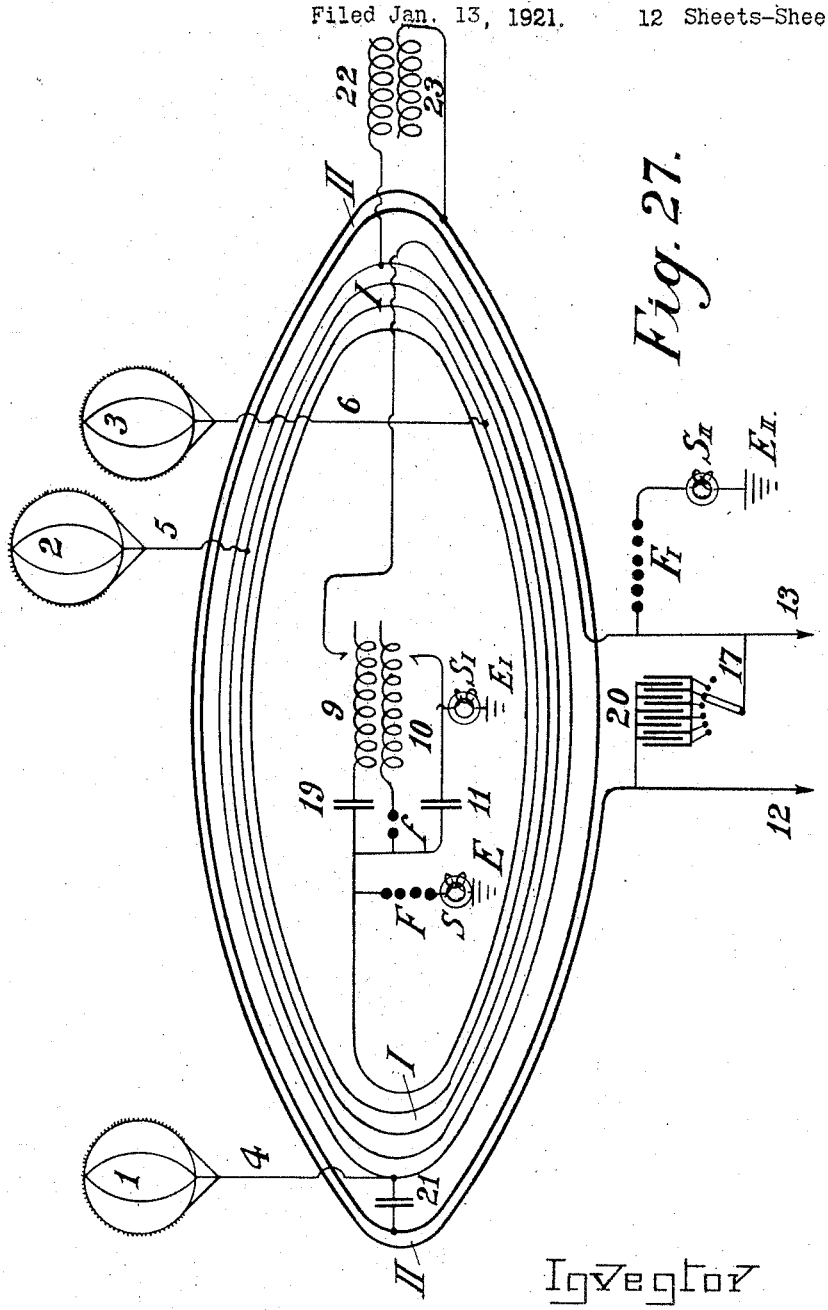

Fig. 27.

Inventor

Hermann Plauson

by Knight Bros

Attorneys

June 9, 1925. 1,540,998

H. PLAUSON

CONVERSION OF ATMOSPHERIC ELECTRIC ENERGY

Filed Jan. 13, 1921 12 Sheets-Sheet 9

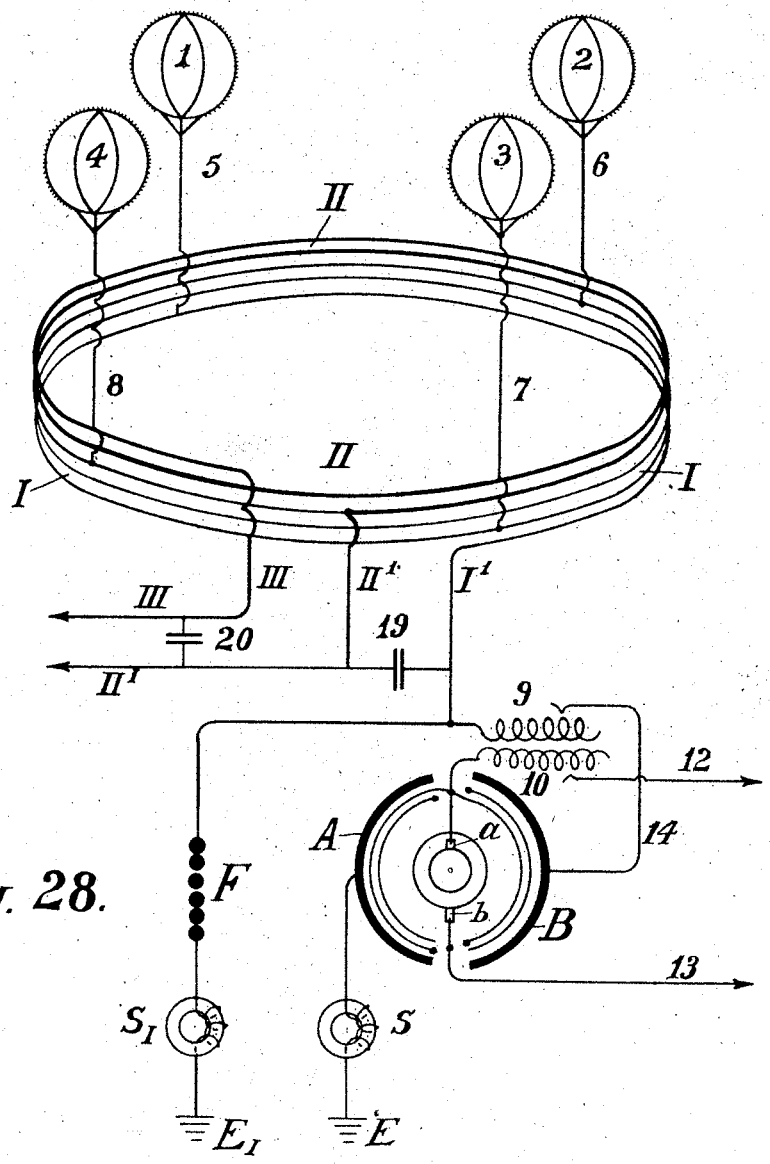

Fig. 28.

Inventor
Hermann Plauson
by
Knight Bros
attorneys

June 9, 1925. 1,540,998

H. PLAUSON

CONVERSION OF ATMOSPHERIC ELECTRIC ENERGY

Filed Jan. 13, 1921. 12 Sheets-Sheet 10

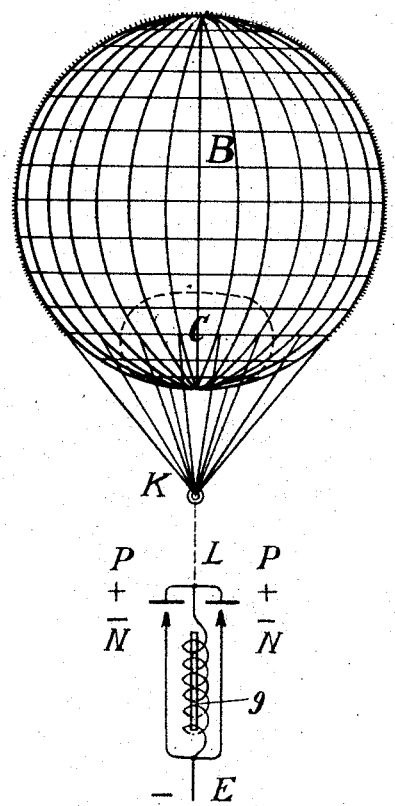

Fig. 29.

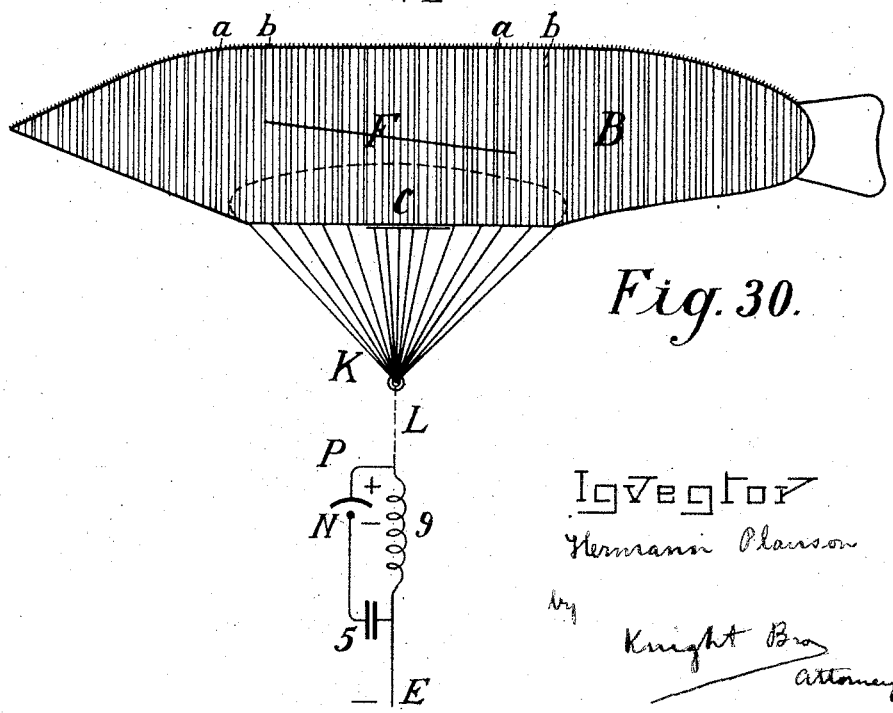

Fig. 30.

Inventor
Hermann Plauson
by
Knight Bros
Attorneys

June 9, 1925. 1,540,998

H. PLAUSON

CONVERSION OF ATMOSPHERIC ELECTRIC ENERGY

Filed Jan. 13, 1921. 12 Sheets-Sheet 11

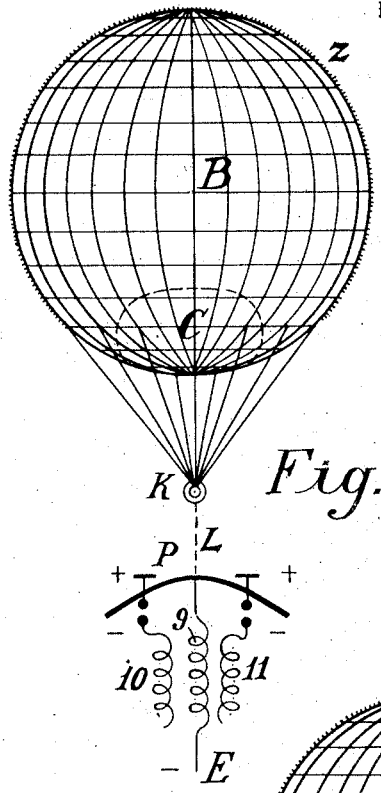

Fig. 31.

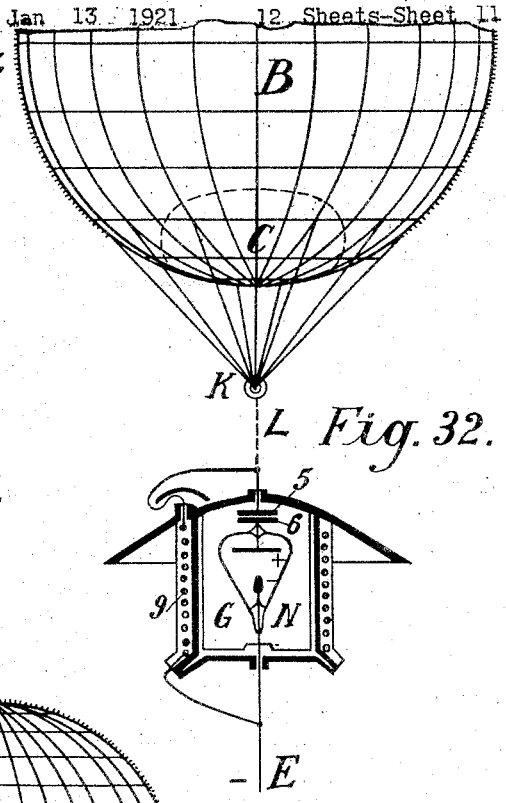

Fig. 32.

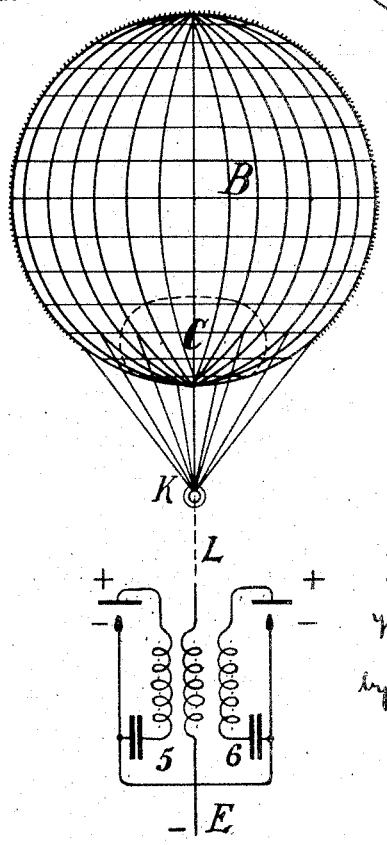

Fig. 33.

Inventor
Hermann Plauson
by Knight Bros
Attorneys

June 9, 1925. 1,540,998

H. PLAUSON

CONVERSION OF ATMOSPHERIC ELECTRIC ENERGY

Filed Jan. 13, 1921 12 Sheets-Sheet 12

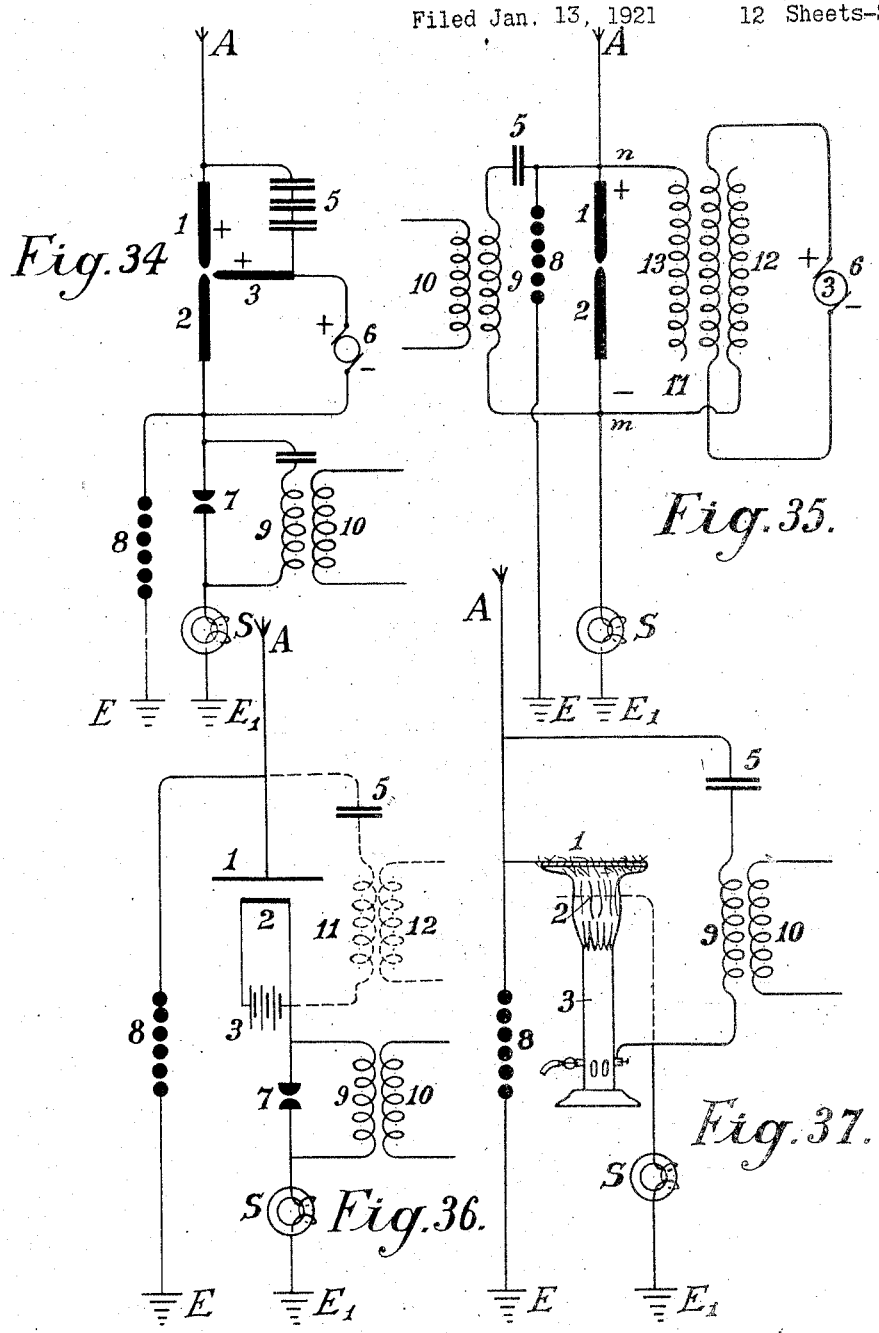

Inventor
Hermann Plauson
by Knight Bros
Attorneys

Patented June 9, 1925. 1,540,998

UNITED STATES PATENT OFFICE.

HERMANN PLAUSON, OF HAMBURG, GERMANY.

CONVERSION OF ATMOSPHERIC ELECTRIC ENERGY.

Application filed January 13, 1921. Serial No. 437,107.

To all whom it may concern:

Be it known that I, HERMANN PLAUSON, Esthonian subject, residing in Hamburg, Germany, have invented certain new and useful Improvements in the Conversion of Atmospheric Electric Energy, of which the following is a specification.

Methods of obtaining atmospheric electricity by means of metallic nettings set with spikes which are held by means of ordinary or anchored kite balloons made of fabrics and filled with hydrogen, are in theory already known. Atmospheric electricity obtained in this way has been suggested to be used in the form of direct current for the charging of accumulators. This knowledge however is at present only theoretical as the conversion in practice has hitherto been a failure. No means are known of protecting the apparatus from destruction by lightning. The balloons used for collecting the charge must also be made of very large size in order to be able to support the weight of the metallic netting and the heavy cable connections.

Instead of using heavy metallic netting as collectors attached to single air balloons of non-conducting materials which are liable to be torn and are permeable to the gas, it is proposed to use metallic balloon collectors which have the following important advantages—

(*a*) The metallic cases are impenetrable to helium and hydrogen; they also represent large metallic weather-proof collecting surfaces.

(*b*) Radio active means and the like may be easily applied internally or externally; whereby the ionization is considerably increased and therewith also the quantity of atmospheric electricity capable of being collected.

(*c*) Such balloon collectors of light metal do not require to be of large size as they have to carry only their own moderate weight, and that of the conducting cable or wire.

(*d*) The entire system therefore offers little surface for the action of storm and wind and is resistant and stable.

(*e*) Each balloon can be easily raised and lowered by means of a winch so that all repairs, recharging and the like can be carried out without danger during the operation.

It is further proposed to use a collecting aerial network of several separate collectors spread out in the air above the earth, which collectors are interconnected by electrical conductors.

According to this invention charges of atmospheric electricity are not directly converted into mechanical energy, and this forms the main difference from previous inventions, but the static electricity which runs to earth through aerial conductors in the form of direct current of very high voltage and low current strength is converted into electro-dynamic energy in the form of high frequency vibrations. Many advantages are thereby obtained and all disadvantages avoided.

The very high voltage of static electricity of a low current strength can be converted by this invention to voltages more suitable for technical purposes and of greater current strength. By the use of closed oscillatory circuits it is possible to obtain electromagnetic waves of various amplitude and thereby to increase the degree of resonance of such current. Such resonance allows various values of inductance to be chosen whereby again the governing of the starting and stopping of machines driven thereby by simply tuning the resonance between coils of the machine and the transformer circuit forming the resonance can easily be obtained. Further, such currents have the property of being directly available for various uses, even without employing them for driving motors, of which there may be particularly mentioned, lighting, production of heat and use in electro-chemistry.

Further, with such currents a series of apparatus may be fed without direct current supply through conductors and also the electro-magnetic high frequency currents may be converted by means of special motors adapted for electro-magnetic oscillations into mechanical energy, or finally converted by special machines into alternating current of low frequency or even into direct current of high potential.

The invention is more particularly described with reference to the accompanying diagrams in which:—

Figure 1 is an explanatory figure.

Figure 2 is a diagrammatic view of the simplest form.

Figure 3 shows a method of converting atmospheric electrical energy for use with motors.

Figure 4 is a diagram showing the use of protective means.

Figure 5 is a diagram of an arrangement for converting large current strengths.

Figure 6 is a diagram of an arrangement including controlling means.

Figure 7 shows means whereby the spark gap length can be adjusted.

Figure 8 shows a unipolar connection for the motor.

Figure 9 shows a weak coupled system suitable for use with small power motors.

Figures 10, 11 and 12 show modified arrangements.

Figure 13 shows a form of inductive coupling for the motor circuit.

Figure 14 is a modified form of Figure 13 with inductive coupling.

Figure 15 is an arrangement with non-inductive motor.

Figure 16 is an arrangement with coupling by condenser.

Figures 17, 18 and 19 are diagrams of further modifications.

Figure 20 shows a simple form in which the aerial network is combined with special collectors.

Figure 21 shows diagrammatically an arrangement suitable for collecting large quantities of energy.

Figure 22 is a modified arrangement having two rings of collectors.

Figure 23 shows the connections for three rings of collectors.

Figure 24 shows a collecting balloon and diagram of its connection of condenser batteries.

Figures 25 and 26 show modified collector balloon arrangements.

Figure 27 shows a second method of connecting conductor for the balloon aerials.

Figure 28 shows an auto-transformer method of connection.

Figure 29 shows the simplest form of construction with incandescent cathode.

Figure 30 shows a form with cigar shaped balloon.

Figure 31 is a modified arrangement.

Figure 32 shows a form with cathode and electrode enclosed in a vacuum chamber.

Figure 33 is a modified form of Figure 32.

Figure 34 shows an arc light collector.

Figure 35 shows such an arrangement for alternating current.

Figure 36 shows an incandescent collector with Nernst lamp.

Figure 37 shows a form with a gas flame.

Figure 1 illustrates a simple diagram for converting static electricity into dynamic energy of a high number of oscillations. For the sake of clearness in the drawings an influence machine is assumed to be employed and not an aerial antenna. 13 and 14 are combs for collecting the static electricity of the influence machine. 7 and 8 are spark discharging electrodes, 6 and 5 condensers, 9 an inductive primary coil, 10 secondary coil, 11 and 12 ends of conductors of the secondary coil 10. When the disc of the static influence machine is rotated by mechanical means, the combs collect the electric charges one the positive and the other the negative, and charge the condensers 5 and 6 until such a high potential is formed across the spark gap 7—8, that the spark gap is jumped. As the spark gap 7—8 forms a closed circuit with condensers 6 and 5, and inductive resistance 9, as is well known, waves of high frequency electromagnetic oscillations will pass in this circuit.

The high frequency of the oscillations produced in the primary circuit induces waves of the same periodicity in the secondary circuit. Thus in the primary circuit electromagnetic oscillations are formed by the passage of the spark over the spark gap and these waves are maintained by fresh charges of static electricity.

By suitably selecting the ratio between the number of the coils in the primary and secondary circuits with regard to a correct application of the co-efficients of resonance (capacity, inductance, and resistance) the high voltage of the primary circuit may be suitably converted into low voltage and high current strength.

When the oscillatory discharges in the primary circuit becomes weaker or entirely cease, the condensers are charged again by the static electricity until the accumulated charge again breaks down the spark gap. All this is repeated as long as electricity is produced by the static machine by employing mechanical energy.

An elementary form of the invention is shown in Figure 2 in which two spark gaps in parallel are used one of which may be termed the working gap 7 in Figure 2, whilst the second serves as a safety device for excess voltage and consists of a larger number of spark gaps than the working section, which gaps are arranged in series and are bridged by very small capacities as is illustrated in a_1, b_1, c_1, Figure 2 which allow of uniform sparking in the safety section.

In Figure 2 A is the aerial antenna for collecting charges of atmospheric electricity, 13 is the earth connection of the second part of the spark gap, 5 and 6 are condensers, 9 a primary coil. Now when through the aerial A the positive atmospheric electricity seeks to combine with the negative charge to earth, this is prevented by (the air gap between) the spark gaps. The resistance of the spark gap 7 is, as shown in the drawings, lower than that of the other safety section which consists of three spark gaps connected in

series, and consequently a three times greater air resistance is offered by the latter.

So long therefore, as the resistance of the spark gap 7 is not overloaded, so that the other spark gaps have an equal resistance with it the discharges take place only over spark gap 7. Should however the voltage be increased by any influences so that it might be dangerous for charging the condensers 5 and 6 or for the coil insulation 9 and 10 in consequence of break down, by a correct regulation of this spark gap the second spark gap can discharge free from inductive effects direct to earth without endangering the machine.

Without this second spark gap, arranged in parallel having a higher resistance than the working spark gap it is impossible to collect and render available large quantities of electrical energy.

The action of this closed oscillation circuit consisting of spark gap 7, two condensers 5 and 6, primary coil 9, and also secondary coil 10 is exactly the same as the one described in Figure 1 with the arrangement of the static induction machine with the only difference that here the second spark gap is provided. The electromagnetic high frequency alternating current obtained can be tapped off from the conductors 11 and 12 for lighting and heating purposes. Special kinds of motors adapted for working with these peculiar electrical charges may be connected at 14 and 15 which can work with static electricity charges or with high frequency oscillations.

In addition to the use of spark gaps in parallel a second measure of security is also necessary for taking off the current. This precaution consists according to this invention, in the introduction of and method of connecting certain protective electromagnets or choking coils in the aerial circuit as shown by S in Figure 3.

A single electromagnet only having a core of the thinnest possible separate laminations is connected with the aerial.

In the case of high voltages in the aerial network or at places where there are frequent thunder storms, several such magnets may however be connected in series.

In the case of large units or plants several electromagnets can be employed in parallel or in series parallel.

The windings of these electromagnets may be simply connected in series with the aerials. In this case the winding preferably consists of several thin parallel wires, which make up together, the necessary section.

The winding may be made of primary and secondary windings in the form of a transformer. The primary winding will be then connected in series with the aerial network, and the secondary winding more or less short-circuited over a regulating resistance or an induction coil. In the latter case it is possible to regulate to a certain extent the effect of the choking coils. In the further description of the connecting and constructional diagrams the aerial electromagnet choke coil is indicated by a simple ring S.

Figure 3 shows the simplest way of converting atmospheric electricity into electromagnetic wave energy by the use of special motors adapted for high oscillatory currents or static charges of electrical energy. Recent improvements in motors for working with static charges and motors working by resonance, that is to say, having groups of tuned electromagnetic cooperating circuits render this possible but such do not form part of the present invention.

A motor adapted to operate with static charges will for the sake of simplicity be diagrammatically indicated by two semicircles 1 and 2 and the rotor of the motor by a ring M. (Figure 3.) A is a vertical aerial or aerial network. S the safety choke or electromagnet with coil O as may be seen is connected with the aerial A. Adjacent the electromagnet S the aerial conductor is divided into three circuits, the circuit 8 giving the safety spark gap, the circuit 7 with the working spark gap, and then a circuit including the stator terminal 1, the rotor and stator terminal 2 at which a connection is made to the earth wire. The two spark gaps are also connected metallically with the earth wire. The method of working these diagrams is as follows:

The positive atmospheric electric charge collected tends to combine with the negative electricity (or earth electricity) connected with the earth wire. It travels along the aerial A through the electromagnet S without being checked as it flows in the same direction as the direct current. Further, its progress is arrested by two sparks gaps placed in the way and the stator condenser surfaces. The stator condenser surfaces are charged until the charge is greater than the resistance of the spark gap 7, whereupon a spark springs over the spark gap 7 and an oscillatory charge is obtained as by means of the motor M, stator surfaces 1 and 2, and spark gap 7, a closed oscillation circuit is obtained for producing the electromagnetic oscillations. The motor here forms the capacity and the necessary inductance and resistance, which, as is well known, are necessary for converting static electricity into electromagnetic wave energy.

The discharges formed are converted into mechanical energy in special motors and can not reach the aerial network by reason of the electromagnet or choke. If, however, when a spark springs over the spark gap 7 a greater quantity of atmospheric electricity tends to flow to earth, a counter voltage is

induced in the electromagnet, which is greater the more rapidly and strongly the flow of current direct to the earth is. By the formation of this opposing voltage a sufficiently high resistance is offered to the flow of atmospheric electricity direct to earth to prevent a short circuit with the earth.

The circuit containing spark gap 8 having a different wave length which is not in resonance with the natural frequency of the motor, does not endanger the motor and serves as security against excess voltage, which, as practical experiments have shown, may still arise in certain cases, but can be conducted direct to earth through this spark gap.

In the diagram illustrated in Figure 4 the spark gap 7 is shunted across condensers 5 and 6 from the motor M. This construction affords mainly a better insulation of the motor against excess voltage and a uniform excitation through the spark gap 7.

In Figure 5 a diagram is illustrated for transforming large current strengths which may be employed direct without motors, for example, for lighting or heating purposes. The main difference is that here the spark gap consists of a star shaped disc 7 which can rotate on its own axis and is rotated by a motor opposite similarly fitted electrodes 7^a. When separate points of stars face one another, discharges take place, thus forming an oscillation circuit over condensers 5 and 6 and inductance 9 for oscillatory discharges. It is evident that a motor may also be directly connected to the ends of the spiral 9.

The construction of the diagram shown in Figure 6 permits of the oscillation circuit of the motor being connected with an induction coil. Here a regulating inductive resistance is introduced for counter-acting excess voltages in the motor. By cutting the separate coils 9 (coupled inductively to the aerial) in or out the inductive action on the motor may be more or less increased or variable aerial action may be exerted on the oscillation circuit.

In Figure 7 the oscillation circuit is closed through the earth (E and E_1). The spark gap 7 may be prolonged or shortened by more or fewer spark gaps being successively connected by means of a contact arm 7^b.

Diagram 8 shows a unipolar connection of the motor with the aerial network. Here two oscillation circuits are closed through the same motor. The first oscillation circuit passes from aerial A through electromagnet S, point x, inductance 9^a to the earth condenser 6 and further, over spark gap 7 to the aerial condenser 5 and back to x. The second oscillation circuit starts from the aerial condenser 5 at the point x^1 over the inductance 9 to the earth condenser 6 at the point x^3 and through the condenser 6 over the spark gap 7 back to x^1. The motor itself is inserted between the two points of the spark gap 7. From this arrangement slightly damped oscillation wave currents are produced.

In the diagram illustrated in Figure 9 a loosely coupled system of connections is illustrated which is assumed to be for small motors for measuring purposes. A indicates the aerial conductor, S the electromagnet in the aerial conductor, 9 the inductance, 7 the spark gap, 5 and 6 condensers, E the earth, M the motor, and 1 and 2 stator connections of the motor. The motor is directly metallically connected with the oscillation circuit.

In Figure 10 a purely inductive coupling is employed for the motor circuit. The motor is connected with the secondary wire 10 as may be seen in Figure 11 in a somewhat modified diagram connection. The same applies to the diagram of Figure 12.

The diagrams hitherto described preferably allow of motors of small and medium strength to be operated. For large aggregates, however, they are too inconvenient as the construction of two or more oscillation circuits for large amounts of energy is difficult; the governing is still more difficult and the danger in switching on or off is greater.

A means of overcoming such difficulties is shown in Figure 13. The oscillation circuit here runs starting from the point x over condenser 5, variable inductance 9, spark gap 7 and the two segments (3^a and 4^a) forming arms of a Wheatstone bridge, back to x. If the motor is connected by brushes 3 and 4 transversely to the two arms of the bridge as shown in the drawings, electromagnetic oscillations of equal sign are induced in the stator surfaces 1 and 2 and the motor does not revolve. If however, the brushes 3 and 4 are moved in common with the conducting wires 1 and 2 which connect the brushes with the stator poles a certain alteration or displacement of the polarity is obtained and the motor commences to revolve.

The maximum action will result if one brush 3 comes on the central sparking contact 7 and the other brush 4 on the part x. They are however, usually in practice not brought on to the central contact 7 but only held in the path of the bridge segments 4^a and 3^a in order not to connect the spark gaps with the motor oscillation circuit.

As however, the entire oscillation energy can thereby not act on the motor it is better to carry out the same system according to the diagram 14. The diagram 14 differs from the foregoing only by the motor not being directly metallically connected with the segments of the commutator, but only a primary coil 9 which induces in a secondary coil 10, current which feeds the motor M and takes the place of the rotor. By this

arrangement a good transforming action is obtained, a loose coupling and also an oscillation circuit without a spark gap.

In Figure 15 the motor is not purely inductively as in 14, but directly metallically branched off from the primary coil (at x and x^1) after the principle of the auto-transformer.

In Figure 16 instead of an inductance a condenser 6 is in similar manner, and for the same object inserted between the segments 3^a and 4^a. This has the advantage that the segments 3^a and 4^a need not be made of solid metal but may consist of spiral coils whereby a more exact regulation is possible and further motors of high inductance may be employed.

The arrangements of Figures 17, 18 and 19 may be employed for use with resonance and particularly with induction condenser motors; between the large stator induction condenser surfaces, small reversing pole condensers are connected, which, as may be seen from Figures 17, 18 and 19 are led together to earth. Such reversing poles have the advantage that with large quantities of electrical energy the spark formation between the separate oscillation circuits ceases.

Figure 19 shows a further method which prevents electromagnetic oscillations of high number of alternations formed in the oscillation circuit striking back to the aerial conductor. It is based on the well known principle that a mercury lamp, one electrode of which is formed of mercury, the other of solid metal such as steel allows an electric charge to pass in only one direction from the mercury to the steel and not vice versa. The mercury electrode of the vacuum tube N is therefore connected with the aerial conductor and the steel electrode with the oscillation circuit. From this it results that charges can pass only from the aerial through the vacuum tube to the oscillation circuit, but not vice versa. Oscillations which are formed on being transformed in the oscillation circuit cannot pass to the aerial conductor.

In practice these vacuum tubes must be connected behind an electromagnet as the latter alone affords no protection against the danger of lightning.

As regards the use of spark gaps, all arrangements as used for wireless telegraphy may be used. Of course the spark gaps in large machines must have a sufficiently large surface. In very large stations they are cooled in liquid carbonic acid or better still in liquid nitrogen or hydrogen; in most cases the cooling may also take place by means of liquefied low homologues of the metal series or by means of hydrocarbons the freezing point of which lies at between —90° C. and —40° C. The spark gap casing must also be insulated and be of sufficient strength to be able to resist any pressure which may arise. Any undesirable excess super-pressure which may be formed must be automatically let off. I have employed with very good results mercury electrodes which were frozen in liquid carbonic acid, the cooling being maintained during the operation from the outside through the walls.

Figure 20 is one of the simplest forms of construction of an aerial network in combination with collectors, transformers and the like illustrated diagrammatically. E is here the earth wire, 8 the safety spark gap, 7 the working spark gap, 1 and 2 the stator surfaces of the motor, 5 a condenser battery, S the protective magnet which is connected with the coil in the aerial conductor, A^1 to A^{10} aerial antennæ with collecting balloons, N horizontal collecting or connecting wires from which, to the centre a number of connections run.

The actual collectors consist of metal sheaths preferably made of an aluminium magnesium alloy, and are filled with hydrogen or helium and are attached to copper plated steel wires. The size of the balloon is selected so that the actual weight of the balloon and the weight of the conducting wire is supported thereby. On the top of the balloon aluminium spikes, made and gilded in a special manner hereinafter described, are arranged in order to produce a conductor action. Small quantities of radium preparations, more particularly polonium-ionium or mesothorium preparations considerably increase the ionization, and therewith the action of these collectors.

In addition to metal balloons, fabric balloons which are superficially metal coated according to Schoop's metal spraying process, may however also be employed. A metallic surface may also be produced by lacquering with metallic bronzes, preferably according to Schoop's spraying process or lacquering with metallic bronze powders in two electrical series of widely different metals, because thereby the collecting effect is considerably increased.

Instead of the ordinary round balloons, elongated cigar shaped ones may be employed. In order also to utilize the frictional energy of the wind, patches or strips of non-conducting substances which produce electricity by friction, may be attached to the metallized balloon surfaces. The wind will impart a portion of its energy in the form of frictional electricity, to the balloon casing, and thereby the collecting effect is substantially increased.

In practice however, very high towers (up to 300 metres is fully admissible) may be employed as antennæ. In these towers copper tubes rise freely further above the top of the tower. A gas lamp secured

against the wind is then lit at the point of the copper tube and a netting is secured to the copper tube over the flame of this lamp to form a collector. The gas is conveyed through the interior of the tube up to the summit. The copper tube must be absolutely protected from moisture at the place at which it enters the tower and also rain must be prevented running down the walls of the tower which might lead to a bad catastrophe. This is done by bell shaped enlargements which expand downwards, being arranged in the tower in the form of high voltage insulators of Siamese pagodas.

Special attention must be devoted to the foundations of such towers. They must be well insulated from the ground, which may be obtained by first embedding a layer of concrete in a box form to a sufficient depth in the ground and inserting in this an asphalt lining and then glass bricks cast about 1 or 2 metres in thickness. Over this in turn there is a ferro-concrete layer in which alone the metal foot of the tube is secured. This concrete block must be at least 2 metres from the ground and be fully protected at the sides by a wooden covering, from moisture. In the lower part of the tower a wood or glass house for the large condenser batteries or for the motors may be constructed. In order to lead the earth connection to the ground water, a well insulated pit constructed of vitreous bricks, must be provided. Several such towers are erected at equal distances apart and connected with a horizontal conductor. The horizontal connecting wires may either run directly from tower to tower or be carried on bell shaped insulators similar to those in use for high voltage conductors. The width of the network may be of any suitable size and the connection of the motors can take place at any suitable places.

In order to collect large quantities of electricity with few aerials it is well to provide the aerial conductor with batteries of condensers as shown in two methods of construction in Figures 21 and 22. In Figure 21 the batteries of condensers 5 are connected on the one hand with the aerial electricity collectors Z by the aerial conductor A, and on the other hand interconnected in series with an annular conductor from which horizontal conductors run to the connecting points C to which the earth wire is connected.

Figure 22 shows a similar arrangement. Should two such series of antennæ rings be shown by a voltmeter to have a large difference of potential (for example, one in the mountains and one in the plain) or even of different polarity these differences may be compensated for by connecting sufficiently large condenser batteries ($5, 5^a, 5^b$) by means of Maji star conductors D and D^1. In Figure 23 a connection of three such rings of collectors to form a triangle with a central condenser battery is illustrated.

The condenser batteries of such large installations must be embedded in liquefied gases or in liquids freezing at very low temperatures. In such cases a portion of the atmospheric energy must be employed for liquefying these gases. It is also preferable to employ pressure. By this means the condenser surfaces may be diminished, and still allow for large quantities of energy to be stored, secure against breakdown. For smaller installations the immersing of the condensers in well insulated oil or the like, suffices. Solid substances on the other hand cannot be employed as insulators.

The arrangement in the diagrams hitherto described was always such that the condenser batteries were connected with both poles directly to the aerial conductors. An improved diagram of the connections for obtaining atmospheric electricity for the condenser batteries has however, been found to be very advantageous, this arrangement consists in that they are connected by only one pole (unipolar) to the collecting network. Such a method of arrangement is very important, as by means of it a constant current and an increase of the normal working pressure or voltage is obtained. If for example a collecting balloon aerial which is allowed to rise to a height of 300 metres, shows 40,000 volts above earth voltage, in practice it has been found that the working voltage (with a withdrawal of the power according to the method hereinbefore described by means of oscillating spark gaps and the like) is only about 400 volts. If however, the capacity of the condenser surfaces be increased, which capacity in the above mentioned case was equal to that of the collecting surface of the balloon aerials, to double the amount, by connecting the condenser batteries with only one pole, the voltage rises under an equal withdrawal of current up to and beyond 500 volts. This can only be ascribed to the favourable action of the connecting method.

In addition to this substantial improvement it has also been found preferable to insert double inductances with electromagnets and to place the capacities preferably between two such electromagnets. It has also been found that the useful action of such condensers can be further increased if an induction coil be connected as inductive resistance to the unconnected pole of the condenser, or still better if the condenser itself be made as an induction condenser. Such a condenser may be compared with a spring which when compressed carries in itself accumulated force, which it again gives off when released. In charging, a charge with reversed sign is formed at the

other free condenser pole, and if through the spark gap a short circuit results, the accumulated energy is again given back since now new quantities of energy are induced at the condenser pole connected with the conductor network, which in fact charges with opposite signs to that at the free condenser pole. The new induced charges have of course the same sign as the collector network. The whole voltage energy in the aerial is thereby however increased. In the same space of time larger quantities of energy are accumulated than is the case without such inserted condenser batteries.

In Figures 24 and 25 two different diagrams of connections are more exactly illustrated, Figure 24 shows a collecting balloon and the diagram of the connections to earth. Figure 25 four collecting balloons and the parallel connection of the condenser batteries belonging thereto.

A is the collecting balloon made of an aluminium magnesium alloy (electron metal, magnalium) of a specific gravity of 1.8 and a thickness of plate 0.1 to 0.2 mm. Inside there are eight strong vertical ribs of T shaped section about 10 to 20 mm. in height and about 3 mm. in thickness with the projecting part directed inwards (indicated by *a*, *b*, *c*, *d* and so forth); they are riveted together to form a firm skeleton and are stiffened in a horizontal direction by two cross ribs. The ribs are further connected with one another internally and transversely by means of thin steel wires, whereby the balloon obtains great power of resistance and elasticity. Rolled plates of 0.1 to 0.2 mm. in thickness made of magnalium alloy are then either soldered or riveted on this skeleton so that a fully metallic casing with smooth external surface is obtained. Well silvered or coppered aluminium plated steel wires run from each rib to the fastening ring 2. Further, the coppered steel hawser L preferably twisted out of separate thin wires (shown in dotted lines in Figure 24) and which must be long enough to allow the balloon to rise in the desired height, leads to a metal roller or pulley 3 and from thence to a winch W, well insulated from the earth. By means of this winch, the balloon, which is filled with hydrogen, or helium, can be allowed to rise to a suitable height (300 to 5,000 metres) and brought to the ground for recharging or repairs.

The actual current is taken directly through a friction contact from the metal roller 3 or from the wire, or even from the winch or simultaneously from all three by means of brushes (3, 3^a and 3^b). Beyond the brushes the conductor is divided, the paths being:—firstly over 12 to the safety spark gap 8, from thence to the earth conductor E^1, and secondly over electromagnet S^1, point 13, to a second loose electromagnet having an adjustable coil S^2, then to the spark gap 7 and to the second earth conductor E^2. The actual working circuit is formed through the spark gap 7, condensers 5 and 6, and through the primary coil 9; here the static electricity formed by oscillatory discharges is accumulated and converted into high frequency electromagnetic oscillations. Between the electromagnets S^1 and S^2 at the crossing point 13, four condenser batteries are introduced which are only indicated diagrammatically in the drawings each by one condenser. Two of these batteries (16 and 18) are made as plate condensers and prolonged by regulating induction coils or spirals 17 and 19 while the two others (21 and 23) are induction condensers. As may be seen from the drawings each of the four condenser batteries 16, 18, 21, 23 is connected only by one pole to the aerial or to the collector conductor. The second poles 17, 19, 22, 24 are open. In the case of plate condensers having no inductive resistance an induction coil is inserted. The object of such a spiral or coil is the displacement of phase of the induction current by ¼ periods, whilst the charging current of the condenser poles which lie free in the air, works back to the collector aerial. The consequence of this is that in discharges in the collector aerial the back inductive action of the free poles allows a higher voltage to be maintained in the aerial collecting conductor than would otherwise be the case. It has also been found that such a back action has an extremely favourable effect on the wear of the contacts. Of course the inductive effect may be regulated at will within the limits of the size of the induction coil, the length of the coil in action being adjustable by means of wire connection without induction (see Fig. 24, No. 20).

S^1 and S^2 may also be provided with such regulating devices in the case of S^2 (illustrated by 11). If excess voltage be formed it is conducted to earth through the wire 12 and spark gap 8 or through any other suitable apparatus, since this formation would be dangerous for the other apparatus.

The action of these condenser batteries has already been hereinbefore described.

The small circles on the collector balloon indicate places at which zinc amalgam or gold amalgam or other photoelectric acting metals in the form of small patches in extremely thin layers (.01 to .05 mm. in thickness) are applied to the balloon casing of light metal. Such metallic patches may also be applied to the entire balloon as well as in greater thickness to the conducting network. The capacity of the collector is thereby considerably strengthened at the surface. The greatest possible effect in collecting may be obtained by polonium amalgams and the like. On the surface of the

collector balloon metal points or spikes are also fixed along the ribs, which spikes serve particularly for collecting the collector charge. Since it is well known that the resistance of the spikes is less the sharper the spike is, for this purpose it is therefore extremely important to employ as sharp spikes as possible. Experiments made as regards these have shown that the formation of the body of the spike or point also plays a large part. for example, spikes made of bars or rollers with smooth surfaces, have a many times greater point resistance as collector accumulator spikes than those with rough surfaces. Various kinds of spike bodies have been experimented with for the collector balloons hereinbefore mentioned. The best results were given by spikes which were made in the following way. Fine points made of steel, copper, nickel, or copper and nickel alloys, were fastened together in bundles and then placed as anode with the points in a suitable electrolyte (preferably in hydrochloric acid or muriate of iron solutions) and so treated with weak current at 2 to 3 volts pressure. After 2 to 3 hours according to the thickness of the spikes or pins the points become extremely sharp and the bodies of the spikes have a rough surface. The bundle can then be removed and the acid washed off with water. The spikes are then placed as cathode in a bath consisting of solution of gold, platinum, iridium, paladium or wolfram salts or their compounds and coated at the cathode galvanically with a thin layer of precious metal, which must however be sufficiently firm to protect them from atmospheric oxidation.

Such spikes act at a 20 fold lower voltage almost as well as the best and finest points made by mechanical means. Still better results are obtained if polonium or radium salts are added to the galvanic bath when forming the protective layer or coating. Such pins have a low resistance at their points and even at one volt and still lower pressures have an excellent collector action.

In Figure 24 the three unconnected poles are not connected with one another in parallel. That is quite possible in practice without altering the principle of the free pole. It is also preferable to interconnect in parallel to a common collector network, a series of collecting aerials.

Figure 25 shows a diagram for such an installation. A^1, A^2, A^3, A^4 are four metal collector balloons with gold or platinum coated spikes which are electrolytically made in the presence of polonium emanations or radium salts, which spikes or needles are connected over four electro-magnets S^1, S^2, S^3, S^4, through an annular conductor R. From this annular conductor four wires run over four further electromagnets S^a, S^b, S^c, S^d, to the connecting point 13. There the conductor is divided, one branch passing over 12 and the safety spark gap 8 to the earth at E^1, the other over inductive resistance J and working spark gap 7 to the earth at E^2. The working circuit, consisting of the condenser 5 and 6 and a resonance motor or a condenser motor M, such as hereinbefore described, is connected in proximity round the sparking gap section 7.

Instead of directly connecting the condenser motor of course the primary circuit for high frequency oscillatory current may also be inserted.

The condenser batteries are connected by one pole to the annular conductor R and can be either inductionless (16 and 18) or made as induction condensers as shown by 21 and 23. The free poles of the inductionless condensers are indicated by 17 and 19, those of the induction condensers by 22 and 24. As may be seen from the drawings all these poles 17, 22, 19, 24 may be interconnected in parallel through a second annular conductor without any fear that thereby the principle of the free pole connection will be injured. In addition to the advantages already set forth the parallel connection also allows of an equalization of the working pressure in the entire collector network. Suitably constructed and calculated induction coils 25 and 26 may also be inserted in the annular conductor of the free poles, by means of which a circuit may be formed in the secondary coils 27 and 28 which allows current produced in this annular conductor by fluctuations of the charges or the like appearances to be measured or otherwise utilized.

According to what has been hereinbefore stated separate collector balloons may be connected at equidistant stations distributed over the entire country, either connected directly with one another metallically or by means of intermediate suitably connected condenser batteries through high voltage conductors insulated from earth. The static electricity is converted through a spark gap into dynamic energy of a high number of oscillations and may in such form be coupled as a source of energy by means of a suitable method of connecting, various precautions being observed and with special regulations. The wires leading from the collector balloons have hitherto been connected through an annular conductor without this endless connection, which can be regarded as an endless induction coil, being able to exert any action on the whole conductor system.

It has now been found that if the network conductor connecting the aerial collector balloons with one another is not made as a simple annular conductor, but preferably short circuited in the form of coils over a

condenser battery or spark gap or through thermionic tubes or valves or audions, then the total collecting network exhibits quite new properties. The collection of atmospheric electricity is thereby not only increased but an alternating field may be easily produced in the collector network. Further, the atmospheric electrical forces showing themselves in the higher regions may also be directly obtained by induction. In Figures 26 and 28 a form of construction is shown on the basis of which the further foundations of the method will be more particularly explained.

In Figure 26 1, 2, 3, 4 are metal collector balloons, 5, 6, 7, 8 their metallic aerial conductors and I the actual collector network. This consists of five coils and is mounted on high voltage insulators in the air, on high voltage masts (or with a suitable construction of cable embedded in the earth). One coil has a diameter of 1 to 100 km. or more. S and S^1 are two protective electromagnets, F the second safety section against excess voltage, E its earth conductor and E^1 the earth conductor of the working section. When an absorption of static atmospheric electricity is effected through the four balloon collectors, the current in order to reach the earth connection E^1 must flow spirally through the collector network over the electromagnet S, primary induction coil 9, conductor 14, anode A of the audion tube, incandescent cathode K, as the way over the electromagnet and safety spark gap F offers considerably greater resistance. Owing to the fact that the accumulated current flows in one direction, an electromagnetic alternating field is produced in the interior of the collector network coil, whereby the whole free electrons are directed more or less into the interior of the coil. An increased ionization of the atmosphere is therefore produced. In consequence of this the points mounted on the collector balloon show a considerably reduced resistance and therefore increased static charges between the points on the balloon and the surrounding atmosphere are produced. The result of this is a considerably increased collector effect.

A second effect which could not be obtained otherwise is obtained by the electromagnetic alternating field which running parallel to the earth surface, acts more or less with a diminishing or increasing effect on the earth magnetic field, whereby in the case of fluctuations in the current a return induction current of reversed sign is always produced in the collector coil by earth magnetism. Now if, however, a constantly pulsating continuous alternating field is produced as stated in the above collector network I, an alternating current of the same periodicity is produced also in the collecting network coil. As the same alternating field is further transmitted to the aerial balloon, the resistance of its points is thereby considerably reduced, whilst the collector action is considerably increased. A further advantage is that positive electrons which collect on the metal surfaces during the conversion into dynamic current produce a so-called drop of potential of the collector area. As an alternating field is present, the negative ions surrounding the collector surfaces, when discharge of the collector surfaces takes place produce by the law of induction, an induction of reversed sign on the collector surface and so forth (that is to say again a positive charge). In addition to the advantages hereinbefore set forth, the construction of connecting conductors in coil form when of sufficiently large diameter, allows of a utilization of energy arising in higher regions also in the simplest way. As is well known electric discharges frequently take place at very great elevations which may be observed, such as St. Elmo's fires or northern lights. These energy quantities have not been able to be utilized up to now. By this invention all these kinds of energy, as they are of an electromagnetic nature and the direction of the axis of the collector coils stands at right angles to the earth's surface, can be more or less absorbed in the same way as a receiver in wireless telegraphy absorbs waves coming from a far distance. With a large diameter of the spiral it is possible to connect large surfaces and thereby to take up also large quantities of energy.

It is well known that large wireless stations in the summer months, and also in the tropics are very frequently unable to receive the signals in consequence of interruptions which are caused by atmospheric electricity, and this takes place with vertical coils of only 40 to 100 m. diameter. If on the contrary horizontal coils of 1 to 100 km. diameter be employed very strong currents may be obtained through discharges which are constantly taking place in the atmosphere. Particularly in the tropics or still better in the polar regions where the northern lights are constantly present, large quantities of energy may probably be obtained in this way. A coil with several windings should act the best. In similar manner any alteration of the earth magnetism should act inductively on such a coil.

It is not at all unlikely that earthquakes and spots on the sun will also produce an induction in such collector coils of sufficient size. In similar manner this collector conductor will react on earth currents more particularly when they are near the surface of the earth or even embedded in the earth. By combining the previous kind of current collectors so far as they are adapted for

the improved system with the improved possibilities of obtaining current the quantities of free natural energy which are to be obtained in the form of electricity are considerably increased.

In order to produce in the improved collector coil uniform current oscillations of an undamped nature so-called audion high vacuum or thermionic tubes of suitable connection are employed instead of the previously known spark gaps (Fig. 26, Nos. 9–18). The main aerial current flows through electromagnet S (which in the case of a high number of alternations is not connected here but in the earth conductor E^1) and may be conveyed over the primary coils in the induction winding through wire 14 to the anode A of the high vacuum grid tube. Parallel with the induction resistance 9 a regulating capacity of suitable size, such as condenser 11 is inserted. In the lower part of the vacuum grid tube is arranged the incandescent filament or the cathode K which is fed through a battery B. From the battery B two branches run, one to the earth conductor E^1 and the other through battery B^1 and secondary coil 10 to the grid anode *g* in the vacuum tube. By the method of connections shown in dotted lines, a desired voltage at the grid electrode *g* may also be produced through the wire 17 which is branched off from the main current conductor through switches 16 and some small condensers (*a*, *b*, *c*, *d*) connected in series, and conductor 18, without the battery B^1 being required.

The action of the entire system is somewhat as follows:—

On the connecting conductor of the aerial collector network being short circuited to earth, the condenser pole 11 is charged and slightly damped oscillations are formed in the short circuited existing oscillation circuit formed of the condenser 11 and self inductance 9. In consequence of the coupling through coil 10, fluctuations of voltage take place in the grid circuit 15 with the same frequency, which, fluctuations in turn influence the strength of the electrode current passing through the high vacuum amplyfying tube and thus produce current fluctuations of the same frequency in the anode circuit. A permanent supply of energy to the oscillation circuits 9 and 10 consequently takes place, until a condition of balance is set up, in which the consumed oscillation energy is equal to that absorbed. Thereby constant undamped oscillations are now produced in the oscillation circuits 9–11.

For regular working of such oscillation producers high vacuum strengthening tubes are necessary and it is also necessary that the grid and anode voltages shall have a phase difference of 180° so that if the grid is negatively charged, then the anode is positively charged and vice versa. This necessary difference of phase may be obtained by most varied connections, for example, by placing the oscillation circuit in the grid circuit or by separating the oscillation circuit and inductive coupling from the anodes and the grid circuit and so forth.

A second important factor in this way of converting static atmospheric electricity into undamped oscillations is that care must be taken that the grid and anode voltages have a certain relation to one another; the latter may be obtained by altering the coupling and a suitable selection of the self induction in the grid circuit, or as shown by dotted lines 18, 17, 16 by means of a larger or smaller number of condensers of suitable size connected in series; in this case the battery B^1 may be omitted. With a suitable selection of the grid potential a glow discharge takes place between the grid *g* and the anode A, and accordingly at the grid there is a cathode drop and a dark space is formed. The size of this cathode drop is influenced by the ions which are emitted in the lower space in consequence of shock ionization of the incandescent cathodes K and pass through the grid in the upper space. On the other hand the number of the ions passing through the grid is dependent on the voltage between the grid and the cathode. Thus if the grid voltage undergos periodic fluctuations (as in the present case) the amount of the cathode drop at the grid fluctuates and consequently the internal resistance of the tube correspondingly fluctuates, so that when a back coupling of the feed circuit with the grid circuit takes place, the necessary means are afforded for producing undamped oscillations and of taking current, according to requirements from the collecting conductor.

The frequency of the undamped oscillations produced is with a suitably loose coupling equal to the self frequency of the oscillation circuits 9 and 10. By a suitable selection of the self induction of the coil 9 and capacity 11 it is possible to extend from frequencies which produce electromagnetic oscillations of only a few metres wave length down to the lowest practical alternating current frequency. For large installations a suitable number of frequency producing tubes in the form of the well known high vacuum transmission tubes of .5 to 2 kw. in size may be connected in parallel so that in this respect no difficulty exists.

The use of such tubes for producing undamped oscillations, and also the construction and method of inserting such transmission tubes in an accumulator or dynamo circuit is known and also that such oscillation producing tubes only work well at voltages of 1,000 up to 4,000 volts, so that on the contrary their use at lower voltages is

considerably more difficult. By the use of high voltage static electricity this method of producing undamped oscillations as compared with that through spark gaps must be regarded as an ideal solution particularly for small installations of outputs of from 1 to 100 kw.

By the application of safety spark gaps, with interpolation of electro-magnets, not only is short circuiting avoided but also the taking up of current is regulated. Oscillation producers inserted in the above way form a constantly acting electromagnetic alternating field in the collector coil, whereby as already stated, a considerable accumulating effect takes place. The withdrawal wire or working wire is connected at 12 and 13, but current may be taken by means of a secondary coil which is firmly or movably mounted in any suitable way inside the large collector coil, i. e. in its electromagnetic alternating field, so long as the direction of its axis runs parallel with that of the main current collecting coil.

In producing undamped oscillations of a high frequency (50,000 per second and more) in the oscillation circuits 9 and 11, electromagnets S and S^1 must be inserted if the high frequency oscillations are not to penetrate the collector coil, between the oscillation producers and the collector coil. In all other cases they are connected shortly before the earthing (as in Figs. 27 and 28).

In Figure 27 a second method of construction of the connecting conductor of the balloon aerials is illustrated in the form of a coil. The main difference consists in that in addition to the connecting conductor I another annular conductor II is inserted parallel to the former on the high voltage masts in the air (or embedded as a cable in the earth) but both in the form of a coil. The connecting wire of the balloon aerials is indicated as a primary conductor and also as a current producing network; the other is the consumption network and is not in unipolar connection with the current producing network.

In Figure 27 the current producing network I is shown with three balloon collectors 1, 2, 3 and aerial conductors 4, 5, 6; it is short circuited through condenser 19 and inductance 9. The oscillation forming circuit consists in this diagram of spark gap *f*, inductance 10, and condenser 11; the earth wire E, is connected to earth over electromagnet S^1. F is the safety spark gap which is also connected to earth through a second electromagnet S at E. On connecting up the condenser circuit 11 this is charged over the spark gap *f* whereby an oscillatory discharge is formed. This discharging current acts through inductance 10 on the inductively coupled secondary 9, whereby in the producing network a modification of the potential of the condenser 19 is produced. The consequence of this is that oscillations arise in the coil shaped producer network. These oscillations induce a current in the secondary circuit II, which has a smaller number of windings and a less resistance, the voltage of which, according to the proportion of the number of windings and of the ohmic resistance, is considerably lower whilst the current strength is greater.

In order to convert the current thus obtained into current of an undamped character, and to tune its wave lengths, a sufficiently large regulatable capacity 20 is inserted between the ends 12 and 13 of the secondary conductor II. Here also current may be taken without an earth conductor, but it is advisable to insert a safety spark gap E^1 and to connect this with the earth over an electromagnet S^2.

The producer network may be connected with the working network II over an inductionless condenser 21 or over an induction condenser 22, 23. In this case the secondary conductor is unipolarly connected with the energy conductor.

In Figure 28 the connecting conductor between the separate accumulator balloons is carried out according to the autotransformer principle. The collecting coil connects four aerial balloons 1, 2, 3, 4, the windings of which are not made side by side but one above the other. In Figure 28 the collector coil I is shown with a thin line, the metallically connected prolongation coils II with a thick line. Between the ends I^1 and II^1 of the energy network I a regulating capacity 19 is inserted. The wire I^1 is connected with the output wire and with the spark gap F.

As transformer of the atmospheric electricity an arrangement is employed which consists in using rotary pairs of condensers in which the one stator surface B is connected with the main current, whilst the other A is connected with the earth pole. Between these pairs of short circuited condensers are caused to rotate from which the converted current can be taken by means of two collector rings and brushes, in the form of an alternating current, the frequency of which is dependent on the number of balloons and the revolutions of the rotor. As the alternating current formed in the rotor can act, in this improved method of connection described in this invention, through coils 10 on the inductance 9, an increase or diminution of the feed current in I can be obtained according to the direction of the current by back induction. Current oscillations of uniform rhythm thereby result in the coil shaped windings of the producer net-work.

As the ends of this conductor are short cir-

cuited through the regulatable condenser 19 these rhythms produce short circuited undamped oscillations in the energy conductor, the periodicity and wave lengths of which oscillations can be adjusted according to desire by altering the capacity 19 to a given wave length and therewith also to a given frequency. These currents may also be employed in this form directly as working current through the conductors II¹ and III. By inserting the condenser 20 a connection between these conductors may also be made, whereby harmonic oscillations of desired wave length are formed. By this means quite new effects as regards current distribution are obtained. The withdrawal of current can even take place without direct wire connection if, at a suitable point in the interior of the producing network (quite immaterially whether this has a diameter of 1 or 100 km.) a coil tuned to these wave lengths and of the desired capacity is firmly or movably mounted in the aerial conductor in such a way that its axial direction is in parallel with that of the collector coil. In this case a current is induced in the producing network, the size of which is dependent on the total capacity and resistance and also on the periodicity employed. A possibility is thereby afforded in future, of taking energy from the producer network by wireless means. As thereby in addition to atmospheric electricity also magnetic earth currents and the energy from the higher atmosphere (at least partially) may be simultaneously obtained, this last system for collecting the atmospheric energy is of particular importance for the future.

Of course everywhere instead of spark gaps suitable grid vacuum tubes may be employed as producers for undamped oscillations. The separate coils of the producer net-work with large diameters may be connected with one another through separate conductors all in parallel or all in series or in groups in series. By regulating the number of oscillations and also the extent of the voltage more or less large collector coils of this kind may be employed. The coils may also be divided spirally over the entire section. The coils may be carried out in annular form or also in triangular, quadrangular, hexagonal or octagonal form.

Of course wires may be carried from a suitable place to the centre or also laterally which serve the current waves as guides. This is necessary when the currents have to be conducted over mountains and valleys and so forth. In all these cases the current must be converted into a current of suitable periodicity.

As already hereinbefore mentioned separate collecting balloons may be directly metallically interconnected at equidistant stations distributed over the entire country or may be connected by interpolation of suitable condenser batteries by means of high voltage conductors. The static electricity is converted through a spark gap into dynamic energy of a high number of oscillations, and could then in such form, with a suitable arrangement of the connections, observing various measures of precaution, be employed as source of energy after separate or special regulation.

According to this invention in order to increase the collecting effect of the balloon in the aerial collector conductor or in the earth wire, radiating collectors are employed. These consist either of incandescent metal or oxide electrodes in the form of vacuum grid tubes, or electric arcs (mercury and the like electrodes) Nernst lamps, or finally flames of various kinds may be simply connected with the respective conductor.

It is well known that energy can be drawn off from a cathode consisting of an incandescent body opposite an anode charged with positive electricity (vacuum grid tube). Hitherto however, a cathode was always first directly placed opposite an anode, and secondly the system always consisted of a closed circuit.

Now if we dispense with the ordinary ideas in forming light or flame arcs in which a cathode must always stand directly opposite an anode, and if we place an incandescent cathode opposite an anode charged to a high potential or another body freely floating in the air, or regard the incandescent cathode only as a source of unipolar discharge (which represent group and point discharges in electro-static machines similar to unipolar discharges), it may be ascertained that incandescent cathodes and less perfectly all incandescent radiators, flames and the like admit of relatively large current densities and allow large quantities of electric energy to radiate into the open space in the form of electron streams as transmitters.

The object of this invention is as described below, if such incandescent oxide electrodes or other incandescent radiators or flames are not freely suspended in space but connected metallically with the earth so that they can be charged with negative terrestrial electricity, these radiators possess the property of absorbing the free positive electrical charges contained in the air space surrounding them (that is to say of collecting them and conducting them to earth). They can therefore, serve as collectors and have, in comparison to the action of the spikes, or points, a very large radius of action R; the effective capacity of these collector is much greater than the geometrical capacity (R_0–) calculated in an electro-static sense.

Now as our earth is surrounded as is well

known, with an electro-static field and the difference of potential

$$\frac{\delta V}{\delta h}$$

of the earth field according to the latest investigations, is in summer about 60 to 100 volts and in winter 300 to 500 volts per metre of difference in height (δh), a simple calculation gives the result that when such a radiation collector or flame collector is arranged for example on the ground, and a second one is mounted vertically over it at a distance of 2,000 metres and both are connected by a conducting cable, there is a difference of potential in summer of about 2,000,000 volts and in winter even of 6,000,000 volts and more.

According to Stefan Boltzmann's law of radiation, the quantity of energy which an incandescent surface (temperature T) of 1 sq. cm. radiates in a unit of time into the open air (temperature T_o) is expressed by the following formula:

$$S=\sigma\,(T^4-T^4_o)\ \text{watt/sq. cm.}$$

and the universal radiation constant σ is according to the latest researches of Ferry (Annales de Chimie et de physique 17 page 267 (1909)) equal to 6.30×10^{-12} watt/sq. cm.

Now if an incandescent surface of 1 sq. cm. shows, as compared with the surrounding space a periodic fall of potential δV it radiates (independent of the current direction, that is to say of the sign) in accordance with the above formula, for example at a temperature of 3725° C. an energy of 1.6 kw. per sq. cm. per second. As for the radiation the same value can be calculated for the collection of energy, but reversed. Now as carbon electrodes at the temperature of the electric arc support on the current basis a current density up to from 60 to 65 amperes per sq. cm. no difficulties will result in this direction in employing radiating collectors as accumulators.

If the earth be regarded as a cosmically insulated condenser in the sense of geometrical electro-statics x there results from the geometric (compare Ewald Rasch, "das elektrische Bogenlicht" (The electric arc light) page 169) capacity of the earth according to Chwolson:

For negative charging 1.3×10^6 Coulomb

For negative potential $V=10\times10^8$ volts.

From this there results however, $EJT\cong24.7\times10^{24}$ watt/Sec. Now if it is desired to make a theoretic short circuit through an earthed flame collector this would represent an electric total work of about 79,500 10^{10} kilowatt years. As the earth must be regarded as a rotating mechanism which is thermo-dynamically, electromagnetically, and also kinematically coupled with the sun and stars system by cosmic radiations and gravitation a diminution of the electric energy of the earth field is not to be feared. The energies which the incandescent collectors would withdraw from the earth field can only cause by the withdrawal of motor work a lowering of the earth temperature (temperature $T_E=300$) and reduce this to that of the world space (T=O) by using the entire energy. This is however not the case as the earth does not represent a cosmically entirely insulated system. On the contrary there is conveyed ~~to the~~ same according to the recent value corrected by Ferry for the solar constants through the radiation from the sun an energy of 18,500 $\times10^{10}$ kw. Accordingly any lowering of the earth temperature (T_E) without a simultaneous lowering of the sun's temperature (T_S) would contradict Stefan Boltzmann's law of radiation.

$$S=\sigma\,(T_S^4-T_E^4).$$

From this it must be concluded that if the earth temperature (T_E) sinks, the total radiation S absorbed by the earth increases, and further also that the secular speed of cooling of the earth is directly dependent on that of the sun and the other radiators cosmically coupled with the sun and is connected most closely with these.

The incandescent radiation collectors may, according to this invention, be employed for collecting atmospheric electricity if they (1) are charged with the negative earth electricity (that is to say when they are directly connected by means of a metallic conductor with the earth) and (2) if large capacities (metal surfaces) charged with electricity are mounted opposite them as positive poles in the air. This is regarded as the main feature of the present invention as without these inventive ideas it would not be possible to collect with an incandescent collector, sufficiently large quantities of the electrical charges contained in the atmosphere as technology requires; the radius of action of the flame collectors would also be too small, especially if it be considered that the very small surface density (energy density) (σ about$=2\times7\,.\,10^9$ St. E. per sq. cm.) does not allow of large quantities of charge being absorbed from the atmosphere.

x) Calculated according to Poisson's calculation;

$\Delta V=-4\pi\delta$; as here the alteration of the potential or potential gradients only takes place in the direction of the normal, this calculation assumes the simple form

$$\delta=\frac{1}{4\pi}\times\frac{\delta^2V}{\delta n^2}$$

It has indeed already been proposed to employ flame collectors for collecting atmospheric electricity and it is known that

their collecting effect is substantially greater opposite the points. It is however, not known that the quantities of current which could hitherto be obtained are too small for technical purposes. According to my experiments the reason for this is to be found in the too small capacities of the collector conductor poles. If such flame or radiating collectors have no or only small positive surfaces, their radius of action for large technical purposes is too small. If the incandescent collectors be constantly kept in movement in the air they may collect more according to the speed of the movement, but this is again not capable of being carried out in practice.

By this invention the collector effect is considerably increased by a body charged with a positive potential and of the best possible capacity being also held floating (without direct earth connection) opposite such an incandescent collector which is held floating in the air at a desired height. If for example, a collecting balloon of sheet metal or of metalized balloon fabric be caused to mount to 300 up to 3,000 metres in the air and as positive pole it is brought opposite such a radiating collector connected by a conductor to earth, quite different results are obtained.

The metallic balloon shell (with a large surface) is charged to a high potential by the atmospheric electricity. This potential is greater the higher the collecting balloon is above the incandescent collector. The positive electricity acts concentratedly on the anode floating in the air as it is attracted through the radiation shock ionization, proceeding from the incandescent cathode. The consequence of this is that the radius of action of the incandescent cathode collector is considerably increased and thereby also the collecting effect of the collecting balloon surface. Further the large capacity of the anode floating in the air plays therefore an important part because it allows of the taking of large charges, and thereby a more uniform current is obtained even when there is a large consumption: this cannot be the case with small surfaces.

In the present case the metallic collecting balloon is a positive anode floating in the air and the end of the earth conductor of this balloon serves as positive pole surface opposite the surface of the radiating incandescent cathode, which in turn is charged with negative earth electricity being conductingly connected to earth.

The process may be carried out by two such contacts (negative incandescent cathode and anode end of a capacity floating in the air) a condenser and an inductive resistance being switched on in parallel, whereby simultaneously undamped oscillations may be formed.

In very large installations it is advisable to connect two such radiating collectors in series. Thus an arc light incandescent cathode may be placed below on the open ground and an incandescent cathode which is heated by special electro-magnetic currents be located high in the air. Of course for this the special vacuum Liebig tubes with or without grids may also be employed. An ordinary arc lamp with oxide electrodes may be introduced on the ground and the positive pole is not directly connected with the collecting balloon, but through the upper incandescent cathode or over a condenser. The method of connecting the incandescent cathode floating in the air may be seen in Figs. 29–33.

B is the air balloon, K a Cardan ring (connection with the hawser) C the balloon, L a good conducting cable, P a positive pole, N negative incandescent cathode, and E earth conductor.

Fig. 29 represents the simplest form of construction. If electric oscillations are produced below on the ground by means of a carbon arc lamp or in other suitable way a considerably greater electric resistance is opposed to that in the direct way by inserting an electrical inductive resistance 9. Consequently between P and N a voltage is formed, and as, over N and P only an inductionless ohmic resistance is present, a spark will spring over so long as the separate induction co-efficients and the like are correctly calculated. The consequence of this is that the oxide electrode (carbon or the like) is rendered incandescent and then shows as incandescent cathode an increased collecting effect. The positive poles must be substantially larger than the negative in order that they may not also become incandescent. As they are further connected with the large balloon area which has a large capacity and is charged at high voltage, an incandescent body which is held floating in the air and a positive pole which can collect large capacities is thereby obtained in the simplest way. The incandescent cathode is first caused to become incandescent by means of separate energy produced on the earth, and then maintained by the energy collected from the atmosphere.

Fig. 30 only shows the difference that instead of a round balloon a cigar shaped one (of metal or metalized fabric) may be employed and also a condenser 5 is inserted between the incandescent cathode and the earth conductor so that a short circuited oscillation circuit over P. N 5 and 9 is obtained. This has the advantage that quite small quantities of electricity cause the cathode to become incandescent and much larger cathode bodies may be rendered incandescent.

In this form of construction both the in-

candescent cathode and also the positive electrode may be enclosed in a vacuum chamber as may be seen in Fig. 32. A cable L is carried well insulated through the cover of a vessel and ends in a condenser disc 5. The cover is arched in order to keep off the rain. The vessel is entirely or partially made of magnetic metal and well insulated inside and outside. Opposite the disc 5 another disc 6 and on this again a metallic positive pole of the vacuum tube *g* with the incandescent cathode (oxide electrode) N is arranged. The negative electrode is on the one hand connected with the earth conductor E, and on the other hand with the inductive resistance 9 which is also connected with the cable L with the positive pole and wound round the vessel in coils. The action is exactly the same as that in Fig. 29 only instead of an open incandescent cathode one enclosed in vacuo is employed. As in such collectors only small bodies can be brought to incandescence in large installations a plurality of such vacuum tubes must be inserted in proximity to one another. According to the previous constructions Figs. 31 and 33 are quite self evident without further explanations.

Figs. 34–37 represent further diagrams of connections over radiating and flame collectors, and in fact, how they are to be arranged on the ground.

Fig. 34 shows an arc light collector with oxide electrodes for direct current and its connection; Fig. 35 a similar one for alternating current, Fig. 36 an incandescent collector with a Nernst lamp and Fig. 37 a similar one with a gas flame.

The positive pole 1 of the radiating collectors is always directly connected to the aerial collecting conductor A. In Fig. 34 this is further connected over the condenser battery 5 with a second positive electrode 3. The direct current dynamo *b* produces current which flows over between the electrodes 3 and 2 as an arc light. On the formation of an arc the negative incandescent electrode 2 absorbs electricity from the positive poles standing opposite it and highly charged with atmospheric electricity and conveys the same to the working circuit. The spark gap 7, inductive resistance 9 and induction coil 10 are like the ones previously described. The protective electromagnet S guards the installation against earth circuiting, the safety spark gap 8 from excess voltage or overcharging.

In Fig. 35 the connection is so far altered that the alternating current dynamo feeds the exciting coil 11 of the induction condenser. 12 is its negative and 13 its positive pole; if the coil 3 on the magnet core of the dynamo is correctly calculated and the periodicity of the alternating current is sufficiently high an arc light can be formed between the two poles 1 and 2. As the cathode 2 is connected with the negatively charged earth, and therefore always acts as a negative pole, a form of rectification of the alternating current produced by the dynamo 3 is obtained, the second half of the period is always suppressed. The working circuit may be carried out in the same way as in Fig. 34; the working spark gap 7 may however be dispensed with, and instead thereof between the points *n* and *m* a condenser 5 and an induction resistance 9 may be inserted from which the current is taken inductively.

Fig. 36 represents a form of construction similar to Fig. 34 only that here instead of an arc lamp a Nernst incandescent body is employed. The Nernst lamp is fed through the battery 3. The working section is connected with the negative pole, the safety spark gap with the + poles. The working spark gap 7 may also be dispensed with and the current for it taken at 12 over the oscillation circuit 5, 11 (shown in dotted lines).

Flame collectors (Fig. 37) may also be employed according to this invention. The wire network 1 is connected with the aerial collector conductor A and the burner with the earth. At the upper end of the latter, long points are provided which project into the flame. The positive electrode is connected with the negative over a condenser 5 and the induction coil 9 with the earth.

The novelty in this invention is firstly, the use of incandescent cathodes opposite positive poles which are connected with large metallic capacities as automatic collecting surfaces, (2) the connection of the incandescent cathodes with the earth whereby, in addition to the electricity conveyed to them from the battery or machine which causes the incandescing, also the negative charge of the earth potential is conveyed, and (3) the connection of the positive and negative poles of the radiating collectors over a condenser circuit alone or with the introduction of a suitable inductive resistance, whereby simultaneously an oscillatory oscillation circuit may be obtained. The collecting effect is by these methods quite considerably increased.

I declare that what I claim is:—

1. An electrical energy generating system, comprising a conducting surface for static charges, means to support same at a distance above the earth, a conductor leading to the earth level, a spark gap associated with said conductor to convert electrostatic charges into electromagnetic high frequency oscillations means to supply said electromagnetic energy to a net work, and a spark gap of greatly increased relative resistance in parallel therewith.

2. An electrical energy generating system

comprising a conductor, means to support same above the earth level, an inductance therein, a spark gap associated with said conductor, a second spark gap of much higher relative resistance in parallel therewith and an energy receiving circuit coupled with the spark gap of lesser resistance.

3. An electrical energy generating system comprising a collecting surface, means to support same above the earth level, a conductor connecting said collecting surface with the earth level, a choke in said conductor, an electromagnetic resistance converting electrostatic energy to electromagnetic energy, a safety higher resistance in parallel therewith and a net work coupled with the conversion resistance of lesser value.

4. An electrical energy generating system comprising electric conductors spaced above the earth to form electromagnetic oscillating circuits, conductors connecting to earth level, electrostatic to electromagnetic energy conversion means therein, a safety high electrostatic resistance in parallel therewith and means to alter the electromagnetic characteristic of the circuits.

5. An electrical energy generating system comprising in combination a static collecting surface arranged above the earth, conductors connecting to earth level, a pair of spark gaps in parallel of different electrostatic resistance, a utilization net work shunted across the spark gap of lesser resistance and an electromagnetic choke in said conductors.

6. An electrical energy generating system comprising an open circuit energy collecting aerial, a pair of sparking gaps in parallel of widely different resistance, connected thereto and a closed electric oscillation circuit in shunt across the gap of lesser resistance.

7. An electrical energy generating system comprising an open circuit energy collecting aerial, a pair of sparking gaps in parallel of widely different resistance connected thereto, a closed electric oscillation circuit in shunt across the gap of lesser resistance, a plurality of electrostatic collecting surfaces, means to connect said collecting surfaces in parallel in groups and means to connect said groups symmetrically with said aerial.

In witness whereof, I have hereunto signed my name this 30 day of Dec., 1920, in the presence of two subscribing witnesses.

HERMANN PLAUSON.

Witnesses:
H. F. Armstrong,
W. H. Beeston.

Poor Man's Electronics Web Page

Random Wire Antenna Project Links:

Back to main page
How to build it
How it works
Computer program
Homebrew arrestor

Random Wire Antenna

Homebrew lightning arrestor:

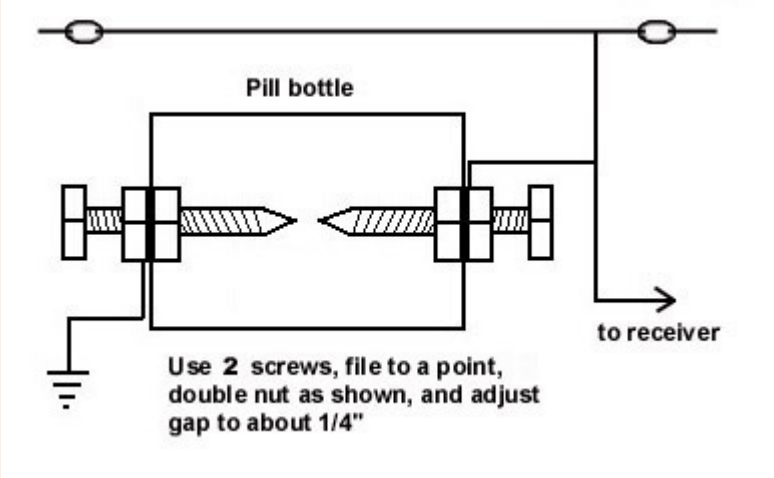

How to make it

Drill a hole in the bottom and in the lid of a 2-1/2" long by 1-1/4" dia. pill bottle. File the ends of two 3" #20 machine bolts into a sharp point. Then lock them in place on each end of the pill box with double nuts. Adjust the gap to about 1/4".

Strip about 3/4" of #14 copper stranded wire and loop it under the outside nut. Do this on both ends. The wires should connect to the antenna lead-in on one side and the ground lead wire on the other side.

Seal around the lid and connections with clear silicone caulking to make the unit water tight.

How it works

Electrical field intensity is a function of the amount of voltage divided by the surface area over which it acts. The diameter of the tip of the screws when filed down is quite small, so the surface area is quite small. Since field intensity is greater for a smaller area, it will take a relatively small voltage to raise the field intensity inside the pill bottle to the point where the air across the gap will ionize.

Once the air has ionized, it becomes a conductor; that is, a short circuit, and will bypass the static charges to ground.

Copyright © 2007 - Prof. W.S. Walker, West Virginia State University - All Rights Reserved.

Contact me

310-12 SR
F462A OR 4,151,431

United States Patent [19]
Johnson

[11] **4,151,431**
[45] **Apr. 24, 1979**

[54] **PERMANENT MAGNET MOTOR**

[76] Inventor: **Howard R. Johnson,** 3300 Mt. Hope Rd., Grass Lake, Mich. 49240

[21] Appl. No.: **422,306**

[22] Filed: **Dec. 6, 1973**

[51] **Int. Cl.**[2] **H02K 41/00;** H02N 11/00
[52] **U.S. Cl.** **310/12;** 310/152
[58] **Field of Search** ..... 24/DIG. 9; 415/DIG. 2; 46/236; 273/118 A, 119 A, 120 A, 121 A, 122 A, 123 A, 124, 125 A, 126 A, 130 A, 131 A, 131 AD, 134 A, 135 A, 136 B, 137 AE, 138 A

[56] **References Cited**

U.S. PATENT DOCUMENTS

4,074,153 2/1978 Baker et al. 310/12

Primary Examiner—Donovan F. Duggan
Attorney, Agent, or Firm—Beaman & Beaman

[57] **ABSTRACT**

The invention is directed to the method of utilizing the unpaired electron spins in ferro magnetic and other materials as a source of magnetic fields for producing power without any electron flow as occurs in normal conductors, and to permanent magnet motors for utilizing this method to produce a power source. In the practice of the invention the unpaired electron spins occurring within permanent magnets are utilized to produce a motive power source solely through the superconducting characteristics of a permanent magnet and the magnetic flux created by the magnets are controlled and concentrated to orient the magnetic forces generated in such a manner to do useful continuous work, such as the displacement of a rotor with respect to a stator. The timing and orientation of magnetic forces at the rotor and stator components produced by permanent magnets to produce a motor is accomplished with the proper geometrical relationship of these components.

28 Claims, 10 Drawing Figures

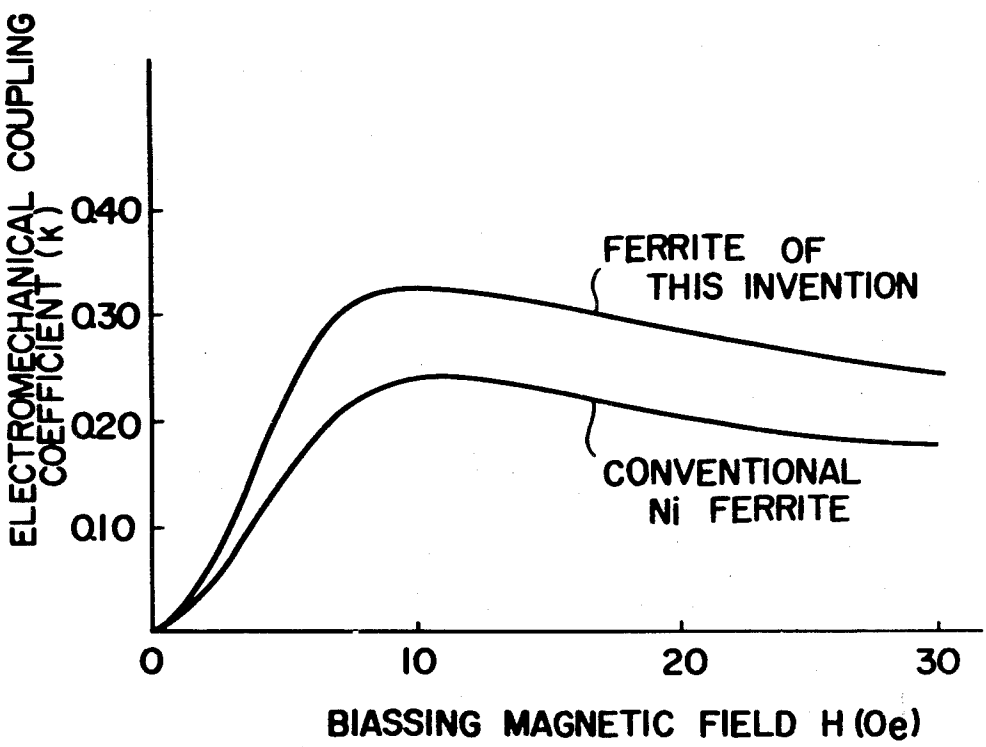

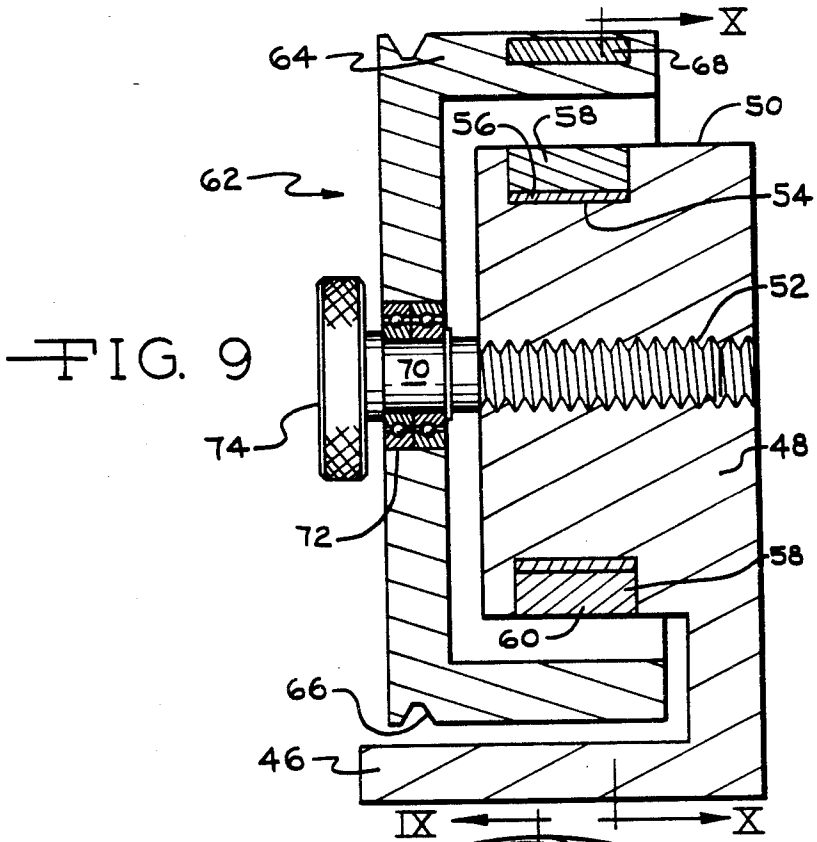

FIG. 9

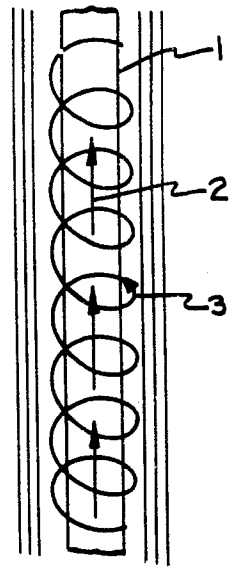

FIG. 1

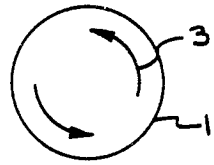

FIG. 2

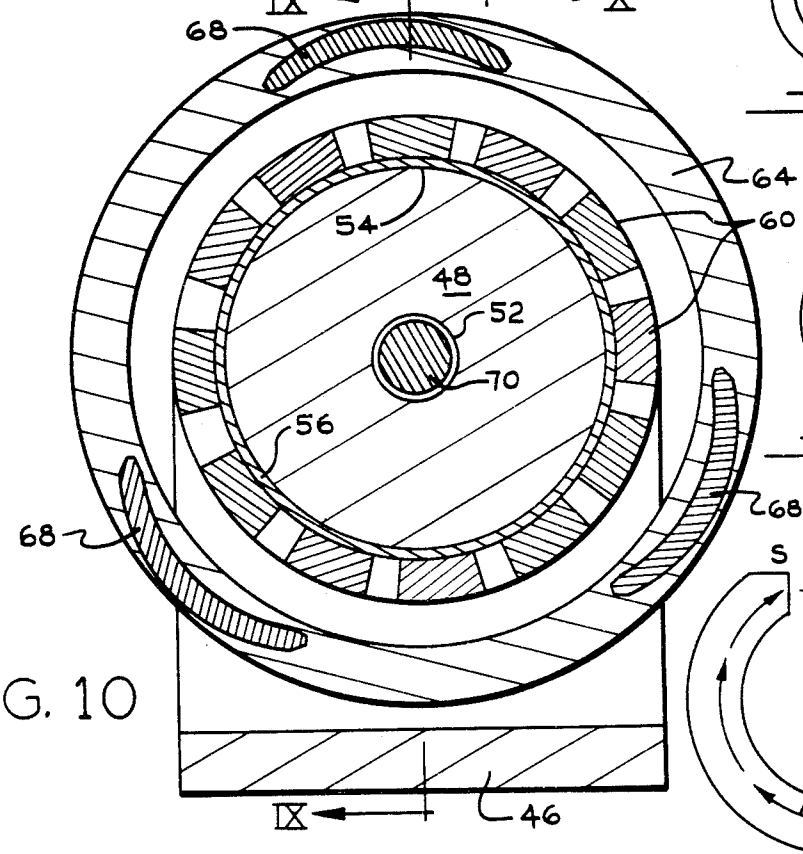

FIG. 10

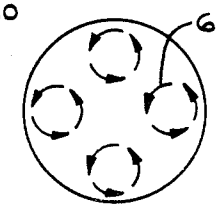

FIG. 4

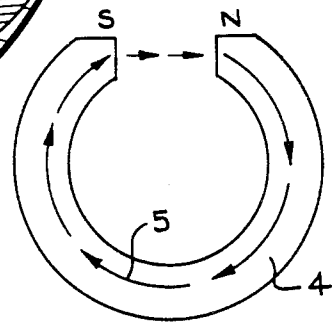

FIG. 3

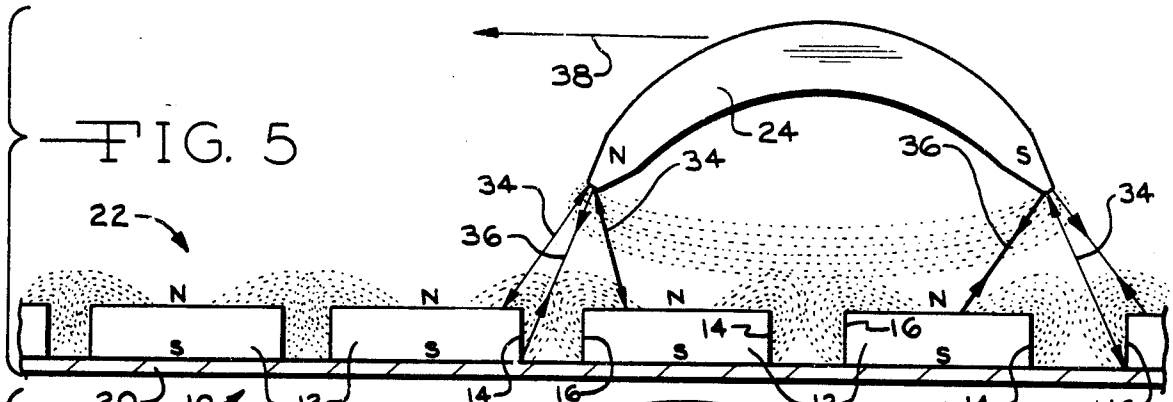

FIG. 5

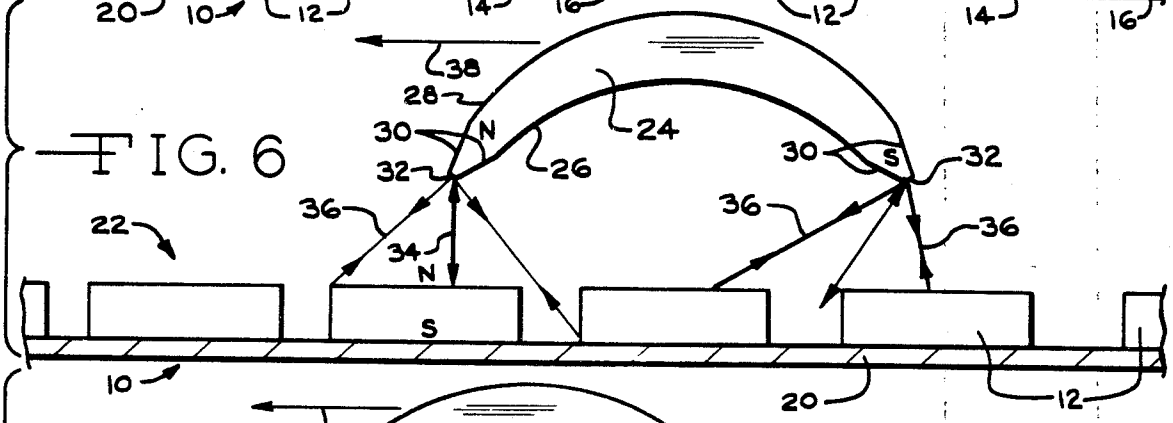

FIG. 6

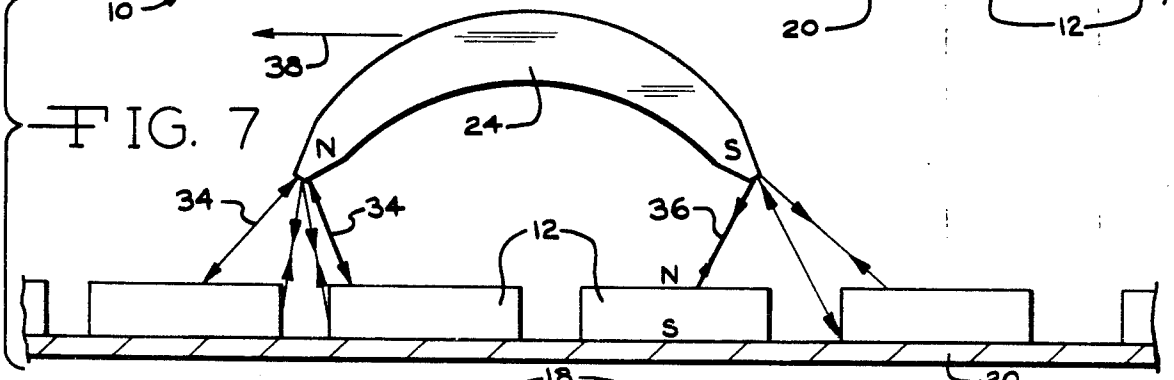

FIG. 7

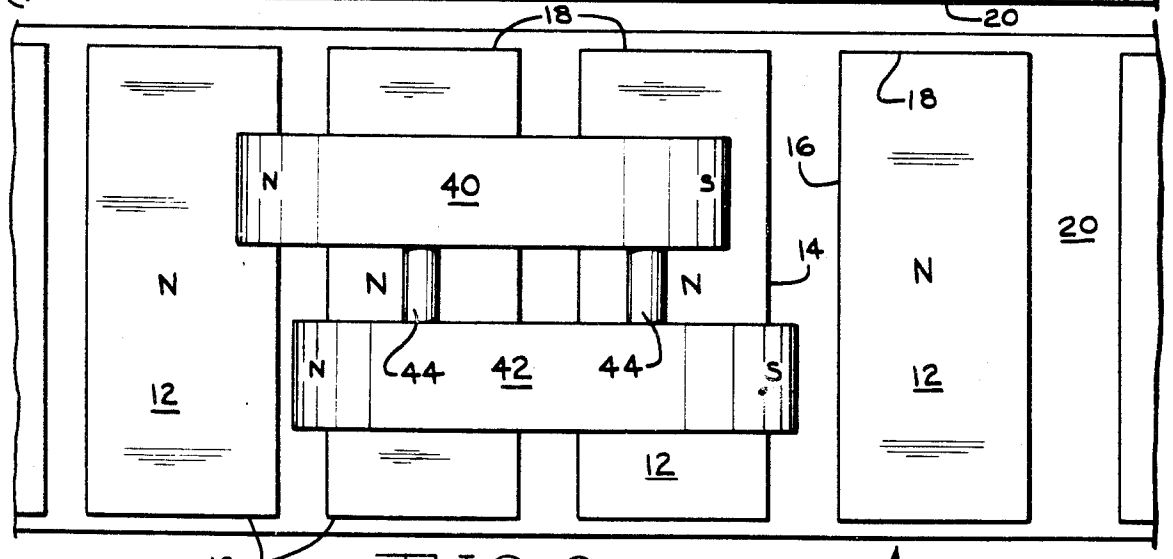

FIG. 8

PERMANENT MAGNET MOTOR

FIELD OF THE INVENTION

The invention pertains to the field of permanent magnet motor devices solely using the magnetic fields created thereby to product motive power.

BACKGROUND OF THE INVENTION

Conventional electric motors employ magnetic forces to produce either rotative or linear motion. Electric motors operate on the principle that when a conductor is located in a magnetic field which carries current a magnetic force is exerted upon it.

Normally, in a conventional electric motor, the rotor, or stator, or both, are so wired that magnetic fields created by electromagnetics may employ attraction, repulsion, or both types of magnetic forces, to impose a force upon the armature to cause rotation, or to cause the armature to be displaced in a linear path. Conventional electric motors may employ permanent magnets either in the armature or stator components, but in the art heretofore known the use of permanent magnets in either the stator or armature require the creation of an electromagnetic field to act upon the field produced by the permanent magnets, and switching means are employed to control the energization of the electromagnets and the orientation of the magnetic fields, to produce the motive power.

It is my belief that the full potential of magnetic forces existing in permanent magnets has not been recognized or utilized because of incomplete information and theory with respect to the atomic motion occurring within a permanent magnet. It is my belief that a presently unnamed atomic particle is associated with the electron movement of a superconducting electromagnet and the lossless current flow of Amperian currents in permanent magnets. The unpaired electron flow is similar in both situations. This small particle is believed to be opposite in charge and to be located at right angles to the moving electron, and the particle would be very small as to penetrate all known elements, in their various states as well as their known compounds, unless they have unpaired electrons which capture these particles as they endeavor to pass therethrough.

Ferro electrons differ from those of most elements in that they are unpaired, and being unpaired they spin around the nucleus in such a way that they respond to magnetic fields as well as creating one themselves. If they were paired, their magnetic fields would cancel out. However, being unpaired they create a measurable magnetic field if their spins have been oriented in one direction. The spins are at right angles to their magnetic fields.

In niobium superconductors at a critical state, the magnetic lines of force cease to be at right angles. This change must be due to establishing the required conditions for unpaired electronic spins instead of electron flow in the conductor, and the fact that very powerful electromagnets that can be formed with superconductors illustrates the tremendous advantage of producing the magnetic field by unpaired electron spins rather than conventional electron flow.

In a superconducting metal, wherein the electrical resistance becomes greater in the metal than the proton resistance, the flow turns to electron spins and the positive particles flow parallel in the metal in the manner occurring in a permanent magnet where a powerful

flow of magnetic positive particles or magnetic flux causes the unpaired electrons to spin at right angles. Under cryogenic superconduction conditions the freezing of the crystals in place makes it possible for the spins to continue, and in a permanent magnet the grain orientation of the magnetized material results in the spins permitting them to continue and for the flux to flow parallel to the metal.

In a superconductor, at first the electron is flowing and the positive particle is spinning; later, when critical, the reverse occurs, i.e., the electron is spinning and the positive particle is flowing at right angles. These positive particles will thread or work their way through the electron spins present in the metal.

In a sense, a permanent magnet may be considered the only room temperature superconductor. It is a superconductor because the electron flow does not cease, and this electron flow can be made to do work because of the magnetic field it supplies. Previously, this source of power has not been used because it was not possible to modify the electron flow to accomplish the switching functions of the magnetic field. Such switching functions are common in a conventional electric motor where electrical current is employed to align the much greater electron current in the iron pole pieces and concentrate the magnetic field at the proper places to give the thrust necessary to move the motor armature. In a conventional electric motor, switching is accomplished by the use of brushes, commutators, alternating current, or other known means.

In order to accomplish the switching function in a permanent magnet motor, it is necessary to shield the magnetic leakage so that it will not appear as too great a loss factor at the wrong places. The best method to accomplish this is to use the superconductor of magnetic flux and concentrate it to the place where it will be the most effective. Timing and switching can be achieved in a permanent magnet motor by concentrating the flux and using the proper geometry of the motor rotor and stator to make most effective use of the magnetic fields generated by the electron spins. By the proper combination of materials, geometry and magnetic concentration, it is possible to achieve a mechanical advantage of high ratio, greater than 100 to 1, capable of producing a continuous motive force.

To my knowledge, previous work done with permanent magnets, and motive devices utilizing permanent magnets, have not achieved the result desired in the practice of the inventive concept, and it is with the proper combination of materials, geometry and magnetic concentration that the presence of the magnetic spins within a permanent magnet may be utilized as a motive force.

SUMMARY OF THE INVENTION

It is an object of the invention to utilize the magnetic spinning phenomenon of unpaired electrons occurring in ferro magnetic material to produce the movement of a mass in a unidirectional manner as to permit a motor to be driven solely by magnetic forces as occurring within permanent magnets. In the practice of the inventive concepts, motors of either linear or rotative types may be produced.

It is an object of the invention to provide the proper combination of materials, geometry and magnetic concentration to utilize the force generated by unpaired electron spins existing in permanent magnets to power a motor. Whether the motor constitutes a linear embodi-

ment, or a rotary embodiment, in each instance the "stator" may consist of a plurality of permanent magnets fixed relative to each other in space relationship to define a track, linear in form in the linear embodiment, and circular in form in the rotary embodiment. An armature magnet is located in spaced relationship to such track defined by the stator magnets wherein an air gap exists therebetween. The length of the armature magnet is defined by poles of opposite polarity, and the length of the armature magnet is disposed relative to the track defined by the stator magnets in the direction of the path of movement of the armature magnet as displaced by the magnetic forces.

The stator magnets are so mounted that poles of like polarity are disposed toward the armature magnet and as the armature magnet has poles which are both attracted to and repelled by the adjacent pole of the stator magnets, both attraction and repulsion forces act upon the armature magnet to produce the relative displacement between the armature and stator magnets.

The continuing motive force producing displacement between the armature and stator magnets results from the relationship of the length of the armature magnet in the direction of its path of movement as related to the dimension of the stator magnets, and the spacing therebetween, in the direction of the path of armature magnet movement. This ratio of magnet and magnet spacings, and with an acceptable air gap spacing between the stator and armature magnets, will produce a resultant force upon the armature magnet which displaces the armature magnet across the stator magnet along its path of movement.

In the practice of the invention movement of the armature magnet relative to the stator magnets results from a combination of attraction and repulsion forces existing between the stator and armature magnets. By concentrating the magnetic fields of the stator and armature magnets the motive force imposed upon the armature magnet is intensified, and in the disclosed embodiments such magnetic field concentration means are disclosed.

The disclosed magnetic field concentrating means comprise a plate of high magnetic field permeability disposed adjacent one side of the stator magnets in substantial engagement therewith. This high permeability material is thus disposed adjacent poles of like polarity of the stator magnets. The magnetic field of the armature magnet may be concentrated and directionally oriented by bowing the armature magnet, and the magnetic field may further be concentrated by shaping the pole ends of the armature magnet to concentrate the magnet field at a relatively limited surface at the armature magnet pole ends.

Preferably, a plurality of armature magnets are used which are staggered with respect to each other in the direction of armature magnet movement. Such an offsetting or staggering of the armature magnets distributes the impulses of force imposed upon the armature magnets and results in a smoother application of forces to the armature magnet producing a smoother and more uniform movement of the armature component.

In the rotary embodiment of the permanent magnet motor of the invention the stator magnets are arranged in a circle, and the armature magnets rotate about the stator magnets. Means are disclosed for producing relative axial displacement between the stator and armature magnets to adjust the axial alignment thereof, and thereby regulate the magnitude of the magnetic forces being imposed upon the armature magnets. In this manner the speed of rotation of the rotary embodiment may be regulated.

BRIEF DESCRIPTION OF THE DRAWINGS

The aforementioned objects and advantages of the invention will be appreciated from the following description and accompanying drawings wherein:

FIG. 1 is a schematic view of electron flow in a superconductor indicating the unpaired electron spins,

FIG. 2 is a cross-sectional view of a superconductor under a critical state illustrating the electron spins,

FIG. 3 is a view of a permanent magnet illustrating the flux movement therethrough,

FIG. 4 is a cross-sectional view illustrating the diameter of the magnet of FIG. 3,

FIG. 5 is an elevational representation of a linear motor embodiment of the permanent magnet motor of the invention illustrating one position of the armature magnet relative to the stator magnets, and indicating the magnetic forces imposed upon the armature magnet,

FIG. 6 is a view similar to FIG. 5 illustrating displacement of the armature magnet relative to the stator magnets, and the influence of magnetic forces thereon at this location,

FIG. 7 is a further elevational view similar to FIGS. 5 and 6 illustrating further displacement of the armature magnet to the left, and the influence of the magnetic forces thereon,

FIG. 8 is a top plan view of a linear embodiment of the inventive concept illustrating a pair of armature magnets in linked relationship disposed above the stator magnets,

FIG. 9 is a diametrical, elevational, sectional view of a rotary motor embodiment in accord with the invention as taken along section IX—IX of FIG. 10, and

FIG. 10 is an elevational view of the rotary motor embodiment as taken along section X—X of FIG. 9.

DESCRIPTION OF THE PREFERRED EMBODIMENTS

In order to better understand the theory of the inventive concept, reference is made to FIGS. 1 through 4. In FIG. 1 a superconductor 1 is illustrated having a positive particle flow as represented by arrow 2, the unpaired electrons of the ferrous conducting material 1 spin at right angles to the proton flow in the conductor as represented by the spiral line and arrow 3. In accord with the theory of the invention the spinning of the ferrous unpaired electrons results from the atomic structure of ferrous materials and this spinning atomic particle is believed to be opposite in charge and located at right angles to the moving electrons. It is assumed to be very small in size capable of penetrating other elements and their compounds unless they have unpaired electrons which capture these particles as they endeavor to pass therethrough.

The lack of electrical resistance of conductors at a critical superconductor state has long been recognized, and superconductors have been utilized to produce very high magnetic flux density electromagnets. FIG. 2 represents a cross section of a critical superconductor and the electron spins are indicated by the arrows 3.

A permanent magnet may be considered a superconductor as the electron flow therein does not cease, and is without resistance, and unpaired electric spinning particles exist which, in the practice of the invention, are utilized to produce motor force. FIG. 3 illustrates a

horseshoe shaped permanent magnet at **4** and the magnetic flux therethrough is indicated by arrows **5**, the magnetic flow being from the south pole to the north pole and through the magnetic material. The accumulated electron spins occurring about the diameter of the magnet **5** are represented at **6** in FIG. **4**, and the spinning electron particles spin at right angles in the iron as the flux travels through the magnet material.

By utilizing the electron spinning theory of ferrous material electrons, it is possible with the proper ferromagnetic materials, geometry and magnetic concentration to utilize the spinning electrons to produce a motive force in a continuous direction, thereby resulting in a motor capable of doing work.

It is appreciated that the embodiments of motors utilizing the concepts of the invention may take many forms, and in the illustrated forms the basic relationships of components are illustrated in order to disclose the inventive concepts and principles.

The relationships of the plurality of magnets defining the stator **10** are best appreciated from FIGS. **5** through **8**. The stator magnets **12** are preferably of a rectangular configuration, FIG. **8**, and so magnetized that the poles exist at the large surfaces of the magnets, as will be appreciated from the N (North) and S (South) designations. The stator magnets include side edges **14** and **16** and end edges **18**. The stator magnets are mounted upon a supporting plate **20**, which is preferably of a metal material having a high permeability to magnetic fields and magnetic flux such as that available under the trademark Netic CoNetic sold by the Perfection Mica Company of Chicago, Illinois. Thus, the plate **20** will be disposed toward the south pole of the stator magnets **12**, and preferably in direct engagement therewith, although a bonding material may be interposed between the magnets and the plate in order to accurately locate and fix the magnets on the plate, and position the stator magnets with respect to each other.

Preferably, the spacing between the stator magnets **12** slightly differs between adjacent stator magnets as such a variation in spacing varies the forces being imposed upon the armature magnet at its ends, at any given time, and thus results in a smoother movement of the armature magnet relative to the stator magnets. Thus, the stator magnets so positioned relative to each other define a track **22** having a longitudinal direction left to right as viewed in FIGS. **5** through **8**.

In FIGS. **5** through **7** only a single armature magnet **24** is disclosed, while in FIG. **8** a pair of armature magnets are shown. For purposes of understanding the concepts of the invention the description herein will be limited to the use of single armature magnet as shown in FIGS. **5** through **7**.

The armature magnet is of an elongated configuration wherein the length extends from left to right, FIG. **5**, and may be of a rectangular transverse cross-sectional shape. For magnetic field concentrating and orientation purposes the magnet **24** is formed in an arcuate bowed configuration as defined by concave surfaces **26** and convex surfaces **28**, and the poles are defined at the ends of the magnet as will be appreciated from FIG. **5**. For further magnetic field concentrating purposes the ends of the armature magnet are shaped by beveled surfaces **30** to minimize the cross-sectional area at the magnet ends at **32**, and the magnetic flux existing between the poles of the armature magnet are as indicated by the light dotted lines. In like manner the magnetic fields of the stator magnets **12** are indicated by the light dotted lines.

The armature magnet **24** is maintained in a spaced relationship above the stator track **22**. This spacing may be accomplished by mounting the armature magnet upon a slide, guide or track located above the stator magnets, or the armature magnet could be mounted upon a wheeled vehicle carriage or slide supported upon a nonmagnetic surface or guideway disposed between the stator magnets and the armature magnet. To clarify the illustration, the means for supporting the armature magnet **24** is not illustrated and such means form no part of invention, and it is to be understood that the means supporting the armature magnet prevents the armature magnet from moving away from the stator magnets, or moving closer thereto, but permits free movement of the armature magnet to the left or right in a direction parallel to the track **22** defined by the stator magnets.

It will be noted that the length of the armature magnet **24** is slightly greater than the width of two of the stator magnets **12** and the spacing therebetween. The magnetic forces acting upon the armature magnet when in the position of FIG. **5** will be repulsion forces **34** due to the proximity of like polarity forces and attraction forces at **36** because of the opposite polarity of the south pole of the armature magnet, and the north pole field of the sector magnets. The relative strength of this force is represented by the thickness of the force line.

The resultant of the force vectors imposed upon the armature magnet as shown in FIG. **5** produce a primary force vector **38** toward the left, FIG. **5**, displacing the armature magnet **24** toward the left. In FIG. **6** the magnetic forces acting upon the armature magnet are represented by the same reference numerals as in FIG. **5**. While the forces **34** constitute repulsion forces tending to move the north pole of the armature magnet away from the stator magnets, the attraction forces imposed upon the south pole of the armature magnet and some of the repulsion forces, tend to move the armature magnet further to the left, and as the resultant force **38** continues to be toward the left the armature magnet continues to be forced to the left.

FIG. **7** represents further displacement of the armature magnet **24** to the left with respect to the position of FIG. **6**, and the magnetic forces acting thereon are represented by the same reference numerals as in FIGS. **5** and **6**, and the stator magnet will continue to move to the left, and such movement continues the length of the track **22** defined by the stator magnets **12**.

Upon the armature magnet being reversed such that the north pole is positioned at the right as viewed in FIG. **5**, and the south pole is positioned at the left, the direction of movement of the armature magnet relative to the stator magnets is toward the right, and the theory of movement is identical to that described above.

In FIG. **8** a plurality of armature magnets **40** and **42** are illustrated which are connected by links **44**. The armature magnets are of a shape and configuration identical to that of the embodiment of FIG. **5**, but the magnets are staggered with respect to each other in the direction of magnet movement, i.e., the direction of the track **22** defined by the stator magnets **12**. By so staggering a plurality of armature magnets a smoother movement of the interconnected armature magnets is produced as compared when using a single armature magnet as there is variation in the forces acting upon each armature magnet as it moves above the track **22** due to

the change in magnetic forces imposed thereon. The use of several armature magnets tends to "smooth out" the application of forces imposed upon linked armature magnets, resulting in a smoother movement of the armature magnet assembly. Of course, any number of armature magnets may be interconnected, limited only by the width of the stator magnet track **22**.

In FIGS. **9** and **10** a rotary embodiment embracing the inventive concepts is illustrated. In this embodiment the principle of operation is identical to that described above, but the orientation of the stator and armature magnets is such that rotation of the armature magnets is produced about an axis, rather than a linear movement being achieved.

In FIGS. **9** and **10** a base is represented at **46** serving as a support for a stator member **48**. The stator member **48** is made of a nonmagnetic material, such as synthetic plastic, aluminum, or the like. The stator includes a cylindrical surface **50** having an axis, and a threaded bore **52** is concentrically defined in the stator. The stator includes an annular groove **54** receiving an annular sleeve **56** of high magnetic field permeability material such as Netic Co-Netic and a plurality of stator magnets **58** are affixed upon the sleeve **56** in spaced circumferential relationship as will be apparent in FIG. **10**. Preferably, the stator magnets **58** are formed with converging radial sides as to be of a wedge configuration having a curved inner surface engaging sleeve **56**, and a convex outer pole surface **60**.

The armature **62**, in the illustrated embodiment, is of a dished configuration having a radial web portion, and an axially extending portion **64**. The armature **62** is formed of a nonmagnetic material, and an annular belt receiving groove **66** is defined therein for receiving a belt for transmitting power from the armature to a generator, or other power consuming device. Three armature magnets **68** are mounted on the armature portion **64**, and such magnets are of a configuration similar to the armature magnet configuration of FIGS. **5** through **7**. The magnets **68** are staggered with respect to each other in a circumferential direction wherein the magnets are not disposed as 120° circumferential relationships to each other. Rather, a slight angular staggering of the armature magnets is desirable to "smooth out" the magnetic forces being imposed upon the armature as a result of the magnetic forces being simultaneously imposed upon each of the armature magnets. The staggering of the armature magnets **68** in a circumferential direction produces the same effect as the staggering of the armature magnets **40** and **42** as shown in FIG. **8**.

The armature **62** is mounted upon a threaded shaft **70** by antifriction bearings **72**, and the shaft **70** is threaded into the stator threaded bore **52**, and may be rotated by the knob **74**. In this manner rotation of the knob **74**, and shaft **70**, axially displaces the armature **62** with respect to the stator magnets **58**, and such axial displacement will very the magnitude of the magnetic forces imposed upon the armature magnets **68** by the stator magnets thereby controlling the speed of rotation of the armature.

As will be noted from FIGS. **4–7** and **9** and **10**, an air gap exists between the armature magnet or magnets and the stator magnets and the dimension of this spacing, effects the magnitude of the forces imposed upon the armature magnet or magnets. If the distance between the armature magents, and the stator magnets is reduced the forces imposed upon the armature magnets by the stator magnets are increased, and the resultant force vector tending to displace the armature magnets in their path of movement increases. However, the decreasing of the spacing between the armature and stator magnets creates a "pulsation" in the movement of the armature magnets which is objectionable, but can be, to some extent, minimized by using a plurality of armature magnets. The increasing of the distance between the armature and stator magnets reduces the pulsation tendency of the armature magnet, but also reduces the magnitude of the magnetic forces imposed upon the armature magnets. Thus, the most effective spacing between the armature magnets. Thus, the most effective spacing between the armature and stator magnets is that spacing which produces the maximum force vector in the direction of armature magnet movement, with a minimum creation of objectionable pulsation.

In the disclosed embodiments the high permeability plate **20** and sleeve **56** are disclosed for concentrating the magnetic field of the stator magnets, and the armature magnets are bowed and have shaped ends for magnetic field concentration purposes. While such magnetic field concentration means result in higher forces imposed upon the armature magnets for given magnet intensities, it is not intended that the inventive concepts be limited to the use of such magnetic field concentrating means.

As will be appreciated from the above description of the invention, the movement of the armature magnet or magnets resultsfrom the described relationship of components. The length of the armature magnets as related to the width of the stator magnets and spacing therebetween, the dimension of the air gap and the configuration of the magnetic field, combined, produce the desired result and motion. The inventive concepts may be practiced even though these relationships may be varied within limits not yet defined and the invention is intended to encompass all dimensional relationships which achieve the desired goal of armature movement. By way of example, with respect to FIGS. **4–7**, the following dimensions were used in an operating prototype:

The length of armature magnet **24** is 3⅛", the stator magnets **12** are 1" wide, ¼" thick and 4" long and grain oriented. The air gap between the poles of the armature magnet and the stator magnets is approximately 1½" and the spacing between the stator magnets is approximately ½" inch.

In effect, the stator magnets define a magnetic field track of a single polarity transversely interrupted at spaced locations by the magnetic fields produced by the lines of force existing between the poles of the stator magnets and the unidirectional force exerted on the armature magnet is a result of the repulsion and attraction forces existing as the armature magnet traverses this magnetic field track.

It is to be understood that the inventive concept embraces an arrangement wherein the armature magnet component is stationary and the stator assembly is supported for movement and constitutes the moving component, and other variations of the inventive concept will be apparent to those skilled in the art without departing from the scope thereof. As used herein the term "track" is intended to include both linear and circular arrangements of the static magnets, and the "direction" or "length" of the track is that direction parallel or concentric to the intended direction of armature magnet movement.

I claim:

1. A permanent magnet motor comprising, in combination, a stator track defining a track direction and having first and second sides and composed of a plurality of track permanent magnets each having first and second poles of opposite polarity, said magnets being disposed in side-by-side relationship having a spacing between adjacent magnets and like poles defining said track sides, an elongated armature permanent magnet located on one of said track sides for relative movement thereto and in spaced relationship to said track side wherein an air gap exists between said armature magnet and said track magnets, said armature magnet having first and second poles of opposite polarity located at the opposite ends of said armature magnet defining the length thereof, the length of said armature magnet being disposed in a direction in general alignment with the direction of said track, the spacing of said armature magnet poles from said track associated side and the length of said armature magnet as related to the width and spacing of said track magnets in the direction of said track being such as to impose a continuous force on said armature magnet in said general direction of said track.

2. In a permanent magnet motor as in claim 1 wherein the spacing between said poles of said armature magnet and the adjacent stator track side are substantially equal.

3. In a permanent magnet motor as in claim 1 wherein the spacing between adjacent track magnets varies.

4. In a permanent magnet motor as in claim 1 wherein a plurality of armature magnets are disposed on a common side of said stator track, said armature magnets being mechanically interconnected.

5. In a permanent magnet motor as in claim 4 wherein said armature magnets are staggered with respect to each other in the direction of said track.

6. In a permanent magnet motor as in claim 1 wherein magnetic field concentrating means are associated with said track magnets.

7. In a permanent magnet motor as in claim 6 wherein said field concentrating means comprises a sheet of magnetic material of high magnetic field permeability engaging side and pole of said track magnets opposite to that side and pole disposed toward said armature magnet.

8. In a permanent magnet motor as in claim 1 wherein said armature magnet is of an arcuate configuration in its longitudinal direction bowed toward said track, said said armature magnet having ends shaped to concentrate the magnetic field at said ends.

9. In a permanent magnet motor as in claim 1 wherein said stator track is of a generally linear configuration, and means supporting said armature magnet relative to said track for generally linear movement of said armature magnet.

10. In a permanent magnet motor as in claim 1 wherein said stator track magnets define a circle having an axis, an armature rotatably mounted with respect to said track and concentric and coaxial thereto, said armature magnet being mounted upon said armature.

11. In a permanent magnet motor as in claim 10, means axially adjusting said armature relative to said track whereby the axial relationship of said armature magnet and said stator magnets may be varied to adjust the rate of rotation of said armature.

12. In a permanent magnet motor as in claim 10 wherein a plurality of armature magnets are mounted on said armature.

13. In a permanent magnet motor as in claim 12 wherein said armature magnets are circumferentially nonuniformily spaced on said armature.

14. A permanent magnet motor comprising, in combination, a stator comprising a plurality of circumferentially spaced stator permanent magnets having poles of opposite polarity, said magnets being arranged to substantially define a circle having an axis, the poles of said magnets facing in a radial direction with respect to said axis and poles of the same polarity facing away from said axis and the poles of opposite polarity facing toward said axis, an armature mounted for rotation about said axis and diposed adjacent said stator, at least one armature permanent magnet having poles of opposite polarity mounted on said armature and in radial spaced relationship to said circle of stator magnets, said armature magnet poles extending in the circumferential direction of armature rotation, the spacing of said armature magnet poles from said stator magnets and the circumferential length of said armature magnet and the spacing of said stator magnets being such as to impose a continuing circumferential force on said armature magnet to rotate said armature.

15. In a permanent magnet motor as in claim 14 wherein a plurality of armature magnets are mounted upon said armature.

16. In a permanent magnet motor as in claim 14 wherein said armature magnets are asymmetrically circumferentially spaced on said armature.

17. In a permanent magnet motor as in claim 14 wherein the poles of said armature magnet are shaped to concentrate the magnetic field thereof.

18. In a permanent magnet motor as in claim 14, magnetic field concentrating means associated with said stator magnets concentrating the magnetic fields thereof at the spacings between adjacent stator magnets.

19. In a permanent magnet motor as in claim 18 wherein said magnet field concentrating means comprises an annular ring of high magnetic field permeability material concentric with said axis and in substantial engagement with poles of like polarity of said stator magnets.

20. In a permanent magnet motor as in claim 14 wherein said armature magnet is of an arcuate bowed configuration in the direction of said poles thereof defining a concave side and a convex side, said concave side being disposed toward said axis, and said poles of said armature magnet being shaped to concentrate the magnetic field between said poles thereof.

21. In a permanent magnet motor as in claim 14, means for axially displacing said stator and armature relative to each other to adjust the axial alignment of said stator and armature magnets.

22. The method of producing a unidirectional motive force by permanent magnets using a plurality of spaced stator permanent magnets having opposite polarity poles defining a track having a predetermined direction, and an armature magnet having a length defined by poles of opposite polarity movably mounted for movement relative to the track in the direction thereof, and of a predetermined length determined by the width and dimensions of said stator magnets comprising forming a magnetic field track by said stator magnets having a magnetic field of common polarity interrupted at spaced locations in a direction transverse to the direction of said magnetic field track by magnetic fields created by magnetic lines of force existing between the

poles of the stator magnets and positioning the armature magnet in spaced relation to said magnetic field track longitudinally related to the direction of the magnetic field track such a distance that the repulsion and attraction forces imposed on the armature magnet by said magnetic field track imposes a continuing unidirectional force on the armature magnet in the direction of the magnetic field track.

23. The method of producing a unidirectional motive force as in claim **22** including concentrating the magnetic fields created by magnetic lines of force between the poles of the stator magnets.

24. The method of producing a unidirectional motive force as in claim **22** including concentrating the magnetic field existing between the poles of the armature magnet.

25. The method of producing a unidirectional motive force as in claim **22** including concentrating the magnetic fields created by magnetic lines of force between the poles of the stator magnets and concentrating the magnetic field existing between the poles of the armature magnet.

26. The method of producing a motive force by permanent magnets wherein the unpaired electron spinning particles existing within a permanent magnet are utilized for producing a motive force comprising forming a stator magnetic field track by means of at least one permanent magnet, producing an armature magnetic field by means of a permament magnet and shaping and locating said magnetic fields in such a manner as to produce relative continuous unidirectional motion between said stator and armature field producing magnets.

27. The method of producing a motive force by permanent magnets as in claim **26** wherein said stator magnetic field is substantially of a single polarity.

28. The method of producing a motive force by permanent magnets as in claim **26** including concentrating the magnetic field of said stator field track and armature magnetic field.

* * * * *

UNITED STATES PATENT AND TRADEMARK OFFICE

CERTIFICATE OF CORRECTION

PATENT NO. : 4,151,431

DATED : April 24, 1979

INVENTOR(S) : Howard R. Johnson

It is certified that error appears in the above—identified patent and that said Letters Patent is hereby corrected as shown below:

The title page should be deleted to insert the attached title page therefor.

Column 12, claims 26, 27 and 28 should be deleted inclusively.

Signed and Sealed this

Twenty-sixth Day of *August 1980*

[SEAL]

Attest:

SIDNEY A. DIAMOND

Attesting Officer

Commissioner of Patents and Trademarks

United States Patent [19]

Johnson

[11] **4,151,431**

[45] **Apr. 24, 1979**

[54] **PERMANENT MAGNET MOTOR**

[76] Inventor: **Howard R. Johnson,** 3300 Mt. Hope Rd., Grass Lake, Mich. 49240

[21] Appl. No.: **422,306**

[22] Filed: **Dec. 6, 1973**

[51] **Int. Cl.**[2] **H02K 41/00;** H02N 11/00

[52] **U.S. Cl.** **310/12;** 310/152

[58] **Field of Search** ..... 24/DIG. 9; 415/DIG. 2; 46/236; 273/118 A, 119 A, 120 A, 121 A, 122 A, 123 A, 124, 125 A, 126 A, 130 A, 131 A, 131 AD, 134 A, 135 A, 136 B, 137 AE, 138 A

[56] **References Cited**

U.S. PATENT DOCUMENTS

4,074,153 2/1978 Baker et al. 310/12

Primary Examiner—Donovan F. Duggan

Attorney, Agent, or Firm—Beaman & Beaman

[57] **ABSTRACT**

The invention is directed to the method of utilizing the unpaired electron spins in ferro magnetic and other materials as a source of magnetic fields for producing power without any electron flow as occurs in normal conductors, and to permanent magnet motors for utilizing this method to produce a power source. In the practice of the invention the unpaired electron spins occurring within permanent magnets are utilized to produce a motive power source solely through the superconducting characteristics of a permanent magnet and the magnetic flux created by the magnets are controlled and concentrated to orient the magnetic forces generated in such a manner to do useful continuous work, such as the displacement of a rotor with respect to a stator. The timing and orientation of magnetic forces at the rotor and stator components produced by permanent magnets to produce a motor is accomplished with the proper geometrical relationship of these components.

25 Claims, 10 Drawing Figures

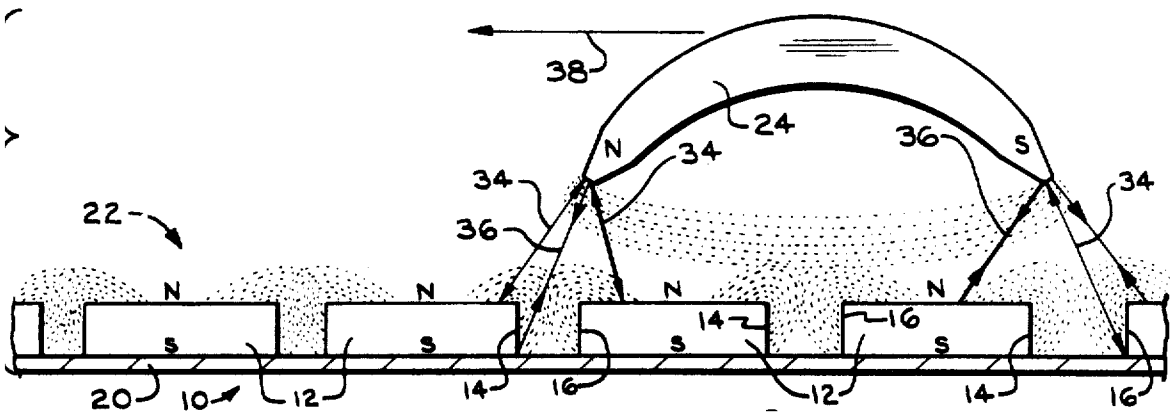

rexresearch.com

Howard JOHNSON

Magnet Motor

Permanent Magnet Motor
Looking for Permanent Magnet Motor? See Permanent Magnet Motor.
GrovesIndustrial.com

How to make Electricity
$197 DIY kit has energy co's execs screaming for a ban on its sale.
www.Power-4-Homes.com

Linear Synchronous Motors
Design and manufacture of LSMs Mining, defence, renewable energy
www.texchange.co.uk

Buckyballs Magnetic Toy
Get the Gadget on Everyone's List. Best prices on this year's hot toy!
www.getbuckyballs.com

Alternators/Generators
Permanent Magnet Alternators / Generators for aircraft, ATVs, etc…
www.compositemotors.com

Permanent Magnet Motor
We have great resources for Permanent Magnet Motor
maziro.com

Advanced Motion Control
Intelligent Servo Drives For AC, DC and Step Motors
www.technosoftmotion.com

Flexible Magnet Material
Flexible Magnet and rubber magnet Best Magnets Source for all kinds r
www.magnets-flexible.com

Magnets
Hunting For Magnets? Browse Our Magnets Directory.
kellyscornerstore.com

***Science & Mechanics*: "Amazing Magnet-Powered Motor" (Spring 1980)**
H. Johnson & W. Harrison, Jr:" The Permanent Magnet Motor"
USP # 4,151,431: Permanent Magnet Motor
USP # 4,877,983: Magnetic Force Generating Method & Apparatus
USP # 5,402,021: Magnetic Propulsion System
Tom Bearden/Karl Bergmann Comments
Blueprints:
http://www.greaterthings.com/news/freeenergy/directory/howard_johnson_motor/blueprints/index.html

Lab Memorandum, CTEC, Inc (1996) (MS Word.doc, 1 MB)

Howard R. Johnson

Science & Mechanics **(Spring 1980) Cover Illustration**

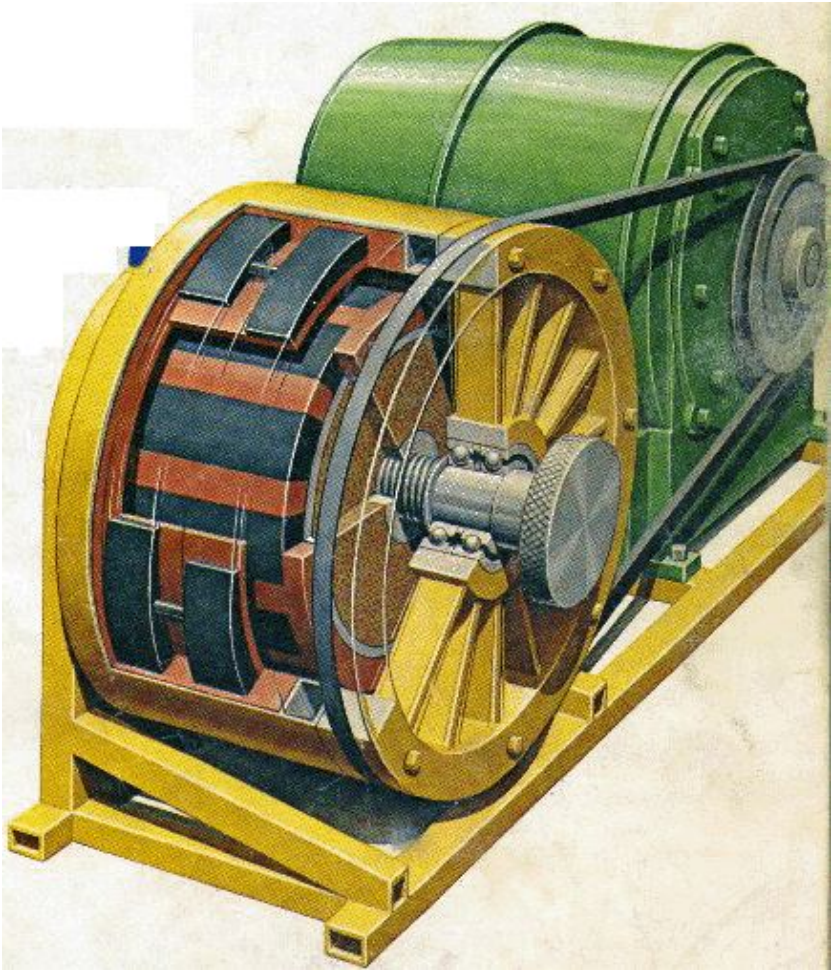

Figure 1

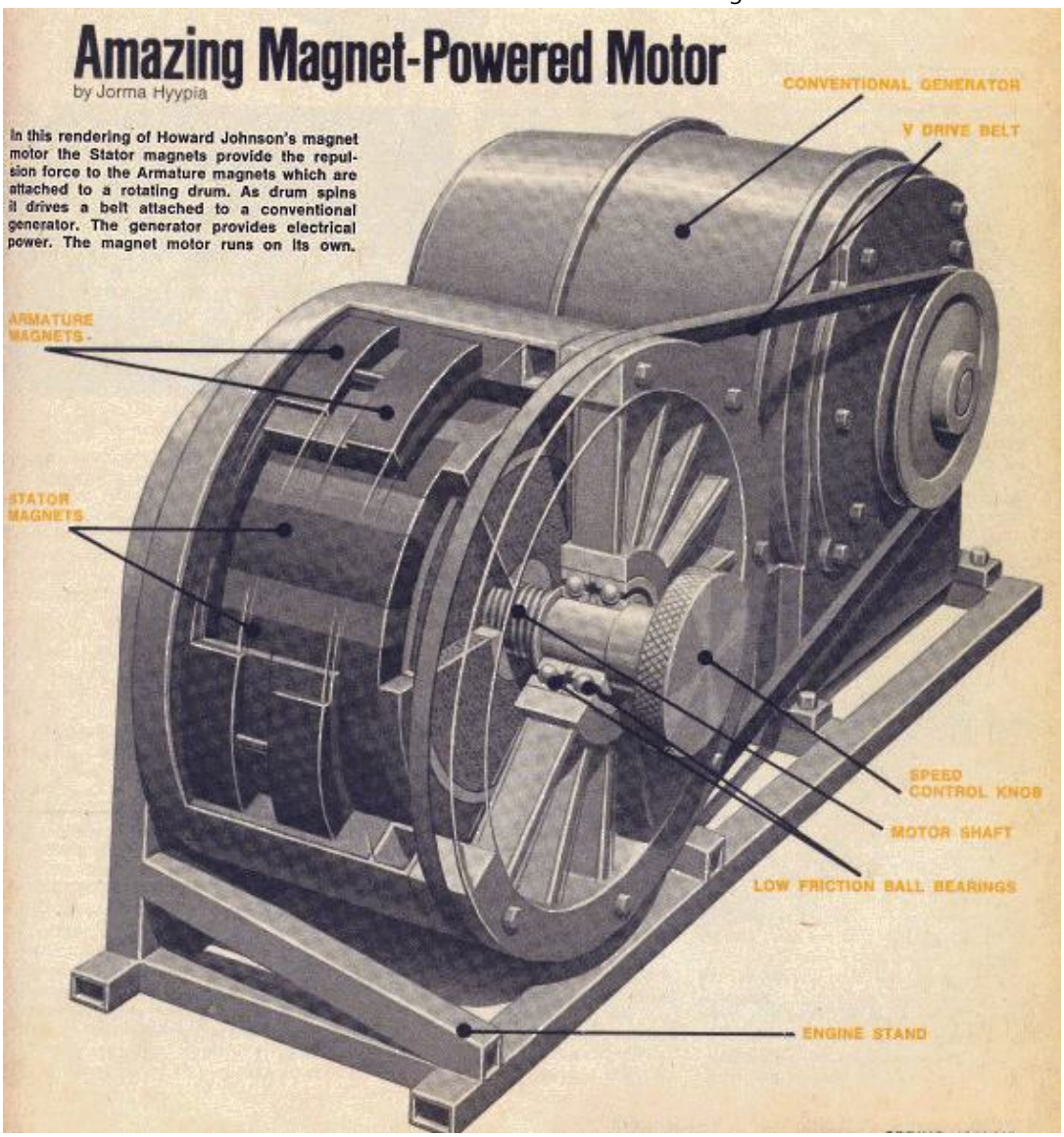

Science & Mechanics (Spring 1980)

"Amazing Magnet-Powered Motor"

by
Jorma Hyypia

"We don't grant patents on perpetual motion machines," said the examiners at the U.S. Patent Office. "It won't work because it violates the law of Conservation of Energy," said one physicist after another. But because, inventor Howard Johnson is not the sort of man to be intimidated by such seemingly authoritative pronouncements, he now owns U.S. Patent No. 4,151,431 which describes how it is possible to generate motive power, as in a motor, using only the energy contained in the atoms of permanent magnets. That's right. Johnson has discovered how to build motors that run without an input of electricity or any other kind of external energy!

The monumental nature of the invention is obvious, especially in a world facing an alarming, escalating energy shortage. Yet inventor Johnson is not rushing to peddle his creation as the end-all solution to world- wide energy problems. He has more important work to do. First, there's the need to refine his laboratory prototypes into workable practical devices -in particular a 5,000-watt electric power generator

already in the building. His second and perhaps more difficult major challenge: persuade a host of skeptics that his ideas are indeed practical.

Johnson, who has been coping with disbelievers for decades, can be very persuasive in a face-to-face encounter because he can not do more than merely theorize; he can demonstrate working models that unquestionably create motion using only permanent magnets. When this writer was urged by the editor of Science & Mechanics to make a thousand mile pilgrimage to Blacksburg, Virginia, to meet with the inventor, he went there as an "open-minded skeptic" and as a former research Scientist determined not to be fooled. Within two days, this former skeptic had become a believer. Here's why.

Doing the Unthinkable

Howard Johnson refuses to view the "laws" of science as somehow sacred, so doing the unthinkable and succeeding is second nature to him. If a particular law gets in the way, he sees no harm in going around it for a while to see if there's something on the other side. Johnson explains the persistent opposition he experiences from the established scientific community this way: "Physics is a measurement science and physicists are especially determined to protect the ‘Law’ of Conservation of Energy. Thus the physicists become game wardens who tell us what laws' we can't violate. In this case they don't even know what the game is. But they are so scared that I and my associates are going to violate some of these laws, that they have to get to the pass to head us off!"

The critics say Johnson offers a "free lunch" solution to energy problems, and that there can be no such thing. Johnson demurs, reminding repeatedly that he has never suggested that his invention provides something for nothing. He also points gut that no one talks about a "free lunch" when discussing extraction of enormous amounts of atomic power by means of nuclear reactors and atom bombs. In his mind, it's much the same thing.

Johnson is the first to admit he doesn't actually know where the power be has tapped derives. But he postulates that the energy may be associated with spinning electrons, perhaps in the form of a "presently unnamed atomic particle." How do other physicists react to Johnson's suggestion that there may be an atomic particle so far overlooked by nuclear physicists? Says Johnson: "I guess it’s fair to say that most of them are revolted." On the other hand, a few converted scientists, including some who are associated with large and prestigious research laboratories, are intrigued enough to suggest that there should be a hunt for the answer, be it a "particle" or some other as yet unsuspected characteristic of atomic structure.

This article is prefaced with the foregoing brief summary of the ongoing controversy so that, in fairness to the inventor, we might all view his claims with open minds, even if it means temporary setting aside of cherished scientific concepts until more complete explanations are forthcoming. The main question to be answered here and now is this: Does Johnson permanent magnet motor work?

Before providing the answer, we need to face up to another question that undoubtedly nags in the minds of many readers: Is Johnson a bona fide researcher, or merely a "garage mechanic" mad inventor? As the following brief summary suggests, the inventor's credentials appear to be impeccable. Following seven years of college and university training, Johnson worked on atomic energy projects at Oak Ridge, did

magnetics research for Burroughs company, and served as scientific consultant to Lukens Steel. He has participated in the development of medical electrical products, including injection devices. For the military he invented a ceramic muffler that makes a portable motor generator silent at 50 feet; this has been in production for the past 18 years. His contributions to the motor industry include: a hysteresis brake; non-locking brake materials for anti- skid application, new methods of curing brake linings; and a method of dissolving asbestos fibers. He has also worked on silencers for small motors, a super charger, and has perfected a 92-pole no-brush generator to go in the wheel of Lincoln automobiles as a skid control; that last item reduced the cost to one-eighth of the cost of an earlier design by utilizing metal-filled plastics for the armature and field. In all, Johnson is connected with more than 30 patents in the fields of chemistry and physics.

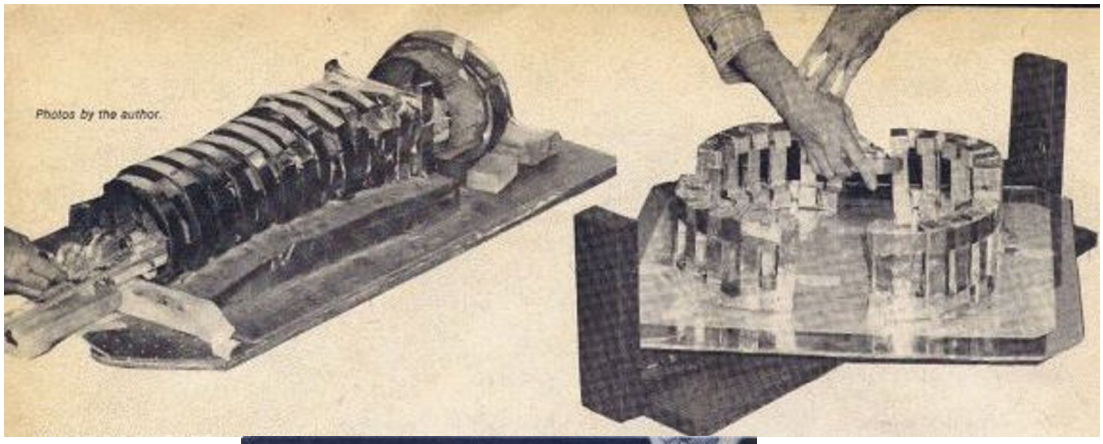

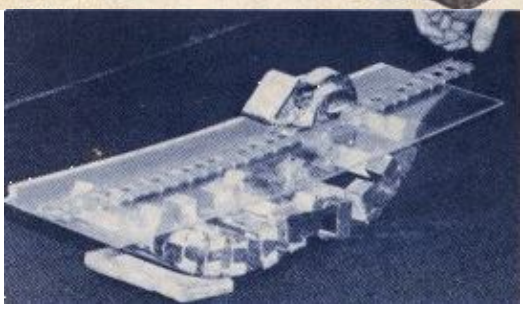

Figures 2, 3 & 4: Magnet Motor Models ~ Pictured here are three of the inventor's early models. Top left is a linear motor which propels a magnetic vehicle at high speeds through a series of rings. Top right is rotary motor upon which the prototype will be built. The 8-ounce manget, hand held to the large ring weighing 40 pounds, provides enough force to spin the entire assembly. In the third assembly above, the vehicle is propelled, in either direction, by the force of the large magnets arranged below tracks.

Sticky Tape Scientist

Despite his impressive credentials, this amiable and unpretentious inventor likes to characterize himself as a "Sticky tape" scientist. He sees no virtue in wasting time building fancy, elaborate equipment when more simple assemblies serve as well to test new ideas. The prototype devices shown in the photographs in this article were assembled with sticky tape and aluminum foil, the later material being used mainly to keep individual, permanent magnets packaged together so that they do not fly apart.

Perhaps the best way to describe what these three gadgets do is by reciting this writer's personal experiences during the interview demonstration. That way I will not

merely be telling what the inventor says they do, but I will reveal what happened when I tried the experiments myself. When we start talking about how and why the things work as they do, well have to rely on the inventor’s explanations.

The first item consists of more than a dozen foil-wrapped magnets assembled to form a broad arc. Each magnet is extended upward slightly at each end to form a low U-shape, the better to concentrate magnetic fields where they are needed. The overall curvature of the mass of magnets apparently has no particular significance except to show that the distance between these stator magnets and the moving vehicle is not critical. A transparent plastic sheet atop this magnet assembly supports a length of plastic model railroad track. The vehicle, basically a model railroad flatcar, supports a foil-wrapped pair of curved magnets, plus some sort of weight, in some cases merely a rock. The weight is needed to keep the vehicle down on the track, against the powerful magnetic forces that would otherwise push it askew. That 'is all there is to the construction of this representation of a "linear motor."

I was prepared to develop eye strain in an effort to detect some sort of motion in the vehicle. I need not have been concerned. The moment the inventor let go of the vehicle be carefully placed at one end of the track, it accelerated and literally zipped from one end to the other and flew onto the floor! Wow!

I tried the experiment myself, and could feel the powerful magnetic forces at work as I placed the vehicle on the track. I gently eased the vehicle to the critical starting point, taking great care not to exert any kind of forward push, even inadvertently. I let go, Zip! It was on the floor again, at the other end of the track. Knowing that I would be asked if the track might have had a slant, I reversed the vehicle and started it from the opposite end of the track. It worked just as effectively in the reverse direction. In fact, the vehicle can even navigate a respectable upgrade. In light of these tests, and considering the remarkable speed of the vehicle, you can discount any notion that this was a simple "coasting" effect.

Incidentally, the photograph shows the vehicle about half ways along the track. It was "frozen" there by the electronic flash used to make the picture; there is no way of "posing" the vehicle in that position short of tying it down.

The second device has the U-shaped magnets standing on end in a rough circular arrangement oddly reminiscent of England's Stonehenge. This assembly is mounted on a transparent plastic sheet supported on a plywood panel pivoted, underneath, on a free turning wheel obtained from a skateboard. As instructed, I eased the 8-ounce focusing magnet into the ring of larger magnets, keeping it at least four inches away from the ring. The 40 pound magnet assembly immediately began to turn and accelerated to a very respectable rotating speed which it maintained for as long as the focusing magnet was held in the magnetic field. When the focusing magnet was reversed, the large assembly turned in the opposite direction.

Since this assembly is clearly a crude sort of motor, there's no doubt that it is indeed possible to construct a motor powered solely by permanent magnets.

The third assembly, which looks like the bones of some prehistoric sea creature, consists of a tunnel constructed of rubber magnet material that can be easily bent to form rings. This was one of the demonstration models Johnson took to the U.S. Patent Office during his appeal proceedings. Normally the patent examiners spend only a few

minutes with each patent applicant, but played with Johnson’s devices for the better part of an hour. As the inventor was leaving, he overheard one sideline observer remark: "How would you like to follow that act?!"

It took Johnson about six years of legal hassling to finally obtain his patent, and he has been congratulated for his ultimate victory over patent office bureaucracy as well as for his inventiveness. One sign that he left the patent office more than a little shaken by the experience was the inclusion of diagrammatic material in the printed patent that does not belong there. So if you look up the patent, pay no attention to the "ferrite" graph on the first page; it belongs in some other patent!

The tunnel device of course worked very well in the inventor's office during my visit although Johnson observed that the rubber magnets are perhaps a thousand times weaker than the cobalt samarium magnets used the other assemblies. There's just one big problem with the more powerful magnets: they cost too much. According to the inventor, the magnets used to construct the Stonehenge rotating model are collectively worth more than one thousand dollars. But there's no need to depend solely on mass-production economies to bring the cost down to competitive levels. Johnson and U.S. Magnets and Alloy Co. are in the process of developing alternative, relatively low cost magnetic materials that perform very well.

How do they work?

The drawing that shows a curved "arcuate" armature magnet in three successive positions over a line of fixed stator magnets provides at least highly simplified insights into the theory of permanent magnet motive power generation. Johnson says curved magnets with sharp leading and trailing edges are important because they focus and concentrate the magnetic energy much more effectively than do blunt-end magnets. These arcuate magnets are made slightly longer than the lengths of two stator magnets plus the intervening space, in Johnson's setups about 3-1/8 inches long.

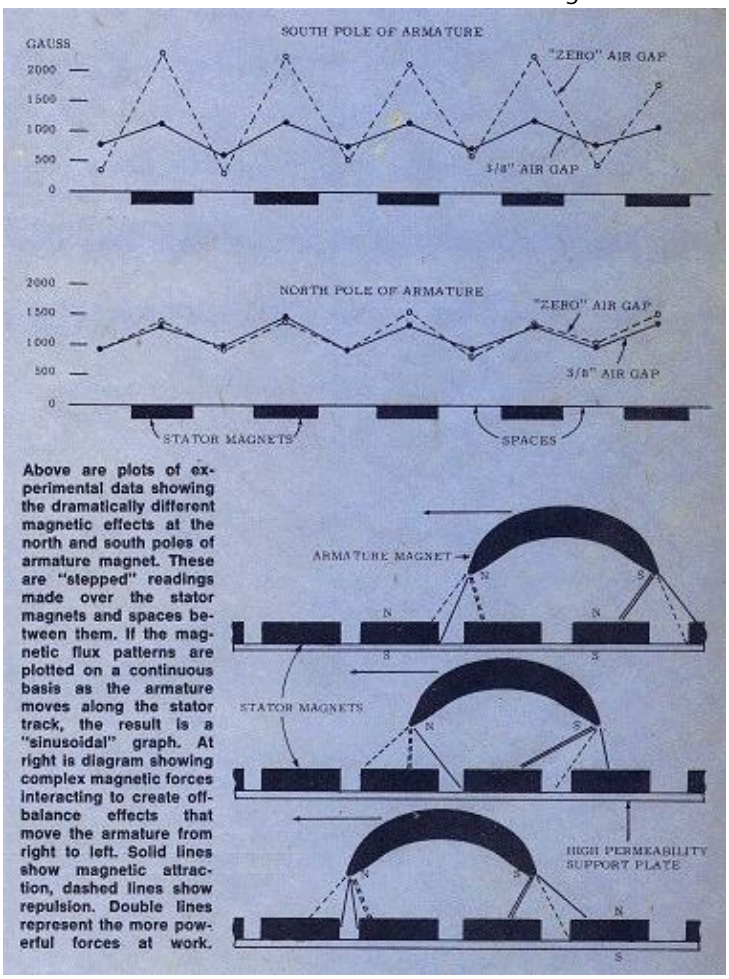

Above are plots of experimental data showing the dramatically different magnetic effects at the north and south poles of armature magnet. These are "stepped" readings made over the stator magnets and spaces between them. If the magnetic flux patterns are plotted on a continuous basis as the armature moves along the stator track, the result is a "sinusoidal" graph. At right is diagram showing complex magnetic forces interacting to create off-balance effects that move the armature from right to left. Solid lines show magnetic attraction, dashed lines show repulsion. Double lines represent the more powerful forces at work.

Note that the stator magnets all have their North faces upward, and that they are resting on a high magnetic permeability support plate that helps concentrate the force fields. The best gap between the end poles of the armature magnet and the stator magnets appears to be about 3/8 inch.

As the armature north pole passes over a magnet, it is repelled by the stator north pole; and there's an attraction when the north pole is passing over a space between the stator magnets. The exact opposite is of course true with respect to the armature South pole. It is attracted when passing over a stator magnet, repelled when passing over a space.

The various magnetic forces that come into play are extremely complex, but the drawing shows some of the fundamental relationships. Solid lines represent attraction forces, dashed lines represent repulsion forces, and double lines in each case indicate the more dominant forces.

As the top drawing indicates, the leading (N) pole of the armature is repelled by the north poles of the two adjacent magnets. But, at the indicated position of the armature magnet, these two repulsive forces .(which obviously work against each other), are not identical; the stronger of the two forces (double dashed line) overpowers the other force and tends to move the armature to the left. This left movement is enhanced by the attraction force between the armature north pole and the stator south pole at the bottom of the space between the stator magnets.

But that's not all! Let's see what is happening simultaneously at the other end (S) of the armature magnet. The length of this magnet (about 3-1/8 inches) is chosen, in relation

to the pairs of stator in magnets plus the space between them, so that once again the attraction/repulsion forces work to move the armature magnet to the left. In this case the armature pole (S) is attracted by the north surfaces of the adjacent stator magnets but, because of the critical armature dimensioning, more strongly by the magnet (double solid line) that tends to "pull" the armature to the left. It overpowers the lesser "drag" effect of the stator magnet to the right. Here also there is the added advantage of, in this case, repulsion force between the south pole of the armature and the south pole in the space between the stator magnets.

The importance of correct dimensioning of the armature magnet cannot be over-emphasized. If it is either too long or too short, it could achieve an undesirable equilibrium condition that would stall movement. The objective is to optimize all force conditions to develop the greatest possible off-balance condition, but always' in the same direction as the armature magnet moves along the row of stator magnets. However, if the armature is rotated 180 degrees and started at the opposite end of the track, it would behave in exactly the same manner except that it would, in this example, move from left to right. Also note that once the armature is in motion, it has momentum that helps carry it into the sphere of influence of the next pair of magnets where it gets another push and pull, and additional momentum.

Complex Forces

Some very complex magnetic forces are obviously at play in this deceptively simple magnetic system, and at this time it is impossible to develop a mathematical model of what actually occurs. However, computer analysis of the system, conducted by Professor William Harrison and his associates at Virginia Polytechnic Institute (Blacksburg, VA), provide vital feedback information that greatly helps in the effort to optimize these complex forces to achieve the most efficient possible operating design.

As Professor Harrison points out, in addition to the obvious interaction between the two poles of the armature magnet and the stator magnets, many other interactions are in play. The stator magnets affect each other and the support plate. Magnet distances and their strengths vary despite best efforts of manufacturers to exercise quality controls. In the assembly of the working model, there are inevitable differences between horizontal and vertical air spaces. All these interrelated factors must be optimized, which is why computer analysis in this refinement stage is vital. It's a kind of information feedback system. As changes are made in the physical design, fast dynamic measurements are made to see whether the expected results have actually been achieved. The 'new computer data is then used to develop new changes in the design of the experimental model. And so on, and on.

That very different magnetic conditions exist at the two ends of the armature is shown by the actual experimental data displayed in the table and associated graph. To obtain this information, the researchers first passed the probe of an instrument used to measure magnetic field strengths over the stator magnets and the intervening spaces. We shall call this the "Zero" level although there is a very tiny gap between the probe and the tops of the stator magnets. These measurements in effect indicate what each pole of the armature magnet "sees" below as it passes over. the stator magnets.

Next the probe is moved to a position just beneath one of the armature poles, at the top of the 3/8-inch armature-to-stator air gap. Another set of magnetic flux measurements is made. The procedure is repeated with the probe positioned just

beneath the other armature pole.

Now "Instinct" might suggest, and correctly so, that the flux measurements at the top and bottom of the air gap will differ. But if "instinct" also suggests that these differences are pretty much the same at the two armature pole positions, you would be very much in error!

"Zero" Air Gap SOUTH POLE of Armature over:		⅜" Air Gap SOUTH POLE of Armature over:	
Spaces (Repulsion)	Stator Magnets (Attraction)	Spaces (Repulsion)	Stator Magnets (Attraction)
925	1650	950	1250
675	2200	550	1175
600	2200	650	1150
500	2175	650	1150
375	2325	800	1150
300	2275	600	1175
525	2150	750	1150
600	2275	700	1200
450	1800	800	1100
550	1700	850	1150
575	1825	650	975
400	2050	850	1250
475	2150	675	1350
6,950 Gauss	26,775 Gauss	9,475 Gauss	15,225 Gauss
33,725 Gauss (Total)		24,700 Gauss (Total)	
9,025 Gauss (Difference)			

"Zero" Air Gap NORTH POLE of Armature over:		⅜" Air Gap NORTH POLE of Armature over:	
Spaces (Attraction)	Stator Magnets (Repulsion)	Spaces (Attraction)	Stator Magnets (Repulsion)
750	1600	875	1100
700	1450	950	1450
850	1500	950	1400
1175	1600	925	1375
950	1400	925	1350
900	1400	950	1450
950	1575	925	1350
800	1350	925	1350
1050	1550	1000	1350
1000	950	925	1100
850	1700	875	1250
800	1900	775	1275
550	1400	600	1300
11,325 Gauss	19,375 Gauss	11,600 Gauss	17,100 Gauss
30,700 Gauss (Total)		28,700 Gauss (Total)	
2,000 Gauss (Difference)			

First study the two tables that show actual flux density measurements. Note that in this particular experiment the total magnetic flux amounted to 30,700 Gauss (the unit of magnetic strength) when the probe was held at the "Zero" level under the north pole of the magnet, and a total of 28,700 Gauss when the probe was moved to the top of the 3/8-inch air gap. The difference between these total 'measurements is 2,000 Gauss.

Similar readings made at the air gap between the south pole of the armature and the stator magnets indicates a total flux at "Zero" level of 33,725 Gauss, and 24,700 Gauss at the top of the air gap. This time the difference is a much larger 9,025 Gauss, or four and one half times greater than for the north pole! Clearly, the magnetic force conditions are far from identical at the two ends of the armature magnet.

The middle five pairs of figures from each table hive been plotted in graphic form to make these differences more obvious. In the top "South Pole" graph the dashed line connects, the "Zero" level readings made over the stator magnets and over the intervening air spaces. Points along the solid line indicate comparable readings made with the probe just beneath the armature south pole. It is easy to see that there is an average 43% reduction of the attraction between the armature and stator magnets created by the air gap. Equally true, but perhaps not so obvious, is the fact that there

is an average 36% increase of repulsion when the south pole of the armature passes over the spaces between the stator magnets. The percentage increase only seems smaller because it applies to a much smaller "Zero" level value.

The second graph shows that the changes are much less dramatic at the north pole of the armature. In this case there's an average 11.7% decrease of attraction over the spaces, and a 2.4% increase, of repulsion when the armature north pole passes over the stator magnets.

As you study the data, be sure to note that the columns are labeled differently. In the case of the north pole data, the stator magnet areas repulse the armature north pole while the spaces between the stator magnets attract. The conditions are exactly the opposite for the south pole of the armature magnet. When the south pole passes over a magnet, there is strong attraction; when it passes over a space, there is repulsion.

The Ultimate Motor

A motor based on Johnson's findings would be of extremely simple design compared to conventional motors. As shown in the diagrams developed from Johnson’s patent literature, the stator/base unit would contain a ring of spaced magnets backed by a high magnetic permeability sleeve. Three arcuate armature magnets would be mounted in the armature which has a belt groove for power transmission. The armature is supported on ball bearings on a shaft that either screws or slides into the stator unit. Speed control and start/stop action would be achieved by the simple means of moving the armature toward and away from the stator section.

There is a noticeable pulsing action in the simple prototype units that may be undesirable in a practical motor. The movement can be smoothed, the inventor believes, by simply using two or more staggered armature magnets as shown in another drawing.

What’s Ahead?

For inventor Howard Johnson and his permanent magnet power source there's bound to be plenty of controversy, certainly, but also progress. A 5000 watt electric generator powered by a permanent magnet motor is already on the way, and Johnson has firm licensing agreements with at least four companies at this writing.

Will we see permanent magnet motors in automobiles in the near future? Johnson wants nothing to do with Detroit at this time because, as he puts it: "It’s too emotional - we’d get smashed into the earth!" The inventor is equally reluctant to make predictions about other applications as well, mainly because he just wants time to perfect his ideas and, hopefully, get the scientific establishment to at least consider his unorthodox ideas with a more open mind.

For example, Johnson argues that the magnetic forces in a permanent magnet represent superconductance that is akin to phenomena normally associated only with extremely cold superconducting systems. He argues that a magnet is a room temperature superconducting system because the electron flow does not cease, and because this electron flow can be made to do work. And for those who pooh- pooh the idea that permanent magnets do work, Johnson has an answer: "You come along with a magnet and pick up a piece of iron, then some physicist says you didn't do any work because you used that magnet. But you moved a mass through a distance.

Right? That's work that requires energy. Or you can hold one magnet in the air indefinitely by positioning it over another magnet with like poles facing. The physicist will argue that because it involves magnetic repulsion, no work is done. Yet if you support the same object with air, they will agree in a minute that work is done!"

There's no doubt in Johnson's mind that he has succeeded in extracting usable energy from the atoms of permanent magnets. But does that imply that the electron spins and associated phenomena that he thinks provide this power will eventually be used up? Johnson makes no pretense of knowing the answer: I didn't start the electron spins, and I don't know any way to stop them - do you? They may eventually stop, but that is not my problem."

Johnson still has many practical problems to solve to perfect his invention. But his greater challenge may be to win general acceptance of his ideas by an obviously nervous scientific community in which many physicists remain compulsive about defending the law of Conservation of Energy without ever wondering whether that "law" really needs defending.

The dilemma facing Johnson is not really his dilemma but rather that of other scientists who have observed his prototypes. The devices obviously do work. But the textbooks say it shouldn’t work. And all that Johnson is really saying to the scientific community is this: here is a phenomenon which seems to contradict some of our traditional beliefs. For all our sakes let’s not dismiss it outright but take the time to understand the complex forces at work here.

The Permanent Magnet Motor

by
Howard R. Johnson
&
William P. Harrison, Jr.

(Engineering Fundamentals Division, Virginia Polytechnic Institute and State University, Blacksburg, VA)

Presented at the UNITAR (UN Institute for Training & Research) Conference on Long-Term Energy Resource, Montreal, Canada, November 26-December 7, 1979.

I. Introductory remarks (by Mr. Johnson)

Today when energy is so expensive, it is not hard to drum up interst for most any avenue that offers a breath of hope or a way of escape, but this was not necessarily so in 1942. We were somewhat satisfied and convinced that we had the main sources of energy in view. So it took a pure act of faith to try to develop a new un-named source.

It took faith to spend time on it. It took faith to spend money on it. And it took faith to consider facing the opposition later when I made my work known and faced all the *status quo* people.

So, in 1942 using the Bohr model of the atom, and knowing that unpaired electron

spins created a permanent magnet dipole, I kept wondering why we couldn't use these fields to drive something. I was sure that the magnetic effect of the spins was similar enough to the field of a current in a wire to do the same thing. I had no knowledge of electron spins stopping and knew no method that I could exert to stop them, so I decided to try to work out a method to use them.

At the same time there were no good hard magnetic materials that I knew of, materials that could be opposed with strong magnetic fields and not be demagnetized enough to damage them. Not only that, they would not give the thrust that I desired.

Having a chemical background, I thought it would be nice to use the best magnetic materials I could find in combination with an interstitial material that was highly diamagnetic to force the electron spin to stay in place.

The U.S. Navy later made such a compound using bismuth and good magnetic materials, but the internal coercive forces were so great that this strong magnet would fall apart if not encased in glass. It was also expensive.

So I kept checking magnetic materials while I worked on designs that I thought should be implemented. It was a quiet, sometimes lonely job over the years, for I didn't share my plans with my associates. My self-imposed security would not permit it, and I knew of few people who would be interested anyway.

In the fifties, as ceramic magnets became better and harder, and long-field metal magnets appeared on the scene, I began to freeze some designs and to have magnets custom made to fit them.

It was about this time that I mentioned the fact that just as I believed electron spins made permanent magnets, I also believed that they were responsible for the 60° angles in the structure of snowflakes giving the six-spoked wheel, the six-sided spokes, etc. The dean of the school where I was teaching said, "Maybe so" and ask me if I knew that snowflakes were mentioned in the Bible as being important. I told him, "No, I didn't know that," but I looked it up. It said: "Hast thou entered into the treasures of the snow? Or hast thou seen the treasures of the hail? Which I have reserved against the time of trouble, against the day of battle and war."

My comment was, "Well, maybe this is more important than I thought." So I went ahead and worked on it another ten years.

I went to the Library of Congress and looked up snowflakes. I found a wonderful book there by Dr. Bentley of New Hampshire. He has spend many years making these studies, and he had learned a lot, as well as turning out one of the world's most beautiful books. He had found that snowflakes have gas pockets oriented on 60° angles and that the gas has a higher percentage of oxygen than air. That's one reason why snow water rusts so well. This higher concentration of oxygen also interested me because oxygen is more attracted to a magnetic field than other gases.

Finally, using the best ceramic magnets I could find and the best metal magnets, I worked out a scheme for a linear motor. The stator would be laid out as if it were unwound from around a motor. The parts of the armature would ride just above the stator and have the same beveled angular orientations I have just mentioned.

Dies were made for the curved armature magnets, and an order was placed for these

shapes, despite the objections of magnet manufacturers who said it was a bad design. They didn't know what it was for, but they were sure it was a bad design. They wanted to make horseshoe magnets. They even begged me to content myself with half an order. I did not agree --- and once again you have that little matter of faith; faith to try to implement a new theory; faith to spend your own limited funds when you have a a family and other financial responsibilities staring you in the face; faith to buck the recognized authorities and manufacturers in the field; faith to believe that your work is good and that some day, despite all the hazards, you will apply for and receive patent rights in your own country and perhaps throughout the rest of the world; and finally, faith that you can resist being smashed into dust by industrial giants and/or being robbed by others who know only how to steal.

Believe it or not, my first motor assembly showed about two pounds of thrust. The little toy car on which I fastened the armature magnets for support ran in both directions over the stator, showing that the focusing and timing of the interactions was not too bad.

This was the first light at the end of a rather dark tunnel I had been traveling for many years. I breathed a real sign of relief as my young son played with this "new toy," and was able to operate it as easily as I could.

After much testing of linear and circular designs, and looking for an attorney for years suited to securing a patent on the new theoretical work, I was led to Dunkan Beaman of Beaman & Beamon in Jackson, Michigan. It took some time to prepare the patent. The attorney built some models himself to check certain parameters. Finally, we entered the case in the patent office expecting a lot of opposition. We were correct. We got it. But again, faith saved the day as we battled for many years to gain a rather complete victory.

Now the work requires different kinds of faith: faith in those who have taken cut licenses and who will license; faith to continue the research to replace scarce materials in the magnets; and faith that this work will continue to progress and that it will eventually fulfill its goal.

For a number of reasons, the permanent magnet motor has not received much consideration. In fact, nothing too radical has been done since Faraday took some very crude materials and showed the world that it was possible to make a motor. This work of his largely influenced the thinking of Clerk Maxwell and others who followed.

Today, the two greatest obstacles to using a permanent magnet motor are, first, the belief that it violates the conservation of energy law; and, secondly, that the magnetic fields of attraction and repulsion decrease according to the inverse square law then the air gap is increased.

In fact, both contentions are quite wrong because they are based on wrong considerations.

The permanent magnet is a long time energy source. This has been shown for many years in the rating of magnets as <u>high</u> or <u>low</u> energy sources for many applications over long usage.

A loudspeaker composed entirely of electromagnets would be unreal in size and energy consumption. Yet, despite examples of this type, many hesitate to apply the

same principles to motors and extend them even further by using permanent magnets for both the stator and armature.

The elements of all electric and permanent magnet motors are similar. A field imbalance must be created, the fields must be focused and timed, and magnetic leakage must be controlled.

In the wound motor, brushes and contact rings give the timing, the size and shape of the wound fields and poles gives the focusing, and the motor case and kind of iron used help to limit the leakage.

In our permanent magnet motors the timing is built into the motors by the size, shape, and spacing of the magnets in the stator and armature. The focusing is controlled by the shape of the magnets, pole length, and the width of the air gap. This air gap, through which magnets oppose and attract each other, is a rare phenomenon. Usually when a magnetic air gap is increased, the field decreases inversely as the square.

When the air gap of the permanent magnet motor is increased, a curious but definite change takes place. There is a large decrease in the reading at south pole of the armature and an increase in the reading at the north pole. Thus, a Hall-effect sensing probe will give a higher gauss reading at the north pole and a decreasing count at the south pole. This helps explain why the thrust is better with a larger air gap than a smaller one. The attracting field is minimized and will not produce a locking force, while the repulsion of the crescent magnet is great enough to generate a thrust vector component that will drive the armature.

As I tried to explain in the patent, I believe that the permanent magnet is the first room temperature super conductor. In fact, I believe that super conductors are simply large wound magnets. The current in a super conductor is not initiated by a strong emf, such as a battery, but is instead actually induced into existence by a magnetic field. Then, in order to determine how much current may be flowing in the super conductor coil, we measure its magnetic field. This appears to be something like going out the door and coming back in the window.

Another rather unique feature of super conductors is the fact that their magnetic lines of force experience a change in direction. No longer do these lines flow at right angles to the conductor, but they now exist parallel to the conductor. Theoretically, the heavy conductor currents exist in the fine filaments of niobium within each small wire of niobium tin from which such super conductors are made. Isn't it interesting that the finer the wire the less the resistance until eventually there is no resistance at all?

II. Theoretical Analysis (presented by William P. Harrison, Jr.)

1. Introduction

Despite the fact that the linear version of the permanent magnet motor (Johnson, 1979) may appear conceptually simple (see Fig. 1), the complex interactions of the fields alone place it in a class with other quite sophisticated motive systems.

Figure 1: Partial Front and Plan Views of a Linear Model of the Howard Johnson Permanent Magnet Motor

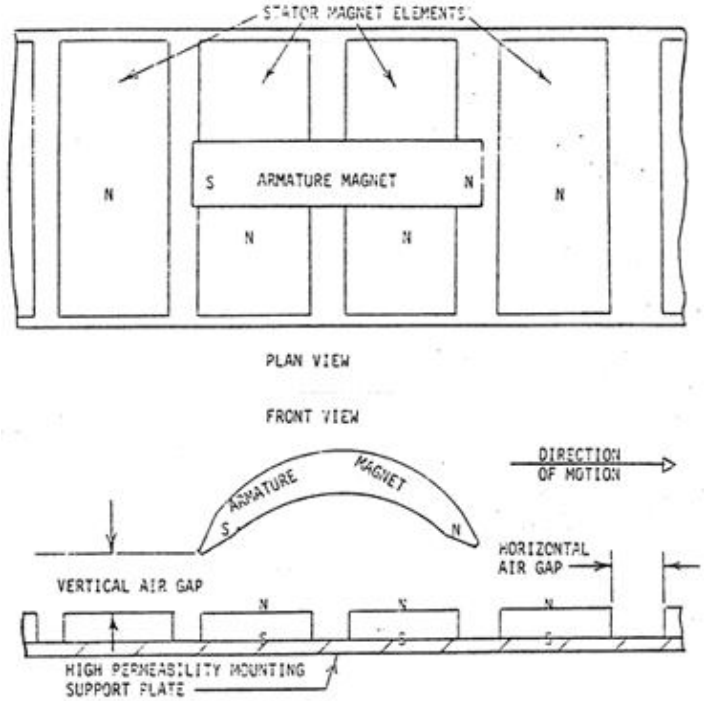

Many parameters play an important part in making possible the successful design of a permanent magnet motor. A number of these variables relate directly to the geometry of the system and its components. Mathematical models for both the linear and circular versions of Mr. Johnson's motors are presently under development, and include such controllable parameters as stator-to-armature air gap, stator element air gap spacing, armature pole length, stator magnet dimensions, magnet material variations, magnetic permeability and geometry of backing metals, and multiple armature couplings, to mention only a few. However, much of the early work involved quit simple mathematical investigations, and even at this level some remarkable revelations resulted. Also, as often is true with simple models, considerable insight into the mechanisms that might prove predominant was gained. Therefore, it is our intention to share with you some of those early analytical investigations and findings.

Even though Coulomb's Law, embodying the inverse square relationship as it does, may yet prove suspect, it nevertheless provides an exceedingly simple yet viable form upon which to base an elementary model of the linear version of the permanent magnet motor. Describing the interaction between two magnetic monopoles, Coulomb's Law in vector form is recalled as

(1) $$\bar{f} = \frac{\overline{MM'}}{ur^2}$$

where M and M' are the pole strengths (positive if north, negative if south), *u* [mu] is the permeability of the medium in which the poles are located, *r* is the straight-line separation distance between the two poles, and $\underline{f}$ [*f* with line over top] is the vector of force (see Fig. 2) acting at each pole (positive in magnitude for repulsion and negative for attraction).

Figure 2: Coulomb's Law

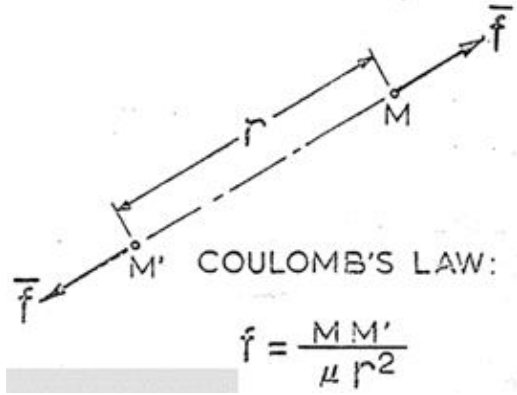

The vector nature of Eq. (1), the fact that f's line of action is colinear with the straight-line distance *r* between poles, its superposition properties when applied to multiple poles, and its restriction to static systems fixes in space are all well known conditions on Eq. (1). We will use the superposition property of Eq. (1) to extend its application to a spatial domain containing many more poles than the two shown in Fig. 2. However, Eq. (1) will first be resolved into scalar components so that analytical expressions can be more easily developed.

Our analysis will be two-dimensional and coplanar, restricted to the vertical x-y plane. It should be noted that the horizontal stator "track" of H.R. Johnson's linear model comprises a plurality of flat magnets, rectangular in cross section, each having an aspect ratio (length-to-thickness ratio) of 16. This high value contributes to the two-dimensional nature of the model and helps to minimize and effects in the z direction. Thus there is some justification for a two-dimensional analysis, at least in the case of the linear model we are considering here.

Figure 3: Positional Locations of Two Opposing North monopoles in X-Y Space ~

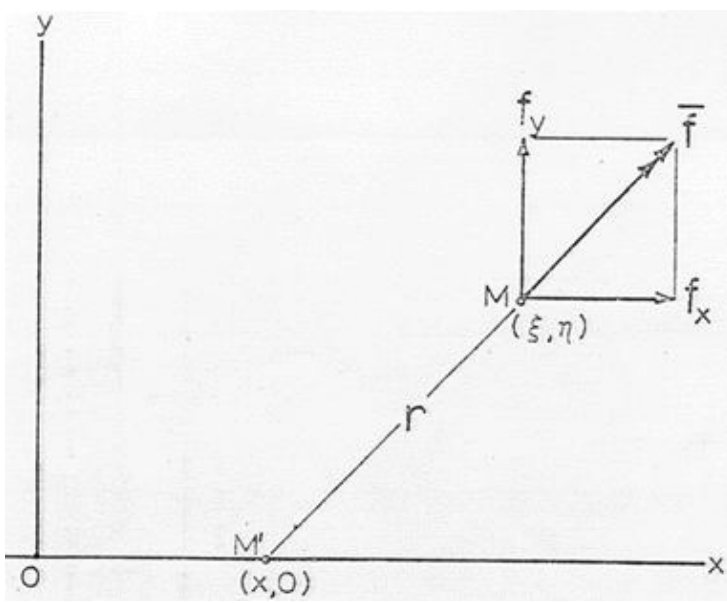

As shown in Fig. 3, we consider first a north pole of strength M located at coordinates (*E* [epsilon], *n* [nu]) with a second north pole of strength M', located on the x-axis at (x,0). Force *f*, acting on the monopole at (*E,n*), when resolved into its horizontal and vertical components yields, respectively,

$$f_x = \frac{MM'(\xi - x)}{\mu[(\xi - x)^2 + \eta^2]^{3/2}}$$

(2)

and

$$f_y = \frac{MM'\eta}{\mu[(\xi - x)^2 + \eta^2]^{3/2}}$$

(3)

2. The Attractive Sheet

Figure 4: Spatial Orientation of Thin, Magnetized Sheet having high aspect ratio and with S side face up

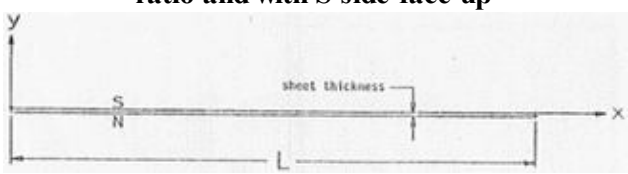

To illustrate some of the assumptions and extensions of Coulomb’s Law that will be made, the simple example of a magnetic sheet lying along the x-axis will be considered first (see Fig. 4). The sheet, of finite length L, is a permanent magnet magnetized across its y-direction thickness and having a high aspect ratio (to eliminate z-direction edge effects). The south-pole face will be oriented up, with north facing downward on the underside of the sheet. Underside effects will be ignored as though the sheet represented a continuous distribution of only south monopoles along the x-axis. To incorporate such distributions into Eq. (1) we replace M’ with the differential dM’ and introduce the function B(x) so that

(4) dM’ = B(x) dx

Then the magnitude of the total force vector, F, acting on an isolated north monopole of strength M situated somewhere within the upper half of the x-y plane, becomes

$$F = \frac{ML}{\mu}\int_0 \frac{B(x)}{r^2}\,dx$$

(5)

where x is the ratio x/L. Assuming that the magnetic density along the sheet can be represented by the southern constant -*B*, and neglecting end effects at x = 0 and x = L, Eq (5) reduces to

$$F = -\mathcal{F}\int_0^1 \frac{1}{\rho^2}\, dx$$

(6)

where

$$\mathcal{F} \equiv \left| \frac{MM'}{\mu L^2} \right|$$

(7)

the strength parameter M’ having been determined by integrating Eq (4) over the sheet length L, and $\underline{\rho}$ is the ratio r/L.

Figure 5: North Monopole Positioned Symmetrically above the center of a magnetized, attracting sheet

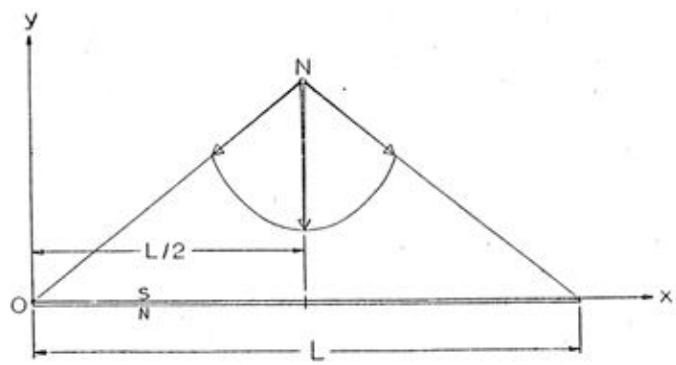

Figure 6: Force Imbalance Acting on a North Monopole above a mangetized sheet tending to restore the pole to sheet center

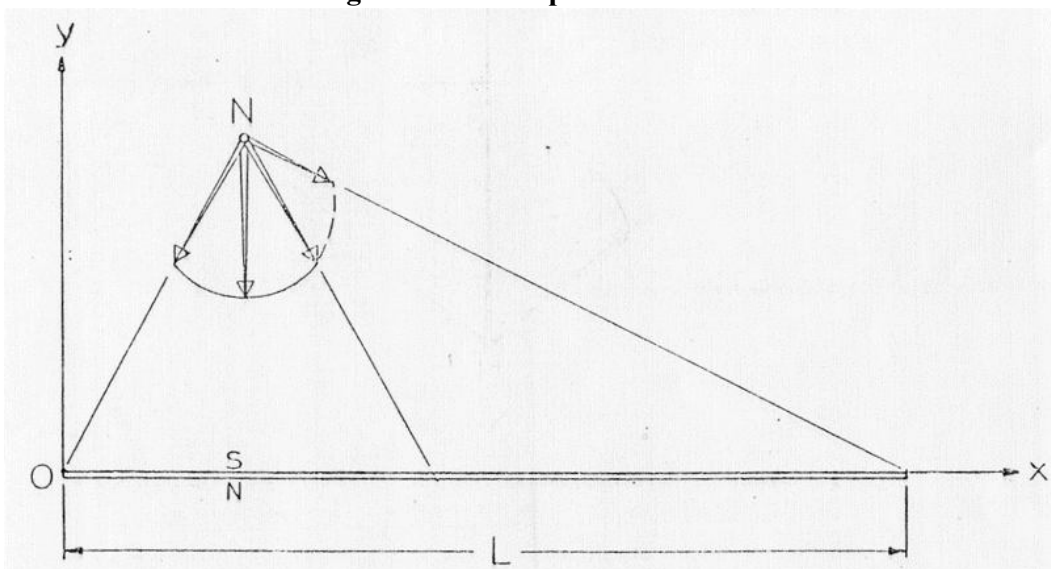

If the north monopole is placed directly above the center of the sheet, at coordinates (*E, n*), with *E* = L/2 and the vertical air-gap separation distance n taken as arbitrary, the symmetrical distribution of incremental force vectors acting at (*E,n*) will appear as shown in Fig. 5. Note that a shift of the north monopole to the left results in a force imbalance which tends to pull the pole back to the right, as shown in Fig. 6. So considering now only the x-component of F, similar to Eq (2) we write

$$F_X = \mathcal{F} \int_0^1 \frac{X - x}{[(X - x)^2 + Y^2]^{3/2}} \, dx \tag{8}$$

where X and Y are the dimensionless ratios

$$X \equiv E/L \tag{9}$$

and

$$Y \equiv n/L \tag{10}$$

For any fixed position (X,Y) of the north monopole in the upper half plane, Eq (8) can be integrated to give

$$\frac{F_X}{\mathcal{F}} = \frac{1}{\sqrt{X^2 + Y^2}} - \frac{1}{\sqrt{(X - 1)^2 + Y^2}} \tag{11}$$

Figure 7: X-Direction Distribution of the X-Component of attractive force exerted on a north monopole by a thin, magnetized sheet

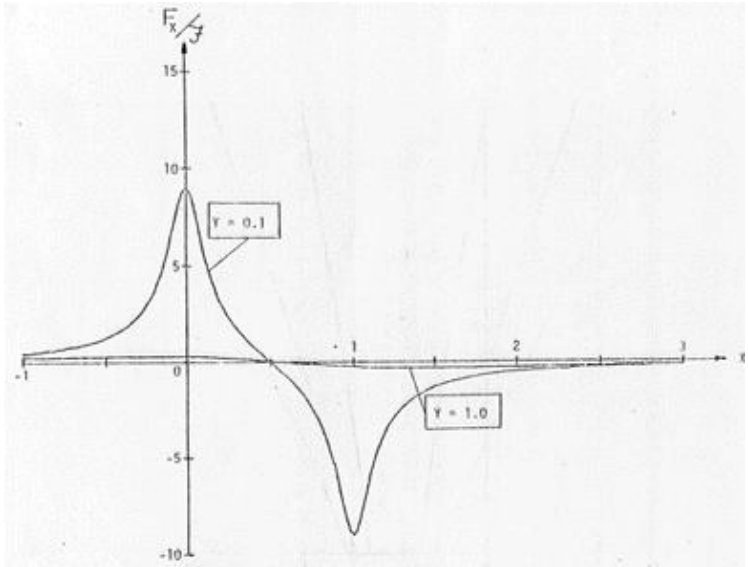

This ratio is shown in Fig (7) as a continuous function of X locations with Y treated parametrically. The Y = 1 curve represents the field influence on the north monopole situated at a constant air-gap separation (n = L) quite some vertical distance above the sheet; whereas at Y = 0.1 the monopole is located much closer to the x axis. Reversal of the force component through its zero value at mid-sheet (X = ½) is clearly shown.

In order to trace some trajectories through this field, we now observe that the y-component of force $\underline{F}$ will be

$$\frac{F_Y}{\mathcal{J}} = -\frac{1}{Y}\left[\frac{X}{\sqrt{X^2+Y^2}} - \frac{X-1}{\sqrt{(X-1)^2+Y^2}}\right] . \tag{12}$$

This function is shown in Fig (8) with a Y value of 0.20

Figure 8: [Missing]

In dimensionless form the equations of motion for trajectory paths of the monopole above the sheet in planar X-Y space become

$$\frac{d^2X}{d\tau^2} = E(r_X)_{mag} \tag{13}$$

and

$$\frac{d^2Y}{d\tau^2} = E(r_Y)_{mag} - G \tag{14}$$

where

$$\tau \equiv \frac{t}{T} \tag{15}$$

$$G \equiv \frac{gT^2}{L} \tag{16}$$

and

$$E \equiv \frac{G}{(W/\mathcal{F})} \tag{17}$$

In these expression *t* is real time and *T* is simply a time constant chosen arbitrarily. As previously noted, *L* is the length of the sheet; whereas, *g* is the gravitational acceleration constant and *W* is the downward weight force of the moving monopole above the sheet. For magnetic force terms $(r_x)_{mag}$ and $(r_y)_{mag}$ we substitute directly Eq (11) and Eq (12), respectively.

Several of the trajectories resulting from the integration of Eq (13) and Eq (14) are shown in Fig.9. They all exhibit the expected behavior. As already implied in the discussion of Fig. 7, the function $(r_x)_{mag}$ given by Eq (11) has a stable point of equilibrium at X = ½ and therefore drives the free-falling monopole towards the sheet center, regardless of the initial drop-point location. The function $(r_y)_{mag}$ from Eq (12) is equally persuasive in pulling the monopole down towards the sheet itself, and manifests that attraction quite pervasively throughout the integration of Eq (14), even when the *G* term may be omitted (as it was in the trajectories of Fig. 9). Actually, the computer integration procedure will not carry the monopole all the way to surface contact with the sheet at Y = 0 because of the infinite condition which exists there as reflected by Eq (12). Thus, tailings of these trajectories (Fig 9) have been completed by manually overriding the plotter.

Figure 9: Trajectories of a North Monopole in an attractive field generated by the thin, magnetized sheet lying in the X-interval 0-1

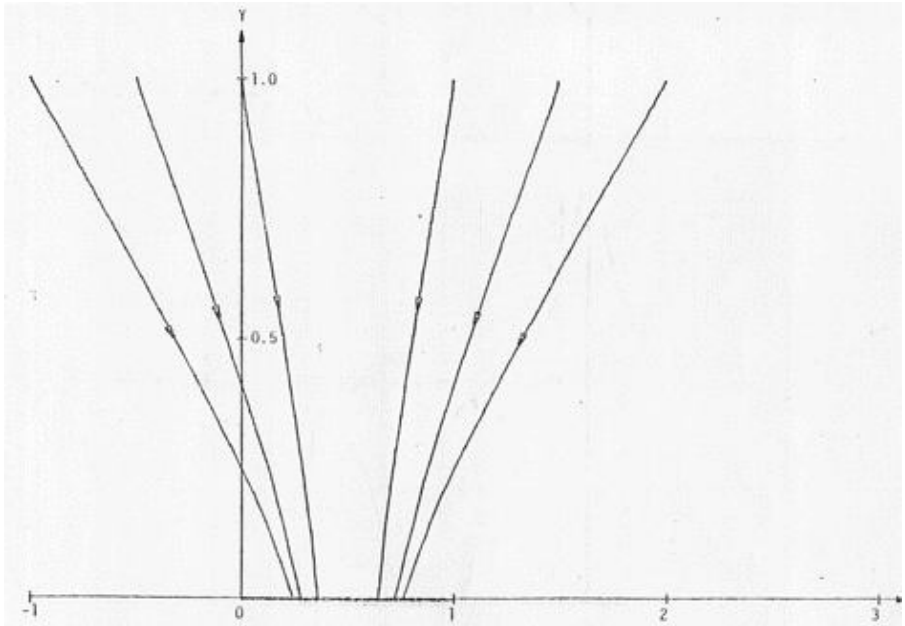

As we would anticipate in working with this type of central field, where *B* in Eq (4) is a simple constant, the field is conservative with curl of F vanishing. Also, the reverse symmetry of $(r_x)_{mag}$ about X = ½, as seen in Fig. 7, confirms that the energy integral for this function will vanish without any appropriate limit pairs of X.

3. The Repulsive Sheet

By substituting +*B* instead of -*B* for *B* in Eq (4), the sheet of length L lying along the x-axis becomes repulsive, with its northern face directed upward, opposing the north monopole above it at location (*E,n*). Of course the sign in Eq (6) becomes positive and the functions $(r_x)_{mag}$ and $(r_y)_{mag}$ reverse their behavior accordingly, as illustrated in Fig. 10. Again $(r_x)_{mag}$ will have an equilibrium point at X = ½, but now it is destabilizing. As a consequence, resulting trajectories for the north monopole are much more interesting in this case than they were with the attractive sheet. Several paths are shown in Fig 11 with different values used for the W/$\mathcal{J}$ trajectory in Eq (17). Parameter G was included, and in each example the trajectories commenced at (0.9, 0.2) with zero initial velocity.

Figure 10: X-Direction Distributions of $(r_x)_{mag}$ and $(r_y)_{mag}$ for the repulsive field of a thin, magnetized sheet acting on a moving north monopole

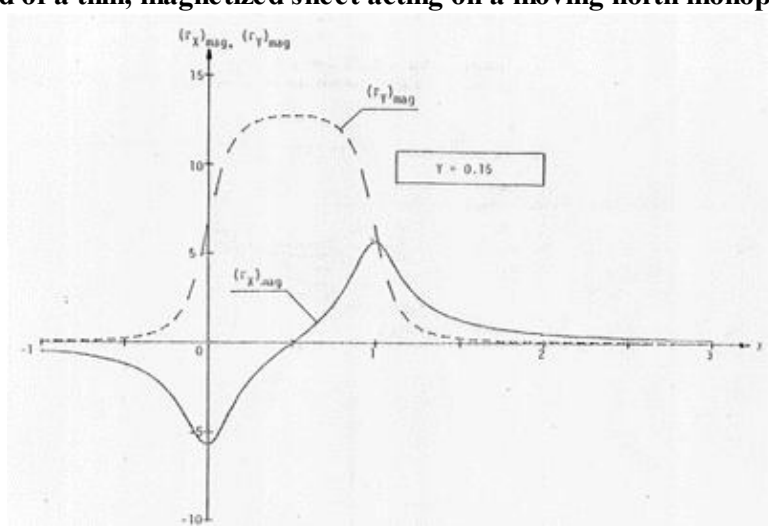

Figure 11: Trajectories of a North Monopole in a repulsive field generated by a thin, magnetized sheet lying in the X-interval 0-1

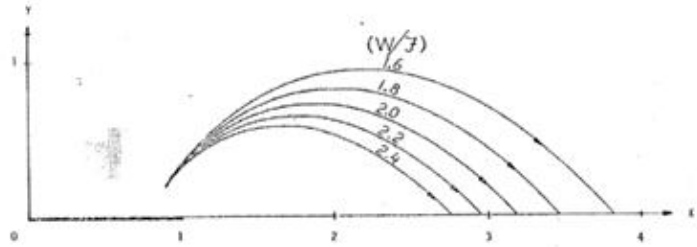

The attractive and repulsive sheet results are easily demonstrated since rubberized flexible sheet magnets are commercially available, such as those sold by the Permag Corp. of Jamaica, NY. It may also be interesting to note that with slight modifications this first simple analytical sheet model can be used to gain some insight into operation of the so-called "magnetic Wankel" reported on by Scott (1979).

Figure 12: Pole Strength Influence Factor, M', as a cosine function of linear displacement distance, x

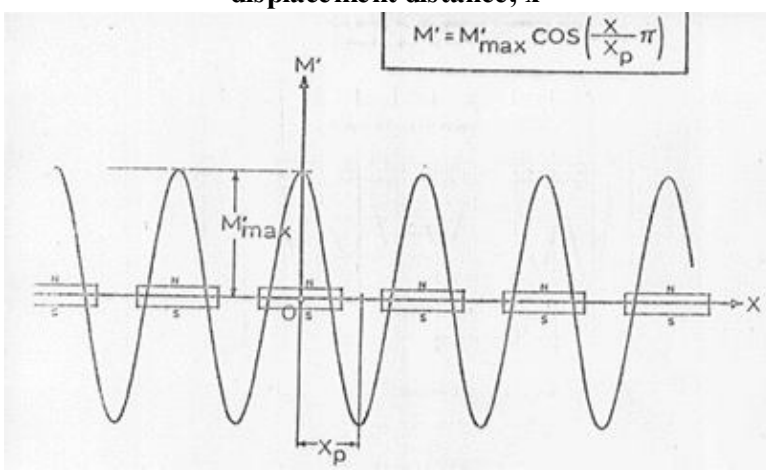

Figure 13: Experimentally Detemined Magnetic Flux Density, B, along a linear model of the Johnson permanent magnet motor

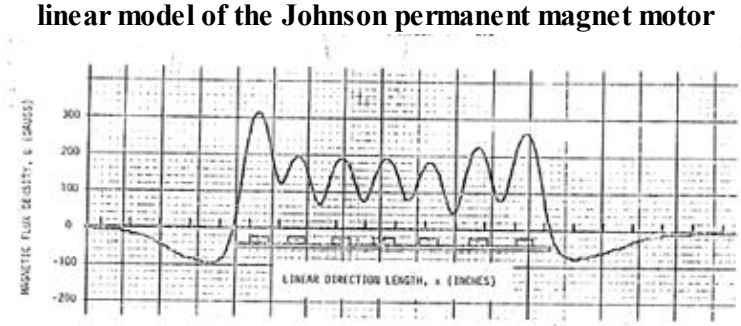

4. The Sinusoidal Model

The first paper (Harrison, 1979) relating, indirectly, to any mathematical analysis of the permanent magnet motor adopted a cosine function (Fig 12) to simulate the distribution of influence parameter M’ generated by the flat stator track of Mr Johnson’s linear model. An experimentally determined distribution, shown in Fig 13, was obtained by moving a Hall-effect probe over the stator track of one of Mr Johnson’s early linear models having seven flat ceramic magnet elements. The figure shown was produced by a plotter connected directly to the monitor computer controlling positioning of the Hall probe and processing its output signal. Ordinate values on the graph are magnetic flux density in gauss measured relative to a

predetermined background value. These direct-reading experimental results suggest that the function

(18) $$B(x) = \beta \cos(2\pi x/x_p)$$

substituted into Eq (4) should prove interesting to pursue as a more challenging test of what might be gleaned from this simple Coulomb model we have been discussing. It should be noted that one of the important differences between the function (18) and that shown in Fig 12 is that in Eq (18) the period length parameter xp is double that shown in Figure 12.

Using Eq (18), the total force magnitude expression Eq (5) becomes

(19) $$(\Gamma_X)_{mag} \equiv \frac{F_X}{\mathcal{J}} = \int_0^1 \frac{(X - x)\cos(2\pi x/x_p)}{[(X - x)^2 + Y^2]^{3/2}}\, dx$$

where a total track length distance of L has been used to form the dimensionless ratios p = r/L, x = x/L, and xp = xp/L. Also, if Eq (7) is used for $\mathcal{J}$ in Eq (19), then in that expression one must substitute the product BL for M’.

Now we plan to hold Y constant while investigating linear motion of the monopole along this track in the X-direction only. So we need consider only the X-component of $\underline{F}$ from Eq (19) which yields

(20) $$(\Gamma_X)_{mag} \equiv \frac{F_X}{\mathcal{J}} = \int_0^1 \frac{(X - x)\cos(2\pi x/x_p)}{[(X - x)^2 + Y^2]^{3/2}}\, dx$$

Figure 14: Oscillatory Path of a North Monopole restrained to x-direction motion over a three-element linear stator assembly

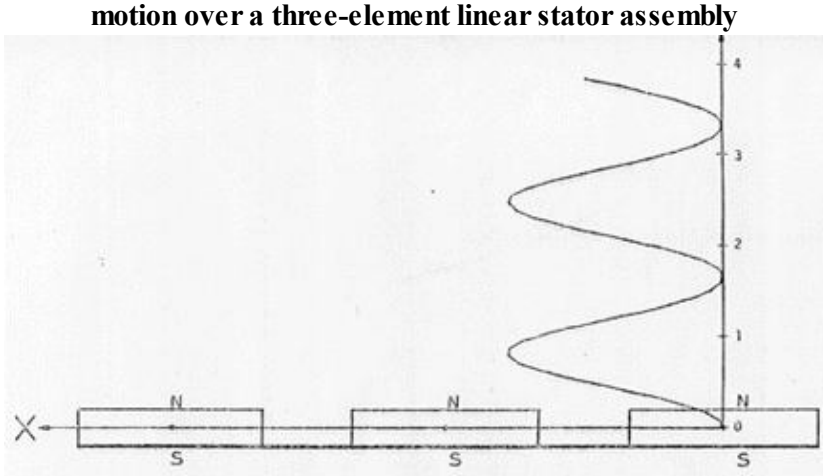

With this expression substituted into Eq (13), integration becomes straightforward and yields the typical oscillatory type of trajectory path shown in Fig 14. As Mr Johnson has brought out, the focusing armature magnet of his linear model will start at either end of the stator track simply by insuring that the north end of this bipoled crescent is leading the south (see Fig. 1). So, in Fig. 14, we are showing the X-direction motion from right to left instead of from left to right as in our previous examples. Also, by

simply rotating the figure clockwise through 90 degrees, it becomes easy to follow the behavior of dimensionless velocity, V_x, in Fig 11, since Vx is defined as

$$V_X = \frac{dX}{d\tau} \tag{21}$$

It will be noted in Fig 14 that the north monopole has been allowed to self-start its motion at the origin with V_x initially zero.

We now discuss out final adjustment which proved to be an exciting revelation at the time it was first investigated several months ago. Johnson (1979, col. 5, line 39) states that the horizontal air-gap spacing between the magnet elements which the stator track comprises should vary slightly from normal in order to smooth out movement of the armature. Introducing this type of variation into a two-dimensional model, provided the charge is nonuniform, would certainly transform the field from conservative to nonconservative. It should by now be apparent that only a nonconservative model has any chance at all of even partially explaining the phenomena of the permanent magnet motor.

With these thoughts in mind, an attempt was made to drive the armature monopole of Fig 14 on to the second stator magnet and beyond by varying the horizontal gap parameter xp during the integration process (i.e., during the motion). The results are shown in Fig 15. It was found that through small variations in *xp* in Eq (20), as the monopole advanced along its trajectory path from one X position to another, sufficient control over the moving pole could be exercised to carry it over the full length of the stator and beyond.

Figure 15: Continuus Path of a North Monopole restrained to x-direction motion shown traversing a linear stator assembly comprised of seven permanent magnet elements

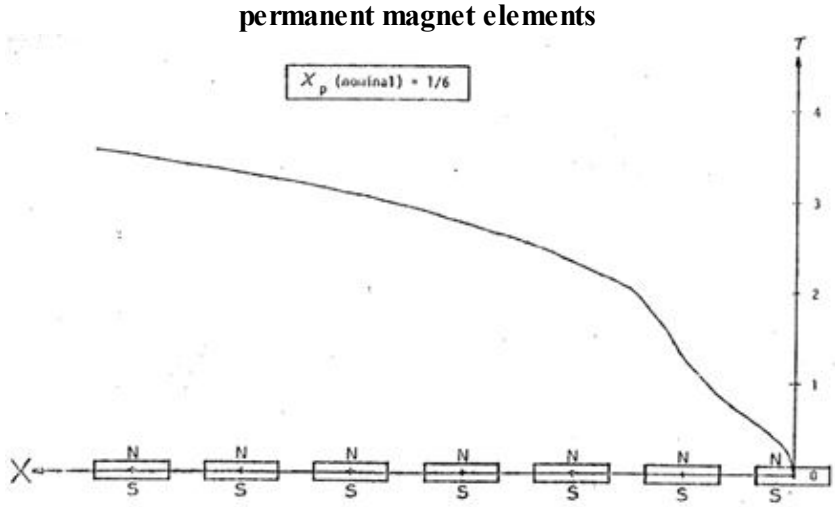

III. References

Harrison, William P., Jr.: "A Solution for the Optimal Gap of a Monopole Element Moving in a Sinusoidally Distributed Magnetic Field", paper presented to the Engineering Section, Virginia Academy of Science, 57th Annual Meeting, Richmond VA, May 8-11, 1979.

Johnson, Howard R: US Patent # 4,151,431 (April 24, 1979), "Permanent Magnet Motor".

Scott, David, "Magnetic ‘Wankel’ for Electric Cars", *Popular Science*, p. 80, June 1979.

US Patent # 4,151,431

Permanent Magnet Motor
(April 24, 1979)

Howard R. Johnson

Abstract --- The invention is directed to the method of utilizing the unpaired electron spins in ferro magnetic and other materials as a source of magnetic fields for producing power without any electron flow as occurs in normal conductors, and to permanent magnet motors for utilizing this method to produce a power source. In the practice of the invention the unpaired electron spins occurring within permanent magnets are utilized to produce a motive power source solely through the superconducting characteristics of a permanent magnet and the magnetic flux created by the magnets are controlled and concentrated to orient the magnetic forces generated in such a manner to do useful continuous work, such as the displacement of a rotor with respect to a stator. The timing and orientation of magnetic forces at the rotor and stator components produced by permanent magnets to produce a motor is accomplished with the proper geometrical relationship of these components.

Inventors: Johnson; Howard R. (3300 Mt. Hope Rd., Grass Lake, MI 49240)
Appl. No.: 422306 ~ Filed: December 6, 1973

Current U.S. Class: 310/12; 310/152; 415/10; 415/916; 416/3; 505/877
Intern'l Class: H02K 041/00; H02N 011/00
Field of Search: 24/DIG. 9 415/DIG. 2 46/236 ;134 A;135 A;136 B;137 AE;138 A 273/118 A,119 A,120 A,121 A,122 A,123 A,124,125 A, 126 A,130 A,131 A,131 AD

References Cited:

U.S. Patent Documents
4,074,153 (Feb., 1978) Baker, et al. 310/12.

Description

FIELD OF THE INVENTION

The invention pertains to the field of permanent magnet motor devices solely using the magnetic fields created thereby to product motive power.

BACKGROUND OF THE INVENTION

Conventional electric motors employ magnetic forces to produce either rotative or linear motion. Electric motors operate on the principle that when a conductor is located in a magnetic field which carries current a magnetic force is exerted upon it.

Normally, in a conventional electric motor, the rotor, or stator, or both, are so wired that magnetic fields created by electromagnetics may employ attraction, repulsion, or

both types of magnetic forces, to impose a force upon the armature to cause rotation, or to cause the armature to be displaced in a linear path. Conventional electric motors may employ permanent magnets either in the armature or stator components, but in the art heretofore known the use of permanent magnets in either the stator or armature require the creation of an electromagnetic field to act upon the field produced by the permanent magnets, and switching means are employed to control the energization of the electromagnets and the orientation of the magnetic fields, to produce the motive power.

It is my belief that the full potential of magnetic forces existing in permanent magnets has not been recognized or utilized because of incomplete information and theory with respect to the atomic motion occurring within a permanent magnet. It is my belief that a presently unnamed atomic particle is associated with the electron movement of a superconducting electromagnet and the lossless current flow of Amperian currents in permanent magnets. The unpaired electron flow is similar in both situations. This small particle is believed to be opposite in charge and to be located at right angles to the moving electron, and the particle would be very small as to penetrate all known elements, in their various states as well as their known compounds, unless they have unpaired electrons which capture these particles as they endeavor to pass therethrough.

Ferro electrons differ from those of most elements in that they are unpaired, and being unpaired they spin around the nucleus in such a way that they respond to magnetic fields as well as creating one themselves. If they were paired, their magnetic fields would cancel out. However, being unpaired they create a measurable magnetic field if their spins have been oriented in one direction. The spins are at right angles to their magnetic fields.

In niobium superconductors at a critical state, the magnetic lines of force cease to be at right angles. This change must be due to establishing the required conditions for unpaired electronic spins instead of electron flow in the conductor, and the fact that very powerful electromagnets that can be formed with superconductors illustrates the tremendous advantage of producing the magnetic field by unpaired electron spins rather than conventional electron flow.

In a superconducting metal, wherein the electrical resistance becomes greater in the metal than the proton resistance, the flow turns to electron spins and the positive particles flow parallel in the metal in the manner occurring in a permanent magnet where a powerful flow of magnetic positive particles or magnetic flux causes the unpaired electrons to spin at right angles. Under cryogenic superconduction conditions the freezing of the crystals in place makes it possible for the spins to continue, and in a permanent magnet the grain orientation of the magnetized material results in the spins permitting them to continue and for the flux to flow parallel to the metal.

In a superconductor, at first the electron is flowing and the positive particle is spinning; later, when critical, the reverse occurs, i.e., the electron is spinning and the positive particle is flowing at right angles. These positive particles will thread or work their way through the electron spins present in the metal.

In a sense, a permanent magnet may be considered the only room temperature superconductor. It is a superconductor because the electron flow does not cease, and this electron flow can be made to do work because of the magnetic field it supplies.

Previously, this source of power has not been used because it was not possible to modify the electron flow to accomplish the switching functions of the magnetic field. Such switching functions are common in a conventional electric motor where electrical current is employed to align the much greater electron current in the iron pole pieces and concentrate the magnetic field at the proper places to give the thrust necessary to move the motor armature. In a conventional electric motor, switching is accomplished by the use of brushes, commutators, alternating current, or other known means.

In order to accomplish the switching function in a permanent magnet motor, it is necessary to shield the magnetic leakage so that it will not appear as too great a loss factor at the wrong places. The best method to accomplish this is to use the superconductor of magnetic flux and concentrate it to the place where it will be the most effective. Timing and switching can be achieved in a permanent magnet motor by concentrating the flux and using the proper geometry of the motor rotor and stator to make most effective use of the magnetic fields generated by the electron spins. By the proper combination of materials, geometry and magnetic concentration, it is possible to achieve a mechanical advantage of high ratio, greater than 100 to 1, capable of producing a continuous motive force.

To my knowledge, previous work done with permanent magnets, and motive devices utilizing permanent magnets, have not achieved the result desired in the practice of the inventive concept, and it is with the proper combination of materials, geometry and magnetic concentration that the presence of the magnetic spins within a permanent magnet may be utilized as a motive force.

SUMMARY OF THE INVENTION

It is an object of the invention to utilize the magnetic spinning phenomenon of unpaired electrons occurring in ferro magnetic material to produce the movement of a mass in a unidirectional manner as to permit a motor to be driven solely by magnetic forces as occurring within permanent magnets. In the practice of the inventive concepts, motors of either linear or rotative types may be produced.

It is an object of the invention to provide the proper combination of materials, geometry and magnetic concentration to utilize the force generated by unpaired electron spins existing in permanent magnets to power a motor. Whether the motor constitutes a linear embodiment, or a rotary embodiment, in each instance the "stator" may consist of a plurality of permanent magnets fixed relative to each other in space relationship to define a track, linear in form in the linear embodiment, and circular in form in the rotary embodiment. An armature magnet is located in spaced relationship to such track defined by the stator magnets wherein an air gap exists therebetween. The length of the armature magnet is defined by poles of opposite polarity, and the length of the armature magnet is disposed relative to the track defined by the stator magnets in the direction of the path of movement of the armature magnet as displaced by the magnetic forces.

The stator magnets are so mounted that poles of like polarity are disposed toward the armature magnet and as the armature magnet has poles which are both attracted to and repelled by the adjacent pole of the stator magnets, both attraction and repulsion forces act upon the armature magnet to produce the relative displacement between the armature and stator magnets.

The continuing motive force producing displacement between the armature and stator magnets results from the relationship of the length of the armature magnet in the direction of its path of movement as related to the dimension of the stator magnets, and the spacing therebetween, in the direction of the path of armature magnet movement. This ratio of magnet and magnet spacings, and with an acceptable air gap spacing between the stator and armature magnets, will produce a resultant force upon the armature magnet which displaces the armature magnet across the stator magnet along its path of movement.

In the practice of the invention movement of the armature magnet relative to the stator magnets results from a combination of attraction and repulsion forces existing between the stator and armature magnets. By concentrating the magnetic fields of the stator and armature magnets the motive force imposed upon the armature magnet is intensified, and in the disclosed embodiments such magnetic field concentration means are disclosed.

The disclosed magnetic field concentrating means comprise a plate of high magnetic field permeability disposed adjacent one side of the stator magnets in substantial engagement therewith. This high permeability material is thus disposed adjacent poles of like polarity of the stator magnets. The magnetic field of the armature magnet may be concentrated and directionally oriented by bowing the armature magnet, and the magnetic field may further be concentrated by shaping the pole ends of the armature magnet to concentrate the magnet field at a relatively limited surface at the armature magnet pole ends.

Preferably, a plurality of armature magnets are used which are staggered with respect to each other in the direction of armature magnet movement. Such an offsetting or staggering of the armature magnets distributes the impulses of force imposed upon the armature magnets and results in a smoother application of forces to the armature magnet producing a smoother and more uniform movement of the armature component.

In the rotary embodiment of the permanent magnet motor of the invention the stator magnets are arranged in a circle, and the armature magnets rotate about the stator magnets. Means are disclosed for producing relative axial displacement between the stator and armature magnets to adjust the axial alignment thereof, and thereby regulate the magnitude of the magnetic forces being imposed upon the armature magnets. In this manner the speed of rotation of the rotary embodiment may be regulated.

BRIEF DESCRIPTION OF THE DRAWINGS

The aforementioned objects and advantages of the invention will be appreciated from the following description and accompanying drawings wherein:

FIG. 1 is a schematic view of electron flow in a superconductor indicating the unpaired electron spins,

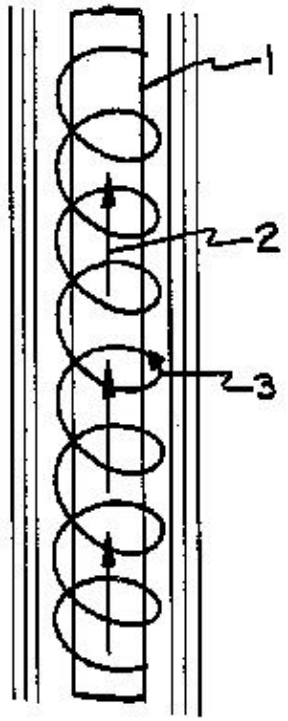

FIG. 1

FIG. 2 is a cross-sectional view of a superconductor under a critical state illustrating the electron spins,

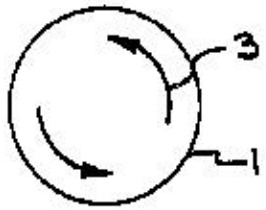

FIG. 2

FIG. 3 is a view of a permanent magnet illustrating the flux movement therethrough,

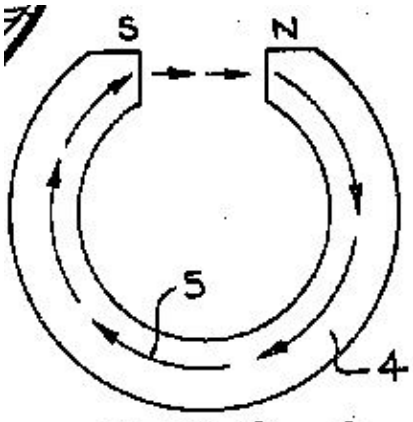

FIG. 3

FIG. 4 is a cross-sectional view illustrating the diameter of the magnet of FIG. 3,

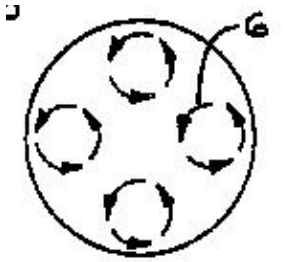

FIG. 4

FIG. 5 is an elevational representation of a linear motor embodiment of the permanent magnet motor of the invention illustrating one position of the armature magnet relative to the stator magnets, and indicating the magnetic forces imposed upon the armature magnet,

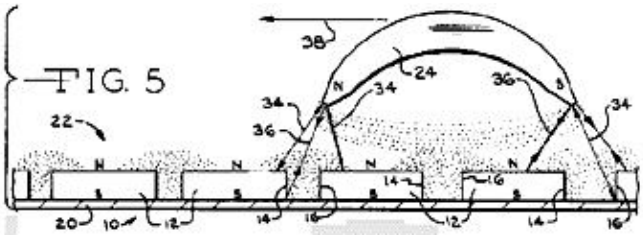

FIG. 6 is a view similar to FIG. 5 illustrating displacement of the armature magnet relative to the stator magnets, and the influence of magnetic forces thereon at this location,

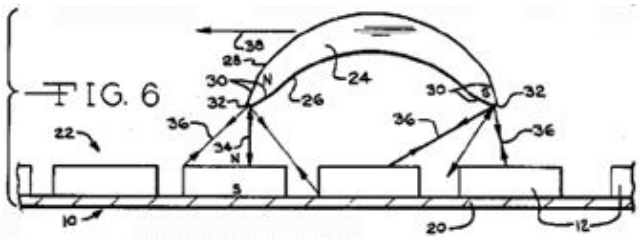

FIG. 7 is a further elevational view similar to FIGS. 5 and 6 illustrating further displacement of the armature magnet to the left, and the influence of the magnetic forces thereon,

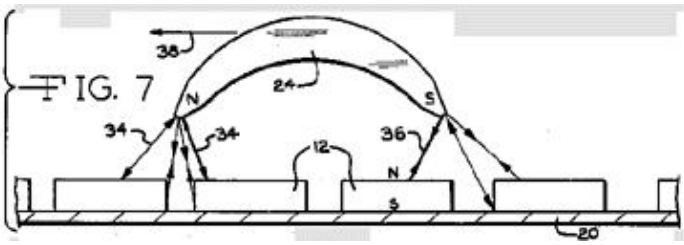

FIG. 8 is a top plan view of a linear embodiment of the inventive concept illustrating a pair of armature magnets in linked relationship disposed above the stator magnets,

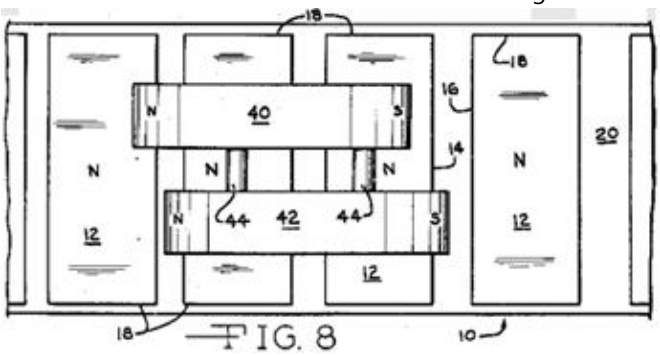

FIG. 8

FIG. 9 is a diametrical, elevational, sectional view of a rotary motor embodiment in accord with the invention as taken along section IX--IX of FIG. 10, and

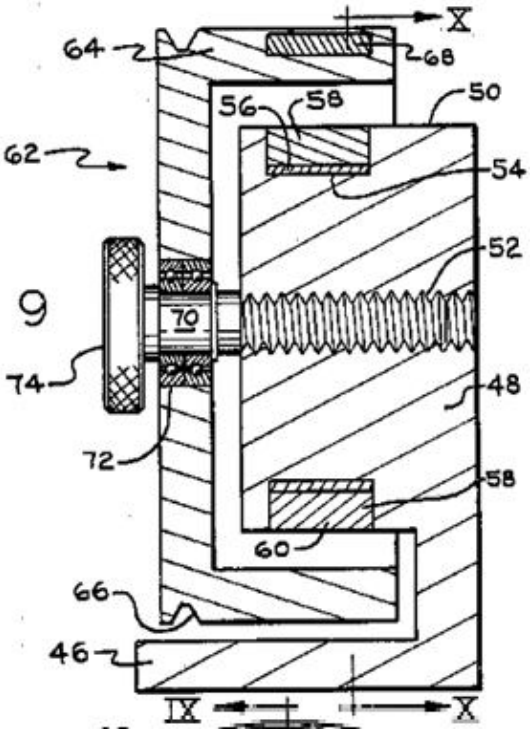

FIG. 9

FIG. 10 is an elevational view of the rotary motor embodiment as taken along section X--X of FIG. 9.

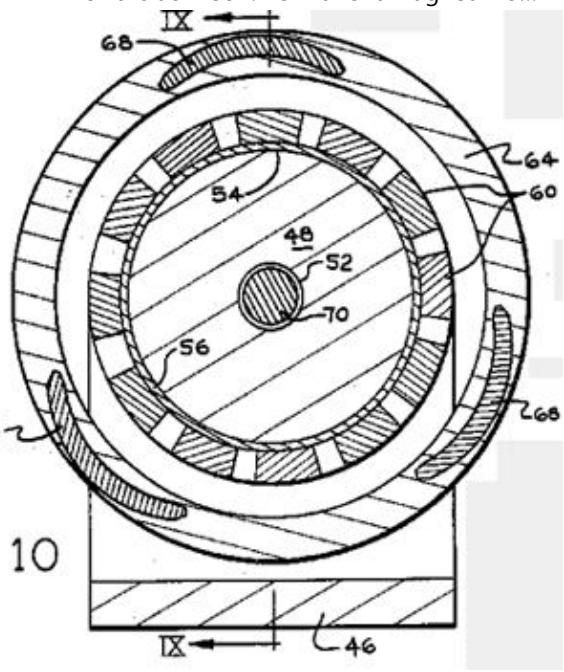

FIG. 10

DESCRIPTION OF THE PREFERRED EMBODIMENTS

In order to better understand the theory of the inventive concept, reference is made to FIGS. 1 through 4. In FIG. 1 a superconductor 1 is illustrated having a positive particle flow as represented by arrow 2, the unpaired electrons of the ferrous conducting material 1 spin at right angles to the proton flow in the conductor as represented by the spiral line and arrow 3. In accord with the theory of the invention the spinning of the ferrous unpaired electrons results from the atomic structure of ferrous materials and this spinning atomic particle is believed to be opposite in charge and located at right angles to the moving electrons. It is assumed to be very small in size capable of penetrating other elements and their compounds unless they have unpaired electrons which capture these particles as they endeavor to pass therethrough.

The lack of electrical resistance of conductors at a critical superconductor state has long been recognized, and superconductors have been utilized to produce very high magnetic flux density electromagnets. FIG. 2 represents a cross section of a critical superconductor and the electron spins are indicated by the arrows 3.

A permanent magnet may be considered a superconductor as the electron flow therein does not cease, and is without resistance, and unpaired electric spinning particles exist which, in the practice of the invention, are utilized to produce motor force. FIG. 3 illustrates a horseshoe shaped permanent magnet at 4 and the magnetic flux therethrough is indicated by arrows 5, the magnetic flow being from the south pole to the north pole and through the magnetic material. The accumulated electron spins occurring about the diameter of the magnet 5 are represented at 6 in FIG. 4, and the spinning electron particles spin at right angles in the iron as the flux travels through the magnet material.

By utilizing the electron spinning theory of ferrous material electrons, it is possible with the proper ferromagnetic materials, geometry and magnetic concentration to utilize the spinning electrons to produce a motive force in a continuous direction, thereby resulting in a motor capable of doing work.

It is appreciated that the embodiments of motors utilizing the concepts of the invention may take many forms, and in the illustrated forms the basic relationships of components are illustrated in order to disclose the inventive concepts and principles.

The relationships of the plurality of magnets defining the stator 10 are best appreciated from FIGS. 5 through 8. The stator magnets 12 are preferably of a rectangular configuration, FIG. 8, and so magnetized that the poles exist at the large surfaces of the magnets, as will be appreciated from the N (North) and S (South) designations. The stator magnets include side edges 14 and 16 and end edges 18. The stator magnets are mounted upon a supporting plate 20, which is preferably of a metal material having a high permeability to magnetic fields and magnetic flux such as that available under the trademark Netic CoNetic sold by the Perfection Mica Company of Chicago, Illinois. Thus, the plate 20 will be disposed toward the south pole of the stator magnets 12, and preferably in direct engagement therewith, although a bonding material may be interposed between the magnets and the plate in order to accurately locate and fix the magnets on the plate, and position the stator magnets with respect to each other.

Preferably, the spacing between the stator magnets 12 slightly differs between adjacent stator magnets as such a variation in spacing varies the forces being imposed upon the armature magnet at its ends, at any given time, and thus results in a smoother movement of the armature magnet relative to the stator magnets. Thus, the stator magnets so positioned relative to each other define a track 22 having a longitudinal direction left to right as viewed in FIGS. 5 through 8.

In FIGS. 5 through 7 only a single armature magnet 24 is disclosed, while in FIG. 8 a pair of armature magnets are shown. For purposes of understanding the concepts of the invention the description herein will be limited to the use of single armature magnet as shown in FIGS. 5 through 7.

The armature magnet is of an elongated configuration wherein the length extends from left to right, FIG. 5, and may be of a rectangular transverse cross-sectional shape. For magnetic field concentrating and orientation purposes the magnet 24 is formed in an arcuate bowed configuration as defined by concave surfaces 26 and convex surfaces 28, and the poles are defined at the ends of the magnet as will be appreciated from FIG. 5. For further magnetic field concentrating purposes the ends of the armature magnet are shaped by beveled surfaces 30 to minimize the cross-sectional area at the magnet ends at 32, and the magnetic flux existing between the poles of the armature magnet are as indicated by the light dotted lines. In like manner the magnetic fields of the stator magnets 12 are indicated by the light dotted lines.

The armature magnet 24 is maintained in a spaced relationship above the stator track 22. This spacing may be accomplished by mounting the armature magnet upon a slide, guide or track located above the stator magnets, or the armature magnet could be mounted upon a wheeled vehicle carriage or slide supported upon a nonmagnetic surface or guideway disposed between the stator magnets and the armature magnet. To clarify the illustration, the means for supporting the armature magnet 24 is not illustrated and such means form no part of invention, and it is to be understood that the means supporting the armature magnet prevents the armature magnet from moving away from the stator magnets, or moving closer thereto, but permits free movement of the armature magnet to the left or right in a direction parallel to the track 22 defined by the stator magnets.

It will be noted that the length of the armature magnet 24 is slightly greater than the width of two of the stator magnets 12 and the spacing therebetween. The magnetic forces acting upon the armature magnet when in the position of FIG. 5 will be repulsion forces 34 due to the proximity of like polarity forces and attraction forces at 36 because of the opposite polarity of the south pole of the armature magnet, and the north pole field of the sector magnets. The relative strength of this force is represented by the thickness of the force line.

The resultant of the force vectors imposed upon the armature magnet as shown in FIG. 5 produce a primary force vector 38 toward the left, FIG. 5, displacing the armature magnet 24 toward the left. In FIG. 6 the magnetic forces acting upon the armature magnet are represented by the same reference numerals as in FIG. 5. While the forces 34 constitute repulsion forces tending to move the north pole of the armature magnet away from the stator magnets, the attraction forces imposed upon the south pole of the armature magnet and some of the repulsion forces, tend to move the armature magnet further to the left, and as the resultant force 38 continues to be toward the left the armature magnet continues to be forced to the left.

FIG. 7 represents further displacement of the armature magnet 24 to the left with respect to the position of FIG. 6, and the magnetic forces acting thereon are represented by the same reference numerals as in FIGS. 5 and 6, and the stator magnet will continue to move to the left, and such movement continues the length of the track 22 defined by the stator magnets 12.

Upon the armature magnet being reversed such that the north pole is positioned at the right as viewed in FIG. 5, and the south pole is positioned at the left, the direction of movement of the armature magnet relative to the stator magnets is toward the right, and the theory of movement is identical to that described above.

In FIG. 8 a plurality of armature magnets 40 and 42 are illustrated which are connected by links 44. The armature magnets are of a shape and configuration identical to that of the embodiment of FIG. 5, but the magnets are staggered with respect to each other in the direction of magnet movement, i.e., the direction of the track 22 defined by the stator magnets 12. By so staggering a plurality of armature magnets a smoother movement of the interconnected armature magnets is produced as compared when using a single armature magnet as there is variation in the forces acting upon each armature magnet as it moves above the track 22 due to the change in magnetic forces imposed thereon. The use of several armature magnets tends to "smooth out" the application of forces imposed upon linked armature magnets, resulting in a smoother movement of the armature magnet assembly. Of course, any number of armature magnets may be interconnected, limited only by the width of the stator magnet track 22.

In FIGS. 9 and 10 a rotary embodiment embracing the inventive concepts is illustrated. In this embodiment the principle of operation is identical to that described above, but the orientation of the stator and armature magnets is such that rotation of the armature magnets is produced about an axis, rather than a linear movement being achieved.

In FIGS. 9 and 10 a base is represented at 46 serving as a support for a stator member 48. The stator member 48 is made of a nonmagnetic material, such as synthetic plastic, aluminum, or the like. The stator includes a cylindrical surface 50

having an axis, and a threaded bore 52 is concentrically defined in the stator. The stator includes an annular groove 54 receiving an annular sleeve 56 of high magnetic field permeability material such as Netic Co-Netic and a plurality of stator magnets 58 are affixed upon the sleeve 56 in spaced circumferential relationship as will be apparent in FIG. 10. Preferably, the stator magnets 58 are formed with converging radial sides as to be of a wedge configuration having a curved inner surface engaging sleeve 56, and a convex outer pole surface 60.

The armature 62, in the illustrated embodiment, is of a dished configuration having a radial web portion, and an axially extending portion 64. The armature 62 is formed of a nonmagnetic material, and an annular belt receiving groove 66 is defined therein for receiving a belt for transmitting power from the armature to a generator, or other power consuming device. Three armature magnets 68 are mounted on the armature portion 64, and such magnets are of a configuration similar to the armature magnet configuration of FIGS. 5 through 7. The magnets 68 are staggered with respect to each other in a circumferential direction wherein the magnets are not disposed as 120.degree. circumferential relationships to each other. Rather, a slight angular staggering of the armature magnets is desirable to "smooth out" the magnetic forces being imposed upon the armature as a result of the magnetic forces being simultaneously imposed upon each of the armature magnets. The staggering of the armature magnets 68 in a circumferential direction produces the same effect as the staggering of the armature magnets 40 and 42 as shown in FIG. 8.

The armature 62 is mounted upon a threaded shaft 70 by antifriction bearings 72, and the shaft 70 is threaded into the stator threaded bore 52, and may be rotated by the knob 74. In this manner rotation of the knob 74, and shaft 70, axially displaces the armature 62 with respect to the stator magnets 58, and such axial displacement will very the magnitude of the magnetic forces imposed upon the armature magnets 68 by the stator magnets thereby controlling the speed of rotation of the armature.

As will be noted from FIGS. 4-7 and 9 and 10, an air gap exists between the armature magnet or magnets and the stator magnets and the dimension of this spacing, effects the magnitude of the forces imposed upon the armature magnet or magnets. If the distance between the armature magents, and the stator magnets is reduced the forces imposed upon the armature magnets by the stator magnets are increased, and the resultant force vector tending to displace the armature magnets in their path of movement increases. However, the decreasing of the spacing between the armature and stator magnets creates a "pulsation" in the movement of the armature magnets which is objectionable, but can be, to some extent, minimized by using a plurality of armature magnets. The increasing of the distance between the armature and stator magnets reduces the pulsation tendency of the armature magnet, but also reduces the magnitude of the magnetic forces imposed upon the armature magnets. Thus, the most effective spacing between the armature magnets. Thus, the most effective spacing between the armature and stator magnets is that spacing which produces the maximum force vector in the direction of armature magnet movement, with a minimum creation of objectionable pulsation.

In the disclosed embodiments the high permeability plate 20 and sleeve 56 are disclosed for concentrating the magnetic field of the stator magnets, and the armature magnets are bowed and have shaped ends for magnetic field concentration purposes. While such magnetic field concentration means result in higher forces imposed upon the armature magnets for given magnet intensities, it is not intended that the inventive

concepts be limited to the use of such magnetic field concentrating means.

As will be appreciated from the above description of the invention, the movement of the armature magnet or magnets resultsfrom the described relationship of components. The length of the armature magnets as related to the width of the stator magnets and spacing therebetween, the dimension of the air gap and the configuration of the magnetic field, combined, produce the desired result and motion. The inventive concepts may be practiced even though these relationships may be varied within limits not yet defined and the invention is intended to encompass all dimensional relationships which achieve the desired goal of armature movement. By way of example, with respect to FIGS. 4-7, the following dimensions were used in an operating prototype:

The length of armature magnet 24 is 31/8", the stator magnets 12 are 1" wide, 1/4" thick and 4" long and grain oriented. The air gap between the poles of the armature magnet and the stator magnets is approximately 11/2" and the spacing between the stator magnets is approximately 1/2" inch.

In effect, the stator magnets define a magnetic field track of a single polarity transversely interrupted at spaced locations by the magnetic fields produced by the lines of force existing between the poles of the stator magnets and the unidirectional force exerted on the armature magnet is a result of the repulsion and attraction forces existing as the armature magnet traverses this magnetic field track.

It is to be understood that the inventive concept embraces an arrangement wherein the armature magnet component is stationary and the stator assembly is supported for movement and constitutes the moving component, and other variations of the inventive concept will be apparent to those skilled in the art without departing from the scope thereof. As used herein the term "track" is intended to include both linear and circular arrangements of the static magnets, and the "direction" or "length" of the track is that direction parallel or concentric to the intended direction of armature magnet movement.

United States Patent 4,877,983

Magnetic Force Generating Method & Apparatus

Howard R. Johnson

(October 31, 1989)

Abstract --- A permanent magnet armature is magnetically propelled along a guided path by interaction with the field within a flux zone limited on either side of the path by an arrangement of permanent stator magnets.

Inventors: Johnson; Howard R. (Box 199, 314 N. Main, Blacksburg, VA 24060)
Appl. No.: 799618 ~ Filed: November 19, 1985

Current U.S. Class: 310/12; 310/152 ~ Intern'l Class: H02K 041/00
Field of Search: 310/152,12,46

References Cited:
U.S. Patent Documents

USP # 4,074,153 (Feb., 1978) Baker, et al. (Cl. 310/12).
USP # 4,151,431 (Apr., 1979) Johnson (Cl. 310/12).

Primary Examiner: Skudy; R. ~ Attorney, Agent or Firm: Fleit, Jacobson, Cohn, Price, Holman & Stern

Claims

What is claimed as new is as follows:

1. In combination with a movable armature, means for guiding movement of the armature along a predetermined path and a permanent armature magnet having magnetic poles of opposite polarity spaced from each other along said path to establish a magnetic field of limited extent movable with the armature and magnetic stator means for establishing a stationary magnetic flux zone along said path, the improvement comprising flux emitting surfaces of one polarity mounted on the stator means on opposite sides of said path for limiting said flux zone through which said path extends and means mounting the permanent armature magnet on the armature with the poles thereof orientated relative to said flux emitting surfaces on the stator means for unidirectionally propelling the armature along said path through the limited zone in response to magnetic interaction between the movable magnetic field and the limited flux zone, said magnetic stator means including a plurality of magnetic gate assemblies fixedly spaced from each other along said path and respectively establishing stationary magnetic fields, each of said gate assemblies including a plurality of interconnected bar magnets substantially bordering said limited flux zone exposing pole faces of opposite polarity in parallel spaced planes intersected by said path, and magnetic means connected to said interconnected bar magnets exposing one of the flux emitting surfaces of said one polarity perpendicular to said parallel planes for magnetic interaction of the stationary magnetic fields.

2. The combination of claim 1 wherein said armature magnet is curved between end faces at which said poles of opposite polarity are located, the end faces being orientated by the mounting means in converging relation to each other toward the guiding means.

3. In combination with a movable armature, means for guiding movement of the armature along a predetermined path and a permanent armature magnet having magnetic poles of opposite polarity spaced from each other along said path to establish a magnetic field of limited extent movable with the armature and magnetic stator means for establishing a stationary magnetic flux zone along said path, the improvement comprising flux emitting surfaces of one polarity mounted on the stator means on opposite sides of said path for limiting said flux zone through which said path extends and means mounting the permanent armature magnet on the armature with the poles faces thereof orientated relative to said flux emitting surfaces on the stator means for unidirectionally propelling the armature along said path through the limited zone in response to magnetic interaction between the movable magnetic field and the limited flux zone, said armature magnet being curved between end faces at which said poles of opposite polarity are located, the end faces being orientated by the mounting means in converging relation to each other toward the guiding means.

4. In combination with a movable armature, means for guiding movement of the armature along a predetermined path and a permanent armature magnet having

magnetic poles of opposite polarity spaced from each other along said path to establish a magnetic field of limited extent movable with the armature and magnetic stator means for establishing a stationary magnetic flux zone along said path, the improvement comprising flux emitting surfaces of one polarity mounted on the stator means on opposite sides of said path for limiting said flux zone through which said path extends and means mounting the permanent armature magnet on the armature with the poles thereof orientated relative to said flux emitting surfaces on the stator means for unidirectionally propelling the armature along said path through the limited zone in response to magnetic interaction between the movable magnetic field and the limited flux zone, said magnetic stator means including a pair of permanent magnet assemblies having continuous, confronting pole faces of said one polarity bordering said limited zone, each of said assemblies having means for varying magnetic field intensity in the flux zone along said path, and a second armature magnet connected to the first mentioned armature magnet in mirror image relation thereto.

5. The combination of claim 4 wherein said armature magnet is curved between end faces at which said poles of opposite polarity are located, the end faces being orientated by the mounting means in a plane parallel to said path.

6. In combination with a movable armature, means for guiding movement of the armature along a predetermined path and a permanent armature magnet mounted on the armature having magnetic poles of opposite polarity spaced from each other along said path, the improvement comprising a plurality of permanent magnet gate assemblies mounted in spaced relation to each other along said path establishing interacting stationary magnetic fields along said path, each of said assemblies including stator magnets interconnected in surrounding relation to said path and having pole faces of opposite polarity aligned with parallel planes intersected by said path and magnetic means fixed to the pole faces aligned with one of the parallel planes for interaction of the armature magnet with said stationary magnetic fields for unidirectional propulsion of the armature along said path, said magnetic means being an annular magnet having a radially inner pole surface of one polarity enclosing a magnetic flux zone through which said path extends.

Description

BACKGROUND OF THE INVENTION

This invention relates in general to the use of permanent magnets to generate unidirectional propelling forces.

The generation of unidirectional propelling forces by permanent magnets is already known and recognized in U.S. Pat. Nos. 4,151,431 and 4,215,330 to Johnson and Hartmen, respectively, by way of example. According to applicant's own prior Pat. No. 4,151,431, such forces are generated by magnetic interaction between a curved magnet bar of an armature guided for movement along a circular path and an arrangement of spaced stator magnets having pole faces of one polarity facing the armature on one side thereof parallel to the path of movement.

It is therefore an important object of the present invention to provide certain improved stator arrangements of permanent magnets interacting with a permanent magnet armature for unidirectional propulsion thereof in a novel manner believed to be more efficient.

SUMMARY OF THE INVENTION

In accordance with the present invention, the armature magnet is guided along a path through a magnetic flux zone limited on opposite sides of the path by an arrangement of magnetic pole surfaces of one polarity on stator magnets. According to one embodiment, the flux zone is formed by spaced gate assemblies of magnets having exposed pole faces of one polarity in a plane perpendicular to the armature path from which a magnetic field extends to the opposite pole faces and a ring magnet fixed to such opposite pole faces of the other polarity, with a radially inner pole surface of the same polarity producing a magnetic field perpendicular to the first mentioned field to their opposite radially outer pole surfaces.

According to another embodiment, the flux zone is formed between continuous confronting pole surfaces of one polarity on stator magnets arranged to produce a magnetic field of varying intensity along the armature path.

In yet another embodiment, at least two curved bar magnets are interconnected to form the armature with two pairs of pole faces spaced along the armature path.

These together with other objects and advantages which will become subsequently apparent reside in the details of construction and operation as more fully hereinafter described and claimed, reference being had to the accompanying drawings forming a part hereof, wherein like numerals refer to like parts throughout.

BRIEF DESCRIPTION OF THE DRAWINGS

FIG. 1 is a somewhat schematic side elevational view showing an installation of the present invention in accordance with one embodiment, with parts broken away and shown in section.

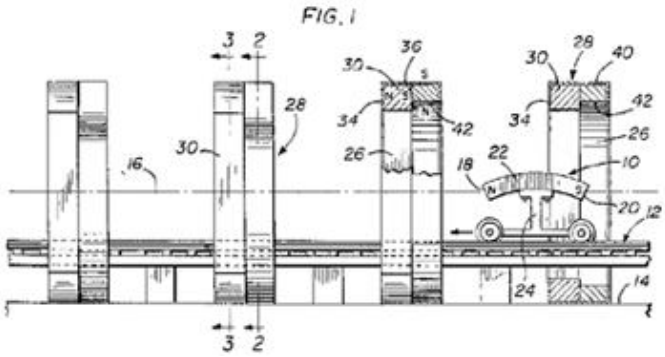

FIG. 2 is a transverse sectional view taken substantially through a plane indicated by section line 2--2 in FIG. 1.

FIG. 2

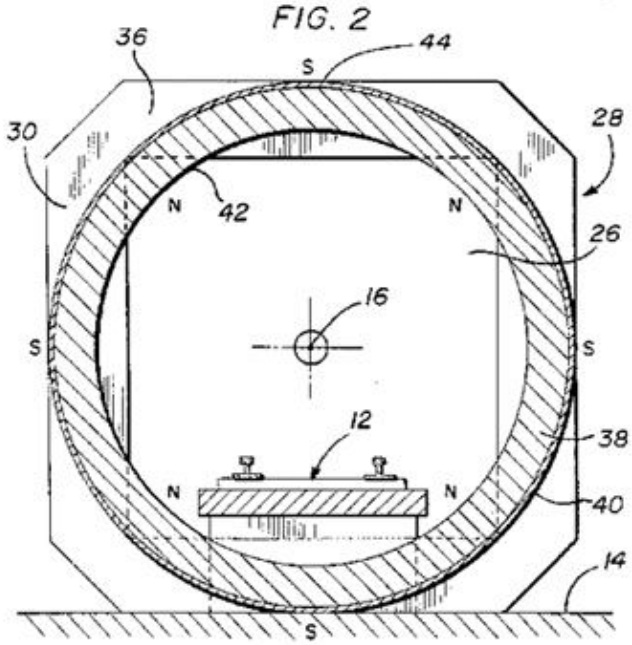

FIG. 3 is an enlarged partial sectional view taken substantially through a plane indicated by section line 3--3 in FIG. 1.

FIG. 3

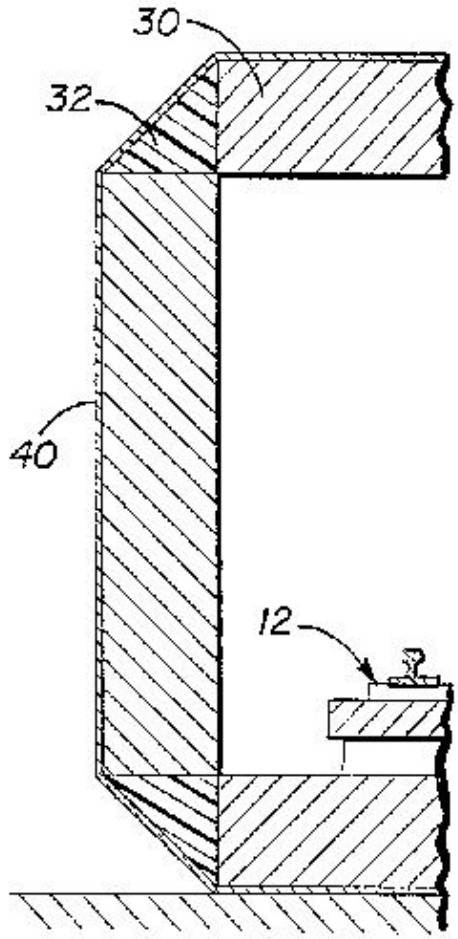

FIG. 4 is a top plan view of an installation in accordance with another embodiment of the invention.

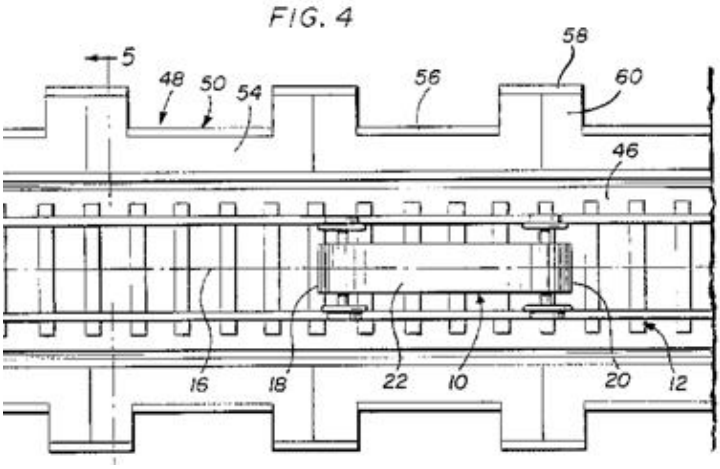

FIG. 5 is a sectional view taken substantially through a plane indicated by section line 5--5 in FIG. 4.

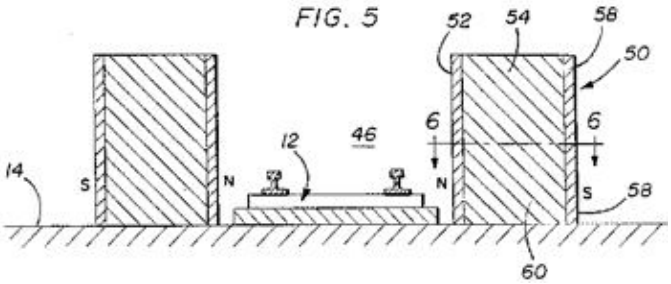

FIG. 6 is a sectional view taken substantially through a plane indicated by section line 5--5 in FIG. 5.

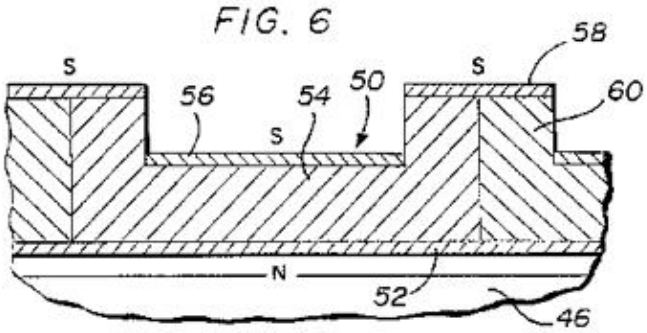

FIG. 7 is a simplified side view through the flux zone shown in FIGS. 4, 5 and 6 with the armature bar magnet positioned therein.

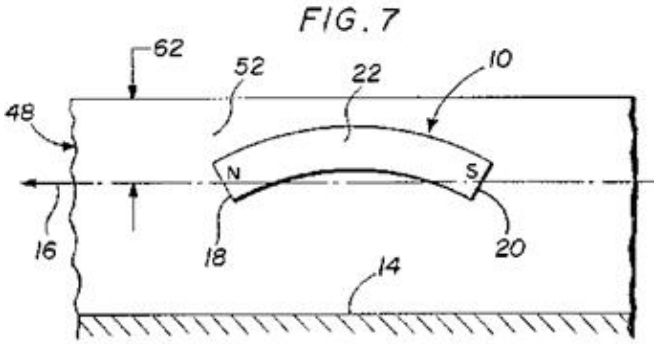

FIG. 8 is a top plan view of an installation in accordance with yet another embodiment.

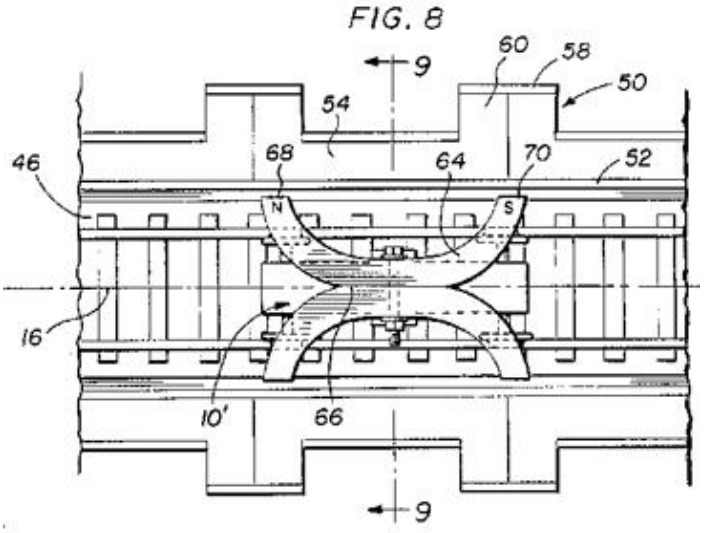

FIG. 9 is an enlarged partial sectional view through a plane indicated by section line 9--9 in FIG. 8.

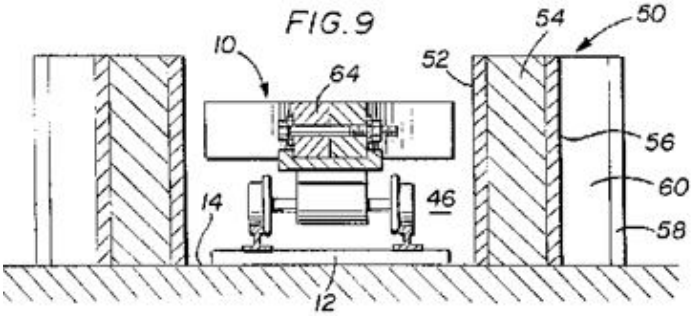

DETAILED DESCRIPTION OF THE PREFERRED EMBODIMENTS

Referring now to the drawings in detail, FIG. 1 illustrates one embodiment of the invention in which a magnetic armature generally referred to by reference numeral 10 is unidirectionally propelled along a predetermined path established by a motion guiding track 12 fixed to a frame or support 14. The path is represented by a line 16 extending through pole faces 18 and 20 of opposite polarity at the longitudinal ends of a curved armature bar magnet 22. The armature 10 in the illustrated example includes a wheeled vehicle mount 24 to which the armature magnet 22 is fixedly secured with the pole faces 18 and 20 converging toward the guiding track 12. The pole faces 18 and 20 are furthermore orientated so that the magnetic field extending between pole faces 18 and 20 is movable therewith within a flux zone 26 limited in surrounding relation to the guided path at spaced locations by stator gate assemblies 28 formed by permanent magnets fixed to the frame support 14.

Each of the stator gate assemblies 28 as shown in FIGS. 1-3, includes four bar magnets 30 interconnected at corners by non-magnetic elements 32, such as triangular wooden blocks as more clearly seen in FIG. 3, to form a rectangular enclosure in surrounding relation to the track 12. Pole faces 34 and 36 between which a stationary magentic field extends are formed on the bar magnets substantially aligned with parallel spaced planes in perpendicular intersecting relation to the path line 16. The pole face

34 of one polarity (north) is effective through its magnetic field to magnetically interact with the magnetic field of the armature magnet 22 causing unidirectional propulsion of the armature 10 as actually observed during tests. Such magnetic interaction is obviously influenced by the pole face 36 of opposite polarity (south) abutting and fixed to an annular or circular ring magnet 38 magnets 30. The interconnected and 38 may be held in assembled relation by an outer skin or sheathing 40 as shown in FIG. 3.

The ring magnet 38 has a radially inner pole surface 42 of the same polarity (north) as that of the pole faces 34 to interact with the other pole faces 36 as aforementioned, to the exclusion of the radially outer pole surface 44. The obvious effect of said arrangement is to exert a net magnetic force on the armature magnet 22 causing the observed continuous, unidirectional propulsion thereof through the gate assemblies 28. Such assemblies 28 are spaced apart distance dependent on the magnetic field intensity or strength of the permanent magnets 30 and 38 which dictate the effective axial extent of the aforementioned magnetic fields associated with the assemblies 28 and the armature magnet 22.

FIGS. 4-7 illustrate another embodiment of the invention utilizing the same type of movable armature 10 guided along a predetermined path by a frame mounted track 12 extending through a flux zone 46 established by another type of permanent magnet stator arrangement, generally referred to by reference numeral 48. The stator 48 includes a pair of permanent magnet assemblies 50 extending in parallel spaced relation to each other on opposite sides of the armature path established by the track 12. Each assembly 50 is a mirror image of the other so as to expose continuous confronting pole surfaces formed by a magnetic layer material 52 such as Neodynium, mounted on interconnected ceramic bodies 54. The confronting pole surfaces of the magnetic layers 52 are of like polarity (north), opposite to the polarity of the pole surface of magnetic layer sections 56 and 58 made of Samarium Cobalt, for example, and carried on the ceramic bodies 54. The bodies 54 have transversely extending flange portions 60 at the abutting ends so as to mount the layer sections sections 58 laterally outwardly of layer sections 56 as more clearly seen in FIGS. 4 and 6 to thereby vary the magnetic field intensity along the guided armature path within the limited flux zone 46 in which the magnetic fields of the stator assembly 48 interact with the magnetic field of bar magnet 22.

The curved armature magnet 22 is orientated within the flux zone 46 between the confronting pole surfaces on 52 as depicted in FIG. 7, with the pole faces 18 and 20 converging toward the track 12 as previously described in connection with FIGS. 1-3. However, it was found that maximum propelling thrust is produced by optimum location of the path line 16 through the pole faces 18 and 20 a distance 62 closer to the upper edge of surface layer 52 than the lower edge on the frame support 14.

FIGS. 8 and 9 illustrate yet another embodiment of the invention involving the same type of permanent magnet stator arrangement 50 as described with respect to FIGS. 4-7. a modified form of armature 10' is featured in FIGS. 8 and 9, including two curved armature magnets 64 that are mirror images of each other with respect to an intermediate abutting portion 66. The magnets 64 are interconnected at the abutting portion 66 in alignment with a plane containing the path line 16 centrally between the confronting pole surfaces on 52. The end pole faces 68 and 70 for each magnet 64, are aligned with a plane in parallel spaced relation between the path line 16 and the pole surface on 52. With the number of pole faces thereby doubled for the armature, a higher and more efficient propelling thrust may be achieved.

The foregoing is considered as illustrative only of the principles of the invention. Further, since numerous modifications and changes will readily occur to those skilled in the art, it is not desired to limit the invention to the exact construction and operation shown and described, and accordingly, all suitable modifications and equivalents may be restorted to, falling within the scope of the invention.

US Patent # 5,402,021

Magnetic Propulsion System

Howard R. Johnson

(March 28, 1995)

Abstract --- A magnetic propulsion system including a plurality of specifically arranged permanent magnets and a magnetic vehicle propelled thereby along a path defined by the permanent magnets. The magnetic vehicle which is to be propelled includes a rigidly attached armature comprising several curved magnets. The propulsion system further includes two parallel walls of permanent magnets arranged so as to define the lateral sides of a vehicle path. Preferably, the walls are identical to one another except that the polarities of the magnets which define one wall are opposite from the polarities of the corresponding magnets in the opposite wall. A first wall, for example, includes a series of generally rectangular magnets, each magnet arranged with a North-to-South axis pointing longitudinally down the wall in the intended direction of vehicle travel. Each of the rectangular magnets is separated from the next successive rectangular magnet by a thinner magnet, which thinner magnet is arranged with its North-to-South axis pointing laterally toward the opposite wall and therefore perpendicular with respect to the North-to-South axis of the rectangular magnets. The opposite (or second) wall includes the same general arrangement of magnets, except that the North-to-South axis for each of the generally rectangular magnets is in a direction opposite from the direction of vehicle travel and the North-to-South axis of the thinner magnets points away from the first wall. In addition, the propulsion system includes several spin accelerators.

Inventors: Johnson; Howard R. (1440 Harding Rd., Blacksburg, VA 24060)
Appl. No.: 064930 ~ Filed: May 24, 1993

Current U.S. Class: 310/12; 198/619; 310/152
Intern'l Class: B65G 035/06; H02K 041/00
Field of Search: 310/12,152,46 198/619,805

References Cited [Referenced By]

U.S. Patent Documents:
4,151,431 ~ Aug., 1979 ~ Johnson (Cl. 310/12).
4,215,330 ~ Jun., 1980 ~ Hartman (335/306).
4,877,983 ~ Oct., 1989 ~ Johnson (310/12).

Other References:
Advances in Permanent Magnetism, pp. 44-57 date unknown.
Scientific American, Jan. 1989, pp. 90-97.

Introduction to Magnetic Materials, pp. 129-135 date unknown.
Applications of Magnetism, pp. 42-47 date unknown.

Description

FIELD OF THE INVENTION

The present invention relates to a magnetic propulsion system including a plurality of specifically arranged permanent magnets and a magnetic vehicle propelled thereby along a path defined by the permanent magnets.

BACKGROUND OF THE INVENTION

The generation of unidirectional propelling forces by permanent magnets is already known and recognized in U.S. Pat. Nos. 4,151,431 and 4,877,983 to Johnson, and U.S. Pat. No. 4,215,330 to Hartmen, by way of example. According to applicant's first patent (U.S. Pat. No. 4,151,431), such forces are generated by magnetic interaction between a curved magnet bar of an armature guided for movement along a circular path and an arrangement of spaced stator magnets having pole faces of one polarity facing the armature on one side thereof parallel to the path of movement.

According to applicant's second patent (U.S. Pat. No. 4,877,983), the armature magnet is mounted on a vehicle and guided along a path through a magnetic flux zone limited on opposite sides of the path by an arrangement of magnetic pole surfaces of one polarity on stator magnets. According to one embodiment of the second patent, the flux zone is formed by spaced gate assemblies of magnets having exposed pole faces of one polarity in a plane perpendicular to the armature path from which a magnetic field extends to the opposite pole faces and a ring magnet fixed to such opposite pole faces of the other polarity, with a radially inner pole surface of the same polarity producing a magnetic field perpendicular to the first mentioned field to their opposite radially outer pole surfaces. Several other embodiments are illustrated including variations in the armature structure and in the stator structure; however, all of the embodiments teach use of an annular stator assembly.

SUMMARY OF THE INVENTION

It is therefore an object of the present invention to provide an improved magnetic propulsion system having a plurality of permanent magnets and a magnetic vehicle propelled thereby along a path defined by the permanent magnets, wherein the permanent magnets need not encircle the path of the magnetic vehicle.

In order to achieve this and other objects, the present invention comprises two parallel walls of permanent magnets arranged so as to define the lateral sides of a vehicle path. The walls are identical to one another except that the polarities of the magnets which define one wall are opposite from the polarities of the corresponding magnets in the opposite wall.

A first wall, for example, includes a series of generally rectangular magnets, each magnet arranged with a North-to-South axis pointing longitudinally down the wall in the intended direction of vehicle travel. Each of the rectangular magnets is separated from the next successive rectangular magnet by a thinner magnet, which thinner magnet is arranged with its North-to-South axis pointing laterally toward the opposite wall and therefore perpendicular with respect to the North-to-South axis of the rectangular

magnets.

The pole-to-pole length of each thinner magnet is preferably no more than half the width of the generally rectangular magnets. Accordingly, a gap on the inside surface of the wall is defined by the presence of each thinner magnet.

The opposite (or second) wall includes the same general arrangement of magnets, except that the North-to-South axis for each of the generally rectangular magnets is in a direction opposite from the direction of vehicle travel and the North-to-South axis of the thinner magnets points away from the first wall.

In addition, the propulsion system of the present invention includes several spin accelerators for crowding the magnetic fields at predetermined positions along the length of the walls. This crowding of the magnetic fields serves to intensify the fields and causes the vehicle's armature to be accelerated faster than would otherwise be the case without the spin accelerators.

The spin accelerators project laterally outward from each of the walls at predetermined positions along the longitudinal length of each wall. Each spin accelerator comprises a generally rectangular permanent magnet which is preferably identical to that of the first and second walls. Each spin accelerator further includes a shorter magnet having a smaller pole-to-pole length than that of the generally rectangular magnet and a wedge separating the generally rectangular magnet of the spin accelerator from the shorter magnet.

The orientation of the generally rectangular magnet in the spin accelerator is determined by which pole of the wall's thinner magnet is facing outwardly. The rectangular magnet's orientation is such that face-to-face contact is established between opposite poles of the generally rectangular magnet in the spin accelerator and the thinner magnet in the wall. Accordingly, the North-to-South axis of the generally rectangular magnet in the spin accelerator points in the same direction as the North-to-South axis of the thinner magnet in the wall. The shorter magnet in the spin accelerator is likewise arranged with its North-to-South axis pointing in the same general direction as that of the thinner magnet in the wall; but here, an acute angular tilt away from the North-to-South axis of the thinner magnet is established by the wedge. In particular, the angle of the wedge determines the acute angle which exists between the North-to-South axis of the shorter magnet in the spin accelerator and the North-to-South axis of the thinner magnet in the wall.

The magnetic vehicle which is to be propelled by the instant propulsion system includes a rigidly attached armature comprising several curved magnets. Each curved magnet is arranged on the vehicle such that its North-to-South axis is parallel with respect to that of the other curved magnets. In particular, the North-to-South axes of all the curved magnets point in the same direction as the North-to-South axes of the thinner magnets in each wall. The vehicle itself is preferably a wheeled vehicle mounted on a track; however, it is understood that other vehicle structures will suffice so long as the vehicle is maintained between the walls of the propulsion system.

In operation, the magnetic fields created by the two walls exert a propelling force on the armature of the vehicle in the desired direction of travel. Since the armature of the vehicle is rigidly attached to the vehicle, the vehicle itself begins to accelerate and is hence set in motion by the propulsion system.

Preferably, the curved magnets of the vehicle armature are "Alnico 8" magnets tipped with neodymium magnets. The magnets which constitute the walls and spin accelerators are preferably made of neodymium and ceramic material, except for the thinner magnets. The thinner magnets are preferably made of rubber or plastic, and each can comprise a plurality of magnetic rubber or plastic layers.

Although the present invention has been described with regard to generally rectangular magnets, it is understood that other permanent magnet shapes will suffice, including but not limited to generally cylindrical shapes.

BRIEF DESCRIPTION OF THE DRAWING

FIG. 1 is a schematic plan view of a magnetic propulsion system in accordance with a preferred embodiment of the present invention.

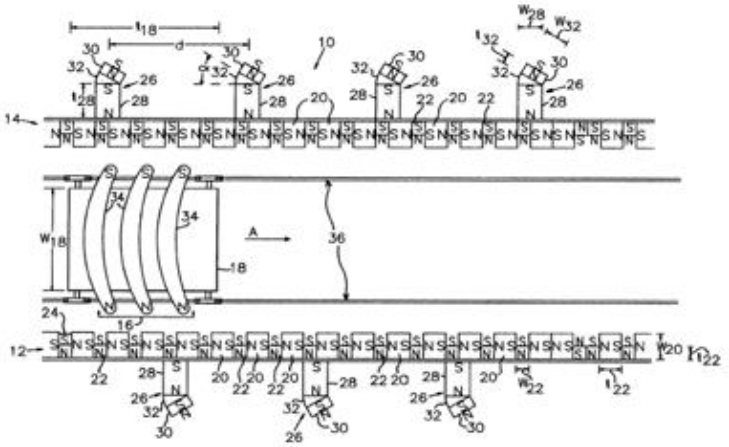

FIG. 1

DETAILED DESCRIPTION OF A PREFERRED EMBODIMENT

With reference to FIG. 1, a preferred embodiment of the inventive magnetic propulsion system and vehicle propelled thereby will now be described.

FIG. 1 schematically illustrates a propulsion system 10 comprising two parallel magnetic walls 12,14 which are stationary, and an armature 16 rigidly attached to a vehicle 18. The two parallel walls 12,14 are formed from several permanent magnets arranged so as to define the lateral sides of a vehicle path. The desired direction of vehicle travel is indicated by an arrow A in FIG. 1. The two walls 12,14 are identical to one another except that the polarities of the magnets which define one wall 12 are opposite from the polarities of the corresponding magnets in the opposite wall 14. A first wall 12, for example, includes a series of generally rectangular magnets 20, each magnet arranged with a North-to-South axis pointing longitudinally down the wall in the intended direction of vehicle travel (indicated by arrow A). Each of the magnets 20 preferably comprises a ceramic magnet with a neodymium north pole. In addition, each of the generally rectangular magnets 20 is separated from the next successive rectangular magnet 20 by a thinner magnet 22. The thinner magnets 22 are arranged with their North-to-South axes pointing laterally toward the opposite wall 14 and therefore perpendicular with respect to the North-to-South axis of the rectangular magnets 20. Each thinner magnet 22 is preferably made from rubber or plastic permanently magnetic material. Also, the pole-to-pole length of each thinner magnet 22 is preferably no more than half the width of the generally rectangular magnets 20.

Consequently, a gap 24 on the inside surface of the wall 12 is defined by the presence of each thinner magnet 22.

The opposite (or second) wall 14 includes the same general arrangement of magnets 20,22, except that the North-to-South axis for each of the generally rectangular magnets 20 points in a direction opposite from the direction of vehicle travel, while the North-to-South axes of the thinner magnets 22 point away from the first wall 12.

By arranging the thinner magnets 22 between the generally rectangular magnets 20 in the foregoing manner, there is a pole shading effect on the magnets 20 of the walls 12,14.

In addition, the propulsion system 10 of the preferred embodiment includes several spin accelerators 26 for crowding the magnetic fields at predetermined positions along the length of the walls 12,14. This crowding of the magnetic fields serves to intensify the fields and causes the vehicle's armature to be accelerated faster than would otherwise be the case without the spin accelerators.

The spin accelerators 26 project laterally outward from each of the walls 12,14 at predetermined positions along the longitudinal length of each wall 12,14. According to the preferred embodiment, the spin accelerators 26 are positioned along the walls 12,14 at every other thinner magnet 22 (as is shown in the middle of FIG. 1). Each spin accelerator 26 comprises a generally rectangular permanent magnet 28 which is preferably identical or very similar to that of the first and second walls 12,14. Each spin accelerator 26 further includes a shorter magnet 30 having a smaller pole-to-pole length than that of the generally rectangular magnet 28 and a wedge 32 separating the generally rectangular magnet 28 of the spin accelerator 26 from the shorter magnet 30. The orientation of the generally rectangular magnet 28 in the spin accelerator 26 is determined by which pole of the wall's thinner magnet 22 is facing outwardly. The rectangular magnet's orientation is such that face-to-face contact is established between opposite poles of the generally rectangular magnet 28 in the spin accelerator 26 and the thinner magnet 22 in the wall 12,14. Accordingly, the North-to-South axis of the generally rectangular magnet 28 in the spin accelerator 26 points in the same direction as the North-to-South axis of the thinner magnet 22 in the wall 12,14. The shorter magnet 30 in the spin accelerator 26 is likewise arranged with its North-to-South axis pointing in the same general direction as that of the thinner magnet 22 in the wall 12,14; but here, an acute angular tilt away from the North-to-South axis of the thinner magnet 22 is established by the wedge 32. In particular, the angle .alpha. of the wedge determines the acute angle which exists between the North-to-South axis of the shorter magnet 30 and the North-to-South axis of the thinner magnet 22 in the wall 12,14. The shorter magnet 30 preferably consists of neodymium.

The magnetic vehicle 18 which is to be propelled by the instant propulsion system 10 includes a rigidly attached armature 16 comprising several curved magnets 34. Each curved magnet 34 is arranged on the vehicle 18 such that its North-to-South axis is parallel with respect to that of the other curved magnets 34. In particular, the North-to-South axes of all the curved magnets 34 point in the same direction as the North-to-South axes of the thinner magnets 22 in each wall 12,14. The vehicle 18 itself, according to the preferred embodiment, is a wheeled vehicle mounted on a track 36. It is understood, however, that other vehicle structures will suffice so long as the vehicle is maintained between the walls 12,14 of the propulsion system 10.

In operation, when the vehicle 18 is positioned as is shown in FIG. 1, the magnetic fields created by the two walls 12,14 exert a propelling force on the armature 16 of the vehicle 18 in the desired direction of travel (arrow A). Since the armature 16 is rigidly attached to the vehicle 18, the vehicle 18 itself begins to accelerate and hence is set in motion by the propulsion system 10.

Furthermore, since the spin accelerators 26 serve to crowd and thereby intensify the magnetic fields at predetermined positions along the walls 12,14, the acceleration of the vehicle is enhanced as the vehicle passes these predetermined positions.

The spin accelerators 26 can be reversed in order to lessen their effectiveness at crowding the magnetic fields. Reversing of the spin accelerators 26 can be accomplished by rotating the spin accelerators 26 so that the shorter magnets 30 tilt away from the intended direction of vehicle travel, rather than in the direction of travel as is the case for the illustrated embodiment.

Preferably, the curved magnets 34 of the vehicle armature 16 are "Alnico 8" magnets tipped with neodymium magnets, while the wedges 32 comprise wood or similar material and an angle .alpha. of 45 to 90 degrees.

The width w.sub.20, height, and pole-to-pole length 1.sub.20 of the generally rectangular magnets 20 in each wall 12,13 are 0.75 inches to 1.25 inches, 3.75 to 4.25 inches, and 1.25 inches to 1.75 inches, respectively. The width w.sub.22, height, and pole-to-pole length 1.sub.22 of the thinner magnets 22 in the walls 12,14 are 1 inch to 1.5 inches, 3.75 inches to 4.25 inches, and no more than one half the width w.sub.20 of the generally rectangular magnets, respectively. In the spin accelerators 26, the width w.sub.28, height, and pole-to-pole length 1.sub.28 of the generally rectangular magnets 28 are 1.125 to 1.625 inches, 3.75 to 4.25 inches, and 0.875 inches to 1.375 inches, respectively, while the width w.sub.32, height, and pole-to-pole length 1.sub.32 of the shorter magnets 30 are 0.75 inch to 1.25 inches, 3.75 inches to 4.25 inches, and 0.125 inch to 0.375 inch, respectively.

Preferably, the distance separating the walls 12,14, is such that each wall 12,14 is 0.5 inch to 1.25 inches away from the tips of the armature magnets 34, both walls 12,14 being equidistant from the tips of the armature 16. Also, the curved magnets 34 of the armature 16 are preferably 0.375 inch to 0.625 inch apart from one another.

Testing of the foregoing prototype propulsion system resulted in the vehicle moving 2 feet in one second.

Although the present invention has been described with reference to a preferred embodiment, it is understood that various modifications to this embodiment will become subsequently apparent to those having ordinary skill in the art. In this regard, the scope of the invention is limited only by the claims appended hereto, and not by the illustrated embodiment.

Tom Bearden Comments
(Cribbed from www.greaterthings.com)

From: "Karl" <krlbrgmnn@mailandnews.com>
To: "Sterling D. Allan, PerenTech.com" <sterlingda@perentech.com>
Sent: Thursday, December 19, 2002 2:01 PM

Subject: Truth about Howard Johnson and his motor

Sterling,

Just a quick note to let you know I spoke to Tom Bearden today and, regarding the statement on your webpage by your "anonymous source" who said "Howard Johnson never was able to get the rotary version to work. He was only able to get the linear version working, and there were some questions about its viability.", Tom said such a person doesn't know what they are talking about. I'd say Tom is in the best position to know, since he and Howard have been friends for decades and Howard has personally brought a functional, rotary PMM to Tom's house, and they've played with it for hours. Next to Howard himself, I'd consider Tom to be the best resource on the subject of HJ's PMM.

He also said that Howard is still working on getting another functioning unit constructed (he's had numerous setbacks over the years after his working unit was vandalized by thieves that broke into Howard's shop and stole only the magnets off that model, leaving many $K worth of other material nearby untouched). Howard is still plugging away every day, at over 70 years old, but his wife's health problems are keeping him busy. However, he has gotten hooked up with a respectable, honest businessman who is financing him and Howard also now has some younger help to do the grunt work that is becoming tougher for him. All in all, Tom hopes to see some real progress being made for Howard in the next year or so.

Tom mentioned that there are a few critical things that anyone who wants to successfully build a working HJ PMM needs to know, some of which are probably obvious to the more experienced builders:

1) The most critical element is the precise machining of the magnets. Joe Q. Public, with his diamond saw, cutting his own magnets by hand has little chance of succeeding in shaping the magnets to the aerospace-critical specs that are the minimum necessary, much less duplicating that feat several times for each necessary part.

2) Alignment of the parts is highly important too. One slight misalignment and the motor will not run continuously.

3) All magnets aren't the same. This application requires expensive, extremely high quality magnets. Howard, in order to get them cheaper, was buying them in $50K lots from China, where high quality and a lower price can be had.

I also spoke with a gentleman named Gary Hanson who had been in touch with Howard years ago when Gary was trying to build Howard's motor. Howard told him, as I think most researchers on this know now, that the motor *can* be build directly from the patent but that there needs to be 5 or 6 armtures and not just the one that is shown as an illustration in the patent. Just want to make sure any newbies understand this.

I hope some of this has helped clear up any misunderstandings for those of us interested in building a functional HJ PMM. My opinion is that, if you want to do it right, go to the horse's mouth (Howard) or else as close as you can possibly get (Tom). Hopefully, doing so will enable us to make this motor a reality.

Regards, Karl

Tom Bearden: ***Chasing the Wild Dragon*** **[**Excerpts from www.cheniere.org]

Howard Johnson is also a respected colleague, whom I very much admire. (See Figure 23). Howard has continued to work quietly and patiently upon his patented permanent magnet motor, [note 31] including patenting various magnetic gates, etc. that are necessary to make such a motor work in a rotary configuration. [note 32] Howard employs a two-particle theory of magnetism; i.e., each magnetic flux line is envisioned as having a particle traveling from the north pole to the south pole, and also a particle traveling from the south pole to the north pole. The particles are spinning; the forward-time particle spins in one direction, and the antiparticle spins in the other direction. Howard then slightly separates the two particle flows. [note 33] In other words, Johnson splits the flux lines themselves, into two different pieces. When so separated, the component lines are now curls, so their paths curve. The paths of the two "curl particles" are different; one curls in one direction and the other curls in the opposite direction. Further, a predominance of one form of curl particle gives a "time-forward" aspect, while a predominance of the other form of curl particle gives a "time-reversed" aspect. Johnson is thus able to employ a deeper kind of magnetism than the textbooks presently contain. He demonstrates that a "spin-altered" magnetic assembly exhibiting (to a compass or other such detector) a north polarity can attract another unaltered magnetic assembly exhibiting a north polarity. In short, he can make a north pole attract a north pole. We will give you further insight into Johnson's two-particle theory in a future article. [note 34] We will also explain how and why the physicists missed that antiparticle in the magnetic field's flux lines, and thereby failed to advance the theory of magnetism to a deeper level. Make no mistake, one day when the new theory is done, Johnson may well be awarded a Nobel Prize for his epochal discovery of a deeper structure of magnetism.

Footnotes:

[32] I personally saw and closely examined one demonstration rotary Johnson permanent magnet motor some years ago, and toyed with it for about one hour. It would definitely self- rotate as long as you wished to permit it to turn. It was not a powerful device at all, but just a small laboratory "proof of principle" prototype. It had cost Johnson an enormous amount of time, labor, and optimization to get the critical adjustment required of his two magnet assemblies. But the device had no power source other than the permanent magnet assemblies themselves. Johnson's nonlinear rotor and stator magnets interacted with each other in a manner to break local symmetry. So his machine was an open system and therefore a permissible overunity device; it was not a perpetuum mobile.

[33] As I have pointed out repeatedly in the past, photons also carry time, not just energy. We have previously shown the process and the photon interaction mechanism that creates the flow of time itself; we will discuss this mechanism in the future. So when Johnson separates the particles and antiparticles, not only does he partially separate them according to spin, but he also alters the local character of time flow during which the resulting magnetic field forces must appear. In other words, he accomplishes a partial separation of time-forward and time- reversed polar interactions. A south pole is just a time- reversed magnetic north pole, in the first place! So a north pole of a bar magnet that is slightly time reversed on one side will

partially act on that side just like a south pole. On the other side it will continue to act like a normal north pole. By partially time-reversing (phase conjugating) one side of the north magnetic pole piece, Johnson makes that side look and act like a south pole. that way Howard is able to create two north poles, one on a stator and the other on a rotor, and time-reverse part of one face of the stator's north magnetic pole-piece. Therefore when the proper sides of the stator and rotor north poles are facing, they attract each other, contrary to the conventional textbook. The two poles then repel each other normally as soon as the north rotor poles passes the north stator pole. Hence Johnson can make a surrounding north pole stator assembly "draw in" an approaching north pole rotor assembly, and then kick it on out the other side, because he has broken the local magnetic symmetry. In short, Johnson's magnetic gate can provide a legitimate component of unidirectional magnetic thrust, which means that he can indeed make a rotary permanent motor. Simply put, this "partially separating the spin particles," and thereby partially phase conjugating one face of a magnet, is what Johnson calls a "gate," and this is the patented secret by which his magnet assemblies can be made self-powering. The entire process is still very meticulous, and assembly and adjustments are extremely critical. With Johnson's blessings we hope to shed more light on this subject in coming articles.

[34] For a basic article on rotary permanent magnet motors, see T.E. Bearden, "On Rotary Permanent Magnet Motors and 'Free' Energy," *Raum & Zeit*, 1(3): 43-53 (Aug.-Sep. 1989).

Your Support Maintains this Service. Please Invest in the mind-boggling Rex Research Website CD -- Always The Best Investment ... Everything on this Website & More (the Bonus Files CD) -- Only $13, Postpaid Anywhere ! Secure Transaction via PayPal: All Major Credit Cards Accepted:

Buy Now

No Credit ? Don't like PayPal ? Send a Check/Money Order to:

Rex Research, PO Box 19250, Jean, NV 89019 USA

---

rexresearch.com

www.PositiveOffset.com

Electronic Kit & Parts for Educators, Researchers & Hobbyists

30 kHz / 1 kHz Zapper Kit
with Color Illustrated Instructions
$50.00 Add to Cart

Our Zapper Kit contains all the parts necessary to build either a 30,000 Hz or a 1,000 Hz Positive Offset Square Wave Frequency Generator Unit. This breadboard kit is based on Dr. Hulda Clark's zapper circuit design that was recently updated and published in 2003. Copper Pipes and 9 Volt Battery are not included in kit. For copper pipes and individual electronic parts, click the links in the right column.

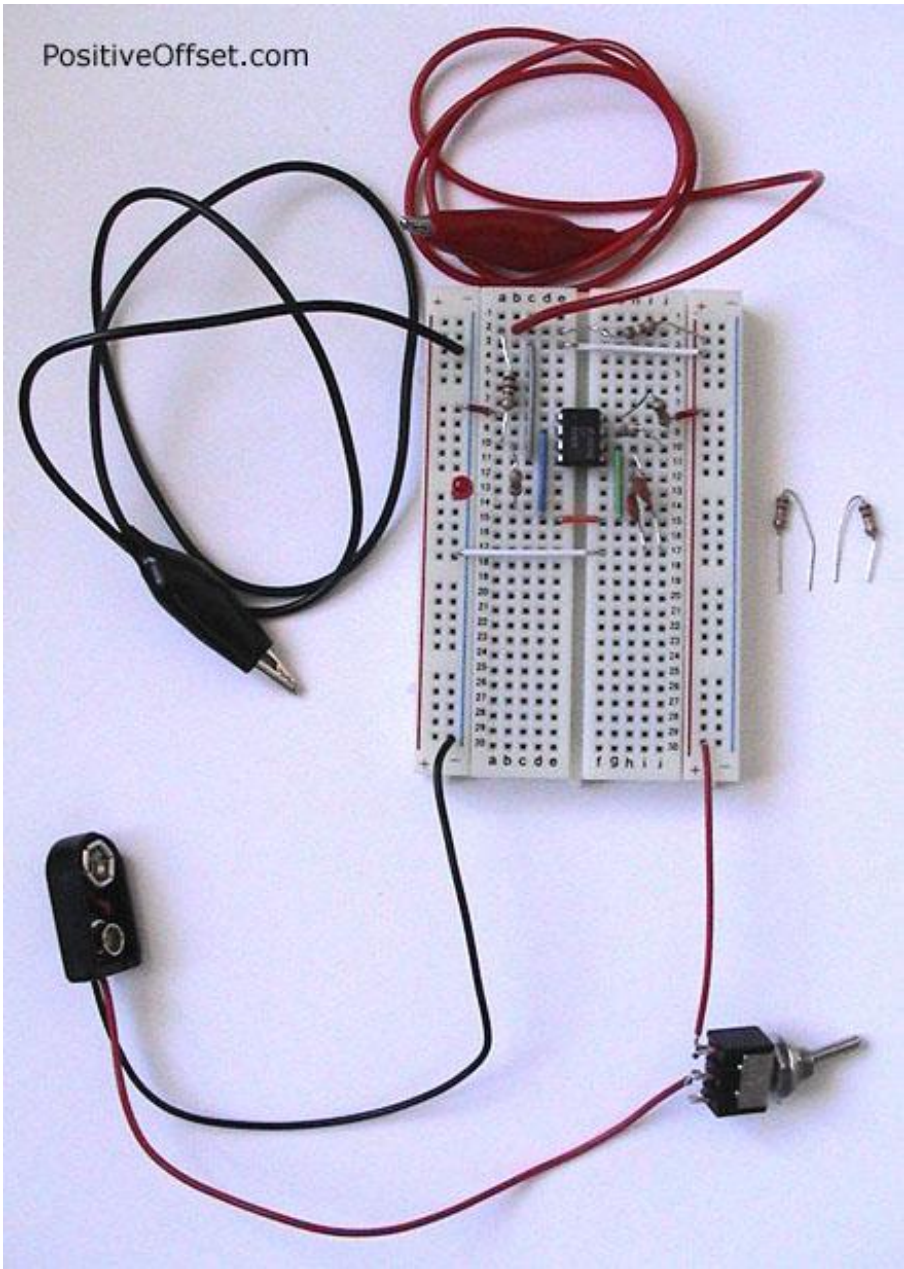

- 30 kHz/1 kHz Zapper Kit
- .0047 uF Capacitors
- 1 uH Inductors
- 1K Ohm Resistors
- 2.2K Ohm Resistors
- 3.9K Ohm Resistors
- 4.7K Ohm Resistors
- 39K Ohm Resistors
- 270K Ohm Resistors
- 555 CMOS Timer
- 8 Pin Wire Wrap Socket
- 9 Volt Battery Snap
- Alligator Clip Converter
- Alligator Leads
- Aluminum Square
- Banana to Alligator Leads
- Breadboard
- Color Coded Jump Wires
- Copper Pipes
- Nuts and Bolts
- On/Off Toggle Switch
- Red Mini LED
- Switching diode 1N914
- Video Instructions

www.PositiveOffset.com

VIEW CART

Hulda Clark Zapper Kit with Color Illustrated Instructions
$50.00 Add to Cart

Zapper Kit includes: Breadboard, 555 CMOS Timer, (2) 1K Ohm resistors, 2.2K Ohm resistor, 4.7K Ohm resistor, 39K Ohm resistor, (2) 270K Ohm

resistors, (2) .0047 uF Capacitors, Mini Red LED, (9) Color Coded Jump Wires, 9-Volt Battery Snap, (2) Alligator leads, and an On/Off Switch. All this comes in a sturdy little cardboard box you can use to house your finished circuit. The full-color instructions will help you build either a 30,000 Hz or 1,000 Hz circuit.

It's so easy to build. No soldering required! Watch the video instructions right here (36 minutes).

- YouTube video instructions: 9 easy steps to build this circuit
- Build a zapper Frequently Asked Questions and Answers
- Already have electronic parts? Download PDF Instructions

Remember the Hulda Clark Zapper has not been licensed as a medical device by the US FDA. Zapper Kit is sold as an educational tool only, no medical claims are intended by the sale of these electronic parts. Our Zapper Kit is a great project for a school science fair, or to learn the basics of building simple electronics.

Please note that when ordering electronic parts and kits we can assume no liability on the customer's ability to use them. Safety, craftsmanship, experience, and ability are the user's responsibility.

Electronic parts are small and fragile. We can not offer refunds or replacements on electronic parts. Buy electronic parts and kits only if you believe you can accomplish the work. If you experience difficulty with your build, or have little experience in electronics, please order replacement parts along with your kit.

The 555 CMOS Timer is the most likely part to need replacement, so it may be smart to order extras when building a kit.

The 555 CMOS Timer is vulnerable to static electricity. If you walk on a carpeted floor and the 555 receives a static shock it may burn out and need replacement.

555 CMOS Timers are sold separately for those who want to have several at hand during a kit build, or to troubleshoot a circuit that is not working.

If you are new to electronics, or just want to be cost effective, you may want to purchase extra 555 CMOS Timers when building your first kit. We can not offer refunds or replacements on electronic parts.

View Shopping Cart / Checkout

View Shopping Cart / Checkout

Customer Service Information

We accept all major credit cards via our secure shopping cart. We also accept checks and money orders through the mail. All packages are shipped United States Postal Service Priority Mail with Delivery Confirmation. If you have an existing order and would like to track your package's Delivery Confirmation, click: **USPS Delivery Confirmation**. If you have any other question or concern about your order, please send an email to Customer Service.

Natural Health Supply .com

www.PositiveOffset.com

Electronic Kit & Parts for Educators, Researchers & Hobbyists

Hulda Clark 30 kHz / 1 kHz Zapper Kit
with Color Illustrated Instructions
Order Zapper Kit Here

Hulda Clark Zapper Kit includes: Breadboard, 555 CMOS Timer, 7 resistors: (2) 1K Ohm, 2.2K Ohm, 4.7K Ohm, 39K, (2) 270K Ohm, (2) .0047 uF Capacitors, Red LED, (8) Color Jump Wires, (2) Alligator Leads, and Soldered Battery Snap/On-Off Switch. All this comes in a sturdy little cardboard box you can use to house your finished circuit. The full-color instructions will help you build either a 30,000 Hz or 1,000 Hz circuit. Kit does not include copper pipes. Click here to order copper pipes.

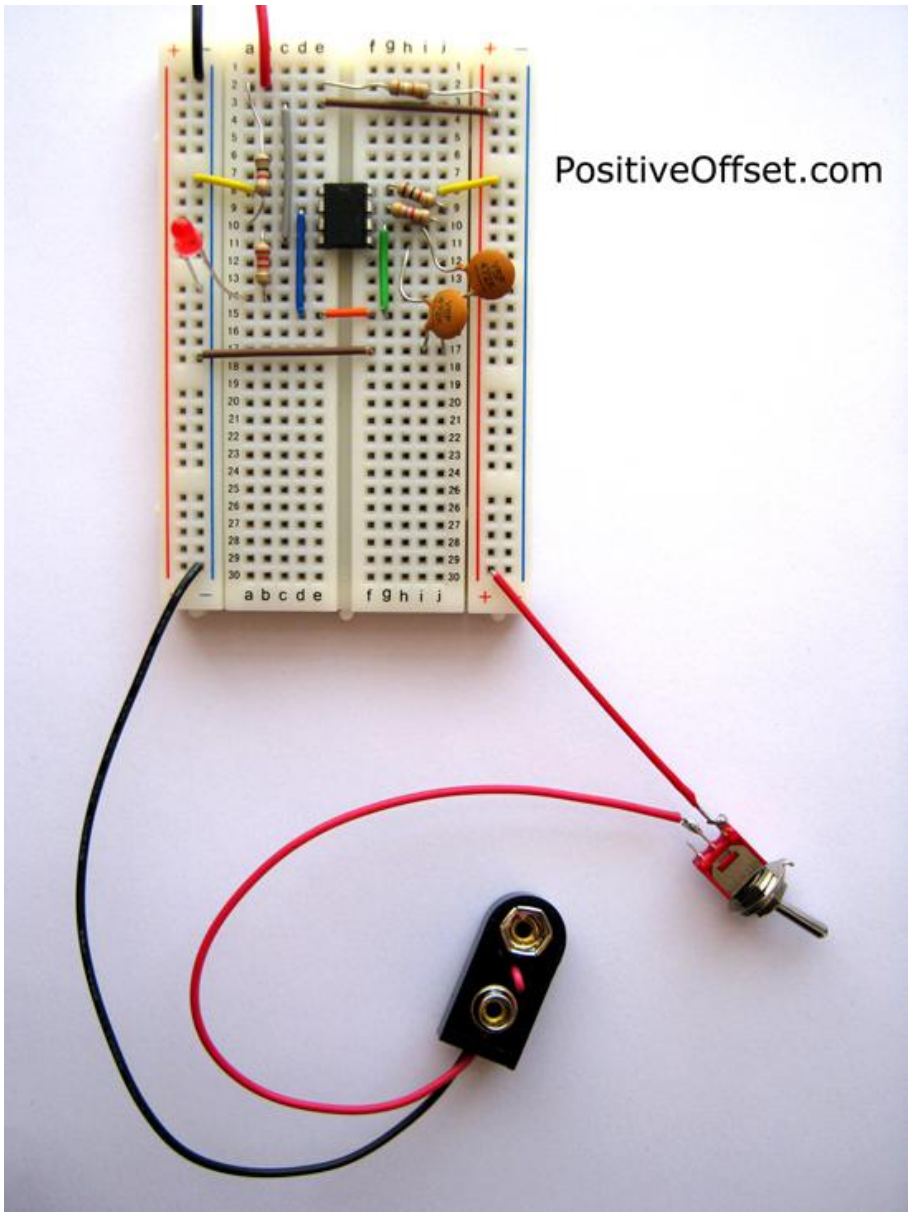

Hulda Clark Zapper Kit with Color Illustrated Instructions
Order Zapper Kit Here

If you are new to building electronics, you may also want to watch the instruction video. The 'Build A Zapper Video' shows how to build this Clark Zapper breadboard kit. Watch the video below. (Note: There are minor updates to the "Build Your Own Zapper" Kit. We have adjusted the jump wires for a

- 30 kHz/1 kHz Zapper Kit
- 555 CMOS Timer
- Switching diode 1N914
- Mini Alligator Leads
- Copper Pipes
- Dial-A-Zap
- Chair Zappicator
- Pet Zappicator
- Video Instructions

VIEW CART

better fit. We have also pre-soldered the 9-volt battery snap to the on/off switch. These updates are not shown in this video, but are clearly described in the kit instructions.)

It's so easy to build. No soldering required! Watch the video instructions right here (36 minutes).

More Video Instructions

- Build a Zapper, Plate Zapper, Food Zappicator, and Toothbrush Zappicator
- Zapper Kit Frequently Asked Questions and Answers
- Already have electronic parts? Download PDF Instructions

The Hulda Clark Zapper has not been licensed as a medical device by the US FDA. Zapper Kit is sold as an educational tool only, no medical claims are intended by the sale of these electronic parts. Our Zapper Kit is a great project for a school science fair, or to learn the basics of building simple electronics.

Please note that when ordering electronic parts and kits we can assume no liability on the customer's ability to use them. Safety, craftsmanship, experience, and ability are the user's responsibility.

Electronic parts are small and fragile. We can not offer refunds or replacements on electronic parts. Buy electronic parts and kits only if you believe you can accomplish the work.

The 555 CMOS Timer is the most likely part to need replacement, so it may be smart to order extras when building a kit.

The 555 CMOS Timer is vulnerable to static electricity. If you walk on a carpeted floor and the 555 receives a static shock it may burn out and need replacement. If you ever touch the 9 volt battery backwards to the battery snap, it may burn out the 555. You may want to protect your 555 by adding a 1N914 Switching Diode to your kit (diode sold separately).

555 CMOS Timers are sold separately for those who want to have several at hand during a kit build, or to troubleshoot a circuit that is not working. If you are new to electronics, or just want to be cost effective, you may want to purchase extra 555 CMOS Timers when building your first kit. We can not offer refunds or replacements on electronic parts.

View Shopping Cart / Checkout

Customer Service Information

We accept all major credit cards via our secure shopping cart. We also accept checks and money orders through the mail. All packages are shipped United States Postal Service Priority Mail with Delivery Confirmation. If you have an existing order and would like to track your package's Delivery Confirmation, click: **USPS Delivery Confirmation**. If you have any other question or concern about your order, please send an email to Customer Service.

www.ZapperLab.com

Order A Hulda Clark Zapper - Order Dr. Clark's Books - Order Electrical Supplies

Welcome to the Zapper Lab. Here we have the step-by-step instructions for building your very own Hulda Clark Zapper, reprinted with permission from the books by Dr. Hulda Clark. Dr. Clark has improved her original zapper circuit and published this update in 2003. Knowing her readers have varying experience with building electronics, this recent update released several different sets of instructions on how to build a zapper, depending on one's electronic expertise.

- The original published Zapper instructions require soldering or twisting the parts together. It is best when soldered, which does require some special tools and skill. These instructions are found reprinted below from Dr. Clark's 2003 update.
- A newer, easier to build design employs the use of an electronic *breadboard*. A breadboard does not require soldering, as one can push the electronic components into place onto the breadboard to easily build a circuit. Dr. Clark published designs for the 30 kHz Zapper, and the 1000 Hz Zappicator to be built on a breadboard. The instructions for building both breadboard zapper circuits are at ClarkZapper.net along with a nifty on-line video to help guide you through the process.
- And last, for advanced electricians, Dr. Hulda Clark published a schematic for building the updated Zapper (see photo below).

If you do not know anyone who could put one together for you, you can order a pre-built Zapper at the web site, www.ClarkZapper.com. Remember, the Hulda Clark Zapper is not a licensed medical device. It has not been tested by the FDA or AMA for use on humans or animals. The Clark Zapper can be sold and used only as an experimental device, and no claim can be made as to a diagnosis, cure or treatment for any medical condition or disease. Dr. Clark's book states to not experiment with a zapper if you are either pregnant or wearing an electronic pacemaker. Please be sure to read one of Dr. Clark's books before using a Hulda Clark Zapper.

Order A Hulda Clark Zapper - Order Dr. Clark's Books - Order Electrical Supplies

---

How To Build A Hulda Clark Zapper

click here to print the 2003 schematic for building a zapper

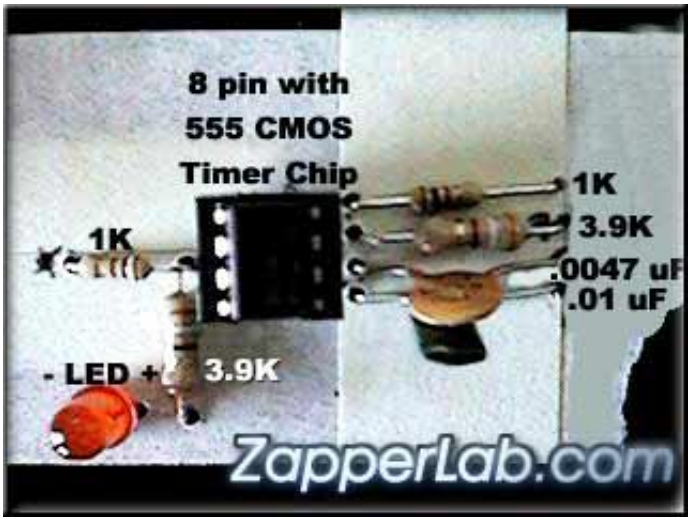

Order A Hulda Clark Zapper

Instructions for building your very own zapper can be found reprinted below from the books by Dr. Hulda Clark. You can get all the parts you need at online electrical supply stores such as: PositiveOffset.com. If you would rather order a pre-built zapper, just click: Clark Zapper.

Dr. Clark has released new devices called the *Food Zappicator* and the *Toothbrush Zappicator.* For the instructions on how to build this new type of zapper, visit: FoodZappicator.com and ToothZappicator.com

NEW! Build A Hulda Clark Zapper Video Instructions
Nine short videos that take you step-by-step through the process of building a Hulda Clark Zapper.

How To Build A Hulda Clark Zapper

***The Cure For All Cancers* © Copyright 1993 by Hulda Regehr Clark, Ph.D., N.D.**
Zapper instructions have been updated for 2003 by Dr. Hulda Clark

Hints for absolute novices: Don't let unusual vocabulary deter you. A "lead" is just a piece of wire used to make connections. When you remove a component from its package, label it with a piece of tape. A serrated kitchen knife works best, as does a large safety pin. Practice using the micro clips. If the metal ends are L-shaped bend them into a U with the long-nose pliers so they grab better. Chips and chip holders (wire wrap sockets) are very fragile. It is wise to purchase an extra one of each in case you break the connections. The "555" timer is a widely used component; if you can't locate this one, try another electronics shop.

The Shoebox Way

This circuit has been improved since the one given in earlier books. A resistor has been added that gives every pulse an added Positive Offset of 1/4 volt. You no longer need to operate your zapper so daringly close

to a Negative voltage.

Get from Radio Shack, (serial number included to make it easy).
Order these parts from their web site at: www.RadioShack.com. If any electrical parts are unavailable at Radio Shack, visit another on-line electrical supplier of these items, such as: www.PositiveOffset.com to buy your electrical parts.

Parts List for the 30,000 Hz Zapper Circuit	
Item	**Radio Shack Catalog Number**
Use Shoebox or Buy a Plastic Project Box	270-1809
9 volt battery	
9 volt battery snap connector	270-324 (set of 5 you need 1)
on-off toggle switch	275-624A micro mini toggle switch
If not available, choose any toggle switch with holes in the contact points or Radio Shack 275-612	
1 K Ohm resistor, brown-black-red-gold	271-312 (500 piece assortment) use 2
3.9 K Ohm resistor, orange-white-red-gold	Use 2 from 500 piece assortment
39 K Ohm resistor, orange-white-orange-gold	From 500 piece assortment
low-current red LED	276-044
.0047 uF capacitor	272-130 (set of 2, you need 1)
.01 uF capacitor	272-131 (set of 2, you need 1)
555 CMOS timer chip (TLC 555)	276-1718 (you may wish to buy a spare)
8 pin wire-wrapping socket for the chip	900-7242
If only 16 pin sockets are available, cut one in half OR leave half empty. Editor's Note: These parts have been discontinued at most Radio Shacks. 8 pin wire wrap sockets are available at many other electrical supply stores such as: www.PositiveOffset.com	
short (12") alligator clip leads	any electronics shop, get 10
If not available, use 14" length from Radio Shack, 278-1156	
Micro clip jumper wires	278-017 (you need 2 packages of 2)
If not available, use mini-clip jumper wires 278-016	
2 bolts, about 1/8" diameter, 2" long, with 4 nuts and 4 washers	hardware store
2 copper pipes, 3/4" diameter, 4" long	hardware store
Sharp knife, pin, long-nose pliers, tape, 4 twist ties or rubber bands.	

Editor's Note:

The 8 pin wire-wrapping socket has been discontinued at many Radio Shacks and readers have asked what to do. We know a great electrical supply store where 8 pin wire wrap sockets are available, as well as easy-to-build science kits for making a 30,000 Hz Frequency Generator with all the parts listed above in one simple package.

A Hulda Clark zapper is basically just a common Frequency Generator

set at 30,000 Hz, with a 100% positive offset square wave. The cost for the electrical parts to build one is about $30-$40 for them all. Visit the electrical suppliers at PositiveOffset.com for all your electrical needs. They have everything you'd need to build a basic 30,000 Hz Positive Offset Square Wave Frequency Generator, and their kit is much easier to build than the instructions given below, because it uses a breadboard so there is no need to twist or solder wires, you simply push the electrical parts into place on the breadboard. **-editor.**

Assembling The Zapper

If you have tools such as a drill, needle nose pliers, and small drill bits, buy one of the plastic project boxes on the list, otherwise build your zapper in a shoe box, or a box half the size of a shoe box.

1. You will be using the lid of the shoe box or plastic lid of the project box to mount the components. Save the box to enclose the finished project.

2. Pierce two holes near the ends of the lid. Enlarge the holes with a pen or pencil until the bolts would fit through. Mount the bolts on the outside about half way through the holes so there is a washer and nut holding it in place on both sides. Tighten. Label one hole "grounding bolt" on the inside and outside.

3. Mount the 555 chip in the wire wrap socket. Find the "top end" of the chip by searching the outside surface carefully for a cookie-shaped bite or hole taken out of it. Align the chip with the socket and very gently squeeze the pins of the chip into the socket until they click in place.

4. Make 8 pinholes to fit the wire wrap socket. Enlarge them slightly with a sharp pencil. Mount it on the outside. Write in the numbers of the pins (connections) on both the outside and inside, starting with number one to the left of the "cookie bite" as seen from outside. After number 4, cross over to number 5 and continue. Number 8 will be across from number 1. The pins are numbered like this:

1	8
2	7
3	6
4	5

5. Pierce two holes ½ inch apart very near to pins 5,6,7, and 8. They should be less than 1/8 inch away. (Or, one end of each component can share a hole with the 555 chip.) Mount the .01 uF capacitor near pin 5 on the outside. On the inside connect pin 5 to one end of this capacitor by simply twisting them together. Loop the capacitor wire around the

pin first; then twist with the long-nose pliers until you have made a tight connection. Bend the other wire from the capacitor flat against the inside of the shoe box lid. Label it .01 on the outside and inside. Mount the .0047 uF capacitor near pin 6. On the inside twist the capacitor wire around the pin. Flatten the wire from the other end and label it .0047. Mount the 3.9 K Ohm resistor near pin 7, connecting it on the inside to the pin. Flatten the wire on the other end and label it 3.9. Mount the 1 K Ohm resistor and connect it similarly to pin 8 and label it 1K.

6. Pierce two holes ½ inch apart next to pin 3 (again, you can share the hole for pin 3 if you wish), in the direction of the bolt. Mount the other 1 K Ohm resistor and label inside and outside. Twist the connections together and flatten the remaining wire. This resistor protects the circuit if you should accidentally short the terminals. Mount the 3.9 K Ohm resistor downward. One end can go in the same hole as the 1K resistor near pin 3. Twist that end around pin 3 which already has the 1K resistor attached to it. Flatten the far end. Label.

7. Next to the 3.9 K Ohm resistor pierce two holes ¼ inch apart for the LED. Notice that the LED has a positive and a negative connection. The longer wire is the positive (anode). Mount the LED on the outside and bend back the wires, labeling them + and - on the inside.

8. Near the top pierce a hole for the toggle switch. Enlarge it until the shaft fits through from the inside. Remove nut and washer from switch before mounting. You may need to trim away some paper with a serrated knife before replacing washer and nut on the outside. Tighten.

9. Next to the switch pierce two holes for the wires from the battery holder and poke them through. Do not attach the battery yet.

10. An inch away from the switch pierce two holes 1/4 inch apart. Mount the 39 K Ohm resistor on the outside and label it inside and outside as "39 K, Positive offset." Flatten the wires on the inside.

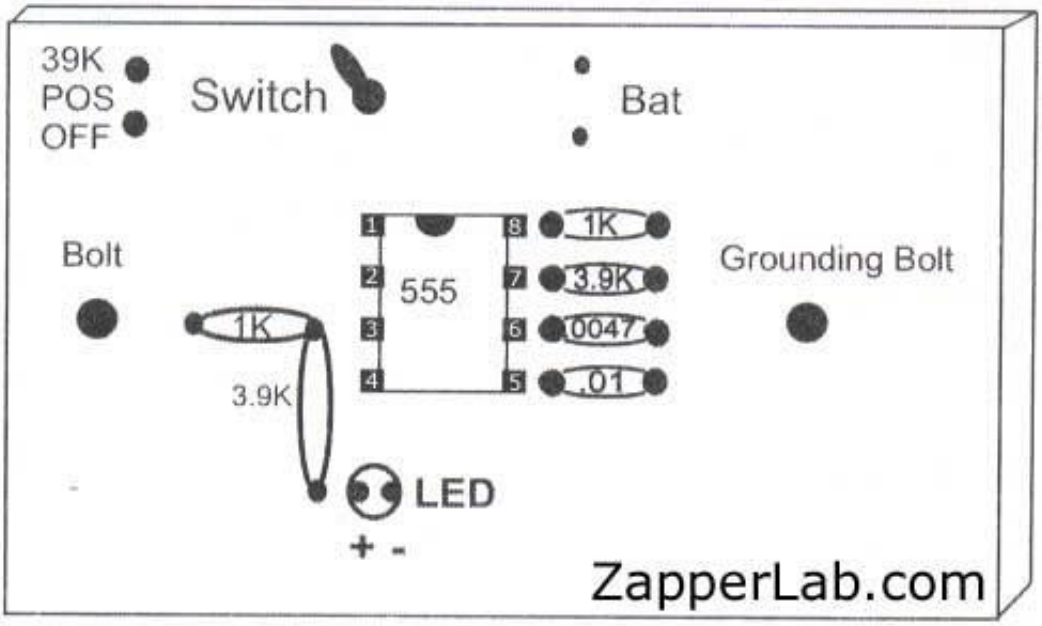

Now To Connect Everything

1. Twist free ends of the two capacitors .01 and .0047 together. Connect this to the Grounding Bolt using an alligator clip.

2. Bend the top ends of pin 2 and pin 6 (which already has a connection) inward towards each other in an L shape. Catch them both with an alligator clip and attach the other end of the alligator clip to the free end of the 3.9 K Ohm resistor by pin 7.

3. Using an alligator clip connect pin 7 to the free end of the 1 K Ohm resistor attached to pin 8.

4. Using three micro clips connect pin 8 to one end of the switch, pin 4 to the same end of the switch, and one end of the offset resistor to the same end of the switch. (Put one hook inside the hole and the other hooks around the whole connection. Check to make sure they are securely connected.) Connect the free end of the offset resistor to the bolt using an alligator clip.

5. Use an alligator clip to connect the free end of the 1 K Ohm resistor (by pin 3) to the bolt. It is the **output resistor**.

6. Twist the free end of the 3.9 K Ohm resistor by pin 3 around the plus end of the LED. Connect the minus end of the LED to the grounding bolt using an alligator clip.

7. Connect pin number 1 on the chip to the grounding bolt with an alligator clip.

8. Attach an alligator clip to the outside of one of the bolts. Attach the other end to a handhold (copper pipe). Do the same for the other bolt and handhold.

9. Connect the minus end of the battery snap connector (black wire) to the grounding bolt with an alligator clip.

10. Connect the plus end of the battery snap connector (red wire) to the free end of the switch using a micro clip lead. Attach the battery very carefully. Before attaching the battery to its snap connector, cover one terminal with tape. After snapping in one terminal, remove the tape to attach the other terminal. This is to prevent accidental touching of terminals in a backwards direction. If the LED lights up you know the switch is ON. If it does not, flip the switch and see if the LED lights. Label the switch clearly. If you cannot get the LED to light in either switch position, double-check all of your connections, and make sure you have a fresh battery. Even if it does light up, check every connection again.

11. Finally tie up the bunches of wire with twist-ties or rubber bands

and replace the lid on the box. Slip a couple of rubber bands around the box to keep it securely shut. For safer storage, place it inside a larger box.

Note: Having gained this much experience, you may prefer to build your next zapper on a piece of cardboard folded and able to fit inside a shoebox or plastic electronic project box for more protection.

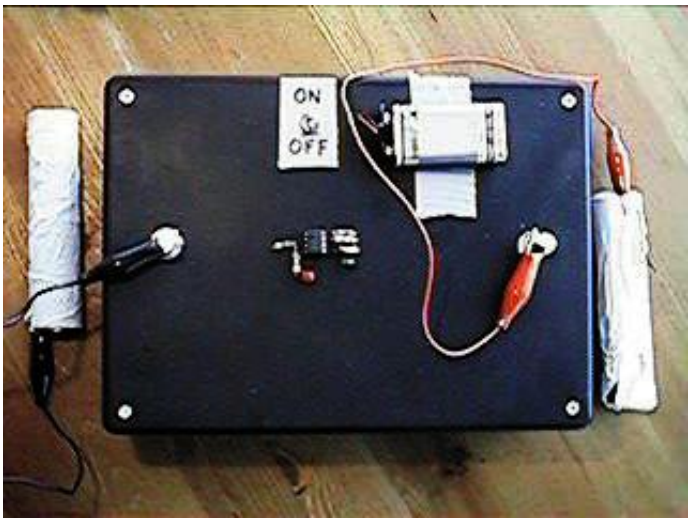

- Optional: measure the frequency of your zapper by connecting an oscilloscope or frequency counter to the handholds. Any electronics shop can do this. It should read between 20 and 40 kHz. The shop can also read the voltage (peak to peak) and the amount of Positive offset (on the .5 volt-per-division scale). The voltage output should be about 8 volts.
- Note: a voltage meter will only read 4 to 5 volts because it displays an average voltage.

Using The Zapper

1. Wrap handholds in one layer of wet paper towel before using. More will reduce the current. Grasp securely and turn the switch on to zap. Keep a bottle of water handy to keep them wet.

2. Zap for seven minutes, let go of the handholds, turn off the zapper, and rest for 20 minutes. Then seven minutes on, 20 minutes rest, and a final seven minutes on. This is the routine for **regular** zapping.

Tell us about your zapper experience at the zapper message board.

To Visit The Zapper Museum - Click Here!

Order A Hulda Clark Zapper - Click Here!

See The *'Build A Zapper'* Video - Click Here!

Learn about Dr Clark's latest zapping technique called: Plate Zapping

Learn about Dr Clark's latest inventions:
The Food Zappicator and The Toothbrush Zappicator

Order Electronic Parts at RadioShack.com and Frequency Generator Kits at PositiveOffset.com

All information is for educational purposes only. These statements have not been evaluated by the FDA. Not intended to diagnose, treat, prevent, mitigate or cure disease. Visit www.HuldaClark.com for more information on Dr. Clark's Syncrometer™ Science, and the Zapper. Legal Disclaimer Privacy Policy

www.HuldaClark.com

The Cure For All Cancers © Copyright 1993 by Hulda Regehr Clark, Ph.D., N.D.

KEELYNET

Zapper Schematics
No claims are made by KeelyNet for any of these plans
They are provided for informational purposes only!
KeelyNet 01/10/02

Simple Zapper Schematic

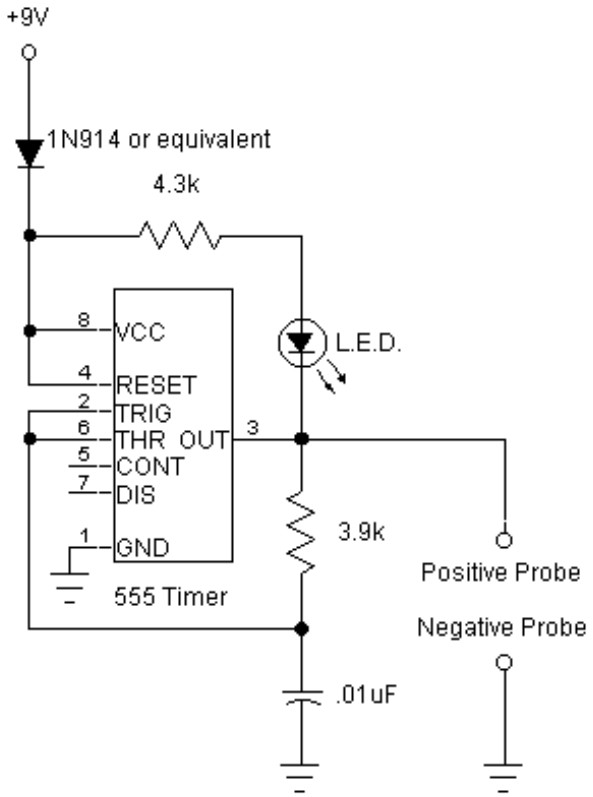

The Research of Dr. Hulda Regehr Clark, Ph. D., N.D.

I have recently (9/15/2000) come across the research of Dr. Hulda Regehr Clark, Ph. D., N.D. In her books, she states that many diseases, among which are cancer and HIV/AIDS, can be cured by the use of, among other things, certain herbs and a frequency generator called a "Zapper" that was invented by her and her son.

Speaking of mothers :), my mother, 62, had fatigue and arthritic symptoms in her hands before I found out about and told her about Dr. Hulda Clark. She is a seamstress, so the arthritic symptoms hindered her work. After doing the Parasite Cleanses and using the Zapper, she doesn't have to take naps like before and her hands are flexible again. She has done the complete Parasite Cleanse only twice but she Zaps practically every day.

Simple Zapper Information

Schematic updated on 12/21/2001

Simple Zapper Information text updated on 12/21/2001.

I forgot to mention that the Simple Zapper that I'm using has a 1 Megohm potentiometer instead of the 2.2k ohm resistor in order to vary the output frequency. If you use a potentiometer with the circuit put it in series with the 2.2k ohm resistor because the chip gets hot when there is too little resistance.

The duty-cycle is pretty consistent with a range of 51% to 57%. With the oscilloscope's frequency analyzer in storage mode, I hold the Zapper probes and put the oscilloscope probes somewhere on my body and then I vary the frequency of the Zapper using the 1 Megohm potentiometer.

When testing my body on a spectrum analyzer while using the Simple Zapper with an output of around 5 Volts (tested on a DC voltmeter), I noticed that the frequencies around 4,000 hz to around 18,000 hz had larger peaks telling me that my body at the time was more conductive (less reactive?) and/or less resistive to frequencies in this range at the given voltage.

With my body being more conductive (less reactive?) at these frequencies, I believe that there is a better dispersal of the Simple Zapper's output within my body. I did this recent test with one Zapper probe in each hand (as opposed to both in one hand) and the oscilloscope probes (RCA to 1/4" phone plug adaptor) in my mouth near my wisdom teeth with my lips around the RCA ground (like a lollipop).

The oscilloscope's frequency analyzer was in storage mode. With the Simple Zapper circuit on this page, change the 2.2k ohm resistor to 4.3k ohm if you want a ~15,000 hz frequency. I have recently built a couple of Zappers with optimized output frequencies of around 11,000 hz. I haven't tested anyone using the Simple Zapper other than myself, so there is the possibility that your body's response may differ.

For more information, check out my Simple Zapper webpage at:

www.members.aol.com/mas1911/index.html

or for really interesting free circuit schematics:

www.members.tripod.com/~mas1911/zappers20011221tripod.html

You can write the Author of Simple Zapper if you have comments or questions.

The following document, written by Luke Parrish, provides instructions on building an astable multivibrator in DC pulse mode, identical in output to the Zapper, described in The Cure For All Diseases by Dr. Hulda Clark.

Plans For Zapper

This page tells how to make a Hulda Clark-style "Parasite Zapper". It's a simpler and more efficient version, but works just as well. We make no theraputic claims for this device. It is for experimental purposes only. We provide a ready made version for those who prefer not to spend so much time building it.

Materials

- A CD4069 hex inverter (Radio Shack link)
- 1 1M resistor, 1 10k resistor, and 1 1k resistor (Radio Shack link) (Resistor color code)
- 1 1000 pF capacitor (Radio Shack link)

NOTE: The size of the resistors and capacitors can vary, because they determine the frequency of the zapper, which doesn't really matter much according to Hulda Clark.

The following parts may be substituted according to preference, though something similar will be needed:
- Solderless breadboard (Radio Shack link)
- 9-volt battery
- 4 alligator clip-leads sets Radio Shack link
- 2 copper pipes (hand-holds)

Instructions

Plug the components into the solderless breadboard according to the following schematic. Make sure none of the wires touch each other. To hook up the power, attach an alligator clip-lead to each side of the capacitor that stretches from hot to ground. Clip the one that goes to hot to the positive terminal on the battery and the one that goes to ground to the negative terminal. The two hand-holds are attached with the other two clip-leads. (One goes to ground, the other to the end of a resistor that goes to pin 12.)

Schematic

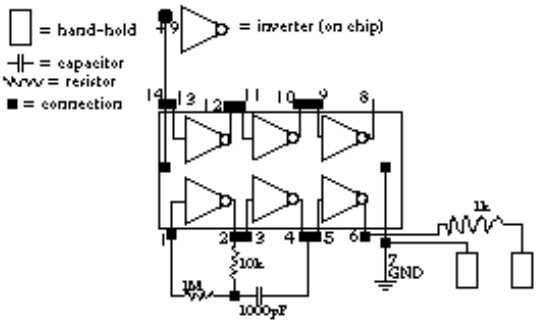

Schematic most recently updated 5-17-2001

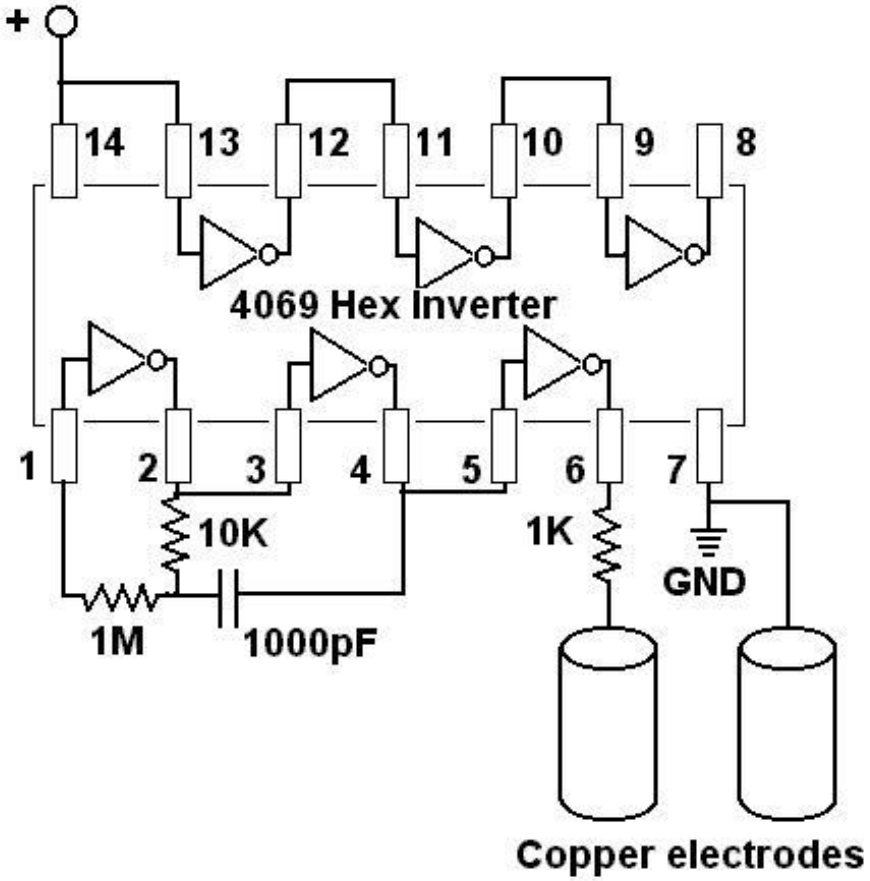

The above instructions are not the only way to do it. You can, for example, solder all the components directly to a 14-pin socket, like we do in our ready made version. This is a lot more trouble and more time-consuming for most people, which is why we recommend a breadboard. The resistors and capacitor don't all have to be the exact sizes mentioned here to make a working Zapper. However, any variation in capacitance or resistivity will change the frequency. (There are certain limits on how high of frequencies the chip can handle, so don't stray too far from the specified values.) If you have an oscilliscope, that's handy to check if it's working.

Ready made Zappers

Free plans from Zapperlab.com

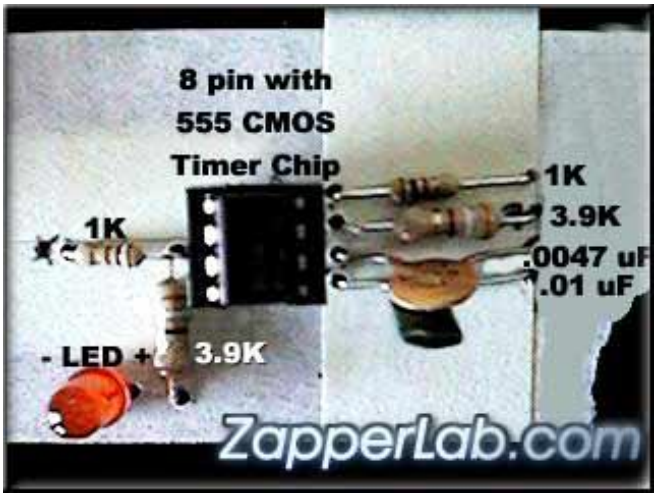

Here we have the easy step-by-step instructions for building your very own Hulda Clark Zapper reprinted with permission from her books (provided below). For advanced electricians there is a schematic for building a Hulda Clark Zapper as well. If you do not know anyone that could put one together for you, you can now order the zapper Hulda Clark uses as described in "The Cure For All Cancers" and "The Cure For All Diseases" at: www.SyncroZap.com. The Dr. Clark Zapper can be sold only as an experimental device, and no claim can be made by us legally as to a diagnosis, cure or treatment for any medical condition or disease.

Build A Dr. Clark Zapper

Order A Dr. Clark Zapper

Instructions for building your very own zapper can be found reprinted below from the books by Dr. Hulda Clark. If you would rather order a pre-built zapper, just click here.

How To Build A Zapper from *The Cure For All Cancers*:

The Cure For All Cancers © Copyright 1993 by Hulda Regehr Clark, Ph.D., N.D.

Get from Radio Shack, (serial number included to make it easy).
Order these parts from their web site at:
www.RadioShack.com

___ Black plastic Project Box Radio Shack # 270-1809

___ 9 volt battery

___ 9 volt battery clips: Radio Shack # 270-325

___ On off switch: Radio Shack # 275-624A

___ 1K Ohm resistor: RS# 271-1321

___ 3.9K Ohm resistor: RS# 271-1123

___ low current red LED: RS# 276-044

___ .0047 uF capacitor: RS# 272-130

___ .01 uF capacitor: RS# 272-1065

___ 555 CMOS timer chip: RS# 276-1723

___ 8 pin wire wrapping socket for CMOS chip: RS# 276-1988

___ two packs of Microclip test jumpers: RS# 278-017

___ one pack of 14" alligator clip leads RS# 278-1156C

Get from any Hardware Store:

2 Bolts 1/8" diameter, 2" long with 4 nuts and washers.

2 pieces of ¾" copper pipe, cut to 4 inches long each.

Editor's Note:

The **8 pin wire-wrapping socket** has been discontinued at many Radio Shacks and readers have asked what to do. Some say it is still available on their website at www.RadioShack.com, if not:

There are a couple options. One can still get the **16 pin wire-**

wrapping socket. Pull out the bottom grouping of 8 pins, and you now have an 8 pin socket. Just make sure when you plug the 555 Timer into it, you line it up with the remaining 8 pins. Very simple.

There is also a **Low Profile 8 pin socket**. The pins are so small one must solder to them.

The wire-wrap socket has long pins for easy twisting onto other wires. The low profile is for those that solder electronics.

If you are soldering your zapper together get the low profile 8 pin socket. Since the socket is just a saddle for the 555 Timer, it is not a vital part of the circuit. It's just a way to put long or short pins on the 555 Timer for easy twisting. If you cannot find one at your local Radio Shack, simply get the 16 pin wire-wrap socket, and pull out 8 pins. -editor.

Assembling The Zapper

If you have tools such as a drill, needle nose pliers, and small drill bits, buy one of the plastic project boxes on the list, otherwise build your zapper in a shoe box, or a box half the size of a shoe box.

1. You will be using the lid of the shoe box or plastic lid of the project box to mount the components. Save the box to enclose the finished project.

2. Pierce two holes near the ends of the lid. Enlarge the holes with a pen or pencil until the bolts would fit through. Mount the bolts on the outside about half way through the holes so there is a washer and nut holding it in place on both sides. Tighten. Label one hole "grounding bolt" on the inside and outside.

3. Mount the 555 chip in the wire wrap socket. Find the "top end" of the chip by searching the outside surface carefully for a cookie-shaped bite or hole taken out of it. Align the chip with the socket and very gently squeeze the pins of the chip into the socket until they click in place.

4. Make 8 pinholes to fit the wire wrap socket. Enlarge them slightly with a sharp pencil. Mount it on the outside. Write in the numbers of the pins (connections) on both the outside and inside, starting with number one to the left of the "cookie bite" as seen from outside. After number 4, cross over to number 5 and continue. Number 8 will be across from number 1. The pins are numbered like this:

1 8

2 7

3 6

4 5

5. Pierce two holes ½ inch apart very near to pins 5,6,7, and 8. They should be less than 1/8 inch away. (Or, one end of each component can share a hole with the 555 chip.) Mount the .01 uF capacitor near pin 5 on the outside. On the inside connect pin 5 to one end of this capacitor by simply twisting them together. Loop the capacitor wire around the pin first; then twist with the long-nose pliers until you have made a tight connection. Bend the other wire from the capacitor flat against the inside of the shoe box lid. Label it .01 on the outside and inside. Mount the .0047 uF capacitor near pin 6. On the inside twist the capacitor wire around the pin. Flatten the wire from the other end and label it .0047. Mount the 3.9 K Ohm resistor near pin 7, connecting it on the inside to the pin. Flatten the wire on the other end and label it 3.9. Mount the 1 K Ohm resistor and connect it similarly to pin 8 and label it 1K.

6. Pierce two holes ½ inch apart next to pin 3 (again, you can share the hole for pin 3 if you wish), in the direction of the bolt. Mount the other 1 K Ohm resistor and label inside and outside. Twist the connections together and flatten the remaining wire. This resistor protects the circuit if you should accidentally short the terminals. Mount the 3.9 K Ohm resistor downward. One end can go in the same hole as the 1K resistor near pin 3. Twist that end around pin 3 which already has the 1K resistor attached to it. Flatten the far end. Label.

7. Next to the 3.9 K Ohm resistor pierce two holes ¼ inch apart for the LED. Notice that the LED has a positive and a negative connection. The longer wire is the positive (anode). Mount the LED on the outside and bend back the wires, labeling them + and - on the inside.

8. Near the top pierce a hole for the toggle switch. Enlarge it until the shaft fits through from the inside. Remove nut and washer from switch before mounting. You may need to trim away some paper with a serrated knife before replacing washer and nut on the outside. Tighten.

9. Next to the switch pierce two holes for the wires from the battery holder and poke them through. Attach the battery and tape it to the outside.

Now To Connect Everything

Twist free ends of the two capacitors .01 and .0047 together. Connect to Grounding Bolt using an alligator clip.

Bend pin 2 and pin 6 together inward, using an alligator clip, catch them and connect to free end of 3.9K Ohm (by pin 7).

Alligator clip Pin 7 to free end 1K Ohm (near pin 8)

Using two microclips Pin 8 and pin 4 to one end of switch (use hole to attach both microclips).

Free end of 1K Ohm (by pin 3) to the Bolt using an alligator clip.

Alligator clip the free end of 3.9K Ohm (by pin 3) to plus end (long) of LED.

Minus end (short) of LED to Grounding Bolt with an alligator clip.

Alligator clip pin 1 to the Grounding Bolt.

Alligator clip Black battery wire to Grounding Bolt.

Micro clip the Red battery wire to free end of switch.

Hook up the battery, and the light should turn on, click the switch if it does not, check connections if LED does not light up.

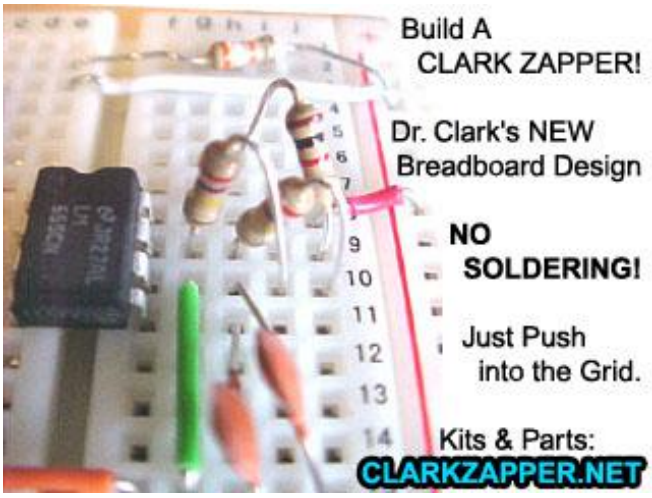

Attach a long lead wire to the grounding bolt & bolt, and then to the copper handles. Wrap handles in paper towel, clip with lead wire, wet handle when you are ready to zap.)

How To Zap

Wrap handles in wet paper towel, or wet cotton sleeves, and hold in each hand. If you have wrist cuffs, run them under water to wet them, attach to each wrist.

Attach handles or wrist cuffs to zapper.

Turn zapper on, zapping for 7 minutes.

At end of 7 minute zapping rest 20 minutes.

Do this a minimum of three 7 minute zapping sessions, with a 20

minute break in between each session. Some people zap five times in extreme cases.

Order A Dr. Hulda Clark Zapper - Click Here!

Learn about Dr Clark's latest zapping technique at: www.PlateZapping.com

All information is for educational purposes only. These statements have not been evaluated by the FDA. Not intended to diagnose, treat, prevent, mitigate or cure disease.

This Circuit designed by Geoff Clark and approved by Dr. Hulda Clark

SOTA Instruments Inc. presents...
"The Zapper" as per Dr. Hulda Clark, Ph.D., N.D.

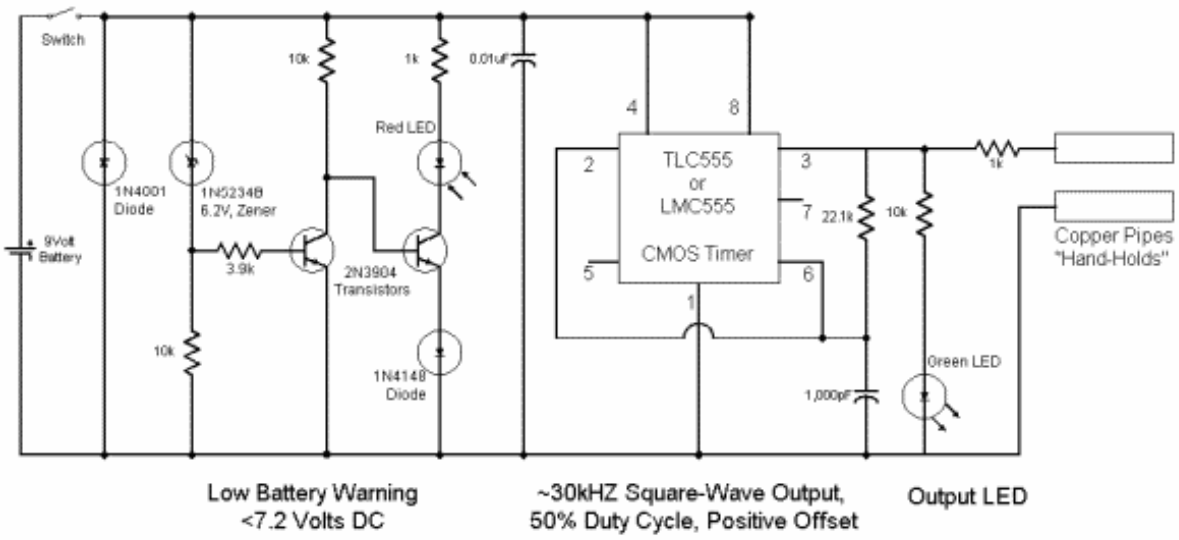

Certified and Approved by Dr. Clark's son Geoff Clark.
Designed & Drawn by Russell J. Torlage, CTech, President, SOTA Instruments Inc.
Model: ZHC3 Rev 4.0
Revised: June 9, 1999

All Resitors are 1/4W, 5% Tol. 22.1k resistor is 1%.

Copyright 2000 SOTA Instruments Inc.
This schematic is not to be used for commercial applications without the express written permission of SOTA Instruments Inc.

If you found this file useful or interesting, please consider a donation or a purchase to help keep KeelyNet online and providing free information. Even a dollar will help. Others sell it, we prefer to share it, thanks!

PayPal DONATE

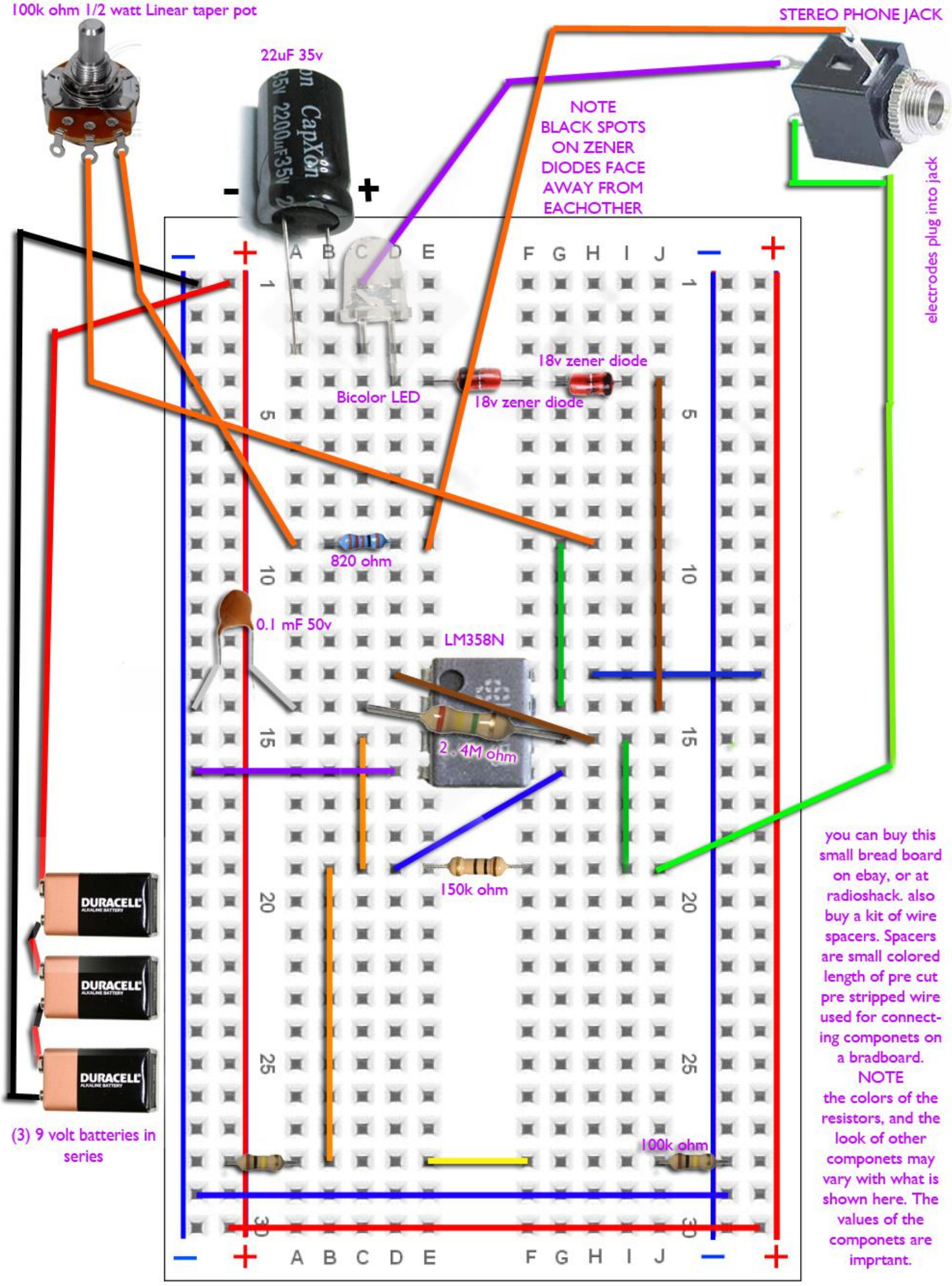
100k ohm 1/2 watt Linear taper pot
STEREO PHONE JACK
22uF 35v
NOTE
BLACK SPOTS
ON ZENER
DIODES FACE
AWAY FROM
EACHOTHER
electrodes plug into jack
Bicolor LED
18v zener diode
18v zener diode
820 ohm
0.1 mF 50v
LM358N
2.4M ohm
150k ohm
100k ohm
(3) 9 volt batteries in series
you can buy this small bread board on ebay, or at radioshack. also buy a kit of wire spacers. Spacers are small colored length of pre cut pre stripped wire used for connecting componets on a bradboard.
NOTE
the colors of the resistors, and the look of other componets may vary with what is shown here. The values of the componets are imprtant.

COMPONENT DESCRIPTIONS, SOURCES, AND CURRENT PRICES

Revision November 24, 1996. Copyright (c) 1991/1999 Robert C. Beck, D.Sc.

Note: These data are for theoretical, informational and instructional purposes only and are not to be construed as medical advice. Consult with your licensed medical practitioner. Hundreds have been built successfully if duplicated exactly as shown.

LM358 CMOS Operational Amplifier (OP-AMP) chip (generic)		U1	$ 1.00
2.4 megohm 1/4 watt 5% resistor		R1	0.07
150 kohm 1/4 watt 5% resistor		R2	0.07
100 k ohm 1/4w 5% resistor	2 required @ 0.15	R3, R4	0.14
100 kohm linear taper pot, 1/2 watt Cattronics P-68		R5	2.56
150 ohm 1/4 watt 5% resistor		R6	0.07
820 ohm 1/4 watt 5% resistor		R7	0.07
0.1 mF 50 V (or higher) ceramic capacitor		C1	0.45
22 mF 35 V (or higher) electrolytic capacitor		C2	0.25
18 Volt Zener diodes (NTE5027A)	% Watt, 2 @ 0.79	D1 & D2	1.58
Bulb, 6.3V 0.075 A	Type 7377	B1	1.34
Bicolor LED Red/Green	RS# 276-012	LED 1	$ 1.19
Jack for electrode leads (3.5mm or 1/8" mono-phone jack)	RS# 274-251 3/$1.59	J1	0.53
Jack for silver wire leads (2.5mm or 3/32" mono-phone jack)	RS# 274-292 3/$1.59	J2	0.53
3 Alkaline 9 V batteries, type 1604 etc.	3 for		3.75
3 x 9 V battery snaps (clip-on connectors)	RS# 270-325 pkg.	5/$1.29	1.29
Misc. wire, solder, etc.			0.50
Box, if used			2.29
Lead wire with 3.5 mm plug, 6 ft., Mouser or Calrad Electronics			0.35
Electrodes, stretch elastic, Velcro, cotton flannel, alligator clips, etc.			
Total Cost **for all** components for improved **do-it-yourself** project			**$22.47**

All components listed above check your local electronics store.

Ensure the IC chip U 1 (LM358) is wired correctly. The location of Pin #1 is shown below:

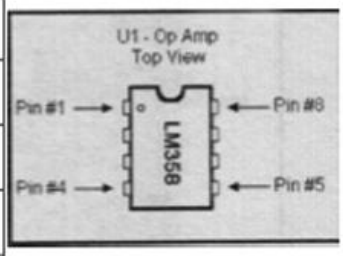

NOTE RESISTOR COLORS NOT TO SPEC. CHECK RESISTOR COLOR VALUES

electrodes: 3/32 x 1 stainless steel cotter pins -hardware store- Snap pins in half across the curve. and wrap the headphone wires comming from the mono plug around the curve of each half of the pin. then hou glue into place.

---

http://www.amazon.com/exec/obidos/ASIN/0759677077/hdruserfansof-20

Patricia Ress wrote a book about inventor **Steven Gibbs called**
"DANGEROUS INFORMATION-- THE FURTHER TIME-TRAVEL EXPERIMENTS/STUDIES OF STEVEN L. GIBBS"

Her first book about Steven Gibbs HDR was -- ***Stranger Than Fiction: The True Time Travel Adventures of Steven L. Gibbs --- The Rainman of Time Travel***

Patricia Ress explains in her latest book how Steven L. Gibbs invented the Hyper Dimensional Resonator - HDR a time machine, using knowledge given to him by two time travellers.

---

http://www.fluxcap.com/HDR_Caduceus_Coil.htm

Main components of Tensor Coil AKA Caduceus Coil

A copper wire with a bifilar winding that has the opposing magnetic fields cancel each other.

Take a enamel copper wire and nick the middle then twist the wire into a double helix.

Now curl the wire into a spiral. This will generate scalar waves when there is a current.

Why does the Caduceus Coil Work?

It is believed that scalar waves have strange effects including the distortion of temporal field.

The HDR caduceus coil built by Steven Gibbs should have the ability to generate an electromagnetic field that disrupts time waves and alters the flow of chronoton particles. My experiment with a watch subjected to the "gibbs effect" establishes that something is causing a disruption in the normal flow of time.

THE HYPER DIMENSIONAL RESONATOR

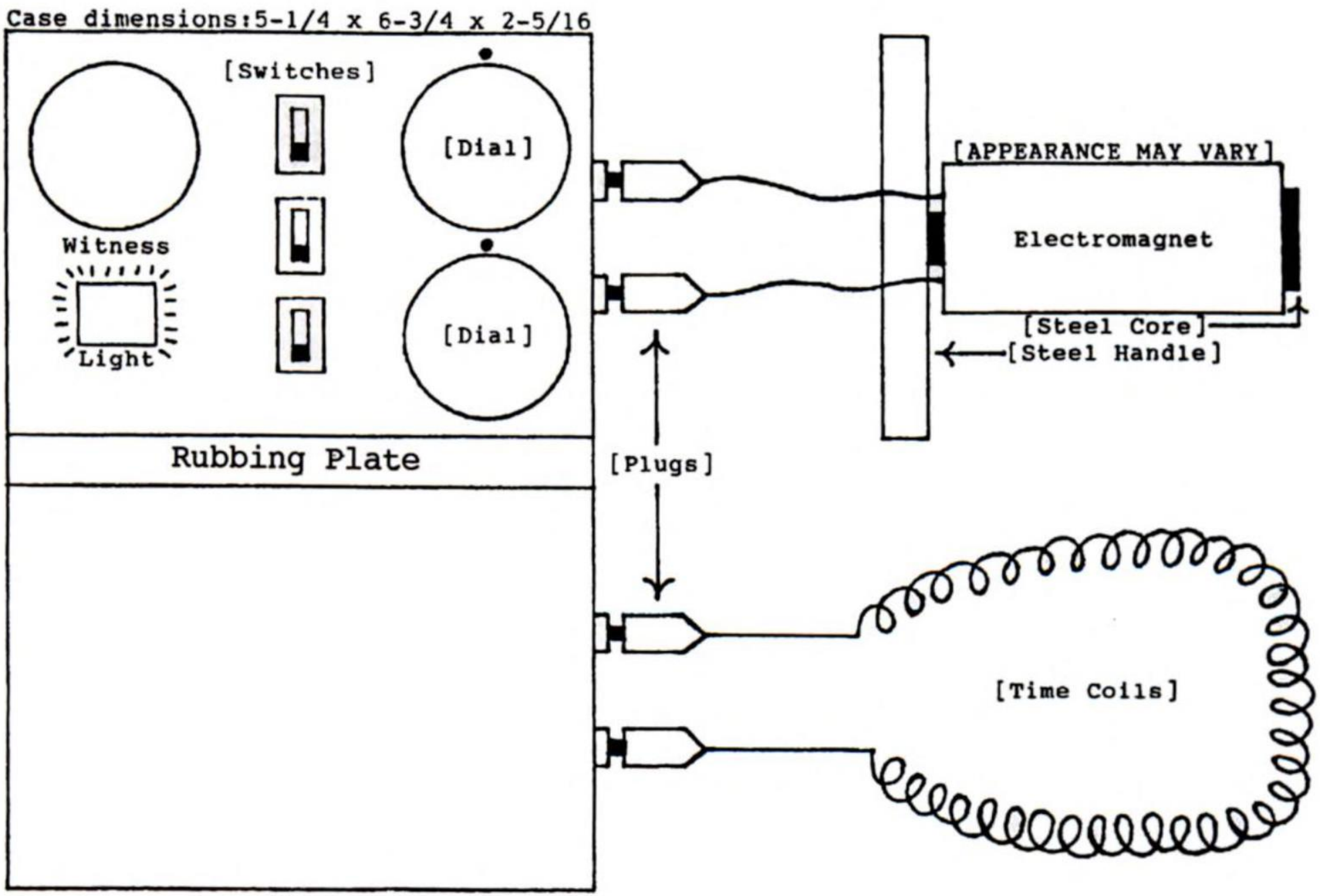

Right: Popular radio talk show host Art Bell holds up an alleged time travel device built by Steven Gibbs. Gibbs appeared on Art Bell's show *Coast to Coast* on January 13, 1997. Gibbs claimed on the show that he was a time traveler who had been to the future using his device which he calls a Hyper Dimensional Resonator. Below: A schematic diagram drawn by Gibbs of his Hyper Dimensional Resonator taken from the Art Bell Web Page (artbell.com). Steve Gibbs can be contacted RR #1, Box 79, Clearwater, Nebraska 68726 USA.

THE HYPER DIMENSIONAL RESONATOR

WITNESS
RUBBING PLATE

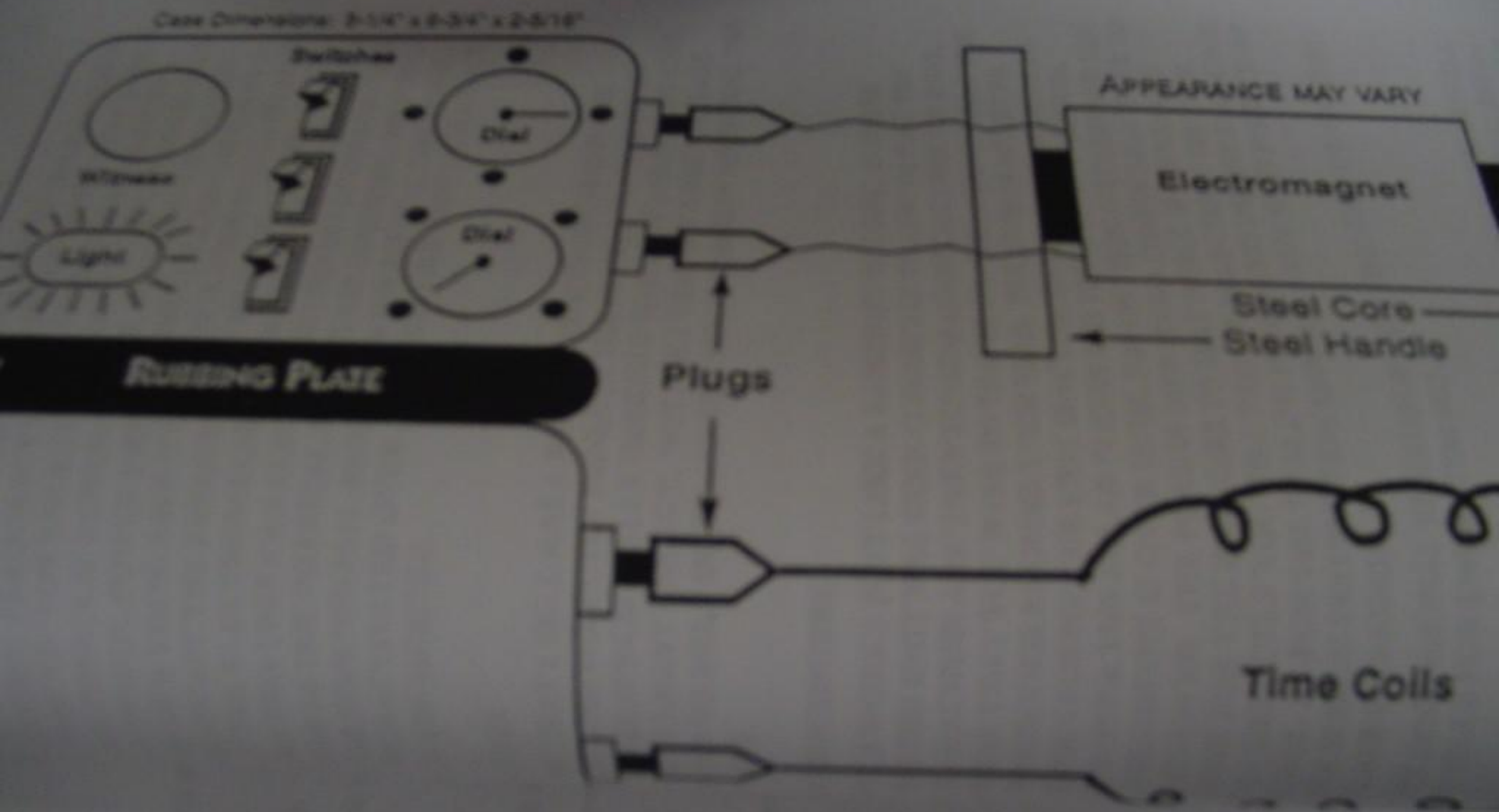
Case Dimensions: 3-1/4" x 6-3/4" x 2-5/16"
Switches
Dial
Dial
Light
Running Plate
Plugs
Appearance May Vary
Electromagnet
Steel Core
Steel Handle
Time Coils

Start, Launch and Expand Your Business
With Unsecured Funding. No Tax Returns

HDR Caduceus Coil

FIELD WITHIN A FIELD
AC/DC
SONIC RESONATOR

(I)

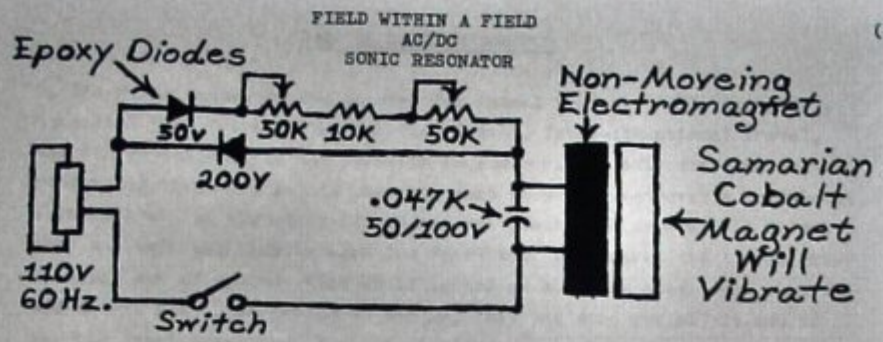

As you can see, this is a very simple unit to construct. The Electromagnet you may have to build yourself, and this you can do, by obtaining some *Soft Iron preferably round in shape, but it is not crucial as to what shape it is in. (See below)

PREFERABLE SHAPE (WITH WIRE ALREADY WRAPPED AROUND IT)

It could be oblong, and that would do just as good, so long as it becomes Electromagnetic. The wire to use should be 2I gage Magnet Wire. This can be obtained at a shop where they repair Electric Motors.

Turn the unit on, and place it against a piece of wood with the Samarian touching the wood. Press the Electromagnet against the Samarian and hold it. The reason I say this, is because the Samarian will be vibrating and the Electromagnet will be still. So hold the two together in your hands, and press on the wood with the Samarian touching the wood. The wood should turn into a magnet. Try putting the Samarian Magnet on the wood after the Experiment. It should stay.

Main components of Tensor Coil AKA Caduceus Coil

A copper wire with a bifilar winding that has the opposing magnetic fields cancel each other.

Take a enamel copper wire and nick the middle then twist the wire into a double helix.

Now curl the wire into a spiral. This will generate scalar waves when there is a current.

Why does the Caduceus Coil Work?

It is believed that scalar waves have strange effects including the distortion of the temporal field. In his time travel reports, Steven Gibbs says that the caduceus wound coil can create tachyons and alter temporal phenomena. He talks about how to make a caduceus coil for time travel.

The HDR caduceus coil built by Steven Gibbs should have the ability to generate an electromagnetic field that disrupts time waves and alters the flow of chronoton particles. My experiment with a watch subjected to the "gibbs effect" establishes that something is causing a disruption in the normal flow of time.

I believe this is caused by scalar waves emanating from the Hyper Dimensional Resonator or HDR created by inventor Steven Gibbs. These waves interact with those of the electromagnet to create a temporal disruption that can affect clocks. See videos of HDR at **HDRusers.com**

Steven Gibbs told me that in his caduceus coil he uses 21 gauge pure copper wire. Tin alloy will mess it up. Also, aluminum wire is a poison. It generates harmonics that are wrong.

What does the HDR Caduceus Coil look like?

The HDR caduceus coil is that round doughnut shaped object at the bottom of the left hand corner in the picture below. This is I believe what makes the HDR work and provides the missing factor for Steven Gibbs HDR.

Insides of a Hyper Dimensional Resonator (HDR) from Steven Gibbs

Return to Flux Cap Main Menu

How does the Steven Gibbs HDR affect time?

In Experiments with Steven Gibbs HDR I have seen clocks move fast while exposed to the field generated by the HDR. Some claim that an electromagnetic field is causing the chronodynamic effect, but perhaps it is special properties of the caduceus coil.

The Hyper Dimensional Resonator (HDR) has a caduceus coil inside and it is my belief that this special coil contains special properties. The caduceus coil is located right under the rubbing plate of the HDR box.

This rubbing plate near the bottom of the box is what allows you to tune Steven Gibbs HDR control box.

This HDR's rubbing plate consist of a caduceus coil made of copper wires taped under a rubbing plate:

The Witness Light turns on when you flip the bottom switch.

You can start rubbbing your fingers clockwise on the *Rubbing Plate* until you finish adjusting the control knobs of the 50K pots.

These 2 dials are used to tune your HDR control box, the top dial is A and the bottom dial is B.

Tune dial A first, then tune the B dial until you get a stick.

Your fingers get stuck to the rubbing plate like glue when you have a STICK REACTION.

I also place a double terminated quartz crystal in the witness well.

(https://ionpowergroup.com/)

Ion Power Group

(https://ionpowergroup.com/) The Sun's Electricity Harvested Day & Night

The Sun provides the Earth's atmosphere with 122 quadrillion watts of radiation daily (122,000,000,000,000,000 watts) sustaining a permanently charged electric field that propagates throughout the atmosphere known as the Earth's Global Electric Circuit.

The Global Electric Circuit surrounds the

TOP

(https://ionpowergroup.com/)

Ion Power Group

(https://ionpowergroup.com/) The Sun's Electricity Harvested Day & Night

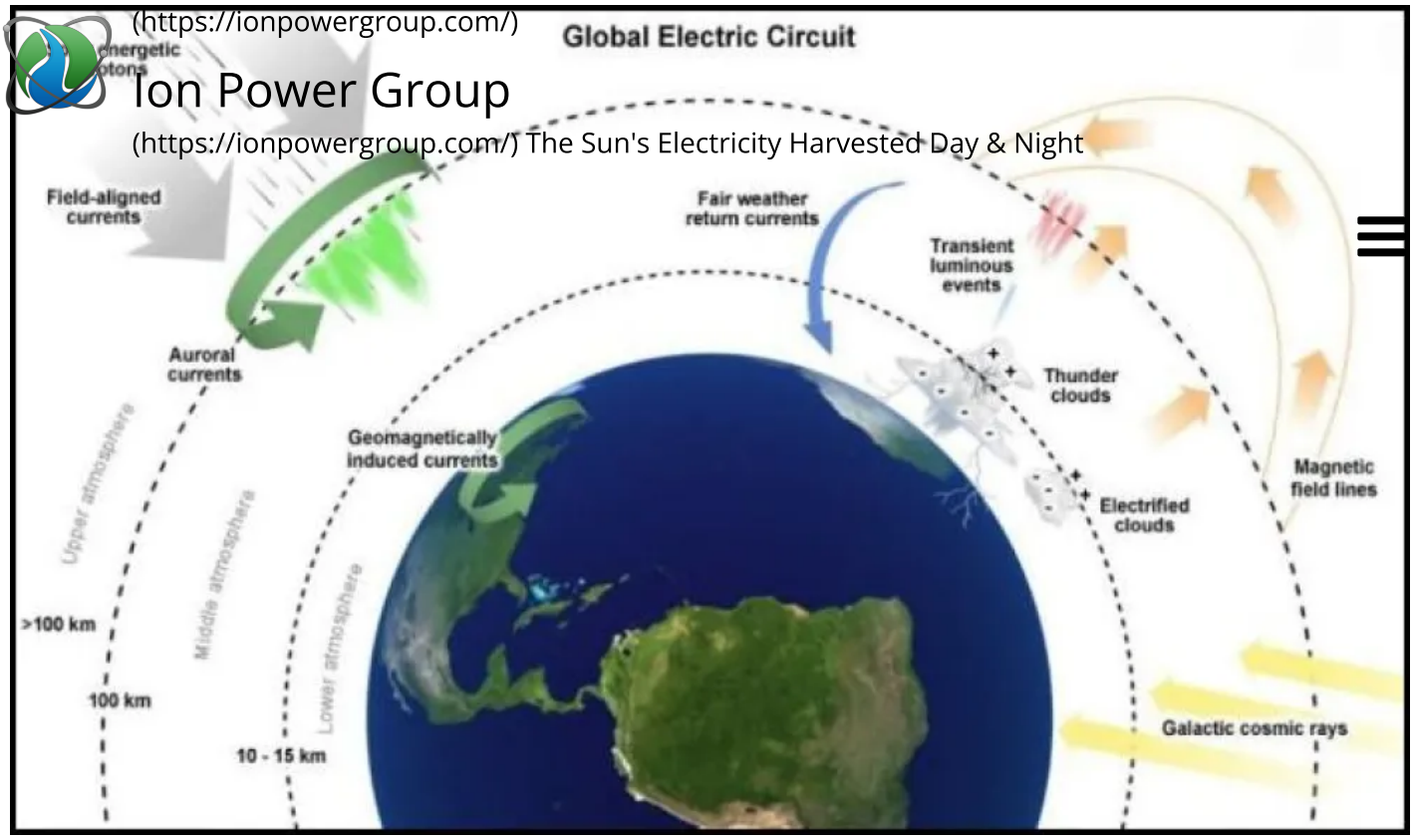

Earth in a blanket of high voltage electricity.

TOP

(https://ionpowergroup.com/)

Ion Power Group

(https://ionpowergroup.com/) The Sun's Electricity Harvested Day & Night

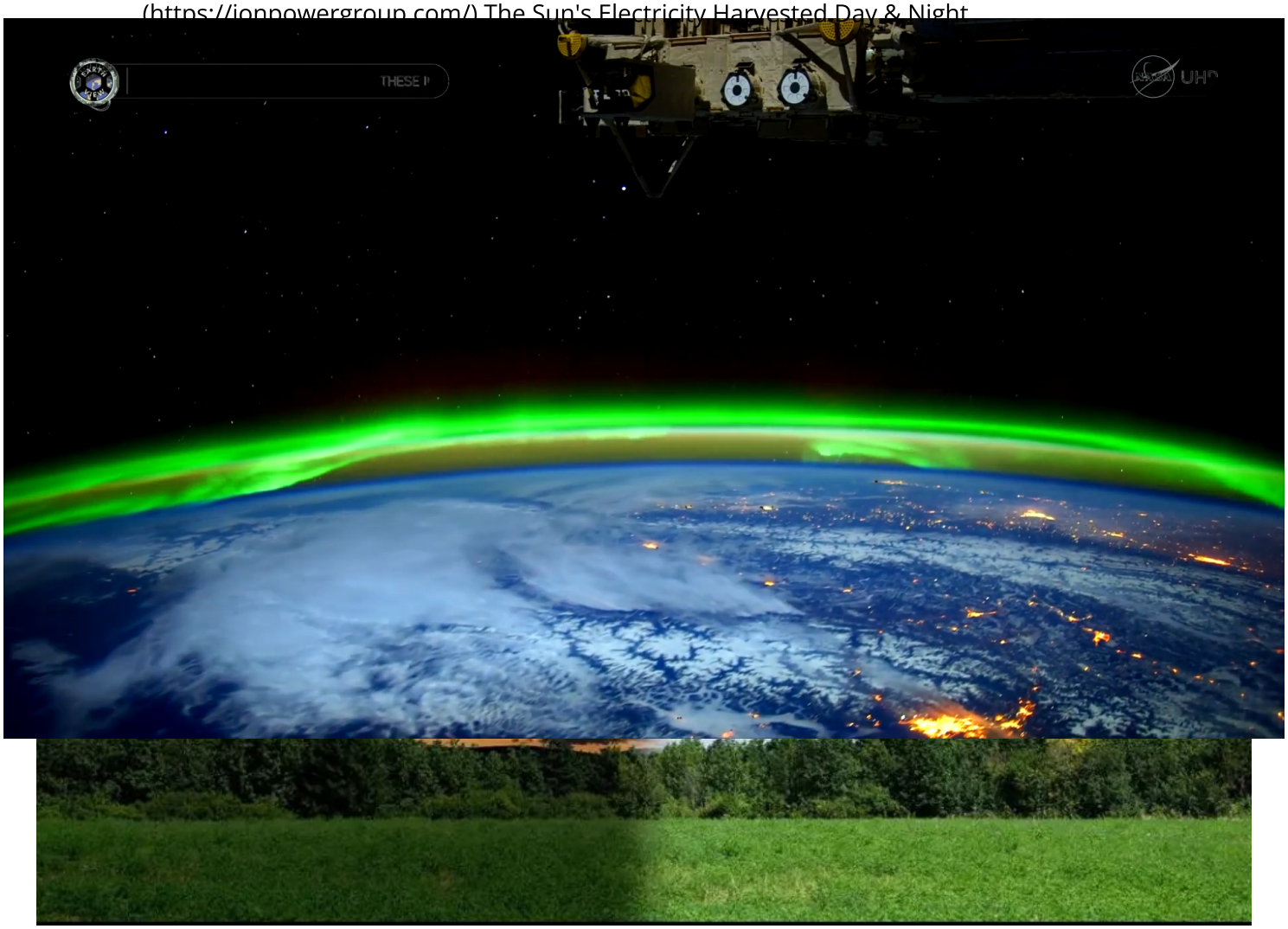

Trillions of naturally renewable electrically charged ions are continuously produced in the atmosphere, around the clock, day & night, powered by the Sun's enormous energy.

A revolutionary breakthrough in nanomaterial research demonstrates that

TOP

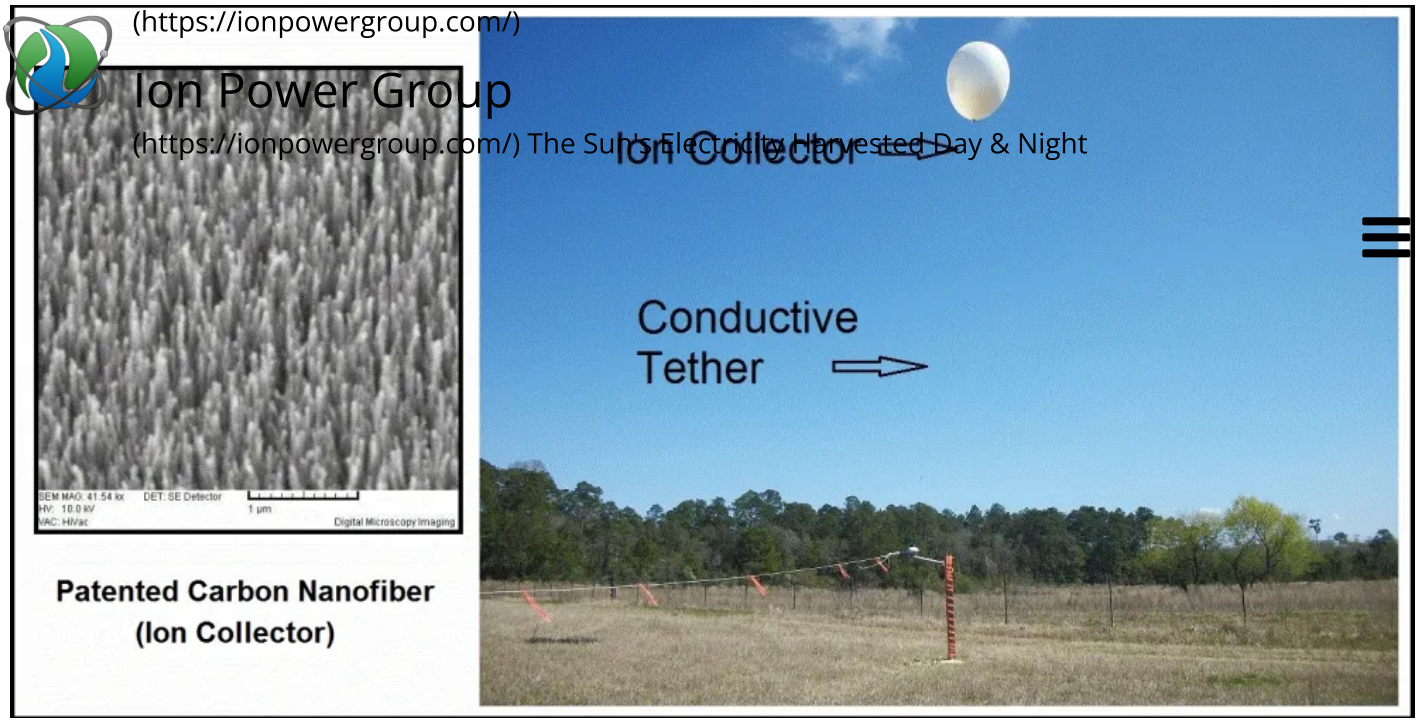

exposing a special type of ultra-lightweight carbon nanomaterial to atmospheric ions harvests high-voltage electricity, day, night, and during storms.

"Physics-based modeling shows that an (https://secureservercdn.net/198.71.233.128/9a0.99e.myftpuploa content/uploads/2017/11/Economic-model-study-Rev-B-authored-by-Dr.-Phil-Metzger-PhD.pdf)electron cloud forms around the ion collector material, and this electron cloud increases conductivity of the air around the collector. This causes electrical current to flow, driven by the atmospheric voltage, so that power is generated at the ground. The rate of this current is governed by complex physics in the boundary layer of the collector material, doubtless because of its very high surface area. Ionization can occur on this collector at extremely low voltages because of the sharp, needle-like protrusions on its surface. This understanding of the physics suggests that power generation can be scaled as surface area

TOP

(https://ionpowergroup.com/)
Ion Power Group
(https://ionpowergroup.com/) The Sun's Electricity Harvested Day & Night

Dr. Philip Metzger
Planetary Scientist - Physicist PhD
NASA Kennedy Space Center
Scientist/Engineer of the Year

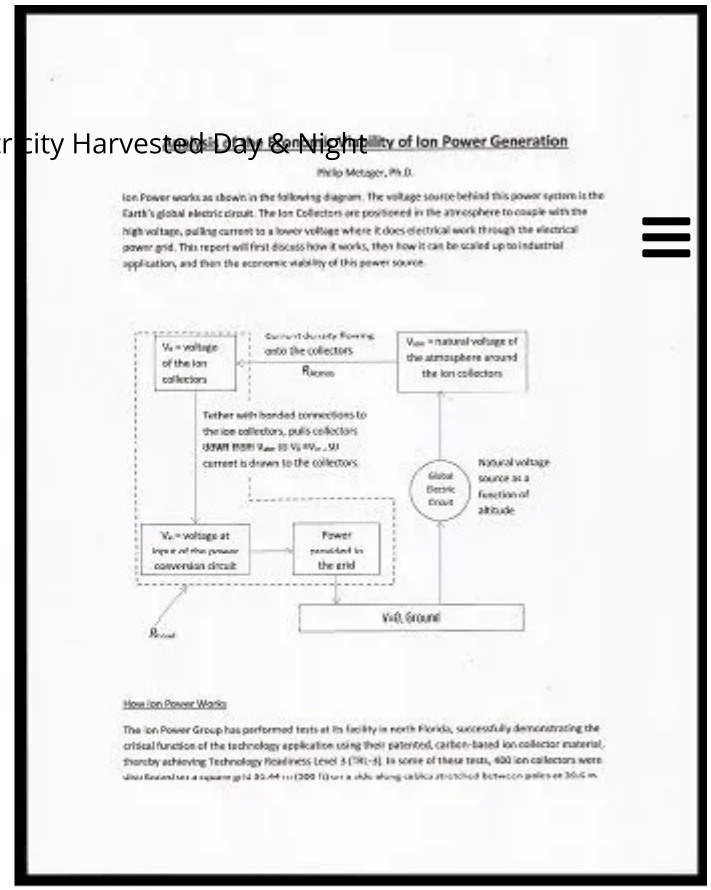

Click for Full Report

times voltage. This was incorporated into a simulation of the solar cycle with random storms, and power generation of photovoltaics (PV) and Ion Power were simulated as feeding into a smart grid. Because Ion Power collects the most energy at complementary times compared to PV, the energy storage requirements on the smart grid is greatly reduced. This causes the cost of electricity also to be greatly reduced compared to photovoltaics alone, resulting in energy costs for the overall smart grid of about 8.25 cents per kWh, which is less expensive than any other energy source other than some wind farms (which are only slightly less expensive and have limited geographic applicability). This analysis uses extremely conservative assumptions, so actual energy costs may be much less. **The estimated value to the US economy is between $62 billion and $150 billion (annually)** with proportionately large value to the global economy.

TOP

(https://ionpowergroup.com/)

Ion Power Group

(https://ionpowergroup.com/) The Sun's Electricity Harvested Day & Night

Proof-of-concept tests have successfully demonstrated the powering of different devices by electricity harvested from atmospheric ions, including...

BATTERIES

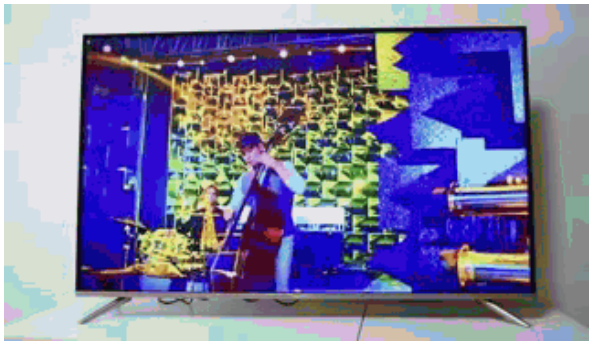

TELEVISIONS

COMPUTERS

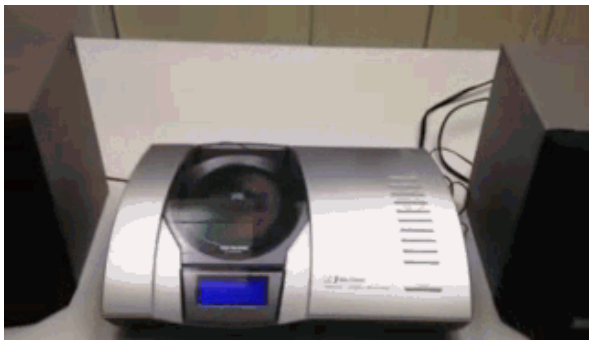

MUSIC SYSTEMS

POWER TOOLS

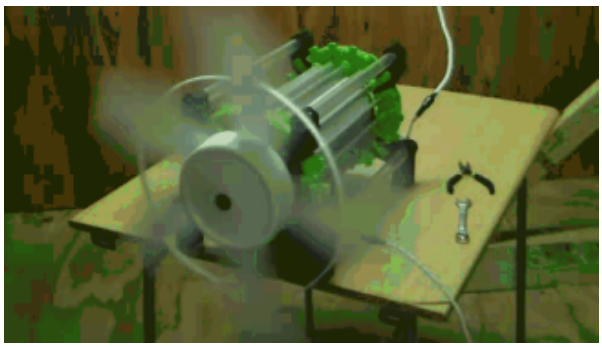

FANS

TOP

(https://ionpowergroup.com/)

Ion Power Group

(https://ionpowergroup.com/) The Sun's Electricity Harvested Day & Night

Powered by the Sun’s radiation about 2,000 thunderstorms are occurring around the Earth at any given moment. On average, across the world there are 4,320,000 lightning discharges each 24 hour period (3000 per minute). This tremendous amount of high voltage electrical energy, together with GCRs bombarding the atmosphere and Radon gas seeping from the Earth’s crust in certain areas, combine to help replenish the supply of electrically charged atmospheric ions around the world.

TOP

(https://ionpowergroup.com/)

Ion Power Group

(https://ionpowergroup.com/) The Sun's Electricity Harvested Day & Night

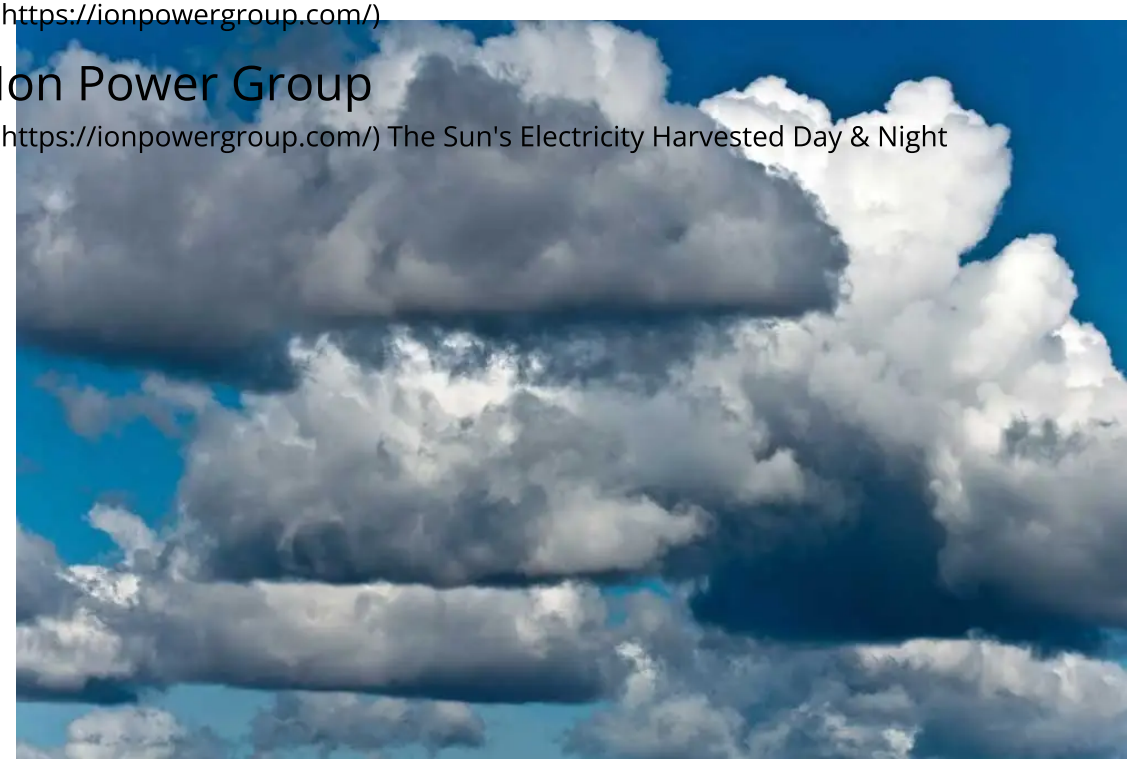

Ion Harvesting Technology harvests electricity day and night and even during bad weather

Ion Power Group’s ion collectors, when provided with adequate altitude, can harvest the electric charge of near-Earth ions to produce clean renewable high-voltage electricity day and night and during storms. Ion Harvesting Technology should not be confused with other techniques that attempt to capture lightning bolts or harvest manmade radio frequency (RF) energy.

TOP

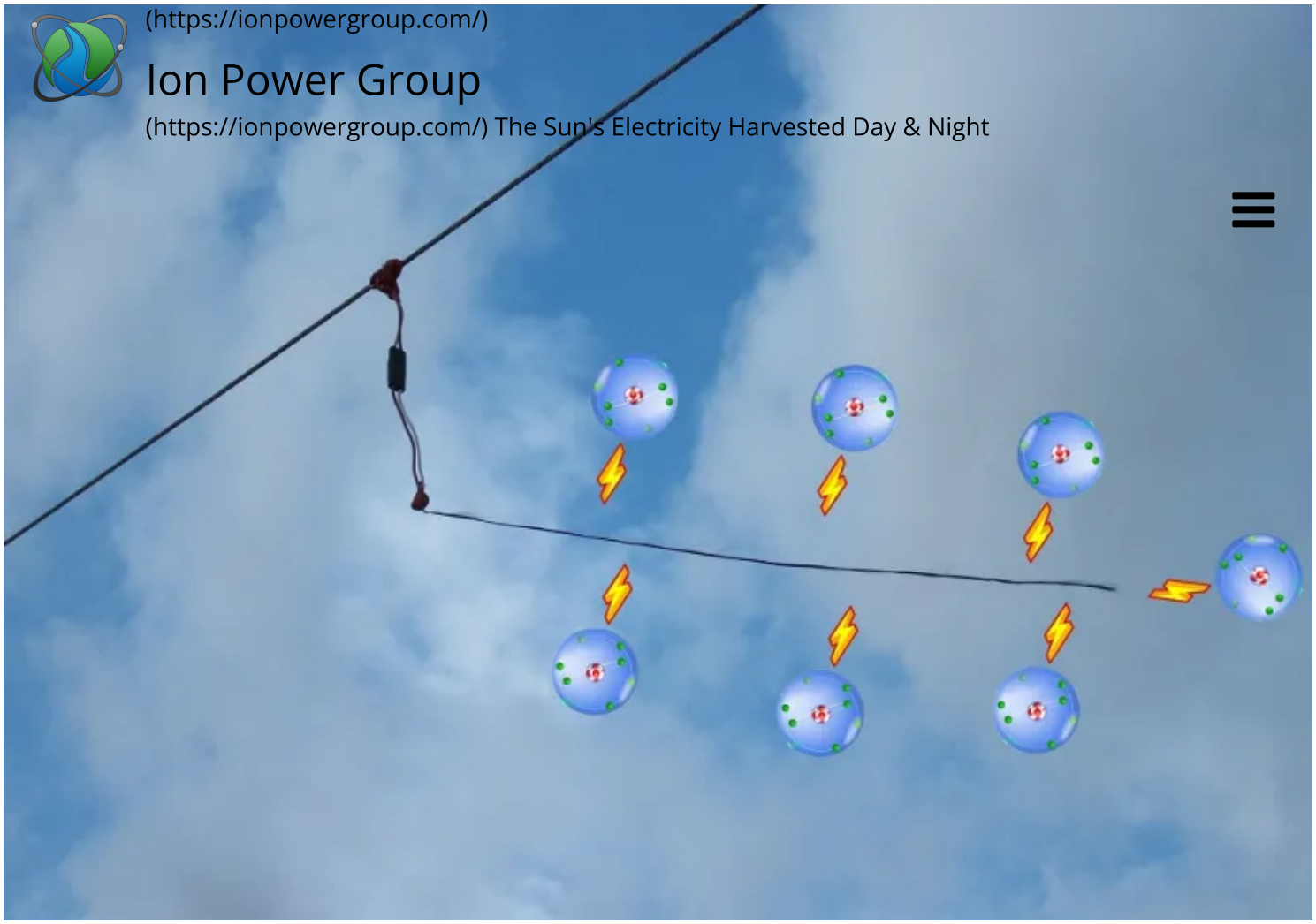

(https://i0.wp.com/ionpowergroup.com/wp-content/uploads/2016/09/Ion-Collector-harvesting-ions-PLAIN.jpg?ssl=1)

TOP

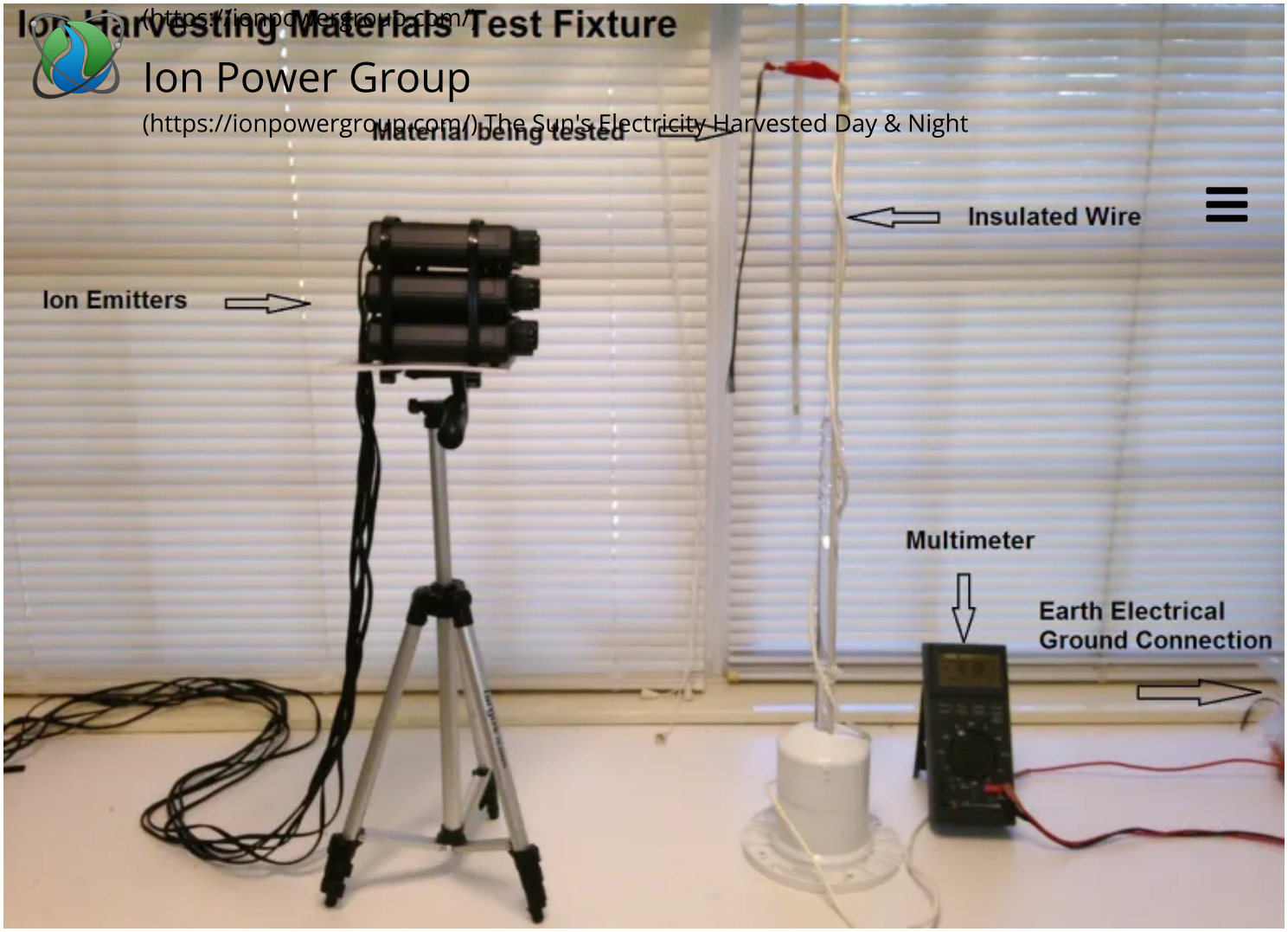

(https://i0.wp.com/ionpowergroup.com/wp-content/uploads/2016/10/Ion-Harvesting-Table-Top-Assembly-annotated.jpg?ssl=1)

Ion collectors can be composed of carbon/graphite/graphene, while not metallic, are electrically conductive, flexible and durable. Electric fields are known to coalesce at conductive points known as the “Corona Effect”. The solution of Poisson’s equation to determine electric field intensity around the collectors shows us that the highest electric fields will be around sharp points; the sharper the point, the greater the electric field. Ion collectors offer millions of microscopic electrically conductive points

TOP

and protrusions which readily couple to the electric fields of near-Earth ions transferring high-voltage electricity from the atmospheric ions to the ion collectors.

$$\nabla^2 \varphi = -\frac{\rho}{\varepsilon}.$$

Ground based circuitry maintains the ion collector material at a voltage considerably lower than the surrounding atmospheric ions thereby employing the electrostatic attraction principle causing nearby ions to migrate to the ion collectors. High voltage wire connected to the ion collectors convey the harvested high voltage DC electricity to a storage medium or electrical load to produce work. Measurements have shown that ion collectors made of graphite are more efficient at harvesting electricity from airborne ions than all other tested metals. In some tests, by as much as 55x greater efficiency. Some of the tested metals include highly conductive silver, copper, and aluminum wire – aluminum spheres – copper and aluminum sheets.

The below graphs show voltage and current coupling characteristics comparing metal in one test (indicated as red and green) to carbon/graphite (indicated as purple).

TOP

(https://ionpowergroup.com/)

Ion Power Group

(https://ionpowergroup.com/) The Sun's Electricity Harvested Day & Night

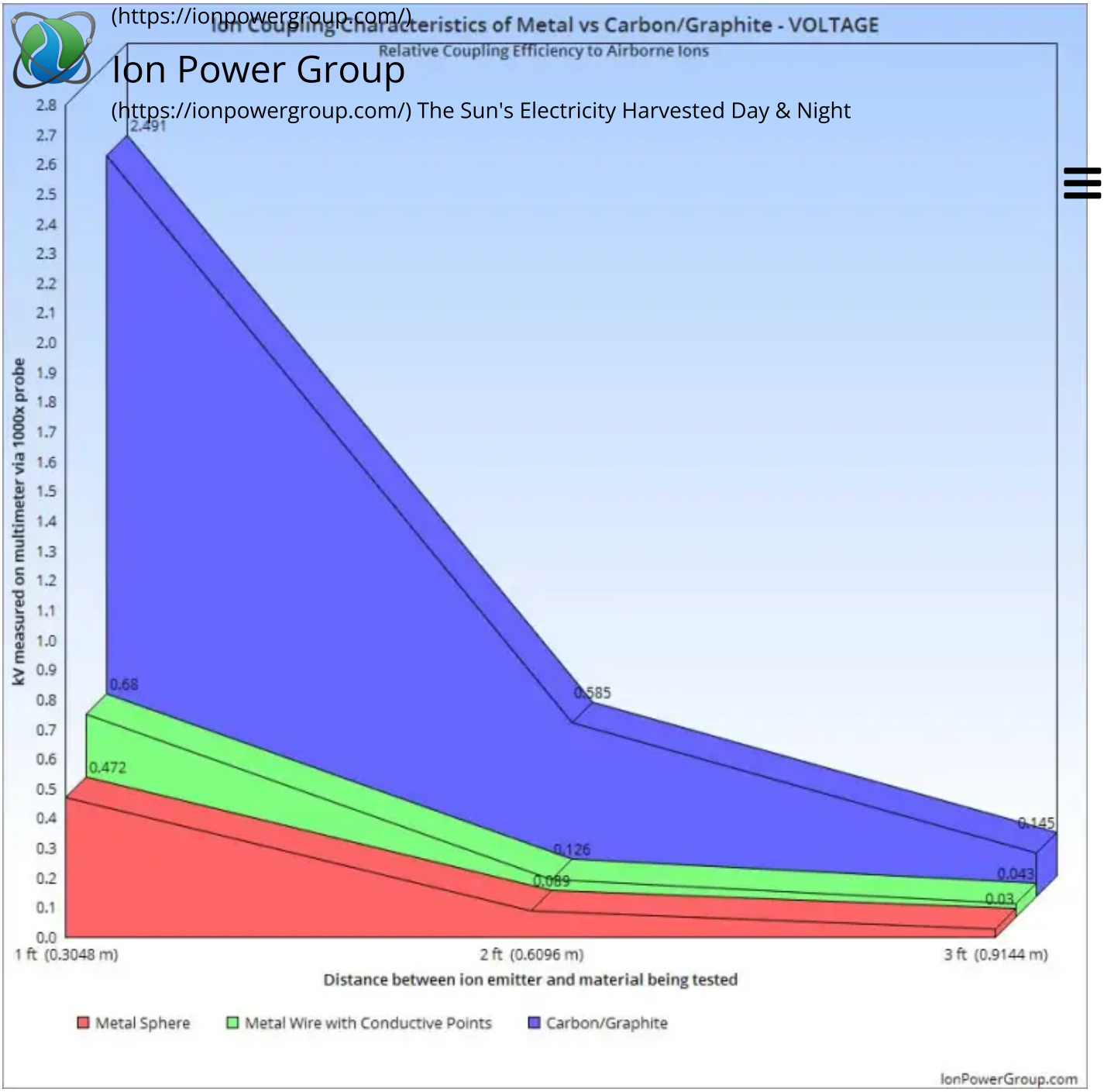

(/wp-content/uploads/2016/07/Ion-Coupling-Characteristics-VOLTAGE-1.jpg)

TOP

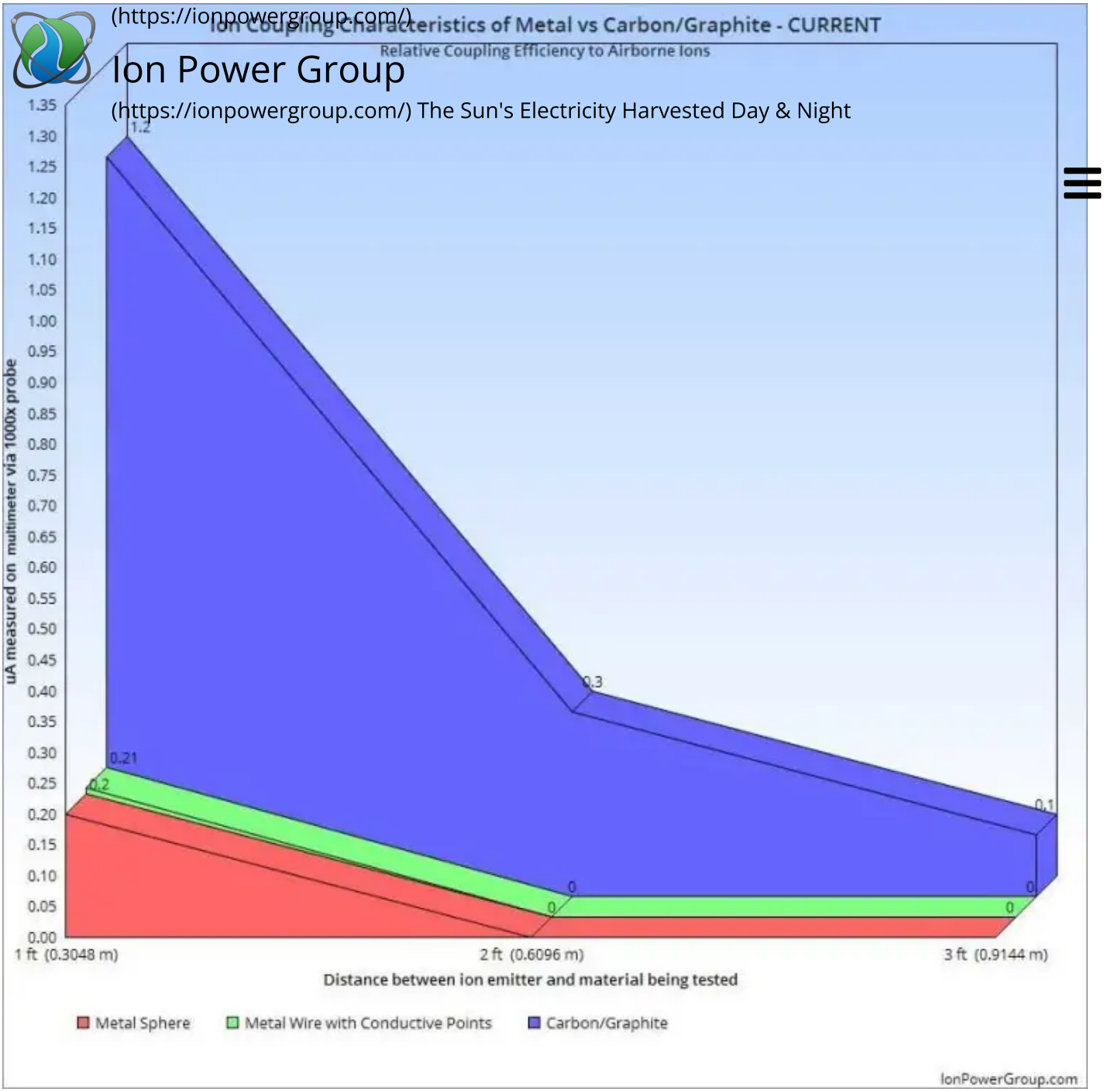

(/wp-content/uploads/2016/07/Ion-Coupling-Characteristics-CURRENT.jpg)

Electricity is produced by providing sufficient altitude to the ultra lightweight ion collector through the use of long-duration aerial

TOP

platforms including tethered balloon, kite or tower. Atmospheric voltage increases at the rate of approximately 90-150vdc per meter of altitude above ground level or sea level and many orders of magnitude greater during disturbed weather. Experiments have

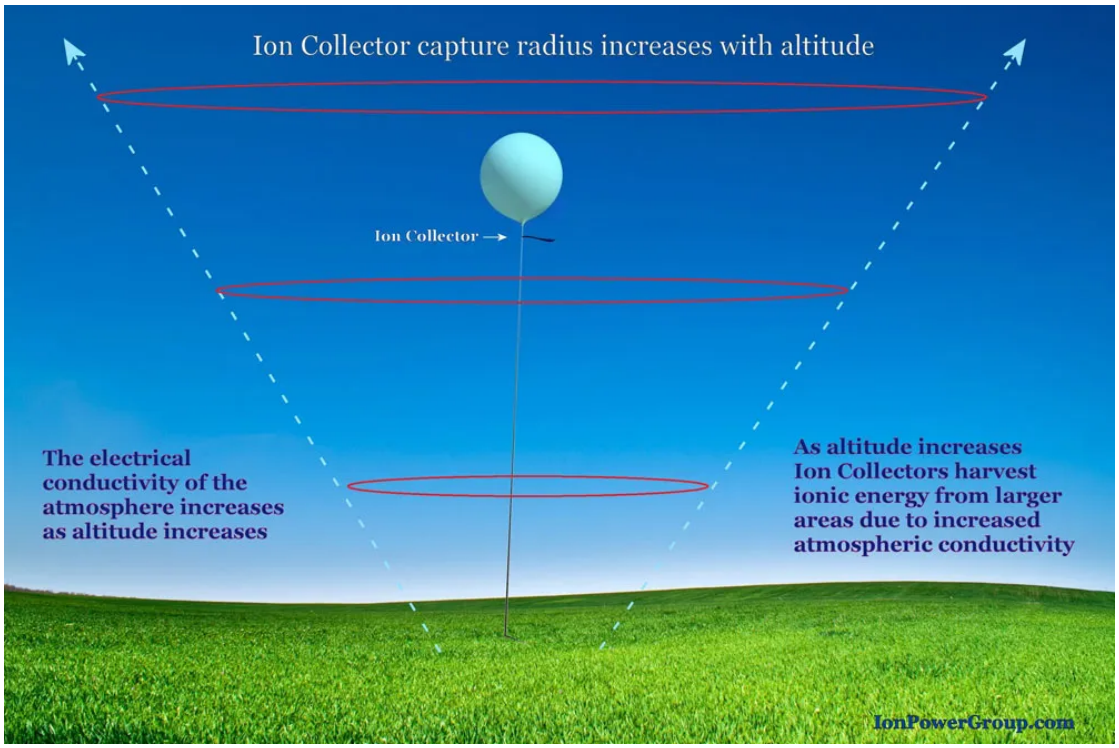

Atmospheric voltage increases about 90-150vdc per meter of altitude

TOP

(https://ionpowergroup.com/)

Ion Power Group

(https://ionpowergroup.com/) The Sun's Electricity Harvested Day & Night

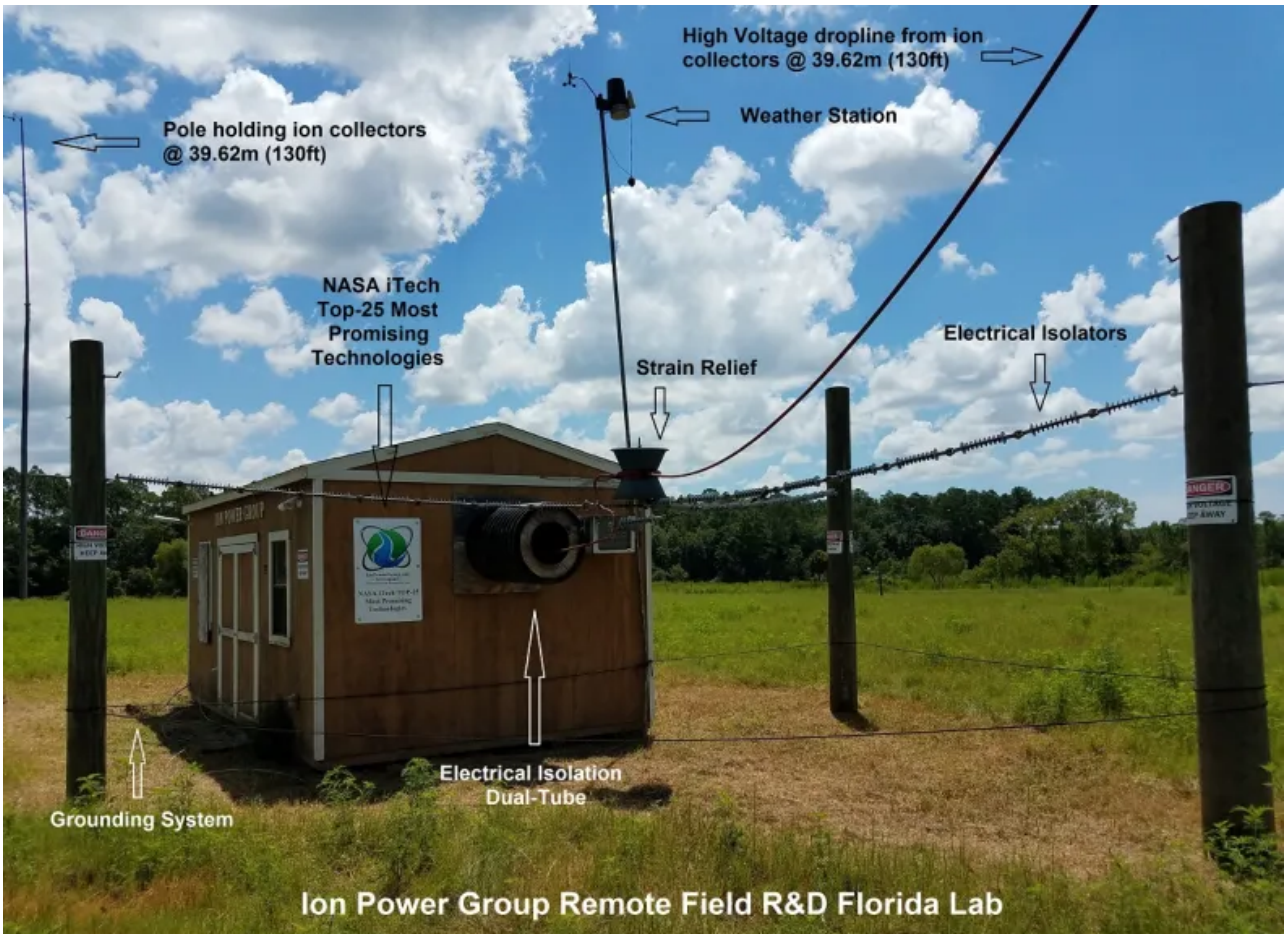

TOP

(https://ionpowergroup.com/)

Ion Power Group

(https://ionpowergroup.com/) The Sun's Electricity Harvested Day & Night

(https://i0.wp.com/ionpowergroup.com/wp-content/uploads/2018/08/Ion-Power-Group-Test-Site-08-05-2018-100.jpg?ssl=1)

TOP

TOP

(https://ionpowergroup.com/)

Ion Power Group

(https://ionpowergroup.com/) The Sun's Electricity Harvested Day & Night

Electricity harvested from Airborne Ions + Water = Hydrogen Gas

TOP

(https://ionpowergroup.com/)

Ion Power Group

(https://ionpowergroup.com/) The Sun's Electricity Harvested Day & Night

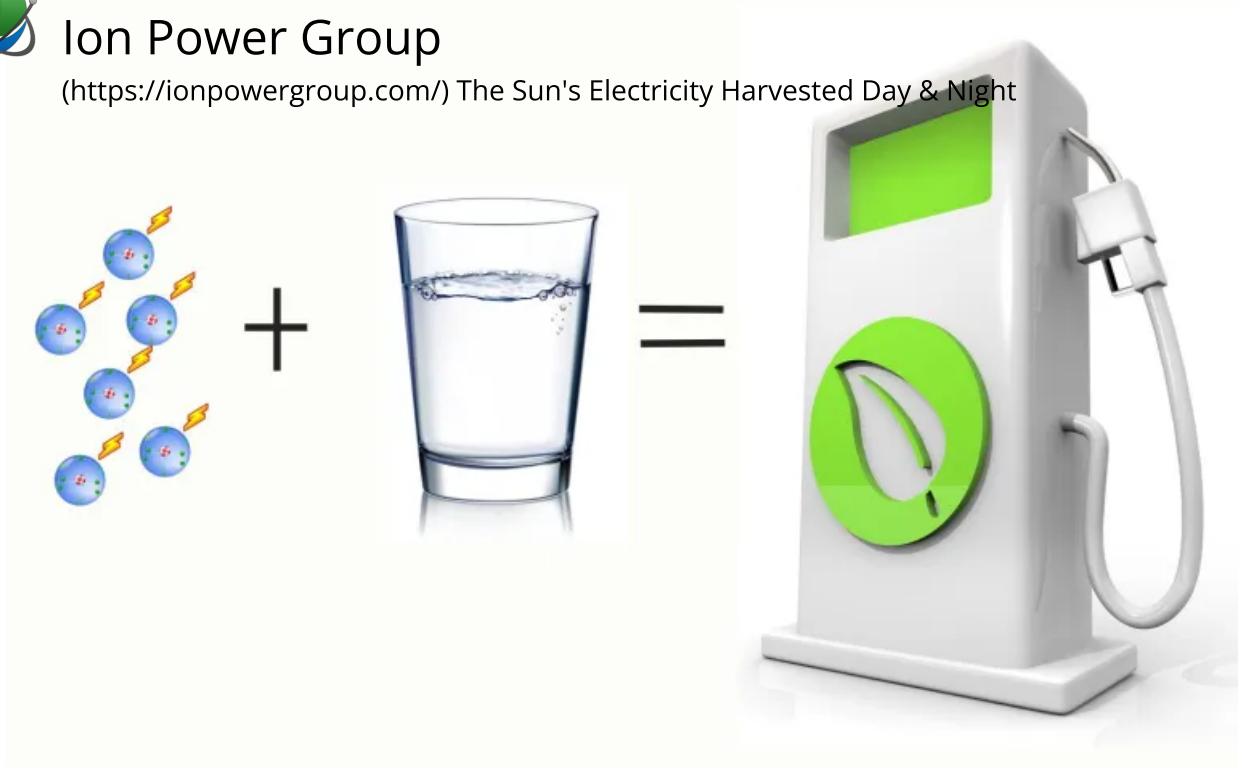

TOP

(https://ionpowergroup.com/)

Ion Power Group

(https://ionpowergroup.com/) The Sun's Electricity Harvested Day & Night

Ion Power Group has been awarded patents for installing ion collectors on automobiles to generate electricity including through the Triboelectric Effect. Preliminary field tests in which a truck, equipped with Ion Collectors, demonstrated that the concept can generate >500 volts when the vehicle is in motion. Initial tests are encouraging, however, further development is required in order to realize automobiles that generate their own supplemental electricity (or onboard hydrogen gas from water) through use of Ion Collectors.

TOP

(https://ionpowergroup.com/)

Ion Power Group

(https://ionpowergroup.com/) The Sun's Electricity Harvested Day & Night

Illustrations (below) of proposed experimental ion power plants using long-duration aerostats (aerostats or balloons) or kites or towers to provide altitude to the ion collectors to harvest ions for electricity, day and night. Future Ion Harvesting Technology embodiments that use long-duration aerostats (balloons) to provide great altitude to ion collectors offer a theoretical energy producing duty-cycle approaching 99%.

(https://i0.wp.com/ionpowergroup.com/wp-content/uploads/2020/03/Ion-Harvesting-Farm-ORIGINAL1.2-scaled.jpg?ssl=1)

TOP

Graphene/Graphite Atmospheric Electricity Collectors – Plus Horrific Hexacopter Crash!

by lasersaber | Jun 2, 2014 | Atmospheric Electricity

While on family vacation I was able to swing by and check out this atmospheric energy test site. They have some amazing energy harvesting technology and encourage replication. Since the visit I have had a non-stop stream of new ideas running through my head, but...

Mini AtmoMotor

by lasersaber | Mar 10, 2014 | Atmospheric Electricity, Motors

This is the most sensitive AtmoMotor design yet. The motor has been designed with easy construction in mind. It makes an excellent wireless demonstration motor.

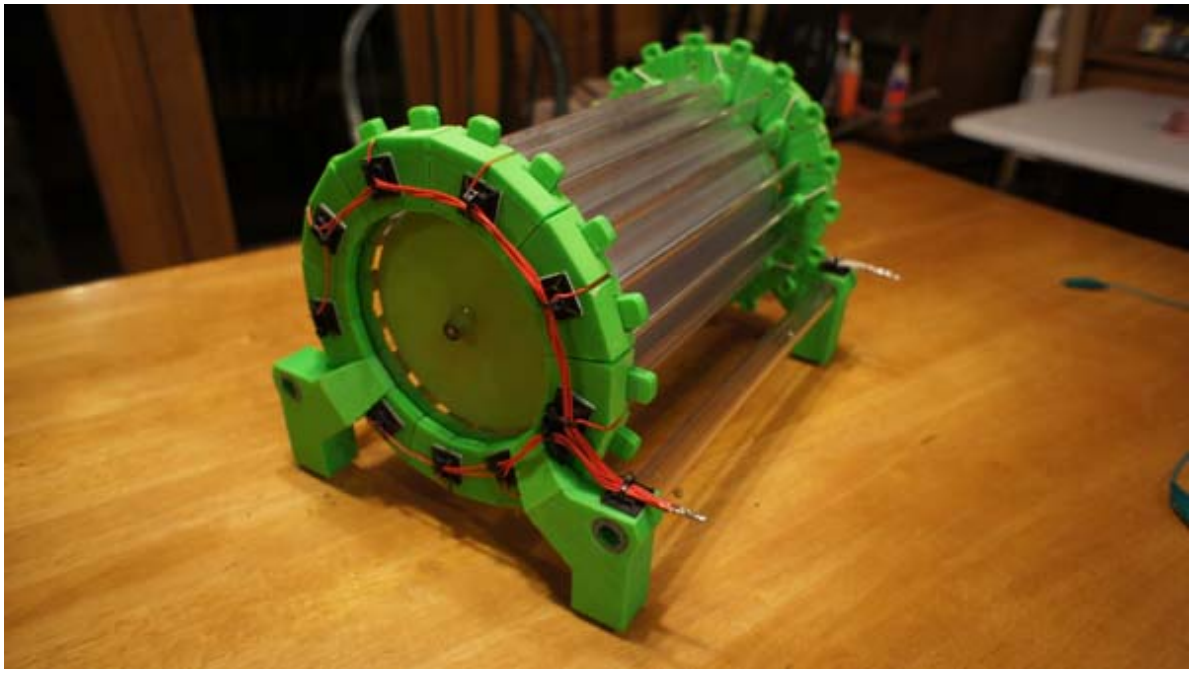

AtmoMotor HV Atmospheric Motor

by lasersaber | Dec 24, 2013 | Atmospheric Electricity, Motors

A high torque atmospheric motor. Tests underway…

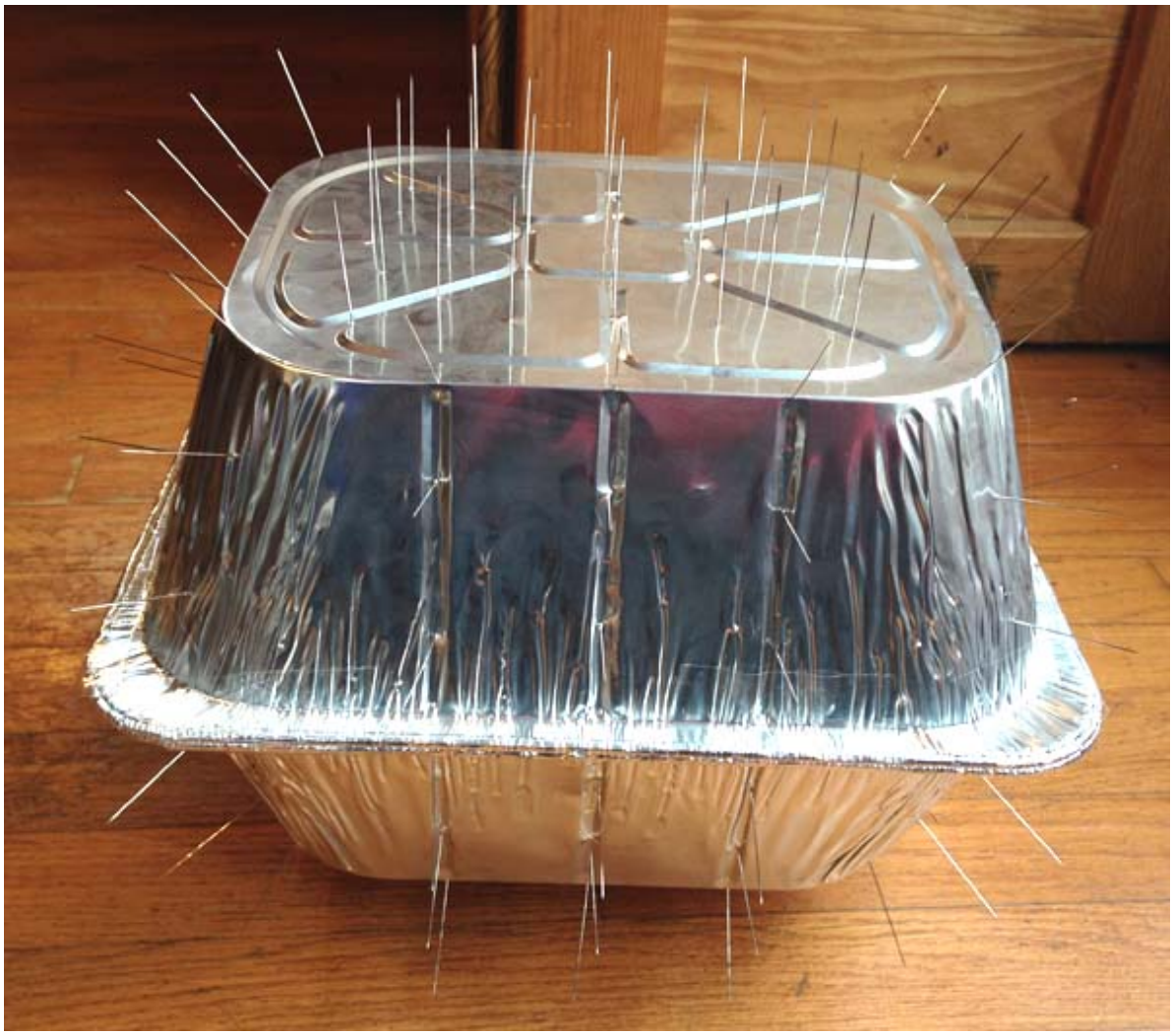

Atmospheric Electricity Antenna Testing

by lasersaber | Dec 4, 2013 | Atmospheric Electricity

Testing to determine the best type of antenna for my experiments.

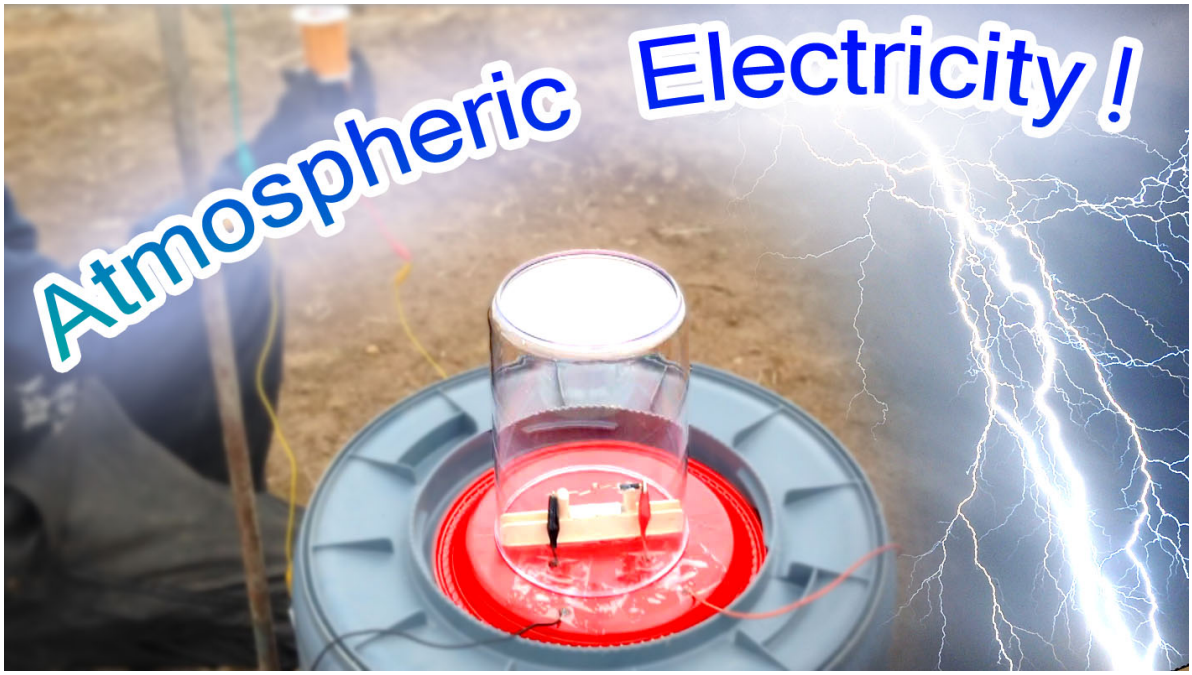

Free Atmospheric Electricity Powers Small Motor – Tesla Radiant Energy

by lasersaber | Nov 26, 2013 | Atmospheric Electricity, Featured Projects

I have always wanted to test a radiant energy motor. This little motor is the beginning of my research in that direction. In the near future I will be making larger more powerful motors. The precision required will probably require my 3D printer.

–

amazon

Tiny House Engineers...

$14.99 Prime

Shop now

–

US 20160043661A1

(19) United States

(12) Patent Application Publication

McCowen

(10) Pub. No.: US 2016/0043661 A1

(43) Pub. Date: Feb. 11, 2016

(54) ENERGY COLLECTION

(71) Applicant: **Ion Power Group LLC**, Navarre, FL (US)

(72) Inventor: **Clint McCowen**, Navarre, FL (US)

(73) Assignee: **ION POWER GROUP LLC**, Navarre, FL (US)

(21) Appl. No.: **14/454,308**

(22) Filed: **Aug. 7, 2014**

Publication Classification

(51) **Int. Cl.**
H02N 1/04 (2006.01)

(52) **U.S. Cl.**
CPC *H02N 1/04* (2013.01)

(57) **ABSTRACT**

An energy collection system may collect and use the energy generated by an electric field. Collection fibers are suspended from a support system. The support system is electrically connected to a load by a connecting wire. The collection fibers may be made of any conducting material, but graphene, carbon and graphite are preferred. Diodes may be used to restrict the backflow or loss of energy.

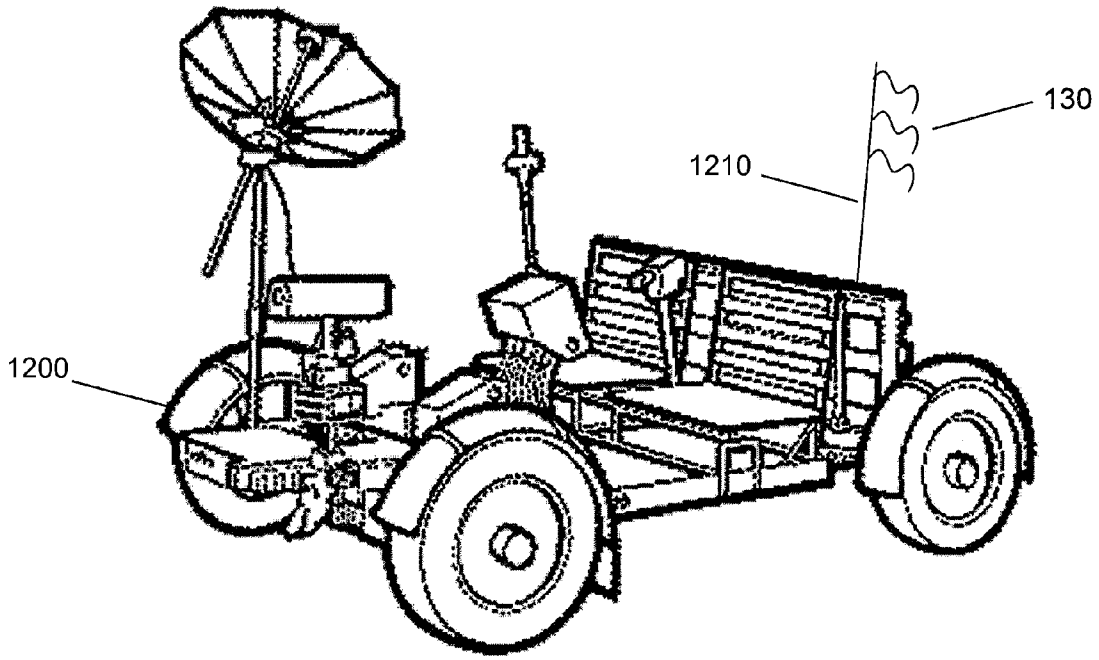

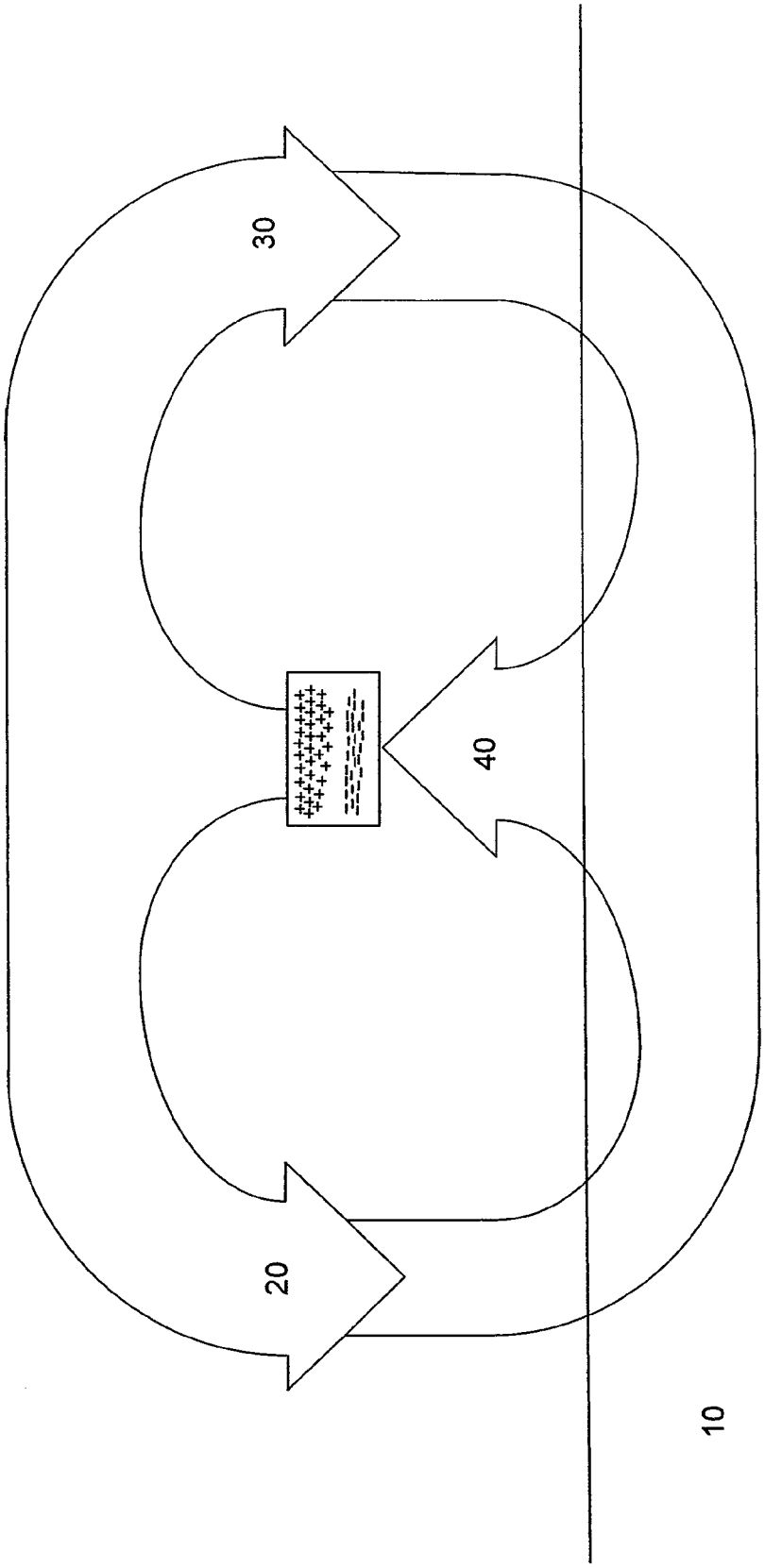

FIGURE 1

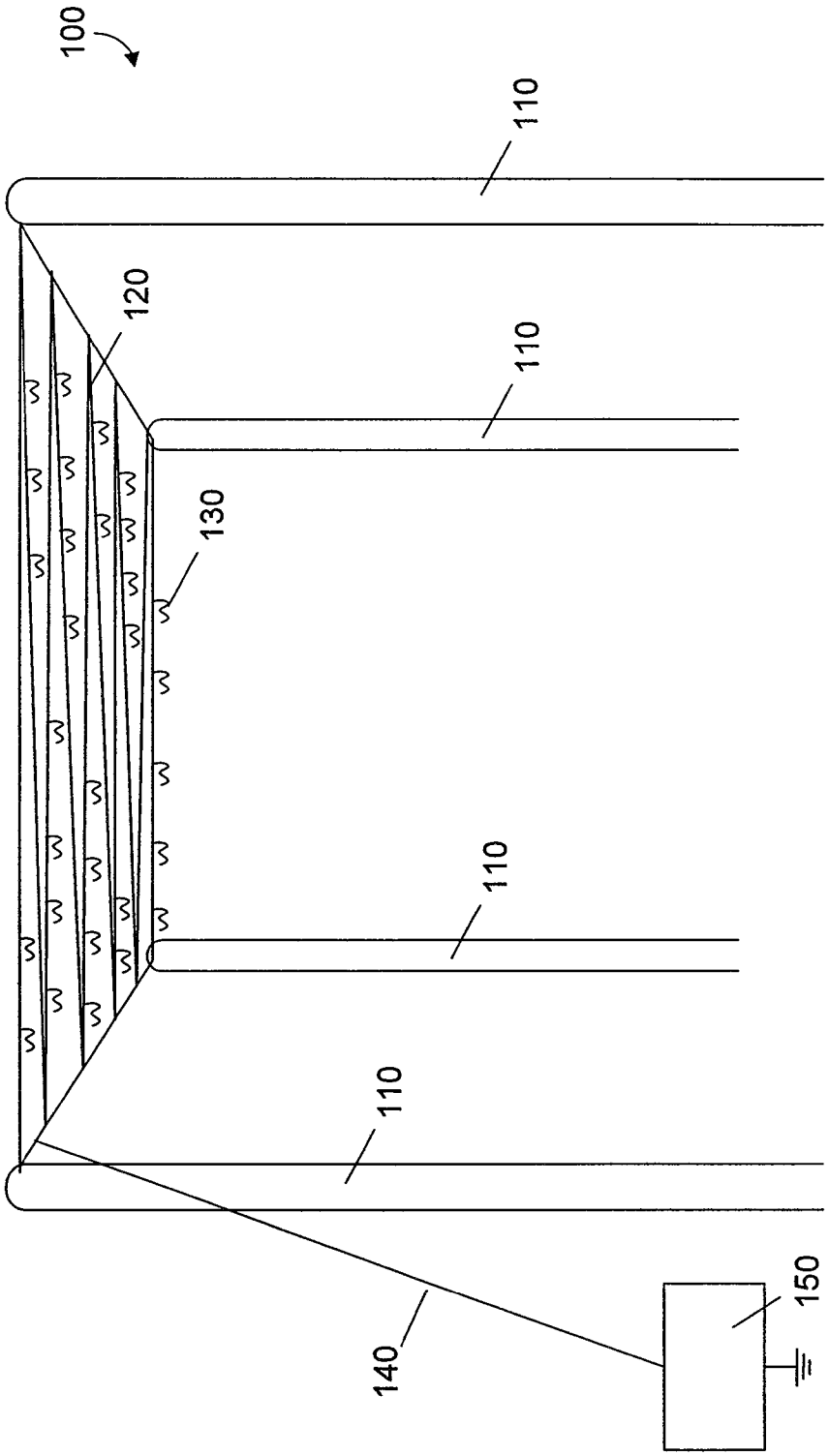

FIGURE 2

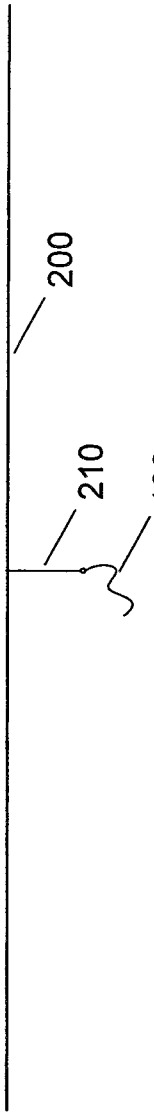

FIGURE 2A

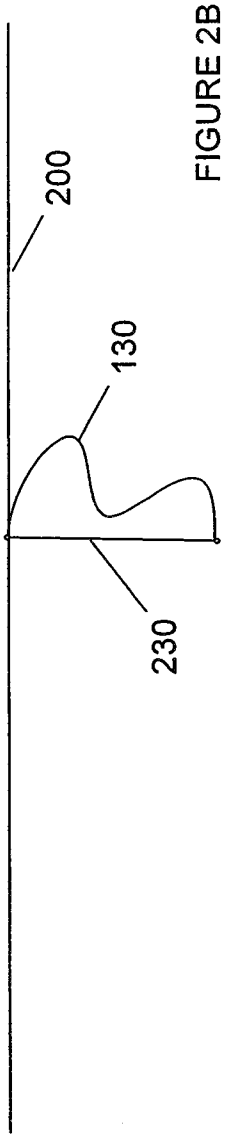

FIGURE 2B

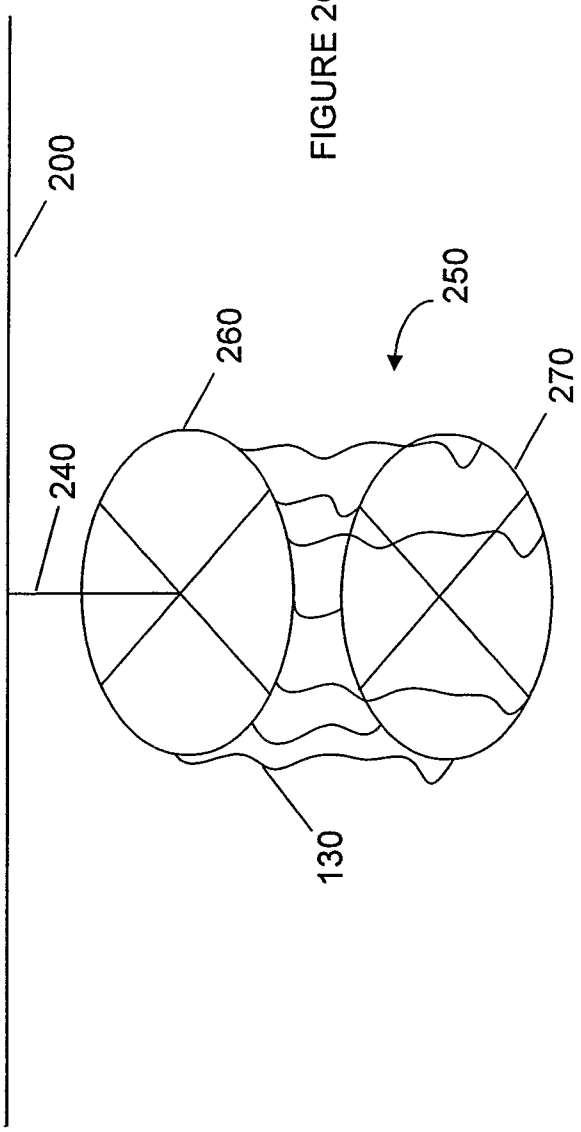

FIGURE 2C

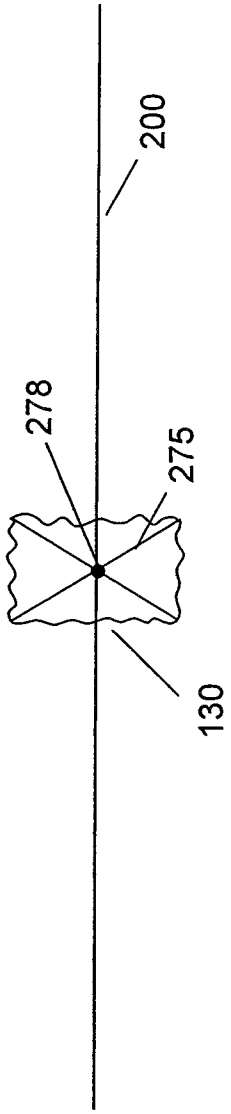

FIGURE 2D

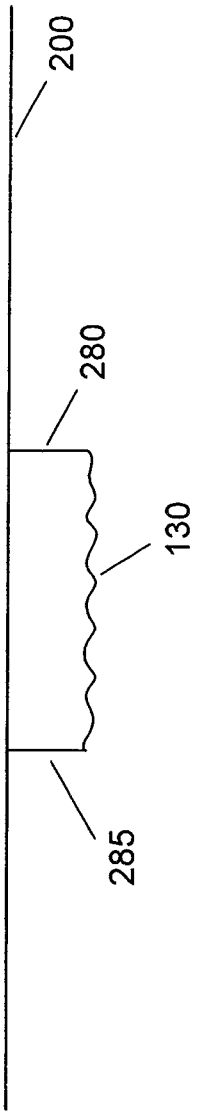

FIGURE 2E

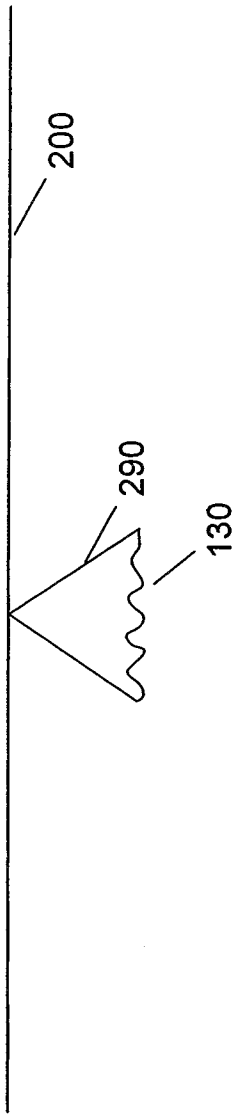

FIGURE 2F

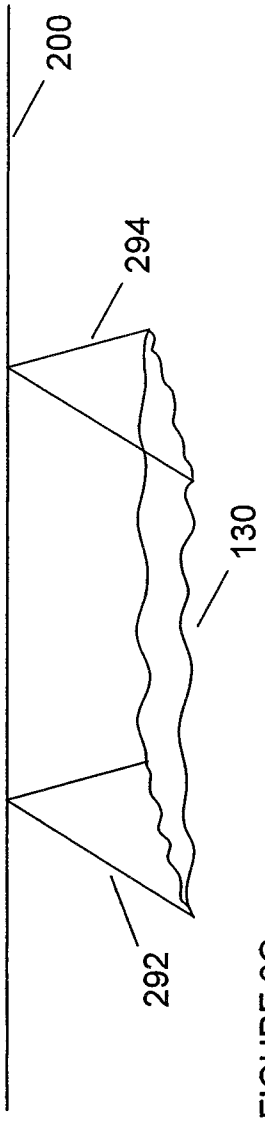

FIGURE 2G

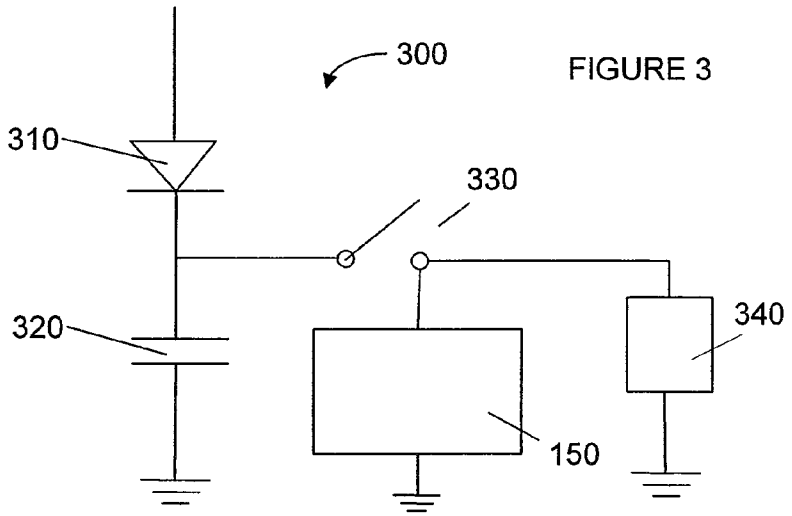

FIGURE 3

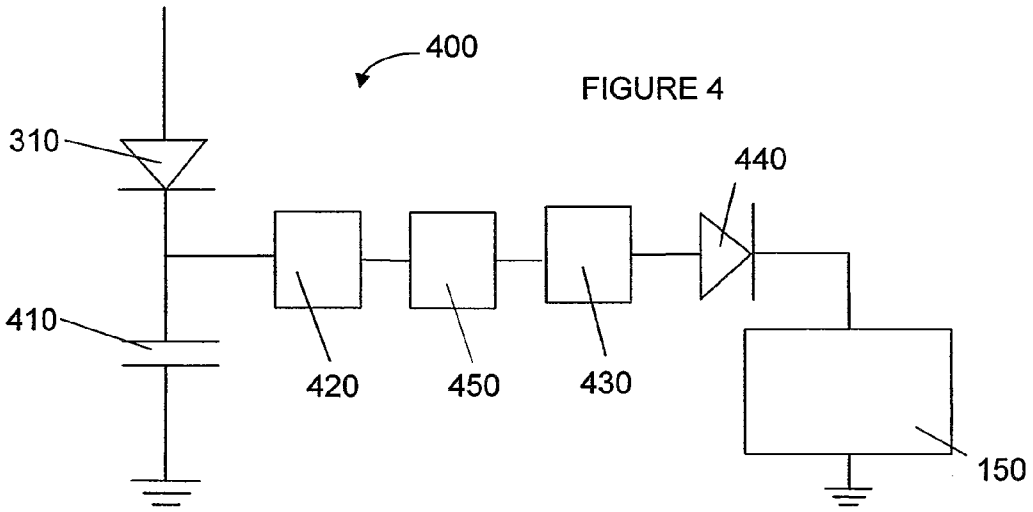

FIGURE 4

FIGURE 5

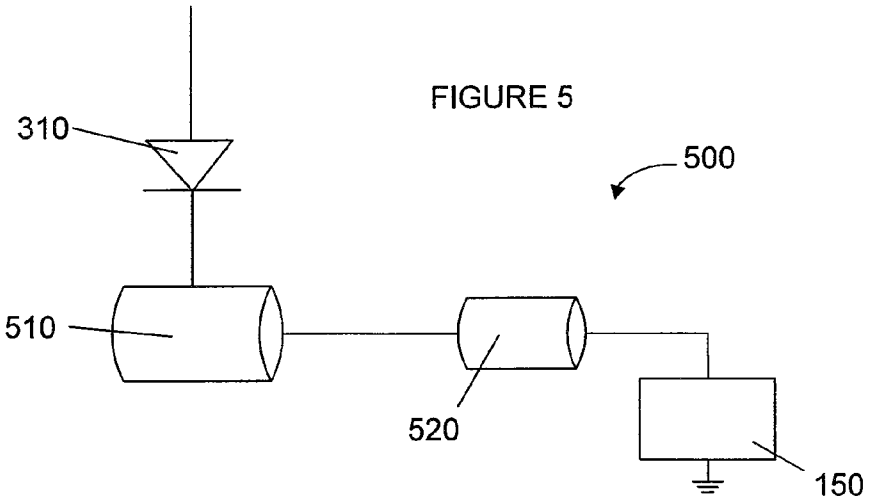

FIGURE 6

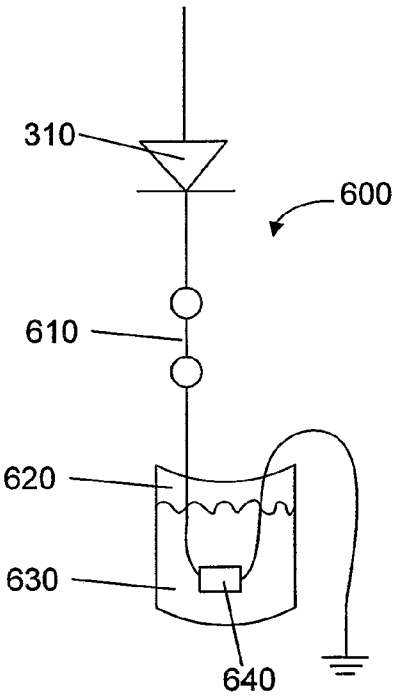

FIGURE 7

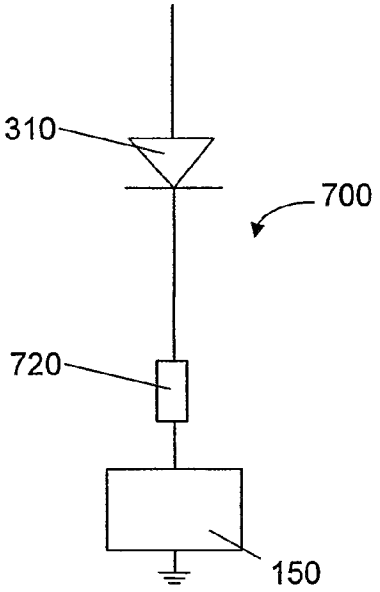

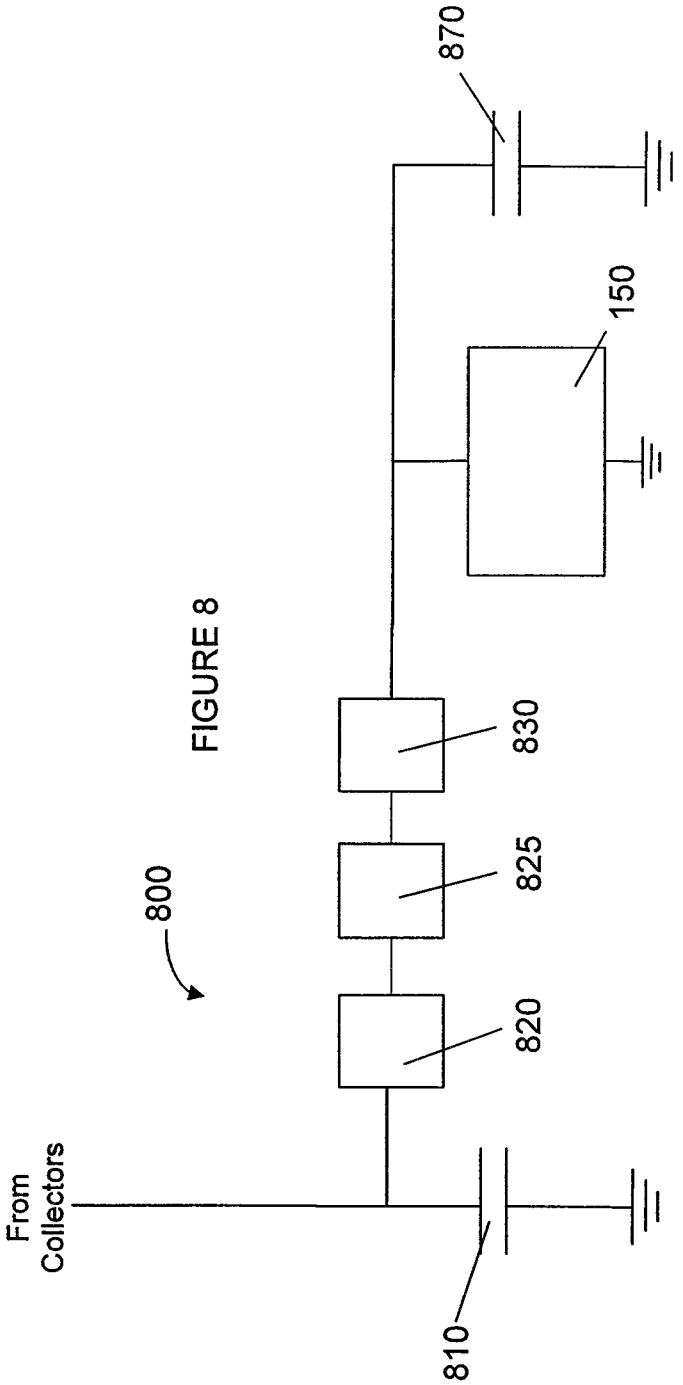

FIGURE 8

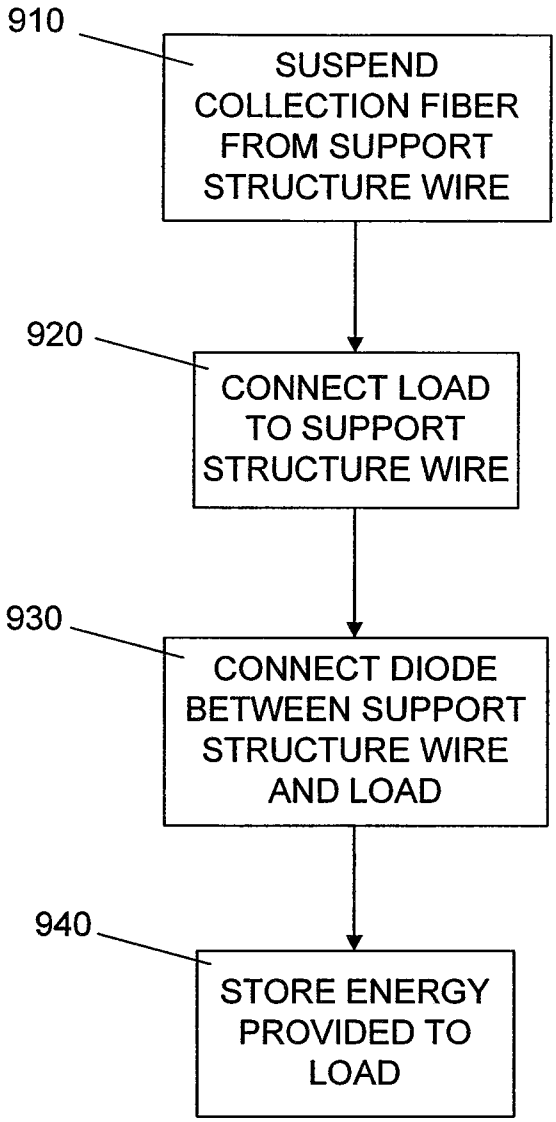
910
SUSPEND COLLECTION FIBER FROM SUPPORT STRUCTURE WIRE
920
CONNECT LOAD TO SUPPORT STRUCTURE WIRE
930
CONNECT DIODE BETWEEN SUPPORT STRUCTURE WIRE AND LOAD
940
STORE ENERGY PROVIDED TO LOAD

FIGURE 9

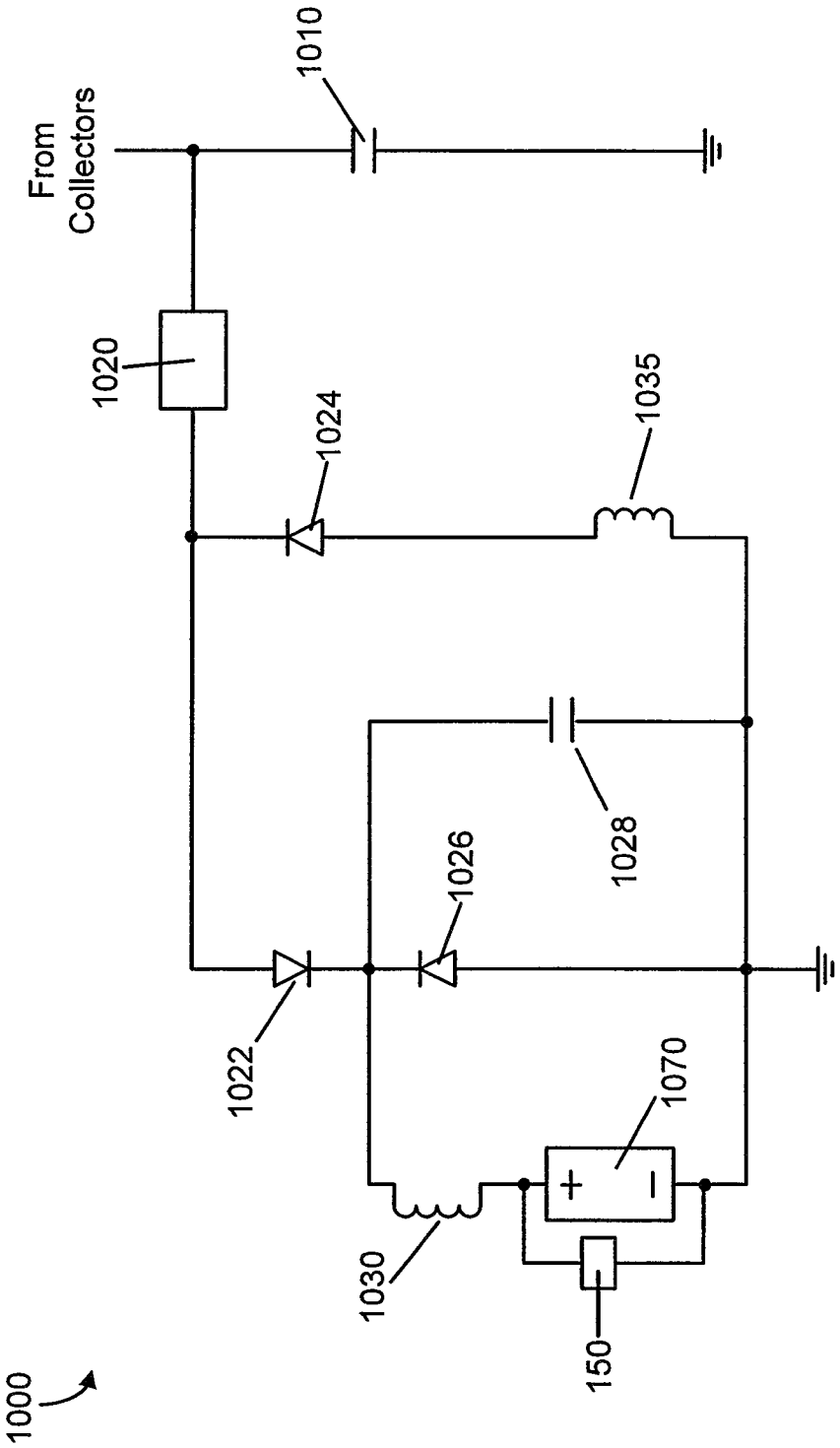
From Collectors
1010
1020
1024
1035
1028
1026
1022
1070
+
−
1030
150
1000

FIGURE 10

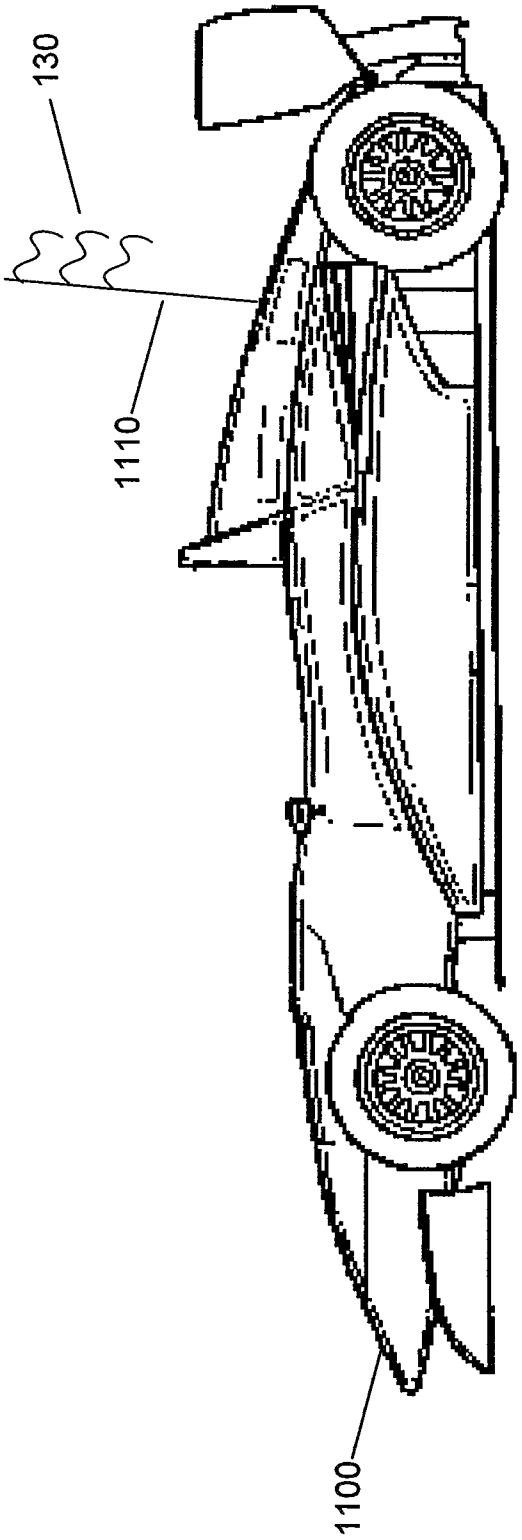

FIGURE 11

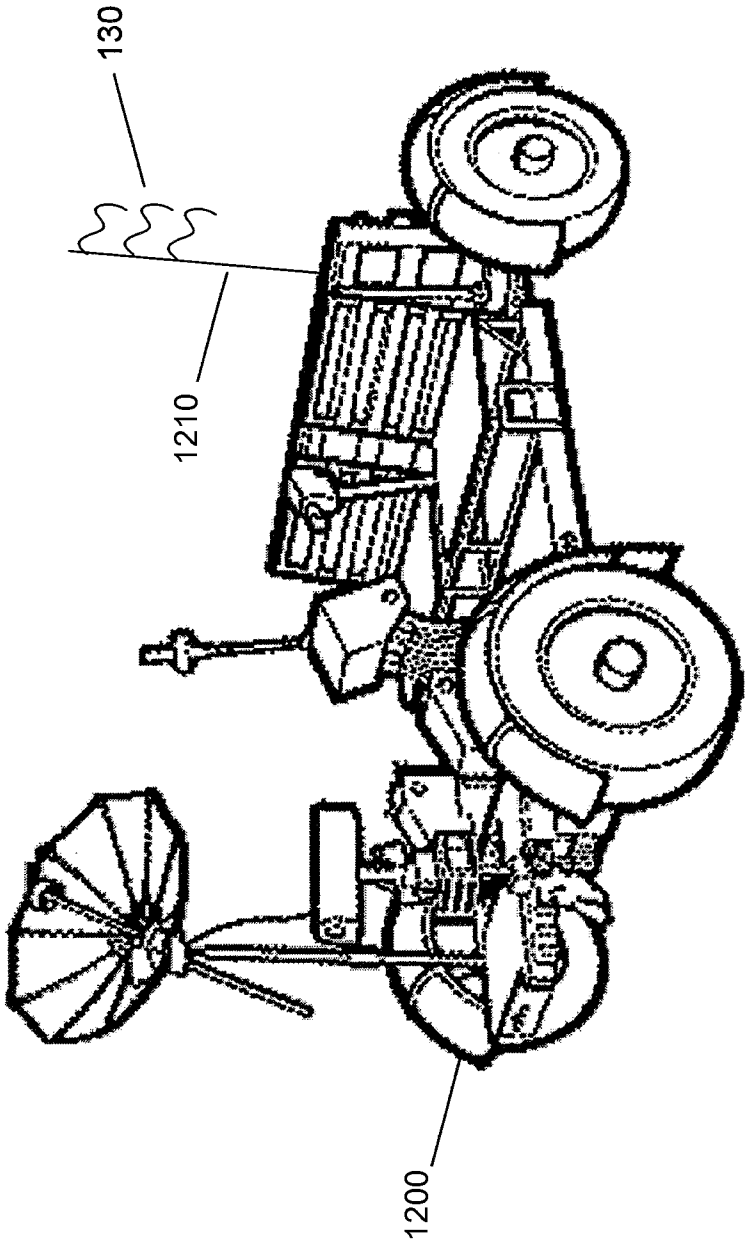

FIGURE 12

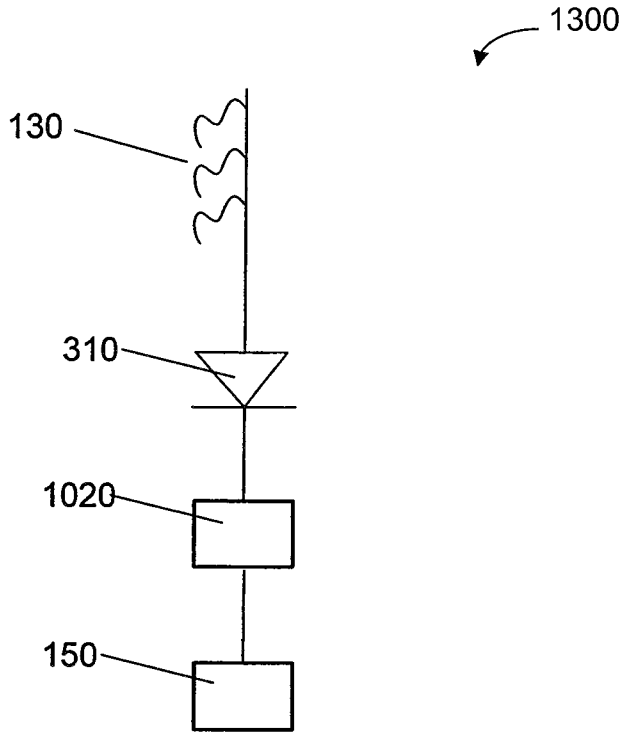

FIGURE 13

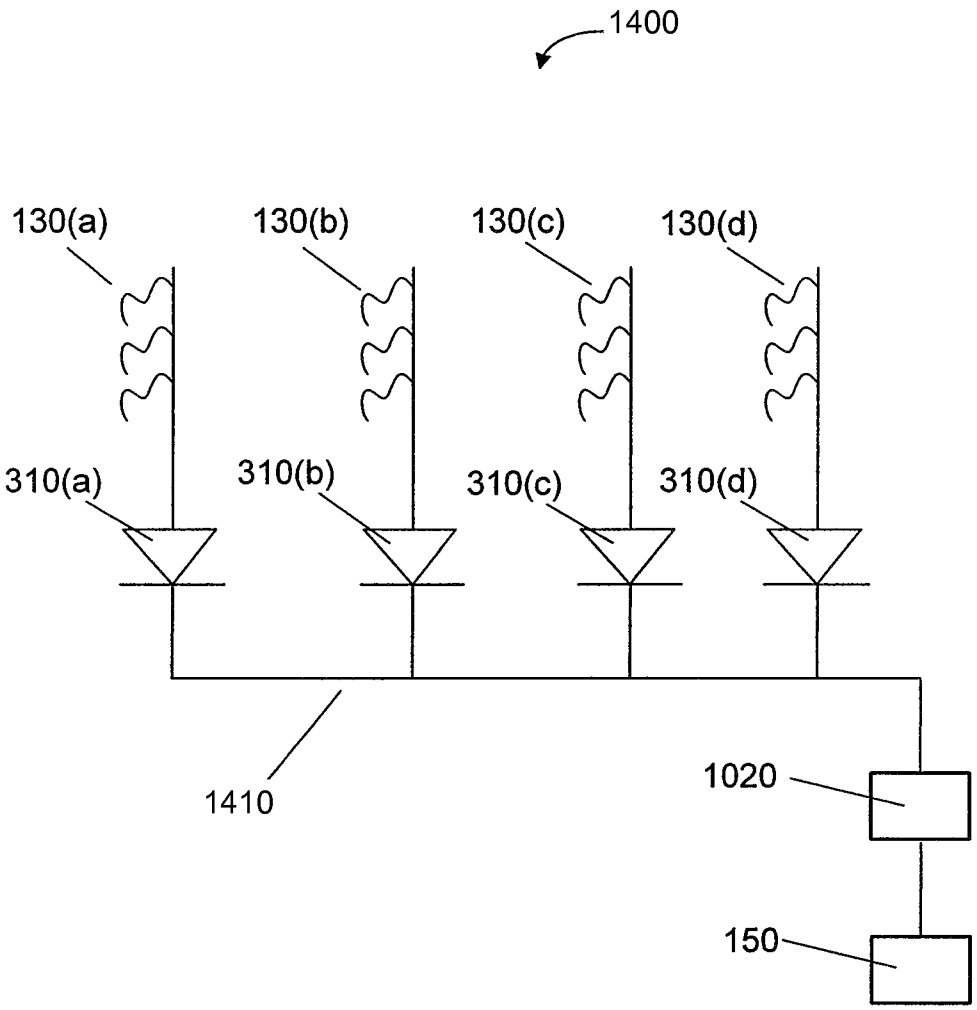

FIGURE 14

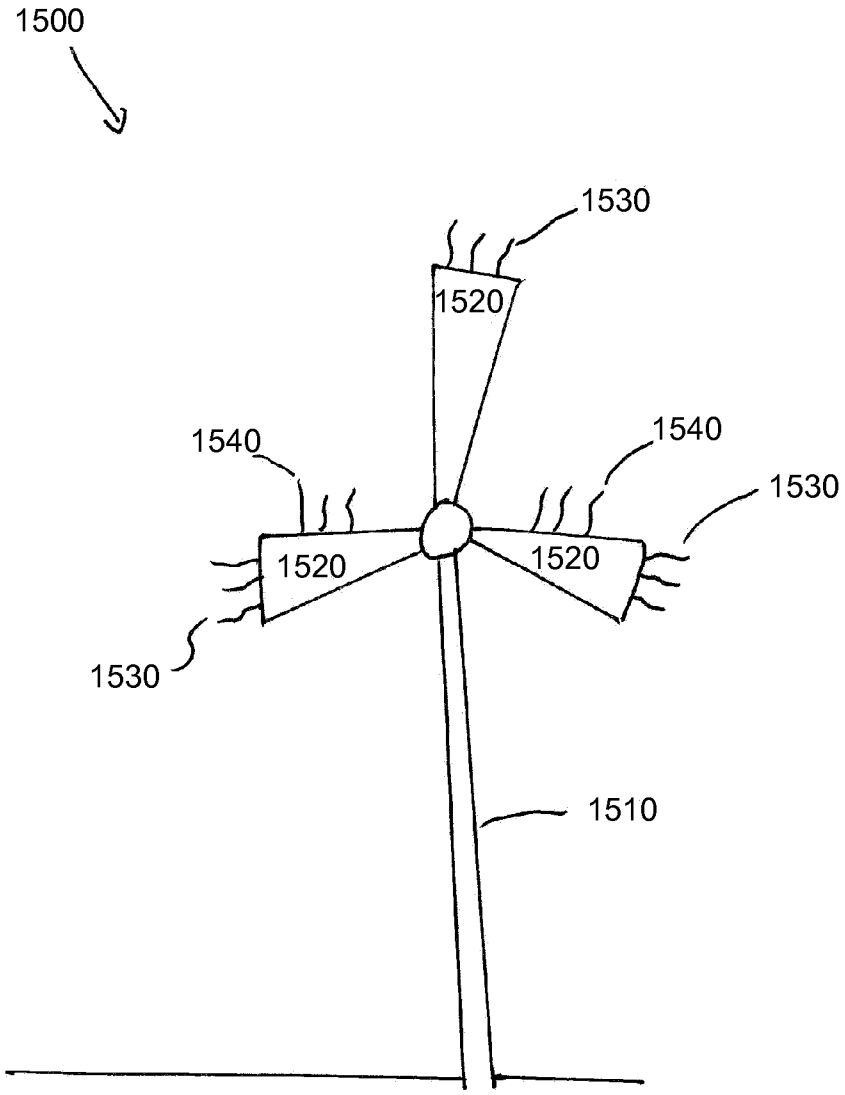

FIGURE 15

ENERGY COLLECTION

TECHNICAL FIELD

[0001] The present disclosure is generally related to energy and, more particularly, is related to systems and methods for collecting energy.

BACKGROUND

[0002] The concept of fair weather electricity deals with the electric field and the electric current in the atmosphere propagated by the conductivity of the air. Clear, calm air carries an electrical current, which is the return path for thousands of lightening storms simultaneously occurring at any given moment around the earth. For simplicity, this energy may be referred to as static electricity or static energy. FIG. **1** illustrates a weather circuit for returning the current from lightning, for example, back to ground **10**. Weather currents **20**, **30** return the cloud to ground current **40**.

[0003] In a lightening storm, an electrical charge is built up, and electrons arc across a gas, ionizing it and producing the lightening flash. As one of ordinary skill in the art understands, the complete circuit requires a return path for the lightening flash. The atmosphere is the return path for the circuit. The electric field due to the atmospheric return path is relatively weak at any given point because the energy of thousands of electrical storms across the planet are diffused over the atmosphere of the entire Earth during both fair and stormy weather. Other contributing factors to electric current being present in the atmosphere may include cosmic rays penetrating and interacting with the earth's atmosphere, and also the migration of ions, as well as other effects yet to be fully studied.

[0004] Some of the ionization in the lower atmosphere is caused by airborne radioactive substances, primarily radon. In most places of the world, ions are formed at a rate of 5-10 pairs per cubic centimeter per second at sea level. With increasing altitude, cosmic radiation causes the ion production rate to increase. In areas with high radon exhalation from the soil (or building materials), the rate may be much higher.

[0005] Alpha-active materials are primarily responsible for the atmospheric ionization. Each alpha particle (for instance, from a decaying radon atom) will, over its range of some centimeters, create approximately 150,000-200,000 ion pairs.

[0006] While there is a large amount of usable energy available in the atmosphere, a method or apparatus for efficiently collecting that energy has not been forthcoming. Therefore, a heretofore unaddressed need exists in the industry to address the aforementioned deficiencies and inadequacies.

SUMMARY

[0007] Embodiments of the present disclosure provide systems and methods for collecting energy. Briefly described in architecture, one embodiment of the system, among others, can be implemented by a support structure, the support structure comprising at least one of an airplane, drone, blimp, balloon, kite, satellite, train, motorcycle, bike, skateboard, scooter, hovercraft, electronic device, electronic device case, billboard, cell tower, radio tower, camera tower, flag pole, telescopic pole, light pole, utility pole, water tower, building, sky scraper, coliseum, roof top, solar panel and a fixed or mobile structure exceeding 1 inch in height above ground or sea level; at least one collection device with, in operation, microscopic points of a cross-section of the collection device exposed to the environment electrically connected to the support structure; and a load electrically connected to the at least one collection device.

[0008] Embodiments of the present disclosure can also be viewed as providing methods for collecting energy. In this regard, one embodiment of such a method, among others, can be broadly summarized by the following steps: suspending at least one collection device with, in operation, microscopic points of a cross-section of the collection device exposed to the environment from a support structure, the at least one collection device electrically connected to the support structure, the support structure comprising at least one of an airplane, drone, blimp, balloon, kite, satellite, train, motorcycle, bike, skateboard, scooter, hovercraft, electronic device, electronic device case, billboard, cell tower, radio tower, camera tower, flag pole, telescopic pole, light pole, utility pole, water tower, building, sky scraper, coliseum, roof top, solar panel and a fixed or mobile structure exceeding 1 inch in height above ground or sea level; and providing a load with an electrical connection to the at least one collection device to draw current.

[0009] Other systems, methods, features, and advantages of the present disclosure will be or become apparent to one with skill in the art upon examination of the following drawings and detailed description. It is intended that all such additional systems, methods, features, and advantages be included within this description, be within the scope of the present disclosure, and be protected by the accompanying claims.

BRIEF DESCRIPTION OF THE DRAWINGS

[0010] Many aspects of the disclosure can be better understood with reference to the following drawings. The components in the drawings are not necessarily to scale, emphasis instead being placed upon clearly illustrating the principles of the present disclosure. Moreover, in the drawings, like reference numerals designate corresponding parts throughout the several views.

[0011] FIG. **1** is a circuit diagram of a weather energy circuit.

[0012] FIG. **2** is a perspective view of an example embodiment of many energy collectors elevated above ground by a structure.

[0013] FIG. **2**A is a side view of an energy collection fiber suspended from a support wire.

[0014] FIG. **2**B is a side view of an example embodiment of an energy collection fiber suspended from a support wire and with an additional support member.

[0015] FIG. **2**C is a perspective view of a support structure for multiple energy collection fibers.

[0016] FIG. **2**D is a side view of an example embodiment of a support structure for multiple energy collection fibers.

[0017] FIG. **2**E is a side view of a support structure for an energy collection fiber.

[0018] FIG. **2**F is a side view of an example embodiment of a support structure for an energy collection fiber.

[0019] FIG. **2**G is a side view of a support structure for multiple energy collection fibers.

[0020] FIG. **3** is a circuit diagram of an example embodiment of a circuit for the collection of energy.

[0021] FIG. **4** is a circuit diagram of an example embodiment of a circuit for the collection of energy.

[0022] FIG. **5** is a circuit diagram of an example embodiment of an energy collection circuit for powering a generator and motor.

[0023] FIG. **6** is a circuit diagram of an example embodiment of a circuit for collecting energy and using it for the production of hydrogen and oxygen.

[0024] FIG. **7** is a circuit diagram of an example embodiment of a circuit for collecting energy, and using it for driving a fuel cell.

[0025] FIG. **8** is a circuit diagram of an example embodiment of a circuit for collecting energy.

[0026] FIG. **9** is a flow diagram of an example embodiment of collecting energy with a collection fiber.

[0027] FIG. **10** is a circuit diagram of an example embodiment of a circuit for collecting energy from a dual polarity source.

[0028] FIG. **11** is a system diagram of an example embodiment of an energy collection system connected to an automobile vehicle.

[0029] FIG. **12** is a system diagram of an example embodiment of an energy collection system connected to a lunar rover vehicle.

[0030] FIG. **13** is a system diagram of an example embodiment of an energy collection system comprising collection devices with a diode.

[0031] FIG. **14** is a system diagram of an example embodiment of an energy collection system comprising multiple legs of the system of FIG. **13**.

[0032] FIG. **15** is a system diagram of an example embodiment of a windmill with energy collectors.

DETAILED DESCRIPTION

[0033] Electric charges on conductors reside entirely on the external surface of the conductors, and tend to concentrate more around sharp points and edges than on flat surfaces. Therefore, an electric field received by a sharp conductive point may be much stronger than a field received by the same charge residing on a large smooth conductive shell. An example embodiment of this disclosure takes advantage of this property, among others, to collect and use the energy generated by an electric field in the atmosphere. Referring to collection system **100** presented in FIG. **2**, at least one collection device **130** may be suspended from a support wire system **120** supported by poles **110**. Collection device **130** may comprise a diode or a collection fiber individually, or the combination of a diode and a collection fiber. Support wire system **120** may be electrically connected to load **150** by connecting wire **140**. Supporting wire system **120** may be any shape or pattern. Also, conducting wire **140** may be one wire or multiple wires. The collection device **130** in the form of a fiber may comprise any conducting or non-conducting material, including carbon, graphite, Teflon, and metal. An example embodiment utilizes carbon or graphite fibers for static electricity collection. Support wire system **120** and connecting wire **140** can be made of any conducting material, including aluminum or steel, but most notably, copper. Teflon may be added to said conductor as well, such as non-limiting examples of a Teflon impregnated wire, a wire with a Teflon coating, or Teflon strips hanging from a wire. Conducting wire **120**, **140**, and **200** may be bare wire, or coated with insulation as a non-limiting example. Wires **120** and **140** are a means of transporting the energy collected by collection device **130**.

[0034] An example embodiment of the collection fibers as collection device **130** includes graphite or carbon fibers. Graphite and carbon fibers, at a microscopic level, can have hundreds of thousands of points. Atmospheric electricity may be attracted to these points. If atmospheric electricity can follow two paths where one is a flat surface and the other is a pointy, conductive surface, the electrical charge will be attracted to the pointy, conductive surface. Generally, the more points that are present, the higher energy that can be gathered. Therefore, carbon, or graphite fibers are examples that demonstrate collection ability.

[0035] In at least one example embodiment, the height of support wire **120** may be an important factor. The higher that collection device **130** is from ground, the larger the voltage potential between collection device **130** and electrical ground. The electric field may be more than 100 volts per meter under some conditions. When support wire **120** is suspended in the air at a particular altitude, wire **120** will itself collect a very small charge from ambient voltage. When collection device **130** is connected to support wire **120**, collection device **130** becomes energized and transfers the energy to support wire **120**.

[0036] A diode, not shown in FIG. **2**, may be connected in several positions in collection system **100**. A diode is a component that restricts the direction of movement of charge carriers. It allows an electric current to flow in one direction, but essentially blocks it in the opposite direction. A diode can be thought of as the electrical version of a check valve. The diode may be used to prevent the collected energy from discharging into the atmosphere through the collection fiber embodiment of collection device **130**. An example embodiment of the collection device comprises the diode with no collection fiber. A preferred embodiment, however, includes a diode at the connection point of a collection fiber to support system **120** such that the diode is elevated above ground. Multiple diodes may be used between collection device **130** and load **150**. Additionally, in an embodiment with multiple fibers, the diodes restricts energy that may be collected through one fiber from escaping through another fiber.

[0037] Collection device **130** may be connected and arranged in relation to support wire system **120** by many means. Some non-limiting examples are provided in FIGS. **2**A-**2**G using a collection fiber embodiment. FIG. **2**A presents support wire **200** with connecting member **210** for collection device **130**. Connection member **210** may be any conducting material allowing for the flow of electricity from connection device **130** to support wire **200**. Then, as shown in FIG. **2**, the support wire **200** of support system **120** may be electrically connected through conducting wire **140** to load **150**. A plurality of diodes may be placed at any position on the support structure wire. A preferred embodiment places a diode at an elevated position at the connection point between a collection fiber embodiment of collection device **130** and connection member **210**.

[0038] Likewise, FIG. **2**B shows collection fiber **130** electrically connected to support wire **200** and also connected to support member **230**. Support member **230** may be connected to collection fiber **130** on either side. Support member **230** holds the fiber steady on both ends instead of letting it move freely. Support member **230** may be conducting or non-conducting. A plurality of diodes may be placed at any position on the support structure wire. A preferred embodiment places a diode at elevated position at the connection point between

collection fiber **130** and support wire **200** or between fiber **130**, support member **230**, and support wire **200**.

[0039] FIG. **2**C presents multiple collection fibers in a squirrel cage arrangement with top and bottom support members. Support structure **250** may be connected to support structure wire **200** by support member **240**. Structure **250** has a top **260** and a bottom **270** and each of the multiple collection fibers **130** are connected on one end to top **260** and on the other end to bottom **270**. A plurality of diodes may be placed at any position on support structure **250**. A preferred embodiment places a diode at an elevated position at the connection point between collection fiber **130** and support structure wire **200**.

[0040] FIG. **2**D presents another example embodiment of a support structure with support members **275** in an x-shape connected to support structure wire **200** at intersection **278** with collection fibers **130** connected between ends of support members **275**. A plurality of diodes may be placed at any position on the support structure. A preferred embodiment places a diode at an elevated position at the connection point between collection fiber **130** and support wire **200**.

[0041] FIG. **2**E provides another example embodiment for supporting collection fiber **130**. Collection fiber **130** may be connected on one side to support member **285**, which may be connected to support structure wire **200** in a first location and on the other side to support member **280**, which may be connected to support structure wire **200** in a second location on support structure wire **200**. The first and second locations may be the same location, or they may be different locations, even on different support wires. A plurality of diodes may be placed at any position on the support structure. A preferred embodiment places one or more diodes at elevated positions at the connection point(s) between collection fiber **130** and support wire **200**.

[0042] FIG. **2**F presents another example embodiment of a support for a collection fiber. Two support members **290** may support either side of a collection fiber and are connected to support wire **200** in a single point. A plurality of diodes may be placed at any position on the support structure. A preferred embodiment places a diode at an elevated position at the connection point between collection fiber **130** and support wire **200**.

[0043] FIG. **2**G provides two supports as provided in FIG. **2**F such that at least two support members **292**, **294** may be connected to support structure wire **200** in multiple locations and collection fibers **130** may be connected between each end of the support structures. Collection fibers **130** may be connected between each end of a single support structure and between multiple support structures. A plurality of diodes may be placed at any position on the support structure. A preferred embodiment places one or more diodes at elevated positions at the connection point(s) between collection fiber **130** and support structure wire **200**.

[0044] FIG. **3** provides a schematic diagram of storing circuit **300** for storing energy collected by one or more collection devices (**130** from FIG. **2**). Load **150** induces current flow. Diode **310** may be electrically connected in series between one or more collection devices (**130** from FIG. **2**) and load **150**. A plurality of diodes may be placed at any position in the circuit. Switch **330** may be electrically connected between load **150** and at least one collection device (**130** from FIG. **2**) to connect and disconnect the load. Capacitor **320** maybe connected in parallel to the switch **330** and load **150** to store energy when switch **330** is open for delivery to load **150** when switch **330** is closed. Rectifier **340** may be electrically connected in parallel to load **150**, between the receiving end of switch **330** and ground. Rectifier **340** may be a full-wave or a half-wave rectifier. Rectifier **340** may include a diode electrically connected in parallel to load **150**, between the receiving end of switch **330** and ground. The direction of the diode of rectifier **340** is optional.

[0045] In an example embodiment provided in FIG. **4**, storage circuit **400** stores energy from one or more collection devices (**130** from FIG. **2**) by charging capacitor **410**. If charging capacitor **410** is not used, then the connection to ground shown at capacitor **410** is eliminated. A plurality of diodes may be placed at any position in the circuit. Diode **310** may be electrically connected in series between one or more collection devices (**130** from FIG. **2**) and load **150**. Diode **440** may be placed in series with load **150**. The voltage from capacitor **410** can be used to charge spark gap **420** when it reaches sufficient voltage. Spark gap **420** may comprise one or more spark gaps in parallel. Non-limiting examples of spark gap **420** include mercury-reed switches and mercury-wetted reed switches. When spark gap **420** arcs, energy will arc from one end of the spark gap **420** to the receiving end of the spark gap **420**. The output of spark gap **420** may be electrically connected in series to rectifier **450**. Rectifier **450** may be a full-wave or a half-wave rectifier. Rectifier **450** may include a diode electrically connected in parallel to transformer **430** and load **150**, between the receiving end of spark gap **420** and ground. The direction of the diode of rectifier **450** is optional. The output of rectifier **450** is connected to transformer **430** to drive load **150**.

[0046] FIG. **5** presents motor driver circuit **500**. One or more collection devices (**130** from FIG. **2**) are electrically connected to static electricity motor **510**, which powers generator **520** to drive load **150**. A plurality of diodes may be placed at any position in the circuit. Motor **510** may also be directly connected to load **150** to drive it directly.

[0047] FIG. **6** demonstrates a circuit **600** for producing hydrogen. A plurality of diodes maybe placed at any position in the circuit. One or more collection devices (**130** from FIG. **2**) are electrically connected to primary spark gap **610**, which may be connected to secondary spark gap **640**. Non-limiting examples of spark gaps **610**, **640** include mercury-reed switches and mercury-wetted reed switches. Secondary spark gap **640** may be immersed in water **630** within container **620**. When secondary spark gap **640** immersed in water **630** is energized, spark gap **640** may produce bubbles of hydrogen and oxygen, which may be collected to be used as fuel.

[0048] FIG. **7** presents circuit **700** for driving a fuel cell. A plurality of diodes may be placed at any position in the circuit. Collection devices (**130** from FIG. **2**) provide energy to fuel cell **720** which drives load **150**. Fuel cell **720** may produce hydrogen and oxygen.

[0049] FIG. **8** presents example circuit **800** for the collection of energy. Storage circuit **800** stores energy from one or more collection devices (**130** from FIG. **2**) by charging capacitor **810**. If charging capacitor **810** is not used, then the connection to ground shown at capacitor **810** is eliminated. A plurality of diodes may be placed at any position in the circuit. The voltage from capacitor **810** can be used to charge spark gap **820** when it reaches sufficient voltage. Spark gap **820** may comprise one or more spark gaps in parallel or in series. Non-limiting examples of spark gap **820** include mercury-reed switches and mercury-wetted reed switches. When spark gap **820** arcs, energy will arc from one end of spark gap **820**

to the receiving end of spark gap **820**. The output of spark gap **820** may be electrically connected in series to rectifier **825**. Rectifier **825** may be a full-wave or a half-wave rectifier. Rectifier **825** may include a diode electrically connected in parallel to inductor **830** and load **150**, between the receiving end of spark gap **820** and ground. The direction of the diode of rectifier **825** is optional. The output of rectifier **825** is connected to inductor **830**. Inductor **830** may be a fixed value inductor or a variable inductor. Capacitor **870** may be placed in parallel with load **150**.

[0050] FIG. **9** presents a flow diagram of a method for collecting energy. In block **910**, one or more collection devices may be suspended from a support structure wire. In block **920**, a load may be electrically connected to the support structure wire to draw current. In block **930** a diode may be electrically connected between the support structure wire and the electrical connection to the load. In block **940**, energy provided to the load may be stored or otherwise utilized.

[0051] FIG. **10** presents circuit **1000** as an example embodiment for the collection of energy from a dual polarity source. This may be used, for example, to collect atmospheric energy that reverses in polarity compared with the ground. Such polarity reversal has been discovered as occurring occasionally on Earth during, for example, thunderstorms and bad weather, but has also been observed during good weather. Such polarity reversal may occur on other planetary bodies, including Mars and Venus, as well. Energy polarity on other planets, in deep space, or on other heavenly bodies, may be predominantly negative or predominantly positive. Collector fibers (**130** from FIG. **2**), which may comprise graphene, silicene, and/or other like materials, are capable of collecting positive energy and/or negative energy, and circuit **1000** is capable of processing positive and/or negative energy, providing an output which is always positive. Circuit **1000** may collect energy from one or more collection devices (**130** from FIG. **2**). Charging capacitor **1010** may be used to store a charge until the voltage at spark gap **1020** achieves the spark voltage. Capacitor **1010** is optional.

[0052] A plurality of diodes may be placed in a plurality of positions in circuit **1000**. The voltage from capacitor **1010** may be used to charge spark gap **1020** to a sufficient voltage. Spark gap **1020** may comprise one or more spark gaps in parallel or in series. Non-limiting examples of spark gap **1020** include mercury-reed switches, mercury-wetted reed switches, open-gap spark gaps, and electronic switches. When spark gap **1020** arcs, energy will arc from an emitting end of spark gap **1020** to a receiving end of spark gap **1020**. The output of spark gap **1020** is electrically connected to the anode of diode **1022** and the cathode of diode **1024**. The cathode of diode **1022** is electrically connected to the cathode of diode **1026** and inductor **1030**. Inductor **1030** may be a fixed value inductor or a variable inductor. The anode of diode **1026** is electrically connected to ground. Capacitor **1028** is electrically connected between ground and the junction of the cathodes of diode **1022** and diode **1026**. Inductor **1035** is electrically connected between ground and the anode of diode **1024**. Inductor **1035** may be a fixed value inductor or a variable inductor. Capacitor **1070**, the anode of diode **1026**, inductor **1035**, and load **1050** are electrically connected to ground. Capacitor **1070** may be placed in parallel with load **150**.

[0053] FIGS. **11** and **12** provide example embodiments of vehicle **1110**, which utilizes electricity, the vehicle employing systems of energy collection provided herein. Vehicle **1100** in FIG. **11** is shown as an automobile vehicle, but could be any means of locomotion that utilizes electricity, including a car, a train, a motorcycle, a boat, an airplane, robotic rovers, space craft, etc. Vehicle **1200** in FIG. **12** is shown as a lunar rover vehicle. In FIGS. **11** and **12**, support rod **1110**, **1210** is electrically connected to an electrical system in vehicle **1100**, **1200**. Energy collectors **130**, which may comprise graphene, silicene, and/or other like materials, are electrically connected to support rod **1110**, **1210** and may be used to supply energy to electrical circuits within the vehicle. A non-limiting use includes a top-off charge for a battery system, on-board hydrogen production, and/or assisting in the same. Energy collectors **130** may be used to augment the efficiency of the locomotion that utilizes electrical energy as well.

[0054] FIG. **13** provides an example embodiment of energy collection system **1200** in which diode **310** is used to isolate collection devices **130** from spark gap **1020** and load **150**. Collection devices **130** may comprise graphite, carbon fibers, carbon/carbon fibers, graphene, silicene, and/or other like materials, or a mixture thereof.

[0055] FIG. **14** provides an example embodiment of energy collection system **1400** in which a plurality of energy collection systems, such as that provided in FIG. **13**, are combined. Each leg consisting of collection devices **130**, which may comprise graphene, silicene, and/or other like materials, and diode **310** are connected in parallel with other legs, each leg electrically connected to trunk wire **1410**. The legs could also be connected serially. Trunk wire **1410** is electrically connected to a collection circuit, which may comprise load **150** and spark gap **1020** in any configuration that has been previously discussed. Each leg may comprise one or more collection devices **130** and at least one diode electrically connected between the collection devices and the collection circuit. Although three collection devices **130** are shown on each leg, any number of collection devices may be used. Although four legs are shown, any number of legs may be used.

[0056] FIG. **15** presents a system diagram of an example embodiment of a windmill with energy collectors, which may comprise graphene, silicene, and/or other like materials in an example embodiment. A windmill is an engine powered by the energy of wind to produce alternative forms of energy. They may, for example, be implemented as small tower mounted wind engines used to pump water on farms. The modern wind power machines used for generating electricity are more properly called wind turbines. Common applications of windmills are grain milling, water pumping, threshing, and saw mills. Over the ages, windmills have evolved into more sophisticated and efficient wind-powered water pumps and electric power generators. In an example embodiment, as provided in FIG. **10**, windmill tower **1500** of suitable height and/or propeller **1520** of windmill tower **1500** may be equipped with energy collecting fibers **1530**, **1540**, which may comprise graphene, silicene, and/or other like materials in an example embodiment. Collecting fibers **1530**, **1540** may turn windmill **1500** into a power producing asset even when there is not enough wind to turn propellers **1520**. During periods when there is enough wind to turn propellers **1520**, collecting fibers **1530**, **1540** may supplement/boost the amount of energy the windmill produces.

[0057] A windmill is an engine powered by the energy of wind to produce alternative forms of energy. They may, for example, be implemented as small tower mounted wind engines used to pump water on farms. The modern wind power machines used for generating electricity are more

properly called wind turbines. Common applications of windmills are grain milling, water pumping, threshing, and saw mills. Over the ages, windmills have evolved into more sophisticated and efficient wind-powered water pumps and electric power generators. In an example embodiment, as provided in FIG. **10**, windmill tower **1000** of suitable height and/or propeller **1020** of windmill tower **1000** may be equipped with energy collecting fibers **1030**, **1040**. Collecting fibers **1030**, **1040** may turn windmill **1000** into a power producing asset even when there is not enough wind to turn propellers **1020**. During periods when there is enough wind to turn propellers **1020**, collecting fibers **1030**, **1040** may supplement/boost the amount of energy the windmill produces.

[0058] Windmill **1500**, properly equipped with ion collectors **1530**, **1540**, such as a non-limiting example of fibers with graphene, silicene, and/or other like materials, can produce electricity: 1) by virtue of providing altitude to the fiber to harvest ions, and 2) while the propeller is turning, by virtue of wind blowing over the fiber producing electricity, among other reasons, via the triboelectric effect (however, it is also possible for the triboelectric effect to occur, producing electricity, in winds too weak to turn the propeller).

[0059] There are at least two ways that energy collectors may be employed on or in a windmill propeller to harvest energy. Propellers **1520** may be equipped with energy collectors **1530**, **1540** attached to, or supported by, propeller **1520** with wires (or metal embedded in, or on propeller **1520**) electrically connecting energy collectors **1530**, **1540**, which may comprise graphene, silicene, and/or other like materials, to a load or power conversion circuit. There may be a requirement to electrically isolate energy collectors **1530**, **1540**, which are added to propeller **1520**, from electrical ground, so that the energy collected does not short to ground through propeller **1520** itself or through support tower **1510**, but rather is conveyed to the load or power conversion circuit. Energy collectors may be connected to the end of propellers **1520** such as collectors **1530**. Alternatively, energy collectors may be connected to the sides of propellers **1520** such as collectors **1540**.

[0060] Alternatively, propeller **1520** may be constructed of carbon fiber or other suitable material, with wires (or the structural metal supporting propeller **1520** may be used) electrically connecting to a load or power conversion circuit. In the case of propeller **1520** itself being constructed of carbon fiber, for example, the fiber may be 'rough finished' in selected areas so that the fiber is "fuzzy." For example, small portions of it may protrude into the air as a means of enhancing collection efficiency. The fuzzy parts of collectors **1530**, **1540** may do much of the collecting. There may be a requirement to electrically isolate carbon fiber propeller **1520** from electrical ground, so that the energy it collects does not short to ground through metal support tower **1510**, but rather is conveyed to the load or power conversion circuit. Diodes may be implemented within the circuit to prevent the backflow of energy, although diodes may not be necessary in some applications.

[0061] In an alternative embodiment, windmill **1500** may be used as a base on which to secure an even higher extension tower to support the energy collectors and/or horizontal supports extending out from tower **1510** to support the energy collectors. Electrical energy may be generated via ion collection due to altitude and also when a breeze or wind blows over the collectors supported by tower **1510**.

[0062] In alternative embodiments to windmill **1500**, other non-limiting example support structures include airplanes, drones, blimps, balloons, kites, satellites, cars, boats, trucks, (including automobile and other transportation conveyance tires), trains, motorcycles, bikes, skateboards, scooters, hovercraft (automobiles and conveyance of any kind), billboards, cell towers, radio towers, camera towers, flag poles, towers of any kind including telescopic, light poles, utility poles, water towers, buildings, sky scrapers, coliseums, roof tops, solar panel and all fixed or mobile structures exceeding 1 inch in height above ground or sea level.

[0063] An example embodiment of a support structure may also include cell phones and other electronic devices and their cases, including cases containing rechargeable batteries. For example, someone may set her cell phone or other electronic device or battery pack on the window ledge of a tall apartment building to help charge it. Other example support structures may include space stations, moon and Mars structures, rockets, planetary rovers and drones including robots and artificial intelligence entities.

[0064] Under some conditions, ambient voltage may be found to be 180-400 volts at around 6 ft, with low current. With the new generation of low current devices being developed, a hat containing ion harvesting material may provide enough charge, or supplemental charge, collected over time to help power low current devices such as future cell phones, tracking devices, GPS, audio devices, smart glasses, etc. Clothes may also be included as examples of support structures. Friction of the ion collection material (such as non-limiting examples of carbon, graphite, silicene and graphene) against unlike materials, such as wool, polyester, cotton, etc (used in clothes) may cause a voltage to be generated when rubbed together. Additionally, wind passing over the ion collection material has been demonstrated to generate voltage, even at low altitude. In an additional example embodiment, embedding collection devices into automobile tires (for example, in a particular pattern) could generate collectible voltage.

[0065] Any process descriptions or blocks in flow charts should be understood as representing modules, segments, or portions of code which include one or more executable instructions for implementing specific logical functions or steps in the process, and alternate implementations are included within the scope of the preferred embodiment of the present disclosure in which functions may be executed out of order from that shown or discussed, including substantially concurrently or in reverse order, depending on the functionality involved, as would be understood by those reasonably skilled in the art of the present disclosure.

[0066] It should be emphasized that the above-described embodiments of the present disclosure, particularly, any "preferred" embodiments, are merely possible examples of implementations, merely set forth for a clear understanding of the principles of the disclosure. Many variations and modifications may be made to the above-described embodiment(s) of the disclosure without departing substantially from the spirit and principles of the disclosure. All such modifications and variations are intended to be included herein within the scope of this disclosure and the present disclosure and protected by the following claims.

Therefore, at least the following is claimed:

1. A method of collecting energy comprising:

suspending at least one collection device with, in operation, microscopic points of a cross-section of the collec-

tion device exposed to the environment from a support structure, the at least one collection device electrically connected to the support structure, the support structure comprising at least one of an airplane, drone, blimp, balloon, kite, satellite, train, motorcycle, bike, skateboard, scooter, hovercraft, electronic device, electronic device case, billboard, cell tower, radio tower, camera tower, flag pole, telescopic pole, light pole, utility pole, water tower, building, sky scraper, coliseum, roof top, solar panel and a fixed or mobile structure exceeding **1** inch in height above ground or sea level; and

providing a load with an electrical connection to the at least one collection device to draw current.

2. The method of claim **1**, wherein the collection device collects energy by triboelectric effect.

3. The method of claim **1**, wherein the collection device comprises a collection fiber.

4. The method of claim **1**, wherein the collection device comprises a diode and a collection fiber and the diode is electrically connected between the collection fiber and the load.

5. The method of claim **1**, further comprising storing energy provided to the load.

6. The method of claim **5**, wherein storing energy provided to the load comprises storing energy in a capacitor or an inductor.

7. The method of claim **3**, wherein the collection fiber comprises at least one of carbon, graphite, silicene and graphene.

8. A system of energy collection comprising:

a support structure, the support structure comprising at least one of an airplane, drone, blimp, balloon, kite, satellite, train, motorcycle, bike, skateboard, scooter, hovercraft, electronic device, electronic device case, billboard, cell tower, radio tower, camera tower, flag pole, telescopic pole, light pole, utility pole, water tower, building, sky scraper, coliseum, roof top, solar panel and a fixed or mobile structure exceeding 1 inch in height above ground or sea level;

at least one collection device with, in operation, microscopic points of a cross-section of the collection device exposed to the environment electrically connected to the support structure; and

a load electrically connected to the at least one collection device.

9. The system of claim **8**, wherein the collection device collects energy by triboelectric effect.

10. The system of claim **8**, wherein the collection device comprises a collection fiber.

11. The system of claim **8**, wherein the collection device comprises a collection fiber and a diode electrically connected between the load and the collection fiber.

12. The system of claim **11**, wherein the diode is elevated relative to the ground level.

13. The system of claim **10**, wherein the collection fiber comprises at least one of carbon, graphite, silicene, or graphene.

14. The system of claim **8**, further comprising a diode electrically connected between the at least one collection device and the support structure.

15. The system of claim **8**, further comprising: a switch connected in series between the at least one collection device and the load; and a capacitor connected in parallel with the switch and the load.

16. The system of claim **15**, wherein the switch comprises an interrupter connected between the load and at least one collection device, and wherein the interrupter comprises at least one of a fluorescent tube, a neon bulb, an AC light, and a spark gap.

17. The system of claim **8**, further comprising: a motor for providing power, the motor connected between the at least one collection device and the load; and a generator powered by the motor.

18. The system of claim **8**, further comprising a fuel cell between the support structure and the load.

19. The system of claim **18**, wherein the fuel cell produces hydrogen and oxygen.

20. A system of collecting energy comprising:

means for suspending at least one collection device with, in operation, microscopic points of a cross-section of the collection device exposed to the environment, the at least one collection device electrically connected to the means for suspending, the means for suspending comprising at least one of an airplane, drone, blimp, balloon, kite, satellite, train, motorcycle, bike, skateboard, scooter, hovercraft, electronic device, electronic device case, billboard, cell tower, radio tower, camera tower, flag pole, telescopic pole, light pole, utility pole, water tower, building, sky scraper, coliseum, roof top, solar panel and a fixed or mobile structure exceeding 1 inch in height above ground or sea level;

means for inducing current flow, the means for inducing current flow electrically connected to the means for suspending; and

means for restricting the backflow of charge carriers, the means for restricting the backflow of charge carriers electrically connected between the at least one collection device and the means for inducing current flow.

* * * * *

US007478712B2

(12) **United States Patent**
McCowen

(10) **Patent No.: US 7,478,712 B2**
(45) **Date of Patent: Jan. 20, 2009**

(54) **ENERGY COLLECTION**

(76) Inventor: **Clint McCowen**, 1902 Rue La Fontaine, Navarre, FL (US) 32566

(*) Notice: Subject to any disclaimer, the term of this patent is extended or adjusted under 35 U.S.C. 154(b) by 0 days.

(21) Appl. No.: **11/839,112**

(22) Filed: **Aug. 15, 2007**

(65) **Prior Publication Data**

US 2007/0273206 A1 Nov. 29, 2007

Related U.S. Application Data

(63) Continuation-in-part of application No. 11/358,264, filed on Feb. 21, 2006.

(51) **Int. Cl.**
H02N 1/00 (2006.01)

(52) **U.S. Cl.** ..... **191/45 R**; 307/149; 361/225; 361/117; 174/2; 320/101; 322/2 A; 191/1 R

(58) **Field of Classification Search** ..... 361/220, 361/117, 212, 233, 221, 222, 225; 322/2 A, 322/2 R; 307/149; 174/2, 3; 320/101; 191/2, 191/1 R, 45 R

See application file for complete search history.

(56) **References Cited**

U.S. PATENT DOCUMENTS

674,427	A *	5/1901	Palencsar	307/149
911,260	A *	2/1909	Pennock	307/149
1,014,719	A *	1/1912	Pennock	307/149
4,104,696	A	8/1978	Cochran, Jr.	
5,047,892	A	9/1991	Sakata et al.	
6,735,830	B1	5/2004	Merciel	
6,974,110	B2	12/2005	Grandics	
2003/0107869	A1	6/2003	Pan et al.	
2004/0160711	A1	8/2004	Stumberger	
2004/0212945	A1	10/2004	Sprenger et al.	

* cited by examiner

Primary Examiner—Mark T Le
(74) *Attorney, Agent, or Firm*—Thomas, Kayden, Horstemeyer & Risley, LLP

(57) **ABSTRACT**

An energy collection system may collect and use the energy generated by an electric field. Collection fibers are suspended from a support wire system supported by poles. The support wire system is electrically connected to a load by a connecting wire. The collection fibers may be made of any conducting material, but carbon, graphite, carbon/carbon, or a mixture thereof are preferred. Diodes may be used to restrict the backflow or loss of energy.

18 Claims, 15 Drawing Sheets

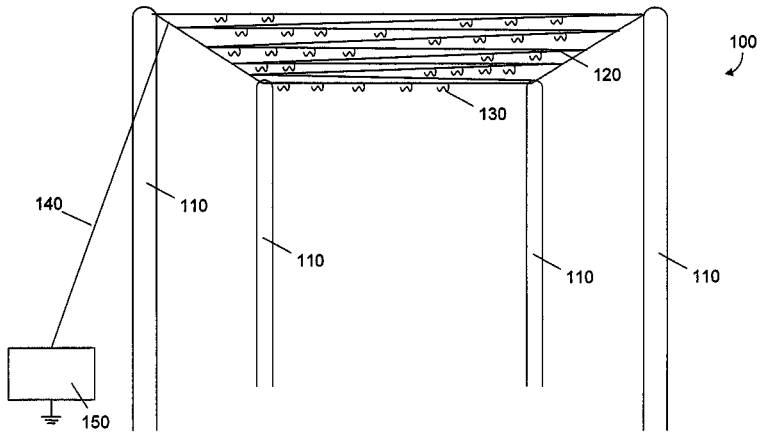

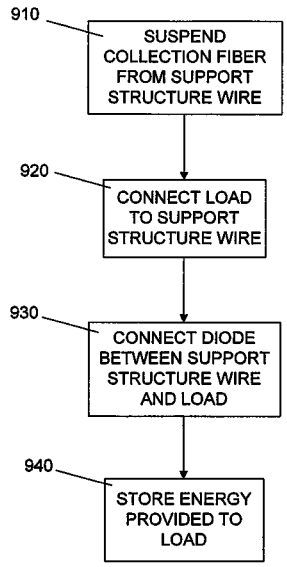

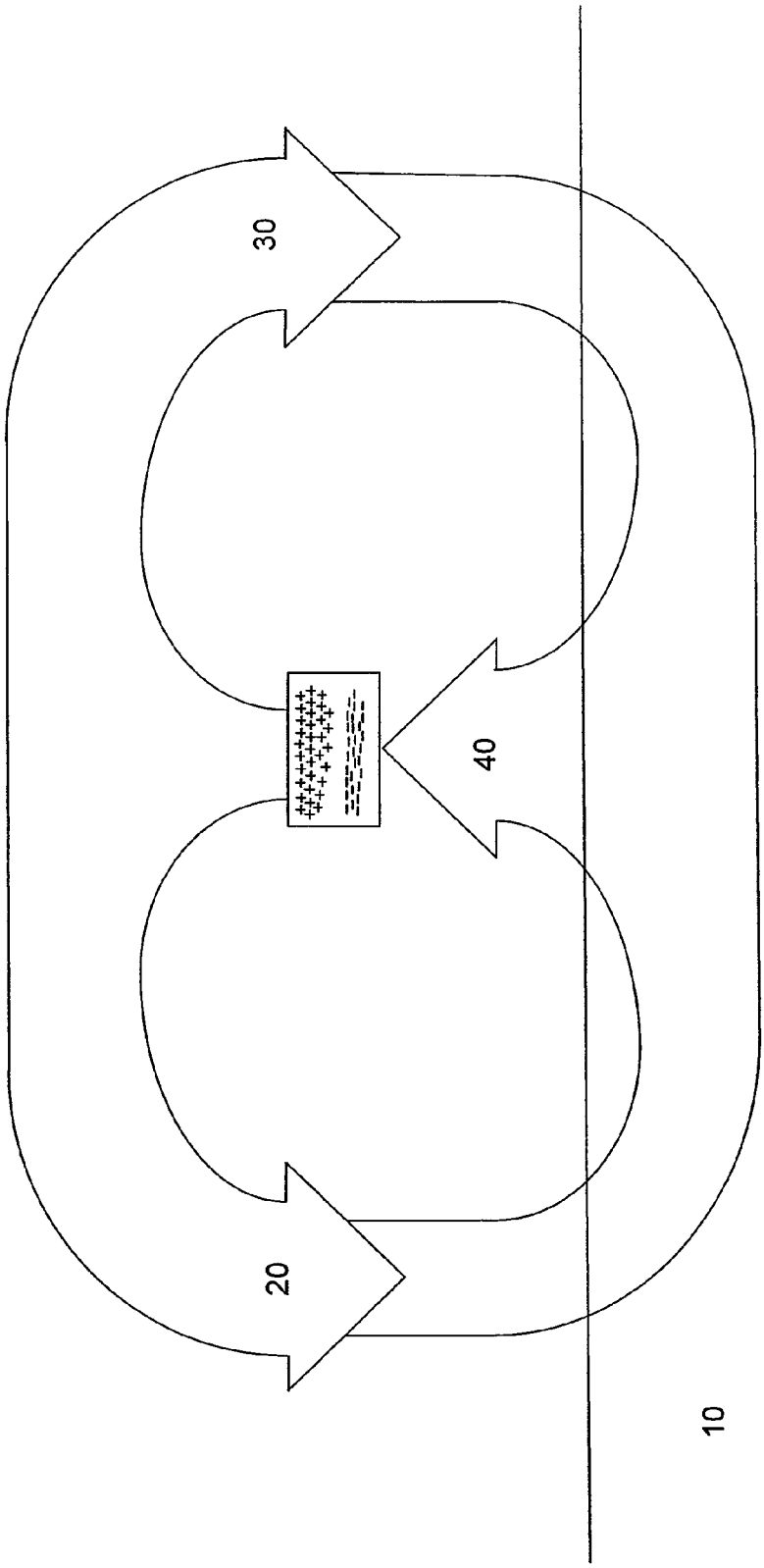

FIGURE 1

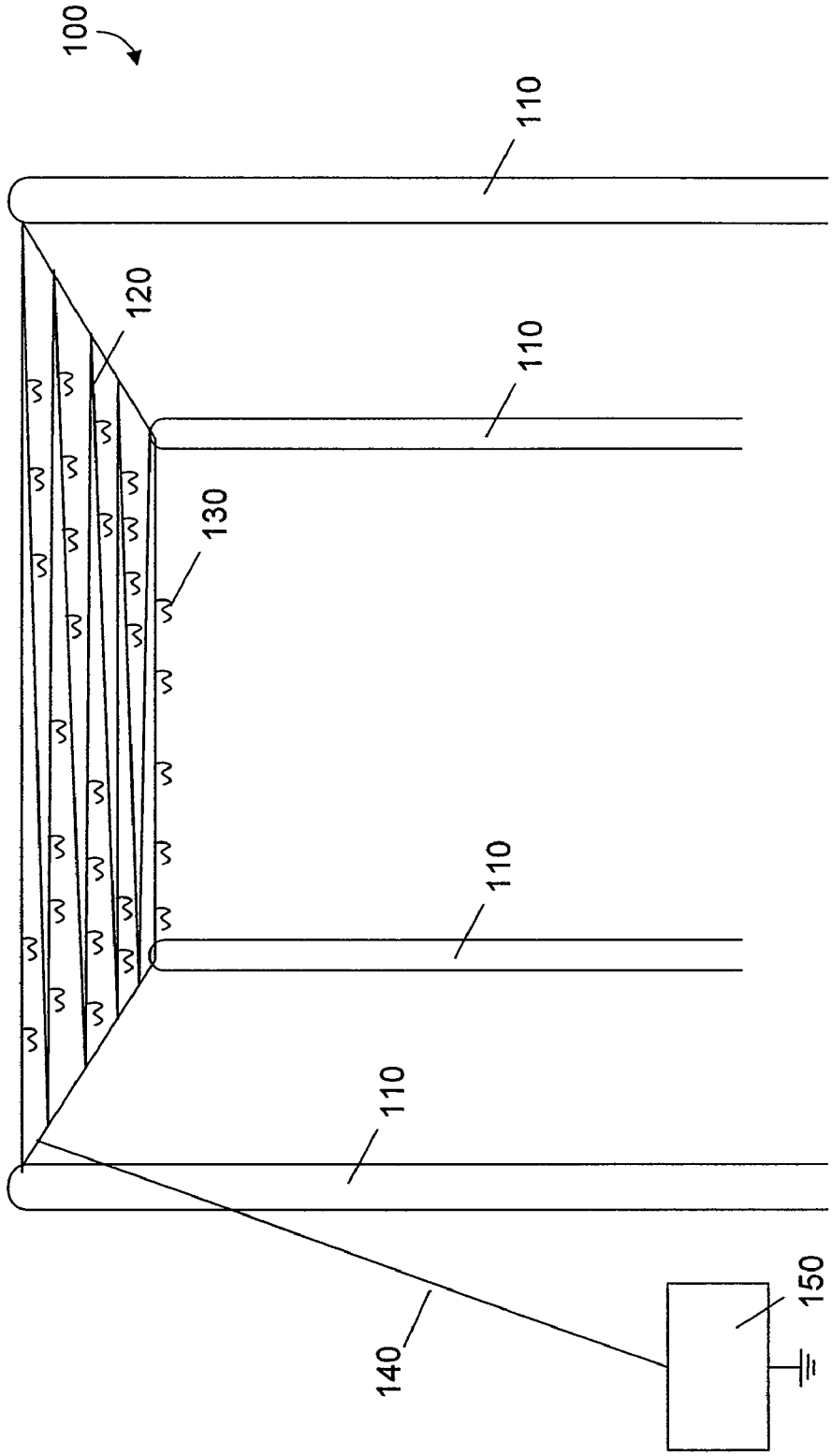

FIGURE 2

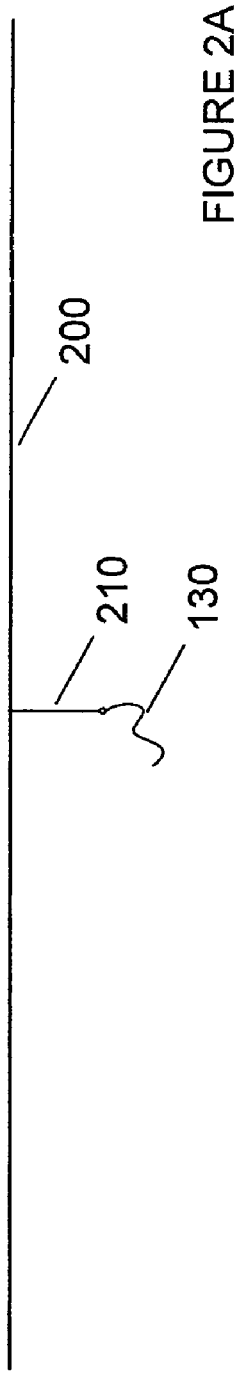

FIGURE 2A

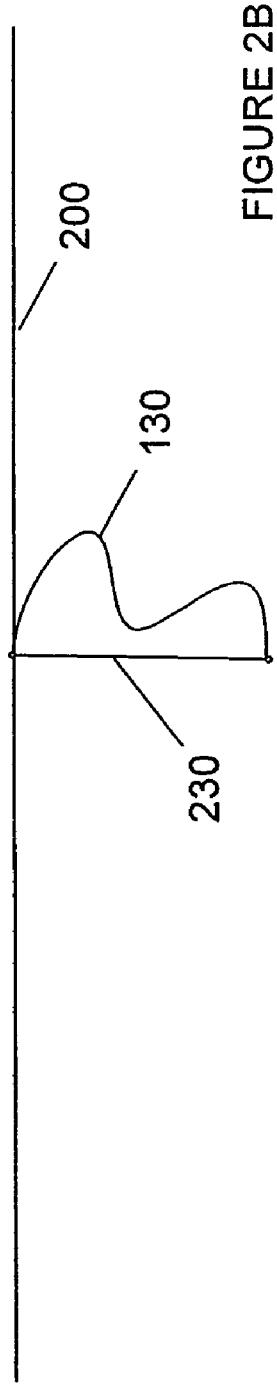

FIGURE 2B

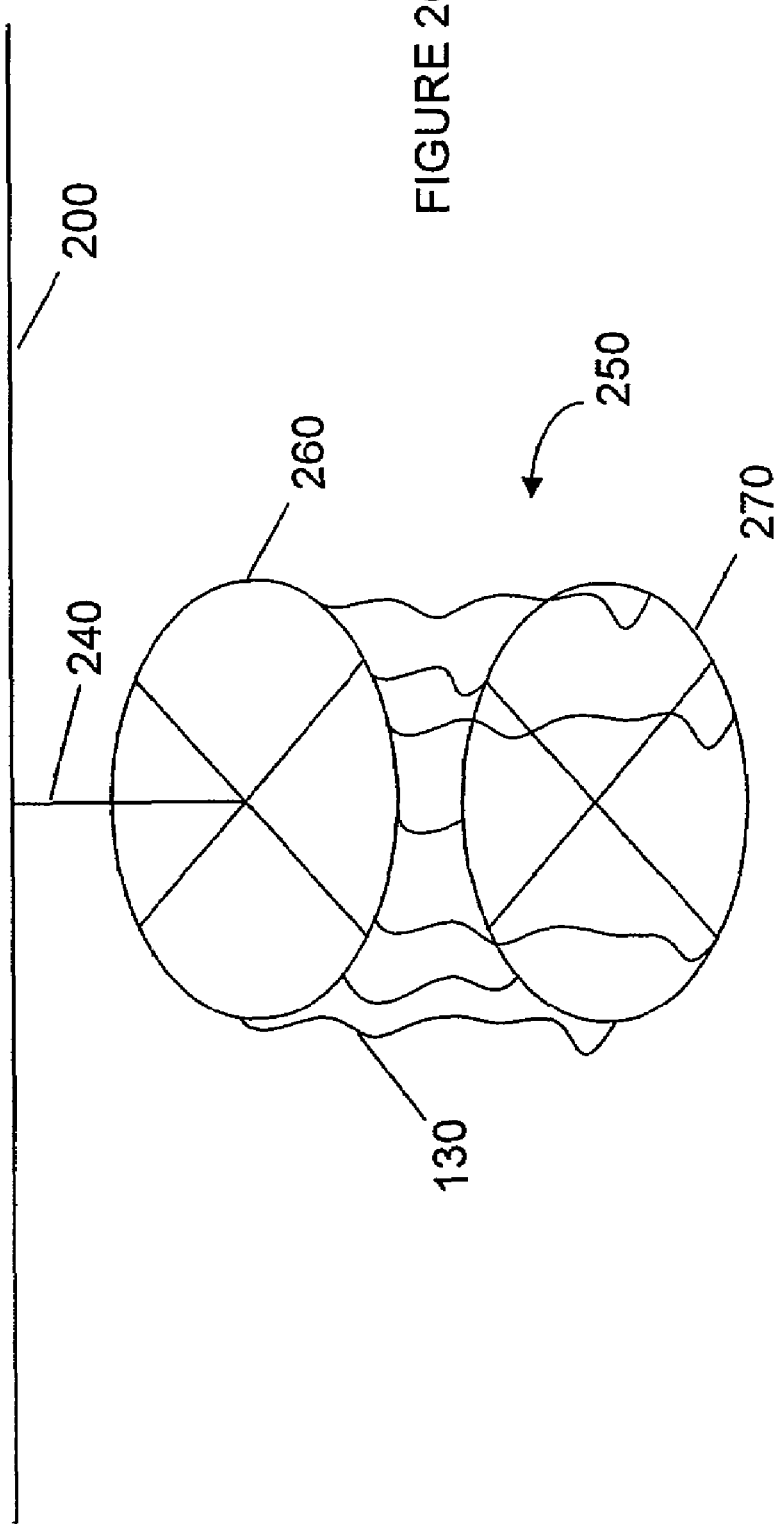

FIGURE 2C

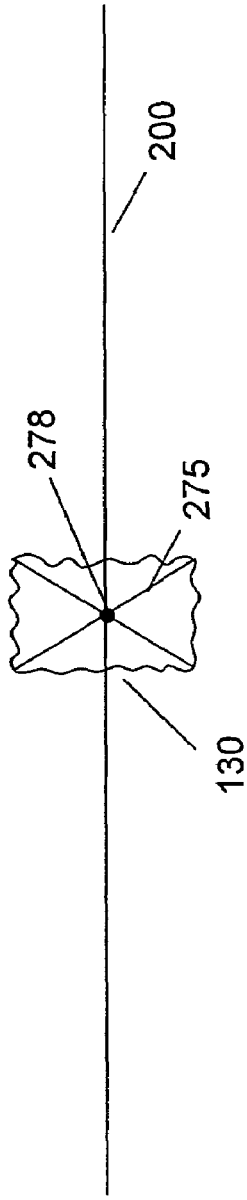

FIGURE 2D

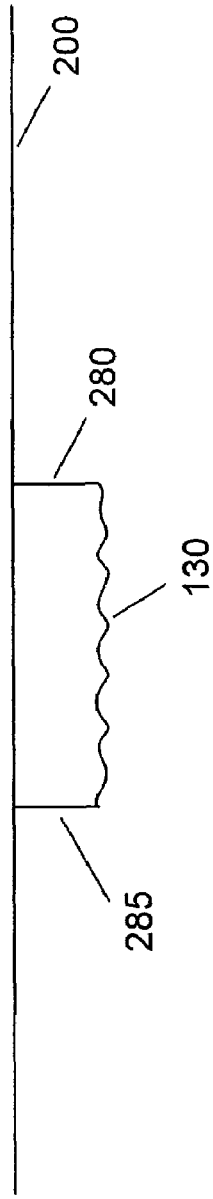

FIGURE 2E

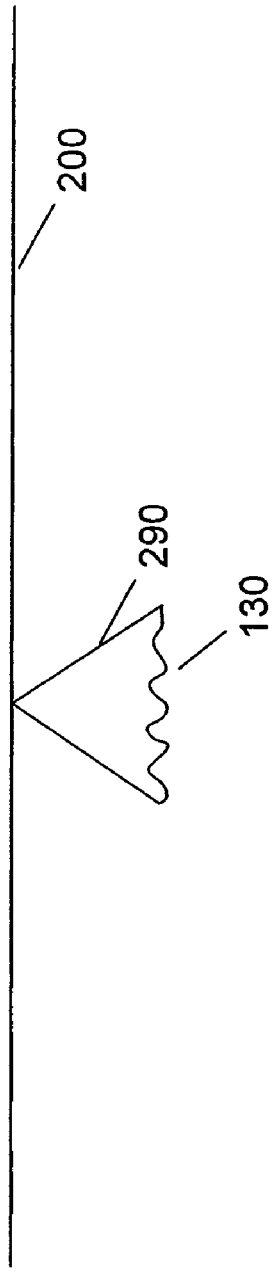

FIGURE 2F

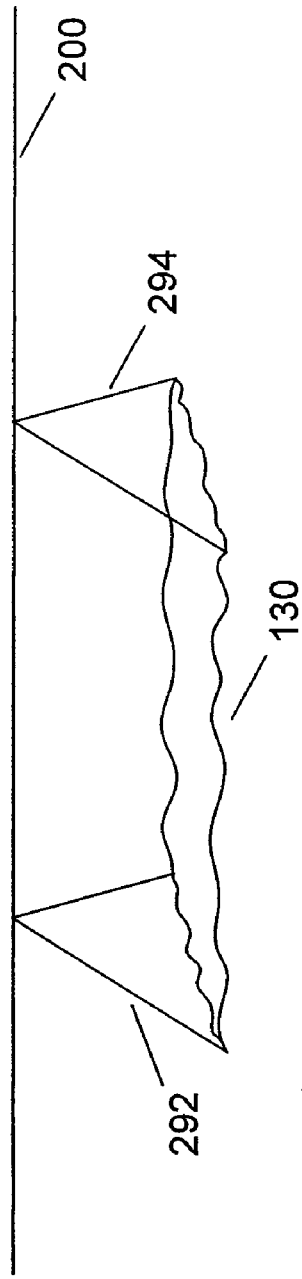

FIGURE 2G

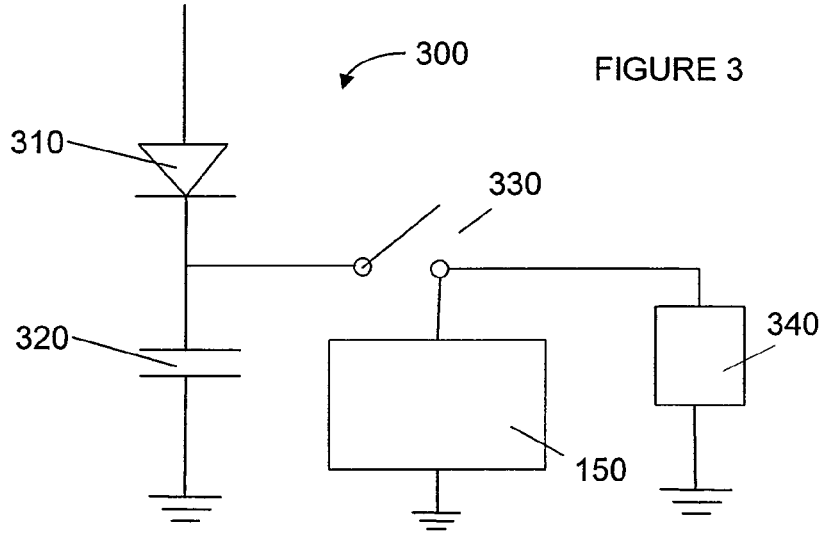

FIGURE 3

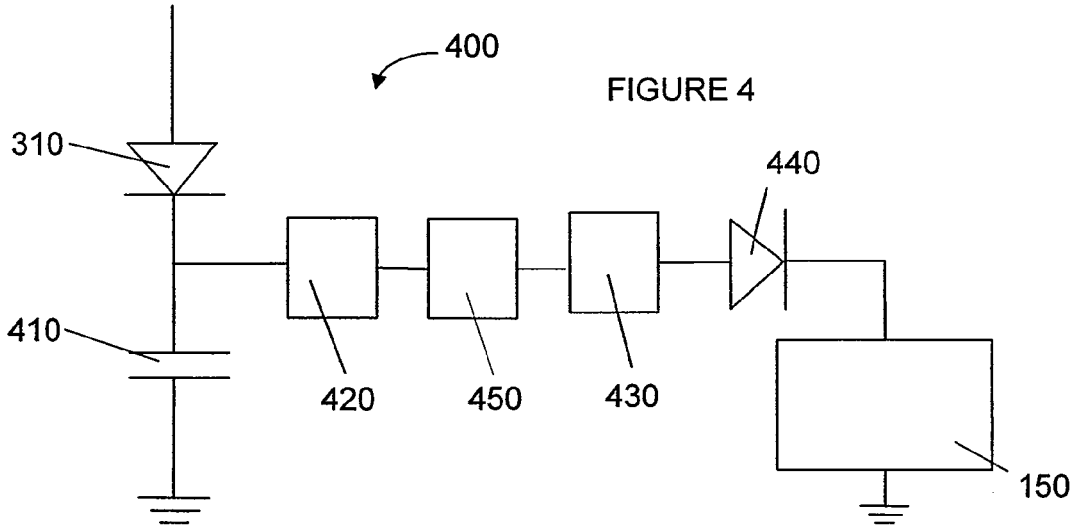

FIGURE 4

FIGURE 5

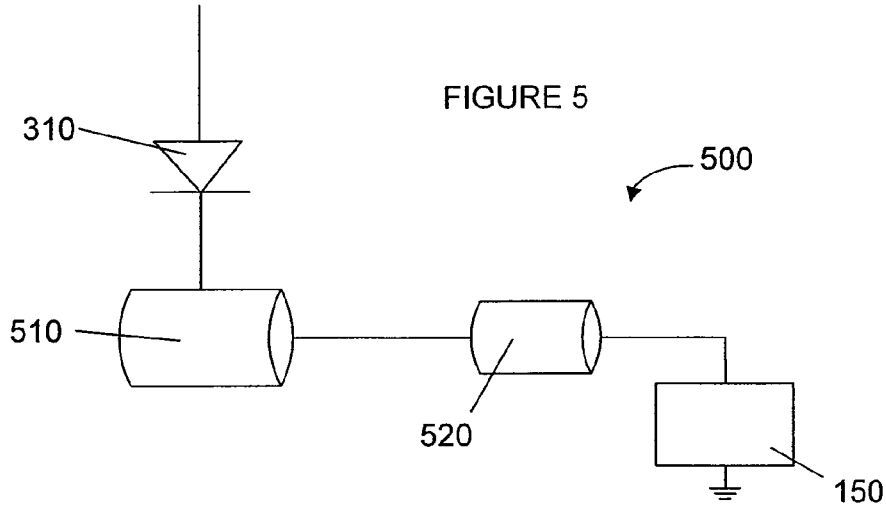

FIGURE 6

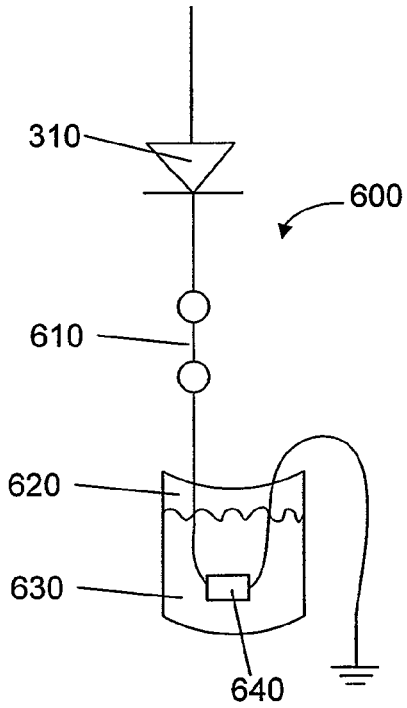

FIGURE 7

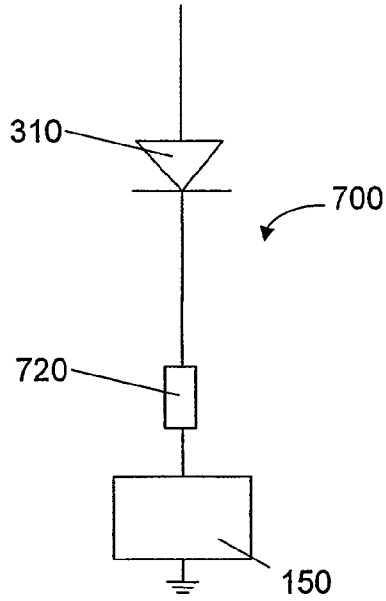

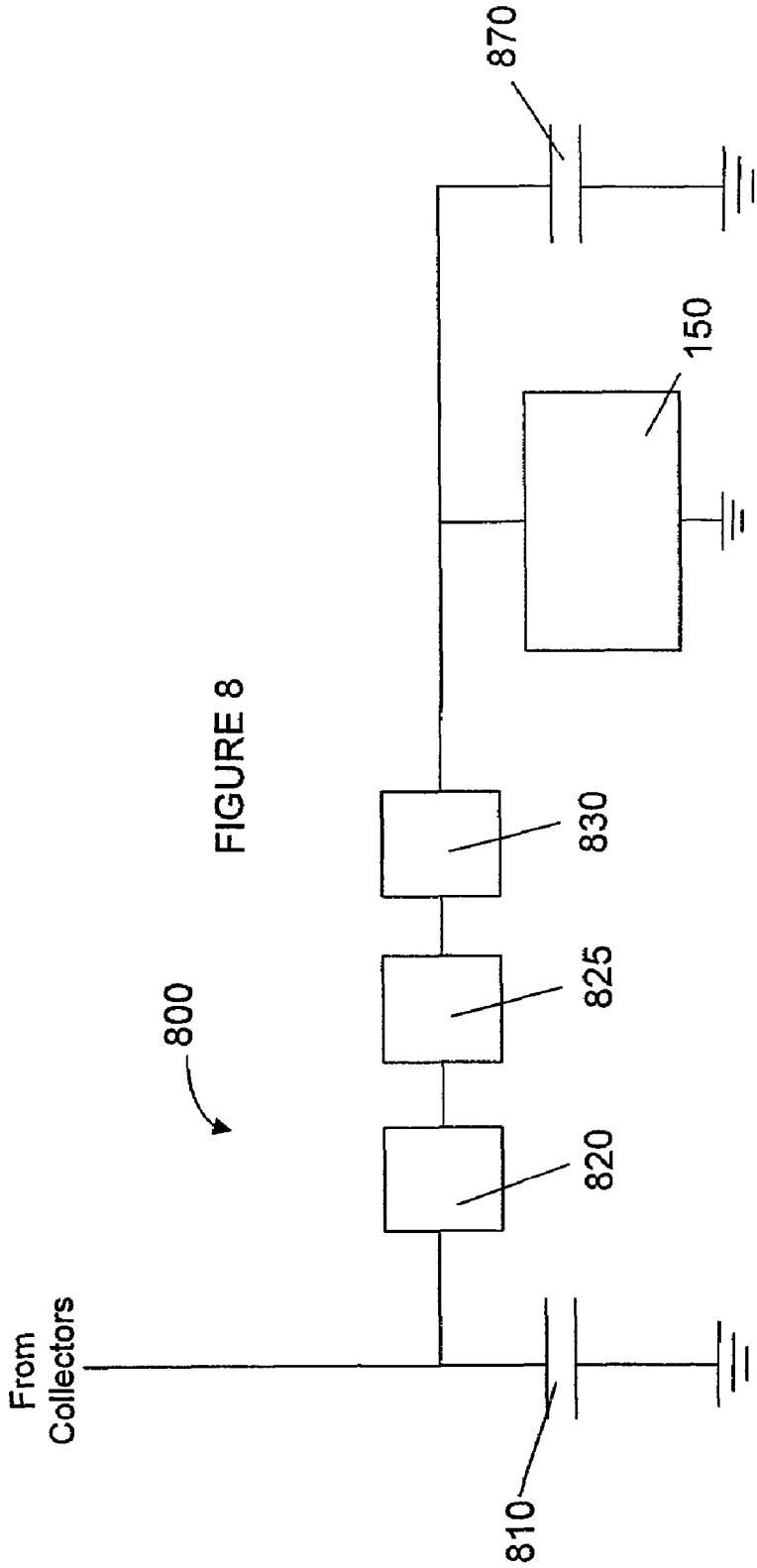

FIGURE 8

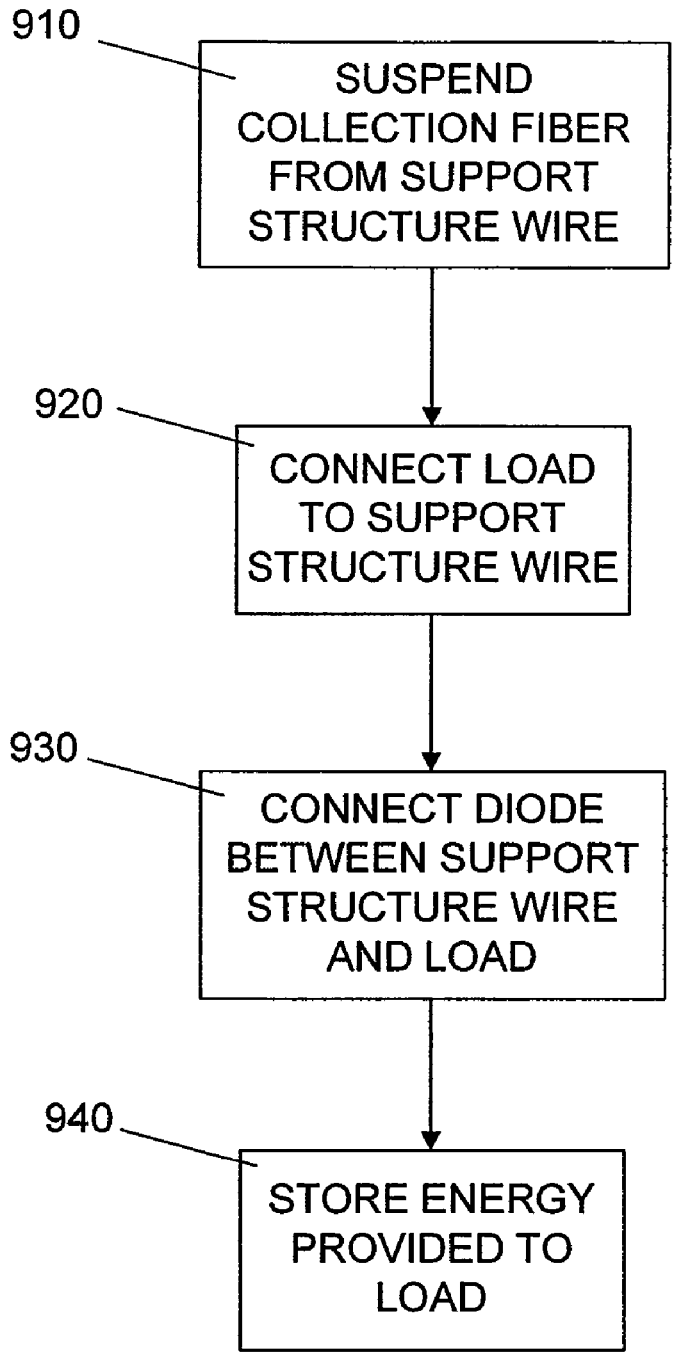
910
SUSPEND COLLECTION FIBER FROM SUPPORT STRUCTURE WIRE
920
CONNECT LOAD TO SUPPORT STRUCTURE WIRE
930
CONNECT DIODE BETWEEN SUPPORT STRUCTURE WIRE AND LOAD
940
STORE ENERGY PROVIDED TO LOAD

FIGURE 9

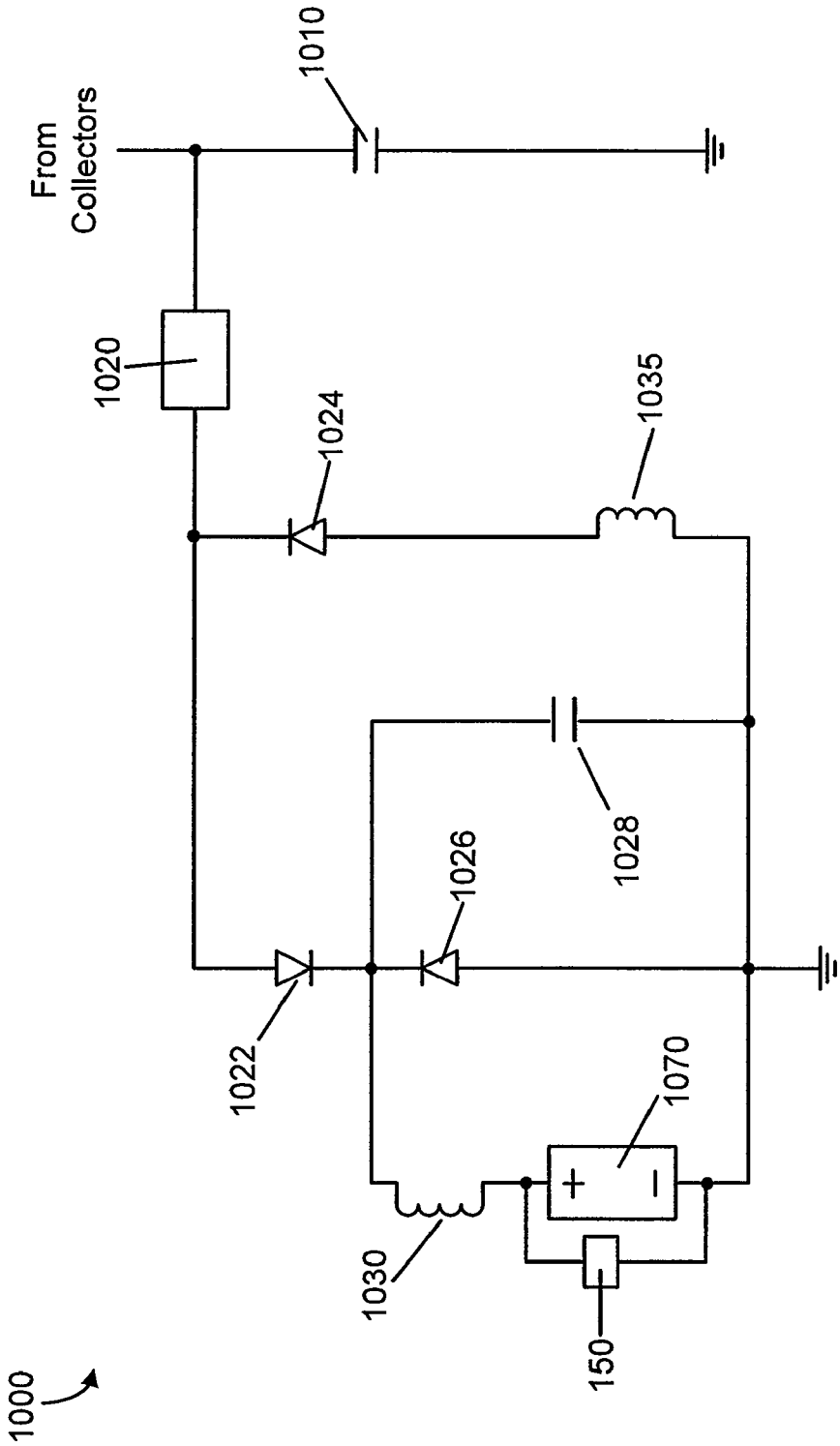
From Collectors
1010
1020
1024
1035
1028
1026
1022
1070
+
−
1030
150
1000

FIGURE 10

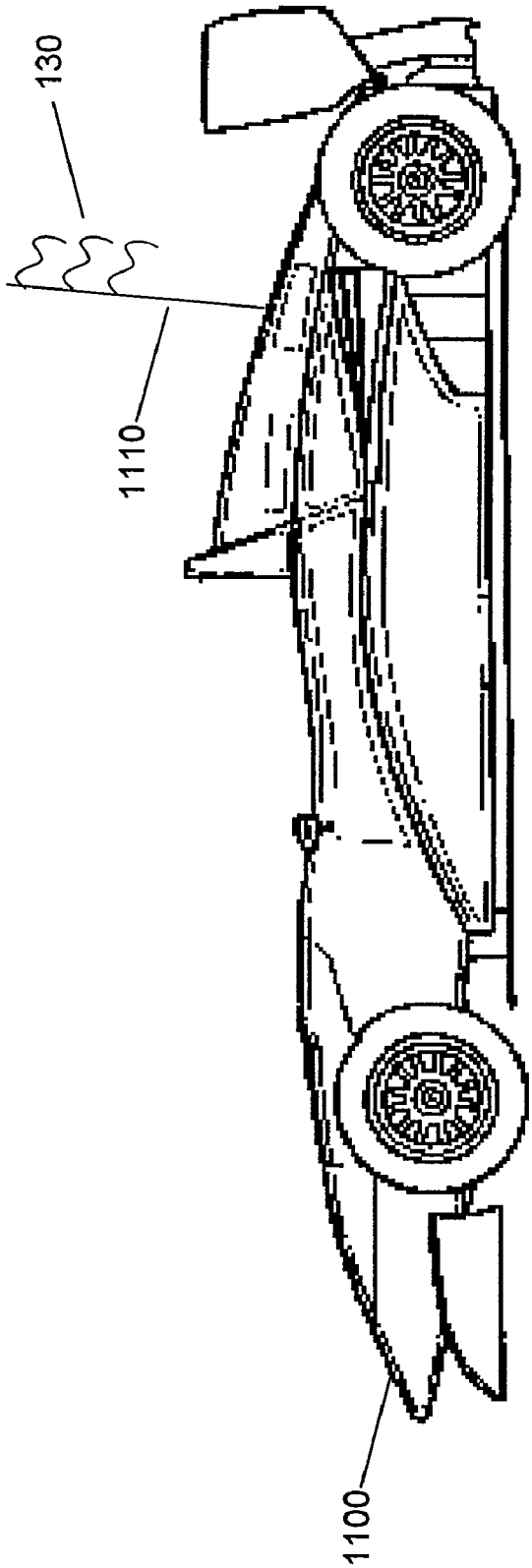

FIGURE 11

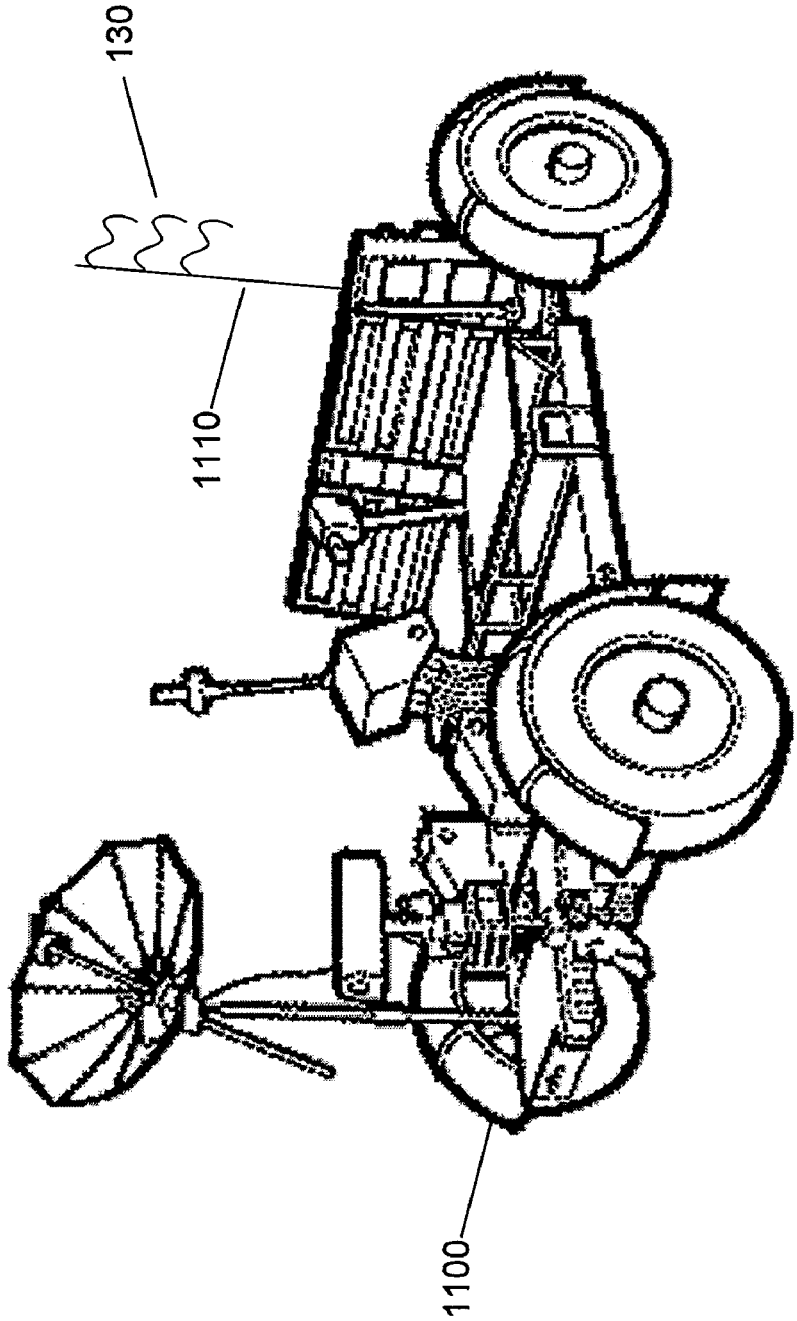

FIGURE 12

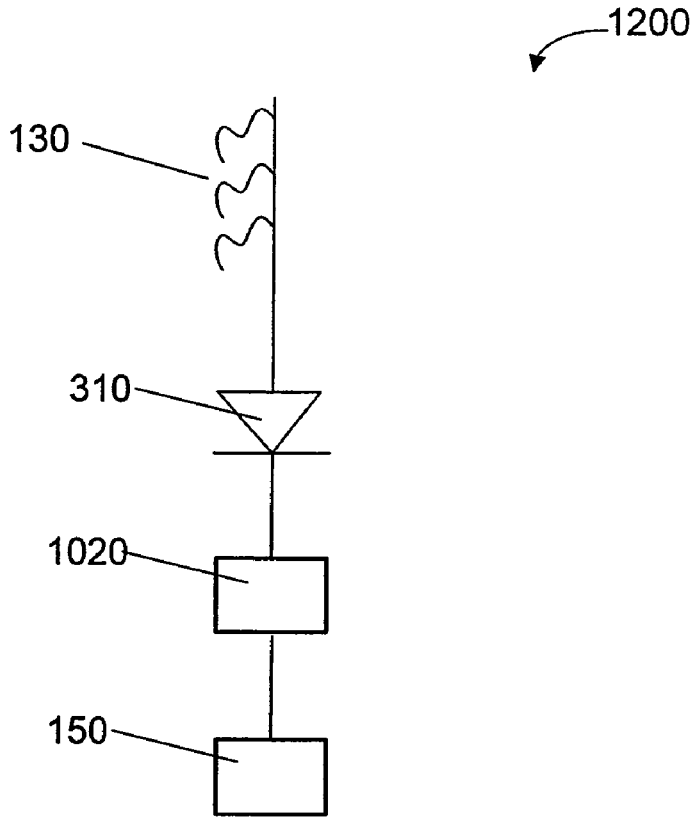

FIGURE 13

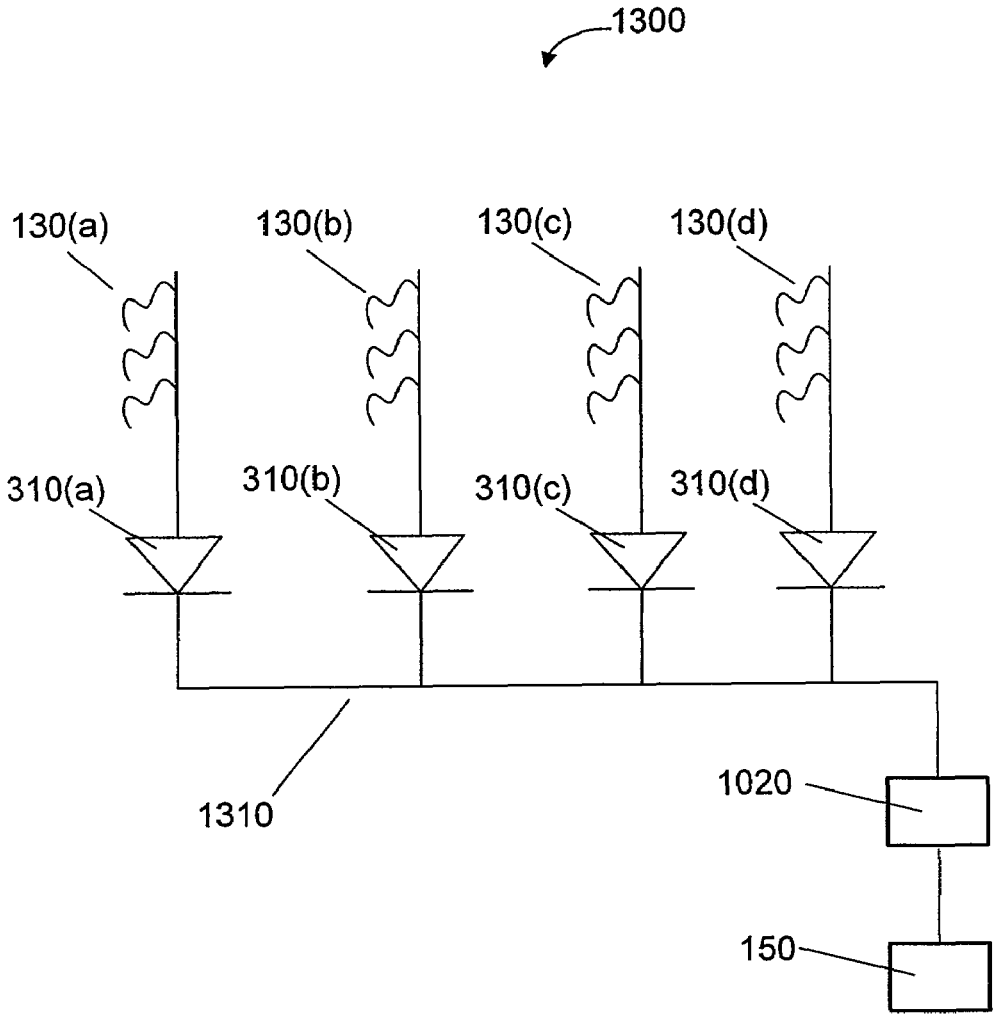

FIGURE 14

ENERGY COLLECTION

CROSS REFERENCE TO RELATED APPLICATION

This application is a continuation-in-part application of U.S. patent application Ser. No. 11/358,264,filed on Feb. 21, 2006,which is incorporated by reference herein.

TECHNICAL FIELD

The present disclosure is generally related to energy and, more particularly, is related to systems and methods for collecting energy.

BACKGROUND

The concept of fair weather electricity deals with the electric field and the electric current in the atmosphere propagated by the conductivity of the air or other gases. On Earth, clear, calm air carries an electrical current, which is the return path for thousands of lightening storms simultaneously occurring at any given moment around the Earth. For simplicity, this energy may be referred to as static electricity or static energy. FIG. **1** illustrates a weather circuit for returning the current from lightning, for example, back to ground **10**. Weather currents **20**, **30** return the cloud to ground current **40**.

In a lightening storm, an electrical charge is built up, and electrons arc across a gas, ionizing it and producing the lightening flash. As one of ordinary skill in the art understands, the complete circuit requires a return path for the lightening flash. The atmosphere is the return path for the circuit. The electric field due to the atmospheric return path is relatively weak at any given point because the energy of thousands of electrical storms across the planet are diffused over the atmosphere of the entire Earth during both fair and stormy weather. Other contributing factors to electric current being present in the Earth's atmosphere or above the surface or in the atmosphere of other planets may include cosmic rays penetrating and interacting with the planet's surface and/or atmosphere, and also the creation and migration of electrically charged ions, as well as other effects yet to be fully studied.

Some of the ionization near the surface of a planet or in the lower atmosphere is caused by airborne radioactive substances. In most places on Earth, ions are formed at a rate of 5-10 pairs per cubic centimeter per second at sea level. With increasing altitude, cosmic radiation causes the ion production rate to increase. In areas with high radon exhalation from the soil (or building materials), the rate may be much higher.

Alpha-active materials are also responsible for atmospheric ionization. Each alpha particle (for instance, from a decaying radon atom) will, over its range of some centimeters, create approximately 150,000-200,000 ion pairs.

While there is a large amount of usable energy available in the atmosphere of Earth, as well as above the surface or in the atmosphere of other bodies in space, a method or apparatus for efficiently collecting that energy has not been forthcoming. Therefore, a heretofore unaddressed need exists in the industry to address the aforementioned deficiencies and inadequacies.

SUMMARY

Embodiments of the present disclosure provide systems and methods for collecting energy. Briefly described in architecture, one embodiment of the system, among others, can be implemented by a support structure wire elevated above a ground level, at least one collection fiber electrically connected to the support structure wire; a load electrically connected to the support structure wire; and a diode electrically connected between the load and at least one collection fiber.

Embodiments of the present disclosure can also be viewed as providing methods for collecting energy. In this regard, one embodiment of such a method, among others, can be broadly summarized by the following steps: suspending at least one collection fiber from a support structure wire elevated above ground level, the fiber electrically connected to the support structure wire; providing a load with an electrical connection to the support structure wire to draw current; and providing a diode electrically connected between the collection fiber and the load.

Other systems, methods, features, and advantages of the present disclosure will be or become apparent to one with skill in the art upon examination of the following drawings and detailed description. It is intended that all such additional systems, methods, features, and advantages be included within this description, be within the scope of the present disclosure, and be protected by the accompanying claims.

BRIEF DESCRIPTION OF THE DRAWINGS

Many aspects of the disclosure can be better understood with reference to the following drawings. The components in the drawings are not necessarily to scale, emphasis instead being placed upon clearly illustrating the principles of the present disclosure. Moreover, in the drawings, like reference numerals designate corresponding parts throughout the several views.

FIG. **1** is a circuit diagram of a weather energy circuit.

FIG. **2** is a perspective view of an example embodiment of many energy collectors elevated above ground by a structure.

FIG. **2**A is a side view of an energy collection fiber suspended from a support wire.

FIG. **2**B is a side view of an example embodiment of an energy collection fiber suspended from a support wire and with an additional support member.

FIG. **2**C is a perspective view of a support structure for multiple energy collection fibers.

FIG. **2**D is a side view of an example embodiment of a support structure for multiple energy collection fibers.

FIG. **2**E is a side view of a support structure for an energy collection fiber.

FIG. **2**F is a side view of an example embodiment of a support structure for an energy collection fiber.

FIG. **2**G is a side view of a support structure for multiple energy collection fibers.

FIG. **3** is a circuit diagram of an example embodiment of a circuit for the collection of energy.

FIG. **4** is a circuit diagram of an example embodiment of a circuit for the collection of energy.

FIG. **5** is a circuit diagram of an example embodiment of an energy collection circuit for powering a generator and motor.

FIG. **6** is a circuit diagram of an example embodiment of a circuit for collecting energy and using it for the production of hydrogen and oxygen.

FIG. **7** is a circuit diagram of an example embodiment of a circuit for collecting energy, and using it for driving a fuel cell.

FIG. **8** is a circuit diagram of an example embodiment of a circuit for collecting energy.

FIG. **9** is a flow diagram of an example embodiment of collecting energy with a collection fiber.

FIG. **10** is a circuit diagram of an example embodiment of a circuit for collecting energy from a dual polarity source.

FIG. **11** is a system diagram of an example embodiment of an energy collection system connected to an automobile vehicle.

FIG. **12** is a system diagram of an example embodiment of an energy collection system connected to a lunar rover vehicle.

FIG. **13** is a system diagram of an example embodiment of an energy collection system comprising collection devices with a diode.

FIG. **14** is a system diagram of an example embodiment of an energy collection system comprising multiple legs of the system of FIG. **13**.

DETAILED DESCRIPTION

Methods for collecting ambient energy have been known since the early 1900's. However, due to low efficiency, those methods did not become commercially feasible. One of the primary advantages of the present disclosure over past arts is the efficiency achievable by utilizing the collection fibers disclosed herein to collect or harvest said ambient energy. Another primary advantage over past arts is the dual-polarity circuit (FIG. **10**) which makes use of both positive and negative ambient energy collected by the collection fibers to convert said energy into a steady positive electrical output.

Electric charges on conductors may reside entirely on the external surface of the conductors, and tend to concentrate more around sharp points and edges than on flat surfaces. Therefore, an electric field received by a sharp conductive point may be much stronger than a field received by the same charge residing on a large smooth conductive shell. An example embodiment of this disclosure takes advantage of this property, among others, to collect and use the energy generated by an electric field in the atmosphere or above the surface of a planet or heavenly body. "Energy" is not limited herein to energy generated by an electric field in the atmosphere. Energy as used herein may include any event, particle, or wave, including, but not limited to photons, protons, neutrons, electrons, neutrinos, leptons, muons, antimuons, mesons, baryons, positrons, bosons, gluons, gravitons, fermions, hadrons, ionic energy, gamma rays, cosmic rays, solar wind, quarks, energy generated by the triboelectric effect, convection lightning, and many other forms of energy known to one of ordinary skill in the art. These forms of energy, as well as others, may be present not only on Earth, but also on the moon of the Earth, on Mars, on Venus, and on other heavenly bodies and even in the relative vacuum of deep space.

Referring to collection system **100** presented in FIG. **2**, at least one collection device **130** may be suspended from a support wire system **120** supported by poles **110**. Collection device **130** may comprise a diode or a collection fiber individually, or the combination of a diode and a collection fiber. Support wire system **120** may be electrically connected to load **150** by connecting wire **140**. Supporting wire system **120** may be any shape or pattern. Also, conducting wire **140** may be one wire or multiple wires. The collection device **130** in the form of a fiber may comprise any conducting or non-conducting material, including carbon, graphite, Teflon, and metal. An example embodiment utilizes carbon fibers, graphite fibers, carbon/carbon fibers, or a mixture thereof for energy collection. Support wire system **120** and connecting wire **140** can be made of any conducting material, including, but not limited to, aluminum, steel, copper, and super-conductive material. Teflon may be added to said conductor as well, such as non-limiting examples of a Teflon impregnated wire, a wire with a Teflon coating, or Teflon strips hanging from a wire. Conducting wire **120**, **140**, and **200** may be bare wire, or coated with insulation as a non-limiting example. Wires **120** and **140** are a means of transporting the energy collected by collection device **130**.

An example embodiment of the collection fibers as collection device **130** includes graphite, carbon fibers, carbon/carbon fibers, or a mixture thereof. Graphite, carbon fibers, and carbon/carbon fibers, at a microscopic level, can have hundreds of thousands of points. Atmospheric electricity, energetic particles, or waves may be attracted to these points. If atmospheric electricity can follow two paths where one is a flat surface and the other is a pointy, conductive surface, the electrical charge will be attracted to the pointy, conductive surface. Generally, the more points that are present, the higher energy that can be gathered. Therefore, carbon, graphite fibers, carbon/carbon fibers, or a mixture thereof are examples that demonstrate example collection ability.

In at least one example embodiment, the height of support wire **120** may be an important factor. The higher that collection device **130** is from ground, the larger the voltage potential between collection device **130** and electrical ground. The electric field may be more than 100-300 volts per meter under some conditions on Earth. When support wire **120** is suspended at a particular altitude, wire **120** will itself collect a very small charge from ambient voltage. When collection device **130** is connected to support wire **120**, collection device **130** becomes energized and transfers the energy to support wire **120**.

A diode, not shown in FIG. **2**, may be connected in several positions in collection system **100**. A diode is a component that restricts the direction of movement of charge carriers. It allows an electric current to flow in one direction, but essentially blocks it in the opposite direction. A diode can be thought of as the electrical version of a check valve. The diode may be used to prevent the collected energy from discharging into the atmosphere through the collection fiber embodiment of collection device **130**. An example embodiment of the collection device comprises the diode with no collection fiber. Another embodiment, however, includes a diode at the connection point of a collection fiber to support system **120** such that the diode is elevated above ground. Multiple diodes may be used between collection device **130** and load **150**. Additionally, in an embodiment with multiple fibers, the diodes restrict energy that may be collected through one fiber from escaping through another fiber.

Collection device **130** may be connected and arranged in relation to support wire system **120** by many means. Some non-limiting examples are provided in FIGS. **2**A-**2**G using a collection fiber embodiment. FIG. **2**A presents support wire **200** with connecting member **210** for collection device **130**. Connection member **210** may be any conducting material allowing for the flow of electricity from connection device **130** to support wire **200**. Then, as shown in FIG. **2**, the support wire **200** of support system **120** may be electrically connected through conducting wire **140** to load **150**. A plurality of diodes may be placed at any position on the support structure wire. One embodiment places a diode at an elevated position at the connection point between a collection fiber embodiment of collection device **130** and connection member **210**. In an alternative embodiment, a diode is not placed between collection device **130** and connection member **210**.

Likewise, FIG. **2**B shows collection fiber **130** electrically connected to support wire **200** and also connected to support member **230**. Support member **230** may be connected to collection fiber **130** on either side. Support member **230** holds the fiber steady on both ends instead of letting it move freely. Support member **230** may be conducting or non-conducting.

A plurality of diodes may be placed at any position on the support structure wire. One embodiment places a diode at elevated position at the connection point between collection fiber **130** and support wire **200** or between fiber **130**, support member **230**, and support wire **200**. In an alternative embodiment, a diode is not placed between collection fiber **130** and support wire **200** or between fiber **130**, support member **230**, and support wire **200**.

FIG. **2**C presents multiple collection fibers in a squirrel cage arrangement with top and bottom support members. Support structure **250** may be connected to support structure wire **200** by support member **240**. Structure **250** has a top **260** and a bottom **270** and each of the multiple collection fibers **130** are connected on one end to top **260** and on the other end to bottom **270**. A plurality of diodes may be placed at any position on support structure **250**. One embodiment places a diode at an elevated position at the connection point between collection fiber **130** and support structure wire **200**. In an alternative embodiment, a diode is not placed at an elevated position at the connection point between collection fiber **130** and support structure wire **200**.

FIG. **2**D presents another example embodiment of a support structure with support members **275** in an x-shape connected to support structure wire **200** at intersection **278** with collection fibers **130** connected between ends of support members **275**. A plurality of diodes may be placed at any position on the support structure. One embodiment places a diode at an elevated position at the connection point between collection fiber **130** and support wire **200**. In an alternative embodiment, a diode is not placed at an elevated position at the connection point between collection fiber **130** and support wire **200**.

FIG. **2**E provides another example embodiment for supporting collection fiber **130**. Collection fiber **130** may be connected on one side to support member **285**, which may be connected to support structure wire **200** in a first location and on the other side to support member **280**, which may be connected to support structure wire **200** in a second location on support structure wire **200**. The first and second locations may be the same location, or they may be different locations, even on different support wires. A plurality of diodes may be placed at any position on the support structure. One embodiment places one or more diodes at elevated positions at the connection point(s) between collection fiber **130** and support wire **200**. In an alternative embodiment, one or more diodes are not placed at elevated positions at the connection point(s) between collection fiber **130** and support wire **200**.

FIG. **2**F presents another example embodiment of a support for a collection fiber. Two support members **290** may support either side of a collection fiber and are connected to support wire **200** in a single point. A plurality of diodes may be placed at any position on the support structure. One embodiment places a diode at an elevated position at the connection point between collection fiber **130** and support wire **200**. In an alternative embodiment, a diode is not placed at an elevated position at the connection point between collection fiber **130** and support wire **200**.

FIG. **2**G provides two supports as provided in FIG. **2**F such that at least two support members **292**, **294** may be connected to support structure wire **200** in multiple locations and collection fibers **130** may be connected between each end of the support structures. Collection fibers **130** may be connected between each end of a single support structure and/or between multiple support structures. A plurality of diodes may be placed at any position on the support structure. One embodiment places one or more diodes at elevated positions at the connection point(s) between collection fiber **130** and support structure wire **200**. In an alternative embodiment, one or more diodes are not placed at elevated positions at the connection point(s) between collection fiber **130** and support wire **200**.

FIG. **3** provides a schematic diagram of storing circuit **300** for storing energy collected by one or more collection devices (**130** from FIG. **2**). Load **150** induces current flow. Diode **310** may be electrically connected in series between one or more collection devices (**130** from FIG. **2**) and load **150**. A plurality of diodes may be placed at any position in the circuit. Switch **330** may be electrically connected between load **150** and at least one collection device (**130** from FIG. **2**) to connect and disconnect the load. Capacitor **320** may be connected in parallel to the switch **330** and load **150** to store energy when switch **330** is open for delivery to load **150** when switch **330** is closed. Rectifier **340** may be electrically connected in parallel to load **150**, between the receiving end of switch **330** and ground. Rectifier **340** may be a full-wave or a half-wave rectifier. Rectifier **340** may include a diode electrically connected in parallel to load **150**, between the receiving end of switch **330** and ground. The direction of the diode of rectifier **340** is optional.

In an example embodiment provided in FIG. **4**, storage circuit **400** stores energy from one or more collection devices (**130** from FIG. **2**) by charging capacitor **410**. If charging capacitor **410** is not used, then the connection to ground shown at capacitor **410** is eliminated. A plurality of diodes may be placed at any position in the circuit. Diode **310** may be electrically connected in series between one or more collection devices (**130** from FIG. **2**) and load **150**. Diode **440** may be placed in series with load **150**. The voltage from capacitor **410** can be used to charge spark gap **420** when it reaches sufficient voltage. Spark gap **420** may comprise one or more spark gaps in parallel or in series. Non-limiting examples of spark gap **420** include mercury-reed switches, mercury-wetted reed switches, open-gap spark gaps, and electronic switches. When spark gap **420** arcs, energy will arc from one end of the spark gap **420** to the receiving end of the spark gap **420**. The output of spark gap **420** may be electrically connected in series to rectifier **450**. Rectifier **450** may be a full-wave or a half-wave rectifier. Rectifier **450** may include a diode electrically connected in parallel to transformer **430** and load **150**, between the receiving end of spark gap **420** and ground. The direction of the diode of rectifier **450** is optional. The output of rectifier **450** is connected to transformer **430** to drive load **150**.

FIG. **5** presents motor driver circuit **500**. One or more collection devices (**130** from FIG. **2**) are electrically connected to static electricity motor **510**, which powers generator **520** to drive load **150**. A plurality of diodes may be placed at any position in the circuit. Motor **510** may also be directly connected to load **150** to drive it directly.

FIG. **6** demonstrates a circuit **600** for producing hydrogen. A plurality of diodes may be placed at any position in the circuit. One or more collection devices (**130** from FIG. **2**) are electrically connected to primary spark gap **610**, which may be connected to secondary spark gap **640**. Non-limiting examples of spark gaps **610**, **640** include mercury-reed switches, mercury-wetted reed switches, open-gap spark gaps, and electronic switches. Secondary spark gap **640** may be immersed in water **630** within container **620**. When secondary spark gap **640** immersed in water **630** is energized, spark gap **640** may produce bubbles of hydrogen and oxygen, which may be collected to be used as fuel or as components for breathable air, among other uses.

FIG. **7** presents circuit **700** for driving a fuel cell. A plurality of diodes may be placed at any position in the circuit.

Collection devices (**130** from FIG. **2**) provide energy to fuel cell **720** which drives load **150**. Fuel cell **720** may produce hydrogen and oxygen.

FIG. **8** presents example circuit **800** for the collection of energy. Storage circuit **800** stores energy from one or more collection devices (**130** from FIG. **2**) by charging capacitor **810**. If charging capacitor **810** is not used, then the connection to ground shown at capacitor **810** is eliminated. A plurality of diodes may be placed at any position in the circuit. The voltage from capacitor **810** can be used to charge spark gap **820** when it reaches sufficient voltage. Spark gap **820** may comprise one or more spark gaps in parallel or in series. Non-limiting examples of spark gap **820** include mercury-reed switches, mercury-wetted reed switches, open-gap spark gaps, and electronic switches. When spark gap **820** arcs, energy will arc from one end of spark gap **820** to the receiving end of spark gap **820**. The output of spark gap **820** may be electrically connected in series to rectifier **825**. Rectifier **825** may be a full-wave or a half-wave rectifier. Rectifier **825** may include a diode electrically connected in parallel to inductor **830** and load **150**, between the receiving end of spark gap **820** and ground. The direction of the diode of rectifier **825** is optional. The output of rectifier **825** is connected to inductor **830**. Inductor **830** may be a fixed value inductor or a variable inductor. Capacitor **870** may be placed in parallel with load **150**.

FIG. **9** presents a flow diagram of a method for collecting energy. In block **910**, one or more collection devices may be suspended from a support structure wire. In block **920**, a load may be electrically connected to the support structure wire to draw current. In block **930** a diode may be electrically connected between the support structure wire and the electrical connection to the load. In block **940**, energy provided to the load may be stored or otherwise utilized.

FIG. **10** presents circuit **1000** as an example embodiment for the collection of energy from a dual polarity source. This may be used, for example, to collect atmospheric energy that reverses in polarity compared with the ground. Such polarity reversal has been discovered as occurring occasionally on Earth during, for example, thunderstorms and bad weather, but has also been observed during good weather. Such polarity reversal may occur on other planetary bodies, including Mars and Venus, as well. Energy polarity on other planets, in deep space, or on other heavenly bodies, may be predominantly negative or predominantly positive. Collector fibers (**130** from FIG. **2**) are capable of collecting positive energy and/or negative energy, and circuit **1000** is capable of processing positive and/or negative energy, providing an output which is always positive. Circuit **1000** may collect energy from one or more collection devices (**130** from FIG. **2**). Charging capacitor **1010** may be used to store a charge until the voltage at spark gap **1020** achieves the spark voltage. Capacitor **1010** is optional.

A plurality of diodes may be placed in a plurality of positions in circuit **1000**. The voltage from capacitor **1010** may be used to charge spark gap **1020** to a sufficient voltage. Spark gap **1020** may comprise one or more spark gaps in parallel or in series. Non-limiting examples of spark gap **1020** include mercury-reed switches, mercury-wetted reed switches, open-gap spark gaps, and electronic switches. When spark gap **1020** arcs, energy will arc from an emitting end of spark gap **1020** to a receiving end of spark gap **1020**. The output of spark gap **1020** is electrically connected to the anode of diode **1022** and the cathode of diode **1024**. The cathode of diode **1022** is electrically connected to the cathode of diode **1026** and inductor **1030**. Inductor **1030** may be a fixed value inductor or a variable inductor. The anode of diode **1026** is electrically connected to ground. Capacitor **1028** is electrically connected between ground and the junction of the cathodes of diode **1022** and diode **1026**. Inductor **1035** is electrically connected between ground and the anode of diode **1024**. Inductor **1035** may be a fixed value inductor or a variable inductor. Capacitor **1070**, the anode of diode **1026**, inductor **1035**, and load **1050** are electrically connected to ground. Capacitor **1070** may be placed in parallel with load **150**.

FIGS. **11** and **12** provide example embodiments of vehicle **1110**, which utilizes electricity, the vehicle employing systems of energy collection provided herein. Vehicle **1100** in FIG. **11** is shown as an automobile vehicle, but could be any means of locomotion that utilizes electricity, including a car, a train, a motorcycle, a boat, an airplane, robotic rovers, space craft, etc. Vehicle **1100** in FIG. **12** is shown as a lunar rover vehicle. In FIGS. **11** and **12**, support rod **1110** is electrically connected to an electrical system in vehicle **1100**. Energy collectors **130** are electrically connected to support rod **1110** and may be used to supply energy to electrical circuits within the vehicle. A non-limiting use includes a top-off charge for a battery system, on-board hydrogen production, and/or assisting in the same. Energy collectors **130** may be used to augment the efficiency of the locomotion that utilizes electrical energy as well.

FIG. **13** provides an example embodiment of energy collection system **1200** in which diode **310** is used to isolate collection devices **130** from spark gap **1020** and load **150**. Collection devices **130** may comprise graphite, carbon fibers, carbon/carbon fibers, or a mixture thereof.

FIG. **14** provides an example embodiment of energy collection system **1300** in which a plurality of energy collection systems, such as that provided in FIG. **13**, are combined. Each leg consisting of collection devices **130** and diode **310** are connected in parallel with other legs, each leg electrically connected to trunk wire **1310**. The legs could also be connected serially. Trunk wire **1310** is electrically connected to a collection circuit, which may comprise load **150** and spark gap **1020** in any configuration that has been previously discussed. Each leg may comprise one or more collection devices **130** and at least one diode electrically connected between the collection devices and the collection circuit. Although three collection devices **130** are shown on each leg, any number of collection devices may be used. Although four legs are shown, any number of legs may be used.

Any process descriptions or blocks in flow charts should be understood as representing modules, segments, or portions of code which include one or more executable instructions for implementing specific logical functions or steps in the process, and alternate implementations are included within the scope of the preferred embodiment of the present disclosure in which functions may be executed out of order from that shown or discussed, including substantially concurrently or in reverse order, depending on the functionality involved, as would be understood by those reasonably skilled in the art of the present disclosure.

It should be emphasized that the above-described embodiments of the present disclosure, particularly, any "preferred" embodiments, are merely possible examples of implementations, merely set forth for a clear understanding of the principles of the disclosure. Many variations and modifications may be made to the above-described embodiment(s) of the disclosure without departing substantially from the spirit and principles of the disclosure. All such modifications and variations are intended to be included herein within the scope of this disclosure and the present disclosure and protected by the following claims.

Therefore, at least the following is claimed:

1. A system of energy collection comprising: a plurality of support structure wires elevated above ground level; at least one collection device including at least one carbon or graphite fiber that collects electrical energy from the air and is electrically connected to the plurality of support structure wires; a load electrically connected to the plurality of support structure wires; and a dual polarity collection circuit electrically connected between the collection device and the load.

2. The system of claim **1**, wherein the collection device comprises a diode.

3. The system of claim **1**, wherein the collection device comprises:

a diode electrically connected between the load and the fiber.

4. The system of claim **2**, wherein the diode is elevated relative to the ground level.

5. The system of claim **1**, wherein the fiber comprises graphite, carbon fibers, carbon/carbon fibers, or a mixture thereof.

6. The system of claim **1**, further comprising a diode electrically connected between the at least one collection device and the plurality of support structure wires.

7. The system of claim **1**, wherein the dual polarity collection circuit comprises a plurality of diodes, at least one inductor, and at least one capacitor.

8. The system of claim **7**, wherein the capacitor is electrically connected in parallel with the load.

9. A vehicle employing a system of energy collection comprising: a means of locomotion; a support structure electrically connected to the vehicle; at least one collection device including at least one carbon or graphite fiber that collects electrical energy from the air and is electrically connected to the support structure; and a load electrically connected to the support structure.

10. The structure of claim **9**, wherein the collection device comprises a diode.

11. The structure of claim **9**, wherein the collection device comprises: a diode electrically connected between the load and the fiber.

12. The structure of claim **10**, wherein the diode is elevated relative to the vehicle.

13. The structure of claim **9**, wherein the fiber comprises graphite, carbon fibers, carbon/carbon fibers, or a mixture thereof.

14. The structure of claim **9**, further comprising a diode electrically connected between the at least one collection device and the support structure.

15. A system of collecting energy comprising:

a plurality of collection legs, each of the collection legs comprising:

at least one collection device including at least one carbon or graphite fiber that collects electrical energy from the air; and

a diode; and

a load electrically connected to ground.

16. The system of claim **15**, wherein the fiber comprises a surface having projections.

17. The system of claim **15**, further comprising a trunk line electrically connected between the plurality of collection legs and the load.

18. The system of claim **17**, further comprising a spark gap device electrically connected between the plurality of collection legs and the load.

* * * * *

US 20210036500A1

(19) United States

(12) Patent Application Publication

McCowen

(10) Pub. No.: US 2021/0036500 A1

(43) Pub. Date: Feb. 4, 2021

(54) **SYSTEMS AND METHODS OF LAUNCH PLATFORM ISOLATION**

(71) Applicant: **Clint McCowen**, Navarre, FL (US)

(72) Inventor: **Clint McCowen**, Navarre, FL (US)

(21) Appl. No.: **16/574,081**

(22) Filed: **Sep. 18, 2019**

Related U.S. Application Data

(60) Provisional application No. 62/732,100, filed on Sep. 17, 2018.

Publication Classification

(51) **Int. Cl.**

H02G 13/00 (2006.01)

B64B 1/50 (2006.01)

(52) **U.S. Cl.**

CPC ***H02G 13/40*** (2013.01); *H02G 13/20* (2013.01); ***H02G 13/80*** (2013.01); ***B64B 1/50*** (2013.01)

(57) **ABSTRACT**

Ion Harvesting Technology harvests high voltage electricity, including from atmospheric ions. A wire, or conductive tether, may be used to connect ion harvesting material (typically carbon, but including any materials such as metals, metamaterials, or others) located on or near an aerial platform to an anchor point. Because the harvested electricity is typically of high voltage, the electricity may arc between the conductive tether to nearby points of lesser or greater voltage. Such arcing represents a loss of power to the overall system, causing the overall system to be less efficient, or possibly non-operational, and in some cases may cause catastrophic system failure. Electrical isolators may be used to prevent the losses from the arcing.

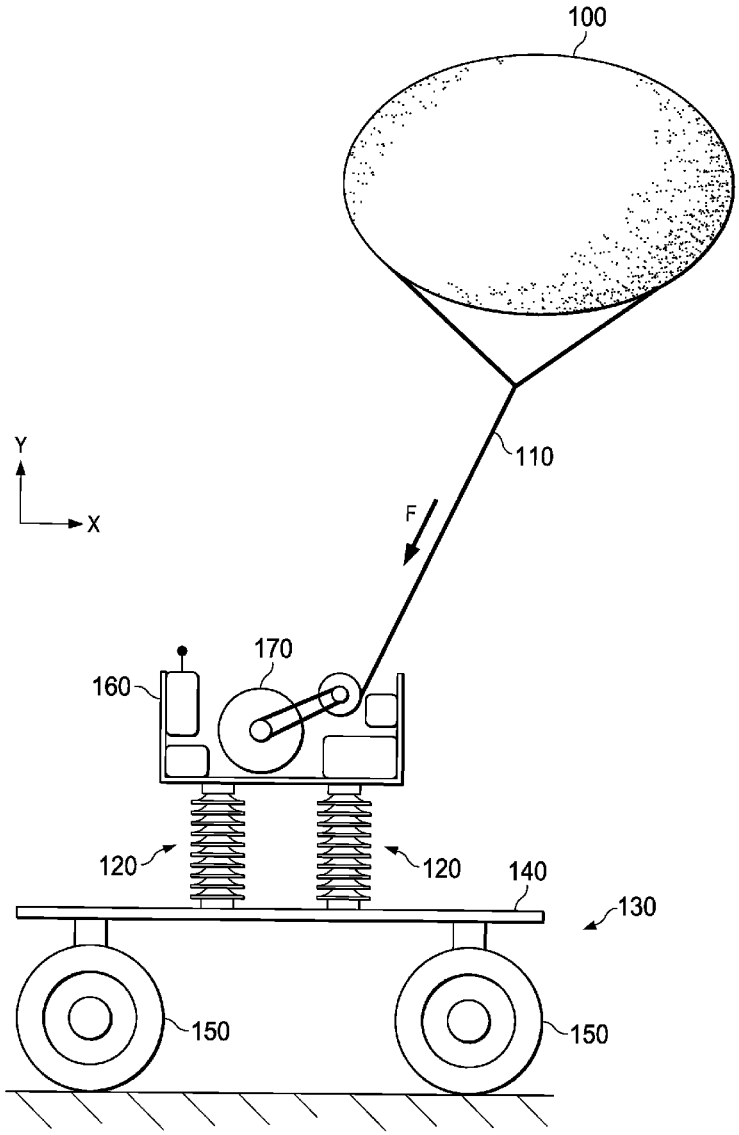

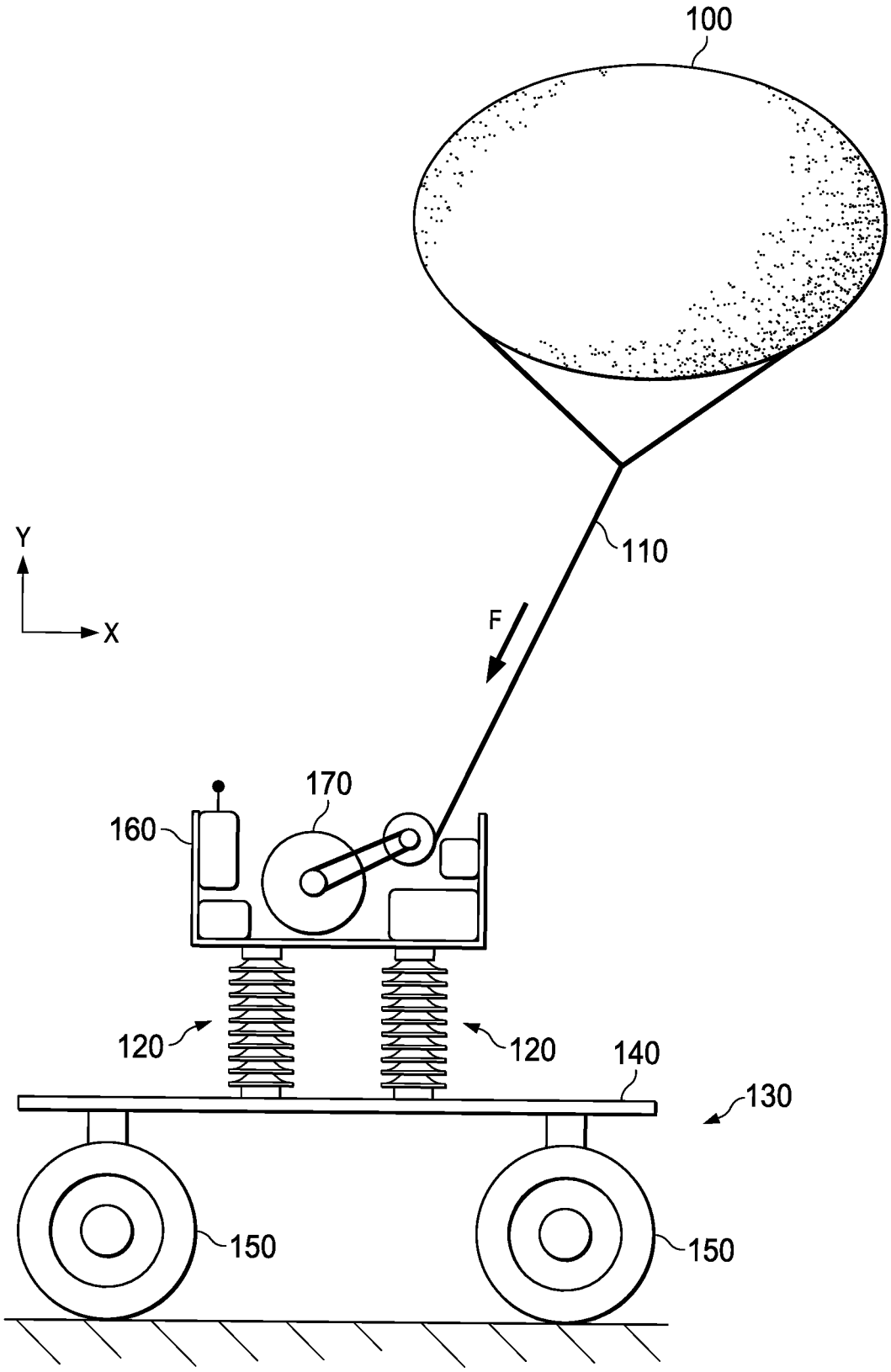

FIG. 1

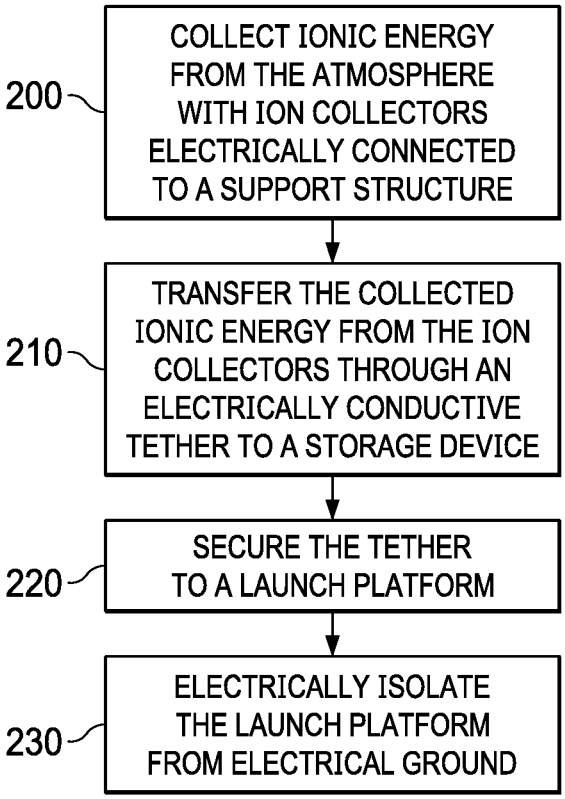
200
COLLECT IONIC ENERGY FROM THE ATMOSPHERE WITH ION COLLECTORS ELECTRICALLY CONNECTED TO A SUPPORT STRUCTURE
210
TRANSFER THE COLLECTED IONIC ENERGY FROM THE ION COLLECTORS THROUGH AN ELECTRICALLY CONDUCTIVE TETHER TO A STORAGE DEVICE
220
SECURE THE TETHER TO A LAUNCH PLATFORM
230
ELECTRICALLY ISOLATE THE LAUNCH PLATFORM FROM ELECTRICAL GROUND

FIG. 2

SYSTEMS AND METHODS OF LAUNCH PLATFORM ISOLATION

CROSS REFERENCE TO RELATED APPLICATIONS

[0001] This application claims benefit to U.S. provisional patent application Ser. No. 62/732,100, filed on Sep. 17, 2018, which is incorporated by reference herein.

TECHNICAL FIELD

[0002] The present disclosure is generally related to energy and, more particularly, is related to systems and methods of isolating a launch platform.

BACKGROUND

[0003] The concept of fair weather electricity deals with the electric field and the electric current in the atmosphere propagated by the conductivity of the air. Clear, calm air carries an electrical current, which is the return path for thousands of lightning storms simultaneously occurring at any given moment around the earth. For simplicity, this energy may be referred to as static electricity or static energy.

[0004] In a lightning storm, an electrical charge is built up, and electrons arc across a gas, ionizing it and producing the lightening flash. As one of ordinary skill in the art understands, the complete circuit requires a return path for the lightening flash. The atmosphere is the return path for the circuit. The electric field due to the atmospheric return path is relatively weak at any given point because the energy of thousands of electrical storms across the planet are diffused over the atmosphere of the entire Earth during both fair and stormy weather. Other contributing factors to electric current being present in the atmosphere may include cosmic rays penetrating and interacting with the earth's atmosphere, and also the migration of ions, as well as other effects yet to be fully studied.

[0005] Some of the ionization in the lower atmosphere is caused by airborne radioactive substances, primarily radon. In most places of the world, ions are formed at a rate of 5-10 pairs per cubic centimeter per second at sea level. With increasing altitude, cosmic radiation causes the ion production rate to increase. In areas with high radon exhalation from the soil (or building materials), the rate may be much higher.

[0006] Alpha-active materials are primarily responsible for the atmospheric ionization. Each alpha particle (for instance, from a decaying radon atom) will, over its range of some centimeters, create approximately 150,000-200,000 ion pairs.

[0007] While there is a large amount of usable energy available in the atmosphere, a method or apparatus for efficiently collecting that energy has not been forthcoming. Therefore, a heretofore unaddressed need exists in the industry to address the aforementioned deficiencies and inadequacies.

SUMMARY

[0008] Embodiments of the present disclosure provide systems and methods for collecting energy. Briefly described in architecture, one embodiment of the system, among others, can be implemented by at least one ion collection device electrically connected to a support structure; a conductive tether electrically connected to the support structure; a launch platform configured to secure the support structure; and electrical isolators configured to isolate the launch platform from electrical ground.

[0009] Embodiments of the present disclosure can also be viewed as providing methods for isolating a launch platform. In this regard, one embodiment of such a method, among others, can be broadly summarized by the following steps: collecting, ionic energy from the atmosphere with ion collectors electrically connected to a support structure; transferring the collected ionic energy from the ion collectors through an electrically conductive tether to a storage device; securing the tether to a launch platform; and electrically isolating the launch platform from electrical ground.

[0010] Other systems, methods, features, and advantages of the present disclosure will be or become apparent to one with skill in the art upon examination of the following drawings and detailed description. It is intended that all such additional systems, methods, features, and advantages be included within this description, be within the scope of the present disclosure, and be protected by the accompanying claims.

BRIEF DESCRIPTION OF THE DRAWINGS

[0011] FIG. **1** is a system diagram of an example embodiment of a system of launch platform isolation.

[0012] FIG. **2** is a flow diagram of an example embodiment of a method of launch platform isolation.

DETAILED DESCRIPTION

[0013] Embodiments of the present disclosure will be described more fully hereinafter with reference to the accompanying drawings in which like numerals represent like elements throughout the several figures, and in which example embodiments are shown. Embodiments of the claims may, however, be embodied in many different forms and should not be construed as limited to the embodiments set forth herein. The examples set forth herein are non-limiting examples and are merely examples among other possible examples.

[0014] Ion Harvesting Technology harvests high voltage electricity, including from atmospheric ions. A wire, or conductive tether, may be used to connect ion harvesting material (typically carbon, but including any materials such as metals, metamaterials, or others) located on or near an aerial platform to an anchor point. In an example embodiment, the anchor point is a mechanical winch, but it may be any type of anchor point located above, near, on, or in the planet's ground. In an alternative embodiment, the anchor point includes attachment to aircraft, vehicles, drones, space stations, and space elevators, among others whether or not they are connected or related to planet ground. Because the harvested electricity is typically of high voltage, the electricity may arc between the conductive tether to nearby points of lesser or greater voltage. Such arcing represents a loss of power to the overall system, causing the overall system to be less efficient or possibly non-operational, and in some cases may cause catastrophic system failure.

[0015] FIG. **1** provides a system diagram of an example embodiment of a system of launch platform isolation. Aerial device **100** comprising ion harvesting material is connected to platform **130** with conductive tether **110**. Platform **130** may comprise one or more of wireless transmitter **160**,

winch **170**, electrical isolators **120**, table **140**, and wheels **150**. Other possible elements include, but are not limited to, motor, gearbox, resistors, capacitors, batteries, energy storage modules, motor controller, wireless data transmitter, electrical measurement device, data recorders, and other support equipment.

[0016] To avoid the arcing problem, conductive tether **110** may be located away from objects of lesser or greater voltage potentials. For example, if winch **170** on which conductive tether **110** is rolled is not electrically isolated from the planet's ground (or artificial ground of greater or lesser potential), then arcing may occur. Utilizing a standard aerostat launching platform may not be suitable, nor compatible, with Ion Harvesting Technology as winch **170** and/or launch platform **130** may not be adequately electrically isolated from the planet's ground, potentially causing arcing.

[0017] In an example embodiment, winch **170** or other anchor device to which tether **110** is connected (including the 'drum' on which tether **170** is rolled) is electrically isolated from the planet's ground. Additionally, any mechanical or electrical connections to winch **170** may be likewise electrically isolated from the planet's ground. Failure to provide adequate electrical isolation to winch **170** or drum or other anchor devices connected to conductive tether **110** may result in catastrophic failure or undesirable operation of the entire Ion Harvesting System.

[0018] Example embodiments provided herein may utilize electrical isolators similar, but not necessarily identical, to electrical isolators used to provide electrical isolation to high voltage transmission lines on Earth grid systems. However, other designs are also included in this disclosure. Alternative embodiments include any rope, cable, pipe, straps, extensions, or the like or liquids, gases, materials, or metamaterials that possess sufficient electrical resistivity to prevent arcing or electrical leakage.

[0019] In an alternative embodiment, the winch support structure includes a point to which electrical isolation is provided.

[0020] In an alternative embodiment, launch platform **130**, including winch **170**, is electrically isolated from the planet's ground through driving or positioning the launch vehicle on another platform or area designed to provide electrical isolation to whatever is placed on it, including winch **170** or other anchor point with or without a launch platform or vehicle. Examples include an area, surface, deck, platform, or mat onto which launch platform **130** is positioned (or driven or towed) so as to provide a surface of high electrical resistivity to provide enhanced electrical isolation to launch platform **130**, including winch **170**. The insulating surface may be affixed or connected, permanently or temporarily, to launch platform **130**, or winch **170**, or any component thereof in order to provide suitable isolation.

[0021] Another example embodiment includes extensions made of high electrical resistivity used to separate or lift launch platform **130** away from the planet's surface. The definition of planet's ground herein, includes any form of ground, water, liquid, marsh, ice, mud, or any natural or man-made surface.

[0022] Another example embodiment, includes utilizing liquid, gas, or metamaterial of sufficient electrical resistivity to prevent arcing or electrical leakage on which winch **170** or launch platform **130** (anchor) may be placed upon or to float upon or in, thereby providing electrical isolation from the planet's ground, ocean, or surface.

[0023] An example embodiment of aerial platform **100** includes but is not limited to aerostats, balloons, kites, helikites, towers, poles, buildings, objects above the planet, in the atmosphere, or in space to which tether **110** is connected (including but not limited to a space elevator), and any device or means of providing altitude greater than 1 cm above the planet's surface or combinations thereof.

[0024] FIG. **2** provides a flow diagram of an example embodiment of a method of launch platform isolation. In block **200**, ionic energy is collected from the atmosphere with ion collectors electrically connected to a support structure. In block **210**, the collected ionic energy is transferred from the ion collectors through an electrically conductive tether to a storage device. In block **220**, a tether is secured to a launch platform. In block **230**, the launch platform is electrically isolated from electrical ground.

[0025] Any process descriptions or blocks in flow charts should be understood as representing modules, segments, or portions of code which include one or more executable instructions for implementing specific logical functions or steps in the process, and alternate implementations are included within the scope of the preferred embodiment of the present disclosure in which functions may be executed out of order from that shown or discussed, including substantially concurrently or in reverse order, depending on the functionality involved, as would be understood by those reasonably skilled in the art of the present disclosure.

[0026] It should be emphasized that the above-described embodiments of the present disclosure, particularly, any "preferred" embodiments, are merely possible examples of implementations, merely set forth for a clear understanding of the principles of the disclosure. Many variations and modifications may be made to the above-described embodiment(s) of the disclosure without departing substantially from the spirit and principles of the disclosure. All such modifications and variations are intended to be included herein within the scope of this disclosure and the present disclosure and protected by the following claims.

Therefore, at least the following is claimed:

1. A system comprising:

at least one ion collection device electrically connected to a support structure;

a conductive tether electrically connected to the support structure;

a launch platform configured to secure the support structure; and

electrical isolators configured to isolate the launch platform from electrical ground.

2. The system of claim **1**, wherein the ion collection device comprises at least one of carbon, graphite, graphene, and silicene.

3. The system of claim **1**, wherein launch platform comprises a winch configured to manipulate the altitude of the support structure.

4. The system of claim **1**, wherein the support structure comprises an aerial platform, the aerial platform comprising at least one of an aerostat, balloon kite, helikite, tower, pole, and building.

5. The system of claim **1**, wherein the electrical isolator at least one of an electrical, mechanical, and optical isolation barrier.

6. The system of claim **1**, wherein the electrical isolator comprises at least one of rope, cable, pipe, straps, extensions, liquids, gases, material, and metamaterial configure to prevent arcing or electrical leakage.

7. The system of claim **3**, wherein the electrical isolator is provided by positioning the launch platform in an area configured to provide electrical isolation to an item in the area.

8. A method comprising:

collecting ionic energy from the atmosphere with ion collectors electrically connected to a support structure;

transferring the collected ionic energy from the ion collectors through an electrically conductive tether to a storage device;

securing the tether to a launch platform; and

electrically isolating the launch platform from electrical ground.

9. The method of claim **8**, wherein the ion collectors comprise at least one of at least one of carbon, graphite, graphene, and silicene.

10. The method of claim **8**, further comprising manipulating the altitude of the support structure with a winch.

11. The method of claim **8**, wherein the support structure comprises an aerial platform, the aerial platform comprising at least one of an aerostat, balloon kite, helikite, tower, pole, and building.

12. The method of claim **9**, wherein electrically isolating the launch platform comprising isolating with at least one of an electrical, mechanical, and optical isolation barrier.

13. The method of claim **10**, wherein electrically isolating the platform comprises implementing at least one of rope, cable, pipe, straps, extensions, liquids, gases, material, and metamaterial configure to prevent arcing or electrical leakage.

14. The method of claim **8**, further comprising positioning the launch platform in an area configured to provide electrical isolation to an item in the area.

15. A system comprising:

a launch platform configured to secure a support structure supporting ionic energy collectors; and

electrical isolators configured to isolate the launch platform from electrical ground.

16. The system of claim **15**, wherein the ion collectors comprise at least one of at least one of carbon, graphite, graphene, and silicene.

17. The system of claim **15**, further comprising a winch configured to manipulate the altitude of the support structure.

18. The system of claim **15**, wherein the support structure comprises an aerial platform, the aerial platform comprising at least one of an aerostat, balloon kite, helikite, tower, pole, and building.

19. The system of claim **15**, wherein the electrical isolators comprise at least one of an electrical, mechanical, and optical isolation barrier.

20. The system of claim **15**, wherein the electrical isolators comprise at least one of rope, cable, pipe, straps, extensions, liquids, gases, material, and metamaterial configure to prevent arcing or electrical leakage.

* * * * *

rimstar.org
... an addiction to science, renewable energy and building stuff

Using earbuds/iphone earpods with a crystal radio

Related links:
[Crystal earphone], [Radio earphone amplifier]

Home
Renewable Energy
Science/Electronics
Projects
Build Van de Graaff
Wimshurst machine
Kelvin water dropper
Electroscope
Corona motors
Ball bearing motor
Crystal radios
Tips and tricks
Crystal earphones
Using earbuds
Razor blade diode
Amplifier for speaker
Amplifier for earphone
Loop antenna radio
AM Radio Transmitter
Fresnel lens
Electrets
Piezoelectric
Electrolytic capacitor
Joule thief
Peltier/Seebeck effect
Franklins bell
Can Stirling
Big Stirling
555 timer music
TEA laser
Laser diode fun
How Ion Prop. Works
Lifter/ionocraft
Star Trek Enterprise
Smoke precipitator
Moving with sound
Straw music instruments
Gravity light - DIY
Nitinol wire
Pyramid hologram
Arduino speech/Talkie
Arduino controlled Skull
Pinhole camera
Wireless electricity
Fly swatter powered CFL
Chlorophyll/fluorescence
Small SG Tesla coil
Photophone
Laser communicator
Hero's steam engine
Alcohol stove
Sunflower heat engine
BB-8 Droid
Ball cyclotron
Atmos. electricity
Photoelectric effect
Bottle rocket
Neural networks
Ornithopter
Curie temp. experiment
Lightning in bottle
Gyroscope - vinyl records
Raspberry Pi
Pepper's ghost phone
Potato chip circuit
Ion wind rotor
LED flashlight
Resources
Power supplies
HV Probes/measuring
Miscellaneous
Efficiency & Conservation
Composting
Food
Non-conv. Energy
Non-conv. Propulsion
Space
Stories

Donate

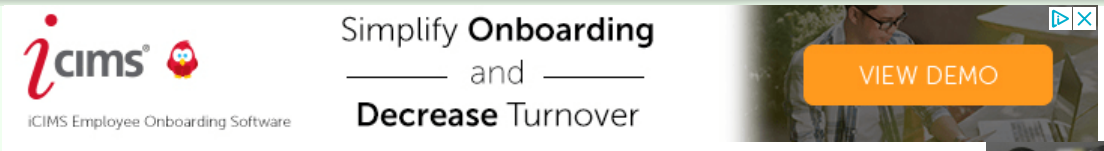

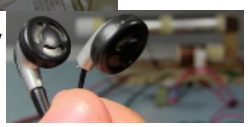

To use earbuds/iPhone earpods with a crystal radio you need to insert a transformer where the crystal earpieces would normally connect to a crystal radio. The jack for the earbuds would be connected to the transformer. Technically speaking, this is for purposes of impedance matching. Below is a diagram for one such crystal radio and some sample photos.

Crystal radio with crystal earpiece.

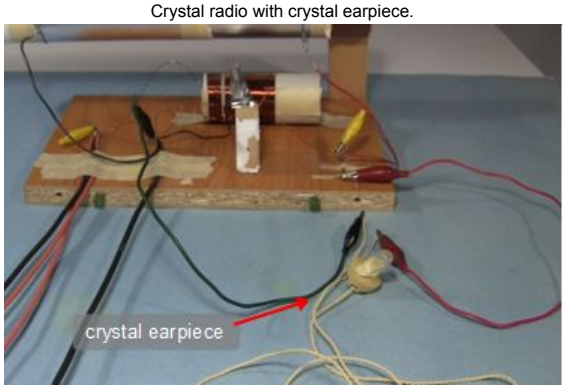

Crystal radio with transformer and jack going to earbuds.

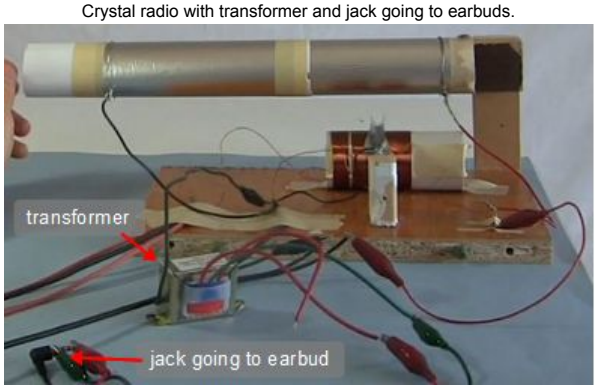

Diagram with crystal earpiece.

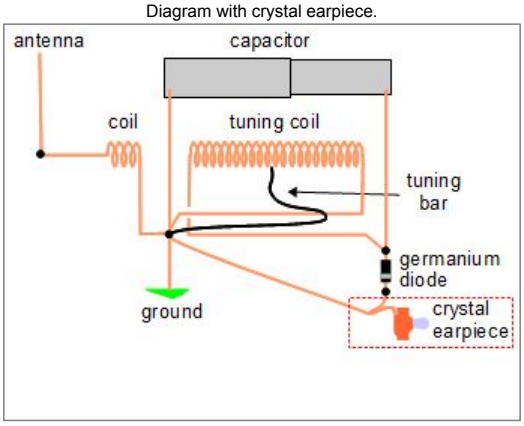

Diagram with transformer and jack going to earbuds.

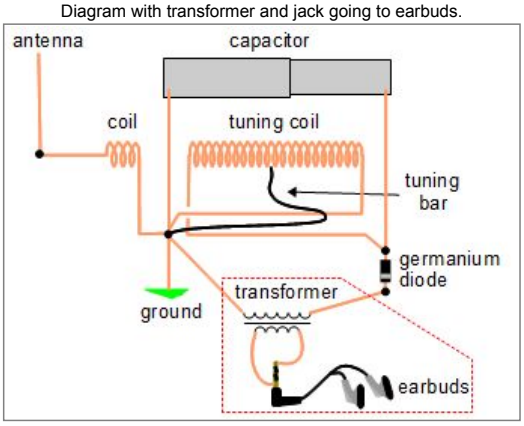

In the photo below are shown the transformers I've tried. Note that the transformer needs to be a *step-up* or *step-down* transformer. I'm not certain that a one-to-one transformer will work. The three smaller ones all gave around the same results. The large microwave oven transformer didn't work as well; the sound was too quiet.

Transformers I've tried with earbuds.

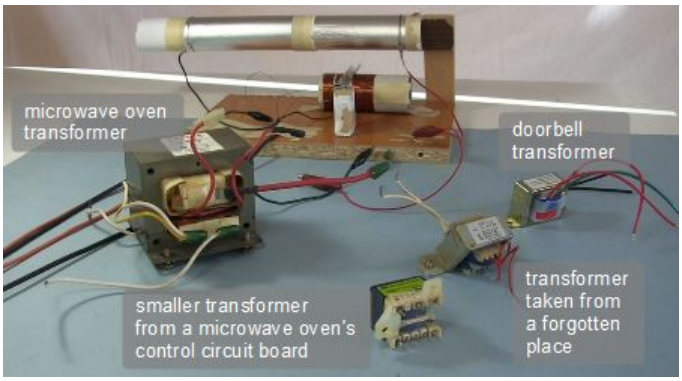

Connecting to the earbud/earpod

Earbud/earpod connectors usually have three places to connect on them. As shown in the following diagram, the tip is for one earbud, the middle is for the other earbud and the place nearest the plastic molded casing is common to the two.

Where to connect to the earbud jack.

AdChoices
Headphones
Model Kits

RC Networks & RC Filters
Custom designed to prevent or minimize the occurrence of arcing & noise generations

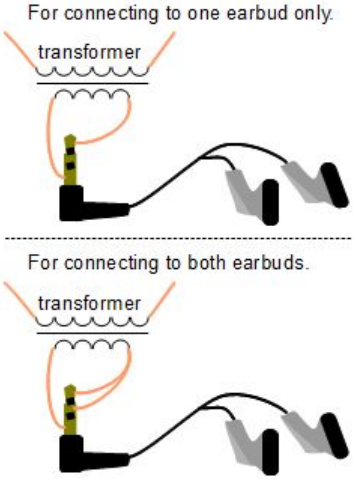

How to determine which side of the transformer to use where

A transformer has two coils/sides and each coil has two wires coming from it. You need to connect the two wires from one side to the crystal radio and the two wires from the other side to the earbuds.

Here are some ways to determine which side goes where. See the corresponding diagrams and photos below. The side that connects to the crystal radio is the side:

- that's labelled with the higher voltage,
- that has the coil with the most turns, or
- that has the highest resistance.

Determining using labelled input/output voltages.

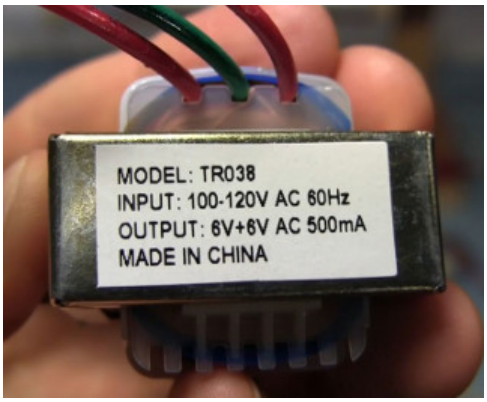

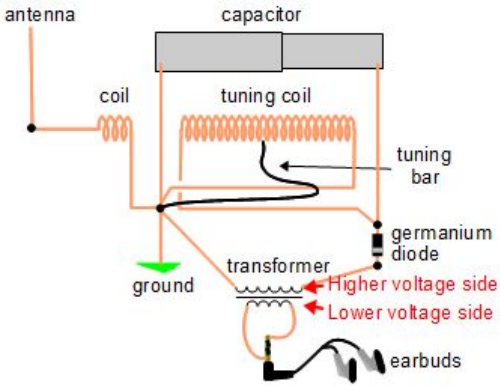

Determining using number of turns for the coils.

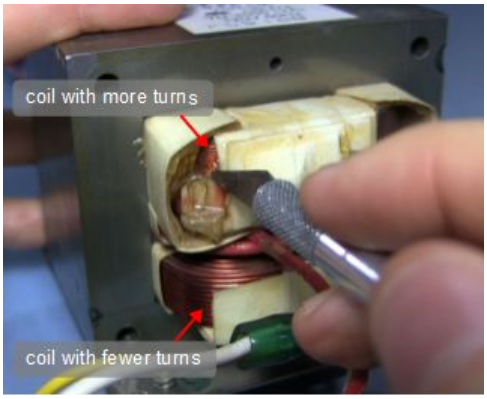

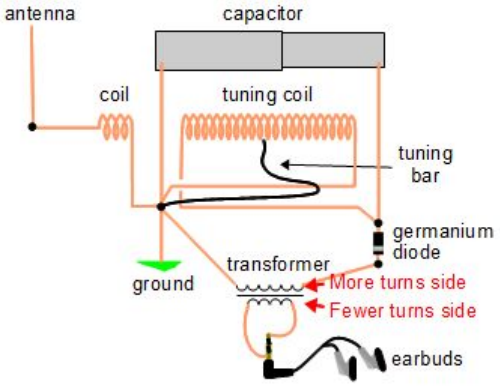

Determining using resistance of the coils.

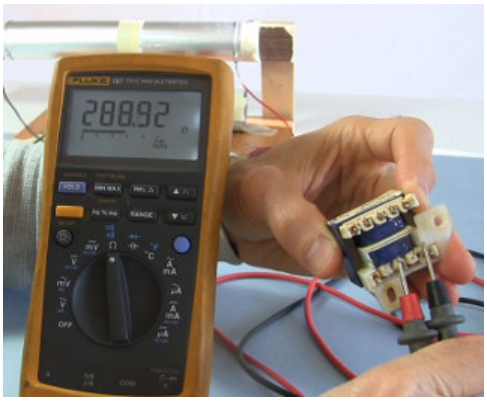

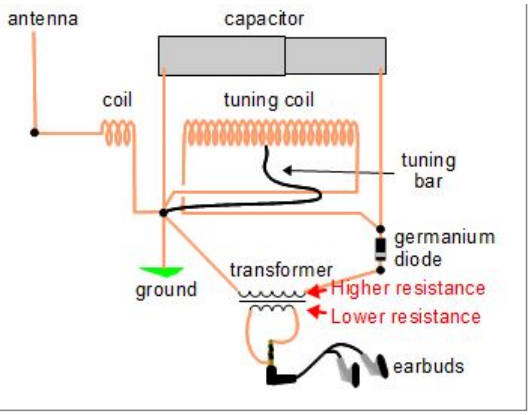

Video - Use earbuds/earphones with a crystal radio

The following is a video showing all of the above - basically how to make earbuds/earpods work with a crystal radio using a transformer.

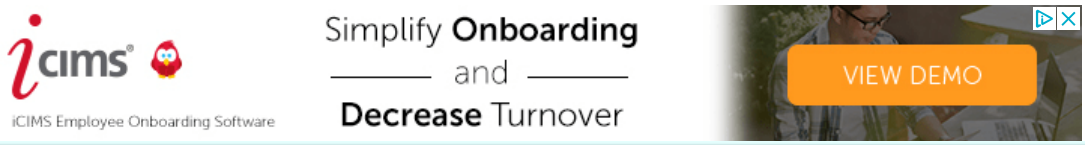

Inventing the tech the world loves
Learn more about 5G NR
Qualcomm

Advertisement Advertisement

JC Bose patents radio wave detector, September 30, 1901

Jessica MacNeil -September 30, 2017

1 Comments

Share G+ Tweet Like 18

James Clerk Maxwell's **equations** predicted the existence of electromagnetic waves of diverse wavelengths in the 1860s, and in 1888 Oliver Lodge and Heinrich Hertz verified it, along wires and in free space. After reading about their experiments, JC Bose, a professor of physics at Presidency College in Calcutta, India, reduced the waves to about 5mm to study them.

He developed the use of galena (lead sulfide) crystals contacted by a metal point for detecting millimeter electromagnetic waves, and filed patent 755840, for a "**Detector for electrical disturbances**" in 1901. It was the first device to use a semiconductor junction to detect radio waves.

Bose created a portable device to study the optical properties of short waves, which incorporated the earliest waveguide and horn antenna. It would be more than 30 years before more research and analysis was done with the now widely-used horn antennas. His use of dielectric lenses, polarizers, prisms, and semiconductors at frequencies as high as 60 GHz, were also well ahead of his time.

Bose's 60-GHz microwave apparatus at the Bose Institute in Kolkata, India.
Source: Wikipedia user Gangulybiswarup

In a 1895 demonstration, he used electromagnetic waves to ignite gunpowder and ring a bell from a distance, reported to be nearly a mile. In 1897 Bose presented his microwave experiments at the Royal Institution in London (see the photo and diagram below).

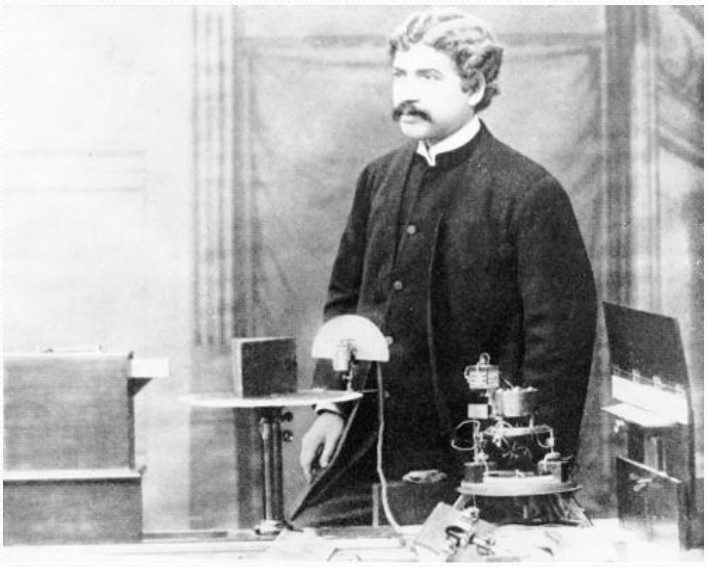

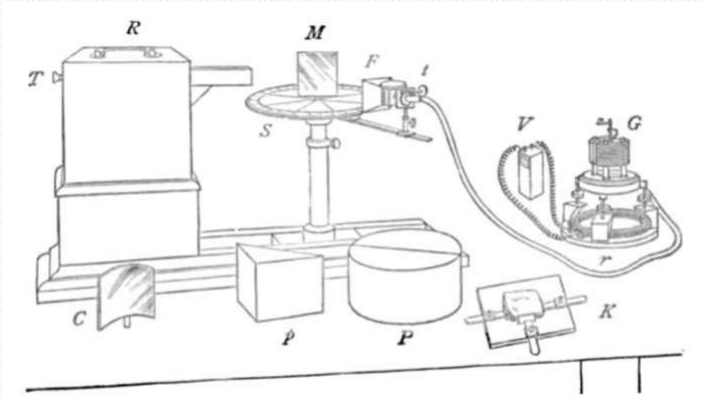

R, radiator ; S, spectrometer-circle ; M, plane mirror ; C, cylindrical mirror ; *p*, totally reflecting prism ; P, semi-cylinders ; K, crystal-holder ; F, collecting funnel attached to the spiral spring receiver ; *t*, tangent screw, by which the receiver is rotated ; V, voltaic cell ; *r*, circular rheostat ; G, galvanometer.

He founded the Bose Institute in 1917 in Calcutta where some of his original instruments and devices are displayed. Bose spent much of his later career studying the effects of electromagnetic radiation on plants.

Diodes

Back to the index

Which diode can I use best in my crystal receiver?

Maybe you think a diode with a voltage drop as low as possible, then also small signals at the detector circuit are detected.
But diodes with a low voltage drop, also have a high reverse current (leaking current), this will load the detector circuit heavier, the Q of the detector circuit reduces, and with that also the voltage across the LC circuit.
At a lower input voltage the diode will give much more losses, and it can happen that despite the lower voltage drop of the diode, you have less voltage at the load resistor.
Besides that, reduction of circuit Q will also gives a less selective receiver.

For every 20 mV less voltage drop, the reverse current will approximately double.

Germanium, silicon, en schottky diodes.

Depending on the material they are made from, we can distinguish germanium diodes, silicon diodes and schottky diodes.
There are some more types, which are not discussed here.

Silicon diodes have the highest voltage drop (about 0.5 Volt) and are for this reason not very useable for crystal receivers.
Unless we use a small DC bias current, which brings the diode already a little bit in conduction.

Germanium diodes have a low voltage drop (about 0.1 - 0.2 Volt) and are often used in crystal receivers.
The properties like voltage drop and reverse current can vary a lot between two germanium diodes of the same type.
In practice we can best test several germanium diodes in our receiver and then choose the best.
The diode resistance R_D of germanium diodes is most times rather low, and only useable in crystal receivers with a low Q (low sensitivity and low selectivity).
For high performance receivers, we can better use a suitable schottky diode.

Schottky diodes have a voltage drop of about 0.25 Volt.
The differences in properties between two diodes of the same type are often small.
Schottky diodes with the correct resistance R_D are very useable in high quality crystal receivers.

The given voltage drop is normally measured at a forward current of about 1 mA.
Also if we measure the voltage drop of a diode with a multimeter, the test current shall be about 1 mA.
But also below this voltage drop the diode can conduct current, and can rectify a RF (radio frequency) signal.
Only the current through the diode is then much smaller.
When receiving very weak stations, the current through the diode can be e.g. only 10 nA.
At such a low current, the voltage drop of the diode is also much lower then at 1 mA.

Detected voltage as function of the input voltage

If we rectify a RF signal with a diode we can distinguish two situations.

Situation 1: Rectifying in the linear region
If the input voltage is high enough (well above the voltage drop of the diode at 1 mA), the output voltage of the diode will be about proportional to the input voltage.
So double input voltage, gives about double output voltage.

The output voltage is almost equal to the peak value of the input voltage.
The power losses in the diode are in this region very low compared to the rectified power.

Situation 2: Recifying in the square law region
If the input voltage is low, lower then the voltage drop of the diode (at 1 mA) then the situation is completely different.
The input of the diode behaves for the RF signal like a resistor with value RD.
The output of the diode behaves like a DC voltage source in series with a resistor, the value of this resistor is also equal to RD.
The value of the DC voltage source is square law related to the amplitude of the RF input signal.
So double input voltage, gives 4 times as much detected DC voltage at the output
In the square law region the output voltage of the diode will be much lower then the input voltage, the diode gives much power loss between input and output.
The lower the input voltage, the higher the losses.
The higher the input voltage, the lower the diode losses.
When further increasing the diode input voltage, we gradually come into the linear detection region.
When receiving weak stations, detection takes place in the square law region.

Between the linear and square law region, there is a region not linear, and not square law but somewhere in between.
This region is not discussed here.

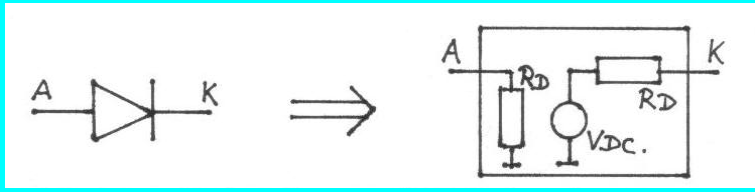

Equivalent circuit of a diode at low input voltages.

Via this link you find a measurement on several schottky diodes, which shows detection in the square law region takes place at input voltages below 200 mVpp.

Diode resistance RD.

At zero voltage, diodes have a certain resistance.
This resistance at zero Volt we call RD.
The lower the reverse leaking current of the diode, the higher resistance RD.
When detecting small signals (in the square law region) the input of the diode also behaves like a resistor with value RD.

But how do we know the RD of a diode?
We can calculate it with the formula:
formula 1: **RD = 0.000086171 x n x TK / Is**

RD = diode resistance at zero Volt (unit: Ohm)
n = *ideality factor*, the lower this factor the better, between 1.0 and 1.1 is a very good value.
TK = temperature in Kelvin (= temperature in ºC + 273)
Is = *saturation current* (unit: A)
x = multiply

The values of n and Is can (sometimes) be found in the diode datasheet.

In the following table some types of schottky diodes, with the values for n, Is and Rd, the maximum reverse voltage and the diode capacitance at zero voltage.

type diode	n	Is at 25 ºC	RD at 25 ºC	maximum reverse voltage	capacitance	
5082-2835	1.08	22 nA	1260 kΩ	8 Volt	1 pF	datasheet
BAT85	?	?	± 200 kΩ ??	30 Volt	10 pF	datasheet
HSMS 2820	1.08	22 nA	1260 kΩ	15 Volt	1 pF	datasheet
HSMS 2850	1.06	3000 nA	9.07 kΩ	2 Volt	0.3 pF	datasheet
HSMS 2860	1.10	38 nA	743 kΩ	4 Volt	0.3 pF	datasheet

To decrease the value RD, we can connect more diodes in parallel, with two the same diodes parallel the value of RD shall halve.
With 3 diodes parallel, the value of RD shall be divided by 3 etc..

Diode resistance when using bias current.

We can decrease the value of RD by sending a small DC bias current (e.g. 0.1 uA) in forward direction through the diode.
The higher the bias current, the lower RD will be.
With the following formula we can calculate the diode resistance RD, when we make use of a DC bias current.

Formula 2: **RD = 0.000086171 x n x TK /(Ib + Is)**

RD= diode resistance at certain DC bias current Ib (unit: Ohm)
n= *ideality factor* of the diode
TK = Temperature in Kelvin (= temperature in ºC + 273)
Ib= DC bias current through the diode in A
Is =*saturation current* of the diode in A

A diode with a certain RD value at a certain bias current, gives the same receiving performance as a diode without bias current with the same RD.

Influence of temperature on "saturation current: Is"

The saturation current (Is-value) is strongly depending on temperature.
A temperature increase of 1 ºC will increase the Is value by about 7 %.
In datasheets, the Is value is most times given at 25 ºC.
If the diode temperature is not 25 ºC, but another value "T", then we must multiply Is with a factor 1.07^(T-25).
T = diode temperature
^ = raise to the power of

Ideality factor n

The ideality factor n of a diode indicates how good the diode performs with regard to an ideal diode.
A (not existing) ideal diode has a value of n=1.
At low input signals, the maximum available detected output power is proportional to 1/n.
So doubling the n will halve the output power (this only applies at weak signals).

Diode capacitance

Between the two connections of the diode there will be a certain capacitance (capacitor value), when this capacitance is fairly high (e.g. 10 pF) the tuning range at high frequencies is limited.

At increasing reverse voltage across the diode the capacitance will reduce, also the detected voltage in a crystal receiver is such a reverse voltage.
Through this, the frequency of the circuit can shift upwards when receiving strong signals.
On the next page: experiments with a detector unit you find in table 3 a measurement about the frequency shift.

Measuring the Is value of a diode.

We can measure the Is value of a diode as follows:
Send a small current through the diode, the value of this current (I_D) must be about 1 µA.
Measure the voltage across the diode (V_D).

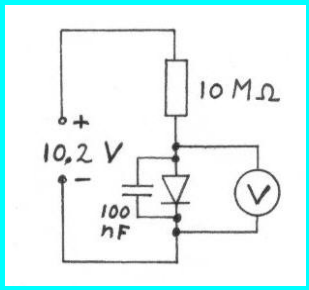

Circuit diagram for measuring the Is value of a diode.
The voltage across the diode is about 0.2 Volt.
The voltage across the resistor is about 10 Volts, so the current is about 1 µA.

The voltmeter must have a resistance of at least 10 MΩ.
The 100 nF capacitor reduces the influence of radio signals and hum on the measurement.

Calculate Is with the formula:

formula 3: **$I_s = I_D / (e^{\wedge} (V_D /(0.0257xn))-1)$**

Is = *saturation current* of the diode in nA
I_D = current through the diode in nA, (1 µA = 1000 nA)
e = base of the natural logarithms, this is about 2.718
^ = raise to the power of
V_D = voltage across the diode in Volt
n = *ideality factor* of the diode, if you don't know this value, take for instance: n= 1.08

More information about measuring the Is you can find on the website of Ben Tongue , in his articles number 4 and 16.

I measured the Is value of several diodes, and calculated the diode resistance R_D.
Also some European germanium types are measured.
Several diodes are measured of the type OA95 and AA119

Diode	V_D (Volt) at 1 µA	Is (nA)	R_D (kΩ).
HSMS282K	0.1341	7.9	3428
HSMS282K 2 parallel	0.118	14.5	1867
HSMS286K (1 diode)	0.1116	18.3	1479
5082-2800	0.1871	1.14	23756
5082-2835	0.1464	5.04	5373
5082-2835 2 parallel	0.1289	9.5	2850
BAT 82	0.136	7.3	3710
BAT 85	0.0686	90.8	298
OA81 (germanium)	0.0225	800	34

OA95 #1 (germanium)	0.0272	600	45
OA95 #2	0.0221	821	33
OA95 #3	0.0271	604	45
OA95 #4	0.0304	502	54
AA116 (germanium)	0.0441	256	106
AA119 #1 (germanium)	0.0320	461	59
AA119 #2	0.0363	370	73
AA119 #3	0.0428	272	100

The HSMS282K is the same as the HSMS2820, only the HSMS282K has 2 equal diodes in one package.

The Is value of the HSMS282K, the HSMS286K and the 5082-2835 is lower than the value in the datasheet, this has also been noticed by other people.
Ben Tongue wrote me, that the Is value of the 5082-2835 has been reduced over the years by the manufacturer.
Also temperature has big influence, I measured at 18 ºC, in datasheets the Is value is given at 25 °C.
A increase from 18 °C to 25 °C will increase the Is by 60 %.

Back to the index

FM Crystal Set

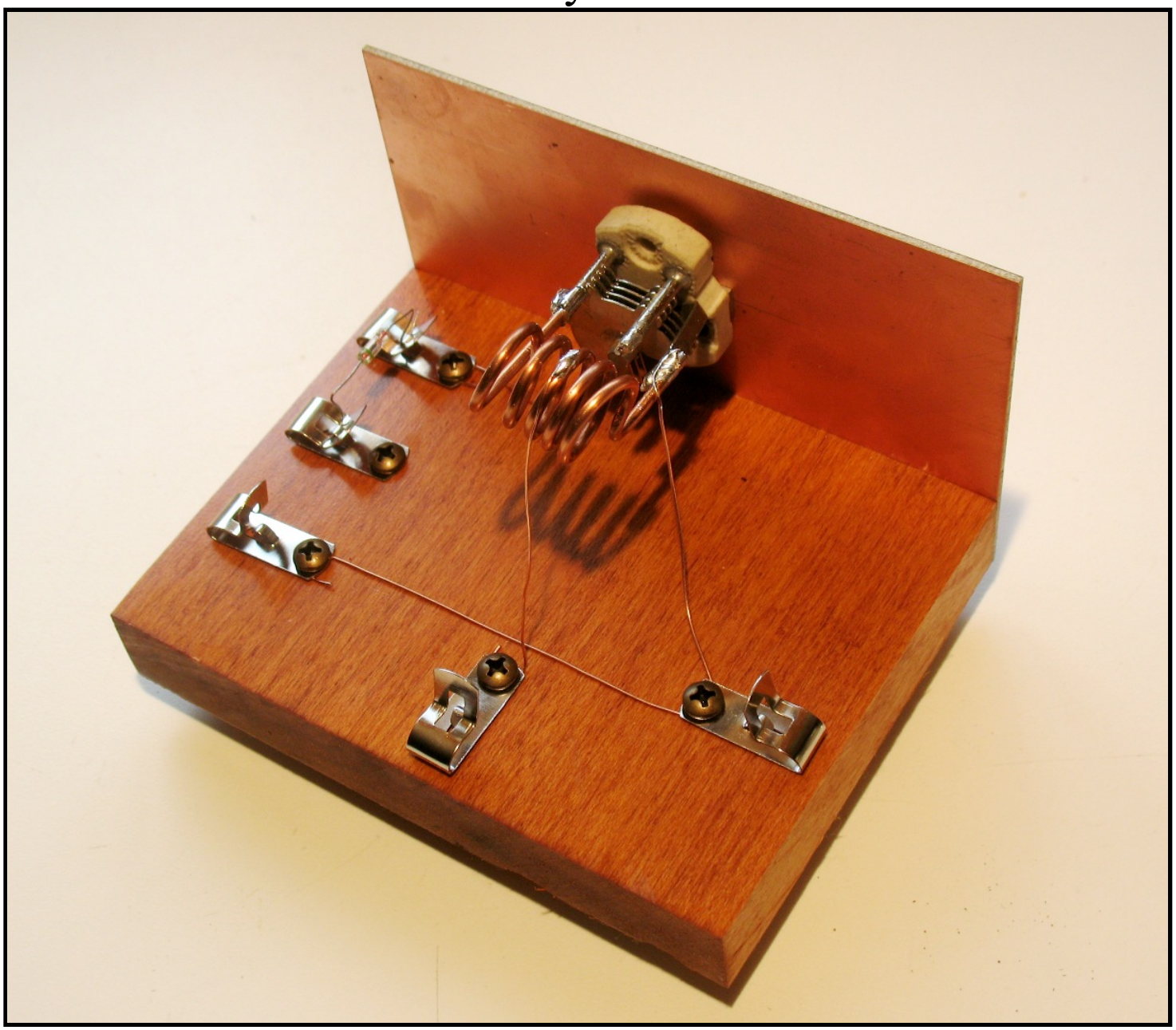

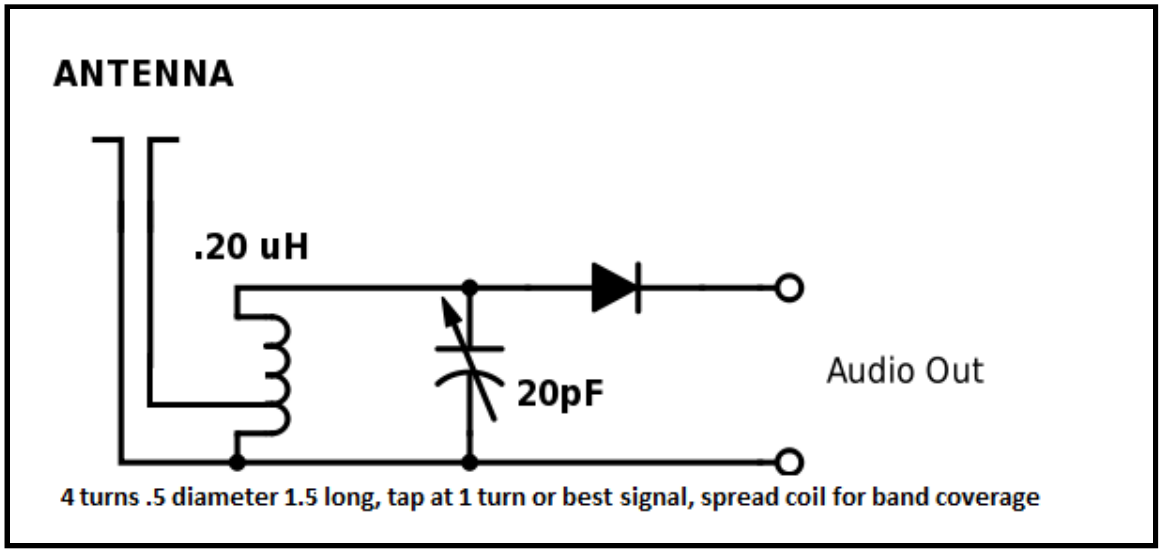

By slope detection you can get FM. If you live close to the stations you should do well with Hi Z phones. I use an audio amp, I am far from the stations. I get three.

Radio a cristallo doppio circuito per O.M.

Un progetto di Luciano Loria

Il circuito più semplice, ed anche molto efficace, per la realizzazione di una radio a cristallo, consiste di un circuito LC accordato sulla frequenza da ricevere e da un rivelatore (cristallo di galena, diodo al germanio).
Vediamo cosa accade se questo circuito si raddoppia: due bobine, due condensatori variabili, due diodi.

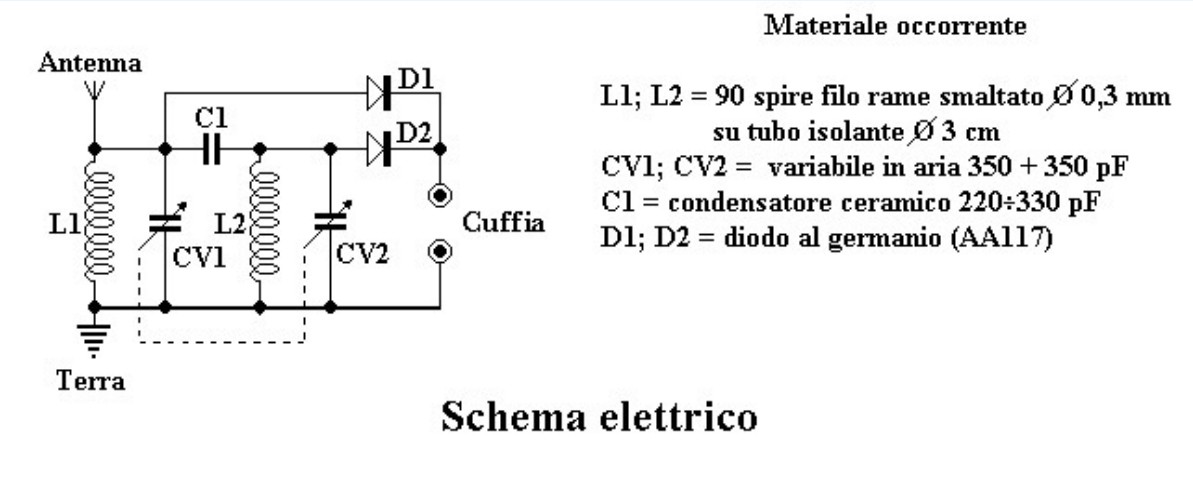

Nello schema elettrico notiamo che L1, CV1, D1 costituiscono un primo circuito di sintonia e di rivelazione, così come L2, CV2, D2 che costituiscono il secondo circuito; questi sono accoppiati tramite il condensatore ceramico C1 da 220/330 pF. Per ottenere risultati apprezzabili, ed una migliore selettività*, occorre che le due bobine siano montate con i rispettivi assi ortogonali fra loro (vedere foto).

* La selettività dipende anche da C1, per aumentarla si può diminuire la capacità fino a circa 33pF.

NOTE COSTRUTTIVE

Evitare, per la costruzione, l'uso di telai metallici, anche le bobine non vanno sistemate troppo vicine al variabile.

Il condensatore variabile ha due identiche sezioni comandate da un alberino unico; L1 e L2 sono avvolte su tubo di cartone di derivazione casalinga, infatti, si tratta del tubo dove sono avvolte le pellicole trasparenti o d'alluminio per cucina.

Il contenitore trasparente, sempre nell'ambito di un riciclaggio intelligente dei materiali che si trovano in ogni casa, è l'astuccio di certe famose praline al cioccolato (nella foto è visto senza il coperchio).

Naturalmente occorrono, anche: una buona antenna filare esterna; una presa di terra efficace; una cuffia ad alta impedenza; in tal caso l'ascolto, della stazione locale in OM, è garantito e risulta migliorato rispetto a quello ottenuto con il circuito base.

luciano.loria@gmail.com

Torna alla Pagina delle radio a cristallo

by Peter J. Bertini, radioconnection@juno.com

Building An FM Crystal Receiver!

Our earlier crystal receiver projects proved popular, so here's another crystal receiver with an odd twist: it's intended to intercept stations on the 88- to 108-MHz FM band! With some modification, it'll also copy nearby VHF AM aviation band traffic, just the ticket for eavesdropping while watching the activity at your local airfield! FM crystal receiver projects aren't new; this project is based on material from an article that ran back in the 1950s, but with some modern refinements to improve performance. Most of the parts you'll need to build this project can be found in your junkbox, but I'll also provide some mail-order sources for those of you who don't have goodies hoarded away!

Monitoring FM signals is more challenging than tuning in your local AM stations with a simple crystal set. There are two reasons: AM signals are readily detected by a crystal-diode detector, and a simple longwire antenna will usually suffice in providing enough signal level so you can hear at least a few of the local stations. FM is a different animal. A crystal detector recovers both a DC and audio signal from an AM carrier, a simple diode detector will only produce a DC signal component when monitoring a FM signal. Since there are no AM sidebands to mix with the carrier in the detector, none of the audible information is recovered.

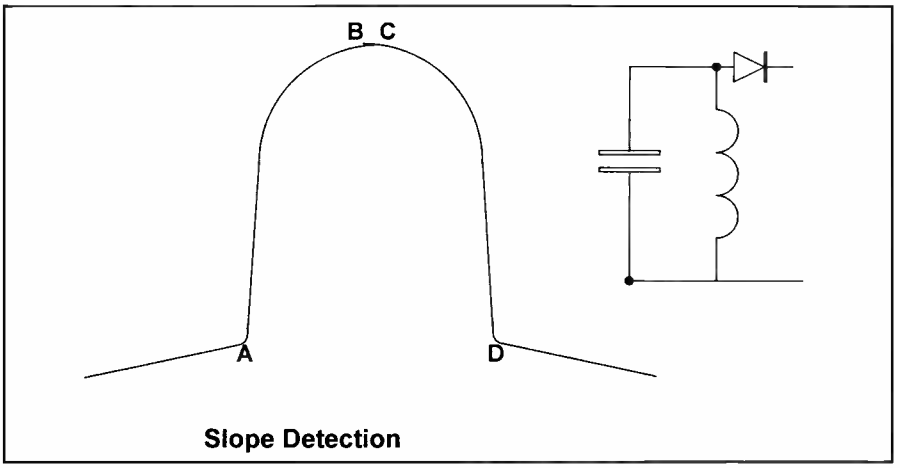

Figure 1. Here's a representative tuning curve for an LC tuned circuit as found in our FM Crystal Set. Slope detection occurs when the FM carrier straddles either side of the tuning curve between points A and B or C and D. An AM carrier would be centered between points B and C for best AM detection.

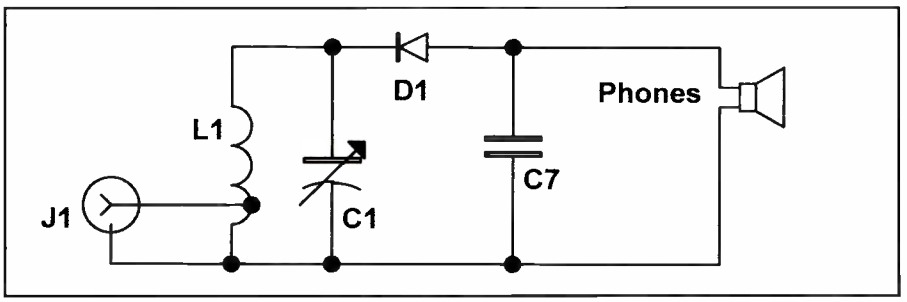

Figure 2. Here's the schematic for the simple and basic FM crystal receiver. FM performance is about 20 dB down from AM signals in the same tuning range. It makes a good companion at the local airfield to monitor AM aircraft and tower traffic in the 120-MHz region.

Slope Detection

So, how's it possible to make a working FM crystal radio? Good question. The answer lies in using a technique called "Slope Detection." FM is simply a carrier being shifted in frequency at an audible rate. The rate of shift corresponds to the frequency of the audio signal while the excursion, or carrier deviation, represents the audio signal level, or amplitude. U.S. FM broadcasters are allowed a deviation of ± 75 kHz, or 150 kHz total. This means we can hear FM signals on a simple crystal radio, providing the tuned circuit has enough Q for the recovered audio to be great enough to drive a pair of headphones. Whereas a crystal detector will detect AM signals without tuned circuits, the FM set relies on a very sharply tuned high-Q circuit to work. If we tune the FM station so it falls on either side of the slope, the modulated FM carrier will be converted to AM since its signal amplitude will vary depending on where it falls on the tuning slope at any given instant.

Many early 2-meter amateur FM repeater operators used AM transceivers, modified with simple external FM modulators, while using slope detection to hear the FM repeaters. Most of these early AM receivers were 15 or 30 kHz wide; the IF bandpass curves easily recovered the ± 5-kHz FM deviation! The trick was to tune to one side of the signal or the other, carefully centering the FM carrier on the center of the tuning skirt, not dead on at the peak! In short: The steeper the slope, the greater the recovered audio for a given deviation.

Figure 1 illustrates how slope detection works. The curve on the drawing represents a typical, but not exact, representation of how a tuned circuit responds as it is tuned across a carrier. Points A and D denote the bandwidth of the tuned LC circuit. The areas between points A and B and C and D represent the slopes of the tuning curve. Ideally, an AM signal would be tuned so its carrier is at the apex, or center, of the tuning curve. If we center the carrier frequency of the FM transmitter to the same spot, the carrier will swing over both slopes, and any recovered audio would be canceled. Instead, the "sweet spot" is where the FM carrier falls near the midpoint of the slope between A and B, or likewise on the slope of the curve between points C and D. The AM detector output will then swing in correspondence with the aural information carried on the FM carrier.

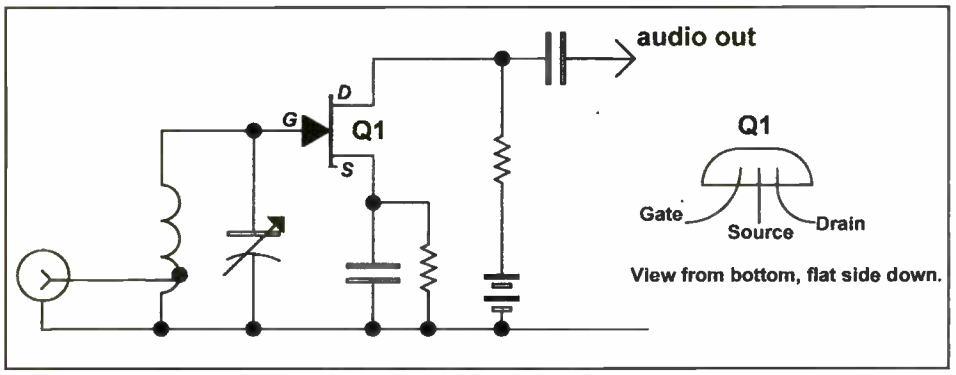

Figure 3. The infinite-impedance detector offers several advantages over a germanium diode detector. It has gain, doesn't load the tuned circuit, and it features better weak-signal detection.

Ideally, for maximum audio recovery, the FM deviation will "sweep" over the largest area of one side of the slope as is possible. It's hard to match the tuning curve to the FM deviation, and also any non-linearity in the slope along the rise or fall on the curve (a straight line, like a saw tooth, is ideal) will cause distortion. Too wide a slope and the FM deviation will fall on a very small area on the slope, giving very poor recovered audio. Too much deviation, where the carrier swings beyond the cutoff and into the opposing slope, yields large amounts of distortion on the recovered audio. In practice, these sets do work, but don't expect anything approaching high-fidelity reception!

The Simplest Receiver

There are several key elements needed for this project to work, most importantly, having a very strong local FM station or two or listen to. Most urban locations are so blessed. You'll also probably need a good outdoor FM or TV antenna to capture enough signal for the set to work, and it's a big plus if your system includes an inline VHF/FM preamplifier.

Let's get started by looking at **Figure 2**, the starting point for our project. It closely resembles the primitive FM crystal set projects shown in those early magazines. The heart of the receiver is the high-quality tuning capacitor and inductor. The tuning capacitor can be salvaged from an old FM tuner or converter, if need be. The tuning capacitor (C1 in the drawings) is a 35-pF capacitor with a built in 3:1 vernier dial reduction, and was salvaged from my junkbox. Any capacitor with a maximum capacity of 25 to 45 pF will work.

The set tunes rather broadly, thus the vernier tuning isn't a necessity, but it is nice to have. One source for the cap is Fair Radio; its 3G-25 variable cap has a vernier drive and three sections with 4-25, 4-20, and 3-17 pF. Two of these sections could be paralleled to yield a larger tuning range. The inductor (L1 in all drawings) is wound from a length of #8 copper ground wire, available from any hardware store. You can substitute a smaller gauge if necessary. The circuit Q could be improved by silver-plating the coil—if you have a means to do so try it. Otherwise, I suggest polishing the copper to a sheen, followed by applying a coat of clear Krylon to prevent tarnishing. The coil consists of six turns; I used a half-inch wood dowel as a form to wind the coil. The antenna tap is made at one-half turn above ground on the coil. **Photo A** shows the tap point and also the tuning capacitor. **Table 1** lists the parts values and sources for all the components used in three versions of the receiver shown in this month's column.

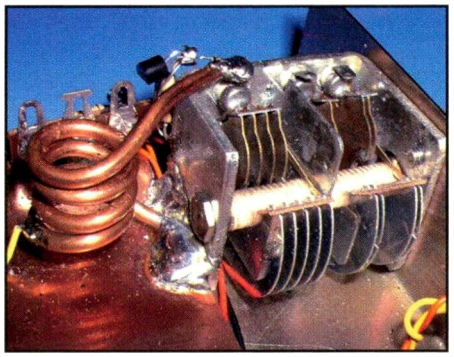

Photo A. The tuning capacitor and coil form the heart of the crystal set. The Q of these parts determines the tuning slope, and ultimately audio recovery on FM signals. The capacitor should be the best quality available. Often military surplus capacitors with ceramic insulation are available on the surplus market or at hamfests. If you can find one, use it. The tap point for the antenna is visible. Use a short lead between the tap and J1 connector.

Photo B. Here's the Millen Grid Dip Meter in action! When tuned to the resonant frequency of the capacitor and coil, the meter on the Millen will dip to a lower value. Fifty or 60 years ago, every ham owned one of these useful pieces of test equipment. That was a time when hams built their own gear. Now using one has become an archaic art.

I know finding parts can be difficult. I listed a few resources in **Table 1**, including one for a basic kit, sans headphones, for building the basic FM crystal set. This five-dollar postpaid kit can serve as the nucleus for the more advanced versions shown here as well.

Checking The Tuning Range

A grid-dip meter is the easiest way to check the tuning range of your coil and tuning capacitor combination. A ham friend who is also a builder is a likely candidate to have one of these units in his workshop. **Photo B** shows my venerable James Miller *'dipper* being used to check that my set will tune the entire FM band. These devices are variable oscillators with calibrated tuning ranges. A set of companion plug-in coils allows covering from the broadcast band up through 300 MHz. When the *'dipper's* coil is held near a tuned circuit, and the grid dipper is tuned to that frequency, the grid current in the *'dipper* will drop (or "dip"), as shown on the *'dipper's* built-in meter.

Alternately, a signal generator would also do for checking the tuning range. Compressing or expanding the coil slightly will shift the range: squeezing the coil will allow lower frequency tuning, while

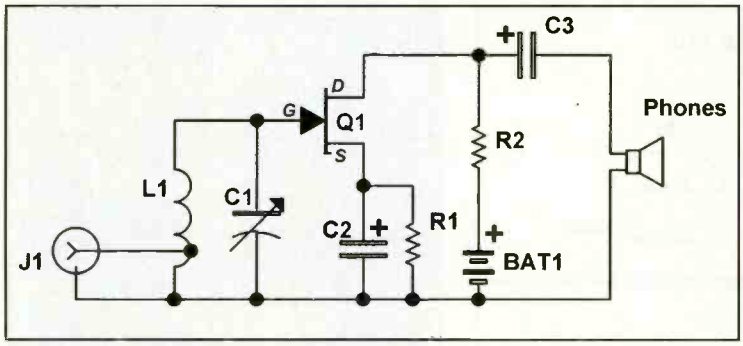

Figure 4. Adding the infinite-impedance detector to the basic FM crystal receiver might make the difference between hearing a station or not!

Photo C. The leads for the infinite-impedance detector should be kept short and direct for VHF. The J-FET leads and associated parts are mounted to the capacitor terminals and frame. →

Table 1. Parts List And Recommended Suppliers

L1	#8 copper wire, see text
C1	variable capacitor, 5 to 50 pF max. with knob
D1	1N34A germanium diode, or equivalent
J1	RCA phono jack or suitable RF connector for antenna
C2	10 µfd @ 16 volts electrolytic
C3	10 µfd @16 volts electrolytic
C4	10 µfd @ 16 volts electrolytic
C5	0.1-mfd ceramic capacitor @ 16 volts
C6	220 to 470 µfd @ 16 volts electrolytic
C7	500-pF ceramic disc or silver mica capacitor
R1	47k-ohm 1/4-watt resistor
R2	47k-ohm 1/4-watt resistor
R3	10k-ohm variable potentiometer, audio taper/with knob
BAT1	9-volt transistor battery with battery clip
Phones	2000-ohm vintage headset or crystal earpiece
Speaker	8-ohm speaker in enclosure
Q1	J-FET, type J-310
U1	LM-386 DIP package 8-pin audio IC

Resources

• Dan's Small Parts, PO Box 3634, Missoula, MO 59806-3634, (406) 258-2782, www.danssmallpartsandkits.net

This is an excellent resource for all components (ICs, FETs, small parts, and variable caps). Dan's features low prices and is set up to deal with home experimenters. Dan's offers an online catalog and ordering system. Minimum order might apply, check with seller.

• Bill Turner, 1117 Pike Street, St. Charles, MO 63301, (636) 949-2210, www.dialcover.com

Bill offers a kit and copy of the original vintage magazine article for the FM Crystal receiver for $5 postpaid. No frills or headphones, just the basic parts. No minimum order.

• Fair Radio Sales, 2935 St. Johns Road, PO Box 1105, Lima, OH, (419) 227-6573, www.fairradio.com

Surplus stalwart Fair Radio has a nice three-section variable (catalog #3G-25) that will work well. Price is $6. They also offer some high-Q ceramic military versions, but these are more expensive. Minimum orders might apply, check with seller.

expanding the coil will increase the higher end of the tuning range. A 40-pF variable capacitor should tune from 80 MHz through at least 130 MHz into the aircraft band. At worst, you may have to wind a new coil with a turn added or removed before you're able to tune the desired range. Adding a full or partial turn will lower the frequency. **Photo B** shows my Millen dip meter in action.

Improving The Detector

Crystal diodes make poor detectors. Germanium diode detectors don't work well on weak signals; for a weak enough signal they act more like resistors than diodes. **Figure 3** shows a circuit for a neat device called an Infinite Impedance Detector. This detector offers some gain and doesn't load the tuned circuit as much as a diode detector would; hence the Q and selectivity are also improved. The J-FET gate adds some capacity to the tuned circuit, and this can reduce the high-frequency tuning by several MHz.

Photo C shows how the J-FET and associated parts for the infinite-impedance detector are mounted using short leads. The gate is tied directly to the tuning capacitor stator terminal, and the FET's *source* lead bypass caps and biasing resistor are tied directly to the capacitor frame for good VHF performance.

Figure 4 shows how the infinite-impedance detector is incorporated in the FM crystal receiver. Parts values are given in **Table 1**. The detector will drive a pair of vintage high-impedance headphones (2000 ohms or better) directly. I use a pair of military sound-powered headphones with a matching transformer. Adding the

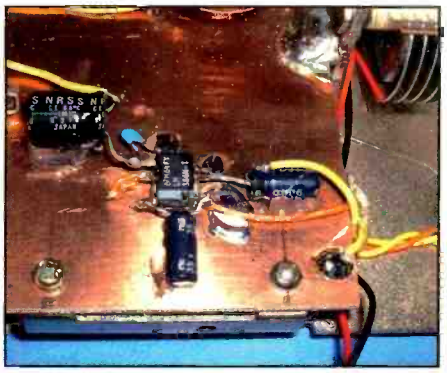

Photo D. The audio amp IC is mounted using "dead bug" construction techniques. The larger parts are glued to the pc board to alleviate stress on the IC leads.

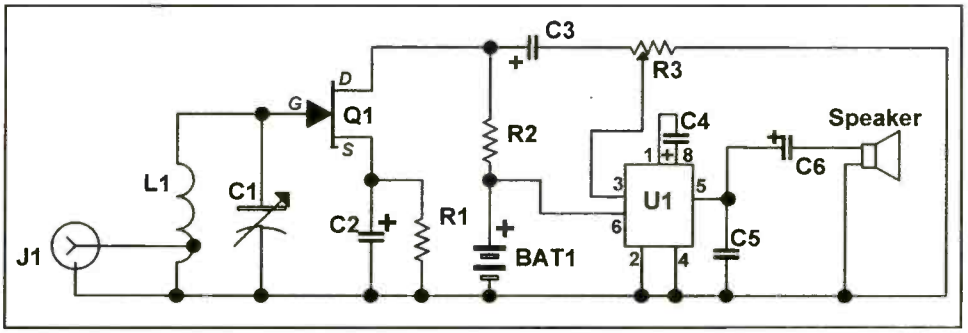

Figure 5. Adding the high-gain audio stage gives loudspeaker volume on strong stations.

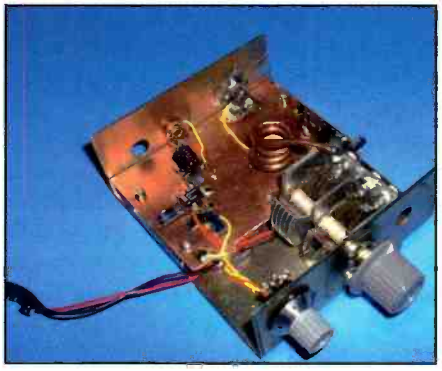

Photo E. Here's a top view of the completed receiver. Ugly, but it works—and it was intended as an experimental prototype to begin with.

Photo F. This is my 6S321 Stars-and-Bars Zenith! Sorry for the mix up! As you can see, this cabinet needs a bit of work. I'd started scraping the old lacquer off the top when the photo was taken. Chemical strippers risk damaging the photo-etched lacquered patterns on the front, which I intend to restore and save.

infinite-impedance detector allowed me to hear some FM stations from my rural home when using some high-gain tower-mounted VHF antennas.

You might want to try this detector on your AM BCB crystal sets; it makes a big improvement!

Adding An Audio Amplifier

Figure 5 shows the final phase of the FM crystal receiver. A small 8-pin LM-386 audio IC gives enough gain for loudspeaker level volume, or to drive more contemporary low-impedance headphones. I mounted the IC and supporting parts "dead bug" fashion on the pc board. If you're not familiar with this breadboarding technique, the parts are soldered directly to the copper side of an unetched pc board for ground, and are self-supporting or glued in place as needed. (ICs were sometimes mounted on their backs, looking like little dead bugs; hence the name.)

It's not very pretty, as shown in **Photo D**, but it works and is good for quickly prototyping circuits on the fly. I think some builders call this technique *Ugly Board* construction. Hot glue assisted in mounting and supporting the IC and larger components to the board. **Photo E** shows an overall view of the entire receiver. Again, it isn't pretty, since I considered this to be an experimental project. An off/on switch is needed to preserve battery life.

An Apology

Our opening photograph in the July 2004 issue purportedly showed the deplorable condition of my Zenith 6S321 cabinet. What accidentally got forwarded for publication was a photo of a nicely restored example from the webpages of Mike Urban's Internet site at www.urban-antiqueradio.com. I had saved his photo as an example to follow when restoring my Zenith. Hopefully **Photo F** is the correct photo. Anyway, visit Mike's website to see some nicely restored radios in his collection, and to check out a few he's offering for sale.

Well, that's it for this month. If you build one of these sets, I'd like to hear about it, and photos would be great! Let me hear about your other projects, as well. Until next month, keep those soldering irons warm and those letters coming in! ■

If you enjoy radio communications you'll love....

POPULAR COMMUNICATIONS

The World's most authoritative monthly magazine for Shortwave Listening and Scanner Monitoring. Read by more active listeners world-wide.

*Get fast home delivery of **Popular Communications** and save $30.93 a year over the newsstand price. Save even more on 2 or 3 year subs.*

☐ 1 year - 12 issues **$28.95** (Save $30.93)

☐ 2 years - 24 issues **$51.95** (Save $67.81)

☐ 3 years - 36 issues **$74.95** (Save $104.69)

SAVE UP TO 58%

SUBSCRIBE TODAY!

Canada/Mexico–One year $38.95, two years $71.95, three years $104.95;
Foreign Air Post–one year $48.95, two years $91.95, three years $134.95,
Payable in US dollars onlyNote: Allow 6-8 weeks for delivery of first Issue.

Mail orders to:
Popular Communications, 25 Newbridge Rd, Hicksville, NY 11801
FAX 516-681-2926

RF Diagnostics, LLC

WELCOME TO RF DIAGNOSTICS

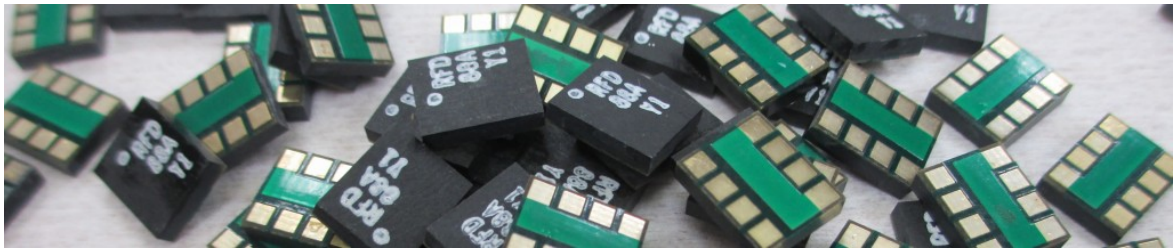

Energy Harvesting Modules

WIRELESS ENERGY HARVESTING PRODUCTS RF Diagnostics, LLC designs and sells surface mount RF to DC converters and other building block modules for energy harvesting systems. With our products you can harvest ambient AC/AM/FM/Wireless Energy to power your IoT battery free system. We also provide custom designs for RF/microwave and general electrical engineering products and design contracting services to clients in the commercial wireless and defense electronics businesses. We strive to be a high quality and cost effective design resource for your design team.

OUR PRODUCTS

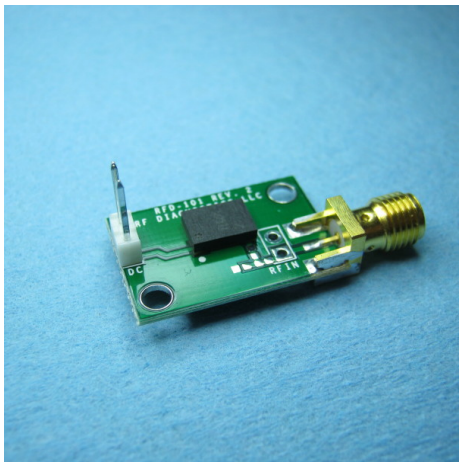

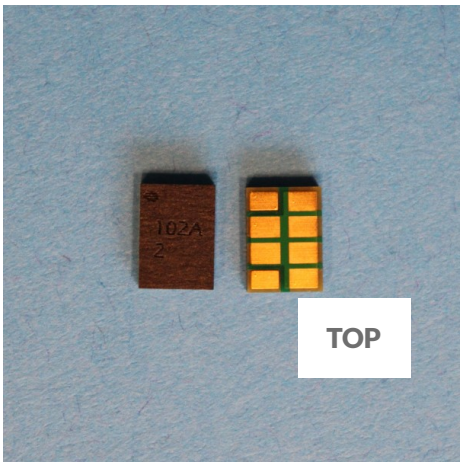

RFD102A-DET: Microwave Energy Detector

$18.00

Add to cart

RFD102A-TB: 60Hz...6GHz Energy Harvesting Test Board

$33.00

Add to cart

RFD102A: Wireless Energy Harvesting Module

$12.00

Add to cart

OUR DESIGN SERVICES

Energy Harvesting Module & System Design

Any of our standard products can be customized for your application. We can support your application with matching, testing, antenna design, assembly and many other tasks. Have a new idea for a product? We can help you realize it. We are developing new products and are always interested in your feedback to guide our product development.

MMIC Design

We use Agilent's Advanced Design System for MMIC design and PCB design. Previous designs completed are quad-band GSM power amplifier modules, 2.4-2.5GHz/5-6GHz wireless LAN power amplifiers, broadband power amplifiers, switch-filter designs, RFID detectors, RF/DC converters and filter designs.

Front End Module Design

We use Agilent's Advanced Design System and Orcad PCB Editor for Front-End Module designs. Previous design examples are high-volume switch filter modules, dual-band 802.11a/b/g front end modules, 76GHz car radar module, RFID card design.

RFID Detector System

On an NSF Phase I & II grant to one of our clients, operating as a subcontractor, the RF Diagnostics design team created a complete RFID MEMS resonator detection system. Both hardware and software were developed under this contract. The work was published at an SPIE conference in July 2010.

LEARN MORE

NISKAYUNA, NY 12309 USA
518-810-6560
INFO@RFDIAGNOSTICS.COM

TOP

RF DIAGNOSTICS, LLC COPYRIGHT © 2017.

WEBSITE BY ROCK THE DEADLINE

The More Standard Parts Crystal Set - V2

Update September 2011; If you're looking for a kit of modern parts that will reproduce the design below quite closely I recommend the Useful Components Choccy Block Crystal Set Radio Kit.

In another page on this site I describe how to make a pretty good loud crystal set which I'm calling the version 1. This uses fairly high impedance, fairly sensitive magnetic headphones, an OA81 diode, a transistor radio ferrite rod and some other parts that were a bit awkward to find.

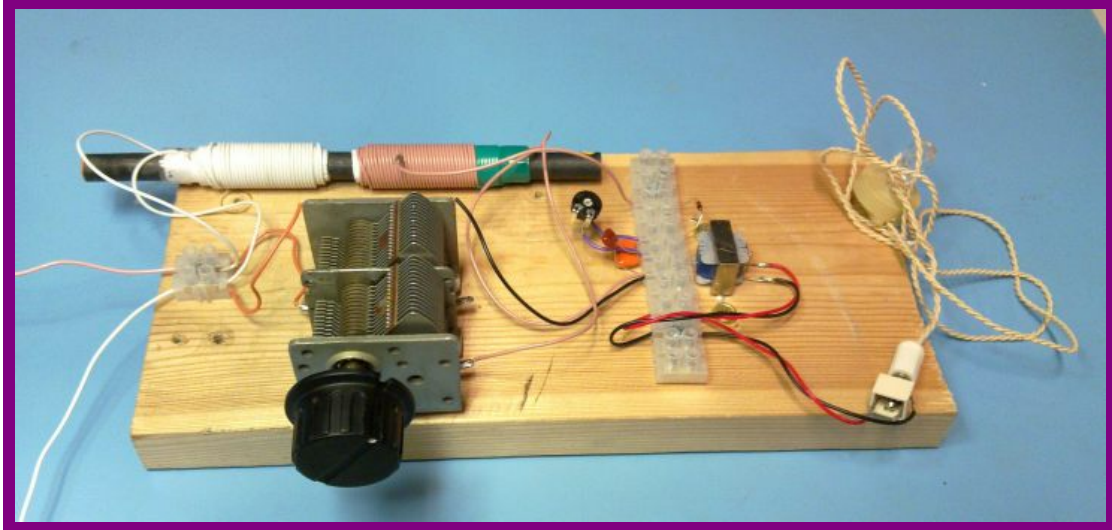

Parts That I Used

1 Standard 120mm ferrite rod with pre-wound MW/LW coils
1 aerial coupling coil that you make (or, see text)
1 output coil that you make (or, see text)
1 1N60 or BAT48 low Vf diode
1 AM variable capacitor from an old transistor radio
1 standard ceramic high impedance earpiece
1 1nF capacitor
1 100nF capacitor
1 100k Ohm variable resistor
1 LT44 interstage audio transformer.
1 20 metres or so of aerial wire
1 2 metres earth connection wire
1 choccy block terminal block connector
1 lump of offcut pine

Some more background

As a kid I played with crystal radios using the little brown crystal earpieces and various circuit configurations with some limited and variable success, but always with quite poor aerials. I couldn't reproduce this limited success using my V1 set and a wire aerial sloping down from an upstairs room to the end of the garden, a mere few metres. This suggested to me that I might be able to get something even louder going using those crystal earpieces, even if they are a bit uncomfortable. I'm calling them crystal earpieces, and so they used to be. When I took one apart in the 1970s they consisted of a light foil diaphragm with two stiff wires leading from the wire terminals to what I assume was a piezo crystal lump, bonded to the middle of the diaphragm with glue at the apex. The new versions contain something which is more like a standard piezo sounder element so might be more accurately described as ceramic earpieces. I suspect that they will have more capacitance than the old ones, which I can't confirm without finding a vintage part. They do seem to work just as well as the old ones though, and are probably more consistant.

Here's the circuit:

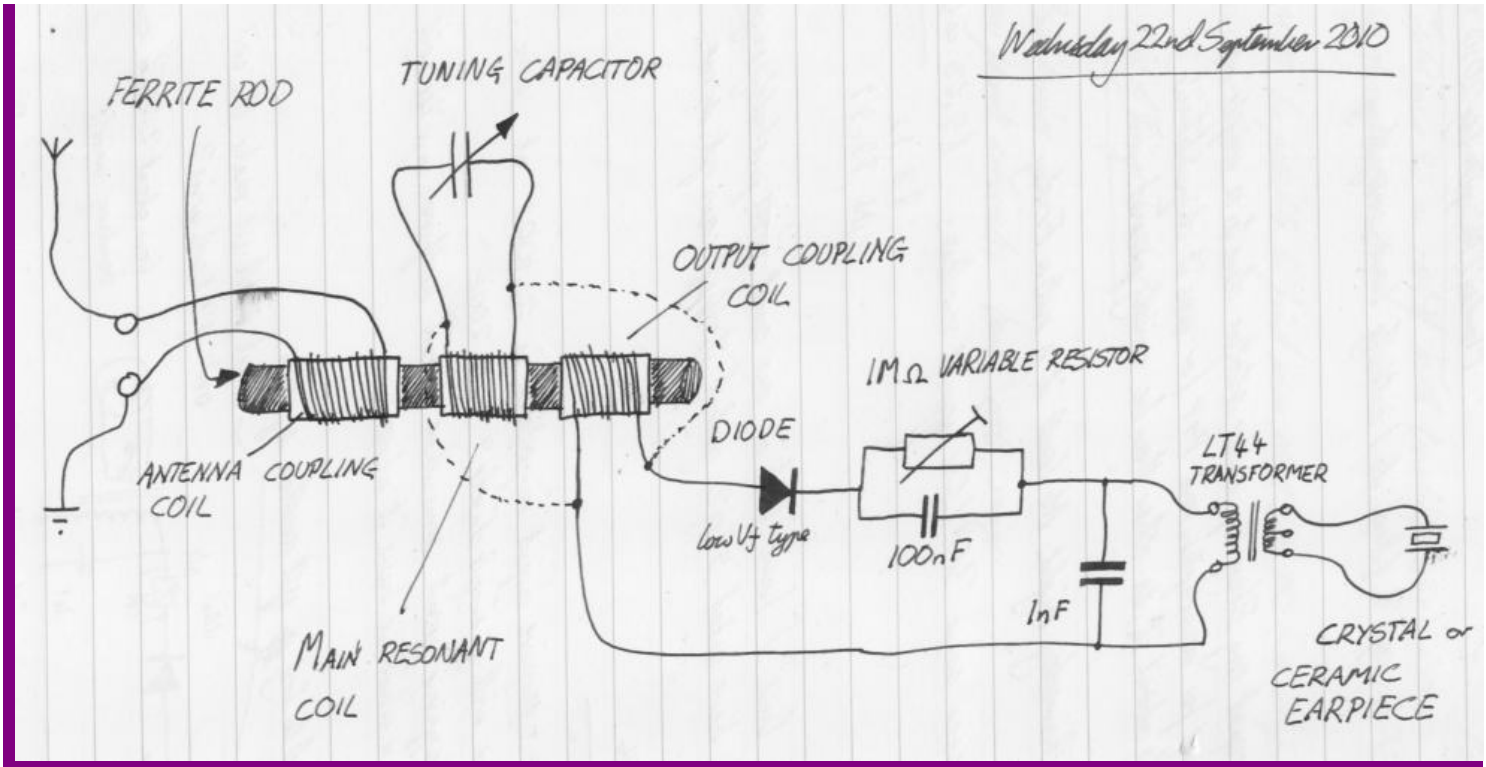

Like the V1 circuit this consists of three coils fitted onto the ferrite rod in such a way that they can slide up and down on it. The reasons for this and plenty more discussion besides are dealt with on the V1 page, so let's deal with the differences here. First, we're using a ceramic earpiece because they are very sensitive and you can buy them easily. I measured a few of these and they are about 27nF capacitance with very high resistance at d.c. At 1kHz, the audio mid-band this is about 6K Ohms impedance. That's quite high, though not high enough to go connecting it directly across the tuning tank. Normally you'd need a resistor connected across it to bleed away the d.c. offset generated by the diode and that makes it a bit less efficient. Here I tried using an LT44 audio transformer instead. This provides a d.c. path to ground for the diode, multiplies the impedance of the earpiece up still further and by coincidence, provides just about the right inductance to resonate with the capacitance of the earpiece at 1kHz. This is a fortunate coincidence indeed, if you're looking for loudness and aren't too bothered about the audio being a bit tinny sounding. When measuring high impedance side of the transformer at 1kHz it actually increases when you connect the earpiece load up to the low side.

Across the high impedance side of the transformer there is a 1nF capacitor. I wasn't expecting to need this, but at low signal levels it increases the volume significantly. A bit of a mystery that. Feeding into the top end of the transformer there is another difference to the V1, that being the inclusion of a d.c. resistor shorted across with a capacitor. These two components together are colloquially known as a "Benny" which I believe is after their inventor and nothing to do with Crossroads. The idea is that the diode works better when the d.c. current is equal to the a.c. current, so you adjust the variable resistor for maximum volume after tuning in your station. It makes no difference at low signal levels, but when you get a decent aerial erected it really does work. I had been very puzzled by this effect when I'd come across it when playing with the V1 set.

The diode is conventional and you can insist on using a germanium point cantact type if you wish, but I've found that silicon low Vf BAT48 schottkys and 1N60s are just as good, even at low signal levels.

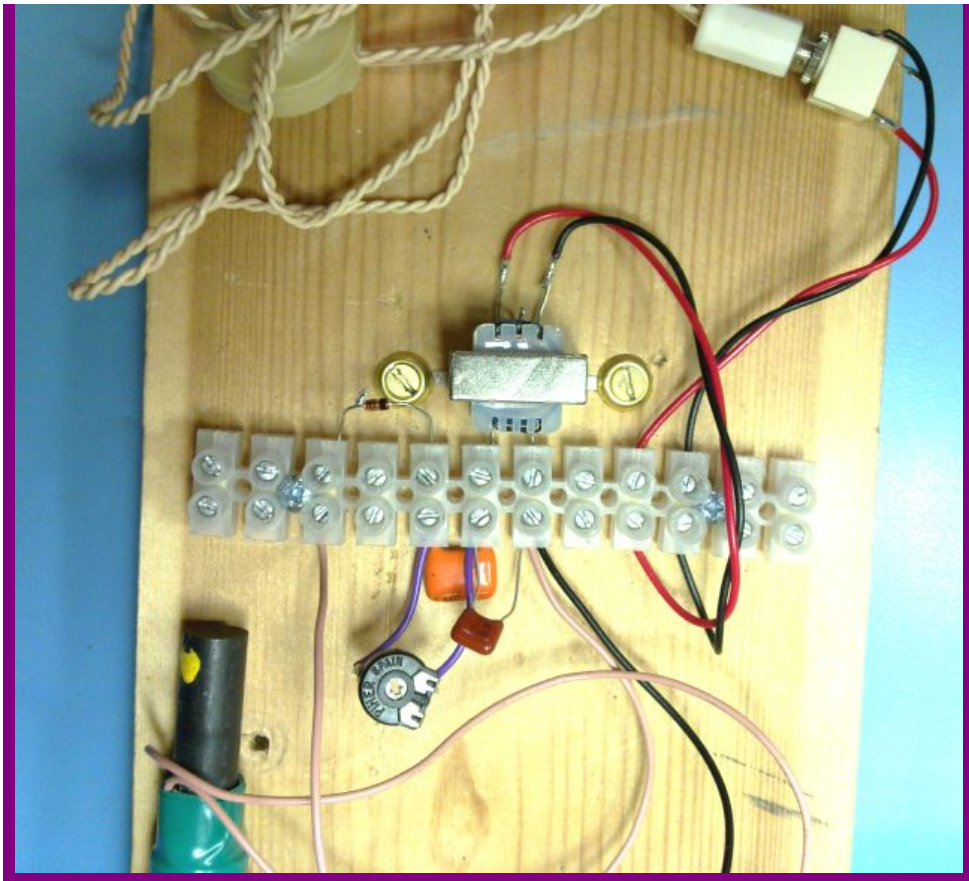

The picture shows small parts on the circuit mounted in a handy 2A terminal strip "choccy block" block. You can guarantee that the insulation between the terminals on these are low loss, which is not necessarily the case if you are trapping the wires under screwcups screwed into variable wood with unknown properties.

Why bother with the audio transformer?

Why bother with the audio transformer when the earpiece is 6KOhms at the frequency of interest and moving your output coupling coil up and down can get the matching correct as in the V1 set? The reasons are that we've changed to a crystal earpiece, so we need that efficient d.c. path to ground instead of a bleed resistor. It also reduces losses due to diode Vf by keeping the signal voltage in the demodulator higher overall. Also, the output coil position should be less critical as we've brought the demodulator stage up in impedance, closer to what would be required for connecting directly across the tank. I've actually used this quite successfully at low signal levels connecting directly across the main tuning coil, but the tuning does become a bit wide. A good compromise might well be to connect the diode about halfway up the main tuning coil. Removing the transformer and using a bleed resistor gives better audio quality particularly at the lower end.

For an aerial coupling coil I have used another LW coil when operating on LW for main tuning and another MW coil when using MW for main tuning. I think there is an element of double resonance going on there with the position of the aerial coil affecting the tuning a little and vice-versa. If you don't want to do that I suggest winding plain insulated wire on a cardboard former until you have enough turns. You have enough when putting more turns on doesn't make it any louder and begins to make it quieter when the aerial and main coils are close together. A similar rule applies for the output coil.

These are all preliminary results based on quite low signal levels, where my Benny has no real effect and maximum output coupling is required to get some fairly meagre sound. I'll be trying to improve the aerial situation at home after which I will be able to be more specific about some issues. For the moment, I can say that this V2 set with the crystal earpiece works better with a small aerial than the V1 so I'd hope that it is also louder in better operating conditions.

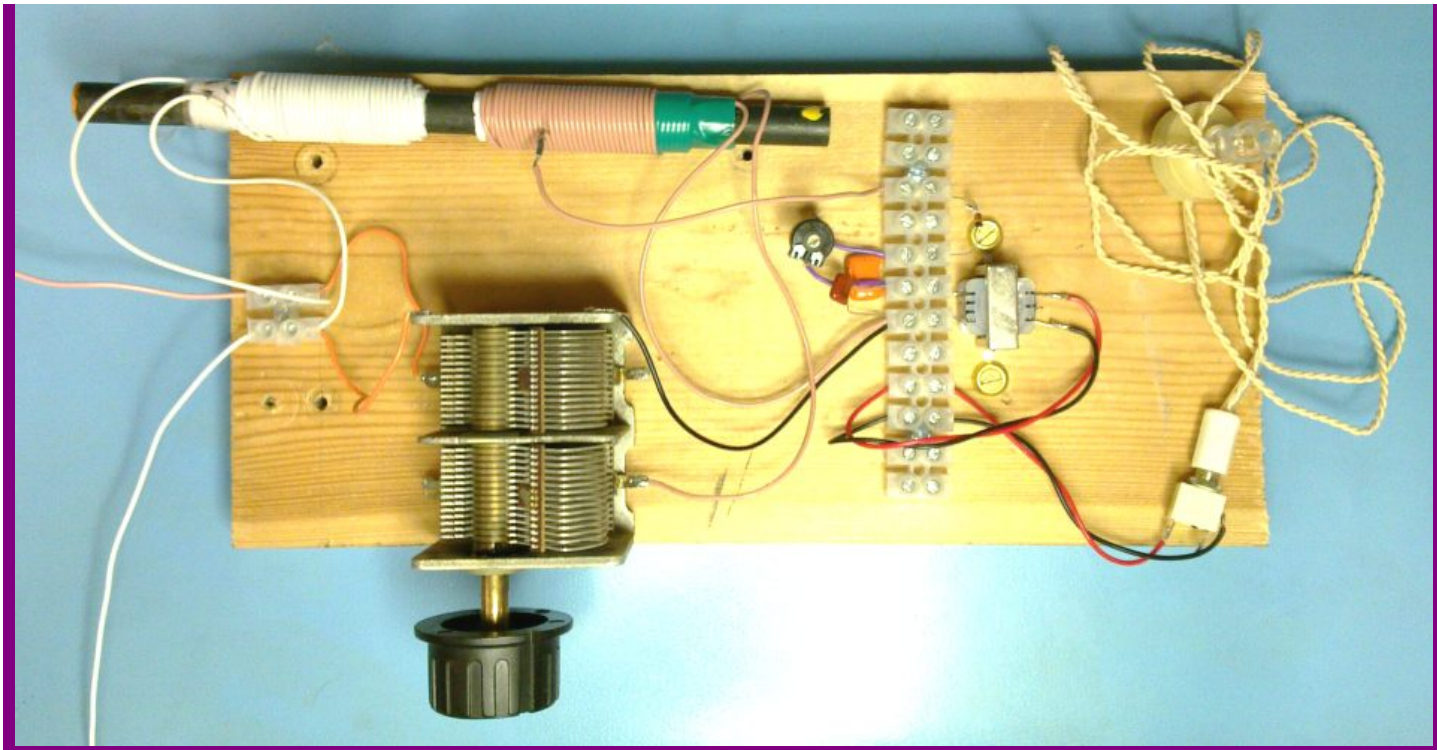

In the picture at the top of the page and the one directly above, you can see that I ended up taking the output coupling off as a tap from the main tuning coil rather than having a separate coil, for this set with the output transformer and ceramic earpiece. In the end it didn't make much difference and the final arrangement with the tap was just more convenient.

Navigate Up

rimstar.org
... an addiction to science, renewable energy and building stuff

Amplifier for crystal radio earphone

Related links:
[Crystal radios], [Build Van de Graaff]

Home
Renewable Energy
Science/Electronics
Projects
Build Van de Graaff
Wimshurst machine
Kelvin water dropper
Electroscope
Corona motors
Ball bearing motor
Crystal radios
Tips and tricks
Crystal earphones
Using earbuds
Razor blade diode
Amplifier for speaker
Amplifier for earphone
Loop antenna radio
AM Radio Transmitter
Fresnel lens
Electrets
Piezoelectric
Electrolytic capacitor
Joule thief
Peltier/Seebeck effect
Franklins bell
Can Stirling
Big Stirling
555 timer music
TEA laser
Laser diode fun
How Ion Prop. Works
Lifter/ionocraft
Star Trek Enterprise
Smoke precipitator
Moving with sound
Straw music instruments
Gravity light - DIY
Nitinol wire
Pyramid hologram
Arduino speech/Talkie
Arduino controlled Skull
Pinhole camera
Wireless electricity
Fly swatter powered CFL
Chlorophyll/fluorescence
Small SG Tesla coil
Photophone
Laser communicator
Hero's steam engine
Alcohol stove
Sunflower heat engine
BB-8 Droid
Ball cyclotron
Atmos. electricity
Photoelectric effect
Bottle rocket
Neural networks
Ornithopter
Curie temp. experiment
Lightning in bottle
Gyroscope - vinyl records
Raspberry Pi
Pepper's ghost phone
Potato chip circuit
Ion wind rotor
LED flashlight
Resources
Power supplies
HV Probes/measuring
Miscellaneous
Efficiency & Conservation
Composting
Food
Non-conv. Energy
Non-conv. Propulsion
Space
Stories

Donate

1 **Handheld Analyzer - Made in Germany - up to 20GHz** Portable RF & EMF Spectrum Analyzer. From 1Hz to 20GHz. Weighs less than 500g. aaronia.com/spect_analyzer

2 **Google AdWords** Reach Potential Customers In The Moments That Matter. Start Today. adwords.google.com

3 **PCB Fab-Assembly-Turnkey** U.S. manufacturer with most advanced technology in the Industry. arrowpcb.com

This is a crystal radio amplifier for amplifying the output to a crystal earphone or telephone receiver earphone. It uses a single transistor and is very simple to make. This circuit is by Charles Wenzel and originated from his website here.

Amplifier circuit. The crystal radio used for example purposes is the crystal radio made from scraps here.

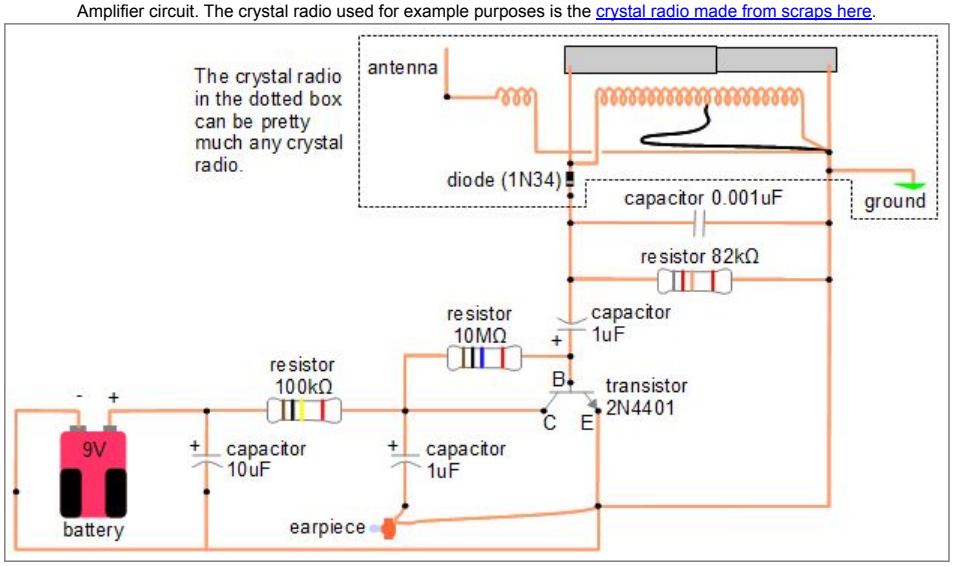

The main components mounted on a breadboard.

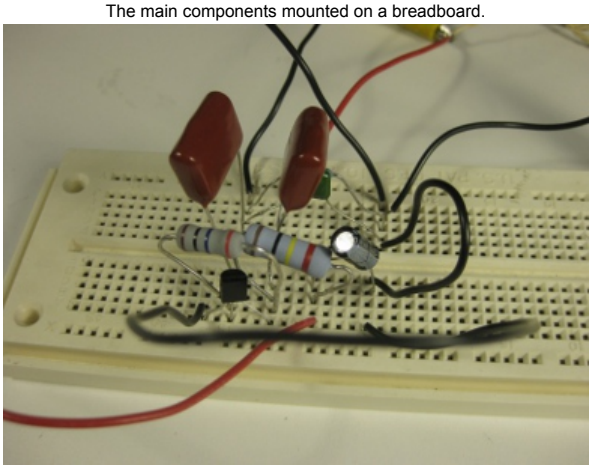

The complete amplifier.

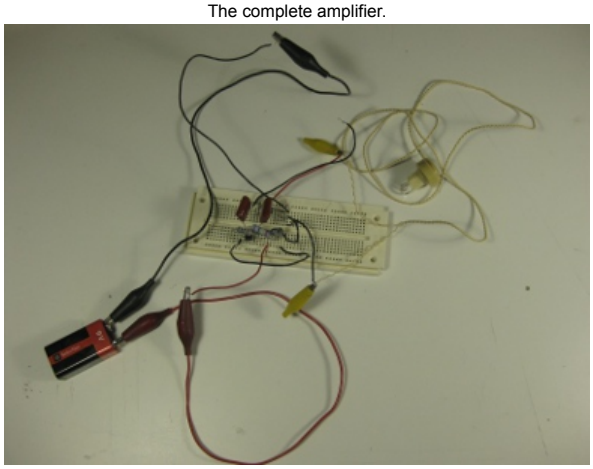

The amplifier attached to a crystal radio.

AdChoices
Crystal Radio
Building Kits
Handheld Analyzer - Made in Germany - up to 20GHz
Portable RF & EMF Spectrum Analyzer. From 1Hz to 20GHz. Weighs less than 500g.
aaronia.com

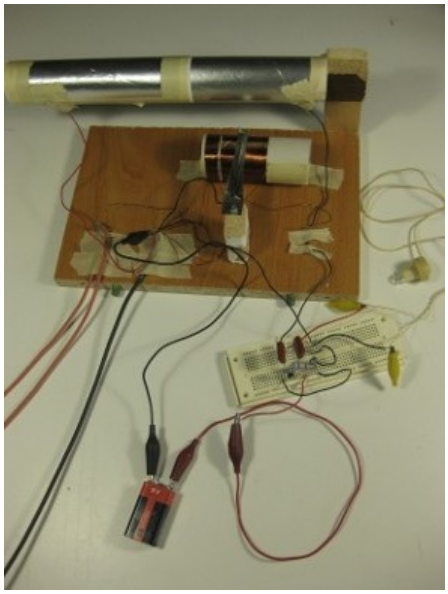

If you did want to try making the above circuit on a breadboard as in the above photo, then the following is a diagram showing how I arranged all the parts. The videos below use this same arrangement.

Diagram for the ampifier circuit on the above breadboard.

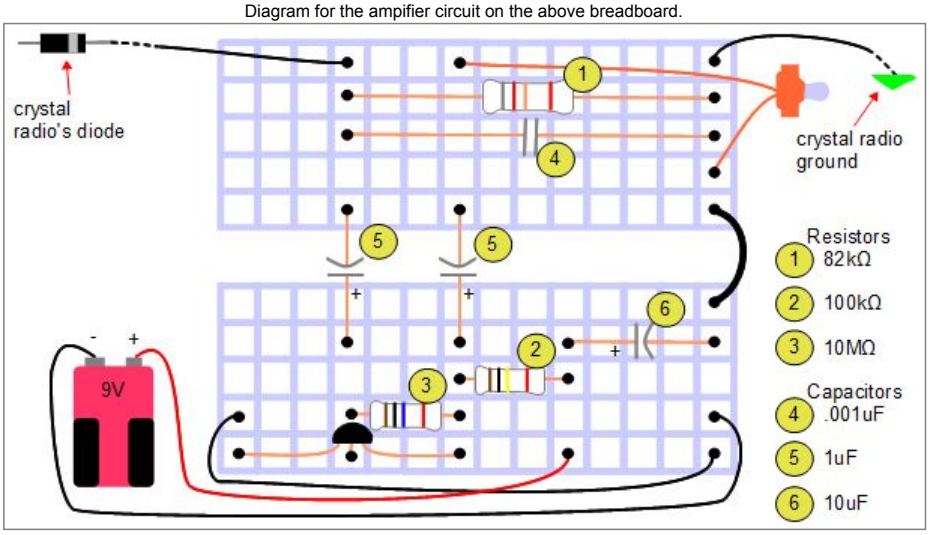

Videos with details of the amplifier construction

The following are two construction videos of the making of this amplifier.

This first one includes:

- discussion about the parts,
- how to use a breadboard,
- circuit diagram and how to use it to fill in the breadboard,
- a little about electrolytic capacitors,
- a little about transistors,
- demonstration of it working, and
- a little about how the circuit works.

A Simple Crystal Radio Set

Whether you are a beginner or a seasoned expert, you would probably agree that there is nothing quite like using this simple design to make a crystal radio and enjoying it, listening to stations both near and far. Add to this the "something for nothing" advantage of not having to power this set with batteries or AC line and you can see why this simple design will be used and enjoyed for a long time to come. Almost like magic... Let' build one!

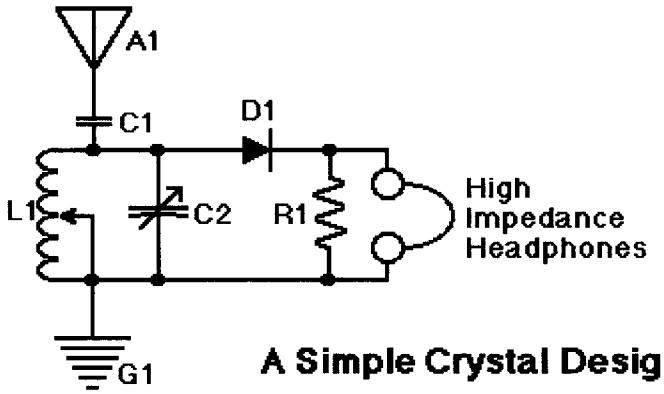

A Simple Crystal Design

Components:

- **A1- 50-100 foot longwire antenna**
- **C1 - 50 pf ceramic capacitor OSE p/n CD-5**
- **C2 - 365 pf variable capacitor OSE p/n BC14400**
- **D1 - 1N34A diode OSE p/n 1N34A**
- **G1 - Ground (see instructions below)**
- **L1 - 100 turns of #20 AWG enamel coated copper wire OSE p/n MW20, adjustable tap (see instrctions below)**
- **R1 - a 100k ohm resistor OSE p/n RQ100K**
- **Crystal Earphones OSE p/n CE748**
- **Fahnestock clips OSE p/n 2090**

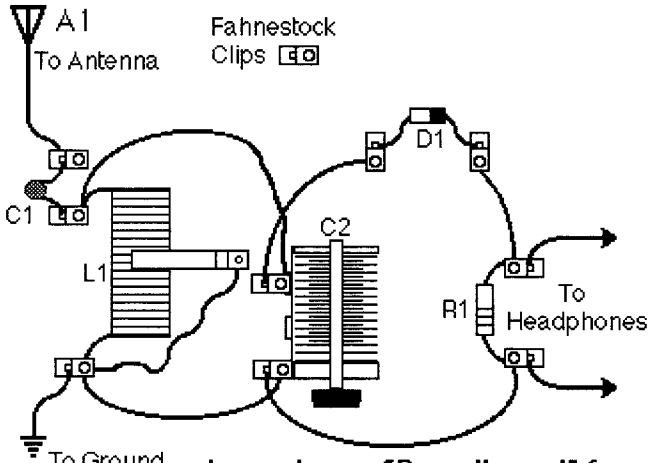

Layout on a "Breadboard" for the Simple Crystal Tuner

TARINGA! Posts Shouts Comunidades Juegos Tops INGRESAR REGISTRARTE

Free Resume Template
Free Resume Samples
Free Resume Formatting
Free Resume Builder
My Perfect Resume

2 años Taringa! > Hazlo tú mismo > Construí tu propia radio Galena
Me gusta 587 mil Seguir
A favoritos
Ir a comentarios
Compartir vía mail
0
7

Construí tu propia radio Galena

Construcción radio Galena

Si te gustan las radio, este proyecto es muy educativo y entretenido, con la "Radio Galena" podrás recepcionar frecuencia de AM y es la base de la radio recepción, además es una radio que no requiere energía proveniente pilas, baterías ni fuente de alimentación. Ya que funciona gracias a la energía que propaga las emisoras, aparte se presta para experimentar mucho, solo busca en google "radio galena" encontraras muchísimas variantes.
Como punta pie puedes leer un poco más sobre el tema aquí http://100ciaencasa.blogspot.com.ar/2014/01/radio-sin-pilas.html y aquí http://es.wikipedia.org/wiki/Radio_a_galena

El circuito es por demás sencillo

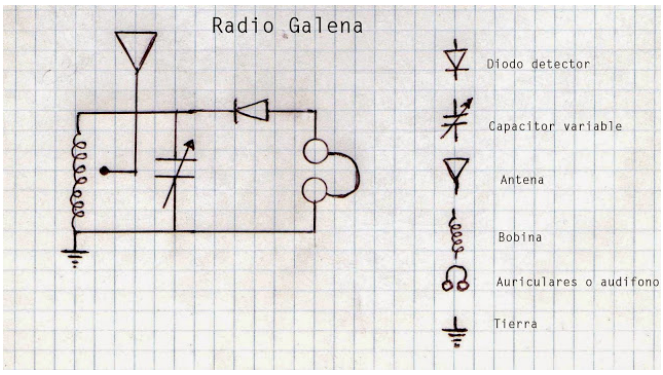

Lista de materiales
1-Diodo de germanio aquí usamos el 1N60 (podrás usar otros siempre y cuando sea detector)
1-auricular de alta impedancia (son un tanto difícil de conseguir, pero puedes usar otro de teléfonos viejos o a la salida puedes conectarle un pequeño amplificador) (no te pierdas próximamente el proyecto Amplificador portátil de bajo coste con LM386)
1-Tandem o capacitor variable, (se lo puede comprar o conseguirse de una radio vieja)
Unos metros de cable para bobinado o cable magneto, yo recicle el

dagonett
EXPERTO
72 SEGUIDORES 5 POSTS 2K PUNTOS

Recomendados Ver más
construir una radio de galena
Cinco canales de Youtube para aprender experimentos caseros
5 Experimentos Caseros... ¡Listos Para Hacer!
Experimentos caseros

bobinado de un motor quemado cuyo cable esmaltado es de .045 milímetro (casi ½ milímetro de espesor)
1-base de madera para hacer el montaje medidas 13x13 cm aprox.
1-tubo de pvc de 4 cm (1,5 pulgadas) por 9 cm de largo (se lo consigue en ferreterías es el que se usa para desagüe)
1-una varilla o alambre de unos 15 cm. aproximadamente (tips se puede usar un rayo de bicicleta)
Como siempre necesitaras estaño, soldador, alicates, algunos tornillos o clavitos, algún pegamento

Diodo de germanio 1N60

Audífonos alta impedancia

Base madera de 13x13 cm aprox

Cable esmaltado para bobinado o cable magneto

Comenzar aquí
3 pasos sencillos
1) Haga clic en "Comenzar aquí"
2) Descargue desde nuestro sitio web
3) Obtenga el conversor de archivos gratis
EasyPDFCombine™

Tandem o capacitor variable y bobina montado en base.

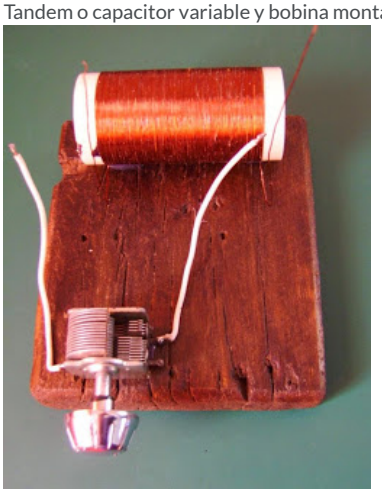

Vallamos a la construcción
Lo primero que vamos hacer es la bobina de nuestra radio, para ello usamos el tubo de pvc fijamos en un extremo del cable esmaltado dejando un excedente de unos 10 cm. para hacer las conexiones luego, podemos usar una cinta adhesiva o como en mi caso una gotita de cianocrilato. Empezar el bobinado en el sentido que quieras (en este caso sentido de las agujas del reloj), solo ten en cuenta que las espiras estén bien prolijas y lo más juntas posibles sin que se encimen unas con otras, realizar 130 espiras y asegurar el otro extremo dejando también 10 cm. para la posterior conexión.

Después montamos según diagrama citado arriba, recuerda que el cable esmaltado de la bobina tienes que pelarlo ayudándote con una lija fina para sacar el esmalte sino el mismo no hace contacto ni se suelda ya que la película esmaltada es aislante.

Fotos de galena terminada

Para la recepción:
Conectamos el audífono de alta impedancia o en su defecto el mini amplificador
A tener en cuenta
vamos a lijar una sección del esmalte a lo largo de la bobina (ver figura) , la antena esta conectada a una varilla, "recepción gruesa" por así llamarlo con ella limitaremos la cantidad de espira de nuestra bobina para poder sintonizar varias estaciones de radio a modo de derivaciones, si todo funciona bien tendremos sintonía quizás algo mezclada y de no muy buena calidad, entonces hacemos el ajuste fino moviendo el tándem o capacitor variable.
Una de las cosas más importante y tener en cuenta en este tipo de radio es la antena y puesta a tierra, la antena se aconseja unos 10 metros como mínimo, pero no te asustes, puedes usar como en mi caso un alambre extendido como lo que usan para colgar la ropa y la puesta a tierra una reja que esté haciendo contacto con la tierra o cañería metálica como la de una bomba de agua vieja

Detalle de conexiones.

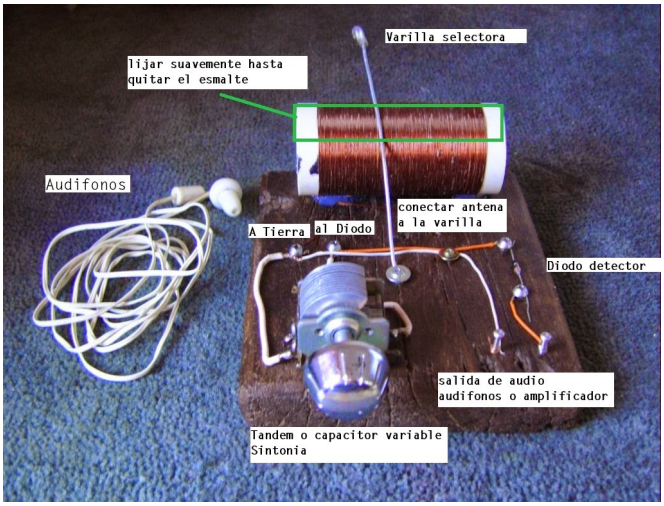

Nota: se puede experimentar con el tamaño del núcleo de la bobina como así también la cantidad de espiras y espesor del cable esmaltado de la bobina o cable magneto, yo he realizado para este proyecto unas 5 bobinas diferentes aunque todas recepcionaban alguna emisora, pero el que mejor me resulto es el que aquí describo. También puedes experimentar con largo de antena y todo los cambios que se nos ocurran, este es un buen proyecto para la experimentación, también como detector en vez del diodo de germanio, se puede usar la piedra galena que es la que le da el nombre al modelo (un tanto difícil de conseguir), con un transistor conectando solo dos terminales, hasta como hicieron en la segunda guerra mundial con una hoja de afeitar y una punta de un lápiz, es cuestión de que investigues un poco y que experimentes. En mi caso llego a funcionar sin el capacitor variable y con recepción muy buena de las estaciones potentes.
Bueno espero te animes ya que es muy gratificante cuando sale funcionando.
Si quieres puedes mandarme o dejarme un comentario con las fotos de tu Galena.

Saludos y hasta pronto

Los invito a pasar por mi blog mi blog:
http://cachivacheselectronicos.blogspot.com.ar/

1 Antivirus Gratis 2018
Mejor Antivirus Gratis de 2018. Comparar y Encontrar el Mejor Antivirus Gratuito mejorantivirus10.com

2 Abogado de DUI
Abogados Expertos En Casos De "Manejar Bajo Influencia" abogadocross.com

Compartir Twittear

Fuentes de Información - Construí tu propia radio Galena

El contenido del post es de mi autoría, y/o, es un recopilación de distintas fuentes.

Tags: electronica | radio | experimentos caseros | reciclado | galena

Dar puntos

1 2 3 4 5 6 7 8 9

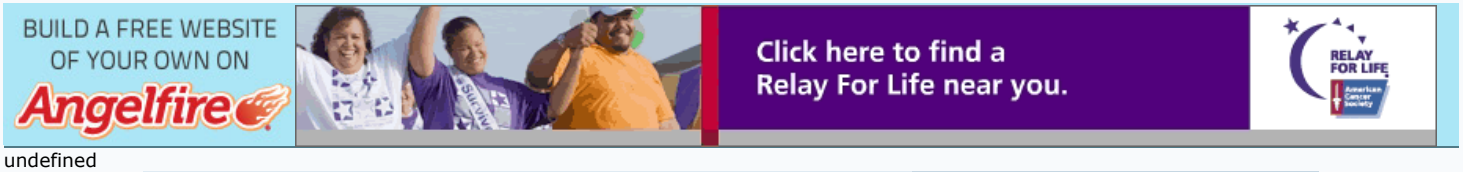

undefined

HOME

GETTING STARTED
Introduction
How Earphones Work
Aerial & Earth Wires

RADIO KITS
The Nic Nac Radio
MK 484 TRF Receiver

COMING SOON!
Book of Radio Kits

CONTACT US
E-mail
Pre-order our Book
On-line Form

Fun with Radio and Electronics!

Print out this page and have a go at building a crystal radio set yourself!*

INTRODUCTION

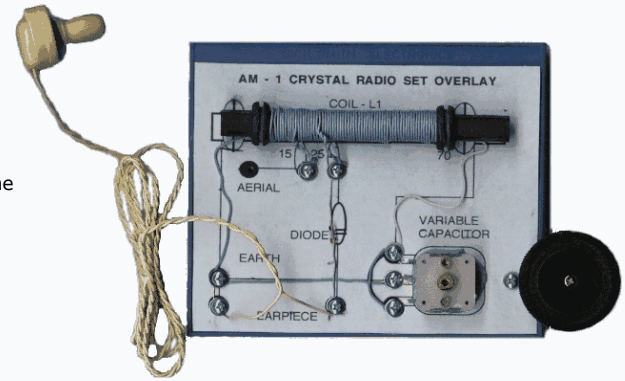

If you're stuck inside on a Saturday afternoon with a junk box full of electronic parts and nothing much to do, you can spend an hour or so and build this very simple but effective Crystal Radio receiver. Often, the satisfaction of building these simple radios is lost amidst the latest computer program or the latest digital marvel chip!

THEORY

Briefly, a Crystal Radio receiver derives it energy from. the radiated power from the AM radio stations in your area, This energy travels in waves, and is induced into your Aerial/Earth wire system (more about safe Aerial and Earth wires later on) and then fed into the coil/capacitor circuit. This coil/capacitor combination is known as a "tank" circuit, because it. stores radiated energy. The coil stores this energy in a pulsating electro-magnetic field, while the. variable capacitor stores energy in 'an electro-static field between its fixed and moving sets of plates.

The Ferrite Rod acts as a bar magnet for radio waves. concentrating them inside the turns of the coil. When.you turn the knob of the variable capacitor you change the value of thisdevice. Changing the value of the capacitor will vary the frequency at which"the Crystal Radio receives. When you tune into a local AM radio station, the tank circuit experiences what is called "resonance". This is like a musician using a tuning fork to tune up the strings of his instrument. Each string will 'resonate' with the chosen tuning fork when they are both pitched at the same frequency.

!n the same way, when a radio station and the Crystal Radio are tuned into the same frequency, resonancetakes place. This state of resonance allows for maximum signal transfer between transmitter and receiver. The selected frequency is then fed into the Germanium Diode detector. This corn portent separates (rectifies) the radio station's "carrier wave" from the program signal (voice and music). The rectified signal is thenfed in the Crystal Earpiece where it is converted into sound waves that we can hear.

OVERLAY FOR CRYSTAL SET

(Refer to printable document for accuracy)

Parts List Dick Smith Electronics	
Ferrite Rod	R5107
Diode OA91	Z3040
VC1 220pf	R2970
Earpiece	C2765
Coil wire (3m)	W2123
Aeria/Earth wire	W2260
8 x screws	H1634
8 x washer	H1488
1 x b'board	H4050

CONSTRUCTION

Our radio set can be made up on a square of wood or plastic around 10cm by 12cm by 1cm. If you or a parent can solder, then feel free to drive nickel plated nails into the wooden baseboard. Then you can "tin" these with a bit of solder and use each nail head as a tie point to interconnect the component leads. **BE VERY CAREFUL** with soldering tools - wear eye safety glasses at all times. Alternatively, you can use a screw/washer combination with the DSE plastic baseboard. These should be the #4x9mm screws and the washers around 5mm in diameter (see parts list). If you decide to solder, take special care with soldering the Diode and the solder tags from the Variable Capacitor. The Diode should only be soldered by using a heat sink (a simple device that will draw any excess heat away from the Diode itself) and this can be a crocodile clip attached to either end of the Diode's leadouts (close to the glass bulb) during soldering. The caseing of the Variable Capacitor is made of plastic, and any excessive heat applied during soldering may well melt a part of this fragile case.

You can use other coils in this simple Crystal Radio design. You can either wind an air-cored coil (if you can't get hold of a Ferrite Rod easily) as shown below (comprised of the same number of

turns -70) wound on a paper roll tube complete with taps (at 15 turns and 25 turns) or you can retrieve a factory made coil from an old, disused transistor radio. This coil actually has two windings, and you can tune the Crystal Radio by wiring a 120pF capacitor (instead of the variable capacitor) across the main winding (usually 'white and black wires) and sliding the square Ferrite Rod up and down inside the coil former to tune in local stations (see diagram below).

AERIALS AND EARTHS

The best Aerial is one that is at least two metres high off the ground (higher if possible) and at least ten metres long. You MUST stay well clear of overhead power and telephone cables for safety's sake. The safest Earth wire is one that's connected to a cold water pipe that is embedded in moist soil. A garden tap fitting just outside a window is ideal. Do NOT use the earth pin of a 240 volt power outlet, nor a hot water pipe, nor a gas pipe, as **these are all unsafe** to use as Earth connections, and may well result in electrical shocks or explosions occuring.

DO NOT operate this Crystal Radio receiver during an electrical thunderstorm.

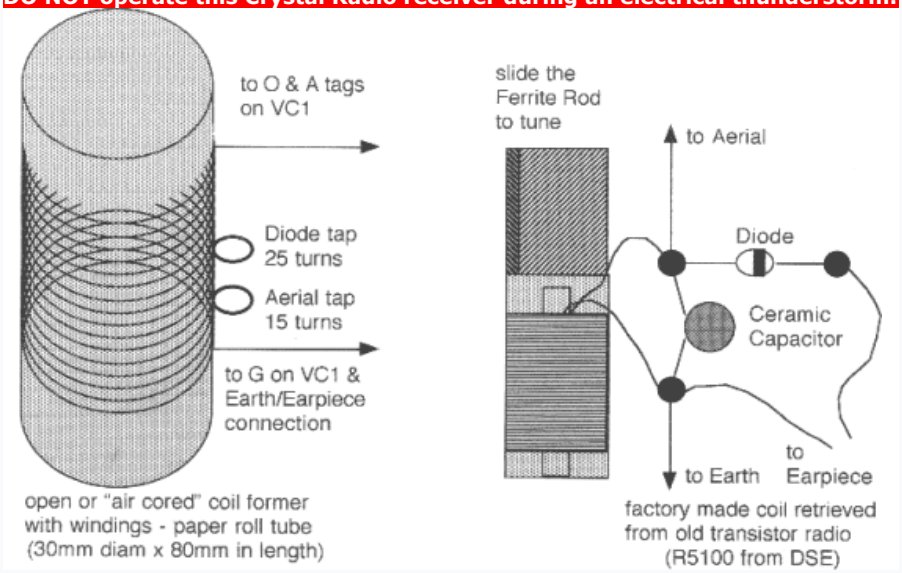

design by **the manikin** **Copyright** © **A. Hellier** 1998 **Disclaimer**.

BUILD A FREE WEBSITE ON Angelfire

American Diabetes Association. diabetes

cebekit

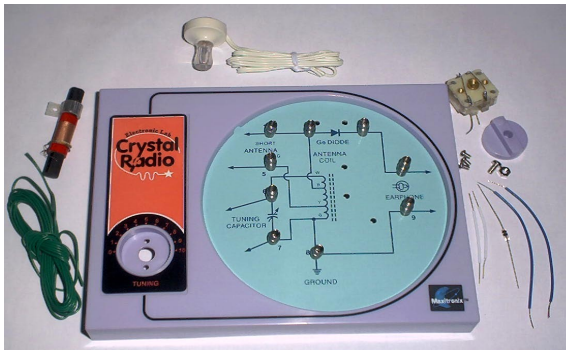

CRYSTAL RADIO MX-901

PARTS LIST

Antenna Coil
Plastic Case with Labeled Panel
D iode
Earphone
Anten na Coil Cl¡p
Tunrng Capac tor Knob
Nut, (1 ea)
Screw smali, {3 ea.)
Screw, medium (1 ea.)
Spíng Terminals (9 ea.)
Tuning Capacilor
Con necting Wrres:
B ue. Long (2 ea.)
Whlte. Short (2 ea.)
Antenna Wire, Green (3 N,4eters)

TOOL YOU MAY NEED

Long-nose pliers
Wire,cutters
Ph llipslype screwdrlver
Pencil or ballpoint pen

INTRODUCTION

With your "Crystal" Fadio Kit you can tune in AfV radro stattons without using batteries or AC powerl This device works on the same principle as the early crystal rad¡o, but the crysta has been replaced with a more reliable modern device called a d¡ode. Your C'ysta, Bad o Kit 'coü.es ro p.evious experience with electronics. You can build and operate it by fo lowing the simple instructions in this manual.

ASSEMBLING YOUR CRYSTAL RADIO

Follow the instructions in the order given, beginning wlth Step 1 .

Notes:

Don't rush. Take your time and enjoy bu¡ld ng your KII,
You can check off each step as you finish it to besure yo{r don't forget an},thing.a
Allthrough these instructions you're asked to make various conr'reclrons. Secure electrical connections are very mponant ln eiectronic devices. One poor connect,on can keep your crystal set from
Be sure all your connections are good ones
To con¡ect a wjre 10 the sprjng terminals:
A - Bend ihe spring to one side with your f nger.
B - Insert the end of the wire into one of the gaps i n : t r e spring.
C - Re ease the sp|ng. I t wi i hold the wire tirrn ly.

Be sure you connect clean. bare wire to each terminal. Some of the wires have insulation that has been stripped of the ends. Other wires have been "t¡nned" (coated with solder) at the ends so that they can make a good connection.
Nake sure lhat you insert the bare end of the wire into the spring terminal Be careful to keep the nsu,ated part out of the spring. If a w¡re has a shiny t¡nned part at the end, Insert the shiny part into the spring.

Step - 1 Using your pencrl or pen, punch out the nine larger holes and the tour srnaller holes in the panel.
Step - 2 Copy the term¡nal numbers lrom the frontof the panel to the corresponding positions on the back side
Step - 3 Install the spring terminals :
A - Press the smaller end of each sprlng terminal into one of the punched holes.

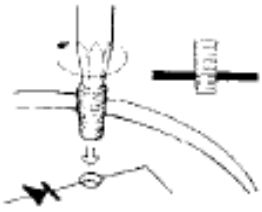

B - Use the pointed end of a pencil to tw¡st each term nal firmly into place.
Step - 4 Mount lhe diode as follows:
A - Use your long-nose pliers to bend each of the diode's tvr'o wires as shown.
B - Inserthe wire from the diode's stnped (cathode)end thro!gh lhe hole nearest Terminal 3.
C - Insert tnc ,/rire lrom lhe diode's other (anode) end through the small hole nearesl Terminal 2.
D - Attach the wlre from the diode's strlped end to Terminal 3
E - Attach the wire from the d¡ode's other end to Terminal 2.

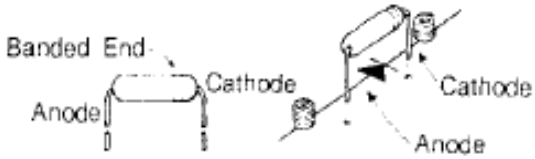

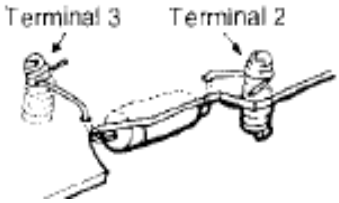

Note: A diode allows currento pass through it in only one direciron, from anode to cathode. fhis ability to block alternating current and pass direct current makes it useful rn many types of electron¡c c¡rcu¡ts.

Slep – 5 Mount th tuning capacrlor :

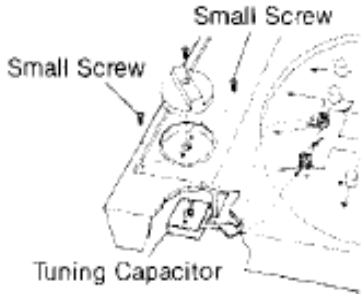

A - Position the capacrtor beneath the panel opening that is just above the word TUNING.
B - The metal shaft ol the capacitor should extend through the openrng.
C - Faslen the capacitor to the panel using the two srna screws.

Step - 6 Install the luning capacitor's knob :
A - Turn the tuning capacitor's shaft all the way to the left.
B - Piace the tunjng knob on the upper end of the shaft
C - Llne up the dot on the knob wlth the 0 on lhe paner.
D - Faster :he knob in place using the reinaining smalll screw.

Step - 7 Connect the tuning capacitor's wires:
A - Connect the wire from the tuning capacitor's langet silver strip to Terminal 6.
B - Connect the wire from the tuning capacltor's sho,lcr silver strip to Termina 7.

Slep - 8 Install the antenna coil :

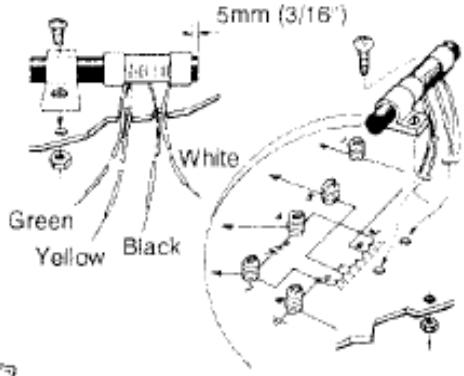

A - Position the antenna coil on the panel near the three rernaining small punched holes.
B - Insert the antenna coil's green and yellow wires through the hole nearest the Y on the diagram.
C - insen the black and white wires through the hole nearest the W on the diagram.
D - Fasten the antenna coil in place wiih lhe nylon clip, medium screw, and nut, using the last of the small punched holes.

Step -9 Connect the antenna coil wires:

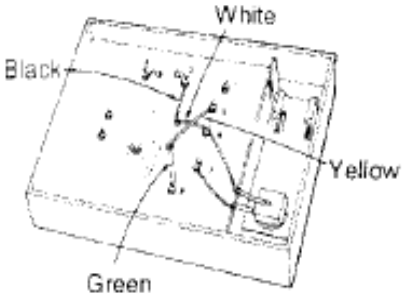

A - Connecr the black wire to Terminal 2.
B - Connect the yel¡ow wjre to Terminal 5
C - Connect the while wire to Terminal 6.
D - Connect the green wire to Terminal 8.

Step - 10 Instafl the blue and white connecting wires:

These connecting wrres can be instailed either on the front or the back of the panel. We suggest that you pul thern on the front, so that you can see how the wiring relates to the diagram on the panel.
A - Connect a short wire between Termrnals I and 2
B - Connect a lo¡g wlre between Terminals 3 and 4.
C - Connect a short wire belween Terminals 7 and 8 .

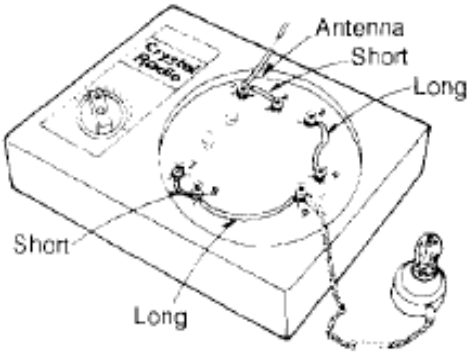

Step - 11 Use your wire cutters to neatly trim the ends of all the w¡res.
Step - 12 Connect the earphone wires to Termrnals 4andL

Step - 13 Install your ground wire:
The ground wire is an lmportant part ot your crystal radjo. Conneci it as caretully as you have connected ail the other parts.
A - From the co¡l of green wire, cut off about 5 feet (150crn)
B - Remove about 6 inches (15cm) of insuiation from one end of the wrre.
C – Find a metal cold water pipe
D - Scrape any paint or d¡rt from the pipe untll you see bright metal al the way around the pipe.
E - Wrap the bare end of the wire several ttmes around the Scraped part of the pipe and twrst the w¡re tightly.
F - Remove % Inch (7mm) of insulatron irom the other end of the ground wire
G -Connect this end of the ground wire to Terminal B of your radio.

Step - 14 Install your antenna:
Your antenna ¡s a very impoftant part of your crystal radio. Connect it as carefully as you have connected all the other parts.
A - Flemove % inch (7mm) of Insulation lrom one end of the remaining length of green wire.
B - Connect this end to Terminal 1 oi your radio.
C - Extend the anlenna w re horizontaily to its full length.

You have oow completed the building of your crystal Iadio. If yoLr have followed the instructions carefully, you should be able to tune n one or more AM,4 radio statrons right away.

USING THE CRYSTAL RADIO

A – Place the earphone in your ear.
B - Adjust the tuning capacitor's knob for the Clearest reception of a local Station.
C - Remember that your crystal radio has no amplifier, so the stations you receive might not be as loudi as if you were listening to a modern radio.

Notes:
- If you ive rn a city, you might be able to receive several stat¡ons.
- Il you do not live near a radlo station, you might need an outside antenna (not supplied), 35 io 85 feet (101o 25m) long, connected to Terminal 5.

lf your radio does not receive stations well, try connecting the antenna w¡re to term nal 6 instead of terrninal 1 or 5. lf reception is still poor, change the antenna coil connection as follows :

White wire from terminal 6 to terminal 2
Black wire frorn terminal 2 to terminal 6

HOW YOUR CRYSTAL RADIO WORKS

All radio broadcast stations do basically the same thing. Thcy combine sound, or audio waves with a radio carries wave. The carrier wave travels great distances. and carries with its information about the strength and pitch of the sound waves

One method of combining the radio carrier wave and the audio wave is called Amplitude Nodulation (AM)

Your AM radio antenna prcks up tne carner wave seni by the radio statlon.

Your crystal radio then does three inlportant thlgs (with sorne help from you) to allow you to hear the radio program. These are:
- Tuning
- Detect¡on
- Changing of an electrical current to sound waves

TUNING

When you turn the tuning capacitor's knob, you are adjusting a circuit formed by the tuning capacitor and the antenna coil. This circult allows only one radio station's carrier wave at a time to enter your radio.
By tuning this circuit, you se{ect the carr er wave lo the station you want to hear'

DETECTION

The d¡ode gets rid oi the carrier wave by sendlng it to the ground through your cold water pipe At the same time. it allows a tiny electric current that represents the sound (audio) inlormation to go to the earphone.

CHANGING ELECTRICITY INTO SOUND

When the electric current reaches the earphone, It causes a small piece of ceramic material to vibrate. The movement of this ceramic to vibrates the crating the sound waves that you hear.

Your crystal radio works very much the sarme way as the early ones. Of course, the “old-time” crystal sets didn't have diodes. They used a piece of galena crystal (lead ore) held in contact with a fine wire called a “cat's whisker.”

This earlier type of radio, like yours, had no amplification. Then as now, more complicated radios amplified the audio waves to vibrate a loudspeaker and produce ouder sound.

All radios slill use the basjc combination of (1) a tuned circuit that selects the carrier wave sent by tne radio station, (2) a detector that separates the sound inforrnatror from the carrier wave and (3) an earphone or loudspea ker yo let you to hear the sound

SCHEMATIC DIAGRAM

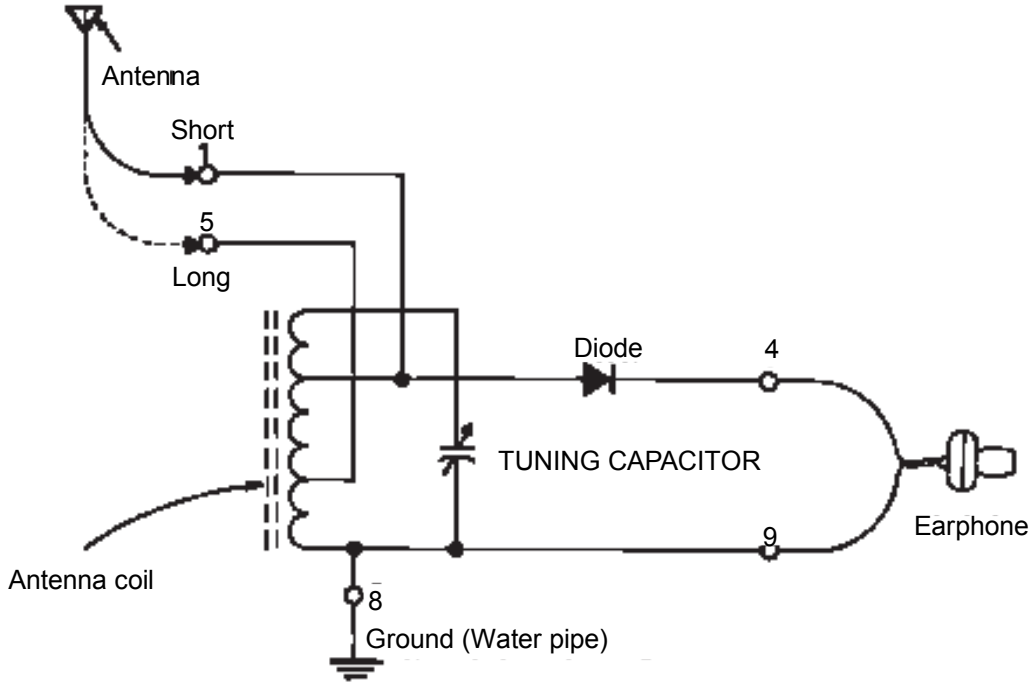

KIT RECOMMENDED FOR CHILDREN From 8 YEARS OLD, ACCOMPANIED BY ADULTS

Benjamin and David Goldenberg's Very-Fine Old-time Crystal Radio

Parts List:

Item	Qty.
PVC pipe, 1" outside diameter (3/4” size) x 4" long	1
Aluminum or steel sheet metal, 0.5” wide x 5” long	1
Coil wire (#24 magnet wire)	36 ft
Hook-up wire (#22)	25 ft
Crystal earphone (GC electronics, cat. no. 30-5302)	1
Jack for the earphone plug	1
Crystal diode (1N34A)	1
Capacitor, 470 picofarad	1
#8 sheet metal screws	8
8-32 machine screw, 1" long	1
8-32 nuts	2
flat washers	6
Ring terminal	1
Board, 3/4" thick, approximately 7" x 9"	1

What else you need:

Vise-Grip pliers
Wire cutters
Soldering iron and solder
Drill, with 1/8", 3/16” and 3/8” bits
File or motorized grinder (e.g. Moto-Tool)
Screwdriver
Scotch tape

Instructions

I. CONSTRUCTION OF SPECIAL PARTS.

The following steps involve making a few special parts for the radio. Some of these steps are most easily performed using power tools and some involve soldering. This work should be done by someone old enough and knowledgeable enough to handle these tools safely. Once these parts are made, however, the rest of the project requires only hand tools and can be completed by nearly anyone.

1. Coil Form

The coil form is a piece of PVC pipe, 1” in diameter (outside) and 4” long. (For reasons fully understood only by plumbers, pipe of this diameter is referred to as 3/4”.)

To facilitate mounting the coil to the board, drill two sets of holes, on opposite sides of the form. On one side of the form, drill two holes, 3/16” in diameter and 3/8” from the ends. Directly opposite from these holes, drill two more holes 3/8” in diameter. Screws will be placed through the smaller holes, while the larger ones make it easy to reach the screws with a screwdriver.

2. Slider

Drill two 3/16” holes in the piece of sheet metal, each 1/4” from an end. After the holes are drilled, place a bend in the metal 3/4” from each end, as shown in the figure on page 3. Use a vise or pliers to bend the metal. Use a file to smooth all of the edges and corners of the metal.

CAUTION: Drilling sheet metal can be very dangerous! If the bit catches on the metal, you can have a very sharp edge flying through your hands. Hold the metal firmly with a pair of pliers (preferably Vice-Grip type), not with your hands! Also, place a piece of wood under the metal as you drill. This will help keep the metal from tearing and grabbing the bit as the passes through.

3. Pointed screw for slider

Using either a file or a grinder, grind a point on the 8-32 machine screw. The point doesn’t need to be very sharp; about like the tip of a medium ball-point pen is ideal.

4. Earphone jack with wires.

Cut two pieces of hook-up wire 2” long. Remove 1/4” of insulation form one end of each wire and solder the wires to the terminals of the earphone jack. Remove 1/2” of insulation from the other ends of the wires.

Note: Headphone jacks often have more than two terminals. Make sure that the terminals you solder to are the ones that will be connected to the tip and side of the plug when it is inserted.

5. Ring terminal with two wires.

Cut two pieces of hook-up wire, one 7” long and the other 2”. Remove 1/4” of insulation from one end of each wire. Solder the two wires to the ring terminal. Remove 1/2” of insulation from the other ends of the wires.

6. Board

Tape the layout template (the last page of this document) to a board, approximately 7” x 9”, and drill a 1/8" hole at each position marked with a cross.

II. ASSEMBLY

1. Wind the coil.

The coil is made by wrapping the #24 magnet wire onto the coil form, which is made from a piece of PVC pipe. The magnet wire is the wire that looks like it has no plastic insulation on it. But, it is actually coated with a thin layer of enamel. This coating must be removed from the ends of the wire before making any connections.

The best way to wind the coil is with two people, one to hold the wire taught (the holder) and the other to wind it onto the coil form (the wrapper). First, thread the end of the coil wire from the outside of the form through one of the large holes and out the end of the form. Leave about 4" of wire going out the end. Hold onto the other end of the wire and begin wrapping it around the form, starting right next to the hole. After you have wound a few turns on, push the wire together so it is nice and neat and put a piece of Scotch tape over it. The coil should look like this:

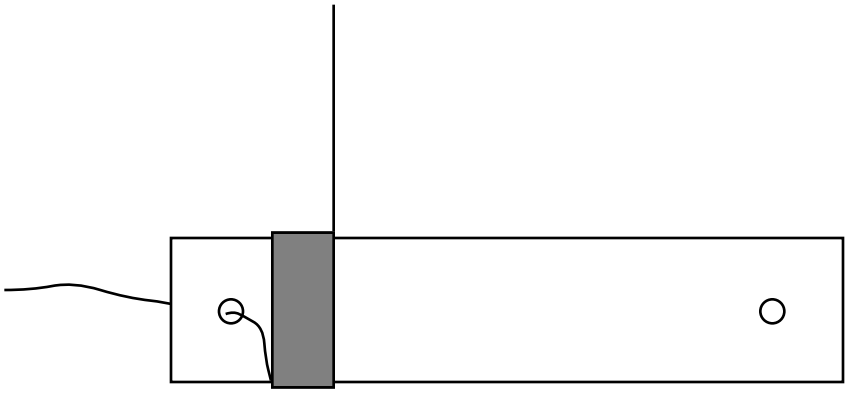

Now, the "holder" should hold the spool of wire loosely while the "wrapper" walks across the room unwinding the wire. Then, the holder should hold the spool very tightly so that the wrapper can wind the wire onto the pipe evenly. Each turn should be wrapped on right next to the previous turn, but shouldn't overlap. As the wire is wrapped on, the wrapper slowly walks across the room keeping the wire tight. When the wrapper reaches the holder, hold the wire that has been wrapped onto the form tightly, while the holder lets the wire on the spool unwrap. The wrapper then walks back across the room unwinding the wire from the spool, and the same procedure is repeated.

When the coil is within about 1/8" of the holes at the other end of the coil, stop winding. Put a piece of Scotch tape on the end of the wrapping, and cut the wire a few inches from the end of the coil. Thread the end of the wire through the large hole in the form.

2. Attach the coil to the board.

Use two of the #8 sheet metal screws to attach the coil to the board, using holes B and C that you drilled. Place the screws through the small holes in the coil form from the inside. You can then use the large holes on the other side of the form to reach the screws with a screwdriver. Make sure the coil is attached snugly to the board.

3. Assemble the slider.

Find the slider, the 8-32 screw and the two 8-32 nuts. Thread one of the nuts onto the screw until it is about 3/8" from the head of the screw. Put the screw through one of the holes in the slider and thread the other nut on, so that the slider looks like this from the side:

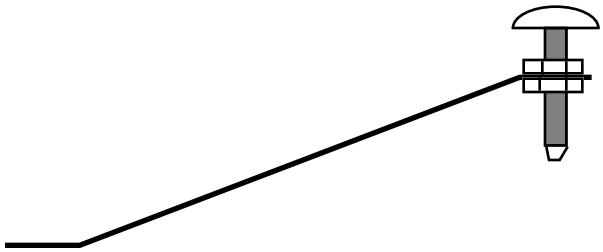

Tighten the second nut against the slider and the first nut with a wrench.

4. Attach the slider to the board.

Find a sheet metal screw, a washer and the ring terminal with two wires attached to it. Put the screw through the ring terminal, the washer and finally the open hole in the slider assembly (from the top of the slider as shown above). Attach the entire assembly to the board with the screw at hole E. Tighten the screw so that it is snug but still allows the slider to move back and forth. The pointed end of the machine screw at the other end of the slider should press firmly against the wire on the coil. If necessary bend the slider so that it makes firm contact with the coil but can still move.

Move the slider back and forth on the coil to scrape the enamel insulation from the coil wire where the pointed end of the machine screw touches it. The screw should be able to make an electrical contact with the coil wire at any position along the length of the coil.

5. Put the remaining screws in the board.

Screw the remaining sheet metal screws into holes A, D, F, G and H, with a washer on each screw. Do not tighten the screws yet.

6. Wire the components of the radio together.

Use the circuit drawing as a guide. For each connection, make sure that the insulation is removed from the end of the wire. Wrap the bare ends of the wires around the screw between the screw head and the washer underneath.

a. Wrap the two wires from the earphone jack around screws F and H. Do not tighten these screws yet.

b. Take the short wire from the slider and wrap the bare end around screw F (which should already be attached to one of the earphone jack wires). Do not tighten the screw yet.

c. Take the long wire from the slider and wrap the bare end around screw A. Do not tighten this screw yet.

d. Find the crystal diode, the small cylinder with two bare wires attached to it. Wrap one of the wires around screw H (attached to the other earphone jack wire), and tighten the screw.

e. Take the other wire from the diode and wrap it around screw G. Do not tighten this screw yet.

f. Find the capacitor, the small disc with two bare wires attached to it. Wrap one of the wires around screw F and tighten the screw.

g. Wrap the other wire from the capacitor around screw G, but do not tighten this screw yet.

h. Cut a piece of hook up wire about 6" long and remove about 1/2" of insulation from each end. Wrap one end around screw G and tighten the screw. Wrap the other end of the wire around screw D, but do not tighten this screw yet.

i. Take the wire from the right hand end of the coil and remove the insulation from about 1/2" from the end of the wire. To remove the insulation, either lightly scrape the wire with a knife or use a small piece of sandpaper. Wrap the bare end of the wire around screw D, but do not tighten the screw yet.

7. Connect the radio to ground.

In order to work, the crystal radio must be wired to a good ground connection. Often, the easiest way to make a ground connection is to use the grounding circuit for the house's electrical system. Cut a piece of hook-up wire long enough to reach from the radio to a nearby electrical outlet. Remove 1/2" of insulation from each end of the wire. Wrap one end around screw A of the radio and tighten the screw. On the electrical outlet, loosen the screw that holds the plate on the box. Wrap the other end of the wire around this screw and tighten it.

CAUTION: Be sure not to let the wire or anything else touch the 120 V socket!

Alternatively, you can use a cold water pipe to connect the radio to ground. Remove a few inches of insulation from the wire from screw A of the radio and wrap the bare end around a cold water pipe.

8. Connect an antenna to the radio.

Use the rest of the hook-up wire to make an antenna. Remove 1/2" of insulation from one end of the wire and wrap it around screw D. Tighten the screw. Unwind the wire from the spool and try to place it as high as possible in the room.

In areas with many powerful radio stations nearby, an inside antenna should be adequate to receive a few stations. If you have trouble hearing anything, it may help to

set up a long outside antenna. Radio Shack sells a kit with the necessary wire and other parts (cat. no. 278-758).

9. Try the radio!

Plug the earphone into the jack. Listen to the earphone and slowly move the slider across the coil. Try to find the position where a station is loudest. You should be able to hear a few different stations with the slider at different positions.

10. If the radio doesn't work, check the following:

a. Make sure all of the connections are correct and that the insulation has been removed from the wires where they are wrapped around screws. Also check that there aren't any short circuits between the screws or bare wires.

b. Make sure that you scraped the insulation from the coil wire with the slider so that the slider can make good contact with the coil.

c. Make sure that you have a good ground connection. Try a different electrical outlet or a cold water pipe.

d. Place the antenna higher up or try a longer wire.

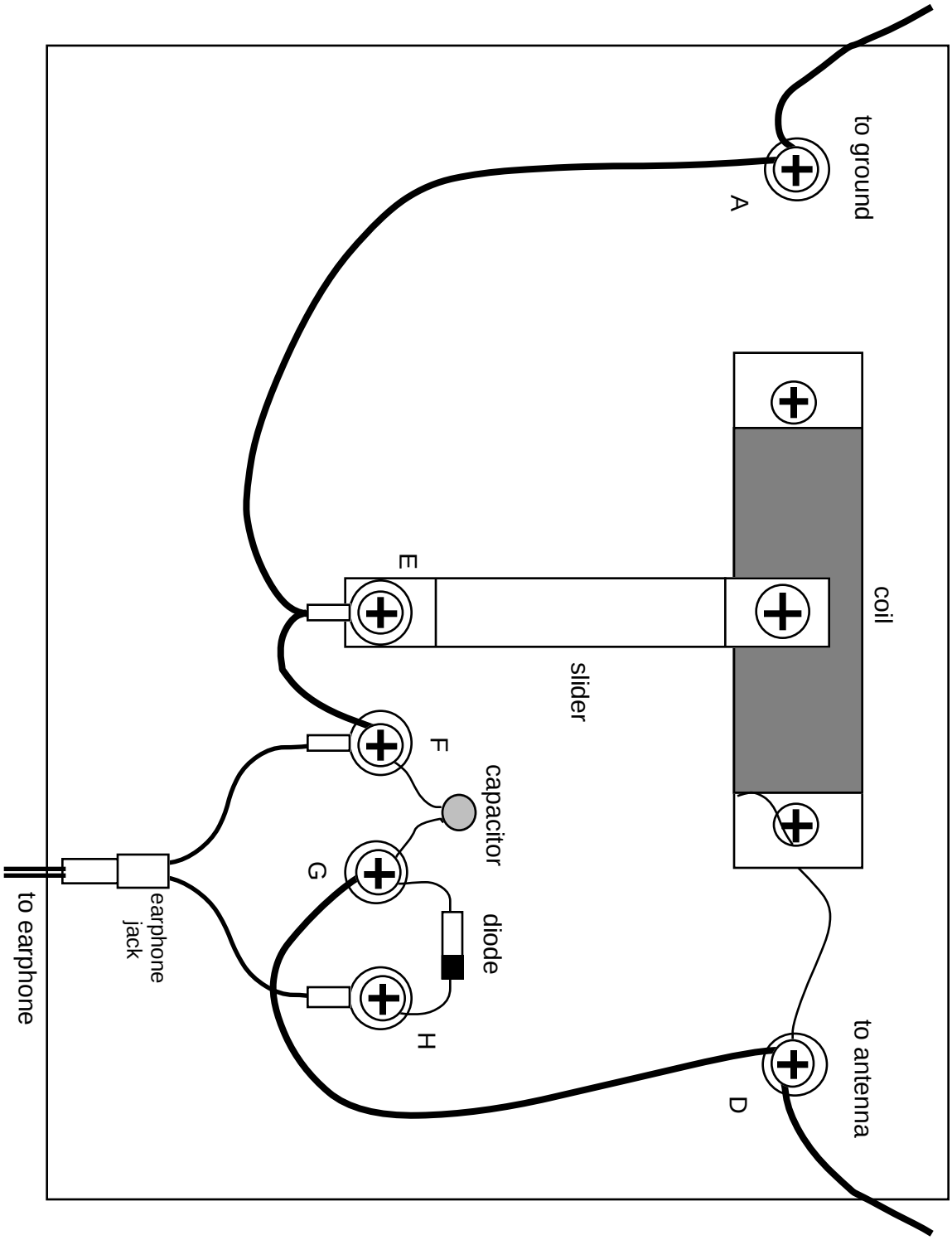
to ground
A
coil
to antenna
D
E
slider
F
capacitor
G
diode
H
earphone
jack
to earphone

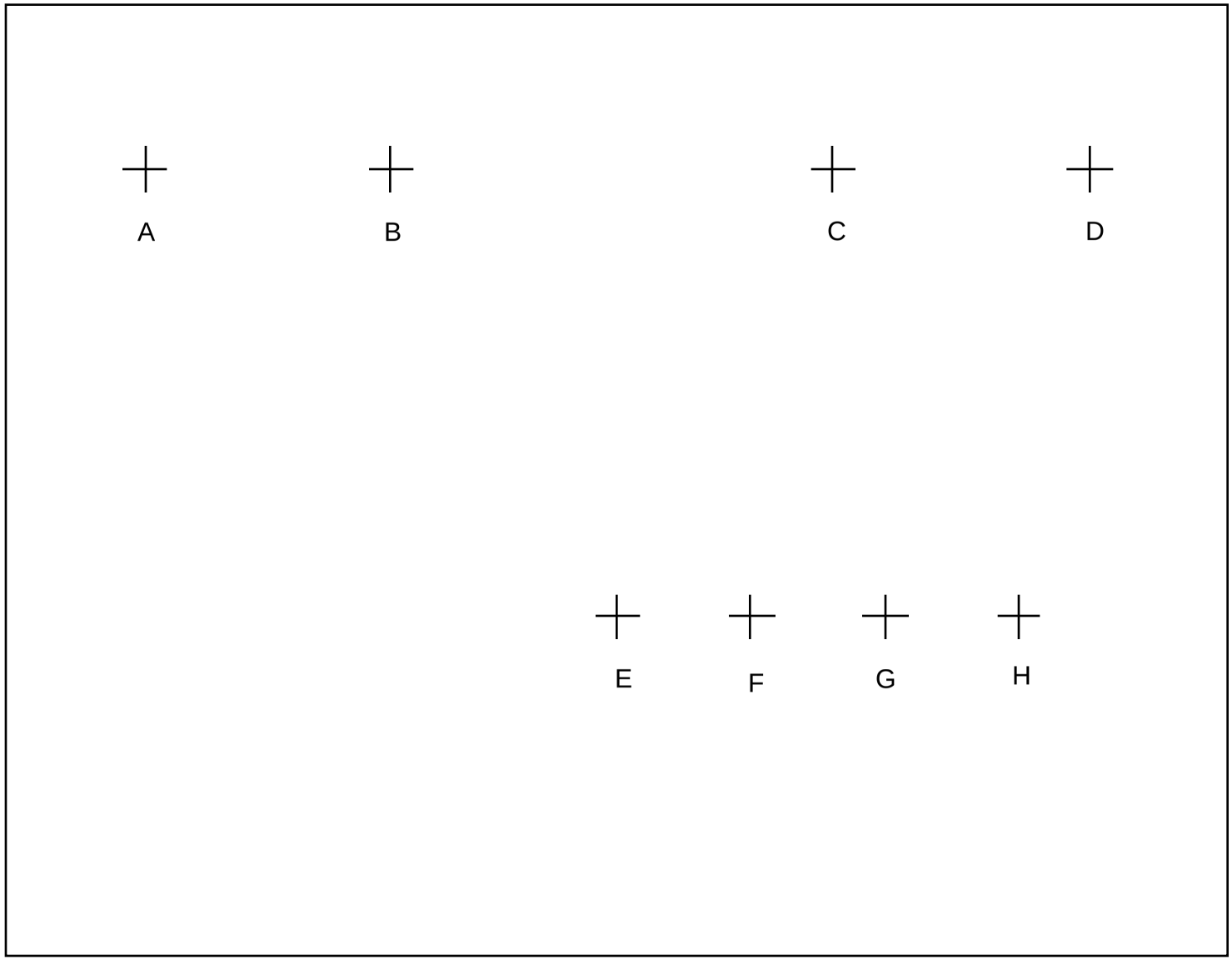
A
B
C
D
E
F
G
H

Crystal Set with Output Meter

I felt that it was not easy to evaluate sensitivity or level of output of a crystal set because human ears are not objective enough. There are several articles on the net about showing the output level as voltage or current. If you connect a voltmeter at the phone jack, the input impedance of the meter will affect the balance between the set's output impedance and the phones input impedance.

I found Mr. Billy Cheung in Hong Kong published an article about a crystal set with an output indicator (http://theradioboard.com/rb/viewtopic.php?f=2&t=6082). (http://theradioboard.com/rb/viewtopic.php?t=6082) It also seemed very nice set to build, so I did. I bought a DC current meter with -50 to +50 uA range at AliExpress. At that time it was the only model available. Since the meter is large, 10cm x 8cm, the case needs to be fairly big, 21cm x 10cm x 7cm.

There are three modifications (additions) to the original. I added a switch to make one of two gang variable capacitor, C1, a part of the tank circuit or an antenna impedance matching capacitor. A switch was added to increase the number of turns for the regeneration in case of MOSFET detection. The last change was to add a switch to increase capacitance of C2 by adding the second section of the air variable capacitor.

Because the case was large, wiring was easy. Therefore, it did not take so long to build the set, except making a few corrections on my stupid wiring errors, as usual.

Performance:

My antenna is about 12 m long wire hanging in my garden, and the ground is a 50 cm copper bar buried in the garden soil. In mode 1, sensitivity is good. We have three local stations, JOPK, JOPB, and JOVR, transmitted at 12 - 16 km distance with 10 kW power. After fine tuning, following values for output in uA were obtained. The values did not change by using different phones or amplifiers.

	1N60	3DQ
JOPK	6.3	8.5
JOPB	3.8	4.5
JOVR	3.8	5.0

Human feeling of loudness for JOPK cannot find any difference between the two detectors. I have no idea if the numbers above are high or low in my environment. No other stations were heard. Because of the capacitor layout in the output circuit, the output sound does not include high audio frequencies and, therefore, is soft, although I have not checked the frequency distribution.

Selectivity of 3DQ is good, while 1N60 gives broad tuning. However, this difference may not be caused by the detectors but by the circuit difference. In case of the diode, primary tank circuit has no tap, and the FET's source gets the signal from the tap.

In mode 2, over-all performance is not satisfactory. Sensitivity is not quite as good as mode 1, and selectivity is even worse. If you set the taps near the top (tap #2-4), you can hear several SW stations in China and Korea as well as domestic ones, but they can be picked up everywhere on the dial. Therefore, there is no way to know the frequency which the set is tuned. This may be caused by the unused part of the coils, lowering the Q, as Mr. Broesel pointed out in the original post by Mr. Cheung (http://theradioboard.com/rb/viewtopic.php?t=6082).

September 30, 2016
October 1, 2017 (last edited)

Crystal Set with Output Meter

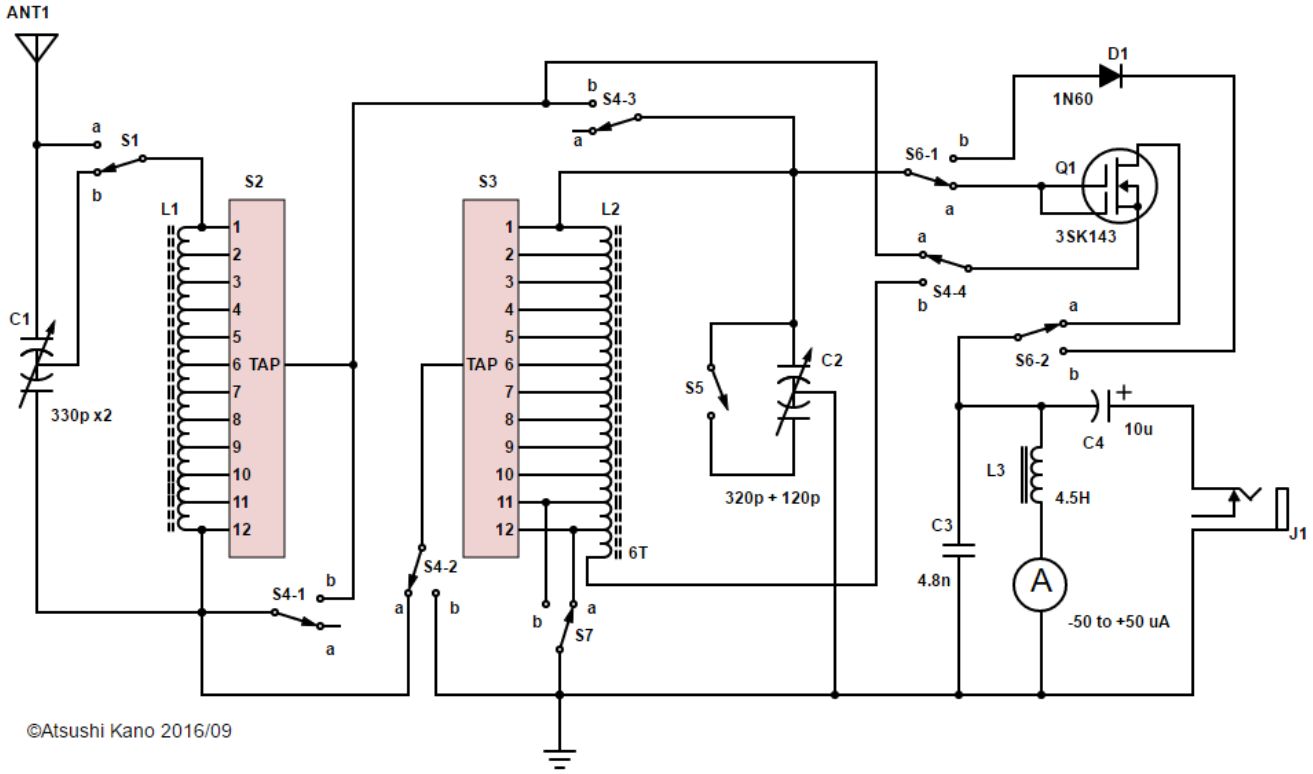

L1: R40C1 ferrite toroid with 250/46 litz wire. 315 uH. 10 taps at every 6 turn.
L2: same as L1 + 6T for regenaration.
L3: one side of 1:1 transformer. See original article by Cheung.
S1: 1/2 of C1 used (a) as a tank, (b) as an ANT impedance matching.
S2: Tap selecting rotary switch for primary tank.
S3: Tap selecting rotary switch for secondary tank.
S4: DP4T. (a) mode 1, (b) mode 2. See text.
S5: Add 120pF to C2.
S6: Detector selection. (a) 1N60, (b) 3SK143.
S7: (a) original, (b) add 6 turns for regeneration.
Q1: 3SK143 (3DQ). Two gates are connected.
C1: Alps two-section poly-variable capacitor.
C2: Alps two-section air variable capacitor.

(/uploads/8/3/7/9/83794474/cs_meter_face.jpg)

Face of the set

The case is TAKACHI TW11-8-22G, W110 x D220 x H75.3mm. You can tell how large the meter is.
I put the rotary switches for tap selection upside-down by mistake, so selecting the taps is confusing a little.

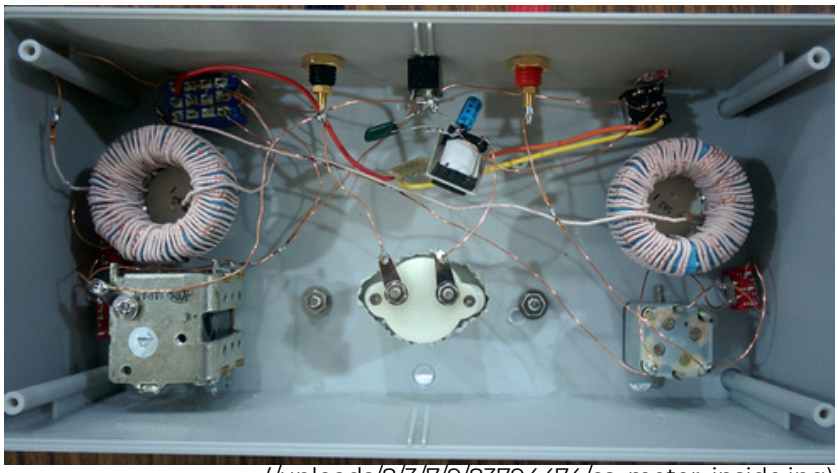

(/uploads/8/3/7/9/83794474/cs_meter_inside.jpg)

Inside

Since few parts were used except switches and variable capacitors, inside the case is almost vacant. The DP4T toggle switch was the most expensive among connectors and switches.
The 3DQ is hidden behind the small universal board, while the 1N60 is connected to the terminals of the switch.

(/uploads/8/3/7/9/83794474/cs_meter_left.jpg)

The switch to separate/combine the sections of the variable capacitor, C1 is shown.

(/uploads/8/3/7/9/83794474/cs_meter_top.jpg)

Phone jack and terminals are placed on the top (side) of the case.

(/uploads/8/3/7/9/83794474/cs_meter_right.jpg)

Mode switch and other switches for the secondary tuning are placed on this side.

Crystal Radio Kit 4

Mike's Electronic Parts, LLC

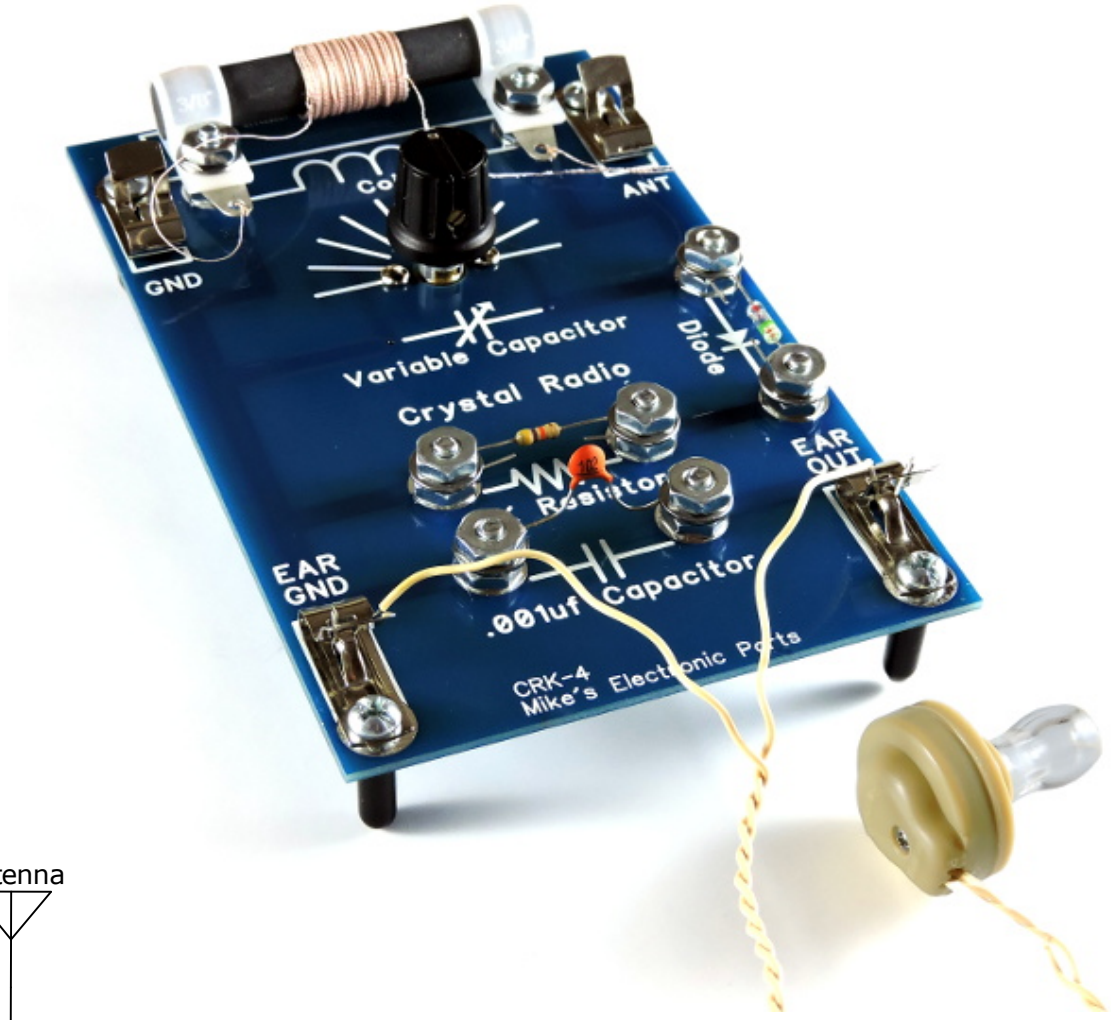

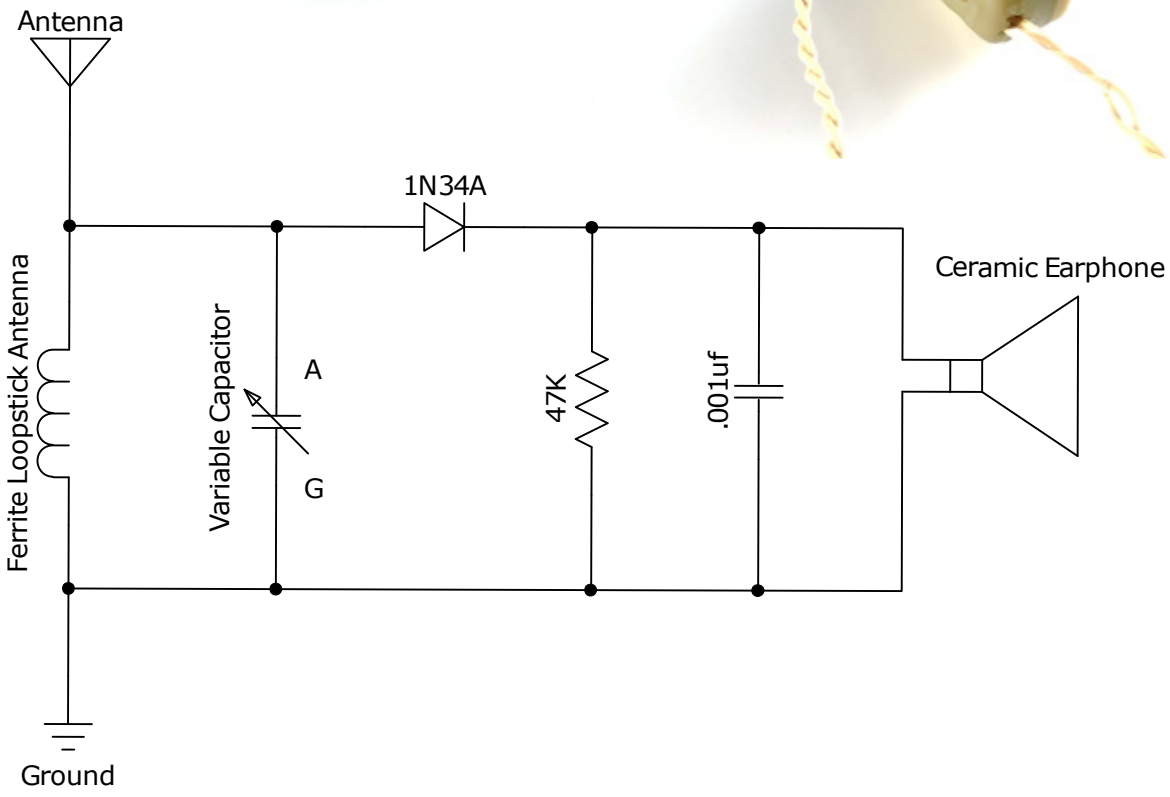

Crystal Radio Kit 4

Mike's Electronic Parts, LLC

Parts List

1 - Circuit Board
  1 - Variable Capacitor Pre-soldered To Circuit Board
1 - Ferrite Loopstick Antenna
  2 - Solder Lugs Pre-soldered To Ferrite Loopstick Antenna
1 - 1N34A Germanium Diode
1 - .001uf Capacitor
1 - 47K Resistor
1 - Ceramic Earphone
4 - Fahnestock Clips
1 - Knob with shaft and screw
2 - Coil Clamps
6 - 3/8" #6 Screws
2- 1/2" #6 Screws
4 - 3/4" #6 Screws
20 - #6 Nuts
8 - #6 Washers
4 - Rubber Feet
1 - ~20 feet antenna wire (color may vary)
1 - ~ 5 feet ground wire (color may vary)

Tools Required

Philips Screwdriver
Small (Jewelers) Screwdriver
5/16" Wrench

Circuit Board

Variable Capacitor

Knob with shaft and screw

Ceramic Earphone

Antenna Wire

Ground Wire

Ferrite Loopstick Antenna

1N34A Germanium Diode

47K Resistor

.001uf Capacitor

Fahnestock Clip

Coil Clamp

Rubber Foot

3/8" #6 Screw

1/2" #6 Screw

3/4" #6 Screw

#6 Washer

#6 Nut

Crystal Radio Kit 4
Mike's Electronic Parts, LLC

Crystal Radio Kit 4 is a great way to get started in electronics and radio building. This is a fun and simple project for both beginners and expert builders alike. Everything needed to build a fully functional radio, including an antenna and ground wire, is included in the kit. Easy to assemble with no soldering required. Crystal Radio Kit 4 is a great project to build with your child or grandchild, boy scout groups and schools.

The kit contains small parts that may be a choking hazard. Adult supervision is always advised while building the radio kit.

Assembly

1. Locate and familiarize yourself with all the parts in the parts list.
2. Assemble the legs.
   Items used: 4 - 3/4" #6 Screws, 4 #6 Nuts, 4 - Fahnestock Clips, 4 - Rubber Feet.
   Insert a 3/4" #6 screw through a Fahnestock Clip. Insert the screw with fahnestock clip through the circuit board. Attach a #6 nut from the bottom side of the circuit board. Snug the nut, do not over tighten. Push a rubber foot over the bottom of the screw. Lightly turn the rubber foot clockwise to ensure it is fully pushed into the screw.
   Repeat for all four legs.

3. Assemble the coil screws.
   Items used: 2 - 1/2" #6 Screws, 2 #6 Nuts.
   Locate the Coil location on the circuit board. Insert a 1/2" screw through the circuit board from the bottom in the hole to the left of the coil schematic symbol. Use a #6 nut from the top to fasten the screw to the circuit board.
   Repeat for the hole to the right side of the coil schematic symbol.

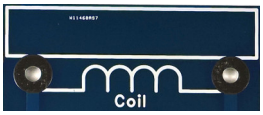

4. Assemble the posts.
   Items used: 6 - 3/8" #6 Screws, 6 #6 Nuts.
   Push a 3/8" #6 screw through the circuit board from the bottom. Use a #6 nut from the top to fasten the screw to the circuit board.
   Repeat for the remaining holes in the circuit board.

Crystal Radio Kit 4
Mike's Electronic Parts, LLC

Assembly Continued

5. Assemble the coil.
   Items used: 1 - Ferrite Loopstick Antenna, 2 - Coil Clamps, 2 - #6 Washers, 2 - #6 Nuts.
   Locate the Coil location on the circuit board. Place the solder lugs over the screws at the end of the Coil symbol. Slide a coil clamp over each end of the ferrite rod. Place the coil clamp over the solder lug and secure with a #6 washer and #6 nut at each end.
   Double check that the coil is between the coil clamps and that the wires are not being pinched by the coil clamp.

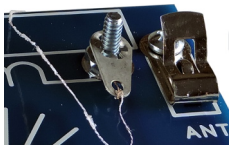

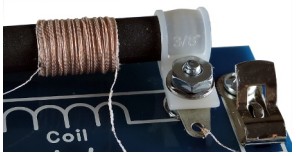

6. Assemble the 47K resistor
   Items used: 1 - 47K Resistor, 2 - #6 Washers, 2 - #6 Nuts.
   Locate the 47K Resistor location on the circuit board. Place the resistor across the nuts. Bend each end of the wire around the screw. Place a #6 washer and #6 nut on top of the wire. Tighten the nut to secure the resistor.

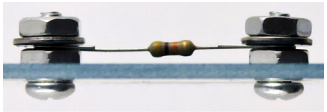

7. Assemble the .001uf Capacitor and 1N34A as described in Step 6 above.

8. Assemble the Knob.
   Attach the Knob shaft using the knob shaft screw to the variable capacitor shaft on the top side of the circuit board. Tighten the shaft screw. Turn the knob shaft to the full left position. Loosen the set screw in the side of the knob. Slide the knob over the knob shaft. Align the dot on the top of the knob with the far left dial markings on the circuit board. Tighten the set screw. The dot on the knob should point to the circuit board markings from full left to full right of the knob rotation.

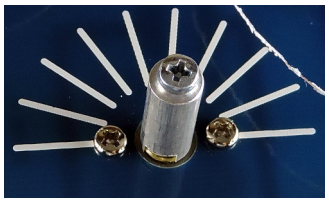

Crystal Radio Kit 4
Mike's Electronic Parts, LLC

Assembly Continued

9. Attach the earphone.
   Items used: 1 - Ceramic Earphone.
   Locate the Fahnestock clips marked EAR. Push down on the fahnestock clip. Slide the end of the earphone wire through the opening. Release the fahnestock clip. Note: Do not clip the wire by the plactic coating. The bare metal portion of the wire must be clamped by the fahnestock clip.

Antenna

The bare end of the wire connects to the fahnestock clip marked ANT. The antenna wire should be placed as high as feasible. Run the antenna horizontal to the ground in as straight a line as possible. If there is not enough space to run the antenna in a straight line, the wire can be placed in an arc or loop shape as well. Experiment with the antenna placement and shape to achieve the best results.

Do not use the antenna outdoors during bad weather.

Ground

The use of a ground is optional. There are many options for connecting a ground. You can just lay the ground wire along the floor in the opposite direction from the antenna. You can connect the end of the ground wire to a metal object, like a metal desk. You can also connect the end of the ground wire to a physical earth ground if you have access to one. Some metal plumbing in a home may be physically earth grounded for example.

Congratulations! Your Crystal Radio is ready to use.

Use the tuning knob to locate local radio stations. Keep in mind that the crystal radio will only receive strong stations. Unlike a traditional battery powered radio, the power to drive the sound you hear is from the signal the antenna is able to pick up. Experiment moving the antenna to different locations to increase stations and/or volume.

If you have any questions at this stage, please refer to the photo on page 1 and double check any directions and photos applicable.

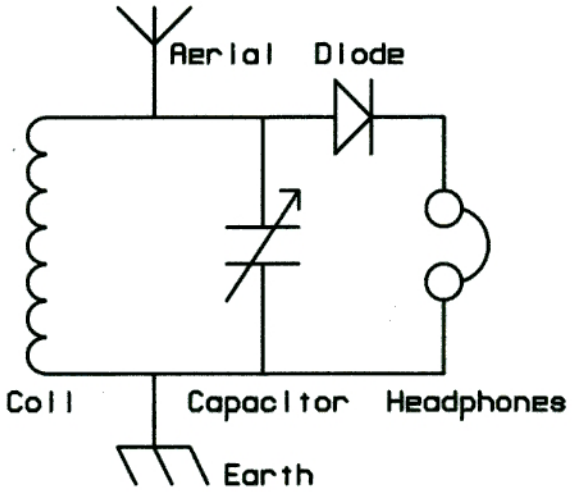

Basic Circuit

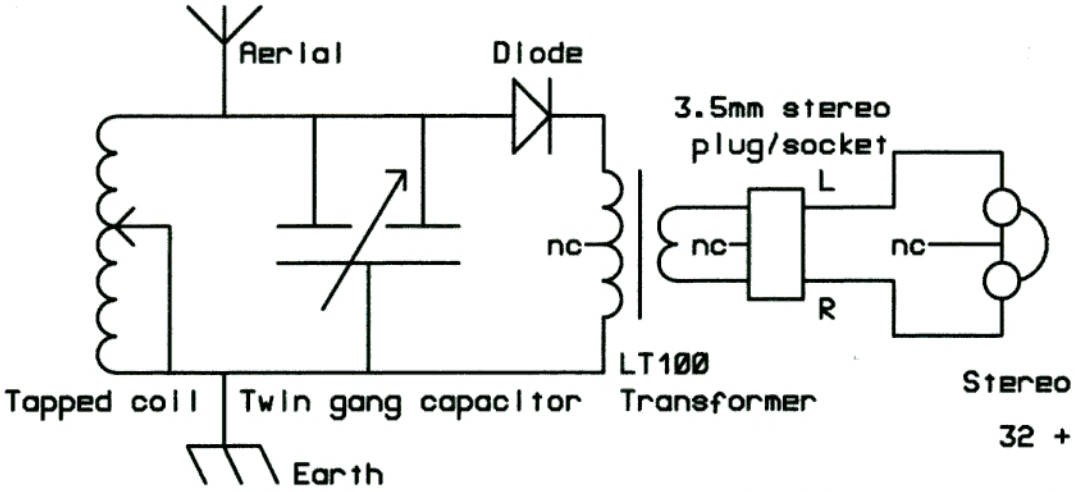

Practical Circuit

(common headphone connection not used)

nc = no connection

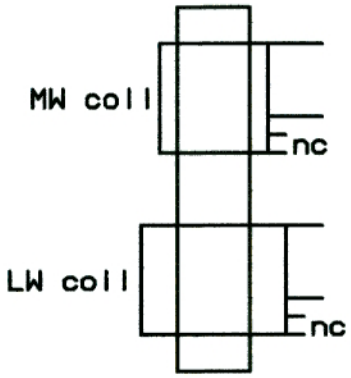

Ferrite rod alternative

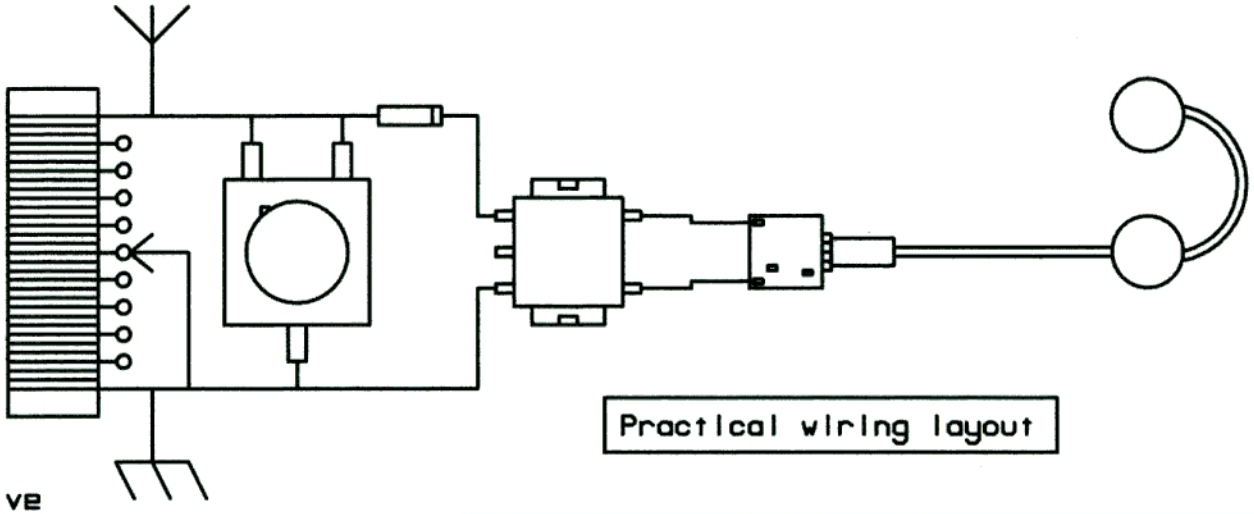

Practical wiring layout

THIS DRAWING IS THE PROPERTY OF THE OPEN UNIVERSITY AND MAY NOT BE REPRODUCED OR DISCLOSED TO A THIRD PARTY WITHOUT WRITTEN PERMISSION. © 00 OPEN UNIVERSITY

DRN:- FGR	TITLE
DATE:- 11/05/2007	OU BBC Crystal Set
JOB No:- 2625	
ISSUE:- 1	

IMPROVED CRYSTAL RECEIVER FOR THE MEDIUM WAVE (AND SHORTWAVE)

(2003)

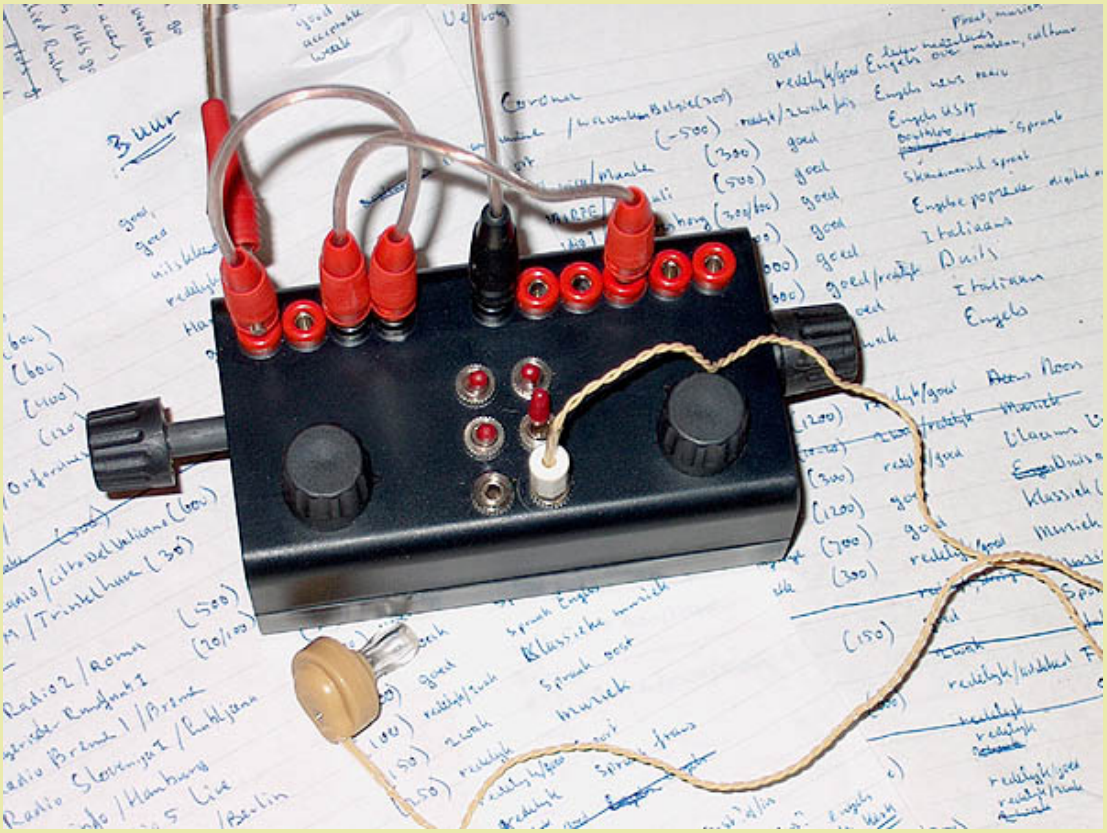

The improved crystal receiver.

WHAT YOU CAN HEAR WITH SUCH A SIMPLE CRYSTAL RECEIVER

All stations are heard **without using any amplifier!**
Just the passive diode detector and crystal telephone are used with a 20 meter long wire antenna at a height of 4 to 5 m!
Total listening time during 2 days was only 3 to 4 hours!

Frequency	Station	Power	Quality	Remarks
621	RTBF-Belgium (Waver-Overyse)	300	acceptable	031129 French
648	BBC Worldservice (Orfordness)	500	good	031128 English
675	Arrow Radio The Netherlands (Lopik)	120	good	031128 Dutch + Music
693	BBC Radio 5 Live	150	acceptable	031128 English
747	Radio 1 The Netherlands (Zeewolde)	400	strong	031128
765	Radio Suisse Romande (Sottens)	600	strong	031129 Music + French

801	Bayerischer Rundfunk 1	100	acceptable	031128 Deutsch + Music
846	RAI Radio 2 (Roma)	500	acceptable	031128 Italian
864	France Bleu (Villebon sur Yvette)	300	good	031129 Music + French
873	AFN Power Network (near Frankfurt)	150	good	031129 Sport USA
900	RAI Radio 1 (Milano)	600	good	031128 Italian
909	BBC Radio 5 Live	-200	good	031128 English about sport
918	Radio Slovenija 1 (Lubljana)	300	good	031128 East European
927	RAI Radio 1 (Milano)	600	good	031128 Italian
927	VRT Radio 1 Belgium (Wolvertem)	300	good	031129 Vlaams about football
936	Radio Bremen (Bremen)	50	weak	031128 Music
945	France Info (Toulouse)	300	acceptable	031128 French
954	CZE Cesky Rozhlas	300	good	031129
963	Radio Finland (Pori)	600	acceptable	031129
972	NDR info (Hamburg)	100	weak	031128 Deutsch
981	Radio Varna?? Bulgary (Varna)	150	weak	031128
990	Deutschland Berlin (Berlin)	100	acceptable	031128 Classic music
1053	Talksport UK	-500	acceptable	031128 Sport
1062	DRP3 Denmark (Kalundborg)	250	acceptable	031128 English
1089	Talksport UK	400	good	031128 English about sport
1134	Voice of Croatia (Zadar)	600	strong	031128
1143	Voice of Russia (Bolshakovo)	150	acceptable	031128
1179	Sveriges Radio 1 (Solvesborg)	-600	good	031128 Swedish?
1188	VOA / RFE Hungary (Marcali)	500	good	031128
1197	Voice of America (Munchen)	300	good	031128 English
1215	Virgin Radio UK	-200	good	031128 English + Music

1296	BBC Worldservice (Orfordness)	500	strong	031128
1314	NRK1 Norway (Kvitsoy)	1200	good	031129 Norwegian language?
1332	RAI Radio 1 Italy	300	acceptable	031128 Italian
1386	KAL Voice of Russia (Bolshakovo)	1200	good	031129 German
1395	Radio 10 FM The Netherlands (Trintelhaven)	30	good	031128 Dutch + Music
1395	Radio Tirana (Fllake)	500	strong	031128
1422	Deutschland Funk (Heusweiler)	600	good	031128 Deutsch
1440	RTL Radio (Marnach)	-1200	acceptable	031128 Deutsch
1467	Transworld + Vatican (Roumoules)	1000	good	031128 Music, various languages
1494	Voice of Russia (St. Petersburg)	600	acceptable	031128
1512	Vlaanderen Belgium (Wolverthem)	300	good	031128 English, Dutch
1530	Vatican Radio (Citta d. Vaticano)	600	good	031128 Italian
1539	Evangeliums Rundfunk (Mainflingen)	700	good	031129 Classic music (opera)
1630	Radio Corona The Netherlands	?	good	031128 Local Pirate station

What is the trick

That is an extra antenna tuner to improve the selectivity and sensitivity!

And there is the fading! Stations vary considerably in strength due to fading. Sometimes they are quite strong for a few minutes, then they disappear and other stations can suddenly be heard. So be patient, keep listening, tune the antenna tuner to maximum sensitivity or selectivity and let the fading do its work.

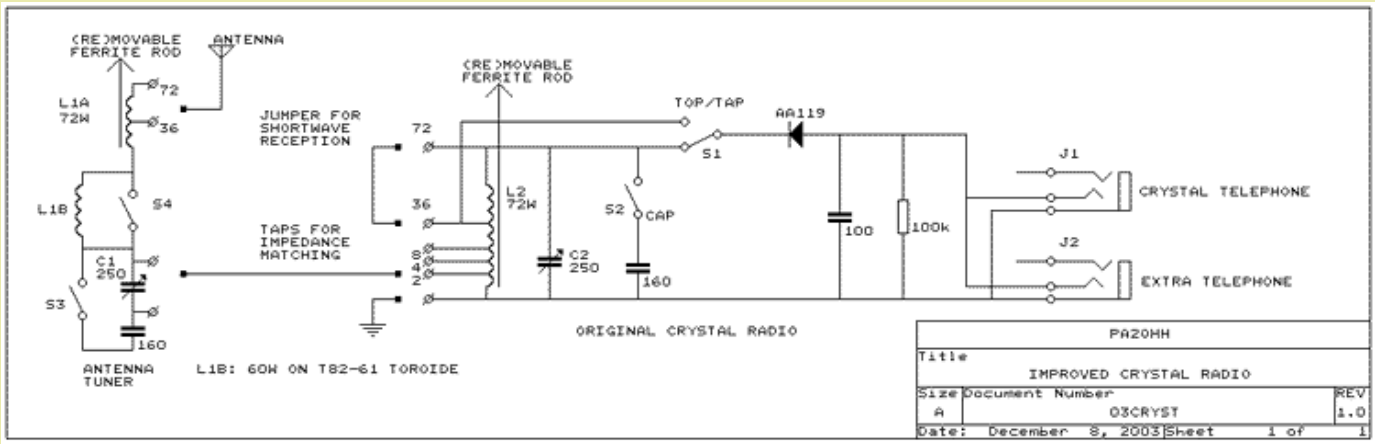

Diagram of the improved crystal receiver with antenna tuner.

big diagram

Top view

Description
This passive receiver is a combination of an antenna tuner with an original crystal receiver. The antenna tuner improves the sensitivity and selectivity considerably as it tunes the antenna to resonance for the reception frequency. It also suppresses breakthrough of shortwave stations.
The tuner and receiver coils are wound on 8mm ferrite rods (0.3 mm copper wire). The rods are provided with a knob and movable, so the value of L1 and L2 can be varied by moving the rods in and out the coils. For shortwave reception they are removed completely.
With L1B (switch S4), the inductance can be increased for the lower end of the medium wave band, the capacitors C1 and C2 can be increased with an extra 160 pF with S3 and S2. With S1, the diode can be connected to a tap instead of the top of L2. Below 1 MHz, the top position was the best one, the tap did only decrease the sensitivity without affecting the selectivity. Above 1 MHz, the tap gave the best selectivity without losing sensitivity.
S2 is added to cover the frequency range below 750 kHz as the value of the variable capacitor was too low or the number of windings of L2 should have been a little more... Connect the tuner part with a jumper wire to that tap of L2 that givest the best selectivity or best sensitivity.

Inside view

How to use the antenna tuner
The antenna tuner tunes the antenna to resonance. Impedance matching is done by choosing the optimum tap of L2.
With jumpers, the tuner can be used in 3 ways:

1. L1 and C1 in series. This is the preferred method with maximum selectivity. Tuning is done by C1 and L1A. Selectivity is maximal if L1B is switched in series with L1A.
2. L1 only, for the lower frequency range if it is not possible to tune the antenna with method 2. Tuning is done by moving the ferrite rod in and out L1A.
3. L1 and C1 in parallel, for the lower frequencies and short antennas (see first picture). Tuning is done by C1. However, use of this method should be avoided, take one of the next two if possible.

However, it depends on the antenna etc. which combination is the best. And of course you need a (good) ground system! I use the central heating for that.

Hanging up the antenna is a real outdoors activity!

BACK TO INDEX PA2OHH

How to make a batteryless (crystal set) radio

July 21, 2012

CRYSTAL SET

The simplest radio receiver, known as a Crystal Set, consists of nothing more than a coil, tuning capacitor, diode detector, and a pair of earphones. A typical circuit diagram for a Crystal Set Radio is given below where inductor or coil L1 is tuned by variable capacitor VC1 to the transmitter frequency. Diode D1 demodulates the signal, which is fed straight to the earphones. There is no amplification.

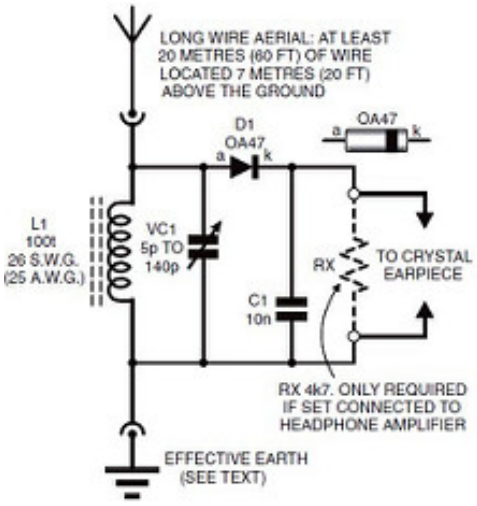

CLICK HERE FOR BIGGER PHOTO

** You can use 1N34 Germanium diode in place of OA47*

A long (at least 20 metres), high (17 metres or more) aerial and a good earth (a buried biscuit tin or a metre of copper pipe driven into damp ground) are required in order to ensure audible headphone reception. The earphones originally used with these receivers had an impedance of around 4000 ohms and were very sensitive (and heavy and uncomfortable). They are no longer available, but a crystal earpiece, which relies on the piezoelectric effect, will give acceptable results.

Low impedance ”Walkman” type earphones are NOT suitable.

Component details:

Resistor- RX-4.7k, 0.25 W- only required if set is connect to audio amplifier

Capacitors- C1- 10nF disc ceramic VC1- 5p to 140p, polythene dielectric variable capacitor.

Semiconductors: D1: OA47 or 1N34- Germanium Diode

Miscellaneous: L1- Ferrite Rod, 100mm(4 inch)x9mm/10mm dia., with coil.

Crystal earpiece and jack socket to suit; plastic control knob; plastic insulated flexible cable for aerial wire, downlead and earth connection, 30 meters minimum; buried biscuit tin or 1 meter of copper pipe for earth system; 50gm reel of 26SWG enamelled copper wire, for tuning coil; card and glue for coil former; multistrand connecting wire; crocodile clips or terminals for aerial and earth lead connection; solder, etc.

READ MY EXPERIENCES- HOW EASILY I MADE A BATTERYLESS RADIO

DRAWBACKS

Quite apart from the absence of amplification, two factors seriously limit the performance of crystal receivers. Germanium diodes become increasingly reluctant to conduct as the applied voltage falls below 0.2V, and this makes the receiver insensitive to weak signals. Silicon diodes have a threshold of around 0.6V, and are, therefore, unsuitable for circuits of this kind.

** Silicon diodes like 1N4001 are not suitable*

The earphone loading imposes heavy damping on the tuned circuit, hence, reduces its ability to separate signals. With such low selectivity insensitivity can be a blessing, and crystal sets are normally only capable of receiving a single, strong transmission on the long and medium wavebands. They will sometimes receive more than one if a shortwave coil is fitted.

The aerial and diode can be connected to tappings on the tuning coil in order to reduce damping, but the improvement in selectivity is usually at the expense of audio output. When valves cost a week's wages and had to be powered by large dry batteries and lead/acid accumulators, the construction of simple receivers of this kind could be justified. With high performance transistors now costing only a few pence

or cents, crystal sets are now regarded as ‘nostalgic pieces”. Some readers may, however, wish to build one out of curiosity, or for the novelty of having a receiver that **does not require a power supply.**

CIRCUIT DETAILS

Ferrite loop aerial L1 and polythene dielectric variable capacitor VC1 form the tuned circuit. Point contact germanium diode D1 (1N34 or OA47) demodulates the signal; capacitor C1 bypasses residual r.f. (radio frequency) to earth and also exhibits a reservoir action, enabling the a.f. (audio frequency) output to approach its peak value. The recovered audio signal is fed directly to a crystal earpiece. Signal voltages introduced in the ferrite loop aerial by the radiated magnetic field are much too much to produce an output from the detector, and the component is used here simply as a tuning coil. The ferrite core does, however, reduce the number of turns required for the coil winding, thereby reducing its resistance and increasing its audio quality.

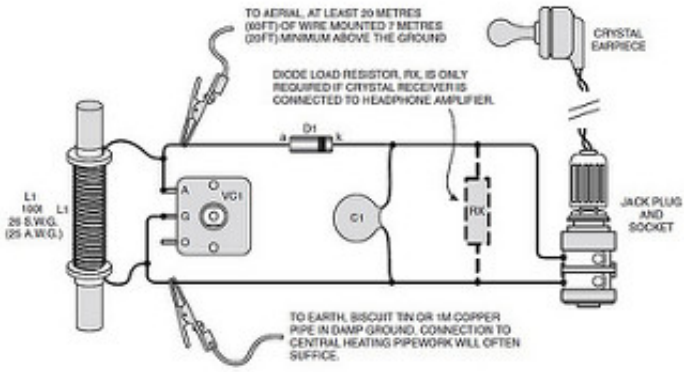

GET BIGGER PICTURE

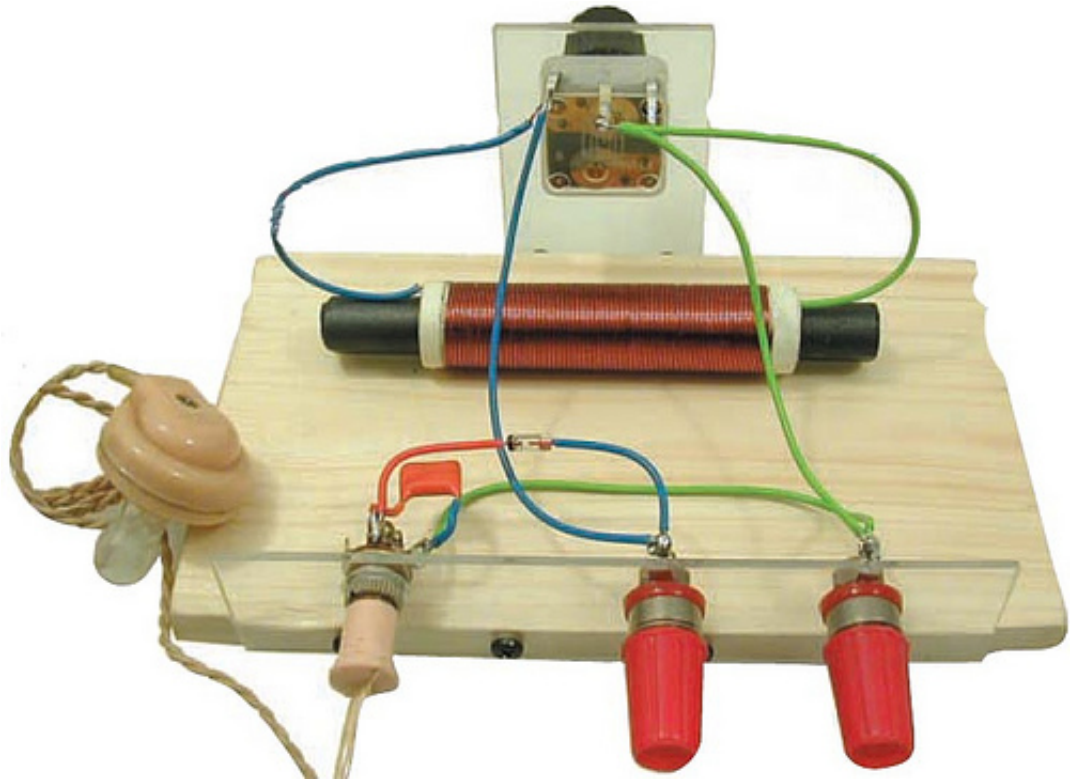

COIL DETAILS

Full construction and winding details for the ferrite tuning/ aerial coil L1 are shown in figure.

The coil is made from 26 SWG(25 AWG) enamelled copper wire, close wound on a cardboard former.

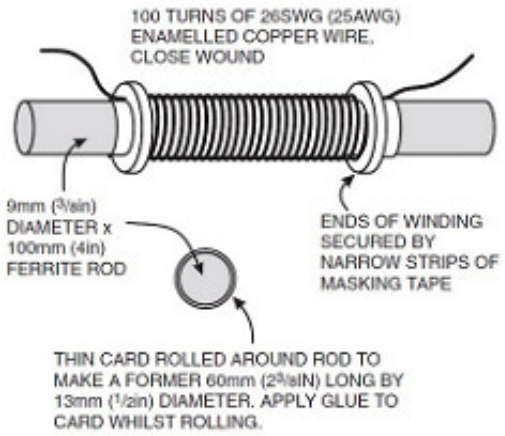

The r.f. bypass capacitor C1 can in practice, be omitted with no noticeable reduction in

performance. However, if the set is to be connected to either the headphone amplifier or speaker amplifier decribed next month, the component together with diode, load resistor, RX, must be included.

AMPLIFICATION Audio frequency amplification, after the diode detector will permit the use of low impedance Walkman type earphones or even loud speaker operation. It will do nothing, however, to overcome the diode's insensitivity to weak signals. For this we must have radio frequency amplification of the signals picked up by the aerial before they reach the detector(The standard circuit for a transistor portable receiver has three stages of radio frequency amplification ahead of the diode).

For amplification, you can use a simple audio amplifier using LM386.

READ MY EXPERIENCES ON MAKING A BATTERYLESS RADIO

WATCH THESE VIDEOS:

BuildCircuit proudly recommends EasyEDA for circuit and PCB design

EasyEDA: A Powerful Free Circuit, Simulation & PCB Design Tool

Register now to use it for free. No Need to download. Lots of resources and Step by step tutorials

Loop-Stick Crystal Set

Dan McGillis

Loop-Stick Crystal Set

Fri Sep 26, 2008 2:25 pm

I wanted a simple crystal set that would highlight Mike Peebles' rock stand ('cause I really like it) and one that could serve as a nucleus for a project radio. This little "loop stick" radio seems to be just the ticket.

0.5"x4" Amidon ferrite-61 rod,
10t cw #24 magnet wire for the antenna coupling coil,
55t cw 165/46 litz (about 230 uH),
10-410 pf Jackson Bros. capacitor,
Peebles rock stand + crystal, or a diode.

The antenna-ground is connected at the top terminal block and the audio comes out the bottom terminal block.

It works pretty good by itself with a piezo earpiece. But it really perks-up when some bells & whistles are added. Like an antenna coupling capacitor, and/or a Bogen+Benny at the output, and/or a sensitive headset, and/or a loose coupled antenna tuner, etc., etc.. It's kind of fun to fiddle around with it.

A problem I've always had is DUST. I'm banished to the basement for crystal set work and the sets seem to accumulate a thick coating of dust in short order if they're not covered-up. But I wanted this little setup to be out in the open so the grandkids could see it & maybe increase their interest in radio. (It's hard to compete with video games!)

I found some $1.50 clear plastic storage boxes - with lids - at Bed Bath & Beyond that make nice dust covers. The radios' wooden base is screwed to the inside of the lid and the box part then sits on top. No dust on the parts and you can see the inner workings through the plastic. The inside clearance is almost 4" so there's plenty of room in there - especially if ferrite-assisted coils are used.

Not elegant, but it works.

73, Dan

OErjan

Fri Sep 26, 2008 3:38 pm

heh, great idea and a good looking set,
I store my competition rig (ATU, detector unit, Phones, ultimatch2...) in a similar box, just MUCH larger (22liters), no

wooden base screwed to the top, just store.
I also use the box as table for the rig in use (it is Poly Propylene so low loss at RF).

Last edited by OErjan on Fri Sep 26, 2008 3:43 pm, edited 1 time in total.

peeblesoriginals

Fri Sep 26, 2008 3:42 pm

Dan,

Looks great!

Mike

corne

Tue Sep 30, 2008 6:01 am

Hi Dan,

Nice set and I like the dust cover idea.

Corne

Dan McGillis

Tue Sep 30, 2008 2:42 pm

Thanks fellas.

And thanks for all the work you guys have posted -- I sure have learned a lot from you nice folks.

73, Dan

homebrew

Tue Sep 30, 2008 9:06 pm

Does anyone know why production loopstick antennas are multi layered?

Ham-er

loopstick layering

Tue Sep 30, 2008 11:53 pm

> **homebrew wrote:**
> Does anyone know why production loopstick antennas are multi layered?

Good question Homebrew,

My best guess is cost(maunfacturer being cheap). As most of the commercial "loopstick" are probably intended to go into cheap transistor superhet desing radio,s, the loopstick doesnt need the best Q or efficiency.
In these sets the selectivity is controlled by the IF stage, and the sensitivity by amplification either in the RF amp if it has one, or the converter transistor if not, and by the AGC.

Can anyone verify my guess?

Dan McGillis

Tue Oct 14, 2008 12:45 am

To complete the story - I used the little loop-stick radio in the just finished '08 Sprint contest. It was single tuned (no antenna tuner) and no diode was used - only "crystal" detectors, primarily galena. Kyocera KBT-44SB-1A piezo elements made-up the headset. I did put a variable capacitor in the antenna line to vary the coupling.

The log is shown below:

heard (daytime) without Bogen + Benny

#	DATE M-D-06	TIME UTC	FREQ khz	STATION call	detector best	detector loud !	detector stable	detector 2nd best
1	10/10/2008	1250	790	waeb	galena 1	PbTe	pyrite	galena 2
2	10/10/2008	1253	1040	wnje	galena 1	PbTe	pyrite	galena 2
3	10/10/2008	1254	1060	kyw	galena 1			galena 2
4	10/10/2008	1255	1100	wgpa	galena 1		pyrite	galena 2
5	10/10/2008	1256	1230	weex	galena 1		pyrite	galena 2
6	10/10/2008	1257	1320	wtkz	galena 1	PbTe	pyrite	galena 2
7	10/10/2008	1258	1470	wsan	galena 1	PbTe	pyrite	galena 2
8	10/10/2008	1259	1600	whol	galena 1			
9	10/10/2008	1347	710	wor	galena 1			
10	10/10/2008	1558	1210	wpht	galena 1			
11	10/10/2008	1604	560	wfil	galena 1			
12	10/11/2008	27	660	wfan	galena 1			
13	10/11/2008	33	700	wlw	galena 1			
14	10/11/2008	34	720	wgn	galena 1			
15	10/11/2008	35	740	cfzm	galena 1			
16	10/11/2008	36	780	wbbm	galena 1			
17	10/11/2008	38	900	chml	galena 1			
18	10/11/2008	39	1030	wbz	galena 1			
19	10/11/2008	52	1110	wbt	galena 1			
20	10/11/2008	115	1660	wwru	galena 1			
21	10/11/2008	121	860	cjbc	galena 1			
22	10/11/2008	122	840	whas	galena 1			
23	10/11/2008	128	650	wsm	galena 1			
24	10/11/2008	132	600	loud spanish	galena 1			
25	10/11/2008	134	550	wgr	galena 1			
26	10/11/2008	147	1080	wtic	galena 1			
27	10/11/2008	149	1170	wwva	galena 1			

Although I didn't spend a lot of time listening, this simple set will bring-in a lot of stations.

The 2 close-by stations (10 km @ 3.6kW & 11 km @ 5kW) are VERY loud -- just right for a grandkids' first taste of crystal radio. Adding a coupling capacitor to the antenna line tamed the "flame-throwers" a bit and then more stations could be heard.

At night, DX stations were strong and in-the-clear. Easy,pleasant listening.

The detector stands' whisker adjustment was smooth and very stable -- even a grandpa could do it When a VERY light contact to the crystal was achieved, the set's selectivity improved greatly. A heavier hand produced broader signals. The effect was dramatic to hear.

The addition of a Bogen + Benny makes a worthwhile improvement -- as everyone here knows.

As-is, it's a kid-friendly, easy to operate, well behaved little set.

When a decent (high Rd) diode like an FO-215 replaces the crystal detector, and an antenna tuner coil - like the one at

viewtopic.php?t=1132

is loosely coupled to the set - there's DX all over the dial. Fun stuff.

73, Dan

FtForger

Nice results...

Tue Oct 14, 2008 5:29 pm

Nice results.

My only problem was that I was never able to find a link to the 08 contest for rules/entry info etc...

OErjan

Tue Oct 14, 2008 8:08 pm

here you are FT, sadly somewhat late.
http://crystalradio.us/crystalsprint/index.htm

foolsgolden

Sun Dec 21, 2008 3:13 pm

i like the incredibly long stick fr0m older portables winding my own
enamald wire round em and tere easy to mount my nostalgia compells
me to usehome brue air cores and vario couplers my next expariment
is a tribute to marconi hes the italian stalion god fater of radio.

gusnaz

Sun Dec 21, 2008 3:23 pm

> Not elegant, but it works.

Elegance is in the eye of the beholder!

I believe it to be elegant.

Gus

golfguru

Sun Dec 21, 2008 8:52 pm

> my next expariment
> is a tribute to marconi hes the italian stalion god fater of radio.

Sounds good Goldy, keep us posted.

exray

Sun Dec 21, 2008 11:45 pm

Thats really nice, Dan. I could use a cover like that over my whole shack I recently built the breadboard rcvr and audio amp that I was showing off here a few months ago. They already look somewhat "vintage" with the tarnished brass.

foolsgolden

Tue Dec 23, 2008 2:50 am

yah dont have camra yet till after holidays but think out side the ciggar box a varyo copler w tuner selector {tikler coyle} wt optional
det/amp/set three peace ciggar box S.E.T. amp is done with feed back gitar amp neatly hidden in ciggar box witth feed back
controle gain vol for 20 ohm all tgether new sp set.stil working on
other half took 1 ciggar left the rest @ nebors rpm shop for his cellibrations the amps not going to be entrd on contest but a
fools gold piyrite det mated with tuner will be.
feed back by the way on gitar amp. works well with tune n det. sets eavin after trans former and ceramic disc cap.
just good gon rite idea i gess might turn old amp box to all together new set or rf osc or somthinng. radio bord is new

The Mystery Crystal Set

This is my version of the famous Mystery Crystal Set from Australia. Click Here for a complete set of plans and a brief history of the set.

Front view showing the nice vintage Apex dial I used. The black plastic material is half-inch thick DuPont Delrin®. which looks like the old hard rubber that was used in the 1920's and 30's. It is very hard and machines easily as you can see by the fancy cut over the dial. This was the first time I used this, and I was very pleased with the results. The binding posts are authentic NOS 1920's style. The three on the left are for the various combinations of antenna and ground connections. The two on the right are for the headphones.

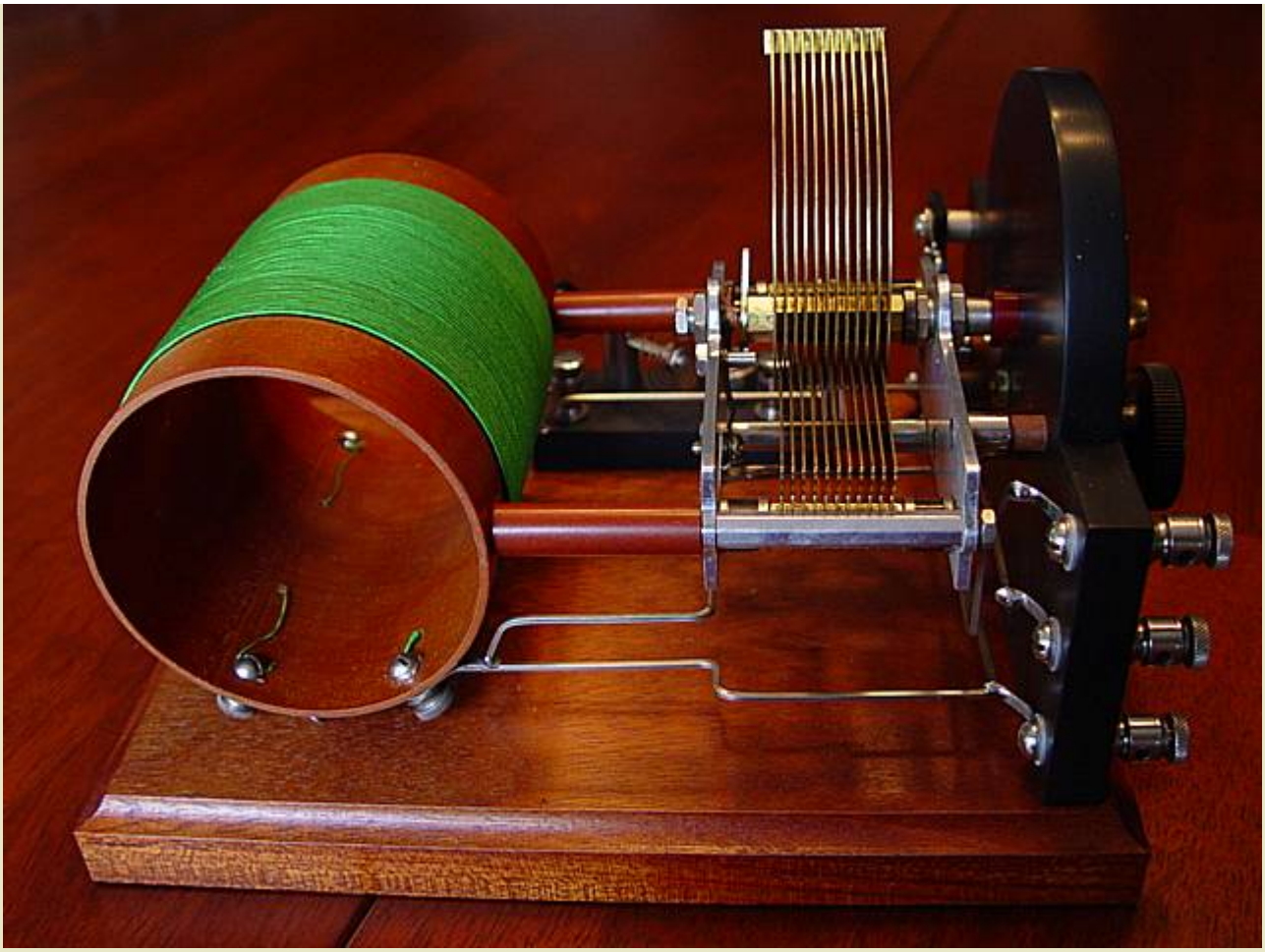

Left side view. I used solid mahogany for the base to which I applied 6 coats of clear gloss lacquer, sanding between each coat. There is no stain on the wood, what you see is the natural color. The wiring is all # 14 square buss wire I obtained from Antique Electronic Supply several years ago. Unfortunately, they were not suppling this size when I checked last. If you find a new source for this wire, please let me know. The variable capacitor is an AMSCO straight line frequency unit. Notice the shape of the plates. This makes the tuning spread more evenly across the dial. A very well made part. For the coil construction, I used a piece of three-inch diameter phenolic tubing. The wire is NOS authentic green silk-covered from my collection. I really hate to use any of this wire because it is irreplaceable. Again, if anyone knows a source for this kind of wire, please, please let me know. I usually apply a coat or two of polystyrene when I finish a winding, but I didn't coat this coil because I didn't want to risk changing the look of it. It seems to be very stable the way it is.

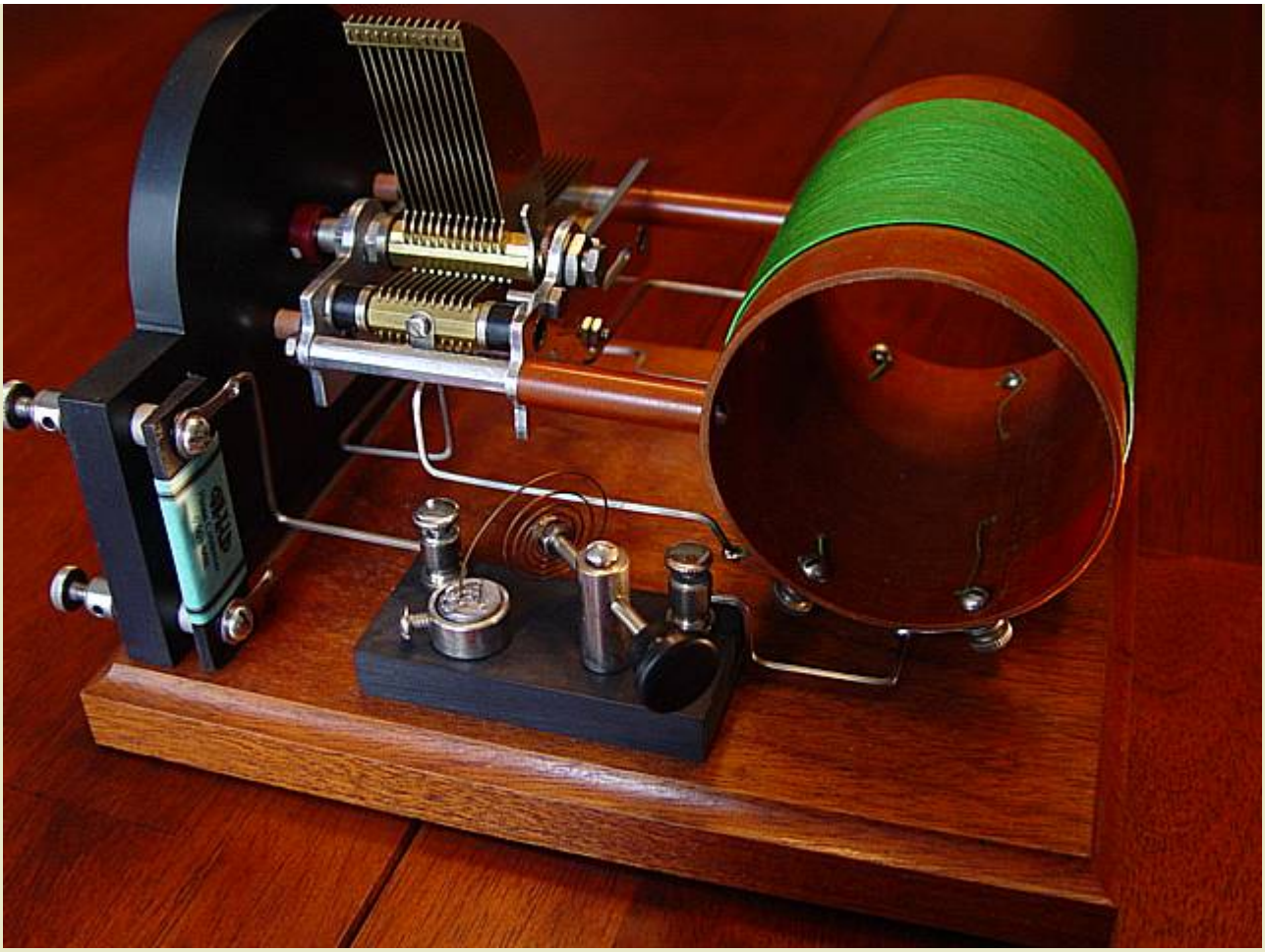

Right side view. Here, you can see one of my homebrew crystal detectors. The bypass capacitor is also homebrew with a scanned copy of an original capacitor label.

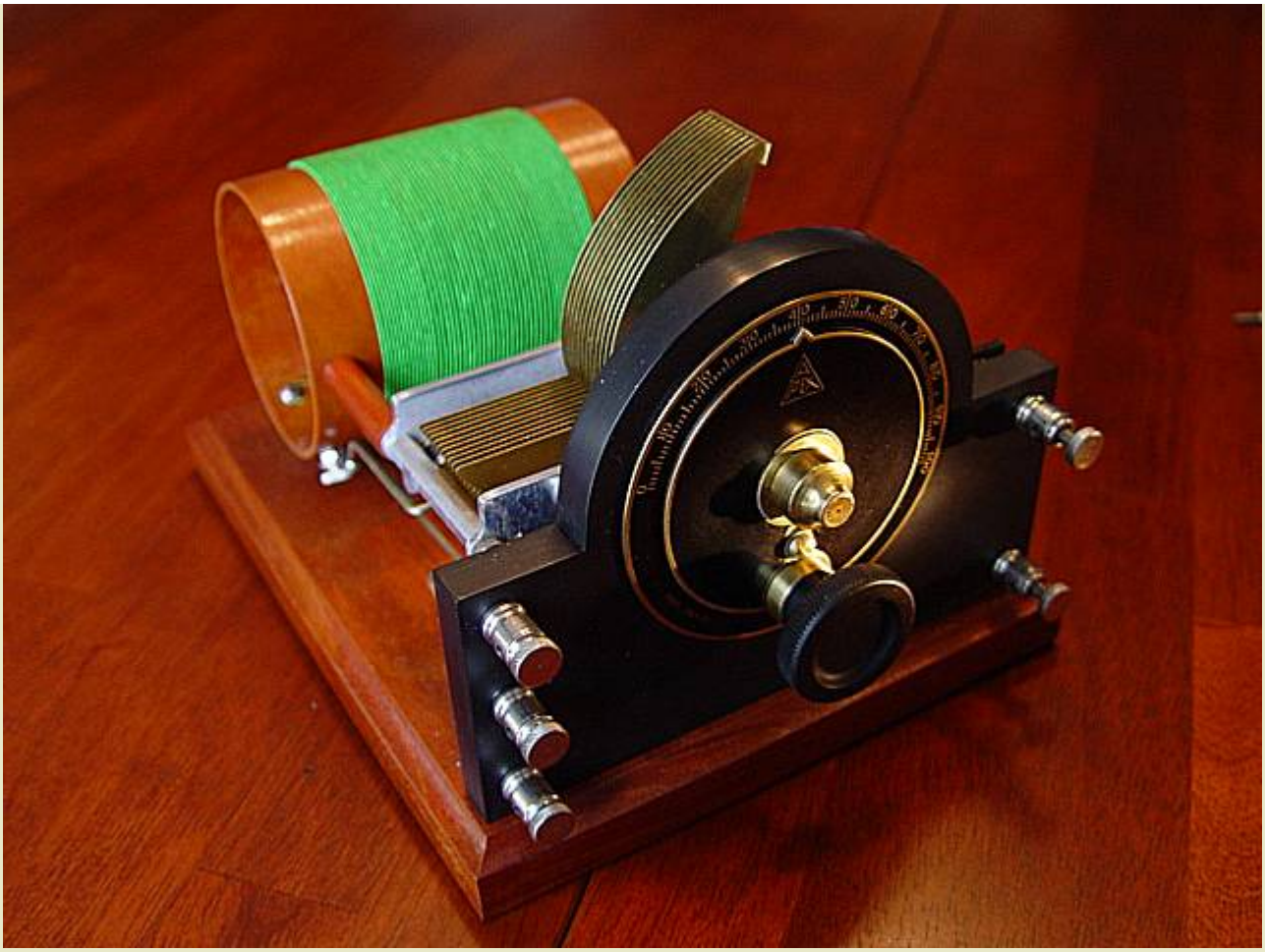

Another view of the AMSCO capacitor with the unusual plates. If you look closely at the coil, you can see the second winding in between the first.

A closeup of the detector. This is a CARCO style from the 1920's. Here again, I used Delrin® for the base with vintage terminals and all other parts made of brass which I nickel plated. I really like the CARCO catswhisker construction, it is easy to adjust and stays where you leave it. The crystal is a standard Galena mounted in low temp alloy.

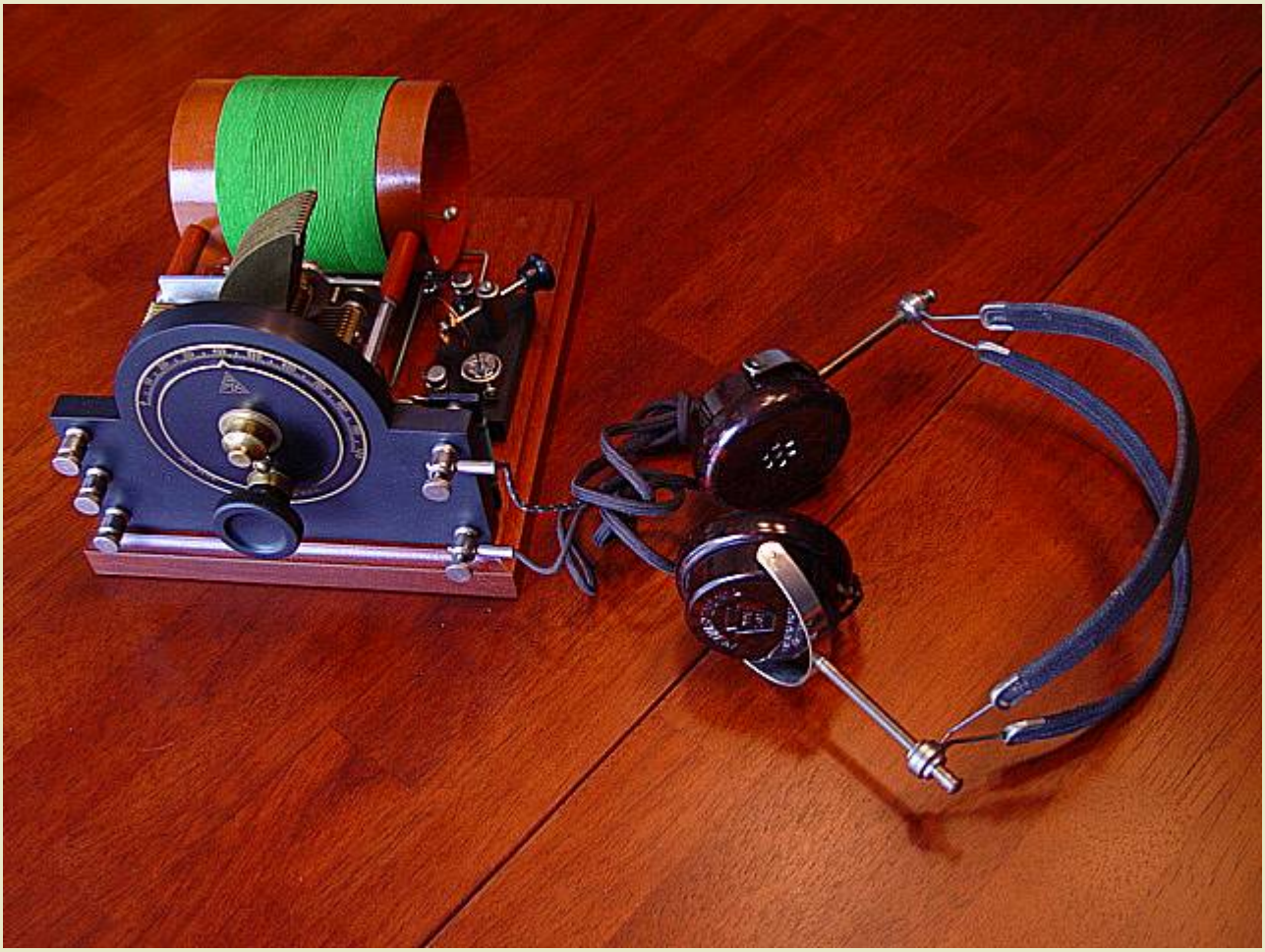

Here I am using a set of 3000 ohm Pennsylvania brand headphones. These work fairly well. I have had best results with a matching transformer and sound-powered phones. This set is very selective and you can get more volume on local stations by changing the input connections.

Click here to return to the VINTAGE HOMEBREW page

© 2006 ~ 2008 Michael R. Starcher ~ All Rights Reserved

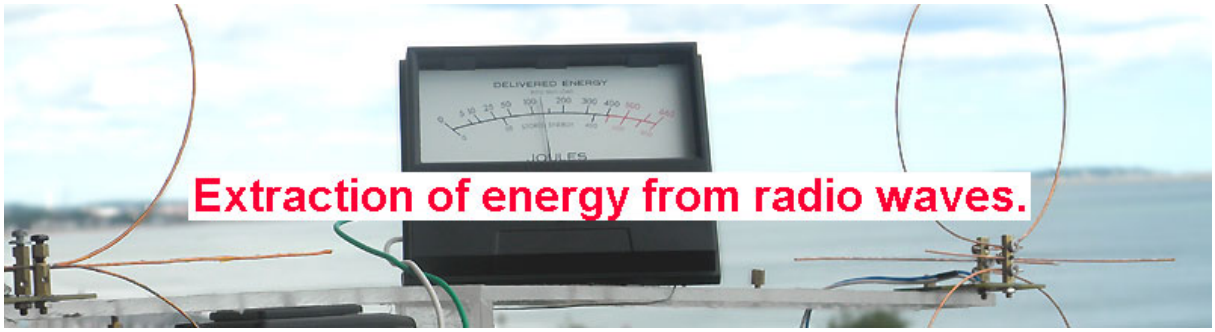

Simply, I like to check things.

Harvesting power from radio waves.

Assuming that most people came here to just find out how much energy can be obtained from radio waves, we will be short.

On the banner, two '**D**ual-**Loop**' directional antennas, designed specifically to collect power at 750MHz. One is connected to 100uA (700Ohms) head, and the average current you can see on it. Both antennas have 'on-board' rectifiers.

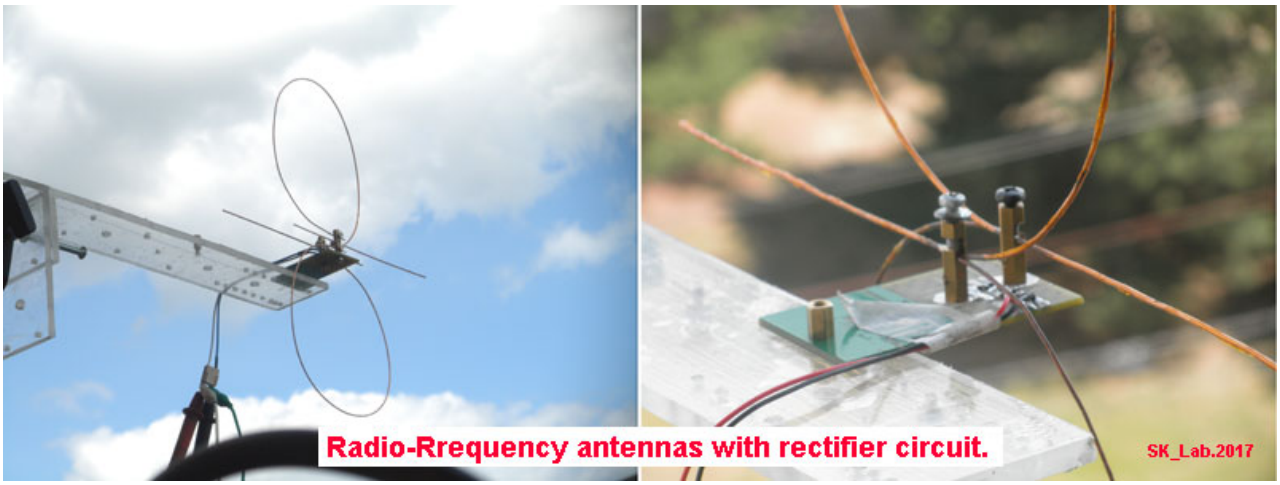

Reality is not as good as we would like. One antenna produces about 1 volt (at 10MOhms), and a current of about 0,4 mA (at 700OHms).

The circuit is simple as a crystal receiver. Diodes with capacitors work as a voltage doubler (rectifier). The remaining inductors and capacitors isolate the output from high frequency.

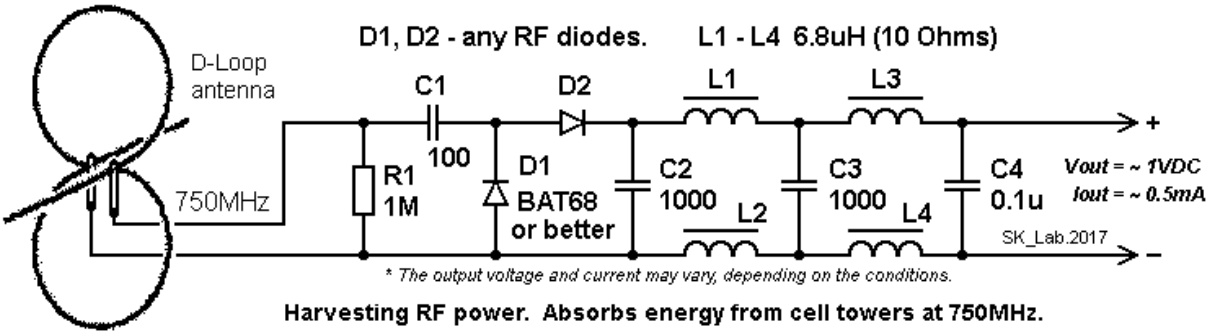

Any RF diodes with junction capacitance less then 1.5pF will be suitable for this application. See the end of this page for a suitable choice.

It's hard to believe, but the old style panel meter is the best indicator of the power that was obtained.

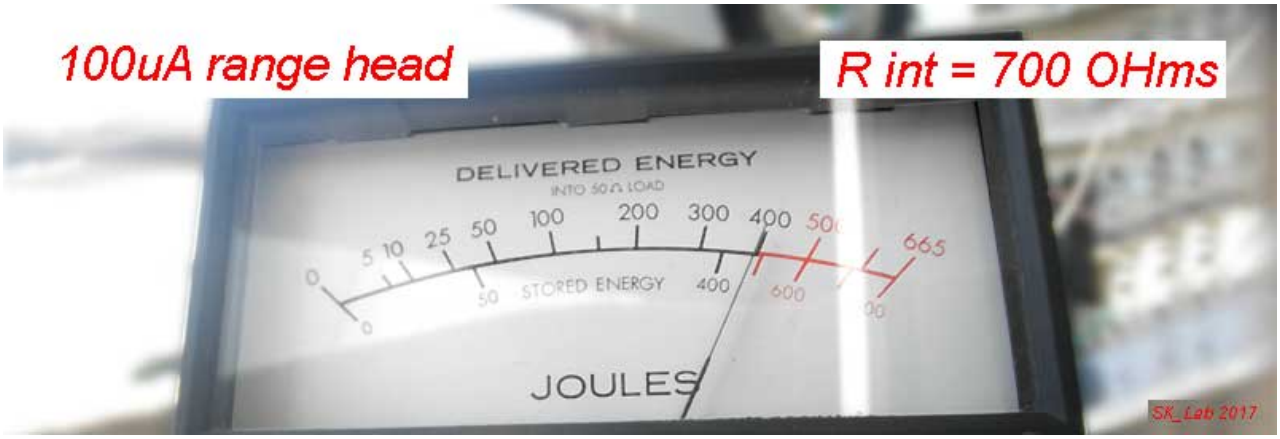

After simple calculations, the total power, received at the moment, is about 0.5mW.

It was a good, top result. But interesting to know what average power can be expected. A simple installation allows me to get more reliable results. We measure the open voltage (at 5 MOhms) and short current (at 4 Ohms) produced by one antenna. The measurement time for obtaining the average is about half an hour. Both multimeters work together to eliminate an accidental error.

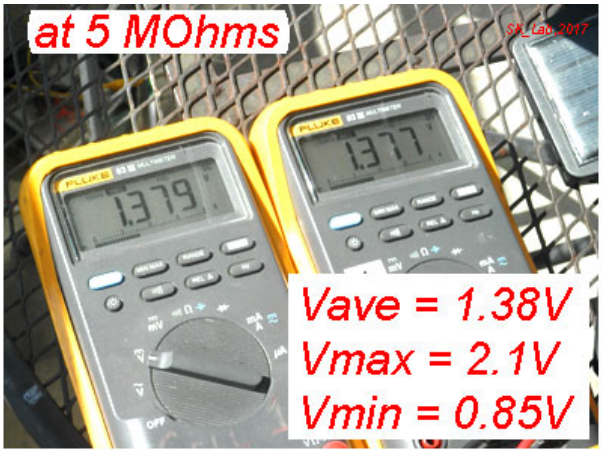

And here we return to reality. During the measurement time, the average power taken from the air by one antenna was ~0.02mW. Even the fact that the maximum power jumped to ~0.8 mW did not change anything.

For most people, these digits do not say anything. So let's move on to the practical side.

Suppose you want to light the LED. 0.02mW is not enough to light the LED even very, very dimly. One way to do this is to charge the capacitor and when enough energy is stored, discharge it through the LED.

Let's say you want to light a white LED (3V), with a current of 0.01A, for 0.1 second. It requires 3**V***0.01**A***0.1**sec**.= 0.003**J**oule. The antenna produces, an average, 0.00002W*1**sec**.=0.00002**J** each second. This means that to get the necessary energy (0.003J), you need to wait 150 seconds or 2.5 minutes.

But it is not all that bad. During the 24 hours, this simple setup with one antenna, can collect about 1.7**J** of totally free energy. This is enough that a data logger would work, and once a day transmit data via wireless or so. For example, a device (or LED) consuming 10mA at 3.6V can run at least 45 seconds per day on the stored energy.

In order to make this idea run, in your particular case, you need to:
a) find a 'hot spot' using any RF detector;
b) with any SDR Receiver find RF frequency with max. power;
c) make a simple antenna (Dual-Loop or so), add RF rectifier and enjoy 'free' energy :)

Yes. It's all. It's simple like that.

* A good article, about radio emission in London UK,(pdf): 'Ambient RF Energy Harvesting in Urban and Semi-Urban'.

In case of questions - address is below.

Poor Man's Electronics Web Page

Crystal Radio Project Links:

Back to main page
How to build it
Using the radio
How it works
Computer program

Crystal radio

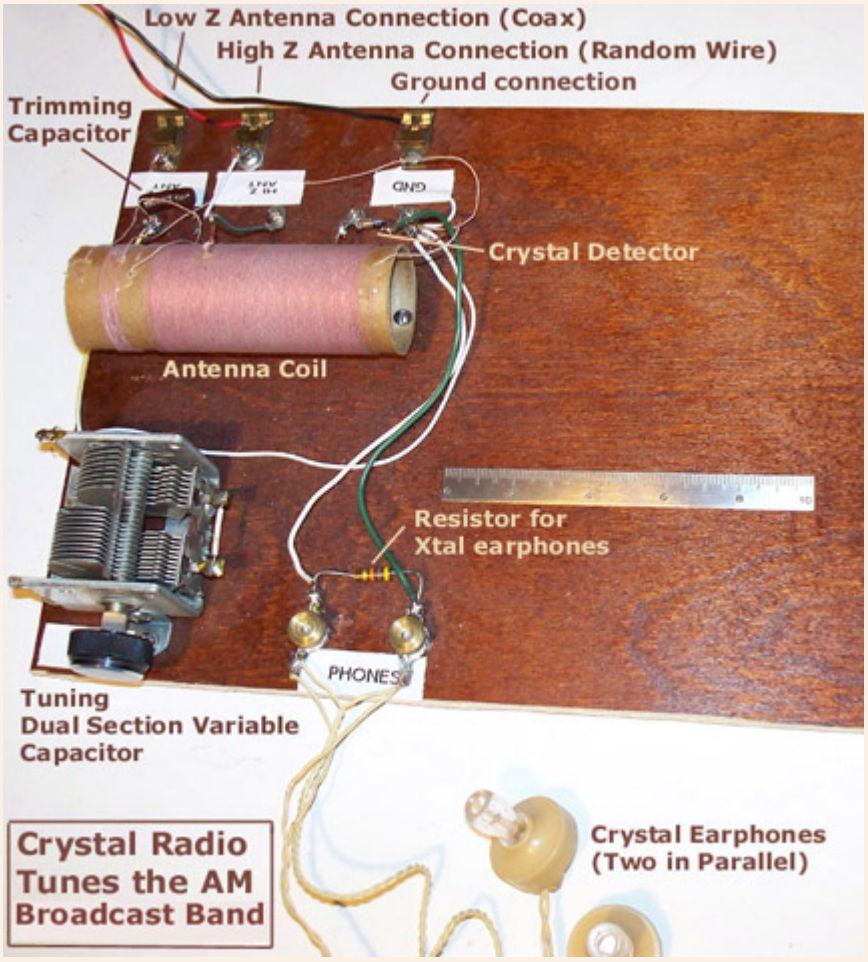

Build this Crystal Radio

A crystal radio is a radio that does not require a power source other than the energy contained in the signal being received. With a good antenna, like the random wire you can build by following the instructions on this web site, strong local stations will be very discernable during the day and at night even a few distant "skip" stations may be picked up.

Here's how to make the crystal radio:

First, you must gather the material. Here is a list of what you will need including a possible *poor man's* source: (If you can't locate a PME source, then try Radio Shack, E-Bay, or Mouser Electronics.)

- A scrap piece of wood about 8 inches square to build the radio on. I used a piece of 1/4" stained panel.
- Sensitive headphones or earphones. The best is the relative high Z (2000 - 4000 ohm) military style headphones. This type is hard to find and may be expensive, so you may use the very inexpensive ceramic earphones instead. Walkman type headphones or earphones will **not** work. I use two of the ceramic types connected in parallel, one for each ear, for increased volume.
- Variable capacitor (or condenser, which is another name for a capacitor.) You can find this device in an old tube or transistor radios. The air dielectric type is best for this project. That means the plates of the capacitor are separated by an air gap. The small variable capacitors found in pocket-sized transistor radios usually have a plastic dielectric. This type will work OK. Most of the variable capacitors found in radios will be dual section; that is, two capacitors on the same shaft. We will tie these two in parallel for increased capacitance -- shooting for about 450pF (picoFarads.) Find a nice knob that will fit on the shaft of the variable capacitor.
- Detector diode. A 1N34 or 1N60 will work great. You can find them in most transistor radios. They look like a small glass resistor. If you have to buy one, they are cheap -- less than a dollar apiece.

1N34 Diode.

- Terminations. You may use Fahnstock clips (I used these on the antenna and ground connections) or binding posts (I used these to connect the earphones.) Binding posts can be salvaged from an old telephone cell. In a pinch, use small double-nutted machine screws.

Fahnstock clip.

- Coil form. I used a 1-1/4" x 3-1/2" cardboard tube that was the center spool in a printing calculator paper roll. If you want to use a different diameter form, then use the computer program that you can download and run. It will calulate the number of turns of wire required based on varying coil form diameters and lengths.
- You will need about 50 feet of magnet wire. I used some Litz wire I had. It is 40/44 Litz which means 40 strands of #44 size. This turns out to be about #24 US Standard solid wire size. Litz wire is great for radio frequency coils. You can find Litz wire in CRT monitor or TV picture tube deflection coils. If you can't find a poor man's electronic free source, then this is one of the supplies that a PME guy should buy. You can purchase Litz wire at the Hobby Electronic Parts page. However, if you use solid enameled wire, the radio will work OK. Solid enameled type of wire can be salvaged from old relays, transformers, chokes, and solenoids.

The following pictorial diagram shows how to hook up the simple crystal radio. I provided connections for both a high impedance antenna such as the random wire or a low impedance antenna such as a coax fed dipole.

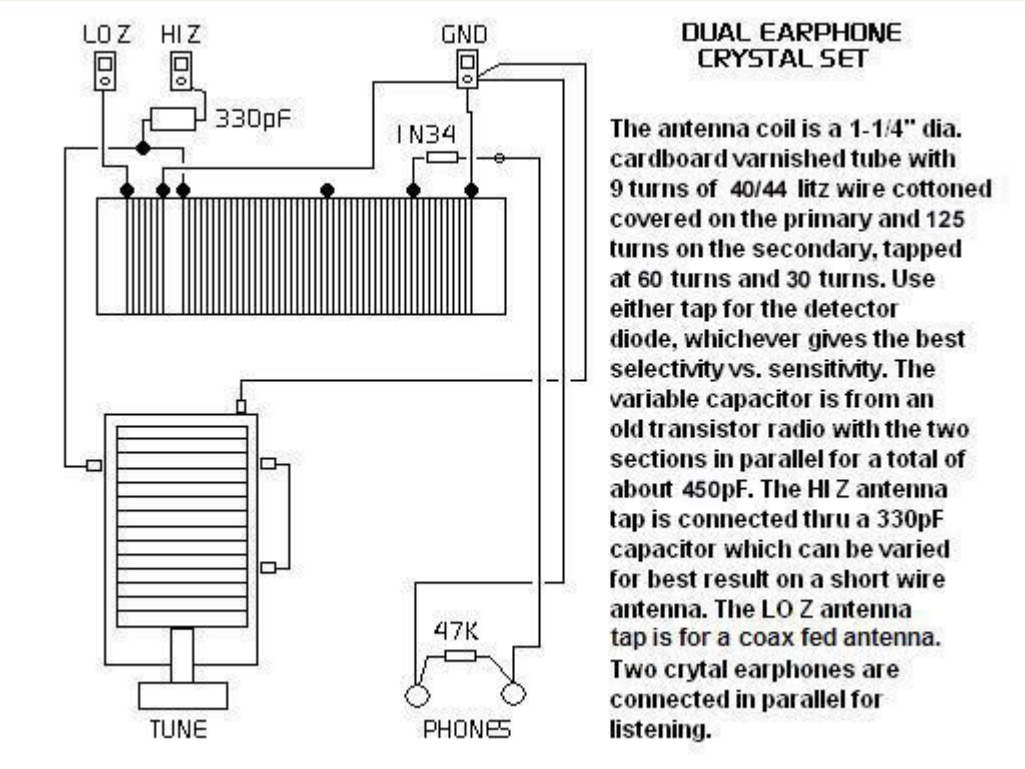

The step by step procedure follows:

- Wind the coil first. Coat the 1-1/4" x 3-1/2" form with 3 layers of spray polyurathane varnish. Let each coat dry before applying the next one. Punch a pair of holes using a small pin in the side of the coil form about 3/8" from the edge. Feed the #24 solid enamel wire or 40/44 Litz wire through these two holes in such a way as to lock the wire in place. Close wind 9 turns for the primary coil and finish by locking the wire into another pair of holes just like the first pair. Both ends of the wire should be well secured and have 3 inches of lead wire.
- Lock the start of the secondary coil in place as you did before about 3/8" from the end of the primary coil. Close wind a total of 125 turns. At 30 turns and 60 turns, put a twist in the wire that sticks out about a 1/4"; these will be coil taps. Finish off the secondary as you did the primary. You should be about 3/8" from the end of the form when done and again have 3 inches of lead wire on the each end.
- Once again, spray the finished coils with three coats of polyurathane varnish. Put a drop of Elmer's glue on each of the ends of the coils and around the taps to provide additional securing.
- Mount the completed antenna coil assembly, variable capacitor, and terminals as per the drawing above. You will

mount the coil by drilling holes in the board and in the coil form into which to feed some small 6-32 machine screws. (Make sure that when you are drilling holes that you do so on the ends where there is no wire.) I used two small micarta bushings between the coil form and the board so that the bottom of the coil will not touch the board. If you don't have any bushings, you can raise the coil form off of the board by triple nutting the screws. Feed the machine screw up from the bottom of the board, hold the screw into place with a nut on the top side of the board; then place another nut on the screw close to it's top, pass the remaining small piece of screw through the form and nut it again. Do this on both ends of the form. Plastic screws would be great for mounting the coil if you can find them.

- If you use an air variable capacitor, it will have 5 connections. For the first capacitor of the dual section unit, there will be one connection on each side of the stator plates (the ones that do not move.) Please note that these two connections are the same; they are NOT separate. Both are connected to the same set of non-rotating plates. The other section will have two similar connections. The frame of the whole unit is the ground side of both sections. Thus, the rotors are already tied together; the ones that move as you turn the knob. To connect the two capacitors in parallel, simply connect the stator plates together a shown in the wiring diagram. Don't worry if the two sections are different in size, in fact, they probably will be. Also, you may find a variable capacitor with three sections. In that case, connect only two of them together.
- I mounted my air variable by using some small "L" brackets fixed to the board with small wood screws and fixed to the capacitor with very short machine screws. Another way is to put a small length of wire from each of the four stator connection tabs that go down and under wood screws in the board.
- If you use the plastic insulated variable capacitor such as is found in small transistor radio radios, it will be a much smaller unit than the air type and will probably only have three connection tabs. The center tab is the rotor or ground connection, and the outer ones are the stator connections which will be tied together. To mount this type of capacitor, you can epoxy the back side to the board. This means the shaft will point up.
- Mount the knob on the shaft of the variable capacitor. There are several ways that knobs are fitted to shafts. One way is with a small slotted or Allen screw in the side of the knob that is tightened down on the shaft. Another way, used when the shaft is notched into a "D" shape, is to use a knob with a matching "D" shaped hole and a spring clip -- no screw is needed in this case. Another way, common to small transistor type variable caps, is to use a very small machine screw that

passes through the center of the knob into a tapped hole in the end of the shaft.

- The terminations for the Lo-Z, Hi-Z, and Ground connections are either Fahnstock clips or machine screws with double nuts. If you use double-nutted screws, then the wires connecting into the circuit will be under the first nut. Make a small loop in the wire(s) then tightened the nut securely down on them. (You may want to add a washer.) Then another nut can be used to make the connection to the antenna lead-in wire and similarly to the ground wire. You may used the same double nutted machine screw scheme for the earphones.
- To make connections to the coil, scrape off the wires to expose the copper after cutting then to length. Tin them with solder. For the taps, scrape and tin them and then solder extension wires cut to the proper length. Start by using the 30 turn tap. Later you can try the 60 turn tap and see if it works better.
- Wire up the circuit as shown in the wiring diagram. This includes wiring in the 330 uuFd (micro-micro farad or *picofarad*) capacitor, the detector diode, and the 47K resistor. Be careful when soldering the detector diode because too much heat can damage it.
- Finish off the project by putting four stick-on rubber feet on the bottom of the board in each of the corners. In a pinch, epoxy on pencil erasers for the non-slip feet.

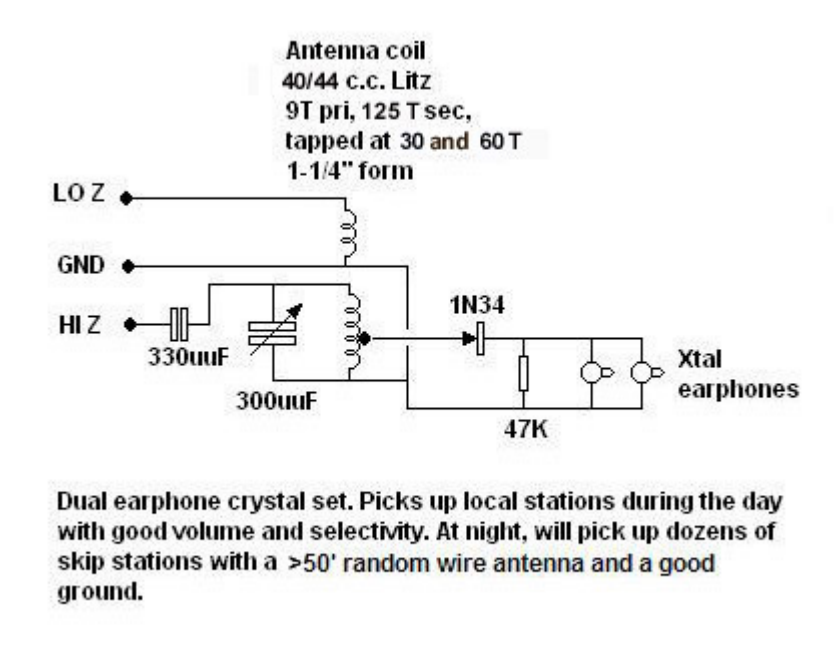

Schematic of the crystal radio

- Learn to read schematic diagrams. Eventually you will learn to wire up projects from the schematic without the need of a wiring pictorial.

Copyright © 2007 - Prof. W.S. Walker, West Virginia State University - All Rights Reserved.

Contact me

rexresearch.com

John BEDINI

Scalar Beam Generator

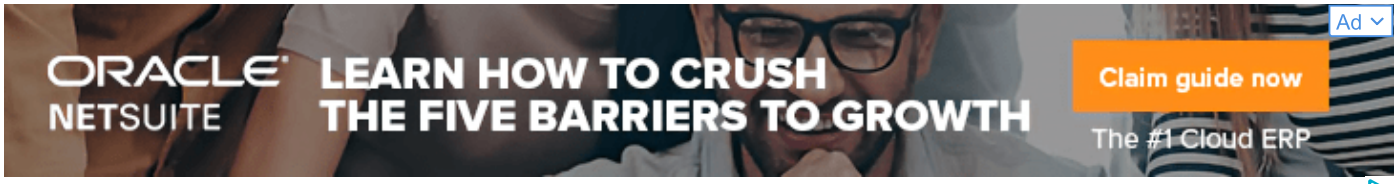

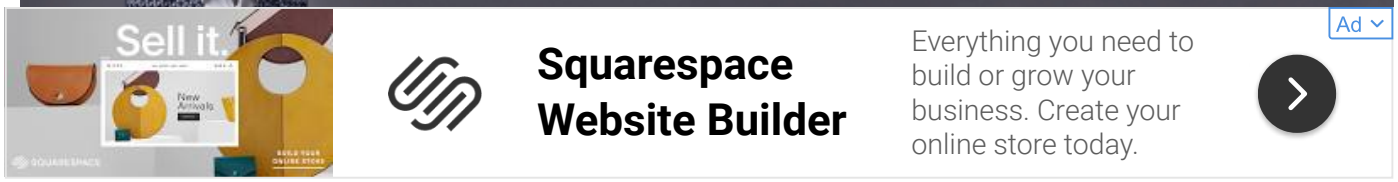

http://amasci.com/freerng/bedini.html

John Bedini's "Scalar Beam" device

Here's a suggestion for "scalar" experiments from a conversation with John Bedini. Mr. Bedini encourages everyone to try this experiment, but warns us that this device is patent applied for, so you should only build a single unit for your own use.

```
  _________
 |\        \
 | \        \
 |\  \        \
 | \  \ _________\ S
  \  \ |       |     Obtain two Radio Shack ceramic magnets and
   \  \|_________| N    glue their north pole faces together.
    \ |       | N
     \|_________|
               S


   _________          Wind the magnets with about 50 turns
  |\   \\\  \       of #30 magnet wire.  Wire gauge is not
  | \  \\\\  \       critical.
```

```
|\   \  \\\\  \
| \   \ _\\\\__\
 \   \ |  \\\\ |
  \   \|__\\\|_|
   \  |  \\\\ |
    \|__\\\|_|
      \ |    ________
      | |    [ small, ]
      |  -----[ noisy  ]----------o
      |      [_motor__]         6v to 12v power supply
      |
      |_____________________________o
```

The brush noise from the DC motor provides a pulse signal to the coil, which modulates the 'colliding' field pattern of the magnets and creates interesting scalar effects within a narrow pencil-beam pattern which extends from each face of the magnet out to a few inches.

```
     ________
    |\   \\\  \
    | \  \\\\  \
    |\   \  \\\\  \
<<<<<<<<<<<\   \ _\\\\__\>>>>>>>>>>>>>>>>>>>> scalar effect comes from the
<<<<<<<<<<<<<\  |  \\\\ |>>>>>>>>>>>>>>>>>>>>> joint between magnet faces
      \   \|__\\\|_|
       \  |  \\\\ |
        \|__\\\|_|
          \ |
          | |
          | |
          | |
```

Mr. Bedini suggests these experiments:

Purchase two identical music CDs. Listen to both to verify that they are identical. Now let the "scalar beam" play all over the surface of one of the CDs for about one minute. You may want to build a simple rotating platform to make this process more convenient. Now play the two CDs and compare them again. Hear any difference? (Note, this process is patent pending, so do not use it for any other purpose except to demonstrate the reality of the effect)

Connect a small probe-coil to an oscilloscope, then move it around in the beam and observe the waveforms.

Taste some wine, then put it in a small airtight container and place it against the magnet face for a few (minutes? hours?) Taste it again. Improvements? Try it with and without the power supply connected to verify that any changes are caused by the scalar beam and by just the magnetic field.

FROM : Some tests I intend to try (but as yet have not!):

Place various foodstuffs in the beam then compare flavor with untreated samples.

Grow two collections of plants, water one with normal water, water the other with water that's been treated by several minutes??hours?? exposure to the beam. As a control, use water which was held nearby identical magnets but without the coil.

Aim the beam directly at a plant for many days, compare it with another untreated plant as a control. (Shield the magnet, or place a similar magnet-block near the control plant.)

Sprout two groups of seeds, one treated and one untreated, and look for differences in number, health, growth rate, etc., between the two groups.

Measure the growth of the tip of a plant stem by using a tiny lever, mirror, and laser beam. Graph the growth rate, then treat the plant with the scalar beam and look for changes in the growth rate. (Note that this method can also be used to observe plants' realtime response to numerous stimuli both conventional and "weird." Fertilizer? Light? Music? Magnetism? Pyramids? Good/Bad thoughts?)

Observe microscopic lifeforms in pond water, then expose them to the beam and see if their behavior changes while it is operating. Or, expose the water to the beam for several minutes??hours??, then compare the number and activity of lifeforms in the water with an untreated bottle. Or, compare the effects of adding treated or untreated water to the slide under the microscope.

Use an opamp buffer and an audio amplifier to listen to the noise output of a capacitor which is shielded in a thick copper box, (or does a resistor or transistor work better?) then aim the beam at the box and listen for signals, or monitor changes to component values. See: http://amasci.com/freenrg/grav3.txt, Hodowanec's capacitor-based gravity detector, for more info.

Apparatus and method for reducing electronic relaxation noise present information recording medium
US5487057

A method and apparatus is provided for reducing relaxation noise in a conducting medium. The device is fabricated by affixing two magnets at like, repelling poles; wrapping said magnets with a coil of wire in an orientation orthogonal to the interface between the joined magnets and the like poles of the magnets to form a magnetic unit; connecting said coil to a motor means, an electrical power supply means and a switch means; attaching a spindle to said motor means. The spindle receives said conducting medium. The apparatus can be in a housing. The conducting medium is placed on said spindle. By activating the device, a modulated magnetic electromagnetic field is created simultaneous to the spinning of the conducting medium. The information recording medium rotates through the modulated electromagnetic field, thereby reducing the relaxation noise.

BACKGROUND OF THE INVENTION

1. Field of the Invention

The invention relates to the general field of playback of recorded conducting media or conductors, more specifically, an apparatus and method that reduces electronic relaxation noise, also known as "linger noise", that exists in information recording medium.

2. Description of Related Art and Information

The utility of the present invention is based on fundamental laws of nuclear and electronic physics at the electron level, particularly with respect to electron gas relaxation phenomena in conductors immediately preceding the initiation of normal current flow per ohms law.

For current to flow through a medium conductor or a conducting plate (conductor) that involves electromagnetic (EM) effects in recording and playback, and in transmission of signals, and thus to provide signals through normal circuitry, conducting plates, etc., a finite time is required before the flow is established, and before stability, referred to as a "stable signal" or stable flow pattern, can be established. This time delay is referred to as electron gas relaxation time.

The relaxation phenomenon involves at least three major stages, all of which must be substantially completed before the relaxation time is actually complete, and coherent signals or patterns are being

transmitted in the conductor. Further, the relaxation time involves damped oscillations.

The first stage in the relaxation time is the relaxation of the electrical charge density. Electrons initially distributed throughout the conductor are "excited" by taking on excess energy in the form of potential gradients across them. They are now substantially involved in working their way to the surface, since most of the current flow must occur on the surface of the conductor, not in its interior. If the total charge is not zero, a very highly non-linear first phase results, and the division between first and second stages is substantially blurred.

A simplifying assumption is made, that the initial charge is zero, so that the compensated charge fluctuations may be described by linear equations. Then the relaxation of electrical charge density can be assumed to be mostly independent of the initial conditions and of the size and shape of the conductor.

Treating the Drude electron gas model as applicable, and assuming each electron is independent of the rest, damped harmonic oscillator equations result for the relaxation. This yields a short relaxation time for stage 1. This erroneously short relaxation time basically results from assuming that the electrons move rather independently and are de-coupled. With coupling remaining as is almost always the case, a combination of stage 1 and stage 2 actually applies immediately, and sometimes an extra combination of stage 3 as well Much "noise" known as small field perturbations in random directions, is present during phase 1. This is because of the random motion of the electrons in all directions, as the addition of the excess energy to them essentially results in an increase in the average electron's kinetic energy and increases the violence and frequency of their collisions with the lattice and with each other.

The second stage is the expulsion of the electric and magnetic fields to the exterior of the conductor, and the expulsion of the excited electrons as axial currents (on the average) to the surface. This electron movement during the second stage is still immersed in the midst of a great collision/violence among the electrons in the electron gas in the conductor. Accordingly, there are erratic electric and magnetic fields from the erratically moving charges, whose violent movements are, in fact, expelling these fields from the conductor and in all directions in the conductor. Consequently, there is much noise, distortion and scattering going on in this stage.

In the third stage, the electrons reach the skin of the conductor, resulting in a marked decrease in collision frequency and violence. The relaxation process terminates with the slower ohmic and radiative damping of the surface currents.

As an end result of the three relaxation stages, a sinusoidal charge disturbance is formed and propagated in the conductor with a phase velocity Vp of roughly 1.times.10@8 cm/sec, or roughly 10@6 meters per second. Further, this disturbance is extremely noisy. It is also moving far slower than the speed of light, hence "lingers" in a circuit after each and every stimulation, directly adding noise to slightly succeeding "signal stimuli." The "signal" moves down the conductor at nearly C, the velocity of light in space.

The net result in a continual digital process is that the 3-stage relaxation phenomena continually generates lingering noise signals in a circuit. This noise is continually produced both when signals are initially recorded on a conductor, increasing the noise in the signal actually recorded, and again when the conducting medium is later optically re-stimulated to detect the recorded "signal and noise". Examples of conducting media are audio compact disc, CD-ROM (read only memory), video laser disc, photo-CD and photgraphic film. The net result is that continual relaxation noise is added to both the recording and playback stages of any recording process utilizing such a conducting medium. Relaxation noise is also added to any signal translated down or in a conductor and through circuits.

In searching prior art that disclosed magnetic and/or modulated EM devices designed for processing or clarifying conducting media for the purpose of reducing relaxation noise, no references were located that either disclosed or anticipated the present invention.

SUMMARY OF THE INVENTION

The device is a housed magnetic unit that, when electrically activated by a switch and motor means,

creates a modulated EM beam or field that dampens and reduces electron relaxation or linger noise in a recorded conducting medium as the conducting medium passes through the EM field.

BRIEF DESCRIPTION OF THE DRAWINGS

FIG. 1 is a perspective view of a device that produces a permanent magnet magnetic field.

FIG. 2 is a perspective view of the outside of a housing for the apparatus.

FIG. 3 is an inside view of the bottom half of the housing and components.

FIG. 4 is a perspective view of the orientation of the conducting medium (compact disc), to a molded spindle.

FIG. 5 is an inside view of the top half of the housing and components.

FIG. 6 is a side view of the housing and components.

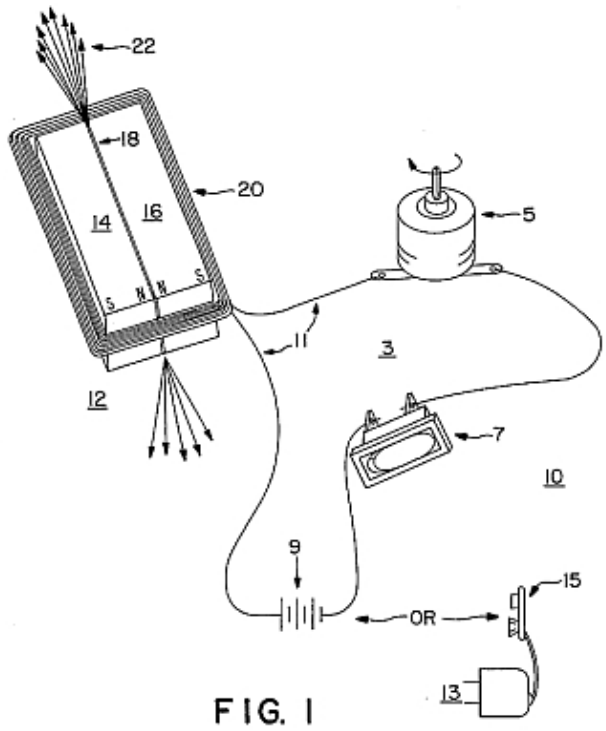

FIG. 1

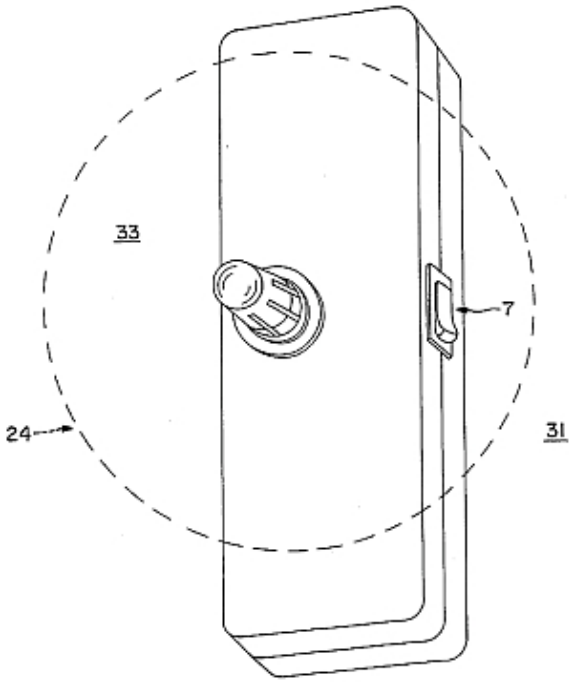

FIG. 2

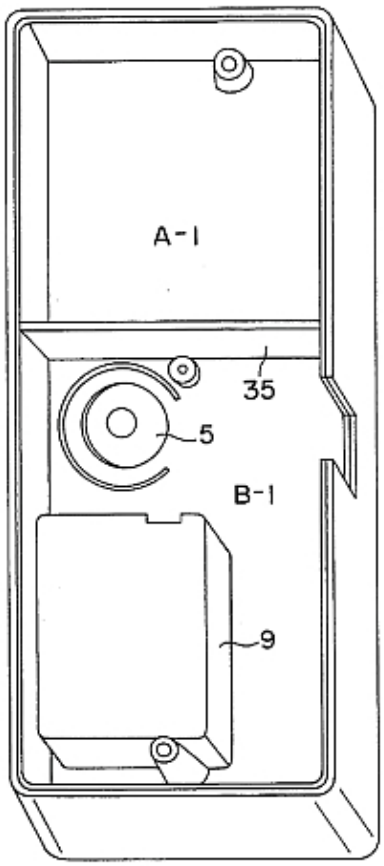

FIG. 3

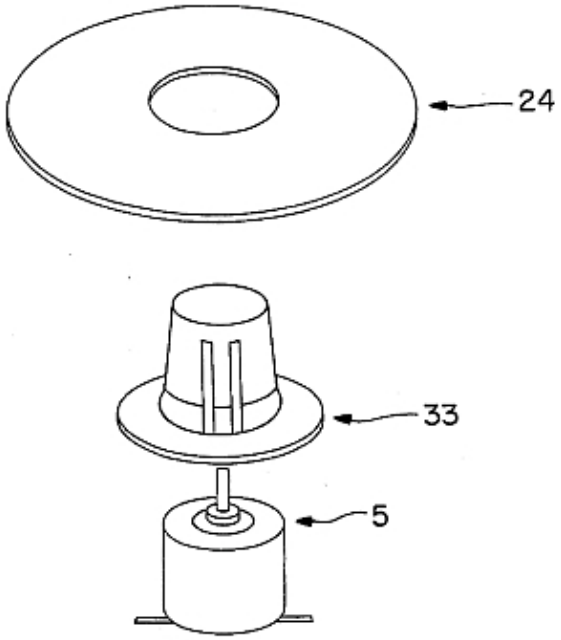

FIG. 4

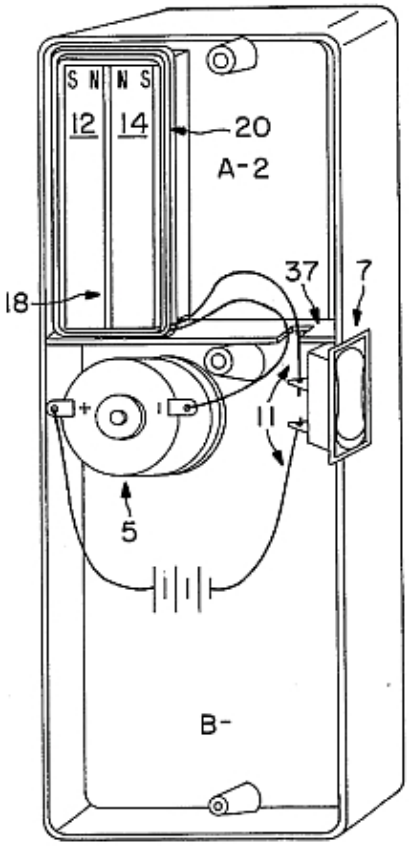

FIG. 5

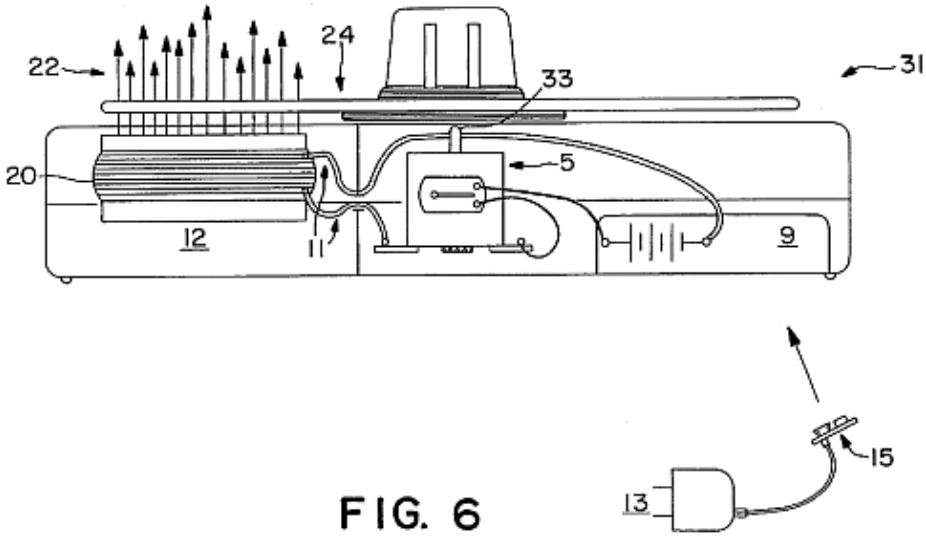

FIG. 6

DETAILED DESCRIPTION OF THE INVENTION

The method and apparatus or device of the present invention is discussed hereinafter in terms of 3-stage relaxation noise actually introduced to all signal conducting media by the recording process, and again introduced in the playback from such recorded conducting media.

First, the sharp distinction between the first and second relaxation stages is removed. The moment the charges present in the electron gas in a conductor are excited with excess energy from the leading part of the incoming signal stimulus, excess fields exist on the electrons, directly combining with the E- and B-fields already in existence. Consequently, stages 1 and 2 are considered combined. In other words, even in stage one, a strong component of the excited fields is attempting to axially eject or expel electrons from the conductor, while other strong fields oriented within the conductor are affecting the entire electron gas, increasing its collision frequency and noise. Axially, there is less collision damping, so on the average an axial movement toward the surface results. Axial expulsion is a radial effect.

Next is the effect of an additional magnetic field from an external magnetic pole, which is what the present invention provides. The magnetic pole, for example, may be fairly localized in the case of recording signals and replaying signals, or it may be distributed in a "cover" or "blanket" covering the outside surface of the conductor. In the case of flat conducting plates, the blanket may cover both sides.

When any field element attempts to emerge from the conductor, or can be decomposed into longitudinal and axial components where the axial component attempts to emerge, it is directly coupled to one or more axially (on the average) moving electrons within the plate, which constitutes the source or sources of the fields. The source electrons are also attempting to move to the surface themselves. However, the strength of the electron-associated magnetic field will be altered, affected and resisted by the externally introduced modulated EM field of the present invention.

The net effect of the magnetic field, as produced by the present invention, is to induce damping and "magnetic braking" of the electrons and damping of their fields. In addition, a moving electron in a magnetic field is forced to turn away from its path, again increasing damping. In the externally introduced modulated EM field of the present device, the axially (on the average) moving electron is forced to develop an electric field gradient at right angles to its (on the average) axial movement, and "back against" the "linger noise" stimulus. In short, the electron develops a "back EMF" from all of the other electrons in the gas, which resist its movement and damp it. This dampens the electron's axial component, consequently its movement and concomitant relaxation "stage 1" and "stage 2" noise, resulting in a materially reduced relaxation noise.

The result of the use of the present invention, is that as the electrons continue to violently alter their directions due to collisions, they are continually damped by the modulated EM field created by the

device. Consequently, the erratic movement of the electrons are constrained, their velocities are lowered, their collision frequency is diminished, and relaxation noise is reduced, compared to the situation where no external EM field is present. The net result is a reduction of relaxation or linger noise resulting in clarifying of audio and/or visual signals from the conductor.

When the external modulated EM field of the present invention crosses the relaxation excitation E-fields of the conductor, longitudinal components on the electrons, in either direction, are produced which contribute to the overall damping. The fundamental principle is that, as the electrons increase their kinetic energy during stage 1 and stage 2 of the relaxation time, that increase is being resisted by a magnetic braking/damping effect, and the axial ejection and noise components that continually develop are damped by the introduced EM field.

This results in a reduction in the production of both immediate and linger noise. It is the mirror symmetry of the "magnetic brake" effect. The excited electrons try to move faster, in effect creating "eddy currents" in the conductor. Moving in the fixed magnet's modulated EM field, these "eddy currents" exert a magnetic repulsion force upon the magnetic pole, which in turn exerts a braking effect back upon the "eddy currents" themselves. This latter effect constitutes noise reduction in the conductor.

The end total result of the use of the device of the present device is:

1. Reduction of the velocity and kinetic energy of the electrons during coupled phase 1 and phase 2;

2. introduction of substantial additional damping upon the harmonic damped-oscillation relaxation noise that results in phases 1, 2 and 3,; and

3. substantial reduction of the overall relaxation noise in the system, in the resulting conducting medium, and in the resulting playback from the conducting medium.

The device directly reduces the relaxation noise in all conducting media which involve EM effects in recording and playback, and in transmission of signals. In any operating system, whether recording or playback as such is being performed or not, the present device directly reduces the continuously-forming "lingering relaxation noise" from signals that have previously occurred, and that are actually slower-moving charge disturbances constituting relaxation noise in the system's operation. The relaxation noise is also a power loss from the signal. Reduction of the signal power being lost in the system constitutes effective enhancement of the noise-free power transmitted by the system.

Application of the device increases the signal-to-noise ratio by dramatically reducing the lingering relaxation noise that is continually produced in: 1) systems operation; 2) the conducting medium; and 3) detection, amplification, and playback from the conducting medium. Media conductors or conducting plates that the apparatus may be applied to are audio compact discs, CD-ROM discs, photographic compact discs, video laser discs, motion picture and still-camera film of all types, x-ray film, optical media, and other medium which involve EM effects in recording and playback and in the transmission of signals through normal circuitry and conducting plates. Video, audio and digital tapes also benefit from the present invention but conducting tape must be treated with the device before recorded upon.

The systems may be any EM system such as electrical, electro-optical, magnetic, and magneto-optical systems. The continuously-formed lingering relaxation noise is a direct part of the so-called "standard noise" in the system.

When the device is applied to a conductor, such as an audio compact disc (CD) that normally produces playback distortion as a result of relaxation noise, the distortion is reduced and there is an improvement in sound quality with improved clarity and sharpness of the music or other such sounds. When the apparatus is applied to a medium that has a visual expression, such as a CD-ROM, Photo-CD, video laser disc or photogaphic film, there is improved visual effects with greater clarity, sharpness and color to the resultant pictures and photographs.

One embodiment of the invention is a device comprised of a pair of permanent magnets in an orientation

in which their like poles, i.e., north or south, are in a facing and repulsing relationship. A coil of wire is then wound around the pair of fixed magnets in an orientation orthogonal to both the interface between the facing magnets and their north and south poles.

A motor means and electric supply means is provided for creating a pulsed current characterized by sharp voltage spikes to the coil of wire creating a modulated EM field while also producing a means for spinning the conducting medium when placed on a spindle that is driven by the motor means. A far greater effect is given by the brushes of the motor means when DC current is applied at a constant rate. At the same time, the motor means provides a more constant means of maintaining optimum rotation of the spindle thus exposing the conductor to the constant effect of the EM field.

The molded spindle allows for improved centering and stability during rotation of the conducting medium. The conducting medium is oriented to the device so that its plane is parallel to a plane running through the north pole orientation of the magnets. As the conducting medium passes through the modulated EM field, the electrons of the conductor are effected by the field, thus reducing the relaxation noise.

The device is housed in a container, such as a molded plastic housing, to maintain magnetic unit placement and to allow for greater penetration of the modulate magnetic field by the magnetic unit and with greater effect on the conductor.

One application of the device of the present invention is in clarifying sounds emitting from an audio compact disc. Compact discs are comprised of an aluminum surface encased in a plastic coating. The disc itself is composed of a very thin piece of stamped aluminum, which is the conducting medium, encased in plastic. The thin aluminum layer is the active ingredient that contains the recorded data.

A second application is in the clarification of compact discs such as video laser discs, photo-CDs and CD-ROMs. Processing of visual compact discs produces a clearer, sharper, brighter and more colorful image both on the computer screen and in a photo image.

A third application is in the clarifying of photographic films of all types. Exposed film that has been clarified before developing the film produces a consistantly clearer image than film that is unclarified.

Referring first to FIG. 1, 10 is a device comprised of a magnetic unit 12 which is further comprised of a pair of permanent magnets 14 and 16 orientated with like poles in a facing, contacting and repelling relationship and fused with an adhesive means 18 forming a seam with joined magnets 14 and 16 producing a shaped magnetic field 22. Magnets 14 and 16 are oriented with their north poles in an abutting relationship, although the magnets may be abutted using their south poles.

FIG. 1 further shows a coil of wire 20 wound around magnets 14 and 16 of the magnetic unit's out facing poles with coil 20 having an orientation perpendicular to the plane of the interface between magnets 14 and 16. Coil 20 may consist of 150 to 300 turns of a #34 enamel-insulated high temperature wire, with 250 turns preferable. Magnetic field 22 is shown emitting above adhesive seam 18 of magnetic unit 12.

Also shown in FIG. 1 is circuitry 3 for providing an electrical supply to coil 20 of magnetic unit 12 used in apparatus 10. Circuitry 3 is comprised of a DC motor 5, a controlling switch 7, either a 9 volt DC battery or a DC power supply 9 and connecting wire 11 to coil 20. DC motor 5 also provides a means for rotating spindle 33 seen in FIG. 2. In the alternative, electrical power may be provided by a 120 volt AC power supply 13 which is reduced to 9 volts by passing through a 9 volt AC to DC convertor or power step-down unit 15.

FIG. 2 is a perspective view of a housing 31 which contains apparatus 10 and its components. Seen emerging from the top of housing 31 is spindle 33 for the placement and orientation of conducting medium 24. Spindle 33 emerges from the top side of housing 31 for ease of placement of the conducting medium. Closure of switch 7 creates a modulated EM field 22 simultaneous to the spinning of conducting medium 24. As the conducting medium spins, it passes through field 22 thus

producing the desired effect on the conductor.

FIG. 3 is an inside view of the bottom half of housing 31 showing compartments, A-1 and B-1 separated by a divider 35. Compartment A-1 is adapted to fit over compartment A-2 of the top half of housing 31, seen in FIG. 5. Compartment B-1 contains a 9 volt DC battery or DC power supply 9, space for switch 7 and space for motor 5.

FIG. 4 is a perspective view showing the orientation of conducting medium 24 to spindle 33 and motor 5.

FIG. 5 is an inside view of the top half of housing 31 showing compartments A-2 and B-2 separated by divider 37. Compartment A-2 contains magnetic unit 12 with connecting wire 11 from coil 20. Wire 11 passes through a recess in divider 37 and into compartment B-2 to connect to motor 5 and switch 7. Compartment B-2 contains motor 5 and a side wall of B-2 contains a recess for switch 7. Beneath motor 5 and on the roof of the top half of housing 31 is an opening for the emergence of spindle 33.

FIG. 6 is a side view of housing 31 showing the relationship of the various elements to each other. Magnetic unit 12 is located in compartment A-2 of housing 31. Connecting wires 11 connect coil 20 to a 9 volt battery or AC to DC convertor 9 and motor 5. Spindle 33 is connected to motor 5 and emerges through the top of housing 31 to accept conducting medium 24. Conducting medium 24 is shown in close proximity to magnetic unit 12 and oriented in a plane perpendicular to the plane of intersection of magnets 14 and 16 so that when apparatus 10 is activated, the rotating conductor 24 will pass through the modulated EM field 22.

EXAMPLE I

An analysis of an audio compact disc was carried out with the test completed using a Schlumberger 1510 Audio Spectrum Analyzer to display real-time fast fourier transform (FFT) spectra of the sound, a Tektronix 465B dual-trace oscilloscope to display phase differences between left and right stereo channels as well as waveform shapes, and a Leader LMV-185A 2 channel AC Millivoltmeter to simultaneously read the amplitude of the left and right stereo channels. The spectrum analyzer has a frequency range of up to 25 khz, a dynamic range of 70 db, and an absolute range of 100 db using attenuators, and an accuracy of 0.1 db and 1/256 of the frequency range selected. All measurements were made using the 25 khz range. The oscilloscope has an upper frequency range of 100 mhz. The test CD was played on the Denon DCD-1500 II compact disk player connected directly to the above instrumentation.

The test CD, CDP 7 46446 2, DIDX 2249 Stereo, UK: CD-PCS 7078, manufactured by Capitol Records, otherwise known as the Beatles: Abbey Road album originally recorded in 1969 and digitally re-mastered in 1987 for CD, was subjected to the above equipment and technique. Spectral measurements at a 00:24 interval was made on track #7, a selection known as "Here Comes the Sun".

Track #7, at a 24 second interval, is exhibited in Example I as a series of bar graphs in diagrams 1-8. The bar graphs simultaneously show the relative loudness in decibels "before" and "after" clarifying of the device. Each pair of bars represents the relative loudness of frequencies between 100 hertz and 25600 hertz of Track #7 time 24 seconds of the audio CD analyzed.

Diagram 1 shows the entire spectrum from 100 to 25600 hertz in 8 frequency bands as labeled at the bottom of the diagram. It is noted that each frequency range except for 200 to 400 hertz is about 1 or 2 decibels louder after processing by the device.

Diagrams 2-8 display the same data in more detail showing a larger number of smaller frequency ranges in intervals of only 100 hertz each. Because frequency ranges are smaller there are more variations in the data, however, the readings show the trend of being 1 to 2 decibels louder after processing.

It is noted that each of the spectral differences as well as the average spectrum difference follow a profile demonstrates the effect that clarifying by the instant device has on the CD.

EXAMPLE II

An analysis of an audio compact disc was carried out by first recording "The Best of Mike Olfield--Elements", track "Portsmouth" without clarifying the CD, on a hard drive using a WAV file of Voyetra's WINDAT software with a sound card connected to a CD-ROM's audio output. The recording was in mono at a sample rate of 44100.

Following the first recording, the CD was then clarified, using the device, by placing the CD in the modulated electormagnetic field of the present device for 10 seconds on each side followed by again recording the CD using the above technique.

Using the WINDAT program, the "before" clarifying and "after" clarifying recordings were trimmed so that application of the device could be easily compared with non-application. Ten second and 0.25 second excerpts were used. The ten second excerpts were measured from the point where sound began to come off of the CD. The 0.25 second excerpts were taken from a consistent point within the body of the recording.

The sound files were converted into graphics using two Shareware programs: Screen Thief and Blaster Master. The recordings were loaded into Blaster Master individually and the graphical representation of each recording was captured using Screen Thief. The graphics of the sound files were then laid down and compared using Deluxe Paint II Enhanced.

The graphical representation of the sounds, in Diagrams 9-11, is based on amplitude and time. The left side of the graphic is the beginning of the recording, and right side is the end. The beginning of the graphic is defined as the point where sound began showing up on the graphic.

Diagram 9 illustrate a 10 second comparison of the unclarified with the clarified CD. The waveform represents amplitude. It is noted that waveform A, the unclarified sample, is taller than waveform B, the clarified sample.

Diagram 10 is of the same recording but compares exclusively unclarified, partial waveform C, unique to waveform A, and clarified partial waveform D, unique to waveform B. That is, all of the points in the unclarified graph, waveform A, that correspond to points in the clarified graph, waveform B, have been erased resulting in waveform C, and all of the points in the clarified graph, waveform B, corresponding to the unclarified graph, waveform A, have been erased, resulting in waveform D. This technique leaves a graph showing the data that is unique to the recording in question. Thus, in Diagram 10, the graph labelled "Exclusively Clarified", the visible lines show data that is unique to the clarified recording, and the "Exclusively Unclarified" graph shows sound or noise that was no longer present after clarification.

Diagram 11 illustrates a 0.25 second comparison of the unclarified CD, waveform E, with the clarified CD, waveform G. Waveform F is the exclusively clarified and shows what is unique to waveform G. A graphic of an exclusively unclarified waveform was eliminated because interest was in the clarified waveform and what is unique to it.

Three criteria were used in analyzing the graphs of Diagrams 9-11: Response Time, Noise level and Density. Response Time refers to "when the sound starts", a key factor because the CD excerpt recorded was timed from the moment that sound began recording off of the CD. The position of the remaining material recorded is dependent on the accuracy of the starting point. In the ten second excerpt of Diagrams 9 and 10, there were no measurable time discrepancies, as the graphs matched up as represented in the Diagrams with the peaks in the sound occurring in the same places throughout the sample.

The 0.25 second excerpts showed a lag time between unclarified waveform E with clarified waveform G. As many of the peaks of waveforms E and G as possible were matched-up and then compared to how much "extra" sound was left at the beginning. By comparing the length of the sound to the length of the whole sample, it was determined that the unclarified 0.25 second excerpt was lagging behind the clarified

excerpt by about 0.01 second. A small discrepancy at the starting point would not be visible on the ten second scale, but on the 0.25 second scale is noticeable.

In terms of Noise Level, the unclarified sample was "noisier" in both excerpts, ten second and 0.25. By noise level is meant, that overall, the unclarified sample consistently had several peaks where the volume line went further than the corresponding volume line in the clarified sample. This lower level in the clarified sample is the result of a reduction of "noise" level in the clarified sample. Extraneous noise makes the overall signal noisier and less clear. The clarified sample has an improved and smoothed out dynamic because of a reduction in noise level.

Density is defined as the solidity of the volume or amplitude lines rather than the range of the lines. Comparison of the volume lines of waveform A, unclarified, with waveform B, clarified, shows waveform B to have a much more consistent volume level than waveform A. Increased Density gives greater consistency to the CD, producing a much fuller sound.

EXAMPLE III

In Example III, the identical technique used in Example II was duplicated. An analysis of the audio compact disc, "The Cross of Changes" by Enigma, track "Return to Innocence" was carried out by first recording, without clarifying the CD, on a hard drive using a WAV file of Voyetra's WINDAT software with a sound card connected to a CD-ROM's audio output. The recording was in mono at a sample rate of 44100. Following the first recording, the compact disc was then clarified, using the device, by allowing the CD to spin for 10 seconds on each side followed by again recording the CD using the above technique. The analysis technique as described in Example II was then completed.

Diagram 12 illustrates a ten second excerpt comparison of waveform A, unclarified, with waveform D, clarified. Waveform B is exclusively unclarified, and unique to waveform A. Waveform C is exclusively clarified and is what is unique to waveform D of the sound track. Waveform A, the unclarified sample, is significantly different than waveform D, the clarified sample.

Diagram 13 illustrates a 0.25 second comparison of the same recording of unclarified waveform E with clarified waveform G of the CD. It also shows exclusively clarified waveform F, demonstrating the unique difference between waveforms E and G.

Response Time, Loudness and Density were analyzed. In the 0.25 graphic of Diagram 13, the Response Time of waveform G is slightly ahead of waveform E, indicating that sound from the recording began sooner than in waveform E. The amplitude lines of waveform G are slightly reduced overall in comparison with waveform E, resulting in a reduction of Noise Level. The Density of waveform G is much greater than in waveform E, especially in the last one-third segment of Diagram 13.

EXAMPLE IV

A Photo-CD was analyzed both "before" and "after" passing the CD through the modulated eletromagnetic field of the device to determine specific changes in the retrievable data from the CD. The method and steps used to derive and quantify the effect that clarifying had on the conductor was determined using the following method and steps:

1. A demonstration Photo-CD sampler, produced by Kodak, was down loaded to the hard drive of an Apple Centris 650, 25 HRZ, 6800040 motherboard and a new file created and properly designated as "before". The photo-CD had not been clarified by the device. Images were transferred to a commercial graphics software program, PhotoShop, developed by Adobe Software.

2. The Photo-CD was removed from the ROM and treated with the present device by spinning the CD on each side for 15 seconds. The CD was then down loaded to the hard drive and a second new file created and properly designated as "after". The images created were transferred to the PhotoShop graphics software program with file separation maintained at all times.

3. Print number 3 of the Photo-CD list, contained in the "before" or unclarifyied, was brought to the screen and a text translator was used to convert the picture to post script computer language. Picture number 3 represented a photo image that measured 21/2.times.13/4 inches, using 132 LPI, 72 DPI and utilized approximately 250K of memory. Following the text translation process to convert the small image to post script, it was then saved to a new file. Following the conversion, there were 360 pages of post script computer language created to describe the image number 3.

4. The identical process as described above was used to create a post script file for the image following use of the device on the photo-CD. The "after" or clarifying effect resulted in 348 pages of post script computer language.

5. The first 16 pages of post script language was specific to language to program the printer. The balance of the pages in both cases was post script language to describe the specific image that was converted. The first 4 pages of both files were then converted into text files using Wordperfect 6.0. The process of converting the post script files to text files was for the specific purpose of utilizing a specialized software program that could compare the text language of both files. The process of converting the first 4 pages of both post script files to text files took 25 minutes and resulted in the generation of 101 pages of new text language. The ratio of pages of text converted from post script is approximately 1 to 25. If the entire post script files (354 pages average) were converted to text file using the same ratio, it would require approximately 8,850 pages of text file to fully describe a single 21/2.times.13/4 inch colored image.

6. The software used to simultaneously compare the text in the two files, DocuComp II, version 1.05, is a product of Advance software, Inc.

7. The first 4 pages produced a total of 101 pages of text file. When placed into the DocuComp file, it resulted in the following summary of information changes: The 4 pages represent slightly more than 1% of the total data available from each image. If the entire 708 pages were converted and analyzed, it would take considerable memory capacity and about 37 hours (4 pages of each file takes 25 minutes) of computer running time to analyze 708 pages of post script computer language.

8. Four pages from each file generated a total of 56 material changes, on the average, resulting in over 5,000 changes for the entire image when "before" clarifying was compared to "after" clarifying.

9. The "before" unclarified file, resulted in 53,336 bytes of information The "after" clarified file version, generated 50,521 bytes of information. The comparison represents a difference in information retrieved equal to 5.7% less for the clarified file.

Clarifying the Photo-CD with the device realigns the data into a tighter format by reducing superfluous data. Each Pixel has a "halo" or influence zone. Exposing the pixel to a modulated EM field reduces the halo by suppressing electron activity or relaxation noise thus causing the pixel to be sharper with improved clarity. The photo-CD manufacturing process can produce residual color around each individual pixel referred to as pixel residual or bleeding. When a pixel, represented by post script and text script, is sharper, it does not require as much information to accurately describe or define it. When a pixel halo or influence zone is reduced, it requires less information to describe the data. In Example IV, 5.7% less information was required following clarifying by the device, at the same time improving the image to describe the same segment of the picture.

The analysis process of converting each image to post script and then to text is accurate. Changes created by treating a photo-CD with the present device can be demonstrated by a computer comparison of the information generated from both images.

Diagram 14 is a Summary of Post Script Changes with a list of differences between the "before" and "after" application of the device to the photo-CD.

EXAMPLE V

Using the identical technique and steps as described in Example IV, steps 1-9, a second Photo-CD,

Nature's Way, published by Gazelle Technologies and produced by Kodak, was tested "before" and "after" application of the present device. In this Example, the original bytes numbered 74,151 before clarifying with the device. After clarifying, the number of bytes were reduced to 70,214 resulting in a 5.6% byte reduction.

Diagram 15 is a Summary of Post Script Changes with a list of differences between the "before" and "after" application of the device to the photo-CD.

Diagrams 16 and 17 are black and white, "before" and "after", copies of color pictures of the photo image of the photo-CD, demonstrating the effect that clarifying the conducting medium has on the comparable results.

John BEDINI's Patents

Device and method for utilizing a monopole motor to create back EMF to charge batteries
US6545444

Analog vector processor and method for producing a binaural signal
US5748745

Circuits and related methods for charging a battery
US7990110

Monaural to binaural audio processor
US4555795

Anti-copy system
US4644422

Device and method of a back EMF permanent electromagnetic motor generator
US6392370

Apparatus and method for reducing electronic relaxation noise present information recording medium
US5487057

MONAURAL TO BINAURAL AUDIO PROCESSOR
WO8400661

Device and method for pulse charging a battery and for driving other devices with a pulse
US6677730

ANTI-COPY SYSTEM
AU1827083

Your Support Maintains this Service --

BUY

The Rex Research Civilization Kit

... It's Your Best Bet & Investment in Sustainable Humanity on Earth ...
Ensure & Enhance Your Survival & Genome Transmission ...
Everything @ rexresearch.com on a Data DVD !

ORDER PAGE

US 20100172217A1

(19) United States

(12) Patent Application Publication

(10) Pub. No.: US 2010/0172217 A1

(43) Pub. Date: Jul. 8, 2010

von Bezold

(54) **SYSTEM OF METHODS AND APPARATI FOR HANDLING AND MODIFYING INFORMATION ENERGY AND MATTER BY FORMATIVE RESONANCE**

(76) Inventor: **Ernst von Bezold**, Richmond Hill (CA)

Correspondence Address:
Ernst von Bezold
RR2, 1020 Rutherford Rad
Maple, Ontario L6A 1S2

(21) Appl. No.: **12/350,960**

(22) Filed: **Jan. 8, 2009**

Publication Classification

(51) **Int. Cl.**
G01V 1/04 (2006.01)

(52) **U.S. Cl.** **367/190**

(57) **ABSTRACT**

This invention relates to an improvement in systems, methods and apparati for handling and processing information, energy and matter by making use of potentials of new technologies, science and industrial art, principally in cymatics, quantum field theory and psychoenergetic science. It comprises a system of methods and apparati for handling information, energy and material using multimodal cymatic (standing wave patterning, whether stationary or moving) generation, and manipulation, principally of material and energy in vorticoid including concatenated and grouped vorticoid forms, to concentrate, cleanse, separate, transform, produce etc., materials and energy, including without limitation the production of clean water and manufactures materials, the production of net usable energy by effects such as Schauberger and vacuum potential-related, the collection, processing and communication of information by nonlocal quantum coherence (entrainment) of dynamic systems, initially cymatic, viz., vorticoid, the similar transport of lower-dimensionality material patterns, i.e., materials, also to facilitate transport of living organisms, and the tuning of higher-dimensional energy forms, i.e., formative fields, for applications such as healing; a means of fine-tune controlling such systems directly by means of psychoenergetic operator interaction and indirectly by means of conditioned space technologies and vibratory enhancing technologies such as "scalar" treated materials and systems; and by other means described as "gauge-symmetry"-level raising, here, e.g., Bearden; and their combination; and a means of facilitating learning to generate Tiller-effect spacial conditioning (higher gauge symmetry) enhancement using motivated feedback in utilising these systems with spacial conditioning technology assist.

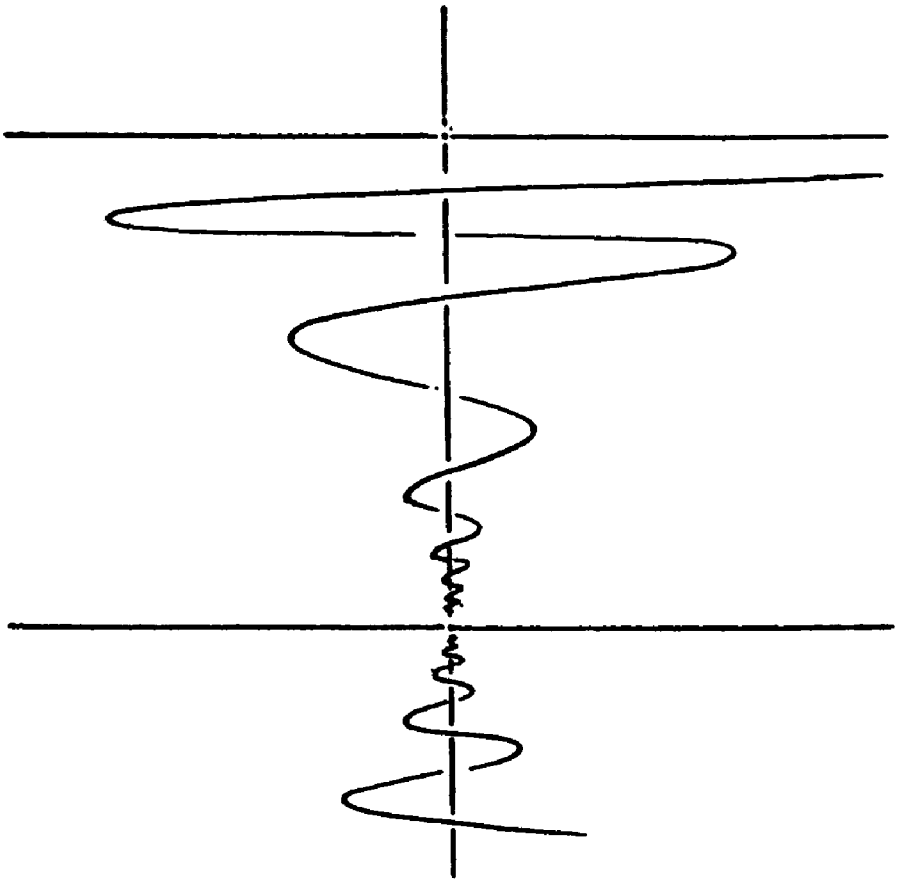

Figure 1

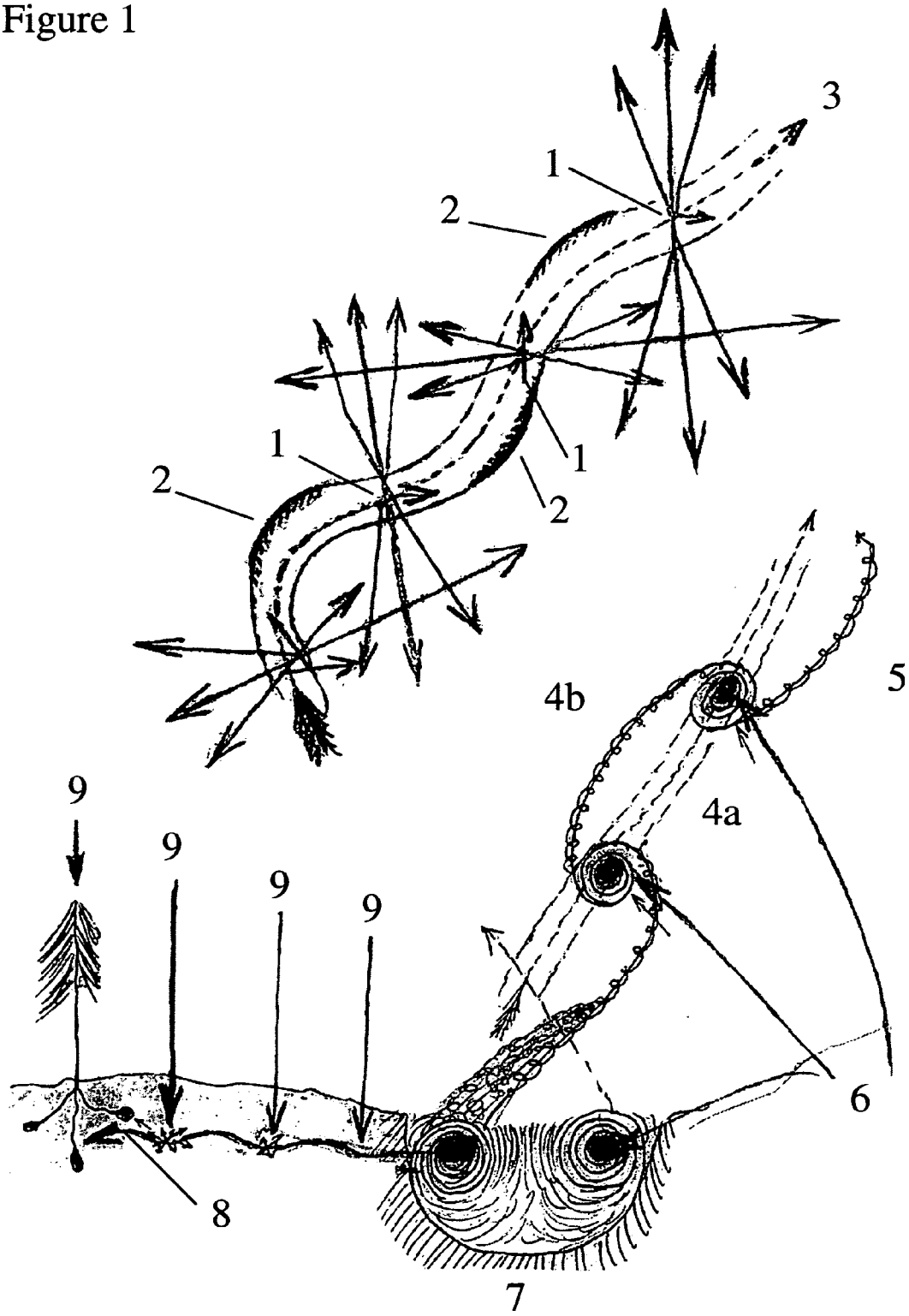

Figure 2

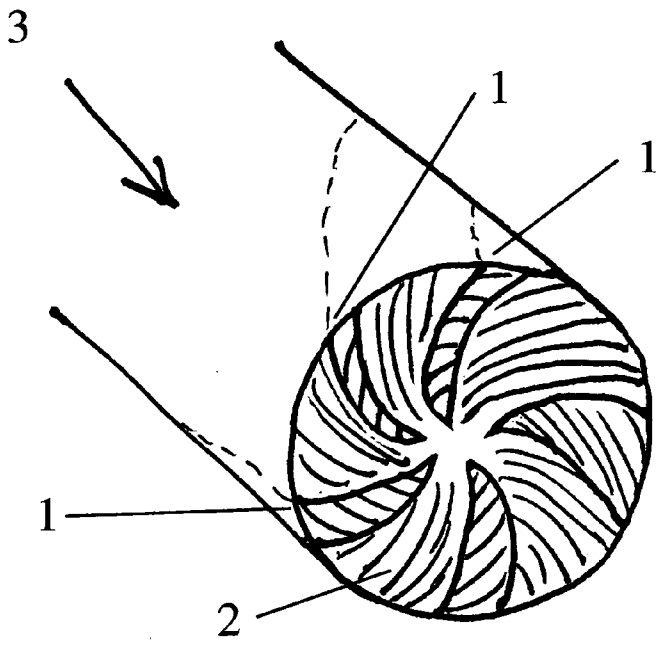

Figure 3

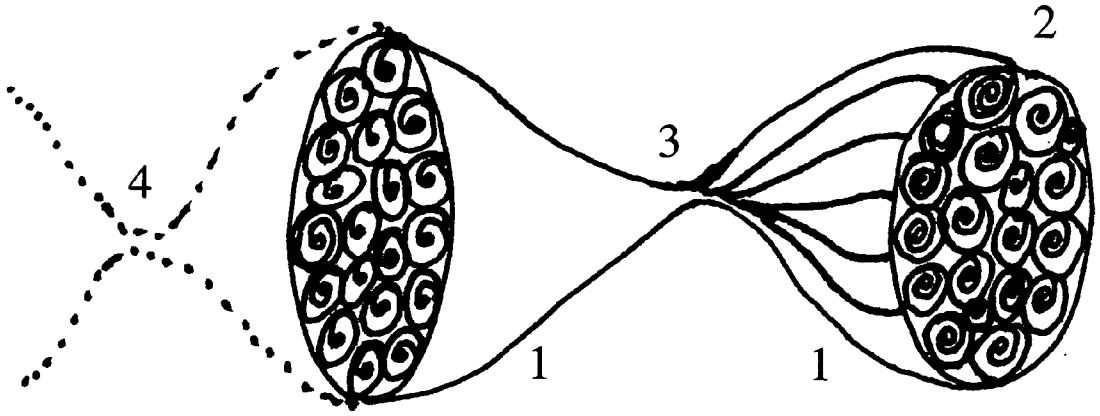

Figure 4a

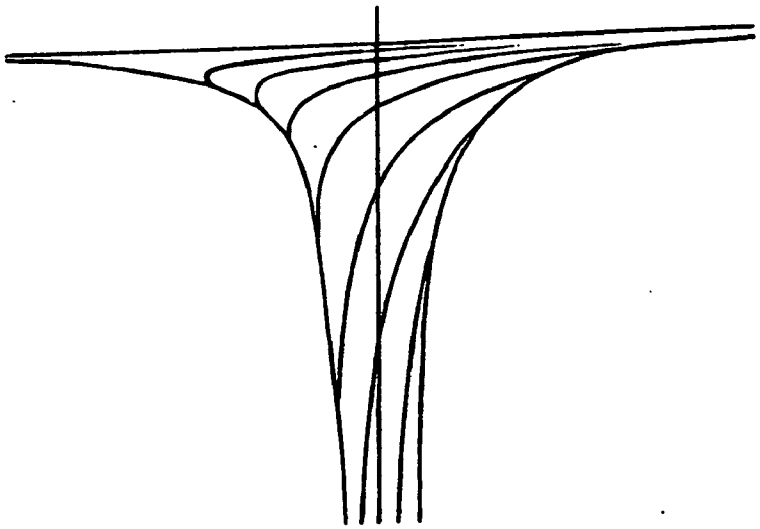

Figure 4b

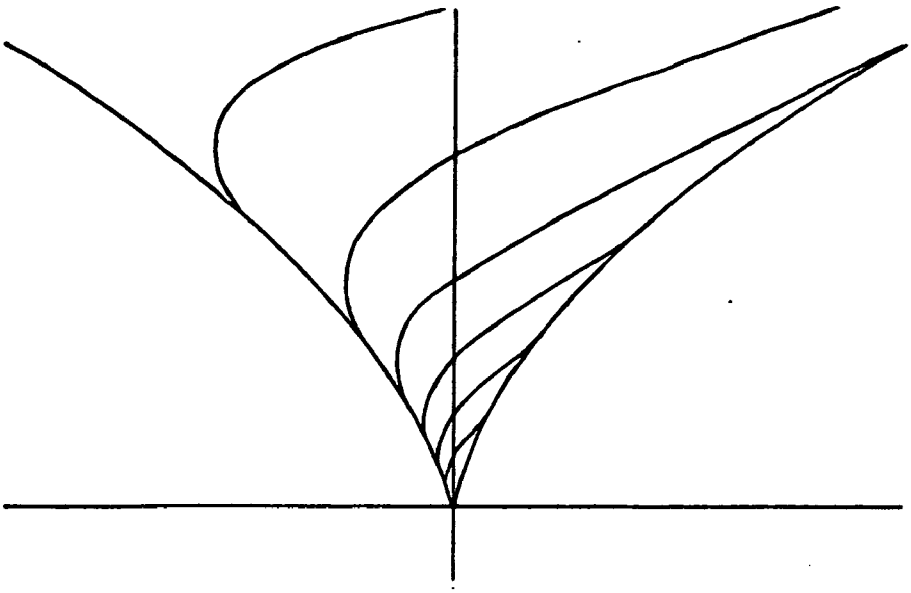

Figure 4c

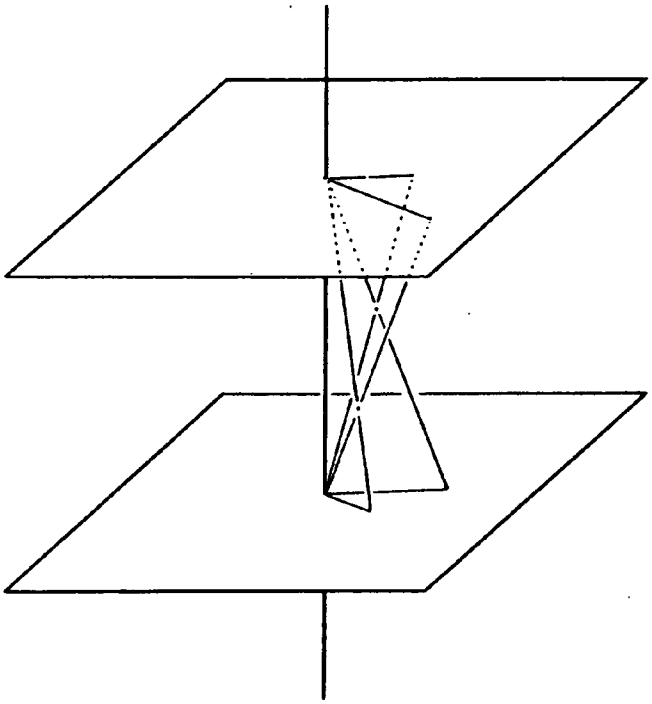

Figure 4d

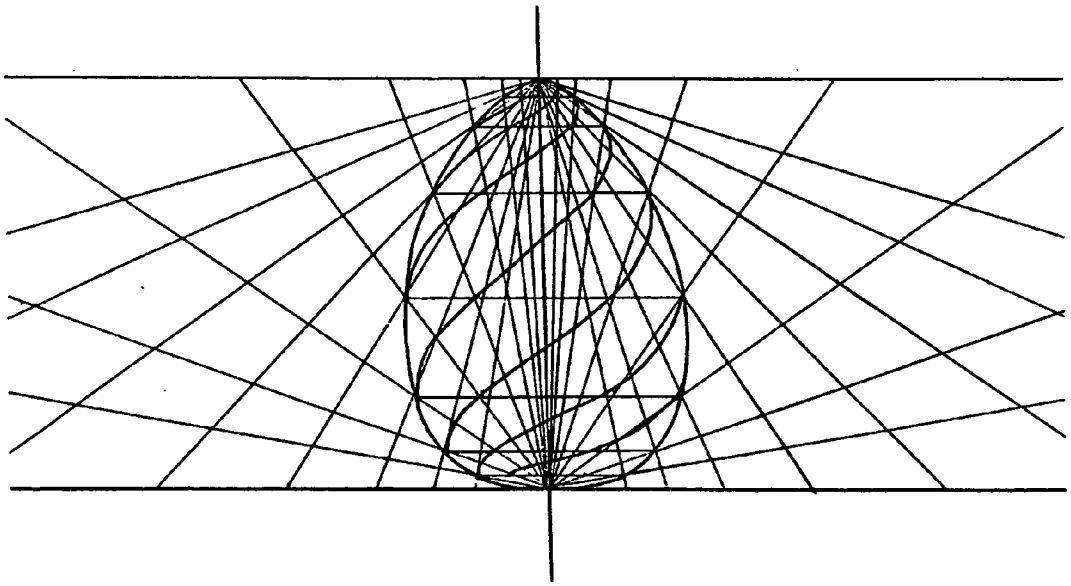

Figure 4e

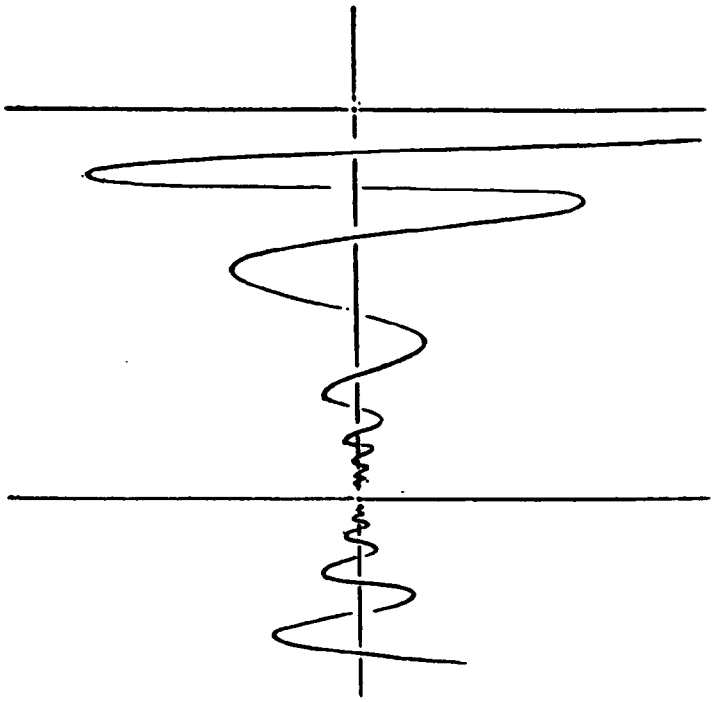

Figure 4f

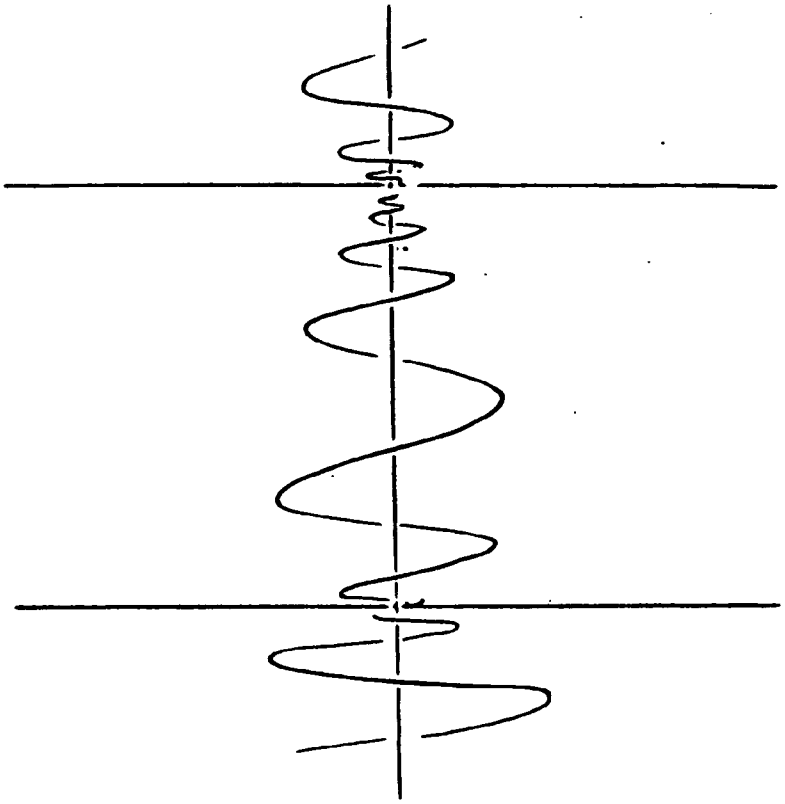

SYSTEM OF METHODS AND APPARATI FOR HANDLING AND MODIFYING INFORMATION ENERGY AND MATTER BY FORMATIVE RESONANCE

BACKGROUND OF THE INVENTION

[0001] This invention relates to an improvement in methods of handling and processing information, energy and matter. It was developed initially to make use of potentials of new technologies, science and industrial art to problems of non-chemical purification, with little or no chemicals added beyond water, of pre-combustion inputs and post-combustion outputs in thermoelectric power generation. The invention extends their application to new, nonobvious and useful systems of methods and apparati for the production, transformation and distribution of matter, energy and information.

PRIOR ART

[0002] With respect to the system of methods and apparati which is the subject of this application, and embodiments therefor, the work of the following, their predecessors and experimentally, clinically or epistemologically near neighbours, form the principal precedent contributions drawn on by this writer: Viktor Schauberger (Austria), Theodor Schwenk (Germany), Hans Jenny (Switzerland), Lawrence Edwards (England), Shafica Karagulla (Canada, United States), Marcel Vogel (United States), Fritz-Albert Popp (Germany), Thomas E. Bearden (United States), Ernst von Bezold (Canada) and William A. Tiller (Canada, United States). The following discussion outlines those contributions applicable to this work as understood by this writer and builds on them to show their relationship to novel, nonobvious and useful aspects of the invention here disclosed.

[0003] Viktor Schauberger was an Austrian forester and technologist whose works are now also widely available in English (1). He observed that when a current in a flowing stream winds centripetally and then centrifugally with an opposite sense of spin, at the turning point of the change of direction of rotation, oxygenation occurs and from this place also there is an energetic flow transverse to the direction of the current, into the stream banks, stimulating the growth of vegetation in those areas. Working with this and similar observations Schauberger was able to invent and frequently to patent 'naturalesque' technologies for diverse applications including trans mountain lumber transport and for transportation; for water purification, energy production, which he identified as environmentally healthier and therefore sustainable in comparison with still-prevalent environmentally destructive mechanistic technologies.

[0004] The centripetal-centrifugal spiral effects he reported (see figure) and made use of ('Schauberger effect') have been applied here in guiding the development of the invention, in light also of observation in the human being's energy field by numerous independent, highly sensitive and skilled observers, of major chakras (see for example S. Karagulla), whirling energetic flexible cones extending well beyond the physical body, situated at and through major glandular centres and aligned in pairs tip-to-tip pointing in opposite directions from the front and back of the body (e.g., B. Brennan and others) set along a central energy channel (called Sushumna in the orient) which runs vertically coincident with the human spine.

[0005] Theodor Schwenk's work on water as a spiraling and projective-geometrically characterisable cosmic sense organ demonstrated, by wheat germination trials using shaken water, the existence and rhythms of cosmic, i.e., extraterrestrial, atmospherically significant Zeitgeber environmental rhythms, and therefore the importance of taking into account not only the use of vortices but also the significance of macroenvironmental rhythms in cleaning and enlivening water organisms to function harmoniously with the syntropic potential of the biospheric macroenvironment.

[0006] Hans Jenny was a physician living in Dornach, Switzerland who developed the field of Cymatics, creating and filming steady and moving three-dimensional standing waves generally produced with fluid agitated to a standing wave by sound through a loudspeaker base, based on Ernst Chladni's acoustically produced two-dimensional standing wave figures and on an appreciation of the contribution of vibration to the creation of form. Hans Jenny patented a device for making speech visible [ca. 1968; reference].

[0007] In a Chladni figure such as that formed by sprinkled fine sand vibrating on the back of a bowed horizontally held violin, the distribution of nodes and antinodes in the particular mode of vibration of the substrate medium, i.e., the violin back, at the frequencies at which it is being excited, may be displayed by the redistribution of the scattered sand in a pattern corresponding to the position of nodal and or to antinodal points and boundaries, evidently dependent primarily on the size and density of the sand particles. This acoustically mediated resonance has been researched by Jenny, Armin Husemann, Sherry Edwards and others as one of a number of formative principles in the human body. A formative faculty (classically, the facultas formatrix) was cited by Johannes Kepler to explain snow crystal form variation (the body of formative forces of the Earth); was researched in embryology by Erich Blechschmidt; and considered more broadly, has been studied as a phenomenon of internal communication demonstrable optically and functionally e.g., electrically, in all living organisms, by Fritz-Albert Popp and coworkers.

[0008] These examples of energetic formative processes in whole systems, i.e., in bodies of connected parts, demonstrate a formative paradigm which is applied and extended with multimodal energy flows or activity sources, e.g., electromagneto-gravitic-(/levitatory)-]optic-acoustic and scalar, as well as psychoenergetic, for application in the invention.

[0009] Lawrence Edwards, an English mathematics teacher and biology researcher, showed that tree buds breathe, or fluctuate rhythmically, in winter around an ideal middle form whose projective geometric path curve is related to the golden mean. His vortex spiral calculation methods and examples are cited here as prior art for the production of vortices and their energetic as well as material products which will enliven nature functionally, in the sense Schauberger described and demonstrated, rather than degrading nature.

[0010] Dr. Shafica Karagulla left the Montreal Neurological Institute to do research on higher sense perception, eventually founding with Viola Neal the Higher Sense Perception Foundation in Los Angeles. Karagulla's clinical reporting of the correlation between chakra structure and activity on the one hand, and physiological health status such as patient endocrinology on the other (1965), provide along with the work of V. V. Hunt (UCLA) and other investigators such as R. Steiner a reliable modern base of published observation of some typical human psychoenergetic anatomy and its corresponding function.. This enables those less skilled in the art of

such observation to make better use of transitory or fragmentary experimental data and to apply with greater confidence, along with those not making such observations, the findings of others as a source of design modeling information.

[0011] Marcel Vogel, a solid state chemist was instrumental in developing the first magnetic memory disk drive coating for IBM. Vogel published work (1973) demonstrating that psychoenergetic telekinetic phenomena become reproducible with sufficient experimenter self-training of the mind which is the instrument of manifesting such psychoenergetic phenomena. Taken together with the contribution of Tiller, Vogel's work exemplifies a shift to scientific knowledge and ordinary technical application of human capacities which have become a part of the state of the art in healing and are applied in the invention for process control enhancement of which water purification, energy production and telecommunication are three examples.

[0012] Fritz-Albert Popp founded the International Institute of Biophysics (Neuss, Germany, a collaborative research undertaking of dozens of scientists globally. His paradigm shifting discoveries have shown that the activity of a quantitatively small amount of energy, as light, directs and maintains the organisation of the body's biochemical activity, and that essentially all measured bioenergetic functions of organisms, e.g., skin electrical resistivity as measured in humans at hundreds of points on the hands, demonstrate an internal coherence predictive and therefore indicative of health. Normative self-validating measurement of coherence (cf. L. Edwards) in the functioning of cymatic structures is therefore incorporated as a monitoring and feedback control criterion of a preferred embodiment of the invention. Popp patent:

[0013] Thomas E. Bearden, a career research scientist (US Army, retired), wrote the book on Energy from the Vacuum (2002). His paper on Giant Negentropy from the Common Dipole provides a physical science foundation for the Schauberger effect which in its higher order gauge symmetry application appears consistent with W. A. Tiller's description of a second, more psychoenergetically malleable level of the physical world access to which depends on an engineerable coupling function. Bearden's presentation of a corrected and extended physics, taken together with technology which demonstrates it (Patrick et al., U.S. Pat. No. 6,362,718, MEG) provides with Schauberger's work the basis in the present invention justifying a the strategic objective of a water cleaning design for power plants which can be upgraded and modified functionally over time to increase net energy production process efficiencies so as to enable combustibles to be reduced and eventually phased out. Bearden's scientific-historical apparatus also provides a point of comparison with Tiller for quantitative modeling of conditioned space effects incorporated as a functional energy control option within the invention.

[0014] Ernst von Bezold published on the BDnow! Agricultural email list (2001), a description which then was archived by colorado.edu, of a class of technologies, i.e., using shapes combined with rhythmitized materials, based in part on L. Edwards' work on shapes applied to the functional renewal, by applying a thin coating of rhythmitized copper ointment (a therapeutic preparation manufactured by, e.g., Wala or Weleda in Europe, and Merkhur Laboratories in Canada, whose detailed experimental scientific basis is referenced by R. Hauschka), of cow horns used in bio-dynamic agriculture, e.g., in making manure or powdered quartz preparations. The principle of cohering shape and material, intensified by rhythmical treatment of the material (treatment such as may also be found in N. Tesla's purple plates, evidently in the Austrian Johannes Grander's water treatment technology, or in more recent "scalar"-resonant liquid treatment vessels and jewelry) has a parallel in the technology of the great pyramid at Giza and an extension in the biogeometry of A. Kareem as and as presented by R. Gilbert, et al. As described earlier in relation to Edwards' work, this principle is applied here with respect to optimised vortex shaping (cf. Edwards) and material, in this case water, formed and controlled cymatically, with psychoenergetic system control enhancement, and eventually, generation.

[0015] William A. Tiller, former department chair and professor emeritus of material science and engineering at Stanford University, wrote Psychoenergetic Science as a simplification and compilation of three previous related volumes documenting 30 years of paradigm-shifting experimental science on the demonstrable, potential, and instrumentally engineerable enhancement of, the integral functional contribution of consciousness to the matter-energy equilibrium of the object-oriented physical science paradigm presently being transformed by the more interactive understanding of reality shown in quantum physics being applied in such diverse fields such as cryptography, quantum computing and psychoneuroimmunologic therapies. Tiller's empirical work on space conditioning for process modulation, together with his work and that of Vogel on experimenter training for replicability (cf. Charles Tart, "state-specific science") applies and extends the implications of the Indian preceptor Patanjali (ca, 8th century) in a unique and distinctly instrumentally modern, scientifically verified and technologically accessible form. The invention applies both the trained-operator effect and the instrument-mediated spacial conditioning effects to control and enhance multimodal cymatic processing and to and anticipate its transformative progression in part as an operator-initiated and controlled activity with corresponding strategic extension of options of scope and scale of application.

REFERENCE NOTES

[0016] 1. 1. Drawings, and descriptions in English, are available from and, respectively for, the work of V. Schauberger e.g., translated and edited by Callum Coates, Ecotechnology v. 1-4. Gateway, Dublin, Ireland, 1997-2000.

[0017] 2. Hans Jenny: Cymatics. Basel, Switzerland.

[0018] 3. Shafica Karagulla: Breakthrough to Creativity. DeVorss, Santa Monica Calif., ca, 1965

[0019] 4. Marcel Vogel: Reproducible long distance communication with plants detailed in Proceedings of the Second International Psychotronics Conference, Prague, 1973.

[0020] 5. Interview for Canadian Broadcasting Corporation 'Ideas' series "Physics and Beyond", 1973.

[0021] 6. Fritz-Albert Popp: Director International Institute of Biophysics, Neuss, Germany. For bibliography see www.lifescientists.de

[0022] 7. Edwards, Lawrence: The Vortex of Life nature's patterns in space and time. Floris, Edinburgh, 1993. ISBN 0-86315-148-5

[0023] 8. Bearden, T. E.: "Giant Negentropy from the Common Dipole," cited from *Journal of New Energy,* 5(1), Summer 2000, p. 11-23. Offprint by the Planetary Association for Clean Energy, Inc., Ottawa Canada; ISBN 0-919969-11-9 [2001].

[0024] 9. Energy From the Vacuum concepts and principles. Xxviii, 952 p. Cheniere Press, Santa Barbara Calif., 2002.

[0025] 10. Patrick; Stephen L. Bearden; Thomas E., Hayes; James C., Moore; Kenneth D., Kenny; James L. Motionless electromagnetic generator. U.S. Pat. No. 6,362,718. Mar. 26, 2002

[0026] 11. Tiller, W. A.: Psychoenergetic science: a second Copernican-scale revolution. Pavior Publishing, Walnut Creek, Calif. c. 2007. ISBN 978-1-4243-3863-4 www.tiller.org

BRIEF SUMMARY OF THE INVENTION

[0027] Essentially, and without limitation of this description to its application in an illustrative preferred embodiment, a cymatic (3- or higher-dimensional Chladni figure-generating) resonant vibrational process is used to induce a rotating standing wave figure in a fluid, such as water, air, plasma, or a slurry including solids, producing a centripetal vortex or vortex of vortices which passing inward through the focus of the tip unwinds from its tip in the same or by induction in an opposite rotation, or meets another incoming vortex tip or tips, at the juncture comprising the tip(s) focus producing differentiable active and potential energetic outputs, and from the focus a likewise differentiable outflow of materials in directions primarily other than that of the axis of tip focus, such as transverse, of least resistance as shaped and sorted within transporting flows of standing waves e.g., whose node-antinode frequencies, amplitudes and spacial configurations are appropriately resonant with selected materials and material-energetic configurations. The forming and modulation of the form may be by external or internal, direct or interferometrically induced, multimodal electro-magneto-gravitic-opto-acoustic and scalar potential drivers controlled by feedback of functional parameters of the manipulated material flow and feedback of the driving energy inputs and their energetic transforms, and having regard to macroenvironmental conditional-probability fluctuations, e.g., in turbulent flow, and, in early embodiments, being fine tuned—later, consequent on operator learning based on feedback with the system as an instrument of learning, increasingly being generated—by operator interaction directly (Vogel), or indirectly using conditioned space effect technology (Tiller) amplification-modulation or other higher gauge broken symmetry operations (Bearden), to bias threshold condition probabilities favourably in respect of intended states of the system.

BRIEF DESCRIPTION OF THE DRAWINGS

[0028] Annotated List of FIGS. **1**. to **4**(*a*)-(*f*)

[0029] FIG. **1**. Background of the invention and cross-reference for FIG. **3**. which illustrates a feature of a preferable embodiment of the invention:

[0030] An example from river current flow, "The Inner Picture of the Dynamics of Current Flow", showing inward spiraling with reversal of spiral direction at the point, i.e., in the region, of start of outward spiraling—and indicating transverse-vectored radiant propagation of energy, as well as in this context reactive enhancement, i.e., oxygenation—is from Schauberger, 1941, as reproduced in Coates, Vol. 1, 1997.

[0031] FIGS. **2** and **3**. Illustrations of features of preferable embodiments of the invention:

[0032] FIG. **2**. A sketch of a sample cross-section functionally spiraling pathway, i.e. here as spirally-fluted piping, whether formed structurally, or through the formed and formative injection of materials such as water into and as a part of the pathway, or in part or in whole energetic-dynamically, or by some combination or permutation of these.

[0033] FIG. **3**. A sketch of a sample complex vortex of vortices, modeled on the inventor's observation as well as on descriptions, of naturally-occurring and developed or "built" complex vortex structures which may be characterised as dynamically stable n-dimensional "standing wave" structures. The example is of a collinear pair of complex vortices shown in oblique cross-section; to the left in the figure is appended a dotted-line indicator of a contiguous, expansion-contraction vortex figure such as may be found in FIG. **1** with a second point of maximal vortex centripetal concentration, as may also be seen in FIG. **4**(*f*). This vortex meeting, or transition, point is a focal region of energy concentration and release which as a focal point of modulation (depending also on vortex spin directions) can be used to amplify the modulating signal's effect in the centrifugal or expansive phase or, respectively depending on vortex spin directions, to modulate energy released along another vector from the focal region; for a naturalesque example; see FIG. **1**.

[0034] FIG. **4** note: Such sets of vortices can be concatenated in various geometries—linearly, in rings, nested, etc.—as information energy and materials handling and transformation structures, e.g., in the processing of water of whatever phase, and gases or other materials, of energy, and of information, associated with combustion, of coal, etc; with other manufacture of energy and of material substance in preferred composition, form, state, and the production of purposed information-rich structures or forms and structures or forms for processing information; with the sensing or other collection, processing, communication of information and associated energetic and material entities, e.g., as information carriers, viz., modulating and as modulators, locally and nonlocally, for example using functionally entrained (i.e., resonantly tuned) nonlocally paired single or doubled (for energetic balance) sets of more or less triple vortices, e.g., three-dimensionally depending on intended function, which are monitored and modulated at the origin (see **4**(*e*) below), e.g., using one or more members of the class of modulators listed above, especially operator- or user-specifiable modulators, to enable transfer of informational, energetic, material pattern momentum between the nonlocally paired vortex sets, in order to facilitate convenient transfer of process-related patterning for the effective replication of data, of energy states, or transfer under competent operation conditions of low-dimensional-number patterns that act as localizing carriers for higher-dimensionally-resonant homeostatic structural fields and their associated states, i.e., principally in living organisms. The same principle can be applied reflexively to enhance holotropic pattern stability of organisms with respect to an operator-programmable template field; e.g., as two examples among many, for conservation and improvement of biotic function and its patterned energetic basis using an algorithmically-controlled amplifier to enhance food stability and therefore conservation or to support healing based on modulation of a resonantly shaped and directed energy flow using a reflexively applied template which is functionally operator-enhanced.

[0035] As cited above, a mathematical apparatus for calculating projective-geometrically visualisable vortex and related path curves, including but not limited to a sample computer program, and sample illustrations of the families of curves employed here, which it is proposed are a functional correspondent class of the shapes observed and then designed and used by V. Schauberger, may be found in Lawrence Edwards' work, inter alia: The Vortex of Life, 1993. See also articles in Mathematical-Physical Correspondence; and, The Field of Form, 1982. FIG. **4** illustrates examples of some applicable projective-geometric curves and their calculation from Edwards (1993); of classes of curves to be applied and based on the mathematical descriptions of their classes, to be used in examples, indicated descriptively in the foregoing (i.e., in the accompanying) text, of preferred embodiments of the invention.

DETAILED DESCRIPTION OF THE INVENTION

[0036] The present invention now will be described more fully with reference to the general inventive concept, and to illustrate embodiments of the invention. As this invention may be embodied in many different forms, its scope should not be construed as limited to the exemplary embodiments set forth; rather, the examples are provided to indicate a scope of potential preferred embodiments to those skilled in the art.

[0037] The present invention of a system of methods to handle information, energy and materials and to modify their properties relates to the modification by manipulation iteratively (including but not limited to, in particular, recursively; the term "iteratively" is so used throughout), simultaneously and prospectively or retrospectively, of the potential and manifest energetic, temporal and spacial coordinate, motional and orientational, coherence and informational or entropic status, dimensionality including but not limited to metric (dimensional curvature), combination or dissociation, of materials in amounts and states ranging from particle to compound and bulk mass, including but not limited to plasma, gas, solid and liquid states singly, intermixed or combined, making use of one or a coordinated combination (including but not limited to, as the case may be, ordered combination, i.e., permutation; "combination" is so used as an inclusive term, throughout) of more than one structure and system of vibration and resonance of material or energetic shape, including but not limited to environmental Zeitgebers or related factors or their artificial analogues, in a feedback or resonance-controlled manner permitting dynamically active, i.e., reflexively, iteratively and synchronically varying differentiation, integration, transformation including but not limited to metamorphosis or conversion from one state to another, of informational, energetic and associated material states, systems, forms and entities.

[0038] The invention consists of a unimodal or multimodal integrated system of methods as outlined here to handle information, energy and material and modify their properties, including but not limited to local and nonlocal interaction, patterning and coherence.

[0039] An example of a class of embodiments is as it relates to communication of information, energy and material, particularly between the holographic sub-quantum and quantum-level entrainment and cross-modulation of asymptotically and hyperbolically n-dimensionally pattern-matched, e.g., including but not limited to in particular functionally synchronous nonlocal, systems of information, energy and material.

[0040] Another example of a class of embodiments is as it relates to holotropically "self"-similar precursorial re-equilibration of organisms and entities, including but not limited to in particular their energetic (viz. their persisting or durable sub- and quantum-resonant) template or formative pattern in a range of applications from medicine to physical device and structures maintenance, to re-establish a proximal functional and structural wholeness at a higher level of holistic functional coherence, in particular also therefore to re-tune them optimally with and to a resonant pattern of macro-environmentally current syntropy with its accessible dimensional and nondimensional substates. "Vis medicatrix naturae per facultatem formatrix": i.e., re-tune organism to their archetypal (basic, healthy) formative patterns in harmony with the macrobiosphere, "The healing life of nature [accessed] through the formative faculty".

[0041] An example of a class of embodiments preferable for their obviously immediately beneficial and pertinent application relates principally to the energies and material substance associated with solids, with liquid and gaseous fluids and solids associated with them; to plasma, and associated quantum-energetic (viz., respectively, subquantum-energetic, i.e., including but not limited to, in particular, ["quantum"-]nonlocally entrained energetic-potential such as so-called zero-point) states.

[0042] A specific application in this class of embodiment is its use for the pre-, real-time ongoing, and post-treatment of fluids, in particular, water and gases including but not limited to related particulates, associated with combustion, in the processing, particularly the cleaning, of pre-, combusting and post-combustion gases, in particular, respectively, gaseous/ified combustants, products and proximal energy, materials and energetic patterns associated with combustion of e.g., hydrocarbons such as coal; by the use singly and in combinations; continuously, and discontinuously, through design-resonant, or forced pulsation inducing turbulence, pulsation, cavitation; of physical-structurally, or energetically, e.g., acoustically; magnetically; etc.; functionally spiraling, e.g., spirally-fluted piping, pathways which may be used to induce or facilitate; optionally with 2, 3 or more dimensional Chladni-figure, i.e., cymatic, dynamically shifting resonance/feedback-controlled electro-magneto-gravitic-levitatory-opto-acoustic-temporal-spacial standing-wave patterns, including but not limited to scalar Whittaker fine structure signaling particularly for thermal behaviour control of materials, and application of Grander and Tiller field-effect systems; and also, optionally with a class of directly operator-driven phenomena, e.g., Keely-effect, Vogel-method or "Hutchison-effect" induction;

[0043] to condense or rarefy and drive spacially, i.e., to segregate, mix, react, shape, etc., said fluids, viz. gases and their constituent and included substances including but not limited to precipitates, elements and compounds to be formed or dissociated, fractionated out, otherwise modified, and to assist in the production of energy; especially, in particular, where certain forms are approached or striven for or referenced, such as the mean as well as ideal value cycloid space curve families described by Lawrence Edwards in the life of nature, materials in these forms being evidently energizing resonant transducers of water quality renewal and related effects; and forms such as the bio-geometrically-analysed designs—e.g., concavities in structures, such as, e.g. a gradual half-degree indentation of each of the outer upper surfaces of the Great Pyramid at Giza used to induce "hori-

zontal negative green", and other, cone-pendulum-response states as presented and described by A. Kareem, R. Gilbert and others—which may be favourable or conducive to the improvement of informational content, energy and material, e.g., i.e., in this case of quality of water and gases and their forms and behaviours, especially combustion-associated gases and water in whatever phase, and of their environment, and of related cleansing, reactive or structural-energetic-chemical including but not limited to biochemical stabilizing activity in this setting as well as in other settings such as biochemical cleansing, stabilisation, renewal of living organisms, their environment and precedents including but not limited to inputs and succedents including but not limited to outputs.

[0044] Modulation preferentially may be varied in feedback, resonantly simultaneous with, or preceding (e.g., within entrainment parameter values range) synchrony with, environmental Zeitgebers and their measures, e.g., using rhythmitized shapes (rhythmitised shaping functions in classes such as that of the Great pyramid, cow horns and other natural structures as resonators, described as mathematical function classes by L. Edwards), with respect to the patterns shown by astronomical ephemerides, and the mathematical descriptions of, in particular, planes and other shapes or figures formed among massive bodies during their transits, by astronomically related variations in the values of the tensor Tau sub jk and associated described functions including but not limited to those identified by G. Unger of Dornach, Switzerland, and by associated indicators; to optimise negentropic as well as entropic functions severally and in combination.

[0045] A specific class of instances of this kind of embodiment would utilise rotating multimodal fields and resonant "radiative" and "field" effects, whether by gross energetic induction as described or by resonant rhythmitised shaping or by indirect Tiller-type or directly operator-programmed tuning or combinations to induce essentially, preferably by means without moving parts,

[0046] the enlivening of energy and of material, i.e., of water;

[0047] pre-cleaning and conditioning of gases; including but not limited to, for both water and combustion-related gases, electrical or other energetic charging or programming, e.g., magnetic induction of appropriate coherent spin and precession of particles and other structures, e.g., hydrogen proton precession;

[0048] cymatic vortical motion including but not limited to, based on the work of Viktor Schauberger, Theodor Schwenk and others, centripetal as well as, as may be useful or conducive in application, centrifugal, and alternating centripetal/centrifugal, with "braiding" of flows to facilitate blending—respectively separation of succedent materials and states—of spiraling gases and water; leading to improved mixing, modification and separation of materials, and improved control of energy production, improved cleansing and production of associated materials in usable higher quality lower cost form than might otherwise be the case;

[0049] modification of gasification, precipitation, and endo/exothermic processes by Whittaker fine structure signaling, by Grander spacial and magnetic induction, et. seq., especially for real-time process- and flow-control stabilisation;

[0050] modification of the foregoing and of other processes, states and conditions through operator-controlled intent and concentration of energies, indirectly by programmable-unit Tiller "field effect" action, viz. gauge-symmetry level modulation, as well as directly, including but not limited to Keely-technology and Vogel-methodology effects.

[0051] An example of a design which preferably embodies elements of the foregoing in an application to facilitate production of clean combustion by-products of coal and of other combustibles or pre-combustible feedstocks and their combustion processing materials and systems, the materials being principally water and air, with an optimal net production of environmentally life-enhancing (i.e., also therefore, minimally life-degrading) quality and quantity of energy, material and information especially bioinformation, is as follows:

[0052] Iteratively, and by resonance including but not limited to pre-emptive or pattern-anticipatory entrainment-leveraging e.g., phase-lock, signaling,

[0053] 1. Form water and gas flows architecturally, i.e., physical-structurally using the patented and unpatented built as well as the designed examples from among: R. Steiner; especially, V. Schauberger with numerous illustrations of examples in patents and other literature to be cited; T. Schwenk; J. Grander; and for informational, energetic and materials modulating effects using shaped rhythmitised materials, E. von Bezold (2001); and, by means of a "complex" vortex, i.e., a set of complex vortices each comprised of multiple vortices arranged in groups as dynamically stable standing-wave "cells", the focal point of each of which may centre on and be contiguous with the focal point of a corresponding collinear vortex whose mouth is pointed in the opposite direction to the first, or with the focal points of a number of vortices dynamically balanced energetically and in space, all with one another.

[0054] 2. Also shape the streams, e.g., for a first approximation as exemplified in the foregoing paragraph, vibrationally by tuned coherent energetic induction and modulation magnetically/diamagnetically, opto-acoustically-thermally using dynamic Chladni-figure standing-wave vortices, i.e., after the cymatics of H. Jenny et. al.—also approached by the flow forms of Wilkes, articulated by A. Husemann and others, also alluded to mathematically by G. Adams, by P. Forchheimer, later by T. Schwenk (1954) who cites I Prigogine in the context of sensitive control-response; discussed mathematically by R. Abram and concurrently and subsequently especially in the work of L. Edwards—in the classes of shapes expressed mathematically by L. Edwards (1993) who provides calculation methods, computer software and diagrammatic illustrations: oscillating, varying, within and around syntropic, life optima "antenna" shapes, e.g., mean as well as ideal shapes, tuned over time to work with principal macro-environmental (Zeitgeber) rhythms; and transformed (e.g., by rotation and by translation in flow, e.g., induced acoustically or by optically-tunnelled electromagnetic radiation, e.g., amplitude-, frequency- and waveform-specific light, such as squeezed light or other coherent as well as incoherent light) metrically and physico-chemically, pulsated, and otherwise modulated to induce enhanced laminar flow, controlled turbulence, and cavitation-reformative collapse cycles, including but not limited to cycles that are rhythmically- i.e. resonantly-enhanced; and further to modulate the sensitive, cf. T. Schwenk, non-equilibrium, cf. I. Prigogine, self-organising activity.

[0055] 3. Concurrently, modify the processes locally and globally, in part and in whole, using as appropriate the means described in 1. and 2., and other available signalling energizing systems as modulators for the above control systems and

as net additional inputs and, as appropriate, use energetic outputs to be fed back into the system as controlling modulators; including but not limited to, as examples, electrostatic dispersion; complementary electrical charging; electrolysis; magnetic, endo/exothermal, other emf or energetic treatment including but not limited to macroenvironmental signals, unamplified and amplified; to, e.g., increase, maintain or reduce solubility; flow formation, as described above, to enliven fluids; centripetal cyclones, compression vortex mixing and transformation of inputs, e.g., vortical compression wave precipitation threshold modification; space state, time state and information coherence system behaviour state programming, e.g., via proximity field conditioning, e.g., Tesla purple plate technology or other "scalar treated" programmed resonators, characterisable for example in quartz by a Cartesian matrix spaced throughout the material of silicon atoms each containing a proton with a doubled Lissajous figure; Tiller-effect units; Grander units; Whittaker structure modulation to improve e.g., output cleansing, output precipitation conditions as well as to optimise thermal production efficiency exothermically internally and endothermically at specified system functional boundaries to eliminate net environmental negative impact and, as with the whole system, optimise positive impact; further to the description in 2., use of sound and acoustically-tuned EMF, e.g., as heterodyned fields, and other means to induce mass hyperacceleration and velocity effects, and other methods of catalysis, e.g., to improve reaction chemistry, hydroxyl radical and hydrogen chemistry optimization, etc.; further applications integrated synergically with above processes, of acoustic, especially pulsating, and EMR (electromagnetic radiation) and other radiative effects other than magnetic; e.g., for improved control of combination-dissociation processes by sound, acoustico-magnetic, infrared, UV, etc., within transient standing-wave cells whose opto- and magneto-acoustics are, for example, like those demonstrated optically by a cyclone, a tornado or an optical fibre, i.e., distinctly self-contained or transmissive in a parametrically-specific manner.

[0056] Specific terms employed for illustration should be read in a generic and descriptive sense only and not for purposes of limitation. The scope of the invention is further set forth in the following claims.

1. A system of methods and apparati for handling information, energy and material using multimodal cymatic (standing wave patterning, whether stationary or moving) generation, and manipulation, principally of material and energy in vorticoid including concatenated and grouped vorticoid forms, to concentrate, cleanse, separate, transform, produce etc., materials and energy, including without limitation the production of clean water and manufactures materials, the production of net usable energy by effects such as Schauberger and vacuum potential-related, the collection, processing and communication of information by nonlocal quantum coherence (entrainment) of dynamic systems, initially cymatic, viz., vorticoid, the similar transport of lower-dimensionality material patterns, i.e., materials, also to facilitate transport of living organisms, and the tuning of higher-dimensional energy forms, i.e., formative fields, for applications such as healing.

2. A means of fine-tune controlling such systems directly by means of psychoenergetic operator interaction and indirectly by means of conditioned space technologies and vibratory enhancing technologies such as "scalar" treated materials and systems; and by other means described as "gauge-symmetry"-level raising, here, e.g., Bearden; and their combination.

3. Means of facilitating learning to generate Tiller-effect spacial conditioning (higher gauge symmetry) enhancement using motivated feedback in utilising these systems with spacial conditioning technology assist.

4. Further, based on the foregoing, all related dependent claims which may properly be construed from the foregoing.

* * * * *

METHOD AND APPARATUS FOR PRODUCING NUCLEAR-FUSION REACTIONS

Filed May 13, 1966 16 Sheets-Sheet 1

FIG. 1

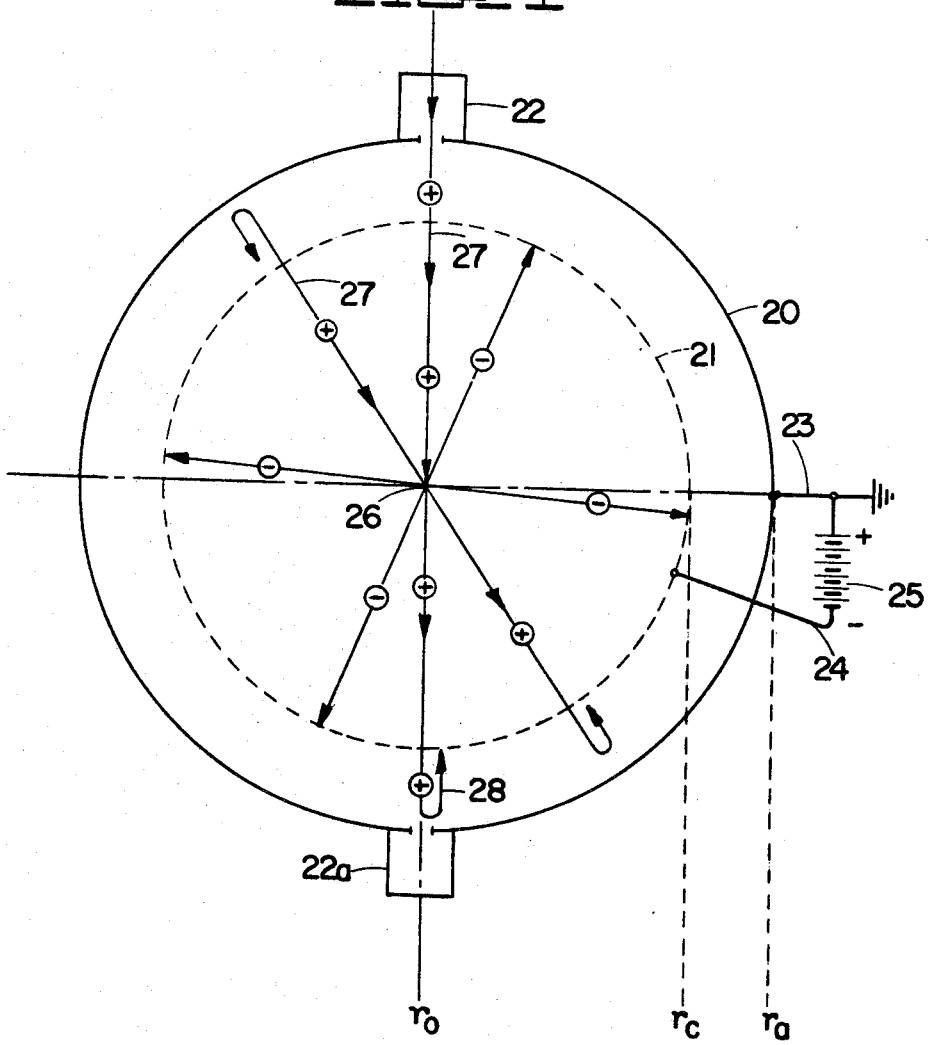

INVENTOR
PHILO T. FARNSWORTH
BY Wood, Gustav & Irish
ATTORNEYS

METHOD AND APPARATUS FOR PRODUCING NUCLEAR-FUSION REACTIONS

Filed May 13, 1966 16 Sheets-Sheet 2

FIG. 2

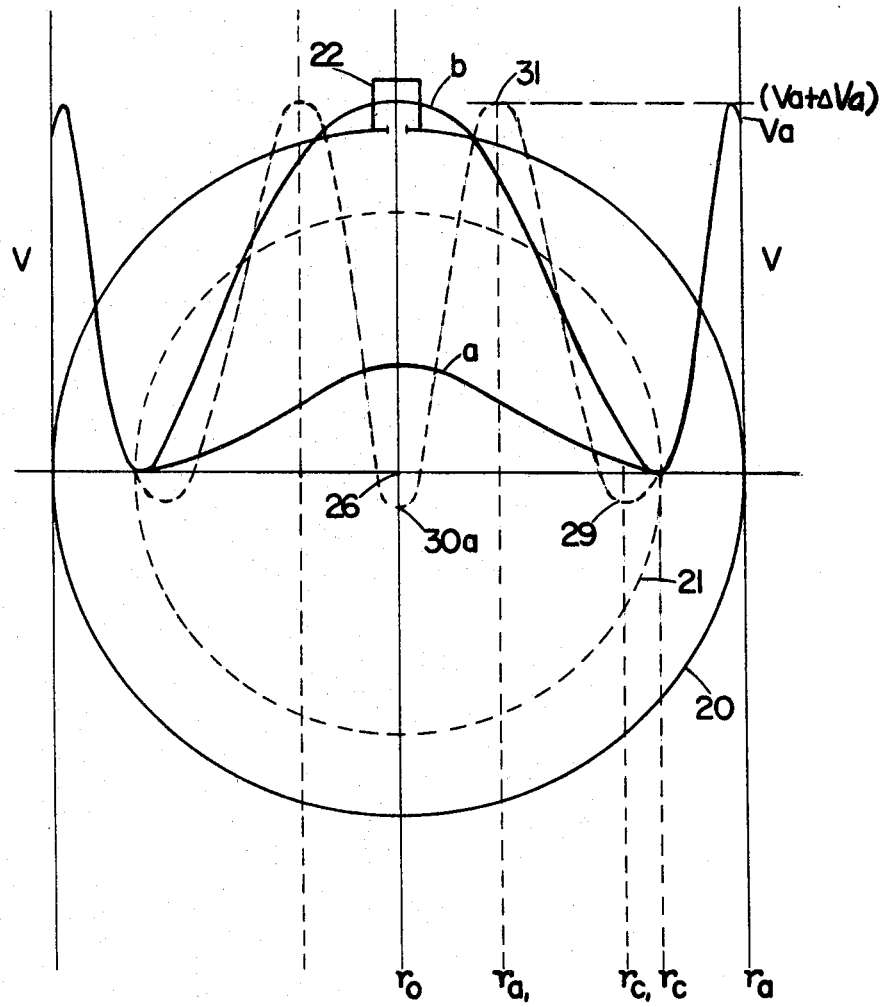

INVENTOR
PHILO T. FARNSWORTH
BY Wood, Dust & Irish
ATTORNEYS

METHOD AND APPARATUS FOR PRODUCING NUCLEAR-FUSION REACTIONS

Filed May 13, 1966 16 Sheets-Sheet 3

FIG. 3

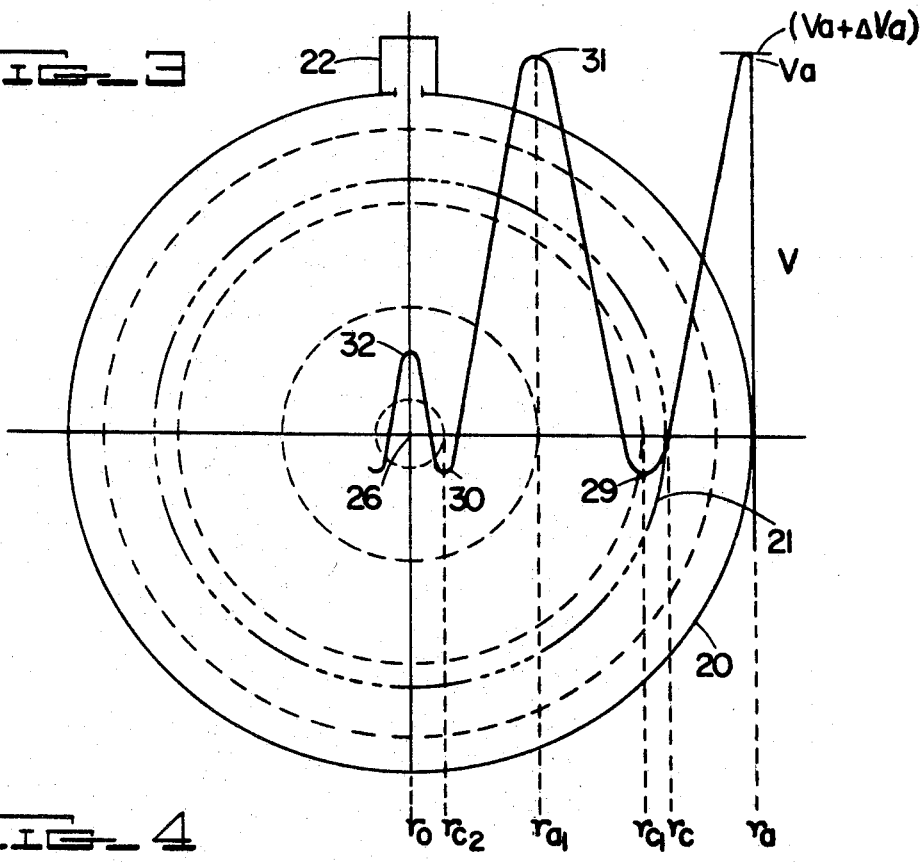

FIG. 4

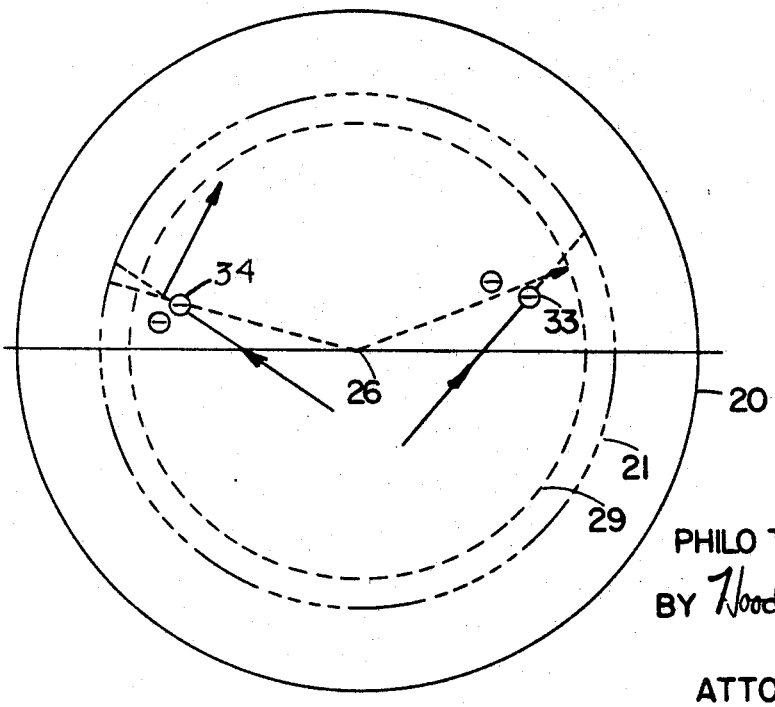

INVENTOR
PHILO T. FARNSWORTH
BY Wood, Herron & Irish
ATTORNEYS

METHOD AND APPARATUS FOR PRODUCING NUCLEAR-FUSION REACTIONS

Filed May 13, 1966 16 Sheets-Sheet 4

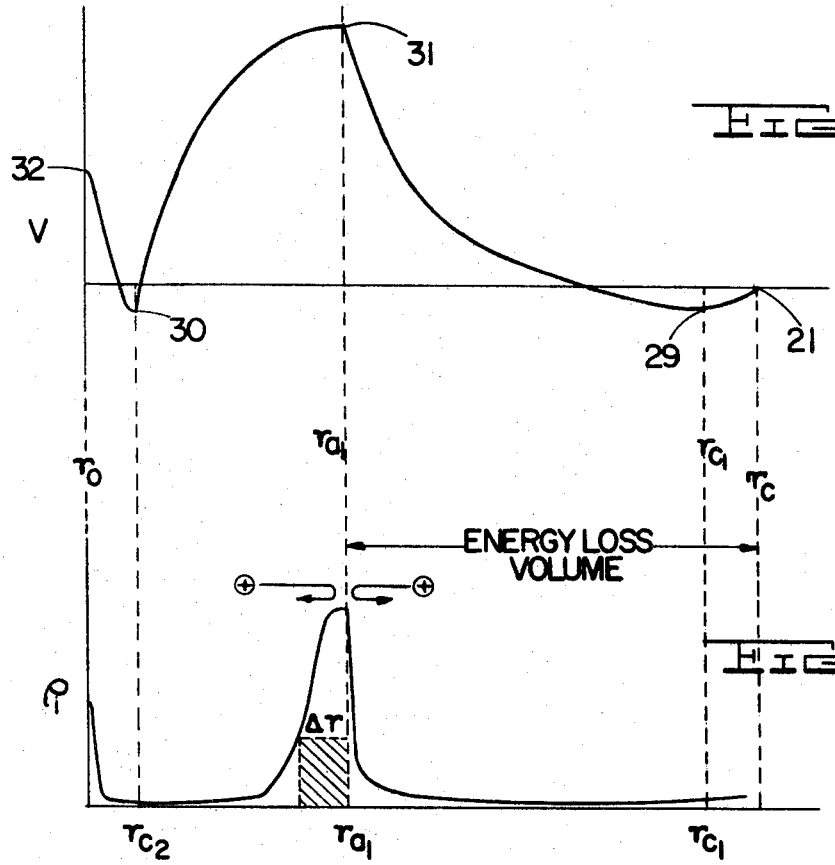

FIG. 5a

FIG. 5b

FIG. 10

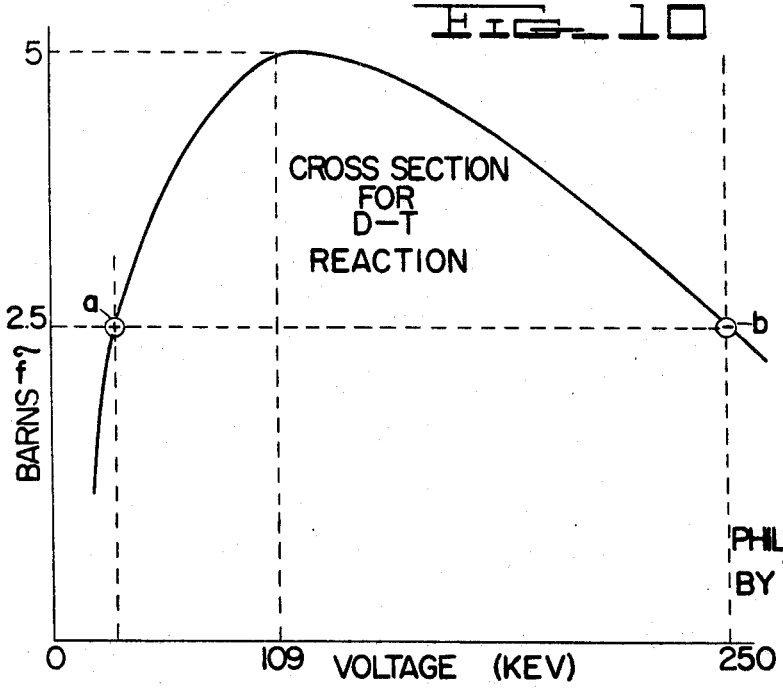

INVENTOR
PHILO T. FARNSWORTH
BY Wood, Herron & Irish
ATTORNEYS

METHOD AND APPARATUS FOR PRODUCING NUCLEAR-FUSION REACTIONS

Filed May 13, 1966 16 Sheets-Sheet 5

FIG. 6

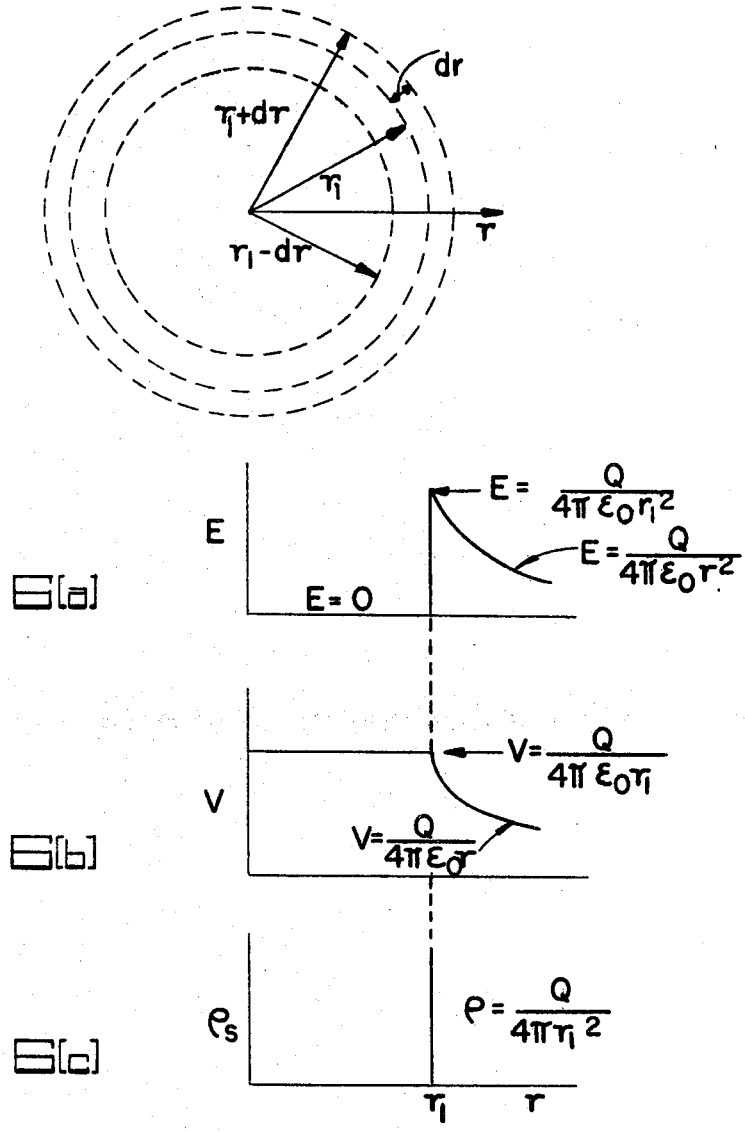

INVENTOR
PHILO T. FARNSWORTH
BY Wood, Herron & Irish
ATTORNEYS

FIG. 7

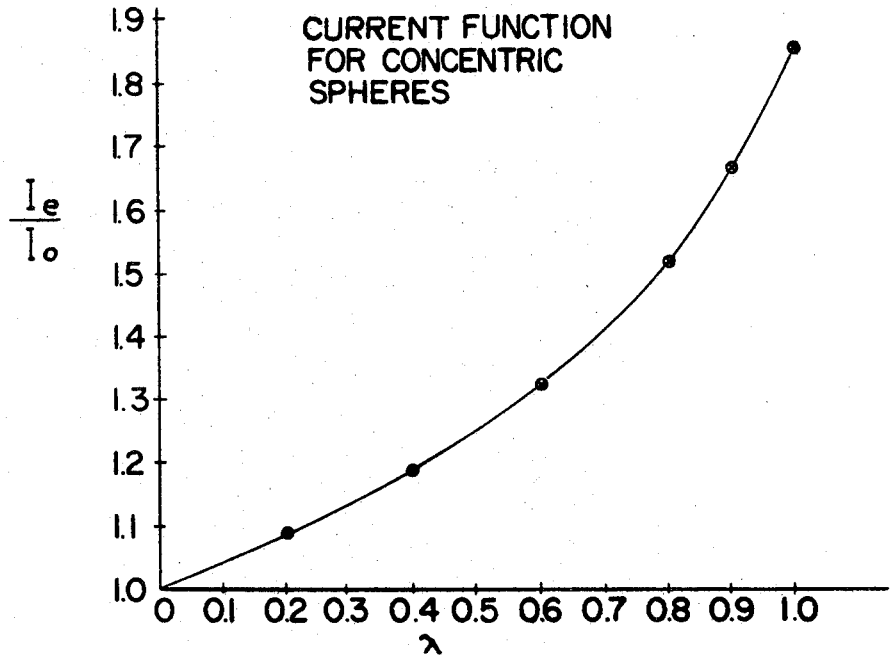

INVENTOR
PHILO T. FARNSWORTH
BY Wood Gust & Irish
ATTORNEYS

METHOD AND APPARATUS FOR PRODUCING NUCLEAR-FUSION REACTIONS

Filed May 13, 1966 16 Sheets-Sheet 7

FIG. 8

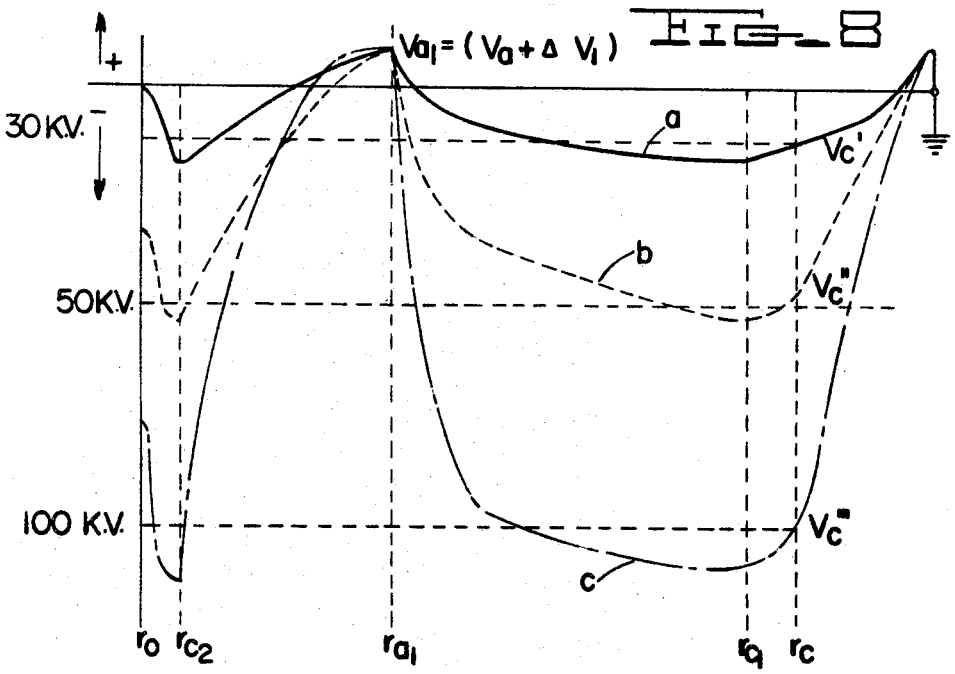

FIG. 9

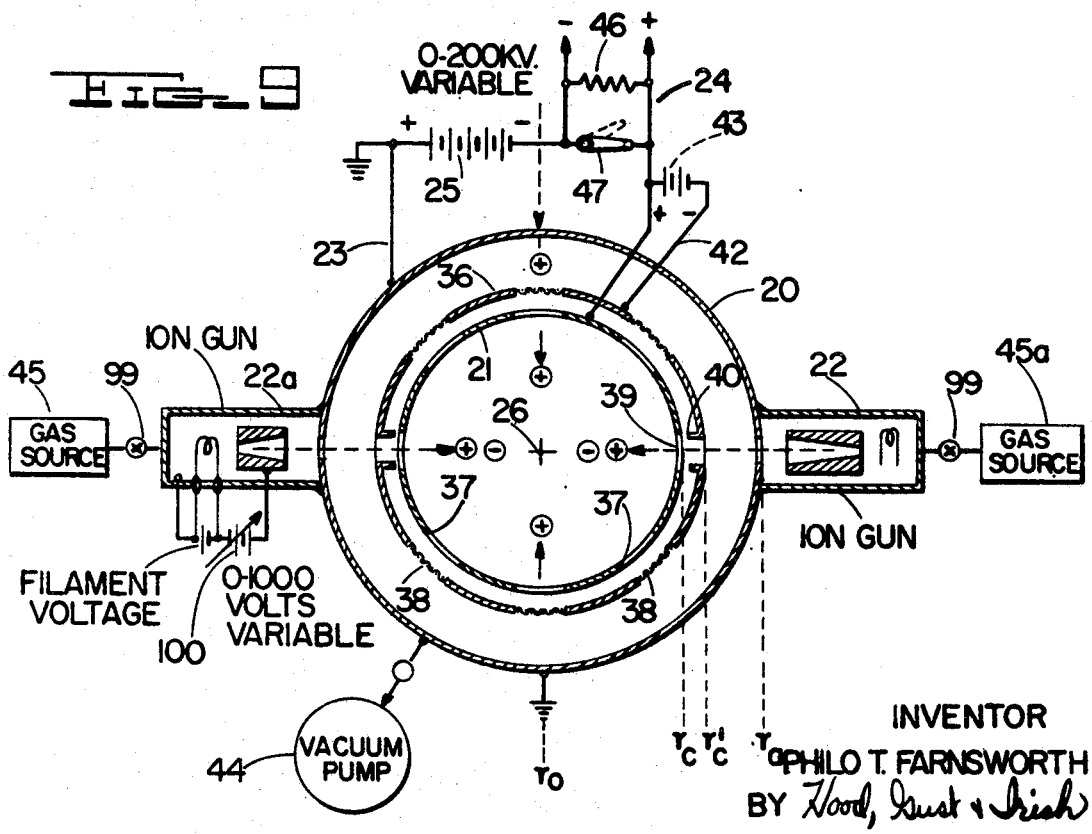

INVENTOR
PHILO T. FARNSWORTH
BY Wood, Gust & Irish
ATTORNEYS

METHOD AND APPARATUS FOR PRODUCING NUCLEAR-FUSION REACTIONS

Filed May 13, 1966 16 Sheets-Sheet 8

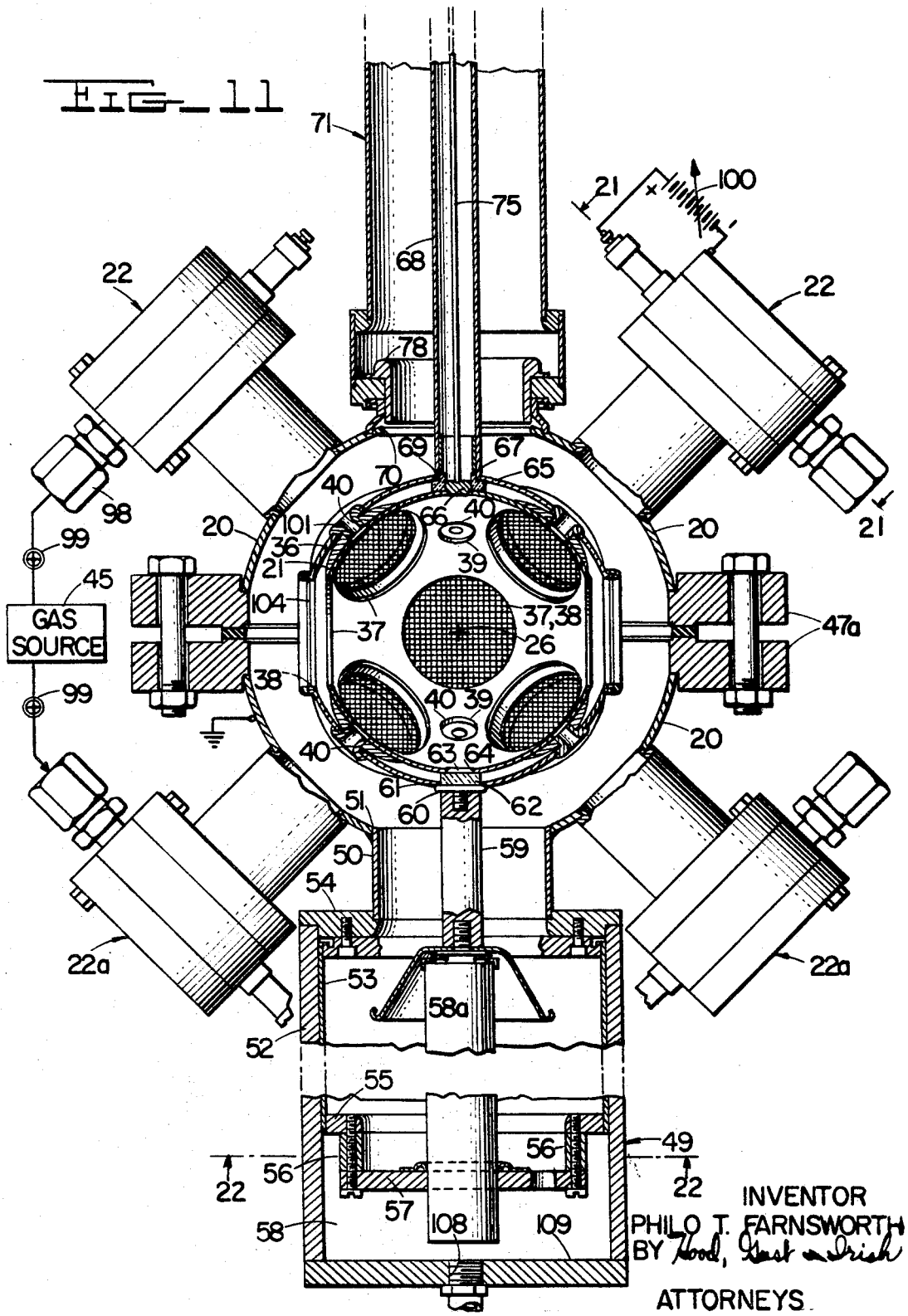

METHOD AND APPARATUS FOR PRODUCING NUCLEAR-FUSION REACTIONS

Filed May 13, 1966 16 Sheets-Sheet 9

FIG. 12

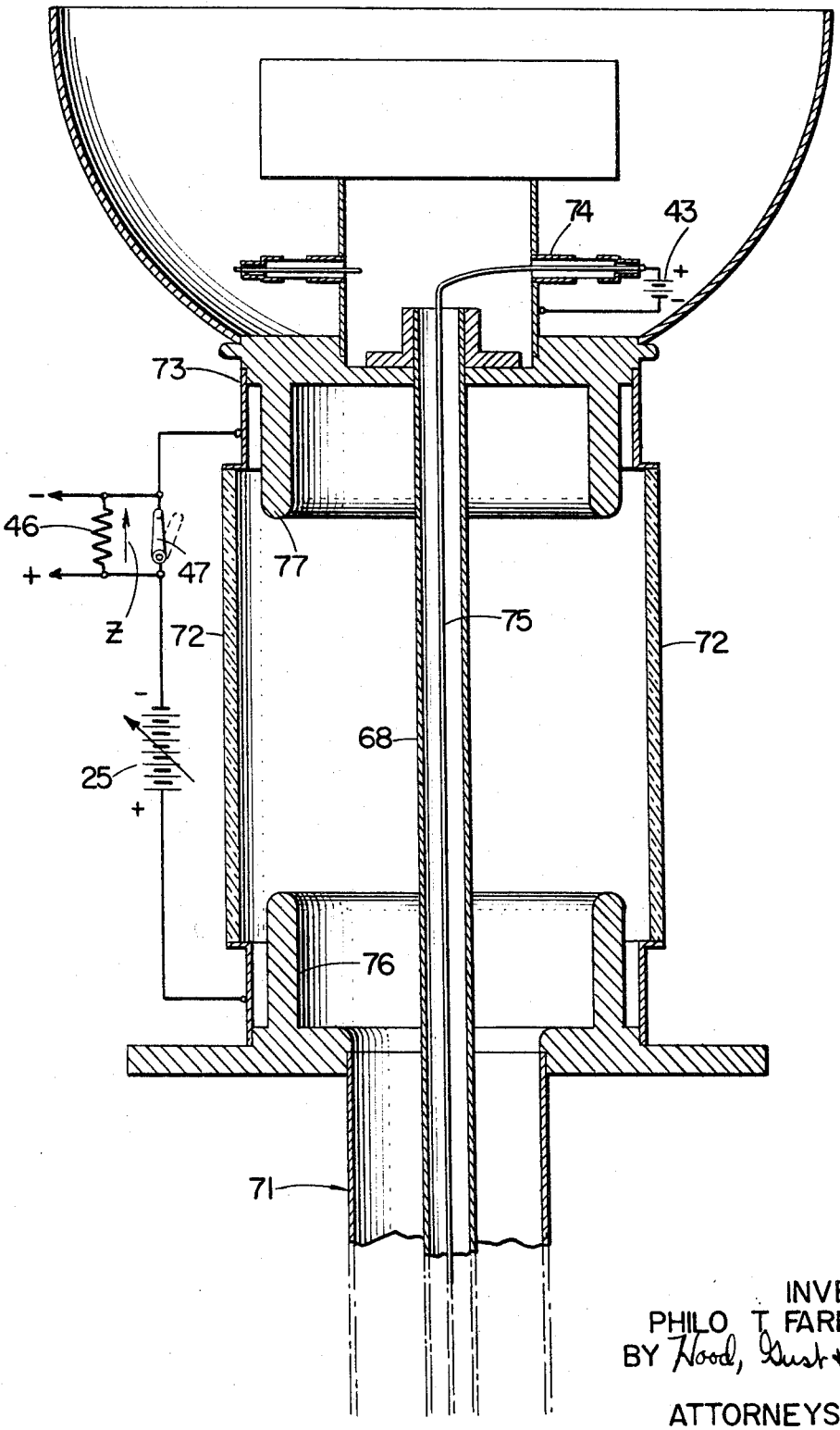

INVENTOR
PHILO T. FARNSWORTH
BY Wood, Dust & Irish
ATTORNEYS

METHOD AND APPARATUS FOR PRODUCING NUCLEAR-FUSION REACTIONS

Filed May 13, 1966 16 Sheets-Sheet 10

FIG. 13

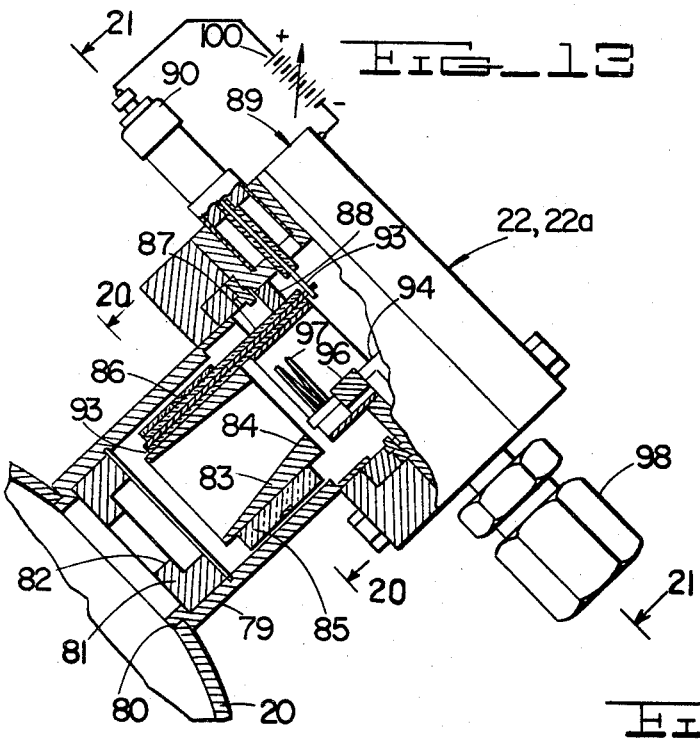

FIG. 20

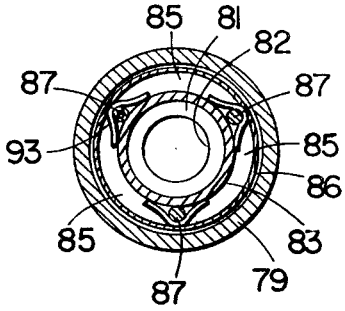

FIG. 21

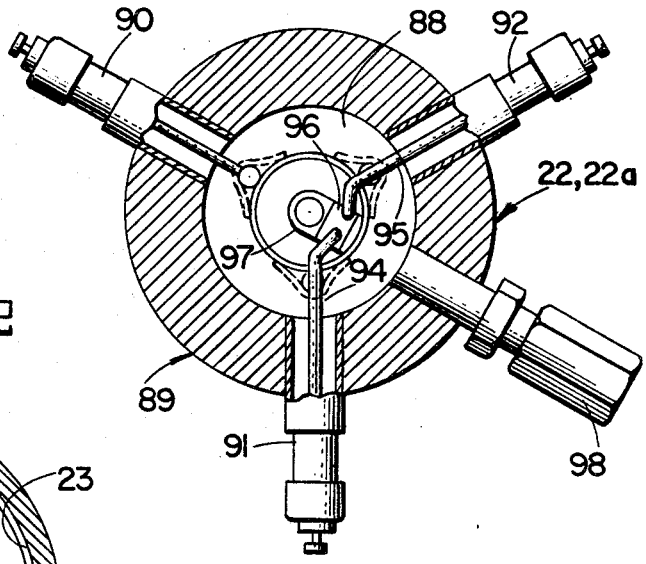

FIG. 22

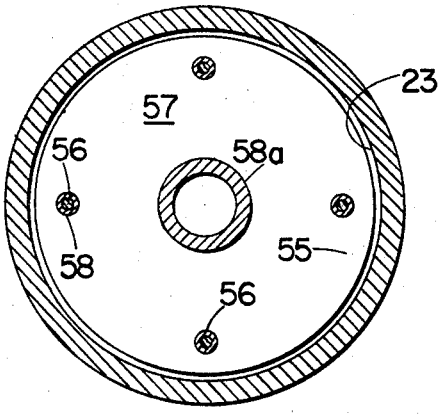

INVENTOR
PHILO T. FARNSWORTH
BY Wood, Gust & Irish
ATTORNEYS

METHOD AND APPARATUS FOR PRODUCING NUCLEAR-FUSION REACTIONS

Filed May 13, 1966 16 Sheets-Sheet 11

FIG. 14

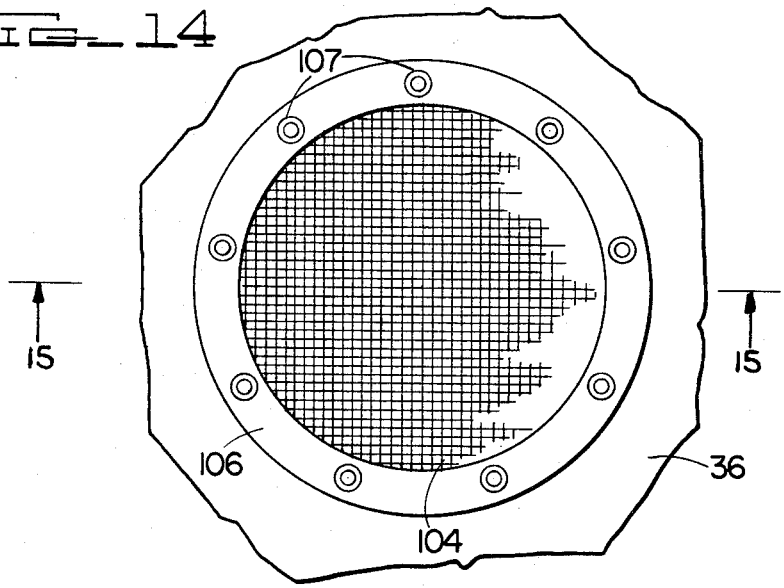

FIG. 15

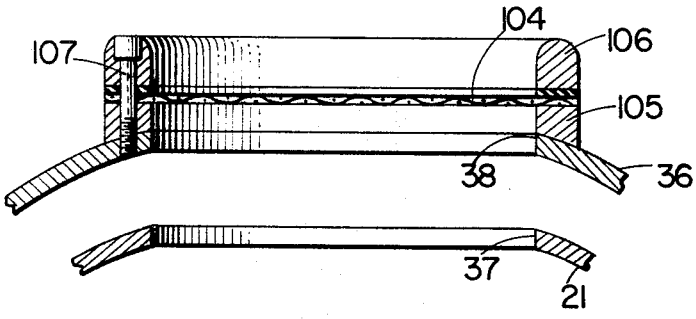

FIG. 16

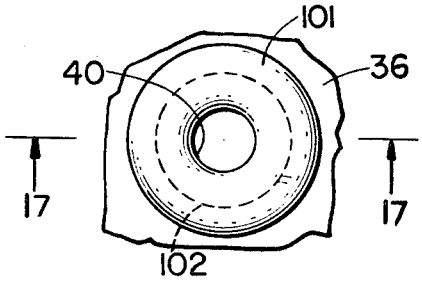

FIG. 17

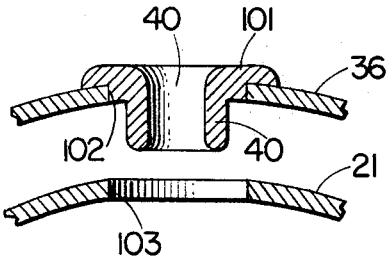

INVENTOR
PHILO T. FARNSWORTH
BY Wood Gush & Irish
ATTORNEYS

METHOD AND APPARATUS FOR PRODUCING NUCLEAR-FUSION REACTIONS

Filed May 13, 1966 16 Sheets-Sheet 13

FIG. 18a

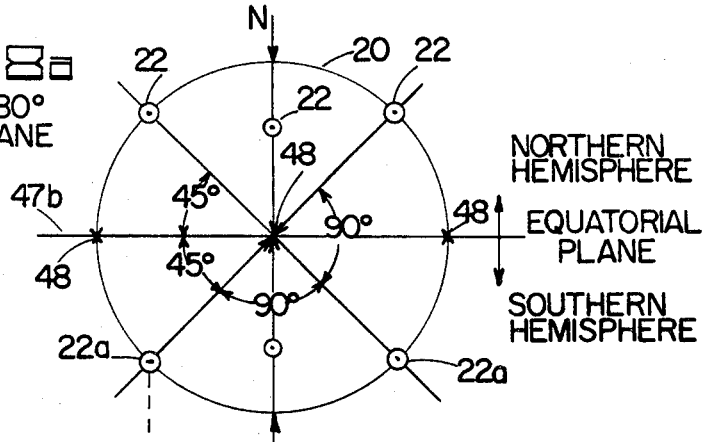

FIG. 18b

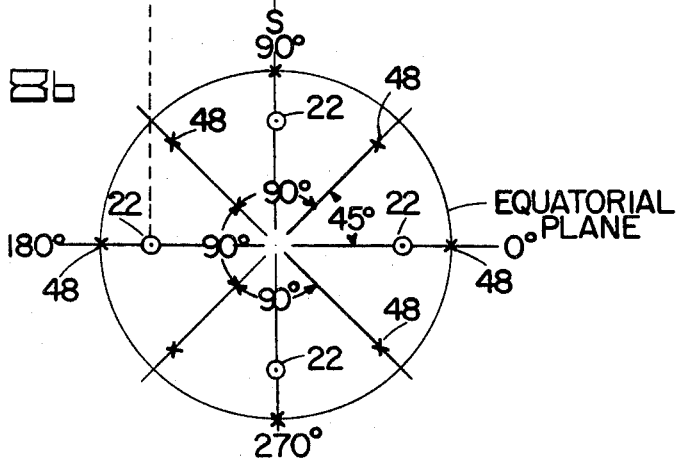

FIG. 19

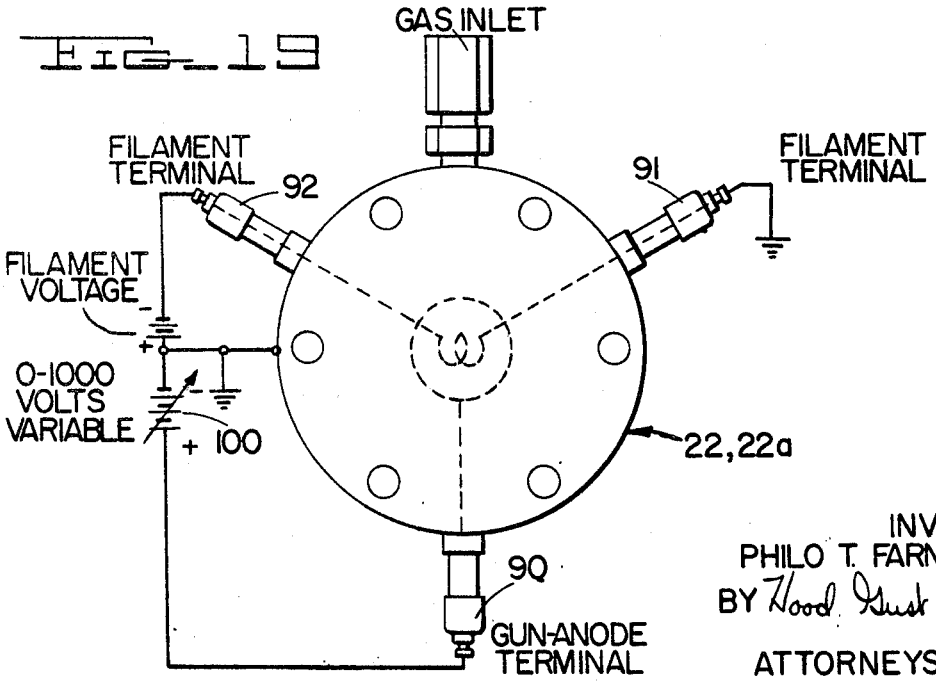

INVENTOR
PHILO T. FARNSWORTH
BY Wood, Herron & Irish
ATTORNEYS

METHOD AND APPARATUS FOR PRODUCING NUCLEAR-FUSION REACTIONS

Filed May 13, 1966 16 Sheets-Sheet 13

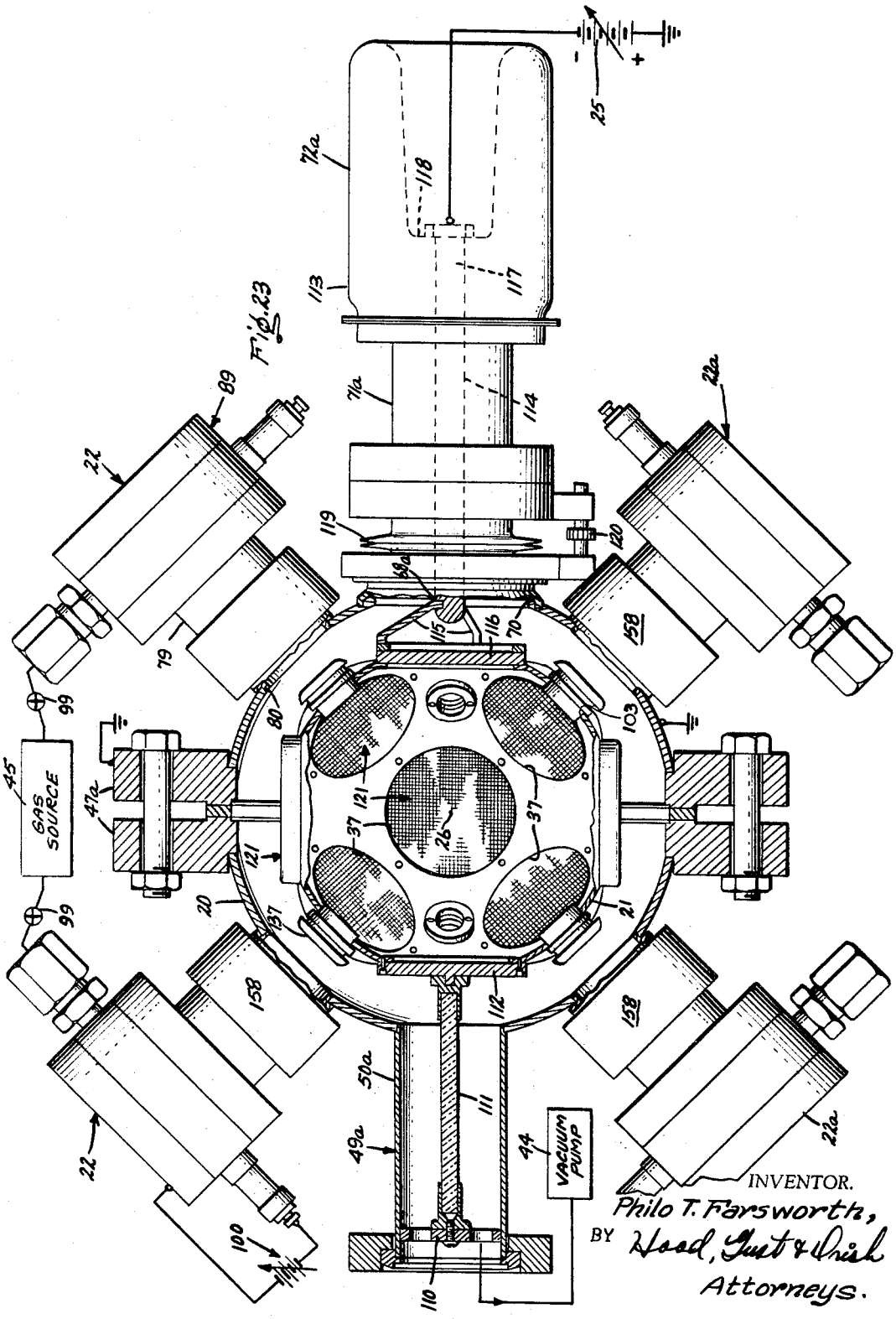

METHOD AND APPARATUS FOR PRODUCING NUCLEAR-FUSION REACTIONS

Filed May 13, 1966 16 Sheets-Sheet 14

Fig. 25

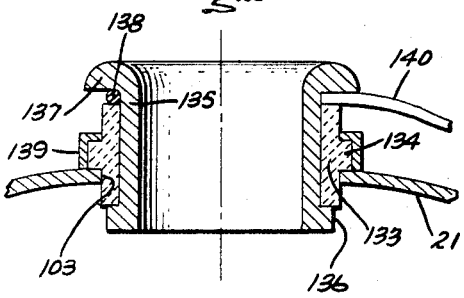

Fig. 29

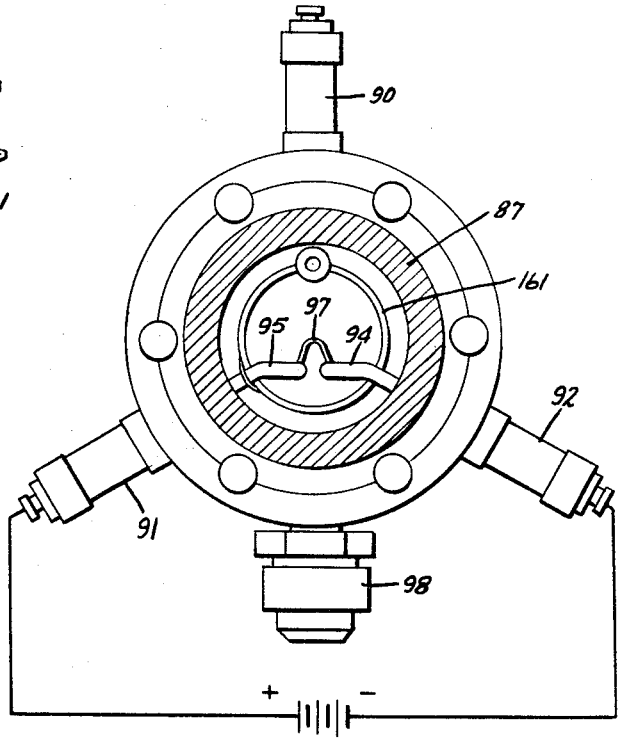

Fig. 24

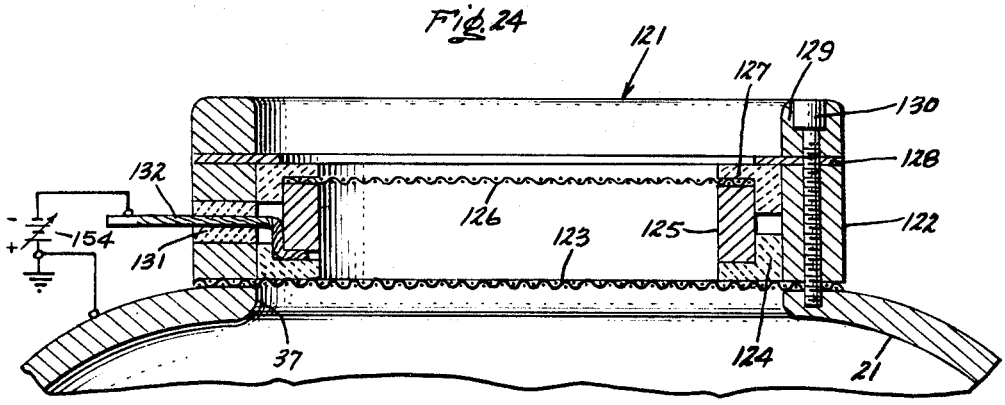

INVENTOR.
Philo T. Farnsworth,
BY Wood, Gust & Dick
Attorneys.

METHOD AND APPARATUS FOR PRODUCING NUCLEAR-FUSION REACTIONS

Filed May 13, 1966 16 Sheets-Sheet 15

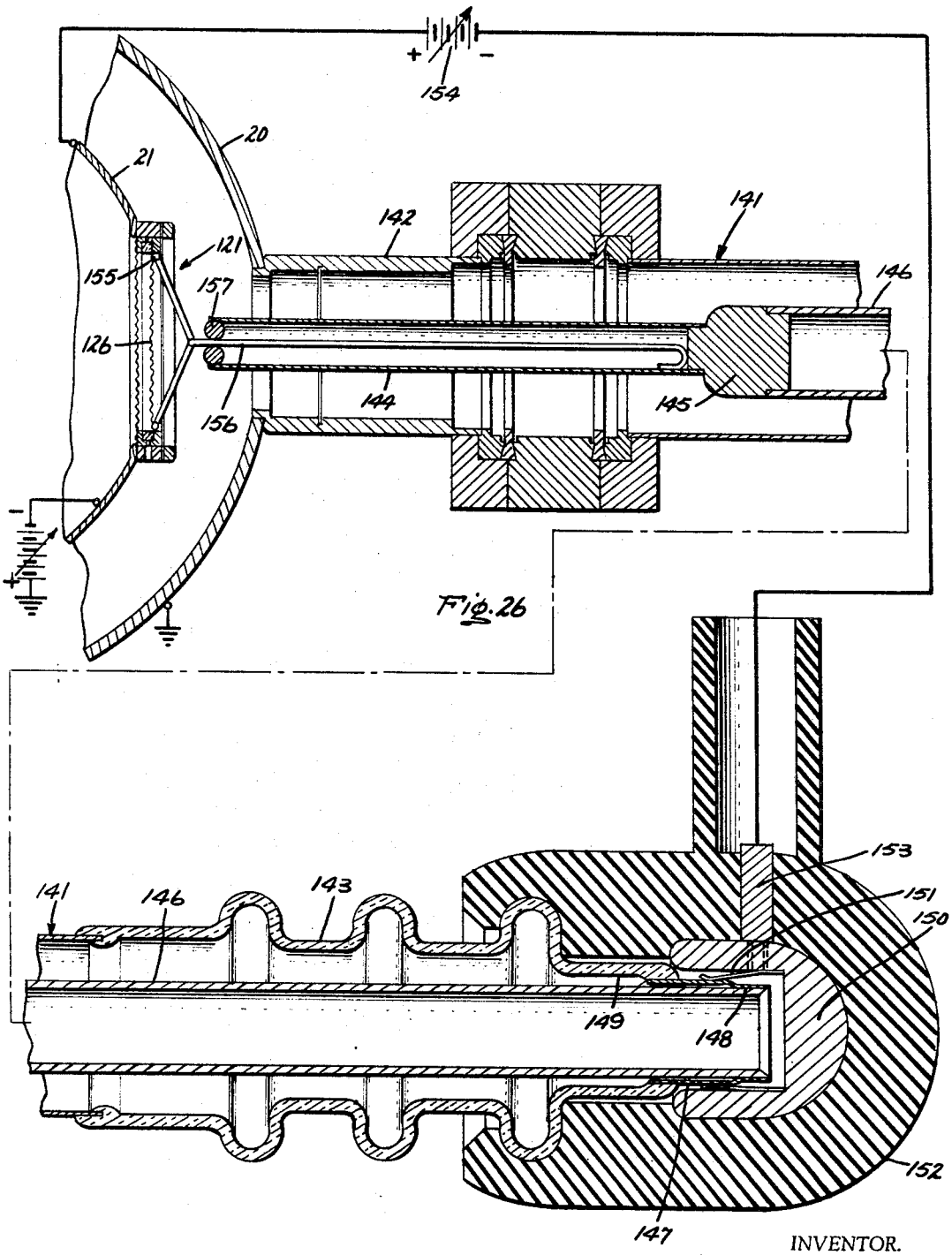

Fig. 26

INVENTOR.
Philo T. Farnsworth,
BY Hood, Gust & Irish
Attorneys.

METHOD AND APPARATUS FOR PRODUCING NUCLEAR-FUSION REACTIONS

Filed May 13, 1966 16 Sheets-Sheet 16

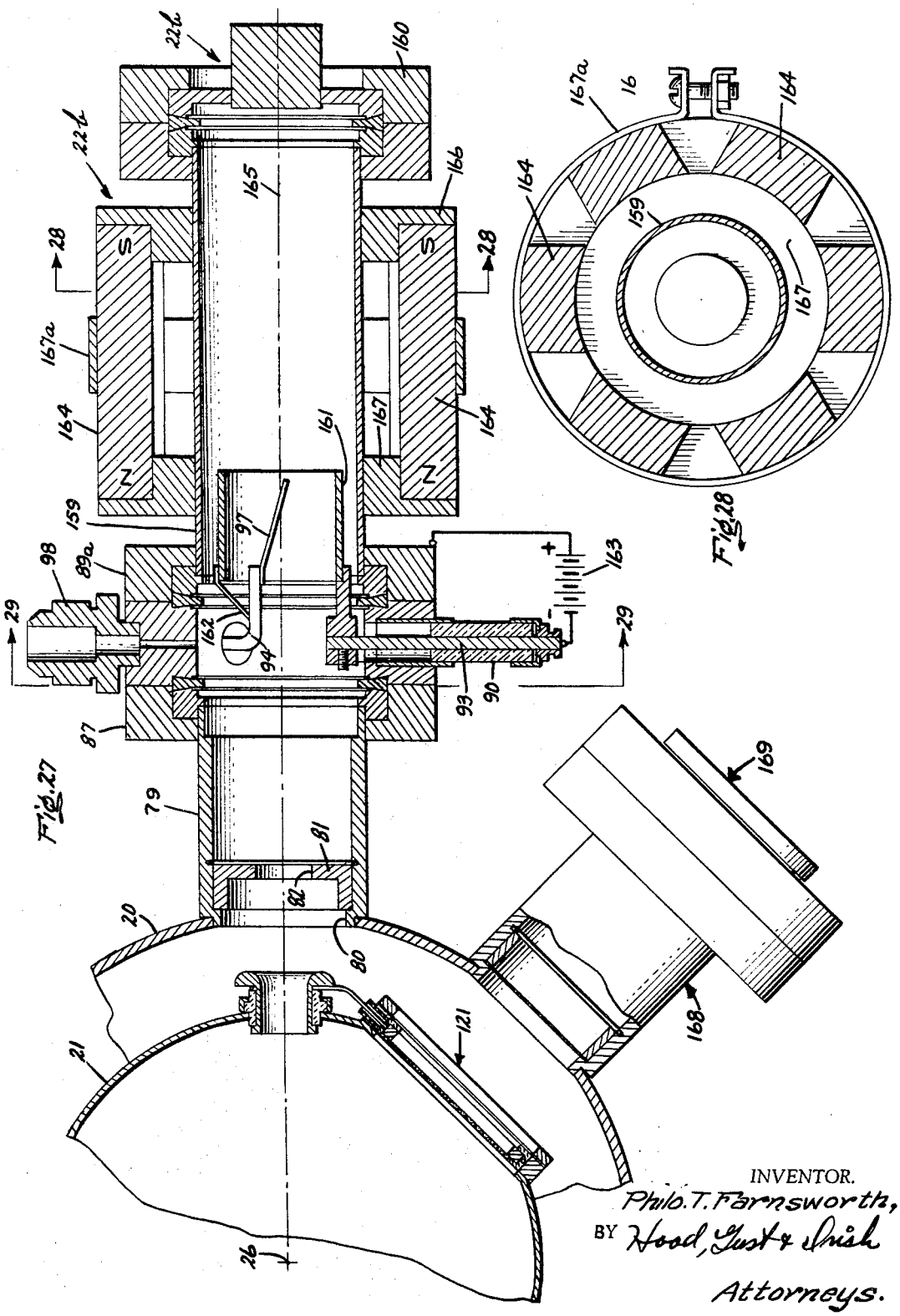

Fig. 27

Fig. 28

INVENTOR.
Philo. T. Farnsworth,
BY Hood, Gust & Irish
Attorneys.

United States Patent Office

3,386,883

Patented June 4, 1968

1

3,386,883

METHOD AND APPARATUS FOR PRODUCING NUCLEAR-FUSION REACTIONS

Philo T. Farnsworth, Fort Wayne, Ind., assignor to International Telephone and Telegraph Corporation, a corporation of Delaware

Filed May 13, 1966, Ser. No. 549,849
19 Claims. (Cl. 176—1)

ABSTRACT OF THE DISCLOSURE

A method and apparatus for producing controlled nuclear-fusion reaction by use of self-generated electric fields and inertial ionized-gas containment. The apparatus comprises a spherical anode which concentrically surrounds a cathode. A plurality of ion guns are mounted on the exterior of the anode in spherically spaced and diametrically aligned relationship such that the beam axes intersect at the center of the cathode. Appropriate apertures are provided in the cathode for passage of the ions. Other apertures permit passage of positively charged particles outwardly from the cathode interior, but are biased negatively to prevent the flow of electrons into the interelectrode space.

A voltage is applied between the anode and cathode. Ions from the guns are propelled and focused into the center of the cathode establishing in the cathode interior a series of concentric spherical sheaths of alternating maxima and minima potentials called "virtual electrodes." The ions in the innermost "virtual electrode" have fusion energies, and are contained at a density sufficient to produce a self-sustained fusion reaction.

I. *Introduction*

The present invention relates to a method and apparatus for producing nuclear-fusion reactions, and more particularly to a method and apparatus for producing controlled nuclear-fusion reactions by use of self-generated electric fields and inertial ionized gas containment.

In the well-known fusion reactions, nuclei of two light elements are combined to form a nucleus of a single heavier element, together with a release of the excess binding energy in the form of sub-atomic particles (neutrons and protons). Before the positively charged nuclei can be brought close enough together for fusion to take place, sufficient energy must be supplied to overcome the forces of electrostatic repulsion between them. There are many possible reactions involving the combination of two light nuclei which are accompanied by the release of energy, but hydrogen isotopes (deuterium and tritium) and helium, under the proper circumstances, are considered to be the most likely to produce controllable fusion reactions. Examples of these reactions are:

(1) ${}_1D^2+{}_1D^2\rightarrow{}_2He^3$ (.82 mev.)$+{}_0n^1$ (2.45 mev.)
(2) ${}_1D^2+{}_1D^2\rightarrow{}_1T^3$ (1.01 mev.)$+{}_1p^1$ (3.02 mev.)
(3) ${}_1D^2+{}_1T^3\rightarrow{}_2He^4$ (3.5 mev.)$+{}_0n^1$ (14.1 mev.)
(4) ${}_1D^2+{}_2He^3\rightarrow{}_2He^4$ (3.6 mev.)$+{}_1p^1$ (14.7 mev.)

It has been determined that to produce a "self-sustained fusion reaction" (release of more energy from the reaction than is required to produce it) the density of the fusionable particles must be maintained at a high order. It is generally accepted that if such a density could be so contained, the other problems involved in producing a self-sustained fusion reaction, principally that of raising the particle energy-levels high enough to overcome their repelling forces, could be solved. Most suggestions and proposals for plasma containment employ very high magnetic fields; these include the pinched discharge, the

2

Stellerator, the magnetic mirror, the Astron, and the like. This invention departs widely from those approaches by utilizing self-generated electric fields for containing the ionized gases. Through the use of such electric fields, many, if not most, of the complex problems inherent in the magnetic-field devices have been overcome.

Methods and apparatus capable of producing such continuous reactions are disclosed and claimed in my application Ser. No. 165,639, filed Jan. 11, 1962, entitled, "Electric Discharge Device for Producing Interactions Between Nuclei," now U.S. Patent No. 3,258,402, issued on June 28, 1966. Generally speaking, one form of the invention of my aforesaid application is of spherical geometry, in which an electron-emissive cathode concentrically surrounds a shell-like anode having an inner concentric cavity or space. The anode is permeable to the flow of atomic particles, while the cathode is not. In operation, an electrical discharge, composed of high-order magnitude electron and ion currents in the space enveloped by the anode, produces a radial potential distribution which is, generally speaking, a minimum adjacent to the center of the anode cavity and a maximum adjacent to the anode wall. Ions created at points intermediate the center and the anode wall fall toward and oscillate through the center at velocities which are dependent upon the operating potentials, the potentials developed within the anodic space and the potentials at which the ions are born. With developed potentials of sufficiently high magnitude, the ions are propelled at nuclear reacting energies, so that ion collisions occur at the center and thus produce nuclear-fusion reactions.

The present invention structurally differs fundamentally therefrom in the respect that the cathode and anode elements are reversed, and the anode therefore surrounds the cathode. The cathode is substantially impervious to the flow of electrons therethrough and is reasonably permeable to the free flow of positively charged particles, while the anode shell is not. An electrical gaseous discharge developed within the device causes the concentration of electrons and ions toward and into the central structureless zone of the volume enclosed by the cathode, thereby producing in said zone concentric, abrupt, shell-like, potential barriers of alternating polarities or virtual cathodes and anodes. High-energy ions within the space of the structure are propelled toward and through these virtual electrodes to the geometric center of the structure, there producing, in concert with the low-energy ions created in that region, an ion concentration of extremely high density. When the space charge in the center fully develops, the potential difference between the innermost virtual cathode and the first adjacent virtual anode reaches a magnitude sufficient to propel ions through the center at fusion-reacting energies. Atomic and sub-atomic products produced by these reactions are available for the production of useful power. The present invention involves novel and improved means and methods for confining the ionized gas particles, regardless of the charge; compressing them into small volumes with high densities; and then maintaining them in a stable condition for a prolonged and continuous period of time.

It is, therefore, an object of the present invention to provide a method and means for compressing and confining an ionized gas discharge by the use of self-generated electric fields.

It is another object of the present invention to provide an electric-field method and means for producing a stable electric discharge.

It is still another object of this invention to provide a method and apparatus for converting the energy released from the nuclear reactions into useful heat energy.

It is another object of this invention to provide a method and apparatus for converting positively-charged particles from the nuclear-fusion reaction directly into electrical power.

It is still another object of this invention to provide a source of electrical power and heat in which the kinetic energy of the products of the nuclear-fusion reactions are converted directly into electrical power with or without accompanying neutrons.

II. *Description of theoretical device*

In the accomplishment of the above and related objects, an electric discharge device has an anode which surrounds a cathode that electrically encloses a structureless space or volume. The cathode is rendered practically impervious to electrons but reasonably pervious to ions. The anode and cathode are uniquely designed and assembled to form an electron-optical system wherein the cathodic space is maintained completely filled with the electrical discharge. Traversing electrons, under the influence of the electron optice, follow radial-like paths through the cathodic space and, as the cathode is quite impervious to electrons, they are thereby kept from being intercepted in appreciable numbers by the surrounding anode. Electron energy spread is thus maintained at minimum values, and there is developed a high-magnitude electron circulatory current which serves to produce the required potential gradient in the cathodic space.

A variety of fusion reactions are possible, with certain of the reactions being useful in directly generating electrical power. The charged particles of these particular fusion reactions are emitted at sufficient kinetic energies to overcome the decelerating field of the anode. This results in the particles, charged positively, performing work against the anode field, and thereby augmenting the energy stored in that field. The remainder of the energy is converted into heat at the anode, but the deposit of the positive charges thereon results in their conversion directly into electrical energy or power. Energy converted into heat also may be utilized in the generation of power.

The above-mentioned and other features and objects of this invention, and the manner of attaining them, will become more apparent and the invention itself will be best understood by reference to the following description of embodiments of this invention taken in conjunction with the accompanying drawings, wherein:

FIG. 1 is a diagrammatic illustration of an embodiment of the present invention used in explaining the theory of operation;

FIGS. 2 and 3 are potential distribution curves used in explaining the operating principles of this invention;

FIG. 4 is a simplified diagram used in explaining the theory of charged particle scattering;

FIGS. 5*a*, 5*b*, 6, 6*a*, 6*b*, 6*c*, 7 and 8 are graphs used in explaining the principles of this invention;

FIG. 9 is a further diagrammatic illustration of an embodiment of this invention (more elaborate than FIG. 1) used in explaining the theory of operation;

FIG. 10 is a graph of the deuterium-tritium reaction used in explaining the operation of this invention;

FIG. 11 is a partial diametral cross-section of a working embodiment of this invention;

FIG. 12 is an axial section of one part of the terminal and supporting structure for the embodiment of FIG. 11;

FIG. 13 is a fragmentary axial section of one ion gun of FIG. 11;

FIG. 14 is an enlarged fragmentary plan view of a cathode biasing screen assembly of FIG. 11;

FIG. 15 is a cross-section taken along section line **15—15** of FIG. 14;

FIG. 16 is an enlarged fragmentary plan view of an ion aperture assembly of FIG. 11;

FIG. 17 is a cross-section taken along section line **17—17** of FIG. 16;

FIGS. 18*a* and 18*b* are diagrams used in explaining the relative positions of the ion guns and the screen-covered apertures in the cathode;

FIG. 19 is an end view of an ion gun;

FIGS. 20 and 21 are cross-sections taken along section lines 20—20 and 21—21, respectively, of FIG. 13;

FIG. 22 is a cross-section taken along section line **22—22** of FIG. 11;

FIG. 23 is a partial cross-section of another working embodiment of this invention;

FIG. 24 is an enlarged fragmentary cross-section of the biasing screen assembly mounted on the cathode shown in FIG. 23;

FIG. 25 is an enlarged fragmentary cross-section of the ion-aperture assembly mounted on the cathode shown in FIG. 23;

FIG. 26 is an enlarged fragmentary cross-section of the terminal assembly for applying the biasing voltage to the biasing screen assembly of FIGS. 23 and 24;

FIG. 27 is an enlarged, fragmentary sectional view of another embodiment of an ion gun assembly;

FIG. 28 is a cross-section taken substantially along section line **28—28** of FIG. 27; and

FIG. 29 is a cross-section taken substantially along section line **29—29** of FIG. 27.

III. Simplified explanation of operation

It has been accepted that fusion reactions, which will yield more energy than that supplied to produce the effect, will occur only in high-density plasmas in which the overall kinetic energies of the ions composing the gas are high enough to overcome their mutual repelling forces. Most approaches proposed or under study to produce these conditions employ powerful external magnets to contain and compress the plasma into a small volume to increase the density and temperature (energy) of the particles therein. Such magnetic fields thus far have been successful in confining the plasma particles in the required high-density configuration for only extremely short (microseconds) fusion reactions. The time required to produce the favorable conditions (interval between pulses) is so great that energy output is extremely small when compared with the energy input.

This invention differs fundamentally from those in that charge-particles are compressed into a suitably dense configuration through the action of an "electrodynamic lens" established by confined bi-polar charges in a volume of free space. Such bi-polar charges are developed into a spherical configuration in such a way as to establish a plurality of concentric spherical potential sheaths radially spaced, these sheaths having large potential differences therebetween. The maxima and minima potential sheaths alternate radially and are characterized, respectively, as virtual anodes and cathodes. A virtual cathode is innermost and substantially coincident with the geometric center.

From this arrangement to virtual anodes and cathodes, a radial potential distribution obtains in a spherical space, with one potential minimum being near the center. Thus positively charged particles in this space fall toward and through the center; hence, in effect they are focused onto the center. The focusing forces may be considered as resulting from bi-polar (electron-ion) charge optics.

Bi-polar charges moving radially within the space produce a radial potential distribution as described above. It is, therefore, convenient to characterize these bi-polar charge optics as "Poisson Optics" inasmuch as the solution of Poisson's differential equation (given later on) for the radial potential distribution resulting from bi-polar charges in a spherical configuration reveals the phenomenon of the aforedescribed virtual anodes and cathodes. The electric field which obtains within this free space occupied by these virtual electrodes I call a "poissor."

The trajectories of the charged particles are determined by the composite field or poissor which is produced by the aggregate of the fields of the oppositely charged particles. When a positively charged particle (ion) of zero velocity falls from a point just inside a virtual anode (which defines a spherical positive-potential boundary), it is accelerated toward the adjacent virtual cathode and, in passing beyond it, decelerates toward a condition of zero velocity at an equipotential boundary of that from which it started, and then repeats this velocity rate of change from zero to maximum, and then again to zero in the opposite direction. Electrons likewise will oscillate through virtual anodes between negative equipotential barriers. Since one polarity of charged particle approaches its maximum velocity while the other polarity approaches its minimum, the two species maintain their separate identities and spaced charges. Hence, it is seen that the particles are trapped inertially between such equipotential boundaries; accordingly, I call my method for containing the nuclear-fusion reacting particles "inertial containment." The ions which are created on the inward sides of the boundaries of the spherical virtual anodes and which oscillate through or near the center of the device produce the required density thereat to satisfy the conditions for a self-sustaining nuclear fusion reaction. Thus, the charged particles are literally compressed into the required density in the central region by the process of inertial containment, and the present device utilizes this process.

Referring to the drawings, and more particularly to FIG. 1, an evacuated spherical electron-tube structure is shown which comprises a spherical, anode shell **20** at radius r_a, enclosing a sperical, cathode shell **21** of radius r_c, and an ion gun **22** which is mounted on the outside of the anode **20** as shown. The anode and cathode electrodes are concentrically arranged as shown. The cathode **21** and its field are substantially impervious to electron flow to the anode **20**, but is pervious to the flow of positively charged particles such as ions. In this theoretical exemplification, the cathode **21** may be considered as an open-mesh electrode formed of metallic screen or the like, which is constructed of a material, the surface of which emits electrons upon bombardment by ions or electrons and preferably is photoelectric in the ultra-violet spectral region. Suitable connections are made to the electrodes, a lead **23** being connected to the anode **20** for applying a positive potential thereto and another lead **24** being connected from the cathode **21** for connection to a negative potential terminal. A power source, such as a battery **25**, delivering a suitably high voltage is connected as shown to the leads **23** and **24**. In the preferred embodiment of this invention, the anode **20** is operated at ground potential.

In one embodiment of this invention, ions of a suitable nuclear-fusion reactive gas are introduced into the space enclosed by the cathode **21**. An electrical discharge composed of high-magnitude electron and ion currents forms in the cathodic volume and develops a difference of potential which is, generally speaking, a minimum near the geometric center **26** and a maximum adjacent to the anode **20**, with one or more potential maxima (virtual anodes) and minima (virtual cathodes) concentrically enclosed within the cathode **21**. Ions created at points adjacent to potential maxima (virtual anodes) fall toward and oscillate through adjacent potential minima (virtual cathodes) with energies equivalent to the potentials at the points where they start their journeys. These ions, falling inwardly toward the center **26** from regions of high potentials, will be propelled at velocities (energies) which are sufficient to overcome the repelling forces of other high-energy ions and also the slower (target) ions born in the region near the center **26** and collide, thus producing nuclear-fusion reactions.

In order to obtain ions with fusion-reacting energies, the sizes of the virtual cathodes and anodes must be maintained such that the boundaries thereof are well defined, and the potential differences therebetween are pronounced. This is achieved by methods which are explained in detail in the written description later following.

IV. *Description of poissor (virtual-electrode system) formation*

With suitable potentials applied to the electrodes, and with the ion gun **22** energized, ions of a fusion reactive gas are directed into the space enclosed by cathode **21**, where they will be accelerated radially inwardly toward the geometric center **26**. Since there is a potential gradient between the anode **20** and cathode **21**, the positively charged ions, as indicated by the numeral **27**, will be accelerated by the cathode **21**. Inasmuch as the latter is substantially ion permeable, each ion **27** will continue its transit and, if the optics are considered to be perfect, it will pass through the center **26** and travel onwardly in a straight line until the repelling field of the anode **20** at about the point **28** is reached. At this point, the direction of travel of the ion will be reversed, and it will repeat the diametric excursion to the opposite side of the device adjacent to the anode **20**, passing through the center **26** enroute.

Because the potential within the cathode is uniform (assuming no other ions or electrons are in existence), ions **27** will experience no velocity-changing force while traveling therethrough. Thus, an ion may be considered as starting its travel at or near a given point on the anode, accelerating toward the cathode, traveling with constant velocity through the cathodic space, and then decelerating from the cathode to the vicinity of the anode where its velocity becomes zero and it reverses its direction of travel. This ion will continue its oscillatory motion until it is lost by one of several competing actions, which will be explained later on. The significance of this single-ion concept is two-fold: firstly, it recognizes that the normal space potential inside cathode **21** is uniform at the value of the cathode, and an ion traveling thereacross does so with uniform velocity; and secondly, that the ion will oscillate within the space enclosed by anode **20** until ultimately collected by the cathode **21**.

Now let it be assumed that two ions leave the anode simultaneously from diametrically oposite points, such as from ion guns **22** and **22*a***. Each of these ions will be propelled radially inwardly toward the exact center **26** of the cathodic space so that they would collide at that point in the absence of any other forces. Inasmuch as each ion is positively charged, it will exert a repelling force upon the other, such that their respective velocities will be progressively decreased until they nearly reach the exact center **26**, where they will have given up all of their energies and stop. Under the repelling influence of their respective fields, they will reverse their direction of travel and be accelerated outwardly. In a practical embodiment, however, the ions will experience a diverting effect and will pass each other at minimum velocity rather than stopping. Upon passing through the cathode **21**, the ions will be decelerated by the anode **20** field until they stop adjacent to the anode **20**, whereupon the cycle is repeated. Even though the unipotential space inside the cathode **21** exerts no force on a single ion passing therethrough, two ions approaching each other along a diametral path experience coulomb repulsion and velocity changes which serve to create a positive electric field in the cathodic space, the maximum effect occurring in the central region where the velocity is the least. This may be properly described as a space-charge effect.

Now assume that a copious quantity of ions are introduced into the space immediately adjacent to the anode **20** from a number of symmetrically disposed ion guns. These ions will converge toward the center **26** at progressively decreasing velocities until they reach a minimum velocity and thereafter diverge outwardly along essentially the same diameters, accelerating until they

pass out through the cathode **21**. The ions contribute a positive charge to the cathodic space which increases progressively as the coulomb forces become effective and reach a maximum within center **26**; as the ions leave the center **26**, they absorb energy from that field on their passage to the cathode **21**. Thus, surrounding the cathodic center **26** (and inside the cathode **21**), a virtual anode will be produced which can be made to have a potential which can exceed that potential (V_a) of the anode **20** by a factor ΔV_a equal to the average voltage increase which is required by the ions from the ion guns to penetrate the anode **20** field. The ions, therefore, oscillate back and forth through the permeable cathode **21** until lost by one of several competing actions which will be explained later, since they do not re-enter the anode **20**.

The establishment of the ion space-charge inside the cathode **21** may be better understood by reference to the graph of FIG. 2 wherein the abscissa represents the radius of the device and the ordinate represents the potential distribution therein. The magnitude of the ion space-charge is dependent upon the amount of space-charge current flowing in the cathodic space. For a minute quantity of current, the positive charge contribution is small, and the potential at the center would appear as shown by curve *a*. A larger current will produce a more positive potential distribution such as curve *b*. Greater or lesser currents will change the potential at the center **26** correspondingly.

Since the cathode **21** is not completely permeable to the flow of ions therethrough, ions will impact it and dislodge secondary and Auger neutralization electrons thereby. (During operation of the device, electrons also will be supplied from the photoelectric cathode **21** by ultra-violet radiation from Bremsstrahlung and recombination.) Electrons, to be able to leave the cathode **21**, must be excited to a potential ($V_c+\Delta V_c$), V_c being the potential of the cathode **21**. The electrons so emitted by cathode **21** will leave with a Fermi-Dirac distribution of velocities and the potential gradient near the cathode **21** thereby becomes more negative by the factor ΔV_c than that of cathode **21**, and the potential curve moves down until it has a minimum at a radius r_{c_1}, close to that of the cathode **21**, at which the potential corresponds to the average velocity of emission. For this condition, most of the electrons are slowed down until they come to rest, thus creating a virtual cathode **29** at a radius r_{c1}, and from which the electrons may flow in either direction, i.e., either return to the cathode **21** or flow into the central cathodic volume.

Some electrons, under the attractive influence of the positive potential gradient (virtual anode) created in the central volume by the ions and the repelling influence of the virtual cathode **29**, will be accelerated toward the center **26** until their mutually repelling coulomb forces predominate. They then will be decelerated, giving up kinetic energy to the field, and ultimately may be scattered through large angles, returning to the virtual cathode **29**, where they will repeat the cycle. Since the electron density is the greatest in the small spherical volume enveloping the center **26**, the negative space-charge contribution by the electrons will be the greatest in that region and a potential minimum or a crater will develop in the center of the positive gradient *b* (FIG. 2) which will increase in depth until a virtual cathode **30***a*, with a potential equal to that of virtual cathode **29**, is created at the center **26**, radius r_0. This action is accompanied by an outward displacement of the peak of the positive potential gradient to a radius r_{a_1}, where a spherical potential sheath or virtual anode **31** is formed.

The description thus far has disregarded the presence of neutral gas molecules within the device. When neutral gas is present, it initially will be distributed equally throughout the volume enclosed by anode **20**. The electrons and ions oscillating within the cathode **21** space will strike the neutral gas molecules, creating additional electrons and ions which, under the influence of the electric fields, will be set into oscillatory motion, the lengths of their respective paths being determined by the potentials at the points within the cathodic space where they were created. For example, suppose an ion is born in the outward (cathode) side of the virtual anode **31** (FIG. 2); it will be propelled through the virtual cathode **29** and impact the cathode **21**, thereby producing additional electrons. The electron which was released during the creation of the ion will pass through the virtual anode **31**, and be brought to rest in the vicinity of the virtual cathode **30***a* where, neglecting any deviation, it will reverse its direction and return to the point where created. Now suppose the ion and electron were created on the inside of virtual anode **31** (FIG. 2). The ion will move inwardly, being accelerated toward and through the virtual cathode **30***a*, and will come to rest at the positive barrier on the opposite side of the center **26**, and then oscillate between those barriers. The electron will be propelled through the virtual anode **31** and will go into oscillation between the virtual cathode **29** and the virtual cathode **30***a*. By far the greatest number of ions (and electrons) will be produced near the virtual cathode **30***a*, because the probability of ionization by electron impact is greater the slower the electron and because the electron density is the greatest in the virtual cathode.

As the process continues, the ion and electron space currents tend to build up a small positive potential maximum within the virtual cathode **30***a* (FIG. 2) by virtue of the ions that are created in that region and which oscillate through it. Thus, a vestigial virtual anode **32** (FIG. 3) is formed in the center **26**, and the virtual cathode **30***a* moves to a new location **30** at radius r_{c_2}. When neutral, gas molecules are present in the virtual cathode, ionization will occur. The electrons so created will be nearly indistinguishable from and react in the same manner as those in the virtual cathode, i.e., they will be accelerated outwardly toward a virtual anode. The associated ions will be born with the very low kinetic energy of the neutral particles and therefore will remain in the vicinity of the virtual cathode, neutralizing some of the space charge. These combined actions of electrons and ions will result in smaller negative space charge which decreases the radius of the virtual cathode. The new radial potential distribution is shown in FIG. 3. It will be noted that an increase in the electron space-charge current within the virtual anode **32** could result in the formation of a new virtual cathode therein. This process of adding virtual electrodes, theoretically, could continue until a point of confusion is reached where they merge and the field collapses. In actual practice, however, the number of virtual electrodes in a poissor may, and will, be controlled. In the practical exemplifications described herein, only two virtual cathodes (**29** and **30**), one virtual anode **31** and the vestigial anode **32** will be assumed to exist.

It must be borne in mind that in an actual operating device neither the ions nor the electrons are traveling precisely radially; moreover, there is a velocity spread within both the ion and electron groups due to interparticle scattering. As a result, the points where ions and electrons reverse their direction of motion do not lie on mathematically thin surfaces; accordingly, the virtual anodes and cathodes have finite radial thicknesses which are called "potential gradient sheaths" or simply "sheaths."

At this point, it will be appreciated that the space charge buildup inside the cathode **21** has resulted in the development of concentric potential gradient sheaths which serve in confining negatively and positively charged particles to movement in paths, almost all of which intersect at the center **26**, while others oscillate along path lengths which are determined by the energy levels at which the charged particles were created. When a high kinetic energy ion (projectile) passes near a low kinetic energy ion (target)

in the central volume, scattering occurs. An energy transfer takes place therebetween which sets the target ion into oscillation and tends to trap the projectile. The positively charged particles for fusion reactions thus are compressed into such a densely packed volume concentric with the geometric center **26** that the probability of those particles being fused is high.

The manifestation of a poissor (virtual-electrode system) by radiation of light within spherical geometries similar to the device described above has been observed through viewing ports and studied photographically, on many occasions.

V. *Other atomic processes in the discharge*

In the immediately preceding discussion, the ions and electrons have been considered as moving past each other, interacting only through their respective space charges. There are a number of other atomic processes which can occur, however, and it will be shown in the following that the design of the apparatus can be such as to minimize some of these effects and use others to good advantage.

As has already been explained, the high-energy ions or electrons, in the absence of outside influences, would oscillate radially through the space of the anode **20** or the cathode **21** (FIG. 3). The ion transit time between the limits of its travel, i.e., the time which an ion takes for one traversal of its path, is proportional to the ion path length and inversely proportional to its average velocity. This ion oscillatory action will, in the presence of electrons and neutral gas, continue only until one of four possible actions occurs:

(a) the ion path is altered by the "scattering process";
(b) the ion "captures" an electron from a neutral atom, called charge exchange, or recombines with an electron and becomes a neutral atom;
(c) the ion is fused by a nuclear reaction; or,
(d) the ion is captured by the cathode or the anode wall.

A scattering event is a collision of or near collision of two or more particles in which the energies and momentums of the individual particles are altered, but total energy and momentum are conserved. In an ionized gas, ion-ion scattering and electron-electron deflections from coulomb forces are of primary importance because energy is most readily transferred between particles of similar masses. Electron-ion deflections involve much less energy transfer because of the large mass difference between the two species.

"Scattering" is the total statistical effect of the probability of electrostatic deflection of like particles with boh radius and distance as variables; i.e., the deflecting of particles of like charge by the coulomb repelling forces. Ion scattering takes place mostly in the virtual anodes where the kinetic energies are low and the ion densities are many fold greater than anywhere else along the ions' paths. Scattering in the virtual anodes cannot result in a large energy transfer. When an ion is scattered in a virtual anode and is accelerated toward a virtual cathode, it gains high kinetic energy and its path is essentially radial. (As the ions and electrons are oscillating within a spherical enclosure, their current densities increase radially inwardly as $1/r^2$ where r is the distance from the geometric center **26** to the point where the density is measured.) An ion will be deflected from its path as it approaches another ion if it is unable to approach closely enough (within the radius of fusion, r_f) for the sub-atomic attractive nuclear forces to predominate. This particular distance between two ion (r_f) where scattering is replaced by fusion, can be calculated if the fusion cross-section for the particular ion is known. For example, if we assume that the fusion cross-section (σ_f) for tritium ions with deuterium ions is:

$$5\times10^{-24}\ \text{cm.}^2$$

then

$$\pi(r_f)^2=\sigma_f=5\times10^{-24}$$

(5) $$r_f=\sqrt{\frac{5\times10^{-24}}{\pi}}\simeq1.26\times10^{-12}\ \text{cm.}$$

If scattering is too great, it will not be possible to maintain the high ion density at the center **26** necessary to assure the required fusion probability. In other words, the effect of scattering is to increase the size of the minute volume of the central vestigial virtual anode **32**. Thus it becomes advantageous to limit the number of ion trips through the center, for a given particle energy, in order to prevent an increase in that volume by scattering.

The deflection angle will depend upon how closely the two ions approach each other, this angle being directly proportional to the density of the target ions bound within the innermost virtual cathode **30** (FIG. 3) and inversely proportional to the square of the energy of the scattered ion. Ions which approach each other at a distance less than r_f will fuse; those that are unable to close within that range will be deflected. The scattering angle will be greater the closer the ions come to each other. The critical angle where fusion occurs, called the "angle of fusion," can be calculated using Rutherford's formula. Neglecting multiple scattering for the tritium-deuterium ions, this angle turns out to be 58°; thus, scattering will take place only when the angles are less than 58°. It can be shown mathematically that the probability of the scattering angle exceeding 8° is only about 10%.

As an ion has a much shorter wavelength than an electron, its atomic dimensions are much smaller. Two important consequences follow:

(a) Diffraction effects will not occur in elastic scattering. Thus, over a major part of angular range, elastic scattering will be the same as that given by the classical theory. (At very small angles, the quantum theory will give better results.)

(b) Elastic scattering will be confined to very small angles. The scattered intensity will decrease with an increase of scattering angle, and the scattering is concentrated to small angles as the incident energy is increased: the total scattering will decrease with increasing energy.

For elastic collisions, the cross-section will be small if:

(6) $$\frac{r}{v}\times de\gg\frac{h}{2\pi}$$

where

de=ionization energy
h=Planck's constant
v=velocity of the ions
r=radius of ion deflection

The greater the value of de, the greater will be the energy at which maximum inelastic cross-section will occur. Because of small values of de, charge-exchange is the most important inelastic collision process.

An ion can be neutralized by an encounter with an electron. This can happen in two different ways: an ion can collide with a neutral atom and rob it of its electron ("charge-exchange"), or the ion may collide with the free electron and recombine to form a neutral atom. The probability of recombination is extremely unlikely compared to charge exchange (see Brown, "Basic Data of Plasma Physics," Wiley, 1959, page 104) and will occur only if the two colliding particles are traveling in the same direction at about the same velocity. Since the charge-exchange cross-section is greater than 10^{-16} cm.^{2} between 1 kev. and 50 kev., charge exchange will occur over a wide range. The gentler the slope of the potential gradient, the longer will be the ion path length within which charge-exchange can occur. The only region in which recombination can occur is close to the virtual cathodes **29** and **30** where the electron velocity is lowest and ion velocity is highest.

When charge-exchange occurs, there is very little energy transfer between the two particles other than the transfer of an electron from one nucleus to the other. The old

ion, which becomes a neutral atom, retains almost all of its velocity, and, since it is no longer influenced by the electric field, it simply travels onwardly until it is lost at the tube wall. The newly formed ion has the energy corresponding to the potential at the point in space where it was created. It begins an oscillatory motion of its own through the center 26, or travels to the cathode 21 with no indication of having been previously deflected. The newly formed ion may be considered to be continuing to increase the average number of trips started by the old ion, but with the disadvantage of having suffered an energy loss. The ion charge-exchange cycle of the inner side of the virtual anode 31 may be repeated several times before the energy loss becomes so great that fusion will not occur.

When recombination occurs, a neutral atom results, which travels outwardly until it is either reionized by another electron or ion or migrates to the tube walls. Recombination results in a loss of energy through radiation as well as a loss of both ions and electrons from the space charge; it is fortunate that the probability of this event occurring is so low and thus represents a negligible energy loss. This condition is achieved by maintaining the paths of the electrons as nearly radial as possible. One means for obtaining this radial motion is to hold the velocity spread of the electrons to a minimum.

Control of charge-exchange by limiting ion trips

Ion scattering will be limited if the number of ion trips through the center of the device can be limited. It will now be shown that this number of ion trips hence charge-exchange can be controlled.

The extent of charge-exchange may be calculated from the relationship which expresses that probability per trip P_c as follows:

$$P_c=\rho_n\times\sigma_c\times L \tag{7}$$

in which:

L=the length of one ion path in centimeters;
ρ_n=the neutral gas density in particles per cubic centimeter; and
σ_c=the charge-exchange cross-section in cm.^{2}.

The highest possible value for P_c is unity (1), since this means that the event of charge-exchange occurs. The obvious minimum value of P_c is zero (0). From the formula, if the calculated value for P_c is 10^{-6}, this means that an ion makes on an average 10^6 oscillatory trips before the energy loss of the ion by charge-exchange becomes so great that it will not be able to reach a fusion radius. Values for charge-exchange cross-section may be obtained from the curve of Jackson & Schriff in "Physical Review," vol. 89, No. 2, page 359, 1953.

In the case at hand, it is desirable to limit the number of ion trips to less than one million during the occurrence of from four (4) to six (6) charge-exchange cycles. If an average of four (4) captures per 10^6 is assumed, then:

$$P_c=\frac{4}{10^6}=4\times10^{-6}$$

Now assuming as an example that the path length is 0.135 centimeter and the value of σ_c is 10^{-16} cm.^{2}, then the value of the neutral gas density ρ_n may be derived from Equation 7 as follows:

$$\rho_n=\frac{P_c}{\sigma_c\times L}=\frac{4\times10^{-6}}{10^{-16}\times0.135}=\frac{1}{250{,}000\times10^{-16}\times0.135}$$
$$\simeq3\times10^{11}\text{ particles/cm.}^3$$

Thus, it is readily observed that the control of charge-exchange, which in turn governs to a major extent the shape of the potential distribution, is achieved by adjustment of gas density as charge-exchange cross-section is inversely proportional to gas density. Thus it is desirable to work at the lowest practicable gas density.

Maintaining radial thinness of virtual cathode by controlling electron scattering

During space charge build-up, electrons initially have energies for oscillating within the confines of the cathode 21 along radial paths which pass through the center 26. These electrons suffer the same type of deflective forces as approaching ions, such that meeting electrons scatter. Electrons approaching each other at or near the center 26 deflect along different paths which are also radial. However, if the electrons should meet at points other than the center 26, they will deflect along new paths which may become either more radial or less radial. As the electron transits continue, the non-radial electrons can and do meet with other electrons, producing further non-radial and radial electrons such that eventually, after a relatively large number of electron transits, electron movements inside the cathode 21 tend to become, in some measure, non-radial. FIG. 4 shows a simplified example of this deflection for two different locations of an electron (33 and 34) with respect to an electron traveling along a non-radial path. In FIG. 4, the electron 33 is deflected along the new (and radial) path, while electron 34 is deflected along a more non-radial path. If the deflection angle is large, some of the electrons could, unless otherwise prevented, acquire sufficient energy to penetrate the virtual cathode 29 and the cathode 21 and be absorbed by the anode 20 or to enter the cathode 21 and thus be removed from the field; others will accumulate orbital momentum.

The required condition for producing sharply resolved virtual anodes and cathodes is initially achieved by controlling the number of electron trips within the cathodic space. This condition may be represented by the equation:

$$I_e=2\overline{N}_e\times i_{e2c} \tag{8}$$

where

I_e=the circulatory electron current through the virtual anode 31 inside the cathode 21 (FIG. 3),
i_{e2c}=the electron current emitted from the inner surface of the cathode 21 (FIG. 3),
$\overline{N}_e$=the average number of electron trips ($2\overline{N}_e$ is the average number of round trips).

If a particle's path is through the center, the distance from its starting point to the point where it commences its return journey is the equivalent of two trips or one "round trip." Where the path of the particle is away from the center, the distance from its point of origin to its reversal point is one trip. It is desired that the factor $\overline{N}_e$ fall somewhere between the figures of 10^3 and 10^4. If $\overline{N}_e$ becomes too large, the virtual cathodes and anodes will not form properly. Thus, by preventing the number of electron trips from becoming excessive, the non-radial component of the electron space-current can be held to a minimum.

The number of electron trips may be made relatively small by maintaining a high electron current density within the cathodic space. Since the maximum value of the circulatory electron current I_e is limited by space-charge saturation, which is a function of the cathode voltage gradient, I_e (Equation 8) may be made to approach its saturation limit by increasing the cathode current i_{e2c}, thereby confining a very large number of electrons within the cathode 21 which make but few round trips. Accordingly, few orbital electrons will be formed. In a practical device, the electron current can be increased by the use of electron emitters within the cathode 21.

The paths of the orbiting electrons are elliptical, and each such electron is therefore subjected to a precessional force which causes the electron's path to sweep a spherical surface inside the cathode. These electrons contribute to the electron circulatory current and also to the fields of the virtual cathodes. Because of their elliptical paths, with non-radial velocity components, orbital electrons cannot approach the virtual cathodes as closely as radial elec-

trons. Thus, their maximum space charge contributions occur farther from the virtual cathodes than those from radials, and the virtual cathodes will tend to be displaced inwardly. Excessively large numbers of orbital electrons (greater than 10% of the electron circulatory current) therefore are undesirable as they prevent the maintaining of sharply defined virtual electrodes. In actual practice, the orbital electrons appear not to exceed that limit.

Orbital electrons, in addition to their contribution to the electron circulatory current, further reduce the probability of recombination. In the fusion-reaction volume enclosed by the virtual cathode **30**, this becomes extremely important as it greatly reduces the loss of fusion-reactive ions from that region. In the region outside of the virtual cathode **30**, the orbital electrons, as previously shown, not only contribute to the field which maintains the virtual cathode **29**, but also displaces that cathode inwardly toward the virtual anode **31** and thereby reduce greatly, any cusps or singularities in the electric field pattern of the virtual cathode **29** produced by the anode **20** field penetrating through the apertures in the cathode **21**.

VI. Particle flow

Further consideration of the process involved in the present invention requires investigation of the space-charge optics and the particle flow. The laws by which charged particles move from an emitter to a collector without regard to the direction of voltage between electrodes have been described by Langmuir and Blodgett ("Physical Review," vol. 24, No. 1, pp. 49–59, June 1924). That particular derivation was made to calculate the currents limited by space-charge between concentric spheres (either electron or ion but not in the presence of each other). For this invention, however, bi-polar charges exist within the spherical electrodes, and the Poisson's equation becomes:

$$\frac{d^2V}{dr^2}+\frac{2}{r}\left(\frac{dV}{dr}\right)=4\pi(\rho_e-\rho_i) \tag{10}$$

where V is the potential at any radius r, and ρ_e and ρ_i are the electron and ion volumetric space-charge densities.

Equation 10, together with the energy equations

$$\tfrac{1}{2}M_e v_e^2=eV, \text{ and } \tfrac{1}{2}M_i v_i^2=e(V_b-V)$$

where M is the mass of the charged particle, e the charge of the electron, v the velocity of the charged particle at any potential V, and b is the point of ion entry (which in this invention is considered to be the anode since most of the charged particles are assumed to be formed at or very near to their respective electrodes); and the density, charge and velocity relationships

$$J_e=\rho_e v_e, \text{ and } J_i=\rho_i v_i$$

(where J is the charge of the space-charge) are sufficient to determine all the relations involved in the electron and ion space-charge flows; i.e., all motions are assumed to be radial in this basic determination.

By following the general approach employed by Langmuir in a later paper, "The Interaction of Electron and Positive Ion Space Charges in Cathode Sheaths," ("Physical Review," vol. 33, page 954, June 1929), Equation 10 reduces to

$$3\mu\frac{d^2\mu}{d\gamma^2}+\left(\frac{d\mu}{d\gamma}\right)^2+3\mu\left(\frac{d\mu}{d\gamma}\right)=1-\gamma\left[\frac{\mu^{4/3}}{\mu_b^{4/3}-\mu^{4/3}}\right]^{1/2} \tag{11}$$

where

$$\lambda=\frac{I_i}{I_e}\sqrt{\frac{M_i}{M_e}} \tag{12}$$

I_i=the circulatory ion current;

I_e=the circulatory electron current in the presence of ions;

$\gamma=ln(r/r_0)$, (r_0 being the radius of the emitting surface); and

$\mu=f(\gamma)$, (corresponding to the α of Langmuir and Blodgett and becomes α when λ equals zero). In this ideal treatment μ_b is taken at the anode and is thus a constant.

A quantity similar to λ was used by Langmuir in his June 1929 referenced paper which he called α. He showed that the potential gradient at the surface of the anode was proportional to $(1-\alpha)^{1/2}$ and so became imaginary if $\alpha>1$. In other words, if α were to become greater than unity, ions would be withdrawn faster than injected. While those calculations referred to a plane-parallel discharge, the same limitation has been found to apply to the spherical concentric shells if the area used in evaluating the current density J from the total current I is taken to be the area of a surface four-fifths of the distance from the emitter to the collector. (See I. Langmuir and K. T. Compton, "Review of Modern Physics," Vol. III, No. 2, April 1931) where one is confronted with radial flow, however, λ may be larger than unity and still satisfy the boundary conditions.

Once I_e is selected, then λ and I_i are uniquely determined; the ratio of the radii is likewise uniquely determined.

It will be noted, from Equation 12, that when one is concerned with a fixed ratio of the radii of the virtual electrodes, λ has but one value and therefore becomes a constant. When λ is zero (no ion current present), Langmuir and Blodgett's α may be substituted for μ in Equation 11 and reduces to:

$$3\alpha\frac{d^2\alpha}{d\gamma^2}+\left(\frac{d\alpha}{d\gamma}\right)^2+3\alpha\left(\frac{d\alpha}{d\gamma}\right)=1 \tag{13}$$

which, as should be, is the Langmuir and Blodgett equation.

Spangenberg (book "Vacuum Tubes," 1st ed. 1948, § 8.4, p. 181) submits that the equation for the electron space-charge flow of current for concentric spherical electrodes in the absence of ions is:

$$I_0=\frac{29.34\times10^{-6}\times V^{3/2}}{\alpha^2} \tag{14}$$

where V is the potential difference between the spherical electrodes and α is a function of $\lambda=ln\ (r/r_0)$ given by the Maclaurin series:

$$\alpha=\gamma-0.3\gamma^2+0.075\gamma^3-0.0013\gamma^4+\ \ldots \tag{14a}$$

The values for α are valid whether the cathode is external or internal and can be found in tabular form in Table II of the referenced Langmuir and Blodgett paper. Two functions designated as α^2 and $(-\alpha)^2$ are listed. The first applies to the case where the voltage V is evaluated at a point P outside the electron emitting electrode; the second where P is inside that source.

Germane to this invention, Langmuir's logic may be extended into the determination of electron and ion circulatory currents in the present of each other. As was the case for the Langmuir and Blodgett Equation 13, Equation 11 probably cannot be integrated directly, but a solution was obtained in the same manner as used by Langmuir and Blodgett. The electron circulatory current in the presence of ions took the form:

$$I_e=\frac{29.34\times10^{-6}\times V^{3/2}}{\mu^2} \tag{15}$$

The values for μ being obtained by expanding the Taylor's series:

$$\mu=f(\gamma)=\gamma_0+\frac{\gamma+\gamma_0}{1}f'(\gamma_0)+\frac{(\gamma-\gamma_0)^2}{2}f''(\gamma_0)+\frac{(\gamma+\gamma_0)^3}{3}f'''(\gamma_0)-\ \ldots \tag{15a}$$

Equation 15a is expanded near zero to avoid infinite terms in the higher derivatives.

It is apparent from Equation 15 that the electron circulatory current I_e is independent of the actual sizes of the spheres since the radii enter only as a ratio.

Knowing the value of λ and the circulatory electron current from Equation 12, circulatory ion current I_i can be determined. Thus:

$$I_i = I_e \times \lambda \times \sqrt{\frac{M_e}{M_i}} = \frac{29.34 \times 10^{-6} \times V^{3/2}}{(-\mu)^2 \sqrt{\frac{M_e}{M_i}}} \lambda \tag{16}$$

It was at this point in the solution of the Poisson equation for bi-polar charges in a spherical geometry that I was led to conclude, and which was later verified by experimentation, that a phenomenon of alternating virtual cathodes and anodes could be made to exist in the volume enclosed by the inner hollow electrode of a fusor. Furthermore, to satisfy the Poisson's equation, λ would have to be greater than unity when a virtual cathode enclosed a virtual anode, such as shown by r_{c1} and r_{a1} (FIG 3). A "singularity" or mathematical discontinuity appears to exist at the virtual anode. Likewise, such a "singularity" appears to exist at the virtual cathode r_{c2}, enclosed by the virtual anode r_{a1}. In this type of system "a space-charge saturated current cannot be produced on the side of an emitting surface which radiates outwardly." The radial potential distribution for the fusor of this invention is shown in FIG. 5*a*. That such "singularities" do exist in the fusor of this invention can be likened to the case of a charge uniformly distributed over an imaginary spherical shell.

If one assumes that a positive charge Q is uniformly distributed over an imaginary spherical shell of radius r_1, Gauss' law for electrostatic charges may be applied to calculate the field intensity (E) and the potential (V) at any radius r inside and outside of the radius r_{a1} (FIG. 5). Additionally, the surface charge density ρ_s may be calculated as a function of the radial distance r. (See Sec. 1–20, Chapter 1, Part I, of "Electromagnetics" by John D. Kraus, McGraw–Hill Electrical and Electronics Engineering Series, 1st Ed., 1953.) It is found that the field intensity E is zero (in the absence of electric charges) for any radius inside the shell and the absolute potential at a radius outside the shell is given by

$$V = \frac{Q}{4\pi r \xi_0} \tag{17}$$

where Q is the positive charge in coulombs; and ξ_0 is the permittivity of air in farads per meter. Since the field intensity is zero inside the shell, the potential within the shell will be constant. The surface density ρ_s is zero everywhere except at the radius of the shell where it has the value

$$\rho_s = \frac{Q}{4\pi r_1^2} \tag{18}$$

The variation of E, V and ρ_s is shown by FIG. 6, curves (*a*), (*b*) and (*c*).

The similarity of the radial potential gradients of FIGS. 5*a* and 6*b* is marked. Inasmuch as the gradient (dV/dr) at r_1 (FIG. 6) and r_{a1} (FIG. 5*a*) is zero, and a condition for space-charge saturation at r_{a1} is defined by an infinitely thin spherical shell at that radius, it is reasonable to assume that Equations 17 and 18 can be applied to the treatment of a radial potential distribution such as shown by FIG. 5*a*, even though that field is not produced by bound charges. It is helpful to identify the referenced emitting surfaces by subscripts (cathode *c* and numeral or anode *a* and numeral) which produced the circulating current (electron or ion) being calculated.

Since the circulatory currents through all virtual electrodes have constant values for all radii between the limits of travel thereof, it becomes fundamental that:

$$\frac{I_e}{I_o} = k^2 \tag{19}$$

where k^2 is a constant independent of the voltages at any radii. Using Equations 14 and 15, Equation 19 may be written in the form:

$$k^2 = \frac{\frac{29.34 \times 10^{-6} \times V_a^{3/2}}{-\mu_e^2}}{\frac{29.34 \times 10^{-6} \times V_a^{3/2}}{-\alpha_e^2}} = \frac{-\alpha_e^2}{-\mu_e^2} \tag{20}$$

when the real cathode *c* is the emitting surface.

Langmuir's Equation 12, et seq., in his paper of June, 1929, teaches a method for computing values of I_e/I_o for plane-parallel electrodes for any values of his α (which corresponds to my λ for the spherical-electrode geometry).

When the ratio of the radii r_{a1}/r_{c1} (FIG. 3) approaches unity, the spherical geometry approaches the plane-parallel geometry so closely that the potential gradient at r_{c1} becomes zero and I_e/I_o (and k^2) takes the same value as Langmuir's for α equal to unity, which is 1.8605. This means that the electron circulatory current in the presence of unlimited ions will be 1.8605 times that for the same applied potential in the absence of ions.

When λ becomes zero, i.e., no ion current present, I_e/I_o again is the same as Langmuir's α and I_e/I_o (and k^2) which is unity.

Thus, one observes that with the limits for Langmuir's α and my λ being identical, it holds that α and λ will be the same for intermediate values. Accordingly, I have computed and plotted in FIG. 7 the values of I_e/I_o for various values of λ so as to permit obtaining any intermediate values readily.

Experimentally, one may apply a desired potential between the real anode **20** at radius r_a and the real cathode **21** at radius r_c (FIG. 3) and measure the current I_o therebetween. Ions from the ion sources are then injected and measurements of the resulting currents I_e recorded. The ratios of I_e/I_o may then be calculated and the corresponding values for λ obtained from FIG. 7.

Thus, having values for I_e/I_o (or k^2), I_e and λ, one may compute values for the corresponding I_i $(-\alpha)^2$, and $(-\mu)^2$, keeping in mind that the virtual electrodes cannot emit outwardly and only the negative values for α and μ are valid. With these data, one has the means for obtaining the radial potential distribution.

The radius of the virtual anode r_{a1} (FIG. 5*a*) is generally known quite accurately from experimental data of a variety of kinds and largely by heuristic reasoning based on those data. The actual value of r_{a1} (and the resulting ratio r_{c1}/r_{a1}) depends upon the total energy losses, which will be taken up later, required to maintain the desired poissor and the magnitude of the high-energy ion current which flows through (or into) the real cathode **21** (radius r_c). The approximate values for r_{a1} have been determined visually for experimental fusors.

In the design of a working embodiment of a fusor, it is essential that the volume enclosed by the innermost virtual cathode, such as **30** at radius r_{c2} (FIG. 5*a*) be adequate to confine a sufficient total number of fusion particles (at a volumetric density of unity fusion probability) to assure the generation of a useful amount of power. It has been found that if the ratio of the radii of the adjacent pair of virtual electrodes is much greater than 3, the inner virtual cathode may not form; if the ratio of radii is too small, the circulatory currents required to maintain the poissor become excessively large.

In an actual working embodiment of a fusor, the radii of the virtual anodes and cathodes can be computed, as well as the values of the currents and the radial potential distribution outside of the virtual cathode **30** at radius r_{c2}. The radial potential within the aforementioned virtual cathode has not been computed because as the radii of the balance of the virtual electrode system become much samller, errors in ion and electron optics begin to reveal themselves to the extent that it is not known whether or not the system continues to repeat itself. Since fusion

does occur in the small volume in the fusor's center, the space-charge conditions prevailing therein have therefore been determined by logic and heuristic reasoning.

In FIG. 3 is illustrated diagrammatically one embodiment of this invention consisting of an anode **20**, a cathode **21** and an ion gun **22**. Enclosed within the cathode **21** is shown a poissor with a virtual cathode **29** at a radius of r_{c_1}, a virtual anode **31** at a radius of r_{a_1}, a virtual cathode **30** at a radius of r_{c2}, and a vestigial virtual anode **32** at a radius of r_o. To understand the operation of the fusor, it is important to distinguish between the currents which flow through the apertures of the real cathode **21**, referred to herein as "mesh currents" (i_m), and the current which flows into the real cathode **21**, termed "cathode current" (i_c).

The ion "mesh current" (i_{im}) is produced by the ions:

(a) injected into the cathode **21** space from the ion guns;
(b) released by the anode **20** under bombardment by electrons and neutral gas molecules;
(c) created in the volume between the anode **20** and the cathode **21**; and,
(d) created by the ionization process within the volume r_{a_1} to r_{c_1}.

Those ions which originate on the anode **20** will be collected by the cathode **21**, or returned to the anode **20** after but one round trip; those few ions created on the inward side of the virtual anode **31** ($r \leqq r_{a_1}$) which have sufficient energy to penetrate therethrough will be collected by the anode **20** or the cathode **21** after only a few round trips; the other ions will oscillate from the virtual anode **31** through the cathode **21** apertures until collected by the cathode **21**. The potential of the virtual anode **31** will build up to that of the anode **20**.

The electron "mesh current" (i_{em}) which initially may be quite large and is extremely useful in the formation of the virtual electrode system, will become so small in operation as to be negligible. It is made up of those electrons emitted by the inner surface of the real cathode **21** and which flow through the cathode **21** apertures to the anode **20**.

The total mesh current through the cathode **21** apertures, therefore, is the algebraic sum of the ion mesh current and the electron mesh current. Thus,

$$i_m = i_{im} + i_{em} \tag{21}$$

The net cathode **21** current i_c is the algebraic sum of the ion current into, and the electron currents into and out of it. Ions flowing into and electrons flowing out of the cathode **21** as usual are positive currents to the cathode **21**. Thus,

$$i_c = i_{ic} + i_{e2c} - i_{e1c} + i_{ec}' \tag{22}$$

where i_{ic} is the ion current into the cathode; i_{e1c} is the electron current into the inside of the cathode; i_{e2c} is the electron current out of the inner surface of the cathode; and i_{ec}' is the electron current from the outside surface of the cathode to the anode.

The space current i_s into or out of the volume enclosed by the cathode **21** is the sum of the mesh current and the cathode **21** current, so

$$i_s = i_m + i_c \tag{23}$$

The general condition for an equilibrium potential field occurs when i_s becomes zero, as no charges are then being added or removed from the space. Accordingly,

$$i_m = i_c = 0 \tag{24}$$

and when i_c is zero, the power consumed by the device is a minimum.

It is the ion mesh current i_{im} into the central cathode **21** volume which maintains the density of the virtual anode **31**, and which causes any free charges therein to be oscillated radially. As the inward flow of ions continues, the positive potential at the virtual anode **31** increases until all the inward flow of ions is cancelled by the outward flow to the cathode **21**. The net ion mesh current then becomes zero. Neglecting the minute electron mesh current i_{em}, when all the electrons that are emitted from the inside of the cathode **21**, as well as all of the ions and electrons generated within the cathode **21** volume, return to the cathode **21**, it is apparent from Equation 22 that only the electron current, i_{ec}', remains to flow to the anode **20**. Thus, for i_c to become zero, i_{ec}' must likewise be brought to zero. Such an equilibrium potential field can be obtained when there are sufficient ions reaching the anode **20** to compensate for i_{ec}'.

Those ions from the virtual anode **31** which have energies equivalent to or greater than V_a will reach the anode **20** and remove an equal or greater number of electrons therefrom. With a sufficient number of such ions reaching the anode **20**, the component of cathode **20** current, i_{ec}' can be reduced to zero.

In the disclosure thus far, a space-charge saturation of the cathode volume has been assumed. The ions which are created near the virtual anode **31** ($r \leqq r_{a_1}$), where the ionization process is a maximum, have energies approaching eV_{a_1}. They traverse the inner virtual cathode **30** and the vestigial virtual anode **32** at fusion-reacting energies; this is an essential operating condition. The bulk of the ions which make up the ion mesh current i_{im} are created in the volume outside the virtual anode **31** ($r \geqq r_{a_1}$) and, like those ions from the ion guns **22** and the anode **20**, are ultimately collected by the cathode **21**; thus, if space-charge saturation could exist in this region, it would produce such an extremely large energy loss that nuclear-fusion reactions could not obtain. Fortunately, as previously shown, ion space-charge saturation cannot exist in this region, and operating conditions are maintained such that the ion circulatory current is just adequate to assure a virtual anode **31** of the desired size. Thus, the ideal radial potential distribution for the device of this invention (sometimes referred to herein as a "fusor") is as shown in FIG. 5*a* where the poissor is maintained by ion space-charge saturation in the volume $r \leqq r_{a_1}$ and a non-space charge (dissymmetrical) field exists in the cathode **21** volume where r is greater than r_{a_1}. λ, therefore, has the value which gives ion space-charge saturation only in the region adjacent to the radiating surface of the virtual anode **31** where the potential gradient is zero; electron space-charge saturation obtains in the region just inside of r_{c_2}.

Within a virtual anode **31** (FIG. 5*a*), each positive charge must be matched by an electron. Most of the flux lines from the ions at a radius $r \leqq r_{a_1}$ terminate in the virtual cathode **30**; where $r \geqq r_{a_1}$, most of the flux lines terminate in the virtual cathode **29**. All the charged particles in the cathode **21** volume are free to move and are in oscillation. The virtual anode **31** at r_{a_1}, the locus of maximum ion density, has the potential practically equivalent to V_a, and very few ions are formed inside that virtual anode with energies greater than eV_{a_1}. Thus, to maintain the potential V_{a_1}, it is only necessary that there be an equal number of flux lines from the inner of r_{a_1} to r_{c_2} as there are outward to r_{c_1} (FIG. 5*a*). Ions with lesser energies than eV_{a_1} will reach their reversal loci at radii greater than r_{a_1} when $r \geqq r_{a_1}$ or less than r_{a_1} when $r \leqq r_{a_1}$ and those ion densities will be less than at r_{a_1}. If a few ions are generated inside of r_{a_1} with energies greater than eV_{a_I}, they will pass through the virtual anode **31** and fall to the cathode **21**, and in some instances to the anode **20**; they do not contribute to the ion circulatory current. The virtual anode **31** thus acts as an effective hi-pass ion filter for ions with energies greater than eV_{a_1}. Inside the virtual anode **31** where $r \leqq r_{a_1}$, the ions travel slowly for a relatively large portion of their radial paths as they approach their respective reversal loci; the opposite is true outside the radius r_{a_1} where the ions are decelerated rapidly as they approach r_{a_I}, giving up their energies within a very short distance from r_{a_1}.

The radial potential V_r is a function of the radius r and the time t; i.e., $V_r=f(r,t)$. The buildup of the poissor inside the radius r_{a_1}, together with the creation of the asymmetrical field outward from r_{a_1}, is shown diagrammatically by FIG. 8. The anode **20** and the cathode **21** initially are at ground potential as shown. If a negative potential of V'_c (curve *a*, FIG. 8) of approximately −30 kv. is applied to cathode **21**, and ions from the ion guns are injected into the cathode **21** volume concurrently, they begin to charge that volume positively. This charge will increase until the potential at some internal radius r_{a_1} is sufficient to return the ions to the cathode **21** at the same rate at which they enter the cathodic **21** volume. This equilibrium may be expressed by the relation

$$i_{im}=i_{ic} \tag{25}$$

As soon as the potential inside the cathode **21** becomes positive, electrons emitted from the inner surface of cathode **21** will be accelerated toward and oscillate through the central volume and quickly establish virtual cathodes at r_{c_1} and r_{c_2}. With the virtual cathodes formed, the position of the virtual anode between them is determined. The equilibrium radius and the potential of the virtual anode at r_{a_1} requires a somewhat longer buildup time than the formation of the virtual cathodes at r_{c_1} and r_{c_2} because of the longer ion transit time.

When the negative potential on the cathode **21** is abruptly increased from V_c' to $V'_c{}'$ to $V'_c{}''$, similar sequences of events occur. Each of the subsequent equilibrium radial potential gradients is shown by curves *b* and *c* of FIG. 8.

To determine the position of the virtual electrodes, it is only necessary to establish the radial density distribution of electrons and ions. The radial potential distribution already has been so calculated. The virtual anode locus will lie close to the surface where the ion density is the greatest. The virtual cathodes will lie at the termini of the electron paths where the electron densities are the highest.

A practical embodiment of this invention by which the aforesaid conditions for a self-sustaining nuclear-fusion reaction can be produced is shown diagrammatically by FIG. 9. A spherical anode **20** of radius r_a encloses dual concentric cathodes **21** and **36** of radii r_c and r_c', respectively, and ion guns **22** and **22a** mounted on the outside of anode **20**. The concentric cathodes **21** and **36**, which are constructed of an electron-emitting material such as stainless steel, molybdenum or the like, and which have an openness of about 70% by virtue of spherically spaced, registered apertures **37** and **38**, are supported within the anode **20** by suitable insulators (not shown). The concentricity of the cathodes **21** and **36** is maintained by suitable insulators therebetween (not shown). Attached to the outer cathode **36** on the axis passing through the ion gun **22** is a conical sleeve **40** through which the intense pencil-like ion beam is focused. Suitable connections are made between the unidirectional power supply **25** and the electrodes through leads **23**, **24**, and **42**. The anode **20** is maintained at or near ground potential as shown, while negative potentials are applied to the cathodes **21** and **36** from a supply **43**, with the outer being more negative than the inner.

In operation, most of the ions from the ion guns **22** and **22a** are utilized to establish the initial virtual anode in the central volume of cathode **21** as previously described. Electrons from cathode **21** are prevented from reaching the anode **20** by the negatively biased outer cathode **36**. The early removal of ions from the non-space-charge saturated field is greatly enhanced by the second cathode **36**, and only those positive charges with energies greater than V_a have any likelihood of avoiding capture on their first outward pass from the virtual anode **31** (FIG. 5*a*). Ions captured by the outer cathode **36** (FIG. 9), will create electrons therefrom which either will enter the cathodic space or be returned by the outermost virtual cathode.

VII. *Losses*

In order to form and sustain a radial-potential distribution such as is shown in FIG. 5*a*, it is first necessary to compensate for all losses. For a typical small fusor, these losses, which represent about 10% of the total power created, in their order of importance and magnitude are:

(1) Heat loss—7%
(2) Charge interchange—2%
(3) Power required to create electrons—⅔ of 1%
(4) Bremsstrahlung—⅓ of 1%

Heat loss.—In the center of an inner virtual cathode in a poissor, the ions from the inner side of the adjacent virtual anode are traversing the center from all directions. As they pass near other ions, they will experience some deflection which will result in small deviations from radial paths and thus they will appear to be in random motion. This is the equivalent of a very high apparent temperature, about 1.6×10^9 °K. for 100 kev. or about 11,600 °K./e.v. (Maxwell-Boltzman constant). This apparent temperature reduces to about 2×10^6 degrees K. in a distance of a few millimeters from the center. Any neutral atom which passes through this central region will be heated to an extremely high temperature. It will experience a cryogenic pumping action that will expel it to one of the real electrodes where, upon impact, it will give up its kinetic energy (heat), penetrate the surface to a depth determined by its kinetic energy, then diffuse out in a random direction following the cosine law. There is very little likelihood of its again reaching the center as it will remain in the vicinity of the electrode until ionization takes place.

It becomes very serious when too many high-energy neutral atoms are intercepted by the cathode as the cooling thereof is most difficult. On the other hand, cooling of the anode is relatively easy. The cooling of the cathode may be accomplished by conduction through its electrical connections to the power supply. The size of the cathode does affect the cooling problem, as increasing the size reduces the heating per unit area by the ratio of $1/r^2$ since the circulating currents are independent of the radii of the spheres.

Rutherford's scattering equation shows how the neutron count can be made to increase with an increase in applied voltage, for: the current rises by the three-halves power; and the particle density may be increased as it is proportional to four times the energy (or voltage) squared. Accordingly, the heat loss will decrease with an increase in voltage as there will be less scattering. For example, refer to FIG. 10, which shows a typical neutron cross-section curve for an equal mixture of deuterium and tritium. The operating points *a* and *b* are for the same fusion cross-section (σ_f), but from the point of view of the heat losses, *b* provides for more efficient performance, for:

$$\frac{N_{\frac{\theta}{2}}}{N_o}=\frac{\pi\rho_c^4}{4w^2}\cot\theta \tag{26}$$

where

$$N_{\frac{\theta}{2}}$$

is the number of ions deflected by half angles; N_o is the total number of ions; and W is the energy ($mv.^2=2W$); ($(mv.^2)^2=4W^2$) which shows that the lower the voltage the greater the losses.

Charge interchange.—Ions travel relatively slowly within the radial thickness adjacent to the virtual anode due to the repelling forces of their like charges. Therefore, there is a fairly high probability that a charge interchange with a neutral atom may occur. This loss is discussed in my Patent No. 3,258,402, previously mentioned. This loss

becomes sizeable if there are too many gas molecules present. The gas density (pressure) must be kept as low as is possible to maintain a high fusion probability. This affects the fusor's design characteristics. In practice, the fusor is operated at a neutral gas density of 3.535×10^{13} molecules or less, such that

ρ_n is the normal gas density of 2.687×10^{19} molecules/cc. at normal temperature (20° C.) and pressure (760 mm. of Hg); and

ρ_i the operating gas density, in ions per cc., is

$$\frac{2.687\times10^{19}}{760\times10^{-3}}\times10^{-6}=3.535\times10^{13}\text{ ions/cc.}$$

at a working pressure of one micron (10^{-3} mm. Hg).

As the power level of a fusor is increased, more ion current will be required from the ion guns, which in turn will increase the radius of the virtual anode **31** (FIG. 5*a*). This will mean a larger volume which, for ion space-charge saturation, will result in an increase of the total number of the ions contained therein. The greater power input (ions) will increase the power loss, thus again increasing the radius of the virtual anode until equilibrium is reached where the power input equals the power dissipated.

Bremsstrahlung.—When high-energy electrons are deflected on their passage through the virtual anode **31**, they radiate at right angles to their directions of motion. As the electrons have momentum which must be conserved, there will occur an equal and opposite reaction when an electron changes its direction of travel. Since these reactions take place after the electron changes its direction, they are non-radial. These non-radial electrons broaden the virtual cathode **30** with a movement toward the center **26**, and thus increase the electron temperatures. The so-called "radiation dampening" effect of the excess ions (positive nuclei) in the virtual anode tends to reduce the Bremsstrahlung losses to less than 1% of the power available in the virtual anode. With the value of the ion density in the virtual anode, the electron scattering can be computed by the well-known Rutherford formula for scattering.

VIII. *Fusion reactions*

The fusor, as shown diagrammatically in FIG. 9, is initially evacuated to a pressure of from 10^{-9} to 10^{-10} millimeters of mercury by means of a vacuum pump **44**, the anode **20** being the hermetically sealed envelope. Potentials are applied to the various electrodes as already explained and a fusion-reactive fuel, in the form of gas, is introduced into the ion guns **22**, **22***a* from sources **45** and **45***a* at a pressure of from 10^{-6} to 10^{-4} millimeters of mercury. This fuel gas is ionized by the guns **22**, **22***a* and formed into ion beams directed diametrically toward center **26**. A poissor forms, as previously explained.

High energy ions oscillate through the region of the center **26** along diametral paths, terminating adjacent to the virtual anode **31** (FIG. 5*a*). Other lower energy ions follow shorter diametral paths within the virtual anode **31** through the same region, thereby contributing to the density of ionic particles in the center. With the virtual anode **31** potential high enough (100 kv.), collisions of the high energy ions with others in the center **26** region will produce nuclear-fusion reactions.

There are a number of nuclear-fusion reactions which are possible. Fusion reactions of an exothermic nature will be specifically considered as one type of reaction which this invention seeks to attain. Power production by such reactions is theoretically proportional to both the amount of energy released per reaction and the number of reactions taking place per unit time. The number of reactions per unit time is obtained from the product of the nuclear cross-section, which expresses the probability for a specific nuclear reaction to occur, the number of ions in the center **26** region, and the number of projectile particles passing through this region from the anode **20** and the virtual anode **31** (FIG. 5*a*) per unit time. The nuclear cross-section, or the probability that a nuclear reaction will occur, is a function of the velocity or energy of the interacting particles, which in this device is a function of the potential difference between the anode **20**, the virtual anode **31** and the center **26** (FIG. 3). From the above, it is clear that good power-producing reactions require a large nuclear cross-section and also a large amount of input energy.

One reaction which theoretically is outstanding in meeting the above requirement is the tritium reaction with deuterium. The nuclear equation for this process is:

(3) ${}_1D^2+{}_1T^3\rightarrow{}_2He^4$ (3.5 mev.)$+{}_0n^1$ (14.1 mev.)

This states that a triton plus a deuteron plus the sum of their kinetic energies results in a nuclear reaction whose products are helium 4, a neutron, and the sum of the excess binding energy and the kinetic energy possessed by the original trition and deuteron. The reaction energy released is 17.6 million electron volts (mev.) for the sample above. This value is large compared with the values for other possible reactions, which in most cases yield 3 or 4 mev. The nuclear cross-section for the reaction shown in Equation 3 peaks at a value of about 5×10^{-24} cm.^{2} for projectile energies of 100 kiloelectron volts (kev.). This cross-section value is about 10^2 times larger than that for most competing reactions when compared at the same projectile energies.

Additional possible reactions are the following:

(1) ${}_1D^2+{}_1D^2\rightarrow{}_2He^3$ (.82 mev.)$+{}_0n^1$ (2.45 mev.)

(2) ${}_1D^2+{}_1D^2\rightarrow{}_1T^3$ (1.01 mev.)$+{}_1p^1$ (3.02 mev.)

(4) ${}_1D^2+{}_2He^3\rightarrow{}_2He^4$ (3.6 mev.)$+{}_1p^1$ (14.7 mev.)

Reactions 1 and 2 have a lower value of released energy and a lower 100 kev. cross-section value than Reaction 3. Reaction 4 has about the same energy value but a lower 100 kev. cross-section value.

IX. *Fusion products in the discharge*

As already explained, when an external voltage is applied between the anode **20** and the cathode **21**, **36** (FIG. 9), a system of virtual anodes and cathodes (poissor) is formed within the cathodic space. The radial potential distribution of the poissor was shown in FIG. 5*a*. It is within the minute volume enclosed by the virtual cathode **30**, where the ion density is the greatest and the energies (velocities) of the projectile ions a maximum, that the probability of fusion is the highest.

It was shown by Equations 1, 2, 3 and 4 that, using only six deuterons, it is possible to trigger four different nuclear-fusion reactions, and these reactions result in the creation of five new kinds of particles having a total energy of 43.2 million electron volts (mev.). Four of these five particles (${}_1p^1$, ${}_1T^3$, ${}_2He^3$ and ${}_2He^4$) are positively charged, and carry 26.65 mev.; the fifth is a neutral particle, the neutron, and the two produced by the two reactions carry 16.55 mev. There are two important aspects of this energy distribution between the charged and uncharged particles. Firstly, the neutrons will escape from the reacting system and dissipate their energy elsewhere as heat, because being uncharged, they easily pass through material walls. Only the charged particles will be retained within the reacting region and be available to compensate for energy losses (radiation, recombination, etc.) and to sustain the nuclear-fusion reactions. Secondly, it is only the energy of the charged particles, which represents 64% of the energy released by the four reactions, that is available to be converted directly into electrical power. It should be noted that only those ions which are created by the fusion reaction will have sufficient energy to produce electrical energy.

All of the particles formed by the nuclear-fusion reaction are ejected radially outward from the reaction volume with the high energies shown by Equations 1 through 4. These energies (velocities) are more than ade-

quate to propel them through the virtual anode **31** (FIG. 5*a*). Under the influence of the real cathode **21, 36** (FIG. 9), they will be accelerated on their outward journey until passing through the cathode apertures **37, 38**, where they will be decelerated by the anodic field and either brought to rest short of the anode **20** or impact the anode. If particles do not reach the anode **20**, they will then reverse their direction of travel and go into oscillation through the center. Those which do strike the anode **20** will dissipate their remaining energies as heat and at the same time deposit their charges on the anode. A few particles may strike the cathode and be captured, with an accompanying release of secondary electrons.

With deuterium only in the fusor, for two D—D reactions (Equations 2 and 3) will take place at essentially equal rates. The positively charged products of these reactions which go into oscillation increase the ion circulatory current, thus increasing the ion density in the reaction space and hence the probability of fusion. The oscillating reactive particles ($_1T^3$ and $_2He^3$) may fuse with deuterons to produce the reactions shown by Equations 1 and 4, or may experience scattering, capture or recombination with electrons and become neutral atoms. The non-fusionable particles ($_1p^1$ and $_2He^4$) contribute to the fusion process only by the creation of fusion-reactive ions through the capture of electrons from fuel-gas atoms and by their contribution to the space-charge; ultimately, they will become neutral gas atoms. The neutral gas atoms will drift toward the electrode walls, where eventually they will be scavenged from the reaction system by the vacuum pump **44** (FIG. 9).

It has been stated that some of the charged particles will reach the real anode **20** when ejected by the nuclear-fusion reactions. When this occurs, the particles remove enough electrons from the anode **20** to neutralize their positive charges and form gas atoms. This is the equivalent of producing a current which flows from the anode **20** to the battery **25** (FIG. 9) (power supply). In other words, the charged particles have been coverted directly into electrical energy. This is one of the unique features of this invention.

Insertion of a suitable resistor **46** (FIG. 9) in series with the power lead **24** becomes a means for coupling the converted electrical power to an external load. A switch **47** is used to connect selectively this resistor **46** into the series arrangement.

It will be seen from Equations 1 through 4 that as many positive charges enter the fusion region as are removed therefrom. In other words, nuclear charges are conserved. What the fusion reactions do accomplish is the formation of new particles with the release of the excess binding energy of the original ions and, as the original energy must be conserved, the excess is applied to the new particles. Accordingly, the new particles leave the reaction volume at extremely high velocities. The replacement ions which enter the reaction volume do so at the comparatively low velocities of the order of 100 to 200 kev. Thus, there is an extremely short period when the potential in the center is less than prior to the fusion reaction which, in effect, tends momentarily to increase the negative potential of the virtual cathode **30** as well as decrease the virtual anode **31**, and there is an associated increase in the electron current. This effect produces an increase in the radii of the virtual electrodes until the original potential of the vestigial anode **32** (FIG. 5*a*) can be restored. Thus, there is a periodic expanding and contracting of the poissor volume by the very high frequency oscillation of the inertially contained particles.

When the fusion reaction commences, there will be more positive charges leaving the center than flowing in and this condition will continue until steady state is reached. This would tend to develop what might be termed a "potential well" (more negative potential) at the virtual cathode **30**. Such a condition could not exist, as current would then flow from the real cathode **21, 36** (FIG. 10) to the virtual cathode **30**. Accordingly, the virtual cathode **30** must be returned to the real cathode potential within an extremely short period of time. This is accomplished by an equivalent increase in the potential of the virtual anode **31**. The loss of positively charged particles from the center produces a positive bias on the virtual cathode **30** which is equivalent to an increase in the potential of the virtual anode **31**. As these increases are cumulative until the steady state condition is produced, it is seen that the virtual anode **31** (FIG. 5*a*) reaches the potential of the real anode **20**.

The positively charged particles formed by the fusion reaction perform work against the field of the virtual anode **31** as they pass through it. In so doing, their velocities are reduced somewhat, thus increasing the field and contributing to the potential of the virtual anode. They are then accelerated by the cathode, regaining energy.

It is the potential of the virtual cathode **30** (FIG. 3) which contributes to the energy of the positively charged particles which oscillate through the center **26**. As the energies of the reacting particles increase, within the resonance limits of the nuclear-fusion cross-section, the probability of fusion increases. Electrons which are created within the virtual anode **31** are ejected radially outwardly with sufficient energy to overcome the repelling field of the real cathode.

If one were to lose control of the input density of the fuel-gas atoms, it might appear that the process of building up the potential of the virtual anode **31** could continue unabated and might well result in a catastrophic accident. Such is not the case, however, as there are "built-in" safety processes which act to prevent such a build-up. The principal control is the cross-section resonance phenomenon which occurs in nuclear reactions. The cross-section curves for D—D (total), D—T and D—HE^3 reactions, such as contained in "Physical Review," vol. 88, p. 468, 1952, by Connor, Bonner and Smith, and also "Physical Review," vol. 88, p. 473, 1952, by the same authors, show that the D—T curve exhibits a maximum at an energy of 110 kilo-electron volts (kev.), where it falls off sharply with increasing deuteron energy. In the same energy range, the D—He^3 cross-sections are appreciably less than the D—D (total) and the D—T values, but the curve is rising rapidly with increasing deuteron energy and it crosses the D—D (total) curve at 120 kev.; it approaches the D—T curve at 500 kev., its peak, and then falls off rapidly. For example, in the range of deuteron energies from 120 to 200 kev., the D—T cross-sections decrease 1 barn (10^{-24} cm.^{2}) while the D—D (total) and the D—He^3 cross-sections increase only about 0.5 barn, an overall decrease of approximately 1 barn. After the D—He^3 cross-sections pass their maximum at 500 kev., the decrease in the overall cross-sections is much more pronounced. Thus, it is apparent that the build-up in the potential of the virtual anode will be checked at deuteron energies greater than about 150 to 200 kev.

Another built-in safety process which assists in preventing a "run-away" by the so-called "potential well" is the widening of the negative potential sheath (virtual cathode **30**) (FIG. 5*a*), as the radius is changed by the oscillating particles, which produces a decrease in the fusion cross-sections.

The conversion of the positively charged particles into electrical energy at the anode has been touched upon briefly. This phase will now be covered in some detail. In order to prevent the over-heating of the anode, it is highly desirable that most of the particle energy be given up to the decelerating virtual and real anode fields. The particles would reach the anode **20** with very much less than their original energies and thus dissipate less heat to it with a significant increase in the overall efficiency. The ideal situation would permit the charges to reach the anode **20** (FIG. 9) with little or no remaining energy, deposit their charges and drift away as neutral gas atoms. Obviously, with such a wide range of energies, 0.82 to

14.7 mev., this condition cannot be achieved. Therefore, one may envision two different operating situations; namely, (a) be satisfied with the maximum electrical conversion that can be obtained with the minimum heating of the anode 20, or, (b) operate the fusor as a heat machine to convert heat and charged particles into the maximum amount of electric power.

In the first situation, it becomes necessary to restrict, as nearly as possible, the fusion reactions to those of Equations 2 and 3, where the energies range from 0.8 to 3.02 mev., and to operate the anode at a potential which will produce a deceleration of the 0.8 mev. particles such that they arrive at the anode 20 with just sufficient energy to deposit their charges. The 3.02 mev. particles under this condition will impact the anode 20 and convert its remaining energy into heat. Inasmuch as approximately 50% of the D—D reactions will follow the proton branch, it is not possible to eliminate that higher energy particle. The reactions of Equations 1 and 4 may be reduced appreciably by operating the fusor at a lower than normal gas density, thereby removing the neutral helium-three and tritium atoms by the use of a large volume vacuum pump 44 before they have an opportunity to fuse.

In direct contrast, if the device is to be operated as a heat generator, the D—T and D—He^3 reactions must be encouraged. Since the contribution of the D—T and D—He^3 reactions could be quite significant in the direct conversion to electricity, it might prove advantageous in some applications to produce tritium by bombarding lithium-six with the neutrons:

$$(27) \qquad {}_3Li^6 + {}_0n^1 \rightarrow {}_2He^4 + {}_1T^3 + 4.6 \text{ mev.}$$

and then utilize the tritium as a fuel gas.

If enough positively charged particles can be made to reach the anode 20 to reverse the current flow from the battery 25, it then becomes possible to remove the applied anode (cathode) voltage 25 while continuing the nuclear-fusion reactions. If I and V_a are the measured current and anode voltage before fusion, then after fusion commences the input power in watts will be

$$(28) \qquad W = V_a \times \left[I - \langle F \rangle e(A-B) \right]$$

where $\langle F \rangle$ is the fusion expectancy; e is the electric charge; A is the interception factor of the positively charged particles by the anode; and B is the interception factor of the positively charged particles by the cathode. Since the cathode 21, 36 is almost pervious to positively charged particles, A will be very much greater than B and when the value of

$$\left[-\langle F \rangle e(A-B) \right]$$

becomes greater than $I(V_a)$, the fusor will become truly self-sustaining. This condition will be reached without the aid of an external load. To remove electrical energy in excess of that required to drive the fusor, it only becomes necessary to add an external load 46 such as shown in FIG. 9.

Working embodiment

A working embodiment of this invention as shown in FIG. 9 is illustrated in substantial detail in FIGS. 11 through 22. In these figures, like numerals indicate like parts. The anode 20 is of spherical construction, being fabricated of two hemispherical shells of stainless steel hermetically sealed together at the equators by means of suitable annular sealing flanges 47*a*. Concentrically positioned inside the anode 20 are the two cathode shells 36 and 21, respectively, which are also assembled of hemispherical shells of stainless steel. The means for supporting these electrodes concentrically will be described in detail hereinafter.

Eight ion guns 22, 22*a* are mounted on the exterior of the anode 20 in spherically spaced and diametrically aligned relationship, these guns all having beam axes which intersect at the center 26 of the fusor. The precise location of these ion guns 22, 22*a* is explained in connection with the spherical diagrams of FIGS. 18*a* and 18*b* which show the angular relationship therebetween. Each of the ion guns is indicated by a circle with a center dot indicating the spot at which the gun axis intersects a spherical surface defined by the anode 20. FIG. 18*a* illustrates a spherical surface corresponding to the anode and cathode shells with the plane of the drawing being the same as the cross-sectional plane of FIG. 11. This latter plane includes the north and south poles of the sphere. The line 47*b* indicates the equatorial plane at right angles to the plane of the drawing. In FIG. 11, this equatorial plane would pass midway between the annular flanges 47*a*. The guns 22 and 22*a* are located in the planes spaced 45° from the equatorial plane 47*b* as shown, these planes passing through the tube center 26 and being rotated about the equatorial diameter which is perpendicular to the plane of the drawing. As shown in FIG. 18*b*, which is a right angle projection of the spherical surface of FIG. 18*a*, there are four such guns 22 spaced 90° apart on the spherical surface and on the same meridian. In terms of angular displacement, these guns are indicated as lying on the 0°, 90°, 180° and 270° lines. Within each plane containing guns, each gun center is at the intersection of a radius 45° above the equator and the spherical surface, certain of the radii lying in the plane of FIG. 18*a*.

Four ion guns 22 are so located in the upper or northern hemisphere of the sphere while four other guns 22*a* are located allochirally in the southern hemisphere.

The apertures 37 and 38 in the cathode shells 21 and 36, respectively, are in twelve registered pairs, each pair 37 and 38 being diagrammatically indicated by an X mark which is assigned numeral 48 in FIGS. 18*a* and 18*b*. The locations of the ion guns and the apertures 48 are indicated as being on the same spherical surface for showing the angular relation therebetween. There are four screen aperture pairs 48 on the equator as shown in FIG. 18*b* at the 0°, 90°, 180° and 270° lines. Planes intersecting the north and south poles which are spaced from each other by 90° contain the remaining aperture pairs 48, these planes being spaced 45° from the 0°–180° plane which includes the north and south poles also. In these individual 90° planes, on a radius at an angle of 35°16′ with respect to the equatorial plane 47*b*, lie the remaining aperture pairs 48. The spherical surface containing the aperture pairs 48 may be regarded as that of one of the cathode shells 21 and 36.

With the equators of the cathode and anode shells lying in the same equatorial plane, the aperture pairs 48 are thus spherically offset in a regular angular pattern from the ion guns 22 and 22*a*.

The anode 20 shell, as well as the cathode shells 21 and 36, are supported in position by a tubular mounting assembly indicated generally by the numeral 49. This mounting assembly includes a stainless steel pipe section 50 perimetrically welded at one end to an opening 51 in the anode shell 20. Coaxially and hermetically secured to the opposite end of the tube 50 is a larger diameter supporting tube or pipe section 52. Inside this larger tube 52 is a smaller diameter sleeve 53 having a sliding fit therewith, the upper end portion of sleeve 53 being secured to the radial flange 54 which joins the two pipe sections 50 and 52.

At the bottom end of the sleeve 53 is coaxially secured a mounting ring 55 from which depends four metal posts 56 spaced 90° apart around the axis of the pipe section 52. A metal disc 57 is coaxially secured to the bottom ends of the posts 56 by means of suitable screws 58, this disc 57 having secured to the central portion thereof a ceramic post 58*a*. This post 58*a* is coaxially positioned inside the pipe section 52 as well as the smaller pipe

section 50 by means of the mounting sleeve, rings and posts just described.

Secured to the upper end of the post 58*a* and coaxially extending thereabove is a metal post 59 having threadedly connected thereto a disc-like mounting stud 60 which is welded into an opening 61 in the outer cathode shell 36. Abutting against the flat surface of this stud 60 is a ceramic or the like spacer 62 having a boss 63 intimately fitting into a locating aperture 64 in the inner cathode shell 21. The spacer 62 is sandwiched between the two shells 21 and 36, thereby determining the spacing therebetween.

The post 59 is of such length with respect to the pipe section 50, for example, as to position the two cathode shells 21 and 36 concentrically inside the anode shell 20. This post 59 may be regarded as coinciding with the south poles of the cathode and anode shells.

At the north poles of these shells is located further supporting structure as well as a terminal assembly for connecting the operating voltages to the electrodes. This assembly includes an annular spacer 65 of suitable insulating material, such as boron nitride, positioned between the two shells 21 and 36 so as to determine the spacing therebetween. This spacing is the same as that between the south poles. Coaxially secured inside this spacer 65 is a conductive terminal button 66 which is intimately conductively fitted into a companion aperture in the shell 21. This aperture coincides with the north pole of the shell.

Telescoped over an upwardly projecting portion 67 of the spacer 65 is an elongated tubular element or conductor 68 which intimately fits into and makes conductive contact with an aperture 69 in the outer shell 36.

This conductor 68 passes diametrically outwardly through the relatively large insulating aperture 70 in the anode 20 in spaced relation therewith, this spacing being large enough to provide insulation at the high voltage at which the fusor is operated. A conductive tubular assembly 71 is rigidly and hermetically sealed to the exterior of the anode 20 in registry with the aperture 70 and extends coaxially outwardly with respect to the conductor 68. At the upper end of this assembly 71 is secured a relatively long, cylindrically shaped insulator 72 (FIG. 12) which has secured to the upper end thereof a conductive terminal assembly 73. This terminal assembly 73 is provided with a suitable connection terminal 74 by means of which cathode bias from the battery 43 may be connected to a wire 75 which extends coaxially through the conductor 68 and connects to the terminal button 66. This tubular assembly 71, 72 and 73 which coaxially surrounds the conductor 68 is hermetically sealed such that the space between the conductor 68 and the assembly 71, 72 and 73 may be evacuated and held at the same pressure as the interior of the anode 20.

Inasmuch as high operating potentials prevail between the conductor 68 and the outer tubular assembly 71, 72 and 73, suitable corona shields 76, 77 and 78, of annular configuration, are used for the purpose of preventing corona discharge. Other configurations for the terminal and supporting assembly may be used without departing from the spirit and scope of this invention, the requirement for such an assembly being that it provide the necessary physical support for the fusor anode and cathode elements and also be capable of supplying the anode and cathode elements with the operating voltages without producing corona discharges or field emission.

All of the ion guns 22 and 22*a* are identically constructed such that a description of one will suffice for all. For this purpose, reference is made to FIGS. 11, 13, 19, 20 and 21. Each ion gun includes a conductive housing or sleeve 79 of stainless steel or the like which is perimetrically sealed to an opening 80 in the anode shell 20. The sleeve 79 is positioned such that its axis coincides with a diameter of the anode 20. Coaxially secured internally to the sleeve 79 and against the anode 20 is an aperture plate 81 having a beam-defining aperture 82. Coaxially positioned inside the sleeve 79 in radially spaced and insulated relation therewith is an anode sleeve 83 having a frusto-conically shaped bore 84, the smaller diameter end of this bore being positioned as shown. Three arcuately shaped and circumferentially spaced insulators 85 surround the anode 83 in spaced relation therewith. For securing these insulators 85 to the anode 83, a thin metal ribbon 86 fits into a shallow circumferentially groove and binds the three insulators 85 against the anode 83.

Axial positional support for the anode 83 is provided by means of three ceramic, axially extending posts 87 which are fastened to the outer surface of the anode 83 at points spaced circumferentially equally part. One such post 87 is shown in FIG. 13. Considering this latter figure along with FIGS. 20 and 21, these three posts 87 are secured to a metallic mounting ring 88 which in turn is secured at its outer periphery to a cap assembly indicated by the numeral 89. This cap assembly 89 is composed of suitably machined metal parts formed to a substantially cylindrical shape of somewhat larger diameter than the sleeve 79, this cap assembly 89 being hermetically sealed to the sleeve 79.

As shown more clearly in FIGS. 19 and 21, three power supply terminals 90, 91 and 92 are mounted in the cap assembly 89 and are spaced circumferentially apart 120°. The terminal 90 has a wire conductor 93 internally thereof which passes coaxially through one of the supporting posts 87 and connects to the anode 83. The terminals 91 and 92 have suitably strong, bar-like conductors 94 and 95 which project into the central portion of the gun and pass through a block 96 of insulation for maintaining the spacing therebetween. At the innermost ends of these conductors 94 and 95 is connected a thermionic filament 97, this filament being in the form of a circular loop of wire located coaxially with respect to the axis of the ion gun. As shown in FIG. 11, this filament 97 is situated to the rear of the anode 83.

A pipe fitting 98 is also secured to the cap assembly 89 midway between the two filament terminals 91 and 92 and communicates with the inside of the ion gun as shown. By means of this pipe connection 98, fusion-reactive gas may be admitted to the interior of the ion guns from a suitable source 45 (FIG. 9) by the adjustment of series-connected hand valves 99.

The anode 83 is maintained insulated from the surrounding sleeve 79 such that a power supply 100 may be connected between this anode 83 and the sleeve 79 as well as the anode 20. In FIGS. 11 and 13, such a power supply 100 is indicated as being connected with the positive electrode to the terminal 90 and the negative electrode to ground and the housing 79 of the ion gun. This power supply 100 in an operating embodiment of this invention is designed to supply a voltage which is variable between the limits of 0 and 1,000. A suitable voltage connected between the two terminals 91 and 92 (FIG. 21) serves to energize the filament 97.

Each ion gun 22 in operation generates and emits a beam of ions which is directed toward the fusor center 26. In order to approach this center 26, the beam must penetrate the cathode structure 36, 21, and for this purpose a suitable aperture assembly is provided therein. This assembly is indicated in enlarged detail in FIGS. 16 and 17 and is shown in proper coaxial relationship with respect to the ion guns in FIG. 11. Each aperture assembly includes an annular insert 101 having smoothly radiused corners, which tightly conductively fits into a companion aperture 102 in the shell 36. The shell 21 is provided with an aperture 103 of the same diameter as aperture 102 in precise radial registry therewith.

The beam emitted from the respective ion gun 22 passes through the annulus 101 and the aperture 103. Each aperture 38 in the cathode shell 36 is covered with a biasing screen indicated by the numeral 104 (FIGS. 14 and

15), this biasing screen 104 being secured in position by means of a first mounting ring 107 secured to the outside of the shell 36 in registry with the opening 38 and another ring 106 which clamps the screen 104 to the ring 105. The aperture 37 in the shell 21 is of a size equal to that of the aperture 38. The two rings 105 and 106 are firmly, conductively secured to the shell 36 by means of a series of circumferentially spaced screws 107.

Except where otherwise stated, the structure of FIG. 11 is fabricated of metal and primarily of stainless steel. The cathode shell 21 should be of a material which is photoelectric, and two suitable materials having the necessary properties are stainless steel and molybdenum. Other material obviously may be used without departing from the spirit and scope of this invention.

Inasmuch as the dimensions of the structure of FIG. 11 are relatively small in comparison with the operating voltages which are used, it is of course necessary to take the usual precautions in connection with preventing field emission and corona discharge. Suitable corona shields in various places are used as explained in some detail hereinabove, and all sharp edges, corners, points and the like, from which field emission could occur, are avoided.

The ion guns 22 and 22*a* are disposed in pairs which are diametrically opposite each other. Additionally, the axes of these opposite pairs are set to be coincident such that the ion beams emitted thereby will occupy essentially the same pencil-like space. This space passes through the fusor center 26.

The operation of the device of FIG. 11 is essentially as has already been described hereinbefore in connection with FIG. 9. To start with, all operating voltages are turned "Off" and a suitable vacuum pump 44 is connected to the interior of the anode shell 20. Referring to FIG. 11, such a vacuum pump is connected to an outlet port 108 in the cap 109 which seals the end of pipe section 52. Thus, gas inside the anode 20 as well as the cathode shells 21 and 36 may be evacuated therefrom, through the pipe sections 50 and 52, through webs in the disc 57 and out of the port 108.

The pump 44 is allowed to operate for a sufficient period of time and the fusor is otherwise outgassed so as to remove contaminates which could interfere with operation.

After outgassing and evacuating the fusor to a pressure of from 10^{-9} to 10^{-10} millimeters of mercury, a suitable fusion-reactive gas, such as deuterium, from gas sources 45 and 45*a* (FIGS. 9 and 11), is admitted to the ion guns 22 and 22*a* by adjustment of the valves 99. For this purpose, these valves 99 are opened just sufficiently to admit small quantities of gas which will raise the pressure to from 10^{-6} to 10^{-4} millimeters of mercury. However, just prior to admitting this gas to the ion guns, operating voltages are applied to the fusor as previously explained. In this connection, in order to have complete control of the fusor operation, it is desirable that all voltages be applied progressively starting from zero voltage. Initially, the voltage is applied to the terminals 91 and 92 for heating the filaments 97 of all of the ion guns 22 and 22*a*. Next, the voltages of ion gun power supplies 100 are increased progressively starting with zero voltage until a sufficiently high difference of potential is applied between the anodes 83 and the respective filaments 97 so as to ionize the fusion reactive gas that has been admitted and to form ion beams. Next, the power supply 25 is steadily increased in voltage until fusion reactions are noted. The detection of neutron counts by usual methods can serve as such an indication. The power supplies 100 are adjusted until a satisfactory degree of ionization as well as suitable intense and compact ion beams are obtained which are directed toward the fusor center 26. Instrumental in the formation and acceleration of these ion beams is, of course, the potential applied to the anode 20 and the cathode 21, 36.

The vacuum pump 44 connected to the port 108 may be kept operating continuously so as to maintain the neutral gas pressure within the fusor to suitably low levels, and, additionally, the gas valves 99 may be opened slightly or may be opened and closed intermittently for the purpose of supplying necessary quantities of fuel gas to the fusor in order to obtain the reactions desired. By adjusting the high voltage supply 25, the reaction rate can be changed. Similarly, adjustment of the ion gun anode voltage can affect the reaction rate. Increasing and reducing, selectively, the quantity of neutral gas admitted to the fusor also affects the reaction rate. Therefore, desired reaction rates may be controlled by adjustment of the various circuit and system parameters. A gas pressure of about 10^{-5} mm. Hg continuously maintained has been found suitable for producing fusion reactions.

As shown in FIG. 12, the switch 47 which is connected in series with the high voltage supply 25 is closed, and the neutron-producing reactions just described are obtained. If it is desired to obtain an electrical output from the fusor, it is only necessary to open the switch 47 to place the resistor 46 in series with the high voltage supply. As the reaction rate increases within the fusor and reaches a suitably high value, a reverse current is developed in the circuit of the anode 20 in the direction of the arrow Z adjacent to the resistor 46. This results in the development of a voltaged drop across the resistor 46. This reverse current Z will develop when the voltage generated on the anode 20 exceeds that of the supply 25. Once this self-sustaining operation is achieved by the generation of this anode voltage, the high voltage supply 25 may be taken out of the circuit by first disconnecting the battery and then providing a conductive or essentially short circuit in place of the supply 25. However, such a circuit change is not necessary if the supply 25 is adapted to conduct current in the reverse direction.

In order to form the poissor in the center of the cathode 21, 36, it is, as previously explained, necessary to have both ions and electrons. These ions are supplied primarily by the ion guns 22 and 22*a*. The electrons are in part provided by photoemission from the internal surface of the cathode shell 21. The ions from the ion guns 22 and 22*a* establish the initial virtual anode as previously explained in the central volume of the cathode shell 21. The poissor thereupon forms, as previously explained. Electron flow from the inside of the cathode shell 21 to the anode 20 is inhibited by reason of the fact that the cathode shell 36 is biased negatively with respect to the shell 21. This bias is supplied by the power supply 43 and is adjusted to a value at which the external anode 20 current is reduced to a desired minimum. The screens 104 over the openings 38 in the outer cathode shell 36 provide the desired equal potential surface which is more negative than the potential on the cathode shell 21. This inhibits the escape of electrons from the inside of the shell 21, thereby reducing losses due to the interception of such electrons by the anode 20. Also, the screens 104 prevent the positive field from the anode 20 from entering the apertures 37 of the cathode shell 21 and upsetting the spherical configuration of the equal potential surface therein, as previously explained.

The various aperture pairs 37 and 38 are arranged in diametric opposition for radial ion traversal. A cathode shell 21 and 36 construction of about 70% openness provides adequate ion permeability.

Alternative working embodiment

In FIGS. 22 through 26 is illustrated an alternative working embodiment wherein like numerals indicate like parts. Basically, the difference between this embodiment and the one just described and shown in FIG. 11 resides in the use of a single cathode shell assembly 21 instead of the double-shell arrangement 21 and 36 of FIG. 11. The construction of the fusor of FIG. 23 to the extent that it differs from the arrangement of FIG. 11 will be described in detail in the following.

The cathode shell **21** of FIG. 23 is mounted in concentric relation with respect to the anode **20** by means of the pedestal assembly *49a* which corresponds to the assembly **49** of the fusor of FIG. 11. This assembly *49a* includes a stainless steel or the like supporting tube *50a* secured at one end to the anode **20** as shown. An apertured disc **110** is perimetrically fastened inside the tube *50a* in the position shown and has secured thereto a ceramic post **111** which projects coaxially through the tube *50a* to a position just inside the anode **20**. The opposite end of the ceramic post **111** is secured to a mounting plate **112** suitably rigidly secured to the cathode shell **21**. All the parts just described are sufficiently strong and rigid to position securely the cathode **21** with respect to the anode **20**.

The left-hand end of the tube *50a* of FIG. 23 is adapted to have a vacuum pump connected thereto the same as has already been described in connection with the preceding embodiments.

The high voltage terminal assembly *72a* corresponds to the assembly **72** of FIG. 11. This assembly *72a* comprises a conductive tubular assembly *71a* capped at its right-hand end as shown in FIG. 23 with a bottle-like insulator **113** which is sealed in vacuum-tight relation to the tubular assembly *71a*. Extending coaxially through the assembly *71a* and the insulator **113** is a rod-like electrode **114** which corresponds to the tubular element **68** of FIGS. 11 and 12. The inner end *68a* of this electrode **114** has rigid conductors **115** connected to a mounting plate **116** secured to the cathode **21** as shown. The opposite end **117** of the electrode **114** penetrates in vacuum-sealed relation the re-entrant end wall portion **118** of the insulator **113** to have connected thereto the high voltage leads shown diagrammatically in FIG. 23. The parts *71a*, **113**, **114**, **115** and **116** are sufficiently strong and rigid as to assist in centering and securing the cathode **21** within the anode **20**. A suitable bellows structure **119** is incorporated within the assembly *71a* along with a threaded micrometer adjustment **120** for tilting the assembly *71a*, **113** slightly so as to position adjustably the cathode **21** within the anode **20**. The total support for the cathode is provided by the two assemblies *49a* and *71a*.

The cathode **21** itself may be made identical to the cathode **21** of FIG. 11, apertures **37** and **103** being provided therein. The biasing function of the outer shell **36** of FIG. 11, however, is performed by a biasing screen assembly shown in enlarged detail in FIG. 24 and identified generally by numeral **121**. This assembly includes an annular spacer **122** of stainless steel or the like which has secured to the underside thereof a fine mesh, conductive screen **123** which full covers the aperture **37**. Concentrically positioned on the peripheral portion of the screen **123** is an annular insulator **124** L-shaped in cross-section as shown. Seated on the insulator **124** is another spacer **125** of some suitable conductor such as stainless steel which has secured to the upper side thereof a second screen **126** like the other screen **123**. The screen **126** is arranged parallel to but is spaced from the screen **123** for performing the purposes previously explained in connection with the screens of FIGS. 14 and 15 which are attached to the outer cathode shell **36**.

Fitted over the spacer **125** is another annular insulator **127** of L-shaped cross-section which engages the main spacer **122** for holding the second spacer **125** in concentric position.

Superposed on and in engagement with the spacer **122** and the insulator **127** is a flat annular retaining ring **128** which clamps the parts **124**, **125** and **127** into assembly. An annular cap **129** fits over the retaining ring **128** as shown, and a plurality of circumferentially spaced screws **130** passing through the parts **129**, **128**, **122** clamp the latter together and secure the same to the cathode **21**.

A sleeve **131** of insulating material is radially secured within a companion aperture in the main spacer **122** as shown and receives therethrough a conductive connecting wire or lead **132**. This lead at its inner end is conductively connected to the spacer **125** by being clamped between the spacer **125** and the insulator **124** as shown. Each of the apertures **37** in the cathode **21** is provided with a biasing screen assembly **121** as just described and the leads **132** of all of these assemblies are connected together so that the biasing potentials applied to all of the screens **126** will be the same.

As in the fusor of FIG. 11, each of the cathode apertures **103** of the fusor of FIG. 23 is coaxially aligned with the beam axis of the respective ion guns **22** and *22a*. However, in each of the apertures **103** of the fusor of FIG. 23 is provided a biasing-electrode assembly shown in enlarged detail in FIG. 25. This assembly includes a tubular sleeve **133** of ceramic having an enlarged annular projection **134** thereon. The sleeve **133** intimately fits into the cathode opening **103** with the projection **134** seating against the outer cathode surface. A tubular metal insert or electrode **135** is snugly received by the sleeve **133** as shown and is provided with an end portion **136** which engages the bottom end of the sleeve **133** as shown. The upper end of the insert **135** is flared outwardly into a smoothly radiused flange **137** which overlaps the upper end of the sleeve **133**. A suitable wire-like conductor **138** is wrapped around the insert **135** between the flange **137** and the upper end of the sleeve **133**. This wire **138** is of such diameter as to have a wedging fit between the flange **137** and the sleeve **133** thereby locking the electrode **135** to the sleeve **133**. The assembly described thus far is finally secured to the cathode shell **21** by means of a clamping ring **139** fitted over the projection **134** and welded to the shell **21**.

Either as a part of the wire **138** or otherwise secured thereto is a connecting lead **140** for applying a biasing potential to the electrode **135**. As will now be apparent, this electrode **135** is insulated from the cathode **21**.

All of the ion-aperture assemblies as shown in FIG. 25 are interconnected by leads **140**. All of these leads **140** are interconnected with the leads **132** of the biasing screen assemblies **121** so that the electrodes **135** will have the same biasing potential applied thereto as the various screen **126**.

Biasing potential is connected to the biasing electrodes **135** (FIGS. 24 and 25) by means of the assembly shown in FIG. 26. This assembly includes an evacuated tubular housing, indicated generally by the numeral **141**, composed of tubular housing **142** of metal hermetically sealed at the inner end to anode **20** and at the outer end to a glass insulator **143** also of tubular configuration. Coaxially within the tubular housing **141** is a center conductor assembly composed of a metal tube **144** which is hermetically sealed at its outer end with a metallic plug **145**. A tubular conductor **146** is also sealed at one end to the plug **145** and receives on the other end a sleeve-like terminal **147** hermetically sealed at **148** to the conductor **146** and at the end **149** to the outer end of the insulator **143**. The space between the outer wall **142**, **143** and the conductor assembly **144**, **145**, **146** is vacuum-tight and in communication with the fusor interior. A metal cap **150** conductively carrying a sleeve-like contactor **151** telescopes over and conductively engages the terminal **147**. The cap **150** is molded into a protective rubber cover **152** which carries a conductive pin **153** connected at one end to the cap **150** and projects outwardly to a point at which a connection may be made to an external biasing circuit. This biasing circuit is indicated as being in the form of a battery **154** having its positive terminal connected to the cathode shell **21** and the negative terminal to the pin **153**.

A loop of spring wire indicated by the numeral **155** conductively engages the peripheral portions of one of the screens **126** and is formed by convoluting one end portion of a wire **156** which extends through the conductive tube **144**. This wire **156** is of such length that the upper end thereof engages the conductive plug **145** and

makes conductive contact therewith. The wire **156** is maintained in position within the tube **144** by means of a small metal ring **157** fitted into the end of the tube **144**. It will now be seen that by providing one of these assemblies **141** on the fusor of FIG. 23, biasing potential may be applied to all of the screens **126** and ion-aperture electrodes **135**.

Referring to the ion guns **22** and **22***a* of the fusor of FIG. 23, it should be noted that annular magnets **158** are provided thereon which encircle the sleeve elements **79**. These magnets **158** have one pole adjacent to the anode **20** and the other pole outwardly therefrom. They are positioned with respect to the anode **83** (FIG. 13) such as to lengthen the travel of the electrons emitted by the cathode **97** axially of the gun thereby increasing the probability of ionization by each electron. This provides an increase in ion generation over the electrostatic arrangement shown in FIG. 13. In all other respects, the ion guns **22** and **22***a* of FIG. 23 are like that shown and described in connection with FIG. 13.

The operation of a fusor of FIG. 23 is the same as that of the fusor of FIG. 11 in almost all respects. The same techniques and operating voltages are applied, and all of the voltages are made variable so as to provide convenient control of fusor operation. As in the case of the fusor of FIG. 11, the bias on the screens **126** and the electrodes **135** and supplied by the battery **154**, for example, is adjusted to a value at which the external anode circuit current is reduced to a desired minimum. The screens **126** over the openings **37** in the cathode shell **21** provide the desired equipotential surface which is more negative than the potential on the cathode shell **21** as well as the inner screens **123**. This inhibits the escape of electrons from the inside of the shell **21** thereby reducing losses due to the interception of such electrons by the anode **20**. Also, the screens **126** prevent the positive field from the anode **20** from entering the apertures **37** and disturbing the spherical configuration of the poissor therein, as explained previously.

The electrodes **135** form the same biasing function, these being more negative than the cathode shell **21**, thereby setting up equipotential surfaces which inhibit the outward flow of electrons from the interior of the cathode shell **21**.

Alternative ion gun

In FIGS. 27 through 29 is illustrated an alternative ion gun **22***b* which may be substituted for the guns **22** and **22***a* of the preceding embodiments. Comparing this gun **22***b* with the one of FIG. 13, like numerals will indicate like parts. Instead of providing a cap such as **89** in FIG. 13 for sealing off the end of the gun, a ring flange **89***a*, like the flange **87**, is used for mounting one end of a tubular anode extension, indicated by the numeral **159**. The outer end of this extension **159** is hermetically sealed by means of a cap structure **160**. Thus, it will be noted that the body or envelope of the gun **22***b* which includes the parts **79** and **159** is considerably longer than the bodies of the guns **22** and **22***a*.

Carried by the wire conductor **93** of the terminal **90** is a tubular electrode **161** which corresponds to some extent to a control grid in an ordinary vacuum tube. This sleeve **161** is secured to the conductor **93** and additionally has a conductive connection **162** to one of the filament leads **94**. The filament **97** as well as the electrode **161** are biased negatively by means of a battery **163**, the negative terminal being connected to the conductor **93** and the positive terminal to the body of the gun **22***b*. This body **79**, **159** constitutes a conductive extension of the anode **20** such that it is operated at the same potential as the anode **20**. Surrounding the anode extension **159** is a series of bar magnets **164** arranged with the longitudinal axis thereof parallel to the axis **165** of the gun **22***b*. Supporting these bar magnets **164** are two axially spaced mounting rings **166** and **167**, these rings being made of iron or some equally suitable, highly magnetic material. A band **167***a* clamps these magnets onto rings **166** and **167** and retains them in assembly. There are six such magnets used in the arrangement of FIG. 27 as shown more clearly in FIG. 28; however, either a greater or fewer number may be used without departing from the scope of this invention.

In operating the guns **22***b*, the same conditions of fusor operation as explained previously are observed. More specifically, with respect to the gun **22***b*, a suitable filament voltage is applied to the filament **97** for the generation of ionizing electrons. Since the filament **97** is substantially contained within the length of the electrode **161**, the electrons in order to travel to the anode **159** must move axially of the gun. By reason of the focusing influence of the magnets **164**, the electrons will be directed rightwardly as viewed in FIG. 27 in a spiral path until they are eventually collected by the right-hand end portion of the anode **159**. Fusion-reactive gas admitted to the gun via the fitting **98** will be ionized by these electrons, such ions thereupon coming under the influence of the more negative electrode **161** as well as the fusor cathode **21**. The ions eventually are accelerated through the aperture **82** and form into beams which travel paths intersecting the tube center **26**.

Higher ion currents may be obtained from the ion guns **22***b* than those of FIG. 11 inasmuch as the ionizing electrons emitted from the filament **97** (FIG. 27) are accelerated through longer paths before interception by the anode; hence, they have a greater probability of producing ions before being intercepted.

In the following are given dimensions and values for system and circuit parameters for the embodiment of this invention as shown in FIG. 23, these being given by way of illustration only and not by way of limitation.

Dimensions

Internal diameter of anode shell **20** ____inches__	6
Thickness of anode shell **20** _____do____	0.093
Anode **20** material _____	[1] 304
Internal diameter of cathode shell **21** ____inches__	4.38
Thickness of shell **21** _____do____	0.060
Cathode **21** material _____	[1] 304
Size of openings **37** _____inches diameter__	1.75
Size of openings **103** _____do____	0.625
Inner diameter of rings **124**, **125**, **127** ____inches__	1.500
Size of screens **123** and **126** _____mesh__	[2] 15
Spacing between screens **123** and **126** _____inch__	0.140
Overall height of assembly **121** radially beyond cathode **21** _____inch__	0.320
Inner diameter of electrode **135** _____do____	0.437
Length of electrode **135** _____do____	0.500
Distance electrode **135** projects radially outwardly from cathode **21** _____inch__	0.312
Size of opening **80** _____do____	1.125
Outer diameter of sleeve **79** _____do____	1.500
Inner diameter of aperture **82** _____do____	0.500
Internal axial length of gun **22**, **22***a* _____do____	2.875
Length of anode **84** _____do____	1.000
Minimum inner diameter of anode **84** ____do____	0.625
Maximum inner diameter of anode **84** ____do____	0.825
Spacing of filament **97** from the adjacent end of anode **84** _____inch__	0.125
Space between anode **84** and sleeve **79** ____do____	0.187
Thickness of aperture ring **81** _____do____	0.375
Distance between ring **81** and anode **84** ___do____	0.500

[1] Stainless steel.
[2] Woven tungsten.

For a neutron count of 10^9, the following operating parameters for the fusor of FIG. 23 may be used as an approximation. Adjustments of voltages and dimensions may be required for obtaining this precise count.

Fusion-reactive gas	Deuterium and tritium, equal portions.
Neutral gas pressure in fusor	2 microns.
Anode **20** circuit current	30 milliamperes.
Anode **20** applied voltage	100 kilvolts.
Voltage of supply **100** as applied to the anode **84**	250 volts.
Voltage applied to the filament **97**	6 volts.
Filament **97** current	7 amperes.
Bias voltage on screens **126**	500 volts.

A viewing port assembly **168** is attached to the anode **20** as shown in FIG. 27 for the purpose of permitting observation, either directly or indirectly by means of closed circuit television equipment, of the reaction which occurs in the center, the outer end of the assembly **168** being vacuum sealed by reason of a window **169**.

While there have been described above the principles of this invention in connection with specific apparatus, it is to be clearly understood that this description is made only by way of example and not as a limitation to the scope of the invention.

What is claimed is:

1. In a device for producing nuclear reactions, anode means, cathode means inside said anode means, said cathode means defining a volume centrally located with respect to both said anode and cathode means, said volume being free of tangible structure, said cathode means being open to the flow of gaseous particles therethrough, a fusion-reactive gas within said volume, means supplying a potential between said cathode and anode means for establishing an electric field therebetween, means including said cathode and anode means and said potential-supplying means for accelerating ions of said gas to fusion-reacting energies along converging radial paths in said volume, and means for inhibiting flow of electrons from said volume to said anode means, said inhibiting means including means for biasing the open portions of cathode means more negatively than the cathode means itself.

2. The device of claim **1** wherein said volume is substantially spherical in shape and said paths have a common intersection in the central portion of said volume, and further including means maintaining said gas at sub-atmospheric pressure.

3. The device of claim **1**, said cathode means being a generally spherically shaped metallic shell having a plurality of openings therein.

4. The device of claim **3** wherein said anode means is a generally spherically shaped metallic shell concentrically surrounding said cathode shell, said inhibiting means including a plurality of biasing electrodes, one electrode for each opening, said biasing electrodes having portions peripherally coextensive with said openings, respectively, and means for applying biasing potential to said biasing electrodes for establishing said equipotential surfaces.

5. The device of claim **4**, including means connected to said anode shell for generating and injecting charge-particles into the space between said cathode and anode means, the magnitude of said electric field being adequate to direct at least a portion of said charge-particles through at least a portion of said openings and into said volume.

6. The device of claim **4**, including a plurality of ion guns carried by said anode shell in radial alignment with respective ones of said openings, means including said ion guns for directing ions through said openings and into said volume, whereby ions from said guns may be projected toward the opposite side of said anode shell.

7. The device of claim **6** wherein the first openings diametrically aligned with said ion guns, respectively, are free of structure and the remaining second openings are covered with biasing screens, respectively, means insulating said screens from the cathode shell next adjacent to said volume, the biasing electrodes for said first openings including annular elements coaxially fitted into the respective cathode shell openings, said annular elements being insulated from said cathode shell.

8. The device of claim **7** wherein each of said second openings is covered with two screens, the first of said screens being conductively mounted on said cathode shell, each second opening further having an annular insulating device coaxially surrounding the same and operatively mounted on the outer side of said cathode shell, each insulating device having a second of said screens mounted thereon spaced from the first screen, and connections to said second screens for biasing the same negatively with respect to said cathode shell.

9. The device of claim **6**, wherein the means for maintaining said gas at sub-atmospheric pressure includes a supply of neutral fusion-reactive gas connected to said ion guns and also means for controlling the pressure of said gas as admitted to said ion guns in the range of from 10^{-3} to 10^{-8} millimeters of mercury, said ion guns and said anode shell being hermetically sealed and in communication with each other, said controlling means including a vacuum pump for exhausting gas from within the space of said anode shell.

10. The device of claim **2**, said anode means incudling a generally spherical anode shell, said cathode means including two generally spherical concentric cathode shells spaced apart a predetermined distance, said two cathode shells having a plurality of openings therein which are in radial registry, said cathode shells being concentric with respect to said anode shell, means for biasing the outer one of said cathode shells more negative than the inner one.

11. The device of claim **10**, including means connected to said anode shell for generating and injecting charge-particles into the space between said cathode and anode shells, the magnitude of said electric field being adequate to direct at least a portion of said charge-particles through at least a portion of said openings and into said volume.

12. The device of claim **11**, including a plurality of ion guns carried by said anode shell in radial alignment with respective ones of said openings, means including said ion guns for directing ions through said openings and into said volume, whereby ions from said guns may be projected toward the opposite side of said anode shell.

13. The device of claim **12**, wherein the first openings diametrically are free of structure and the remaining second openings of the outer cathode shell are covered with biasing screens, respectively, said screens being conductively secured to said outer cathode shell, said means for maintaining said gas at sub-atmospheric pressure includes a supply of neutral fusion-reactive gas connected to said ion guns and also means for controlling the pressure of said gas admitted to said guns in the range of from 10^{-3} to 10^{-8} millimeters of mercury, said ion guns and said anode shell being hermetically sealed and in communication with each other, said controlling means including a vacuum pump for exhausting gas from within the space of said anode shell.

14. The device of claim **13** including means connected to said anode means for coupling electrical power therefrom.

15. In a device for producing nuclear reactions comprising anode means, cathode means inside said anode means, said cathode means defining a volume free of tangible structure, a fusion-reactive gas within said volume, said cathode means having openings for the traversal therethrough of charge-particles, means including said anode and cathode means and ions of said gas forming a space charge in the central portion of said volume, said space charge including electrons and ions of said gas so distributed as to produce a substantially spherical electric field which confines target ions in a point-like region in said central portion and oscillates projectile ions through said region at nuclear reacting energies, whereby fusion

reactions result from collisions between said projectile ions and between said projectile ions and target ions, and means for biasing the openings in said cathode means negatively with respect to said cathode means for inhibiting the flow of electrons from the volume inside said cathode means to said anode means.

16. The device of claim **15** wherein said space charge is arranged in a configuration which provides a spherical virtual anode concentrically surrounding a spherical virtual cathode, said cathode means including a generally spherical shell concentrically surrounding said virtual anode thereby providing an electric field therebetween which exerts a force outwardly on a positively charged particle in a direction radially toward said cathode means, the potential of said virtual anode being of a magnitude which propels ions inwardly and oscillates them as projectiles through said virtual cathode at nuclear-reacting energies, whereby collisions of ions in the region of said virtual cathode produces nuclear reactions.

17. The device of claim **15** wherein said gas is of a composition that reactant products of fusion include positively charged particles which are propelled outwardly against the field of said anode means with sufficient energy to transfer the charges thereof to said anode means thereby generating electrical power, and circuit means connected to said anode means for coupling the generated electrical power therefrom to a utilization device.

18. The device of claim **17** wherein said anode means includes a generally spherical conductive anode shell, said cathode means includes a generally spherical conductive cathode shell concentrically positioned inside said anode shell, said cathode shell having said openings therein, said positively charged particles passing through said openings in transit from said volume toward said anode shell, and said circuit means including a load impedance connected in series between said anode and cathode means whereby said generated electrical power may be coupled from said impedance to a utilization device.

19. The device of claim **17** wherein said space charge-forming means includes a power supply connected to said anode and cathode means for applying an operating voltage thereto; the value of said operating voltage, the composition of said gas and the number of gaseous particles within said volume being so related that the fusion reactions are self-sustaining and contribute more power to said circuit means than is consumed in initiating such reactions.

References Cited

UNITED STATES PATENTS

3,258,402 6/1966 Farnsworth ---------- 176—1

REUBEN EPSTEIN, *Primary Examiner.*

ATMOSPHERIC ELECTRICITY ON EARTH AND PLANETS

J.J. BERTHELIER, LATMOS/IPSL

9th International Planetary Probe Workshop, Toulouse, June 16-17, 2012.

OUTLINE (1)

TERRESTRIAL ATMOSPHERIC ELECTRICITY

1- THE GLOBAL ATMOSPHERIC CIRCUIT

- The Conductive Atmosphere and Boundaries
- Generators
- Coupling with outer space

2- PHYSICAL PROCESSES

- Charging/Discharging Mechanisms in Clouds and Thunderstorms
- High Altitude Phenomena: Transient Luminous Events
- Acceleration Processes: Transient Gamma Ray Flashes
- EM emissions and Schumann resonances

PLANETARY ATMOSPHERIC ELECTRICITY

1- PLANETARY GLOBAL ELECTRICAL CIRCUITS

- Terrestrial Planets: Venus, Mars
- Giant Planets: Jupiter, Saturn and their moons

2- OBSERVATIONS

OUTLINE (2)

INSTRUMENTATION

1- MEASUREMENT CONDITIONS

- Ground Based Observations
- Observations from Space
- Balloons

2- MEASUREMENTS TECHNIQUES

- Conductivity
- Electric Fields and Waves

3- SOME EXAMPLES

THE EARTH'S GLOBAL ATMOSPHERIC ELECTRIC CIRCUIT

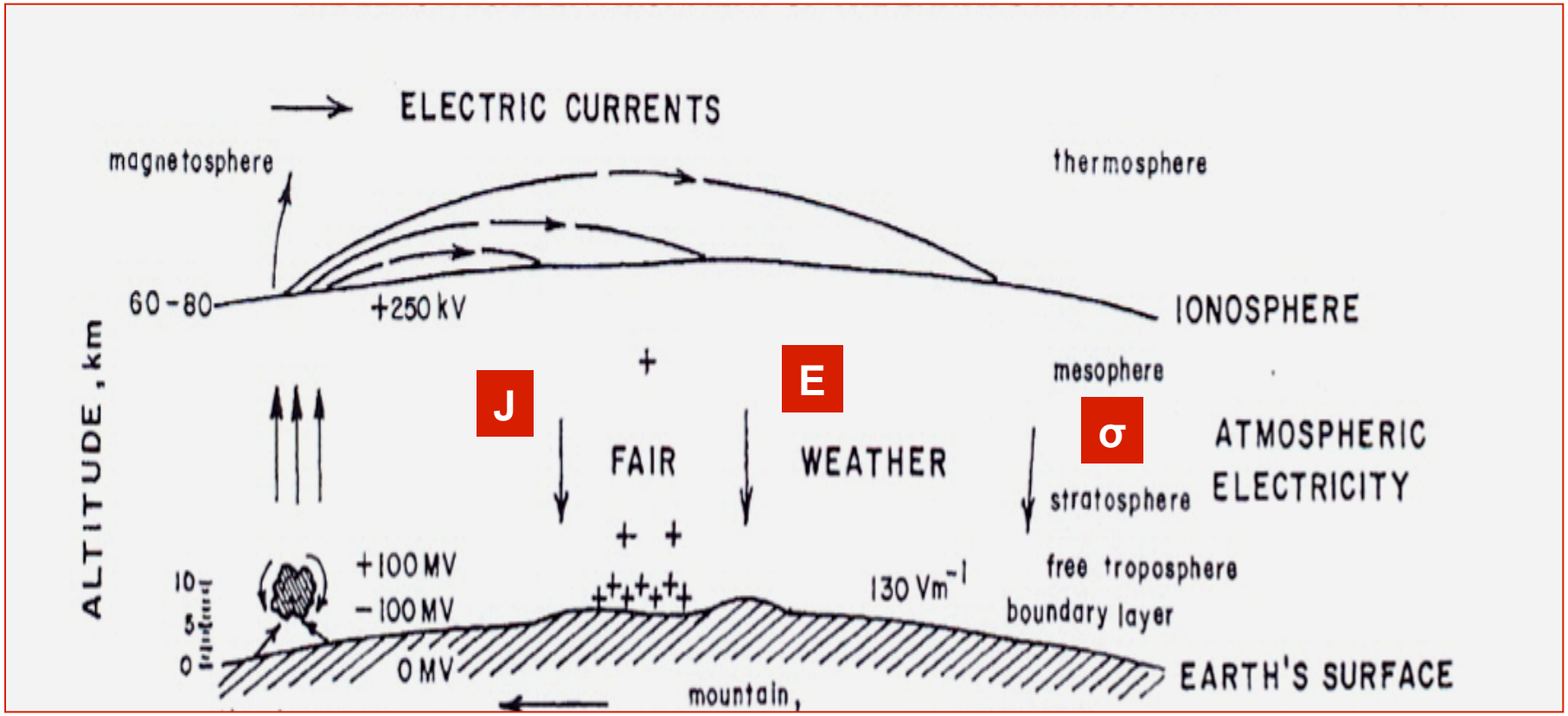

From M.J. Rycroft et al., JASTP, 2000

ATMOSPHERIC CONDUCTIVITY

Production Mechanisms

- Soil radioactivity at low altitude
- Cosmic rays
- Solar sources: UV, X-rays,
- auroral and polar regions: magnetospheric electrons, solar protons

Charged Particles

-Positive and Negative cluster ions

Conductivity profile

- 10^{-14} S/m at ground, scale height H_σ~ atmospheric scale height ~ 6-7 km
- Isotropic till ~ 70 km, anisotropic in the ionosphere σ// >> σ Hall, σPedersen
- day/night and latitude variations

ATMOSPHERIC CONDUCTIVITY

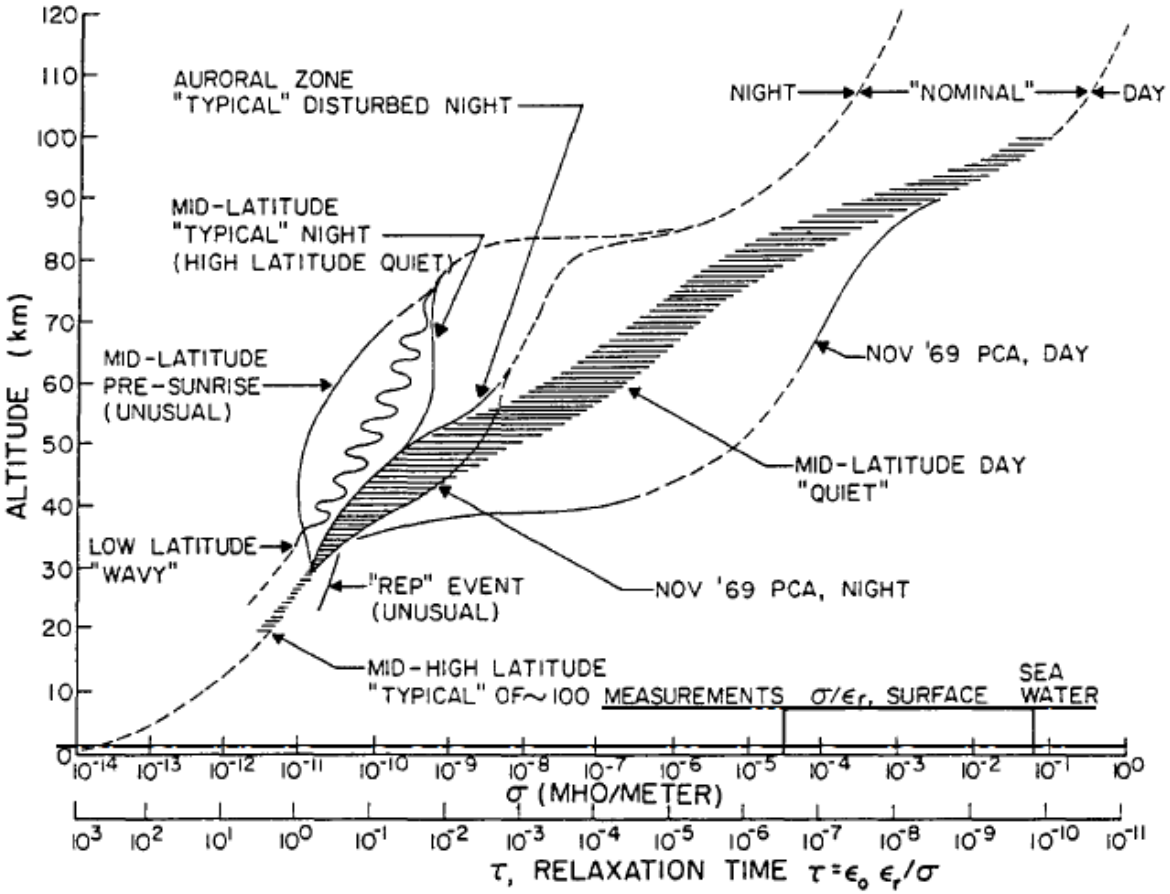

Fig. 3. Total conductivity and corresponding relaxation time under a variety of conditions.

JASR 4:4-H

From Hale, ASR, 1984

GENERATORS, THUNDERSTORMS

CHARGING MECHANISMS

Convective air motion in thunderstorm clouds, temperature profile

Collisional Charging between graupels and rain drops

Electrical structure of Thunderstorm clouds

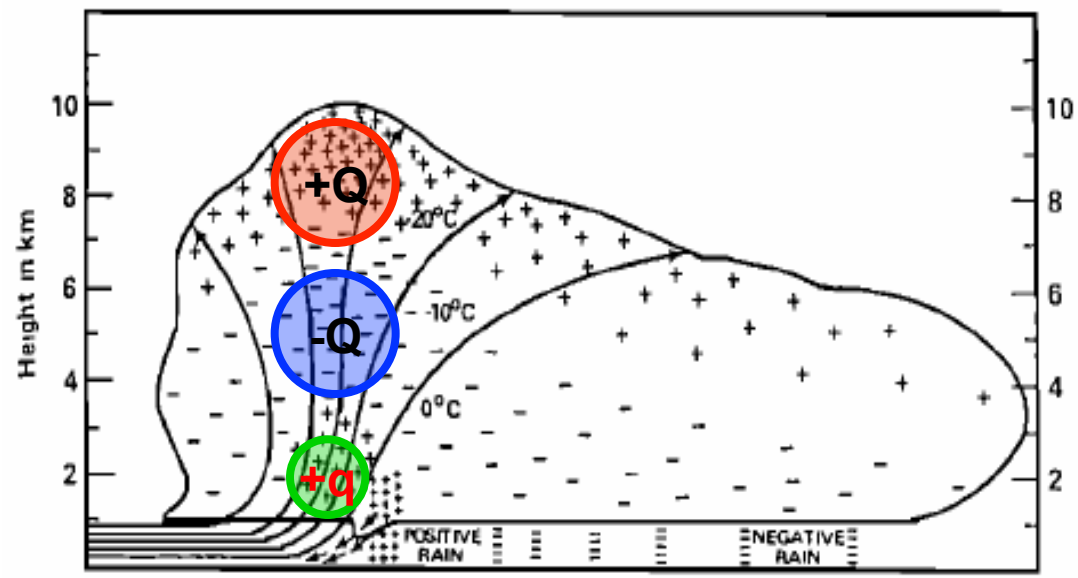

Fig. 1. Illustration of the tripole structure of thunderclouds based on in situ measurements by *Simpson and Scrase* [1937].

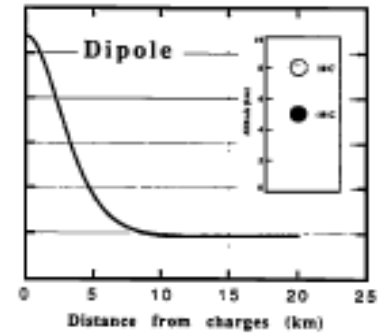

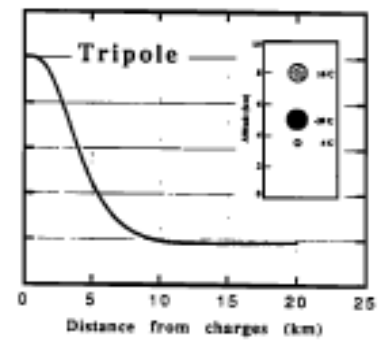

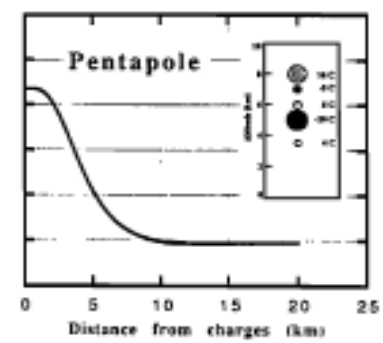

he electric field at the ground beneath three differ
rations. The distributions are shown in the inset box
tion is net neutral. For each distribution the elect
ound changes polarity at a horizontal distance of ab

From Marshall & Rust, JGR, 1991

GENERATORS, LIGHTNING

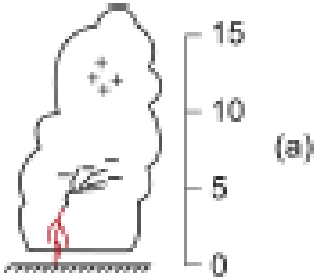

Negative Cloud to Ground, CG-

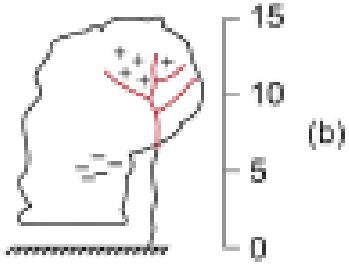

Positive Cloud to Ground, CG+

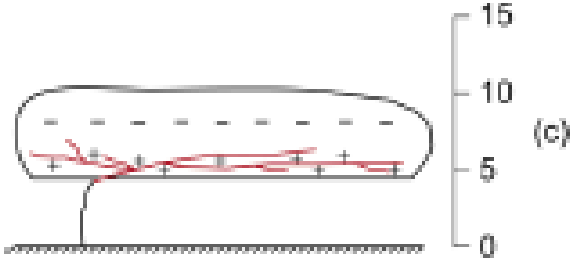

Intracloud IC

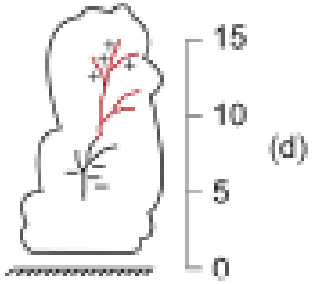

Cloud to Cloud CC

GENERATORS, LIGHTNING

Geographic Average Distribution

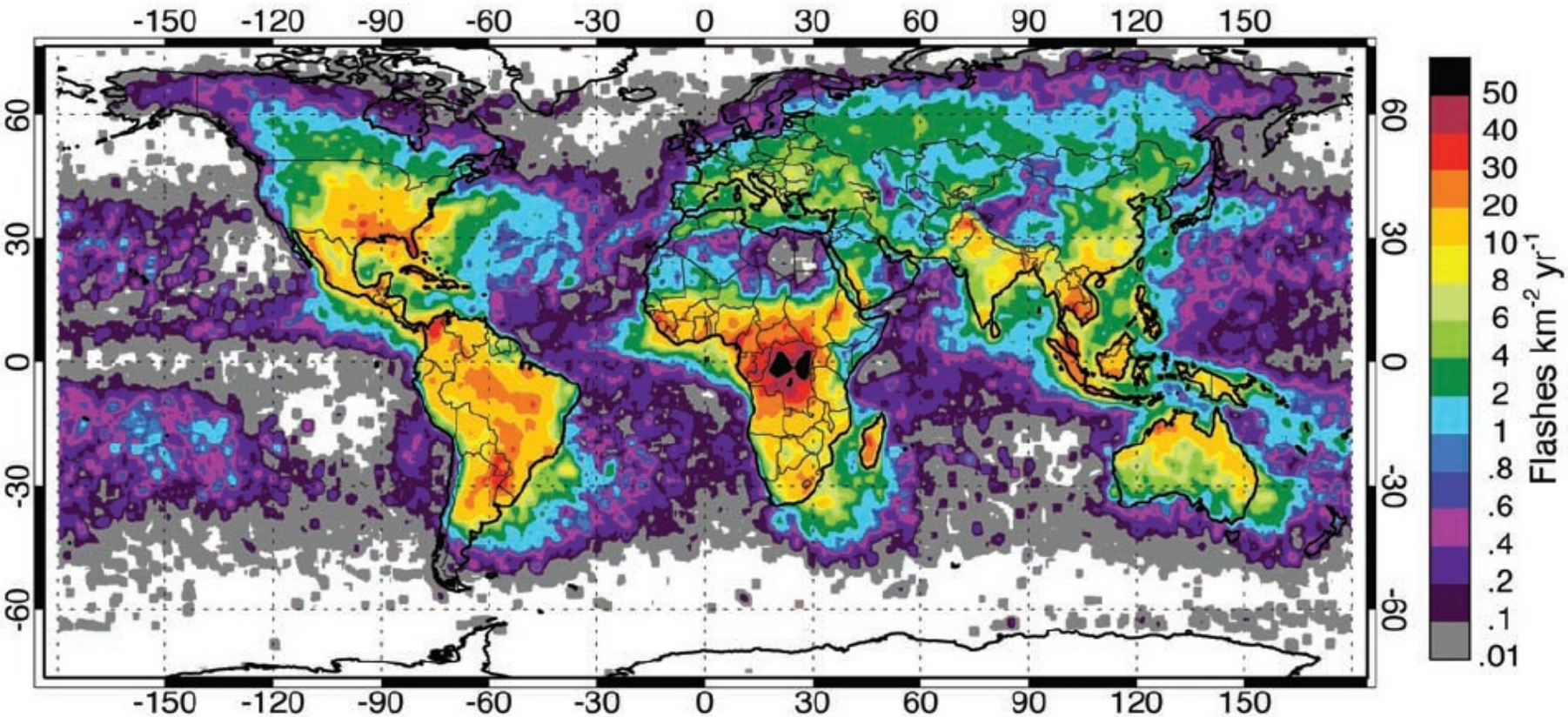

Figure 4. The annualized distribution of total lightning activity (in units of fl km^{-2} yr^{-1}).

From Christian et al, JGR 2003

GENERATORS, LIGHTNING

SEASONAL VARIATIONS

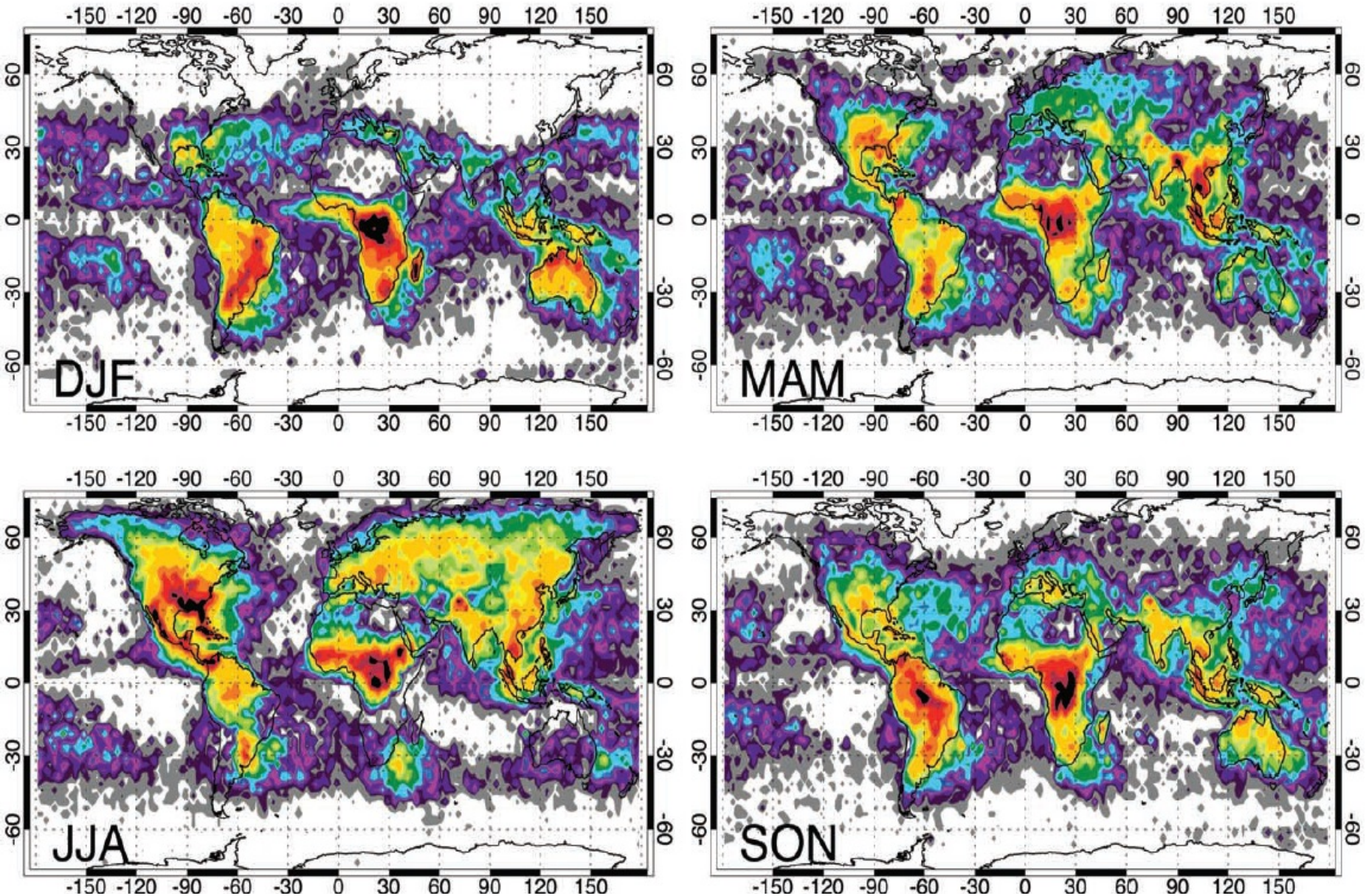

GENERATORS, HIGH ALTITUDE DISCHARGES, TLE's

PHYSICAL PROCESSES

TLE's (Sprites, Blue Jets, Elves, Gigantic jets) are electrical discharges in the stratosphere and mesosphere above active thunderstorm clouds

Sprites

Large Electric Field between cloud and ionosphere following a +CG

Break-down threshold reached at ~ 70 km

Elves

Initiated from the EMP following a CG

Ionization and luminous halo produced in the mesosphere at ~ 90 km

Blue Jets and Gigantic Jets

Streamer initiated at cloud top (~ 15-18 km) by localized intensification of the electric field

Propagate up to ~40 km for BJ, ~ 70 km or GJ

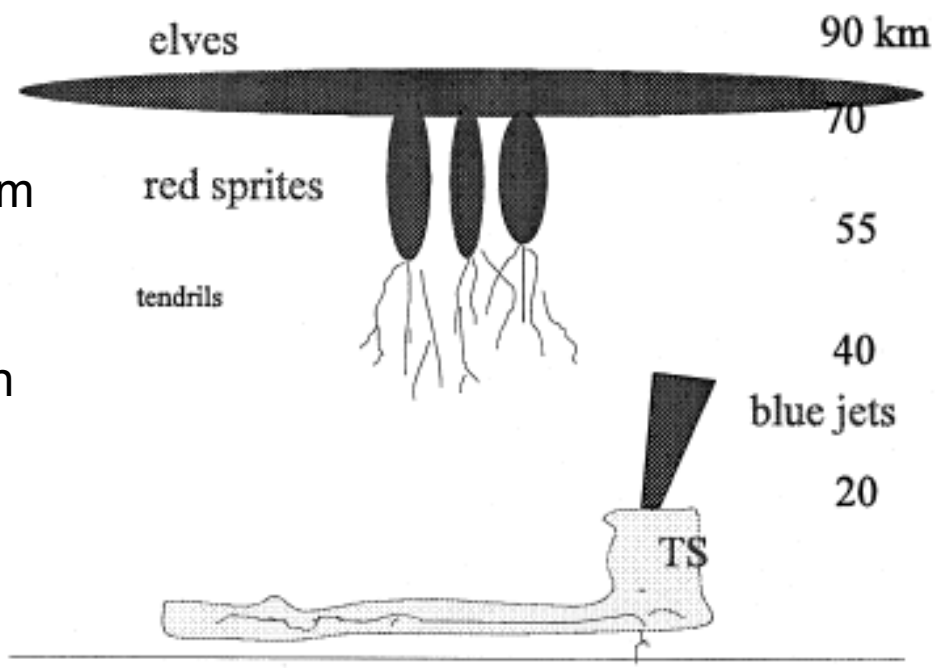

GENERATORS, HIGH ALTITUDE DISCHARGES, TLE's

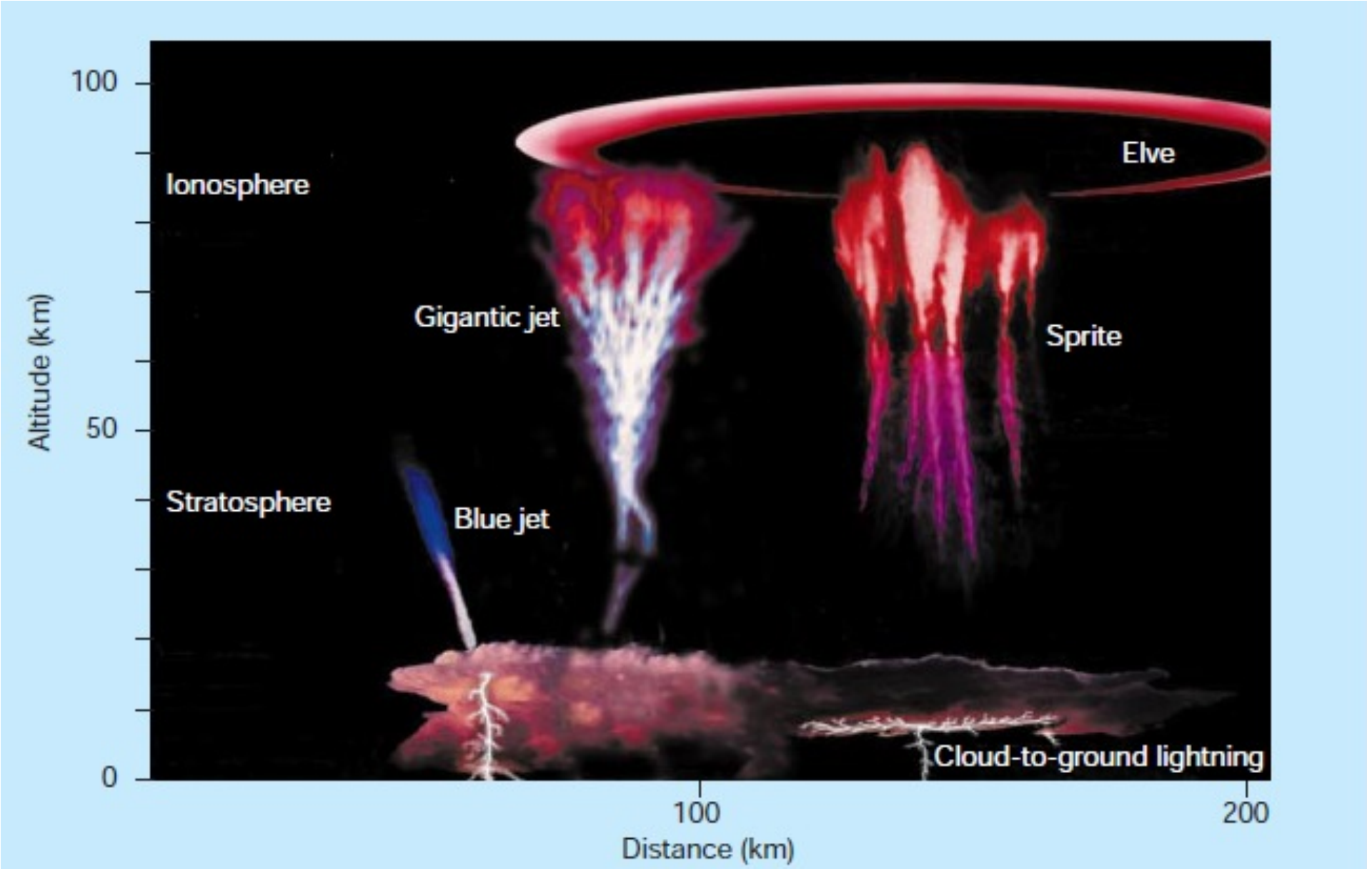

GENERATORS, HIGH ALTITUDE DISCHARGES, TLE's

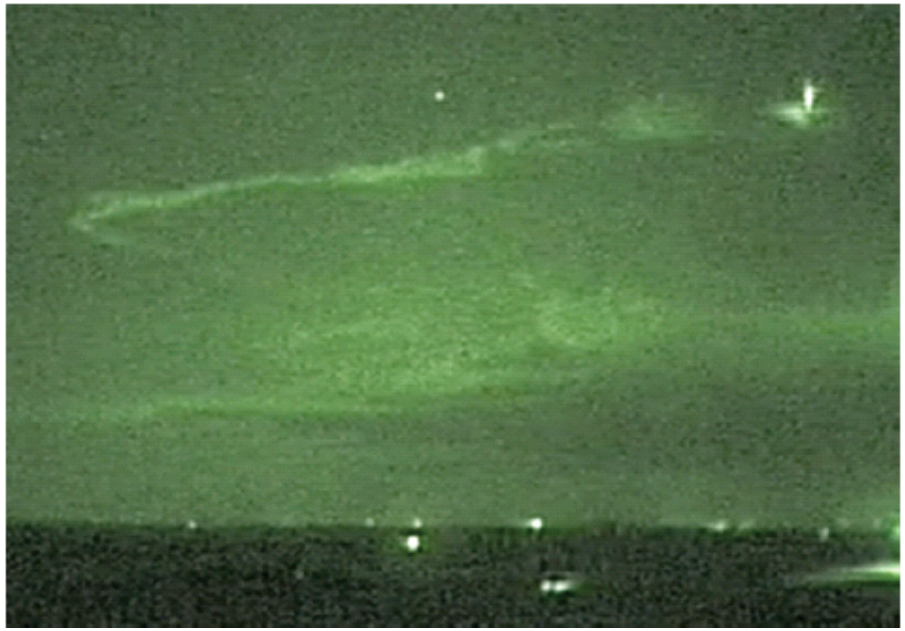

ACCELERATION PROCESSES, TGF

PHYSICAL PROCESSES

Acceleration of Electrons up to ~ 100 MeV

- **Relativistic Runaway Electron Avalanche from cosmic ray generated electrons initially proposed. But**
  (i) cosmic ray showers not a sufficient electron source
  (ii) RREA cannot account for the intensity of TGF fluxes.
- **Two mechanisms recently proposed (Dwyer2007, 2008):**
  - **Relativistic Feedback mechanism from backward propagating positrons and scattered X,γ rays**
- **Runaway Electron production in large E-fields reproduces the duration and intensity of TGF**

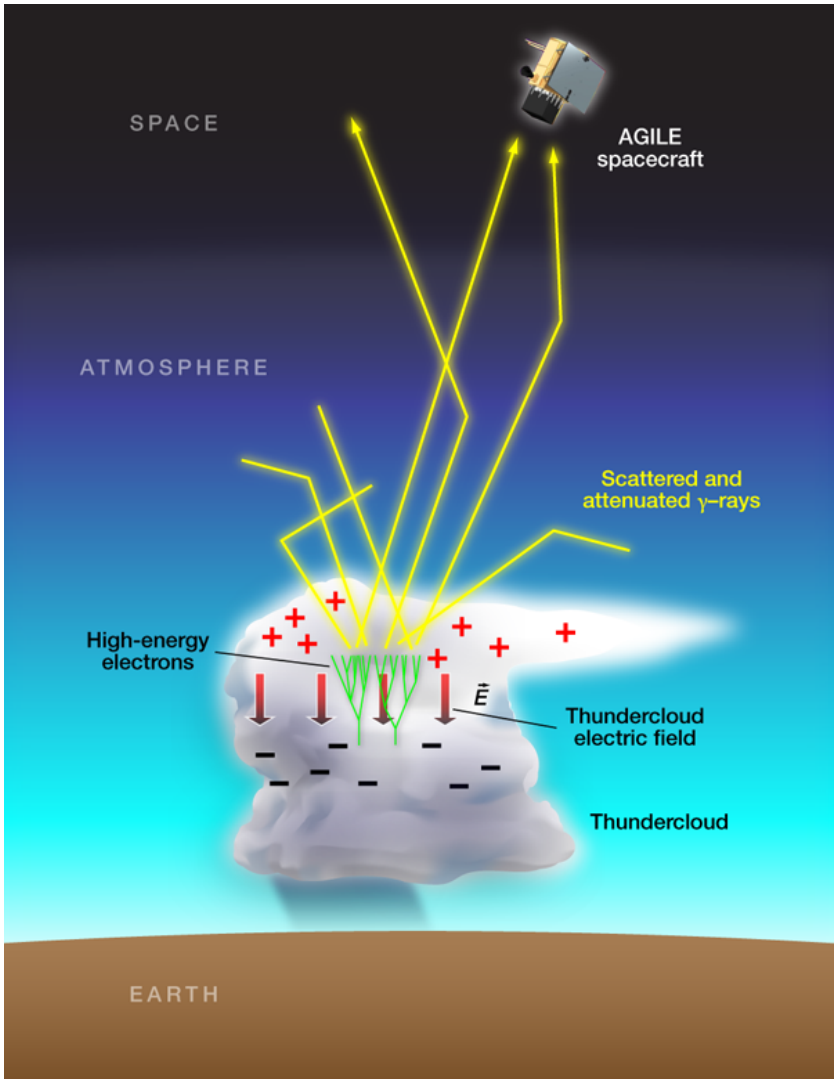

From Dwyer, 2011

ACCELERATION PROCESSES, TGF

Simulation/Observations comparisons

Electron fluxes:

RHESSI data (black dots)

Simulated fluxes (red curve)

(Dwyer, JGR, 2008)

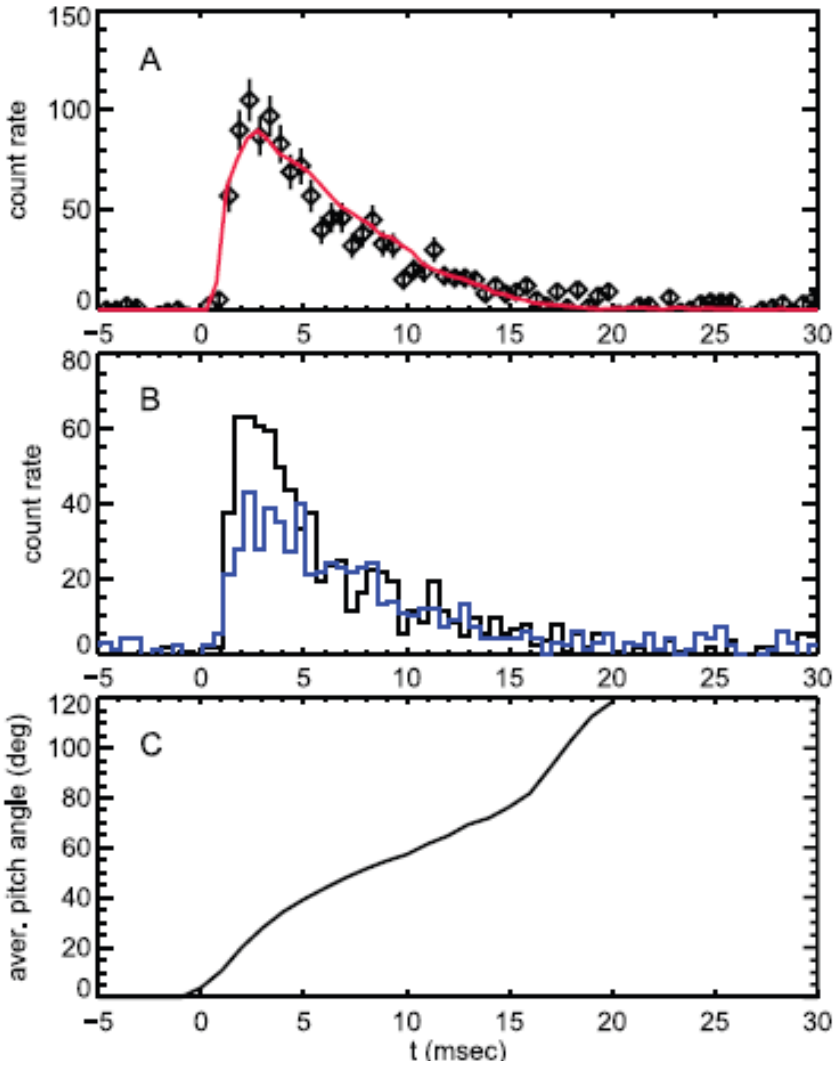

ELECTRO-MAGNETIC EMISSIONS

Sferics

- frequency spectrum peaked at ~ 10 kHz, extends up to a few MHz

Whistlers

- Ionospheric propagation along Earth's magnetic field and ducts at ELF/VLF

Transverse Resonance

- Between the surface and the lower ionosphere, ~ 1.5 to 3 kHz

Schumann Resonances

-Resonant modes of the Earth-Ionosphere wave guide $\omega \sim [n(n+1)]^{1/2}\,(c/R)$

- frequencies 7.8, 14.3, 20.8, 27.3, 33.8, …

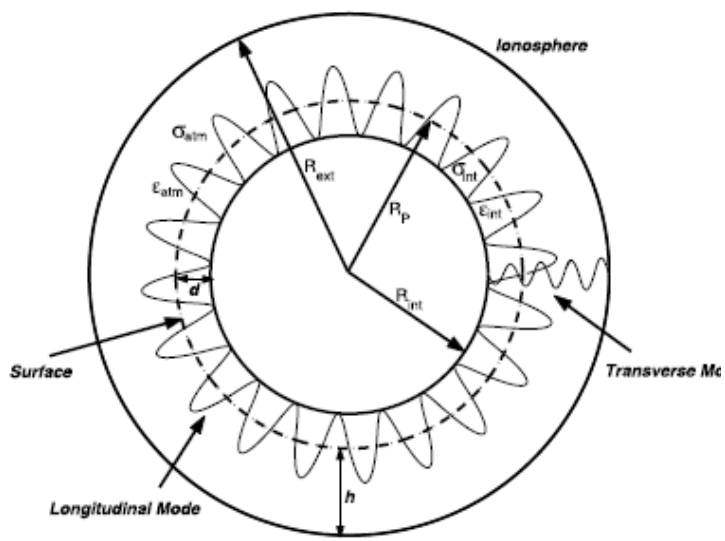

COUPLING WITH OUTER SPACE

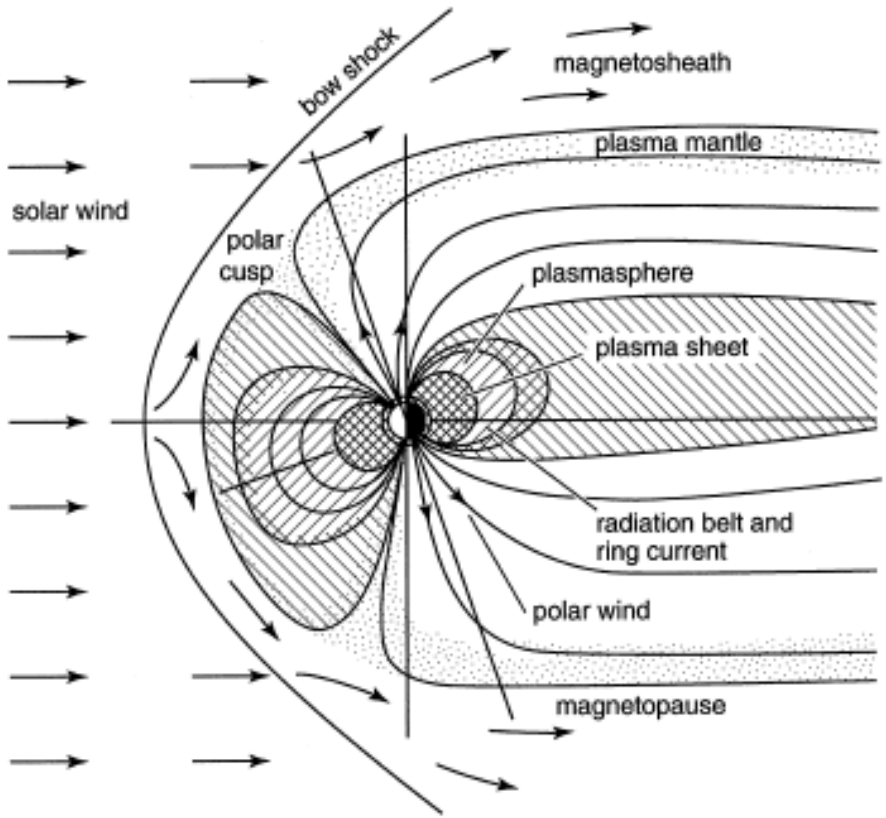

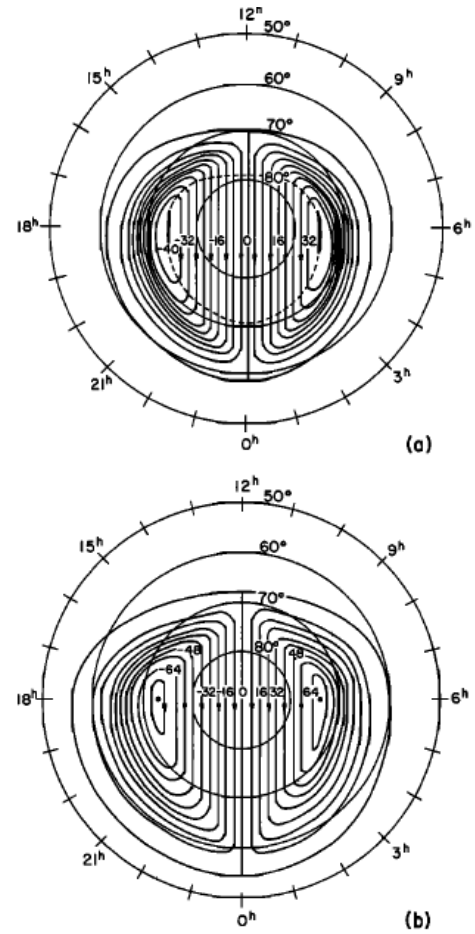

COUPLING WITH OUTER SPACE

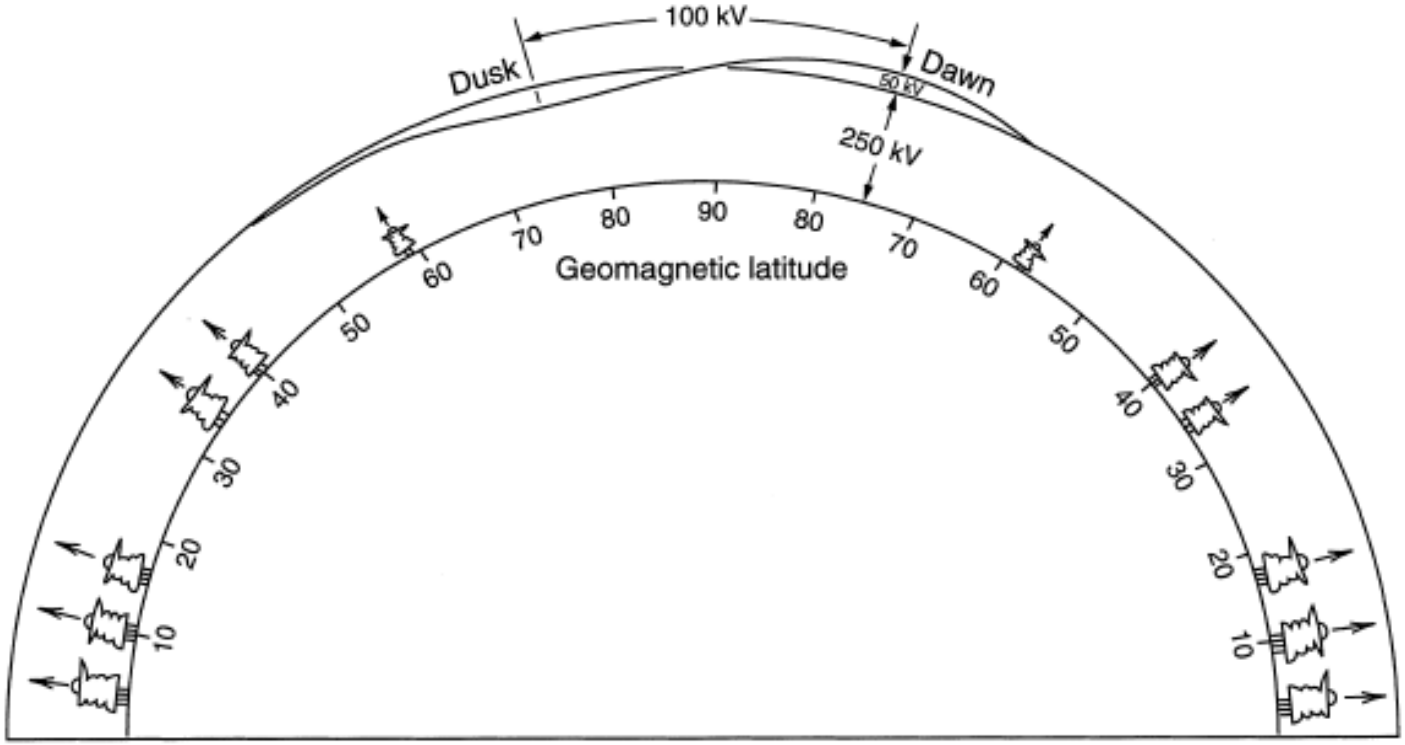

From Rycroft, 2011

PLANETARY ATMOSPHERIC ELECTRICITY

CONDITIONS FOR A GLOBAL ELECTRICAL CIRCUIT ON OTHER PLANETS

	Ion mobility in lower atmosphere	Upper Conductive Boundary	Lower Conductive Boundary	Clouds	Electrification Mechanisms
Venus	yes	Ionosphere	Yes σ_g small	yes	Charge separation Lightning
Mars	yes	Ionosphere	σ_g? Water reservoirs?	Faint, high altitude	Dust impact
Jupiter	Probably not in deep atmosphere	Ionosphere	? Deep layers?	yes	Charge separation lightning
Saturn	Probably not in deep atmosphere	Ionosphere	? Deep layers?	yes	Charge separation Lightning
Titan	Yes, weak at low altitude	Ionosphere	Buried ocean	yes	? Lightning not observed

VENUS

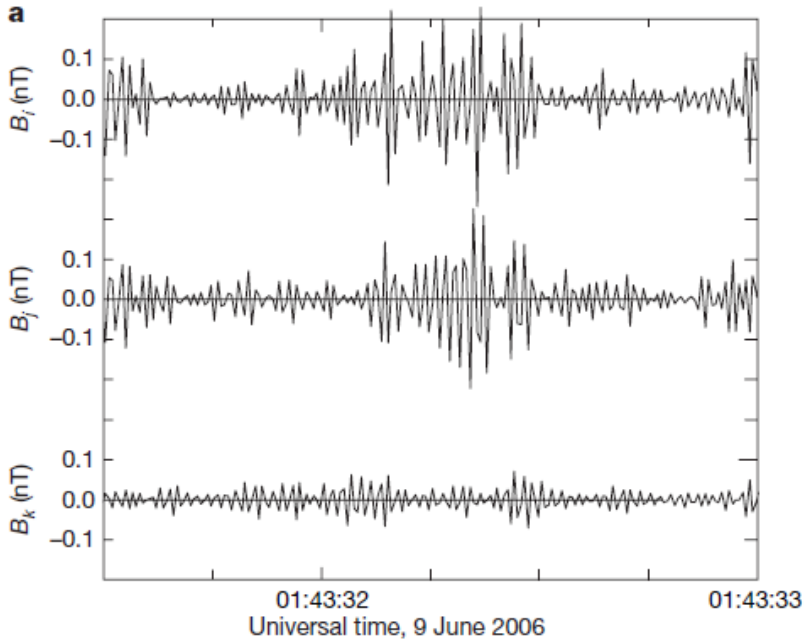

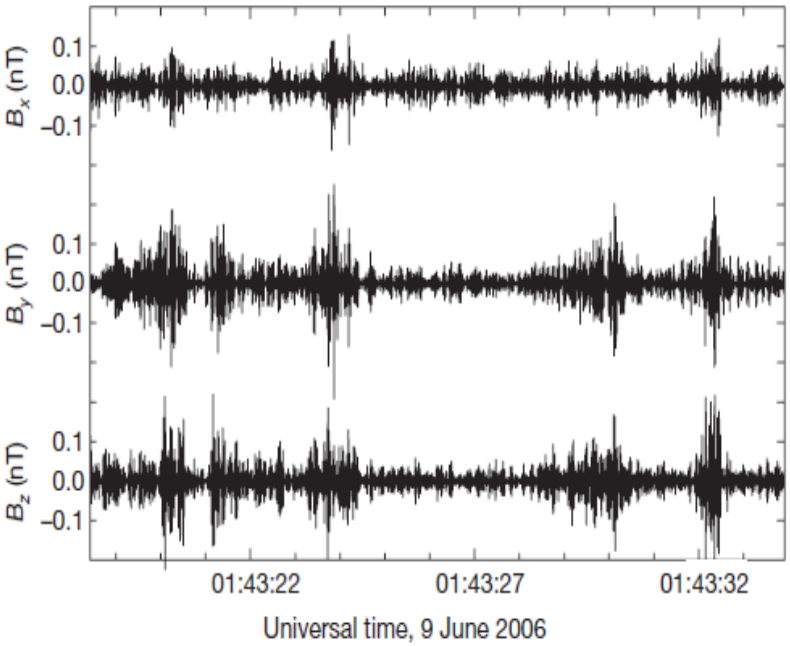

Whistler mode ELF signals from the Venus Express magnetometer
Indicating the existence of lightning

Russel et al., ASR 2008

MARS

Conductivity
- profile similar to Earth
- σ at surface ~ 10^3 σ on Earth

Electrification Mechanism
- Dust Impact
- Charge depends on size, material
- Breakdown at ~ 10 kV/m

Generators
- Dust storms
- Dust Devils

Observations
-SR of extremely high amplitude (?)

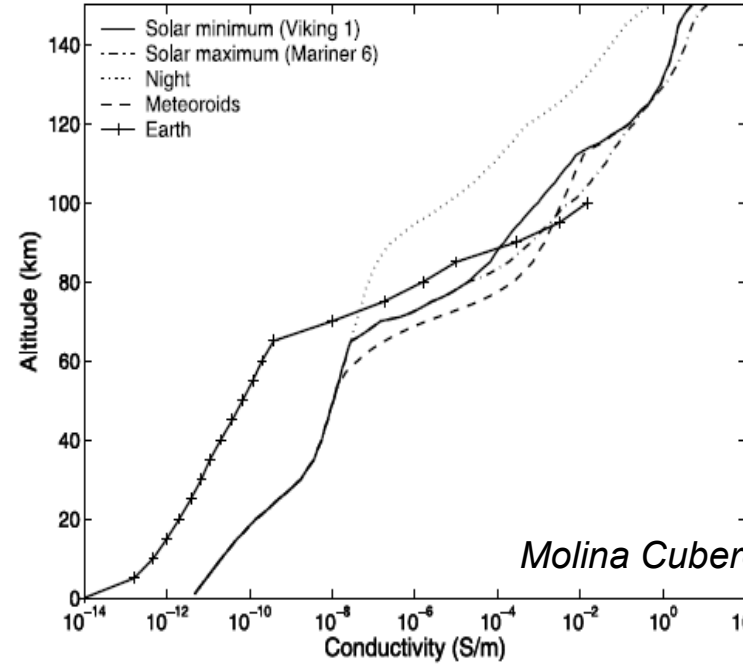

Molina Cuberos, 2006

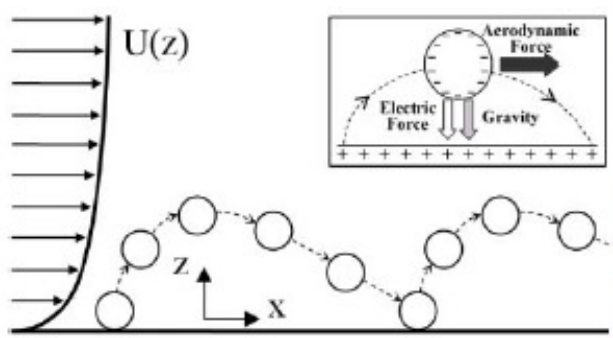

(Kok, Renno, 2007)

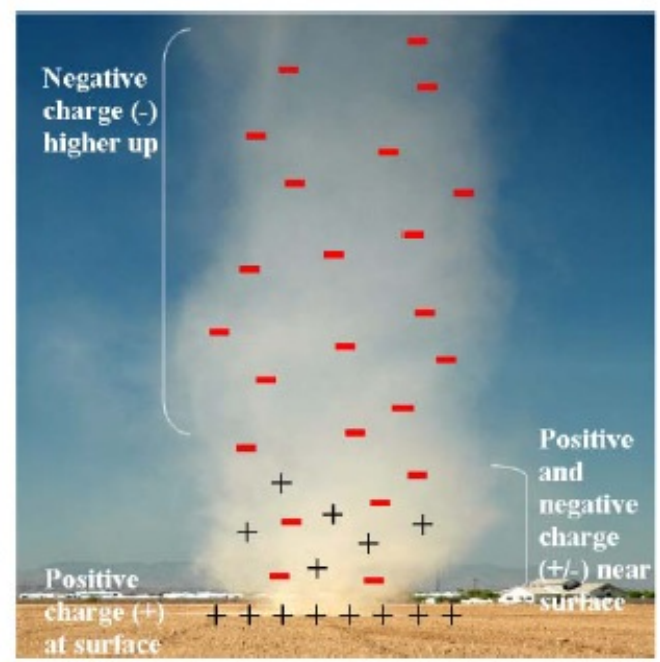

SATURN

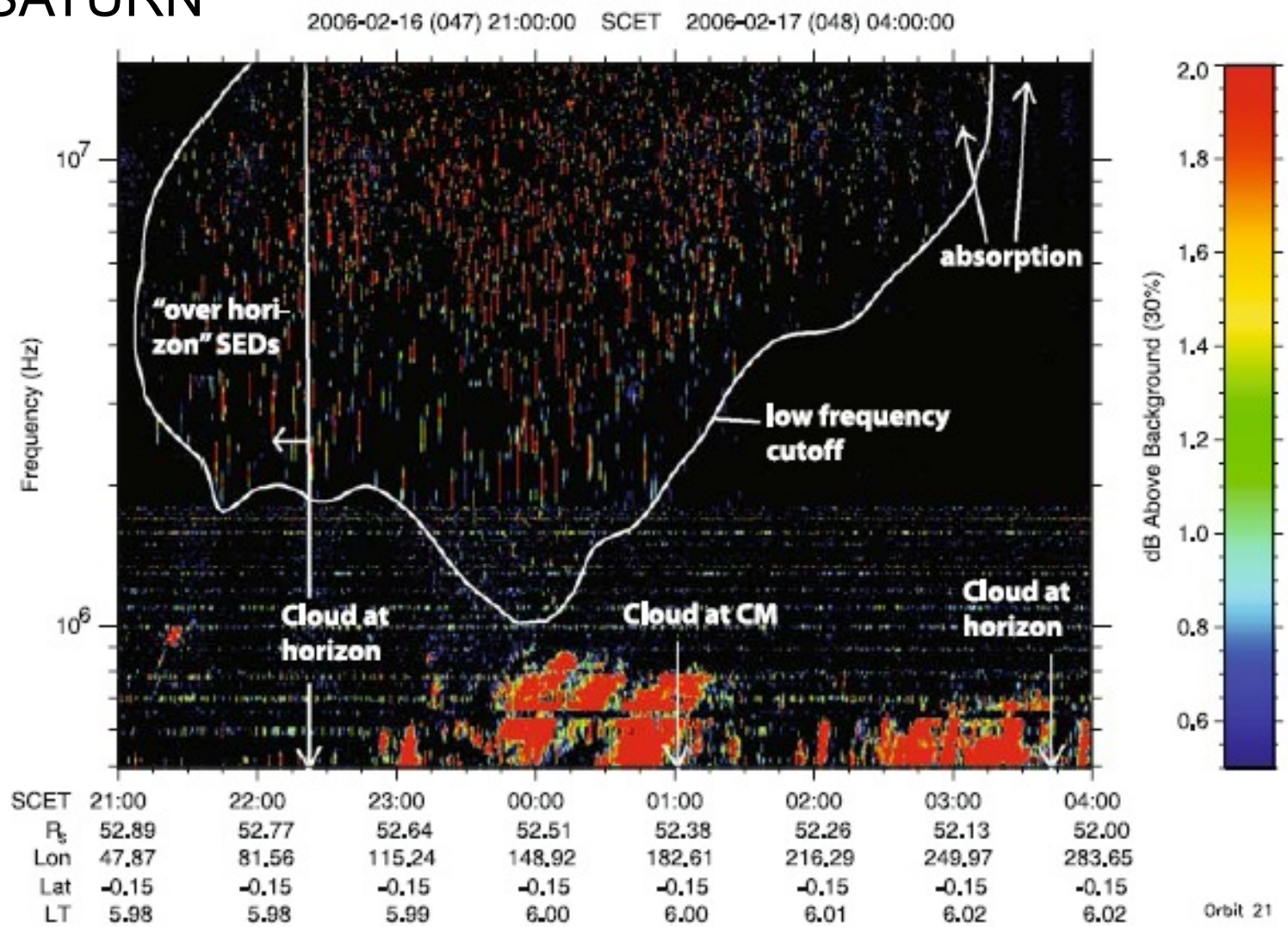

« Saturn Electronic Discharges » (SED) observed by RPWS on Cassini
EM emissions from lightning

SATURN and JUPITER

Comparison between Saturn, Jupiter and Earth lightning

Lightning sources :

- Saturn: Giant convective storm systems 3000 km in diameter, equator or 35°S
- Jupiter: numerous storms in ~ 5° latitude bands at ~ 50° N and S
- Updrafting water clouds at levels of ~ 10 bar (Saturn), ~ 5 bar (Jupiter)

Characteristics

- Frequency spectrum: up to 20 MHz / a few kHz / a few MHz
- Spectral power at MHz frequencies 100 W/Hz / ~10 / 0.01

Physical process

- Saturn: Elves more likely than Sprites
- Jupiter: lightning a few ms long

Desch et al., 2002; Fisher et al., 2008

TITAN

36 Hz peak in ELF AC electric field spectrum
interpreted as the second harmonic of Schumann resonnance
of the planet-ionosphere wave-guide due to a buried ocean at ~ 60-80 km depth

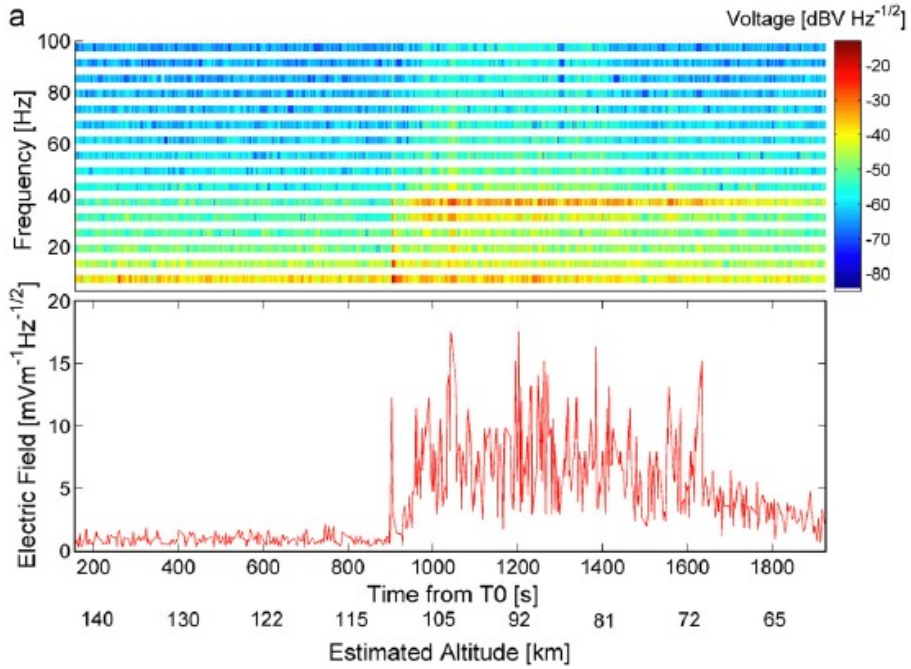

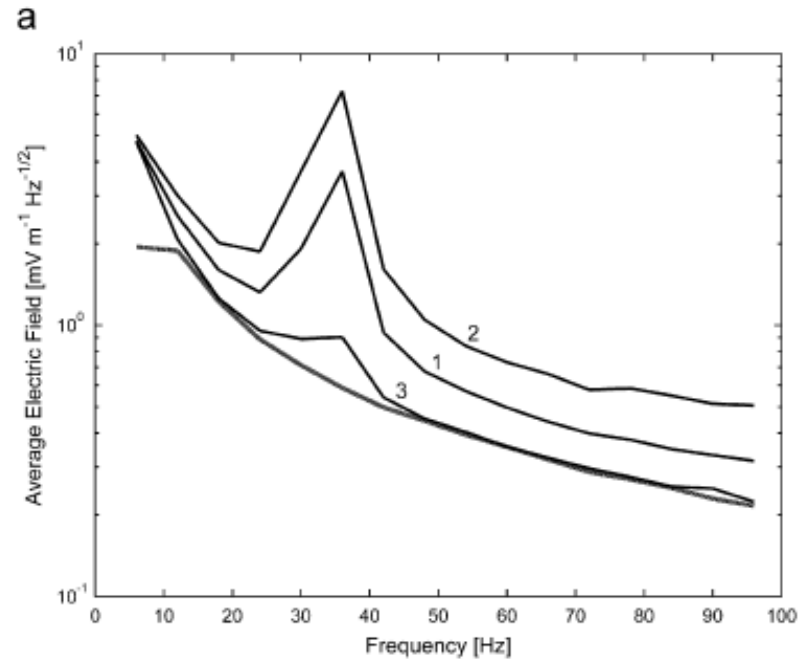

Simoes et al., Icarus, 2007
Beghin et al, 2012

INSTRUMENTATION AND OBSERVATIONS

1- CONDUCTIVITY

2- ELECTRIC FIELDS AND WAVES

3- CURRENTS

4- EXAMPLES OF OBSERVATIONS

- Stratospheric balloon measurements
- Huygens probe measurements in the atmosphere of Titan

ATMOSPHERIC ELECTRICITY PARAMETERS AND THEIR MEASUREMENTS

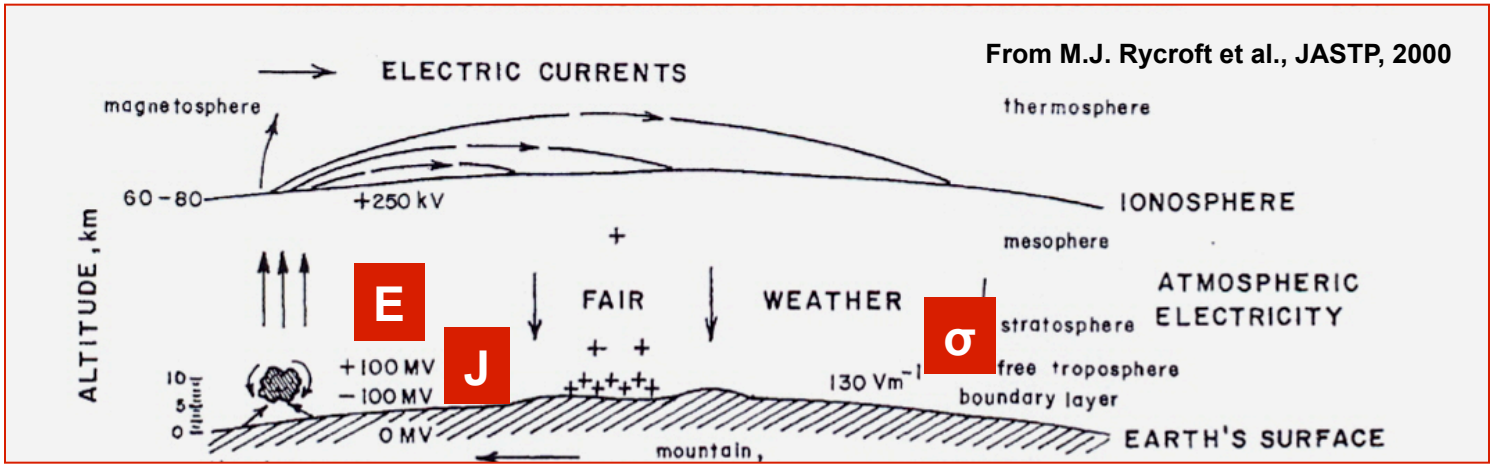

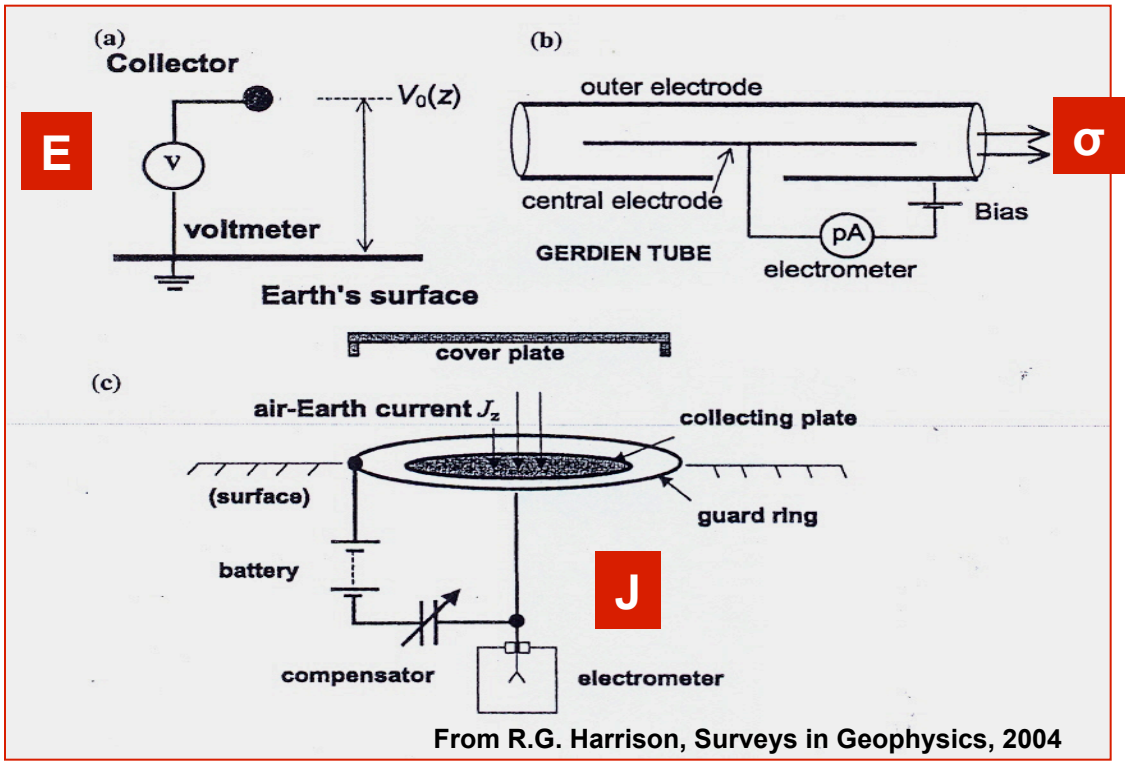

ATMOSPHERE ELECTRIC CONDUCTIVITY (1)

Gerdien Condenser

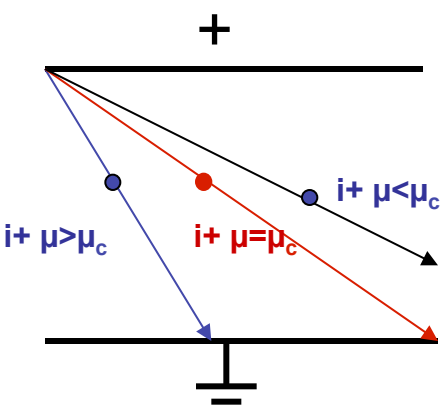

$$\sigma^{+} = \Sigma\ e.n_i.\mu_i$$

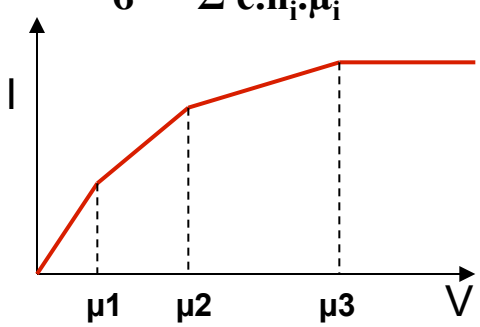

Relaxation method

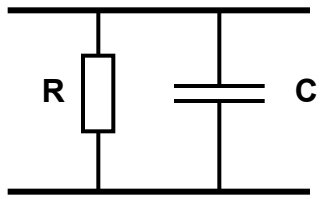

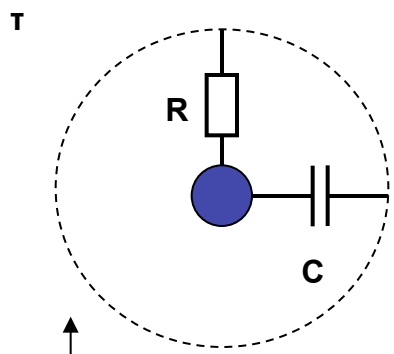

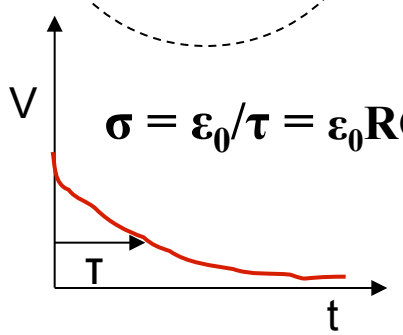

$$\sigma = \varepsilon_0/\tau = \varepsilon_0 RC$$

Mutual Impedance

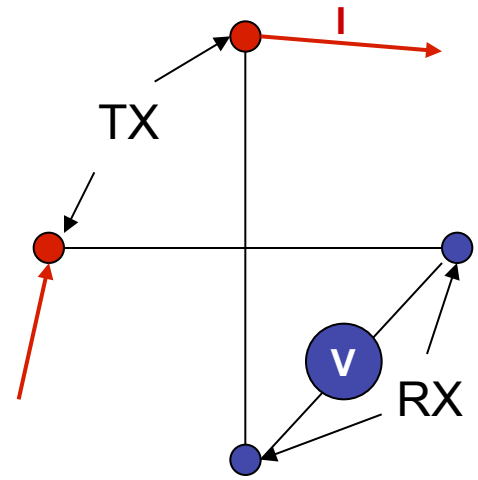

$$Z(\sigma,\varepsilon) = V/I$$

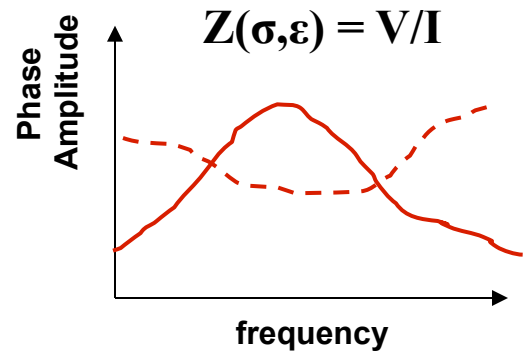

ATMOSPHERE ELECTRIC CONDUCTIVITY (2)

Gerdien condenser

- gives access to the ion mobility spectrum
- relaxation method can be included
- requires accurately controlled air flow
- complexity (fan, electronics…)

Relaxation method (with electrostatic probes)

- simple, can be easily implemented on double probe
- accurate technique for large enough σ and stable electric field
- analysis difficult with a variable background electric field
- requires specific modeling in case of space charge

Mutual impedance

- accurate in atmospheres with both ions and electrons
- able to provide soil measurements if landed on planetary surface
- complexity (booms, electronics…)

TERRESTRIAL CONDUCTIVITY PROFILES

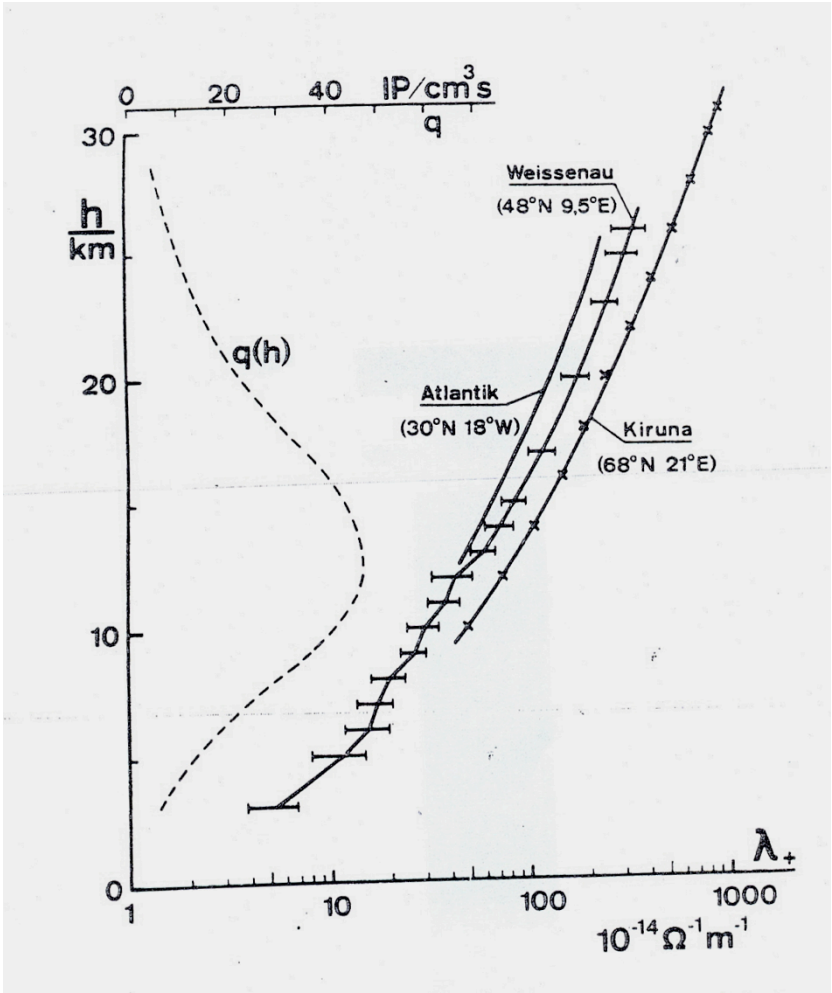

From W. Gringel, Prometheus, 1977

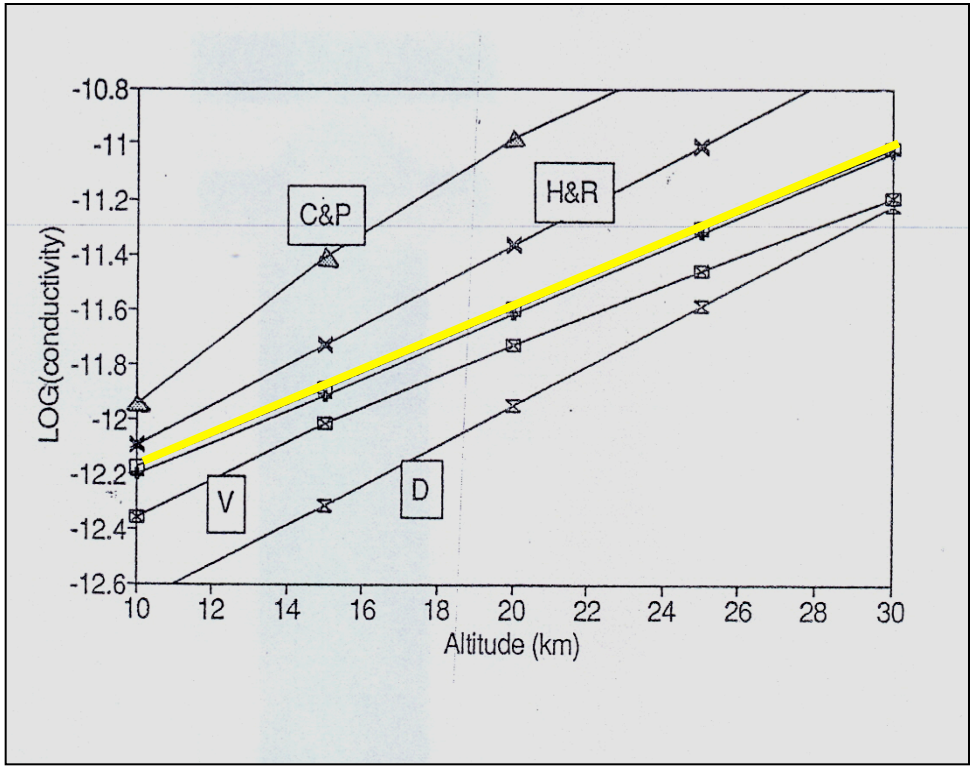

From R.H. Holzworth, JGR, 1991

ELECTRIC FIELD MEASUREMENTS

INDUCTIVE COUPLING

THE « FIELD MACHINES »

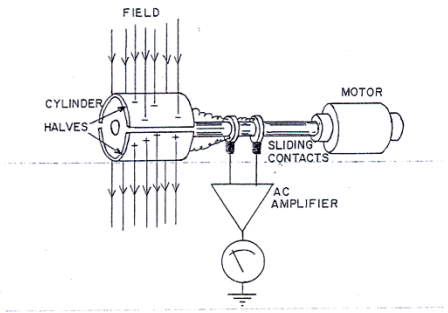

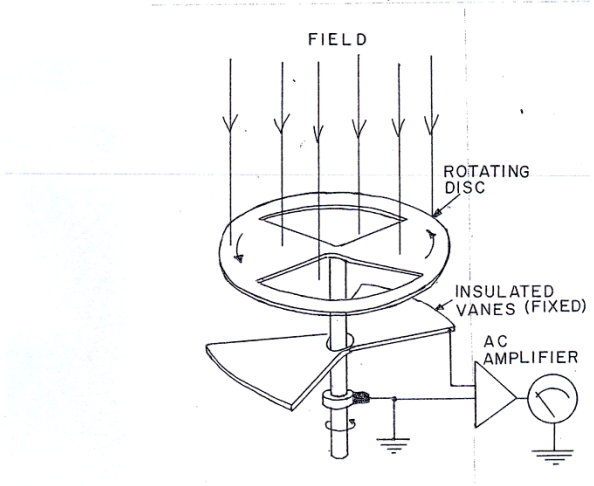

RESISTIVE COUPLING

THE DOUBLE PROBE INSTRUMENT

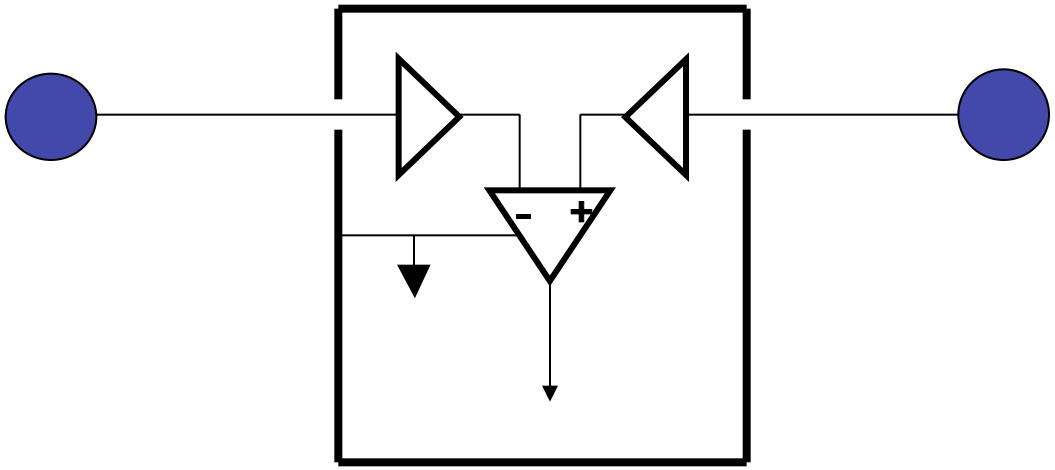

ELECTRIC FIELD MEASUREMENTS

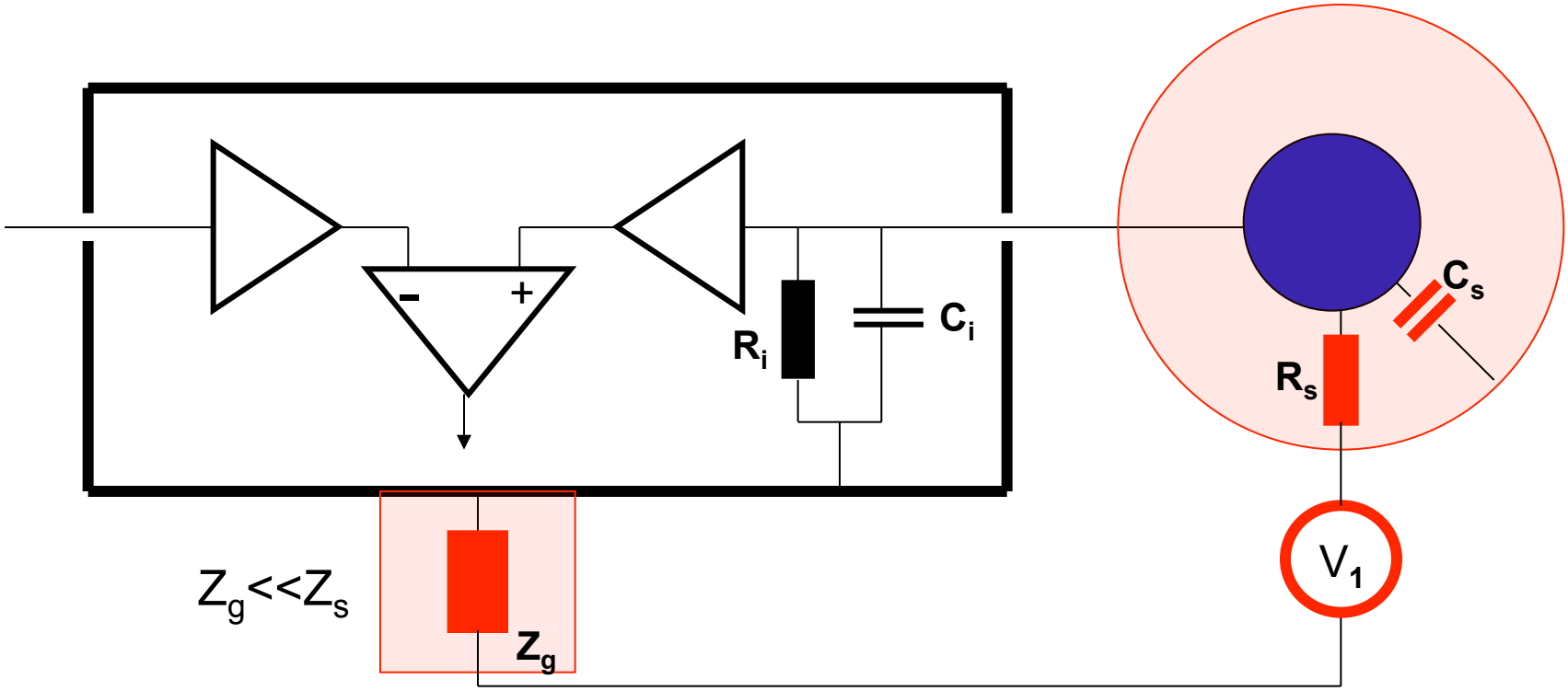

$$V_{out} = \left[(V_1 - V_2) + (WF_2 - WF_1) \right] \cdot \left[\frac{Z_i}{Z_i + Z_s} \right]$$

ELECTRIC FIELD MEASUREMENTS

Transition frequency $$\omega_s = \frac{1}{R_s \cdot C_s}$$

Low Frequency limit $$V_{out} = (V_1 - V_2) \cdot \frac{R_i}{R_i + R_s} \cong (V_1 - V_2)$$ if $R_i >> R_s$

High Frequency Limit $$Z_s \approx 1/\omega C_s \quad Z_i \approx 1/\omega C_i \qquad V_{out} = (V_1 - V_2) \cdot \frac{C_s}{C_s + C_i}$$

DC-ELF : spherical sensors (with polarization current)

HF : cylindrical long antenna

ELECTRIC FIELD MEASUREMENTS

INDUCTIVE COUPLING, THE « FIELD MACHINES »

- high impedance, can operate in very low σ (Earth's surface)
- can measure large DC electric fields
- Some directional capability, 2D measurement with 1 sensor
- innovative designs in progress, miniaturized devices, vibrating system, ASIC

- low sensitivity
- electro-mechanical device (harsh environments, dust, EMI…), signal processing
- low temporal resolution and low frequency capability (no waves)

RESISTIVE COUPLING, THE DOUBLE PROBE INSTRUMENT

- simple device and electronics
- high sensitivity (in AC better than $1\mu V/mHz^{1/2}$)
- high temporal resolution (lightning), high frequency capability (MHz)
- direct measurement, no signal processing
- high amplitude DC and AC electric field measurements in dedicated modes

- booms (deployment, mass,…)
- limited to $\sigma \geq 10^{-13}$ S/m (on Earth above ~ 8 kilometers)

ATMOSPHERIC CURRENT MEASUREMENTS

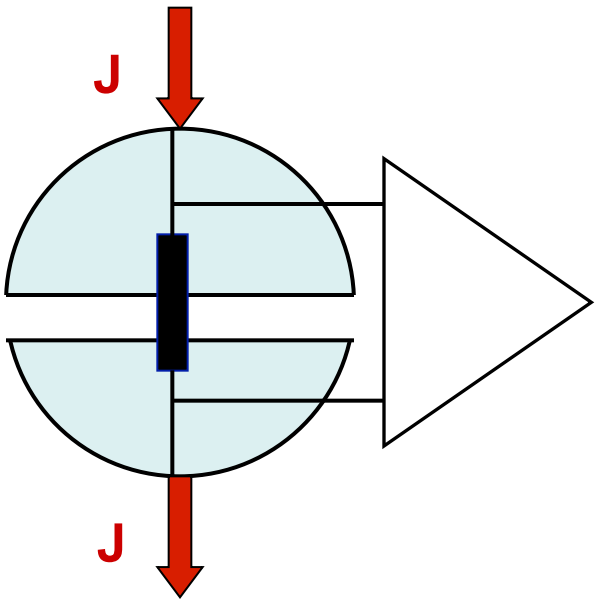

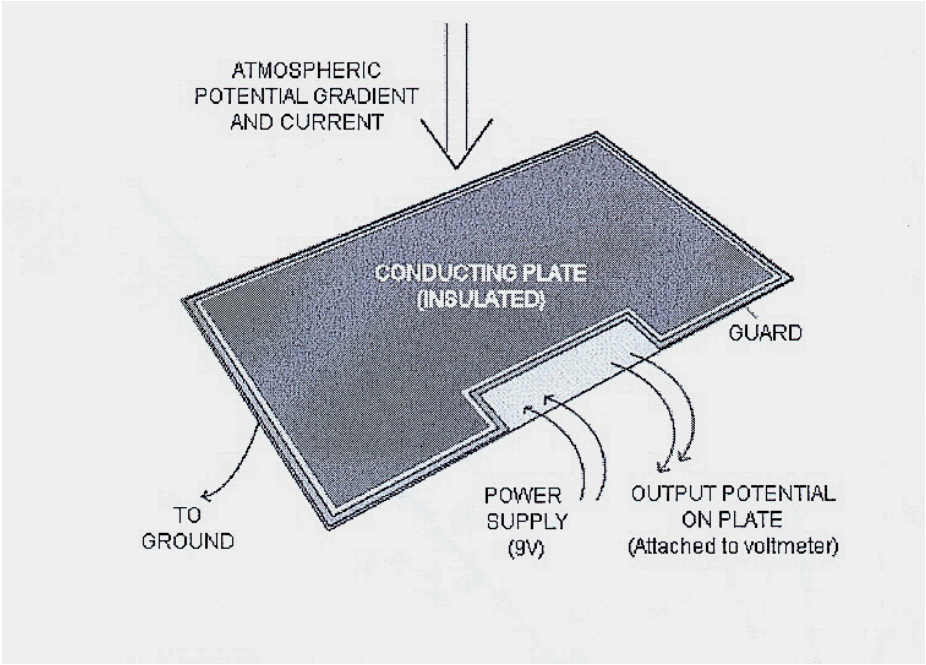

From A.J. Bennet and R.G. Harrison, Sub. Adv in Geosciences

ELECTRIC FIELDS AND CONDUCTIVITY MEASUREMENTS ON STRATOSPHERIC BALLOON FLIGHTS

HVAIRS Gondola
AMMA Campaign in Niger

Electric Field Intrument

- Vertical component of Electric Field
  - DC to 3 kHz
  - Large signal « DC channel »
    ~ ± 50 mV/m to ± 200 V/m
    (up to ± 10 kV/m in special mode)
  - Small signal « AC channel »
    sensitivity ~ 30 µV/m. $Hz^{1/2}$
- Conductivity measurements
  - relaxation method

Optical sensors

- photodiode lightning detectors

On-Board Data Storage

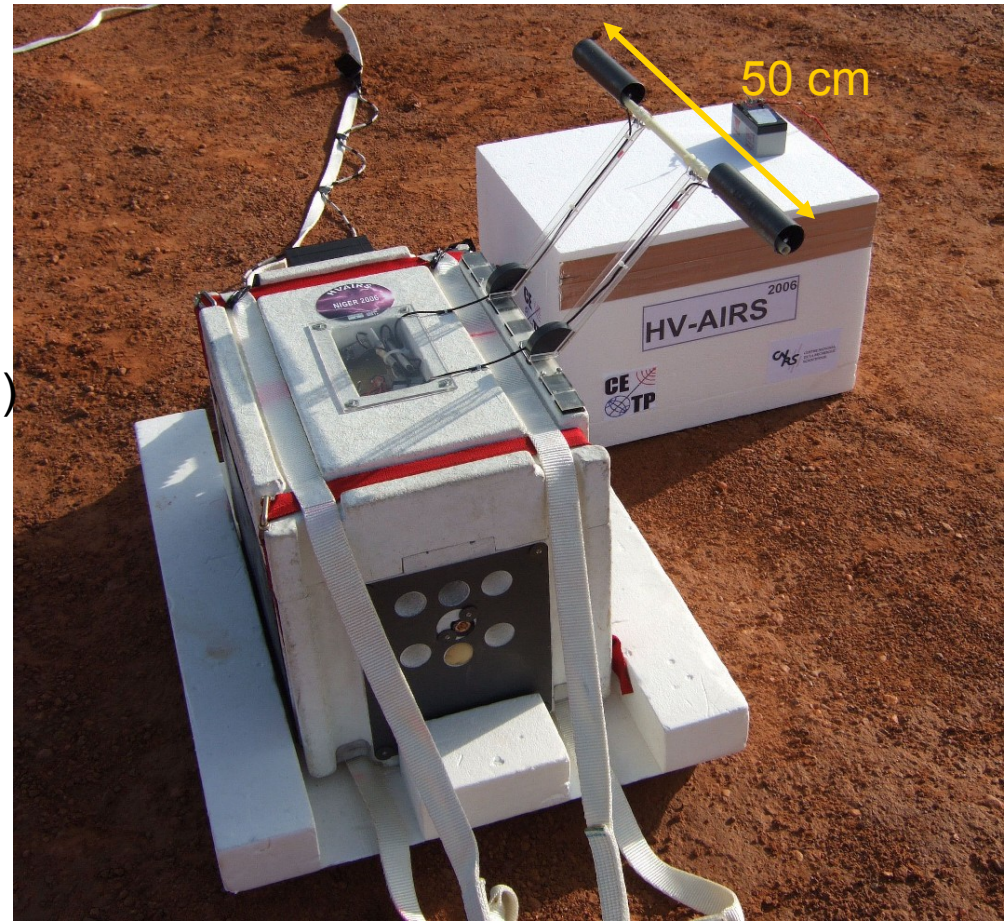

HVAIRS_AMMA, Meteorological Conditions (1)

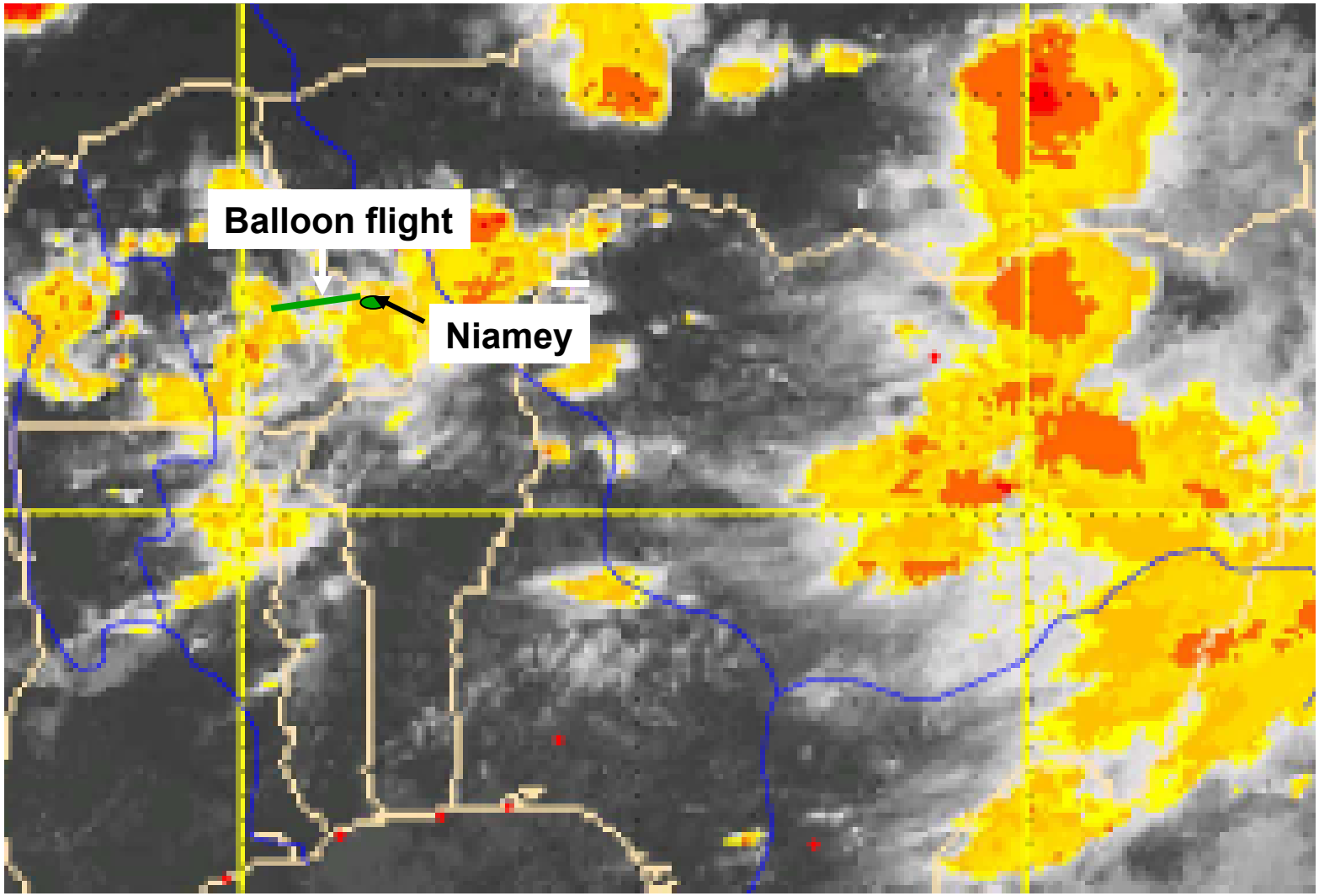

HVAIRS_AMMA, Meteorological conditions (2)

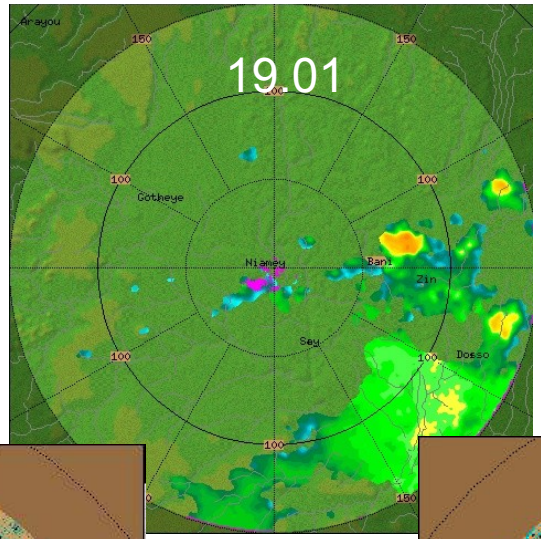

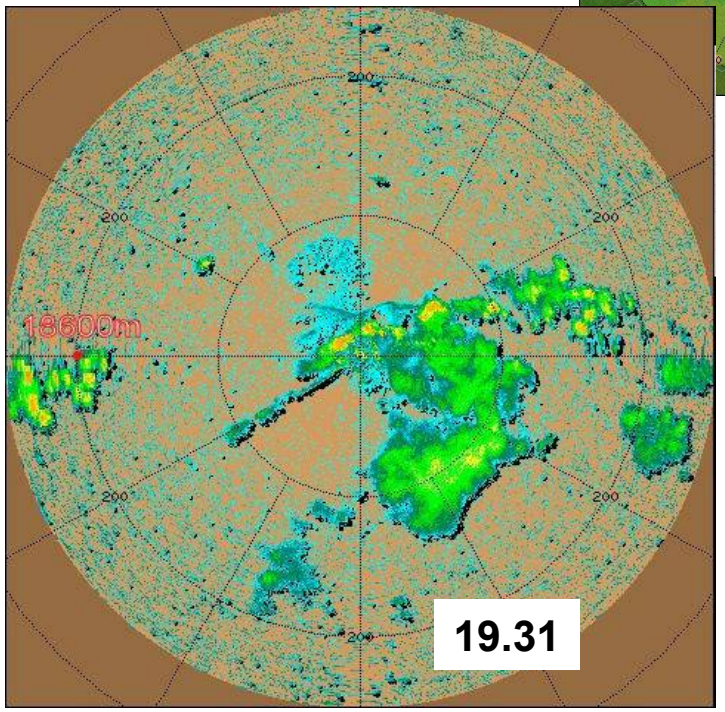

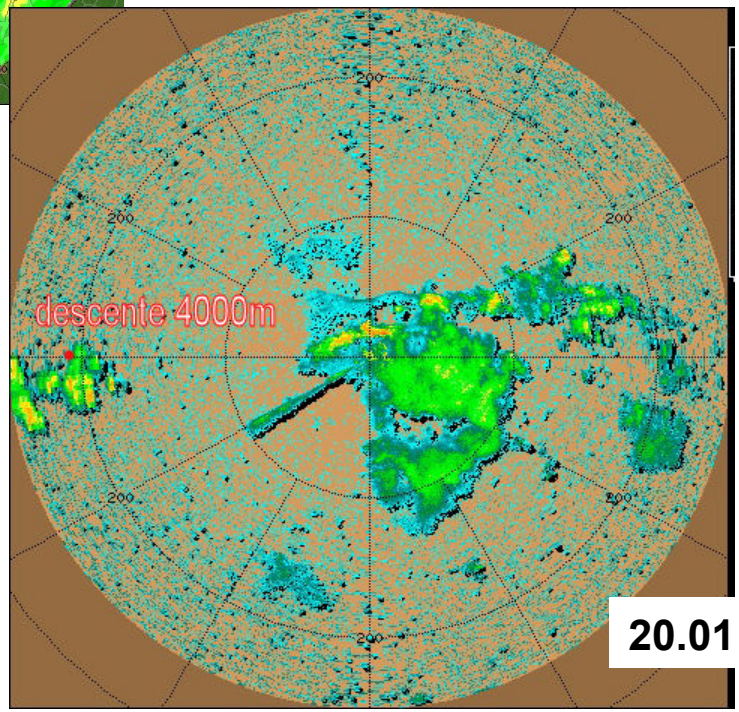

HVAIRS_AMMA, Conductivity Measurements

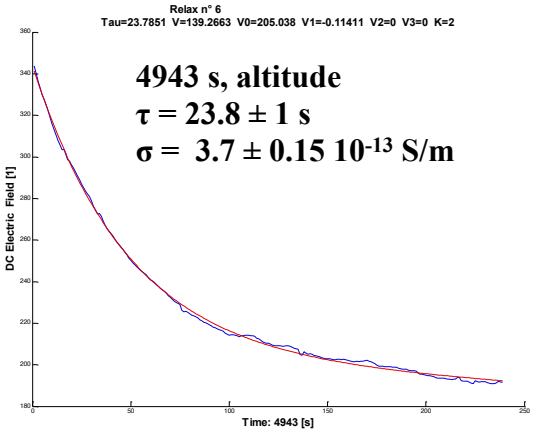

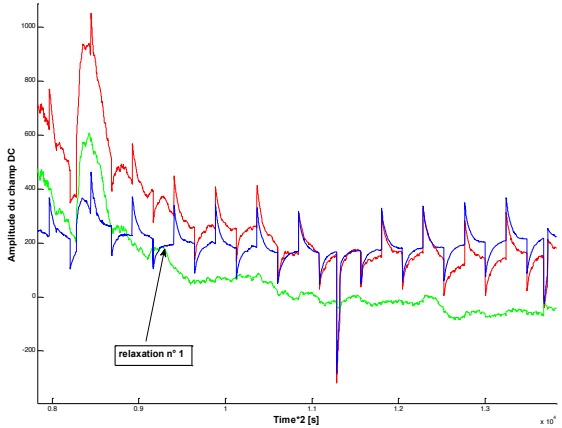

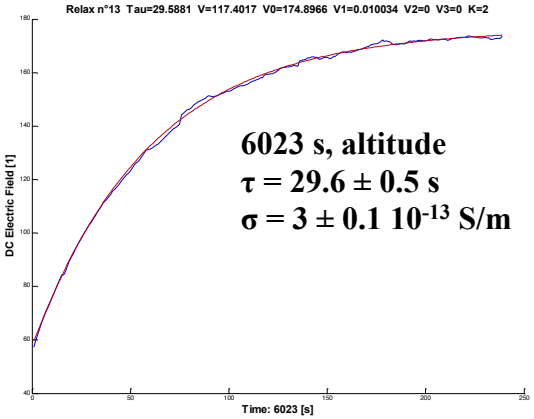

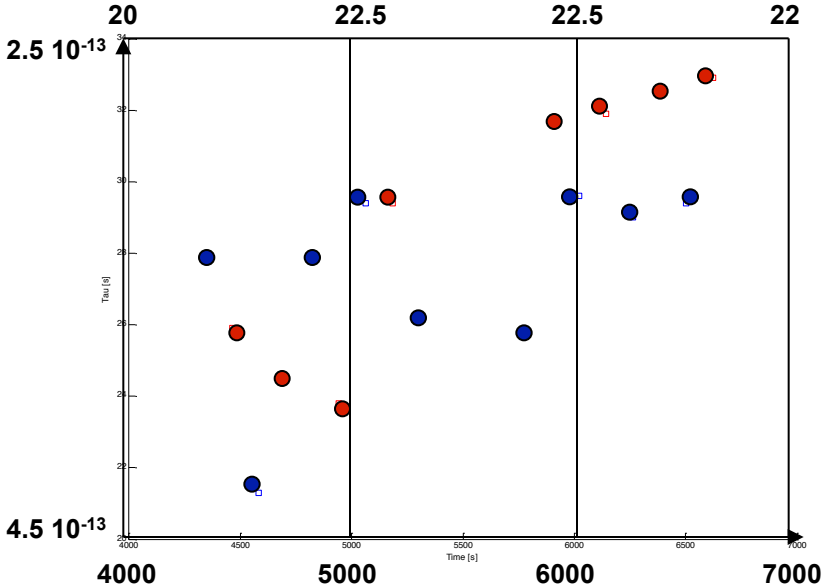

- σ- ~ 3.1 10^{-13} S/m
- σ+ ~ 3.3 10^{-13} S/m

σ ~ 6.4 10^{-13} S/m

σ ~ 2 10^{-12} S/m
R.H. Holzworth JGR, 1991

σ ~ 1.4 10^{-12} S/m
From W. Gringel, Prometheus, 1977

HVAIRS_AMMA, AC ELECTRIC FIELDS
Background noise during ascent and Schumann resonnances

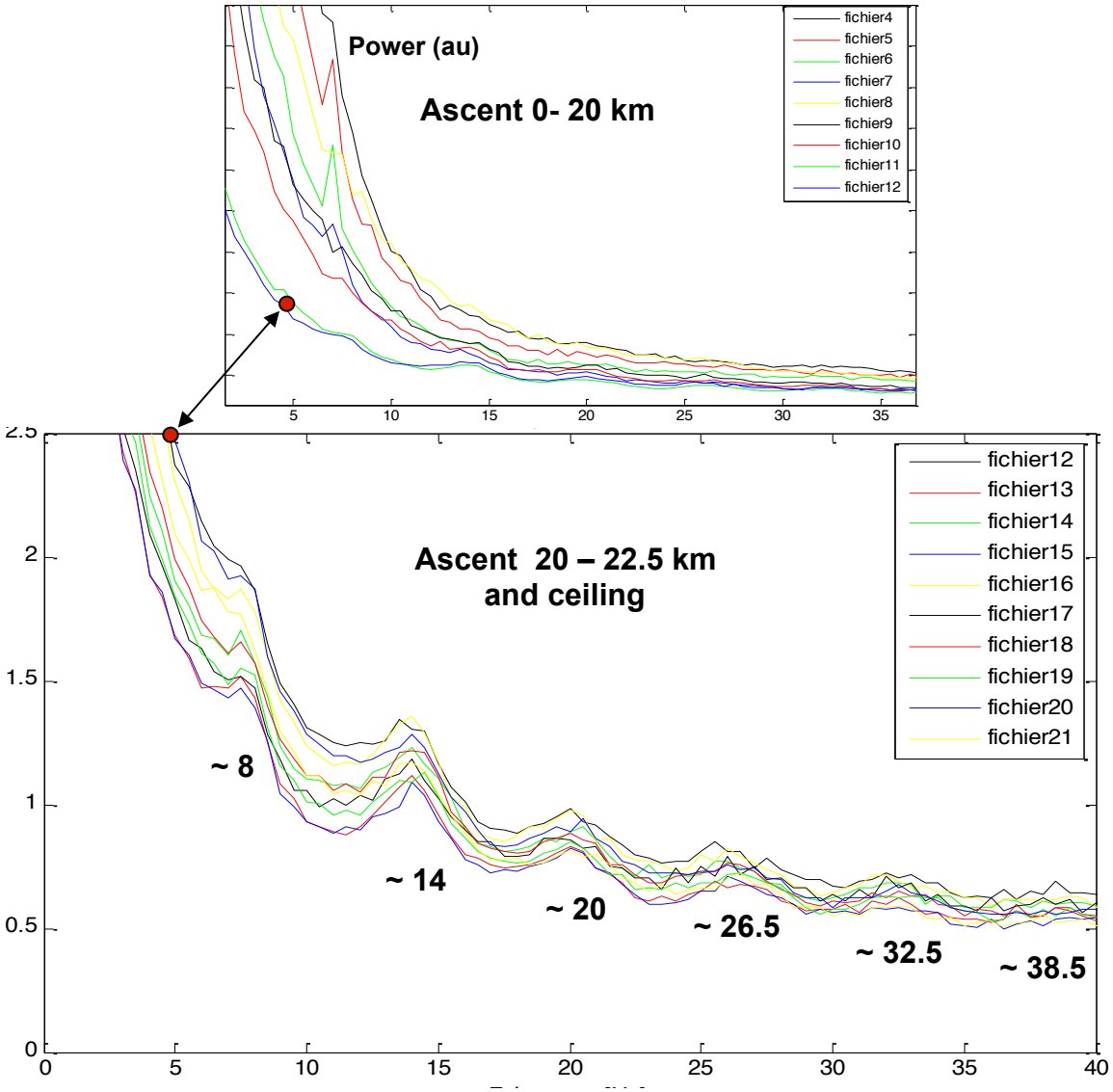

HVAIRS_AMMA, LIGHTNING and DC ELECTRIC FIELDS

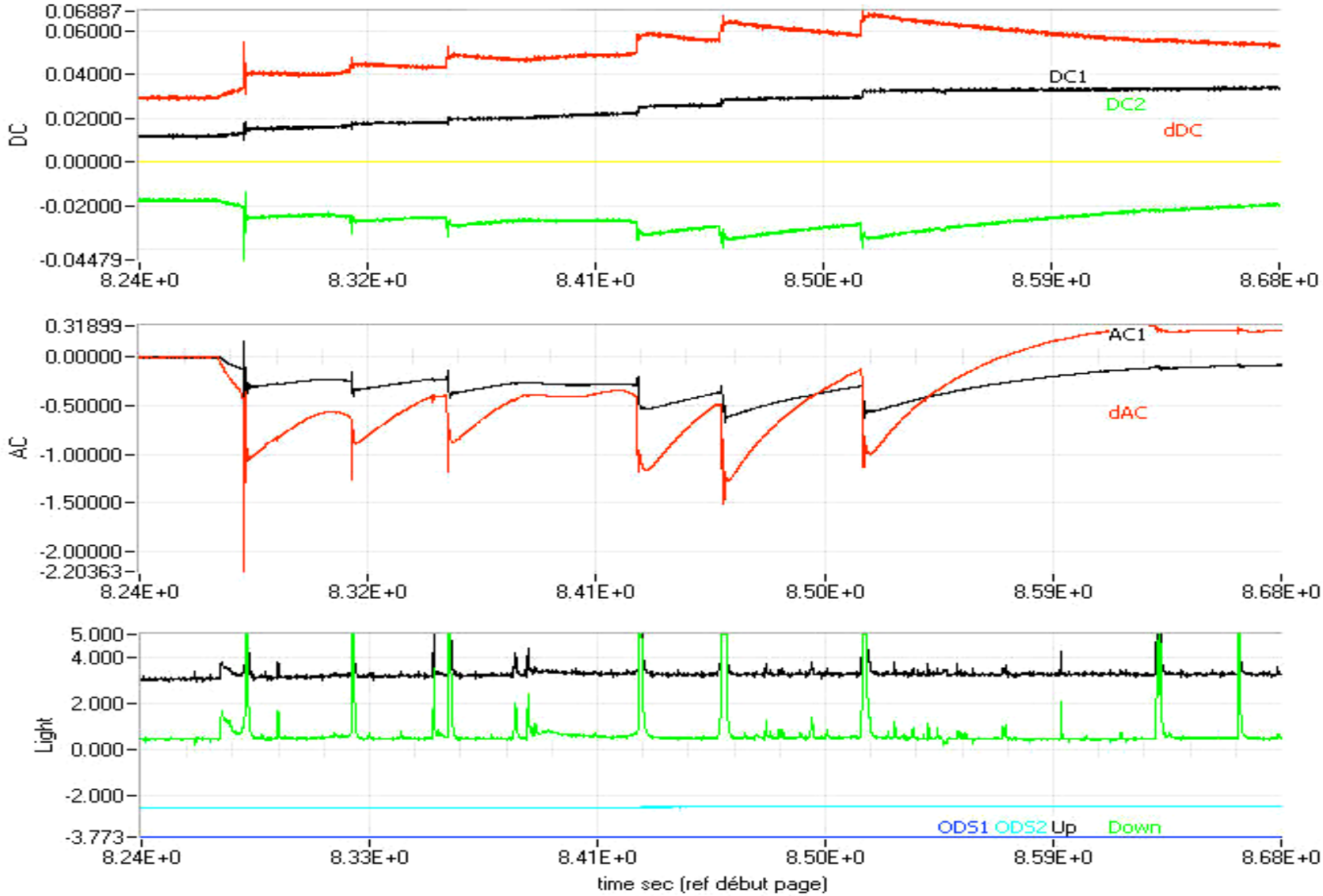

DC Electric Fields variations induced by lightning
Intra-Cloud Charge neutralization

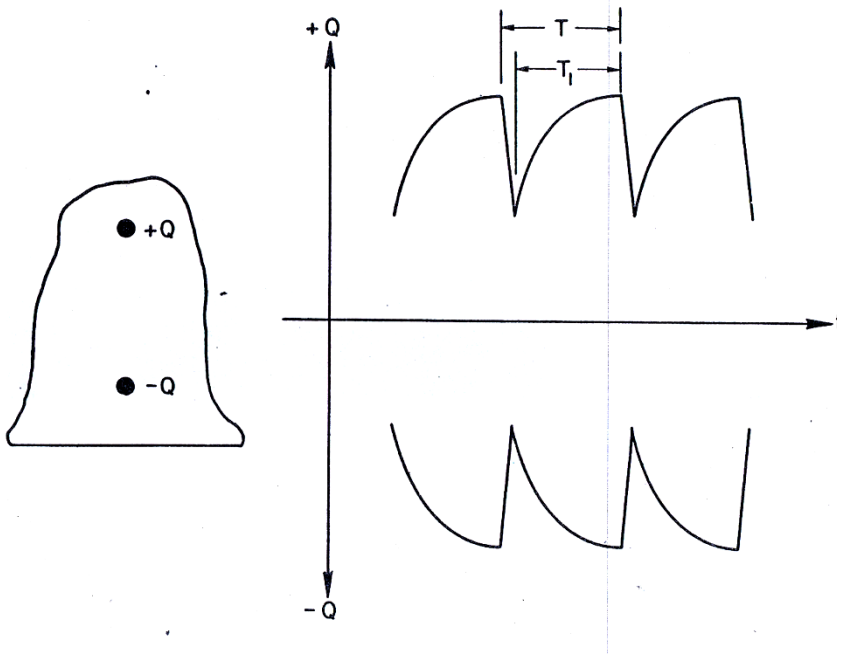

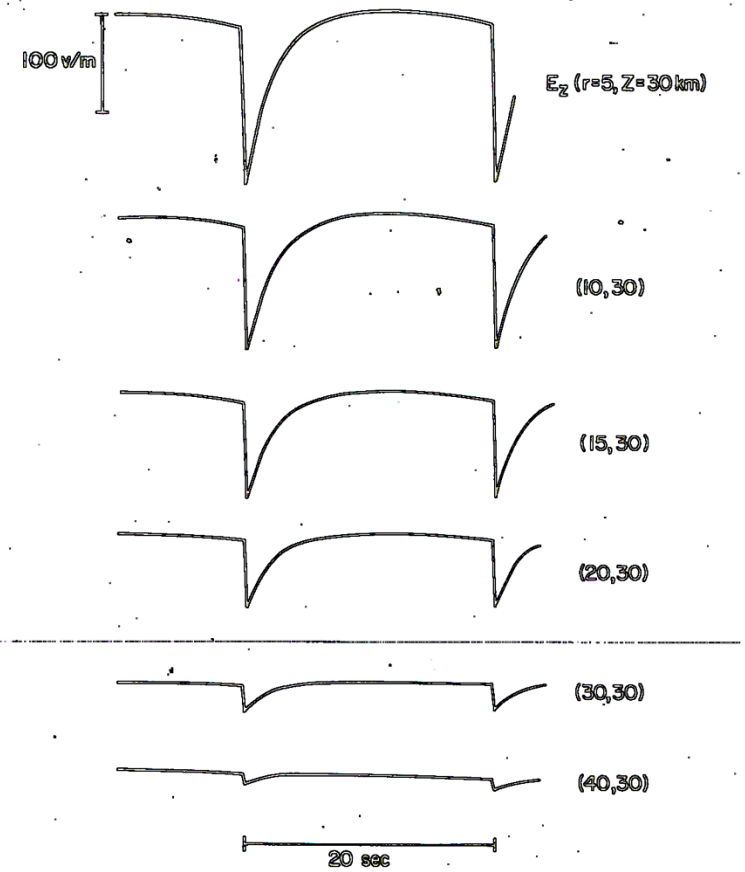

FIGURE 5-26. PLOTS OF E_z AT z = 30 km AND SELECTED VALUES OF T.

115

Dejnakarintra, 1973

HV-AIRS LIGHTNING and E-FIELD
Precursors and Continuing Currents

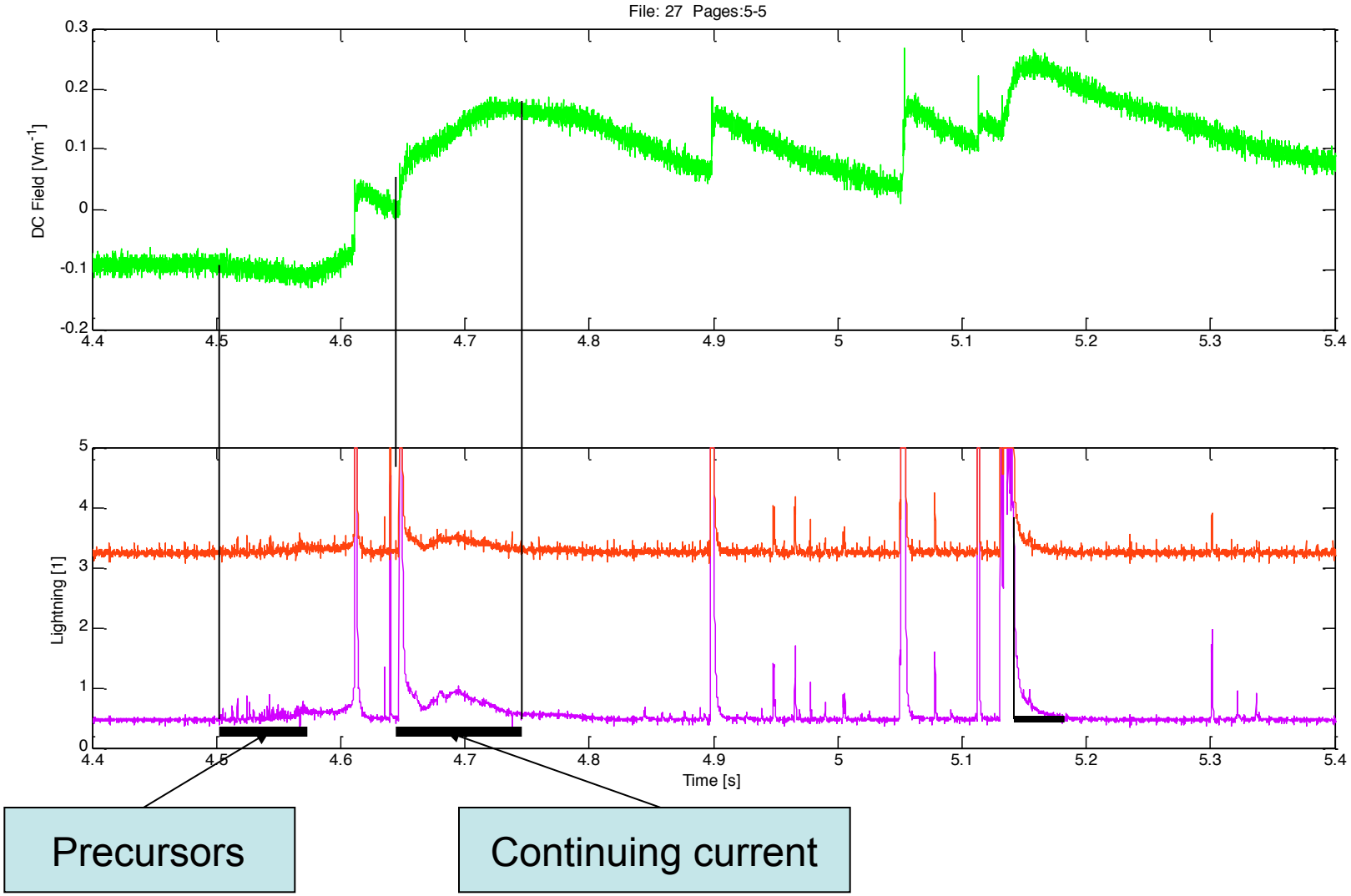

HVAIRS_AMMA, DC Electric Fields
ULF signatures of stratospheric charged clouds

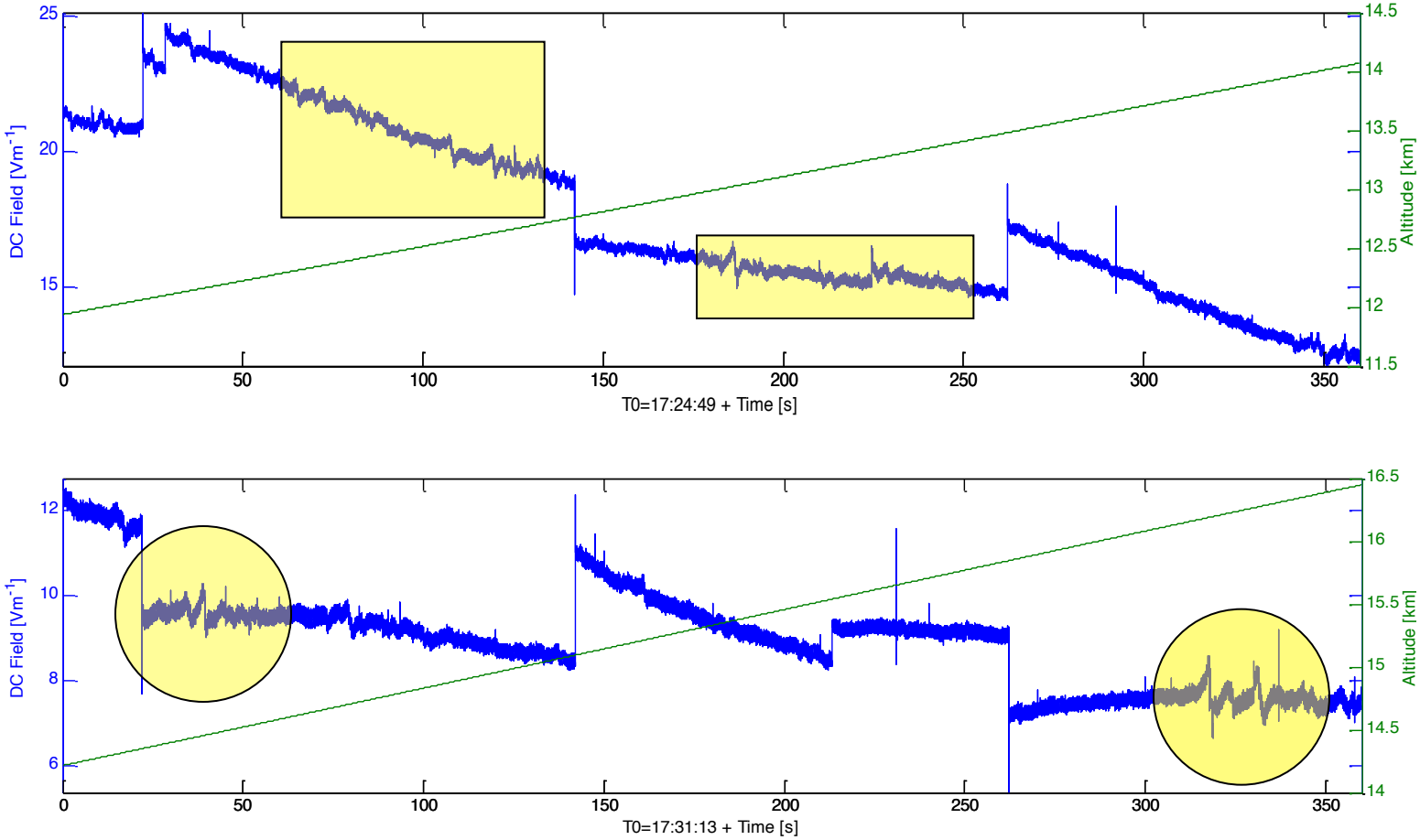

HVAIRS_AMMA, DC Electric Fields
ULF signatures of stratospheric Charged Clouds

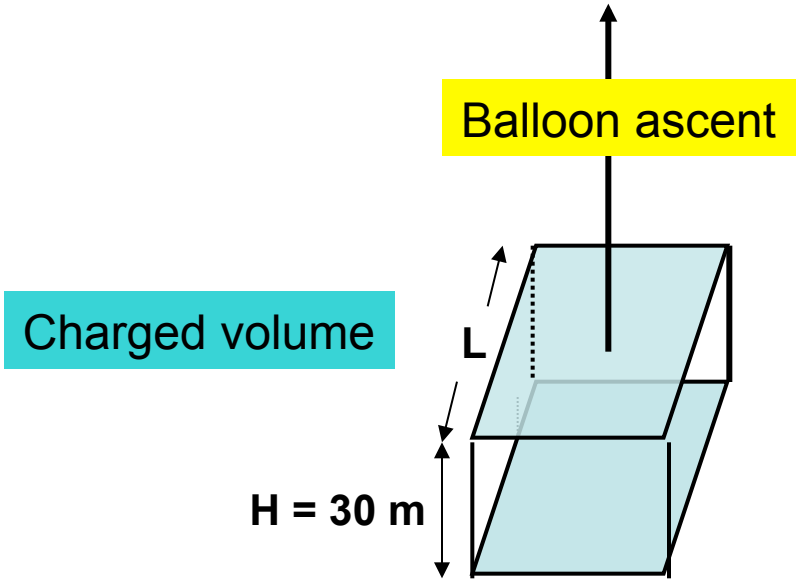

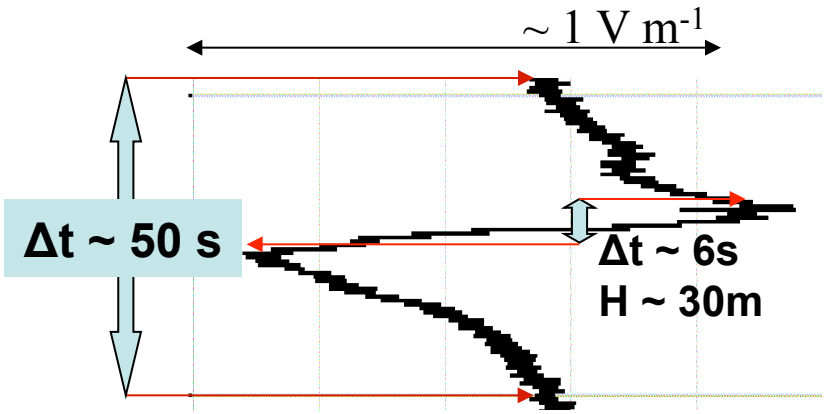

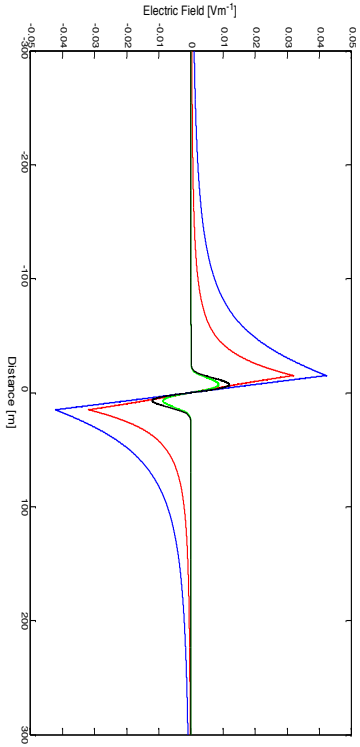

H ~ 30m
L ~ 50-100m
Q~ 10-30 μC

HV-AIRS AMMA, LIGHTNING, EM Pulse and Transverse resonance

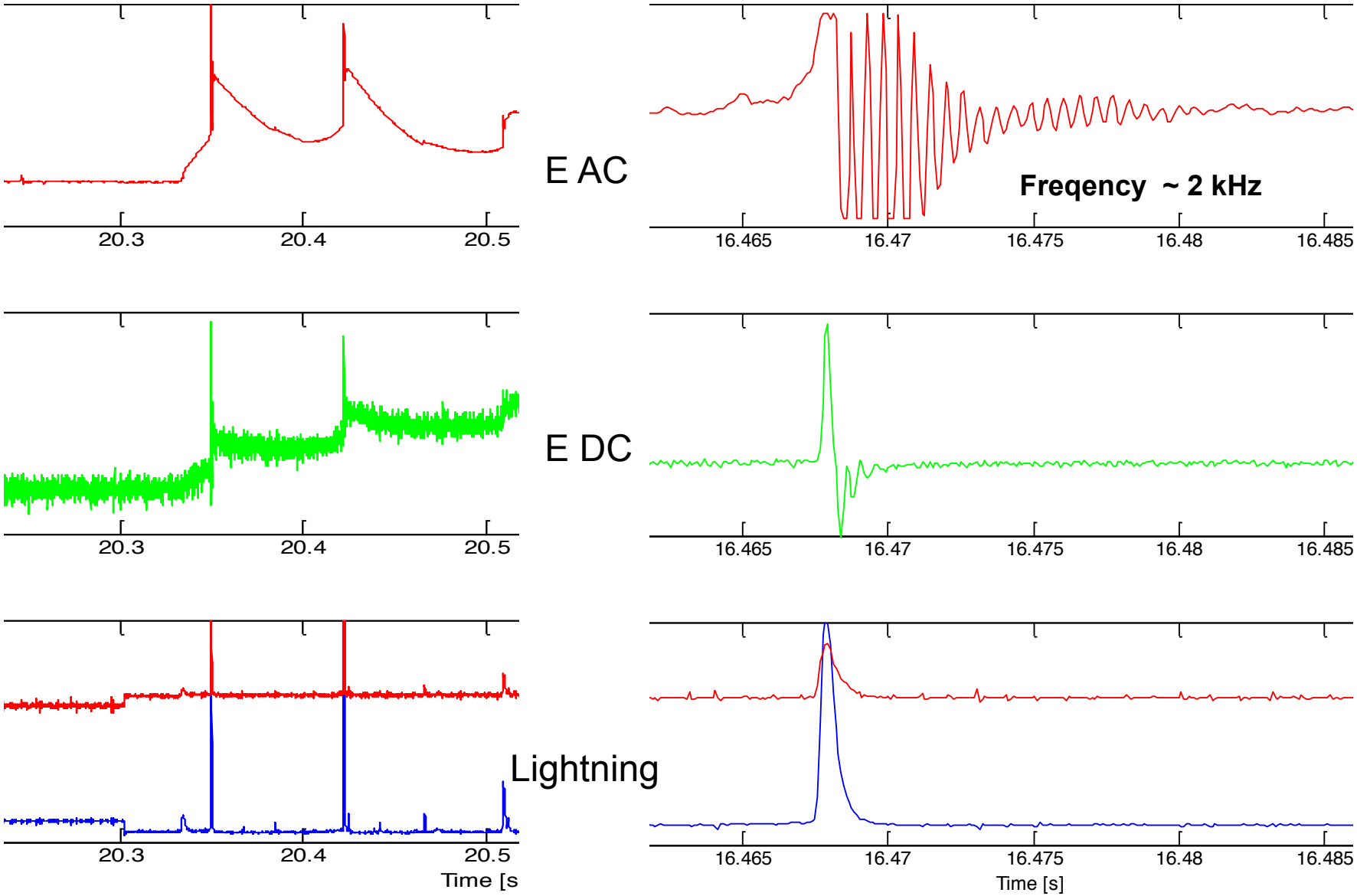

LIGHTNING DETECTION FROM ORBIT

DEMETER Observations at 650 km altitude

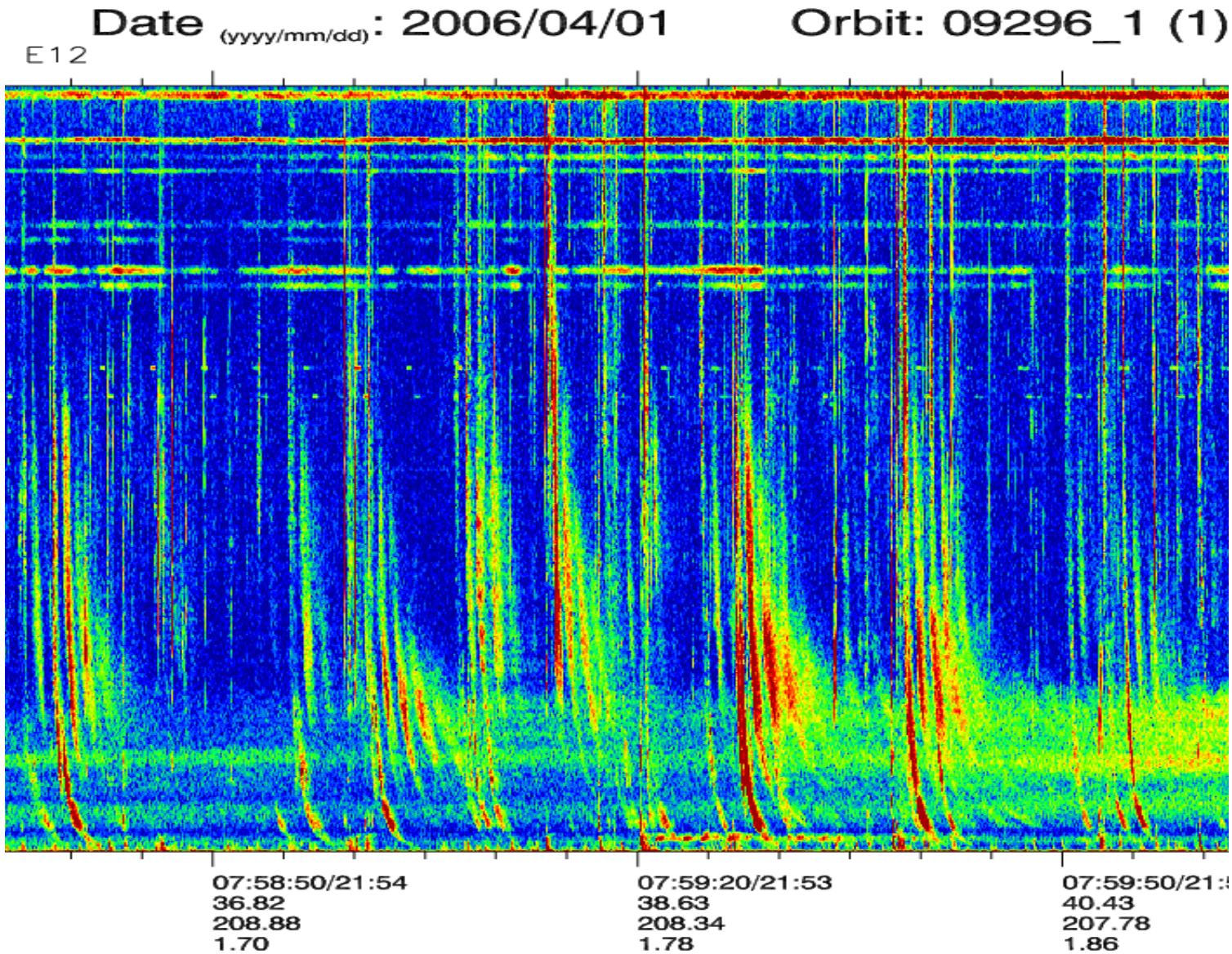

LIGHTNING DETECTION FROM ORBIT

DEMETER Observations at 650 km altitude

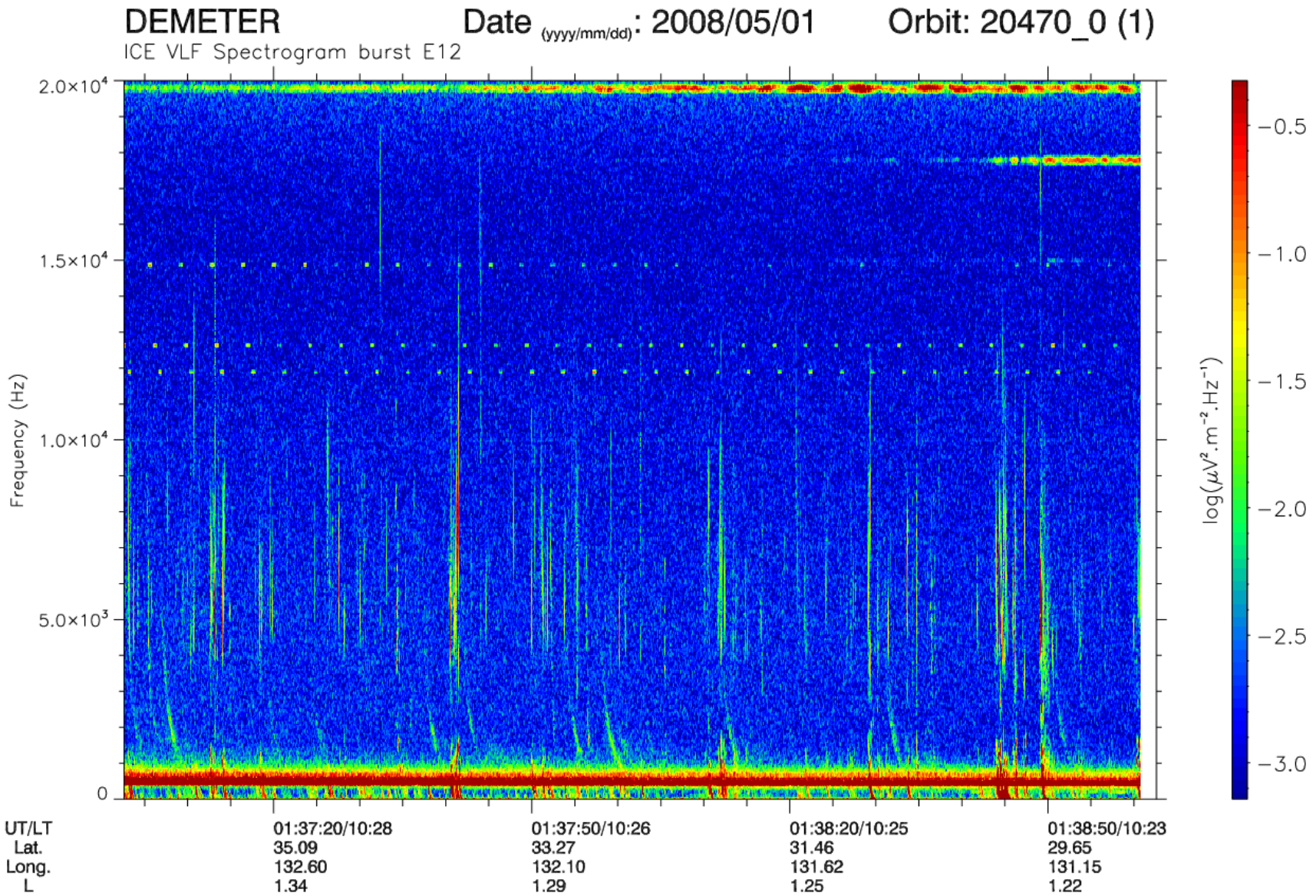

THE HASI/PWA EXPERIMENT ON HUYGENS

PWA aimed at contributing to answering the following questions:

- What are the ion and electron conductivity profiles?
- What is the role of aerosols in atmospheric chemistry?
- Is there lightning on Titan?
- Do standing waves form in the surface-ionosphere cavity?
- What are the dielectric properties of the surface?
- Does a global electric circuit exist on Titan?

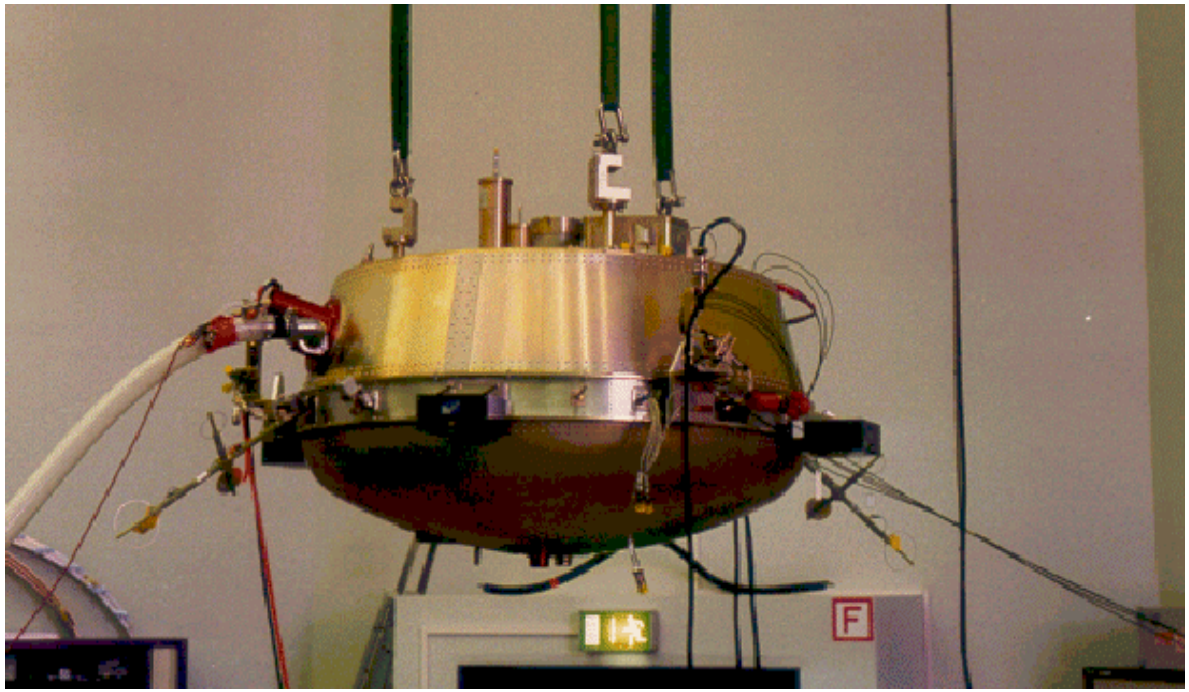

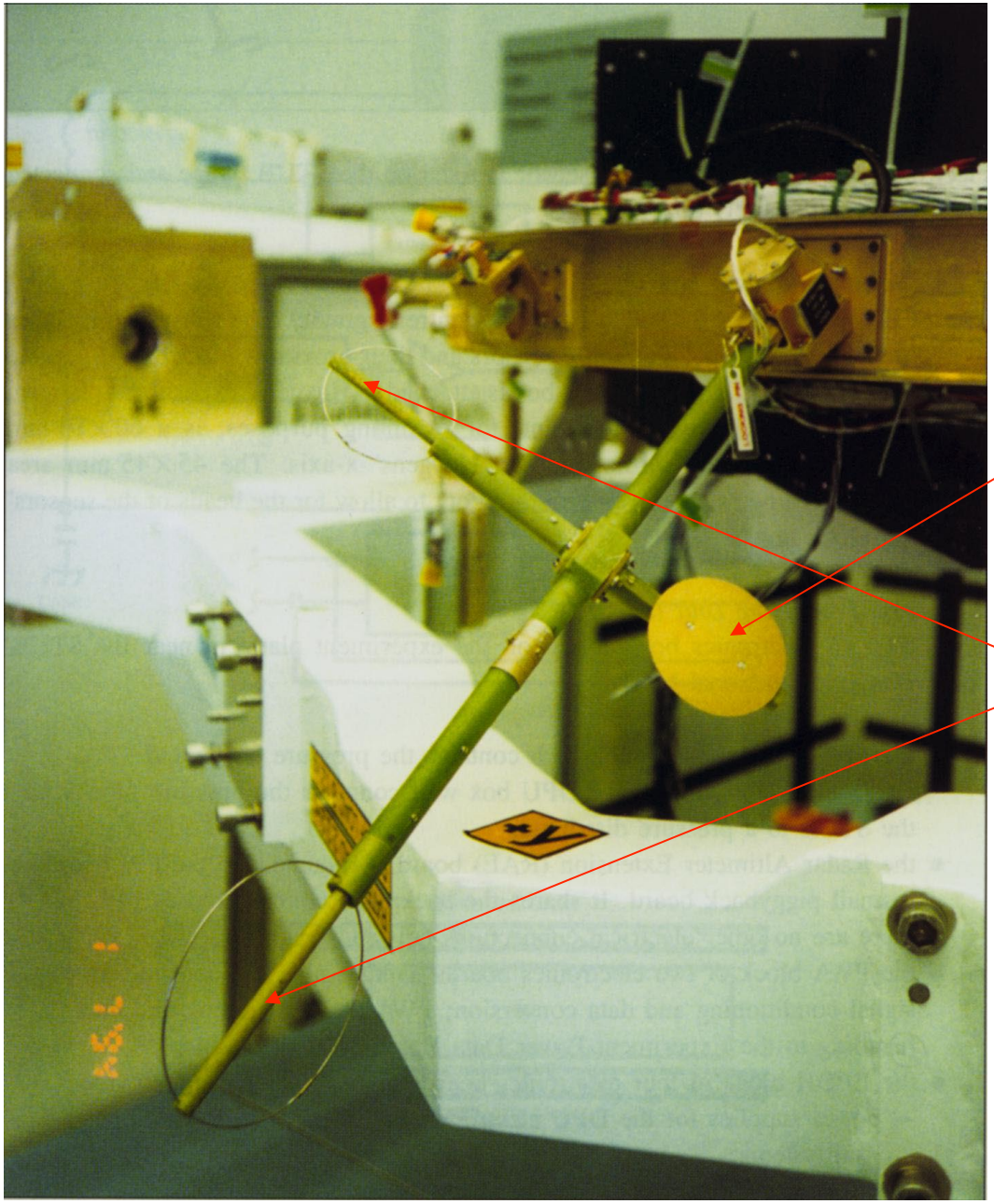

PWA ELECTRODES

Relaxation Probe RP

Mutual Impedance Probe MIP

PLANETARY CONDUCTIVITY PROFILES: TITAN

HASI_PWA experiment on HUYGENS

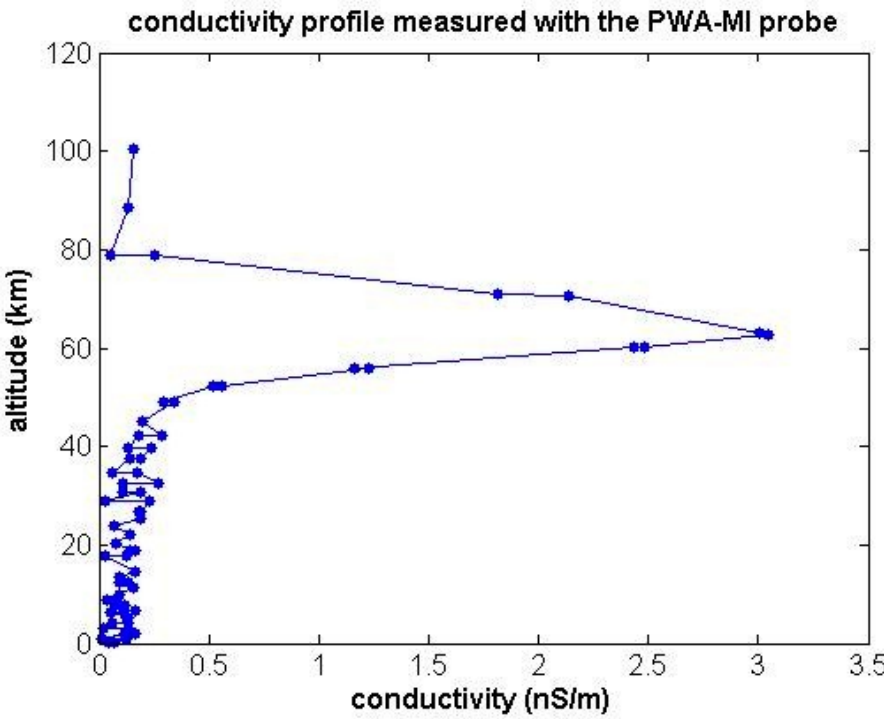

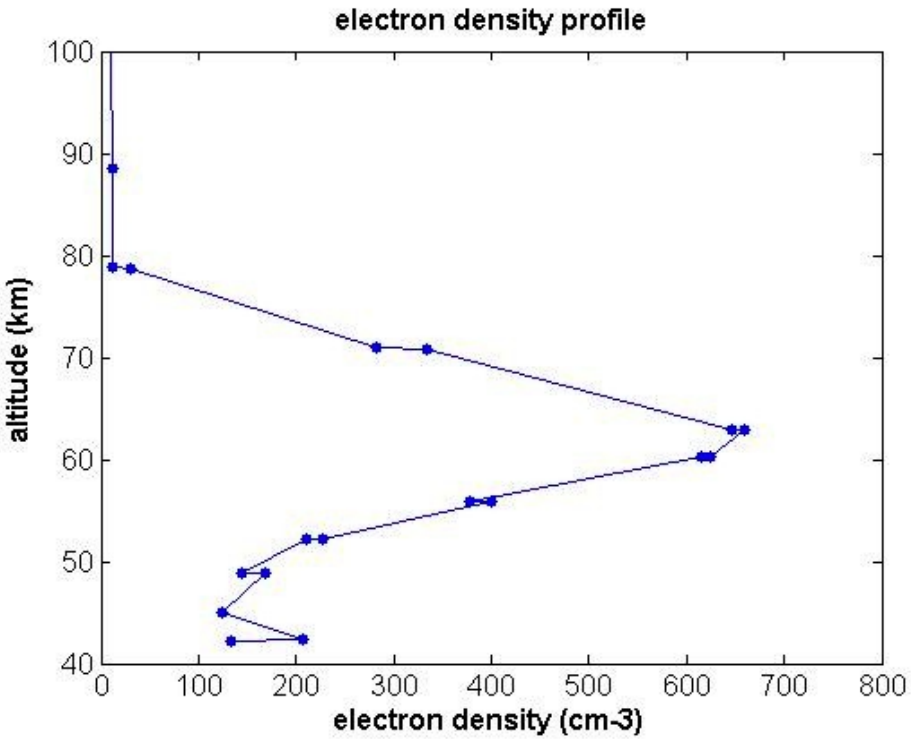

From M. Hamelin et al., PSS, 2007.

HUYGENS: Relaxation Curve with plateaus

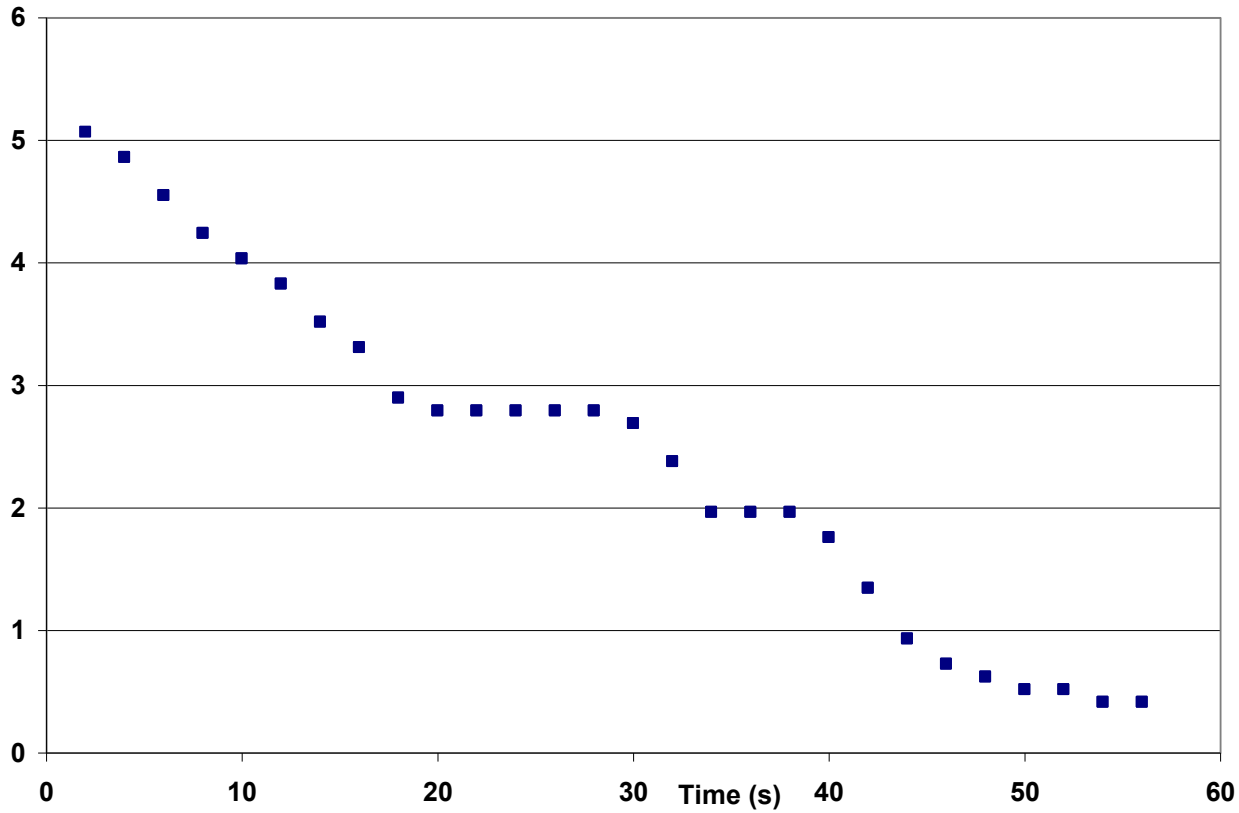

RELAXATION PROBE WAVEFORMS
DETECTION OF AEROSOL LAYER IN TITAN ATMOSPHERE

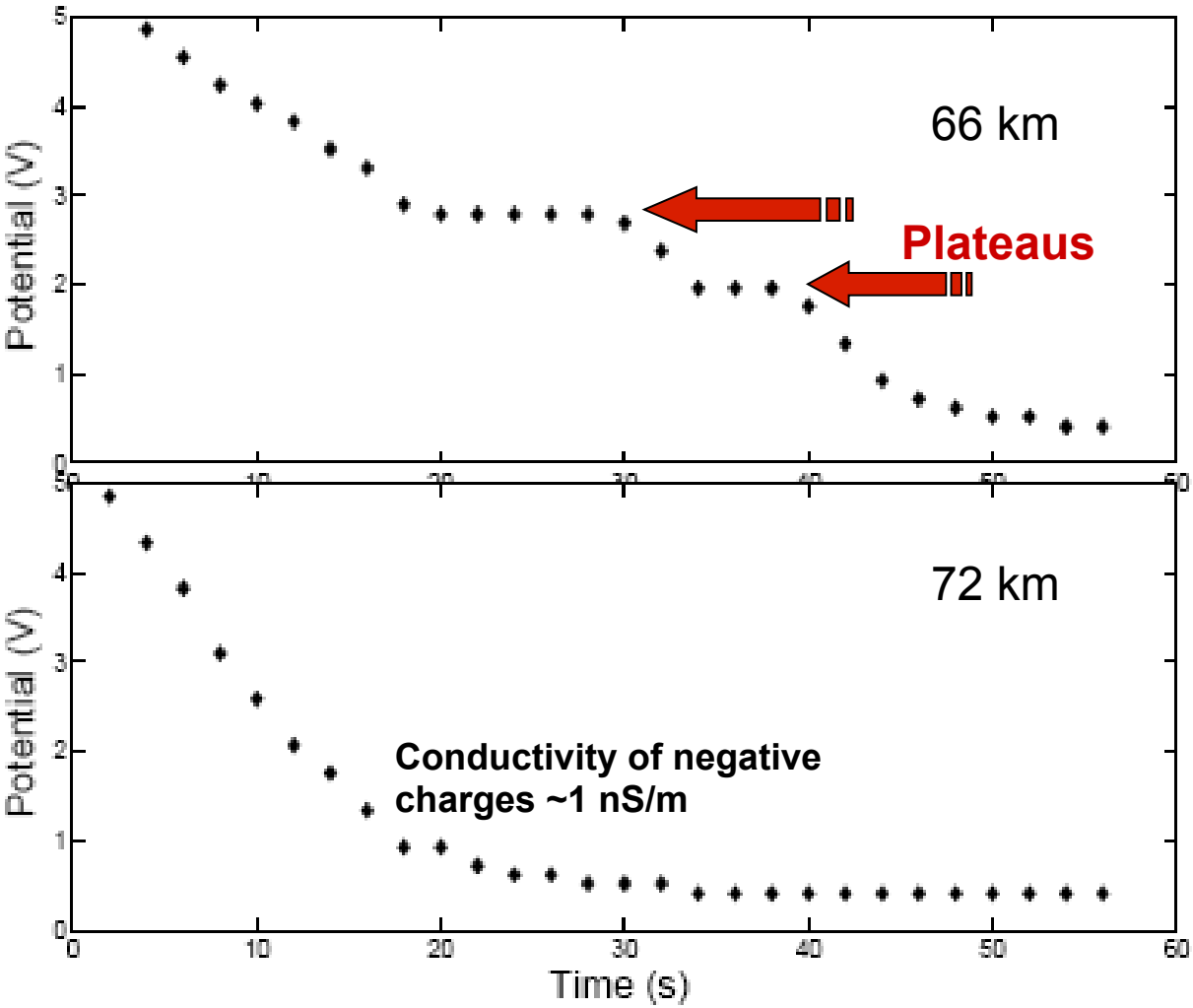

RP measured positive ions and negative ions+electrons

No artefact has been found to explain this behaviour.

Plateaus likely correspond to absence of electrons - aerosol layers or bubbles (*ongoing work*).

Aerosol structure

Altitude [km]	Thickness [km]
94.5	3.3
70 69.7	0.3 0.1
62.2	0.1
57.1 54.3	0.2 0.2
56. 6 50.9	0.1 0.1

López-Moreno et al., 2008

US 20190348842A1

(19) United States

(12) Patent Application Publication

Dinwiddie et al.

(10) Pub. No.: US 2019/0348842 A1

(43) Pub. Date: Nov. 14, 2019

(54) **POWER RECEIVER FOR EXTRACTING POWER FROM ELECTRIC FIELD ENERGY IN THE EARTH**

(71) Applicant: **Earth Energies, Inc.**, Alpharetta, GA (US)

(72) Inventors: **John Dinwiddie**, Pittsboro, NC (US); **Terry L. Wright**, Suwanee, GA (US); **David R. Ames**, Johns Creek, GA (US)

(21) Appl. No.: **16/521,764**

(22) Filed: **Jul. 25, 2019**

Related U.S. Application Data

(63) Continuation of application No. 15/397,281, filed on Jan. 3, 2017, now Pat. No. 10,389,138, which is a continuation-in-part of application No. 14/509,772, filed on Oct. 8, 2014, now Pat. No. 9,564,268.

(60) Provisional application No. 61/889,894, filed on Oct. 11, 2013.

Publication Classification

(51) **Int. Cl.**
H02J 4/00 (2006.01)

(52) **U.S. Cl.**
CPC . ***H02J 4/00*** (2013.01); *H05F 7/00* (2013.01)

(57) **ABSTRACT**

A resonant transformer connected between a ground terminal and elevated terminal draws current from the earth's electric field through a primary winding of the transformer. An impulse generator applies a high voltage impulse to the primary winding of the resonant transformer to cause current to flow from the ground terminal through the primary winding. The flow of current through the primary winding of the resonant transformer induces a current in the secondary winding, which may be converted and filtered to a usable form, e.g. 60 Hz AC or DC.

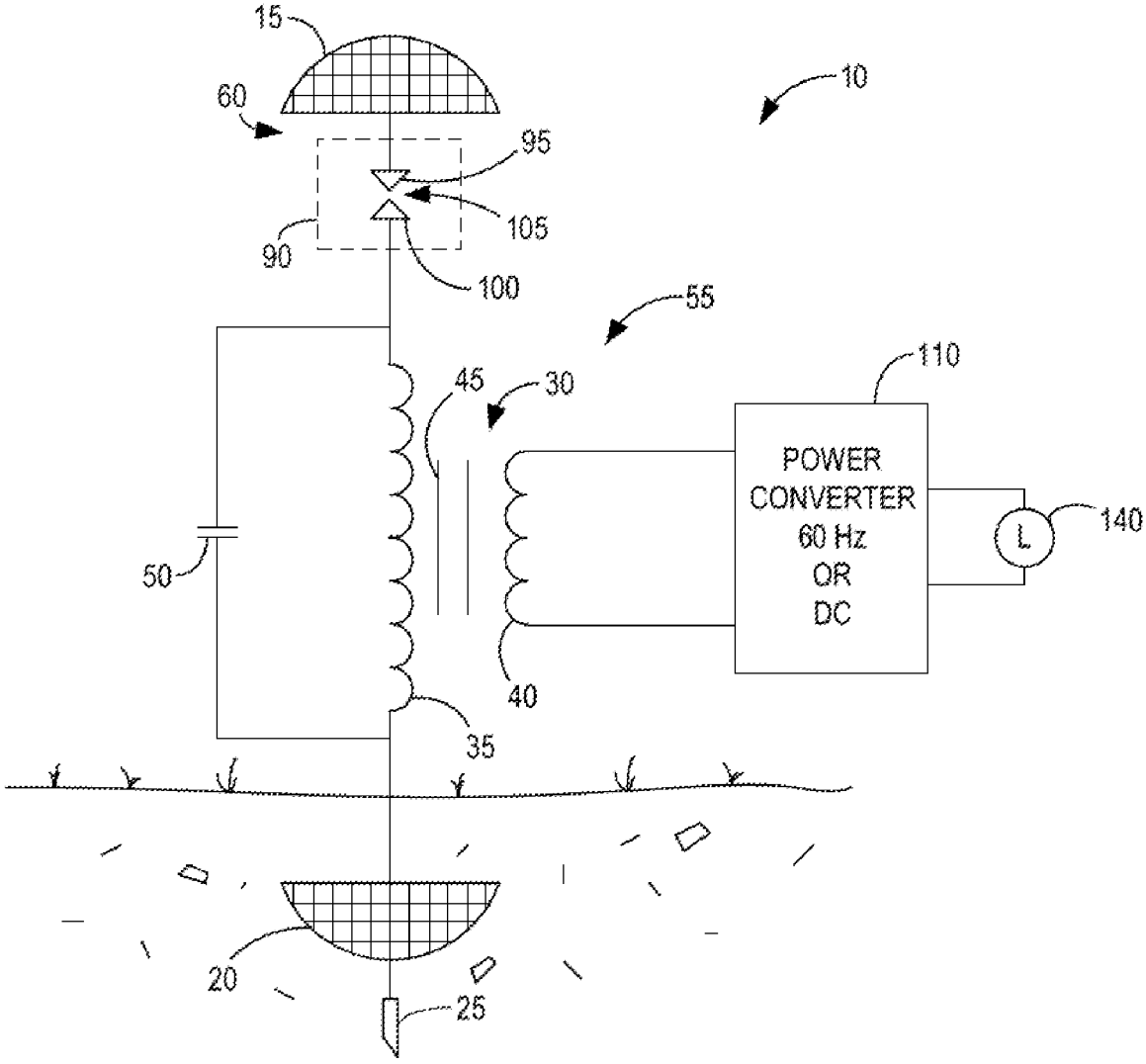

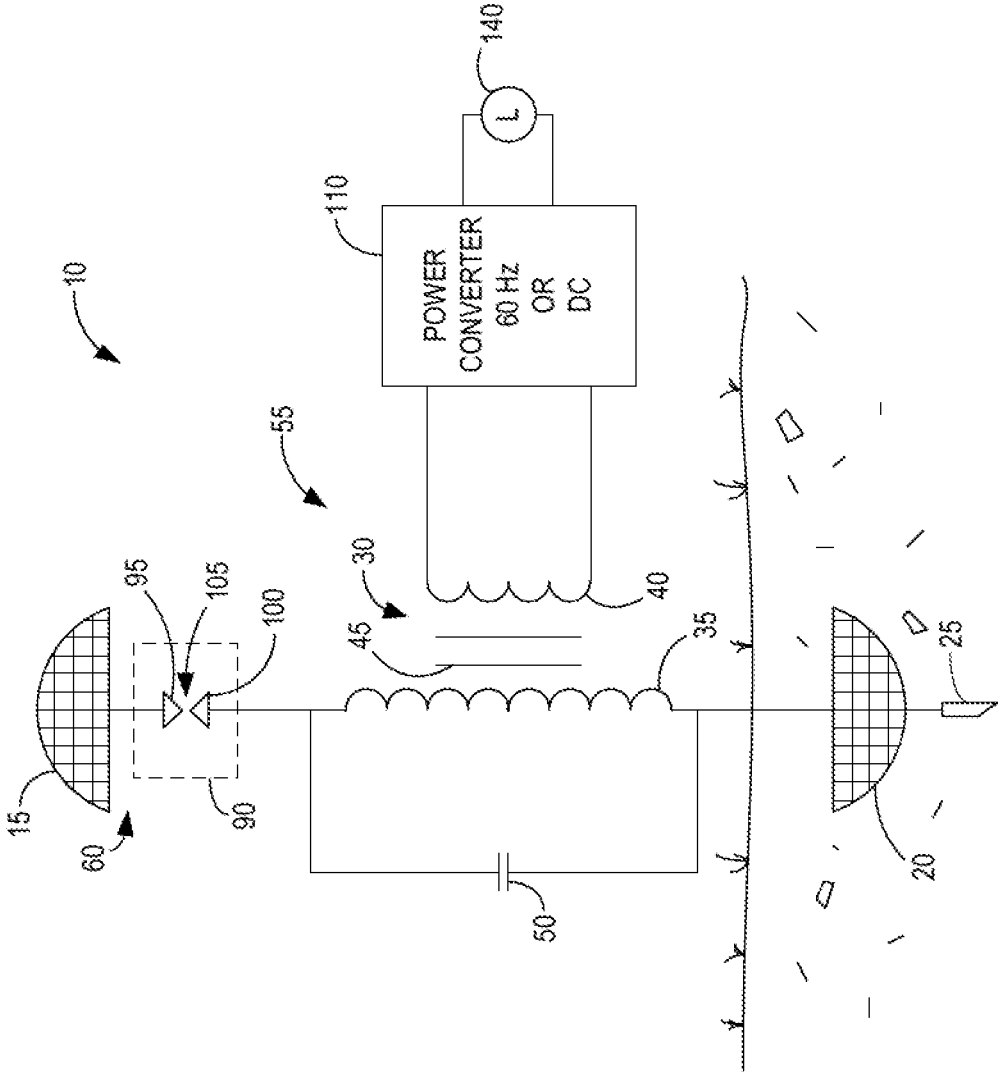
10
15
60
90
95
105
100
55
30
45
50
35
40
110
POWER
CONVERTER
60 Hz
OR
DC
140
L
20
25

FIG 1

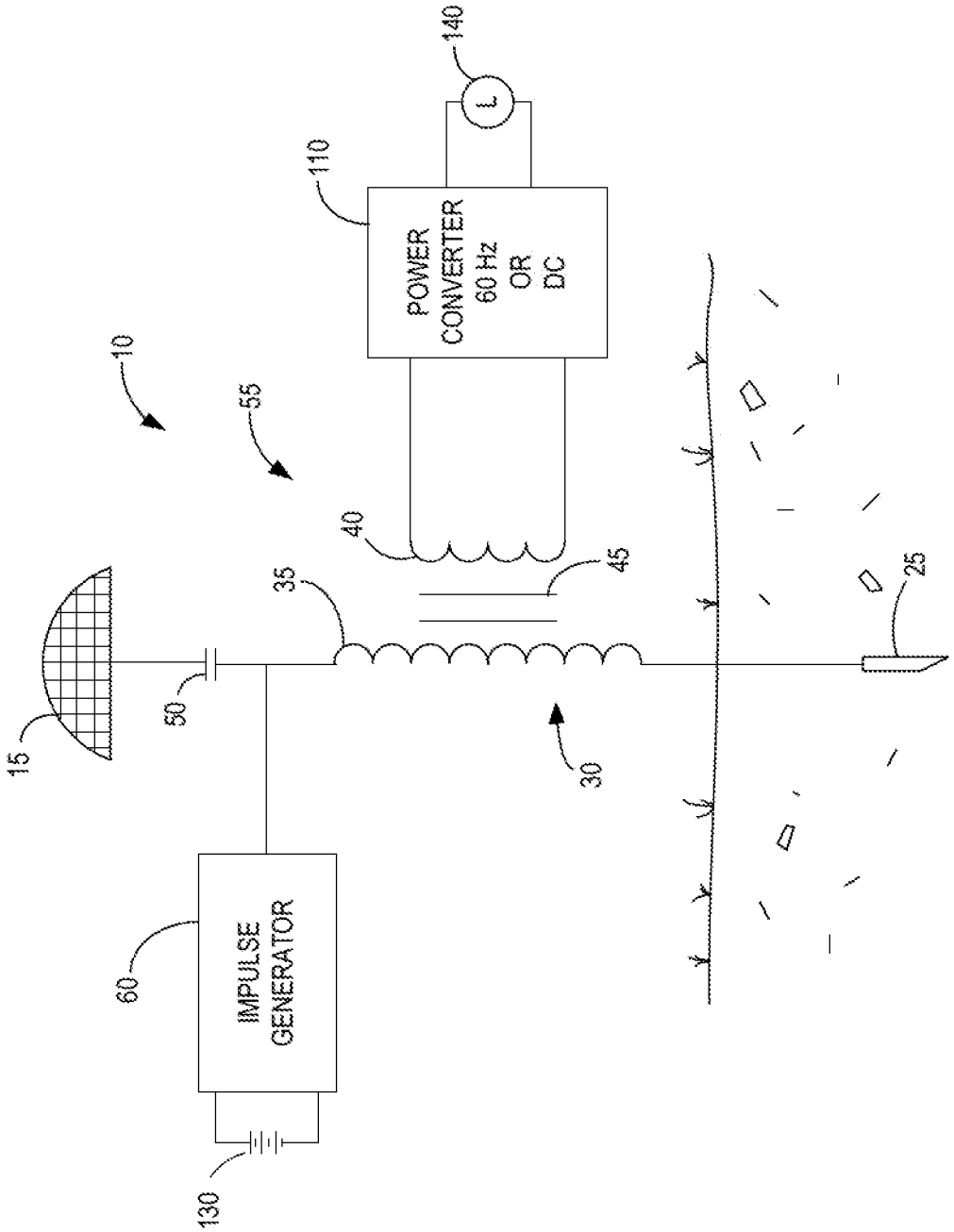
10
55
15
50
35
40
45
30
25
60
IMPULSE GENERATOR
130
110
POWER CONVERTER 60 Hz OR DC
140
L

FIG 2

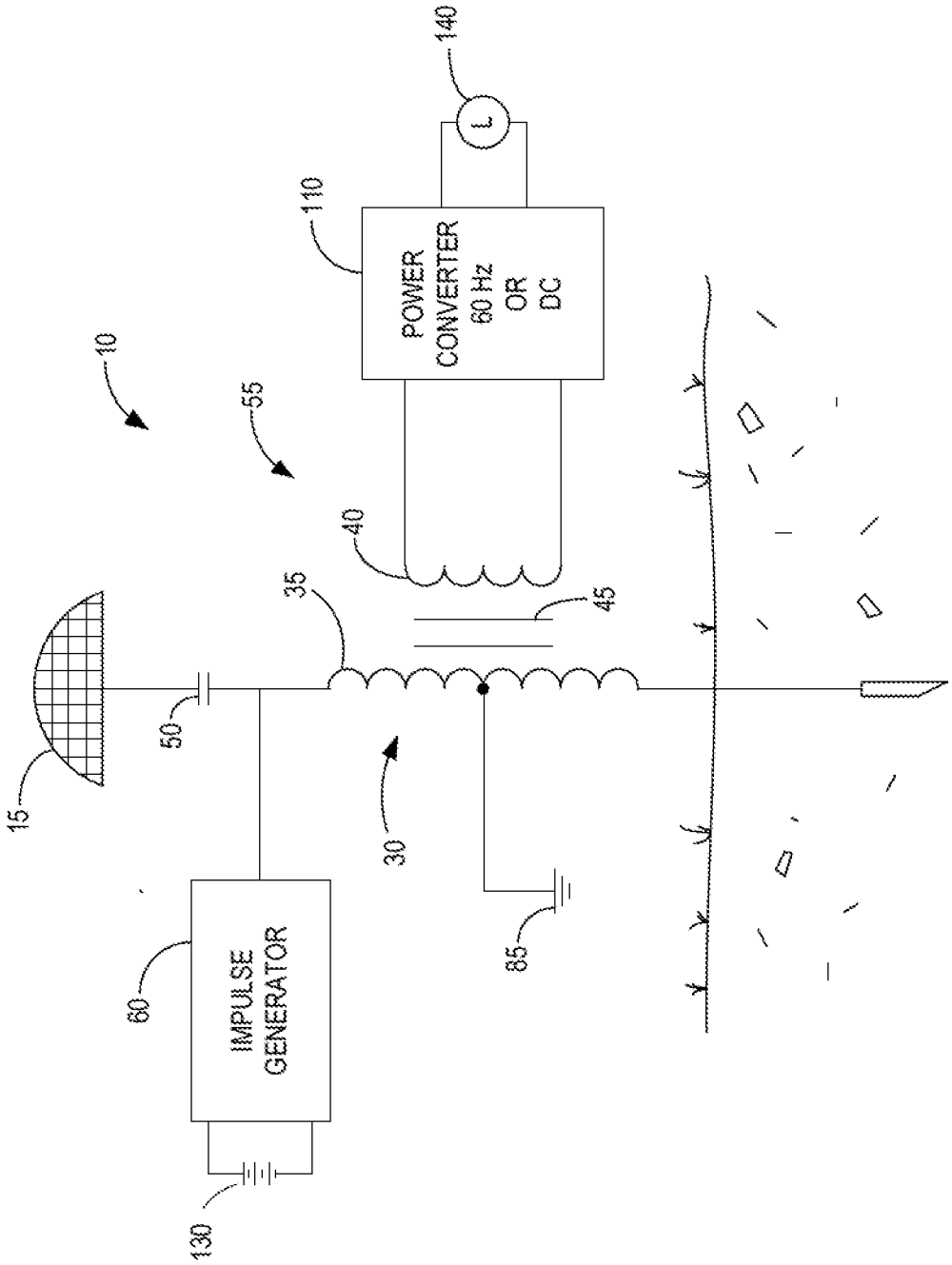
10
55
15
50
35
40
45
30
60
IMPULSE
GENERATOR
130
85
110
POWER
CONVERTER
60 Hz
OR
DC
140
L

FIG 3

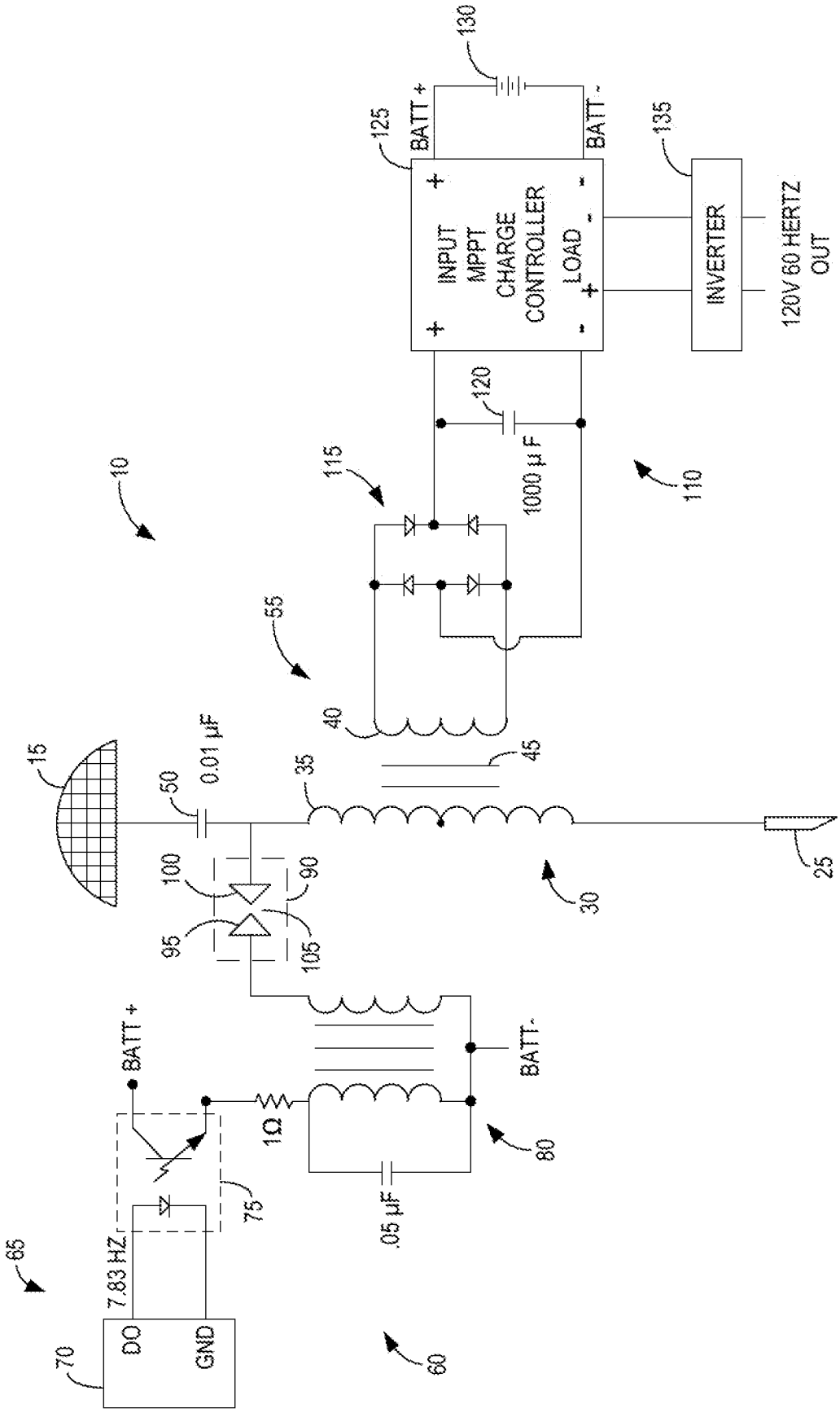
10
15
50
0.01 µF
35
45
25
30
55
40
115
120
1000 µ F
110
125
130
BATT +
BATT -
INPUT
MPPT
CHARGE
CONTROLLER
LOAD
135
INVERTER
120V 60 HERTZ
OUT
100
90
95
105
BATT +
BATT-
1Ω
80
75
.05 µF
65
7.83 HZ
70
DO
GND
60

FIG 4

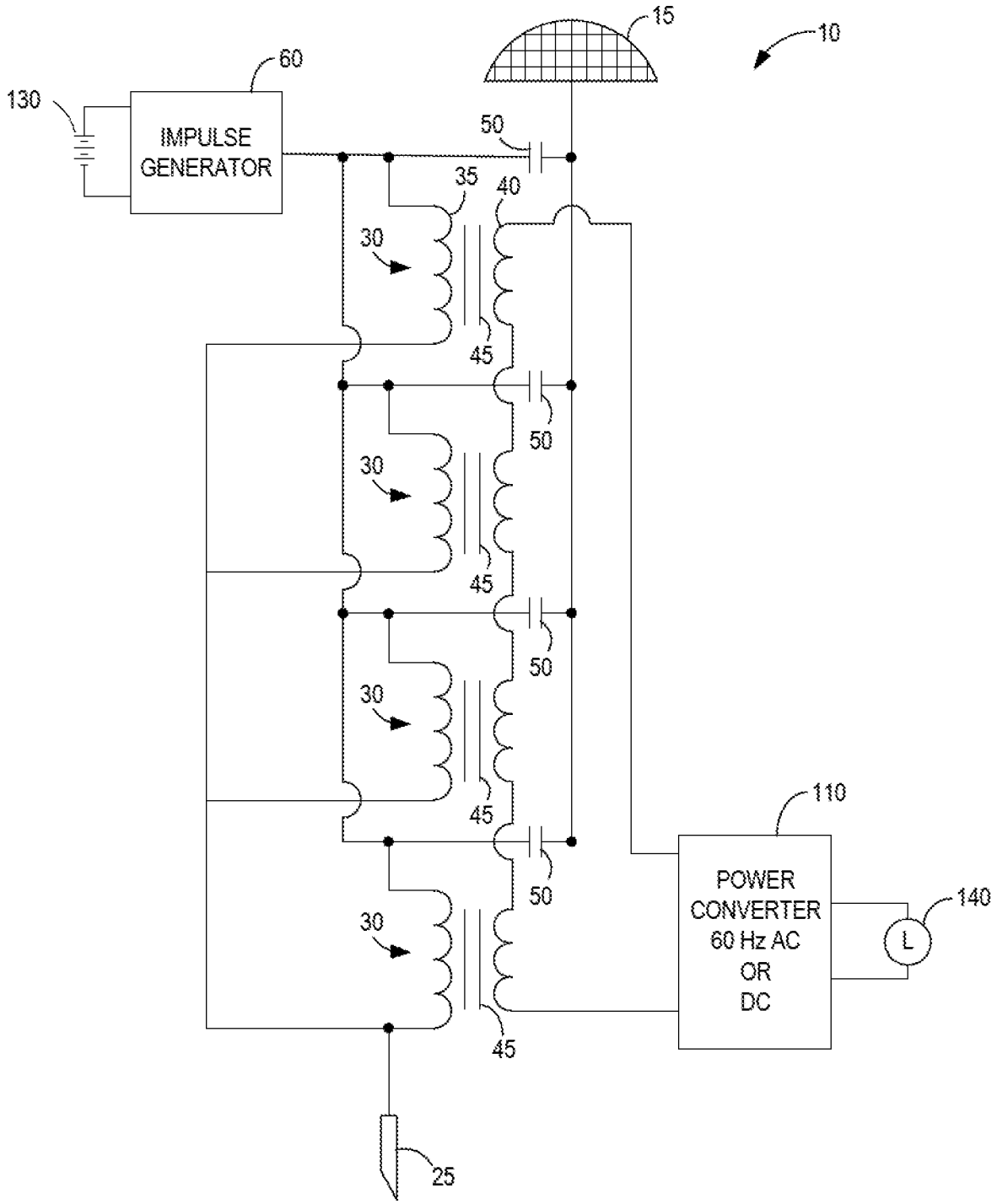
15
10
60
130
IMPULSE
GENERATOR
50
35
40
30
45
50
30
45
50
30
45
110
POWER
CONVERTER
60 Hz AC
OR
DC
140
L
50
30
45
25

FIG 5

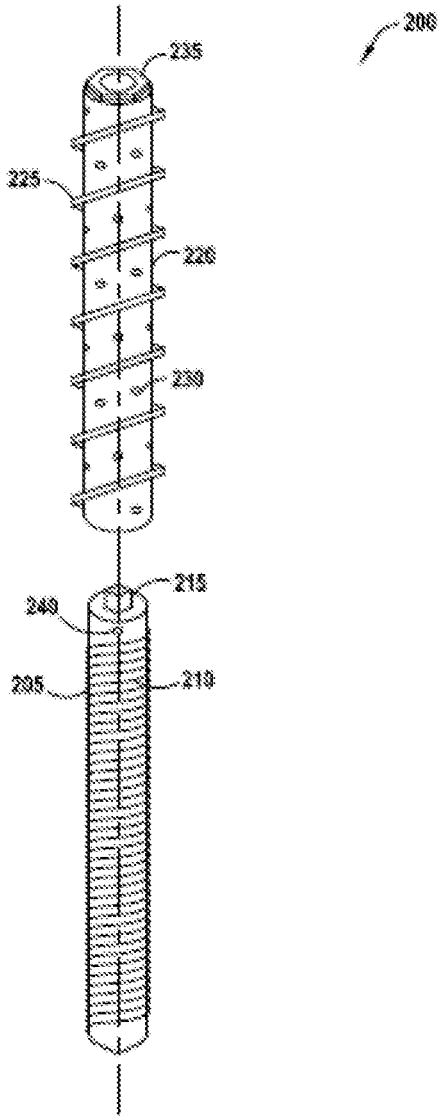

FIG 6A

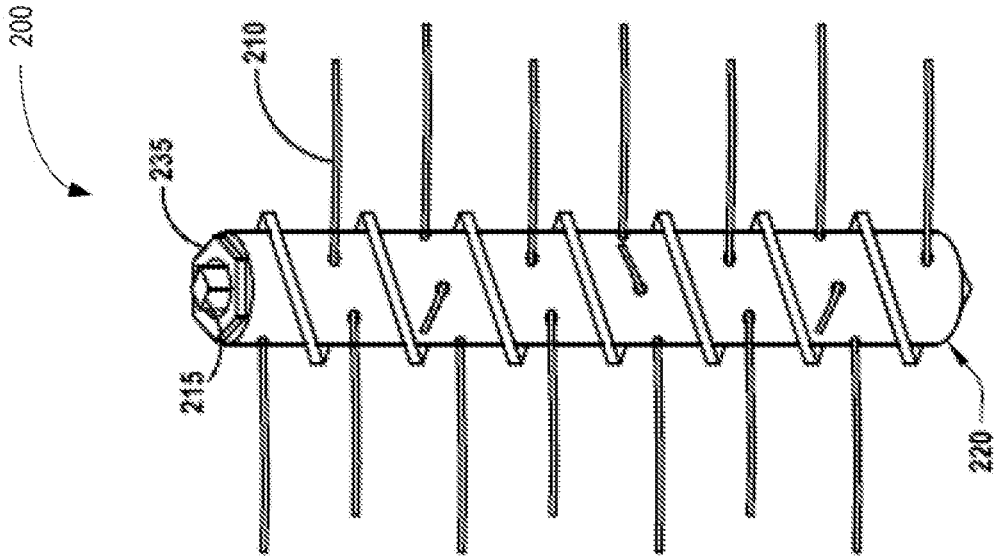

FIG 6C

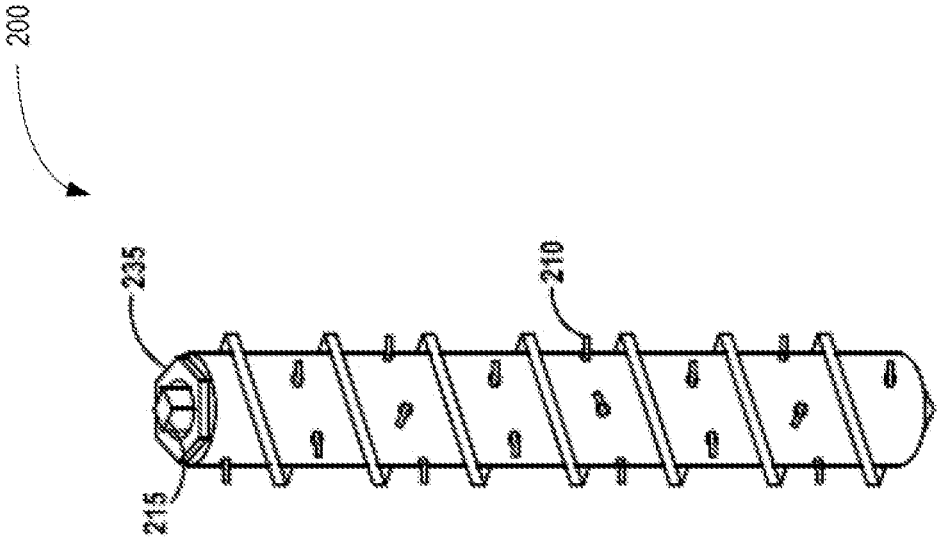

FIG 6B

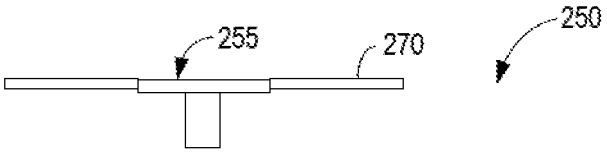

FIG 7A

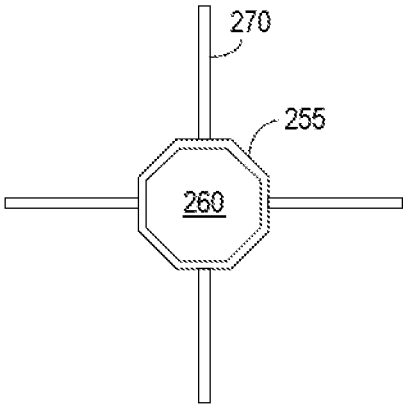

FIG 7B

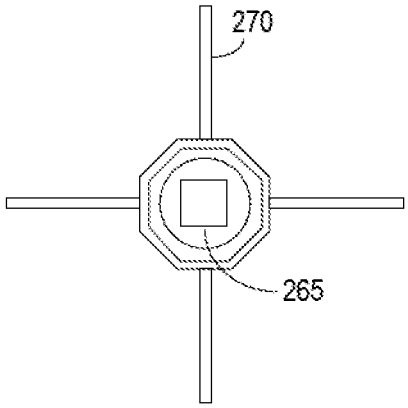

FIG 7C

POWER RECEIVER FOR EXTRACTING POWER FROM ELECTRIC FIELD ENERGY IN THE EARTH

[0001] This application is a continuation of prior U.S. application Ser. No. 15/397,281 filed Jan. 3, 2017, which is a continuation-in-part of prior U.S. application Ser. No. 14/509,772 filed Oct. 8, 2014, U.S. Pat. No. 9,564,268, which claims the benefit of U.S. Provisional Application No. 61/889,894 filed Oct. 11, 2013, the disclosures of all of which are incorporated by reference herein in their entirety.

TECHNICAL FIELD

[0002] The present invention relates generally to renewable energy, and more particularly to methods and apparatus for extracting energy from subsurface electrical fields beneath the earth's surface.

BACKGROUND

[0003] The earth and the ionosphere cavity may be viewed as a global electric circuit. Electrical currents are constantly flowing within the earth and its atmosphere. Within the earth, the majority of the earth's energy is carried by extremely low frequency (ELF) and ultralow frequency (ULF) waves in the 0-200 Hz frequency range. The earth's rotating magnetic field and positive lightning are two energy sources that sustain the ELF/ULF waves within the earth and the atmosphere.

[0004] A great deal of research has been devoted to studying the electric field present in the earth's ionosphere cavity. Joseph M. Crawley, the "Fair Weather Atmosphere as a Power Source", Proceedings ESA Annual Meeting on Electrostatics 2011; O. Jefimenko, "Operation of Electric Motors from Atmospheric Electric Field," American Journal of Physics, Vol. 39, Pgs. 776-779, 1971; M. L. Breuer, "Usability of Tapping Atmospheric Charge as a Power Source," Renewable Energy, Vol. 28, Pgs. 1121-1127, 2003. Numerous attempts have been made in the past to extract electrical energy from the earth's atmosphere. For example, U.S. Pat. No. 1,540,998 to Plauson describes a system for converting atmospheric electrical energy into usable power. These past attempts have been successful in producing only small amounts of power from the electrical field in the earth's ionosphere cavity. The modest success of these experiments compared to results from other renewable energy sources, such as solar and wind, has tempered further research and prevented widespread use of the electric field in the ionosphere cavity as an energy source.

SUMMARY

[0005] The present invention relates to a power receiver for extracting power from electric fields beneath the earth's surface. In embodiments of the present disclosure, a resonant transformer connected to a ground terminal draws current from the earth's electric field through the primary winding of the transformer. Current flow through the resonant transformer is induced by applying a high voltage impulse to the primary winding. The flow of current through the primary winding of the resonant transformer induces a current in the secondary winding, which may be converted and filtered to a usable form, e.g. 60 Hz AC or DC.

[0006] In some embodiments of the power receiver, the resonant frequency of the resonant transformers is below 200 Hz.

[0007] In some embodiments of the power receiver, the resonant transformer comprises a ferro-resonant transformer.

[0008] In some embodiments, the power receiver further comprises an elevated terminal.

[0009] In some embodiments of the power receiver, the primary winding of the resonant transformer is connected between the ground terminal and elevated terminal.

[0010] In some embodiments of the power receiver, the elevated terminal comprises an upper capacitive plate coupled to the earth's ionosphere cavity.

[0011] In some embodiments of the power receiver, the impulse generator comprises the upper capacitive plate and a spark gap connected between the upper capacitive plate and the primary winding of the resonant transformer. The spark gap comprises a pair of electrodes separated by a gap and configured to generate a spark when a voltage difference between the electrodes reaches a predetermined level.

[0012] In some embodiments of the power receiver, the impulse generator comprises a pulse generator for generating low voltage pulses, a step-up transformer for converting the low voltage pulses provided by the pulse generator to high voltage impulses, and a spark gap connected between the step-up transformer and the primary winding of the resonant transformer to generate a spark responsive to the high voltage impulses from the step-up transformer.

[0013] In some embodiments of the power receiver, the impulse generator comprises a pulse generator for generating low voltage pulses, and a step-up transformer connected to the primary winding of the resonant transformer for converting the low voltage pulses provided by the pulse generator to high voltage impulses.

[0014] In some embodiments of the power receiver, the impulse generator comprises a solid state spark generator.

[0015] In some embodiments of the power receiver, the resonant transformer includes a capacitor connected in parallel with the primary winding.

[0016] In some embodiments of the power receiver, the resonant transformer includes a capacitor connected in series with the primary winding between the impulse generator and the elevated terminal.

[0017] In some embodiments, the power receiver comprises multiple resonant transformers having primary windings connected in parallel between the ground terminal and the elevated terminal.

[0018] In some embodiments of the power receiver, the resonant transformers have different resonant frequencies.

[0019] In some embodiments of the power receiver, the resonant frequencies of the resonant transformers are all below 200 Hz.

[0020] In some embodiments of the power receiver, the resonant frequencies of the resonant transformers are matched to respective Schumann resonances.

[0021] Another embodiment of the power receiver comprises a resonant circuit connected to a ground terminal disposed below the surface of the earth, an impulse generator for generating and applying a high voltage electrical impulse to the resonant circuit to induce current flow from the ground terminal through the resonant circuit, and a power conversion circuit connected to the resonant circuit to

convert electrical current flowing through the resonant circuit to a desired form. The resonant circuit has a resonant frequency below 200 Hertz.

[0022] In some embodiments of the power receiver, the resonant circuit comprises a resonant transformer having a primary winding, a secondary winding, and resonant capacitor connected in series with the primary winding.

[0023] In some embodiments of the power receiver, the resonant circuit comprises multiple resonant transformers having primary windings connected in parallel to the ground terminal.

[0024] In some embodiments of the power receiver, the resonant transformers have different resonant frequencies.

[0025] In some embodiments of the power receiver, the resonant frequencies of the resonant transformers are all below 200 Hz.

[0026] In some embodiments of the power receiver, the resonant frequencies of the resonant transformers are matched to respective Schumann resonances.

[0027] Other embodiments of the disclosure comprise a ground terminal for a power receiver. In one embodiment, the ground terminal comprises a ground shaft configured for insertion beneath the surface of the earth, a hollow cylinder surrounding the ground shaft and having a plurality of openings, and a plurality of ground wires connected at one end to the ground shaft. The ground wires are wound around the ground shaft and have free ends protruding through respective openings in the hollow shaft so that rotation of the ground shaft relative to the hollow cylinder causes the ground wires to extend radially into the earth.

[0028] Other embodiments of the disclosure comprise methods of extracting power from the earth. In one embodiment, the method comprises applying a high voltage impulse to resonant circuit coupled to a ground terminal disposed beneath the surface of the earth to initiate resonance in the resonant circuit and induce the flow of current from the ground terminal to the resonant circuit, and converting the current flowing from the ground terminal into the resonant circuit into a useful form.

[0029] In some embodiments of the method, the resonant circuit comprises a resonant transformer including a primary winding coupled to the ground terminal and a second winding coupled to a power converter, and applying a high voltage impulse to resonant circuit comprises applying a high voltage impulse to the primary winding of the resonant transformer.

[0030] In some embodiments of the method, applying a high voltage impulse to the primary winding of the resonant transformer comprises applying an impulse in the range to 10,000 to 40,000 volts to primary winding of the transformer.

BRIEF DESCRIPTION OF THE DRAWINGS

[0031] FIG. **1** illustrates a first exemplary embodiment of a power receiver.

[0032] FIG. **2** illustrates a second exemplary embodiment of a power receiver.

[0033] FIG. **3** illustrates a third exemplary embodiment of a power receiver.

[0034] FIG. **4** illustrates a fourth exemplary embodiment of a power receiver.

[0035] FIG. **5** illustrates a fifth exemplary embodiment of a power receiver.

[0036] FIG. **6**A is an exploded perspective view of an exemplary ground antenna array for the power receiver.

[0037] FIG. **6**B is a perspective view of an assembled ground antenna array before being deployed.

[0038] FIG. **6**C is a perspective view of an assembled ground antenna array after being deployed.

[0039] FIG. **7**A is a side view of an insertion tool for installing the ground antenna array.

[0040] FIG. **7**B is a top view of the insertion tool for installing the ground antenna array.

[0041] FIG. **7**C is a bottom view of the insertion tool for installing the ground antenna array.

DETAILED DESCRIPTION

[0042] Referring now to the drawings, a power receiver for extracting energy from the earth's electric field are illustrated and indicated generally by the numeral 10. Various embodiments of the power receiver **10** are described and similar reference numbers are used throughout the description to indicate similar components.

[0043] The power receiver **10** converts energy in the ELF/ULF waves to useful form, e.g. 60 Hz AC or DC. The power receiver **10** is essentially a resonance circuit that resonates at the natural resonance frequencies in the earth's electric field. These resonance frequencies, known as Schumann resonance frequencies, occur at 7.83 Hz, 14.3 Hz, 20.8 Hz, 27.3 Hz, and 33.8 Hz. A high voltage impulse initiates resonance within the power receiver **10**. In the resonant mode, the impedance of the power receiver **10** is reduced to near zero thus inducing ground currents to flow into the power receiver **10** where the ground currents are converted to useful form.

[0044] FIG. **1** illustrates a first embodiment of the power receiver **10**. The power receiver **10** comprises a resonant transformer **30** connected between an elevated terminal **15** and ground terminal **25**. In this embodiment, the elevated terminal **15** is capacitively coupled to electric fields within the earth's ionosphere cavity and functions as an upper capacitive plate. A lower capacitive plate **20** is connected to the ground terminal **25** beneath the surface of the earth.

[0045] The resonant transformer **30** comprises a primary winding **35**, secondary winding **40**, ferromagnetic core **45**, and capacitor **50**. One end of the primary winding **35** is connected to the lower capacitive plate **20** and ground terminal **25**. The opposite end of the primary winding **35** is connected via a spark gap **90** to the elevated terminal **15**. The capacitor **50** is connected in parallel with the primary winding **35** of the resonant transformer **30** to form an LC circuit **55** with a resonance frequency range of between about 0.1 and 200 Hz. In a preferred embodiment, the resonant transformer has a Q of about 10 or greater and resonance frequency in the range of about 0.1 -200 Hertz. For example, the resonant transformer **30** may have a resonance frequency of about 7.83 Hz, the fundamental Schumann resonance frequency. The secondary winding **40** of the resonant transformer **30** is connected to a power converter **110** as will be hereinafter described in greater detail. The power converter **110** converts the energy extracted from the earth's electric field by the power receiver **10** into a usable form for driving a load **140**.

[0046] The elevated terminal/upper capacitive plate **15** comprises an insulated, dish-shaped plate with a large radius of curvature. The capacitance and resistance of the elevated terminal is chosen for receiving broadband electric field

frequencies in the 0-200 Hz range. The upper capacitive plate **15** is sized to maximize to the extent practical coupling with the electric field in the earth's ionosphere cavity.

[0047] The lower capacitive plate **20** is also a dish-shaped plate with a large radius of curvature. One function of the lower capacitive plate **20** is to collect charge from the earth's ground currents and provide an instantaneous source of current as hereinafter described. The capacitance and resistance of the lower capacitive plate **20** is selected to promote the flow of current from the ground with minimal losses.

[0048] The spark gap **90** connected between the elevated terminal **15** and resonant transformer **30** comprises a pair of electrodes **95**, **100** separated by an evacuated air gap **105**. Electrode **95** is connected to the upper capacitive plate **15**. Electrode **100** is connected to the resonant transformer **30**. The spark gap **105** prevents electrical discharge from the upper capacitive plate **15** to the earth's ionosphere cavity. The spark gap **90** in combination with the elevated terminal **15** function as an impulse generator that applies a high voltage impulse of about 10,000-40,000 volts to the primary winding **35** to initiate resonance in the transformer **30**.

[0049] In operation, the capacitive coupling of the upper capacitive plate **15** induces a high voltage operating current in the upper capacitive plate **15**. The upper capacitive plate is connected to a first electrode **95** to the spark gap **90**. When the voltage difference between the electrodes **95** and **100** reaches a threshold, a spark forms across the electrodes **95**,**100** and a high voltage impulse is applied to the primary winding **35** of the resonant transformer **30**. This high voltage impulse initiates resonance within the transformer **30**.

[0050] In resonant mode, the impedance of the resonance transformer is reduced to nearly zero allowing current to flow from the capacitive plate **20** and ground terminal **25** through the primary winding **35** of the transformer **30**, which in turn induces current in the secondary winding **40**. Power converter **110** converts the current flowing through the secondary winding **40** into a usable form for driving a load **140**. The transformer **30** will continue to resonate for a short period of time. By providing high voltage impulses to the primary winding **35** of the resonant transformer **30** at periodic intervals, it is possible to maintain a continuous flow of current from the earth into the resonant transformer **30**, thus producing a continuous supply of power.

[0051] FIG. **2** discloses a second embodiment of the primary receiver **10**. This embodiment includes a resonant transformer **30** connected between an elevated terminal **15** and ground terminal **25**. The resonant transformer **30** comprises a primary winding **35**, secondary winding **40**, ferromagnetic core **45** and a high voltage capacitor **50**. One end of the primary winding **35** is connected to the ground terminal **25**. The opposite end of the primary winding **35** is connected to the elevated terminal **15**. The capacitor **50** has a capacitance of about 0.01 micro-farads. In contrast to the previous embodiment, capacitor **50** is connected in series with the primary winding **35** and elevated terminal **15** and forms a LC circuit **55** with a Q of about 10 or greater and a resonance frequency in the range of about 0.1 to 200 Hz. In a preferred embodiment, the resonance frequency of the transformer **30** is 7.83 Hz, the fundamental Schumann resonance frequency. An impulse generator **60** is connected between the primary winding **35** of the resonant transformer **30** and the series capacitor **50** and applies a high voltage impulse to the primary winding **35** of the resonant transformer **30**. A battery **130** or other external power source supplies power to the impulse generator **60**. As previously described, the high voltage impulse applied by the impulse generator **60** initiates resonance within the resonant transformer **30** inducing current flow from the ground terminal **25** into the primary winding **35** of the resonant transformer **30**. The flow of current from the ground terminal **25** through the primary winding **35** induces current in the secondary winding **40**. Power converter **110** converts the electrical energy in the current flowing through the primary winding **40** into a usable form.

[0052] In contrast to the first embodiment, it is not required to capacitively couple the elevated terminal **15** in the second embodiment to the earth's ionosphere cavity. Rather, the elevated terminal **15** in this embodiment provides lightning protection and dissipates some of the energy flowing into the power receiver **10** to the earth's ionosphere cavity. Also, in contrast to the first embodiment, the capacitor **50** is connected in series between the primary winding **35** of the transformer **30** and the elevated terminal **15**. Those skilled in the art will appreciate that the capacitor **50** could also be connected in parallel rather than series with the primary winding **35** as shown in FIG. **1**. Another difference is that the impulse generator **60** has an external power source. The amount of energy generated by the power receiver **10**, however, is far greater than the energy needed to generate high voltage impulses. The first embodiment does not require an external power source to generate high voltage impulses.

[0053] FIG. **3** illustrates a third embodiment of the power receiver **10**. This embodiment is essentially the same as the embodiment shown in FIG. **2**. The main difference is that a center tap of the primary winding **35** in the resonant transformer **30** is connected to an electrical ground **85**. It should be appreciated that the electrical ground **85** may be different than the earth ground. When the center tap of the resonant transformer **30** is grounded at a distance away from the ground terminal **25** (e.g. 50 ft to 100 ft), the power receiver **10** becomes a transmitter via the ground loop formed.

[0054] FIG. **4** illustrates the power receiver **10** of FIG. **2** in greater detail. The power receiver includes a resonant transformer **30** connected between a ground terminal **25** and an elevated terminal **15**. The ground terminal **25** may comprise a ⅝-inch×8-foot copper ground rod, such as the ERICO 615880UPC. The elevated terminal **15** may comprise a 90% copper mesh formed into a hemisphere with a radius of about 9 inches. The elevated terminal **15** may be elevated at a height of approximately 6 feet above the ground.

[0055] The resonant transformer **30** includes a primary winding **35**, secondary winding **40**, ferromagnetic core **45** and series capacitor **50** configured as previously described. The resonant transformer **30** may have a Q of about 10 and a resonance frequency in the range of about 0.1 to 200 Hz. The resonant transformer **30** may be made using an Allanson transformer (part #1530BP120R) connected in series with a 0.01 micro-farad capacitor, such as the Condensor Products high voltage capacitor (part #TC 103-17-125). The resonant transformer **30** is used in a step-down configuration. The center tap of the resonant transformer **30** may optionally be connected to a ground.

[0056] An impulse generator **60** is connected between the primary winding **35** of the resonant transformer **30** and the series capacitor **50** and applies a high voltage impulse in the range of about 10,000 to 40,000 volts to the primary winding

of the transformer **30**. A battery **130** or other external power source supplies power to the impulse generator **60**. The power converter **110** connects to the secondary winding **40** of the resonant transformer **30** for converting current in the secondary winding of the transformer to a useful form.

[0057] The impulse generator **60** comprises a pulse generator **65** for generating low voltage pulses, a step-up transformer **80** for converting the low voltage pulses from the pulse generator **65** to high voltage pulses, and a spark gap **90** for generating sparks responsive to the high voltage pulses from the step-up transformer **80**.

[0058] The pulse generator **65** comprises a square wave generator **70**, such as a Sinometer VC2002 function signal generator, and solid state relay **75**. The square wave generator **70** generates a digital pulse stream. In one embodiment, the digital pulse stream generates a square waveform with a frequency of about 7.83 Hz. The frequency of the digital pulse stream is selected to match the resonance frequency of the transformer **30**, though such is not necessarily required. The pulse stream output from the square wave generator **70** is applied to the solid state relay **75**. The solid state relay **75** is connected between a battery or other power source and a first winding of the step-up transformer **80**. The battery may comprise a 12 V, 7.0 A/H sealed lead acid battery, such as the ELB 1270A by Lithonia Lighting. The solid state relay **75** functions as a switch that is activated responsive to the waveform from the square wave generator **70** to provide a continuous stream of low voltage pulses from the battery to the first winding of the step-up transformer **80**. A 1 ohm resistor is connected between the solid state relay **75** and step-up transformer **80**.

[0059] The step-up transformer **80** may comprise a Transco 15 kV, 30 mA neon sign transformer (part # S15612). The step-up transformer **80** converts the low voltage pulses from the pulse generator **65** to high voltage pulses that are applied to the spark gap **90**. The step-up transformer has a 0.5 micro-farad capacitor connected in parallel with the primary winding of the step-up transformer **80**. The step-up transformer produces pulses at the output of about 30,000 to 40,000 volts.

[0060] The spark gap **90** comprises a pair of electrodes **95**, **100** separated by an air gap **105**. A suitable spark gap electrode pair is the Information Unlimited SPARK05 ¼-inch×1-inch tungsten electrodes. As previously described, when the voltage potential between the electrodes **95**, **100** reaches a threshold, a spark forms between the electrodes **95**, **100** and supplies a nearly instantaneous, high voltage impulse to the primary winding **35** of the resonant transformer **30**. This high voltage impulse initiates resonance in the resonant transformer **30** inducing current flow from the ground terminal **25** through the primary winding **35** of the resonant transformer **30**.

[0061] The power converter **110** comprises a bridge rectifier **115**, filter capacitor **120**, charge controller **125**, and inverter **135**. A suitable rectifier is the Micro Commercial Components 10 amp, 1000 volt bridge rectifier (Part #GBJL 1010). The bridge rectifier **115** converts the AC current flowing through the secondary winding **40** of the resonant transformer to a DC current. A filter capacitor **120** removes unwanted frequencies from the DC current. A suitable capacitor **120** is Cornell Dubilier 1000 uF 450 VDC capacitor (part #383LX102M450N082). The filter capacitor **120** has a capacitance of about 1000 micro-farads. The DC current is input to the charge controller **125**. The charge controller **125** may, for example, comprise a maximum power point tracking (MPPT) charge controller, such as a Tracer 4215 BN MPPT Solar Charge Controller, which is commonly used in solar power generating systems. The charge controller **125** applies a small amount of energy to a battery **30** to charge the battery **130**. As previously noted, the battery **130** serves as a power source for the impulse generator **60**. The remaining current is supplied to an inverter **135**, which converts the DC current to an AC current with a desired voltage and frequency, e.g., 120 volts/60 Hz AC. A suitable inverter **135** is the 1500 W Pure Sine power inverter (AIMS) (part # PWRI1500125). The power converter **110** as shown in FIG. **4** may be utilized in the embodiment shown in FIGS. **1**, **2** and **3**.

[0062] FIG. **5** illustrates a power receiver **10** according to another embodiment. The power receiver **10** comprises a plurality of resonant transformers **30** connected between a ground terminal **25** and elevated terminal **15**. Each of the resonant transformers **30** comprises a primary winding **35**, secondary winding **40**, ferromagnetic core **45** and series capacitor **50**. The primary windings **35** of the resonant transformers **30** are connected in parallel. The secondary windings **40** are connected in series with the power converter **110**. An impulse generator **60** applies a high voltage impulse to the primary windings **35** of the resonant transformers **30**. A battery **130** or other external power source supplies power to the impulse generator **60**. The power converter **110** converts the current in the power converter circuit to a usable form for driving a load **140**.

[0063] In one embodiment, each of the resonant transformers **30** shown in FIG. **5** is configured to have a different resonant frequency. In one embodiment, the resonant transformers **30** are configured to resonate at frequencies of 7.83 Hz, 14.8 Hz, 20.3 Hz and 26.8 Hz respectively. Additional resonant transformers **30** could be added to operate at other resonance frequencies.

[0064] FIGS. **6**A-**6**C illustrate a high quality ground antenna array **200** which may be used as a ground terminal **25**. The ground antenna array **200** comprises a generally cylindrical ground shaft **205** disposed with a hollow cylinder **220** and a plurality of reinforced, heavy gauge ground wires **210** attached at one end to the ground shaft **205**. The ground shaft **205** and ground wires **210** should be highly conductive and have low resistance to supply current from the ground to the power receiver **10**. In one embodiment, the ground wires **210** may be copper or other highly-conductive metal. The end of the ground shaft may be pointed to facilitate insertion into the earth. A connection port on the ground shaft **220** is provided to electrically connect the ground antenna array **220** to the resonant transformer **30**.

[0065] The hollow cylinder **220** has external threads **25** to facilitate insertion into the ground. A rotator nut **235** is fixedly secured to the top end of the hollow shaft **220**. A square shaft **215** protrudes from the top end of the ground shaft **205** into the opening in the rotator nut **235**. FIG. **6**B. A tool **250**, shown in FIG. **7**, engages with the rotator nut **235** and square shaft **215** during insertion of the ground antennas array **200** into the ground as will be hereinafter described.

[0066] The insertion tool **250** is shown in FIG. **7**. The insertion tool **250** includes a tool body **255** having a first socket **260** on one side to fit the rotator nut **235** on the hollow cylinder **220** and a second socket **265** on the other side to fit the square shaft **215** on the ground shaft **205**. Arms **270**

extend from the outer periphery of the tool body **255** for manually or mechanically turning the insertion tool **250**.

[0067] Before the antenna array **200** is deployed, the ground wires **210** are wound around the ground shaft **205** with the free ends protruding slightly from respective openings **230** in the hollow cylinder **220** to a distance not to exceed one half (½) the depth of the external threads **225** on the hollow cylinder **220**. FIG. **6**B illustrates the ground antenna array **200** before deployment. FIG. **6**C illustrates the ground antenna array in a deployed configuration.

[0068] Installation of the ground antenna array **200** is performed in two stages. In the first stage, a hole slightly smaller in diameter than the threads **235** of the hollow cylinder **220** is drilled into the Earth to a depth matching the length of the hollow cylinder **220** or slightly longer. The hole is filled with water and the water is allowed to soak into the soil. After the ground is softened, the hollow cylinder **220** is rotated using the insertion tool **250** to insert the ground antenna array **200** into the ground. The first socket **260** of the insertion tool **250** is engaged with the rotator nut **230** and the insertion tool **250** is turned by hand or a mechanized rotating shaft fitted and attached to the tool arms **270** to thread the ground assembly into the hole. During the initial insertion of the ground antenna array **200**, the ground shaft **205** is fixed to the hollow shaft **220** and rotates with the hollow shaft. The hollow cylinder **220** is rotated until it reaches the full depth of the hole.

[0069] Once the ground antenna array **200** has been fully inserted into the earth, the insertion tool **250** is flipped over and the second socket **265** of the insertion tool **250** is engaged with the square shaft **215**. The insertion tool **250** is turned by hand or a mechanized rotating shaft fitted and attached to the tool arms **270** to rotate the ground shaft **205**. During the second phase, the ground shaft **205** rotates freely inside the hollow cylinder **220**. Rotation of the ground shaft **205** causes the reinforced ground wires **210** to extend radially into the earth. The ground shaft **220** is rotated until the ground wires are fully extended. The ends of the ground wires may be sharpened to aid in the extension of the ground wires during the second phase.

[0070] After the ground antenna array **200** is deployed, a connection cable **280** is attached to a connection port **240** on the ground shaft **220** to electrically connect the ground antenna array **220** to the resonant transformer **30** in the power receiver **10**.

What is claimed is:

1. A power receiver for extracting electrical energy from the earth's electric field, said power receiver comprising:

a resonant transformer connected to a ground terminal disposed below the surface of the earth;

an impulse generator for generating and applying a high voltage electrical impulse to a primary winding of the resonant transformer to induce current flow from the ground terminal through the primary winding of the transformer; and

a power converter connected to a secondary winding of the resonant transformer to convert an alternating current flowing through the secondary winding to a direct current.

2. The power receiver of claim **1** wherein a resonant frequency of the resonant transformers is below 200 Hz.

3. The power receiver of claim **1** wherein the resonant transformer comprises a ferro-resonant transformer.

4. The power receiver of claim **1** wherein the impulse generator comprises:

a pulse generator for generating low voltage pulses;

a step-up transformer for converting the low voltage pulses provided by the pulse generator to high voltage impulses;

a spark gap connected between the step-up transformer and the primary winding of the resonant transformer to generate a spark responsive to the high voltage impulses from the step-up transformer.

5. The power receiver of claim **1** wherein the impulse generator comprises a solid state spark generator.

6. The power receiver of claim **1** wherein said resonant transformer includes a capacitor connected in parallel with the primary winding.

7. The power receiver of claim **1** wherein said resonant transformer includes a capacitor connected in series with the primary winding.

8. A method of extracting electrical energy from the earth's electric field, the method comprising:

applying a high voltage electrical impulse to a primary winding of a resonant transformer connected to a ground terminal disposed below the surface of the earth to induce current flow from the ground terminal through the primary winding of the transformer; and

converting an alternating current flowing through a secondary winding of the resonant transformer to a direct current.

9. The method of claim **8** wherein a resonant frequency of the resonant transformers is below 200 Hz.

10. The method of claim **8** wherein the resonant transformer comprises a ferro-resonant transformer.

11. The method of claim **8** wherein the impulse generator comprises:

a pulse generator for generating low voltage pulses;

a step-up transformer for converting the low voltage pulses provided by the pulse generator to high voltage impulses;

a spark gap connected between the step-up transformer and the primary winding of the resonant transformer to generate a spark responsive to the high voltage impulses from the step-up transformer.

12. The method of claim **8** wherein the impulse generator comprises a solid state spark generator.

13. The method of claim **8** wherein said resonant transformer includes a capacitor connected in parallel with the primary winding.

14. The method of claim **8** wherein said resonant transformer includes a capacitor connected in series with the primary winding.

* * * * *

US 20150102675A1

(19) United States

(12) Patent Application Publication

Dinwiddie et al.

(10) Pub. No.: US 2015/0102675 A1

(43) Pub. Date: Apr. 16, 2015

(54) **POWER RECEIVER FOR EXTRACTING POWER FROM ELECTRIC FIELD ENERGY IN THE EARTH**

(71) Applicant: **Earth Energies, Inc.**, Johns Creek, GA (US)

(72) Inventors: **John Dinwiddie**, Cary, NC (US); **Terry L. Wright**, Suwanee, GA (US); **David R. Ames**, Johns Creek, GA (US)

(21) Appl. No.: **14/509,772**

(22) Filed: **Oct. 8, 2014**

Related U.S. Application Data

(60) Provisional application No. 61/889,894, filed on Oct. 11, 2013.

Publication Classification

(51) **Int. Cl.**
H02J 4/00 (2006.01)

(52) **U.S. Cl.**
CPC ***H02J 4/00*** (2013.01)

(57) **ABSTRACT**

A resonant transformer connected between a ground terminal and elevated terminal draws current from the earth's electric field through a primary winding of the transformer. An impulse generator applies a high voltage impulse to the primary winding of the resonant transformer to cause current to flow from the ground terminal through the primary winding. The flow of current through the primary winding of the resonant transformer induces a current in the secondary winding, which may be converted and filtered to a usable form, e.g. 60 Hz AC or DC.

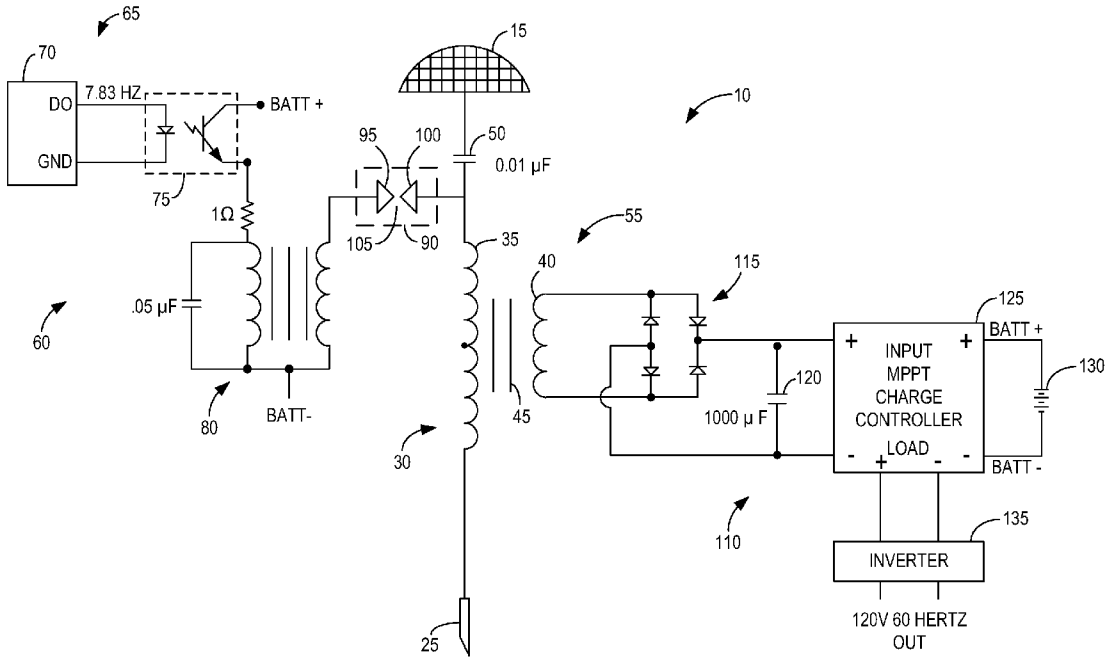

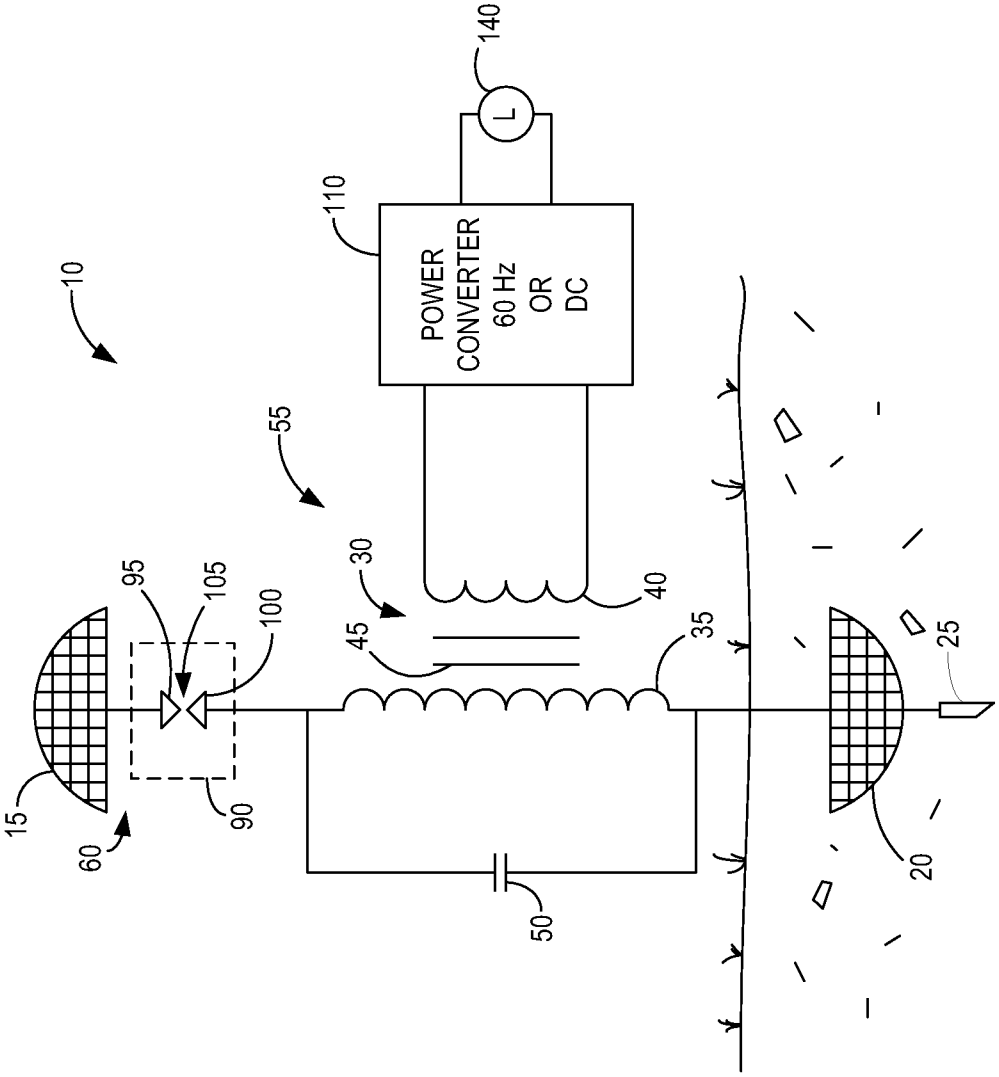
10
15
60
90
95
105
100
55
30
45
50
35
40
110
POWER
CONVERTER
60 Hz
OR
DC
140
L
20
25

FIG 1

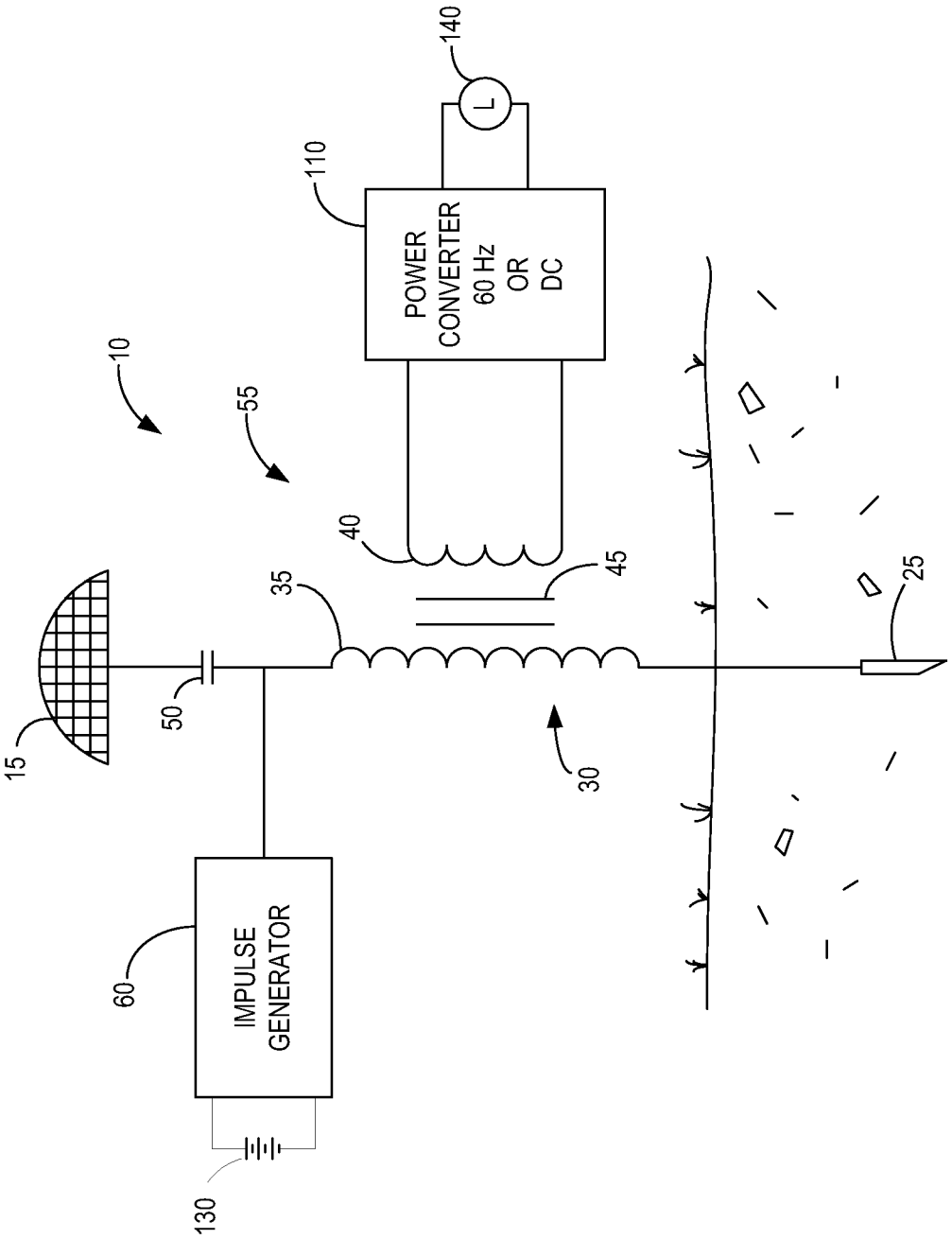
10
55
15
50
35
40
45
30
25
60
IMPULSE GENERATOR
130
110
POWER CONVERTER 60 Hz OR DC
140
L

FIG 2

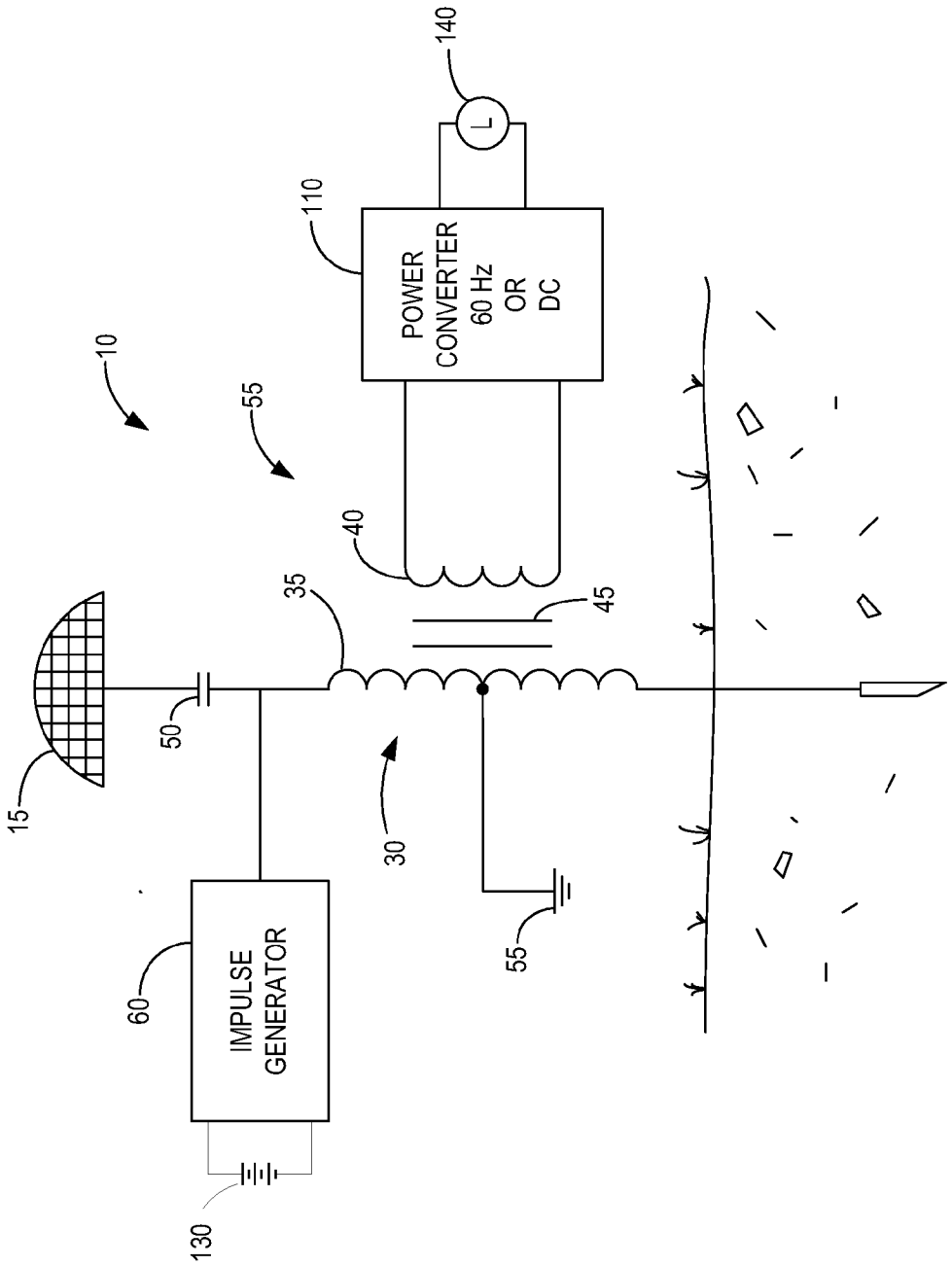
10
55
15
50
35
40
45
30
55
60
IMPULSE GENERATOR
130
110
POWER CONVERTER 60 Hz OR DC
140
L

FIG 3

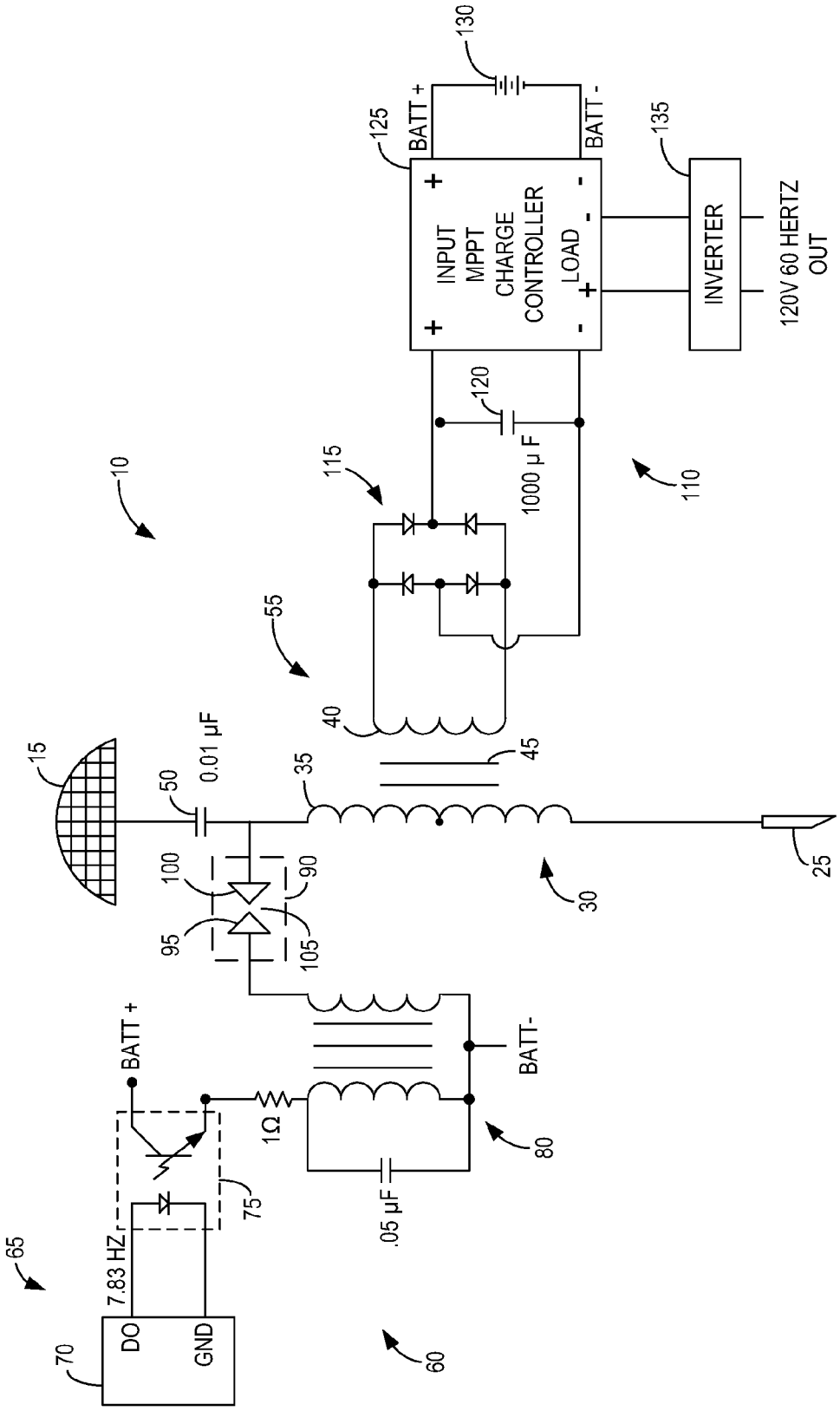
10
15
50
0.01 µF
35
40
45
55
115
120
1000 µ F
125
BATT +
BATT -
130
INPUT
MPPT
CHARGE
CONTROLLER
LOAD
135
INVERTER
120V 60 HERTZ
OUT
110
25
30
100
90
95
105
BATT +
BATT-
1Ω
.05 µF
80
75
65
7.83 HZ
DO
GND
70
60

FIG 4

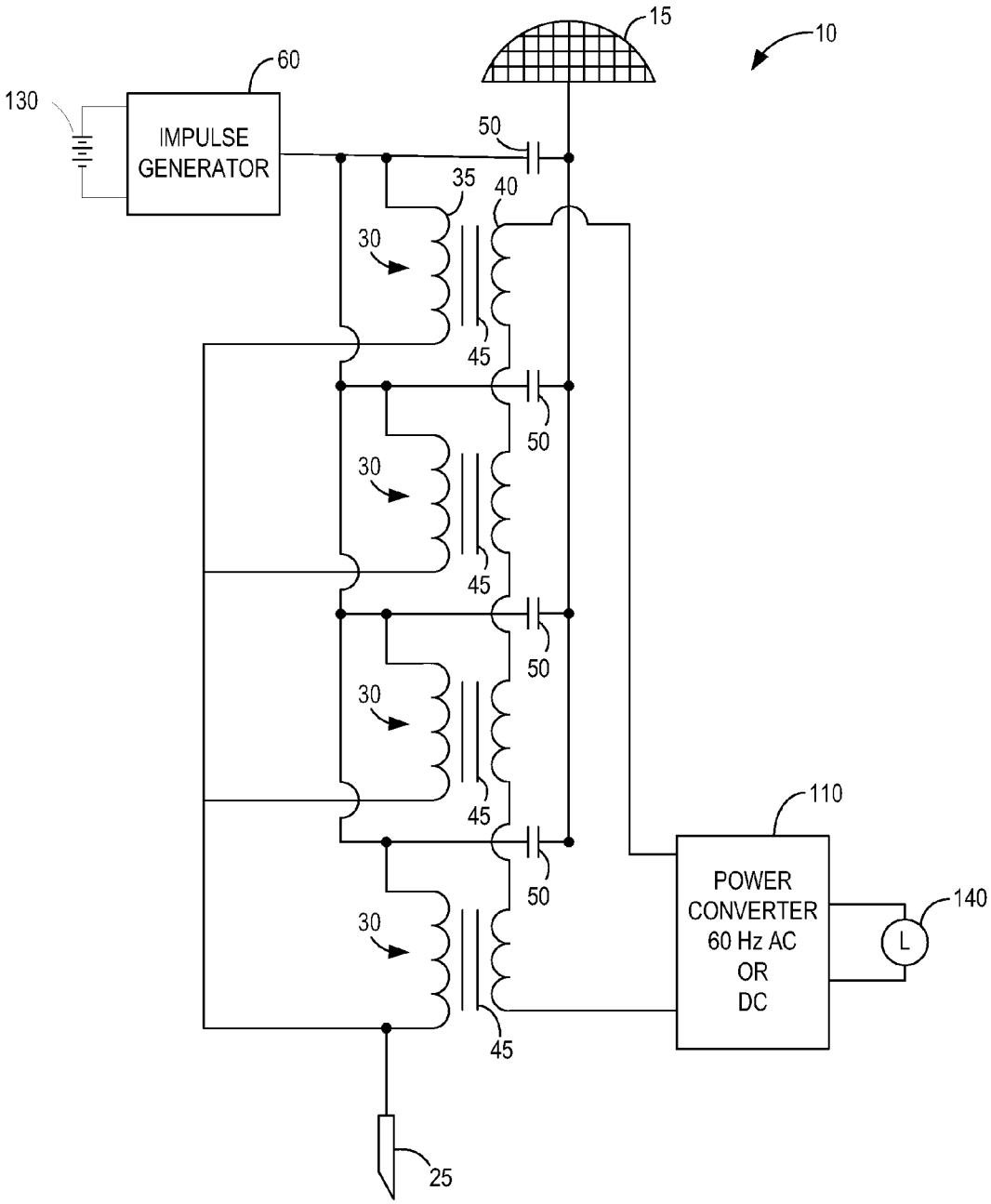
15
10
60
130
IMPULSE
GENERATOR
50
35
40
30
45
50
30
45
50
30
45
50
30
45
110
POWER
CONVERTER
60 Hz AC
OR
DC
140
L
25

FIG 5

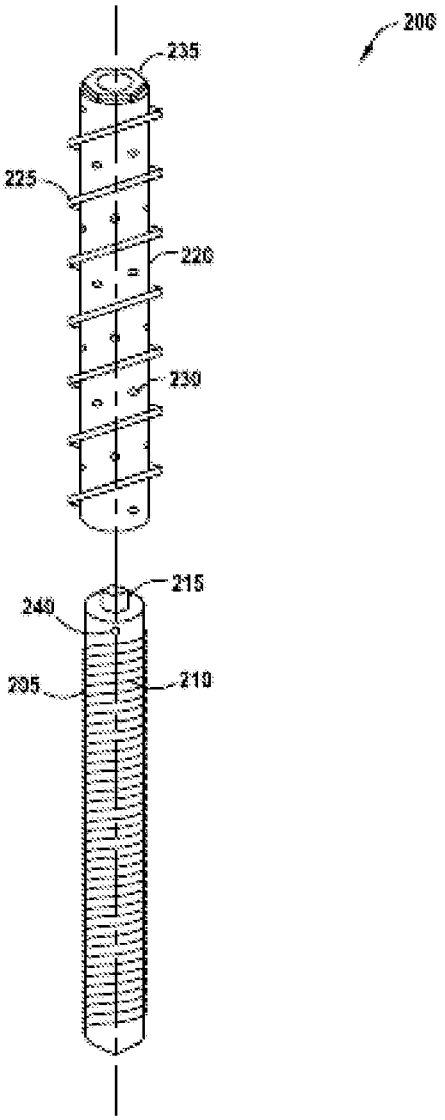

FIG 6A

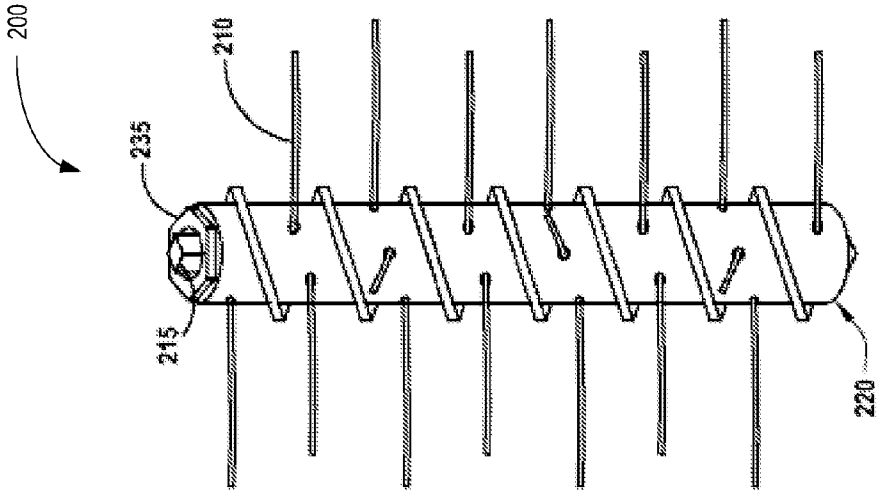

FIG 6C

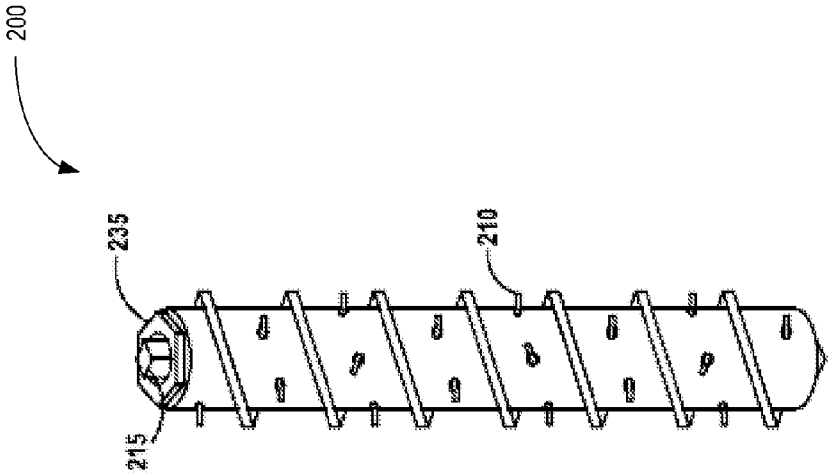

FIG 6B

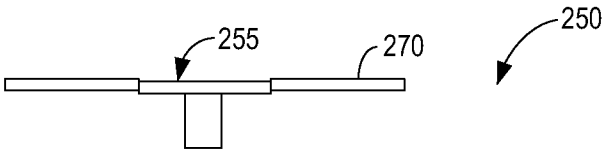

FIG 7A

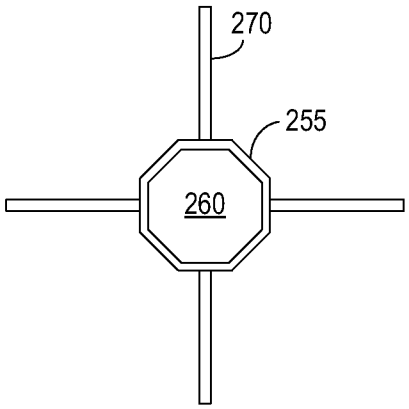

FIG 7B

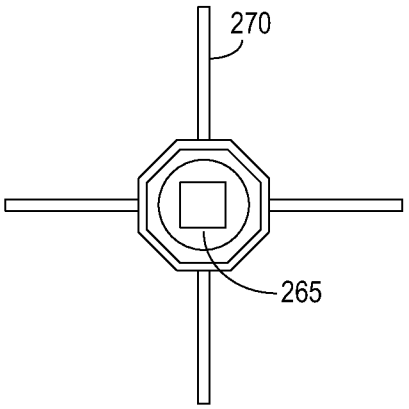

FIG 7C

POWER RECEIVER FOR EXTRACTING POWER FROM ELECTRIC FIELD ENERGY IN THE EARTH

[0001] This application claims the benefit of U.S. Provisional Application No. 61/889,894, filed 11 Oct. 2013, the disclosure of which is incorporated herein by reference in its entirety.

TECHNICAL FIELD

[0002] The present invention relates generally to renewable energy, and more particularly to methods and apparatus for extracting energy from subsurface electrical fields beneath the earth's surface.

BACKGROUND

[0003] The earth and the ionosphere cavity may be viewed as a global electric circuit. Electrical currents are constantly flowing within the earth and its atmosphere. Within the earth, the majority of the earth's energy is carried by extremely low frequency (ELF) and ultralow frequency (ULF) waves in the 0-200 Hz frequency range. The earth's rotating magnetic field and positive lightning are two energy sources that sustain the ELF/ULF waves within the earth and the atmosphere.

[0004] A great deal of research has been devoted to studying the electric field present in the earth's ionosphere cavity. Joseph M. Crawley, the "Fair Weather Atmosphere as a Power Source", Proceedings ESA Annual Meeting on Electrostatics 2011; O. Jefimenko, "Operation of Electric Motors from Atmospheric Electric Field," American Journal of Physics, Vol. 39, Pgs. 776-779, 1971; M. L. Breuer, "Usability of Tapping Atmospheric Charge as a Power Source," Renewable Energy, Vol. 28, Pgs. 1121-1127, 2003. Numerous attempts have been made in the past to extract electrical energy from the earth's atmosphere. For example, U.S. Pat. No. 1,540,998 to Plauson describes a system for converting atmospheric electrical energy into usable power. These past attempts have been successful in producing only small amounts of power from the electrical field in the earth's ionosphere cavity. The modest success of these experiments compared to results from other renewable energy sources, such as solar and wind, has tempered further research and prevented widespread use of the electric field in the ionosphere cavity as an energy source.

SUMMARY

[0005] The present invention relates to a power receiver for extracting power from electric fields beneath the earth's surface. In embodiments of the present disclosure, a resonant transformer connected to a ground terminal draws current from the earth's electric field through the primary winding of the transformer. Current flow through the resonant transformer is induced by applying a high voltage impulse to the primary winding. The flow of current through the primary winding of the resonant transformer induces a current in the secondary winding, which may be converted and filtered to a usable form, e.g. 60 Hz AC or DC.

[0006] In some embodiments of the power receiver, the resonant frequency of the resonant transformers is below 200 Hz.

[0007] In some embodiments of the power receiver, the resonant transformer comprises a ferro-resonant transformer.

[0008] In some embodiments, the power receiver further comprises an elevated terminal.

[0009] In some embodiments of the power receiver, the primary winding of the resonant transformer is connected between the ground terminal and elevated terminal.

[0010] In some embodiments of the power receiver, the elevated terminal comprises an upper capacitive plate coupled to the earth's ionosphere cavity.

[0011] In some embodiments of the power receiver, the impulse generator comprises the upper capacitive plate and a spark gap connected between the upper capacitive plate and the primary winding of the resonant transformer. The spark gap comprises a pair of electrodes separated by a gap and configured to generate a spark when a voltage difference between the electrodes reaches a predetermined level.

[0012] In some embodiments of the power receiver, the impulse generator comprises a pulse generator for generating low voltage pulses, a step-up transformer for converting the low voltage pulses provided by the pulse generator to high voltage impulses, and a spark gap connected between the step-up transformer and the primary winding of the resonant transformer to generate a spark responsive to the high voltage impulses from the step-up transformer.

[0013] In some embodiments of the power receiver, the impulse generator comprises a pulse generator for generating low voltage pulses, and a step-up transformer connected to the primary winding of the resonant transformer for converting the low voltage pulses provided by the pulse generator to high voltage impulses.

[0014] In some embodiments of the power receiver, the impulse generator comprises a solid state spark generator.

[0015] In some embodiments of the power receiver, the resonant transformer includes a capacitor connected in parallel with the primary winding.

[0016] In some embodiments of the power receiver, the resonant transformer includes a capacitor connected in series with the primary winding between the impulse generator and the elevated terminal.

[0017] In some embodiments, the power receiver comprises multiple resonant transformers having primary windings connected in parallel between the ground terminal and the elevated terminal.

[0018] In some embodiments of the power receiver, the resonant transformers have different resonant frequencies.

[0019] In some embodiments of the power receiver, the resonant frequencies of the resonant transformers are all below 200 Hz.

[0020] In some embodiments of the power receiver, the resonant frequencies of the resonant transformers are matched to respective Schumann resonances.

[0021] Another embodiment of the power receiver comprises a resonant circuit connected to a ground terminal disposed below the surface of the earth, an impulse generator for generating and applying a high voltage electrical impulse to the resonant circuit to induce current flow from the ground terminal through the resonant circuit, and a power conversion circuit connected to the resonant circuit to convert electrical current flowing through the resonant circuit to a desired form. The resonant circuit has a resonant frequency below 200 Hertz.

[0022] In some embodiments of the power receiver, the resonant circuit comprises a resonant transformer having a primary winding, a secondary winding, and resonant capacitor connected in series with the primary winding.

[0023] In some embodiments of the power receiver, the resonant circuit comprises multiple resonant transformers having primary windings connected in parallel to the ground terminal.

[0024] In some embodiments of the power receiver, the resonant transformers have different resonant frequencies.

[0025] In some embodiments of the power receiver, the resonant frequencies of the resonant transformers are all below 200 Hz.

[0026] In some embodiments of the power receiver, the resonant frequencies of the resonant transformers are matched to respective Schumann resonances.

[0027] Other embodiments of the disclosure comprise a ground terminal for a power receiver. In one embodiment, the ground terminal comprises a ground shaft configured for insertion beneath the surface of the earth, a hollow cylinder surrounding the ground shaft and having a plurality of openings, and a plurality of ground wires connected at one end to the ground shaft. The ground wires are wound around the ground shaft and have free ends protruding through respective openings in the hollow shaft so that rotation of the ground shaft relative to the hollow cylinder causes the ground wires to extend radially into the earth.

[0028] Other embodiments of the disclosure comprise methods of extracting power from the earth. In one embodiment, the method comprises applying a high voltage impulse to resonant circuit coupled to a ground terminal disposed beneath the surface of the earth to initiate resonance in the resonant circuit and induce the flow of current from the ground terminal to the resonant circuit, and converting the current flowing from the ground terminal into the resonant circuit into a useful form.

[0029] In some embodiments of the method, the resonant circuit comprises a resonant transformer including a primary winding coupled to the ground terminal and a second winding coupled to a power converter, and applying a high voltage impulse to resonant circuit comprises applying a high voltage impulse to the primary winding of the resonant transformer.

[0030] In some embodiments of the method, applying a high voltage impulse to the primary winding of the resonant transformer comprises applying an impulse in the range to 10,000 to 40,000 volts to primary winding of the transformer.

BRIEF DESCRIPTION OF THE DRAWINGS

[0031] FIG. **1** illustrates a first exemplary embodiment of a power receiver.

[0032] FIG. **2** illustrates a second exemplary embodiment of a power receiver.

[0033] FIG. **3** illustrates a third exemplary embodiment of a power receiver.

[0034] FIG. **4** illustrates a fourth exemplary embodiment of a power receiver.

[0035] FIG. **5** illustrates a fifth exemplary embodiment of a power receiver.

[0036] FIG. **6**A is an exploded perspective view of an exemplary ground antenna array for the power receiver.

[0037] FIG. **6**B is a perspective view of an assembled ground antenna array before being deployed.

[0038] FIG. **6**C is a perspective view of an assembled ground antenna array after being deployed.

[0039] FIG. **7**A is a side view of an insertion tool for installing the ground antenna array.

[0040] FIG. **7**B is a top view of the insertion tool for installing the ground antenna array.

[0041] FIG. **7**C is a bottom view of the insertion tool for installing the ground antenna array.

DETAILED DESCRIPTION

[0042] Referring now to the drawings, a power receiver for extracting energy from the earth's electric field are illustrated and indicated generally by the numeral **10**. Various embodiments of the power receiver **10** are described and similar reference numbers are used throughout the description to indicate similar components.

[0043] The power receiver **10** converts energy in the ELF/ULF waves to useful form, e.g. 60 Hz AC or DC. The power receiver **10** is essentially a resonance circuit that resonates at the natural resonance frequencies in the earth's electric field. These resonance frequencies, known as Schumann resonance frequencies, occur at 7.83 Hz, 14.3 Hz, 20.8 Hz, 27.3 Hz, and 33.8 Hz. A high voltage impulse initiates resonance within the power receiver **10**. In the resonant mode, the impedance of the power receiver **10** is reduced to near zero thus inducing ground currents to flow into the power receiver **10** where the ground currents are converted to useful form.

[0044] FIG. **1** illustrates a first embodiment of the power receiver **10**. The power receiver **10** comprises a resonant transformer **30** connected between an elevated terminal **15** and ground terminal **25**. In this embodiment, the elevated terminal **15** is capacitively coupled to electric fields within the earth's ionosphere cavity and functions as an upper capacitive plate. A lower capacitive plate **20** is connected to the ground terminal **25** beneath the surface of the earth.

[0045] The resonant transformer **30** comprises a primary winding **35**, secondary winding **40**, ferromagnetic core **45**, and capacitor **50**. One end of the primary winding **35** is connected to the lower capacitive plate **20** and ground terminal **25**. The opposite end of the primary winding **35** is connected via a spark gap **90** to the elevated terminal **15**. The capacitor **50** is connected in parallel with the primary winding **35** of the resonant transformer **30** to form an LC circuit **55** with a resonance frequency range of between about 0.1 and 200 Hz. In a preferred embodiment, the resonant transformer has a Q of about 10 or greater and resonance frequency in the range of about 0.1-200 Hertz. For example, the resonant transformer **30** may have a resonance frequency of about 7.83 Hz, the fundamental Schumann resonance frequency. The secondary winding **40** of the resonant transformer **30** is connected to a power converter **110** as will be hereinafter described in greater detail. The power converter **110** converts the energy extracted from the earth's electric field by the power receiver **10** into a usable form for driving a load **140**.

[0046] The elevated terminal/upper capacitive plate **15** comprises an insulated, dish-shaped plate with a large radius of curvature. The capacitance and resistance of the elevated terminal is chosen for receiving broadband electric field frequencies in the 0-200 Hz range. The upper capacitive plate **15** is sized to maximize to the extent practical coupling with the electric field in the earth's ionosphere cavity.

[0047] The lower capacitive plate **20** is also a dish-shaped plate with a large radius of curvature. One function of the lower capacitive plate **20** is to collect charge from the earth's ground currents and provide an instantaneous source of current as hereinafter described. The capacitance and resistance of the lower capacitive plate **20** is selected to promote the flow of current from the ground with minimal losses.

[0048] The spark gap **90** connected between the elevated terminal **15** and resonant transformer **30** comprises a pair of

electrodes **95**, **100** separated by an evacuated air gap **105**. Electrode **95** is connected to the upper capacitive plate **15**. Electrode **100** is connected to the resonant transformer **30**. The spark gap **105** prevents electrical discharge from the upper capacitive plate **15** to the earth's ionosphere cavity. The spark gap **90** in combination with the elevated terminal **15** function as an impulse generator that applies a high voltage impulse of about 10,000-40,000 volts to the primary winding **35** to initiate resonance in the transformer **30**.

[0049] In operation, the capacitive coupling of the upper capacitive plate **15** induces a high voltage operating current in the upper capacitive plate **15**. The upper capacitive plate is connected to a first electrode **95** to the spark gap **90**. When the voltage difference between the electrodes **95** and **100** reaches a threshold, a spark forms across the electrodes **95**,**100** and a high voltage impulse is applied to the primary winding **35** of the resonant transformer **30**. This high voltage impulse initiates resonance within the transformer **30**.

[0050] In resonant mode, the impedance of the resonance transformer is reduced to nearly zero allowing current to flow from the capacitive plate **20** and ground terminal **25** through the primary winding **35** of the transformer **30**, which in turn induces current in the secondary winding **40**. Power converter **110** converts the current flowing through the secondary winding **40** into a usable form for driving a load **140**. The transformer **30** will continue to resonate for a short period of time. By providing high voltage impulses to the primary winding **35** of the resonant transformer **30** at periodic intervals, it is possible to maintain a continuous flow of current from the earth into the resonant transformer **30**, thus producing a continuous supply of power.

[0051] FIG. **2** discloses a second embodiment of the primary receiver **10**. This embodiment includes a resonant transformer **30** connected between an elevated terminal **15** and ground terminal **25**. The resonant transformer **30** comprises a primary winding **35**, secondary winding **40**, ferromagnetic core **45** and a high voltage capacitor **50**. One end of the primary winding **35** is connected to the ground terminal **25**. The opposite end of the primary winding **35** is connected to the elevated terminal **15**. The capacitor **50** has a capacitance of about 0.01 micro-farads. In contrast to the previous embodiment, capacitor **50** is connected in series with the primary winding **35** and elevated terminal **15** and forms a LC circuit **55** with a Q of about 10 or greater and a resonance frequency in the range of about 0.1 to 200 Hz. In a preferred embodiment, the resonance frequency of the transformer **30** is 7.83 Hz, the fundamental Schumann resonance frequency. An impulse generator **60** is connected between the primary winding **35** of the resonant transformer **30** and the series capacitor **50** and applies a high voltage impulse to the primary winding **35** of the resonant transformer **30**. A battery **130** or other external power source supplies power to the impulse generator **60**. As previously described, the high voltage impulse applied by the impulse generator **60** initiates resonance within the resonant transformer **30** inducing current flow from the ground terminal **25** into the primary winding **35** of the resonant transformer **30**. The flow of current from the ground terminal **25** through the primary winding **35** induces current in the secondary winding **40**. Power converter **110** converts the electrical energy in the current flowing through the primary winding **40** into a usable form.

[0052] In contrast to the first embodiment, it is not required to capacitively couple the elevated terminal **15** in the second embodiment to the earth's ionosphere cavity. Rather, the elevated terminal **15** in this embodiment provides lightning protection and dissipates some of the energy flowing into the power receiver **10** to the earth's ionosphere cavity. Also, in contrast to the first embodiment, the capacitor **50** is connected in series between the primary winding **35** of the transformer **30** and the elevated terminal **15**. Those skilled in the art will appreciate that the capacitor **50** could also be connected in parallel rather than series with the primary winding **35** as shown in FIG. **1**. Another difference is that the impulse generator **60** has an external power source. The amount of energy generated by the power receiver **10**, however, is far greater than the energy needed to generate high voltage impulses. The first embodiment does not require an external power source to generate high voltage impulses.

[0053] FIG. **3** illustrates a third embodiment of the power receiver **10**. This embodiment is essentially the same as the embodiment shown in FIG. **2**. The main difference is that a center tap of the primary winding **35** in the resonant transformer **30** is connected to an electrical ground **55**. It should be appreciated that the electrical ground **55** may be different than the earth ground. When the center tap of the resonant transformer **30** is grounded at a distance away from the ground terminal **25** (e.g. 50 ft to 100 ft), the power receiver **10** becomes a transmitter via the ground loop formed.

[0054] FIG. **4** illustrates the power receiver **10** of FIG. **2** in greater detail. The power receiver includes a resonant transformer **30** connected between a ground terminal **25** and an elevated terminal **15**. The resonant transformer **30** includes a primary winding **35**, secondary winding **40**, ferromagnetic core **45** and series capacitor **50** configured as previously described. The resonant transformer **30** may have a Q of about 10 and a resonance frequency in the range of about 0.1 to 200 Hz. The resonant transformer **30** may be made using an Allison transformer (part #1530BP120R) connected in series with a 0.01 micro-farad capacitor, such as the Condensor Products high voltage capacitor (part #TC 103-17-125). An impulse generator **60** is connected between the primary winding **35** of the resonant transformer **30** and the series capacitor **50** and applies a high voltage impulse in the range of about 10,000 to 40,000 volts to the primary winding of the transformer **30**. A battery **130** or other external power source supplies power to the impulse generator **60**. The power converter **110** connects to the secondary winding **40** of the resonant transformer **30** for converting current in the secondary winding of the transformer to a useful form.

[0055] The impulse generator **60** comprises a pulse generator **65** for generating low voltage pulses, a step-up transformer **80** for converting the low voltage pulses from the pulse generator **65** to high voltage pulses, and a spark gap **90** for generating sparks responsive to the high voltage pulses from the step-up transformer **80**.

[0056] The pulse generator **65** comprises a square wave generator **70** and solid state relay **75**. The square wave generator **70** generates a digital pulse stream. In one embodiment, the digital pulse stream generates a square waveform with a frequency of about 7.83 Hz. The frequency of the digital pulse stream is selected to match the resonance frequency of the transformer **30**, though such is not necessarily required. The pulse stream output from the square wave generator **70** is applied to the solid state relay **75**. The solid state relay **75** is connected between a battery or other power source and a first winding of the step-up transformer **80**. The solid state relay **75** functions as a switch that is activated responsive to the waveform from the square wave generator **70** to provide

a continuous stream of low voltage pulses from the battery to the first winding of the step-up transformer **80**. A 1 ohm resistor is connected between the solid state relay **75** and step-up transformer **80**.

[0057] The step-up transformer **80** converts the low voltage pulses from the pulse generator **65** to high voltage pulses that are applied to the spark gap **90**. The step-up transformer has a 0.5 micro-farad capacitor connected in parallel with the primary winding of the step-up transformer **80**. The step-up transformer produces pulses at the output of about 30,000 to 40,000 volts.

[0058] The spark gap **90** comprises a pair of electrodes **95**, **100** separated by an air gap **105**. As previously described, when the voltage potential between the electrodes **95**, **100** reaches a threshold, a spark forms between the electrodes **95**, **100** and supplies a nearly instantaneous, high voltage impulse to the primary winding **35** of the resonant transformer **30**. This high voltage impulse initiates resonance in the resonant transformer **30** inducing current flow from the ground terminal **25** through the primary winding **35** of the resonant transformer **30**.

[0059] The power converter **110** comprises a bridge rectifier **115**, filter capacitor **120**, charge controller **125**, and inverter **135**. The bridge rectifier **115** converts the AC current flowing through the secondary winding **40** of the resonant transformer to a DC current. a Filter capacitor **120** removes unwanted frequencies from the DC current. The filter capacitor **120** has a capacitance of about 1000 micro-farads. The DC current is input to the charge controller **125**. The charge controller **125** may, for example, comprise a maximum power point tracking (MPPT) charge controller, which is commonly used in solar power generating systems. The charge controller **125** applies a small amount of energy to a battery **30** to charge the battery **130**. As previously noted, the battery **130** serves as a power source for the impulse generator **60**. The remaining current is supplied to an inverter **135**, which converts the DC current to an AC current with a desired voltage and frequency, e.g., 120 volts/60 Hz AC. The power converter **110** as shown in FIG. **4** may be utilized in the embodiment shown in FIGS. **1**, **2** and **3**.

[0060] FIG. **5** illustrates a power converter **10** according to another embodiment. The power converter **10** comprises a plurality of resonant transformers **30** connected between a ground terminal **25** and elevated terminal **15**. Each of the resonant transformers **30** comprises a primary winding **35**, secondary winding **40**, ferromagnetic core **45** and series capacitor **50**. The primary windings **35** of the resonant transformers **30** are connected in parallel. The secondary windings **40** are connected in series with the power converter **110**. An impulse generator **60** applies a high voltage impulse to the primary windings **35** of the resonant transformers **30**. A battery **130** or other external power source supplies power to the impulse generator **60**. The power converter **110** converts the current in the power converter circuit to a usable form for driving a load **140**.

[0061] In one embodiment, each of the resonant transformers **30** shown in FIG. **5** is configured to have a different resonant frequency. In one embodiment, the resonant transformers **30** are configured to resonate at frequencies of 7.83 Hz, 14.8 Hz, 20.3 Hz and 26.8 Hz respectively. Additional resonant transformers **30** could be added to operate at other resonance frequencies.

[0062] FIGS. **6A-6C** illustrate a high quality ground antenna array **200** which may be used as a ground terminal **25**. The ground antenna array **200** comprises a generally cylindrical ground shaft **205** disposed with a hollow cylinder **220** and a plurality of reinforced, heavy gauge ground wires **210** attached at one end to the ground shaft **205**. The ground shaft **205** and ground wires **210** should be highly conductive and have low resistance to supply current from the ground to the power receiver **10**. In one embodiment, the ground wires **210** may be copper or other highly-conductive metal. The end of the ground shaft may be pointed to facilitate insertion into the earth. A connection port on the ground shaft **220** is provided to electrically connect the ground antenna array **220** to the resonant transformer **30**.

[0063] The hollow cylinder **220** has external threads **25** to facilitate insertion into the ground. A rotator nut **235** is fixedly secured to the top end of the hollow shaft **220**. A square shaft **215** protrudes from the top end of the ground shaft **205** into the opening in the rotator nut **235**. FIG. **6B**. A tool **250**, shown in FIG. **7**, engages with the rotator nut **235** and square shaft **215** during insertion of the ground antennas array **200** into the ground as will be hereinafter described.

[0064] The insertion tool **250** is shown in FIG. **7**. The insertion tool **250** includes a tool body **255** having a first socket **260** on one side to fit the rotator nut **235** on the hollow cylinder **220** and a second socket **265** on the other side to fit the square shaft **215** on the ground shaft **205**. Arms **270** extend from the outer periphery of the tool body **255** for manually or mechanically turning the insertion tool **250**.

[0065] Before the antenna array **200** is deployed, the ground wires **210** are wound around the ground shaft **205** with the free ends protruding slightly from respective openings **230** in the hollow cylinder **220** to a distance not to exceed one half (½) the depth of the external threads **225** on the hollow cylinder **220**. FIG. **6B** illustrates the ground antenna array **200** before deployment. FIG. **6C** illustrates the ground antenna array in a deployed configuration.

[0066] Installation of the ground antenna array **200** is performed in two stages. In the first stage, a hole slightly smaller in diameter than the threads **235** of the hollow cylinder **220** is drilled into the Earth to a depth matching the length of the hollow cylinder **220** or slightly longer. The hole is filled with water and the water is allowed to soak into the soil. After the ground is softened, the hollow cylinder **220** is rotated using the insertion tool **250** to insert the ground antenna array **200** into the ground. The first socket **260** of the insertion tool **250** is engaged with the rotator nut **230** and the insertion tool **250** is turned by hand or a mechanized rotating shaft fitted and attached to the tool arms **270** to thread the ground assembly into the hole. During the initial insertion of the ground antenna array **200**, the ground shaft **205** is fixed to the hollow shaft **220** and rotates with the hollow shaft. The hollow cylinder **220** is rotated until it reaches the full depth of the hole.

[0067] Once the ground antenna array **200** has been fully inserted into the earth, the insertion tool **250** is flipped over and the second socket **265** of the insertion tool **250** is engaged with the square shaft **215**. The insertion tool **250** is turned by hand or a mechanized rotating shaft fitted and attached to the tool arms **270** to rotate the ground shaft **205**. During the second phase, the ground shaft **205** rotates freely inside the hollow cylinder **220**. Rotation of the ground shaft **205** causes the reinforced ground wires **210** to extend radially into the earth. The ground shaft **220** is rotated until the ground wires are fully extended. The ends of the ground wires may be sharpened to aid in the extension of the ground wires during the second phase.

[0068] After the ground antenna array **200** is deployed, a connection cable **280** is attached to a connection port **240** on the ground shaft **220** to electrically connect the ground antenna array **220** to the resonant transformer **30** in the power receiver **10**.

What is claimed is:

1. A power receiver for extracting electrical energy from the earth's electric field, said power receiver comprising:
- a resonant transformer connected to a ground terminal disposed below the surface of the earth;
- an impulse generator for generating and applying a high voltage electrical impulse to a primary winding of the resonant transformer to induce current flow from the ground terminal through the primary winding of the transformer; and
- a power conversion circuit connected to a secondary winding of the resonant transformer to convert electrical current flowing through the secondary winding to a desired form.

2. The power receiver of claim **1** wherein a resonant frequency of the resonant transformers is below 200 Hz.

3. The power receiver of claim **1** wherein the resonant transformer comprises a ferro-resonant transformer.

4. The power receiver of claim **1** further comprising an elevated terminal, and wherein the primary winding of the resonant transformer is connected between the ground terminal and elevated terminal.

5. The power receiver of claim **4** wherein the elevated terminal comprises an upper capacitive plate coupled to the earth's ionosphere cavity.

6. The power receiver of claim **5** wherein the impulse generator comprises:
- the upper capacitive plate;
- a pair of electrodes separated by a spark gap, said electrodes connected between the upper capacitive plate and the primary winding of the resonant transformer and configured to generate a spark when a voltage difference between the electrodes reaches a predetermined level.

7. The power receiver of claim **1** wherein the impulse generator comprises:
- a pulse generator for generating low voltage pulses;
- a step-up transformer for converting the low voltage pulses provided by the pulse generator to high voltage impulses;
- a spark gap connected between the step-up transformer and the primary winding of the resonant transformer to generate a spark responsive to the high voltage impulses from the step-up transformer.

8. The power receiver of claim **1** wherein the impulse generator comprises:
- a pulse generator for generating low voltage pulses;
- a step-up transformer connected to the primary winding of the resonant transformer for converting the low voltage pulses provided by the pulse generator to high voltage impulses.

9. The power receiver of claim **1** wherein the impulse generator comprises a solid state spark generator.

10. The power receiver of claim **1** wherein said resonant transformer includes a capacitor connected in parallel with the primary winding.

11. The power receiver of claim **1** wherein said resonant transformer includes a capacitor connected in series with the primary winding between the impulse generator and the elevated terminal.

12. The power receiver of claim **1** wherein comprise multiple resonant transformers having primary windings connected in parallel between the ground terminal and the elevated terminal.

13. The power receiver of claim **12** wherein the resonant transformers have different resonant frequencies.

14. The power receiver of claim **13** wherein the resonant frequencies of the resonant transformers are all below 200 Hz.

15. The power receiver of claim **12** wherein the resonant frequencies of the resonant transformers are matched to respective Schumann resonances.

16. A power receiver for extracting electrical energy from the earth's electric field, said power receiver comprising:
- a resonant circuit connected to a ground terminal disposed below the surface of the earth, said resonant circuit having a resonant frequency below 200 Hertz
- an impulse generator for generating and applying a high voltage electrical impulse to the resonant circuit to induce current flow from the ground terminal through the resonant circuit; and
- a power conversion circuit connected to the resonant circuit to convert electrical current flowing through the resonant circuit to a desired form.

17. The power receiver of claim **16** wherein the impulse generator comprises:
- a pulse generator for generating low voltage pulses;
- a step-up transformer for converting the low voltage pulses provided by the pulse generator to high voltage impulses;
- a spark gap connected between the step-up transformer and resonant circuit to generate a spark responsive to the high voltage impulses from the step-up transformer.

18. The power receiver of claim **16** wherein the impulse generator comprises:
- a pulse generator for generating low voltage pulses;
- a step-up transformer connected to the resonant circuit for converting the low voltage pulses provided by the pulse generator to high voltage impulses.

19. The power receiver of claim **16** wherein the resonant circuit comprises a resonant transformer having a primary winding, a secondary winding, and resonant capacitor connected in parallel with the primary winding.

20. The power receiver of claim **16** wherein the resonant circuit comprises a resonant transformer having a primary winding, a secondary winding, and resonant capacitor connected in series with the primary winding.

21. The power receiver of claim **16** wherein the resonant circuit comprises multiple resonant transformers having primary windings connected in parallel to the ground terminal.

22. The power receiver of claim **21** wherein the resonant transformers have different resonant frequencies.

23. The power receiver of claim **22** wherein the resonant frequencies of the resonant transformers are all below 200 Hz.

24. The power receiver of claim **23** wherein the resonant frequencies of the resonant transformers are matched to respective Schumann resonances.

25. A ground terminal for a power receiver, said ground terminal comprising:
- a ground shaft configured for insertion beneath the surface of the earth;
- a hollow cylinder surrounding the ground shaft and having a plurality of openings; and

a plurality of ground wires connected at one end to the ground shaft said ground wires being wound around the ground shaft and having free ends protruding through respective openings in the hollow shaft r so that rotation of the ground shaft relative to the hollow cylinder causes the ground wires to extend radially into the earth.

26. A method of extracting power from the earth, said method comprising:

applying a high voltage impulse to resonant circuit coupled to a ground terminal disposed beneath the surface of the earth to initiate resonance in the resonant circuit and induce the flow of current from the ground terminal to the resonant circuit; and

converting the current flowing from the ground terminal into the resonant circuit into a useful form.

27. The method of claim **26** wherein resonant circuit comprises a resonant transformer including a primary winding coupled to the ground terminal and a second winding couple to a power converter, and wherein applying a high voltage impulse to resonant circuit comprises applying a high voltage impulse to the primary winding of the resonant transformer.

28. The method of claim **27** wherein applying a high voltage impulse to the primary winding of the resonant transformer comprises applying an impulse in the range to 10,000 to 40,000 volts to primary winding of the transformer.

* * * * *

US009712036B2

(12) **United States Patent**
Stupac

(10) **Patent No.: US 9,712,036 B2**
(45) **Date of Patent: Jul. 18, 2017**

(54) **GENERATING ELECTRICITY FROM THE EARTH**

(71) Applicant: **Omer Stupac**, Utica, NY (US)

(72) Inventor: **Omer Stupac**, Utica, NY (US)

(*) Notice: Subject to any disclaimer, the term of this patent is extended or adjusted under 35 U.S.C. 154(b) by 396 days.

(21) Appl. No.: **14/229,873**

(22) Filed: **Mar. 29, 2014**

(65) **Prior Publication Data**

US 2015/0280518 A1 Oct. 1, 2015

(51) **Int. Cl.**

G01R 31/00 (2006.01)
H02K 53/00 (2006.01)
H02K 99/00 (2014.01)

(52) **U.S. Cl.**

CPC ***H02K 53/00*** (2013.01); ***H02K 99/10*** (2016.11)

(58) **Field of Classification Search**

CPC H02K 57/003; H02K 53/00
USPC 324/96, 76, 76.11, 76.66
See application file for complete search history.

(56) **References Cited**

U.S. PATENT DOCUMENTS

155,209 A * 9/1874 Snow H01M 14/00 429/47
406,968 A 7/1889 Tesla
685,957 A 11/1901 Tesla
2,181,601 A * 11/1939 Jakosky G01V 3/22 324/357
3,185,877 A 5/1965 Sears
3,245,836 A * 4/1966 Agruss H01M 6/36 429/103
3,288,648 A * 11/1966 Jones H01M 8/00 166/248
3,471,394 A * 10/1969 Sudrabin G01N 27/301 204/435
4,502,028 A * 2/1985 Leake H01P 5/04 324/601
4,678,554 A * 7/1987 Oppitz A01G 7/04 204/290.11
4,923,151 A * 5/1990 Roberts B64G 1/648 244/158.2
5,451,825 A 9/1995 Strohm
(Continued)

OTHER PUBLICATIONS

Southwire Co., Southwire 500 ft. 14-Gauge Stranded THHN Wire—Black, Model 22955957, Mar. 10, 2014, p. 1, www.homedepot.com, USA.

(Continued)

Primary Examiner — Giovanni Astacio-Oquendo
(74) *Attorney, Agent, or Firm* — Lawrence P. Trapani, Esq.

(57) **ABSTRACT**

A system for generating electricity from the geomagnetic field and rotation of the earth is presented. The earth rotates through the geomagnetic field to form a potential difference between first and second terrestrial charged bodies. The first and second charged bodies are spaced apart in a direction substantially normal to the earth's surface. The system comprises an electrical load, a first current path, and a second current path. The electrical load has a supply input and a ground output. The first current path is coupled to the first charged body and to the supply input of the electrical load, for supplying the potential difference to the electrical load. The second current path is coupled to the ground output of the electrical load and to the second charged body. As a result of this arrangement, an electric current related to the potential difference is generated in the electrical load.

17 Claims, 7 Drawing Sheets

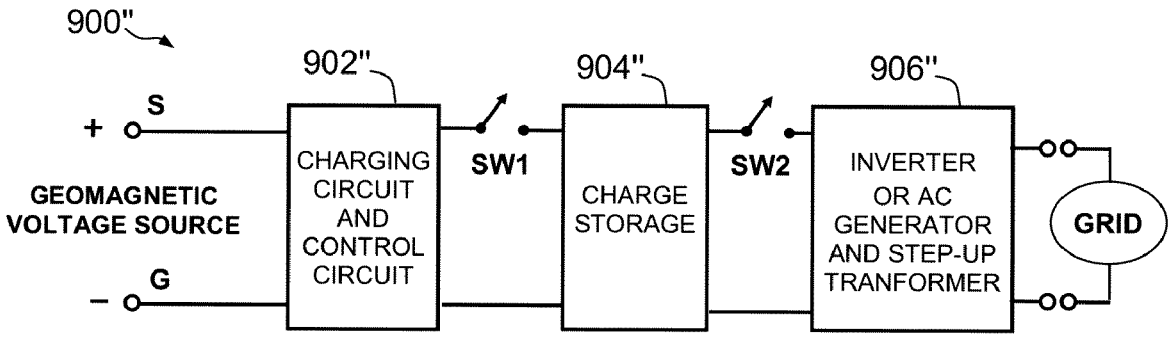

(56) **References Cited**

U.S. PATENT DOCUMENTS

6,051,905	A *	4/2000	Clark	H02K 1/2706 310/178
6,297,730	B1 *	10/2001	Dickinson	H01R 13/6625 307/3
7,170,260	B2	1/2007	Thrap	
7,837,450	B2	11/2010	Moreland	
2003/0232599	A1 *	12/2003	Dostert	H04B 3/56 455/66.1
2004/0027022	A1	2/2004	Weir	

OTHER PUBLICATIONS

Chan, Marco S.W. et al., Effective Charging Method for Ultracapacitors, Journal of Asian Electric Vehicles, vol. 3, No. 2, Dec. 2006, pp. 771-775.

Maxwell Technologies, Charging of Ultracapacitors, Application Note, Document 1008981 Rev 1, Dec. 2005, pp. 1-5, Maxwell Technologies, Inc. San Diego, CA.

GHOST7584 (Forum Member), Free Electricity From Earth Rotation, SciForums.com/Free-Electricity-From-Earth-Rotation-t-44434.html, Dec. 4, 2008 (purported date of post, Jan. 25, 2005), pp. 1-6, web.archive.org/web/20081204124044/http://www.sciforums.com/Free-Electricity-From-Earth-Rotation-t-44434.html.

Valone, Thomas, The Homopolar Handbook, A Definitive Guide to Faraday Disk and N-Machine Technologies, 3rd Edition, Oct. 2001, pp. 2-4, 6-8, 24, 37, 49-53, 59-64, and 77-92, Integrity Research Institute, Washington, DC.

Stern, Dr. David P., #25c. The Space Tether Experiment, www-istp.gsfc.nasa.gov/Education/wtether.html, Nov. 2001, pp. 1-3, NASA.

Nichelson, Oliver, Tesla's Fuelless Generator, Jan. 1991, pp. 1-10, home.earthlink.net/~drestinblack/generator.htm.

Stupac, Omer, Production of Electrical Energy from Electromagnetic Induction Using Earth's Rotation, Submission to Office of Technology Innovation, National Institute of Standards and Technology (NIST), May 15, 1995, pp. 1-8, Ridgewood, NY.

NIST, Energy-Related Inventions Program, Report of First-Stage Evaluation (Response to Submission), Aug. 1995, pp. 1-3, NIST, Geithersburg, MD.

National Bureau of Standards, National Engineering Laboratory (NIST) Brochure, The NBS/DOE Energy-Related Inventions Program, Synopsis of Evaluation Process, U.S. Department of Commerce, Washington, DC, Reprinted Jan. 1980, pp. 1-4.

Valone, Thomas, The Homopolar Generator: Tesla's Contribution (from book, Harnessing the Wheelwork of Nature: Tesla's Science of Energy, by Thomas Valone, Dec. 31, 2004, pp. 271-88, Integrity Research Institute, Washinton, DC, Reprinted from Proceedings of International Tesla Symposium, Jan. 1986, pp. 6-29.

Carrigan, Charles R. and Gubbins, David, The Source of the Earth's Magnetic Field, Scientific American, Inc., vol. 240, Issue 2, Feb. 1, 1979, p. 118-128 & 130.

Elsasser, W.M., The Earth as a Dynamo, Scientific American, Inc., vol. 198, Issue 5, May 1, 1958, p. 44-48.

* cited by examiner

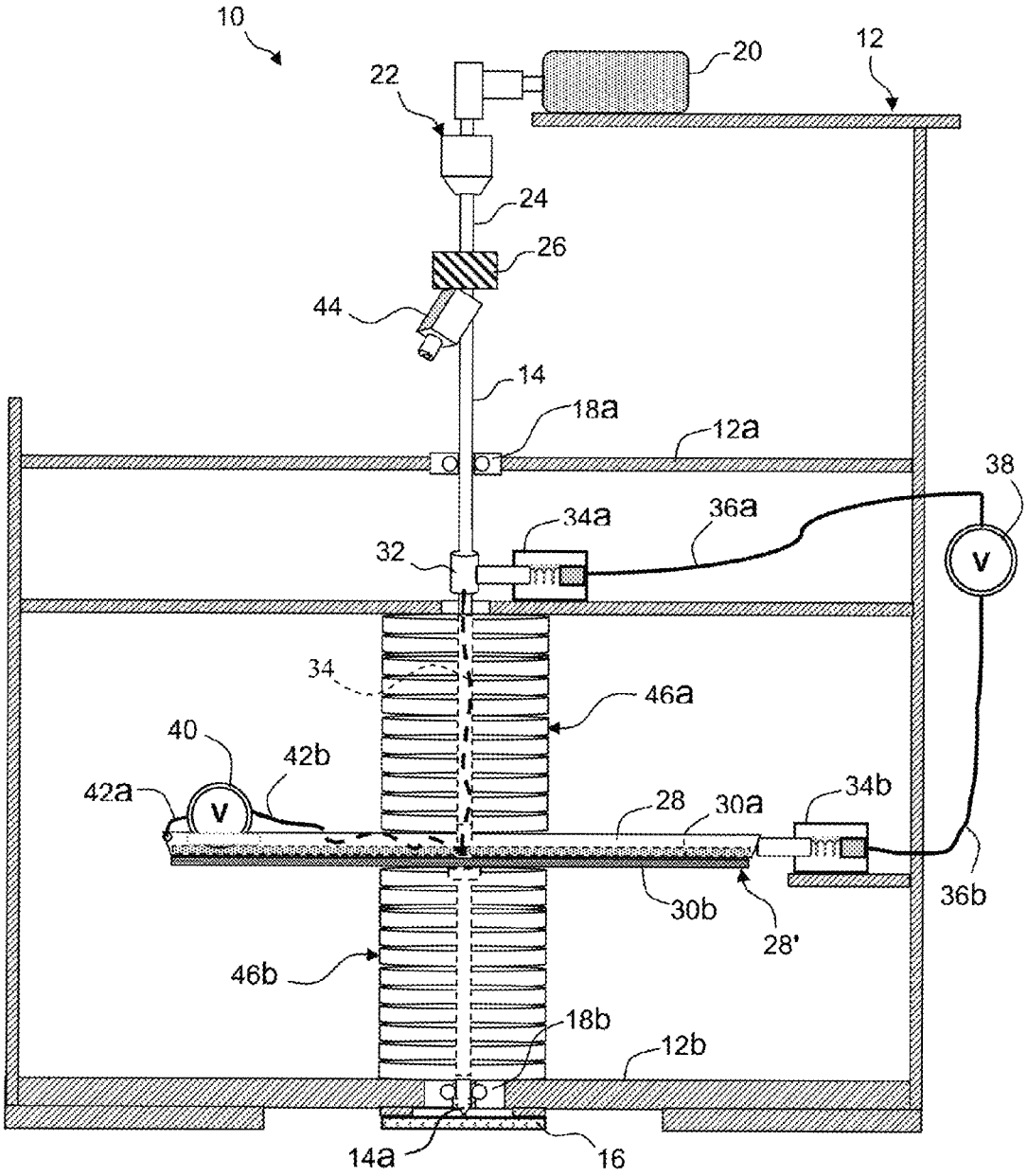
10
12
20
22
24
26
44
14
18a
12a
38
34a
36a
32
V
34
46a
40
42b
42a
V
28
30a
34b
36b
30b
28'
46b
18b
12b
14a
16

FIG. 1

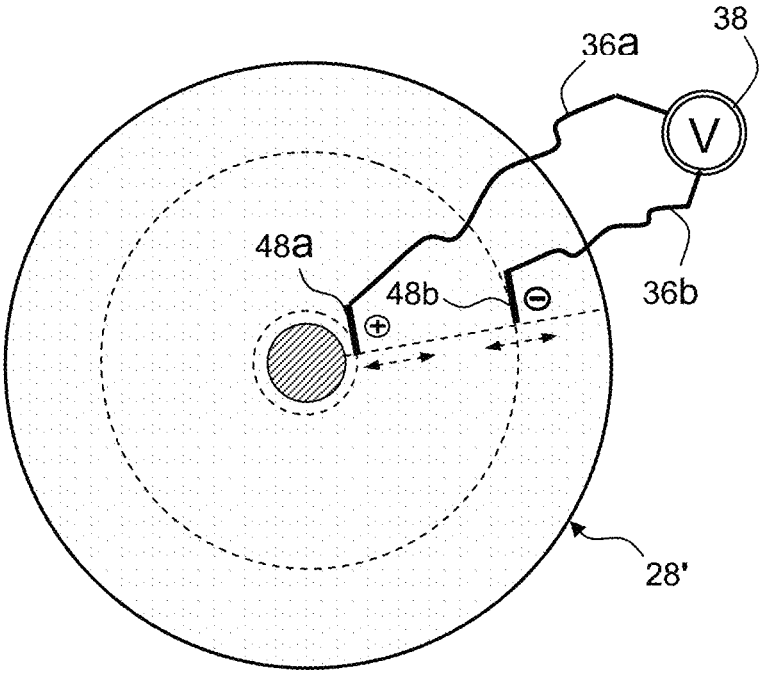

FIG. 2

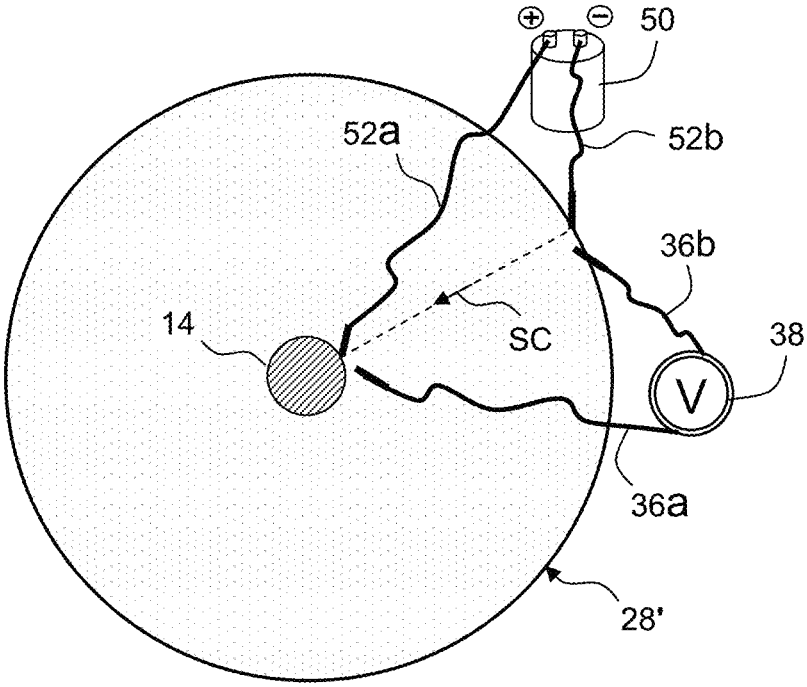

FIG. 3

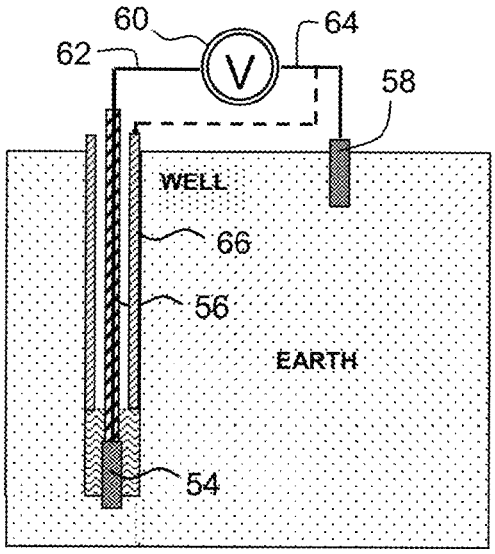

FIG. 4

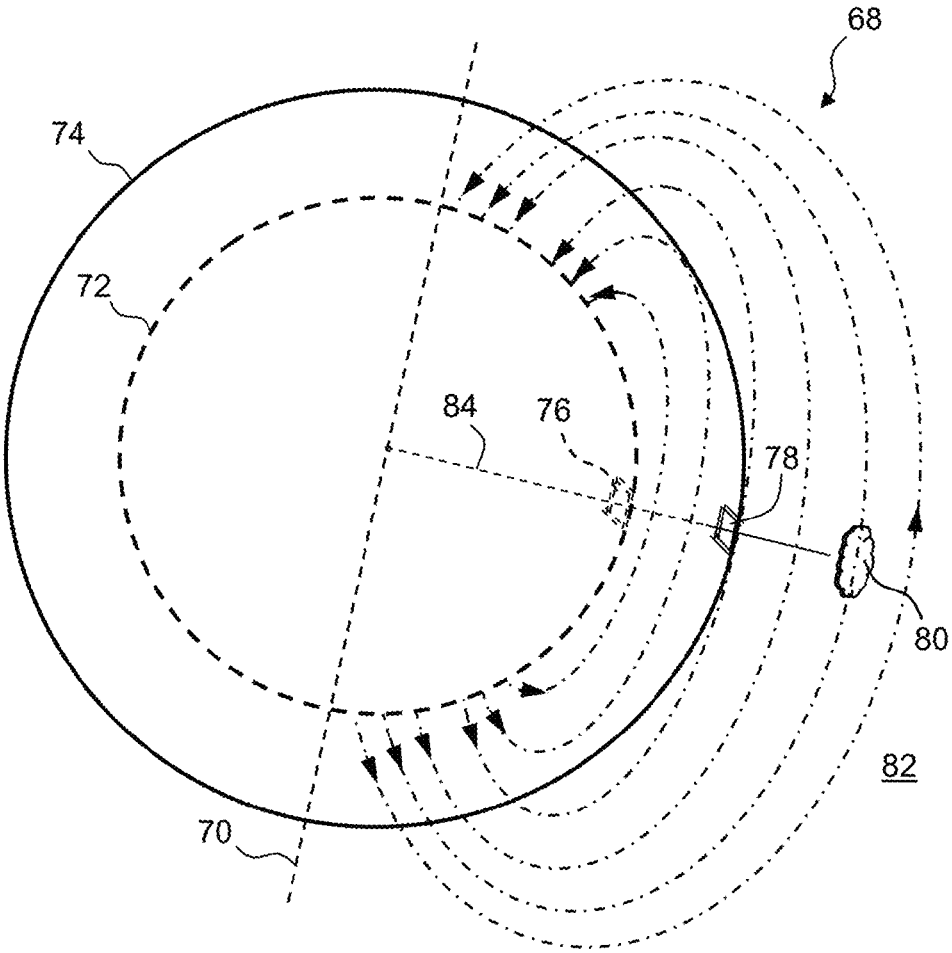

FIG. 5

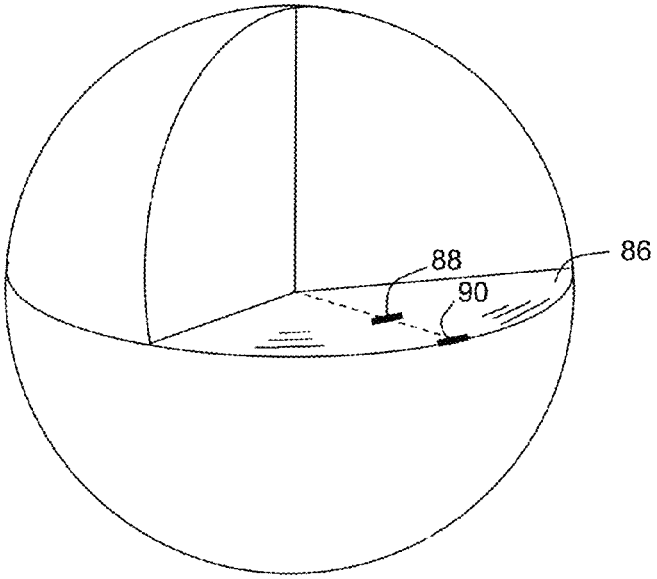

FIG. 6

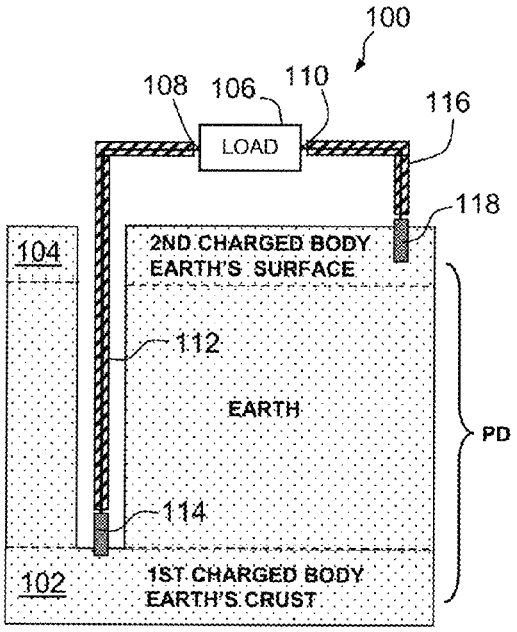

FIG. 7

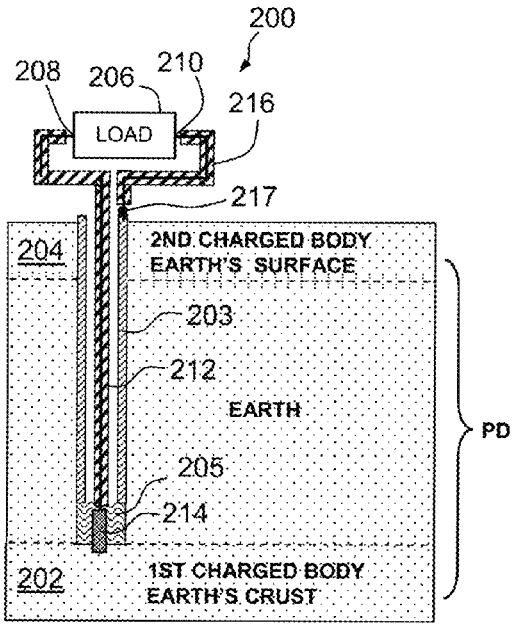

FIG. 8

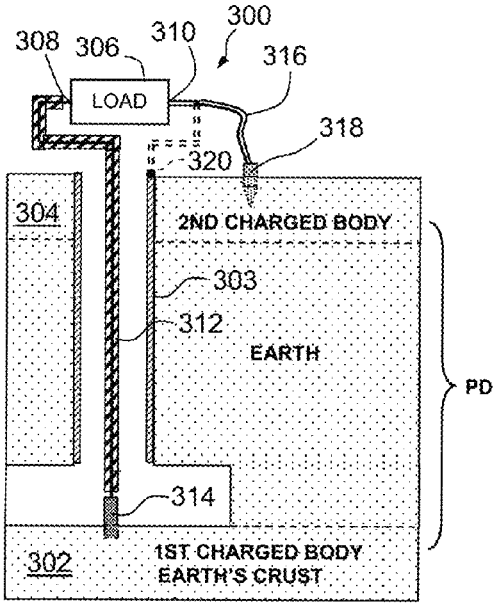

FIG. 9

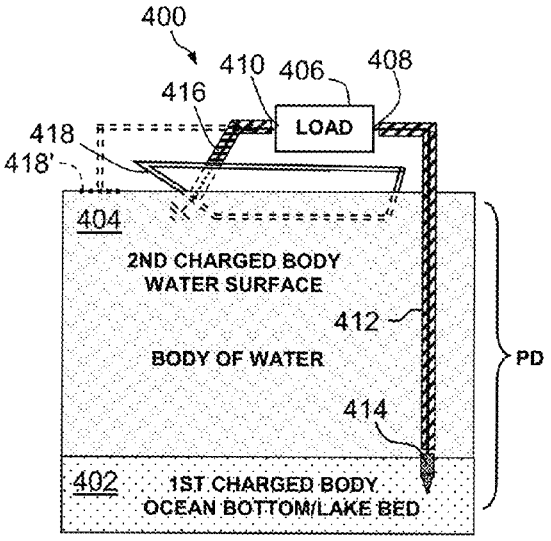

FIG. 10

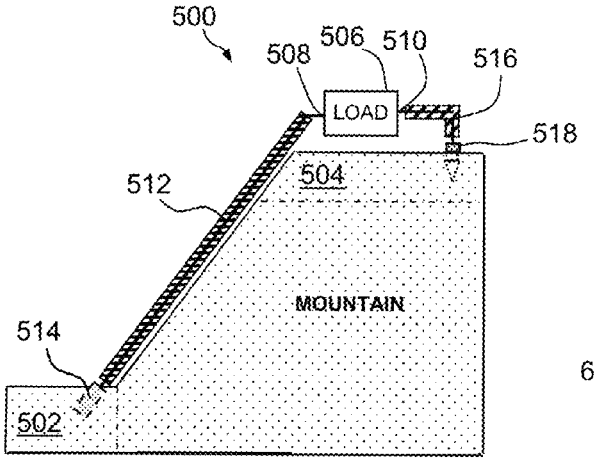

FIG. 11

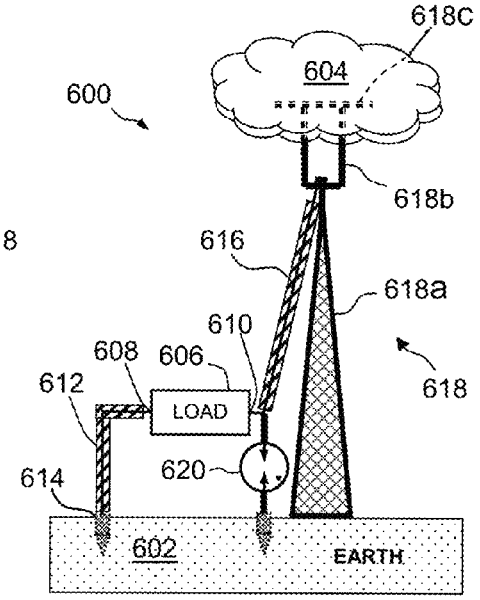

FIG. 12

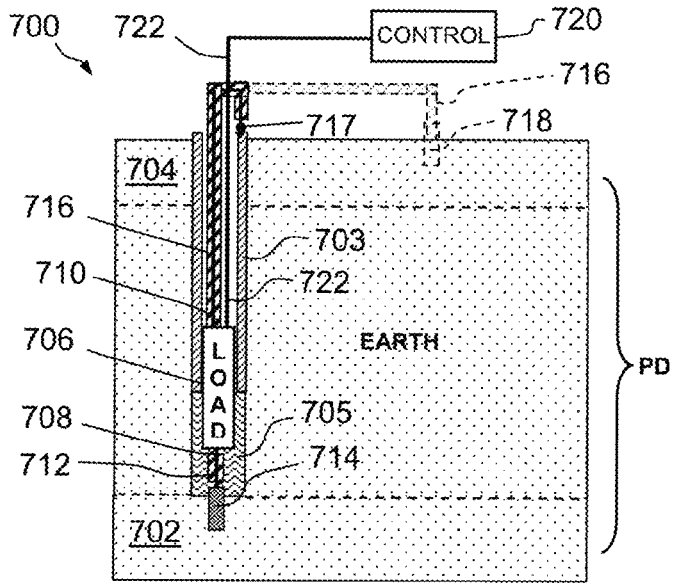

FIG. 13

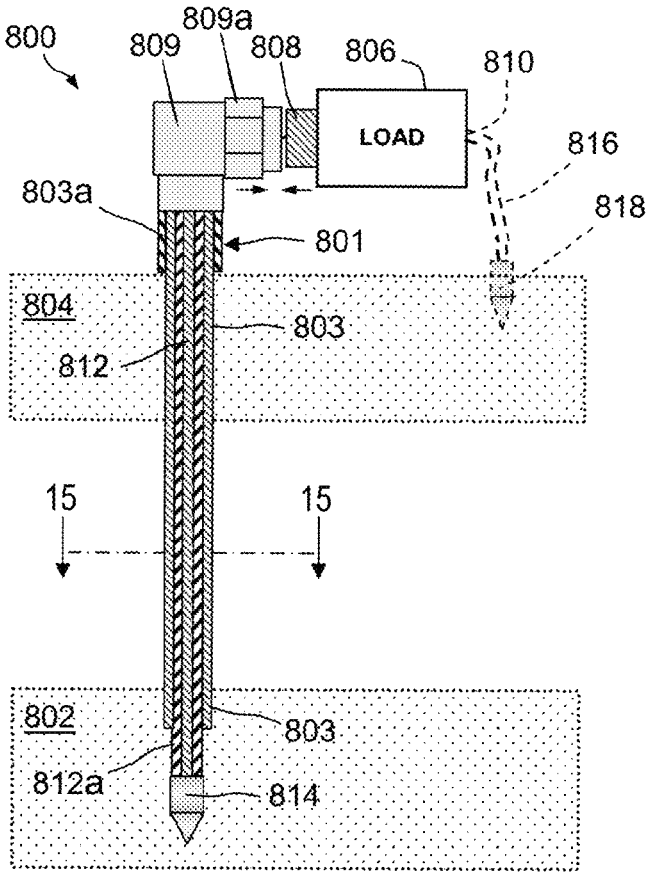

FIG. 14

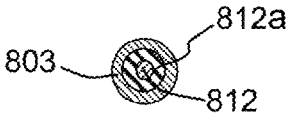

FIG. 15

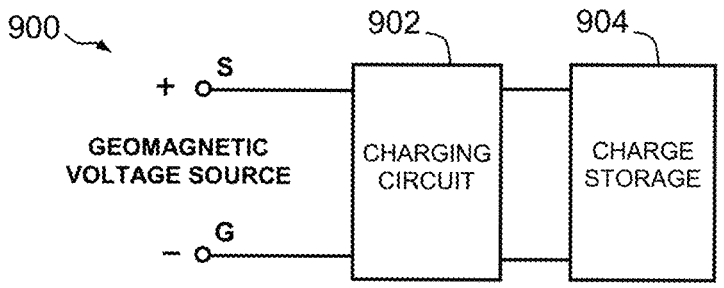

FIG. 16

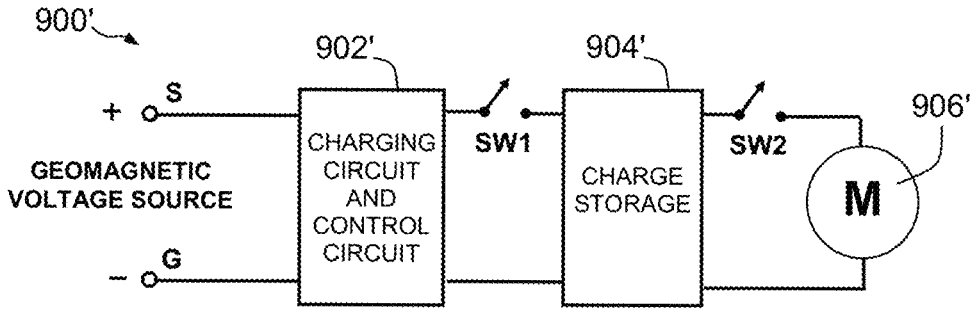

FIG. 17

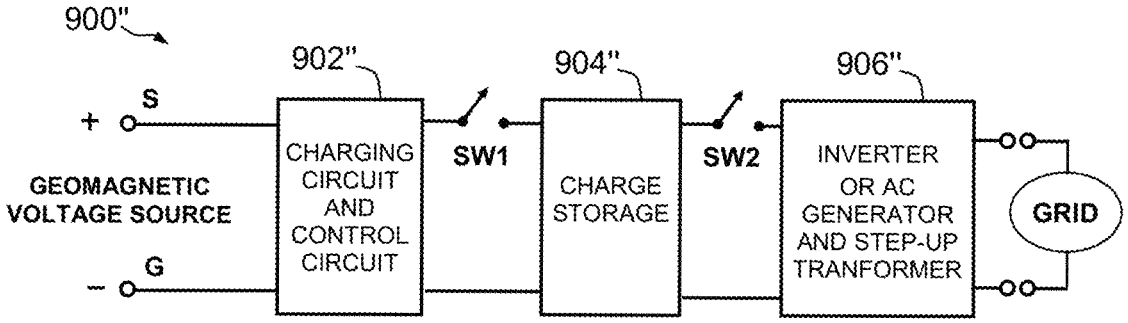

FIG. 18

GENERATING ELECTRICITY FROM THE EARTH

BACKGROUND OF THE INVENTION

Field of Invention

The present invention relates generally to renewable electrical energy sources, and more particularly to apparatus and methods for generating electricity from the earth's magnetic field and rotation.

Background Art

The concepts of electromagnetic induction, Faraday's law, Faraday's disk, and the Lorentz force on charges are all well-known. These concepts have been applied to the earth, which is modeled as a large conductive sphere rotating through its own magnetic field ("geomagnetic field"). In this regard, the earth has been compared to a Faraday disk or homopolar generator. See, for example: W. M. Elsasser, The Earth as a Dynamo, Scientific American, Inc., Vol. 198, Issue 5, May 1, 1958, p. 44, 45; and C. R. Carrigan and D. Gubbins, The Source of the Earth's Magnetic Field, Scientific American, Inc., Vol. 240, Issue 2, Feb. 1, 1979, p. 118, 199-20. In making this comparison, the assumption has been carried over that the electricity to be obtained from the earth is from electromagnetic induction. Laboring under this assumption, it has been asserted that electricity from the geomagnetic field is not practicably retrievable, because the electricity gathering circuit would have to be stationary relative to the rotating earth (i.e., have a stationary frame of reference). This assertion is apparently based on a theory that the currents induced in the Faraday disk (or earth) and in the circuit employed to retrieve the electricity, would cancel each other out if both were moving through the magnetic field. Another theory is that a static electric field is created in the Faraday disk (or earth) that neutralizes the induced electric field, resulting in a zero voltage reading in the rotational frame of reference.

Further to this point, U.S. Patent App. Pub. No. 2004/0027022 (Feb. 12, 2004) to Weir, states that no voltage is generated by a Faraday type homopolar dynamo in the rotational reference frame of the dynamo (Weir, Par. [0010]). Weir even attempted to measure such voltage by mounting a voltmeter onto the rotating disk and connecting one probe to a shaft rotating the disk and the other probe to the rim of the disk. Weir states that the voltmeter read zero volts when the disk was rotating. (Weir Par. [0011].) No details are given regarding the sensitivity of the voltmeter or the test setup. In a book by Thomas Valone, Ph.D, P.E., entitled The Homopolar Handbook, published by Integrity Research Institute, Washington, D.C., 3rd Edition, October 2001 ("Valone I"), it is stated that an electrostatic field (created in response to the Lorentz force) neutralizes the electric field induced on the Faraday disk ("effective electric field"), and thus no voltage can be detected with a meter that rotates with the disk (Valone I, p. 7 & FIG. 8). Valone discusses his voltage measurement on page 24 and again at page 63. He indicates that his voltmeter was set to indicate a voltage reading only if the voltage was greater than 15 millivolts. Thus, the sensitivity of Valone's experiment may have been limited to 15 millivolts, presumably because the induced electric field (obtained in the stationary reference frame) was expected to be 100 millivolts (see Valone I, p. 63).

Valone reminds us that Michael Faraday, in 1831, compared his Faraday disk to the earth and the earth's rotation through its magnetic field. Valone states that Faraday, thinking that an induced voltage could be measured on his rotating disk, attempted to measure a like voltage in the earth

(i.e., in rivers and streams) and apparently was unsuccessful. (Valone I, p. 61.) Valone characterizes Faraday's thinking as a mistake. Valone presumably mentions Faraday's unsuccessful attempt at measuring voltage in the earth as support for his position that a voltage cannot be measured in the rotating reference frame. In an earlier paper, entitled "The Homopolar Generator: Tesla's Contribution," Proceedings of the International Tesla Symposium, January 1986 ("Valone II"), Valone specifically stated that "we can't draw power from the earth's Homopolar generator while rotating with it." (Valone II, p. 273.)

Notwithstanding the view that a voltage is unobtainable in the rotating frame of reference in a Faraday system, proposals were made in the 1980s for a space shuttle to drag a tether (an insulated conductor) through space across the geomagnetic field to generate electric power onboard the shuttle. Current and a voltage potential difference would be induced on the tether's conductor as it passed through the magnetic field lines of the earth. The current return path (or ground path) would be the charged plasma medium of the ionosphere, which would exist between the outer wall of the space shuttle and the distal end of the tether (or an outer wall of a satellite attached to the distal end). A load (e.g., electronic equipment) inside the space shuttle would be connected between the proximal end of the tether and the outer wall of the shuttle (i.e., the return or ground path). A tether experiment was actually performed on a space shuttle mission in 1996, according to a NASA article (www.istp.gsfc.nasa.gov/Education/wtether.html). The voltage generated on the tether was 3500 volts, apparently measured in the rotational frame of reference. It is suggested that the voltage may have been measured at the distal end of the tether with instruments aboard a satellite connected to the distal end. The voltage level at the load inside the shuttle is not mentioned. In this experiment, the voltage applied to the intended load (equipment aboard the shuttle) was supplied by the tether's conductor and the return or ground path for the load was, according to NASA, the ionospheric plasma between the shuttle and the satellite.

An alternative design to the above-mentioned space tether was purportedly developed by or for the U.S. Army in 1988 and patented in U.S. Pat. No. 4,923,151 (1990) to Roberts. Roberts discloses a coaxial tether (Roberts, FIGS. 2 and 3) about 12.5 miles long, comprising an outer conductor 20, a magnetic shield conductor 26, and a center conductor 30. Outer conductor 20 is electrically connected at one end to a satellite 12 and at the other end to an orbiting shuttle 10 (Roberts, FIGS. 1 and 2). Center conductor 30 is magnetically shielded from the geomagnetic field by conductor 26, which is made of a high permeability metal such as soft iron. Center conductor 30 is electrically insulated from conductors 20 and 26 by insulation 28. Center conductor 30 is also electrically connected at one end to satellite 12 (at point 32) and at the other end to a load 36 inside shuttle 10 (through a switch 34). Load 36 is grounded via a return current path including the outer surface 40 of shuttle 10, conductor 20, and the outer surface 22 of satellite 12. The tether passes through the geomagnetic field at an orientation substantially normal to the earth and its magnetic field lines. As a result, a potential difference ("PD") is produced between shuttle 10 and satellite 12. Conductor 26 magnetically shields center conductor 30, so no induced current flows in conductor 30. Conductor 30 assumes the charge potential of satellite 12 and applies the potential difference PD across load 36 (once switch 34 is closed), causing current to flow in load 36. Conductor 20 replaces the ionosphere as the return current path, purportedly making the circuit more stable. Thus,

conductor 20 functions both as a Faraday conductor (i.e., a conductor on which currents are induced from a magnetic field) and as the return current path. In this case, the Faraday conductor (conductor 20) does not function as the supply current path (conductor 30 does). In the previously discussed space tether design, the Faraday conductor (i.e., the tether's only conductor) did serve as the supply current path and did not serve as the return current path (the ionosphere).

For over 40 years, the inventor named herein has been working on an idea for generating electricity from the earth's rotation and magnetic field. The argument that electricity is generated in the earth is supported by some natural phenomena, including: the decreasing speed of the earth's rotation, the continued molten state of the earth's interior, volcanic and geyser activity, the earth's magnetic field, and lightning. The earth uses its primary kinetic energy, which originally started its rotation, to electrically charge itself by electromagnetic induction. Electric energy flowing toward the center of the earth is transformed into magnetic and heat energy, sustaining the earth's magnetic field and the molten state of the earth's interior. The balance in pressure between the surface and the molten interior is maintained through the loss of heat energy at the surface by heat radiation and volcanic and geyser activity. As a result of the work performed by the earth, and possibly because of a counter electromagnetic force (Lenz's law), the earth's kinetic energy is decreasing and its rotation is slowing.

The inventor herein began thinking about his idea while observing thunderstorms. In 1979, during one of his experiments, he was struck by a branch of lightning and luckily survived with no significant injury. He decided to continue experimentation, but in a safe manner. Upon arrival to the United States, the inventor herein applied for a grant and technical support from the National Institute of Standards and Technology (NIST) on May 18, 1995. His application was assigned an Evaluation Request (ER) Number 32042 and a Control Number 015351. The application was ultimately rejected with an explanation that the magnetic field rotates with the earth and thus currents could not be induced in a conductor installed on the earth. NIST's rejection of the idea dissuaded the inventor herein from pursuing the idea further, until recently when the inventor started thinking about the Faraday disk and "Faraday's paradox."

Faraday's paradox is the non-intuitive result that electric currents are induced in the Faraday disk even when the magnet rotates with the disk. It is non-intuitive because many would assume that the magnetic field rotates with the rotating magnet and disk, in which case currents would not be induced in the disk. Faraday conducted three tests to investigate this phenomenon. First, he rotated the disk and kept the magnet stationary and observed a current induced in the disk. Second, he kept the disk stationary and rotated the magnet and observed no induced current in the disk. Third, he rotated the disk and magnet together and observed a current in the disk. From these tests, Faraday concluded that the magnetic field remained stationary when the magnet was rotated around its own magnetic axis. Similarly, the earth (representing a rotating disk and magnet) should produced a stationary magnetic field through which the earth rotates, thus inducing generally radial electric currents in the earth and on conductors substantially aligned with the earth's radius. Since Faraday, there has been a long-standing debate and experimentation about Faraday's paradox and whether or not the magnetic field rotates with the magnet. For example, see Valone I, pp. 2-4 and 37. Notwithstanding the theoretical debate and investigation, it is believed that Faraday was correct and that currents are induced by the geomagnetic field in the earth, in the surrounding atmosphere, and in conductors appropriately located on the earth and in the atmosphere.

Nikola Tesla disclosed a conductor extending into the atmosphere and normal to the earth's surface in U.S. Pat. No. 685,957 (Tesla). Rather than seek to induce currents in the conductor from the geomagnetic field, Tesla sought to collect radiant energy (or particles charged by radiant energy) primarily from the sun. Tesla somehow suspended a conductive plate P and connected it to the distal end of the conductor (Tesla, FIG. 1). The proximal end of the conductor was connected to a capacitor C. The other end of capacitor C was connected to a secondary conductor, which is, in turn, connected to a conductive plate P' grounded in the earth. Plate P was the collector of radiant energy charged particles. The charge from plate P charged capacitor C. A voltage threshold device (d) and a load R are connected across capacitor C to form a circuit. Device (d) closes the circuit when the charge on capacitor C exceeds a predetermined voltage, causing the voltage to be applied to load R. In this patent, Tesla does not seek to obtain the potential difference between two "terrestrial charged bodies" (hereinafter defined).

Herein, the term "terrestrial" is used in a broad sense, to include the whole or any part of the earth and its surrounding atmosphere, including but not limited to: the earth's inner and outer cores, mantle, crust, any layer or level thereof, and its surface; all bodies of water; air; clouds; ice; vegetation; minerals and other resources such as oil; rocks including basalt; or any other composition or thing of the earth and its atmosphere. As used herein, the term "terrestrial charged body" (or its plural form) means a terrestrial body, region, layer, zone, other volume or area, any composition or thing, with or without specifically defined or fixed boundaries, having an electric charge represented by a voltage potential.

OBJECTS AND SUMMARY OF THE INVENTION

It is therefore an object of the present invention to overcome the problems and limitations associated with the prior art and to fulfill a long-felt but unsolved need for a renewable source of energy.

It is another object of the present invention to provide a clean and renewable source of electrical energy.

It is a further object of the present invention to generate electricity from the earth's magnetic field and rotation.

It is yet another object of the present invention to provide a reliable source of electricity from the earth's magnetic field and rotation.

It is yet a further object of the present invention to provide a source of electricity from the earth's magnetic field and rotation that can be easily implemented.

It is still another object of the present invention to provide a source of electricity from the earth's magnetic field and rotation that can be implemented at a low-cost.

These and other objects are attained in accordance with the present invention, wherein there is provided a system for generating electricity from the geomagnetic field and rotation of the earth. The earth rotates through the geomagnetic field to form a potential difference between first and second terrestrial charged bodies. The first and second terrestrial charged bodies are spaced apart in a direction substantially normal to the earth's surface. The system comprises an electrical load, an electrically insulated first current path, and a second current path. The electrical load has a supply input and a ground output. The first current path is coupled

to the first terrestrial charged body and to the supply input of the electrical load, for supplying the potential difference to the electrical load. The second current path is coupled to the ground output of the electrical load and to the second terrestrial charged body. As a result of this arrangement, an electric current related to the potential difference is generated in the electrical load.

In one particular embodiment, the first terrestrial charged body includes a first portion of the earth located below the earth's surface and the second terrestrial charged body includes a second portion of the earth located at or near the earth's surface. The earth contains an opening extending between the first and the second portions of the earth. In this embodiment, the first current path includes (i) an electrically insulated conductor extending at least partially through the opening and (ii) a conductive contact member coupled to the electrically insulated conductor for establishing electrical contact between the first portion of the earth and the electrically insulated conductor. In a more specific embodiment, the opening is a well bore or mine shaft, and the first portion of the earth includes a bottom of a well or mine. The electrically insulated conductor extends through the bore or mine shaft, and the conductive contact member establishes electrical contact between the bottom of the well or mine and the electrically insulated conductor.

In another embodiment, the first terrestrial charged body may be a portion of the earth at or near the surface of the earth, and the second terrestrial charged body may be a cloud above the surface of the earth. In yet another embodiment, the first and second terrestrial charged bodies may be first and second charged portions of the earth, respectively, where both portions are located at or near the surface of the earth. In this latter embodiment, the first portion of the earth is at a first elevation and the second portion of the earth is at a second and different elevation. For example, the first elevation may be at or near the bottom of a mountain or cliff and the second elevation may be at an elevated position on the mountain or cliff. In still another embodiment, first terrestrial charged body is a portion of the earth at the bottom of a body of water, such as the ocean, and the second terrestrial charged body is the water at or near the surface of the body of water.

In any of the embodiments, the electrical load may include a rechargeable energy source, including a rechargeable battery or battery pack and a charging circuit coupled to the rechargeable battery or pack. Alternatively, or in addition to batteries, the rechargeable energy source may include a charging capacitor or a bank of charging capacitors along with an appropriate charging circuit for the capacitor (s). The capacitor or capacitors may be ultracapacitors. The electrical load may further include an electric motor coupled to the rechargeable energy source. The electric motor may be a DC motor, which may be mechanically coupled to an AC generator. In operation, the DC motor would actuate the AC generator, resulting in the AC generator generating AC electric power. Alternatively, the electric load may include an inverter for converting DC electric power to AC electric power. In either case (AC generator or inverter), the AC electric power can be stepped up in voltage and applied to an electric power grid.

A method of generating electricity from the geomagnetic field and rotation of the earth is also within the scope of the present invention. As indicated earlier, the earth rotates through the geomagnetic field to form a potential difference between first and second terrestrial charged bodies. The first and second terrestrial charged bodies are spaced apart in a direction substantially normal to the earth's surface. The method comprises the steps of: (a) providing an electrically insulated first current path having first and second electrically exposed ends; (b) coupling the first end of the first current path to the first terrestrial charged body to establish electrical communication between the first current path and the first terrestrial charged body; (c) coupling the second end of the first current path to a supply input of an electrical load to supply the potential difference to the electrical load; (d) providing a second current path having first and second ends; (e) coupling the first end of the second current path to a ground output of the electrical load; and (f) coupling the second end of the second current path to the second terrestrial charged body to establish electrical communication between the electrical load and the second terrestrial charged body. As a result of these steps, an electric current related to the potential difference is generated in the electrical load.

BRIEF DESCRIPTION OF THE DRAWING

Further objects of the present invention will become apparent from the following description of the preferred embodiments, with reference to the accompanying drawing, in which:

FIG. **1** is a diagram of a test setup used to demonstrate the operation of a Faraday disk and the generation of electricity within the rotational frame of reference;

FIGS. **2** is a diagram of an experiment showing a rotating Faraday disk with a voltmeter having lead wires and test leads for measuring voltages at different points along the disk's radius;

FIG. **3** is a diagram of an experiment illustrating a battery analogy of the Faraday disk and the concept of short circuit (SC) current on the disk;

FIG. **4** is a diagram of a field experiment with one embodiment of the present invention, implemented in conjunction with a water well;

FIG. **5** is a diagram of the earth rotating through its magnetic field and showing (schematically) three terrestrial charged bodies spaced apart from each other in a direction normal to the earth's surface;

FIG. **6** is a diagram of the earth partially dissected to reveal a portion of a flat circular plane through the earth's equator, presented as an analogy of a Faraday disk;

FIG. **7** is a diagram of a first embodiment of the present invention, wherein the terrestrial charged bodies are separated portions of the earth;

FIG. **8** is a diagram of a second embodiment of the invention, which is an implementation utilizing a well;

FIG. **9** is a diagram of a third embodiment of the invention, which is an implementation utilizing a mine and a mine shaft;

FIG. **10** is a diagram of a fourth embodiment of the invention, which is an implementation utilizing a body of water, wherein one terrestrial charged body is the bottom of the body of water and another terrestrial charged body is a surface of the body of water;

FIG. **11** is a diagram of a fifth embodiment of the invention, which is an implementation utilizing different elevations of the earth's surface, such as associated with a mountain or cliff;

FIG. **12** is a diagram of a sixth embodiment of the invention, which is an implementation utilizing the atmosphere of the earth, wherein one terrestrial charged body is a cloud and another terrestrial charged body is a surface of the earth;

FIG. **13** is a diagram of a seventh embodiment of the invention, which is an implementation utilizing a well

having a bore casing and an electrical load (which may include a submersible pump) is located at least partially within the bore casing;

FIG. **14** is a diagram of an eighth embodiment of the invention, which employs coaxial conductors to carryout the invention;

FIG. **15** is a cross-sectional view of the coaxial conductors of FIG. **14**, taken along line **15-15** in FIG. **14**;

FIG. **16** is a block diagram of one example of an electrical load of the present invention, which is a rechargeable energy source including a charging circuit and a charge storage device, such as a rechargeable battery(s) or storage capacitor (s);

FIG. **17** is a block diagram of another example of an electrical load of the invention, which includes a charging and control circuit, charge storage device, and an electric motor; and

FIG. **18** is a block diagram of a further example of an electrical load of the present invention, including a charging and control circuit, a charge storage device, and an inverter or AC generator with step-up transformer.

DETAILED DESCRIPTION OF THE PREFERRED EMBODIMENT

Inspired by the book "The Homopolar Handbook" by Thomas Valone (Valone I), the named inventor built a Faraday disk to perform a few original experiments. A direct consequence of the experiments is the extraction and use of one part of the existing electrical energy of the earth. FIG. **1** illustrates a Faraday disk apparatus **10** built by the inventor herein. Apparatus **10** includes a frame **12** made of 2×6 wooden boards, connected together with screws. An axle **14** is made of a ⅝ inch diameter, 3-foot long steel threaded rod. Axle **14** has a sharpened lower end **14***a*, which rests on a steel plate **16**. Axle **14** is rotatably supported by two bearing assemblies **18***a* and **18***b*. Bearing assembly **18***a* is mounted in an upper cross member **12***a* of frame **12** and bearing assembly **18***b* is mounted in a bottom cross member **12***b* of frame **12**. A drill **20** is connected, via a chuck **22**, to a short rod **24**, which is, in turn, connected to one end of an insulator block **26**. The upper end of axle **14** is connected to the other end of insulator block **26**. Rod **24**, block **26** and axle **14** rotate together as a unit. The speed of drill **20** is manually controlled to control the rotational speed of axle **14**. Insulator **26** electrically isolates axle **14** from the drill to eliminate any chance of electric current from drill **20** finding its way into axle **14**.

As further shown in FIG. **1**, the actual Faraday disk comprises a 17-inch diameter round aluminum baking pan **28** and two 16-inch diameter (and ¼-inch thick) steel disks **30***a* and **30***b*. Pan **28** and disks **30***a*, **30***b* are fixed together and balanced on axle **14**, using washers and steel hex nuts threaded on axle **14**. Disk **30***a* is fixed in and against the bottom of pan **28** and disk **30***b* is fixed directly underneath and against pan **28** (collectively referred to as disk assembly **28'**). Axle **14** and disk assembly **28'** rotate together, almost like a spinning top. In order to reduce electrical resistance associate with axle **14** above disk assembly **28'**, a copper ring **32** is clamped to axle **14** and an insulated copper wire **34** is connected between ring **32** and disk assembly **28'**. Two spring-loaded graphite brush contacts **34***a* and **34***b* are installed. Brush contact **34***a* is adjacent to and in contact with copper ring **32** and brush contact **34***b* is adjacent to and in contact with the rim of disk assembly **28'**. Contact **34***a* and a lead wire **36***a* electrically connect ring **32** to one input of a digital voltmeter **38**. Contact **34***b* and a lead wire **36***b* electrically connect the rim of disk assembly **28'** to a second input of voltmeter **38**. Voltmeter **38** is mounted outside of frame **12** and is held stationary. Another digital voltmeter **40** is mounted on disk assembly **28'** and rotates with assembly **28'**. Voltmeter **40** is electrically connected, via a short lead wire **42***a*, to the rim of disk assembly **28'** and is electrically connected, via a longer lead wire **42***b*, to axle **14**. A digital camera **44** is fixed on axle **14** (just below insulator block **26**) to record the digitally displayed readings of voltmeter **40**.

Again referring to FIG. **1**, twenty-two cylindrical welding magnets, each five inches in diameter and each with a pull strength of 75 lbs, are arranged to form two magnetic cylinders **46***a* and **46***b* (11 magnets each). Cylinders **46***a* and **46***b* are separated from each other by disk assembly **28'**. Magnetic cylinders **46***a*, **46***b* are installed in a way that allows them to be held stationary or to be rotated with disk assembly **28'**. In a series of tests, axle **14** was rotated at a speed of about 200 RPM and voltmeter **38** measured and read a generated potential difference of about 300 millivolts. No difference in voltage generation was noted between tests where magnetic cylinders **46***a*, **46***b* were held stationary or rotated (Faraday's paradox). During the 200 RPM tests, voltmeter 40 read 1 to 3 millivolts, supporting the view that a voltage potential difference is generated and measurable on the rotating frame of reference. These tests are referred to collectively as "Experiment A." The difference in readings between voltmeter **38** and voltmeter **40** will be explained below.

Referring now to FIG. **2**, a diagram of a rotating disk experiment is shown. Disk assembly **28'** and voltmeter **38** are used in this experiment. Lead wires **36***a* and **36***b* of voltmeter **38** include test leads **48***a* and **48***b*, respectively. Leads **48***a*, **48***b* are placed on rotating disk assembly **28'** in a sliding engagement to establish dynamic electrical contact with assembly **28'**. As disk assembly **28'** was rotated, voltage measurements were taken at different points along the radius of the assembly (i.e., at different imaginary concentric circles on disk assembly **28'**). Voltmeter **38** measured the potential difference between the points of contact. The positive side of the potential difference is toward the center, as indicated in FIG. **2**, due to the Lorentz force pushing electrons radially out to the rim. The measured potential difference increased as the distance between the contact points increased. This experiment is referred to hereinafter as "Experiment B."

An understanding as to why there is a difference in electric potential measured by voltmeter **38** and voltmeter **40** (FIG. **1**) was gained in another experiment, illustrated in FIG. **3**. In this experiment, an attempt was made to model the electrodynamics on a rotating Faraday disk. This was done by applying a potential difference across disk assembly **28'** (between axle **14** and the rim), while disk assembly **28'** remained stationary (as did voltmeter **38**). This setup was intended to mimic the case where the voltmeter and disk are rotating in the same frame of reference. The potential difference was applied across disk assembly **28'** using a 6-volt battery **50**. This modeled the potential difference generated on a rotating disk by electromagnetic induction. Insulated copper wires **52***a* and **52***b* were connected to the terminals of battery **50** and to axle **14** and the rim of disk assembly **28'**, as shown in FIG. **3**. The positive side of battery **50** is connected at axle **14** and the negative side is connected at the rim to model the charge displacement due to induction. Lead wires **36***a*, **36***b* of voltmeter **38** were also connected to disk assembly **28'**, in the vicinity of the connections of wires **52***a*, **52***b*, respectively. The voltage (or potential difference) measured by voltmeter **38** was 50

millivolts. A reading of 6 volts would be expected in an open circuit measurement. On the other hand, a reading of 50 millivolts would suggest a near short circuit (considering the inherent resistance in disk assembly **28'**). Voltmeter **38** did measure a short circuit current, which is indicated in FIG. **3** by arrow SC. This experiment is referred to hereinafter as "Experiment C."

Based on Experiments A, B and C, it was concluded that the rotation of disk assembly **28'** in the magnetic field (created by magnetic cylinders **46***a*, **46***b*—FIG. **1**) caused the disk assembly to become charged and develop a potential difference in the radial direction. The potential difference increased as the distance between the center of disk assembly **28'** and a measurement point along the radius of assembly **28'** increased. This potential difference was created by the Lorentz force pushing electrons out to the rim, causing an induced current to flow radially outward. In response to the induced potential difference, electrons seek to establish equilibrium on the disk (as it is a conductor) and begin to flow in a direction opposite of the induced current. This opposite flow of electrons is referred to as the short circuit current and is indicated in FIG. **3** by arrow SC. It is believed that this short circuit current is flowing at all times on a rotating Faraday disk. This may be the reason why a voltage is measureable on the rotating frame of reference (voltmeter on the disk), albeit a smaller voltage than the induced voltage measured in the stationary frame of reference. A rotating Faraday disk (i.e., disk assembly **28'**) behaves like a battery (or multiple batteries connected in series) with one pole at the center of the disk (axle **14**) and the other pole at the rim. While rotation in the magnetic field causes the disk to be charged, a short circuit simultaneously occurs. The disk loses its charge immediately when it stops rotating. A Faraday disk (and thus disk assembly **28'**) can be thought of as comprising a number of imaginary annular rings, each behaving like a circular-shaped battery and the batteries are connected in series. Thus, the largest potential would occur at the rim, where all of the annular rings (batteries) of the disk are in series and in the circuit.

The concepts studied in the lab in Experiments A, B and C were then applied in the field, with respect to the earth's rotation and magnetic field. FIG. **4** illustrates an experiment that was conducted at two different drilled water wells, one 117 feet deep and the other 210 feet deep. The wells were drilled at construction sites of new homes in a suburban area near Utica, N.Y. At the time of the experiments, the wells were not in use. There were no electric power lines or transmitting antennas within a great distance around the construction sites. A copper pipe **54**, one-half inch in diameter and two feet long, was connected to an insulated copper wire **56**, to ensure a good connection with the earth at the bottom of the well. Pipe **54** and wire **56** were lowered to the bottom of each well. Pipe **54** made direct contact with the earth at the bottom of each well. The bottom of each well is considered a first charged body (defined above). Another one-half inch diameter and two-foot long copper pipe **58** was hammered into the ground at the surface, about 6 feet from the well. The surface and earth surrounding pipe **58** is considered a second charged body. A digital voltmeter **60** was used to measure the difference in electric potential between the bottom of the well and the surface of the ground (i.e., between the first and the second charged bodies). Voltmeter **60** has test lead wires **62** and **64**. Test lead wire **62** is connected to insulated wire **56** and test lead wire **64** is connected to copper pipe **58**. Steady measurements of **592** millivolts were obtained in the 117-foot well and 858 millivolts were obtained in the 210-foot well. Short circuit current between the surface and the bottom of the well was also measured with meter **60**. As the distance between the surface and bottom of the well increased, the difference in electric potential increased.

A variation of the setup in FIG. **4** was also tested at the 210-foot well (indicated in dash lines). The well includes a metal bore casing **66** that extends substantially down the well bore. The variation is that casing **66** was used as part of the circuit instead of copper pipe **58**. Test lead wire **64** was connected directly to casing **66**. The voltage measurements were consistent with those obtained in the original tests for the 210-foot well. It is believed that the use of casing **66** as part of the circuit, instead of a ground pipe (like pipe **58**), may yield more consistent voltage readings. The tests performed at both wells, as described in this and the previous paragraph, are collectively referred to hereinafter as "Experiment D." In the tests of Experiment D, wire **56** was an insulated 14-Gauge Stranded THHN Cable, Model No. 22955957, supplied by the Southwire Company, Carrollton, Ga., featuring conductors made of annealed (soft) copper, rated at 600 Volts, and insulated with tough, heat- and moisture-resistant PVC. Voltmeter **60** was a Mini Pocket MultiMeter, Model DM110, by Extech Instruments Corp., Nashua, N.H., with 0.1 millivolt DC voltage resolution and 0.01 milliamp DC current resolution. Another voltmeter was also used to re-confirm the readings. That meter was a Cen-Tech Seven Function Digital Multimeter, Model 98025, supplied by Harbor Freight Tools Co., Camarillo, Calif., with milliamp and millivolts resolutions.

The earth is an oblate spheroid with an equatorial radius of 6378.16 km. The earth and its surrounding atmosphere rotate within the earth's magnetic field (i.e., the geomagnetic field). The speed of a point at the earth's equator is about 463.8 m/sec. In the Utica, N.Y. area, where Experiment D was performed, the speed is about 300 m/sec. By comparison, the speed of sound is 340.29 m/sec. The earth's magnetic field is estimated to be about 0.35 to 0.65 gauss at the earth's surface. By comparison, a strong refrigerator magnet has a field strength of 100 gauss. The geomagnetic field is generally dipolar as it has two poles, the north and south magnetic poles, and the field lines resemble those of a dipolar magnet. FIG. **5** illustrates the geomagnetic field on one side of the earth's magnetic axis **70**. Generally, the earth can be considered a conductor having the following five parts: (1) the solid inner core, which is an excellent conductor; (2) the molten outer core, which is an excellent conductor; (3) the mantle, much of which is a good conductor; (4) the crust, which is a relatively good conductor; and (5) the atmosphere, which can be a good or poor conductor.

To help with the understanding of the results obtained in Experiment D and with the operation of the present invention, consider the following theory. (This theory should not be construed as defining or limiting the scope of the present invention in any way, and it should not affect the validity of the invention if proven to be incorrect. It is presented in the hope that it may aid in the understanding of the invention.) One should picture the earth and the surrounding (rotating) atmosphere as an endless number of concentric spheres, from the earth's center to the earth's surface, and from the earth's surface to the outer reaches of the surrounding, rotating atmosphere. FIG. **5** depicts two spheres associated directly with the earth itself. A sphere **72** represents any level or layer under the earth's surface between the center and the surface. For example, sphere **72** could be (generally) a junction between the earth's crust and its mantle, a junction between the earth's mantle and the outer core, or a particular

layer within the earth's crust or mantle. A sphere **74** represents the earth's surface. Alternatively, one can picture the earth as an endless number of disks, with the largest diameter disk cutting through the equator (see FIG. **6**) and the smallest diameter disks approaching the poles.

As shown in FIG. **5**, the geomagnetic field (showing one side of the field) comprises a plurality of magnetic field lines **68** disposed generally in a dipolar arrangement about magnetic axis **70**. As the earth rotates through the geomagnetic field, it behaves similar to a rotating Faraday disk, in that electrons dislocate outward from the center to the surface. This causes a potential gradient to be established along the radius of the earth and into the atmosphere, with the positive side toward the center and the negative side toward the surface. A potential difference is measured between any two designated spheres of the earth and atmosphere (e.g., spheres **72** and **74** in FIG. **5**), and the potential difference increases with the spacing between the designated spheres. At the same time, electrons travel back toward the center of the earth as the electromagnetic system seeks equilibrium, and this causes a permanent short circuit current to flow in the earth's interior.

Continuing with the theory, induction also exists in the atmosphere, especially in the clouds. Clouds are connected to the earth's surface by air that is generally a poor conductor. Some short circuit current through dry air may exist, but a big difference in electric potential develops between clouds and the earth's surface. During storms, the air between the earth's surface and clouds, and between clouds at different levels (representing different spheres), become saturated with water and form columns that are relatively good conductors. An intense short circuit current occurs through such conductors. When the amount of current becomes so intense that the conductor cannot accept it any longer, because of its properties (air and water), it simply burns out. The flash and explosion (i.e., lightning and thunder) are results of the burning out of the overloaded conductor. Most likely, a similar event happened to NASA's tether experiment, when an almost 20 km long insulated wire burned out by an estimated 1 amp of current at 3500 volts (see NASA tether experiment article, www.istp.gsfc-.nasa.gov/Education/wtether.html).

Further with the theory, the earth behaves like one huge battery (similar to Faraday's disk), constantly being charged by the rotation within its own magnetic field. One pole of the battery is at the earth's center and the other pole is at the earth's surface or at some designated point in the atmosphere. One can also imagine the earth as an endless number of sphere-shaped batteries connected in series. At the same time, a permanent short circuit in the earth exists, like the battery in Experiment C above.

It is not possible or practicable to obtain the electric potential between the center of the earth and its surface using Faraday's approach, because stationary brush contacts cannot be placed at the center and the surface (i.e., a stationary frame of reference for the collection circuit cannot be established). However, it is possible to obtain an electric potential from the short circuit current between different designated spheres reachable from the earth's surface (e.g., Experiment D).

Referring again to FIG. **5**, sphere **72** contains a designated terrestrial charged body **76** and sphere **74** (earth's surface) contains a designated terrestrial charged body **78**. A cloud **80** in the atmosphere **82** is also designated as a terrestrial charged body. Terrestrial charged bodies **76**, **78** and **80** are spaced apart from each other in a direction substantially normal to the earth's surface. An imaginary axis **84** represents the alignment of the charged bodies in a direction normal to the surface. Due to electromagnetic induction, a potential difference is formed between terrestrial charged bodies **76** and **78**, between charged bodies **76** and **80**, and between charged bodies **78** and **80**. A terrestrial charged body is that amount (e.g., area or volume) of earth, water, minerals, rocks, clouds, etc. sufficient to define, accumulate or hold a charge which can produce a measurable potential difference with another terrestrial charged body.

Referring to FIG. **6**, there is shown a model of the earth with a portion removed to reveal an imaginary plane or disk **86**. Disk **86** cuts through the equator. FIG. **6** illustrates an analogy between the earth's interior and a Faraday disk (see earlier discussion above). In this example, an interior section or region of the earth's crust or mantle serves as a first terrestrial charged body **88**, and the earth's surface serves as a second terrestrial charged body **90**. Compare FIG. **6** with FIG. **2**. The rotation of the earth through its magnetic field causes terrestrial bodies **88** and **90** to become charged and a potential difference to be form between them, as in Experiment B (FIG. **2**).

Referring now to FIG. **7**, a system **100** for generating electricity from the geomagnetic field and rotation of the earth is shown as a first embodiment of the present invention. As explained, a potential difference (PD) is formed between terrestrial charged bodies—here terrestrial charged bodies **102** and **104**. In this embodiment, body **102** is underground earth (e.g., rock, soil, and/or minerals, etc.) at the bottom of an opening or hole (man-made or natural) and body **104** is the surface soil of the earth. Charged bodies **102**, **104** are spaced apart in a direction normal to the earth's surface. System **100** comprises an electrical load **106** having an input **108** and an output **110**. A first insulated conductor **112** is coupled at one end to charged body **102** via a contact member **114** and is connected at its other end to load input **108**. Contact member **114** may be, e.g., a short (e.g., 2 ft long) piece of copper or aluminum pipe. Conductor **112** is insulated to avoid direct electrical contact with the earth, except for charged body **102**. Conductor **112** is soldered or otherwise electrically connected to contact member **114**. The other end of conductor **112** is either directly connected to load input **108** (as shown) or is coupled to input **108** via a jumper wire and/or a connector. In FIG. **7**, a first current path is defined between load **106** and body **102** by contact member **114** and conductor **112**. The first current path supplies the PD to load **106**. A second insulated conductor **116** is coupled at one end to charged body **104** via a contact member **118** and is connected at the other end to load output **110**. Contact member **118** may be the same type as contact member **114**. Conductor **116** may be the same type and model as conductor **112**. A second current path is defined between load **106** and body **104** by conductor **116** and contact member **118**. A return current path occurs between charged bodies **104**, **102** via the intervening earth. Thus, a complete electrical circuit is established from charged body **102**, contact member **114**, conductor **112**, load **106**, conductor **116**, contact member **118**, charged body **104**, and the return current path back to charged body **102**. An electric current related to the PD is generated in load **106**. Load **106** may comprise a charging circuit and a charge storage device, a motor, and/or an AC generator or inverter, as discussed later. Contact members **114**, **118** may be any form of electrical conductor, including but not limited to a plate, disk, sphere, cone, rod, cylinder (hollow or solid), or sharp pointed member or members.

Referring now to FIG. **8**, a system **200** for generating electricity from the geomagnetic field and rotation of the

earth is shown as a second embodiment of the present invention. A potential difference PD is formed between spaced apart terrestrial charged bodies **202** and **204**. Body **202** is underground earth at the bottom of a well and body **204** is the surface soil of the earth. The well includes a drilled wellbore extending from the earth's surface to the well bottom. A metal casing **203** extends down into the bore. At the bottom of the well is a supply of water **205**. System **200** comprises an electrical load **206** having an input **208** and an output **210**. A first insulated conductor **212** is coupled at one end to charged body **202** via a contact member **214** and is connected at its other end to load input **208**. Contact member **214** may be submerged in water **205**. Conductor **212** is insulated to avoid direct electrical contact with metal casing **203** and the earth, except for charged body **202**. A first current path is defined between load **206** and body **202** by conductor **212** and contact member **214**. This current path supplies the PD to load **206**. A second insulated conductor **216** is coupled at one end to charged body **204** via a connection (e.g., a solder joint) **217** to casing **203**. Conductor **216** is connected at its other end to load output **210**. A second current path is defined between load **206** and body **204** by conductor **216**, connection **217** and casing **203**. A return current path occurs between charged bodies **204**, **202** via casing **203** and the earth (and/or water **205**). Thus, a complete electrical circuit is established from charged body **202**, contact member **214**, conductor **212**, load **206**, conductor **216**, connection **217**, casing **203**, charged body **204**, and the return current path back to charged body **202**. An electric current related to the PD is generated in load **206**. In this embodiment, it is preferred that the bottom of the well be at least **400** feet deep relative to the surface.

Referring now to FIG. **9**, a system **300** for generating electricity from the geomagnetic field and rotation of the earth is shown as a third embodiment of the present invention. A potential difference PD is formed between spaced apart terrestrial charged bodies **302** and **304**. In this embodiment, body **302** is underground earth at a bottom of a mine and body **304** is the surface soil of the earth. The mine contains a drilled or excavated opening or mineshaft extending from the earth's surface to the bottom. A metal frame **303** may be present in the shaft. System **300** comprises an electrical load **306** having an input **308** and an output **310**. A first insulated conductor **312** is coupled at one end to charged body **302** via a contact member **314** and is connected at its other end to load input **308**. Contact member **314** makes direct contact with the bottom of the mine and, in some cases, may slightly penetrate the bottom. Conductor **312** is insulated to avoid direct electrical contact with frame **303** and/or the earth (except for charged body **302**). A first current path is defined between load **306** and body **302** by conductor **312** and contact member **314**. The first current path supplies the PD to load **306**. A second insulated conductor **316** is coupled at one end to charged body **304** via a contact member **318** and is connected at its other end to load output **310**. Contact member **320** has been driven into the earth to make good electrical contact with body **304**. Alternatively, conductor **316** may be coupled to body **304** via a connection (e.g., a solder joint) **320** to metal frame **303** (if any). A second current path is defined between load **306** and body **304** by conductor **316** and contact member **318** (or by conductor **316**, connection **320** and frame **303**). A return current path occurs between charged bodies **304**, **302** via the earth or, alternatively, via frame **303** and the earth. Thus, a complete circuit is established from charged body **302**, contact member **314**, conductor **312**, load **306**, conductor **316**, contact member **318** (or connection **320** and frame **303**), charged body **304**, and the return current path back to charged body **302**. An electric current related to the PD is generated in load **306**.

Referring now to FIG. **10**, a system **400** for generating electricity from the geomagnetic field and rotation of the earth is shown as a fourth embodiment of the present invention. A potential difference PD is formed between spaced apart terrestrial charged bodies **402** and **404**. In this embodiment, charged body **402** is the bottom or bed of a body of water (e.g., the earth's crust, basalt, sand, clay, sediments or other settled materials, a change in salinity, etc.). Charge body **404** is the water at or near the surface of the body of water. The body of water is preferably a salt water system such as an ocean, sea, ocean bay, strait, estuary, lake, and the like. System **400** comprises an electrical load **406** having an input **408** and an output **410**. A first insulated conductor **412** is coupled at one end to charged body **402** via a contact member **414** and is connected at its other end to load input **408**. Contact member **414** makes direct contact with the bottom and, in some cases, may penetrate the bottom. Conductor **412** is insulated to avoid direct electrical contact with the body of water. A first current path is defined between load **406** and body **402** by conductor **412** and contact member **414**. The first current path supplies the PD to load **406**. A second insulated conductor **416** is coupled at one end to charged body **404** via a metal boat **418**, which serves as a contact member. Conductor **416** is connected at its other end to load output **410**. Conductor **416** is directly connected to boat **418**, as represented by the electrical ground symbol. An alternative contact member may be a thin metal (e.g., copper or aluminum) plate **418'**, which floats on the water. In the latter case, conductor **416** is directly connected to plate **418'**. A second current path is defined between load **406** and body **404** by conductor **416** and boat **418** (or by conductor **416** and plate **418'**). A return current path occurs between charged bodies **404**, **402** via the body of water. Thus, a complete circuit is established from charged body **402**, contact member **414**, conductor **412**, load **406**, conductor **416**, boat **418** or other contact member, charged body **404**, and the return current path back to charged body **402**. An electric current related to the PD is generated in load **406**.

Referring now to FIG. **11**, a system **500** for generating electricity from the geomagnetic field and rotation of the earth is shown as a fifth embodiment of the present invention. A potential difference PD is formed between spaced apart terrestrial charged bodies **502** and **504**. In this embodiment, both charged bodies **502**, **504** are portions of the earth at or near the earth's surface, but body **504** is at a higher elevation than body **502**. This may be the case, for example, at a mountain or cliff System **500** comprises an electrical load **506** having an input **508** and an output **510**. A first insulated conductor **512** is coupled at one end to charged body **502** via a contact member **514** and is connected at its other end to load input **508**. Contact member **514** is driven into the earth to establish good electrical contact with charged body **502**. Conductor **512** is insulated to avoid direct electrical contact with the earth. A first current path is defined between load **506** and body **502** by conductor **512** and contact member **514**. The first current path supplies the PD to load **506**. A second insulated conductor **516** is coupled at one end to charged body **504** via a contact member **518** and is connected at its other end to load output **510**. Member **518** has been driven into the earth to make good electrical contact with body **504**. A second current path is defined between load **506** and body **504** by conductor **516** and contact member **518**. A return current path occurs between

charged bodies **502**, **504** via the intervening earth. Thus, a complete circuit is established from charged body **502**, contact member **514**, conductor **512**, load **506**, conductor **516**, contact member **518**, charged body **504**, and the return current path back to charged body **502**. An electric current related to the PD is generated in load **506**.

Referring now to FIG. **12**, a system **600** for generating electricity from the geomagnetic field and rotation of the earth is shown as a sixth embodiment of the present invention. A potential difference PD is formed between spaced apart terrestrial charged bodies **602** and **604**. In this embodiment, charged body **604** is a cloud or a stream of clouds passing overhead and charged body **602** is a portion of the earth at or near the earth's surface. A preferred location for system **600** is at a high elevation, such as a mountain top, where low lying clouds are a frequent occurrence. As air is generally a poor conductor, the flow of short circuit current between clouds and the earth's surface is very limited, resulting in the buildup of a huge difference in electrical potential between the clouds and the earth's surface. THIS EMBODIMENT IS VERY DANGEROUS DUE TO LIGHTNING STRIKES AND STATIC ELECTRICITY. ANYONE WHO BUILDS THIS EMBODIMENT, WHETHER AUTHORIZED BY THE INVENTOR HEREIN OR NOT, ASSUMES ALL RISK OF PERSONAL INJURY OR DEATH AND ASSUMES ALL LIABILITY TO OTHERS INJURED OR KILLED AS A RESULT OF THE CONSTRUCTION AND/OR OPERATION OF THIS EMBODIMENT.

Again referring to FIG. **12**, system **600** comprises an electrical load **606** having an input **608** and an output **610**. A first insulated conductor **612** is coupled at one end to charged body **602** via a contact member **614** and is connected at its other end to load input **608**. Contact member **614** has been driven into the earth to make good electrical contact with body **602**. A first current path is defined between load **606** and body **602** by conductor **612** and contact member **614**. The first current path supplies the PD to load **606**. A second insulated conductor **616** is coupled at one end to charged body **604** via a contact apparatus **618** and is connected at its other end to load output **610**. Apparatus **618** includes a non-conductive tower **618***a*, an upwardly extending metal bracket **618***b*, and a metal collector plate **618***c*. Tower **618***a* is preferably built from a non-conductive material such as, for example, wood, fiberglass, fiberglass reinforced plastic, and the like. Tower **618***a* may be supported by non-conductive guy wires such as Phyllistran guys or Polygon structural fiberglass guys. Alternatively, tower **618***a* may be electrically insulated from the ground using an electrically insulating barrier between the tower and the ground. Conductor **616** is electrically connected to metal bracket **618***b*. Conductor **616** is insulated to avoid electrical contact with the surrounding atmosphere. Bracket **618***b* and collector plate **618***c* establish electrical coupling with the electric charge in cloud **604**. Plate **618***c* is a metal sheet of metal, such as copper or aluminum. A second current path is defined between load **606** and body **604** by conductor **616**, metal bracket **618***b*, and collector plate **618***c*. A return current path occurs between charged bodies **604**, **602**, via the atmosphere or moisture or precipitation in the atmosphere. Thus, a complete circuit is established from charged body **602**, contact member **614**, conductor **612**, load **606**, conductor **616**, bracket **618***b*, collector plate **618***c*, charged cloud **604**, and the return current path back to charged body **602**. An electric current related to the PD is generated in load **606**.

As mentioned, the hazards of lightning are obviously a major concern in system **600**. Lightning protection schemes are not infallible and no representation is made herein that system **600** is safe from the hazards of lightning strikes or static electricity. In system **600**, a surge arrester device **620** is installed between load output **610** and ground (FIG. **12**). Device **620** is shown as a gas-filled surge arrester, but the preferred arrester is a spark gap rated for lightning strike voltages. Preferably, conductor **616** is a high voltage stranded single conductor cable, such as used to connect lightning rods to grounding rods, but covered with insulation having a high dielectric strength to withstand lightning strikes.

An alternative embodiment to system **600** (not shown) is to replace apparatus **618** with a hydrogen- or helium-filled balloon (e.g., a weather balloon). The balloon would have a conductor such as copper or aluminum foil wrapped around it or a metal plate or band mounted on it. In this embodiment, insulated conductor **616** would be electrically connected to the conductor on the balloon. This embodiment would otherwise be the same as system **600**. The warnings and disclaimers made above with respect to system **600** are equally applicable to this embodiment.

Referring now to FIG. **13**, a system **700** for generating electricity from the geomagnetic field and rotation of the earth is shown as a seventh embodiment of the present invention. This embodiment concerns a well and is fundamentally the same as the second embodiment, except here the electrical load is located down in the wellbore. A potential difference PD is formed between terrestrial charged bodies **702** and **704** (i.e., bottom of well and earth surface). The well includes a drilled bore and a metal casing **703** extending down into the bore. At the bottom of the well is a supply of water **705**. An electrical load **706** has an input **708** and an output **710**. A first insulated conductor **712** is coupled at one end to charged body **702** via a contact member **714** and is connected at its other end to load input **708**. A first current path is defined between load **706** and body **702** by conductor **712** and contact member **714**. The first current path supplies the PD to load **706**. A second insulated conductor **716** is coupled at one end to charged body **704** via an electrical connection (e.g., a solder joint) **717** to metal casing **703**. The other end of conductor **716** is connected to load output **710**. A second current path is defined between load **706** and body **704** by conductor **716**, connection **717** and casing **703**. A return current path occurs between charged bodies **704**, **702**, via casing **703** and the earth (and/or water **705**). Thus, a complete electrical circuit is established from charged body **702**, contact member **714**, conductor **712**, load **706**, conductor **716**, connection **717**, casing **703**, charged body **704**, and the return current path back to charged body **702**. An electric current related to the PD is generated in load **706**. In the case where casing **703** is not made of electrically conductive material, an alternative coupling arrangement with charged body **704** is: conductor **716** is connected to a contact member **718**, which is driven into the ground at the earth's surface.

Load **706** may contain a charge storage system and a wellbore submersible pump controlled by a control unit **720**. The charge storage system stores electricity generated by system **700** and supplies the stored electricity to the pump when called upon by control unit **720**. Control unit **720** communicates with the pump via a control cable **722**. Control unit **720** includes an auto-control function that controls the pump automatically. Unit **720** switches on the power to the pump by means of a pressure switch actuated in response to a pressure valve or by means of a float level

switch actuated by a float. An example of a submersible pump powered by a renewable electrical energy source is disclosed in U.S. Pat. No. 7,837,450, which is incorporated herein by reference.

Referring now to FIGS. **14** and **15**, a system **800** is another embodiment of the present invention. This embodiment is characterized by a coaxial cable **801** installed between two spaced apart, substantially parallel, terrestrial charged bodies **802** and **804**. Cable **801** includes a copper (or copper-clad steel) center conductor **812** insulated by a dielectric insulating material **812***a*, such as cellular polyurethane, polyurethane foam or solid polyethylene. Cable **801** further includes an outer shield conductor **803**, which may be a woven braid of bare or tinned copper wires, a wrap of aluminum foil tape, a solid copper or aluminum tube, or a combination thereof. Shield conductor **803** may be insulated or left uninsulated. In FIGS. **14** and **15**, conductor **803** is insulated generally by a jacket **803***a* made of plastic, such as polyvinyl chloride (PVC). When cable **801** is installed, jacket **803***a* is preferably removed between charged bodies **802** and **804**, as shown in FIG. **14**. System **800** comprises an electrical load **806** having a supply input and a ground output made available at a threaded female coaxial connector **808**. Cable **801** has a finished proximal end with a threaded male coaxial connector **809**. Connector **809** is considered male because it has a stinger wire, which is to be inserted into connector **808**. The stinger wire is connected to or an extension of center conductor **812**. Connector **809** includes a threaded slip ring **809***a* for threading connector **809** onto connector **808**.

Once connectors **808** and **809** are connected together, center conductor **812** is in electrical contact with the supply input of load **806** and shield conductor **803** is in electrical contact with the ground output of load **806**. Center conductor **812** is electrically coupled to charged body **802** via a metal contact member **814**. Conductor **812** delivers the potential difference between charged bodies **802**, **804** to load **806**. Shield conductor **803** is electrically coupled to charged body **804** by direct contact as shown. Thus, the ground output of load **806** is electrically coupled to charged body **804**. Conductor **803** is also coupled to charged body **802** by direct contact as shown. Alternatively, conductor **803** may be in direct contact with a portion of the earth defined to be outside of charged body **802** (thus making indirect contact with body **802**). A return current path occurs between charged bodies **802**, **804** primarily through shield conductor **803**. Using conductor **803** as the return current path improves return path performance by making the path easier to implement and maintain, and it operates more predictably because it is not dependent on the variable properties and conditions of earth, water, atmospheric, and other natural or in situ return current paths. In system **800**, a complete electrical circuit is established from charged body **802**, contact member **814**, center conductor **812**, load **806** (via connectors **809**/**808**), shield conductor **803** (via connectors **808**/**809**), charged body **804**, and shield conductor **803** back to charged body **802**. An electric current related to the PD between charged bodies **802**, **804** is generated in load **806**.

As shown in FIG. **14**, an alternative or additional ground output **810** is provided in electrical load **806**. An insulated conductor **816** is connected to output **810** and to a contact member **818**. In this case, shield conductor **803** may be decoupled from the original ground output, for example, by operation of an automatic impedance sensing switch internal to load **806**. Optionally, both outputs (**810** and original output via **803**) may be in operation together. In connection with output **810**, the return current path remains primarily through shield conductor **803**. The complete electrical circuit is from charged body **802**, contact member **814**, center conductor **812**, load **806** (via connectors **809**/**808**), conductor **816**, contact member **818**, charged body **804**, and shield conductor **803** back to charged body **802**.

Referring now to FIG. **16**, there is shown one example of an electrical load **900** of the present invention. A supply input S and a ground output G of load **900** correspond to, for example, load input **108** and load output **110**, respectively (e.g., see FIG. **7**). The potential difference between a pair of terrestrial charged bodies, obtained in accordance with the present invention, is presented across terminals S and G of load **900**. The apparatus of the present invention that obtains this potential difference (examples of which are shown in FIGS. **7**-**14**) is referred to in FIGS. **16**-**18** as a geomagnetic voltage source. Load **900** includes a charging circuit **902** and a charge storage system **904**. The specifics of charging circuit **902** depend upon the type of charge storage system used. System **904** may be, for example, a rechargeable battery or series of batteries or a charging capacitor or bank of charging capacitors. A basic charging circuit for a rechargeable battery (or series of batteries) may be a positive going diode in series with a source resistor, and both in series with the rechargeable battery (or series of batteries). A basic charging circuit for a capacitor (or bank of capacitors in series) may be an inductor in series with the capacitor (or bank of capacitors). The latter circuit typically includes a switching element or elements to cause the geomagnetic voltage source to charge the inductor in a first switched state and to cause the charged inductor to charge the capacitor or capacitors in a second switched state. If capacitors are used for the charge storage elements, a preferred form of capacitor is the ultracapacitor. Ultracapacitors and their charging circuits are disclosed in the following references: M. S. W. Chan, K. T. Chau, and C. C. Chan, Effective Charging Method for Ultracapacitors, Journal of Asian Electric Vehicles, Vol. 3, No. 2, December 2006, pp. 771-76; and Maxwell Technologies Application Note, Document 1008981 Rev 1, December 2005, pp. 2-3. The disclosures of these references are incorporated herein by reference. See also U.S. Pat. No. 7,170,260 to Thrap (Maxwell Technologies), entitled, Rapid Charger for Ultracapacitors, which is incorporated herein by reference.

Referring now to FIG. **17**, there is shown another example of an electrical load **900'** of the present invention. Load **900'** has a supply input S and a ground output G, as with load **900**. A geomagnetic voltage source of the present invention is applied to terminals S and G. Load **900'** includes a charging and control circuit **902'**, a charge storage system **904'**, and an electric motor **906'**. Blocks **902'** and **904'** contain the same types of charging circuits and charge storage elements as in blocks **902** and **904** (FIG. **16**), respectively. Circuit **902'** further includes a control circuit or IC chip that controls the operation of switches SW**1** and SW**2** in FIG. **17**. In a first operating stage, switch SW**1** is closed and switch SW**2** is open, and the geomagnetic voltage source and circuit **902'** charge the storage element or elements of charge storage system **904'**. In a second operating stage, switch SW**1** is open (or sometimes remains closed) and switch SW**2** is closed, and system **904'** powers electric motor **906'**. Motor **906'** is typically a DC motor, but may be an AC motor if, e.g., an inverter is installed between the output of system **904'** and the motor. It is understood that, in an alternative embodiment, load **900'** may simply consist of motor **906'**, which would be directly driven by the geomagnetic voltage source.

Referring now to FIG. **18**, there is shown a further example of an electrical load **900"** of the present invention. Load **900"** has a supply input S and a ground output G, as with loads **900** and **900'**. A geomagnetic voltage source of the present invention is applied to terminals S and G. Load **900"** includes a charging and control circuit **902"**, a charge storage system **904"**, and an inverter or AC generator with step-up transformer **906"**. Blocks **902"** and **904"** contain the same types of circuits and charge storage elements as in blocks **902'** and **904'** (FIG. **17**), respectively. In a first operating stage of load **900"**, switch SW**1** is closed and switch SW**2** is open, and the geomagnetic voltage source and circuit **902"** charge the storage element or elements of charge storage system **904"**. In a second operating stage, switch SW**1** is open (or sometimes remains closed) and switch SW**2** is closed, and system **904"** powers inverter or AC generator with step-up transformer **906"**. If an inverter, block **906"** directly converts the DC voltage from block **904"** to AC voltage and steps up the voltage to a desired level. If an AC generator, block **906"** includes a DC motor for driving the AC generator and a step-up transformer raises the voltage to a desired level. In the latter case, block **904"** drives the DC motor, which in turn drives the AC generator. The desired level of AC voltage may be at the mains level so that it can be applied to the electric power grid, for contributing power to the grid. FIG. **18** shows the output of block **906"** being applied to an electric power grid.

The phrases, "earth's surface" and "the surface of the earth," when speaking about orientation or relative position (e.g., "a direction normal to the earth's surface"), mean the general or averaged plane of the surface if observed locally or the general tangent of the surface if observed from space. In addition, these phrases are to be construed broad enough to include the surface of any body of land, water or ice or any geological formation such as, e.g., a mountain top or slope, or a valley, whether above or below sea level.

In connection with the first through fifth and seventh embodiments of the present invention (FIGS. **7-11** and **13**), the insulated conductors (**112**, **116**, **212**, **216**, **312**, **316**, etc.) may be a 14-Gauge insulated Stranded THHN Cable, Model No. 22955957, supplied by Southwire Co., Carrollton, Ga.

While the preferred embodiments of the invention have been particularly described in the specification and illustrated in the drawing, it should be understood that the invention is not so limited. Many modifications, equivalents and adaptations of the invention will become apparent to those skilled in the art without departing from the spirit and scope of the invention, as defined in the appended claims.

What is claimed is:

1. A method of generating electricity from the geomagnetic field and rotation of the earth, the earth rotating through the geomagnetic field to form a potential difference between first and second earth-bound terrestrial charged bodies, the first and the second earth-bound terrestrial charged bodies being spaced apart in a direction substantially normal to the earth's surface, said method comprising the steps of:

(a) using a system including (i) an electrical load having a supply input and a return output, (ii) a first current path having a first end coupled to the supply input of the electrical load, and (iii) a second current path having a first end coupled to the return output of the electrical load;

(b) coupling a second end of the first current path to the first earth-bound terrestrial charged body and coupling a second end of the second current path to the second earth-bound terrestrial charged body, such that the electrical load is electrically coupled to the first and the second earth-bound terrestrial charged bodies; and

(c) generating in the electrical load an electrical current related to the potential difference formed between the first and the second earth-bound terrestrial charged bodies by the earth's rotation through the geomagnetic field.

2. The method of claim **1**, wherein the first earth-bound terrestrial charged body includes a first portion of the earth located below the earth's surface and the second earth-bound terrestrial charged body includes a second portion of the earth located at about or near the earth's surface, and wherein the earth contains an opening extending between the first and the second portions of the earth,

said first current path including (i) an electrically insulated conductor extending at least partially through the opening and (ii) a conductive contact member coupled to the electrically insulated conductor for establishing electrical contact between the first portion of the earth and the electrically insulated conductor.

3. The method of claim **2**, wherein the electrical load is located within the opening, between the first and the second portions of the earth.

4. The method of claim **2**, wherein the opening is a bore or shaft of a well or mine, the well or mine including a bottom, and wherein the first portion of the earth includes the bottom of the well or mine, said electrically insulated conductor extending through the bore or shaft and the conductive contact member establishing electrical contact between the bottom of the well or mine and the electrically insulated conductor.

5. The method of claim **4**, wherein the bore or shaft is lined with a metal casing, the metal casing being in contact with the second portion of the earth and the second current path being in contact with the metal casing, such that the second current path is in electrical communication with the second portion of the earth.

6. The method of claim **1**, wherein the first and the second earth-bound terrestrial charged bodies are first and second portions of the earth, respectively, located at about or near the surface of the earth, the first portion of the earth being at a first elevation and the second portion of the earth being at a second elevation, the first elevation being different than the second elevation.

7. The method of claim **1**, wherein the first earth-bound terrestrial charged body is a portion of the earth at a bottom of a body of water, and wherein the second earth-bound terrestrial charged body is water at about or near the surface of the body of water.

8. The method of claim **7**, wherein the body of water is a body of saltwater.

9. The method of claim **1**, wherein the electrical load includes a rechargeable energy source, said method further comprising the step of

(c) charging the rechargeable energy source with the electric current generated in step (c).

10. The method of claim **9**, wherein the electrical load further includes an electric pump, said method further comprising the step of

(d) powering the electric pump with the rechargeable energy source.

11. The method of claim **9**, wherein the electrical load includes an electric motor, said method further comprising the step of

(d) powering the electric motor with the rechargeable energy source.

12. The method of claim **1**, wherein the electrical load includes an electric pump, said method further comprising the step of

(c) powering the electric pump with the electric current generated in step (c).

13. The method of claim **1**, wherein the electrical load includes an electric motor, said method further comprising the step of

(c) powering the electric motor with the electric current generated in step (c).

14. The method of claim **1**, wherein the electrical load includes a rechargeable energy source including a rechargeable battery and a charging circuit coupled to the rechargeable battery.

15. The method of claim **14**, wherein the electrical load further includes an electric motor coupled to the rechargeable battery.

16. The method of claim **1**, wherein the electrical load includes a rechargeable energy source including a one or more capacitors and a charging circuit coupled to the one or more capacitors.

17. The method of claim **16**, wherein the one or more capacitors are one or more ultracapacitors.

* * * * *

This is what we are used to seeing:

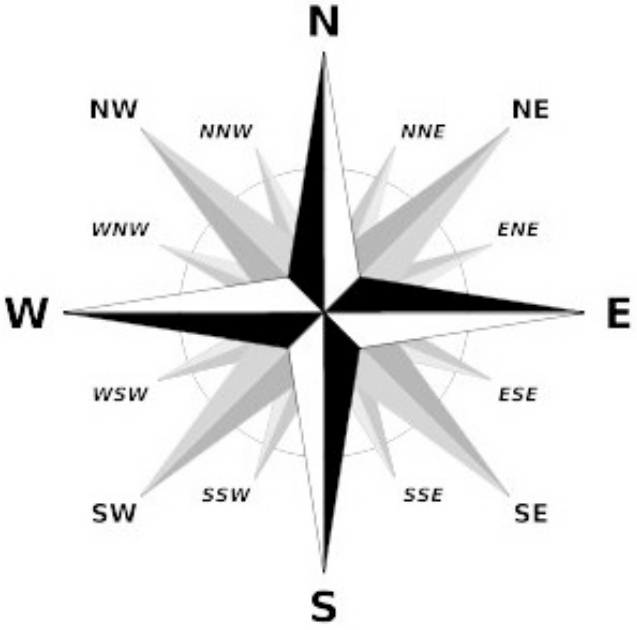

I'm going to break down what I think is actually happening and how I view it using the advice of Ed Leedskalnin, Walter Russell and John Searl's Law of Squares.

Ed Leedskalnin said there was only Positive and Negative. Only North and South. Walter Russell said there are 2 sets of Positive and Negative for every bit of matter since this is a 3 dimensional universe.

Ed Leedskalnin hinted to a mathematical secret he called his "Sweet 16". There just happens to be 16 points on our Cardinal Directional System.
16 = 4 sets of 4

I view 8 bar magnets each with a North and South pole. (Positive and Negative) 8 magnets, 2 poles each = 16 poles
1 bar magnet is a line:

In our Cardinal System, there is a West and East also.
But Ed Leedskalnin says there is only Positive and Negative. Only North and South.
So lets refrain from using West and East and instead... flip North and South 90 degrees on it's axis. Lets only use North and South (N S)

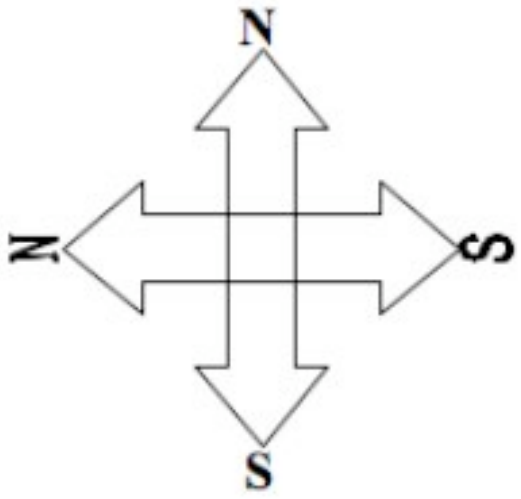

So now we have this below. Consider this Set 1:

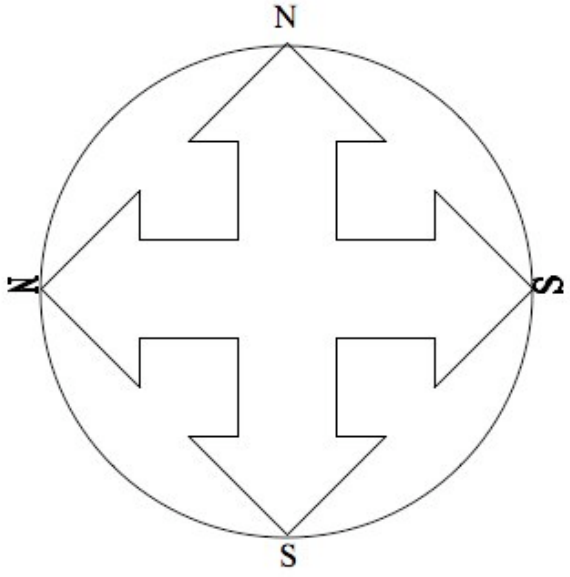

The next part of the Cardinal System is the NW, NE, SE, and SW.
Lets swap NE and SW for N and S.

And swap NW and SE for N and S.

Set 2 is at a 45-degree tilt relative to Set 1.

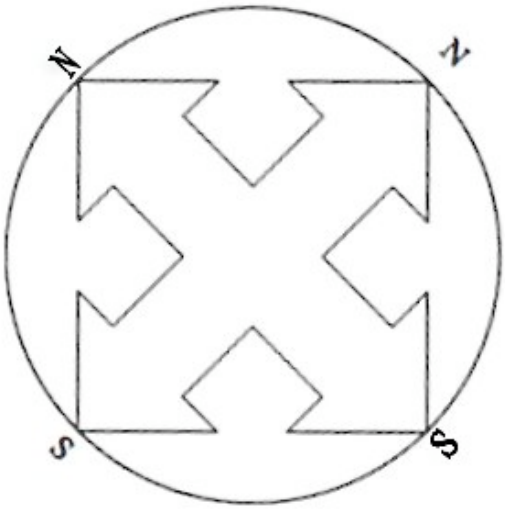

Lets overlap Set 1 and Set 2 to see what it looks like so far.

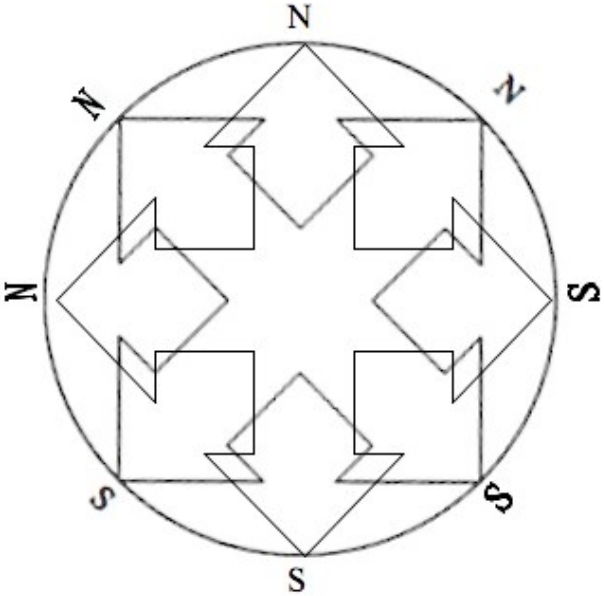

There are 8 more points to account for on the Cardinal System:
NNW, NNE, ENE, ESE, SSE, SSW, WSW, and WNW.

Set 3 and Set 4 seem to be 1.618 smaller than Set 1 and Set 2 and are at a 22.5-degree tilt on either direction relative to Set 1.
Lets swap again.

Set 3:
NNW will become N ... and SSE will become S.
WSW will become N ... and ENE will become S.

Set 4:
NNE will become N ... and SSW will become S.
WNW will become N ... and ESE will become S.

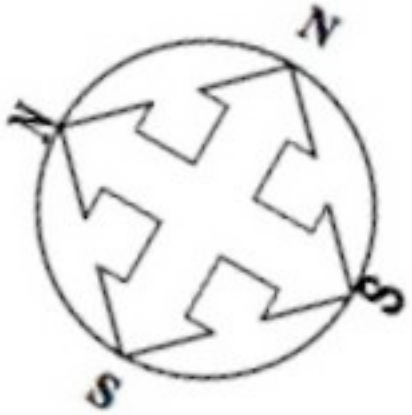

And now let's overlap Set 3 and Set 4 to see what that looks like:

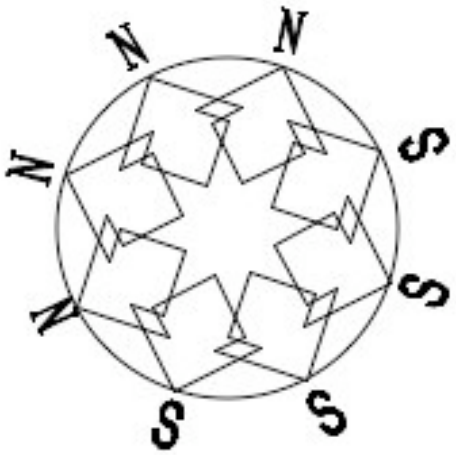

Now lets see what all four sets look like overlapped:

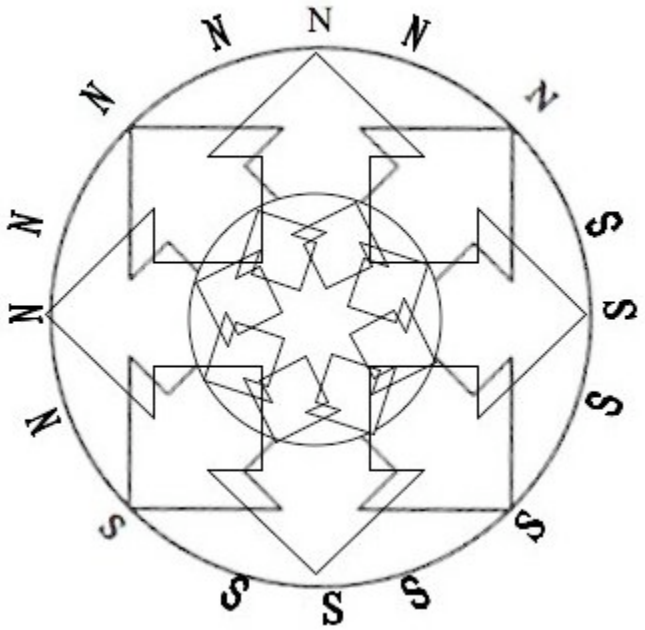

This next part flows right into John Searl's Law of Squares.

Lets put a square over each Set. Red for Set 1, Blue for Set 2, Orange for Set 3 and Green for Set 4.

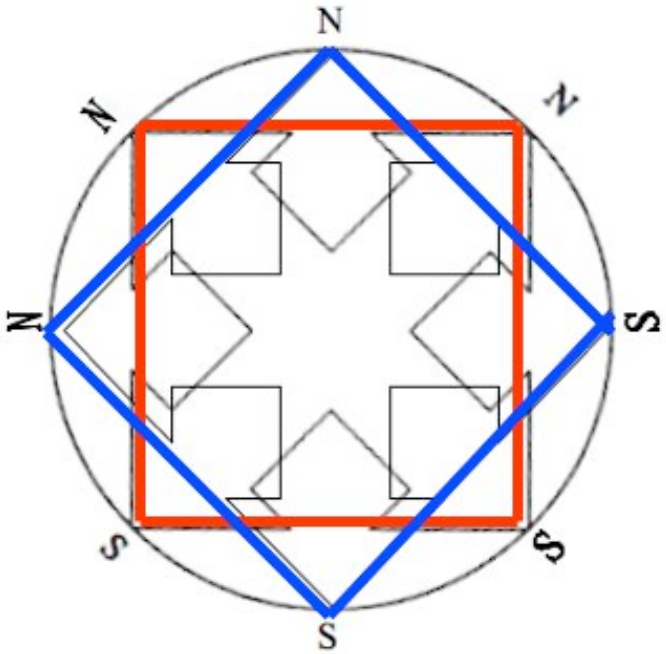

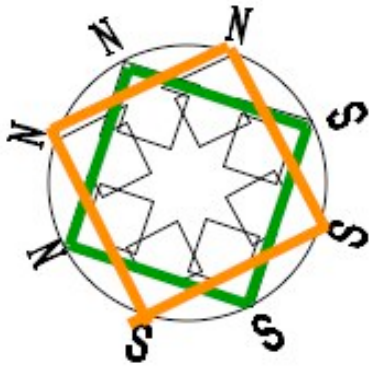

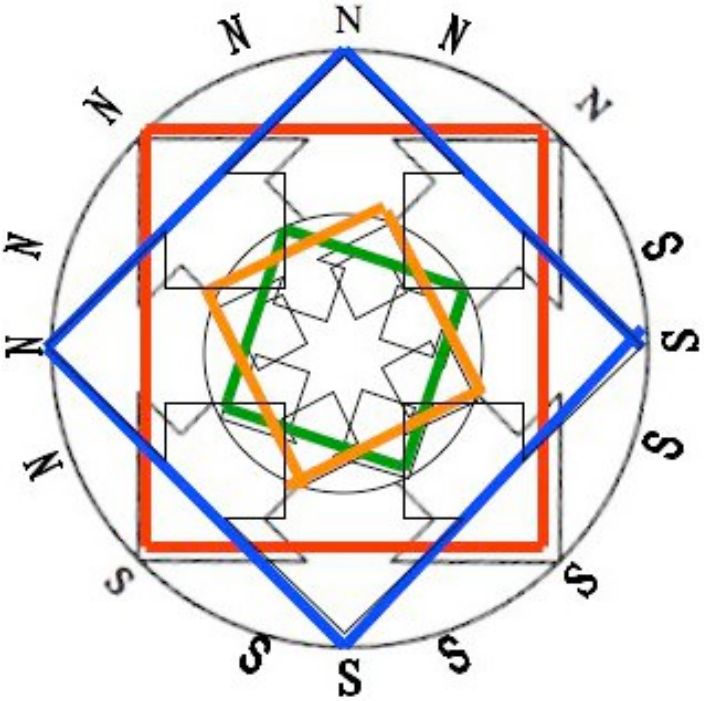

John Searl's Law of Squares.

Here is an example of a 3 by 3. Each row adds up to 15.
The more complex the Squares, the more complex the fractal.

2	7	6	→15
9	5	1	→15
4	3	8	→15
↙15	↓15	↓15	↓15 ↘15

Here is a modern and ancient version called "Magic Squares" which can be found in many cultures throughout history and below that is the fractal I ended up drawing from merely showing the rows add up the same.

Each row that added up to 34, I drew a line through.
Each line and square is a different combination that makes up 34.
There are quite a few. I've counted 15 combinations.

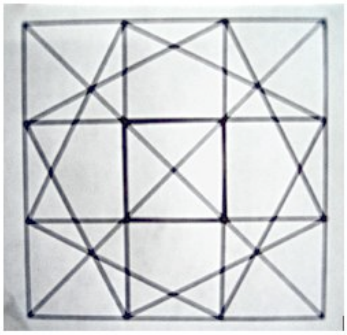

It's difficult to see them all with just black and white, so here is a model with 15 different colors. Red is the thickest all the way to the four black dots which also add up to 34.

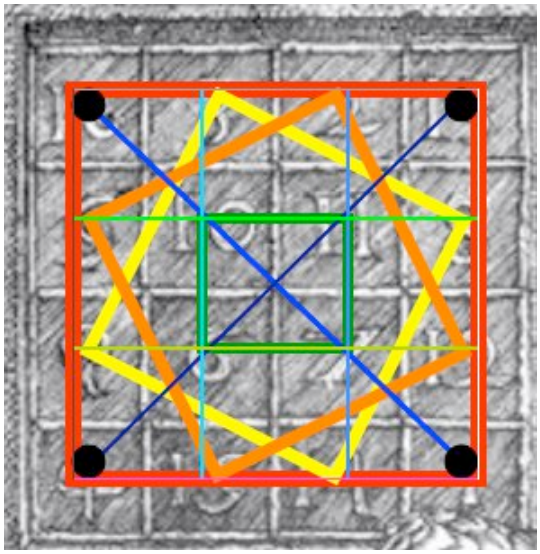

Tesla said in order to make an effective Earth Battery, the North end (Positve / Copper) should be driven in the ground deeper than the South Pole. (Negative / Zinc or Galvanized Steel)
If we look at a bar magnet... we can see that the South Pole or Negative end collects a denser portion of iron shavings. The North Pole's field will always be a little bigger/ expanded than the South Pole.

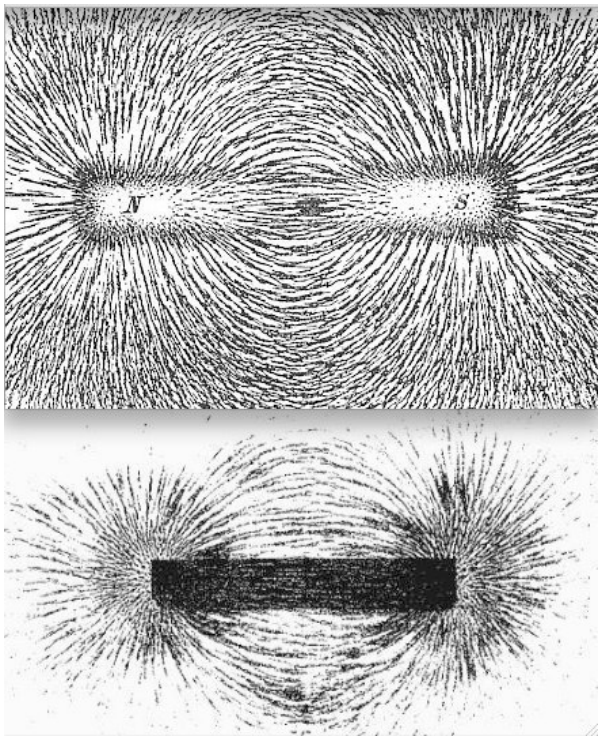

Even some crop circles hint to the notion of a Denser Negative and Expanded Positive.

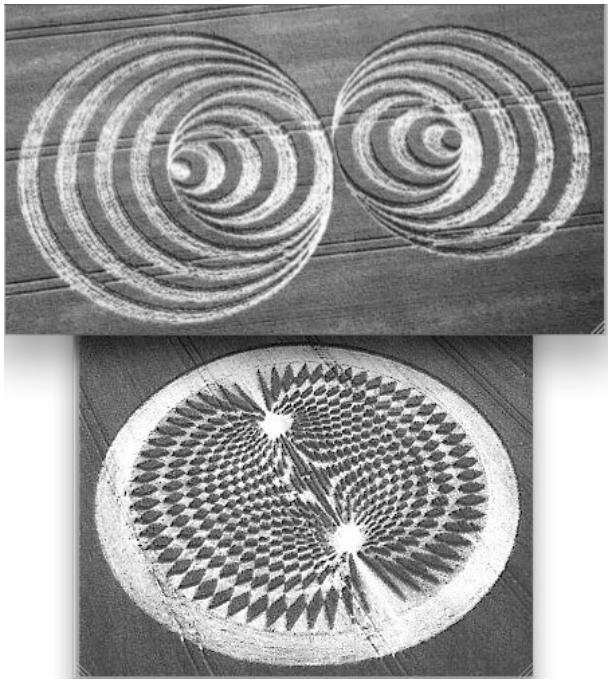

And lets go back and watch the first few seconds of this Cymatic experiment. If you look really closely, you can see more sand accumulates on the right side of the plate.
This leads me to believe that the left side of the plate in this video was facing North and the right side was facing South.
http://www.youtube.com/watch?v=GtiSCBXbHAg

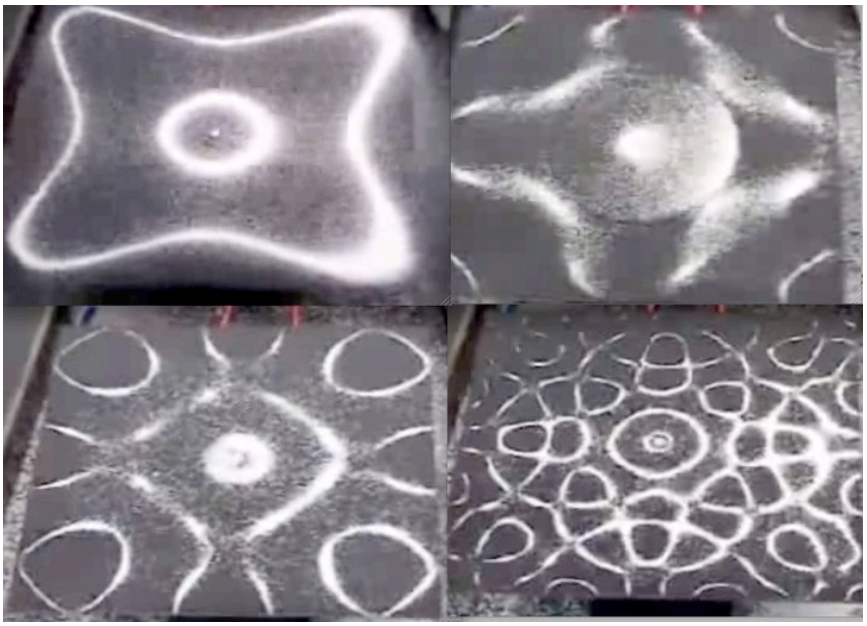

Perhaps part of the reason why we haven't figured it out yet, is because we think perfection is symmetrical.
Perfection in this case is not symmetrical. There are differences.

Even though the vibrational waves are symmetrical in nature, which in turn creates a symmetrical design... it doesn't mean that the matter and parts making up that design are going to be evenly distributed within that magnetic field.
There will always be more "stuff" on one side than the other.

No one's face is perfectly symmetrical either.

It has to be the correct orientation and configuration of magnetic fields.
Always more Positive than Negative... even though it LOOKS like there is more negative than positive because of the dense accumulation.

But even Einstein misinterpreted less as more.

So lets look at the original Cardinal compared to the new one.
If you notice, they don't line up exactly.

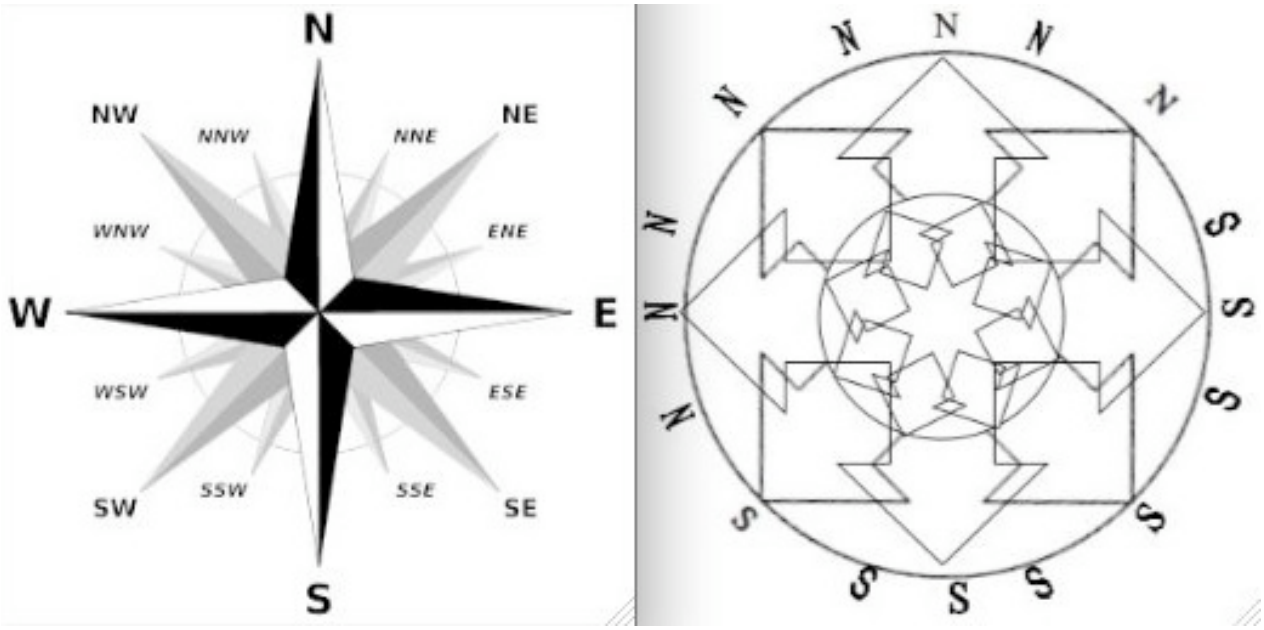

This is because when you overlap all 4 sets, it seems to tilt at a 23.5-degree angle.

Wow... just like Earth.

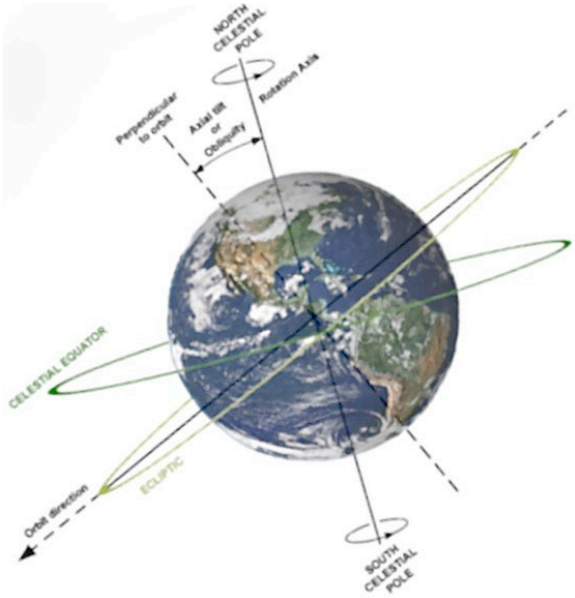

Now lets start to combine all of um!

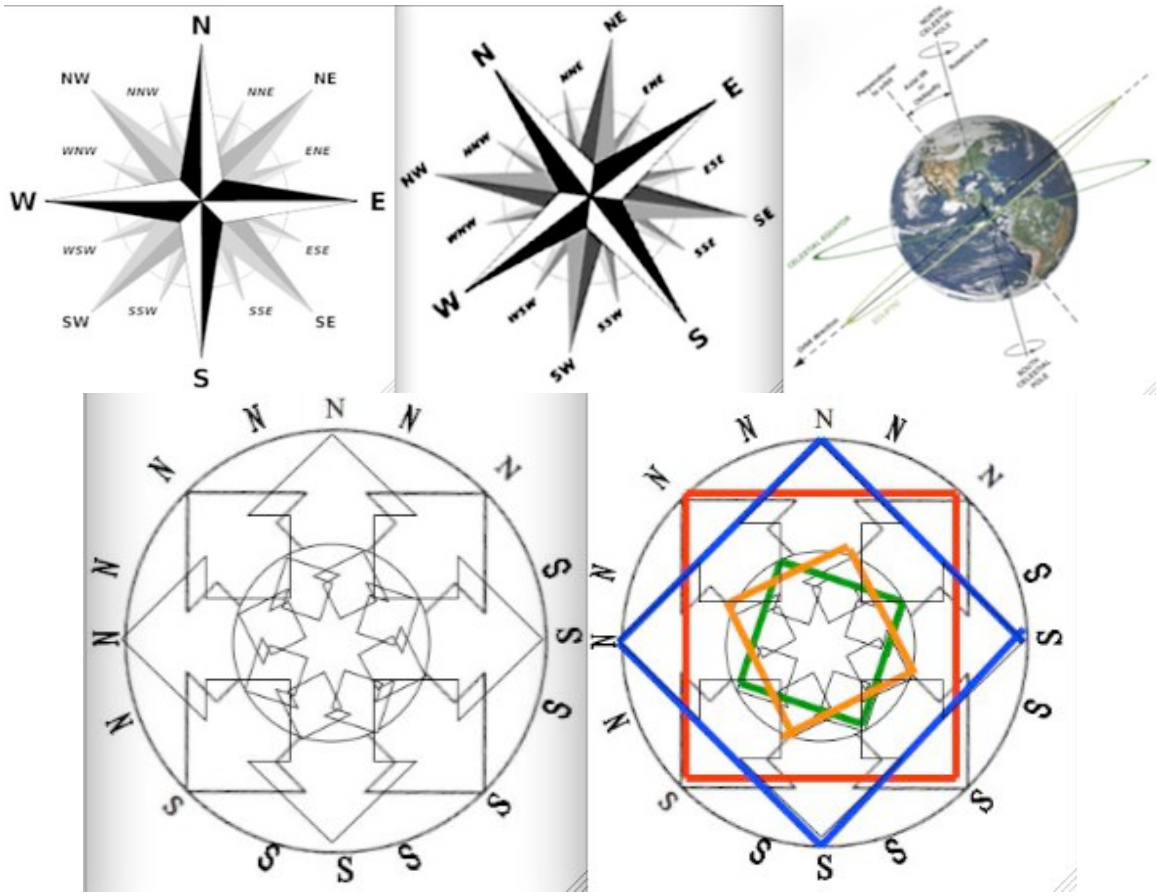

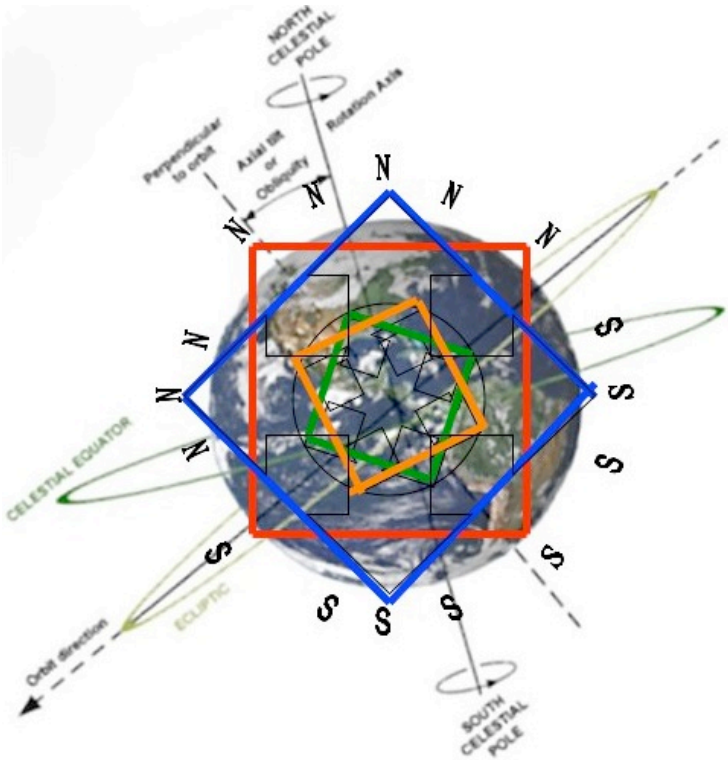

A good notion bought up was that East and West are not exactly Positive and Negative, so we can't use N S for all the points.
East and West are each half North and half South.
That means the 8 smaller points must each be a quarter North and a quarter South. relative to the stronger fields.

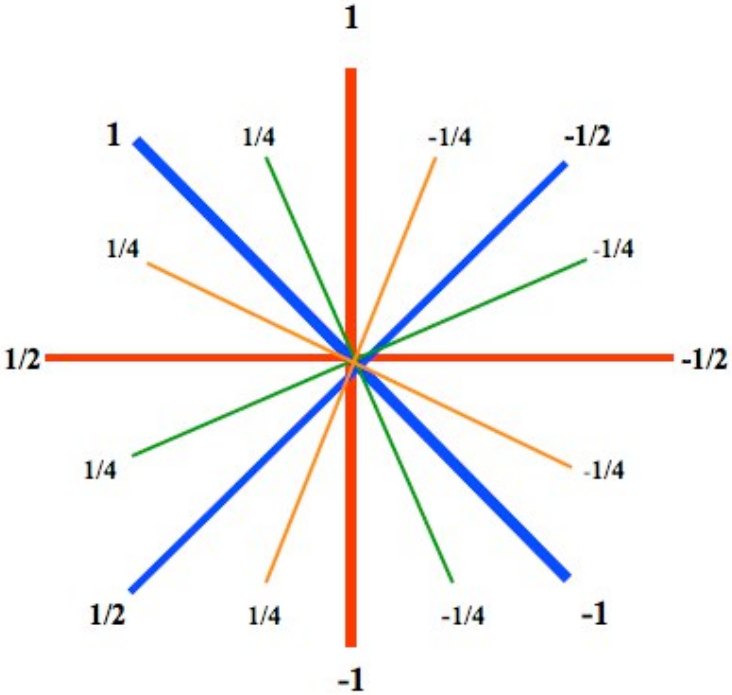

We seem to be missing some things we can't account for on paper.

The Neutral points can't be seen.
So imagine tilting the entire Cardinal Graph like a CD so the perspective changes until you can see the axis of the neutral line or zero point. I believe the "neutral line" colored in purple is representative of a vortex. Like an hour-glass shaped vortex.

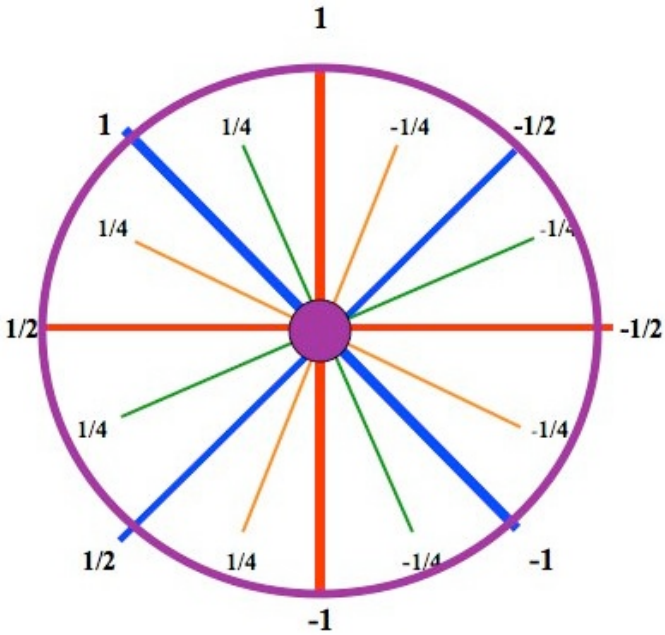

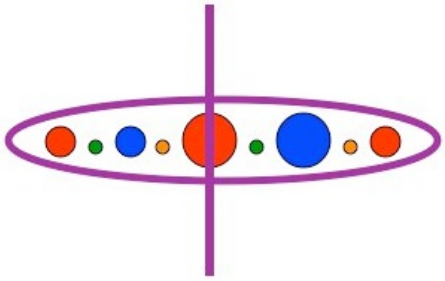

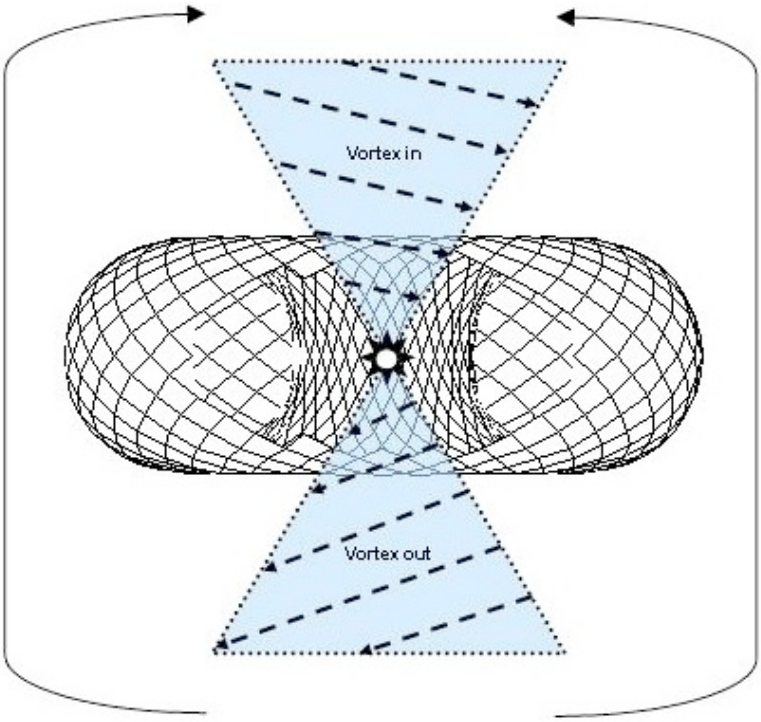

Cardinal Graph in Vortation.
Phi (and inverse Phi)

This one = zero resistance = √t

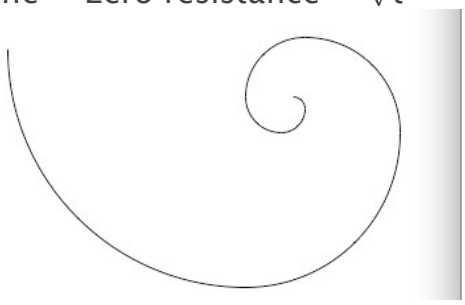

This second one = resistance = t^2

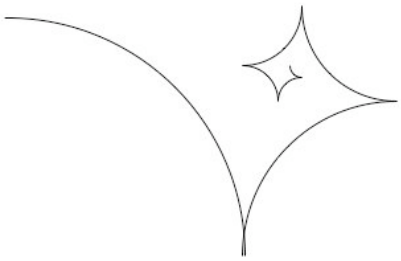

On paper, we can show the Cardinal System as straight lines. But in Reality.... there are no straight lines. Only arcs. So, perhaps...

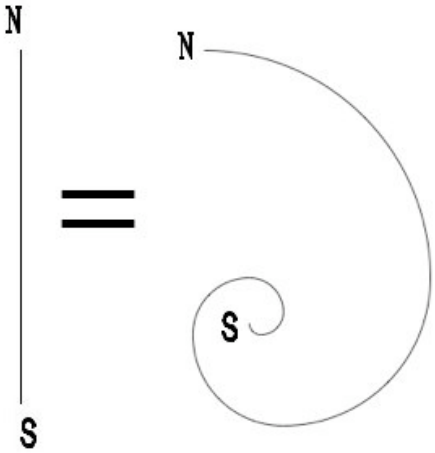

4 directions of Phi = Vortation:

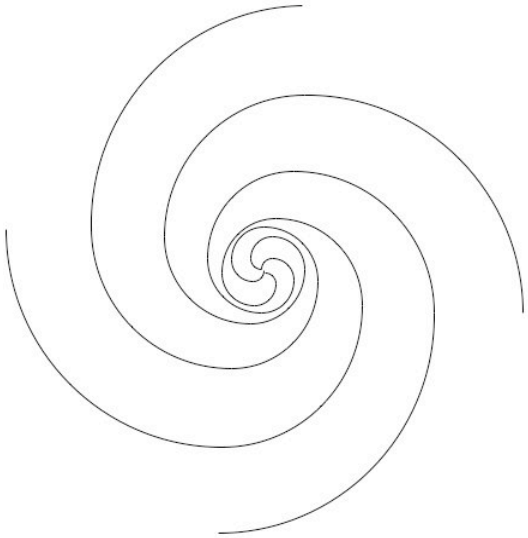

8 Counter-rotating Phis

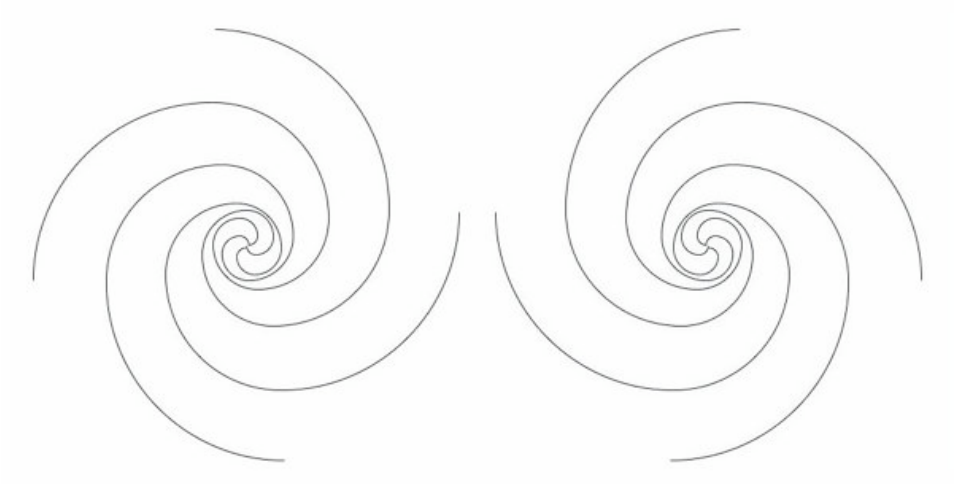

Overlapped

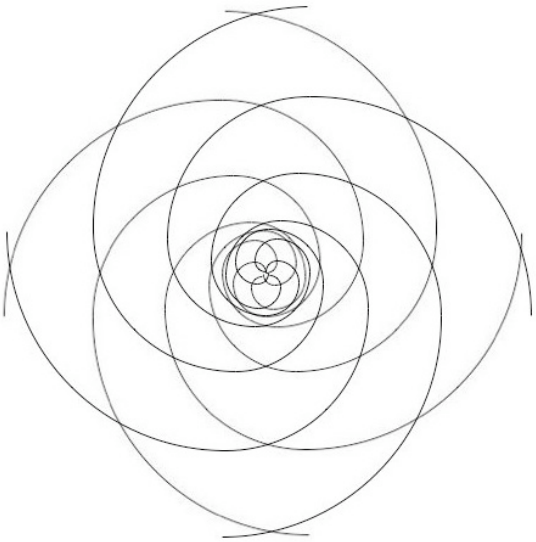

Now lets take a look at Marko Rodin's coil:

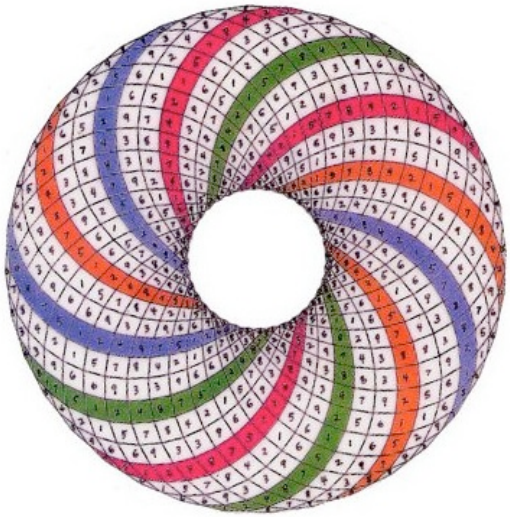

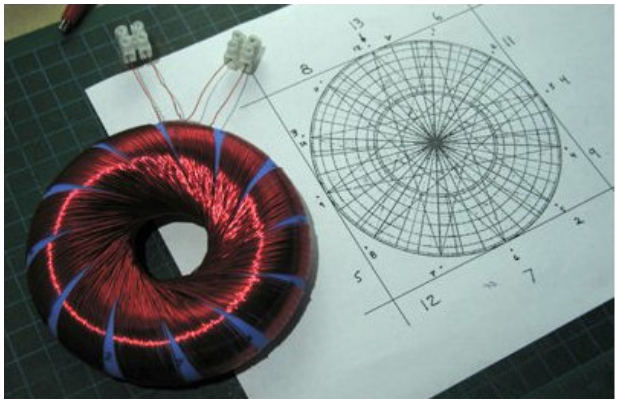

Nov. 12, 1957

L. R. CRUMP

POWERING ELECTRICAL DEVICES WITH ENERGY ABSTRACTED FROM THE ATMOSPHERE

Filed March 12, 1954

2,813,242

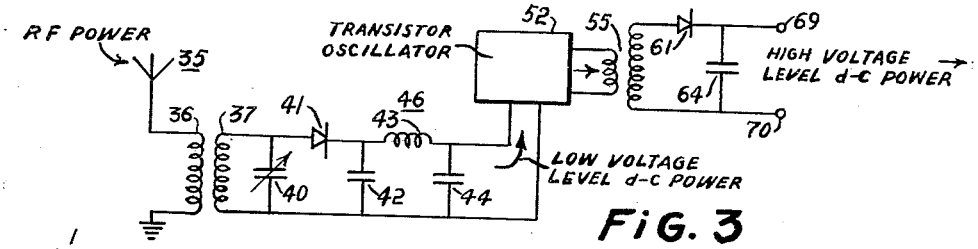

FIG. 3

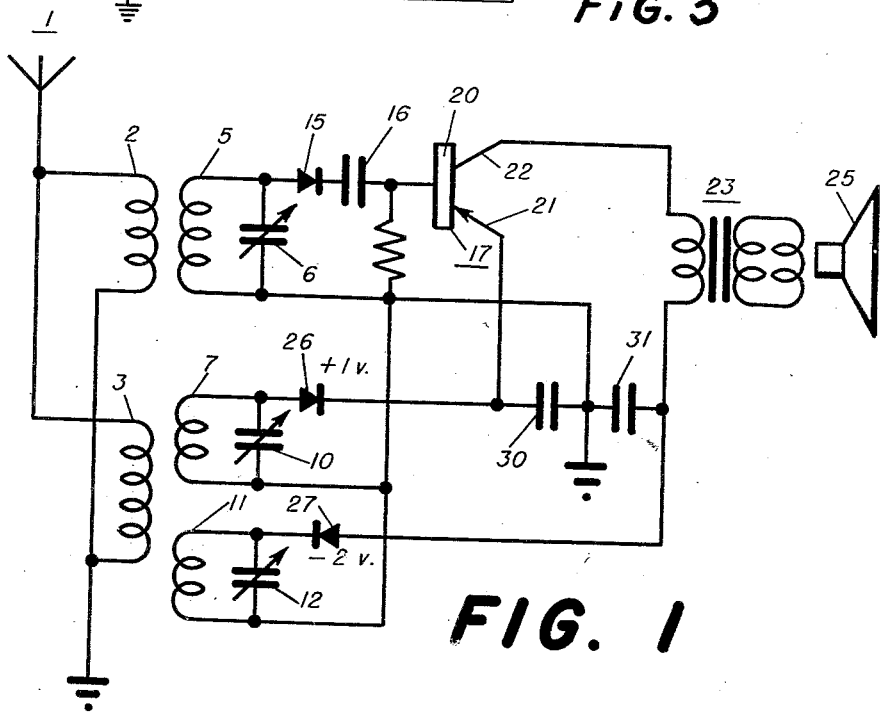

FIG. 1

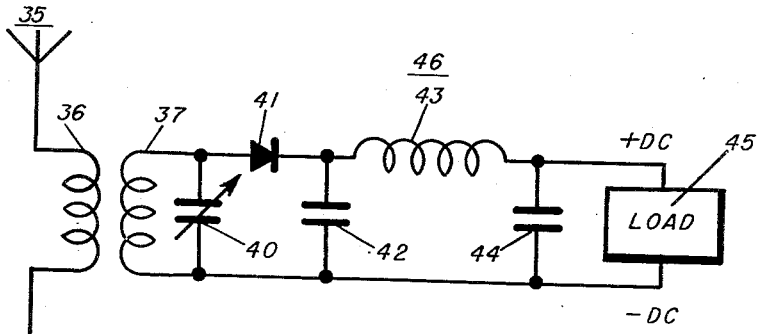

FIG. 2

INVENTOR

Lloyd R. Crump

BY W. E. Thibodeau + A. W. Dew

ATTORNEYS

United States Patent Office

2,813,242

Patented Nov. 12, 1957

1

2,813,242

POWERING ELECTRICAL DEVICES WITH ENERGY ABSTRACTED FROM THE ATMOSPHERE

Lloyd R. Crump, Silver Spring, Md.

Application March 12, 1954, Serial No. 415,986

1 Claim. (Cl. 321—2)

(Granted under Title 35, U. S. Code (1952), sec. 266)

The invention described herein may be manufactured and used by or for the Government for governmental purposes without payment to me of any royalty thereon.

This invention relates to the convenient and economical provision of power for the operation of electronic circuits and devices using transistors, and of other electrical devices having modest power requirements.

A great advantage of transistors, and a major reason for their enthusiastic reception since their introduction a few years ago, is the fact that they will operate satisfactorily with very low supply voltages and currents. One milliwatt or even less is sufficient to power a transistor in many applications. Various batteries have been developed to provide, in a minimum of space, the relatively minute amounts of power needed by transistors.

My invention provides methods and means that permit transistor circuits, and also other low-powered electrical devices, to be economically and conveniently operated without any batteries whatever, and indeed without any power supply whatever as power supplies are ordinarily conceived.

The invention centers around my discovery that it is practicable to construct operative transistor circuits that are able to abstract from the atmosphere sufficient electromagnetic energy to provide all necessary supply voltages and currents for their own operation. Circuits and devices powered according to my invention will operate indefinitely without any local power source whatever.

I have successfully constructed and demonstrated such circuits. For example, I have constructed a batteryless transistor radio receiver on which I have listened to either nearby or distant broadcast stations as desired, using either headphones or a loudspeaker; this receiver has been powered entirely by electromagnetic energy abstracted from the atmosphere.

From the successful operation of this receiver, and from other experimental work, it becomes clear that, by the methods and means of the invention, a great variety of practical and useful transistor circuits can be powered entirely by energy abstracted from the atmosphere.

Furthermore, as will become apparent below, my invention is applicable to the powering of other electrical devices requiring relatively small amounts of power.

An object of the present invention is to provide methods and means for powering transistor circuits entirely from radiofrequency energy abstracted from the atmosphere.

Another object is to provide methods and means for powering remote radio receivers, low-powered radio transmitters, and other low-powered electrical devices, with energy received by radio from a master station, so that no local power supplies are needed by the devices and so that the powering or non-powering of the remote device is under the control of the master station.

A further object is to provide methods and means for powering transistor circuits and other low-powered electrical devices with radiofrequency energy received from one or more remote radio transmitters.

2

Other objects, aspects, uses, and advantages of the invention will become apparent from the following description and from the drawing.

Figure 1 is a schematic diagram of a transistor radio receiver in which all necessary power is supplied by energy abstracted from the atmosphere in accordance with the invention.

Figure 2 is a schematic diagram showing a general application of the invention to provide direct-current power to a load.

Figure 3 is a schematic diagram of a system for obtaining a high energy D.-C. source at a high voltage level using energy abstracted from the atmosphere.

Referring to Figure 1, a receiving antenna **1** is connected to antenna coupling coils **2** and **3**, the other ends of which are connected to ground. A parallel resonant circuit consisting of coil **5** and capacitor **6** is coupled to coil **2**. A second parallel resonant circuit consisting of coil **7** and capacitor **10** is coupled to coil **3**. A third parallel resonant circuit consisting of coil **11** and capacitor **12** is also coupled to coil **3**.

Coil **5** and capacitor **6** are tuned to the frequency of a radio transmitter from which it is desired to receive information—for instance, an amplitude-modulated standard broadcast station. The signal received from this transmitter need not be strong. The signal is detected by diode **15** to obtain an audio-frequency information signal. This audio signal is coupled through a capacitor **16** and is amplified by a circuit that includes a transistor **17** having a base **20**, an emitter **21**, and a collector **22**. The amplified audio output of the transistor is coupled through an audio transformer **23** to an electroacoustical transducer, preferably a permanent-magnet dynamic loudspeaker **25** as shown.

The novelty of the invention lies largely in the method and means by which the necessary direct-current power is supplied to the emitter and collector circuits of transistor **17**. This method and means will now be described.

Coil **7** and capacitor **10**, and also coil **11** and capacitor **12**, are tuned to receive radio signals of relatively high strength. It does not matter whether these signals contain information. These power signals are rectified by diodes **26** and **27** to provide direct-current power that is filtered by capacitors **30** and **31**. The D.-C. power thus obtained is utilized to power the transistor **17**.

In the circuit shown, two tuned circuits (coil **7** and capacitor **10**, and coil **11** and capacitor **12**) are tuned to power signals and the D.-C. voltages obtained from each are connected in series. The tuned power circuits may be tuned to the same or different power signals. Under certain circumstances it may be desirable to use more than two tuned power circuits and to tune them to more than two power signals; in this way power can be obtained from several signals and combined. On the other hand, if a strong power signal is available, a single tuned power circuit may suffice to give the needed D.-C. power.

Even weak information signals can be received successfully. A plurality of transistor amplifier stages can be used if desired, or other circuits such as superheterodyne circuits can be used. It is merely necessary that a sufficiently strong power signal or signals be available to provide the small amount of D.-C. needed to power the transistors.

If the information signal happens to be strong, it can be used as the power signal; all of the tuned circuits (coil **5** and capacitor **6**, coil **7** and capacitor **10**, coil **11** and capacitor **12**) are tuned to the information signal.

Engineers who have observed my invention in operation have been surprised at the unexpectedly good results obtained, even with readily available power signals of quite moderate strength. For instance, sufficient power for satisfactory operation of a loudspeaker at low volumes is

readily obtained from a 5-kilowatt standard broadcast station 5 miles away, using only an indoor antenna to pick up the power signal as well as information signals. In typical operation under these conditions a D.-C. voltage of about 2.5 to 3 volts is obtained between the emitter and the collector, at a current of about 250 microamperes; D.-C. power input to the transistor is thus of the order of 0.5 to 1 milliwatt. So far as I am aware, no one has ever before discovered and demonstrated the practicability of this method of powering a radio receiver.

Because existing broadcast stations within a radius of a number of miles provide adequate power signals, the invention is readily practicable with existing power signals in almost any location in or near any city in the United States.

Although I have described a transistor radio receiver powered by my invention, it will be readily apparent that the invention is applicable to the powering of any transistor circuit using one or a number of transistors, and to the powering of other devices requiring relatively small amounts of power. For instance, sensitive electromechanical, electrochemical, or electrothermal devices can be operated by the method of the invention.

Referring to Figure 2, which shows a more general embodiment of my invention, an antenna **35** picks up radiofrequency energy from the atmosphere. This energy flows through coil **36**, which is coupled to a tuned circuit consisting of coil **37** and capacitor **40**. The radiofrequency voltage across capacitor **40** is rectified by diode **41** and filtered by a low-pass filter **46** consisting of capacitors **42** and **44** and choke coil **43**. The resulting D.-C. voltage is applied to a load **45**.

In the practice of my invention, larger amounts of power can be obtained for short periods of time by storing received energy in a suitable energy storage device. Stored energy may then be withdrawn at intervals at a more rapid rate than that at which it was received and put into the storage device. In this way the invention can be used to provide short pulses of relatively very high electrical energy. This result can be readily obtained by charging a relatively large capacitor with direct current and then discharging the capacitor rapidly into a load when desired. This rapid discharge can be initiated automatically when the voltage across the capacitor reaches a certain level, or it can be initiated when a transistor radio receiver receives a certain information signal.

Higher voltages can be obtained with the invention by means of well known devices for raising D.-C. voltages as shown in Figure 3. The D.-C. voltage output from the capacitor **44** can be used to power a low frequency transistor oscillator **52** whose A.-C. output is raised to a higher voltage level by the transformer **55**. This relatively high A.-C. voltage can then be rectified by a diode **61** and fed to a capacitor **64** to provide a high energy D.-C. source at a relatively high voltage level at the terminals **69** and **70**. If desired, energy can now be withdrawn from the capacitor **64** at intervals in short pulses of high energy at a high voltage level. Pulsed radio transmission is one of the possible uses for this form of the invention. Other uses would be to provide a single relatively powerful pulse needed to actuate an electrothermal or electromechanical device.

As has been indicated above, in many locations and particularly anywhere in or near most American cities, power signals normally present in the atmosphere are readily available for the easy and convenient practice of the invention. However, the invention also has important applications in systems in which the necessary power signal is generated and transmitted specifically for the operation of the particular system. Such systems can, for example, comprise a master station transmitting all the power that is needed for hundreds or thousands of fixed or mobile transistor receivers or other remote devices over

a range of many miles. This eliminates the need for hundreds or thousands, as the case may be, of local power supplies. At the same time, such a system has the advantage that all of the remote devices can be simultaneously activated or deactivated at the will of the master station, simply by starting or stopping the transmission of the power signal. In such systems it will often be advantageous to use power signals of frequencies sufficiently high to permit the use of resonant receiving antennas of small physical dimensions for signal pickup at the remote devices. In addition to the power signal, the master station may transmit an information signal on the same or a different carrier.

Certain types of devices powered entirely by received radio waves are of course well known. The well-known "crystal set" of the early days of radio, which used a diode rectifier to demodulate an amplitude-modulated radiofrequency signal, is an outstanding example of such a device. My invention is readily distinguishable from such prior devices, however. In typical prior devices a modulated radiofrequency signal is applied to a diode to obtain unidirectional half-wave pulses whose amplitudes vary with modulation. These pulses are integrated by means of a capacitor to obtain a unidirectional signal the amplitude of which follows the audiofrequency modulation envelope. If the radiofrequency signal is received with sufficient strength the audio signal may have sufficient power to operate headphones or similar utilization device without power amplification; but the signal is utilized for its information content, rather than to supply non-information-containing power.

My invention, on the other hand, entails the utilization of received radiofrequency energy to supply power to at least one pair of circuit points (across capacitor **31** in Fig. 1, for example), such circuit points requiring power solely for its power content and not for any information or modulation it may contain. In other words, my invention entails the utilization of radiofrequency energy to supply power that would otherwise have to be supplied by batteries, generator, or other local power source.

It will be apparent that the embodiments shown are only exemplary and that various modifications can be made in construction and arrangement within the scope of the invention as defined in the appended claim.

I claim:

An electrical device for obtaining a high energy D.-C. source at a high voltage level using energy abstracted from the atmosphere, said device comprising in combination: resonant means for receiving radio waves, first rectifier means for converting said radio waves into first direct current energy, first capacitor means for storing said first direct current energy, an oscillator powered by said direct current energy, said oscillator producing an A.-C. output, transformer means for raising said A.-C. output to an increased voltage level, second rectifier means for converting the A.-C. output of increased voltage level from said transformer into second direct current energy, and second capacitor means for storing said second direct current energy.

References Cited in the file of this patent

UNITED STATES PATENTS

1,540,998	Plauson	June 9, 1925
2,056,824	Cawley	Oct. 6, 1936
2,553,734	Adler	May 22, 1951
2,569,687	Pan	Oct. 2, 1951
2,647,957	Mallinckrodt	Aug. 4, 1953

OTHER REFERENCES

Turner: "A crystal receiver with transistor amplifier," Radio and Television News, January 1950.

(12) INTERNATIONAL APPLICATION PUBLISHED UNDER THE PATENT COOPERATION TREATY (PCT)

(19) World Intellectual Property Organization
International Bureau

(43) International Publication Date
27 May 2004 (27.05.2004)

PCT

(10) International Publication Number
WO 2004/043783 A1

(51) International Patent Classification[7]: B64C 39/00, 39/02, B64G 1/40

(21) International Application Number: PCT/US2003/036453

(22) International Filing Date: 12 November 2003 (12.11.2003)

(25) Filing Language: English

(26) Publication Language: English

(30) Priority Data:
10/293,826 12 November 2002 (12.11.2002) US

(71) Applicant *(for all designated States except US)*: SCOTT REDMOND [US/US]; 601 Van Ness Avenue, Suite E3613, San Francisco, CA 94102 (US).

(72) Inventor; and
(75) Inventor/Applicant *(for US only)*: REDMOND, Scott, D. [US/US]; 601 Van Ness Avenue, Suite E3613, San Francisco, CA 94102 (US).

(74) Agents: MALLIE, Michael, J. et al.; Blakely, Sokoloff, Taylor & Zafman LLP, 12400 Wilshire Boulevard, 7th Floor, Los Angeles, CA 90025 (US).

(81) Designated States *(national)*: AE, AG, AL, AM, AT, AU, AZ, BA, BB, BG, BR, BW, BY, BZ, CA, CH, CN, CO, CR, CU, CZ, DE, DK, DM, DZ, EC, EE, EG, ES, FI, GB, GD, GE, GH, GM, HR, HU, ID, IL, IN, IS, JP, KE, KG, KP, KR, KZ, LC, LK, LR, LS, LT, LU, LV, MA, MD, MG, MK, MN, MW, MX, MZ, NI, NO, NZ, OM, PG, PH, PL, PT, RO, RU, SC, SD, SE, SG, SK, SL, SY, TJ, TM, TN, TR, TT, TZ, UA, UG, US, UZ, VC, VN, YU, ZA, ZM, ZW.

(84) Designated States *(regional)*: ARIPO patent (BW, GH, GM, KE, LS, MW, MZ, SD, SL, SZ, TZ, UG, ZM, ZW), Eurasian patent (AM, AZ, BY, KG, KZ, MD, RU, TJ, TM),

[Continued on next page]

(54) Title: PERSONAL FLIGHT VEHICLE

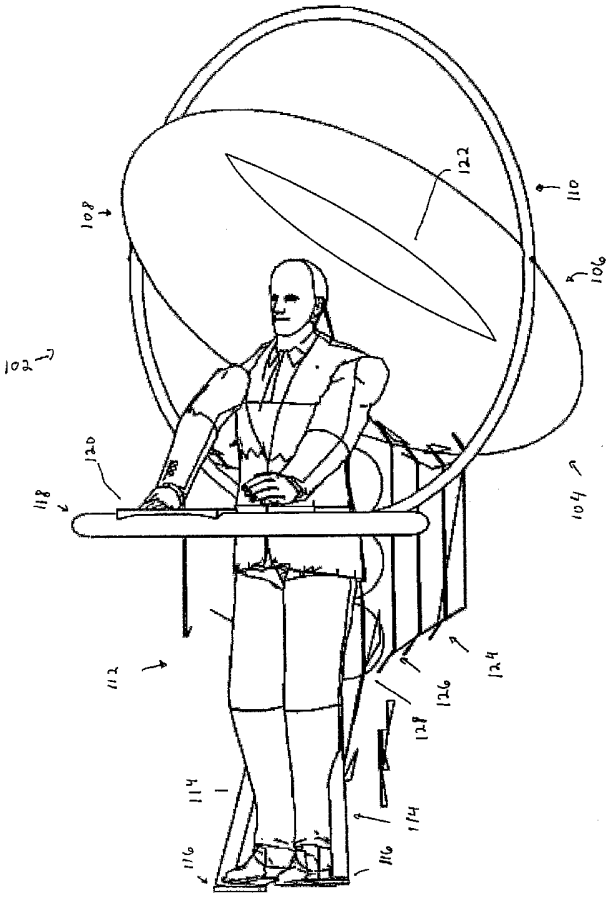

(57) Abstract: An electric-energy lifting panel levitates a user secured to the electric-energy lifting panel. The electric-energy lifting panel (104) includes a first capacitive plate (106) and a second capacitive plate (108) having different geometric dimensions to generate a net-directional force. An ion conditioner (122) ion enhances air around the first capacitive plate and the second capacitive plate.

WO 2004/043783 A1

European patent (AT, BE, BG, CH, CY, CZ, DE, DK, EE, ES, FI, FR, GB, GR, HU, IE, IT, LU, MC, NL, PT, RO, SE, SI, SK, TR), OAPI patent (BF, BJ, CF, CG, CI, CM, GA, GN, GQ, GW, ML, MR, NE, SN, TD, TG).

Published:

— *with international search report*

— *before the expiration of the time limit for amending the claims and to be republished in the event of receipt of amendments*

For two-letter codes and other abbreviations, refer to the "Guidance Notes on Codes and Abbreviations" appearing at the beginning of each regular issue of the PCT Gazette.

PERSONAL FLIGHT VEHICLE

FIELD OF THE INVENTION

[001] Embodiments of the invention generally relate to flight systems. More particularly an aspect of this invention relates to a flight vehicle levitating a user via electric energy.

BACKGROUND OF THE INVENTION

[002] Systems which allow a user to fly above the earth or in space exist today. Some current solutions rely on traditional rocket based thrust which cannot be sustained safely or for any functional duration and propellers which are unsafe and require a tremendous amount of fuel to achieve and maintain lift capability and maneuverability.

[003] These rocket based flight systems can cause dismemberment and death upon failure and throw metal violently upon mishap. The fluid and electromechanics to operate them may be fragile and difficult to maintain. Typically, the systems to operate these rocket based flight systems are so complex and the forces involved so great that only specialized, heavily trained personnel can operate them.

[004] Some propellers based flight systems may cause dismemberment and death upon contact and throw blades violently upon mishap. Usually propellers require tremendous mechanical effort to turn on and maintain velocity. Propellers require heavy engines to power them. Propellers may require a tremendous amount of fuel to achieve and maintain lift capability and maneuverability.

[005] Both of the above systems can require runways, a great amount of space, and be uncomfortably noisy to a human user.

[006] Traditionally, experimental Ion processing and Ion-Wind based lift systems utilize a high-voltage corona-effect to create aerial propulsion. The high-voltage current works by ionizing air-molecules, which are then transported from an emitter to a collector through the surrounding atmosphere. In a manner similar to a propeller or helicopter rotor, the Ion processing is able to move a mass of air, which in turn causes propulsion.

[007] A shortcoming of maintaining a high-voltage is the amount of power required to create the voltage in the first place. The electrical-engineering formula (voltage x current = power) provides some insight into the nature of this problem. To create a conduction channel at 80,000 volts and 1mA of current, the amount of power required is 80 watts. If it is determined that a voltage on the order of 160,000 volts creates a more

powerful conduction-channel than the initial 80,000 volt charge does, then the power requirements double to 160 watts.

[008] Another shortcoming of a high voltage Ion-Wind based propulsion system is unshielded systems during operation produce a significant amount of X-Radiation. While exposure of this sort can be shielded with advanced materials and by engineering the passenger compartment to be distanced from the source of X-Ray emissions, any ion-wind technology utilizing high-levels of both voltage and current will rapidly produce unreasonably high amounts of X-radiation.

[009] Another major consideration for a high-current device utilizing high-voltage electricity to create propulsion is the inherently "messy" nature of high-voltage ion-effect electricity. Ion-wind is seldom as clean as it looks, in that quite often static electricity builds up on nearby surfaces, causing damage to instrumentation and in some cases even a dangerous shock potential.

SUMMARY OF THE INVENTION

[0010] Various methods, apparatuses, and systems in which an electric-energy lifting panel levitates a user secured to the electric-energy lifting panel. The electric-energy lifting panel includes a first capacitive plate and a second capacitive plate having different geometric dimensions to generate a net-directional force. An ion conditioner ion enhances air around the first capacitive plate and the second capacitive plate.

BRIEF DESCRIPTION OF THE DRAWINGS

[0011] The drawings refer to the invention in which:

Figure 1 illustrates an offset front side view an embodiment of a personal flight vehicle having an electric-energy lifting panel that levitates a user via electric-energy and a gaseous propulsion system to supply directional thrust for the flight vehicle.

Figure 2a illustrates a side view of an embodiment of a personal flight vehicle in which the user is using an embodiment of a flight situation display system.

Figure 2b illustrates an offset rear view of an embodiment of a personal flight vehicle.

Figure 3 illustrates a side view of an embodiment of a ground based power distribution tower to inductively supply power to the inductive transformers in the flight vehicle.

Figure 4 illustrates a back view of an embodiment of a personal flight vehicle having an electric-energy lifting panel located underneath the user.

Figures 5a and 5b illustrate an exploded view of a portion of an embodiment of an electric-energy lifting panel having an ion plate array layer to form the first part of the capacitance plate system.

Figure 6 illustrates an offset side view of an embodiment of an ion plate bent over at the top and the relationship of an emitter wire to the ion plate.

Figures 7a and 7b illustrate an exploded view of an embodiment of an electric-energy lifting panel having multiple layers of emitter wires stacked on top ion plate array layers.

Figure 8a illustrates a side view of an embodiment of the personal flight vehicle having an electric-energy lifting panel located above the user.

Figure 8b illustrates a back view of an embodiment of the personal flight vehicle.

Figure 9 illustrates a bottom up view of an embodiment of personal flight vehicle having an ion conditioner to generate an ion enhanced air-gap between and around the capacitive plates.

Figure 10 illustrates a front view of an embodiment of a ground based power distribution tower having a high voltage Direct Current power-supply to inductively supply a pulsating Direct Current to the inductive transformers in the personal flight vehicle.

Figure 11 illustrates an example high voltage pulsating DC power supply located inside a ground based power distribution tower.

Figure 12 illustrates a wire frame view of an embodiment of an electric-energy lifting panel.

Figure 13 illustrates an exploded view of a portion of an embodiment of an electric-energy lifting panel.

Figure 14 illustrates front view an embodiment of the emitter wire air gap and ion plate relationship.

Figure 15 illustrates an embodiment of an electric-energy lifting panel.

Figure 16 illustrates an embodiment of the personal flight vehicle using a laser as an ion conditioner.

Figure 17 illustrates an embodiment of the personal flight vehicle having the flight situation display system.

Figure 18 illustrates an embodiment of the personal flight vehicle having an electric-energy lifting panel located under the user.

Figure 19 illustrates an embodiment of a single layer of concentric rings of an ion plate array.

Figure 20 and Figure 21 illustrate an embodiment of a single ion plate bent over at the top edge of the plate.

Figure 22 illustrates an embodiment of a portion of the electric-energy lifting panel changing the air gap between the emitter wire layer and ion plate array.

Figures 23-28 illustrate various views of an embodiment of a personal flight vehicle.

Figures 29-33 illustrate various views of an embodiment of a personal flight vehicle.

Figures 34 and 35 illustrate electric-energy lifting panels in the shape of a three dimension triangular sphere.

[0012] While the invention is subject to various modifications and alternative forms, specific embodiments thereof have been shown by way of example in the drawings and will herein be described in detail. The invention should be understood to not be limited to the particular forms disclosed, but on the contrary, the intention is to cover all modifications, equivalents, and alternatives falling within the spirit and scope of the invention.

DETAILED DISCUSSION

[0013] In the following description, numerous specific details are set forth, such as examples of specific data signals, named components, connections, number of memory columns in a group of memory columns, etc., in order to provide a thorough understanding of the present invention. It will be apparent, however, to one of ordinary skill in the art that the present invention may be practiced without these specific details. In other instances, well known components or methods have not been described in detail but rather in a block diagram in order to avoid unnecessarily obscuring the present invention. Thus, the specific details set forth are merely exemplary. The specific details may be varied from and still be contemplated to be within the spirit and scope of the present invention. The term coupled is defined as meaning connected either directly to a component or indirectly through another component.

[0014] In general, various methods, apparatuses, and systems are described in which an electric-energy lifting panel levitates a user secured to the electric-energy lifting panel. The electric-energy lifting panel includes a first capacitive plate and a second capacitive plate having different geometric dimensions to generate a net-directional force. An ion conditioner enhances ions in the air around the first capacitive plate and the second capacitive plate.

[0015] Figure 1 illustrates an offset front side view an embodiment of a personal flight vehicle having an electric-energy lifting panel that levitates a user via electric-energy and a gaseous propulsion system to supply directional thrust for the flight vehicle. Embodiments of the personal flight vehicle 102 may have one or more of the following components.

[0016] An electric-energy lifting panel 104 that has a first capacitive plate 106 and a second capacitive plate 108 having different geometric dimensions. The electric-energy lifting panel 104 levitates a user secured to the flight vehicle 102 via electric energy. A tortuous pivot frame 110 couples to the electric-energy lifting panel 104 to allow the electric-energy lifting panel 104 to redirect vertical lift to horizontal thrust.

[0017] A body harness 112 having vertical telescoping posts 114 with foldout footpads 116 and a flip and lock waist dashboard 118 to secure the user to the personal flight vehicle 102. The footpads 116 may have extension heel rests and landing feet. The body harness 112 may also have belts to secure the user to the flight vehicle 102. A front panel navigation system 120 may mount on the flip and lock waist dashboard 118.

[0018] The capacitive plates 106,108 may include, for example, a set of parallel and layered series of lifting cells and an emitter wire. An ion conditioner 122, such as ultra-violet-light emitting bulbs, an Excimer laser or other similar device, may condition air in between and around the capacitive plates 106,108. The ion conditioner 122, such as ultra violet light emitting bulbs, may be mounted in an array on the underside of the electric-energy lifting panel 104.

[0019] A gaseous propulsion system 124 provides directional thrust for the personal flight vehicle 102. The gaseous propulsion system 124 couples to the body harness frame 112. The gaseous propulsion system 124 may use an air-breathing rocket 126 with hydrogen fuel support 128.

[0020] Figure 2a illustrates a side view of an embodiment of a personal flight vehicle in which the user is using an embodiment of a flight situation display system.

The flight situation display system 230 may be built into a visor connected to a users helmet 231. The global positioning system navigation system 220 may send and receive data to the flight situation display system 230. The helmet 231 as well as the user flight suit 232 have Electro Magnetic Field shielding built into these components.

[0021] Figure 2b illustrates an offset rear view of an embodiment of a personal flight vehicle. Uncondensed hydrogen cylinders 234 attach to the frame of the gaseous propulsion system 224. The Uncondensed hydrogen cylinders 234 are part of a solid-state hydrogen storage and recovery system 236. The solid-state hydrogen storage system provides hydrogen to the fuel cells 238 located underneath the uncondensed hydrogen cylinders 234. The solid-state hydrogen storage system also provides hydrogen to the air-breathing rockets 226. The fuel cell stack 238 also connects to the atmosphere in that the fuel cells 238 may use air as an oxidizer.

[0022] An inductive transformer stack 240 also is located under the uncondensed hydrogen cylinders 234. The inductive transformers 240 receive electric energy from one or more ground-based towers. The inductive transformers 240 supply this electric-energy to the first capacitive plate 206 and the second capacitive plate 208. The first capacitive plate 206 and a second capacitive plate 208 having different geometric dimensions generate a net-directional force to levitate the flight vehicle 202 and the user secured to the personal flight vehicle 202. The ion enhanced air gap between and around the capacitive plates 206, 208 decreases the amount of power required to lift a given amount of weight.

[0023] Figure 3 illustrates a side view of an embodiment of a ground based power distribution tower to inductively supply power to the inductive transformers in the flight vehicle. The ground based power distribution tower 342 may have high voltage Direct Current power-supply 344 to inductively provide a pulsating Direct Current to the onboard inductive transformers. The ground based tower 342 may also have electromagnetic field shielding 346 in place.

[0024] Referring to figure 2a, a canister 248 containing an emergency parachute or parasail also connects the frame of the gaseous propulsion system 224. Note, the components can vary on where and how they connect to one another. For example, the ion conditioner 222, such as a laser 250, may attach to the top part of the frame of the gaseous propulsion system 224. Even the electric-energy lifting panel 204 may be located underneath the user.

[0025] Figure 4 illustrates a back view of an embodiment of a personal flight vehicle having an electric-energy lifting panel located underneath the user. In this embodiment, the electric-energy lifting panel 404 located underneath the user. The electric-energy lifting panel 404 has an added shielding layer 405 of built into a portion of the electric-energy lifting panel 404 in order to shield the user from the Electro Magnetic Field generated by the electric-energy lifting panel 404. The tortuous pivot frame still 410 couples to the electric-energy lifting panel 404 to allow the electric-energy lifting panel 404 to redirect vertical lift to horizontal thrust. The air-breathing rockets 426 provide directional thrust and additional lift for initial lift off.

[0026] Figures 5a and 5b illustrate an exploded view of a portion of an embodiment of an electric-energy lifting panel having an ion plate array layer to form the first part of the capacitance plate system. In this example, the electric-energy lifting panel 504 has three layers 550,551, 552 of parallel and layered series of ion plate arrays. The ion plates form concentric rings of differing geometric sizes 554. Each of the concentric rings 554 is stacked on top of one another in the layers 550,551, 552. Note, three layers are only an example number of layers in various embodiments of the electric-energy lifting panel 504.

[0027] Figure 6 illustrates an offset side view of an embodiment of an ion plate bent over at the top and the relationship of an emitter wire to the ion plate. An emitter wire 656, such as a Corona wire, may form the second part of the capacitance plate system. An ion-enhanced air-gap 659 may exist between and around the ion plate 658 and the emitter wire. The ion plate may be bent over at the top edge 660 of the ion plate 660. Multiple ion plates may form concentric rings of ion plates of various geometric shapes and dimensions.

[0028] Referring to figure 5a, the top edge of those concentric rings of ion plates 554 may be bent over pointing toward the ground.

[0029] Figures 7a and 7b illustrate an exploded view of an embodiment of an electric-energy lifting panel having multiple layers of emitter wires stacked on top ion plate array layers. An embodiment of the electric-energy lifting panel 704 may have three main components, the shell of the disk (not shown), one or more emitter wire layers 762, 764, 766, and one or more ion plate arrays 750, 751, 752. An embodiment may have a series of layered concentric ion plates 750, 751, 752 and a series of emitter wires 762, 764, 766 relating to the series of layered concentric ion plate arrays 750, 751, 752. A gradient electrostatic-field 768 may exist between each set of emitter wire

layer and ion plate array, such as the first emitter wire layer 762 and the first ion plate array 750. These two elements compose a low-efficiency, high-voltage air-gap capacitor in which the difference in geometries between the two capacitive elements generates a net-directional force from the larger element towards the smaller element. There may be both a leakage current and a capacitance current between the emitter wire layer 762 and the ion plate array 750. The electric-energy lifting panel 704 may use a manifestation of ion-wind. The electrons crossing the air-gap cause a breeze that causes a thrust. The breeze travels down from the emitter wire layer 762 to the ion plate array 750 to generate an upward thrust for the electric-energy lifting panel 704.

[0030] In an embodiment, ion-wind comes from electrons emitted from the small-diameter of the positively charged emitter wire layer 750 in such great abundance that these electrons move a significant airflow down to the ion plate array 750 where these electrons are absorbed and transported electrically back to the High Voltage (HV) power-supply's electrical ground. In an embodiment, the ion plates bend over at the top so that the top and bottom are pointing at the ground to aim the ion path downwards to generate thrust.

[0031] Another possible source of the upward thrust comes from an Electro Magnetic Field moving up through the ion plate array 750 to the emitter wire layer 762. However under any analysis the electric-energy lifting plate 704 lifts the user via electric force/energy manipulation.

[0032] The Biefeld-Brown Effect proves that highly charged capacitors when properly suspended showed a tendency to move relative to the gravitational force. When the poles of a freely suspended charged capacitor (even in vacuum) are placed on a horizontal axis, a forward thrust would be produced which would move the capacitor in the direction of the positive pole. The direction of thrust would reverse in conjunction with a polarity change. This is the phenomenon known as the Biefeld-Brown Effect. The components forming the capacitive plates 706, 708, such layers of emitter wires and ion plate arrays, in electric-energy lifting plate may make use of this Biefeld-Brown Effect.

[0033] The intensity of the Biefeld-Brown Effect may depend on several factors: 1) the surface area of the plates; 2) the voltage differential between the plates; 3) the proximity of the plates to each other; 4) the material mass between the plates; 5) the dielectric capacity between the plates; as well as some other factors.

[0034] Capacitors store electrical charge. Under a theory of the Biefeld-Brown Effect, the above five factors contribute to the total charge stored in a capacitor, which is the total charge flow that occurs in the capacitor during its charging process. When a capacitor is connected to a dc supply, the positive terminal attracts electrons from the negative terminal even through vacuum environment. The electron flow stops when the electrons on the negative plate repel other electrons and stop them from reaching the plate. At this point a capacitor is said to be fully charged. However, no dielectric is a perfect insulator, and so a charging current will always be present, with the greatest flow occurring during initial charging.

[0035] Under one ion-wind theory, the volume of current does more work than the voltage that it travels at. The only requirement for the magnitude of the voltage is to have enough to conduct through the air gap. The volume of ions is doing most of the work to create thrust, not the ions' speed. Further, when the ion condition generates an ion enhanced air gap in between and around the capacitive plates, then the magnitude of the voltage required to create the ion wind effect also lowers. Also, lowering the magnitude of the voltage between the capacitive plates 706, 708 and the speed of the ions but using far many more of them increases thrust through the aerodynamic linkage between the cumulative mass of ions and the surrounding air. The theories will be described in more detail later.

[0036] The emitter wire layer and ion plate array be only one layer thick. However, massively parallel and layered series of sets of emitter wires 762, 764, 766 related ion plate arrays 750, 751, 752, working in parallel, can contribute to greater stability and higher force output than any single lifting element.

[0037] The distance between the capacitive elements can be automatically adjusted by user control or by the automated navigation system. Changing the distance between the capacitive elements acts to increase or decrease lift. An electromechanical movement system can act to change the distance between the concentric rings 754 or between the emitter wire layer 762, 764, 766 and corresponding ion plate array 750, 751, 752. Alternatively, a software/electronic control system can act to change that distance. The energy to any section, segment or sub segment may be fully addressable in that a particular ion plate concentric ring and can have its power turned up, down or sequenced for maneuverability. An electronic control system can manage the power provided by the inductive transformer array to each ion plate concentric ring.

[0038] In an embodiment, the electric-energy lifting panel 704 may be manufactured as a layered material. One or more of those layers is the emitter wire layer 762, 764, 766, which may be highly charged with about 30kV worth of electrons. Another layer is the concentric ion plate arrays 750, 751, 752 in almost any geometric shape or size. The emitter wire layer 762, 764, 766 may be made from thin film deposition that traces out the exact pattern of the Ion array under the emitter wire. The emitter wire layer 762, 764, 766 may have addressed energy sections and segments that match those in the ion plate area below the emitter wire array. The emitter wire may be coated or polarized. The thin film plate process could use layered metallics containing several hundred microscopically thin layers of magnesium and bismuth deposited via electron-deposition technology, to help produce an absence of oxygen-molecules between the different layers of metals. As discussed previously, another layer is the air-gap 769 between the emitter wire layer 766 and ion plate array 752. The air gap 769 may be for example, 3 cm in height. Another layer may be an electrically-grounded "skirt" of aluminum plate that surrounds a portion of the electric-energy lifting panel. The aluminum plate may be part of the disk shell surrounding the electric-energy lifting panel. The disk shell has mounting points so that the entire electric-energy lifting panel 704 may pivot vertically or laterally within the tortuous pivot frame. In an embodiment, the electric-energy lifting panel 704 may be an inflatable Mylar disk comprised of massively layered thin film sections and one or more areas inflated by the flight vehicle's own hydrogen.

[0039] Figure 8a illustrates a side view of an embodiment of the personal flight vehicle having an electric-energy lifting panel located above the user. The personal flight vehicle 802 is capable of both rapid and gradual lofting via either the rocket or the electric-energy lifting panel 804. The personal flight vehicle 802 is capable of silent flight via the electric-energy lifting panel 804. Additionally, the personal flight vehicle 802 may employ the gaseous propulsion system 824 for additional thrust or maneuverability.

[0040] Figure 8b illustrates a back view of an embodiment of the personal flight vehicle. The gaseous propulsion system 824 uses a thrust jet funnel system. The thrust jet funnel system may employ hydrogen-air combustion start /air oxidizer to provide directional thrust for rapid lifting, landing support and pitch, roll, and yaw support.

[0041] The rocket portion of the system is an air-breathing rockets 826 with hydrogen fuel support 128. The rocket portion of the system 826 has a slow loft system that allows normal human control. In an embodiment, a tactical version of the personal flight vehicle 802 may have a rocket portion 826 with an increased thrust support system that a skilled operator should be able manage.

[0042] In an embodiment, the rocket portion 826 employs a version of the Cruise Missile "Williams research" engines. The thrust aspect of the device uses a rocket-based, combined cycle engine. The combined cycle engine sucks in air. The combined cycle engine then compresses the air, combines it with a fuel, and burns the product, which expands and provides thrust. Air is taken in by the system and compressed by an onboard compressor. The air is then injected into an airflow at the thrust nozzles. Fuel is added to the airflow, where the two mix and burn. Fuels most likely to be used with the air-breathing rockets 826 include hydrogen or hydrocarbon fuel. In an embodiment, the efficiency of the thrusters jumps dramatically to much higher efficiency than even an aircraft once you pre-ionize the air and use a lower voltage. The personal flight vehicle 802 can also produce more thrust then is anticipated but at the expensive of fuel economy. When additional power is required, the vehicle can use both its hydrogen thrust system 824 and the induction transformer amplification 840.

[0043] The solid-state hydrogen storage and recovery system 836 can supply hydrogen to the rocket portion 826. The solid-state hydrogen storage and recovery system 836 can also supply hydrogen to the fuel cell stack 838 located underneath the uncondensed hydrogen canisters 834. The fuel cell stack 838 uses air as an oxidizer after initial liftoff via the hydrogen fuel. In an embodiment, the use of a fuel cell stack 838 dramatically reduces the overall weight of the personal flight vehicle 802 compared to others possible flight units by eliminating significant on-board fuel requirements. Thus, the personal flight vehicle 802 may provide a safe, low-noise, long-duration flight capability with more user control and functionality.

[0044] Further the fuel cells 838 may provide a separate independent supply electrical power to the personal flight vehicle 802. Alternatively, the personal flight vehicle 802 may use on-board beta-decay nuclear DC batteries 870 to provide an independent source of electrical power. In an embodiment, the beta-decay nuclear DC batteries 870 may be either Stimulated Beta-Decay nuclear DC batteries or Conventional Beta-Decay nuclear DC batteries. The voltage range of the batteries may be, for example, 12VDC or 115 VDC.

[0045] Figure 9 illustrates a bottom up view of an embodiment of personal flight vehicle having an ion conditioner to generate an ion enhanced air-gap between and around the capacitive plates. Referring to figure 9, the ion conditioner 922 may be ultra violet light emitting bulbs, such as LEDs or bulbs for an EPROM eraser, grouped in sectional arrays of hundreds of these bulbs. Each ultra violet light emitting bulb may have a fairly narrow focus beam. Most of the light produced by the UV Photon may be just outside the visible spectrum (370 nm). In full darkness, the UV bulbs may cause objects to fluoresce at distances of 20 feet or more. In bright daylight, the UV bulbs the effectiveness may be about 6 - 12 inches. A plastic-pipe may support a wire-mesh on both ends -- one end positive, the other negative, and UV-bulbs in between. In an embodiment, when the UV bulbs substantially ionize all of the air in or by the pipe, electricity flows between the mesh ends and carry a net airflow with it.

[0046] In an embodiment, any two metallic surfaces may be used as terminals and the one or more UV bulbs connected in between the metallic surfaces. The pipe may have side inlet/outlet to further direct airflow in the presence of the UV ionization. Either way the Ultraviolet light can be used to enhance the conductivity of the atmosphere, which can then conduct electricity at otherwise non-ionizing voltage potentials.

[0047] In an embodiment, no emitter wire layer is used in the panel because the pre-ionized air would more readily pick up conduction-charges without using the fine-tip of the emitter wire. The UV light-source may be located inside of a coated aluminum mirroring jacket to boost the efficiency of ionization without expending excess energy. Thus, two flat ion plates in an airflow tube should work adequately. The Aluminum may accompany a silicon oxide or magnesium fluoride overcoat. The overcoating provides a surface rugged enough for normal handling and cleaning, and it provides an effective seal that reduces aging effects in the aluminum film.

[0048] The ion conditioner 922 reduces the magnitude of the voltage to conduct through the air gap and the total power-requirements. Additionally, at lower voltages, a lower X-ray production occurs because the X-rays from the UV ionizing source are absorbed by surrounding material such as metal, glass, or plastic. Also, at lower-voltages the personal flight vehicle 902 generates less ozone and other byproducts.

[0049] Figure 10 illustrates a front view of an embodiment of a ground based power distribution tower having a high voltage Direct Current power-supply to inductively supply a pulsating Direct Current to the inductive transformers in the personal flight vehicle. The ground based energy broadcast tower system may provide point-to-point

direct-line-of site mobility for one or more personal flight vehicles. A ground-based power distribution tower 1042 may pulsate DC power based upon Tesla theories. The ground-based power distribution tower 1042 may be made of a simple construction or specially constructed Magnetic Levitation towers.

[0050] The ground based power distribution towers 1042 may be located strategically along urban points to provide initial thrust enhancement to the personal flight vehicle, thus reducing the system weight. The ground based may also provide control lift points for the Federal-Air-Aviation air traffic control requirements. The ground based power distribution tower 1042 may contain a communication module 1072 to communicate with the navigation system onboard the personal flight vehicle to provide tracking of the personal flight vehicle as well as focusing power to a particular personal flight vehicle. A Global Positioning System 1073 may be incorporated into both the towers and the onboard the navigation system. The communication module 1072 may send a red light and sound an audible signal the user that they have wandered outside of prescribed flight lanes.

[0051] The ground-based towers use an induction broadcast power-supply based upon Tesla's power broadcast theory. The projected induction power from the ground based power distribution tower reduces the onboard power requirements of the personal flight vehicle. A ground based power distribution tower 1042 produces directed high-voltage, high-frequency, low-amperage power either directed at one or more personal flight vehicles in the range of the tower or in a limited general broadcast area. The ground based power distribution tower 1042 slowly lowers a personal flight vehicle to the ground if a user goes outside the prescribed air-lane due to the natural fall off of available energy when the user goes outside the area where the tower pulsates the energy.

[0052] Magnetic levitation launch towers could also be incorporated into emergency and tactical vehicles as collapsible towers. The energy broadcast towers could also be incorporated into emergency and tactical vehicles for fixed operating environment, rapid deployment situations.

[0053] Figure 11 illustrates an example high voltage pulsating DC power supply located inside a ground based power distribution tower. The high voltage pulsating DC power supply 1144 may include components such as an On-Off control circuit 1174, Voltage regulator and short circuit overload protection circuit 1176 such as an IC for the step up transformer 1178, Voltage control adjust 1179, Step up transformer 1176,

Capacitive Diode network 1180 to generate high voltage pulsating direct current, and a connection to circuit/Earth ground 1181. The On-Off control circuit 1174 with may also have overload protection such as a fuse or circuit breaker. The Voltage regulator and short circuit overload protection circuit 1176 provides voltage control for the step up transformer 1178 and thus the level of the voltage being pulsed to the personal flight vehicle. The Voltage regulator and short circuit overload protection circuit 1176 also provides short circuit protection and inductive feedback protection for the step up transformer 1178. In an embodiment the Voltage regulator and short circuit overload protection circuit 1176 may be an Integrated Circuit or System On a Chip. The capacitive-diode network 1180 rectifies and stores the voltage from the step up transformer 1178 to generate high voltage pulsating direct current broadcast from the tower. The circuit/Earth ground 1181 may act to complete the electrical circuit formed by the capacitive plates of the personal flight vehicle, the air, and the Earth.

[0054] In an embodiment, the Pulsed DC increases the efficiency of terst models by about 200%. The frequency at which the flyback operates enhances performance sapping back of an Electro Magnetic Field. As noted, the tower based energy projection system provides the High Voltage power solution and eliminates an onboard weight requirement for the personal flight vehicle 102.

[0055] The HV DC power-supply 1144 provides a pulsed DC voltage to the onboard inductive transformer stack. The onboard adaptive transformer stack, employs the earth's own resonance with its specific vibrational frequency to conduct pulsed DC electricity via a this series of towers acting as electric oscillators placed in strategic points in urban centers or on mobile units.

[0056] The towers may employ a variety of techniques to convert energy to high voltage DC power. For example, the towers may use existing AC power lines, fuel cell powered transformer based ground generators, etc.

[0057] Figure 12 illustrates a wire frame view of an embodiment of an electric-energy lifting panel. As described above, a cross section of an embodiment of the electric-energy lifting panel 1204 may contain multiple sets of emitter wire layer 1262 and concentric ion plate arrays 1250 layered on top of each other. An overall disk shell 1282 may cover those layers 1250, 1262. Support struts 1283 may assist in maintaining or controlling the air gap between capacitive components. The support struts 1283 may also assist in maintaining a defined distance between each layered set of components. The electric-energy lifting panel 1204 may be collapsible along certain

support struts 1283. The electric-energy lifting panel 1204 may be spring load and unfolds upon reaching launch apogee. The electric-energy lifting panel 1204 produces directional thrust using an electromagnetic propulsion system that has no moving parts.

[0058] Figure 13 illustrates an exploded view of a portion of an embodiment of an electric-energy lifting panel. The electric-energy lifting panel 1304 uses the Biefeld-Brown effect, an electromagnetic force exerted on a capacitor when it is charged with electricity. Even though all capacitors experience some type of internal force when charged with a high-voltage a capacitor utilizing capacitive plates of different geometric sizes creates a net-directional force when charged. Thus, by applying a pulsated high-voltage to a particularly designed capacitive module, the capacitive module creates a propulsive force.

[0059] Highly charged capacitors when properly suspended show a tendency to move relative to the gravitational force. When the poles of a freely suspended charged capacitor (even in vacuum) were placed on a horizontal axis, a forward thrust would be produced which would move the capacitor in the direction of the positive pole. The direction of thrust would reverse in conjunction with a polarity change.

[0060] In prior experiments tests for propulsion were performed at high voltages of 300kV and even Megavolts. Typically, between capacitive plates two opposite plates are being charged from zero to high voltage. Electrons leave the metal surface on the negative plate and are accelerated towards the positive plate. As the electron accelerates its speed increases steadily to very high values. In an embodiment, the emitter wire layers 1362, 1364, 1366 and ion plate arrays 1350, 1351, 1352 act as these capacitive plates. In an embodiment the Biefeld Brown effect may cause the effective electron mass to act as a real heavier mass. Applying Newton's laws may result in erroneous calculations because the Biefeld Brown effect deals with relativistic speeds within lifters. The higher the applied voltage to the capacitive components, the higher the input energy E=Vq, the less accurate may be calculations based upon Newton's theories.

[0061] Einstein's Space-Time warping theories can be more practically applied for the effective mass, total energy and actual particle speeds within a high voltage gradient field. Effective mass at relativistic speeds= $m / (1-v^2/c^2)1/2 = ym$. Total energy $= ymc^2$. Energy used during acceleration $= (y-1)mc^2$. $1mc^2$ is equivalent to the energy stored within the mass of particle at rest and is not part of the input energy.

[0062] Several explanations can be generated for the above equations.

[0063] 1. The energy required to move stationary mass m at velocity v is equivalent to that moving a much higher effective mass at velocity v.

[0064] 2. The energy required to move stationary mass m for a distance d is equivalent to that moving the same stationary mass m for a much longer effective distance than d.

[0065] 3. The energy required to move stationary mass m for a distance d during time t is equivalent to that of moving the same stationary mass m for the same distance in a much shorter time.

[0066] 4. The energy required to move stationary mass m at velocity v, is equivalent to the energy required to move the same mass at velocity v, plus an energy doing work against radiation pressure difference (vacuum mod/ ether mod/ space-time warp.) between the front and rear sides of the particle.

[0067] The apparent mass increase is all due to the energy going into the space fabric, and none of it actually increases the real mass of the particle. The mass increase (as shown by points 1,2,3,4) is only a virtual description of the effect best described by point 4.

[0068] When a relativistic particle travels through the field gradient between the capacitive plates a space-time warping effect may occur in the space-time fabric. The greater the 'effective' mass or energy input, the greater the space-time warping effect. Thus, in an embodiment, the electric-energy lifting panel 1304 may produce its own a gravity field and thereby cause an anti-gravity effect. These particles with relativistic speeds undergo time dilation, that is when viewed from an external inertia reference frame, the particles seem to be going slower, and so energy from outside this frame seems to be going in for a longer time. Even if the effect might be very small, the speed of electrons in electric-energy lifting panel 1304 undergo time dilation, which indicates the occurrence of space-time warping. The same kind of space-time warping created by the Earth's gravity field. The higher the voltage, the greater the field, and the greater the deviation between the electric-energy lifting panel 1304 inertial reference frame to its ambient. The volume of air around the electric energy panel also undergoes mechanical inertia changes and electrical permeability changes.

[0069] Embodiments of the electric-energy lifting panel 1304 can still levitate inside a vacuum enclosure. While ion wind propulsion can work in space, it usually assumes that there is argon, krypton, or other noble gas to be used as the propellant. Yet

embodiments of the electric-energy lifting panel 1304 may function in a vacuum enclosure with no such gas available for transport.

[0070] Figure 14 illustrates front view an embodiment of the emitter wire air gap and ion plate relationship. As discussed above, the ion plate 1458 may have a bent over top edge 1460. The emitter wire 1456 may be a variety of geometric shape. The emitter wire 1456 generates a corona effect 1484 around the emitter wire 1456. The air gap 1459 generally has a define space but can be control by the control linkage. The air gap 1459 acts as a dielectric between the capacitive plates of the emitter wire 1456 and ion plate 1458. A support strut 1483 may maintain or control this air gap 1459 and thus dielectric effect of the air gap 1459.

[0071] Embodiments of the electric-energy lifting panel may change the dielectric material from the air-gap 1459 to another materials used to increase the dielectric capacity. High-K dielectric materials may be used to increase the displacement of electrons in the material to enhance charge transport. The increased dielectric potential of the layered materials also increases the breakdown resistance to allow thinner materials to be used. An embodiment of the electric-energy lifting panel without an air gap as the dielectric may accommodate lower voltage requirements between the ion plate 1458 and the emitter wire 1456. A given level of voltage must exist to create the Ion wind effect. However, the voltage may not have to create the very large e-field gradient, such as 50,000v, to create a leakage current across such a large void. Therefore, the overall voltage across the device may be reduced, for the same amount of thrust. I

[0072] In an embodiment, the electric-energy lifting panel may lift 3 pounds per horsepower. Thus an electric-energy lifting panel consuming 66 horsepower may lift 200 pounds of mass. A lower operating voltage in turn means that a lower-output power-supply can be used for a given amount of current, which increases the overall efficiency. The layered materials of the electric-energy lifting panel having a high-k dielectric material rather than an air-gap may also ease manufacture of the electric-energy lifting panel.

[0073] The high electric field between the capacitive plates may act to change the refractive index of the dielectric material. The dielectric constants may increase with refractive index for different materials. The dielectric constant, K, is equal to the sum of the real (E') and imaginary (E") permittivity of a material and is the square of the

refractive index, or $K = n^2 = c^2/v^2$. The effective mass increase factor y, may be related to the dielectric constant K of the dielectric as follows: $y=(1-v^2/c^2)-1/2$; $y=(1-K-1)-1/2$.

[0074] Thus, the effective increase in energy required to accelerate the particle at relativistic speeds may not be due to an increase in the real mass, but due to the changes undergone by the surrounding medium/dielectric properties. The extra energy involved is being used up to modify the dielectric constant within the dielectric material.

[0075] Dielectric materials store energy. Total energy in the accelerating system = $(y+1)mc^2$. Note the $+1mc^2$ is equivalent to the energy stored within the mass of the moving particle and is not part of the input energy. Input energy = ymc^2, where m is the stationary mass, which is a constant. Input energy = $(1-K-1)-1/2mc^2$. However, as speed gains up, input energy goes up, but the actual resulting acceleration may go down, until it zeroes at v=c. Thus the unaccounted for energy may be given out to the surrounding space. The unaccounted for energy may be stored within the dielectric (space, air, mica or whatever). A dielectric may be defined by its permittivity, and it is this value which can be expanded or compressed as the energy fills up this space.

[0076] Note that in the expression: Input energy = $(1-K-1)-1/2mc^2$, the only variables are the energy and the dielectric 'constant' which is not constant at all. The dielectric constant K of a capacitor can change with temperature and frequency. The refractive index (n) varies with frequency (and $K=n^2$). When energy is input into a device containing relativistic speed particles, its dielectric constant (and its refractive index) can change. Of course this will not be the 'relaxed' condition of the dielectric, and it will be in a stressed condition, until the internal energy is dissipated, and the dielectric gives back this energy and acquires back its normal permittivity. This process is very similar (actually the same) to the process of charging a capacitor.

[0077] A high voltage capacitor is thus changing its internal permittivity with electrical energy input, and thus may be modifying space-time within its plates. From the above discussion, it follows that a change in space-time is normally accompanied by a change in dielectric constant, a change in refractive index, a change in the properties of its inertia reference frame and a change in gravitational field within its plate. In fact, it is known that when an isotropic substance is placed in an electric field, a change in refractive index occurs, which is better known as the Kerr Effect. The effect is quadratic with respect to the electric field strength.

[0078] This supports the idea that a capacitor charged at high voltage will gain inertia, not because of its speed or mass, but because of the modified space-time

within it. The highest gain in inertia or gravity field will be nearest to the positive plate where most particles would have accelerated to their maximum speeds a thus left the most stressed space-time. The situation can be explained as 'elastic potential energy within the space-time fabric' and this potential energy will be present as long as the capacitor stores the energy within its dielectric.

[0079] The thrust or lift generated by the electric-energy lifting plate can be higher in asymmetric capacitive electrode configuration. A mass or localized energy field within a highly energized dielectric within a symmetric electric field may not be subject to any external force, other than its own gravity field pointing towards the center of the mass in all directions. Under the Biefeld Brown effect, the thrust is higher in asymmetric electrode configuration. In a symmetric capacitor, the only asymmetry in its energy field is due to the fact that the motion of the electrons at the positive plate is at a higher kinetic energy than that of the electrons leaving the negative plate. This results in very small space-time curvature, with very small interaction with external energy points or masses, resulting in very small thrust. However, a larger space-time curvature occurs for an asymmetric electrode configuration. This asymmetric energy distribution causes generation of space-time elastic stress without the requirement of any particles flowing within the system. This would also explain the fact why a graded dielectric would amplify this elastic stress within such a field. The result of this space-time curvature on masses or energies within the frame (the B-B device) would be similar to a mass entering earth's gravity field. No particles are required to hit the subject, but the subject tends to be accelerated towards the slower time, i.e. the highest energy level. The greatest effect will be obvious on any matter within the field itself, but also on the walls within reach of the electric field force. In case of such a device operating in vacuum, with no mass or walls in the vicinity, the propulsion would be achieved by the space-time curve acting on the surrounding energy within the vacuum (vacuum energy, ether, etc.) which is abundant of high energy cosmic energy, the same energy causing gravity on any planet in the universe.

[0080] The Biefeld Brown effect generates elastic potential energy within the dielectric. Efficiency of this mechanism can reach near 100% if the elastic limit of the dielectric is reached on the positive electrode side. The elastic limit of all dielectrics is the same and equates to the condition v=c. Very high efficiencies such as 99% may be possible by using very high voltage to charge the capacitor. At such a limiting voltage we get:

[0081] Input energy = $(1\text{-}K\text{-}1)\text{-}1/2mc^2=1/2CV^2$, where C is the capacitance and V=terminal voltage. Another formula for capacitance is:

[0082] $C=(2x(1\text{-}K\text{-}1)\text{-}1/2mc^2)/V^2$.

[0083] The Biefeld Brown effect can correlate to the mass of dielectric as well as other conventional physics parameters making up capacitance. The above equation shows that at such high voltages, capacitance is related to dielectric mass as well. Both potential energy within the charged capacitor and Earth's gravitational potential energy may use the same mechanism. An embodiment of the electric-energy lifting panel use the electric energy in the capacitive plates to effect a gravity field. If the gradients of the electric-energy lifting panel gravity field and the Earth's gravity field are pointed against each other, then their elastic potential energies can do work against each other. Similar to pressing two springs together and releasing both. The lighter spring will move faster (our craft) as opposed to the 'Earth'. There may not be energy conversion in this process since they are both gravitational potential energies. This would imply that:

[0084] Electrical input energy=Input energy = $(1\text{-}K\text{-}1)\text{-}1/2mc^2=1/2CV^2=mgh$, where h would be the change in altitude of the powered craft.

[0085] This method could eventually obtain efficiencies of over 99% for the conversion of electrical to kinetic energy within any dielectric medium including space. Under a theoretical basis, the craft's maximum speed may not be limited by the ion drift velocity but only by the speed of light.

[0086] Corona discharge 1484 (ion current flow) starts earlier then visible corona can be seen. Detailed tests about corona formation were made by Peek in the beginning of last century. Based on his tests he came up with an equation known as Peek's for corona onset voltage. An embodiment of the personal flight vehicle can use these equations in calculating thrust/voltage dependence:

[0087] V0=g0*r*ln(d/r) where g0=30*kV/cm*delta*(1+0.301/sqrt(delta*r)); where r is radius of corona-wire in cm, d distance between wires and delta is a factor depending on air pressure and temperature as delta=3.92b/(273+t); where b is pressure in cm of barometric pressure and t is temperature in degree C.

[0088] For example, at d=30mm and r=0.5 mm, an embodiment of the personal flight vehicle gets V0=14.4 kV, but with 50 gauge wire (0.01275 mm) the emitter wire gets V0 of 2.7kV. So when the personal flight vehicle uses thin corona wire, the personal flight vehicle may get useable thrust at 10kV.

[0089] Figure 15 illustrates an embodiment of an electric-energy lifting panel. A spark gap may produce propulsive capabilities. The ion conditioner 1522, such as a laser, can enhance ion conduction of the air. The ion conditioner 1522 acts to increase the amount of conduction current in an ion processing effect propulsion system without increasing the power-consumption. The magnitude of voltage still must be high-enough to create the ion wind conduction current in the first place; however, the ion conditioner 1522 can lower the minimum conduction voltage. Similar to the high K dielectric, the ion conditioner 1522 can lower the operational voltage used in the personal flight vehicle 1502. High voltage ion-wind involves voltages that are enough to cause ionization in the first place. Efficiency curves for ion wind tend to start at the part of the curve where ion-wind begins at around 20,000 volts. If you can visualize a voltage to thrust curve, the curve would start out high and become lower as voltage increases. In other words, you may gain 1 watt's worth of thrust by doubling the voltage, but it costs you 2 watt's worth of input power to achieve one watt of ion wind. Traditionally, most scientists do not try to experiment further up the curve to the part where a high-efficiency exists because air does not typically conduct electricity at those frequencies. However, the ion conditioner 1522 can assist the personal flight vehicle 1502 to operate in these regions of higher efficiency.

[0090] The volume of electricity seems to enhance propulsion more than the speed of the electricity (current versus voltage). While increasing voltage does have a positive effect on propulsion, the trade-off in terms of power required to step up to the voltage may not make up for the increased power consumption.

[0091] Several ways exist to ion enhance the air envelope around the personal flight vehicle 1502, such as UV bulbs, Lasers, and Microwave-Excitation of the air. Ion enhancing the air envelope can increase the conductance of the air gap. Because the air-gap is a dielectric and the ion enhancement forces more ions through it, a higher-voltage is going to cause a greater number of them than a low voltage. In contrast to typical ion-wind theory, under one ion-wind theory, the volume of current does more work than the voltage that it travels at. The only requirement is that the voltage is high enough to conduct through the air gap. The volume of ions is doing most of the work, not the ions' speed. The ion conditioner 1522 increases the volume of ions as well as lowers the required voltage to stimulate ion wind.

[0092] Traditional Ion processing experimenters have indicated that experimentally, 40 kilovolts appears to provide a great deal of thrust compared to 30kv, however, this is

not mathematically supported, and is believed to result from increased conductivity of the atmospheric medium. In other words, since the air essentially functions as a semi-permeable dielectric, the increased voltage has a greatly pronounced effect on conduction-current transfer through the air, which bears the resemblance of being more powerful when in reality it is simply more efficient than the lower voltage.

[0093] Extrapolation into low-voltage behavior from previous equations, which were designed for high-voltage research, shows that lowering the voltage to levels considerably below those thought to be possible allows a much greater increase in efficiency than previously thought. Using Saviour's equations, a baseline voltage of 30kv from an example emitter wire to ion collector plate could produce a performance of 1 g/ Watt, and an ion-transport speed of 1.72 cm^2/Vsec. Having established a baseline to compare against, when the value of 115 volts rectified to DC is used instead of 30,000 volts. The overall performance changes to 324.6 g/ Watt, which is equivalent to nearly 1 pound per watt, or about 746 pounds per horsepower. Further, adverse X-ray and ionic effect are reduced as the voltage field gradient is lowered.

[0094] Ultraviolet photo-ionization occurs at the frequencies of, for example, 1024nm for O2 and 798nm for N2, both of these atmospheric air molecules will photo-ionize. Thus, these molecules found in air will then become ready for manipulation by electrical fields in the same manner that similar molecules ionize by high-voltage.

[0095] An Excimer-laser can stimulate the air-molecules within the beam radius to become conductive. The conductivity of a lightning channel or any atmospheric plasma - is in fact greater than the conductivity of an equal volume of copper wire. Thus, it is possible to manipulate and direct low-voltage currents of electricity through the atmosphere in the same manner that they are directed through a circuit board by using the appropriate wavelengths of ultraviolet radiation. The ion conditioner 1522 stimulates ion-production and conduction-charge transfer to modify the conductivity properties of air. So, instead of using 30 kilovolts of electricity to stimulate ion-production and conduction-charge transfer, a much greater amount of electricity can be transferred at a much lower voltage, such as 115 volts DC, without the side-effects associated with the traditional Ion processing and Ion-Wind technologies. Further, lower-voltages in Ion processing atmospheric conduction apparatus reduce overall power levels, output heat, and component failure rate.

[0096] Figure 16 illustrates an embodiment of the personal flight vehicle using a laser as an ion conditioner. A laser 1622 creates and steps up the ion field in the air

around and between the capacitive plates inside the electric-energy lifting panel 1604. A nitrogen based laser, such as an Excimer laser, that ionizes the atmosphere could be used to reduce the required voltages for useable thrust to, for example, 125 volts. One watt of electricity stepped up to 10,000 volts may not be efficient. Pre-ionizing the operational air around the Personal Flight Vehicle 1604 provides efficiencies of energy. Ultraviolet light can be used to enhance the conductivity of the atmosphere, which can then conduct electricity at otherwise non-ionizing potentials. For example, after laser ion amplification and broadcast by a 193nm ArF excimer laser, 115 volts may generate up to 2800+ grams/watt. Transmitting ions down a laser beam may have one drawback, which is it is difficult to get as much "lifting area" as with the wire-foil combination. Lasers 1622 such as UV-laser diodes, Nitrogen lasers, or CO2 lasers may be used to ion enhance the air. The laser 1622 may be combined with a targeting component to direct such a laser pre-ionizer or ionization amplifier.

[0097] In an embodiment, a different approach could involve the use of a short-wavelength UV laser pulse (248nm) from the ground tower. The short-wavelength UV laser pulse produces a line of photoelectrons between the Personal flight vehicle 1602 and ground. The density of the photoelectrons created by direct three- or four-photon ionization is controlled by the peak intensity of the UV pulse. By contrast, in the case of the CO2 laser, the high field of the laser may lead to an uncontrollable electron-avalanche process. A distinct advantage of the shorter wavelength UV laser pulse is generating plasma having the reduced diffraction. The aperture of the short-wavelength beam on the ground could be at least 40 times less than that needed for a CO2 laser beam.

[0098] Three steps occur in the process of using a UV femtosecond pulse to create an ionized air channel. First, the pulse is propagated through the atmosphere to generate photoelectrons. Then, these electrons migrate and multiply in the electric field and induce a local electrical-field enhancement and electron avalanche. This avalanche leads to a completely ionized front or "streamer", moving at speeds up to one-third the speed of light.

[0099] The temporal and spatial focusing of femtosecond pulses at a wavelength of for example, 248nm, can be used to create a narrow elongated needle of photoelectrons in the atmosphere. Two properties of air are particularly interesting at that wavelength. First, the ionizations of cross-sections of oxygen (three-photon) and nitrogen (four-photon) are particularly large, so that less than 50 mJ is required to

obtain the minimum photoelectron density of 5 x 10 to the 11th e-/cm squared to initiate a lightning discharge. Second, the wavelength dependence of the index of refraction of air can be used for compression of properly pre-chirped pulses.

[00100] Ionizing a column through the air is only the first step. The ionized electrons remain for a few nanoseconds, before attaching to oxygen to form O2 and O- ions. Due to their low mobility, the conductibility of the ionized path is drastically reduced with the substitution of these ions to the electrons. This problem can be solved easily by sending a "photo-detaching" laser beam along the same path as the UV laser. A 0.2-mJ optical-pulse energy at one-half the self-breakdown voltage could be one of the smaller energies used to stimulate the effect. Such a system consists of a Ti: sapphire laser, a negative-dispersion line, a regenerative preamplifier, a large aperture amplifier, and a frequency-tripling assembly.

[00101] In an embodiment, the navigation system 1620 mounted on the flip and lock dashboard 1618 may include a control electro-mechanical system. The control electro-mechanical system coordinates with the tortuous pivot frame 1610 to control the pivoting of the electric-energy lifting panel 1604. The navigation system 1620 may also include a HITS GPS system which tracks the induction stream beamed from the ground based power distribution towers to keep a user on the air-roads. The GPS system relays positioning information and generates a red light and audible signal the operator that a user has wandered outside of prescribed flight lanes.

[00102] Figure 17 illustrates an embodiment of the personal flight vehicle having the flight situation display system. The global positioning system navigation system 1720 may send and receive data from the flight situation display system 1730. The flight situation display system 1730 may be ergonomically designed. The flight situation display system 1730 replaces the old-fashioned instrument panel per the NASA Advanced General Aviation Transportation Experiment (AGATE) cockpit revolution. The display system 1730 is the foundation for NASA's Highway in the Sky (HITS) initiative, which is developing affordable glass cockpits for single-engine, single-pilot airplanes by the year 2001. The HITS display projects a pre-planned course "highway" for the pilot to follow, instead of gauges and dials for the pilot to interpret and synthesize into a mental picture of the airplane situation. The graphical display system 1730 includes a two-panel display of Global Positioning System (GPS) position and attitude, course, weather depiction, and aircraft track and performance. The integrated flight display system 1730 provides the pilot with an intuitive pictorial for situational awareness, and with a system

that is affordable for a wide spectrum of general aviation aircraft. The pilot will use the highway display to guide and control the airplane intuitively.

[00103] In an embodiment, the frame the personal flight vehicle 1702 and the electric-energy lifting panel 1704 may be of composite structure, Graphites, bonded laminates and or similar materials. The electric-energy lifting panel 1704, flight suit 1732, and helmet 1731 contain Electro Magnetic Field shielding.

[00104] Figure 18 illustrates an embodiment of the personal flight vehicle having an electric-energy lifting panel located under the user. An embodiment of the personal flight vehicle 1802 may have an electric-energy lifting panel 1804 located under the user. In an embodiment, the personal flight vehicle 1802 may produce ozone gas to help fill the Earth's disappearing ozone layer. The production of Ozone is a by-product of the kinetic interaction of electricity of sufficient voltage levels with air-molecules. In embodiments that use higher voltages, the increase in ion conduction reduces ozone production compared to the same voltages without increased ion conduction. Further, in embodiments that use higher voltages, added shielding 1885 reduces electromagnetic-interference between the personal flight vehicle 1802 and nearby electrical-equipment.

[00105] The pitch, roll and yaw process may be accomplished by either, varying energy to sections of the energy plate or triggering compressed hydrogen gas bursts through thrusters on the backpack or triggering hydrogen thruster gas combustion through thrusters on the back pack or via a small electric fan mounted on the back pack which can be directed via cables or servo motors. A joystick which can be plugged into the waist yoke at a connector on either the right, left or center of the yoke may be the main control mechanism.

[00106] Figure 19 illustrates an embodiment of a single layer of concentric rings of an ion plate array. Each ion plate 1950 may be formed in a concentric ring or a different shape.

[00107] Figure 20 and Figure 21 illustrate an embodiment of a single ion plate bent over at the top edge of the plate. As discussed, an ion plate 2058 bent over at the top edge of the plate 2060. In an embodiment, the ion plate collector-voltage is set below the ground-voltage level of the environment to reduce static charge build up.

[00108] Figure 22 illustrates an embodiment of a portion of the electric-energy lifting panel changing the air gap between the emitter wire layer and ion plate array. Several

mechanisms exist to change the air gap 2259 between the emitter wire layer 2266 and ion plate array 2252.

[00109] Figures 23-28 illustrate various views of an embodiment of a personal flight vehicle. In an embodiment, a version of a personal flight vehicle 2302 that has an enclosure for a user to sit in may employ the electric-energy lifting panel which has two capacitive plates with different geometric dimensions to generate a net-directional force. An embodiment of the personal flight vehicle may have the following components: one or more electric-energy lifting panels 2304 having a first capacitive plate 2306 and a second capacitive plate 2308; a tortuous pivot frame 2310; one or more ion conditioners 2322, such as ultra-violet-light emitting bulbs, an Excimer laser or other similar device; a gaseous propulsion system 2324; one or more air-breathing rockets 2326 with hydrogen fuel support 2328; a flight situation display system 2330; a global positioning system navigation system 2320; Uncondensed hydrogen cylinders 2334; fuel cells 2338; an inductive transformer stack 2340; thermal slipstream enhancers 2380, Laser/ionization power module 2990, as well as other components.

[00110] When high voltage (—30 kV) is applied to a capacitor whose electrodes have different physical dimensions, the capacitor experiences a net force toward the smaller electrode. This operates on capacitors of various shapes.

[00111] The order of magnitude of the net force on the asymmetric capacitor may be estimated assuming two different primary mechanisms of charge conduction between its electrodes and a variety of secondary mechanisms. The primary mechanisms are ballistic ionic wind and ionic drift.

[00112] Calculations indicate that ionic wind may be at least three orders of magnitude too small to explain the magnitude of the observed force on the capacitor. The ionic drift transport assumption leads to the correct order of magnitude for the force. A thermodynamic treatment of the net force on an asymmetric capacitor also contributes to the effect. The thermodynamic treatment takes into account plasma effects: ionization of gas (or air) in the high electric field region, charge transport, and resulting dynamic forces on the electrodes. There may be some varying degrees of interdependence of the ion force on gas pressure, gas species and applied voltage.

[00113] When a high voltage (—30 kV) is applied to the electrodes of an asymmetric capacitor, a net force is observed on the capacitor. Asymmetric may mean that the physical dimensions of the two electrodes are different, i.e., one electrode is large and the other small.

[00114] In an embodiment, the largest force on the capacitor is in a direction from the negative (larger) electrode toward the positive (smaller) electrode. The force on the capacitor exceeds its weight. There is a force on the capacitor independent of the polarity of applied voltage. The greatest force on the capacitor is created when the small electrode is positive. The effect occurs in a dielectric medium which is air but future applications for space vehicle propulsion could be operate in a vacuum as well.

[00115] In the inverse effect: when a dielectric medium is made to move between high voltage electrodes, there is a change in the voltage on the electrodes. The asymmetric capacitor does show a net force, even in vacuum. Responsibility for the net force on an asymmetric capacitor may be dependant on whether the asymmetric capacitor is in a polarizable medium, iii air, or in vacuum. A net force is exerted on the capacitor when a high D.C. voltage is applied to the electrodes. With many different types of geometries, a common feature may be that one electrode is thin and the other very wide (asymmetric dimensions). Also, a suspended wire, representing a capacitor with the second electrode at infinity, showed lift.

[00116] In an embodiment, the force on the capacitor generally appeared in the direction toward the small electrode—independent of the orientation of the capacitor with respect to the plane of the Earth's surface. The significance of this observation is that the force may have nothing to do with the gravitational field of the Earth, and may have nothing to do with the electric potential of the Earth's atmosphere.

[00117] In an embodiment, the thin emitter wire electrode must be at a sufficient distance away from the ion plate so that arcing does not occur from the thin wire electrode to the foil, at the operating voltage. The edges of the capacitor, nearest to the thin wire, may be rounded over and pointing towards the ground to prevent arcing or corona discharge at sharp capacitive plate edges (which are closest to the thin wire).

[00118] The capacitor showed improved lift when rounded foil was put over the foil electrode closest to the thin wire, thereby smoothing-over the sharp foil edges. Physically, this means that the radius of curvature of the foil nearest to the small wire electrode was made larger, creating a greater asymmetry in radii of curvature of the two electrodes.

[00119] In an embodiment, when operated in air, the asymmetric capacitors exhibit a net force toward the smaller conductor and this force is independent of the D.C. voltage polarity. The detailed shape of the capacitor seems immaterial, as long as there is a large asymmetry between the characteristic size of the two electrodes.

[00120] Sonic manifestation may be produced in operation which appears as a peculiar hissing sound with pitch varying with the applied voltage. The personal flight vehicle may use sonic sensors as part of the flight control system to verify proper operation of the craft. This sound generally increases with air ionization or conditioning.

[00121] In an embodiment, the propulsion force may come from several different forces. The first is that there exists an ionic wind in the high field region between the capacitor electrodes, and that this ionic wind causes the electrodes to move as a result of the momentum recoil. Additionally, a drift current may exist between the capacitor plates. In this scheme, the order of magnitude of the force on an asymmetric capacitor is correct, however, this scheme may contribute as a scaling theory. Additionally there is a thermodynamic treatment of the force on an asymmetric capacitor

[00122] The most common explanation for the net force on an asymmetric capacitor invokes ionic wind. Under a high voltage D. C. bias, ions are thought to be accelerated by the high potential difference between electrodes, and the recoil force is observed on an asymmetric capacitor. Consider a capacitor that operates at voltage V. Charged particles of mass in, having charge q, such as electrons or (heavy) ions, are accelerated to a velocity v, having a kinetic energy

[00123] Another possibility is that heavy ions (from the air or stripped off the wire) are responsible for the ionic wind. As the heaviest ions around, assume that Cu is being snipped from the wire. Using Cu for the ions, the mass of the ions is 63.55 mi,, where 63.55 i5 the atomic mass of Cu and MR is the mass of a proton. The force of the ionic wind this effect will operate in vacuum, and may contribute to the overall force on a capacitor.

[00124] One can compute an upper limit to the force on a capacitor due to ionic wind effects. Ionic wind is a ballistic flow of charges from one electrode to the other. There is another type of classical transport: drift of charge carriers in an electric field. In the case of drift, the carriers do not have ballistic trajectories, instead they experience collisions on their paths between electrodes. However, due to the presence of an electric field, the carriers have a net motion toward the opposite electrode This type of transport picture is more accurate (than ballistic ionic wind) for a capacitor whose gap contains air.

[00125] The positive and negative electrodes of the capacitor are charged and that these charges experience different forces, because the electric field surrounding the capacitor is non-uniform. The electric field surrounding the capacitor is created by the

potential applied to the capacitor electrodes and partial ionization of air into positive ions and electrons. These charge carriers experience drift and diffusion in the resulting electric field. The high voltage DC power supply or main energy source supplies the energy that is dissipated by transport of carriers in the electric field. The electric field is particularly complicated because it is the result of a steady state: the interplay between the dynamics of ionization of the air in the high-field region surrounding the electrodes, and charge transport (drift and diffusion of positive and negative carriers) in the resulting electric field.

[00126] If the capacitor is surrounded by vacuum (rather than a dielectric, such as air), the net force F on the asymmetric capacitor can be computed by the sum of two surface integrals, one over the surface of the positive electrode and one over the surface of the negative electrode. An alternative but equivalent picture is that the capacitor is an electric dipole in an nonuniform electric field that it has produced, and the ions form an electronic maple syrup, due to their high mass and resulting low mobility.

[00127] The energy flow from the positive corona wire to the negative foil below may not be a straight line of energy but an outflowing balloon shaped cascade of energy that is moving towards the lower negative ion-plate. One embodiment causes the energy to miss the lower ion plate and to create thrust by flying past it and downwards in increasing power.

[00128] Therefore, the physical picture is that in the high field region the electrons, with their high mobility, are swept out by the electric field, toward the thin wire electrode and cause dynamic screening of the potential (Dielectric screening due to polarized air atoms will also take place.) However, the massive (probably positive) ions are less mobile and are left behind in a plasma surrounding the thin wire electrode. An asymmetric capacitor may have a mass that is two orders or magnitude greater. Consequently, drift of electrons may not fully explain the observed force on the capacitor.

[00129] Figures 29-33 illustrate various views of an embodiment of a personal flight vehicle. In an embodiment, a version of a personal flight vehicle 2900 that has an enclosure for a user to sit in may employ the electric-energy lifting panel which has two capacitive plates with different geometric dimensions to generate a net-directional force.

[00130] As noted above, an alternative to using the value of electron mobility is to use the smaller value of ionic mobility. This will lead to a larger force because the force is inversely proportional to the mobility.

[00131] When a high voltage is applied to the asymmetric capacitor, for example, positive voltage on the thin emitter wire layer and negative voltage on the ion plate arrays, the high electric field around the thin wire ionizes the atoms of the air. There is comparatively little ionization near the ion plate arrays due to the lower magnitude electric field near the ion plate arrays. The ionized atoms around the ion plate arrays form a plasma, consisting of charged electrons and positively charged ions.

[00132] The electron drift current leads to a force on the capacitor that may be too small to fully explain the effect on the capacitor. Using the value of mobility appropriate for (nitrogen) ions leads to a force magnitude in agreement with the reality of the effect.

[00133] Note that the force given scales inversely with the mobility p. If the ions are responsible for providing the required small mobility, then the idea is that the ions are like a low-mobility syrup, which provides a large space-charge to attract the negatively charged ion plate arrays electrode. As soon as the ion plate arrays electrode moves toward the positive ion cloud. Another positive ionic cloud is set up around the thin emitter wire electrode, using the energy from the voltage source. In this way, the dipole (asymmetric capacitor) moves in the non-uniform electric field that it has created.

[00134] The force, generated on an asymmetric capacitor, can be described by the thermodynamics of a fluid dielectric in an external electric field produced by charged conductors. The (partially ionized) air between capacitor electrodes is the fluid dielectric. Although the air is partially ionized, we assume that this fluid dielectric is close to neutral on the macroscopic scale. The charged conductors are the asymmetric electrodes of the capacitor. The batten' provides the charge on the electrodes and the energy sustain the electric field in the air (dielectric) surrounding the capacitor electrodes.

[00135] The system may include several parts: the partially ionized air dielectric, the metal electrodes of the capacitor and the battery (voltage source), and the electromagnetic field. The battery/DC power supply in the remote power broadcast is simply a large reservoir of charge. The total momentum including the electromagnetic field of this system may be constant.

[00136] As far as the electric field is concerned, its total momentum changes little during the operation of the capacitor, because the field is in a steady state; energy is

supplied by the battery (charge reservoir). So the personal flight vehicle sets the rate of change of field momentum to zero, giving a relation between the force on the electrodes and the dielectric:

[00137] The thermodynamic theory of the net force on a capacitor that is immersed in a nonlinear dielectric fluid, such as air in a high electric field. The main result for the net force on the capacitor is given in Eq. The thermodynamic theory uses the dielectric properties of the gas surrounding the capacitor plates. The personal flight vehicle uses a control mechanism to manage the high-field dielectric properties of the fluid, which is air in this case.

[00138] In an embodiment, Cesium ions can be introduced into the operating air (fluid) envelope of the aircraft to provide additional thrust.

[00139] Figures 34 and 35 illustrate electric-energy lifting panels in the shape of a three dimension triangular sphere. The electric-energy lifting panels 3404 in the shape of a three dimension triangular sphere can be used as the outer shell of the personal flight vehicle or as steering pods with separate addressing of each triangular section for steering. The corona wire-ion plate arrays form in each triangular section 3484. All of the triangular sections 3484 assemble to form a Buckminster Fuller geodesic dome or sphere.

[00140] While some specific embodiments of the invention have been shown the invention is not to be limited to these embodiments. The invention is to be understood as not limited by the specific embodiments described herein, but only by scope of the appended claims.

CLAIMS

What is claimed is:

I claim:

1. An apparatus, comprising:

an electric-energy lifting panel including a first capacitive plate and a second capacitive plate having different geometric dimensions to generate a net-directional force, the electric-energy lifting panel to levitate a user secured to the electric-energy lifting panel; and

an ion conditioner to ion enhance air around the first capacitive plate and the second capacitive plate.

2. The apparatus of claim 1, wherein the second capacitive plate is a layer of emitter wire.

3. The apparatus of claim 1, wherein the ion conditioner comprises a laser.

4. The apparatus of claim 1, wherein the ion conditioner comprises ultra violet light emitting bulbs.

5 The apparatus of claim 1, wherein the ion conditioner also conditions air between the first capacitive plate and the second capacitive plate.

6 The apparatus of claim 1, wherein High-K dielectric material is in between the first capacitive plate and the second capacitive plate.

7. A flight vehicle, comprising:

a panel to levitate a user secured to the flight vehicle via electric-energy; and

a gaseous propulsion system to provide directional thrust for the flight vehicle.

8. The flight vehicle of claim 7, further comprising:

a tortuous pivot frame to allow the panel to redirect vertical lift to horizontal thrust.

9. The flight vehicle of claim 8, wherein the tortuous pivot frame is composed of composite materials.

10. The flight vehicle of claim 7, wherein the gaseous propulsion system further comprises:

an air-breathing rocket with hydrogen fuel support.

11. The flight vehicle of claim 7, further comprising:

a fuel cell stack that uses air as an oxidizer.

12. The flight vehicle of claim 7, further comprising:

a solid-state hydrogen storage and recovery system to supply hydrogen for a fuel cell stack..

13. The flight vehicle of claim 7, wherein the panel is located above the user.

14. The flight vehicle of claim 7, wherein the panel is located under the user.

15. The flight vehicle of claim 7, further comprising:

a body harness having vertical telescoping posts with foldout foot pads and a flip and lock waist dashboard, wherein the body harness couples to the gaseous propulsion system.

16. The flight vehicle of claim 7, further comprising:

a flight situation display system for the user.

17. The flight vehicle of claim 16, further comprising:

a global positioning system navigation system to send and receive data from the flight situation display system.

18. The flight vehicle of claim 7, further comprising:

an Electro Magnetic Field shield built into a helmet of the user and an Electro magnetic field deflector built into the panel.

19. The flight vehicle of claim 7, further comprising:

an emergency parachute/parasail for the user.

20. An apparatus

an electric-energy lifting panel including a first capacitive plate and a second capacitive plate having different geometric dimensions to generate a net-directional force, the electric-energy lifting panel to levitate a user; and

an inductive transformer to provide electric-energy to the first capacitive plate and the second capacitive plate.

21 The apparatus of claim 20, wherein an ion enhanced air-gap exists between the first and second plate.

22 The apparatus of claim 20, wherein the first capacitive plate includes a plurality of parallel and layered series of ion plates.

23. The apparatus of claim 20, further comprising:

a tower having a Direct Current power-supply to inductively provide a pulsating Direct Current to the inductive transformer.

24. The apparatus of claim 20, wherein the electric-energy lifting panel has an electrically-grounded skirt of aluminum plate that surrounds a portion of the electric-energy lifting panel .

25. An apparatus, comprising:

a means for levitating a user via electric-energy; and

a means for supplying directional thrust for the means levitating the user.

26. The apparatus of claim 24, further comprising:

a means for supplying pulsating direct current to the means levitating the user.

27. A system, comprising:

a flight vehicle that includes an electric-energy lifting panel and an inductive transformer, wherein the electric-energy lifting panel has a first capacitive plate and a

second capacitive plate that have different geometric dimensions in order to generate a net-directional force, the electric-energy lifting panel to levitate a user, and wherein the inductive transformer operable to provide electric-energy to the first capacitive plate and the second capacitive plate; and

a tower having a Direct Current power-supply to inductively supply a pulsating Direct Current to the inductive transformer.

*****

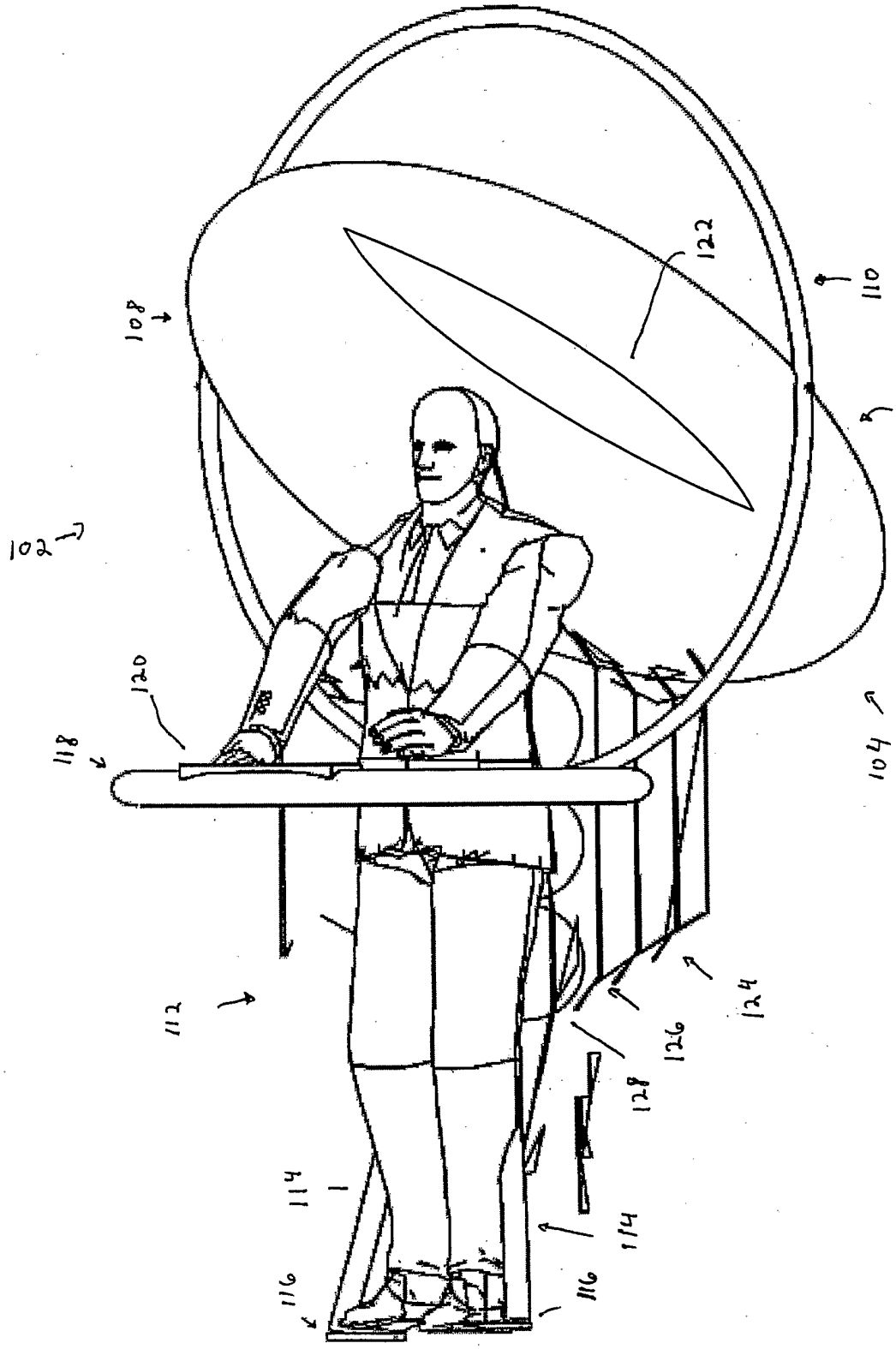

Figure 1

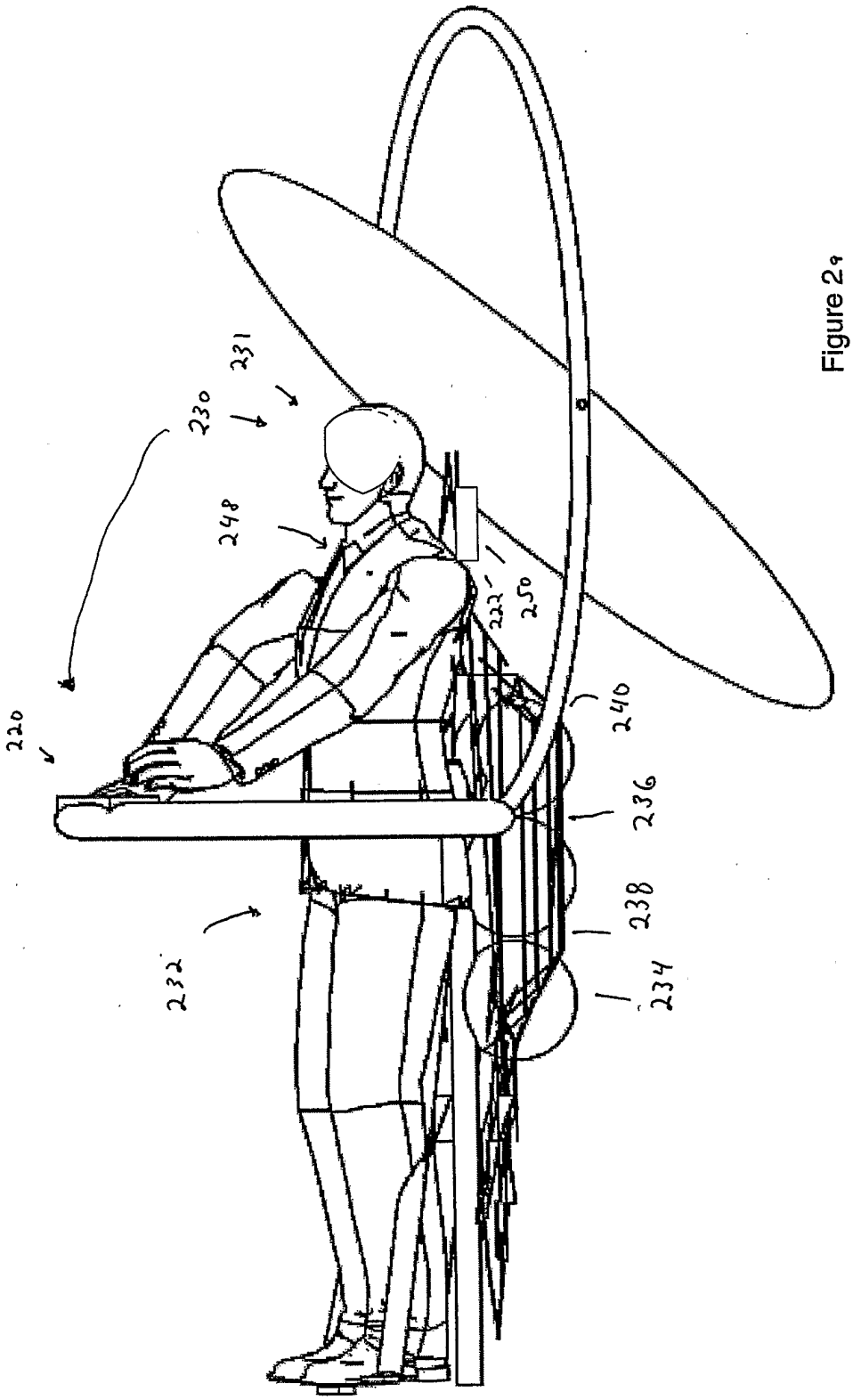

Figure 2a

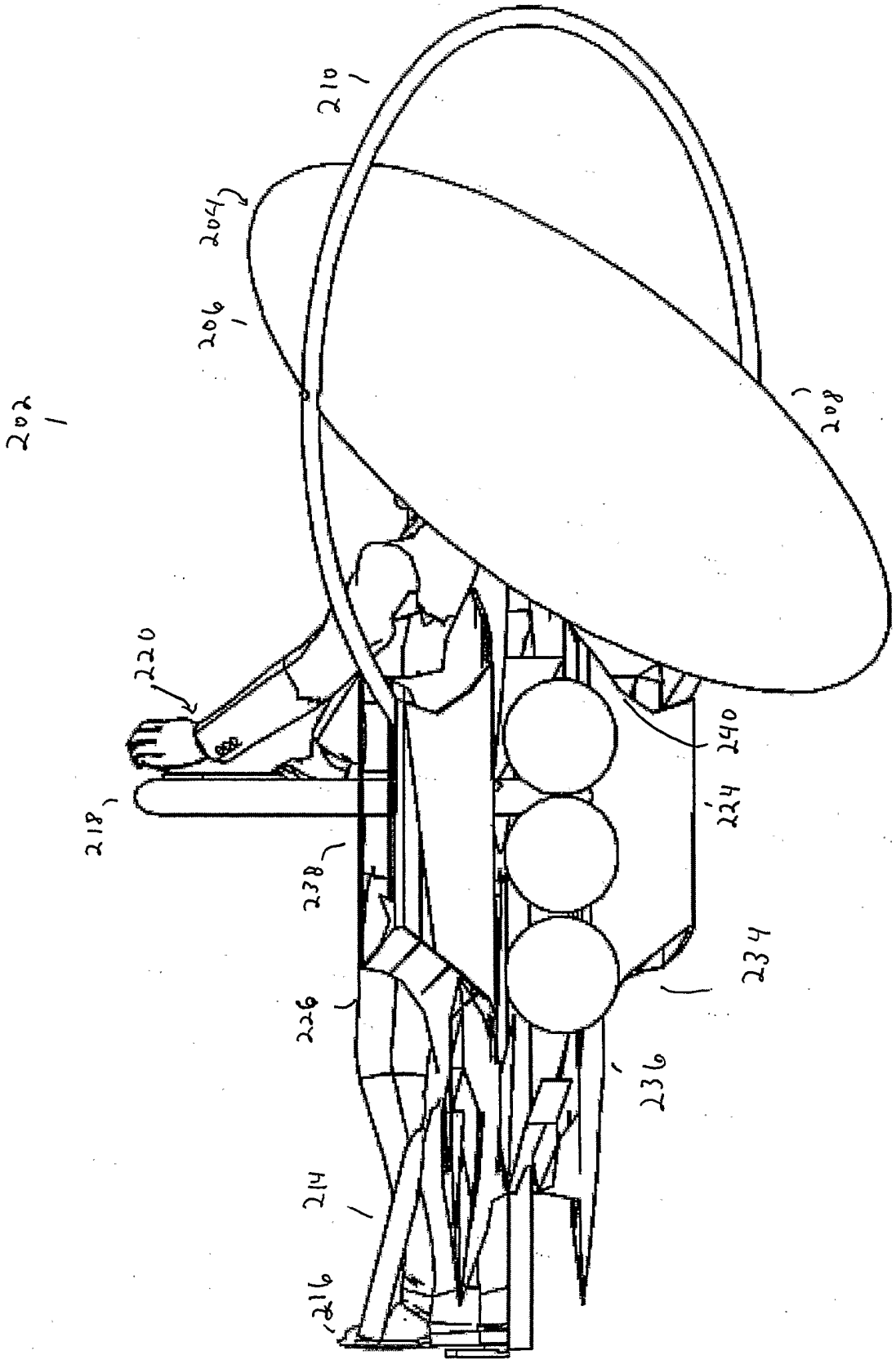

Figure 2b

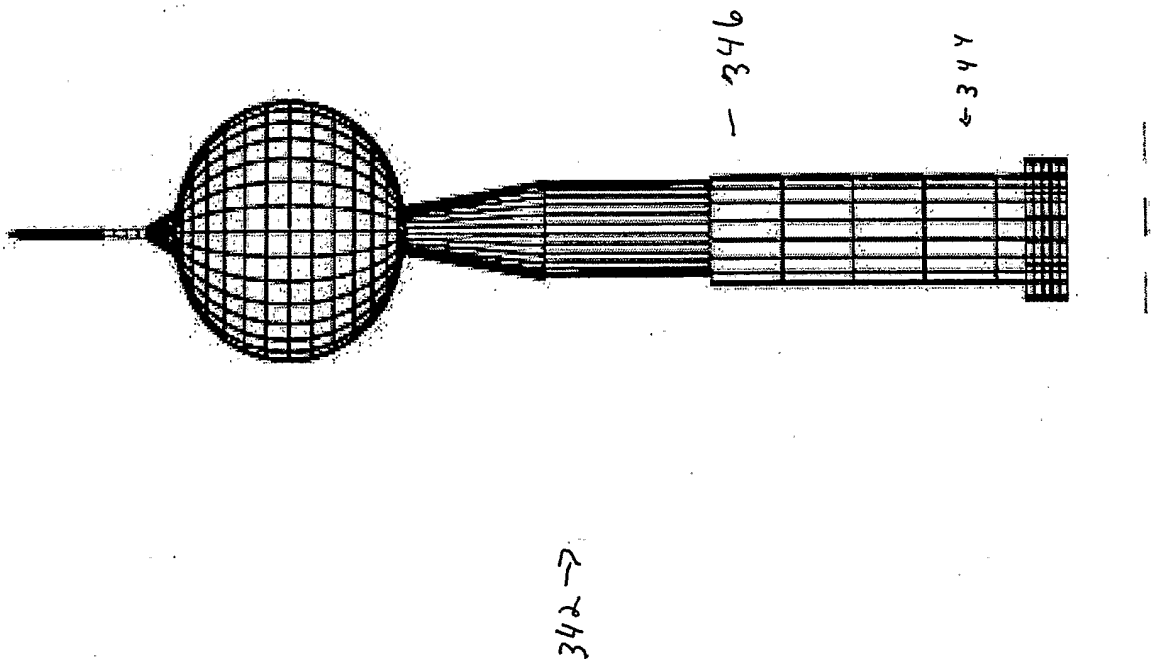

Figure 3

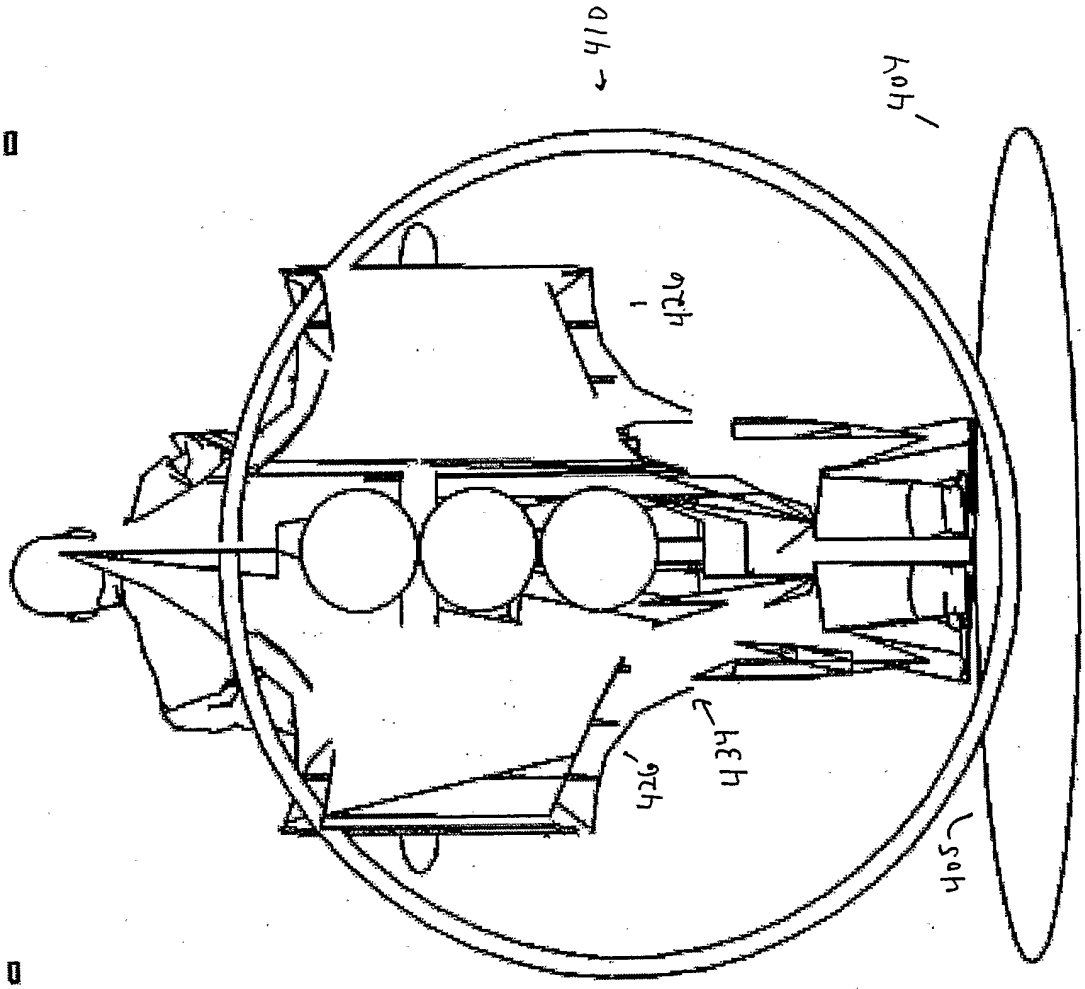

Figure 4

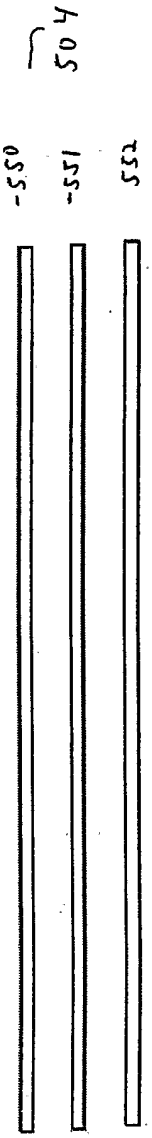

Figure 5b

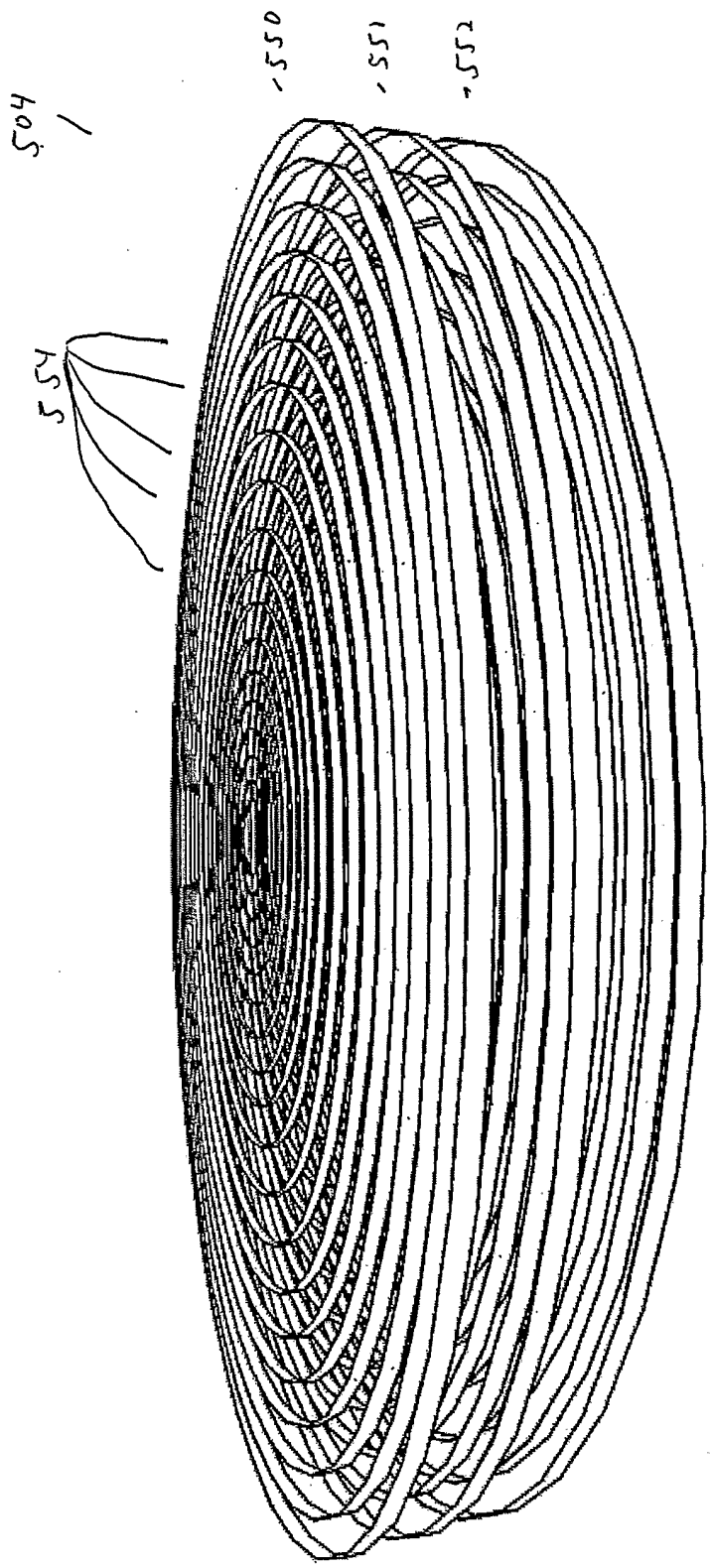

Figure 5a

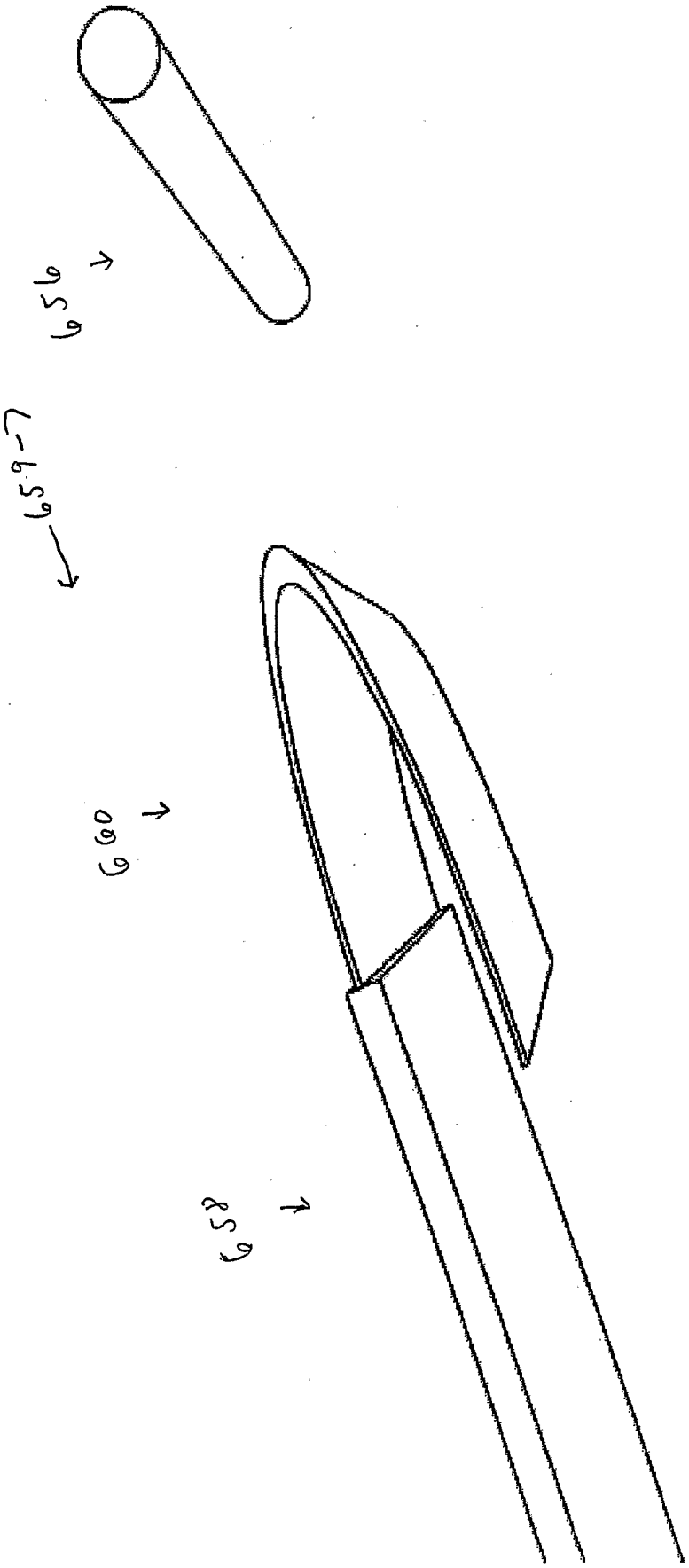

Figure 6

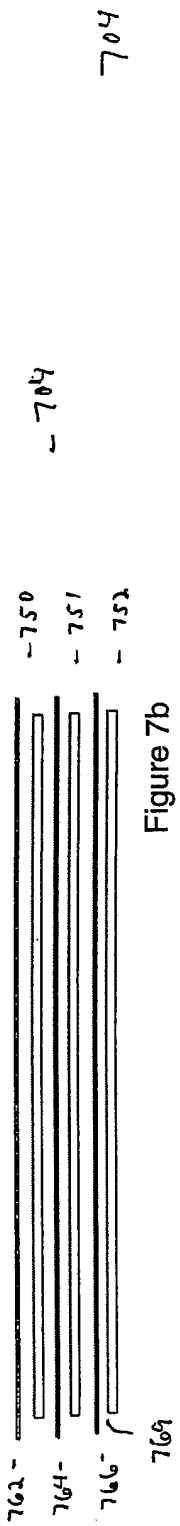

Figure 7b

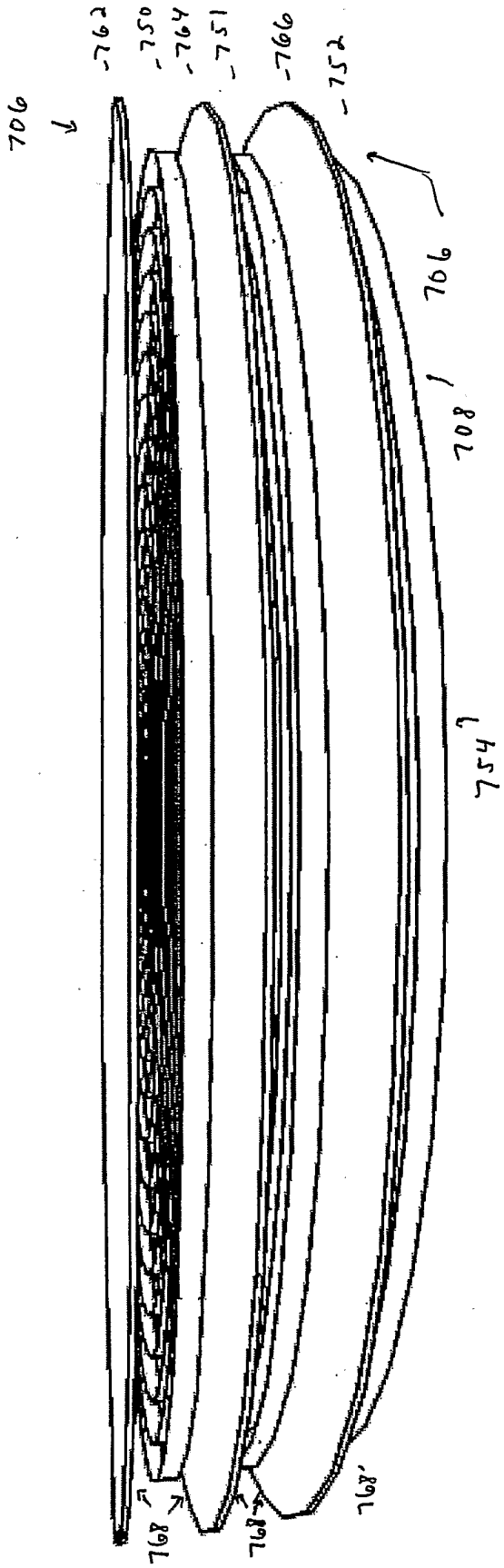

Figure 7a

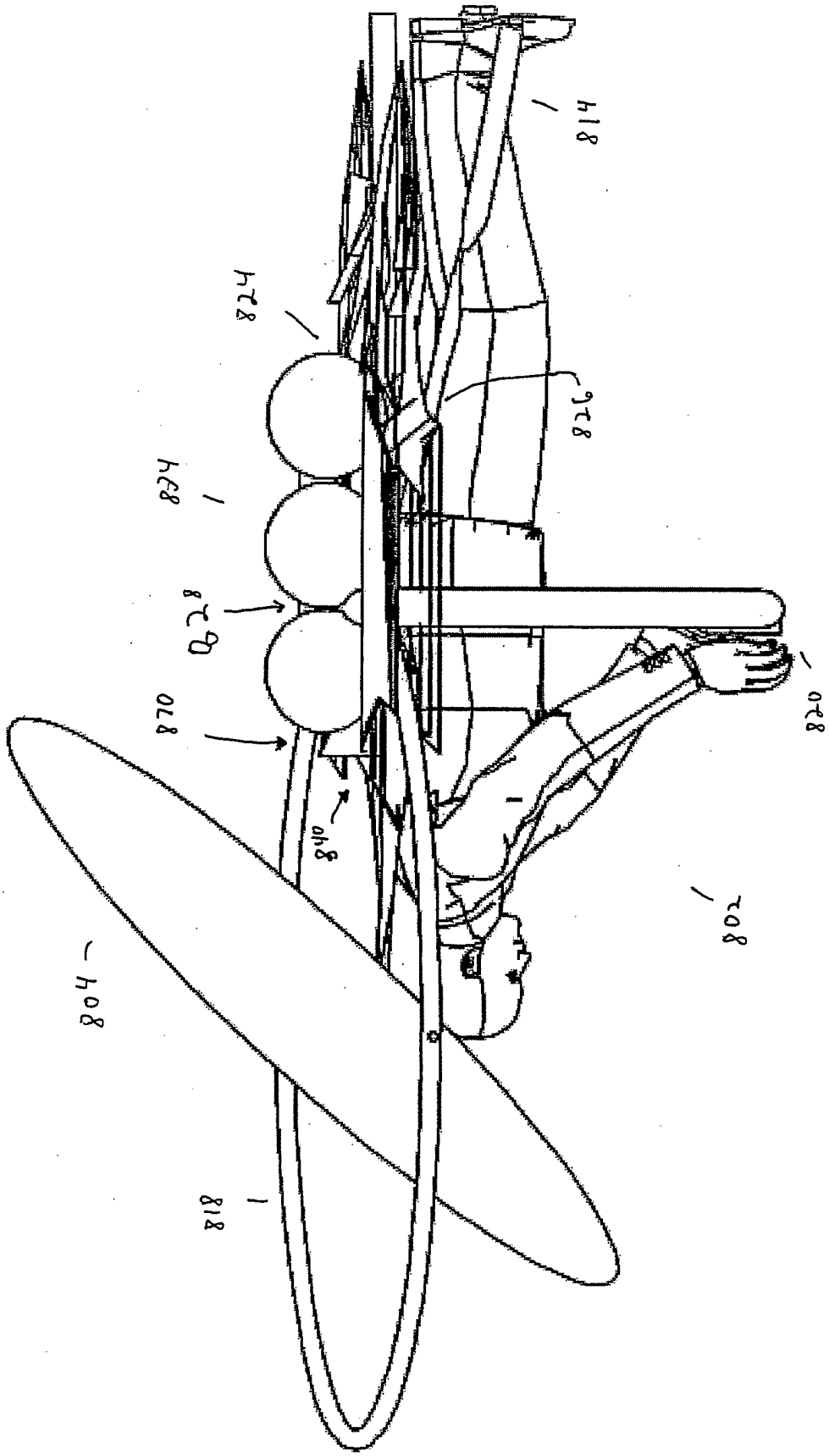

Figure 8a

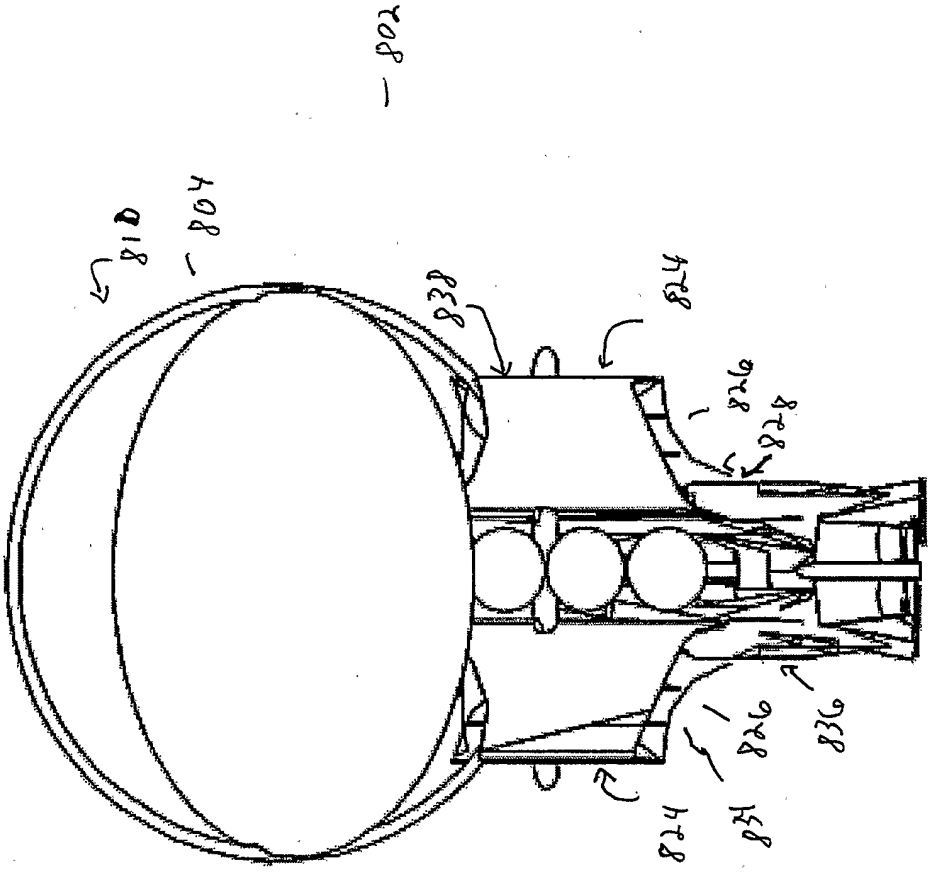

Figure 8b

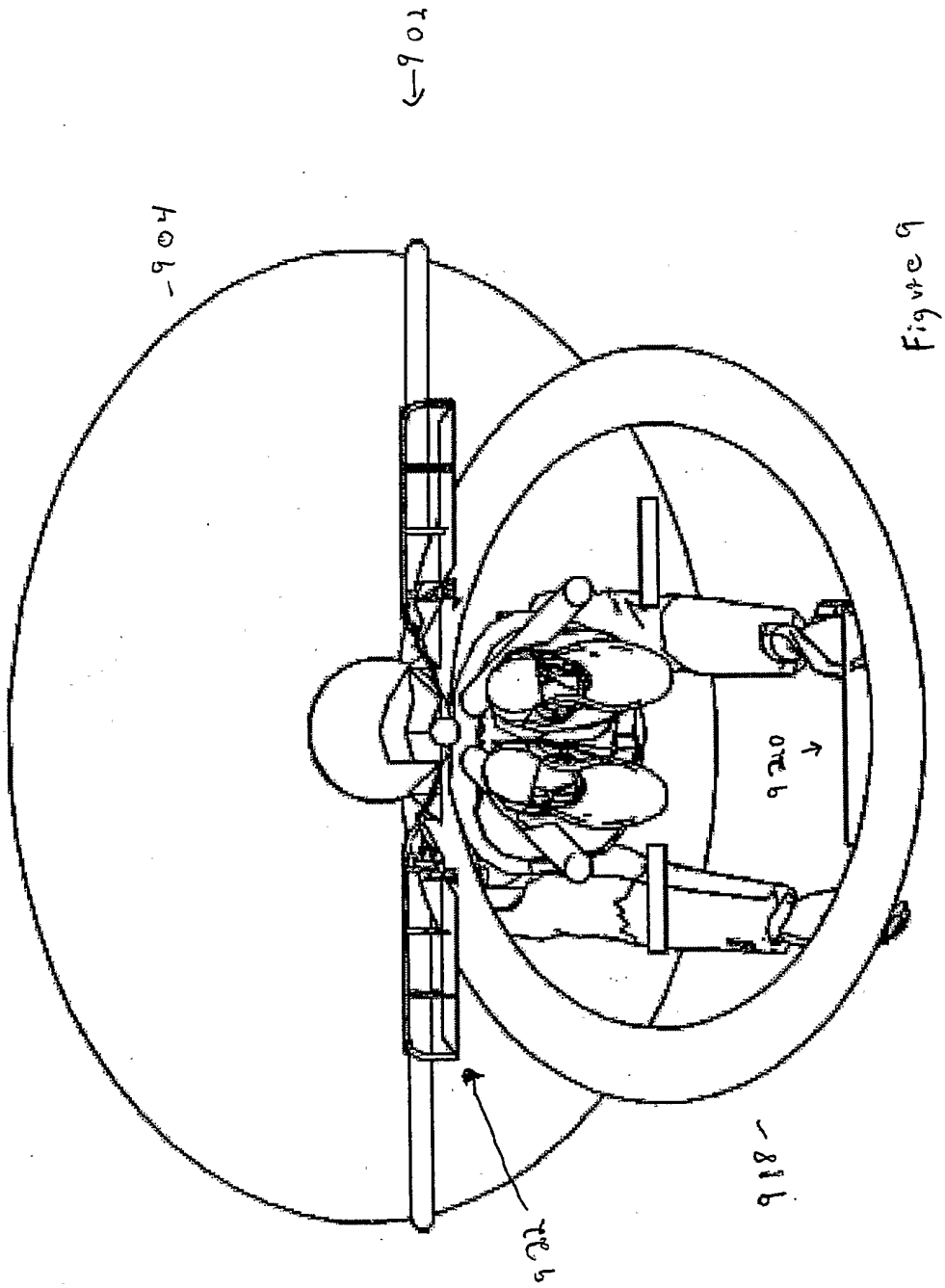

Figure 9

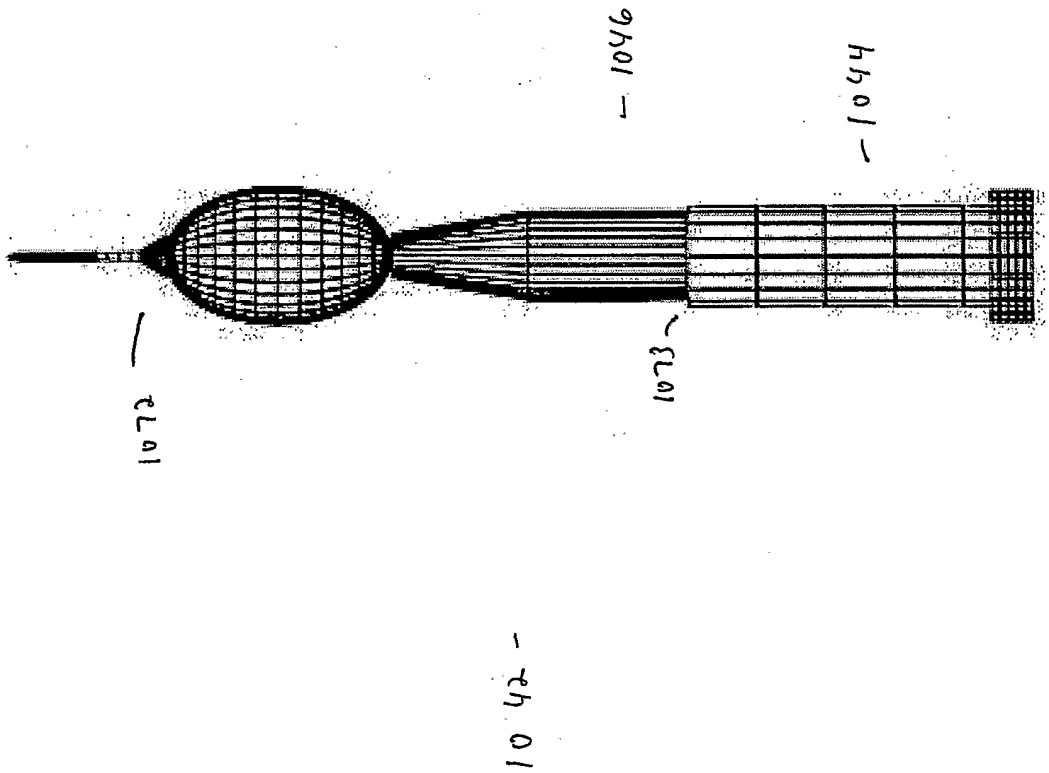

Figure 10

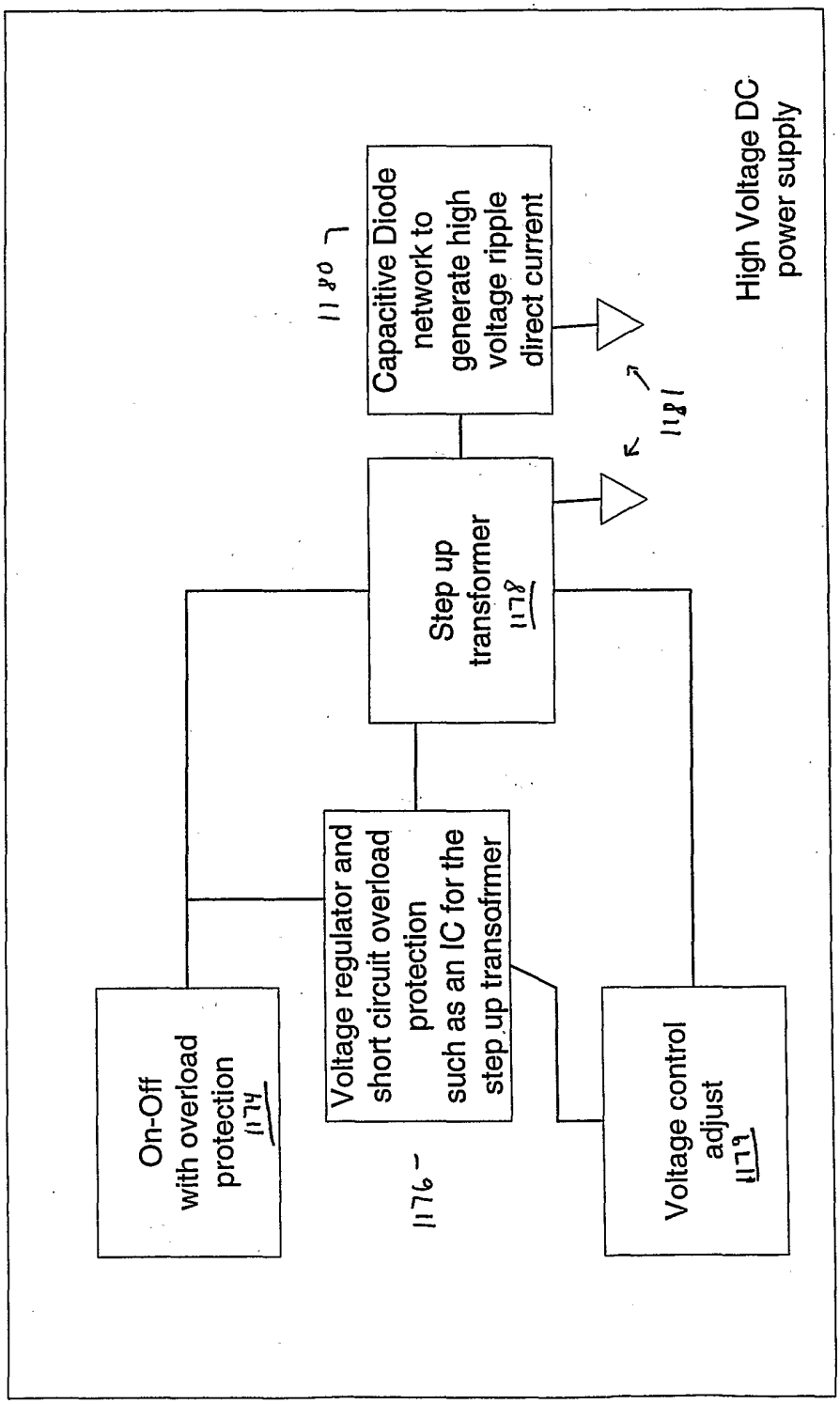
High Voltage DC power supply
1144
Capacitive Diode network to generate high voltage ripple direct current
1180
1181
Step up transformer 1178
Voltage regulator and short circuit overload protection such as an IC for the step up transofrmer
1176
On-Off with overload protection 1174
Voltage control adjust 1179

Figure 11

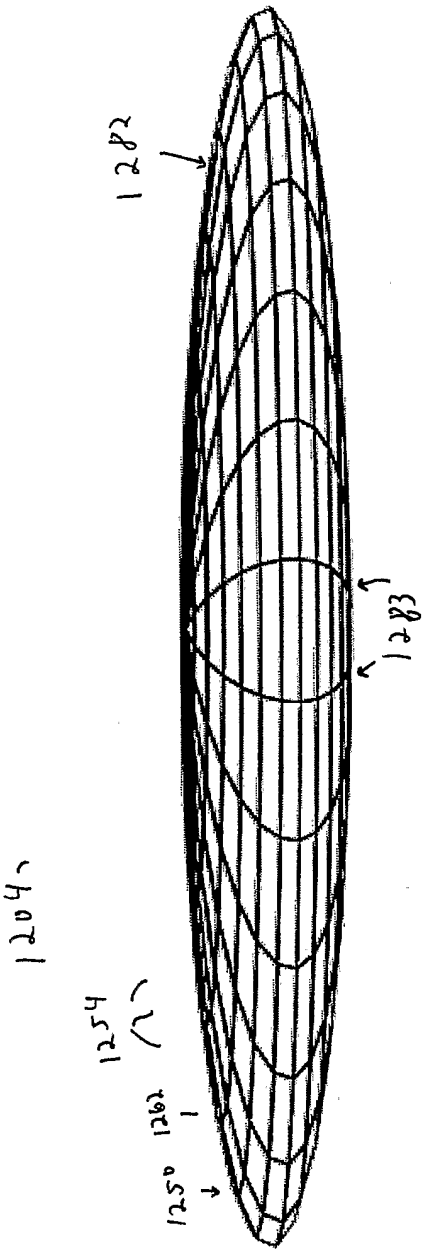

Figure 12

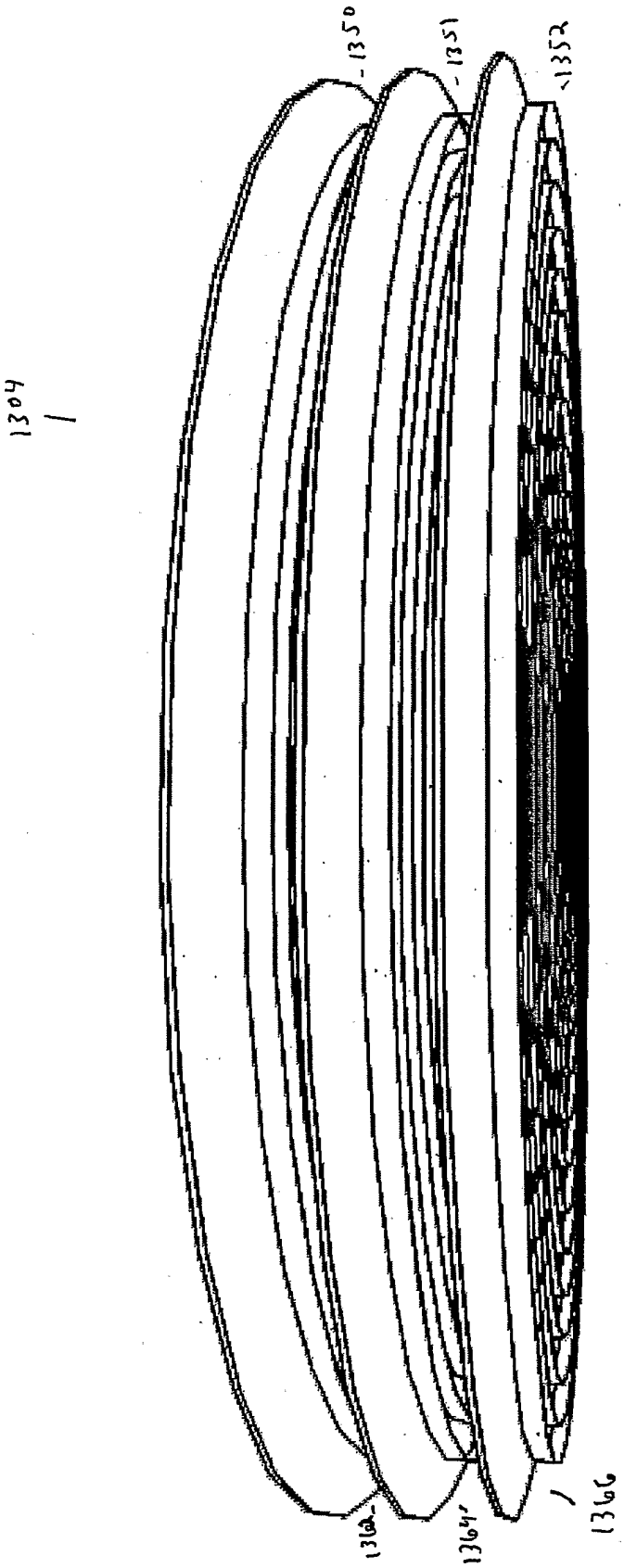

Figure 13

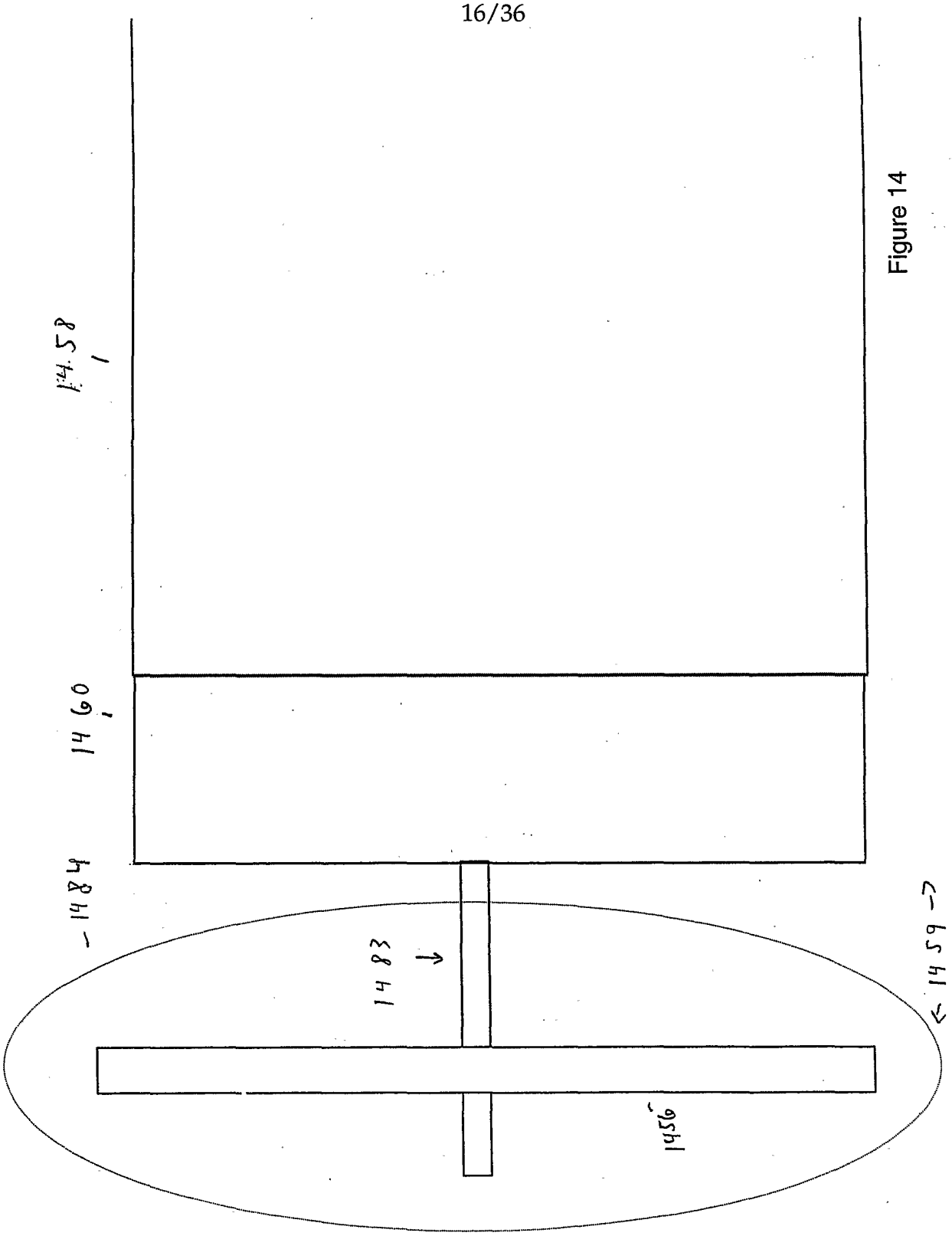

Figure 14

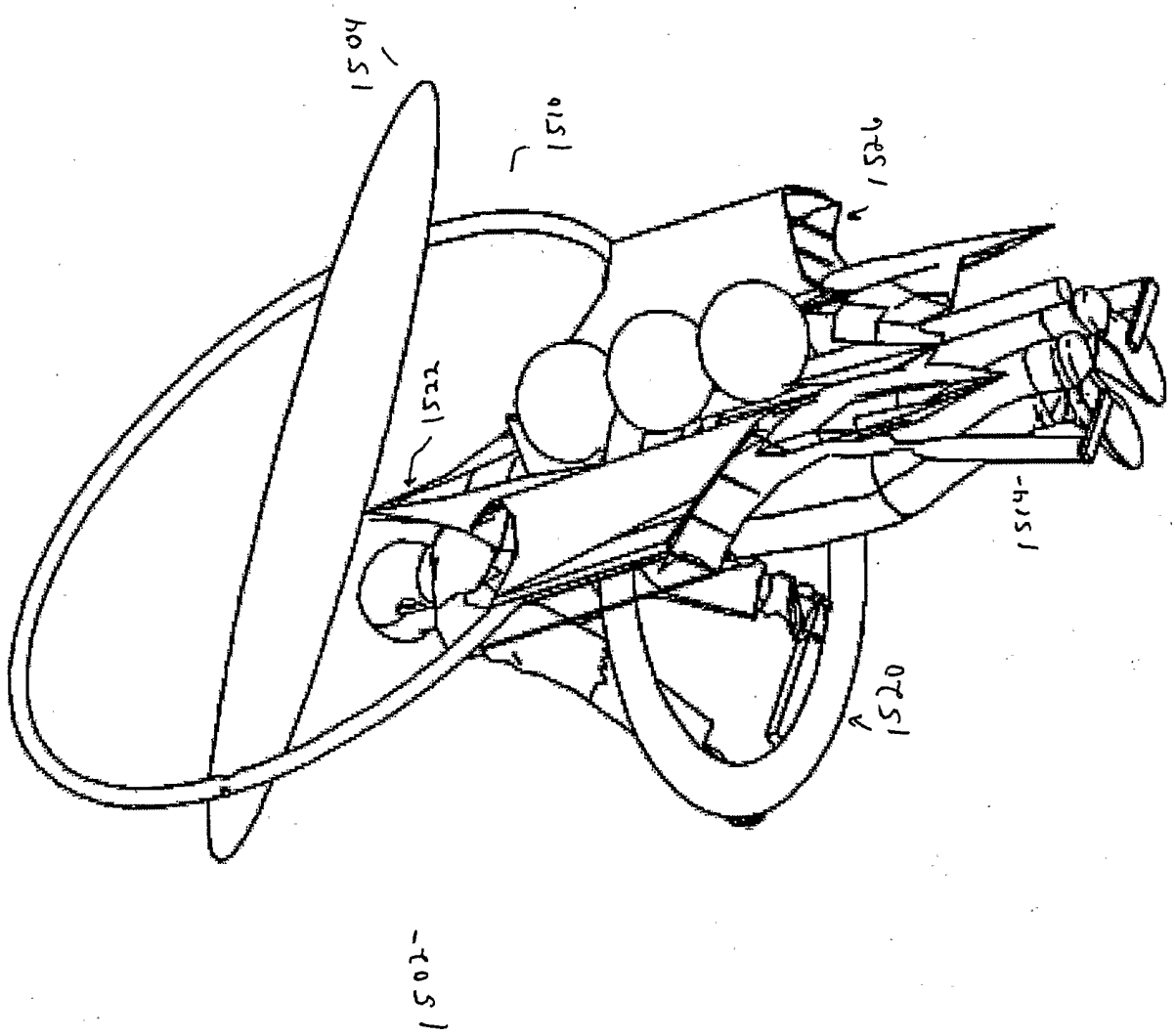

Figure 15

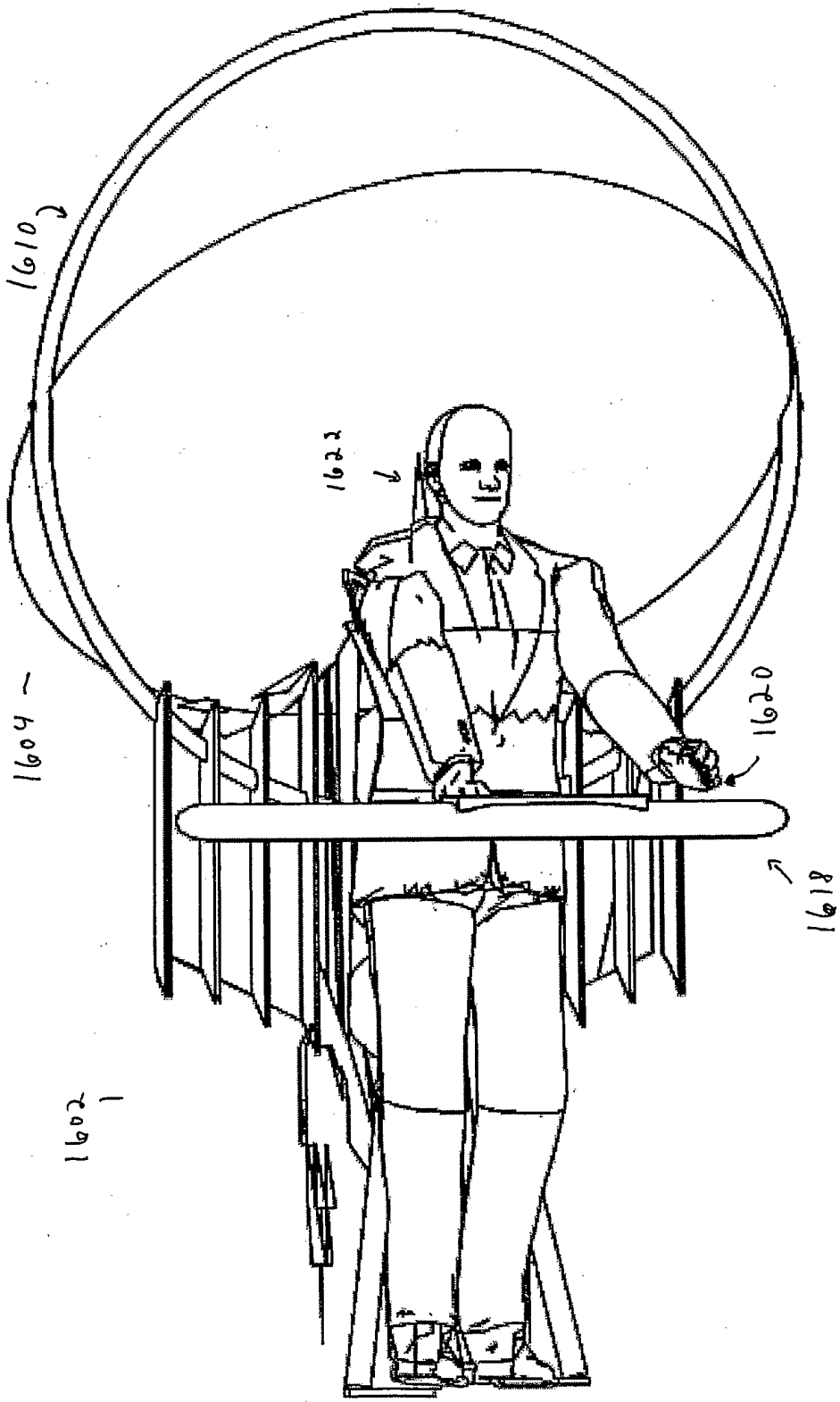

Figure 16

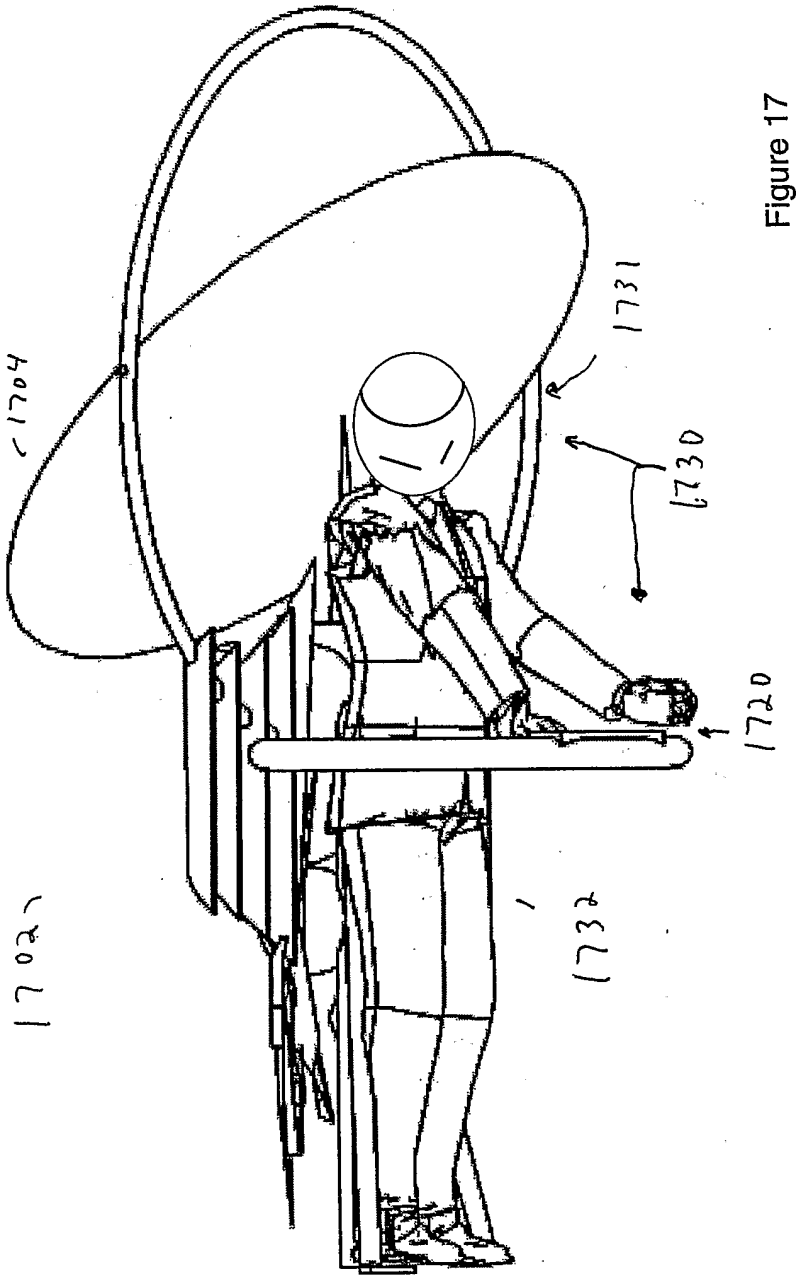

Figure 17

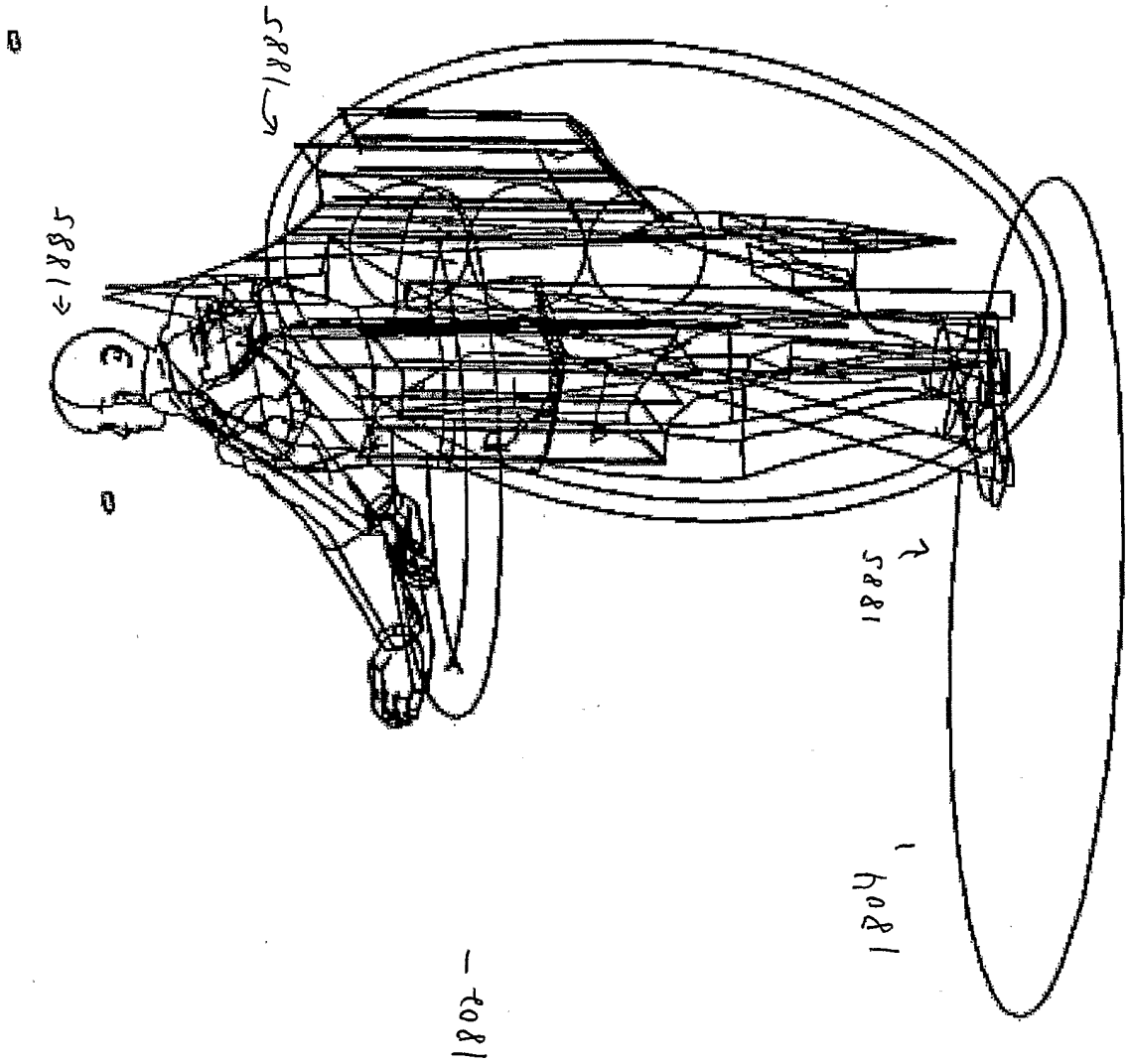
1885
1885
1885

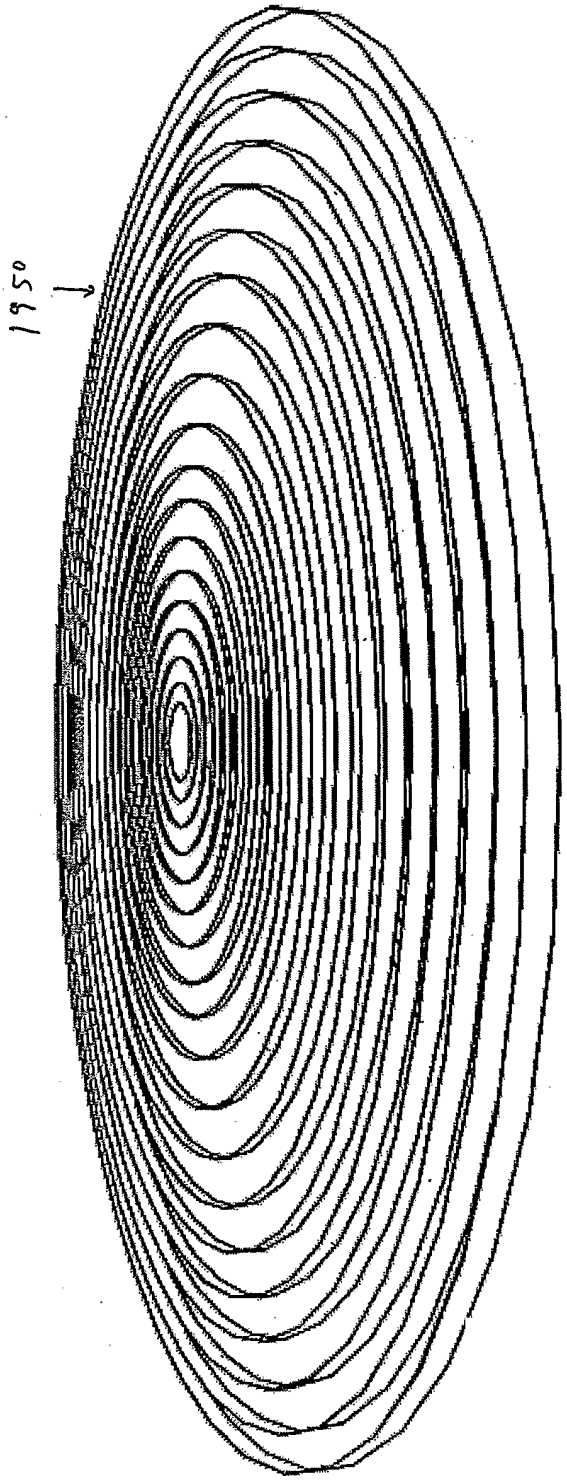

Figure 19

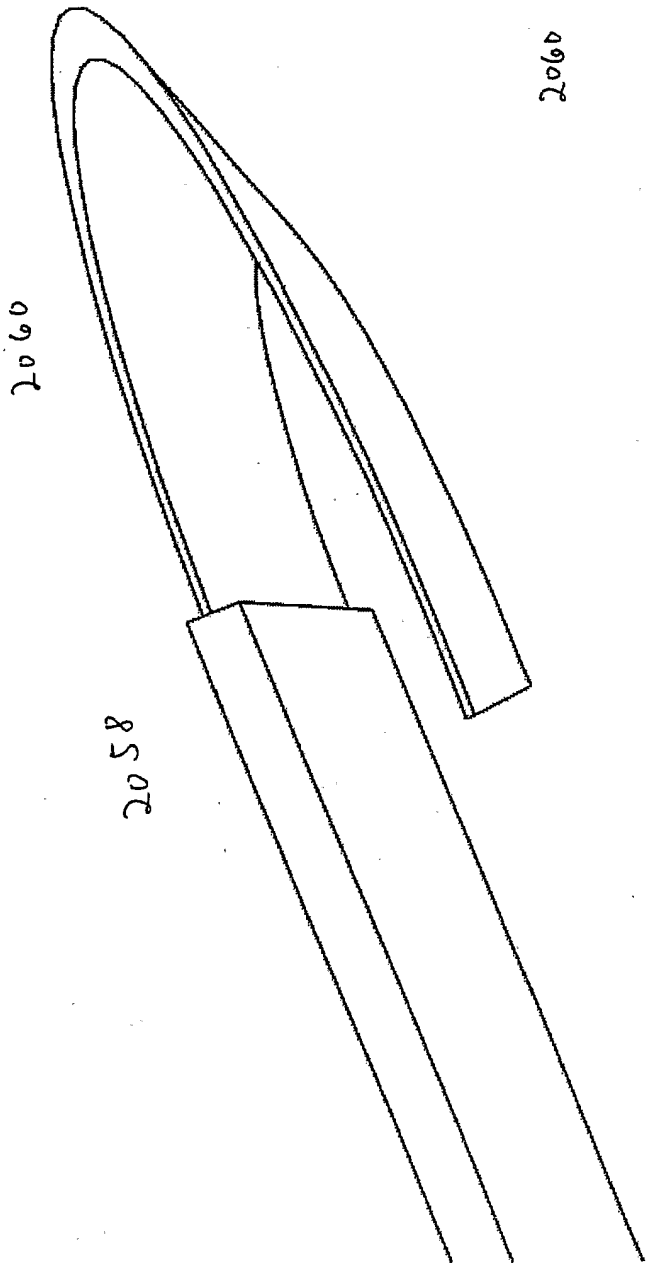

Figure 20

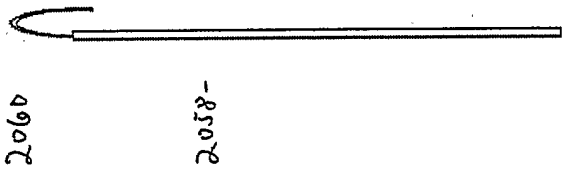

Figure 21

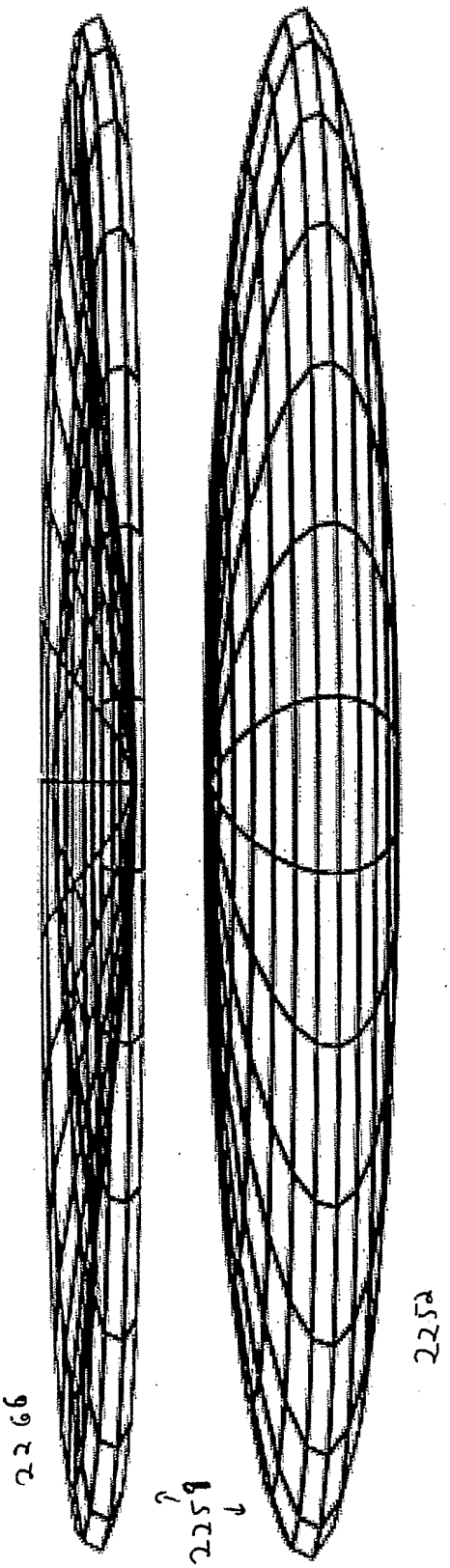

Figure 22

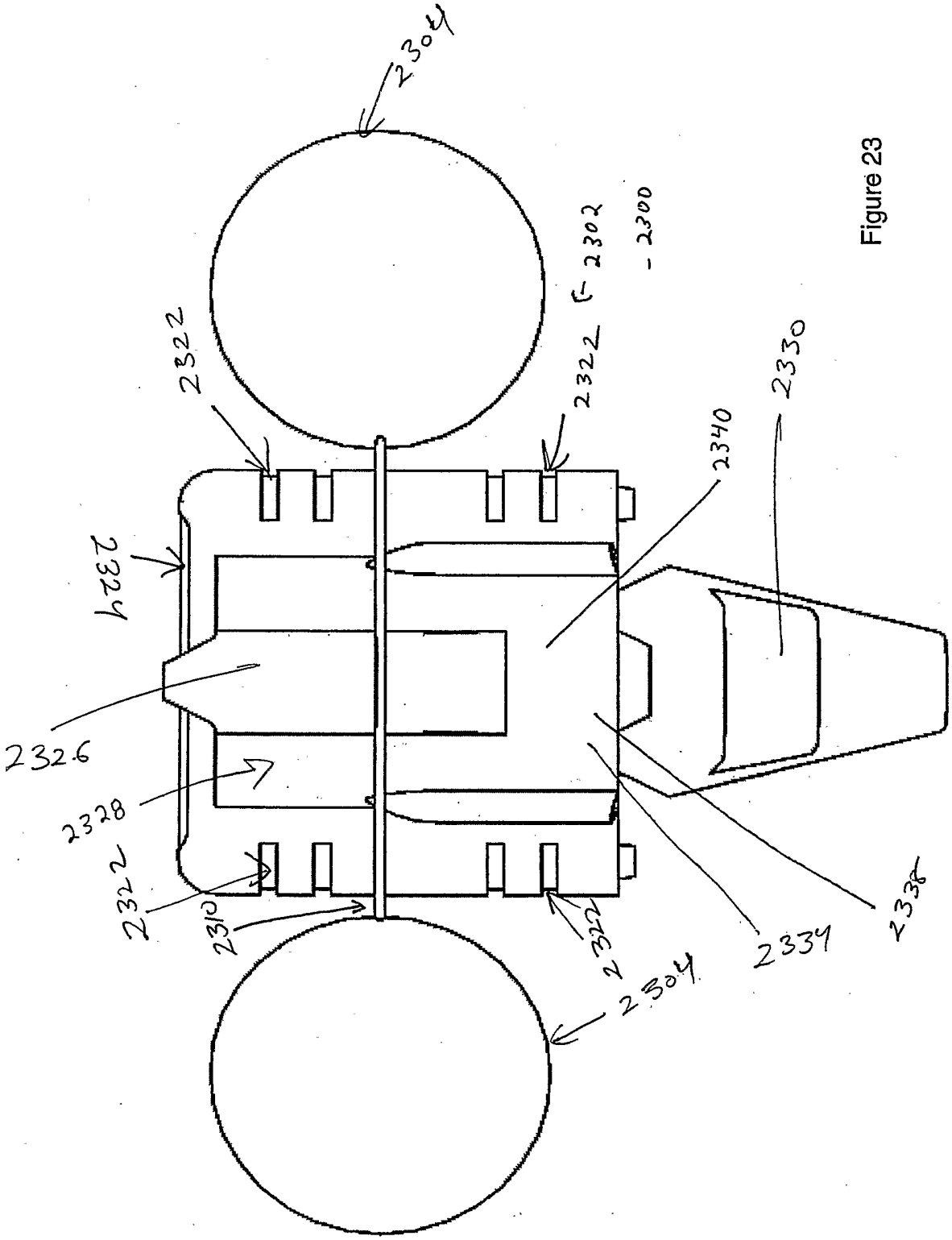
2304
2322
2324
2326
2328
2322
2310
2322
2302
2300
2322
2340
2330
2334
2336
2304

Figure 23

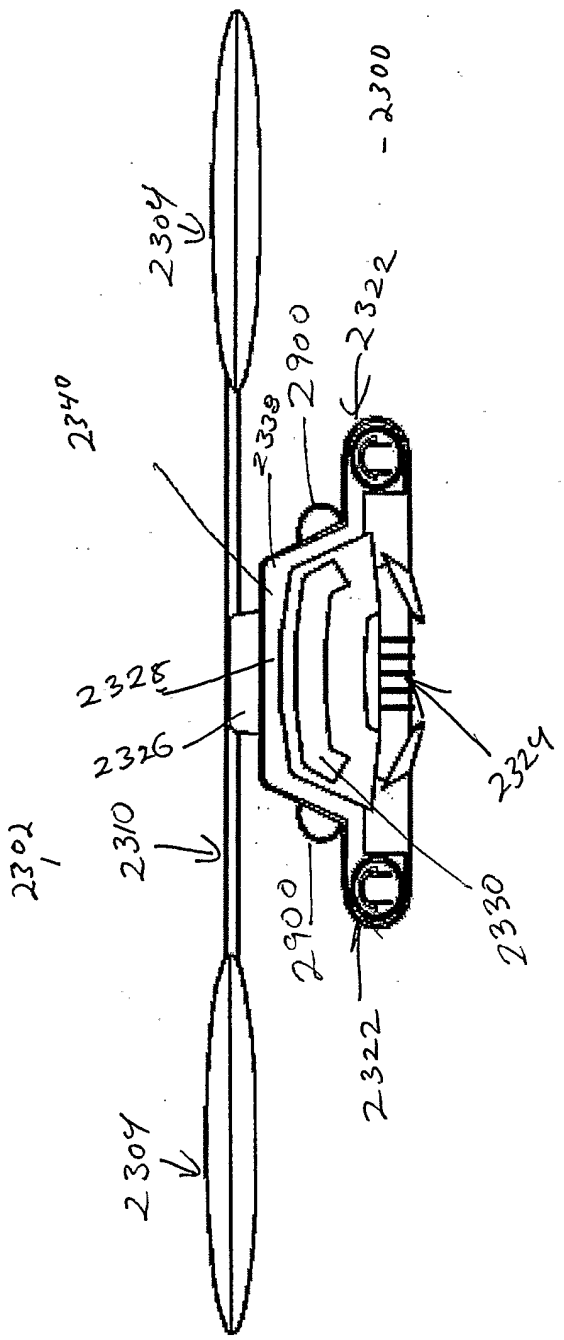
2300
2304
2322
2900
2338
2340
2328
2326
2324
2302
2310
2330
2900
2322
2304

Figure 24

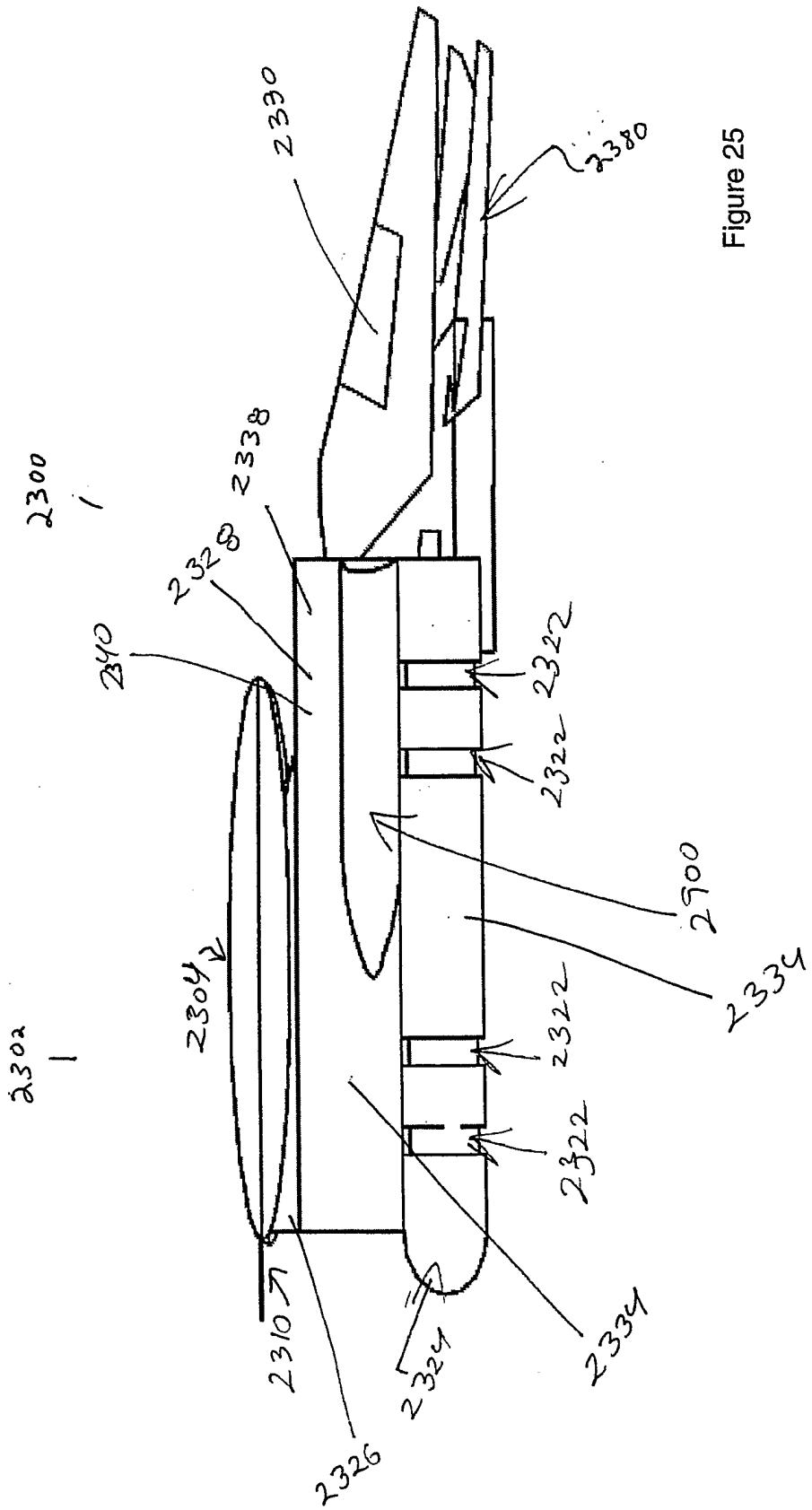
2300
2302
2304
2310
2322
2322
2322
2322
2324
2326
2328
2330
2334
2334
2338
2340
2380
2900

Figure 25

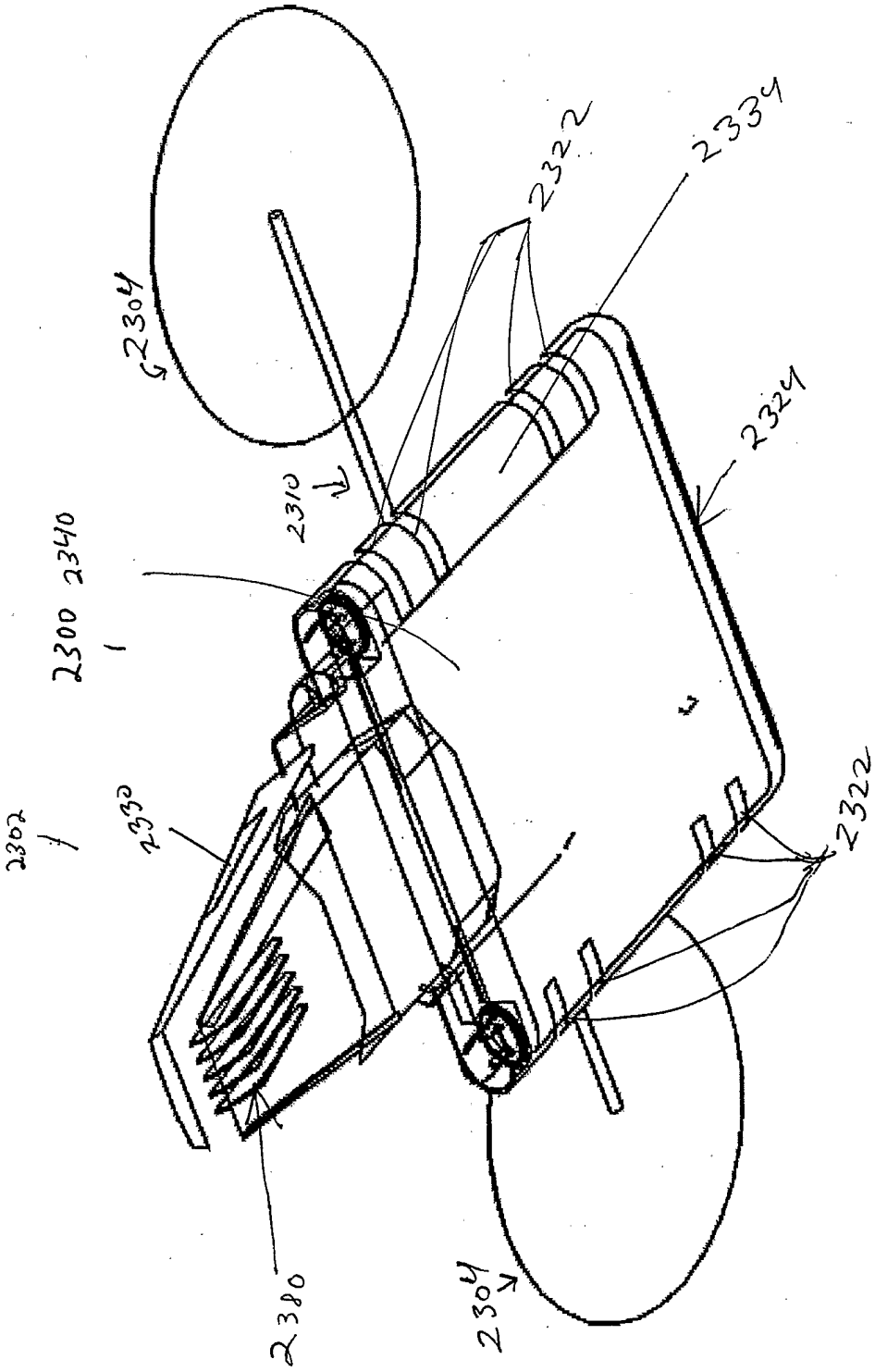

Figure 26

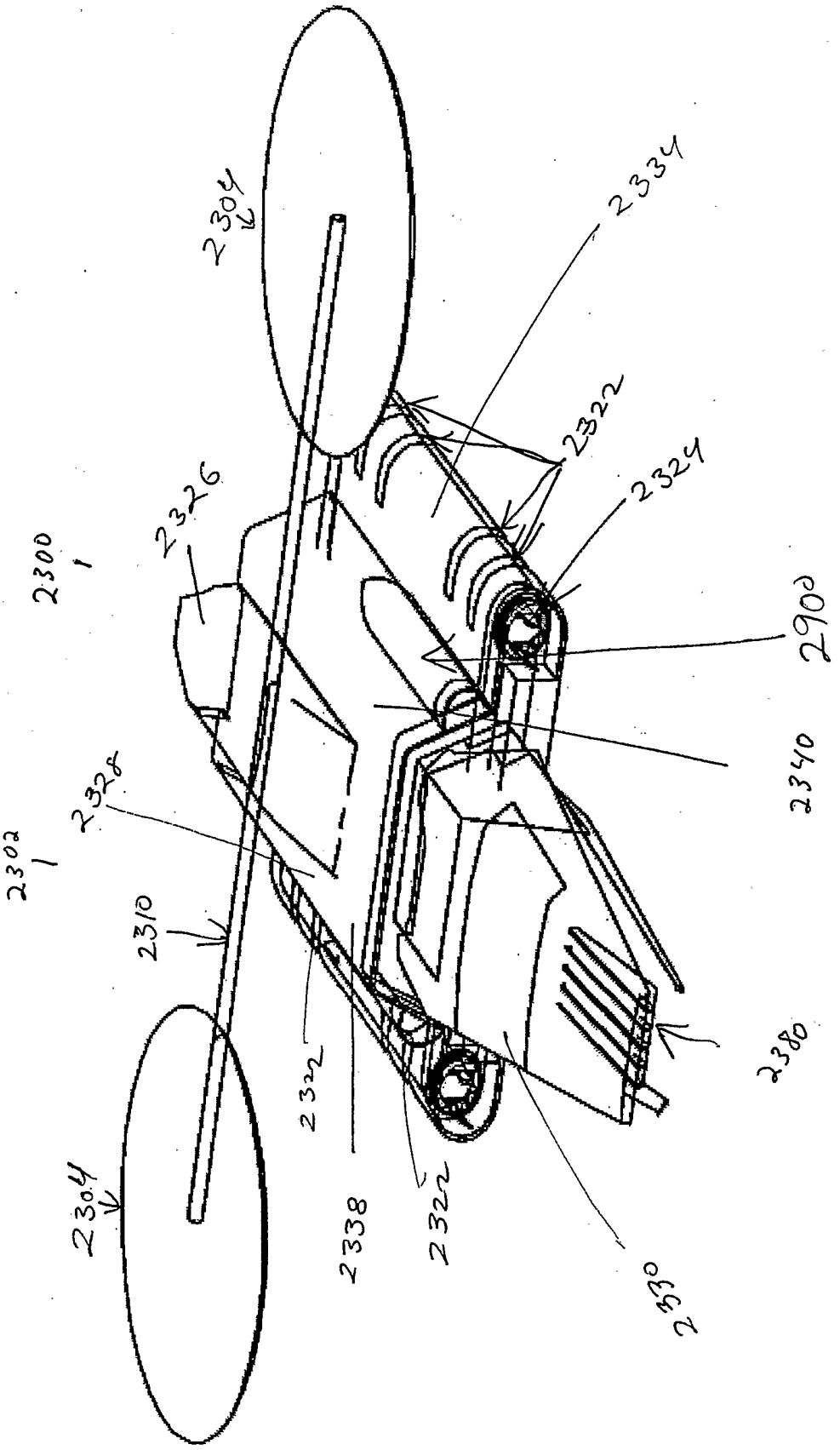
2304
2334
2322
2324
2326
2300
2900
2340
2328
2302
2310
2380
2332
2338
2322
2330
2304

Figure 27

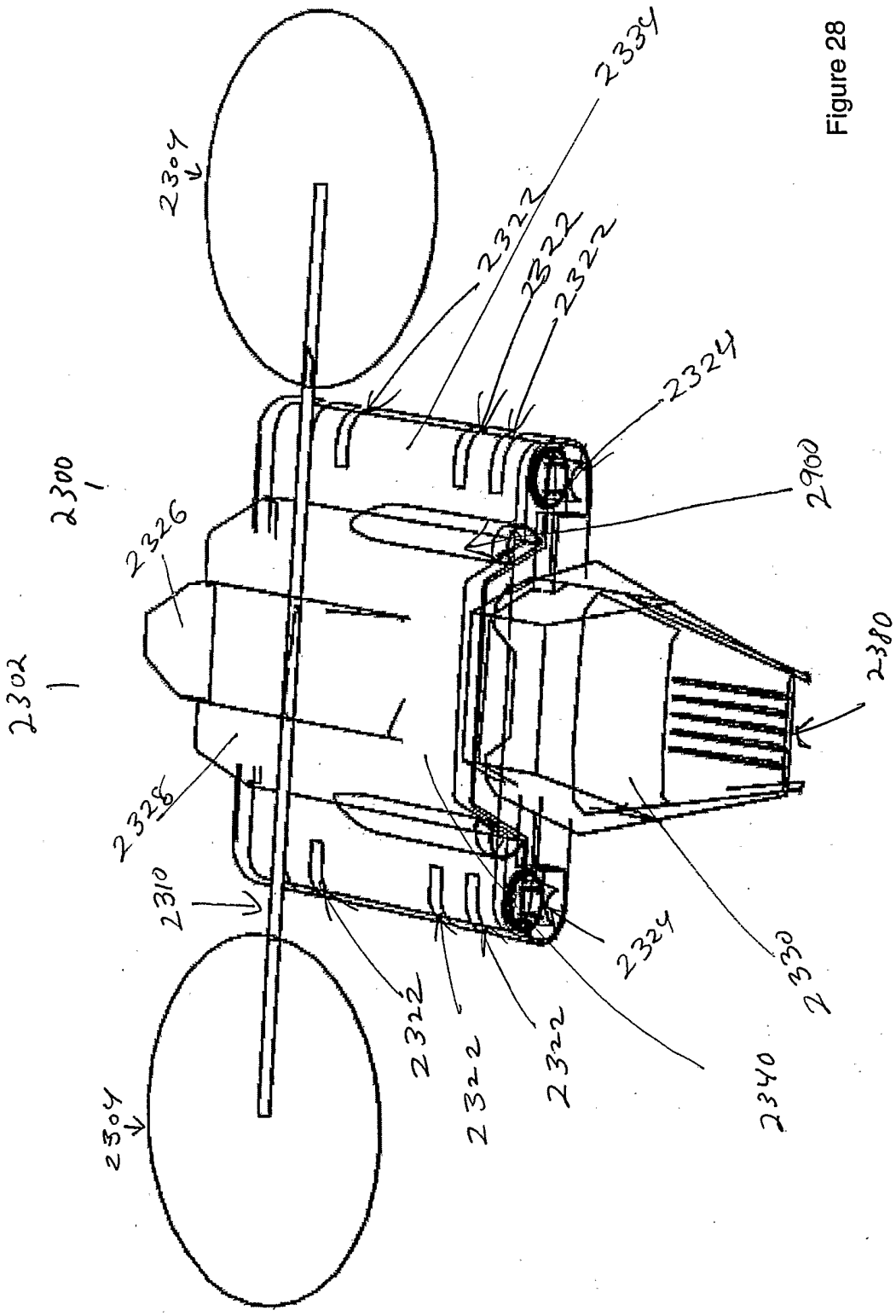
2304
2334
2322
2322
2322
2324
2900
2300
2326
2302
2380
2328
2310
2324
2330
2322
2322
2322
2340
2304

Figure 28

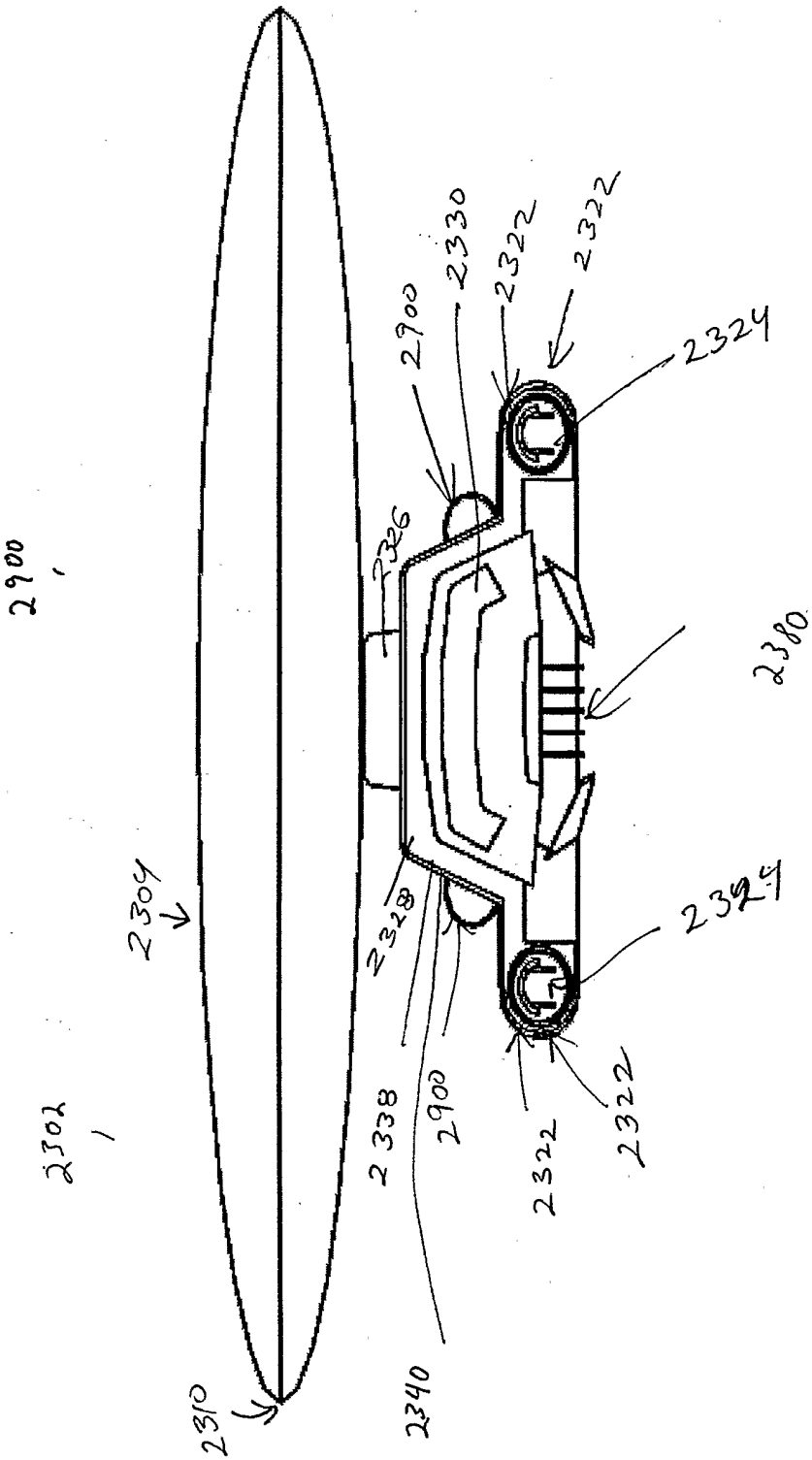
2900
2302
2304
2310
2340
2338
2328
2326
2900
2330
2322
2322
2324
2322
2324
2380

Figure 29

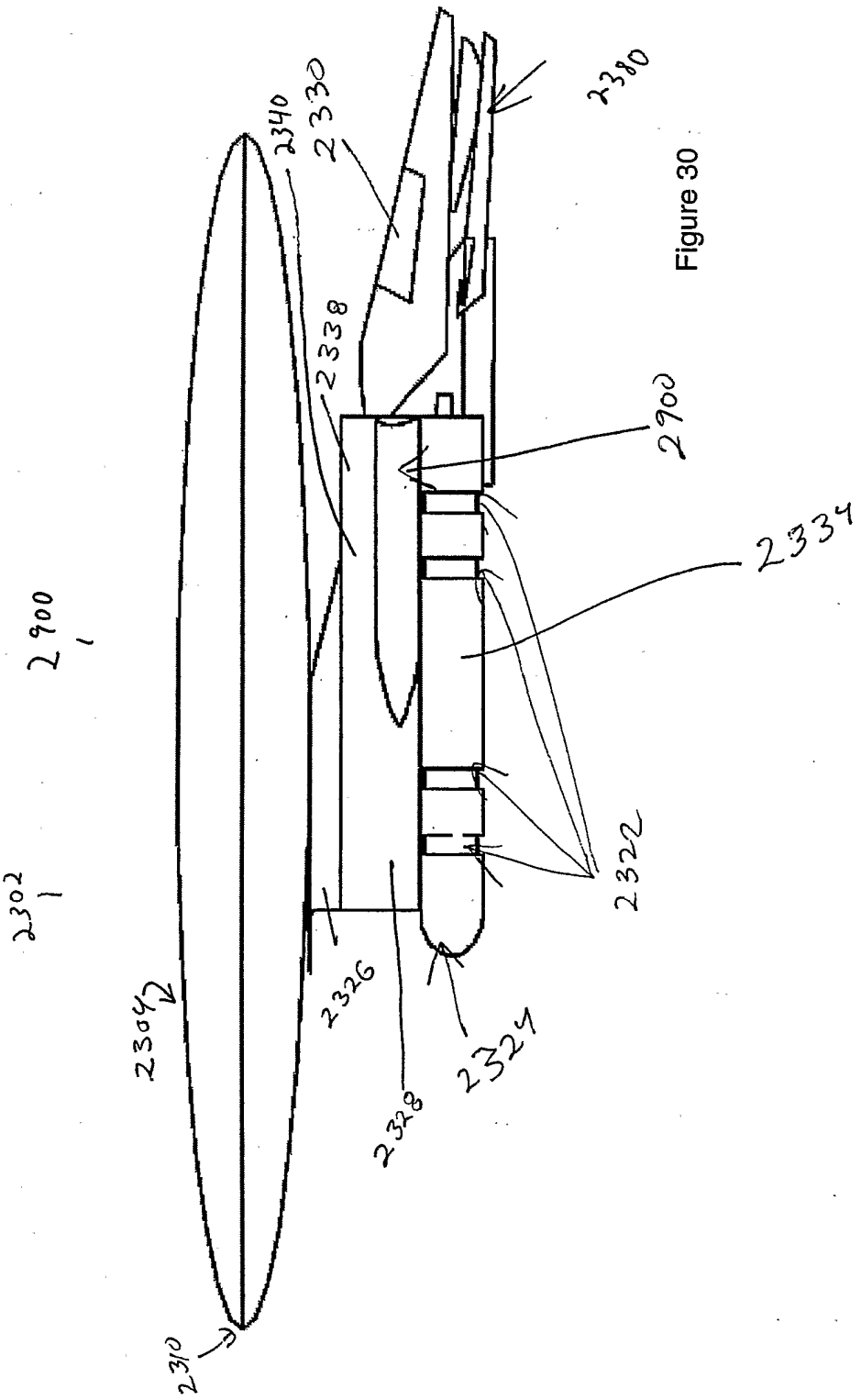
2900
2302
2304
2310
2326
2328
2324
2322
2334
2900
2338
2340
2330
2380

Figure 30

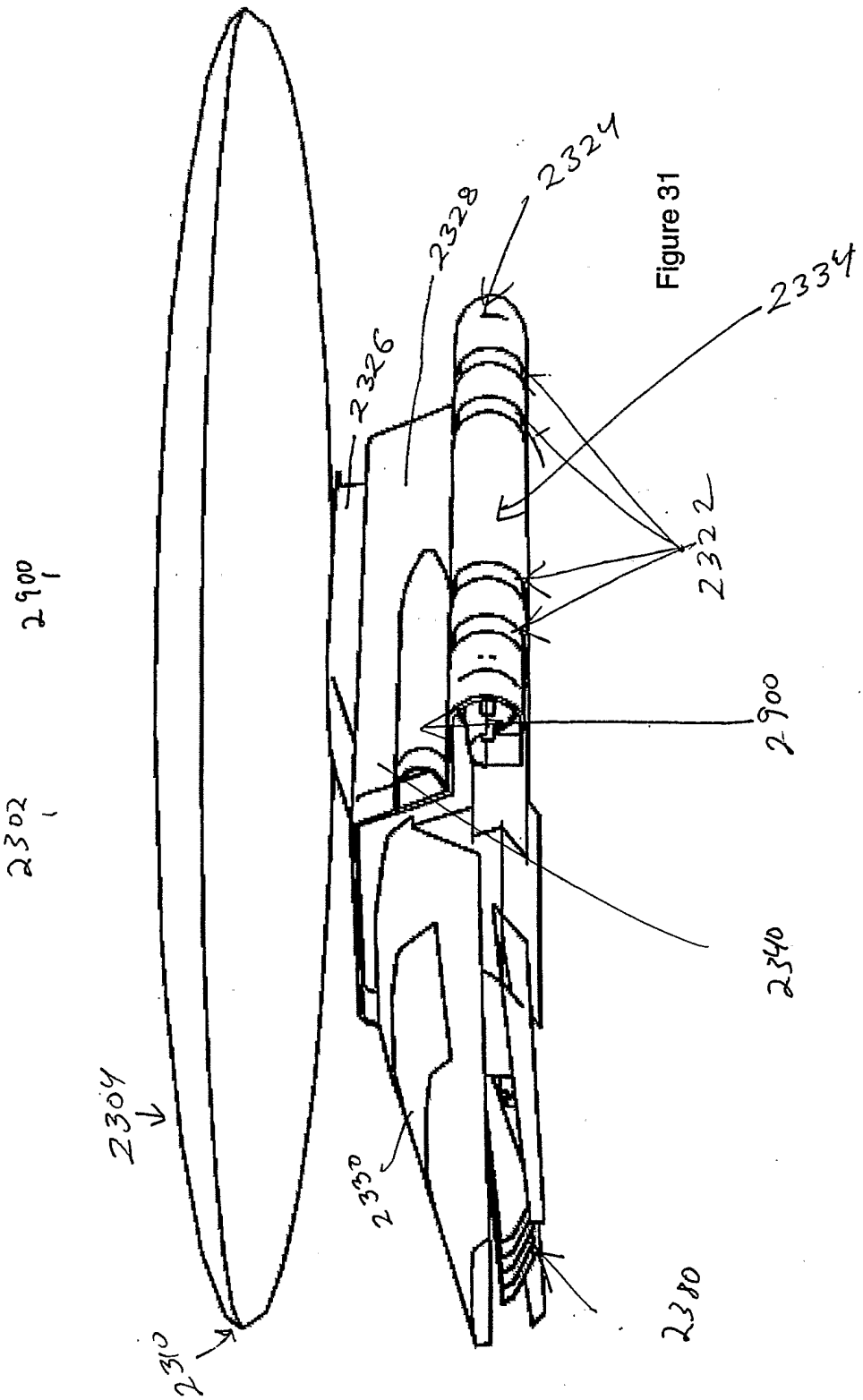
2900
2302
2304
2310
2330
2326
2328
2324
2322
2334
2900
2340
2380

Figure 31

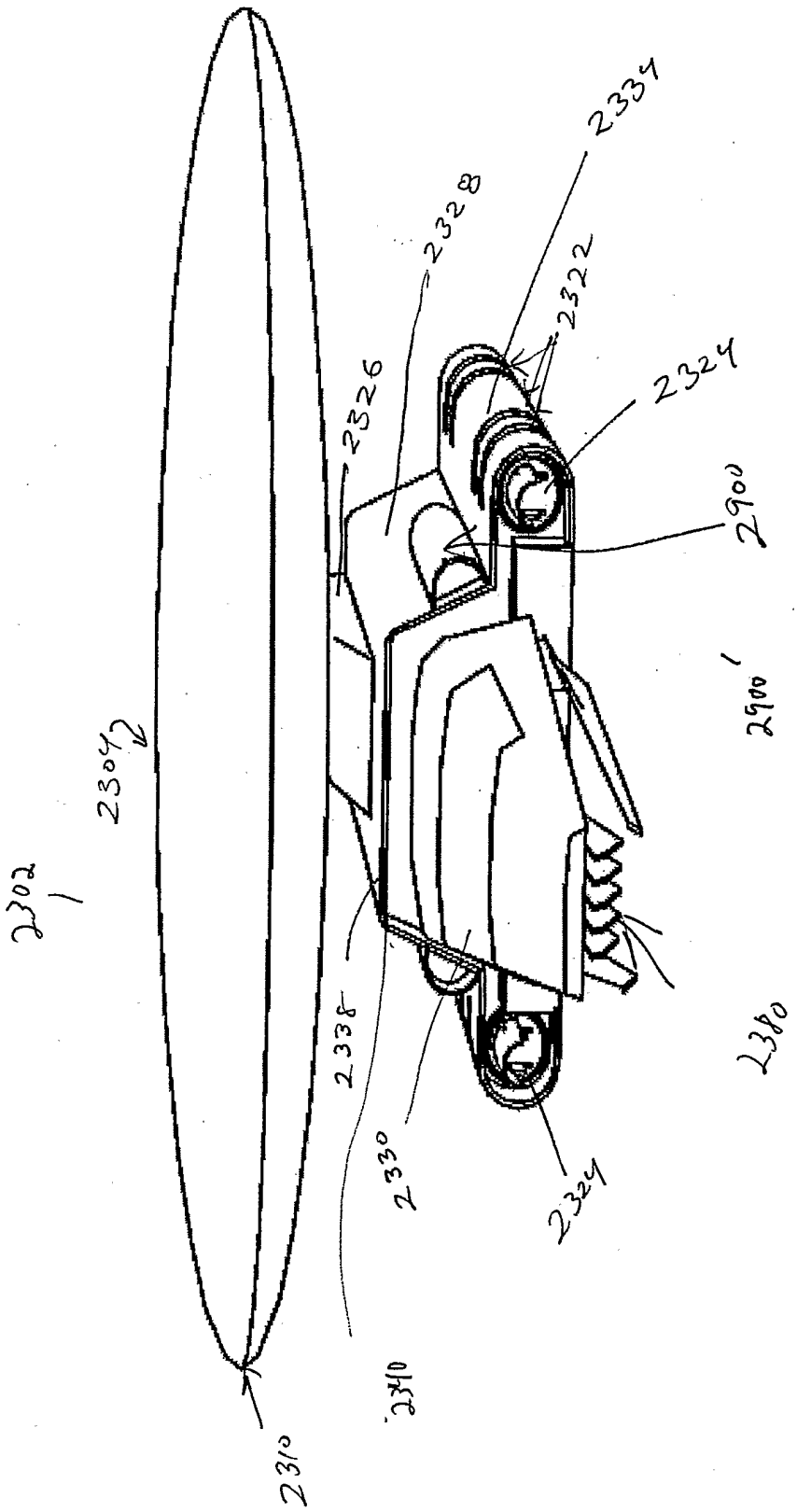
2302
2304
2310
2338
2340
2330
2324
2326
2328
2334
2322
2324
2900
2900'
2380

Figure 32

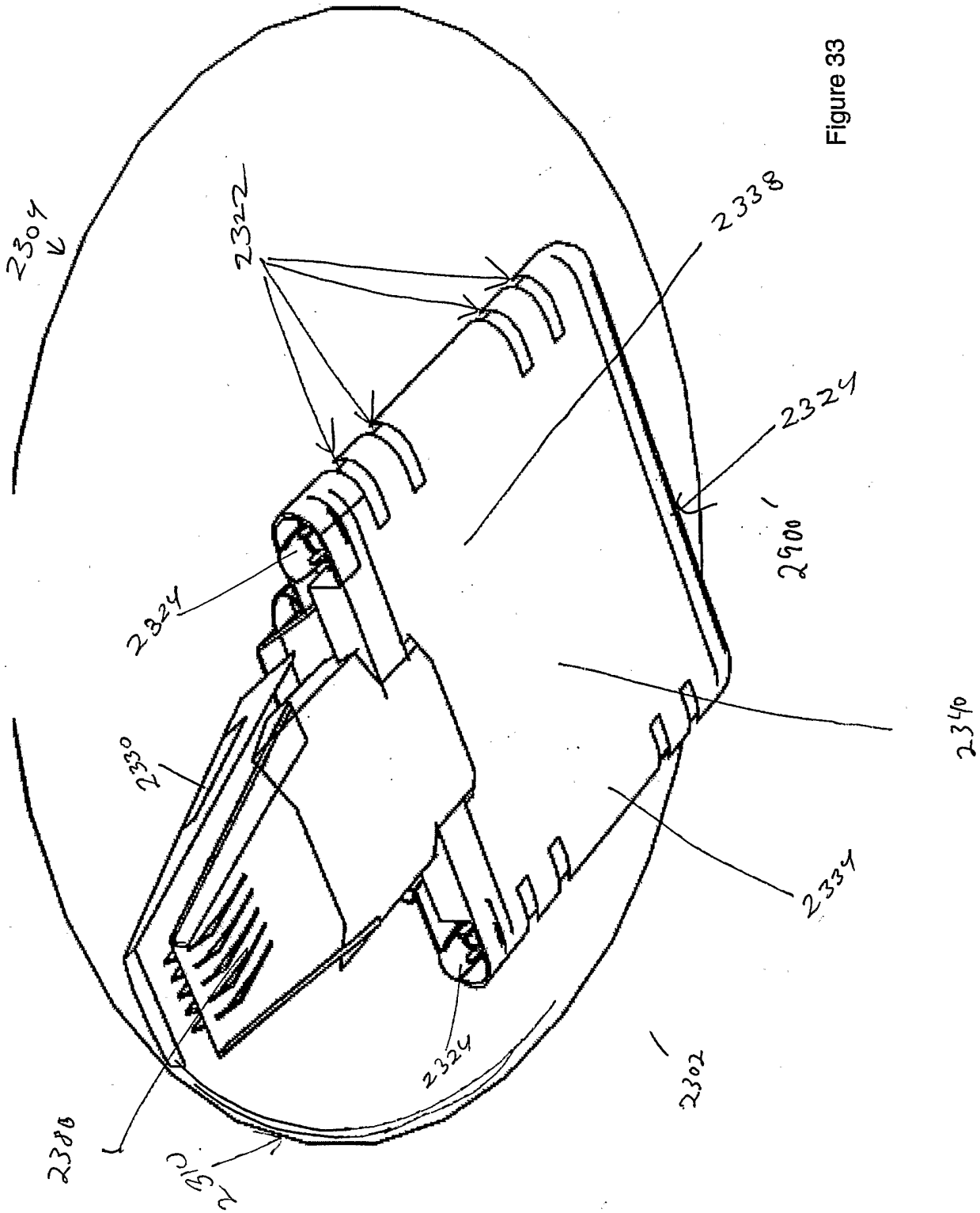
2304
2322
2338
2324
2900
2340
2334
2302
2324
2330
2824
2308
2310

Figure 33

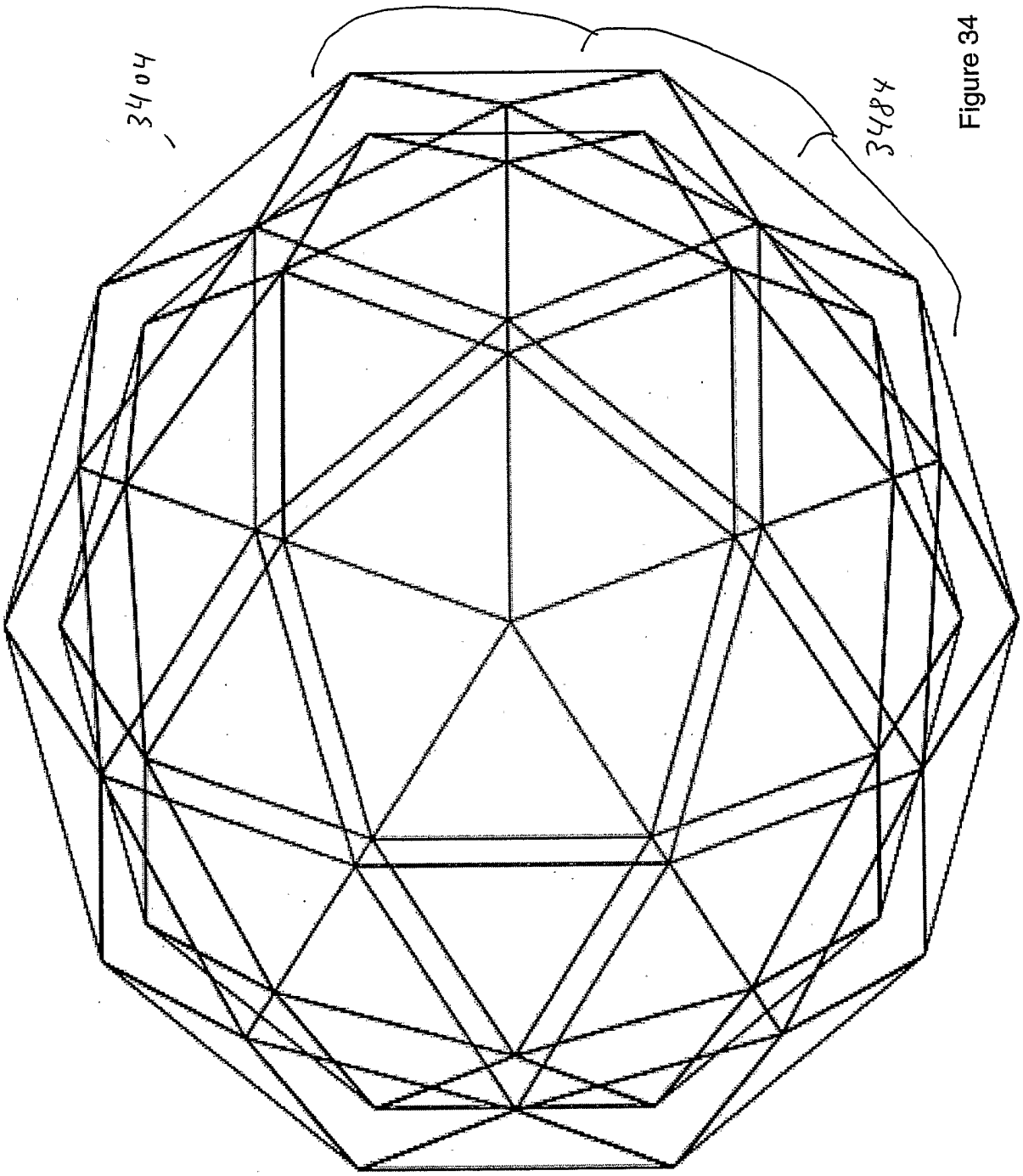

Figure 34

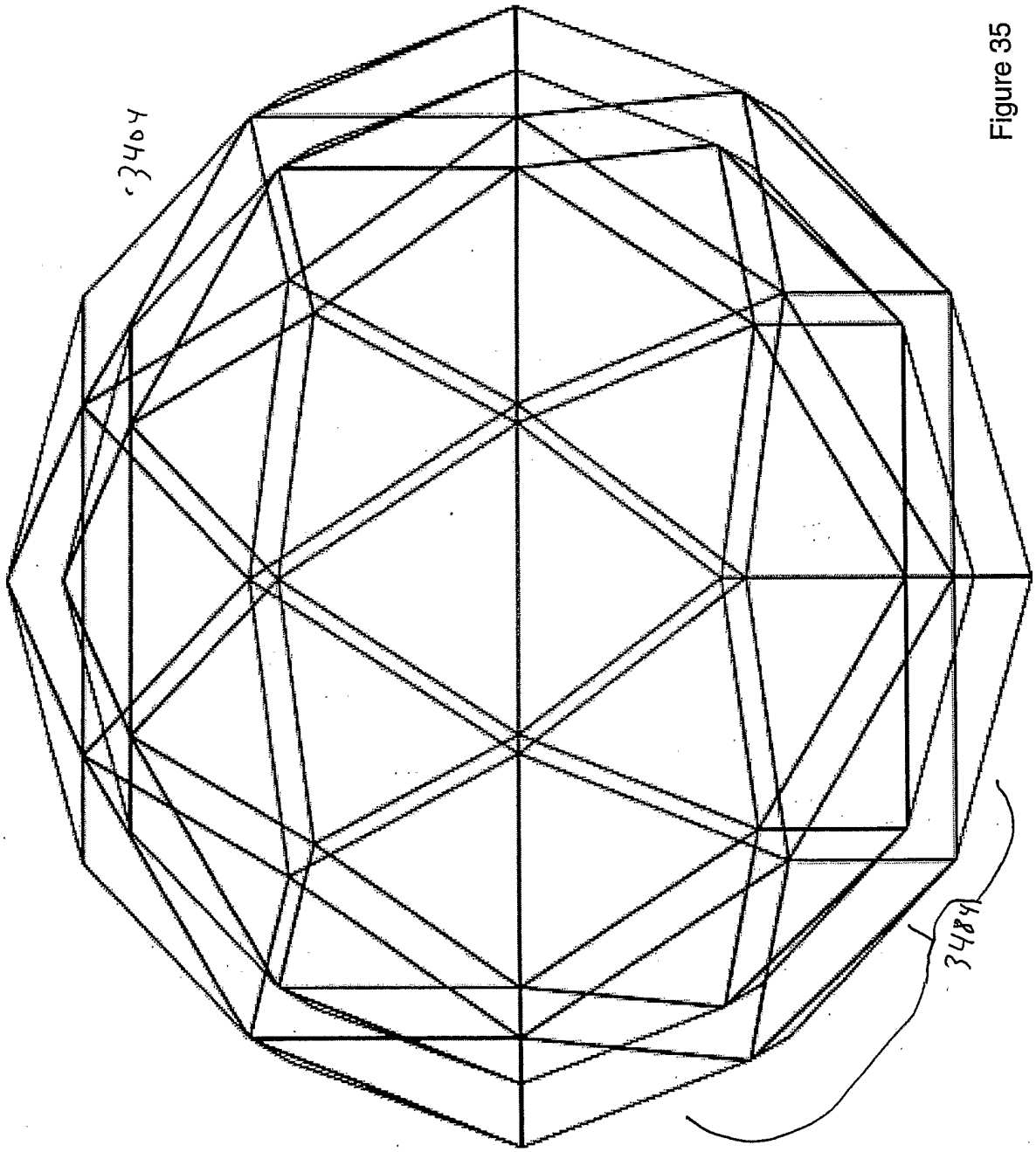

Figure 35

INTERNATIONAL SEARCH REPORT

International Application No
PCT/US 03/36453

A. CLASSIFICATION OF SUBJECT MATTER
IPC 7 B64C39/00 B64C39/02 B64G1/40

According to International Patent Classification (IPC) or to both national classification and IPC

B. FIELDS SEARCHED

Minimum documentation searched (classification system followed by classification symbols)
IPC 7 B64C B64G B64D

Documentation searched other than minimum documentation to the extent that such documents are included in the fields searched

Electronic data base consulted during the international search (name of data base and, where practical, search terms used)

EPO-Internal, WPI Data, PAJ

C. DOCUMENTS CONSIDERED TO BE RELEVANT

Category °	Citation of document, with indication, where appropriate, of the relevant passages	Relevant to claim No.
X	WO 01 49084 A (GRANDICS PETER) 5 July 2001 (2001-07-05)	7,25
A	abstract page 11, line 16 -page 13, line 26; figures	1,20,27

A	GB 2 213 440 A (ADIMORA ANTHONY NGORNADI) 16 August 1989 (1989-08-16) abstract page 8, last line -page 9, paragraph 3; figure 15	1-27

A	FR 2 722 039 A (TRILLES HENRI) 5 January 1996 (1996-01-05) the whole document	1-27

☐ Further documents are listed in the continuation of box C.

☒ Patent family members are listed in annex.

° Special categories of cited documents:

"A" document defining the general state of the art which is not *considered to be of particular relevance*

"E" earlier document but published on or after the international filing date

"L" document which may throw doubts on priority claim(s) or which is cited to establish the publication date of another citation or other special reason (as specified)

"O" document referring to an oral disclosure, use, exhibition or other means

"P" document published prior to the international filing date but later than the priority date claimed

"T" later document published after the international filing date or priority date and not in conflict with the application but cited to understand the principle or theory underlying the invention

"X" document of particular relevance; the claimed invention cannot be considered novel or cannot be considered to involve an inventive step when the document is taken alone

"Y" document of particular relevance; the claimed invention cannot be considered to involve an inventive step when the document is combined with one or more other such documents, such combination being obvious to a person skilled in the art.

"&" document member of the same patent family

Date of the actual completion of the international search	Date of mailing of the international search report
29 March 2004	13/04/2004

Name and mailing address of the ISA	Authorized officer
European Patent Office, P.B. 5818 Patentlaan 2 NL – 2280 HV Rijswijk Tel. (+31–70) 340–2040, Tx. 31 651 epo nl, Fax: (+31–70) 340–3016	Monica S. O. Navarro

INTERNATIONAL SEARCH REPORT

Information on patent family members

International Application No
PCT/US 03/36453

Patent document cited in search report		Publication date	Patent family member(s)			Publication date
WO 0149084	A	05-07-2001	AU	5514801	A	09-07-2001
			WO	0149084	A2	05-07-2001
			US	2004011925	A1	22-01-2004
			US	2001032905	A1	25-10-2001
GB 2213440	A	16-08-1989	NONE			
FR 2722039	A	05-01-1996	FR	2722039	A3	05-01-1996

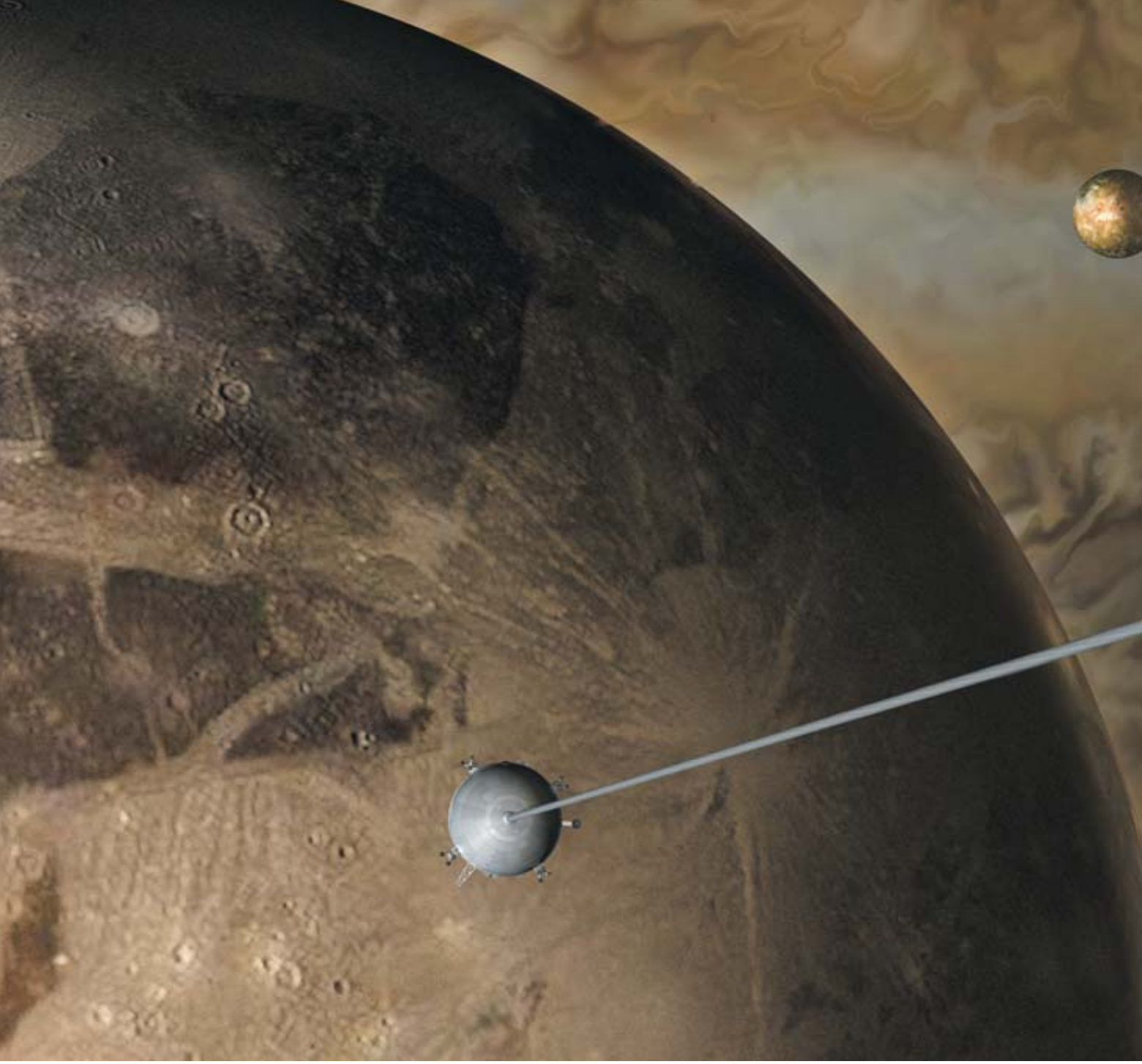

Electrodynamic Tethers in Space

By Enrico Lorenzini and Juan Sanmartín

COPYRIGHT 2004 SCIENTIFIC AMERICAN, INC.

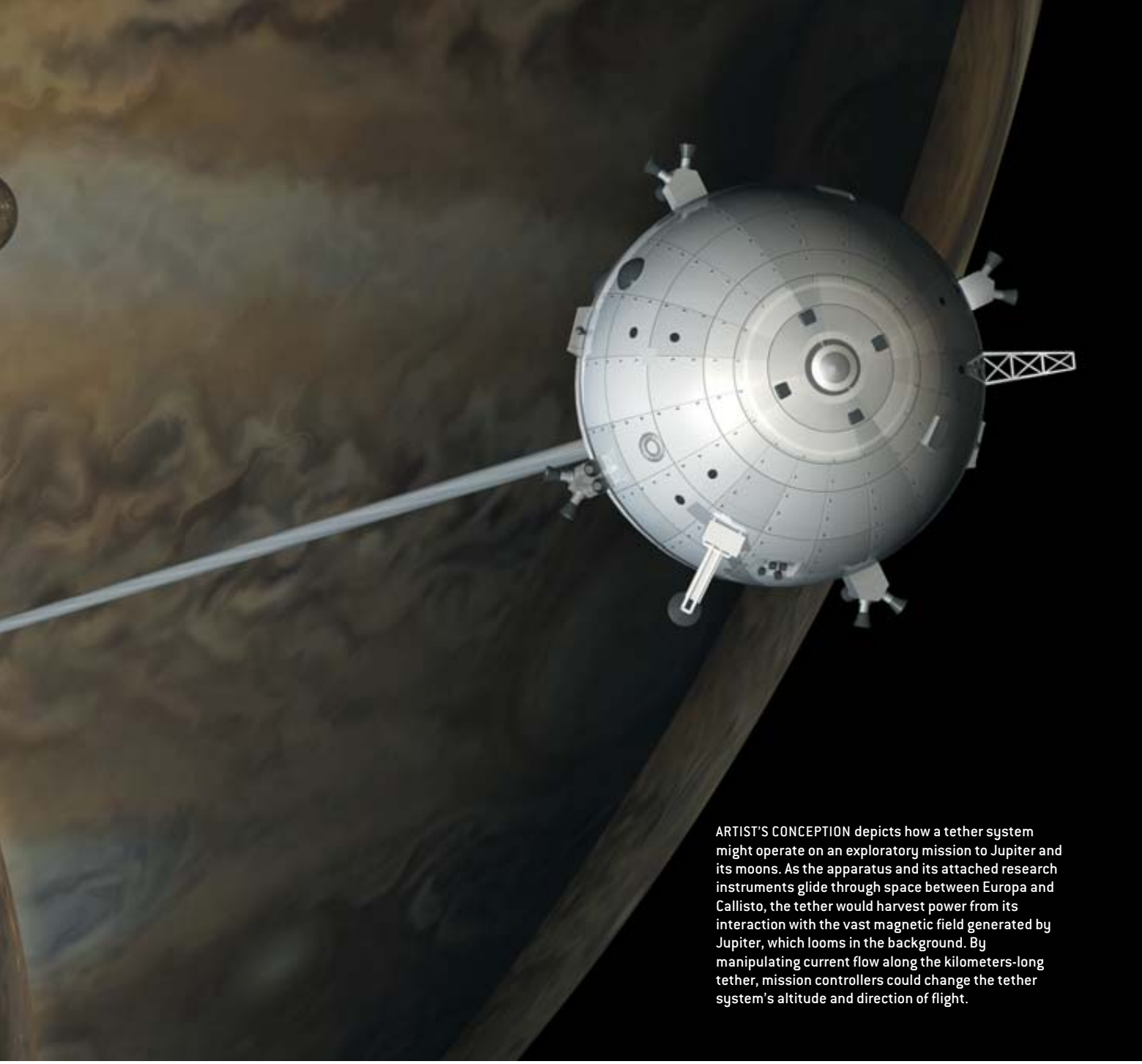

ARTIST'S CONCEPTION depicts how a tether system might operate on an exploratory mission to Jupiter and its moons. As the apparatus and its attached research instruments glide through space between Europa and Callisto, the tether would harvest power from its interaction with the vast magnetic field generated by Jupiter, which looms in the background. By manipulating current flow along the kilometers-long tether, mission controllers could change the tether system's altitude and direction of flight.

By exploiting fundamental physical laws, tethers may provide low-cost electrical power, drag, thrust, and artificial gravity for spaceflight

COPYRIGHT 2004 SCIENTIFIC AMERICAN, INC.

There are no filling stations in space.

Every spacecraft on every mission has to carry all the energy sources required to get its job done, typically in the form of chemical propellants, photovoltaic arrays or nuclear reactors.

The sole alternative—delivery service—can be formidably expensive. The International Space Station, for example, will need an estimated 77 metric tons of booster propellant over its anticipated 10-year life span just to keep itself from gradually falling out of orbit. Even assuming a minimal price of $7,000 a pound (dirt cheap by current standards) to get fuel up to the station's 360-kilometer altitude, that is $1.2 billion simply to maintain the orbital status quo. The problems are compounded for exploration of outer planets such as Jupiter, where distance from the sun makes photovoltaic generation less effective and where every gram of fuel has to be transported hundreds of millions of kilometers.

So scientists are taking a new look at an experimentally tested technology—the space tether—that exploits some fundamental laws of physics to provide pointing, artificial gravity, electrical power, and thrust or drag, while reducing or eliminating the need for chemical-energy sources.

Overview/*A New Look at Tethers*

- Electrodynamic tether systems—in which two masses are separated by a long, flexible, electrically conductive cable—can perform many of the same functions as conventional spacecraft but without the use of chemical or nuclear fuel sources.
- In low Earth orbit, tether systems could provide electrical power and positioning capability for satellites and manned spacecraft, as well as help rid the region of dangerous debris.
- On long-term missions, such as exploration of Jupiter and its moons, tethers could drastically reduce the amount of fuel needed to maneuver while also providing a dependable source of electricity.

Tethers are systems in which a flexible cable connects two masses. When the cable is electrically conductive, the ensemble becomes an electrodynamic tether, or EDT. Unlike conventional arrangements, in which chemical or electrical thrusters exchange momentum between the spacecraft and propellant, an EDT exchanges momentum with the rotating planet through the mediation of the magnetic field [*see illustration on opposite page*]. Tethers have long fascinated space enthusiasts. Visionaries such as Konstantin Tsiolkovsky and Arthur C. Clarke imagined using them as space elevators that whisked people from surface to orbit. In the mid-1960s two of the Gemini flights tested 30-meter tethers as a way to create artificial gravity for astronauts, and numerous kinds of tether experiments have taken place since then. The chief challenges are electromechanical: engineers have not yet devised reliable techniques to deal with the high voltages that EDTs experience in space. Nor have they solved all the issues of tether survivability in the hostile space environment or mastered the means to damp the types of vibrations to which EDTs are prone.

Nevertheless, many scientists believe that the technology could revolutionize some types of spaceflight. Its applications cover low Earth orbit as well as planetary missions. EDTs are likely to find uses around Earth for cleaning up orbital debris and generating electricity at higher efficiency than fuel cells as well as keeping satellites in their desired orbits.

A Self-Adjusting System

TETHERS EXPLOIT the sometimes counterintuitive quirks of orbital mechanics. Two countervailing forces act on any object in a stable orbit around a planet: an outward-pulling centrifugal force produced by orbital motion exactly balances a downward gravitational force. The gravity and centrifugal forces offset each other perfectly at the object's center of mass. An observer onboard is in zero *g*, or free fall, and does not perceive any acceleration.

What happens if, instead of one compact satellite, we have two in slightly different orbits, connected by a tether? The teth-

ALFRED T. KAMAJIAN (*preceding pages*)

COPYRIGHT 2004 SCIENTIFIC AMERICAN, INC.

HOW ELECTRODYNAMIC TETHERS WORK

Electrodynamic tether systems have the potential to accomplish many of the same tasks as conventional spacecraft but without the need for large quantities of onboard fuel.

They take advantage of two basic principles of electromagnetism: current is produced when conductors move through magnetic fields, and the field exerts a force on the current.

INDUCED CURRENT

When a conductor moves through a magnetic field, charged particles feel a force that propels them perpendicular to both the field and the direction of motion. An electrodynamic tether system uses this phenomenon to generate electric current. The current, in turn, experiences a force, which opposes the motion of the conductor.

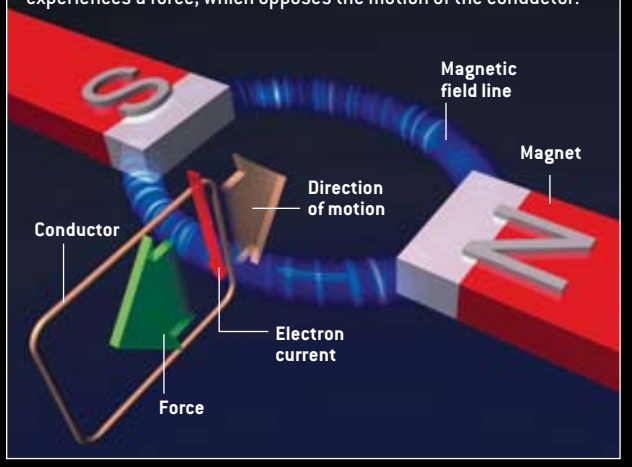

EXTERNALLY DRIVEN CURRENT

A battery added to the circuit can overcome the induced current, reversing the current direction. Consequently, the force changes direction. An electrodynamic tether exploits this effect to produce thrust. (Technical note: These diagrams show the electron current, which is opposite the usual current convention.)

HOW A CURRENT CAN CONTROL TETHER ORBIT

In low orbit, as an electrically conductive tether passes through Earth's magnetic field, an electron current is induced to flow toward Earth (*left*). This current in turn experiences a force from the Earth's field that is opposite the tether's direction of motion. That produces drag, decreasing the tether's energy and lowering its orbit.

Alternatively, reversing the direction of the tether current (using a solar panel or other power source) would reverse the direction of the force that the tether experiences (*right*). In this case, the force would be in the same direction as the tether system's motion, increasing its energy and raising its orbital altitude.

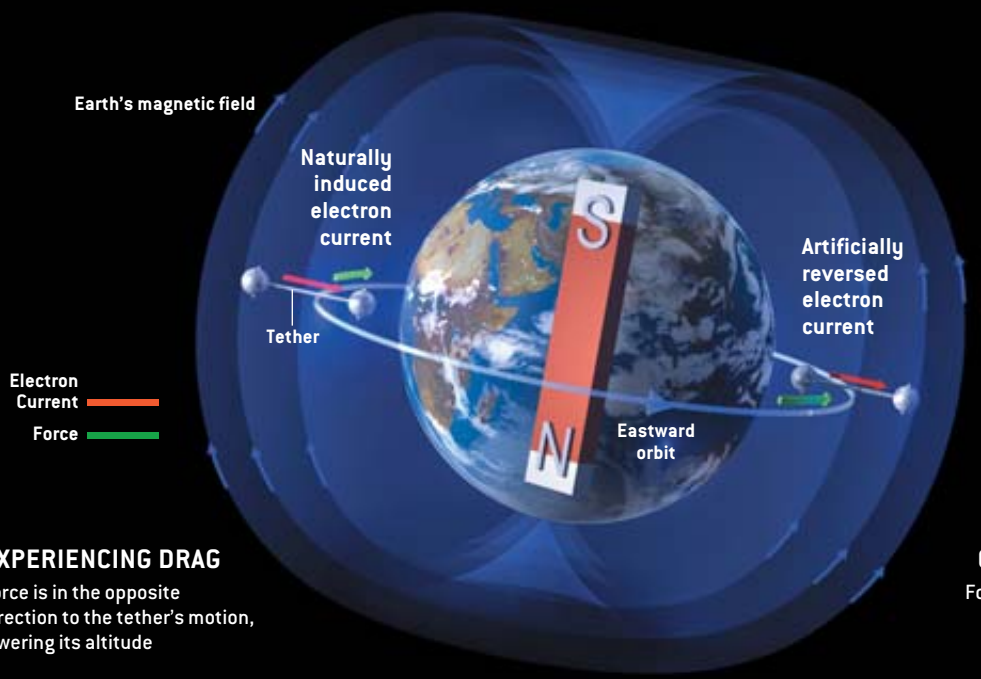

EXPERIENCING DRAG

Force is in the opposite direction to the tether's motion, lowering its altitude

GENERATING THRUST

Force is in the same direction as the tether's motion, raising its altitude

ALFRED T. KAMAJIAN

COPYRIGHT 2004 SCIENTIFIC AMERICAN, INC.

er causes the two satellites to act as a single system. The gravity and centrifugal forces still balance at the center of mass, halfway between the satellites, but they no longer balance at the satellites themselves. At the outer satellite, the gravity force will be weaker and the centrifugal force stronger; a net force will thus push the satellite outward. The opposite situation occurs at the inner satellite, which is pulled inward.

What is happening is that the lower satellite, which orbits faster, tows its companion along like an orbital water-skier. The outer satellite thereby gains momentum at the expense of the lower one, causing its orbit to expand and that of the lower one to contract. As the satellites pull away from each other, they keep the tether taut. Nonconductive tethers are typically made of light, strong materials such as Kevlar (a carbon fiber) or Spectra (a high-strength polyethylene). Tensions are fairly low, typically from one half to five kilograms for nonrevolving tether systems.

The only equilibrium position of the system is with the tether aligned along the radial direction, called the local vertical. Every time the system tilts away from that configuration, a torque develops that pulls it back and makes it swing like a pendulum. This type of stabilization was used in the Earth-observing satellite GEOS-3 in 1975 to keep the satellite, equipped with a rigid boom several meters long, oriented toward Earth.

Researchers refer to the force imbalance between the two masses as the gravity gradient. Passengers would perceive it as mild gravity pulling them away from Earth on the outer satellite and toward Earth on the inner. In low Earth orbit (LEO, 200 to 2,000 kilometers), a 50-kilometer tether would provide about 0.01 *g* (1 percent of the gravity at Earth's surface). Astronauts would not be able to walk around: a person cannot get sufficient traction at less than 0.1 *g*. But for many purposes (tool use, showers, settling liquids), having a definitive "up" and "down" would obviously be superior to a completely weightless environment. And unlike other techniques for creating artificial gravity, this method does not require that the satellites revolve around each other [*see illustration on opposite page*].

An EDT, employing aluminum, copper or another conductor in the tether cable, offers additional advantages. For one, it serves as an electrical generator: when a conductor moves through a magnetic field, charged particles in the conductor experience an electrodynamic force perpendicular to both the direction of motion and the magnetic field. So if a tether is moving from west to east through Earth's northward-pointing magnetic field, electrons will be induced to flow down the tether [*see illustration on preceding page*].

The tether exchanges electrons with the ionosphere, a region of the atmosphere in which high-energy solar radiation strips electrons from atoms, creating a jumble of electrons and ions, called a plasma. The tether collects free electrons at one end (the anode, or positively charged electron attractor) and ejects them at the opposite end (the cathode, or negatively charged electron emitter). The electrically conductive ionosphere serves to complete the circuit, and the result is a steady current that can be tapped to use for onboard power. As a practical matter, in LEO a 20-kilometer tether with a suitable anode design could produce up to 40 kilowatts of power, sufficient to run manned research facilities.

Visionaries imagined using space tethers as space elevators that whisked *people from surface to orbit.*

That capability has been recognized since the 1970s, when Mario Grossi of the Harvard-Smithsonian Center for Astrophysics and Giuseppe Colombo of the University of Padua in Italy were the first to conduct research on EDTs. As many as 16 experimental missions have flown in space using either electrically conductive or nonconductive tethers [*see box on page 57*].

In these early electrodynamic tether systems, a Teflon sleeve fully insulated the conductive part of the tether from the ionosphere, and the anode was either a large conductive sphere or an equivalent configuration to gather electrons. Such anodes, however, turned out to be relatively inefficient collectors. In the 1990s, for example, NASA and the Italian Space Agency jointly launched two versions of the 20-kilometer Tethered Satellite System (TSS). The TSS collected electrons using a metal sphere the size of a beach ball and convincingly demonstrated electrodynamic power generation in space. Despite those positive results, however, researchers discovered a difficulty that must be overcome before EDTs can be put to practical use. A negative net charge develops around a large spherical anode, impeding the flow of incoming electrons much as a single exit door creates a pileup of people when a crowd rushes to leave a room.

One of us (Sanmartín) and his colleagues introduced the bare-tether concept to solve this problem. Left mostly uninsu-

THE AUTHORS

ENRICO LORENZINI and *JUAN SANMARTÍN* have worked together for a decade on tether projects. Lorenzini is a space scientist at the Harvard-Smithsonian Center for Astrophysics in Cambridge, Mass., where, since 1995, he has led the research group of the late pioneers of space tethers Mario Grossi and Giuseppe Colombo. In 1980 he received his doctorate in aeronautics from the University of Pisa in Italy. Sanmartín has been professor of physics at the Polytechnic University of Madrid in Spain since 1974. Before that, he worked at Princeton University and the Massachusetts Institute of Technology. He has doctoral degrees from the University of Colorado and the Polytechnic University of Madrid.

COPYRIGHT 2004 SCIENTIFIC AMERICAN, INC.

ARTIFICIAL GRAVITY FROM A TETHER

For any object in a stable orbit, the outward-pushing centrifugal force is exactly balanced by the inward-pulling gravitational force. In a tether system, all forces balance at the system's center of mass. But at the outer sphere, the centrifugal force is slightly larger than the gravitational force. As a result, a passenger would feel a slight "downward" force away from Earth—a form of artificial gravity (local down). The situation is precisely reversed for the inner sphere. For a system with a 50-kilometer-long tether, the force would be about $^{1}/_{100}$ the magnitude of Earth's gravity. The force is approximately proportional to the tether length.

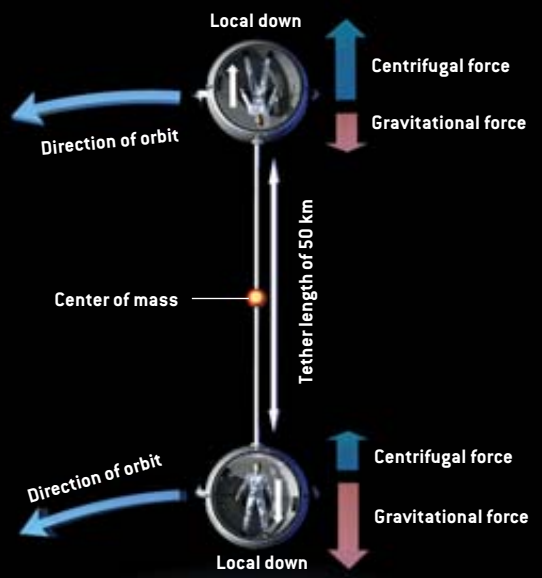

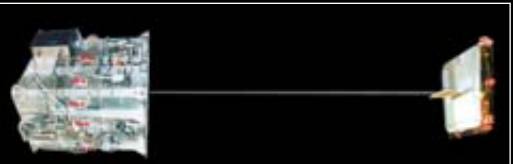

COMPOSITE PHOTOGRAPH of an actual tether system, called ATEx, shown in its semideployed state.

lated, the tether itself collects electrons over kilometers of its length rather than just at the tip. The tether benefits further from its thin, cylindrical geometry: electrons do not have to bunch up at one anode point, where their collective negative charge inhibits the arrival of more electrons. It need not be a round wire; a thin tape would collect the same current but would be much lighter.

A Nearly Free Lunch

ALL EDTS SHARE an advantage: they can reduce or increase their velocity while in orbit by exploiting a fundamental principle of electromagnetism. A magnetic field exerts a force on a current-carrying wire according to the familiar "right-hand rule." Thus, for an EDT in eastward LEO, in which the electrons flow from top to bottom of the tether, the force is opposite to the direction of motion. The EDT experiences a resistance akin to air drag, which in turn lowers the tether system's orbit.

That may not seem like a desirable feature. But it is extremely attractive to planners concerned with sweeping up the large amount of space junk that now circles the planet in the form of dead satellites and spent upper stages of rockets. Indeed, the problem has been one of the motivations behind the development of tethers by NASA, universities and small companies. At present, LEO is littered with several thousands of such objects, about 1,500 of which have a mass of more than 100 kilograms. Eventually atmospheric drag removes them from orbit by lowering their altitudes until they burn up on reentry into the dense lower atmosphere. Typically objects at an orbital altitude of 200 kilometers decay in several days, those at 400 kilometers in several months, and those at 1,000 kilometers in about 2,000 years.

If newly launched satellites carried EDTs that could be deployed at the end of their lifetimes, or if a robot manipulator could capture debris and carry it to an orbiting tether system, the drag effect could be used to speed up the reentry timetable [*see illustration on next page*]. Conversely, reversing the direction of the current in an EDT in low Earth orbit (by using a photovoltaic array or other power supply) would produce the opposite effect. The tether system would experience a force in its direction of motion, yielding thrust instead of drag and raising its orbit. Propulsive EDTs could thus serve as space tugs to move payloads in LEO to a higher orbit or to counteract orbital decay. Recall the International Space Station's high-cost boost problem. If the ISS had employed an electrodynamic tether drawing 10 percent of the station power, it would need only 17 tons of propellant (as opposed to 77 in the current design) to avoid orbital decay; more power would nearly eliminate the need for propellant. Also, switching on a propulsive EDT at the right time along the orbit can produce lateral forces useful for changing the inclination of any spacecraft in orbit—an operation that requires a large amount of fuel when it is carried out with chemical thrusters.

Of course, conservation of energy demands that there is no "free lunch." For instance, power is generated only at the ex-

ALFRED T. KAMAJIAN; COURTESY OF THE NAVAL RESEARCH LABORATORY

COPYRIGHT 2004 SCIENTIFIC AMERICAN, INC.

pense of the satellite's altitude, which was originally achieved by expending energy in rocket engines. So it may seem at first glance as if EDTs merely exchange one kind of energy for another in a rather pointless exercise. In drawing power from the tether, the satellite would descend and require reboosting. A fuel cell, in contrast, converts fuel into electricity directly. So why bother?

The answer is that the tether system is potentially more efficient, however paradoxical it may appear. The combination tether/rocket can generate more electrical power than a fuel cell can because the cell does not profit from the orbital energy of its fuel, whereas the tether/rocket does. In an EDT, the electrical power produced is the rate of work done by the magnetic drag—that is, the magnitude of the drag force times the velocity of the satellite (relative to the magnetized ionosphere), which is about 7.5 kilometers per second in LEO. By comparison, the chemical power generated by a rocket equals one half the thrust times the exhaust velocity. A mixture of liquid hydrogen and liquid oxygen produces an exhaust with a speed as high as five kilometers per second. In practical terms, therefore, a tether/rocket combination could generate three times as much electrical power as the chemical reaction alone produces. A fuel cell, which also uses hydrogen and oxygen, has no such advantage.

The combination tether/rocket might consume substantially less fuel than a fuel cell producing equal power. The tradeoff is that the tether is heavier than the fuel cell. Thus, use of a tether to generate power will result in overall savings only for a period longer than five to ten days.

Tethers, by Jove

IN CERTAIN CIRCUMSTANCES, such as a mission to explore Jupiter and its moons, tether systems have further advantages. By exploiting the giant planet's physical peculiarities, a tether system could eliminate the need for enormous amounts of fuel. Like Earth, Jupiter has a magnetized ionosphere that rotates with the planet. Unlike Earth, its ionosphere persists beyond the stationary orbit—the altitude at which a given object remains above the same location on the planet's surface. For Earth, that is about 35,800 kilometers; for Jupiter, about 88,500 kilometers above the cloud tops.

In a Jovian stationary orbit, a spacecraft goes around the planet at the same speed as the ionosphere. So if the spacecraft descends below stationary altitude, where the speed of the magnetized plasma is lower than the speed of the spacecraft, the natural output of an EDT is a drag force, along with usable electrical power from the tether current. Alternatively, above the stationary orbit, where the magnetized plasma moves faster than the spacecraft, the natural result is thrust and usable electrical power.

USING TETHERS TO REMOVE OBJECTS FROM ORBIT

The region of low Earth orbit—from 200 to 2,000 kilometers above the surface—has become littered with tens of thousands of objects, including defunct satellites, rocket motors, explosion debris and miscellaneous hardware.

It takes decades to centuries for these objects to sink into the lower atmosphere, where they are incinerated by air friction. Deploying tethers on newly launched spacecraft would provide a simple and low-cost way to speed up that timetable.

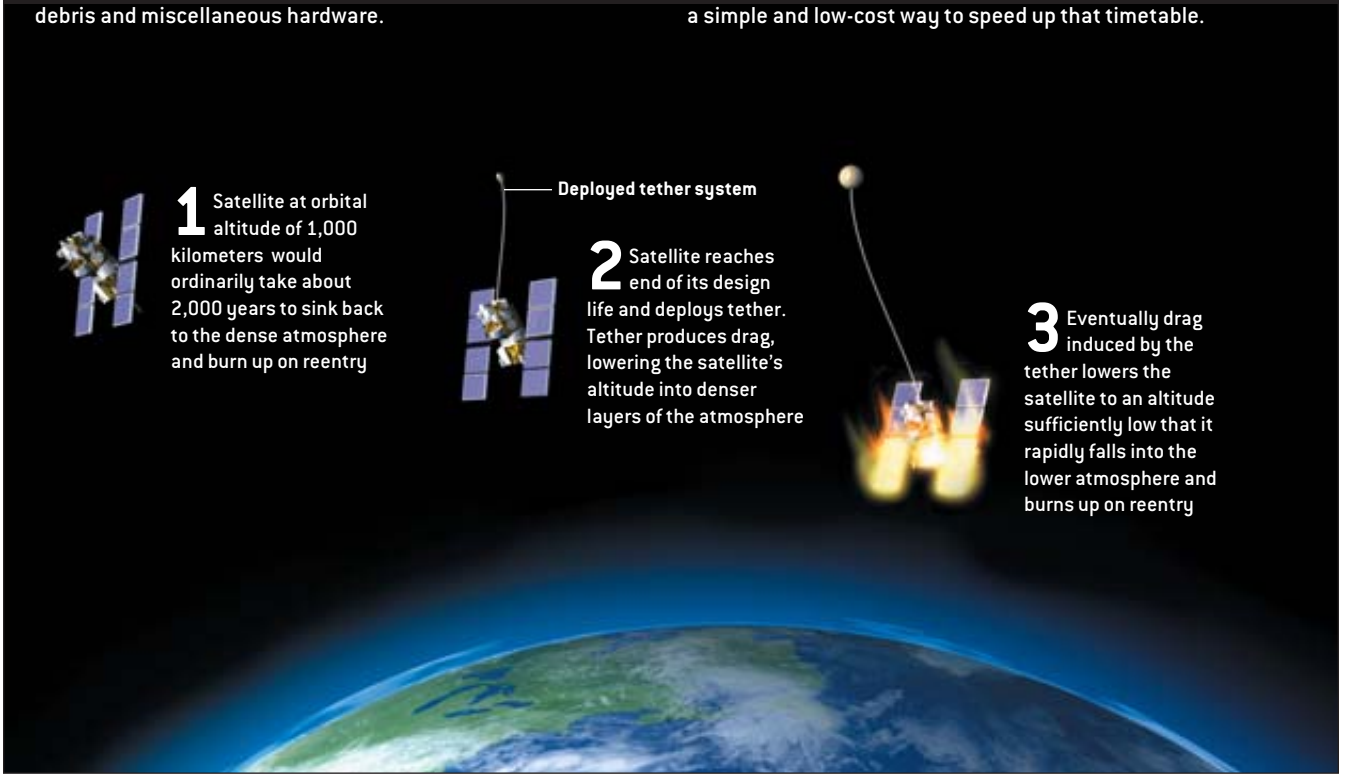

ALFRED T. KAMAJIAN

COPYRIGHT 2004 SCIENTIFIC AMERICAN, INC.

TETHERED MISSIONS

Researchers have launched experimental tether systems for decades, with varying degrees of success. Sometimes the tethers could not extend to their full lengths. But even problematic flights have confirmed the capabilities of tether systems and led to numerous design improvements. Missions that used electrodynamic tethers are indicated in brown.

NAME	DATE	ORBIT	LENGTH	AGENCY
Gemini 11	1967	LEO	30 m	NASA
Gemini 12	1967	LEO	30 m	NASA
H-9M-69	1980	Suborbital	< 500 m	NASA
S-520-2	1981	Suborbital	< 500 m	NASA
Charge-1	1983	Suborbital	500 m	NASA/Japanese ISAS
Charge-2	1984	Suborbital	500 m	NASA/Japanese ISAS
Oedipus-A	1989	Suborbital	958 m	Canadian NRC/NASA
Charge-2B	1992	Suborbital	500 m	NASA/Japanese ISAS
TSS-1	1992	LEO	< 500 m	NASA/Italian Space Agency
SEDS-1	1993	LEO	20 km	NASA
PMG	1993	LEO	500 m	NASA
SEDS-2	1994	LEO	20 km	NASA
Oedipus-C	1995	Suborbital	1 km	Canadian NRC/NASA
TSS-1R	1996	LEO	19.6 km	NASA/Italian Space Agency
TiPS	1996	LEO	4 km	NRO/NRL
ATEx	1999	LEO	6 km	NRL

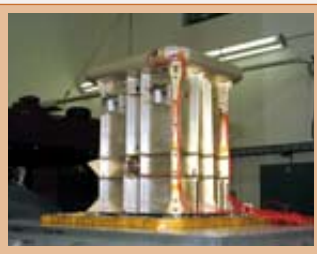

ATEx

TiPS

Again, this might appear to be a free-lunch scenario. But it is not. The energy is taken from the planet's rotation in both cases. Jupiter's collective momentum, however, is so vast that the tiny amount expended on the spacecraft is negligible.

According to the principles of orbital dynamics, the most efficient places to apply drag or thrust are the points in the orbit nearest (periapsis) and farthest (apoapsis) from Jupiter. The natural force will be drag if the point lies inside the stationary orbit and thrust if it lies outside. Assume that a tether-bearing spacecraft would approach Jupiter with a relative velocity of about six kilometers per second. If drag were not applied, the spacecraft would fly past Jupiter. But if the tether were turned on as the spacecraft came inside the stationary orbit, it could brake the motion just enough to put the spacecraft in an elongated, highly eccentric ellipse around Jupiter. Capture into such an orbit requires reducing the velocity by only hundreds of meters per second. A tether tens of kilometers long would suffice.

As the spacecraft went around and around Jupiter, mission controllers would turn on the tether near periapsis to produce drag (and usable power) and turn it off elsewhere. That gradually would reduce the orbit from an elongated ellipse to smaller, progressively more circular shapes. The spacecraft would then require only modest electrodynamic forces to visit each of the four largest moons of Jupiter, from the outermost (Callisto) to the innermost (Io). With Callisto's orbital period of about half a month, the entire sequence could take less than a year.

To return, controllers would reverse the process. They would first switch on the EDT at apoapsis, which lies outside the stationary orbit, to produce thrust and power. The repeated thrust applications at apoapsis would raise periapsis from inside to outside the stationary orbit. Now thrust could be generated (for "free" again) at periapsis, progressively increasing the altitude of apoapsis. A final push could boost the spacecraft out of orbit for transfer back to Earth. Tapping Jupiter's rotation would provide all the energy for these maneuvers as well as generate usable power. By reducing drastically the fuel and power requirements, the tether would greatly cut the cost of a mission.

The technology of space tethers has matured tremendously in the past 30 years. But it still faces several challenges before EDTs can be put to practical use in orbit around Earth, Jupiter or elsewhere. Designers will have to devise ways to protect tethers from the effects of the high electrical potential between the tether and the ionosphere as well as from the slow degradation of materials in space. And they must learn to control the various vibrations that arise in electrodynamic tether systems. These obstacles are not insuperable, however, and many scientists expect to see tethers doing real work in orbit in the not so distant future. SA

MORE TO EXPLORE

In-Orbit Experimentation with the Small Expendable-Tether Deployment System. E. C. Lorenzini and J. A. Carroll in *ESA Journal,* Vol. 15, No. 1, pages 27–33; 1991.

Bare Wire Anodes for Electrodynamic Tethers. J. R. Sanmartín, M. Martinez-Sanchez and E. Ahedo in *Journal of Propulsion and Power,* Vol. 9, No. 3, pages 353–360; 1993.

Tethers in Space Handbook. M. L. Cosmo and E. C. Lorenzini. Third edition. Smithsonian Astrophysical Observatory, 1997. Available at **http://cfa-www.harvard.edu/spgroup/handbook.html**

Overview of Future NASA Tether Applications. L. Johnson, B. Gilchrist, R. D. Estes and E. Lorenzini in *Advances in Space Research,* Vol. 24, No. 4, pages 1055–1063; 1999.

Active Charging Control and Tethers. J. R. Sanmartín in *Environnement Spatial: Prévention des Risques Liés aux Phénomènes de Charge—Space Environment: Prevention of Risks Related to Spacecraft Charging.* CNES/ONERA course, Toulouse, 2002. Cépaduès Éditions, 2002.

IMAGES COURTESY OF THE NAVAL RESEARCH LABORATORY

COPYRIGHT 2004 SCIENTIFIC AMERICAN, INC.

ELECTRONIC GADGETS FOR THE EVIL GENIUS

28 BUILD-IT-YOURSELF PROJECTS

- Illustrated instructions and schematics
- Lists of materials and parts suppliers
- Science and math behind each project

BOB IANNINI

TAB ROBOTICS

Electronic Gadgets for the Evil Genius

Electronic Gadgets for the Evil Genius

BOB IANNINI

McGraw-Hill
New York Chicago San Francisco Lisbon
London Madrid Mexico City Milan New Delhi
San Juan Seoul Singapore Sydney Toronto

The McGraw-Hill Companies

Library of Congress Cataloging-in-Publication Data

Iannini, Bob.
Electronic gadgets for the evil genius / Bob Iannini.
p. cm.
Includes index.
ISBN 0-07-142609-4
1. Electronics—Amateurs' manuals. 2. Electronic apparatus and appliances—Design and construction. I. Title.
TK9965.I25 2004
621.381—dc22 2004049070

Copyright © 2004 by The McGraw-Hill Companies, Inc. All rights reserved. Printed in the United States of America. Except as permitted under the United States Copyright Act of 1976, no part of this publication may be reproduced or distributed in any form or by any means, or stored in a data base or retrieval system, without the prior written permission of the publisher.

6 7 8 9 0 QPD/QPD 0 1 0 9 8 7 6 5

ISBN 0-07-142609-4

The sponsoring editor for this book was Judy Bass and the production supervisor was Sherri Souffrance. It was set in Times Ten by MacAllister Publishing Services, LLC. The art director for the cover was Anthony Landi.

Printed and bound by Quebecor/Dubuque.

This book is printed on recycled, acid-free paper containing a minimum of 50 percent recycled, de-inked fiber.

McGraw-Hill books are available at special quantity discounts to use as premiums and sales promotions, or for use in corporate training programs. For more information, please write to the Director of Special Sales, McGraw-Hill Professional, Two Penn Plaza, New York, NY 10121-2298. Or contact your local bookstore.

Information contained in this work has been obtained by The McGraw-Hill Companies, Inc. ("McGraw-Hill") from sources believed to be reliable. However, neither McGraw-Hill nor its authors guarantee the accuracy or completeness of any information published herein, and neither McGraw-Hill nor its authors shall be responsible for any errors, omissions, or damages arising out of use of this information. This work is published with the understanding that McGraw-Hill and its authors are supplying information but are not attempting to render professional services. If such services are required, the assistance of an appropriate professional should be sought.

Contents

Acknowledgments xi

Special Notes xiii

Introduction xv

Part One 1

Chapter One Antigravity Project 1

Theory of Operation 1

Construction Steps 3

Board Assembly Steps 4

Testing Steps 9

Notes 15

Tethering Setup 15

Lifter Troubleshooting Guide 17

Problem 1: The Lifter Is Not Moving, and I Don't Hear a Hissing Noise 17

Problem 2: The Lifter Is Not Moving, and the High-Voltage Supply Seems Completely Dead 17

Problem 3: The Lifter Is Not Moving, and I Do Hear a Hissing Noise 17

Problem 4: The Lifter Is Moving a Little but Is Not Taking Off 18

Problem 5: The Lifter Is Moving but Has a Lot of Electrical Arcing 18

Problem 6: The Lifter Is Lifting Off, but When Arcing Occurs It Suddenly Drops or Loses Height 18

Problem 7: The Lifter Is Lifting off and "Bouncing" the Tether, but Thrust Is Not Stable 18

Problem 8: Arcing Is Occurring Between the Ground Wire and the HV Wire 19

Problem 9: The Lifter Lifts Off and Immediately Shorts the HV and Ground Wires 19

Problem 10: The Lifter Lifts Off and Immediately Pulls to One Side 19

Problem 11: The Corona Wire Flutters During Liftoff and Causes Thrust Problems 19

Problem 12: The Foil Skirt Flutters During Liftoff and Causes Thrust Problems 20

Problem 13: The Lifter Hisses but Just Will Not Lift Off 20

Author's Note: General Troubleshooting Guidelines 20

Chapter Two Low-Power Electrokinetic Gun 23

Basic Theory 23

First and Preferred Method 23

Second Method 24

Circuit Description 24

Board Assembly Steps 24

Fabrication 25

Electrical Pretest 27

Obtaining More Velocity (Under No Condition Point or Shoot Toward a Person) 28

Chapter Three High-Energy Pulser 31

System Description 32

Circuit Theory of Operation 32

Special Note 33

Construction Steps 33

Final Assembly 36

Electrical Pretest 37

Main Test 38

Helpful Mathematical Relationships with This Equipment 38

Chapter Four Mass Accelerator 41

Theory of Operation 41

Setup and Operation of the Mass Accelerator 41

Chapter Five Plasma Thermal Gun 47

Theory of Operation 47

Assembly Steps of the Thermal Gun 47

Special Notes 50

Chapter Six Wire-Exploding Project 55

Theory of Operation 55

Setup and Operation 55

Special Notes 57

Chapter Seven Magnetic Can Crushing 61

Setup and Operation 61

Special Notes 63

Part Two 65

Chapter Eight Handheld Burning CO_2 Gas Laser 65

Basic Description 66

Theory of Operation 66

Circuit Operation 66

Assembly Steps 69

Laser Head Construction 73

Testing Your Laser 74

Special Notes 80

Optional Focusing Lens 80

Battery Operation 80

Cleaning Output Optics 80

Purging the Cooling System 81

Operating Time 81

Increasing Power Output 81

General-Purpose Test Fixture for Line-Powered Circuits 81

Chapter Nine Handheld Burning Diode Laser Ray Gun 85

Applications 85

Basic Theory 86

Circuit Theory 86

Assembly Steps 86

Circuit Pretest 88

Safety 92

General Handling 92

Static Electrical Damages (ESD) 92

Excessive Forward Voltage 92

Excessive Forward Current 92

Reverse Currents 93

High Temperature 93

Chapter Ten Long-Range Optical Laser Project 97

Chapter Eleven Handheld, Ultrabright Green Laser 99

Applications 99

Circuit Description 100

Assembly Steps 100

Electrical Pretest 102

Collimation and Final Assembly 102

Chapter Twelve Laser Property-Protection Fence 105

Special Note 106

Circuit Description 106

Construction Steps for the Receiver and Controller 106

Construction Steps for the Laser Beam Generator 109

Chapter Thirteen Laser Window Bounce Listening Device 113

Special Note 113

Basic Theory 114

Project Description 114

Project Construction 115

Laser Transmitter 115

Circuit 117

Construction of the Electronics Assembly Board 118

Assembly Is Ready for Pretest 118

Special Note 121

Final Enclosure and Optics 121

Fabrication 121

Final Assembly 121

Test-Tone Module Construction 122

Laser Receiver 124

Circuit Theory 124

Construction Steps 125

Unit Is Ready for Pretest 126

Final Assembly 126

Laser Receiver Is Ready for Final Testing 127

System Application, Safety, and Legality 128

Setup Using Direct Reflection 128

Assembly of a Field-Worthy, Integrated System 131

Parts and Fabrication Description 132

Part Three **137**

Chapter Fourteen Twelve-Inch-Spark Tesla Coil 137

Use Caution Around Sensitive Electronic Equipment 137

Tesla Coil 137

Brief Theory 138

Introduction to Your Easy-to-Build Tesla Coil 138

Circuit Theory 139

Construction Steps 140

Special Notes 145

Application and Operation 145

Experiments Using Your Coil 150

Chapter Fifteen Two-Inch-Spark Tesla Coil with Timer 157

Circuit Theory 158

Construction Steps 158

Electrical Pretest 158

Final Assembly 159

Chapter Sixteen Tesla Plasma and Ion Projects 163

Experiments and Applications Using Plasma 163

Circuit Theory 163

Construction 163

Pretest 166

Mechanical Assembly 166

Test and Function Selection 167

Experiments and Applications Using Plasma 167

Experiments and Applications Using Ions 169

Chapter Seventeen Solid-State Tesla Coil 175

Circuit Theory 175

Assembly 176

Test Steps 180

Chapter Eighteen Thirty-Inch-Spark Tesla Lightning Generator 185

Basic Points to Consider Before Building This Project 185

Brief Theory of Operation 186

Circuit Description 187

Description of Major Components 188

LS1 Secondary Coil 188

Output Terminal 188

LP1 Primary Coil 188

Coupling 188

SPKGAP Spark Gap Switch 188

C3 Primary Capacitor 189

CHK1—RF Choke 189

Assembly Steps 189

Testing Steps 191

Special Notes 194

Part Four **203**

Chapter Nineteen Traveling-Plasma Jacob's Ladder 203

Origin 203

Basic Description 203

Circuit Descriptions 204

Assembly Steps 204

Testing the Circuit 205

Chapter Twenty Amazing Plasma Tornado Generator 209

Theory of Operation 209
Project Description 210
Assembly Instructions 210
Application and Operation 213
Special Note 213

Chapter Twenty-One Plasma Lightsaber 215

Circuit Theory 215
Construction 216
Construction Steps 217
Mechanical Assembly Steps 220
Test Points and Troubleshooting Suggestions 221
Special Notes 222
Batteries 222
Applications 222

Part Five **225**

Chapter Twenty-Two Ion Ray and Charge Gun 225

Circuit Operation 226
Construction Steps 227
Board Assembly Steps 227
Testing Steps 229
Mechanical Assembly 231
Operation and Applications 232
Experiments 234
Negative Ion Information 236
Special Notes 236

Chapter Twenty-Three See-in-the-Dark Project 239

General Description 239
Basic Theory 240
Circuit Description 241
Circuit Assembly 241
Circuit Board Testing 242
Fabrication and Mechanical Assembly 243
Special Notes 244

Chapter Twenty-Four Fish Stunning and Wormer Project 247

General Description 247
Circuit Description 248
Construction Steps 249
Subassembly Pretest 251
Final Assembly 251
Operation 252
Verification of Operation 254

Chapter Twenty-Five Electromagnetic Pulse (EMP) Generator 257

Basic Description 258
Project Objective 258
Hazards 258
Theory 258
Capacitor 259
Inductor 259

Spark Switch 259

Exploding Wire Disruption Switch (High-Power, High-Frequency Pulse) 262

RFC1 Radio Frequency Choke 262

R1 Resistor 262

Charger 262

Assembly 262

Application 265

Sources 266

Part Six **267**

Chapter Twenty-Six Ultrasonic Microphone 267

Applications 268

Circuit Description 268

Construction Steps 269

Electrical Pretest 271

Special Note: Utilizing a Standing Wave 272

Supplementary Application Note 273

Recording 274

Chapter Twenty-Seven Phaser Pain Field Gun 277

Circuit Theory 278

Construction Steps 279

Subassembly Pretest 280

Final Assembly 282

Chapter Twenty-Eight Pain Field Property-Protection Guard 285

Project Description 286

Driver Circuit Description 286

Detection Circuit Description 287

Construction 287

Final Assembly 289

Test Procedure 290

Testing Detector-Sensing Circuit 291

Special Notes 292

Application and Setup 292

A Word of Caution 293

General Information on Ultrasonics 293

Index **297**

Acknowledgments

I wish to express thanks to the employees of Information Unlimited and Scientific Systems Research Laboratories for making these projects possible. Their contributions range from many helpful ideas to actual prototype assembly. Special thanks go out to department heads Rick Upham, general manager in charge of the lab and shop and layout designer; Sheryl Upham, order processing and control; Joyce Krar, accounting and administration; Walter Koschen, advertising and system administrator; Chris Upham, electrical assembly department; Al (Big Al) Watts, fabrication department; Sharon Gordon, outside assembly; and all the technicians, assemblers, and general helpers at our facilities in New Hampshire, Florida, and Hong Kong that have made these endeavors possible.

Also not to be forgotten is my wife Lucy, who has contributed so much with her support and understanding of my absence due to long hours in front of the computer necessary for preparing this manuscript.

I wish to acknowledge the contributions, including the front cover material, of Durlin Cox of Resonance Research in Baraboo, Wisconsin. Resonance Research is a supplier of large, museum-quality, electrical display devices.

My gratitude goes to Tim Ventura of American Gravitics and his contributions to the lifter craft technology found in Chapter 1 "Antigravity Project."

Finally, I would like to thank Zarir Sholapura of Zeonics and his contributions to high-voltage and high-energy research.

Special Notes

General Information

All projects in this book have been built and tested in our laboratories at Information Unlimited/Scientific Systems. The gadgets perform as described. Builders having difficulties may contact our technical help department.

Part Sources

Most parts are readily available through electronic supply houses, electrical supply houses, and hardware/builder supply outlets. Certain specialized and proprietary parts such as transformers, capacitors, *printed circuit boards* (PCB), tooled fabrication, and optical parts are manufactured in our shops. They are indicated with database numbers on the parts list and must be obtained by email or through our web site at www.amazing1.com. Without these special items, many of these projects would not be possible. Advanced builders may attempt substitution with the risk of reduced performance or failure.

Safety

Several projects are noted as being dangerous electrically, kinetically, and optically. Such projects must not be attempted unless the builder is experienced in his or her related field. Safety is stressed with all necessary compliances required for the trade.

Labeling is shown as required if the finished product is being offered to the trade. Labels are available and should be used if your project is to be exposed or demonstrated to the public.

Unfortunately, many scientific devices must use dangerous parameters to properly produce the desired target effects.

Printed Circuit Boards

Some projects are shown using PCB. They may also be built on vector or circuit boards. Attempt to follow the layout as shown when transposing component locations and wire routing.

Project Origins

Some of the devices shown are fall-out technology acquired from our project contracts as performed for the government and other related agencies. Others are the result of our own research efforts. We are constantly engaged in research for the trade and in many interesting research and development programs.

Other Available Options

Most of the projects are available as partial or complete kits and may be laboratory assembled upon request.

Our offshore assembly operation can competitively supply all types of specialty transformers, coils, and power supplies in volume for the trade.

Our engineering services specialize in high-voltage power supplies, shock and *electromagnetic pulse* (EMP) pulsers, Marx impulse generators, and all related components.

Contact Us

Information Unlimited
Phone Number: 603-673-6493
Fax Number: 603-672-5406
Web site: www.amazing1.com
Email: riannini@metro2000.net

General Information

All projects in this book have been built and tested in our laboratories at Information Unlimited Scientific Systems. The gadgets perform as described. Builders having difficulties may contact our technical help department.

Part Sources

Most parts are readily available through electronic supply houses, electrical supply houses, and hardware/builder supply outlets. Certain specialized and proprietary parts such as transformers, capacitors, printed circuit boards (PCB), tooled fabrication, and optical parts are manufactured in our shops. They are indicated with a dagger mark on the parts list and must be obtained by email or through our web site at www.iusa.org/. Even without these special items, many of these projects would not be possible. Advanced builders may attempt substitution with the risk of reduced performance or failure.

Safety

Several projects are noted as being dangerous electrically, kinetically, and optically. Such projects must not be attempted unless the builder is experienced in his or her related field. Safety is stressed with all necessary compliances required for the trade.

Labeling is shown as required if the finished product is being offered to the trade. Labels are available and should be used if your project is to be exposed or demonstrated to the public.

Unfortunately, many scientific devices must use dangerous parameters to properly produce the desired target effects.

Printed Circuit Boards

Some projects are shown using PCB. They may also be built on vector or circuit boards. Attempt to follow the layout as shown when transposing component locations and wire routing.

Project Origins

Some of the devices shown are fall-out technology acquired from our project contracts as performed for the government and other related agencies. Others are the result of our own research efforts. We are constantly engaged in research for the trade and in many interesting research and development programs.

Other Available Options

Most of the projects are available as partial or complete kits and may be laboratory assembled upon request.

Our otherwise assembly operation can competitively supply all types of specialty transformers, coils, and power supplies in volume for the trade.

Our engineering services specialize in high-voltage power supplies, shock and electromagnetic pulse (EMP) pulses, Marx impulse generators and all related components.

Contact Us

Information Unlimited
Phone Number: 603-673-6103
Fax Number: 603-673-5106
Web site: www.iusa.org/
Email: rennin@iusa.com

Introduction

On a typical day, electronics enable us to turn on the TV or the computer, use the cellular phone, hear the "beeps and blips" of electronic toys and games, have a medical checkup, listen to the news on space exploration and world conflicts, even drive our car.

Electronic Gadgets for the Evil Genius presents a "hands-on" approach allowing the electronic enthusiast to construct many devices that are not as well known. These "action" projects demonstrate exciting and useful concepts of this diversified field.

Tesla Coils

The spectacular and highly visible effect produced by the Tesla coil has amazed and fascinated people for years. These high-frequency, high-voltage devices possess qualities unlike conventional electricity. Tesla output energy defies most insulation materials; transmits energy without wires; produces heat, light, and noise; and harmlessly passes through human tissue, causing virtually no sensation or shocking effect in the person.

Considerable research, money, and effort have been dedicated to the actual construction of similar, large Tesla coil-type devices capable of producing 200-foot lightning bolts and powering lights 25 miles away. Nikola Tesla was the originator of this research, along with countless other contributions to the electrical sciences. As more progress was made in these fields, it was soon realized that he indeed was responsible for many advances in the development of energy production.

Tesla is finally being credited for his work and is taking his rightful place as a truly great electrical genius in this field. His main theory of wireless energy transmission, however, is still much in question, and many dedicated groups are hopeful in obtaining some breakthrough that will resurrect it. The Tesla coil is the basis for much of this interesting research and still amazes all who come in contact with this visual and audible effect.

Plasma Devices

Electrical plasma can be anything from a simple electric arc from a welder to a complex entity of closed-circuit, toroidal flowing currents such as ball lightning. A nuclear explosion produces a plasma; the sun and a simple fire are forms of plasma. Plasma guns may be the weapons of the future, and plasma propulsion may power spacecraft to near the speed of light. Plasma confinement may be a key to fusion energy, and rotating plasma fields may hold the secrets to levitation devices such as hover boards. Gas displays using energized plasma can also provide spectacular visual effects.

Lasers

Lasers first appeared in the early sixties as a crystalline rod of aluminum oxide (ruby) placed within a helical flash tube. A high-powered flash of light caused a stimulated emission of a powerful light pulse within the ruby rod, capable of punching holes in the hardest of metals. Since then, the laser (an acronym for *light amplification by stimulated emission of radiation*) has been a part of our lives from laser printers and recorders to complicated eye surgery and mega-power-directed beams of energy protecting us from a potential missile attack. To the experimenter, the laser possesses an almost magical property due to its ability to transport energy over a distance.

Lasers are classified in relation to their power output and are closely regulated and labeled:

- *Class 2* lasers can produce up to 1 milliwatt of optical power. Some popular applications include alignment, intrusion alarms, and point-to-point communications. Even though this class of lasers has the lowest power, a Class 2 laser pointing in your direction can appear as the brightest object at distances over 10 miles.
- *Class 3a* lasers can produce up to 5 milliwatts. Some applications include laser pointers, gun sights, disc readers, holography, small light shows, and other visual effects.
- *Class 3b* lasers can produce up to 500 milliwatts and are used for printing, disk burning, range finding, target designation, and night vision illumination to name a few applications.
- *Class 4* lasers have unlimited power output. They are the workhorses of the group, with the capability to work with many materials from the hardest of metals to simple wood engraving. Class 4 laser surgery now provides a precision never before thought possible, and eye surgery for cataract removal is now sworn by all who have it done. High-power light shows similar to those at Walt Disney World use Class 4 optical lasers. Bluish-green lasers easily penetrate seawater because of compatible colors allowing covert point-to-point communications. By penetrating seawater for submarine communications, the concentration of energy into a micro-sized area opens up high-temperature and fusion research. Projecting energy over great distances can power powering interplanetary spacecraft. The integration of multiple micro-sized plasma explosions may provide the magical levitating vehicles often depicted as spacecraft. Also, weapons that use directed beam energies into the megajoules in battles against aircraft, ground vehicles, and other difficult targets are now possible. Antipersonal weapons designed to neutralize and disable personel use energies into the kilojoules using timed, pulsed laser diodes have kill ranges well in excess of one mile and are backpackable. These systems are lightweight and require complex optical conditioning.

Many high-powered lasers use carbon dioxide as the laser's medium. These devices are efficient, transmit through air, and are easy to build. They can be made to generate continuous power output into the tens of thousands of watts. An experimenter that can easily build this type of laser that will burn and cut many materials Lasers can be are *pulsed,* obtaining enormous peak powers into the gigawatts. This power is not to be confused with energy, as the power pulses last for fractions of a second, whereas energy must be integrated over a 1-second period. A true measure of pulsed laser energy is by its output in joules.

Research in the field of lasers still remains very fertile with many new and exciting developments still yet to come.

Ultrasonics

The field of ultrasonics remains a relative gray area with few available hobbyist-level projects. Ultrasonic energy is produced by a piezoelectric or magnetostrictive transducer powered by a signal generator. Ultrasonics can be used for cleaning where a solvent transmits these vibrations dislodging unwanted materials and dirt. Plastic materials can be welded or cut by rapid vibrations, causing frictional heating. Acoustical ultrasonics is often used for discouraging animals against intruding into a certain area. It is also used for range finding and can be an excellent intrusion detection device.

High-sound-pressure, acoustical energy is very inefficient, owing to the physics of energy transfer between two surfaces of dissimilar densities. Standing waves impede this energy coupling and make it difficult to obtain high-decibel output. Energy transfer between two surfaces is optimized when both materials have like densities, which is why sound travels better through water. Air is many times less dense than a liquid and its lack of density therefore offers a greater challenge to the researcher in overcoming the problem of successful energy transfer. Nevertheless, sonic transducers are effectively used with horns and other means to vibrate as much air as possible.

The effects of high-sound-pressure sonic energy can provide an excellent low-liability deterrent to unauthorized intrusion. A vertical wall of pain can be

generated, causing nausea, dizziness, and extreme paranoia, which usually discourages the intrusion. No after-effects are produced once out of the field. However, sound pressure levels exceeding 140 decibels per minute can be harmful and should be avoided.

Listening to low-level ultrasonic sounds can be interesting to a nature enthusiast. Many insects and mammals emit sounds well out of human hearing range. Many man-made devices, such as rotating machinery, generate high-frequency sound and enable the detection of leaking air, water, or leaking electricity in the form of corona usually indicating a potential fault. Thus, directional ultrasonic listening can be a valuable tool.

Electrokinetics

The properties of magnets have long fascinated man since the discovery of lodestones by the ancient Greeks centuries ago. Even in today's advanced technology, the ability to attract and repel magnetized objects still remains a mystery. Magnetism, in spite of its mysterious properties, is perhaps the most important force known to man. Without the knowledge of how to use magnets, everyday motors, transformers, communications, and most forms of transportation would be next to impossible. Electricity generation would not exist.

The Star Wars defense initiative has opened up many doors to the potential use of this technology. Electrokinetically launching objects at hypervelocities much like the effect of a meteor shower will create a destructive barrier to incoming ballistic missiles. The propelling of radioactive waste and many other materials safely into outer space, the potential levitation of terrestrial vehicles, and of course projectile-type weapons are other applications.

Even though magnetic properties do not give way to variances, they do manifest properties in different forms. Motors use magnets to produce rotating mechanical energy from electricity and, of course, the opposite where generators use magnets and rotating energy to produce electrical power. Transformers take advantage of changing magnetic fields as a function of time, whereas relays and solenoids produce linear motion.

Electrokinetic accelerators utilize magnetic forces where a conducting and movable armature is placed between two parallel conducting rails. A force is now produced in the armature as a result of the interactive magnetic fields occurring around the armature and the current-carrying rails. Remember a current-carrying conductor produces a proportional magnetic field, which is basic high school physics.

Those who are familiar with vectors will recall the Lorentz JXB forces where a force is produced between a current-carrying conductor (the armature) and the magnetic B field produced in the rails. Acceleration of the armature occurs over the entire length of the rails and can reach unheard of velocities compared to chemical combustion.

Even though pulsed magnetics is not new, little information exists to provide a "hands-on" approach for the hobbyist or experimenter. Positive interest exists in this field for using this technology as a viable potential for the previously mentioned applications, as well as the nonevasive use of shockwaves in breaking up kidney and gallstones. Even a form of "magnetic destructors" is intended for use in robot wars and contests.

We therefore feel a "how-to" book demonstrating projects for the serious electronic and mechanical experimenter, as well as for technical interest groups, will prove to be popular. The projects here will fall within the realms of both the amateur and the serious experimenter. All the projects will contain a briefing of mathematical theory for those interested, along with a simple explanation of the operation. Individual chapters will have headings suggesting the required competence and experience of the reader, as well as any hazards that may be encountered. All the construction projects will also contain a full bill of materials with sources necessary to complete the device as described.

About the Author

Bob Iannini runs Information Unlimited, a firm dedicated to the experimenter and technology enthusiast. Founded in 1974, the company holds many patents, ranging from weapons advances to children's toys. Mr. Iannini's 1983 *Build Your Own Laser, Phaser, Ion Ray Gun & Other Working Space-Age Projects*, now out of print, remains a popular source for electronics hobbyists.

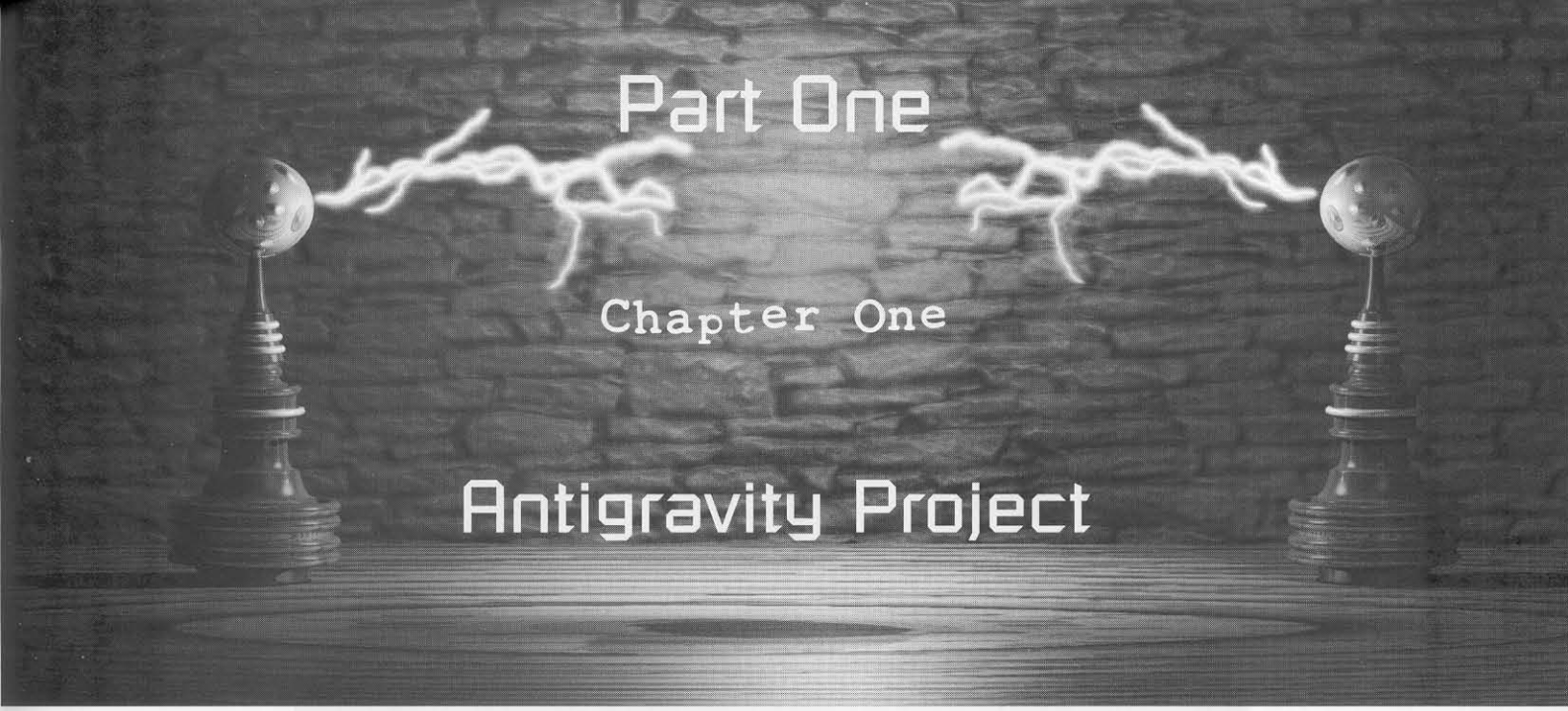

Part One

Chapter One

Antigravity Project

An antigravity project provides a means of levitating an object purely by electrical forces (see Figure 1-1). Motors, fans, jets, or magnets are not used. A propulsive thrust is created by the reactionary forces of an ion wind. This phenomenon is an excellent means for future transportation once a few engineering problems are solved, and a vehicle could operate in an almost frictionless environment.

Construction requires minimal electronic experience in building the electronics, as well as patience with a steady hand in constructing the craft. The project is presented into two sections, the ion power supply and the craft. Expect to spend between $25 to $50 for parts, noting many are available through Information Unlimited (www.amazing1.com). The complete parts list is at the end of the chapter as Table 1-1.

Theory of Operation

The following equations show motion obtained via the reactionary effect of a volume of air accelerated by electric charges. A thin, positively charged emitter wire is located in a charge that is in proximity to a smooth, attracting surface. Air particles are now charged in proximity to this thin emitter wire and are attracted to the negative space charge around the smooth surface. It appears that maximum thrust (or effect) requires moving as much air mass as fast as possible in a given amount of time, expressed as the following:

$$\text{Thrust} = mv/t \quad m = \text{mass of air}$$
$$v = \text{velocity} \quad t = \text{time}$$

The power input to produce this movement is related to $(\frac{1}{2}mv^2)/t$ energy in joules.

If we now define system efficiency as the ratio of "power out" to "power in," we obtain

$$\text{Eff} = mv/t \times 1/2\ mv^2/t = 2/v$$

Efficiency now becomes inversely proportional to the velocity of the air and therefore suggests the utilization of large masses or volumes at low velocities to be efficient. This is not to say that the effect on the maximum lifting capability follows these same guidelines.

It is known that air molecules and ions are elastic on impact at low velocities. High velocities have a tendency to cause molecular disassociation with accompanying secondary ionization.

This secondary ionization will cause a net decrease in the reactionary effect or thrust due to a reversal of direction of the now oppositely charged particles. The objective now becomes to move as much mass as possible at a low velocity or energy where the maximum amount of elastic collision takes place with a

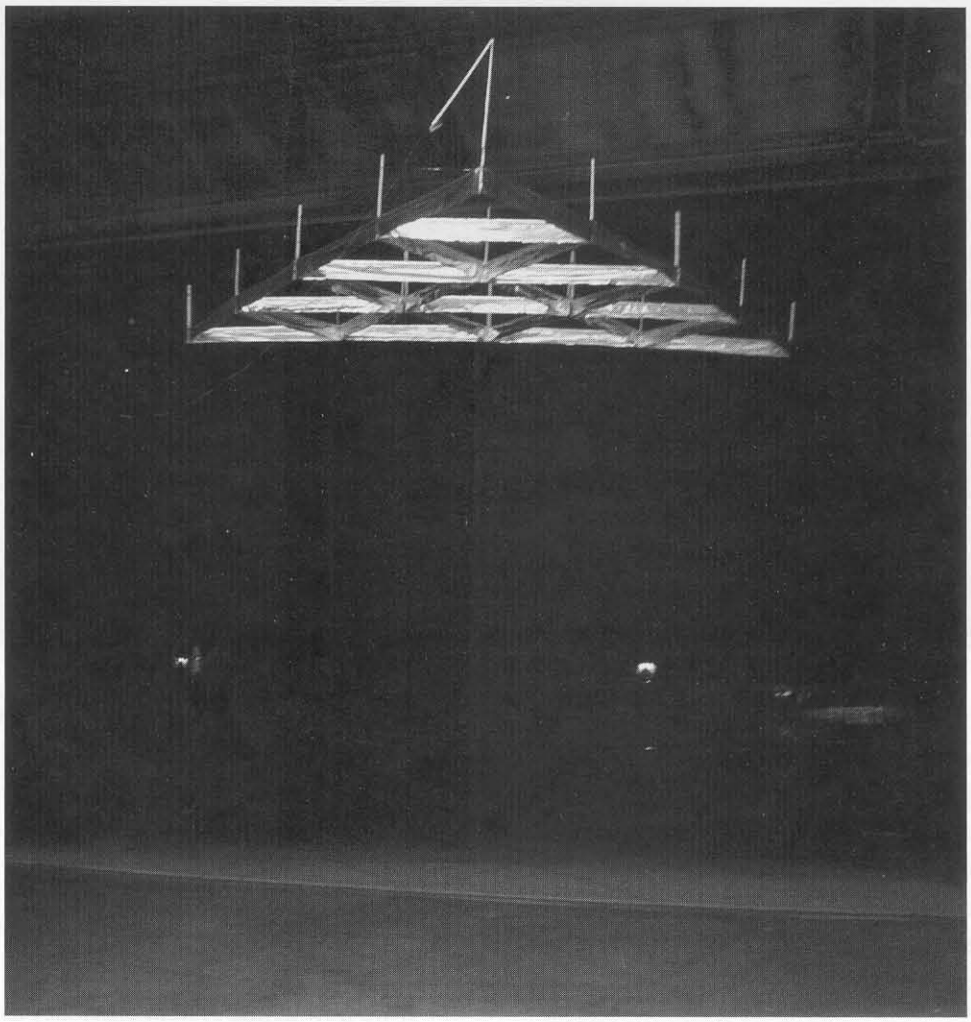

Figure 1-1 *Antigravity lifter in flight*

minimum of destructive molecular disassociation and secondary ionization.

Your lifter requires a high DC voltage at a relatively low current. The driver power supply schematic is shown in Figure 1-2. It generates 30,000 volts at a load current of 1 *milliampere* (ma). This is usually sufficient to power lifters up to 36 inches per side when properly constructed using up to 1½-inch emitter wire spacing. It easily powers the 8-inch unit shown in these instructions. Even though the current is low, improper contact can result in a harmless yet painful shock.

The output voltage of the driver is obtained using a Cockcroft Walton voltage multiplier with four to five stages of multiplication. Note this method of obtaining high voltages was used in the first atom smasher ushering in the nuclear age! This multiplier section requires a high-voltage/frequency source for input. Input is supplied by a transformer (T1) producing 6 to 8 *kilovolts* (Kv) at approximately 30 *kilohertz* (kHz). You will note that this transformer is a proprietary design owned by Information Unlimited. The part is small and lightweight for the power produced.

The primary part of T1 is current driven through an inductor (L1) and is switched at the desired frequency by a *field-effect transistor* (FET) switch (Q1). The capacitor (C6) is resonated with the primary of T1 and zero voltage switches when the frequency is properly adjusted. (This mode of operation is very similar to class E operation.) The timing of the drive pulses to Q1 is therefore critical to obtain optimum operation.

The drive pulses are generated by a 555 timer circuit (I1) connected as an astable multivibrator with a

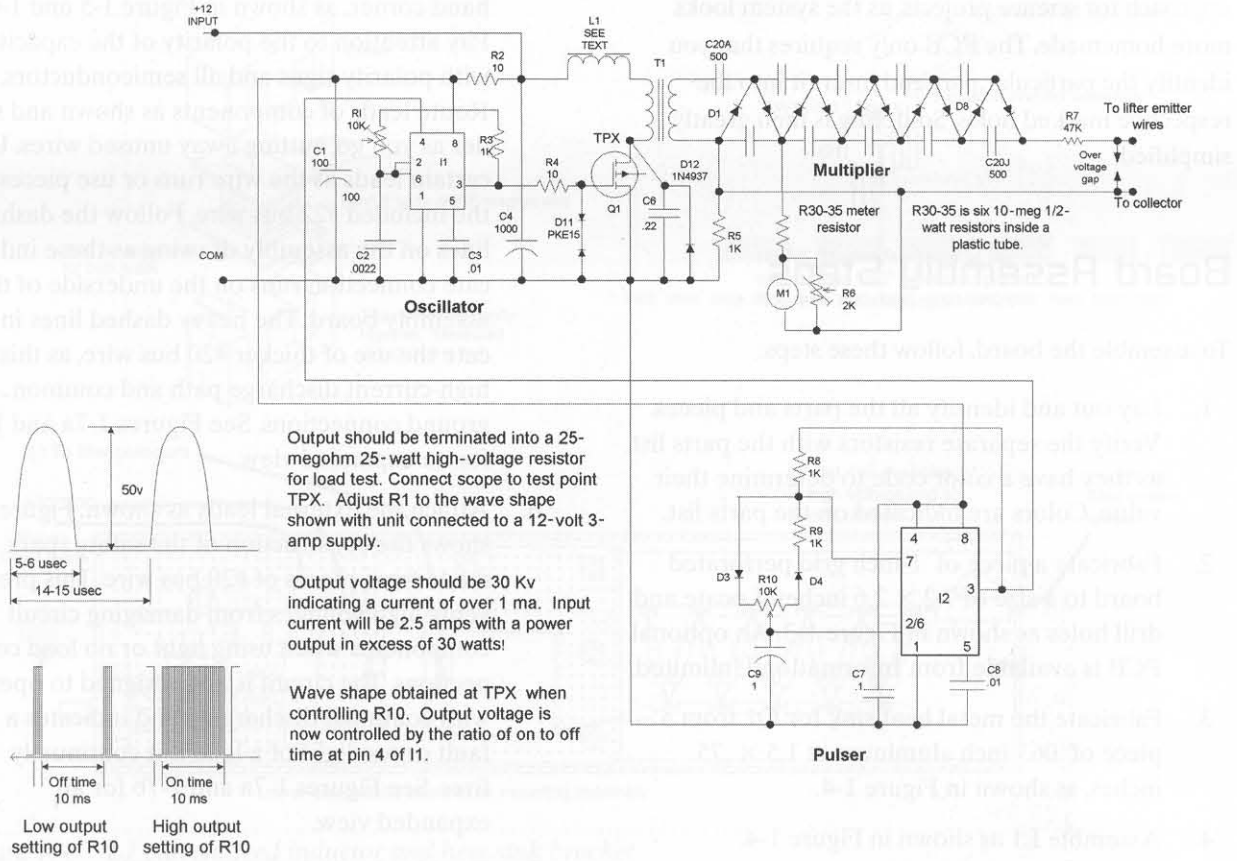

Figure 1-2 *Antigravity schematic*

repetition rate determined by the setting of the trimpot (R1) and a fixed-value timing capacitor (C2).

I1 is now turned on and off by a second timer (I2). This timer operates at a fixed frequency of 100 Hz but has an adjustable "duty cycle" (the ratio of the on to off time) determined by the setting of the control pot (R10). I1 is now gated on and off with this controlled pulse providing an adjustment of output power.

An over-voltage protection spark gap is placed across the output and is easily set to break down at 20 to 30 Kv. This usually is sufficient for lifters having a 2- to 3-centimeter separation between the emitter wire and the collector skirts. Even though the output is short circuit protected against continuous overload, constant hard discharging of the output can cause damage and must be limited. A pulse current resistor (R7) helps to protect the circuit from these potential catastrophic current spikes.

Power input is controlled by a switch (S1) that is part of the control pot (R10). The actual power can be a small battery capable of supplying up to 3 amps or a 12-volt, 3- to 5-amp converter for 115 uses. Power switch S1 must be added to the GRA1 series or you must use other external means to power control.

Construction Steps

This section discusses the construction of the electronic, ion-generating power supply and the lifter craft. The ion generator is built using a *printed circuit board* (PCB) that is individually available or you may use the more challenging *perforated circuit board*. The perforated board approach is more complicated, as the component leads must be routed and used as the conductive metal traces. It is suggested that you follow the figures in this section closely and mark the actual holes with a pen before inserting the parts. Start from a corner and proceed from left to right. Note that the perforated board is the preferred

approach for science projects, as the system looks more homemade. The PCB only requires that you identify the particular part and insert it into the respective marked holes. Soldering is then greatly simplified.

Board Assembly Steps

To assemble the board, follow these steps:

1. Lay out and identify all the parts and pieces. Verify the separate resistors with the parts list, as they have a color code to determine their value. Colors are indicated on the parts list.
2. Fabricate a piece of .1-inch grid perforated board to a size of 7.2 × 2.6 inches. Locate and drill holes as shown in Figure 1-3. An optional PCB is available from Information Unlimited.
3. Fabricate the metal heat sink for Q1 from a piece of .063-inch aluminum at 1.5 × .75 inches, as shown in Figure 1-4.
4. Assemble L1 as shown in Figure 1-4.
5. If you are building from a perforated board, insert components starting in the lower left-hand corner, as shown in Figure 1-5 and 1-6. Pay attention to the polarity of the capacitors with polarity signs and all semiconductors. Route leads of components as shown and solder as you go, cutting away unused wires. Use certain leads as the wire runs or use pieces of the included #22 bus wire. Follow the dashed lines on the assembly drawing as these indicate connection runs on the underside of the assembly board. The heavy dashed lines indicate the use of thicker #20 bus wire, as this is a high-current discharge path and common ground connections. See Figures 1-7a and 1-7b for an expanded view.
6. Attach the external leads as shown. Figure 1-6 shows the construction of the safety spark gap made from pieces of #20 bus wire. This prevents high voltages from damaging circuit components when using light or no load connections. The circuit is not designed to operate with continual discharging and indicates a fault or too light of a load if it continually fires. See Figures 1-7a and 1-7b for an expanded view.
7. Double-check the accuracy of the wiring and the quality of the solder joints. Avoid wire

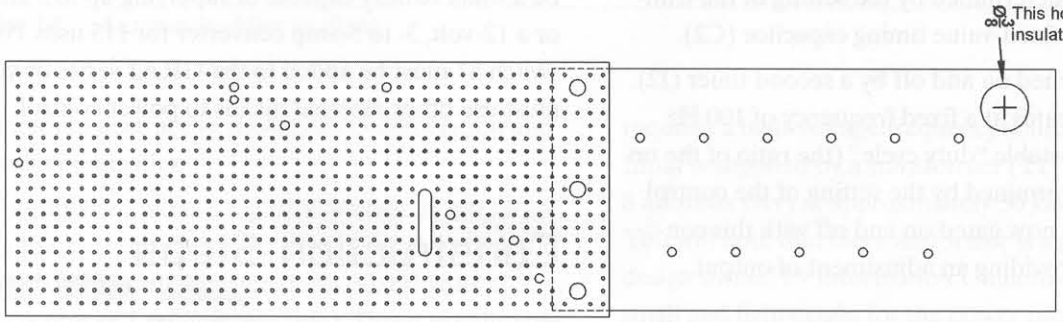

The assembly board is in two sections attached together by two outer 6-32 nylon screws and nuts. The middle hole is used to fasten the entire assembly to the base of the enclosure.

The circuit section is 4.8" x 2.9" .1 x .1 perforated board. The high-voltage Plexiglas section is 3.8 x 2.9" .063 thickness. Drill eight .063" holes in the perforated section and eleven in the Plexiglas section located as shown.

Drill the three .125" holes in both sections for attaching together.

Drill and drag the .125" slot as shown. This cutout and the enlarged holes are for mounting transformer T1.

Using the optionally available printed circuit board will still require fabrication of the Plexiglas board.

Hole diameters are not critical.

Always use the lower left-hand corner of perf board for position reference.

Figure 1-3 *Driver board fabrication*

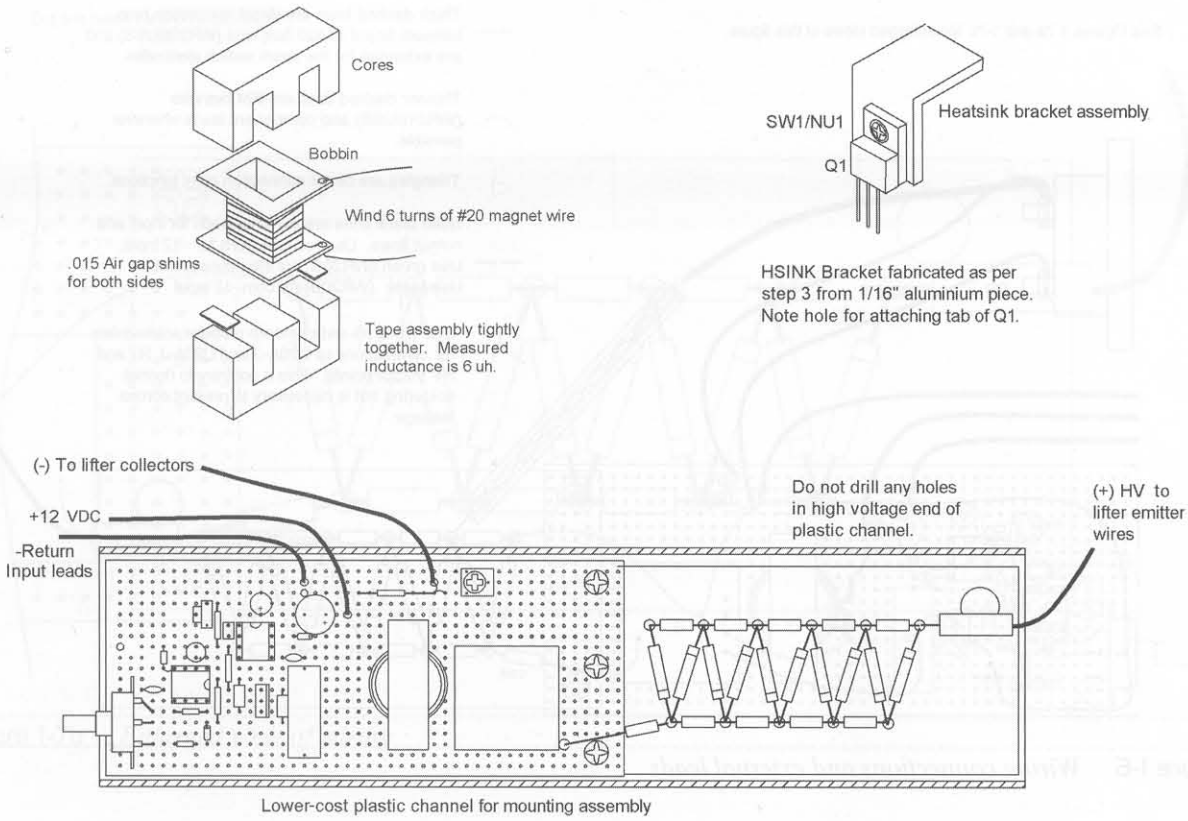

Figure 1-4 *L1 current feed inductor and heat sink bracket*

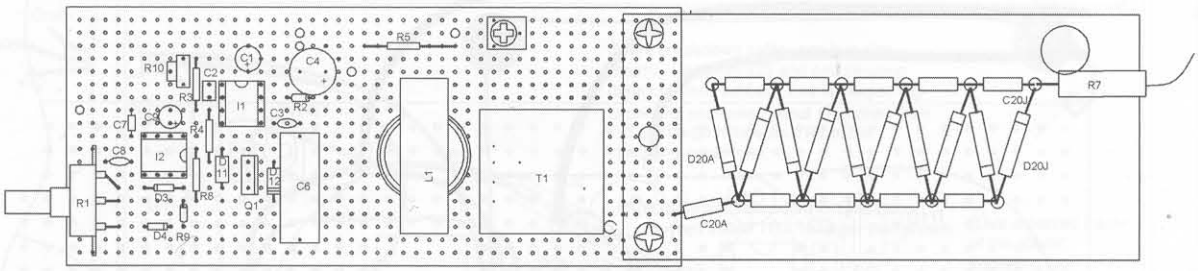

Note polarity of C1, C4, C9, D3, D4, D12, and D20A-D20J.

Note position of I1, I2, Q1.

Figure 1-5 *Parts identification*

bridges, shorts, and close proximity to other circuit components. If a wire bridge is necessary, sleeve some insulation onto the lead to avoid any potential shorts.

8. Fabricate a channel from a piece of $^1/_{16}$-inch plastic material. Add it to the assembly and secure it at its corners using silicon rubber adhesive. You may also enclose it in a suitable plastic box as shown in Figures 1-8 and 1-9. Figure 1-10 shows the simplified channel enclosure that does not include the meter M1.

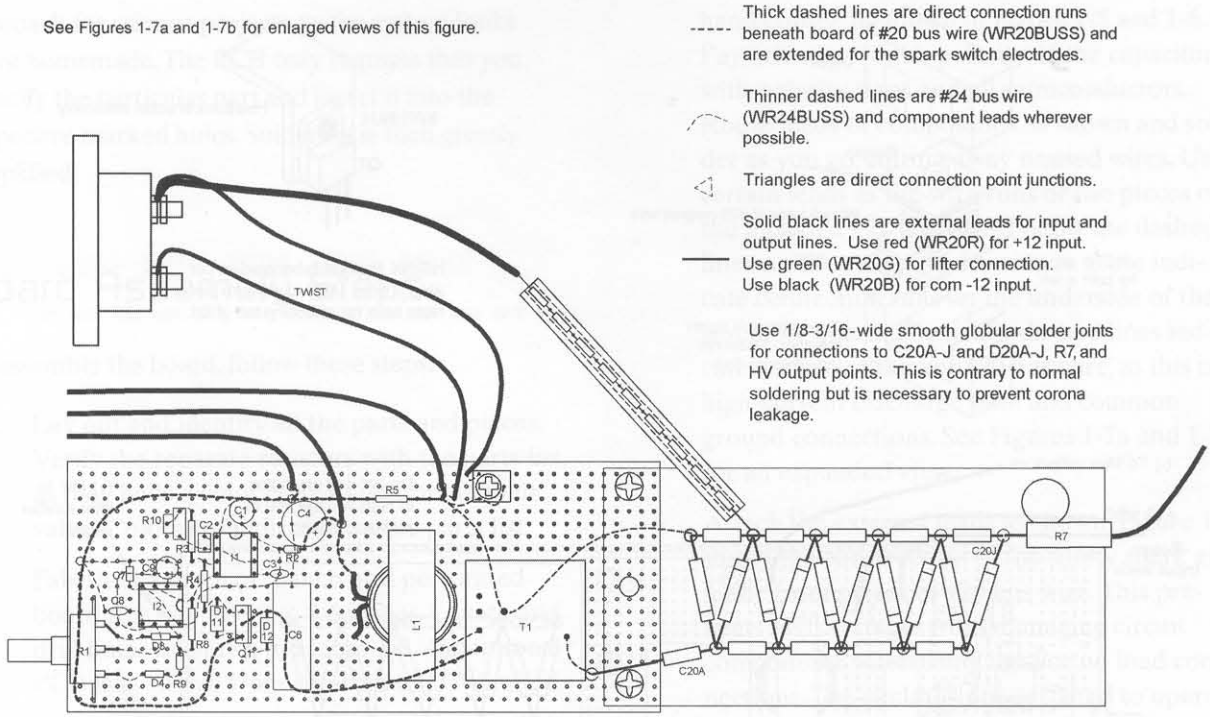

Figure 1-6 *Wiring connections and external leads*

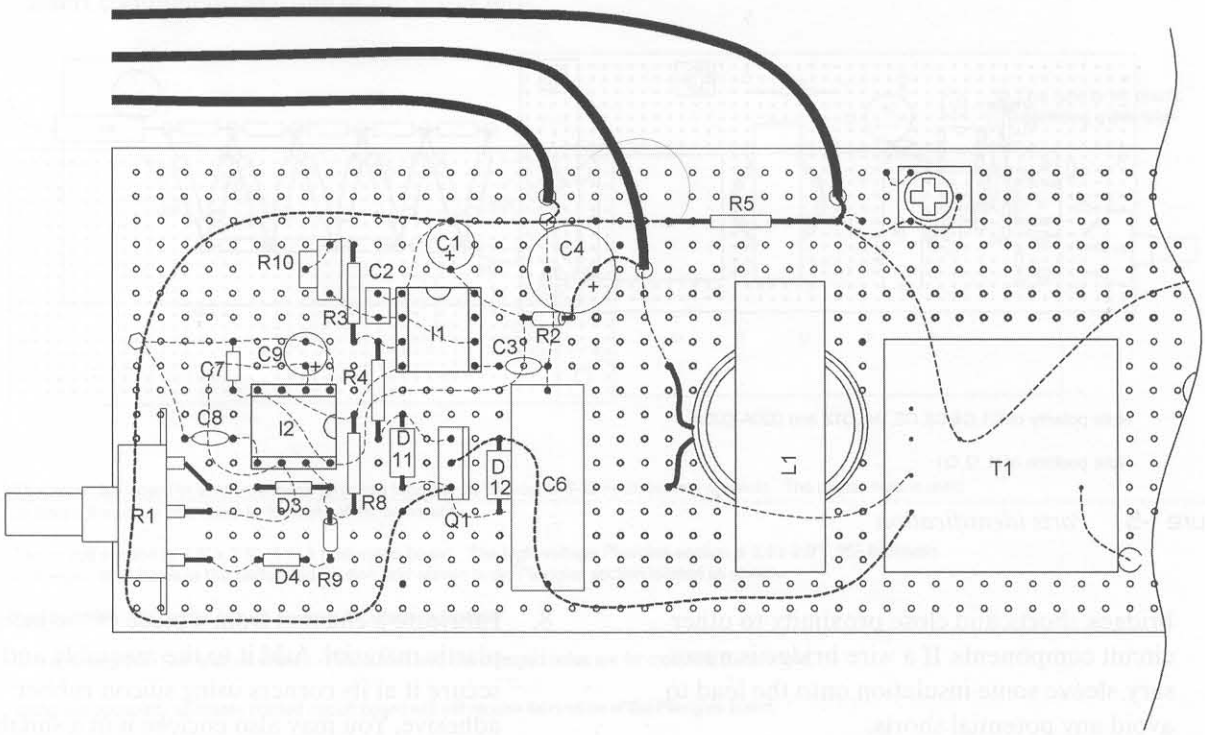

Figure 1-7a *Enlarged view of wiring*

Cut and paste 7a and 7b together.

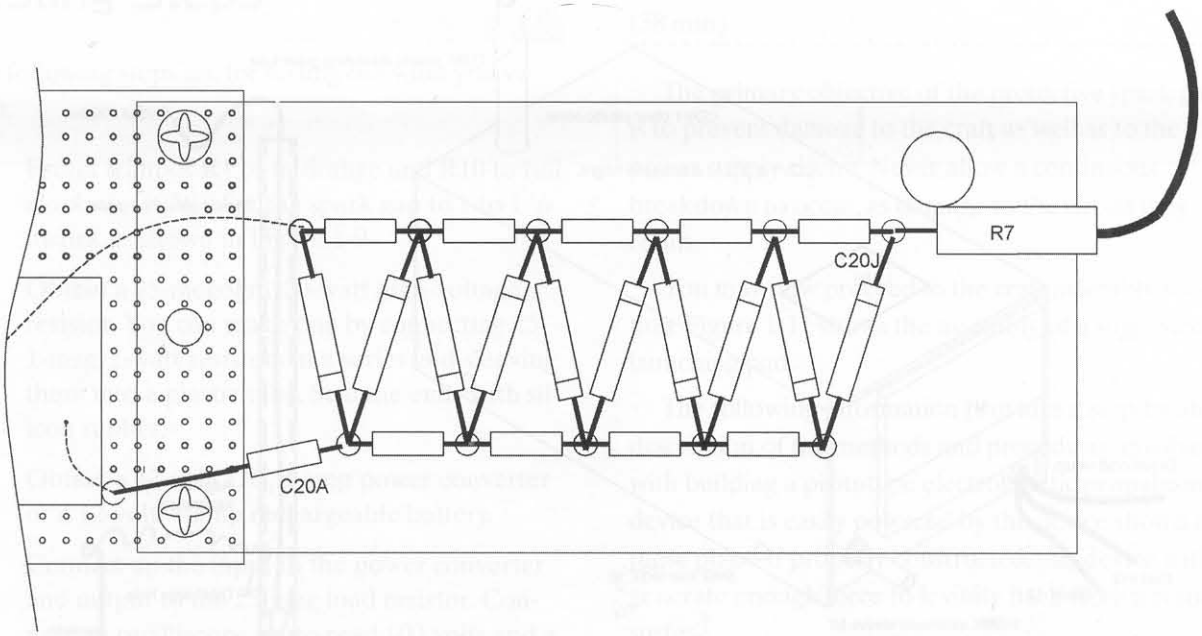

Figure 1-7b *Enlarged view of wiring*

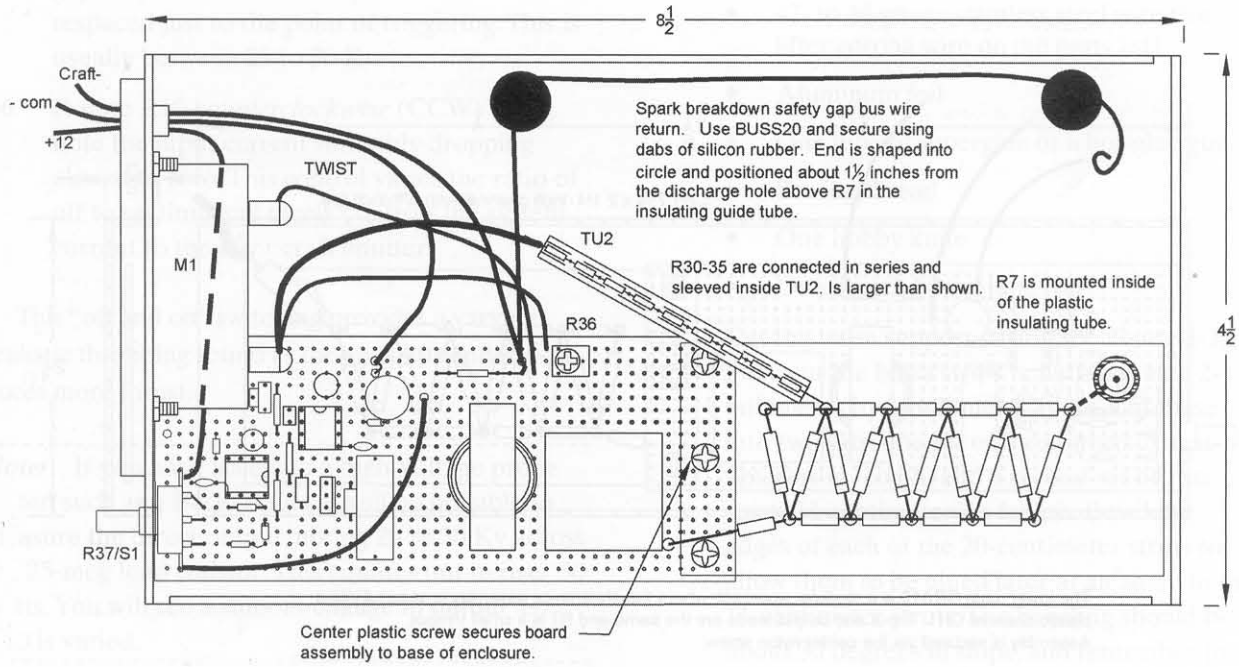

Figure 1-8 *Final assembly showing metered enclosure*

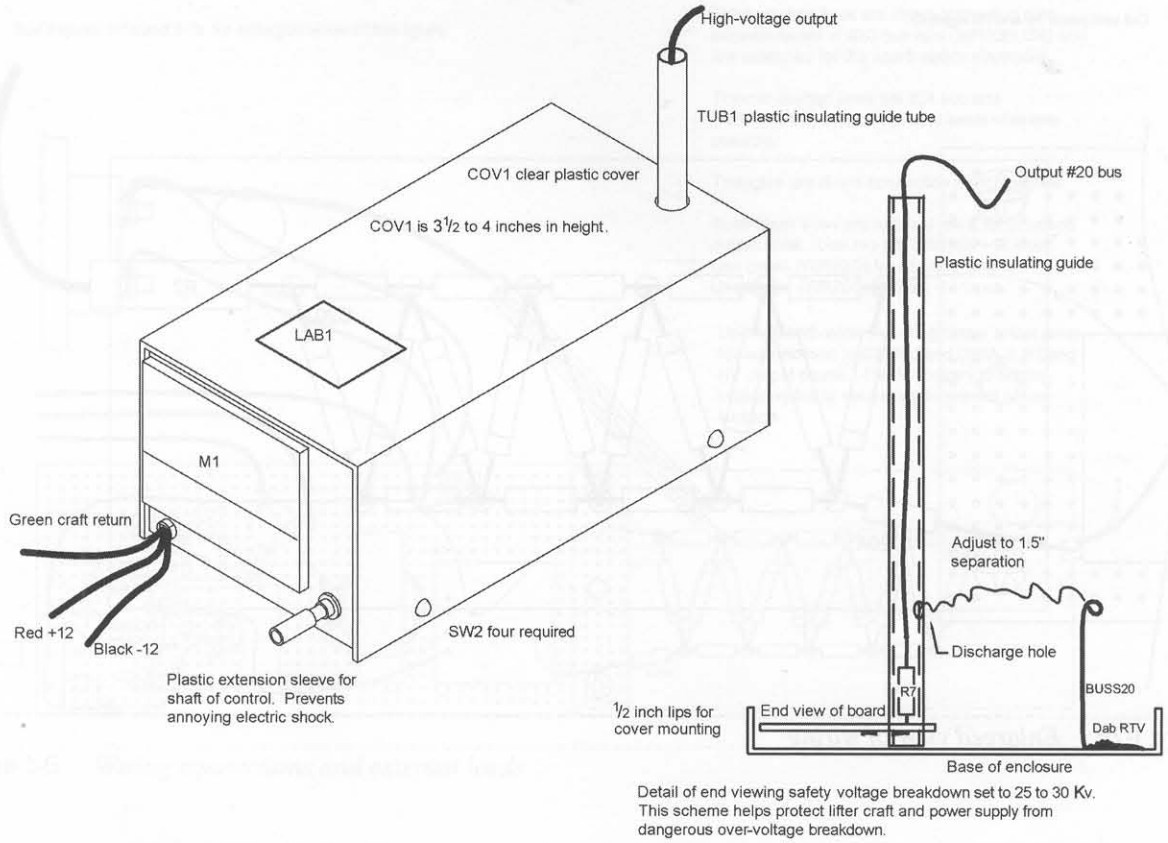

Figure 1-9 *Final isometric view*

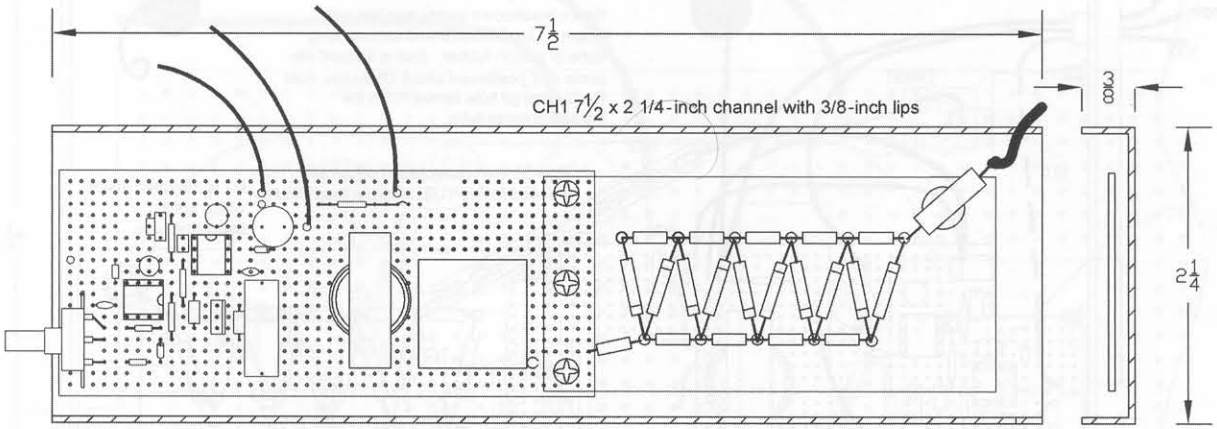

The lower-cost GRA10 is a modular approach where the electronics assembly is secured into a plastic channel CH1. Input and output leads are the same and R1 is a small trimpot. Assembly is secured via the center nylon screw.

Figure 1-10 *Alternate GRA10 assembly module*

Testing Steps

The following steps are for testing out what you've built:

1. Preset trimpot R1 to midrange and R10 to full *clockwise* (CW). Set the spark gap to 1 to 1 1/4 inches, as shown in Figure 1-9.
2. Obtain a 25-megohm, 20-watt high-voltage resistor. You can make one by connecting 25 1-meg, 1-watt resistors in a series and sleeving them into a plastic tube. Seal the ends with silicon rubber.
3. Obtain a 12-volt, DC, 3-amp power converter or a 12-volt, 4-amp rechargeable battery.
4. Connect up the input to the power converter and output to the 25-meg load resistor. Connect an oscilliscope set to read 100 volts and a sweep time of 5 usecs to drain pin of Q1 for viewing the signal wave shape as R1 is adjusted.
5. Apply power and quickly adjust R1 to the wave shape shown in Figure 1-2. The spark gap may fire intermittently and should be respaced just to the point of triggering. This is usually between 25 to 30 Kv.
6. Rotate R10 *counterclockwise* (CCW) and note the input current smoothly dropping almost to zero. This control varies the ratio of off to on time and nicely controls the system current to the lifter craft emitters.

This "off and on" switching provides a varying, realistic throbbing sound as the craft lifts and produces more thrust.

Note: If you have access to a high-voltage probe meter, such as a B&K HV44, it will be possible to measure the direct output, noting 20 to 30 Kv across the 25-meg load resistor. This equates out to over 30 watts. You will see a smooth change in output as R10 is varied.

Note: The spark gap spacing adjustment and the spacing between the craft ion emitter wires and collectors are strongly dependent on one another. Fine-tune the system by setting the gap on the threshold of firing before the craft emitter wire starts to break down. Do not exceed 1 1/2 inches (38 mm).

The primary objective of the protective spark gap is to prevent damage to the craft as well as to the power supply circuit. Never allow a continuous breakdown to occur, as damage to the circuit may result.

You may now proceed to the craft assembly section. Figure 1-11 shows the assembly of a suggested launching pad.

The following information provides a step-by-step description of the methods and procedures involved with building a prototype electrokinetic propulsion device that is easily powered by the device shown in these plans. If properly constructed, this device will generate enough force to levitate itself from a resting surface.

1. Obtain the required materials:
   - 2 mm by 6 mm balsa wood strips
   - 30-gauge enameled copper magnet wire for high-voltage power leads
   - 42- to 44-gauge stainless steel wire (for lifter corona wire on the parts list)
   - Aluminum foil
   - One tube of superglue or a hot-glue gun
   - Sewing thread
   - One hobby knife
   - One Scotch brand tape roll
2. Cut the balsa support struts (see Figure 1-12). First, cut the balsa strips in half to create 2-millimeter by 3-millimeter strips. Cut these into two sets: one set of three struts 20 centimeters in length, and a second set of two struts 11 centimeters in length. Bevel the edges of each of the 20-centimeter struts to allow them to be glued later at an angle to the 11-centimeter struts. The beveling should be about 30 degrees in slope, and remember to bevel both ends on the same side of the balsa face.
3. Assemble the balsa struts (see Figure 1-13). Mark each of the 11-centimeter struts at the top (to help you remember which end is up)

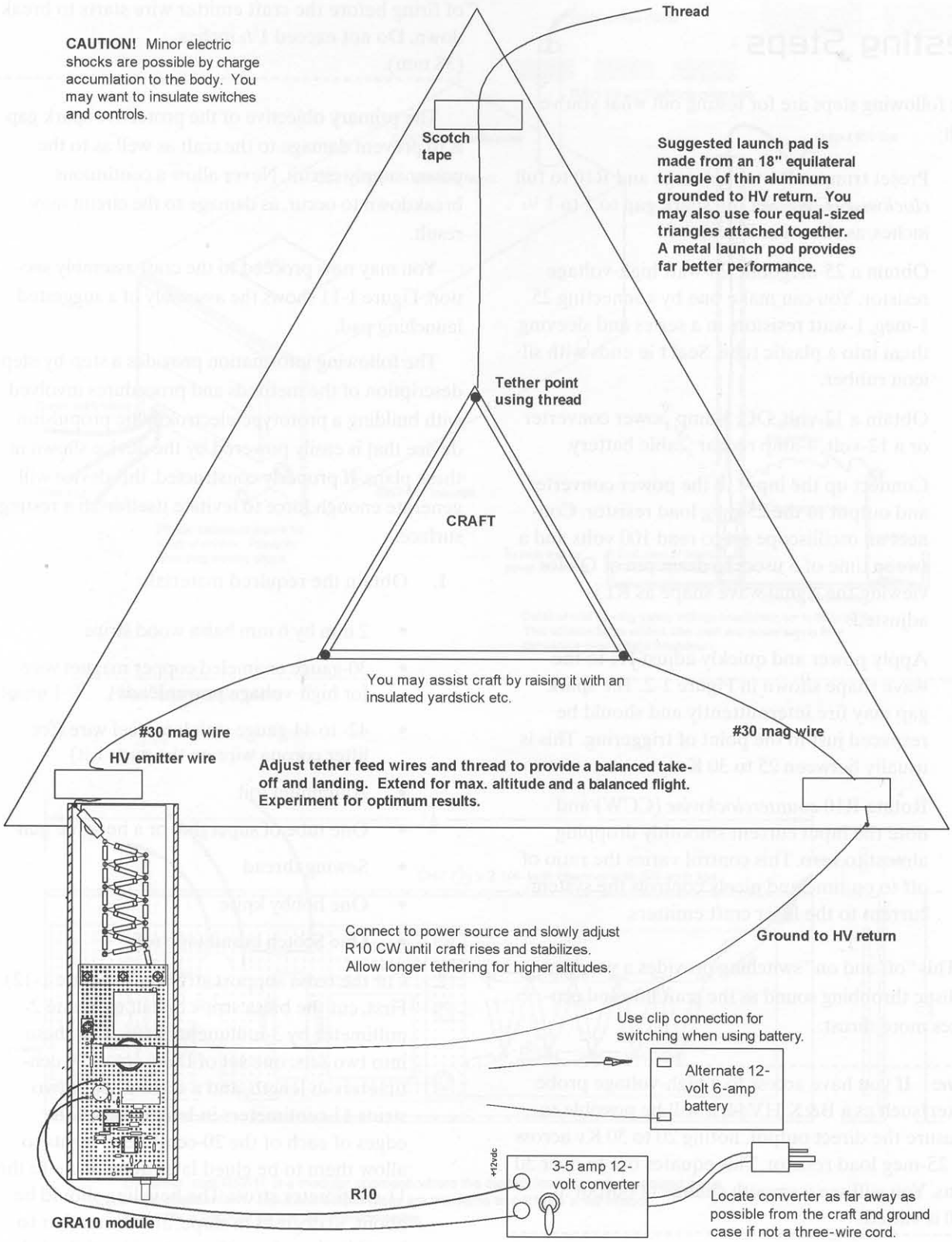

Figure 1-11 *Final setup showing launching pad*

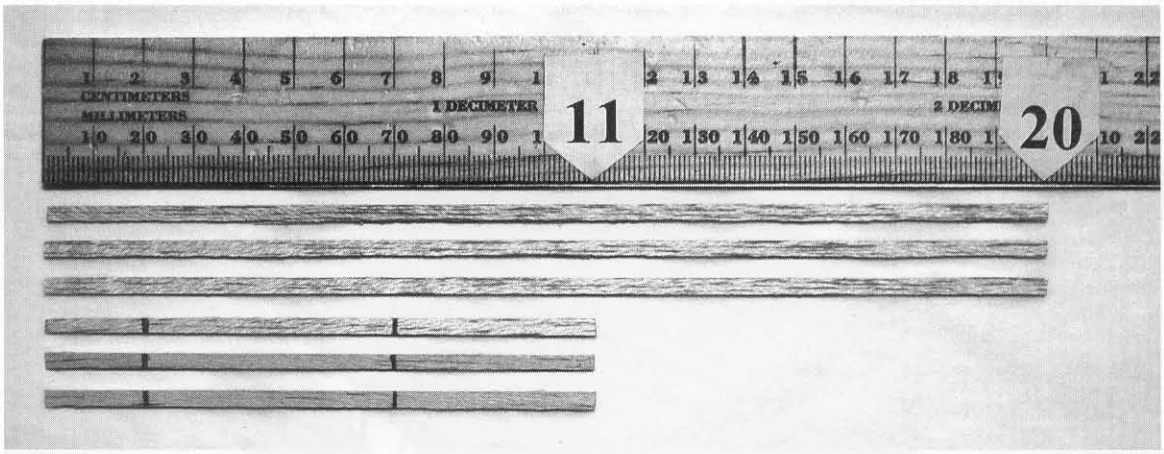

Figure 1-12 *Balsa wood struts*

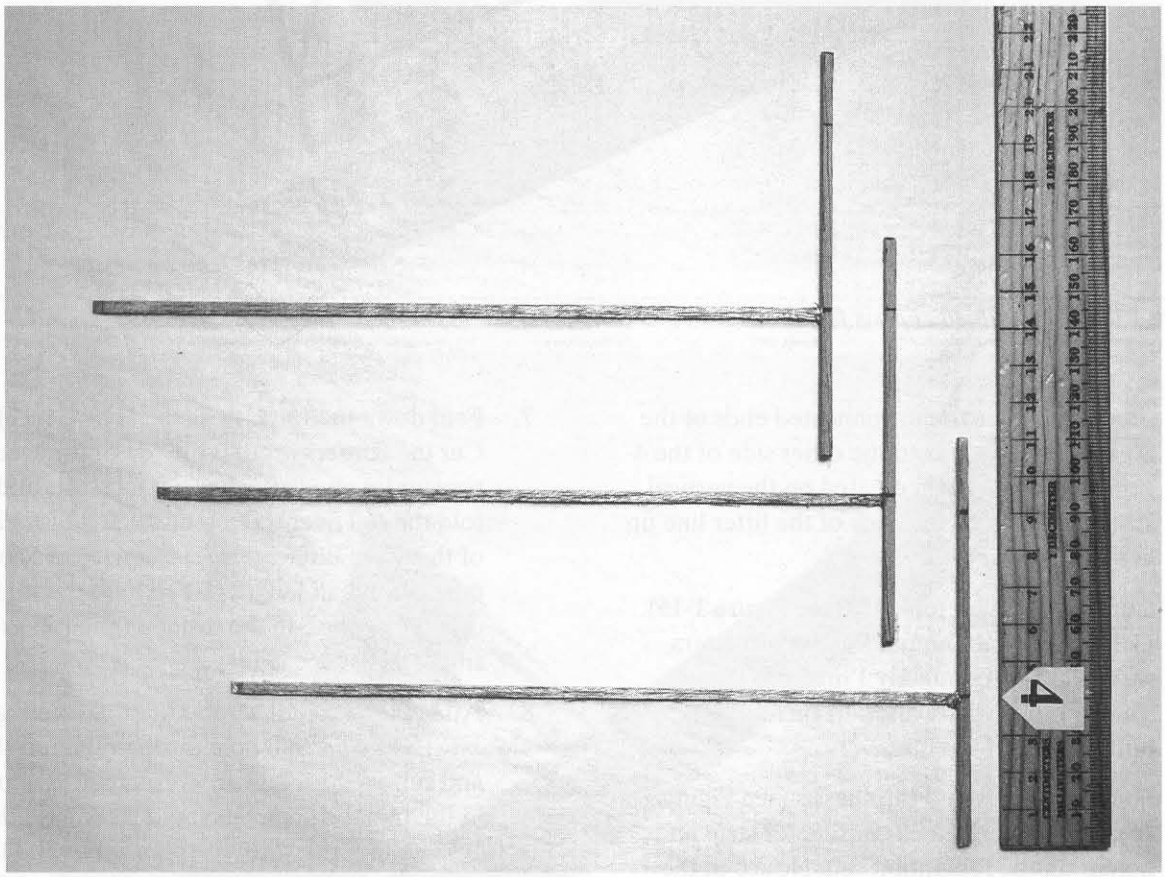

Figure 1-13 *Assembly of balsa wood struts*

and again at a mark 4 centimeters from the bottom. Sparingly use superglue to attach each of the three vertical 11-centimeter struts to a 20-centimeter horizontal strut as shown in the figure. In the figure, the beveled ends of the 20-centimeter struts have been glued at right angles at the 4-centimeter mark on the vertical struts.

4. Complete the chassis assembly (see Figure 1-14). Similar to the previous step, glue together the three pieces of the lifter frame using

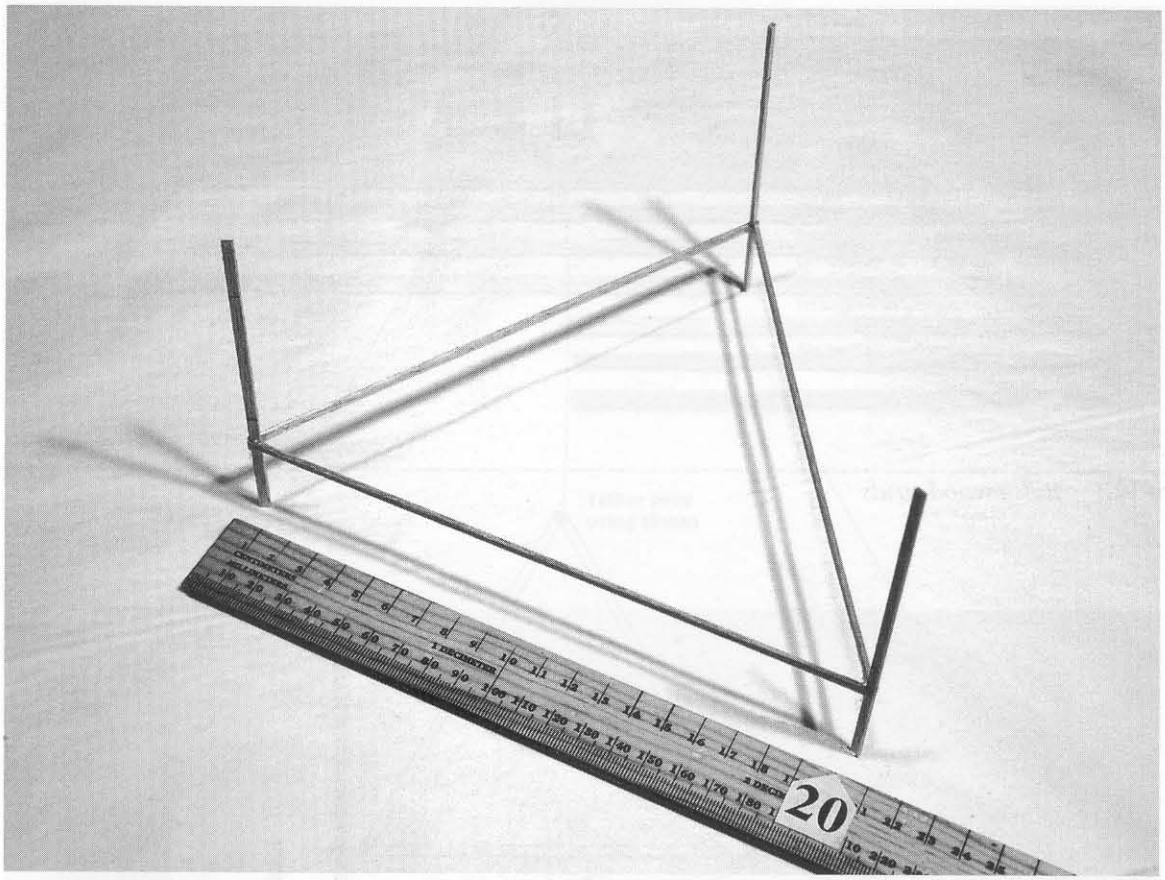

Figure 1-14 *Assembled chassis frame*

superglue. Glue the unconnected ends of the 20-centimeter struts to the other side of the 4-centimeter mark you created on the vertical strut. Ensure that the ends of the lifter line up as shown in the figure.

5. Cut an aluminum foil strip (see Figure 1-15). Cut a strip of aluminum foil 5 centimeters wide and approximately 1 meter in length. This foil strip will be used to surround the bottom part of the lifter.

6. Fold the foil around the chassis (see Figure 1-16). Put glue on the 20-centimeter strip and hold it on the foil until it sets. Notice in the figure how the foil is even with the bottom of the vertical struts. If done correctly, you should have an extra 1 centimeter of foil above the 20-centimeter balsa horizontal strut. Roll the lifter chassis down the length of the foil, gluing each side of the chassis as you go. You must have an extra 1-centimeter lip above the horizontal struts to reduce ion leakage.

7. Fold down the foil edges (see Figure 1-17). Cut the corners around the top of the 1-centimeter lip above the horizontal struts and fold the foil over the top of the strut for each of the three lifter sides. Use a piece of Scotch tape cut in half lengthwise to hold the folded corners as close to the inside of the foil as possible and reduce leakage.

8. Attach the ground wire to the foil (see Figure 1-18). Poke a small hole through the foil skirt and run the ground wire through it, as shown in the figure. The hole should be behind the strut so that the wire is supported by it. Make sure to strip the ground wire of its enamel coating before you connect it. The ground wire must have a section of bare copper to contact the foil in order to work. Give yourself about two extra feet of wire off the lifter to connect it to your power supply's ground.

9. Attach the corona wire (see Figure 1-19). Approximately 3 centimeters up from the top of the foil, or about 2 centimeters from the

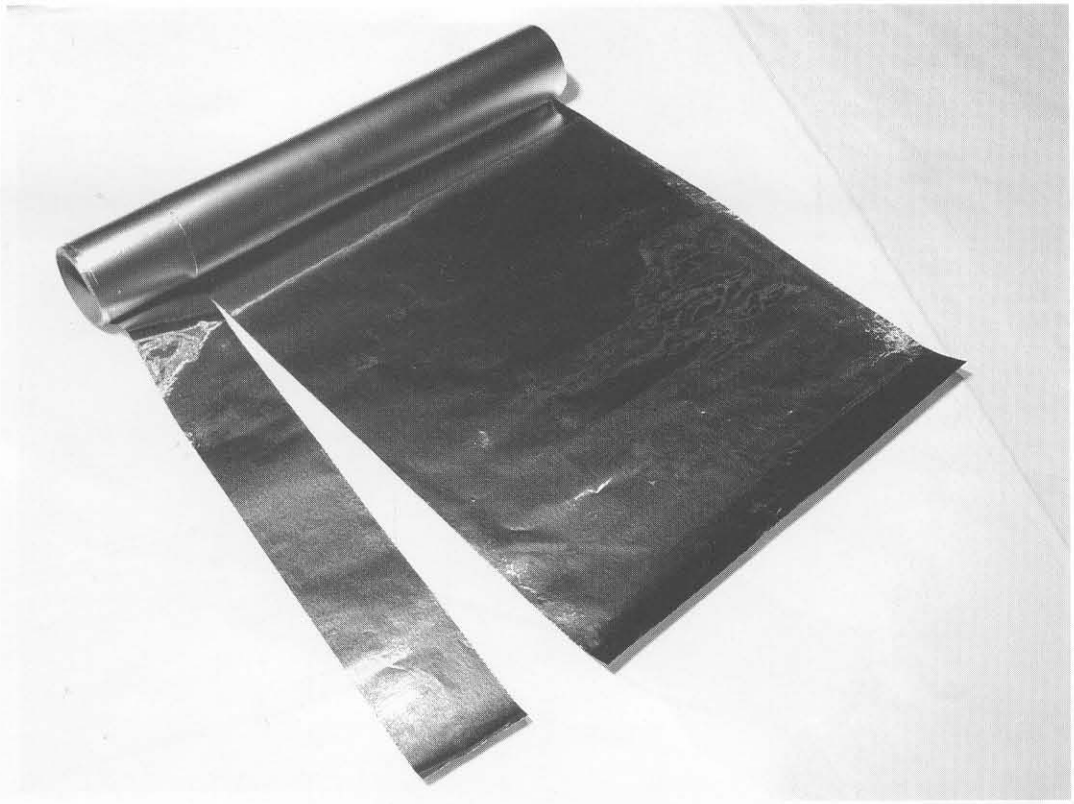

Figure 1-15 *Cutting of alumunum foil strip*

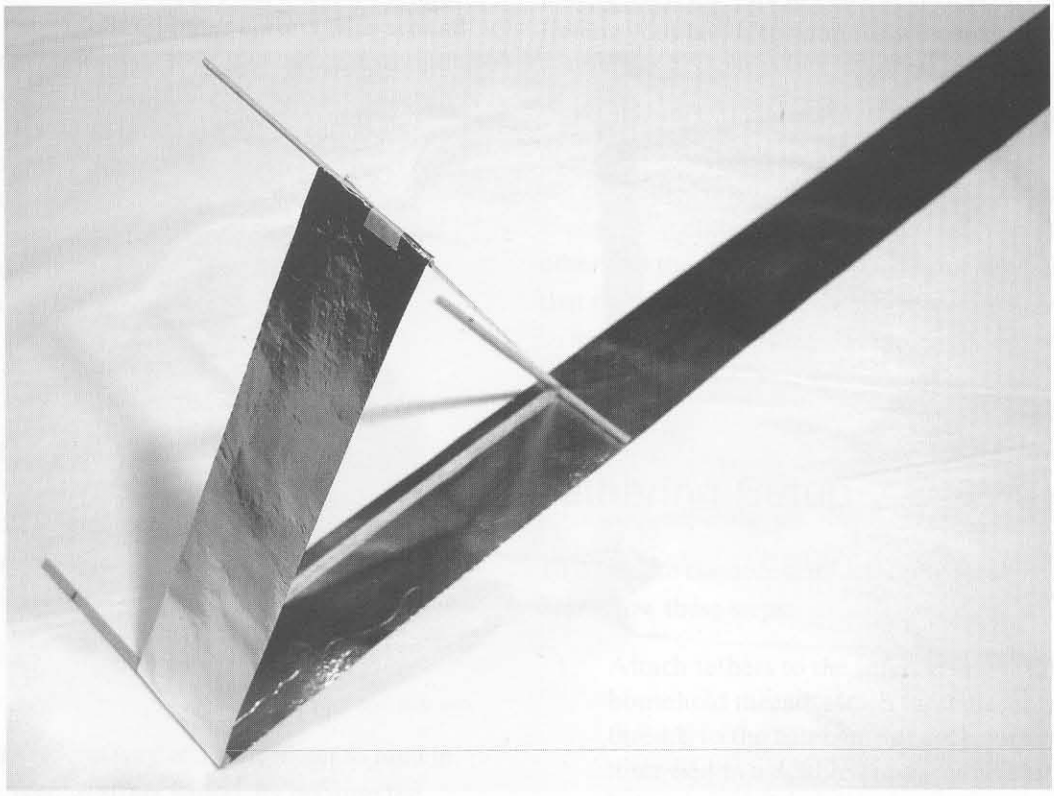

Figure 1-16 *Gluing of alumunum strip to frame*

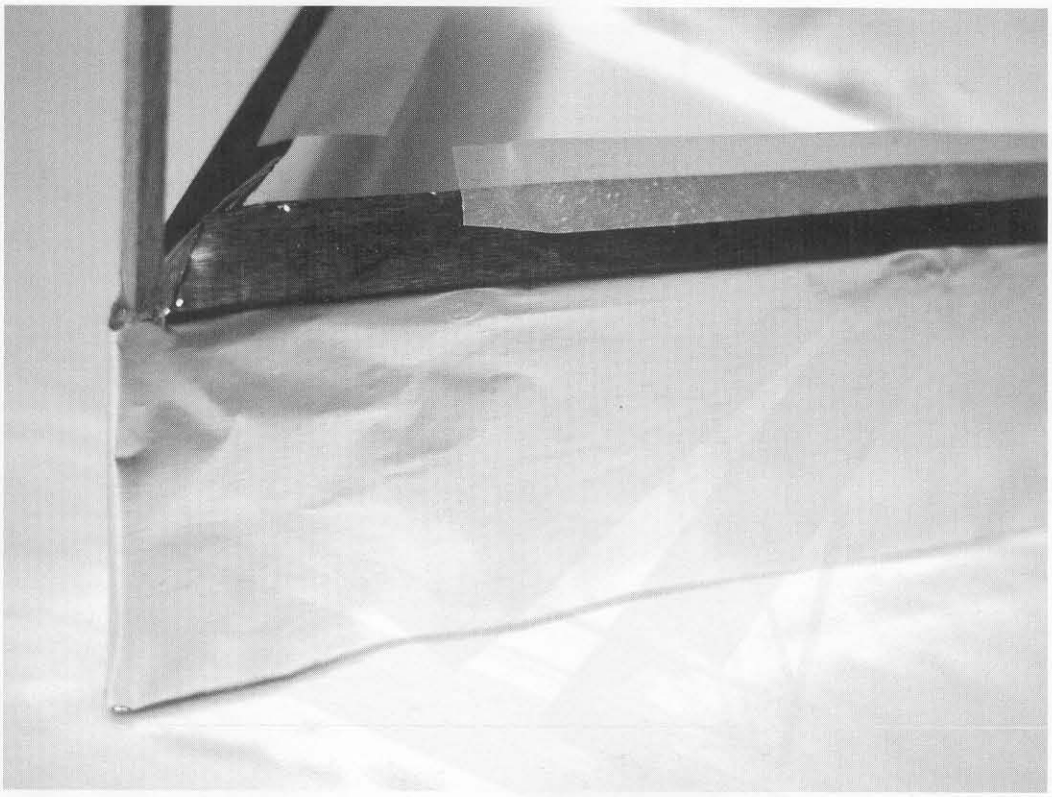

Figure 1-17 *Folding over the aluminum foil edges*

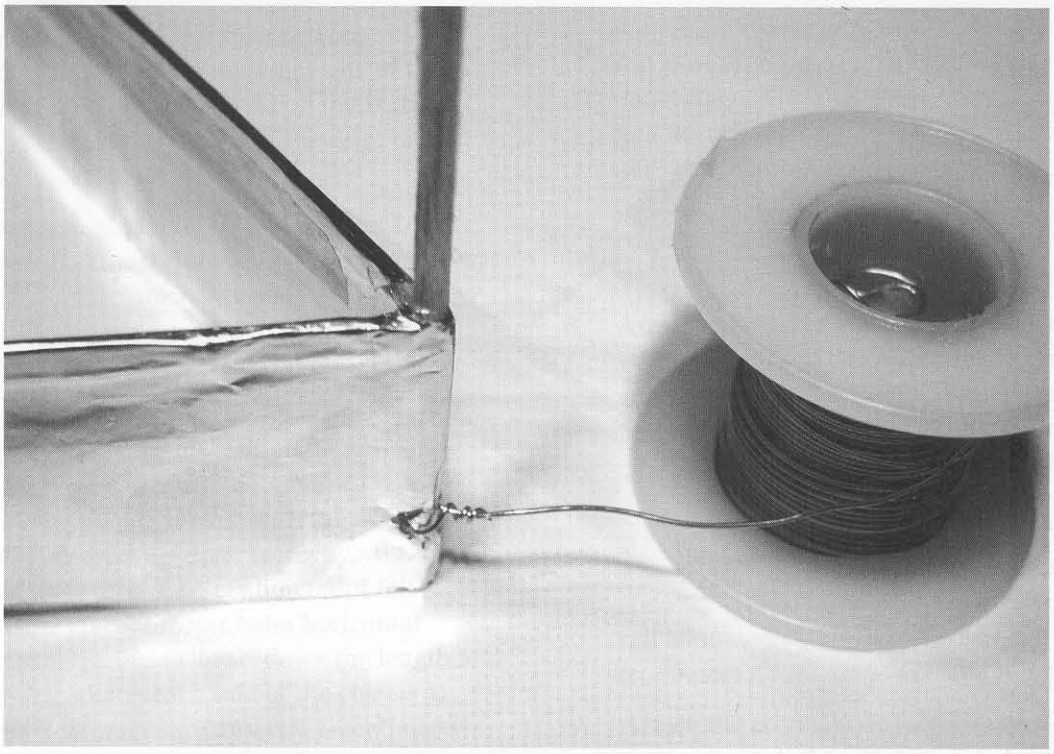

Figure 1-18 *Connection of the ground feed wire*

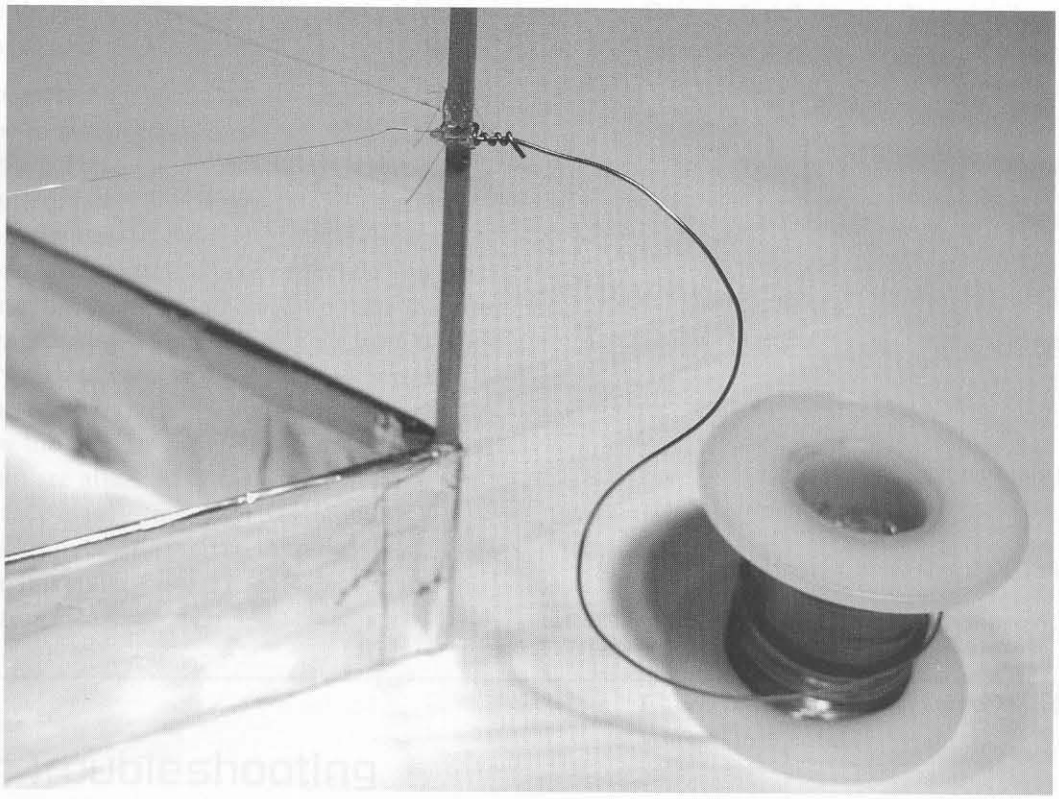

Figure 1-19 *Attaching and connecting of the corona ion emitter wire*

top of the vertical support struts, run a length of 40-gauge, 2.8-millimter corona wire around all three vertical struts and connect it to the 30-gauge power supply wire to be connected to the power supply. Make sure to loop the wire around each of the vertical struts at least once to ensure that they stay in place, and when you come back to the first vertical strut, tie the wire off so that the corona wire runs around the entire frame of the lifter.

If you have correctly followed the steps, you should have a lifter prototype identical to the one shown in Figure 1-20. Use the Testing Guide document to assist you with testing the lifter, and use the Troubleshooting document if you encounter problems while testing.

Notes

Attaching the corona wire can be difficult to hold in place on the vertical struts, especially because the wire is so thin. One method is to use a tiny dab of hot glue to keep the wire in place at each post, thereby freeing your hands to wrap the wire around the next post.

Another way to hold the wire in place is to wrap it around the 30-gauge power-lead wire and then wrap the tip of the 30-gauge wire around the vertical strut. Using this method you can attach both wires to each other and the vertical post at the same time. Ensure that the tip of the 30-gauge wire is completely stripped of enamel before wrapping the corona wire around it.

Tethering Setup

To complete the necessary tethering (see Figure 1-21), follow these steps:

1. Attach tethers to the lifter. Using common household thread, attach three tie-down threads to the lifter, one at each corner of the lifter tied in a double knot around the vertical balsa strut at the point where the strut meets the foil skirt wrapped around the lifter. Cut

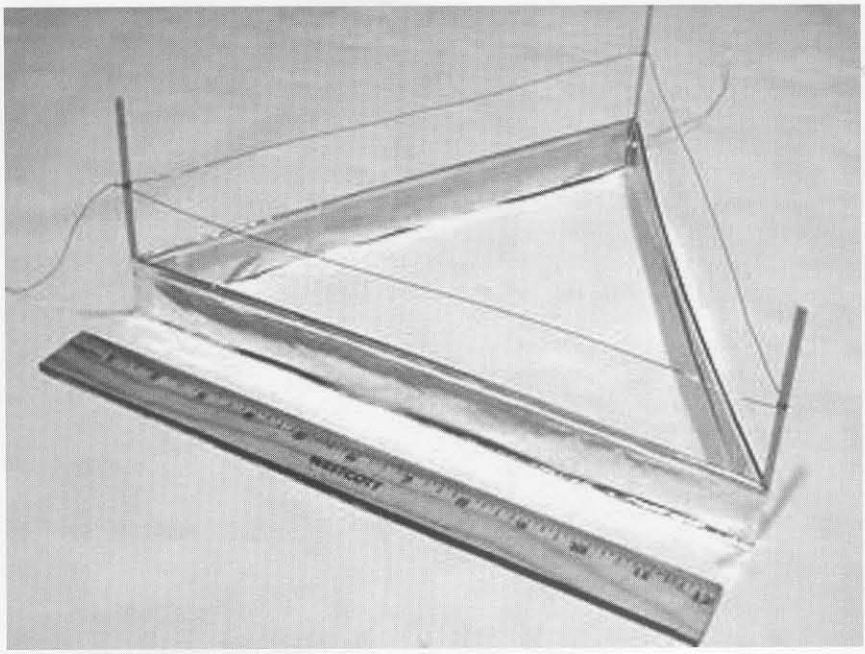

Figure 1-20 *Completed lifter assembly*

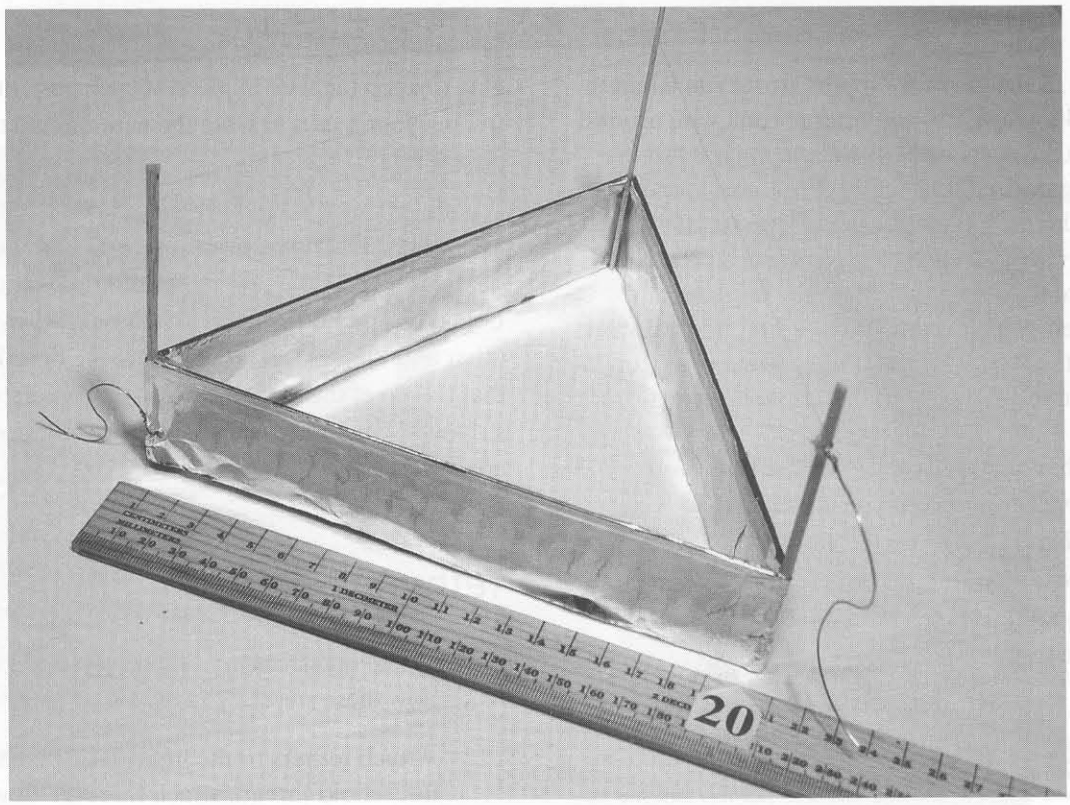

Figure 1-21 *Tethering the lifter craft*

the thread lengths at approximately 1 foot in length each.

2. Attach tethers to the test surface. Use Scotch tape to attach the lengths of thread to the test surface. Place the thread under the tape with approximately 8 inches of thread extending from the tape in order to provide enough slack for the lifter to take off. When you have done this, you should be able to raise the lifter approximately 8 inches in height from the test surface and have all of the thread become taut at the same height. Note in Figure 1-21 how the three tie-downs (colored pieces of tape) are attached to the thread and the test surface is very close to the actual lifter itself. Slack can be adjusted so that the lifter remains stable once it has taken off from the test surface.

Lifter Troubleshooting Guide

This section provides in-depth information on troubleshooting a prototype lifter in the event that it does not work correctly during testing.

Problem 1: The Lifter Is Not Moving, and I Don't Hear a Hissing Noise

If you don't hear a hissing noise, this means the lifter is not receiving high-voltage power from the high-voltage supply. Try these suggestions:

- Unplug the high-voltage supply and wait for the high-voltage charge to dissipate.
- Check the ground connection to the lifter and make sure you have good contact to both the foil skirt and the high-voltage supply's ground wire.
- Make sure the crimped end of your corona wire is hooked snugly around the electrode that comes out of the high-voltage supply.
- Ensure that the enamel coating has been removed from the ends of the ground wire. You can do this by scraping the enamel off with the edge of a hobby knife.

Problem 2: The Lifter Is Not Moving, and the High-Voltage Supply Seems Completely Dead

Have you tried checking the power supply to the high-voltage supply?

- Check the high-voltage supply's on/off switch.
- Check the 12-volt supply that provides power to the high-voltage supply.
- Check the on/off switch on the power strip if you are using one.

Problem 3: The Lifter Is Not Moving, and I Do Hear a Hissing Noise

The hissing noise (and slight breeze) means that the lifter is getting high-voltage power from the high-voltage supply. One of the following suggestions might eliminate the problem:

- Unplug the high-voltage supply and wait for the high-voltage charge to dissipate.
- Check the ground-wire connectivity to make sure it has a connection back to the high-voltage supply.
- Try sliding the entire corona wire down the vertical balsa struts a little until it is closer to the foil skirt. This reduces the distance between the two capacitive elements and increases the lifting power.

Problem 4: The Lifter Is Moving a Little but Is Not Taking Off

The lifter either does not have enough power to lift off or the high-voltage capacitance on the foil skirt is causing an attraction to the test surface. Try one of the following:

- Leave the high-voltage supply plugged in and the power turned on.
- Try gently blowing on the lifter until it moves. This may jostle the lifter off the capacitive spot that it sits on and it may suddenly lift off without warning.
- Try using a long nonconductive piece of plastic to gently lift one edge of the lifter up from the testing surface.
- Check the high-voltage and ground wires to ensure that they are off the testing surface. They may also cause static cling to the testing surface.

Problem 5: The Lifter Is Moving but Has a Lot of Electrical Arcing

The electrical arcing on your lifter is preventing enough capacitance to build up to allow a sustainable lift.

- Unplug the high-voltage supply and wait for the high-voltage charge to dissipate.
- Try sliding the entire corona wire up the vertical balsa struts a little (less than 1 centimeter at a time) until it is farther away from the foil skirt. This increases the distance between the two capacitive elements and it reduces lifting power, but it should also reduce electrical arcing and make liftoff possible.
- Ensure that the foil skirt has been folded over the top of the balsa horizontal strut and has been taped with a piece of Scotch tape on the other side. If the foil has not been folded over the top of the horizontal balsa strut, it will not have proper surface area capacitance.
- Ensure that no sharp edges are present that would lead to ion leakage on the foil skirt of the lifter. Also ensure that no sharp edges are sticking off the end of the corona wire as they will reduce capacitance.

Problem 6: The Lifter Is Lifting off, but when Arcing Occurs It Suddenly Drops or Loses Height

Sudden drops in lift height may accompany large, electrical arcs between the foil and the corona wire due to a rapid reduction in capacitance in the corona wire and foil skirt of the lifter, which in turn reduces thrust. See Problem 5 for details on troubleshooting this.

Problem 7: The Lifter Is Lifting off and "Bouncing" the Tether, but Thrust Is Not Stable

If the lifter is bouncing at the end of the tether or rapidly swaying back and forth, it is due to irregularities in thrust versus positioning.

- Unplug the high-voltage supply and wait for the high-voltage charge to dissipate.
- Check each of the tethering threads and make sure they are all the same length when fully extended.
- Check each of the tethering threads to make sure they are a reasonable length (8 to 14 inches).
- Check the high-voltage and ground wires to make sure they aren't snagging on something during liftoff. You may try taping the high-voltage and ground wires to a nonconductive surface about 10 inches from the top of the testing surface. (Note: Make sure these wires *do not* cross or else they will short out your power supply.)

- Make sure all three corners of the lifter are about the same weight. Note that the corners with wires attached will weigh a little more but should not be noticeably heavier.

Problem 8: Arcing Is Occurring Between the Ground Wire and the HV Wire

Electrical arcing between the ground wire and the high-voltage wire occurs because the wires are too close. This does not include the arcing that occurs on the lifter itself, which is covered under Problem 5.

- *Immediately* unplug the high-voltage supply and wait for the high-voltage charge to dissipate.
- Move the ground and high-voltage wires farther apart from each other to prevent future arcing.

Note that electrical arcs between these two wires can cause permanent damage to your high-voltage supply power source.

Problem 9: The Lifter Lifts off and Immediately Shorts the HV and Ground Wires

Electrical shorts between the high-voltage and ground wires can occur when the position of these wires changes as the lifter lifts off from the test surface.

- *Immediately* unplug the high-voltage supply and wait for the high-voltage charge to dissipate.
- Reposition the high-voltage and ground wires so that they are less likely to touch and cause an electrical short during liftoff. Taping the wires in place about 10 inches from the testing surface can also reduce the movement of these wires during liftoff.

Problem 10: The Lifter Lifts off and Immediately Pulls to One Side

The lifter may pull to one side when it lifts off, meaning that instead of moving up in a reasonably straight manner from the testing surface, it takes off and flies in a particular direction. This occurs because of weight or thrust instability and is usually due to weight on the corners of the lifter due to incorrectly positioned high-voltage and ground wires.

- Unplug the high-voltage supply and wait for the high-voltage charge to dissipate.
- Try shortening or lengthening the tethering threads to position the lifter where it should be at maximum height.
- Try shortening all three tethering threads to a reasonable length by reducing them approximately 2 inches.
- Ensure that the high-voltage and ground wires are suspended from the testing surface so that they do not add excess weight to the corners of the lifter.
- Ensure that the aluminum foil skirt is reasonably straight and not crumpled around the entire frame of the lifter and that it is cut to the same height all the way around the frame.
- Ensure that the corona wire maintains the same distance from the foil skirt around the entire frame of the lifter and is pulled reasonably tight between vertical balsa struts.

Problem 11: The Corona Wire Flutters During Liftoff and Causes Thrust Problems

The corona wire may flutter during liftoff due to electrostatic forces.

- Unplug the high-voltage supply and wait for the high-voltage charge to dissipate.
- Try straightening the corona wire by hand until it is lined up reasonably straight above the foil skirt.

- Try removing the corona wire from the lifter and rewrapping it with a new piece of wire stretched firmly between posts. (Remember that the posts are balsa and cannot take much stress.)

Problem 12: The Foil Skirt Flutters During Liftoff and Causes Thrust Problems

A reasonable amount of aluminum skirt flutter may occur during testing due to electrostatic forces; however, an excessive amount may cause thrust problems.

- Unplug the high-voltage supply and wait for the high-voltage charge to dissipate.
- Try straightening the corona wire by hand until it is lined up reasonably straight above the foil skirt.
- Try using small dabs of superglue to hold the bottom of the skirt in place on the bottom of the vertical balsa support struts. Be aware that weight is critical and superglue may add too much weight if it is used excessively.

Problem 13: The Lifter Hisses but Just Will Not Lift Off

If you've gone through this entire troubleshooting document and still not found out what the problem is, it could be that your lifter is just too heavy. Some ways to correct weight problems include the following:

- Shaving excess balsa from the frame
- Trimming aluminum foil off the lifter (trim even strips around the bottom to remove the foil)
- Supporting the high-voltage and ground wires off the test surface to reduce wire weight
- Ensuring that you used the correct gauge of stainless steel corona wire
- Shortening the overall length of the high-voltage and ground wires to reduce electrical resistance
- Ensuring that you've used balsa wood and not basswood to construct the lifter (basswood looks almost identical but has a smoother consistency and more almond-like color and texture)
- Ensuring that you haven't used heavy-duty aluminum foil for the foil skirt

Author's Note: General Troubleshooting Guidelines

Here are some extra thoughts on troubleshooting that don't really fit well in any of the previous categories but may assist you during testing:

- First, there needs to be a capacitance between the corona wire and the foil skirt. If sharp edges are present or if these elements are just too close, then too much charge transfer will occur and capacitance will be lost. This is the main reason why the foil is folded over the top of the horizontal balsa support struts: to reduce sharp edges and increase capacitance. This is also why several centimeters of distance occur between the corona wire and the foil skirt. This also reduces the charge transfer and increases capacitance.
- Second, the charge transfer between the corona wire and the foil skirt needs to occur for the Biefeld-Brown effect to work properly. If the corona wire is too heavily shielded due to the wire's enamel coating, the charge transfer will not occur. Similarly, if the distance between the corona wire and the foil skirt is too great, the charge transfer will not occur. Please note that the charge transfer seems to be required only when the device is tested in an atmosphere, because the lifter design has been successfully tested in a vacuum environment.
- Make sure your lifter weighs as little as possible. The required weight appears to be about 2.6 grams maximum, although that is not set

in stone. It depends on construction, leakage current, and so on. The prototypes I've constructed weighed so little that I could barely tell when I was holding them; the wires seemed to outweigh the prototype itself.

- The lifter prototype requires time and a little finesse to make it work. I spent nearly two weeks building prototypes before I built my first working model. It only takes me about 20 minutes to build a working model at this point.

  The lifter has a tendency to cause attraction to the test surface. This is static cling from the capacitive charge on the foil skirt to the testing surface. You can reduce this by putting something underneath the lifter (I use a plastic straw) to prop it up from the surface during testing.

Table 1-1 Complete parts list

Ref. #	Qty.	Description	DB #
R1		10K trimpot vertical	
R2, 4	2	10-ohm, 1/4-watt resistor (br-blk-blk)	
R3, 5, 8, 9	4	1K, 1/4-watt resistor (br-blk-red)	
R7	1	47K, 1-watt resistor (yel-pur-or)	
R10		10K trimpot vertical	
C1		100 mfd/25-volt vertical electro-radial leads	
C2		.0022 *microfared* (mfd)/50-volt greenie plastic cap (222)	
C3, 8	2	.01 mfd/50-volt disk (103)	
C4		1000 mfd/25-volt vertical electrolytic capacitor	
C20A–20J	10	500 pfd, 10 Kv ceramic disk cap	#500P/ 10KV
C6		.22 mfd/250-volt metalized polypropylene	
C9		1 mfd/25-volt vertical electro cap	
C7		.1 mfd/50-volt cap INFO#VG22	
D20A–20J	10	16 Kv, 5 ma avalanche diodes	#VG16
D3, 4	2	IN914 silicon diodes	
D11	1	PKE15 15-volt transient suppressor	
D12		1N4937 fast-switching 1 Kv diode	
Q1		IRF540 MOSFET transistor TO220	
I1, 2	2	555 DIP timer	
T1		Mini-switching transformer, 7 Kv 10 ma.	#IU28 K089
L1 #IU6UH	2	6 Uh inductor; see text on assembly	
PBOARD		5- × 2.8- × .1-inch grid perforated board. Fab to size per Figure 1-3.	
PCGRA		Optional PCB	#PCGRA
WR20R	12 inch	#20 vinyl red wire for positive input	
WR20B	12 inch	#20 vinyl black wire for negative input	
WR20G	12 inch	#20 vinyl green wire for output ground to craft return	
WR20KV	4 inch	20 Kv silicon high-voltage wire for output	
WR20 BUSS	18 inch	#20-inch bus wire for spark gap and heavy leads (see Figure 1-8)	
WR24 BUSS	12 inch	#24 bus wire for light leads (see Figure 1-7a, b).	
WR30 MAG	36 inch	#30 magnet wire for tethering the craft	
M1		50-uamp meter shown with 3-inch face	
R30–35	6	10 meg, 1-watt resistor (br-bk-bl)	
R36		2 kHz trimpot for meter adjust	
R37/S1		10K pot and switch	
TOP1		Top 8 1/2 - × 4 1/2 - × 3 1/2 - × 1/32 -inch black or clear plastic	
COV1		Bottom 8 1/2 - × 4 1/2 - × 3 1/2 - × 1/32 -inch black or clear plastic	
TUB1		Insulating tube 5- × 3/8 -inch-thick wall rigid plastic tubing	
TUB2		4- × 3/8 -inch Tygon sleeving for R30–35	
BU1		3/8 -inch clamp bushing	
SW2		#6 × 3/8 sheet metal screws	
HSINK		1.5- × 1-inch .063 AL plate fabbed as per Figure 1-4	
SW1	1	6-32 1/2 Phillips screw	
NUT	4	6-32 kep nut	
SW3	3	6-32 × 3/8 -inch nylon screws	

Table 1-1 Complete parts list (continued)

Optional Items

Ref. #	*Qty.*	*Description*	*DB #*
WIRE2 MIL10	10 inch	2-millimeter stainless wire for ion emitters	#WIRE2MIL10
1MEG	20	1-meg, 1-watt resistors	#1MEG
12DC/3		115 Vac to 12 Vdc/3-amp converter	#12DC/3
BAT12		12-volt, 4-amp hour rechargeable battery	#BAT12
BC12K		Battery charger kit for above BAT12 (parts available though www.amazing1.com)	#BC12K
M1		50-uamp meter shown with 3-inch face	M1
R30–35	6	10-meg, 1-watt resistor (br-bk-bl)	R30–35
R36		2 kHz trimpot for meter adjust	R36
R37/S1		10K pot and switch	R37/S1

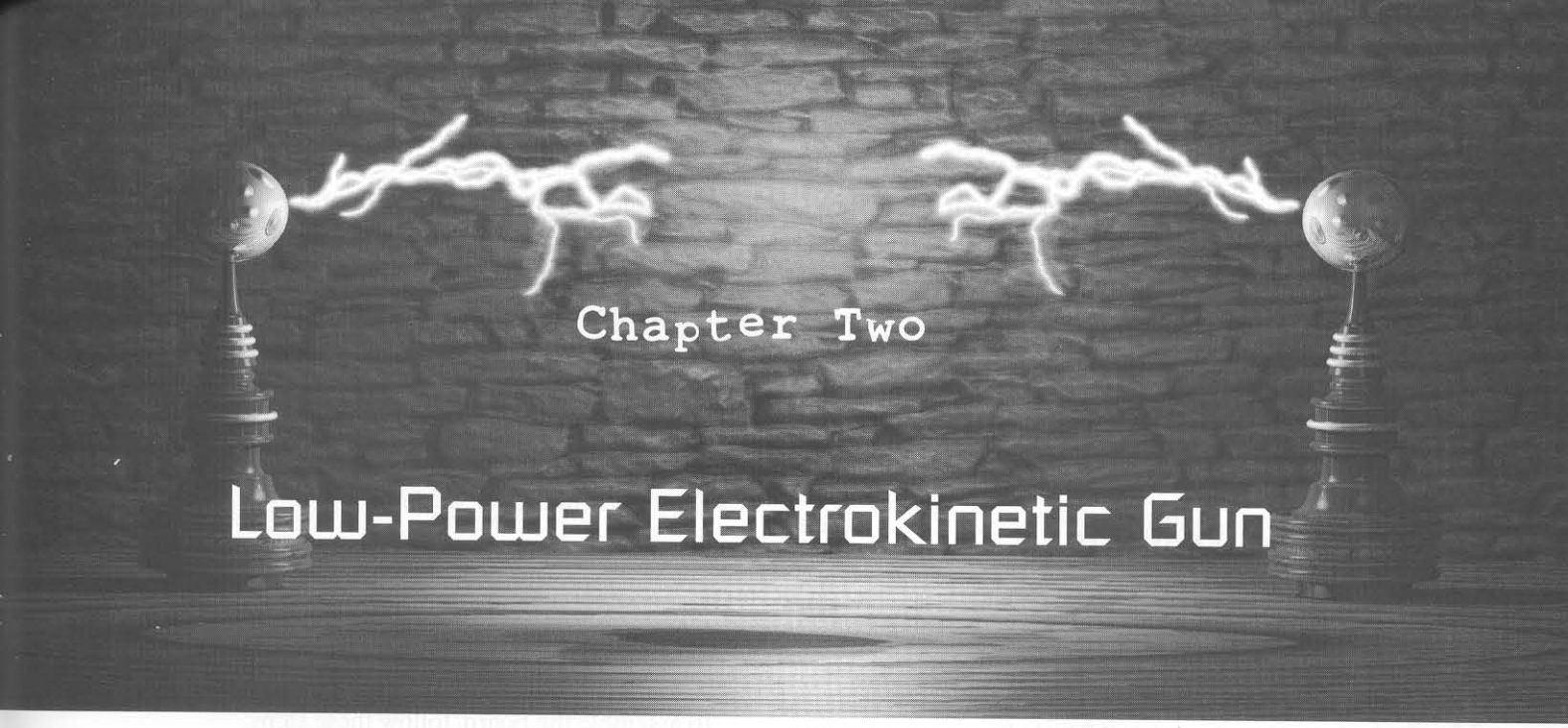

Chapter Two

Low-Power Electrokinetic Gun

This chapter covers a project intended for high school-level experimenters. Supervision is suggested when working in the classroom. The unit operates from a low-voltage source of 12 *volts direct current* (VDC) or a battery (see Figure 2-1). The circuit produces 72 joules of capacitive energy storage at 600 volts. This is labeled as a dangerous electrical device if the protective cover is removed. The unit must not be aimed or pointed in the direction of personal or breakable objects. Projectiles can reach a reasonably high velocity.

Figure 2-1 *Low-power electro-kinetic gun*

This is an advanced intermediate-level project requiring basic electronic skills. Expect to spend $35 to $45. All parts are readily available with specialized parts through Information Unlimited (www.amazing1.com) and are listed in Table 2-1 at the end of the chapter.

Basic Theory

Your electrokinetic accelerator demonstrates two methods of electrokinetic acceleration.

First and Preferred Method

A flat, pancake-shaped accelerator coil is structured to match the dimensions of a circular aluminum ring that serves as the launch vehicle. This closed ring now becomes a shorted secondary winding of a pulse transformer that is as closely coupled to the primary windings as possible. A current pulse is produced in the secondary that is the aluminum ring induced by the current pulse in the primary. The result is opposing magnetic fields that cause a mechanical repulsion pulse propelling the nonmagnetic aluminum ring. If the ring were magnetic, it would be attracted to the coil and completely counteract the repulsive force. It is the current flowing in the aluminum ring that causes the repulsive magnetic field (Lenz's law).

The design of the accelerator coil must minimize the leakage inductance of the coil assembly and limit the impedance in the primary discharge circuit. A disadvantage of this type of kinetic system is that the acceleration event occurs over a short distance interval. Therefore, the resulting peak forces must be very high to achieve a high velocity. The repulsive forces will vary as the inverse of the square of the separation distance between the accelerator coil and the moving projectile.

Second Method

This method uses a solenoid coil with a pitch equal to its diameter. This coil uses a magnetic pulse that attracts a small ball or rod-shaped projectile made from a magnetic material. The ball is accelerated into and along the coil axis, exiting with a velocity. The initial positioning of the ball is critical to obtain the maximum exit velocity. The inner diameter of the coil should only be large enough to allow unobstructed movement of the projectile ball. Again, magnetic leakage and pulse width plays an important part in achieving optimum results.

Circuit Description

A single-ended inverter circuit is shown in Figure 2-2 consisting of a self-oscillating transistor (Q1) that resonantly switches the primary of the voltage step-up transformer (T1) and tuning capacitor (C3). The input power is 12 VDC at 1 amp and is controlled by the charging switch (S1).

The base drive to Q1 is provided by the *feedback winding* (FB) of the T1 that must be properly phased. The bias for Q1 is provided by the resistor (R2). The capacitor (C2) speeds up the switching by providing a low-impedance path for the feedback signal. The resistor (R1) provides the starting bias for turning on Q1. The capacitor (C1) bypasses the switching frequency to ground by providing a low-impedance path. A charging choke (L1) is necessary to limit the switching current during the initial charging cycle of the storage capacitors.

The high-voltage/frequency output of the secondary winding of T1 is rectified by the diode (D1) charging storage capacitors (C5, C6) through the low-impedance winding of the accelerator coil (L2). Resistors (R7, R8) help to balance the voltage charge across the two individual capacitors. The charge across these capacitors is applied to L2 by the switching function of the SCR switch. This energy exchange generates the magnetic pulse necessary to launch the projectile. The SCR switch is controlled by the trigger switch (S2) applying a voltage to the gate of the SCR when ready to fire the device.

Board Assembly Steps

To assemble the board, follow these steps:

1. Lay out and identify all parts and pieces. Verify them with the parts list, and separate the resistors as they have a color code to determine their value. Colors are noted on the parts list.
2. Create a piece of .1-inch × .1-inch grid perforated board at 5 3/5 × 3 3/8 inches. Locate and cut out sections for pins of T1 as shown in Figure 2-3.
3. If you are building from a perforated board, insert components starting in the lower left-hand corner, as shown in Figure 2-3. Pay attention to the polarity of capacitors with polarity signs and all semiconductors. Route the leads of the components as shown and solder as you go, cutting away unused wires. Attempt to use certain leads as the wire runs. Follow the dashed lines on the assembly drawing as these indicate connection runs on the underside of the assembly board. The heavy dashed lines indicate the use of thicker #18 bus wire, as this is a high-current discharge path.

   Note that the Q1 transistor must be mounted so that it mounts flush to its mounting surface at a right angle. This step is important for proper heat sinking and mechanical stability.
4. Secure large storage capacitors, C5 and C6, to the board using silicon rubber cement (*room temperature vulcanizing* [RTV]) or tape them in place, as shown in Figure 2-3.

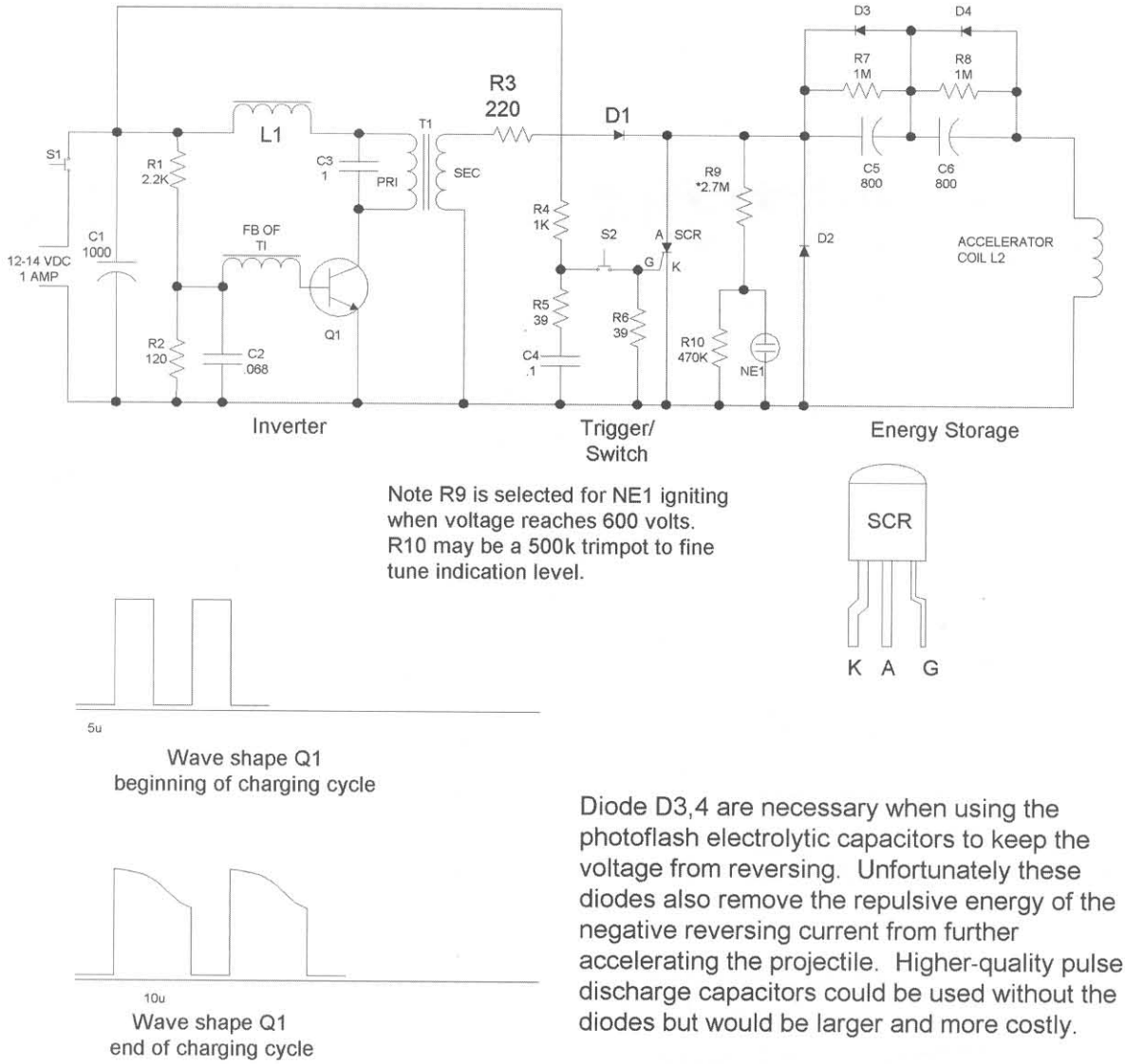

Figure 2-2 *Circuit schematic*

5. Wire in SCR1 using short pieces of bus wires for extensions through the holes of the board.

6. Attach the following leads, as shown in Figure 2-4:

   Three 3-inch leads of #20 (WR20) connected to S1 and S2

   Two 5-inch leads of #20 (WR20) for connected to NE1

   One 3-inch jump between D2 and + of C5

7. Double-check the accuracy of the wiring and the quality of the solder joints. Avoid wire bridges, shorts, and close proximity to other circuit components. If a wire bridge is necessary, sleeve some insulation onto the lead to avoid any potential shorts.

Fabrication

To create the fabrication, follow these steps:

1. Fabricate the chassis as shown in Figure 2-5. Be sure to make a trial fit and check the sizes of the panel components before actually making holes. Kits will usually contain a predrilled piece that will mate to the included parts.

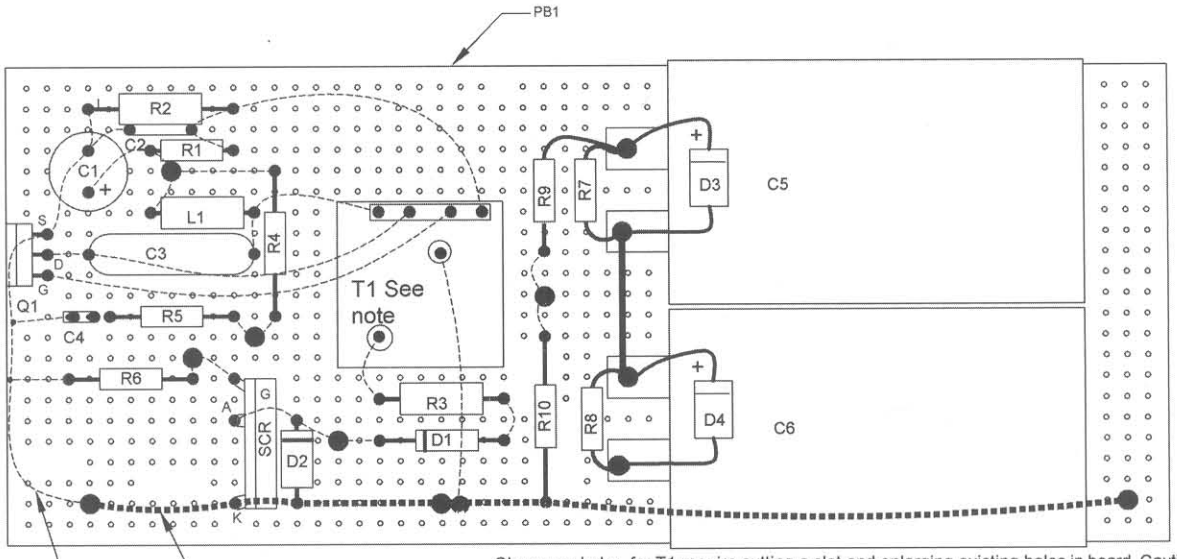

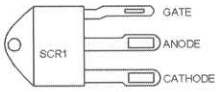

Shows position for soldering into circuit

Clearance holes for T1 require cutting a slot and enlarging existing holes in board. Caution transformer must easily clear holes as any stress will damage connections.

Drawing shows top view with pin locations.

- ● Large black dots are for external lead connections.
- • Medium black dots are holes used for mounting components.
- · Small black dots are for solder points on bare wire runs.

Thin dashed lines are #20 bare bus wire and leads of components to make the underboard wire runs and connections.

Thick dashed line is a piece of #18 bus wire to carry high discharge current.

You may use insulated leads for two wire runs from Q1 to T1.

You may use short pieces of bare wire to wire in pins of SCR1 or drill holes for actual pins.

Figure 2-3 *Assembly board showing wiring under the board and part identification*

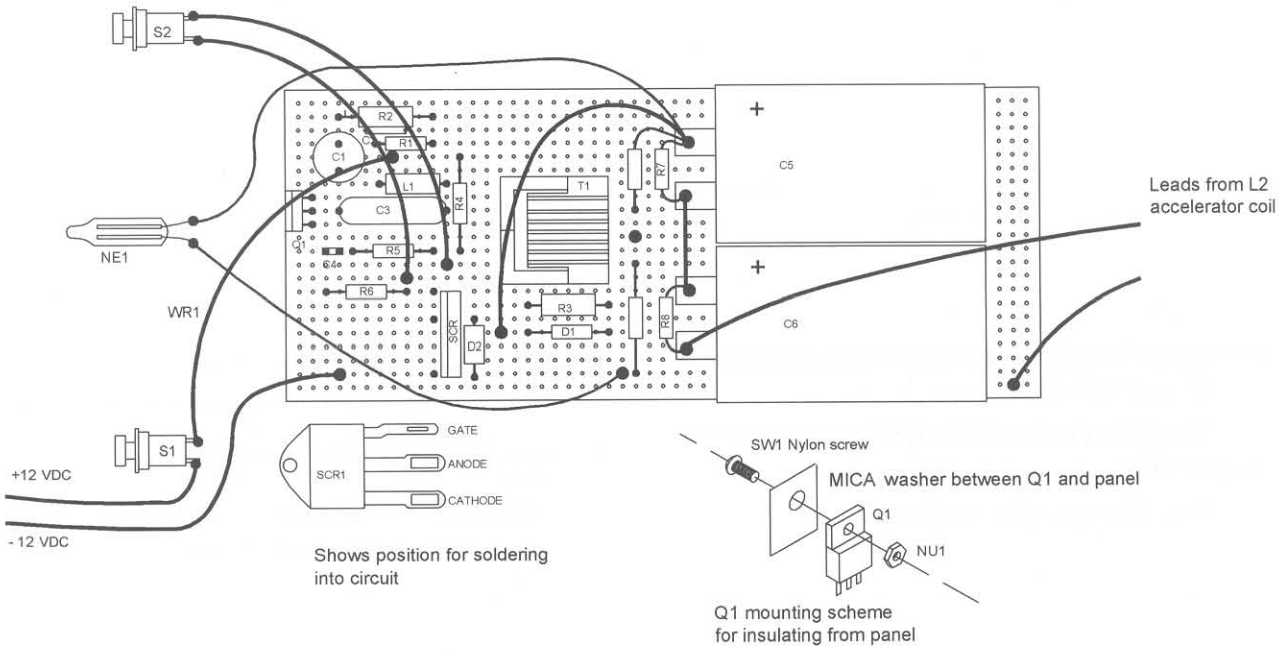

Figure 2-4 *Assembly board showing external wiring*

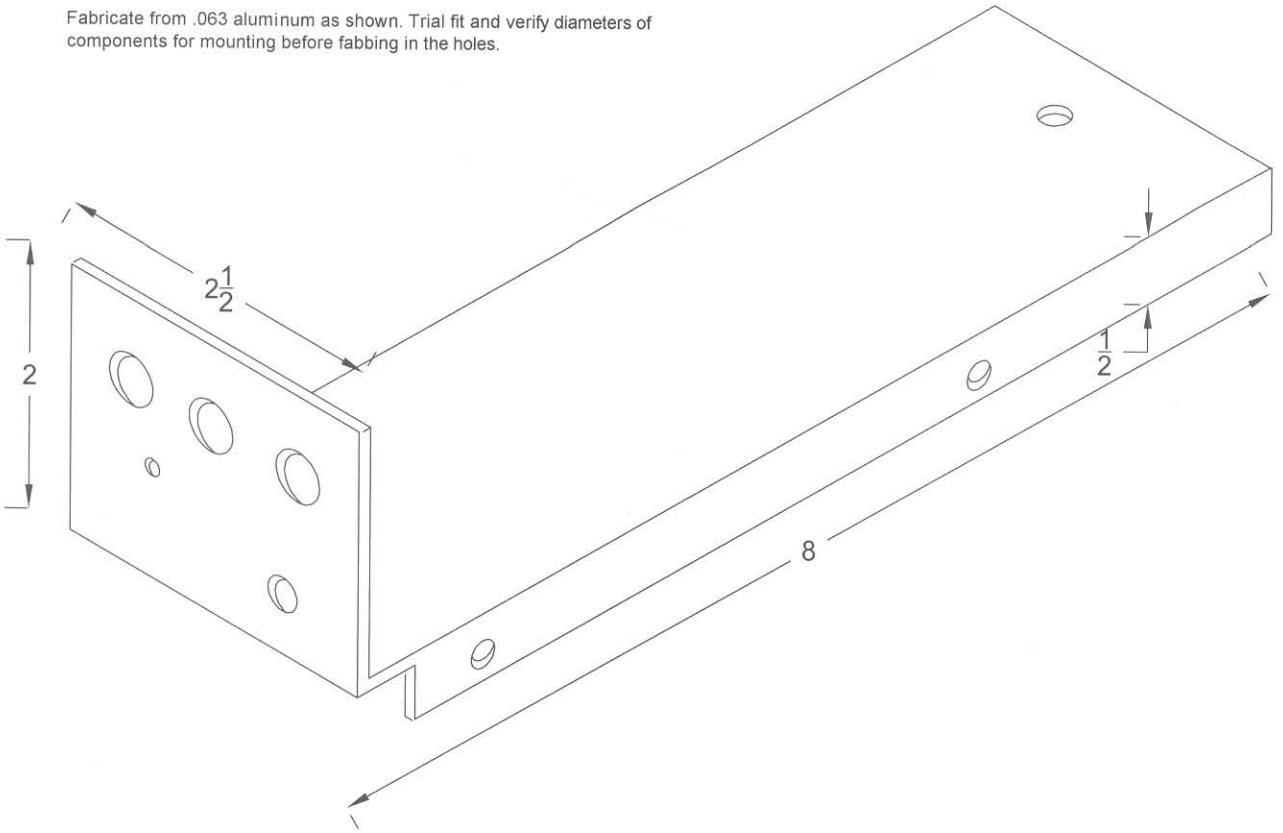

Figure 2-5 *Chassis fabrication*

2. Fabricate a BK1 bracket, a MAND1 mandrel, and a FLY1 flyway, as shown in Figure 2-6.
3. Add the cover as shown in Figure 2-7. Note to mate the clearance holes for screws with holes in the chassis section for the (SW4) #6 sheet metal screws.
4. Wind the L1 accelerator coil, as shown in Figure 2-6. Sleeve in a 1/4-inch section of MAND1 mandrel into the FLY1. Drill small holes for the start and finish of the winding into the side of the bobbin as shown. The measured coil inductance should read 90 to 100 microhenries without the projectile, dropping down to 50 to 60 with the projectile in place. Connect in the coil leads as shown in Figure 2-4.

   Note that the objective is to get the projectile body as close to the windings as physically possible. This provides maximum magnetic coupling, and consequently optimum performance.
5. The final assembly is shown in Figure 2-8. Note the proper mounting of Q1 using a mica washer, shown also in Figure 2-3.

Electrical Pretest

To conduct a pretest, follow these steps:

1. Connect a 1000-voltmeter across +C5 and − of C6. If you have a scope, you can check the wave shape on the collector of Q1 and verify it, as in Figure 2-2.

   Slide the PROJ1 projectile onto the mandrel and point the unit away from people or breakable objects. For maximum velocity, the projectile must be evenly positioned onto the accelerator coil.

   Connect 12 volts to the input and push switch S1. Note the voltmeter reading increases in value as long as the switch is held. A current meter on the 12-volt supply will indicate around an ampere of current and will vary through the charging cycle.

   Allow the charging to reach 600 volts. Push switch S2 simultaneously while still holding S1

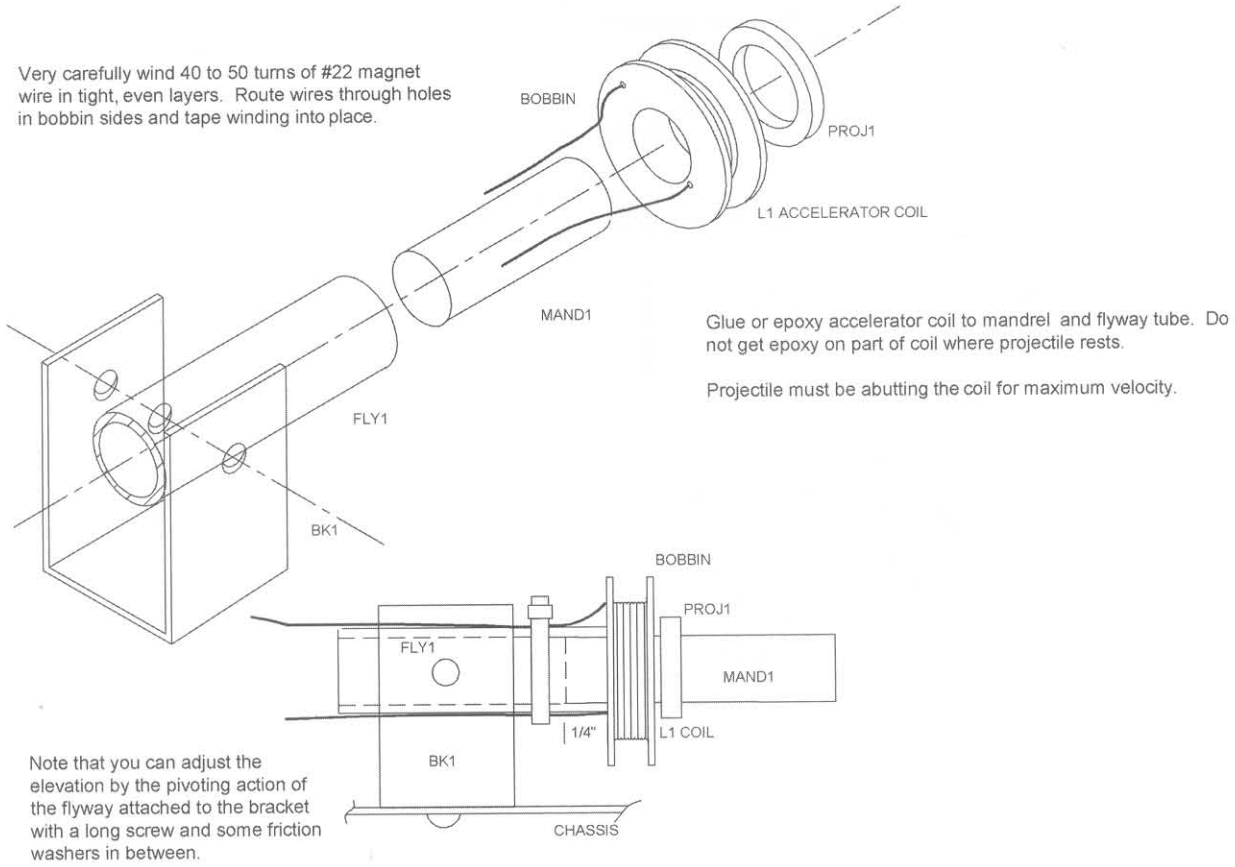

Figure 2-6 *Bracket and flyway fabrication*

and note the projectile shooting off the mandrel.

The indicator lamp NE1 should light when the intended charge voltage level is reached. This is a maximum of 700 volts and should not be exceeded. The resistor divider, consisting of R9 and R10, sets this point. You may have to vary these values to get the desired indication at the charge voltage level you want. Without this lamp, you must time the charging cycle and coordinate it with an external meter to obtain the charging time or always use the meter.

Note that the velocity will increase after the first several shots. This is due to the capacitors polarizing their electrolyte.

Obtaining More Velocity (Under No Condition Point or Shoot Toward a Person)

Increase the mandrel diameter to $^{23}/_{32}$ and wind 40 turns of #22 magnet wire in six to eight even wound layers on your .75-inch diameter×.312-wide nylon bobbin #BOBTHER. The measured inductance should be 120 to 150 microhenries. The objective here is to get the body of the projectile as close to all the copper windings as physically possible. This will reduce the reluctance and increase coupling. Further velocity increase can be obtained by removing several turns on the accelerator coil until the current reversing diodes start to blow. Our laboratory unit got down to 50 microhenries, obtaining a very dangerous velocity.

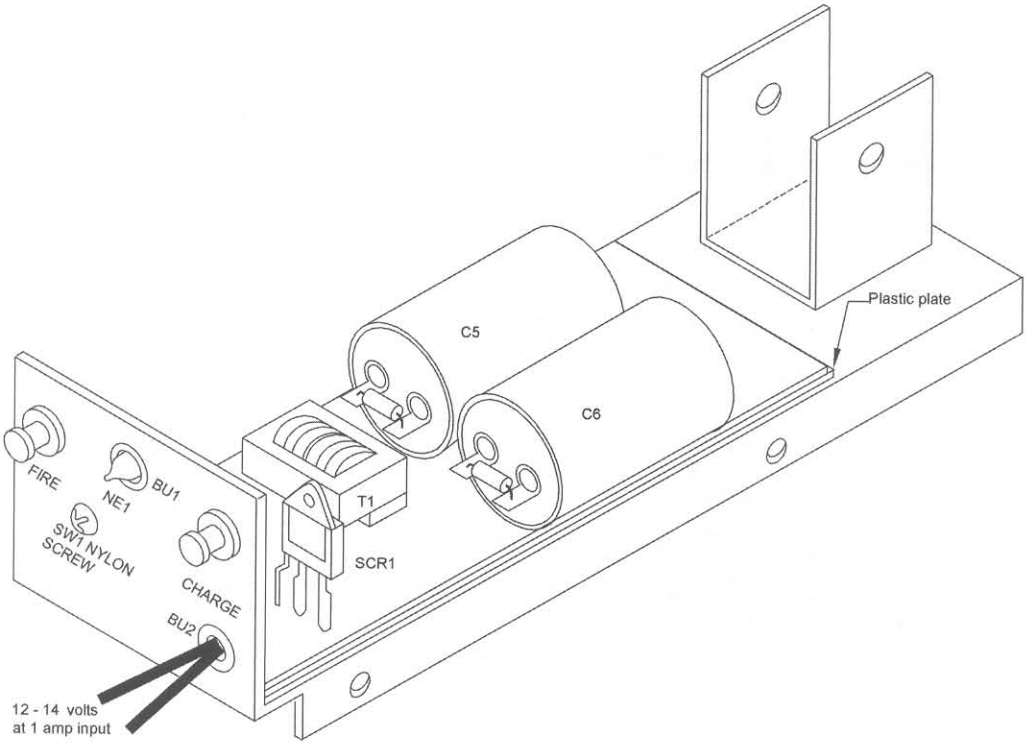

Figure 2-7 *Final assembly without cover*

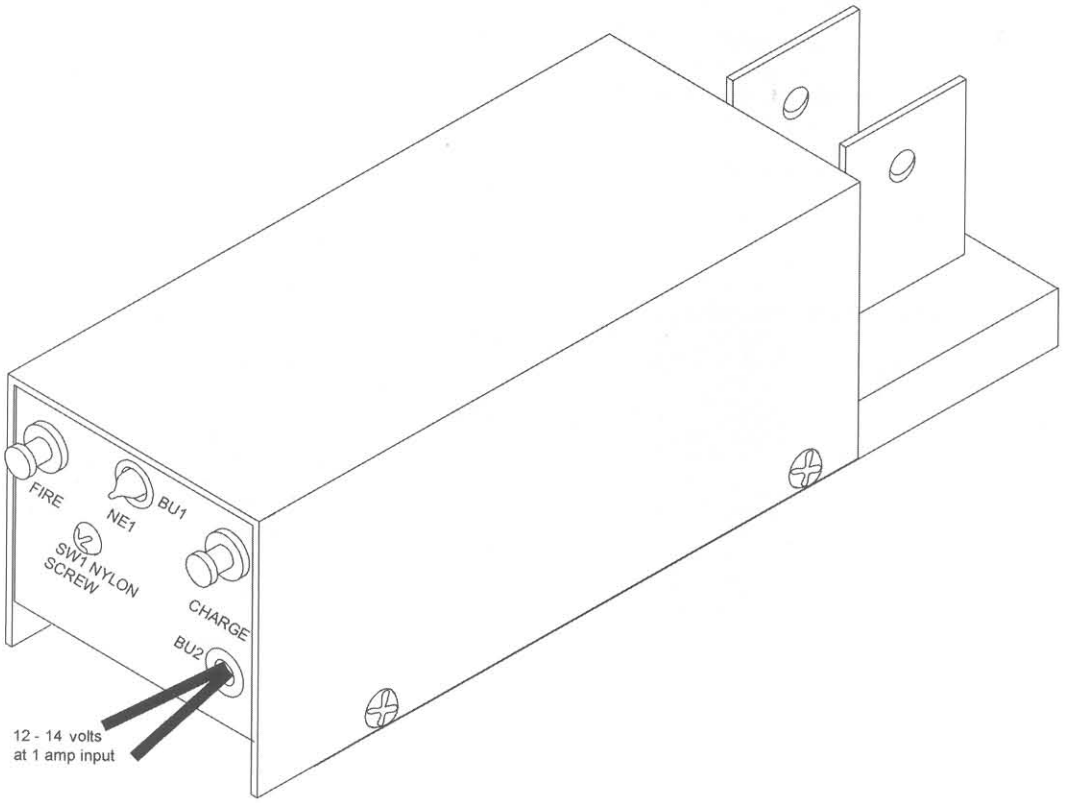

Figure 2-8 *Final assembly*

Table 2-1 Parts list for the electrokinetic gun

Low-Power Kinetic Gun		
Ref #	*Qty.*	*Description*
R1		2.2K, 1/4-watt [red-red-red]
R2		120K 1-watt [br-red-br]
R3		220K 1/4-watt [red-red-br]
R4		1K, 1/4-watt [br-blk-red]
R5, 6	2	39K 1/4-watt [or-wh-blk]
R7, 8	2	1 m, 1/4-watt [br-blk-grn]
R9		750K, 1/4-watt [pur-grn-yel]
R10		100K, 1/4-watt [br-blk-yel]
C1		1000 m/25-volt vertical elect. capacitor
C2		.068 m/50-volt plastic capacitor
C3		1 m/250-volt *metal polypropylene capacitor* (mpp)
C4		.1 m/50-volt plastic capacitor
C5, 6	2	800 m/330-volt photo flash capacitor info database #800M/360
L1		3.6 Uh, 1.5-amp inductor [or-bl-blk] 3.6U
T1		Inverter transformer info database #28K074
S1, 2	2	Pushbutton switches SPST
D1		6 Kv, 10 ma high-voltage fast-recovery rectifier info database #VG
D2, 3, 4	3	11 Kv, 1-amp diode 1n5408
SCR1		80-amp scr info database #8070W
NE1		Neon indicator lamp
Q1		Mje3055 NPN TO 220 transistor
PB1		.1 grid perforated circuit board cut to 2.5 × 6 inches
WR18B	6"	#18 bus wire for discharge path (see Figure 2-3)
WR20B	12"	#20 bus wire for long leads on bottom of board
WR20B	48"	#20 vinyl hookup wire for hookup of external parts
WR22M	10'	#22 magnet wire for winding accelerator coil
SW1		6-32 × 1/2-inch nylon screw for mounting Q1
SW2		6-32 × 1/2-inch screw for mounting bracket
SW3		6-32 × 1.5-inch screw for mounting flyway to bracket (see Figure 2-6)
SW4	4	#6 × 1/4-inch screws for attaching cover to chassis
NUT		6-32 hex nuts
MICA		Mica insulation washer between Q1 and chassis (see Figure 2-4)
CHASSIS		Fabricate from 1/16-inch aluminum, as shown in Figure 2-5
COVER		Fabricate from thin plastic or aluminum, as shown in Figure 2-8
BK1		Fabricate bracket (see Figure 2-6) from a 1- × 4- × 1/16-inch aluminum or plastic
FLYWAY		2 × 11/16-inch innerdiameter (ID) × 1/16 wall plastic tube
MAND1		11/16- × 2-inch cold roll; must sleeve into flyway
PROJ		1- outerdiameter (OD) × 3/4-inch ID 1/8" wall alumunum tubing cut into 1/4-inch length rings
PLATE		2.5- × 6-inch plastic plate to insulate board from chassis
ADAPTR		12-volt, .8-amp adapter for bench use
BHOLD8		8 AA cell vertical battery holder to fit in handle for gun configuration
ENDPLATE	2	Fabricate from .035 G10 or stiff strong plastic
BOBBIN		.75-inch ID × 1.5-inch OD × .312 width nylon bobbin BOBTHER

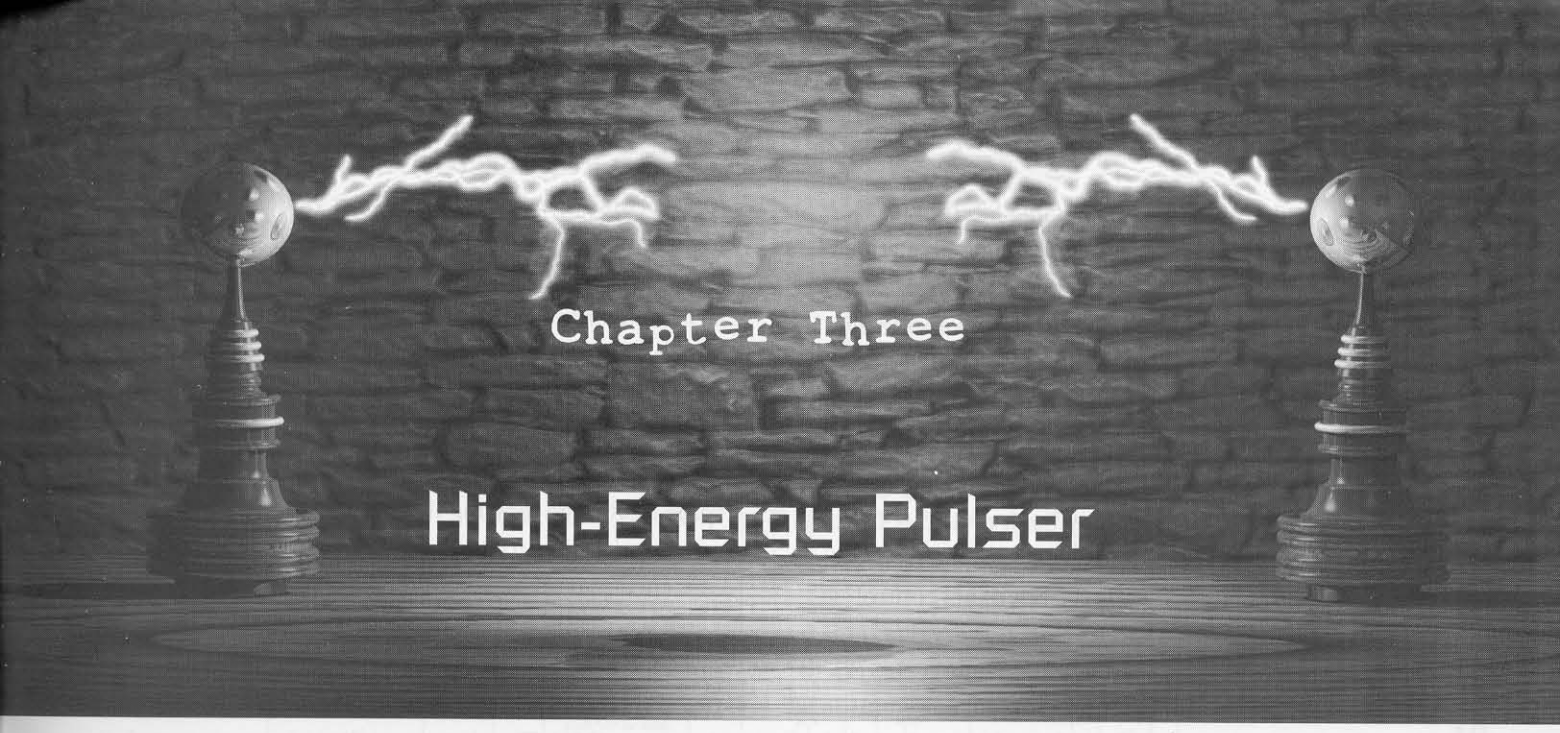

Chapter Three

High-Energy Pulser

This high-energy pulser is intended to supply the pulsed electrical energy in order to generate a powerful magnetic pulse capable of accelerating objects, constricting cans, shaping metals, exploding and vaporizing materials, accelerating small projectiles to high velocities, powering small rail guns, and other functions where conditioned magnetic energy is required (see Figure 3-1).

Construction and operation is intended for those with experience handling high-voltage, high-energy systems. This is for the advanced builder and requires assembly skills. Expect to spend $200 to $500 mainly for the necessary storage capacitors with most parts being available through Information Unlimited (www.amazing1.com). A parts list can be found at the end of the chapter in Table 3-1.

This device will be referenced for use with our mass accelerator, can crusher, wire exploder, and thermo plasma generator projects in subsequent chapters.

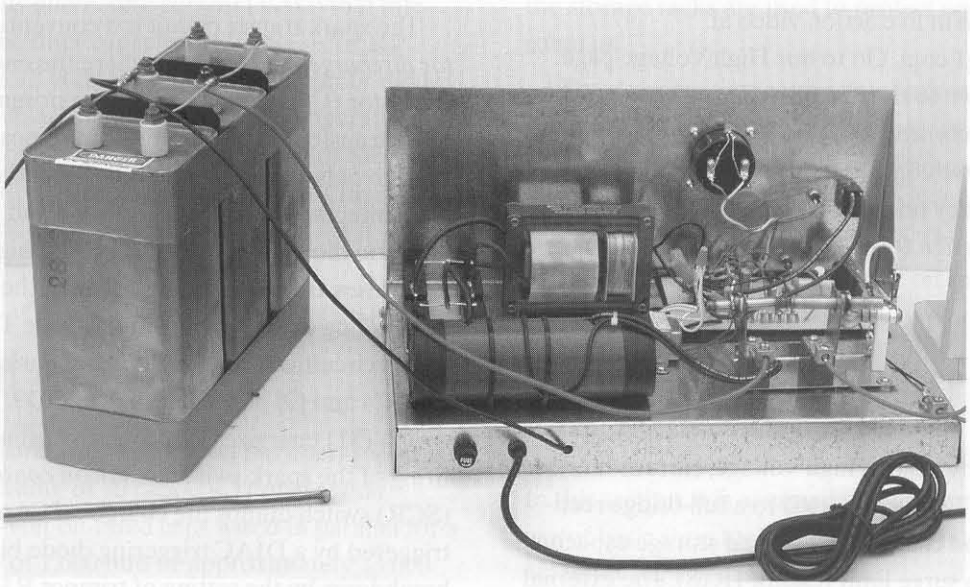

Figure 3-1 *High-energy pulser*

System Description

The described system is a valuable lab tool for the experimenter and researcher dealing with electrokinetic weapons, high-power magnets, *electromagnetic pulses* (EMPs), exploding wires/metal vaporizing, plasma pyrotechnics, high-pulse-powered lasers, electromagnetic launchers, gravity propulsion, and other similar research.

The device provides constant current charging to an external capacitive energy bank up to 5,000 joules with the system. The voltage is adjustable from 500 to 5,000 volts and is preset by a front panel control. Once set, the voltage will remain at this value until the firing period and then automatically recharges to the preset value as long as the safety charge button is activated. A meter monitors the voltage selected. A built-in, triggered spark switch using 3/8 -inch (9.5 mm), pure tungsten electrodes switches the stored bank energy into the target load within a period determined by the load inductance and resistance. A high peak-powered pulse approximately equal to dE/dt is now produced. (Power is the derivative of energy E.)

The system is intended for use as the energy-charging source and switch for many of our related projects. These projects include our mass accelerator driver as an example of a device capable of converting magnetic energy into kinetic energy. Such projects are shown in live action video at www.amazing1.com. Go to our High Voltage page and scroll down to the MASS10. The other available support projects are listed and will be supplemented with more as we complete various research programs, obtain necessary releases, prepare the data on *computer-aided design* (CAD), and so on.

Circuit Theory of Operation

Figure 3-2 shows that a high-voltage, current-limited transformer (T1) is connected to a full bridge rectifier (D1-4) and charges an external storage capacitor (C) through a surge limit resistor (R18). The external storage capacitor is connected between the discharge ground and a spark electrode (G1). The target load is now connected between the discharge ground and a spark switch electrode (G2). You will note that the load (R and L) takes on a complex value, usually highly inductive (not in all cases), with a small series resistance resulting from the inductor wire. Spark switch electrodes G1 and G2 are spaced to approximately 1.2 to 1.5 times the breakdown distance of the current operating voltage used.

A third trigger electrode (TE1) discharges a fast, low-energy, high-voltage pulse into G2, creating a spike of voltage ionizing the gap between G1 and G2, now causing the stored energy in the external storage capacitor to discharge into the load impedance.

The charging voltage of the external storage capacitors is sampled by the resistor divider network (R17) that also provides the series dropping value for the meter (M1). The charging voltage is programmed by control (R8) connected in series with R17. This control sets the trip level of comparator (I1) biasing the relay driver transistor (Q1) where it turns off, deenergizing the primary winding of T1 through relay (RE1) contacts. Once R8 is set to a selected value, it automatically maintains this preset voltage level on the external storage capacitors. A safety pushbutton switch (S3) provides a manual hold for charging the external capacitor.

The *light-emitting diode* (LED) LA1 indicates that the main power is on. LED LA2 indicates the charge has reached its programmed value.

The spark trigger circuit is a conventional *capacitor discharge* (CD) system where the energy on the capacitor (C6) is dumped into the primary of the pulse transformer (T2). This train of positive, high-voltage pulses generated on the secondary winding of T2 is integrated onto capacitors C8 and C9 through isolation diodes D12 and D13. These high-voltage DC pulses cause ionization between the gaps by the discharging action of trigger electrode TE1. The input to this circuit is a voltage doubler consisting of capacitors C4 and C5 and diodes D8 and D9. The "fire" switch (S1) energizes this circuit, causing immediate firing of the spark switch. A *silicon control rectifier* (SCR) switch dumps the charge on C6 and is gate-triggered by a DIAC triggering diode biased into breakdown by the setting of trimpot R14 and timing capacitor C7.

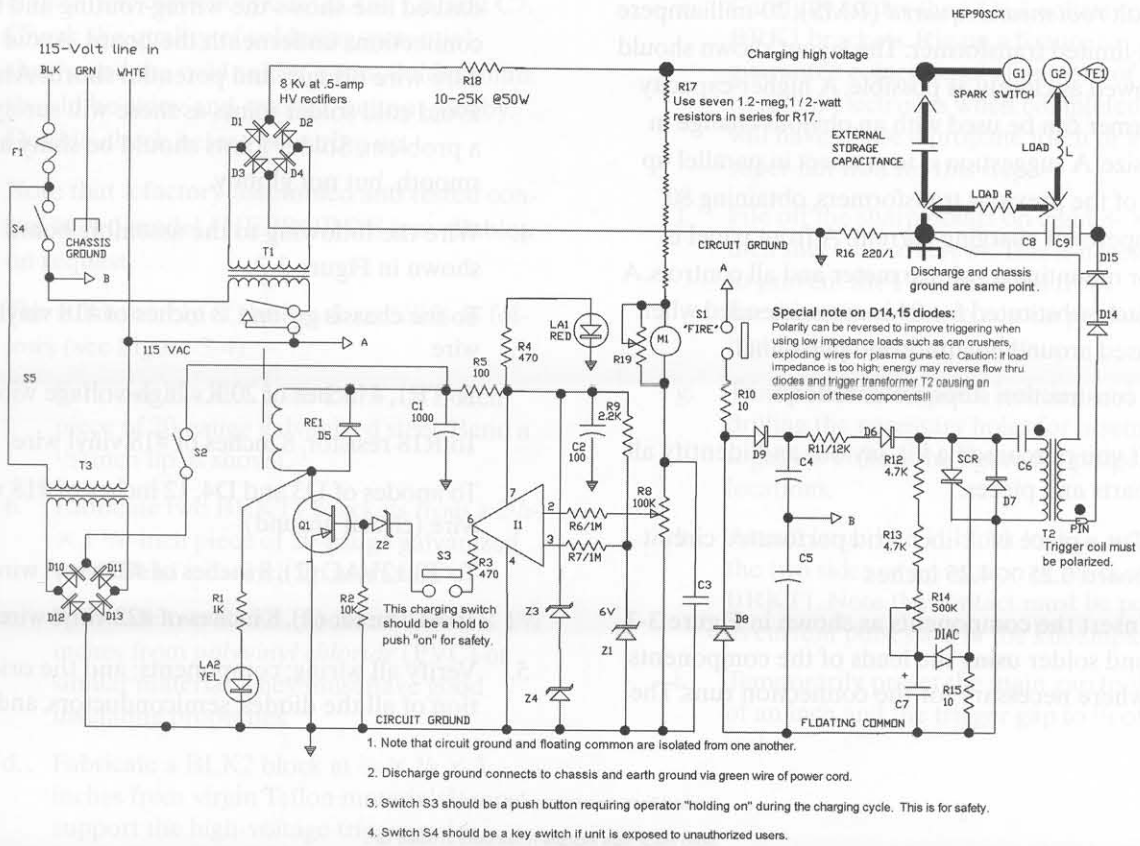

Figure 3-2 *Pulser schematic*

A 12-volt transformer (T3) powers the control circuit, including the RE1 relay. Without these 12 volts, the system cannot be energized without manually actuating RE1. Rectifier diodes D10 through 13 rectify the 12 *volts-alternating current* (VAC) that integrates onto the filter capacitor (C1). Resistor R1 decouples the 12 volts for regulating via zener diodes (Z3, Z4), which are necessary for stable operation of the comparator circuit. The main power for the charging energy is from the 115 VAC lines, fused by F1 and controlled by switch S4.

Special Note

Our lab at Information Unlimited has energy storage facilities consisting of 10 racks of 32 *microfarad* (MFD), 4500-volt oil-filled cans wired in parallel for a total capacity of 1,600 mfd or approximately 13,000 joules at 4,000 volts per rack. All racks connected in parallel produce 130,000 joules. It is paramount at these energy levels to properly wire and assemble the complete system with adequate spacing and conductor or wire sizes in order to support the multi-megawatt pulses obtained. Explosion shields around the storage racks are used to protect operating personal.us.

The charging time per rack is approximately 10 minutes. All 10 racks would be impractical with this charger, as it would take almost 2 hours. We use a 10,000-volt, 1-amp, current-controlled system that charges 130,000 joules in 1 minute. This 10 Kv, 1-amp high-powered charger is available on special request.

Construction Steps

In this section, it is assumed you are familiar with the use of basic shop tools and have had intermediate assembly experience.

The pulser is built on a metal chassis that is 10 × 17 × 1.5 inches of 22-gauge galvanized steel. It uses a

6,500-volt *root means squared* (RMS), 20-milliampere current-limited transformer. The layout shown should be followed as closely as possible. A higher-capacity transformer can be used with an obvious change in layout size. A suggestion is to connect in parallel up to four of the previous transformers, obtaining 80 milliamperes of charging current. A front panel is used for mounting a voltage meter and all controls. A key switch substituted for S4 is recommended when being used around unauthorized personnel.

The construction steps are as follows:

1. If you purchased a kit, lay out and identify all parts and pieces.
2. Cut a piece of .1-inch grid perforated circuit board 6.25 × 4.25 inches.
3. Insert the components as shown in Figure 3-3 and solder using the leads of the components where necessary for the connection runs. The dashed line shows the wiring routing and the connections underneath the board. Avoid bare wire bridges and potential shorts. Also avoid cold solder joints as these will surely be a problem. Solder joints should be shiny and smooth, but not globby.
4. Wire the following to the assembly board as shown in Figure 3-3:

   To the chassis ground, 8 inches of #18 vinyl wire

   To TE1, 4 inches of 20 Kv high-voltage wire

   To R18 resistor, 8 inches of #18 vinyl wire

   To anodes of D3 and D4, 12 inches of #18 vinyl wire (circuit ground)

   To T3 12VAC (2), 8 inches of #22 vinyl wire

   To M1 meter (2), 8 inches of #22 vinyl wire

5. Verify all wiring; components; and the orientation of all the diodes, semiconductors, and

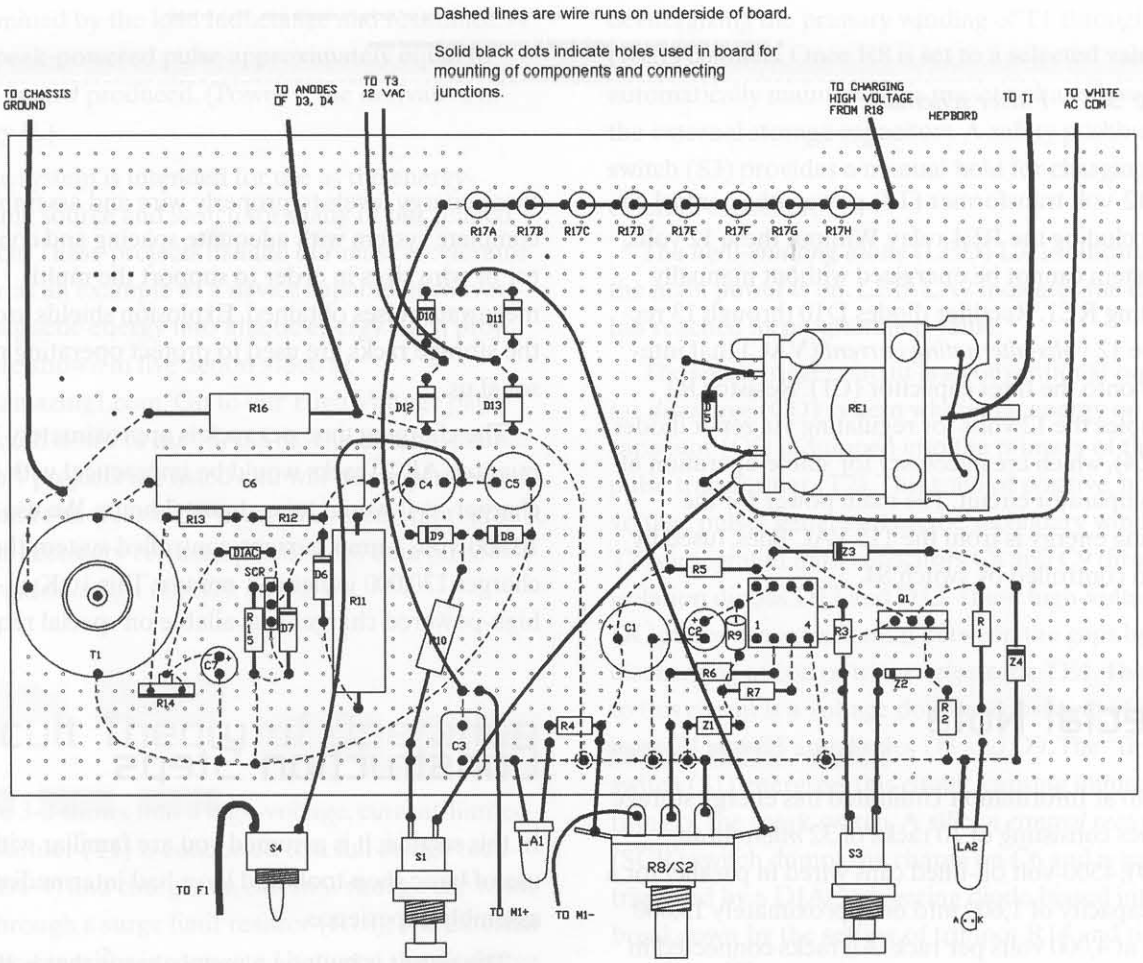

Figure 3-3 *Pulser assembly board*

electrolytic capacitors C1, C2, C4, C5, and C7. Check the quality of soldering, potential shorts, and the cold solder joints. Solder joints should be shiny and smooth, but not globby. Double-check before powering up.

Note that a factory-assembled and tested control board model #HEPBORDE is available on request.

6. The subassembly of the spark switch is as follows (see Figure 3-4):

   a. Fabricate BASE1 from a 4 3/4 - × 2-inch piece of 20-gauge galvanized steel. Bend a 1/2 -inch lip as shown.

   b. Fabricate two BRKT1 brackets from a 2 1/2- × 1 1/4 -inch piece of 20-gauge galvanized steel. Bend a 3/4 -inch lip as shown.

   c. Fabricate two BLK1 blocks at 3/4 × 1 × 1 1/4 inches from *polyvinyl chloride* (PVC) or similar material. They must have good insulating properties.

   d. Fabricate a BLK2 block at 3/8 × 3/8 × 3 inches from virgin Teflon material. It must support the high-voltage trigger pulse.

   e. Carefully solder the COL1 collars to the BRK1 brackets. Rig up a fixture to guarantee coincidental alignment of the tungsten electrodes when completed. You will have to use a propane torch or a super-hot iron for this step.

   f. File off the sharp points on eight 8- × 3/8 -inch sheet metal screws. This is necessary to prevent the PVC material from breaking down due to corona produced by high voltage at sharp points.

   g. Trial-position the parts, locating and drilling the necessary holes for assembling together. Follow the figure for proper locations.

   h. Attach large LUG1 block lugs to either the two sides or lip section of brackets BRKT1. Note the contact must be positive as current pulses are in the kiloamps.

   i. Temporarily preset the main gap to 1/16 of an inch and the trigger gap to 1/8 of an inch.

The spark switch is the heart of the system and is where the stored energy in the capacitors over the charging period is quickly released into the target load as a very high powered pulse. It is important that all connections be able to support the high discharge currents and voltage potentials.

The design shown here is for the HEP90 and is capable of switching up to 3000 joules (with a properly conditioned pulse) being usually sufficient to effectively experiment with MASS DRIVING, CAN CRUSHING, EXPLODING WIRES, MAGNETIZATION, AND OTHER RELATED PROJECTS.

A higher-energy switch capable of switching 20,000 joules is available on special request. Both switches use a high-voltage trigger pulse that depends on a relatively high impedance feed line to the target load for support of the trigger voltage pulse. This is usually not a problem with moderately inductive targets but can be if this value is low. It can be solved by placing several ferrite cores or high u toroids in these lines. The cores produce a high reactance to the trigger pulse but saturate at the main discharge current.

Construction of the spark switch must take into consideration medium mechanical forces resulting from high-peak magnetic fields. This is especially important in the higher-power approach and will require parallel wiring and terminating to reduce inductance and resistance. A sturdy base is always required being securely mounted. A protective shield must be placed over the assembly to protect the operator from potential shrapnel should a fault occur.

NOTES: For reliable triggering, the main gap shoud be set depending on charge voltage used.

The trigger gap should be set to not less than .25" from its contact point on the bracket. If triggering is erradic it is suggested to experiment with this setting.

Important Relationships
Ipk = Ech*SQRT(C/L)
Ipkt = pi/2*SQRT(L*C)

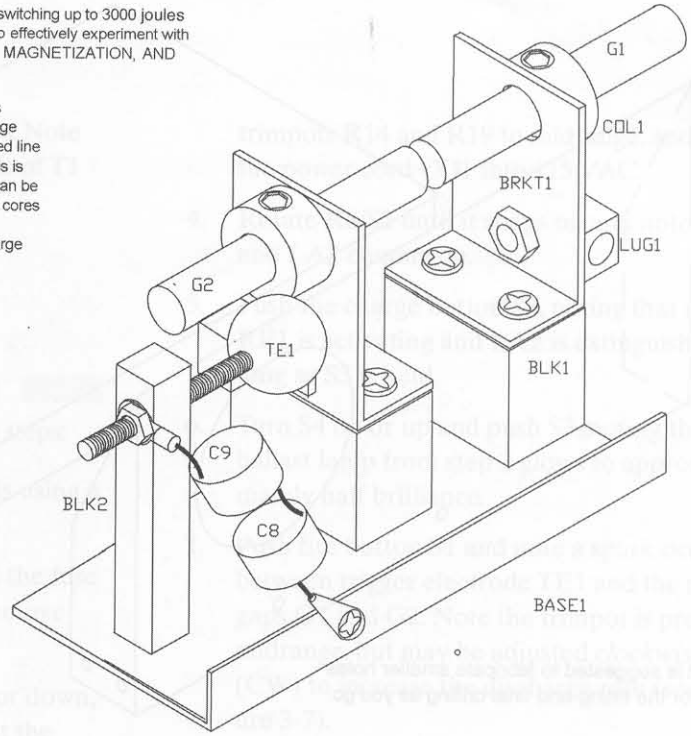

Figure 3-4 *Spark gap switch and ignitor*

Final Assembly

The steps for final assembly are as follows:

1. Fabricate the chassis and panel as shown in Figure 3-5. It is a good idea to fabricate the large hole necessary for the panel meter before doing any forming. The meter we use requires a 4-inch hole. The other smaller holes can be located and drilled after the panel and chassis are attached together.
2. Trial-fit the control board and locate the necessary clearance holes for the controls, indicators, and so on. Note the piece of insulating material between the assembly and the chassis; see the PLATE1 section in Figure 3-6. This can be secured with a couple dabs of *room temperature vulcanizing* (RTV) adhesive commonly known as silicon rubber. Drill the respective holes as you go, verifying proper location and clearances.
3. Trial-fit the other parts as shown in Figure 3-6 and drill all the necessary mounting and clearance holes. Note the fuse holder FH1/FS1 and the line cord bushing BU2. They are located on the underside of the chassis and are shown as dashed lines.
4. Allow for the proper clearance of high-voltage-carrying components such as the transformer output leads, high-voltage diodes, and resistor R18. Note the high-voltage diodes are mounted to a plastic plate via two-sided tape or RTV adhesive.
5. Secure the control board in place via front panel controls. Secure the rear of the assembly board with several dabs of RTV adhesive when proper operation is verified.

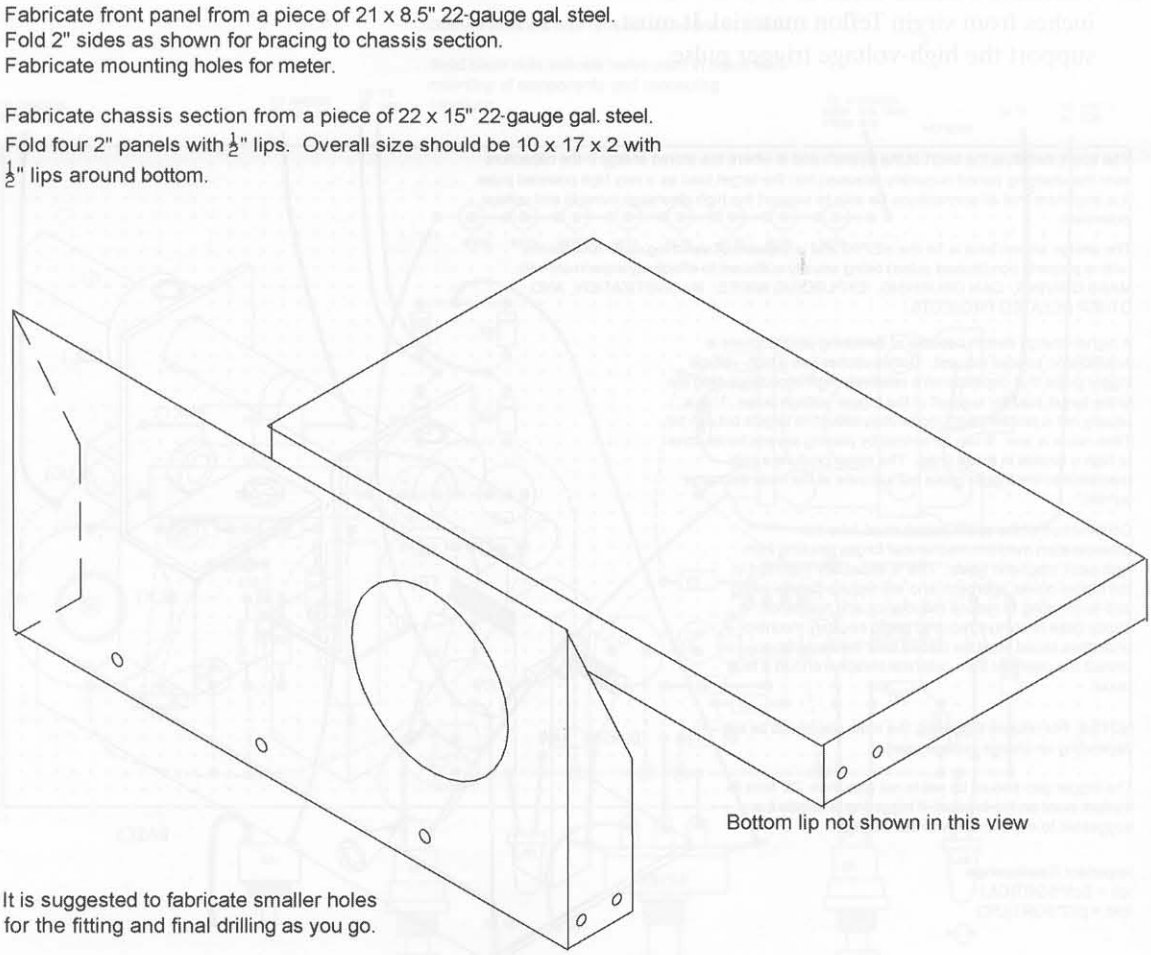

Figure 3-5 *Chassis fabrication*

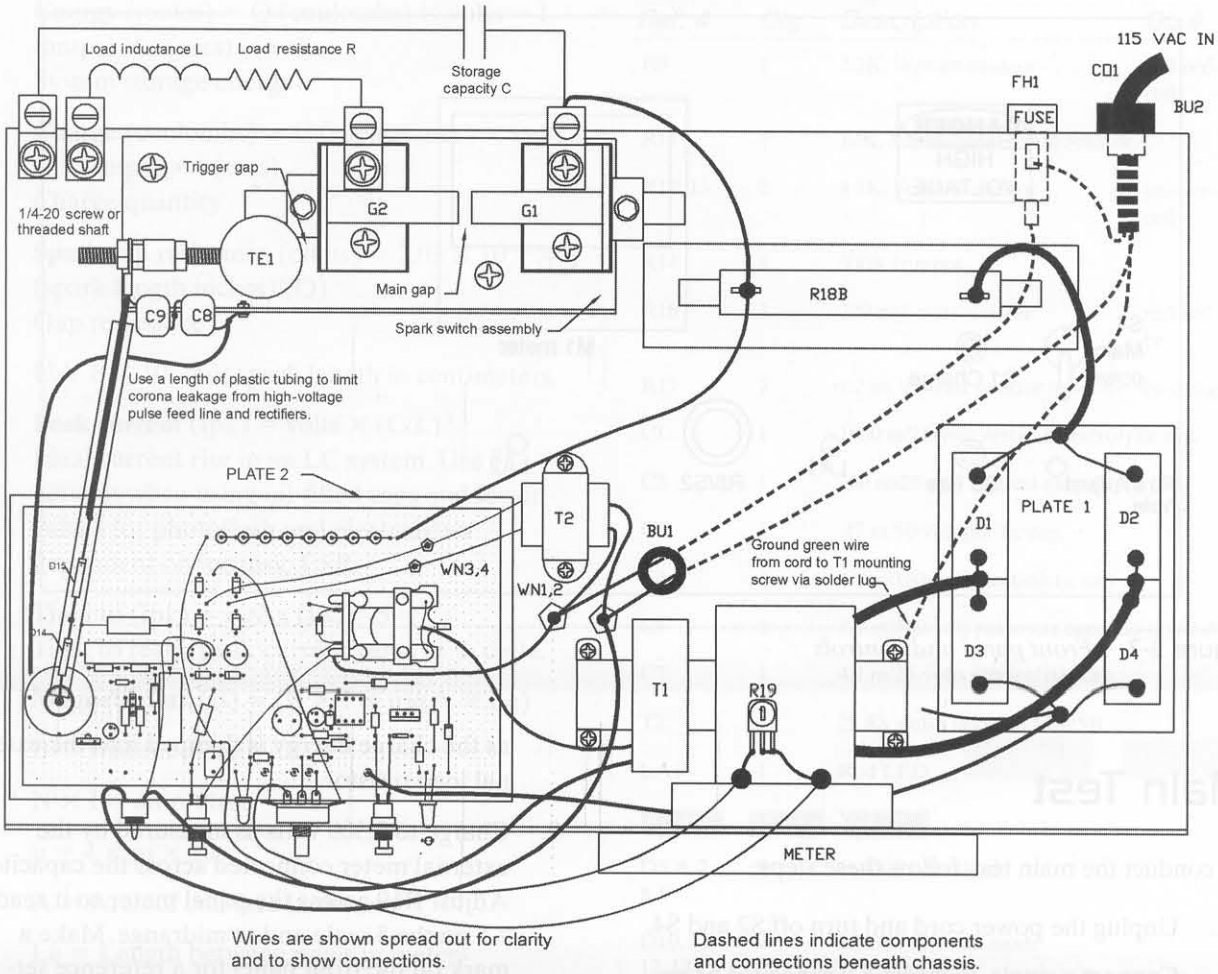

Figure 3-6 *Final assembly layout*

6. Interconnect all wires and connections. Note the use of wire nuts for attaching leads of T1 and T2.

Electrical Pretest

To conduct an electrical pretest, follow these steps:

1. Short out the transformer output leads using a good-quality clip lead.
2. Connect a 60-watt ballast lamp across the fuse holder as a ballast for initial tests. (Remove the fuse!)
3. Preset the safety toggle switch S4 off or down, rotate the control pot R8/S2 off, adjust the trimpots R14 and R19 to midrange, and plug the power cord CO1 into 115 VAC.
4. Rotate R8/S2 until it snaps on and note LA1 and LA2 coming on.
5. Push the charge button S3, noting that relay RE1 is activating and LA2 is extinguishing as long as S3 is held.
6. Turn S4 on or up and push S3, noting that the ballast lamp from step 2 glows to approximately half brilliance.
7. Push fire button S1 and note a spark occuring between trigger electrode TE1 and the main gaps G1 and G2. Note the trimpot is preset to midrange, but may be adjusted *clockwise* (CW) to increase the discharge rate (see Figure 3-7).

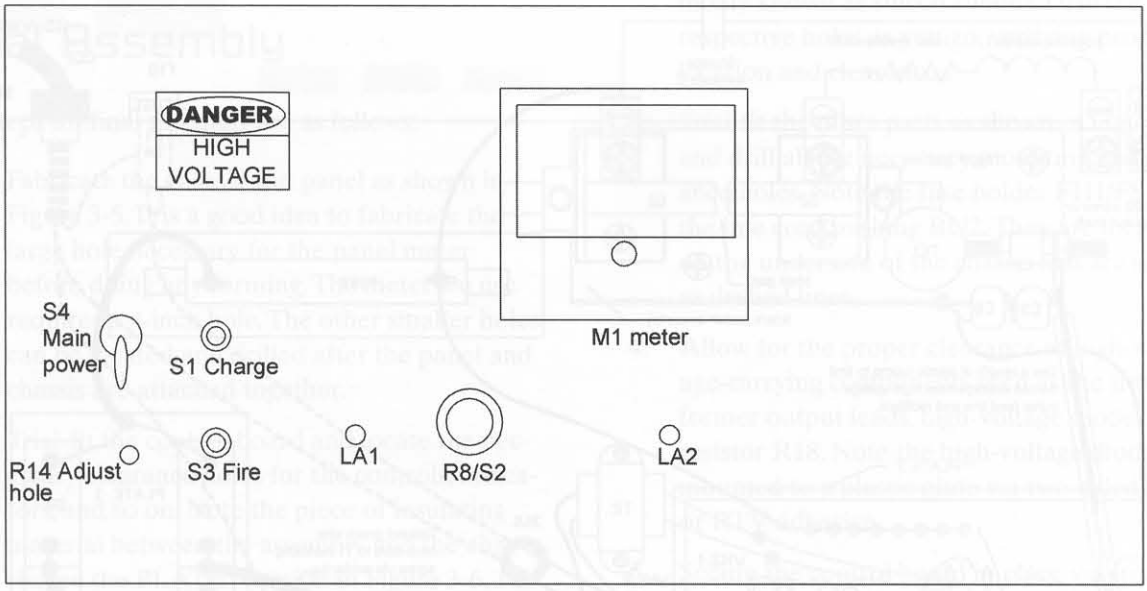

Figure 3-7 *Front panel and controls*

Main Test

To conduct the main test, follow these steps:

1. Unplug the power cord and turn off S2 and S4.
2. Connect a single 30 mfd/4 Kv capacitor or an approximately valued a 5K, 50-watt resistor for C and R, as shown in Figure 3-6.
3. Remove the ballast across the fuse holder and insert a 2-amp slow-blow fuse.
4. Preset the trigger gap to 1/8 of an inch and the main gap to 1/16 of an inch.
5. Connect up an accurate voltmeter across the external capacitor.
6. Plug the unit in and turn on S2 and S4. Push S3 and note the external capacitor charging to less than 1 Kv before RE1 deactivates. Note that LA2 is normally on and goes out only during the charging cycle. When the preset charge is reached, it comes back on, indicating the system is charged.
7. Rotate R8/S2 about 30 degrees CW and note that the voltage reaches a higher value before deactivating.
8. Now push fire button S1 and note a momentary heavy arc between the main gap occuring as the charge energy is dumped into the external load resistor.
9. Charge to 2,500 volts as measured by the external meter connected across the capacitor. Adjust R19 across the panel meter so it reads 2.5 on the 5 scale and at midrange. Make a mark on the front panel for a reference setting of 2,500 volts. The panel meter will now provide the charge voltage with a good degree of accuracy dependent on the external meter accuracy. Repeat step 8, noting a heavy arc discharge. Repeat the charge and fire cycles at different voltage settings to become familiar with the controls.

This completes the test and calibration steps. Further operations will require additional support equipment dependent on the particular project you are experimenting with.

Helpful Mathematical Relationships with This Equipment

Energy (joules) $= .5 \times$ farads $\times$ volts^2
System storage energy

Energy (joules) = Q (coulombs) × volts = I (amps) × t (secs) × volts
System storage energy

Charge (coulombs) = C (capacitance) × volts = I (amps) × t (secs)
Charge quantity

Spark gap resistance (ohms) = 2.03×10^{-3} × (spark length inches)/(Q)
Gap resistance

Use $.8 \times 10^{-3}$ for spark length in centimeters.

Peak current (Ipk) = volts × $(C/L)^{.5}$
Ideal current rise in an LC system. Use 75 percent when using oil-filled caps and lower values for photoflash and electrolytics dependent on intrinsic ESR.

Time to (Ipk) = pi/2 x (LC)^.5
Time to reach peak current value at 1/4 cycle.

Magnetic flux (B) = (N × I × u)/(A × Le)

B = Webers/meter^2

N × I = amp-turns

u = 4 × pi × 10^{-7}

A = Area of coil face in meters^2

Le = Length between poles in meters

M = Mass in kg

Force (newtons) = B × A × I

Acceleration (meters/t^2) = F/M

Velocity (meters/sec) = 1/2 at^2

t = from above **time** of current rise

Table 3-1 High-power pulser parts list

Ref. #	Qty	Description	Db #
R1	1	1K, 1/4 -watt resistor	br-bl-red
R2	1	10K, 1/4-watt resistor	br-bl-or
R3, 4	2	470K, 1/4 -watt resistor	yel-pur-br
R5	1	100-ohm resistor	br-bl-br
R10, 15	2	10-ohm, 1/4 - or 1/2-watt resistor	br-bl-bl
R6, 7	2	1 m, 1/4 -watt resistor	br-bl-gr
R8/S2	1	100K pot/switch	
R9	1	2.2K, 1/4 -watt resistor	red-red-red
R11	1	12K, 3-watt metal oxide resistor	
R12, 13	2	4.7K, 1/4 -watt resistor	yel-pur-red
R14	1	500K trimpot	
R16	1	220 m/1-watt resistor	red-red-br
R17	7	1.2 m, 1/2 -watt resistor in series	br-red-gr
C1	1	1000 m/25-volt vertical electrolytic cap.	
C2	1	100 m/25-volt vertical electrolytic cap.	
C3	1	.47 m/50-volt plastic cap.	
C4, 5	2	4.7 m/160-volt electrolytic cap.	
C6	1	3.9 m/350-volt polyester cap. info db# 3.9M	
C7	1	4.7 m/25-volts electrolytic cap.	
T2	1	25 Kv pulse info db# CD25B	
LA1	1	Red LED	
LA2	1	Yel LED	
D5, 6, 7, 8, 9	5	1n4007 1 Kv diode	
D10, 11, 12, 13	2	1n4001 100-volt diode	
Z1, 3, 4	3	6-volt 1-watt zener 1n4735a	
Z2	1	4.3-volt zener 1n5229	
LENS-HOLD	2	LED panel-mount lens holder	
PBOARD	1	6.25 × 4.24-inch PC or perforated board	
S1, 3	2	No pushbutton switch	
S4	1	SPST 115-volt/3-amp toggle switch or key switch	
RE1	1	12 vdc *Double-Pole, Double-Throw* (DPDT) relay info db# RELAY12	
Q1	1	NPN TIP 31 to 220 transistor	
I1	1	741 DIP OP AMP	
DIAC	1	Trigger DIAC	
SCR	1	Mcr 106-8 SCR info db# 8070W	
*HEP-BORDE		Assembled control board module info db# HEPBORDE	
WR18	3	One 4-foot piece of #18 red, gr, bl, vinyl, or plastic wire	

Table 3-1 Continued

Ref. #	Qty	Description	Db #
WR12		One 8-foot piece of #12 red, blk, vinyl, or plastic wire	
COL1	2	3/8-inch steel collars with set screws	
#G1, 2	2	3/8- × 2-inch pure tungsten rods	
BALL78	1	7/8-inch brass ball with 1/4-20 hole	
BRKT1	2	Bracket fab from a 2 1/2 - × 1 1/4 -inch piece of 20-gauge galvanized steel	
BLK1	2	Block fab from a 3/4 - × 1- × 1 1/4 -inch piece of PVC plastic	
BLK2	1	Block fab from 3/8 × 2/8 × 2 1/4 piece of Teflon	
BASE1	1	Base fab from a piece of 4 3/4 × 2 1/2 of 20-gauge galvanized steel	
TE1	1	1/4 -20 × 3-inch threaded rod fabrication with point	
LUG1	4	Heavy-duty screw lugs with 1/4 -inch hole	
LUG2	3	Large solder lug with 1/4 -inch hole	
NU1/420	3	1/4 -20 hex nuts	
SW6	8	#6 blunt sheet metal screws	
SW612	9	6-32 × 1/2 -inch screws with nuts and washers	
C8, 9	2	1000 *picofarads* (PFDs) 15 Kv ceramic capacitors info db# .001/15 KV	
*HEPGAP		Assembled switch module as shown in Figure 3-4	
CHASSIS	1	Fabricated as shown in Figure 3-5	
FRONT PANEL	1	Fabricated as shown in Figure 3-5	
PLATE 1	1	Fabricated as shown in Figure 3-6	
PLATE 2	1	Fabricated as shown in Figure 3-6	
FH1	1	Panel-mounted fuse holder	
FS1	1	2-amp fuse	
CO1	1	3-wire #18 line cord	
BU1	1	1/2 -inch plastic bushing	
BU2	1	Clamp bushing for line cord	
WN1	3	Medium-wire nuts	
WN2	2	Small-wire nuts	
METER	1	50 to 100 ua PANEL METER info db# METER50S	
T1	1	6500-volt/20 ma current-limited xfmr info db# 6 kv/20	
T3	1	12-volt/100-milliampere stepdown xfmr info db# 12/.1	
*D1, 2, 3, 4	4	8 Kv, 1-amp block rectifiers info db# H407	
D14, 15	2	30 Kv, 5-milliampere, .1 us RECTIFIERS db# VG30	
*R18	1	10 to 20K, 50-watt resistor info db# 10K/50	
R19	1	2K trimpot	
SW838	8	#8 × 3/8 sheet metal screw	

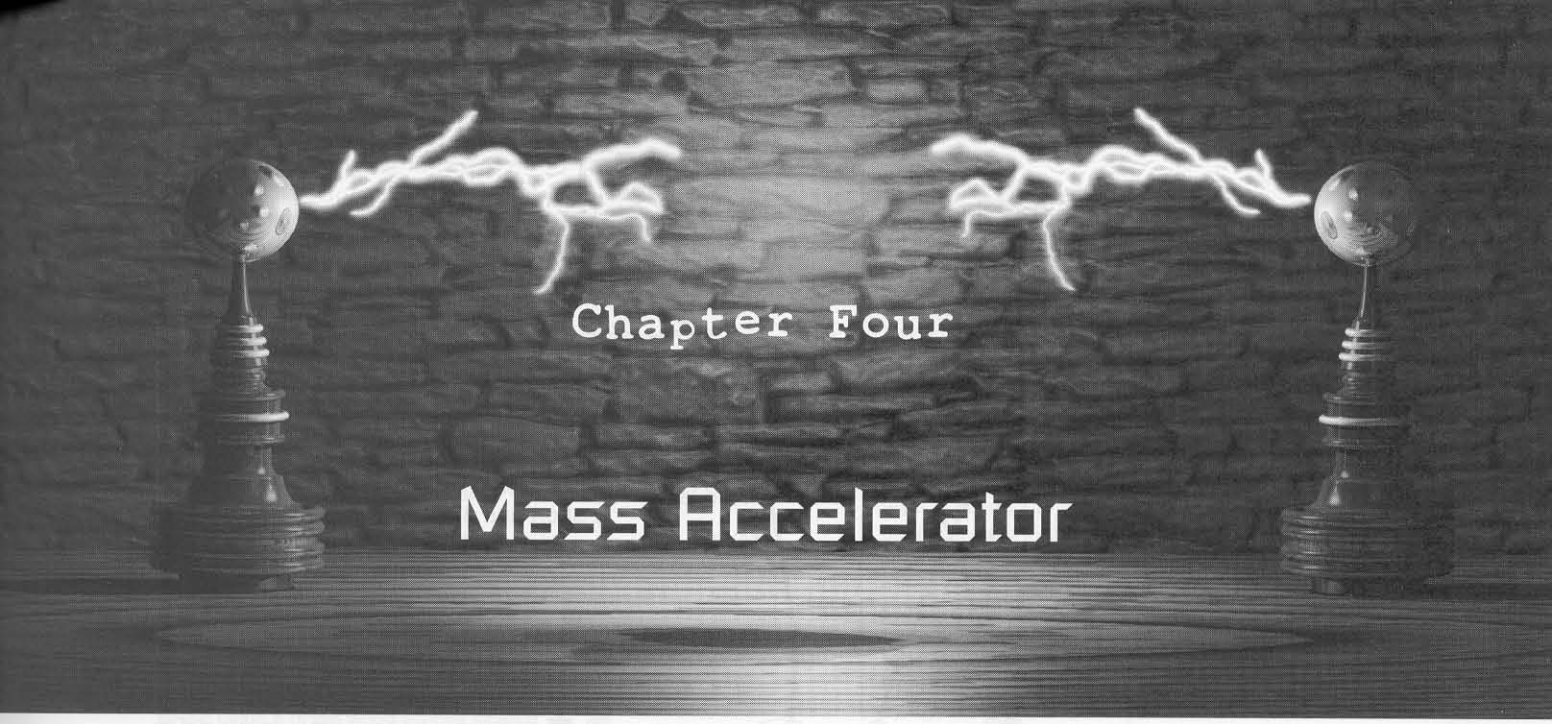

Chapter Four

Mass Accelerator

The mass accelerator device accelerates a mass shown as a 100-gram aluminum ring to ballistic velocities (see Figure 4-1). It provides an excellent outdoor action demonstration of electrokinetics requiring qualified adult supervision. A video clip can be seen at www.amazing1.com, showing the project vaporizing an object on impact. The project requires experience in the handling of high-voltage, high-energy devices.

Construction of the device requires a working *high-energy pulser,* as described in Chapter 3, "High-Energy Pulser," along with the assembly of the launcher and mass projectiles. It is shown using energy-storage capacitors currently available on the surplus market. These values can be altered within limits to allow use of the available capacitors that you may have on hand.

Figure 4-1 *Mass accelerator*

Theory of Operation

A circular, nonmagnetic conductive aluminum ring (a projectile) is placed on a flat, pancake-shaped coil. A high-energy storage capacitor is discharged into this coil, producing a high-current pulse. This pulse is coupled into the projectile, inducing an opposing magnetic field that provides a moment of force to accelerate the projectile.

Setup and Operation of the Mass Accelerator

1. Verify a properly operating high-energy pulser system, as described in Chapter 3.
2. Assemble the capacitor bank and safety discharge probe, as shown in Figure 4-2. This probe is connected directly across the storage capacitors and is used to verify that they are fully discharged before going into the circuit

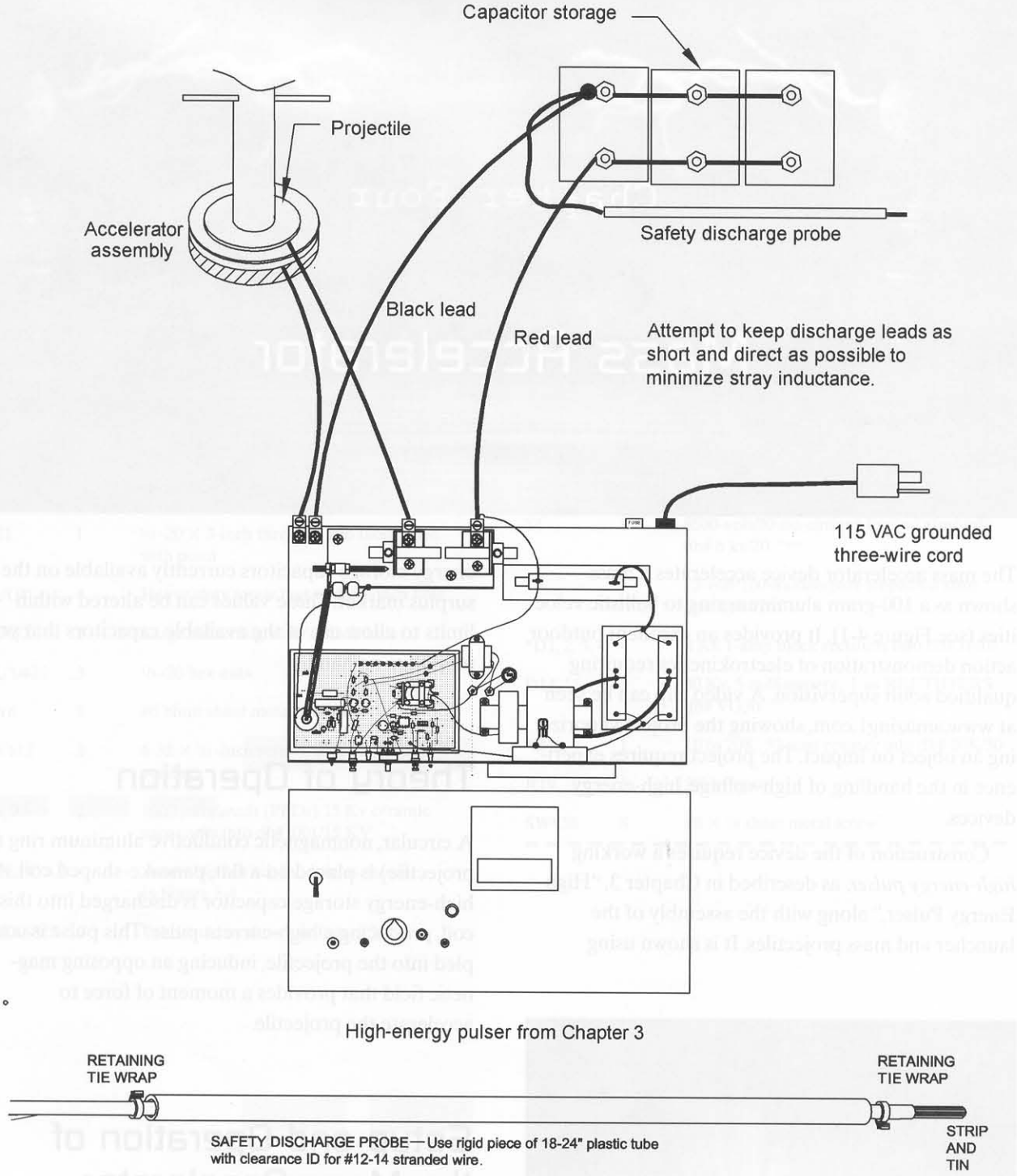

Figure 4-2 *System setup for mass accelerator*

to make adjustments. Use #12 wire for all discharge connections. The capacitors shown are 32 *microfarad* (MFD) at 4.5 *kilovolts* (Kv) and were used in our lab. Other obtainable values may be used, but we cannot guarantee full performance.

3. Assemble the accelerator as shown. Figures 4-3 and 4-4 require more fabricating but will tolerate energies up to 2,000 joules. Figure 4-5 is simpler but cannot exceed 1,000 joules without breaking up.

1. Fabricate the BASE section from a 7 x 7" piece of 3/4" plywood. Cut corners to form an octagonal shape.

2. Fabricate the FLYWAY from a 12" piece of 2" PVC tubing.

3. Cut out an approximate diameter hole in center of BASE section to provide a very tight fit to the FLYWAY tube.

4. Fabricate the BAFFLE sections by cutting out a 5" diameter disc from a 1/4" piece of polycarbonate (lexan). Cut out a 2 1/16" hole from the exact center to form a ring. Cut in half to form two sections.

5. Wind a coil of 30 turns of #12 in 15 layers of 2 turns each. Finished coil must be in a tight pancake configuration. *You may have to make up a temporary bobbin jig for this step*. Hold together with tape etc.

6. Attach the two BAFFLE halves to the BASE using 8 brass wood screws located as shown.

7. Drill a .1" clearance hole for the inner lead of the COIL assembly. The space between the BAFFLE sections can be used for routing out the outer lead of the COIL.

8. Place COIL section into cavity routing the leads as shown. COIL section should nest into cavity and be positioned flat.

9. Seal all points that can leak as epoxy must be carefully poured over the COIL forming a 1 /16" layer on top.

Note: The objective is to get the aluminum PROJECTILE as close to the COIL as possible. This improves energy coupling between the COIL and PROJECTILE and limits reactive impedance. You therefore must compromise system integrity in regards to strength versus electro to mechanical efficiency. The COIL will want to break its position forcing outwards due to magnetic reactionary forces. This effect becomes a serious problem with energy over 1000 joules. You may want to form a 1/8" layer over the top at the expense of system efficiency. Start at a low-energy level and increase, noting any cracking or deformation of COIL assembly.

NOTE: You may eliminate the BAFFLES and the epoxy fill if system energy is kept below 1000 joules. A 1/16" thick x 7" diameter polycarbonate retaining disc with a clearance hole for the FLYWAY tube can be used to hold the COIL in place. Use screws to attach to BASE.

PROJECTILE is an aluminum ring fabbed to a $4\frac{1}{2}$" to 5" OD X 2 $\frac{1}{16}$"ID X $\frac{3}{16}$" thickness. The PROJECTILE should match the size of the COIL face assembly and nest into the cavity. It should move freely on the FLYWAY tube.

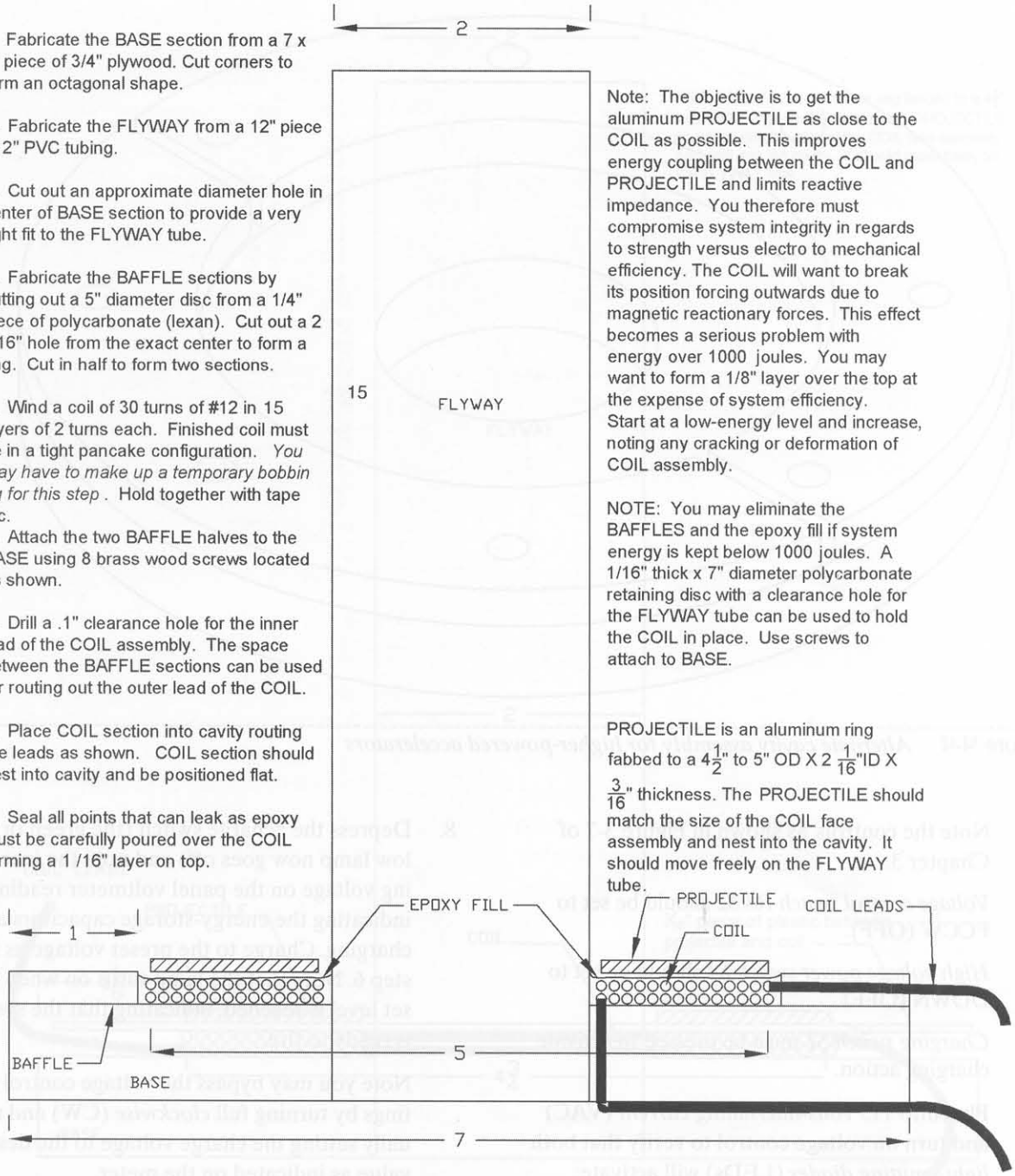

Figure 4-3 *Accelerator up 2,000 joules*

4. Position the accelerator coil assembly at the desired location, noting the direction of the projectile as it is accelerated along the flyway tube. Velocities can be reached that can break glass and do damage to objects that are directly and individually struck. Caution should be used, as the projectile can also cause injury.

You may use a flyway tube of at least several meters with a retaining stop at its end. This prevents the projectile from flying off and automatically resets its position for the next launch as it returns back to the original position by the force of gravity. Do not exceed 3,000 volts as the assembly will quickly break up due to the impact forces.

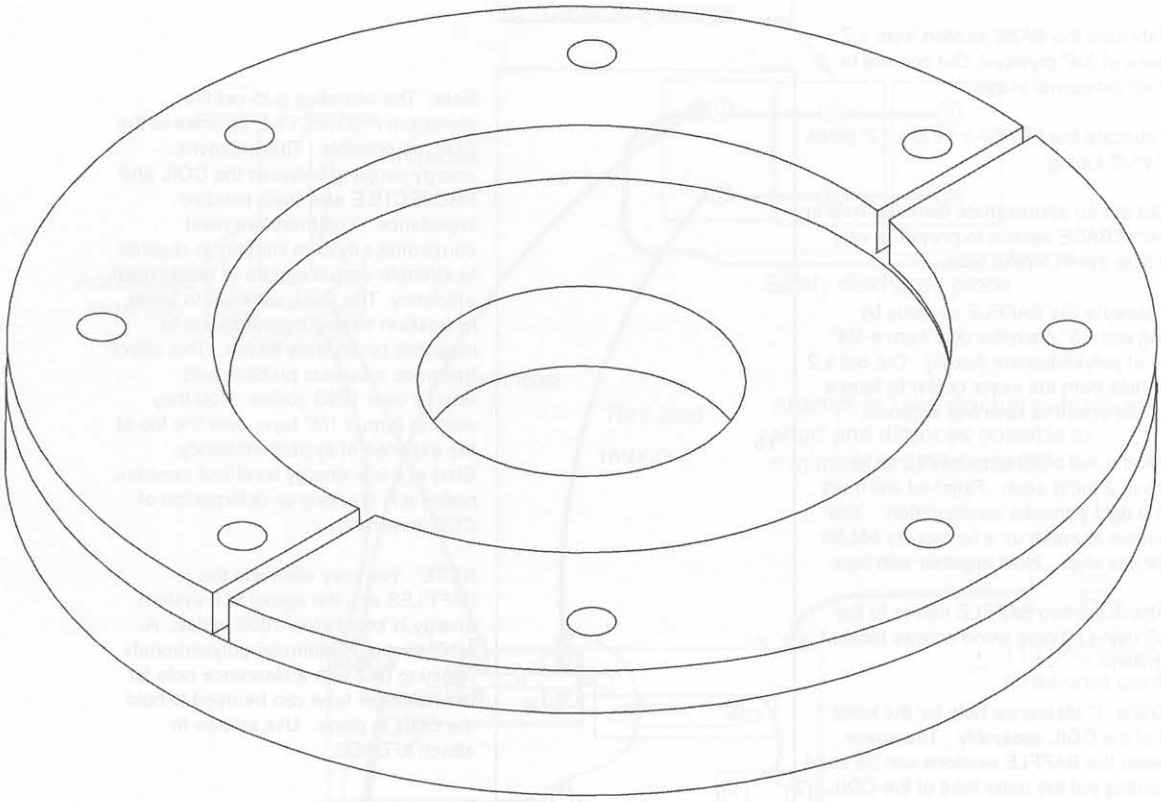

Figure 4-4 *Alternate cavity assembly for higher-powered accelerators*

5. Note the controls, as shown in Figure 3-7 of Chapter 3:

   Voltage control switch R8/S2 should be set to FCCW (OFF).

   High voltage power switch S4 should be set to DOWN (OFF).

   Charging switch S1 must be pressed to activate charging action.

6. Plug into 115 *volts-alternating current* (VAC) and turn on voltage control to verify that both *light-emitting diodes* (LEDs) will activate:

   The *red lamp LA1* indicates the system is in an "on" state.

   The *green or yellow lamp LA2* comes on but extinguishes in the charge cycle and comes on when the preset voltage level is reached, indicating the system is ready to "fire."

7. Set *charge voltage control* to 2,500 volts as marked on the panel. Plug the unit into 115 VAC and turn on the high-voltage power switch.

8. Depress the *charge switch (the green or yellow lamp now goes off) and note the increasing voltage on the panel voltmeter reading, indicating the energy-storage capacitors are charging. Charge to the preset voltage as in step 6. Note that the lamp turns on when the set level is reached, indicating that the system is ready to fire.

   Note you may bypass the voltage control settings by turning full *clockwise* (CW) and manually setting the charge voltage to the desired value as indicated on the meter.

9. Depress the fire switch and note the projectile accelerating up the flyway tube. Remove the flyway stop pin and verify the overhead clearance for higher voltages over 2,500. Repeat at a setting of 3,000 and up to 4,000 volts. Note that the system energy varies as the square of the increased voltage. For example, projectile kinetic energy will increase by 9 when voltage increases from 1,000 to 3,000.

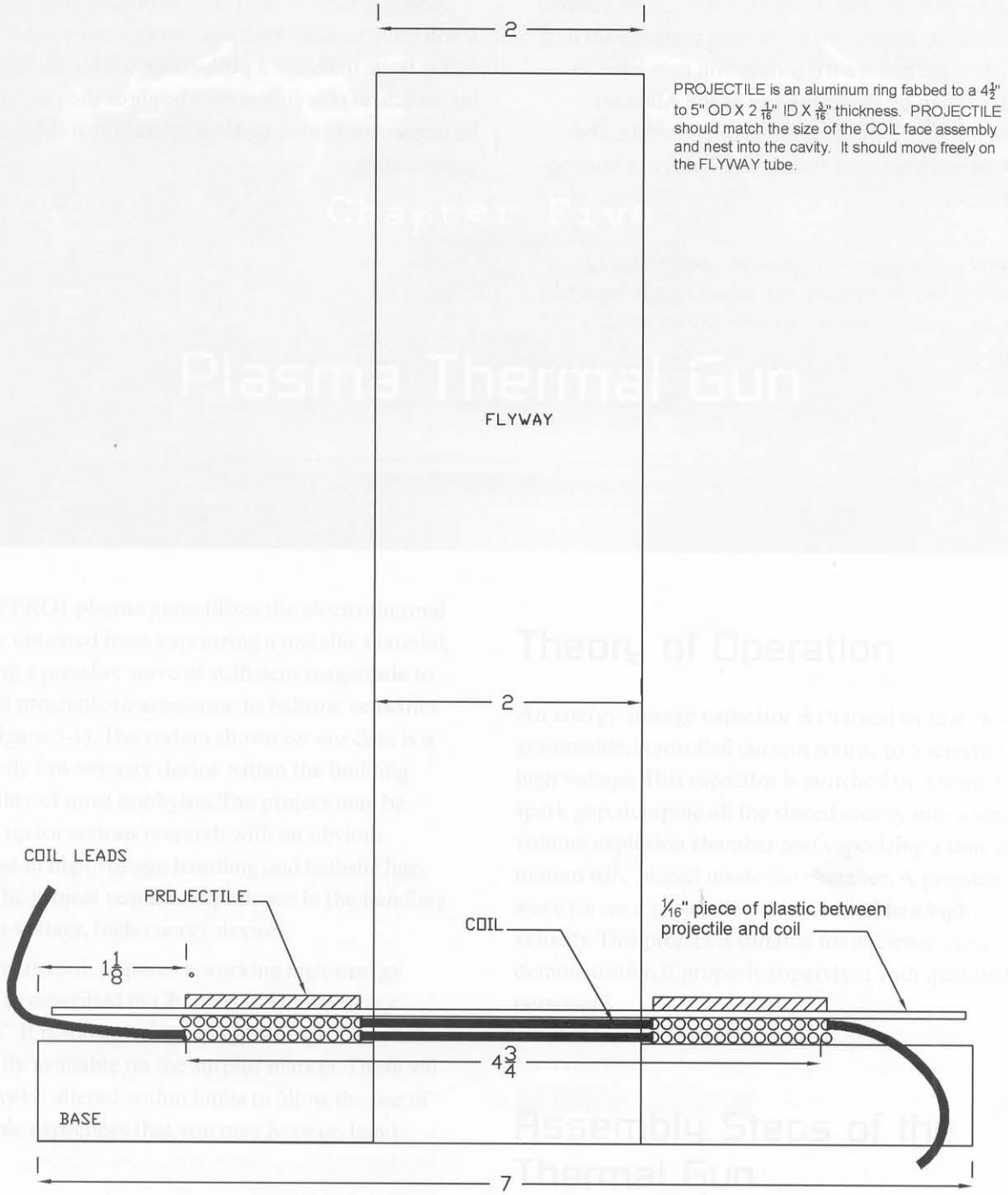

Figure 4-5 *Simple accelerator for up to 1,000 joules*

Note that continued operation at over 3,000 volts eventually will mechanically weaken the coil and erode the spark switch. Do not go over 2,500 volts as marked on the knob, except for experimenting! The system may be test-fired up to 5,000 volts for experimental research but will require continual maintenance of the coil and cleaning of the spark switch electrodes. Always increase in 500-volt increments to verify system integrity. Use an externally calibrated meter connected across the energy-storage capacitors to verify the panel meter calibration from time to time.

Also note that the spark gap is factory set at .1-inch for operation at 2 to 3 Kv. Lower-voltage

operation may require decreasing the gap for reliable triggering. Operation over 3 Kv will require widening to prevent premature triggering. You may have to tweak the gap by loosening one of the Allen set screws for your particular range of operation. The spark switch may prematurely fire if dirty or improperly gapped.

Danger! Unplug and discharge energy-storage capacitors before making any adjustments. Verify by shorting capacitor terminals with the safety discharge probe.

Also, if system uses a push-on/off charging switch, it will automatically recharge the capacitor bank after firing. Basic units use a push-on switch for the charging switch, as charging always requires the switch to be depressed, providing safer operation at the cost of convenience.

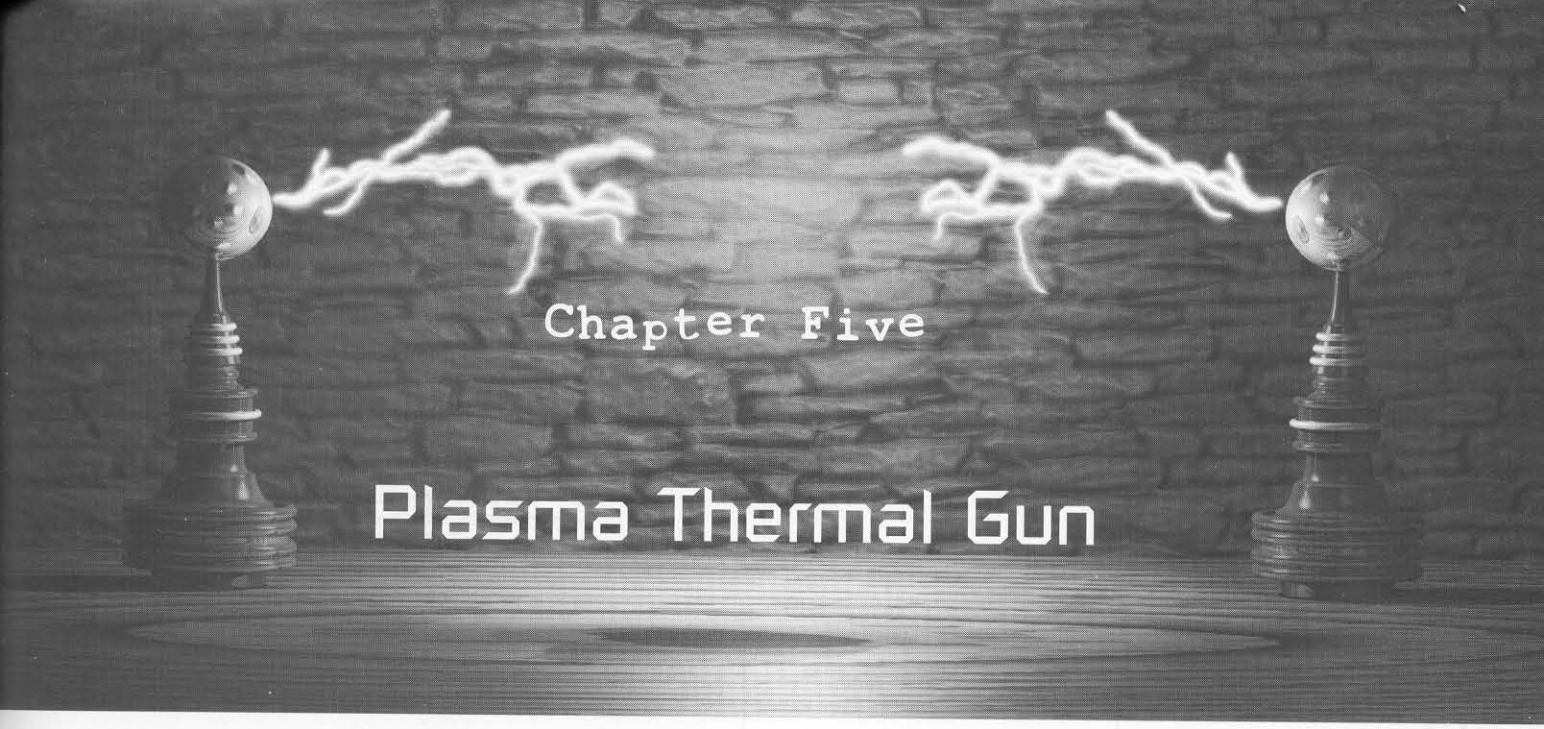

Chapter Five

Plasma Thermal Gun

Your PPRO1 plasma gun utilizes the electrothermal energy obtained from vaporizing a metallic material, creating a pressure wave of sufficient magnitude to cause a projectile to accelerate to ballistic velocities (see Figure 5-1). The system shown on our data is a relatively low velocity device within the building capability of most hobbyists. The project may be scaled up for serious research with an obvious increase in high voltage handling and ballistic hazards. The project requires experience in the handling of high-voltage, high-energy devices.

Construction requires a working high-energy pulser as described in Chapter 3, "High-Energy Pulser." It is shown using energy-storage capacitors currently available on the surplus market. These values may be altered within limits to allow the use of available capacitors that you may have on hand.

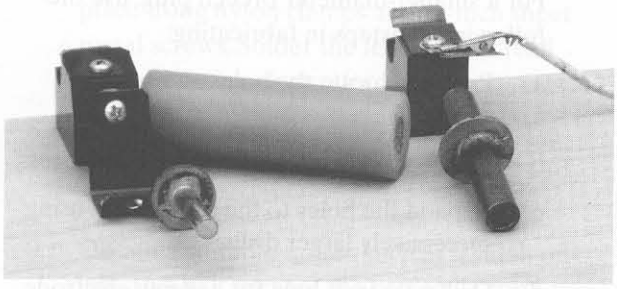

Figure 5-1 *Plasma thermal gun*

Theory of Operation

An energy-storage capacitor is charged from a programmable, controlled current source to a selected high voltage. This capacitor is switched by a triggered spark gap, dumping all the stored energy into a small-volume explosion chamber and vaporizing a thin, aluminum wire placed inside the chamber. A pressure wave forces a projectile out the barrel to a high velocity. This project is suitable for a science class demonstration if properly supervised with qualified personnel.

Assembly Steps of the Thermal Gun

To construct the thermal gun, follow these steps:

1. Fabricate the barrel and breech plug, as shown in Figure 5-2, rounding off all edges and inner barrel ridges.
2. Fabricate the breech tube, as shown in Figure 5-3. Note that the mating of the barrel and breech plug are precision-drilled using fractional bits. The inner diameter should be .007 to .008 over the outer dimensions of the barrel

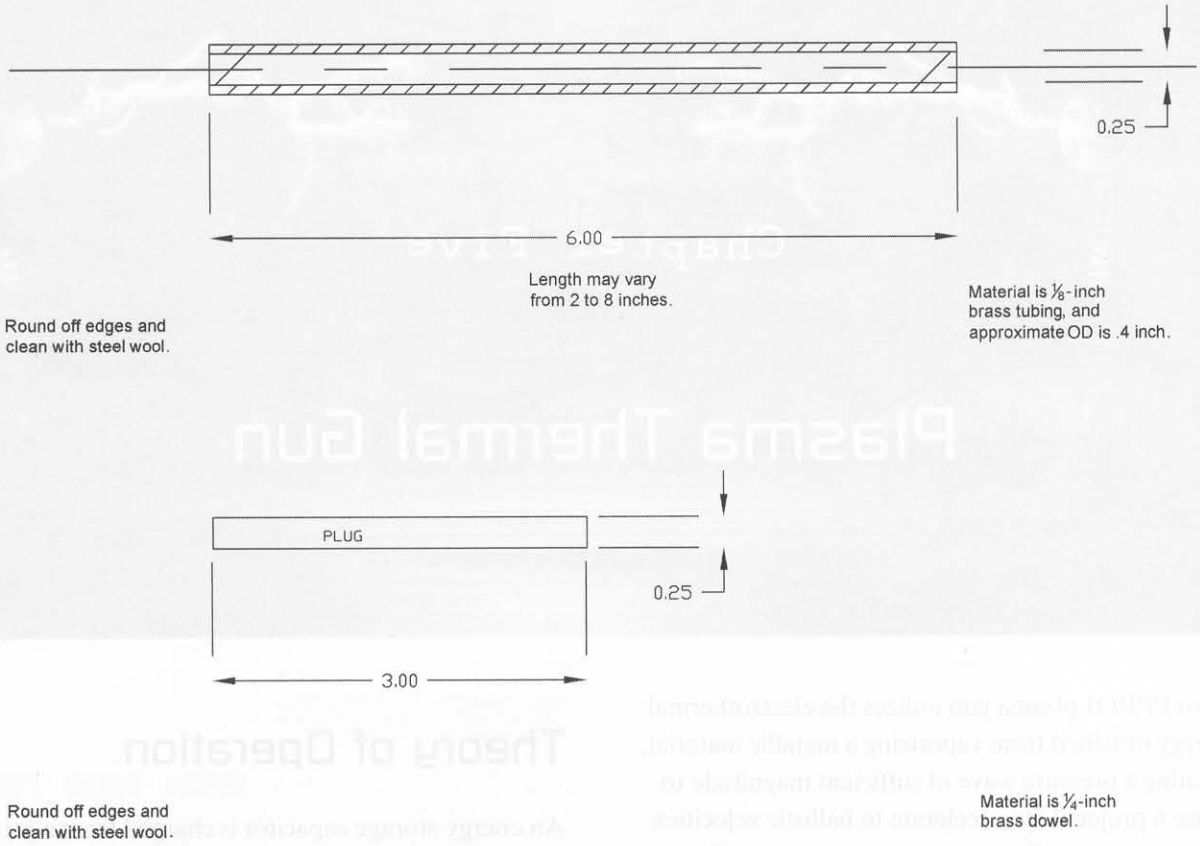

Figure 5-2 *Barrel and breech plug fabrication*

and breech plug to allow for clearance of the exploding wire, as shown in Figure 5-4.

If the clearance is too tight, it will be difficult to insert the barrel and breech plug without breaking the wire.

If the clearance is too loose, improper contact will occur on the exploding wire. Drill a bit at a time to establish the proper fitting action.

3. Solder the brass retaining washers at certain points, as shown, to allow the proper gauging of the barrel and breech plug insertion depths into the breech tube.
4. Fabricate projectiles from 1/2-inch pieces of 1/4-inch plastic, polycarbonate, or wooden dowels. Round off the end to give it a bullet-like shape, creating a streamlined effect. The final assembled gun should look like Figure 5-4 and easily fit together for the reloading of the exploding wire and projectile. You will note the metal barrel and breech plug are also the feed electrodes connected to the exploding wire via a sandwiching action. The high-powered current pulse is now applied to these electrodes, generating an explosive, heated plasma vapor that produces a pressure wave, which forces the projectile out of the barrel.
5. Create a lab proto unit shown in Figures 5-5 and 5-6. It allows easy disassembly and provides positive electrical contact to the gun electrode ends. You may have your own ideas to this approach, but the objective must be the same: good electrical contact, easy disassembly, and reloading.

For a smaller-diameter breech plug, use the following substeps in fabricating:

a. Precisely locate the holes and center punch.
b. Drill a 1/8-inch pilot hole using a drill press.
c. Expand the holes to the final radius using successively larger drills.
d. Drill a 1/16-inch hole for a spring electrode sheet metal screw.

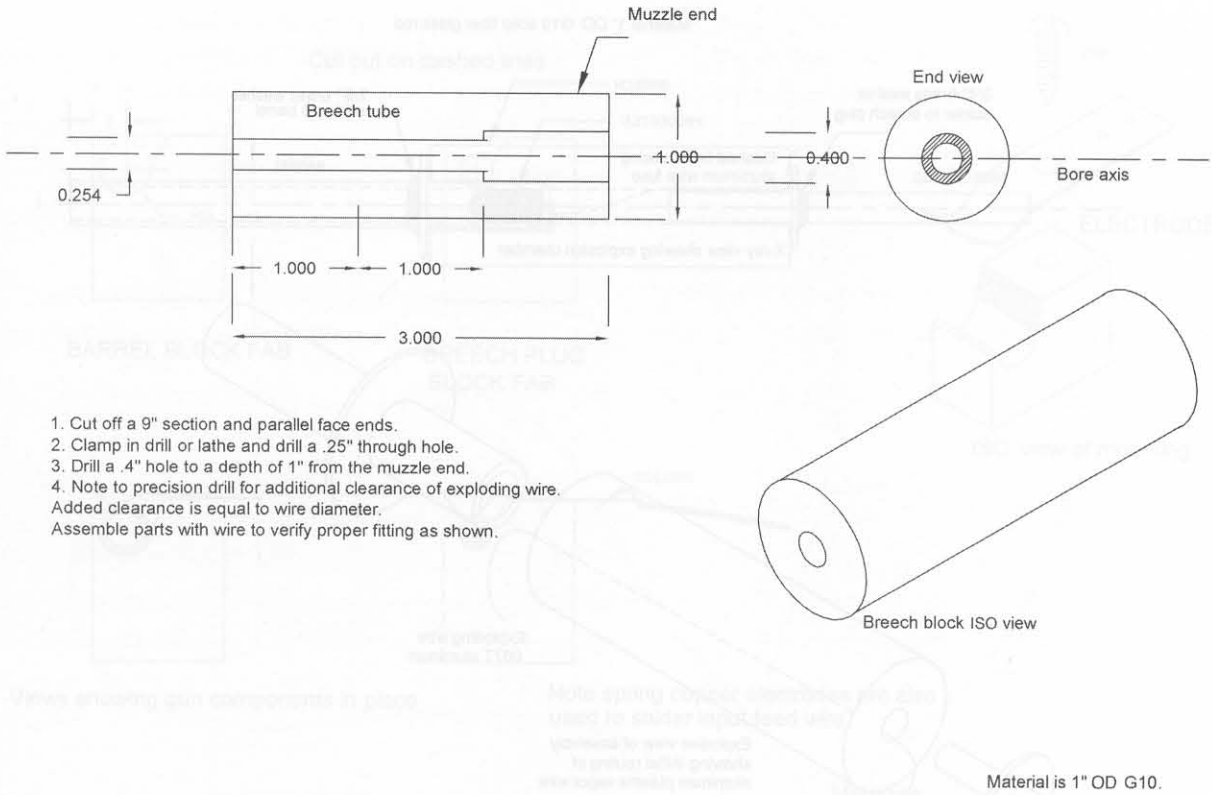

Figure 5-3 *Breech tube fabrication*

e. Drill two 1/16-inch holes for mounting blocks to the base section.

f. Use a band saw to cut out sections shown by dashed lines. File for final sizing and finishing.

6. Fabricate and shape the spring electrodes as shown. Use pliers and a small vise to bend them properly. These pieces must snap into the gun assembly and provide a positive contact.

7. Fabricate the base section in Figure 5-6 from a piece of 3/4-inch finished plywood. Sand and varnish it for a good appearance. Mount the components as shown and clamp the wires in place using nylon clamps and 1/2-inch sheet metal screws. Solder the leads of the feed wires to spring electrodes.

8. Connect up as shown in Figure 5-7. Use at least #16 wire. The leads must be short and direct.

9. Obtain a suitable target, such as a small pillow. This will prevent the projectile from ricocheting all over the place, making it hard to find for reloading.

10. Prep the gun with exploding wire, as shown in Figure 5-4. Snap it into the holders and insert the projectile to point as shown.

    It is assumed that the high-energy pulser is properly operating and connected as per the instructions and has a calibrated voltmeter and set spark switch. Familiarize yourself with the pulser operation.

11. Connect the high-energy pulser and energy-storage capacitors as shown. Note that the inductor L2 is not used in this project.

12. Allow charging up to 2,000 volts and then test the fire unit. Note the loud crack as the projectile exits the barrel. Increase the voltage in steps of 500 and note the increase in velocity. Experiment using different projectiles, targets, and so on.

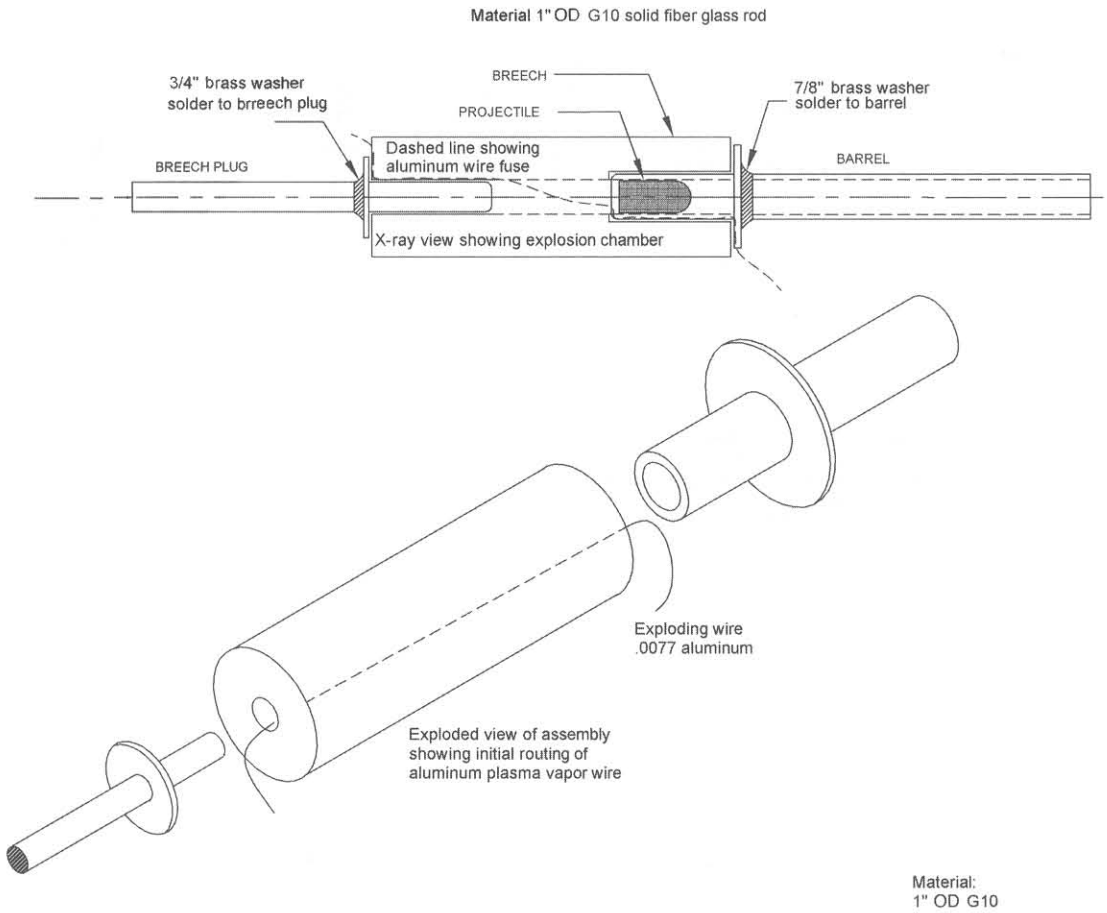

Figure 5-4 *Breech and gun assembly*

Danger! Verify that the energy-storage capacitors are fully discharged before touching any part of the gun assembly. Always short out the capacitor terminals using the safety discharge probe until you are ready to operate as this eliminates any residual stored energy from accumulating.

Special Notes

The system as shown was tested with two 32 *microfarad* (mfd), 4 *kilovolt* (Kv) capacitors in parallel for a total energy of 500+ joules. The projectile velocity was more than 200 *meters per second* (m/s). It is suggested to use only one capacitor for the science project approach.

Serious experimenters should consider our HEP90 higher-energy charger and additional energy-storage capacitors. The gun section must be beefed up for any significant increase in energy. Some suggestions are the following if stored energy is to exceed 1,000 joules:

- The entire assembly must be placed inside an explosion shield consisting of a half-inch of Lexan.
- Retaining washers should be replaced with multiple washers or a sleeve all securely soldered in place.
- The breech tube must be sleeved into a secondary sleeve of equal wall thickness. The entire breech assembly is now inserted into a steel tube or pipe for further reinforcement.
- The mounting blocks should be reinforced with a 1/4-inch angle of aluminum or steel.
- The mounting base should be fabricated from aluminum or steel.

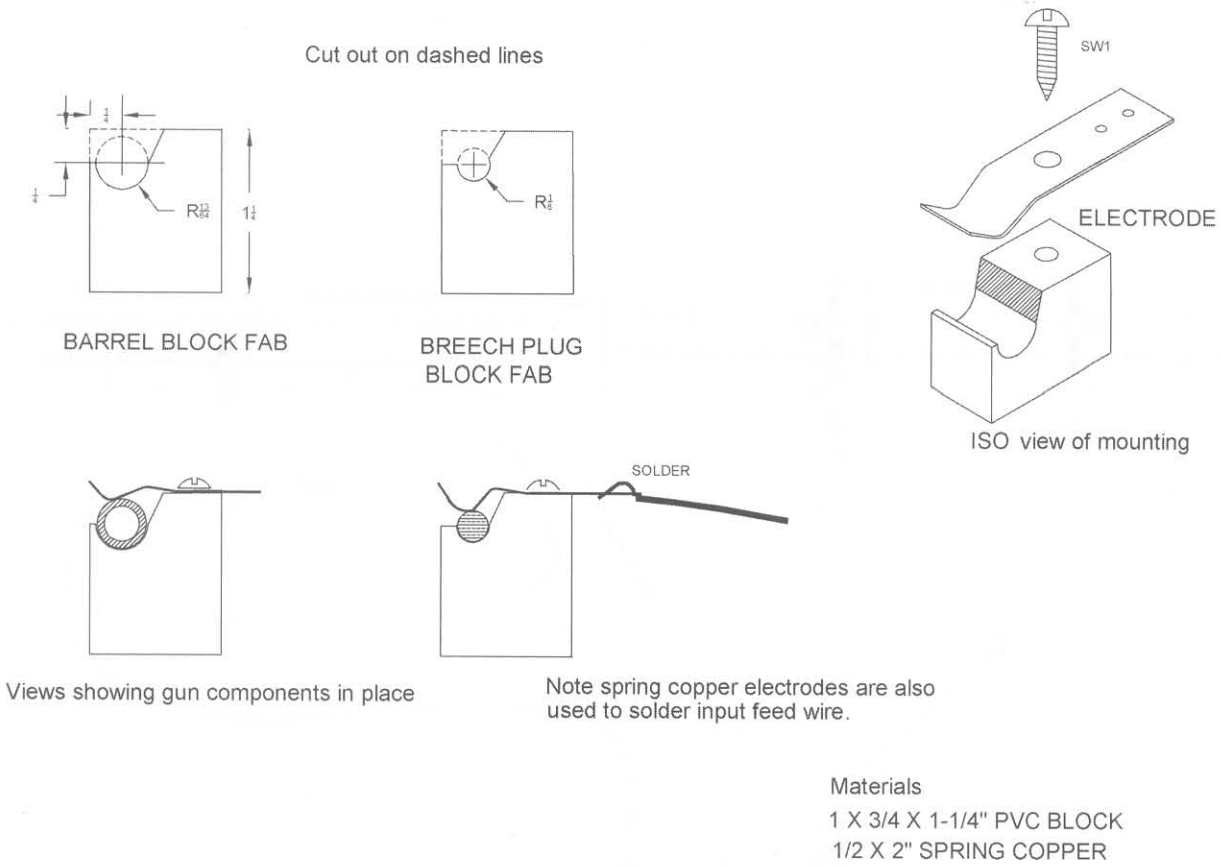

Figure 5-5 *Mounting scheme showing mounting blocks*

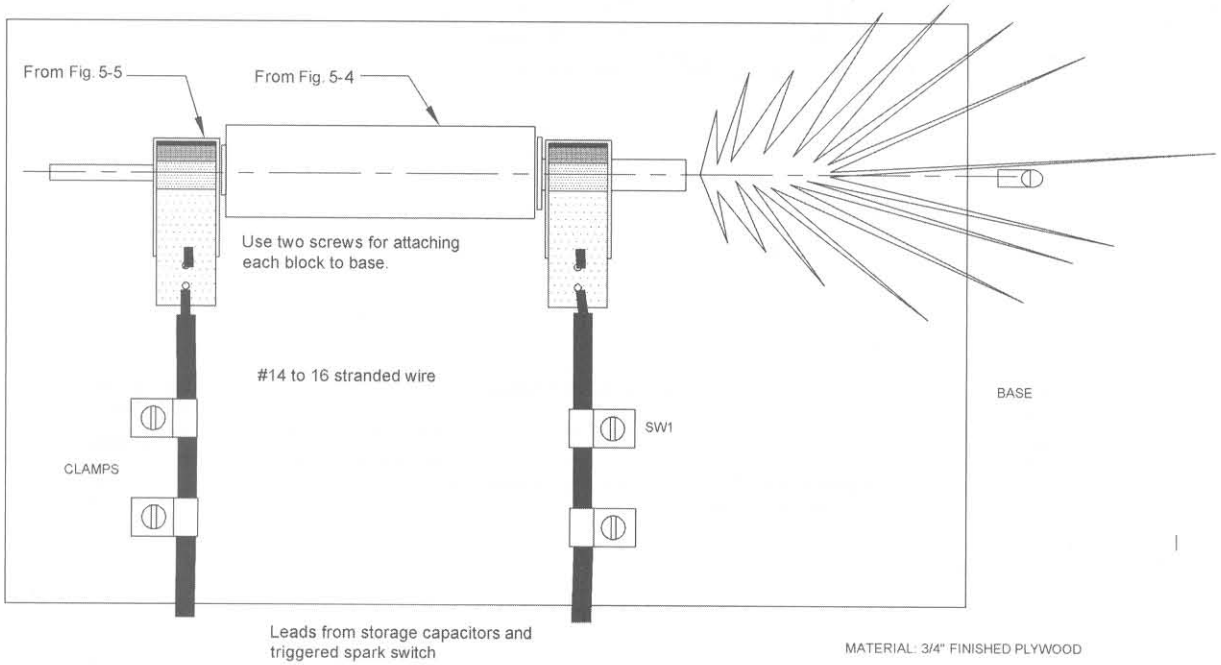

Figure 5-6 *Plasma gun top view showing muzzle blast when firing*

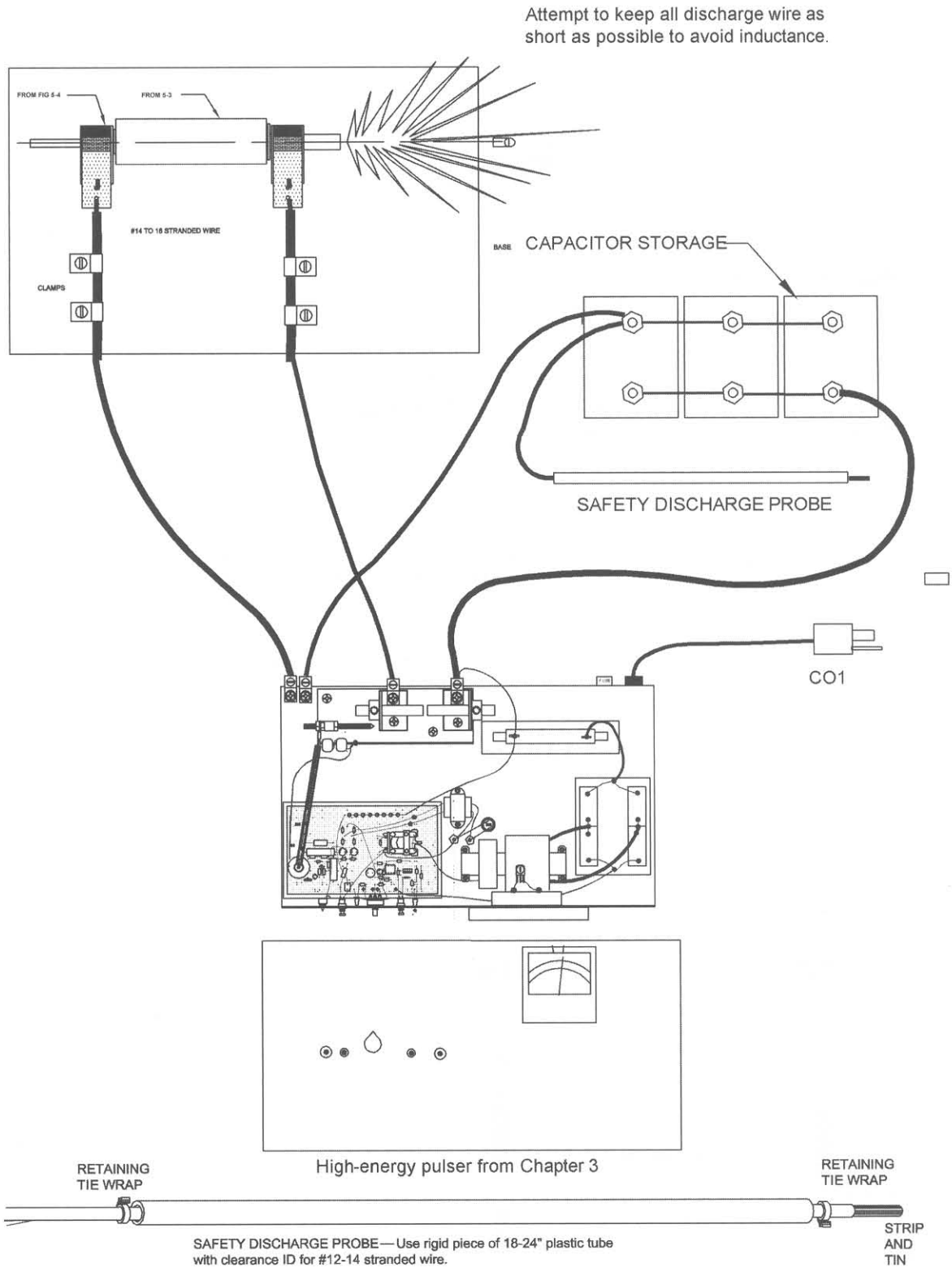

Figure 5-7 *Setup of plasma thermal gun*

When attempting to fire larger systems, it is important to increase the energy in small steps, always rechecking the system integrity for any damage resulting from prior shots. You will need the following parts to make this system:

- The fabricated parts as shown in Figures 5-4 and 5-3. These can be purchased through the factory but will require final fitting. Raw materials are available through most hardware stores.
- The energy storage caps are shown as 32 mfd/4500 volts and are available through the factory. Other values obtainable through surplus sources may be used, but we cannot guarantee performance.
- The HEP3 charger/pulser/spark switch is available through the factory as a kit or as an assembled unit. Our HEP9 higher-powered version intended for more serious experimental research is also available. It can charge banks of multiple capacitors up to 5,000 joules.

Danger! If a system uses a push-on/off charging switch, it will automatically recharge the capacitor bank after firing. Basic units use a push-on switch for the charging switch, as charging always requires the switch to be depressed, providing safer operation at the cost of convenience. The red lamp (LA1) indicates the system is in an "on" state. The green or yellow lamp (LA2) comes on but extinguishes in the charge cycle and comes on when the preset voltage level is reached, indicating the system is ready to "fire."

Figure 5-7 *Snap of plasma thermal gun*

Chapter Six

Wire-Exploding Project

The explosion of wires or objects by the rapid discharge of high electrical currents produces some interesting phenomena. The obvious audible and visual display is not the only objective, and it does find use as a part of special effects and demonstrations. The detonation of a wire from a moderate energy source can provide a blast equal to a pyrotechnic high explosive. The detonation velocity can exceed thousands of meters per second, producing high-speed microparticles and switching high currents in the multigigawatts at nanosecond speeds for *electromagnetic pulse* (EMP) generation and electrokinetics. The project may be scaled up for serious research with an obvious increase in high voltage handling and ballistic hazards. This project requires experience in the handling of high-voltage, high-energy devices.

Construction requires a working high-energy pulser as described in Chapter 3, "High-Energy Pulser," along with the assembly of the explosion chamber. It is shown in Figure 6-1 using energy-storage capacitors currently available on the surplus market. These values may be altered within limits in order to use available capacitors that the builder may have on hand. It can be hazardous and requires protective eyewear. This project can function as an excellent museum demonstration when performed by qualified adult personnel. Safety eyewear must be worn by the operator.

Theory of Operation

An energy-storage capacitor is charged from a programmable, controlled current source to a selected high voltage. This capacitor is now switched by a triggered spark gap, discharging all the stored energy into and vaporizing a wire. A shock wave is produced by the rapid oxidization of the object. This project is suitable for a science class demonstration of the concept if properly supervised with qualified personnel.

Setup and Operation

To begin the project, follow these steps:

1. Assemble the explosion chamber, as shown in Figure 6-2.
2. Position the explosion chamber and connect it up as shown in Figure 6-3. The transparent shield section provides protection to the operator but is open in the rear and side sections. The rear section is used to place the target material where the explosive blast exits. It is suggested to *completely* shield the chamber if spectators are to be in the area.

   Note the inclusion of the trigger pulse blocking inductor in one of the leads. This part

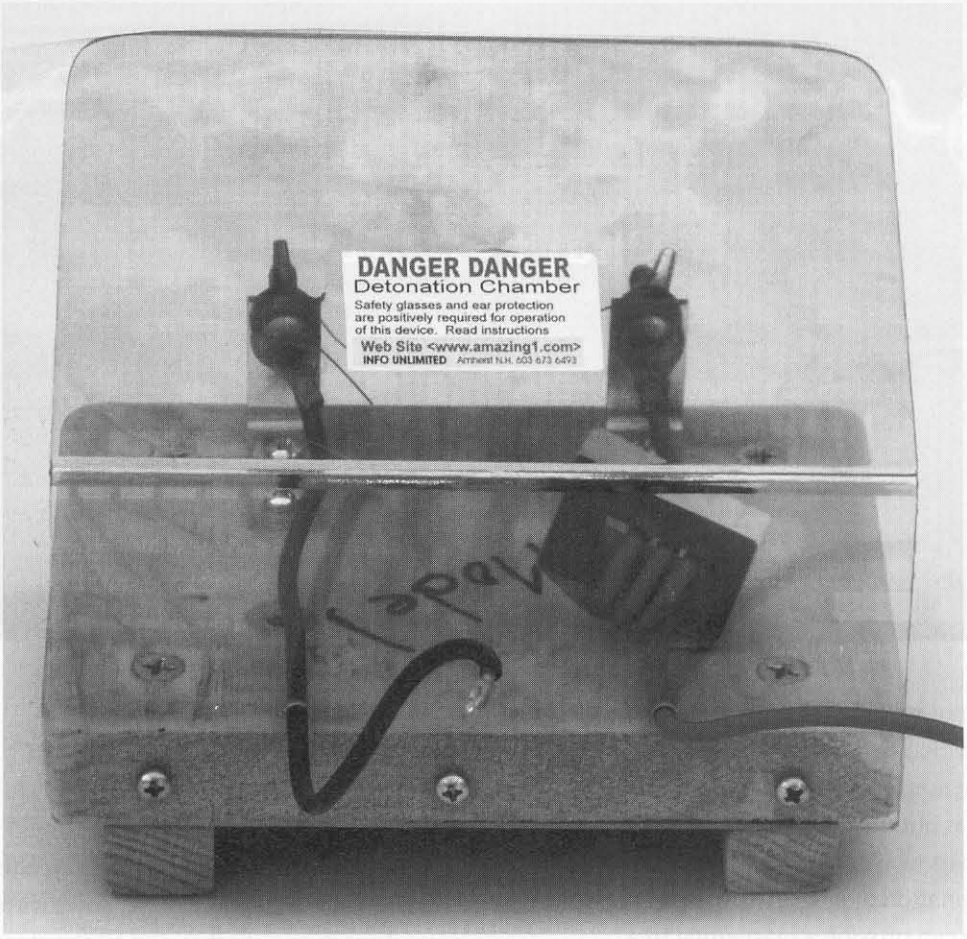

Figure 6-1 *Explosion chamber*

provides reliable triggering when using low-impedance loads such as wires and so on.

3. Note the controls as shown in Figure 3-7 of Chapter 3.

   Voltage Control Switch (R8/S2) should be set to FCCW (OFF).

   High-Voltage Power Switch (S4) should be set to DOWN (OFF).

   Charging Switch (S1) must be pressed to activate the charging action.

4. Connect a 3- to 4-inch piece of #24 bare copper wire to the terminal block as shown. Make sure that the wire is firmly clamped by giving it a tug. Place a safety cover over the assembly if required.

5. Plug into 115 *volts-alternating current* (VAC) and turn on voltage control to verify both *light-emitting diode* (LED) lamps coming on:

   The *red lamp (LA1)* indicates the system is in an "on" state.

   The *green or yellow lamp (LA2)* comes on but extinguishes in the charge cycle and comes on when the preset voltage level is reached, indicating the system is ready to "fire."

   Turn the voltage control off and unplug it once the previous steps are verified.

6. Set the charge voltage control to a 3,000-volt setting, as marked on the panel. Plug unit into 115 VAC and turn voltage control.

7. Depress *charge switch S1 (the green or yellow lamp now goes off) and note the increasing voltage on the panel voltmeter reading, indicating the energy storage capacitors are charging. Allow charging to the preset voltage as in step 6. Note that the LA2 lamp now turns on when the set level is reached, indicating that the system is ready to fire.

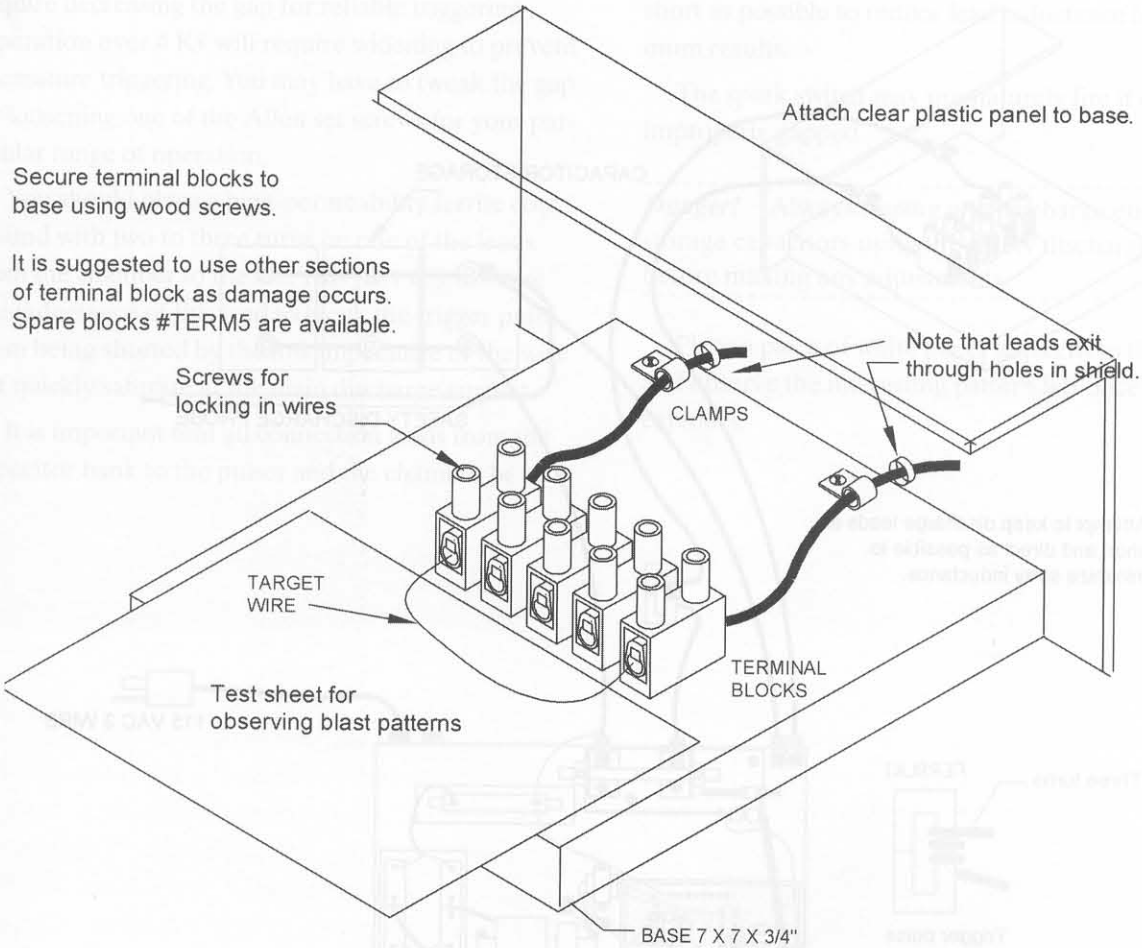

Introducing all new **BLAST ART**™
Place a piece of white paper near the target wire and note the myriad of blast patterns produced. You may experiment by placing paper at different locations and distances relative to the wire, noting the various effects of the blast. This is an excellent form of a new art that we are introducing called BLAST ART where an infinite amount of weird and bizarre blast patterns are permanently embedded onto many surface materials. Wires of different sizes and materials may be experimented with further, adding to the effects possible.

Figure 6-2 *Explosion chamber scheme*

8. Depress the fire switch and note a loud report of discharge in the spark switch. The wire should vaporize with a bright flash and a loud report similar to a firecracker. Repeat at 4,000 volts, noting a brighter flash and a louder bang.

Special Notes

System energy varies as the square of the increased voltage. For example, energy will increase by 9 when the voltage is increased from 1,000 to 3,000. You may

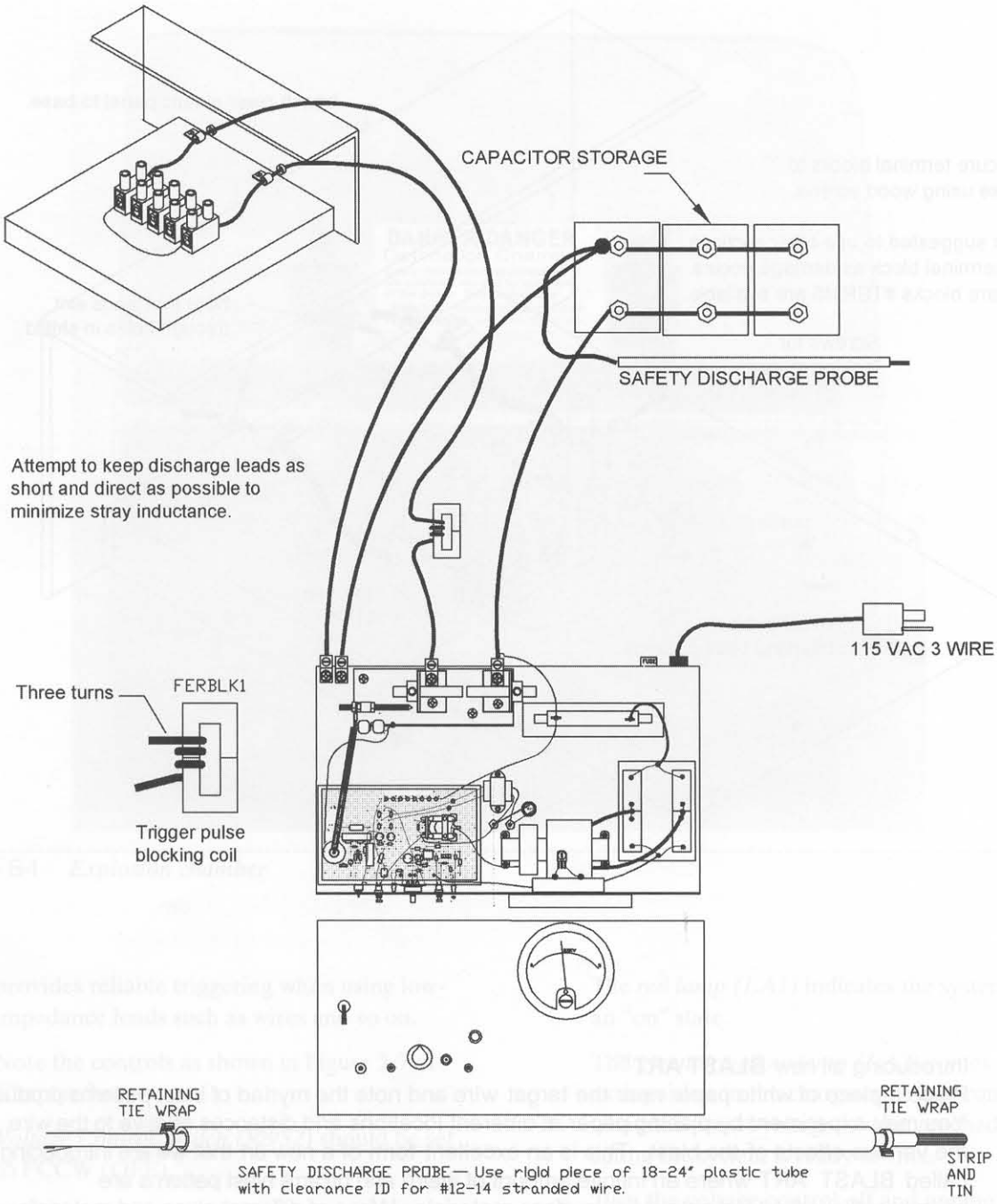

Figure 6-3 *Setup of wire explosion project*

go to 4,500 volts for an increased effect, add more capacity, or both. Use caution.

Also note that the continued operation at over 4,000 volts eventually will erode the spark switch. Do not go over the 4 Kv setting except for experimenting. The system may be test-fired up to 5,000 volts for experimental research but may require continual maintenance of spark switch electrodes. Always increase in 500-volt increments to verify system integrity.

It may be a good idea to check the front panel meter calibration from time to time. Use an externally calibrated meter connected across the storage capacitors to verify panel voltage settings.

The spark gap is factory set at .1 inches for operation at 3 to 4 Kv. Lower-voltage operations may

require decreasing the gap for reliable triggering. Operation over 4 Kv will require widening to prevent premature triggering. You may have to tweak the gap by loosening one of the Allen set screws for your particular range of operation.

You should place a high-permeability ferrite core wound with two to three turns on one of the leads from the chamber to the G2. This part will increase the inductance of this lead to block the trigger pulse from being shorted by the low impedance of the wire yet quickly saturate at the main discharge current.

It is important that all connection leads from the capacitor bank to the pulser and the chamber be as short as possible to reduce lead inductance for optimum results.

The spark switch may prematurely fire if dirty or improperly gapped.

Danger! Always unplug and discharge energy-storage capacitors using the safety discharge probe before making any adjustments.

Place a piece of white paper adjacent to the wire and observe the interesting pattern left once it explodes.

Figure 6-3 *Setup of wire explosion project.*

go to 4,500 volts for an increased effect, add more capacity, or both. Use caution.

Also note that the continuous operation above 4,000 volts eventually will erode the spark switch. Do not go over the 4 Kv setting except for experimenting. The system may be test fired up to 5,000 volts for experimental research but may require continuous maintenance of spark switch electrodes. Always increase in 500-volt increments to verify system integrity.

It may be a good idea to check the front panel meter calibration from time to time. Use an externally calibrated meter connected across the storage capacitors to verify good voltage readings.

The spark gap is factory set at .3 inches for operation at 3 to 4 Kv. Lower voltage operations may

Chapter Seven

Magnetic Can Crushing

This project is an excellent demonstration of pulsed magnetics where a normal, everyday aluminum soda can is crushed into an hourglass configuration (see Figure 7-1). Several of these systems are on interactive display at public museums where it has been reported that students would bring their own cans, placing them into the test coil and keeping them as souvenirs.

Construction requires a working high-energy pulser as described in Chapter 3, "High-Energy Pulser," along with the assembly of the shaping coil. It is shown using energy-storage capacitors currently available on the surplus market. These values can be altered within limits to allow the use of available capacitors that the builder may have on hand. The project requires experience in the handling of high-voltage, high-energy devices. This can also be an excellent museum demonstration when performed by a qualified adult.

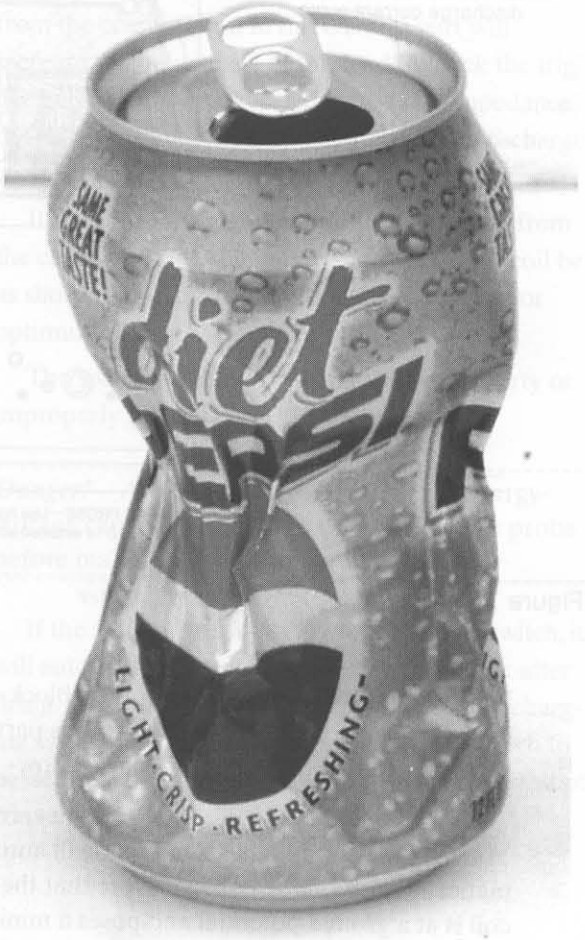

Figure 7-1 *A magnetically crushed can*

Setup and Operation

To begin the project, proceed as follows:

1. Assemble the warping and blocking coils, as shown in Figure 7-2.
2. Position the warping coil assembly at the desired location and connect it up as shown.

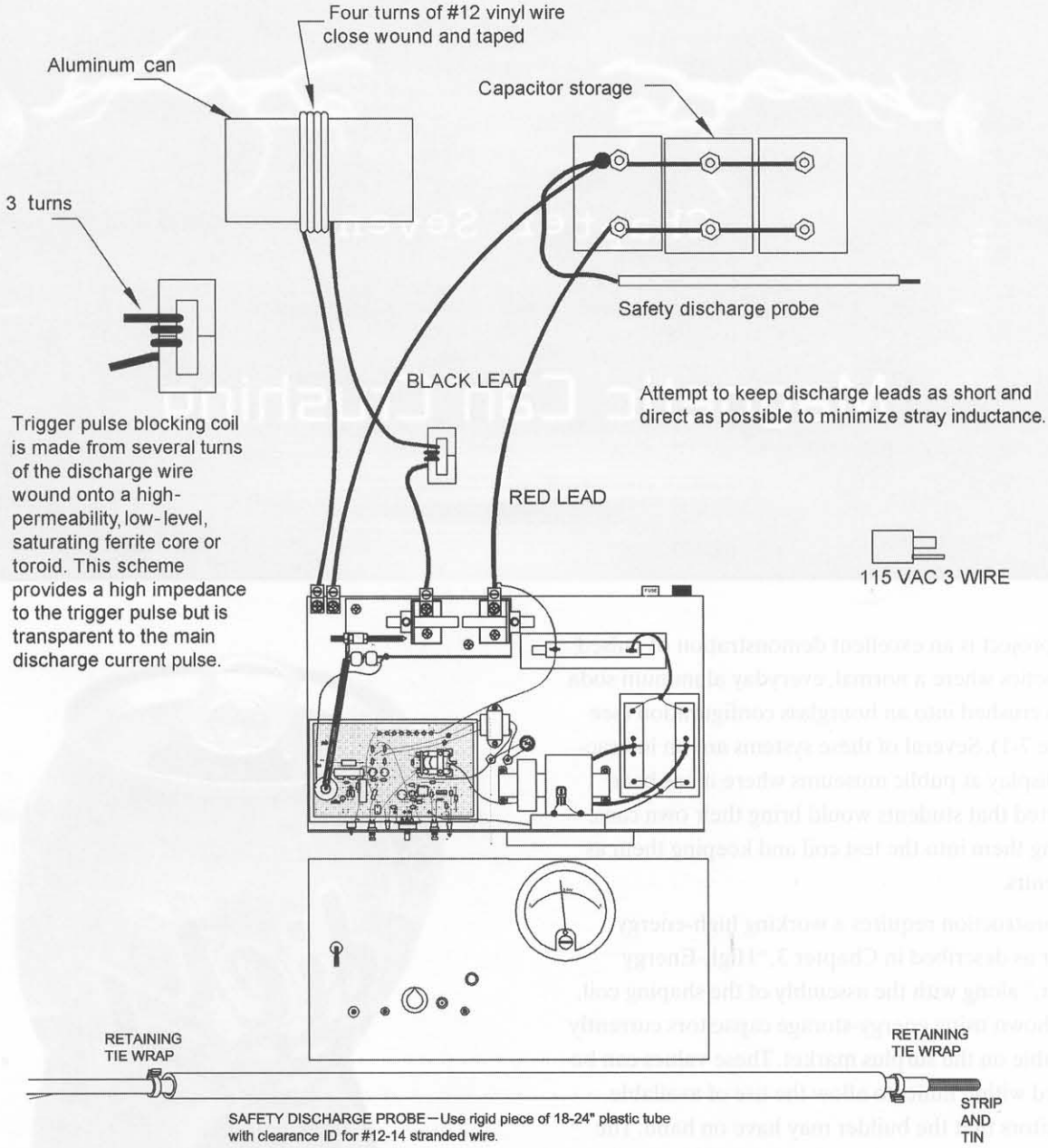

Figure 7-2 *Setup for magnetic can crusher*

Note the inclusion of the trigger pulse blocking inductor in one of the coil leads. This part provides reliable triggering when using low-impedance loads.

You may make a suitable stand that will automatically position the pop can. Note that the coil is at a ground potential and poses a minimal shock threat when used as directed. It can be safely set up for public demonstration. Contact the factory for suggestions.

3. Set the controls as follows (reference front panel drawing, see Figure 3-7):

   Voltage Control Switch (R8/S2) should be set to FCCW (OFF).

   High-Voltage Power Switch (S4) should be set to OWN (OFF).

   Charging Switch (S1) must be pressed to activate the charging action.

4. Plug into 115 *volts-alternating current* (VAC) and turn on the voltage control to verify both *light-emitting diode* (LED) lamps coming on:

   The *red lamp (LA1)* indicates the system is in an "on" state."

   The *green or yellow lamp (LA2)* comes on but extinguishes in the charge cycle and comes on when the preset voltage level is reached, indicating the system is ready to "fire."

5. Turn the voltage control off and unplug it once the previous steps are verified.

6. Set the charge voltage control to the 3,000-volt setting as marked on the panel. Plug the unit into 115 VAC and turn on the high-voltage safety switch S4.

7. Depress the *charge switch (S1) (the green or yellow lamp now goes off) and note the increasing voltage on the panel voltmeter reading, indicating the energy storage capacitors are charging. Allow it to charge to the preset voltage as in step 6. Note the LA2 lamp now turns on when the set level is reached, indicating that the system is ready to fire.

8. Depress the fire switch and note a loud report of discharge in the spark switch. You should see some deformation around the can under the coil. Repeat at 4,000 volts and the can deforms to about 50 percent of its original shape.

Special Notes

Note that system energy varies with the square of the increased voltage. For example, energy will increase by 9 when the voltage is increased from 1,000 to 3,000. You may go to 4,500 volts for an even greater effect, add more capacity, or both to really devastate the can.

Note that continued operation at over 4,000 volts eventually will erode the spark switch. Do not go over the 4 *kilovolts* (Kv) setting except for experimenting. The system may be test-fired up to 5,000 volts for experimental research but may require the continual maintenance of spark switch electrodes. Always increase in 500-volt increments to verify system integrity.

It may be a good idea to check the front panel meter calibration from time to time. Use an externally calibrated meter connected across the energy storage capacitors to verify the panel voltage settings.

The spark gap is factory set at .1 inches for operation at 3 to 4 Kv. Lower-voltage operation may require decreasing the gap for reliable triggering. Operations over 4 Kv will require widening to prevent premature triggering. You may have to tweak the gap by loosening one of the Allen set screws for your particular range of operation.

You should place a high-permeability ferrite core wound with two to three turns on one of the leads from the crushing coil to the G2.This part will increase the inductance of this lead to block the trigger pulse from being shorted by the low impedance of this coil yet quickly saturate at the main discharge current.

It is important that the all connection leads from the capacitor bank the pulser and the crusher coil be as short as possible to reduce lead inductance for optimum results.

The spark switch may prematurely fire if dirty or improperly gapped.

Danger! Always unplug and discharge energy-storage capacitors using the safety discharge probe before making any adjustments.

If the system uses a push-on/off charging switch, it will automatically recharge the capacitor bank after firing. Basic units use a push-on switch for the charging switch, as charging always requires the switch to be depressed, providing safer operation at the cost of convenience.

Part Two

Chapter Eight

Handheld Burning CO_2 Gas Laser

This chapter offers an excellent, high-powered laser project that provides a full 20 watts of continuous output power and is meant to be conducted by experienced users. The system is shown constructed with all the necessary compliance for a class 4 laser device. A water-cooled, sealed laser tube is powered by a special high-efficiency, energy-conditioning circuit providing either a battery for field use or normal 115 *volts-alternating current* (VAC) for laboratory use.

This project is shown as being built in two parts (see Figure 8-1). The first is the power supply and cooling system housed in an enclosure along with all the controls, meters, and indicators. The second part is the laser head consisting of the laser tube with optics enclosed in a cylindrical tube and connected to the power supply via a 3- to 4-foot "umbilical" cable supplying coolant and electrical power. An alternative

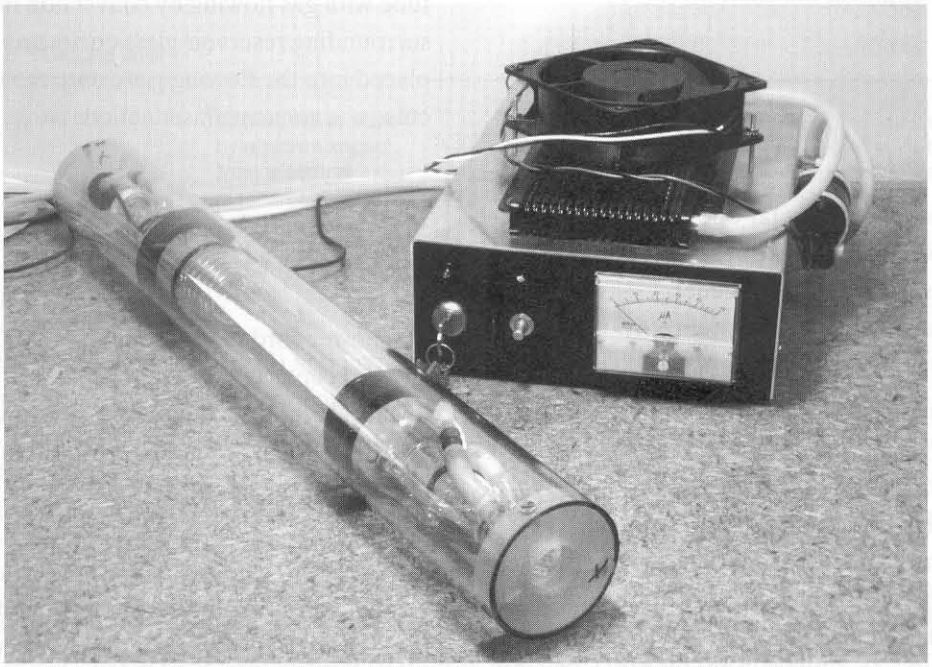

Figure 8-1 *Carbon dioxide burning laser for laboratory use*

assembly scheme is shown for portable field and handheld applications using rechargeable batteries.

Expect to spend up to $500 for this advanced and rewarding project. The actual cost for a laser with this capability would be $5,000 or more. This project requires basic electromechanical shop skills with all parts, including protective eyewear available through Information Unlimited at www.amazing1.com. The finished device will conform to laser compliances and must be used with protective eyewear. A complete list of the necessary parts is provided at the end of the chapter in Table 8-1.

Basic Description

A gas laser tube is shown in Figure 8-1 with integral optics and a cooling jacket. This approach greatly simplifies construction, providing a neat, compact, and versatile project. The power supply used is capable of operating from a 115 VAC line or from batteries using a 200-watt sine wave inverter.

The project is shown constructed with all the necessary compliances for use in the trade or as a low-cost laboratory device. Cooling is accomplished by circulating water through the laser head cooling jacket to a forced air-cooled heat transfer radiator. A fan is used for supplying the airflow.

Theory of Operation

A carbon dioxide laser is by far one of the simplest laser devices to assemble and operate. This asset is sometimes a disadvantage as this energy can be dangerous in the hands of the inexperienced, both to the builder and his or her surroundings.

As shown in Figure 8-2, a $C0_2$ laser is a two-level, vibrational device emitting in the 10.6-micron infrared region. Creating lasers is accomplished by electrically exciting nitrogen gas (N_2) to an energy level close to that of the $C0_2$ molecule. The main dissipation of this energy is in the resonant transfer to the $C0_2$ molecules, causing them to change from a ground state to the excited level 2 state. You will note that the lower laser level 3 state is not prone to this transfer of energy; hence, a population inversion now exists between levels 2 and 3.

Population inversion is an unnatural state of an atom that must be forced by an external influence. It is where higher-energy-level bands are more inhabited than lower bands occurring naturally. Apopulation inversion is necessary for stimulating laser emission. The laser action commences as a result of the stimulated energy transition from level 2 to 3. A means of returning level 3 energy to ground level is accomplished by quenching it with a third gas being helium. Obviously, if level 3 were allowed to build up, the population inversion would soon be reduced between 2 and 3, hence terminating laser action.

It should be noted that the $C0_2$ gas molecule consists of many modes of vibration that contribute to the laser frequency. The main mode of vibration is around 10.6 microns and the system is often categorized in respect to this wavelength. Mother nature's atmosphere offers a natural window to this wavelength, and consequently a $C0_2$ laser is excellent in respect to an application requiring propagation over long distances. A $C0_2$ laser of sufficient power obviously is an excellent candidate for use as a direct energy-beam weapon.

The laser described in this project is referred to as a *low flow axial device*. This is the simplest approach and is nothing more than an airtight glass discharge tube with gas flowing by convection in and out of the surrounding reservoir glass enclosure. Electrodes placed into the flowing gas excite the nitrogen molecules, commencing laser action.

Circuit Operation

The power cord (CO1) supplies a 115/220 VAC from a wall receptacle for laboratory use or a sine wave inverter for portable battery operation in the field. The third green grounding lead wire must be securely attached to the metal enclosure cover (COV1) for safety.

As shown in Fiure 8-3, the key switch (SW1) energizes the primary circuits and cooling fan (FAN). A fuse (FH1/FS1) protects the main circuit from any catastrophic faults. The indicator lamp (NEON)

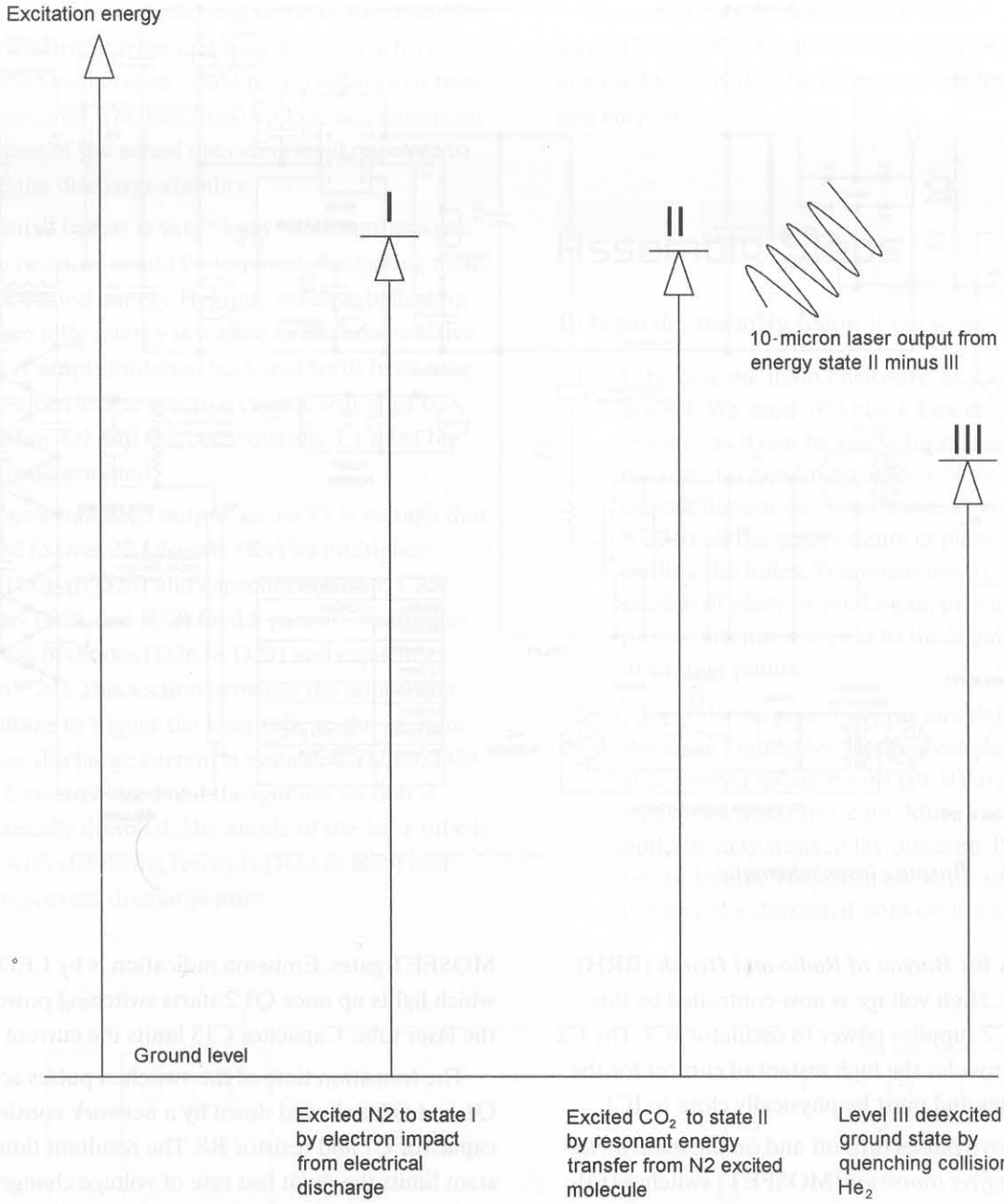

Figure 8-2 *Carbon dioxide energy-level diagram*

requires a current-limiting resistor (R12) and lights up when SW1 is turned on. The peak charging current to C10 and C11 is limited by a rush resistor (RX). The rectifiers (D1, D2, D3, D4) are shown in a full bridge configuration when used for a 220 VAC input. For 115 VAC operation, only D1 and D3 are used along with a jumper (JMPR1) in a voltage doubler configuration. The output voltage across C10 and C11 is 300 *volts-direct current* (VDC) and is referred to as the plus and negative rails.

The secondary circuits are controlled by a switch (SW2) that energizes a low-voltage transformer (T2). Twelve VAC is a full wave rectified by diodes D30 to D33 and filtered by a capacitor (C30). A dropping resistor (R28) and zener diode (Z1) regulate output to 12 VDC. The timer (IC2) supplies a delayed voltage to the oscillator driver (IC1). It is connected as a monostable switch with a delay being determined by the time constant of capacitor C31 and a resistor R27. The delay is 10 seconds with the values as shown and

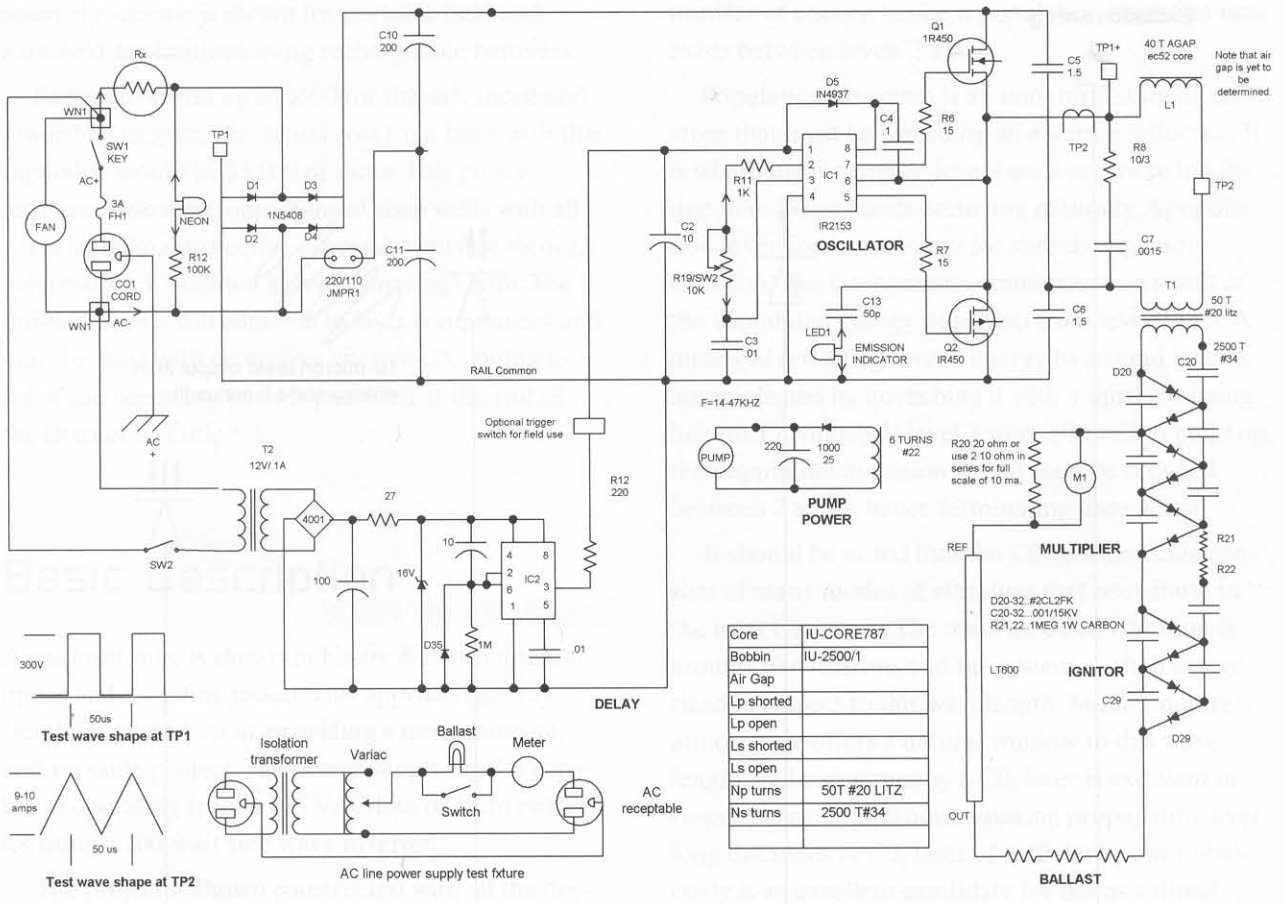

Figure 8-3 *Burning laser schematic*

is necessary for *Bureau of Radio and Health* (BRH) compliance. High voltage is now controlled by this action as IC2 supplies power to oscillator IC1. The C2 capacitor provides the high instant of current for the output pulses and must be physically close to IC1.

These drive pulses turn off and on the main *metal oxide field effect transistor* (MOSFET) switches (Q1 and Q2). The switching frequency is determined by the time constant of the power control pot (R19) and the timing capacitor (C3). A trimpot (R10) adjusts the range limits of R19. The switching circuit is in a half-bridge configuration where the MOSFET connected to the positive end (+ rail) must be driven with its source pin referenced at 150 volts above the common end (− rail). This is accomplished by biasing a bootstrap capacitor (C4) through the ultra-fast diode (D5) providing the correct DC level to fully control Q1. Resistors (R6 and R7) eliminate the high-frequency parasitic oscillation occurring as a result of rapidly switching the capacitive load of the MOSFET gates. Emission indication is by LED1, which lights up once Q1.2 starts switching power to the laser tube. Capacitor C13 limits the current flow.

The transition time of the switched pulses across Q1 and Q2 is slowed down by a network consisting of capacitor C7 and resistor R8. The resultant time constant limits the dv/dt fast rate of voltage change that could cause a premature activation at the wrong switching MOSFET, creating a catastrophic fault mode. Capacitors C5 and 6 provide a voltage midpoint and produce the necessary storage energy to maintain the voltage level of the individual pulses.

Transformer T1 increases the 150-volt average pulses fed to the primary winding to 7,500 volts across the secondary winding. Another winding of only several turns supplies the 12 volts required for the cooling fan. This current is rectified by diode D34 and filter capacitor C33.

You will note that the output load for the power supply is a gas discharge being the laser tube. A gas

discharge requires a ballasting network to control the discharge current from reaching destructive levels. This ballasting network could be a resistance or reactive impedance. The ballasting voltage is a significant proportion of the actual operating level required to provide the discharge stability.

Resistive ballast is very "lossy" and cumbersome as large resistors would be required, dissipating many watts of wasted energy. By using reactive ballasting (L1), very little energy is wasted as the now reactive current is simply switched back and forth from magnetic to electric. The reactive current still must be switched by Q1 and Q2; consequently, L1 must be carefully determined.

The now ballasted output across T1 is voltage that is tripled to over 22 *kilovolts* (Kv) by multiplier diodes (D20 to D25) and capacitors (C20 to C25). Resistors (R21 and R22) feed a parasitic multiplier consisting of diodes (D26 to D29) and capacitors (C26 to C29). This section provides the added ignition voltage to trigger the laser tube to the on state. Once the discharge current is sustained, D26 to D29 are all forward biased and the ignition section is automatically disabled. The anode of the laser tube is shown with stabilizing resistors (R23 to R25) and helps to prevent discharge jitter.

The cathode of the laser tube is returned through meter (M1) and ranging shunt resistors (R20) intended to provide 10 milliamps of full-scale deflection current.

Assembly Steps

To begin the assembly, follow these steps:

1. Fabricate the main enclosure, as shown in Figure 8-4. We used .063 black Lexan (polycarbonate) as it can be easily formed in a leaf brakemetal bending machine. Note that only overall dimensions are shown, as you should trial-fit all the components in place before drilling the holes. You could use .035 aluminum in place of the Lexan, providing proper attention is paid to the high-voltage insulating points.
2. Assemble the power supply circuit board as shown in Figure 8-5. The project uses an available *printed circuit board* (PCB) available from www.amazing1.com. More experienced builders may want to lay out their PCB or use vector board. You are, however, cautioned to observe the darkened lines on the schematic

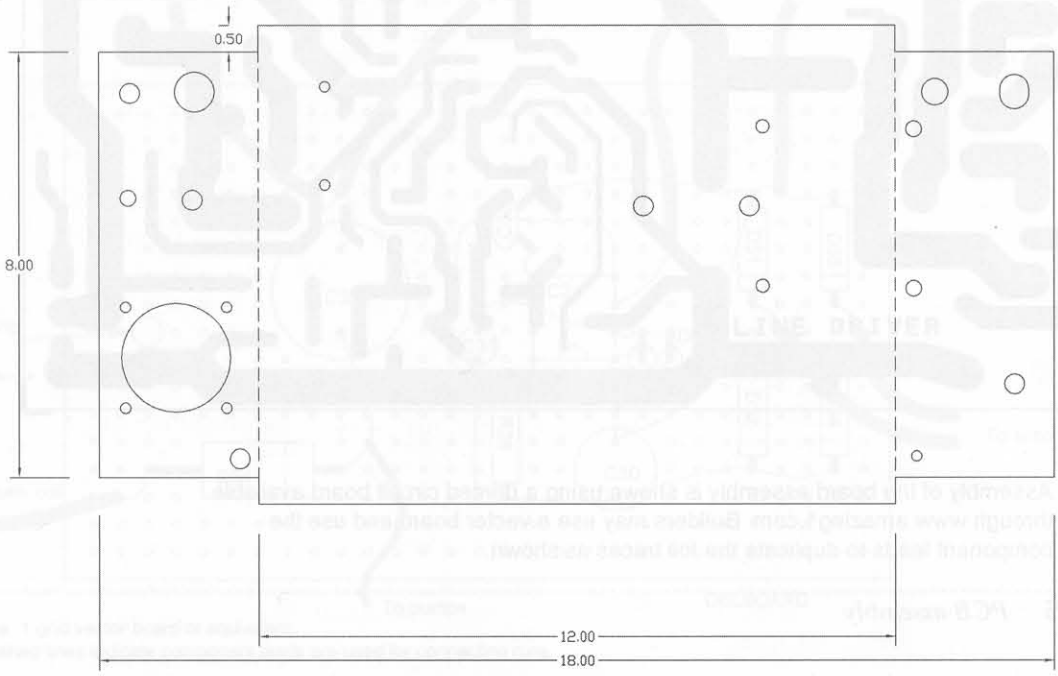

Figure 8-4 *Fabrication of power module enclosure EN1*

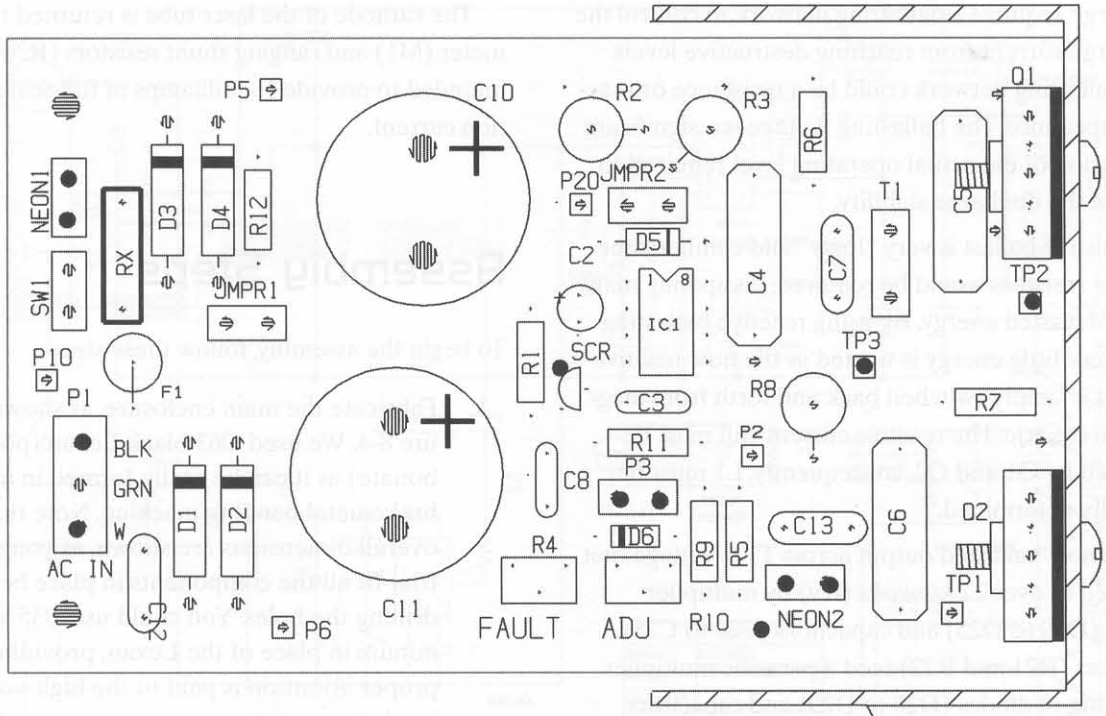

1. Black dots are connection points to external leads as shown in Figure 8-10 and 8-11.

2. The PC board as shown is used in several projects and does not use all the components as indicated.

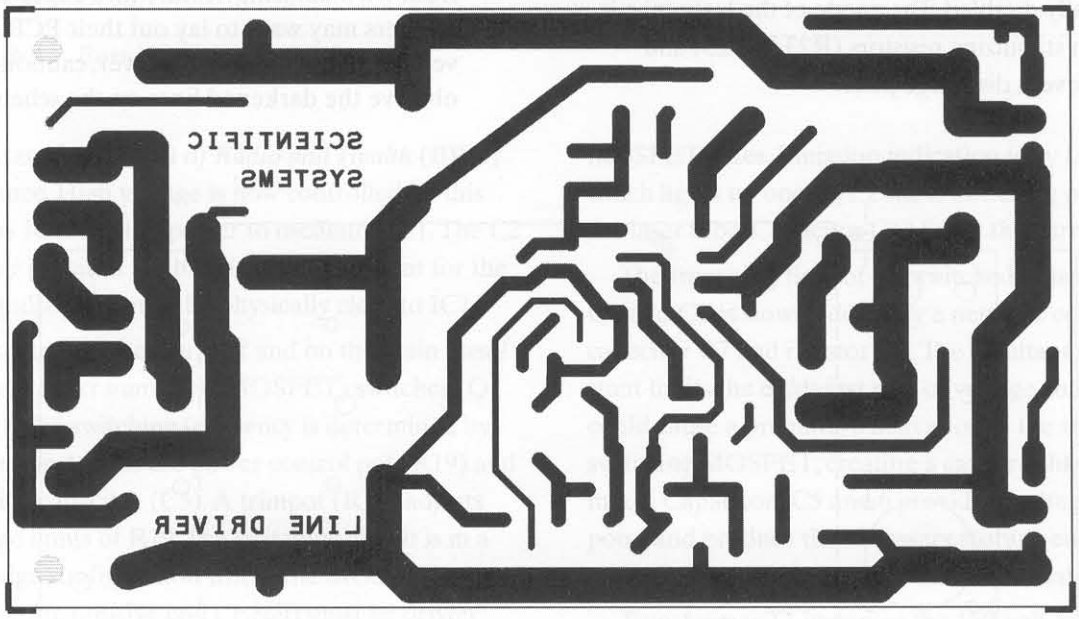

Assembly of the board assembly is shown using a printed circuit board available through www.amazing1.com Builders may use a vector board and use the component leads to duplicate the foil traces as shown.

Figure 8-5 *PCB assembly*

as these indicate high current and direct connection runs requiring the use of #18 bus wire. You will note that the PCB contains stenciling showing component locations. Only the parts shown on the schematic and parts list are to be used. Many parts will not be used on this project.

3. Assemble the delay circuit board, as shown in Figure 8-6.
4. Assemble the high-voltage multiplier circuit board, as shown in Figure 8-7. You may use vector board.
5. Assemble the heat sink bracket and the current-controlling inductor L1, as shown in Figure 8-8. It is important that the holes for attaching Q1 and Q2 are in perfect alignment when inserted into the PCB. Leads must not be stressed and the body of the transistor must be in total contact with the bracket for an efficient heat transfer.
6. Lay out the subassemblies in the main enclosure, as shown in Figure 8-9. Follow the layout locations, drilling the mounting holes as you go. High-voltage components are secured in place by large tie wraps. More conventional screws and nuts secure other assemblies.

Special note on transformer T1: This part is available assembled and ready to use. Experienced builders may want to build and wind their own. The specifications are given as the following:

The core set is a Magnetics #40658 or #40787 in P material.

The secondary winding is 2500 turns of #34 heavy coated magnet wire on a 1-inch inner-diameter bobbin. Use high-voltage TV flyback winding technique with "start" at ground potential.

For the primary wind, use 50 turns of #20 Litz wire in even layers with additional winding of 6 turns of #22 wire for pump motor power. These primary windings are wound on a diameter that will fit on the core and also slide into the 1-inch innerdiameter of the secondary.

7. Wire in first-stage components, as shown in Figure 8-10. Attempt to use existing leads and only splice using appropriate wire nuts where absolutely necessary. Leads exiting the enclosure should be 18 inches or more and will be trimmed to length when finally assembled. Use a 36-inch piece of WR20 Kv high-voltage wire for the output lead-designated HVOUT.

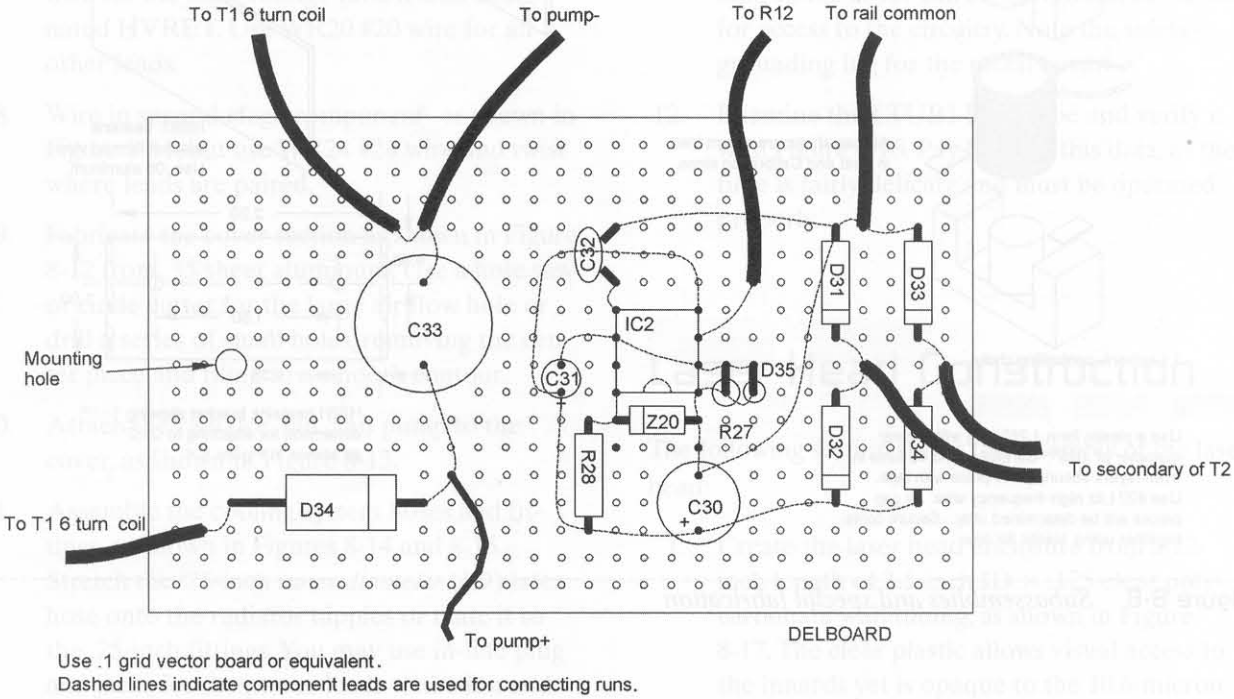

Figure 8-6 *Delay control and pump power board*

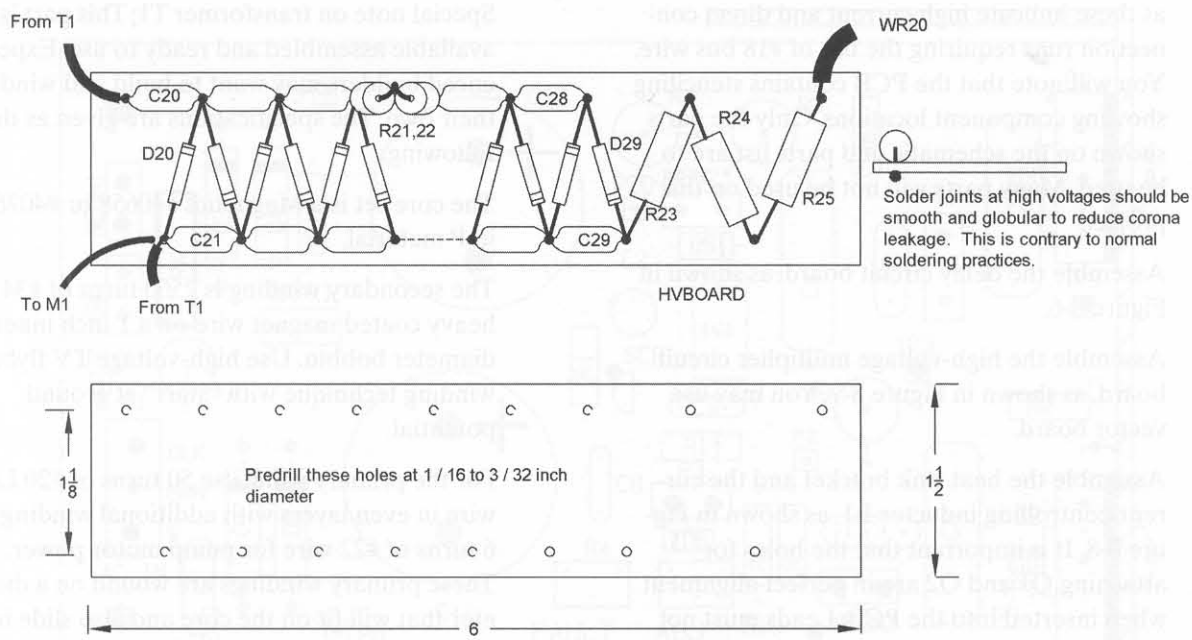

Figure 8-7 *High-voltage multiplier and igniter board*

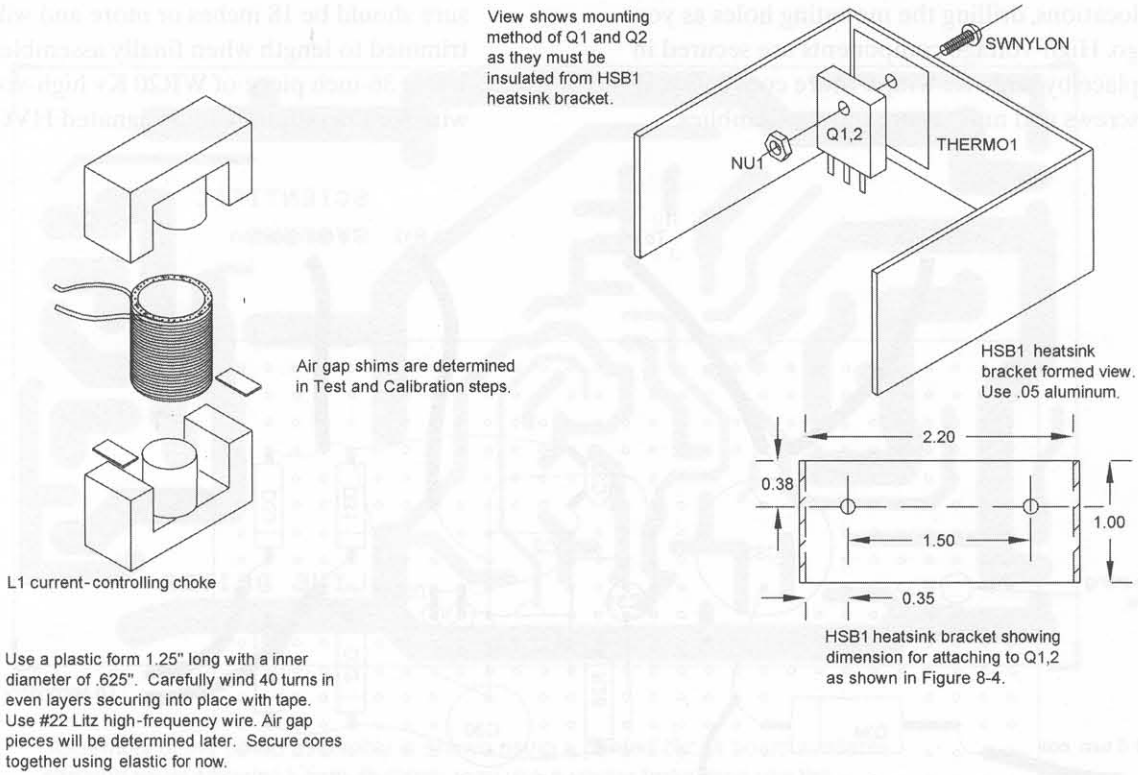

Figure 8-8 *Subassemblies and special fabrication*

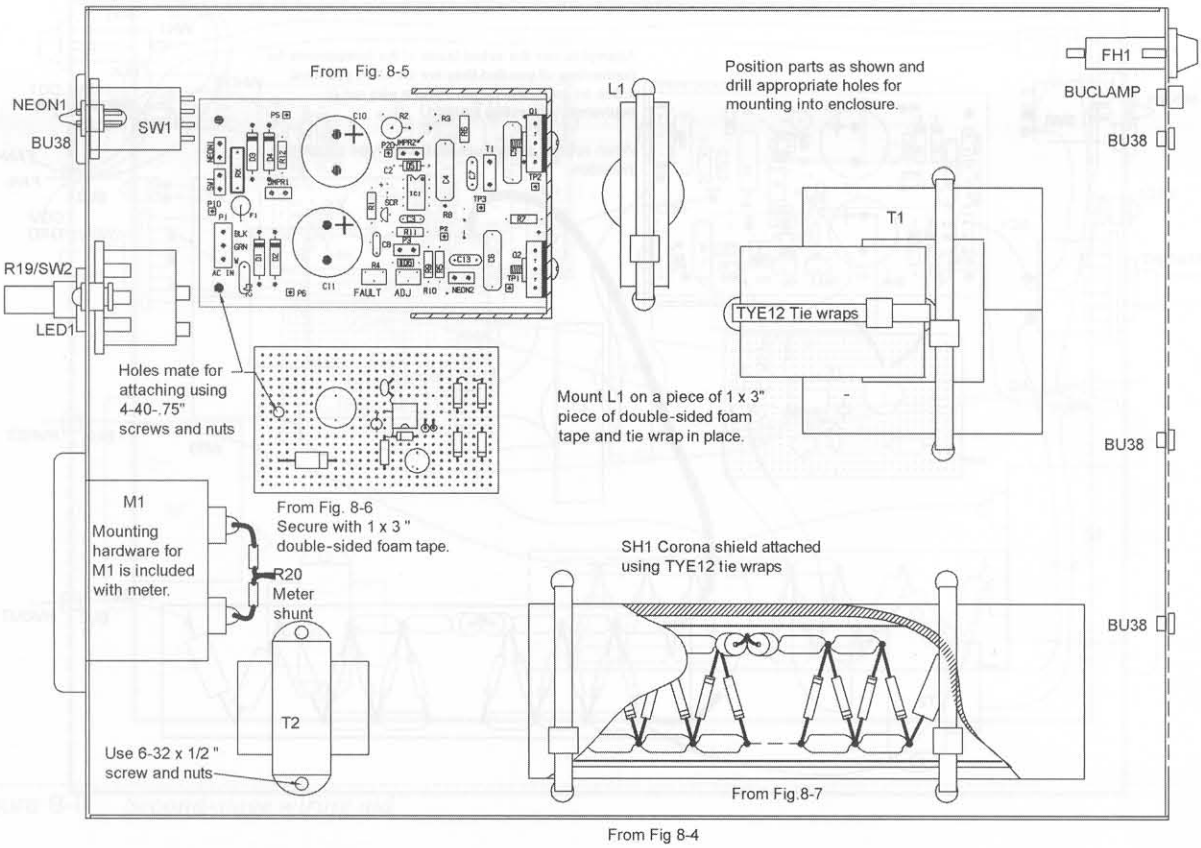

Figure 8-9 *Assembly of power module enclosure showing parts location and securing*

Use a 60-inch piece of WR5 Kv meter lead wire for the high-voltage return lead-designated HVRET. Use WR20 #20 wire for all other leads.

8. Wire in second-stage components as shown in Figure 8-11, but use WR24 #24 wire and twist where leads are paired.

9. Fabricate the cover section as shown in Figure 8-12 from .35 sheet aluminum. Use a hole saw or circle cutter for the large air flow hole or drill a series of small holes, removing the center piece and filing to a smooth contour.

10. Attach the radiator, fan, and pump to the cover, as shown in Figure 8-13.

11. Assemble the cooling system hoses and fittings, as shown in Figures 8-14 and 8-15. Stretch the .25-inch *inner diameter* (ID) latex hose onto the radiator nipples or mate it to the .25-inch fittings. You may use in-line plug and jacks for the power leads to the fan and pump so the cover can be completely separated. Nonetheless, leads must be sufficiently long so the cover can be moved out of the way for access to the circuitry. Note the safety-grounding lug for the metal cover.

12. Examine the LTUB1 laser tube and verify it with Figure 8-16. Pay heed to this data, as the tube is fairly delicate and must be operated properly.

Laser Head Construction

The following section shows the assembly of the laser head:

1. Create the laser head enclosure from a 22-inch length of 2.5-inch ID × .125 clear polycarbonate wall tubing, as shown in Figure 8-17. The clear plastic allows visual access to the innards yet is opaque to the 10.6-micron laser energy.

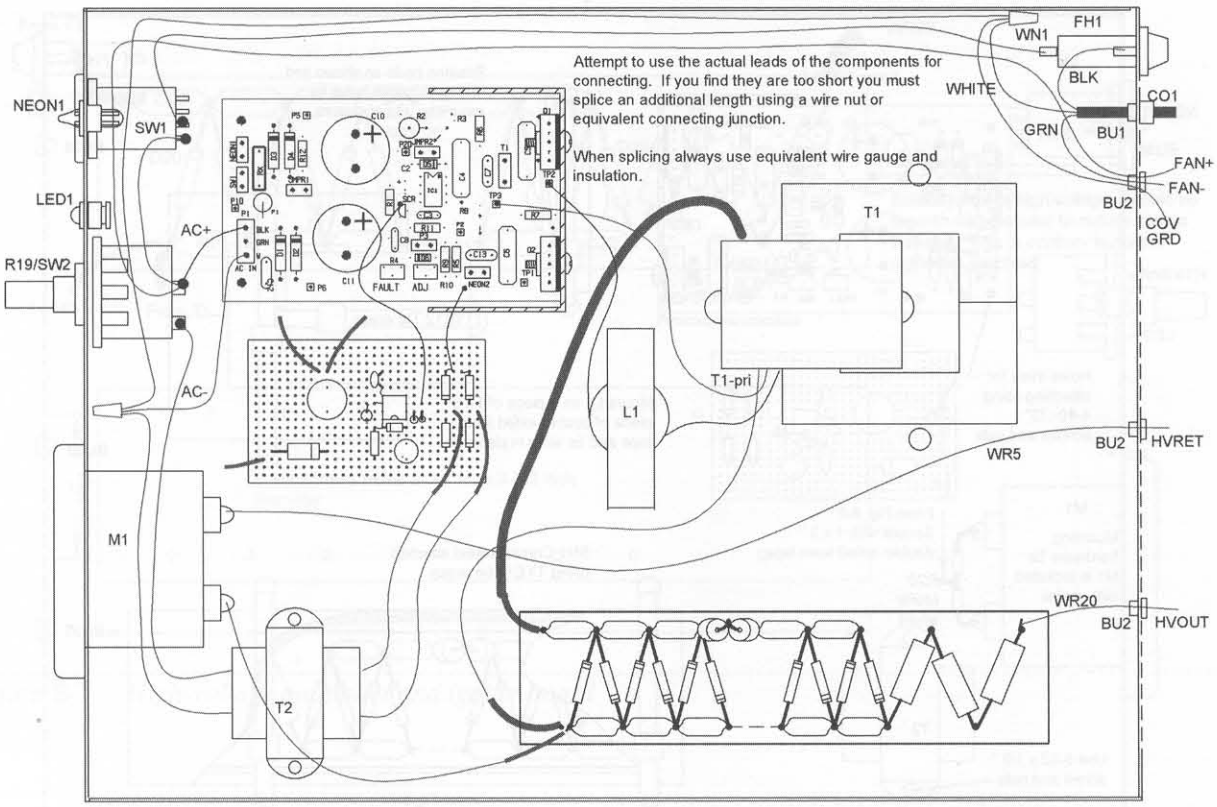

Figure 8-10 *First-stage wiring aid*

2. Create DISKFRONT and DISKREAR from a solid 2.5-inch polycarbonate rod as shown. The front output disk has a 1-inch aperture for the beam output or as a sleeve for a focusing lens. The rear disk is fabricated with four .25-inch holes for feeding through the cooling hoses and the power leads. You may strain or relieve these feed points using tie wraps or clamp bushings. This is not shown and left to the discretion of the builder.

3. Fabricate the laser head base (HEADBASE) from a 22-inch length of a .035-inch-wide piece of aluminum sheet, as shown in Figure 8-17. Note the acute angle bend for contact to the sides when sitting flush and screwed to the enclosure.

4. Fabricate the aperture flap shutter (FLAP) from a 1.25 × 1.75 × .035 piece of aluminum. Round the corners and drill the pivot hole, as shown in Figure 8-17.

5. Measure out the hoses and power leads to the laser tube and thread through the respective holes in the REARDISK.

6. Assemble everything, as shown in Figure 8-18, but do not screw on the cover at this time. Note the instructions for labeling.

Testing Your Laser

It assumed that your system is accurately and properly wired per the instructions. To test the laser , follow these steps:

1. Obtain a container of clean drinking water and insert the fill and drain hoses, as shown in Figure 8-18. With your mouth, suck in water through the drain tube until the laser tube water jacket is reasonably filled. Insert the

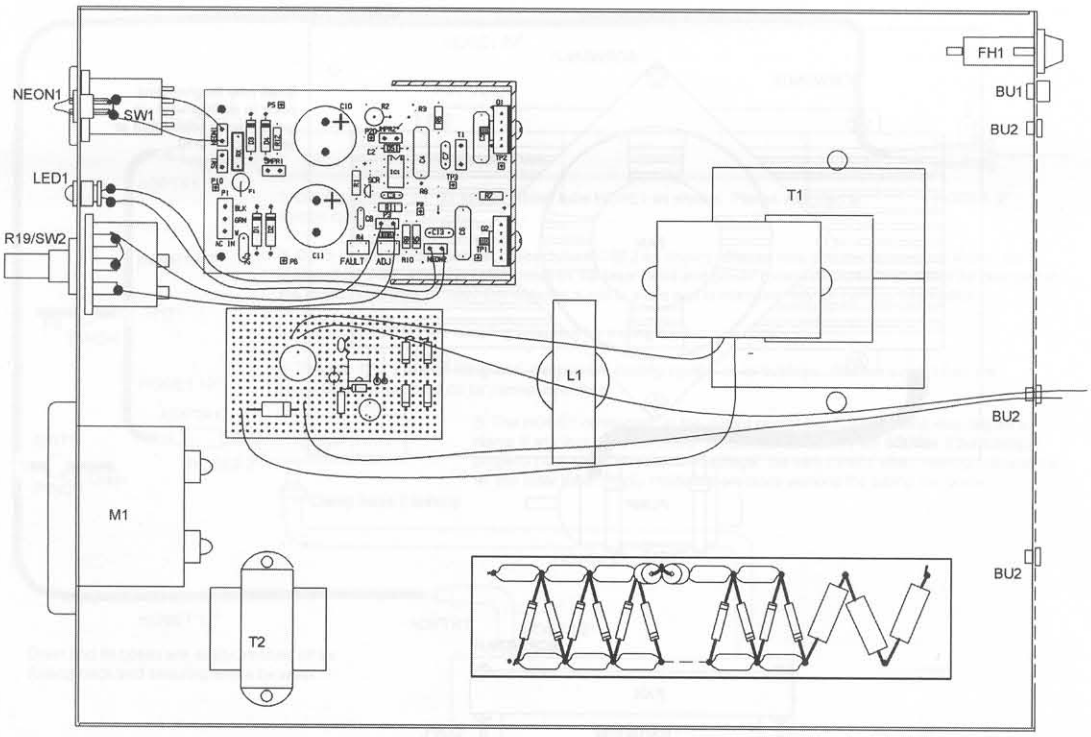

Figure 8-11 *Second-stage wiring aid*

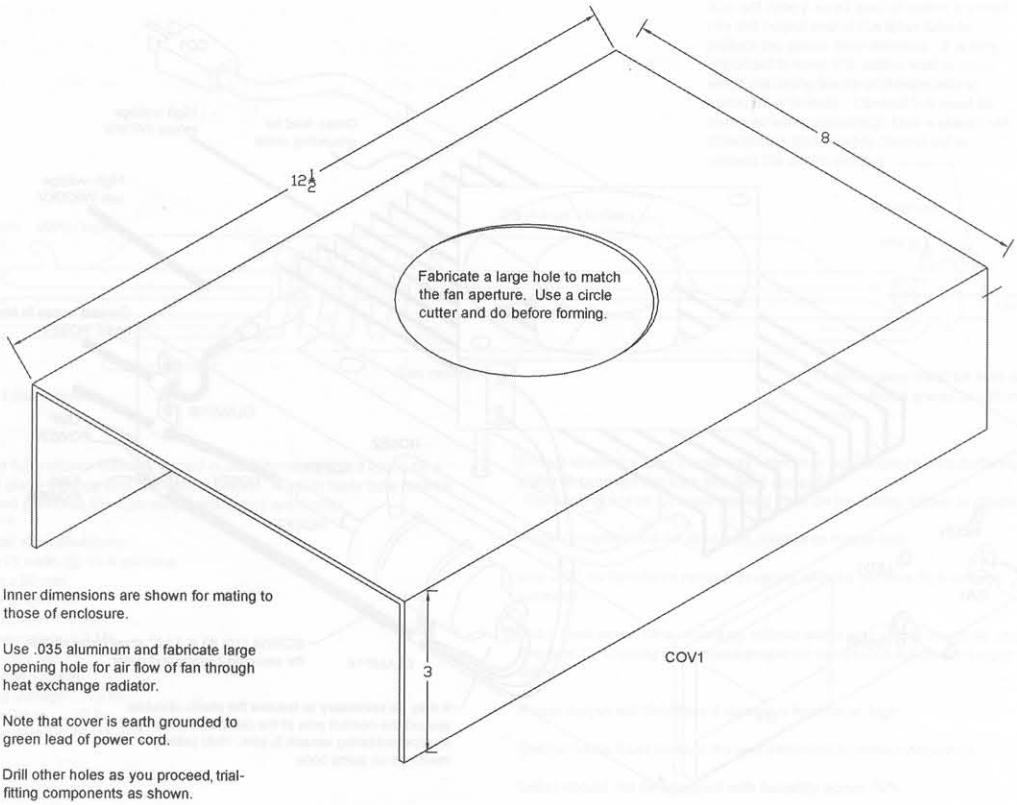

Figure 8-12 *Cover fabrication*

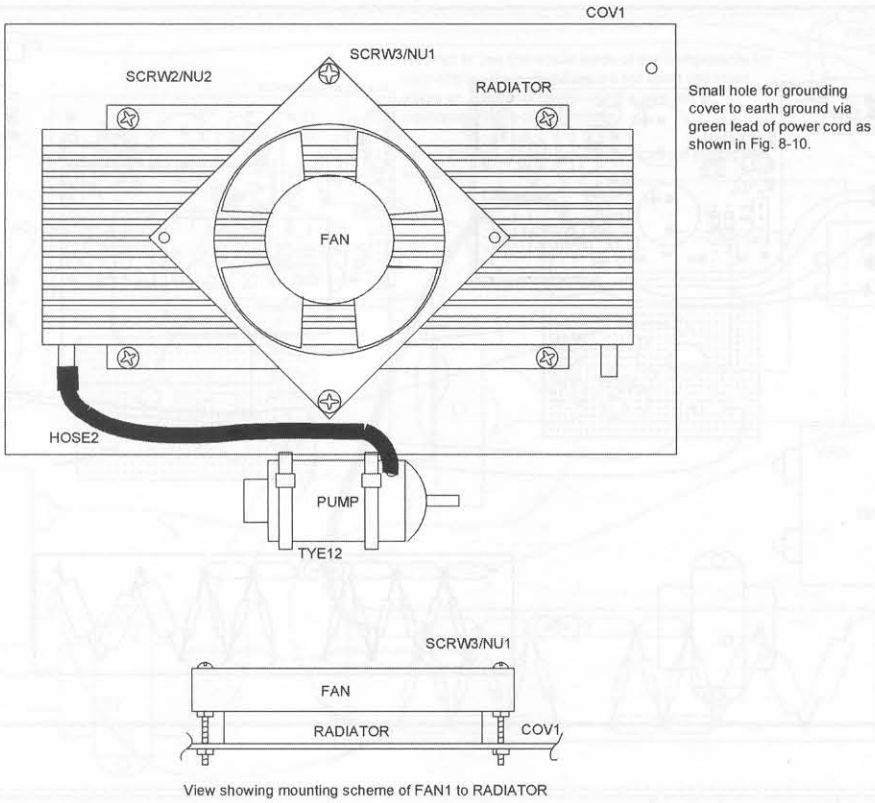

Figure 8-13 *Cover and cooling components*

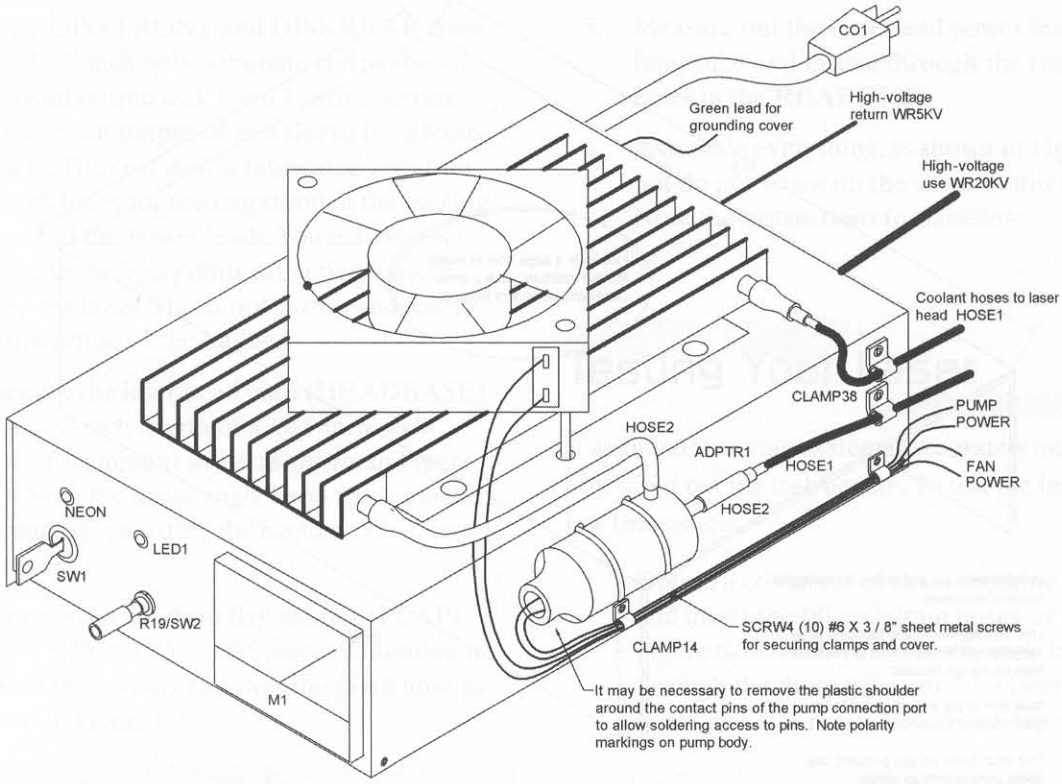

Figure 8-14 *Final view of the assembled controller and cooling system*

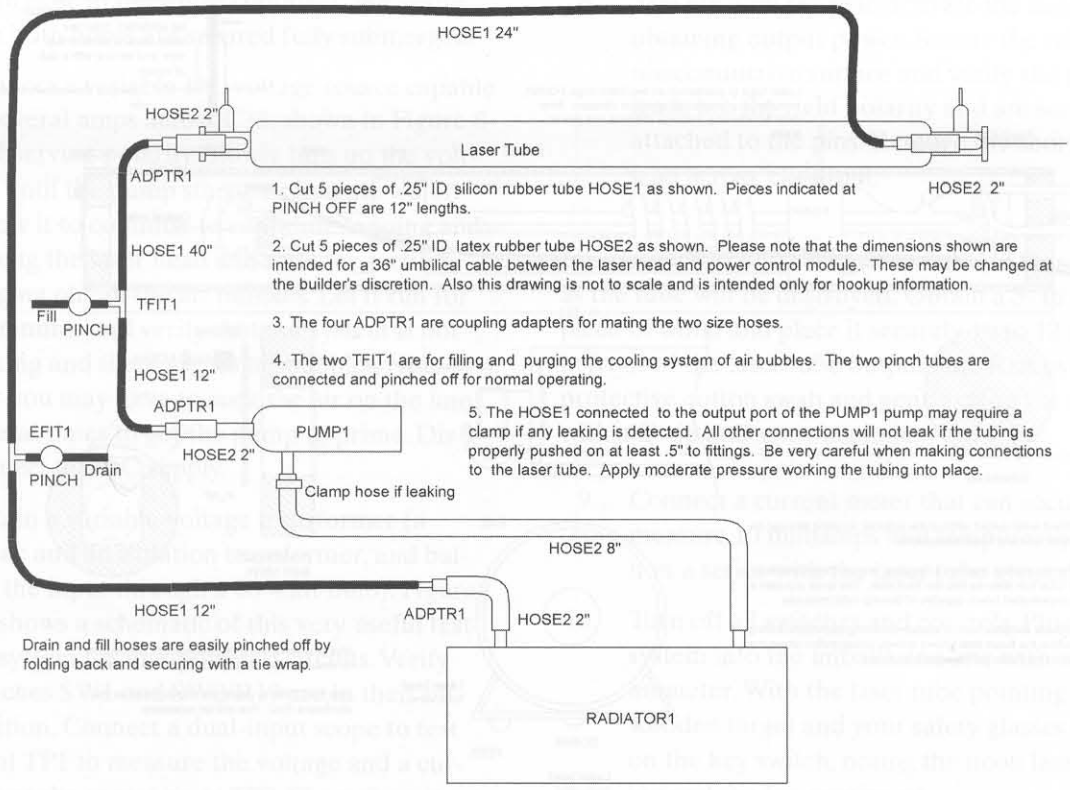

Figure 8-15 *Water cooling hookup*

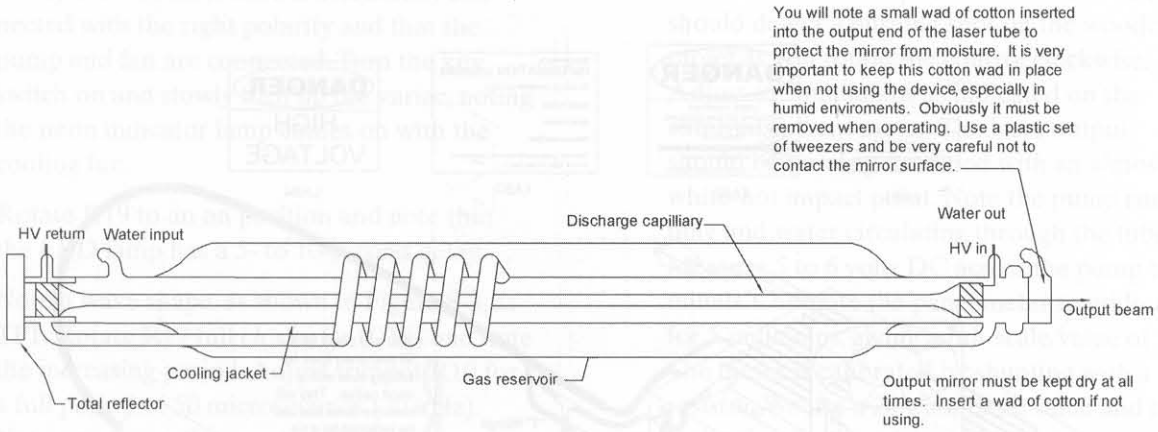

The laser tube shown was developed in our laboratories and made by a qualified glass blowing and fabrication house. Another laser tube may be substituted providing the operating parameters are similar.

Technical specifications:
Output >15 watts @ 10.6 microns
Size mm x 50 mm
Reflector length mm
Beam diameter < 1 mm
Beam divergence < 2 Mr.
Beam quality M2 <1
Beam mode TEM00
Operating voltage.....15 kv
Trigger voltage.....22 kv
Operating current 10 -15 ma.

Do not stress the tube in any way. Mount in an enclosure on a buffering material between the tube and fixed surface.
Connecting hoses for water cooling must be insulating rubber or plastic.

Proper polarity must be observed positive to output end.

Use a 20-to 30-kilohm resistor in series with the positive high-voltage connection.

Tube must never be powered up without water and should never be above 25 degrees C. Cooling water requirement for continuous full power output is 5 liters.

Power output will decrease if current is too low or high.

Output mirror must be kept dry and protected by absorbent cotton.

Laser should not be operated with humidity above 70%.

Figure 8-16 *Laser tube detail showing connections*

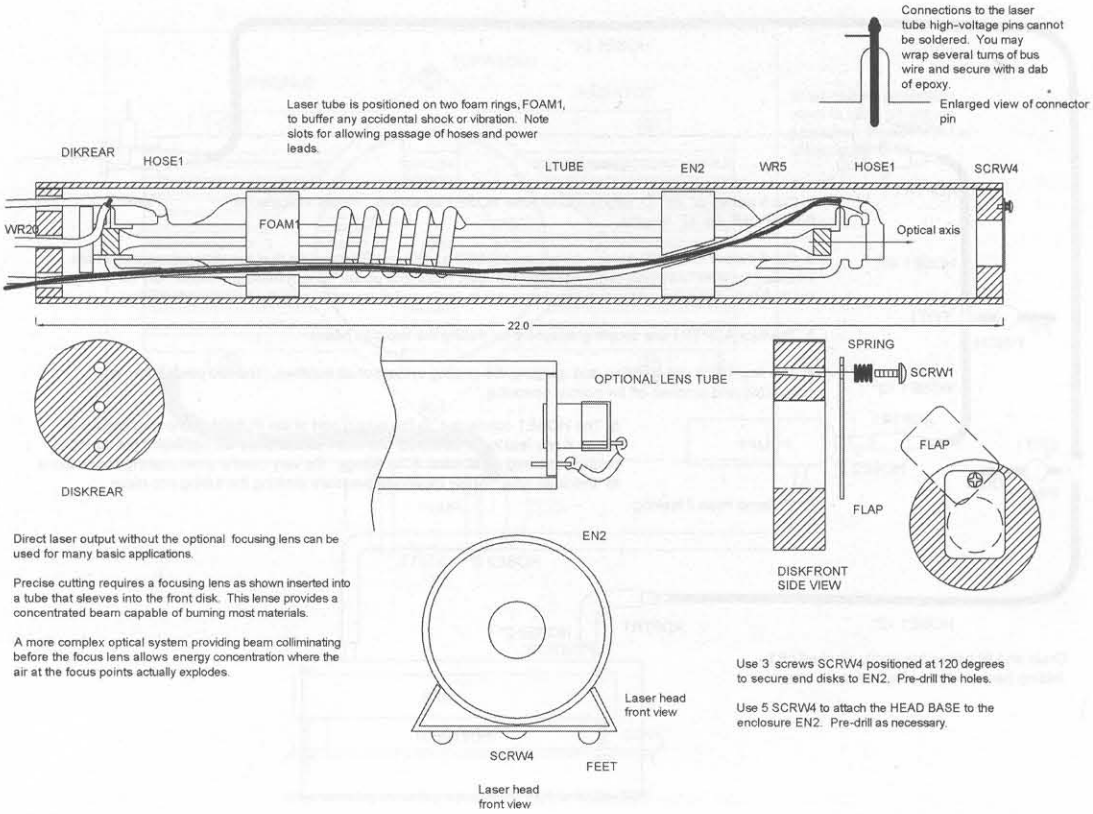

Figure 8-17 *Laser head side and end views*

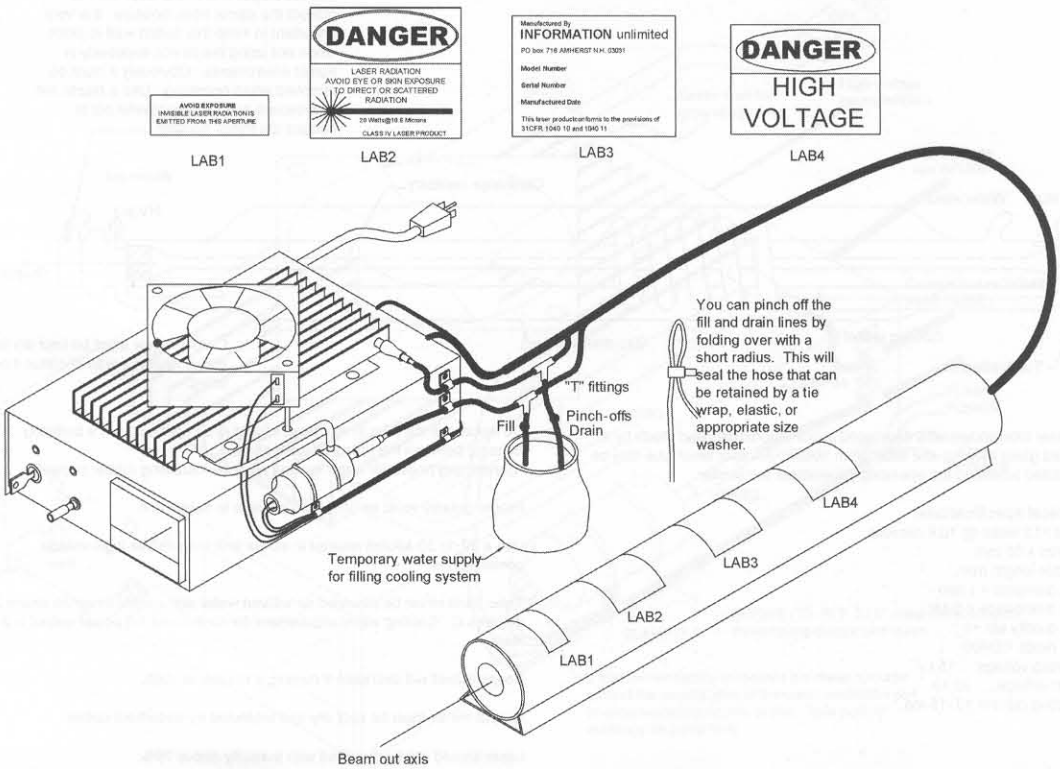

Figure 8-18 *Laser system for 115 VAC laboratory use showing labels*

drain hose in the water container and verify that both hoses are secured fully submerged.

2. Connect a variable DC voltage source capable of several amps across C33, shown in Figure 8-6, observing polarity. Slowly turn up the voltage until the pump starts to circulate water. Allow it to continue to run while tapping and tipping the laser head and radiator section, purging out all the air bubbles. Let it run for 30 minutes and verify that the system is not leaking and there are no air bubbles. Note that you may have to suck the air on the line several times to get the pump to prime. Disconnect the DC supply.

3. Obtain a variable voltage transformer (a variac and an isolation transformer, and ballast the input through a 60-watt bulb). Figure 8-3 shows a schematic of this very useful testing system for line-powered circuits. Verify switches SW1 and SW2/R19 are in their off position. Connect a dual-input scope to test point TP1 to measure the voltage and a current probe at test point TP2. Short the output terminals of secondary T1 and temporarily assemble L1 without any air gaps.

4. Verify that the laser tube is electrically connected with the right polarity and that the pump and fan are connected. Turn the key switch on and slowly turn up the variac, noting the neon indicator lamp comes on with the cooling fan.

5. Rotate R19 to an on position and note that the LED lamp has a 5- to 10-second delay.

6. Note a wave shape, as shown in Figure 8-3, at TP1. Rotate R19 full *clockwise* (CW) and note the increasing period. Adjust trimpot R10 for a full period of 50 microseconds (20 kHz). Note a very small current at TP2.

7. Shut the power down and put a layer of approximately 10 mils (.01 inch)-thick tape or an equivalent for the first air gap setting, as shown in Figure 8-8. Repeat this, increasing the air gap until you get the current waveform value as shown in TP2. You should have a peak current rise at TP2 of 7 to 8 amps with the 60-watt ballast in the line. This will increase to around 10 amps with the ballast removed (shorted). Our lab units require a gap thickness of .03 inches.

8. You are now ready to activate the laser tube obtaining output power. Secure the tube to a nonconductive surface and verify the power leads are the right polarity and are securely attached to the pins. Remove the shorting lead across TI output.

Caution: Do not attempt to solder to these pins, as the tube will be destroyed. Obtain a 3- to 4-inch piece of wood and place it securely 10 to 12 inches in front of the laser tube output end. Remove the protective cotton swab and gently clean the mirror with a Q-tip and some acetone.

9. Connect a current meter that can accurately measure 10 milliamps and temporarily insert it in a series with the laser tube ground lead.

10. Turn off all switches and controls. Plug the system into the unballasted line with an AC ammeter. With the laser tube pointing at the wooden target and your safety glasses on, turn on the key switch, noting the neon lamp lighting and the fan coming on.

11. Click on R19 and note the LED lighting with about a 5- to 10-second delay. If you did your homework and Murphy's laws are lenient, you should detect a burning spot on the wooden target as you rotate the control clockwise. Adjust to 5 milliamps as indicated on the external current meter. The laser output should be burning the wood with an almost white-hot impact point. Note the pump running and water circulating through the tube. Measure 5 to 6 volts DC across the pump terminals. Calibrate the panel meter to midscale for 5 milliamps, giving a full-scale value of 10. The meter is calibrated by shunting with a resistor. We use a 20-ohm basic value and trim with other larger values to bring the meter reading into the proper range.

12. Verify all functions, air bubbles, the excessive heating of parts, potential high-voltage breakdown points, and loose connections and correct as necessary.

13. Finally assemble and label everything. Study the following notes.

Special Notes

Included is some useful information about the laser system.

Optional Focusing Lens

Your laser system may be used with a focusing lens for close work such as etching, wood and plastic engraving, materials testing, precision cutting and drilling, and other obvious fine fabrication. The focused energy will cause a surface to burn like the sun! The focusing lens can be mounted to a tube that sleeves into the front disk aperture. Use your own ingenuity to secure it in place.

The raw beam from the laser itself without any optional optics will project a burning spot of about .3 to .4 inches at a distance of 10 feet. Obvious caution is required when projecting the beam without a known target stop, as the energy can be a serious fire hazard.

Battery Operation

Portable field use simply involves using a rechargeable battery pack. A garden tractor or motorcycle battery can provide up to 1 hour of continuous operation when the beam current is set to 5 milliamps. Our shop field model uses four 12-volt, 4-amp gel cells with a 200-watt sine wave converter, as shown in Figure 8-19. Again, the device is a two-part system with the batteries, converter, and power supply packaged as a side pack with a shoulder strap. The laser head is built into a gun configuration with a pushbutton trigger switch, as shown in optionally wired Figure 8-3.

Cleaning Output Optics

It is important to protect the output lens with a cotton swab to absorb moisture that would damage the output optics. The output mirror should be cleaned with a Q-tip immersed in acetone periodically.

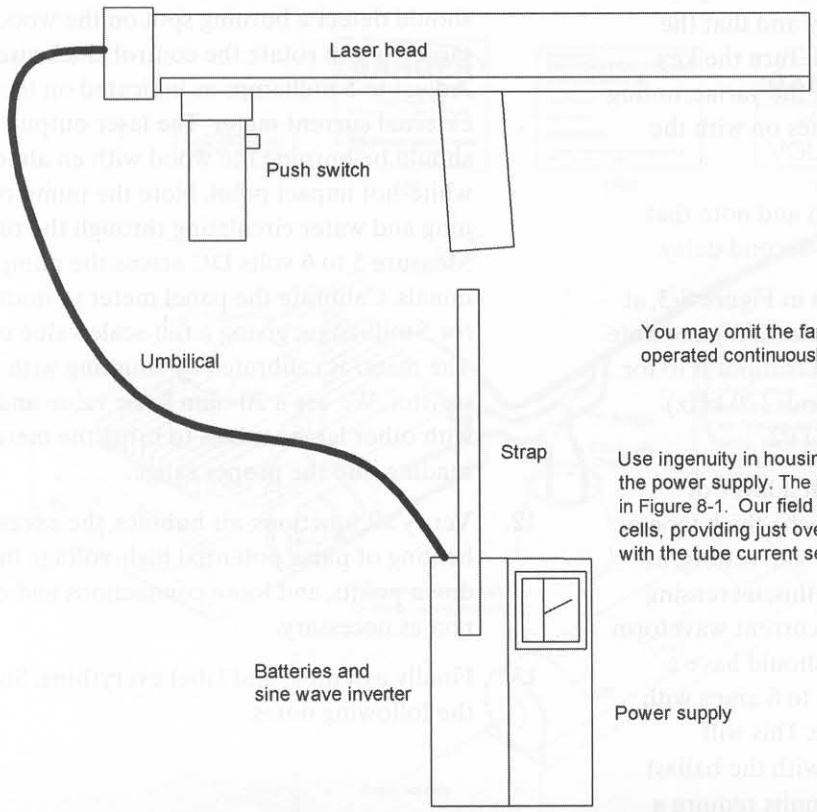

You may omit the fan for field use if not operated continuously.

Use ingenuity in housing the batteries and inverter with the power supply. The pushbutton switch is wired as shown in Figure 8-1. Our field model used four 12-volt, 4.5-amp gel cells, providing just over an hour of continous operation with the tube current set to 5 milliamps.

Figure 8-19 *Portable battery-operated system*

Always remember to remove the cotton before powering up or serious damage to the mirror will result.

Purging the Cooling System

It may be necessary to purge out the air bubbles from the cooling system from time to time. Do not allow large air bubbles to form, as the mirrors may not be adequately cooled due to these air pockets.

Operating Time

The system may be left on indefinitely, providing there is no excessive heating of the electronics and the cooling system adequately keeps the laser tube at ambient or below.

Increasing Power Output

The system is shown operating at a tube current of 5 milliamps, resulting in around 10 to 15 watts of output. You may further decrease the air gap in L1 to obtain more tube current of up to 10 milliamps. This will result in up to 20 watts but may overheat the electronics if left on for an extended period.

General-Purpose Test Fixture for Line-Powered Circuits

A universal test fixture schematic is shown in the inset drawing in Figure 8-3. This fixture is strongly recommended for the serious hobbyist or builder constructing line-powered circuitry. Not only does it provide some electrical safety, but it also can help prevent catastrophic component burnouts due to prototype and project wiring errors. Our labs use several of these fixtures ranging in line currents of 3 amps at 115 VAC to 100 amps, 3 phase, at 220 VAC.

The suggested unit for most projects up to 500 watts is to obtain an isolation transformer and a variac good for up to 5 amps. Wire as shown using #18 wire and observe line cord polarity relative to the hot side. You can also monitor line current by connecting in a series with the hot lead to the output.

The earth-grounding wire is directly connected from an input cord to an output receptacle and to the case ground of the fixture. The output lead is also in series with a lightbulb socket with a shorting switch. This scheme allows you to set the maximum short-circuit fault current by ballast wattage selection. Once it is determined that the circuit is reasonably functional, the ballast is shorted out by the switch.

Table 8-1 Handheld burning CO_2 laser parts

Ref. #	*Qty.*	*Description*
		Main board assembly from Figure 8-5
R1		220-ohm, 1/4-watt resistor (red-red-br)
R6, 7	2	15-ohm, 1/4-watt resistor (br-grn-blk)
R8		10-ohm, 3-watt resistor *metal oxide* (MOX)
R10		10K vertical trimpot
R11		1K, 1/4-watt resistor (br-blk-red)
R12		100K, 1/4-watt resistor (br-blk-yel)
Rx		In rush current limiter #CL190
C2		10 *microfarad* (mfd)/25-volt vertical electrolytic capacitor
C3		.01 mfd/100-volt plastic capacitor
C4		.1 mfd/600-volt *metalized polypropylene* (MPP) capacitor
C5, 6	2	1.5 mfd/250-volt MPP capacitor
C7		.0015 mfd/600-volt MPP capacitor
C10, 11	2	220 to 330 mfd/200-volt vertical electrolytic capacitor
C13		50 *picofarad* (Pfd), 1 Kv ceramic capacitor
D1, 2, 3, 4	4	IN5408 1 Kv, 3-amp rectifier
D5		1N4937 1 Kv fast-switching diode
IC1		IR2153 *dual in-line package* (DIP) driver
Q1, 2	2	IRF450 MOSFET
PC1		PCB and wire as shown in Figure 8-5, #PCLINE
THERMO1	2	Insulating thermo pads for Q1 and Q2
SWNYLON	2	6-32 × 1/2 -inch nylon screws and metal nuts

Table 8-1 Continued

Ref. #	Qty.	Description
		Remaining electrical parts
FH1/3 A		Panel-mounted fuse holder and 3-amp slow-blow fuse
R19/SW2		10K pot and switch
R20		Meter shunt resistor start, 20 ohms and 1/4 watt; see text
R21, 22	2	1-meg, 1-watt resistors
R23, 24, 25	3	10K 5-watt MOX resistors
R27		1-meg, 1/4 -watt resistor
R28		27-ohm, 1/2 -watt resistor
C20–29	10	.001 mfd, 15 Kv ceramic capacitors, #.001/15 Kv
C30		100 mfd, 25-volt vertical electrolytic capacitor
C31		10 mfd, 25-volt vertical electrolytic capacitor
C32		.01 mfd, 50-volt disc capacitor
C33		1000 mfd, 25-volt vertical electrolytic capacitor
D20–29	10	10 Kv, 100-milliampere, 100-nanosecond, high-voltage diode, #VG10HC
D30–33	4	1N4001 50-volt, 1-amp diode
D34		1N5401 50-volt, 3-amp diode
D35		IN914 small signal diode
Z1		16-volt, 1-watt zener diode
IC2		555 DIP timer
CO1		3-wire #18 power cord
NEON1		Neon indicator lamp with leads
SW1		Key switch—removable in off position only
T1		High-voltage ferrite switching transformer, #LABURT10; see text
T2		12-volt, 100 milliampere power transformer, #12DC/.1
L1		Current-controlling inductor shown in Figure 8-8, #LABURL10
M1		Panel meter with 50-microamp movement
LED1		Green ultra-bright LED
WN1	5	Small wire nuts for #20 wires
WN3	2	Medium wire nut for #18 wires
WR24	3 feet	#24 red and black pieces of hookup wire
WR20	6 feet	#20 red and black pieces of hookup wire
WR5KV	6 feet	5 Kv flexible test lead wire
WR20KV	5 feet	20 Kv silicon high-voltage wire
		Cooling section parts
FAN1		4-inch-square 110 *cubic feet per minute* (CFM) 115 VAC muffin fan
RADIATOR		Transmission cooler, JC Whitney, #COOLER
PUMP		12-volt automotive window washer pump, #PUMP1
LTUBE		20-watt CO_2 laser tube, #COTUB2; see text
HOSE1	10 feet	1/8 -inch ID silicon rubber tubing or equivalent
HOSE2	2 feet	1/4 -inch ID latex rubber tubing or equivalent
TFIT1	2	1/8 -inch T fitting
ADPTR1	4	1/8 - to 1/4 -inch hose adapter
		Fabricated parts
EN1		Enclosure as shown in Figure 8-4
DEL BOARD		.1 × .1 vector board cut 3 × 1.6 inches as shown in Figure 8-6
HVBOARD		1/16 -inch lexan 6- × 1.5-inch fabricate as shown in Figure 8-7
HSB1		Heatsink bracket as shown in Figure 8-8
COV1		Aluminum cover as shown in Figure 8-12
SH1		Corona shield fabricate from 7- × 1.5-inch *polyvinyl chloride* (PVC) tubing
HEADBASE		Aluminum base for laser head support as shown in Figure 8-17
EN2		Laser head tube 22- × 2.5-inch *innerdiameter* (ID) × .125-inch clear Lexan shown in Figure 8-17
DISKFRONT		Output end .5 × 2.5 *outerdiameter* (OD) Lexan disk as shown in Figure 8-17
DISKREAR		Feed end .5 × 2.5 OD Lexan disk as shown in Figure 8-17
FLAP		Aperture flap as shown in Figure 8-17
		Hardware and small mechanical parts
SCRW1	6	6-32 × .5-inch machine screw
SCRW2	4	8-32 × .5-inch machine screw
SCRW3	2	6-32 × 1.5-inch machine screw

Ref. #	Qty.	Description
SCRW4	20	6 × .25-inch sheet metal screw
SCRW5	3	4-40 × .75-inch machine screw
SWNYLON	2	6-32 × .5-inch nylon screw
NU1	10	6-32 machine hex nut
NU2	4	8-32 machine hex nut
NU3	6	4-40 machine hex nut
SPRING		.25- × .5-inch medium compression spring
TYE12	7	12-inch nylon tie wraps
LUG3		#8 solder lug for cover grounding
LUG4	2	Slip on lug for laser tube connection pins as shown in Figure 8-17
WN1	5	HI3 wire nuts
BUCLAMP		Clamp bushing for power cord
BU38	8	.25-inch feedthrough bushings
FEET	8	Rubber feet for power supply and laser head
CLAMP25	2	.25-inch nylon cable clamp
CLAMP38	2	.375-inch nylon cable clamp
		Optional support items
		150-watt sine wave inverter for 12 *volts-direct current* (VDC) operation, #SINE150
		12-volt, 4.5-amp rechargeable battery 2.75- × 4- × 3.6-inch, #BAT12
		12-volt, 1-amp recharger kit, #BC12K
		5-inch focusing lens with a 1- diameter× 5-inch fl. zinc selenide, #MENC5

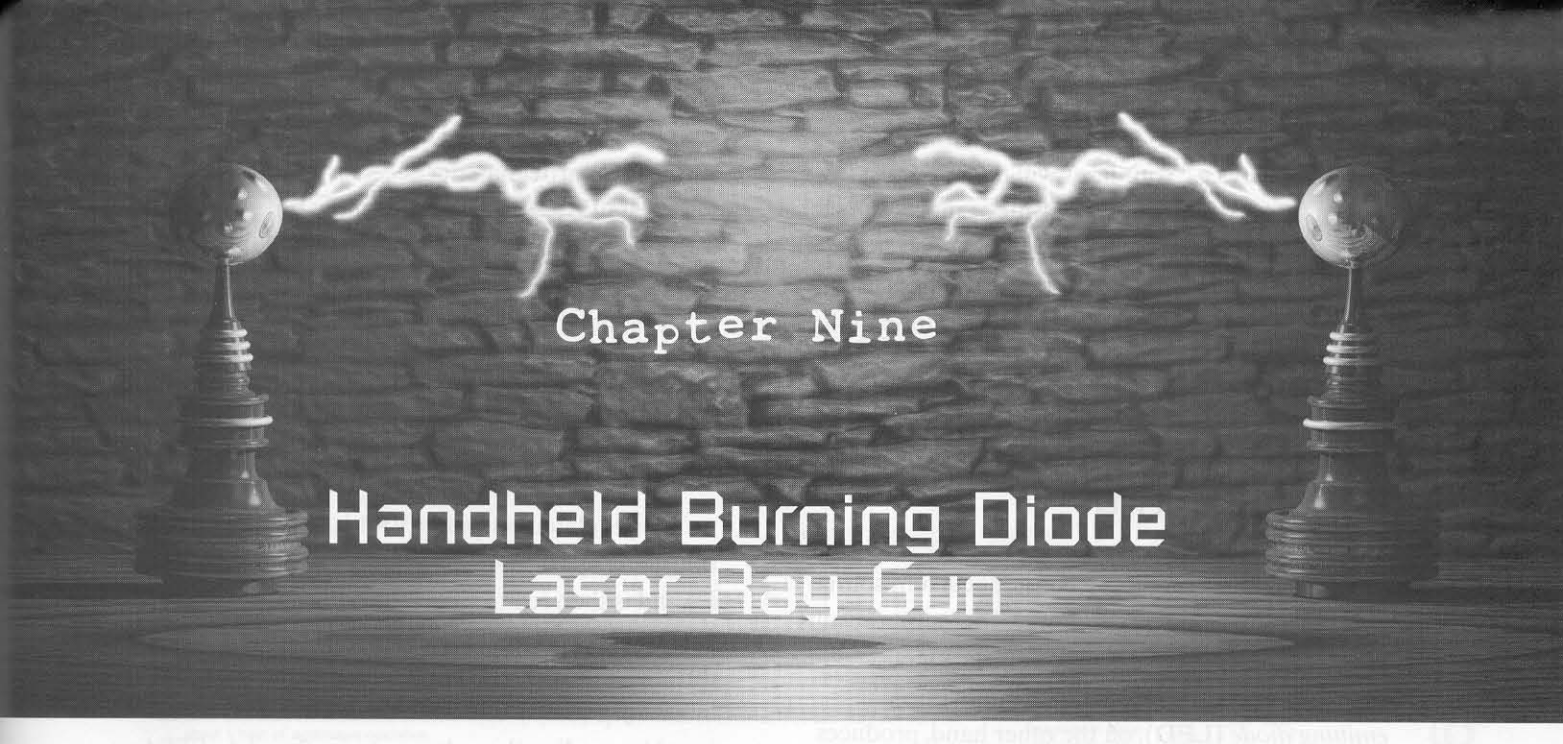

Chapter Nine

Handheld Burning Diode Laser Ray Gun

This project is a very rewarding one for the laser experimenter with the result being a tool that can burn and cut many different materials (see Figure 9-1). The continuous output of 1 watt at wavelengths from .7 to 1 micron requires class IV labeling and other compliances that are clearly shown and explained. Project data is highly detailed, as errors in assembly can be very costly, owing to replacing the laser diode; they are not cheap! Protective eyewear must be worn and is available at www.amazing1.com.

Expect to spend $50 to $100 for all the components, minus the laser diode. Sometimes these are available on the surplus market ranging from $100 to $200. Required test equipment involves only DC-reading meters. All parts are available on the previously mentioned web site and are listed in Table 9-1.

Figure 9-1 *Diode burning laser*

The laser will operate most laser diodes from 10 *milliwatts* (MW) to 1 watt or more. The circuit is not temperature compensated and is intended to operate near ambient temperature. This is usually not a problem for normal room temperature applications.

Applications

The system, when operated with a .5- to 1-watt diode, is capable of cutting, engraving, trimming, and performing many small-scale fabricating applications.

When operated at around 1060 *nanometers* (nm), output may be frequency doubled to an intense, visible green beam at 532 nm. Output in the green can be a conservative third of the input where a 1-watt diode will easily produce 300 milliwatts of visible, intense green light.

Diodes operating in the 800 to 900 nm range produce intense, *infrared* (IR) illumination for night vision devices. Low-powered devices can invisibly illuminate windows that act as a microphone, converting internal sounds and voices to mechanical vibrations. The reflected light now spatially varies and is processed back into sounds by a special optical

receiver. A laser window bounce listening system is described in Chapter 13, " Laser Window Bounce Listening Device." Your laser will operate most laser diodes from 10 milliwatts to 1 watt or more. The circuit is not temperature compensated and is intended to operate near ambient temperature. This is usually not a problem for normal room temperature applications.

Basic Theory

Your laser diode requires a constant current source of clean, stable, ripple-free power. The output results when a forward-biased semiconductor junction emits optical energy due to stimulated emission. A *light-emitting diode* (LED), on the other hand, produces optical output via spontaneous emission and lacks coherence properties.

A forward-biased diode junction must be current controlled as this junction resistance is not linear and has a tendency to draw large increments of current for small, incremental changes in voltage. The diode is also sensitive to temperature and must be operated with a feedback loop to control the drive current if used in widely varying temperatures. This is not a built-in feature of this system as operation is intended to be around room temperature. The circuit provides the necessary control and conditioning of the diode current for most room temperature applications. The diode junction is also very thin and cannot take any voltage transients without a catastrophic failure. Therefore, all transients and surges must be minimized to protect this junction.

Circuit Theory

Input to the system may be a battery pack capable of supplying 1½ times the rated laser diode current or an equivalent wall adapter for direct 115 *volts-alternating current* (VAC) use. We suggest a nonregulated type as the switching units can cause transient damage under certain conditions. The input power is initially controlled by a toggle switch (S1) that immediately turns on the blower (BLW1) and the indicating LED (LA1). The actual laser output is controlled by the action of a key switch (S2) that initiates a timer (I1) providing the necessary delay required for a class IV laser. Output from the timer now turns on a DC switch consisting of Q1 and Q2 through a slow turn-on by the charging action of start capacitor (C7), as shown in Figure 9-2.

This DC switch now feeds current to a voltage regulator (VR1) with its output set to 7 to 8 volts by the trim pot (R5). LED LA2 now indicates that the laser is emitting energy.

The regulated output of VR1 is conditioned for transients by transorb PZ1 and a tantalum capacitor C9 and is then fed to a current-controlled module (CC1). The laser diode is connected to the module through a resistor (R7) junctioned at the solder terminal strip (TE4). The laser diode current is monitored by reading the voltage at pins 3 and 4 of TE4 or via an external jack (J2) connected to these points. The diode current is carefully controlled by the multi-turned trimpot for current adjusting mounted on the CC1 module and it must be closely monitored in order to not exceed the manufacturer ratings. You will note that all switches and contacts are bypassed by a .1-microfarad capacitor to minimize noise from contact bounce.

Assembly Steps

The figures show our layout and should be followed reasonably closely. It is suggested that you obtain the necessary parts and then trial-position and fabricate the chassis as you proceed. The steps for assembly are as follows:

1. Insert the components into the perforated board as shown in Figure 9-3, using the component leads for connection points, as indicated by the dashed lines. Attempt to follow the layout using the hole locations as shown. Note the component polarity, where shown, avoids short circuits, cold solder, solder bridges, and wire shorts. Figures 9-6, 9-7, and 9-8 show various stages of wiring.
2. Create the chassis per Figure 9-4 from .063 aluminum as shown. Note that important dimensions are shown, such as the overall

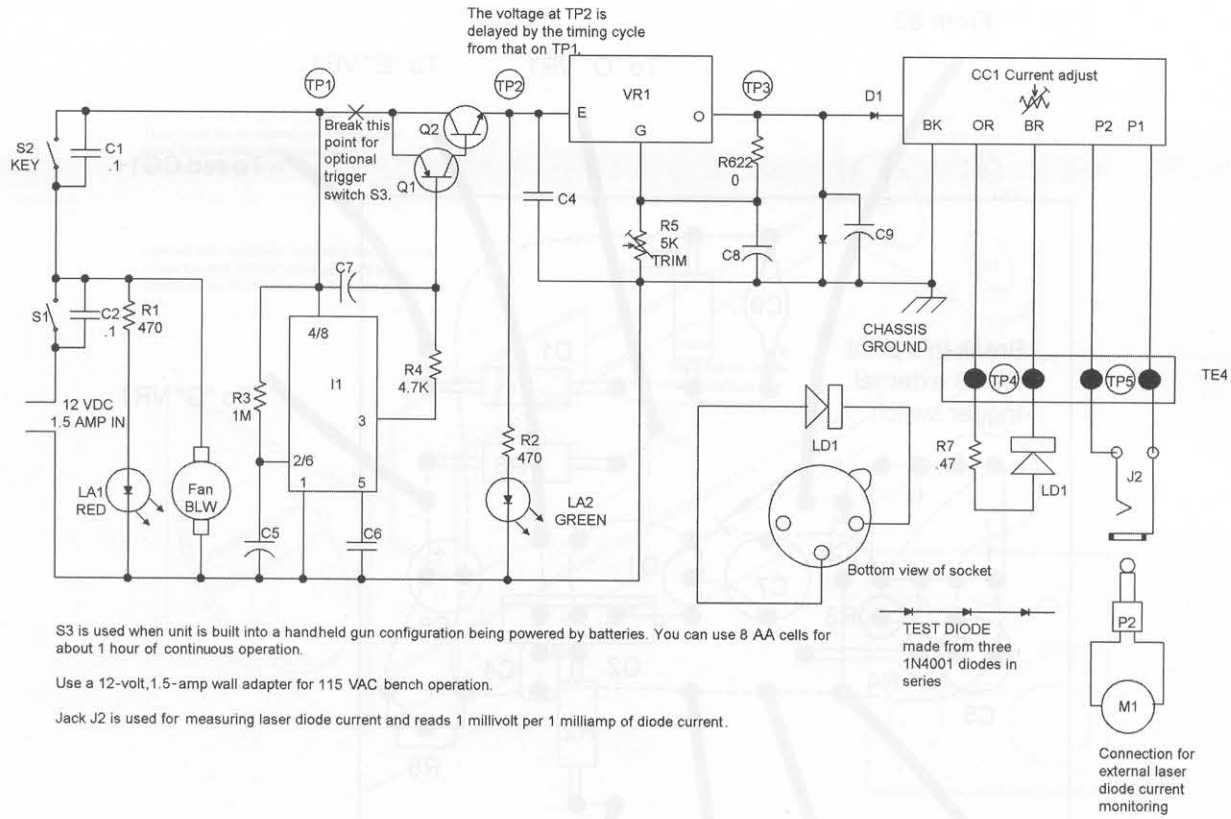

Figure 9-2 *Burning diode laser schematic*

length, width, and so on. Make the actual holes for components as shown. Dimension them as needed for particular component size and in the proper locations according to the drawings.

3. Assemble the bracket as shown in Figure 9-4 from a 4- × 2-inch piece of .063 aluminum and mount it to the chassis via two #8 × 3/8 sheet metal screws. Note the holes for the MK1 mounting socket of the voltage regulator (VR1). These holes must be free from any burrs or sharp edges that could puncture the insulating mica washer.

   Drill a single hole for the single screw mounting of the CC1 current controller.

4. Mechanically assemble the chassis as shown in Figure 9-5:
   a. Attach the terminal lug strip (TE6) via pieces of bus wire secured under the nuts of the two grounding screws, SW1 and NU1. These pieces of support wires connect to the two outer lugs of this strip grounding these points.
   b. Snap in BU1, two plastic bushings.
   c. Attach the front panel components.

5. Connect the remaining interconnecting wires and connections as shown in Figures 9-6, 9-7, and 9-8.

6. Verify the wiring accuracy and check for shorts, bad solder joints, and general assembly errors.

7. Assemble TUBE1 and 2 as shown in Figures 9-9 and 9-10. Note these pieces must mate with one another in a telescope-like structure. It may be necessary to ream out the outer tube to obtain a proper sliding fit.

8. Glue the lens to the end of TUBE2. Use a *room temperature vulcanizing* (RTV) adhesive sparingly, avoiding touching the lens.

9. Carefully solder the umbilical lead WIREZIP to the respective connections on the SOCK1 socket. Observe the polarity when connecting the other end to TE6.

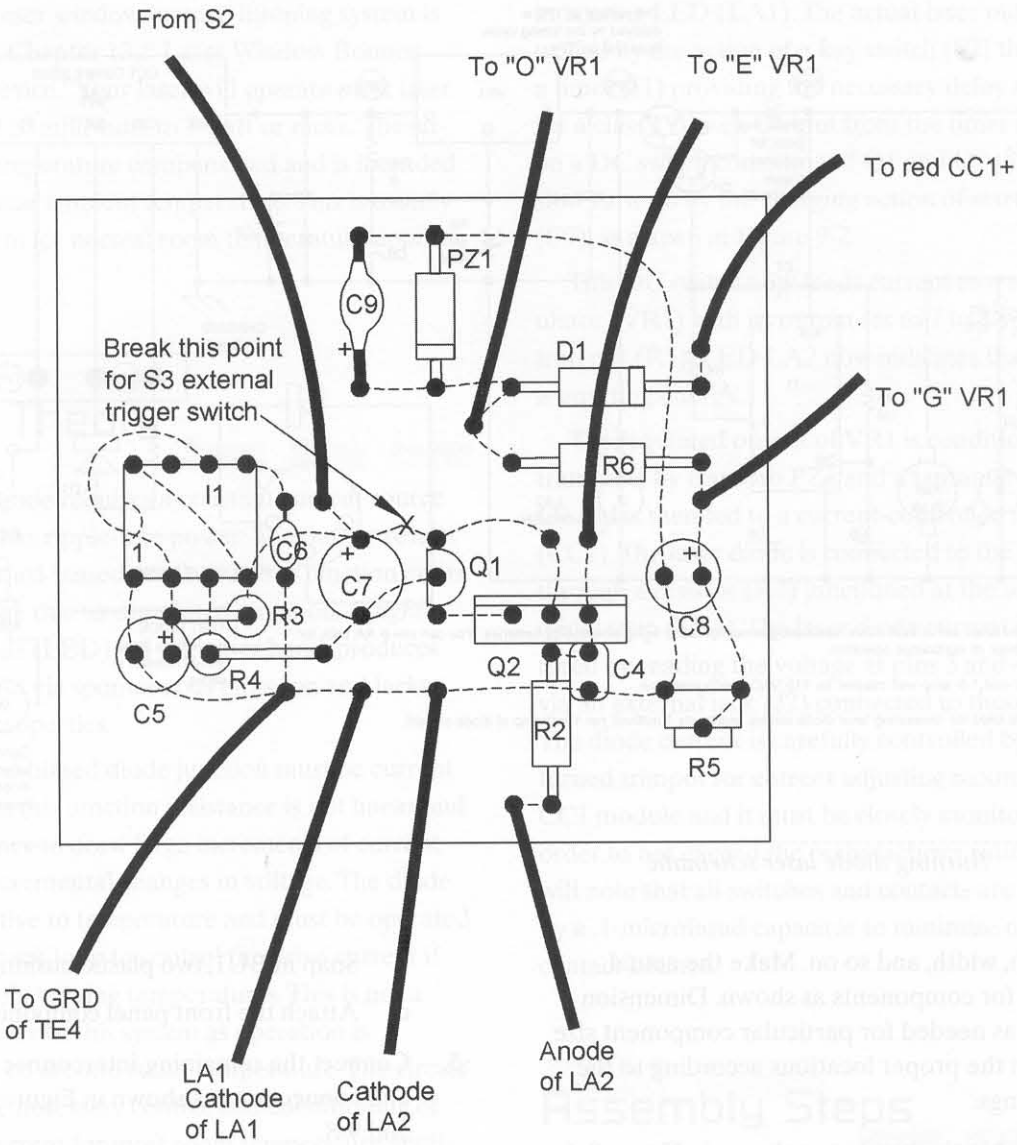

Figure 9-3 *Assembly board blowup*

10. Assemble the LDIODE laser diode to the HSINK heat sink via a retaining washer and two screws. Note the sandwiching action of the assembly with a diode nesting in the recess of the heat sink. Do not insert the laser diode into the socket at this time.

Circuit Pretest

To conduct a pretest on the circuit, follow these steps:

1. Assemble a test diode using three 1N4001 connected in a series to simulate the laser diode as shown in Figure 9-2.
2. Connect the leads of the test diode to the pins of the laser diode socket using small alligator clips, observing the polarity.
3. Preset all switches to "off" positions and connect a voltmeter to TP3.
4. Turn on S1 and note the blower BLW1 and LED LA1 coming on.
5. Turn on S2 and note a 5- to 10-second delay before LA2 comes on and the voltmeter indicates a voltage. Note that the indicator LED on the CC1 module also lights up. Adjust trimpot R5 for 7 volts on the meter. Adjust input voltage from 10 to 14 and note the meter not changing from 7 volts. This verifies proper voltage regulation.

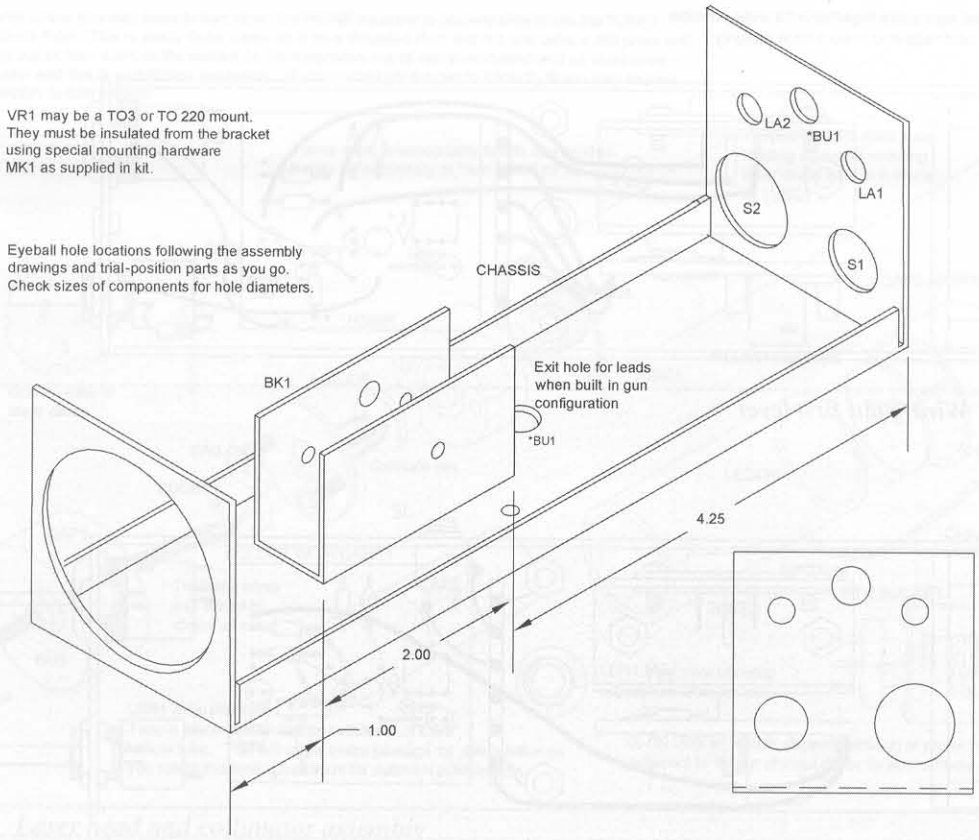

Figure 9-4 *Chassis fabrication showing bracket BK1*

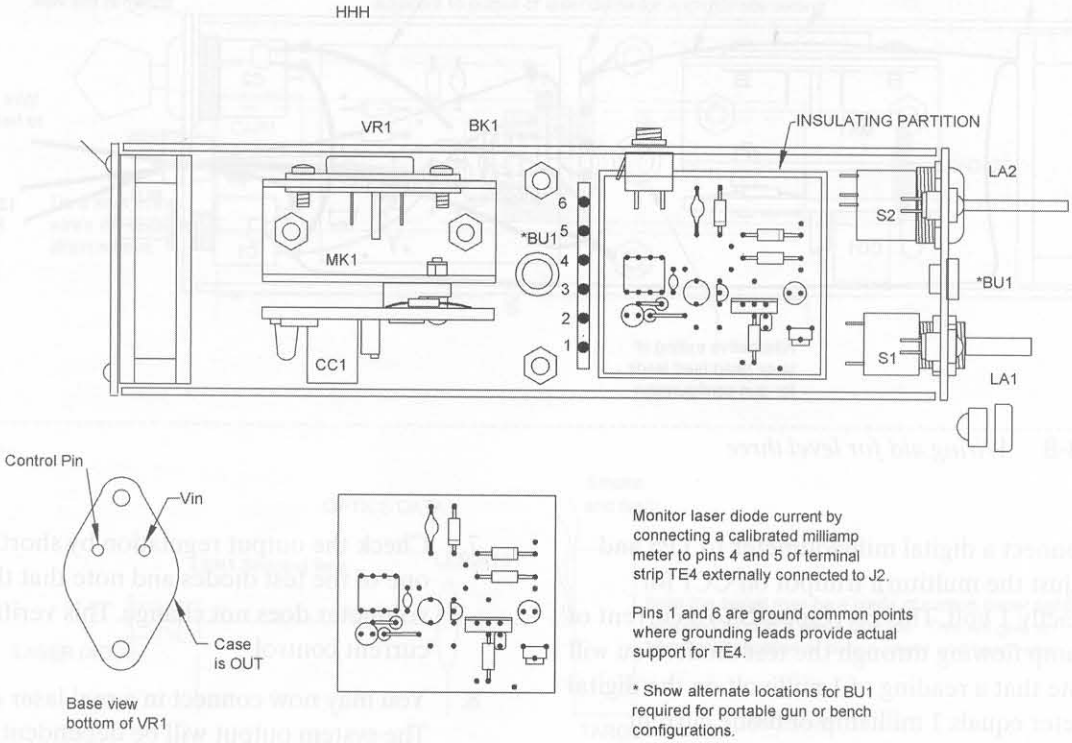

Figure 9-5 *Mechanical layout*

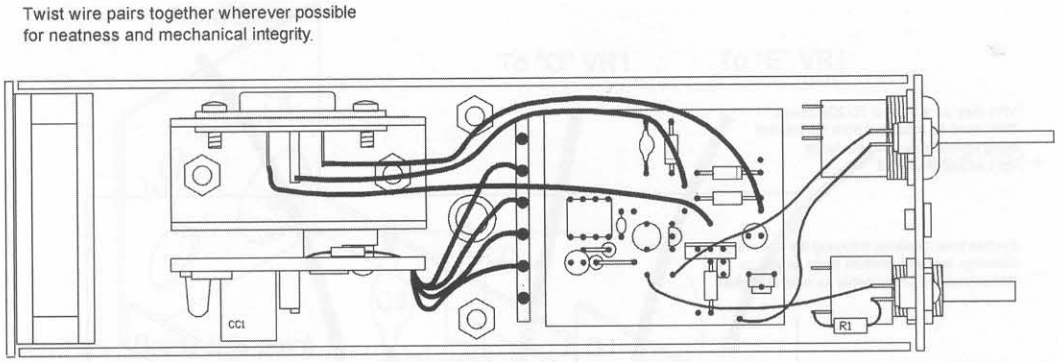

Figure 9-6 *Wiring aid first level*

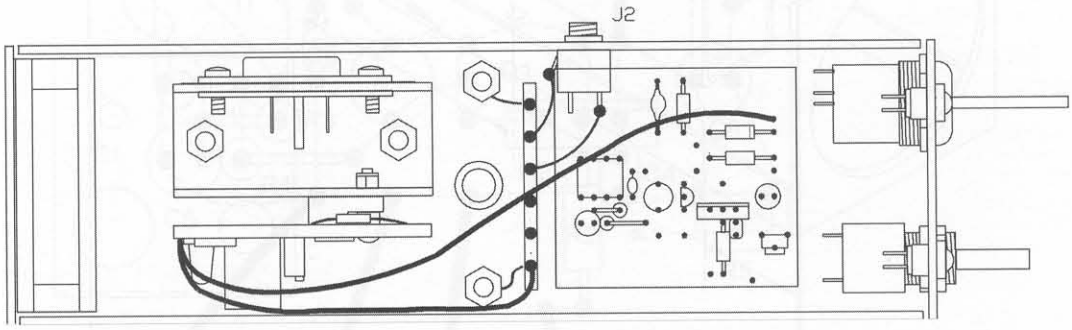

Figure 9-7 *Wiring aid for level two*

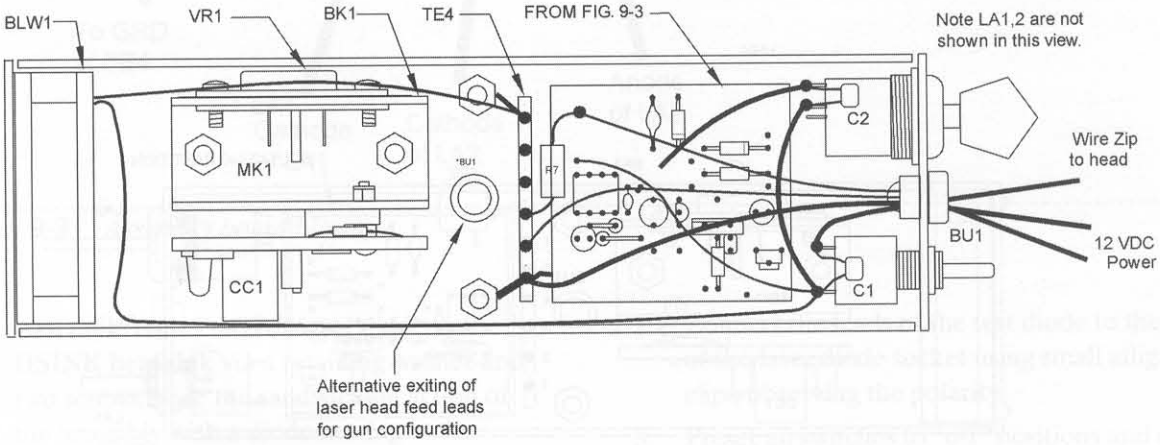

Figure 9-8 *Wiring aid for level three*

6. Connect a digital millivoltmeter to TP5 and adjust the multiturn trimpot on CC1 for exactly 1 volt. This corresponds to a current of 1 amp flowing through the test diode. You will note that a reading of 1 millivolt on the digital meter equals 1 milliamp of diode current.

7. Check the output regulation by shorting out one of the test diodes and note that the millivoltmeter does not change. This verifies the current control.

8. You may now connect in a real laser diode. The system output will be dependent on the

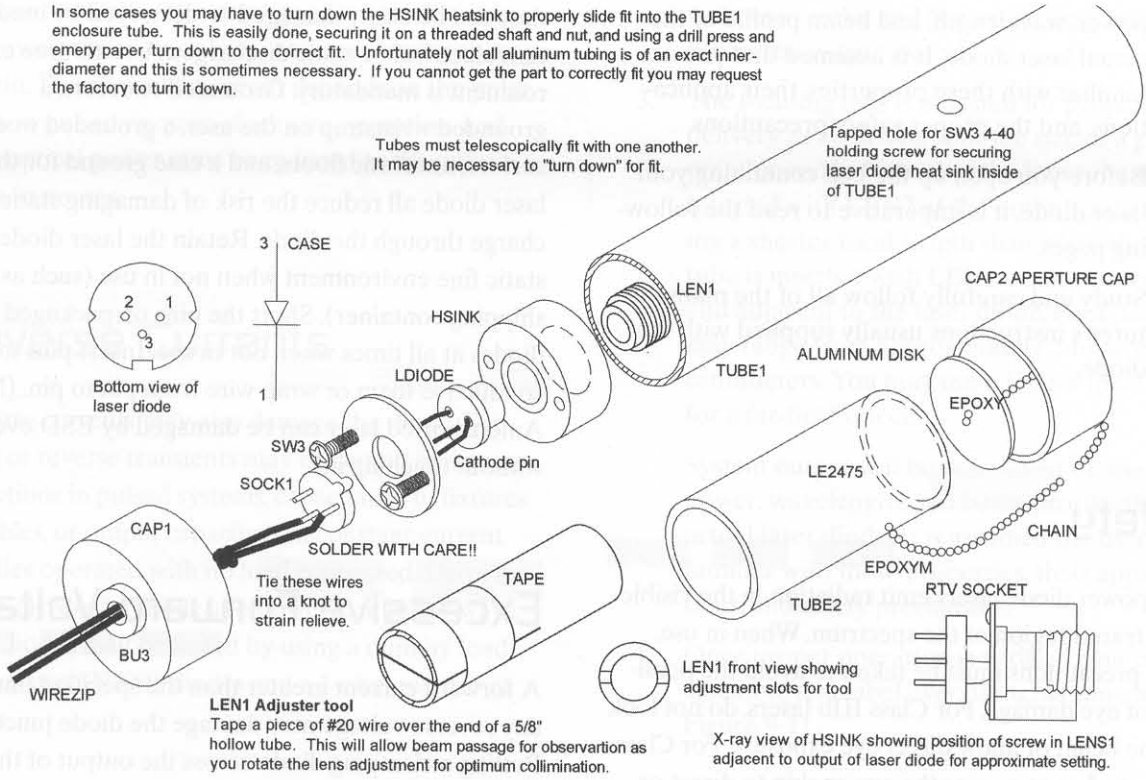

Figure 9-9 *Laser head and collimator assembly*

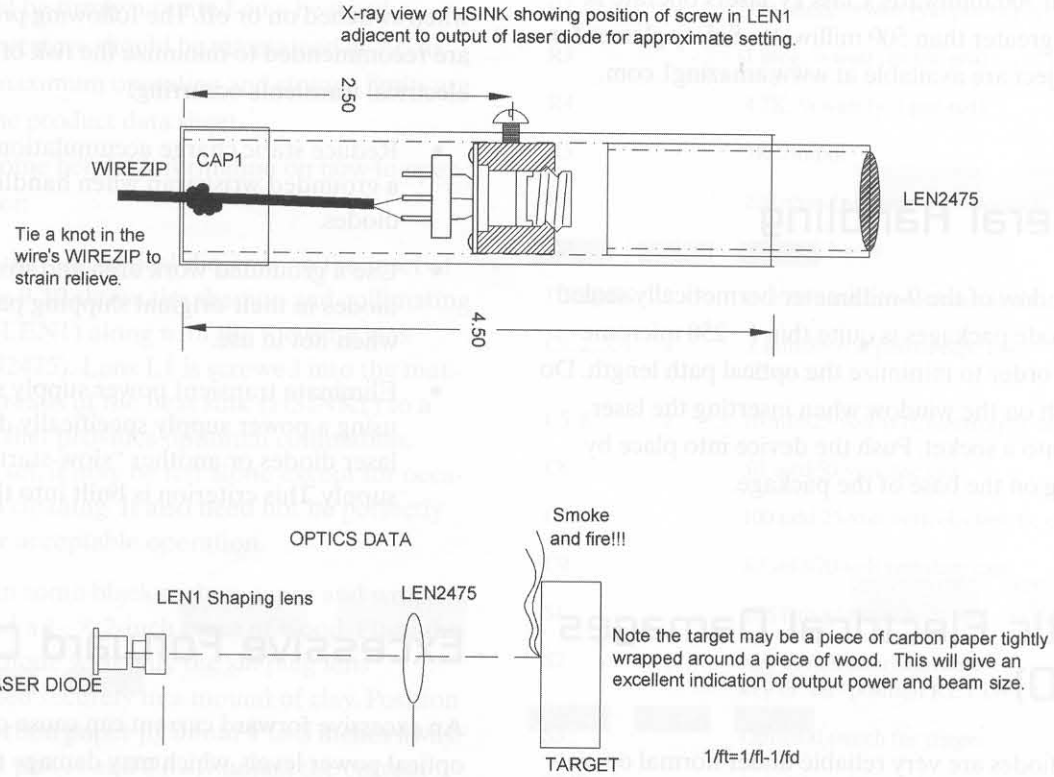

Figure 9-10 *X-ray view of laser head and collimator*

power, wavelength, and beam profile of the actual laser diode. It is assumed that you are familiar with these properties, their applications, and the proper safety precautions.

Before you open up the box containing your laser diode, it is imperative to read the following pages.

Study and carefully follow all of the manufacturer's instructions usually supplied with the diode.

Safety

High-power diode lasers emit radiation in the visible and infrared region of the spectrum. When in use, safety precautions must be taken to avoid the possibility of eye damage. For Class IIIb lasers, do not look into the beam or allow direct eye exposure. For Class IV lasers, do not expose the eye or skin to direct or scattered radiation. If viewing is required, the beam should be observed by reflection from a matte surface, utilizing an image converter or a suitable fluorescent screen. Class IIIb lasers operate at powers less than 500 milliwatts. Class IV lasers operate at powers greater than 500 milliwatts. Safety glasses for this project are available at www.amazing1.com.

General Handling

The window of the 9-millimeter hermetically sealed laser diode packages is quite thin (~250 micrometers) in order to minimize the optical path length. Do not push on the window when inserting the laser diode into a socket. Push the device into place by pressing on the base of the package.

Static Electrical Damages (ESD)

Laser diodes are very reliable under normal operating conditions, but like most semiconductor devices, they can be easily damaged or destroyed by inadvertent electrical or static discharges. A static-free environment is mandatory. Grounded tweezers, a grounded wriststrap on the user, a grounded work surface, antistatic floors, and a case ground for the laser diode all reduce the risk of damaging static discharge through the diode. Retain the laser diode in a static fine environment when not in use (such as the shipping container). Short the pins on packaged diodes at all times when not in use. Insert pins into conductive foam or wrap wire from pin to pin. (Note: A nonshorted laser can be damaged by ESD even without touching it.)

Excessive Forward Voltage

A forward current greater than the specified limit or any reverse voltage may damage the diode junction. Putting a clamping diode across the output of the power supply solves this problem. Commonly, these conditions occur from a static discharge or from activation or range-changing voltage transients in laboratory power supplies. Many power supplies, even current-regulated one, exhibit fast voltage spikes a when switched on or off. The following precautions are recommended to minimize the risk of destructive electrical transients occurring:

- Reduce static charge accumulation by wearing a grounded wriststrap when handling laser diodes.
- Use a grounded work area and store the laser diodes in their original shipping packages when not in use.
- Eliminate transient power supply spikes by using a power supply specifically designed for laser diodes or another "slow-start" power supply. This criterion is built into this project.

Excessive Forward Current

An excessive forward current can cause operation at optical power levels, which may damage the output facet in less than 1 *microsecond* (usec). Laser action

may continue after this damage at lower efficiency and lower power, or only spontaneous emission may remain. The allowable current depends on the pulse width in pulsed or quasi-clockwise operation, and peak optical power must be reduced as the pulse width increases.

Reverse Currents

Reverse currents may also damage the diode. Forward or reverse transients may be caused by energy reflections in pulsed systems, capacitance in fixtures or cables, or output capacitors in constant-current supplies operated with no load connected. Drive levels on drivers for moderate-power, continous-wave laser diodes may be tested by using a dummy load, such as two 1N4001 diodes and a 1-ohm resistor in series.

High Temperature

For normal, room-temperature operation, the laser diode should be firmly mounted on a heat sink, whose temperature should be maintained at 20° to 25° C. The maximum operating and storage limits are shown on the product data sheet.

Here is some helpful information on how to operate your laser:

1. Note that the optical diagram on the inset of Figure 9-10 shows the shaping and collimating lens (LEN1) along with the focusing lens (LEN2475). Lens L1 is screwed into the mating threads of the heat sink (HSINK1) to a point that provides optimum collimation. Once set, it may be left alone except for occasional cleaning. It also need not be perfectly set for acceptable operation.
2. Obtain some black carbon paper and wrap it around a 1- × 2-inch piece of wood. Place the laser diode with only the shaping lens installed securely in a mound of clay. Position the carbon paper jig about 1 to 3 inches away. Apply power and slowly adjust the current trimpot on the CC1 module to 1.3 amps. You will note smoke and fire as the jig is moved across the output beam.
3. The focusing lens is adjusted for proper beam delivery as a burning spot the size of a pinpoint or wider. Note that the lens tube may be inserted with LEN2 at the output end, providing a shorter focal length than when the lens tube is inserted with LEN1 on the internal end adjacent to the laser diode. Focal lengths may range from approximately 2 to around 50 centimeters. You may use a longer focal length for a far-field effect.

   System output will be dependent on the power, wavelength, and beam profile of the actual laser diode. It is assumed the user is familiar with these properties, their applications, and safety precautions.
4. Once proper operation is verified, you may assemble and label everything, as shown in Figure 9-11.

Table 9-1 Handheld burning diode laser parts

Ref. #	Qty.	Description	DB #
R1, 2	2	470 ohms, 1/4 watt (yel-pur-br)	
R3		1 meg, 1/4 watt (br-blk-grn)	
R4		4.7K, 1/4 watt (yel-pur-red)	
R5		5K trimpot	
R6		220 ohm, (red-red-br) 1/4 watt	
R7		.47 ohm, 3 watt	
DIODES	3	IN4001 used for test laser diode	
C1, 2, 3, 4	4	.1 mfd/50-volt plastic cap.; note C3 on S3	
C5, 8	2	10 mfd/25-volt vert. electrolytic cap.	
C6		.01 mfd/50-volt disc cap.	
C7		100 mfd/25-volt vert. electrolytic cap.	
C9		3.3 mfd/20-volt tantalum cap.	
S1		SPST toggle switch	
S2		Key switch nonremovable key in "on" position KEYSW	
S3		Optional switch for trigger	
BLW1		2- × 2-inch 12-volt blower fan	

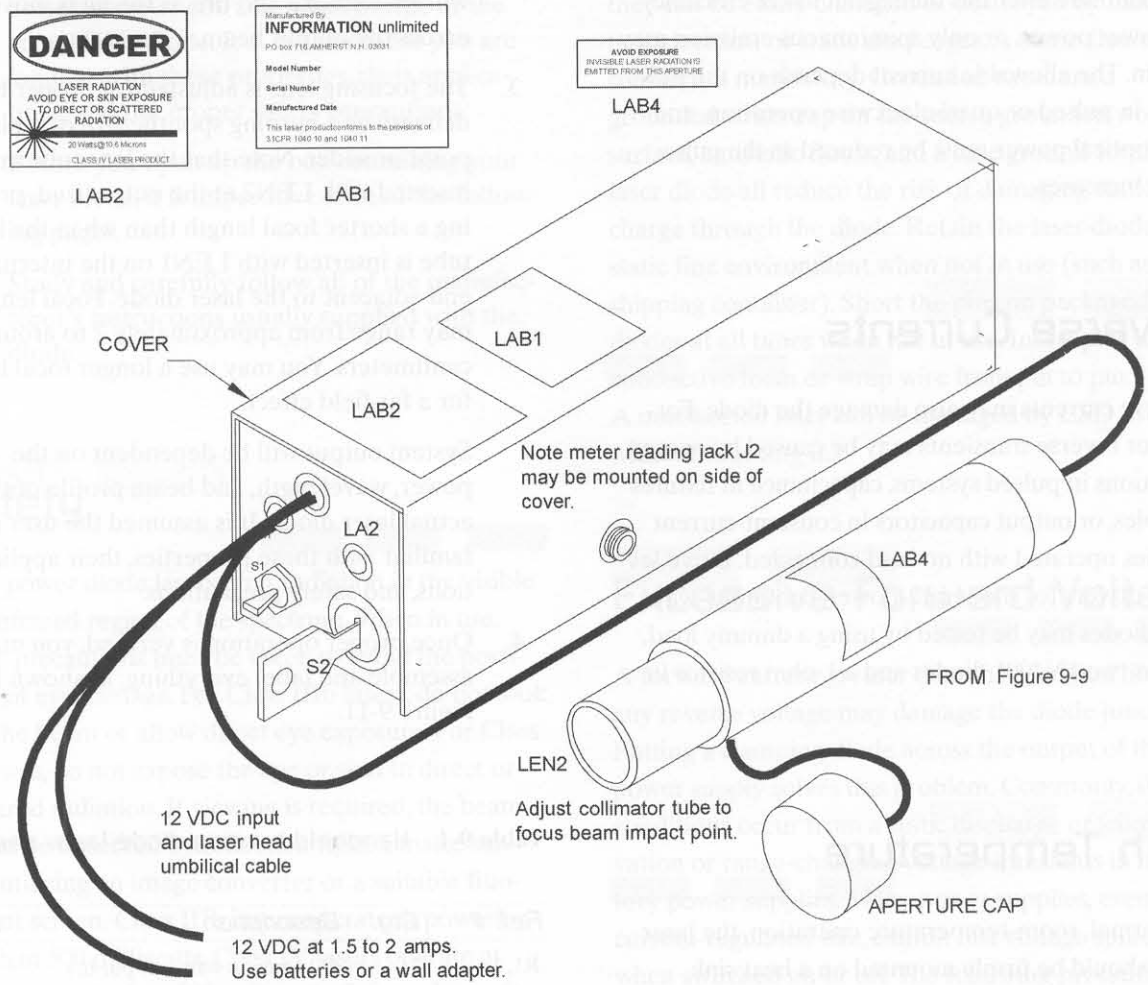

Figure 9-11 *Final assembly with laser head and labels*

Table 9-1 Continued

Ref. #	Qty.	Description	DB #
LA1		Red LED indicator for primary power on	
LA2		Green LED indicator for laser emitting	
D1		1N5401 power diode	
PZ1		PKE15 transorb	
CC1		Adjustable current driver module	CC1
VR1		317 voltage regulator, shown as TO3	
Q1		PN2907 PNP general purpose transistor	
Q2		MJE3055 NPN GP transistor TO220 case	
I1		555 dual in-line package IP timer	
J2/P2		3.5 mm stereo jack and plug for external meter	
J1		2.5 mm DC jack or use direct wiring	
TE6		6-lug solderable terminal strip	
PB1		1¾ × 2.1 × .1 perforated circuit board	
COVER		Shown in Figure 9-11	
CHASSIS		Shown in Figure 9-4	
BK1		Shown in Figure 9-4 inset	
MK1		Mounting kit for TO3 transistor	
BU1		⅜-inch clamp bushing	
WIRE22	2 feet	22-gauge, vinyl-stranded hookup wire	

Ref. #	Qty.	Description	DB #
WIRE20	6 feet	20-gauge, vinyl-stranded hookup wire	
SW1/NU1	4	6-32 × 1/2-inch screws and nuts	
SW2	2	4-40 × 1/2-inch screws for mounting BLW1	
FEET	4	1/2-inch rubber stick-on feet for chassis bottom	
PLASTIC		2- × 2-inch piece of insulating plastic	
Laser Head and Collimator			
WIREZIP	4 feet	#18 zip lead, parallel stranded wire	
TUBE1		4 1/2 × 1 × .062 wall aluminum tube; see Figure 9-9	
TUBE2		2 1/4 × 7/8 × .062 wall aluminum tube; see Figure 9-9	
HSINK1		Heatsink, washer, and screws combination per Figure 9-9	HSINK
SOCK1		Three-pin TO5 transistor socket	
CAP1, 2	2	1-inch plastic caps; see Figure 9-9	
BU3		Small, 1/4-inch Heyman clamp bushing	
LEN1		Special threaded lens fixture	LENS13
LEN2475		24- × 75-millimeter extending lens	LE2475
SW3	2	4-40 × 3/8-inch small screws for securing HSINK	
LDIODE		See text of options and instructions on laser diode.	LD0098
LAB1		Laser certification label	
LAB2		Laser classification label	
LAB4		Aperture label	

Copyright © 2000 Prentice Hall, Inc.

Chapter Ten

Long-Range Optical Laser Project

This relatively low cost kit, shown in Figure 10-1, shows how to build a laser gun that can project a red dot over several miles. Someone looking toward the laser would see it as the brightest object on the horizon from distances of tens of miles. The project is intended for beginners who may have more mechanical than electrical skills. The enclosure and fabrication are readily available from most hardware stores, but it will require some work using files, saws, drills, and other small hand tools. Expect to spend about $30, and that includes the laser module.

This project is intended for the laser experimenter who desires to add a simple optical system that allows for far-field focusing, beam collimation, or beam expanding. The kit contains all the crucial parts, including a working 3- to 5-milliwatt, 650 *nanometer* (nm) red laser module.

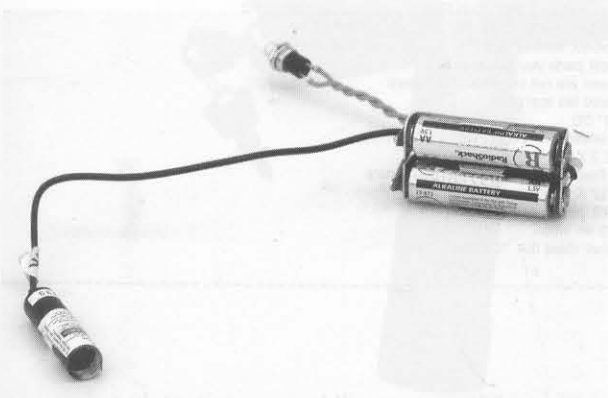

Figure 10-1 *Optical laser electronic assembly*

Construction parts such as tubing, handles, brackets, and hardware are all readily available at your local hardware store. Our suggested lab approach is to acquire some telescopic tubing of metal or plastic, or a combination of both, and fabricate the laser and lense holders from a suitable sized plastic rod or the equivalent. The center holes of the holders must be as accurate as possible or the optical system integrity will be greatly degraded.

The grip or handle is fabricated from a 1-inch-thick piece of finished pine that has a section carefully removed for the battery holder and pushbutton switch. Passage holes for the power leads are drilled as shown in Figure 10-2. A clear piece of lexan (polycarbonate) sheet is formed with a flange at a 90-degree bend that is the surface for mounting the switch. This cover is screwed to the wooden handle and has a neat appearance if done with care and precision. A contoured shape may be fabricated into the handle to mate to the curvature of the tube. See Figure 10-3 for assembly details.

The operation of the laser can be used without any of the optics, providing a similar performance to a higher-quality laser pointer. The addition of the lens system allows far-field focusing, close-range expan-

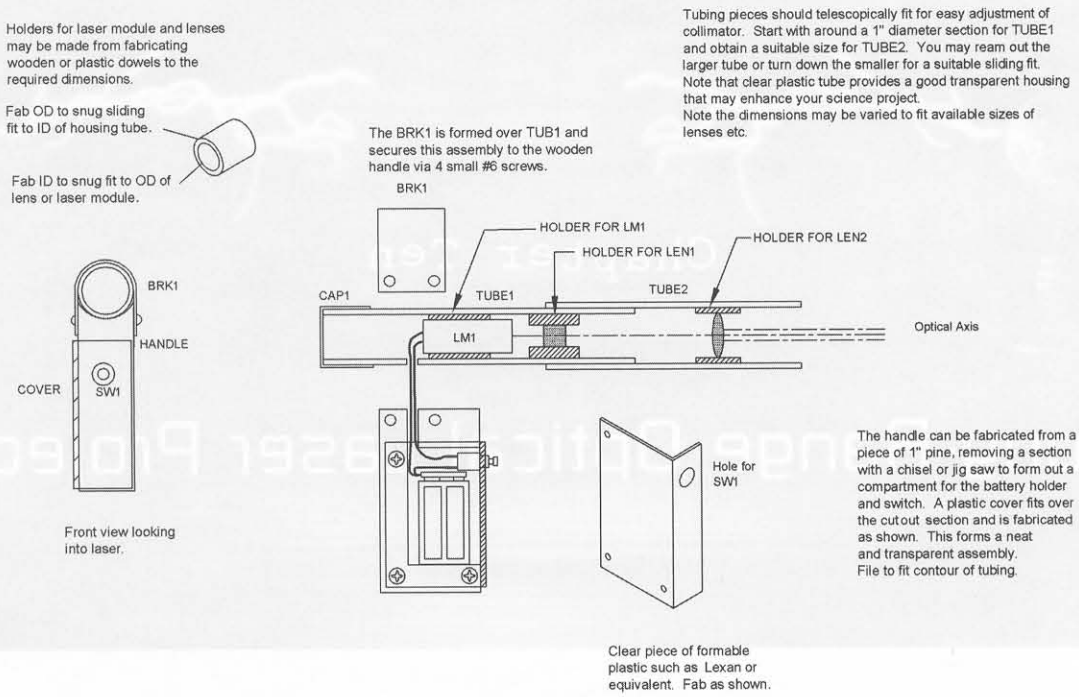

Figure 10-2 *Long-range optical laser gun*

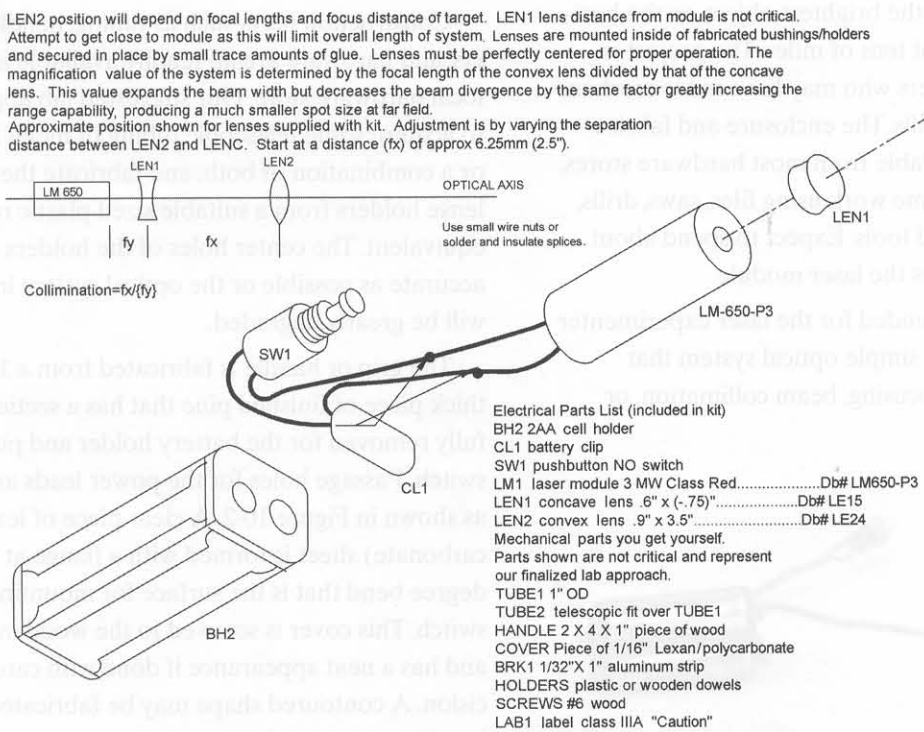

Figure 10-3 *Isometric assembly drawing*

sion, and far-field collimation where the beam spot effect will be reduced by the collimating power of the system. As an example, the beam diameter without optics at 300 meters will be approximately a 50-centimeter diameter spot. With a 10× collimator, the diameter will be reduced to 5 centimeters.

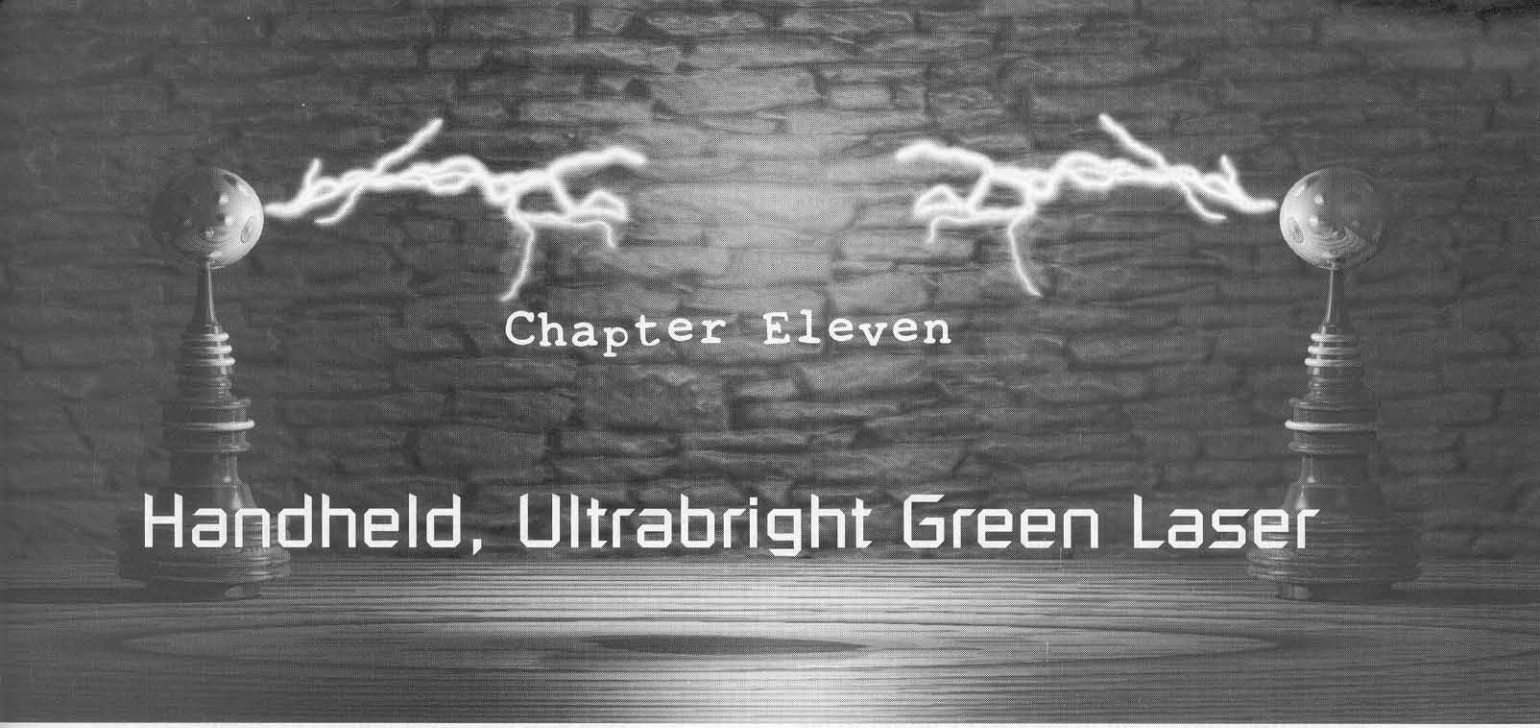

Chapter Eleven

Handheld, Ultrabright Green Laser

This excellent visual effects laser produces a visible green beam of light. The device is shown constructed as a fully compliant 20-milliwatt class 3b laser (see Figure 11-1). This tool has many useful applications, and the range can be up to tens of miles.

Expect to spend up to several hundred dollars on this reasonably simple construction project. All parts are available through Information Unlimited at www.amazing1.com and are listed in Table 11-1.

Applications

The green diode laser project requires protective eyewear if viewing the direct beam or reflection. It is intended for star pointing by amateur astronomers, spooking light-sensitive animals, long-range pointing, target intimidation, special effects, or just general optical research and experimentation.

Figure 11-1 *Handheld, ultrabright green laser*

The laser operates from a 6-volt battery pack and includes an adjustable collimator where the beam spot can be expanded and converged for extra-long-range applications. The system is in full compliance for a class 3b laser project and is built using easy-to-fabricate plastic parts.

Circuit Description

Figure 11-2 shows a key switch (S1) applying main power to the circuit and starting timer I1, initiating the activation cycle. The delay time of I1 is determined by the time constant of R2 and C2. The LED1 *light-emitting diode* (LED) indicator now energizes, indicating the system is ready to fire via S2. Resistor R1 controls the current to the LED. Current to the laser module (LM1) is sent through transistor switch Q1 by controlling its base current from pin 3 of I1 through resistor R3. You will note that the beam control pushbutton switch S2 is used to control the laser output and can only apply power after the emission delay circuit times out and pin 3 of I1 goes high.

Resistors R4 and R5 are selected to allow the required current through the laser module. The Z1 zener diode maintains a 3-volt level at the laser module input connections.

Assembly Steps

To begin the project, follow these steps:

1. Identify all the parts and pieces and verify them with the bill of materials.
2. Insert the components, starting from one end of the perforated circuit board, and follow the locations shown in Figure 11-3, using the individual holes as guides. Use the leads of the actual components as the connection runs. These are indicated by the dashed lines. It is a good idea to trial-fit the larger parts before actually starting to solder.

   Always avoid bare wire bridges, messy solder joints, and potential solder shorts. Check for cold or loose solder joints. Pay attention to the polarity of the capacitors with polarity signs and all the semiconductors.
3. Cut, strip, and tin 4-inch wire leads for connecting to S1, S2, and the LED. Solder to these components along CL1 and LM1, as shown in Figure 11-3. Note the polarity of the laser module. Red is positive, and black is negative.
4. Fabricate rear cap CA1 from a 1⅝-inch plastic cap. Note the large hole for the S1 key switch and the small hole for the LED.

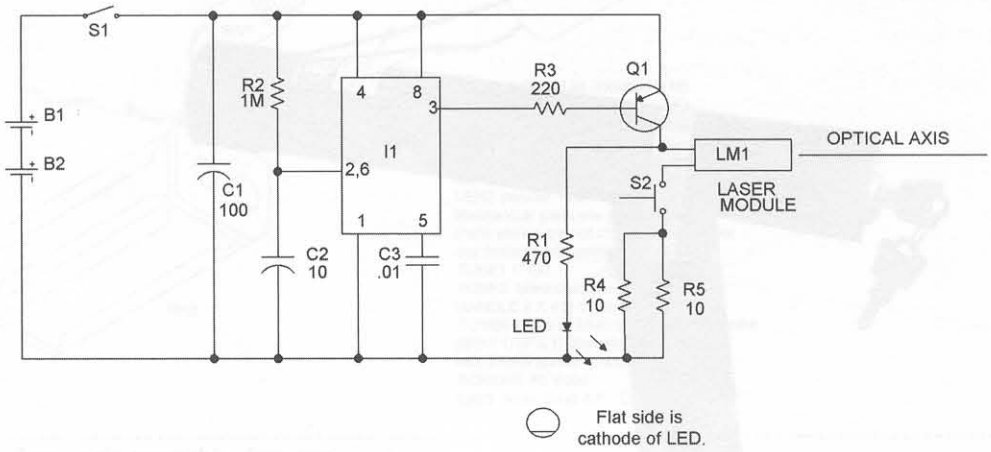

Figure 11-2 *Laser model schematic*

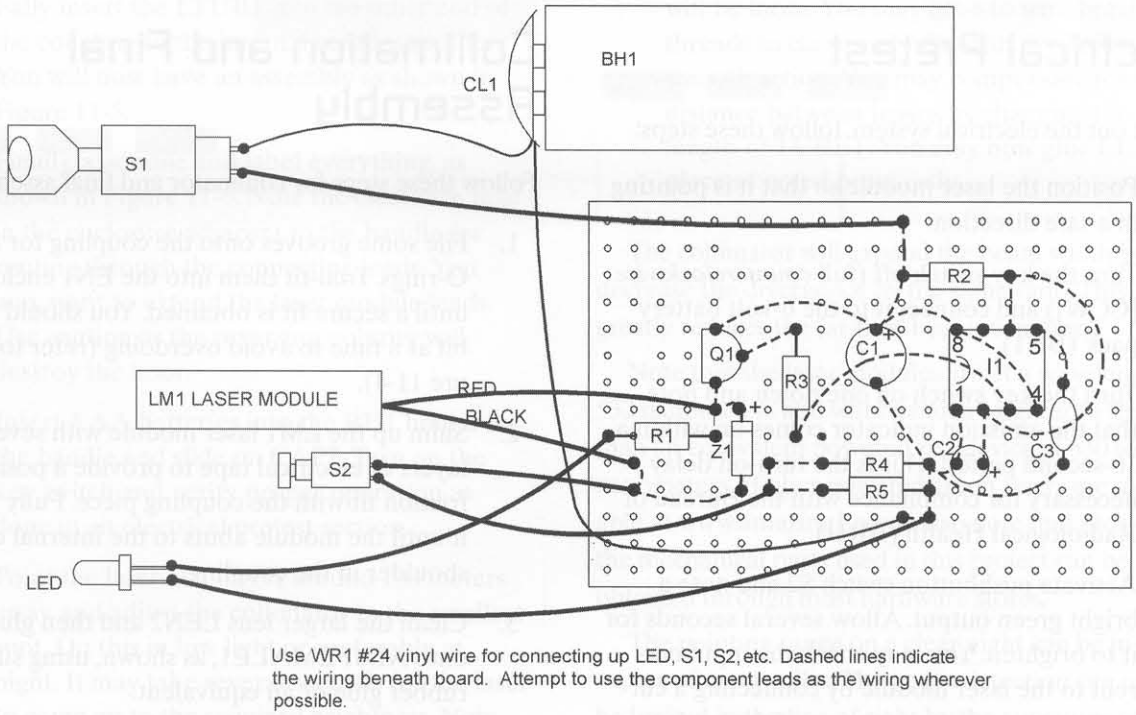

Figure 11-3 *External wiring to the board*

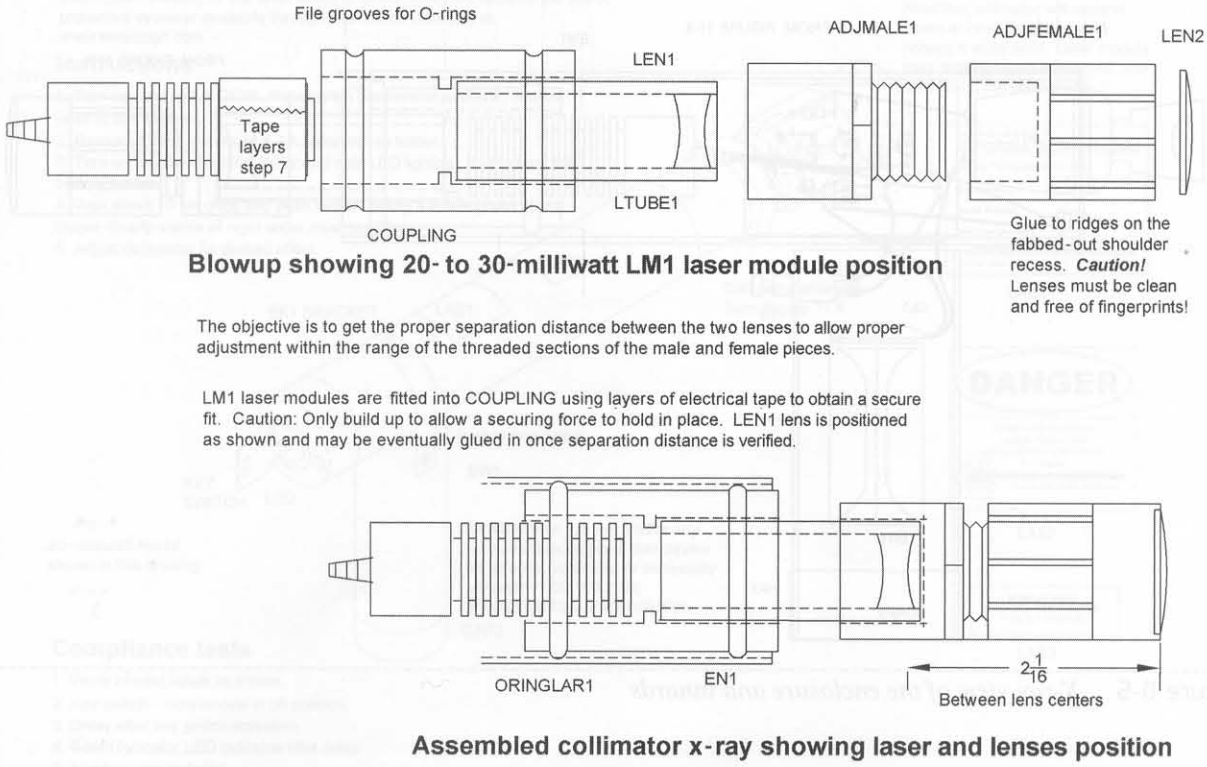

Figure 11-4 *Collimator assembly*

Electrical Pretest

To test out the electrical system, follow these steps:

1. Position the laser module so that it is pointing in a safe direction.
2. Turn the key switch off (full *counterclockwise* [CCW]) and connect it to the 6-volt battery pack (BH1).
3. Turn the key switch on one notch and note that the emission indicator comes on within a 10-second period. This is the turn-on delay necessary for compliance with the Bureau of Radiological Health (BRH).
4. Activate pushbutton switch S2 and note a bright green output. Allow several seconds for it to brighten. You may check the input current to the laser module by connecting a current meter in series with one of the leads to the laser module and measure 250 milliamps for the total current.

Collimation and Final Assembly

Follow these steps for collimator and final assembly

1. File some grooves onto the coupling for large O-rings. Trial-fit them into the EN1 enclosure until a secure fit is obtained. You should file a bit at a time to avoid overdoing (refer to Figure 11-4).
2. Shim up the LM1 laser module with several layers of electrical tape to provide a positive friction fit with the coupling piece. Fully insert it until the module abuts to the internal center shoulder in the coupling.
3. Clean the larger lens LEN2 and then glue it onto ADJFEMALE1, as shown, using silicon rubber glue or an equivalent.
4. Insert LEN1 into the laser output end of the LTUB1 assembly as shown. Do not glue at this time.

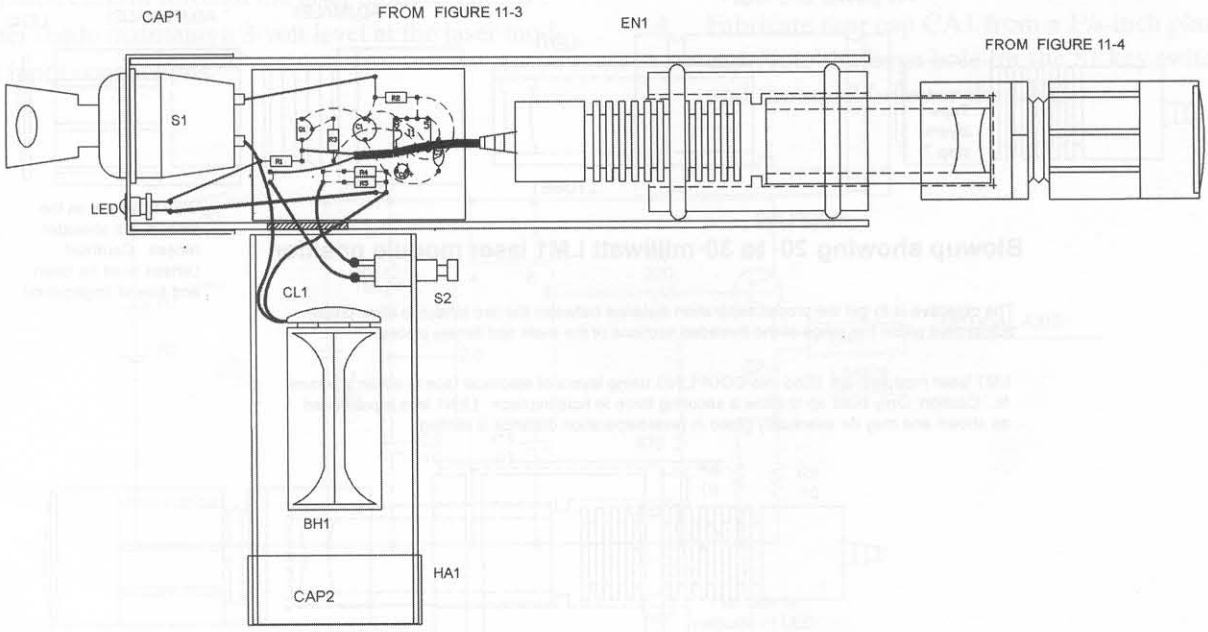

Figure 11-5 *X-ray view of the enclosure and innards*

5. Fully insert the LTUB1 into the other end of the coupling to the internal center shoulder. You will now have an assembly as shown in Figure 11-5.

6. Finally, assemble and label everything, as shown in Figure 11-6. Note the clearance hole in the enclosure adjacent to the handle for routing through the connecting leads. You may want to extend the laser module leads. Use caution as the reversing polarity will destroy the laser.

7. Insert 4 AA batteries into the BH1 holder in the handle and slide on CAP2. Turn on the key switch and verify proper operation as done in an electrical pretest section.

8. Point the laser at a target around 100 meters away and adjust the collimator to the smallest spot. Do this in low light or preferably at night. It may take several seconds for the laser to come up to the required brightness. Note that the adjustment should be about a 1/2 to 3/4 turn from being fully tight for a mechanically stable operation. If too far out, the assembly will be loose. You may have to wire brush threads to clean and lube with dry Teflon for smooth action. You may compensate for the distance between lenses by changing the length of TUBE1. You may now glue LEN1 in place as noted previously.

The collimator will expand the beam width but decrease the divergence by the same ratio. This greatly reduces the far field beam diameter.

Note that the laser modules are at a wavelength of 532 nanometers and will be much brighter to the eye than an equivalent powered red device at 630 to 650 nanometers. Higher-powered green lasers are available at www.amazing1.com. Also note that most of the mechanical parts used in this project can be obtained through most hardware stores.

The pointing range on a clear night can be in excess of many miles. The target detection can only be limited in the line of sight by the curvature of the earth. On a clear night, when looking toward the laser, it will appear as a very bright source from up to tens of miles.

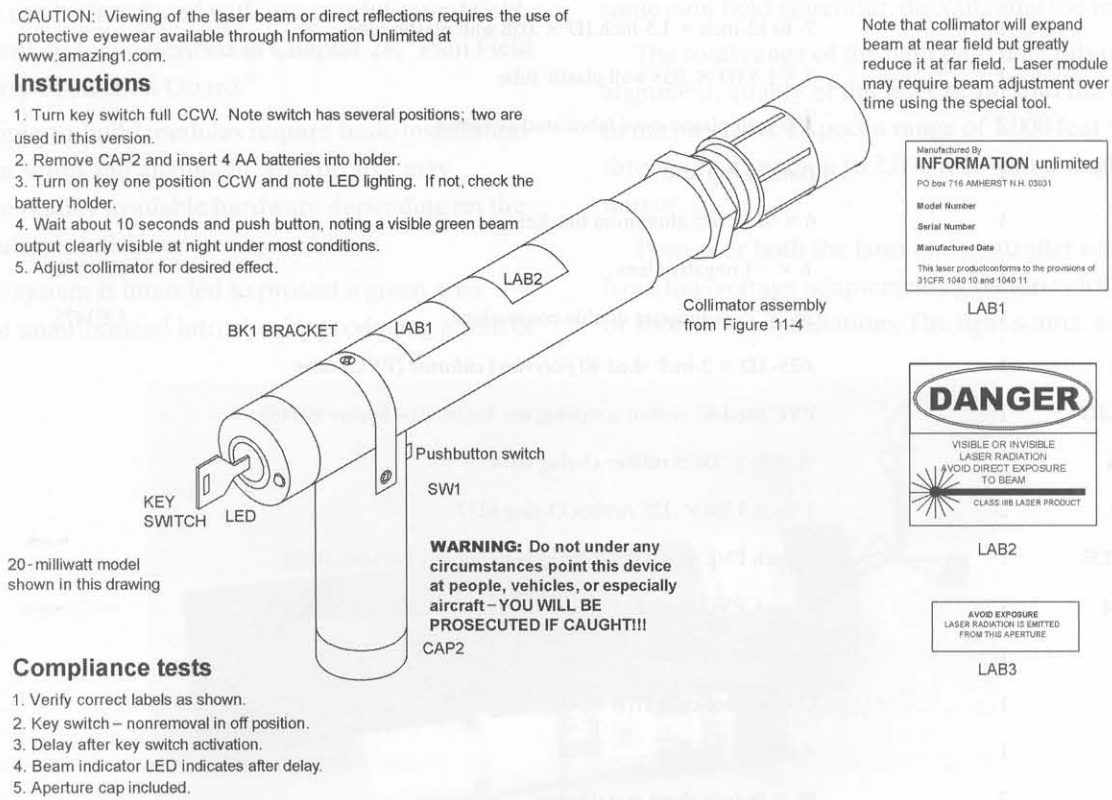

Figure 11-6 *Final assembly view and labels*

Table 11-1 Handheld, ultrabright green laser parts

Ref. #	*Qty.*	*Description*	*DB#*
R1	1	470-ohm, 1/4-watt (yel-pur-br) resistor	
R2	1	1-megohm, 1/4-watt (br-blk-grn) resistor	
R3	1	220-ohm, 1/4-watt (red-red-br) resistor	
R4, 5	2	10-ohm, 1/4-watt (br-blk-blk) resistor	
C1	1	100-microfarad, 25-volt vertical electrolytic capacitor	
C2	1	10-microfarad, 25-volt vertical electrolytic capacitor	
C3	1	.01-microfarad, 50-volt polyester capacitor	
LED	1	High-brightness LED	
I1	1	555 dual in-line integrated circuit chip timer IC	
Z1	1	3-volt, 1/2-watt zener diode 1N5225	
Q1	1	PN2907 PNP general purpose transistor	
*LM1	1	Class IIIBiib 10- to 30-milliwatt 532 nanometer laser module	LM532-20
S1	1	Panel-mount key switch	
S2	1	Pushbutton NO switch	
PB1	1	1.5- × 2- × .1-inch grid vector board	
BH1	1	4 AA cell holder	
WR1	24 inches	#24 hookup vinyl wire	
EN1	1	7- to 12-inch × 1.5-inch ID × .058 wall plastic tube	
HA1	1	5 × 1.5 ID × .058 wall plastic tube	
CAP1, 2	2	1 5/8-inch plastic caps, fabricated as shown	
CL1	1	Battery clip lead	
BK1	1	6 × 1/2 × .035 aluminum bracket	
LEN1	1	.6 × −1 negative lens	LE15-25
LEN2	1	24- × 75-millimeter double convex lens	LE2475
*LTUBE	1	.625- ID × 2-inch sked 40 *polyvinyl chloride* (PVC) tube	
*COUPLIG	1	PVC sked 80 1/2-inch coupling; use for lm 10—Spears #02467	
ORINGS	2	1/2 × 5/8 × .0625 rubber O-ring #014	
ORINGL	2	1 3/16 × 1 7/16 × .125 rubber O-ring #217	
ADJMALE	1	1/2-inch PVC sked 40 slip fit to male thread, Genova 30405	
ADJFEM	1	1/2-inch PVC sked 40 slip fit to female thread, Genova 30305	
LAB1	1	Certification label	
LAB2	1	Compliance class IIIB label	
LAB3	1	Aperture label	
SW1	3	#6 × 3/8-inch sheet metal screw	

Chapter Twelve

Laser Property-Protection Fence

A low-cost property-protection device provides a laser beam perimeter that, when broken by an intruder, will sound an alert or an intrusion deterrent. It consists of a laser beam generator, optical detector, controller, and front-surface mirrors to reflect the beam around the perimeter (see Figure 12-1). The device can be interfaced with our painful sound field deterrent system described in Chapter 28, "Pain Field Property-Protection Guard."

Simple-to-build modules require basic installation skills in setup and alignment. This project may require readily available hardware depending on the particular installation.

The system is intended to protect a given area against unauthorized intrusion by producing a wall of ultrasonic pain. The system can be used for small inside areas or larger outside areas. The system utilizes a laser that bounces between several strategically placed front-surface mirrors before impacting an optical light detector and controller. Once the beam is broken, the controller sends a signal to the sonic pain field generator, discouraging the intruders.

The total range of the light path depends on the alignment, quality of the laser beam, and the number of mirrors used. Expect a range of 1,000 feet with three mirrors and up to 2,000 feet with a single mirror.

Power for both the laser and controller comes from low-voltage adapters using batteries for backup or short-term installations. The light source is a visible

Figure 12-1 *Property protection system*

red laser but may be invisible infrared. The laser section must be securely mounted on a sturdy pole and bracket. A tree or existing structure may be used, providing it allows a clear shot to the first mirror and is out of the way of normal traffic.

The optical receiver and controller section requires 12 *volts-direct current* (VDC) as supplied by the included wall adapter transformer. It must be mounted like the laser section and avoid any exposure to bright sunlight. This section also provides the control to other external deterrents, as well as having a buzzer and *light-emitting diode* (LED) indicating lamp.

The device is shown housed into a plastic cylindrical tube (EN1) fitted with a focusing tube and a lens for long-range applications. You may use an aperture cap with its opening customized to size depending on the range and collimation of the reflected laser light. A diffusion plate can also be made from two milky white plastic caps assembled together. This method may be necessary when being used with the highly coherent beam of light from a nearby laser.

Special Note

The optical light detector controller receiver section can also be used to cause an event when light is detected and exceeds a certain value. The threshold detection level is set by the adjustment of a trimpot. This mode of operation is designed to be used in conjunction with any laser, light gun, or similar device to control any external function. It can provide a means of improving handgun steadiness by holding the laser beam on the aperture as long as possible. A means for the instinctive point firing of such weapons as shotguns and machine guns is also realized. Long-range optical remote control is possible up to a half-mile or over.

Circuit Description

Light entering the focus tube (FT1) through the lens (LE1) is detected by phototransistor Q1. From Figure 12-2 Q1 is placed so that it picks up the laser light and causes its collector to conduct through the R1 base sensitivity trimpot resistor that biases transistor Q2 into conduction. A positive voltage is now developed across the R3 collector resistor. This voltage remains across coupling capacitor C1 until the light beam is broken. When this occurs, a negative-going voltage appears at the junction of biasing resistors R4 and R5 that are connected to the control pin 2 of monostable timer I1. The timing cycle now turns "on," causing pin 3 to go positive. It turns on transistor Q3 and energizes the sounding buzzer (BZ1), the LED, and control relay (RE1). The relay is capable of switching noninductive loads of up to 5 amps at 120 *volts-alternating current* (VAC) or of providing the detection level to trigger our PPG10 pain-field generator or other deterrent.

Construction Steps for the Receiver and Controller

Follow these steps in constructing the optical receiver and controller:

1. Lay out and identify all parts.
2. Assemble the board as shown in Figure 12-3. Note the PNP and NPN transistors. Use the leads of components as connecting wires whenever possible. Avoid bare wire bridges and short-circuit points.
3. Attach leads and external components, as shown in Figure 12-4.
4. Create the focus tube FT1 from a 6-inch piece of 1⁷/₈-inch *polyvinyl chloride* (PVC) tube, shown in Figure 12-5. Create EN1 from a 12-inch length of 2³/₈-inch tubing. Glue the lens to the shoulder of FT1. Note that the tubes should provide a secure telescoping fit.
5. Make the final assembly as shown with leads exiting through CAP1 using the clamp bushing BU1.
6. Test your unit by presetting both trimpots to midrange. Note the 1-megohm pot R6 controls the "on" timer once the light beam is broken. The 100K pot R1 controls the light necessary to keep the unit from triggering.

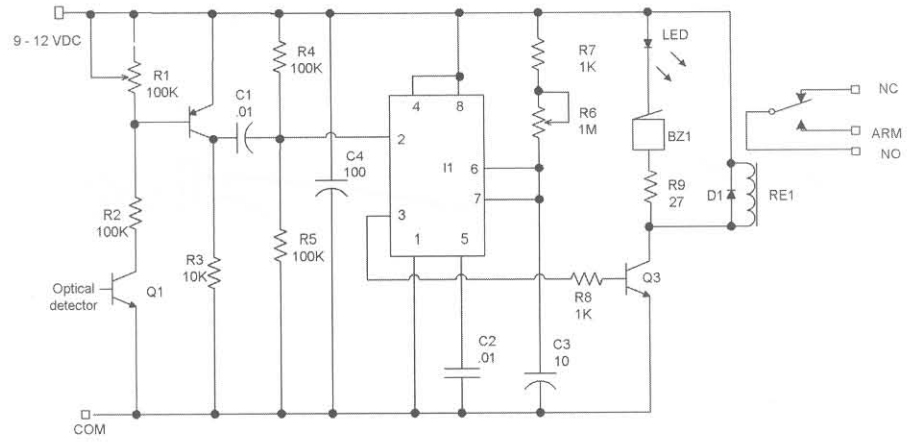

This circuit is intended as an alarm using a laser to continuously activate phototransistor Q1. When the beam is broken by an intrusion, the I1 timer is activated, turning on the buzzer, the LED, and the relay for the external of our #PPG100 Phasor Shockwave Blaster described in Chapter 26.

Figure 12-2 *Detector and controller schematic*

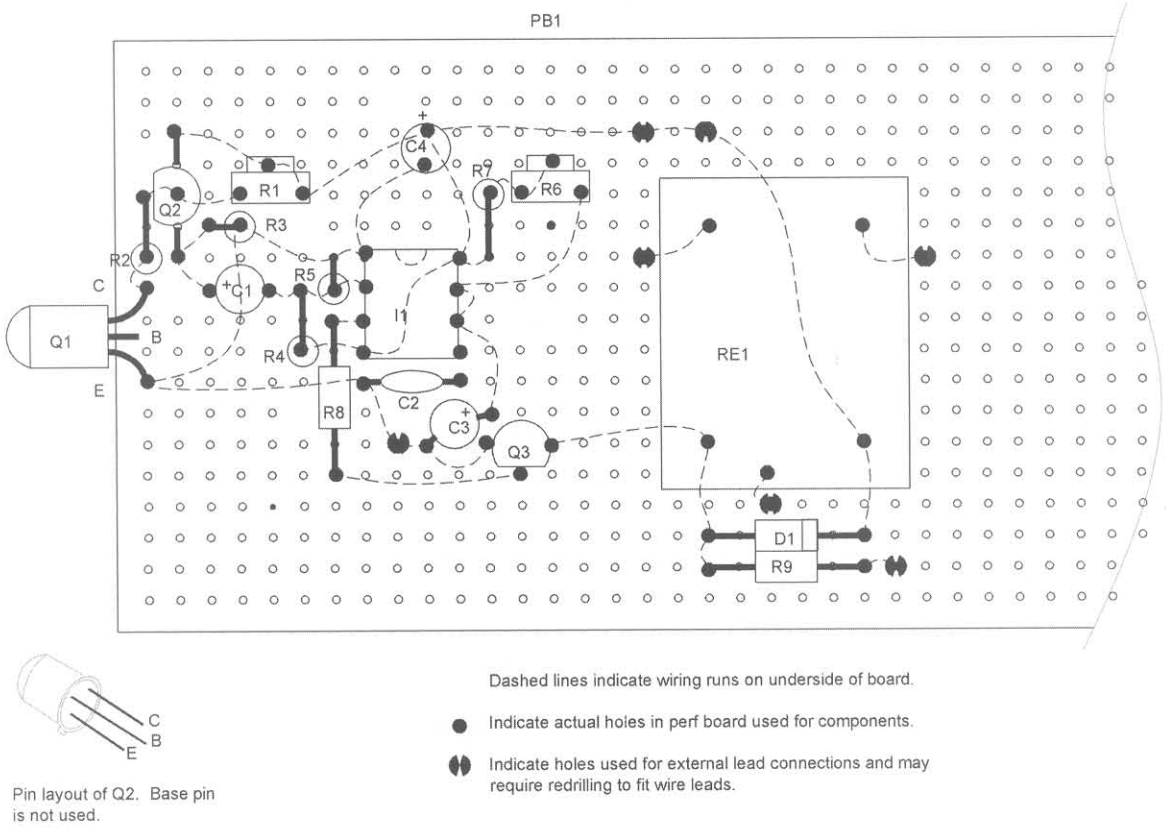

Figure 12-3 *Magnified view showing wire routing on the underside of the board*

7. Place the unit in a brightly lit area and connect it to a 12-volt power supply or wall adapter. Point the unit to a light source and then place your hand over the aperture. The LED and buzzer should respond for a period of time determined by the R6 setting. Adjust R1 for reliable triggering and R6 for the desired response time. The relay also activates,

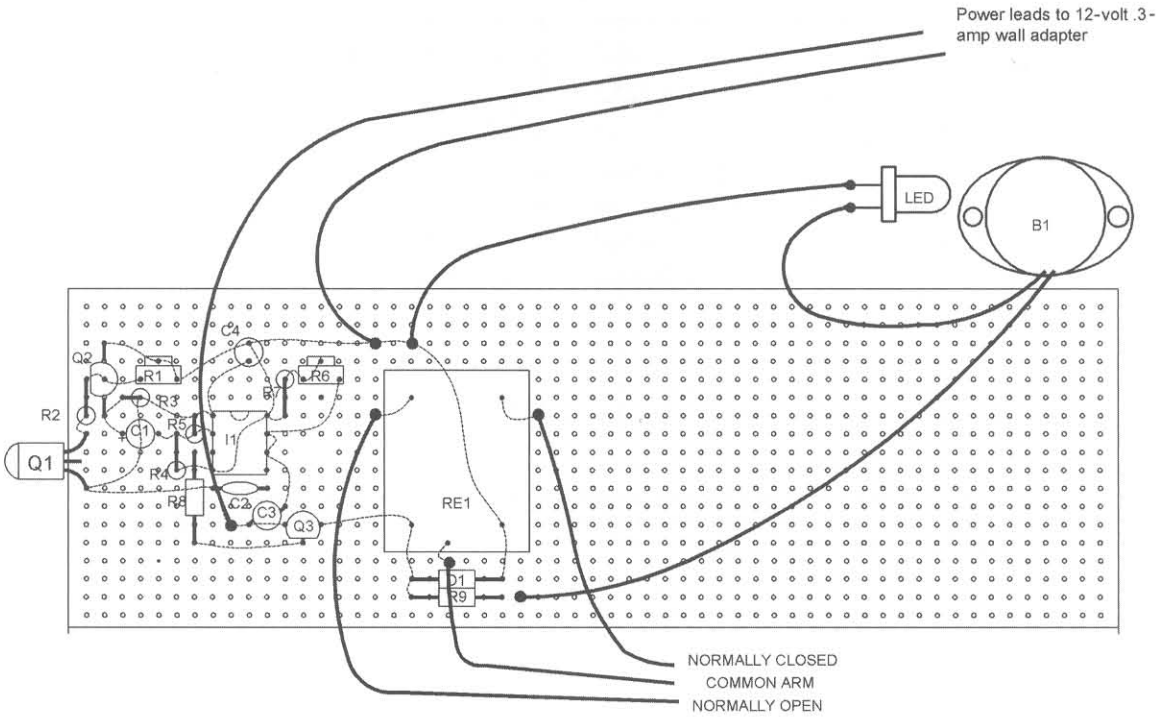

Figure 12-4 *Board assembly showing external wiring*

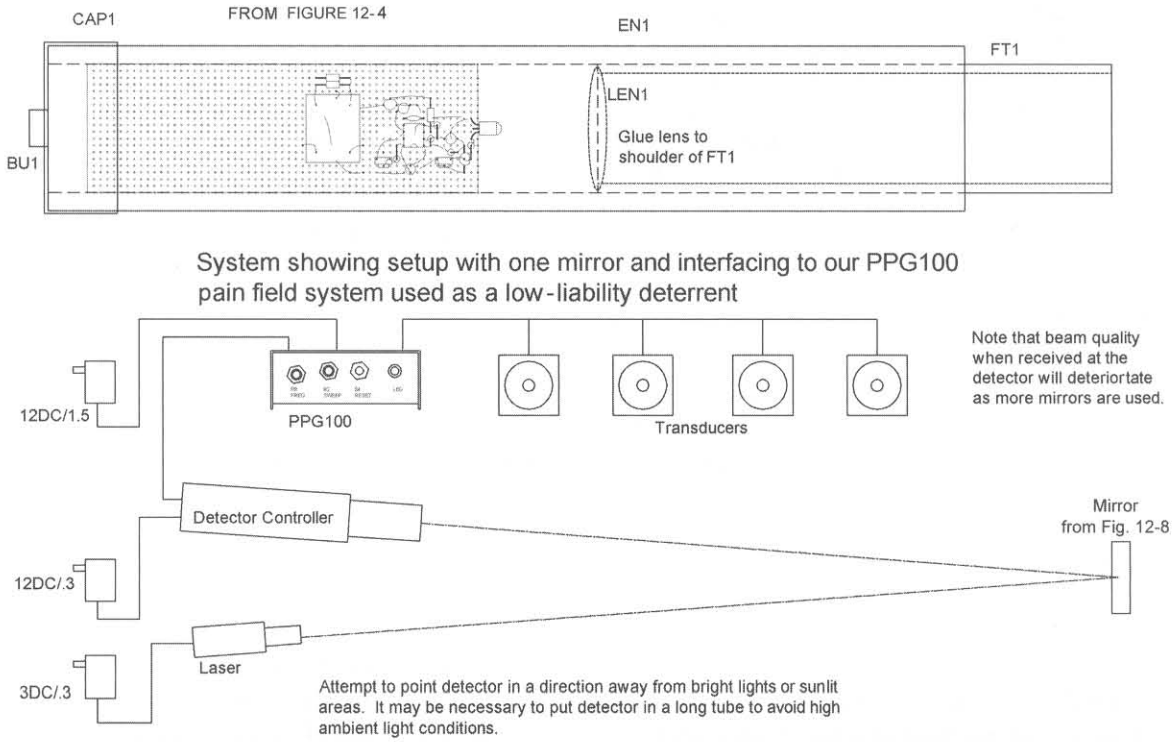

Figure 12-5 *X-ray view optical detector and controller in enclosure*

closing the contacts that now will turn on the pain field generator or other device. This now verifies the proper operation of the receiver controller.

Construction Steps for the Laser Beam Generator

Follow these steps in constructing of the laser beam generator:

1. Mechanically assemble the laser section, as shown in Figure 12-6. You may wire the 3-volt adapter directly, and strain relieves the power leads, which can be done using a clamp bushing or tying a knot. Verify that the far-field beam spot is fairly condensed when using the collimator.
2. Proceed to set up the system as outlined in Figures 12-5, 12-7, and 12-8. Stabilize the laser, detector, and all the mirrors. Use your own ingenuity in these steps, using available materials and any possible mounting points for components.

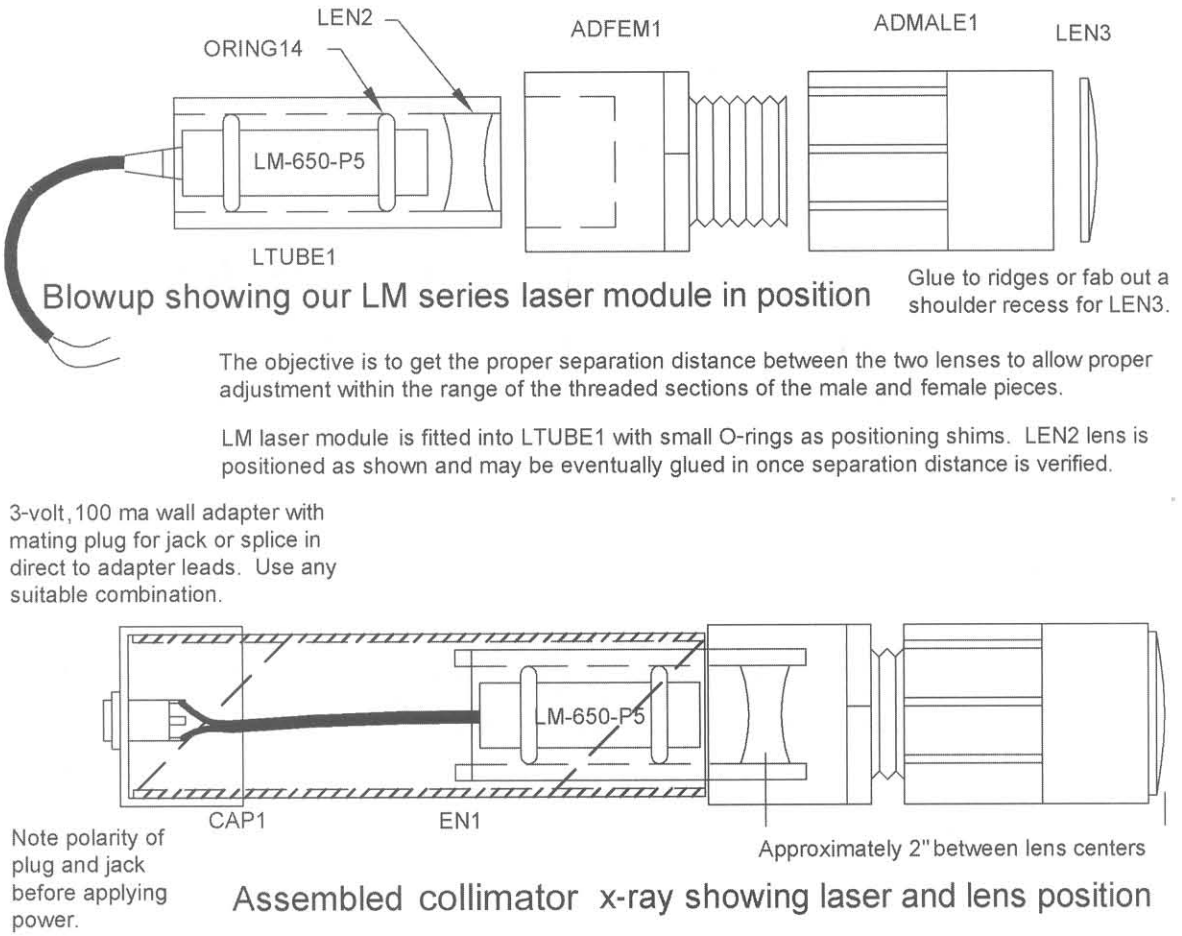

Figure 12-6 *Assembly using the laser module*

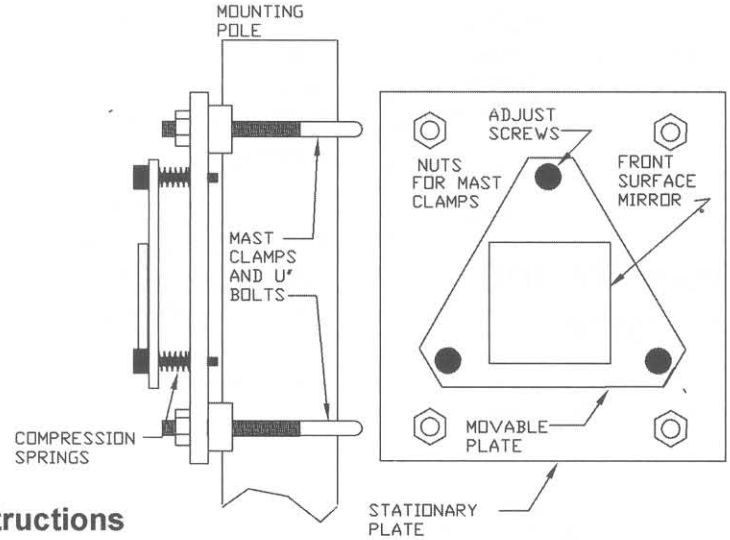

Basic instructions

Your laser protector fence is designed to provide an intrusion-detection perimeter around your home or target area. It uses a Class iiia diode laser to minimize but not eliminate any optical hazard. A low-liability sonic shock field generator such as the system shown in Chapter 26 is suggested as a deterrent. Caution: check local laws for proper posting of this equipment on your property. Remember if you injure a criminal, even if he is robbing you, it can result in a stiff penalty in certain states for violating his rights.

System setup

1. Obtain the following equipment listed in the latest Information Unlimited catalog:

A. Class iiia diode laser or a HeNe Laser

B. Optical light detector and controller with built-in alarm or

C. PPG10 low liability sonic shock pain field generator from chapter 26

2. Examine the area you want to protect. Attempt to position beam travel over level terrain to eliminate possible "easy-to-sneak-under"points.

3. Establish corner points of property where mirrors are to be positioned. Note that a clear view of adjacent mirrors, laser, and receiver must be maintained in all weather conditions for reliable operation.

4. Determine the corner you want to position the actual laser and laser detector at. Note there should be access to these devices for powering and control.

5. Construct mirror mounts using your own ingenuity; allow for adjustment and stability. Roughly align mirror to approximate position.

6. Turn on laser and position it to hit center of first mirror. Secure laser in place.

Adjust first mirror to hit center of second and repeat for remaining mirrors all the way back to the optical receiver. Secure them in place as you go.

Special note - Large areas may require an optical collimator at the laser output to reduce beam width at longer ranges. The collimator can be a rifle scope, telescope, binoculars etc., positioned in axial alignment with the laser. Beam divergence will be reduced by the magnification factor of the system used; however, the actual beam will be expanded by the same factor. The net result is a smaller cross-section at longer ranges.

Figure 12-7 *Scheme showing adjustable mirror mounts*

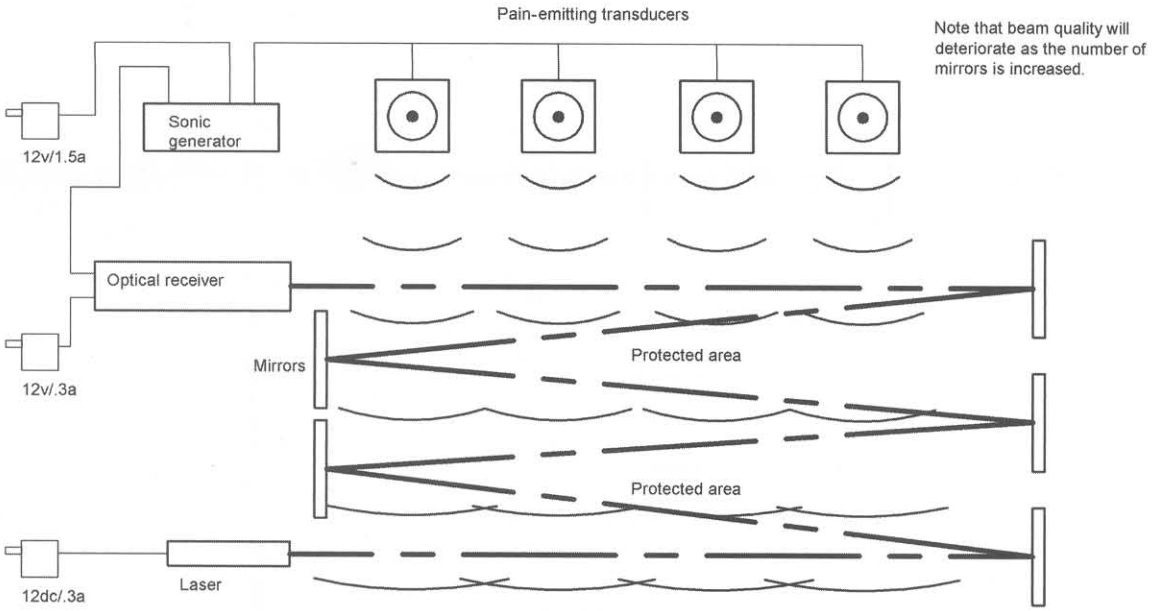

The laser beam is reflected back and forth in the protected area via strategically placed mirrors. Once the beam is broken by an intruder, the optical receiver detects and sends a level to the sonic generator where the transducers are activated, producing an intolerable sonic pain field discouraging the intrusion.

Even though there is no lasting effect from exposure to the transducers, it is always best to check with local laws before implementing this system.

Figure 12-8 *Example of system layout using multiple mirrors*

Table 12-1 Laser property-protection fence

Ref. #	*Qty.*	*Description*	*DB#*
R1		100K vertical trimpot resistor	
R2, 4, 5	3	100K, 1/4-watt (br-bl-yel) resistor	
R3		10K, 1/4-watt (br-bl-or) resistor	
R6		1 m, 1/4-watt (br-bl-gr) resistor	
R7, 8	2	1K, 1/4-watt (br-bl-red) resistor	
R9		27, 1/4-watt (red-pur-blk) resistor	
C1, 3	2	10-microfarad, 25-volt vertical electrolytic capacitor	
C2		.01-microfarad, 25-volt disk capacitor (103)	
C4		100-microfarad, 25-volt vertical electrolytic-capacitor	
Q1		L14 phototransistor	L14P2
Q2		PN2907 PNP general-purpose transistor	
Q3		PN2222 NPN general-purpose transistor	
D1		IN4007 1 Kv diode	
I1		555 DIP dual in-line integrated circuit timer LED1	Ultrabright LED
BZ1		4- to 8-volt, 20-milliampere, 90-decibel, 1-inch OD buzzer	

Table 12-1 Continued

Ref. #	Qty.	Description	DB#
RE1		12-volt SPDT relay 115/5a contacts	
PB1		3 × 1 .75 of .1 × .1 grid perforated board	
WR24	60 inches	#24 vinyl hookup wire	
EN1		12 inches of 2³/₈-inch schedule 80 PVC tubing	
FT1		6 inches of 1⁷/₈-inch schedule 40 PVC tubing	
CAP1		2³/₈-inch plastic cap	
BU1	2	Small clamp bushing	
LEN1		45 × 90 focusing lens	LE4590
12DC/.3		12-volt, .3-amps adapter for detector	12DC/.3
PPG100		Optional pain field deterrent	PPG100
		Laser section	
3DC/.3		3-volt, .3-amp wall adapter for laser	3DC/.3
LM1		3-milliwatt laser module	LM650P3
LTUBE1		2¹/₄ - × ⁷/₈ -inch OD PVC tubing	
EN2		3¹/₂ - × 1-inch OD plastic tubing	
CAP2		1-inch plastic cap	
LEN2		.6 × −1-inch negative lens	LE15
LEN3		.9 × 3-inch F/L double convex lens	LE24
ADMALE		¹/₂-inch PVC slip to male Genova #30405	
ADFEM		¹/₂-inch PVC slip to female Genova #30305	
ORING	2	¹/₂ - × ⁵/₈-inch O-rings #014	

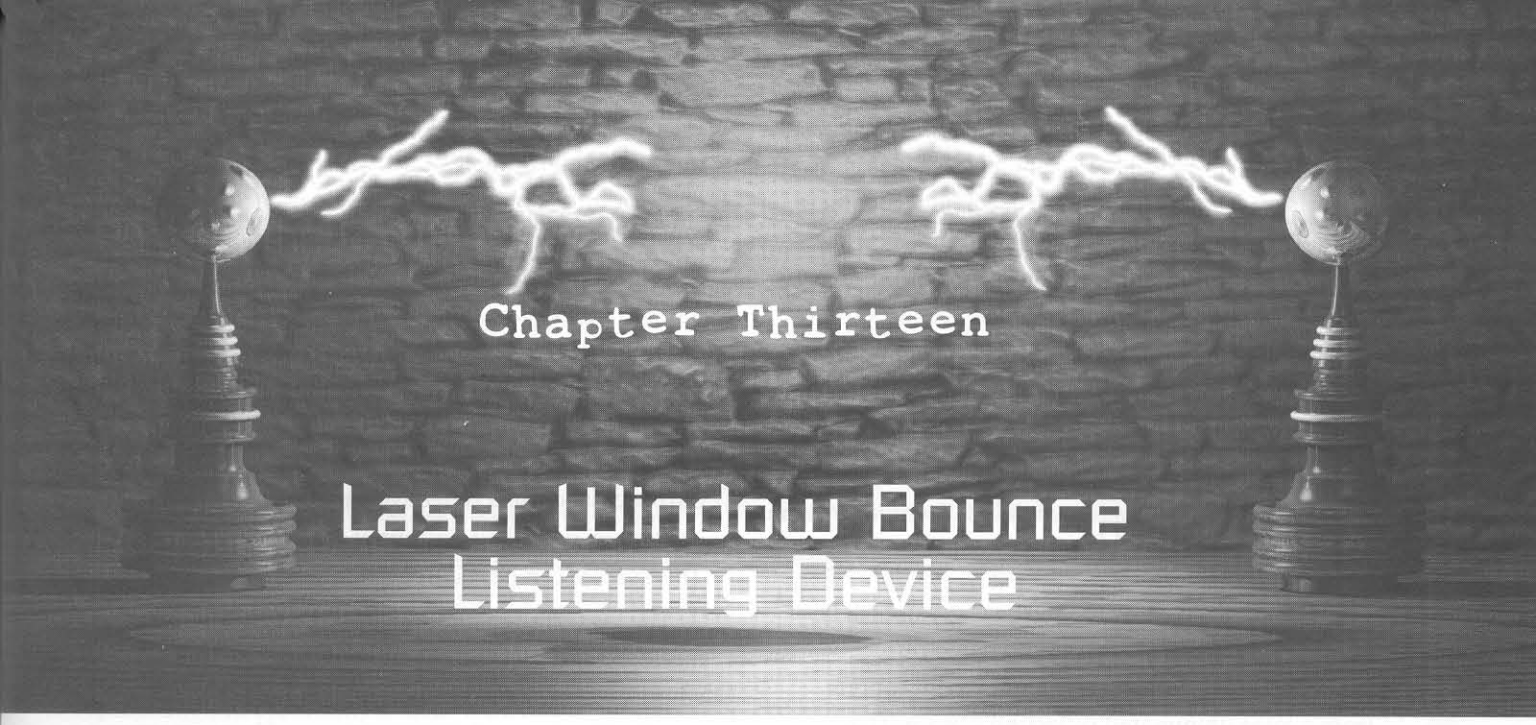

Chapter Thirteen

Laser Window Bounce Listening Device

This chapter offers an excellent demonstration in which a laser illuminates a window or another reflecting surface and is then reflected back to a specialized optical receiver. Information is retrieved from the window laser as a result of vibrations on the reflecting surface. This device (see Figure 13-1) makes many potential tasks possible from a safe distance, such as surveillance or monitoring radioactive pipes in reactors, high-voltage insulators, and other objects in hostile environments.

Complete detail on the construction of the required electronic modules is provided in this chapter, allowing you to set up and demonstrate the concept without a precision machined optical housing lab. This approach is excellent for science projects, and a sample housing is shown for those wanting to build a medium-performance field-usable device lab.

Expect to spend around $100 for the basic parts. Most are readily available, whereas specialized parts are available through Information Unlimited at www.amazing1.com. The parts for the laser transmitter and receiver are listed in Tables 13-1 and 13-2.

Special Note

The builder must realize that using a system for acoustical surveillance could violate Federal Law #90-352 (which states that it is illegal to covertly

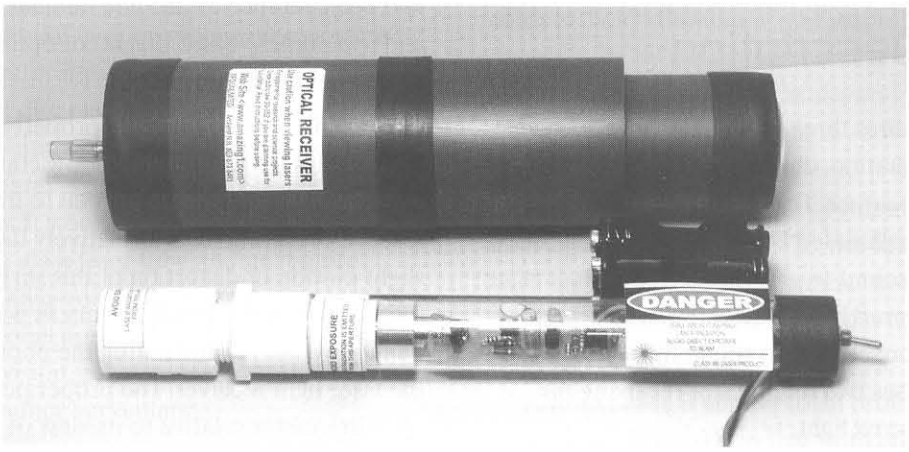

Figure 13-1 *Laser bounce listening system*

listen to a conversation without permission from one of the parties) and may also be in further violation of certain state and local laws. Remember that you need permission from one of the parties being listened to. Our advice on this point is when in doubt, consult your state attorney general as to your bottom-line objective. Using the device for a science fair project, research and development, or individual experimenting usually is not a legal issue.

Basic Theory

This project shows how to interface any optical laser and a sensitive light with a sound detector/receiver to create a system capable of listening to vibrations from a laser-illuminated reflecting surface. This device makes it feasible to listen to mechanical abnormalities of moving machinery, dangerous bursting pipes, volcanic activity, high-voltage insulator failures, and nuclear reactors, all from a safe distance. Monitoring and acoustically listening to a certain premises without ever illegally entering, as would be necessary for purposes of installing a bug or a similar device, now are possible. The principle is sound, but to achieve optimum results it may sometimes be difficult due to the many variables often encountered. These variables strongly depend on the optical and mechanical properties of the reflecting surface, the positioning of the *laser transmitter* relative to the *laser receiver*, and the quality of the target sounds in intensity, wavelength, and background interference.

Project Description

Your system requires three parts: *the laser transmitter* for surface illumination, the *laser receiver*, and the *sound-to-optical surface*. The laser transmitter projects a coherent, collimated beam of light that is reflected off the sound-to-optical surface. This reflected or scattered light is detected by the laser receiver and is converted into sound through a headset. The system uses two methods of receiving the reflected or scattered light.

The *direct reflection* (DR) method is where the laser transmitter and receiver are at two defined locations dictated by Snell's Law, which states that the angle of reflection equals the angle of incidence in all planes. This approach can be cumbersome and is limited due to positioning problems, as both the transmitter and receiver must be optically aligned in both the horizontal and vertical planes. It does provide a maximum range of operation. The DR method provides a high level of signal that may require optically attenuating with polarized filters. A shortcut for demo purposes is to use a reflective surface such as a mirror or window pane, and position it for proper alignment. This surface can be secured using your own ingenuity.

The preferred method is the *scattered reflections* mode, using the signal provided by the light from where the laser hits the surface. This is the spot you usually see at any relative position and is many times weaker than the DR, but it reduces the problem of positioning. The laser transmitter and receiver can be mounted on the same frame but must be aligned so both may view the target point. Obviously, large optical lenses on the receiver and a higher-power laser with a collimator can greatly enhance this method by collecting and providing more light for the signal.

All systems use our laser light receiver, utilizing a "light-biased" phototransistor for operation at low light signal levels. A voice enhancement bandpass filter limits high- and low-frequency sounds, further utilizing performance.

The surface of reflection plays a major role in performance, as well as the actual position of the laser spot. Double- and triple-glazed windows further complicate the situation. We can only suggest patience and perseverance to become familiar with the tricks and sometimes "black magic" of optimizing the performance of this system.

You will notice a peculiar property of the reflected laser light, such as from a window containing interference bands. This is primarily due to the phase interference occurring from a relatively flat surface. A slight motion or distortion of this surface will cause these interference bands to vary in position. This quality we use in modulating the phototransistor of the laser light receiver. The proper position of the phototransistor relative to its view of these bands can

be a very sensitive adjustment. A slight change can cause a tremendous difference in reception.

You will note that it is *not* necessary to view the beam at an exact right angle to the reflection surface. Any reasonably acute angle will produce the interference bands since they are a function of the differential flatness of the reflecting surface. The detector wants to view the interface of these interference bands for optimizing performance. The importance of good, sturdy tripods for the system cannot be overstressed.

An ideal condition for testing is to position both the laser transmitter and the laser receiver so that the reflected beam has a small angle or the reflected path is near that of the incident path. This might be difficult in actual use because you have two planes (azimuth and elevation) to deal with. It is suggested when experimenting to attempt to position the "test" reflecting or vibrating surface to fine-tune these nearly coincidental axes.

Project Construction

The project is divided into three sections consisting of the laser transmitter, the laser receiver, and the completed assembly.

Laser Transmitter

First, a little laser theory. "Laser" is an acronym for *light amplification by stimulated emission of radiation.* Visible lasers are used in many applications, including gun sites, pointers, printers, construction and surveying aids, compact disc players, barcode readers, light shows, and many others. The helium-neon gas laser is one of the most familiar types, with its bright red directional beam. It's been a workhorse for years despite its fragile glass laser tube and its requirements for costly high-voltage power supplies. Infrared diode lasers are used in telemetry, security detection, night vision, robotics, covert target designation, and laser bounce surveillance.

The recently developed laser diodes emit coherent laser light in the visible and invisible spectrum, and do not require a high-voltage power supply. Because they're small, low cost, and fairly rugged, laser diodes are well suited for many new applications.

Before reviewing some basic laser theory, we must first talk about regular light for a minute. When you turn on a lightbulb, light energy is emitted in what is referred to as a spontaneous form. It is an integration of many individual atomic-energy-level changes, each producing its own little "packet" or photon of light energy, with each photon having a particular phase and frequency. In the case of a lightbulb, electrical energy "pumps" the filament electrons to higher than normal atomic energy levels shown in the 13-2a section of Figure 13-2.

Photons are emitted when the electrons return to their initial states and give up that energy in the form of light. The frequency of the light is dependent on the difference between the previously excited and the normal energy-level states: the larger the difference in energy levels, the lower the wavelength of light. The light produced by the process of spontaneous emission is incoherent or random, as shown in the 13-2b section of Figure 13-2.

Unlike spontaneous emission, laser light is highly directional. The radiant energy is released in steps, or in synchronism, resulting in coherent, reinforced light where all the waves are in phase. In other words, all the rays are parallel and at the same wavelength. This requires that the number of excited atoms in the higher energy state exceeds that of the initial or rest state. This condition, referred to as *population inversion*, normally doesn't occur in nature and must be "forced."

Given a population inversion, each energized atom is then "stimulated" to return to its lower energy state by the emission energy or the incident light of an adjacent atom, as shown in 13-2c. The result is coherent lightwaves, as shown in 13-2d. An optical cavity with mirrored ends is usually necessary to provide the right amount of stimulated energy for laser light. As shown in 13-2e, the light is reflected back and forth within its confines until it is a powerful beam that is allowed to exit the cavity as useful laser light energy.

A laser diode is similar to an ordinary *light-emitting diode* (LED) in that both are composed of a semiconductor PN junction, as shown in Figure 13-2f.

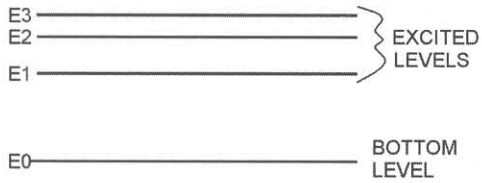

Fig 13-2a Light is the result of radiation produced within an individual atom by an electron being "pumped" to a higher than normal energy level by an external energy source.

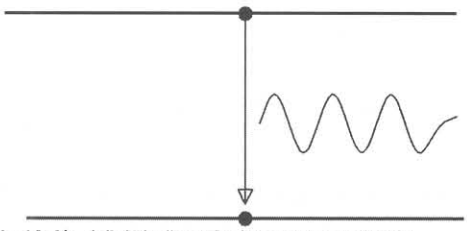

Fig 13-2b A lightbulb emits "spontaneous" light that does not allow the energy packets to reinforce one another in phase or position.

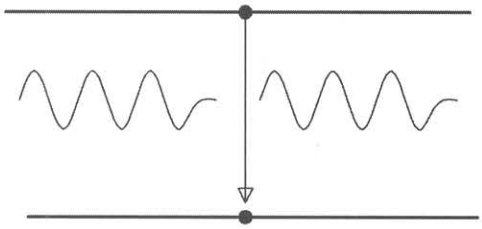

Fig 13-2c When more excited atoms exist in the higher-energy state than in the initial or rest state, each energized atom is "stimulated" to return to its lower-energy state by the emission energy, or incident light of an adjacent atom.

Fig 13-2d A laser beam is the result of an "in lockstep" train of coherent lightwaves.

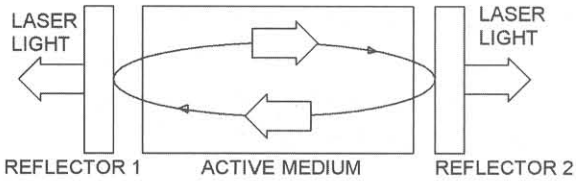

Fig 13-2e An optical cavity having mirrored ends provides the right amount of stimulated energy for laser light. Light is reflected back and forth within its confines until it is a powerful beam that is allowed to exit the cavity as useful laser radiation.

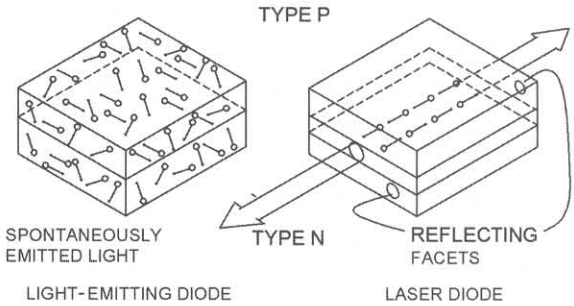

Fig 13-2f A laser diode is similiar to an ordinary LED except that the LED produces spontaneous light, while the laser emits light by stimulated emission where the wavelengths and temporal relation are coherent. A laser diode also contains two reflecting mirrors that form a cavity and permit the emitted light to be highly directional.

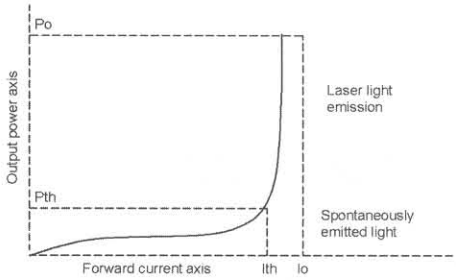

Fig 13-2g A laser diode operates similarly to a forward-biased diode. The vertical axis corresponds to optical output while the horizontal axis is the forward diode current. Io is the operating current, and anything below Ith will produce the effects of an LED.

Figure 13-2 *Laser diode theory*

An electrical potential causes a flow of holes and electrons that, upon recombination, emit light. The LED produces spontaneous light, whereas the laser emits light by stimulated emission. The laser diode also contains two reflecting mirrors that form what's called a Fabry Perot cavity and permit the emitted light to be highly directional, an important laser property. The 13-2g section of Figure 13-2 shows the characteristic diode curve showing the slope sensitivity of the device.

In spite of a laser diode's apparent physical ruggedness, it is very sensitive to temperature

changes, electrical transients, and operating-current parameters. It is totally unforgiving of errors, so our circuitry and construction techniques must take that into consideration. The curve shows a steep slope where laser operation takes place and the input-current "window" on the horizontal axis is very narrow; consequently, the driver circuit must operate within those limits or you'll end up with one of the world's most expensive medium-powered LEDs.

It is possible in certain cases to cool your laser diode down to a low temperature and obtain more output. Caution is advised for two reasons: You may damage the diode's built-in optics and you may exceed the laser classification rating.

The laser in this circuit uses a diode that can produce up to 10 milliwatts of optical power at a wavelength of 880 nanometers. The output level must be kept to fewer than 5 milliwatts to comply with safety issues when using this application.

Circuit

The schematic of the handheld laser is shown in Figure 13-3. The laser diode (LD1) is actually an assembly that contains a laser-emitting section (LD) and a photodiode section (PD). The photodiode enables the circuit to monitor the laser diode's output and produce the feedback necessary to control the circuit and protect the diode from excess drive current.

The laser diode is connected in series with current-limiting resistors R3 and R4 and the collector of transistor Q2. The current through Q2 is controlled by transistor Q1. The zener diode (Z1) maintains the

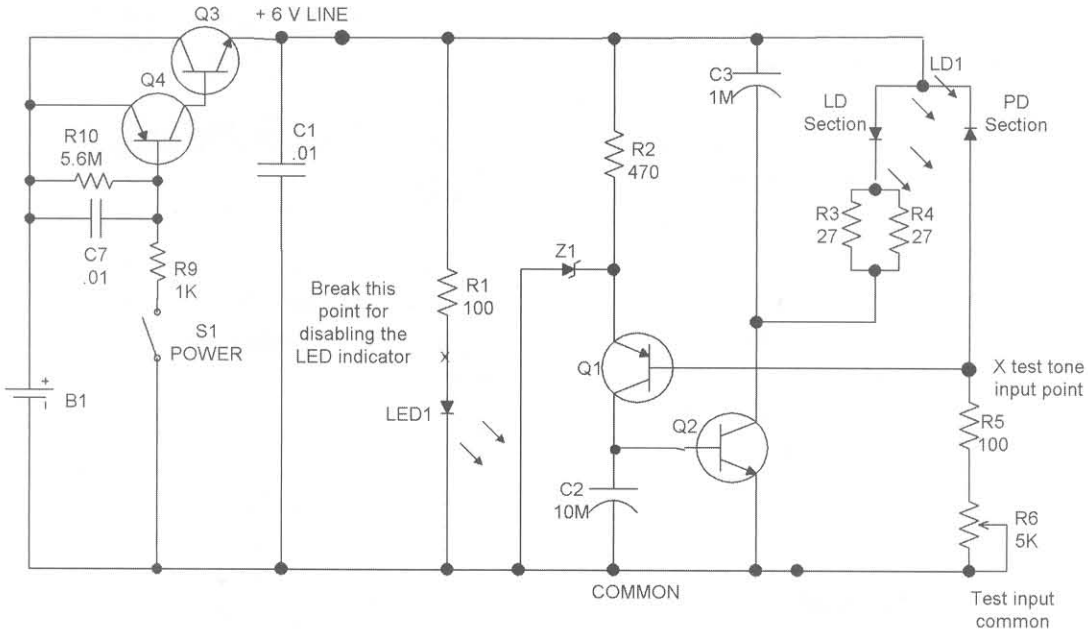

Note 1 Laser output power may be controlled to some extent by physical pressure to contact probes connected in place of S1 switch.

Note 2 Do not adjust R6 to limits as the resistance jump could damage the laser diode.

Note 3 Power to the module is shown using a 6-volt battery pack of 4 AA cells. You may use any clean source of 6 volts, providing it can deliver a current of 150 ma without a voltage drop. Use caution when setting the power on weak batteries as when new ones are replaced the laser may be overpowered.

Note 4 The test tone oscillator and voice modulator are connected to the points shown across R5,6. A separate battery of 9 volts is recommended for power to these external circuits. Connecting wires to these circuits are twisted and routed out through rear cap CAP1.

Figure 13-3 *Laser schematic*

voltage across Q1, and resistor R2 limits the zener current. The collector current of Q1, also the base current of Q2, is controlled by its own base, which is connected across resistors R5 and R6. Current through the photo diode PD develops a voltage across these resistors that is proportional to the optical output energy and constitutes the feedback required for output stabilization. Increased output causes Q1 to conduct less base current to Q2, resulting in less laser diode current. Potentiometer R6 presets the value of the quiescent current. Capacitors C2 and C3 limit transients at the base of Q2, whereas capacitor C1 limits them from the 6-volt line. The system turns on when transistor Q3 starts to conduct and eventually reaches saturation.

The leads to switch S1 may be touch-control electrodes consisting of small pieces of metallic tape that, when bridged by finger contact, cause a small amount of base current to flow into transistor Q4. The collector current of Q4 flows into the base of Q3, causing it to saturate and supply current to the laser diode circuitry. The base current to Q4 is limited by resistors R9 where R10 and capacitor C7 reduce the circuit's sensitivity to stray AC or static fields that could cause premature activation. This scheme would only be used in certain applications and may be eliminated by a simple switch.

The laser is powered by four external AA batteries or any convenient source of 6 volts. S1 controls the power to the circuit and may be a key switch, push button, toggle, or slider switch rated at .5 amps. LED1 is intended for emission indication, and resistor R1 controls the diode current.

Construction of the Electronics Assembly Board

To construct the board, follow these steps:

1. Identify all the parts and pieces and verify them with the bill of materials.
2. Insert the components, starting from one end of the circuit board, and follow the locations shown in Figure 13-4. If you are using a perforated vector board, it is a good idea to trial-fit the larger parts before actually starting to solder. Always avoid bare wire bridges, messy solder joints, and potential solder shorts. A *printed circuit board* (PCB) is available for this project.
3. Check for cold or loose solder joints. Pay attention to the polarity of the capacitors with polarity signs and all the semiconductors.
4. Carefully solder the bus wire extension pieces to the laser socket as shown in Figure 13-5. The socket must abut to the top side of the assembly board when soldered in place. It is suggested that the socket be secured in place using *room temperature vulcanizing* (RTV) silicon rubber when the proper assembly is verified.
5. Solder two 6-inch switch leads and a CL1 battery clip to the assembly board. You may also connect leads to the optional test-tone circuit if building the laser for window bounce experiments. Note the dual connections to pins 1 and 3. These are the anode of the diode laser and the cathode of the monitor diode.

Assembly Is Ready for Pretest

Do not install the laser diode in the circuit at this time. The circuit must be checked and calibrated beforehand. To test the construction, follow these steps:

1. Make sure that the batteries are at full capacity before you proceed with the following. Check on the lowest meter range; any current flowing into the circuit above a fraction of a micro-amp with the system off will cause premature discharging of the batteries. Check for defective components, flux paths, excessive moisture, and so on if any current reading is detected in this step.
2. Set up a meter in series with one of the battery leads to monitor the system current in the range of 10 to 250 milliamperes.
3. Temporarily unsolder the LED from R1. Short the switch leads together and measure a current of approximately 15 milliamperes. Bridge R1 to the LED and note the current going to 40 milliamperes and the LED lighting. Still

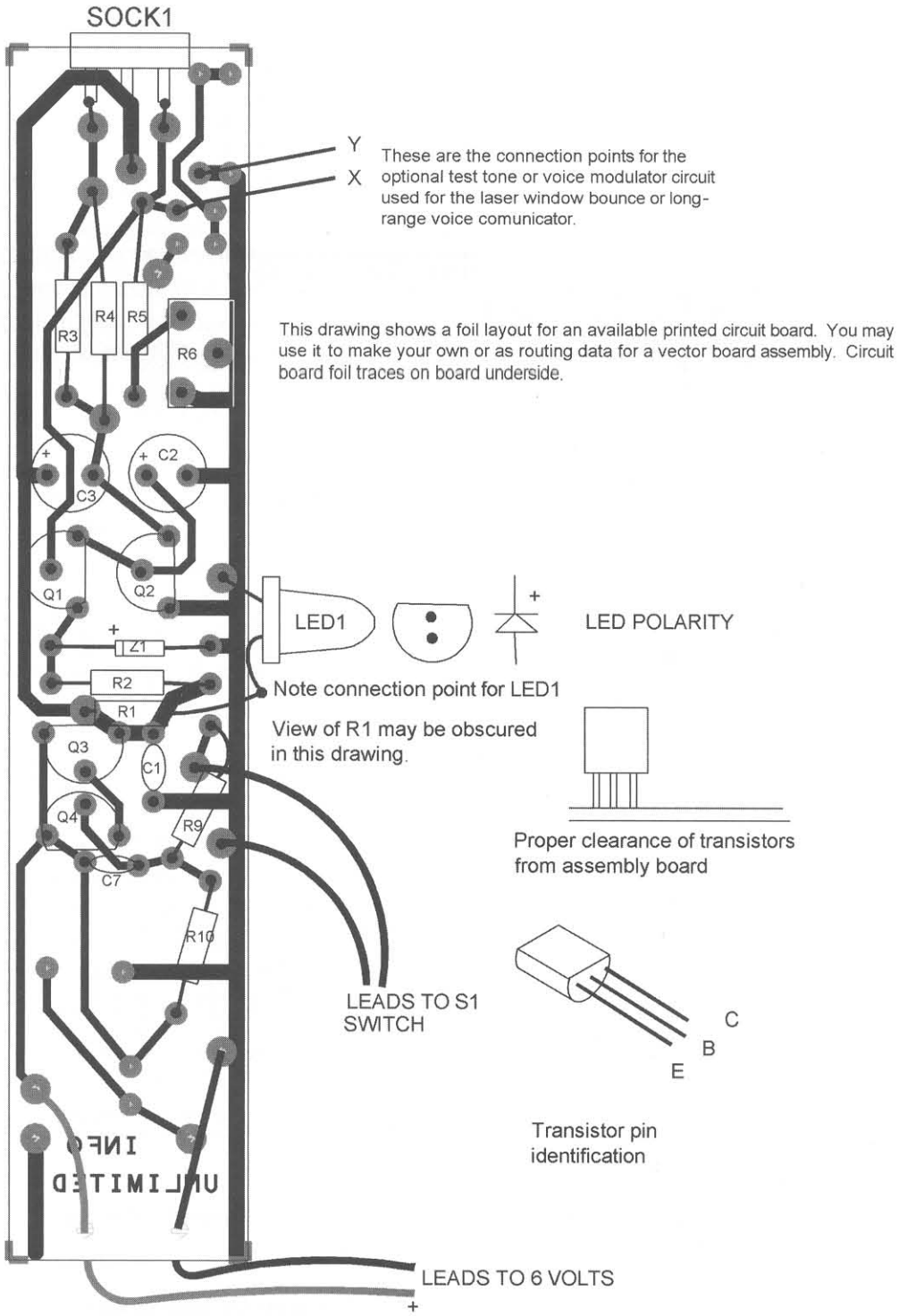

Figure 13-4 *Assembly circuit board*

leave it disconnected. This verifies the LED1 lighting necessary for emission indication.

4. Obtain a 1N4001 diode and connect it in place of the LD laser diode section of LD1. You can connect the anode to the 6-volt line and the cathode end to the junction of the R3 four-socket end. Rotate R6 to full *counterclockwise* (CCW).

5. Turn the system on and note the input current going to 250 milliamperes. Add a 10K resistor in place of the PD section of LD1 and note

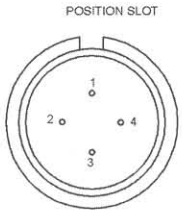

REAR VIEW
OF LASER DIODE

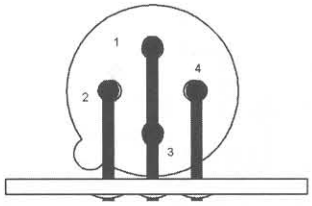

Rear view of laser socket shown wired to printed circuit board using extended pieces of bus wire leads.
Note pin 1 and 3 are wired together.

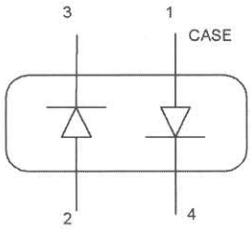

Pin 1 laser anode and case
Pin 2 monitor diode anode
Pin 3 monitor diode cathode
Pin 4 laser cathode

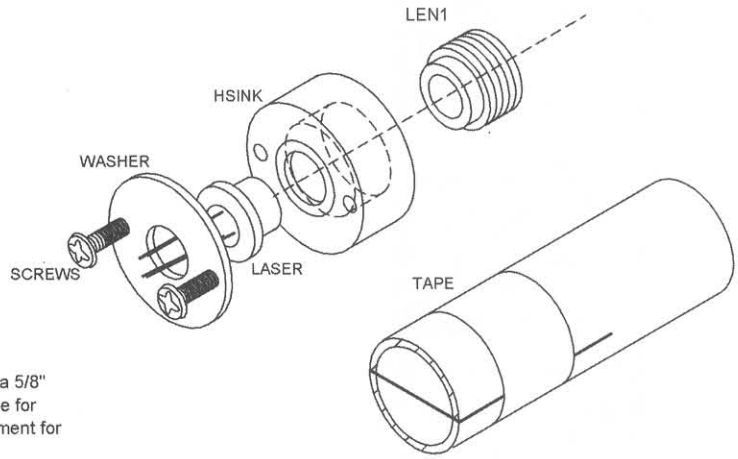

LEN1 adjuster tool
Tape a piece of #20 wire over the end of a 5/8" hollow tube. This will allow beam passage for observation as you rotate the lens adjustment for optimum collimation.

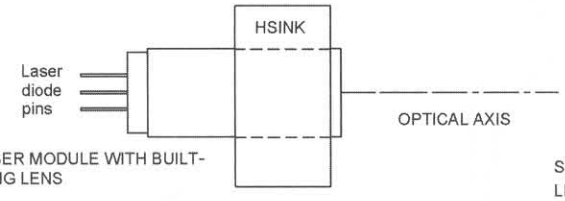

LASMOD1 LASER MODULE WITH BUILT-IN COLLIMATING LENS

This view shows our optional integrated laser diode collimator combination module. This is a great advantage over the alternate method shown using the adjustable threaded lens assembly as the adjustment is fixed and optimized.
You will need to drill out the heatsink just slightly over the diameter of the module so it fits in snugly with minimal movement. You may then apply a few light spots of epoxy or something similar to secure it in place as shown. Use caution not to get the lens dirty!

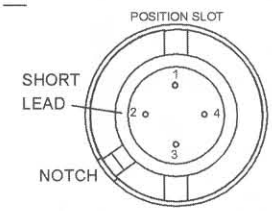

Rear view of laser module as mated to laser socket

Figure 13-5 *Laser socket wiring for a separate diode and a diode with an integral collimator*

the input current dropping to around 15 milliamperes.

6. Rotate R6 through its range and note the input current varying between 15 and 250 milliamperes. This is *not* a linear control.

   Note that an integrated laser diode with optics (LASMOD1) is available as shown in Figure 13-5, making optical alignment simpler.

7. Assemble the laser diode to the heat sink, as shown in Figure 13-5, and very carefully install the laser diode into the socket. Observe the position slot shown. Verify that R6 is fully CCW. Apply power and carefully adjust the input current to 100 milliamperes. The diode should be producing around 2 milliwatts of output and is detectable using infrared-sensitive paper or a night vision device. Many video cameras will respond to this laser wavelength.

You can operate the diode up to 125 milliamperes and obtain almost 10 milliwatts of output. This will exceed the class 3a rating and the system must be labeled accordingly. Safety glasses must be used at this power level.

Once you set the desired power level, you can reconnect LED1, noting that it draws 20 milliamperes of additional current. The optional test-tone or voice modulator can be connected and will be clearly heard when used with the optical detector by just picking up the scatter. Note these optional circuits can operate up to 12 VDC.

The output of this laser is also an excellent invisible illumination source for starlight night vision scopes, allowing long-range viewing in total darkness.

At this point you should have a fully functional board-level laser system capable of producing up to 10 milliwatts of optical output power at 820 nanometers. The laser must now be housed or contained in a suitable enclosure dependent on its application.

Special Note

Unfortunately, the output of this system is in the infrared range and is invisible to the naked eye as the radiation is at 820 nanometers and appears as a dull, red glow. The actual viewing of the laser energy will require a night vision device. Many video cameras will pick up this radiation.

Lumitek supplies infrared sensor paper that will glow, indicating the beam profile. It is available on their web site at lumintek.com. Look for Q11 sensor paper or sticks.

Final Enclosure and Optics

Insert the small lens (LEN1) with the small, plastic-threaded retainer into the heat sink, as shown in Figure 13-5. If your heat sink is threaded, simply screw it in until it bottoms out. If it is not threaded, you must shim up the assembly with some thin tape until it fits into the heat sink reasonably securely. Adjustment is much simpler using the threaded heat sink as you simply screw it into the right position to obtain the smallest far-field beam profile as indicated by the detection equipment used. The unthreaded version will require trial-and-error positioning of the lens to achieve the correct position. This can be very cumbersome and requires patience and perseverance to find the optimum position. The objective is to obtain the minimum beam divergence at far field (several meters).

Fabrication

Fabricate the enclosure tube (EN1) from a 1- × 1/16 - × 7-inch polycarbonate tube, as shown in Figure 13-6. We use clear tube to enhance the science project approach, showing the innards.

Create the lens tube (LTUB1) from a .835- OD × .6- × 2-inch schedule 40 *polyvinyl chloride* (PVC) tube. Note these are the nominal dimensions for 1/2-inch PVC tubing. Insert a negative concave lens (LEN2) into the LTUB1.

Make sure the lens is clean without fingerprints. Use a clean eraser on a pencil to position it. This should fit smoothly into this tube. PVC tubing can vary in dimension and you may have to shim or actually bore out the tube for proper fitting of this part.

Final Assembly

Finally, assemble the attaching lens (LEN3) to the fitting (ADJFEMALE) with glue as shown. Press the lens tube completely into the mating fitting (ADJMALE). The collimator assembly now fits into the enclosure tube. You may have to shim the LTUB1 section to obtain a secure fit.

The laser module fits inside the enclosure tube and is secured by a small nylon screw (SW1) mating to the clearance hole on the board. S1 is mounted to the rear cap (CAP1). A clearance hole for power adjust trimpot R6 must be drilled in the enclosure tube.

Now the ultimate trick is to get the two-lens separation distance approximately to 2 inches or where the best collimation occurs at the midrange of the threaded adjustment of the ADJMALE and FEMALE fittings. Once this is verified you can secure it using a forgiving adhesive such as RTV silicon rubber.

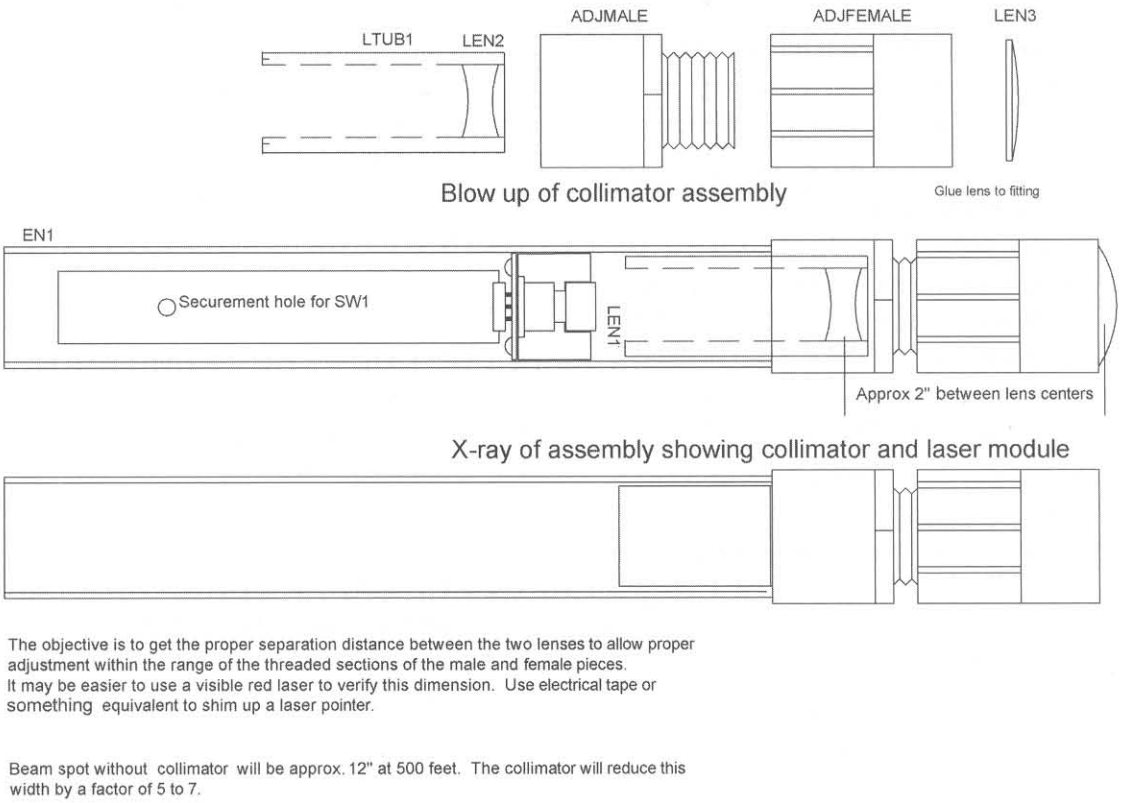

Figure 13-6 *Housing and collimator*

Experiment by checking the basic lens position in the heat sink and by resetting the collimation adjustment, noting the objective of obtaining minimal beam divergence at far field. You may also require an expanded beam for night viewing. The final assembly should resemble that shown in Figure 13-7.

Test-Tone Module Construction

To assemble the test-tone module, follow these steps:

1. Identify all parts and pieces and verify them with the bill of materials.
2. Insert the components, starting from one end of the perforated circuit board, and follow the locations shown later in Figure 13-14, using the individual holes as guides. The board is cut 1 × 1.5 × .1.

   Use the leads of the actual components as the connection runs. These are indicated by the dashed lines. It is a good idea to trial-fit the larger parts before actually starting to solder.

   Always avoid bare wire bridges, sloppy solder joints, and potential solder shorts. Check for cold or loose solder joints.

   Pay attention to the polarity of the capacitors with polarity signs and all the semiconductors.
3. Cut, strip, and tin the wire leads for connecting to the diode laser module points X and Y. These should be #24 leads to fit into the hole pads of the laser module.
4. Connect a scope across output X and Y and connect a 9-volt battery to the CL1 snap clip. Note the circuit draws 10 milliamperes when activated.
5. Turn on S1 and note a 1,000 to 1,500 Hz test tone of 2 volts peak.
6. Connect the output leads to the laser board, as shown at points X and Y. Preset the laser diode current to 100 milliamperes as directed. Aim the laser at a light-colored surface. You

CAUTION: Viewing of laser beam or direct reflections require the use of protective eyewear available through KENTEK in N.H. tel# 1 603 435 7201

Note that collimator will expand the beam at near field but greatly reduce it at far field. LEN1 basic lens in heastsink may require beam adjustment over time using a special tool.

Instructions:

1. Note switch is off and insert batteries.
2. Mount or secure laser assembly and point to target.
3. Power up by turning on S1. Note emission LED coming on.
4. Adjust optics for desired effects.

Note that the collimator's adjustable piece is shown as the male part. This is a user preference. We prefer the female section with the flutes.

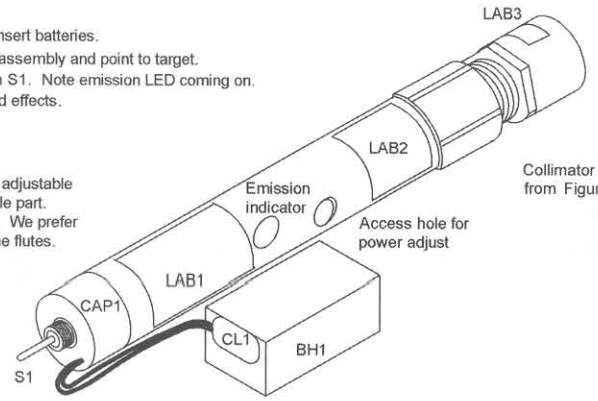

Collimator assembly from Figure 13-5

LAB1

LAB2

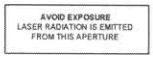

LAB3

Compliance tests

1. Verify correct labels as shown.
2. Key switch with nonremoval in off position.
3. Delay after key switch activation.
4. Beam indicator LED indicates after delay.
5. Aperture cap included.

Figure 13-7 *Final assembly view and labels*

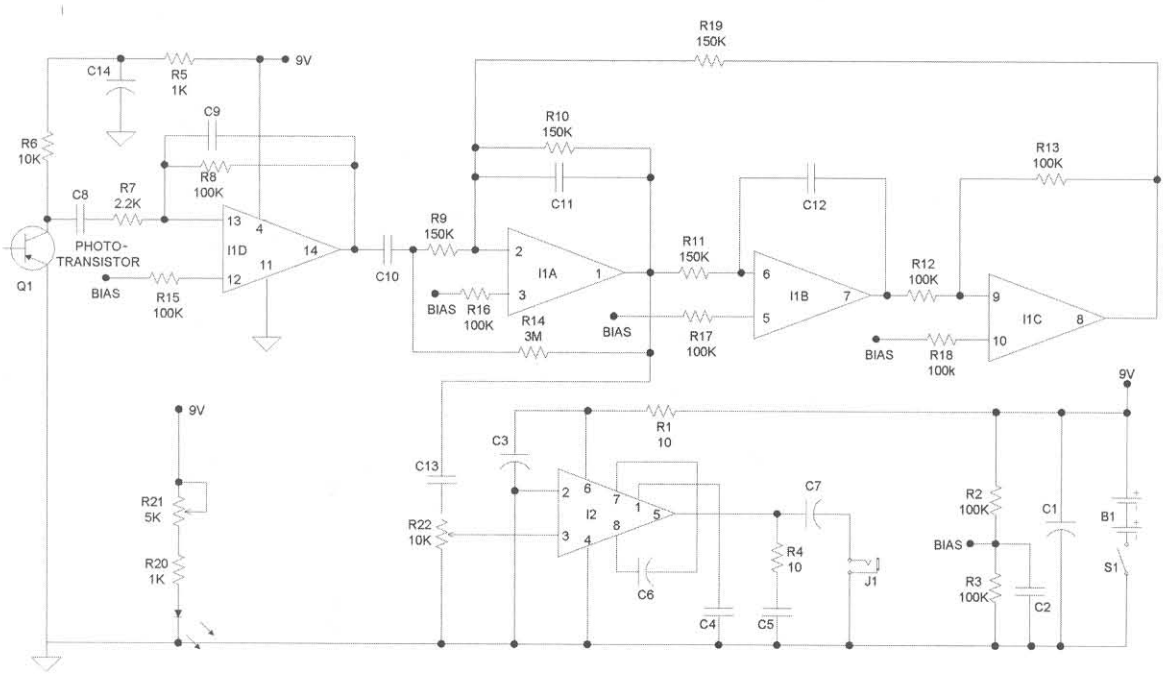

Figure 13-8 *Optional receiver schematic*

should clearly and loudly hear the test-tone signal when pointing the laser receiver in the direction of the scattered reflections.

Laser Receiver

This section shows how to construct the electro-optical receiver capable of detecting and reproducing the modulated information placed on optical beams of laser light energy. It also enables you to listen to any varying, periodic source of light, such as calculator displays, TV sets, normal lighting, the light produced from a fire, lightning, infrared sources, and of course intentionally modulated beams for voice or other analog communications. It functions as an excellent detector for this laser listening project by detecting the vibrations on a window or other similar surface when illuminated by laser light. These signals are clearly reproduced via a speaker or headset.

The device is housed in a round PVC enclosure that is easily mounted to a camera tripod when used for sensitive positioning applications. The gain control power switch and headphone jacks are mounted on the rear of the enclosure. A pistol grip configuration is suggested for pointing and listening to random sources.

Circuit Theory

Figure 13-8 shows the output from a sensitive phototransistor (Q1) amplified by a low noise amplifier (I1D) to a gain of 50. The output is pass-band filtered by voice filter I1ABC at 3-decibel rolloff points between 500 and 2,000 Hz. This provides maximum performance at most voice frequencies. The filtered output is further amplified to a usable level by IC2 for headsets or a small speaker. The J1 jack is connected to allow individual volume controls when using high-performance headsets (HS30). System gain is controlled via a pot and switch combination (R22/S1). S1 controls battery (B1) power to the circuit. A network consisting of resistors (R2 and R3) provides the necessary midpoint biasing for I1ABCD.

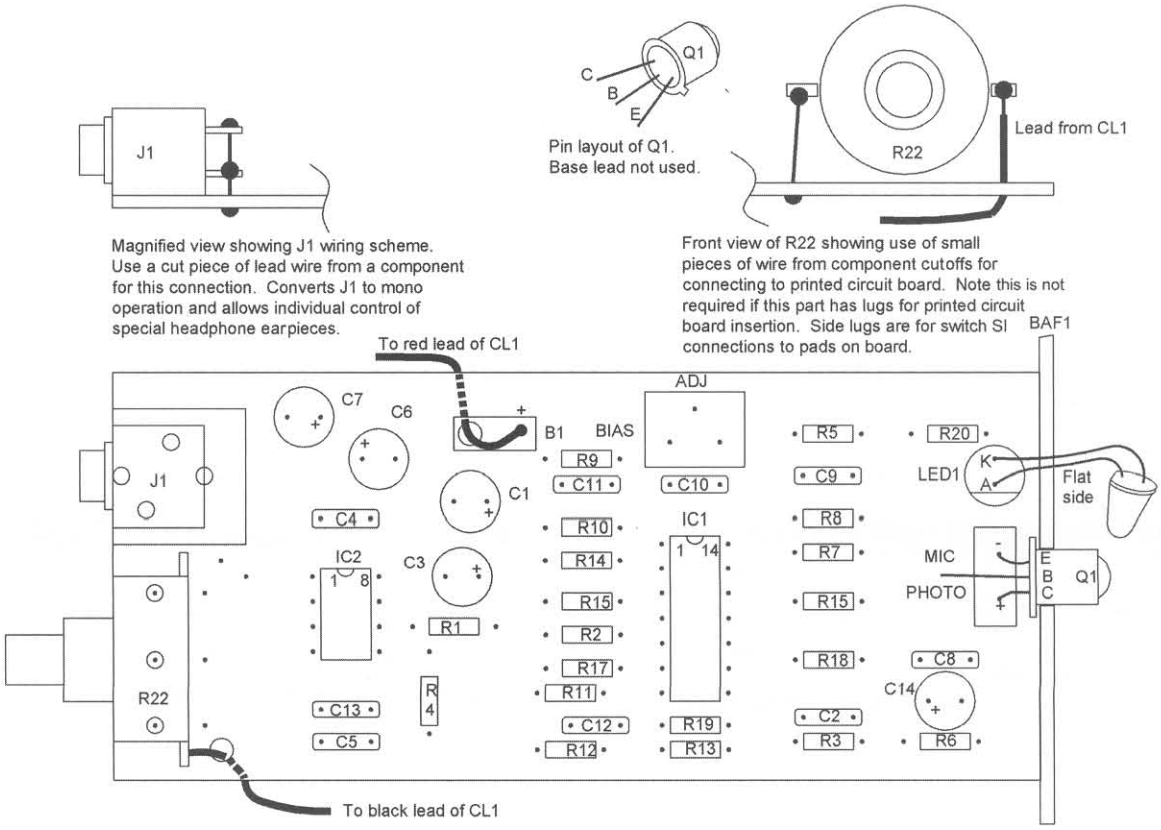

Figure 13-9 *Optical receiver assembly board*

A special circuit consisting of LED1 provides a light bias to phototransistor Q1. This is especially useful in a low light signal condition when viewing the scattered reflection mode of operation. Resistor biasing Q1 creates bothersome noise, limiting the full performance of the system. Trimpot R21 controls the emission output of LED1 and must be carefully adjusted in final testing for optimum effect.

Construction Steps

To build the laser receiver, follow these steps:

1. Lay out and identify all the parts and pieces with the parts list—note the color identification on the resistors. Capacitors are easily identified by markings with alternative value codes in parentheses. Assembly is shown on a PCB with a foil layout, as shown in this data. Construction may be on a vector board if layout is followed.
2. Insert the resistors as shown in Figure 13-9. Start with R1 and progress until all the resistors are mounted. Solder and clip off the excess leads. It is important to avoid solder bridges, shorts, and cold solder joints. Figure 13-10 shows the foil traces on the underside of the PCB for those wanting to etch their own.
3. Repeat with capacitors, observing the polarity of C1, C3, C6, C7, and C14.
4. Insert I1 and I2; note the position marks.
5. Insert Q1 phototransistor. Note the polarity as shown in Figure 13-7.
6. Insert B21, R22, and J1. Solder in place.
7. Connect the CL1 battery clip. Note the color-coded leads and dedicated strain relief holes in the PCB.
8. Fabricate the baffle plate (BAF1), as shown in Figure 13-11. This piece is used to view the position of the reflected laser or focused light as gathered by the extender lens. It is necessary to position this light onto the lens of the phototransistor. The baffle should be small enough to slide into the enclosure tube without obstruction. Drill two small holes for the leads of LED1 and center the hole for the phototransistor. Insert the LED1 leads, observing the polarity through the holes, and solder in place. Note the leads must be as long as possible. Position LED1 off to the side relative to the Q1 phototransistor so the emission signal can obliquely be seen yet does not block out any signal along the optical axis. Position it as shown in Figure 13-12 and secure it to the PCB with an RTV adhesive or an equivalent.
9. Create SPCR1 from a 1½ - × 2-inch piece of plastic, cardboard, or any suitable resource. This piece is sandwiched between the battery and the bottom of the PC board for insulating

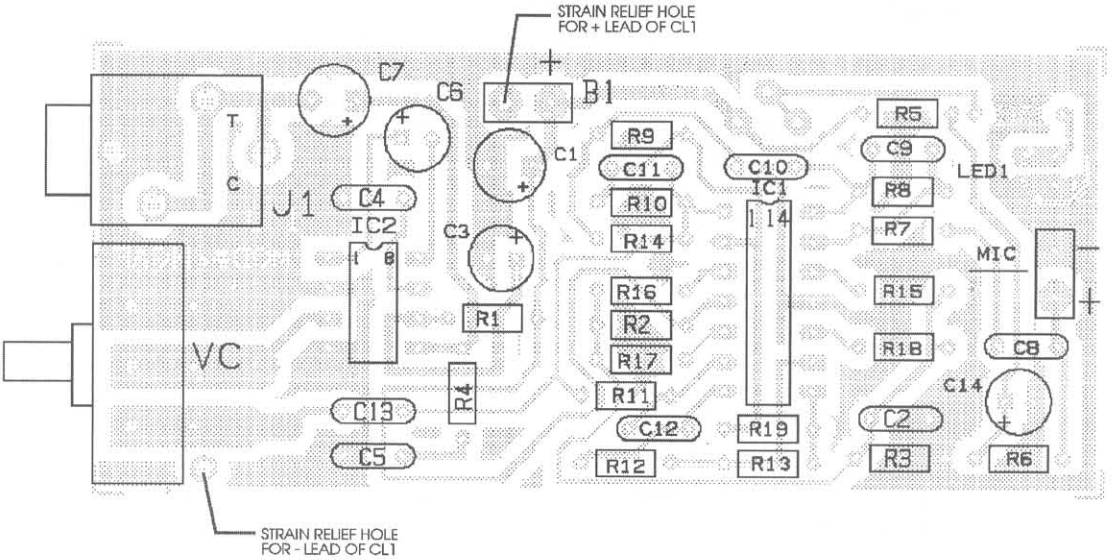

Figure 13-10 *Assembly board layout foil traces*

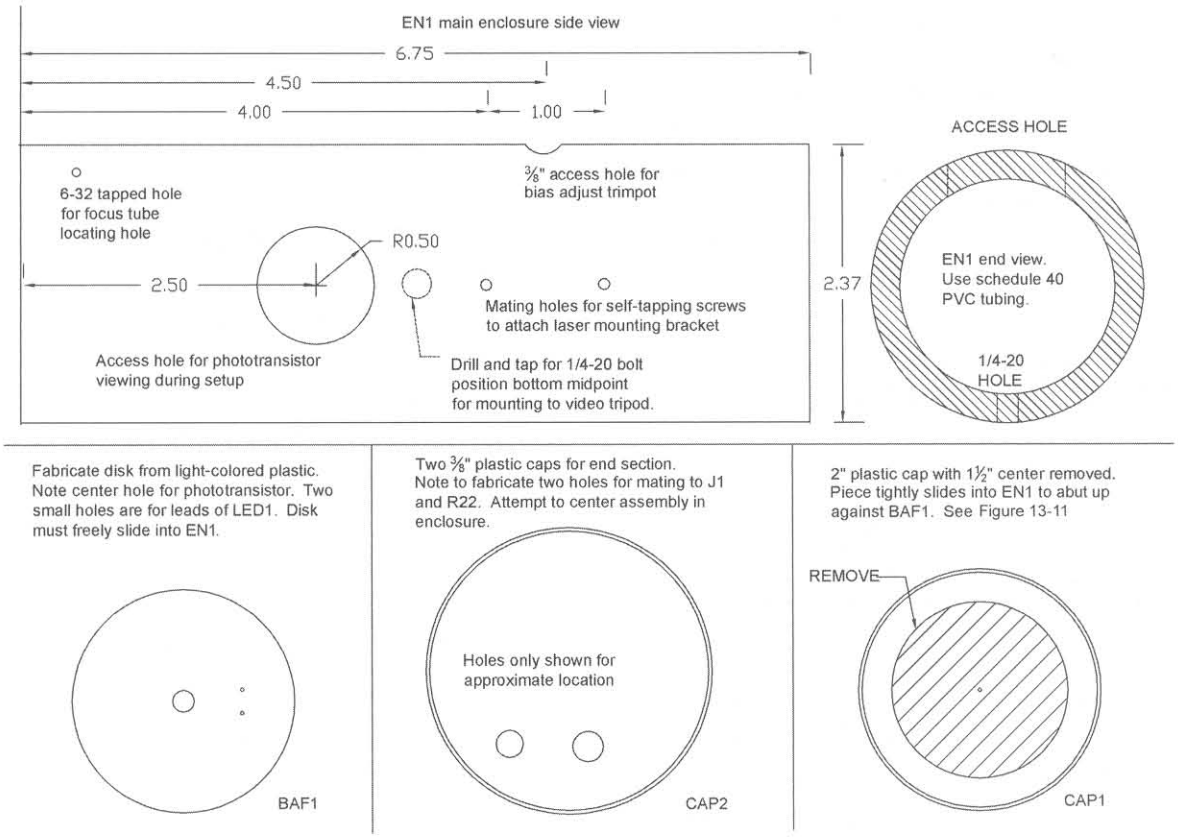

Figure 13-11 *Parts fabrication sketches*

purposes, as shown in Figure 13-12. The battery can simply be held in place with suitable elastic or an O-ring as shown. Create the collimator as shown in Figure 13-13.

10. Check all the wiring and the integrity of the solder points. Check for solder bridges and shorts on the assembly circuit board.

Unit Is Ready for Pretest

To test the unit out, follow these steps:

1. Connect a headset to J1 and clip in a 9-volt battery or connect to a suitable DC bench supply. Preset R21 FCCW. Click on R22/S1 and advance until a hum is heard in the headphones. Back off to a comfortable listening level. Note the hum is from the 60 Hz lighting.
2. Obtain a calculator with a clocked display and point unit to pick up the display emissions. Note a loud tone indicating signal pickup.
3. Verify the filter operation (which is not necessary unless circuit problems are encountered) by inserting a variable sine wave signal through an attenuator network across Q1. Preset the signal generator frequency to 1 kHz and turn up the level until a 1-volt peak-to-peak signal is measured via a scope connected across J1. Slowly vary the signal frequency and note the output response. The signal should start to roll off at 300 Hz with 3 kHz peaking in the center of these extremes. The battery current should read approximately 10 to 20 milliamperes with the headphones connected, detecting a normal signal.

Final Assembly

The final steps are as follows:

1. Fabricate EN1, CAP1, and CAP2, as shown in Figure 13-11.

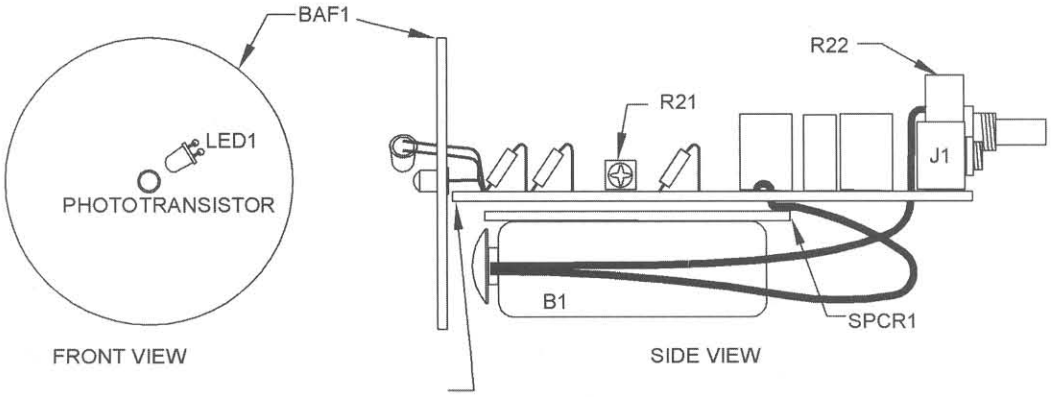

Place a dab of RTV or equivalent to secure BAF1 to printed circuit board. Verify position before adhesive sets.

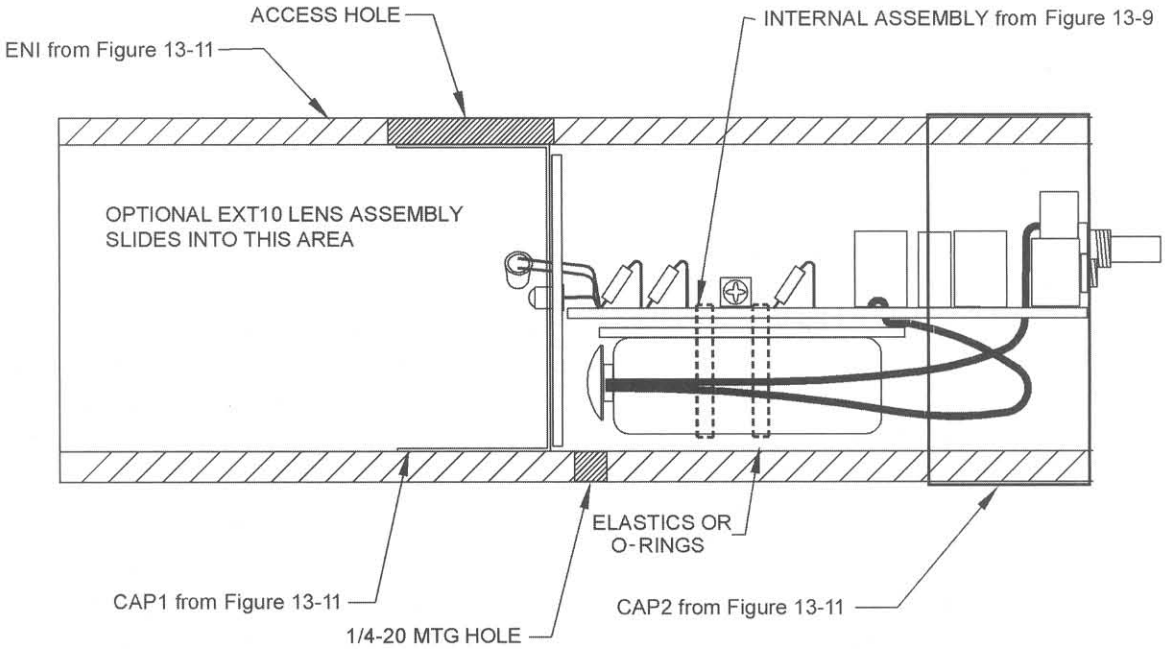

Figure 13-12 *Internal view of innards*

2. Assemble as shown in Figure 13-12. Note the positioning of CAP1. This keeps BAF1 in alignment.

Laser Receiver Is Ready for Final Testing

To conduct the final test, follow these steps;

1. Attach the unit to a video tripod via the 1/4-20 threaded hole.

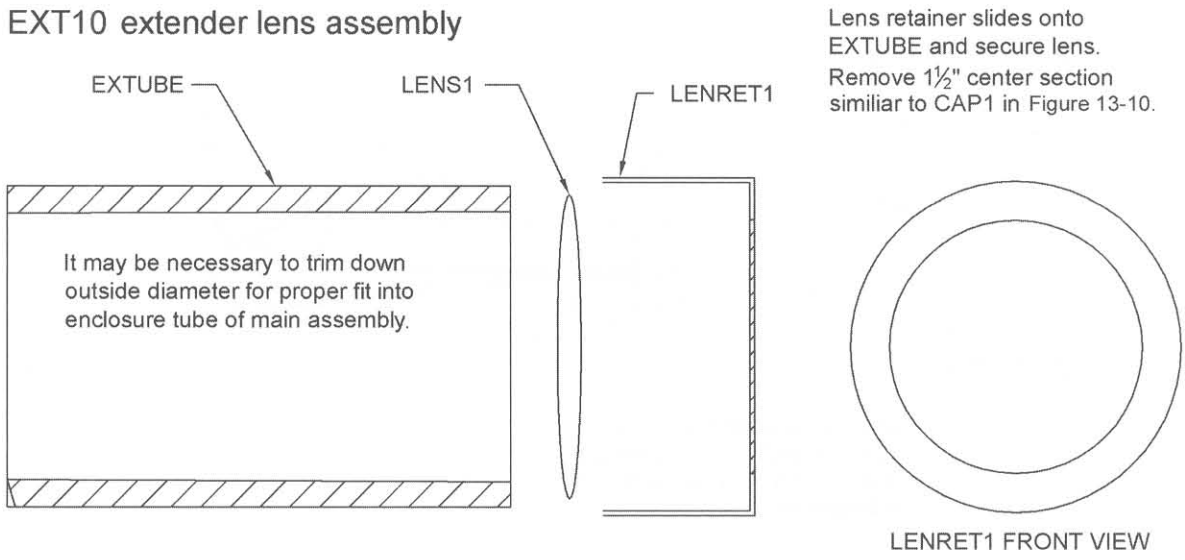

Figure 13-13 *Extender lens assembly*

2. Obtain a source of signal such as the clocked display of a hand calculator or a similar device. Note the liquid crystal will not work. Point the unit in the general direction of the display at a distance of 10 to 15 feet. Do not use the EXT10 lens at this time.
3. Allow for total darkness and attempt to obtain a signal by panning the tripod. Adjust the bias light control R21 for the best signal to background noise. Note the difference in low-level signal detection in total darkness *without* the bias light.
4. Experiment with the EXT10 lens at longer distances and appreciate the detection sensitivity of this device. Note that alignment may be difficult due to a narrow field of view.

System Application, Safety, and Legality

These fully working modules may be packaged by the builder into a compatible housing that will allow micro-mechanical adjustments. You can use a visible red laser module for short-range demonstration or sighting and alignment purposes. The illuminating laser transmitter must be precisely in alignment with the optical axis of the laser receiver and be mechanically fine-tuned via micrometer head screws to receive and process the scattered reflections. The laser transmitter described in this project uses the test-tone circuit that greatly simplifies rough optical alignment to a far-field surface. Output of the laser transmitter may be preset to 2 to 4 milliwatts for class 3a or at 8 to 10 milliwatts for class 3b. A collimator is included that greatly extends the potential range of the system. Optional use of the telephoto lens retrofitted to the optical receiver will greatly enhance distance and performance. The prebuilt modules may be set on tripods to verify performance integrity or for demonstration purposes before being enclosed.

The lasers used can be class 3a to class 3b visible or invisible. Protective eyewear is positively required in case you look into the direct reflection. Using the scattered reflection mode is less dangerous.

Get permission of those parties you are listening to! Experimental demonstration of this system should not pose a legal problem, nor should it be used for applications not involving oral interception.

Setup Using Direct Reflection

The direct reflection method requires the following steps:

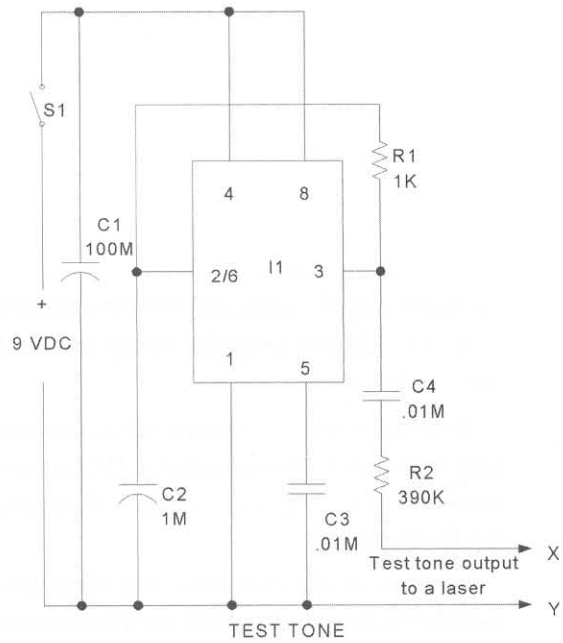

Bill of Materials

R1	1K 1/4 W (BR-BLK-RED)
R2	(1) 390K 1/4 W (OR-WH-YEL)
C1	(1) 100 M / 25V vert electro capacitor
C2	(1) 1 M / 25V vert electro capacitor
C3,4	(2) .01 M / 50V disc (103)
I1	(1) 555 DIP timer IC
S2	(1) Slider SPDT switch
CL1	(1) Battery snap clip
WR1	(30") #24 vinyl hookup wire
PB1	(1) 1 X 1.5" .1 grid perf board

Assembly board layout

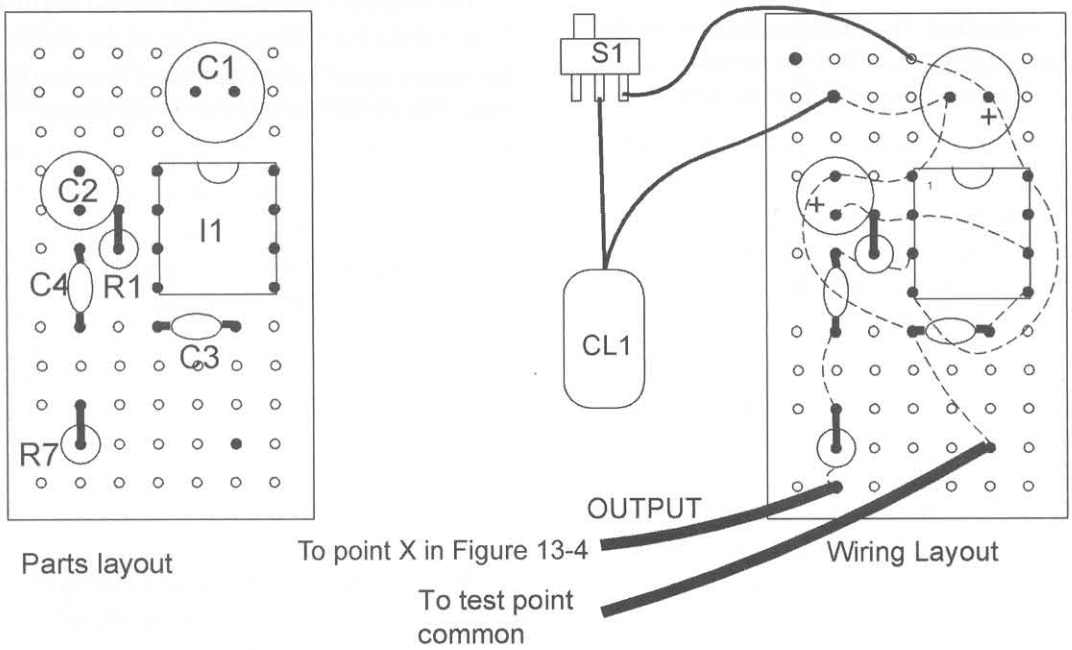

Figure 13-14 *Test-tone circuit*

1. Obtain two video camera tripods and secure the laser transmitter to one and the laser receiver to the other. Use duct tape, bungee cord, electrical tape, and your own ingenuity.
2. Remove the rear cover of the laser receiver and install a 9-volt battery into the clip.
3. Determine the target window. Select an easy one that is nearly "normal" and on the same

level where you are located. Place a loud radio on the opposite side of the window.

4. If your laser is a pointer or gun sight, it will be necessary to apply pressure to the trigger switch. This can be accomplished using a paper clip or clothespin to clamp the switch.

5. Position the laser transmitter tripod so the angle is as close as possible to the normal, reflected surface. This will allow minimal separation between the transmitter and receiver.

   Note that this is not necessary for proper performance but is easier until you are familiar with overall system alignment.

6. Locate the position of the reflected "laser spot" resulting from the direct reflection of the laser beam as it bounces back from the window. This will depend a lot on the relative position as in step 5, since the angle of reflection will equal the angle of incidence (Snell's Law).

7. Carefully adjust the positioning of the laser receiver so that it intercepts the spot from the direct reflection. The final position where the reflected signal is incident on the phototransistor as viewed through the view hole.

8. If you are using the extender focal lens, adjust it so that the reflected signal is about the size of a penny as viewed on the phototransistor and the white baffled disc. This lens is not necessary for ranges below 50 feet.

9. Turn the amplifier on via the control and adjust it to a comfortable audio level. Optimum results may require "tweaking" to an actual signal. A rough adjustment requires detecting a weak optical signal source in total darkness and adjusting for the best performance/noise figure. Note that the unit will not work correctly if not properly set.

10. Carefully adjust the position of the laser receiver for maximum clarity and volume. Note that only a slight adjustment can make a world of difference in performance. Experiment with the lens assembly when using ranges over 50 feet. Note the laser beam spot profile on the surface of the white baffle disc. You will see interference bands or fringes consisting of light and dark sections.

Note that clarity, volume, and general performance depend on many factors. The size of the window; the setting of the pane; and even the vibration picked up from window air conditioners, motors, pumps, oil burners, and so on can seriously degrade a usable signal.

Serious experimenters may want to interface the system with an audio equalizer to filter and enhance the usable signal. Again, experiment and experience is the best solution to quickly set up and obtain optimum performance.

A setup using the scattered reflection utilizes the light detected off the optical axis. The signal will be weaker over a given distance and will require more careful alignment.

You now have a choice of using the individual modules mounted on tripods for a demonstration of the concept and experiment. You may also choose to retrofit the modules within a sturdy housing similar to what is shown in the following data, providing a usable, field-worthy system of medium performance.

The objective is to allow an optical alignment between the laser impact point on the window and the return signal being coincident (coming back on same axis) to the optical axis of the receiver. Once this initial alignment is accomplished, it is only necessary to "tweak" the micro adjust screws that secure the laser optimizing the signal from any reasonable distance. It is assumed some signal is always detectable once initially aligned.

A test-tone signal modulates the laser at 1 to 2 kHz. This scheme provides easy access to aligning the optical axis. You now carefully search for the test tone, which is clearly detected with the optical receiver. Night vision equipment also can be an aid in initial alignment.

Mounting the laser in our test prototype involved floating it inside a stable housing, allowing several degrees of both vertical and horizontal adjustment for final "tweaking" using vernier adjust screws. The lens used on our prototype was from a low-cost video camera and screwed into a mating adapter plate firmly attached to the housing.

Obviously, a certain amount of mechanical ingenuity will be required in finalizing the system. The suggested assembly of this integrated system is shown in Figures 13-15, 13-16, and 13-17.

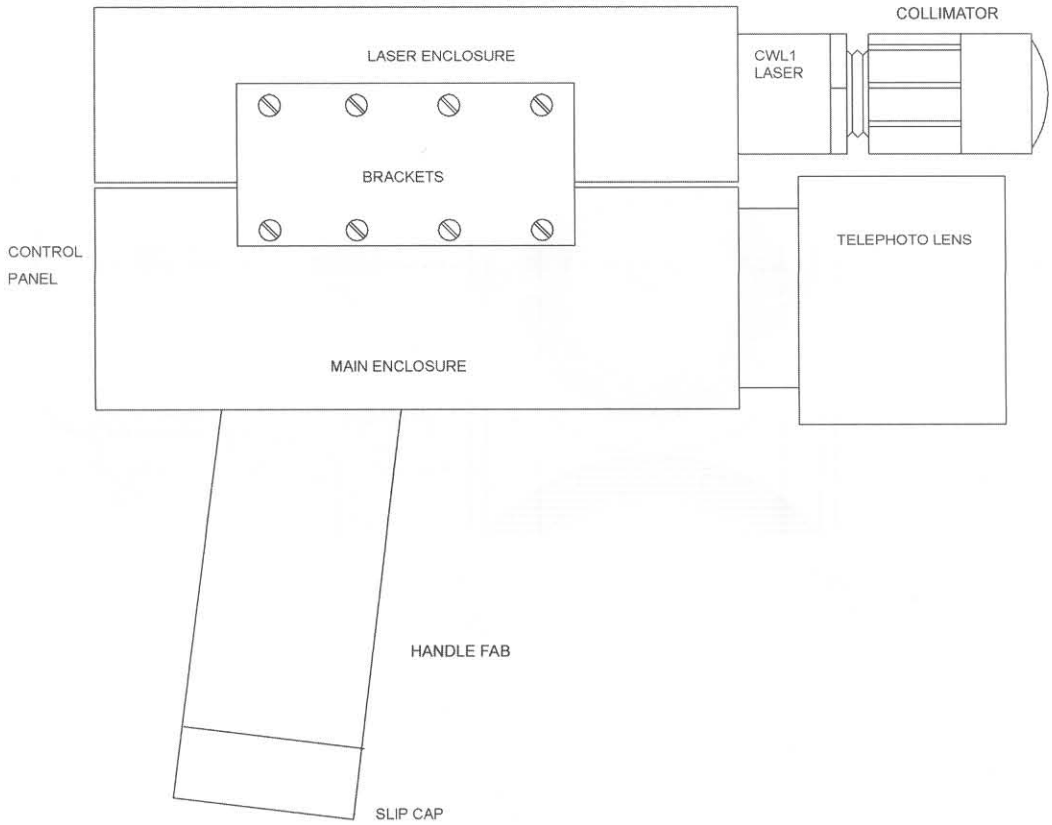

Figure 13-15 *Suggested system assembly—side view*

Exact dimensions are not given, as this might limit you due to the access of materials and the use of your own ingenuity. We show our approach to be used only as a guide that may be closely or partially followed.

Assembly of a Field-Worthy, Integrated System

The laser receiver innards are placed inside a sturdy housing and secured in place. An adapter fitting is secured to the exit end, allowing the fitting of your choice of telephoto lens. The laser transmitter is housed with a collimator and is secured to the laser receiver by two aluminum brackets.

This assembly requires good accuracy for maintaining close optical alignment, as any adjustment is via two micro-head adjusting screws for azimuth and elevation adjustments for fine-tuning.

You will note that the laser module is supported at its midsection by two rubber O-rings that provide a flexing motion both fore and aft. Compression springs are placed directly opposite the contact points of the micro-head adjusting screws. These springs load the position of the laser module beyond the optical alignment point and now require contact pressure of the micro head adjusting screws to adjust back into alignment against the spring pressure. The front points provide pivoting for elevation adjustments, whereas the rear points provide for the azimuth adjust.

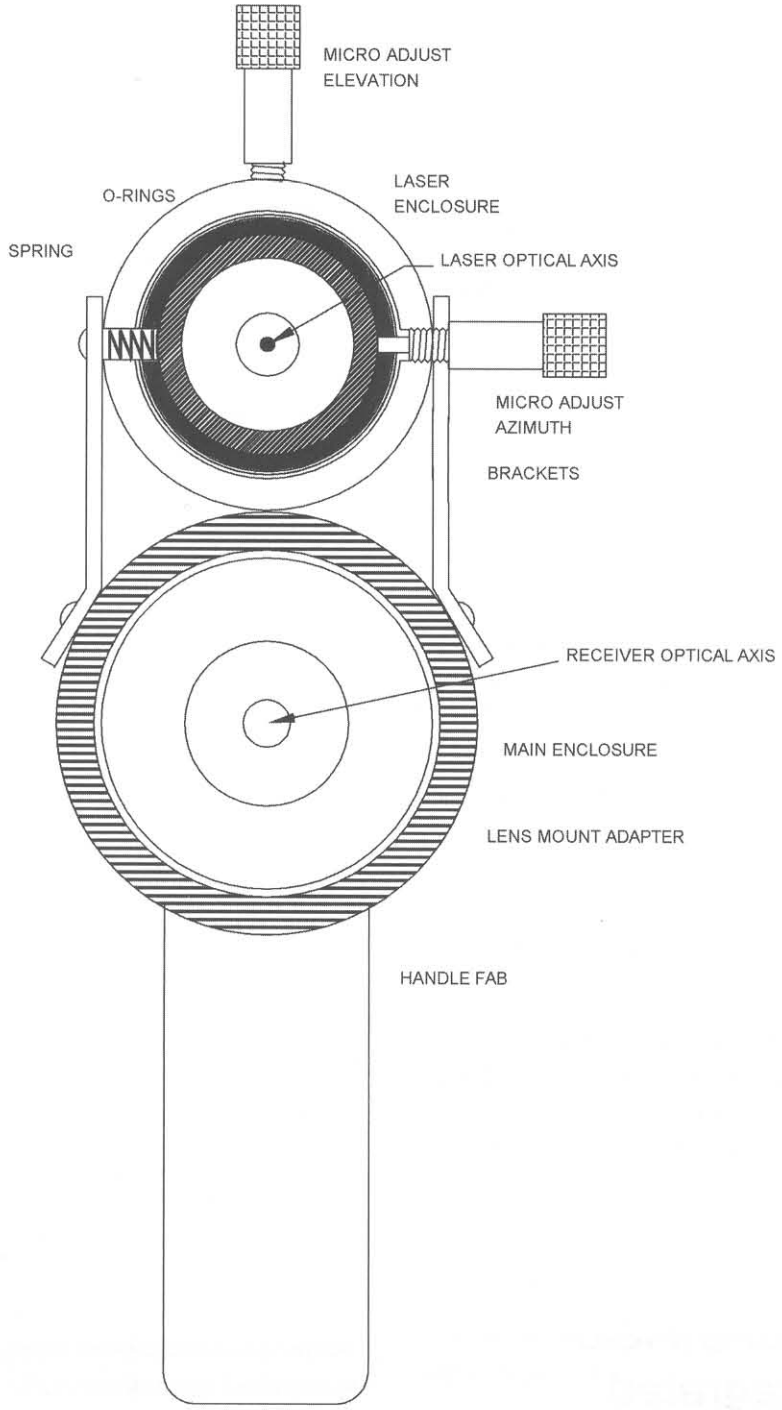

Figure 13-16 *Suggested system assembly—front view minus optics*

Parts and Fabrication Description

You must supply the following parts for final enclosure and assembly. Note that the recommended housing is aluminum tubing with at least a 1/4-inch wall thickness. Plastic PVC may be used for easier fabricating at the cost of mechanical stability.

- **Main enclosure** 2 3/8 OD × 1/4-inch wall aluminum tubing. Fabricate a hole for the press fit of the handle section. Note 1/4–20 holes for mounting to tripods.

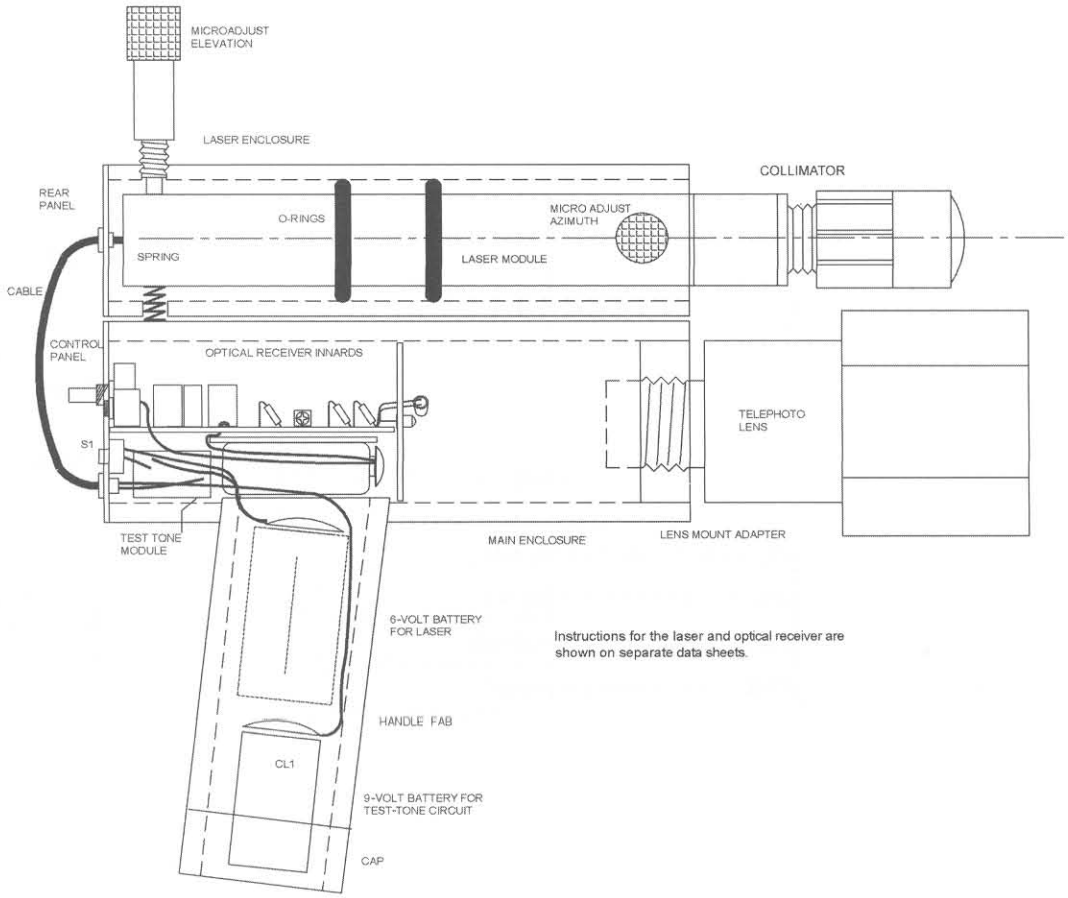

Figure 13-17 *Suggested system assembly—x-ray view of side*

- **Laser enclosure** 1¾ OD × ¼ -inch wall aluminum tubing. Fabricate as shown for spring-retaining cutouts and holes for micro-adjusting verniers.
- **Handle** 1⅝-inch aluminum tubing for handle and battery enclosure.
- **Brackets** Fabricate two brackets for securing the laser and main enclosure together. It is important that this step be as precise as possible, as the two-enclosure axis must be parallel.
- **Control panel** You may use the front panel of the laser receiver module. Fabricate additional holes for the test-tone switch and feed-through bushing for the cable going to the laser section.
- **Rear panel** For the rear section of the laser enclosure with a hole for cable bushing.
- **Lens mount adapter** Fabricate for a ½-inch-thick piece of PVC to fit into the *innerdiameter* (ID) of the main enclosure tube. Cut out the center to mate with the telephoto lens of choice.
- **O-rings** For sleeving over the laser module and sandwiching with the laser enclosure tube. The position along the length may be adjusted for best movement using vernier adjusters. Experiment for best results.
- **Springs** Compression springs for maintaining a positive pressure against micro-adjusting vernier screws through their adjusting movement.
- **Micro-head adjusting screws** For precise elevation and azimuth positioning.
- **Cable** A multiconductor for 6-volt battery power and test-tone input to the laser module.
- **Switches** For power and test-tone control to the laser module.
- **6-volt battery** Uses a four AA battery pack for powering the laser module and is controlled by one of the switches.

- **9-volt battery** For powering the test-tone circuit.
- **Telephoto lens** An optional choice will greatly determine the potential range and performance of the system. Mates to the mount adapter.
- **Cap** Slip-on plastic cap for the retaining end of the handle.
- **Cushioned headset with individual volume controls**

Table 13-1 Laser receiver parts list

Ref. #	Qty.	Description	DB#
R1, 4	2	10-ohm, 1/4-watt resistor (brn-blk-blk)	
R2, 3, 8, 12, 13, 15, 16, 17, 18	9	100K, 1/4-watt resistor (brn-blk-yel)	
R5, 20	2	1K, 1/4-watt resistor (brn-blk-red)	
R6		10K, 1/4-watt resistor (brn-blk-or)	
R7		2.2K, 1/4-watt resistor (red-red-red)	
R9, 10, 11, 19	4	150K, 1/4-watt resistor (br-grn-yel)	
R14	1	3 meg, 1/4-watt resistor (or-blk-grn)	
R21		5K trimpot resistor	
R22		10K pot and switch	
C1, 7	2	100 mfd/25 vertical electrolytic capacitor	
C2, 4, 5	3	.1 mfd, 25-volt disc capacitor (104)	
C3, 14	2	47 mfd/25-volt vertical. electrolytic capacitor	
C8, 10, 13	3	01/25-volt disc capacitor (103)	
C9		470 pfd, 25-volt disc capacitor (471)	
C11, 12	2	.001 mfd, 25-volt disc capacitor (102)	
IC1		LM074 or 324 14-pin DIP note	
IC2		LM386 B8 pin DIP	
J1		Stereo jack for P1	
CL1		9-volt battery clip	
Q1		L14G3 phototransistor	
LED1		IR light-emitter diode	
PC1		HGAPC PCB	
CAP1		2 3/8-inch plastic cap	
CAP2		2-inch plastic cap	
EN1		6 3/4-inch × 2 3/8-inch sked 40 PVC tube	
HS3		High-quality headsets	
EXTUBE		3- × 2-inch schedule 40 PVC (see Figure 13-13)	
LEN1		45- × 89-millimeter convex lens	
LENRET1		2-inch plastic cap #A2 (see Figure 13-13)	

Table 13-2 Laser transmitter parts list

Ref. #	Qty	Description	DB #
R1, 5	2	100-ohm, 1/4-watt (br-blk-br) resistor	
R2		470-ohm, 1/4-watt (yel-pur-br) resistor	
R3, 4	2	27-ohm, 1/4 watt (red-pur-blk) resistor	
R6		5,000-ohm trimpot resistor 502	
R9	1	1K, 1/4-watt (br-blk-red) resistor	
R10		5.6 m, 1/4-watt (gr-bl-gr) resistor	
C1, 7	2	.01 mfd/50-volt disc capacitor	
C2		10 mfd/25-volt vertical electrolytic capacitor	
C3	1	1 mfd/25-volt vertical electrolytic capacitor	
Z1		3-volt zener diode 1N5221B	
Q1, 4	2	PN2907 PNP TO92 transistor	
Q2, 3	2	PN2222 NPN TO92 transistor	
LED1		Any high-brightness LED	
SOCK1		Four-pin transistor socket	
BH1		Four AA cell holder	
CL1		Battery clip	
S1		Small toggle switch; key or push button may be used	
BUSS24		#24 bus wire for extension leads of SOCK1	
WR6		12-inch #22 vinyl hookup wire	
PC1		CWL1 PCB	PCCWL1
LASMOD1		Laser diode with integrated optics	LASMOD
LD1		10-milliwatt, 880 nm laser diode; see text	IRLD1
HS1NK		Special fabricated aluminum heatsink, lens holder, and hardware	HSINK
LEN1		Basic lens in threaded fitting for 9-millimeter diode	LENS13
LEN2		15- × -25-millimeter double concave DCV negative glass lens	LE15-25
LEN3		24- × 75-millimeter double convex DCX glass lens	LE2475
EN1		1- × 1/16- wall × 7-inch length of clear polycarbonate tubing	
LTUB1		.835- × .6- × 2-inch length of schedule 40 1/2 inches PVC tubing	
ADJMALE		1/2-inch sked 40 female slip to male thread GENOVA 30405	
ADJFEMALE		1/2-inch sked 40 female slip to female thread GENOVA 30305	
CAP1		1-inch plastic cap	
SW1		6-32 × 1/2-inch nylon screw	
LABEL CLASSIIIBSET		Labels cert, class, and aperture	

Part Three

Chapter Fourteen

Twelve-Inch-Spark Tesla Coil

Use Caution Around Sensitive Electronic Equipment

This fascinating visual and audible display project never fails to attract attention as fiery bolts of lightning jump into the open air. The project, when properly built and tuned, will generate some 12-inch spark discharges (see Figure 14-1). Operation is done from a standard 3-wire 115 *volts-alternating current* (VAC) outlet and requires caution in assembling and operation. The transformer secondary output is 23 milliamps and is not considered lethal but can provide a nasty shock and burn that the victim will remember. The system output, while quite spectacular, can be contacted by firmly holding a metal object and bringing it near the output terminal. You will experience a very mild shock.

Expect to spend around $100 for this very rewarding project. Assembly is more mechanical than electrical and will require basic skills in the use of hand tools. The winding of the secondary coil may require building a simple jig and fixture to allow turning for applying the fine wire windings.

Tesla Coil

A Tesla coil is one of the most fascinating electrical display devices to see in operation; a large unit can produce a continuous spark exceeding the height of the coil. Electric discharges that simulate lightning bolts will produce cracks of noise louder than a rifle shot. These sparks, as well as being very impressive and attention getting, can also can produce bizarre effects in most common materials. For example, wood may explode into splinters or be made to glow with an eerie, reddish light from within. Insulating materials seem to be useless against this energy. Lights energize without wires, and sparks and corona in the form of St. Elmo's fire occur within proximity of the device. High-energy electric and magnetic fields render electronic equipment useless. Phenomena not normally associated with standard high-voltage electricity become apparent in the form of many weird and bizarre effects.

Figure 14-1 *Twelve-inch spark Tesla coil*

Brief Theory

A Tesla coil is a high-frequency resonant transformer. It differs from a conventional transformer in that the voltage and current relationships between the primary winding and secondary winding are independent of the winding turn's ratios. A working apparatus basically consists of a secondary (LS1) and a primary (LP1) coil. It is obvious that the primary circuit is capacitance dominant, and tuning the primary circuit via taps along the primary coil alters the frequency accordingly. However, this relative fine-tuning of the primary circuit to the secondary is mandatory for proper operation. Force driving the secondary coil will produce hot spots and an interwinding breakdown along with other negative results.

Introduction to Your Easy-to-Build Tesla Coil

The circuit schematic in Figure 14-2 shows a step-up transformer producing 6,500 volts at 23 milliamps from the 115 AC line. This voltage-current combination can produce a painful shock. The builder must use adequate caution, just as being around any live 115 VAC circuit. When in doubt, consult someone experienced with this equipment. Safety rules should be followed at all times.

The device also produces ozone; therefore, use it in a well-ventilated area. Do not use it for prolonged periods of time. Thirty seconds at any one time is ample for any demonstration. Avoid eye exposure to the spark gap and use ample protection, such as

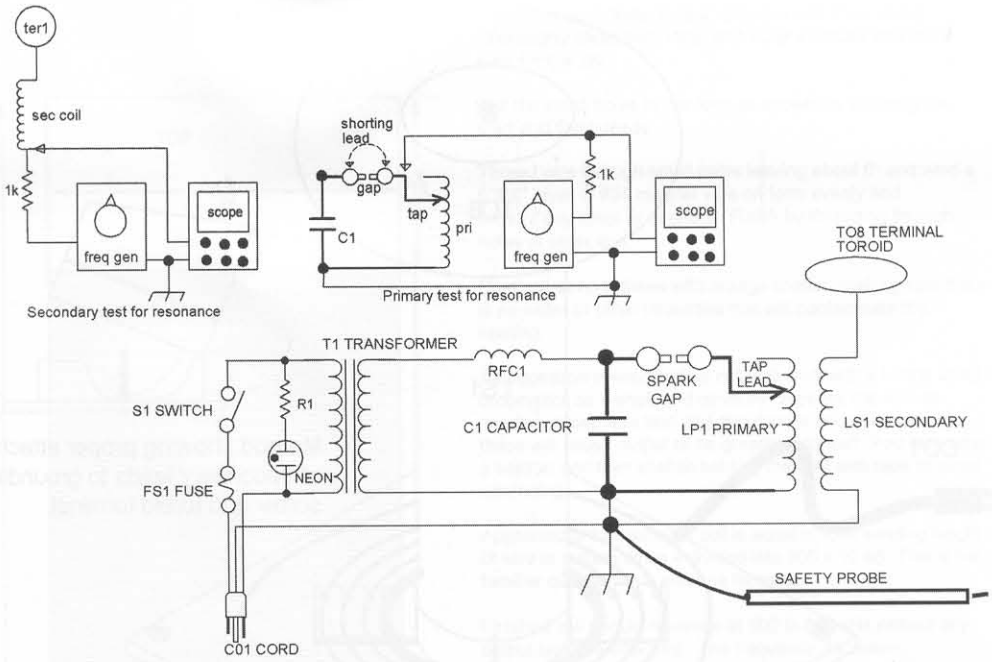

1. Disconnect ground end of secondary coil and insert a 1k resistor in series with a variable frequency generator. Connect a scope across resistor and determine resonant frequency by noting a sharp dip in signal amplitude. Record this reading. Note that output terminal must be solidly connected to the coil lead and must be away from conductive objects to obtain an accurate reading. Approximate frequency of this coil is around 500 kHz.

2. Short out spark gap with a short clip lead and disconnect lead from the RF choke. Connect scope and generator combination to tap of primary coil. Start at maximum turns and note a sharp rise in the voltage wave form at some frequency. Record and repeat at various tap points.

Note that the direction of routing the tap lead around the secondary coil will cause considerable difference in performance. It is suggested to experiment with these settings. You will note that a static tuning setting will vary in actual operation due to capacitance gained by the output spark. Primary resonant frequency should be preset to a slightly lower frequency than that of step 1.

Figure 14-2 *Circuit schematic*

safety glasses or shielding, as dangerous ultraviolet light is emitted.

The unit, when constructed, can develop voltages up to and in excess of 250,000 volts. (This is the DC value of voltage that would be necessary to produce the arc lengths obtainable with this Tesla coil model.) It will cause a gas discharge lamp, such as a regular household fluorescent lamp, to glow up to a distance of several feet from the unit. The high-voltage output coil terminal can actually be touched with a piece of metal held securely in the demonstrator's hand, creating quite a conversation piece.

Circuit Theory

The device, as shown in Figure 14-3, consists of a secondary coil, LS1, containing approximately 500 turns wound on a *polyvinyl chloride* (PVC) form 13 inches long. This coil possesses an inherent resonant frequency determined by its inductance and capacity, usually around 500 kHz. A primary circuit consisting of a drive coil (LP1) and a capacitor (C1) are impulse driven by a spark gap (SGAP1). This primary circuit should also have a resonant frequency equal to that of the secondary coil for maximum performance. It is possible to "force drive" the secondary coil with fewer results. The output voltage of the device is dependent on the ratio of Q between these two coils.

The primary coil has an adjustable tap that allows for fine-tuning. It should be noted that it does not take much in the way of added capacitance to the secondary to alter its resonance point. Even a change in the output terminal will require a readjustment of the tap.

Transformer T1 supplies the necessary high voltage. It is rated at 6,500 VAC at 20 milliamperes. (A larger-capacity transformer will produce more output but may stress the other circuit components.) This voltage charges the primary resonating "tank" capacitor (C1) to a voltage where it fires the spark gap

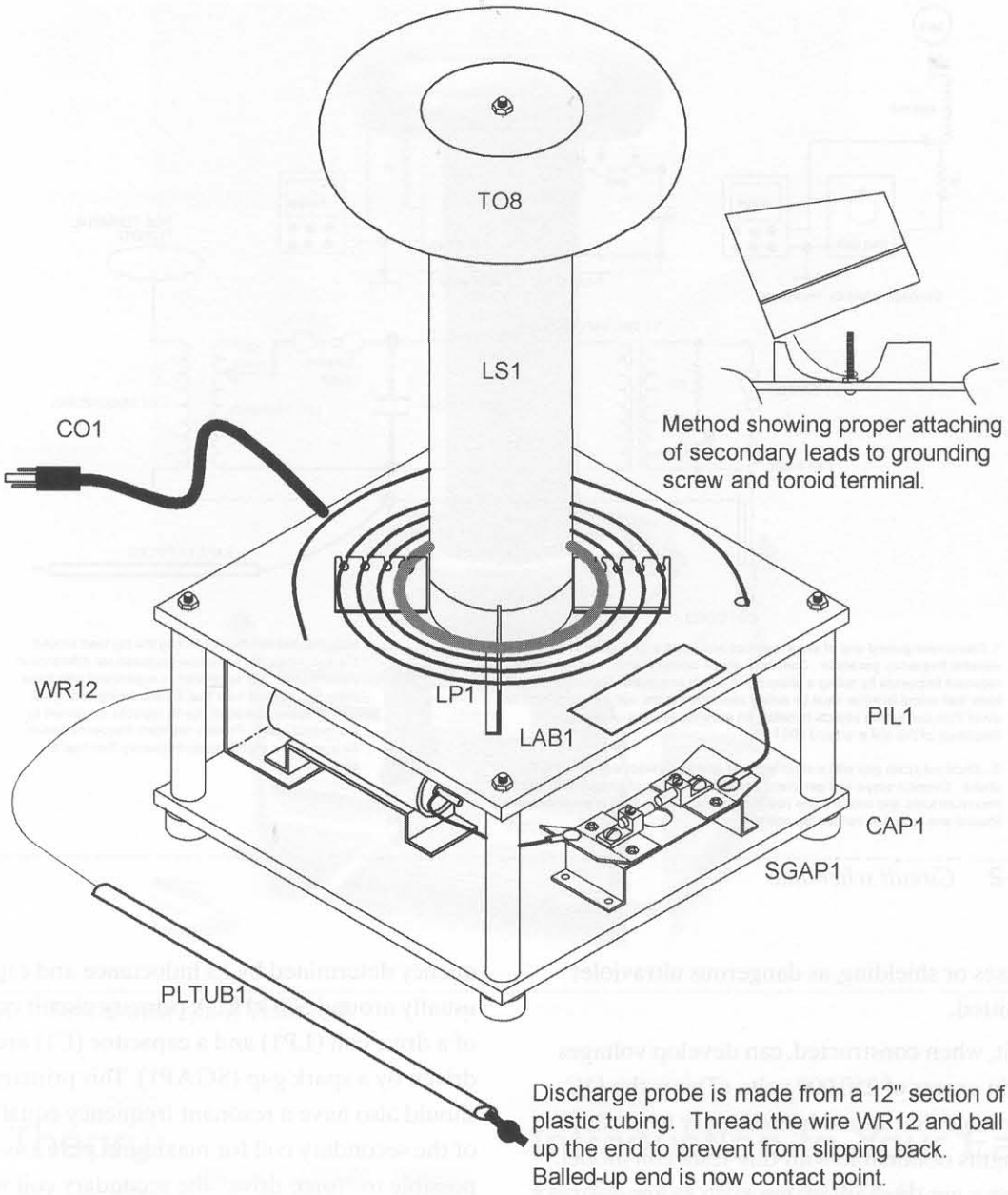

Figure 14-3 *Completed Tesla coil rear view*

(SGAP1), producing an impulse of current through the primary inductance (LP1) where oscillations take place. The frequency is determined by the inductance and capacity values of the primary circuit. The voltage output of the secondary coil, LS1, is usually approximately related to the primary voltage Vp multiplied by C1/C2 where C1 equals the primary capacity, VP equals the spark gap discharge voltage, and C2 equals the secondary coil capacitance (usually relatively small). Another way of expressing this relation is that the output volts are dependent on the input drive voltage times the ratio of primary Q to secondary Q. Information describing some of Tesla's works are available on our site at www.amazing1.com.

Construction Steps

Note that the layout must be closely followed only where actual dimensions are shown. Otherwise, trial-

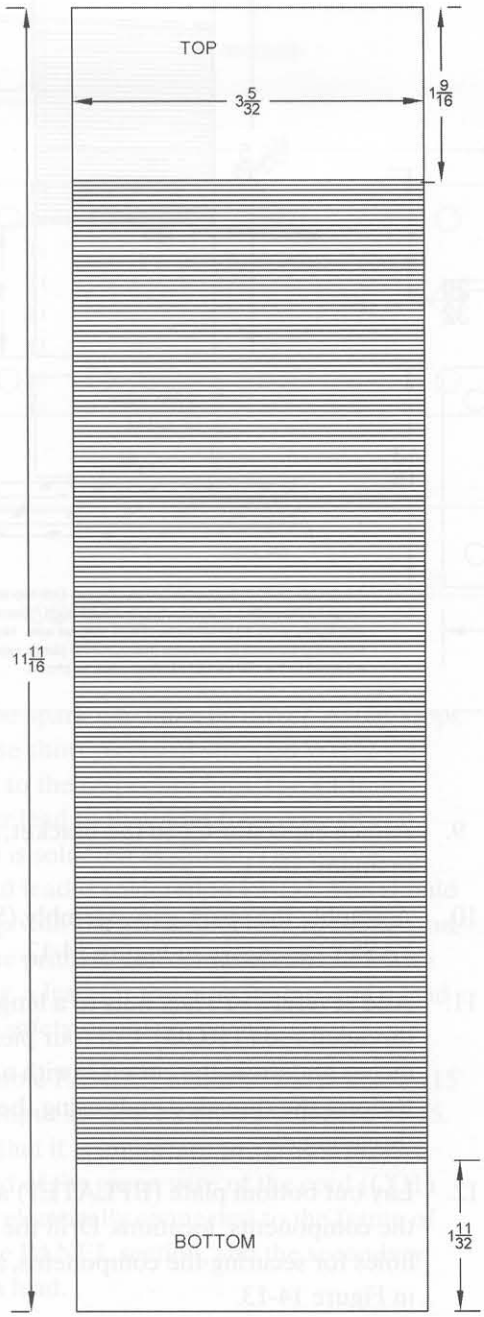

Precut coil form from 3" (3.5" OD) thin wall PVC tubing. Thoroughly clean both inner and outer surfaces and make sure form is dry.

Drill the small holes in the form as shown for securing the start and finish leads.

Thread wire through small holes leaving about 6" and wind a 9 3/4" layer of #24 magnet wire on form evenly and without any kinks or overlaps. Finish by threading through holes at other end.

Coat coil several times with orange shellac, making sure there is no water or other impurities that will contaminate the coating.

A suggestion in winding this coil is to work with a buddy using a broomstick as a shaft and carefully dispense the wire as needed. Keep wire taut and avoid kinks and overlaps as these will cause output to be greatly reduced!! You may wind a section and then shellac holding the wire with tape to avoid unwinding.

Approximate frequency of coil is equal to total winding length of wire in meters times 4 divided into 300 x 10 e8. This is the familiar quarter-wave antenna formula.

Finished coil should resonate at 500 to 600 kHz without any output terminal attached. The frequency decreases substantially when a terminal is added, changing more or less with terminal size.

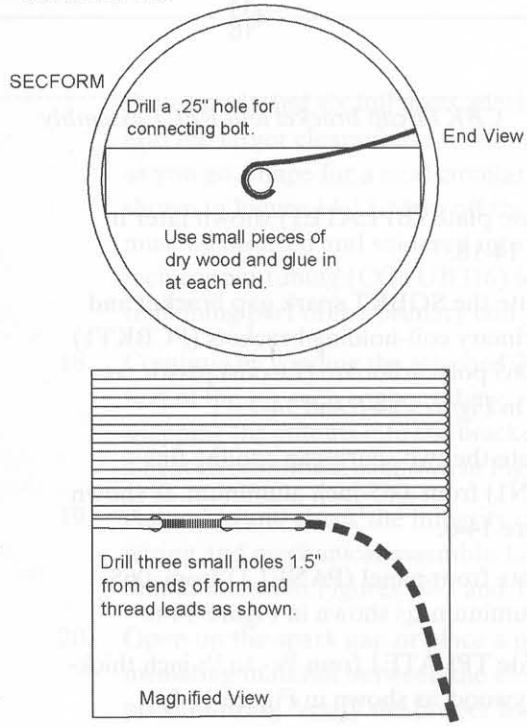

Figure 14-4 *Secondary coil*

position the components as shown in the figures and use the "eyeball" approach to locate them. Please note that you may make substitutions that may increase or decrease performance.

1. Assemble subassembly secondary coil (LS1), as shown in Figure 14-4.
2. Assemble the RFC1 subassembly and fabricate the CBKT1 capacitor bracket, as shown in Figure 14-5. Drill two small holes for threading the 4-inch connection leads. Evenly and tightly wind 40 to 50 turns of #26 magnet wire. Note the mounting scheme of sleeving into a plastic cap (CAP15) screwed

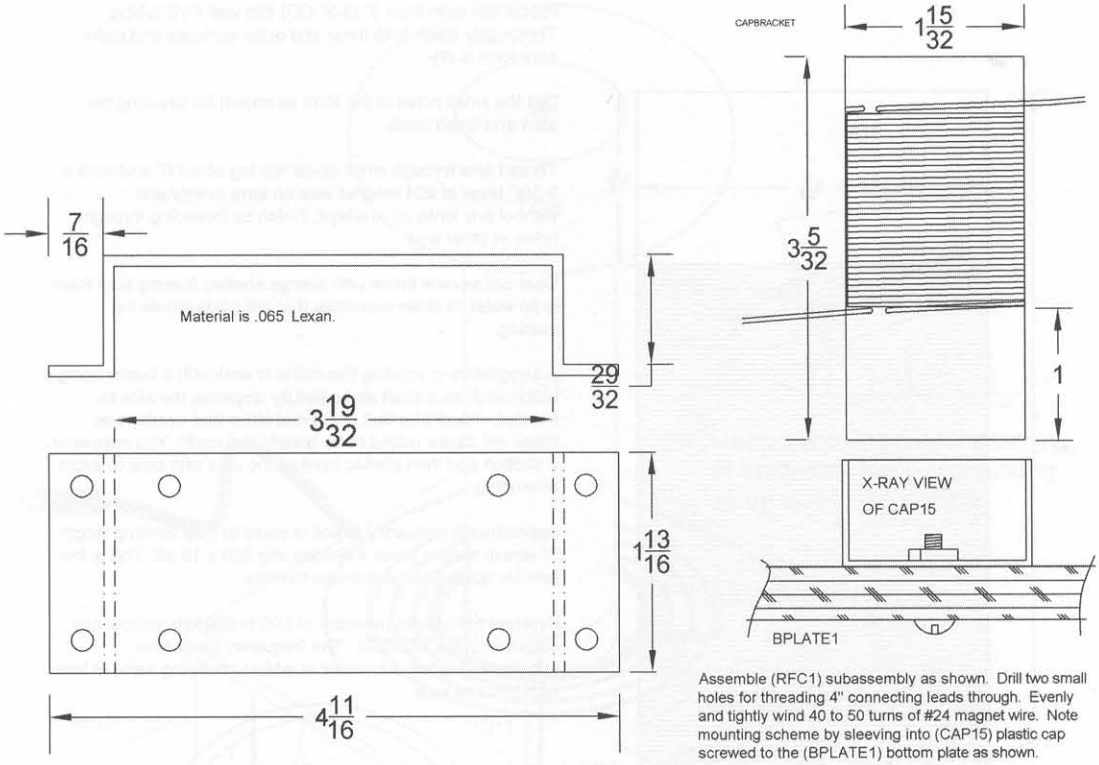

Figure 14-5 *CBKT1 cap bracket and RFC1 assembly*

to a base plate (BPLATE1) shown later in Figure 14-16.

3. Fabricate the SGBKT spark gap bracket and four primary coil-holding brackets (PCBKT1) from .065 polycarbonate (Lexan) plastic, as shown in Figures 14-6 and 14-7.
4. Fabricate the two spark gap cooling fins (SGFIN1) from .065-inch aluminum, as shown in Figure 14-6.
5. Fabricate front panel (PANEL1) from .065-inch aluminum, as shown in Figure 14-8.
6. Fabricate TPLATE1 from 3/8 - to 1/2-inch thickness plywood, as shown in Figure 14-9.
7. Fabricate BPLATE1 from 3/8 - to 1/2-inch plywood, as shown in Figure 14-10. Drill holes when the layout is verified in step 12. More serious craftsman may want to replace the plywood with clear Lexan or Plexiglas. This approach creates a professional-looking project.
8. Fabricate four pillars (PIL1) at 5 3/4-inch lengths of 1/2-inch PVC tubing, as shown in Figure 14-3.
9. Attach capacitor C1 to the bracket, as shown in Figure 14-11.
10. Assemble the spark gap assembly (SGA-PASSY) as shown in Figure 14-12.
11. Add several 1/4-20 hex nuts to a length of threaded rod (TROD). Cut four pieces to 7 1/4 inches and dress the cut ends with a small file. Reform the threaded ends using the nuts as a threading die.
12. Lay out bottom plate (BPLATE1) and verify the components' locations. Drill the mounting holes for securing the components, as shown in Figure 14-13.
13. Assemble the four PVC caps with pillars at the corners using the threaded rods and hardware. Assemble the components using the 6-32 × 1-inch screws with washers and nuts. Note the front panel is secured by the sandwiching action of T1 and the capacitor bracket. Attach the solder lugs as shown in Figure 14-13.
14. Wire up the high-voltage section, as shown in Figure 14-14. Note all leads to the capacitor

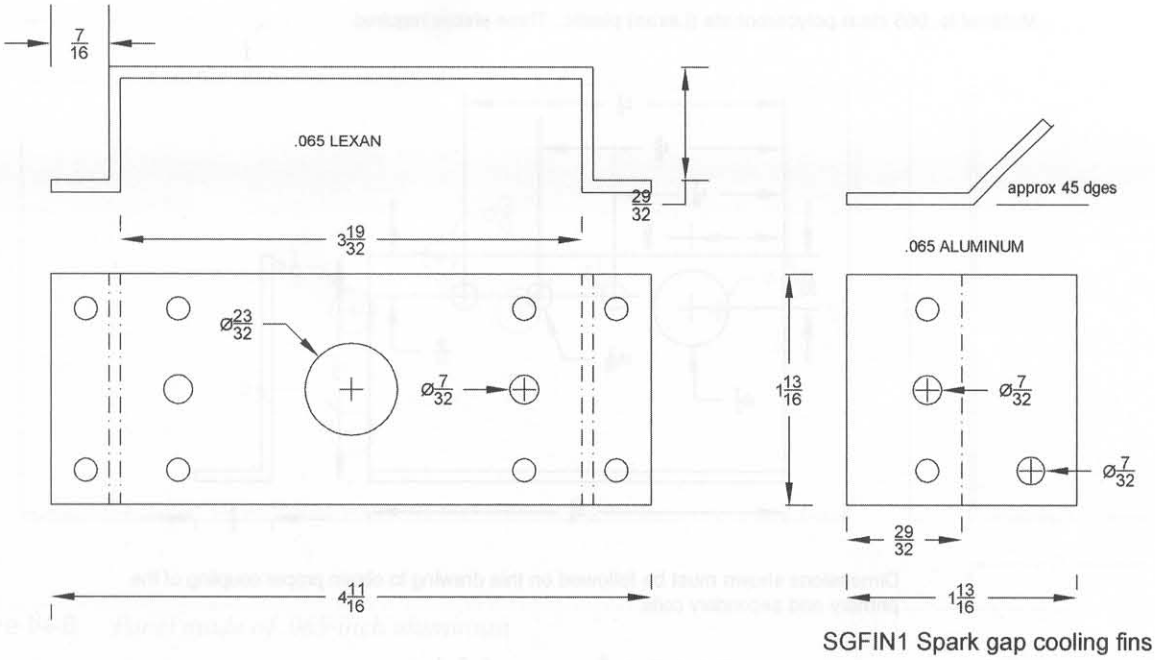

Figure 14-6 *SGPK1 spark gap brackets*

and the spark gap must be direct. Avoid loops and use short pieces of stripped WR12 soldered to the respective lugs. The T1 transformer lead to the *radio frequency* (RFC) choke is soldered as shown. The secondary ground lead is soldered to LUG2. You should end up with the grounding lead to the secondary, the primary coil center connection with the lug, a lead for the primary tap, and a lead to the safety discharge probe.

15. Assemble PANEL1 and wire the primary 115 VAC input section, as shown in Figure 14-15. Note that it is important to verify a proper ground of the green wire of the cord (CO1) being electrically connected to the frame of T1, the PANEL section, and the secondary return lead.

16. Attach a 3½-inch plastic cap (CAP35) to the center via a ¼-20 × 1-inch brass screw and nut. This point is the earth-grounded common return of both the primary and secondary coils. Attach the four coil brackets using #6 ⅜-inch brass, flathead wood screws. Verify that the bracket holes line up with the pilot holes so that everything fits as shown in Figure 14-16. If not, redo the pilot holes and assemble as shown.

17. Measure an 8-foot length of wire (WR12) and thread one end through the clearance hole as shown and wind six full turns, placing them into the larger clearance in the four brackets as you go. Shape for a neat circular shape, as shown in Figure 14-17. Strip off the end as it must be inserted and soldered into the 3/16-inch copper tubing (COTUB316) for the remaining part of the primary coil.

18. Continue by winding the attached 7-foot section of the 3/16 -inch copper tubing as shown, snapping the cutouts into the brackets. Attempt a neat circular look, as shown in Figure 14-17.

19. Assemble and check the integrity of all the wiring and mechanical assembly. Label the unit as shown in Figures 14-3 and 14-18.

20. Open up the spark gap or place a piece of insulating material between the electrodes to prevent firing. Verify the proper assembly and plug the unit into a 115 VAC, three-wire, grounded outlet. Check the action of S1 and note the lamp NE1 igniting. Quickly short out the spark gap electrode attached to C1 to the chassis ground with the safety probe. Note a loud, bright discharge occurring. Only perform this momentarily as it subjects components to unusual stress and only serves to verify proper operation at this point. Also remove the power cord and material between the spark gap electrodes.

Material is .065 clear polycarbonate (Lexan) plastic. Three pieces required.

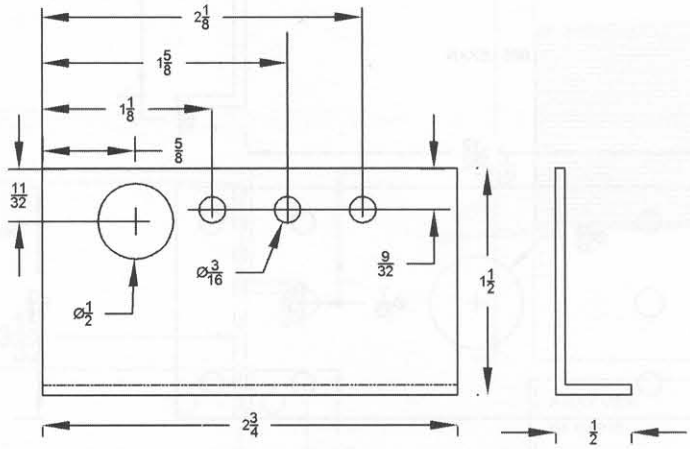

Dimensions shown must be followed on this drawing to obtain proper coupling of the primary and secondary coils.

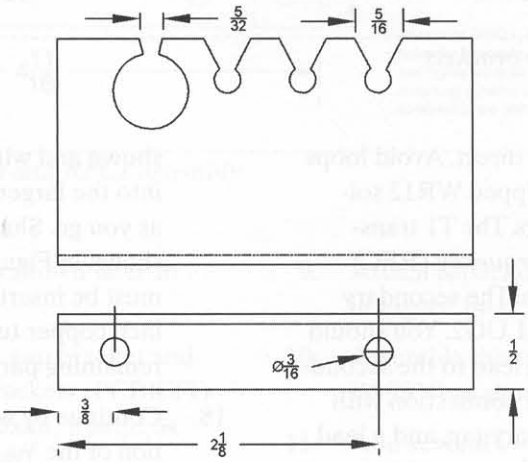

Follow this drawing to get the correct slotting. Use as a pattern or template. Slots must retain wire and tubing but allow snapping into position.

Figure 14-7 *PCBK1 primary coil holding brackets (four required)*

21. Feed the tap wire through the appropriate hole and attach a crocodile clip (CLIP1). Insert the secondary coil assembly into cap CAP350, attaching the ground return wire to the screw. This lead should be as short as possible, as breakdown will occur inside of the coil. Attach the output terminal to the top of the coil using the same procedure. See Figure 14-3.

    Before proceeding to the next step, you must always remove the power cord before making adjustments. The tap lead is a shock hazard, producing 23 milliamperes to earth ground. The 115 VAC power lines must be avoided, as they can be lethal.

22. When firing up your coil, start with the spark gap set at 1/8 inches and the adjustment tap at the outermost winding tap to provide maximum inductance. Note that this lead also contributes to total inductance when routed as shown (the same direction as turns of the primary coil). It should be possible with this coil to easily obtain 10- to 12-inch streamers when properly adjusted. Careful adjustment of the

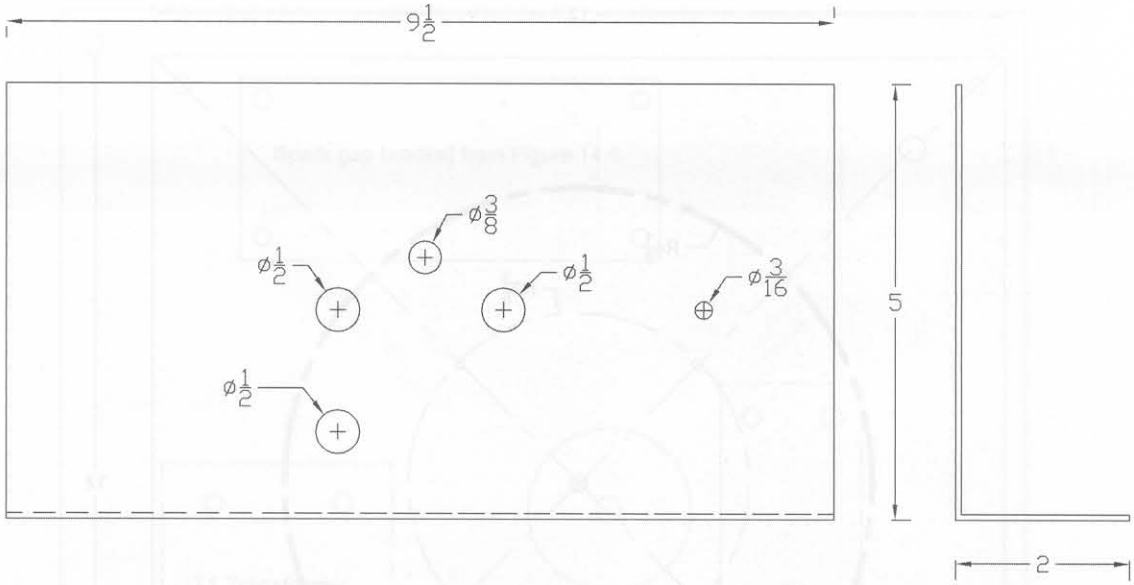

Figure 14-8 *Panel made of .065-inch aluminum*

tap location and gap adjustment will greatly enhance performance. When operating for a prolonged period, always note the potential breakdown points, indicated by heavy corona or premature sparking. These points must be corrected or a burning tracking condition will result.

Special Notes

The tap lead is shown being 3 feet long, enough to wrap itself around the primary coil assembly, providing an additional turn. You may shorten this lead to a shorter length, bearing in mind that it will require readjustment, as it is part of the primary coil.

If you cannot obtain open-air discharges of 10 to 12 inches, it will be necessary to experiment with the tap position along with the spark gap spacing. Open-air discharges are where the sparks emit from the output terminal into the open air. These will be longer than if they were direct to a discharge probe. Point-to-point discharge lengths of 7 to 10 inches are possible and will be more intense but shorter than the open-air discharges.

The spark gap should be set to a maximum length where reliable operation occurs without extinguishing. The coil should not be operated for periods over 30 seconds due to *radio frequency interface* (RFI) potentials and overheating. You may have to place the system in a Faraday cage as shown on our plans as #FARA1. This will be necessary around sensitive electronic and communications equipment.

The secondary coil leads must never be allowed to route inside the coil form, as breakdown and irreversible damage will occur (see Figure 14-3). Figure 14-4 shows a wooden block with leads secured.

Note the coil is referenced TOP and BOTTOM, where one end is slightly spaced shorter than the other. The shop unit seems to work best with the short end at the bottom. Coupling between the coils is critical and you may experiment by placing the secondary coil on wooden blocks with various thicknesses and check the results. A toroid terminal is recommended for optimum performance and you may use metal bowls.

Application and Operation

Please note this Tesla coil device produces electromagnetic radiation that can damage or interfere with certain types of equipment. Operation inside a screen room or Faraday cage may be required for FCC compliance.

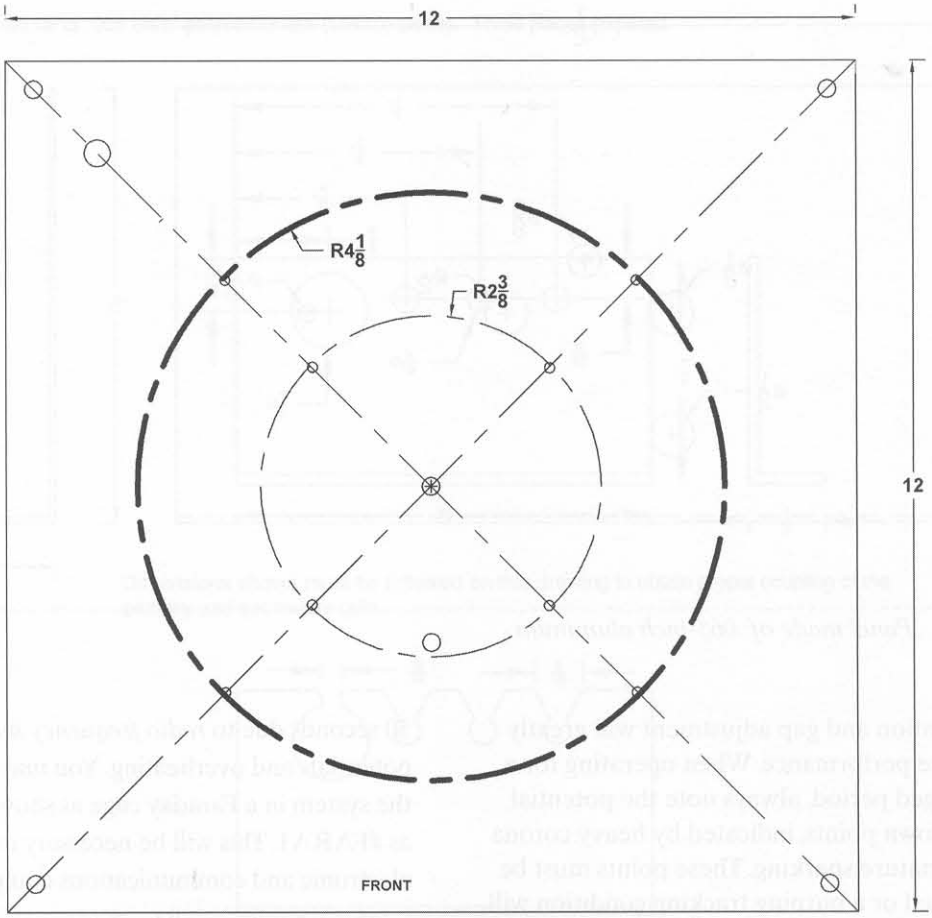

Material for this piece may be 3/8" to 1/2" finished plywood. Plexiglas for this section will add greatly to the finished aesthetics of the project.

1. **Note that only holes shown dimensioned must be precise. Others may be eyeballed.**
2. **Corner holes are 1/4" and are located 1/2" from edges.**
3. **Use small pilot holes for #6 wood screws for securing the four BKPC1 brackets.**
4. **Dimensioned holes are referenced from exact center.**

Figure 14-9 *TPLATE1 fabrication*

As stated previously, remove the power cord before making any of the following adjustments. The tap lead when ungrounded from the primary is a shock hazard and can produce 23 milliamperes to ground.

Optimum output requires the proper selection of the correct tap position on the primary coil. Start at the end of the outermost turn and reconnect the tap to the exposed sections, changing a quarter of a turn at a time while noting the increasing or decreasing output. You may secure it via soldering when the proper position is determined. Caution: Keep this lead flat, as breakdown to the secondary will permanently damage the windings. Note the tap lead clip position and mark it when using different terminals. Note Figure 14-17 for proper routing of the tap lead, which we found tuned reasonably close with this terminal.

The capacitance of the output terminal will greatly affect the tuning, requiring more turns the larger the terminal size and vice versa. To operate the coil, you need to perform the following steps:

1. Place the coil on a table away from sensitive electronic equipment. Computers must be

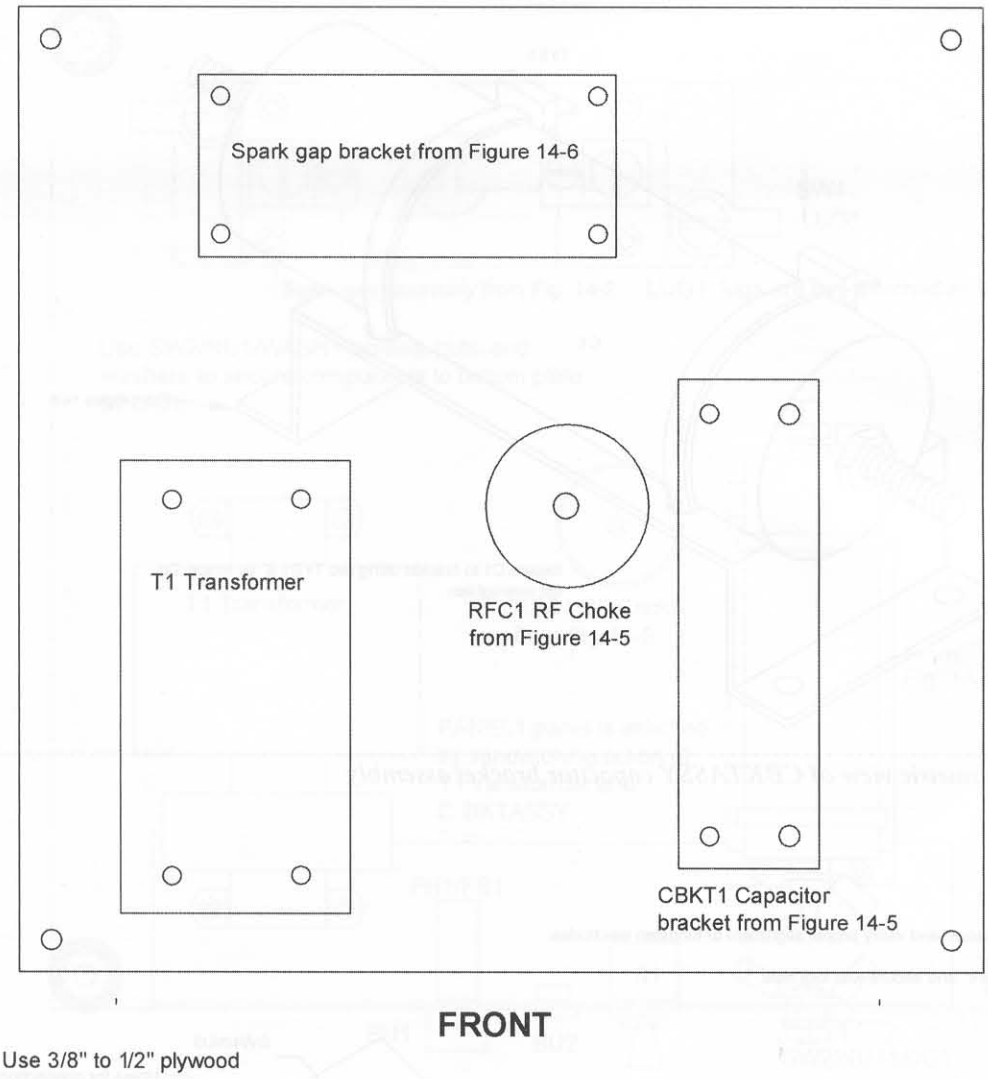

1. Corner holes are 1/4" and mate to those on TPLATE1 in Figure 14-9.
2. Trial-position referenced subassemblies as shown and mark hole locations for drilling 1/8" clearance holes.

Figure 14-10 *Fabrication of BPLATE1*

removed from the area and disconnected from power if on the same line. Observe, read, and heed all warning labels.

2. Make sure the switch is "off" on the front panel before plugging the coil into a three-wire grounded outlet. Defeating the ground on the plug will result in system failure, potential fire, and an extreme shock hazard.
3. Attach the secondary coil as shown in Figure 14-3. Make sure that leads from the coil are as short as possible, allowing only what is necessary to make the connections to the bottom grounding screw and repeating for the top terminal. Failure to do this will result in irreversible damage to the coil.
4. The spark gap can be increased just before reliable firing becomes a problem. Further spacing may produce intermittently longer discharges but may overstress the capacitor and transformer. Always set for a reliable, steady firing of continued operation. It is a good idea to space the gap at 1/8 of an inch when first firing up, and increase as described previously.

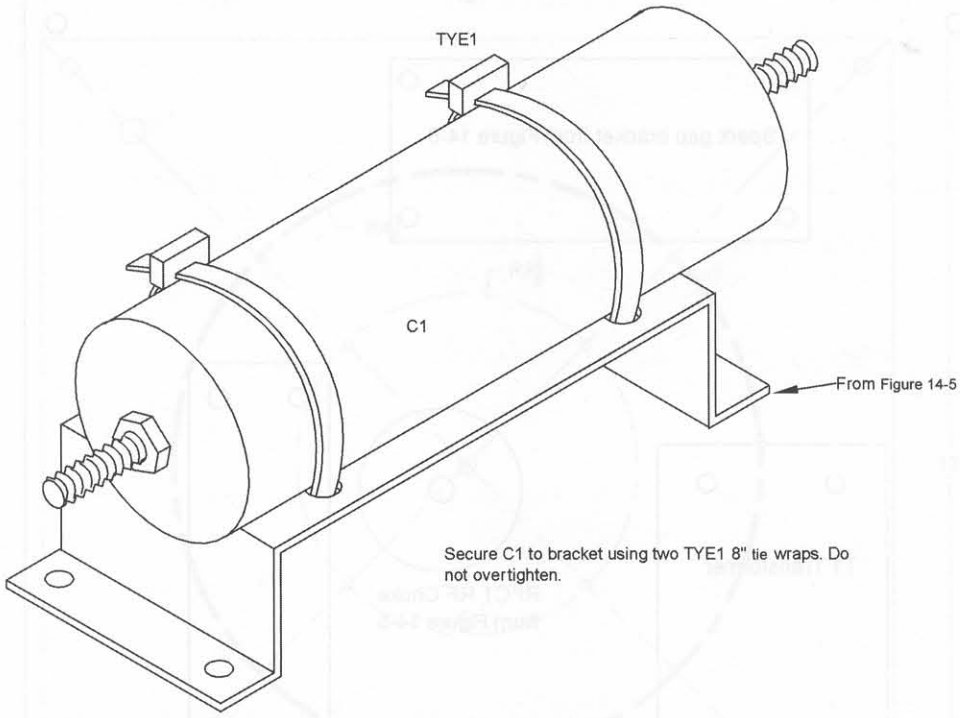

Figure 14-11 *Isometric view of CBKTASSY capacitor bracket assembly*

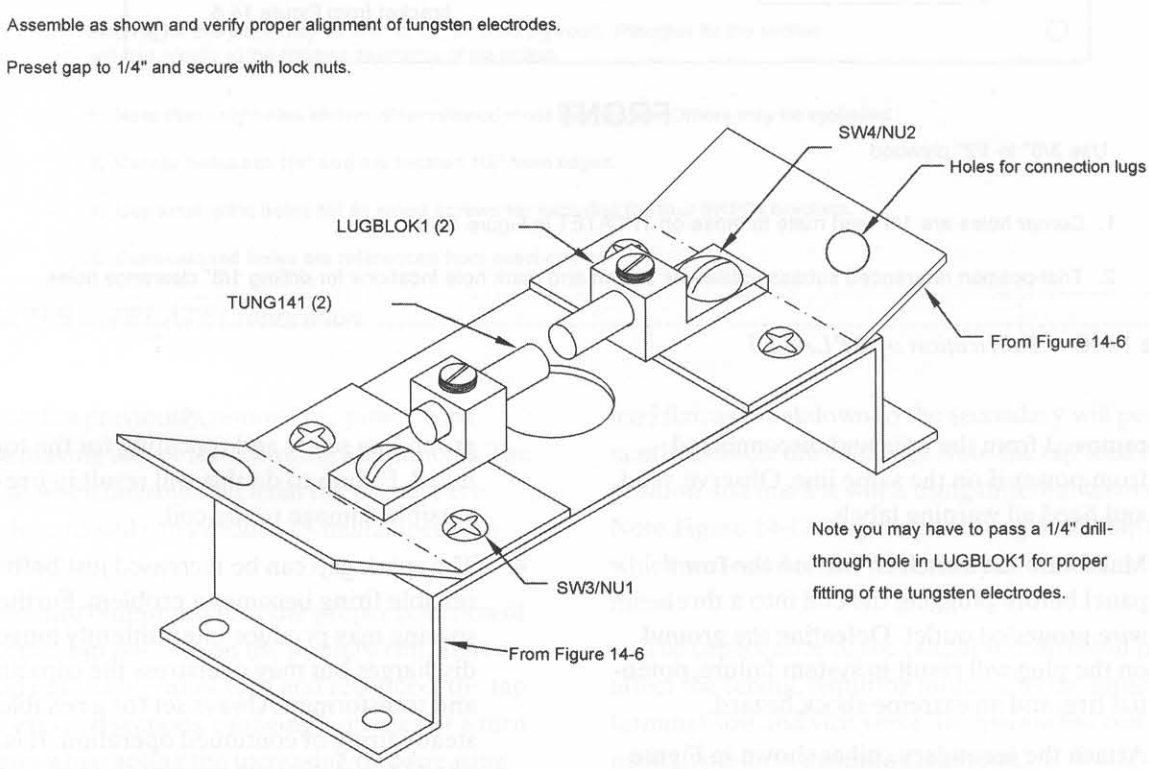

Figure 14-12 *ISO view of SGAPASSY spark gap assembly*

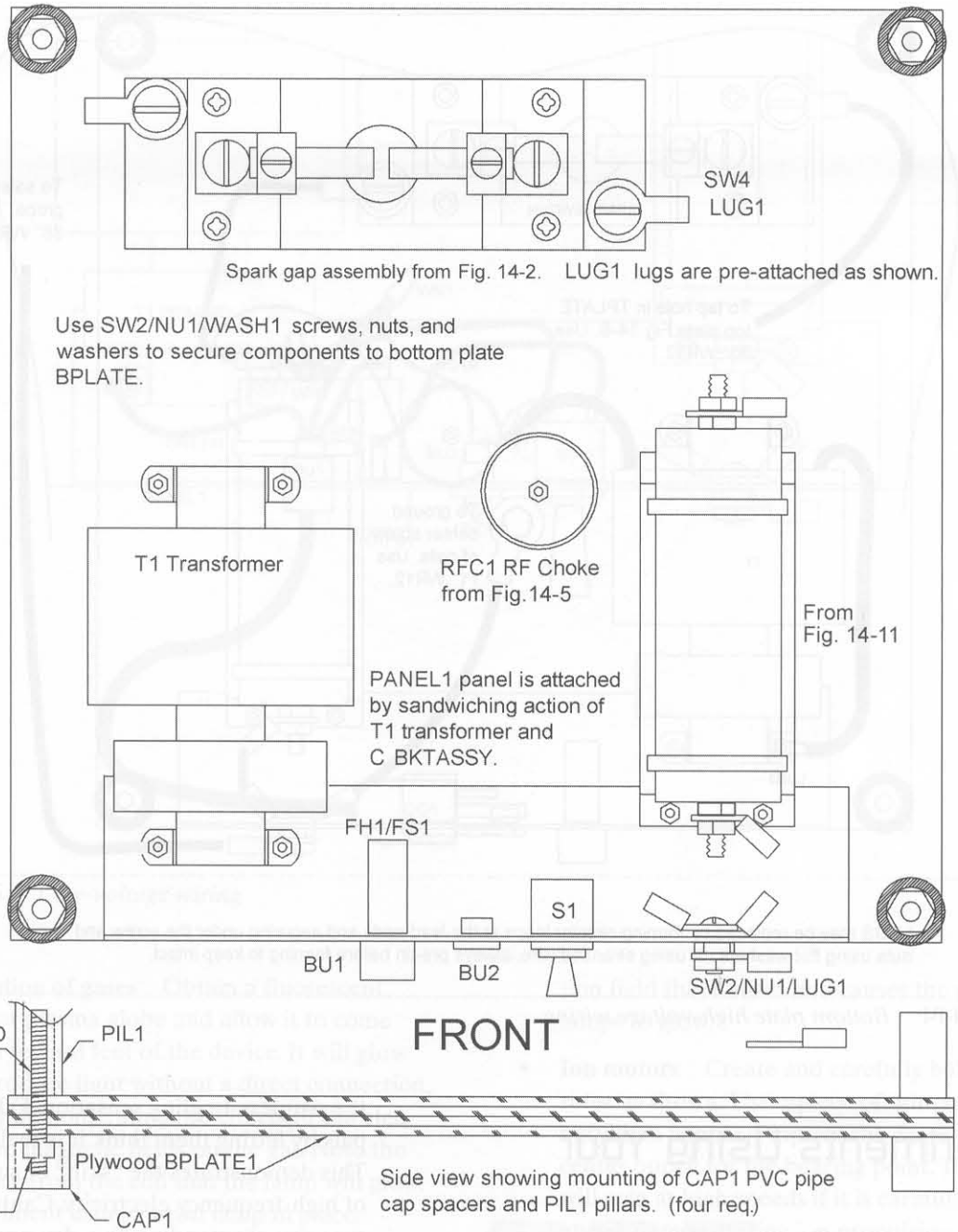

Figure 14-13 *Bottom plate assembly*

The secondary coil should be terminated into a conductive object such as a sphere or torus. A metal 13- to 16-ounce coffee can or salad bowl may also be used with reasonable results.

5. The trick now is to adjust the tap lead for the maximum spark output from the particular terminal used. Note the lead position along with the spark output of the secondary coil; the discharge length increases or decreases as adjustments are made. Note that a variance of several inches along the primary coil winding can make a noticeable difference in output. The open-air discharges will be longer than the point-to-point ones.

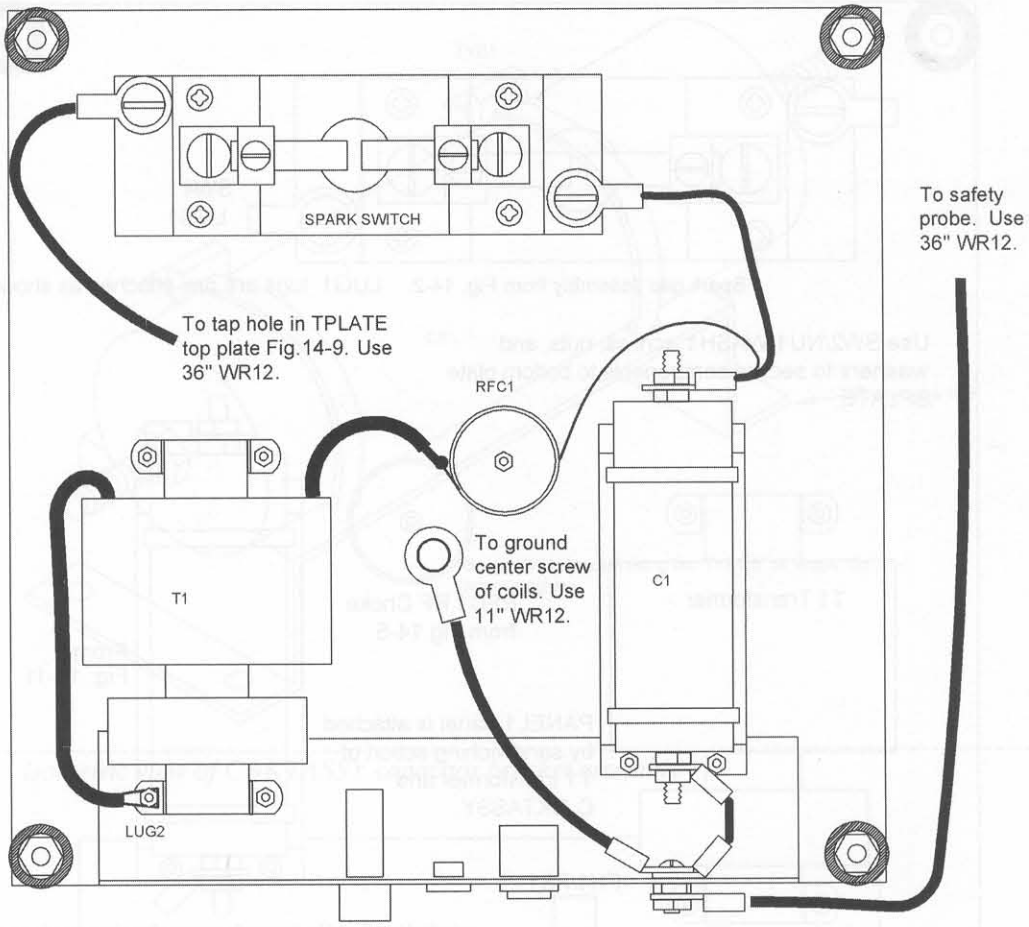

LUGS may be replaced by forming circular loops at the lead ends and securing under the screw and nuts using flat washers. If using stranded wire, always pre-tin before forming to keep intact.

Figure 14-14 *Bottom plate high-voltage wiring*

Experiments Using Your Coil

You may perform the following experiments with your coil:

- **Adjustment** Suspend a grounded metallic object above the device. Start at about 3 inches of separation and make adjustments, increasing the separation until the optimum spark length is obtained. (Note grounding means connection to the metal base.)
- **Effect on human body** Use caution as this may cause a reflex secondary reaction even though it is painless. Hold a metal object tightly and advance to the coil terminal. Note the painless, tingling sensation. Fake out your pals by letting them think it is really painful. This demonstrates the "skin" or surface effect of high-frequency electricity. Caution! Make sure you are standing on a dry, nonconductive surface.
- **Effect on insulators** Place various objects on top of the coil and note the effects of the high-frequency electricity. Glass or other usual insulators do not stop the sparks. Experiment using objects such as lightbulbs, bottles, glass, and so on.
- **Effect on partial insulators** Use some wood pieces about 12 × 1 × 3-inches and notice red streaks and other weird phenomena occurring from within the piece. Try other materials as well.

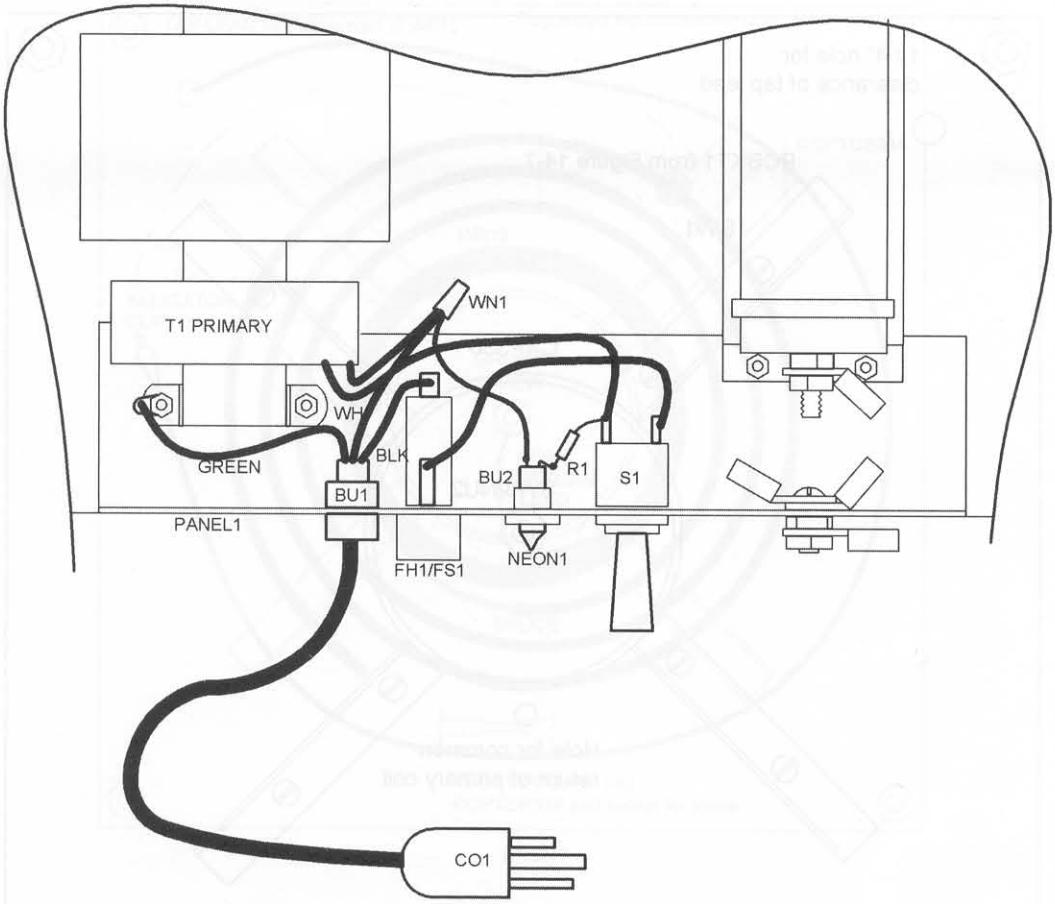

Figure 14-15 *Low-voltage wiring*

- **Ionization of gases** Obtain a fluorescent lamp or plasma globe and allow it to come within several feet of the device. It will glow and produce light without a direct connection, clearly demonstrating the effects of the electric and magnetic fields on the gas. Note the distance from the coil that the lamp will glow. Experiment using a neon lamp in place. Obtain other lamps and note the colors, distances, and other phenomena.
- **Induction fields** Obtain a small filament-type lamp, such as a flashlight bulb, and connect it between a large 1½- to 2-inch-diameter metal or wire loop. The lamp will light due to energy coupled by induction. You will note that a current is required to light this type of lamp and is entirely different than the radiation field that ionizes and causes the gas lamps to glow.
- **Ion motors** Create and carefully balance the rotor as shown. Use a piece of thin, spring beryllium copper. Pinprick the center with a center punch for the bearing point. The rotor will spin at high speeds if it is carefully balanced, demonstrating ion propulsion.

Note that your Tesla coil output is hungry for "capacitance." It is suggested that you obtain an 8-inch toroidal terminal such as our TO8 at www.amazing1.com. You may substitute two metal bowls and attach them together to produce a spherical-shaped object. The torus, however, provides electrostatic shielding of the coil, eliminating a discharge at these points.

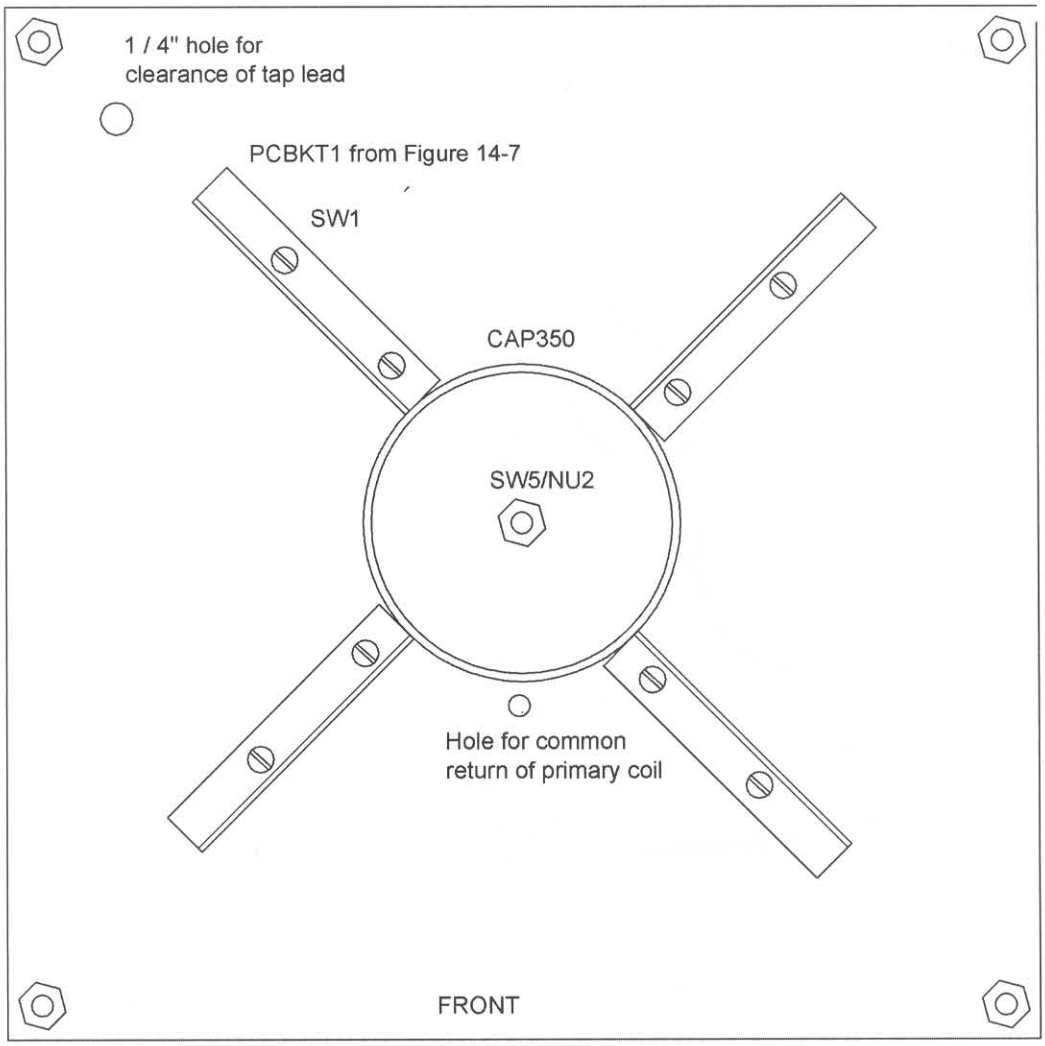

Figure 14-16 *Top-plate layout showing component mounting*

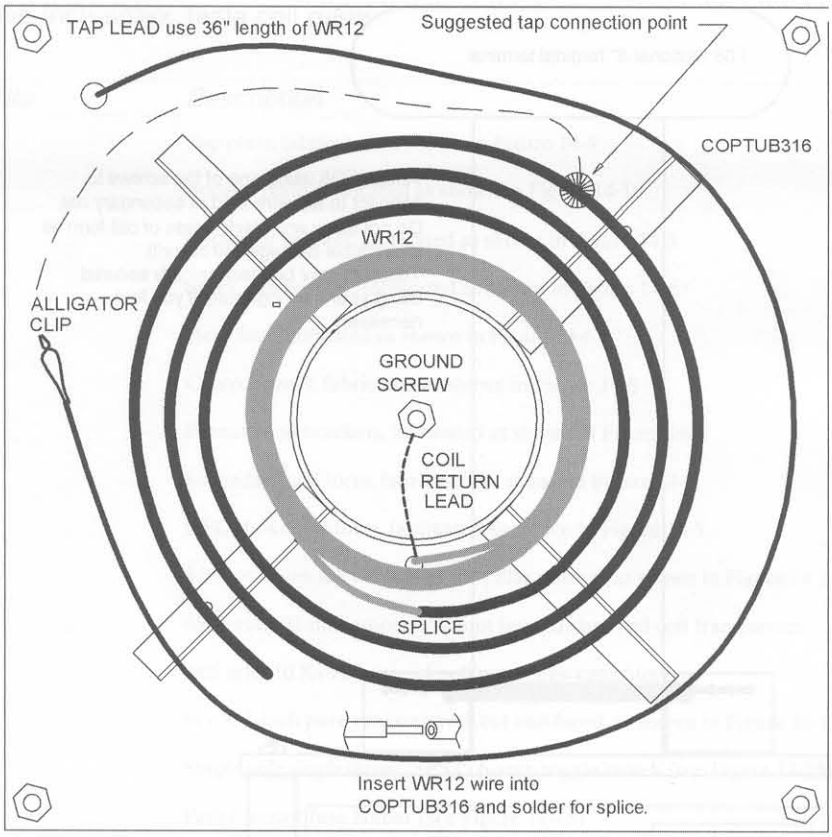

FRONT

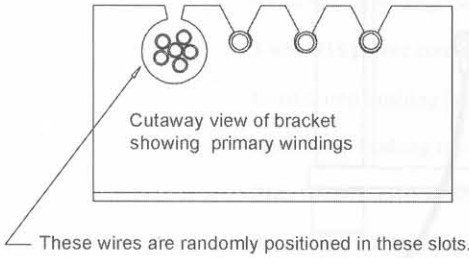

Tapped lead to primary coil must be positioned close to surface of top plate as possible for avoiding arcing to secondary coil.

Tap position shown here is where the shop model is roughly tuned to and may serve as an approximate starting point.

Position and direction of tap lead will affect tuning. Experiment until you get 10-12" open air discharges.

Figure 14-17 *Top-plate layout showing primary coils*

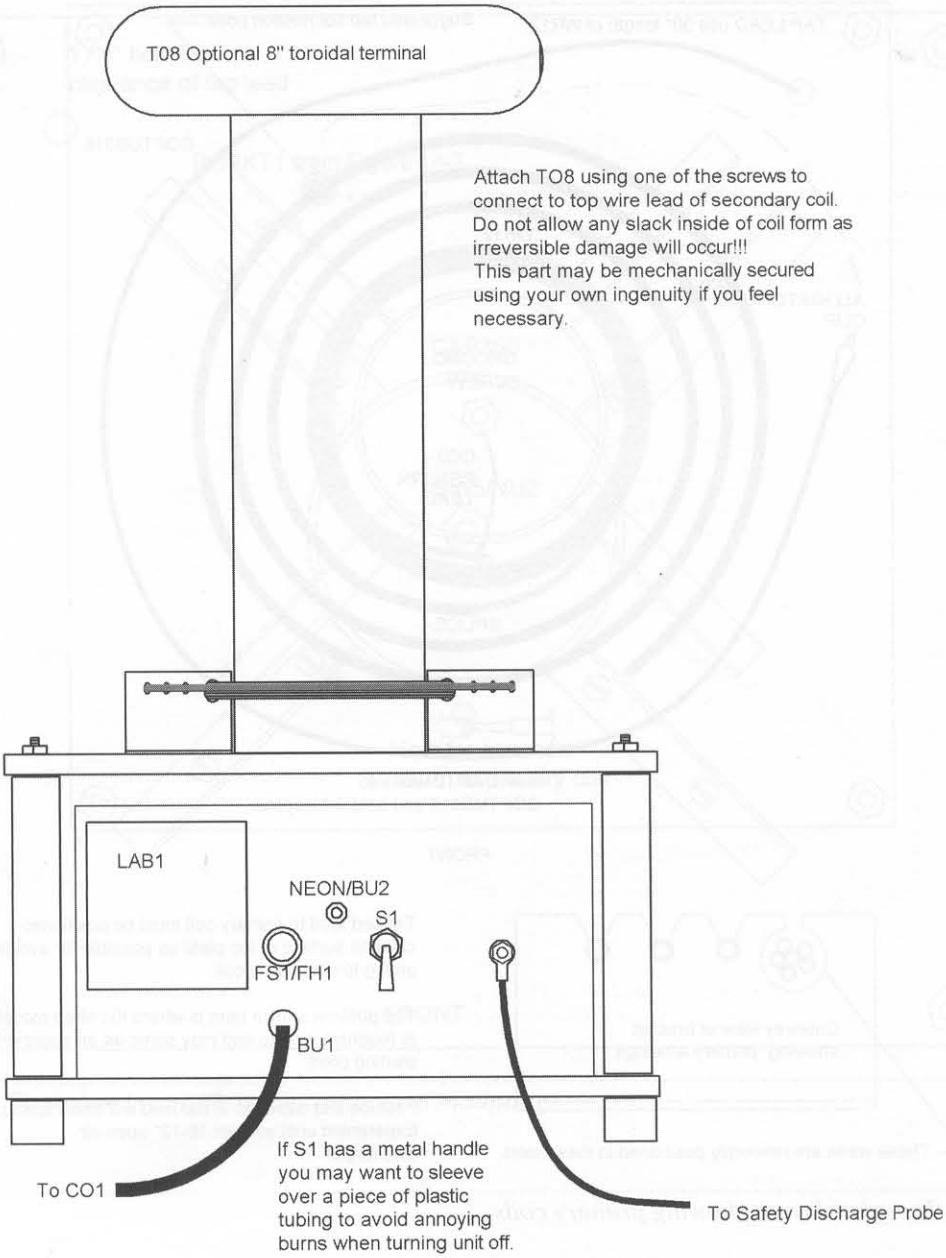

Figure 14-18 *Front view showing the control panel*

Table 14-1 Twelve-inch-spark Tesla coil parts

Ref. #	*Qty.*	*Description*	*DB#*
TPLATE1	1	Top plate, fabricated as shown in Figure 14-9	
BPLATE1	1	Bottom plate, fabricated as shown in Figure 14-10	
CBKT1	1	Capacitor bracket, fabricated as shown in Figure 14-5	
SGBKT1	1	Spark gap bracket, fabricated as shown in Figure 14-6	
SGFIN1	2	Heat fins, fabricated as shown in Figure 14-6	
PANEL1	1	Control panel, fabricated as shown in Figure 14-8	
PCBKT1	4	Primary coil brackets, fabricated as shown in Figure 14-7	
LS1	1	Secondary coil form, fabricated as shown in Figure 14-4	
RFC1	1	RFC choke coil form, fabricated as shown in Figure 14-5	
PIL1	4	5 1/2 - × 1/2 -inch PVC tubing for pillar spacers, as shown in Figure 14-3	
TRAN1	4	6500-volt/.02-milliampere current limited core and coil transformer	6KV/02A
C1		.005 mfd, 10 Kv AC special polypropylene capacitor	.005 M/10 Kv
TUNG141	2	1/4 - × 1-inch pure tungsten rod, cut and faced, as shown in Figure 14-12	TUNG141
S1		*Single pole single throw* (SPST) 6-amp toggle switch (see Figure 14-15)	
FH1		Panel-mount fuse holder (see Figure 14-15)	
FS1		3-amp, slow-blow, 3 ag size fuse (see Figure 14-15)	
NEON		Neon indicator lamp (see Figure 14-15)	
CO1		3-wire #18 power cord (see Figure 14-15)	
BU1		Cord clamp bushing (see Figure 14-15)	
BU2		Neon lamp bushing (see Figure 14-15)	
R1		39K, 1/4-watt resistor (see Figure 14-15)	
WN1		Small wire nut (see Figure 14-15)	
CAP158		1 5/8-inch plastic cap (see Figure 14-5)	
CAP350		3 1/2-inch plastic cap (see Figure 14-16)	
CAP	4	3/4-inch PVC cap used for feet (see Figure 14-13)	
PLTUB1		10 to 12 inches of 3/8 -inch OD plastic tubing (see Figure 14-3)	
TYE1	2	8-inch tie wraps (see Figure 14-11)	
CLIP1		Small crocodile clip (see Figure 14-17)	
WR12	15 feet	#12 AWG stranded, vinyl-covered wire	
SW1	8	#6 × 3/8 brass wood screws	
SW2	14	#6-32 × 1 screws, Phillips	
SW3	4	#6-32 × 1/4 screws, Phillips	
NU1	20	#6-32 hex nuts	
WASH1	28	#6 × 1/2 flat washers; use under #6 screws and nuts	
SW4	2	1/4-20 × 1/2 -inch brass screw	

Table 14-1 Continued

Ref. #	Qty.	Description	DB#
SW5	1	1/4-20 × 1-inch brass screw	
NU2	4	1/4-20 brass hex nut	
NU3	4	#8-32 hex nut for threads of C1	
COTUBE	7 feet	3/16 coiled copper tubing	
ROD1	4	1/4-20 × 7 1/4 -inch threaded rod (see Figure 14-13)	
NU4	12	1/4-20 steel hex nut	
LUG1	8	1/4-20 × #12 solder ring lug (see Figure 14-13 and 14-14)	
LUG2	2	#6 solder lug for green lead of CO1 and T1 ground (see Figure 14-14)	
LUGBLOK	2	1/4-20 block lug #YLA6 (see Figure 14-12)	
LAB1		General label (see Figure 14-18)	
LAB2		Spark gap danger label (see Figure 14-3)	
TO8		8- × 2-inch spun aluminum toroidal terminal (optional)	TO8

Chapter Fifteen

Two-Inch-Spark Tesla Coil with Timer

This low-cost and interesting project generates a continuous spark discharge with a variable rate of current. It operates from a 12-volt wall adapter or a battery for portable use or a science project where outlets may not be available. The device (see Figure 15-1) has a built-in timer, allowing you to set the off and on times. This property provides excellent display for desk or bar conversation pieces where it will automatically turn on for several seconds and recycle, surprising those in the area as the unit generates this noisy visual display.

Construction involves minimal electronic experience. Expect to spend around $25 for this rewarding and interesting conversation piece with most parts readily available. Those that are special, including a *printed circuit board* (PCB), may be obtained through www.amazing1.com. Table 15-1 outlines the parts needed for this project.

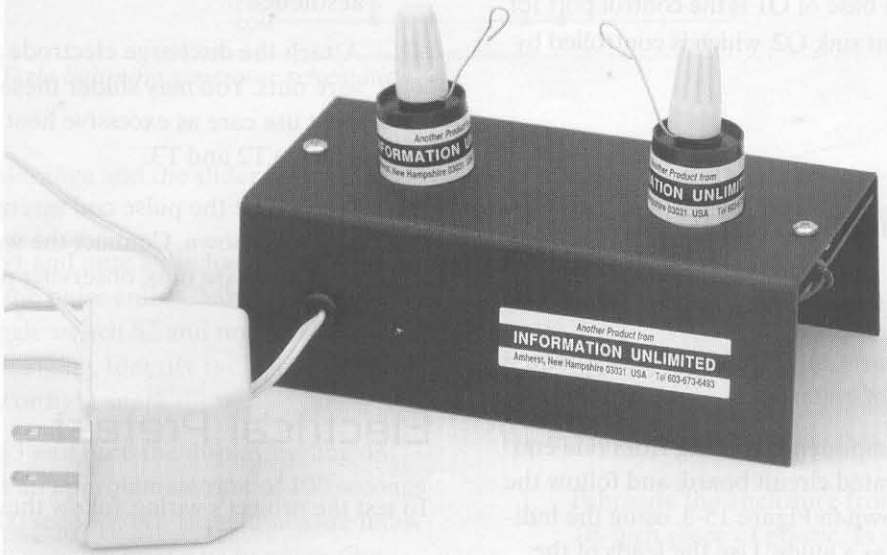

Figure 15-1 *Spark Tesla coil with timer*

Circuit Theory

Figure 15-2 shows a high DC voltage being produced by a blocking oscillator circuit consisting of a transformer (T1) being switched on and off by a transistor (Q1). The current through the primary winding (I) rises as a function of Et/L (when Q1 is on), where E is the applied voltage, in this case 12 *volts-direct current* (VDC), and L is the primary inductance of T1. This rise in current induces a voltage in the feedback winding further holding Q1 on, due to supplying the base current through resistor R2 and the speed-up capacitor C2. When the core of T1 saturates because of a high primary DC current, the induced base voltage goes to zero, turning off Q1. This results in a reverse voltage induced in the secondary forward-biasing diode (D1) and charging capacitors (C3 and C4). When the charging capacitor reaches the trigger voltage of the SIDAC silicon switch (around 300 volts), it now turns on, dumping the energy stored in the capacitor into the primaries of pulse transformers (T2 and T3). This energy causes a rapid rise in the current "forward," inducing the high-voltage output pulses required for the lightning display.

You will note that two pulse transformers are connected out of phase (reversed connected) relative to one another. This approach generates twice the output of what is possible from one transformer, now being in excess of 50,000 volts. You will note switch S1 controls the primary power. Switch S2 selects the display texture. The base of Q1 is the control port for the output of current sink Q2, which is controlled by switch S3.

Construction Steps

To begin the project, follow these steps:

1. Identify all parts and pieces and verify them with the bill of materials.
2. Insert the components, starting from one end of the perforated circuit board, and follow the locations shown in Figure 15-3, using the individual holes as a guide. Use the leads of the actual components as the connection runs, which are indicated by the dashed lines. It is a good idea to trial-fit the larger parts before actually starting to solder.

   Always avoid bare wire bridges, messy solder joints, and potential solder shorts. Also check for cold or loose solder joints.

   Pay attention to the polarity of the capacitors with polarity signs and all the semiconductors. The transformer position is determined using an ohmmeter as instructed in Figure 15-3 . Note the SIDAC may have two or three pins. Only the outer ones are used and may connect in either way, as the part is not polarized.
3. Cut, strip, and tin the wire leads for connecting to S1, S2, and S3 and solder them. These leads should be 4 to 5 inches long.
4. Fabricate the plate section from a $4^3/_4 \times 2^1/_4 \times .06$ piece of plastic. This is the base plate for mounting and gluing the T2 and T3 pulse coils/transformers.
5. Prewire T2 and T3, as shown in Figure 15-3, at the separation distance of 2 inches. Use short pieces of vinyl wire to extend these leads. Splice in 5-inch leads for interconnecting to the board.
6. Carefully position the wired pulse coil assembly to the plastic plate and secure it with silicon rubber cement (a *room temperature vulcanizing* [RTV] adhesive). Clamp it in place to hold it in position as the cement sets. It is important to keep these coils straight for aesthetics.
7. Attach the discharge electrode wires using the wire nuts. You may solder these wires but must use care as excessive heat can internally damage T2 and T3.
8. Preconnect the pulse coil assembly to the board as shown. Connect the wall adapter using the wire nuts, observing proper polarity.

Electrical Pretest

To test the project's wiring, follow these steps:

1. Separate the ends of the discharge wires to approximately 2 inches. Preset the trimmer

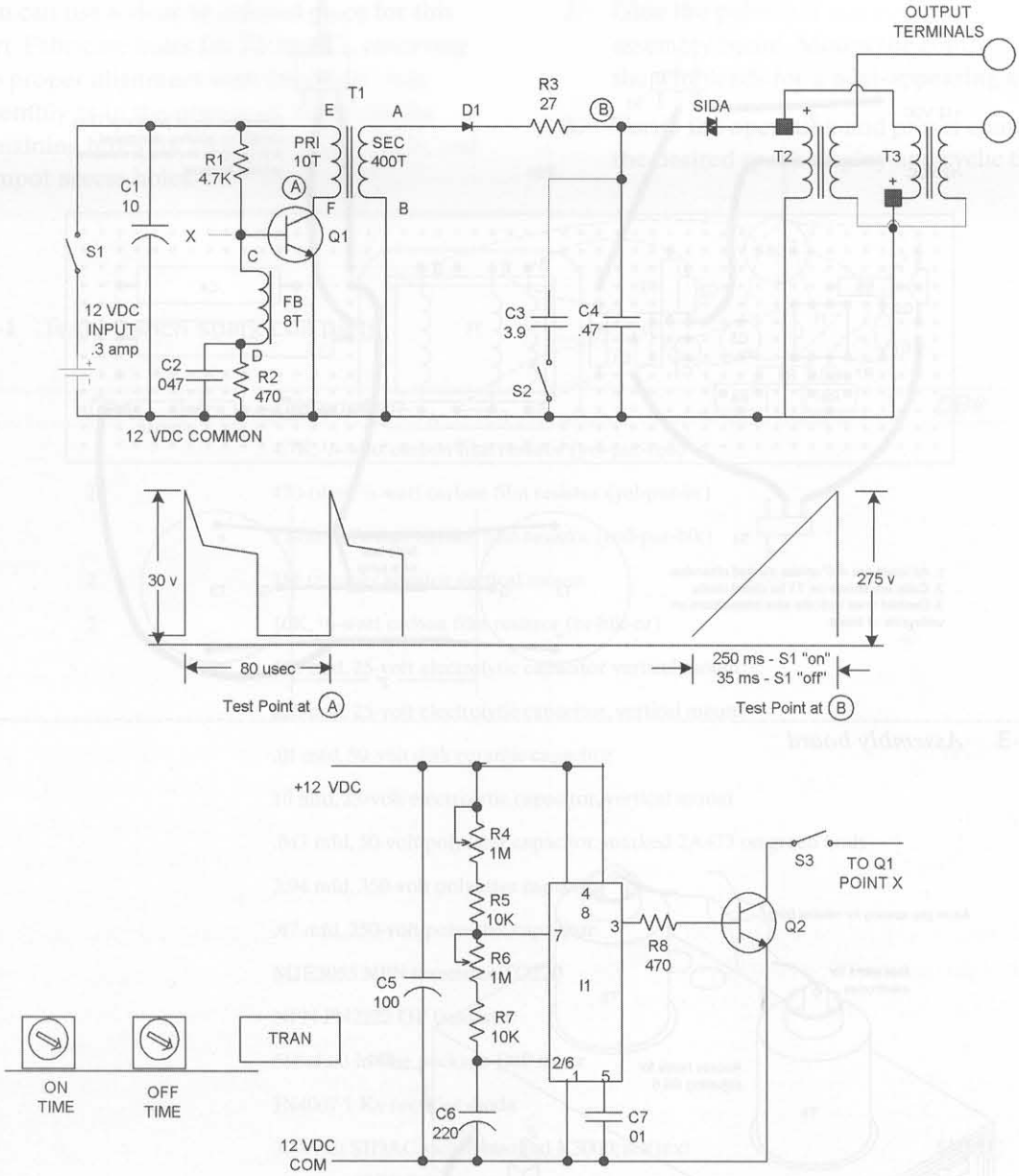

Figure 15-2 *Tesla lightning generator schematic*

pots to midrange and the slider switches S1 and S3 to "off."

2. Turn on S1 and note a discharge occurring between the pulse coils. Change the position of the toggle switch S2 and note the discharge texture changing. Identify the switch position for heavy or light spark display.

3. Turn on S3 and note the display cycling on and off at an approximate rate of 100 seconds on and 100 seconds off. These times are independently variable over a wide range. Our suggested setting is 100 seconds on and 100 seconds off. The device can be left on continuously with these low-duty cycle settings.

Final Assembly

For the final assembly, follow these steps:

1. Fabricate the enclosure from a 6¼ - × 5¼ - × .06-inch piece of plastic, as shown in Figure 15-4.

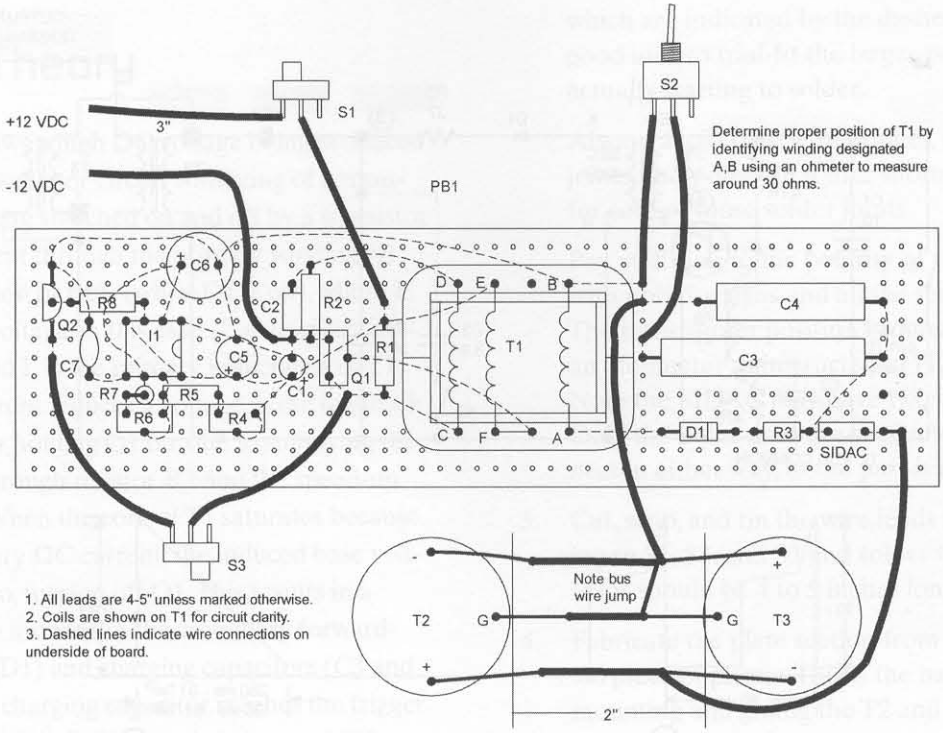

Figure 15-3 *Assembly board*

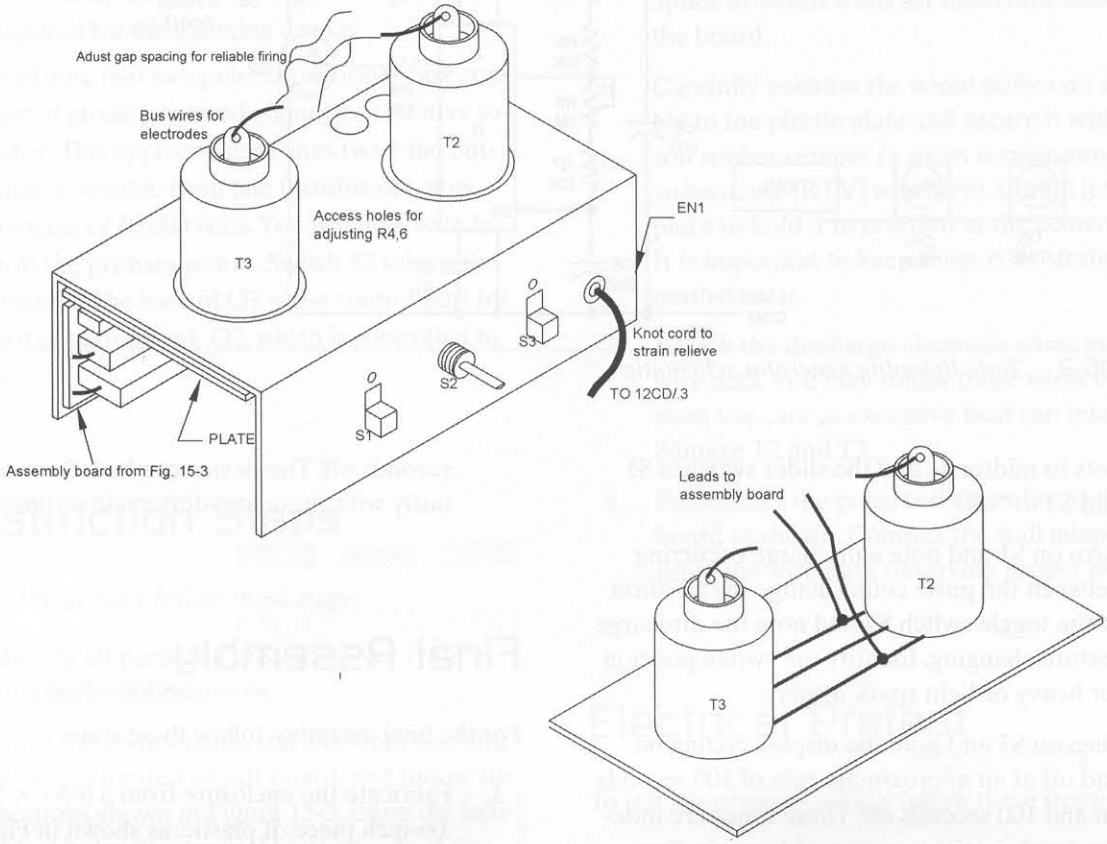

Figure 15-4 *Final assembly*

You can use a clear or colored piece for this part. Fabricate holes for T2 and T3, observing the proper alignment with the glued plate assembly as in the prior step. Fabricate the remaining holes for switches, power leads, and trimpot access holes.

2. Glue the pulse coil assembly, followed by the assembly board. Mount the controls and dress the wire leads for a neat-appearing assembly.
3. Verify the operation and preset controls for the desired spark display and cyclic timing.

Table 15-1 Tesla 2-inch spark coil parts

Ref. #	*Qty.*	*Description*	*DB#*
R1		4.7K, 1/4-watt carbon film resistor (yel-pur-red)	
R2, 8	2	470-ohm, 1/4-watt carbon film resistor (yel-pur-br)	
R3		27-ohm, 1/4-watt carbon film resistor (red-pur-blk)	
R4, 6	2	1M trimmer resistor vertical mount	
R5, 7	2	10K, 1/4-watt carbon film resistor (br-blk-or)	
C5		100 mfd, 25-volt electrolytic capacitor vertical mount	
C6		220 mfd, 25-volt electrolytic capacitor, vertical mount	
C7		.01 mfd, 50-volt disk ceramic capacitor	
C1		10 mfd, 25-volt electrolytic capacitor, vertical mount	
C2		.047 mfd, 50-volt polyester capacitor, marked 2A473 on green body	
C3		3.94 mfd, 350-volt polyester capacitor	
C4		.47 mfd, 250-volt polyester capacitor	
Q1		MJE3055 NPN transistor TO220	
Q2		NPN PN2222 GP transistor	
I1		555-dual in-line package DIP timer	
D1		IN4007 1 Kv rectifier diode	
SIDAC		300-volt SIDAC switch marked K3000; see text	SIDAC
T1		Switching square-wave transformer 400V	TYPE1PC
T2, 3	2	25 Kv pulse transformers	CD25B
S1, 2, 3	3	SPST 3-amp toggle switch or equivalent	
PB1		5 × 1.5 .1 grid perforated circuit board	
PCTLITE		Optional PCB replaces PB1	PCTLITE
WR20B	36 inches	#20 vinyl stranded hookup wire, black	
WR20R	36 inches	#20 vinyl stranded hookup wire, red	
WN1	2	Small wire nuts, #71B	
EN1		Enclosure 6 1/4 × 5 1/4 × .062 plastic, see Figure 15-4	
PLATE		2 1/4 × 4 3/4 × .062 plastic partition	
TAPE		6 × 1 × .125 double-sided sticky tape	
12DC/.3		12-volt DC .3-amp wall adapter	12DC/.3

Table 1-2. Test Cont Target-Target

Cable the bottom and necessarily followed by the

the [illegible] charge [illegible]

the [illegible] and the [illegible] [illegible]

[illegible] the [illegible] and [illegible] [illegible]

[illegible] the [illegible] [illegible] [illegible]

[illegible] the [illegible] [illegible] [illegible]

[illegible] the [illegible]

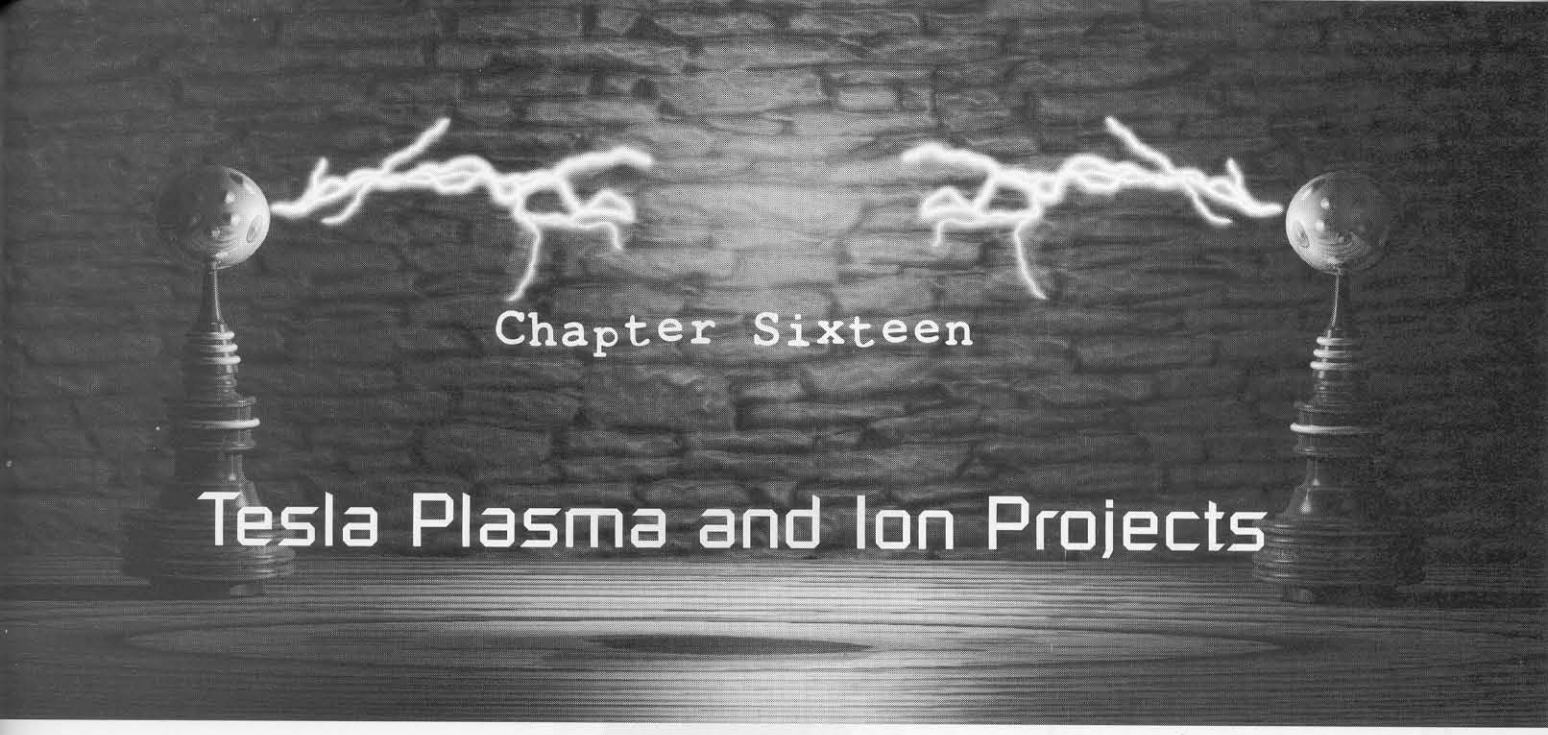

Chapter Sixteen

Tesla Plasma and Ion Projects

This multifunctional electrical project is very suitable for science fairs, as the device is powered by a 12 *volts-direct current* (VDC) battery or a low-voltage wall adapter transformer (see Figure 16-1). Many interesting action and display experiments are shown in detail with safety stressed throughout, thus suitable for the younger hobbyist. Construction involves basic wiring and soldering with some basic mechanical assembly.

Most parts are readily available. Those that are special, including a *printed circuit board* (PCB), may be obtained through www.amazing1.com. Expect to spend $25 to $50 to complete the project as shown. Table 16-1 outlines the parts needed for the project.

Experiments and Applications Using Plasma

Circuit Theory

Figure 16- 2 shows transistor Q1 connected as a free-running flyback oscillator with a resonant frequency determined by capacitor CX and the short-circuit primary inductance (LP) of transformer T1. The leakage inductance of T1 must be high as it is where the inductive energy is stored when Q1 is biased on. The current now ramps up as a function of $i = ET/L$. Energy is equal to $W = Li^2/2$.

Circuit operation commences when 12 VDC is applied and resistor R2 biases Q1 on, and the current now flows through the primary of T1, inducing a high voltage into the secondary winding. Oscillation is maintained by the base of Q1 being controlled by the feedback voltage from the feedback winding on T1. The feedback current is limited by resistor R2. Capacitor CX aids in speeding up the turnoff time of Q1. Resistor R3 and capacitor C5 form a filter to prevent self-oscillation at the resonant frequency of the secondary of T1.

Construction

To begin the project, follow these steps:

1. Lay out and identify all the parts and pieces. Verify them with the parts list, and separate the resistors as they have a color code to determine their value. Colors are noted on the parts list.
2. Obtain the available PCB as shown in Figure 16-3 or fabricate a piece of perforated circuit board (perf) to match the PCB (PC) as laid

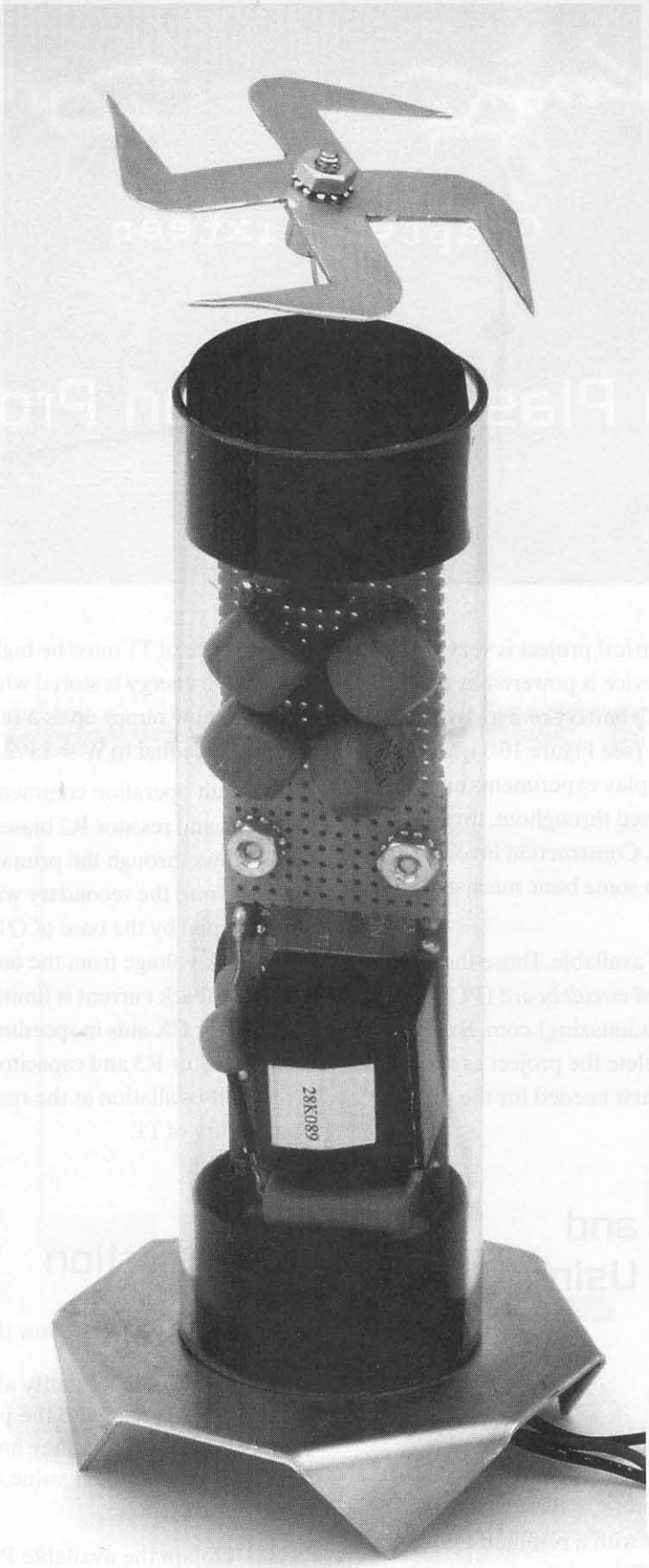

Figure 16-1 *Tesla plasma and ion generator*

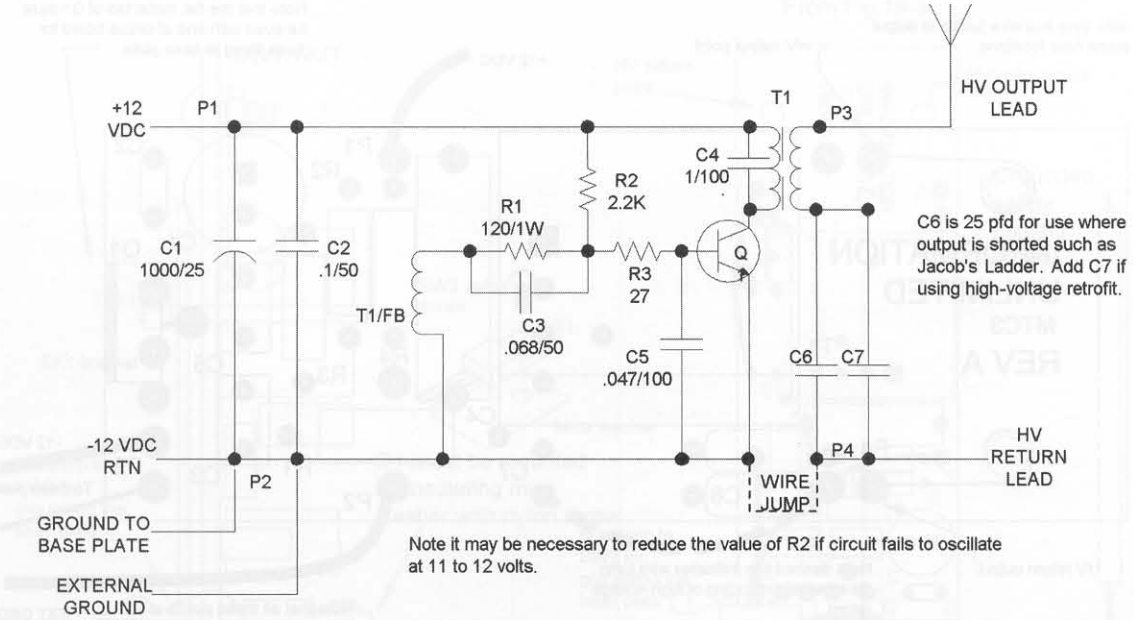

High voltage ion generator retrofit

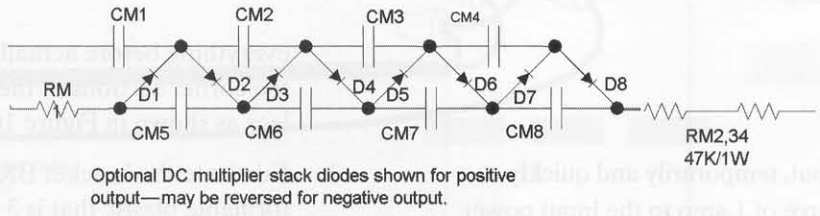

Figure 16- 2 *Tesla plasma and ion schematic*

out. Note that the size of the PC board is 3½ - × 1⅜-inches and contains the silk screening that shows the positioning of the mounted parts. Note that the Q1 transistor must be mounted so that it is flush with its mounting surface at a right angle. This step is important for proper heat sinking and mechanically stability.

3. If you are building from a perforated board, insert components starting in the lower left-hand corner. Pay attention to the polarity of the capacitors with polarity signs, as well as all the semiconductors.

   Route the leads of the components as shown and solder as you go, cutting away unused wires. Attempt to use certain leads as the wire runs. Follow the dashed lines on the assembly drawing as these indicate connection runs on the underside of the assembly board.

4. Attach three 6-inch #22-20 leads as shown for input power (P1 and P2) and external grounding. Attach a short piece of bus wire for grounding of the base section. Leads are routed through the BU1 bushing and are twisted in the final assembly steps. Attach pieces of bus wire to the output connections (P3 and P4) and shape them to fit around the screws as shown.

5. Double-check the accuracy of the wiring and the quality of the solder joints. Avoid wire bridges, shorts, and any close proximity to other circuit components. If a wire bridge is necessary, sleeve some insulation onto the lead to avoid any potential shorts.

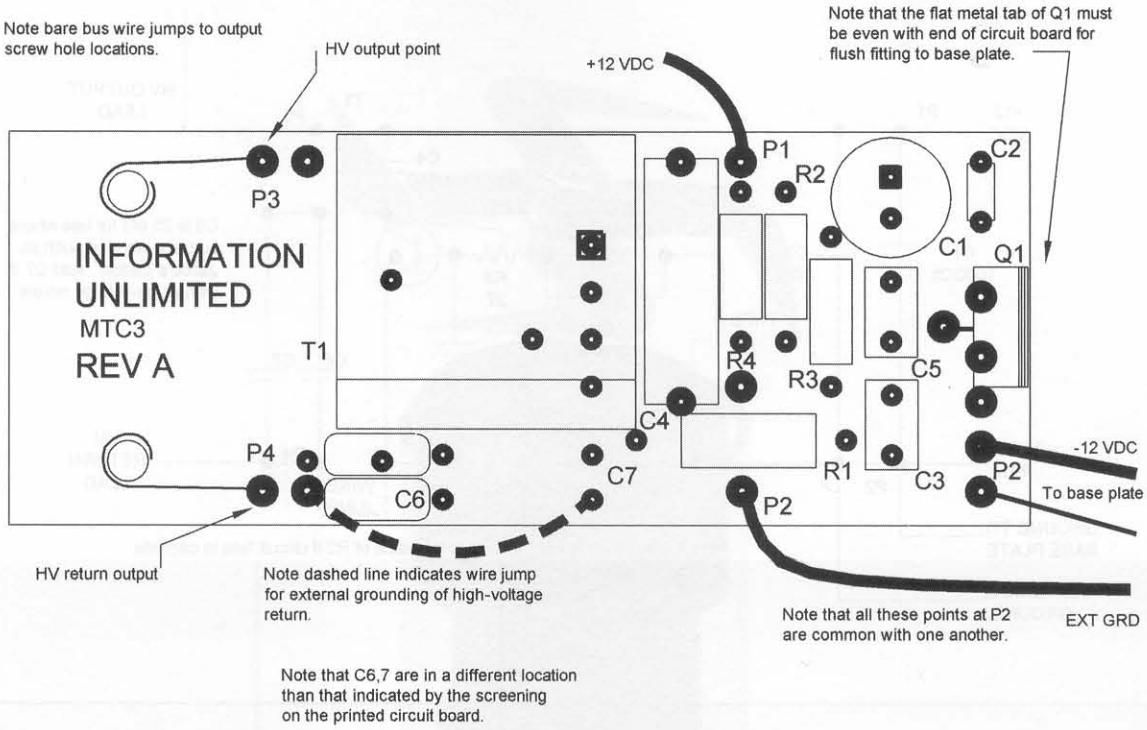

Figure 16-3 *Assembly board showing part identification*

Pretest

To test the circuit out, temporarily and quickly connect a 12 VDC source of 1 amp to the input power leads, and note a current draw of around .3 to .5 amps. Touch the output lead with an insulated metal tool and note a small arc of 1/4 to 1/2 inches. Do not operate for more than several seconds as Q1 will overheat because it requires mounting to the base section for heat sinking. You may want to verify the wave shape on the collector of Q1, using a scope. It should resemble that shown in Figure 16-2.

Mechanical Assembly

Assembling the parts is done by following these steps:

1. Fabricate the base section, BASE, from a 3 × 3 × .063 aluminum plate and drill a hole to mount the heat sink of Q1, a small hole for SW2 to mount the BK1 bracket, and a 3/8-inch clearance hole for the BU1 bushing. Trial-fit everything before actually drilling. Fold down the corner sections of the base to form the legs as shown in Figure 16-4.
2. Fabricate the bracket BK1 from a piece of formable plastic that is 3 × 1 1/4 × .063 inches. Fold a 1/2-inch lip for mounting to the base section. Note the clearance hole for SW2. Position as shown, abutting to the rear of the assembly board. This will provide a stable mounting scheme.
3. Finally, assemble as shown in Figure 16-4. Secure the assembly board to the bracket using a plastic tie wrap. Ground the base section with a short piece of bus wire under SW2 and attach the wire to the P2 line on the board.
4. Fabricate the shroud tube from a piece of clear 10- × 1 3/4-inch OD plastic tubing. This piece slips over the assembly and provides enclosure protection while allowing visibility of the circuitry. This is an obvious asset when making a science project presentation. Note you will have to file slots or grooves at the bottom to allow airflow and to clear screw SW2.

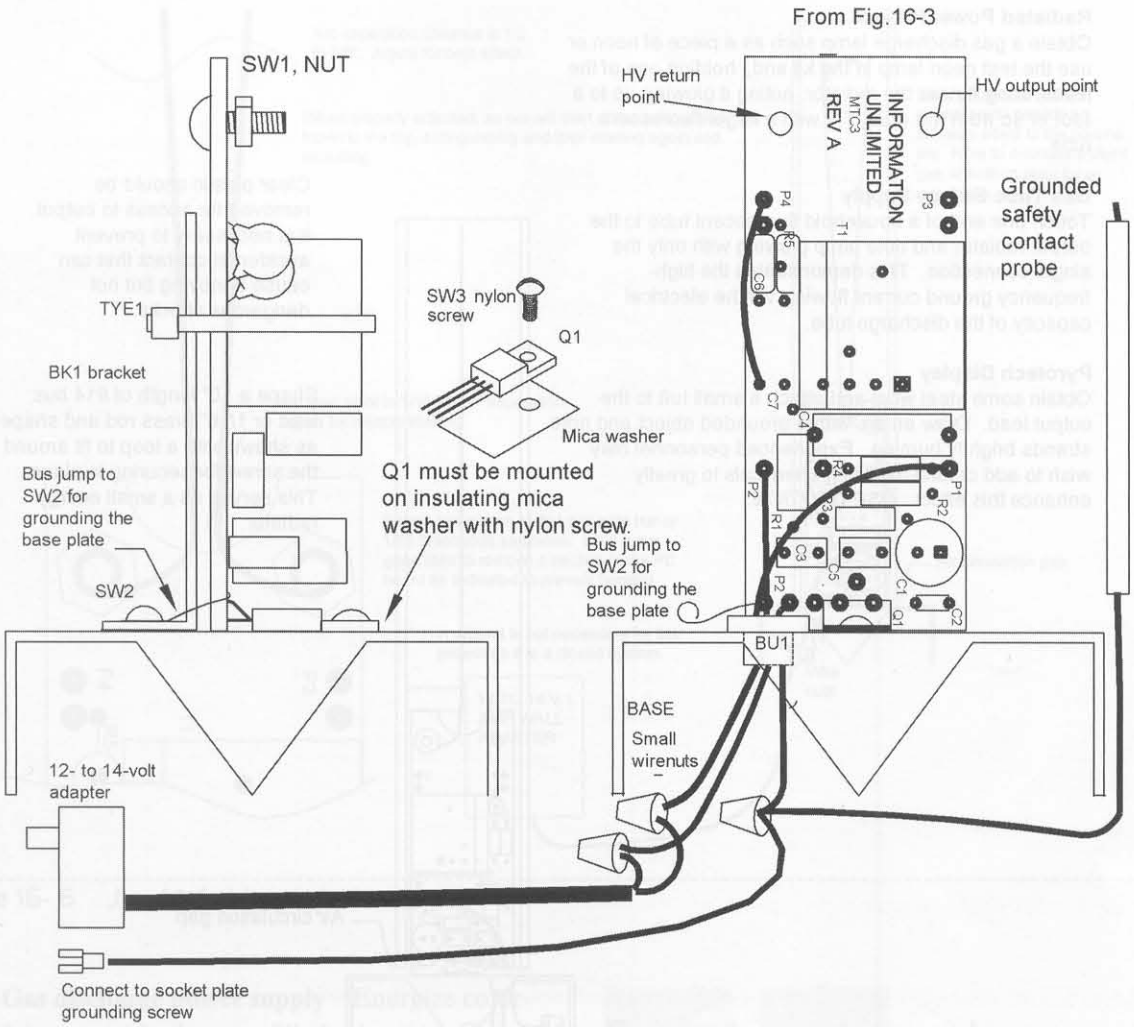

Figure 16-4 *Mechanical assembly*

Test and Function Selection

Connect a 12 to 14 VDC source of 1 to 2 amps, and test it by touching the output with the end of a fluorescent tube, noting a moderate bright glowing. Study the following data to decide the experiments you wish to pursue. The unit can be operated from any 12- to 14-volt battery pack that can supply a current of 1 to 2 amps or more.

It is important, where noted, that the unit be earth grounded with a separate grounding connection to a known, grounded object. A wall adapter, when used, will require a separate grounding wire for proper operation as the output circuitry is usually isolated from the primary plug side, as there is no third wire grounding pin. The screw of a receptacle plate can be used for this external connection, as is noted on the drawings. When using a converter, automatic grounding is usually via the third prong on the power plug, which is the same as the negative lead output (see Figure 16-4). Experimenting with ions will require assembly of the magnifier retrofit as shown in Figure 16-10.

Experiments and Applications Using Plasma

- **Radiated power** Energize a light without any connections (see Figure 16-5).

Radiated Power Project
Obtain a gas discharge lamp such as a piece of neon or use the test neon lamp in the kit and, holding one of the leads, bring it near the radiator, noting it glowing up to a foot or so from the unit. Try with a larger fluorescent tube.

Gas Tube Energy Supply
Touch one end of a household fluorescent tube to the output radiator and note lamp glowing with only the single connection. This demonstrates the high-frequency ground current flowing via the electrical capacity of the discharge tube.

Pyrotech Display
Obtain some steel wool and attach a small tuft to the output lead. Draw an arc with a grounded object and note strands brightly burning. Experienced personnel may wish to add certain oxidizing chemicals to greatly enhance this effect. *USE CAUTION.*

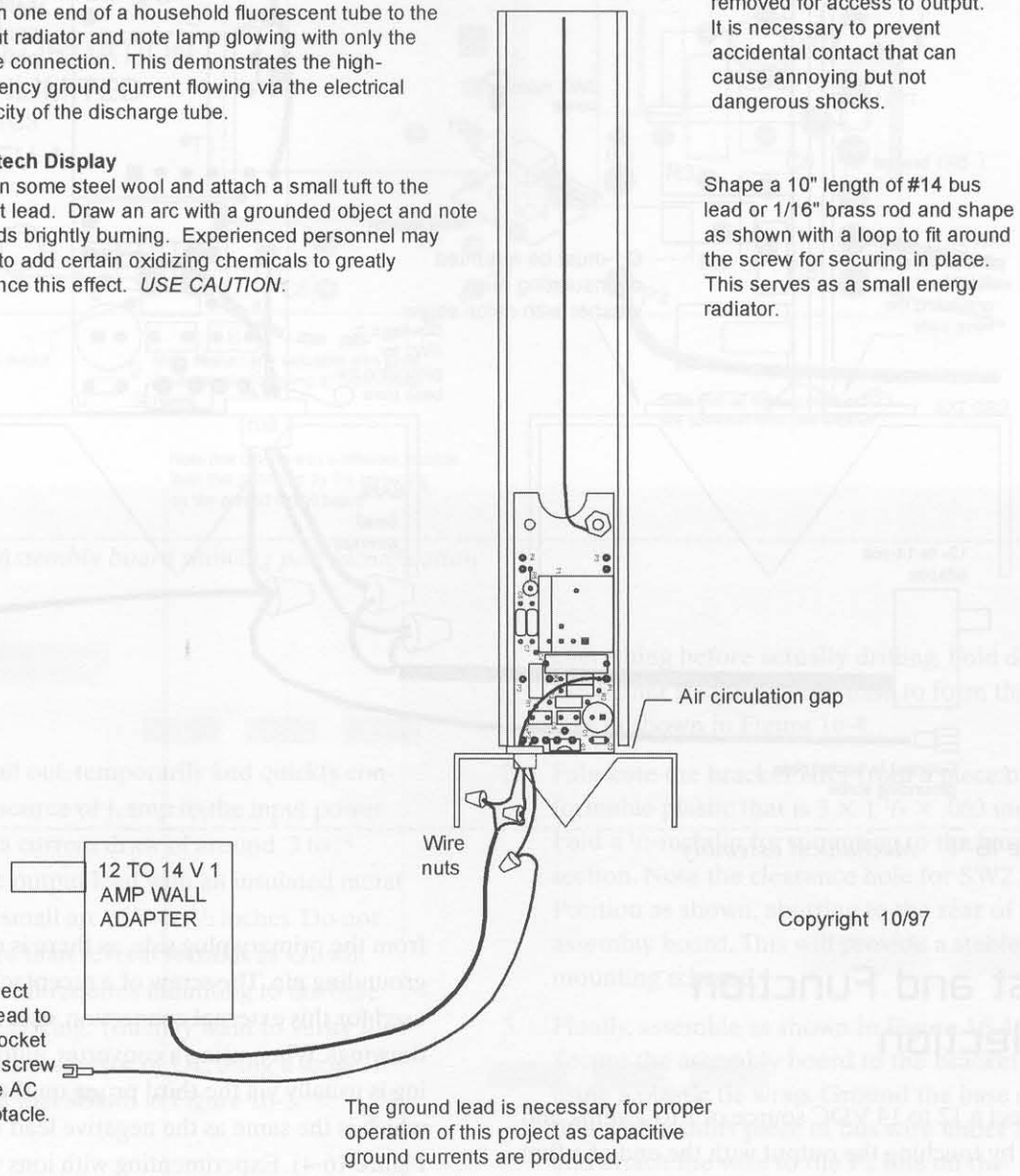

Figure 16-5 *Set up for radiated power*

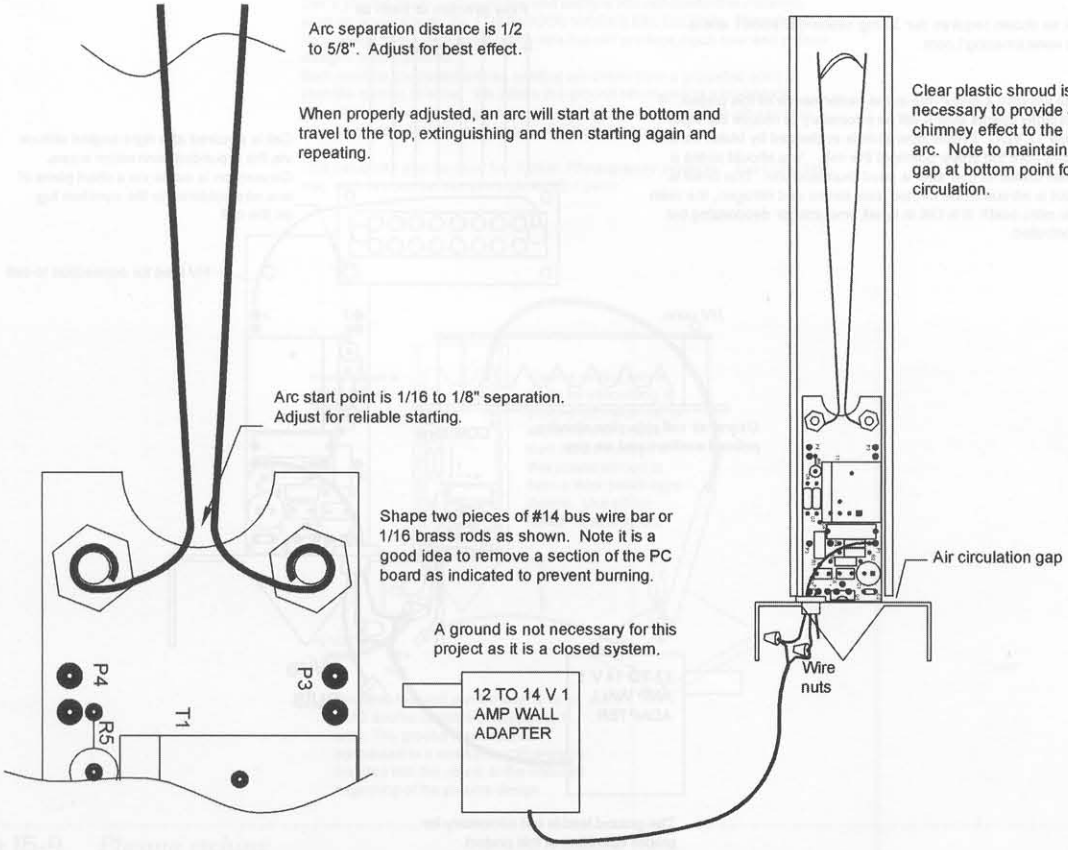

Figure 16- 6 *Jacob's ladder project*

- **Gas discharge power supply** Energize colorful neon and other gas-filled tubes (see Figure 16-5).
- **Electrical pyrotechnic display** Burn up a piece of steel wool in a shower of sparks (see Figure 16-5).
- **Jacob's ladder** Build the popular traveling plasma arc machine seen in Frankenstein movies (see Figure 16-6).
- **Build an effective deodorizing machine** It actually produces fresh air (see Figure 16-7).
- **Magic electric man** Energize a fluorescent tube by the touch of your hand (see Figure 16-8).
- **Plasma etching** Use an electrical arc to create intricate designs in wood and plastic (see Figure 16-9).

Experiments and Applications Using Ions

- **Ion high speed motor** Spin a metal rotor into the thousands of RPM (see Figure 16-1 and 16-10).
- **Force field** Forces an object on to a surface with considerable pressure (see Figure 16-10).
- **Motion freezing** Capture high-speed periodic motion as a moment in time (see Figure 16-10).
- **Charge transmission and capacitor charging** Charge objects to high voltages without contact (see Figure 16-10).
- **Negative ion generator and ion wind** Produce a high flux of beneficial negative ions. Easily detectable (see Figure 16-10).

This project as shown requires our 30 mg ozone cell #SS01 and is available at www.amazing1.com.

Input voltage will play a major role in the performance of this project. If the cell constantly sparks over it will be necessary to reduce the input voltage below 12 VDC. Proper operation is evidenced by bluish coronal fire emanating from the sharp points of the cell. You should notice a fresh air smell similar to that after a good thunderstorm. This smell is not ozone but is nitrous oxide formed from ozone and nitrogen, the main ingredient to nitric acid!! It is OK in small amounts for deodorizing but must be controlled.

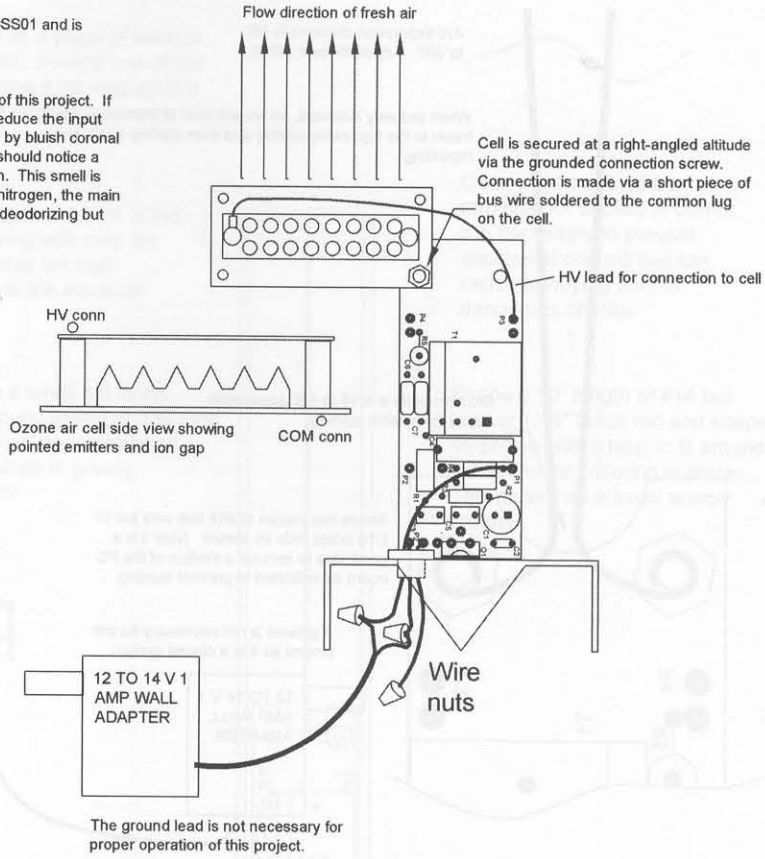

Figure 16-7 *Set up for deodorizing machine*

Caution This project can produce painful and annoying shocks if improperly used. It should only be attempted by those experienced in use of HV for magic shows, props, etc.

Instructions - Grab a fluorescent or neon tube in one hand and with the other **tightly hold** a metal object at least 1" in diameter by 6 to 8 in. in length. (touching as much surface area as possible with your hand). Turn the unit on and contact the HV output with the metal object, noting the lamp in your other hand energizing, indicating an electric current flow through your body without any shock!! Bring the lamp near a large metal object or another person and note it getting brighter. This experiment affects the skin where high-frequency currents flow on the surface of the person's body, lighting the lamp and the capacitive properties of conductive objects where they seemingly attract electrical energy.

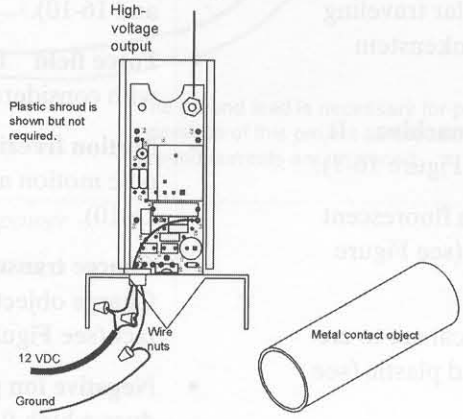

Power to this unit can be any 12 to 14 VDC source capable of supplying 1 amp. The ground lead must be grounded for proper operation.

Figure 16-8 *Magic electric man*

Use a plasma arc to burn in etches and designs into nonconductive materials such as wood, plastic, etc. (THIN WOOD WORKS EXCELLENT). This effect is very similar to the old wood-burning sets but can produce much finer and precise designs once mastered.
Burn must be prestarted with an existing arc drawn from a grounded point to start the carbon channel. We attach the ground return wire to a thumbtack. Once the arc trace is started, it can be continued as desired. Our lab samples were done on a 1/4" piece of mason slightly dampened.

This setup can also be used for ***Kirlian Photography projects.*** Experimenters may wish to consider our available #KIRL1 plans.

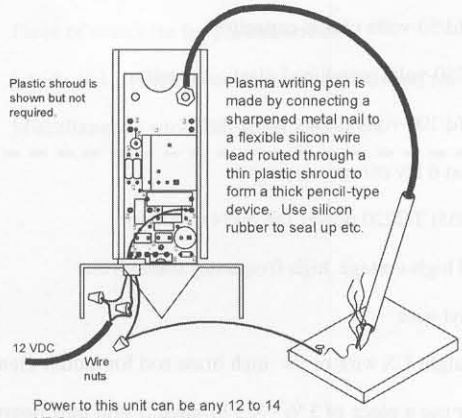

Power to this unit can be any 12 to 14 VDC source capable of supplying 1 amp. The ground lead must be connected to a small pin or thumbtack inserted into the object at the intended beginning of the plasma design.

Figure 16-9 *Plasma etching*

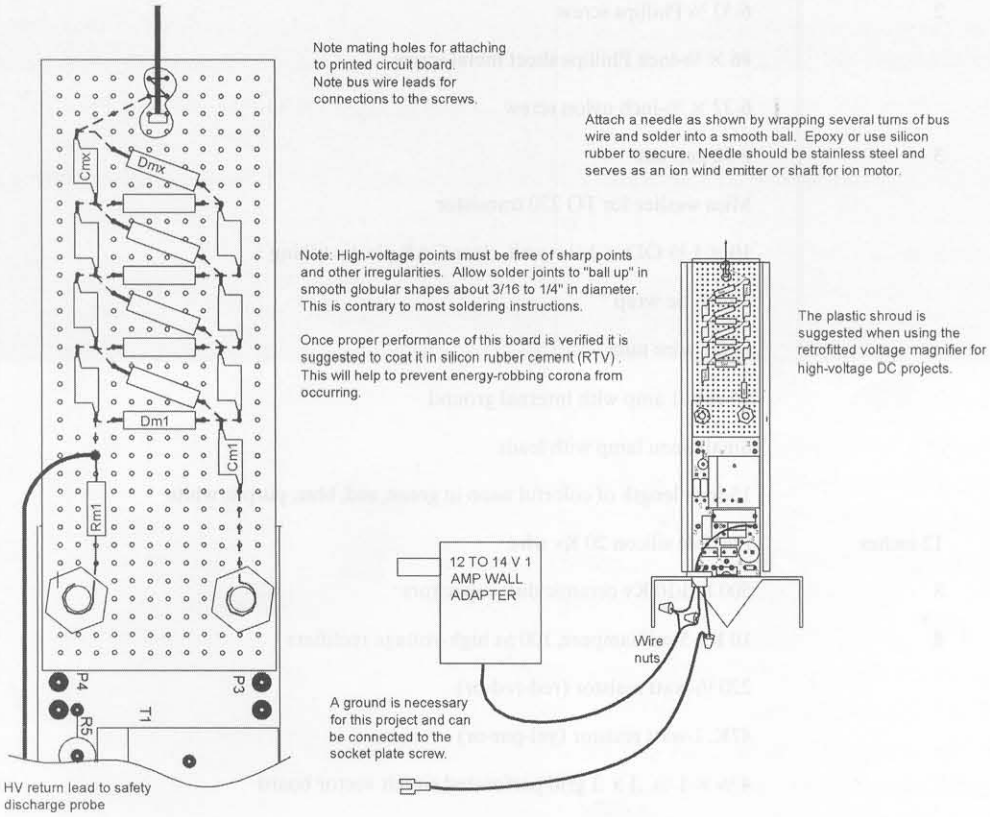

Figure 16-10 *Magnifier retrofit*

Table 16-1 Complete parts list for your Tesla plasma and ion generator

Ref. #	Qty.	Description	DB#
R1		120 ohms, 1 watt (br-red-br)	
R2		1.5K, 1/4 watt (br-grn-red); see note on schematic	
C1		1000 mfd/25-volts electrolytic vertical capacitor	
C2		.1 mfd/50-volts plastic capacitor	
C3		.068 mfd/50-volts plastic capacitor	
C4		1 mfd/250-volts metallized plastic capacitor	
C5		.047 mfd/100-volts plastic capacitor	
C6, 7	2	25 pfd at 6 Kv ceramic capacitor	
Q1		MJE3055t TO220 power tab NPN transistor	
T1		Special high-voltage, high-frequency transformer	28K089
WR20	48 inches	#20 vinyl wire	
WRBUSS	16 inches	#14 straight US wire or 1/16 -inch brass rod for ladder elements in Jacob's ladder	
PCMTC		PCB or use a piece of 3 1/2 - × 1 1/2 -inch .1 grid perf board	PCMTC
BASE		3 × 3 .063 Al plate with folded corners fabricated as shown	
BU1		3/8-inch plastic bushing	
PLTUBE		3/8- × 6-inch length of plastic tubing for safety probe and plasma pen	
BK1		3- × 1 1/4-inch .063 plastic bracket	
SW1	2	6-32 3/4 Phillips screw	
SW2		#6 × 3/8-inch Phillips sheet metal screw	
SW3		6-32 × 1/2-inch nylon screw	
NUT	3	6-32 kep nut	
MICA		Mica washer for TO 220 transistor	
TUBE		10 × 1 3/4 OD × 1 1/16 wall, clear CAB plastic tubing	
TYE1		4-inch tie wrap	
WN1		Small wire nuts	
14/1G		14 volt, 1 amp with internal ground	14DC/1
NE1		Small neon lamp with leads	
NE15		15-inch length of colorful neon in green, red, blue, purple, white	NE15COL
WRHV	12 inches	Flexible silicon 20 Kv wire	
CM1-8	8	500 Pfd/10 Kv ceramic disk capacitors	500/10 Kv
DM1-8	8	10 Kv, 5-milliampere, 100 ns high-voltage rectifiers	VG12
RM1		220 1/2-watt resistor (red-red-br)	
RM2, 3		47K, 1-watt resistor (yel-pur-or)	
PB1		4 1/4 × 1 1/4 .1 x .1 grid perforated circuit vector board	

Table 16-1 Continued

Ref. #	*Qty.*	*Description*	*DB#*
ROTOR		Ion-propelled, four-point aluminum rotor	ROTOR
BALL38		Small brass ball with threaded hole	
		Miscellaneous hardware	
		Small needle for ion motors	
		Piece of masonite for plasma writer	
		6 to 8- × 1 1/2-inch piece of metal tube or rod for electric man experiment	
		Miscellaneous wire, hardware, and so on	

Chapter 14 Electronic Equipment Test Facilities

Chapter Seventeen

Solid-State Tesla Coil

This versatile project shows how to convert a readily available television flyback transformer into a high-frequency, high-voltage generator operating from 12 volts or a battery source (see Figure 17-1). The assembled device is excellent for powering all kinds of gas display pieces from plasma balls to an everyday lightbulb. Chapter 20, "Amazing Plasma Tornado Generator," shows how to actually build a plasma tornado with some fascinating and unique properties. The solid-state Tesla coil can be used to create ozone, corona and brush discharges, and electric pyrotechnics, including a small Jacob's ladder.

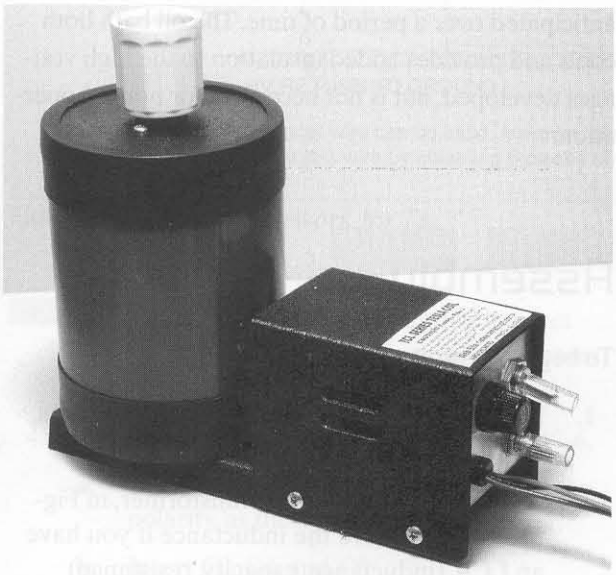

Figure 17-1 *Solid-state Tesla coil*

The construction here includes an easy-to-build circuit costing under $50 with parts readily available. Those that are special, such as a *printed circuit board* (PCB), may be obtained through www.amazing1.com. Flyback will require some rework involving disassembly and the addition of a 10-turn coil. Some small hand and soldering tools are required. The necessary parts are listed in Table 17-1.

Circuit Theory

The output is a result of a resonating action of the secondary coil occurring around 50 to 70 kHz. Under these "tuned" conditions, the transformer requires considerable power and produces high-voltage discharges that would quickly break down the insulation if left on for any period of time. Immersion in an oil bath can help limit overheating and eventual breakdown, but is not necessary if operated as directed.

Figure 17-2 shows the primary transformer T1 being driven by two *metal-oxide-semiconductor field effect transistors* (MOSFETs), Q1 and Q2, in a push-pull configuration. This approach utilizes the full core potential of the flyback and reduces the electrical strain on the MOSFETs as they run very cool, even at 5 to 7 amps input. A driver circuit (I1) generates complementary outputs 180 degrees out of phase

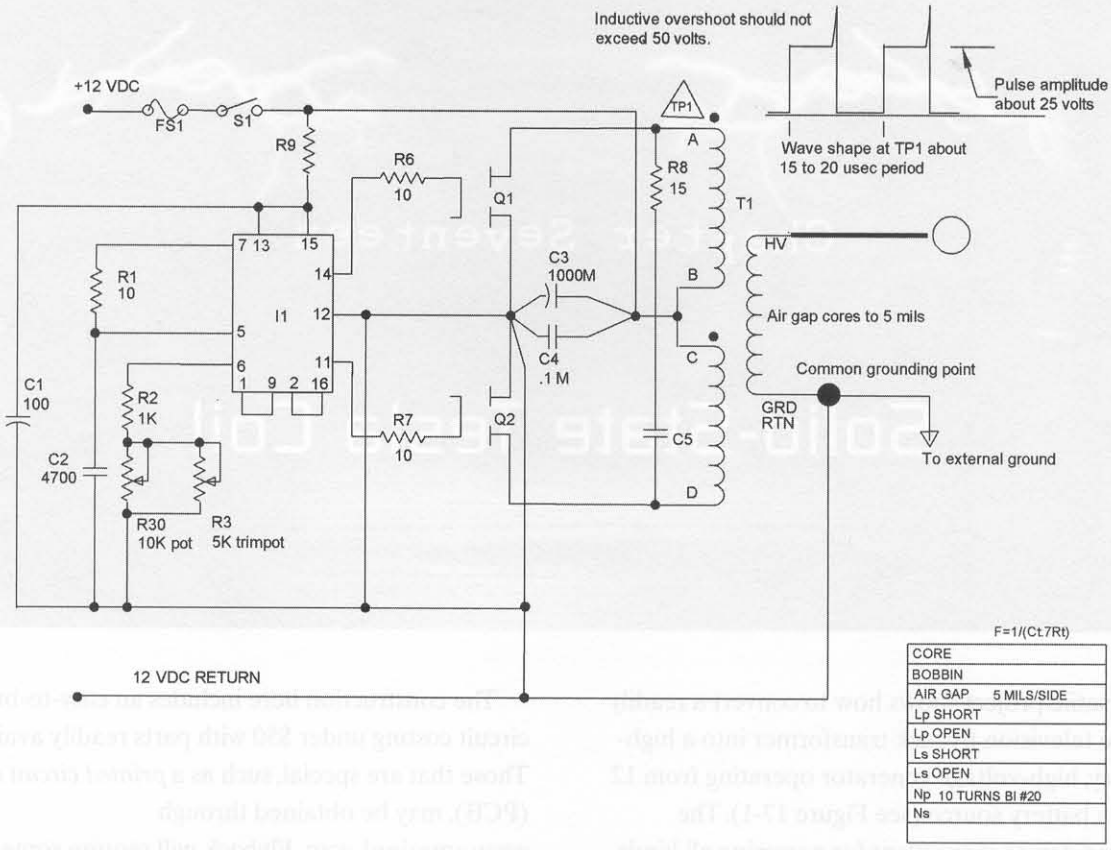

Figure 17-2 *Circuit schematic*

with built-in dead time. The frequency is made variable by control pot R30 and range-adjust trimpot R3. This adjustment allows a wide range of frequency, driving T1 out of the resonant mode where it can power a voltage multiplier and make a variable high-voltage DC source.

Capacitor C2 and R3 determine the operating frequency. Resistor R2 sets the upper frequency limit, and resistor R1 sets the switching dead time for reliable operation. Resistor R9 and capacitor C1 provide decoupling between the MOSFETs and driver I1. Resistors R6 and R7 eliminate parasitic oscillation from occurring on the gates of Q1 and Q2. Resistors R8 and C5 form a snubber network to clamp the voltage spike generated by the leakage inductance of T1. The capacitance of the snubber absorbs the current charge of the spike, limiting the voltage peak to a safe level. The MOSFETs would quickly break down as a result of high-voltage spikes if it were not for this network. C3 and C4 bypass any of the high frequencies, appearing at the primary center point of T1.

The power requirement for the unit is 12 to 14 *volts-direct current* (VDC) at a maximum of 5 to 7 amps when tuned to the resonant frequency of T1. It is suggested that the entire T1 flyback assembly be immersed in transformer oil if full output operation is anticipated over a period of time. The oil bath both cools and provides added insulation to the high voltages developed, but is not necessary for normal operation.

Assembly

To begin the project, follow these steps:

1. Lay out and identify all the parts and pieces, and check them against the parts list.
2. Assemble T1, the ferrite transformer, in Figure 17-3. Measure the inductance if you have an LCR (inductance, capacity, resistance) meter for verifying the values given.

Due to the difficulty in reworking certain flyback transformers this ready-to-use part is available on www.amazing1.com Fortunately some units are easy to disassemble while others are not.

1. Remove the "U" bolt and one of the core halves. Some units may require chipping away the binding material with a pointed object until the cores will come apart using moderate force.

2. Form a bobbin from a piece of plastic or cardboard tubing, as shown, of a length that allows core pieces to touch one another.

3. Bifilarly (parallel) wind two different color #18 magnet wires for 10 turns of these double windings, leaving 8" leads. Note the different colors will help identify the lead ends.

4. Scotch tape the face of each core half so that when reassembled there will be two pieces separating each side of the cores. These should produce a 5 mil gap at each junction.

5. Place the coil wound in step 3 onto the cores as shown and tape tightly into place.

6. Identify the secondary lead return that will be the leads attached to the base. Usually any one will work but it is suggested to use an ohmmeter and use the highest resistive combination. Carefully attach an external wire to this point and strain relieve with some silicon rubber. Verify other leads are not shorted together.

You may verify the inductance as follows secondary open:
A to B&C are around 15 microhenries.
D to B&C are around 15 microhenries

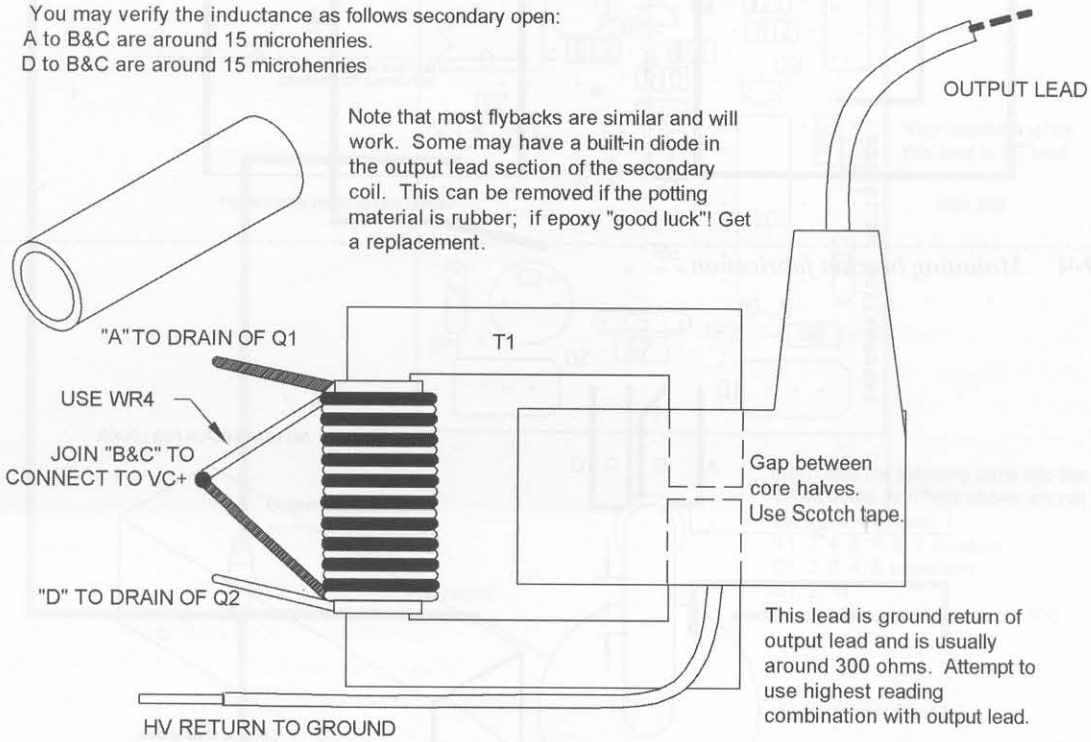

*#18 solid magnet wire can be used; however, high-frequency LITZ wire will give a slight improvement. You can make this wire by obtaining 6 pieces of #26 magnet wire and twist together as a single wire.

Figure 17-3 *Flyback rework for T1*

3. Fabricate the MTGBKT mounting bracket (see Figure 17-4) and the channel/cover combination as shown in Figure 17-5.

4. Assemble the board as shown in Figure 17-6.

   a. Insert capacitors C1 and C3, and note the polarity, as these are electrolytic.

   b. Insert C2, C4, and C5.

   c. Insert R1, R2, R5, R6, R7, and R8. Note that the exposed lead of R8 should attach to Q1 for an easy access test point.

   d. Insert Q1, Q2, and I1, noting the polarity.

   e. Solder in the remaining components and clip off the excess leads.

5. Mount the components to the chassis bracket MTGBKT. Wire the assembled board to the

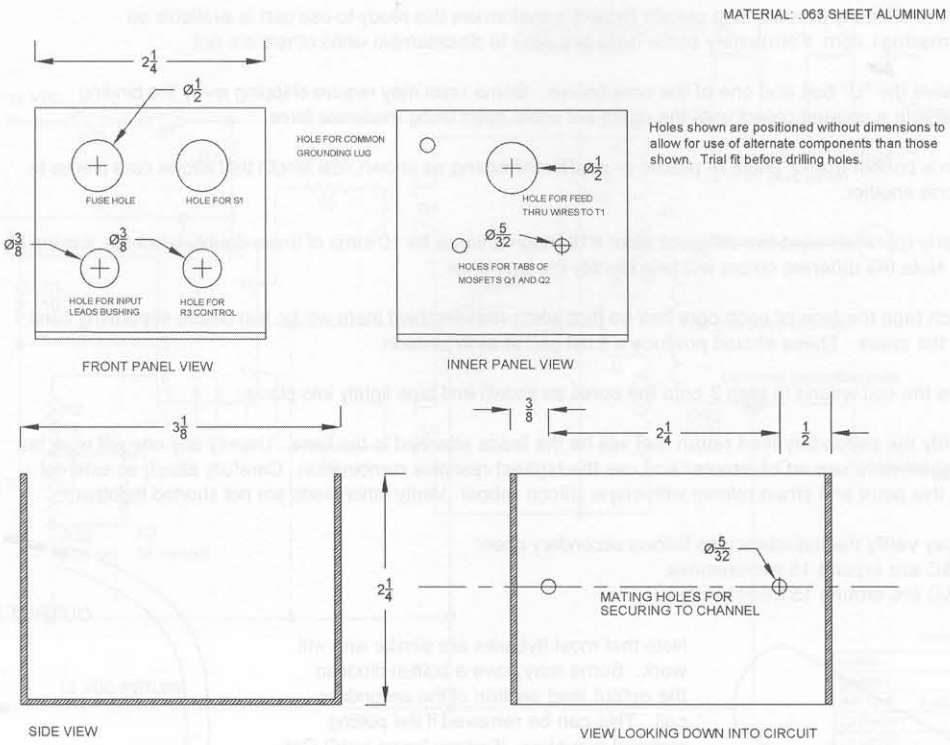

Figure 17-4 *Mounting bracket fabrication*

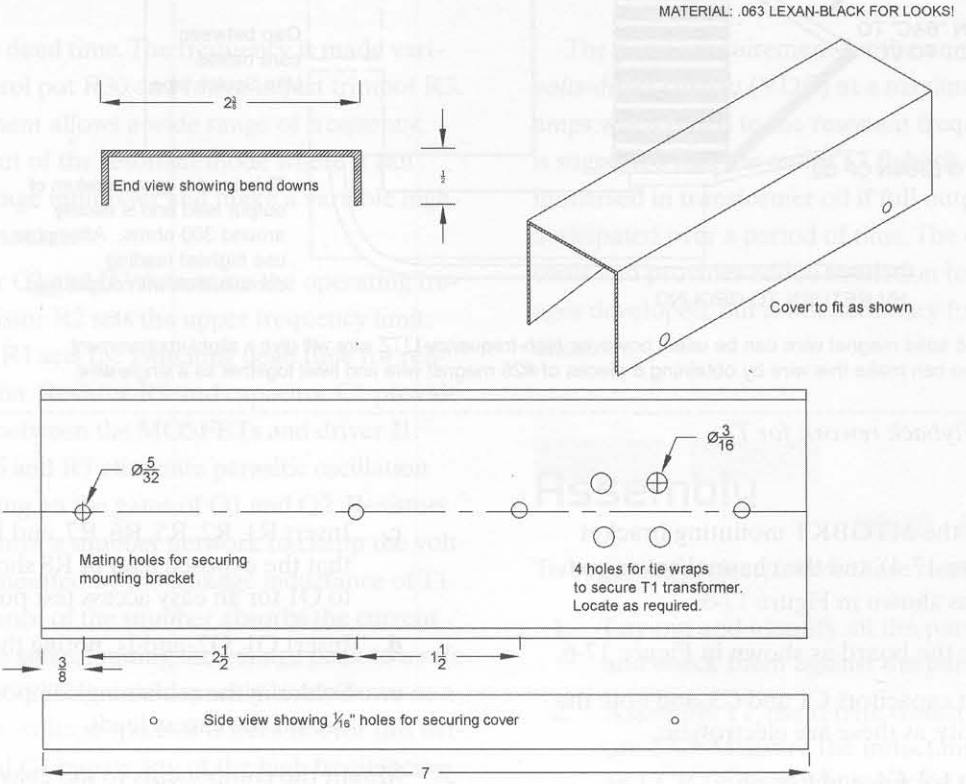

Figure 17-5 *Fabrication of plastic channel and cover*

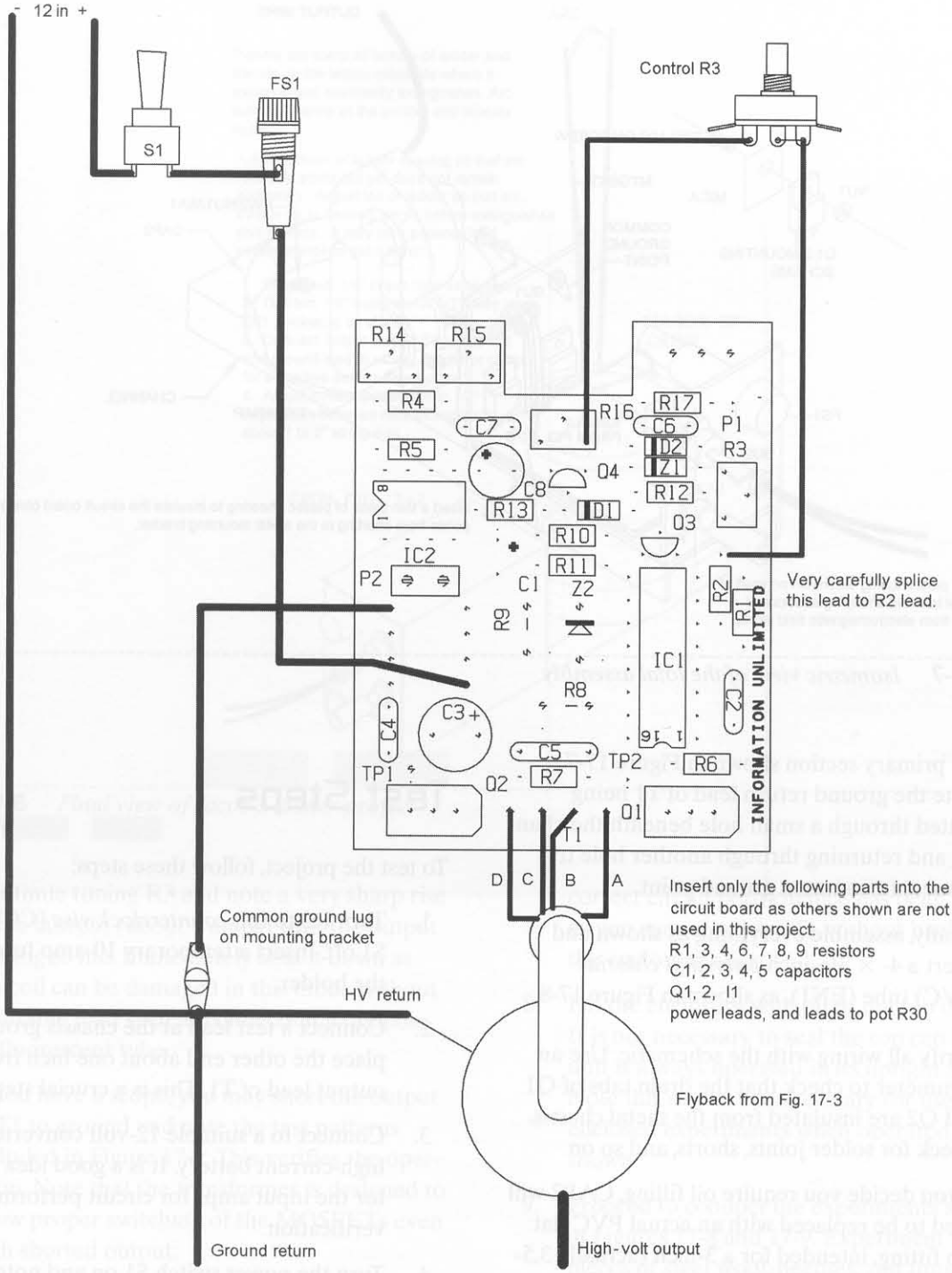

Figure 17-6 *Assembly board and external wiring*

mounted parts and the primary leads of T1, as shown in Figure 17-6 and Figure 17-7, using the appropriate lengths of the #20 vinyl hookup wire. Note the mounting scheme of Q1 and Q2, as they must be insulated from the chassis bracket. Assemble this to the channel via two 6-32 × 1/2 screws and nuts SW2/NU1. Note the thin piece of plastic insulating material for the PC board.

6. Mount a 3.5-inch plastic cap, CAP2, to the channel using two screws, nuts, and small, flat washers SW2/NU1/WA1. Note the four holes for the two tie wraps to secure T1 in place via

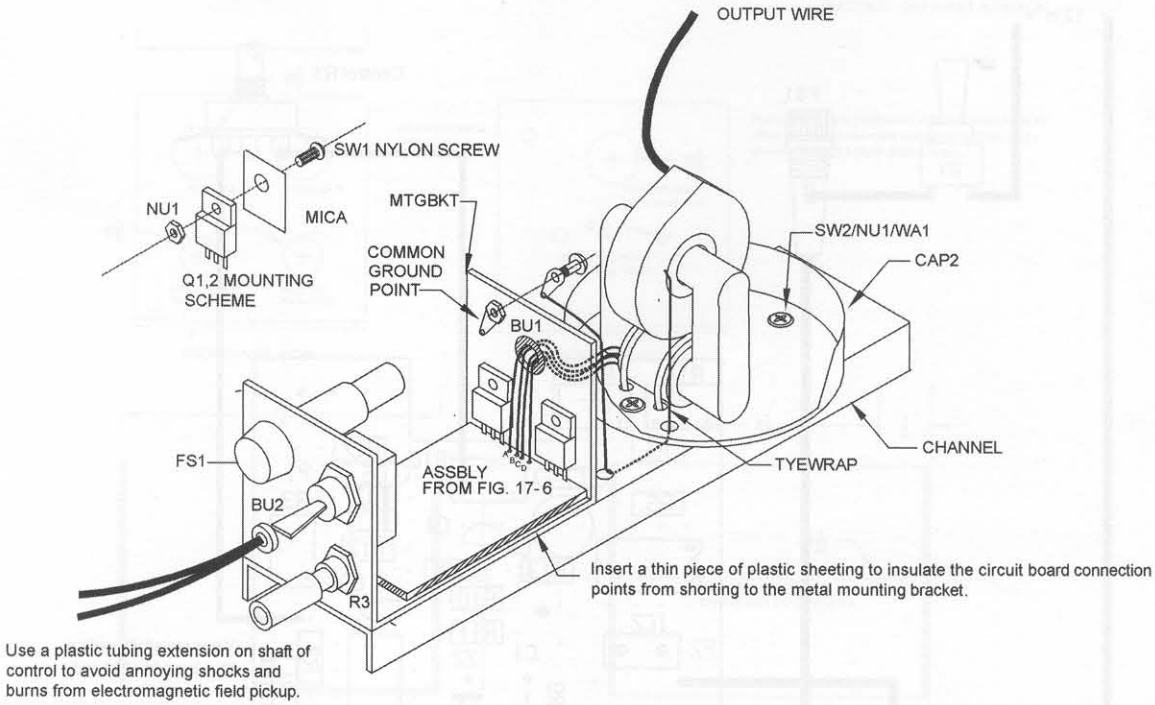

Figure 17-7 *Isometric view of the total assembly*

the primary section shown in Figure 17-7. Note the ground return lead of T1 being routed through a small hole beneath the channel and returning through another hole to connect to common ground point.

7. Finally, assemble everything as shown and insert a 4- × 3½-inch *polyvinyl chloride* (PVC) tube (EN1), as shown in Figure 17-8.

8. Verify all wiring with the schematic. Use an ohmmeter to check that the drain tabs of Q1 and Q2 are insulated from the metal chassis. Check for solder joints, shorts, and so on.

9. If you decide you require oil filling, CAP2 will need to be replaced with an actual PVC flat cap fitting, intended for a 3-inch (actually 3.5-inch OD) schedule 40 PVC tube. These parts are available through most local hardware stores. Add a sealant using PVC cement and primer as directed on the container. Note that the oil filling is only needed for light loads where the output voltage will be excessively high.

Test Steps

To test the project, follow these steps:

1. Turn R3 to full *counterclockwise* (CCW) and S1 off. Insert a temporary 10-amp fuse into the holder.

2. Connect a test lead at the chassis ground and place the other end about one inch from the output lead of T1. This is a crucial step.

3. Connect to a suitable 12-volt converter or a high-current battery. It is a good idea to monitor the input amps for circuit performance verification.

4. Turn the power switch S1 on and note a quiescent current of 1 amp. Slowly adjust R3 clockwise and note a rise in the current of about 2 amps along with some corona at the output terminal. This is the low-output mode and can be used for continuous operation without overheating. Preset R4 to midrange.

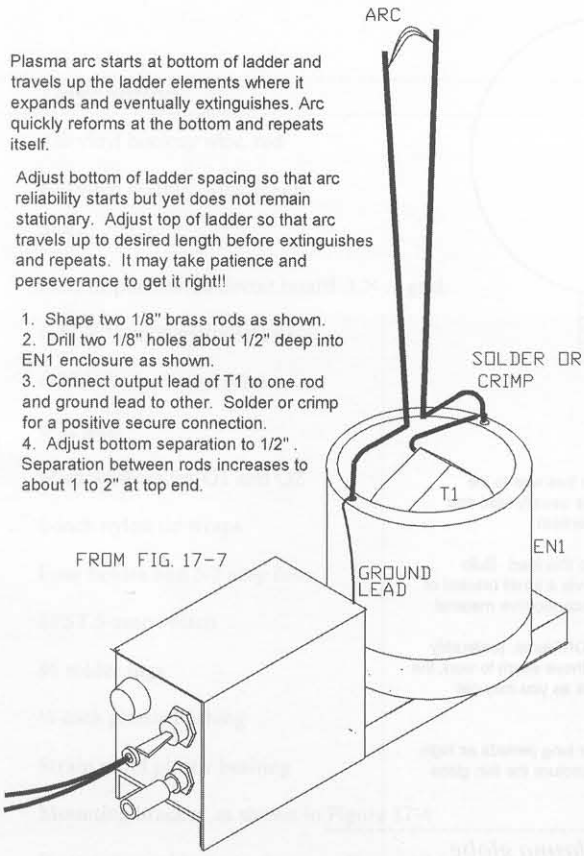

Figure 17-8 *Final view of Jacob's ladder project*

5. Continue tuning R3 and note a very sharp rise in the current (about 7 amps) with the output coming to life. Immediately shut it down as the coil can be damaged in this mode without a suitable load such as connection to a neon or fluorescent tube.

   If you have a scope, you may short the output of T1 to ground and note the test patterns included in Figure 17-2. This verifies the operation. Note that the transformer is designed to allow proper switching of the MOSFETs even with shorted output.

6. Replace the 10-amp fuse with a 5- to 7-amp value.

7. Insert a four-inch enclosure tube (EN1) into the bottom cap (CAP1). Use PVC plumber cement to seal these pieces as they must not leak the transformer oil. Do this only after correct circuit performance has been verified as you cannot service T1 without hacksawing the enclosure apart.

8. Fill the enclosure with oil to the top of the T1. It is not necessary to seal the top cap if the unit is always operated in its upright position. Note this step is not necessary for use with the enclosed experiments when operated as shown.

9. Proceed to conduct the experiments as shown in Figures 17-8 and 17-9. Experiment using pieces of steel wool, needles, and fluorescent and gas-filled lamps, and observe how different materials react to the high-frequency energy. Caution: Obtain some potassium nitrate and sprinkle it onto some steel wool. Note the pyrotechnic display. Danger: Do not use chlorates or perchlorates.

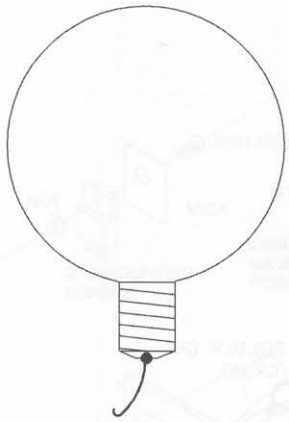

1. Carefully solder a piece of thin bus wire to the center terminal of lightbulb. This is usually lead and solders easily. Caution to not overheat.

2. Connect output lead from T1 to this lead. Bulb should be secured to top of EN1 via a small bracket or other suitable means. Use a nonconductive material.

3. Use a 5", clear 100-watt "DECOR" lamp, preferably one made by Sylvania or GE as these seem to work the best. Experiment with other bulbs as you may get some interesting results.

4. Do not leave this display on for long periods as high-frequency energy may quickly puncture the thin glass envelope of these bulbs.

Figure 17-9 *A poor man's plasma globe*

Table 17-1 Solid-state Tesla coil

Ref. #	Qty.	Description	DB#
R1, 6, 7	3	10-ohm, 1/4-watt resistor (br-blk-blk)	
R2		1-kilo-ohm, 1/4-watt resistor (br-blk-red)	
R3		5 kilo-ohm trimpot	
R9		10-ohm, 1/2-watt resistor (br-blk-blk)	
R8		15-ohm, 3-watt resistor (br-grn-blk)	
R30		10K, 17-millimeter potentiometer	
C1		100 mfd, 25-volt vertical electrolytic capacitor	
C2		4700 pfd, 50-volt polyester capacitor	
C3		1000 mfd, 25-volt vertical electrolytic capacitor	
C4		.1 mfd, 100-volt polyester capacitor	
C5		.0033 mfd, 250-volt polypropylene capacitor	
I1		Integrated circuit driver 3525	
Q1, 2	2	MOSFETs IRF540	
T1		Reworked flyback transformer; see Figure 17-3	FLYGRA
WR1BLK	6 feet	#20 vinyl hookup wire, black	

Table 17-1 Continued

Ref. #	Qty.	Description	DB#
WR1REDK	6 feet	#20 vinyl hookup wire, red	
WR1GRN	6 feet	#20 vinyl hookup wire, green	
WR2	6 inches	#20 bus wire	
PCTCL		PCB or perforated circuit board .1 × .1 grid	PCVARG
SW1	2	6-32 × 1/2-inch nylon screws	
SW2	5	6-32 × 1/2-inch steel screws	
NU1	7	6-32 nuts	
MICA	2	Mica washers for Q1 and Q2	
TYEWRAPS	2	6-inch nylon tie wraps	
FH1/FS1		Fuse holder and 5-7 amp fuse	
S1		SPST 5-amp switch	
LUGS	2	#6 solder lugs	
BU1		3/8-inch plastic bushing	
BU2		Strain relief plastic bushing	
MTGBK1		Mounting bracket, as shown in Figure 17-4	
CHANNEL		Plastic channel base, as shown in Figure 17-5	
PLASTIC		2- × 2-inch thin plastic insulating sheet	
CAP2		3 1/2-inch plastic cap	
EN1		4- × 3 1/2-inch schedule 40 PVC tube	
COVER		Plastic cover, as shown in Figure 17-5	
SLEEVE		1- × 1/4-inch vinyl tube for control pot, which prevents annoying burns	
12DC/7		12-volt, 5- to 7-amp converter for main power	

Table 17-1 Solid-state Tesla coil

Ref. #	Qty.	Description
R1, R2	2	10 megohm resistor (Digi-Key)
R3	1	1 megohm resistor (Digi-Key)
R4	1	100 ohm resistor (Digi-Key)
R5	1	1 megohm resistor (Digi-Key)
R6	1	100 ohm resistor (Digi-Key)
R7	1	1 megohm resistor (Digi-Key)
R8	1	100 ohm resistor (Digi-Key)
R9	1	1 megohm resistor (Digi-Key)
R10	1	100 ohm resistor (Digi-Key)
C1	1	1000 pF, 2 kV ceramic capacitor
C2	1	1000 pF, 2 kV ceramic capacitor
C3	1	1000 pF, 2 kV ceramic capacitor
C4	1	1000 pF, 2 kV ceramic capacitor
C5	1	1 mfd, 100 volt polyester capacitor
C6	1	1000 mfd, 250 volt polyester capacitor
C7	1	Tesla primary capacitor (see text)
Q1, Q2	2	MOSFET (IRF740)
T1	1	Pulse transformer (see text)
T2	1	Tesla primary coil (see text)

Chapter Eighteen

Thirty-Inch-Spark Tesla Lightning Generator

An advanced electrical project is an excellent display for museums or can be a fascinating and rewarding project for the serious and experienced hobbyist. Highly energetic audible and visual bolts of lightning jump into empty space, providing a spectacular effect. This can be an excellent advertising and attention-getting display when properly set up (see Figure 18-1).

The project is shown using basic materials but will require certain specialized parts readily available through our web site at www.amazing1.com (see Table 18-1). Expect to spend around $400 for the special parts with the others available at a local hardware store. The unit utilizes dangerous high voltages and is not recommended for inexperienced personnel. Safety is fully emphasized throughout these construction plans.

Basic Points to Consider Before Building This Project

Your Tesla coil produces large amounts of electromagnetic energy. It may damage computer systems and cause destructive interference to communication and sensitive electrical equipment. The system should be operated within a shielded enclosure, such as a Faraday cage, if near such sensitive equipment.

The primary circuitry, consisting of transformers T1 through T4, produces lethal currents. Human contact with these points, when the system is connected to a power source, can result in a dangerous and fatal shock or serious burns.

Never stand on a conductive surface such as cement or wet ground when operating this equipment. The proper grounding of the system is very important for safe and optimum operation. Omission of the line bypass capacitors C1 and C2 can create an unsafe condition with a voltage breakdown in the primary feed lines.

Never operate the device in a flammable atmosphere as sparks can cause ignition. Low, overhead wooden structures are also prone to fire hazards. Also, always provide adequate ventilation as the discharge produces ozone in large amounts.

It is often a merit of Tesla coil operation to make physical contact with the secondary spark discharge for demonstration purposes. An experienced and qualified person should only attempt to do such a demonstration. The secondary return of the output coil must be directly grounded to earth.

Never leave the system unattended where children or other unqualified personnel may turn it on. Also, there is no need to energize the coil for longer than 10 to 20 seconds at a time.

This coil can produce up to 36-inch discharges. Therefore, it is suggested to position the main power

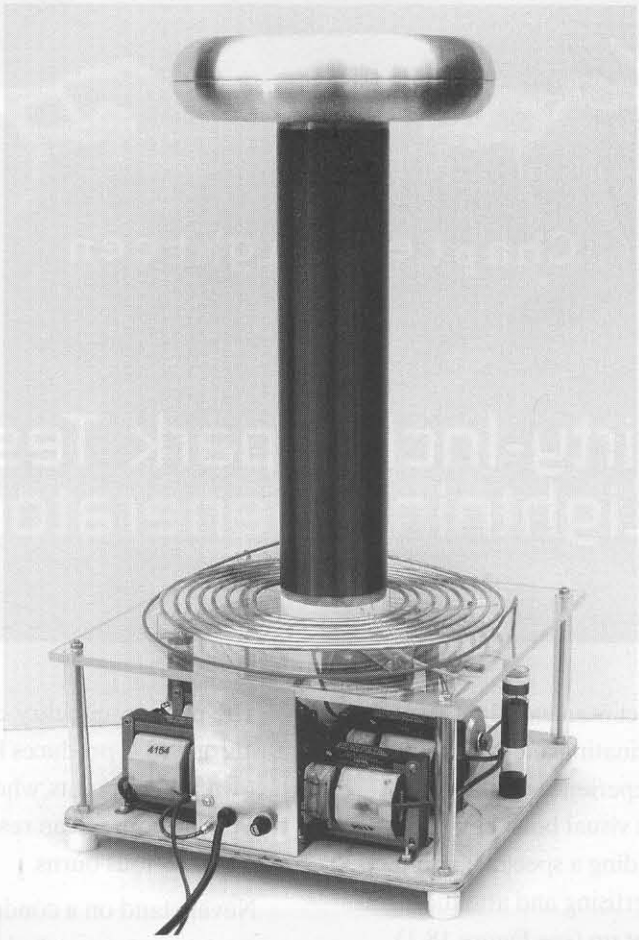

Figure 18-1 *The 30-inch-spark Tesla lightning generator*

switch from a remote point as the sparks may jump toward you if you are standing too close to the output coil. All metal controls should be insulated because contact may cause irritating burns.

Do not use near pacemakers or other similar devices. Always warn spectators as to the possible danger of being near this device if wearing or using sensitive equipment. Also do not operate this device near computers.

Brief Theory of Operation

Transformers T1 through T4 step up the household 115 to 8,000 *volts-alternating current* (VAC) and charges the "tank" capacitor C3. This capacitor now discharges through the *spark gap switch* (SPKGAP) on voltage peaks and steps a pulse of current into the primary coil (LP1). This sets up a resonant voltage of a frequency determined by the inductance of LP1 and the capacity of C3. Energy is now coupled into the secondary coil (LS1), also tuned to the resonant frequency of the primary circuit. The secondary energy now "rings down" with an exponential decaying waveform. The high voltage output produced in the secondary is now a function of the ratios of primary LP1 to secondary LS1 Q factors or capacities.

It is important to note that voltage is not dependent on turn ratios. The spark gap switch must turn off in order to not allow the "secondary ring down" energy to couple back into the primary circuit. The spark gap uses multiple gaps to enhance the positive turnoff and to prevent ionization from excessive heating. The spark gap electrodes can be brass or steel for limited use but should be tungsten for prolonged operation. Input may be wired for 110- or 220-volt operation as shown in Figure 18-2.

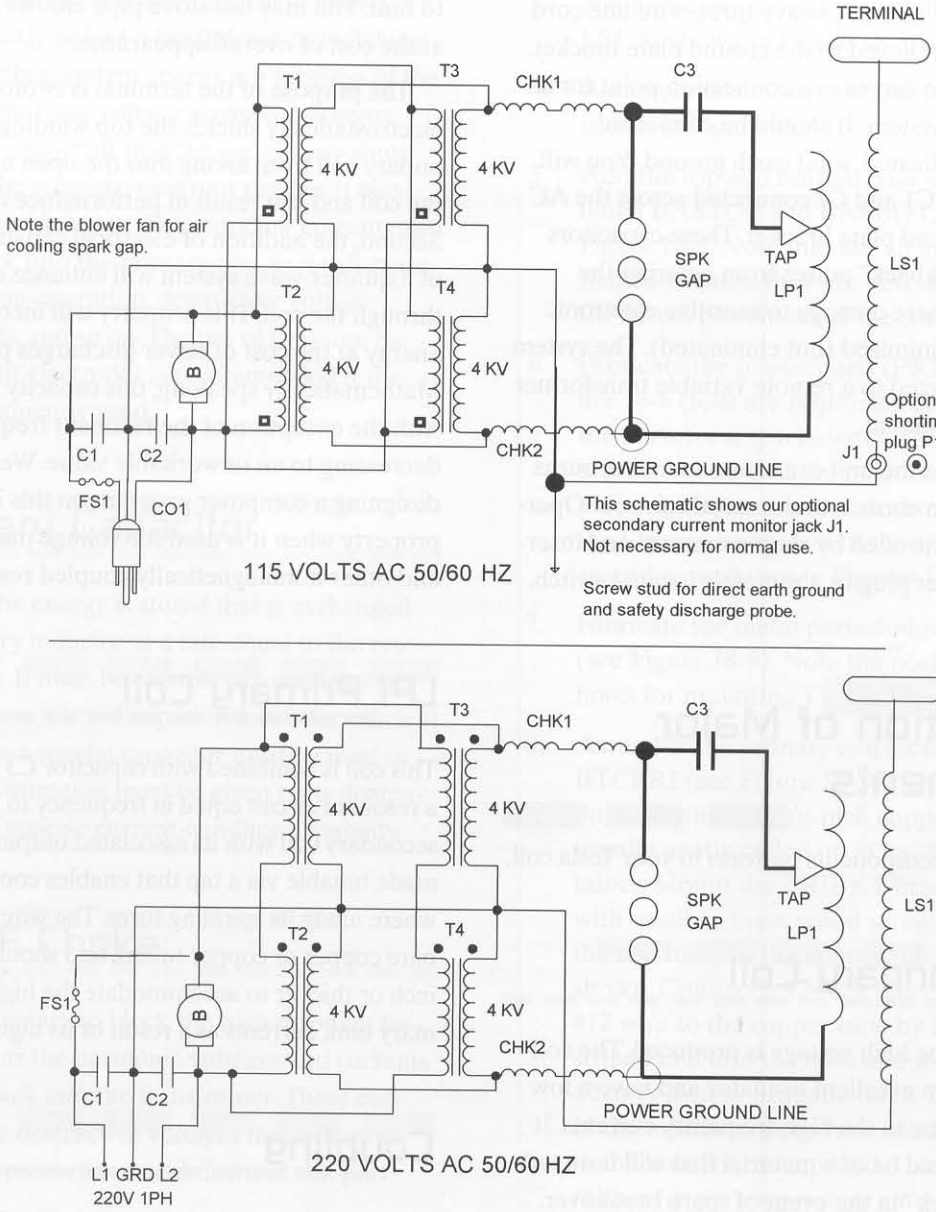

Figure 18-2 *Schematic for both 115- and 220-volt operation*

Circuit Description

Figure 18-2 shows transformer T1, T2, T3, and T4 connected in a parallel series, parallel combination to produce 8,000 volts at 60-*milliampere* (ma) output. The secondary coils are connected to a common neutral point to provide a midpoint ground. This scheme provides 8 Kv between the transformer endpoints but only 4 Kv from any end point to ground. The primaries are wired using standard 115 VAC wiring techniques.

It is important to note the phasing dots shown adjacent to the windings. These must be followed in both primary and secondary circuits. Use Figure 18-2 for wiring points.

Caution: Note that the primary wiring must be isolated from the secondary. The secondary coil is connected directly to the ground plate bracket (GRDPLT).

The fuse (FS1) is rated for 10 amps and is necessary to prevent catastrophic damage from faults,

breakdown, and so on. A heavy three-wire line cord (CO1) is strain relieved to the ground plate bracket. This bracket also serves as a connection point for all grounds of the system. It should be connected directly to a dedicated, solid earth ground. You will note capacitors C1 and C2 connected across the AC lines to the ground plate bracket. These capacitors bypass any "kickback" pulses from entering the house wiring where damage to sensitive electronic equipment is minimized (not eliminated). The system might be connected to a remote variable transformer for output adjustment.

The output of the unit can cause annoying burns and shocks from contact to the metal controls. Operation can be controlled by simple removal and insertion of the power plug or a remotely located switch.

Description of Major Components

The role main components perform in your Tesla coil.

LS1 Secondary Coil

This is where the high voltage is produced. The coil form must be an excellent insulator and have a low dissipation factor to the high-frequency currents. It preferably should be of a material that will not readily "carbon track" in the event of spark breakover. Turns must be even and properly spaced. Turn crossovers or overlaps will always cause serious performance problems and must be avoided like the plague. The resonant frequency of the secondary coil can approximately be calculated by considering it to be a quarter-wave section of the length equal to the actual physical length of the wire used. A reduction in this figure can be fudged due to extra capacitance as a result of ionization at the top of the coil when a discharge occurs.

Output Terminal

The output terminal of your system is shown as a 12-inch toroidal terminal. These are expensive and hard to find. You may use stove pipe elbows as a substitute at the cost of overall appearance.

The purpose of the terminal is twofold. First, it electrostatically shields the top winding of the secondary coil from arcing into the open air. This burns the coil and can result in performance degradation. Second, the addition of electrical capacity to the top of a quarter-wave system will enhance current flow through the coil. This property will increase the spark energy at the cost of fewer discharges per unit time. Mathematically speaking, this capacity is unlimited, with the exception of the resonant frequency decreasing to an unworkable value. We are currently designing a computer program on this important property when it is used for voltage magnification and other nonmagnetically coupled resonant systems.

LP1 Primary Coil

This coil is combined with capacitor C3 and must form a resonant circuit equal in frequency to that of the LS1 secondary coil with its associated output terminal. It is made tunable via a tap that enables connection anywhere along its spiraling turns. The wire used is heavy, bare copper or copper tubing and should be 3/16 of an inch or thicker to accommodate the high-flowing primary tank currents as a result of its high Q factor.

Coupling

The secondary coil LS1 is coupled to the LPl primary coil and must be inherently tuned to the same frequency for efficient operation. The coupling of these circuits must not be too tight as beat frequencies can cause hot spots along the secondary coil. Coupling that is too loose, however, will not allow a proper energy transfer between the circuits. You may want to experiment by changing the position of LS1 by placing it on wooden blocks.

SPKGAP Spark Gap Switch

This is where energy stored in capacitor C3 is switched into the primary inductor LP1. The spark gap electrodes must allow for clean "makes" and

"breaks." Adjustment is usually critical to allow C3 to charge sufficiently before a breakdown or switching occurs. Remember, system energy is a function of the square of the charging voltage across the primary capacitor. It is important that the gap cleanly shuts down before the secondary current reaches it maximum value. The energy in the secondary current must not couple back into the primary one, as it will cause erratic spark gap operation, destructive voltage nodes, hot spots, and so on. The use of tungsten for the spark switch electrodes is recommended if the coil is to be frequently used.

C3 Primary Capacitor

This is where the energy is stored that is exchanged with the primary inductor at a rate equal to the resonant frequency. It must be capable of handling high currents and have a low dissipation factor for efficient operation. Note a special capacitor must be used in this circuit and attention must be given to its dissipation factor and reverse current-handling capability.

CHK1—RF Choke

This part is necessary to block the high resonant frequency as well as the harmonic voltages and currents from feeding back into the transformer. These currents can create destructive voltages that will most certainly cause premature breakdown of this part.

Assembly Steps

The following steps are those used by our laboratory when assembling this device. You may implement your own ideas, but we cannot guarantee the performance claimed if circuit parameters and values are changed. The dimensions shown may also vary with different mechanical parts.

1. Study all of the the plans, schematics, and figures.
2. Identify the parts and pieces if you purchase the kit. Important: The hardware located near the primary coil must be brass.
3. Assemble the secondary coil designated as LS1, as shown in Figure 18-3.
4. Assemble the chokes, designated CHK1, as shown in Figure 18-4 (two are required).
5. Add the top and bottom base sections, designated BASTOP and BASBOT, as shown in Figure 18-5. Note that not all holes are prefabricated because they are best determined by the actual placement of the components.
6. Fabricate the plastic parts (PRIBKT) per Figure 18-6 (four are required). Then, fabricate the parts for a spark switch, as shown in Figure 18-7. Note that the hole location on these pieces must be accurate, as shown. Also note the top and front view of the spark switch assembly, as shown in Figures 18-6 and 18-8.
7. Fabricate the metal parts designed GRDPLT (see Figure 18-9). Note the position of the holes for mounting T1, T2, T3, and T4.
8. Assemble the primary coil section designated BTCPRI (see Figure 18-10). This can easily be done because the 3/16-inch copper tubing is usually neatly coiled up in its shipping container. Mount the PRIBKT brackets in place with small #6 brass wood screws. Carefully fit the coil turns of the copper tubing in place as shown. Connect a 12-inch piece of insulated #12 wire to the copper tube by inserting the striped end into the tube and soldering it with a heavy iron or propane torch. Note the end of the outside copper tube winding adjacent to the hole for the tap lead. Use some silicon rubber (*room temperature vulcanizing* [RTV] adhesive) and apply at slots in PRIBKTS to hold the copper tubing in place. Allow 24 hours to set. Cut a 3-foot piece of the #12 wire for the coil tap lead and attach the crocodile clip for connection to the copper tube.
9. Assemble the parts to the bracket, designated GRDPLT, as shown in Figure 18-9. Note the fuse holder, strain relief, grounding screw (GRDSCR), and current monitor jack, as shown in Figure 18-11. Positioning is not critical but should allow adequate clearance of the connection points.

The transformers are mounted to the bottom base (BASBOT) via suitable hardware. Use Figures 18-12a and 18-12b and attempt to follow the layout as closely as shown. Note that

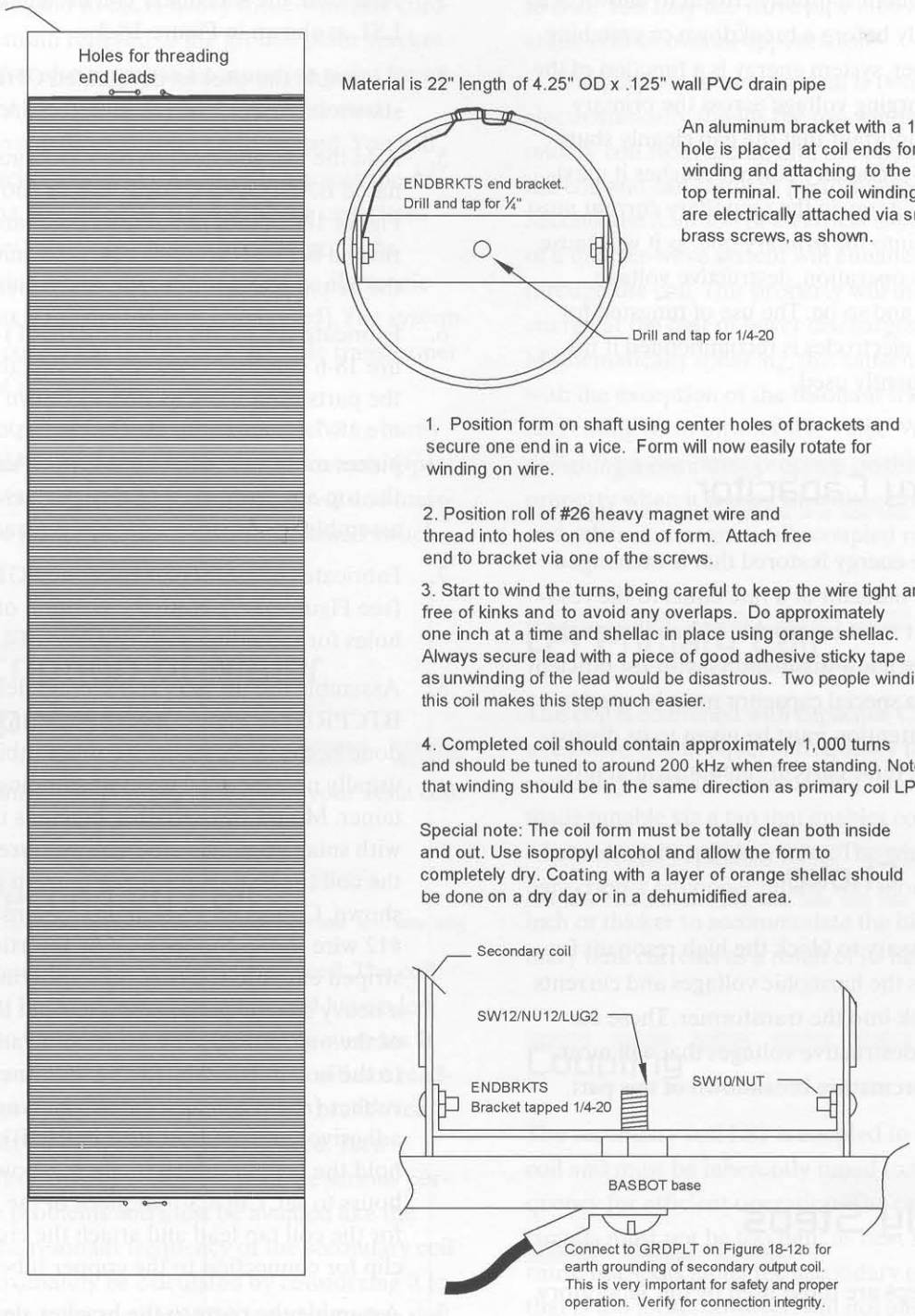

Figure 18-3 *Secondary coil assembly*

the inner mounting legs of the transformer are electrically contacted to the grounding bracket GRDPLT, providing a positive earth ground for the transformer frames.

Finally, assemble everything as shown in the remaining figures. Note the individual schematic showing both 115 and 230 VAC operation. Note the wire nuts are shown connecting to primary wires. You may use terminal strips or another more suitable means. Remember these points are at 115/220 VAC and must support at least 5 amps.

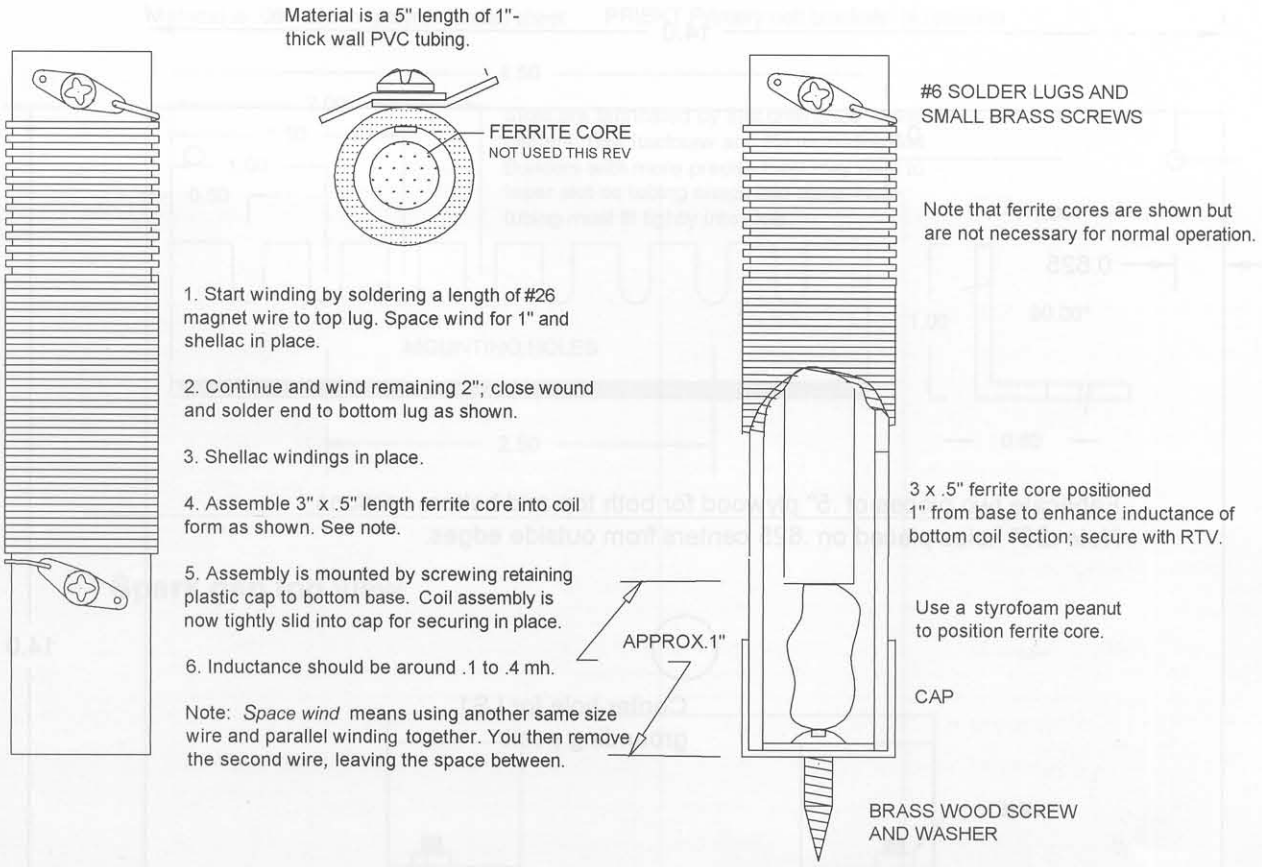

Figure 18-4 *CHK1 choke protection coils*

The wire in spark gap assembly is as shown in Figure 18-13. Note the mounting of C3 via two heavy tie wraps.

Testing Steps

If you live in a congested area, close to an airport, or near computers and other sensitive electronic equipment, it will be necessary to test this system within a Faraday cage (FAR1). It is also strongly advised to test this system in an area with wooden floors, as dangerous ground currents resulting from accidental contact will be reduced. To conduct the test, follow these steps:

1. Carefully position the secondary coil bottom bracket over the center screw and rotate until it secures in place.
2. Verify the correct wiring, the proper clearance of high-voltage points, and a proper grounding to the GRDPLT ground plate.
3. Set the two spark gaps to about 1/16 of an inch.
4. Connect the tap lead to the outermost primary turn. You will note that the flexible primary tap lead is used as a full turn of the primary winding and adds another turn depending on the position of the tap connection. This is important, as the system may not properly tune with the toroidal terminal without this added turn.
5. Connect a meter to J1 or short (not necessary for a basic setup).
6. Attach a toroid or another similar terminal. Note that a metal bowl will suffice in a pinch. Screw on to the top secondary bracket and secure with a nut.
7. You may use a 2- to 3-inch screw as an output terminal if not using the toroid. Attach and

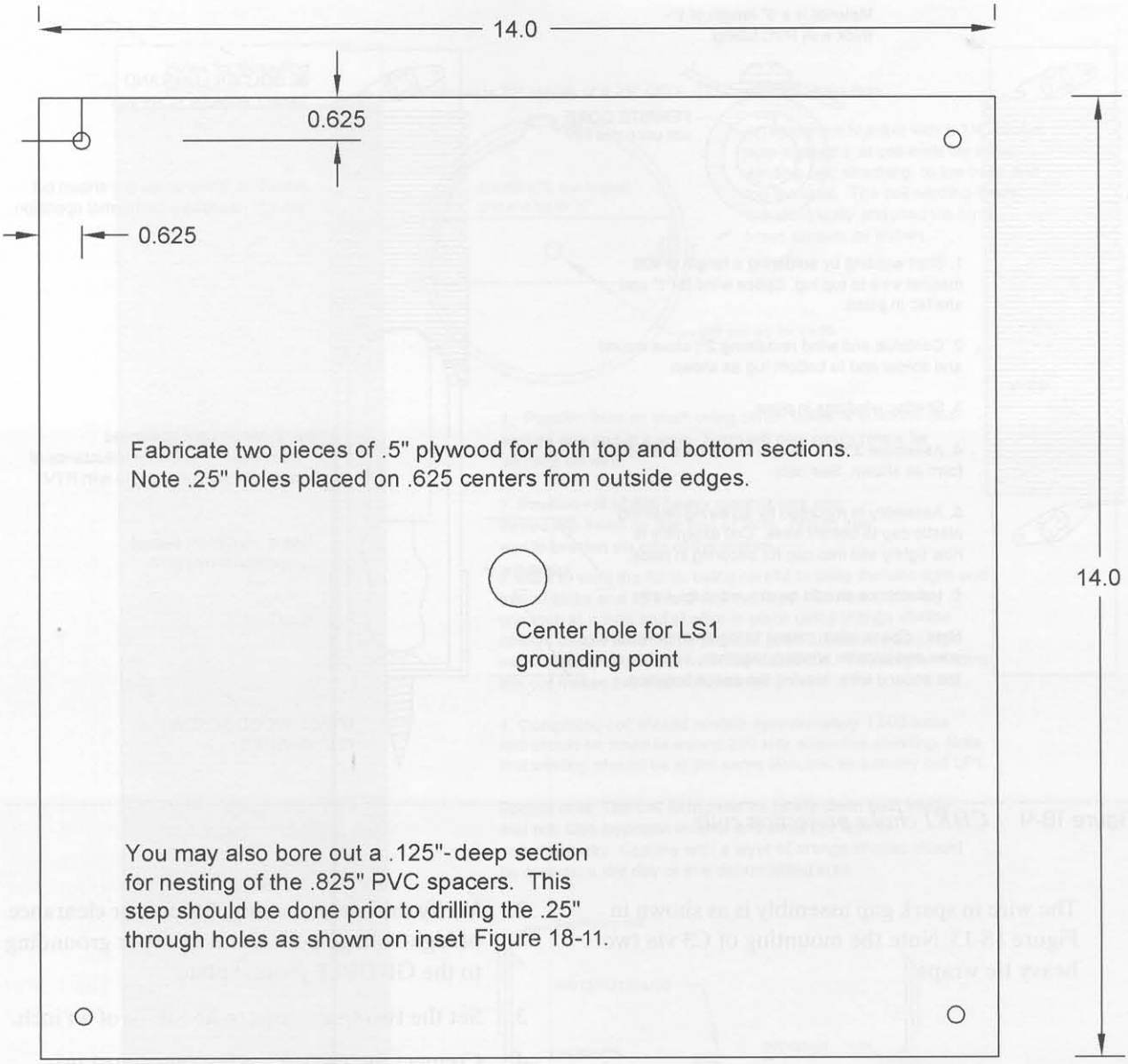

Figure 18-5 *Fabrication of both the top and bottom pieces BASTOP and BASBOT*

screw into the center hole of the top bracket from the bottom. Note that maximum output will require the tap lead now being moved inwards several turns. Do not allow discharges to occur from the actual top winding as you may cause burning of the PVC coil form.

8. Place a grounded contact approximately 8 inches from the terminal and secure it in place.
9. Quickly plug the unit in and note a discharge occurring at the test contact. If not, recheck the system.
10. Separate the test contact from the point where the spark is erratic and connect the tap to the next inner winding on LP1. Reapply power.
11. Repeat the previous steps in an attempt to find the exact point on the primary tap for maximum output. Slightly open the spark gaps and repeat. Note that discharges into open air will be considerably longer than those from point to point. You may tune for this effect if the unit is for display purposes.

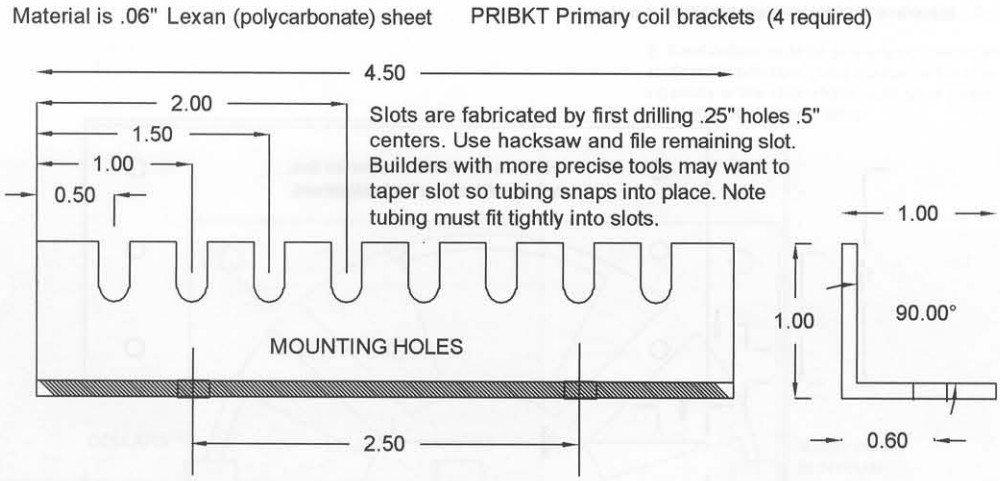

Spark gap top view

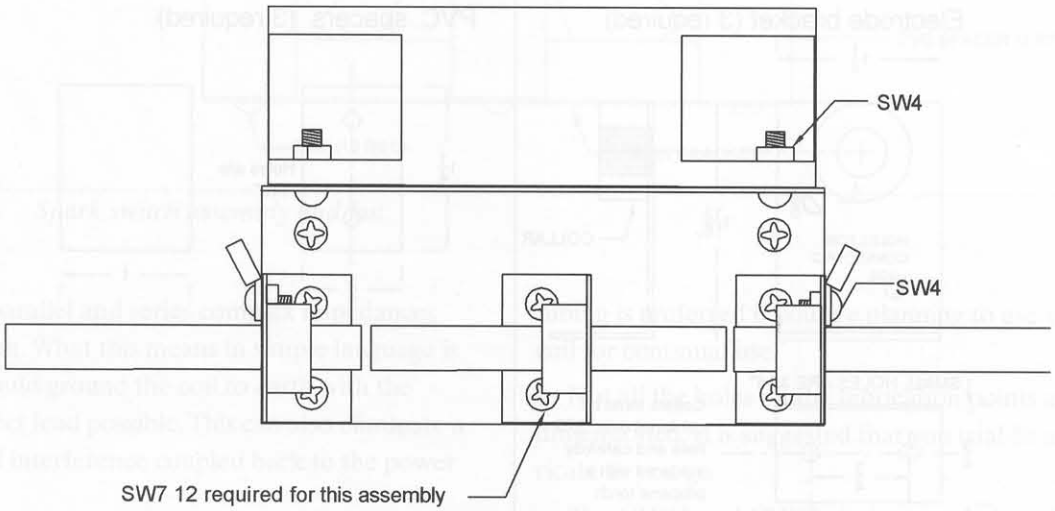

Figure 18-6 *BTCFABP fabrication of plastic parts*

Note that there will be a second-order differential effect when the gap is opened due to changes in dynamic capacity resulting from space volume ionization. This effect will manifest itself as requiring slightly more inductance in the primary. We are currently developing an advanced program in MATHCAD for those into the complex higher math and electrical physics of resonant high-voltage systems.

12. Experiment by using different values of coupling by raising the secondary coil on wooden blocks and readjusting all parameters. A round or square wooden block that fits inside the secondary coil will position and secure it in place. Always use brass screws for fastening. You may have to remove the bottom bracket. Use your own ingenuity in performing this experiment.

It is also a good idea to keep notes as you experiment.

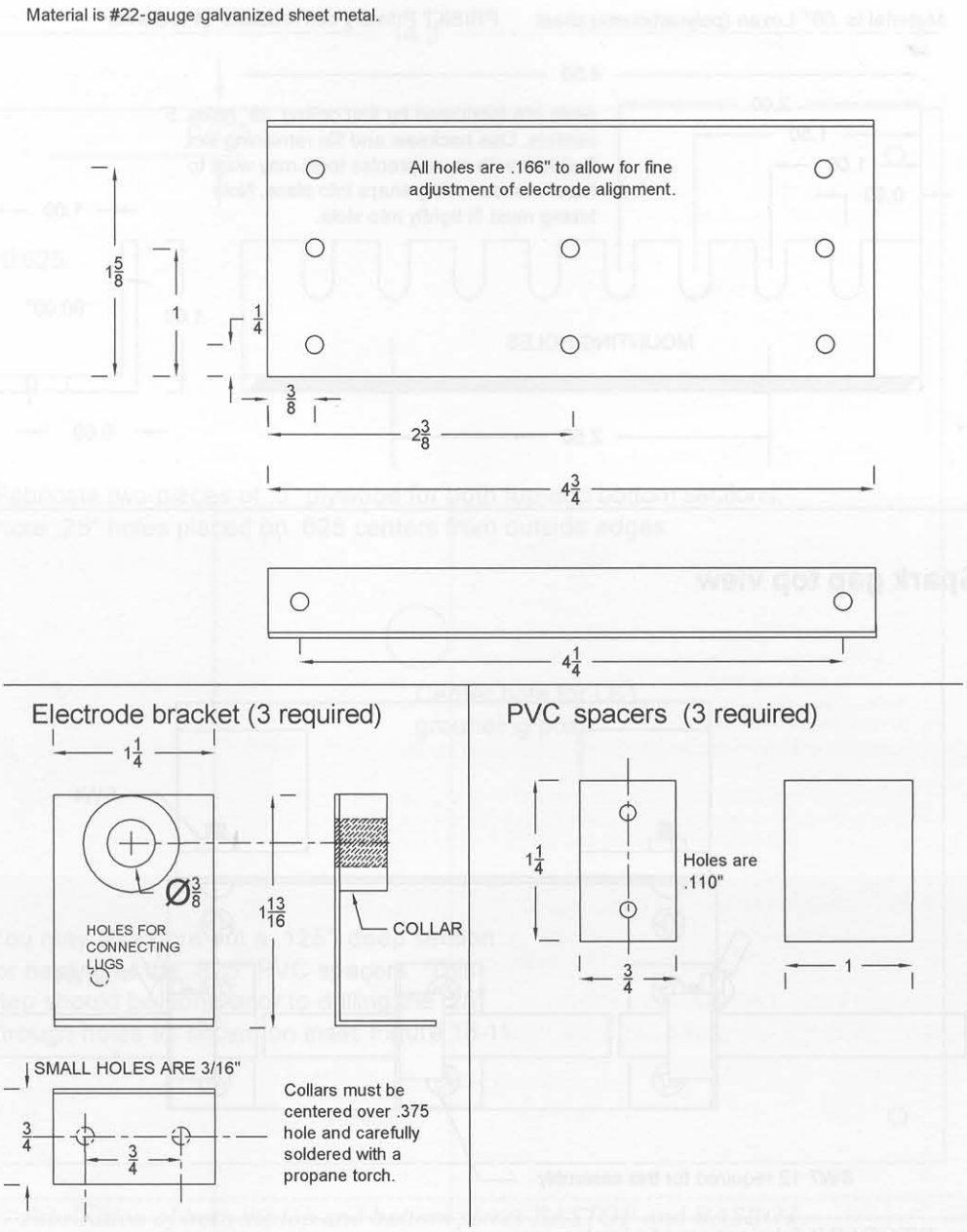

Figure 18-7 *Spark switch fabrication*

Special Notes

Note the optional current meter (M1) can be used for an indication of fine-tuning by adjusting to a maximum value. An initial operation where tuning may be way off can result in erroneous current peaks, especially if coupling is too tight. Use a thermo couple device if available.

The secondary coil in the system acts similar to a quarter-wave antenna with top loading capacity. This means a current node at the base in amps. If you depend on the green wire of the line cord for grounding, you force your electrical wiring to become a part of this system. This is not a good idea as a voltage gradient can result along the wiring run. This voltage value is determined by many complex factors such as frequency, harmonic content, and, of course, a varying

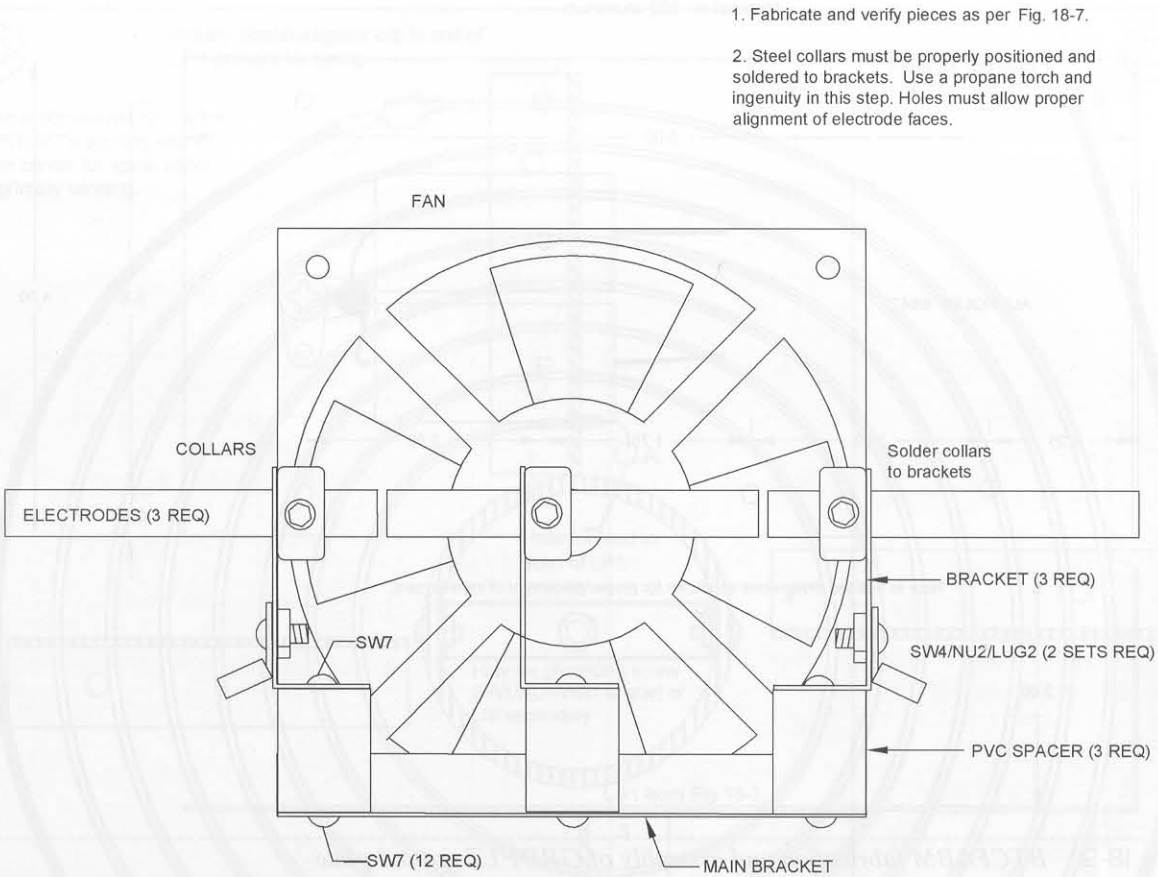

Figure 18-8 *Spark switch assembly and fan*

amount of parallel and series complex impedances along this run. What this means in simple language is that you should ground the coil to earth with the shortest direct lead possible. This can also eliminate a good part of interference coupled back to the power line.

The coil form used for the secondary coil should be an excellent insulator, plus be a relatively lossless dielectric at the operating frequency. A ruby mica coil form would be ideal if it existed. A material with this property can be expensive. Thin-wall PVC tubing, while not the best, is a good compromise between cost and performance. Unfortunately, PVC is hygroscopic (it absorbs moisture), but it can be treated by driving out the moisture with a heat gun and then sealing in orange shellac or an equivalent (do this on a dry day).

Caution: PVC tubing may give off undesirable gases under high-voltage stress. Lexan polycarbonate tubing is preferred if you are planning to use your coil for continual use.

Not all the holes on the fabrication points are dimensioned. It is suggested that you trial-fit and fabricate as you go.

The CHK1 and CHK2 chokes are designed to provide a relatively high impedance to the resonant operating frequency and any of its associated harmonies. This is necessary to choke off these high frequencies from reaching the power transformer, T1 to T4, where damage to the secondary winding inevitably results. You may use 1K 50-watt wire-wound resistors in place of these chokes.

The spark gap is connected across the transformer to limit voltage stress on their secondary windings. The gaps are fabricated from three pieces of 2-inch × 3/8-inch tool steel or tungsten rod. A muffin fan keeps the assembly cool (see Figure 18-13). Be cautious of any ultraviolet hazards. Spark gap discharges emit

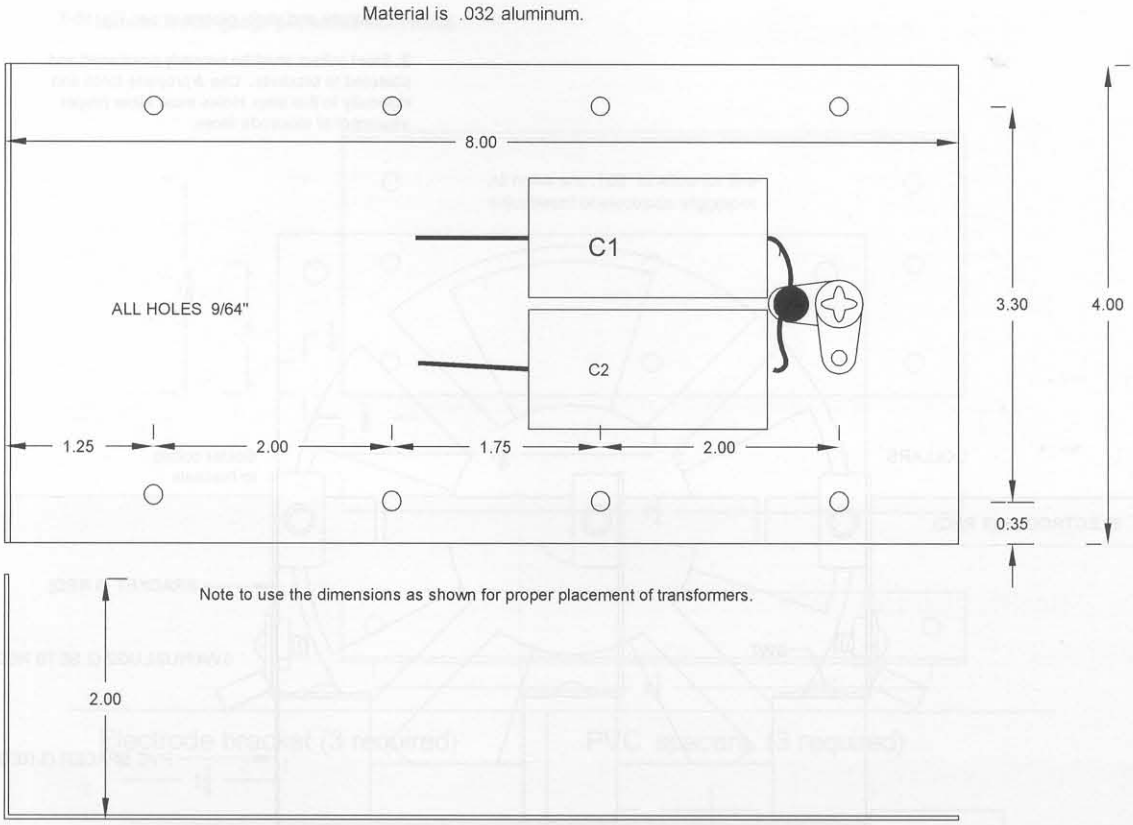

Figure 18-9 *BTCFABM fabrication and assembly of GRDPLT ground plate*

hazardous ultraviolet emissions and must not be viewed directly. Observe them through a clear piece of plastic or protective eyewear.

Tungsten is recommended for long-term reliable coil operation. However, tungsten is expensive and those requiring short-term operation may use drill rod/tool steel. It will be necessary to reface electrodes more often than if they were tungsten.

Use the remaining four feet of #14 wire to make a ground discharge probe that must connect directly to the ground plate (see Figure 18-11). This can be used for drawing sparks from the output of the coil.

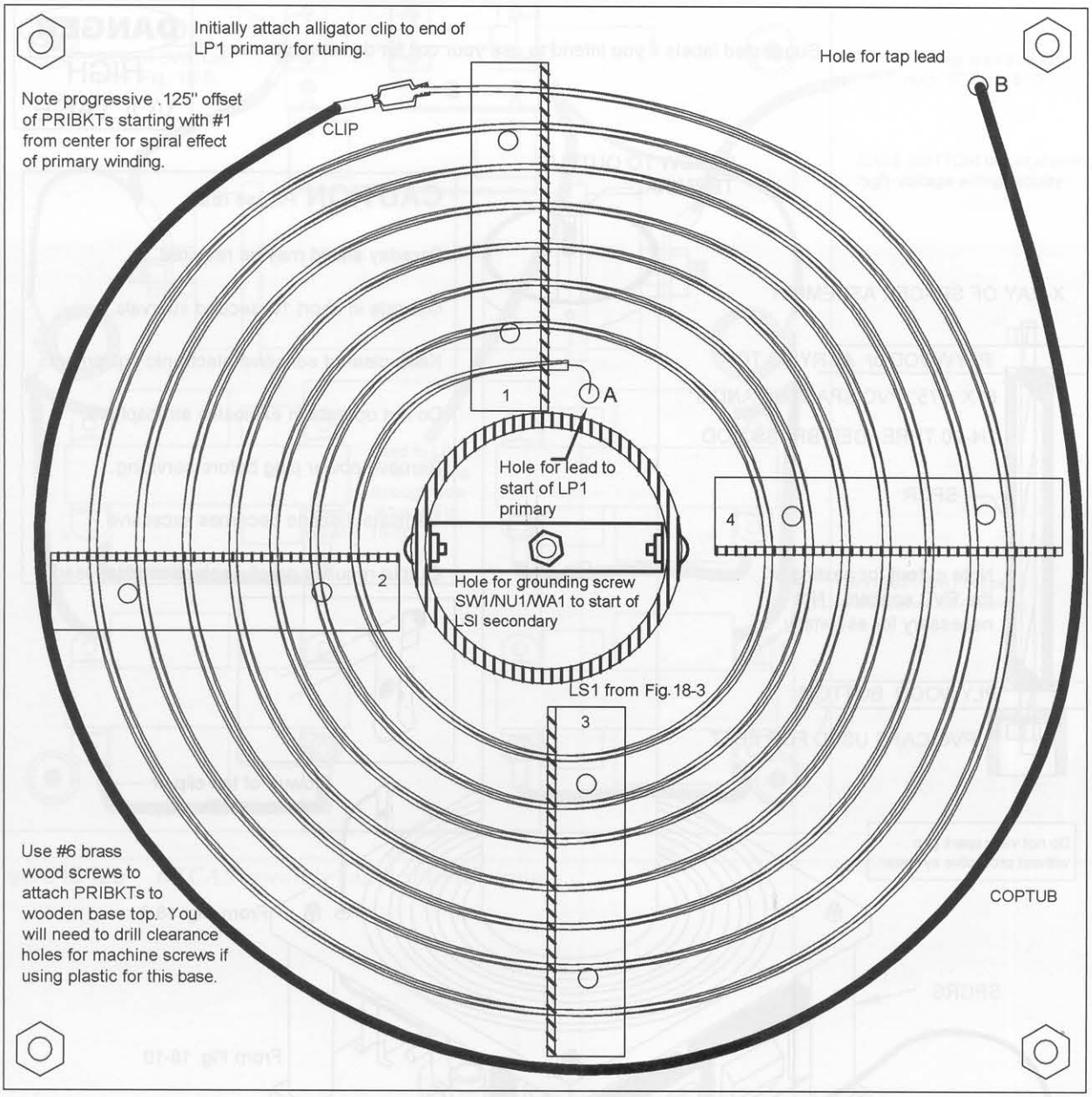

Dashed lines show possible routing of tap lead when used with optional toroidal terminal. This is a rough adjustment of tap setting and will require repositioning to obtain maximum output. It does, however, suffice as a starting point and should produce some impressive streamers into open air. You will note the routing of this tap lead is in the direction as the primary winding and actually adds a turn. Going the other way would effectively remove a turn. The routing and positioning shown will vary dependent on assembly.

Figure 18-10 *Assembly of primary coil*

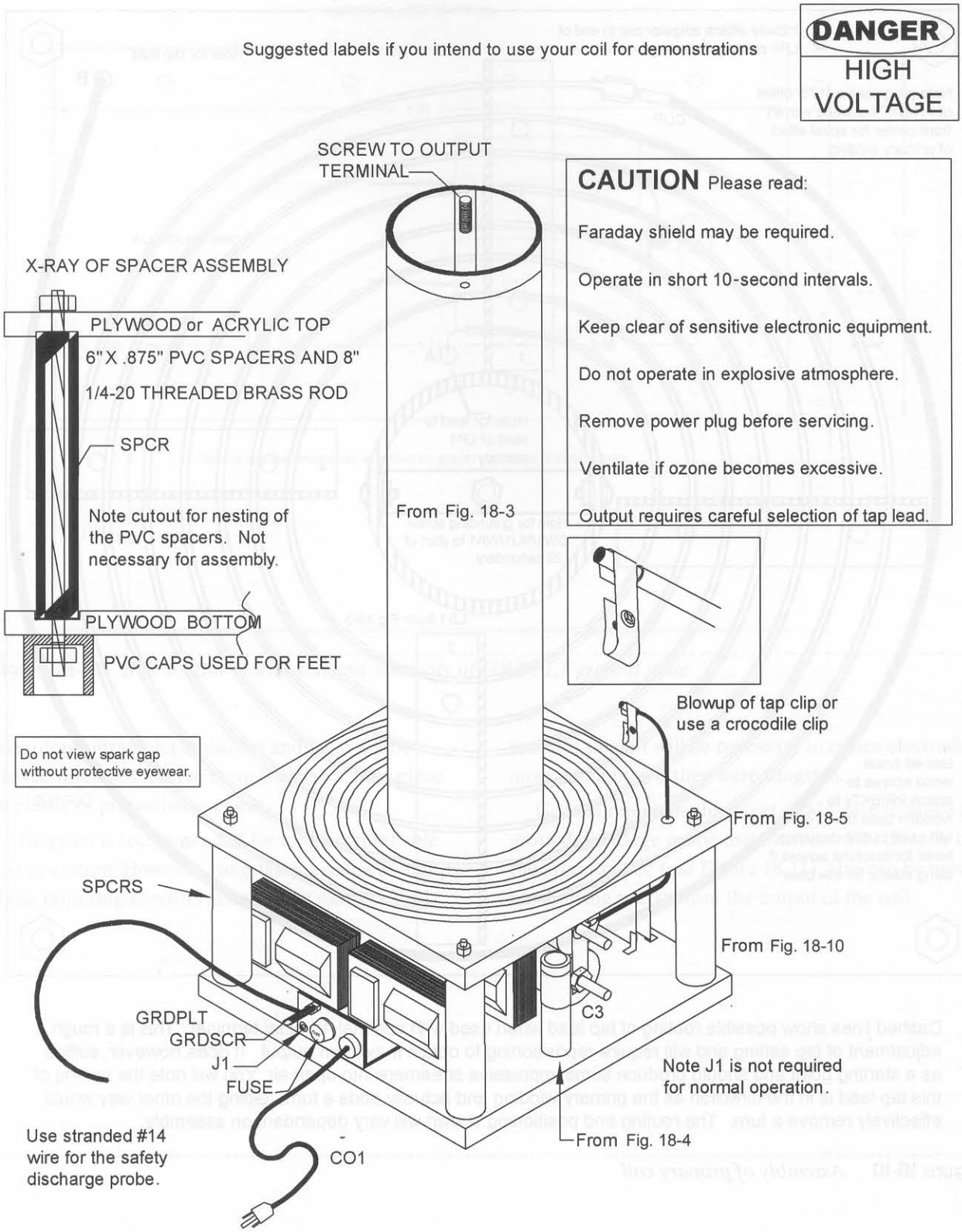

Figure 18-11 *Isometric view of the final assembly*

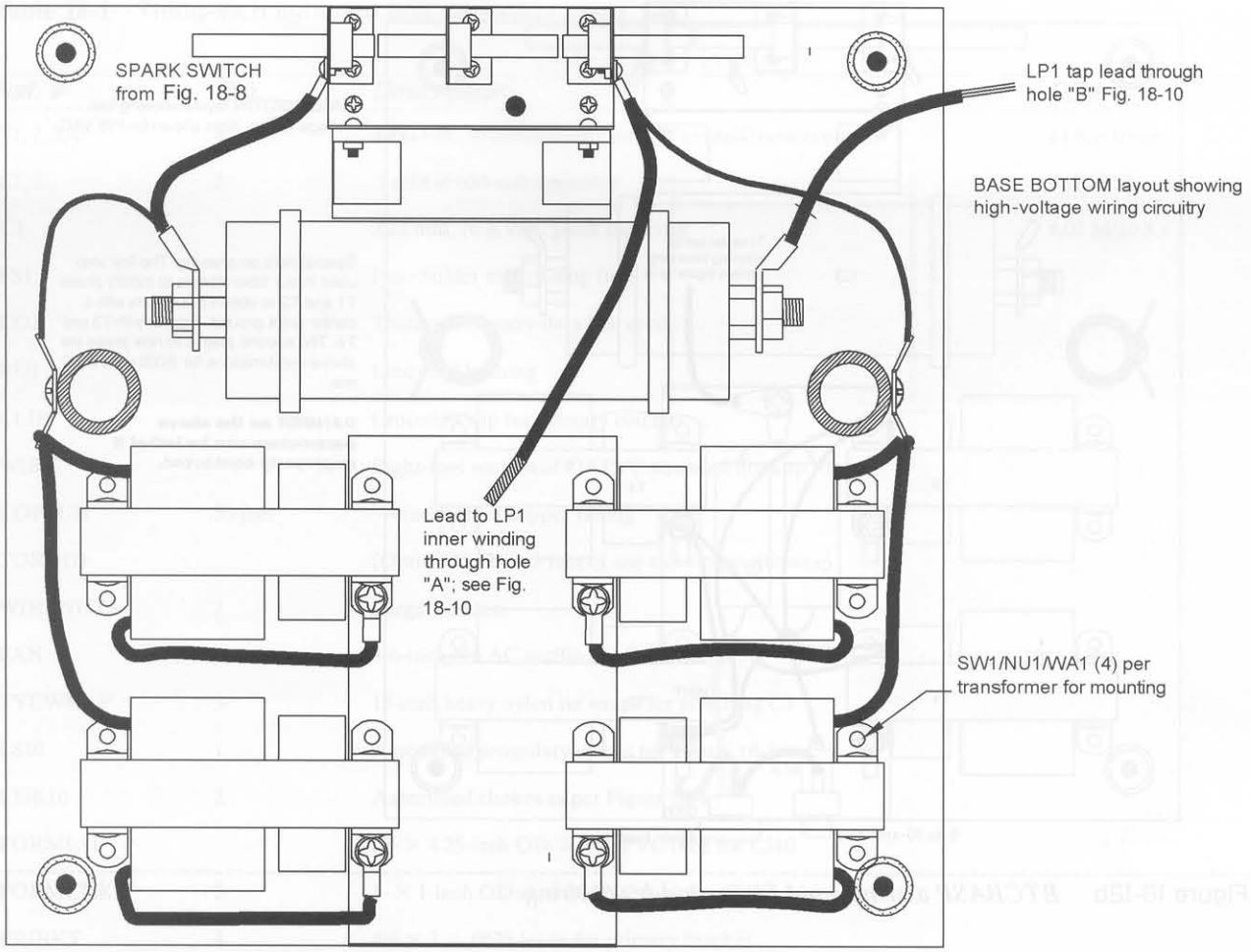

Figure 18-12a *BTCAS assembly and first-level wiring*

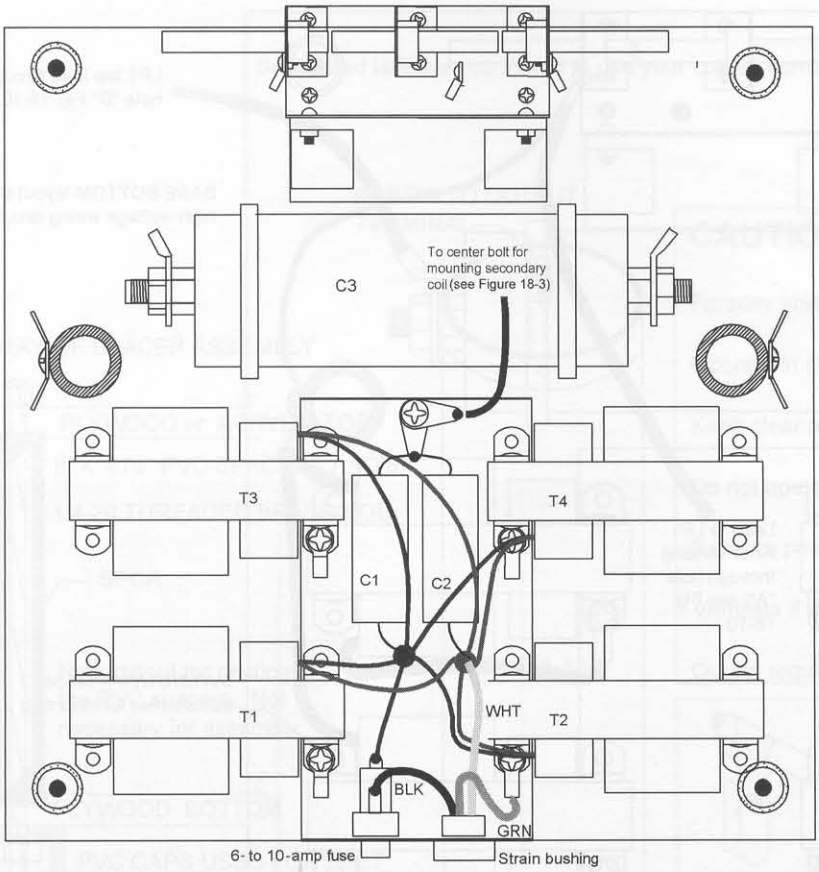

BASE BOTTOM layout showing low-voltage wiring. Note shown for 115 VAC.

Special note on phasing: The first step used in our laboratory is to initially phase T1 and T2 to obtain 8,000 volts with a center point ground. Repeat with T3 and T4. The second step is to now phase the above combinations for 8,000 volts at 60 ma.

DANGER as the above parameters can be lethal if improperly contacted.

Figure 18-12b *BTCBASP assembly aid for second-level wiring*

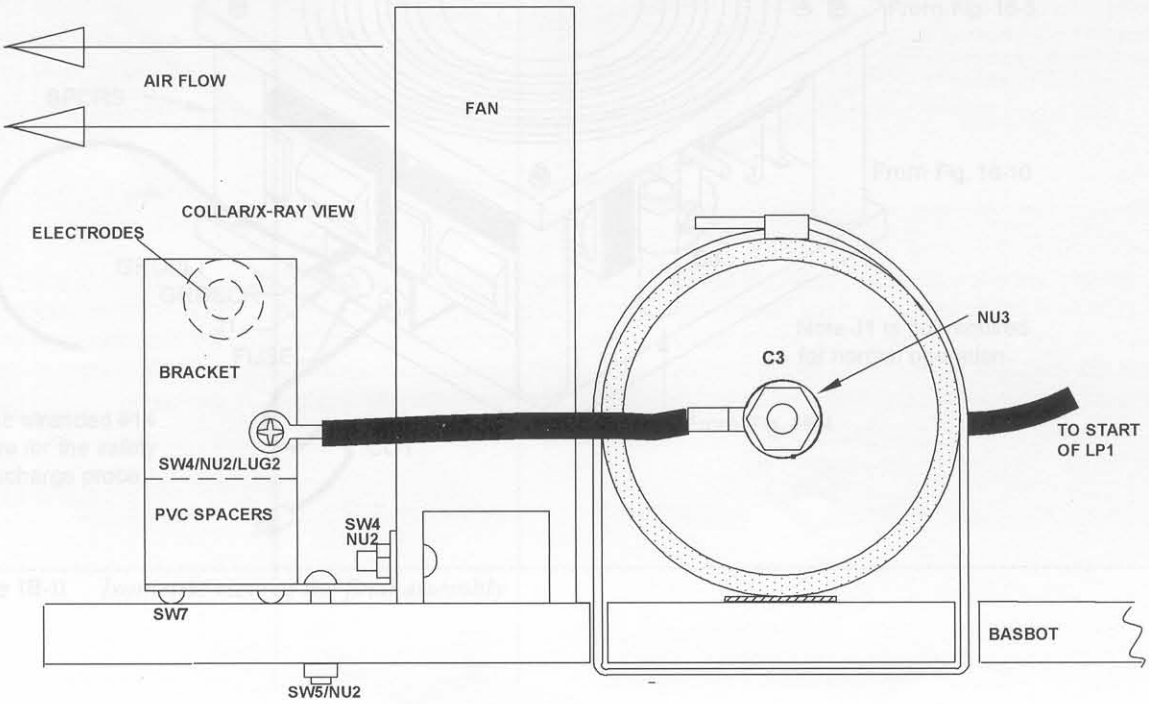

Figure 18-13 *Side view of spark gap and capacitor*

Table 18-1 Thirty-inch lightning bolt generator parts

Ref. #	*Qty.*	*Description*	*DB#*
T1, 2, 3, 4	4	4000-volt, 30-milliampere current-limited transformer	#4 Kv/.03 amp
C1, 2	2	.1 mfd @ 630-volt capacitor	#.1M/630
C3		.022 mfd, 10 KVAC pulse capacitor	#.02 M/10 Kv
FS1		Fuse holder and 10-amp fuse	
CO1		Three-wire, heavy-duty line cord	
BU1		Line cord bushing	
CLIP		Crocodile clip for primary coil tap	
WIRE		Eight-foot section of #14 PVC stranded hookup wire	
COPTUB	50 feet	3/16-inch roll of copper tubing	
TOROID		(Optional) 12- × 3-feet or use stove pipe elbows	
WIRENUTS	2	Large wirenuts	
FAN		4 1/2-inch 115 AC muffin fan (high output)	
TYEWRAP	3	15-inch heavy nylon tie wraps for attaching C3	
LS10	1	Assembled secondary coil as per Figure 18-3	
CHK10	2	Assembled chokes as per Figure 18-4	
FORMLS1		22- × 4.25-inch OD 1/8 wall PVC tube for LS10	
FORMCHK	2	5- × 1-inch OD sked 80 PVC tube for CHK1 form	
PRIBKT	4	4 1/2 × 2 × .0625 lexan for primary bracket	
GRDPLT		4 × 10 × .063 aluminum for ground plate	
BASTOP/BOT	2	14 × 14 × 1/2 finished plywood (see Figure 18-5)	
SPCR	4	6- × 1-inch OD PVC tube (see Figure 18-11)	
ELECTRODES	3	2- × 3/8-inch tungsten or tool steel	#TUNG38
MAIN BRACKET		Fabricate as shown in Figure 18-7	
PVC SPACERS	3	Fabricate as shown in Figure 18-7	
ELTRODE BRKETS	3	Fabricate as shown in Figure 18-7	
END BRKTS	2	Fabricate for top and bottom of secondary coil as shown in Figure 18-3	
SW1	16	6-32 × 1-inch screws	
SW3	4	6-32 × 1/4-inch screws	
SW4	6	8-32 × 1/2-inch screws	
SW5	2	8-32 × 1-inch screws	
SW6	4	1/4-20 × 8-inch threaded rod (see Figure 18-11)	
SW7	16	#6 × 1/4-inch sheet metal	
	1	8-32 × 2-inch brass screw	
NU1	16	6-32 nuts	
NU2	8	8-32 nuts	

Table 18-1 Continued

Ref. #	Qty.	Description	DB#
NU3	12	1/4-20 nuts	
WA1	17	1/2-inch flat washers	
LUG1	9	#6 solder lugs	
LUG2	5	1/4-20 lugs	
PVCCAP	4	PVC end caps for bottom feet (see Figure 8-11)	
COLLARS	3	3/8 ID × 3/4 OD steel collars with set screws	
SW2	10	6 × 1/2 brass wood screws	
SW10/NUT	4	6-32 × 3/8-inch brass machine screws and nuts	
SW12	2	1/4-20 × 1 1/2-inch brass machine screw	
NU12	4	1/4-20 brass hex nuts for previous screws	

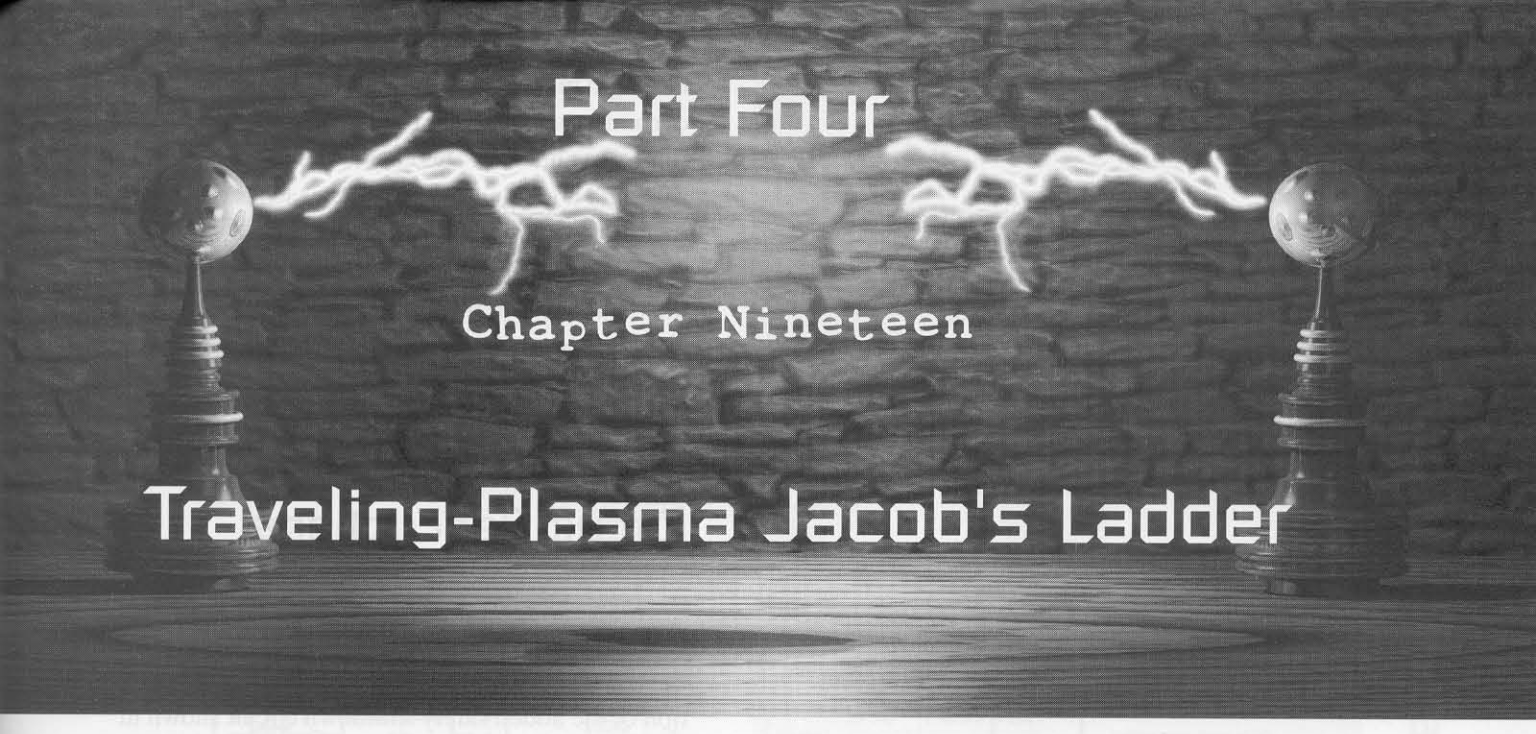

Part Four

Chapter Nineteen

Traveling-Plasma Jacob's Ladder

This popular electrical display saw great fame in the old *Frankenstein* horror movies of the 1930s. A continuous traveling arc of electrical plasma climbs a metal ladder, expanding and eventually evaporating into space (see Figure 19-1). At that moment, the arc reinitiates at the bottom of the ladder and now continually repeats the cycle. It must be noted that these older displays required dangerous and lethal amounts of electricity to obtain the desired results. This property often discouraged their use in public places.

This project generates a plasma arc over 3 inches long that travels a ladder height of nearly 24 inches. It rapidly recycles and contains an arc power adjustment.

Not only is this a rewarding and energetic display, any shock hazard is greatly reduced by the use of our patented safety shutdown circuitry. Any contact to the ladder elements results in immediate circuit shutdown, avoiding any shock. Even if the shutdown were disabled, contact would only cause a minor burn as the output energy is at a high frequency.

Most parts are readily available and are listed in Table 19-1 at the end of the chapter. Those that are specialized, including a *printed circuit board* (PCB), may be obtained through www.amazing1.com. Expect to spend $50 to $75 to complete the project as shown.

Origin

The Bible tells the story of Jacob's dream about a ladder that extended from Earth to heaven. Jacob, the son of Isaac, was the father of the founders of the 12 tribes of Israel. Among sailors, however, a Jacob's ladder is a long rope ladder that is hung over the side of a ship so the harbor pilot can climb aboard.

Basic Description

The power supply for this project forms electric arcs across two diverging stainless steel strips (LADDER). The 16-inch-long strips are mounted on insulating blocks to eliminate possible leakage. The stainless steel strips are separated by about a quarter-inch at their bases and diverge to a distance of about 3 to 4 inches at their upper ends.

The strips form a gap across the secondary winding of the output transformer. After power is turned on, the air dielectric breaks down due to the almost short-circuit state across the lower end of the gap, and an electric arc is formed. As the arc heats up, thermal convection causes the arc to rise up the V-shaped ladder. As the plasma arc ascends the ladder,

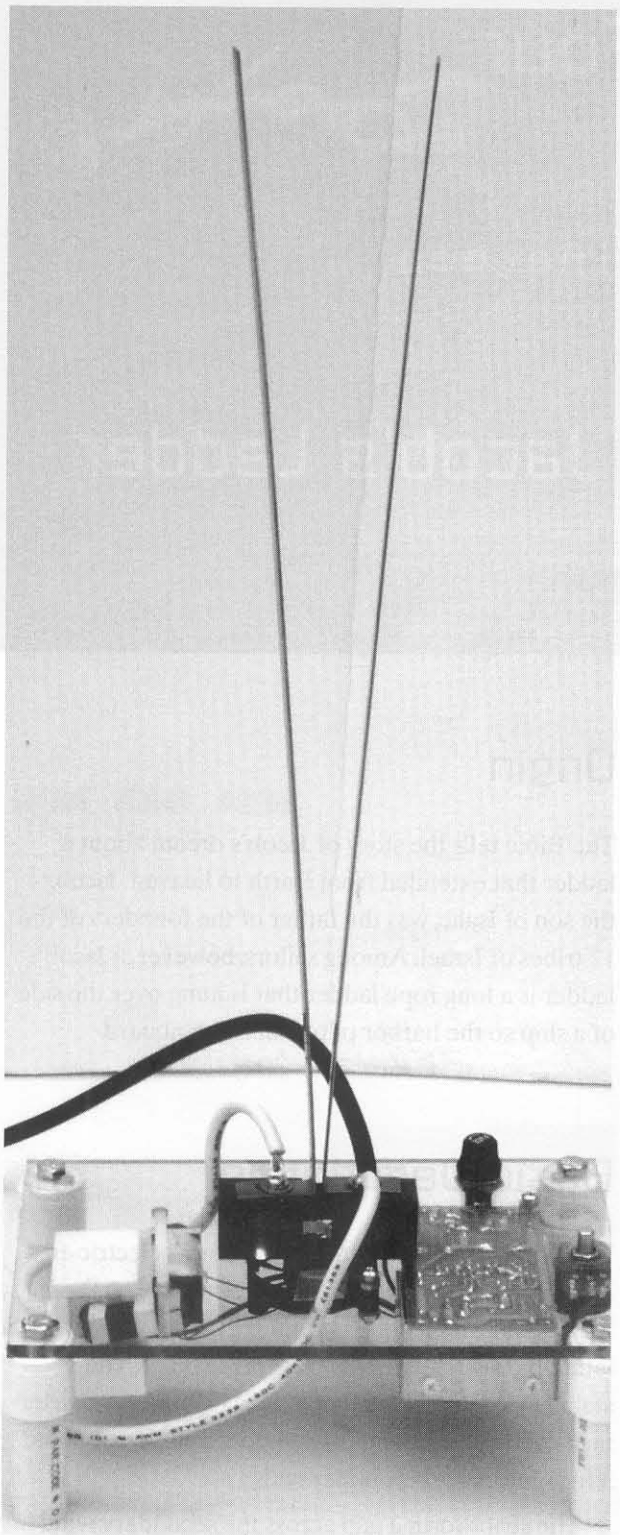

Figure 19-1 *Jacob's ladder plasma machine*

its length increases, thereby increasing the arc's dynamic resistance and thus increasing power consumption and heat. This causes the arc to stretch as it rises, and it extinguishes when it reaches the top of the ladder. When this happens, the transformer output momentarily exists in an open circuit state until the breakdown of the air dielectric produces another arc at the base of the ladder and the sequence repeats.

Circuit Descriptions

We suggest you refer to the circuit description sections in Chapter 8, "Handheld Burning CO_2 Gas Laser," as this project is very similiar, with the exception of the added safety shutdown circuit shown in Figure 19-2. This circuit detects any abnormal ground currents that would be produced by accidental contact to one of the ladder elements. Current now flows through the resistor divider (R5 and R9) and biases diode (D6) into conduction. A rectified voltage is now developed across capacitor (C8) and trimpot (R4). The trimpot sets the trip point of the silicon-controlled crowbar switch, shorting out the supply voltage to IC1 and turning off the power circuit.

Assembly Steps

To begin the project, follow these steps:

1. Study Figures 19-3 and 19-4 showing the power board. Assemble as shown, adding the safety shutdown components shown in Figure 19-2. The added parts are R1, R4, R5, R9, C8, C12, D6, and SCR and are included on the parts list in this chapter.
2. Assemble the heat sink bracket as shown in Figure 8-8 (Chapter 8).
3. Assemble the main power board shown in Figure 19-3.
4. Finally, assemble everything as shown in Figures 19-4 and 19-5, and read all special notes and options.

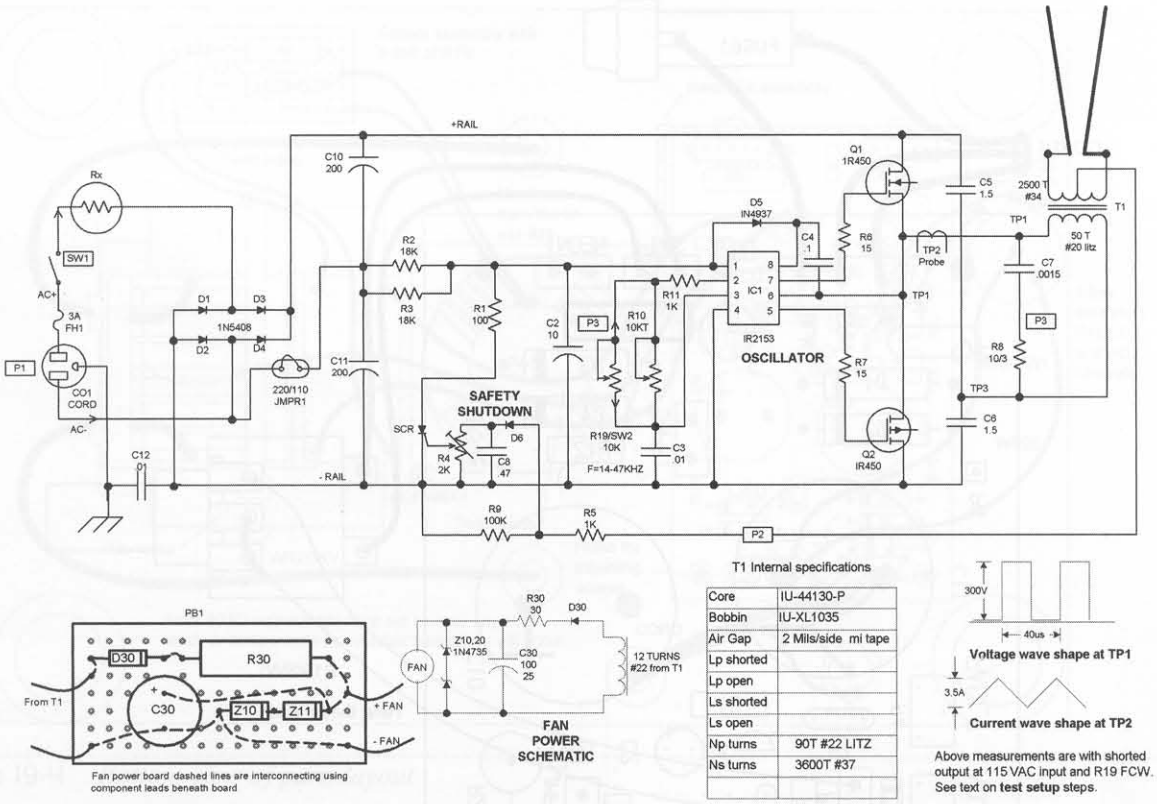

Figure 19-2 *Jacob's ladder circuit schematic*

5. Verify all the wiring for the solder shorts, the correct components, the polarity of parts where noted, and the general overall quality of the assembly.

Testing the Circuit

To test the circuit, follow these steps (see Figure 19-2):

1. Set the bottom of the ladder elements to no more than 1/8 of an inch separation and temporarily short circuit the ladder elements with a clip lead. Preset the trimpots R4 and R10 to midrange (12 o'clock).
2. Connect an oscilliscope to TP1 and TP2. If you do not have a scope and your assembly is correct, you may assume the circuit is correctly functioning if the following measurements are read.
3. Obtain a 40-watt lightbulb used as a ballast and an isolated source of 115 *volts-alternating current* (VAC), preferably with a adjustable voltage transformer (variac) and a current-reading meter. A suggested circuit is described in Chapter 8 (see Figure 8-3).

   Rotate R19 full *clockwise* (CW) and quickly adjust R4 to read a period of 40 *microseconds* (usec) (25 kHz). Turn R9 back full *counter-clockwise* (CCW).
4. Turn off the power and remove the short across the ladder elements, as directed in step 1. Turn on the power and advance R19 in a CW direction, noting an arc that forms and attempts to rise up the ladder. Switch out the ballast, noting the full action of the plasma arc rising and breaking at around 3 inches and repeating. Check that the fan is fully on and measure 12 *volts-direct current* (VDC) across the leads.
5. Observe the line current, noting that it rises to around 1 to 2 amps as the arc rises and breaks at the ladder top.
6. Firmly grab a metal object and contact one of the ladder elements. The unit should quickly

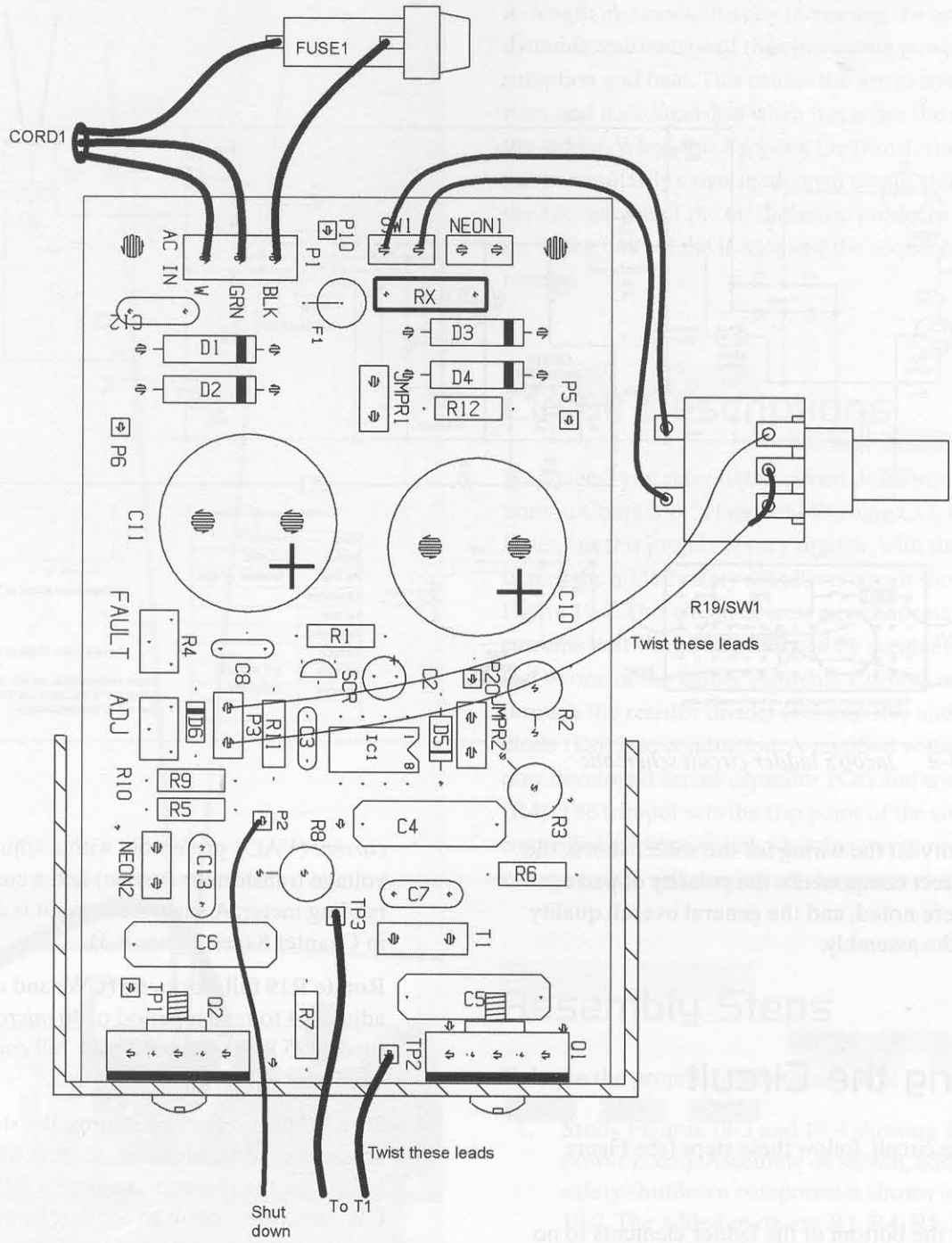

Figure 19-3 *Wiring diagram*

shut down. Note that R4 may be adjusted CW to increase shutdown sensitivity or to full CCW to disable. The normal setting is at midrange.

7. Even though the circuit is intended for continuous use, the project as described should not be left on unattended.

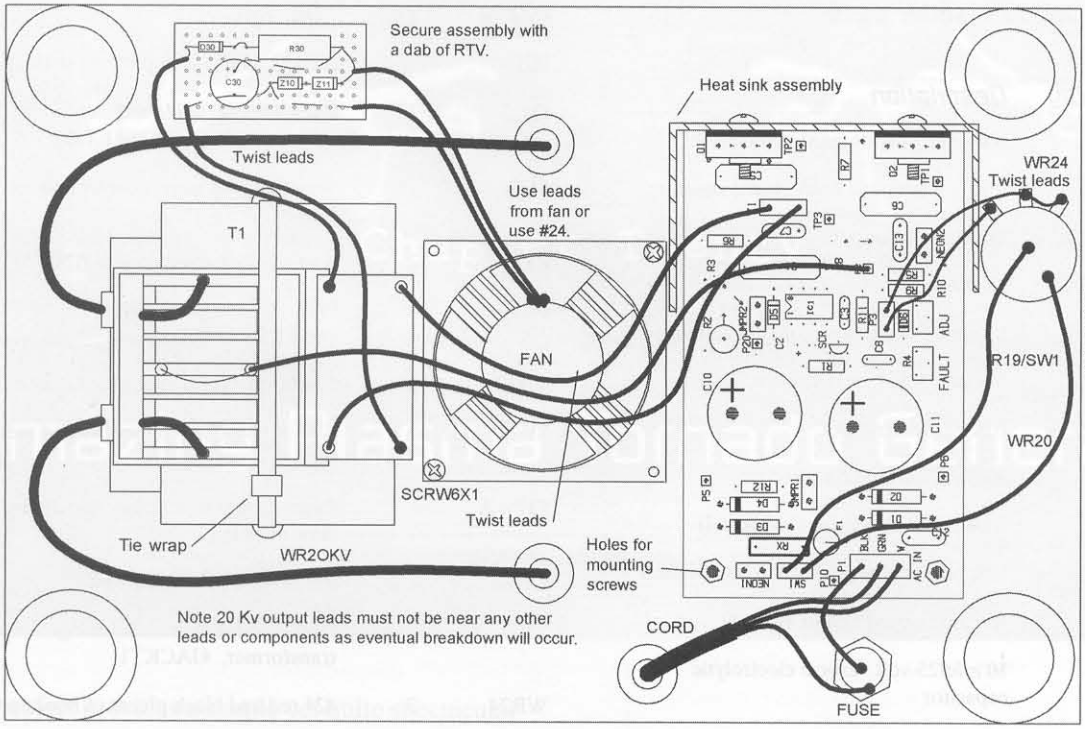

Figure 19-4 *Bottom view of parts layout*

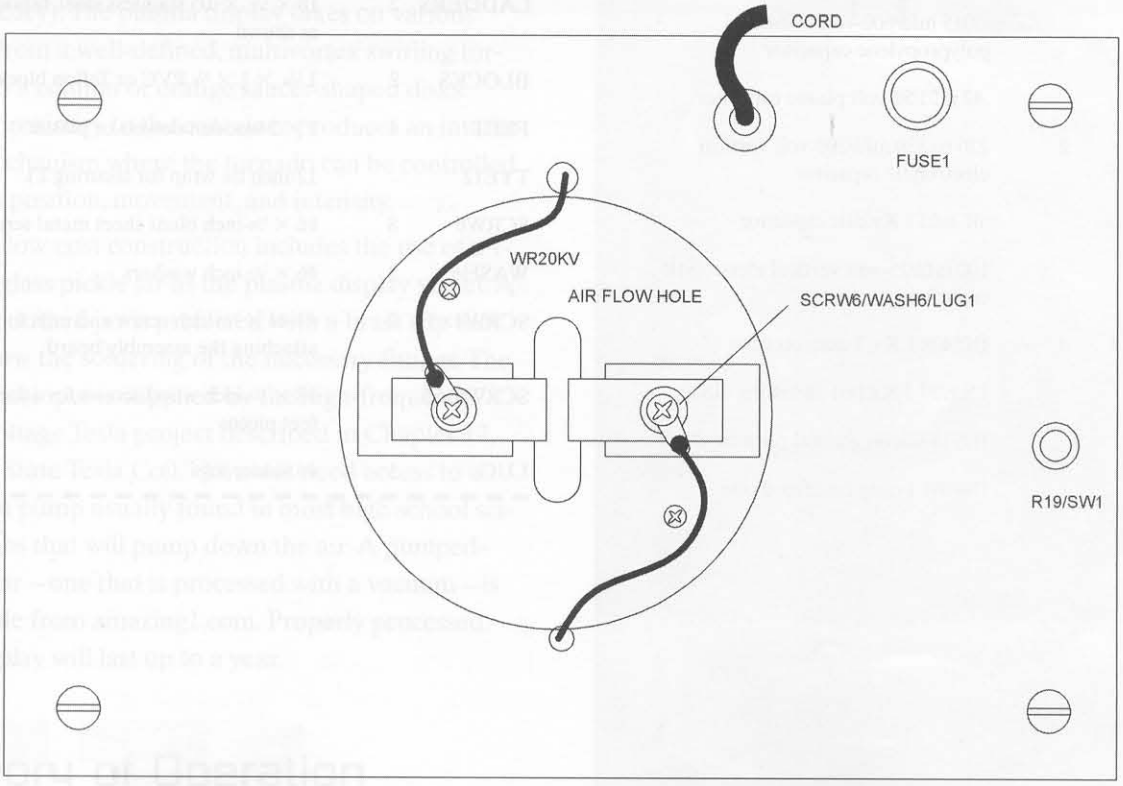

Figure 19-5 *Top view of parts layout*

Table 19-1 Jacob's ladder parts

Ref. #	Qty.	Description
R1		100-ohm, 1/4-watt resistor (br-blk-br)
R2, 3	2	18K, 3-watt *metal oxide* (mox) resistor
R4		2K vertical trimpot
R5, 11	2	1K, 1/4-watt resistor (br-blk-red)
R6, 7	2	15-ohms, 1/4-watt resistor (br-grn-blk)
R8		10-ohm, 3-watt mox resistor
R10		10K vertical trimpot
R30		30-ohm, 3-watt mox resistor
R9		100K, 1/4-watt resistor (br-blk-yel)
R19/SW1		10K potentiometer and 115 VAC switch
Rx		In-rush current limiter #CL190
C2		10 mfd/25-volt vertical electrolytic capacitor
C3		.01 mfd/100-volt plastic capacitor
C4		.1 mfd/600-volt metalized polypropylene capacitor
C5, 6	2	1.5 mfd/250-volt metalized polypropylene capacitor
C7		.0015 mfd/600-volt metalized polypropylene capacitor
C8		.47 mfd/50-volt plastic capacitor
C10, 11	2	220 to 330 mfd/200-volt vertical electrolytic capacitor
C12		.01 mfd/1 Kv disc capacitor
C30		100 mfd/25-volt vertical electrolytic capacitor
D1, 2, 3, 4	4	IN5408 1 Kv, 3-amp rectifier
D5		1N4937 1 Kv fast-switching diode
D6		IN914 silicon general purpose diode
D30		IN4001 1-amp rectifier diode
IC1		IR2153 dual in-line package driver
Q1, 2	2	IRF450 *metal-oxide-semiconductor field effect transistors* (MOSFETs)
SCR		Sensitive gate silicon-controlled rectifier #EC103D
Z1, 2	2	6-volt 1-watt zener diodes #IN4735
PC1		PCB and wire as shown in Figure 19-3 #PCLINE
THERMO1	2	Insulating thermo pads for Q1 and Q2
SWNYLON	2	6-32 × 1/2-inch nylon screws and metal nuts
FH1/3 A		Panel-mount fuse holder and 3-amp slow-blow fuse
CO1		Three-wire #18 power cord
T1		High-voltage ferrite switching transformer, #JACKT1
WR24	3'	#24 red and black pieces of hookup wire
WR20	6'	#20 red and black pieces of hookup wire
WR20KV	5 feet	20 Kv silicon high-voltage wire
BASE		6 × 9 × 1/4 finished plywood or Lexan, fabricated as required
LADDERS	2	18 × 1/2 × .05 stainless steel, fabricated as shown
BLOCKS	2	1 1/4 × 1 × 3/4 PVC or Teflon blocks
FEET	4	1 × 2 wooden dowels or plastic
TYE12		12-inch tie wrap for securing T1
SCRW6	8	#6 × 3/8-inch blunt sheet metal screws
WASH6	2	#6 × 1/2-inch washers
SCRW4×1	2	#4-44 × 1/2-inch screw and nuts for attaching the assembly board
SCRW8×.5	4	#8 × 1/2-inch wood screws for attaching feet pieces
LUG	1	#6 solder lugs

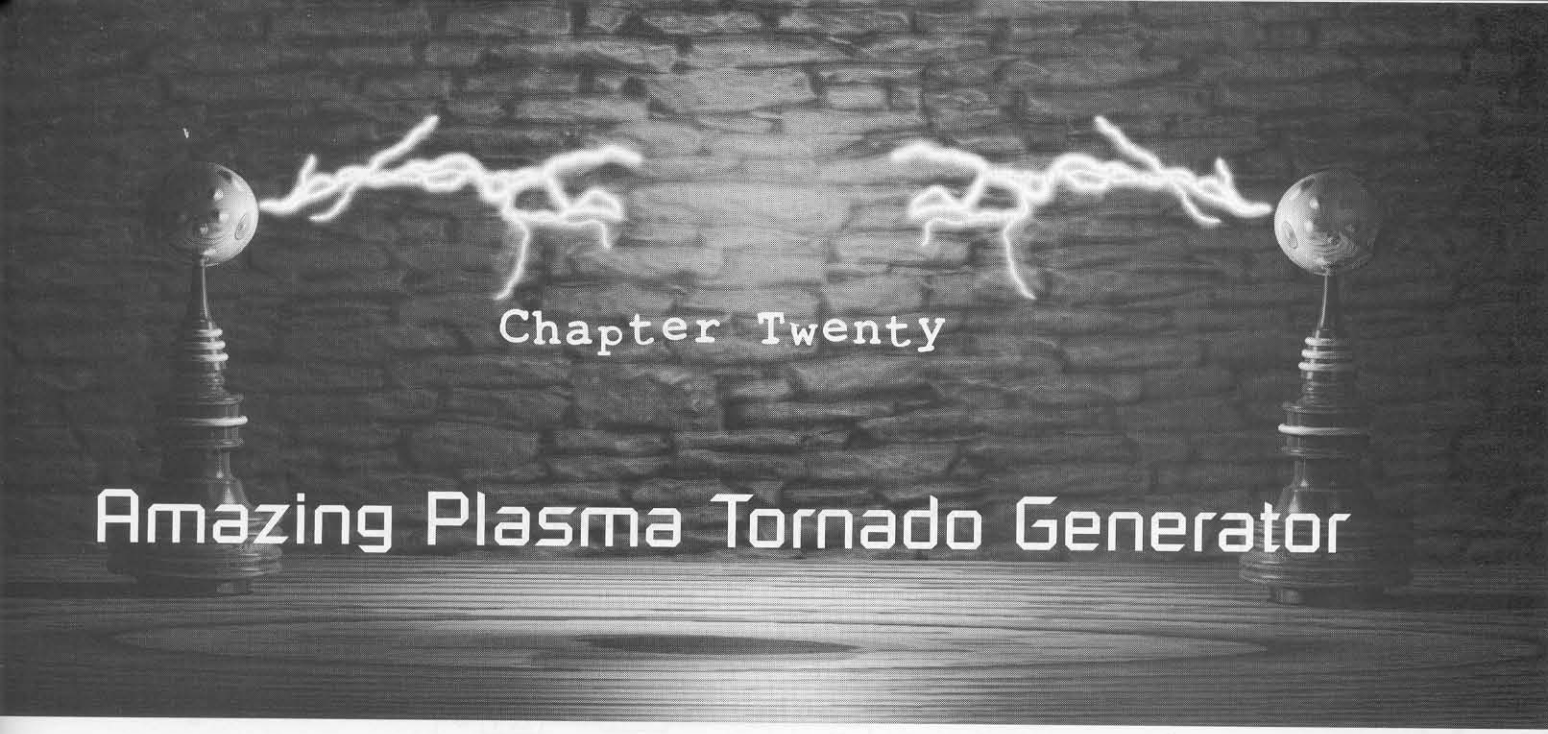

Chapter Twenty

Amazing Plasma Tornado Generator

This project provides a simple yet quite spectacular display of various forms of electrical plasma (see Figure 20-1). The medium used is safe, ordinary, rarefied air pumped down to a rough vacuum of approximately 1/2 millimeters (which is measured in Torr, which is a measure of pressure equal to 1 millimeter of mercury). The plasma display takes on various forms from a well-defined, multivortex swirling tornado to a column of orange saucer-shaped disks. Hand proximity to the container produces an interactive mechanism where the tornado can be controlled both in position, movement, and intensity.

The low-cost construction includes the use of a 1-gallon glass pickle jar as the plasma display vessel. A wide-mouthed jar is preferred with a brass cap that will allow the soldering of the necessary fittings. The electrical input is supplied by the high-frequency, high-voltage Tesla project described in Chapter 17, "Solid-State Tesla Coil." You will need access to a vacuum pump usually found in most high school science labs that will pump down the air. A pumped-down jar—one that is processed with a vacuum—is available from amazing1.com. Properly processed, the display will last up to a year.

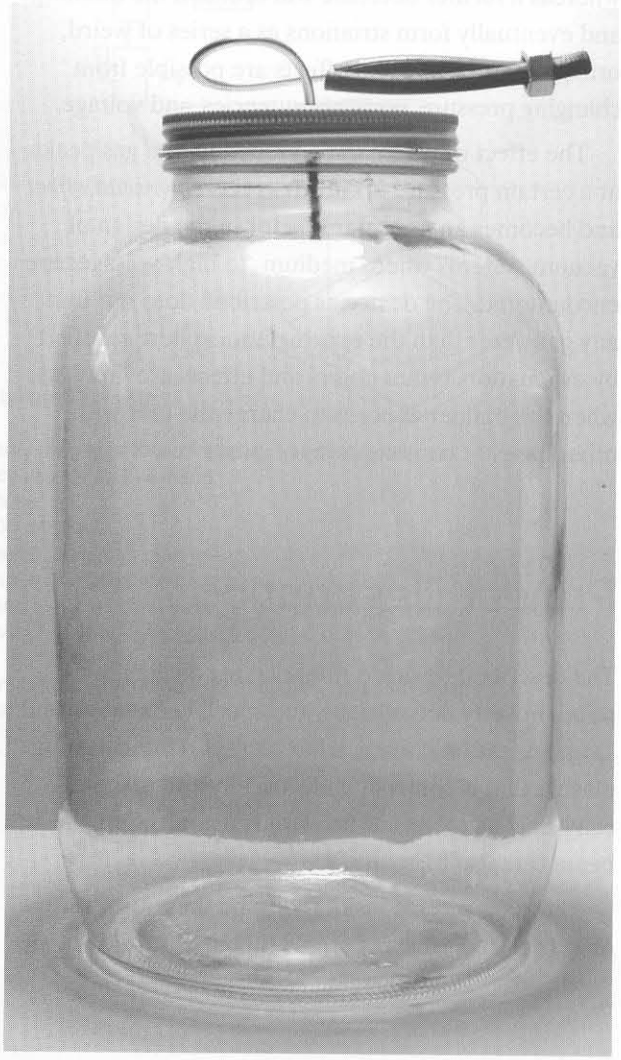

Figure 20-1 *Plasma tornado enclosure jar*

Theory of Operation

An evacuated glass container is sealed and pumped to .5 to 2 Torrs of pressure. A metal cap seals the con-

tainer and serves as an electrode for charging the remaining thin gas mixture. The voltage applied to the cap is at a potential of 10 to 20 thousand volts and is at a high frequency of approximately 25 kHz. The capacitive effect of the thin gas causes a current to flow, creating the plasma discharges. One may visualize the device in the following manner: A capacitor is formed by the conductive gas inside the container forming one plate, the glass envelope being the insulating dielectric and the outer air serving as the other plate. Any conducting object brought near the container now only enhances this effect and appears to draw the plasma arc to the point of contact.

The vacuum will vary along with the physical parameters of the container and can be adjusted to enhance the type of discharge desired. A pressure where the plasma discharges are most defined may be critical. Increases will create a broken, wispy effect, whereas a further decrease will broaden the discharge and eventually form striations as a series of weird, orange disks. Any weird effects are possible from changing pressure, power frequencies, and voltage.

The effect of where the conduction of a gas peaks at a certain pressure is known as the *Townsend effect* and becomes an important factor in the design of vacuum systems where medium- to high-voltages are encountered. The device as described does not use any gas other than the existing atmosphere rarefied by evacuation. Other colors and effects are limitless when the builder chooses to charge the unit with other gases or combinations of pressures.

Project Description

The described device is intended for display purposes, novelty decorations, and special effects, as well as an educational science fair project demonstrating plasma that is controlled electrically and magnetically. Special materials treated by a controlled plasma beam can also be realized.

Plasma is often considered to be the fourth state of matter. It consists of atoms that are ionized and demonstrates peculiar effects unlike the other three forms of matter.

Columns of pinkish and purplish plasma are attracted to external influences such as fingers and other objects when placed on or near the display container. These columns of plasma light span the entire length of the display container, dancing and writhing with a tornado-like effect. Balls of plasma and fingers are created and controlled by simply touching the container. This effect cannot be effectively or justifiably described in words and can only be appreciated when actually observed.

The device is low powered, high frequency, and high voltage, producing the necessary parameters for obtaining the described plasma effect. This generator utilizes conventional electrified circuitry, consisting of a transistor switching the ferrite core of a high-voltage resonant transformer (similar to a TV flyback). Power for the transistors is obtained from a simple step-down transformer and rectifier combination.

Assembly Instructions

This project will require a properly working Tesla driver, as described in Chapter 17.

Obtain a 1-gallon pickle jar or the equivalent with a brass- or tin-plated metal cap for the display container, as shown in Figures 20-2 and 20-3. The display container must have a provision for depressurizing and then being permanently sealed. Again, this metal cover of a pickle jar makes an excellent choice because a piece of copper capillary can be directly soldered to it, forming a good, vacuum-tight seal and allowing pinching off for sealing. Should the display container require repumping, the pinched capillary may be easily reopened for reconnection to the vacuum system.

The display container may be mounted on a suitable stand that houses the generator beneath, resembling a water cooler. Refer to the figures for final assembly and pump down instructions.

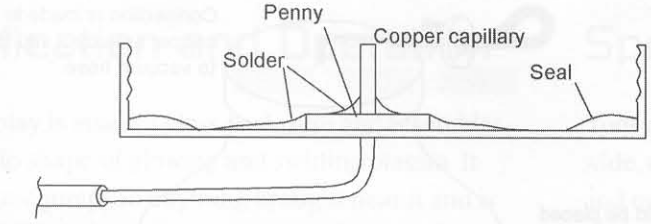

Note that the penny stiffens up the thin metal cover to provide a sturdy mounting point for the capillary tubing.

Cover preparation:

1. Drill a .125" hole in the center of a copper penny and in the jar cover.
2. Throughly clean the penny and cover to a bare shiny surface.
3. Obtain a propane torch and solder the tube to the penny and to the jar cover as shown. Try not to burn the jar seal. Verify that the solder completely seals this point as any leaks will prevent operation.
4. Throughly clean the jar and let it dry. Put in microwave and "nuke" for 30 seconds.
5. Apply vacuum grease to the jar seal and tightly screw on the cap.
6. Unit is ready to pump down.

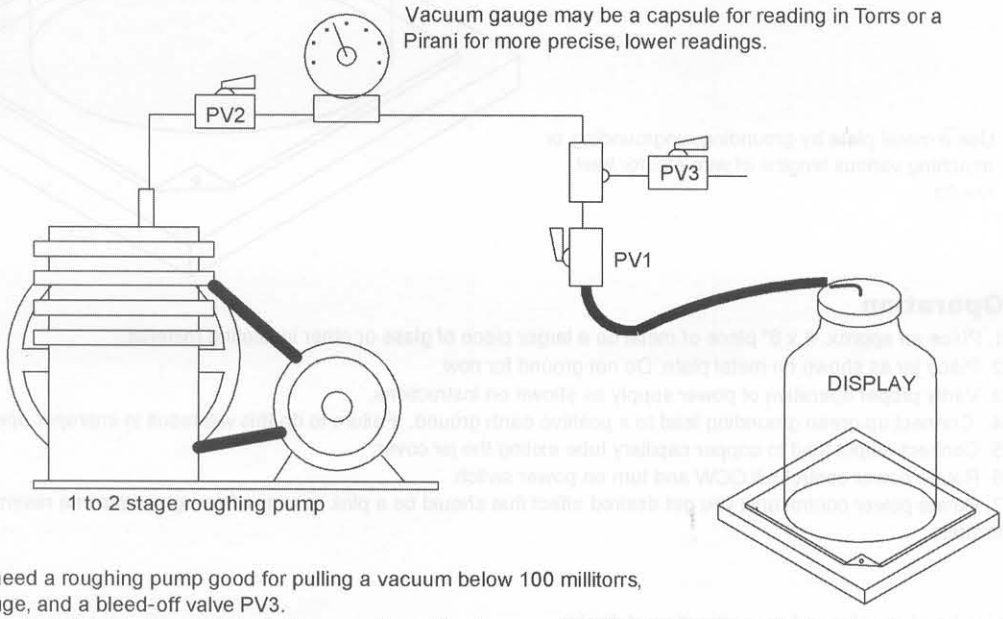

1. You will need a roughing pump good for pulling a vacuum below 100 millitorrs, a Pirani gauge, and a bleed-off valve PV3.
2. Connect output of power supply to metal base section. Verify proper isolation from any conducting objects as this point must support the high voltage and high-frequency energy for this setup.
3. Slide copper capillary into appropriate section of vacuum hose.
4. Allow to pump down to limit of system–should be below 100 millitorrs.
5. Bleed off to .5 Torr and apply power, noting rarefied air glowing a purplish pink.
6. Disconnect from vacuum system and pinch off section of rubber hose as shown.
7. Connect power supply output now to copper tube on cap and reapply power, noting a well-defined tornado-shaped discharge extending the full length of jar. Display is visible under normal lighting but should be quite spectacular in the dark. See note below.

NOTE: Display may vary with temperature, proximity to other objects, grounding, and, of course, pressure of air inside. Many display variations are possible and experimentation is suggested.

Figure 20-2 *Assembly and pump data*

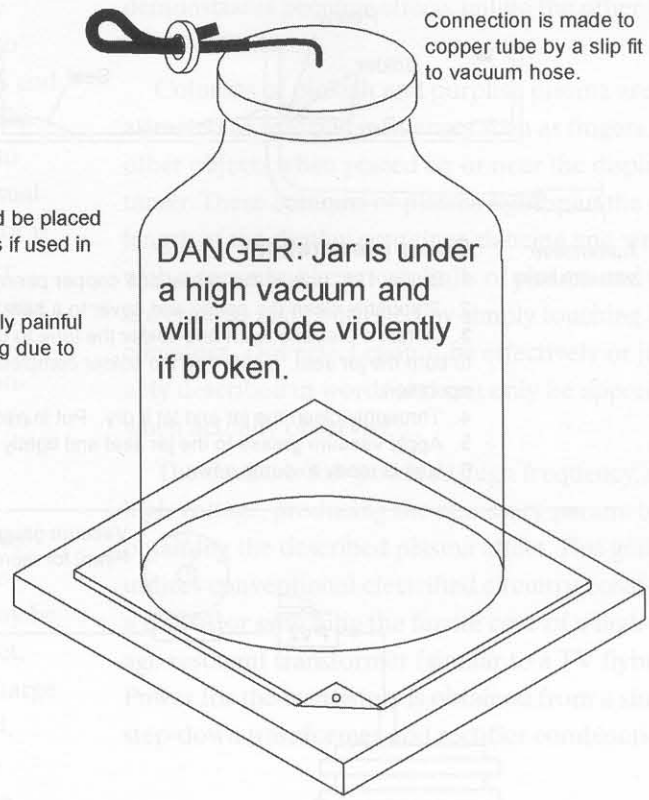

Operation

1. Place an approx. 6 x 6" piece of metal on a larger piece of glass or other insulating material.
2. Place jar as shown on metal plate. Do not ground for now.
3. Verify proper operation of power supply as shown on instructions.
4. Connect up green grounding lead to a positive earth ground. Failure to do this will result in improper operation.
5. Connect output lead to copper capillary tube exiting the jar cover.
6. Rotate power control full CCW and turn on power switch.
7. Rotate power control until you get desired effect that should be a pink column of energized plasma resembling a tornado.

Bring hand near jar and note attraction of display.
This demonstrates the capacitive effect produced by proximity of two conductive objects. The high-frequency current now wants to flow between these points that form a capacitive reactance.

Hold a fluorescent lamp near the jar and note it lighting! This demonstrates the radiative effects of the energized plasma and provides an interesting science project.

If you are fortunate enough to have access to a vacuum pump, experiments with different pressures can yield some real interesting results.

Adjust power control knob for maximum display. Note a peak in adjustment.
Do not leave on for extended periods of time until you check for heating of supply and jar.

Figure 20-3 *Plasma tornado jar setup*

Application and Operation

The display is inside a glass enclosure and resembles a tornado shape of glowing and swirling plasma. It dances and jumps to anything brought near it and is highly visible, even in normal, fluorescent lighting. This sensitivity to any external capacity creates many bizarre and seemingly striking effects. The plasma also can light up a fluorescent lamp when brought near the glass enclosure without any wires or connections of any kind. This feature demonstrates the highly radiative properties of the plasma field and serves as an excellent science fair project or a unique conversation piece.

Special Note

Your display will vary over time, starting out as a wide, undefined glow with purplish and orange disks and eventually forming a defined purple tornado-like vortex extending to the length of the container. This change is due to the pressure increasing and is a function of leakage and internal impurities. The system, properly processed, should be active for up to months before repumping is required.

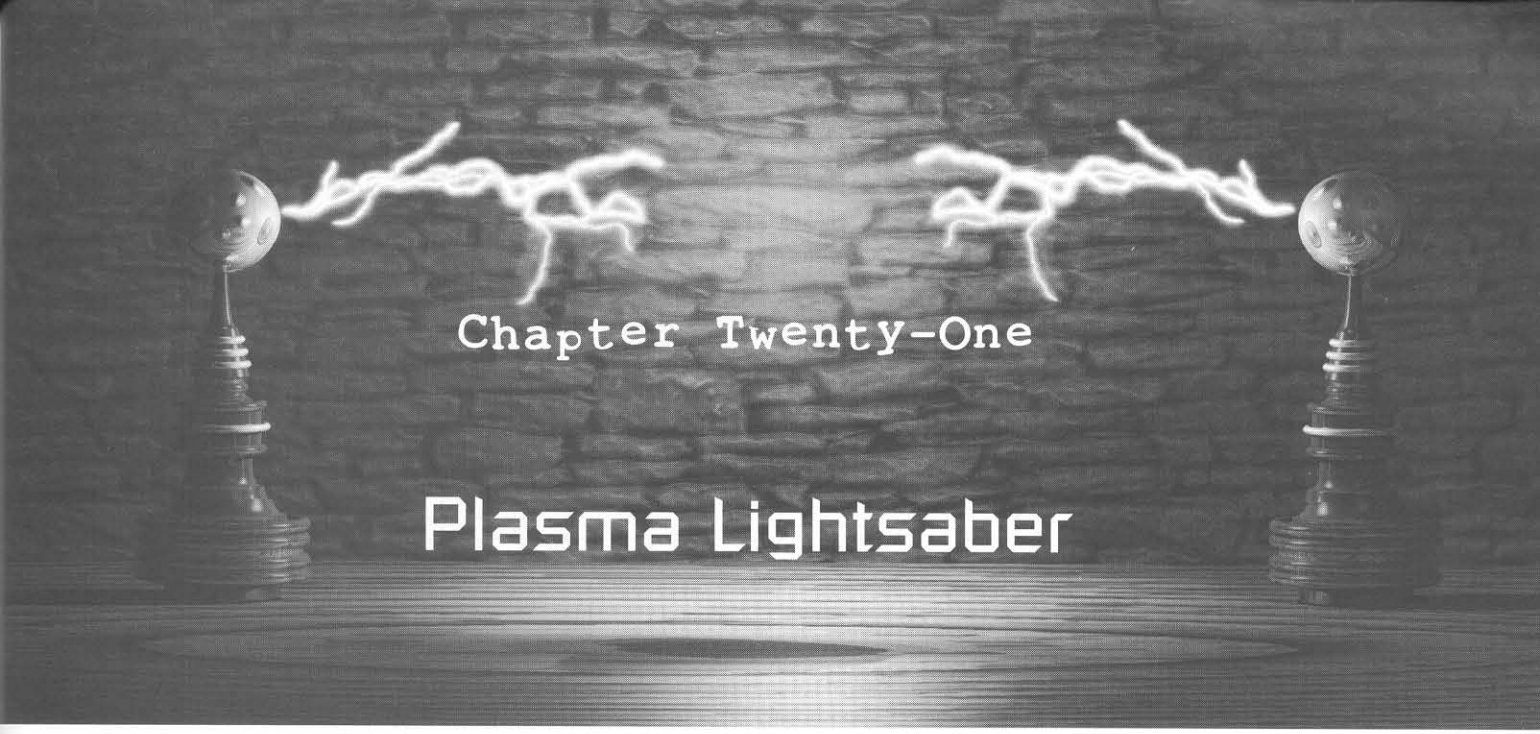

Chapter Twenty-One

Plasma Lightsaber

This chapter shows how to construct a novelty product that provides a bizarre special-effect light display. It is fashioned after the *Star Wars* lightsaber (see Figure 21-1) and uses a recently patented phenomenon involving "traveling plasma" (our patent #5,089,745). Total control of this display effect is accomplished by simple grip contract on the saber's handle. No switch is used in any way. Energized plasma (an electrically ignited gas giving off visible light) travels up the saber, illuminating its length as it moves. The effect is greatly enhanced in darkness and is quite dramatic when properly controlled by the user. This gives the effect of a controllable length of visible light appearing to emanate from the handle of the device and continues out into space. A striking visual display now results when operated at low light levels.

Expect to spend $25 to $35 for this awesome, attention-getting display project. Instructions are detailed with all the specialized parts, the *printed circuit board* (PCB), and the actual plasma tube available from www.amazing1.com. The parts list is included in Table 21-1 at the end of the chapter.

Circuit Theory

The system utilizes a high-frequency, high-voltage plasma power source that requires only one electrode or an external capacitive electrode for input to the plasma display discharge tube (see Figure 21-2). The external capacitive effect greatly reduces the cost of producing this plasma tube, as no internal electrode or glass-to-metal seals are required. Also eliminated are any grounds or electrical returns required in conventional systems.

Ignition of the plasma discharge appears to occur, extending outwardly into space without a return connection. In actuality, high-frequency electrical currents flow through the capacitive reactance of the plasma tube with the surroundings where the glass enclosure acts as the dielectric between the two. The user, by hand contact with the control pads, forms the other plate of this virtual capacitor.

The circuit consists of transistor Q3 connected as a Hartly-type oscillator where its collector is in a series

Figure 21-1 *Lightsaber*

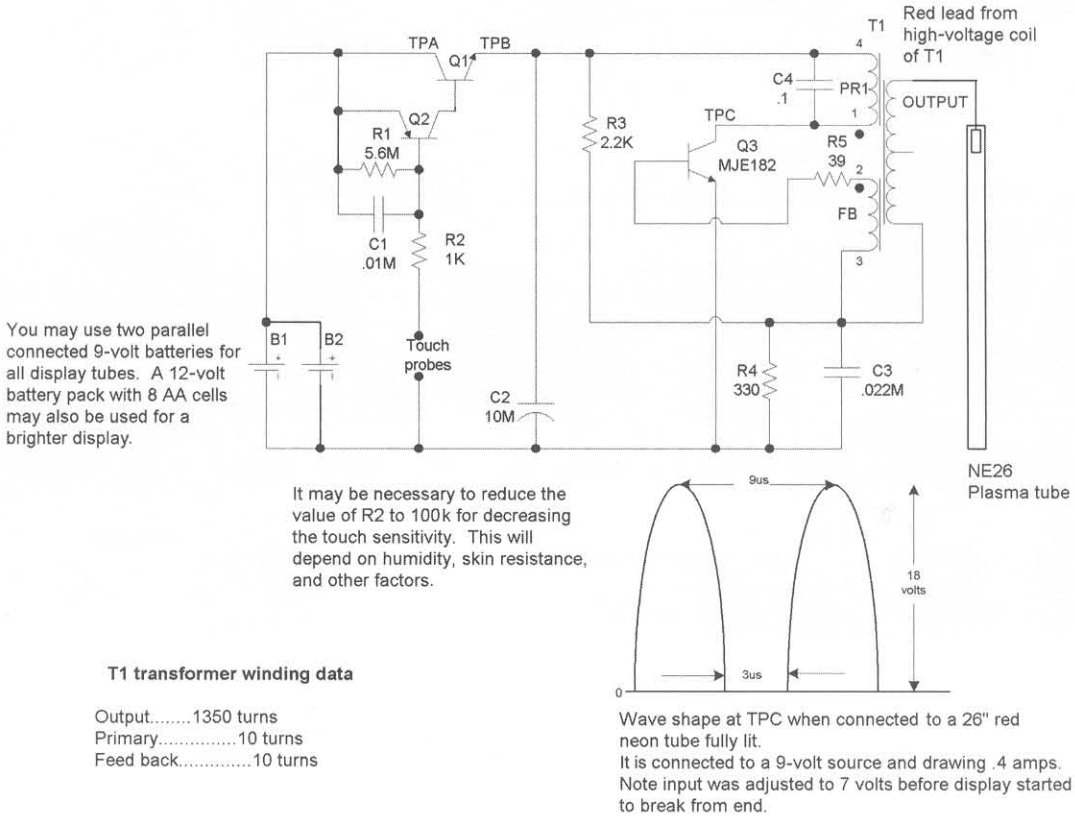

Figure 21-2 *Plasma lightsaber schematic*

with the primary winding, PR1, of transformer T1 and is energized by batteries B1 and B2. The drive signal to its base is obtained by a feedback winding (FB) properly phased to allow oscillation to take place. The base current is limited by resistor R4 and biased into conduction by resistor R3. Capacitor C3 speeds up the switching times. The oscillations produced are at a frequency of approximately 100 kHz. This is usually determined by the resonant frequency of T1 and tank capacitor C4.

The output of Q3 is controlled via the conductance of pass transistor Q2 by biasing its base with a ramp signal from transistor Q1. C2 bypasses any high-frequency switching currents to the common line of the circuit. This approach provides a positively defined state between the energized and denergized plasma, hence its lit display length.

The current through Q2 and therefore the power to Q3 is controlled by the DC ramp amplifier Q1. The Q1 transistor is now controlled when a base current flows through resistor R2. This occurs when the user's fingers simultaneously touch the two external pad contacts biasing Q1 to a point dependent on the user's contact resistance. This effect produces the variable current ramp that controls the current through pass transistor Q2, hence controlling the output of Q3. No off/on switch is necessary since total power is controlled by the user's finger contact, a capacitor C1 bypasses any external signals that may cause premature operation, and R1 controls the sensitivity range of the necessary contact resistance for full ignition as well as linearity.

Construction

The device can be built in two parts, consisting of the display and power sections. These are easily separated for convenience should the plasma display discharge tube become broken or damaged. Also, we must consider the option of using display tubes with other gases, producing different colorful effects.

The display section of the device can consist of a 12- to 36-inch length of small-diameter neon or another gas tube. Only one electrode is necessary on the display tube, thus eliminating unnecessary costs. This internal gas tube is centered in a clear or colored plastic tube that serves for protection from breakage and provides a more enhanced visual effect due to its diffusive, refractive, and diffractive optical properties.

Construction Steps

Figure 21-3 shows the foil traces for those wanting to do their own PCB. To begin construction, follow these steps:

1. Lay out and identify all the parts and pieces, and check them with the parts list. Note that some parts may sometimes vary in value. This

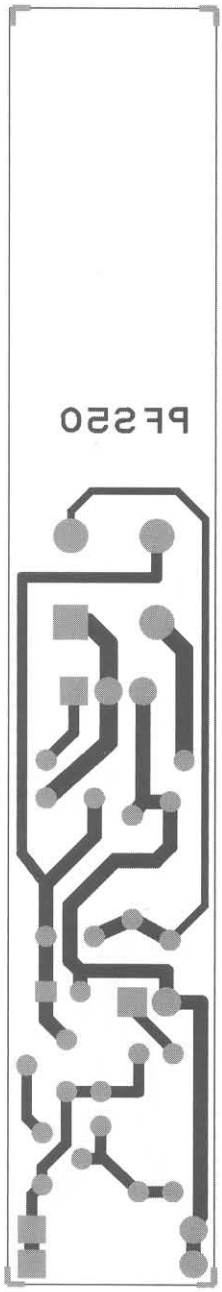

This view is helpful for those who want to design their own layout on a vector or perforated circuit board. Component leads may be used for most routing traces with heavier leads for the wider traces.

Figure 21-3 *X-ray view showing foil traces and pads*

is acceptable as all components are 10 to 20 percent tolerant unless otherwise noted.

2. Identify the pins on the base of transformer T1, as shown in Figure 21-4.

3. Insert components into PCB PCPF5 as shown in Figure 21-4. Note to leave at least 1/8 to 1/4 of an inch of lead between the actual components and the surface of the board. Also notice the polarity on C2 and the proper position of transistors Q1 and Q3. Solder the connections and cut away the excess leads. Connect the T1 transformer using short pieces of bus wire and secure it to the board using some tape. Then attach the leads for B1 and B2. Note these leads are strain relieved by passing through

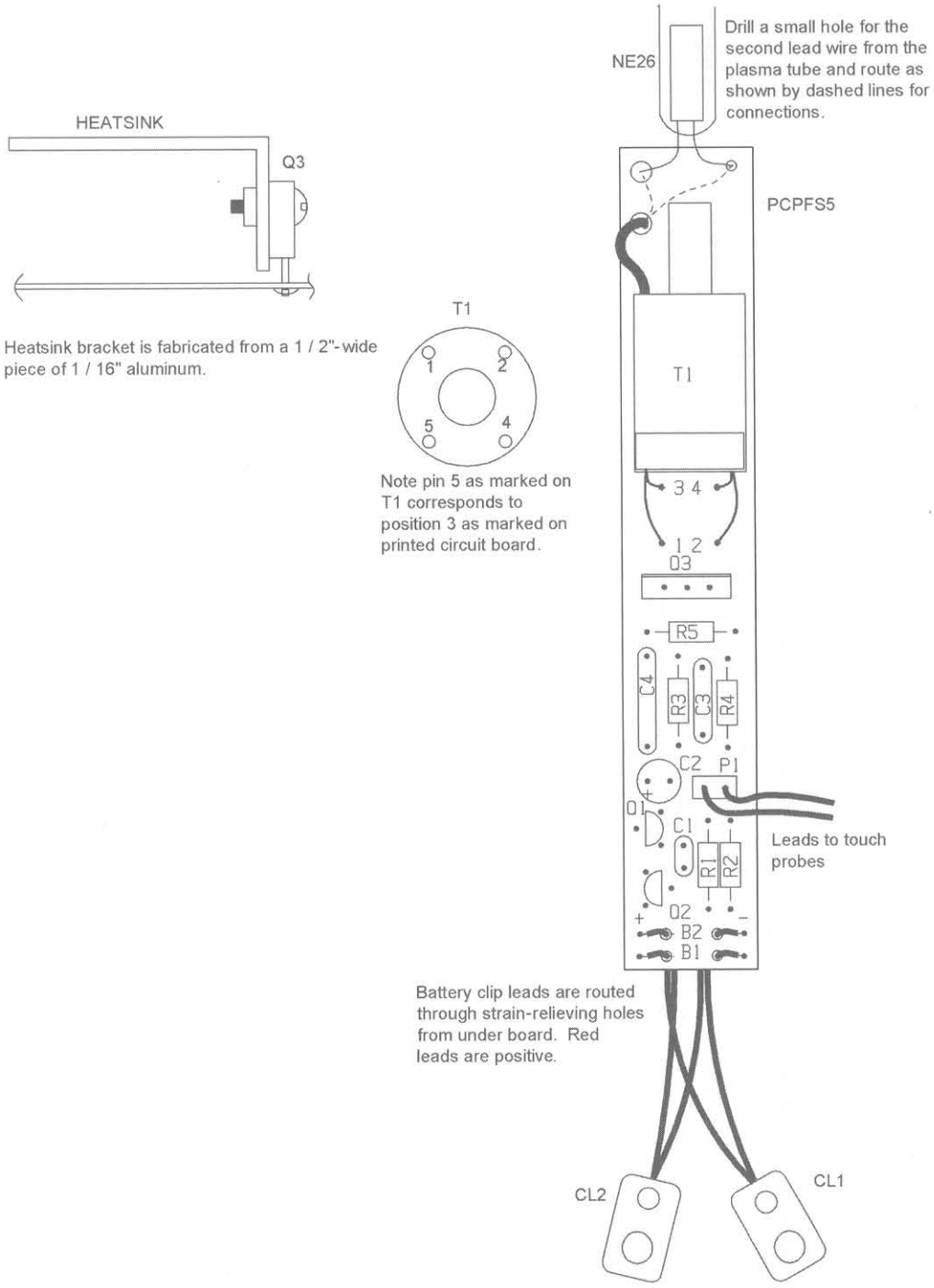

Figure 21-4 *View showing parts placement on board*

the holes on the foil side of the board. Solder 11-inch leads for contact pads located on the enclosure tube. These may be shortened later. Check for accuracy, the quality of solder joints, potential shorts, and so on.

4. Obtain a 12- to 36-inch neon tube, NE26, as shown in Figure 21-5. Note that the neon tube is shown utilizing only one internal electrode. An external electrode consisting of a piece of metallic tape wrapped around the tube end will also work. The internal electrode approach seems to work slightly better as the input impedance of the feedpoint is obviously nonreactive, now being only resistive.

   Note that the assembly of the tube is beyond most hobbyists and probably should be obtained as indicated on the parts list. Solder the tube to the assembly board as shown in Figure 21-5 and secure it with some *room temperature vulcanizing* (RTV) silicon rubber. Insert a piece of plastic vinyl tubing between the tube and the PCB to protect the tube from hitting the assembly board and possibly fracturing.

5. Connect two 9-volt batteries or a 9-volt power converter. Note that batteries are connected in a parallel way to supply more current and consequently last longer.

6. You may verify the circuitry by connecting a current meter in series with the batteries and note it reading zero. Turn the meter range down a step at a time to 50 micro-amps or the lowest range. The meter should still read zero. Note that any current flow in this test will wear down the battery over a period of time, indicating transistor leakage or a wiring error. The battery will drain down even if the saber is not in use.

7. Now set the meter range to read 300 to 400 milliamperes and reverse if necessary. Make contact between the pads' − and + leads. Note that the neon tube fully ignites and the current meter indicates around 300 milliamperes. Please refer to the test points in Figure 21-2 if you experience difficulty. These are explained in the supplementary test points section.

8. Attempt to make contact between these points using the resistance of your finger and verify the partial ignition of the neon tube. Dampen your finger if the skin is dry. This verifies the proper operation of the electronics. A

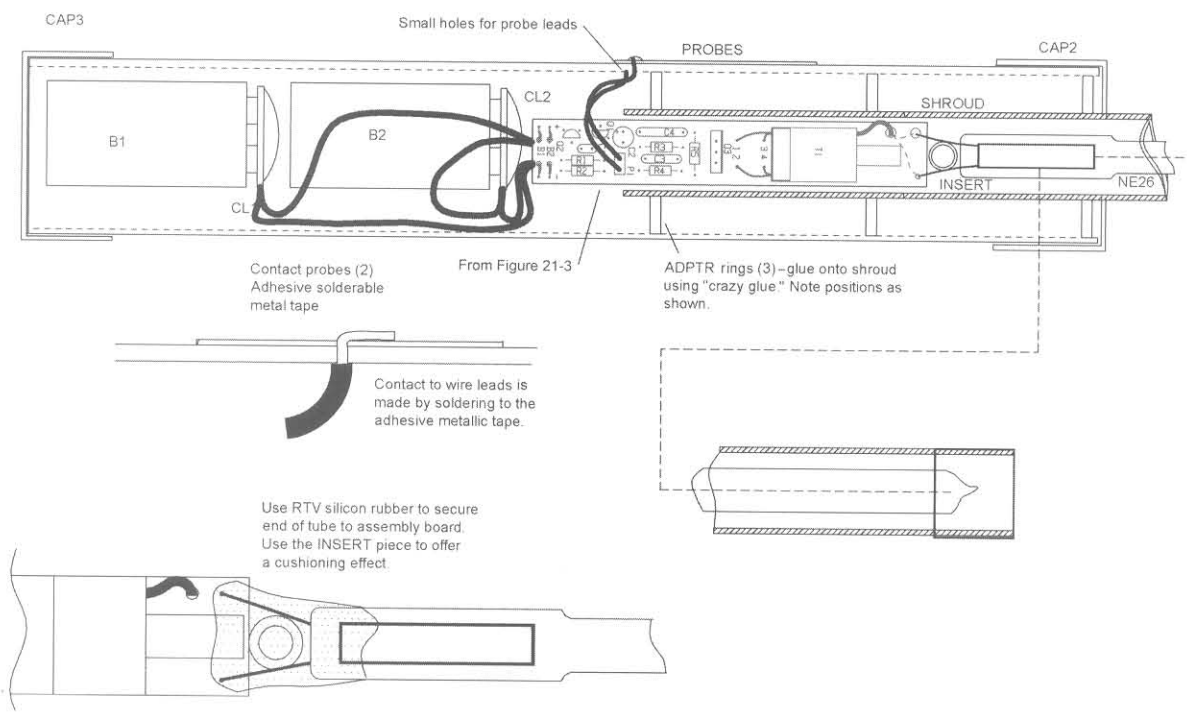

Figure 21-5 *X-ray view of handle innards*

dry hand may require a tighter grip, whereas a damp hand requires only a light touch to achieve full plasma ignition.

Mechanical Assembly Steps

To begin the project assembly, follow these steps:

1. Cut a 29 1/2-inch length of 1-inch OD plastic tube for the shroud, as shown in Figure 21-6. Even up and remove sharp edges from the ends. A red transparent tube greatly enhances the display when using red neon gas.

2. Fabricate four flexible spacer rings from a sheet of clear, flexible 1/8-inch vinyl, as shown in Figure 21-6. These spacers position the neon tube, NE26, inside the plastic shroud and offer some shock protection in case the units are mishandled. The center holes should be a snug fit to the neon with the outer diameter providing reasonable friction to the inner walls of the shroud tube. These spacer rings should be positioned on the NE26 display tube as shown. Note that other materials may be used for this part.

3. Fabricate three adapter rings as shown in Figure 21-6. The outside diameter must fit snugly into handle HA1. A 1-inch hole must be in the true center and fit snugly around the shroud. These are positioned and glued to the shroud tube, as shown in Figure 21-5.

4. Fabricate CAP2 with a 1-inch center hole and position it on the shroud assembly as shown in Figure 21-5. It should abut closely to the forward adapter ring.

5. Fabricate handle HA1 from a 10-inch-long piece of 1 5/8- × 1/16-inch rigid, wall *polyvinyl chloride* (PVC) or an equivalent material. Place two, small 1/16-inch holes as shown in Figure 21-5 for contact probe leads. Note that

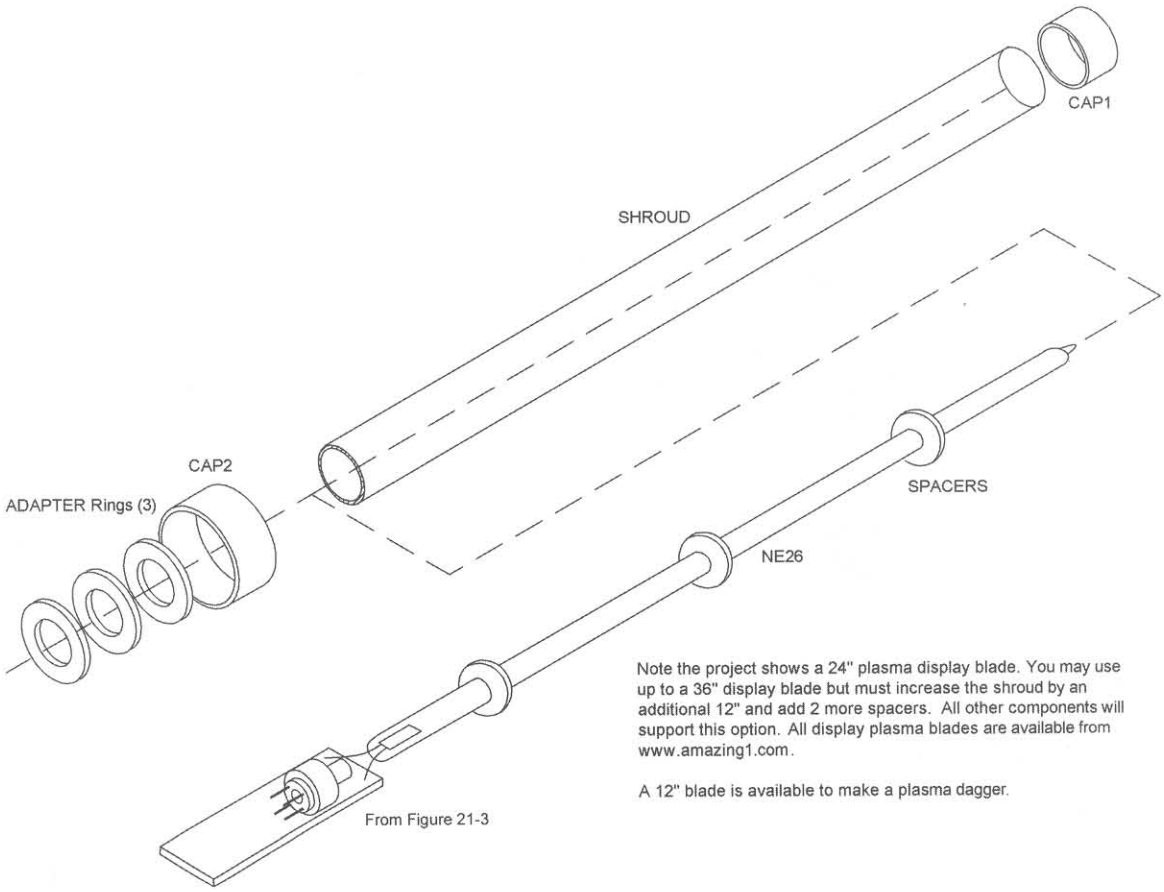

Figure 21-6 *Assembly of display tube, shroud, and spacers*

the position is not critical and can be placed to suit your preference.

6. Insert the NE26 tube assembly (see Figure 21-6) with spacer rings along with the assembly board into the shroud as shown. It may help to moisten the inner walls of the shroud by breathing into one end and quickly inserting the neon tube assembly. You may also use a mist bottle. Work gloves should be used to avoid injury in case of breakage.

7. Insert the above assembly into handle HA1 with the forward adapter ring recessed into the handle approximately 1/4 of an inch (see Figure 21-5). You may glue it in place or leave it as is for disassembly. Slide CAP2 into place as shown. Please note that it may take considerable force as the fit is tight and will not normally need gluing.

8. Using extreme patience and your own ingenuity, attempt to thread the probe wires through the holes in HA1, as shown in Figure 21-5. Sandwich the stripped ends to the handle with small pieces of metallic tape as shown. Note that electrical contact is made to the metallic probes by this sandwiching action. Cut the pads to shape for appearance using an x-acto knife.

9. Insert two fresh, standard 9-volt alkaline or lithium batteries into CL1 and two battery snaps into the handle. Obtain some foam rubber and use some pieces to hold the batteries in place. Secure the end with the CAP3 cap. Test the unit by touching the probes and verify that the correct operation occurs. Verify the heatsink is not too hot to touch.

10. Finally, assemble everything as shown (see Figure 21-7) by attaching the caps into place along with any labels or decals. Now go forth, have fun, and may the force be with you.

Test Points and Troubleshooting Suggestions

The following are some measurements for testing the device:

- Measure 9 VDC at the TPA point and at the COM line. If the previous tests cannot be obtained, it is suggested to double-check all

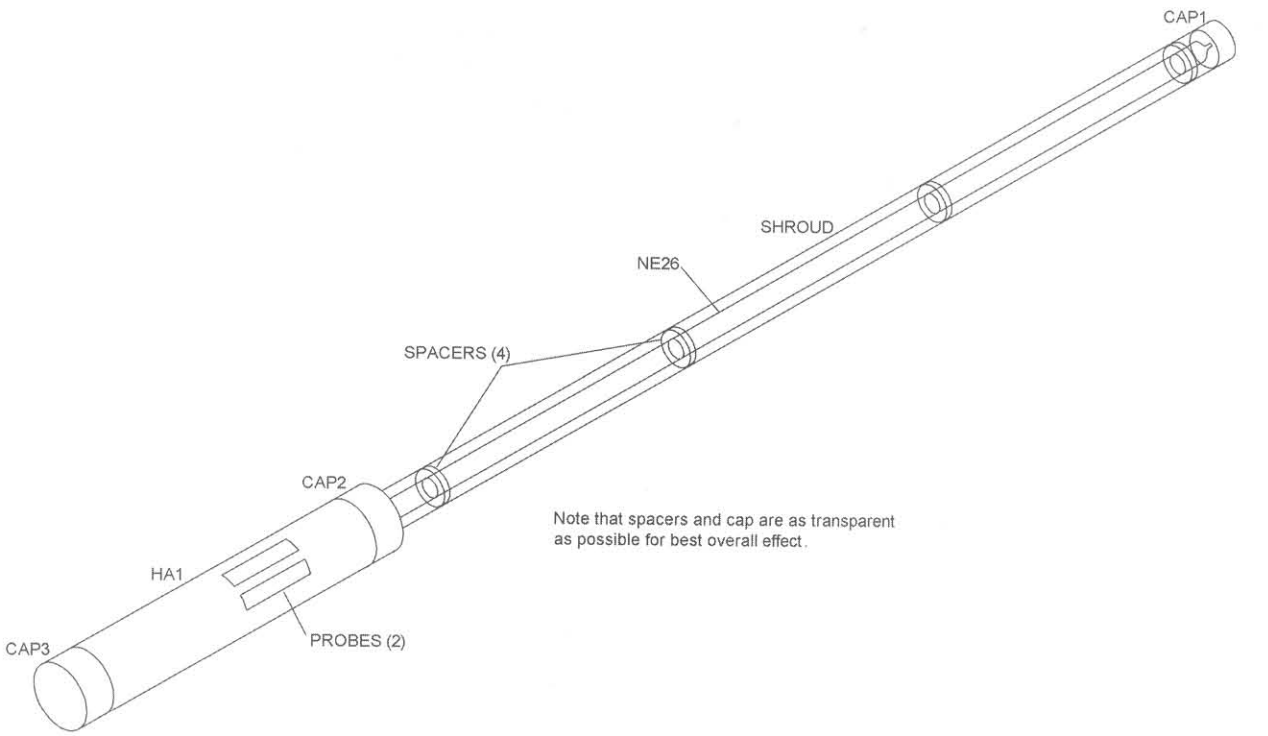

Figure 21-7 *Plasma lightsaber final view*

wiring and components for correct placement. Pay attention to Q1 and Q2, as they are not the same.

- Measure 0 VDC at the TPB point and at the COM line.
- Short contact probes A and B together and now measure 8 to 9 VDC at TPB.
- If the display tube fails to ignite, double-check all the wiring and components for correct placement. Pay attention to Q1 and Q2, as they are not the same.

Special Notes

Gas tubes longer than 30 inches may require a 12-volt battery pack to activate to full length.

The electronics assembly and batteries will easily fit into the often preferred Graphlex and Heiland camera flash handles. Contact the factory for facsimiles of this hard-to-find part.

This chapter's plans show the unit built with a 26-inch gas display tube. The system is designed to use any length of tube up to 36 inches long. The only modifications will be the length of the outer shroud tube and adding or subtracting the spacer rings. Our standard lengths of tubes are 12, 26, and 36 inches.

The touch probes may be replaced by a 1 megohm adjustable pot and switch for varying the discharge length. R1 must be changed to a 47-kilo-ohm value.

Batteries

The unit will work with two alkaline batteries connected in parallel to double the current rating for about five hours of "off and on" operation. Two lithium batteries, while more expensive, will allow eight hours of operation. The suggested *nickel-cadmium* (NiCad) rechargeables are Varta #TR 7/8 for 9.8 volts. The running time for two batteries will be almost an hour before recharging.

Thirty-six-inch red neon units may require 12 volts, which is obtainable by using 8 AA cells to fully ignite the display. You may also use two AAA cells connected in a series with the existing two 9-volt batteries. The wiring is shown in Figure 21-2. This approach allows fitting with the Graphlex and Heiland handles, as were the original props. Double-check the heatsink tab for Q3.

Applications

The property of the moving, ignited plasma your lightsaber produces can be utilized to provide an indicator of direction, such as turn signals for vehicles, semaphore signaling, pointing devices, or an excellent safety device for nighttime jogging or walking as a visible, piercing colored light is produced.

Table 21-1 Plasma lightsaber parts list

Ref. #	Qty.	Description	DB #
R1		5.6 meg, 1/4-watt resistor (gr-bl-gr)	
R2		1K, 1/4-watt resistor (br-blk-red)	
R3		2.2K, 1/4-watt resistor (red-red-red)	
R4		4.7K, 1/4-watt resistor (yel-pur-red)	
R5		330-ohm, 1/4-watt resistor (or-or-br)	
C1		.01 mfd, 50-volt plastic capacitor	
C2		10 mfd, 25-volt electrolytic capacitor	
C3		.022 mfd, 250-volt plastic capacitor	
C4		.1 mfd, 400-volt metal polypropylene capacitor	
Q1		PN2907 PNP GP transistor	
Q2		PN2222 NPN GP transistor	
Q3		MJE182 power tab NPN transistor	
T1		Ferrite high-voltage transformer	#28K077
CL1, 2	2	Battery snap connectors	
PCPFS5		PCB	#PCPFS5
HS1/SW1		Heatsink bracket and #6 × 1/4-inch sheet metal screw	
BUSWIRE		Three-inch piece of bus wire for connecting T1 pins	
WR2	2	12-inch lengths of #24 vinyl hookup wire	
ADPAPTERINGS	3	1 1/2 OD × 1 hole × 1/16 Lexan washer fabrication	
SHROUD		29 1/2 × 1 OD × 1/16 wall Lexan or other clear or colored plastic tubing	
SPACER	4	7/8 × 3/8 hole × 1/8 flexible, clear vinyl washer	
CAP1		1-inch clear plastic cap	
CAP2		1 5/8-inch black plastic cap with 1-inch hole	
CAP3		1 5/8-inch black plastic cap	
PROBE	2	2- × 1/4-inch strips of adhesive, solderable, metallic tape	
HA1		10 1/2- × 1 5/8-inch black plastic handle	
INSERT		3/8- × 3/8-inch Tygon tubing	
NE26		26-inch × 10-millimeter special prepared plasma tube	#NE26 available in "phaser" green, "photon" blue, "starfire" purple or "neon" red

Part Five

Chapter Twenty-Two

Ion Ray and Charge Gun

This project shows how to build a device that produces a bizarre yet interesting electrical phenomena that possibly may provide the propulsive forces used for space travel in the near future. A high potential source is allowed to leak off charges by being terminated into a sharp and pointed object. A charge emission now occurs due to the repulsive force of like charges occuring at the pointed end, producing a high density of charged particles that possess mobility over a distance. The finished unit is intended for use by the electrical physicist (see Figure 22-1) as well as for educational demonstrations, material testing, and many other applications as presented in this chapter.

Expect to spend $75 to $100 for this useful electrical device. Assembly will require only basic hand tools, wiring, and soldering. The finished project must be used with caution as moderate electrical charges can be generated at a distance. The parts list for this project is shown in Table 22-1.

Figure 22-1 *Ion ray gun*

Circuit Operation

Your ion ray gun requires a high DC voltage at a very low current. The driver power supply, as shown in Figure 22-2, generates over 600 micro-coulombs (600 micro-amps per second). This amount is a large number of ions and is sufficient to induce shocks at a distance, charge objects, and perform a host of bizarre electrical experiments. Even though the current is low, improper contact can result in a harmless yet painful shock.

The output voltage of the driver is obtained using a Cockcroft Walton voltage multiplier with 4 to 10 stages of multiplication. This method of obtaining high voltages was used in the first atom smasher ushering in the nuclear age. The multiplier section requires a high-voltage/frequency source for input supplied by transformer T1, producing 6 to 8 Kv at approximately 30 kHz. You will note that this transformer is a proprietary design owned by Information Unlimited. The part is small and lightweight for the power produced.

The primary winding of T1 is current driven through inductor L1 and is switched at the desired frequency by *field-effect transistor* (FET) switch Q1. Capacitor C6 is resonated with the primary of T1 and zero-voltage switches when the frequency is properly adjusted. (This mode of operation is very similar to class E operation.) The timing of the drive pulses to Q1 is therefore critical to obtain optimum operation.

The drive pulses are generated by a 555 timer circuit (I1) connected as an astable multivibrator with a repetition rate determined by the setting of trimpot (R1) and a fixed-value timing capacitor (C2). I1 is now turned on and off by a second timer, I2. This timer operates at a fixed frequency of 100 Hz but has an adjustable "duty cycle" (ratio of on to off time) determined by the setting of control pot R10. I1 is now gated on and off with this controlled pulse, providing an adjustment of output power.

Even though the output is short circuit protected against a continuous overload, constant hard discharging of the output can cause damage and must be limited. A pulse current resistor, R7, helps to protect the circuit from these potential damaging current spikes.

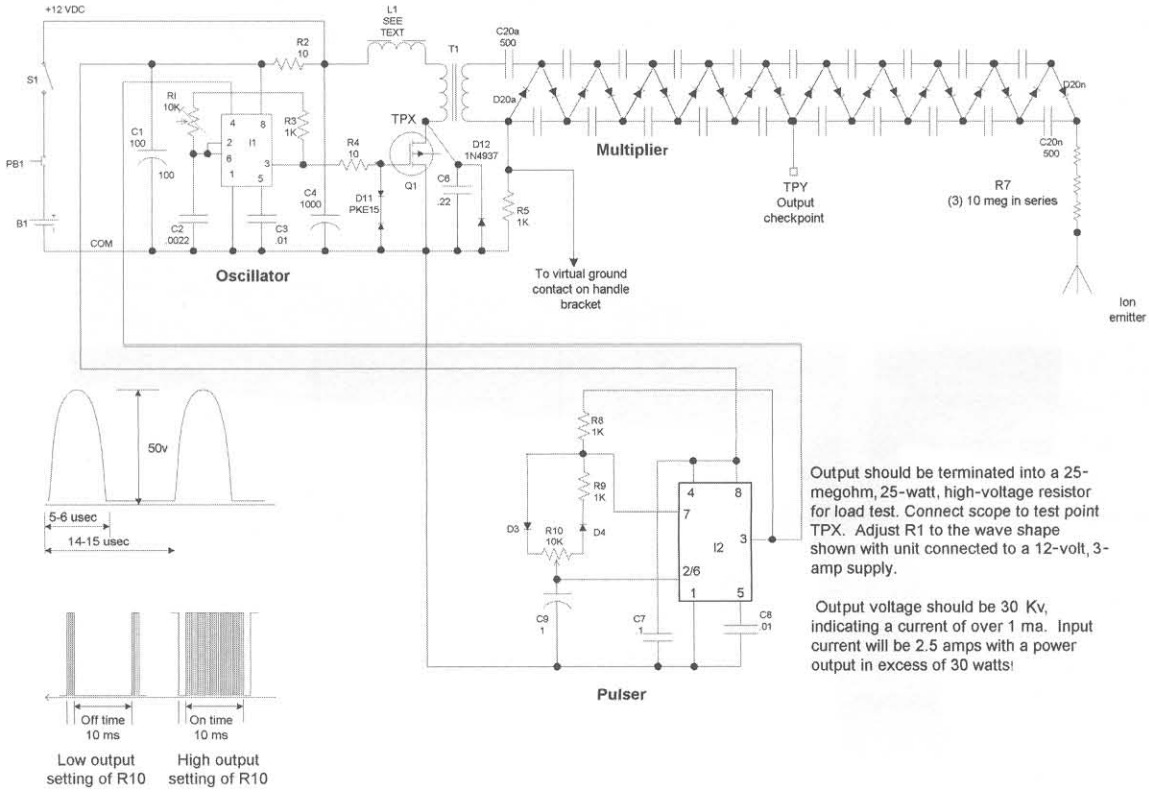

Figure 22-2 *Ion ray gun schematic*

Power input "enable" is controlled by switch S1 that is part of control pot R10. A trigger switch (PB1) allows instantaneous control. The actual power is a battery pack placed in the handle that consists of 8 AA cells in a suitable holder. A virtual ground is produced by user contact to the circuit return via a metallic probe built into the handle.

Construction Steps

Here you'll begin construction of the electronic ion-generating power supply. The ion generator is shown built using a perforated circuit board, as this is the preferred approach for science projects because the system looks more homemade.

The perforated board approach is more challenging, as the component leads must be routed and used as the conductive metal traces. We suggest that you closely follow the figures in this section and mark the actual holes with a pen before inserting the parts. Start from a corner, using it a reference, and proceed from left to right.

The *printed circuit board* (PCB) only requires that you identify the particular part and insert it into the respective marked holes. Soldering is now greatly simplified.

Board Assembly Steps

To assemble the perforated circuit board, follow these steps:

1. Lay out and identify all the parts and pieces. Verify them with the parts list, and separate the resistors as they have a color code to determine their value as noted.
2. Cut a piece of .1-inch grid perforated board to a size of 4.8 × 2.9 inches. Then cut a piece of 10- × 2.9- × .063-inch polycarbonate for the multiplier section. Locate and drill the holes as shown in Figure 22-3. An optional PCB is available from Information Unlimited.
3. Fabricate the metal heatsink for Q1 from a piece of .063 aluminum at 1.5 × .75 inches, as shown in Figure 22-4.
4. Assemble L1 as shown in Figure 22-4.
5. If you are building from a perforated board, insert components starting in the lower left-hand corner, as shown in Figure 22-5 and 22-6. Pay attention to the polarity of the capacitors with polarity signs and to all the semiconductors. Route the leads of the components as shown and solder as you go, cutting away unused wires. Attempt to use certain leads as

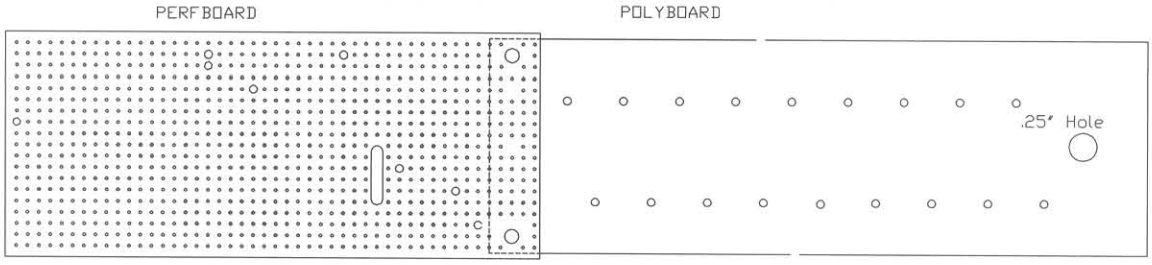

The assembly board is in two sections attached together by two outer 6-32 nylon screws and nuts. The middle hole is used to fasten the entire assembly to the base of the enclosure.

The circuit section is 4.8" x 2.9" x .1" perforated board. The high voltage polycarbonate section as shown is 10" x 2.9" x .063" thickness. This is sufficient to accommodate 10 stages of multiplication.
Drill .063" holes in the perforated section and the polycarbonate section located as shown.

Drill the three .125" holes in both sections for attaching together.

Drill and drag the .125" slot as shown. This cutout and the enlarged holes are for mounting transformer T1.

Using the optionally available printed circuit board will still require fabrication of the Plexiglas board.

Hole diameters are not critical.

Always use the lower left-hand corner of the perf board for position reference.

Figure 22-3 *Driver and multiplier board fabrication*

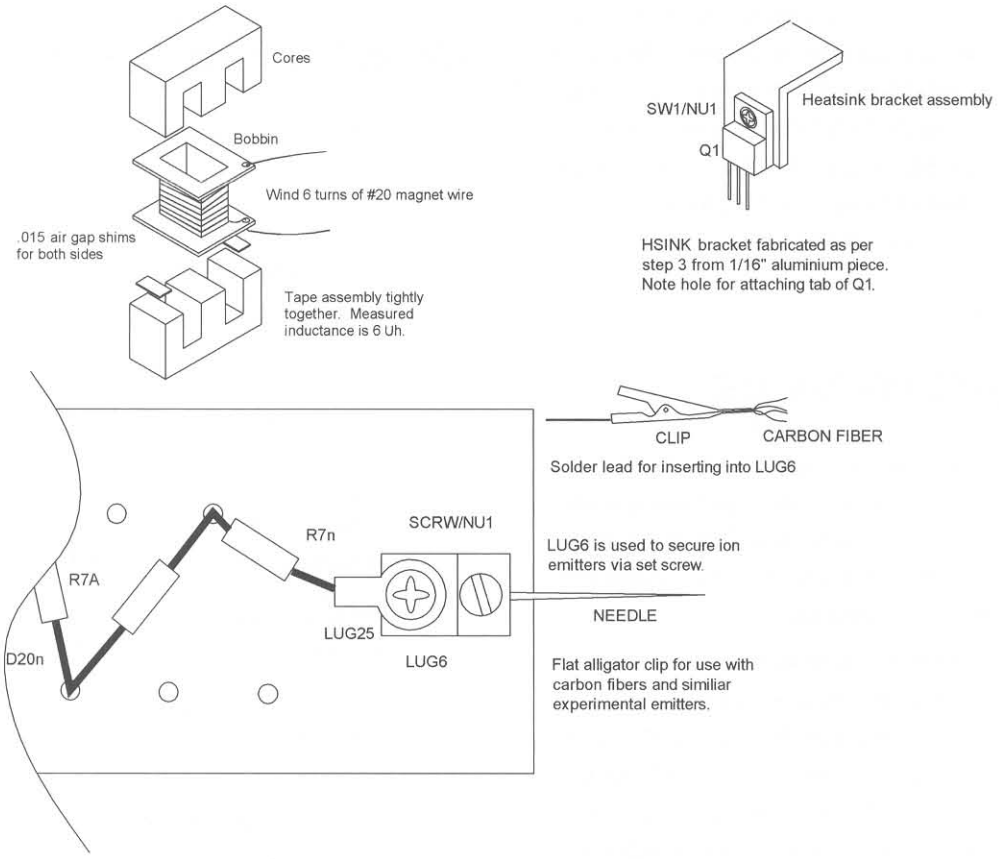

Figure 22-4 *L1 current feed inductor and heatsink bracket*

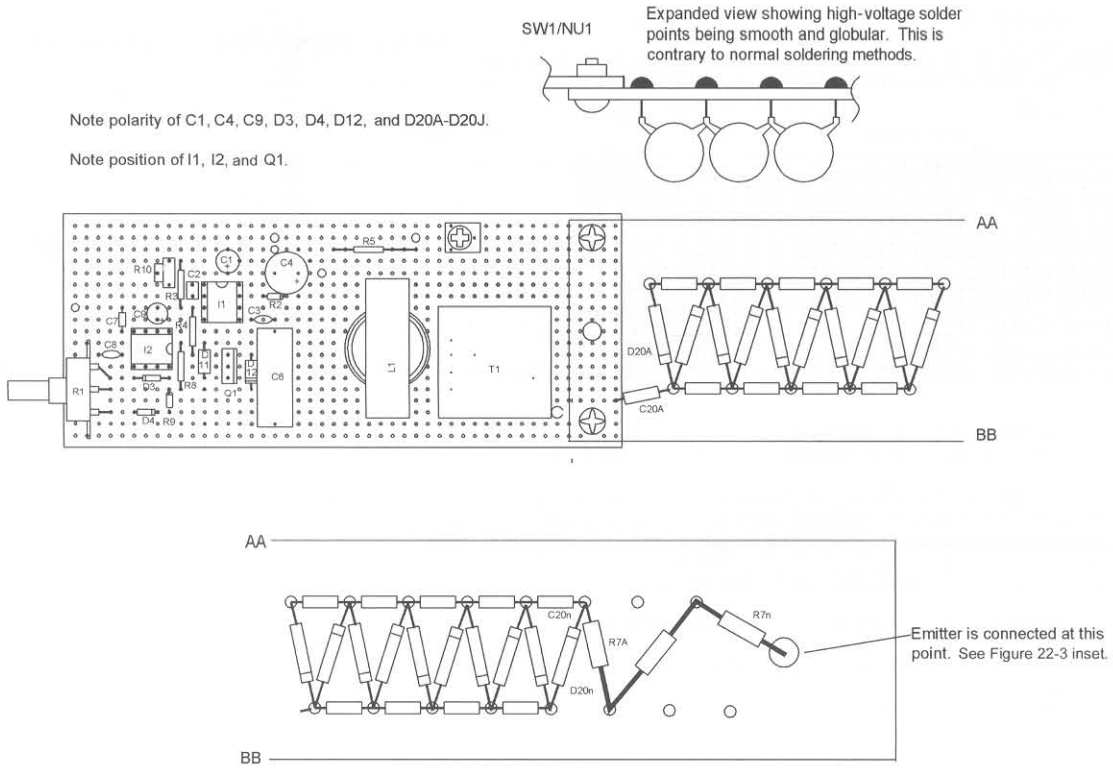

Figure 22-5 *Parts identification*

wire runs or use pieces of the included #22 bus wire. Follow the dashed lines on the assembly drawing as these indicate connection runs on the underside of the assembly board. The heavy dashed lines indicate use of thicker #20 bus wire, as this is a high-current discharge path and common ground connection.

6. Attach the external leads as shown in Figure 22-6. Figures 22-7a and 22-7b are enlarged views of the assembly board wiring.

7. Assemble the voltage multiplier as shown in Figure 22-5. The project shows 10 stages of voltage multiplication. Each stage consists of two capacitors (C20xx) and two diodes (D20xx). The stages can be reduced to a number of 10 where you will obtain 7 to 10 Kv of output as each stage contributes this amount of additional voltage. Additional stages over 10 will produce more ions but will only generate a higher potential when terminated into a smooth 4- to 5-inch terminal.

8. Double-check the accuracy of the wiring and the quality of the solder joints. Avoid wire bridges, shorts, and close proximity to other circuit components. If a wire bridge is necessary, sleeve some insulation onto the lead to avoid any potential shorts. See the note in Figure 22-5 showing smooth, globular solder joints for all high-voltage points on the multiplier board.

Testing Steps

To run a test on your device, follow these steps:

1. Preset trimpot R1 to midrange and R10 to full *clockwise* (CW).

2. Obtain a 25-megohm, 20-watt high-voltage resistor. You can make this part by connecting 25 1-megohm, 1-watt resistors in a series and sleeving them into a plastic tube. Then seal the ends with silicon rubber

3. Obtain a 12-volt, DC, 3-amp power converter or a 12-volt battery. You may use the 8 AA cells in the specified holder.

See Figures 22-7a and 22-7b and B for enlarged views of this figure.

- - - - - Thick dashed lines are direct connection runs beneath board of #20 bus wire (WR20BUSS) and are extended for the spark switch electrodes.

Thinner dashed lines are #24 bus wire (WR24BUSS) and component leads wherever possible.

Triangles are direct connection point junctions.

Solid black lines are external leads for input and output lines. Use red (WR20R) for +12 input.
Use green (WR20G) for lifter connection.
Use black (WR20B) for com -12 input.

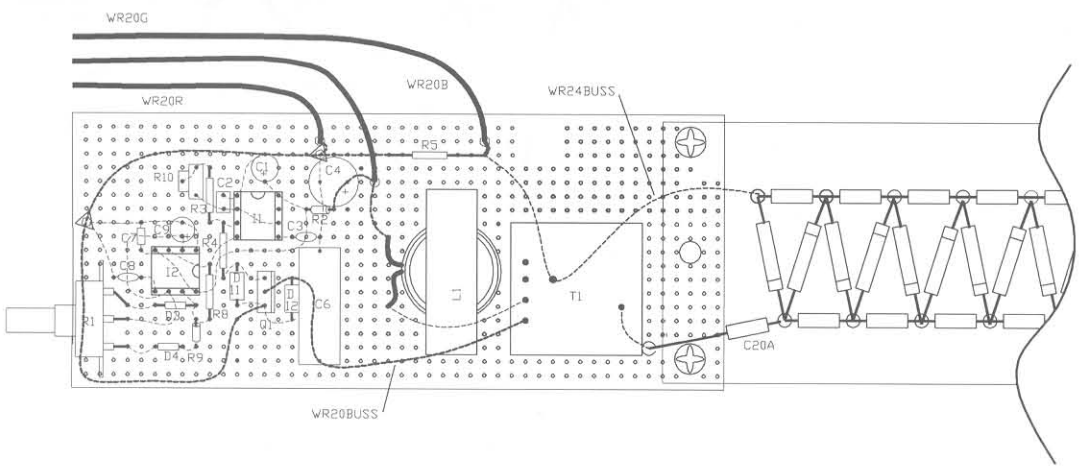

Figure 22-6 *Wiring connections and external leads*

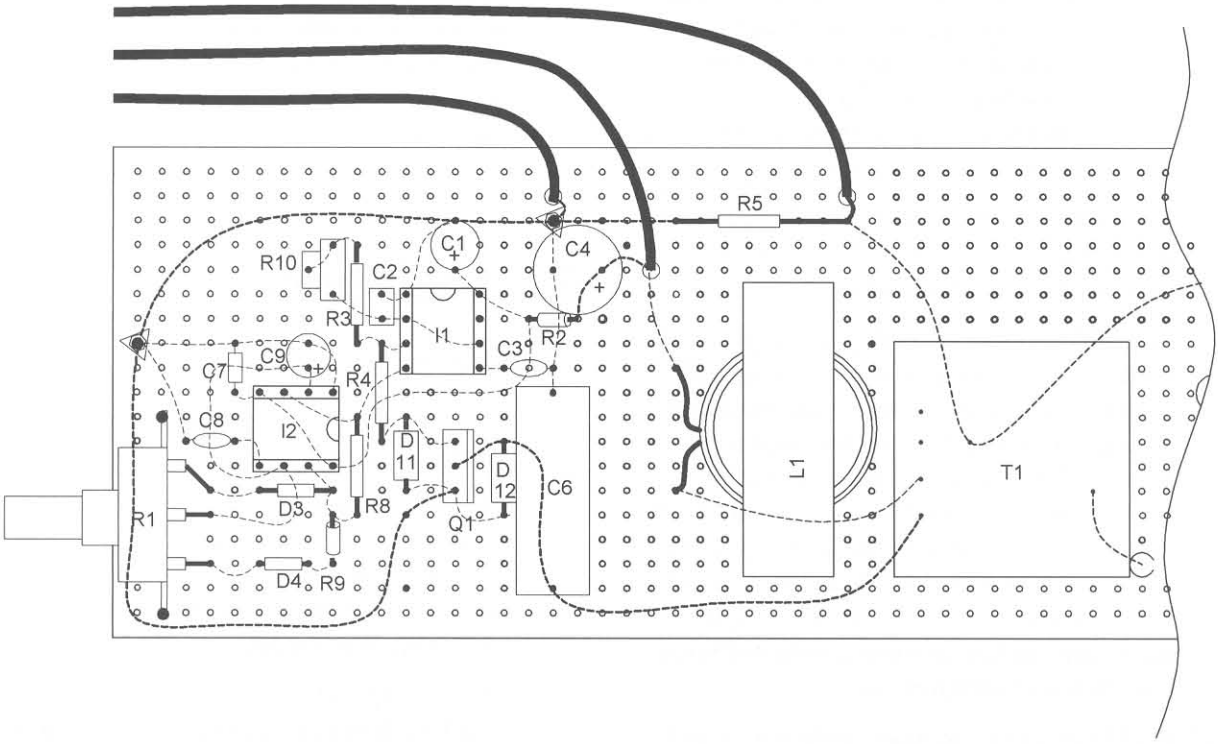

Figure 22-7A *Enlarged view of the assembly board*

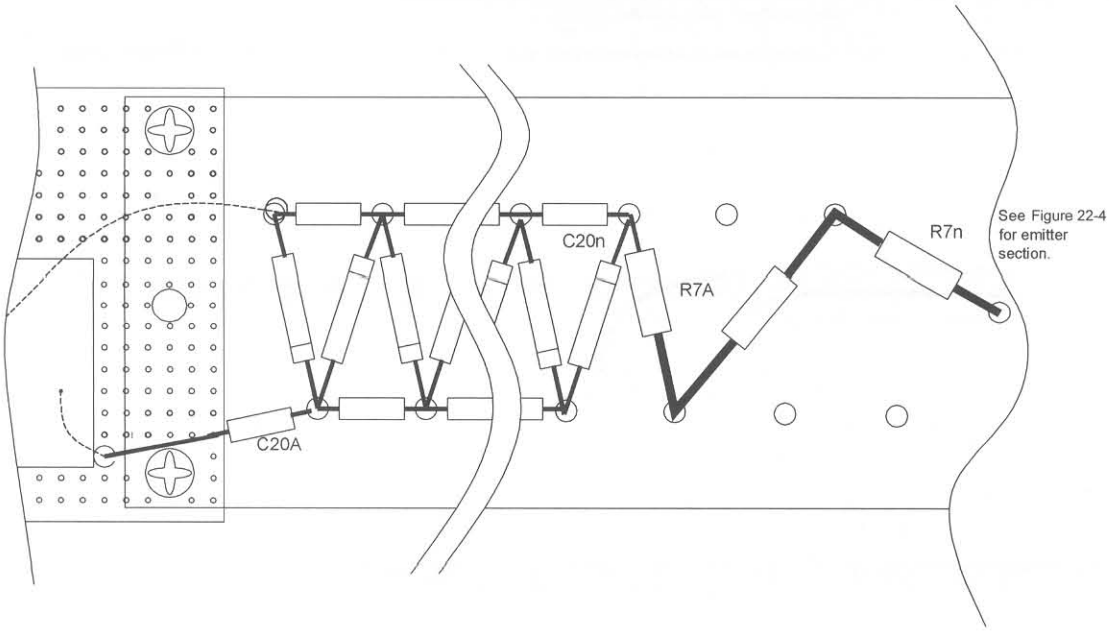

Figure 22-7B *Enlarged view of the high-voltage section of the assembly board*

4. Connect the input to the power converter and the midsection of the multiplier section to the 25-megohm load resistor. Connect oscilloscope to drain pin of Q1 and set it to read 100 volts with a sweep time of 5 *microseconds* (usecs).
5. Apply power and quickly adjust R1 to the wave shape shown in Figure 22-2. The spark gap may fire intermittently and should be respaced just to the point of triggering. This is usually between 25 to 30 Kv.
6. Rotate R10 *counterclockwise* (CCW) and the input current smoothly drops almost to zero. This control varies the ratio of off to on time and nicely controls the system current to the ion emitters.

If you have access to a high-voltage probe meter, such as a B&K HV44, it will be possible to measure the direct output, noting 20 to 30 Kv across the 25-meg load resistor. This equates to over 30 watts! You will see a smooth change in output as R10 is varied.

Also note that the output voltage indicates only half the output value and is also heavily loaded by the load resistor along with the rest of the system. In actual usage in the intended ion and charge gun, the input current will be adjusted low by the setting of R10 as excessive power is not necessary.

Also, do not continually allow a hard spark discharge as circuit damage can occur.

Mechanical Assembly

To put the rest of the device together, follow these steps:

1. Create the main enclosure (EN1) from a 15-inch section of 2 3/8-inch schedule 40 PVC tubing, as shown in Figure 22-8. Note the 2 1/2-inch clearance holes accessing the retaining screw on LUG6 that are necessary to secure the emitter selection and passage of the leads to the HA1 handle section. You may want to use a piece of 2 1/4-inch OD clear plastic tubing with a 2-inch ID for this piece as it allows viewing of the circuit innards and can be impressive if your assembly is neat and orderly.

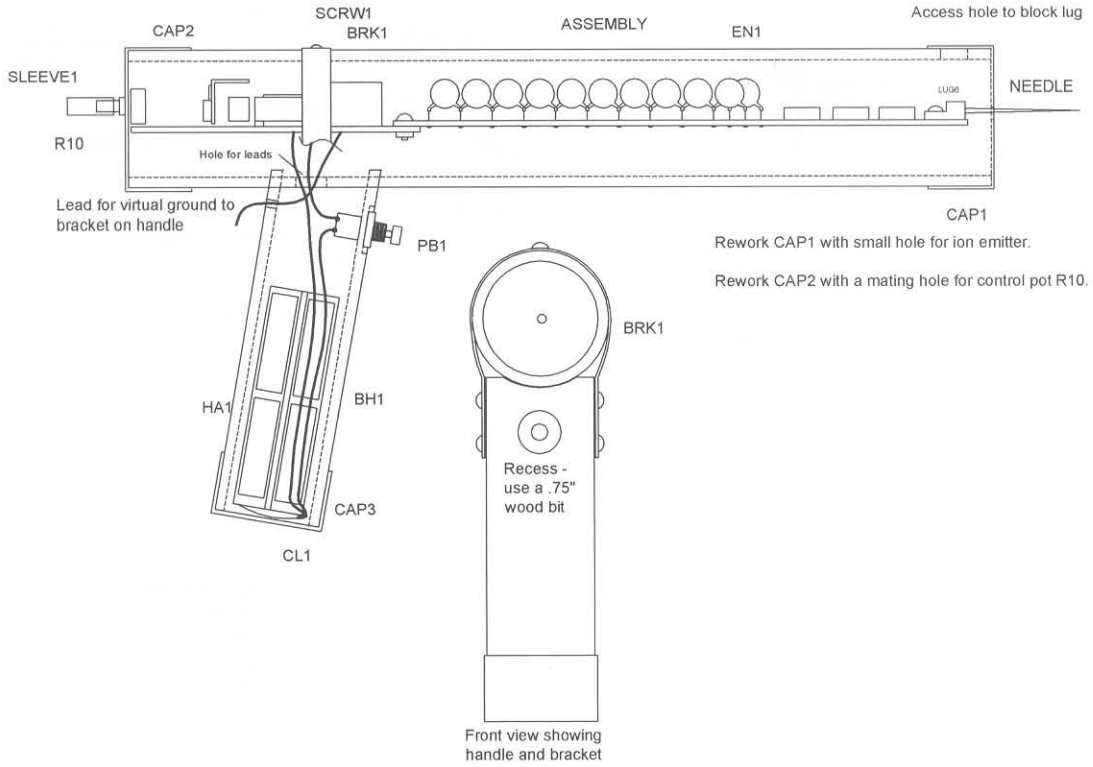

Figure 22-8 *X-ray view on circuit innards*

2. Build the handle section HA1 from a 6-inch piece of 1.9-inch schedule 40 PVC tubing. Note the contour that is filed out to fit the curvature of the enclosure section is at a slight angle, providing a gun-like look. You will need a small hole for the passage of the BRK1 grounding lead and a hole for the pushbutton switch PB1. The hole will require recessing using a 3/4-inch wood bit because the width of the handle tubing is too wide to allow adequate clearance for the securing nut.
3. Create the bracket, BRK1, from a 10-inch length of 1/2-inch .035 aluminum strip and shape as shown in Figure 22-8. Drill holes for the screws (SCRW1).
4. Assemble everything as shown in Figure 22-9, reading all the data in the figure.

Operation and Applications

The unit's output will be a soft, bluish flame forming at the emitter point. Ions are produced by charge concentration occurring at the end of the ion emitter. In order to be optimized, a return path to ground is necessary and is provided by a conductive hand grip connected to the common line of the circuit. The user now creates the ground return or electrical image necessary for enhancing the charge and ion mobility.

Control of the system is done via a pushbutton switch. This switch can easily be modified or changed to suit the user's needs. A low-current, spring-loaded push button is shown.

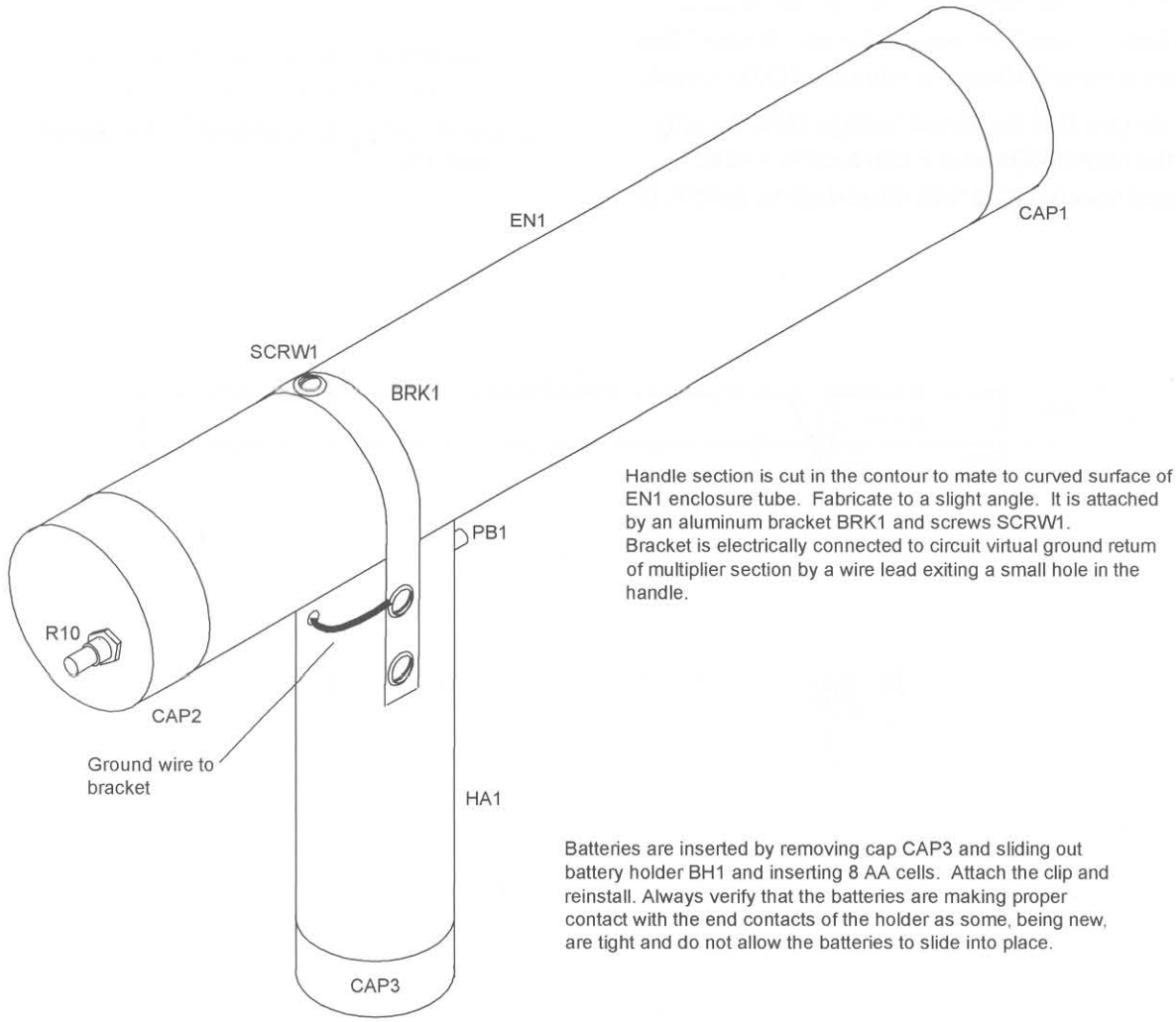

Figure 22-9 *Ion ray and charge gun*

Power to the unit is via an eight AA cell battery pack fitted in the handle. This approach provides a neat compact unit. Rechargeable batteries may be used, utilizing a built-in charging circuit for those applications where constant use is required.

Your ion ray gun demonstrates an interesting phenomenon involving the mobility of charged particles. It is capable of producing the following effects:

- Inducing electrical shocks in other people
- Causing lamps to flicker and ignite without contact
- Causing paper to stick to surfaces, playing cards, and so on
- Causing motion of objects/ion motors
- Charging of objects to a high potential without contact
- Static electricity experiments
- Kirlian photography and ozone production
- Strange and bizarre effects on certain materials
- Effects on painted and insulated surfaces that require darkness
- Effects on vapors, steam, and liquids
- Visual discharge of plasma force, corona, and so on
- Effect on electronics equipment, TV, and computers—use caution

The device accomplishes all the previous effects without any direct connections other than the traveling of ions through the air. In order to demonstrate this effect, it is necessary to produce voltages of magnitudes that may be at a hazardous shock potential but at a relatively small amperage. Even though the device is battery operated with low-input voltage, it must be treated with caution. Use discretion when using, as it is possible for a person wearing insulated shoes to accumulate enough of a charge to produce a moderately painful or irritating shock when he touches a grounded object. The effect could cause injury to a person in weak physical condition (note

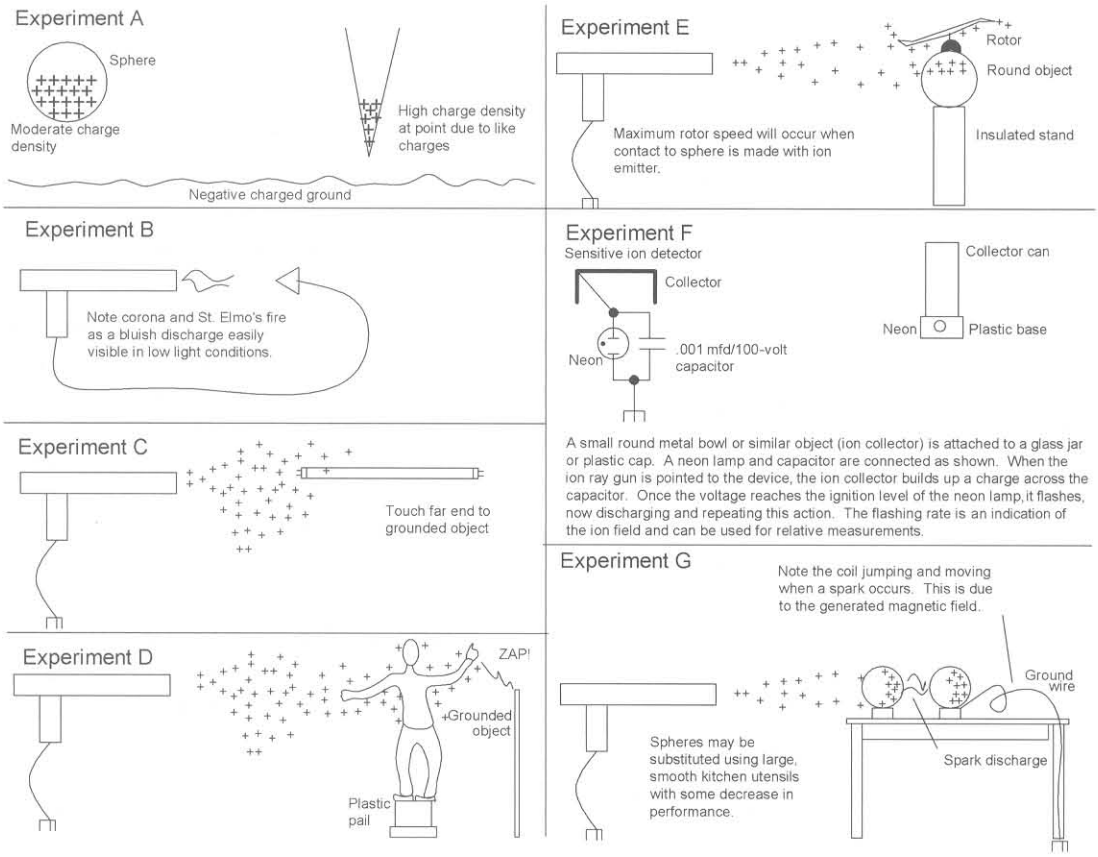

Figure 22-10 *Experiments*

the warnings). The effects depend on many parameters, including humidity, leakage amounts, types of objects, and proximity.

The device can be used in two ways. When the output is terminated into a large, smooth-surface collector such as a large metal sphere or oblate, it becomes a useful high-potential source capable of powering particle accelerators and other related devices. It may be built as a producer of negative or positive ions, demonstrating a phenomenon that is often regarded as a demerit when building and designing high-voltage power supplies.

The device is then terminated into a sharp point where the leakage of positive or negative ions can occur. This will result in corona and the formation of nitric acid via the production of the ozone produced when combining with nitrogen and forming nitrous oxide, which, with water, produces this strong acid. The production of ions as leakage also robs the available current from the supply.

Experiments

The following experiments are graphically shown in Figure 22-10. It is well known that high-voltage generators usually consist of large, smooth-surface collectors where leakage is minimized, allowing these collective terminals to accumulate high voltages with less current demand. Leakage of a high voltage point is the result of the repulsion of similar charges to the extent that these charges are forced out into the air as ions. The rate of ions produced is a result of the charge density at a certain point. The magnitude of this quantity is a function of voltage and the reciprocal of the angle of projection of the surface.

Note that Experiment A in the figure shows why lightning rods are sharply pointed. This causes the charges to leak off into the air before a voltage can be developed to create the lightning bolt.

It is now evident that to create ions it is necessary to have a high voltage applied to an object such as a needle or another sharp device used as an emitter. Once the ions leave the emitter, they possess a certain mobility that allows them to travel moderate distances, contacting and charging up other objects by accumulation and collision.

Experiment B shows St. Elmo's Fire. This glow discharge occurs during periods of high electrical activity. It is a corona discharge that is brush-like, luminous, and often may be audible when leaking from charged objects in the atmosphere. It occurs on ship masts, aircraft propellers, wings, and other projecting parts, as well as on objects projecting from high terrain when the atmosphere is charged and a sufficiently strong electrical potential is created between the object and the surrounding air. Aircraft most frequently experience St. Elmo's fire when flying in or near cumulonimbus clouds, in thunderstorms, in snow showers, and in dust storms.

Experiment C shows a flashing fluorescent or neon light. This experiment demonstrates the mobility of the ions and their ability to charge up the capacitance in a fluorescent light tube and discharge in the form of a flash. For this experiment, perform the following steps:

1. Have a friend carefully hold a 10- to 40-watt fluorescent light or neon-filled tube and turn off the lights. Allow your eyes to become accustomed to the total darkness.
2. Hold the end about 3 feet from the output of the ion ray gun and note the lamp flickering. Increase the distance and note the flicker rate decreasing. Under ideal conditions and total darkness, the lamp will flicker to a considerable distance from the source. Use caution in total darkness. Hold the lamp by a glass envelope and touch the end pins to a water pipe, metal objects, and so on for best results and the brightest flash. The flash time is the equivalent of the equation $T = CV/I$, where T is the time between flashes and V is the flash breakdown voltage characteristic of the tube. C is the inherent capacity in the tube and I is the equivalent of the amount of ions reaching the lamp and obviously decreases by the $^5/_2$ power of the distance.

Experiment D concerns ion charging. This demonstrates the same phenomena as in the previous experiment but in a different way. Perform the following steps:

1. Set up the unit as shown with a ground contact about $^1/_4$ of an inch from the charge sphere.

2. Note the spark occurring at the grounded contact as a result of the ion accumulation on the sphere. Increase the distance and note where the spark becomes indistinguishable.
3. Obtain a subject brave enough to stand a moderate electric shock (use caution as a person with a heart condition should not be near this experiment).
4. Have the subject stand on an insulating surface and then touch a grounded or large metal object. Shoes with rubber soles often work to an extent.

Experiment E shows an ion motor. This dramatically demonstrates Newton's law of action producing a reaction. Escaping ions at a high velocity produce a reactive force. This is a viable means of propulsion for a spacecraft where hyper-velocities may approach the speed of light in this frictionless environment. Here you will work with a rotor and pin attached to a sphere via a lump of clay or something similar. A piece of folded paper will sometimes work.

Form a piece of #18 wire as shown. For maximum results, carefully balance and provide minimum friction at the pivot point. There are many different methods of performing this experiment with far better results. We leave this to the experimenter, bearing in mind that a well-made, balanced rotor can achieve amazing rpms. Note that as the rotor spins, giving off ions, one's body hair will bristle, nearby objects will spark, and a cold feeling will persist.

Experiment F shows accumulated ions on the insulated spherical object, charging it theoretically to its open circuit potential (this in practice doesn't occur due to leakage). The object accumulates a voltage equal to $V = it/c$. Note that the unit is also directly grounded to increase this effect by producing the necessary electrical mirror image. The quantity Q (coulombs) of the charge is equal to CV where C equals the capacitance of the object and V equals the voltage charged. The energy W (joules) stored is equal to $\frac{1}{2}$ *capacitance* $\times$ voltage squared (CVE2). The capacitance can be calculated by approximating the area of the object's shadow projected directly beneath it and calculating the mean separation distance. The capacitance is now approximately equal to .25 times the projected area in square inches, divided by the separation in inches.

Also regarding Experiment F, note that the IOD1 ion detector described in the Information Unlimited catalog is an excellent device and provides extraordinary sensitivity. The ESCOPE electroscope also is an excellent detector.

Experiment G demonstrates the transmission of energy via mobile ions. The objects used here are round spheres placed on glass bottles used as insulators. One object is grounded using thin, insulated wire. Another object discharges to the grounded object. Note that the grounding wire physically jumps at the time of discharge; these phenomena are the result of current producing a mechanical force. As the unit is brought closer, the length of the spark discharge and the discharge rate will increase. A discharge length of a half-inch may be obtainable with the unit 4 to 5 feet away. This demonstrates the potential effectiveness of the device.

Other experiments and uses would be materials and insulation dielectric breakdown testing, ozone production for odor control, X-ray power supplies, and capacitance charging using a Leyden jar. Other uses include the ignition of gas tubes and spark gaps, particle acceleration and atom smashers, Kirlian photography, electrostatics, and ion generation. Other related material may easily be obtained on these subjects.

For example, an experiment on charge attraction demonstrates the force between *unlike* charges. Place an 8- $\times$ 11-inch piece of paper on a wooden desk or tabletop. Scan the paper with the unit approximately 2 to 3 inches from its surface. Note the paper pressing to the surface and becoming strongly attracted as indicated when attempting to lift it up.

An experiment on change repulsion would demonstrate the force between *like* charges. For example, place a small paper cup on top of the output. Obtain some small pieces of Styrofoam and place them in the cup. Note that some of the pieces fly out of the cup. Bring a grounded lead near the cup and note the reaction.

The effects on many materials can supply hours of interesting experiments, producing sometimes weird and bizarre phenomena. If you discover or happen to come up with any new experiments or data, contact us at www.amazing1.com.

Negative Ion Information

In the last two decades, a medical controversy has evolved pertaining to the beneficial effects of these minute electrical particles. As with any device that appears to affect people in a beneficial sense, there are those who sensationalize and exaggerate these claims as a cure for all ailments and ills. Such people manufacture and market these devices under false pretenses and consequently give the products a bad name. The Food and Drug Administration now steps in on these claims and the product, along with any beneficial facets, goes down the tubes.

People are affected by negative ions from the property of these particles to increase the rate of activity by cilia (whose property is to keep the trachea clean from foreign objects), thus enhancing oxygen intake and increasing the flow of mucous. This property neutralizes the effects of cigarette smoking, which slows down this activity of the cilia. Hay fever and bronchial asthma victims are greatly relieved by these particles. Burns and surgery patients are relieved of pain and heal faster. Tiredness, lethargy, and a general feeling of fatigue are replaced by a sense of well-being and renewed energy. Negative ions destroy bacteria and purify the air with country air freshness. They cheer people up by decreasing the serotonin content of the blood. As can be seen in countless articles and technical writings, negative ions are a benefit to man and his environment.

Negative ions occur naturally from static electricity, certain kinds of wind, waterfalls, crashing surf, cosmic radiation, radioactivity, and ultraviolet radiation. Positive ions are also produced from some of the previous phenomena and usually neutralize each other out as a natural statistical occurrence. However, many man-made objects and devices have a tendency to neutralize the negative ions, thus leaving an abundance of positive ions, which create sluggishness and most of the opposite physiological effects of its negative counterpart.

One method of producing negative ions is obtaining a radioactive source rich in Beta radiations (electrons). Alpha and gamma emissions from this source produce positive ions that are neutralized electrically. The resulting negative ions are electrostatically directed to the output exit of the device and are further dispersed by the action of a fan (this method has recently come under attack by the Bureau of Radiological Health and Welfare) for the use of tritium or other radioactive salts. This approach appears to be the most hazardous one according to the product consumer safety people.

A more accepted method is to place a small tuft of stainless steel wool as the ion emitter at the output terminal of a negative high-voltage DC power supply. The hair-like property of the stainless steel wool allows ions to be produced at a relatively low voltage yet with reduced ozone output. Ions are produced by the leakage of the particles charging air molecules in the immediate vicinity of the steel wool emitter. The unit should be operated below 15 Kv as too much voltage can produce substantial amounts of ozone that can mask the beneficial effects of the increased ions obtained.

Special Notes

The ion emitter plays an important function in the proper operation of this unit for the particular application. It is suggested that you use a small, sharp, stainless steel needle for starters.

The average current is about 500 microamps and can be considered constant for most loads. It charges objects of an electrical capacitance (C) to a voltage by the following formula: $V = it/c$, where t equals the time in seconds and c equals the capacitor of the object in farads. The average human body usually equates out to 10 to 20 *picofarads* (pfd). Objects of a larger capacity could mathematically be charged up to dangerous energy amounts if they were well insulated. Consequently, this must be taken into consideration.

Here's an example. An object of a capacity equal to .001 mfd, insulated up to 25,000 volts, would charge up to near this value in approximately 1/3 of a second. This should equate out to .2 joules and can result in a painful electric shock, as anyone knows who has gotten across a charged capacitor.

An interesting phenomenon is that a human body on a dry day can accumulate a sufficient charge to cause a neon or fluorescent lamp to flash reasonably brilliantly when contact is made with a grounded object.

Table 22-1 Ion ray and charge gun project parts list

Ref. #	Qty.	Description	DB #
R1		10K trimpot vertical	
R2, 4	2	10-ohm, 1/4 -watt resistor (br-blk-blk)	
R3, 5, 8, 9	4	1K, 1/4 -watt resistor (br-blk-red)	
R7	3	10-megohm, 1-watt resistor (br-blk-bl)	
R10/S1		10K pot and switch	
C1		100 mfd/25-volt vertical electroradial leads	
C2		.0022 mfd/50-volt green plastic cap (222)	
C3, 8	2	.01 mfd/50-volt disk (103)	
C4		1000 mfd/25-volt vertical electrolytic capacitor	
C20a–n	20	500 pfd, 10 Kv ceramic disk cap	#500P/10KV
C6		.22 mfd/250-volt metallized polypropylene	
C9		1 mfd, 25-volt vertical electro cap.	
C7		.1 mfd, 50-volt cap	
D20a–n	20	16 Kv, 5-milliampere avalanche diodes	#VG16
D3, 4	2	IN914 silicon diodes	
D11	1	PKE15 15-volt transient suppressor	
D12		1N4937 fast-switching 1 Kv diode	
Q1		IRF540 *metal-oxide-semiconductor field effect transistor* (MOSFET) TO220	
I1, 2	2	555 DIP timer	
T1		Mini-switching transformer. 7 Kv, 10 milliampere	#IU28K089
L1	1	6 Uh inductor; see text on assembly	#IU6UH
CL1		Battery clip #22 with 12-inch leads	
BH1		Eight AA cell battery pack	
PB1		Pushbutton switch (normal open)	
PERFBOARD		5 × 2.9 × .1 grid perforated board; cut to size per Figure 22-3	
PCGRA		Optional PCB	#PCGRA
POLYBOARD		10 × 2.9 × .063 polycarbonate (Lexan) plastic	
WR20R	12 inches	#20 vinyl red wire for positive input	
WR20B	12 inches	#20 vinyl black wire for negative input	
WR20G	12 inches	#20 vinyl green wire for output ground to craft return	
WR20BUSS	12 inches	#20 bus wire for light leads	
WR24BUSS	12 inches	#24 bus wire for light leads	
SCRW1	5	#6 × 3/8 sheet metal screws	
SW1/NU1	3	#6-32 × 1/2-inch screws and nuts	
HSINK		1.5- × 1-inch .063 AL plate fabricated as per Figure 22-4	
LUG6		#6 aluminum block lug	
LUG25		1/4-inch ring lug	
CLIP		Small alligator clip, duckbill type	
EN1		15 × 2 3/8 OD × 1/8 wall PVC or clear plastic tube	
HA1		6- × 1 7/8-inch OD PVC schedule 40 tube	
BRK1		10 × 1/2 × .035 aluminum strip fabricated as shown	
CAP1, 2	2	2 3/8-inch plastic caps fabricated as shown with holes	
CAP3		1 7/8-inch plastic cap	
		Optional items	
B1-8	8	AA alkaline cells, 1 1/2 volts	
NEEDLE		Stainless steel	
CARBONFIB		Carbon fiber hair for high-output emitters	#CARBFIB

Chapter Twenty-Three

See-in-the-Dark Project

This useful and interesting project shows how to build a device capable of seeing in total darkness. Unlike conventional devices requiring the minute light from the stars or other ambient background light, this system contains its own infrared source, allowing covert viewing of the desired subject (see Figure 23-1).

Assembly is shown in two parts, the high voltage power supply and the final enclosure with optics and an illuminator. Expect to spend $50 to $100 for this useful infrared imaging system with all the specialized parts available from www.amazing1.com.

General Description

This project shows how to construct a device capable of allowing one to see in total darkness. It can be used to view a subject for recognition or evidence-gathering reasons without any indication to the target subject that he or she is under surveillance. It is an invaluable device when used for detection, the alignment of infrared alarms, invisible-laser gun sights, and in communications systems. This technology can also be used to detect diseased vegetation in certain types of crops from the air, to serve as an aid to nighttime varmint hunting, and to view high-temperature thermographic scenes where heat is used to produce the image. This device is excellent for use with the infrared laser described in Chapter 9, "Handheld Burning Diode Laser Ray Gun," with a performance that is as good operationally as units that cost much more.

The unit is built using readily available parts for the enclosure and basic optics. The batteries are enclosed into the housing and do not require side packs, cables, and so on. The range and field of viewing are determined by the intensity of the integrated infrared source and the viewing angle of the optics. Readily available and low-cost optics are usable, but they may have spherical aberration and other adverse effects. This approach keeps the basic cost down for those not requiring actual viewing of detailed scenes. Improved optics will eliminate these effects and can be obtained at most video supply houses as an option.

Assembly focuses around common *polyvinyl chloride* (PVC) tubing as the main housing and a specially designed, patented, miniature power source for energizing the image tube. The tube is a readily available image converter being used by most manufacturers of similar devices. This tube establishes the limits of viewing resolution and is suitable for most applications but may be limited if one desires video perfection.

The viewing range is determined mainly by the intensity of the infrared source and can be controlled by varying this parameter. Our basic unit is shown

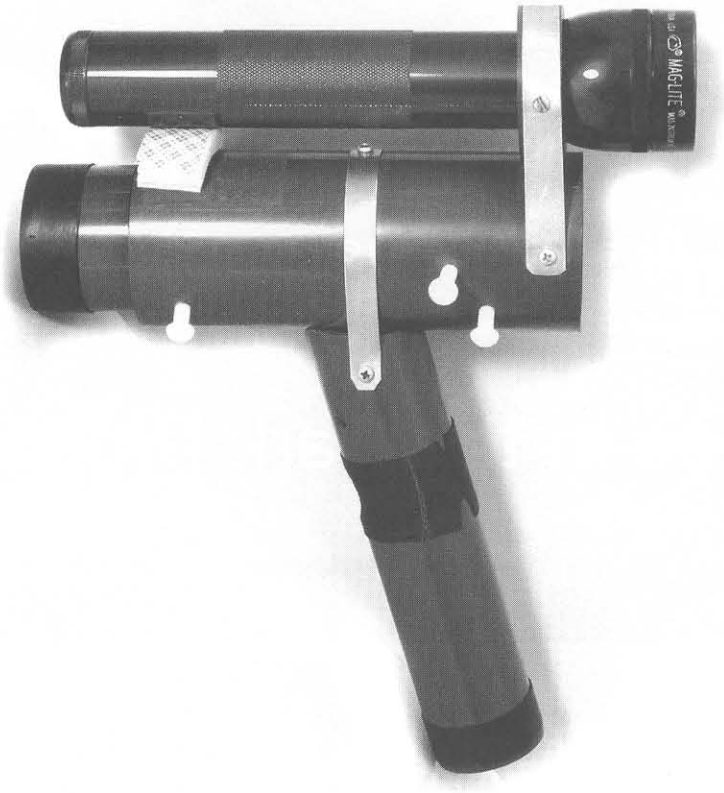

Figure 23-1 *See-in-the-dark viewer*

utilizing a 2-D cell flashlight with an integrated filter placed over the lens to prevent the subject from seeing the source. This provides a working range of up to 50 feet (reliably) and can be increased to several hundred using a more powerful source such as a 5 to 6 cell flashlight. Needless to say, the builder can choose his or her infrared source and adjust the optics to meet his or her needs. Infrared *light-emitting diodes* (LEDs) or lasers, as described in our catalog, are also good illumination sources. Long-range, quick viewing may utilize a small, two-cell light with eight *nickel-cadmium* (NiCad) AA cells to replace the normal two D cells, providing a significantly brighter infrared source yet lasting for less time than the normal D cell would.

The unit can also be operated using external sources such as super-intense Q-beam handheld lamps with an added filter extending the range out to 400 to 500 feet, providing a wide field of illumination. Note the viewing of active infrared sources such as lasers does not require the internal infrared source.

An optional long-range, infrared illuminator for viewing up to 300 feet is available. See #HLR10 at www.amazing1.com and optional equipment can be found on the parts list at the site.

Basic Theory

A subminiature high-voltage power supply produces approximately 15 Kv at several hundred microamperes from a 7- to 9-volt rechargeable *nickle cadmium* (NiCad) or alkaline battery. This voltage is applied to the tube (IR16) with the "plus" going to the viewing end and the "negative" to the objective end. A focus voltage is taken from a tap in the multiplier circuit and is approximately 1/6 of the total potential.

An objective lens (LENSI) with an adjustable focal length gathers the reflected image, illuminated by the infrared lens, and focuses this image at the objective end of the tube. Image conversion now takes place inside the tube and is displayed on the viewing screen of the tube in a greenish tinge. The viewing resolution is usually adequate to provide

subject identification at a distance of 50 feet or more depending on the intensity of the infrared source and the quality of the optics.

Circuit Description

Transistor Q1 is connected as a free-running resonant oscillator with a frequency determined by the combination resonance of capacitor C3 and the primary winding of the stepup transformer, T1. This oscillating voltage is stepped up to several thousand in the secondary winding of T1. Capacitors C4 through C15, along with diodes D1 through D12, form a full-wave voltage multiplier where the output is multiplied by six and is converted to *direct current* (DC). Output is taken between C5 and C15, as shown, and may be either positive or negative depending on the direction of the diodes. Different values of voltage may be obtained at various taps of the capacitors. Figure 23-2 shows the connections for the taps to the image tube.

The base of Q1 is connected to a feedback winding of T1 where the oscillator voltage is at the proper value to sustain oscillation. Resistor R2 biases the base into conduction for the initial activation. Resistor R1 limits the base current, wheras capacitor C2 speeds up the deactivation of Q1 by supplying a negative bias and capacitor C1 bypasses any high-frequency energy. The input power is supplied through switch S1 via a "snap-in" battery clip.

Circuit Assembly

To put the circuitry together, follow these steps:

1. Lay out and identify all the parts and pieces, checking them with the parts list. Note that some parts may sometimes vary in value. This is acceptable as all components are 10 to 20 percent tolerant unless otherwise noted. A length of bus wire is used for long circuit runs.
2. Create the PB1 perforated circuit board as shown in Figure 23-3. Enlarge the holes as follows:

   Thirteen 1/16-inch holes for the junctions of the diodes and the capacitors in the multiplier

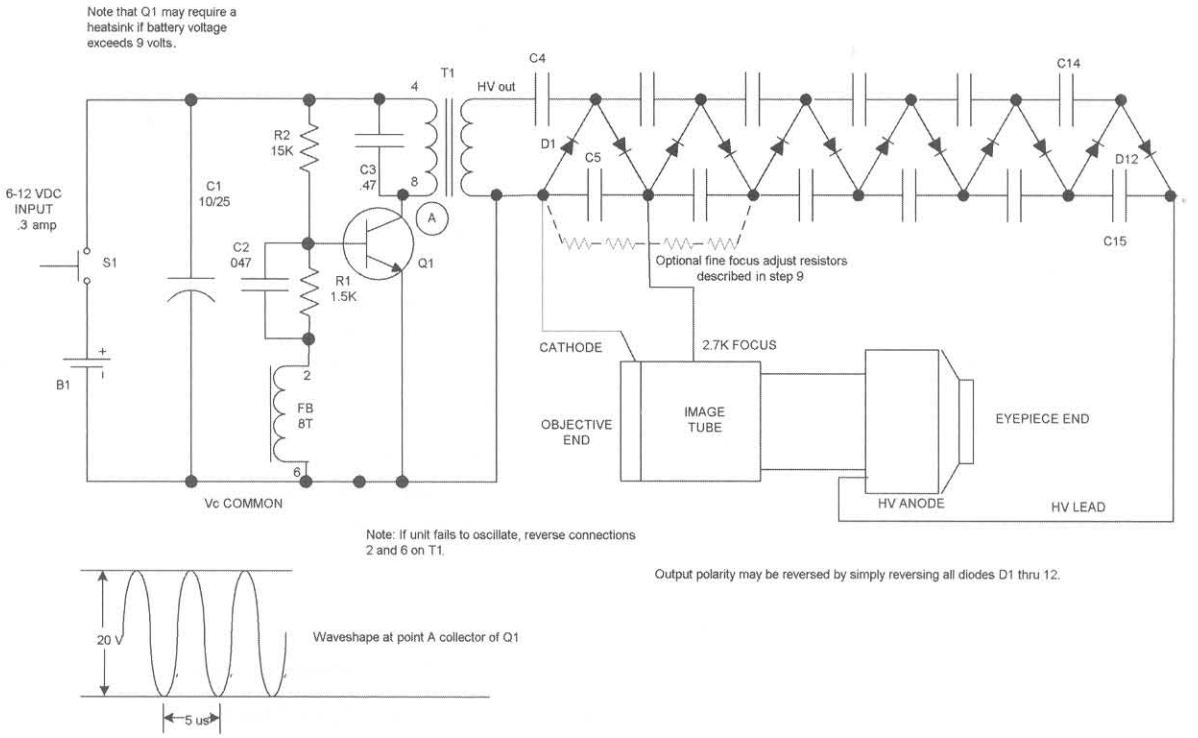

Figure 23-2 *Power supply schematic*

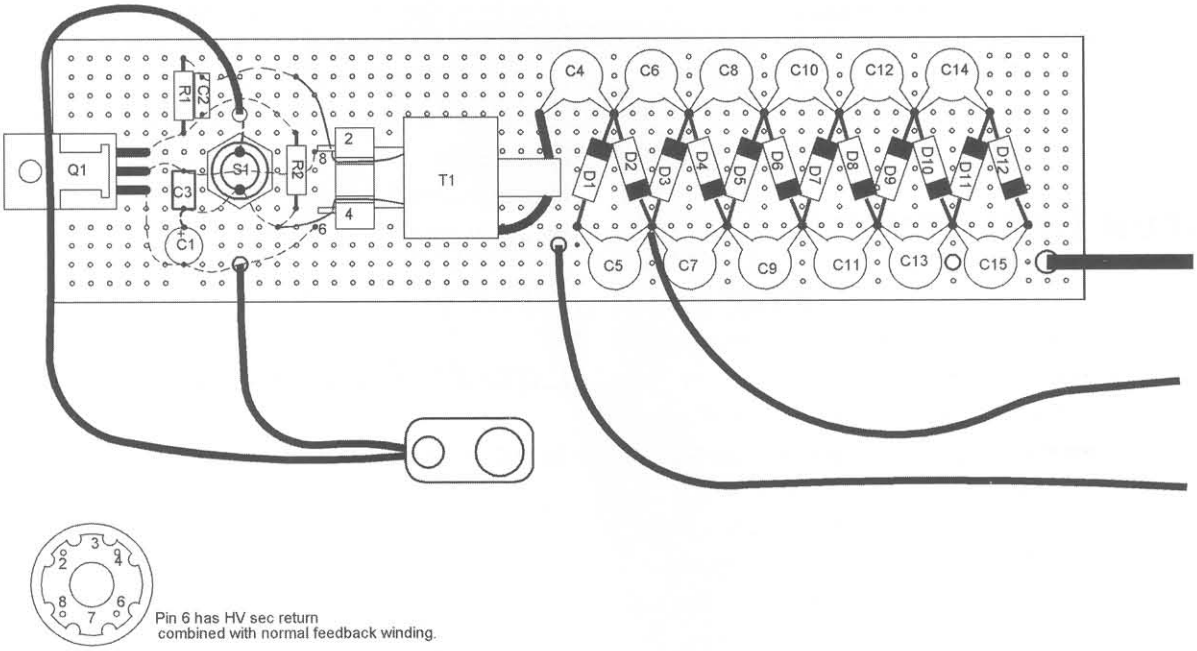

Figure 23-3 *Assembly board*

Seven 1/8-inch holes for mounting the switch (S1) and the external connection leads

The switch is shown attached to the assembly board but may be remotely located using interconnecting leads.

3. Assemble the board as shown in Figure 23-3. Start to insert components into the board holes as shown. Note to start and proceed from right to left, attempting to obtain the layout as shown.

Certain leads of the actual components will be used for connecting points and circuit runs. Do not cut or trim at this time. It is best to temporarily fold the leads over to secure the individual parts from falling out of the board holes for now.

Note that the solder joints in the multiplier section, consisting of C4 through C15 and D1 through D12, should be globular shaped and smooth to prevent high-voltage leakage and corona. The solder globe size is that of a BB. Run your fingers over the joints and verify the absence of sharp points and protrusions.

Also note that T1 is laying on its side and uses short pieces of bus wire soldered to its pins as extensions for connections to the circuit board.

Circuit Board Testing

To test the circuit board, follow these steps:

1. Separate high-voltage output leads approximately 1 inch from one another.
2. Connect 9 volts to the input and note a current draw of approximately 150 to 200 milliamperes when S1 is pressed.
3. Decrease the separation of the high-voltage leads until a thin, bluish discharge occurs, usually between 1/2 to 3/4 of an inch. Note the current input increasing. The increased value depends on the length of the spark, corona, and so on, but should not exceed 300 milliamperes.
4. Check the collector tab of Q1 and add a small heatsink if too hot to touch. A heatsink tab is shown in Figure 22-4 (Chapter 22).

For those with a scope, it may be interesting to note the wave shape at the collector tab, as shown in Figure 23-2. Note this is without any sparking occurring.

Note the takeoff point for the focus lead. This point is approximately at 1/6 the output voltage. The unit may be powered up to 12 *volts-direct current*

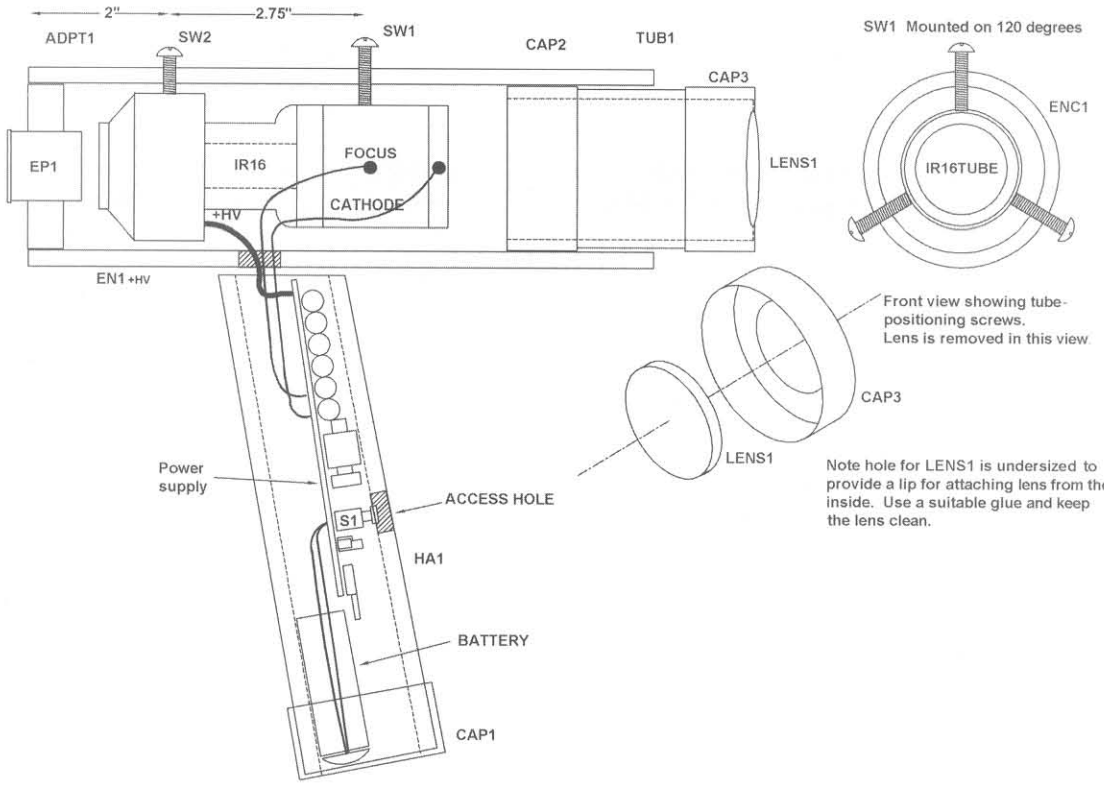

Figure 23-4 *X-ray view showing innards*

(VDC) but will positively require a heatsink on the tab of Q1.

This unit is capable of producing 10 to 20 Kv from a small, standard 9-volt battery. It is built on a *printed circuit board* (PCB) or a small piece of perforated circuit board and can easily be housed or enclosed, as the application requires. Applications include powering image converter tubes for night vision devices, ignition circuits for flame-throwing or -producing units, capacitor charging for energy storage, shocking electric fences, insect eradication, Kirlian photography, ion propulsion electric field generators, ozone producing, and more.

Fabrication and Mechanical Assembly

To begin the assembly of the device's machinery, follow these steps:

1. It is assumed the power board as outlined is properly operating. Check for the absence of corona in the high-voltage section. Corona dope is a coating that reduces electrical leakage. Remove all sharp points and insulate with corona dope and so on.
2. Take a window screen and place it flush against the objective end of the image tube, TUB1, with a piece of clear scotch tape. Secure the tube on the bench via modeling clay and temporarily connect it to the leads from the power board, as shown in Figure 23-2. Observe the proper clearance of the leads and components. Darken the room and place a source of infrared filter light pointing toward the tube. (Use a flashlight preferably with an IR filter.) Note the tube glowing greenish and an image of the screen appearing either sharp or blurred. If the image is good and sharp, you are in luck. You may further improve the focusing by adding the 22-megohm resistors as shown in Figure 23-2. This is usually not necessary.
3. Fabricate EN1 from a 7-inch length of 2 3/8-inch ID schedule 40 PVC tubing. Note the hole adjacent to the HA1 handle for feeding high-voltage wires to the tube from the power

board and 1/4-20 threaded holes are dimensioned in Figure 23-4 for securing and centering the image tube. These holes are located on a 120-degree radius.

4. Fabricate the HA1 handle from an 8-inch length of 1 1/2-inch ID schedule 40 PVC tubing. The tube must be shaped and fitted where it abuts to the EN1 main enclosure.

5. Fabricate the BRK 1 and 2 brackets from a half-inch-wide strip of 22-gauge aluminum as shown. Note the holes for #6 × 1/4 sheet metal screws for securing the assembly together.

6. Fabricate TUB1 from a 3 1/2-inch length of 2-inch ID schedule 40 PVC tubing for the objective lens. Note this is only 2 inches long when using the optional optics and "C or T" mount adapter fitting.

7. In order for TUB1 to telescope into the main enclosure EN1, suitable cylindrical shims, CAP2 and CAP3, must be fabricated. These are the 2 3/8-inch plastic caps. CAP2 has its end removed by cutting out the center using the wall of tubing as a guide for the knife. CAP3 has a smaller section cut out for LENS1. This method is cheap and works reasonably well. You obviously could substitute the pieces with properly fitted parts fabricated from aluminum or plastic if you desire. This approach is more professional looking but can be much more costly.

8. The lens shown is a simple, uncorrected convex that is adequate for most infrared source viewing. It is not a quality viewing lens such as the optional 50 mm wide-angle or 75 mm telephoto with the C mount threads. When using this lens, you should either create or purchase an adapter ring that will adapt to the lens threads and fit snugly into the enclosure. See CMT1.

9. The IR16 image tube has preconnected leads. The negative short lead attached to the objective end must have a 10-inch lead spliced to it. Insert the tube partway into the enclosure and snake the leads through the access hole. Position the tube and gently screw in the retaining screws by hand to secure and center it.

10. Connect the leads from the tube to the power board as shown.

11. Insert the power board into the HA1 handle. You will have to determine the access hole and drill for the switch S1 once the board is secured in its final position. Wires should be long enough for the complete removal of the assembly when the handle is secured in place via the BRKI bracket. This allows any preliminary adjustment or service. Leads may be shortened once proper operation is verified. Connect the battery to the power board and energize switch SI. If you did your homework, you will not have to readjust the focus taps or divider values. Once the operation is verified, check for any excessive corona and eliminate it. Position the board to switch S1 adjacent to the access hole in the handle. It may be necessary to further secure the board in place via foam rubber pieces, a *room temperature vulcanizing* (RTV) adhesive, and so on. Slide a flexible rubber membrane over the access hole and insert the battery and cap CAPI.

12. Finally, assemble everything as shown in Figure 23-5 and mount the infrared filtered flashlight. You will have to seal any light leaks using plumbers' "monkey dung" or coax seal.

13. Adjust the objective and then the eyepiece for the clearest image.

Special Notes

The unit is shown with a built-in infrared source consisting of a common, everyday two-cell flashlight fitted with a special infrared filter. Any visible light leaks must be sealed with electrician's gunk, coax seal, or black liquid rubber.

This approach allows total flexibility in viewing sources not requiring infrared illumination as the light need not be energized or may even be removed. The light source may also be intensified by replacing the two D cells with an eight AA cell NiCad pack providing approximately 9 volts. A suitable lamp may be substituted, providing several times more illumination. The lamp and battery life will be greatly

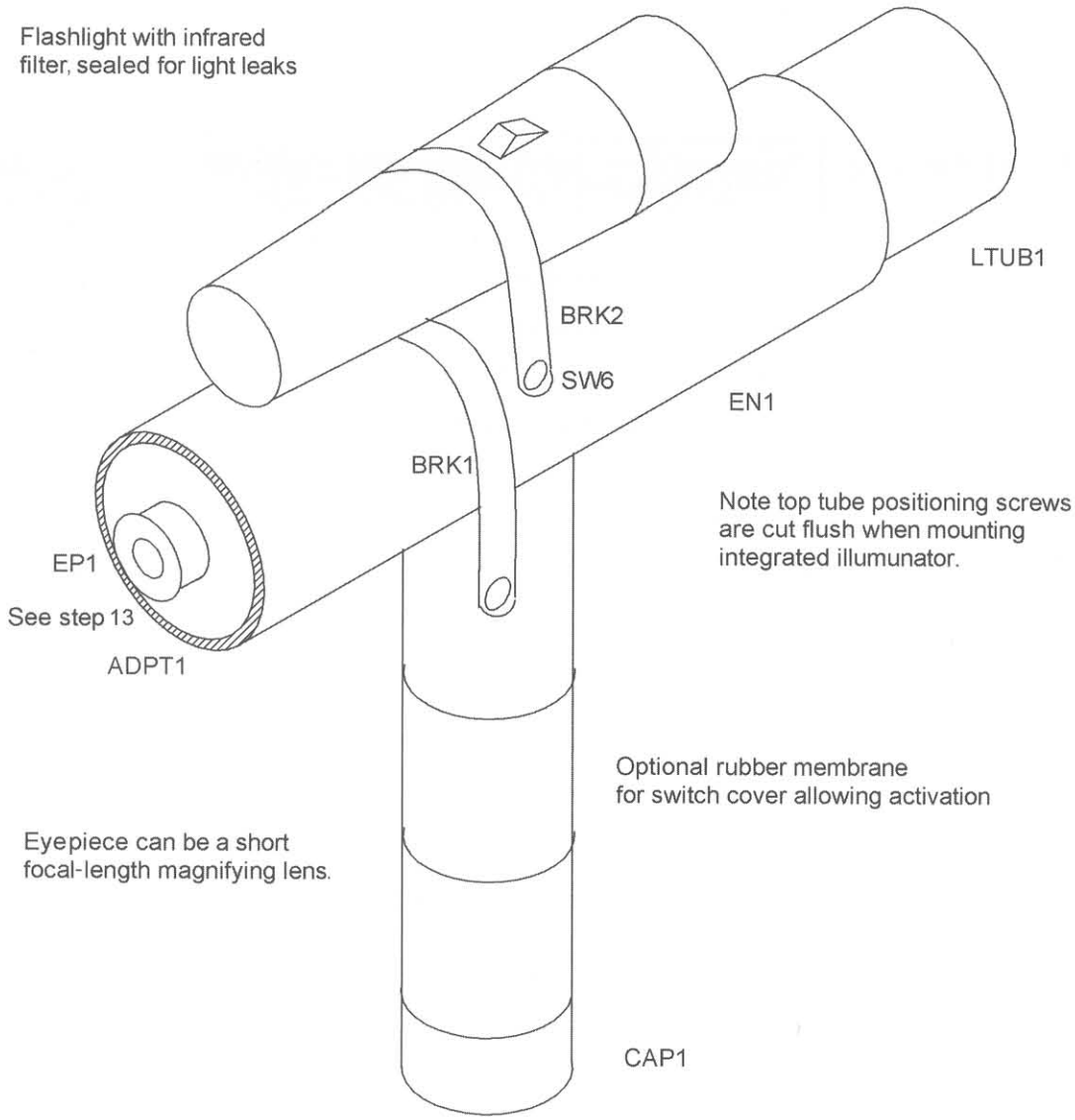

Figure 23-5 *Final view*

reduced as this approach is only intended for intermittent use. Note the now available halogen lamps are far more intense and make excellent infrared sources.

Longer-range viewing may be accomplished by using other, more intense sources such as higher-powered lights, auto headlamps, and so on. These must be fitted with the proper filters to be usable. A range of several hundred meters may be possible with these higher-powered sources. A source capable of allowing viewing from up to 500 feet is referenced in the project parts list.

Obtaining maximum performance and range from the system may require the optional lens system specified. The viewing of externally illuminated infrared sources will not require the integral infrared source.

You will note that this device is excellent for viewing the output of most solid-state, gallium arsenide laser systems, LEDs, or any other source of infrared energy in the 9000 A spectrum. No internal infrared source is necessary when viewing these actual sources.

Table 23-1 See-in-the-dark project

Ref. #	Qty.	Description	DB #
R1		1.5K, 1/4 -watt resistor (br-gr-red)	
R2		15K, 1/4 -watt resistor (br-gr-or)	
C1		10 m/25-volt electrical vertical capacitor (blue or green can)	
C2		.047 m/50-volt plastic capacitor (473)	
C3		.47 m/100-volt plastic capacitor (474)	
C4–15	12	270 pfd/3 Kv plastic disk capacitors	
D1–12	12	6 Kv, 100-nanosecond high-voltage avalanche diodes	
Q1		MJE3055 NPN TO 220 case transistor	
T1		Special transformer info #28K077	#IU28K077
S1		Pushbutton switch	
PB1		5 1/2 - × 1 1/2 -inch perforated board with .1 × .1 grid	
CL1		Snap battery clip	
WR22	2	24-inch length of #22 vinyl hookup wire	
WRHV20		12-inch, 20 Kv silicon wire	
IR16		Image converter tube	#IUIR16
EN1		8- × 2 3/8 -inch schedule 40 gray PVC tube, created as shown	
TUB1		3 1/2 -inch length × 2-inch ID schedule 40 gray PVC	
BRK1, 2	2	9- × 1/2 -inch-thin aluminum strip as shown	
CAP1		2-inch plastic cap for handle	
CAP2,3	2	2 3/8 -inch plastic cap as shown	
LENS1		45 × 63 double convex glass lens	
SW1, 2	6	1/4 -20 × 1-inch nylon screws	
SW6	6	#6 × 1/4 -inch sheet metal screws	
		Optional parts	
PCPBK		PCB	#PCPBK
CMT1		Prefabricated C mount adapter for EN1 enclosure	
EP1		Small eyepiece	
FIL6		6-inch glass infrared filter, 99.99 percent dark, for Q beam light	
HLR10		200,000-candle-power infrared illuminator invisible to the naked eye, at 12 VDC	#HLR10

Chapter Twenty-Four

Fish Stunning and Wormer Project

This useful project is intended used for driving worms out of the ground or stunning fish while in their normal environment. This stupefying effect allows tagging and relocating as the fish float to the surface. It is best to check before trying this in public waters, as many states do not allow "electric fishing," except by those qualified.

The device (see Figure 24-1) must be used with caution as improper use can cause electric shock.

Figure 24-1 *Fish shocker*

The finished project should have a danger label affixed to it.

Expect to spend $50 to $100 for this outdoor project. Most parts are readily available, and any specialized parts are obtainable through www.amazing1.com. The parts for this project are listed in Table 24-1.

General Description

As shown in Figure 24-2, this project generates an adjustable 1 to 2 joules of 600-volt pulses at a 30-reps-per-second rate. The output of the circuit is electrically floating (no ground reference) to minimize but not totally eliminate a dangerous shock potential. The output leads are intended to be connected to probes or drag chains, as shown in the operating instructions.

The device is housed in a 3-inch *polyvinyl chloride* (PVC) tube with splash-proof plastic end caps. The front cap retains the control panel with power switch (S1), pulse energy pot (R5), *light-emitting diode* (LED) power on the indicator, and the input power leads. The rear cap has a passage hole for exiting the output leads. This arrangement helps protect the device from moisture but in no way makes the unit submersible.

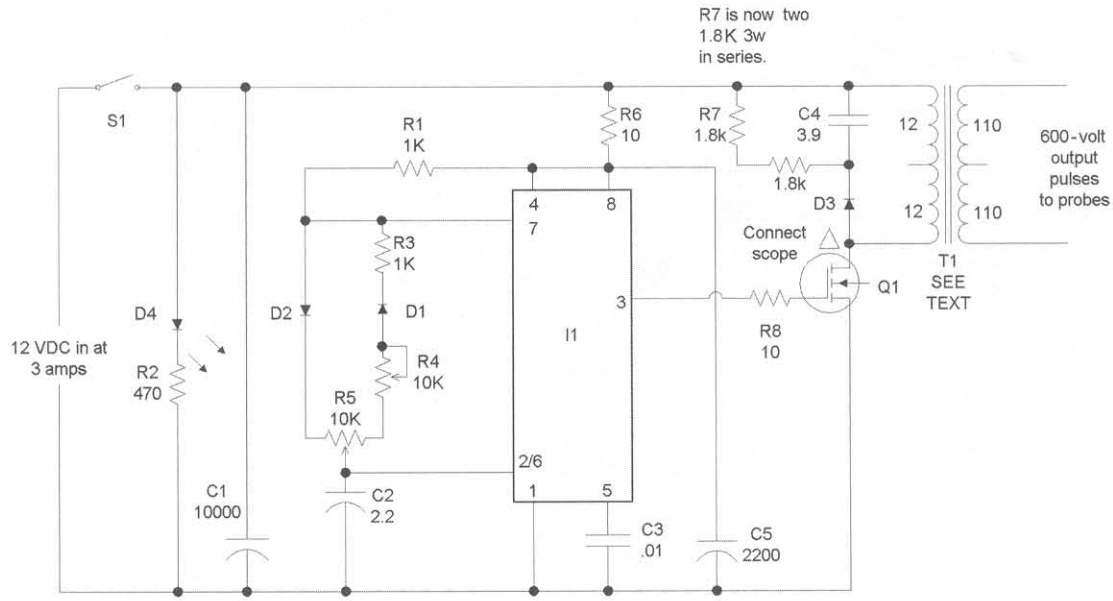

Wave shape on drain of Q1 with R5 fcw lowest output setting. Input current is .1-.2 amps with a 500-ohm load.

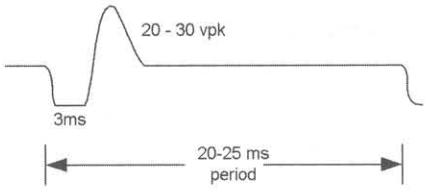

Wave shape on drain of Q1 with R5 fcw highest output setting. Adjust R4 for 3 millisecs pulse width. Total period should be 22-23 milliseconds with input current of 3.5 to 4 amps.

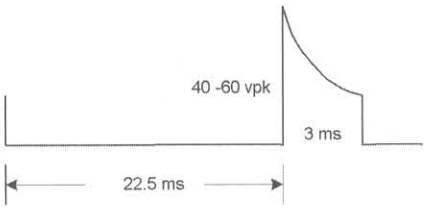

Load test resistor may overheat with the unit in the high output setting if left on for more than a minute.

Figure 24-2 *Circuit schematic*

Circuit Description

The circuit utilizes inductive charging similar to that used in the ignition systems of older automobiles. The primary winding of the transformer TI current charges through *metal-oxide-semiconductor field effect transistor* (MOSFET) switch Q1. The current ramps up to a value determined by i = Et/L, where E equals the 12 *volts-direct current* (VDC) input, L the inductance of the T1 primary, and t the "on" time of switch Q1. The pulse energy is now equal to $Li^2/2$ because it is being controlled by the "on" time as determined by pot R5.

Transformer T1 requires cutting in an air gap necessary to store the inductive energy because the core itself would saturate, making T1 useless.

Timer I1 is wired as a stable pulse generator with a fixed frequency determined by the total value of pot R5 and trimpot R4, along with timing capacitor C2.

Trimpot R4 is used to set the maximum core charging time range of R5. Resistor R6 and capacitor C5 decouple the operating voltage (Vc) to timer I1 from the main 12 VDC. LED D4, along with the current-limit resistor, indicate when power switch S1 is on.

Construction Steps

To begin assembly, follow these steps:

1. Lay out and identify all parts and pieces, checking them with the parts list. Note that certain parts may sometimes vary in value. This is acceptable as all components are 10 to 20 percent tolerant unless otherwise noted.
2. Create the PB1 assembly board at 2¼ × 5 inches from a piece of .1 × .1 vector board. Note that it is a good idea to duplicate the placement of the perforated holes as shown in Figures 24-3 and 24-4. This makes placement of the components identical to what is shown.
3. Assemble the board as shown, inserting the components into the board holes. Proceed from right to left, attempting to obtain the layout as shown. Dashed lines indicate connection runs on the underside of the board. Note that certain leads of the actual components will be used for connecting points and circuit runs. Do not cut or trim them at this time. It is best to temporarily fold the leads over to secure the individual parts from falling out of the board holes for now.
4. Rework the T1 transformer as shown in Figure 24-4.
5. Put the frame assembly (FRAME) together, as shown in Figure 24-5. You may want to trial-fit the components before actually fabricating.
6. Mount the components to the frame as shown in Figure 24-6, using TYE1 wraps to secure T1. Note the mounting of Q1, using a thermo pad and nylon screw. The large capacitor C1 is mounted behind the assembly board with the ground side attached to the common grounding lug LUG1.
7. Preconnect all the leads as shown in Figure 24-4. Note that the wires intended for input and output leads are 3 to 4 feet in length. They may be longer or shorter.
8. Check the wiring for any potential shorts, wire bridge shorts, poor solder joints, the correctness of the components, and the position and orientation of semiconductors and capacitors.

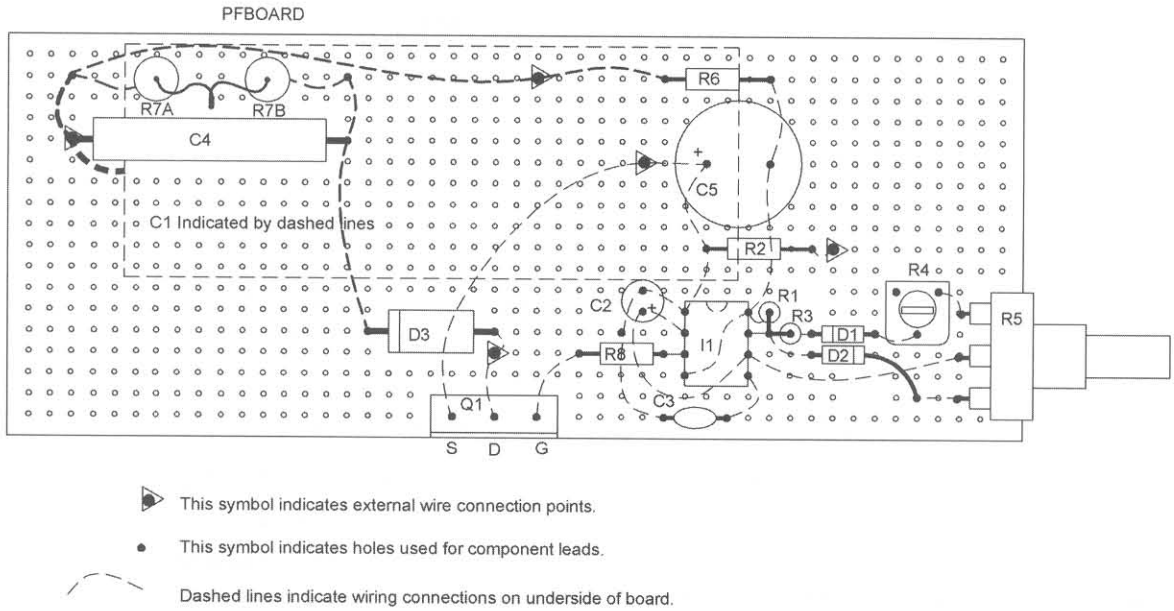

Figure 24-3 *Parts layout and wiring of assembly board*

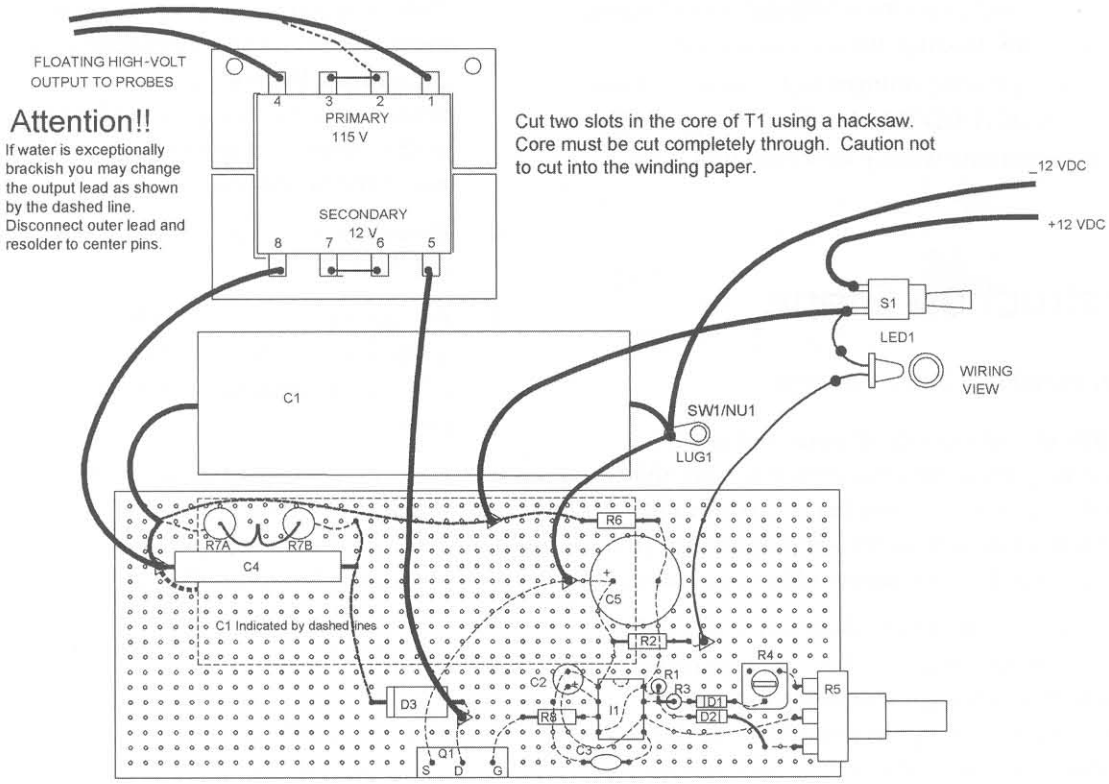

Figure 24-4 *Final wiring showing transformer rework*

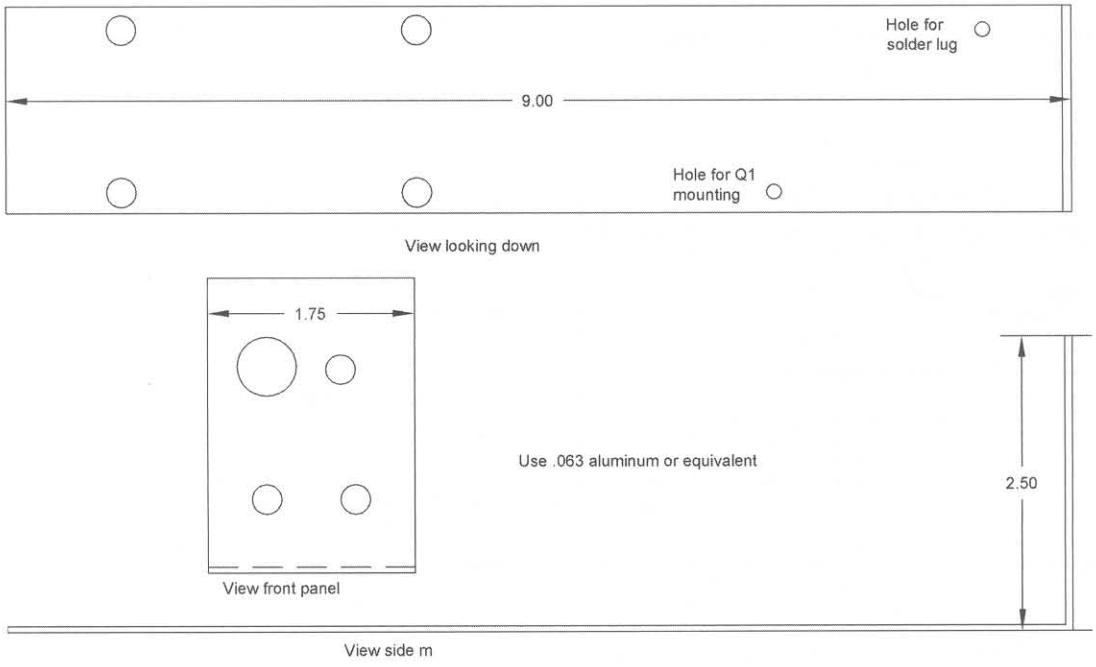

You may use these drawings as templates for fabricating the frame section. Note to verify hole dimensions for components used.

Figure 24-5 *Construction of the frame assembly template*

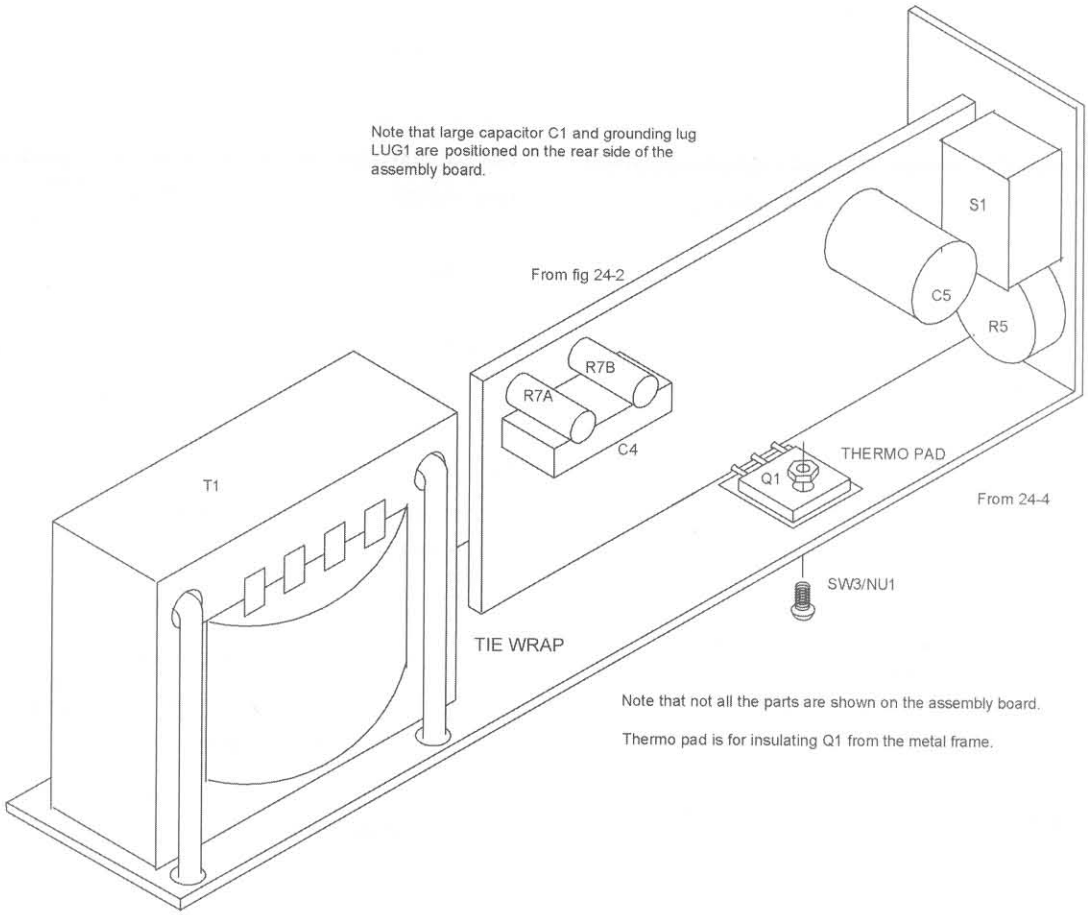

Figure 24-6 *Isometric overall view*

Subassembly Pretest

To run a test on the device, follow these steps:

1. Turn pots R5 to full *counterclockwise* (CCW), R4 trimpot to midrange, and S1 to off (down position).
2. Connect a 10- to 25-watt, 500-ohm testing power resistor to the output leads. If you have a scope, it is suggested that you connect it to the drain of Q1.
3. Apply a 12-volt DC to the input leads, and turn S1 on (to the up position). Adjust R5 full *clockwise* (CW) and note that the input current does not exceed 2.5 amps. Adjust trimpot R4 to limit this maximum value with R5 at full CW. Check for wave shapes as shown with R5 at full CW and CCW. Do not operate into the test resistor for too long as the resistor may overheat.
4. Verify D4 LED lighting when S1 is energized.

Final Assembly

To complete the assembly, follow these steps:

1. Cut a 10-inch piece of 3½-inch OD schedule 40 PVC tubing for the enclosure (EN1). Rework the 3½-inch plastic end caps by simply poking two small holes for the output leads (CAP1). Cut out the center of cap CAP2 by placing it onto a suitable form and remove the center with an x-acto knife using the wall of the form tube as a guide.

2. Retest using a load resistor and verify all the controls before actually using the device. It is a good idea to attach suitable connection clips to the input leads for battery terminals.
3. Connect the output leads to a suitable probe scheme and study the instructions section of these plans.
4. Place a high-voltage warning label on the enclosure (see Figure 24-7).

Operation

Your fish stunner is intended for survey tagging and population evaluation of certain species. The system is designed to operate from a 12-volt battery and draws 3 amps at maximum output. The unit is shock circuit protected and utilizes our highly efficient induction charging and switching to obtain the high-peak currents necessary for the high conductivity often found in brackish waters. A power adjuster controls the duration of the pulse, therefore controlling the current flowing in the water. The pulse repetition rate is factory set at 25 pulses per second. The ratio of the pulse's "on" to "off" time is controlled by the power adjuster control. The output voltage with a load of 500 ohms is over 300 volts at its peak at a corresponding current of over half an amp. No load voltage rises to a high value and open-circuit operation must be avoided. Five hundred ohms correspond to a water resistance representing a typical freshwater pond found in southern New Hampshire.

At these parameters, the power dissipated into the water is around 25 watts and is effective up to 10 feet from the boat.

The effectiveness of the system is dependent on the following:

- Is the target fish within the area?
- Are the fish bottom dwellers?
- The fish size. Larger fish are easier to stun than the smaller ones.
- The water temperature may be too cold. This is important for proper operation.

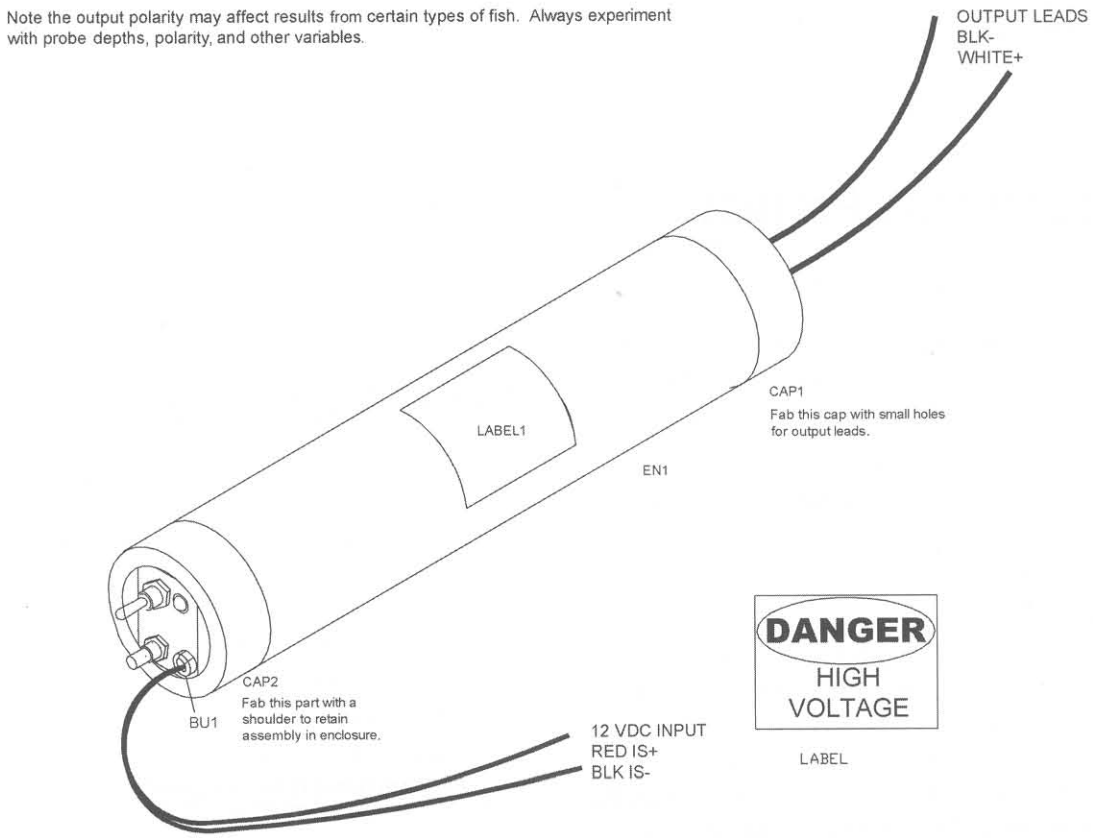

Figure 24-7 *Fully assembled unit*

- Use of the correct dragline, chains, wire mesh, and weights for the particular fish. Several examples are shown in Figure 24-8.

Please note that the system utilizes a floating output, which means you do not have to use the electrical system of the boat or the boat itself as an electrode. If it is metal, you may choose to do this for certain applications. This is simply done by connecting the negative output lead to the −12 VDC input or craft common, forcing a grounded return.

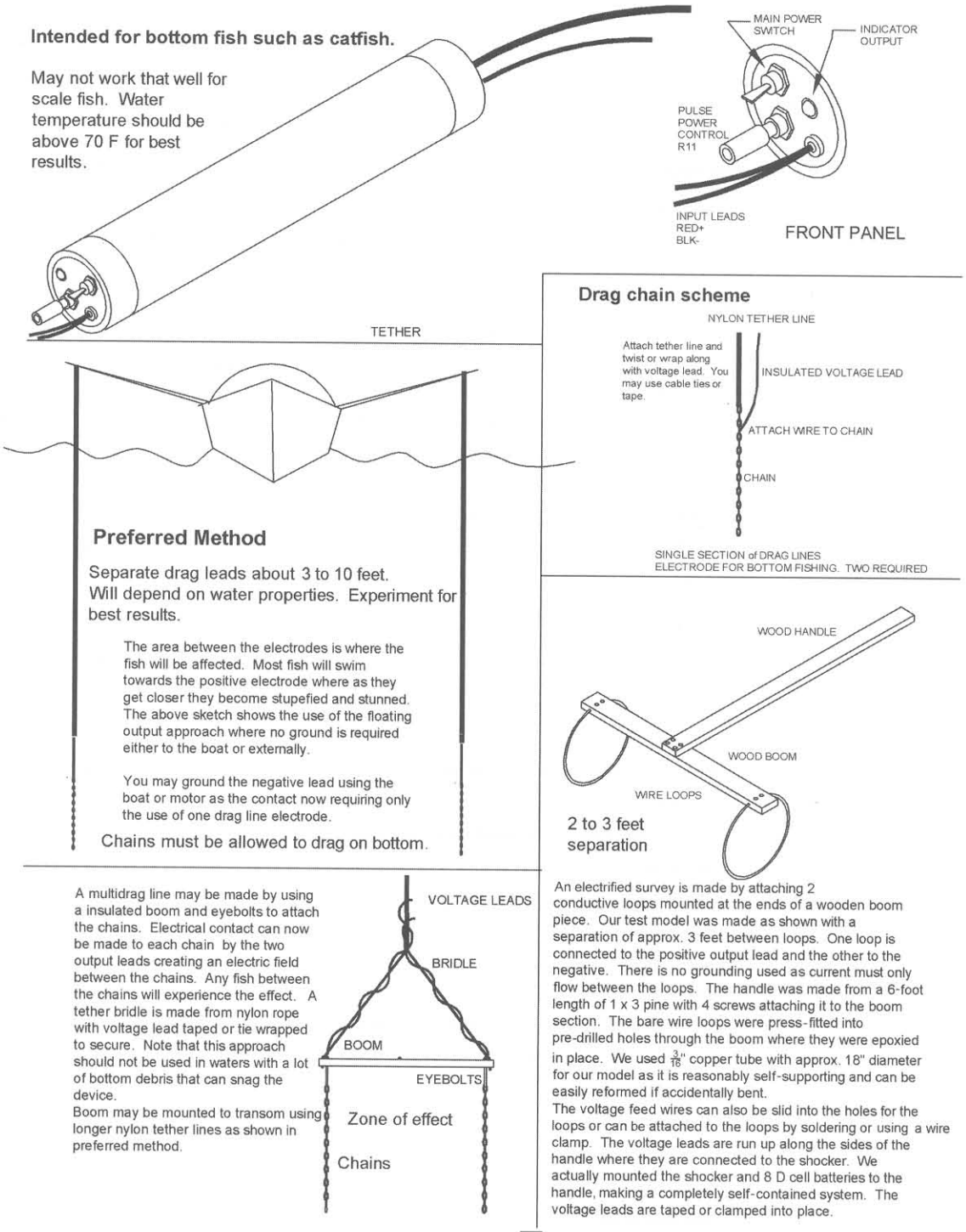

Figure 24-8 *Electric fishing probes*

A floating output provides a certain degree of safety for the operator because he or she must make actual contact with both output leads simultaneously to get shocked. If you now ground one of the output leads, it is possible to get shocked just by being in water that may be inside the boat and making accidental contact with only one of the output leads.

Verification of Operation

To confirm that the device works properly, follow these steps:

1. Connect the output to a household 15-watt, 115 VAC fluorescent lamp.

Table 24-1 Fish stunner project parts

Ref. #	Qty.	Description	DB #
R1, 3	2	1K, 1/4-watt resistor (br-blk-red)	
R2		470-ohm, 1/4-watt resistor (yel-pur-br)	
R4		10K trimpot (103)	
R5		10K control pot linear	
R6, 8	2	10-ohms, 1/4-watt (br-blk-blk)	
R7	2	1.8K, 3-watt *metal-oxide-semiconductor* (MOX) resistors, two in a series for 3600 ohms	
C1		10,000 mfd/16-volt electrolytic capacitor axial leads	
C2		2.2 mfd/50-volt nonpolarized electrolytic capacitor	
C3		.01 mfd/50-volt disk (103)	
C5		2,200 mfd/25-volt vertical electrolytic capacitor	
C4		3.9 mfd, 350-volt plastic capacitor	#3.9M
D1, 2	2	IN914 silicon diodes	
D3		IN5408 1 Kv, 3-amp rectifier	
D4		Bright-green LED	
Q1		IRF450 MOSFET transistor	
LAB1		DANGER HIGH VOLTAGE label	
I1		555 DIP timer IC	
T1		24-volt 4 A with 240-volt primary 60 Hz, reworked per text	#IUTR2412R
S1		SPST 3-amp toggle switch	
PBOARD		2 1/4 × 5 × .1 grid perforated board, cut to size per Figure 24-3	
WR20R	6 feet	#20 vinyl wires, red	
WR20B	6 feet	#20 vinyl wires, black	
WRBUSS	24 inches	#20-inch bus wire	
THERMO		Thermo pad for mounting under Q1	
LUG1		6-32 solder lug	
TYEWRAP	2	12-inch heavy-duty tie wraps for holding T1 to frame	
FRAME		11.5 × 1.75 .063 Al plate fabricated per Figure 24-5	
BU1		3/8" plastic clamp bushing	
SW1	1	6-32 1/2 Phillips screw	
SW3	1	6-32 × 1/2-inch nylon screw	
NUT1	2	6-32 kep nut	
CAP1, 2	2	3 1/2-inch plastic caps fabricated per Figure 24-7	
EN1		10- × 3 1/2-inch OD schedule 40 PVC tubing	

2. Connect the input to a 12 VDC source or a battery capable of supplying 2 amps.
3. Turn on the power and rotate the control, noting that the bulb lights and gets brighter as the control is turned clockwise. Also note the output indicator lighting.
4. Connect to the required electrodes and test it out on a target fish. Use as suggested in Figure 24-8.

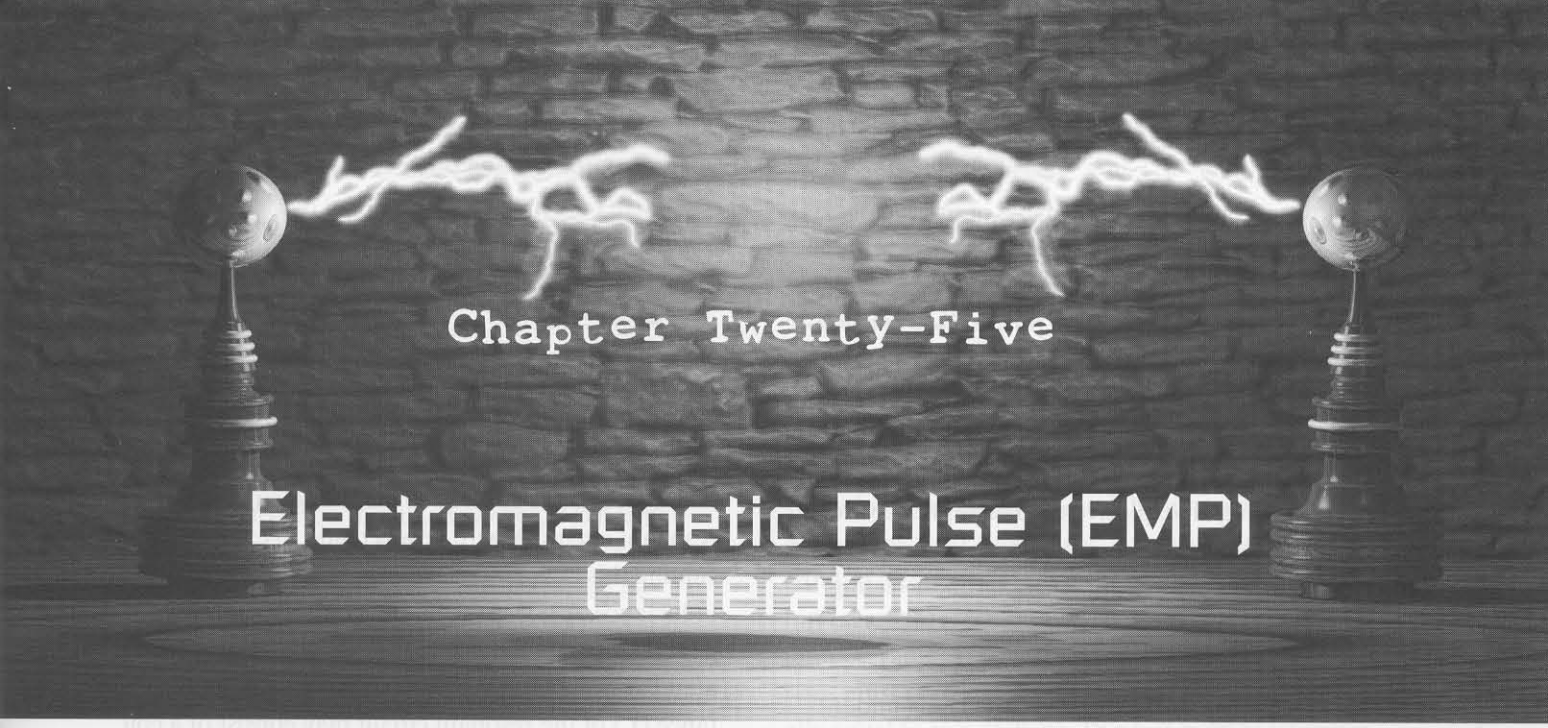

Chapter Twenty-Five

Electromagnetic Pulse (EMP) Generator

This advanced project shows how to produce a multi-megawatt pulse of electromagnetic energy that can cause irreversible damage to computerized and sensitive communication equipment. A nuclear detonation causes such a pulse, which must be countermeasured to protect electronic devices. This project requires lethal amounts of electrical energy storage and must not be attempted unless in a qualified laboratory environment. Such a device can be used to deactivate the computer systems in automobiles, avoiding dangerous high-speed chases. Sensitive electronic equipment can be tested for susceptibility to lightning and potential nuclear detonations.

The project is semidetailed with references made only to the major components. A low-cost, open-air spark switch is shown but will provide only limited results. A gas-filled or isotope doped switch is required for optimum results (see Figure 25-1).

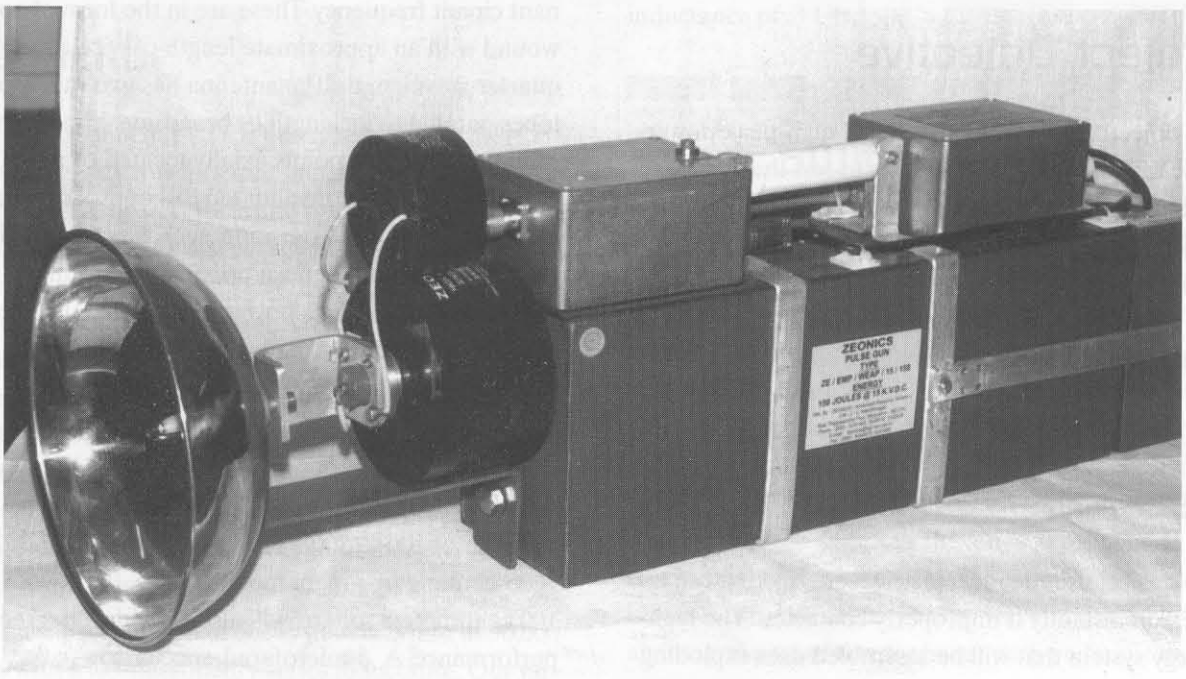

Figure 25-1 *Electromagnetic pulser*

Basic Description

Shockwave generators are capable of producing focused acoustic or electromagnetic energy that can break up objects such as kidney stones and other similar materials. *Electromagnetic pulse* (EMP) generators can produce pulses of electromagnetic energy that can destroy the sensitive electronics in computers and microprocessors. Destabilized inductive and capacitive (LC) circuits can produce multigigawatt pulses by using an explosive wire disruption switch. These high-power pulses can be coupled into parallel plate transmission lines for EMP hardness testing, parabolic and elliptical antennas, horns, and so on for directional far-field effects.

For example, research is currently being undertaken to develop a system that would disable a car during a dangerous high-speed chase. The trick is generating a high enough power pulse to fry the electronic control processor modules. This would be a lot simpler if the vehicle were covered in plastic or fiberglass rather than metal. The shielding of the metal body offers a challenge to the researcher developing a practical system. A device could be built to do this, but it would be costly and could produce collateral damage to friendly targets.

Project Objective

The objective here is to generate a high-peak power pulse of electromagnetic energy to test the hardness of sensitive electronic equipment. Specifically, this project explores the use of such a device for disabling vehicles by jamming or destroying computerized control chips. We'll experiment with disruptive LCR circuits with focused shockwave capabilities.

Hazards

The project uses deadly electrical energy that can kill a person instantly if improperly contacted. The high-energy system that will be assembled uses exploding wires that can create dangerous shrapnel-like effects. A discharge of the system can severely damage nearby computers and other related equipment.

Theory

A capacitor (C) is charged from a current source to an energy source over a period of time. Once it reaches a certain voltage corresponding to a certain energy level, it is allowed to discharge quickly into a resonant circuit. A wire now is made to explode, disrupting this high-peak current through the circuit inductance. A powerful, undampened wave is now generated at the natural frequency and at the associated harmonics of this resonant circuit. The inductance (L) of the resonant circuit may consist of a coil and associated lead inductance, along with the intrinsic inductance of the capacitor, which is around 20 nanohenries. The capacitor of the circuit determines the energy storage and also has an effect on the resonant frequency of the system.

Radiation of the energy pulse can be made via a conductive conic section or a metal, horn-like structure. Some experimenters have used lumped, half-wave elements center-fed by a coil coupled to the coil of the resonant circuit. This half-wave antenna consists of two quarter-wave sections tuned to the resonant circuit frequency. These are in the form of coils wound with an approximate length of wire equal to a quarter-wavelength. The antenna has two radiation lobes parallel to its length or broadside. Minimum radiation occurs at points axially located or at its ends, but we have not validated this approach. For example, a gas discharge lamp, such as a household fluorescent lamp, will flash brightly at a distance from the source, indicating a powerful directional pulse of electromagnetic energy.

Our test pulse system produces conservative, multimegawatt electromagnetic pulses (1 megawatt of broadband energy) and is radiated preferably via a conical section antenna consisting of a parabolic reflector of 100 to 300 millimeters in diameter. A 25- × 25-centimeter-square metallic horn, flaring out to 100 centimeters square, will also provide a degree of performance. A .5-microfarad, special, low-

inductance capacitor charges up in about 20 seconds with the ion charger described in Chapter 1, "Antigravity Project," and is modified as shown. Faster charging rates can be obtained by a higher-current system available on special request for more serious research from www.amazing1.com.

A high-power radio frequency pulse can be generated where the output of the pulser may also be coupled to a full-size, center-fed, half-wave antenna tuned between 1 and 1.5 MHz. The actual length at 1 MHz is over 150 meters (492 feet) and may be too large for many experiments. However, it is normalized for a radiation coefficient of 1, with all other schemes being less. The actual elements may be reduced in length by using tuned quarterwave sections consisting of a 75-meter (246-foot) length of wire spaced and wound on 2- to 3-meter pieces of *polyvinyl chloride* (PVC) tubing. This scheme produces a pulse of low-frequency energy.

Please note, as stated, that the pulse output of this system will cause damage to computers and any devices using microprocessors or similar circuitry up to a considerable distance. Always use caution when testing and using this system—just being close can damage sensitive electronic equipment. Figure 25-2 provides a description of the strategic parts used in our lab-assembled system.

Capacitor

The capacitor (C) used for this type of application must have very low inherent inductance and discharge resistance. At the same time, the part must have the energy storage sufficient to produce the necessary high-powered pulse at the target frequency. Unfortunately, these two requirements do not go hand in hand. Higher-energy capacitors always will have more inductance than lower-energy units. Another important point is the use of relatively high-discharge voltages (V) to generate high-discharge currents. These values are required to overcome the inherent complex loss impedance of the series inductance and resistance of the discharge path.

The capacitor used in our system is .5 mfd at 50,000 volts with a .03-microhenry series inductance. Our target fundamental frequency for the low-power nondisruptive circuit is 1 MHz. The system energy is 400 joules, as determined by $E = \frac{1}{2} CV^2$, with E at 40 Kv.

Inductor

The inductor can be easily made for a low-frequency radio pulse. The inductance shown as L1 is a lumping of all stray connecting leads, the spark switch, the exploding wire disrupter, and the inherent inductance of the capacitor. This inductance resonates at a wide band of frequencies and must be able to handle the high-discharge current pulse (I). The value of the lumped value is around .05 to .1 Uh. The conductor sizes must take into effect the high pulse current, ideally equal to $V \times (C/L)^{1/2}$. This fast current transition wants to flow on the conductor surface due to the high-frequency skin effect.

You may use an inductor of several turns for experimenting at the lower frequencies along with a coupled antenna. Dimensions are determined by the air inductance formula: $L = (10 \times D^2 \times N^2)/l$, where D is the diameter in centimeters, l is the length in centimeters, and N is the number of turns. A coil from 3 turns of 10 millimeters (.375 inches) of copper tubing on a 7.5-centimeter (3-inch) diameter spread out to 15 centimeters (6 inches) will have a calculated inductance of .3 Uh.

Spark Switch

The spark gap switches the energy from the capacitor into the inductor where a resonant tank is momentarily set up (see Figure 25-2). The current rise time occurs over the period $pi/2 \times (LC)^{-5}$. The gap separation distance is set to fire at the desired breakdown voltage. The impedance of the spark switch is determined by the equation $Z_{SP} = (k \times l)/Q$, where k equals $.8 \times 10^{-3}$, l equals the spark gap distance in centimeters, and Q equals the amps per second (coulombs) of discharge. The gap is self-firing and requires no external triggering. The gap assembly is an integral part of the discharge path and must be constructed to minimize inductance and resistance.

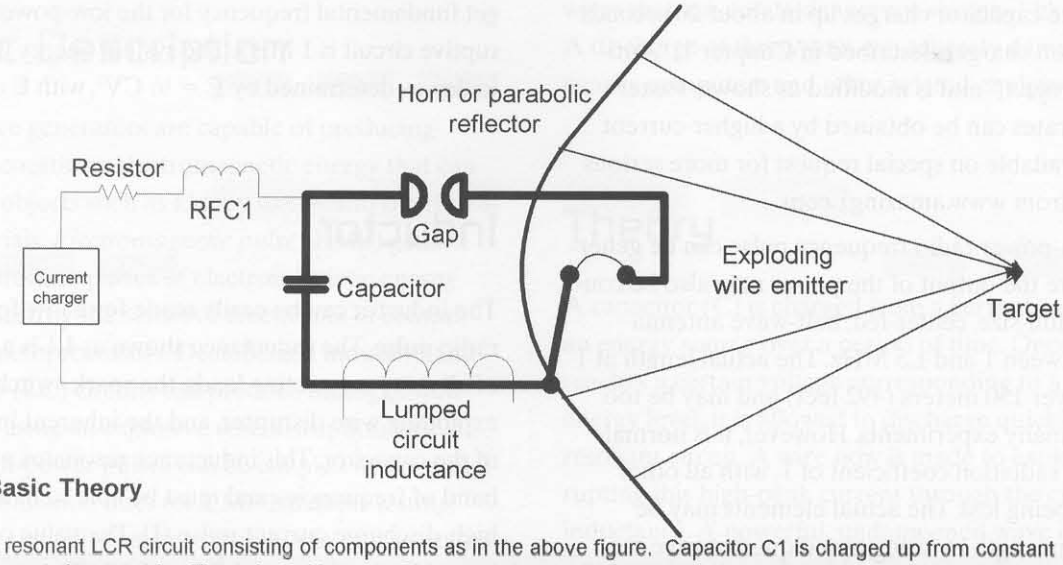

Basic Theory

A resonant LCR circuit consisting of components as in the above figure. Capacitor C1 is charged up from constant current charger at Ic. The voltage V across C1 is now related to V = It/C. The spark switch (GAP) is set to fire just before V reaches 50,000 volts. Once fired, a peak current rise of di/dt=V/L occurs. The period of circuit response is functional of .16 x $(LC)^{.5}$. The capacitor now discharges into the circuit inductance in 1/4t with the peak current now causing the wire to explode and interrupting this current just before it peaks. The inductive energy (LI^2) is released in an explosive burst of broadband electromagnetic radiation. The peak power is derived via the following and is in excess of many megawatts!!!!!

1. Charging Cycle: dv=Idt/C (Expresses the voltage charging on the capacitor as a f(t) with I constant current)

2. Storage energy in C as a f(v): $E=.5Cv^2$ (Expresses energy in joules as the voltage increases)

3. Response time 1/4 cycle current peak: $1.57(LC)^{.5}$. (Expresses the time for the first resonant current peaking when the spark switch fires)

4. Peak current in 1/4 cycle: $V\ (C/L)^{.5}$ (Expresses the peak current)

5. Initial response as a (f)t: Ldi/dt+iR+1/C+1/C$\underline{\text{int}}$ idt = 0 [Expresses voltages as a f(t)]

6. Energy joules in inductor: $E= .5Li^2$

7. Response when circuit is disrupted at max current through L: $Ld^2\ i/dt^2$ + Rdi/dt + it/C = dv/dt. One now sees the explosive effects of the first term of this simple equation as the energy in the inductor must go somewhere in a very short time, resulting in an explosive E X B field energy release.

An appreciable pulse of many megawatts in the upper RF energy spectrum can be obtained by destabilizing the LCR circuit as shown above. The only limiting factor is the intrinsic real resistance that is always present in several forms, such as leads, skin effect, dielectric and switching losses, etc. These losses must be minimized for optimum results. The RF output can be coupled to a parabolic microwave dish or tuned horn. The Q of the output will depend to an extent on the geometry of the wire switch. Longer lengths will produce more "B" field characteristics while short more "E" field. These parameters will enter into the coupling equations regarding the radiation efficiency of the antenna. Experimenting is the best approach using your math skills only for approximating key parameters. Damage to circuitry usuallly is the result of very high di/dt (B field) pulse properties. This is a point of discussion!!

Figure 25-2 *EMP pulser schematic*

The fabrication of our lab test unit is shown and you may deviate with your own ideas, but the objective must be minimal circuit impedance.

You will note that the bottom ball of the spark gap switch is at a high potential and is made adjustable by a threaded rod and locking jam nut scheme. The top ball also uses a threaded rod that fits into the 3/4-inch PVC tubing used for the structural support of the wire disruption scheme.

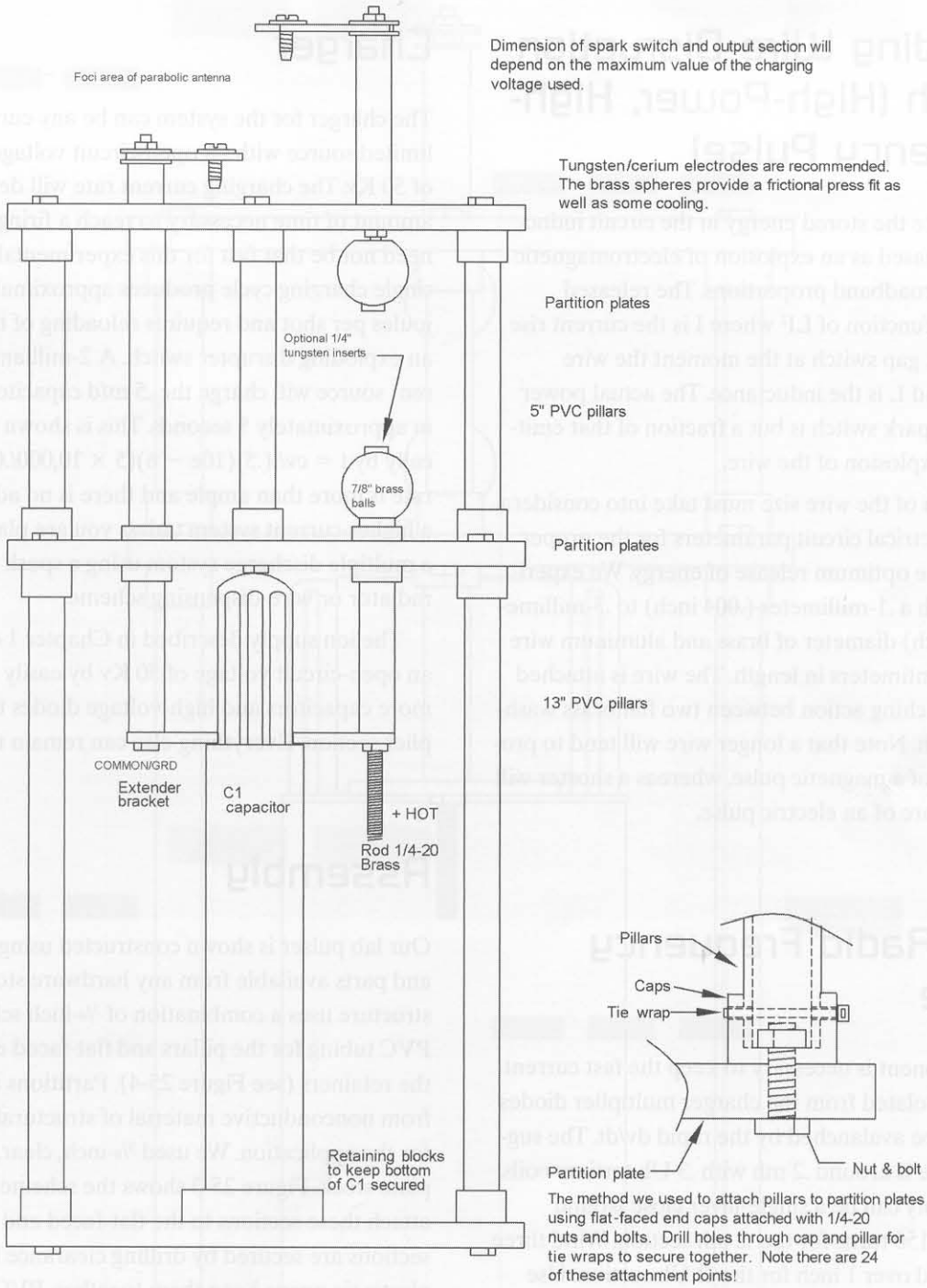

Figure 25-3 *Front view of pulser showing spark switch*

Low-inductance extension pieces are used to lengthen the capacitor terminals and are fabricated from 1/4-inch brass plates with mating holes to the existing block terminals of the capacitor. The edges are rounded and smoothed to prevent corona.

The open-air, self-triggering spark switch is intended as a low-cost approach to this very strategic part. A system of this type requires the fastest switching times possible. Gas-filled, triggered gaps will switch faster than open air, and isotope doped electrodes will further enhance performance.

Exploding Wire Disruption Switch (High-Power, High-Frequency Pulse)

This is where the stored energy in the circuit inductance is released as an explosion of electromagnetic energy at broadband proportions. The released energy is a function of LI^2 where I is the current rise in the spark gap switch at the moment the wire explodes and L is the inductance. The actual power lost in the spark switch is but a fraction of that emitted in the explosion of the wire.

Selection of the wire size must take into consideration the electrical circuit parameters for the proper timing of the optimum release of energy. We experimented with a .1-millimeter (.004 inch) to .3-millimeter (.012 inch) diameter of brass and aluminum wire about 50 centimeters in length. The wire is attached by a sandwiching action between two flat brass washers as shown. Note that a longer wire will tend to produce more of a magnetic pulse, whereas a shorter will produce more of an electric pulse.

RFC1 Radio Frequency Choke

This component is necessary to keep the fast current pulse rise isolated from the charger multiplier diodes that could be avalanched by the rapid dv/dt. The suggested value is around .2 mh with .3 Uh tertiary coils. The assembly can be a single-layer close wound winding of 150 turns for the .2 mh section. Wind three turns spaced over 1 inch for the .3 Uh section. Use #28 magnet wire on a 1 1/2- × 12-inch PVC plastic tube.

R1 Resistor

Intended as a safety precaution, this resistor provides a high impedance should a short occur in the output stage of the current driver. Use approximately 50 to 100K with at least 100 watts.

Charger

The charger for the system can be any current-limited source with an open-circuit voltage in excess of 50 Kv. The charging current rate will determine the amount of time necessary to reach a firing level and need not be that fast for this experimental system. A single charging cycle produces approximately 500 joules per shot and requires reloading of the wire for an exploding disrupter switch. A 2-milliampere current source will charge the .5 mfd capacitor to 50 Kv in approximately 5 seconds. This is shown mathematically by $t = cv/i(.5)(10e - 6)(5 \times 10{,}000/.002)$. This rate is more than ample and there is no advantage to a higher-current system unless you are planning to do a multiple discharge system using a spark gap-driven radiator or wire-dispensing scheme.

The ion supply described in Chapter 1 can supply an open-circuit voltage of 50 Kv by easily adding four more capacitors and high-voltage diodes to the multiplier section. Everything else can remain the same.

Assembly

Our lab pulser is shown constructed using materials and parts available from any hardware store. The structure uses a combination of 3/4-inch schedule 40 PVC tubing for the pillars and flat-faced end caps for the retainers (see Figure 25-4). Partitions are made from nonconductive material of structural integrity for the application. We used 3/8-inch, clear, acrylic plate stock. Figure 25-3 shows the scheme we used to attach these sections to the flat-faced end caps. The sections are secured by drilling clearance holes and plastic tie wraps keep them together. PVC cement is obviously stronger but prevents disassembly unless you destroy the support structure.

The pillar and cap assemblies are attached to the partition plates using 1-inch × 1/4-20 bolts and nuts. A cradle assembly fabricated from wood or plastic secures the capacitor C1 to the bottom partition. This scheme stabilizes the bottom of the capacitor.

The metal plate sections extend the terminal connections of the capacitor. These attach to the terminals connecting to the exploding wire cavity section

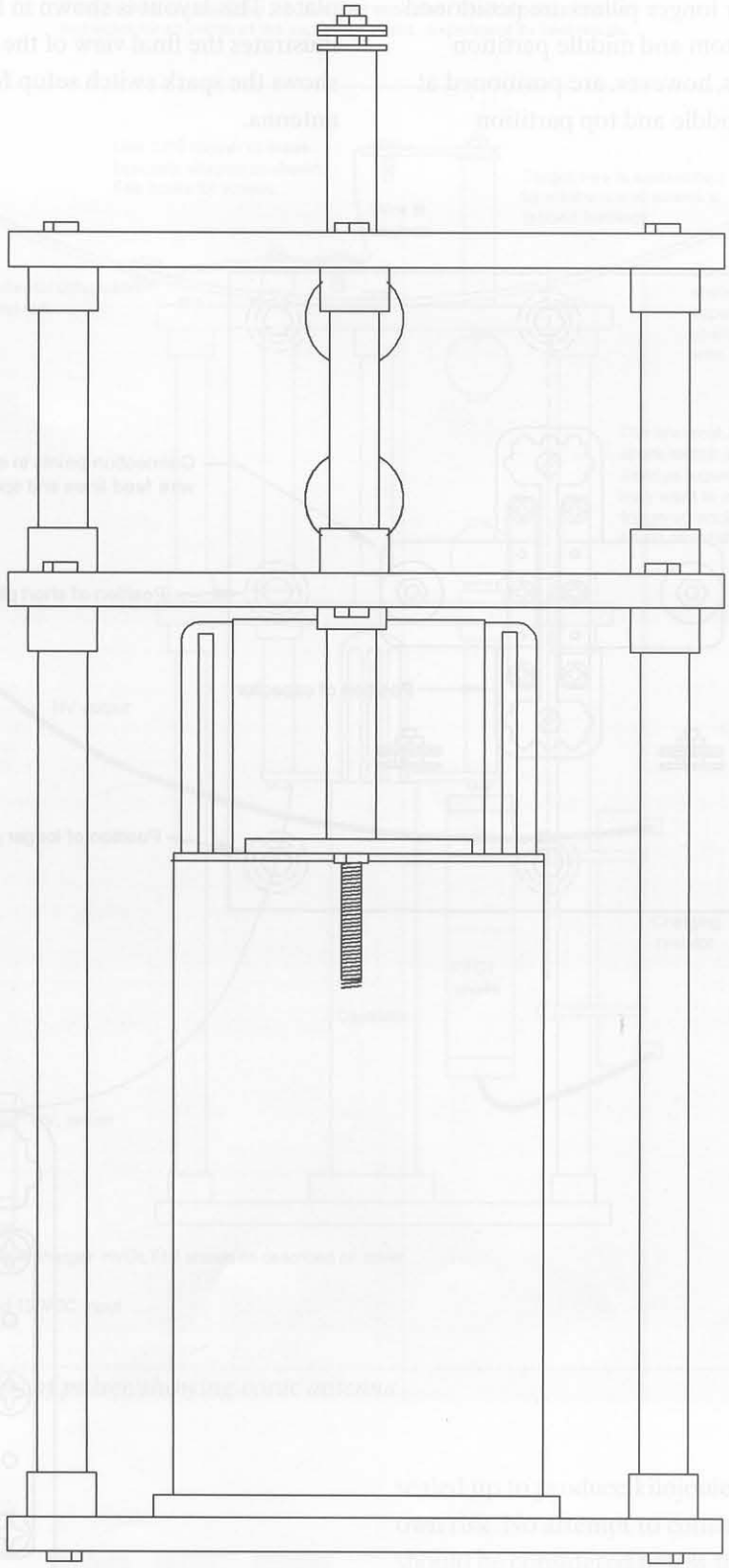

Figure 25-4 *Side view of EMP pulser*

via brass-threaded rods sleeved into pieces of 3/4-inch PVC pillar tubing. The bottom spark gap electrode is made adjustable by adjusting the bottom nut on the extended rod.

You will note the four longer pillars are positioned at the corners of the bottom and middle partition plates. The shorter pillars, however, are positioned at the midsections of the middle and top partition plates. This layout is shown in Figure 25-5. Figure 25-6 illustrates the final view of the pulser and Figure 25-7 shows the spark switch setup for coupling to the antenna.

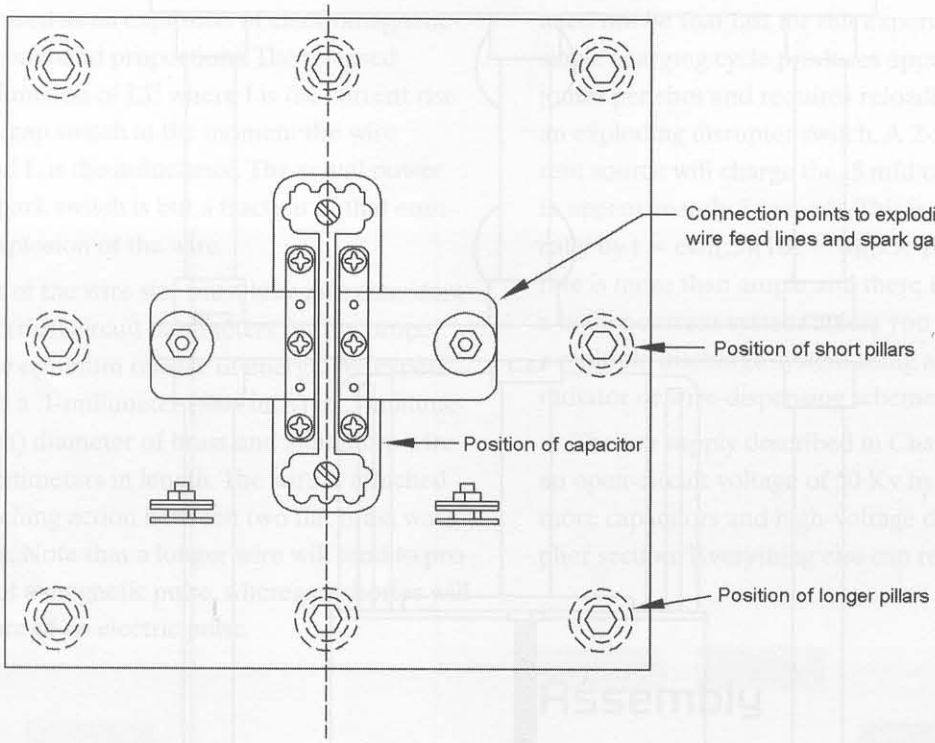

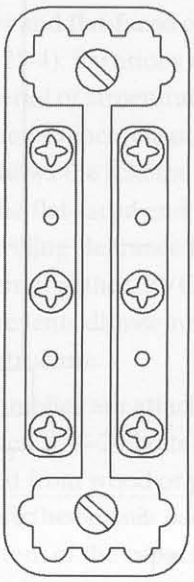

Figure 25-5 *Top view of middle partition plate, showing the x-ray view of capacitor placement and mounting holes*

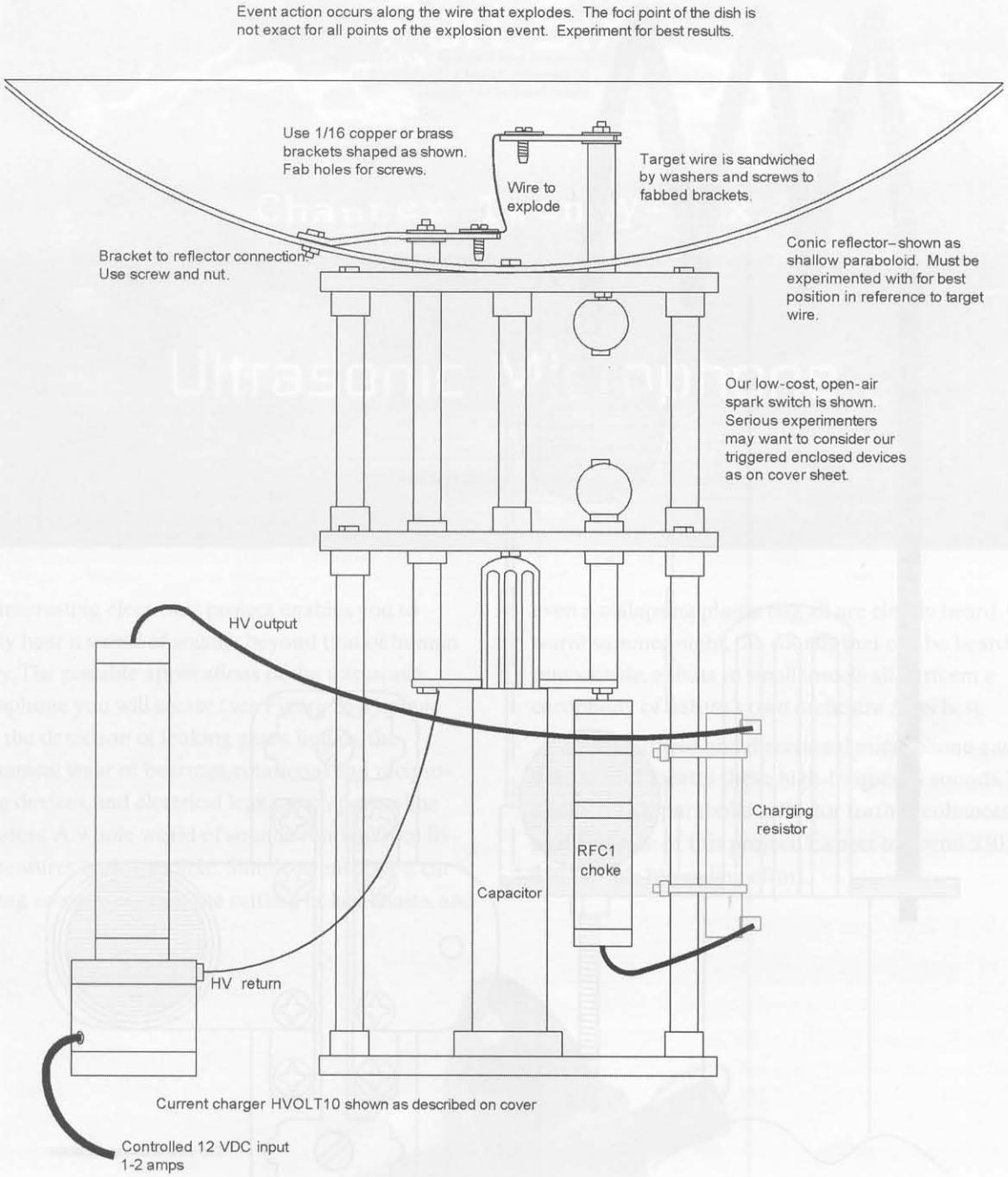

Figure 25-6 *Final view of pulser, showing conic antenna*

Application

This system is intended for research into the susceptibility of sensitive electronic equipment to an EMP. The system can be scaled down for portable field use and operate on rechargeable batteries. It can be scaled up to produce kilojoule pulses at the user's own risk. No attempt to construct or use this device should be considered unless thoroughly experienced in the use of high-pulse energy systems.

The electromagnetic energy pulse can be focused or made parallel by use of a parabolic reflector. Experimental targets can be any sensitive electronic

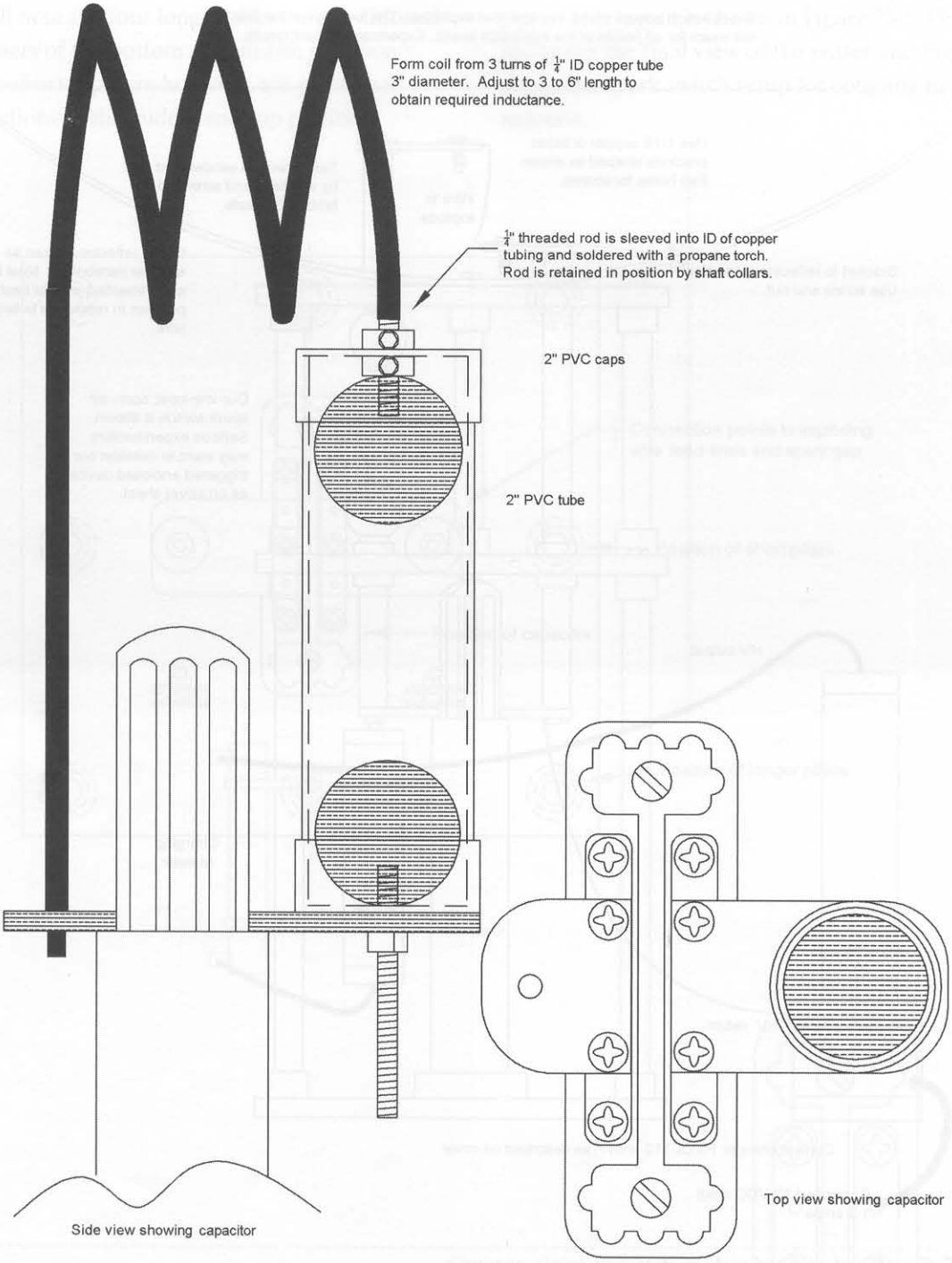

Figure 25-7 *Spark switch setup and layout for low-frequency coupling to antenna*

equipment or even a gas-discharge lamp. The acoustical spark energy can produce a sonic shockwave of high sound pressure at the focal length of the parabolic antenna.

Sources

High-voltage chargers, transformers, capacitors, gas-filled and isotope doped spark switches, MARX impulse generators up to 2 megavolts, and EMP generators are all available at www.amazing1.com.

Part Six

Chapter Twenty-Six

Ultrasonic Microphone

This interesting electronic project enables you to clearly hear a world of sounds beyond that of human ability. The possible applications of the ultrasonic microphone you will create (see Figure 26-1) range from the detection of leaking gases, liquids, the mechanical wear of bearings, rotational and reciprocating devices, and electrical leakage on power-line insulators. A whole world of sounds coming from living creatures is also audible. Simple events like a cat walking across wet grass, the rattling of key chains, and even a collapsing plastic bag all are clearly heard. On a warm summer night, the sounds that can be heard are remarkable, as bats to small insects all perform a cacophony of nature's own orchestra at its best.

This handheld and directional microphone easily detects and locates these high-frequency sounds. The addition of a parabolic reflector further enhances the performance of this project. Expect to spend $30 to $50 for this rewarding effort.

Figure 26-1 *Ultrasonic microphone with parabolic reflector*

This project enables you to listen to a world of sound that few people even know exists. The unit is built in a gun configuration with the barrel housing the electronics. A rear panel contains the on/off volume, the tuning control pot, and the headphone jack. The front of the unit contains the directional receiving transducer. The handle houses the batteries.

The addition of an optional parabolic reflector greatly enhances the device's performance, providing super-high gain and directivity.

Applications

One of the most interesting sources of high-frequency sound is the many species of insects emitting their mating and warning calls. On a typical summer night, one can spend hours listening to bats and other strange insect noises. A whole new world of natural sound awaits the user. Many man-made sounds also generate high-frequency sounds easily detected by the device. Several examples are as follows, yet these only represent a small fraction of the potential sources of high-frequency sounds:

- Leaking gases and rushing air.
- Water from sprinklers or leaks.
- Corona leakage, sparking devices, or lightning.
- Fires and chemical reactions.
- Animals walking in wet grass or in the brush can be heard over a considerable distance. This is an excellent aid for hunters or trackers, or for just finding pets at night.
- Computer monitors, TV sets, high-frequency oscillators, mechanical wear bearings, rattle detection often developing in automobiles, plastic bags, and rattling change.

An excellent demonstration of this ultrasonic microphone would involve Doppler shifts where motion toward the source produces a rise in frequency and motion away from it does the opposite.

Doppler shift is when an observer moving toward a source of sound experiences an increasing frequency. This is easy to visualize when one realizes that sound propagates as a longitudinal wave at a relatively constant velocity. As the observer moves toward the direction of the sound source, he intercepts more waves in a shorter period of time, thus hearing a sound that seems to be shorter in wavelength or higher in frequency.

A fun game both for children and adults is to hide a small test oscillator and attempt to have your opponent locate it in a minimal amount of time.

Circuit Description

An ultrasonic transducer mike (TD1) picks up high-frequency sounds and converts them to electrical signals via the piezoelectric effect (see Figure 26-2). Inductor L1 tunes the inherent capacity of the transducer to a window frequency centering around 25 kHz. This parallel, equivalent resonant circuit produces a high-impedance signal source that is coupled to *field-effect transistor* (FET) Q1 amplifier through capacitor C2. Resistor R1 and capacitor C1 decouple the bias voltage to the drain. Layout and input lead shielding is important, as this section is prone to noise, feedback, and extraneous signal sensitivity.

The output of Q1 is taken across the drain resistor R2 and is capacitance coupled to amplifier I1A. Gain is set to ×50 by the ratio of resistors (R6/R4).

The output of I1A is AC coupled to the combination mixer/amplifier I1B through capacitor C4. The output of oscillator I1C is coupled into the circuit by a "gimmick" capacitor, CM. This is a short lead from pin 8 of IC1 and is twisted with a similar lead from pin 2 of I1B. (It is suggested to check performance without this gimmick.) The oscillator now generates a frequency that is mixed with the picked-up signals. The resultant is two signals, one being the sum and the other the difference.

Capacitor C7 and resistor R17 form a filter network attenuating the higher-frequency component of the mixed frequencies while allowing the lower frequency to pass by a factor of 20 *decibels* (db). The lower-frequency results are the difference between the oscillator frequency and the actual signal frequency. This is similar to a superheterodyne effect. The high frequency is obviously bypassed by filter C7 and R17. The filtered signal, being the composite dif-

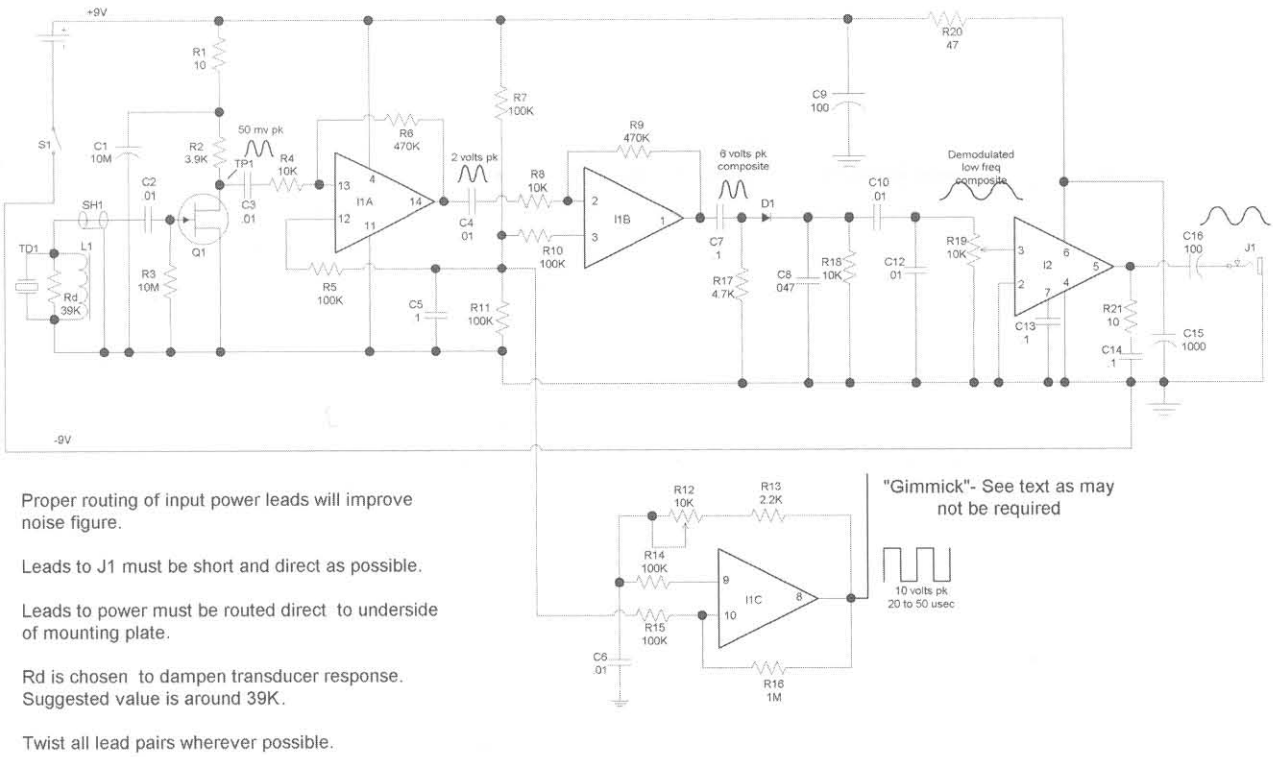

Figure 26-2 *Ultrasonic microphone schematic*

ference, is rectified by diode D1 and integrated with capacitor C8. This signal is in the audio frequency range and is what you actually hear. It is tuned by control pot R12 in the oscillator section and enables the selective tuning of certain target frequencies within an acceptance window of the transducer TD1. These resulting audio frequencies are coupled to volume control R19 through DC blocking capacitor C10. Capacitor C12 bypasses any higher frequencies that may leak through. The arm of R19 feeds the audio signal into headphone amplifier I2. The output is 8 ohms and is capacitance-coupled to the headset jack J1. You may use a small speaker in a quiet location for group listening. Network R21/C4 further attenuates any further higher frequencies.

Power to I2 is decoupled through resistor R20 and capacitor C15. This provides circuit stability, preventing feedback oscillations and other undesirable effects.

The operating points of I1A, I1B, and I1C are set at the supply voltage midpoint selected by divider resistors R7 and R11. Resistors R5, R10, and R15 compensate for offset currents.

Construction Steps

To begin constructing the device, follow these steps:

1. Identify all the parts and pieces and verify them with the bill of materials.
2. Insert the components, starting from one end of the perforated circuit board, and follow the locations shown in Figure 26-3, using the individual holes as guides. The board is cut 2.25 × 2.25 × .1. A *printed circuit board* (PCB) is also available from www.amazing1.com.

   Use the leads of the actual components as the connection runs, which are indicated by the dashed lines. It is a good idea to trial-fit the larger parts before actually starting to solder.

   Always avoid bare wire bridges, messy solder joints, and potential solder shorts. Also check for cold or loose solder joints.

   Pay attention to the polarity of the capacitors with polarity signs and to all the semiconductors. The positioning of the control pots must

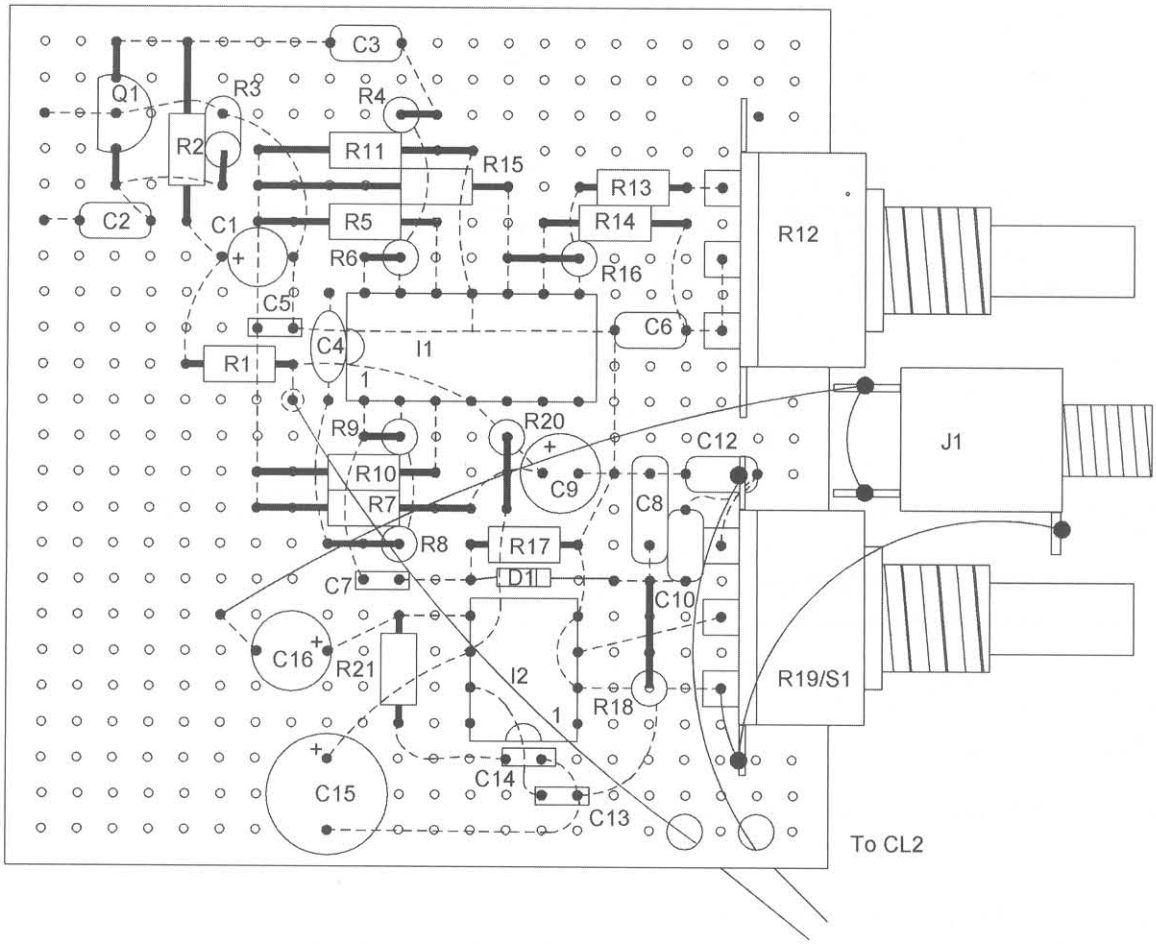

Figure 26-3 *Assembly board*

allow physical alignment with the mounting holes in RP1.

3. Cut, strip, and tin the wire leads for connecting to J1 and solder them. These leads should be 2 inches long and twisted.

4. Fabricate the CHAS1 chassis, the RP1 front panel section, the EN1 enclosure, and the HAND1 handle, as shown in Figure 26-4.

5. Prepare the SH1 shielded cable at both ends as follows. If the optional reflector is used, you will need a length of 18 inches; if not, you will need 6 inches. This is shown in Figure 26-5.

   a. Carefully remove 3/4 of an inch of the outer insulation, being careful not to nick the shielded braid.

   b. Shred the shielding braid using a pointed object, such as a pin, and twist it into a lead. Carefully tin only the ends to hold the wires together.

   c. Carefully strip 1/4 of an inch of the insulation from the center conductor and tin.

   d. Check the finished cable for shorts or leakage with a high-resistance meter.

6. Solder the inductor L1 and the damping resistor Rd, as shown in Figure 26-5. Solder one end of the SH1 cable, being careful not to overheat the transducer pins or the insulation of the center conductor. Overheating these pins will ruin this part. If in doubt, you must perform a simple test of measuring a short circuit to the metal case of the part to the shorter pin. If this resistance is above 1 ohm, you have trashed this part and need a replacement. The inset in Figure 26-5 suggests using mechanical connections such as crimpling, wire nuts, and so on.

7. Assemble as shown. Figure 26-6 shows an assembly using the parabolic reflector, whereas Figure 26-7 shows one without.

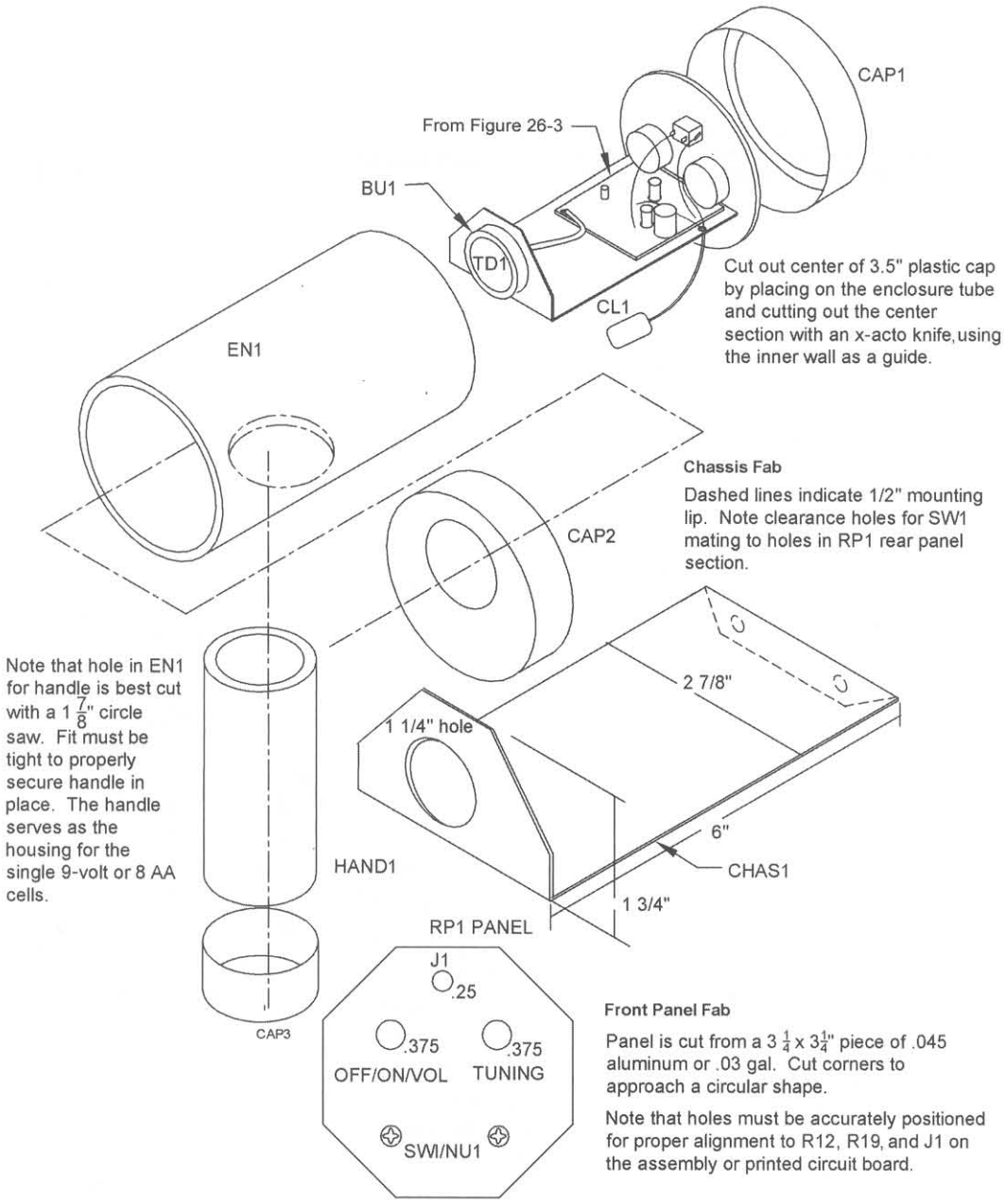

Figure 26-4 *Final blowup and fabrication*

Electrical Pretest

To run a test on the system, follow these steps:

1. Turn the controls to "off," plug in the HS30 headset, and insert a 9-volt battery. Connect a meter set to read 100 milliamperes across the switch pins of R19 and quickly read a current of around 20 milliamperes. Remove the meter and turn control pot R19 to the midway point. Note a smooth, rushing sound in the headsets. Then turn on a computer or TV monitor, and adjust the R12 control until you hear a clear tone. Turn off the sound source and gently rub two fingers together, noting a distinct sound. Check the range of the controls for unwanted feedback or spurious signals.

The unit is now ready for final assembly. Note the test points and wave shapes shown in Figure 26-2.

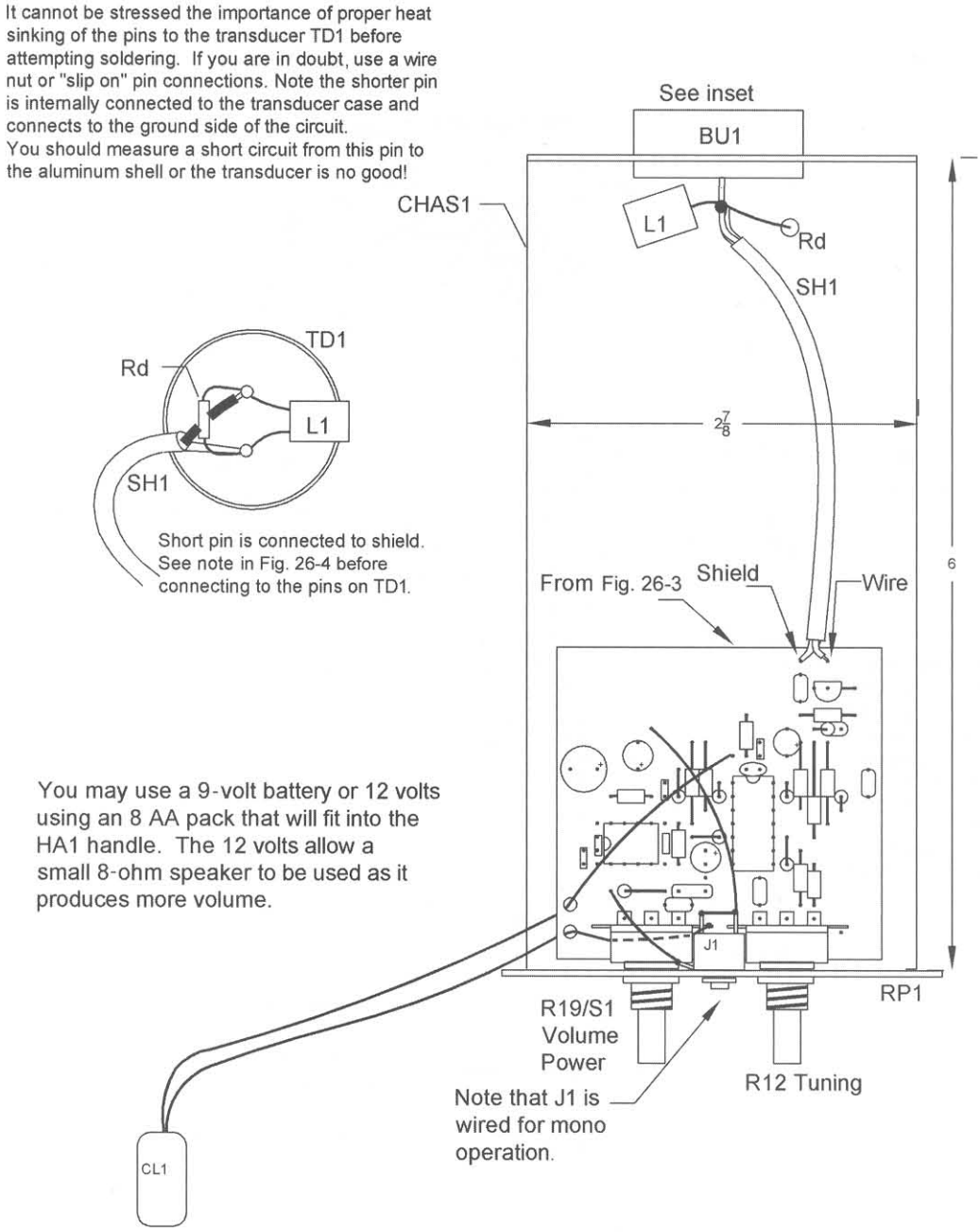

Figure 26-5 *Chassis assembly with board connections*

2. Complete the final assembly, adding parabolic reflector PARA12 for a greatly enhanced performance, as shown in Figure 26-6.

Note that your unit may pick up strong magnetic fields, as it is not shielded for such. Performing the Doppler shift test, as noted earlier in these plans, easily differentiates these fields.

Special Note: Utilizing a Standing Wave

It is possible to produce a standing wave at the face of the transducer TD1 and improve the system sensitivity. Point the device at a steady, low-intensity source of high-frequency energy and carefully adjust

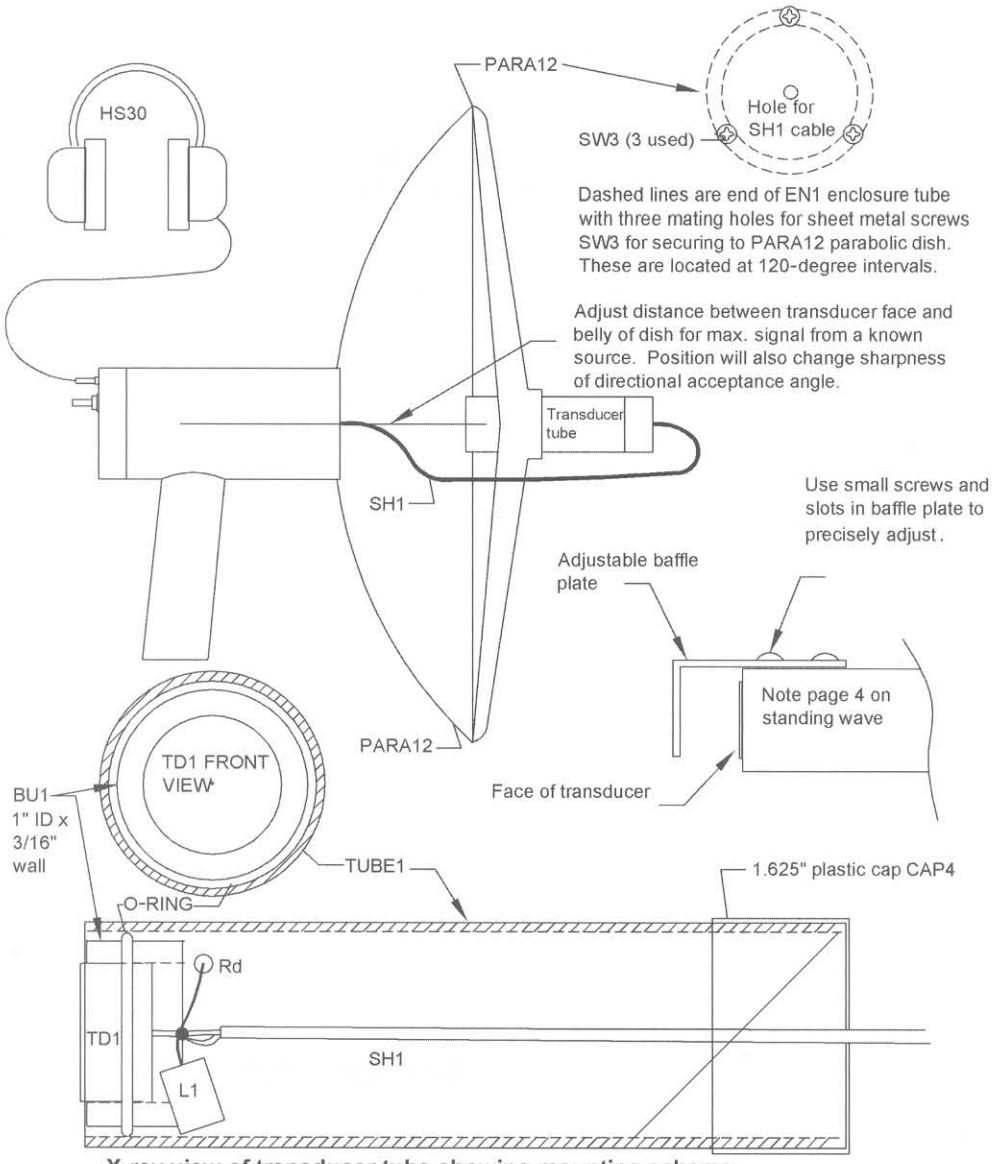

X-ray view of transducer tube showing mounting scheme

Note shielded cable is 18" and is routed through a small hole in the rear cap CAP3 and in PARA12 reflector.

TD1 is fitted into bushing BU1. Assembly is then inserted into the 5.5" x 1.625" diameter enclosure TUBE and is spaced by the O-RING. This scheme shock mounts the transducer and secures it in place.

Transducer is wired as shown in set Fig. 26-5.

Figure 26-6 *Final view showing a reflector*

the distance of the 1 × 1" metal flat plate relative to the transducer face, noting an increase in the signal. This effect will occur at half-wave multiples with the most pronounced being closest to the face. Use your own ingenuity in retrofitting this simple step.

Supplementary Application Note

This device can provide hours of entertainment for adults and children alike. For example, a small box containing an oscillator at a frequency of 25 kHz

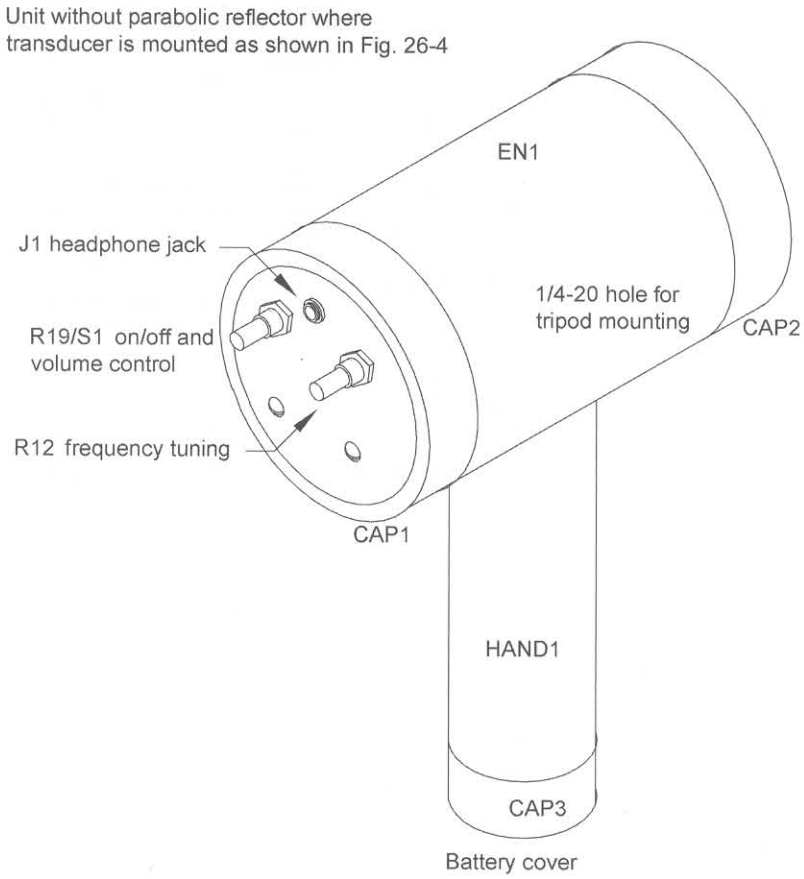

Figure 26-7 *Final assembly without a reflector*

could be well hidden somewhere. The highly directional characteristics of the device with its ability to respond to various signal levels enable a quick bearing to be made on the hidden source and the fun begins. It should be noted that the detection range could be in excess of a quarter-mile! This allows great flexibility in hiding the oscillator, using only your imagination for making detection difficult. Along with my children and friends, I have had many enjoyable hours and good laughs playing with this equipment.

Recording

You may easily record the output to a recording device by connecting the auxiliary input to the headphone output jack. A "Y" adapter can be used for simultaneously plugging in the headset to monitor the recorded sounds. Two sets of headphones can be used with the adapter, and the output impedance is 8 ohms.

Table 26-1 Ultrasonic microphone parts

Ref. #	Qty.	Description	DB#
R1, 21	2	10 ohm, 1/4 watt (br-blk-blk)	
R2		3.9K, 1/4 watt (or-wh-red)	
R3		10 megs, 1/4 watt (br-blk-blue)	
R4, 8, 18	3	10K, 1/4 watt (br-blk-or)	
R12		10K, 17-millimeter pot	
R5, 7, 10, 11, 14, 15	6	100K, 1/4 watt (br-blk-yel)	
R6, 9	2	470K, 1/4 watt (yel-pur-yel)	
R13		2.2K, 1/4 watt (red-red-red)	
R16		1 meg, 1/4 watt (br-blk-grn)	
R17		4.7K, 1/4 watt (yel-pur-red)	
R19/S1		10K, 17-millimeter linear pot and switch	
R20		47 ohm, 1/4 watt (yel-pur-blk)	
Rd		Select for dampening transducer circuit—10 to 47K, 1/4 watt	
C1		10 mfd, 25-volt vertical electrolytic capacitor	
C2, 3, 4, 6, 10, 12	6	.01 mfd, 25-volt disk or plastic capacitor	
D1		IN914 small-signal diode	
C8		.047 mfd, 50-volt plastic capacitor	
C5, 7, 13, 14	4	.1 mfd, 25-volt disk or plastic capacitor	
C9, 16	2	100 mfd, 25-volt vertical electrolytic capacitor	
C15		1,000 mfd, 25-volt vertical electrolytic capacitor	
L1		27 millihenry inductor	#IU27H
Q1		J202 n-channel FET	
I1		LM074 4-second OP amp DIP	
I2		LM386 audio amplifier DIP	
J1		3.5-millimeter stereo audio jack wired for mono	
TD1		25 kHz acoustical receiving transducer	#IUTR8925
SH1	18 inches	Shielded mike cable	
PB1		PC or .1 grid perforated vector board, 2.25- × 2.25-inch	
BAF1		Thin piece of 2.25- × 2.25-inch plastic for insulating	
BU1		1 × 1/2 × 3/16 wall neoprene bushing	
CL1		Battery clip with 12-inch leads	
PARA12		Optional parabolic reflector	#IUPARA12
PCHT9		Optional PCB	#IUPCHT9

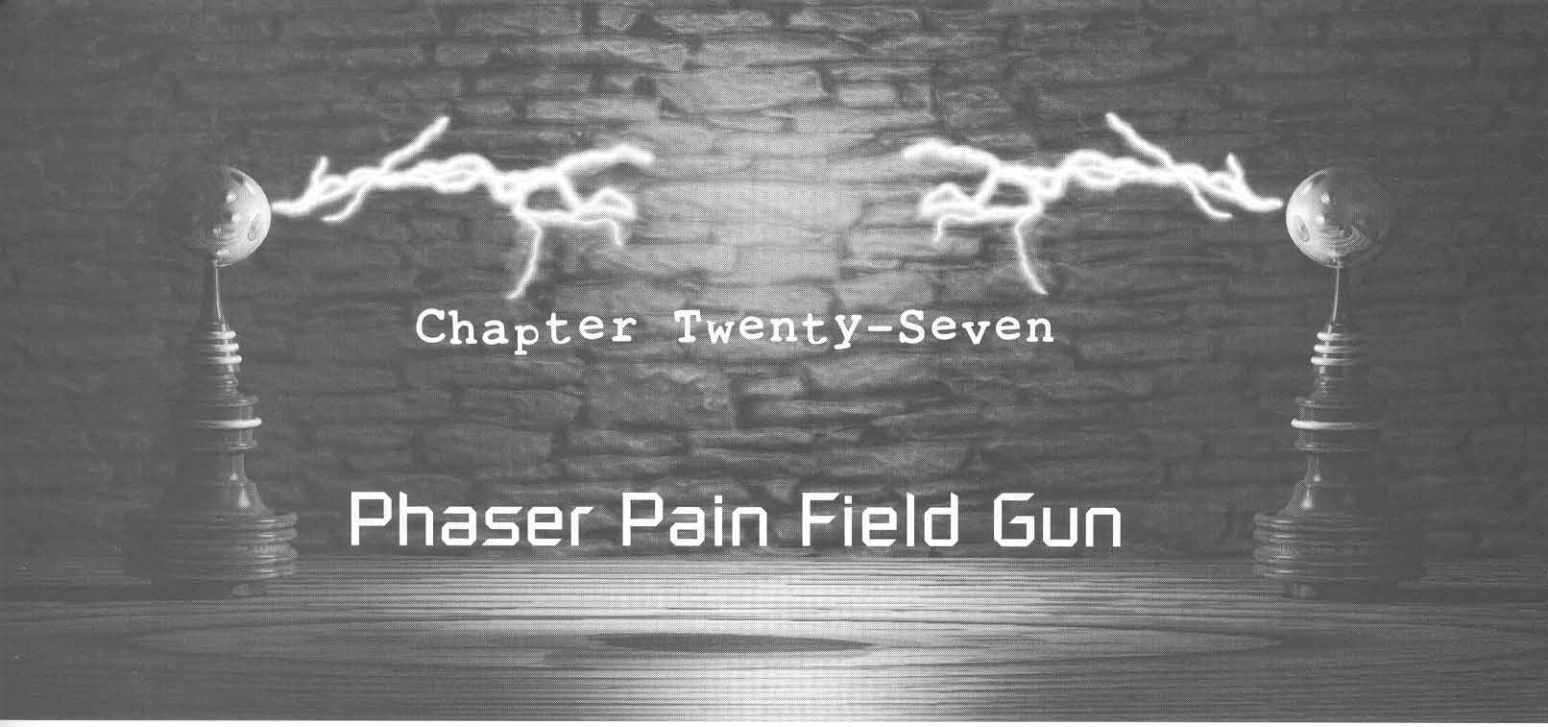

Chapter Twenty-Seven

Phaser Pain Field Gun

This project shows how to build a directional, hand-held device capable of driving off both wild and domestic animal pests (see Figure 27-1). This device produces high-pressure-level sound at complex frequencies mostly above that of human hearing. This sound is painful to many animals as their hearing is much more acute than humans. The unit is tunable and can also be adjusted to be very annoying to people when exposed at close range.

The circuitry is housed inside an easily obtainable piece of *polyvinyl chloride* (PVC) tubing and resembles a large ray gun. The output controls are on the rear panel with the batteries in the handle. Expect to spend around $25 to assemble this sound gun. All the parts are readily available, with the hard-to-find items available at www.amazing1.com.

Figure 27-1 *Phaser pain field gun*

Caution: Exposure below 20 kHz at a sound-pressure level of 105 decibels (db) in excess of 1 hour may cause a hearing impairment.

This project shows how to construct a moderately powered, directional source of continuous, adjustable, high-frequency, time-variant acoustical shockwaves. The output energy of the device is conservatively rated at 125 db. The frequency is programmable or is constantly sweeping at an internal preset rate and is variable approximately from an audible 5 to 20 kHz. The unit is intended for use as a research tool in the study of animal behavior, acoustical experimentation, or as a source of intense, directional, acoustical, high-frequency sound for other scientific and laboratory applications. The device is excellent for use in agricultural applications such as flushing out rats and other rodents from granaries, silage bins, chicken coups, and so on.

It is to be used with discretion and not treated as a toy. Caution must be used as exposure to most people causes pain, headaches, nausea, and extreme irritability (younger women are especially affected). Do not, under any circumstances, point the unit at a person's ears or head at close range, as severe discomfort and possible ear damage may result. Usage on dogs and other animals must be done with discretion to avoid excessive discomfort.

Circuit Theory

A timer (1C2) is connected as a stable, free-running multivibrator whose frequency is externally controlled by pot R9 (see Figure 27-2). Resistor R10 selects the range limit of R9. Capacitor C5, along with the resistors, determines the frequency range of the device. The square wave output of 1C2 is via pin 3 and is resistively coupled to power amplifier Q2. The drain of Q2 is DC biased through resonator choke L1.

The square wave output signal is now fed into transducer TD1 in a series with resonating coils L2 and L3 in a parallel combination. The resonant action among the inherent capacities of TD1, the tuning capacitor C7, and the inductance now produces a sinusoidal-shaped wave peaking around 25 kHz or the upper limit of the tuning range. This signal waveform now has a peak-to-peak voltage several times that of the original square wave. Transducer TD1 now can take advantage of these peak voltages to produce the high-pressure-level sounds necessary without exceeding the high average ratings of an equivalent voltage-level square wave.

Timer IC1 is similarly connected as a stable running multivibrator and is used to produce the sweeping voltage necessary for modulating the frequency of

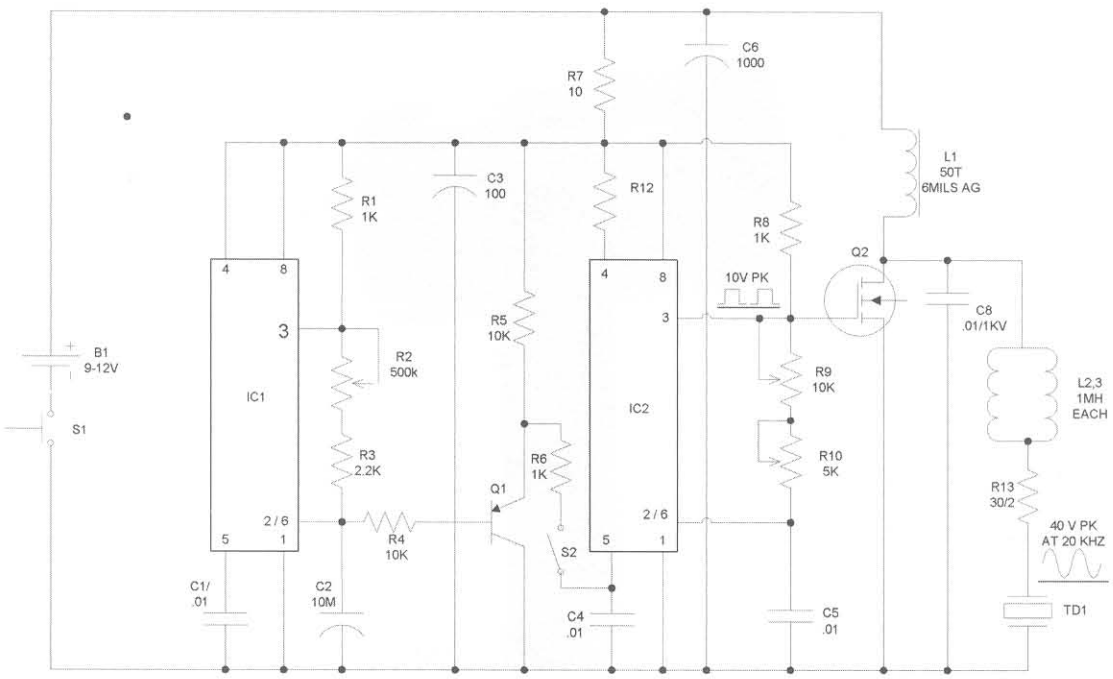

Figure 27-2 *Phaser pain field gun schematic*

1C2. This sweep repetition rate is controlled by pot R2, and resistor R3 limits the range of this repetition time. Resistor R1 selects the duty cycle of the pulse, whereas capacitor C2 sets the sweep time range. The output for II is via pins 6 and 2 where the signal ramp function voltage is resistively coupled to inverter transistor Q1 via resistor R4. The output of Q1 is fed to pin 5 of 12 and provides the output modulation voltage necessary to vary the frequency as required. Note that the modulation signal is easily disabled via R2/S2.

Power to the system comes from battery B1 and pushbutton S1. Capacitor C6 guarantees an AC return path for the output signal. Power to the driver circuits IC1 and IC2 come through a decoupling network consisting of resistor R7 and capacitor C3.

Construction Steps

To begin the assembly of the gun, follow these steps:

1. Lay out and identify all the parts and pieces, checking them with the parts list.
2. Cut the HS1 heatsink bracket from a .75 × 2 × .065 aluminum piece. Bend it 90 degrees at its midsection and drill a hole for the SW1/NU1 screw and nut. Then attach it to Q2 as shown later in Figure 27-4.
3. Figure 27-3 shows the assembly using a *printed circuit board* (PCB) available through www.amazing1.com. Experienced builders may use a piece of .1-inch grid perforated vector board. Use the drawing for parts location and the schematic for the connections. Certain leads of the actual components will be used for connecting points and circuit runs. Do not cut or trim them at this time. It is best to temporarily fold the leads over to secure the individual parts from falling out of the board holes. If you obtain a PCB, you may omit this step.
4. Insert and then solder in the designated components:
   a. Insert the 1/4-watt resistors: R1, R3, R4, R6, R7, R8, and R12.
   b. Insert R10 and R13.

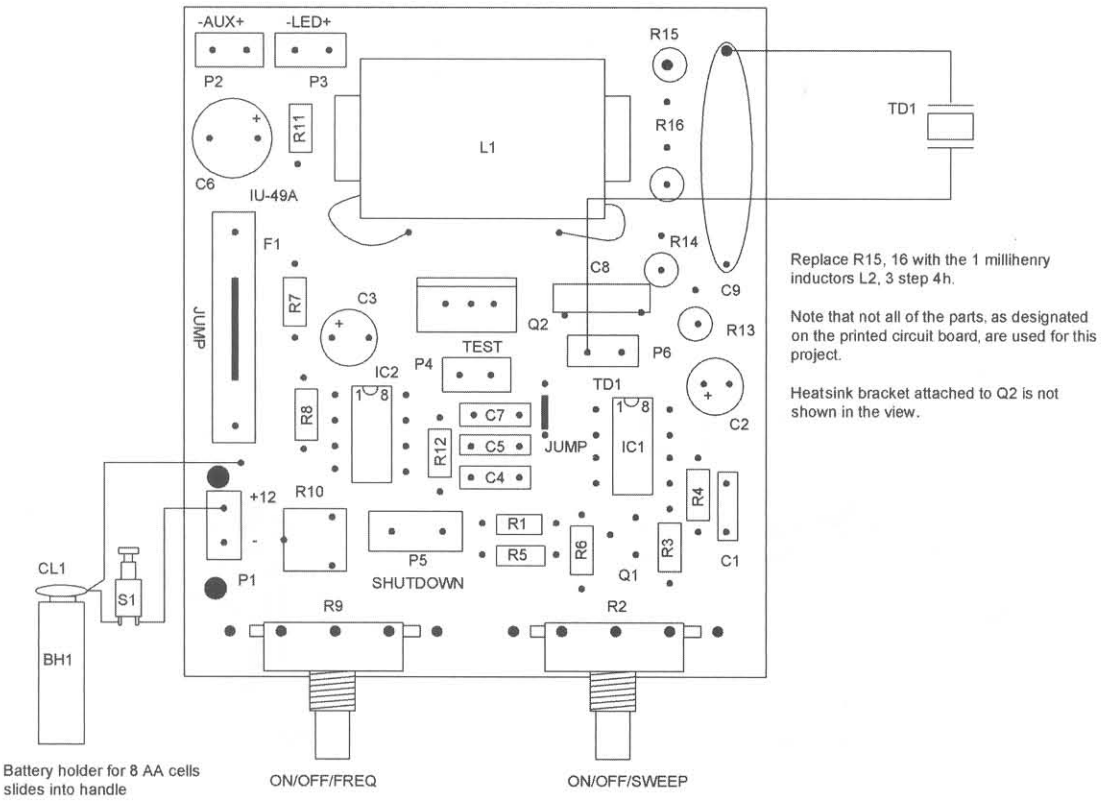

Figure 27-3 *PCB wiring*

c. Solder in the control pots R2/S2 and R9. Use short pieces of bare-wire leads from the component pins to the respective holes in the PCB. Note these controls must be as close to the board surface as possible.

   Note that R11 and R14 are not used and the positions for R15 and R16 are used for components designated as L2 and L3.

d. Insert capacitors C1, C4, C5, and C8.

e. Insert electrolytic capacitors C2, C3, and C6, noting the polarity. Note that C7 is not used in this circuit.

f. Insert semiconductors Q1, Q2, IC1, and IC2. Note that Q2 is attached to heatsink HS1 via SW1/NU1.

g. Insert two wire jumps.

h. Insert the two 1 millihenry inductors in place of R15 and R16.

i. Insert the red lead of CL1 and the 10-inch lead for S1 as shown.

j. Insert two 10-inch leads for transducer TD1.

5. Assemble the Ll choke coil by wrapping 50 turns of #24 magnet wire on the nylon bobbin as evenly as possible. Leave two inches of leads for connection to the circuitry. Assemble the E core, as shown in Figure 27-4. Shim each side with pieces of yellow cardboard strips of .003 inches each for a total of .006 inches. If you have an inductance capacitance bridge, measure 1.5 millihenrys.

6. Wire in the inductor and secure it to the board with *room temperature vulcanizing* (RTV) silicon rubber or another suitable adhesive.

7. Preconnect all the leads to TD1, S1, and CL1.

8. Check the complete wiring for potential shorts, wire bridge shorts, poor solder joints, the correctness of the components, and the position and orientation of Q1, Q2, C3, C6, IC1, and IC2.

Subassembly Pretest

To conduct a test on the device, follow these steps:

1. Turn pots counterclockwise and install eight fresh AA batteries into the BH1 holder, as shown in Figure 27-5.

   Note that a variable bench supply capable of 12 *volts-direct current* (vdc) at 1 amp with a volt and current meter can be a great convenience for the remaining steps and for the testing of other similar circuits.

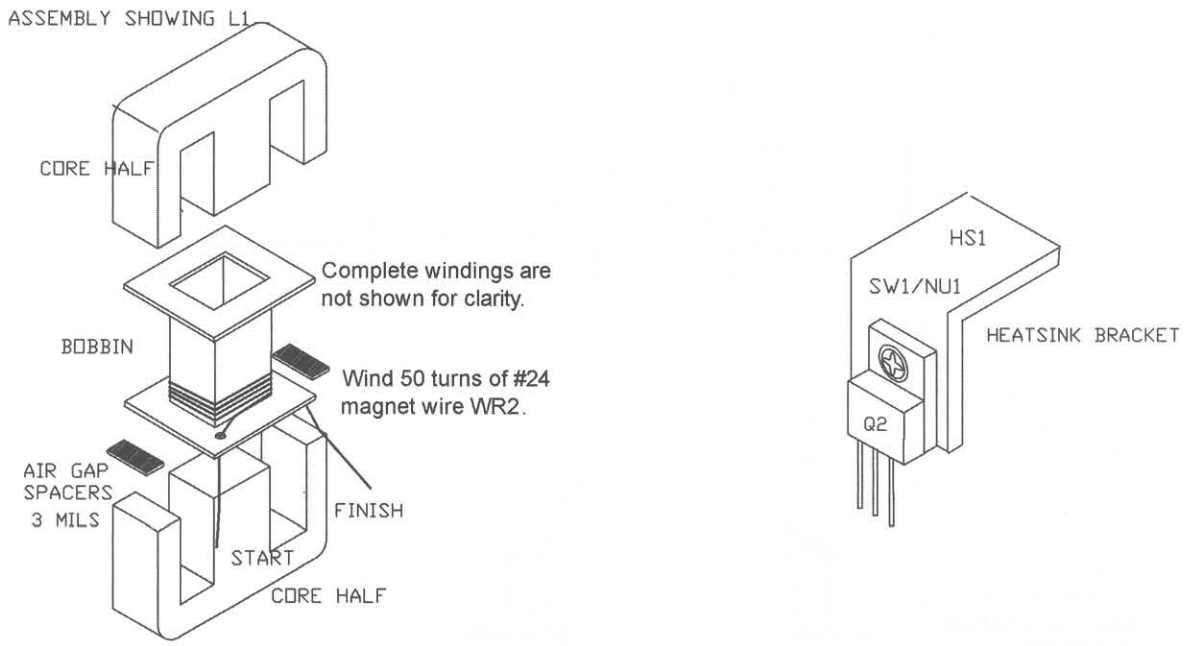

Figure 27-4 *Assembly of inductor L1 and heatsink HS1*

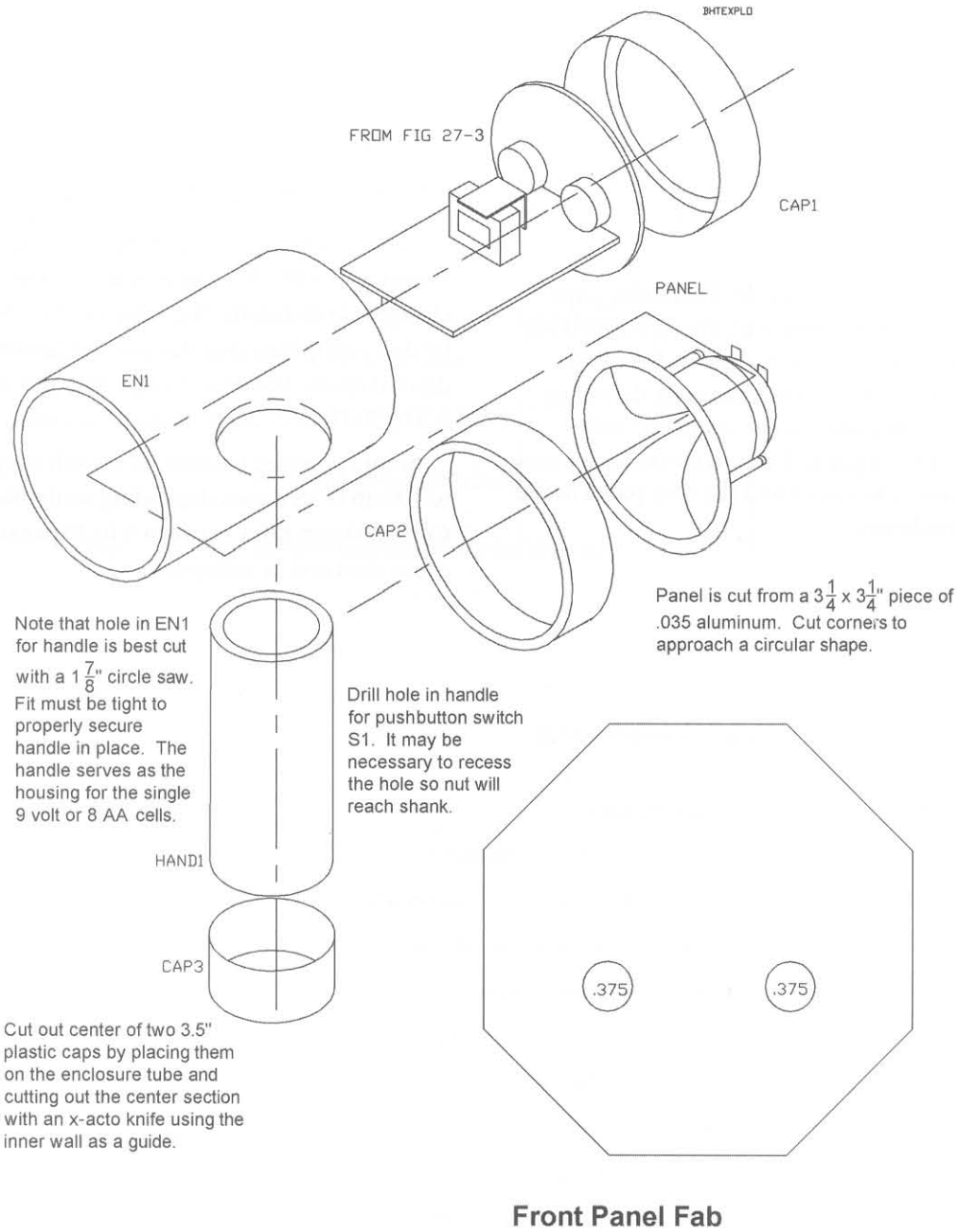

Figure 27-5 *Final blowup*

2. Push button S1 and note a loud, piercing wave coming from TD1. Measure a current of 300 to 400 milliamperes in a series with a battery.
3. Rotate R9 and note that the frequency increases to above the audible range. Then measure a current of 100 to 200 milliamperes.
4. Note the wave shapes shown in Figure 27-2 for those who have a scope.
5. Turn on sweep control R2/S2 and note the frequency being modulated by a changing rate as this control is adjusted. Use caution as certain sweep rates may cause epileptic fits and other undesirable effects. Sweep rates between 7 and 20 per second should be used with caution.

Final Assembly

The final steps are as follows:

1. Cut the rear panel from a 3¼- × 3¼-inch piece of aluminum. Add holes for the controls as shown in Figure 27-5.
2. Create the CAP2 and CAP3 retaining caps from a 3½-inch plastic cap. This is easily done by placing a cap over the end of the main enclosure and carefully removing the center section with a sharp knife, using the wall thickness as a guide. These reworked caps now retain the transducer and the rear panel to the main enclosure.
3. Create EN1 and HA1 from the material indicated on the parts list. Add a hole in the main enclosure for the insertion of the HA1 handle section. The hole must provide a tight fit. Glue the parts together.
4. Create the final assembly as shown.

Note that the frequency range with the values shown is 4 to 20 kHz. The frequency range can be changed by increasing the value of C5 to lower it or by decreasing the range to raise it. Experiment for a desired result. The sweep range with the value shown is 4 to 50 Hz. C2 can be changed in a similar function.

Sound pressure measurements will vary from 130 to 100 db at 18 inches depending on the frequency. Certain sweep rates between 5 to 20 per second may cause dizziness or epileptic fits.

Table 27-1 Phaser pain field gun project parts

Ref. #	Qty.	Description	DB#
R1, 6, 8, 12	4	1K, ¼-watt resistor (br-blk-red)	
R2/S2		500K to 1 meg pot/switch, 17 millimeters	
R3		2.2K, ¼-watt resistor (red-red-red)	
R4, 5	2	10K, ¼-watt resistor (br-blk-or)	
R7		10-ohm, ¼-watt resistor (br-blk-blk)	
R9		10K pot, 17 millimeters	
R10		5K trimpot, horizontal	
R13	1	30-ohm, 3-watt resistors (or-blk-blk)	
C1, 4	2	.01 mfd/50-volt disk capacitor (103)	
C3		100 mfd/25-volt vertical electrolytic capacitor	
C2		10 mfd/25-volt vertical electrolytic capacitor	
C5		.01 mfd/50-volt polyester capacitor	
C6		1000 mfd/25-volt vertical electrolytic capacitor	
C8		.01 mfd/2 Kv disk capacitor	
C9			
L2, 3	2	1 millihenry inductors in place of R15 and R16, as marked on PCB	IU1MH
L1		Inductor—2 Hitachi 30.48 E cores and mating bobbin, as shown in Figure 27-4	IUPPP1L1
Q1		PN2907 PNP GP transistor	
Q2		IRF530 or 540 N channel *metal-oxide-semiconductor field effect transistors* (MOSFETs)	

Table 27-1 Continued

Ref. #	Qty.	Description	DB#
IC1, 2	2	555 DIP timer	
HS1		Heatsink bracket shown in Figure 27-4	
SW1/NUT		6-32 × 1/4-inch screw and nut	
CL1	1	9-volt battery clip	
BH1		Eight AA cell holders for 1.5 volt batteries (B1)	
S1		SPST pushbutton switch	
PCPPP1 IUPCSONIC		PCB or use perforated vector board	
TD1 IUMOTRAN		Polarized 130 db piezo transducer	
WR1	3 feet	#24 vinyl hookup wire, red and black piece	
WR2	5 feet	#24 magnet wire to wind L1	
CAP1		1 7/8-inch plastic cap (A1 7/8)	
CAP2, 3	2	3 1/2-inch plastic cap (A3 1/2), as shown in Figure 27-5	
RP1		3 1/8-inch square #22-24 aluminum, as shown in Figure 27-5	
EN1		3 1/2- OD × 7-inch PVC tube, as shown in Figure 27-5	
HAND1		1 7/8- OD × 6-inch PVC tube, as shown in Figure 27-5	

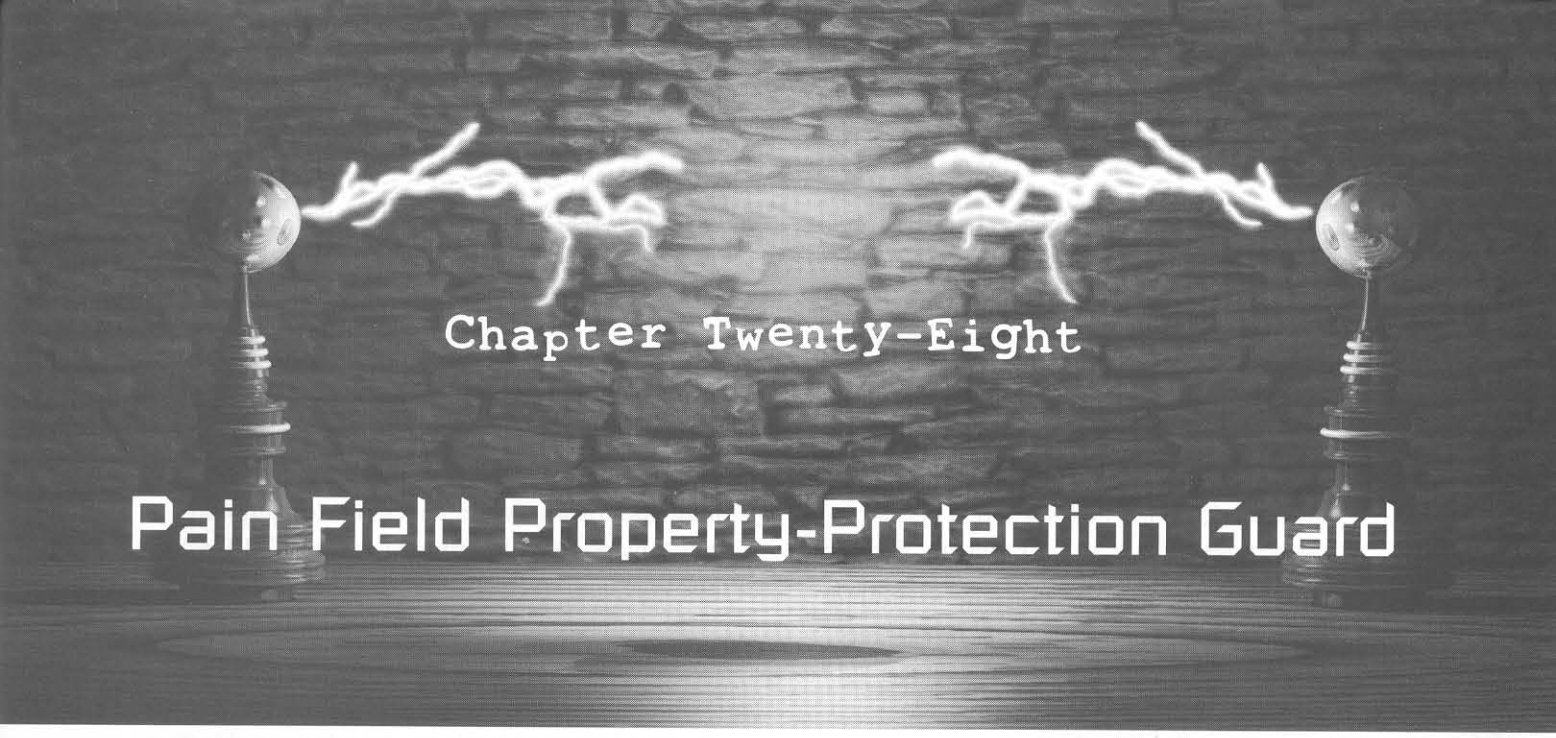

Chapter Twenty-Eight

Pain Field Property-Protection Guard

This chapter offers an excellent home- and property-protection project when properly built that provides a low-liability deterrent to unauthorized intrusion from both two- and four-legged threats. Once activated, strategically placed transducers project an uncomfortable and disorientating field of complex acoustical sound and shockwaves. It is a harmless effect yet discourages most intrusions in a defined area.

A reasonably simple electronic system can power up to eight individual transducer emitters positioned in the target area (see Figure 28-1). Activation can be an open or closed fault switch or a voltage level such as that produced by our laser property guard described in Chapter 12, "Laser Property-Protection Fence." Together these projects can be interfaced to produce an effective intrusion detection and deterrent system. Expect to spend $50 to $100 with hard-to-find parts available at www.amazing1.com. The complete parts list is outlined in Table 28-1.

Warning: Do not operate this system at continuous, high output at frequencies below 20 kHz. Daily sound pressure exposures in excess of 1 hour at 105 *decibels* (db) may lead to hearing impairment. When properly used, this device provides a limited liability deterrent. It should not cause permanent damage or trauma.

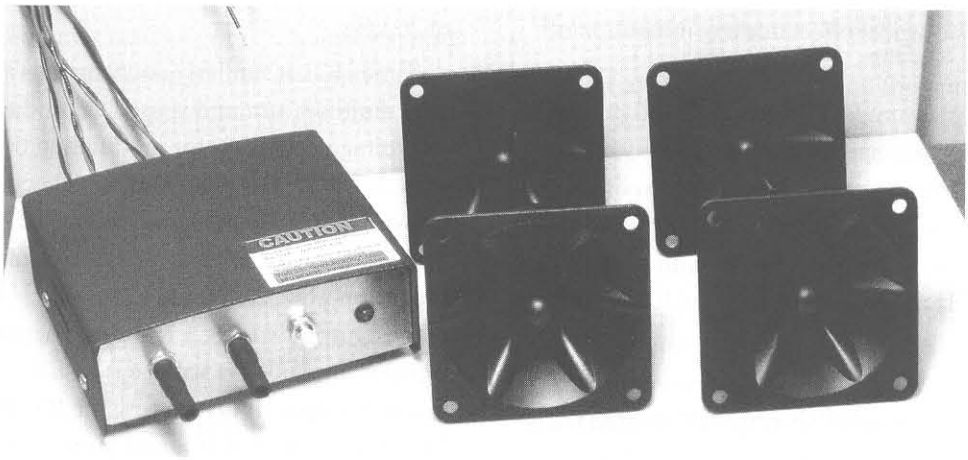

Figure 28-1 *Phaser property protection guard*

Project Description

The following product is intended to be a property- or home-protection device. It consists of a field of acoustical, ultrasonic, high sound pressure energy that is triggered when unauthorized intrusion is detected.

Detection consists of the following functions:

- A "trip wire" or closed system such as taped glass windows and doors where a break or open triggers the unit. *This function is via J3.*
- A "switch" input where a closure to ground such as a pressure switch, door, or entrance switch triggers the unit. *This function is via J2.*
- A "+ level" input where a voltage pulse or level from other detection equipment such as an infrared intrusion, motion, or sound detection system triggers the unit. *This function is via J1.*

Test and Reset buttons enable total system control.

Upon activation via the above, a moderately powered source of acoustical, ultrasonic energy is produced, causing certain adverse effects to the intruder. These may be paranoia, severe headaches, disorientation, nausea, cranial pain, an upset stomach, or just plain irritating discomfort. Most people are affected in one way or the other, with young women unfortunately being the most sensitive. External adjustments enable the user to select clearly audible sounds that serve as an alarm, high-frequency energy that produces the physiological effects, or a combination of both.

The sound pressure level is less than 130 db and will not produce permanent damage if exposure is kept to a minimum. Obvious prolonged exposure is not encouraged for these reasons. A rule of thumb is to keep exposure to less than 1 hour with a frequency less than 20 kHz at a sound pressure of 105 db or over.

The system consists of the central power and control unit that powers up to six remotely located transducers. These are now positioned to take advantage of potential entrance and intrusion areas, considering that each transducer can produce up to 118 db measured at 1 meter. Since the sound pressure level is logarithmic, an attenuation factor of −3 db must be factored in every time the distance is doubled from one of the transducer stations.

Driver Circuit Description

A timer (IC2) is connected as a stable, free-running multivibrator whose frequency is externally controlled by pot R9. The trimmer resistor (R10) selects the range limit of R9. Capacitor C5, along with the resistors, determines the frequency range of the device (see Figure 28-2).

The square wave output of 1C2 is via pin 3 and is connected to *metal-oxide-semiconductor field effect transistor* (MOSFET) Q2. The drain of Q2 is DC biased through L1. The amplified square waves are fed to the transducer via resonating coil L1 and capacitor C8, along with Q spoiling resistors, R13 through R16. Resonating coils (L2A and L2B) are selected to tune out the inherent capacity of the transducer at their upper-frequency limit, usually around 25 kHz. A sinusoidal wave is generated and allows the transducers to operate at a higher peak power level than the equivalent voltage square wave would. Resonant peaking of the voltage is also obtained. These transducers, unlike their electromagnetic counterparts, have a tendency to draw high current at higher frequencies. This effect is compensated to an extent by power resistors R17A and R17B. Note the wave shapes shown are at a fixed frequency of 20 kHz.

Timer IC1 is similarly connected as a stable, running multivibrator and is used to produce the sweeping voltage necessary for modulating the frequency of 1C2. The switch section of R2/S2 activates it, and this sweep repetition rate is controlled by the pot section R2. Resistor R3 limits the lower range of this repetition time. Capacitor C2 sets the sweep time range. Output from IC1 is via pins 6 and 2 where the signal ramp function voltage is resistively coupled to inverter transistor Q1 via resistor R4. The output of Q1 is fed to pin 5 of 1C2 and provides the modulation voltage necessary to generate the sweeping frequency action required. Note that this signal is easily

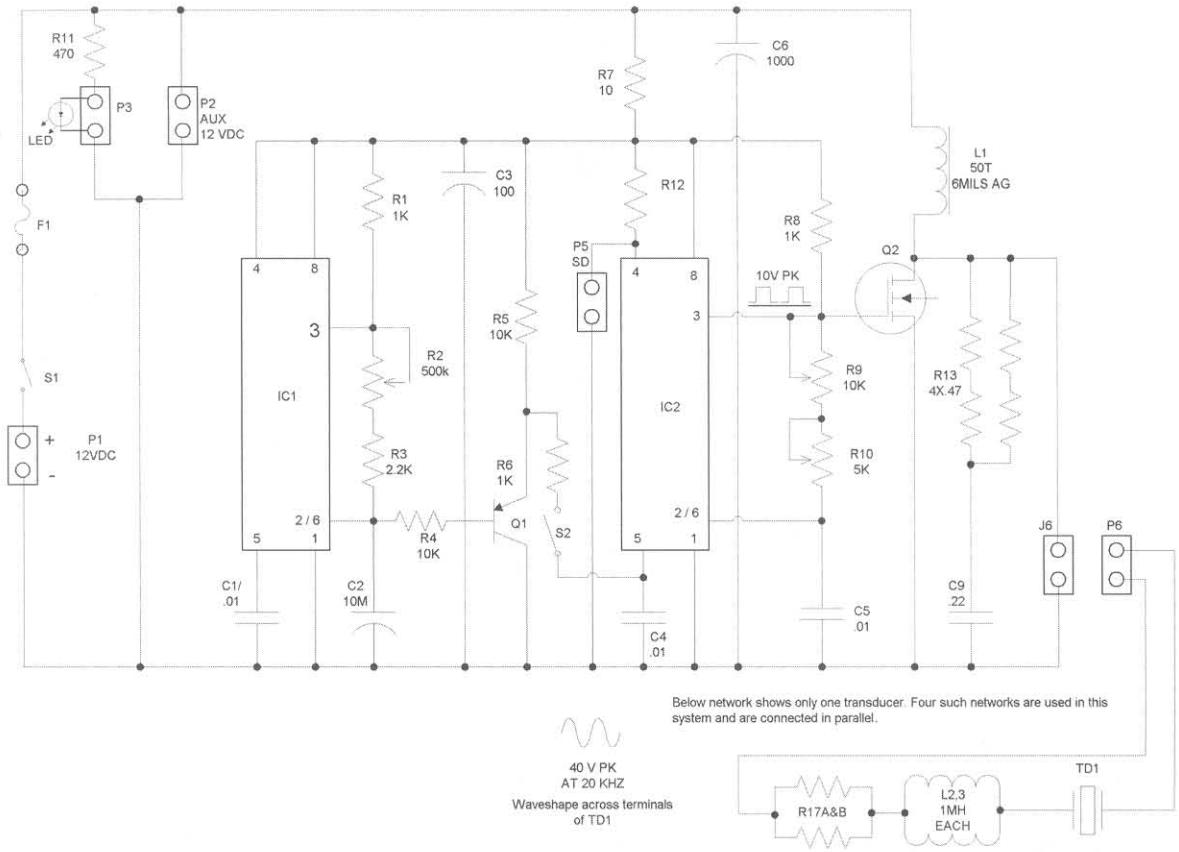

Figure 28-2 *Phaser pain field property guard schematic*

disabled via the switch section of R2/S2. This is a convenience when initially setting or checking the range of 1C2 as it eliminates the constant varying frequency.

Power is supplied to the system via a conventional step-down converter wall transformer, T1, which connects to the system via the DC JACK chassis mount connector. Power is controlled by switch S1 that is part of the frequency control pot R9. A *light-emitting diode* (LED) indicator lamp and an associated current-limit resistor (R11) tell when the system is energized.

Detection Circuit Description

The detection circuits consist of inputs J1, J2, and J3, which sense an intrusion and energize P5, enabling timer IC2. A reset switch (S4) enables the circuit to be reset. A test switch (S5) enables the verification of system operation. Detection circuit functioning, along with the appropriate jack identification, is shown in Figure 28-3.

Construction

To begin assembling the project, follow these steps:

1. Lay out and identify all the parts and pieces to the assembly board (see Figure 28-4), sense board (refer to Figure 28-3), and the remaining parts for the final assembly.
2. Assemble inductor L1 as shown later in Figure 28-8. Drill a small hole in the bobbin for the start of the winding and wrap 50 turns of #24 magnet-enameled wire tightly and evenly along the bobbin length. Tape the winding in place and allow 2 inches for both the "start" and "finish" leads. Assemble everything as shown, inserting core halves into the bobbin, and place the air gap spacers between them.

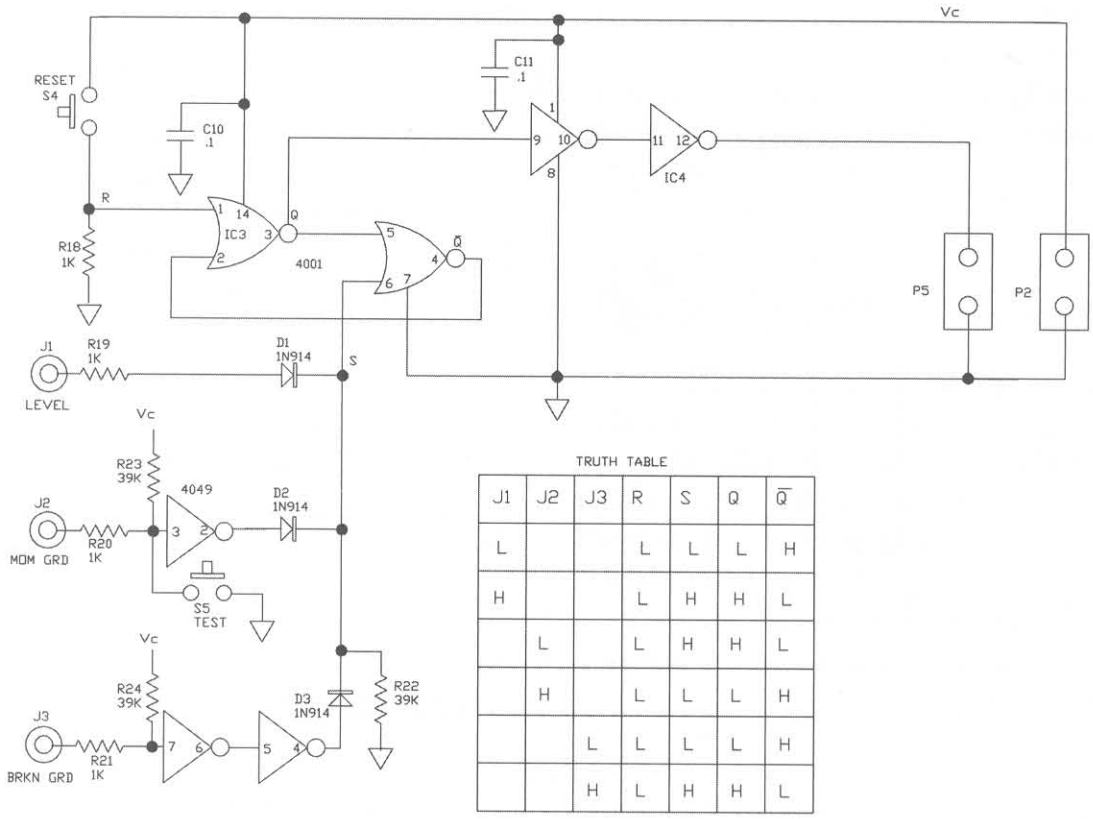

J1	J2	J3	R	S	Q	Q̄
L			L	L	L	H
H			L	H	H	L
	L		L	H	H	L
	H		L	L	L	H
		L	L	L	L	H
		H	L	H	H	L

Figure 28-3 *Detection circuit schematic*

These spacers can be from a cut-up business card. You should attempt to find a thickness of 3 mils (.003) and confirm with vernier calipers. Tape the assembly together or use elastics, O-rings, and so on. The finished inductor should read approximately 1 millihenry when measured on an inductance capacitance bridge.

3. Create the heatsink bracket HS1 from a .75 × 2 × .0625 aluminum piece. Bend it 90 degrees in the middle and drill a hole for the SW1/NU1 screw and nut, as shown later in Figure 28-8.

4. Assemble the PCB as shown in Figure 28-4. Note the polarity of all the diodes, transistors, integrated circuit, and electrolytic capacitors. Note the two wire jumps. Be careful of the solder bridges on the PCB foil as these can cause damage to circuit components. Attach approximately 6 inches of wire leads to the front and rear panel-mounted components per Figures 28-4 and 28-5. Note that most resistors are vertically mounted. Always leave at least a 1/16-inch lead between the body of the component and the board.

   Experienced builders may use a piece of .1-inch grid perforated vector board. Use Figure 28-4 for parts location and the schematic for the connections. Certain leads of the actual components will be used for connecting points and circuit runs. Do not cut or trim them at this time. It is best to temporarily fold the leads over to secure the individual parts from falling out of the board holes. If you obtain a PCB, you may omit this step. Figure 28-6 shows the foil layout.

5. Assemble a sense board from a piece of 2 1/4- × 1 1/2-inch of .1-inch grid perforated board per Figure 28-7.

   Insert the components into the board holes as shown. Certain leads are used for connecting points and circuit runs. Do not cut anything at this time. Fold over the leads to secure the parts in place.

   Please read the following before doing any soldering:

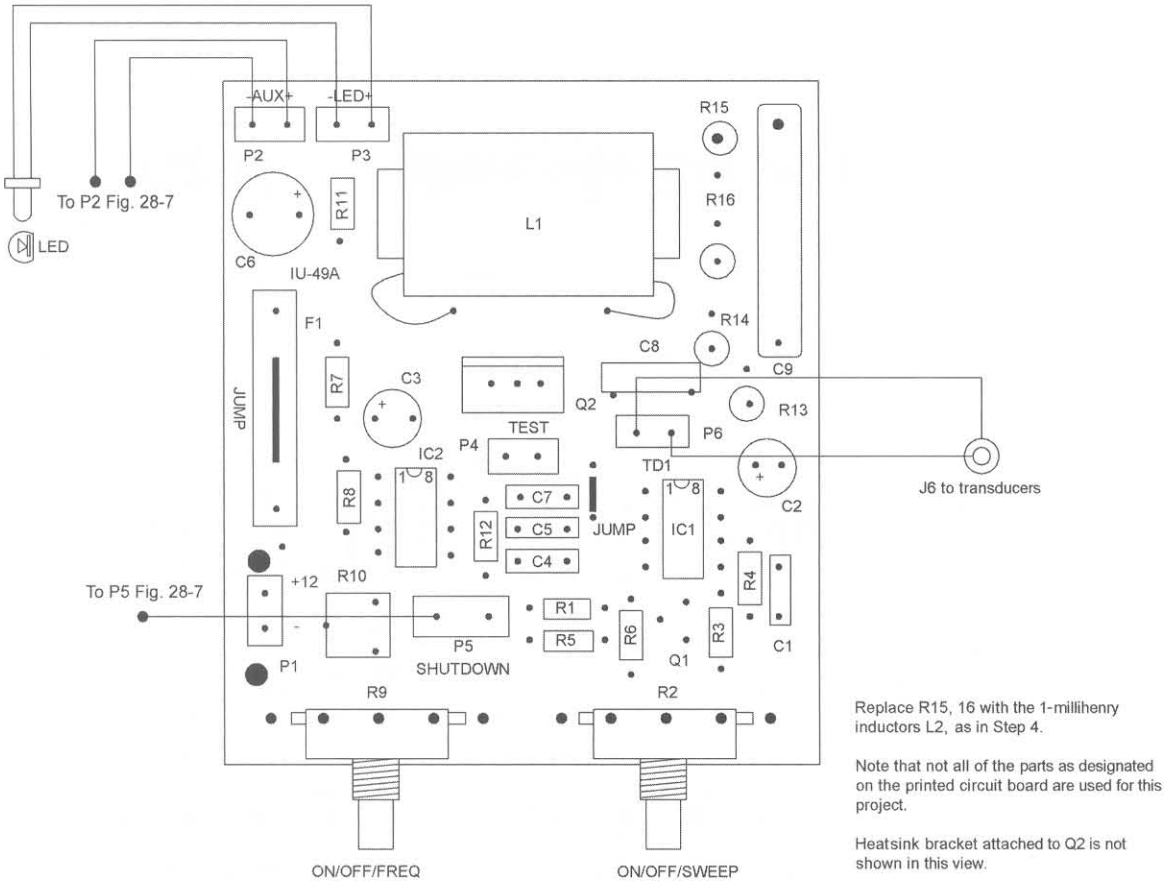

Figure 28-4 *Printed circuit board (PCB) wiring first level*

a. Components are mounted both horizontally and vertically. Leave at least 1/16 of an inch between the part and the board surface.

b. Verify the polarity of IC3, IC4, D1, D2, and D3.

Use a good, pencil-type soldering iron, keeping the tip tinned and cleaned. Use rosin core solder. Do not overheat the solder joint as you may damage a component. All the connections should be smooth and shiny. Avoid excess solder.

Wire as shown, using the dashed lines as the circuit runs.

6. Attach the wire leads to the related front and rear panel components as shown.

   Connect the interconnecting leads with the circuit board (see Figure 28-4) for P2, AUX12V, and P5, SHUTDOWN.

   Note that most of these interconnecting leads are approximately 6 inches in length.

7. Wire L2A, L2B, R17A, and R17B to the rear of transducers TD1 through 4, as shown in Figure 28-8. Note securing the two-conductor speaker leads is, done via a small nylon clamp.

8. Check the wiring for accuracy, correct components, the quality of the solder joints, short circuits, foil shorts on the circuit board, pinched wires, and debris.

Final Assembly

To complete the assembly, follow these steps:

1. Fabricate the chassis from a piece of 6- × 7- × .063-inch aluminum, as shown in Figure 28-8. Bend up 1 1/2-inch sections for the front and rear panels. Then bend up 1/2-inch flanges to mount the cover via four sheet metal screws (SW2). The location of most of the mounting holes is not critical and may be "eyeballed."

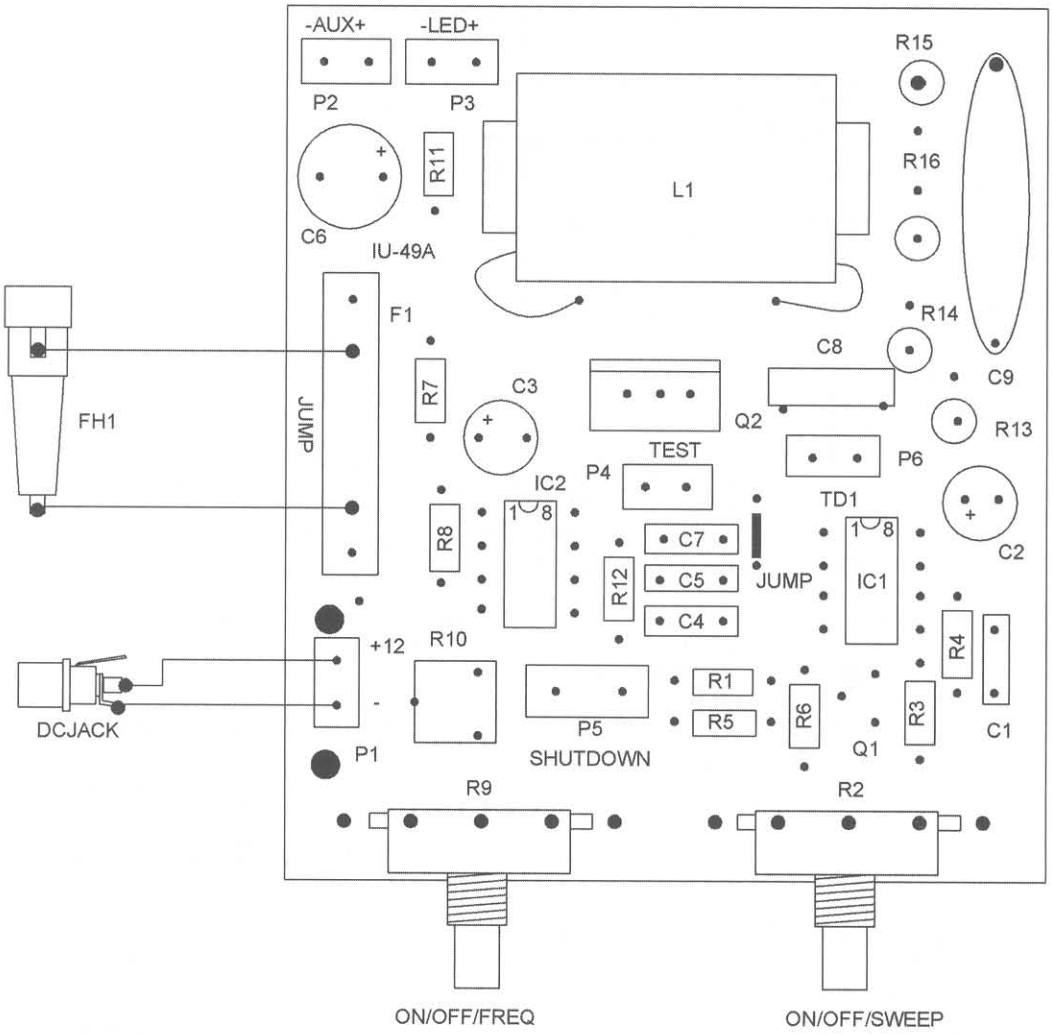

Figure 28-5 *PCB wiring second level*

However, the holes for R2 and R9 should be measured to match the PC1 PCB pads.

2. Fabricate the cover from a piece of 8½ - × 5- × 1/16-inch-thick plastic or aluminum. Form it to fit over the chassis and secure it via mating holes for the SW2 screws.
3. Fabricate a 4¼- × 3½-inch piece of plastic or cardboard insulating material for placement between the circuit boards and the metal chassis.
4. Finally, assemble the circuit boards and the panel-mounted components to the chassis as shown in Figures 28-4 and 28-5. Twist the leads and dress as shown. Use a small piece of sticky tape to hold them in place.

Test Procedure

Testing the device can be done by following these steps:

1. Insert a 1-amp fuse into F1, connect a shorting plug into J3, as shown in Figure 28-9, preset controls to full *counterclockwise* (CCW), and click "off."
2. Apply 12 volts to the DC jack from a bench supply. You may use T1 or a 1-amp wall adapter if a supply is not available.
3. Connect a scope to pin 3 of IC2. Turn on R9 and note a square wave, as shown in Figure 28-2. Rotate R9 a full *clockwise* (CW) turn

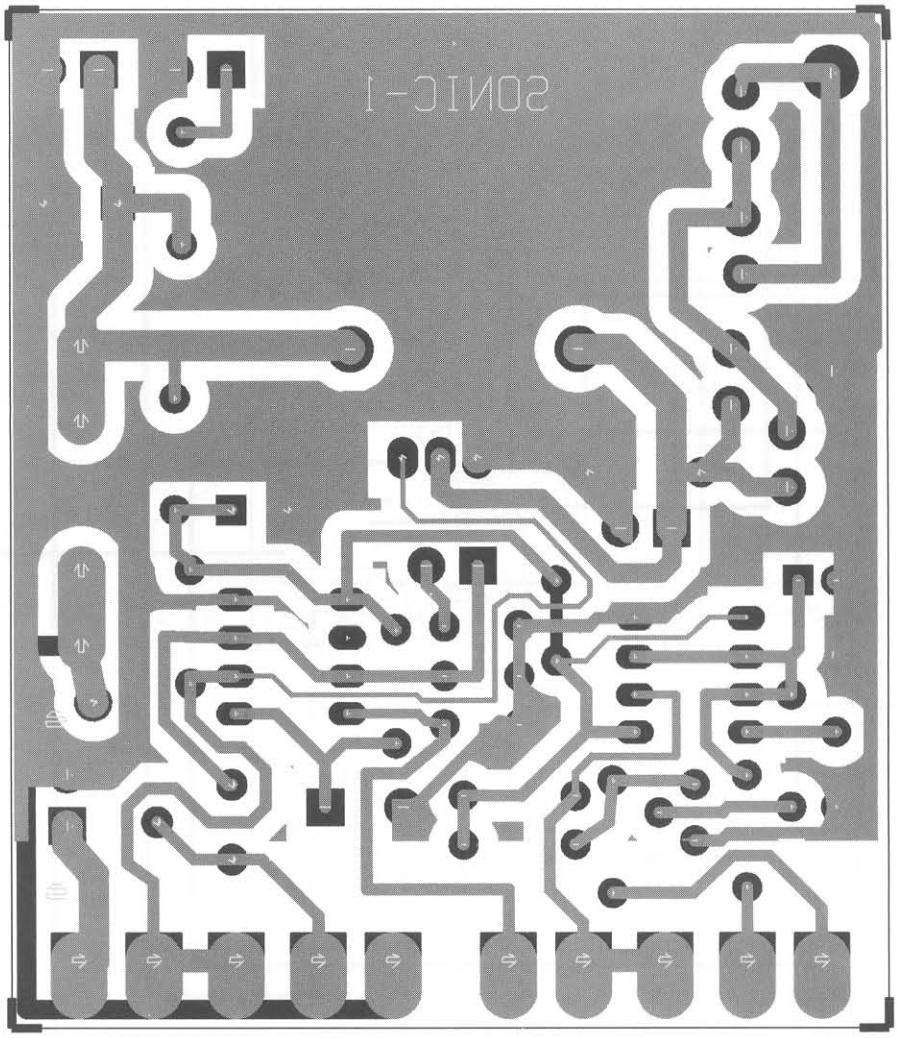

Figure 28-6 *View of foil routing and pad location*

and adjust R10 for a period of 50 *microseconds* (usec). This sets the high-frequency range to 20 kHz.

Obtain hearing protection for the next steps.

4. Temporarily connect the four-transducer assemblies in parallel and connect to J6. Turn R10 a full CCW turn and note a piercing, shrill, and uncomfortable shriek. Adjust R10 CW and note the pitch increasing to an upper-frequency limit.
5. Turn on R2 and note the frequency of the shriek periodically changing. Adjust and note a sweeping action varying from very slow all the way to a chirping sound.

Testing Detector-Sensing Circuit

To test the detector circuit, follow these steps:

1. Momentarily press S4 (RESET) and the unit shuts down. Press S5 (TEST) and the unit turns on. Repeat this action several times to verify proper operation.
2. With the unit in the reset mode, temporarily remove the shorting plug from J3 and note the unit turning on.
3. In the reset mode, temporarily short J2 to ground and note the unit turning on.

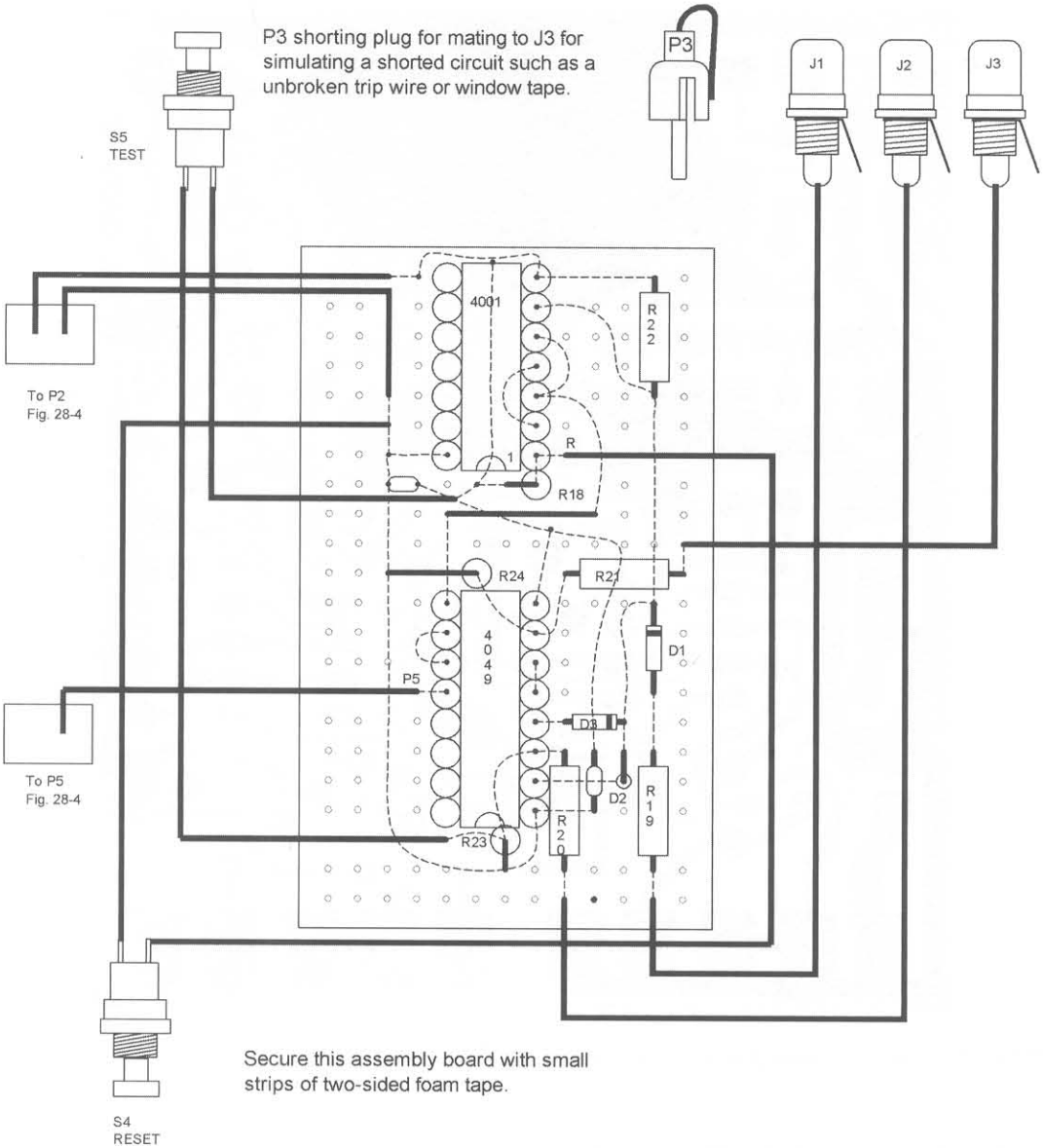

Figure 28-7 *Sense board layout and wiring*

4. Still in the reset mode, temporarily connect a 5-volt level to J1 and note the unit turning on.

Special Notes

The transducers used in this system are piezoelectric and consequently are many times more efficient than the electromagnetic type. Several operational curves and charts are available and intended for those who may want to modify or optimize the existing circuitry for a particular range of frequencies, beam spread, and placement.

Application and Setup

Your phaser property guard system is capable of operating in two modes. Mode 1 is at a frequency known to produce paranoia, nausea, disorientation, and many other physiological effects. Mode 2 enables you to use the system as an audible alarm to frighten off intruders or warn the user. Both modes can be

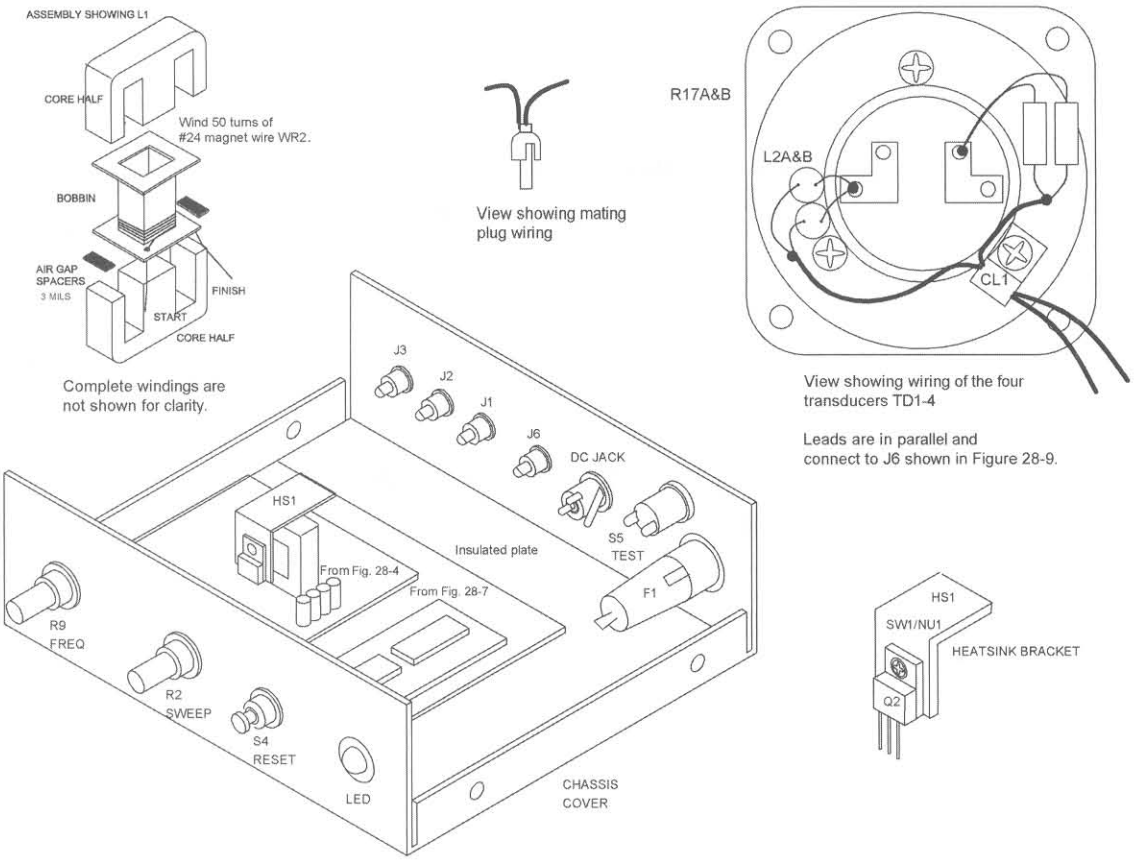

Figure 28-8 *Final assembly*

used in combination and are easily front-panel-controlled by the user. Three separate jacks enable the detection of a broken trip wire or contact foil, a pressure or actuating switch, and a positive voltage-level pulse obtained from other detection equipment such as those listed in the Information Unlimited catalog.

The position of the transducers should be set to direct as much energy as possible to the points of intrusion or access. They can be directed to any target area or be individually placed for multiple effects.

The power unit should be placed where the user can reset the device and preset the controls for maximum effect. Figure 28-9 shows the connections to the rear panel.

A Word of Caution

Ultrasonic is a gray area in many respects when an application involves the control of animals or even a deterrent to unauthorized intrusion. It is always best to consult with local, municipal, and state laws before using this device to protect your home or property. Remember that many state laws lean more toward the right of the criminal rather than the victim.

General Information on Ultrasonics

Numerous requests have been made for information on the effect of these devices on people.

None of these devices have the ability to stop a person with the same effect as a gun, club, or more conventional weapon. They will, however, produce an extremely uncomfortable, irritating, and sometimes painful effect in most people. Not everyone will experience this effect to the same degree. As stated, young women are much more affected than older men due to being more acoustically sensitive. The range of the

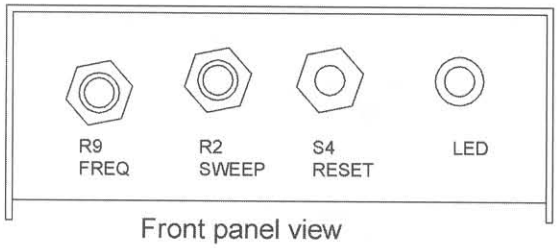

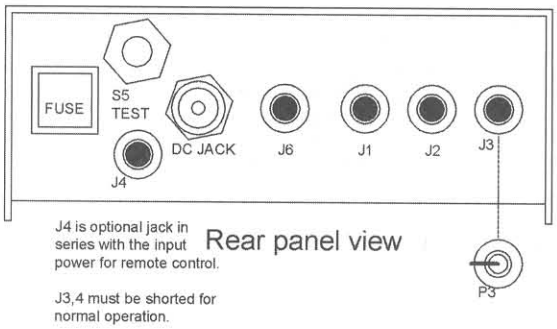

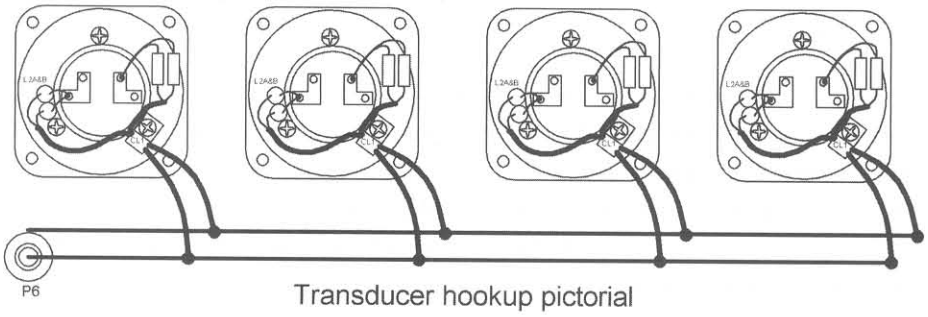

Figure 28-9 *Controls and hookup instructions*

devices depends on many variables and is normally somewhere between 10 and 100 feet from the transducers.

One possible use of the device (that deserves careful consideration) is for all the transducers to protect an area from unauthorized intrusion. This approach is excellent for protecting target areas such as jewelry boxes, gun cabinets, and safes and vaults. Normal use is to place each transducer to cover a given area.

Table 28-1 Phaser pain field property guard parts

Ref. #	Qty.	Description	DB#
R1, 6, 8, 18, 19, 20, 21	7	1K, 1/4-watt resistor (br-blk-red)	
R2/S2		500K pot and switch	
R3		2.2K, 1/4-watt resistor (red-red-red)	
R4, 5	2	10K, 1/4-watt resistor (br-blk-or)	
R7		10-ohm, 1/4-watt resistor (br-blk-blk)	
R9/S1		10K pot and switch	
R10		5K trimmer resistor	
R11		470-ohm, 1/4-watt resistor (yel-pur-br)	Ohms
R13, 14, 15, 16	4	.47-ohm, 3-watt resistor (yel-pur-sil)	
R17A and B		120-ohm, 1-watt resistor (br-red-br)	
R22, 23, 24	3	39K, 1/4-watt resistor (or-wh-or)	
C1, 4	2	.01 mfd, 50-volt disc capacitor	
C2		10 mfd, 25-volt electrolytic capacitor	
C3		100 mfd, 25-volt electrolytic capacitor	
C5		.033 mfd, 50-volt polyester capacitor	
C6		1000 mfd, 25-volt electrolytic capacitor	
C9		.22 mfd, 250-volt polypropylene capacitor	
C10, 11	2	.1 mfd, 50-volt polyester capacitor	
L1A and B	2	1-millihenry .25-amp inductor	IU1MH
L2		1-millihenry choke (see Figure 28-8)	IU1MHPPC
IC1, 2	2	555 DIP timer IC	
IC3		4001 Norgate *complementary metal oxide semiconductor* (CMOS) DIP IC	
IC4		4049 inverter/buffer CMOS dual in-line package integrated circuit	
Q1		PN2907 GP PNP transistor	
Q2		IRF540 power MOSFET TO220	
D1, 2, 3	3	IN914 silicon diodes	
LED		Light-emitting diode	
TD1, 2, 3, 4	4	Polarized high-output ceramic transducers	IUMOTRAN
S4, 5	2	Momentary pushbutton switches	
J1, 2, 3, 6	4	RCA chassis mount phono jacks	
P1, 2, 3, 6	4	RCA phono mating phono plugs	
DCJACK		2.1-millimeter DC jack	
F1		Fuse holder panel mount	
LEDRET		LED retainer bushing	

Table 28-1 Continued

Ref. #	Qty.	Description	DB#
PCPPP1		PCB	IUPCSONIC
PB1		Alternate 2- × 3-inch .1-inch grid perforated vector board	
HS1		Heatsink bracket fabricated as shown	
SW1/NU1		6-32 × 3/8-inch screw and nut for HS1 attaching to Q2	
SW2	4	#6 × 3/8-inch sheet metal screw for cover	
FEET	4	1/2-inch stick-on rubber feet	
CHASSIS		Metal chassis fabricated as shown	
COVER		Plastic cover to fit chassis	

Index

A

accelerator, electrokinetic (*See* electrokinetic gun), 23
acoustical surveillance devices, Federal Law 90-352, 113-114
antigravity project, 1-22
  arcing between ground wire and HV wire, 19
  Biefeld-Brown effect in, 20
  construction steps in, 3-4
  corona wire flutters during liftoff, 19-20
  corona wires in, 12, 15
  foil skirt flutters during liftoff, 20
  general operational/troubleshooting guidelines, 20-21
  ground wires in, 12, 19
  launching pad for, 9-15
  lifter moves, bounces, 18
  lifter moves, but not much, 18
  lifter moves, no hissing noise, 17
  lifter moves, pulls to one side, 19
  lifter moves, shorts out HV and ground wires, 19
  lifter moves, with arcing, 18
  lifter not moving, high-voltage supply dead, 17
  lifter not moving, hissing noise, 17, 20
  parts list for, 21-22
  power supply for, 2-3
  printed circuit board (PCB) for, 3-9
  schematic for, 3
  spark gap adjustment in, 9
  testing, 9-15
  tethering setup for, 15-17
  theory of operation for, 1-3
  troubleshooting guide for, 17-21
  voltage requirements for, 2-3
  wiring for, 6

B

Biefeld-Brown effect, antigravity project and, 20
Bureau of Radio and Health (BRH) compliance, carbon dioxide laser and, 68

C

can crusher, magnetic field, 61
capacitor charging using Tesla plasma and ion generator, 168
carbon dioxide laser, 65-83
  assembly steps for, 69-73
  Bureau of Radio and Health (BRH) compliance, 68
  circuit operation in, 66-69
  cleaning output optics in, 80-81
  coolant system in, 65-66, 81
  focusing lens (optional) for, 80
  laser head construction for, 73-74
  low-flow axial device nature of, 66
  operating time limits for, 81
  parts list for, 81-83
  population inversion in, 66
  power output increase for, 81
  power supply for, 65, 66-69
  printed circuit board (PCB) for, 70
  purging cooling system in, 81
  testing, 74-79
  text fixture for line-powered circuits, 81
  theory of operation in, 66
charge transmission using tesla plasma and ion generator, 168
coherent light of lasers, 115
collimation of lasers, 102-103

D

deodorizing machine using tesla plasma and ion generator, 168
direct reflection (DR) method, laser window bounce listening device, 114-115, 128-131

E

efficiency equation, 1
electrical pyrotechnic display using Tesla plasma and ion generator, 168
electrokinetic gun, low-power, 23-30
  basic theory of operation in, 23-24
  board assembly steps for, 24-25
  circuit description for, 24
  electrical pretest for, 27-28
  fabrication of, 25-27
  parts list for, 30
  power supply for, 23, 24
  safe use cautions, 28
  velocity increasing tips, 28
electromagnetic pulse (EMP) generator, 257-266
  applications for, 265-266
  assembly of, 262-264
  basic description of, 258
  capacitor in, 259
  charger in, 262
  exploding wire disruption switch in, 262
  hazards of, 258
  inductor in, 259
  objective of, 258
  power supply for, 258, 266
  radio frequency choke (RFC1) in, 262
  resistor (R1) in, 262
  spark switch in, 259-261
  theory of, 258
electromagnetic pulses (EMP), 32, 55
  generator for, 257-266
electrostatic discharge (ESD) damage, laser ray gun, 91

F

Fabry-Perot cavity, laser window bounce listening device, 116
Federal Law 90-352 acoustical surveillance devices, 113-114
fence (*See* laser property protection fence)
fish stunner and wormer, 247-255
  circuit description and construction for, 248-249
  construction steps in, 249
  final assembly in, 251-252
  operation of, 252-254
  parts list for, 254
  subassembly pretest in, 251
  verification of operation in, 254-255
  voltage generated by, 247
fluorescent tube electrification through human body, 168
focusing lens, carbon dioxide laser and, 80
force field generation using Tesla plasma and ion generator, 168

G

gas discharge power supply using Tesla plasma and ion generator, 168
green laser (*See* ultrabright green laser)

H

handheld laser (*See* carbon dioxide laser)
high-energy pulser, 31-40
  charging time and energy storage requirements for, 33
  circuit theory of operation for, 32-33
  construction steps for, 33-37
  electrical pretest in, 37
  electrical specifications for, 38-39
  electromagnetic pulses (EMPs) and, 32
  final assembly steps for, 35-37
  magnetic can crushing, 61
  main test in, 38
  mass accelerator and, 41
  mathematical relationships for use with, 38-39
  parts list for, 39-40
  plasma thermal gun, 47
  schematic for, 33
  system description for, 32
  voltage requirements and power supply for, 32
  wire-exploding project, 55
human body, fluorescent tube electrification through, 168

I

induction fields generated by tesla coil, 12-inch-spark, 151
insulators and effect of tesla coil, 12-inch-spark, 150
ion motor,
  Tesla coil, 12-inch-spark, 151
  Tesla plasma and ion generator, 168
ion ray and charge gun, 225-237
  circuit board assembly for, 227-229
  circuit operation in, 226-227
  construction steps in, 227
  experiments using, 234-235

mechanical assembly in, 231-232
negative ion information for, 236
operation and applications in, 232-234
parts list for, 237
special notes on operation of, 236
testing, 229-231, 229
ion wind generator using Tesla plasma and ion generator, 168
ionization
antigravity project and, 1
ion ray and charge gun, 236
Tesla coil, 12-inch-spark, 151

J

Jacob's ladder experiment
Tesla plasma and ion generator, 168
traveling plasma type, 203-208

L

laser, carbon dioxide (*See* carbon dioxide laser)
laser diode (*See* laser ray gun)
laser, optical (*See* long-range optical laser)
laser property protection fence, 105-112
circuit description for, 106
detection-level threshold setting for, 106
instructions for setup and use of, 110
laser beam generator in, construction steps for, 109-111
pain field property protection guard used with, 105
parts list for, 111-112
power supplies for, 105-106
receiver and controller in, construction steps for, 106-109
laser ray gun (burning diode), 85-95
applications for, 85-86
assembly steps for, 86-88
basic theory for, 86
circuit pretest in, 88-91
electrostatic discharge (ESD) damage and, 91
excessive forward current in, 91-92
excessive forward voltage in, 91
general handling of, 91
high temperatures and heat sink in, 92
light-emitting diodes (LEDs) and, 86
parts list for, 92-95
power supplies for, 86
reverse current in, 92
safety precautions for, 91
laser, ultrabright green (*See* ultrabright green laser)
laser window bounce listening device, 113-135
applications for, 128
assembly of field-worthy integrated system using, 131
batteries for, 133, 134
brackets for, 133
cable for, 133
construction of, 115
control panel for, 133
direct reflection (DR) method in, 114-115, 128-131
handle for, 133
headset for, 134
laser enclosure in, 133
legal issues and, Federal Law 90-352 acoustical surveillance devices, 113-114, 128
lens mount adapter for, 133
main enclosure in, 132
microhead adjusting screws in, 133
O-rings for, 133
parts fabrication for, 132-134
parts list for, 134-135
population inversion in, 115
rear panel for, 133
receiver for, 124-128
construction steps for, 125-126
final assembly for, 126-127
final testing for, 127-128
pretest for, 126
regular vs. laser light, 115
safety issues of, 128
scattered reflection method in, 114-115
sound to optical surface for, 114
springs for, 133
switches for, 133
telephoto lens and cap for, 134
theory of operation for, 114
transmitter for, 114, 115-124
circuit schematic for, 117-118
electronics assembly board in, 118
enclosure tube fabrication for, 121
Fabry Perot cavity in, 116
final assembly steps for, 121-122
infrared light from, night vision devices for, 121
light-emitting diodes (LED) in, 115-116
power supply for, 117-118
pretest of assembly in, 118-121
test tone module construction for, 122-124
lasers
coherent light of, 115
collimation of, 102-103
photons of light and, 115
regular light vs., 115
spontaneous emission of light and, 115

stimulated emission of light and, 115
wavelength of light in, 115
launching pad for antigravity project, 9-15
light-emitting diodes (LEDs)
laser ray gun, 86
laser window bounce listening device, 115-116
See in-the-dark project, 240
ultrabright green laser and, 100
lightning generator (*See* tesla coil, lightning generator)
listening device (*See* laser window bounce listening device)
long-range optical laser, 97-98
low-flow axial device, carbon dioxide laser and, 66

M

magnetic can crushing, 61-63
high-energy pulser for, 61
setup and operation of, 61-63
special operational notes on, 63
voltage requirements/power supplies for, 62-63
mass accelerator, 41-46
high-energy pulser required for, 41
setup and operation of, 41-46
theory of operation for, 41
microphone, ultrasonic (*See* ultrasonic microphone)
motion freezing using tesla plasma and ion generator, 168
motor, ion, Tesla plasma and ion generator, 168

N

negative ion generator using Tesla plasma and ion generator, 168
negative ion information, ion ray and charge gun, 236

O

optical laser (*See* long-range optical laser)
ozone, tesla coil, 12-inch-spark, 138

P

pain field property-protection guard, 285-296
application and setup for, 292-293
caution with, 293
construction in, 287-289
detection methods used in, 286
detector-sensing circuit testing in, 291-292
detection circuit description in, 287
driver circuit operation in, 286-287
final assembly in, 289-290
frequency range output of, 285, 286
laser property protection fence, 105
parts list for, 295-296
special notes on, 292
test procedure in, 290-291
ultrasonics in, 293-294
phaser pain field gun, 277-283
circuit theory for, 278-279
construction steps in, 279-280
final assembly in, 282
frequency range of, 277-278
parts list in, 282-283
power supply for, 278-279
subassembly pretest in, 280-281
photons of light, 115
plasma lightsaber, 215-223
applications for, 222
batteries for, 222
circuit theory for, 215-216
construction of, 216-220
mechanical assembly steps for, 220-221
parts list for, 223
power supply for, 216
special notes on, 222
test points and troubleshooting, 221-222
plasma thermal gun, 47-53
assembly steps for, 47-49
energy requirements/power supplies for, 50
high-energy pulser for, 47
projectiles for, 48
special operational notes on, 50-53
theory of operation for, 47
plasma tornado generator, 175, 209-213
application and operation of, 213
assembly instructions for, 210
special note on, 213
Tesla coil in, 209
theory of operation for, 209-210
Townsend effect in, 210
population inversion
carbon dioxide laser and, 66
laser window bounce listening device, 115
power supplies
antigravity project and, 2-3
carbon dioxide laser and, 65, 66-69
electrokinetic gun, low-power, 23, 24
electromagnetic pulse (EMP) generator, 258, 266
gas discharge type, 168
high-energy pulser, 32
laser property protection fence, 105-106
laser ray gun, 86
laser window bounce listening device, 117-118
magnetic can crushing, 62-63
phaser pain field gun, 278-279

plasma lightsaber, 216
plasma thermal gun, 50
Tesla coil, 12-inch-spark, 137
Tesla coil, lightning generator, 186, 187-188
Tesla coil, solid state, 175-176
Tesla coil, timered, 2-inch-spark, 157, 158
Tesla plasma and ion generator, 163
traveling plasma Jacob's ladder, 203-204
ultrasonic microphone, 268-269
wire-exploding project, 56
printed circuit board (PCB)
antigravity project and, 3-9
carbon dioxide laser and, 70
ion ray and charge gun, 227-229
property protection fence (*See* laser property protection fence)
pyrotechnic display
Tesla plasma and ion generator, 168
wire-exploding project, 55

R

radiated power experiment, Tesla plasma and ion generator, 167
receiver, for laser window bounce listening device, 124-128
reflection, in laser window bounce listening device, 114-115, 128-131

S

scattered reflection method, in laser window bounce listening device, 114-115
See in-the-dark project, 239-246
basic theory of, 240-241
batteries in, 240
circuit description and assembly for, 241-242
fabrication and mechanical assembly in, 243-244
light-emitting diodes (LEDs) in, 240
parts list for, 246
special notes on, 244-245
testing circuit board for, 242-243
solid state Tesla coil (*See* Tesla coil, solid state)
spontaneous emission of light, 115
St. Elmo's fire, Tesla coil, 12-inch-spark, 137
standing waves, ultrasonic microphone, 272-273
stimulated emission of light, 115

T

Tesla coil, 12-inch-spark, 137-156
adjustment for, 150
applications and operation of, 145-149
circuit design and schematic of, 138-140
construction steps for, 140-145
electrical discharge phenomena of, 137
experiments using, 150-151
human body and effect of, 150
induction fields generated by, 151
insulators and effect of, 150
ion motors and, 151
ionization of gases by, 151
ozone produced by, 138
parts list for, 155-156
safety precautions when using, 137-138
spark gap setting, 145
special operational notes for, 145
theory of operation for, 138
voltage and power supply requirements for, 137
Tesla coil, lightning generator, 30-inch-spark, 185-202
assembly steps in, 189-191
circuit description for, 187-188
coil materials for, 195-196
coupling in, 188
major components of, 188-189
output terminal in, 188
parts list for, 201-202
primary capacitor in, C3, 189
primary coil in, LP1, 188, 196
RF choke in, CHK1, 189
safety precautions for use of, 185-186
secondary coil in, LS1, 188, 194-195
spark gap switch (SPKGAP), 188-189
special notes on, 194
testing steps in, 191-193
theory of operation for, 186, 186
voltage and power supply requirements for, 186, 187-188
Tesla coil, solid state, 175-183
assembly steps for, 176-180
circuit theory and design, 175-176
parts list for, 182-183
plasma tornado generator and, 175, 209
power supply for, 175-176
testing, 180-181
Tesla coil, timered, 2-inch-spark, 157-161
circuit theory and design in, 158
construction steps in, 158
electrical pretest for, 158-159
final assembly of, 159-161
parts list for, 161
power supply for, 157, 158
Tesla plasma and ion projects, 163-173
capacitor charging using, 168
charge transmission using, 168
circuit theory and design in, 163
construction steps in, 163-165
deodorizing machine using, 168
electrical pyrotechnic display using, 168

experiments using, 163, 167-169
fluorescent tube electrification through human body using, 168
force field generation using, 168
gas discharge power supply using, 168
ion high-speed motor using, 168
ion-type experiments and applications, 168-169
ion wind generator using, 168
Jacob's ladder experiment using, 169
mechanical assembly in, 166
motion freezing using, 168
negative ion generator using, 168
parts list for, 172-173
power supply for, 163
pretest in, 166
radiated power experiment for, 167
test and function selection, 167
thermal gun (*See* plasma thermal gun)
thrust equation, 1
timer (*See* Tesla coil, timered)
tornado generator (*See* plasma tornado generator)
Townsend effect, plasma tornado generator, 210
transmitter, laser window bounce listening device, 115-124
traveling plasma Jacob's ladder, 203-208
assembly steps in, 204-205
circuit description and power supply for, 203-204
origin of term, 203
parts list for, 208
testing, 205-206

U

ultrabright green laser (handheld), 99-104
applications for, 99-100
assembly steps for, 100-101
circuit description for, 100
collimation and final assembly, 102-103
electrical pretest for, 102
light-emitting diodes (LEDs) in, 100
parts list for, 104
ultrasonic microphone, 267-275
applications for, 268, 273-274
circuit description for, 268-269
construction steps in, 269-270
electrical pretest for, 271-272
parts list for, 275
power supply for, 268-269
recording with, 274
standing wave utilization in, 272-273
ultrasonics (*See also* pain field property-protection guard), 293-294

W

wavelength of light, 115
window bounce listening device (*See* laser window bounce listening device)
wire-exploding project, 55-59
electromagnetic pulse (EMP) in, 55
high-energy pulser for, 55
setup and operation in, 55-57
special operational notes for, 57-59
theory of operation in, 55
voltage requirements/power supplies for, 56

SHOCK AND AMAZE!

INEXPENSIVE PROJECTS YOU CAN BUILD!

Electronics fans have waited a long time for this book. Not since 1983 has author Bob Iannini published a collection of his amazing projects—all of them fun, easy, and inexpensive to make at home and, best of all, *seriously exciting and impressive!*

Iannini takes the stuff of science fiction and science future and brings it down to size for the home hobbyist. Full of easy-to-follow plans and clear diagrams and schematics, and respectful of your wallet, ***Electronic Gadgets for the Evil Genius*** gives you:

- Illustrated instructions and plans for amazing pretested projects advanced enough for sophisticated electronics enthusiasts but described in sufficient detail to be built easily by newcomers
- Explanations of the science and math behind each project (e.g., you can explore different methods of achieving acceleration)
- Frustration-free plans—needed parts are listed, along with sources—and most of these projects can be built for $100 or less

INSIDE: PROJECTS THAT TOUCH THE LEADING EDGE OF ELECTRONICS

★★★★★ FOR BOB IANNINI!

★★★★★ "Only book of its kind—it's way cool! I love the projects in this book! It brings a lot of ideas from *Star Wars* and other science fiction films to real life! It is a must for all science fiction enthusiasts and inventors."*

★★★★★ "An amazing book with plans for anything cool that you could ever want to build. It has very clear and easy-to-understand instructions. There are lots of diagrams and detailed parts lists. All of the things work very well, and the material costs are all less than 100 dollars."*

★★★★★ "Excellent. The schematics were easy to understand.... Robert has done a great job."*

★★★★★ "An excellent book of electronics for beginners and experts alike. It gives step-by-step instructions on building real lasers and much more. Requires little or no electrical experience."*

★★★★★ "Robert E. Iannini seems to have spent a lot of time building and writing about all of the projects in his 390-page book. His technical expertise in the field guided me greatly...when I built two of his projects. There are lots of other projects...and a great project that I am going to build next."*

* Online reviewers on Bob Iannini's 1983, out-of-print *Build Your Own Laser, Phaser, Ion Ray Gun & Other Working Space-Age Projects*

WHAT WOULD YOU DO WITH...?

This book equips you with complete plans, instructions, parts lists, and sources for these wonderful projects:

- Infrared viewer
- Object levitation device
- Laser listening system
- Electromagnetic pulse (EMP) generator
- Sonic phaser cannon
- Electromagnetic launcher
- Object projectort
- Traveling plasma wave generator
- Multivortex plasma tornado
- Laser beam cutter
- Ion ray projector
- Several Tesla coil projects
- Pyrotechnic blaster and shock wave pulser
- Lightning bolt generator
- Robotic circuit jamming EMP generator
- Ultrabright green laser
- Working light saber
- Magnetic pulse can crusher
- Mass driver and launcher
- Ultrasonic microphone
- Laser protection project
- Ultrasonic shock projector
- Electric fishing and worming machine

The McGraw-Hill Companies

ISBN 0-07-142609-4

52495

9 780071 426091

Visit TAB Robotics at:
http://books.mcgraw-hill.com/robots/

Cover design: Todd Radom

$24.95 U.S.A. | £14.99 U.K. | $39.95 CAN

Electronics

22 RADIO AND RECEIVER PROJECTS

FOR THE EVIL GENIUS

TAB ELECTRONICS

- Teaches how to read a schematic, to solder, to use tools, and construction techniques
- Discusses all types of radios and receivers
- Covers both early radio models and contemporary options

TOM PETRUZZELLIS

22 Radio Receiver Projects for the Evil Genius

Evil Genius Series

Bionics for the Evil Genius: 25 Build-it-Yourself Projects

Electronic Circuits for the Evil Genius: 57 Lessons with Projects

Electronic Gadgets for the Evil Genius: 28 Build-it-Yourself Projects

Electronic Games for the Evil Genius

Electronic Sensors for the Evil Genius: 54 Electrifying Projects

50 Awesome Auto Projects for the Evil Genius

50 Model Rocket Projects for the Evil Genius

Mechatronics for the Evil Genius: 25 Build-it-Yourself Projects

MORE Electronic Gadgets for the Evil Genius: 40 NEW Build-it-Yourself Projects

101 Spy Gadgets for the Evil Genius

123 PIC® Microcontroller Experiments for the Evil Genius

123 Robotics Experiments for the Evil Genius

PC Mods for the Evil Genius

Solar Energy Projects for the Evil Genius

25 Home Automation Projects for the Evil Genius

51 High-Tech Practical Jokes for the Evil Genius

22 Radio Receiver Projects for the Evil Genius

TOM PETRUZZELLIS

New York Chicago San Francisco Lisbon London Madrid
Mexico City Milan New Delhi San Juan Seoul
Singapore Sydney Toronto

The McGraw·Hill Companies

Copyright © 2008 by The McGraw-Hill Companies, Inc. All rights reserved. Manufactured in the United States of America. Except as permitted under the United States Copyright Act of 1976, no part of this publication may be reproduced or distributed in any form or by any means, or stored in a database or retrieval system, without the prior written permission of the publisher.

0-07-159475-2

The material in this eBook also appears in the print version of this title: 0-07-148929-0.

All trademarks are trademarks of their respective owners. Rather than put a trademark symbol after every occurrence of a trademarked name, we use names in an editorial fashion only, and to the benefit of the trademark owner, with no intention of infringement of the trademark. Where such designations appear in this book, they have been printed with initial caps.

McGraw-Hill eBooks are available at special quantity discounts to use as premiums and sales promotions, or for use in corporate training programs. For more information, please contact George Hoare, Special Sales, at george_hoare@mcgraw-hill.com or (212) 904-4069.

TERMS OF USE

This is a copyrighted work and The McGraw-Hill Companies, Inc. (“McGraw-Hill”) and its licensors reserve all rights in and to the work. Use of this work is subject to these terms. Except as permitted under the Copyright Act of 1976 and the right to store and retrieve one copy of the work, you may not decompile, disassemble, reverse engineer, reproduce, modify, create derivative works based upon, transmit, distribute, disseminate, sell, publish or sublicense the work or any part of it without McGraw-Hill’s prior consent. You may use the work for your own noncommercial and personal use; any other use of the work is strictly prohibited. Your right to use the work may be terminated if you fail to comply with these terms.

THE WORK IS PROVIDED “AS IS.” McGRAW-HILL AND ITS LICENSORS MAKE NO GUARANTEES OR WARRANTIES AS TO THE ACCURACY, ADEQUACY OR COMPLETENESS OF OR RESULTS TO BE OBTAINED FROM USING THE WORK, INCLUDING ANY INFORMATION THAT CAN BE ACCESSED THROUGH THE WORK VIA HYPERLINK OR OTHERWISE, AND EXPRESSLY DISCLAIM ANY WARRANTY, EXPRESS OR IMPLIED, INCLUDING BUT NOT LIMITED TO IMPLIED WARRANTIES OF MERCHANTABILITY OR FITNESS FOR A PARTICULAR PURPOSE. McGraw-Hill and its licensors do not warrant or guarantee that the functions contained in the work will meet your requirements or that its operation will be uninterrupted or error free. Neither McGraw-Hill nor its licensors shall be liable to you or anyone else for any inaccuracy, error or omission, regardless of cause, in the work or for any damages resulting therefrom. McGraw-Hill has no responsibility for the content of any information accessed through the work. Under no circumstances shall McGraw-Hill and/or its licensors be liable for any indirect, incidental, special, punitive, consequential or similar damages that result from the use of or inability to use the work, even if any of them has been advised of the possibility of such damages. This limitation of liability shall apply to any claim or cause whatsoever whether such claim or cause arises in contract, tort or otherwise.

DOI: 10.1036/0071489290

About the Author

Thomas Petruzzellis is an electronics engineer currently working at the geophysical laboratory at the State University of New York, Binghamton. Also an instructor at Binghamton, with 30 years' experience in electronics, he is a veteran author who has written extensively for industry publications, including *Electronics Now*, *Modern Electronics*, *QST, Microcomputer Journal*, and *Nuts & Volts*. Tom wrote five previous books, including an earlier volume in this series, *Electronic Sensors for the Evil Genius*. He is also the author of *Create Your Own Electronics Workshop*; *STAMP 2 Communications and Control Projects*; *Optoelectronics, Fiber Optics, and Laser Cookbook*; *Alarm, Sensor, and Security Circuit Cookbook*, all from McGraw-Hill. He lives in Vestal, New York.

Copyright © 2008 by The McGraw-Hill Companies, Inc. Click here for terms of use.

This page intentionally left blank

Acknowledgments

I would like to thank the following people and companies listed below for their help in making this book possible. I would also like to thank senior editor Judy Bass and all the folks at McGraw-Hill publications who had a part in making this book possible. We hope the book will inspire both radio and electronics enthusiasts to build and enjoy the radio projects in this book.

Richard Flagg/RF Associates

Wes Greenman/University of Florida

Charles Higgins/Tennessee State University

Fat Quarters Software

Radio-Sky Publishing

Ramsey Electronics

Vectronics, Inc

Russell Clift

Todd Gale

Eric Vogel

Copyright © 2008 by The McGraw-Hill Companies, Inc. Click here for terms of use.

This page intentionally left blank

For more information about this title, click here

Contents

Acknowledgments vii

Introduction xi

1 Radio Background and History 1

2 Identifying Components and Reading Schematics 12

3 Electronic Parts Installation and Soldering 25

4 AM, FM, and Shortwave Crystal Radio Projects 39

5 TRF AM Radio Receiver 49

6 Solid-State FM Broadcast Receiver 59

7 Doerle Single Tube Super-Regenerative Radio Receiver 70

8 IC Shortwave Radio Receiver 81

9 80/40 Meter Code Practice Receiver 94

10 WWV 10 MHz "Time-Code" Receiver 104

11 VHF Public Service Monitor (Action-Band) Receiver 116

12 6 & 2-Meter Band Amateur Radio Receiver 127

13 Active and Passive Aircraft Band Receivers 140

14 VLF or Very Low Frequency Radio Receiver 153

15 Induction Loop Receiving System 165

16 Lightning Storm Monitor 175

17 Ambient Power Receiver 186

18 Earth Field Magnetometer Project 192

19 Sudden Ionospheric Disturbance (SIDs) Receiver 203

20 Aurora Monitor Project 212

21 Ultra-Low Frequency (ULF) Receiver 224

22 Jupiter Radio Telescope Receiver 233

23 Weather Satellite Receiver 246

24 Analog to Digital Converters (ADCs) 262

Appendix: Electronic Parts Suppliers 273

Index 277

This page intentionally left blank

Introduction

22 Radio Receiver Projects for the Evil Genius was created to inspire readers both young and old to build and enjoy radio and receiver projects, and perhaps propel interested experimenters into a career in radio, electronics or research. This book is for people who are interested in radio and electronics and those who enjoy building and experimenting as well as those who enjoy research.

Radio encompasses many different avenues for enthusiasts to explore, from simple crystal radios to sophisticated radio telescopes. This book is an attempt to show electronics and radio enthusiasts that there is a whole new world "out there" to explore.

Chapter 1 will present the history and background and elements of radio, such as modulation techniques, etc. Chapter 2 will help the newcomers to electronics, identifying components and how to look and understand schematics vs. pictorial diagrams. Next, Chapter 3 will show the readers how to install electronic components onto circuit boards and how to correctly solder before embarking on their new radio building adventure.

We will start our adventure with the simple "lowly" crystal radio in Chapter 4. Generally crystal radios are only thought of as simple AM radios which can only pickup local broadcast stations. But did you know that you can build crystal radios which can pickup long-distance stations as well as FM and shortwave broadcasts from around the world? You will learn how to build an AM, FM and shortwave crystal radio, in this chapter.

In Chapter 5, you will learn how AM radio is broadcast, from a radio station to a receiver in your home, and how to build your own TRF or Tuned Radio Frequency AM radio receiver. In Chapter 6, we will discover how FM radio works and how to build an FM radio with an SCA output for commercial free radio broadcasts.

Chapter 7 will present the exciting world of shortwave radio. Shortwave radio listening has a large following and encompasses an entire hobby in itself. You will be able to hear shortwave stations from around the world, including China, Russia, Italy, on your new shortwave broadcast receiver. Old time radio buffs will be interested in the single tube Doerle super-regenerative shortwave radio.

If you are interested in a portable shortwave receiver that you could take on a camping trip, then you may want to construct the multi-band integrated circuit shortwave radio receiver described in Chapter 8.

If you are interested in Amateur Radio or are thinking of learning Morse code or want to increase your code speed, you may want to consider building this 80 and 40-meter code receiver. This small lightweight portable receiver can be built in a small enclosure and taken on camping trips, etc.

In Chapter 10, you will learn how to build and use a WWW time code receiver, which can be used to pick up time signal broadcast from the National Institute of Standards and Technology (NIST) or

Copyright © 2008 by The McGraw-Hill Companies, Inc. Click here for terms of use.

National Atomic Time Clock in Boulder CO. Time signal broadcasts present geophysical and propagation forecasts as well as marine and sea conditions. They will also help you set the time on your best chronometer.

With the VHF Public service receiver featured in Chapter 11, you will discover the high frequency "action bands" which cover the police, fire, taxis, highway departments and marine frequencies. You will be able to listen-in to all the exciting communications in your hometown.

The 6-meter and 2-meter dual VHF Amateur Radio receiver in Chapter 12 will permit to discover the interesting hobby of Amateur Radio. The 6-meter and 2-meter ham radio bands are two of the most popular VHF bands for technician class licensees. You may discover that you might just want to get you own ham radio license and talk to ham radio operators through local VHF repeaters or to the rest of the world.

Why not build an aircraft radio and listen-in to airline pilots talking from 747s to the control tower many miles away. You could also build the passive Air-band radio which you use to listen-in to your pilot during your own flight. Passive aircraft radios will not interfere with airborne radio so they are permitted on airplanes, without restriction. Check out these two receivers in Chapter 13.

Chapter 14 will also show you how to build an induction communication system, which will allow you to broadcast a signal around home or office using a loop of wire, to a special induction receiver. The induction loop broadcast system is a great aid to the hearing impaired, since it can broadcast to hearing aids as well.

The VLF, or "whistler" radio in Chapter 15, will pickup very very low frequency radio waves from around the world. You will be able to listen to low frequency beacon stations, submarine transmissions and "whistlers" or the radio waves created from electrical storms on the other side of the globe. This project is great for research projects where you can record and later analyze your results by feeding your recorded signal into a sound card running an FFT program. Use your computer to record and analyze these interesting signals. There are many free programs available over the Internet. An FFT audio analyzer program can display the audio spectrum and show you where the signals plot out in respect to frequency.

If you are interested in weather, then you will appreciate the Lightening to Storm Receiver in Chapter 16, which will permit you to "see" the approaching storm berfore it actually arrives. This receiver will permit you to have advanced warning up to 50 miles or more away; it will warn you well in advance of an electrical storm, so you can disconnect any outdoor antennas.

The Ambient Power Module receiver project illustrated in Chapter 17, will allow to you pickup a broad spectrum of radio waves which get converted to DC power, and which can be used to power low current circuits around your home or office. This is a great project for experimentation and research. You can use it to charge cell phones, emergency lights, etc.

Our magnetometer project shown in Chapter 18 can be used to see the diurnal or daily changes in the Earth's magnetic field, and you can record the result to a data-logger or recording multi-meter.

If you are an avid amateur radio operator or shortwave listener, you many want to build a SIDs receiver shown in Chapter 19. A SIDs receiver can be used to determine when radio signals and/or propagation is disturbed by solar storms. This receiver will quickly alert you to unfavorable radio conditions. You can collect the receiver to your personal computer's sound card and use the data recorded to correlate radio propagation against storm conditions.

The Aurora receiver project in Chapter 20 will alert you, with both sound and meter display, when the Earth's magnetic increases just before an Aurora display is about to take place. UFO and Alien contact buffs can use this receiver to know when UFOs are close by.

For those interested in more earthly research projects, why not build your own ULF or ultra low frequently receiver, shown in Chapter 21, which can be utilized for detecting low frequency wave generated by earthquakes and fault lines. With this receiver you will be able to conduct your own research projects on monitoring the pulse of the Earth. You can connect your ELF receiver to a data-logger and record the signals over time to correlate your research with that of others.

You can explore the heavens by constructing your own radio telescope to monitor the radio signals generated from the planet Jupiter. This radio receiver, illustrated in Chapter 22, will pick up radio signals which indicate electrical and or magnetic storms on the Jovian planet. The Radio Jupiter receiver can be coupled to your personal computer, and can be used for a research project to record and analyze these radio storm signals.

Why not construct your own weather satellite receiving station, shown in Chapter 23. This receiver will allow you to receive APT polar satellites broadcasting while passing overhead. You can display the satellite weather maps on the computer's screen or save them later to show friends and relatives.

Chapter 24 discusses different analog to digital converters which you can use to collect and record data from the different receiver projects.

We hope you will find the *22 Radio Projects for the Evil Genius* a fun and thought-provoking book, that will find a permanent place on your electronics or radio bookshelf. Enjoy!

This page intentionally left blank

22 Radio Receiver Projects for the Evil Genius

This page intentionally left blank

Chapter 1

Radio Background and History

Electromagnetic energy encompasses an extremely wide frequency range. Radio frequency energy, both natural radio energy created by lightning and planetary storms as well as radio frequencies generated by man for communications, entertainment, radar, and television are the topic of this chapter. Radio frequency energy, or RF energy, covers the frequency range from the low end of the radio spectrum, around l0 to 25 kHz, which is used by high-power Navy stations that communicate with submerged nuclear submarines, through the familiar AM broadcast band from 550 to 1600 kHz. Next on the radio frequency spectrum are the shortwave bands from 2000 kHz to 30,000 kHz. The next band of frequencies are the very high frequency television channels covering 54 to 2l6 MHz, through the very popular frequency modulation FM band from 88 to l08 MHz. Following the FM broadcast band are aircraft frequencies on up through UHF television channels and then up through the radar frequency band of 1000 to 1500 MHz, and extending through approximately 300 gHz. See frequency spectrum chart in Figure 1-1. The radio frequency spectrum actually extends almost up to the lower limit of visible light frequencies.

Radio history

One of the more fascinating applications of electricity is in the generation of invisible ripples of energy called radio waves. Following Hans Oersted's accidental discovery of electromagnetism, it was realized that electricity and magnetism were related to each other. When an electric current was passed through a conductor, a magnetic field was generated perpendicular to the axis of flow. Likewise, if a conductor was exposed to a change in magnetic flux perpendicular to the conductor, a voltage was produced along the length of that conductor.

Joseph Henry, a Princeton University professor, and Michael Faraday, a British physicist, experimented separately with electromagnets in the early 1800s. They each arrived at the same observation: the theory that a current in one wire can produce a current in another wire, even at a distance. This phenomenon is called electromagnetic induction, or just induction. That is, one wire carrying a current induces a current in a second wire. So far, scientists knew that electricity and magnetism always seemed to affect each other at right angles. However, a major discovery lay hidden just beneath this seemingly simple concept of related perpendicularity, and its unveiling was one of the pivotal moments in modern science.

The man responsible for the next conceptual revolution was the Scottish physicist James Clerk Maxwell (1831–1879), who "unified" the study of electricity and magnetism in four relatively tidy equations. In essence, what he discovered was that electric and magnetic fields were intrinsically related to one another, with or without the presence of a conductive path for electrons to flow. Stated more formally, Maxwell's discovery was this: a changing electric field produces a perpendicular magnetic field, and a changing magnetic field produces a perpendicular electric field. All of this can take place in open space, the alternating electric and magnetic fields supporting each other as they travel through space at the speed of light. This dynamic structure of electric and magnetic fields propagating through space is better known as an electromagnetic wave.

Later, Heinrich Hertz, a German physicist, who is honored by our replacing the expression "cycles per second" with hertz (Hz), proved Maxwell's theory between the years 1886 and l888. Shortly after that, in 1892, Eouard Branly, a French physicist, invented a device that could receive radio waves (as we know them today) and could cause them to ring an electric bell.

Copyright © 2008 by The McGraw-Hill Companies, Inc. Click here for terms of use.

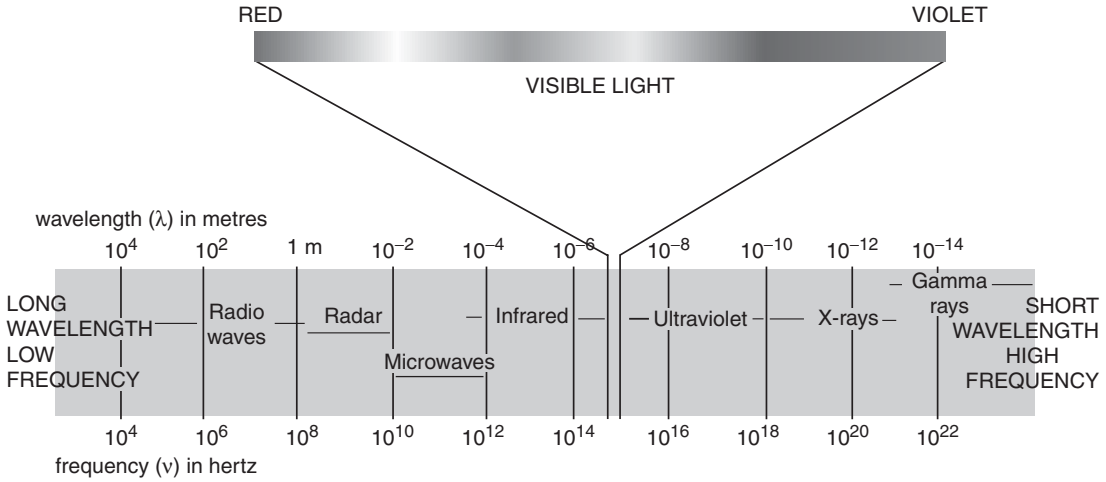

Figure 1-1 *Electromagnetic spectrum*

Note that at the time all the research being conducted in what was to become radio and later radio-electronics, was done by physicists.

In 1895, the father of modem radio, Guglielmo Marconi, of Italy, put all this together and developed the first wireless telegraph and was the first to commercially put radio into ships. The wire telegraph had already been in commercial use for a number of years in Europe. The potential of radio was finally realized through one of the most memorable events in history. With the sinking of the Titanic in 1912, communications between operators on the sinking ship and nearby vessels, and communications to shore stations listing the survivors brought radio to the public in a big way.

AM radio broadcasting began on November 2, 1920. Four pioneers: announcer Leo Rosenberg, engineer William Thomas, telephone line operator John Frazier and standby R.S. McClelland, made their way to a makeshift studio—actually a shack atop the Westinghouse "K" Building in East Pittsburgh—flipped a switch and began reporting election returns in the Harding vs. Cox Presidential race. At that moment, KDKA became the pioneer broadcasting station of the world.

Radio spread like wildfire to the homes of everyone in America in the 1920s. In a few short years, over 75 manufacturers began selling radio sets. Fledgling manufacturers literally came out of garages over-night. Many young radio enthusiasts rushed out to buy parts and radio kits which soon became available.

Radio experimenters discovered that an amplitude-modulated wave consists of a carrier and two identical sidebands which are both above and below the carrier wave. The Navy conducted experiments in which they attempted to pass one sideband and attenuate the other. These experiments indicated that one sideband contained all the necessary information for voice transmission, and these discoveries paved the way for development of the concept of single-sideband or SSB transmission and reception.

In 1923, a patent was granted to John R. Carson on his idea to suppress the carrier and one sideband. In that year the first trans-Atlantic radio telephone demonstration used SSB with pilot carrier on a frequency of 52 kc. Single sideband was used because of limited power capacity of the equipment and the narrow bandwidths of efficient antennas for those frequencies. By 1927, trans-Atlantic SSB radiotelephony was open for public service. In the following years, the use of SSB was limited to low-frequency and wire applications. Early developments in FM transmission suggested that this new mode might prove to be the ultimate in voice communication. The resulting slow development of SSB technology precluded practical SSB transmission and reception at high frequencies. Amateur radio SSB activity followed very much the same pattern. It wasn't until 1948 that amateurs began seriously experimenting with SSB, likely delayed by the wartime blackouts.

The breakthroughs in the war years, and those following the war, were important to the development of HF-SSB communication. Continued advances in

technology made SSB the dominant mode of HF radio communication.

The radio-frequency spectrum, once thought to be adequate for all needs, has become very crowded. As the world's technical sophistication progresses, the requirements for rapid and dependable radio communications increase. The competition for available radio spectrum space has increased dramatically. Research and development in modern radio systems has moved to digital compression and narrow bandwidth with highly developed modulation schemes and satellite transmission.

The inventor most responsible for the modern day advances in radio systems was Edwin H. Armstrong. He was responsible for the Regenerative circuit in 1912, the Superheterodyne radio circuit in 1918, the Superregenerative radio circuit design in 1922 and the complete FM radio system in 1933. His inventions and developments form the backbone of radio communications as we know it today. The majority of all radio sets sold are FM radios, all microwave relay links are FM, and FM is the accepted system in all space communications. Unfortunately, Armstrong committed suicide while still embittered in patent lawsuits: later vindicated, his widow received a windfall.

Sony introduced their first transistorized radio in 1960, small enough to fit in a vest pocket, and able to be powered by a small battery. It was durable, because there were no tubes to burn out. Over the next 20 years, transistors displaced tubes almost completely except for very high power, or very high frequency, uses. In the 1970s; LORAN became the standard for radio navigation system, and soon, the US Navy experimented with satellite navigation. Then in 1987, the GPS constellation of satellites was launched and navigation by radio in the sky had a new dimension. Amateur radio operators began experimenting with digital techniques and started to send pictures, faxes and teletype via the personal computer through radio. By the late 1990s, digital transmissions began to be applied to radio broadcasting.

Types of radio waves

There are many kinds of natural radiative energy composed of electromagnetic waves. Even light is electromagnetic in nature. So are shortwaves, X-rays and "gamma" ray radiation. The only difference between these kinds of electromagnetic radiation is the frequency of their oscillation (alternation of the electric and magnetic fields back and forth in polarity). By using a source of AC voltage and a device called an antenna, we can create electromagnetic waves.

It was discovered that high frequency electromagnetic currents in an antenna wire, which in turn result in a high frequency electromagnetic field around the antenna, will result in electromagnetic radiation which will move away from the antenna into free space at the velocity of light, which is approximately 300,000,000 meters per second.

In radio transmission, a radiating antenna is used to convert a time-varying electric current into an electromagnetic wave, which freely propagates through a nonconducting medium such as air or space. An antenna is nothing more than a device built to produce a dispersing electric or magnetic field. An electromagnetic wave, with its electric and magnetic components, is shown in Figure 1-2.

When attached to a source of radio frequency signal generator, or transmitter, an antenna acts as a transmitting device, converting AC voltage and current into electromagnetic wave energy. Antennas also have the ability to intercept electromagnetic waves and convert their energy into AC voltage and current. In this mode, an antenna acts as a receiving device.

Radio frequencies spectrum

Radio frequency energy is generated by man for communications, entertainment, radar, television,

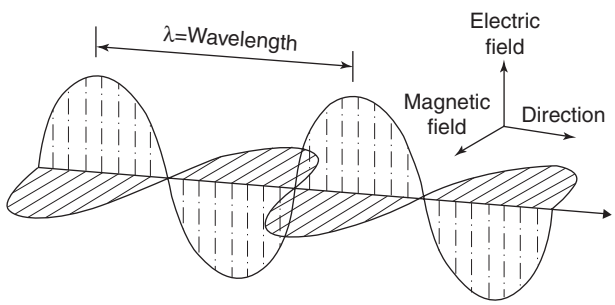

Figure 1-2 *Magnetic vs. electric wave*

navigation, etc. This radio frequency or (RF) energy covers quite a large range of radio frequencies from the low end of the radio spectrum from l0 to 25 kHz, which is the domain occupied by the high-power Navy stations that communicate with submerged nuclear submarines: these frequencies are called Very Low Frequency waves or VLF. Above the VLF frequencies are the medium wave frequencies or (MW), i.e. the AM radio broadcast band from 550 to 1600 kHz. The shortwave bands or High Frequency or (HF) bands cover from 2000 kHz to 30,000 kHz and make use of multiple reflections from the ionosphere which surrounds the Earth, in order to propagate the signals to all parts of the Earth. The Very High Frequencies or VHF bands begin around 30 MHz; these lower VHF frequencies are called low-band VHF. Mid-band VHF frequencies begin around 50 MHz which cover the lowest TV channel 2. Low-band television channels 2 through 13 cover the 54 to 2l6 MHz range. The popular frequency modulation or (FM) broadcast band covers the range from 88 to l08 MHz, which is followed by low-band Air-band frequencies from 118 to 136 MHz. High-band VHF frequencies around 144 are reserved for amateur radio, public service around 150 MHz, with marine frequencies around 156 MHz. UHF frequencies begin around 300 MHz and go up through the radar frequency band of 1000 to 1500 MHz, and extending through approximately 300 gHz. Television channels 14 through 70 are placed between 470 and 800 MHz. American cell phone carriers have cell phone communications around 850 MHz. Geosynchronous weather satellites signals are placed around 1.6 GHz, and PCS phone devices are centered around 1.8 GHz. The Super-high frequency (SHF) bands range from 3 to 30 GHz, with C-band microwave frequencies around 3.8 GHz, then X-band, from 7.25 to 8.4 GHz, followed by the KA and KU-band microwave bands.

Table 1-1 illustrates the division of radio frequencies. The radio frequency spectrum extends almost up to the lower limit of visible light frequencies, with just the infrared frequencies lying in between it and visible light. The radio frequency spectrum is a finite resource which must be used and shared with many people and agencies around the world, so cooperation is very important.

So how does a radio work? As previously mentioned, radio waves are part of a general class of waves known as electromagnetic waves. In essence, they are electrical and magnetic energy which travels through space in the form of a wave. They are different from sound waves (which are pressure waves that travel through air or water, as an example) or ocean waves (similar to sound waves in water, but much lower in frequency and are much larger). The wave part is similar, but the energy involved is electrical and magnetic, not mechanical.

Electromagnetic waves show up as many things. At certain frequencies, they show up as radio waves. At much higher frequencies, we call them infrared light. Still higher frequencies make up the spectrum known as visible light. This goes on up into ultraviolet light, and X-rays, things that radio engineers rarely have to worry about. For our discussions, we'll leave light to the physicists, and concentrate on radio waves.

Radio waves have two important characteristics that change. One is the amplitude, or strength of the wave. This is similar to how high the waves are coming into shore from the ocean. The bigger wave has a higher amplitude. The other thing is frequency. Frequency is how often the wave occurs at any point. The faster the wave repeats itself, the higher the frequency. Frequency is measured by the number of times in a second that the wave repeats itself. Old timers remember when frequency was described in units of cycles per second. In more recent times we have taken to using the simplified term of hertz (named after the guy who discovered radio waves). Metric prefixes are often used, so that 1000 hertz is a kilohertz, one million hertz is a megahertz, and so on.

A typical radio transmitter, for example, takes an audio input signal, such as voice or music and amplifies it. The amplified audio is in turn sent to a modulator and an RF exciter which comprises the radio frequency transmitter. The exciter in the transmitter generates a main carrier wave. The RF signal from the exciter is further amplified by a power amplifier and then the RF signal is sent out to an antenna which radiates the signal into the sky and out into the ionosphere. Depending upon the type of transmitter used the modulation technique can be either AM, FM, SSB signal sideband, CW, or digital modulation, etc.

AM modulation

Amplitude modulation (AM) is a technique used in electronic communication, most commonly for transmitting information via a carrier wave wirelessly.

Table 1-1
Radio frequency spectrum chart

Frequency range			
Extremely Low Frequency (ELF)	0	to	3 kHz
Very Low Frequency (VLF)	3 kHz	to	30 kHz
Radio Navigation & maritime/aeronautical mobile	9 kHz	to	540 kHz
Low Frequency (LF)	30 kHz	to	300 kHz
Medium Frequency (MF)	300 kHz	to	3000 kHz
AM Radio Broadcast	540 kHz	to	1630 kHz
Travellers Information Service	1610 kHz		
High Frequency (HF)	3 MHz	to	30 MHz
Shortwave Broadcast Radio	5.95 MHz	to	26.1 MHz
Very High Frequency (VHF)	30 MHz	to	300 MHz
Low Band: TV Band 1 - Channels 2-6	54 MHz	to	88 MHz
Mid Band: FM Radio Broadcast	88 MHz	to	174 MHz
High Band: TV Band 2 - Channels 7-13	174 MHz	to	216 MHz
Super Band (mobile/fixed radio & TV)	216 MHz	to	600 MHz
Ultra-High Frequency (UHF)	300 MHz	to	3000 MHz
Channels 14-70	470 MHz	to	806 MHz
L-band:	500 MHz	to	1500 MHz
Personal Communications Services (PCS)	1850 MHz	to	1990 MHz
Unlicensed PCS Devices	1910 MHz	to	1930 MHz
Superhigh Frequencies (SHF)			
(Microwave)	3 GHz	to	30.0 GHz
C-band	3600 MHz	to	7025 MHz
X-band	7.25 GHz	to	8.4 GHz
Ku-band	10.7 GHz	to	14.5 GHz
Ka-band	17.3 GHz	to	31.0 GHz
Extremely High Frequencies (EHF)			
(Millimeter Wave Signals)	30.0 GHz	to	300 GHz
Additional Fixed Satellite	38.6 GHz	to	275 GHz
Infrared Radiation	300 GHz	to	430 THz
Visible Light	430 THz	to	750 THz
Ultraviolet Radiation	1.62 PHz	to	30 PHz
X-Rays	0.30 PHz	to	30 EHz
Gamma Rays	0.30 EHz	to	3000 EHz

It works by varying the strength of the transmitted signal in relation to the information being sent.

In the mid-1870s, a form of amplitude modulation was the first method to successfully produce quality audio over telephone lines. Beginning in the early 1900s, it was also the original method used for audio radio transmissions, and remains in use by some forms of radio communication—"AM" is often used to refer to the medium-wave broadcast band (see AM Radio–Chapter 5).

Amplitude modulation (AM) is a type of modulation technique used in communication. It works by varying

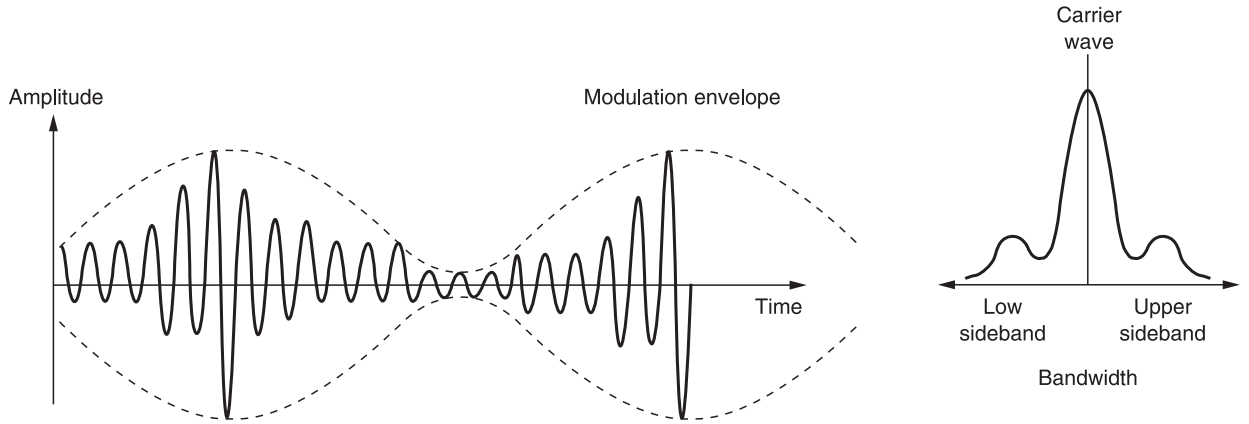

Figure 1-3 *Amplitude modulation waveform*

the strength of the transmitted signal in relation to the information being sent, for example, changes in the signal strength can be used to reflect sounds being reproduced in the speaker. This type of modulation technique creates two sidebands with the carrier wave signal placed in the center between the two sidebands. The transmission bandwidth of AM is twice the signal's original (baseband) bandwidth—since both the positive and negative sidebands are 'copied' up to the carrier frequency, but only the positive sideband is present originally. See Figure 1-3. Thus, double-sideband AM (DSB-AM) is spectrally inefficient. The power consumption of AM reveals that DSB-AM with its carrier has an efficiency of about 33% which is too efficient. The benefit of this system is that receivers are cheaper to produce. The forms of AM with suppressed carriers are found to be 100% power efficient, since no power is wasted on the carrier signal which conveys no information. Amplitude modulation is used primarily in the medium wave band or AM radio band which covers 520 to 1710 kHz. AM modulation is also used by shortwave broadcasters in the SW bands from between 5 MHz and 24 MHz, and in the aircraft band which covers 188 to 136 MHz.

FM modulation

Frequency modulation (FM) is a form of modulation which represents information as variations in the instantaneous frequency of a carrier wave. Contrast this with amplitude modulation, in which the amplitude of the carrier is varied while its frequency remains constant. In analog applications, the carrier frequency is varied in direct proportion to changes in the amplitude of an input signal. Digital data can be represented by shifting the carrier frequency among a set of discrete values, a technique known as frequency-shift keying. The diagram in Figure 1-4, illustrates the FM modulation scheme, the RF frequency is varied with the sound input rather than the amplitude.

FM is commonly used at VHF radio frequencies for high-fidelity broadcasts of music and speech, as in FM broadcasting. Normal (analog) TV sound is also broadcast using FM. A narrowband form is used for voice communications in commercial and amateur radio settings. The type of FM used in broadcast is generally called wide-FM, or W-FM. In two-way radio, narrowband narrow-FM (N-FM) is used to conserve bandwidth. In addition, it is used to send signals into space.

Wideband FM (W-FM) requires a wider bandwidth than amplitude modulation by an equivalent modulating signal, but this also makes the signal more robust against noise and interference. Frequency modulation is also more robust against simple signal amplitude fading phenomena. As a result, FM was chosen as the modulation standard for high frequency, high fidelity radio transmission: hence the term "FM radio." FM broadcasting uses a well-known part of the VHF band between 88 and 108 MHz in the USA.

FM receivers inherently exhibit a phenomenon called capture, where the tuner is able to clearly receive the stronger of two stations being broadcast on

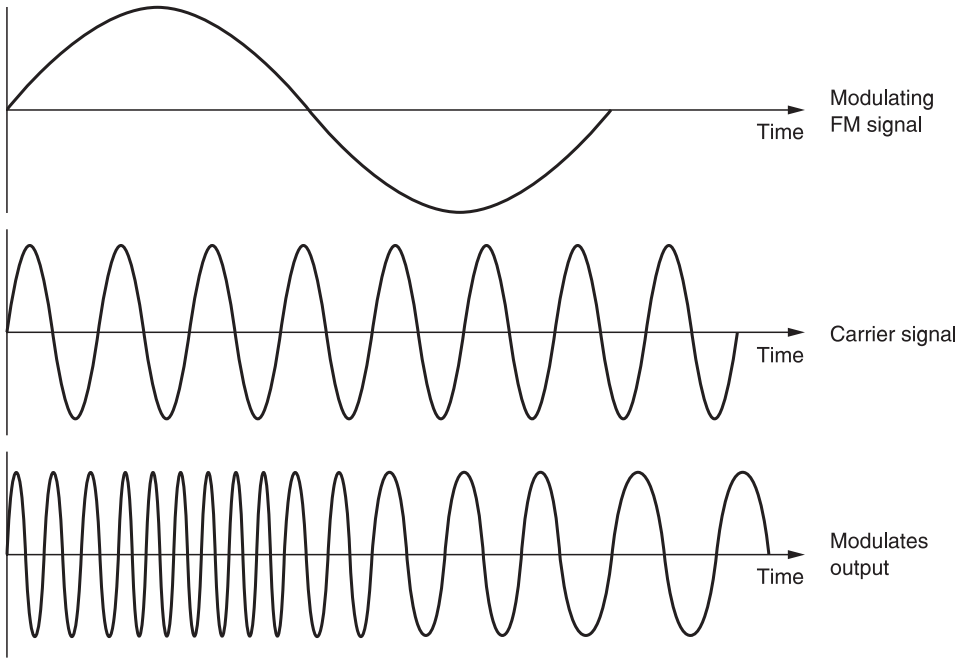

Figure 1-4 *FM modulation waveform*

the same frequency. Problematically, however, frequency drift or lack of selectivity may cause one station or signal to be suddenly overtaken by another on an adjacent channel. Frequency drift typically constituted a problem on very old or inexpensive receivers, while inadequate selectivity may plague any tuner. Frequency modulation is used on the FM broadcast band between 88 and 108 MHz as well as in the VHF and UHF bands for both public service and amateur radio operators.

Single sideband (SSB) modulation

Single sideband modulation (SSB) is a refinement upon amplitude modulation, which was designed to be more efficient in its use of electrical power and spectrum bandwidth. Single sideband modulation avoids this bandwidth doubling, and the power wasted on a carrier, but the cost of some added complexity.

The balanced modulator is the most popular method of producing a single sideband modulated signal. The balanced modulator provides the "sidebands" of energy that exist on either side of the carrier frequency but eliminates the RF carrier, see Figure 1-5. The carrier is removed because it is the sidebands that provide the actual meaningful content of material, within the modulation envelope. In order to make SSB even more efficient, one of these two sidebands is removed by a bandpass. So the intelligence is preserved with SSB and it becomes a more efficient use of radio spectrum energy. It provides almost 9 Decibels (dBs) of signal gain over an amplitude modulated signal that includes an RF "carrier" of the same power level! As the final RF amplification is now concentrated in a single sideband, the effective power output is greater than in normal AM (the carrier and redundant sideband account for well over half of the power output of an AM transmitter). Though SSB uses substantially less bandwidth and power, it cannot be demodulated by a simple envelope detector like standard AM.

SSB was pioneered by telephone companies in the 1930s for use over long-distance lines, as part of a technique known as frequency-division multiplexing (FDM). This enabled many voice channels to be sent down a single physical circuit. The use of SSB meant that the channels could be spaced (usually) just 4000 Hz apart, while offering a speech bandwidth of nominally 300–3400 Hz. Amateur radio operators began to experiment with the method seriously after World War II. It has become a *de facto* standard for long-distance voice radio transmissions since then.

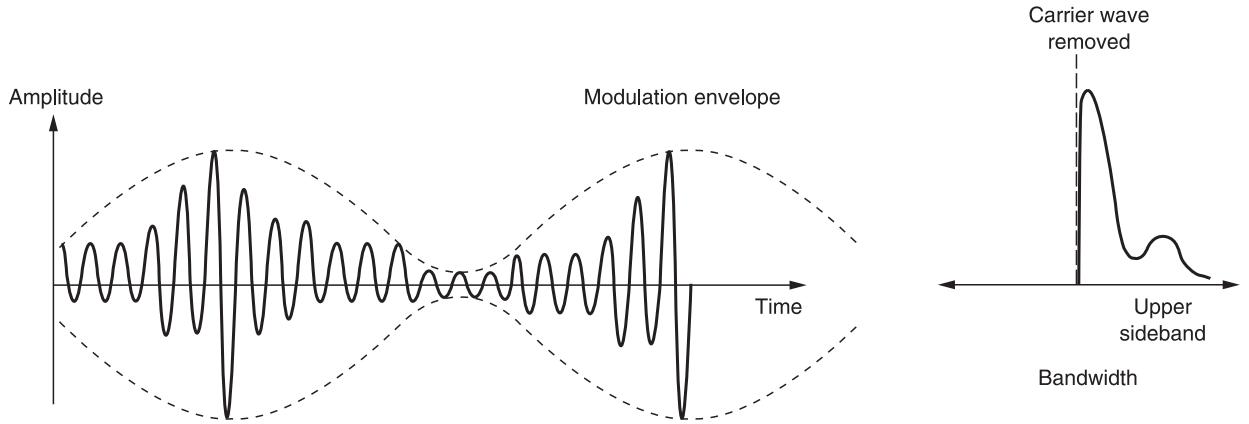

Figure 1-5 *Single sideband modulation waveform*

Single Sideband Suppressed Carrier (SSB-SC) modulation was the basis for all long-distance telephone communications up until the last decade. It was called "L carrier." It consisted of groups of telephone conversations modulated on upper and/or lower sidebands of contiguous suppressed carriers. The groupings and sideband orientations (USB, LSB) supported hundreds and thousands of individual telephone conversations. Single sideband communications are used by amateur radio operators and government, and utility stations primarily in the shortwave bands for long-distance communications.

Shortwave radio

Shortwave radio operates between the frequencies of 1.80 MHz and 30 MHz and came to be referred to as such in the early days of radio because the wavelengths associated with this frequency range were shorter than those commonly in use at that time. An alternate name is HF or high frequency radio. Short wavelengths are associated with high frequencies because there is an inverse relationship between frequency and wavelength. Shortwave frequencies are capable of reaching the other side of the Earth, because these waves can be refracted by the ionosphere, by a phenomenon known as Skywave propagation. High-frequency propagation is dependent upon a number of different factors, such as season of the year, solar conditions, including the number of sunspots, solar flares, and overall solar activity. Solar flares can prevent the ionosphere from reflecting or refracting radio waves.

Another factor which determines radio propagation is the time of the day; this is due to a particular transient atmosphere ionized layer forming only during day when atoms are broken up into ions by sun photons. This layer is responsible for partial or total absorption of particular frequencies. During the day, higher shortwave frequencies (i.e., above 10 MHz) can travel longer distances than lower ones; at night, this property is reversed.

Different types of modulation techniques are used on the shortwave frequencies in addition to AM and FM. AM, amplitude modulation, is generally used for shortwave broadcasting, and some aeronautical communications, while Narrow-band frequency modulation (NFM) is used at the higher HF frequencies. Single sideband or (SSB), is used for long-range communications by ships and aircraft, for voice transmissions by amateur radio operators. CW, Continuous Carrier Wave or (CW), is used for Morse code communications. Various other types of digital communications such as radioteletype, fax, digital, SSTV and other systems require special hardware and software to decode. A new broadcasting technique called Digital Radio Mondiale or (DRM) is a digital modulation scheme used on bands below 30 MHz.

Shortwave listening

Many hobbyists listen to shortwave broadcasters and for some listeners the goal is to hear as many stations from as many countries as possible (DXing); others listen to specialized shortwave utility, or "UTE," transmissions

such as maritime, naval, aviation, or military signals. Others focus on intelligence signals. Many, though, tune the shortwave bands for the program content of shortwave broadcast stations, aimed to a general audience (such as the Voice of America, BBC World Service, Radio Australia, etc.). Some even listen to two-way communications by amateur radio operators. Nowadays, as the Internet evolves, the hobbyist can listen to shortwave signals via remotely controlled shortwave receivers around the world, even without owning a shortwave radio (see for example http://www.dxtuners.com). Alternatively, many international broadcasters (such as the BBC) offer live streaming audio on their web-sites. Table 1-2, lists some of the popular shortwave broadcast bands.

Shortwave listeners, or SWLs, can obtain QSL cards from broadcasters, utility stations or amateur radio operators as trophies of the hobby. Some stations even give out special certificates, pennants, stickers and other tokens and promotional materials to shortwave listeners.

Major users of the shortwave radio bands include domestic broadcasting in countries with a widely dispersed population with few long-wave, medium-wave, or FM stations serving them. International broadcasting stations beamed radio broadcasts to foreign audiences.

Table 1-2
Shortwave broadcast chart

Band	*Megahertz Band (MHz)*	*Kilohertz (KHz)*
120 Meter	2.3–2.5 MHz	2300–2500 KHz
90 Meter	3.2–3.40 MHZ	3200–3400 KHz
75 Meter	3.90–4.00 MHZ	3900–4000 KHz
60 Meter	4.750–5.060 MHz	4750–5060 KHz
49 Meter	5.950–6.20 MHz	5950–6200 KHz
41 Meter	7.10–7.60 MHz	7100–7600 KHz
31 Meter	9.20–9.90 MHz	9500–9900 KHz
25 Meter	11.60–12.200 MHz	11600–12200 KHz
22 Meter	13.570–13.870 MHZ	13570–13870 KHz
19 Meter	15.10–15.800 MHz	15100–15800 KHz
16 Meter	17.480–17.900 MHz	17480–17900 KHz
13 Meter	21.450–21.850 MHz	21450–21850 KHz
11 Meter	25.60–26.100 MHz	25600–26100 KHz

Speciality political, religious, and conspiracy theory radio networks, individual commercial and non-commercial paid broadcasts for the north American and other markets. Utility stations transmitting messages not intended for a general public, such as aircraft flying between continents, encoded or ciphered diplomatic messages, weather reporting, or ships at sea. Amateur radio operators have rights to use many frequencies in the shortwave bands; you can hear their communications using different modulation techniques and even obtain a license to communicate in these bands yourself. Contact the Amateur Radio Relay League for more information. Table 1-3 illustrates the amateur radio frequencies and how they are divided between the different license classes. On the shortwave band you will also encounter time signal stations and number stations, thought to be spy stations operating on the shortwave bands.

Types of receivers

A radio signal is transmitted through the ionosphere and is picked up by the antenna in your radio receiver. The antenna is fed to an RF amplifier and usually an intermediate amplifier or IF amplifier and then on to a detector of some sort depending upon the type of receiver you are using. From the detector, the resultant audio signal is amplified and sent to a loudspeaker for listening. Figure 1-6 illustrates a block diagram of a typical AM radio receiver. The antenna is sent to the RF amplifier. The mixer is fed by both the local oscillator and the RF amplifier. The signal from the mixer is sent to a bandpass filter and then on to the first IF amplifier. The first IF amplifier is next sent to the detector and then on to the final audio amplifier stage which drives the speaker. The illustration depicted in Figure 1-7 shows a typical FM receiver block diagram. The antenna feeds the RF amplifier stage. Both the RF amplifier and local oscillator are fed into the mixer. The signal from the mixer is next sent to the IF amplifier stage. From the IF amplifier stage the signal is next sent to the FM demodulator section, which feeds the signal to the voltage amplifier and then the signal is fed to the final audio amplifier stage and on to the speaker. Note the feedback path between, i.e. the AGC or automatic frequency control from the FM demodulator back to

Table 1-3

US amateur radio bands

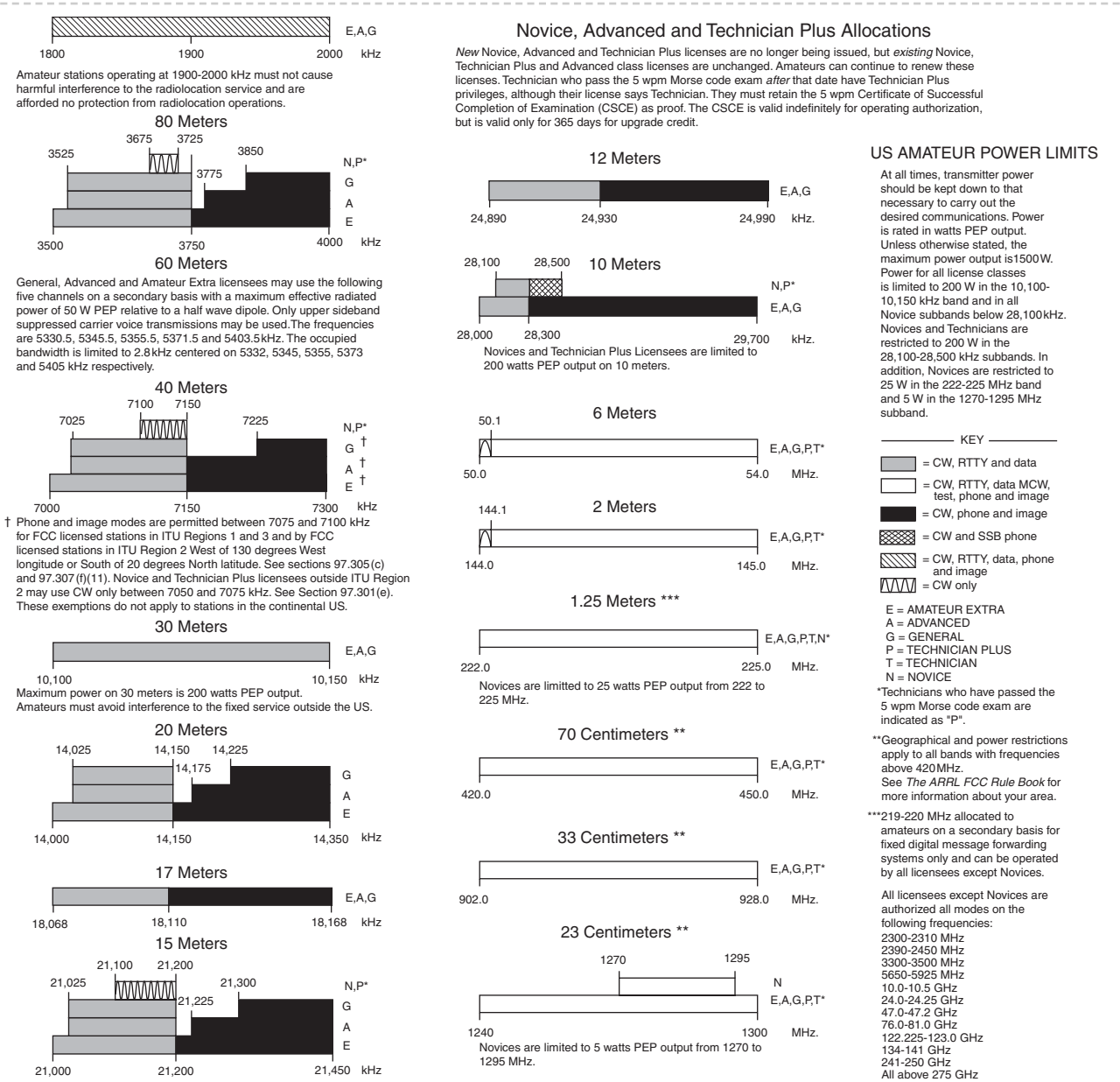

the local oscillator. Finally, the shortwave radio block diagram is illustrated in the diagram in Figure 1-8. The antenna line is fed to the RF amplifier section. Both the local oscillator and the RF amplifier are fed to a filter section, which is in turn sent to the IF amplifier section. The output signal from the IF amplifier section is next sent to the product detector. A BFO or beat frequency oscillator signal is sent to the product detector, this is what permits SSB reception. The signal from the product detector is next sent to the audio amplifier and then on to the speaker. The receivers shown are the most common types of receivers. There are in fact many different variations in receiver designs including receivers made to receive special digital signals, which we will not discuss here.

Next, we will move our discussion to identifying electronics components and reading schematics and learning how to solder before we forge ahead and begin building some fun radio receiver projects.

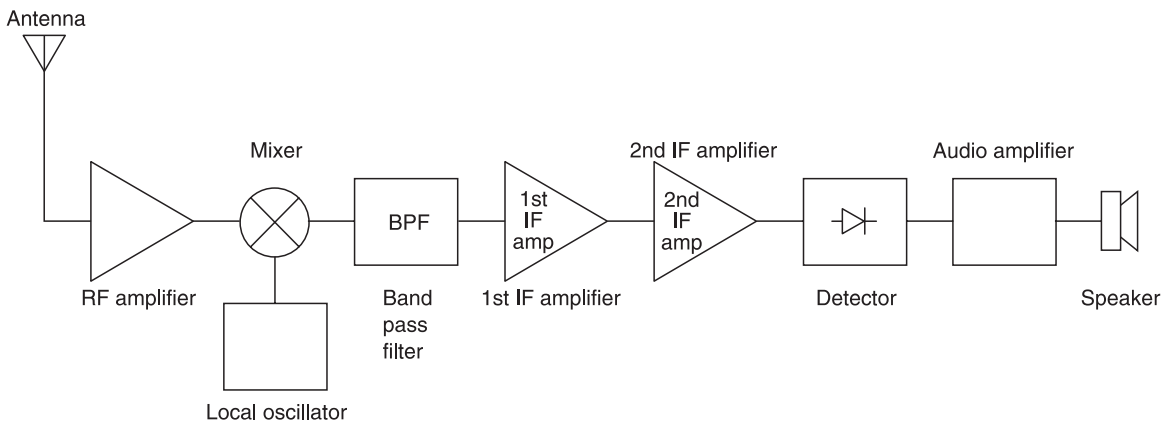

Figure 1-6 *AM radio block diagram*

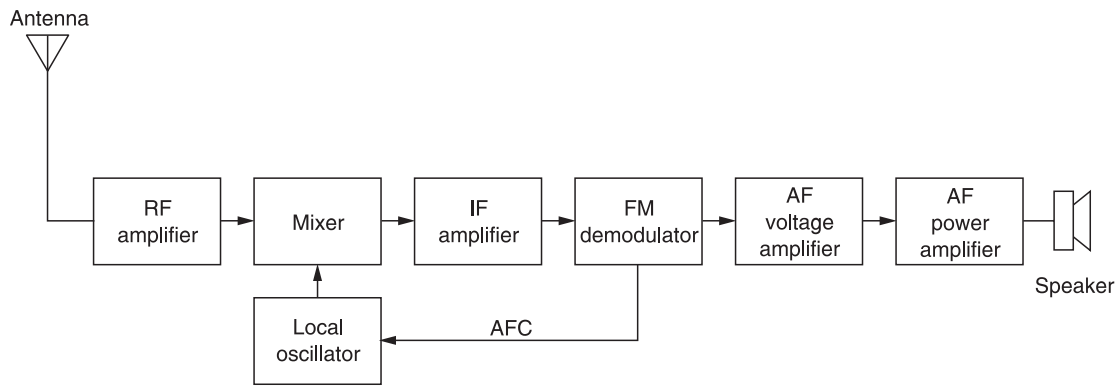

Figure 1-7 *FM radio block diagram*

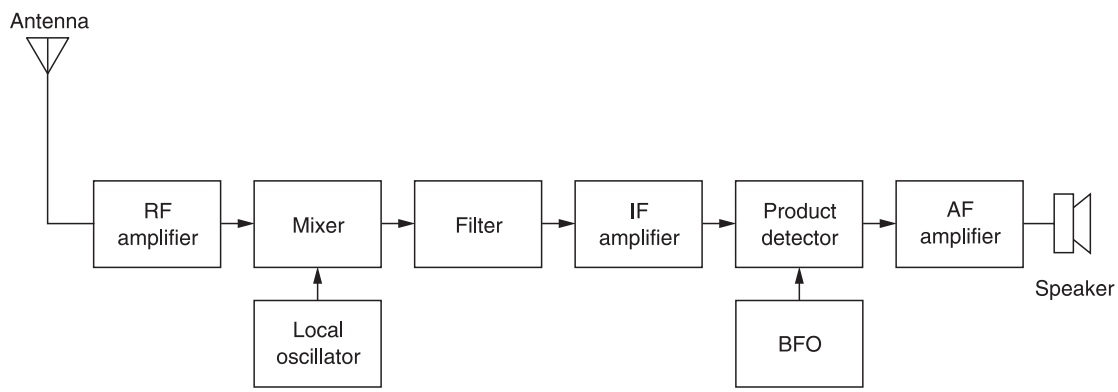

Figure 1-8 *SSB shortwave receiver block diagram*

Chapter 2

Identifying Components and Reading Schematics

Identifying electronic components

If you are a beginner to electronics or radio, you may want to take a few minutes to learn a little about identifying electronic components, reading schematics, and installing electronic components on a circuit board. You will also learn how to solder, in order to make long-lasting and reliable solder joints.

Electronic circuits comprise electronic components such as resistors and capacitors, diodes, semiconductors and LEDs, etc. Each component has a specific purpose that it accomplishes in a particular circuit. In order to understand and construct electronic circuits it is necessary to be familiar with the different types of components, and how they are used. You should also know how to read resistor and capacitor color codes, recognize physical components and their representative diagrams and pin-outs. You will also want to know the difference between a schematic and a pictorial diagram. First, we will discuss the actual components and their functions and then move on to reading schematics, then we will help you to learn how to insert the components into the circuit board. In the next chapter we will discuss how to solder the components to the circuit board.

The diagrams shown in Figures 2-1, 2-2 and 2-3 illustrate many of the electronic components that we will be using in the projects presented in this book.

Types of resistors

Resistors are used to regulate the amount of current flowing in a circuit. The higher the resistor's value or resistance, the less current flows and conversely a lower resistor value will permit more current to flow in a circuit. Resistors are measured in ohms (Ω) and are identified by color bands on the resistor body. The first band at one end is the resistor's first digit, the second color band is the resistor's second digit and the third band is the resistors's multiplier value. A fourth color band on a resistor represents the resistor's tolerance value. A silver band denotes a 10% tolerance resistor, while a gold band denotes a 5% resistor tolerance. No fourth band denotes that a resistor has a 20% tolerance. As an example, a resistor with a brown, black, and red band will represent the digit (1), the digit (0), with a multiplier value of (00) or 1000, so the resistor will have a value of 1k or 1000 ohms. There are a number of different styles and sizes of resistor. Small resistors can be carbon, thin film or metal. Larger resistors are made to dissipate more power and they generally have an element wound from wire.

A potentiometer (or pot) is basically a variable resistor, generally having three terminals and fitted with a rotary control shaft which varies the resistance as it is rotated. A metal wiping contact rests against a circular carbon or wire wound resistance track. As the wiper arm moves about the circular resistance, the resistance to the output terminals changes. Potentiometers are

Copyright © 2008 by The McGraw-Hill Companies, Inc. Click here for terms of use.

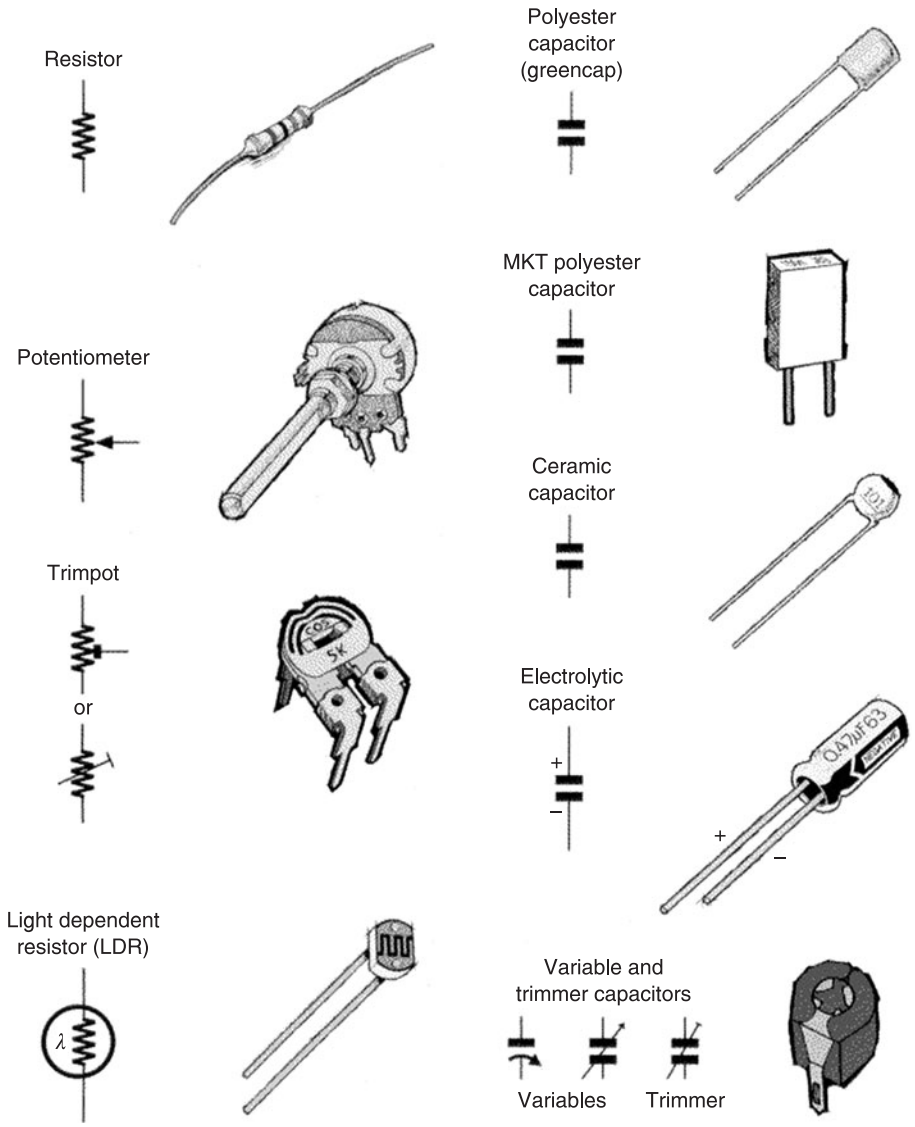

Figure 2-1 *Electronic components 1*

commonly used as volume controls in amplifiers and radio receivers.

A trimpot is a special type of potentiometer which, while variable, is intended to be adjusted once or only occasionally. For this reason a control shaft is not provided but a small slot is provided in the center of the control arm. Trimpots are generally used on printed circuit boards.

A light-dependent resistor (LDR) is a special type of resistor that varies its resistance value according to the amount of light falling on it. When it is in the dark, an LDR will typically have a very high resistance, i.e. millions of ohms. When light falls on the LDR the resistance drops to a few hundred ohms.

Types of capacitors

Capacitors block DC current while allowing varying or AC current signals to pass. They are commonly used for coupling signals from part of a circuit to another part of a circuit, they are also used in timing circuits. There are a number of different types of capacitor as described below.

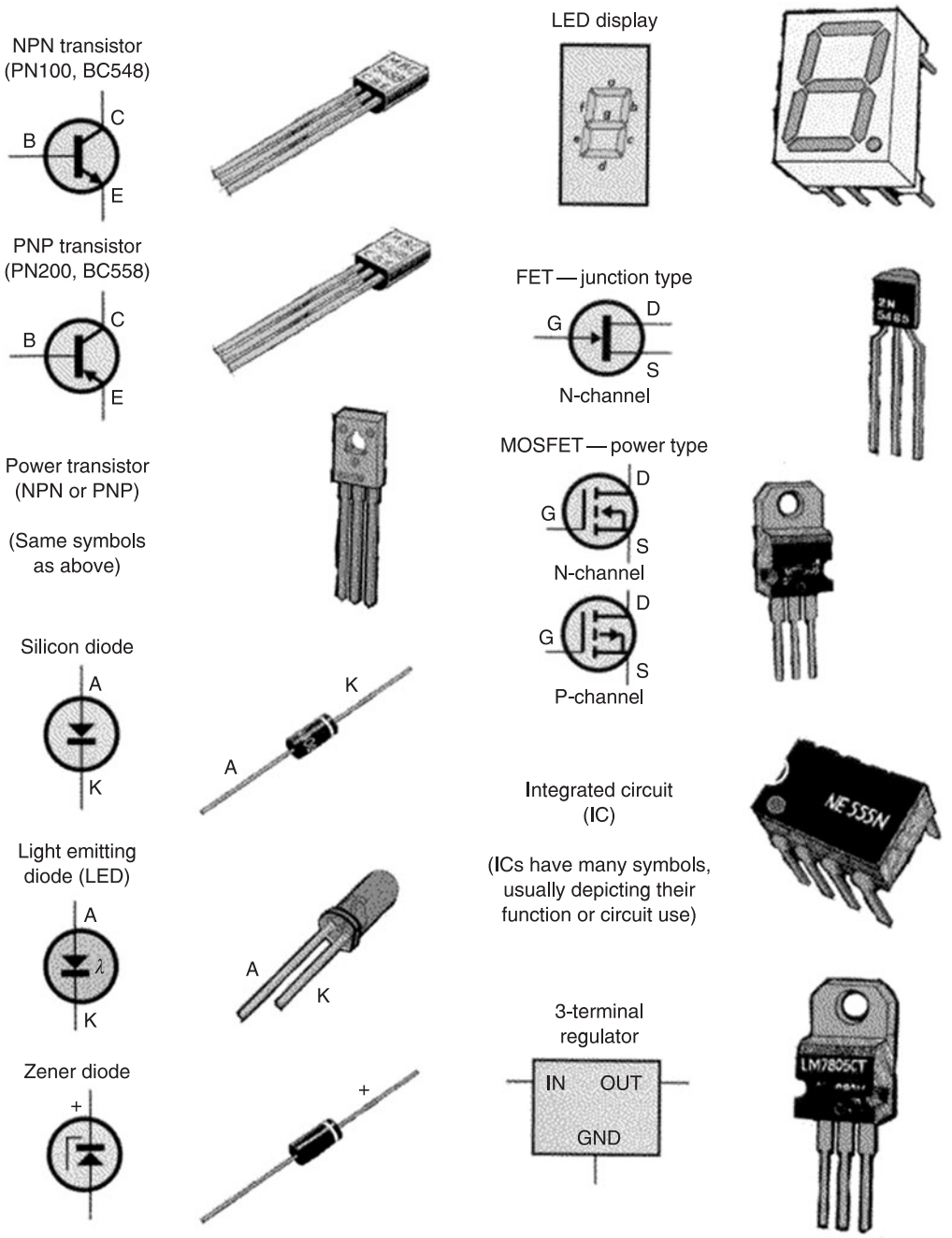

Figure 2-2 *Electronic components 2*

Polyester capacitors use polyester plastic film as their insulating dielectric. Some polyester capacitors are called greencaps because they are coated with a green or brown color coating on the outside of the component. Their values are specified in microfarads or (µF), nanofarads, (nF), or picofarads (pF) and range from 1 nF up to about 10 µF. These capacitors do not have polarity and have fixed values.

MKT capacitors are another type of capacitor, but they are rectangular or (block) in shape and are usually yellow in color. One of the major advantages of these capacitors is a more standardized lead spacing, making them more useful for PC board projects. The components can generally be substituted for polyester types.

Ceramic capacitors use a tiny disk of ceramic or porcelain material in their construction for a dielectric

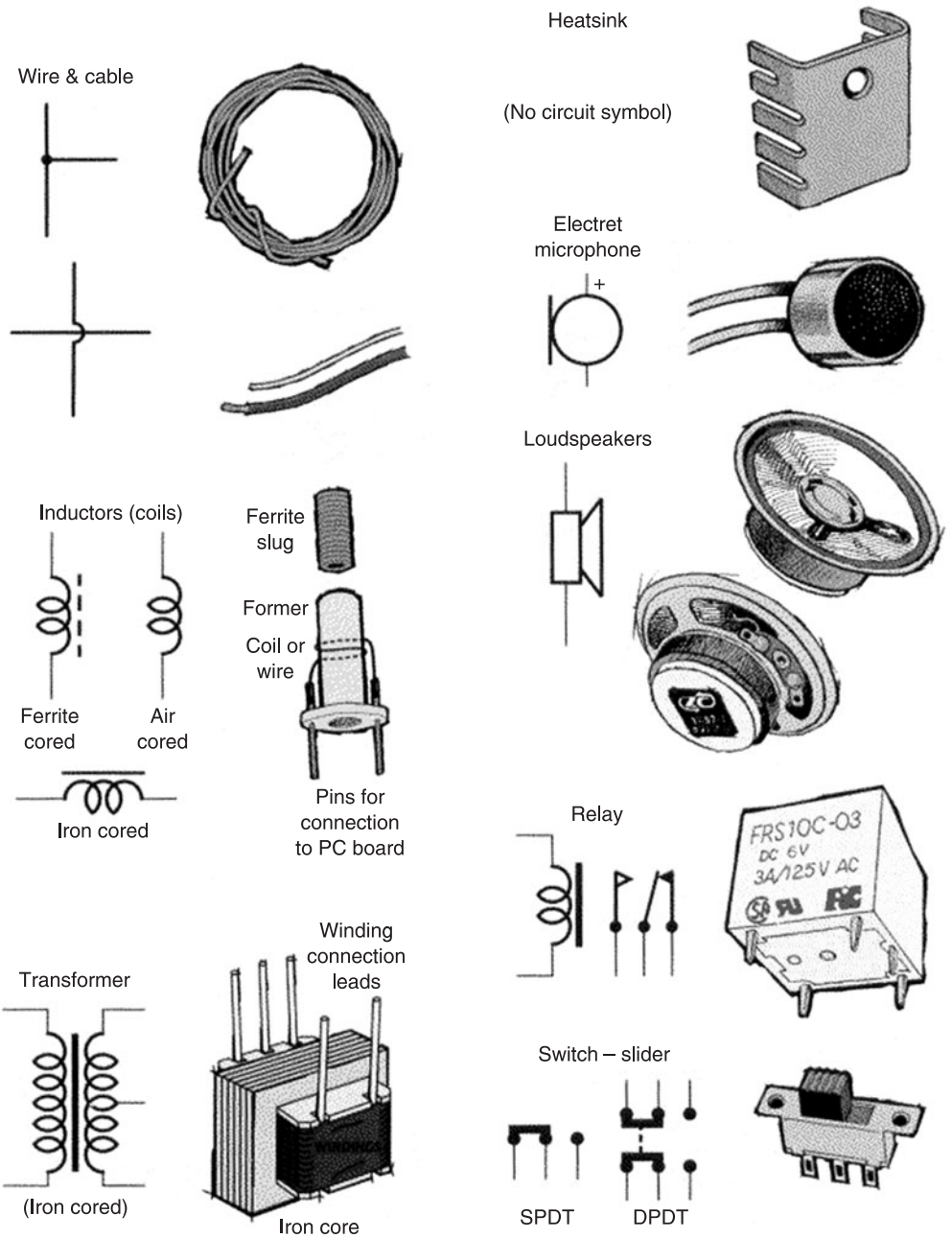

Figure 2-3 *Electronic components 3*

and they range in value from 1 pF up to 2.2 µF. Those with values above 1 nF are often made with multiple layers of metal electrodes and dielectric, to allow higher capacitance values in smaller bodies. These capacitors are usually called 'multilayer monolithics' and distinguished from lower value disk ceramic types. Ceramic capacitors are often used in RF radio circuits and filter circuits.

Electrolytic capacitors use very thin film of metal oxide as their dielectric, which allows them to provide a large amount of capacitance in a very small volume. They range in value from 100 nF up to hundreds and thousands of microfarads (µF). They are commonly used to filter power supply circuits, coupling audio circuits and in timing circuits. Electrolytic capacitors have polarity and must be installed with respect to these polarity marking. The capacitor will have either a white or black band denoting polarity with a plus (+) or minus (–) marking next to the color band.

Variable capacitors are used in circuits for (trimming) or adjustment, i.e. for setting a frequency. A variable capacitor has one set of fixed plates and one set of plates which can be moved by turning a knob. The dielectric between the plates is usually a thin plastic film. Most variable capacitors have low values up to a few tens of picofarads (pF) and a few hundreds of microfarads for larger variable capacitors.

Diodes

A diode is a semiconductor device which can pass current in one direction only. In order for current to flow the anode (A) must be positive with respect to the cathode (K). In this condition, the diode is said to be forward biased and a voltage drop of about .6 volt appears across its terminals. If the anode is less than .6 volt positive with respect to the cathode, negligible current will flow and the diode behaves as an open circuit.

Types of transistors

Transistors are semiconductor devices that can be used either as electronic switches or to amplify signals. They have three leads, called the Collector, Base, and Emitter. A small current flowing between base and emitter (junction) causes a much larger current to flow between the emitter and collector (junction). There a two basic types of transistors, PNP and NPN styles.

Field Effect Transistors, or FETs, are a different type of transistor, which usually still have three terminals but work in a different way. Here the control element is the "gate" rather than the base, and it is the "gate" voltage which controls the current flowing in the "channel" between the other terminals—the "source" and the "drain." Like ordinary transistors FETs can be used either as electronic switches or as amplifiers; they also come in P-channel and N-channel types, and are available in small signal types as well as power FETs.

Power transistors are usually larger than the smaller signal type transistors. Power transistors are capable of handling larger currents and voltages. Often metal tabs and heatsinks are used to remove excess heat from the part. These devices are usually bolted to the chassis and are used for amplifying RF or audio energy.

Integrated circuits

Integrated circuits, or ICs, contain all, or most, of the components necessary for a particular circuit function, in one package. Integrated circuits contain as few as 10 transistors or many millions of transistors, plus many resistors, diodes and other components. There are many shapes, styles and sizes of integrated circuits: in this book we will use the dual-in-line style IC, either 8, 14 or 16 pin devices.

Three-terminal regulators are special types of integrated circuits, which supply a regulated or constant and accurate voltage from output regardless (within limits) of the voltage applied to input. They are most often used in power supplies. Most regulators are designed to give specific output voltages, i.e. a 'LM7805" regulator provides a 5 volt output, but some IC regulators can provide adjustable output based on an external potentiometer which can vary the output voltage.

Heatsinks

Many electronic components generate heat when they are operating. Generally heatsinks are used on semiconductors like transistors to remove heat. Overheating can damage a particular component or the entire circuit. The heatsink cools the transistor and ensures a long circuit life by removing the excess heat from the circuit area.

Light-emitting diodes

Light-emitting diodes, or LEDs, are special diodes which have a plastic translucent body (usually clear, red, yellow, green or blue in color) and a small semiconductor element which emits light when the diode passes a small current. Unlike an incandescent lamp, an LED does not need to get hot to produce light. LEDs must always be forward biased to operate. Special LEDs can also produce infrared light.

LED displays consist of a number of LEDs together in a single package. The most common type has seven elongated LEDs arranged in an “8” pattern. By choosing which combinations of LEDs are lit, any number of digits from “0” through “9” can be displayed. Most of these “7-segment” displays also contain another small round LED which is used as a decimal point.

Types of inductors

Inductors or “coils” are basically a length of wire, wound into a cylindrical spiral (or layers of spirals) in order to increase their inductance. Inductance is the ability to store energy in a magnetic field. Many coils are wound on a former of insulating material, which may also have connection pins to act as the coil’s terminals. The former may also be internally threaded to accept a small core or “slug” of ferrite, which can be adjusted in position relative to the coil itself to vary the coil inductance.

A transformer consists of a number of coils of windings of wire wound on a common former, which is also inside a core of iron alloy, ferrite of other magnetic material. When an alternating current is passed through one of the windings (primary), it produces an alternating magnetic field in the core and this in turn induces AC voltages in the other (secondary) windings. The voltages produced in the other winding depend on the number of turns in those windings, compared with the turns in the primary winding. If a secondary winding has fewer turns than the primary, it will produce a lower voltage, and be called a step-down transformer. If the secondary winding has more windings than the primary, then the transformer will produce a higher voltage and it will be a step-up transformer. Transformers can be used to change the voltage levels of AC power and they are available in many different sizes and power handling capabilities.

Microphones

A microphone converts audible sound waves into electrical signals which can be then amplified. In an electret microphone, the sound waves vibrate a circular diaphragm made from very thin plastic material which has a permanent charge in it. Metal films coated on each side form a capacitor, which produces a very small AC voltage when the diaphragm vibrates. All electret microphones also contains FET which amplifies the very small AC signals. To power an FET amplifier, the microphone must be supplied with a small DC voltage.

Loudspeakers

A loudspeaker converts electrical signals into sound waves that we can hear. It has two terminals which go to a voice coil, attached to a circular cone made of either cardboard or thin plastic. When electrical signals are applied to the voice coil, its creates a varying magnetic field from a permanent magnet at the back of the speaker. As a result the cone vibrates in sympathy with the applied signal to produce sound waves.

Relays

Many electronic components are not capable of switching higher currents or voltages, so a device called a relay is used. A relay has a coil which forms an electromagnet, attracting a steel “armature” which itself pushes on one or more sets of switching contacts. When a current is passed through the coil to energize it, the moving contacts disconnect from one set of contacts to another, and when the coil is de-energized the contacts go back to their original position. In most cases, a relay needs a diode across the coil to prevent damage to the semiconductor driving the coil.

Switches

A switch is a device with one or more sets of switching contacts, which are used to control the flow of current in a circuit. The switch allows the contacts to be controlled by a physical actuator of some kind—such as a press-button toggle lever, rotary or knob, etc. As the name denotes, this type of switch has an actuator bar which slides back and forth between the various contact positions. In a single-pole, double throw, or “SPDT”

slider switch, a moving contacte links the center contact to either of the two end contacts. In contrast, a double-pole double throw (DPDT) slider switch has two of these sets of contacts, with their moving contacts operating in tandem when the slider is actuated.

Wire

A wire is simply a length of metal conductor, usually made from copper since its conductivity is good, which means its resistance is low. When there is a risk of a wire touching another wire and causing a short, the copper wire is insulated or covered with a plastic coating which acts as an insulating material. Plain copper wire is not usually used since it will quickly oxidize or tarnish in the presence of air. A thin metal alloy coating is often applied to the copper wire; usually an alloy of tin or lead is used.

Single or multi-strand wire is covered in colored PVC plastic insulation and is used quite often in electronic applications to connect circuits or components together. This wire is often called “hooku” wire. On a circuit diagram, a solid dot indicates that the wires or PC board tracks are connected together or joined, while a “loop-over” indicates that they are not joined and must be insulated. A number of insulated wires enclosed in an outer jacket is called an electrical cable. Some electrical cables can have many insulated wires in them.

Semiconductor substitution

There are often times when building an electronic circuit, it is difficult or impossible to find or locate the original transistor or integrated circuit. There are a number of circuits shown in this book which feature transistors, SCRs, UJTs, and FETs that are specified but cannot easily be found. Where possible many of these foreign components are converted to substitute values, either with a direct replacement or close substitution. Many foreign parts can be easily converted directly to a commonly used transistor or component. Occasionally an outdated component has no direct common replacement, so the closest specifications of that component are attempted. In some instances we have specified replacement components with substitution components from the NTE brand or replacements. Most of the components for the projects used in this book are quite common and easily located or substituted without difficulty.

When substituting components in the circuit, make sure that the pin-outs match the original components. Sometimes, for example, a transistor may have bottom view drawing, while the substituted value may have a drawing with a top view. Also be sure to check the pin-outs or the original components versus the replacement. As an example, some transistors will have EBC versus ECB pin-outs, so be sure to look closely at possible differences which may occur.

Reading electronic schematics

The heart of all radio communication devices, both transmitters and receivers, all revolve around some type of oscillator. In this section we will take a look at what is perhaps the most important part of any receiver, and that is the oscillator. Communication transmitters, receivers, frequency standards and synthesizers all use some type of oscillators circuits. Transmitters need oscillators for their exciters, while receivers most often use local oscillators to mix signals. In this section you will see how specific electronics components are utilized to form oscillator circuits. Let’s examine a few of the more common types of oscillator designs and their building considerations. In this section, you will also tell the difference between a schematic diagram and a pictorial diagram. A schematic diagram illustrates the electronic symbols and how the components connect to one another, it is the circuit blue-print and pretty much universal among electronic enthusiasts. A pictorial diagram, on the other hand, is a “picture” of how the components might appear in an actual circuit on a circuit board of one type or another. Take a close look at the difference between the two types of diagram, and they will help you later when building actual circuits. Our first type of oscillator shown below is The Hartley.

Hartley oscillator

The Hartley RF oscillator, illustrated in Figure 2-4, is centered around the commonly available 2N4416A FET transistor. This general purpose VFO oscillator operates around 5100 kHz. The frequency determining components are L1, C1, a 10 pF trimmer and capacitors C2, C3, C4, C5 and C6. Note capacitor C6 is a 10-100 pF variable trimmer type. Capacitor C7 is to reduce the loading on the tuned circuit components. Its value can be small but be able to provide sufficient drive to the succeeding buffer amplifier stage. You can experiment using a small viable capacitor trimmer, such as a 5-25 pF.

The other components, such as the two resistors, silicon diode at D1 are standard types, nothing particularly special. The Zener diode at D2 is a 6.2 volt type. Capacitor C8 can be selected to give higher/lower output to the buffer amplifier. Smaller C6 values give lower output and conversely higher values give larger output.

In order to get the circuit to work properly, you need to have an inductive reactance for L1 of around about 180 ohms. At 5 MHz this works out at about 5.7 uH. The important consideration, is that the feedback point from the source of the JFET connects to about 25% of the windings of L1 from the ground end. An air cored inductor is shown in the diagram. It could be, for example, 18-19 turns of #20 gauge wire on a 25.4 mm (1″) diameter form spread evenly over a length of about 25.4 mm (1″). The tap would be at about 4½ turns. Alternatively, with degraded performance, you could use a T50-6 toroid and wind say 37 turns of #24 wire (5.48 µH) tapping at 9 turns.

So to have the oscillator operate at around 5 MHz, we know the LC is 1013 and if L is say 5.7 µH then total C for resonance (just like LC Filters eh!) is about 177 pF. We want to be able to tune from 5000 to 5100 kHz, a tuning ratio of 1.02, which means a capacitance ratio of 1.04 (min to max).

Colpitts oscillators

Colpitts oscillators are similar to the shunt fed Hartley oscillator circuit except the Colpitts oscillator, instead of having a tapped inductor, utilizes two series capacitors in its LC circuit. With the Colpitts oscillator the connection between these two capacitors is used as the center tap for the circuit. A Colpitts oscillator circuit is shown at Figure 2-5, and you will see some similarities with the Hartley oscillator.

The simplest Colpitts oscillator to construct and get running is the "series tuned" version, more often referred to as the "Clapp Oscillator." Because there is no load on the inductor, a high "Q" circuit results with a high L/C ratio and of course much less circulating current. This aids drift reduction. Because larger inductances are required, stray inductances do not have as much impact as perhaps in other circuits.

The total capacitive reactance of the parallel combination of capacitors depicted as series tuning below the inductor in a series tuned Colpitts oscillator or "Clapp oscillator" should have a total reactance of

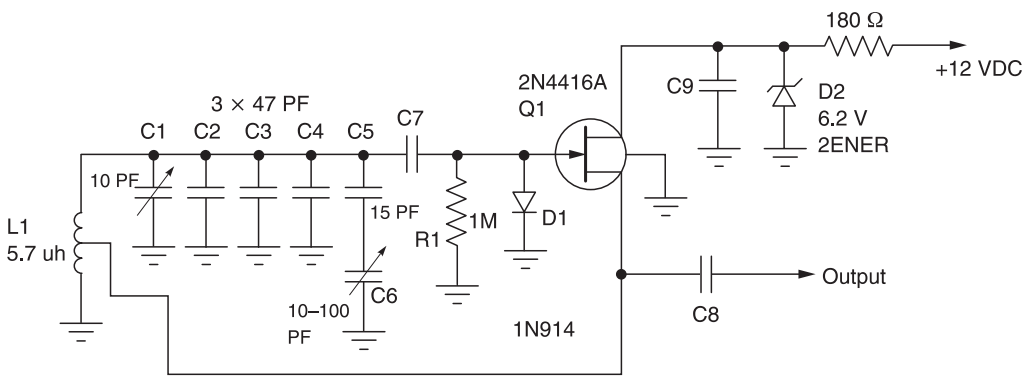

Figure 2-4 *Hartley oscillator circuit*

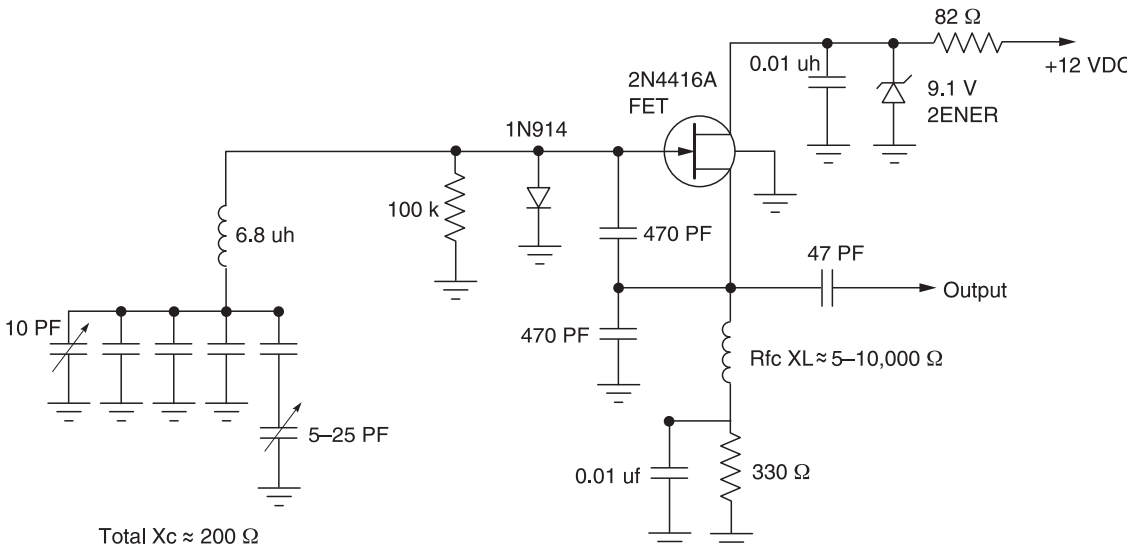

Figure 2-5 *Series tuned Colpitts oscillator circuit*

around 200 ohms. Not all capacitors may be required in your particular application. Effectively all the capacitors are in series in a Colpitts oscillator, i.e. they appear as parallel connected but their actual values are in fact in series.

Ideally, your frequency determining components L1 and the parallel capacitors should be in a grounded metal shield. The FET used in the Colpitts oscillator is the readily available 2N4416A. Note, the metal FET case is connected to the circuit ground. The output from the Colpitts oscillator is through output capacitor 47 pF; this should be the smallest of values possible, consistent with continued reliable operation into the next buffer amplifier stage.

Crystal oscillators

Crystal oscillators are oscillators where the primary frequency determining element is a quartz crystal. Because of the inherent characteristics of the quartz crystal the crystal oscillator may be held to extreme accuracy of frequency stability.

Crystal oscillators are, usually, fixed frequency oscillators where stability and accuracy are the primary considerations. For example, it is almost impossible to design a stable and accurate LC oscillator for the upper HF and higher frequencies without resorting to some sort of crystal control. Hence the reason for crystal oscillators.

The crystal oscillator depicted at Figure 2-6 is a typical example of an RF or radio frequency crystal oscillators which may be used for exciters or RF converters. Transistor Q1, can be any transistor which will operate up to 150 MHz, such as a 2N2222A.

The turns ratio on the tuned circuit depicts an anticipated nominal load of 50 ohms. This allows a theoretical 2.5k ohms on the collector, so typically a 7:1 turns ratio for T1 would be used. Use the: L * C = 25330 / $F0^2$ formula for determining L and C in the tuned circuits of crystal oscillator. Personally I would make L a reactance of around 250 ohms. In this case, I'd make C1 a smaller trimmer capacitor. The crystal at X1 could be an overtone type crystal for the crystal, selecting a L * C for the odd particular multiple of overtone wanted in your crystal oscillators. Typically the output of the crystal oscillator would be followed by a buffer circuit. A pictorial diagram of the crystal controlled oscillator circuit is shown in Figure 2-7. Note that the components in this diagram are illustrated as component blocks as they might actually look placed on the circuit, rather than as electronic symbols in a circuit diagram or schematic.

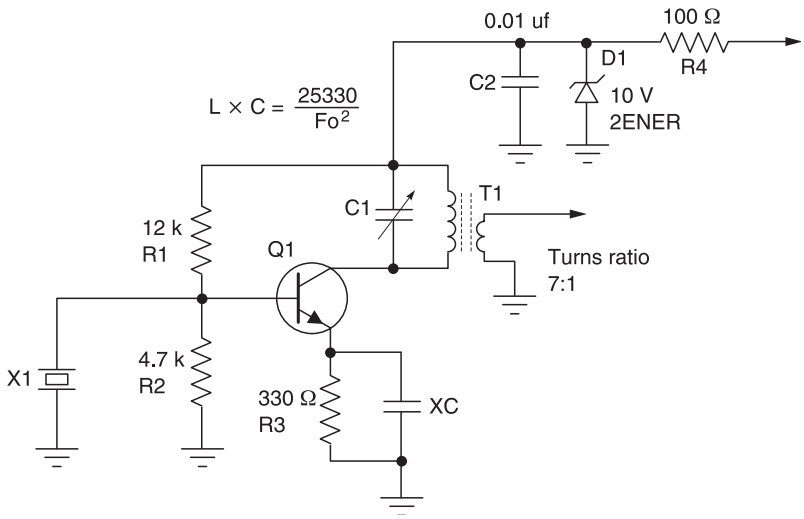

Figure 2-6 *Crystal oscillator circuit*

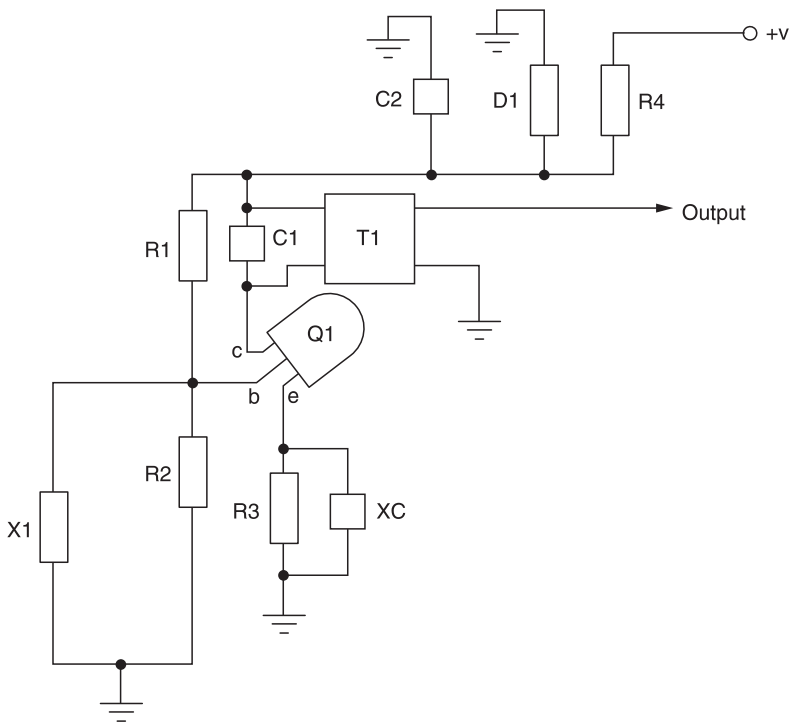

Figure 2-7 *Crystal oscillator pictorial diagram*

Ceramic resonator VFO oscillator

The ceramic resonator VFO, or variable frequency oscillator circuit shown in Figure 2-8, illustrates a 7MH oscillator with a variable crystal oscillator (VXO). The VXO oscillator is extremely stable, but allows only a small variation in frequency, as compared with a conventional VFO. In contrast, a VFO with an LC resonant circuit can be tuned over a range of several hundred kHz, but its frequency stability will depend upon its construction, and is never as good as a crystal oscillator. The use of a ceramic resonator as a frequency determining component fulfills both requirements. The VXO oscillator is very stable yet it can vary the frequency, so the oscillator can be tuned. The range of a VXO oscillator circuit is not as wide as an LC oscillator but it offers a tuning range of 35 kHz with good frequency stability. The somewhat unusual resonant LC circuit at the collector of Q1 has two functions. It improves the shape of the output signal and also compensates for the amplitude drop starting at approx. 7020 kHz. Transistor Q1 is a readily obtainable 2N3904 and the ceramic resonator is a Murata SFE 7.02 M2C type or equivalent. Inductor L1 consists of two coils on a T50-2 powered iron toroid. The primary coil is 8-turns, while the secondary coil is 2-turns.

The diagram shown in Figure 2-9 depicts the ceramic resonator as a pictorial diagram, where the components look as a components block that might be placed in a circuit rather than an actual schematic diagram.

Voltage controlled oscillator (VCO)

A voltage controlled oscillator, or VCO, is an oscillator where the main variable tuning capacitor is a varactor diode. The voltage controlled oscillator is tuned across the "band" by a well regulated Dc voltage applied to the varactor diode, which varies the net capacitance applied to the tuned circuit. The voltage controlled oscillator, shown in Figure 2-10, illustrates a VCO which operates in the amateur radio band between 1.8 and 2.0 MHz.

Buying quality variable capacitors today is often quite expensive, so VCOs are an extremely attractive alternative. As an alternative, all you need is an extremely stable and clean source of Dc power, a varactor diode and a high quality potentiometer—usually a 10 turn type. Note that circuit "Q" tends to be somewhat degraded by using varactor diodes instead of variable capacitors.

When a reverse voltage is applied to a diode, it exhibits the characteristics of a capacitor. Altering the voltage alters the capacitance. Common diodes such as

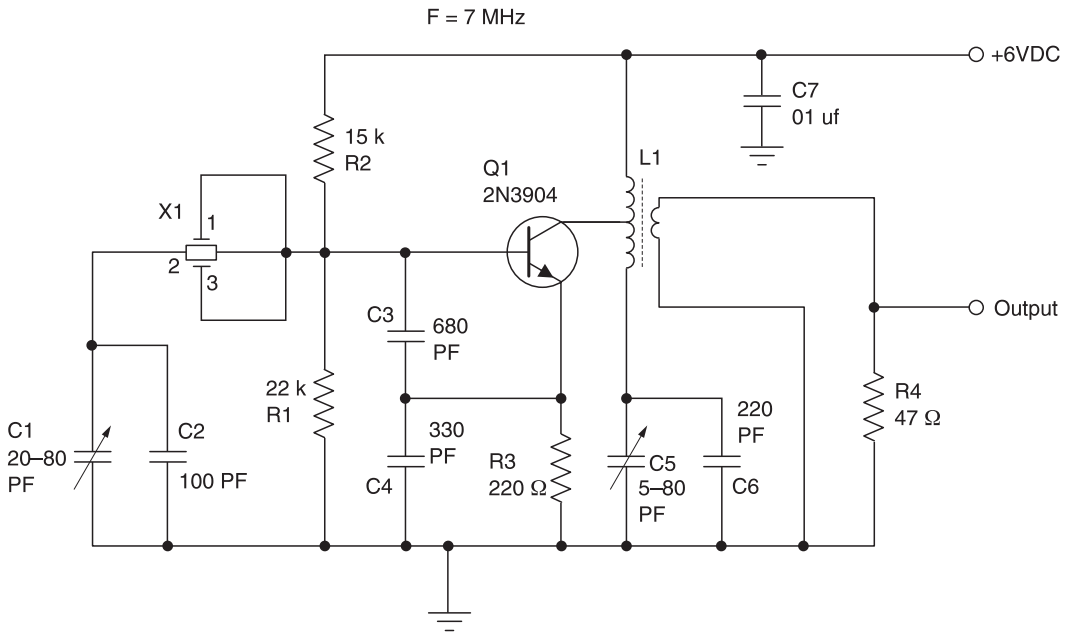

Figure 2-8 *Ceramic resonator VFO circuit*

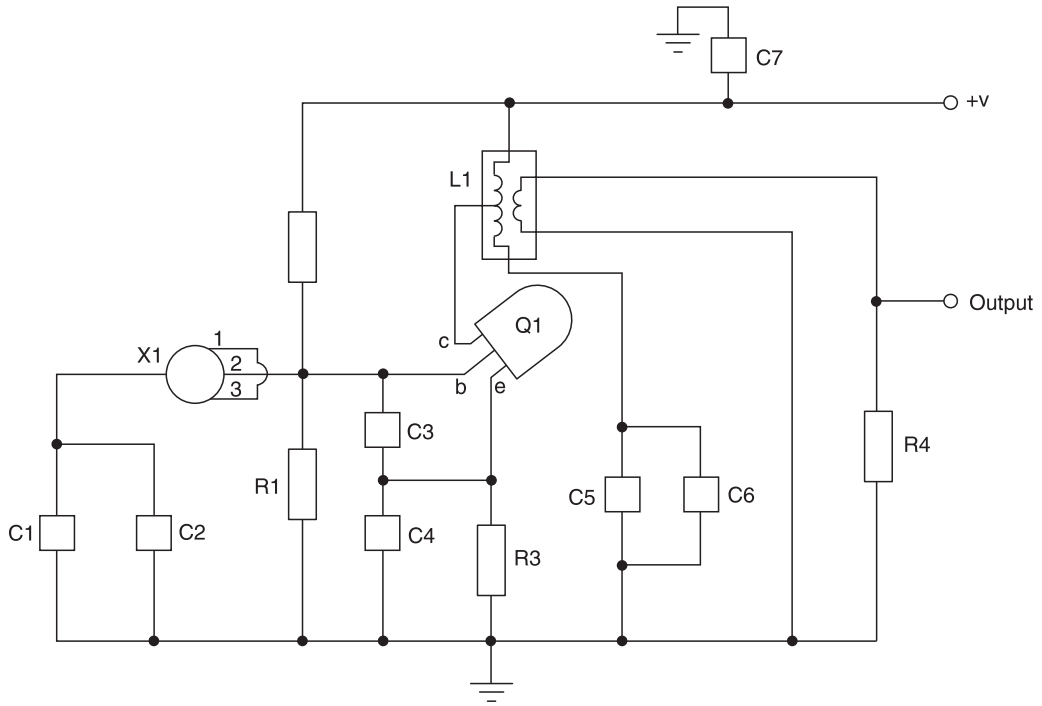

Figure 2-9 *Ceramic resonator VFO pictorial circuit diagram*

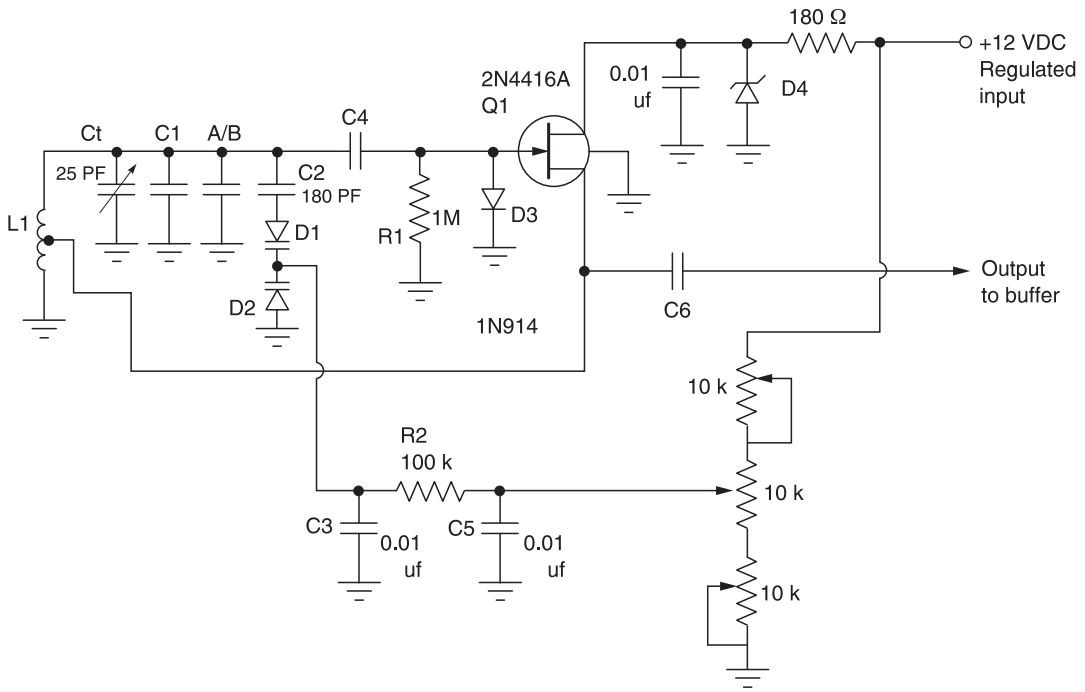

Figure 2-10 *Voltage controlled oscillator (VCO) circuit*

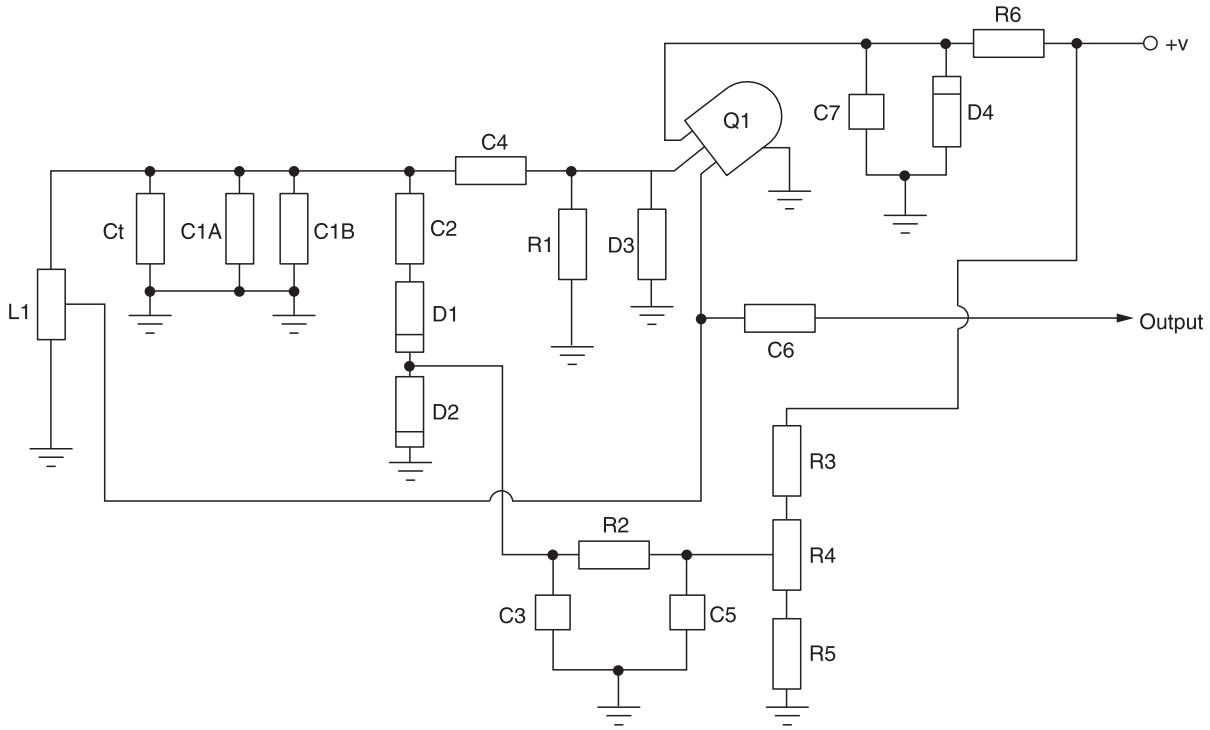

Figure 2-11 *Voltage controlled oscillator (VCO) pictorial diagram*

1N914 and 1N4004 can be used, but more commonly a special diode known as a varactor diode is specifically manufactured for VCO use, such as Motorola's MVAM115.

The variable capacitor in this circuit is replaced by a varactor diode as a tuning diode, in series with capacitor C2. Note, the two, diodes back-to-back in series. Although this in effect divides total varactor diode capacitance by two, it eliminates RF energy present in the tank circuit driving a single diode into conduction on peaks which will increase the bias voltage; this also gives rise to harmonics.

Inductor L is wound on a toroid, an Amidon T50-2 type which would require about 55 turns of #26 wire, or even the T68-2 type requiring about 51 turns of #24 wire. Both gauges mentioned are those which will conveniently fit around the core. The inductor should have a value of about 15 µH. Capacitor C2 should have around180 pF, and the total capacitance of C1 a/b should be 390 pF. C4 is used to reduce the loading of the tuned circuit components. Its value can be small but be able to provide sufficient drive to the succeeding buffer amplifier stage. You can experiment using a small viable capacitor trimmer, such as a 5-25 pF.

The 10K potentiometer is a 10 turn "quality" potentiometer for tuning; the upper and lower trim pots (set and forget) allow you to adjust the voltage range of your choice that your tuning potentiometer will see. Use "quality" trimpots for these potentiometers, since they will affect the stability of the tuning of the circuit. The 100K resistor and the two 0.1 µF capacitors are further filtering. The diagram in Figure 2-11 depicts a pictorial diagram of the voltage controlled oscillator circuit. The circuit is shown as the components might appear rather than as symbols in a schematic diagram. The pictorial diagram often reflects an actual layout or parts placement and how the parts may appear on a circuit board.

Now that you can identify electronics components and you understand how they function in an electronics circuit, as well how electronics circuits are drawn, we can move on to the how-to-soldering section. In the next chapter, you will learn how to install components and how to solder the components onto a circuit board.

Chapter 3

Electronic parts installation and soldering

Before we discuss mounting the components to the printed circuit board we should take a few minutes to discuss the resistor and capacitor codes which are used to help identify and install these components. Table 3-1 lists the resistor color code information. Resistors generally have three or four color bands which help identify the resistor values. The color band will start from one edge of the resistor body; this is the first color code which represents the first digit, and the second color band depicts the second digit value, while the third color band is the resistor's multiplier value. The fourth color band represents the resistor tolerance value. If there is no fourth band then the resistor has a 20% tolerance; if the fourth band is silver, then the resistor has a 10% tolerance value, and if the fourth band is gold then the resistor has a 5% tolerance value. Therefore, if you have a resistor with the first band having a brown color, the second band with a black color and a third band with an orange color and a fourth with gold, then one (1) times zero (0) multiplied by a value of (1000), so the resistor will have a 10,000 ohm or 10k ohm value with a 5% tolerance.

Now let's move to identifying various capacitors. When identifying and installing the ceramic, mylar or poly capacitors, you will need to refer to Table 3-2, which lists capacitor (code) values vs. actual capacitor values. Most large capacitors, such as electrolytic types, will have their actual value printed on the body of the capacitor. But often with small capacitors they are just too small to have the actual capacitor values printed on them. An abbreviated code was devised to mark the capacitor, as shown in the table. A code marking of (104) would therefore denote a capacitor with a value of .1 µF (microfarads) or 100 nF (nanofarads). Once you understand how these component codes work, you can easily identify the resistors and capacitor and proceed to mount them on the printed circuit board.

Before we begin building actual electronic radio receiver circuits, you will need to understand how to prepare the electronic components before installing them onto the circuit board. First, you will need to know how to "dress" or prepare resistor leads, which is shown in Figure 3-1. Resistor leads are first bent to fit the PC board component holes, then the resistor is mounted to the circuit board. Figure 3-2 depicts how capacitor leads are bent to fit the PC board holes. Once, the capacitor leads are prepared, the capacitor can be installed onto the circuit board. The diagram shown in Figure 3-3 illustrates how to prepare diode leads before mounting them to the PB board. Finally, Figure 3-4 depicts transistor lead preparation, while Figure 3-5 shows how integrated circuit leads are prepared for installation.

Learning how to solder

Everyone working in electronics needs to know how to solder well. Before you begin working on a circuit, carefully read this chapter on soldering. In this section you will learn how to make good solder joints when soldering point-to-point wiring connections as well as for PC board soldering connections.

In all electronics work, the wiring connections must be absolutely secure. A loose connection in a radio results in noise, scratching sounds, or no sound at all. In a TV, poor connections can disrupt the sound or picture. The safe operation of airplanes and the lives of astronauts in flight depend on secure electronics connections.

Copyright © 2008 by The McGraw-Hill Companies, Inc. Click here for terms of use.

Table 3-1
Resistor color code chart

Color Band	*1st Digit*	*2nd Digit*	*Multiplier*	*Tolerance*
Black	0	0	1	
Brown	1	1	10	1%
Red	2	2	100	2%
Orange	3	3	1,000 (K)	3%
Yellow	4	4	10,000	4%
Green	5	5	100,000	
Blue	6	6	1,000,000 (M)	
Violet	7	7	10,000,000	
Gray	8	8	100,000,000	
White	9	9	1,000,000,000	
Gold			0.1	5%
Silver			0.01	10%
No color				20%

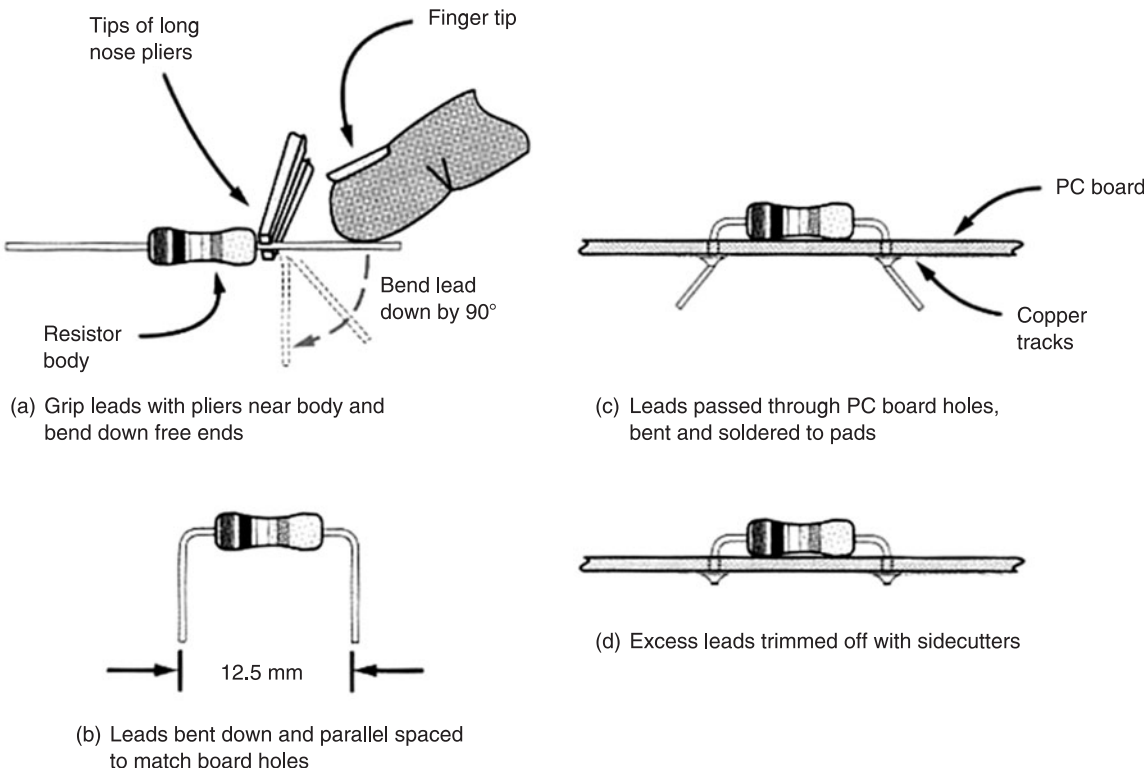

(a) Grip leads with pliers near body and bend down free ends

(b) Leads bent down and parallel spaced to match board holes

(c) Leads passed through PC board holes, bent and soldered to pads

(d) Excess leads trimmed off with sidecutters

Figure 3-1 *Preparing resistor leads for horizontal mounting*

Table 3-2

Capacitor code identification information

This table is designed to provide the value of alphanumeric coded ceramic, mylar and mica capacitors in general. They come in many sizes, shapes, values and ratings; many different manufacturers worldwide produce them and not all play by the same rules. Most capacitors actually have the numeric values stamped on them; however, some are color coded and some have alphanumeric codes. The capacitor's first and second significant number IDs are the first and second values, followed by the multiplier number code, followed by the percentage tolerance letter code. Usually the first two digits of the code represent the significant part of the value, while the third digit, called the multiplier, corresponds to the number of zeros to be added to the first two digits.

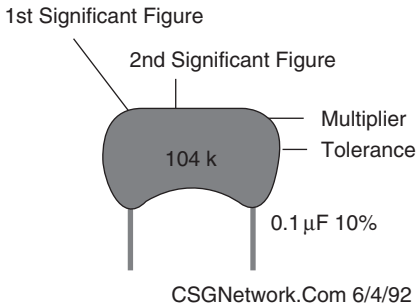

Value	*Type*	*Code*	*Value*	*Type*	*Code*
1.5 pF	Ceramic		1,000 pF /.001 µF	Ceramic / Mylar	102
3.3 pF	Ceramic		1,500 pF /.0015 µF	Ceramic / Mylar	152
10 pF	Ceramic		2,000 pF /.002 µF	Ceramic / Mylar	202
15 pF	Ceramic		2,200 pF /.0022 µF	Ceramic / Mylar	222
20 pF	Ceramic		4,700 pF /.0047 µF	Ceramic / Mylar	472
30 pF	Ceramic		5,000 pF /.005 µF	Ceramic / Mylar	502
33 pF	Ceramic		5,600 pF /.0056 µF	Ceramic / Mylar	562
47 pF	Ceramic		6,800 pF /.0068 µF	Ceramic / Mylar	682
56 pF	Ceramic		.01	Ceramic / Mylar	103
68 pF	Ceramic		.015	Mylar	
75 pF	Ceramic		.02	Mylar	203
82 pF	Ceramic		.022	Mylar	223
91 pF	Ceramic		.033	Mylar	333
100 pF	Ceramic	101	.047	Mylar	473
120 pF	Ceramic	121	.05	Mylar	503
130 pF	Ceramic	131	.056	Mylar	563
150 pF	Ceramic	151	.068	Mylar	683
180 pF	Ceramic	181	.1	Mylar	104
220 pF	Ceramic	221	.2	Mylar	204
330 pF	Ceramic	331	.22	Mylar	224
470 pF	Ceramic	471	.33	Mylar	334
560 pF	Ceramic	561	.47	Mylar	474
680 pF	Ceramic	681	.56	Mylar	564
750 pF	Ceramic	751	1	Mylar	105
820 pF	Ceramic	821	2	Mylar	205

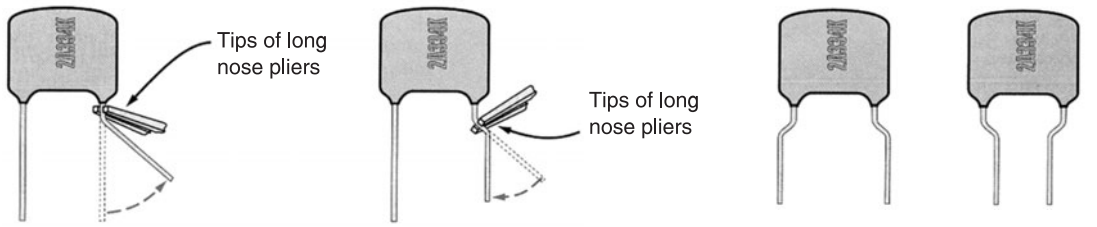

(a) Grip leads with pliers near body and bend out or in by 45°

(b) Grip now about 2 mm down and bend down by 45°, parallel again

(c) Both leads cranked in (or out) if necessary to match PC board hole spacing

Figure 3-2 *"Dressing" capacitor component leads*

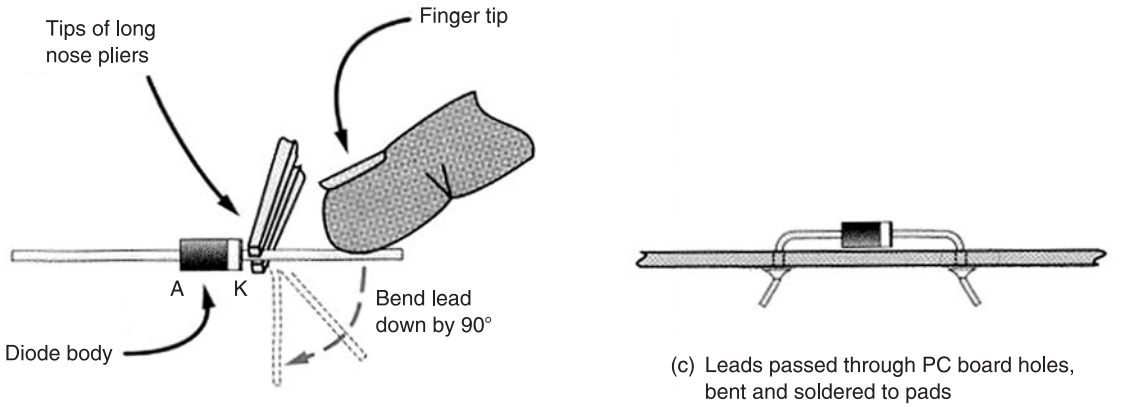

(a) Grip leads with pliers near body and bend down free ends

(c) Leads passed through PC board holes, bent and soldered to pads

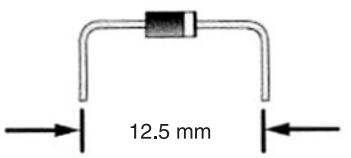

(b) Leads bent down and parallel, spaced to match board holes

(d) Excess leads trimmed off with sidecutters

Figure 3-3 *Preparing diode leads for horizontal mounting*

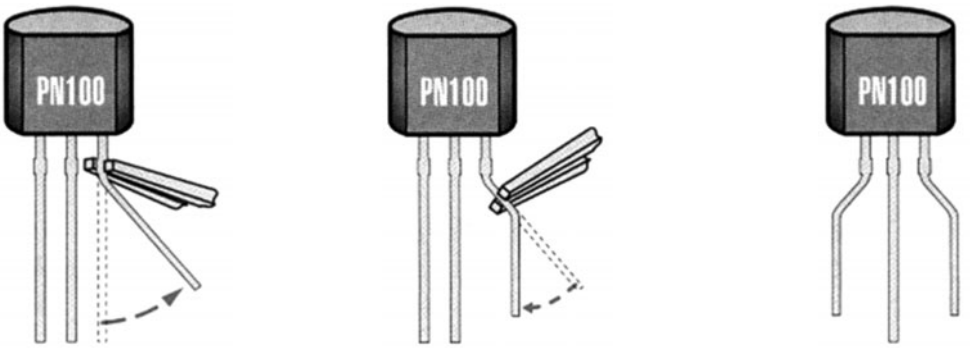

(a) Grip outer lead near body and bend out by 45°

(b) Grip about 2 mm down and bend down by 45°, parallel again

(c) Both leads cranked to match 2.5 mm PC board hole spacing

Figure 3-4 *"Dressing" TO-92 transistor leads*

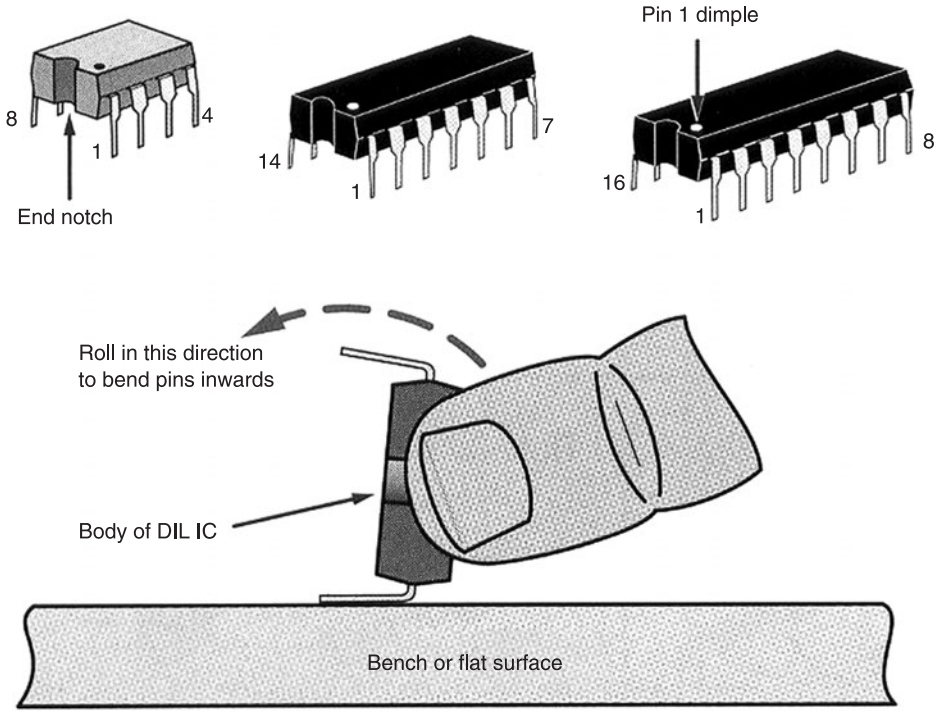

Figure 3-5 *DIL IC packages and preparing them for insertion*

Soldering joins two pieces of metal, such as electrical wires, by melting them together with another metal to form a strong, chemical bond. Done correctly, it unites the metals so that electrically they act as one piece of metal. Soldering is not just gluing metals together. Soldering is tricky and intimidating in practice, but easy to understand in theory. Basic supplies include a soldering iron, which is a prong of metal that heats to a specific temperature through electricity, like a regular iron. The solder, or soldering wire, often an alloy of aluminum and lead, needs a lower melting point than the metal you're joining. Finally, you need a cleaning resin called flux that ensures the joining pieces are incredibly clean. Flux removes all the oxides on the surface of the metal that would interfere with the molecular bonding, allowing the solder to flow into the joint smoothly. You also need two things to solder together.

The first step in soldering is cleaning the surfaces, initially with sandpaper or steel wool and then by melting flux onto the parts. Sometimes, flux is part of the alloy of the soldering wire, in an easy-to-use mixture. Then, the pieces are both heated above the melting point of the solder (but below their own melting point) with the soldering iron. When touched to the joint, this precise heating causes the solder to "flow" to the place of highest temperature and makes a chemical bond. The solder shouldn't drip or blob, but spread smoothly, coating the entire joint. When the solder cools, you should have a clean, sturdy connection.

Many people use soldering in their field, from electrical engineering and plumbing to jewelry and crafts. In a delicate procedure, a special material, called solder, flows over two pre-heated pieces and attaches them through a process similar to welding or brazing. Various metals can be soldered together, such as gold and sterling silver in jewelry, brass in watches and clocks, copper in water pipes, or iron in leaded glass stained windows. All these metals have different melting points, and therefore use different solder. Some "soft" solder, with a low melting point, is perfect for wiring a circuit board. Other "hard" solder, such as for making a bracelet, needs a torch rather than a soldering iron to get a hot enough temperature. Electrical engineers and hobbyists alike can benefit from learning the art and science of soldering.

Solder

The best solder for electronics work is 60/40 rosin-core solder. It is made of 60% tin and 40% lead. This mixture melts at a lower temperature than either lead or tin alone. It makes soldering easy and provides good connections. The rosin keeps the joint clean as it is being soldered. The heat of the iron often causes a tarnish or oxide to form on the surface. The rosin dissolves the tarnish to make the solder cling tightly. Solders have different melting points, depending on the ratio of tin to lead. Tin melts at 450°F and lead at 621°F. Solder made from 63% tin and 37% lead melts at 361°F, the lowest melting point for a tin and lead mixture. Called 63-37 (or eutectic), this type of solder also provides the most rapid solid-to-liquid transition and the best stress resistance. Solders made with different lead/tin ratios have a plastic state at some temperatures. If the solder is deformed while it is in the plastic state, the deformation remains when the solder freezes into the solid state. Any stress or motion applied to "plastic solder" causes a poor solder joint.

The 60-40 solder has the best wetting qualities. Wetting is the ability to spread rapidly and bond materials uniformly; 60-40 solder also has a low melting point. These factors make it the most commonly used solder in electronics.

Some connections that carry high current can't be made with ordinary tin-lead solder because the heat generated by the current would melt the solder. Automotive starter brushes and transmitter tank circuits are two examples. Silver-bearing solders have higher melting points, and so prevent this problem. High-temperature silver alloys become liquid in the 1100°F to l200°F range, and a silver-manganese (85-15) alloy requires almost 1800°F.

Because silver dissolves easily in tin, tin bearing solders can leach silver plating from components. This problem can greatly reduced by partially saturating the tin in the solder with silver or by eliminating the tin. Tin-silver or tin-lead-silver alloys become liquid at temperatures from 430°F for 96.5-3.5 (tin-silver), to 588°F for 1.0-97.5-1.5 (tin-lead-silver). A 15.080.0-5.0 alloy of lead-indium-silver melts at 314°F.

Never use acid-core solder for electrical work. It should be used only for plumbing or chassis work. For circuit construction, only use fluxes or solder-flux combinations that are labeled for electronic soldering.

The rosin or the acid is a flux. Flux removes oxide by suspending it in solution and floating it to the top. Flux is not a cleaning agent! Always clean the work before soldering. Flux is not a part of a soldered connection—it merely aids the soldering process. After soldering, remove any remaining flux. Rosin flux can be removed with isopropyl or denatured alcohol. A cotton swab is a good tool for applying the alcohol and scrubbing the excess flux away. Commercial flux-removal sprays are available at most electronic-part distributors.

The soldering iron

Soldering is used in nearly every phase of electronic construction so you'll need soldering tools. A soldering tool must be hot enough to do the job and lightweight enough for agility and comfort. A temperature controlled iron works well, although the cost is not justified for occasional projects. Get an iron with a small conical or chisel tip. Soldering is not like gluing; solder does more than bind metal together and provide an electrically conductive path between them. Soldered metals and the solder combine to form an alloy.

You may need an assortment of soldering irons to do a wide variety of soldering tasks. They range in size from a small 25-watt iron for delicate printed-circuit work to larger 100 to 300-watt sizes used to solder large surfaces. If you could only afford a single soldering tool when initially setting up your electronics workbench than, an inexpensive to moderately priced pencil-type soldering iron with between 25 and 40-watt capacity is the best for PC board electronics work. A 100-watt soldering gun is overkill for printed-circuit work, since it often gets too hot, cooking solder into a brittle mess or damaging small parts of a circuit. Soldering guns are best used for point-to-point soldering jobs, for large mass soldering joints or large components. Small "pencil" butane torches are also available, with optional soldering-iron tips. A small butane torch is available from the Solder-It Company. Butane soldering irons are ideal for field service problems and will allow you to solder where there is no 110 volt power source. This company also sells a soldering kit that contains paste

solders (in syringes) for electronics, pot metal and plumbing. See the Appendix for the address information.

Keep soldering tools in good condition by keeping the tips well tinned with solder. Do not run them at full temperature for long periods when not in use. After each period of use, remove the tip and clean off any scale that may have accumulated. Clean an oxidized tip by dipping the hot tip in sal ammoniac (ammonium chloride) and then wiping it clean with a rag. Sal ammoniac is somewhat corrosive, so if you don't wipe the tip thoroughly, it can contaminate electronic soldering. You can also purchase a small jar of "Tip Tinner," a soldering iron tip dresser, from your local Radio Shack store. Place the tip of the soldering iron into the "Tip Tinner" after every few solder joints.

If a copper tip becomes pitted, file it smooth and bright and then tin it immediately with solder. Modern soldering iron tips are nickel or iron clad and should not be filed. The secret of good soldering is to use the right amount of heat. Many people who will have not soldered before use too little heat dabbing at the joint to be soldered and making little solder blobs that cause unintended short circuits. Always use caution when soldering. A hot soldering iron can burn your hand badly or ruin a tabletop. It's a good idea to buy or make a soldering iron holder.

Soldering station

Often when building or repairing a circuit, your soldering iron is kept switched "on" for unnecessarily long periods, consuming energy and allowing the soldering iron tip to burn and develop a buildup of oxide. Using this soldering-iron temperature controller, you will avoid destroying sensitive components when soldering.

Buying a lower wattage iron may solve some of the problems, but new problems arise when you want to solder some heavy-duty component, setting the stage for creating a "cold" connections. If you've ever tried to troubleshoot some instrument in which a cold solder joint was at the root of the problem, you know how difficult such defects are to locate. Therefore, the best way to satisfy all your needs is to buy a temperature controller electronics workbench.

A soldering station usually consists of a temperature controlled soldering iron with an adjustable heat or temperature control and a soldering iron holder and cleaning pad. If you are serious about your electronics hobby or if you have been involved with electronics building and repair for any length of time, you will eventually want to invest in a soldering station at some point in time. There are real low cost soldering station for hobbyists, for under $30, but it makes more sense to purchase a moderately price soldering station such as the quality Weller series. A typical soldering station is shown in Figure 3-6.

Soldering gun

An electronics workbench would not be complete without a soldering gun. Soldering guns are useful for soldering large components to terminal strips, or splicing wires together or when putting connectors on coax cable. There are many instances where more heat is needed than a soldering iron can supply. For example, a large connector mass cannot be heated with a small soldering iron, so you would never be able to "tin" a connector with a small wattage soldering iron. A soldering gun is a heavy duty soldering device which does in fact look like a gun. Numerous tips are available for a soldering gun and they are easily replaceable using two small nuts on the side arm of the soldering gun. Soldering guns are available in two main heat ranges.

Figure 3-6 *Temperature controlled soldering station*

Most soldering guns have a two-step "trigger" switch which enable you to select two heat ranges for different soldering jobs. The most common soldering gun provides both a 100 watt setting when the "trigger" switch is pressed to its first setting, and as the "trigger" switch is advanced to the next step, the soldering gun will provide 150 watts, when more heat is needed. A larger or heavy-duty soldering gun is also available, but a little harder to locate is the 200 to 250 watt solder gun. The first "trigger" switch position provides 200 watts, while the second switch position provides the 250 watt heat setting. When splicing wires together either using the "Western Union" or parallel splice or the end splice, a soldering gun should be used especially if the wire gauge is below size 22 ga. Otherwise the solder may not melt properly and the connections may reflect a "cold" solder joint and therefore a poor or noisy splice. Soldering wires to binding post connections should be performed with a soldering gun to ensure proper heating to the connection. Most larger connectors should be soldered or pre-tinned using a soldering gun for even solder flow.

Preparing the soldering iron

If your iron is new, read the instructions about preparing it for use. If there are no instructions, use the following procedure. It should be hot enough to melt solder applied to its tip quickly (half a second when dry, instantly when wet with solder). Apply a little solder directly to the tip so that the surface is shiny. This process is called "tinning" the tool. The solder coating helps conduct heat from the tip to the joint face, the tip is in contact with one side of the joint. If you can place the tip on the underside of the joint, do so. With the tool below the joint, convection helps transfer heat to the joint. Place the solder against the joint directly opposite the soldering tool. It should melt within a second for normal PC connections, within two seconds for most other connections. If it takes longer to melt, there is not enough heat for the job at hand. Keep the tool against the joint until the solder flows freely throughout the joint. When it flows freely, solder tends to form concave shapes between the conductors. With insufficient heat solder does not flow freely; it forms convex shapes-blobs. Once solder shape changes from convex to concave, remove the tool from the joint. Let the joint cool without movement at room temperature. It usually takes no more than a few seconds. If the joint is moved before it is cool, it may take on a dull, satin look that is characteristic of a "cold" solder joint. Reheat cold joints until the solder flows freely and hold them still until cool. When the iron is set aside, or if it loses its shiny appearance, wipe away any dirt with a wet cloth or sponge. If it remains dull after cleaning, tin it again.

Overheating a transistor or diode while soldering can cause permanent damage. Use a small heatsink when you solder transistors, diodes or components with plastic parts that can melt. Grip the component lead with a pair of pliers up close to the unit so that the heat is conducted away. You will need to be careful, since it is easy to damage delicate component leads. A small alligator clip also makes a good heatsink to dissipate from the component.

Mechanical stress can damage components, too. Mount components so there is no appreciable mechanical strain on the leads.

Soldering to the pins of coil forms male cable plugs can be difficult. Use suitable small twist drill to clean the inside of the pin and then tin it with resin-core solder. While it is still liquid, clear the surplus solder from each pin with a whipping motion or by blowing through the pin from the inside of the form or plug. Watch out for flying hot solder, you can get severe burns. Next, file the nickel tip. Then insert the wire and solder it. After soldering, remove excess solder with a file, if necessary. When soldering to the pins of plastic coil-forms, hold the pin to be soldered with a pair of heavy pliers to form a heatsink. Do not allow the pin to overheat; it will loosen and become misaligned.

Preparing work for soldering

If you use old junk parts, be sure to completely clean all wires or surfaces before applying solder. Remove all enamel, dirt, scale, or oxidation by sanding or scraping the parts down to bare metal. Use fine sandpaper or emery paper to clean flat surfaces or wire. (Note, no amount of cleaning will allow you to solder to aluminum. When making a connection to a sheet of aluminum, you must connect the wire by a solder lug or a screw.)

When preparing wires, remove the insulation with wire strippers or a pocketknife. If using a knife, do not

cut straight into the insulation; you might nick the wire and weaken it. Instead, hold the knife as if you were sharpening a pencil, taking care not to nick the wire as you remove the insulation. For enameled wire, use the back of the knife blade to scrape the wire until it is clean and bright. Next, tin the clean end of the wire. Now, hold the heated soldering-iron tip against the under surface of the wire and place the end of the rosin-core solder against the upper surface. As the solder melts, it flows on the clean end of the wire. Hold the hot tip of the soldering iron against the under surface of the tinned wire and remove the excess solder by letting it flow down on the tip. When properly tinned, the exposed surface of the wire should be covered with a thin, even coating of solder.

How to solder

The two key factors in quality soldering are time and temperature. Generally, rapid heating is desired, although most unsuccessful solder jobs fail because insufficient heat has been applied. Be careful; if heat is applied too long, the components or PC board can be damaged, the flux may be used up and surface oxidation can become a problem. The soldering-iron tips should be hot enough to readily melt the solder without burning, charring or discoloring components, PC boards or wires. Usually, a tip temperature about 100°F above the solder melting point is about right for mounting components on PC boards. Also, use solder that is sized appropriately for the job. As the cross-section of the solder decreases, so does the amount of heat required to melt it. Diameters from 0.025 to 0.040 inches are good for nearly all circuit wiring.

Always use a good quality multi-core solder. A standard 60% tin, 40% lead alloy solder with cores of non-corrosive flux will be found easiest to use. The flux contained in the longitudinal cores of multi-core solder is a chemical designed to clean the surfaces to be joined of deposited oxides, and to exclude air during the soldering process, which would otherwise prevent these metals coming together. Consequently, don't expect to be able to complete a joint by using the application of the tip of the iron loaded with molten solder alone, as this usually will not work. Having said that, there is a process called tinning where conductors are first coated in fresh, new solder prior to joining by a hot iron.

Solder comes in gauges like wire. The two most common types of solder, are 18 ga., used for general work, and the thinner 22 ga., used for fine work on printed circuit boards.

A well-soldered joint depends on

1. Soldering with a clean, well-tinned tip.
2. Cleaning the wires or parts to be soldered.
3. Making a good mechanical joint before soldering.
4. Allowing the joint to get hot enough before applying solder.
5. Allowing the solder to set before handling or moving soldered parts.

Making a good mechanical joint

Unless you are creating a temporary joint, the next step is to make a good mechanical connection between the parts to be soldered. For instance, wrap the wire carefully and tightly around a soldering terminal or soldering lug, as shown in Figure 3-7. Bend wire and make connections with long-nosed pliers. When connecting two wires together, make a tight splice before soldering. Once you have made a good mechanical contact, you are ready for the actual soldering.

The next step is to apply the soldering iron to the connection, soldering the connection as shown.

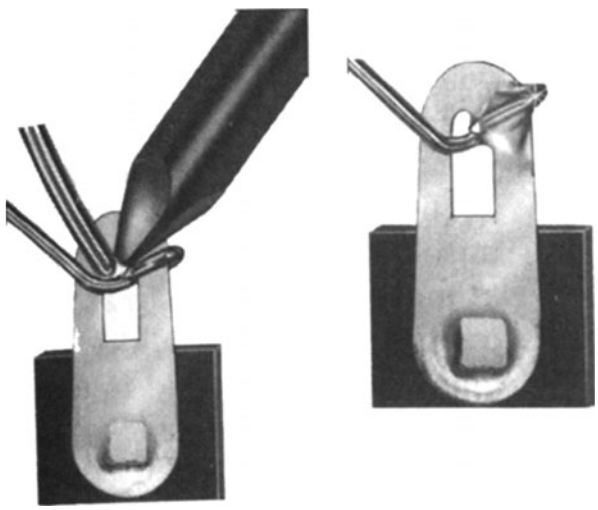

Figure 3-7 *Wire to lug soldering joint*

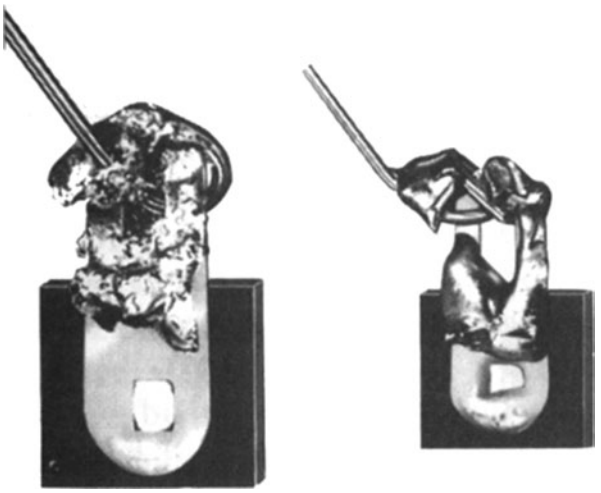

Figure 3-8 *Inferior wire to lug solder joint*

In soldering a wire splice, hold the iron below the splice and apply solder to the top of the splice. If the tip of the iron has a bit of melted solder on the side held against the splice, heat is transferred more readily to the splice and the soldering is done more easily. Don`t try to solder by applying solder to the joint and then pressing down on it with the iron. Be sure not to disturb the soldered joint until the solder has set. It may take a few seconds for the solder to set, depending upon the amount of solder used in making the joint. Now take a good look at the joint. It should have a shiny, smooth appearance—not pitted or grainy. If it does have a pitted, granular appearance as seen in Figure 3-8. reheat the joint, scrape off the solder, and clean the connection. Then start over again. After the solder is well set, pull on the wire to see if it is a good, tight connection. If you find that you made a poor soldering job don't get upset, be thankful you found it and do it over again. A quick reference solder check list is shown in the listing in Table 3-3.

Soldering printed circuit boards

Most electronic devices use one or more printed circuit (PC) boards. A PC board is a thin sheet of fiberglass or phenolic resin that has a pattern of foil conductors "printed" on it. You insert component leads into holes in the board and solder the leads to the foil pattern. This method of assembly is widely used and you will probably encounter it if you choose to build from a kit. Printed circuit boards make assembly easy. First, insert component leads through the correct holes in the circuit board. Mount parts tightly against the circuit board unless otherwise directed. After inserting a lead into the board, bend it slightly outward to hold the part in place.

When the iron is hot, apply some solder to the flattened working end at the end of the bit, and wipe it on a piece of damp cloth or sponge so that the solder forms a thin film on the bit. This is tinning the bit.

Table 3-3
Soldering check list

1. Prepare the joint. Clean all surfaces and conductors thoroughly with fine steel wool. First, clean the circuit traces, then clean the component leads.
2. Prepare the soldering iron or gun. The soldering device should be hot enough to melt solder applied to the tip. Apply a small amount of solder directly to the tip, so that the surface is shiny.
3. Place the tip in contact with one side of the joint, if possible place the tip below the joint.
4. Place the solder against the joint directly opposite the soldering tool. The solder should melt within two seconds; if it takes longer use a larger iron.
5. Keep the soldering tool against the joint until the solder flows freely throughout the joint. When it flows freely the joint should form a concave shape; insufficient heat will form a convex shape.
6. Let the joint cool without any movement, the joint should cool and set-up with in a few seconds. If the joint is moved before it cools the joint will look dull instead of shiny and you will likely have a cold solder joint. Re-heat the joint and begin anew.
7. Once the iron is set aside, or if it loses its shiny appearance, wipe away any dirt with a wet cloth or wet sponge. When the iron is clean the tip should look clean and shiny. After cleaning the tip apply some solder.

Melt a little more solder on to the tip of the soldering iron, and put the tip so it contacts both parts of the joint. It is the molten solder on the tip of the iron that allows the heat to flow quickly from the iron into both parts of the joint. If the iron has the right amount of solder on it and is positioned correctly, then the two parts to be joined will reach the solder's melting temperature in a couple of seconds. Now apply the end of the solder to the point where both parts of the joint and the soldering iron are all touching one another. The solder will melt immediately and flow around all the parts that are at, or over, the melting part temperature. After a few seconds remove the iron from the joint. Make sure that no parts of the joint move after the soldering iron is removed until the solder is completely hard. This can take quite a few seconds with large joints. If the joint is disturbed during this cooling period it may become seriously weakened.

The most important point in soldering is that both parts of the joint to be made must be at the same temperature. The solder will flow evenly and make a good electrical and mechanical joint only if both parts of the joint are at an equal high temperature. Even though it appears that there is a metal-to-metal contact in a joint to be made, very often there exists a film of oxide on the surface that insulates the two parts. For this reason it is no good applying the soldering iron tip to one half of the joint only and expecting this to heat the other half of the joint as well.

It is important to use the right amount of solder, both on the iron and on the joint. Too little solder on the iron will result in poor heat transfer to the joint, too much and you will suffer from the solder forming strings as the iron is removed, causing splashes and bridges to other contacts. Too little solder applied to the joint will give the joint a half finished appearance: a good bond where the soldering iron has been, and no solder at all on the other part of the joint.

The hard cold solder on a properly made joint should have a smooth shiny appearance and if the wire is pulled it should not pull out of the joint. In a properly made joint the solder will bond the components very strongly indeed, since the process of soldering is similar to brazing, and to a lesser degree welding, in that the solder actually forms a molecular bond with the surfaces of the joint. Remember it is much more difficult to correct a poorly made joint than it is to make the joint properly in the first place. Anyone can learn to solder, it just takes practice.

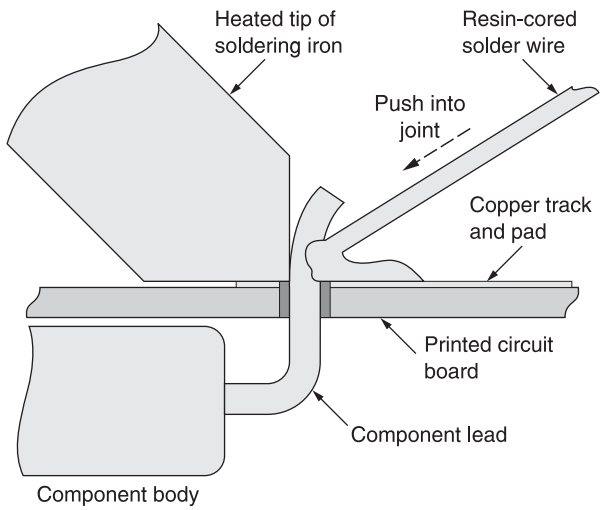

Figure 3-9 *Proper technique for soldering components on PC board*

The diagram in Figure 3-9 shows how to solder a component lead to a PC board pad. The tip of the soldering iron heats both the lead and the copper pad, so the end of the solder wire melts when it's pushed into the contact. The diagram illustrated in Figure 3-10 shows how a good solder joint is obtained. Notice that it has a smooth and shiny "fillet" of solder metal, bonding all around to both the component lead and the copper pad of the PC board. This joint provides a reliable electrical connection.

Try to make the solder joint as quickly as possible because the longer you take, the higher the risk that the component itself and the printed circuit board pad and track will overheat and be damaged. But don't work so quickly that you cannot make a good solder joint.

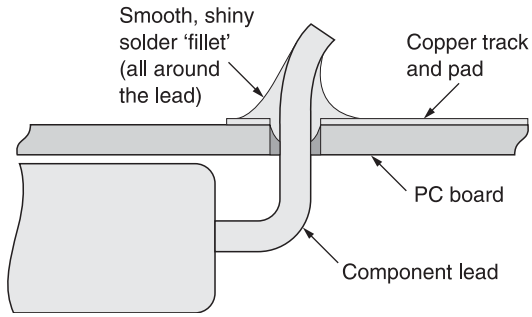

Figure 3-10 *Excellent solder joint*

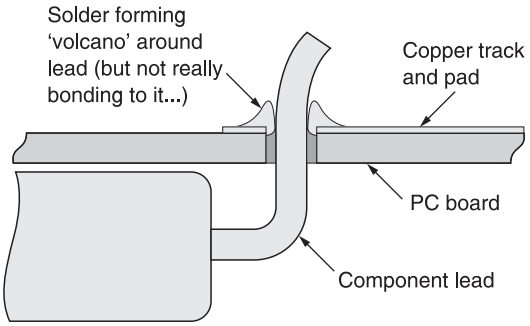

Figure 3-11 *Inferior solder joint: Example 1*

Having to solder the joint over again always increases the risk of applying too much heat to the PCB.

As the solder solidifies, take a careful look at the joint you have made, to make sure there's a smooth and fairly shiny metal "fillet" around it. This should be broadly concave in shape, showing that the solder has formed a good bond to both metal surfaces. If it has a rough and dull surface or just forms a "ball" on the component lead, or a "volcano" on the PCB pad with the lead emerging from the crater, you have a "dry joint." If your solder joint looks like the picture shown in Figure 3-11, you will have to re-solder the joint over again. Figure 3-12 shows another type of dry solder joint which would have to be re-soldered. These types of "dry" solder joints if now redone will cause the circuit to be unreliable and intermittent.

For projects that use one or more integrated circuits, with their leads closely-spaced pins, you may find it easier to use a finer gauge solder, i.e. less than 1 mm in diameter. This reduces the risk of applying too much solder to each joint, and accidentaly forming "bridges" between pads to PC "tracks."

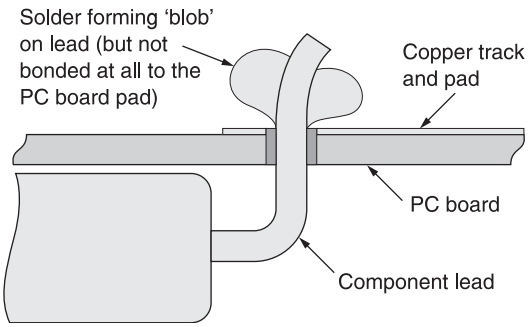

Figure 3-12 *Inferior solder joint: Example 2*

The finished connection should be smooth and bright. Reheat any cloudy or grainy-looking connections. Finally, clip off the excess wire length, as shown in Figure 3-13.

Occasionally a solder "bridge" will form between two adjacent foil conductors. You must remove these bridges; otherwise a short circuit will exist between the two conductors. Remove a solder bridge by heating the bridge and quickly wiping away the melted solder with a soft cloth. Often you will find a hole on the board plugged by solder from a previous connection. Clear the hole by heating the solder while pushing a component lead through the hole from the other side of the board. Good soldering is a skill that is learnt by practice.

How to un-solder

In order to remove components, you need to learn the art of de-soldering. You might accidentally make a wrong connection or have to move a component that you put in an incorrect location. Take great care while un-soldering to avoid breaking or destroying good parts. The leads on components such as resistors or transistors and the lugs on other parts may sometimes break off when you are un-soldering a good, tight joint. To avoid heat damage, you must use as much care in un-soldering delicate parts as you do in soldering them. There are three basic ways of un-soldering. The first method is to heat the joint and "flick" the wet solder off. The second method is to use a metal wick or braid to remove the melted solder. This braid is available at most electronics

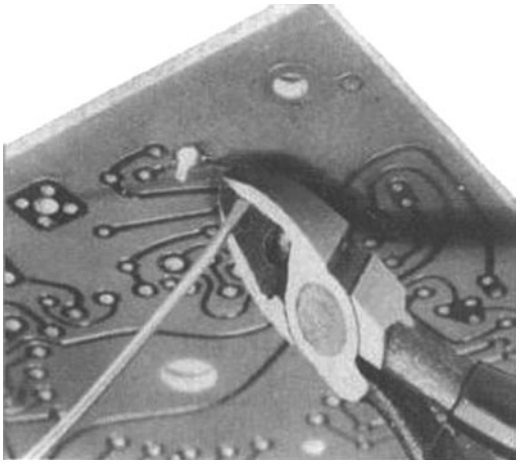

Figure 3-13 *Trimming excess component leads*

parts stores; use commercially made wicking material (braid). Place the braid against the joint that you want to un-solder. Use the heated soldering iron to gently press the braid against the joint. As the solder melts, it is pulled into the braid. By repeating this process, you can remove virtually all the solder from the joint. Then re-heat the joint and lift off the component leads. Another useful tool is an air-suction solder remover.

Most electronics parts stores have these devices. Before using a de-solder squeeze bulb, use your soldering iron to heat the joint you want to un-solder until the solder melts. Then squeeze the bulb to create a vacuum inside. Touch the tip of the bulb against the melted solder. Release the bulb to suck up the molten solder. Repeat the process until you've removed most of the solder from the joint. Then re-heat the joint and gently pry off the wires. This third method is easy, and is the preferred method, since it is fast and clean. You can use a vacuum device to suck up molten solder. There are many new styles of solder vacuum devices on the market that are much better than the older squeeze bulb types. The new vacuum de-soldering tools are about 8 to 12 inches long with a hollow Teflon tip. You draw the vacuum with a push handle and set it. As you re-heat the solder around the component to be removed, you push a button on the device to suck the solder into the chamber of the de-soldering tool.

De-soldering station

A de-soldering station is a very useful addition to an electronics workshop or workbench, but in many cases they just cost too much for most hobbyists. De-soldering stations are often used in production environments or as re-work stations, when production changes warrant changes to many circuit boards in production. Some repair shops used de-soldering stations to quickly and efficiently remove components.

Another useful de-soldering tool is one made specifically for removing integrated circuits. The specially designed de-soldering tip is made the same size as the integrated circuit, so that all IC pins can be de-soldered at once. This tool is often combined with a vacuum suction device to remove the solder as all the IC pins are heated. The IC de-soldering tips are made in various sizes; there are 8 pin, 14 pin and 16 pin versions, which are used to uniformly de-solder all IC pins quickly and evenly, so as not to destroy the circuit board. The specialized soldering tips are often used in conjunction with vacuum systems to remove the solder at the same time.

Remember these things when un-soldering:

1. Be sure there is a little melted solder on the tip of your iron so that the joint will heat quickly.
2. Work quickly and carefully to avoid heat damage to parts. Use long-nosed pliers to hold the leads of components just as you did while soldering.
3. When loosening a wire lead, be careful not to bend the lug or tie point. Use pieces of wire or some old radio parts and wire. Practice until you can solder joints that are smooth, shiny, and tight. Then practice un-soldering connections until you are satisfied that you can do them quickly and without breaking wires or lugs.

Caring for your soldering iron

To get the best service from your soldering iron, keep it cleaned and well tinned. Keep a damp cloth on the bench as you work. Before soldering a connection, wipe the tip of the iron across the cloth, then touch some fresh solder to the tip. The tip will eventually become worn or pitted. You can repair minor wear by filing the tip back into shape. Be sure to tin the tip immediately after filing it. If the tip is badly worn or pitted, replace it. Replacement tips can be found at most electronics parts stores. Remember that oxidation develops more rapidly when the iron is hot. Therefore, do not keep the iron heated for long periods unless you are using it. Do not try to cool an iron rapidly with ice or water. If you do, the heating element may be damaged and need to be replaced or water might get into the barrel and cause rust. Take care of your soldering iron and it will give you many years of useful service.

Remember, soldering equipment gets hot! Be careful. Treat a soldering burn as you would any other. Handling lead or breathing soldering fumes is also hazardous. Observe these precautions to protect yourself and others!

Ventilation

Properly ventilate the work area where you will be soldering. If you can smell fumes, you are breathing them. Often when building a new circuit or repairing a "vintage" circuit you may be soldering continuously for a few hours at a time. This can mean you will be breathing solder fumes for many hours and the fumes can cause you to get dizzy or lightheaded. This is dangerous because you could fall down and possibly hurt yourself in the process. Many people highly allergic are also allergic to the smell of solder fumes. Solder fumes can cause sensitive people to get sinus infections. So ventilating solder fumes is an important subject. There are a few different ways to handle this problem. One method is to purchase a small fan unit housed with a carbon filter which sucks the solder fumes into the carbon filter to eliminate them. This is the most simple method of reducing or eliminating solder fumes from the immediate area. If there is a window near your soldering area, be sure to open the window to reduce the exposure to solder fumes. Another method of reducing or eliminating solder fumes is to buy or build a solder smoke removal system. You can purchase one of these systems but they tend to be quite expensive. You can create your own solder smoke removal system by locating or purchasing an 8 to 10 foot piece of 2 inch diameter flexible hose, similar to your vacuum cleaner hose. At the solder station end of the hose, you can affix the hose to a wooden stand in front of your work area. The other end of the hose is funneled into a small square "muffin" type fan placed near a window. Be sure to wash your hands after soldering, especially before handling food, since solder contains lead; also try to minimize direct contact with flux and flux solvents.

Chapter 4

AM, FM, and Shortwave Crystal Radio Projects

Parts list

Simple Crystal Radio

L1 150 turns of 24 ga. enameled wire on 4″ × 2″ dia tube

C1 365 pF tuning capacitor (old radio)

D1 1N34 germanium diode (not a silicon diode)

C2 .005 µF, 35 volt disk capacitor

H1 high impedance headphones (crystal or 2000k type)

ANT 80–100 foot long wire antenna

GND cold water pipe or ground rod

Misc wood block, coil tube, hardware, screws, clips, washers, Krylon spray, wire, etc.

FM Crystal Radio Set

R1 47k ohm ¼ watt, 5% resistor

C1 82 pF capacitor

C2 80 pF air variable capacitor

C3 18 pF capacitor

D1 1N34 or rock crystal diode

L1 5 turns AWG #18 bare copper or silver wire, 12 mm inside diameter, tapped at 2.5 turns

H1 high impedance headphones (crystal type of 2k ohm type)

Ant antenna- 7″ of #18 bare copper wire

Misc wood block, wire, hardware, clips, etc.

Supersensitive AM/Shortwave Crystal Radio

L1 11 turns, 22 ga. enameled wire on 2⅞″ cardboard form

L2 (AM) 54 turns, 22 ga. enameled wire on 3″ air-core form

Taps are brought out at 40T, 27T, 15T and 6T

L2 (SW) 15 turns, 22 ga. enameled wire on 3″ air-core form

Taps are brought out at 12T, 9T, 6T and 3T

Copyright © 2008 by The McGraw-Hill Companies, Inc. Click here for terms of use.

D1 germanium diode or galena crystal w/"cat's whisker"

C1 500 pF turning capacitor

C2 .001 µF, 35 volt disk capacitor

S1 single-pole - 5-position rotary switch

S2 single-pole - 6-position rotary switch

H1 crystal headphone or 2k headphones (Baldwin, Brandes)

ANT 80-100 foot long wire antenna

GND cold water pipe or ground rod

Misc wood block, hardware, wire, clips, screws, Krylon, etc.

A crystal radio is the simplest form of AM (amplitude modulation) receiver ever invented. It has great potential for experimentation and usually requires no source of power for its operation other than the radio signal itself, and costs little. Most people do not realize that crystal radios can be built to pickup shortwave as well as FM radio signals. Did you know that you can build very sensitive and selective crystal radios far better than most commercial AM radios! Ever thought of building a crystal radio? Building a crystal radio will give you immense satisfaction, and the results are sure to please.

Crystal sets date back to the earliest days of wireless (pre-W.W.I) and an enormous variety of circuit designs have been produced over the years. Their popularity has been variable as developments in other more elaborate forms of reception have taken place. However, fascination with this crystal radio design, building and experimentation, is still very strong today with national and international organizations and clubs offering competitions.

So how does a crystal radio work? An AM transmitter sends out its broadcast in the form of an electromagnetic wave that radiates from its transmitting antenna. The AM transmitter sends out a fixed frequency carrier wave. When sound is present in the program material, the strength, or amplitude, of these waves is made to vary in response to the audio content of the program. The resulting wave is called an amplitude modulated wave. See Figure 4-1.

The purpose of a simple AM or crystal radio receiver is to pick up these AM waves and extract the audio signal so that it can be heard by the listener. It does this by a process called "detection." The detection process utilizes a device called a detector which effectively strips off either the upper half or lower half of the AM wave. It only remains to filter out the carrier wave to leave the audio signal and the job is done! The following diagram shows how the detector and filter work together to "recover" the original audio signal. The strength of the recovered audio signal is small but, given the right conditions, it can be large enough to drive a pair of headphones; all without any power source other than the signal itself.

The diagram shown in Figure 4-2 illustrates a basic crystal radio. In its simplest form, a crystal radio is composed of just our main components. A good antenna, a detector, a filter capacitor and pair of headphones. The basic diagram shows the input section at (A), the rectifier section at (B), the filter section at (C) and finally the headphones at section (D).

The antenna consists of a length of wire suspended above the ground, while the ground or earth connection could be a metal spike driven into the ground. When a

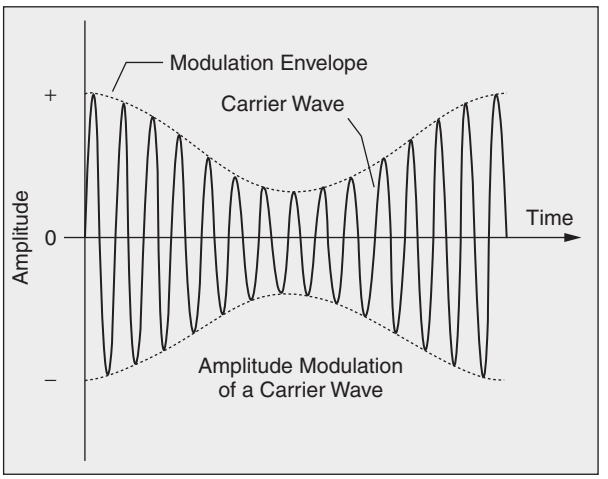

Figure 4-1 *Amplitude modulation*

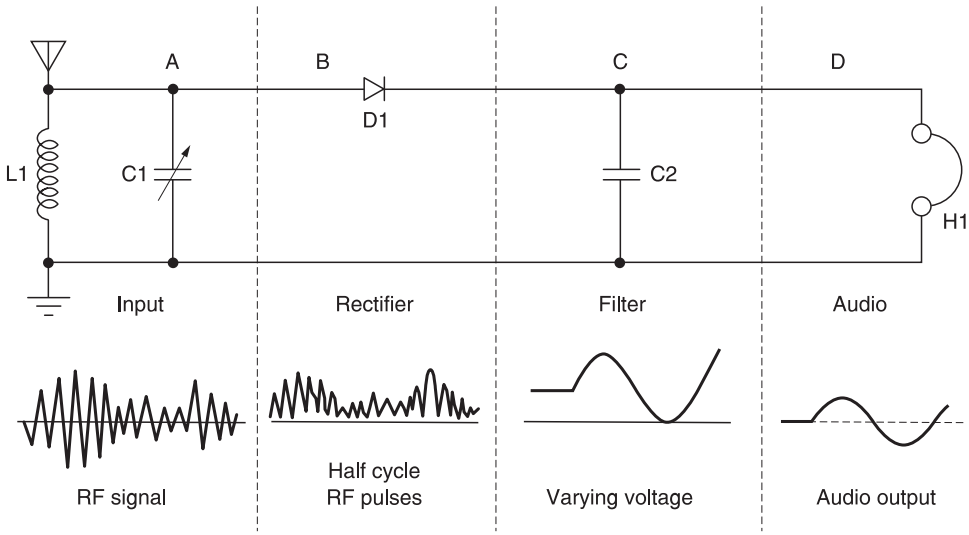

Figure 4-2 *Basic crystal radio*

capacitor is connected in parallel with an inductor and an alternating voltage applied across the combination, alternating current will flow. The amount of current that flows depends upon the frequency of the applied voltage. At a particular frequency, called the resonant frequency, almost no current flows. For frequencies above or below the resonant frequency, significant current will flow. In Figure 4-2, capacitor C1 plus the aerial capacitance forms the capacitor of our tuned circuit, while L1 forms the inductor. At the resonant frequency of the tuned circuit, almost no current flows to earth through L1 or C1, leaving virtually all of it free to flow through the detector. Alternating currents at broadcast frequencies either above or below the resonant frequency will tend to flow through C1 or L1 to earth. Thus we have added selectivity to the receiver. Notice that C1 is adjustable, as signified by the arrow. By varying C1 we can tune the receiver to select specific broadcast frequencies.

The main requirement for a detector is that it should act as a non-return "valve" or one-way "switch" to the alternating currents of the AM wave. If you could look at the alternating current in a circuit you would see it flowing back and forth, first one way and then the other. A detector placed in such a circuit allows the alternating current to flow easily in one direction but not in the other. Certain naturally occurring minerals were found to have this property and these became some of the earliest forms of detectors. One such mineral, the crystalline form of galena (lead sulphide), was found to be particularly good at detection, and became very popular for building crystal radios. The detector consists of galena in a small cup or tin. A small coil of wire, with one free end was called the "cat's whisker" which was used to make contact with the crystal.

The remaining uni-directional current is filtered by the combined effect of the headphone impedance and the capacitor at C2 and only the desired audio signal current passes on through to the headphones at H1. One drawback with the very simple circuit shown is that it has little selectivity. That is, it picks up all AM broadcast signals with similar efficiency and often close together. So as time passed more advanced, more sensitive and more selective receivers were born.

Let's construct a simple crystal radio. In order to build the crystal radio shown in Figure 4-3, you will need to secure some tools and supplies. First you will need to find a clean well lit work bench or table to spread out all your tools, charts, diagrams and components. You will also need to secure a soldering iron, some 60/40 rosin core solder and a small jar of "Tip Tinner," a soldering iron tip cleaner/dresser, obtainable from your local Radio Shack store. You will also want to locate some small tools such a pair of end-cutters, a pair of needle-nose pliers, a magnifying glass and a set of Phillips and flat-blade screwdrivers for this project. Grab the crystal radio schematic, see Figure 4-2, and the resistor and capacitor identification charts, and place them in front of you, so we can get started building the project. The resistor identification chart in Table 4-1 will help you

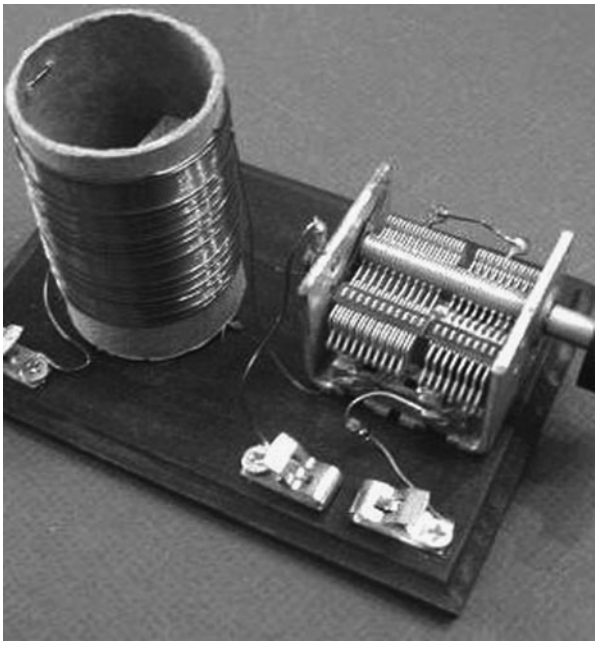

Figure 4-3 *AM crystal radio*

identify resistors needed for the some of the projects in this chapter. Each resistor will have three or four colored bands on the body of the resistor. These colors identify the resistor's value. The color bands start at one end of the resistor, the first colored band is the first digit of the resistor's value, while the second resistor represents the resistor's second digit of the value. The third colored band is the resistor's multiplier value. For example, a resistor whose first color band is yellow represents a digit four (4), while a second color band which is violet is seven (7). If the third color band is orange, then the multiplier would be (000) or one thousand, so the value would be 47,000 or 47k ohms. Resistors usually have a fourth colored band which represents the resistor's tolerance value. A silver band denotes a 10% tolerance value, while a gold band denotes a 5% tolerance resistor. No color band represents a tolerance value of 20%.

Our crystal radio projects in this chapter all utilize capacitors of some sort. Capacitors usually are available in two major classifications, polarized and non-polarized. The project in this chapter will utilize only non-polarized capacitors. Non-polarized capacitors can often be physically very small and not have their actual value printed on the body of the capacitor, so a chart was developed to help identify a capacitor using a three-digit code. See Table 4-2.

As this project will not require a circuit board, we will build the crystal radio on a 6″ × 6″ × ¾″ wood block base. You can elect to use an additional piece of wood at a right angle to the base as a front panel to secure the tuning capacitor as shown in Figure 4-3.

Table 4-1
Resistor color code chart

Color Band	*1st Digit*	*2nd Digit*	*Multiplier*	*Tolerance*
Black	0	0	1	
Brown	1	1	10	1%
Red	2	2	100	2%
Orange	3	3	1,000 (K)	3%
Yellow	4	4	10,000	4%
Green	5	5	100,000	
Blue	6	6	1,000,000 (M)	
Violet	7	7	10,000,000	
Gray	8	8	100,000,000	
White	9	9	1,000,000,000	
Gold			0.1	5%
Silver			0.01	10%
No color				20%

Table 4-2

Capacitance code information

This table provides the value of alphanumeric coded ceramic, mylar and mica capacitors in general. They come in many sizes, shapes, values and ratings; many different manufacturers worldwide produce them and not all play by the same rules. Some capacitors actually have the numeric values stamped on them; however, many are color coded and some have alphanumeric codes. The capacitor's first and second significant number IDs are the first and second values, followed by the multiplier number code, followed by the percentage tolerance letter code. Usually the first two digits of the code represent the significant part of the value, while the third digit, called the multiplier, corresponds to the number of zeros to be added to the first two digits.

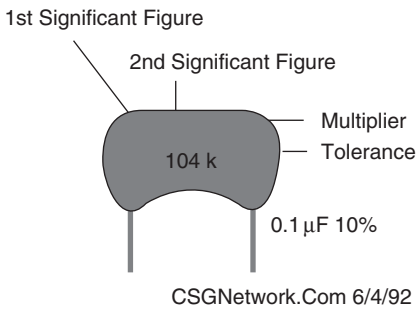

Value	*Type*	*Code*	*Value*	*Type*	*Code*
1.5 pF	Ceramic		1,000 pF /.001 µF	Ceramic / Mylar	102
3.3 pF	Ceramic		1,500 pF /.001 5µF	Ceramic / Mylar	152
10 pF	Ceramic		2,000 pF /.002 µF	Ceramic / Mylar	202
15 pF	Ceramic		2,200 pF /.0022 µF	Ceramic / Mylar	222
20 pF	Ceramic		4,700 pF /.0047 µF	Ceramic / Mylar	472
30 pF	Ceramic		5,000 pF /.005 µF	Ceramic / Mylar	502
33 pF	Ceramic		5,600 pF /.0056 µF	Ceramic / Mylar	562
47 pF	Ceramic		6,800 pF /.0068 µF	Ceramic / Mylar	682
56 pF	Ceramic		.01	Ceramic / Mylar	103
68 pF	Ceramic		.015	Mylar	
75 pF	Ceramic		.02	Mylar	203
82 pF	Ceramic		.022	Mylar	223
91 pF	Ceramic		.033	Mylar	333
100 pF	Ceramic	101	.047	Mylar	473
120 pF	Ceramic	121	.05	Mylar	503
130 pF	Ceramic	131	.056	Mylar	563
150 pF	Ceramic	151	.068	Mylar	683
180 pF	Ceramic	181	.1	Mylar	104
220 pF	Ceramic	221	.2	Mylar	204
330 pF	Ceramic	331	.22	Mylar	224
470 pF	Ceramic	471	.33	Mylar	334
560 pF	Ceramic	561	.47	Mylar	474
680 pF	Ceramic	681	.56	Mylar	564
750 pF	Ceramic	751	1	Mylar	105
820 pF	Ceramic	821	2	Mylar	205

Next, you will need to locate a plastic or cardboard tube approximately 3½ to 4″ long by 2″ in diameter on which to wind your coil. Punch a hole at both ends of the tube about ½″ from the actual end of the tube. Start winding the coil at one end of the tube using #24 ga. enameled wire, leave about 6″ of wire free at the first hole to allow connection to the circuit. Wind the coil with each winding touching the previous winding but not overlapping the prior winding. Wind about 150 turns of wire across the length of the tube. After winding about 150 turns take the free end of the remaining wire and put it through the last punched hole, leave about 6″ of wire so you can connect the coil to the circuit. When you are finished winding the coil, you can varnish the coil winding or just spray Krylon around the coil to keep the winding close to the coil, so they won't spread out or come loose. Fasten the coil to a 6″ × 6″ wood block; you can mount the coil upright as shown in Figure 4-3, or you can lay the coil down near one edge of the wood block and secure it to the block with some brackets or clips. You will have to use a knife and scrape off the enameled insulation of the two coil wires before you can fasten or solder them to the tuning capacitor. Now fasten the tuning capacitor to the wood block near the coil assembly, and wire the coil in parallel with the tuning capacitor. Next locate a germanium diode; make sure you use only a germanium diode and not the more common silicon diode. Remember to observe the correct polarity when connecting the diode in the circuit, the black to white colored band is the cathode lead. The cathode end of the diode points to the headphone in the circuit diagram. The anode side of the diode connects to one end of the "tank" or coil/capacitor and the cathode side of the diode connects to capacitor C2 and one end of the high impedance headphones. The free end of the headphones connects to the remaining end of the capacitor at C2 which connects to the free end of the "tank" circuit. You can connect the headphones via a terminal strip, a Fahnestock clip or headphone jack mounted on the wood block. Crystal radios generally require high impedance headphones, so you must use either a small crystal headphone or a pair of older high impedance (2000) ohm headphones; these are still available through EBAY or from Antique Electronics.

You could elect to build the radio using a galena crystal, with a "cat's whisker" instead of the germanium diode to give the radio an "old-time" look if desired: see the Appendix for Antique Radio Supply.

Connect an antenna and a ground wire to rod in the ground or an electrical ground in your house and your crystal radio will be ready to test out. The ground wire can be attached to a metal cold water pipe, or to a metal rod stuck a couple of feet into the earth. Do not attach it to a line carrying gas or electricity. The crystal radio will operate forever without a power supply, but you do need a good antenna to make the radio work well. The simplest outdoor antenna for receiving signals is a horizontal wire with the lead-in wire to the set connected on one end. An insulated wire 50 to 100 feet long placed as high and clear of surrounding objects as possible works best: see Figure 4-4. Both ends of the antenna should have insulators and rigid support. Tree branches are not good because they sway in the wind. If you use a tree trunk, have slack in the wire so it can move without pulling the wire. Keep the antenna wire far away from chimneys, metal roofs, gutters, drain pipes, telephone, and especially power lines. The antenna and lead-in should be one continuous piece of wire. Use stranded copper wire, with only the lead-in extending beyond the insulator. A lightning arrestor and ground wire should also be used to avoid a direct hit by lightning.

A crystal radio will generally be able to detect radio signals within 25 to 35 miles, during the day and often much further at night. A simple crystal radio is not very selective, if there are many local AM radio stations that are close in frequency, then you may have some trouble tuning them in, and you may have to build a more selective radio, such as the All-Wave model below. The crystal radio project above is a great project for demonstrating the principles of AM radio and the fun and excitement of building a crystal radio or "free-power" radio.

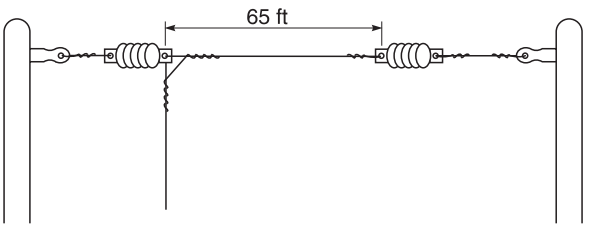

Figure 4-4 *Basic long-wire antenna*

FM radio crystal radio

Believe it or not, you can actually create a simple FM radio crystal radio. An FM crystal receiver is depicted in Figure 4-5. The key to understanding how this simple circuit can decode FM signals is to understand what happens when an FM signal is coupled to a tuned circuit. A good tuned circuit (one with a high "Q factor") will attenuate signals that are not near its resonant frequency. If you apply an FM signal to a good tuned circuit, as the frequency of the FM signal moves away from the resonant frequency of the tuned circuit, the tuned circuit will attenuate that signal. As the frequency of the FM signal moves toward the resonant frequency of the tuned circuit, the tuned circuit will let more of the signal pass through. Thus, a tuned circuit will impose amplitude changes on an FM radio signal that match the frequency changes. A crystal diode is sensitive to amplitude changes, so it converts the amplitude changes into a signal that the listener can hear through headphones.

Using a tuned circuit to induce amplitude changes onto an FM signal, then converting the amplitude changes to sound frequencies, is called slope detection. "Slope" refers to the slope of the tuned circuits' attenuation curve. If you have an AM receiver you can listen to an FM signal by using the *slope* of the tuned circuits in the receiver. This *slope tuning* method gives you none of the real advantages of FM. For instance, FM is noted for its immunity to static. An AM receiver used to slope detect will hear static. The only real advantage to slope detection is that is can be cheap and convenient. When tuning in an FM signal with an AM receiver, the clearest sound occurs when the FM center frequency is offset from the center frequency of the receiver's tuned circuits. If the FM signal is at the receiver's center frequency, then frequency deviations both up and down produce downward amplitude changes. When the FM signal is off center frequency, up and down frequency changes create up and down amplitude changes in the receiver.

The FM crystal receiver circuit, shown in Figure 4-6, looks almost identical to a classic AM crystal circuit; but look closely, there are a few major changes. The FM crystal radio is relatively easy to build and can be built on a small block of wood as shown. The components values for the "tank" or resonant circuit were reduced to resonate at higher frequencies in the FM band. This was done by experimenting with smaller and smaller coils and capacitors values. The antenna is also much reduced in size (from that of AM crystal radio) to resonate at higher frequencies. The antenna is actually a 7″ long bare copper wire. The coil at L1 is just four turns #18 copper or silver wire, 12 mm inside diameter, tapped at 2.5 turns, The coil was wrapped around a "magic marker," then slipped off and expanded. As you can see, this is far different than the 150 turn coil for the AM crystal radio. The detector diode, once again, is a 1N34 germanium diode and not a silicon diode, or you could use a galena crystal as a detector if you desire. Capacitor C3 is 18 pF, but is not critical and can be 10 to 50 pF. Resistor R1 is a 47k ohm, ¼ watt, 5% carbon composition type. The air variable capacitor, used in the prototype, was an 80 pF variable type and it had two trimmers in it which should be adjusted for best reception.

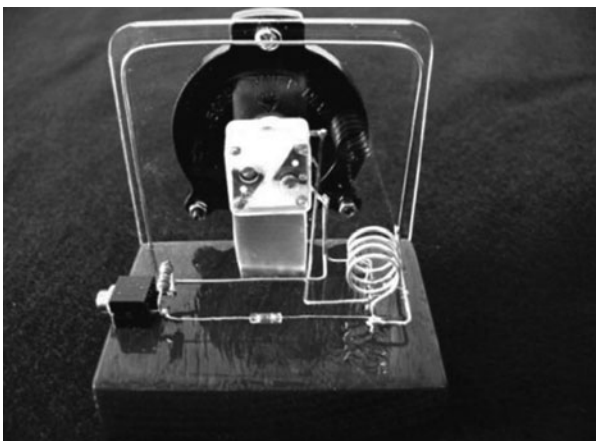

Figure 4-5 *FM crystal radio*

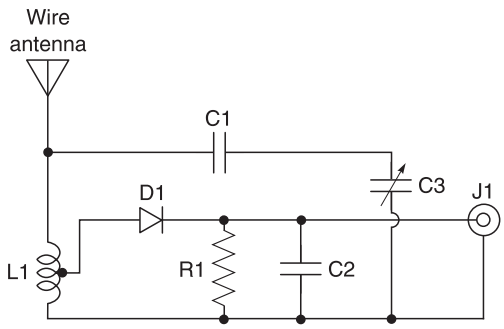

Figure 4-6 *Simple FM crystal radio*

Commonly available vernier dial and knob will fit the tuning capacitor and will work nicely. When building the FM crystal radio it is important to keep the components physically close together and the wiring short as possible. You can build the FM crystal radio in an open style format on a wood or Lucite plastic sheet. You can make your receiver a work of art, and impress your friends with an FM crystal radio built from scratch. Note that you will have to use high impedance headphones for this receiver. A detected FM signal is converted to AM due to an effect called slope detection that modulates amplitude.

This FM crystal radio works best near the transmitter, reception seems fine up to 15 miles away. Secondly, the sound level is not very loud; a quiet room is best for listening. One must be willing to move the set around to find a location for the best reception of signals. If desired, you could connect the audio output of the FM set directly to an audio amplifier's fed to a small speaker.

Supersensitive AM/Shortwave crystal radio

There are several characteristics that make the difference between a good and a great receiver. One of these characteristics is sensitivity. Great receivers can pick up weak signals and amplify them into a useful output. A second characteristic is selectivity. Great receivers can separate signals so that only one is heard at a time. The third and final thing that separates good receivers from great receivers is fidelity. Great receivers not only pick up weak signals but can reproduce a signal without distortion. The last project in this chapter is the All-Wave, AM/Shortwave crystal radio. This All-Wave design takes the crystal radio concept a little further and provides a more sensitive and more selective radio for you to build and enjoy.

The All-Wave Crystal Radio is a supersensitive and selective AM and shortwave receiver; see Figure 4-7. The design of the All-Wave radio has been around since the early 1930s and is still a very efficient receiver design that is fun to build and use. The receiver will

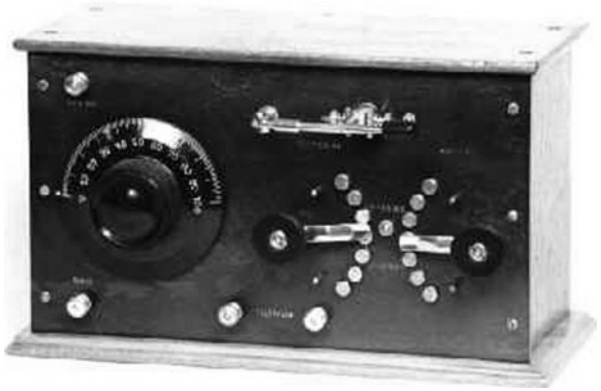

Figure 4-7 *Shortwave crystal radio*

tune from below the AM broadcast band to around the 40 meter band, so you will be able to pickup international shortwave reception quite well. You will be surprised how well it performs with a good pair of high impedance headphones.

The key to this efficient receiver's design lies with the two coils, L1 and L2, which are shown in the schematic at Figure 4-8. Coil L2 is a multi-tapped plug-in coil based on the band selected. For the AM radio band, L2 is the 54 turn multi-tapped coil, with tapped from the ground end at 6T, 15T, 27T and at 40T. The shortwave version of the L2 coil is a 15 turn multi-tapped coil with tapped at 3T, 6T, 9T, and 12 turns. Depending upon the band chosen, you simply plug in the AM or shortwave coil. The AM and shortwave coils (L2) were wound on a 3″ cardboard tube, but you could use a plastic form instead. The untuned primary coil (L1) was wound a slightly smaller 2 ⅞ form, so that it can be slipped inside of the L2 coil at the ground side of the coil assembly. The interchangeable coils (L2) were mounted on a non-metallic carrier, a piece of phenolic board with five pin-plugs secured to the carrier board. The coil form for L2 was glued to the phenolic carrier board which forms the plug-in coil assembly. The wire tapes are brought out to the five pin-plugs on the carrier board, so that the coil (L2) assembly can be plugged into sockets on the radio's wood base plate, see Figure 4-9. This will allow either the AM coil or the shortwave coil to be plugged into the crystal receiver. You could elect to build a fixed coil version of the crystal radio for either AM or shortwave reception if you desire, making the receiver a bit easier to build.

The detector for the All-Wave Crystal Radio can be either a 1N34 germanium diode or you could elect to

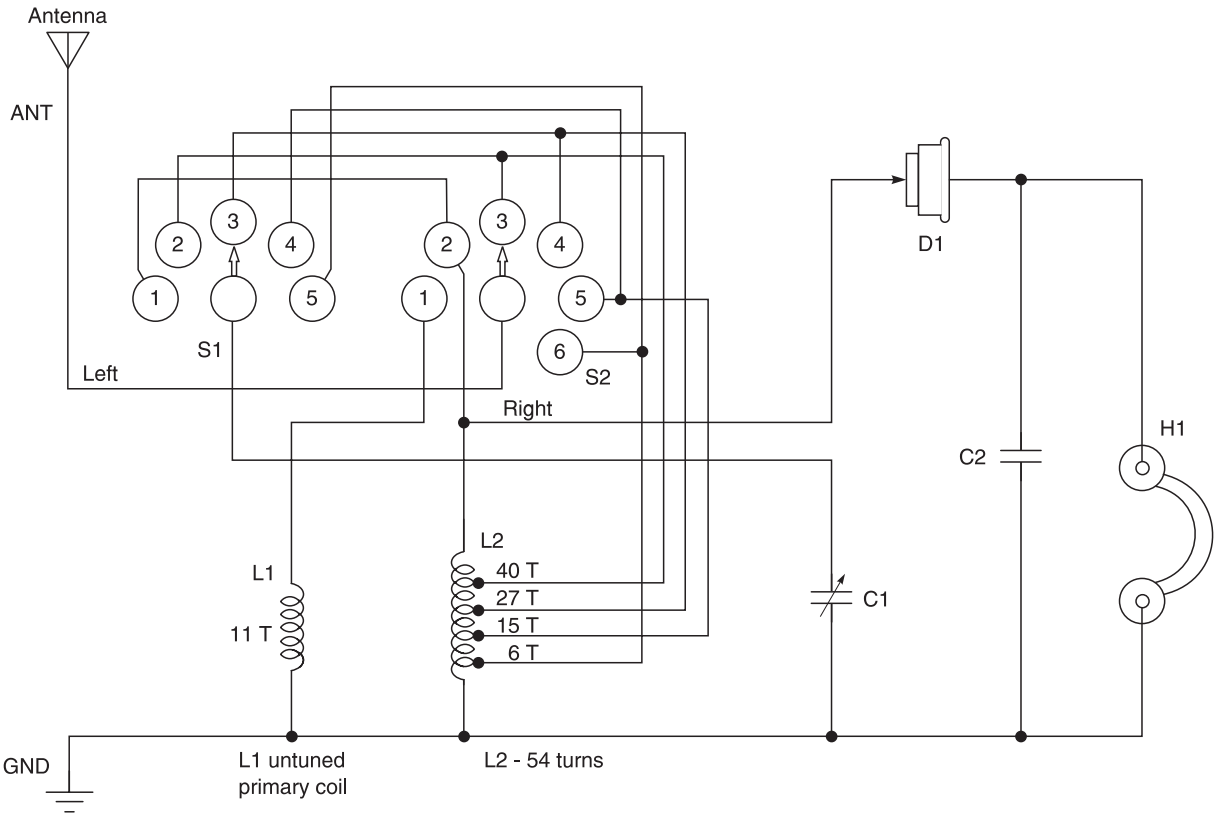

Figure 4-8 *Sensitive/selective AM/shortwave crystal radio. Courtesy of Midnight Science*

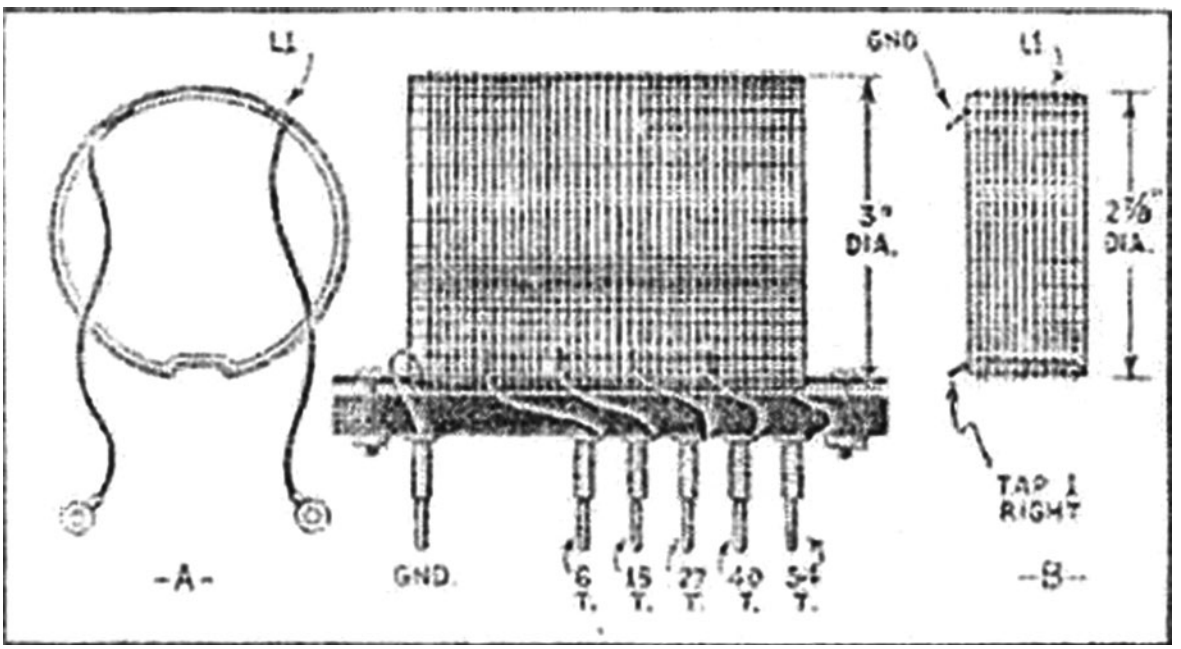

Figure 4-9 *Shortwave coil assembly*

build the radio more like the "original" version by using a galena crystal with a "cat's whisker." The galena crystal and "cat's whisker" are still available, see Appendix. Be careful to install the diode or galena crystal with the proper orientation.

The original All-Wave receiver used a 500 pF tuning capacitor at C1, but you could also use a 365 pF type which are easier to locate from sources such as Antique Radio Supply. Mount the tuning capacitor to the wood block base using standoff and screws. The ceramic disk capacitor at C2 acts as an audio filter, ahead of the high impedance headphones.

The All-Wave receiver needs to be used with either a crystal earphone or a pair of dual high impedance (2K) headphones such as the old Baldwin or Brandes headphones which are still available via EBAY or from Antique Radio Supply, see Appendix.

Switches S1 and S2 are used to select the taps between the antenna and the detector. The two switches are labeled **Right** and **Left** as shown in the diagram. The same station may come in on several taps, but use the one which places the station lowest on the turning capacitor setting for the loudest signals. Move the **Right** (S2) forward or clock-wise, one to three taps before advancing the **Left** switch (S1). The efficiency of this radio seems to lie partly in the low loss coils, but mostly in the one basic change in the circuit, in which the detector is connected permanently to the last turn of L2 towards ground.

The All-Wave Crystal radio is just about completed and you now have only to connect a good antenna and ground for the receiver to spring-to-life! The All-Wave Crystal Radio should be connected to a good ground such as a cold water pipe or 6 to 8 foot copper ground rod pounded into the ground. The All-Wave receiver will perform best with an 80 to 100 foot insulated long-wire antenna placed up-in-the-air outdoors away from metal objects. An alternate antenna might be a 50 to 60 foot insulated wire strung around your attic, away from any metal objects. You will be amazed at how well this receiver will work with a good antenna and a good pair of high impedance headphones.

In the event that your new All-Wave Crystal Radio fails to work, you will have to re-check a few details. First check the diode and how it was oriented in the circuit, you may have placed it backward and this will prevent the receiver from functioning. You will also need to check the coil connections and placement of L1 with respect to coil L2. There is no polarity regarding coil L1, but its placement at the ground end of L2 is important in order for the receiver to work properly. Also check the connections to L2, you may have reversed two end wires of the coil, and this will prevent the radio from working as well. Try the receiver once more, hopefully all of the connections are right now and the receiver should work fine. Reconnect up your ground and antenna, put on your high impedance headphones and you'll be ready to listen to your new All-Wave receiver. You may want to have a "log" book close to your new radio to log down the far away stations you will receive with this radio. During nighttime hours, you will be able to receive stations much further away, and when the shortwave coil is plugged in you will hear international shortwave stations from all around the world on your new All-Wave receiver. Have fun with your new All-Wave crystal radio.

Chapter 5

TRF AM Radio Receiver

Parts list

TRF AM Radio Project

R1 120k ohm, ¼ watt, 5% resistor

R2 2.7k ohm, ¼ watt, 5% resistor

R3 10k ohm potentiometer (volume)

R4 10k ohm potentiometer (trim)

R5 820 ohm, ¼ watt, 5% resistor

R6,R9,R13 10k ohm, ¼ watt, 5% resistor

R7,R8 22k ohm, ¼ watt, 5% resistor

R10 150k ohm, ¼ watt, 5% resistor

R11,R12 4.7k ohm, ¼ watt, 5% resistor

C1 10 nF, 35 volt polyester capacitor

C2 500 pF tuning capacitor (variable)

C3 100 nF, 35 volt polyester capacitor

C4,C5 2.2 µF, 35 volt electrolytic capacitor

C6 33 µF, 35 volt electrolytic capacitor

C7 220 µF, 35 volt electrolytic capacitor

C8 2200 µF, 35 volt electrolytic capacitor

L1 220 µH coil; see text (Ocean State-LA-540)

D1,D2,D3,D4,D5,D6 1N4148 silicon diodes

Q1 BC108B-NTE123A transistor

Q2 BC109C-NTE123AP transistor

Q3 BC179C-NTE234 transistor

U1 ZN414 or MK484 - TRF Radio IC

U2 LM741 Op-amp IC

S1 SPST power switch

B1 9-volt transistor radio battery

SPK 8-ohm speaker or headphone

Misc PC board, chassis, battery holder, battery clip, wire, hardware

AM radio is the name given for the type of radio broadcasting used in the medium wave band in all parts of the world and in the long wave band in certain areas, notably Europe. Medium wave frequencies in the US range from 540 to 1710 kHz with 10 kHz spacing. The letters AM stand for amplitude modulation,

Copyright © 2008 by The McGraw-Hill Companies, Inc. Click here for terms of use.

the technique by which speech and music are impressed on the radio waves. The sound waves from the studio are converted into electrical signals by the microphones, and these electrical signals are used to vary the amplitude, or the distance from 'peak' to 'trough' of the main constant frequency carrier wave generated at the transmitting station. As a result, the signal radiated by the station varies in amplitude in step with the variations in the loudness and pitch of the sound in the studio. In the receiver, the amplitude variations of the radio signal are separated from the carrier wave by a process known as demodulation, and after further amplification are fed to the loudspeaker.

Amplitude modulation is also used by international broadcasting stations operating in the shortwave band, and for some professional communications such as air traffic control, ship-to-shore traffic, and some mobile radio services.

AM radio stations in the medium wave or AM radio band can provide a service over an area the size of a town or of a whole continent, depending upon the power of the transmitter which can vary from less than a hundred watts to hundreds of kilowatts. Long wave AM radio stations cover even larger areas. Normally, all radio waves travel only in straight lines, which would limit a radio station to an area of only about 40 miles (65 km) in diameter—as far as the horizon. Medium and long wave stations can actually cover much larger areas because their signals are bent round the curvature of the Earth by the ionosphere (an electrically charged layer in the upper atmosphere which can reflect radio waves). In the US, where AM radio stations are operated on a commercial basis, coverage is generally and deliberately limited to one city and its environs. Major cities such as New York are served by large numbers of stations, each radiating a different program. AM radio stations in the US generally operate with omni-direction patterns during the day. In the evening many AM broadcasters switch to directional antenna beam patterns, and their broadcasts go much further due to ionospheric bending. This is why you can hear AM broadcast stations more distant in the evening.

AM radio first began with the experimental broadcast in 1906 by Reginald Fessenden, and was used for small-scale voice and music broadcasts up until World War I. The great increase in the use of AM radio came the following decade. The first licensed commercial radio services began on AM in the 1920s (the first licensed American radio station was started by Frank Conrad: KDKA in Pittsburgh, Pennsylvania). Radio programming boomed during the "Golden Age of Radio" (1920s–1950s). Dramas, comedy and all other forms of entertainment were produced, as well as broadcasts of news and music.

The quality of reproduction on AM radio is not as good as FM radio because of limitations in the amplitude modulation technique itself and because of overcrowding and subsequent interference in the medium wave band. Interference is particularly serious at night because the nature of the ionosphere alters after sunset, so that it can then reflect medium wave signals back to Earth a long way beyond their normal service area. Here, they interfere with other stations, producing whistles and other unwanted noises.

The AM method is still used for most popular broadcasting. Although the alternative FM radio system gives better quality, it is more difficult to receive, and is less suitable than AM for use in inexpensive transistor portables and car radios.

The most important concept in any communications system is the ability to send information from one place to another via a transmitter to a receiver, see Figure 5-1. This means you have to find a way to impress the audio signal information on the radio wave in such a way that it can be recovered at the other end. This process is known as modulation. In order to modulate a radio wave, you have to change either or both of the two basic characteristics of the wave: the amplitude or the frequency.

If you change the amplitude, or strength, of the signal in a way corresponding to the information you are trying to send, you are using a modulation system called amplitude modulation, or AM. The earliest means of radio communications was by Morse code, and the code key would turn the transmitter on and off. The amplitude went from nothing to full power whenever the key was pressed, a basic form of AM.

Modern AM transmitters vary the signal level smoothly in direct proportion to the sound they are transmitting. Positive peaks of the sound produce maximum radio energy, and negative peaks of the sound produce minimum energy.

The main disadvantage of AM is that most natural and man made radio noise is AM in nature, and

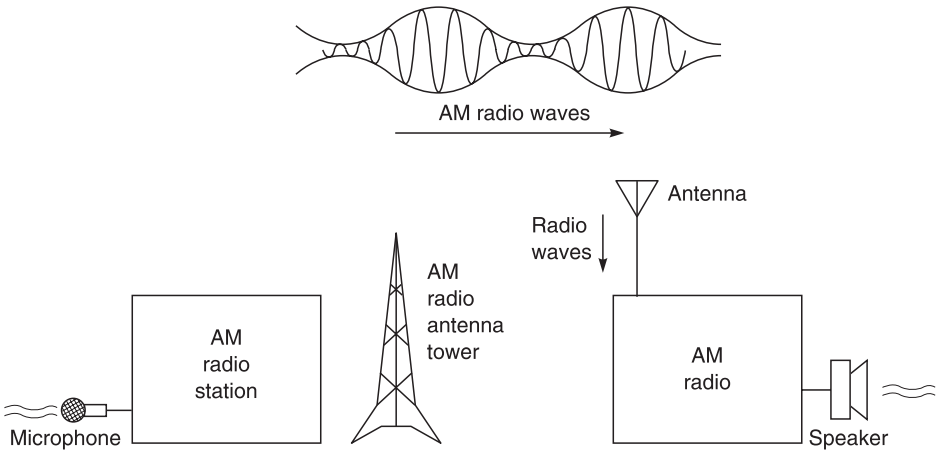

Figure 5-1 *AM broadcast system block diagram*

AM receivers have no means of rejecting that noise. Also, weak signals are (because of their lower amplitude) quieter than strong ones, which requires the receiver to have circuits to compensate for the signal level differences.

An AM radio station takes a low-frequency audio signal such as people talking or music (2500 Hz) and mixes it or superimposes on a high-frequency carrier wave (540 kHz), see Figure 5-2. It sends this radio signal out into the air as electromagnetic waves using a tall antenna. The electromagnetic wave travels through the air, going in all directions. At home, your AM radio takes this incoming signal, in a process called detection. With amplitude modulation it is simple. All you need to do is to rectify the signal, through a rectifier which removes the bottom half of every cycle. Essentially you are throwing away the high-frequency or carrier part, but keeping the low-frequency or audio part. At the output of the detector the original audio information is sent to the speaker in your radio. You then "hear" whatever was broadcast at the radio station.

The AM radio project that we are going to build in this chapter is called a TRF or tuned radio frequency type AM radio, see Figure 5-3. The TRF AM Radio design was at the forefront of radio design in the early 1920s. It utilized a tuned front end which allowed only RF energy of interest to be amplified by the RF amplifier, the signal was then passed on to the detector

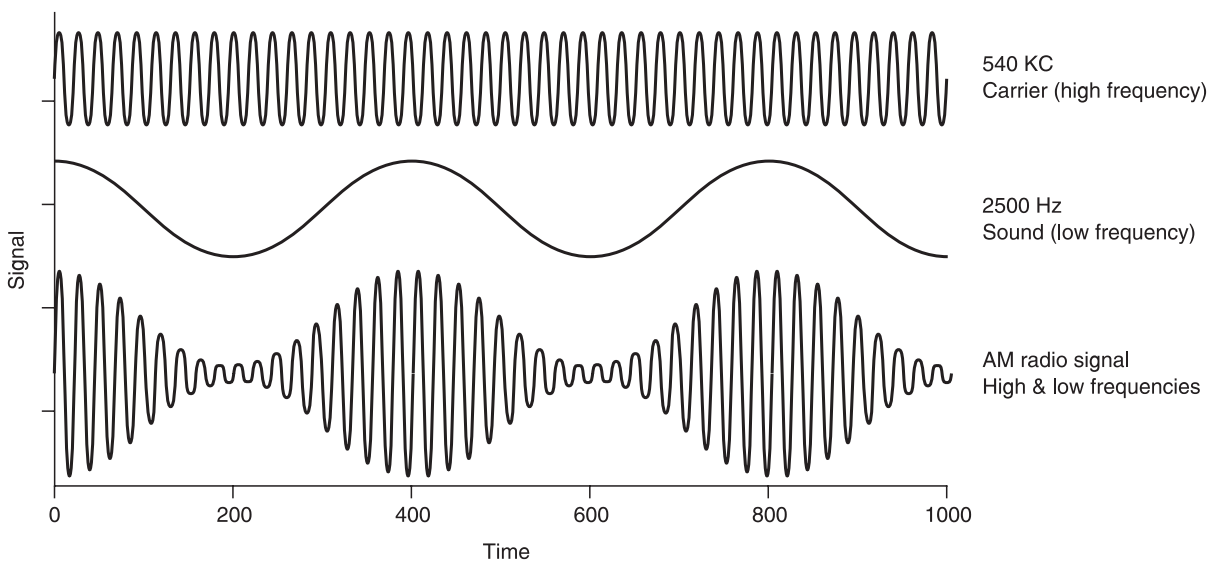

Figure 5-2 *AM carrier and modulation signals*

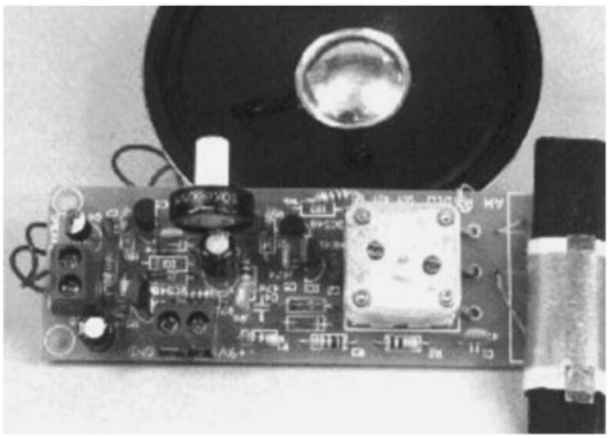

Figure 5-3 *AM TRF receiver*

followed by an audio amplifier to drive headphones. Early TRF radios had up to three controls for tuning the receiver, but later all three controls were consolidated into "tuning" control. Our modern day TRF receiver shown in the block diagram in Figure 5-4 illustrates the three major components of the AM TRF receiver. The first block consists of the tuned RF front-end resonant coil/capacitor, the second block consists of the MK484 IC, an integrated circuit RF amplifier and detector, and finally the third block, which is an audio amplifier.

The TRF AM radio project was designed around the popular MK484 TRF integrated circuit module, shown in Figure 5-5. This receiver covers the medium wave band or (AM) radio band from approximately 540 to 1700 kHz. The TRF front end consists of two components, the ferrite aerial coil and the tuning capacitor and the MK484 TRF IC. The important word is tuned, since this AM radio is called a TRF, or tuned RF radio All the AM signals reaching the radio are very weak. Only that signal which matches the TRF

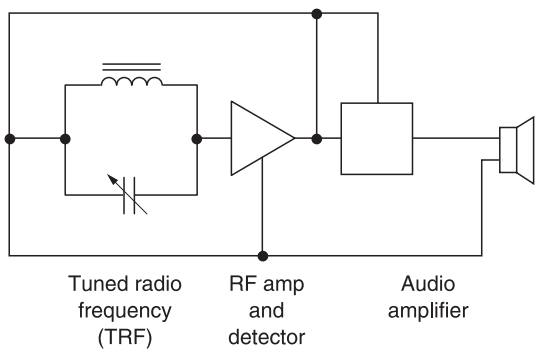

Figure 5-4 *TRF AM radio block diagram*

frequency is magnified by resonance so that it stands out at a very much higher level of signal strength. The original ZN414 IC, has now been replaced by the MK484, which is considerably easier to locate. The integrated circuit is a 3-pin, tuned radio frequency circuit, and incorporates several RF stages, automatic gain control and an AM detector. The receiver front-end is easily overloaded and the operating voltage of the IC is somewhat critical to achieve good results, but all-in-all the receiver is a great little radio for AM reception. The TRF radios were some of the first radios on the scene when the dawn of radio appeared in the early 1920s.

The front-end of the TRF receiver as mentioned consists of a tuned circuit composed of the ferrite inductor, a tuning capacitor and the TRF radio chip. A small square plastic 0-200 pF tuning capacitor was used for this radio project, but you could locate any suitable tuning capacitor within the range and it will work equally well. Often these small tuning capacitors will have additional on-board trimmer capacitors, but we used only the main tuning capacitor in the center of the device.

The second critical component of the TRF receiver is the coil at L1, which is wound on a ferrite bar. First, let's begin winding the coil at L1. The coil needs approximately 65 turns of #28 gauge enameled Litz wire on a 2½″ long ferrite rod. The windings should measure approximately 25 mm wide. Start winding the coil, close to one end, by securing the enameled wire by a piece of insulating tape. Leave approximately 100 mm for connection. The quality of reception is dependent upon the care taken in winding the antenna coil.

The signal reception will vary, dependent upon location, and is better away from large buildings that can distort the signal. Wind the wire tightly around the ferrite rod, taking care to keep the coil together and not to overlap the windings. To help hold the windings in place a piece of double-sided tape can be placed on the ferrite rod. Before soldering the antenna coil to the circuit board, you will need to scrape off the enamel coating from the ends of the wire. The two components L1 and C2 are connected in parallel to form an LC network. The Litz wire coil and the ferrite bar give the LC network a high "Q" or quality factor. This is important to the selectivity of the receiver, that is the ability to tune into one radio station at a time.

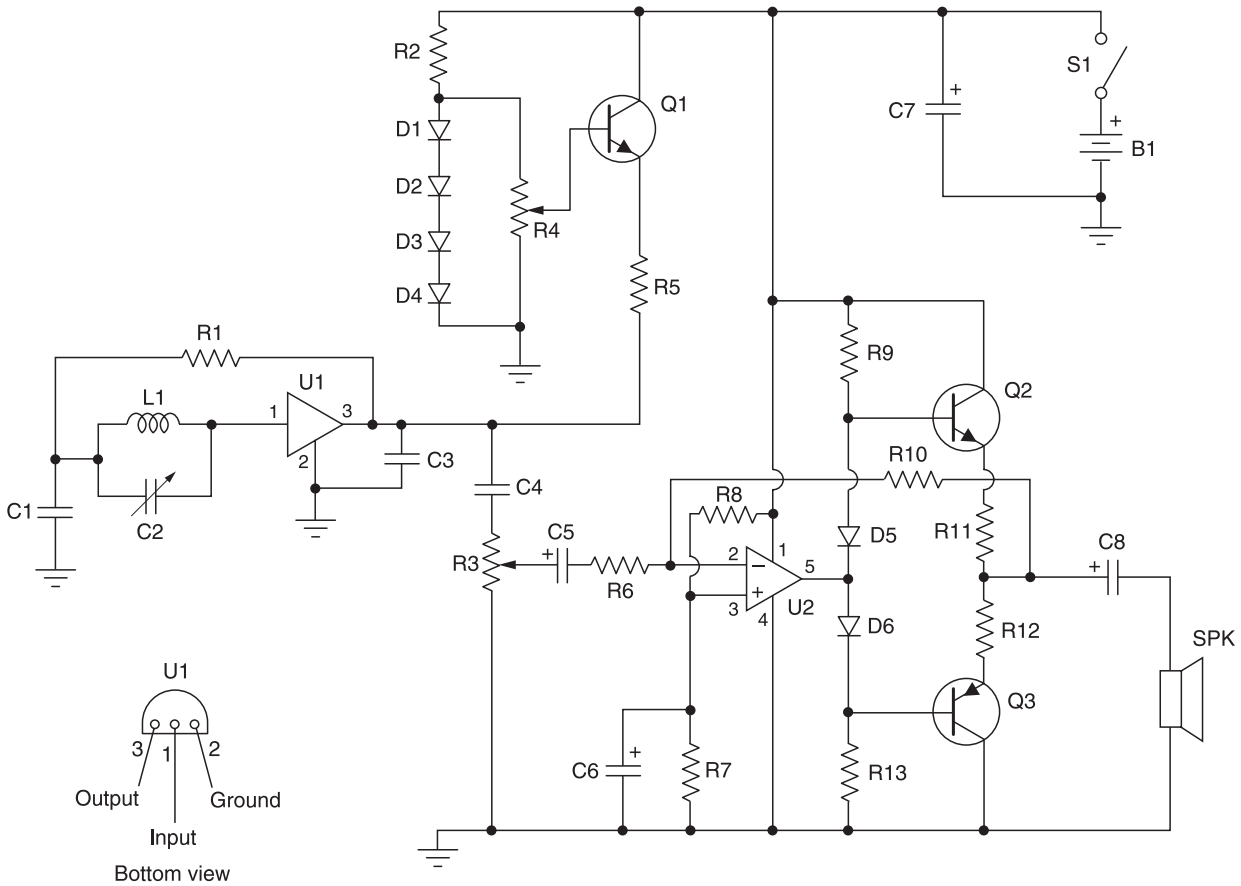

Figure 5-5 *TRF AM receiver broadcast band receiver*

The coil winding and the ferrite bar act as an efficient wire antenna, as no additional antenna is required. The only disadvantage is that the tuned circuit is directional and depends on the orientation of the bar with respect to the originating broadcast station. The coil winding and the ferrite bar act as an efficient wire antenna. No additional external antenna is needed. The only disadvantage is that the tuned circuit is directional. Signal strength depends on the orientation of the bar with respect to the origin of the signal. The coil and tuning capacitor may be taken from an old AM radio to save time, if desired.

The third main component of the TRF radio front-end is the TRF integrated circuit. The MK484 is a Japanese copy of the original ZN414. It contains an RF amplifier, active detector and automatic gain control (AGC to improve sensitivity) all in a 3-pin package. The input impedance is typically 4 M ohm. It operates over a range of 150 kHz to 3 MHz. DC supply of 1.1 V to 1.8 V and 0.3 mA current drain makes it ideal for battery operation. The output is typically 40–60 mV of audio signal. It is important to realize that the radio IC does not create any sounds by itself. It can only take the RF signal provided from the TRF circuit, amplify it, separate the audio signal from the RF (called detection) and pass the audio signal on to be amplified. It has no selective or rejection components contained in it. (This is in contrast to superhetrodyne receivers.)

In this circuit, a small voltage regulator is built around the BC108B transistor, four 1N4148 diodes, the 2.7k and 10k preset resistor and the 820 ohm resistor. The 10k pot acts as a selectivity control for the whole receiver, controlling the operating voltage for the ZN414 (or MK484). If you live in an area that is permeated with strong radio signals, then the voltage may need to be decreased. I found optimum performance with a supply of around 1.2 volts.

The audio amplifier is built around an inverting 741 op-amp amplifying circuit. Extra current boost is provided using the BC109C/BC179 complementary

transistor pair to drive an 8 ohm loudspeaker. The voltage gain of the complete audio amplifier is around 15. The audio output of the complete receiver is really quite good and free from distortion. I used a small wooden enclosure and the complete tuning assembly from an old radio.

Before we begin the AM radio project, you will want to locate a well lit and well ventilated work space. You will want a large work table or work bench to spread out all you components, diagrams and tools. Locate a small pencil tipped 27 to 33 watt soldering iron and a roll of 60/40, 22 ga. tin/lead rosin core solder. If you don't have a jar of "Tip Tinner," a soldering iron tip conditioner/dresser, then you will want to go to a local Radio Shack store and purchase one. Place all the component parts in front of you along with the necessary project diagrams, so it will be easy to work with everything in front of you. Grab a few small tools, such as a pair of end-cutters, a pair of needle-nose pliers, a pair of tweezers, a magnifying glass, a small flat-blade, and small Phillips screwdriver. Once everything is right in front of you we can begin building the AM radio project. Warm up your soldering iron and we will begin. It is a good idea to use a circuit board for this project, since circuit boards provide a more reliable method used to build circuits: you could elect to use prototype construction or point-to-point wiring on a perf-board as an alternative.

Refer to the chart in resistor color chart in Table 5-1 and the capacitor code chart in Table 5-2. Resistors used in this project will be mostly carbon composition type resistors and potentiometers. Each resistor will have three or four color bands on the body of the resistor. The first band closest to one edge will be the first color which represents the first value. For example, a brown color band will signify the first digit as a one (1). The second color band represents the second digit value. So if the second color is red, then the value of the second digit would be two (2). The third color band is the multiplier value. So, if the third color is orange then the multiplier value would be (000), so the resistor value would be 12,000 or 12k ohms. Often there is a fourth color band which represents the tolerance value. No fourth band denotes a resistor with a 20% tolerance, a silver band denotes a 10% tolerance value, and a gold band represents a 5% tolerance value. Now refer the capacitor code chart. Many small capacitors are too small to have their full value marked on the body of the capacitor, so a three-digit code is used to represent the value.

Let's begin installing the project resistors now; find and identify a couple of resistors at a time. Once you are

Table 5-1
Resistor color code chart

Color Band	*1st Digit*	*2nd Digit*	*Multiplier*	*Tolerance*
Black	0	0	1	
Brown	1	1	10	1%
Red	2	2	100	2%
Orange	3	3	1,000 (K)	3%
Yellow	4	4	10,000	4%
Green	5	5	100,000	
Blue	6	6	1,000,000 (M)	
Violet	7	7	10,000,000	
Gray	8	8	100,000,000	
White	9	9	1,000,000,000	
Gold			0.1	5%
Silver			0.01	10%
No color				20%

Table 5-2

Capacitance code information

This table provides the value of alphanumeric coded ceramic, mylar and mica capacitors in general. They come in many sizes, shapes, values and ratings; many different manufacturers worldwide produce them and not all play by the same rules. Some capacitors actually have the numeric values stamped on them; however, many are color coded and some have alphanumeric codes. The capacitor's first and second significant number IDs are the first and second values, followed by the multiplier number code, followed by the percentage tolerance letter code. Usually the first two digits of the code represent the significant part of the value, while the third digit, called the multiplier, corresponds to the number of zeros to be added to the first two digits.

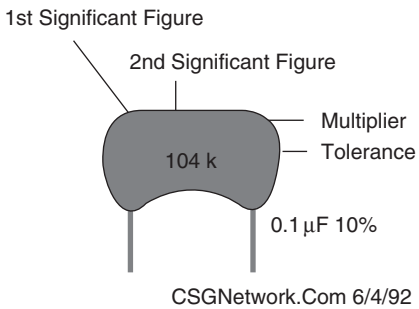

Value	*Type*	*Code*	*Value*	*Type*	*Code*
1.5 pF	Ceramic		1,000 pF /.001 µF	Ceramic / Mylar	102
3.3 pF	Ceramic		1,500 pF /.0015 µF	Ceramic / Mylar	152
10 pF	Ceramic		2,000 pF /.002 µF	Ceramic / Mylar	202
15 pF	Ceramic		2,200 pF /.0022 µF	Ceramic / Mylar	222
20 pF	Ceramic		4,700 pF /.0047 µF	Ceramic / Mylar	472
30 pF	Ceramic		5,000 pF /.005 µF	Ceramic / Mylar	502
33 pF	Ceramic		5,600 pF /.0056 µF	Ceramic / Mylar	562
47 pF	Ceramic		6,800 pF /.0068 µF	Ceramic / Mylar	682
56 pF	Ceramic		.01	Ceramic / Mylar	103
68 pF	Ceramic		.015	Mylar	
75 pF	Ceramic		.02	Mylar	203
82 pF	Ceramic		.022	Mylar	223
91 pF	Ceramic		.033	Mylar	333
100 pF	Ceramic	101	.047	Mylar	473
120 pF	Ceramic	121	.05	Mylar	503
130 pF	Ceramic	131	.056	Mylar	563
150 pF	Ceramic	151	.068	Mylar	683
180 pF	Ceramic	181	.1	Mylar	104
220 pF	Ceramic	221	.2	Mylar	204
330 pF	Ceramic	331	.22	Mylar	224
470 pF	Ceramic	471	.33	Mylar	334
560 pF	Ceramic	561	.47	Mylar	474
680 pF	Ceramic	681	.56	Mylar	564
750 pF	Ceramic	751	1	Mylar	105
820 pF	Ceramic	821	2	Mylar	205

sure you have correctly identified each resistor, and you know where each resistor is placed on the PC board, you can go ahead and install them on the circuit board. Solder the resistors in place and then trim the excess component leads with your end-cutters. Cut the excess component leads flush to the edge of the circuit board. Install the remaining resistors, solder them in place and remember to trim the excess leads from the board.

Next we will move on to installing the capacitors. This project uses two types of capacitors, small mica or polyester types and electrolytic types. The smaller capacitors may not have their actual value printed on them, but might have a three-digit code on them. Refer to the capacitor code chart to help identify each capacitor before installing them on the PC board. Slowly identify each capacitor and place it in the correct location on the circuit board. Solder these small capacitors in their respective locations after referring to the schematic and parts layout diagrams. This project also utilizes larger electrolytic capacitors. Electrolytic capacitors have polarity and this must be observed if the circuit is to work correctly. Take a look at one of the larger electrolytic capacitors and you will notice that it may have a black or white color band or a plus (+) or minus (–) marking on one side of the capacitor body. When placing these types of capacitors on the circuit board, be sure you have oriented the capacitor correctly. Install the electrolytic capacitors on the circuit board and solder them in place; remember to trim the excess component lead with your end-cutter.

Let's move on to installing the silicon diodes. The AM radio project uses six silicon diodes, and they too have polarity which must be observed. Each diode will have either a white or black band at one end of the diode's body. This band denotes the cathode lead of the particular diode. Refer to the parts layout and schematic diagram when installing the six resistors. Place the diodes on the circuit board and solder them in place on the board. Don't forget to cut the extra lead lengths.

Locate the semiconductor pin-out diagram shown in Figure 5-6. Now, go ahead and identify all three of the transistors for the project and install the transistors on the circuit board. There are two NPN types and one PNP type transistors in the AM radio project. Transistors usually have three leads, a Base lead, a Collector lead and an Emitter lead. The symbol for a transistor is a vertical line which is the Base lead and two lines running at 45°angles with respect to the Base lead. The angled lead with the arrow pointing towards or away from the Base lead is the Emitter lead and the remaining lead is the Collector lead. Be sure you can identify each of the transistor leads before placing them on the circuit board. Solder the transistors in place on

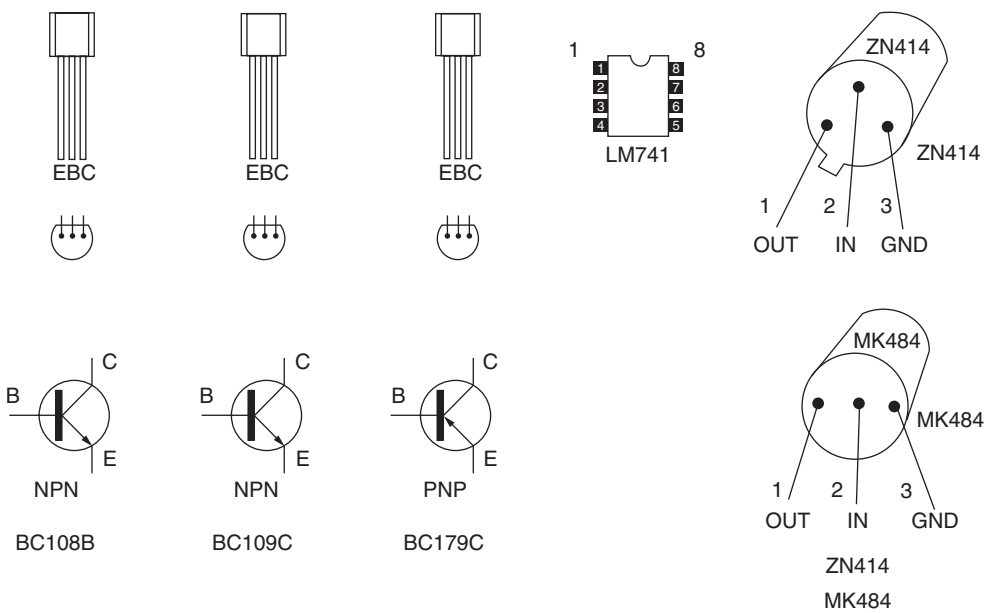

Figure 5-6 *Semiconductor pin-outs*

the circuit board; when finished remember to trim the excess component leads.

The ZN414 or MK484 TRF module looks very much like a common three-lead transistor. Carefully refer to the pin-out diagram for the MK484 before installing, in order to prevent damaging it upon power-up. One lead is the input lead from the tuned circuit. One lead is the ground lead and the remaining lead is the output lead which is directed to the actual circuit.

The AM radio project uses a single dual in-line integrated circuit, an LM471. We elected to use an IC socket as insurance against a possible circuit failure at some point in time. Integrated circuit sockets are inexpensive and make life easier in the event of a circuit problem, since it is much easier to unplug an IC rather than attempting to unsolder a multi-pin integrated circuit. Go ahead and solder-in a good quality IC socket for U2. Take a look at U2 and you will notice that at one end of the plastic package you will find a cut-out, notch or indented circle. Pin 1 of the IC will be just to the left of the notch or cut-out. Be sure to align pin of the IC to pin 1 of the IC socket, pin 1 of U2 is the null offset pin which is not used in this circuit. Note that pin 2 of U2 is the inverting input which is connected to the junction of R6 and R8.

Next locate the ferrite inductor coil or L1; you will notice that it is in parallel with the tuning capacitor C2. The parallel tuned circuit is placed between capacitor C1 and the input of U1, the MK484 TRF IC. These components are best placed at one end of the PC board if possible, or can be placed off the PC board on the front of your enclosure. Now, locate the volume control, the 10k ohm potentiometer; it is a chassis mounted control which can be mounted on the front panel of your enclosure.

Let's wrap up the project. First you will want to solder the battery clip; note that the black wire of the battery clip will go to the circuit board minus or ground bus and the red battery clip wire will go in series with one post on the on-off switch at S1, the remaining post of the SPST toggle switch will connect to the Collector of Q1. Finally locate two 4″ pieces of #22 ga. insulated hookup wire. Bare both ends of the two wires, solder one end of each wire to the speaker leads. Now take one free wire end and solder it to the common ground of the circuit and then solder the remaining free wire end to the minus end of capacitor C8.

This completes the construction of the AM radio project. Let's take a well deserved rest and when we return we will check the circuit board for possible "cold" solder joints and possible "short" circuits. Pick up the circuit board with the foil side facing upwards toward you. Look closely at the circuit board, first we will inspect the circuit board for possible "cold" solder joints. The solder joints should all look clean, shiny and bright. If any of the solder joints look dull, dark or "blobby" then you should remove the solder from that joint and re-solder the joint over again. Now pick up the circuit board once again and we will look for possible "short" circuits. "Short" circuits are usually caused from one of two reasons. The first cause of "short" circuits are loose solder "blobs" or solder balls which can sometimes stick to the circuit board. The second cause for "short" circuits is to have "stray" component leads stick to the foil side of the board. Rosin core solder residue can often be sticky and often solder "blobs" or "stray" component leads can bridge across circuit traces causing a "short" circuit. Look over the board and remove anything that looks like it might be bridging any circuit traces. Once the circuit inspection has occurred, you can prepare the circuit for its first test.

Connect up a fresh 9 volt battery to the AM radio circuit. Once the battery is connected to the circuit, you can "flip" the on-off switch to the on position and you should begin to hear some "hiss" from the speaker. If you do not hear anything, turn up the volume control to mid-position. At this point you should begin to hear some sounds from the speaker. Move the tuning capacitor control across the AM radio band and if all goes well you should begin to hear some local stations. Move the ferrite core coil or the circuit board around in a 360° pattern to see where the station is loudest. Hopefully the radio works fine without any further adjustments.

In the event that the AM radio circuit does not work at all, you will have to remove the battery from the circuit and inspect the circuit board one more time, but this time you will be looking for components placed incorrectly. Remember earlier, we talked about certain components have polarity such as diodes, electrolytic capacitors, transistors, etc. Now, you will need to

inspect the PC board closely to see if you might have placed a component incorrectly. Its easy to make a mistake and insert a capacitor or diode incorrectly; it happens to professionals too! Another possible cause for failure is that you may have placed an IC incorrectly in the socket! Finally, it's easy to incorrectly install one of the transistors. Look at each transistor carefully, you may want to refer to the manufacturer's specification and/or pin-out information sheets along with the circuit layout and schematic diagram to confirm transistor pin-outs. Once you have inspected the circuit board for misplaced components and have corrected any mistakes, you can reapply power to the AM radio circuit and check out the circuit once again. Have fun listening to your new AM radio, you will have the great satisfaction of listening to the radio that you just built.

Chapter 6

Solid-State FM Broadcast Receiver

Parts list

FM Radio Receiver

R1,R15 4.7k ohm, ¼w, 5% resistor (yellow-violet-red)

R2,R18 1K resistor, ¼w, 5% resistor (brown-black-red)

R3,R16,R17 270 ohm, ¼w, 5% resistor (red-violet-brown)

R4,R11 47k ohm, ¼w, 5% resistor (yellow-violet-orange)

R5,R7,R8,R9,R14 10K, ¼w, 5% resistors (brown-black-orange)

R6 470 ohm, ¼w, 5% resistor (yellow-violet-brown)

R10 2.2k ohm, ¼w, 5% resistor (red-red-red)

R12,R13 10k ohm, potentiometers

R19 2 ohm, ¼w, 5% resistor (red-black-gold)

C1 4.7 or 5pF, 35v disk capacitor (marked 5 or 5K)

C2,C3,C7,C8,C16,C18, .01µF, 35v disk capacitor (marked .01 or 103 or 10 nF)

C4,5,15,27 .001µF, 35v disk capacitor (marked .001 or 102 or 1 nF)

C6,C14 100 pF, 35v disk capacitor (marked 100, 101, or 101K)

C9,C17,C22,C26 4.7 or 10 µF, 35v electrolytic capacitor

C10,C13,C19 100 to 220 µF, 35v electrolytic capacitor

C11,C12 22 pF, 35v disk capacitor (marked 22)

C20,C21,C23,C24,C28,C29 .01 µF, 35v disk capacitor (marked .01 or 103 or 10 nF)

C25 .1 µF, 35v disk capacitor (marked .1 or 104)

FL1 10.7 MHz ceramic filter; Digi-Key Electronics

L1 slug tuned plastic molded coil

L2 10.7 MHz shielded can style IF transformer (421F122)

Copyright © 2008 by The McGraw-Hill Companies, Inc. Click here for terms of use.

D1 varactor diode, 33 pF

D2 Zener diode, 6.2 volt

U1 ULN2111 or MC1357 IC

U2 LM386 IC

U3 SA602 IC

Q1,Q3 2N3904 NPN transistor

Q2 2SC2498 or 2SC2570A NPN transistor

B1 9 volt transistor radio battery

Misc PC board, battery holder, battery clip, RCA jacks

⅛″ earphone jack, wire, antenna

The FM broadcast receiver will permit you to listen to your favorite radio shows as well as allow you to tune outside of the standard FM broadcast band to "listen-in" to FM room bugs, FM mikes and other interesting hidden transmitters. The FM receiver could also be connected to an SCA adapter, so that you may listen to 'MUSAK' radio show used in stores and restaurants. The FM radio project is just plain fun and will teach you about FM radio theory.

The FM broadcast receiver demonstrates the basics of FM radio theory in one compact, simple circuit! Separate circuits are "sections" of the receiver, making it easy to visualize every function. The latest in IC circuitry is used in the FM receiver, which allows high performance.

The FM receiver project is designed to receive wide-band FM transmissions typical of FM broadcast stations, wireless mikes, and telephone transmitters or "bugs," rather than Narrow Band FM transmissions (NBFM) as used on police or public service radios.

Why not build your own FM Broadcast receiver like the one shown in Figure 6-1. Not only will you learn how FM receiver works but you will be able to build and utilize your new FM radio. The FM receiver is great for listening to FM broadcasts and news as well as listening-in to commercial SCA—free music, stock quotes, sports, etc. The receiver has an SCA or sub-carrier output which can be fed into an SCA converter to allow this reception of these signals.

Figure 6-1 *FM receiver*

The receiver tunes from 70 to 110 MHz, ideal for tuning in out-of-band FM wireless mikes, "bugs" and other "hidden" transmitters. The FM receiver also features plenty of audio output, and operates from a standard 9 volt battery for truly portable operation.

FM modulation

Frequency modulation (FM) is a form of modulation which represents information as variations in the instantaneous frequency of a carrier wave. Contrast this with amplitude modulation, in which the amplitude of the carrier is varied while its frequency remains constant. In analog applications, the carrier frequency is varied in direct proportion to changes in the amplitude of an input signal. Digital data can be represented by shifting the carrier frequency among a set of discrete values, a technique known as frequency-shift keying. The diagram in Figure 6-2 illustrates the FM modulation scheme, the RF frequency is varied with the sound input rather than the amplitude.

FM is commonly used at VHF radio frequencies for high-fidelity broadcasts of music and speech, as in FM broadcasting. Normal (analog) TV sound is also broadcast using FM. A narrowband form is used for voice communications in commercial and amateur radio settings. The type of FM used in broadcast is generally

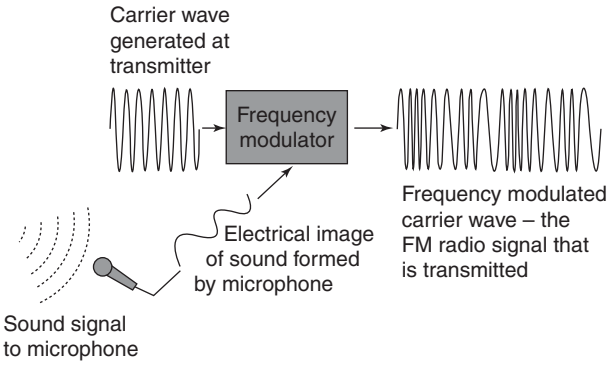

Figure 6-2 *FM modulation*

called wide-FM, or W-FM. In two-way radio, narrowband narrow-fm (N-FM) is used to conserve bandwidth. In addition, it is used to send signals into space.

Wideband FM (W-FM) requires a wider bandwidth than amplitude modulation by an equivalent modulating signal, but this also makes the signal more robust against noise and interference. Frequency modulation is also more robust against simple signal amplitude fading phenomena. As a result, FM was chosen as the modulation standard for high frequency, high fidelity radio transmission: hence the term "FM radio." FM broadcasting uses a well-known part of the VHF band between 88 and 108 MHz in the USA.

FM receivers inherently exhibit a phenomenon called capture, where the tuner is able to clearly receive the stronger of two stations being broadcast on the same frequency. Problematically, however, frequency drift or lack of selectivity may cause one station or signal to be suddenly overtaken by another on an adjacent channel. Frequency drift typically constituted a problem on very old or inexpensive receivers, while inadequate selectivity may plague any tuner. Frequency modulation is used on the FM broadcast band between 88 and 108 MHz as well as in the VHF and UHF bands for both public service and amateur radio operators.

FM receiver circuit description

The FM receiver block diagram in Figure 6-3 illustrates the fundamentals of FM reception. The schematic diagram of the FM broadcast receiver is depicted in Figure 6-4. FM broadcast signals captured by the whip antenna or from the input jack are applied to the RF amplifier Q2, a high gain, low noise microwave style transistor. Input signals are amplified about 100 times or equivalent to 20 dB. After being boosted, these input signals are routed to the SA602 mixer-oscillator chip for conversion down to the 10.7 MHz Intermediate Frequency (IF). The SA602 is a very popular chip used in a great variety of receivers from cellular telephones to satellite receivers. The reason for its popularity is that it contains most of a receiver's "front end" circuitry on a single, easy-to-use chip. Internal to the SA602 is an oscillator tuned by an external tank circuit; C11, 12, L1 and varactor diode D1. A varactor diode acts like a voltage variable capacitor and the voltage applied across it comes from tuning pot R12. This IF signal is an exact reproduction of the desired signal, but at 10.7 MHz. We then band-pass filter it with ceramic filter FL-1.

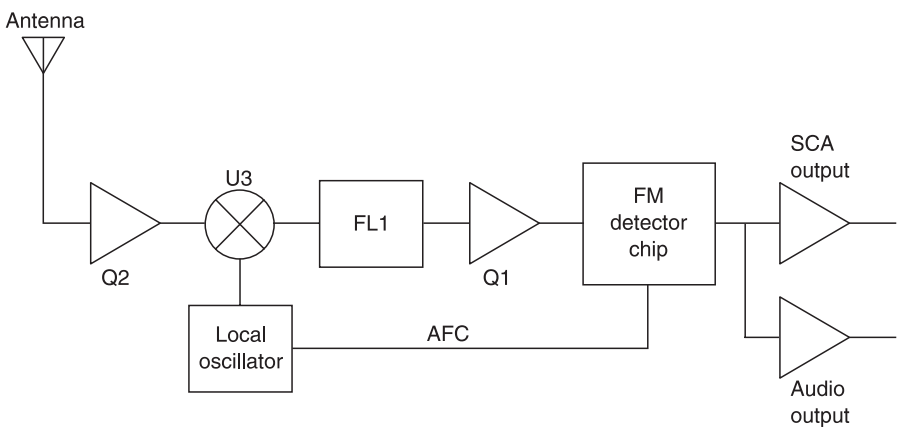

Figure 6-3 *FM broadcast receiver block diagram*

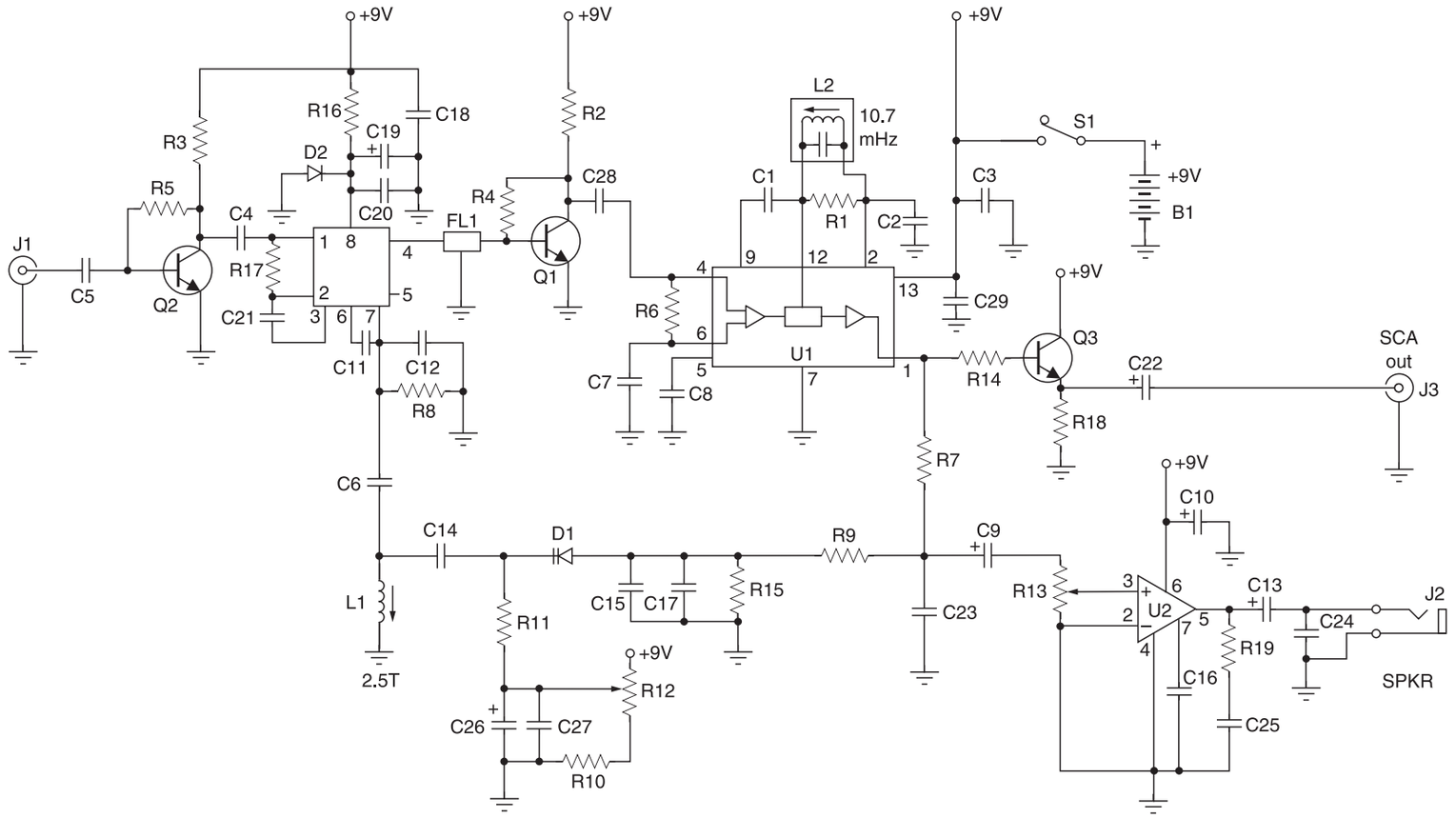

Figure 6-4 *FM broadcast receiver. Courtesy of Ramsey Electronics*

The ceramic filter allows only the desired 10.7 MHz signal to pass, rejecting any adjacent channel signals. Transistor Q1 amplifies the IF signal before it is applied to the detector chip U1.

One of the primary advantages of FM is that the program information (modulation) is contained in carrier frequency variations and not in amplitude changes like AM, which would be susceptible to noise and interference. This means that we can limit or clip the signal, thus removing any noise and not affecting the desired information. The first section of U1 performs this limiting function, providing high gain and clipping any amplitude (noise) variations. FM is detected in the second section using a process known as quadrature detection. We'll not get into this too deeply because it requires a knowledge of trigonometry identities—let's just say it extracts the frequency modulated program information. Capacitor C1 and coil assembly L2 comprise a phase shift network that is required by the quadrature detector. Demodulated signals are amplified and sent out through pin 1 to the volume control, AFC circuitry and the SCA buffer amp. The AFC circuitry is used to properly keep the receiver locked on to the tuned-in radio station. Resistor R9 and capacitor C17 filter out any audio voltage variations so that only major frequency changes will shift the tuning voltage to lock the frequency.

Audio signals from the volume control are amplified to speaker levels by U2, an LM-386 audio amplifier chip. Transistor Q3 provides a buffer stage to external SCA devices you may connect up to the receiver. SCA units decode (demodulate, actually) "hidden" audio and data services transmitted over standard FM broadcast channels. These services include stock quotes, sports scores, talk shows and even background music—commercial free!

Circuit assembly

Look for a clean well lit area in which to assembly your shortwave receiver. You will need a 27 to 30 watt pencil tip soldering iron, some 60/40 tin/lead rosin core solder. You will also need a few hand tools including a pair of end-cutters, needle-nose pliers, a few screwdrivers and a pair of tweezers to pick up small parts. You will want to locate a small jar of "Tip Tinner" from your local Radio Shack store. "Tip Tinner" is a soldering iron tip cleaner/dresser which is invaluable when soldering circuit board. Locate the schematic and layout diagrams and we will begin to construct your new shortwave receiver. Place the project circuit board in front of you and we will begin building the receiver.

Locate all of the resistors for the project and place them in front of you. Each resistor has a color code which describes its value. Check the color code against the parts list and schematic before installing them onto the circuit board. Refer to the resistor color chart in Table 6-1. Place about four or five resistors on the PC board and place these resistors in their respective locations carefully making sure each on is in the correct location. Let your soldering iron tip heat both the component lead wire and PC board trace enough so that the wire itself and the foil trace both become hot enough together to melt a bit of solder so that it flows smoothly from the component leads to the PC board trace. Now, go ahead and solder each of the resistors onto the circuit board. Trim off the excess component leads with and small pair of end-cutters. Pick up and identify the next grouping of resistors and install them on the circuit board, follow up by soldering this next batch of resistors to the circuit board, remember to trim the extra lead lengths form the PC board.

Once all the resistors have been installed on to the circuit board, we can move on to identifying all of the capacitors for the project. Note that there will be different looking capacitors for this project, some will be small disks, while others will be larger body devices with minus and plus marking on them. These larger capacitors with polarity marking are electrolytic capacitors and they have polarity which must be observed for the circuit to work correctly. Look through the parts pile and locate the capacitors and place them in front of you. You will notice a number of small disk capacitors, we will install these first. Look closely at each of the disk capacitors at their markings. Sometimes the capacitors are very small and they may not have their actual value printed on them but will instead have some sort of code. Refer to the parts list for these codes or the capacitor code chart Table 6-2. Locate four or five of these small disk capacitors, identify them and install them on the circuit board, while referring to the schematic and layout diagrams.

Table 6-1
Resistor color code chart

Color Band	*1st Digit*	*2nd Digit*	*Multiplier*	*Tolerance*
Black	0	0	1	
Brown	1	1	10	1%
Red	2	2	100	2%
Orange	3	3	1,000 (K)	3%
Yellow	4	4	10,000	4%
Green	5	5	100,000	
Blue	6	6	1,000,000 (M)	
Violet	7	7	10,000,000	
Gray	8	8	100,000,000	
White	9	9	1,000,000,000	
Gold			0.1	5%
Silver			0.01	10%
No color				20%

After inserting the disk capacitors on to the circuit board, you can go ahead and solder them to the circuit board. Remember to cut the excess component leads. Next, move on and install another grouping of small disk capacitors, then solder them in place on the printed circuit board. Cut the extra component leads after soldering in the capacitors. When you are finished installing the small capacitors we will move on to the larger electrolytic types.

Next, we will identify and install the electrolytic capacitors. Electrolytic capacitors each have polarity markings on them in the form of a black band with either a plus or minus marking, which denotes the polarity of the device. You must pay particular attention to these markings in order for the FM receiver to work properly. Refer to the schematic and parts layout diagrams when installing C9, C17, C22 and C26, which are all 4.7 to 10 µF electrolytic capacitors. Install these four capacitors and solder them to the circuit board. Remember to trim the excess component leads. Cut the excess leads flush to the edge of the PC board with a pair of small end-cutters. Now locate and install electrolytic capacitors C10, C13 and C19, these are all 100 to 200 µF electrolytic types. After placing them on the PC board in their proper location and with respect to polarity marking you can go ahead and solder them to the PC board.

At this time, locate diodes D1, the varactor "tuning" diode and D2, a Zener diode from the parts pile. Install D1, varactor diode. It has a black body with green and red bands. Observe the correct positioning of the banded end by following the silkscreen. The green band is positioned as shown on the silkscreen. Now, install D2, the Zener diode. It has a gray painted glass body with a black band. Orient the band as shown on the layout diagram. A Zener diode acts as a voltage regulator, keeping the voltage across it constant. This keeps frequency drift to a minimum. Once both of the diodes have been placed on the PC board you can solder them in place and then trim the extra lead lengths flush to the edge of the circuit board.

Next, we are going to locate and install the two inductors; see Table 6-3. Locate the slug tuned plastic molded coil, which is coil L1. Once you have located it, you can place it on the PC; remember to check the schematic and parts layout diagram for placement details. Now, locate L2, the 10.7 MHz shielded metal quadrature coil. Notice that it will only go into the PC board one way. Place L2 on the board and now solder both L1 and L2 to the PC board. Trim the excess component leads from the board.

At this time, you can locate FL1, the 10.7 MHz ceramic IF filter. This part looks like a disk capacitor

Table 6-2

Capacitance code information

This table provides the value of alphanumeric coded ceramic, mylar and mica capacitors in general. They come in many sizes, shapes, values and ratings; many different manufacturers worldwide produce them and not all play by the same rules. Some capacitors actually have the numeric values stamped on them; however, many are color coded and some have alphanumeric codes. The capacitor's first and second significant number IDs are the first and second values, followed by the multiplier number code, followed by the percentage tolerance letter code. Usually the first two digits of the code represent the significant part of the value, while the third digit, called the multiplier, corresponds to the number of zeros to be added to the first two digits.

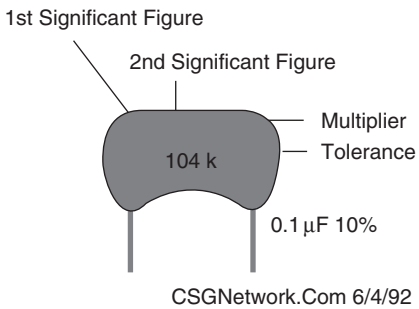

Value	*Type*	*Code*	*Value*	*Type*	*Code*
1.5 pF	Ceramic		1,000 pF /.001 µF	Ceramic / Mylar	102
3.3 pF	Ceramic		1,500 pF /.0015 µF	Ceramic / Mylar	152
10 pF	Ceramic		2,000 pF /.002 µF	Ceramic / Mylar	202
15 pF	Ceramic		2,200 pF /.0022 µF	Ceramic / Mylar	222
20 pF	Ceramic		4,700 pF /.0047 µF	Ceramic / Mylar	472
30 pF	Ceramic		5,000 pF /.005 µF	Ceramic / Mylar	502
33 pF	Ceramic		5,600 pF /.0056 µF	Ceramic / Mylar	562
47 pF	Ceramic		6,800 pF /.0068 µF	Ceramic / Mylar	682
56 pF	Ceramic		.01	Ceramic / Mylar	103
68 pF	Ceramic		.015	Mylar	
75 pF	Ceramic		.02	Mylar	203
82 pF	Ceramic		.022	Mylar	223
91 pF	Ceramic		.033	Mylar	333
100 pF	Ceramic	101	.047	Mylar	473
120 pF	Ceramic	121	.05	Mylar	503
130 pF	Ceramic	131	.056	Mylar	563
150 pF	Ceramic	151	.068	Mylar	683
180 pF	Ceramic	181	.1	Mylar	104
220 pF	Ceramic	221	.2	Mylar	204
330 pF	Ceramic	331	.22	Mylar	224
470 pF	Ceramic	471	.33	Mylar	334
560 pF	Ceramic	561	.47	Mylar	474
680 pF	Ceramic	681	.56	Mylar	564
750 pF	Ceramic	751	1	Mylar	105
820 pF	Ceramic	821	2	Mylar	205

Table 6-3
Inductor coil winding information

L1	2½ turn coil #22 ga. insulated magnet wire on slug tuned coil form. Unwind original coil and rewind. 2½ turns onto Series 48 adjustable coil form 48A Series Coil (48A117MPC) Circuit Specialists.
L2	10.7 MHz shielded can style IF transformer (red) Part # (421F122) Mouser Electronics.

but has three leads. Amazingly, its function is equal to a small handful of inductors and capacitors hooked up in a bandpass filter configuration. For those techno-types, its bandwidth is 280 kHz centered at 10.7 MHz with an insertion loss of only 6 dB. Go ahead and solder FL1 in now.

Let's locate the transistors for the receiver now! Next, refer to the semiconductor pin-out diagram shown in Figure 6-5. Transistors are three semiconductors which generally have three leads: Base lead, a Collector lead and an Emitter lead. The transistor symbol shows that the Base lead is a vertical line. Both the Collector and Emitter leads are diagonal lines which point to the Base lead. The Emitter lead has a small arrow which points toward or away from the Base lead. Try and locate transistor Q1, a 2N3904 type. Watch placement of its flat side, refer to the parts layout diagram and the schematic for proper placement. Install Q2, 2SC2498 or 2SC2570A NPN transistor. Transistors are VERY critical of correct orientation of their leads. Be sure to pay close attention to the position of the flat side of the transistor. Finally, install Q3, 2N3904 transistor. Be sure to observe flat side orientation of the transistors when mounting them. Now go ahead and solder the transistors in place on the PC board.

Let's take a short break and when we return we will install the integrated circuits and the final components. Before installing the integrated circuits, please consider using integrated circuit sockets as an insurance policy against having to try and un-solder a 14 pin IC from the circuit board which is a difficult task even for the seasoned electronics technician. Integrated circuits DO fail and if one ever does, you can simply unplug it and replace it with a new one. Refer to the schematic and parts layout diagrams when installing the integrated circuits. Solder in the IC sockets in their respective locations and then we will install the actual ICs.

Integrated circuit packages will generally have a cut-out, notch or indented circle at the top end of the IC package. The cut-out or notch will usually be at the top center while if there is an indented circle it will be at the top left of the IC package. Pin 1 of the IC will always be left of the cut-out or notch, so you can easily identify the pin-outs. Using your schematic and parts

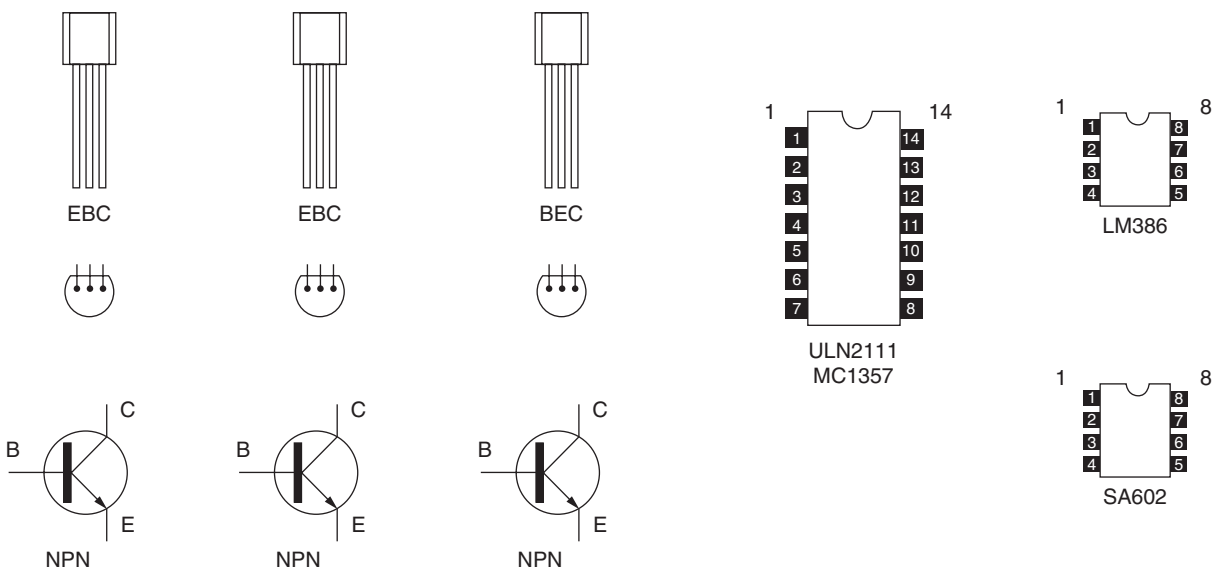

Figure 6-5 *Semiconductor pin-outs*

layout diagrams observe the correct orientation of the integrated circuits before inserting them into the sockets. First locate and install U1, the ULN2111 FM demodulator chip. Since this chip has 14 pins, be especially careful not to bend any pins under as you insert it into the PC board. When you solder the chip, verify that you are soldering all 14 pins. Next, let's install U2, the LM386 audio amplifier IC chip. The LM386 is a very popular part, and with good reason. Tucked inside that little plastic case are about 20 transistors that take a feeble audio signal and amplify it up to room-filling volume! Finally, go ahead and install U3, the SA602 IC mixer-oscillator. The marked end of the IC (band or dot) must face the edge of the PC board. If you wish, install an 8-pin DIP socket, still remembering to orient and install the SA602 correctly. Remember to firmly press the integrated circuits into their sockets.

The receiver project has two potentiometers, R12 is the "tuning" control, while R13 is the volume control. Locate the two 10k ohm potentiometers and install them, being sure to refer to the schematic and parts layout diagrams. Note that both potentiometers are on the front panel of the PC board. Install potentiometer R12, the tuning control. Insert it into the PC board so it seats firmly and is straight and even. Solder the three pins and the two mounting tabs. Next, install potentiometer R13, the volume control in the same manner.

Now locate S1, the on-off push button switch. Solder all six pins firmly. We've installed some "landmark" parts so far just to get us used to soldering our PC board. Finally, we are going to place the panel jacks on the rear portion of the circuit board. Locate and install J1, the RCA antenna jack, solder all four points. Now locate and install J2, the speaker jack, solder all three pins. At last, install J3, the SCA output jack, solder all four points.

There are only a few more components to go before we finish our FM receiver project. Install the 9 volt battery clamp. Use a scrap component lead wire looped through the holes in the clamp and into the holes in the PC board. Solder the wire to the clamp but don't use too much solder as this will prevent you from seating the battery fully into the clamp. Now, go ahead and install the 9 volt battery snap connector. Make sure you put the right color wire into the proper hole on the PC board. At long last, you are all done and ready to listen to tunes from your radio.

Before we apply power to the FM receiver for the first time we should make one last inspection of our work. First you will want to make sure that you have installed the diodes, electrolytic capacitors and the transistors with the correct orientation. Failure to do so may result in a damaged circuit, when power is first applied. Don't forget to check the orientation of the integrated circuits for proper location and orientation. Now we will inspect the PC board for "cold" solder joints. Pick up the PC board with the foil side facing upwards towards you. Take a look at all of the solder connections and make sure that they all look clean, smooth and shiny. If you find a solder joint that looks dirty, dark, dull or "blobby" then un-solder the connection, remove the solder and re-solder the connection once again until it looks good. Finally, we are going to inspect the PC board for possible "short" circuits. Often "cut" components leads can form "bridges" which can "short" out the circuit board traces, thus causing power to flow into the wrong places, and possibly damage the circuit. Also look carefully for any solder blobs that can form "bridges" between circuit traces. Now that you have inspected the PC circuit board, we can move on to testing and aligning your new receiver.

Testing and alignment

A hex head alignment tool is required to tune up your FM receiver. If you do not already have a set of plastic or nylon coil alignment tools and expect to build other radio or transmitter type kits, such tools are well worth having and can be found at any electronics store, including Radio Shack. While a hex style Allen wrench will fit the coil slug, the metal itself will drastically change the coil's inductance while it is in the slug. For this reason you should not use an Allen wrench unless you don't mind the trial and error process of turning the slug, withdrawing the tool, checking tuning, reinserting the tool, re-tuning, checking and so on.

You can fabricate your own non-metallic tuning tool with some patience, a bit of sandpaper and a piece of plastic rod. Try a large wooden matchstick, kebab skewer, or small plastic crochet needle. Carefully sand down the end to a hex shaped form and check for proper fit within the coil slug. It is better to have the

tool fit loosely rather than too tight, since a tight tool will cause stress on the delicate slug.

Connect up a fresh 9 volt battery (preferably heavy duty alkaline type), a speaker or earphone, a short length of wire (about two feet) to serve as antenna, or the telescopic whip if the optional matching case and knob set was purchased. Now, set the volume and the tuning controls to the center of their range, then press the power switch "ON," you should hear some rushing noise from your speaker. Next, rotate the volume control and see if it does its job, then slowly turn L2's slug back and forth for maximum noise. This noise should be similar to what you would hear when a regular FM radio is tuned between stations. L2 may be tuned with a regular blade style screwdriver.

Try turning the tuning control, and see if you can receive any stations, but don't be alarmed if nothing is received since we haven't adjusted the oscillator coil yet. The oscillator coil, L1, is adjustable to receive from 70 to 110 MHz. We have to adjust it to cover the frequency range of interest. For alignment purposes we'll work with the understanding that the standard FM 88-108 MHz band is what we wish to receive.

Using an insulated alignment tool, slowly rotate L1's slug gently so that the slug is even with the top of the coil form. (Do not force the slug; if it binds, rotate the slug back and gently "rock it" to-and-fro as you would a thread forming tap. Slugs are by nature very brittle and will crack easily.) Now carefully rotate the slug into the coil form seven turns. The slug will be in about ¼″. Rotate the tune control until you hear an FM broadcast signal. Adjust L2 for best sound. Install R9, 10k ohm (brown, black, orange). R9 adds in AFC voltage to stabilize against drift. Without it your radio may "wander." After a signal is received, rotate the tune control to receive other stations. If the stations seem to "jump away" as you try to tune one in, the coil L1 is adjusted incorrectly and should be re-tuned. The reason for this odd phenomenon is that the AFC circuit is pushing the signal away rather than pulling it in. This is caused by having the oscillator 10.7 MHz below the desired signal rather than 10.7 MHz above it. A similar example of this is closing your eyes, hearing a sound, but not being able to determine if it is in front of, or behind you. Readjusting L1 will correct this situation. Make sure the slug is about three turns from the top of the coil form.

Calibrating the receiver is easy. First tune in a station known to operate at the low end (88 MHz) of the FM broadcast band. Rotate the tune control almost fully counter-clockwise to where that station should logically be located on the dial. Turn L1's slug until that same station is received. The tune control should now tune in the entire FM broadcast band. An easy way of making your own dial is to paste a small rectangle of paper behind the tuning dial knob. Then as you tune in different frequencies, pencil in on the paper the received frequency.

Additional receiver considerations

Your FM receiver was designed for clean, undistorted audio from average FM broadcast stations, while keeping battery current drain low. You may significantly increase the FM radio's audio output by adding a single 10 uF electrolytic capacitor across pins 1 and 8 on the LM-386 audio amplifier IC. The "+" side should connect to pin 1. An easy way of adding this capacitor is to simply "tack" solder it right on the IC pins on the solder side of the PC board. A 50-cent of speaker, lying naked on your workbench, will not give you a fair test of your FM receiver audio quality or volume. Speaker quality and well-designed enclosures have their clear purposes! A reasonable speaker in a box delivers a pleasant listening volume as well as significantly improved fidelity.

Out-of-band operation

Although many people use their receiver for comfortable FM broadcast reception, some James Bond types will want to use it to receive clandestine transmissions from phone bugs, room transmitters, etc. It's a simple matter to re-tune coil L1 to receive the frequency band of interest. First make sure you verify

that your receiver receives the FM broadcast band correctly before re-tuning.

SCA output

Many FM broadcast stations now transmit sub-carriers on their signals. Sub-carriers are signals that are modulated on the carrier, just like the normal audio signals, except that they are too high in frequency to be heard. Normal audio signals range in frequency from 20 to 20,000 hertz. Most sub-carriers start at 56,000 hertz (56 kHz). These sub-carriers are themselves modulated, sometimes with audio signals, such as background music, but more and more these days with various forms of data. Some of the information carried on these sub-carrier data services include stock quotes, weather reports, news, sports and even paging signals. There is no limit to the variety of data that can be sent on a sub-carrier signal, and broadcasters are finding new things to send all the time!

The SCA output is a baseband demodulated sub-carrier signal output before any low pass filtering or de-emphasis. It provides a handy connection point for add-on SCA adapters such as the Ramsey SCA-1 kit. You can also connect this output to a receiver capable of receiving 30 to 75 kHz FM signals, or a PLL demodulator you've built yourself. Check out the data sheet from Signetics concerning the NE-565 PLL chip; an SCA demodulator is featured.

Chapter 7

Doerle Single Tube Super-Regenerative Radio Receiver

Parts list

Doerle Receiver – Original #19 Dual Triode

R1 2.2 megohm ½w, 10% resistor

R2 330k ohm ½w, 10% resistor

R3 47k ohm, ½w, 10% resistor

R4 100k ohm, potentiometer panel mount

R5 25 ohm reostat

C1 5–18 pF antenna trimmer capacitor

C2 140 pF main tuning capacitor

C3 .001 mF, 200 volt disk capacitor

C4 100 pF, 200 volt disk capacitor

C5 .1 mF, 200 volt disk capacitor

C6 .005 mF, 200 volt disk capacitor

L1 2.5 mH choke coil - Digi-Key Electronics

L2 "tickler" coil (see text)

L3 main tuning coil (see text)

T1 #19 triode tube – 2.5 volt filaments

B1 Type A filament batteries (6 volts)

B2 Type B battery 90 volt battery pack

HP 200 ohm high impedance headphones

Misc chassis, tuning dial, wire, sockets, standoffs, screws, etc.

Doerle Receiver – 6SN7 Version

R1 2.2 megohm ½w, 10% resistor

R2 1000 ohm, ½w, 10% resistor

R3 470k ohm potentiometer panel mount

R4 100k ohm, ½w 10% resistor

R5 100k ohm potentiometer

C1 8–18 pF trimmer capacitor

Copyright © 2008 by The McGraw-Hill Companies, Inc. Click here for terms of use.

C2 100 pF main tuning capacitor

C3 50 pF variable tuning control (fine tune)

C4,C5 470 pF, 200 volt disk capacitor

C6 100 pF, 200 volt disk capacitor

C7 .01 mF, 200 volt disk capacitor

C8 .22 mF, 200 volt capacitor

L1 2.5 mH choke coil Digi-Key Electronics

L2 "tickler" coil (see text)

L3 main tuning coil (see text)

T1 6SN7 triode tube

B1 type A battery - 6.3 volt power supply or batteries

B2 type B battery - 150 volt power supply or batteries

HP 200 ohm high impedance headphones

Misc chassis, tuning dial, wire, standoffs, screws, etc.

Old Time Radio lovers will enjoy building this single tube regenerative AM/Shortwave receiver called the Doerle Radio, shown in Figures 7-1 and 7-2. It is a classic radio from around 1934, which was offered as a radio kit that a radio enthusiast could build at home. This very sensitive receiver is a fun-to-build radio which can be powered from batteries as they did in the "old days" or you could construct an AC power supply for it. The original Doerle radio receiver was offered as a kit for $3.00. The early Doerle receiver used a #19 dual triode receiving tube, one section of the tube acted as a regenerative detector and the second section of the tube acted as an audio amplifier. Doerle perfected this receiver design in 1933 when the new #19 tube became readily available.

Figure 7-1 *Doerle receiver*

In this chapter we will build a copy of the original Doerle radio and we will also show you how to build the Doerle radio receiver using a more modern tube such as the 6SL7, which may be a lot easier to locate these days. If you are a "purist" you may want to try and locate the original #19 triode tube, which is still actually available. You can build either version, which you can construct to look just like the original radio looked back in the 1930s.

This radio is a study in simplicity, the low parts count kept the original cost down. A single sheet of metal, probably steel, painted in black wrinkle finish became a chassis. The single #19 tube powered by batteries eliminated unnecessary tubes and power supplies. The result is a simple, high-performance shortwave radio that beginners could afford to build and operate during the depths of the Great Depression.

First let's examine the circuit diagram, shown in Figure 7-3 for the original Doerle radio. The antenna is

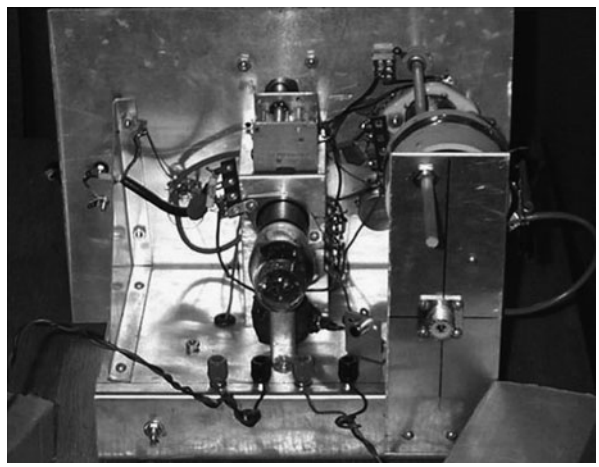

Figure 7-2 *Doerle receiver – inside view*

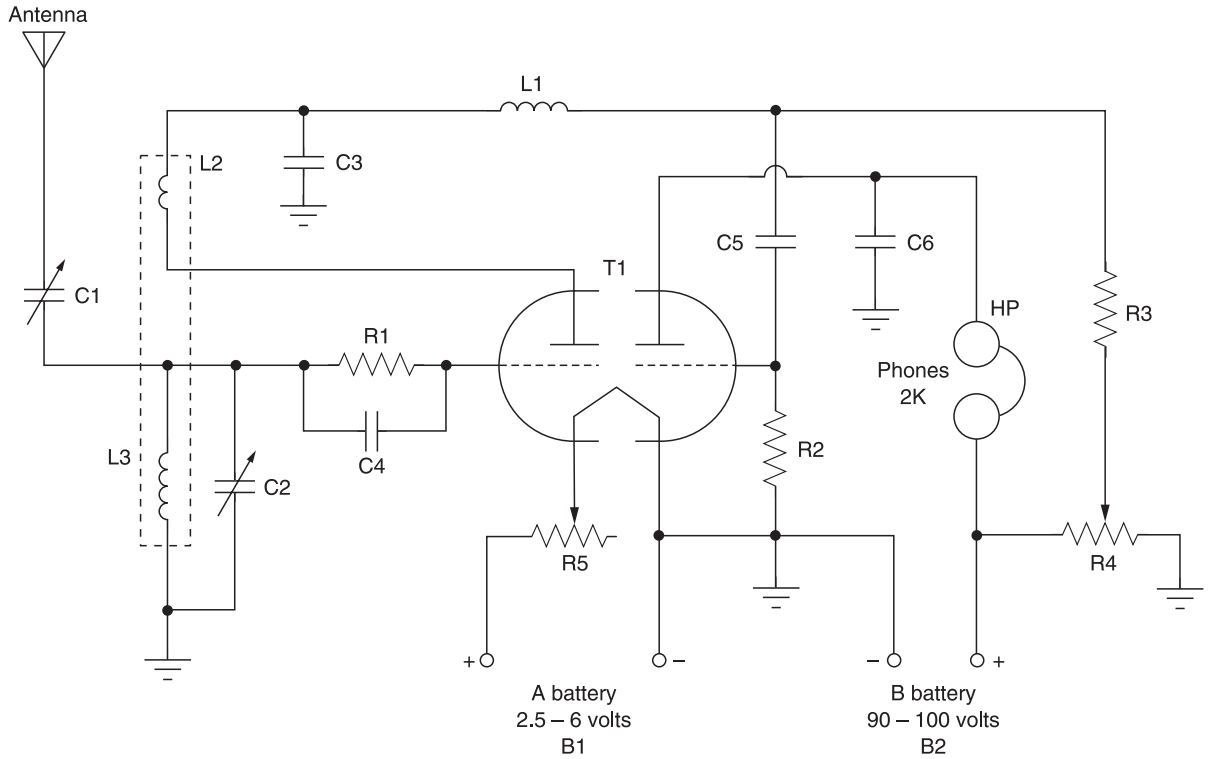

Figure 7-3 *Original #19 dual triode receiver*

coupled through a small 15 pfd screwdriver adjusted variable capacitor to the main tuning coil wound on a four pin form. A 10 pfd variable capacitor across it gives a fairly good trade-off between slow tuning rate and wide tuning range. The signal is fed through a grid leak configuration to one of the grids of the #19 tube. From the plate, the signal goes to the tickler wound on the same four pin coil form. The top side of the tickler coil connects to a 500 pfd capacitor and a 2.1 mH radio frequency choke (RF). The choke allows DC plate voltage into the tickler but prevents the radio frequency (RF) alternating current from getting into the rest of the circuit. The 500 pfd capacitor takes the RF to ground, thereby allowing RF voltage to build up on the tickler winding. Without this 500 pfd capacitor the receiver would probably not regenerate properly.

Variations in the DC voltage delivered to the detector plate feed through a .1 mfd capacitor to the second grid. A 250K, ½ watt resistor pulls the grid to DC ground, to provide the necessary zero bias for this class B amplifier tube, yet the resistance is high enough so that the AC avoids the ground and readily flows into the second grid.

Voltage on the detector plate is changed by a 50K resistor attached to the wiper of a 50K regeneration potentiometer that is connected from the B+ battery to ground. Plate current in the detector flows through these two resistors. Variations in current creates a varying voltage drop across this pair. The varying voltage is the audio signal that is applied to grid of the audio triode.

The B+ voltage source is fed through headphones to the second plate to complete the audio amplifier part of the circuit. The sound that is heard in the headphones comes from the variations in the audio plate current. A .006 mfd capacitor on the plate is large enough to take any stray RF to ground, but is not so large to take audio frequency (AF) voltage to ground. This capacitor aids receiver stability and audio quality.

A 20 ohm rheostat in series with one of the filament legs allows adjustment of the voltage. A rheostat is a low resistance, high wattage potentiometer. In the 1930s, you would have used two No. 6 1.5 volt dry cells (they were about 6″ tall and 2¾″ diameter) as your filament power supply. The rheostat would cut the voltage down to two volts needed by the tube's filament. As the voltage provided by the batteries dropped with use, you would adjust the rheostat to maintain the proper voltage on the filament. In other words, the rheostat allowed you to continue using the filament batteries as their voltage dropped to the point of total failure. Since the

filament current for a #19 triode tube is just over 250 mA, so a 20 ohm resistor would allow you to use filament batteries up to 6 volts. And quite frequently that 6 volts was the battery borrowed from the family car.

Building the original Doerle receiver

The first step in building this or any project is getting the parts. In fact, this may be the most difficult step. When it comes to building a replica of an old radio like this, you just cannot go out and buy everything you need. You may have to adapt and use whatever you have on hand or can scavenge. For a project of this type you may want to build the circuit using point-to-point wiring between terminal and components rather than a circuit board to give the radio an "old-time" look. You are probably going to need both a soldering iron and a soldering gun to build this radio. You will also want to consult with the resistor color code chart in Table 7-1 and the capacitor code chart in Table 7-2 in order to identify the correct components.

Building this old radio can be lots of fun, but locating all of these old components can be difficult, and in fact you won't be able to locate the exact same items. You'll get something close. You'll have to mix and match whatever you can find. Most of these components are available at flea markets if you visit enough of them. Many of the components are available new from dealers, such as Antique Radio Supply, see Appendix. But often you'll have to pay substantially higher yet fair prices. The used #19 tube was purchased from a flea market dealer for $5. Yet, that same tube can be obtained brand new from Antique Electronic Supply for about $6, see Appendix. Again, you may have to scrounge, make do, adapt, experiment, and make a few mistakes. But the results are well worth it.

One idea is to build a prototype receiver with whatever components you can find, no matter how new or old, and get it working. Then, over the next few years, visit flea markets, antique radio meets, check out dealers' catalogs, and accumulate the older, more authentic parts. After you accumulate some of those rare, old, beautiful parts from the 20% and 30%, rebuild the receiver. And then a few years later rebuild it again. And every time you rebuild it, add older and more authentic parts, until you get an exact copy of the #19 Doerle receiver. The radio will become more and more of an authentic replica of a receiver from the early days of radio. With patience, practice, and plenty of enjoyment, you can build a fine radio.

Looking at the illustration of the Doerle-1 version, we see in the center a large, slow-motion dial drive

Table 7-1
Resistor color code chart

Color Band	*1st Digit*	*2nd Digit*	*Multiplier*	*Tolerance*
Black	0	0	1	
Brown	1	1	10	1%
Red	2	2	100	2%
Orange	3	3	1,000 (K)	3%
Yellow	4	4	10,000	4%
Green	5	5	100,000	
Blue	6	6	1,000,000 (M)	
Violet	7	7	10,000,000	
Gray	8	8	100,000,000	
White	9	9	1,000,000,000	
Gold			0.1	5%
Silver			0.01	10%
No color				20%

Table 7-2

Capacitance code information

This table provides the value of alphanumeric coded ceramic, mylar and mica capacitors in general. They come in many sizes, shapes, values and ratings; many different manufacturers worldwide produce them and not all play by the same rules. Some capacitors actually have the numeric values stamped on them; however, many are color coded and some have alphanumeric codes. The capacitor's first and second significant number IDs are the first and second values, followed by the multiplier number code, followed by the percentage tolerance letter code. Usually the first two digits of the code represent the significant part of the value, while the third digit, called the multiplier, corresponds to the number of zeros to be added to the first two digits.

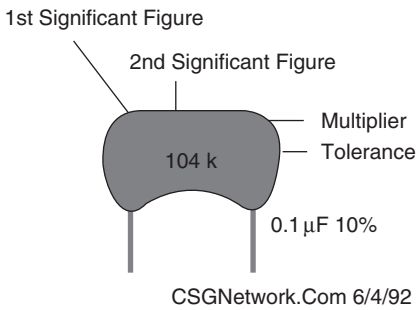

Value	*Type*	*Code*	*Value*	*Type*	*Code*
1.5 pF	Ceramic		1,000 pF /.001 µF	Ceramic / Mylar	102
3.3 pF	Ceramic		1,500 pF /.0015 µF	Ceramic / Mylar	152
10 pF	Ceramic		2,000 pF /.002 µF	Ceramic / Mylar	202
15 pF	Ceramic		2,200 pF /.0022 µF	Ceramic / Mylar	222
20 pF	Ceramic		4,700 pF /.0047 µF	Ceramic / Mylar	472
30 pF	Ceramic		5,000 pF /.005 µF	Ceramic / Mylar	502
33 pF	Ceramic		5,600 pF /.0056 µF	Ceramic / Mylar	562
47 pF	Ceramic		6,800 pF /.0068 µF	Ceramic / Mylar	682
56 pF	Ceramic		.01	Ceramic / Mylar	103
68 pF	Ceramic		.015	Mylar	
75 pF	Ceramic		.02	Mylar	203
82 pF	Ceramic		.022	Mylar	223
91 pF	Ceramic		.033	Mylar	333
100 pF	Ceramic	101	.047	Mylar	473
120 pF	Ceramic	121	.05	Mylar	503
130 pF	Ceramic	131	.056	Mylar	563
150 pF	Ceramic	151	.068	Mylar	683
180 pF	Ceramic	181	.1	Mylar	104
220 pF	Ceramic	221	.2	Mylar	204
330 pF	Ceramic	331	.22	Mylar	224
470 pF	Ceramic	471	.33	Mylar	334
560 pF	Ceramic	561	.47	Mylar	474
680 pF	Ceramic	681	.56	Mylar	564
750 pF	Ceramic	751	1	Mylar	105
820 pF	Ceramic	821	2	Mylar	205

Table 7-3
Short-wave band listening frequencies

Shortwave Band	*Shortwave Band*
120 meters = 2300–2495 kHz	25 meters = 11.500–12.160 MHz
90 meters = 3200–3400 kHz	22 meters = 13.570–13.870 MHz
75 meters = 3900–4000 kHz	19 meters = 15.030–15.800 MHz
60 meters = 4750–5060 kHz	17 meters = 17.480–17.900 MHz
49 meters = 5730–6295 kHz	16 meters = 18.900–19.020 MHz
41 meters = 6890–6990 kHz	13 meters = 21.450–21.750 MHz
41 meters = 7100–7600 kHz	11 meters = 25.670–26.100 MHz
31 meters = 9250–9990 kHz	

friction-driven by a small knob at the bottom of the set. This allows fine tuning of stations. To the upper left are the antenna and ground terminals. Just to the right in a hole in the front panel is exposed the screw which adjusts the antenna coupling capacitor. Below left is the filament rheostat knob. At the upper right are the headphone terminals with the regeneration control located at the lower right. Although the receiver as shown in the original drawings may appear complex, it really is not. This is one of simplest receivers that you could build.

The original chassis for the Doerle receiver was an L-shaped piece of sheet metal, most likely steel, and painted with a black wrinkle finish. While the front panel was perfectly rectangular, the base was trapezoidal. Dimples were embossed into the base plate which served as feet.

For our replica Doerle receiver, you can start with an 11″ × 9″ sheet of .063″ (1⁄16″) aluminum to construct the chassis. The most complicated mechanical problems that you may encounter in building the receiver is the mounting #19 dual triode tube up on standoffs, mounting the variable capacitors and building the coils on the coil-form, see Figure 7-4.

The original Doerle model used a simple single bearing variable capacitor. We elected to use a heavy duty Hammarlund tuning capacitor; it is of significantly higher quality and is much heavier, so you will have to support the rear end of the capacitor with a bracket of some type. Once a Z-bracket as fabricated and attached to the breadboard, the prototype dial-drive-capacitor assembly was solid, yet turned smoothly.

Since a solid, rigid mount for the tuning capacitor is essential if you are to achieve frequency stability and eliminate microphonics, you must get this part of the assembly correct. And since your components will need their own custom mounting hardware, you'll need to experiment until you get it right. That's why the breadboard prototype is so useful. Take your time.

In continuing the capacitor assembly, I used a pair of ½″ long 6-32 machine screws in the top and bottom pair of holes on the drive mechanism. In the left-right pair of holes, I used a pair of 1½″ long 6-32 machine screws. The extra length became mounting studs to which an aluminum cross-arm was attached. In the cross-arm was drilled a ⅜″ hole to accommodate the mounting flange of the capacitor.

After the capacitor holes were drilled, the burrs removed, and edges of the panel were rounded and smoothed, I roughed up the surface with fine sandpaper.

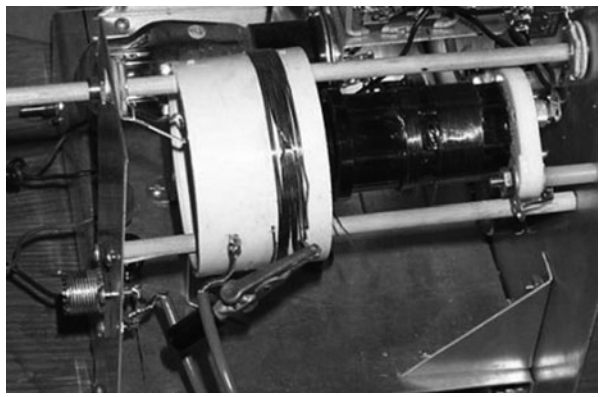

Figure 7-4 *Doerle coil assembly*

Next, the panel was bent into an L shape. You can use an old sheet metal brake, or you can could do the same by clamping the metal between a couple of 1 by 2's or lengths of angle iron held tightly together in a vise or with C-clamps. Since only a single, simple bend is required, you might get by clamping the sheet metal to a table top and by bending the sheet over the edge.

In order to obtain smooth tuning with a large range, you should locate some sort of planetary drive mechanism in front of the main tuning capacitor, such as a used National Velvet Vernier dial drive, which can be removed from an old radio. The first step was to dismantle it into the drive mechanism, the knob, and the dial plate. To mount the actual planetary drive mechanism, I had to cut a ⅝″ hole in the plate with a socket punch. Next, the drive collar was slipped through the ⅝″ hole. With a marker I marked the location of the four mounting holes.

In moving the capacitor and dial drive to the finished receiver, I chose to position the angle mounting bracket vertically as shown in the photos. This made fabrication and installation of a new base bracket much easier, and allowed more clearance for the tube and coil socket as well as for the terminal strip below the dial drive.

When the components are "test" mounted, you can move from the prototype stage to the finished L-shaped panel, if you are happy with the final layout. Then you can spray on a thick coat of fast drying metal primer. Once dry, I wet-sanded it under a stream of water until smooth. Then came the black wrinkle paint. If you wish to try and duplicate the original, you will want to try and create the wrinkle finish. If you are not that concerned about having the radio look exactly like the original radio, you can just paint the chassis with a single coat of black paint. Black Krylon paint is available in a spray can in your local home improvement store. For best results in creating a wrinkle finish, you must put down a heavy layer of paint. It must be heavy so that it can wrinkle up as it dries. If the coat is too light, or if you try to apply a second light coat over the existing layer, you won't get the best results. It might even be shiny where it is supposed to be flat black.

It is recommended that you paint one surface at a time and let it dry. Then reposition the chassis so that another surface is horizontal and then paint that. Of course, it will take four times as long to paint the radio than if you get in a hurry and paint the whole thing at once, but the results will be more predictable. You can bake it in an electric kitchen oven at the lowest possible heat. Nasty smelling solvents are baked out of the paint, so your wife or mother may not be too happy with you!

After mounting the tuning capacitor, the only other assembly of any complexity is the coil socket and antenna trimmer mount. Mounting the other components was fairly easily done. You can use machine screws, spacers of wood, plastic, porcelain, and metal. You can slice wood spacers from hardwood planks, but you'll need a table saw to do a good job. Plastic spacers can be cut from plastic tubing, but just be sure to get the rigid stuff used by plumbers for water supply lines. Porcelain spacers are something, which can be scavenged at a local hamfest or radio flea market. A small trimmer capacitor is mounted on porcelain standoffs in order to insulate both terminals from the chassis. Between the standoffs is a drilled ⅜″ hole in the front panel to allow screwdriver adjustment. That sounds simple enough. But behind the trimmer is the socket that accepts the four-pin lube socket coil form. What I used here were a couple of 2″ 6-32 machine screws cut to the appropriate length with heavy clippers. They were then fed through the coil socket mounting holes and through brake line spacers into the porcelain standoffs. Two soldering lugs were sandwiched between each metal spacer and porcelain standoff. One lug on each side was soldered to a capacitor lead. The other lug on each side became connector for the trimmer. Since the metal spacer pressed tightly against the capacitor lead, it was imperative that the four pin socket be made of insulating material. Here I used an old phenolic wafer socket. A metal socket would short out the capacitor. It sounds complicated but it should be fairly easily understood by studying the photographs.

Wiring was done with some modern plastic covered hookup wire, and with some genuinely old cloth-covered hookup wire salvaged from a piece of old tube gear. Watch for old tube gear with long lengths of cloth-covered wiring at flea markets. New old stock cloth covered wire is around but it is not always easy to find. Sometimes you can look for old wire while scavenging at hamfests.

The coils used in the original circuit were 1½″ dia. by 3″ tall phenolic coil forms. You can use phenolic bases from four prong tubes for the coil forms and they can be

purchased from Antique Electronic Supply. The low frequency or main "short-wave" coil is close-wound with about 30 turns of #26 wire. You wind the "tickler" coil, which is 9 or10 turns of #24 ga. wire below the tuning coil, and both coils were covered with clear fingernail polish. The coil covers approximately 2.5 to 4.5 MHz. The exact number of turns you'll need is going to depend on the tuning capacitor you use and the stray capacitance that results from your particular component layout, among other things. You'll have to experiment to get the right number of turns.
The original Dorele receiver had plug-in coils for different radio bands. In order to construct an AM radio coil, you will have to wind another main coil along with another "tickler" coil on a second coil form. The main coil will need about 40 turns of #26 ga. wire, with a 9–10 turn "tickler" winding.

Battery terminals can also be purchased at a radio flea market. Using a table saw you could elect to slice a ¼″ strip from an oak 1×6. That gave me a mounting strip of ¾″ × 5 ½″ × ¼₁″ thick, just right for this radio.

Firing up your original Doerle receiver

Now your #19 Doerle radio receiver is bolted together and wired up. It's time to try it out. First, check the wiring, then check it again. It's easy to make stupid wiring errors, sometimes after checking the wiring once or twice! Have a friend look over the circuit before applying power to the circuit for the first time. The coils used in the original drawing look like 1½″ dia. by 3″ tall coil forms. You can use phenolic bases from four prong tubes. They're not from old tubes but from Antique Electronic Supply.

The low frequency coil is close-wound with about 30 turns of #26 wire. You can wind about 10 turns of tickler below the tuning coil, and cover both coils with clear fingernail polish. The coil covers approximately 2.5 to 4.5 MHz. The exact number of turns you'll need is going to depend on the tuning capacitor you use and the stray capacitance that results from your particular component layout among other things. You'll have to experiment to get the right number of turns.

The original ten turns of tickler turned out to be too many, so you may have to improvise to get it right. You'll discover this problem very quickly if, when you advance the regeneration control, the receiver goes into a deafening howl. You may need to remove one turn of tickler coil at a time until regeneration starts up smoothly near the end of the control clockwise rotation. You should adjust the tickler with the tuning capacitor open, that is, at the receiver's highest frequency. Here, more regeneration is necessary than at lower frequencies. And you must adjust the antenna trimmer control for the minimum capacity that gives excellent sensitivity. Adjusting the antenna trimmer "couples" or "de-couples" the connection between the receiver and the antenna, and can have a pronounced effect on regeneration adjustment and overall sensitivity.

The #19 tube filaments can be powered by alkaline flashlight batteries. Alkaline batteries should be used rather than cheaper zinc-carbon types since alkaline can deliver higher currents, and because they'll last much longer. Alkaline batteries will give many more hours of use for your money. You can hook the filament batteries up to the set with the rheostat set to maximum resistance. You can then rotate the rheostat, with a voltmeter connected to the filament leads, in order to allow the meter to show two volts. Then put a reference dot on the panel with a marker pen. You can do something similar to the finished machine. As the batteries age, their voltage will drop making it necessary to adjust the control to maintain the two volts on the filaments.

If you do not want to use flashlight batteries, you may consider nickel-cadmium batteries. They're inexpensive, each cell delivers about 1.2 volts, so you will need two, three or even four in series, which will deliver as much as 4.8 volts. And when they run down, you can recharge them. But before you go to that trouble: try flashlight batteries. You may be surprised by how long they last. As for a 90 volt B+ battery, you will most likely not be able to find them and if you do they will be expensive. Newark Electronics still had them, the last time I checked their catalog. It is easy enough to build a 90 volt "stack" of batteries. You can build a battery "pack" by buying ten 9 volt transistor radio batteries, and taping them together with electrical tape. When you do this, alternate their terminals so that you can easily wire the batteries in series.

The tube manuals lists the filament current at 260 mA. A voltmeter will show that the filament battery voltage drops about .2 volt over 15 to 20 minutes of operation. The batteries will last quite a long time. As for B+, a "stack" of 9 volt transistor radio batteries produced about 97 volts. With the receiver fired up and properly adjusted, the current draw was only 4 mA, significantly less than what a transistor radio battery is capable of delivering. After several minutes, the B+ battery dropped to 95.9 volts, so you can expect to get long life out of this battery pack. Several changes of filament batteries will be needed before the B+ battery dies.

So how does a Doerle radio receiver perform? For such a simple radio, it performs very well. Just a quick run through the band allowed me to copy amateur CW and marine Morse code. The foreign shortwave broadcasters came blasting-in.

Improvements? Yes, I can think of some. First, a volume control would be useful. I suspect that radio stations today run far more power than they did in the 30s. Therefore, the signals in the headphones are so loud as to be painful. A volume control would be useful to cut some signals down to size. I find the tuning a little too fast. Tuning a single sideband signal in is touchy and difficult in some cases. This could be fixed by going to five pin coils forms where the tuning capacitor could be attached to a tap in the tuning coil. Such a modification, however, changes the Doerle kit which was built for shortwave listeners, not amateurs. If you're a ham, you'll probably want to modify the design so that a ham band is spread out along the whole dial. And the last change that I would make is to improve the antenna trimmer adjustment. Adjusting the trimmer with a screwdriver can be painful after awhile. You don't do it very often, but when necessary it's not a convenient thing.

The 6SL7 Doerle receiver

In 1934, there was only one dual triode available for battery operation, the #19 dual triode! But the 1930s were years of explosive growth in the electronics industry. Just months after the #19 triode was released new metal tubes appeared, and in another ten years, seven and nine pin miniature tubes became available. These new series of tubes offered a variety of new dual triode tubes, many of which were better suited for the Doerle receiver circuit: see the 6SL7 Doerle receiver schematic shown in Figure 7-5.

If you elect to build this modified version of the Doerle, you will need to locate a 6SL7. The 6SL7 is a glass octal high-μ or (hi-gain) twin triode. The μ (mu) of a tube is the amplification factor, or voltage gain. Although the value of what is considered "high μ" has increased over the years, today "high" means a μ of from 60 to 100 or more. That means that the maximum voltage gain possible is 60 to 100, but usually it is significantly less.

High voltage gain tubes usually don't develop very much power. High power tubes usually have lower voltage gain. You can get both in the same tube. The #19 is an audio power tube with a relatively low μ. The 6SL7, on the other hand, has a μ of 70, but delivers little power. If you build both the #19 and 6SL7 versions, you'll immediately hear the increased headphone volume of the latter tube. Headphones don't need much power, so high voltage gain tubes works well, although more gain is usually better. A medium-μ tube like the #19 triode will give great performance. The 6SL7 was very common, and is still available. It is a higher-power, lower-voltage-gain tube with the same pin-out arrangement as the 6SL7.

The only major change introduced into this version of the Doerle is the mechanical layout. In this version, the prototype used an old National ACN dial drive, found at a local hamfest or flea-market, for a couple of dollars. I mounted it on an aluminum face place wrapped around a piece of 1 × 6 oak. The actual planetary drive is identical to that under the phenolic dial plates of the Velvet Vernier used in the model 19 Doerle. The ACN is much larger, 5″ × 7″ overall, and allows the user to mark a paper scale so that the dial becomes direct reading.

The antenna coupling trimmer was replaced by an 8-18 pF air variable stripped from an old radio. A custom bracket was snipped out of aluminum sheet and quickly bent up. By mounting the bracket on the wood base away from other meta components the capacitor electrically "floated" as needed. A knob allows the operator to reach around the side and easily adjust coupling when necessary. But you can take a similar small capacitor and cannibalize it by removing one or more plates to reduce the capacity. Just try get something less than 50 pfd for antenna coupling.

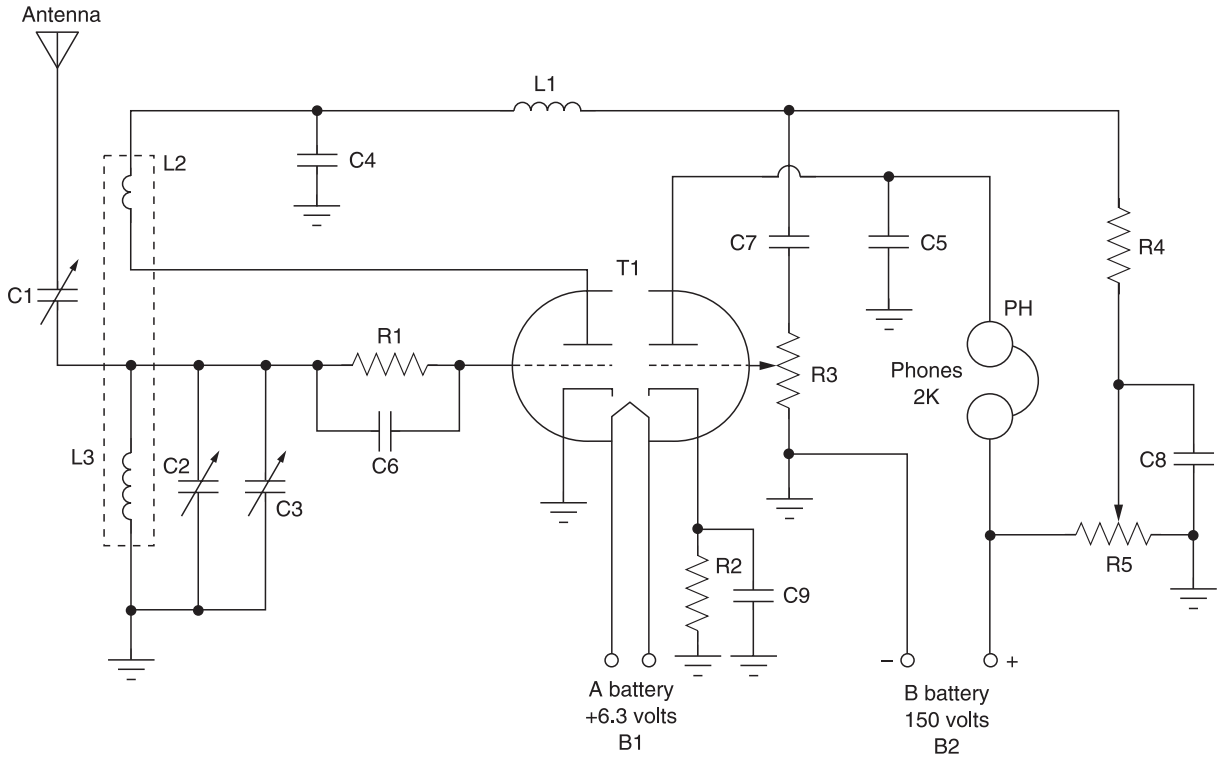

Figure 7-5 *New 6SL7 Doerle received*

A half megohm potentiometer replaced the 330 kilohm grid resistor used in the audio side of the original receiver, by connecting the panel-mounted pot to the rest of the circuit with miniature coaxial cable to reduce AC hum. In the original circuit, the audio grid was biased as before, but now has control over the volume. With a high gain tube like the 6SL7, it is important to reduce the audio output so that you don't destroy your hearing. A one kilohm resistor and a 10 mfd capacitor in parallel are inserted in the cathode lead of the audio triode to provide at least some negative bias to help the tube amplify with less distortion. You may want to increase or decrease the value of the resistor to achieve the necessary grid voltage specified in the tube manual. The voltage you measure across the cathode resistor is your grid bias.

If you compare the original circuit with this version, you'll find that almost all the same components can be used. The few differences are minor. And, again, don't be afraid to substitute. Just about anything within reason will work.

The biggest problem with this version of the Doerle receiver is that you will likely need a power supply, since you have to supply 6.3 volts AC into the filaments. Remember the original Doerle radio had 2.5 volt filaments, and you'll need about 150 volts for the plates on the 6SL7.

Does the 6SL7 version of the Doerle radio work? It sure does! You can use the same coils used in the original version of the Doerle radio for the 6SL7 version of the radio. When powering this version of the Doerle receiver be sure to set the volume control all the way down before applying power, since the audio output is much greater than that of the original radio. Put on a pair of headphones and turn on the 150 volts B+. Remember, you must use high impedance type headphones for this type of radio, not 8 ohm types. The Internet is a good source of the old 2000 ohm high impedance headphones. Bringing up the regeneration and audio controls brought in stations immediately. Many stations appeared across the dial, and they were surprisingly easy to tune in.

One important change in this circuit is the use of two capacitors in the main tuning LC circuit. In the circuit shown, you'll see a 50 pF fixed capacitor is parallel with a 100 pF variable capacitor. Since capacitance in

parallel adds, the combination of the two essentially creates a virtual variable capacitor with a range of 50 to 150 pF. The net effect is to slow down the rate of tuning. The amount of band that can be covered by a single coil is reduced, but makes tuning far less "touchy." This is important when tuning a sideband signal because very slight changes in tuning are needed to clear up the signal. You might want to replace the 50 pF with a 20–150 pF trimmer or something similar. By adjusting the trimmer, you can change the "speed" at which signals are tuned in. More capacitance reduces the speed, but it will also decrease the band of frequencies covered by the coil being used. You might want to replace the 50 pF fixed capacitor with a 140 pF for use as a band-set capacitor and a 35 pF for use as a band-spread capacitor.

Both should be equipped with slow-motion dial drives. You can use just about any dial drive that turns up at a flea market or in a radio parts catalog. You can mix and match components. Many times you'll need more mechanical skills than you will need electronic skills for building old radios, so dig through your junk box, visit a hamfest and have fun building an old radio!

Chapter 8

IC Shortwave Radio Receiver

Parts list

Shortwave Receiver Project

R1,R5,R20 100k ohm, ¼w 5% resistor [brown-black-yellow]

R2,R4 22k ohm,¼w, 5% resistor

R3,R7,R9,R10 1k ohm, ¼w 5% resistor [brown-black-red]

R13,R17,R18,R24 1k ohm, ¼w 5% resistor [brown-black-red]

R6,R8,R11,R19,R23 10k ohm, ¼w 5% resistor [brown-black-orange]

R12 1M ohm, ¼w 5% resistor [brown-black-green]

R14,R21 10K potentiometers, 103, or 10nF

R15 2 ohm, ¼w 5% resistor [red-black-gold]

R16,R22,R25 270 ohm, ¼w 5% resistor [red-violet-brown]

R26 100 ohm, ¼w 5% resistor [yellow-violet-orange]

C1,C3,C20,C21,C25 .001 µF, 35 vdc disk capacitor

C2 330 pF, 35 vdc mylar capacitor

C4,C6,C8,C28 .01 µF disk capacitors, 35 vdc (marked .01, 103, or 10nF)

C5,C17 100 pF disk capacitors, 35 vdc (marked 100, 101, or 100K)

C7,C10,C12,C18,C19,C29 1 µF ceramic disk capacitor, 35 vdc (marked .1 or 104)

C9,C24 1 µF, 35 vdc electrolytic capacitor

C11,C22,C23,C27 10 µF, 35 vdc electrolytic capacitor

C13,C14 220 µF, 35 vdc electrolytic capacitor

C15 (see text)

C16 (see text)

C26 1000 µF, 35 vdc electrolytic capacitor

C30 10 pF, 35 vdc mylar capacitor

L1,L2 1 µH molded type inductor (brown-black-gold)-Digi-Key

L3 12 µH molded type inductor (brown-red-black) -Digi-Key

T1,T2 shielded can inductor (42IF-103) Mouser Electronics

Copyright © 2008 by The McGraw-Hill Companies, Inc. Click here for terms of use.

T3 shielded can inductor (42IF-123) Mouser Electronics

D1 1N270 diode, glass bead style

D2 Red LED (RSSI)

D3 Varactor diode, transistor style with 2-leads (MVAM108)

Q1,Q2,Q3 2N3904 NPN transistors

U1 LM358 8-pin DIP IC

U2 LM386 8-pin DIP IC

S1 DPDT PC-mount pushbutton switch

J1 RCA-type PC-mount jack

J2 subminiature 1/8 inch PC-mount jack

B1 9 volt transistor radio battery

Misc PC board, battery holder, battery clip, wire, hardware, speaker

Have you ever wanted to listen-in into the fascinating world of radio? The shortwave radio project will allow you to listen to international stations such as the BBC, Radio Canada, Radio Moscow, Radio Sweden. Using just a few feet of wire as you antenna you will be able to reach out and hear the world. Shortwave listening is fun for folks of all ages from 8 to 80 years of age.

The shortwave radio project shown in Figure 8-1 covers the shortwave bands from 4 to 10 MHz. The receiver uses varactor diode for smooth tuning across the band. The superheterodyne shortwave receiver provides both great sensitivity and selectivity. The tuning control as well as the volume and RF gain controls are all located on the front panel for easy operation. The shortwave receiver is powered from a common 9 volt transistor radio battery, so the receiver can be taken virtually anywhere. The receiver would make an ideal scout, school or club project.

You'll easily tune into broadcasts from many other countries as well. As you become more and more

Figure 8-1 *Shortwave radio*

familiar with the world of shortwave broadcasting, you'll be deciding on your own favorite band. You will hear a variety of other "interesting" sounds, but just remember that this receiver is designed for AM only. If a Morse code signal really sounds "good," it is because it is being transmitted in AM tone-modulated form, or perhaps the signal is so close to an AM broadcast carrier that the carrier acts as a "beat-frequency-oscillator" (BFO). Even though this receiver will permit you to tune through several different ham radio bands, the signals are not likely to be intelligible. Reception of CW and SSB signals on an AM receiver requires a BFO. This is not a complicated feature, but it is not a feature of this receiver. Our companion receivers designed for the ham bands will let you tune into these SSB and CW broadcasts.

Shortwave listening as a hobby in itself

Many people worldwide enjoy listening to shortwave broadcasts of all kinds, and they keep written records of what they hear. Almost every nation on Earth has some sort of shortwave broadcast service, though many are much more challenging to tune than the powerful signals of Radio Moscow and the BBC. In addition, these "SWLs" (Shortwave Listeners) listen to ham operators, government and commercial stations and even clandestine operations. Some shortwave listeners enjoy collecting QSL cards from stations which they have logged. Shortwave listening is, for some, a step toward getting a ham radio license. For others, it is a great hobby in itself.

The Shortwave Receiver is a good introductory receiver for this hobby. After you decide exactly what kinds of listening are of the most interest to you, you'll be in a better position to choose a more elaborate receiver.

To learn more about this SWL hobby, look for a copy of *Popular Communications* at newsstands. An inexpensive and interesting general introduction to all kinds of radio listening is the book, *Shortwave Listening Guide* by William Barden, Jr. (1987; Radio Shack Catalog Number 62-1084). To learn more about the hobby of ham radio, write to ARRL (American Radio Relay League), 225 Main Street, Newington, CT 06111.

Circuit description

Take a moment and examine the shortwave receiver block diagram in Figure 8-2. The simplified signal flow of the block diagram shows the basic sections of the receiver. The corresponding components are noted under each main block and can be cross-referenced to the schematic.

The main shortwave receiver diagram is illustrated in Figure 8-3. The receiver circuit begins at the antenna input at J1. RF signals (Fc = carrier frequency) from the antenna are applied to the RF input and filtering allowing only the signals of interest to pass through. The high pass filter helps eliminate unwanted signals picked up by the antenna, so improving the overall reception quality of the radio. After the input signal is filtered, it moves to the mixer stage. Notice on the diagram that there are two inputs to the mixer. We have discussed one of these input signals coming into the mixer but not the other. Now, look down at the local oscillator block. The local oscillator (LO for short) acts as your tuning control for what frequencies you can receive by generating a signal on the board close in value to that which will be used by the mixer. There is a direct relationship between the generated frequency of the local oscillator (LO) and the exact receive frequency (Fc) you want to listen to. This will become clear when we finish discussing the block diagram. The LO section is a Colpitts oscillator that takes advantage of smooth varactor diode tuning. The varactor (D3) forms an L/C (inductor/capacitor) tank circuit with T3. Increasing the voltage on the varactor diode with R21 (tuning pot) increases the capacitance of D3, thus increasing the frequency output of the LO section.

Now that we know the two signals coming into the mixer stage, both the Fc (receive carrier frequency) and the LO (generated local oscillator), we can better cover its operation. The mixer takes these input signals and performs a few very basic operations. The technical explanation of how the mixer combines these

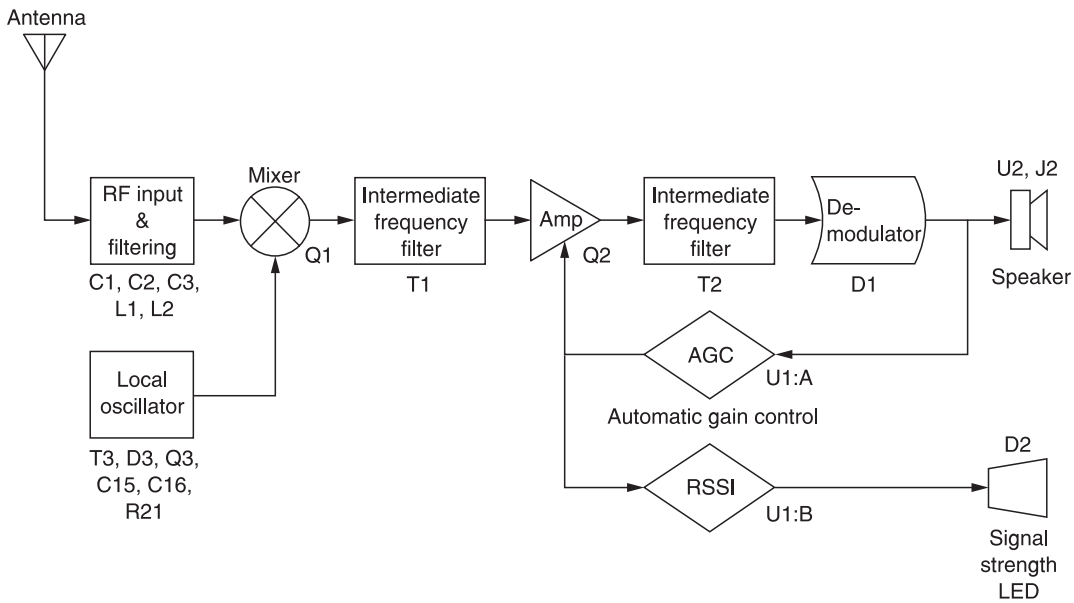

Figure 8-2 *Shortwave receiver block diagram*

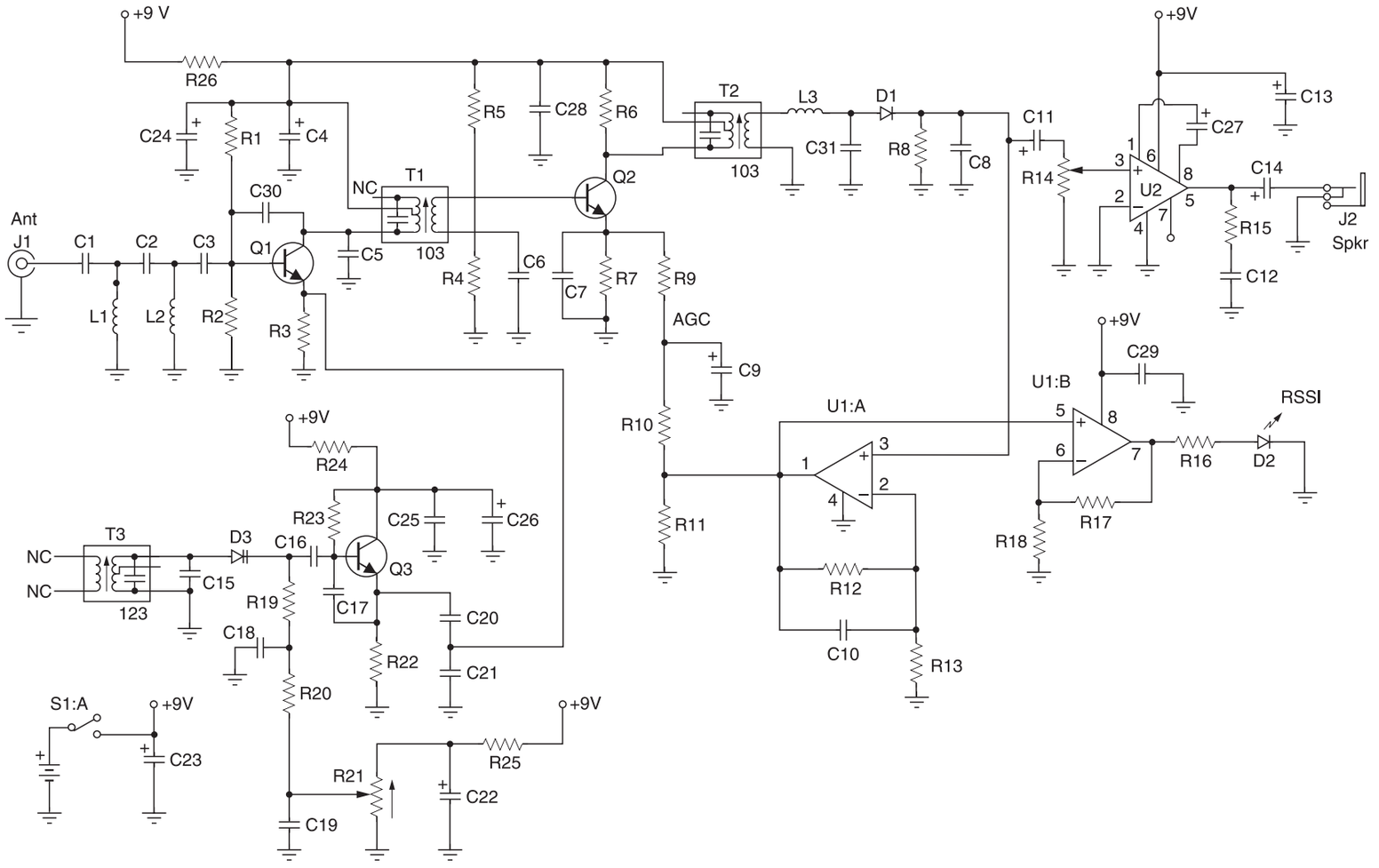

Figure 8-3 *Shortwave receiver schematic. Courtesy of Ramsey Electronics*

signals through Fourier Series is interesting but very drawn out. The point of using the block diagram, however, is to simplify matters. Therefore, the function of the mixer is to obtain the "product" and the "sum" of the input signals. This means you take the input signals and merely "add" and "subtract" their values to determine what you get on the output. The general formulas to use are quite simply, "Fc + LO = Mixer Output" and "Fc – LO = Mixer Output."

The output of the mixer stage unfortunately has other signals besides the ones we want. This brings us to the next stage, Intermediate Frequency Filtering. An Intermediate Frequency (IF) is a signal somewhere between the RF signal Fc we started with and the final audio message we are trying to get. The desired IF we are dealing with is a fixed number, such as 455 kHz. As long as the proper relationship between Fc and the LO exists, the IF value will stay constant. Due to the fact that the IF frequency stays the same all the time, the Intermediate Frequency Filter can be very narrow. The filter will remove any other signals coming from the mixer that are not in the proper pass band and yield a clean signal for further processing.

The next stage is an amplifier with an adjustable gain feedback loop. The gain control is dependent on the amount of signal being received (this Automatic Gain Control "AGC" will be covered in a moment). The amplifier boosts the signal level of the incoming IF and gives us a stronger signal to work with. After the amplifier stage is another Intermediate Frequency Filter. This helps remove any unwanted residual signals still present and cleans up the amplified IF for a high quality signal. At this point the audio signal we are trying to obtain is riding on the IF signal.

The demodulator circuit finally extracts the message from the IF section through a process called envelope detection. Now that we have our message back in the audio realm, it is directed through the audio circuitry to the speaker output. The demodulated audio branches off before the audio circuitry and is used to perform some useful functions. The RSSI LED, Received Signal Strength Indicator Light Emitting Diode, gives us a general signal level feature. The stronger the signal we receive, the brighter the LED will glow. This is great for help pulling in those weak transglobal transmitter signals. The gain of the RSSI circuit is controlled by the value the feedback resistor R17. If you are commonly using a small whip antenna and listening to weak signals, you may need to increase the value of R17 to customize the response indication of D2, the signal strength LED.

The final stage, and the real secret to the sensitivity of the receiver, is the Automatic Gain Control (AGC). The gain control looks at the amount of signal level present at the output of the demodulator and varies the amount of gain the amplifier has accordingly. If there is a strong signal coming through the demodulator the AGC circuit lowers the gain of the amplifier. If the received signal coming through the demodulator is very weak, the AGC circuit increases the gain of the amplifier (Q2) allowing us to receive signals from around the world and listen to them with clarity.

Receiver assembly

Look for a clean well lit area in which to assemble your shortwave receiver. You will need a 27 to 30 watt pencil tip soldering iron, some 60/40 tin/lead rosin core solder, a few hand tools including a pair of end-cutters, a needle-nose pliers, a few screwdrivers and a pair of tweezers to pick up small parts. Locate your schematic and layout diagrams and we will begin to construct your new shortwave receiver. Let your soldering iron tip heat both the component lead wire and PC board trace enough so that the wire itself AND the foil trace BOTH become hot enough TOGETHER to melt a bit of solder so that it flows smoothly from the pin to the PC board trace. Locate the printed circuit board and all the components and we will start.

Before we begin constructing the shortwave receiver, refer to the resistor color code chart in Table 8-1 and the capacitor code chart in Table 8-2. Each resistor will have three or four color bands on them. The first color band will start close to one edge of the resistor body. The first color band will represent the first digit of the resistor value. The second color band will represent the second digit value, while the third color band illustrates

Table 8-1
Resistor color code chart

Color Band	*1st Digit*	*2nd Digit*	*Multiplier*	*Tolerance*
Black	0	0	1	
Brown	1	1	10	1%
Red	2	2	100	2%
Orange	3	3	1,000 (K)	3%
Yellow	4	4	10,000	4%
Green	5	5	100,000	
Blue	6	6	1,000,000 (M)	
Violet	7	7	10,000,000	
Gray	8	8	100,000,000	
White	9	9	1,000,000,000	
Gold			0.1	5%
Silver			0.01	10%
No color				20%

the resistor multiplier value. The fourth band, if there is one, will represent the resistor's tolerance value. A silver band is a 10% tolerance, while a gold band depicts a 5% tolerance value. No fourth color band notes a resistor with a 20% tolerance. Locate all of the resistors for the project and place them in front of you. Each resistor has a color code which describes its value. Check the color code against the parts list and schematic before installing them onto the circuit board. Place about four or five resistors on the PC board and place these resistors in their respective locations carefully making sure each one is in the correct location. Next solder each of the resistors onto the circuit board. Trim off the excess component leads with a small pair of end-cutters. Pick up and identify the next grouping of resistors and install them on the circuit board, follow up by soldering this next batch of resistors to the circuit board, remember to trim the extra lead lengths form the PC board.

Once all the resistors have been installed onto the circuit board we can move on to identifying all of the capacitors for the project. Note that there will be different-looking capacitors for this project, some will be small disks, while others will be larger body devices with minus and plus marking on them. These larger capacitors with polarity marking are electrolytic capacitors and they have polarity which must be observed for the circuit to work correctly. Look through the parts pile and locate the capacitors and place them in front of you. You will notice a number of small disk capacitors, we will install these first. Look closely at each of the disk capacitors at their markings. Sometimes the capacitors are very small and they may not have their actual value printed on them but will instead have some sort of code. Refer to the parts list for these codes. Locate four or five of these small disk capacitors, identify them and install them on the circuit board, while referring to the schematic and layout diagrams. After inserting the disk capacitors onto the circuit board, you can go ahead and solder them to the circuit board. Remember to cut the excess component leads. Next move on and install another grouping of small disk capacitors, then solder them in place on the printed circuit board. Cut the extra component leads after soldering in the capacitors. When you are finished installing the small capacitors we will move on to the larger electrolytic types.

Capacitors C9 and C24 are 1.0 µF electrolytic capacitors and capacitors, while C11, C22, C23, and C27 are 10 µF electrolytic capacitors. Capacitors C13 and C14 are 220 µF, while C26 is a 1000 µF electrolytic capacitor. When installing these capacitors you must orient them with respect to their polarity. Each electrolytic will have either a plus or minus marking

Table 8-2

Capacitance code information

This table provides the value of alphanumeric coded ceramic, mylar and mica capacitors in general. They come in many sizes, shapes, values and ratings; many different manufacturers worldwide produce them and not all play by the same rules. Some capacitors actually have the numeric values stamped on them; however, many are color coded and some have alphanumeric codes. The capacitor's first and second significant number IDs are the first and second values, followed by the multiplier number code, followed by the percentage tolerance letter code. Usually the first two digits of the code represent the significant part of the value, while the third digit, called the multiplier, corresponds to the number of zeros to be added to the first two digits.

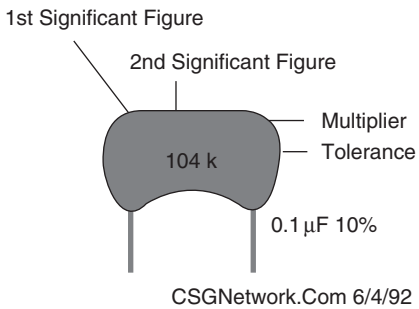

Value	*Type*	*Code*	*Value*	*Type*	*Code*
1.5 pF	Ceramic		1,000 pF /.001 µF	Ceramic / Mylar	102
3.3 pF	Ceramic		1,500 pF /.0015 µF	Ceramic / Mylar	152
10 pF	Ceramic		2,000 pF /.002 µF	Ceramic / Mylar	202
15 pF	Ceramic		2,200 pF /.0022 µF	Ceramic / Mylar	222
20 pF	Ceramic		4,700 pF /.0047 µF	Ceramic / Mylar	472
30 pF	Ceramic		5,000 pF /.005 µF	Ceramic / Mylar	502
33 pF	Ceramic		5,600 pF /.0056 µF	Ceramic / Mylar	562
47 pF	Ceramic		6,800 pF /.0068 µF	Ceramic / Mylar	682
56 pF	Ceramic		.01	Ceramic / Mylar	103
68 pF	Ceramic		.015	Mylar	
75 pF	Ceramic		.02	Mylar	203
82 pF	Ceramic		.022	Mylar	223
91 pF	Ceramic		.033	Mylar	333
100 pF	Ceramic	101	.047	Mylar	473
120 pF	Ceramic	121	.05	Mylar	503
130 pF	Ceramic	131	.056	Mylar	563
150 pF	Ceramic	151	.068	Mylar	683
180 pF	Ceramic	181	.1	Mylar	104
220 pF	Ceramic	221	.2	Mylar	204
330 pF	Ceramic	331	.22	Mylar	224
470 pF	Ceramic	471	.33	Mylar	334
560 pF	Ceramic	561	.47	Mylar	474
680 pF	Ceramic	681	.56	Mylar	564
750 pF	Ceramic	751	1	Mylar	105
820 pF	Ceramic	821	2	Mylar	205

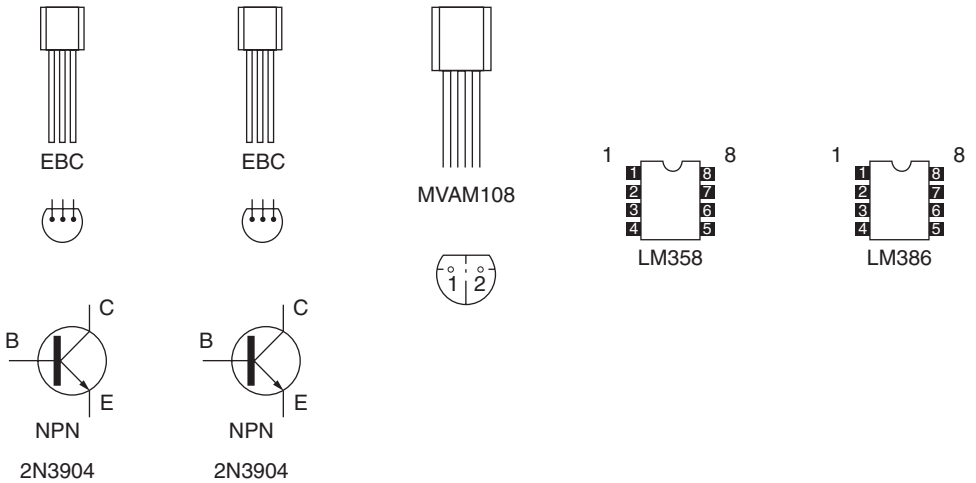

Figure 8-4 *Semiconductor pin-outs*

on them. You must look at the schematic and layout diagram and observe the polarity marking on the diagram match up with the markings on the capacitor when installing them to ensure that the circuit will work. Failure to observe polarity marking may result in damage to the circuit when it is first powered up. Identify these electrolytic capacitors and install on the PC board. Solder them in place and then cut the extra lead lengths flush to the edge of the circuit board.

Take a short break and locate the semiconductor pin-out diagram, shown in Figure 8-4, which illustrates the output pins of the transistors and integrated circuits in the receiver. Next, let's move on to identifying and installing the two diodes; note that diode D2 is the varactor or tuning diode and D1 is a glass bead style diode, while D3 is the red LED RSSI indicator. Diodes have marking on them that denote polarity and it must be observed for the circuit to work correctly. You will notice that a diode will have a small black or white colored band at one end of the diode body. This band denotes the diode's cathode. You will remember that a diode's symbol looks like a triangle pointing to a line. Well, the triangle is the anode and the line corresponds to the black or white band on the diode. Refer to the schematic when installing the two diodes and make sure you have installed them in the correct PC locations before soldering them in place. The RSSI LED is mounted on the front of the PC board near the potentiometers.

Now locate the three NPN transistors and we will install them on the PC board. Remember that transistors each will most likely have three leads, a Base lead, a Collector lead and an Emitter lead. The symbol for a transistor is a vertical line, with two other leads, at 45° angles, pointing to this vertical line. One of these angled leads will have a small arrow pointing towards or away from the vertical line, this lead is the Emitter lead. The vertical lead is the Base lead and the remaining lead is the Collector. Locate and identify these four transistors and install them on the PC board. Be sure you can identify each lead and that each lead goes to the correct PC hole on the board; refer to the layout diagram and schematic before soldering the transistors to the printed circuit board. Don't forget to trim the excess lead from the transistors after the transistors have been soldered to the board.

Now, it's time for a little "destruction"! (If you jumped ahead and installed T3, we've got bad news for you.) Before this, two shielded transformers can be installed, and the internal capacitors need to be removed. Looking at the underside of these two transformers, you'll see a tubular part, probably white with a brown band, somewhat like a resistor. These are brittle and easily crushed with any sharp object that can be pressed against them with mild force (small nail, small screwdriver). You'll find these capacitors will easily disintegrate into particles. DO NOT crush the capacitors in the other two inductors. After crushing the capacitor, install T3. Next locate the remaining inductor cans, i.e. T1 and T2 and install them on the PC board; remember orientation of the inductor cans is important. Now locate the small "resistor like" inductor, i.e. L1,

L2 and L3. Solder the inductors to the circuit board and remember to trim the excess leads.

Finally we are going to install the integrated circuits to the circuit board. Consider installing IC sockets, instead of mounting the IC's directly to the PC board. Integrated circuit sockets are good insurance in the event of a possible circuit failure at some later date. It is much easier to unplug an IC rather than trying to un-solder one from a PC board. Mount three IC sockets to the PC boards at the respective locations of U1 and U2. Before installing the ICs we will need to make sure that you can identify the pin-outs on each of the ICs. Have a look at the eight pin integrated circuits, note that at the top of each of them you will see a notch in the center of the device or a small indented circle at the left side at the top of the package. The IC pin to the left of the notch or indented circle is pin one (1). Refer to the schematic and layout diagram to observe where pin one (1) is for each of the integrated circuits before installing them to the PC board. Once you are sure of the pin-outs for each of the ICs and where they go on the PC board, you can insert them into the proper IC socket. If there are any jumpers on the circuit board, you can go ahead and install them now.

Well, we have made quite a bit of progress on building your shortwave receiver. Take a short break and when we return we will mount the remaining final components. At this time look through the remaining parts and look for the two chassis mounted potentiometers R1 and R2. Place the potentiometes at the front of the PC board and solder them in place. Now, locate and install the power on-off switch at S1, and solder it in place on the printed circuit board.

Finally locate and install J1, an RCA chassis jack and J2, the ⅛″ phone jack onto the PC board. Locate the battery clip and solder it to the PC board, where you see the plus and minus markings. The red battery clip wire will go the plus marking on the board, while the black wire will go to the minus marking on the board. Install the battery clamp. Position battery and holder so as not to cover nearby PC board mounting holes. Use the method for securing the clamp that is most convenient for you, such as a (1) wire looped through clamp and PC board holes and soldered, (2) small screws, (3) double-faced adhesive strips or (4) hot-melt glue.

Your shortwave broadcast receiver is now almost finished. Now, you will need to decide what frequency range you would like your receiver to tune, and then select the values for C15 and C16 from the chart, shown in Table 8-3. A suggested configuration would be C15 = 47 pF and C16 = 100 pF. This will give you complete coverage from 6 to 11 MHz by adjusting T3 in or out. This is a very active section of the shortwave band and will provide you with hours of listening enjoyment any time of the day. Select and install C15 and C16.

Table 8-3
Band selection components

C16 = .001	**T3 Slug In**	**T3 Slug out**
C15	6.5–13 MHz	9–18.3 MHz
C15	5.1–7.9 MHz	7.1–10.7 MHz
C15	4.3–5.3 MHz	6–8.3 MHz
C16 = 100 pF	**T3 Slug in**	**T3 Slug out**
C15	8.4–14.2 MHz	11.5–19.5 MHz
C15	6–8.1 MHz	8.5–11 MHz
C15	4.9–6.3 MHz	6.7–8.4 MHz

Finally, you will need to locate an enclosure for the receiver, and then install the circuit board into the enclosure. Place the knobs on the potentiometer shafts, locate a 9 volt transistor radio battery and connect it to the receiver battery clips. Connect up an antenna and you are ready to test out your new receiver.

Before turning on your receiver, double-check that you have correctly oriented all three of the ICs, that you have correctly oriented the transistors, that you have installed the diodes correctly, and that you have installed the electrolytic capacitors correctly.

Finally we will inspect the circuit board for "cold" solder joints and possible "short" circuits. Pickup the PC board with the foil side of the board facing you and inspect the solder connections. You will want to make sure that all of the solder connections look clean, smooth and shiny. If any of the solder joints look dull, dirty or "blobby" then you should un-solder that particular joint and re-solder it over again so that it looks clean, smooth and shiny. Next, let's inspect the CP board for any possible "short" circuits. Often "stray" cut component leads will "bridge" across between circuit traces and "short" out a PC trace. Another possible source of "short" circuits is a solder blob which

can "bridge" across a circuit trace. Carefully inspect the PC board for any solder blobs or "stray" wires before connecting up a 9 volt battery.

Initial testing and adjustment

Now, connect up a speaker or headphones, connect up some sort of antenna and install a fresh 9-volt battery and we can begin testing the receiver. We have come to the "moment-of-truth," go ahead and turn the receiver power switch to the "on" position. After adjusting the volume to a pleasant level, you should hear some shortwave stations by turning the Tune Control, no matter how any of the adjustable coils happen to be set. While listening to any kind of station, whether broadcast or Teletype, etc., use a small screwdriver to adjust the slugs in transformers T1 and T2 for the best-sounding reception. The Tuning Control covers varying segments of the bands selected by adjustment of oscillator coil T3. Adjustment of T3 anywhere between the full In position to the full Out position will give the user full range between the minimum and maximum frequency coverage set by C15 and C16.

Both T1 and T2 must be adjusted with a non-metallic alignment tool such as is used in radio-TV service. If you do not have one, a suitable tool can be made by patiently sanding a screwdriver-like blade on the end of a wooden match stick, kebab skewer or small plastic crochet needle. Again, please be aware that a metal screwdriver blade will drastically increase the coil inductance and make adjustment quite difficult. T1 and T2 are simply adjusted for strongest reception of any signal range that is tuned in.

If you do not have any sort of testing or frequency reference equipment whatsoever, the easiest way to begin using the receiver, is to set the Tune Control at its midpoint, slowly tune T3 with your alignment tool as though it were a tuning dial. Stop when you come into the middle of a group or cluster of foreign broadcast stations. Try tuning around these stations with the Tune Control. If you like what you hear, readjust both T1 and T2 for best reception. Eventually, you will get a clue as to what general frequency band you are hearing, because many stations periodically announce their frequencies, particularly at sign-on and sign-off times.

If you like precision, use a frequency counter or calibrated receiver to find the SR2's strong oscillator signal, remembering that there is a 455 kHz IF difference (above or below) between the local oscillator frequency and the broadcast signal you are hearing.

Shortwave antenna ideas

The type of antenna you'll want to use for your shortwave receiver depends on the degree of interest you have in shortwave listening, on whether you are limited to an indoor or balcony antenna. If you cannot use an outdoor antenna, you can make yourself a whip antenna from telescoping radio antenna from your local Radio Shack store. A better antenna would be to throw a 10 to 20 foot piece of insulated wire out the window, secured to a pole or tree away from your window. You could also place a length of wire in your attic to act as an antenna. An even better antenna would be a dipole antenna "cut" for the desired radio band of most interest. In order to construct your own dipole antenna, you can refer to the diagram depicted in Figure 8-5. Simply use the formula: 468 divided by the frequency in Megahertz for example. If you wanted to construct a dipole for 7.410 MHz, you would divide 468 by 7.410. The results would be 63.157 feet, so one-half of that number is 31.5 feet. Each leg of the dipole antenna would then be 31.5 feet. If you do construct your own dipole antenna, you should keep the antenna away from metal objects and use insulated wire and be sure to keep

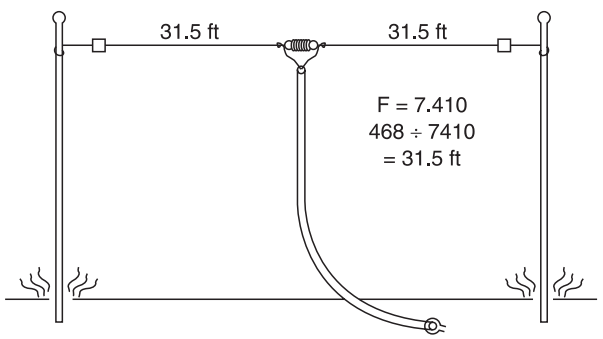

Figure 8-5 *Shortwave dipole antenna*

away from all power lines. The lead-in wire for your dipole antenna to your new receiver can be a length of RG8X min-coaxial cable.

Shortwave listening

Shortwave listening is a fun hobby for young and old alike. Once you have your antenna all set up, it is time to begin listening to your new radio. The chart in Table 8-4 illustrates the most common shortwave bands and their shortwave frequency in Megahertz vs. their wavelength in meters. Many times the shortwave bands are referred to in meters, such as the 40 or 80 meter band, so this chart will help you see the relationship between the two. As a shortwave radio listener, you will want to know what International broadcasters are broadcasting when you have time to listen to your new radio. Most people have spare time in the evening for their hobby. So you will want to know which bands are best for night time use, and who is broadcasting at that time. Refer to the chart in Table 8-5, which illustrates the broadcaster and their frequencies, etc. Usually the best shortwave bands, for evening use are the lower frequency bands such as the 40, 41 and 49 meter bands. Use this chart or check on the Internet for the latest shortwave listings. Have fun!

Table 8-4
Popular shortwave bands

Frequency vs. Meters

Broadcast Frequency – kHz/MHz	*Frequency in Meters*
2300–2495 kHz	120 Meters
3200–3400 kHz	90 Meters
3900–4000 kHz	75 Meters
4750–5060 kHz	60 Meters
5850–6200 kHz	49 Meters
7100–7350 kHz	41 Meters
9400–9900 kHz	31 Meters
11600–12050 kHz	25 Meters
13570–13800 kHz	22 Meters
15100–15800 kHz	19 Meters
17480–17900 kHz	16 Meters
18900–19020 kHz	15 Meters
21450–21850 kHz	13 Meters
25600–26100 kHz	11 Meters

Troubleshooting tips

If you experience difficulty, think of your receiver as consisting of several sections or stages: oscillator-mixer, IF audio and AGC, and final audio output (LM386). The first step in case of problems is to make sure that the tunable oscillator is working, which can be done by listening for its signal on another receiver. After the oscillator circuit is confirmed as working, standard signal tracing procedures should isolate any problem, which will be either an incorrectly installed part, a defective part or a bad solder connection. Correct orientation or polarity of all diodes, transistors, electrolytic capacitors and ICs is essential.

Problem: Strong shortwave broadcast audible throughout tuning range.

Solution: This can occur if your antenna is "too good" or if the RF Gain control is turned up too high. The high sensitivity of the front end is designed for simple antennas, with most reception quite satisfactory with only 25 feet or so of wire.

Problem: Local AM radio station audible throughout tuning range.

Solution: Whether this will even happen depends on how close you are to a local AM station. It is very important that all component leads be as short as possible, since just a bit of wire can help D1 and the several stages of audio amplification give you a free, unwanted "classic crystal radio." A grounded metal case for the SR2 is one possible solution.

Table 8-5
Evening shortwave broadcast listings

English shortwave broadcasts to the Americas sorted by time:

1700–1800 NA	U.S.A.	WYFR	13695, 17555
1700–1800 NA, LA	Japan	R. Japan	9535
1700–1900 Am	U.S.A.	WHRI	9840, 15285, 15650
1700–2200 NA	U.S.A.	WBCQ	18910
1705–1905 Am	Canada	R. Canada Int'l	9610
1705–1905 NA	Canada	R. Canada Int'l	9800 drm
1800–1900 NA	U.S.A.	WYFR	13695, 17535, 17555
1800–1900 NA, Su-F	U.S.A.	WBCQ	7415
1830–1845 NA, Eu	Israel	Israel B/C Auth.	6985, 7545, 9345
1900–2000 NA	U.S.A.	WYFR	13695, 17535, 17555
1900–2000 LA	U.S.A.	WYFR	6085
1900–2000 Am	U.S.A.	WHRI	9840, 13760, 15285
1900–2100 NA	U.S.A.	KJES	15385
1900–2100 NA, Sa-Su	Netherlands	R. Netherlands	15315bo, 15525bo, 17725ca
1900–2200 NA	U.S.A.	WWCR4	9975
1900–2400 NA	U.S.A.	WBCQ	7415
2000–2025 NA, Eu, Af	Israel	Israel B/C Auth.	6280, 7545, 15640
2000–2100 Am	U.S.A.	WHRI	11765, 15285
2000–2100 LA	U.S.A.	WYFR	17575
2000–2200 NA	U.S.A.	WYFR	17535, 17555
2000–2400 NA	Costa Rica Univ.	Network	13750
2030–2130 NA, Eu	Cuba	R. Havana Cuba	9505, 11760
2045–2130 Am	Vatican City	Vatican R.	9800 drm
2100–2127 Eu, As, NA	Czech Republic	R. Prague	5930, 9430
2100–2130 NA, Sa	Canada	CBCNQ	9625
2100–2200 NA, Eu, Af	U.S.A.	WEWN	6890, 15785
2100–2200 NA	Japan	R. Japan	17825
2100–2200 LA	United Kingdom	BBC	9480sc, 11675gr
2100–2200 Am, Sa-Su	U.S.A.	WRMI	7385
2100–2200 Am	U.S.A.	WHRI	9660, 11765
2100–2300 NA	U.S.A.	WWCR1	7465
2100–2400 Am, M-F	U.S.A.	WRMI	7385
2130–2156 NA, Eu	Romania	R. Romania Int'l	6055, 6115, 7145, 9755
2130–2200 NA, M-Sa	Canada	CBCNQ	9625
2130–2200 NA	Netherlands	R. Netherlands	9800ca drm
2200–2257 NA	Netherlands	R. Netherlands	15425fg drm
2200–2300 NA, M-F	U.S.A.	WBCQ	5110
2200–2300 LA	United Kingdom	BBC	5975fg, 9480sc
2200–2300 NA	Canada	R. Canada Int'l	9800 drm
2200–2300 Am	U.S.A.	WHRI	7490, 9660

Table 8-5
Evening shortwave broadcast listings—cont'd

English shortwave broadcasts to the Americas sorted by time:

2200–2300 NA, M-F	U.S.A.	WBCQ	18910
2200–2300 NA, Sa-Su	U.S.A.	WWRB	3185
2200–2400 LA	Guyana	V. of Guyana	3290
2200–2400 NA, Su-F	Canada	CBCNQ	9625
2200–2400 Am	Anguilla	Wld Univ Network	6090
2200–2400 NA	U.S.A.	WWCR3	5070
2200–2400 NA	U.S.A.	WWCR4	9985
2200–2400 NA, Eu, Af	U.S.A.	WEWN	7560, 9975
2200–2400 NA	U.S.A.	WWRB Overcomer	6890
2230–2257 NA, Af	Czech Republic	R. Prague	5930, 9435
2300–2330 NA	Germany	Deutsche Welle	9800ca drm
2300–2350 NA	Turkey	V. of Turkey	5960
2300–2356 NA, Eu	Romania	R. Romania Int'l	6055, 6115, 7105, 9610
2300–2400 NA	Egypt	R. Cairo	11885
2300–2400 NA	China	China R. Int'l	6040, 11970
2300–2400 NA	U.S.A.	WBCQ	5110
2300–2400 Am	U.S.A.	WINB	9265
2300–2400 NA	Cuba	R. Havana Cuba	9550
2300–2400 NA, LA	China	China R. Int'l	5990ca
2300–2400 NA	U.S.A.	WHRA	5850
2300–2400 Am	U.S.A.	WHRI	7315, 7490
2300–2400 LA	U.S.A.	WYFR	15170, 15400
2300–2400 NA	U.S.A.	WWCR1	3215
2300–2400 NA	U.S.A.	WWRB	3185, 5050
2300–2400 LA, Su-F	U.S.A.	WWRB	5745
2330–2357 NA	Czech Republic	R. Prague	5930, 7345
2330–2359 NA	Sweden	R. Sweden	9800ca drm
2330–2400 NA	Lithuania	R. Vilnius	7325
2330–2400 Am, Su	U.S.A.	WRMI	9955
2335–2400 LA, Su-M	Austria	Osterreich 1	9870
2343–2358 LA, Tu-Sa	Austria	Osterreich 1	9870

Relay site codes: ae-United Arab Emirates, al-Albania, an-Antigua, ar-Armenia, as-Ascension, au-Austria, bo-Bonaire Neth. Antilles, bu-Bulgaria, ca-Sackville Canada, ch-China, cl-Chile, cu-Cuba, cy-Cyprus, de-Delano USA, fg-French Guiana, fr-France, ga-Gabon, ge-Germany, gr-Greenville USA, it-Italy, ja-Japan, ka-Kazakhstan, ko-South Korea, la-Latvia, li-Lithuania, ma-Madagascar, ml-Mali, mo-Moldova, ne-Netherlands, om-Oman, po-Sines Portugal, ru-Russia, rw-Rwanda, sc-Cypress Creek SC, se-Seychelles, si-Singapore, sl-Sri Lanka, so-Slovakia, sp-Spain, sw-Sweden, ta-Taiwan, th-Thailand, uk-United Kingdom, uz-Uzbekistan, wb-WBCQ USA, wr-WRMI USA, wy-WYFR USA, za-South Africa.

Notes – Days of week: Su-Sunday, M-Monday, Tu-Tuesday, W-Wednesday, Th-Thursday, F-Friday, Sa-Saturday, exW-except Wednesday.
Target areas: Af-Africa, Am-America, As-Asia, Eu-Europe, LA-Latin America, ME-Middle East, NA-North America, Oc-Oceania/Australia; Other: alt-alternate frequency, drm-Digital Radio Mondiale, occ-occasional use, se-Special English.

Courtesy of Daniel Sampson; www.primetimeshortwave.com

Chapter 9

80/40 Meter Code Practice Receiver

Parts list

80/40 Meter Direct Conversion Receiver Specifications

Sensitivity 3-uV or better

Modes CW, RTTY (FSK), SSB, AM

Audio output 50 mW typical

Frequency coverage Portions of the 80, 75, and 40 meter bands

Power Source 9 volt transistor battery, alkaline preferred

PC Board 4.000" × 4.700"

80/40 Meter Direct Conversion Receiver

R2 15 ohm, ¼w, 5% resistor (brown, green, black)

R3,R8 100 ohm, ¼w, 5% resistor (brown, black, brown)

R1 1000 ohm variable potentiometer

C1 8.2 pF ceramic disk (8.2)

C18 100 pF ceramic trimmer capacitor

C19 15-50 pF variable capacitor (main tuning) - see text

C2,C6,C7 .1 µF monolithic (.1 or 104)

C3 see chart below

C4 not used

C5 see chart below

C8,C9,C10 .1 µF monolithic (.1 or 104)

C20 .01 µF ceramic disk (.01 or 103)

C12,C13,C14 1 µF, 35 volt electrolytic capacitor

C16,C17 470 µF, 35 volt electrolytic capacitor

C11,C15 10 µF, 35 volt electrolytic capacitor

U1 SA602 RF Mixer IC, 8-pin DIP

U2 78L05 voltage regulator

U3 LM386 audio amplifier, 8-pin DIP

S1 Power On-off switch

J1 RCA antenna jack

J2 ⅛" headphone jack

B1 9 volt transistor radio battery

Misc PC board, IC sockets, chassis, knobs, wire, battery

Copyright © 2008 by The McGraw-Hill Companies, Inc. Click here for terms of use.

holder, battery clip, hardware, etc.

80 Meter Band Tuning components

C3,C5 470 monolithic capacitor (471)

L1 6.8 µH variable inductor, shielded

L2 3.3 µH molded choke (orange-orange-gold)

L3 33 µH molded choke (orange-orange-black)

40 Meter Band Turning Components

C3 470 pF monolithic (471)

C5 680 pF monolithic (681)

L1 1.5 µH variable inductor, shielded

L2 1 µH molded choke (brown-black-gold)

L3 10 µH molded choke (brown-black-black)

* Inductors available from Digi-Key Electronics, see Appendix.

Whether you're a novice or an "old-timer," you'll be pleasantly surprised at how this dual band Direct Conversion Receiver performs! The receiver can be constructed to receive either the 80 meter or 40 meter amateur radio bands. You will be able to receive AM, CW and SSB, signals from hams around the world.

Far-away signals are easily copied; and the sensitivity of the 80/40 Meter Direct Conversion Receiver rivals more expensive receivers. This receiver is ideal for practicing and increasing your CW or code efficiency or just having fun listening to shortwave broadcasts or ham radio operators, at home or away. Build the receiver for your favorite band, tuning options allow you to customize the tuning range from full-band to 100 kHz or less. Powered by a common 9 volt transistor battery, it's always ready for action on vacation and camping trips!

Figure 9-1 *80/40 meter code receiver*

The 80/40 Meter Direct Conversion Receiver shown in Figure 9-1, can easily be constructed by a radio neophyte in a few hours with the easy-to-follow instructions.

Circuit description

The circuit diagram shown in Figure 9-2 illustrates the schematic for the 80/40 Meter Direct Conversion Receiver. A dipole or suitable antenna is fed directly to input jack J1, which is coupled to potentiometer R1, which serves as a continuously variable RF attenuator and also serves as the receiver's gain control. Using the RF gain control to set volume is advantageous as it also reduces strong in-band signals that could otherwise overload the receiver front end. Series inductors L2 and L3, and trimmer capacitor C18, provide front-end bandpass filtering, and an impedance match to 50 to 75-ohm antenna systems. IC U1 is an NE602/612 mixer and Local Oscillator (LO) in an 8-pin dip package. The mixer section is an active Gilbert cell design for good conversion gain and low noise figure. The LO section uses heavy capacitive loading to minimize frequency drift. Tuning is capacitive, using a modern Hi-Q miniature plastic variable. The local oscillator (LO) stability is enhanced by a 78L05 voltage regulator.

Since this is a direct conversion receiver, the LO is tuned to the carrier frequency of Single Sideband Signals, or to a difference of 300 to 800 Hz on CW

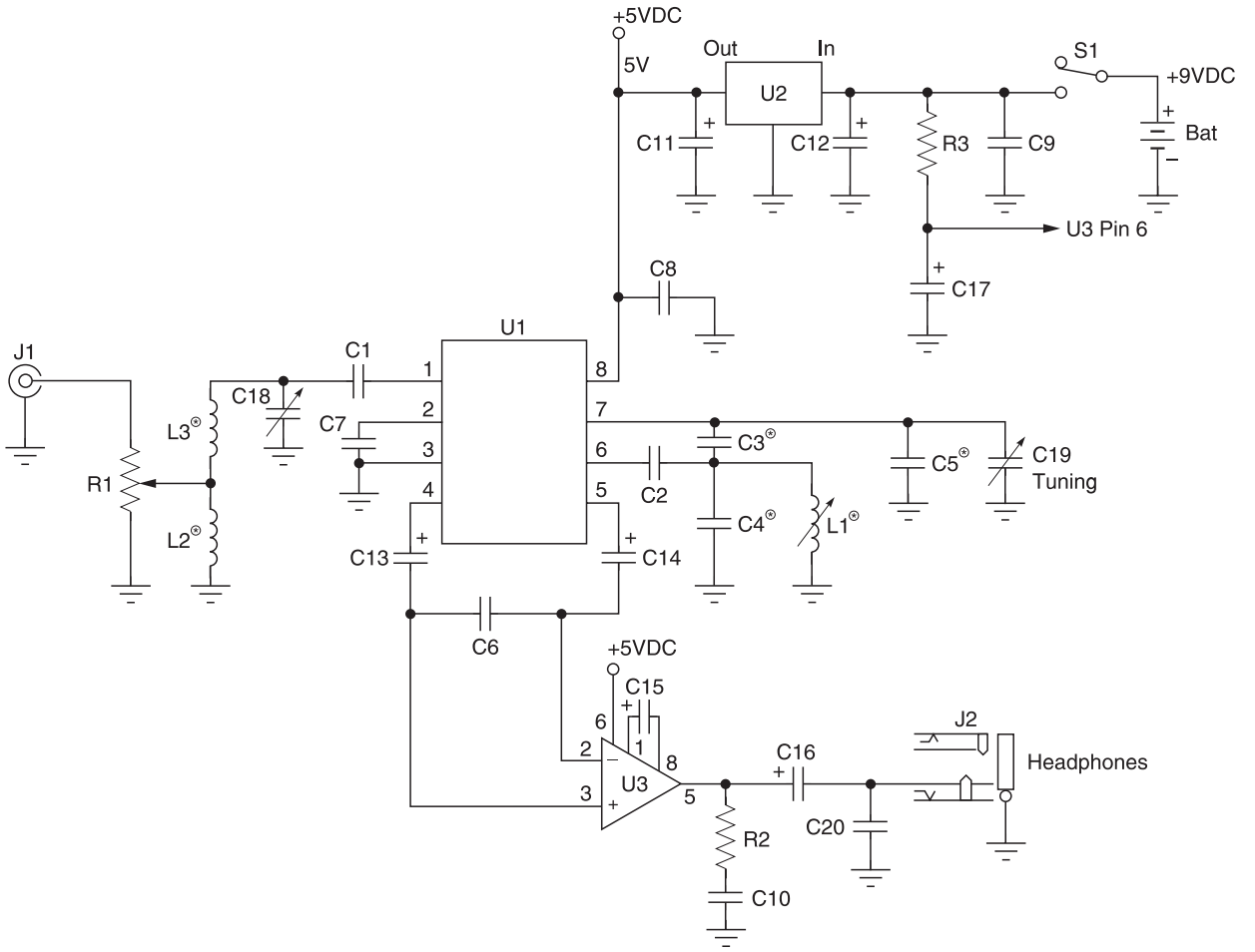

Figure 9-2 *80/40 meter direct conversion amateur radio receiver. Courtesy of Vectronics*

signals, to produce an aural output that is differentially coupled to a LM386 audio IC. The audio amplifier IC is coupled to the headphone jack at J2 by capacitor C16. The receiver circuit is power from a single 9 volt transistor radio battery.

Let's get started! Before we begin building the 80/40 meter receiver, you will need to locate a clean well lit and well ventilated work area. A large table or workbench would be a suitable work surface for your project. Next you will want to locate a small 27 to 33 watt pencil tipped soldering iron, as well as a roll of #22 gauge 60/40 tin/lead solder and a small jar of "Tip Tinner," a soldering iron tip cleaner/dresser, from your local Radio Shack store. You will also want to secure a few hand tools for the project, such as a pair of small end-cutters, a pair of tweezers and a pair of needle-nose pliers. Locate a small Phillips and a small flat-blade screwdriver, as well as a magnifying glass to round out your tool list. Grab the schematic, parts layout diagram as well as the resistor and capacitor identifier charts and we will begin our project. Place all the project components on the table in front of you. The 80/40 direct conversion radio is an RF or radio frequency project and it is best constructed on a printed circuit board with large ground plane areas covering the board for the best RF grounding techniques. Once you have all the parts and PC board in front of you, heat up the soldering iron and we'll get started!

First, find your resistor identifier chart in Table 9-1, which will help you select the resistors from the parts pile. Resistors used in this project are mostly small ¼ watt carbon composition type resistors, which have colored bands along the resistor body. The first color band should be closest to one end of the resistor body. This first color band represents the first digit of the resistor value. For example, resistor R2 has four color bands, the first one is a brown band followed by a green band followed by a black band. The fourth band is gold.

Table 9-1
Resistor color code chart

Color Band	*1st Digit*	*2nd Digit*	*Multiplier*	*Tolerance*
Black	0	0	1	
Brown	1	1	10	1%
Red	2	2	100	2%
Orange	3	3	1,000 (K)	3%
Yellow	4	4	10,000	4%
Green	5	5	100,000	
Blue	6	6	1,000,000 (M)	
Violet	7	7	10,000,000	
Gray	8	8	100,000,000	
White	9	9	1,000,000,000	
Gold			0.1	5%
Silver			0.01	10%
No color				20%

The first band is brown, which denotes a digit one (1), the second band is green, which represents a digit five (5), and the third band is black, which represents a multiplier of zero (0), so the resistor value is 15 ohms with a tolerance value of 5%. Identify the remaining resistors for the project and we can begin "populating" the PC board. Place a few resistors on the board at one time, so as not to confuse the process. Make sure that you place the correct resistor into the correct PC location before soldering it in place. Once you solder a few resistors in place on the PC board you can use your end-cutter to trim the excess component leads. Cut the excess leads flush to the edge of the circuit board. Then place a few more resistors on the PC board and solder them on to the board. Remember to trim the component leads as necessary.

Next we will locate the capacitors for the 80/40 meter receiver. Capacitors are listed as electrolytic and non-electrolytic types. The non-electrolytic types are generally smaller in value and size as compared with the electrolytic types. Non-electrolytic capacitors, in fact, can be so small that their actual value cannot be printed on them, so a special chart was devised as shown in Table 9-2. The chart illustrates the three digit codes which are often used to represent capacitors. For example, a .001 µF capacitor will have (102), while a .01 µF capacitor will have (103) marked on it to represent its true value. Use the chart to identify the small capacitors in the project. Non-electrolytics have no polarity markings on them so they can be installed in either direction on the PC board.

Electrolytic capacitors are usually larger in size and value and they will have a white or black band on the side of the capacitor body or a plus (+) or minus (–) marking on the body of the capacitor near the leads. These markings are polarity markings and that indicate the direction in which the capacitor must be mounted on the PC board. Failure to observe polarity when installing the capacitor may result in damage to the capacitor or to the circuit itself, so pay particular attention to capacitor polarity when placing the capacitors on the board. Note that the receiver can be built for either the 80 meter ham band or the 40 meter ham band. You will need to look at the parts list when deciding which band you want to receive. The inductors L1, L2 and L3 as well as capacitors C3, C4 and C5 determine the band selection.

Let's go ahead and place some of the non-electrolytic capacitors on the PC board. Identify a few small capacitors at a time and place them on the PC board and solder them in place. Trim the component leads after. Go ahead and install the remaining non-electrolytic capacitors after choosing your desired band. Install the capacitors and solder them in place, remember to cut

Table 9-2

Capacitance code information

This table provides the value of alphanumeric coded ceramic, mylar and mica capacitors in general. They come in many sizes, shapes, values and ratings; many different manufacturers worldwide produce them and not all play by the same rules. Some capacitors actually have the numeric values stamped on them; however, many are color coded and some have alphanumeric codes. The capacitor's first and second significant number IDs are the first and second values, followed by the multiplier number code, followed by the percentage tolerance letter code. Usually the first two digits of the code represent the significant part of the value, while the third digit, called the multiplier, corresponds to the number of zeros to be added to the first two digits.

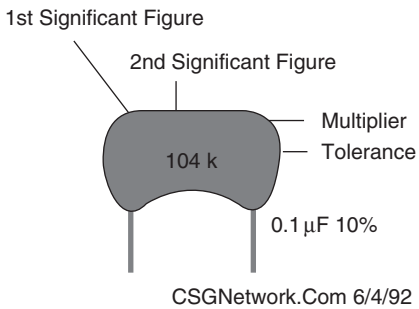

Value	*Type*	*Code*	*Value*	*Type*	*Code*
1.5 pF	Ceramic		1,000 pF /.001 µF	Ceramic / Mylar	102
3.3 pF	Ceramic		1,500 pF /.0015 µF	Ceramic / Mylar	152
10 pF	Ceramic		2,000 pF /.002 µF	Ceramic / Mylar	202
15 pF	Ceramic		2,200 pF /.0022 µF	Ceramic / Mylar	222
20 pF	Ceramic		4,700 pF /.0047 µF	Ceramic / Mylar	472
30 pF	Ceramic		5,000 pF /.005 µF	Ceramic / Mylar	502
33 pF	Ceramic		5,600 pF /.0056 µF	Ceramic / Mylar	562
47 pF	Ceramic		6,800 pF /.0068 µF	Ceramic / Mylar	682
56 pF	Ceramic		.01	Ceramic / Mylar	103
68 pF	Ceramic		.015	Mylar	
75 pF	Ceramic		.02	Mylar	203
82 pF	Ceramic		.022	Mylar	223
91 pF	Ceramic		.033	Mylar	333
100 pF	Ceramic	101	.047	Mylar	473
120 pF	Ceramic	121	.05	Mylar	503
130 pF	Ceramic	131	.056	Mylar	563
150 pF	Ceramic	151	.068	Mylar	683
180 pF	Ceramic	181	.1	Mylar	104
220 pF	Ceramic	221	.2	Mylar	204
330 pF	Ceramic	331	.22	Mylar	224
470 pF	Ceramic	471	.33	Mylar	334
560 pF	Ceramic	561	.47	Mylar	474
680 pF	Ceramic	681	.56	Mylar	564
750 pF	Ceramic	751	1	Mylar	105
820 pF	Ceramic	821	2	Mylar	205

the extra leads flush to the edge of the circuit board. Now, you can go ahead and install the electrolytic capacitors onto the circuit board. Go ahead and solder them in place and trim the leads as necessary.

This receiver project uses a number of small inductors. These small inductors will generally have color bands on them to help identify them. Molded chokes appear, at first glance, to be similar to resistors in both shape and band marking. However, a closer look will enable you to differentiate between the two—chokes are generally larger in diameter and fatter at the ends than resistors. When doing your inventory, separate out any chokes and consult the parts list for specific color-code information. Note, that inductor L1 is an adjustable slug tuned type. Remember that specific chokes are used for each band: see parts list before mounting the chokes. Chokes do not have polarity so they can be mounted in either direction on the PC board.

The 80/40 meter receiver utilizes two integrated circuits and a regulator IC. Take a look at the diagram shown in Figure 9-3, which illustrates the semiconductor pin-outs. When constructing the project it is best to use IC sockets as an insurance against a possible circuit failure down-the-road. Its much easier to unplug an IC rather than trying to un-solder it from the PC board. IC sockets will have a notch or cut-out at one end of the plastic socket. Pin one (1) of the IC socket will be just to the left of the notch or cut-out. Note that pin 1 of U1 connects to C1, while pin one (1) of U2 connects to C15. When inserting the IC into its respective socket make sure you align pin one (1) of the IC with pin one (1) the socket. Failure to install the IC properly could result in damage to the IC as well as to the circuit when power is first applied.

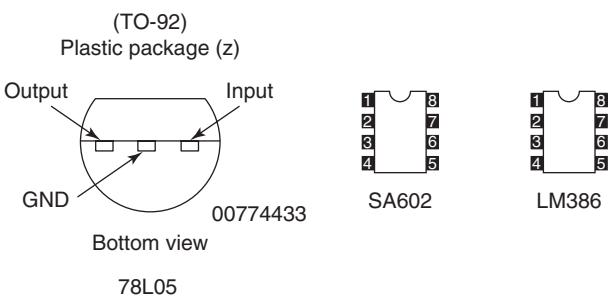

Figure 9-3 *Semiconductor pin-outs*

Let's finish the circuit board by mounting the volume control and the adjustable capacitors. The volume control potentiometer at R1 is a right angle PC board mounted type, which is placed at the edge of the PC board as is the main tuning capacitor. Capacitor C18, which is connected at the junction of L3 and C1, is an 8.2 pF trimmer type; go ahead and solder it to the circuit board using two pieces of bare #22 ga. stiff single conductor wire.

Locate main-tuning capacitor C19, now locate the mounting location for main tuning capacitor C19. The tuning capacitor was mounted on its side using double-sided sticky tape. Remove the protective cover from the double-sided tape, and firmly press the body of capacitor C19 to mount it to the PC board. Firmly press the double-sided tape over the silk-screened outline for the body of C19. You may decide to mount the tuning capacitor in a different way. At the rear of the capacitor: locate the four internal trimmer capacitors, and using a small jeweler's screwdriver or alignment tool, fully open (unmesh) all four trimmers. Note: tuning shaft faces front of board. Bend the two rotor lugs so they are parallel to the front face of the capacitor as shown above. Connect the two rotor lugs to the PC board ground points as shown using scraps of lead wire trimmed from resistors as jumper wires. Cut a 6″ length of 24-AWG insulated hook-up wire in half. Remove about ¼″ of the insulation from each of the cut ends. Solder the jumpers to the capacitor rotor lugs, and to the ground foil run on the bottom of the PC board. Since the tuning capacitor has four sections, you can increase the tuning ranges by paralleling different sections to give a greater tuning range: see Table 9-3. If you used just the 140 pF section, your tuning range would be 190 kHz, but if you combined the 140 pF section with the 40 pF section your tuning range would become 180 pF and so forth. Capacitor jumpers: 180 pF = use 140-pF and 40-pF sections paralleled; 222 pF = use 140-pF and 82-pF sections paralleled; 262 pF = use 140-pF, 82-pF and a 40-pF sections paralleled; 302 pF = use all four capacitor sections in parallel.

The 80/40 meter code practice receiver can be built for either of your favorite ham bands. First you will need to decide which band you are interested in. Then you will have to select the proper components from the chart in Table 9-4, for the band of interest. Note that you will have to select three capacitors and three coils for each band.

Table 9-3
Band tuning range

80 Meter Tuning	
302 pF	350 kHz
262 pF	310 kHz
222 pF	270 kHz
180 pF	230 kHz
140 pF	190 kHz
82 pF	110 kHz
40 pF	55 kHz
40 Meter Tuning Range	
302 pF	N/A
262 pF	N/A
222 pF	N/A
180 pF	310 kHz
140 pF	250 kHz
82 pF	150 kHz
40 pF	75 kHz

Let's take a few minutes for a short well-deserved break, and when we return we will look over the circuit board for any possible "cold" solder joints or "short" circuits. Pick up the circuit board with the foil side facing upwards toward you. First, we will examine the circuit board for "cold" solder joints. Take a look at all of the solder joints on the board, they should look clean, bright and shiny. If you see any solder joints which look dark, dull or "blobby," then you should remove the solder with a solder-sucker and then reapply more solder and re-solder the joint all over again so that it looks good. Next, we will look the board over for any possible "short" circuits which are often caused by "stray" component leads cut from the board or from small solder blobs which may have bridged between circuit traces. Rosin core solder can often leave a sticky residue which will collect component leads and solder blobs, so look the PC board over carefully for any foreign objects on the foil side of the board.

Table 9-4
80/40 Band change components

40-Meter Components	*80-Meter Components*
C3 - 470 pF capacitor	C3 - 470 pF capacitor
C4 - not used	C4 - not used
C5 - 680 pF capacitor	C5 - 470 pF capacitor
L1 - 1.5 µH molded coil	L1 - 6.8 µH molded coil
L2 - 1 µH molded coil	L2 - 3.3 µH molded coil
L3 - 10 µH molded coil	L3 - 33 µH molded coil

The 80/40 meter receiver radio prototype was mounted in a metal chassis box on plastic standoffs. The PC board was aligned in the enclosure so that the volume control, and main tuning control and power switch were all mounted at one side of the case. Alight the PC board along the edge of the chassis box, so that you drill holes in the chassis for the volume and tuning controls. The ⅛″ switched headphone jack at J2 was mounted on the front of the chassis, while the antenna input jack at J1 was mounted on the rear of the case. The 9 volt transistor radio battery was mounted in a battery holder which was fastened to the bottom panel of the chassis box.

Your new 80/40 meter direct conversion receiver project is almost completed. Apply the battery clip to the 9 volt battery. Connect up an antenna to the antenna jack, a dipole antenna cut for the band of interest would be the best type of antenna. For test purposes, you could connect a long piece of wire to the antenna jack for a temporary antenna. Plug in an 8 ohm headphone and then, turn on the power switch to the "On" position. Now, adjust the volume control to the mid-position and then turn the main tuning control. If all-goes-well, you should begin to hear some radio stations. You may want to test the radio in the early morning or evening when these two bands are most active for best results. Hopefully you will hear some stations while you tune across the band.

If for some reason, your receiver is DEAD, then you will want to turn off the receiver and remove the battery clip and do another inspection of the circuit board. This inspection is best done by another pair of eyes, someone who is skilled at electronics might be your best choice for inspection. You will want to make sure that you installed the electrolytic capacitors correctly with respect to their polarity. You will also want to make sure that the integrated circuits are aligned correctly in their respective sockets: it's easy to make a mistake. Check to make sure that the regulator IC at U2 was correctly

installed with the input of the regulator going to capacitor C12, and the output of the regulator going to capacitor C11. Finally, make sure that you have the battery clip polarity wired correctly. Once you have examined the circuit board once more, you can go ahead and reconnect the battery and antenna and try the receiver again to see if it works now.

If your receiver is now working correctly, we can move on to the alignment of your new receiver. There are two primary methods of aligning the receiver's local oscillator.

Receiver alignment method 1: using an additional receiver

Place your new 80/40 meter receiver next to an amateur or general coverage receiver that covers the band of interest. Connect a short 3 or 4 foot wire antenna to the receiver, route the antenna wire so it passes near the direct conversion receiver PC board. Next, select a tuning tool that properly fits coil L1. The 20 meter kit requires a hex type alignment tool. The other kits require a small blade type tool that matches the slot in the coil core, or use a small jeweler's screwdriver. Now, set coil L1 tuning core to the top of the coil form. At this time, tune the receiver to the lowest operating frequency by turning the tuning capacitor shaft fully CCW (counter clockwise). Next, go ahead and set the monitor receiver to the lowest frequency you wish to receive on the direct conversion receiver. The receiver should be set to a wide filter bandwidth, and if it has a BFO, it should be on. Install a fresh 9 volt alkaline battery to the receiver, and turn it on by depressing the push-action power switch.

Finally, carefully adjust the core in coil L1 until it is heard sweeping across the monitor receiver frequency. Set the coil for zero beat, or strongest S-meter reading on the receiver. Note that metal alignment tools will cause some frequency shift, and interact with the tuning when removed or inserted into the coil. You will have to adjust the coil in small increments, and observe the point where the proper frequency is reached when the tool is removed.

Receiver alignment method 2: using a signal generator

First, set the signal generator to the direct conversion receiver's lowest operating frequency. Set the generator output level for a 30-µV CW signal. Next, connect the generator RF output to the VEC direct conversion antenna jack (J1) using coax cable and the appropriate mating connectors or adapters. Now, connect a speaker or headphones to jack J2 on the receiver. At this point, set the receiver gain fully CW (clockwise) and the tuning knob fully CCW (counter clockwise). Next, select a tuning tool that properly fits coil L1. The 20 meter kit requires a hex type alignment tool. The other kits require a small blade type tool that matches the slot in the coil core. Or, a jeweler's screwdriver may be used. Go ahead and set coil L1 tuning core to the top of the coil form. Now, connect a fresh 9 volt alkaline battery to the receiver, and turn it on using the push-action power switch. Finally, carefully adjust the core in coil L1 until the generator signal is heard. Set the coil for zero beat. Note that metal alignment tools will cause some frequency shift, and interact with the tuning when removed or inserted into the coil. You will have to adjust the coil in small increments, and observe the point where the proper frequency is reached when the tool is removed.

Final alignment

Once the tuning range is set, the RF input stage must be peaked for best sensitivity. This can be done using a signal generator, or on-the-air signals. Find an alignment tool or jeweler's screwdriver that fits trimmer capacitor C18. Use one of the following three methods to peak C18.

1. Using a signal generator, peak C18 for best sensitivity. Reduce the signal generator output, or reduce the R1 Gain control setting, to prevent overload as C18 is brought into resonance.
2. Using off-air signals, adjust C18 until signals are loudest. Reduce the R1 Gain control as C18 is

brought into resonance to prevent overload. Verify that C18 is properly peaked while monitoring a known on-air signal.

3. With an outside antenna connected, peak C18 for maximum atmospheric noise in the headphones or speaker. Verify that C18 is properly peaked while monitoring a known on-air signal.

Antenna considerations

With your new receiver completed and aligned, you can attach a dipole antenna for the chosen band of operation. Direct conversion receivers need good antennas. Using a random length of wire will give poor results. Half-wave dipoles are very effective antennas and are simple to construct. For low-power or QRP work, or for receive only applications, low-cost RG-58 52 ohm coax is fine. The formula for dipole antennas: 234/(frequency in MHz) = ¼-wavelength in feet will give the length of wire needed for each leg of the dipole. For example, if you wanted to build a 40-meter dipole for the CW portion of the band you would divide 234 by 7.040 MHz and the result would be 33.238 feet per leg on either side of the center insulator: see Figure 9-4.

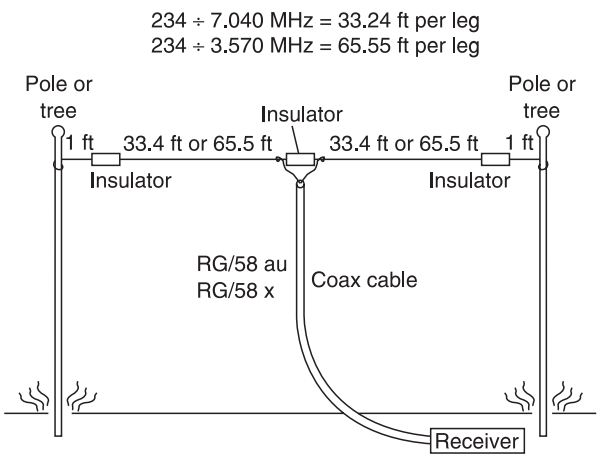

Figure 9-4 *80/40 meter dipole antenna*

Tuning notes

While trying to tune CW stations, you should tune across the band until a CW signal is heard. Set the gain control at R1 for a comfortable listening level. Then, carefully adjust the tuning control until the "beat note," or tone, sounds best for you. Most experienced CW operators prefer a lower beat note of about 300 or 400 Hz.

When trying to tune-in single-side band (SSB) stations, you may need a little practice to tune-in the signal properly. Direct conversion receivers offer no upper or lower sideband rejection, so you will have to slowly tune across the SSB signal until the voices become natural sounding. Use the gain control to prevent overload and to set a comfortable listening level.

In order to tune-in AM stations, you will need to realize that, unlike SSB signals, AM signals have a carrier frequency. That means you will hear a beat note as you tune across an AM signal. Tune the signal so the beat note becomes lower in frequency and stop when "zero beat" (beat note disappears) is reached.

Possible overload problems

An unfortunate fact of life is that low-power amateur signals are surrounded by high-power SW broadcast signals, so there may be a possibility of overload problems. In order to compensate for this possible problem, you may need to lower the gain control. Simply lowering the gain setting will resolve many overload problems. Another approach to an overload problem is to use a **preselector**. A preselector provides protection from strong out-of-band signals. They are most effective when the interfering signal is far from the operating frequency.

A resonant antenna favors signals in the band it was cut for, so when faced with a severe overload problem, you elect to use a resonant antenna. The final approach to solving an overload problem is to change the direction the dipole faces; this may lower unwanted pickup of undesired SW signals. Lowering the antenna will change its angle of pickup; a low antenna may favor local stations over the low-angle of distant broadcast signals. A shorter antenna can also be tried; it will be less efficient and signals will be weaker.

Table 9-5
W1AW on-air code practice sessions

Pacific	*Mtn*	*Central*	*East*	*Mon*	*Tues*	*Weds*	*Thur*	*Fri*
6 am	7 am	8 am	9 am		fast code	slow code	fast code	slow code
7-9 am	8-10 am	9-11 am	10-noon	visiting	operator	time	———	———
10 am-12:45 pm	11 am-1:45 pm	noon-2:45 pm	1-3:45 pm					
1 pm	2 pm	3 pm	4 pm	fast	slow	fast	slow	fast
2 pm	3 pm	4 pm	5 pm	———	code	bulletin	———	———
3 pm	4 pm	5 pm	6 pm	———	teleprint	bulletin	———	———
4 pm	5 pm	6 pm	7 pm	slow	fast	slow	fast	slow
5 pm	6 pm	7 pm	8 pm	———	code	bulletin	———	———
6 pm	7 pm	8 pm	9 pm	———	teleprint	bulletin	———	———
6:45 pm	7:45	8:45	9:45	———	voice	bulletin	———	———
7 pm	8 pm	9 pm	10 pm	fast	slow	fast	slow	fast
8 pm	9 pm	10 pm	11 pm	———	code	bulletin	———	———

Frequencies are 1.8175, 3.5815, 7.0475, 14.0475, 18.0975, 21.0675, 28.0675 and 147.555 MHz.

Slow Code = practice sent at 5, 7½, 10, 13 and 15 words per minute (wpm).

Fast Code = practice sent at 35, 30, 25, 20, 15, 13 and 10 wpm.

The chart shown in Table 9-5 illustrates the W1AW code practice sessions for Ham Radio operators or those interested in obtaining a Ham Radio license. The 80-meter frequency is 3.5815 MHz and the 40-meter frequency is 7.0475. The Amateur Radio Relay League (ARRL) offers these code practice sessions every day to help amateur radio enthusiasts increase their code speed. The ARRL is a great resource for those interested in Amateur Radio and offers many books, magazines and free literature in including videos to help you understand what Amateur Radio is all about. Take a few minutes and explore their web-site.

Chapter 10

WWV 10 MHz "Time-Code" Receiver

Parts list

WWV Time Receiver

R1 22k ohm, ¼w, 5% resistor

R2,R6,R7,R10 100 ohm, ¼w, 5% resistor

R16,R18,R30 100 ohms, ¼w, 5% resistor

R3,R21 1 megohm, ¼w, 5% resistor

R4 3k ohm, ¼w, 5% resistor

R5,R11,R12 2k ohm, ¼w, 5% resistor

R8,R13 47k ohm, ¼w, 5% resistor

R9 220k ohm, ¼w, 5% resistor

R14,R24,R29 100k ohm, ¼w, 5% resistor

R19,R22 5.6k ohm, ¼w, 5% resistor

R20 27k ohm, ¼w, 5% resistor

R17,R23,R28 4.7k ohm, ¼w, 5% resistor

R31,R33,R34 4.7k ohm, ¼w, 5% resistor

R25,R26,R27 10k ohm, ¼w, 5% resistor

R32 12k ohm, ¼w, 5% resistor

R35,R36 22 ohm, ¼w, 5% resistor

R37 2.7k ohm, ¼w, 5% resistor

C1,C2,C6,C7,C15 .001 µF, 35v ceramic disk capacitor

C3,C17,C19,C22 .01 µF, 35v ceramic disk capacitor

C4,C5,C8,C9,C14 .1 µF, 35v ceramic disk capacitor

C16,C23,C28,C31 .1 µF, 35v ceramic disk capacitor

C10,C11,C12,C13 20 pF, 35v plastic capacitor

C18 1000 pF, 35v plastic capacitor

C20,C21 220 pF, 35v plastic capacitor

C24,C27 1.0 µF, 35v electrolytic capacitor

C25,C32 22 µF, 35v electrolytic capacitor

C26 2.2 µF, 35v electrolytic capacitor

C29,C30 390 pF, 35v plastic capacitor

Copyright © 2008 by The McGraw-Hill Companies, Inc. Click here for terms of use.

C33 100 µF, 35v electrolytic capacitor

C34 2200 µF, 35v electrolytic capacitor

C35 10 µF, 35v electrolytic capacitor

C36,C37 1000 µF, 35v electrolytic capacitor

C38 330 µF, 35v electrolytic capacitor

C39 470 µF, 35 volt electrolytic capacitor

CV1 10-40 pF trimmer capacitor

CV2 10-70 pF trimmer capacitor

VR1 10k ohm RF gain potentiometer

VR2 1M ohm Sensitivity potentiometer

VR3 10k ohm volume control potentiometer

L1 4.1 µH coil - 27 turns on T-28-2 ferrite core using 22 AWG wire tap 2-turns from ground side

L2,L4 12 turns on FT37-43 ferrite toroid core

L3 3.0 µH - 25 turns #26 AWG wire on T50-2 ferrite core

L5 12 turns on FT37-43 ferrite toroid core

L6 1000 µH coil

D1 1N5711 silicon Schottky diode NTE 112

D2 optional LED - power "on" indicator

Y1,Y2,Y3 10 MHz crystal

(F) 3-ferrite beads - (see front-end)- run wire through beads

Q1,Q2,Q3 Dual Gate MOSFET 40673 or ECG222

Q4,Q5 nJFET MPF102

Q6,Q7 2N3904 NPN transistor

Q8 2N3906 PNP transistor

U1 Signetics NE5532 Op-Amp

J1 RCA jack - antenna

J2 Coaxial power jack

SPK 8-ohm 3" speaker

S1 SPST power switch

Misc PC board, wire, hardware, sockets, etc.

Does anybody really know what time it is? The WWV receiver, shown in Figures 10-1 and 10-2, is designed to tune the National Institute of Standards and Technology (NIST) atomic clock for moment by moment time accuracy! This is a great receiver project that actually serves a dedicated purpose. Put one in the boat or on a desk and you'll always know what time it is!

The WWV receiver is quite sensitive, and with a good antenna you should be able to receive time signals most of the time! The receiver features easy tuning and small size, it can be packed up and taken anywhere and runs on a 12 volt DC power supply, or a 12 volt battery for portable operation. An earphone jack is provided for headset operation so you can use it night or day.

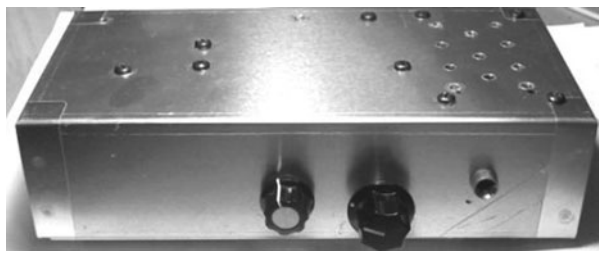

Figure 10-1 *WWV time code received*

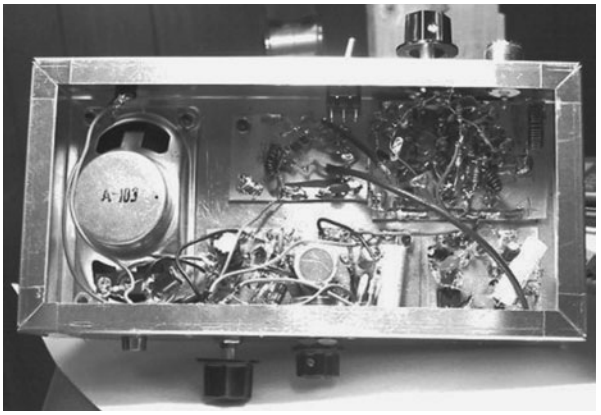

Figure 10-2 *WWV time code received – inside view*

People have always been fascinated with the measurement and properties of time. What happened to that last second that you just spent reading this sentence? Perhaps this is the reason that so many of us have tuned in over the years to the National Institute of Standards and Technology (NIST) "clock" operating at a transmitting frequency of 10 MHz. The cesium standard NIST-7 has an accuracy of 5 × 10-15 seconds. Now that's accurate! In fact, the definition of a "second" is the duration of 9,192,631,770 periods of the radiation corresponding to the transition between the two hyperfine levels of the ground state of the cesium-133 atom.

We set our clocks, watches, and chronometers to the all-important "beep" of the radio signal that denotes the correct time to the second. In addition; avid listeners of the NIST clock are also treated to the following (from the NIST web site).

The OMEGA Navigation System status reports are voice announcements broadcast on WWV at 16 minutes after the hour. The OMEGA Navigation System consists of eight radio stations transmitting in the 10- to 14-kHz frequency band. These stations serve as international aids to navigation. The status reports are updated as necessary by the U.S. Coast Guard. Current geophysical alerts (Geoalerts) are broadcast in voice from WWV at 18 minutes after the hour. The messages are less than 45 s in length and are updated every 3 hours (typically at 0000, 0300, 0600, 0900, 1200, 1500, 1800, and 2100 UTC). Hourly updates are made when necessary.

Marine storm warnings are broadcast for the marine areas that the United States has warning responsibility for under international agreement. The storm warning information is provided by the National Weather Service. Storm warnings for the Atlantic and eastern North Pacific are broadcast by voice on WWV at 8, 9, and 10 minutes after the hour. An additional segment (at 11 minutes after the hour on WWV) is used occasionally if there are unusually widespread storm conditions. The brief voice messages warn mariners of storm threats present in their areas. The storm warnings are based on the most recent forecasts. Updated forecasts are issued by the National Weather Service at 0500, 1100, 1700, and 2300 UTC for WWV. Since March 1990 the U.S. Coast Guard has sponsored two voice announcements per hour on WWV giving current status information about the GPS satellites and related operations. The 45-s announcements begin at 14 and 15 minutes after each hour.

WWV radiates 10,000 watts on 5, 10, and 15 MHz. The WWV antennas are half-wave dipoles that radiate omnidirectional patterns. The station uses double sideband amplitude modulation. The modulation level is 50 percent for the steady tones, 25 percent for the BCD time code, 100 percent for the seconds pulses and the minute and hour markers, and 75 percent for the voice announcements. That's a lot of information being broadcast, and you can easily pickup these signals with the high frequency 10 MHz Time Receiver shown in this project. The WWV Time receiver has excellent sensitivity, selectivity, and dynamic range. (from the NIST web site http://www.nist.gov/)

Circuit description

The 10 MHz WWV Receiver is shown in the block diagram of Figure 10-3 and in the main schematic diagram in Figure 10-4. The WWV Time Code receiver is an AM TRF or Tuned Radio Frequency or TRF type receiver. This receiver project is designed specifically for 10 MHz time signal operation. The block diagram of the WWV receiver illustrates the four major sections of the receiver. The receiver's front-end, as shown in the schematic diagram, features two sensitive dual-gate MOSFETs in the front-end circuit with a single-pole filter. An RF gain control is shown at VR1 which adjusts the input sensitivity, via a 10k ohm potentiometer. Note inductor L1 is 4.1 µH coil, which consists of 27 turns of 22 ga. AWG wire wound on a

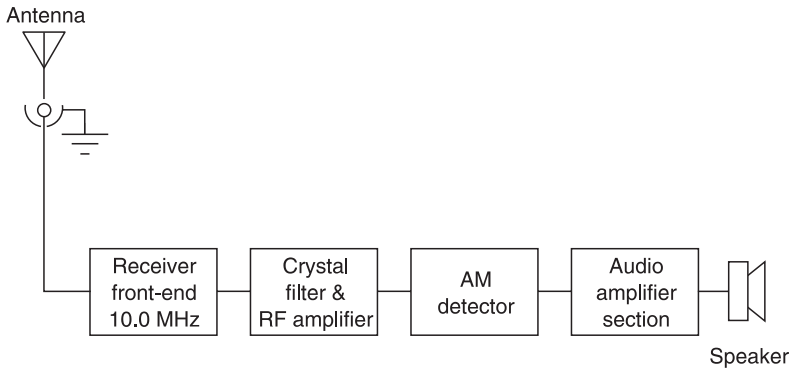

Figure 10-3 *10 MHz WWV receiver block diagram*

T-68 ferrite core. Inductors L2 and L4 consist of 12 turns of 22 ga. AWG wire on an FT37-43 ferrite core, and finally L3 consists of 25 turns of #26 ga. AWG wire on a T50-2 ferrite core. For even greater selectivity (but greater insertion loss), you can consider moving the L1 tap to 1 turn from ground. Fine tuning the WWV receiver is accomplished by adjusting CV1 and CV2 trimmer capacitors. The front-end MOSFETs are extremely sensitive to static electricity, so be very careful in handling them. Note the two ferrite beads, one is placed in series with the Drain lead of Q1, while the second ferrite bead is in series with the Drain of Q2. These ferrite beads are important, so be sure to use them. The receiver front-end, at J1, should be connected to a dipole antenna "cut" for 10 MHz. TRF receivers are especially sensitive and are subject to overloading a BCB or Broadcast Band Interference, so internal lead lengths should be kept short between components and the front-end should be shielded and the receiver placed in a metal enclosure for best results.

The output impedance of Q2 is 2000 ohms, which nicely matches the input impedance of the Cohn crystal filter, in the crystal filter section of the receiver. This filter utilizes three 10 MHz crystals. Choose 10 MHz crystals that are marked for a 20 pF or 32 pF load capacitance if possible. Using a 10 MHz crystal oscillator, find three that are closest to one another in frequency. You may substitute 2.2k ohm resistors instead of the specified 2k with a slight penalty in pass band shape. The crystal filter section utilizes a single dual-gate MOSFET transistor at Q3. Coil L5 is 12 turns on an FT37-43 ferrite core. The output of the Cohn crystal filter is next fed to the input of the AM detector stage.

The AM detector has three distinct advantages; it has high bandwidth, low distortion and incredible (and variable) sensitivity. The variable bias control allows the listener to adjust the bias to maintain detected audio fidelity even when the RF signal is weak. The detector uses a Schottky UHF mixer diode at D1. Increasing the diode bias from zero volts to maximum causes three things to happen: increased sensitivity, increased audio high frequency response, and a slight increase in receiver noise.

The AM detector section matches the 2000 ohm impedance of the crystal filter stage quite nicely. A sensitivity control at VR2 is a 1 megohm potentiometer, which feeds directly to L6, a 1000 µH coil. Coil L6 is connected directly to a Schottky diode at D1. The resultant signal is next sent through a 5.6k ohm resistor and on to a 1 µF capacitor which feeds the nJFET at Q4. The Source lead of Q1 is connected to the Drain lead of Q5, and the Source lead of Q5 is connected to ground via a 5.6k ohm resistor. Note the two 22 µF electrolytic capacitors on each of the Drain leads of the nJFETs.

When the WWV RF signal is weak, turning the bias off may result in the detected WWV signal disappearing. Increasing the bias will bring the WWV signal back in. You run the bias control pot about half way and, of course, higher as WWV fades out. The fidelity that the bias adds even when the WWV signal is strong is quite pleasing to the ear. For the 1 µF and 2.2 µF capacitors, I used polyester film types which sounded better than electrolytic capacitors.

The audio amplifier section features low noise audio amplifier. Distortion is very low as long as the input is

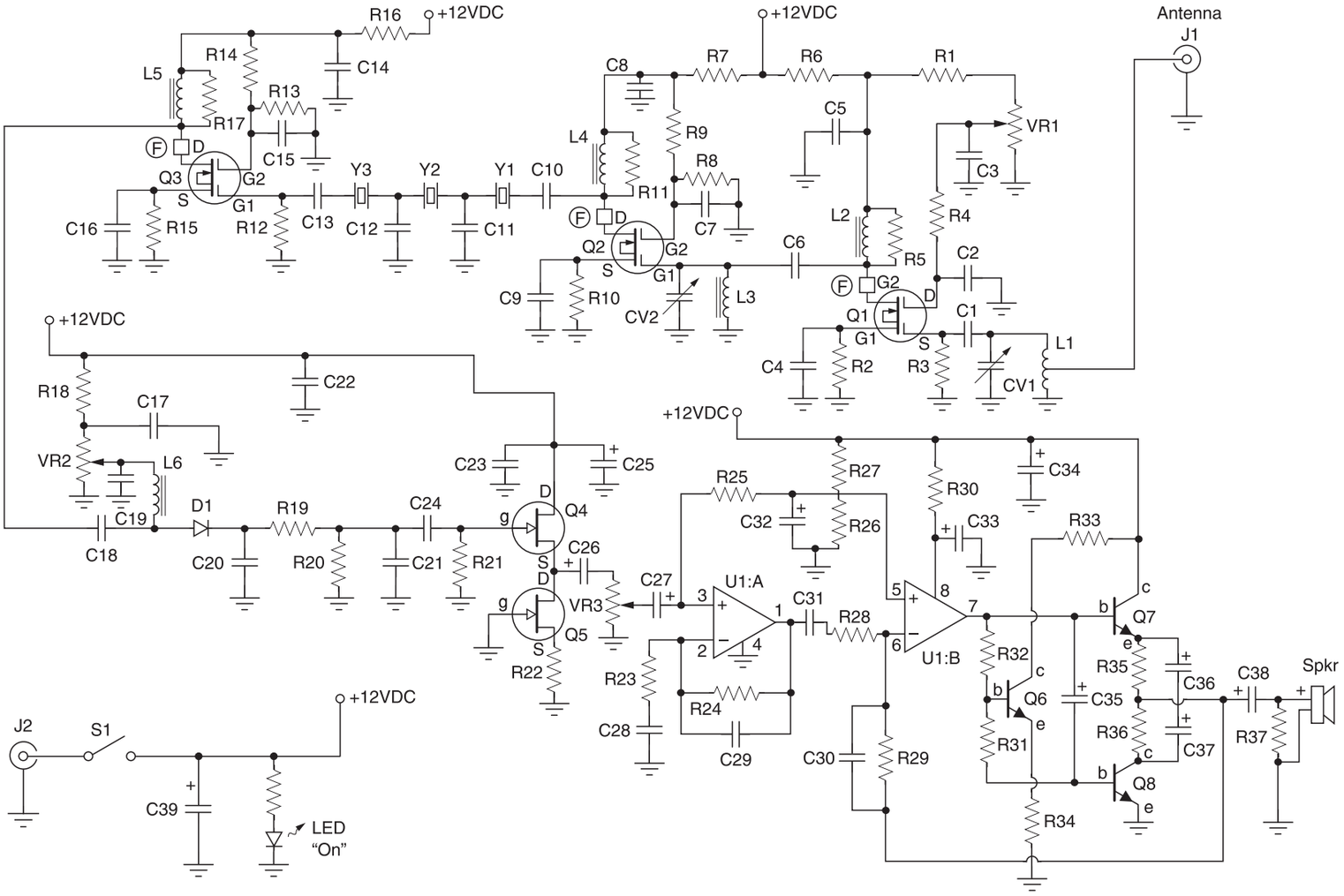

Figure 10-4 *WWV time code receiver schematic. Courtesy of VC7BFO – Todd Gale*

not over driven. The audio amplifier section consists of a dual NE5532 op-amp and three transistors. Transistors Q6 and Q7 are NPN types, while transistor Q7 is a PNP type. The input signal from the detector is fed directly to the volume control at VR3, a 10k ohm potentiometer. The input signal is first sent to the non-inverting stage of the first op-amp at pin 3. The output of the first op-amp section at pin 1 is next sent to the second stage of the op-amp through a .1 µF capacitor in series with a 4.7k ohm resistor to pin of U1:b. The output of U1, at pin 7 is then fed to the output transistor stage. The output of the transistor pair is two 1000 µF capacitors which coupled to a 330 µF capacitor which feeds the 8 ohm speaker.

The entire WWV receiver is powered from a 12 volt "wall-wart" power or can be powered from a 12 volt battery for portable operation.

Receiver assembly

You are probably quite anxious to begin the assembly of the receiver project; it is best to follow the assembly steps in order. Try to avoid the urge to "jump ahead" installing components. Locate your layout and schematic diagram. Place all the components in front of you and locate a 27-30 watt pencil tip soldering iron. Make sure you have a large work table in order to spread out all the parts and diagrams. A printed circuit board is highly recommended for this project, so you should have your circuit board in front of you oriented correctly, in order to begin populating the PC board. Remember that the components will be mounted on the "component" side of the circuit board and soldered on the "solder" side of the circuit board, the side with the printed circuit traces. Locate a spool of 60/40 tin/lead rosin core solder for this project.

First we will begin by locating all of the resistors for the project. Most all of the resistors are ¼ watt carbon composition type resistors except for the potentiometer. Before we begin building the Time receiver, take a moment to refer to the resistor color chart shown in Table 10-1. Note that each resistor will have three or four color bands beginning at one end of the resistor body. The first color code represents the resistor's first digit value, while the second color band denotes the resistor's second digit value. The third color band represents the multiplier value of the resistor and the fourth band denotes the tolerance value of the resistor. If the fourth color band is silver then the resistor has a tolerance of 10%, while a gold band denotes a 5% tolerance. If there is no fourth color band then the resistor has a tolerance of 20%. The first color band of a 10,000 ohm resistor, for example,

Table 10-1
Resistor color code chart

Color Band	*1st Digit*	*2nd Digit*	*Multiplier*	*Tolerance*
Black	0	0	1	
Brown	1	1	10	1%
Red	2	2	100	2%
Orange	3	3	1,000 (K)	3%
Yellow	4	4	10,000	4%
Green	5	5	100,000	
Blue	6	6	1,000,000 (M)	
Violet	7	7	10,000,000	
Gray	8	8	100,000,000	
White	9	9	1,000,000,000	
Gold			0.1	5%
Silver			0.01	10%
No color				20%

would be brown with a value of (1). The second color band would be black with a value of (0). The third color band would be orange with a value of (000). Read the color codes on the resistors and compare them to the parts list and layout diagram so that you place the correct resistor in the correct hole on the printed circuit board. You can install the resistors in groups of four or five. Solder the first group of resistors onto the circuit board, then cut the excess component leads flush to the edge of the PC board using a pair of small end-cutters. Then move on to the next group of resistors until all of the resistors have been installed.

Next we will move on to installing the capacitors. Most all of the capacitors will have some sort of marking on them, so compare the value or marking on the component with the parts list before installing the components on the PC board. Note that capacitors C24, C25, C26, C27 are all electrolytic capacitors; these capacitors will have additional polarity markings on them and they must be installed with respect to these polarity markings in order for the circuit to work properly. Each of these capacitors will have a white or black band with either a plus or minus marking on one side or edge of the component. You must orient the capacitor correctly, so you should refer to the layout diagram and schematic diagram when installing these parts. Also note that capacitors C32 through C38 are also all electrolytic types. All the other capacitors have no polarity marking so they can be installed in either direction. Now, you will want to refer to the capacitor code chart shown in Table 10-2, which illustrates the codes used for small size capacitors. Often very small capacitors will not have their actual value printed on them, because there may not be enough room, so a three-digit code was developed. Look at the chart and compare the numbers on the chart with the actual capacitors to help identify them. You can go ahead and install all of the capacitors at this time. It is best to install the capacitors in groups of four or five at a time, then solder them on to the circuit board before moving on to the next group of capacitors; this helps keep some order to the building process. It is also advisable to check off each of the components against the parts list, so you can keep tabs on your progress and make sure that all of the parts are accounted for. Solder a group of four or five components, cut the excess leads and then move on to the next group of components. This will keep things in an orderly fashion.

Next, go ahead and locate and install the Schottky diode at D1. Note that the diode has a polarity marking on the glass enclosure. At one end of the diode body you should see a black or white band; this denotes the cathode side of the diode. Look at your schematic diagram to observe the direction of the cathode band in the circuit before you install the diodes.

The WWV receiver incorporates six inductors; five of the inductors are wound on ferrite cores, while L6 is a ready-made 1000 µH choke coil. Refer to the chart in Table 10-3 for details on winding each of the coils. When winding the coil you will have to scrape the insulation off each of the wire ends in order to solder the coil to the circuit board. You will need to secure the coil to the circuit board using a couple of "dabs" of rubber cement. Once the coils have been secured to the PC board, you can solder the coil leads to the circuit board, and then remove the excess lead lengths.

Locate the three crystals, Y1, Y2 and Y3 and place them on the PC board. Now solder the crystals to the PC board and then trim the excess leads flush to the edge of the circuit board.

Before we attempt to install the semiconductors, take a quick look at the semiconductor pin-out diagram shown in Figure 10-5. Now locate the MOSFETs Q1, Q2 and Q3. These devices are very static sensitive and must be handled very carefully using an anti-static wrist-band to avoid damage before they are soldered into the circuit. Transistor sockets are highly recommended for all of the transistors, see the pin-out diagram for the MOSFETs and make sure you can identify each of the leads before placing the MOSFETs on to the circuit board. The MOSFETs have two Gate leads, G1 and G2, as well as a Source lead (S) and a Drain lead (D). Once you are sure of each of the leads, you can go ahead and install the MOSFETS onto the circuit board. The AM detector portion of the receiver utilizes two nJFETS at Q4 and Q5, these semiconductors are also static sensitive and must be handled with extreme care to avoid damage. The nJFETS have three leads, like most conventional transistors, but they have a Gate, Source and Drain lead,

Table 10-2

Capacitance code information

This table provides the value of alphanumeric coded ceramic, mylar and mica capacitors in general. They come in many sizes, shapes, values and ratings; many different manufacturers worldwide produce them and not all play by the same rules. Some capacitors actually have the numeric values stamped on them; however, many are color coded and some have alphanumeric codes. The capacitor's first and second significant number IDs are the first and second values, followed by the multiplier number code, followed by the percentage tolerance letter code. Usually the first two digits of the code represent the significant part of the value, while the third digit, called the multiplier, corresponds to the number of zeros to be added to the first two digits.

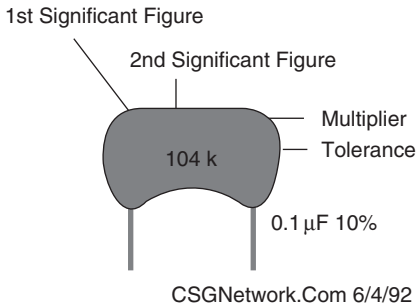

Value	*Type*	*Code*	*Value*	*Type*	*Code*
1.5 pF	Ceramic		1,000 pF /.001 µF	Ceramic / Mylar	102
3.3 pF	Ceramic		1,500 pF /.0015 µF	Ceramic / Mylar	152
10 pF	Ceramic		2,000 pF /.002 µF	Ceramic / Mylar	202
15 pF	Ceramic		2,200 pF /.0022 µF	Ceramic / Mylar	222
20 pF	Ceramic		4,700 pF /.0047 µF	Ceramic / Mylar	472
30 pF	Ceramic		5,000 pF /.005 µF	Ceramic / Mylar	502
33 pF	Ceramic		5,600 pF /.0056 µF	Ceramic / Mylar	562
47 pF	Ceramic		6,800 pF /.0068 µF	Ceramic / Mylar	682
56 pF	Ceramic		.01	Ceramic / Mylar	103
68 pF	Ceramic		.015	Mylar	
75 pF	Ceramic		.02	Mylar	203
82 pF	Ceramic		.022	Mylar	223
91 pF	Ceramic		.033	Mylar	333
100 pF	Ceramic	101	.047	Mylar	473
120 pF	Ceramic	121	.05	Mylar	503
130 pF	Ceramic	131	.056	Mylar	563
150 pF	Ceramic	151	.068	Mylar	683
180 pF	Ceramic	181	.1	Mylar	104
220 pF	Ceramic	221	.2	Mylar	204
330 pF	Ceramic	331	.22	Mylar	224
470 pF	Ceramic	471	.33	Mylar	334
560 pF	Ceramic	561	.47	Mylar	474
680 pF	Ceramic	681	.56	Mylar	564
750 pF	Ceramic	751	1	Mylar	105
820 pF	Ceramic	821	2	Mylar	205

Table 10-3
Inductor coil winding information

Coil	*Value*	*Ferrite Core*	*Description*
L1	4.1 µH	T-28 toroid (*)	27 turns #22 AWG wire on ferrite core
L2		FT-37-43 (**)	12 turns #22 AWG wire on ferrite core
L3	3.0 µH	T50-2 toroid *	25 turns #26 AWG wire on ferrite core
L4		FT37-43 (**)	12 turns #22 AWG wire on ferrite core
L5		FT37-43 (**)	12 turns #22 AWG wire on ferrite core
L6	1000 µH		pre-wound choke coil; Digi-Key

* Toroids can be obtained from Circuit Specialists; see Appendix.

** FT-37-43 toroid available from RP electronics; see Appendix.

unlike conventional transistors, with a Base, Emitter and Collector. Once the nJFETS have been identified, they can be installed on the circuit board. Finally, the audio amplifier section utilizes three conventional transistors. Transistors Q6 and Q7 are NPN types, while Q8 is a PNP transistor. Transistors have three "legs" and must be oriented correctly. Notice that the part contains a "flat" side with the writing imprinted on it. Be sure to follow the parts diagram for correct placement. To install, slide the center legs through the circuit board and push the component as close to the board as possible without "straining" the leads. Identify the transistor pin-outs and then go ahead and install the transistors onto the circuit board. Remember to trim the

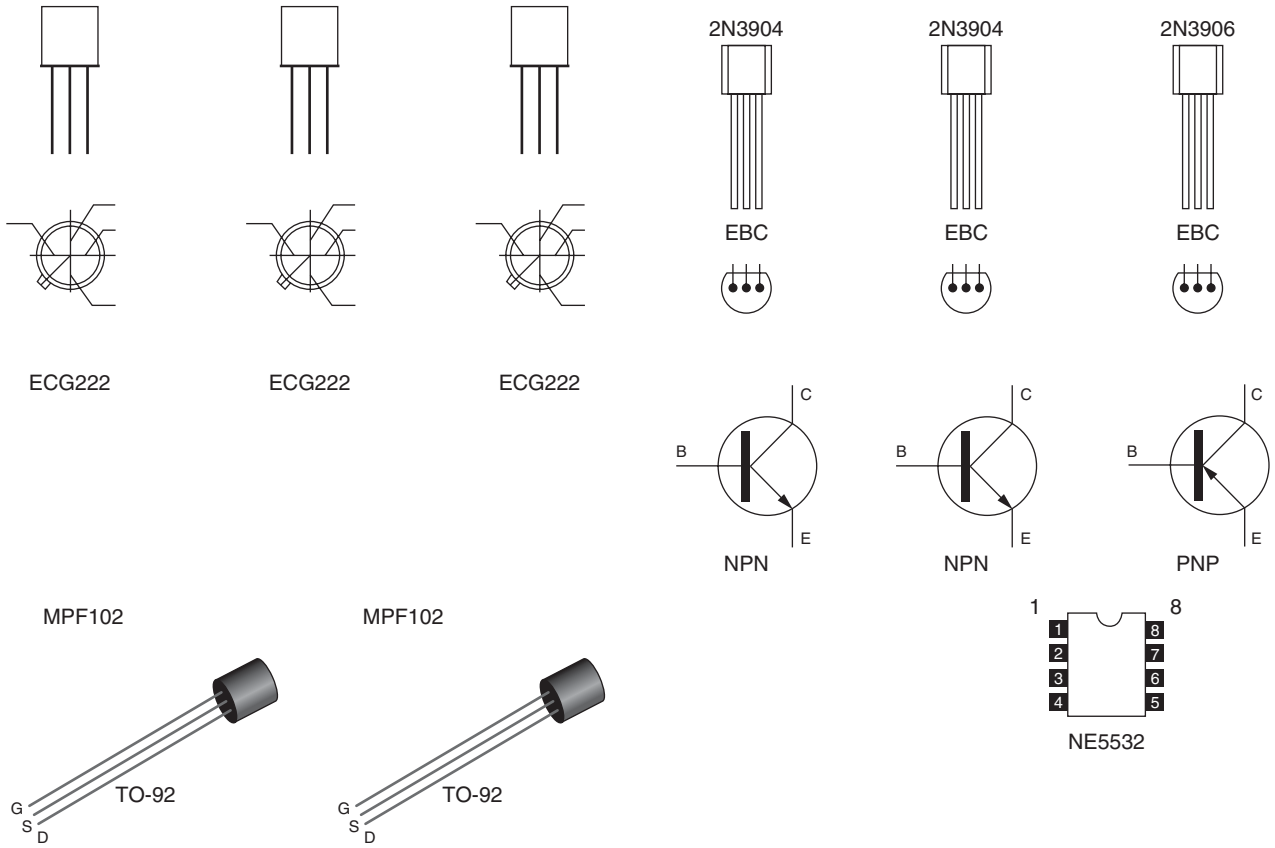

Figure 10-5 *Semiconductor pin-outs*

excess transistor leads after all of the transistors have been installed on the PC board.

It is a good idea to use an IC socket for each of the integrated circuits in the event of a component failure at a possible later date.

Leads length from the board

Now that your soldering skills are at their peak, we'll install the integrated circuit. An integrated circuit socket is highly recommended in the event of a possible circuit failure. It is much easier to simply unplug a "burnt" IC, rather than trying to un-solder a defective IC from the circuit board. Most hobbyists have considerable trouble trying to un-solder multi-pin integrated circuits from a PC board successfully, so it is easier to install a socket from the beginning. Most IC sockets will have a notch or cut-out and one end of the plastic package. Pin 1 will be just to the left of the notch or cut-out. Make sure you orient the socket, so that pin 1 will be close to C29, C31 and R22. When installing the IC into the socket make sure you align pin of the IC with pin 1 of the IC socket.

That's a lot of parts! Take a short break and rest your weary eyes. Before we start up again, we will check your solder joints for "short" circuits and "cold" solder joints. First, pick up the circuit board with the foil side of the board facing upwards toward you. Take a close look at the solder joints in front of you. The solder joints should all look clean, bright and shiny. If any of the solder joints look dark, dull or "blobby," then you need to remove the solder from that particular joint, re-apply solder and re-solder the joint all over again. Next, we will inspect the circuit board for possible "short" circuits. Look closely for small solder "blobs" that often bridge circuit traces. Also look carefully for any "stray" components leads which may have stuck to the foil side of the PC board. Sometimes sticky rosin from solder can leave a residue that will "hold" pieces of wire on the board, often causing "short" circuits between circuit traces.

Identify and install the three potentiometer; they can now be mounted on the metal enclosure that you chose to use for the receiver. Make up three or four inches leads for each of the potentiometer leads, so you can connect the potentiometer to the circuit board. All three potentiometers can be mounted on the front panel of the receiver enclosure. Using a length of speaker wire, connect the speaker to the circuit board. The speaker can be mounted on the top or front of the enclosure.

If you desire you can customize your new receiver with an LED power indicator. Install a red LED on the front panel. Being a diode, this component is polarized and must be oriented correctly. Examine the LED and notice how one lead is longer than the other. The longer of the two leads is the anode, or (+) connection. Most diodes also have a flat side molded in the component body. This corresponds to the cathode or (–) side of the part. This flat should face in the direction of the band marking of the diode. Leave the diode's leads as long as possible as this component will also mount to the front panel as a power indicator. You can connect up the LED across the power input of the circuit's +12 volt lead and ground.

You can also customize the receiver by installing a closed circuit earphone jack if desired, so that the jack will bypass the speaker when the headphones are plugged into the jack.

Moving to the rear of the enclosure, install antenna connector J1, you can use an RCA jack or a BNC connector as desired. Next, go ahead and mount a coaxial power plug on the rear panel of the chassis and then solder the connectors to the circuit board using a length of insulated wire. Now you will need to decide how you will power your new WWV receiver. You elect to power the receiver from a 12 volt battery or re-chargeable power pack or from a 12 volt DC "wall-wart" power supply.

Congratulations, you have successfully completed your WWV receiver; now let's move on to final testing of the receiver!

Initial receiver testing

This project was designed to be pretty much "plug and play," with minimal testing upon completion. Turn all three potentiometers to their mid-point position. Connect up you power supply or battery and depress the power switch. The power on LED should illuminate. Connect up your outdoor antenna via connector J1.

Now increase the RF gain control, more clockwise. You can also adjust the volume control for more gain as well. You should begin to hear the "beep" signal from the WWV Colorado transmitting station. You may have to adjust VR2 until the signal is sound best in the speaker. If the signal is too strong, you may have to adjust the RF gain and volume control as needed.

In the event that you do not hear any sounds from your new receiver, you will have to turn off the receiver and remove the battery and do a close inspection of the circuit. The most common reasons for circuit problems is due to placing the wrong component in a particular circuit board location or possible reverse placement of a component. Take a look at the Time-Code Receiver circuit board very carefully. Sometimes it is better to get a pair of "fresh eyes" or have a friend take a look at your circuit to find a possible error. Look at each of the resistors and make sure you have placed the correct resistor in each resistor location; read the color code carefully. Check the placement of the diodes and electrolytic capacitors to make sure you have installed them with respect to their polarity marking. Next, take a close look to make sure that you have installed the transistors correctly, looking closely at the pin-outs with respect to the manufacturer's pin-out diagram. Finally, examine the circuit to make sure that the integrated circuit has been oriented properly in its IC socket, since this is a common cause for error. Once you have fully inspected the circuit board and located your error, you can re-connect the battery and switch on the receiver to test it once again.

Antenna considerations

In order to obtain the best reception on your new WWV Time-Code receiver you will want to construct an optimum antenna. Using a random length of wire will give poor results. A very efficient method to use with the WWV Time-Code receiver is a dipole antenna "cut" for the proper frequency of 10 MHz. Half-wave dipoles are very effective antennas and are simple to construct. For low-power work or receiver use, you can use low-cost RG-58 52 ohm coax from the dipole antenna to your new receiver. The formula for dipole antennas: 234/(frequency in MHz) = ¼-wavelength in feet will give the length of wire needed for each leg of the dipole. For example, if you wanted to build a 10 MHz dipole for your Time-Code receiver, you would divide 234 by 10 MHz and the result would be 23.4 feet per leg on either side of the center insulator. The diagram in Figure 10-6 illustrates a dipole antenna which can be used with the Time-Code receiver. Depending upon your location, you will want to orient the antenna for best reception. The antenna should be placed broad-side or parallel towards Colorado for best reception.

Using your new WWV receiver

You will have fun learning about other interesting things on WWV besides the time function feature, such as accurate tone frequencies, geophysical alerts (solar activity reports), marine storm warnings, the global positioning system (GPS) and Omega navigation system status reports.

Table 10-4 shows the broadcast schedule for WWV in Fort Collins, CO. A similar schedule is available for WWVH in Hawaii. This diagram is extracted from a National Institute of Standards and Technology (NIST) publication. If you want to order a copy, it is available for a modest charge from the Government Printing Office, Washington DC 20402. Write and ask for a current list of available publications. The two features of most interest are precise frequency of the carrier signal, to calibrate radio and test equipment, and precise time information given each minute as a voice transmission. But there are many other interesting parts of their transmissions.

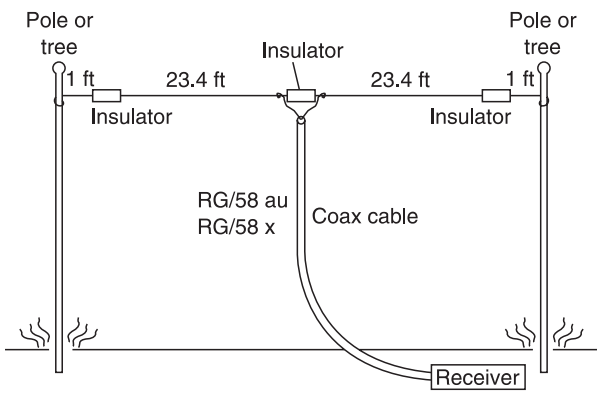

Figure 10-6 *MHz dipole antenna*

Table 10-4

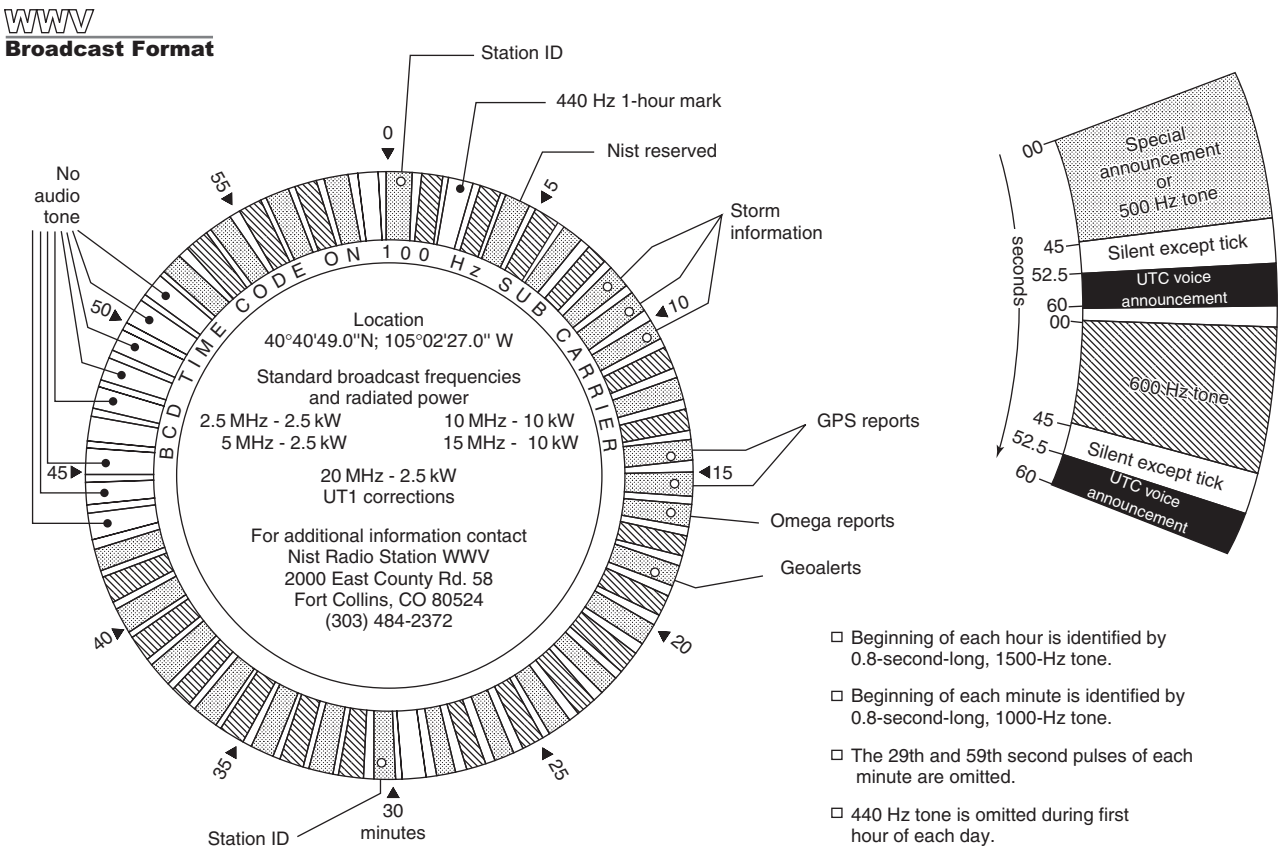

There are various tones which can be used to check audio equipment or musical instruments and they can be captured to detect the start of each hour or each minute. At certain intervals, voice announcements are made for the benefit of other government agencies.
The predominant ones are as follows:

Marine storm warnings are prepared by the National Weather Service and broadcast for areas of the Atlantic and Pacific Oceans which are of interest to the US Government.

Global Positioning System status announcements are prepared by the Coast Guard to give current status information about the GPS satellites.

Omega Navigation System reports are prepared by the Coast Guard to give the status of the 8 Omega transmitting stations in the 10–l4 kHz frequency range. These serve as navigation aids.

Geophysical alerts are prepared by the Space Environment Service Center of NOAA. They are broadcast on the 18th minute of the hour and give information of interest to amateur radio operators, as well to as various scientific organizations regarding solar activity, geomagnetic fields, solar flares, and other geophysical statistics. This propagation information can help you decide when the DX will be good.

- Beginning of each hour is identified by 0.8 second-long, 1500 Hz tone.
- Beginning of each minute is identified by 0.8 second-long, 1000 Hz tone.
- The 29th and 59th second pulses of each minute are omitted.
- 440 Hz tone is omitted during the first hour of each day.

You will have fun learning about other interesting things on WWV at certain times besides just the time function feature. Features such as accurate tone frequencies, geophysical alerts (solar activity reports), marine storm warnings, and global positioning system (GPS) and Omega navigation system status reports.

Chapter 11

VHF Public Service Monitor (Action-Band) Receiver

Parts list

VHF Public Service Monitor Receiver:

R1,R2,R3 10k ohm potentiometer

R4,R8,R13,R21 47k ohm, ¼w, 5% resistor [yellow-violet-orange]

R5 470 ohm, ¼w, 5% resistor [yellow-violet-brown]

R6,R9,R20 270 ohm, ¼w, 5% resistor [red-violet-brown]

R7,R17,R19 10k ohm, ¼w, 5% resistor [brown-black-orange]

R10 1 megohm, ¼w, 5% resistor [brown-black-green]

R11,R12 1k ohm, ¼w, 5% resistor [brown-black-red]

R14 33k ohm, ¼w, 5% resistor [orange-orange-orange]

R15 470k ohm, ¼w, 5% resistor [yellow-violet-yellow]

R16 100k ohm, ¼w, 5% resistor [brown-black-yellow]

R18 18k ohm, ¼w, 5% resistor [brown-gray-orange]

R22 2 ohm, ¼w, 5% resistor [red-black-gold]

C1,C6,C22 100 pF, 35 vdc disk capacitor [marked 100, 101, or 101K]

C2,C5 10 pF, 35 vdc disk capacitor

C3,C4 56 pF, 35 vdc disk capacitor

C7,C8,C11,C20 .001 µF, 35 vdc disk capacitor [.001 or 102 or 1 nF]

C9,C10 15 pF, 35 vdc disk capacitor

C13,C16,C17,C21 .01 µF, 35 vdc disk capacitor [marked .01 or 103 or 10 nF]

C12 8.2 pF, 35 vdc disk capacitor

C14,C32,C33,C35 100 to 220 µF, 35 vdc electrolytic capacitor

C15,C30,C36 4.7 µF, 35 vdc electrolytic capacitor

C18 220 pF, 35 vdc disk capacitor [marked 220 or 221]

C19 22 pF, 35 vdc disk capacitor

Copyright © 2008 by The McGraw-Hill Companies, Inc. Click here for terms of use.

C23,C24,C25 .001 µF, 35 vdc disk capacitor [.001 or 102 or 1 nF]

C26,C28,C29,C31 .01 µF, 35 vdc disk capacitor [marked .01 or 103 or 10 nF]

C34 .1 µF, 35 vdc disk capacitor [marked .1 or 104]

C27 1.0 µF, 35 vdc electrolytic capacitor

L1,L2 2-turn coil 5/32" OD dia - #24 ga. Insulated magnet wire

L3 slug-tuned 3 ½ turn coil, see Table 11-3

L4 450 kHz shielded quadrature coil, see Table 11-3

D1 Varactor diode, BB505 [orange body marked BB505]

D2 1N4148 signal diode

Q1 2SC2498 or 2SC2570A transistor

Q2,Q3,Q4 2N3904 transistor

U1 SA602 8-pin IC

U2 MC3359 18-pin FM receiver IC

U3 LM386 8-pin audio amplifier IC

Y1 10.24 MHz Crystal

FL1 10.7 MHz ceramic filter [brown, molded, 3 leads]

FL2 450 kHz ceramic filter [black, square]

S1 DPDT push switch

J1 PC mount RCA jack

J2 PC mount subminiature speaker jack

B1 9 volt transistor radio battery

ANT telescoping antenna

Misc PC board, battery holder, battery clip, speaker, etc.

Keep an ear on the local action from your easy chair with the VHF Public Service Receiver project, shown in Figure 11-1. The VHF Public Service Radio will allow you to tune the VHF high-band Police and Fire band, marine band, weather band, as well as railroad frequencies. The receiver tunes any 5 MHz portion of the 136 to 175 MHz band. Excellent performance, less than 1 uV sensitivity. The receiver features: tuned input, low noise pre-amp stage with true dual-conversion superhet design with 2 pole Ceramic High Intermediate Filter or I-F and 6 pole ceramic low I-F filters! The receiver also features front panel volume, squelch, and tuning controls. This is a great inexpensive receiver to put on your desk at home or to "watch" local radio activity while you are away from home on vacation or business trip.

Circuit description

The heart of the VHF Public Service Receiver shown in the block diagram of Figure 11-2 is the MC3359

Figure 11-1 *VHF public service receiver*

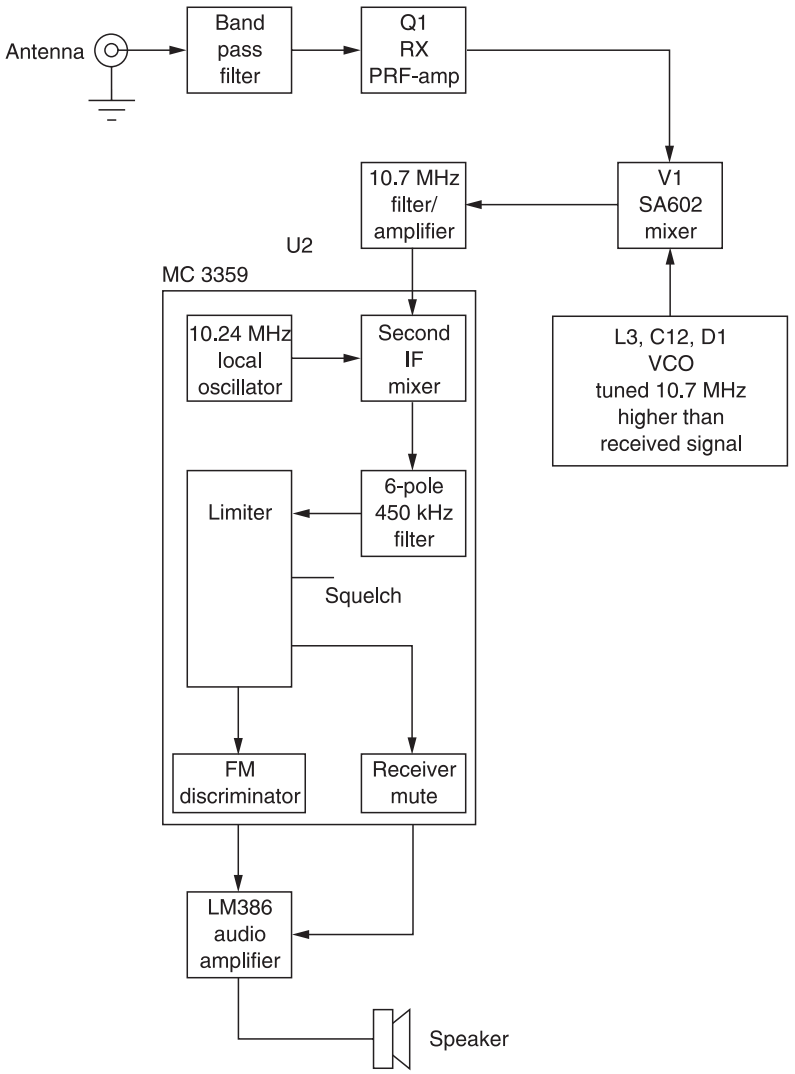

Figure 11-2 *VHF monitor receiver block diagram*

integrated circuit. The integrated circuit is a complete high gain low power FM IF sub-system which includes an oscillator, a mixer, a limiting amplifier, AFC, quadrature discriminator, op-amp, squelch, scan control and mute switch all combined in a single IC. The MC3359 was designed to detect narrow-band FM signals using a 455 KHz ceramic filter.

Let's get into more details of the VHF Public Service Receiver by examining the schematic diagram shown in Figure 11-3. VHF signals from the antenna are amplified through the tuned input circuit (L1, C3 and L2, C4) by Q1, a microwave bipolar transistor. Q1's output is fed to the input of the SA602 IC, an efficient single-package (8-pin DIP) mixer-product detector-oscillator. The tuneable oscillator section of the SA602 is aligned to operate at 10.7 MHz higher than the signal fed and amplified by Q1. For example, to receive 144-148 MHz signals, the oscillator must tune 154.7 to 158.7 MHz in order for the SA602's mixing capability to produce a steady 10.7 MHz output signal to the rest of the circuit. The oscillator frequency is determined by L3 and its associated capacitors, and varied by the varactor tuning network using D1 and varied by R1.

The output from pin 4 of the SA602 passes through a ceramic 10.7 MHz filter, amplified by transistor Q2 and applied to input pin 18 of U2. Q3 provides AFC (Automatic Frequency Control) by keeping the local oscillator of U1 from drifting away from an incoming signal. This is accomplished by tuning the varactor circuit in the direction opposite the drift.

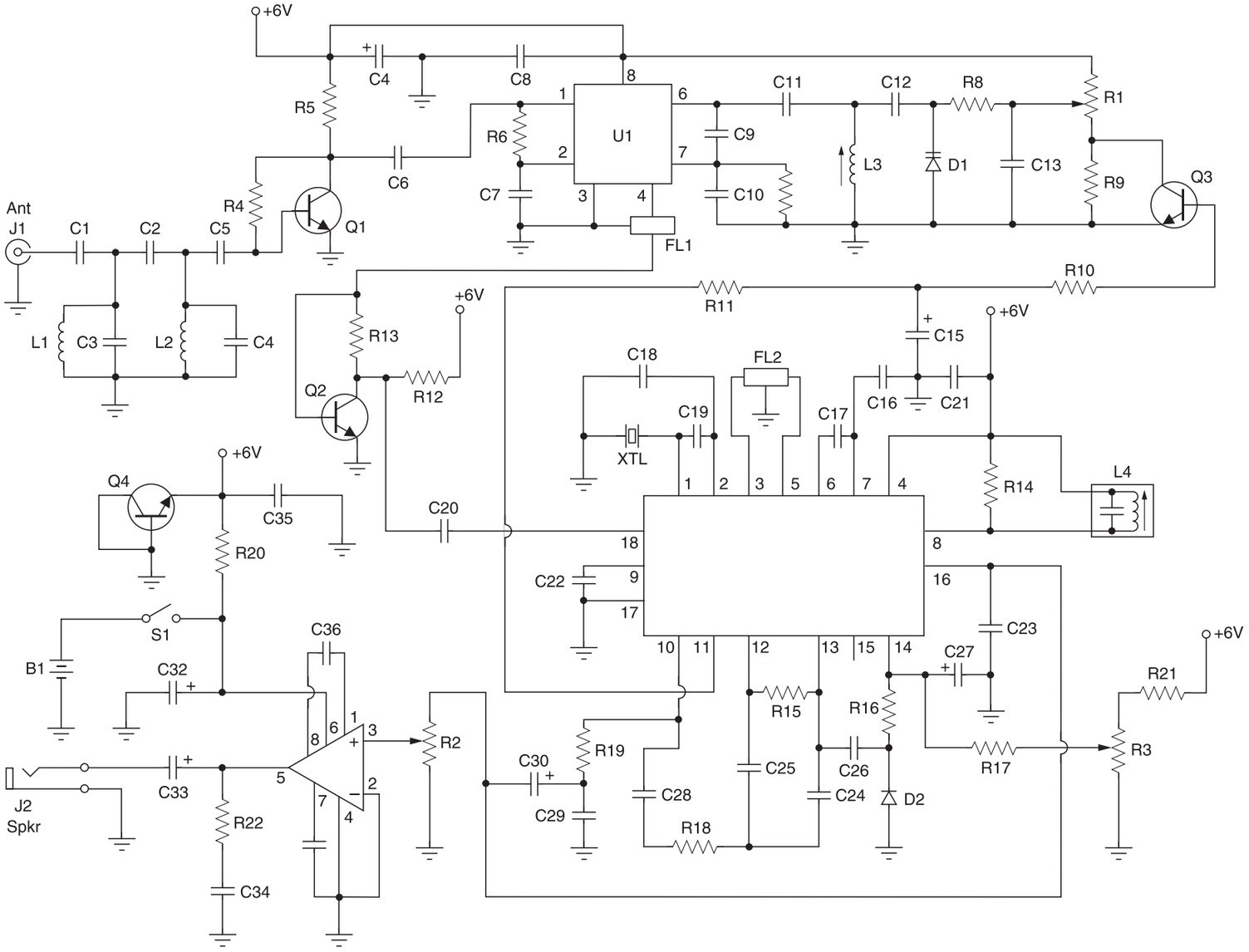

Figure 11-3 *VHF public service block diagram*

The MC3359 IC has an internal oscillator controlled by the 10.24 MHz crystal. The 10.24 MHz signal is mixed with the 10.7 MHz input from U1 to convert down to the low IF of 450 kHz. The 450 kHz IF is filtered by FL2 and then amplified by a limiting amplifier in U2. Audio demodulation takes place in the quadrature detector, with L4 adjusting the detector. The audio modulation is detected in U2, and the background noise is used to control the squelch. U3 amplifies the audio output from pin 10 of U2 to a practical level for speaker or headphone operation. Pin 16 of U2 will ground the input of U3 when the squelch is closed. L4, a 450 kHz IF coil, permits adjustment of the 90° voltage-current phasing ("quadrature") of FL2's output to the FM detector demodulator (pin 8 of the MC3359).

Circuit assembly

Look for a clean well lit area in which to assembly your shortwave receiver. You will need a 27 to 30 watt pencil tip soldering iron, some 60/40 tin/lead rosin core solder, a few hand tools, including a pair of end-cutters, a needle nose pliers, a few screwdrivers and a pair of tweezers to pick up small parts. Locate your schematic and layout diagrams and we will begin to construct your new shortwave receiver. Let your soldering iron tip heat both the component lead wire and PC board trace enough so that the wire itself AND the foil trace BOTH become hot enough TOGETHER to melt a bit of solder so that it flows smoothly from the pin to the PC board trace. Locate the printed circuit board and all the components and we will start.

Locate all of the resistors for the project and place them in front of you. Each resistor has a color code which describes its value. The first color band at one edge of the resistor body represents the resistor's first digit value, while the second color band denotes the second digit of the resistor value. The third color band represents the multiplier value of the resistor. A fourth color band is the tolerance value. A silver band denotes a 10% tolerance, while a gold band denotes a 5% tolerance. The absence of a fourth color band denotes a 20% tolerance value. Check the color code against the parts list and schematic before installing them onto the circuit board. Refer to the resistor color chart in Table 11-1. Place about four or five resistors on the PC board and place these resistors in their respective locations carefully making sure each one is in the correct location. Next, solder each of the resistors onto the circuit board. Trim off the excess component leads with a small pair of end-cutters. Pick up and identify the next grouping of resistors and install them on the circuit board, follow up by soldering this next batch of resistors

Table 11-1
Resistor color code chart

Color Band	*1st Digit*	*2nd Digit*	*Multiplier*	*Tolerance*
Black	0	0	1	
Brown	1	1	10	1%
Red	2	2	100	2%
Orange	3	3	1,000 (K)	3%
Yellow	4	4	10,000	4%
Green	5	5	100,000	
Blue	6	6	1,000,000 (M)	
Violet	7	7	10,000,000	
Gray	8	8	100,000,000	
White	9	9	1,000,000,000	
Gold			0.1	5%
Silver			0.01	10%
No color				20%

to the circuit board; remember to trim the extra lead lengths form the PC board.

Once all the resistors have been installed onto the circuit board, we can move on to identifying all of the capacitors for the project. Note that there will be different looking capacitors for this project, some will be small disks, while others will be larger body devices with minus and plus marking on them. These larger capacitors with polarity marking are electrolytic capacitors and they have polarity which must be observed for the circuit to work correctly. Look through the parts pile and locate the capacitors and place them in front of you. You will notice a number of small disk capacitors, we will install these first. Look closely at each of the disk capacitors at their markings. Sometimes the capacitors are very small and they may not have their actual value printed on them but will instead have some sort of code marked on them. Refer to the parts list for these codes or the capacitor code chart in Table 11-2. Locate four or five of these small disk capacitors, identify them and install them on the circuit board, while referring to the schematic and layout diagrams. After inserting the disk capacitors onto the circuit board, you can go ahead and solder them to the circuit board. Remember to cut the excess component leads. Next, move on and install another grouping of small disk capacitors, then solder them in place on the printed circuit board. Cut the extra component leads after soldering in the capacitors. When you are finished installing the small capacitors we will move on to the larger electrolytic types.

Capacitors C14, C32, C33 and C35 are all 100 uF to 200 µF electrolytic types. These capacitors will have either a plus or minus marking and/or black band denoting polarity. You must orient these capacitors with respect to their polarity markings. Check both the layout diagram and the schematic diagram for polarity references. Note also that capacitors C15, C30 and C36 are also electrolytic capacitors with a 4.7 µF value. These too must be oriented correctly for the circuit to operate correctly when power is applied. It is possible to actually damage the circuit upon power-up if these capacitors have been installed incorrectly, so pay careful attention when mounting these capacitors. Install the electrolytic capacitors in groups of two or three. Once they have been placed on the circuit board, you can move on to soldering them in place. Remember to trim the excess component leads from the PC board after soldering.

Next we will move to installing the two diodes. Diode D1 is the varactor “tuning” diode while D2 is a 1N4148 silicon diode. When mounting the diodes be careful to observe polarity markings on the diodes. Usually each diode will have a black or white band at one end of the diode body. This color band denotes the cathode end of the diode. Refer to the schematic diagram and layout diagrams in order to see how the diodes should be mounted with respect to polarity considerations.

Before we go ahead and install the semiconductors, take a look at the semiconductor pin-out diagram in Figure 11-4 which will help you orient the components. Now locate the transistors from the components. Transistor Q1 is a 2SC2498 or 2SC2507A, while transistors Q2, Q3 and Q4 are 2N3904 NPN types. Transistors have three leads, a Base lead, a Collector lead and an Emitter lead. The symbol for the Base is a vertical line, while the Collector and Emitter are slanted lines pointing to the Base lead. The Emitter lead is shown with a small arrow pointing towards or away from the Base lead. Refer to the schematic and layout diagrams to determine the orientation of the transistors. Clearly identify Q1, the 2SC2498 or 2SC2570A transistor. Do not confuse it with the other transistors supplied. Position Q1 as shown on the PC board layout, with the flat side facing to the right, toward the middle of the board. Press the transistor snugly into the PC board so that only a minimum amount of wire lead is exposed above the board. In soldering, don’t be afraid to use enough heat to make good clean connections.

Once the transistors are in place on the PC board, you can go ahead and solder them to the foil side of the PC board. Don’t forget to trim the extra component leads.

Now we are going to install FL1, the ceramic filter. This component looks like a capacitor with three leads and may be installed either way. Next go ahead and locate FL2, the 450 kHz filter. Its three leads are delicate and fit in only one way. At this time you can locate Y1, the 10.24 MHz crystal. No special procedure is required. Simply press the crystal firmly into its holes as far as it will go. Now go ahead and solder in the crystal and ceramic filters, remove the excess leads if any.

Table 11-2

Capacitance code information

This table provides the value of alphanumeric coded ceramic, mylar and mica capacitors in general. They come in many sizes, shapes, values and ratings; many different manufacturers worldwide produce them and not all play by the same rules. Some capacitors actually have the numeric values stamped on them; however, many are color coded and some have alphanumeric codes. The capacitor's first and second significant number IDs are the first and second values, followed by the multiplier number code, followed by the percentage tolerance letter code. Usually the first two digits of the code represent the significant part of the value, while the third digit, called the multiplier, corresponds to the number of zeros to be added to the first two digits.

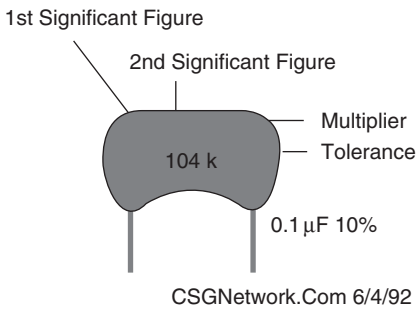

Value	*Type*	*Code*	*Value*	*Type*	*Code*
1.5 pF	Ceramic		1,000 pF /.001 µF	Ceramic / Mylar	102
3.3 pF	Ceramic		1,500 pF /.0015 µF	Ceramic / Mylar	152
10 pF	Ceramic		2,000 pF /.002 µF	Ceramic / Mylar	202
15 pF	Ceramic		2,200 pF /.0022 µF	Ceramic / Mylar	222
20 pF	Ceramic		4,700 pF /.0047 µF	Ceramic / Mylar	472
30 pF	Ceramic		5,000 pF /.005 µF	Ceramic / Mylar	502
33 pF	Ceramic		5,600 pF /.0056 µF	Ceramic / Mylar	562
47 pF	Ceramic		6,800 pF /.0068 µF	Ceramic / Mylar	682
56 pF	Ceramic		.01	Ceramic / Mylar	103
68 pF	Ceramic		.015	Mylar	
75 pF	Ceramic		.02	Mylar	203
82 pF	Ceramic		.022	Mylar	223
91 pF	Ceramic		.033	Mylar	333
100 pF	Ceramic	101	.047	Mylar	473
120 pF	Ceramic	121	.05	Mylar	503
130 pF	Ceramic	131	.056	Mylar	563
150 pF	Ceramic	151	.068	Mylar	683
180 pF	Ceramic	181	.1	Mylar	104
220 pF	Ceramic	221	.2	Mylar	204
330 pF	Ceramic	331	.22	Mylar	224
470 pF	Ceramic	471	.33	Mylar	334
560 pF	Ceramic	561	.47	Mylar	474
680 pF	Ceramic	681	.56	Mylar	564
750 pF	Ceramic	751	1	Mylar	105
820 pF	Ceramic	821	2	Mylar	205

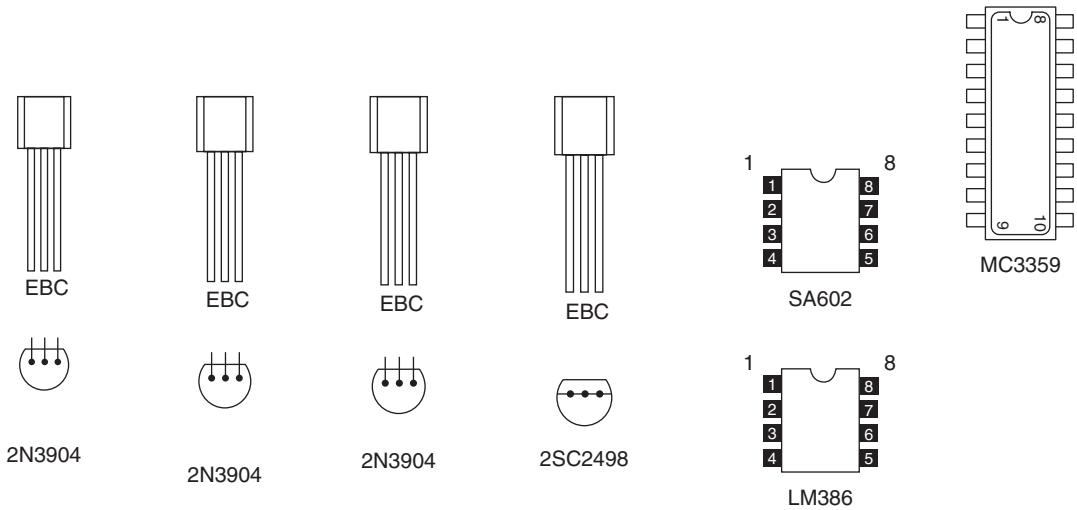

Figure 11-4 *Semiconductor pin-outs*

Look through the remaining components and locate the inductors L1 through L4. Coils L1 and L2 are small 1 and ½ turn coils. Go ahead and install coils L1 and L2, they are both the same. Now, locate and install L3, the slug tuned coil. It is important that the body of this coil be snug against the PC board for mechanical stability, which directly affects the frequency stability of the receiver. Make good, solid solder connections, when installing the above coils. Finally locate coil L4, the 455 kHz quadrature coil, soldering the two pins and the two mounting tabs. Remove any excess lead lengths if any; see Table 11-3 for coil winding information.

Let's move on to installing the SA602 IC, you may wish to use an 8-pin DIP socket rather than soldering the IC directly to the board. Reasons for doing this might include the peace of mind of beginners afraid of damaging the IC, or experienced builders testing the merits of the SA602's cousin, the SE602. However, please be aware that we have seen more service problems with improper socket insertion than from soldering heat damage to ICs. Even if this is your first IC, don't be afraid to use enough heat to make eight clean connections, but DO be sure to correctly orient the end marked by a band, dot, or notch. Before soldering, make sure that the IC or socket is perfectly flat against the top of the PC board. Install U1, the SA602, in accord with the preceding directions.

Now, install MC3359 IC, U2. As in the case of the SA602 IC, you could choose to install an 18-pin IC socket rather than soldering the IC directly. Re-read the discussion of IC sockets offered for the installation of U1. Larger ICs such as the MC3359 require considerably more care in socket insertion. Notice that the end of the IC marked by a band, dot, or notch must be oriented correctly as shown on the parts layout diagram. Solder each of the 18 connections carefully.

Table 11-3
Coil winding information

L1,L2	2-turn coil - #24 ga. Insulated magnet wire - 5/32″ OD dia. Air-core coil.
L3	3 ½ turn coil ferrite slug-tuned coil, unwind original coil from form and rewind 3½ turns of #24 ga. insulated magnet wire on form - use series 49A coil Circuit Specialists (49A127MPC).
L4	450 kHz shielded quadrature coil TOKO America Coils (7MC-81282).

Make sure you have good lighting as well as good technique to make sure that no solder "bridges" flow between the connections.

Finally locate and install U3, the LM386 IC audio amplifier integrated circuit. Once again use of an IC socket is highly recommended. Solder the IC socket to the PC board and insert the LM386 paying particular attention to the small notch or indented circle on the top of the IC body. Pin 1 is to the left of the notch, cut-out or indented circle.

Take a short well-deserved break and when we return, we will install the remaining components on the PC board and finish up building the receiver. Now locate power switch S1. Press S1 firmly into its six holes and solder all six pins. The switch fits the board only one way. Next, install J1, the RCA-style antenna jack and solder all four points. Now, install J2, the subminiature headphone jack. Solder all three points. Be gentle and patient in inserting, so as not to damage the solder tabs.

Locate all three potentiometers and we will install them now. Potentiometer controls R1, R2 and R3 are all mounted in a row next to switch S1. Insert the three PC mount potentiometers into their positions. Check that the controls are pressed in firmly and straight against the top of the board. Solder the three center pins and then the two larger mechanical mounting tabs. Use enough solder for a solid connection.

The circuit board may require a few jumpers; "cut" component leads make good jumpers. Insert the jumpers and solder into place, remember to trim the excess leads. We are now down to the home-stretch. Install the battery snap terminal in the two holes below S1, making sure that the positive (red) lead is inserted into the (+) hole on the PC board.

Finally, go ahead and mount the battery bracket, it may be attached in a variety of ways. A wire jumper can be passed through the two holes on the PC board, then both ends soldered on the underside of the board. You may prefer to use very small screws or even a double-sided mounting adhesive strip or glue. In using such methods, make sure that the battery will not block the PC board's mounting hole in its vicinity.

Wiring of the PC board is now complete. If you have the patience, we suggest a short break. Then take a magnifying lens and a bright light and examine all your solder joints, touching up any connection which appears less than perfect. Make sure all excess leads have been trimmed, and that one is not bent back flat against the board, possibly causing a short. Brush the solder side of the board with a stiff brush to make sure that no loose wire trimmings or solder drippings are lodged between connections. Connect up a suitable antenna and connect up the 9 volt battery to the receiver and you are ready to try out the receiver for the first time.

After power is first applied and you have connected up your antenna, you will need to adjust the gain control to midrange. Next, you should adjust the squelch control just below the threshold point, so that you can hear the normal background hiss. Now begin turning the tuning control and you should soon come across a public service transmission from a local police or fire broadcast.

In the event that you do not hear any hiss coming from the speaker or headphones, or you do not hear any stations after about 20 to 30 minutes, then you may have to troubleshoot the receiver for any errors that may have occurred during the building process. First, disconnect the battery and antenna and un-mount the receiver circuit board from the enclosure. Have a friend assist you in inspecting the circuit board; a different set of eyeballs can often help to find errors quickly.

The most common causes for circuit failure are resistors placed in the wrong locations, the second possible cause for errors are improper installation of diodes and electrolytic capacitors. Make sure that you re-check the orientation of these components one more time and refer to the schematic, and parts layout diagrams. Another possible cause for mistake is the improper installation of transistors and integrated circuits. Be sure to recheck the orientation of transistors. Each transistor has three leads, an Emitter, a Collector and a Base lead. Closely inspect and compare the schematic diagram along with the parts layout diagram and manufacturer's specifications sheets to ensure that you have oriented the transistors correctly. Lastly, integrated circuits are often placed backwards in their sockets. After you have checked all the above tips, make sure that the battery is connected correctly with the black battery or minus lead (–) connected to the circuit ground and the plus (+) or red battery lead connected to the power input regulator of the circuit. Reconnect the battery and the antenna and then switch

the receiver to the "On" position and retest the receiver once again to make sure that it is now working.

Testing, alignment and adjustment

In order to prepare the VHF FM Receiver for reliable monitoring operation, you will need a few basic tools, such as useful VHF signal source, a hexagonal, non-metallic coil slug alignment tool for L3, and a small screwdriver to adjust L4. To align your new receiver, you will need to locate some sort of a signal source. This signal can be from your test bench equipment or from a "live" source such as a local repeater. The "live" signals are best for fine-tuning, but they also have that VHF communications character of being fast and to the point. Good test bench signal sources include your own 2-meter transceiver, if you are licensed to use it, a signal generator or grid-dip oscillator. If you do not have a steady test signal source for the band within 135–175 MHz of primary interest to you, and still wish to verify immediately the proper operation of your receiver, a good and steady VHF signal source will be your local NOAA Weather Service station, broadcasting around 160 MHz. Once you have verified reliable reception of your regional NOAA station, adjustment to your desired listening range will become easier.

If you do not already have a set of plastic or nylon coil alignment tools and do expect to try further ham radio or electronic hobby projects, such tools are worth having and can be found inexpensively at any electronics store including Radio Shack. While a metal hex key wrench can fit the coil slug, the metal itself would damage the coil inductance drastically and therefore should not be used. With patience and sandpaper, a useable tool might be formed from a wood or plastic rod.

The alignment procedure should begin as follows: first make sure the power switch is off. Next, connect the antenna, earphone or speaker and battery, then turn the slug of L3 until it is even with the top of the coil form. Then turn the slug of L3 clockwise seven turns back into the form.

Now, turn the slug of L4 until it is flush with the top of the coil and then turn it two turns back into the coil. Next turn all three controls to the left, fully counterclockwise. Now, you can turn the power switch to "On." Now turn R2 (volume control) until you hear some noise. Finally, adjust L4 for maximum noise from the speaker.

Further alignment now consists of adjusting the oscillator coil L3 to permit the tuning control (R1) to cover the 5 MHz segment between 135 and 175 MHz of primary interest to you. Assuming you wish to adjust for the 2-meter 144–148 MHz Amateur Band, adjust L3 until you hear your intended test signal. If you are a beginner with no license or other equipment, any ham operator with a 2-meter transceiver should be willing to give you the test signal and extra help that you need. Your new VHF receiver is very sensitive, so operate the transceiver on low power on a simplex frequency from a distance of at least across the room. An 8″ piece of wire will be a sufficient receiving antenna for such tests. If you don't know any hams, visit a friendly two-way radio service center to get close to the test signal you need!

Receiver sensitivity

Your FM receiver features sensitivity under 1 uv. Radio hams constantly marvel at how an FR146 displayed at hamfests tunes in dozens of hand-held QSOs on the premises without an antenna connected! You can expect to monitor local repeater and simplex transmissions easily, using a simple ground-plane style antenna.

Customization

For many people, a pilot lamp to indicate "power on" is more than a nice touch. They expect it and depend on it. Adding a simple LED power-on indicator to your VHF receiver is easy. All you need is the LED itself and a small 1k to 2.2k resistor. Study the PC traces between the positive battery supply wire and the on-off switch. The unused connectors on top of your switch are an ideal point to get the + DC voltage needed for the anode (longer lead) of the LED. Plan where and how you wish to install the LED in your enclosure.

Locating the LED immediately above the on-off switch is logical and ideal. The simplest way to make a good installation is to drill a neat hole just slightly smaller than the diameter of the LED. Then, enlarge the

hole a little bit at a time just enough to let the LED be pressed in and held firmly. The resistor may be connected to either the anode or cathode of the LED, but the anode MUST go to + DC, with the cathode connected to the nearest common ground point.

Antenna considerations

For local VHF reception, the VHF receiver will operate fine just using a whip antenna. If you wish to receive stations which are further away than just the local stations, you may want to install some sort of an outdoor antenna such a ground plane or Discone antenna for VHF operation. Since most of the transmissions in this band are of vertical polarization, vertical antennas, ground plane and Discone antennas will work best in this band. Various VHF scanner type antennas from your local Radio Shack store will work fine. The chart illustrated in Table 11-4 shows the utilization of the VHF Public Service band. Have fun and enjoy you new VHF "action" band receiver.

Table 11-4
VHF high-band frequency band utilization

150.995 MHz to 151.130 MHz	Highway maintenance
151.145 MHz to 151.475 MHz	Forestry conservation
152.030 MHz to 152.240 MHz	Mobile telephone
152.270 MHz to 152.450 MHz	Taxi services
152.510 MHz to 152.810 MHz	Mobile telephone
153.410 MHz to 154.115 MHz	Utilities/light/power/water and local gov't
153.830/153.890/154.010/154.070 MHz	Fire
154.130 MHz to 154.445 MHz	Fire
154.650 MHz to 155.700 MHz	State & Local police
155.715 MHz to 156.255 MHz	Local Gov't / police/ highway maintenance
156.275 MHz to 157.425 MHz	Marine Frequencies
157.530 MHz to 158.265 MHz	Taxi & Mobile telephones
158.280 MHz to 158.460 MHz	Utilities water/power/industrial
158.730 MHz to 159.210 MHz	Highway Maintenance & police
159.225 MHz to 159.465 MHz	Forestry
159.495 MHz to 160.200 MHz	Motor carrier trucks
160.215 MHz to 161.565 MHz	Railroad
161.640 MHz to 161.760 MHz	Broadcast pickups & Studio to Xmiter Links
161.800 MHz to 162.00 MHz	Maritime Shore Stations
162.400 MHz to 162.550 MHz	NOAA weather broadcasts
162.250 MHz to 173.500 MHz	Gov't sonobuoys
169.00 MHz to 172.000 MHz	Low power wireless mikes
173.2037 MHz to 173.396 MHz	Fixed/mobile industrial & remote control
173.400 MHz to 173.5000 MHz	Remote control & telemetry

Chapter 12

6 & 2-Meter Dual-Band Amateur Radio Receiver

Parts list

6N2 Meter Amateur Radio Receiver

R1 68 k, ¼w, 5% resistor

R2 47 k, ¼w, 5% resistor

R3, R7 3.3k, ¼w, 5% resistor

R5 20 k 5% ¼W

R8 8.2k, 5% ¼W

R9 Jumper wire (use a discarded resistor lead)

R10, R12 1k, ¼w, 5% resistor

R11 10 k, ¼w, 5% resistor

R15 10 ohm, ¼w, 5% resistor

VR1, VR3 100 k potentiometer (chassis mount)

VR2 5k, 20% linear potentiometer (chassis mount)

C1 120 pF, 25v capacitor (121)

C2 .005 µF, 35v 20% capacitor (502)

C3,C4,C9 .1 µF +80, −20% 50v capacitor (104)

C5 3.9 pF, 50v disk capacitor

C6 33 pF, 50v, 10% disk capacitor

C7 470 pF, 50v, 10% 50 v disk

C8 7 pF, 25v, 20% disk capacitor

C10 1000 pF, 50v, 10% disk capacitor (102)

C11,C13,C16 .01 µF, 50 v, +80, −20% capacitor (103)

C17 51 pF, 25v, 10% capacitor (51K)

C12 68 pF, 25v, 10% capacitor (68K)

C14, C21 4.7 µF, 50v Radial capacitor

C15 220 µF, 16v Radial capacitor

C18,C19,C20 .1 µF, 50v, +80, −20% capacitor (104)

C22 .047 µF, 50v, +80, −20% capacitor (473)

D1, D2 Diode 1N914 silicon diode

U1 IC MC3362P FM Receiver IC

U2 IC LM386N-1 Audio Amp IC

Copyright © 2008 by The McGraw-Hill Companies, Inc. Click here for terms of use.

U3 IC 78L05 Regulator +5v 78L05

L1 Coil (4.5 turns coated wire- #24 ga.) -air-core

L2, L3 Coil (on form with core)

L4 Coil (1.5 turns coated wire- #24 ga.) -air-core

L5 .64 mH Coil (yellow) I-F Transformer (42IF301)

F1 455 kHz Ceramic Filter

F2 10.7 MHz Ceramic Filter

Y1 10.245 MHz Crystal

SW1, SW2 Switch Slide DPDT

B1 9 volt transistor radio battery

SPKR 8 ohm speaker

J1 RCA jack - antenna

Misc PC Board, battery holder, battery clip,

The 6N2 receiver is a dual conversion, dual band amateur radio receiver; it combines the excitement of two very active amateur radio bands in one small receiver, see Figure 12-1. The 6N2 receiver will allow radio enthusiasts, both the young and old, to get a glimpse of the active world of VHF amateur radio. This receiver combines both the 2-meter and the 6-meter bands which are popular with radio enthusiasts around the country. The 2-meter band is probably the most active ham radio band especially for newcomers with a technician class license. Two-meter band coverage is usually quite good in most parts of the country. The 2-meter band features many ham radio repeaters, and in some have wide-area long-range repeaters in most US states and in many Canadian provinces. These ham radio repeaters allow amateur radio operators to communicate over long distances. The 6-meter band has often been called the "magic band." This amateur band is usually only used for fairly local coverage but when the band is "open" you can often hear hams on the opposite side of the US or in Cuba or the Caribbean, which is really exciting!

Figure 12-1 *6N2 meter amateur radio receiver*

You can listen-in to these exciting two ham radio bands and hear all the action, day or night with the 6N2 portable receiver. You may just decide the action sounds like something you would like to be part of, and you can easily get your own ham radio "ticket" or license. Contact the Amateur Radio Relay League (ARRL) at http://www.arrl.org; they have many books, publications as well as introductory videos. They are a great resource in locating local ham radio clubs, where you can make friends and learn a lot about ham radio and communication.

The 6N2 radio is known as a narrow band FM VHF receiver. FM of course is a type of modulation and is denoted as Frequency Modulation. Frequency modulation means the data or voice changes the frequency of the radio wave. The other popular forms of modulation are AM (Amplitude Modulation) and PM (Phase Modulation). We also mentioned narrow band, which notes that the selectivity of the entire system is limited to only enough frequencies to pass voice or low frequency data. A commercial broadcast FM receiver would have a bandwidth large enough to pass music and high frequency data transmissions.

The 6N2 receiver is a dual conversion, two-band radio receiver. In a dual conversion receiver, the original radio frequency is converted first to a 10.7 MHz intermediate frequency (I-F) and amplified in (Block 4). The 10.7 MHz signal is then converted to 455 kHz and amplified in (Block 3). Noise is removed and the

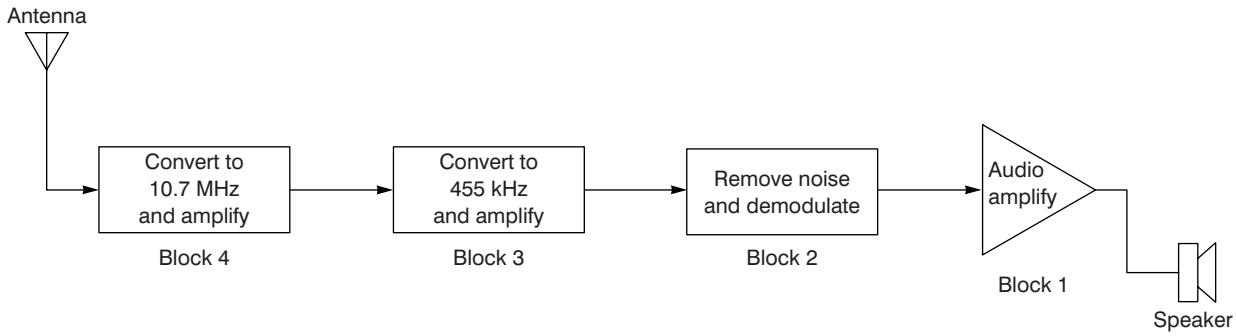

Figure 12-2 *½ meter amateur radio receiver block diagram*

modulated signal is recovered from the 455 kHz I-F signal in (Block 2). The audio signal is amplified to drive a speaker in (Block 1), see Figure 12-2. The 6N2 receiver specifications are illustrated in Table 12-1.

So you ask, why dual conversion? To answer this question, take a look at the diagram shown in Figure 12-3, and it may become more clear. In order to obtain the desired intermediate frequency (I-F) signal by mixing the local oscillator with the desired radio frequency, an unwanted output may result due to a transmission spaced one intermediate frequency or (I-F) on the opposite side of the oscillator (image). By using a large I-F frequency, this image is moved further out of the band of desired frequencies. The second conversion provides the selectivity to filter out the desired narrow band transmission.

Table 12-1
The 6N2 amateur radio specifications

2-meter band covers 144 MHz to 148 MHz

6-meter band covers 50 MHz to 54 MHz

- Single supply voltage (4-12 v)
- Idle current - 4 milliamps
- Inputs referenced to ground
- Input resistance - 50 k
- Self-centering output voltage
- Total harmonic distortion less than 0.2%
- Output power with 9 volt supply voltage
- Voltage gain with 10 µF from pin 1 to 8 - 200 or 46 dB
- Voltage gain with pins 1 and 8 open - 20 or 26 dB
- Bandwidth with pins 1 and 8 open - 300 kHz

The 6N2 receiver operates on two of the most popular VHF amateur radio bands. The 6N2 VHF amateur radio receiver receives both the 6-meter ham band and the 2-meter ham bands, and you can select the band with a band-switch.

To help you visualize the relationship between frequency and wavelength, take a look at the diagram shown in Figure 12-4. If the speed of a wave (meters per second) is divided by the number of waves that pass a given point (cycles per second), the seconds cancel and you obtain the wavelength λ = meters per cycle. The speed of radio waves is approximately 300,000,000 meters per second. If the frequency is 50 to 54 MHz, the wavelength becomes 300,000,000/50,000,000 or 6 meters. So for the 2-meter band, which is approximately 150 MHz, the wavelength becomes 300,000,000/150,000,000 or 2 meters. The actual bands are: 2-meter band which covers 144 MHz to 148 MHz, and the 6-meter band which covers 50 MHz to 54 MHz.

The 6N2 dual band VHF receiver is composed of four major blocks, i.e. blocks 1 through 4. It is a bit easier to follow how the receiver works if we break it down into smaller defined blocks, see Figure 12-5. The heart of the receiver is the integrated circuit at U1, an almost complete FM receiver on-a-chip. The FM receiver chip only requires timing components, a crystal and RF tuning components, a filter. The output of the FM radio chip is sent to the audio amplifier chip at U2. Power for the receiver is regulated via the regulator chip at U3.

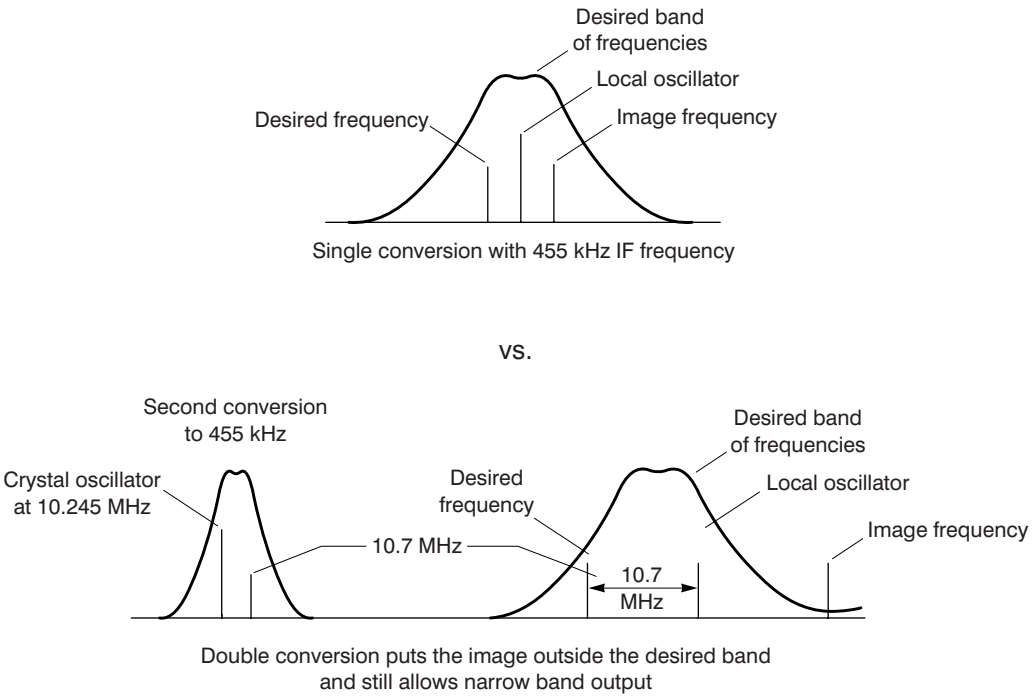

Figure 12-3 *Single vs. double conversion receiver*

The receiver is relatively straightforward and can therefore be constructed in stages, one through four. We will begin with Stage 1, which can be built and tested separately. You can progress step by step and build and test each stage before moving on to the next stage. Let's begin with Block 1, the audio amplifier stage.

The audio amplifier – block 1

The audio section in this receiver is amplified by using an integrated circuit audio power amplifier. The output

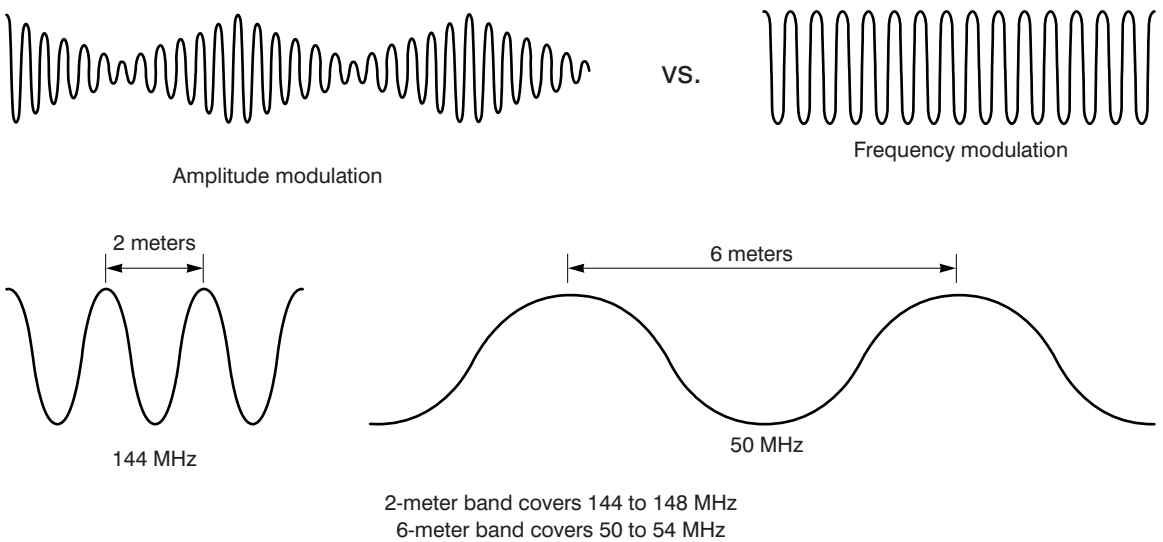

Figure 12-4 *Frequency coverage diagram*

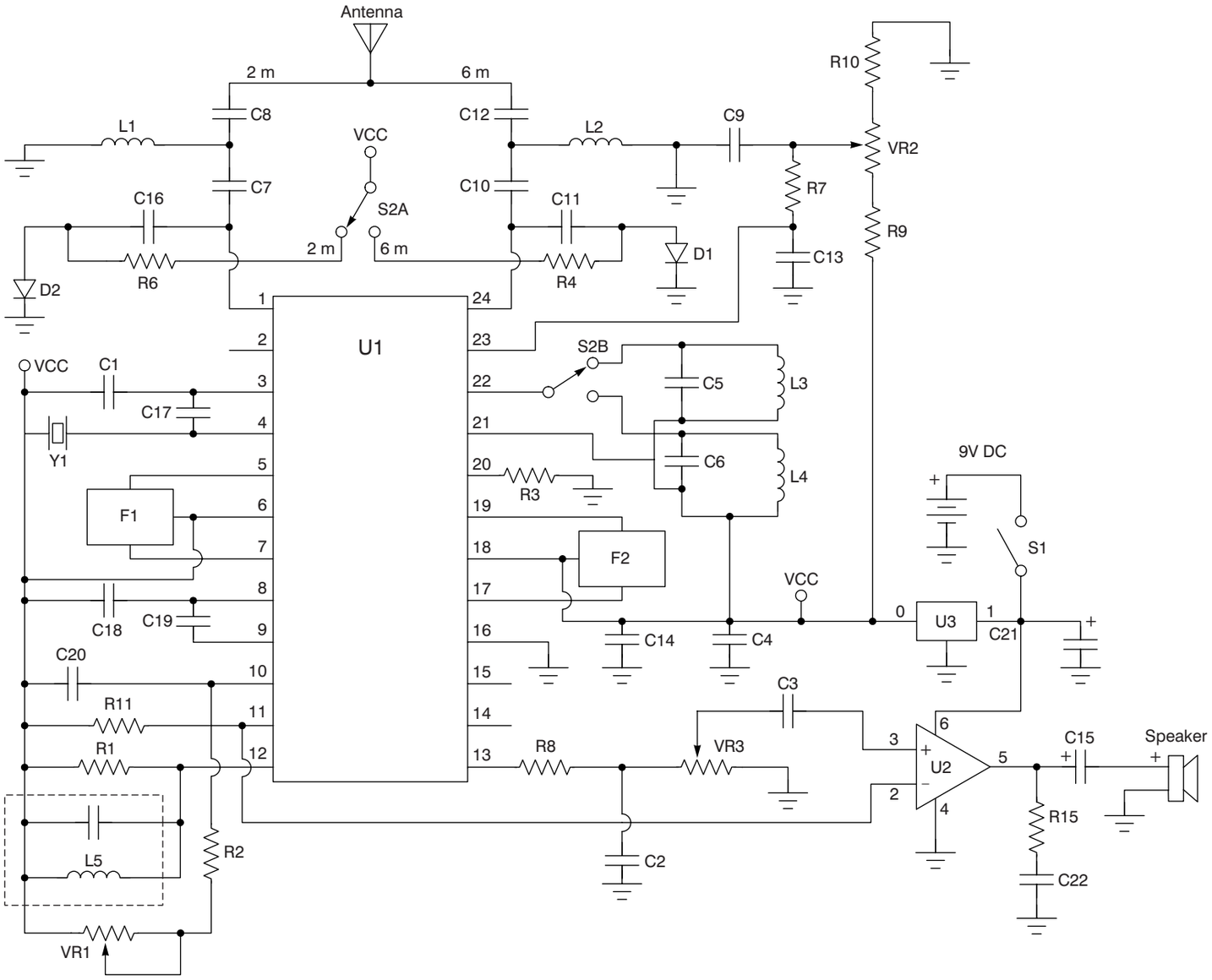

Figure 12-5 *VHF public service receiver schematic. Courtesy of Elenco Electronics*

impedance of the amplifier is low enough to drive an 8 ohm speaker directly. The coupling capacitor value is picked to pass audio signals down to 100 cycles by matching the reactance of the capacitor with the speaker impedance.

Due to the high input resistance of the amplifier (50 k), the audio coupling capacitor C3 can be as small as 0.1 µF. The equivalent resistance at the junction of R8 and VR3 is approximately 6.6 k (the parallel combination of R8, VR3 and the 50 k input impedance of the LM-386). The capacitor C2 and this equivalent resistance sets the 3 dB corner used to attenuate any IF voltage at pin 13. A simple RC filter attenuates at a rate of 6 dB per octave (an octave is the same as doubling the frequency). By using 6.6 k as the equivalent resistance and 0.005 µF as the capacitance, we get a 3 dB corner at approximately 4.8 kHz. To get to 455 kHz, you must double 4.8 kHz approximately 6.6 times. This equates to a reduction of the IF voltage at the R8 - VR3 junction of 39.6 dB (6 dB per octave times 6.6 octaves), or 95 times.

Recovering the data – block 2

In working with FM receivers, there are some terms that need to be defined. First, let's determine the term **deviation** as the frequency swing of the incoming FM signal. When no modulation is present, the incoming signal is a fixed frequency **carrier wave (Fc)**. **Positive deviation (Fp)** is the increase in Fc due to modulation, and **negative deviation (Fn)** is the decrease in Fc due to the modulation. The detector must be linear over the maximum total deviation (Fp max. - Fn max.) produced by the transmitter or distortion will occur. Before the second I-F signal reaches the detector, it is applied to a **limiting amplifier** inside the integrated circuit. A limiting amplifier is designed to remove any amplitude variations in the signal by amplifying the signal well beyond the limit of the amplifier. The frequency variations (FM) are not affected by the limiter. The limiter removes the affects of fading (driving through a tunnel) and impulse noise (lightning and ignition). These affects produce significant unwanted amplitude variations in the received signal, but minor frequency variations. Noise immunity is one of the great advantages of frequency modulation over amplitude modulation. The remaining signal contains only the frequency modulation.

The 6N2 receiver uses a quadrature detector to demodulate the FM signal. After the noise is removed by the limiter, the signal is internally connected to the quadrature detector. A parallel tuned circuit must be connected from pin 12 to the power supply. This circuit produces the 90° phase needed by the quadrature detector. A resistor shunting this coil sets the peak separation of the detector. If the value of the resistor is lowered, it will increase the linearity, but decrease the amplitude of the recovered audio.

The quadrature detector combines two phases of the I-F signal that are 90° apart, or in quadrature, to recover the modulation. The shifted signal is used to gate the non-shifted signal in a synchronous detector. When the frequency increases above the carrier frequency (positive deviation), the phase shift increases causing a decrease in the width of the gated impulse output. In a similar manner, when negative deviation occurs, the gated impulse output will widen. The gated output is then filtered to remove the pulses and recover the modulating signal.

455 kHz conversion – blocks 3 & 4

The first local oscillator should be set at 133.3 MHz to 137.3 MHz for the 2-meter band and 39.3 MHz to 43.3 MHz for the 6-meter band. This oscillator is free-running varactor-tuned. The first mixer converts the RF input to an I-F frequency of 10.7 MHz. This I-F signal is then filtered through a ceramic filter and fed into the second mixer. If the oscillator of the second mixer is precisely set at 10.245 MHz, it will produce an output containing the sum (20.945 MHz) and the difference (0.455 MHz or 455 kHz) frequencies. This 455 kHz signal is then sent to the limiter, detector, and audio circuits. The mixers are doubly balanced to reduce spurious (unwanted) responses. The first and second mixers have conversion gains of 18 to 22 dB respectively.

Conversion gain is the increase in a signal after the signal has been converted to a new frequency and amplified. For both converters, the mixers are designed to allow the use of pre-tuned ceramic filters. After the first mixer, a 10.7 MHz ceramic bypass filter is used. This eliminates the need for special test equipment for aligning I-F circuits. The ceramic filter also has a better aging and temperature characteristic than conventional LC tuned circuits.

Assembling the 6N2 receiver

Before constructing your new 6N2 receiver, you will need to locate a clean well lit, well ventilated work space. Locate a small pencil tipped 27 to 33 watt soldering iron. You should also locate a spool of 22 ga. rosin core solder, a small container of "Tip Tinner" from your local Radio Shack store. "Tip Tinner" helps to clean and dress the soldering iron tip. Place the schematics and parts layout diagram in front of you along with all of the project components. A few small tools would be helpful to constructing your project, so find a small pair of end-cutters, a pair of tweezers, a magnifying glass, a small Phillips and flat-blade screwdrivers, and we can begin. When building a project with integrated circuits it is wise to consider installing integrated circuit sockets on the PC board, as a form of insurance in the event of a possible circuit failure somewhere down the road. It is much more easy to simply unplug a damaged IC and simply replace it by plugging in a new one.

Before we get some momentum on the project, you may also want to refer to the chart in Table 12-2. This table lists the color codes for the resistors, and will greatly aide you in constructing the receiver. Go ahead and locate resistor R1, a 68 k resistor, its color code is (blue-gray-orange). Now locate resistor R2, a 47 k ohm resistor with (yellow-violet-orange) color code. Place these resistors on the circuit board in their respective locations and solder them in place. Now you can identify the remaining resistors and place them on the circuit board and solder them in their proper locations. Use your end-cutters to trim the excess component leads. Cut the extra component leads flush to the edge of the circuit board.

Now locate and install capacitors; first locate and identify capacitors C1 and C2. Capacitor C1 is a small disk capacitor marked (121) or120 pF. Small capacitors often do not have their actual values printed on them but use a three-digit code to represent their value. Refer to the chart in Table 12-3 to help you identify the small capacitors. Now look for capacitor C2, its value

Table 12-2
Resistor color code chart

Color Band	*1st Digit*	*2nd Digit*	*Multiplier*	*Tolerance*
Black	0	0	1	
Brown	1	1	10	1%
Red	2	2	100	2%
Orange	3	3	1,000 (K)	3%
Yellow	4	4	10,000	4%
Green	5	5	100,000	
Blue	6	6	1,000,000 (M)	
Violet	7	7	10,000,000	
Gray	8	8	100,000,000	
White	9	9	1,000,000,000	
Gold			0.1	5%
Silver			0.01	10%
No color				20%

Table 12-3
Capacitance code information

This table is designed to provide the value of alphanumeric coded ceramic, mylar and mica capacitors in general. They come in many sizes, shapes, values and ratings; many different manufacturers worldwide produce them and not all play by the same rules. Some capacitors actually have the numeric values stamped on them; however, some are color coded and some have alphanumeric codes. The capacitor's first and second significant number IDs are the first and second values, followed by the multiplier number code, followed by the percentage tolerance letter code. Usually the first two digits of the code represent the significant part of the value, while the third digit, called the multiplier, corresponds to the number of zeros to be added to the first two digits.

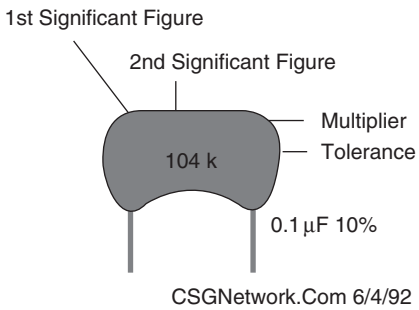

Value	*Type*	*Code*	*Value*	*Type*	*Code*
1.5 pF	Ceramic		1,000 pF /.001 µF	Ceramic / Mylar	102
3.3 pF	Ceramic		1,500 pF /.0015 µF	Ceramic / Mylar	152
10 pF	Ceramic		2,000 pF /.002 µF	Ceramic / Mylar	202
15 pF	Ceramic		2,200 pF /.0022 µF	Ceramic / Mylar	222
20 pF	Ceramic		4,700 pF /.0047 µF	Ceramic / Mylar	472
30 pF	Ceramic		5,000 pF /.005 µF	Ceramic / Mylar	502
33 pF	Ceramic		5,600 pF /.0056 µF	Ceramic / Mylar	562
47 pF	Ceramic		6,800 pF /.0068 µF	Ceramic / Mylar	682
56 pF	Ceramic		.01	Ceramic / Mylar	103
68 pF	Ceramic		.015	Mylar	
75 pF	Ceramic		.02	Mylar	203
82 pF	Ceramic		.022	Mylar	223
91 pF	Ceramic		.033	Mylar	333
100 pF	Ceramic	101	.047	Mylar	473
120 pF	Ceramic	121	.05	Mylar	503
130 pF	Ceramic	131	.056	Mylar	563
150 pF	Ceramic	151	.068	Mylar	683
180 pF	Ceramic	181	.1	Mylar	104
220 pF	Ceramic	221	.2	Mylar	204
330 pF	Ceramic	331	.22	Mylar	224
470 pF	Ceramic	471	.33	Mylar	334
560 pF	Ceramic	561	.47	Mylar	474
680 pF	Ceramic	681	.56	Mylar	564
750 pF	Ceramic	751	1	Mylar	105
820 pF	Ceramic	821	2	Mylar	205

is .005 µF, but may be marked (502). Go ahead and install these capacitors in their respective locations on the circuit board. Remember to trim the excess component lead lengths with your end-cutters. Next, locate the remaining small capacitors and install them on the circuit board.

Next, we are going to locate and install the electrolytic capacitors. Electrolytic capacitors are generally larger in size and higher in value than the small value capacitors and usually they are vertical or horizontally mounted. Remember, electrolytic capacitors have polarity and must be installed with respect to this polarity if the circuit is going to work properly. The capacitor's value will be printed on the body of the capacitor along with a white or black polarity marking, either a plus or minus marking. Pay attention to this plus or minus marking and align it with the proper holes on the PC board, you will have to refer to the schematic and or parts layout diagram when placing the electrolytic capacitors. Locate and install the remaining electrolytic capacitors onto the circuit board. Remember to trim the excess electrolytic capacitor leads after they are soldered in place.

In this project there are two silicon diodes. Diodes are generally rectangular in shape like a resistor but they are often clear glass or painted black. You will see a black or white band at one edge of the diode body, this marking denotes the diode's polarity. The colored band is the diode's cathode lead. When installing the diode make sure that you observe the polarity marking by referring to the parts layout and the schematic diagram. Polarity is important and must be observed in order for the circuit to work properly.

The 6N2 receiver has two crystal filters, a 455 kHz one and a 10.7 MHz one. These devices are small three-lead devices and look much like a small capacitor with three leads. Make sure that you can identify them properly before installing them on the circuit board. The 455 kHz unit connects to U1 at pins 5, 6 and 7, while the 10.7 MHz crystal filter is connected to pins 17, 18 and 19. The receiver also employs a single 10.24 MHz crystal which is connected between pins 4 and 6. This is a two-lead device and is usually a small metal can.

Now locate the air-wound coils L1 and L4. Coil L1 is 4½ turns of wire, it will be placed on the right edge of the PC board, and coil L4, a 1½ turn air-wound coil, will be mounted at the bottom center of the board. Coils L2 and L3 are 9 turn coils wound on a coil form with a ferrite tunable slug in the center of the form. Coil L5 is a 0.64 mH coil in a small metal can with five leads. Coil L5 is a tunable slug tuned coil with a yellow ferrite core, see Table 12-4 for coil winding details.

The 6N2 receiver utilizes three integrated circuits. Before we go ahead and install the integrated circuits, let's take a brief look at the semiconductor pin-out diagram shown in Figure 12-6. The main receiver chip U1 is the Motorola MC3362, a 24 pin dual conversion FM receiver on-a-chip which contains oscillators, mixers, quadrature discriminator, and meter drive/carrier detect circuitry all in one chip. The audio amplifier at U2 is an LM386 chip, while U3 is 5 volt regulator, an LM78L05. When installing the integrated circuits, you will need to identify the pin-outs of each of the integrated circuits. It is advisable to install IC sockets prior to installing the ICs on the circuit board, to avoid the rare event of circuit failure at a late date. It is much easier to simply unplug an IC and insert another without un-soldering a 24 pin chip from the circuit board. Integrated circuits will generally have a small cut-out at one end of the IC package or a small indented circle at one end of the chip. Pin one (1) of the integrated circuit will be to the left of these markings. Be sure to orient the IC before placing into its proper socket. Note that pin 1 of U1 will connect to the junction of capacitors C7 and C16.

Table 12-4
Coil Winding Information

L1	4.5 turns insulated magnet wire - #22 ga. Air-core coil wound on ¼″ form then remove coil.
L2, L3	8½ turns #24 ga. insulated magnet wire coil-wound on 49A Series form - ferrite slug adjustable (49A127MPC) Circuit Specialists. Remove original coil from form and rewind 8½ turns.
L4	1.5 turns insulated magnet wire - #22 ga. Air-core wound on ¼″ form then remove coil.
L5	.64 mH Coil (yellow) 455 kHz I-F Transformer Circuit Specialists - (42IF301).

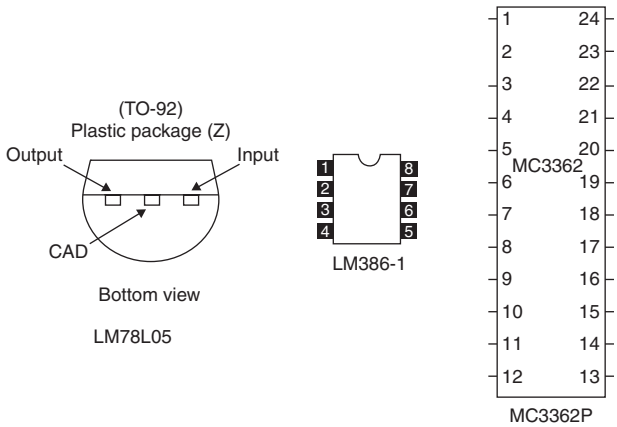

Figure 12-6 *Semiconductor pin-outs*

Finishing the PC board assembly

Now cut three 3″ pieces of wire from the roll of 22 gauge solid wire and strip ¼″ of insulation off each end. Using these wires, solder the 5k potentiometer (VR2) to the PC board. Be sure to mechanically attach each wire. Note that VR3 is the tuning control potentiometer, the center lead is connected to the PC board hole marked (D), while the left-most pot terminal gets connected to the hole marked (N). The final potentiometer wire on the right side of the potentiometer goes to the hole marked (P).

Finally, connect up a short piece of coax to the terminals on the PC board marked ANT and GND. The center wire of the coax goes to the terminal marked antenna (ANT) and shield wire from the coax goes to the terminal marked ground or (GND). The other free end of the coax goes to RCA antenna jack which gets mounted on the front panel of the chassis box.

After completing the circuit board, take a short break and when we return, we will examine the circuit board for possible "cold" solder joints and "short" circuits. Pick up the circuit board with the foil side of the circuit board facing upwards toward you. First, we will look at the circuit board for possible "cold" solder joints. Take a close look at the solder joints, they should all look clean, shiny and bright. If any of the solder joints look dark, dull or "blobby," then you should un-solder that particular joint and clean it and then re-solder the joint so that it looks clean, shiny and bright. Next we will examine the circuit board for possible "short" circuits.

The front panel assembly

The speaker was mounted on the receiver's front panel. Using the three black 4-40 screws, 4-40 nuts and #4 internal tooth washers, mount the three small right-angle brackets to the speaker mounting holes. The short side of the brackets should be against the panel. Use a blunt tool to bend the brackets over the speaker. Using the hardware shown, mount the phono jack. Using the hardware shown, mount the On-Off switch, 2M/6M switch, squelch pot, volume pot, and tuning pot to the front panel.

Orient the speaker terminals, so they don't interfere with the nearby battery mounting. Solder the loose end of the shielded cable to the phono jack, center conductor to the phono jack terminal and shield to the GND terminal. Peel the backing off one side of the ½″ wide, double-sided tape and stick it to the battery clamp. Peel the backing off the other side of the double-sided tape and stick it to the inside bottom of the plastic case. With the power switch OFF, connect a 9V alkaline battery to the battery snap and put the battery into the battery clamp. When the final test and alignment (next section of manual) is completed, place the front plate on the plastic case and insert the four nylon plugs into the holes in each corner of the plate.

Connecting the front panel parts to the PC board

To wire the speaker, pot and switch, cut the indicated length of wire from the roll of 22 gauge solid wire and strip ¼″ of insulation off each end. Next, go ahead

and mount the phono jack at J1. Finally mount the On/Off switch, the 2 meter/6 meter band switch, the squelch potentiometer, the volume potentiometer, and tuning potentiometer to the front panel as shown in Figure 12–7. For the jumper wire, cut 2″ of 22 gauge solid wire, strip ¼″ of insulation off each end and solder to the points indicated. Attach two 4″ long pieces of insulated wire to the speaker terminals and solder them. Now solder two 4″ pieces of insulated wire to the On-Off switch, use the center terminal and one of the outside terminals on the switch. Next attach three 3″ long insulated wires to the volume control on VR3.

Next locate the Squelch control (VR1) and solder two 3″ long insulated wires to the potentiometer. Take the two free wires and connect them to the PC board. The center terminal from the potentiometer goes to the PC board hole marked (Q), while the other potentiometer lead goes to the hole marked (R).

Take the free ends of the two speaker wires and solder them to the circuit board at their respective terminal strip on the bottom left side of the PC board. Now take the two free ends of the On-Off switch leads and solder them to the terminals on the left side of the PC board. Next take the three potentiometer leads and solder them to the PC board. The center terminal of VR3 goes to the terminal marked (D) on the circuit board. The left-most potentiometer terminal goes to the hole marked (C) on the PC board, while the right-most potentiometer terminal goes to the hole marked (E) on the circuit board. Finally locate the 9 volt snap battery terminal stip and connect it to the battery terminals on the far left marked BATT.

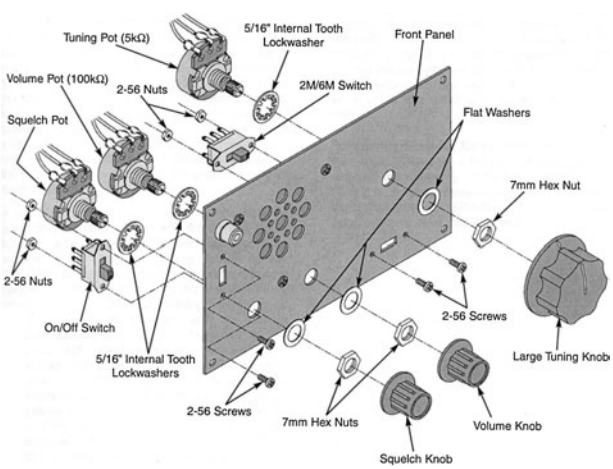

Figure 12-7 *6N2 meters*

Now that your 6N2 receiver has been completed, it is time to test out your receiver to see if it is going to work. Connect up the 9 volt battery clip to the 9 volt battery. Connect an antenna to the antenna terminal. For testing purposes you can simply connect a 19″ piece of wire to the antenna terminals, or if you have an outdoor antenna you can connect it up to the receiver. Position the band switch to the 2-meter band position. Now adjust the volume control to the mid-way position, and adjust the squelch control counterclockwise so that you just break the squelch and you should hear the receiver noise coming from the speaker. If all is well, you should hear a hissing sound or receiver noise. Adjust the tuning control around the band, back and forth, and you should eventually hear a ham radio operator calling another friend.

In the event that you hear no receiver noise and the receiver appears "dead," you will have to disconnect the antenna and battery clip and examine the receiver's circuit board for any errors which might have occurred during construction. Some of the most common causes for construction errors include installing diodes and electrolytic capacitors backwards in the circuit; remember that these components have polarity and it must be observed in order for the circuit to work properly. Another common problem is having resistors installed in the wrong place on the circuit board. Finally, when installing semiconductors such as transistors and FETs, you must refer to the manufacturer's pin-out diagram and the parts layout diagram along with the schematic when constructing the circuit. Often times transistors are installed incorrectly; also check the orientation of all integrated circuits to make sure that you have oriented them correctly with respect to their marking and pin numbers. Hopefully you have found your error by now and are ready to reassemble the circuit in order to test once again.

Reconnect the antenna and battery leads and turn the On-Off switch to the "On" position. Turn up the volume control to the midway position, and set the BAND switch to the 2-meter position. The 2-meter band will

generally be much more active than the 6-meter band unless there is a 6-meter band "opening." Now, you will need to adjust the squelch control. The correct adjustment of the squelch control is to advance the control until the receiver noise is silenced. When the receiver is tuned across the band and a signal is found, the squelch will release and the transmission will be heard. As you continue tuning away from this signal, the squelch should again come into effect and "squelch" the receiver noise. Remember that the function of the squelch control is to eliminate static when there is no signal present. This control sets the level of passable signals. The squelch control works by raising the voltage to the (–) input to the audio amplifier and thus disabling the amplifier output. Turn the squelch control fully counterclockwise. The audio should produce a hissing sound. Turning the squelch control clockwise should quiet the audio. Check the leads going to the control.

Now that the receiver seems to be functioning, you will need to calibrate the receiver using an RF frequency generator. You will need to borrow an RF signal generator from a friend or local radio enthusiast in order to calibrate your receiver for best operation.

Frequency measurements

Attach a two foot or longer length of wire to the male RCA plug and connect it to the radio antenna jack. Install a fresh battery and turn the power ON. Make sure that the squelch control is fully counterclockwise and the volume control is set at mid-position. A "rushing" noise should be heard from the speaker when no signal is present, which is normal. Slowly tune the radio on each band and listen for activity. Reception will only be possible if someone is transmitting. If you know someone with a 2M or 6M transmitter, you should test your receiver with known frequencies of transmission and adjust the high frequency oscillator for proper tuning of desired bands.

A calibrated RF generator may also be used to adjust the oscillators. Start with the 2-meter band. Loosely couple the output of the RF generator to the receiver input. Turn the tuning control on the receiver to the full counterclockwise position (lowest frequency). With the squelch control tuned fully counterclockwise (OFF), a "rushing" noise will be heard. Tune the RF generator until the receiver noise disappears and note the frequency on the generator dial. Next, rotate the receiver tuning control to the full clockwise position (higher frequencies). Repeat the above procedure to determine the upper frequency of your tuning range. If the range is too low, decrease L4 by spreading the turns. If the range is too high, substitute the 39 pF capacitor with the 33 pF capacitor in C6. Then, repeat both procedures to determine the upper and lower frequency limits. With a little perseverance, you should arrive at a range covering the 2-meter band (144 to 148 MHz). Set the generator at different points (144, 145, 146, etc.) and tune the radio for quieting at each setting. Mark the dial with the appropriate values. Using the plastic alignment tool to adjust L3, follow the same procedure for the 6-meter band (50 to 54 MHz). **Note:** Before the receiver is properly adjusted, you may receive a broadcast from an FM station or TV station. These signals will be distorted because they are wide band FM transmissions and the 6N2 is a narrow band amateur receiver.

If a frequency counter is available, it can be used to measure the frequency of the local oscillator at pin 20 of U1. On the 2-meter band, the counter should read 133.3 MHz to 137 MHz, and on the 6-meter band, it should read 39.3 MHz to 43.3 MHz.

Antenna considerations

For local VHF reception, the VHF receiver will operate fine just using a whip antenna. If you wish to receive stations which are further away than just the local stations, you may want to install some sort of outdoor antenna such as a ground plane or discone antenna for VHF operation. Since most of the transmissions in this band are of vertical polarization, vertical antennas, ground plane and discone antennas will work very well in this band. Various VHF scanner type antennas from your local Radio Shack store will work fine as well.

Connect up a whip antenna or an outdoor Discone antenna and you can now begin to listen-in to the exciting world of VHF ham radio communication. The charts in Table 12-5 illustrate the band plan for the two popular ham radio VHF bands. Note the SSB satellite and long-range portion of the 2-meter band from 144.1 MHz to 144.3 MHz and the 6-meter DX windows around 51.1 and 52.05 MHz.

Table 12-5

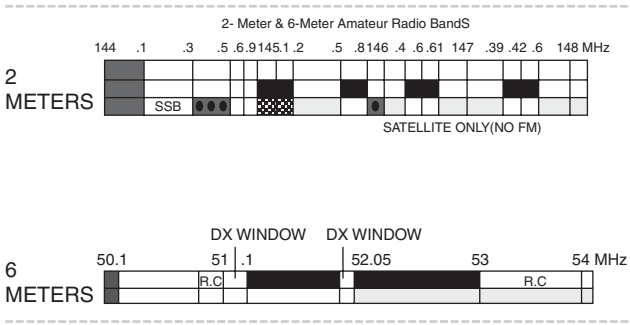

Chapter 13

Active and Passive Aircraft Band Receivers

Parts list

Active Aircraft Receiver

R1,R2,R3 10k potentiometers

R5,7,11,18,25,27 1k ohm [brown-black-red]

R6,R28 270 ohm [red-violet-brown]

R8,12,17,23 10k ohm [brown-black-orange]

R26 22k ohm [red-red-orange]

R13,R22 33k ohm [orange-orange-orange]

R4,9,15,16,20,21,24 47k ohm [yellow-violet-orange]

R19 100k ohm [brown-black-yellow]

R10,R14 1 megohm [brown-black-green]

C3,C5 3.9 pF ceramic capacitor

C11 10 pF ceramic capacitor

C12,C14 27 pF ceramic capacitor

C2,C4,C6 82 pF ceramic capacitor

C1,7,8,13,16 .001 µF disk capacitor (marked.001 or 102)

C9,17,19,20,28,30 .01 µF disk capacitor (marked .01 or 103 or 10 nf)

C23,C24 .1 µF disk capacitor (marked .1 or 104)

C22 .47 µF electrolytic capacitor

C10,15,21,25,26,31 4.7 to 10 µF electrolytic capacitor

C18,27,29 100 to 220 µF electrolytic capacitor

Q1 2SC2498 or 2SC2570A NPN UHF transistor

Q2 2N3904 NPN transistor

U1 SA602 8 pin IC

U2 MC1350 8 pin IC

U3 LM324 14 pin IC

U4 LM386 8 pin IC

D1 BB505 varactor diode (marked BB505)

D2 1N270 germanium diode

D3 1N4148 silicon diode

L1,L3,L5 See Table 13-3

L2,L4 See Table 13-3

L6 See Table 13-3

L7 See Table 13-3

FL1 10.7 MHz ceramic filter - (Murata/ Digi-Key)

Copyright © 2008 by The McGraw-Hill Companies, Inc. Click here for terms of use.

S1 PC mount DPDT switch

J1 PC mount RCA jack

J2 subminiature phone jack

B1 9 volt battery

Misc PC board, battery clip, battery holder

*** Ramsey Electronics Inc.

Passive Aircraft Monitor

R1,R2 10 megohm, ¼ watt, 5% resistor

R3 100k ohm potentiometer - volume (chassis mount)

R4,R5 3.3k ohm, ¼ watt, 5% resistor

R6 100 k ohm, ¼ watt, 5% resistor

R7 100 ohm ¼ watt, 5% resistor

C1 1.5 pF, 35 volt mica/poly capacitor

C2 5-18 pF trimmer capacitor (tuning)

C3 .01 µF, 35 volt ceramic disk capacitor

C4 330 pF, 35 volt polyester capacitor

C5,C8 100 µF, 35 volt electrolytic capacitor

C6,C7 1 µF, 35 volt electrolytic capacitor

D1 1N34 germanium diode

L1 .15 µH choke coil - (Digi-Key)

U1 LM358 dual op-amp

S1 SPST toggle switch

B1 9 volt transistor radio battery

PH high-impedance (2 k ohm) headphone

Misc battery clip, battery holder, wire, enclosure, etc.

Eavesdroping in on the pilots as they trace their way across the sky can be very fascinating and exciting listening for aircraft enthusiasts of all ages. An aircraft receiver will allow you to listen-in to high flying commercial aircraft from jumbos to pipers, as well as control towers passing instructions to the airplanes overhead. It will provide many hours of interesting listening.

In this chapter, we will present two different types of aircraft receivers: a passive aircraft receiver and an active aircraft receiver. A passive aircraft receiver is a more simple receiver with no local oscillator to interfere with the on-board aircraft electronics. A passive aircraft receiver is defined as a tuned detector with an amplifier which can be carried aboard an airplane in order to listen-in to the pilot while you are on a flight. You will be able to listen-in to the pilot in flight as well as the control tower when in fairly close range. This type of receiver does not interfere with the airplane's electronics and in most instances you will be permitted to use this type of receiver on-board your aircraft. The active receiver is a more sensitive active receiver which can be used at home to listen-in to high-flying aircraft as well as control towers over longer distances. Listening to aircraft communications can be very interesting but very cryptic, with lots of bursts of information passing in a short period of time.

Active aircraft band receiver

Ideal for arm-chair pilots, student pilots and the seasoned pilots, this sensitive receiver will pick up planes up to 100 miles away. The active aircraft band receiver tunes the aircraft band between 118 and 136 MHz and will allow you to listen to control towers, centers, and planes en-route to their destination. The active aircraft band receiver, shown in Figure 13-1 has good sensitivity, image rejection, signal-to-noise ratio and stability. It is designed for casual "listening in" both

Figure 13-1 *Active aircraft band receiver*

ground and air communication, for both commercial airlines and general aviation, and it will provide you with many years of easy sky-monitoring enjoyment.

This project is especially good for people with an interest in learning more about aviation and electronics and radio. The active aircraft receiver can be built by folks of all ages and skill levels.

What you can hear

A basic fact about the VHF Aviation Band which even licensed pilots can overlook or forget is that communications are in the AM mode, not FM, as in the case of the FM broadcast band immediately below it, and the VHF public service and ham bands immediately above it. No matter where you live, you will be able to receive at least the airborne side of many air traffic communications. If you know where to tune, you'll hear any aircraft you can see, PLUS planes a hundred miles away and more, since VHF signals travel "line of sight". An airliner at 35,000 feet altitude in the next state is still line of sight to your antenna. Similarly, whatever ground stations you may hear are also determined by this "line of sight" character of VHF communication. If there are no major obstacles between your antenna and an airport (tall buildings, hills, etc.), you'll be able to hear both sides of many kinds of aviation communication. Be prepared for them to be fast and to the point, and for the same airplane to move to several different frequencies in the span of a few minutes! The most common types of ground services with which pilots communicate is the control tower, ground control, clearance delivery and ATIS or "Automatic Terminal Information System."

At most metropolitan airports, a pilot communicates with the FAA on a frequency called "Clearance Delivery" to obtain approval or clearance of the intended flight plan. This communication is done before contacting ground control for taxi instructions. From the control tower, ground movements on ramps and taxiways are handled on the "Ground Control" frequency, while runway and in-flight maneuvers near the airport (takeoffs, local traffic patterns, final approaches and landings) are on the "Control Tower" frequency. ATIS, or "Automatic Terminal Information System" is a repeated broadcast about basic weather information, runways in use, and any special information such as closed taxiways or runways. Such a broadcast offers an excellent steady signal source for initial adjustment of your receiver. If you are close enough to the airport to receive ATIS, you will hear the Approach Control and the Departure Control transmissions. These air traffic radar controllers coordinate all flight operations in the vicinity of busy metropolitan airport areas, and are called the ATC Center.

When you hear a pilot talking with "Jacksonville Center" or "Indianapolis Center," you know the aircraft is really enroute on a flight rather than just leaving or just approaching a destination. A pilot will be in touch with several different "Regional Centers" during a cross-country flight. These smaller centers are called "Unicom" centers.

Airports without control towers rely on the local "Unicom" frequency dedicated only to advisory communications between pilots and ground personnel such as fuel service operators. The people on the ground can advise the pilot on the status of incoming or outgoing aircraft, but the pilot remains responsible for landing and takeoff decisions. Typical Unicom frequencies are 122.8 and 123.0 MHz.

The FAA's network of Flight Service Stations keeps track of flight plans, provides weather briefings and other services to pilots. Some advisory radio communication takes place between pilots and a regional "FSS." If there is an FSS in your local area, but no airport control towers, the FSS radio frequency will stay interesting.

Fast talking pilot and controllers

Aviation communication is brief, but it is clear and full of meaning. Usually, pilots repeat back exactly what they hear from a controller so that both know that the message or instructions were correctly interpreted. If you are listening in, it is hard to track everything said from a cockpit, particularly in big city areas. Just to taxi, take off and fly a few miles, a pilot may talk with six or eight different air traffic control operations, all on different frequencies, all within a few minutes! Here are the meanings of a few typical communications:

"Miami center, delta 545 heavy out of three-zero for two-five."

Delta Flight 545 acknowledges Miami Center's clearance to descend from 30,000 feet to 25,000 feet altitude. The word "heavy" means that the plane is a jumbo jet such as 747, DC-10, etc.

"Seneca 432 lima cleared to outer marker. contact Tower 118.7."

The local Approach Control is saying that the Piper Seneca with the N-number (tail number) ending in "432L" is cleared to continue flying an instrument approach to the outer marker (a precision radio beacon located near the airport) and should immediately call the airport radio control tower at 118.7 MHz. This message also implies that the controller does not expect to talk again with that aircraft.

"Cessna 723, squawk 6750, climb and maintain five thousand."

A controller is telling the Cessna pilot to set the airplane's radar transponder to code 6750, climb to and fly level at an altitude of 5000 feet.

"United 330, traffic at 9 o'clock, 4 miles, altitude unknown."

The controller alerts United Airlines flight #330 of radar contact with some other aircraft off to the pilot's left at a 9 o'clock position. Since the unknown plane's altitude is also unknown, both controller and pilot realize that it is a smaller private plane not equipped with altitude-reporting equipment.

Active receiver circuit description

Now, take a look at the schematic diagram shown in Figure 13-2. The aircraft band antenna is first coupled through C1 to a three-section tuned LC filter input network. The aircraft band signals ranging from 118 to 135 MHz signals are amplified by VHF transistor Q1 and fed to the input of U1, the SA602 mixer-oscillator. Inductor L6 and its associated capacitor network establish the LO (local oscillator) frequency at 10.7 MHz higher than the incoming 118–135 MHz signals. The local oscillator frequency may be tuned across about 15 MHz by the varactor tuning network formed by diode D1 and resistor R1. The 10.7 MHz difference between the local oscillator and the received signal is fed through the 10.7 MHz ceramic filter FL1, and then amplified by Q2 and the signal is then applied to U2, the MC1350 IF amplifier IC with AGC input. The 10.7 MHz IF is peaked by inductor L7, and the AM audio signal is then demodulated by diode D2 and fed through the four op-amps of U3, the LM324, where volume control, AGC output, audio filtering and squelch functions are managed. The LM386 (U4) is the audio amplifier, and is capable of driving simple communications speakers to excellent volume levels.

Circuit construction

The aircraft band receiver is best constructed on a printed circuit board for best results. Place your schematic diagram in front of you, heat up your 27 to 30 watt pencil tipped soldering iron and prepare to insert

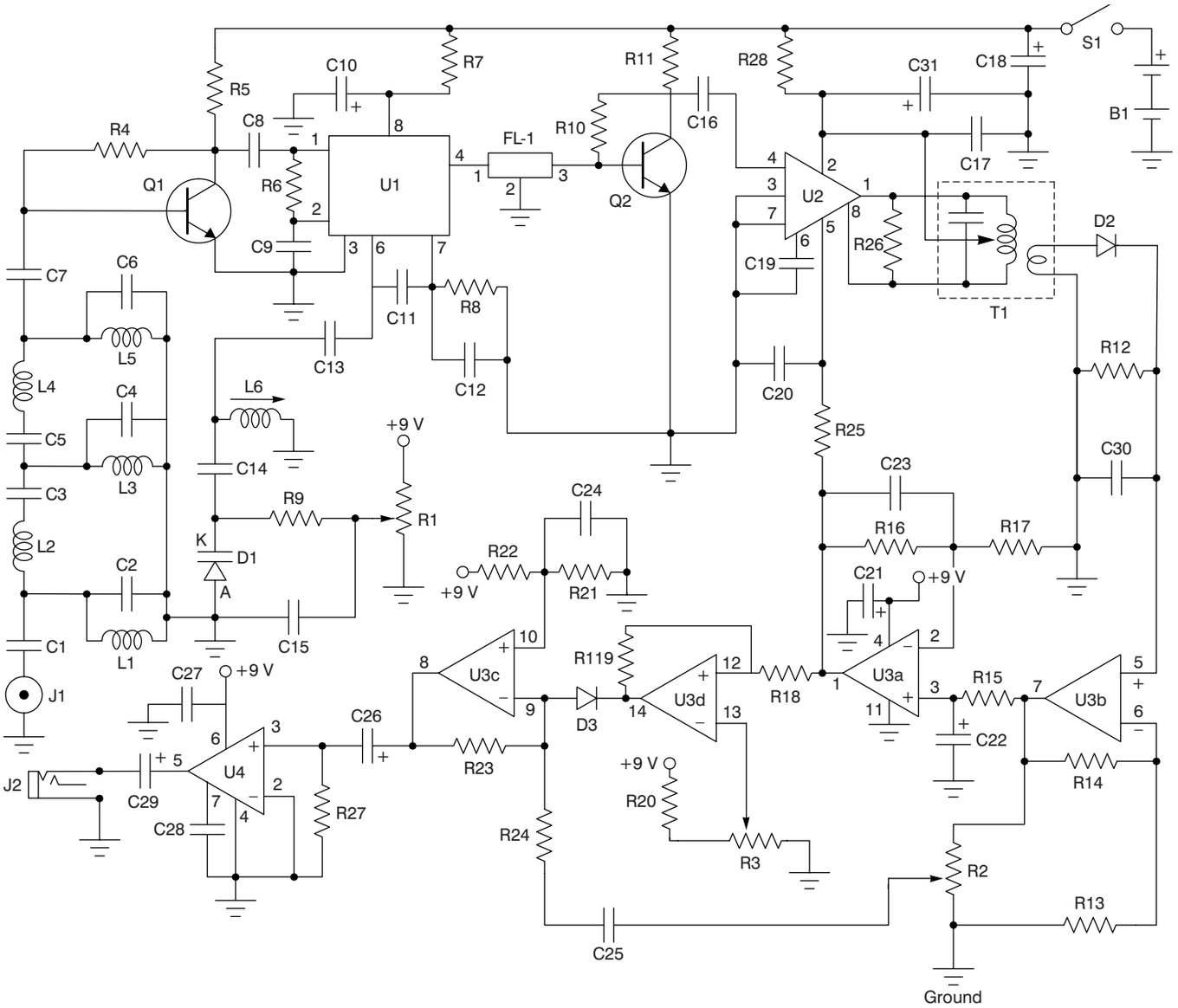

Figure 13-2 *Active aircraft receiver schematic. Courtesy of Ramsey Electronics*

Table 13-1
Resistor color code chart

Color Band	*1st Digit*	*2nd Digit*	*Multiplier*	*Tolerance*
Black	0	0	1	
Brown	1	1	10	1%
Red	2	2	100	2%
Orange	3	3	1,000 (K)	3%
Yellow	4	4	10,000	4%
Green	5	5	100,000	
Blue	6	6	1,000,000 (M)	
Violet	7	7	10,000,000	
Gray	8	8	100,000,000	
White	9	9	1,000,000,000	
Gold			0.1	5%
Silver			0.01	10%
No color				20%

the components into the circuit board. You can fabricate your own circuit board from scratch if you are an experienced builder or you could elect to build the receiver from the kit supplier, Ramsey Electronics, listed in the Appendix. We will build the receiver in sections and will begin first with the antenna and input pre-amplifier section.

Before we go ahead and build the aircraft receiver, let's take a few moments to look at Table 13-1, which illustrates the resistor color chart. Resistors have three or four color bands, which begin at one edge of the resistor body. The first color band represents the resistor's first digit value, while the second color band denotes the second digit of the resistor value. The third color band represents the multiplier value of the resistor. The fourth color band denotes the tolerance value of the resistor. A silver band represents a 10% tolerance, while a gold band notes a 5% tolerance value. The absence of a fourth color band states that the resistor has a 20% tolerance value. Therefore, a 10,000 ohm or 10 k ohm resistor would have a brown band (1) a black band (0) and a multiplier of (000), and an orange band.

Go ahead and install resistors R4, R5 and R6, then solder them in place on the PC board. Then cut the excess leads from the PC board with a pair of end-cutters. Cut the excess leads flush to the PC board.

Next we are going to install the capacitors for the project. Capacitors are described as electrolytic and non-electrolytic types. Electrolytic types are large sized and larger in value than non-electrolytic types. Electrolytic type capacitors have polarity, i.e. both a positive and negative terminal, often with color band and/or (+) or minus (–) marking on them. These electrolytic capacitors must be installed with respect to these polarity markings if you expect the circuit to work correctly. Take your time installing them and refer regularly to both the schematic and parts layout diagrams. Non-electrolytic capacitors can sometimes be very small in size, and often their actual value will NOT be printed on them. A three-digit code is used to help identify these capacitors; refer to Table 13-2. For example, a .001 µF capacitor would be marked with (102), while a .01 µF capacitor would be marked with (103).

Go ahead and install capacitors C1 through C8 into their respective PC holes on the PC board, being sure to observe polarity on the capacitors before installing them on the PC board. Most electrolytics will have a black band or a plus or minus marking next to a pin. Solder the capacitors to the PC board, then remove the excess leads. Next install inductors L1, L2, L3 and L4 into

Table 13-2

Capacitance code information

This table provides the value of alphanumeric coded ceramic, mylar and mica capacitors in general. They come in many sizes, shapes, values and ratings; many different manufacturers worldwide produce them and not all play by the same rules. Some capacitors actually have the numeric values stamped on them; however, many are color coded and some have alphanumeric codes. The capacitor's first and second significant number IDs are the first and second values, followed by the multiplier number code, followed by the percentage tolerance letter code. Usually the first two digits of the code represent the significant part of the value, while the third digit, called the multiplier, corresponds to the number of zeros to be added to the first two digits.

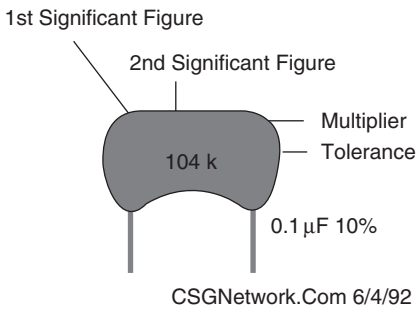

Value	*Type*	*Code*	*Value*	*Type*	*Code*
1.5 pF	Ceramic		1,000 pF /.001 µF	Ceramic / Mylar	102
3.3 pF	Ceramic		1,500 pF /.0015 µF	Ceramic / Mylar	152
10 pF	Ceramic		2,000 pF /.002 µF	Ceramic / Mylar	202
15 pF	Ceramic		2,200 pF /.0022 µF	Ceramic / Mylar	222
20 pF	Ceramic		4,700 pF /.0047 µF	Ceramic / Mylar	472
30 pF	Ceramic		5,000 pF /.005 µF	Ceramic / Mylar	502
33 pF	Ceramic		5,600 pF /.0056 µF	Ceramic / Mylar	562
47 pF	Ceramic		6,800 pF /.0068 µF	Ceramic / Mylar	682
56 pF	Ceramic		.01	Ceramic / Mylar	103
68 pF	Ceramic		.015	Mylar	
75 pF	Ceramic		.02	Mylar	203
82 pF	Ceramic		.022	Mylar	223
91 pF	Ceramic		.033	Mylar	333
100 pF	Ceramic	101	.047	Mylar	473
120 pF	Ceramic	121	.05	Mylar	503
130 pF	Ceramic	131	.056	Mylar	563
150 pF	Ceramic	151	.068	Mylar	683
180 pF	Ceramic	181	.1	Mylar	104
220 pF	Ceramic	221	.2	Mylar	204
330 pF	Ceramic	331	.22	Mylar	224
470 pF	Ceramic	471	.33	Mylar	334
560 pF	Ceramic	561	.47	Mylar	474
680 pF	Ceramic	681	.56	Mylar	564
750 pF	Ceramic	751	1	Mylar	105
820 pF	Ceramic	821	2	Mylar	205

Table 13-3
Coil winding information

L1,L3,L5	1.5 turns #28 ga. magnet wire, 5 mm inner diameter air core - about 1 mm spacing (2-turns works fine)
L2,L4	.33 µH, molded inductor (Digi-Key M9R33-ND)
L6	.1 µH, 3.5 turns, slug tuned coil (Digi-Key TK2816-ND)
L7	10.7 MHz shielded I-F transformer (Mouser 42FIF122) or Circuit Specialists

their respective holes, followed by L5; see Table 13-3 for winding instructions. When you have inserted the inductors, you can solder them in place and then cut the excess component leads flush to the edge of the circuit board.

Before you go ahead and install the transistors and integrated circuits, refer to the semiconductor pin-out diagram shown in Figure 13-3, which will help you orient the components. Now locate and install transistor Q1, being sure you have the correct component before installing it on the PC board. Be sure you can identify all three leads as to their correct pin-outs before inserting it into the circuit board to avoid damage to the circuit once power is later applied. Solder Q1 to the board and then remove the excess leads.

Next we are going to move on to installing the Local Oscillator components. First install resistors R1, R7, R8, and R9 followed by resistors R10, R11, R12 and then resistors R25, R26 and R28. Solder the resistors into their respective locations and be sure to remove the excess lead lengths. Next we will install capacitors C9, C10, C11 and C12 followed by capacitors C13, C16, C17, C19 and C20 followed by C30 and C31. Be sure to observe the polarity of the capacitors when installing them on the board to prevent circuit damage when power is first applied. Install the capacitors into their respective location on the PC board. Once inserted, solder the capacitors to the circuit board and then remove the excess leads.

Now locate diode D1 and D2, and note that the cathode or black band side of the diode points to the battery. Diode D1 is the varactor "tuning" diode. Go ahead and install these diodes, then solder them to the board. Remove the excess leads. Locate transistor Q2 and install it on the PC, once you have identified all the leads. Solder Q2 to the board, and then remove the excess leads with your end-cutter. Now locate and install inductor L6, the 3.5-turn slug tuned coil and L7, the 10.7 I-F transformer. Remember to trim the extra lead lengths as needed. Locate the FL1, the 10.7 MHz ceramic filter, it will have three leads and is usually a small square component. Solder it in place and remove the excess leads. Finally install the 8-pin SA602 local oscillator-mixer at U1. It is advisable to install an IC socket into place in the proper location and then insert the IC into the socket. This is good insurance in the event of a possible component failure at some later point. When inserting the IC into the socket be sure to first identify which pin is #1. Usually each IC will have a small circle or cut-out on the top or top left side of the IC. Usually the pin is just to the right of this indented circle.

Next we will install the LM324 IC circuit components. First locate resistors R13, R14, R15, R16, R17, R18 and R19 followed by resistors R20, R21, R22, R23 and R24. Install these resistors in their respective locations and then solder them in place on the

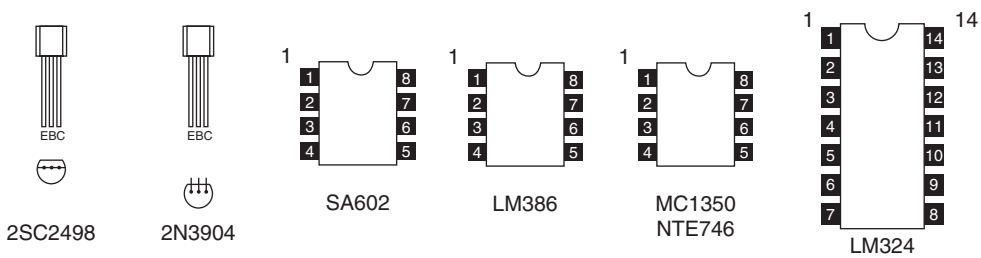

Figure 13-3 *Semiconductor pin-outs*

PC board. Remember to cut the extra leads. Now locate diode D3, remember to observe the polarity when installing D3. Solder the diode in place, then remove the excess lead lengths. Now locate and install capacitors C18, C21, C22 followed by capacitors C23, C24 and C25. Remember electrolytic capacitors have polarity markings and they must be observed for the circuit to operate correctly. You will see either a plus or minus marking at one end of the capacitor. Once installed, solder the capacitors in place and then remove the extra leads by cutting them flush to the circuit board. Finally install an integrated circuit socket for U3 and then place U3 into the socket, but be sure to install it correctly, observing the indented circle as near pin 1 on the IC.

Finally we are going to install the audio amplifier components. First locate resistor R27 and install it on the PC board. Next solder it in place and cut the extra leads. Now, locate and install capacitors C26, C27, C28, and C29. Remember C26 and C27 are electrolytic types, so polarity must be observed before installing them. Finally install an IC socket for U4 the LM386 amplifier IC. When installing U4 be sure to observe the correct orientation before inserting it into the socket to prevent damage when power is applied.

Now you finish up the circuit by installing the 9 volt battery holder, the 9 volt battery clip, followed by switch S1. Once these components have been installed you can locate and install jacks J1 and J2 onto the circuit board.

If you haven't already installed the potentiometers, R1, R2 and R3, go ahead and install them and solder the controls firmly in place. Be sure the mounting tabs are completely soldered for a good mechanical connection.

Let's take a short break and when we return we will inspect the PC board for poor solder joints and "short" circuits before applying power to the circuit board. Pick up the circuit board and bring the foil side of the board up towards you to inspect the board. First, we will look for "cold" or poor solder joints on the PC board. Take a look at each of the solder joints. You want to make sure each of the solder joints appears to look clean, smooth and shiny. If you see any solder joints that look dull or "blobby" then you will need to remove the solder from the joint with a solder-sucker or wick and then re-solder the joint, so that it appears to be clean, shiny and smooth.

Next we will inspect the PC board for "short" circuits. Often "stray" or "cut" component leads will "bridge" across or between circuit traces on the PC board. These possible "shorts" can cause damage to the circuit when power is first applied, so it is best to remove any "bridging" leads or solder blobs or "shorts" before power is sent to the circuit board. Look over the board carefully for any signs of "bridging" wires or blobs of solder. Once you are comfortable with your inspection, you can lay the circuit board back down on the table.

Enclosure recommendations

If your first goal is economy and rugged portability, you will find that the circuit board can be nicely mounted in a standard VHS videotape storage box, which also gives room for a speaker or earphone storage, and even a roll of antenna wire. The controls are easily mounted at one end of such a box. It may be necessary to cut away the molded posts which secure the tape cassette itself. These storage boxes come in several styles, so pick one which truly looks practical as a project enclosure.

The most economical metal enclosure nicely suited for Ramsey PC board kits is the Radio Shack 270-253A. This metal utility cabinet can accommodate one or two different receiver boards plus a speaker, with room for various refinements you might want to add, such as a bigger battery pack, fine tuning control, and so forth. When you have selected your enclosure, you can place the circuit board into the case and mount it. Be sure to allow the extension of the squelch control, the volume control and the tuning control on the front panel of the chassis. The speaker can be mounted on the top of the case, and the earphone and antenna jack can be mounted on the rear of the receiver.

Congratulations, you have successfully completed your active aircraft band receiver. Now you are ready to test and adjust the receiver before setting down and enjoying it. Now, you can attach a speaker or pair of headphones to jack J2. Next, attach a whip antenna to jack J1, and then connect a 9 volt battery to the battery clip leads and we can go ahead and test the active

aircraft receiver. Now, turn the On-Off switch to the "ON" position. Be sure to turn down the squelch control to below the threshold point, so you can hear a hissing sound coming from the speaker or headphone. Now, turn up the volume control to about midway. Take a few minutes to tune up and down the band with the main tuning control. If after about 15 minutes, you do not hear any transmissions on your radio or if you do not hear any hissing sounds from the speaker, then you know there could be a problem with your receiver.

In the event of a problem with your new aircraft band receiver, you will have to disconnect the speaker, antenna and battery and visually inspect the circuit board for any errors. Often a second or new pair of eyes is very helpful in locating problems on circuit boards. The most likely causes of circuit failure are misplaced components or components such as diodes and electrolytic capacitors installed backwards. The second most likely cause for problems are semiconductors, such as transistors installed backwards. Be sure to re-check the manufacturer data sheets for proper pin-out information when installing the transistors. Finally, check the orientation of the integrated circuits in their respective sockets; sometimes the ICs can be put in backwards in their sockets causing the circuit to malfunction. Once you have fully inspected and hopefully located your problem, you can reconnect the battery, headphones and antenna and then retest the receiver once again.

Antenna considerations

An antenna for your new aircraft receiver can be as simple as a 21″ piece of wire, an extendable whip antenna or a roof-mounted ground-plane aviation antenna. Most folks near an airport will get plenty of in-the-air action from a wire or whip antenna, but if you're more than a few miles away, a decent roof-mount antenna is the way to go. Radio Shack sells an ideal antenna designed for scanners which covers the aircraft band nicely and it costs around $30. A low cost TV antenna works well, even better if rotated 90 degrees (remember aircraft antennas are vertically polarized).

Adjustment and alignment

Alignment of the air-band receiver consists of simply adjusting L6 for the desired tuning range and peaking the IF transformer (L7). If you are using a signal generator, frequency counter or other VHF receiver for calibration, remember that you want to set the local oscillator frequency 10.7 MHz higher than the desired signal or range to be received. Adjustment of the L6 oscillator coil MUST be made with a non-metallic alignment tool. The use of a metal tool of any kind will detune the coil drastically, making alignment almost impossible. Also, if you're receiving FM broadcast stations, you have the slug tuned too far down in the coil form. Turn it until it is higher in the form and try again. One other thing that you can do to improve the operation of your kit is to spread out the three 2-turn coils at the antenna input, L1, L3, and L5. Stretching these out will give you greater sensitivity.

Once you know you are receiving aircraft or airport transmissions, adjust the IF transformer (L7) for best reception. Typically, L7 is adjusted 2–3 turns from the top of the shield can. If you don't have any signal reference equipment at home, and are not yet hearing airplanes, your best bet is to pack up your AR1C and needed tools and head for the nearest airport! If there is no control tower, don't hesitate to visit a general aviation service center on the airport grounds. If you've never done this before, you will probably find it to be a fun and interesting experience. Ask which are the most active frequencies and adjust L6 and your front panel tuning control until you hear the action. A ground service operator or private pilot may be willing to give you a brief test transmission on the 122.8 Unicom frequency. Remember, also, that if your airport has ATIS transmissions, you can get a steady test signal as soon as you are line-of-sight with its antenna.

The aircraft receiver does not produce a loud hiss when no signal is being received (unlike an FM receiver or expensive AM receiver); this is due to the somewhat limited amount of IF or Intermediate Frequency gain. Increasing the IF gain would produce a hiss and marginally better sensitivity (about a microvolt) but also require much more alignment, AGC circuitry, and builder ability—far beyond the intention of this kit.

Tuning the aircraft receiver

With the varactor tuning control capable of going across 10–15 MHz, and with pilots and controllers talking so briefly, you will need to get used to tuning your receiver! You'll find that ANY knob gives smoother tuning than the bare control shaft, and that a "vernier" dial will make the procedure even easier—but at the expense of being able to check up and down the band quickly, which you might like to do if you're tracking the same airplane. The air-band receiver is designed to let you explore the entire communications section of the aviation band. If you become really interested only in being able to check a certain frequency such as a nearby FAA control tower, or Unicom, it will be helpful to mark that spot on a dial template such as is reproduced for your convenience below.

"VOR" or "OMNI" transmissions

While driving around the countryside you may have come across a tall white "cone" structure near your airport or in the middle of a big farming field; it is useful for you to know that these are VHF navigational aids operating in the 118–135 MHz frequency range, just below the air-ground communications range, sending a steady signal which may be helpful in initial alignment. If you tune in such a signal on your receiver, remember that you will have to increase the local oscillator frequency later in order to listen to air traffic communications.

Passive aircraft receiver

The passive air-band receiver is a type of "crystal" radio which contains no local oscillator which might interferes with the on-board aircraft's sensitive electronics. The passive aircraft receiver broadly tunes from 118 MHz to 136 MHz, and was designed to listen-in to in-flight communications between your pilot and the control tower. The passive aircraft receiver is shown in Figure 13-4. The passive aircraft receiver can be built small enough to place inside your vest pocket and it operates from an ordinary 9 volt battery.

The passive aircraft receiver is basically an amplified type of "crystal radio" designed to receive AM aircraft transmissions. The "passive" design uses no oscillators or other RF circuitry capable of interfering with aircraft communications. This receiver utilizes a coil/capacitor tuned "front-end," which feeds an RF signal to a detector diode. The tuning capacitor may be any small variable with a range from about 5 pF to about 15 or 20 pF. The 0.15 µH inductor may be a molded choke or a few turns wound with a small diameter. Experiment with the coil to get the desired tuning range. The aircraft frequencies are directly above the FM band so a proper inductor will tune FM stations with the capacitor set near maximum capacity. (The FM stations will sound distorted since they are being slope detected.) A 1N34 germanium detector diode or a Schottky diode like the 1N5711 or HP2835 should be used as the detector diode in this receiver circuit. The 10 megohm resistors provide a small diode bias current for better detector efficiency.

The LM358 dual op-amp amplifier draws under 1 ma so the battery life should be quite long. Potentiometer R3 is used to adjust the gain to the second stage of the dual op-amp. The second op-amp stage drives a 100 ohm resistor in series with a 100 µF capacitor. You must use a high impedance "crystal" headphone, since the op-amp output will not drive a speaker directly. A speaker amplifier may be added to drive a speaker or low-z earphone, if desired, but the power consumption will increase sharply, as will the size of the receiver.

The passive aircraft receiver is powered from an ordinary 9 volt transistor radio battery. The entire aircraft band receiver can be built inside a small plastic box. Simply mount an SPST slide switch on the side of the case to apply power to the circuit. If you elect, you can install a ⅛″ phone jack for the "crystal" headphone.

Construction

The passive air-band receiver can be constructed on a regular circuit board or it could be built on a

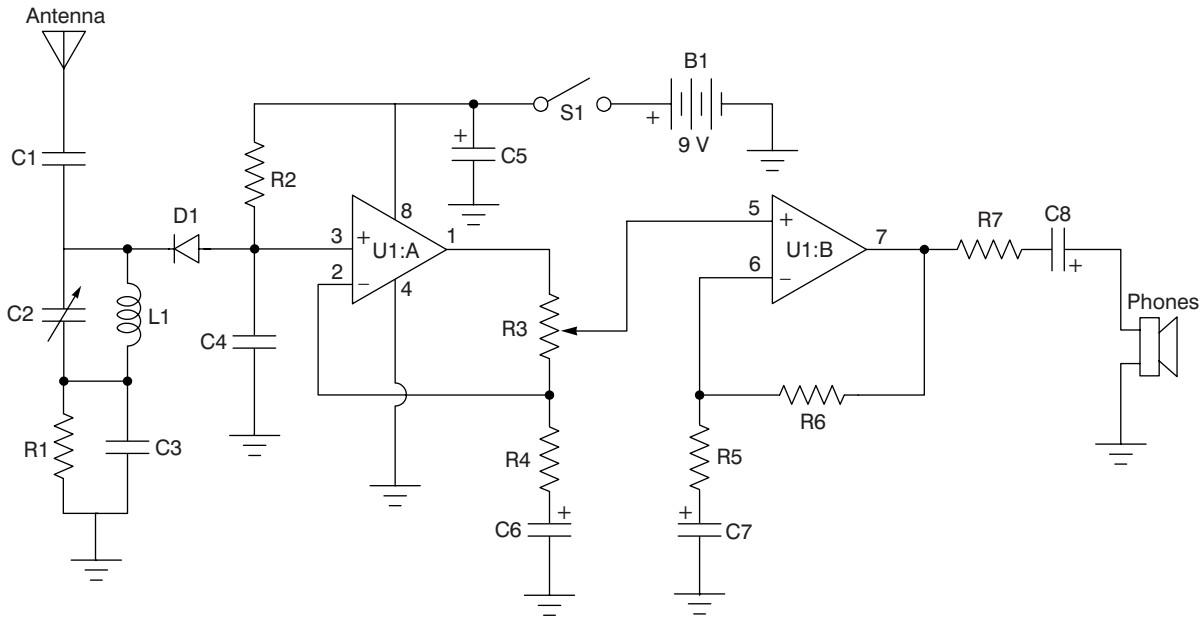

Figure 13-4 *Passive aircraft receiver schematic*

"quick-board" which contains ready-made circuit traces, these are available at Radio Shack stores.

You may want to lay out the circuit so that the tuning control is at one edge of the board, which will make things a little easier when installing the circuit in an enclosure. Building the circuit is pretty straightforward and should only take a few hours to build. Refer to Table 13-1 for identifying the resistors and Table 13-2 for identifying the small capacitors in the circuit. Remember it is very important to install the diode correctly with respect to its polarity in order for the circuit to work properly. The passive air-band receiver also contains a few electrolytic capacitors, and you will remember that these devices have polarity and it must be observed for the circuit to work. The aircraft receiver uses a dual op-amp to amplify the signals and you will have to ensure that it is installed correctly. An integrated circuit is highly recommended for the op-amp. In the event of a circuit failure at some later date, it is much easier to simply unplug an IC rather than trying to un-solder one from a PC board to replace it with a new one. When installing the IC into its socket, you will have to make sure that you orient it correctly. An IC will typically have a notch or small cut-out at one end of the IC case. Pin one (1) will be to the left of the cut-out of notch when viewed from the top of the IC. In this project pin 1 of the IC connects to potentiometer R3, while pin 8 of the IC is connected to the power source. Note that pin 4 of the IC is connected to the circuit ground.

You can elect to use a small speaker in this circuit, but in order to make a miniature receiver you may want to simply use a small ⅛″ mini jack and just plug into a pair of small earphones. The circuit is powered from a standard 9 volt battery; remember the black or minus (–) battery clip is connected to ground, while the plus (+) or red battery clip lead is connected to capacitor C5 at the plus (+) end.

You will want to have the tuning capacitor C2 near the edge of the circuit board, so that you can allow the tuning knob to protrude through the case so you can easily tune the receiver. Once the receiver has been completed, you should take a few minutes rest.

After the break, you should inspect the foil side of the circuit board for any "cold" solder joints. Cold solder joints often look dark, dull or "blobby." If you see any solder joints that look this way, you should re-solder the connections. You should also take a moment to examine the circuit board for any "short-circuits" which may be the result of a "stray" component lead shorting between circuit traces.

You can make yourself an antenna from a piece of stiff 20 ga. wire as a whip antenna to capacitor C1, or install a miniature jack in order to plug in a

whip antenna. The antenna can be a 6″ piece of #20 ga. stiff solid copper wire or a small telescoping aluminum antenna connected to capacitor C1. Radio Shack has a good selection of whip antennas. You could elect to solder the wire antenna directly to C1 and just bring the antenna out the top of the enclosure, or you could install a small ½″ mini jack for the antenna on the rear of the enclosure. The selectivity is reduce as the antenna length is increased so best performance is achieved with the shortest acceptable antenna. Try increasing the 1.8 pF capacitor value when using very short antennas and decreasing it for long antennas. In order to "tune" the passive aircraft receiver you can either leave a small hole on the side of the plastic enclosure to adjust the frequency using a plastic tuning tool, or you need to find a way to attach a plastic knob onto the tuning screw; you will have to drill a larger hole in the case to bring the knob outside the case for easy tuning.

To test the passive aircraft receiver, park near your local airport. Turn on the passive air-band receiver, attach your wire antenna or pull up your telescoping antenna and tune the receiver. You should try to listen when you see an aircraft take-off or land or when you see an aircraft taxiing along the runway. If you can get close to the tower in a small airport, that should ensure that you will be able to test your receiver adequately. As you see a plane arrive or leave, "tune" around the band and you should hear either the pilot or the control tower. If you plan on taking the passive aircraft receiver on-board an aircraft to listen-in to the pilot during your flight, you should ask the pilot or stewardess if it is permitted aboard your aircraft. Generally you are given permission without a problem. Enjoy building and using your new aircraft receivers!

Chapter 14

VLF or Very Low Frequency Radio Receiver

Parts list

VLF Whistler Receiver

R1,R4 10k ohm ¼w, 5% resistor

R2,R3 22k ohm ¼w, 5% resistor

R5 6.2 megohm, ¼w 5% resistor

R6 1 meg ohm potentiometer (trimpot) - single turn

R7 10 megohm, ¼w 5% resistor

R8 1k ohm, ¼w 5% resistor

R9 1k ohm, ¼w 5% resistor

R10 3.3k ohm, ¼w 5% resistor

R11,R12 820 ohm, ¼w 5% resistor

R13 10k ohm potentiometer (panel)

R14,R17 10 ohm, ¼w, 5% resistor

R15,R16 2.2k ohm, ¼w, 5% resistor

C1,C3 47 pF, 35 volt mica capacitor

C2 100 pF, 35 volt mica capacitor

C4,C5,C6 3.3 nF, 35 volt mylar capacitor

C7,C15 .01 µF, 35 volt ceramic disk capacitor

C8 27 pF, 35 volt mica capacitor

C9 1 µF, 35 volt electrolytic capacitor

C10 .18 µF, 35 volt tantalum capacitor

C11 .12 µF, 35 volt tantalum capacitor

C12 1.8 µF, 35 volt tantalum capacitor

C13 .68 µF, 35 volt tantalum capacitor

C14 .22 µF, 35 volt tantalum capacitor

C16 .068 µF, 35 volt tantalum capacitor

C17,C18 .22 µF, 35 volt tantalum capacitor

C19 .05 µF, 35 volt ceramic disk capacitor

C20,C22,C24 100 µF, 35 volt electrolytic capacitor

Copyright © 2008 by The McGraw-Hill Companies, Inc. Click here for terms of use.

C21,C23 .1 µF,35 volt ceramic disk capacitor

L1 120 mH coil (Mouser electronics)

L2 150 mH coil (Mouser electronics)

L3 18 mH coil (Mouser electronics)

L4 56 mH coil (Mouser electronics)

Q1a,Q1b U401 Siliconix Dual matched N-Channel FETs

Q2 MPSA56 transistor

U1 LM386 op-amp

S1 DPDT toggle switch (trap)

S2 DPDT toggle switch (high-pass)

S3 DPDT toggle switch (low-pass)

B1 9 volt transistor radio battery

J1,J2 ⅛ mini phone jack w/switch

J3 SO-238 UHF chassis jack

P1 PL259 UHF plug

P2 binding post (ground)

Misc PC board, IC socket, solder, wire, antenna, battery holder

Battery clip, hardware, chassis

"Natural Radio" is a name sometimes used for describing radio noise with natural origins, mainly due to but not confined to lightning. At first suggestion, you may think that listening to lightning crackles would be dull or uninteresting, but electromagnetic radiation from lightning can travel great distances and undergo strange modifications along the way. The frequencies of the original pulse can be spread out in time (a process called "dispersion") since the higher frequencies travel a little faster than the lower. The result is that the short impulse from a lightning strike in South America can sound like a chirp in Texas. Slower sweeping tones are called "whistlers" and they are a bit of a mystery. The energy from a lightning bolt streams out into space into a region called the "magnetosphere," magnetized plasma created by the interaction of solar wind with the Earth's magnetic field. The lightning pulse is reflected or "ducted" back down to Earth after a very long trip during which time the frequencies are spread out by a dispersion-like process. Short whistlers might be due to dispersion, but some whistlers last five seconds so ordinary dispersion is probably inadequate an explanation. A radio wave can travel a million miles in five seconds, so to accumulate that much difference in arrival times, the signal would have to travel hundreds of millions of miles, assuming a pretty steep dispersion curve. More likely, the whistler is an emission from the magnetosphere triggered by the lightning pulse. When conditions are just right, numerous lightning strikes combine with numerous reflections to give an eerie chorus that sounds a bit like a flock of geese.

Most people have never heard of Natural Radio produced by several of natures's processes, including lightning storms and aurora, aided by events occurring on the Sun. The majority of Earth's natural radio emissions occur in the extremely-low-frequency and very-low-frequency (ELF/VLF) radio spectrum. Whistlers, one of the more frequent natural radio emissions to be heard, are just one of many natural radio "sounds" the Earth produces at all times in one form or another, and these signals have caught the interest and fascination of a small but growing number of hobby listeners and professional researchers for the past four decades.

Whistlers are amazing sounding bursts of ELF/VLF radio energy initiated by lightning strikes which "fall" in pitch. A whistler, as heard in the audio output from a VLF or "whistler" receiver, generally falls lower in pitch, from as high as the middle-to-upper frequency range of our hearing downward to a low pitch of a couple hundred cycles-per-second (Hz). Measured in frequency terms, a whistler can begin at over 10,000 Hz and fall to less than 200 Hz, though the majority are heard from 6000 down to 500 Hz. Whistlers can tell scientists a great deal of

the space environment between the Sun and the Earth and also about Earth's magnetosphere.

The causes of whistlers are generally well known today though not yet completely understood. What is clear is that whistlers owe their existence to lightning storms. Lightning stroke energy happens at all electromagnetic frequencies simultaneously. The Earth is literally bathed in lightning-stroke radio energy from an estimated 1500 to 2000 lightning storms in progress at any given time, triggering over a million lightning strikes daily. The total energy output of lightning storms far exceeds the combined power output of all man-made radio signals and electric power generated from power plants.

Whistlers also owe their existence to Earth's magnetic field (magnetosphere), which surrounds the planet like an enormous glove, and also to the Sun. Streaming from the Sun is the Solar Wind, which consists of energy and charged particles, called ions. And so, the combination of the Sun's Solar Wind, the Earth's magnetosphere surrounding the entire planet, and lightning storms all interact to create the intriguing sounds and great varieties of whistlers.

How do whistlers occur from this combination of natural solar-terrestrial forces? Some of the radio energy bursts from lightning strokes travel into space beyond Earth's ionosphere layers and into the magnetosphere, where they follow approximately the lines-of-force of the Earth's magnetic field to the opposite polar hemisphere along "ducts" formed by ions streaming toward Earth from the Sun's Solar Wind. Solar-Wind ions get trapped in and aligned with Earth's magnetic field. As the lightning energy travels along a field-aligned duct, its radio frequencies become spread out (dispersed) in a similar fashion to light shining into a glass prism. The higher radio frequencies arrive before the lower frequencies, resulting in a downward falling tone of varying purity.

A whistler will often be heard many thousands of miles from its initiating lightning stroke—and in the opposite polar hemisphere! Lightning storms in British Columbia and Alaska may produce whistlers that are heard in New Zealand. Likewise, lightning storms in eastern North America may produce whistlers that are heard in southern Argentina or even Antarctica. Even more remarkably, whistler energy can also be "bounced back" through the magnetosphere near (or not-so-near) the lightning storm from which it was born!

Whistlers are descending tones. Their duration can range from a fraction of a second to several seconds, with the rate of frequency shift steadily decreasing as the frequency decreases. A whistler's note may be pure, sounding almost as if it was produced using a laboratory audio signal generator; other whistlers are more diffuse, sounding like a breathy "swoosh" or composed of multiple tones. On occasion, some whistlers produce echoes or long progressions of echoes, known as "echo trains," that can continue for many minutes.

Whistlers can occur in any season. Some types are more likely to be heard in summer than winter and vice-versa. Statistically, the odds are especially high for good whistler activity between mid-March and mid-April.

Whistlers and the sounds of the dawn chorus are not heard equally well everywhere in the world. Reception of these are poor in equatorial regions, with best reception at geomagnetic latitudes above 50°. Fortunately the continental United States and Canada are well positioned for reception of whistlers and other signals of natural radio.

Considered by many listeners to be the "Music of Earth", whistlers are among the accidental discoveries of science. In the late 19th century, European long-distance telegraph and telephone operators were the first people to hear whistlers. The long telegraph wires often picked up the snapping and crackling of lightning storms, which was mixed with the Morse code "buzzes" or voice audio from the sending station. Sometimes, the telephone operators also heard strange whistling tones in the background. They were attributed to problems in the wires and connections of the telegraph system and disregarded.

The first written report of this phenomenon dates back to 1886 in Austria, when whistlers were heard on a 22-km (14 mile) telephone wire without amplification. The German scientist, H. Barkhausen, was eavesdropping on Allied telephone conversations during World War I. In order to pick up the telephone conversations, he inserted two metal probes in the ground some distance apart and connected these to the input of a sensitive audio amplifier. He was surprised to hear whistling tones which lasted for one or two seconds and which glided from a high frequency in the audio range to a

lower frequency where they disappeared into the amplifier or background noise level. On occasion, the whistlers were so numerous and loud that he could not detect any type of telephone.

Later, three researchers from the Marconi Company in England reported in 1928 on the work they had done in whistler research. Eckersley, Smith, and Tremellen established a positive correlation between whistler occurrence and solar activity, and they found that whistlers frequently occur in groups preceded by a loud click. The time between the click and the whistlers was about three seconds. They concluded that there must have been two paths of propagation involved; one for the click which preceded the whistler, and a second, much longer path, over which the whistler and its echoes propagated.

Eckersley was able to show in 1931 that Earth's magnetic field permits a suitably polarized wave to pass completely through the ionosphere. This was in accordance with the magneto-ionic theory. Tremellen had on one occasion observed that during a summer thunderstorm at night every visible flash was followed by a whistler. This served as the first definite evidence of the relationship between lightning discharges and whistlers—the click being the lightning discharged which caused the whistler. As the Marconi workers continued their research, they also discover a new type of atmospheric which sounded somewhat like the warbling of birds. Since the sound tended to occur most frequently at dawn, they gave it the name *dawn chorus*.

L.R.O. Storey of Cambridge University began an intensive study of whistlers in 1951. He confirmed Eckersley's law which showed that most whistlers originate in ordinary lightning discharges, and found the path of propagation of the whistler to be along the lines of the Earth's magnetic field.

Other interesting sounds include "tweeks," which have been described by one listener as a cross between chirping birds and a hundred little men hitting iron bars with hammers. The ephemeral "dawn chorus," is a cacophony of sounds that resembles nothing else on Earth.

Tweeks are abrupt descending notes that resemble "pings." They are usually heard at night during the winter and early spring.

The dawn chorus has been variously described as sounding like birds at sunrise, a swamp full of frogs, or seals barking. In fact, it varies constantly. "Hooks," "risers," and "hiss" are all part of the dawn chorus, but sometimes these sounds are also heard as solitary events. A hook starts out like a whistler but then abruptly turns into a rising tone. Risers increase in frequency from beginning to end. And hiss sounds just like its name. Appropriately enough, dawn chorus is best heard around dawn, but it may occur at any time of the day or night. The dawn chorus is most likely to be heard during and shortly after geomagnetic storms.

A whistler receiver

You cannot easily buy a radio capable of tuning 1 to 10 kHz, but it is possible to build a sensitive receiver to permit you to hear the sounds of natural radio. We will explore what causes these sounds and see how you can study them yourself.

A whistler receiver, even though whistlers and related emissions occur at acoustical frequencies, is a receiver of radio signals. To hear whistlers, you must intercept their electromagnetic energy with an antenna and transform it to the mechanical vibrations to which our ears respond.

The "classic" whistler receiving system consists of an antenna for signal collection, an amplifier to boost the signal level, and headphones or a speaker to transform the signal to sound waves. (A magnetic tape recorder can be substituted for the headphones or speaker.) A whistler receiver can simply be an audio amplifier connected to an antenna system. However, powerful man-made interference immediately above and below the frequencies of interest tend to seriously overload receivers of this sort and make reception of whistlers and related phenomena difficult.

To overcome these problems, a good whistler receiver circuit includes a circuit called a low-pass filter that attenuates all signals above 7 kHz. This greatly reduces interference from such sources. To escape interference from AC power lines and other forms of non-natural radio noise, the receiver is designed for portable operation "in the field" away from such interference sources.

A sensitive dual FET whistler receiver is shown in the photo in Figure 14-1, and in the schematic diagram in Figure 14-2. The antenna is first fed to an RF filter

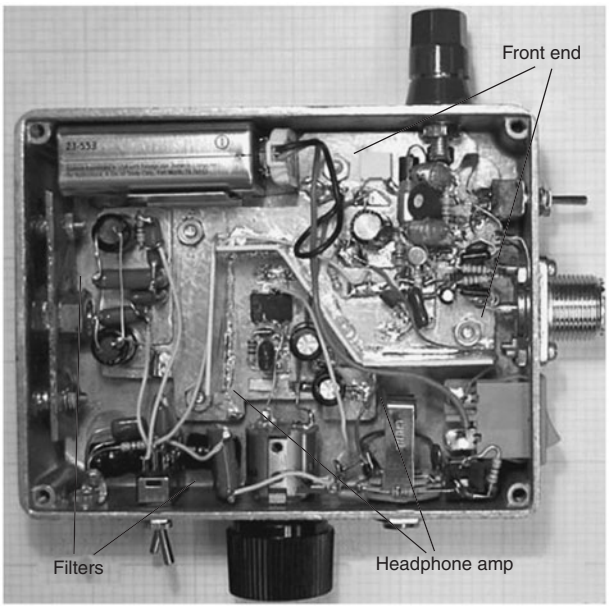

Figure 14-1 *VLF whistler receiver*

which is composed of resistors R1 through R4 and capacitors C1 through C3. This filter only allows the desired frequencies to be sent to the next section of the receiver. The RF filter is next fed to the 60 Hz filter or "trap" which filters out 60 Hz power line frequencies before the RF signals are amplified. The 60 Hz filter can be switched in and out of the circuit with switch S1:a. The dual matched FET transistor Q1 along with transistor Q2 are used to amplify the RF signals of the desired band of frequencies. The amplified signals are then fed to the input of a set of selectable filters which can be switched in and out of the circuit. Toggle switch S2 is used to switch in the high-pass filter circuit, while switch S3 is used to switch-in the low-pass filter. You can select either or both filters if desired.

The output of the low-pass filter circuit is coupled to the final audio amplifier stage via capacitor C17. Potentiometer R12 controls the audio level entering the LM386 audio amplifier at U1; also note that R12 also contains a switch S5, which is used to supply power to the LM386 audio amplifier. The output of the LM386 is coupled to an audio output jack via capacitor C20. Note that capacitor C18 is coupled to a recorder output jack to allow a chart recorder or analog to digital converter to be used to monitor and record the output from the whistler receiver. The whistler receiver is powered from a 9 volt battery for both stationary and field receiving applications.

Building a whistler receiver

Before we start building the Whistler receiver, you will need to locate a clean, well lit and well ventilated area. A workbench or large table top to spread out all you diagrams, components and tools for the project. First, you will need a small pencil tipped 27 to 33 watt soldering iron, a spool of 22 ga. 60/40 tin/lead solder, and a small jar of "Tip Tinner." "Tip Tinner" is a soldering iron tip cleaner/dresser and is available at your local Radio Shack store. You will also want to locate a few small tools such as a pair of end-cutters, a pair of needle-nose pliers, a pair of tweezers and a magnifying glass. Look for a small flat-blade screwdriver as well as a small Phillips screwdriver to round out your tools for the project. Next locate all the components for the Whistler project as well as all of the diagrams including the schematic, parts layout diagram and the necessary charts and tables and we will begin.

In order to construct a stable well performing radio receiver, it is recommended practice to build the Whistler receiver on a printed circuit board, with large ground plane areas. You will need to use good RF building practices, such as keeping leads as short as possible, clean solder joints, etc. With your circuit board in hand we will begin building the circuit.

Take a look at the schematic diagram and you will notice that there are dotted or dashed lines. These dashed lines represent shielded compartments on the circuit board. These shielded areas are used to separate different portions of the circuit from one another. You can create a shielded area by soldering a vertical piece of scrap circuit board material onto the circuit board ground plane areas on the circuit board. You could also modularize the circuit building three small circuit boards, one for the RF filter and "trap" circuit, one for the high-pass and low-pass filter, and a third board for the audio amplifier and power circuit. Small metal shield covers could be built using scrap circuit board material.

First, you will need to locate the resistors for the project, and you will also want to refer to the resistor color code chart in Table 14-1, which will help you to identify each of the resistors. Resistors generally have three or four color bands which are used to denote the

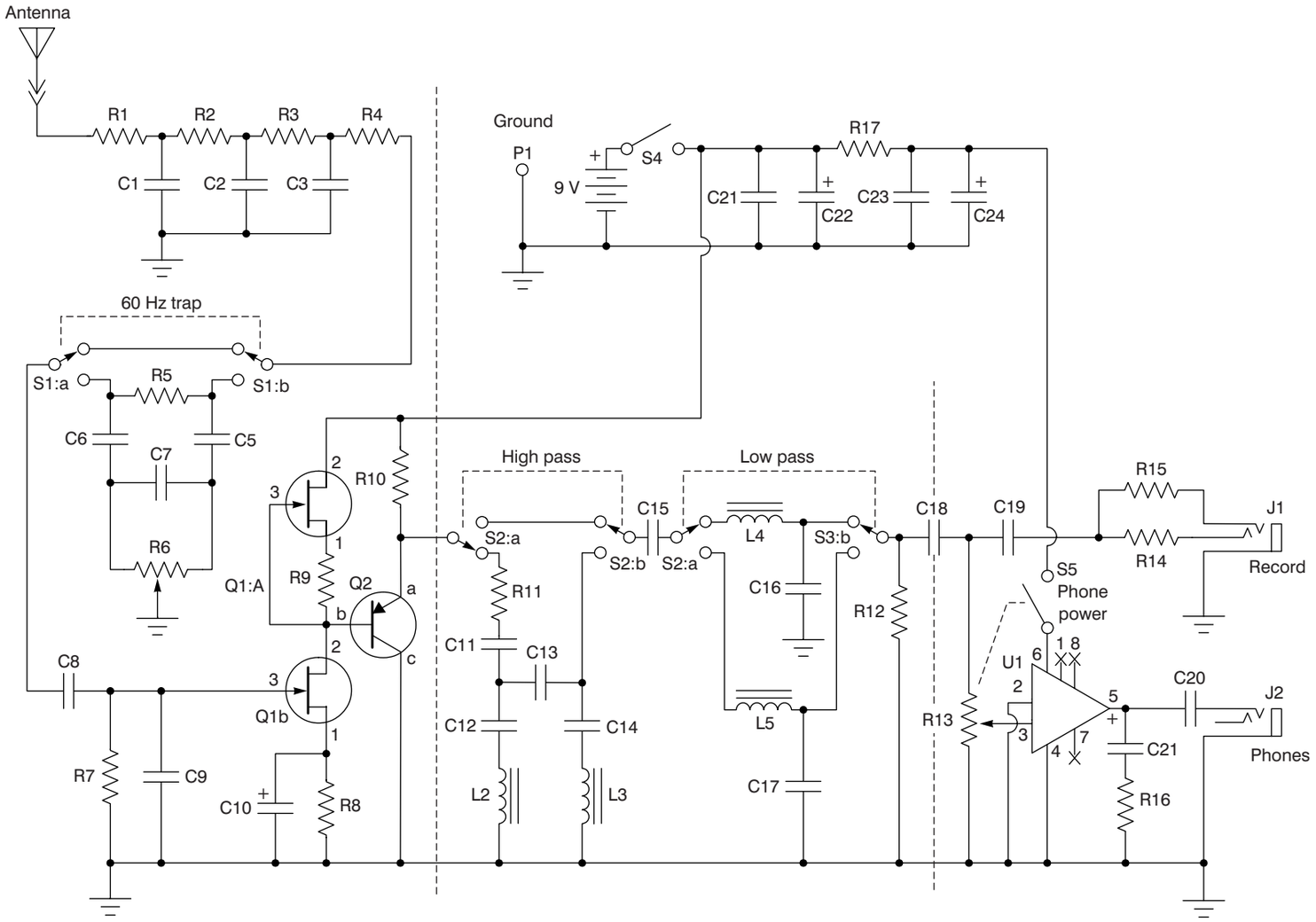

Figure 14-2 *FET VLF receiver schematic. Courtesy of Eric Vobel*

Table 14-1
Resistor color code chart

Color Band	*1st Digit*	*2nd Digit*	*Multiplier*	*Tolerance*
Black	0	0	1	
Brown	1	1	10	1%
Red	2	2	100	2%
Orange	3	3	1,000 (K)	3%
Yellow	4	4	10,000	4%
Green	5	5	100,000	
Blue	6	6	1,000,000 (M)	
Violet	7	7	10,000,000	
Gray	8	8	100,000,000	
White	9	9	1,000,000,000	
Gold			0.1	5%
Silver			0.01	10%
No color				20%

resistor's value. The first color band will be closest to one edge of the resistor. The first color band represents the first digit of the value. Resistor R1, for example, is a 10k ohm resistor. Its first color band would be brown (1), the second color band would be black (0) and the third color band which denotes the resistor's multiplier value would be orange or (000), so 10,000 or ten thousand ohms. A fourth color band represents the resistor's tolerance value. The absence of a fourth color band denotes a 20% tolerance, while a silver band represents a 10% tolerance and a gold denotes a 5% tolerance resistor. Use the color code chart to identify resistors R1, R2 and R3. When you are confident that you know the color codes and can identify these resistors, you can go ahead and solder these resistors onto the circuit board. Use your end-cutters to cut the excess component leads flush to the edge of the circuit board. Now locate another grouping of resistors and install them to the circuit board, then solder them in place on the PC board. Remember to trim the extra component lead lengths from the PC board. Install the remaining resistors onto the circuit board, until all have been mounted to the board, solder them in place and trim the leads as necessary.

Next, we are going to install the capacitors for the Whistler receiver. Capacitors come in two major types, i.e. electrolytic and non-electrolytic. Generally the non-electrolytic capacitors are the small types such as ceramic disks, mylar or polyester types. These small capacitors may have their actual value printed on them, or if the capacitors are very small may instead have a three-digit code printed on them. Refer to the chart in Table 14-2, which will help you identify these capacitors. A .001 µF capacitor, for example, would have (102) marked on the body of the device to denote its value of .001 µF. Electrolytic capacitors are generally the larger capacitors with polarity marking on them. You will find either a black or white color band on them or a plus (+) or minus (–) marking on them. Electrolytic capacitors have polarity, so this means that you have to orient them correctly while installing them in order for the circuit to work properly. Reversing electrolytic capacitors can often cause the circuit to malfunction, and it can destroy the component and/or the circuit itself, so be careful when installing them. Refer to the schematic and the parts layout diagram when installing electrolytic capacitors.

Let's begin installing the capacitors now. Try and separate the electrolytic capacitors from the other types of capacitors. Locate a few of the non-electrolytic capacitors, identify them and install a few of the capacitors on the circuit board. Go ahead and solder these capacitors onto the PC board, once you are sure you have correctly identified them. Trim the excess

Table 14-2

Capacitance code information

This table provides the value of alphanumeric coded ceramic, mylar and mica capacitors in general. They come in many sizes, shapes, values and ratings; many different manufacturers worldwide produce them and not all play by the same rules. Some capacitors actually have the numeric values stamped on them; however, many are color coded and some have alphanumeric codes. The capacitor's first and second significant number IDs are the first and second values, followed by the multiplier number code, followed by the percentage tolerance letter code. Usually the first two digits of the code represent the significant part of the value, while the third digit, called the multiplier, corresponds to the number of zeros to be added to the first two digits.

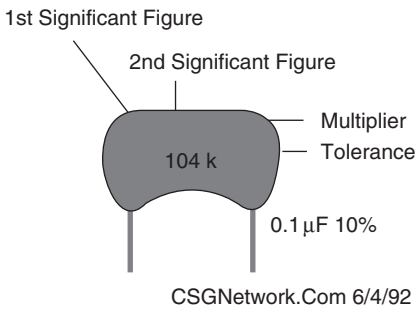

Value	*Type*	*Code*	*Value*	*Type*	*Code*
1.5 pF	Ceramic		1,000 pF /.001 µF	Ceramic / Mylar	102
3.3 pF	Ceramic		1,500 pF /.0015 µF	Ceramic / Mylar	152
10 pF	Ceramic		2,000 pF /.002 µF	Ceramic / Mylar	202
15 pF	Ceramic		2,200 pF /.0022 µF	Ceramic / Mylar	222
20 pF	Ceramic		4,700 pF /.0047 µF	Ceramic / Mylar	472
30 pF	Ceramic		5,000 pF /.005 µF	Ceramic / Mylar	502
33 pF	Ceramic		5,600 pF /.0056 µF	Ceramic / Mylar	562
47 pF	Ceramic		6,800 pF /.0068 µF	Ceramic / Mylar	682
56 pF	Ceramic		.01	Ceramic / Mylar	103
68 pF	Ceramic		.015	Mylar	
75 pF	Ceramic		.02	Mylar	203
82 pF	Ceramic		.022	Mylar	223
91 pF	Ceramic		.033	Mylar	333
100 pF	Ceramic	101	.047	Mylar	473
120 pF	Ceramic	121	.05	Mylar	503
130 pF	Ceramic	131	.056	Mylar	563
150 Pf	Ceramic	151	.068	Mylar	683
180 pF	Ceramic	181	.1	Mylar	104
220 pF	Ceramic	221	.2	Mylar	204
330 pF	Ceramic	331	.22	Mylar	224
470 pF	Ceramic	471	.33	Mylar	334
560 pF	Ceramic	561	.47	Mylar	474
680 pF	Ceramic	681	.56	Mylar	564
750 pF	Ceramic	751	1	Mylar	105
820 pF	Ceramic	821	2	Mylar	205

component leads from the PC board. Install a few more non-electrolytic capacitors and solder them to the board, remember to cut the extra leads from the board. Install the remaining non-electrolytic capacitors to the circuit board and solder them in place.

Next, locate the electrolytic capacitors and we will install them on the PC board. Refer to the schematic and parts layout diagrams to make sure you can orient the capacitors correctly before soldering them. Place a few electrolytic capacitors on the board and solder them in, trim the excess leads as necessary. Add the remaining electrolytic capacitors on to the PC board and solder them in place.

The Whistler receiver also has a number of coils in the circuit, most of them are low cost and readily available from Mouser Electronics, see Appendix. Identify the coils for the project and place them in their respective locations on the PC board. Now, solder them in place and remember to trim the excess component leads flush to the edge of the circuit board.

Looking at the circuit you will notice three transistors, more correctly one dual FETs and one conventional transistor. Before we go ahead and install the semiconductors, take a quick look at the semiconductor pin-out diagram shown in Figure 14-3. The FETs are very sensitive to static electricity damage, so be extremely careful when handling them, use a grounded anti-static wrist-band. The FETs have three leads much like a regular transistor but their pin-outs are a bit different. An FET will usually have a Drain, Source and Gate lead; see pin-out diagram for each particular FET, when installing them on the PC board. The conventional transistor at Q2 is a PNP type which has a Base, Collector and Emitter lead, once again refer to the transistor pin-out diagram, the schematic and parts layout

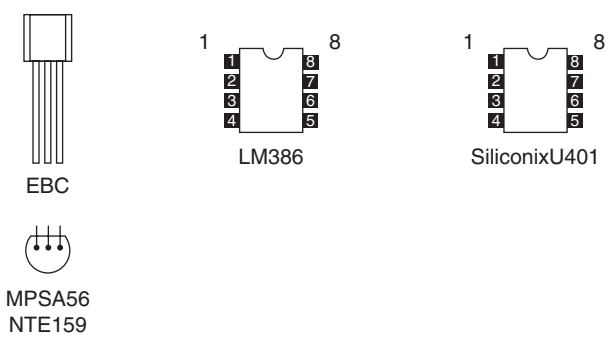

Figure 14-3 *Semiconductor pin-outs*

diagrams when installing the transistor and FET. Installing the FET and transistor incorrectly will prevent the circuit from working correctly and may damage the component as well, so be careful when installing the FET and transistor.

The receiver has a single integrated circuit at U1, an LM386 audio amplifier IC. As an insurance policy against a possible circuit failure in the present or possible future date, it is recommended that you use an integrated circuit socket. Integrated circuit sockets will usually have a notch or cut-out at one end of the socket; this is supposed to represent pin 1 of the IC socket. You will have to align the socket correctly so that pin 2 of the IC socket connects to the ground bus. Note that pin 1 is not used in this application. When installing the IC into the socket, you will note that the IC itself will have either a small indented circle, a cut-out or a notch at one end of the plastic IC body. Pin 1 of the IC is just to the left of the notch. Insert the IC into the socket making sure pin of the IC is aligned with pin of the socket.

Take a short break and when we return we will check over the printed circuit board for "cold" solder joints and possible "short" circuits. Pick up the PC board with the foil side facing upwards toward you. First we will inspect the PC board for possible "cold" solder joints. Take a look at all of the solder joints. All the solder joints should appear to look clean, shiny and bright, with well formed solder connections. If any of the solder joints appear dull, dark or "blobby," then you should un-solder and remove the solder from the joint and re-solder the joint all over again, so that it looks good. Next, we will inspect the PC board for possible "short" circuits. "Short" circuits can be caused by small solder balls or blobs which stick to the underside of the board. Many times rosin core solder leaves a sticky residue on the PC board. Sometimes "stray" component leads will adhere to the underside of the board and often they can form a bridge across the PC traces on the PC board causing a "short" circuit, which can damage the circuit upon power-up, so be careful to remove any component leads or solder blobs from the underside of the board.

The VLF Whistler receiver was housed in a metal chassis box to prevent "stray" RF from affecting the circuit operation. The main circuit board can be mounted to the bottom of the enclosure with 1/8″

plastic standoffs. The 60 Hz "trap" filter switch, the high-pass filter and low-pass filter switches, along with the power on-off switch, were mounted on the front panel of the chassis box. The headphone power amplifier power switch, the headphone jack and volume control at R13 were also mounted on the front panel of the chassis box. The SO-238 antenna jack, the 1/8″ record jack and the ground binding post were all mounted on the rear panel of the chassis box. A 9 volt battery holder was used to secure the battery to the left rear corner of the chassis box. Once the circuit has been mounted in the selected chassis, you can move on to applying power and testing the VLF receiver. Connect a fresh 9 volt battery to the VLF receiver, connect a pair of headphones and a whip antenna to the antenna terminals. Turn the power switch to the "ON" position and you should hear a hissing sound from the headphones. If the receiver is totally quiet and you hear nothing, you have a problem! First, you will need to disconnect the battery, the headphones and the antenna, and you will need to carefully examine the circuit board. The most common cause for circuit failure is improper installation of electrolytic capacitors and diodes. Remember that these components have polarity and it must be observed for the circuit to work correctly. Look over the circuit very carefully. It is often advisable to have a second pair of eyes. Have a knowledgeable electronics friend help you examine the circuit board for mistakes. Another cause for possible errors are the incorrect placement of resistors. Often colors are mistaken and resistors are installed in the wrong location. Another possible problem can be the installation of the semiconductors, namely in this circuit the transistors or FETs. Check the manufacturer's pin-out diagrams for the particular device and carefully re-examine the installation. Hopefully at this point you have found your error and corrected it and you can then re-connect the battery, antenna and headphones and re-test the VLF receiver to make sure it is now working.

Using your VLF receiver

The whistler receiver works best out doors in open areas, with a vertical antenna of roughly 3 to 12 feet in height. It can also be used in wooded or obstructed areas with wire antennas between roughly 50 to 200 feet in length connected instead of the vertical antenna. Wire antennas should be insulated and supported off the ground as high as you can place them. The performance of a wire antenna improves the more you can get it in the clear and the more vertically it can be positioned. If you do use a wire antenna, you may have to reduce the value of the input resistor R1 for best results.

The whistler receiver also needs a ground connection, also called a counterpoise. A simple but often effective ground can be provided by your body in contact with the ground terminal (BP2). I have used an improvised finger ring attached to a wire connected to the ground terminal. Other places to make a ground connection include car bodies, wire fences, or other large metal objects not connected in any way to an AC power circuit. Another approach is to use short sections of copper tubing as ground stakes which can be driven into the ground and connected to your receiver. Try several different grounding schemes to see which one provides the quietest reception. Don't be too surprised, however, to discover that you wind up having to still make body contact with the ground terminal for quietest reception!

The prototype receiver, with a whip antenna, was mounted on a piece of wood approximately 2″ × 60″. You can install the antenna at one end of the long rectangular piece of wood (it can be mounted on a bracket or just taped on) and the receiver can be mounted at the other end of the piece of wood, about one foot down from the antenna using duct tape, two-sided foam tape or a mounting bracket. A length of wire was run from the receiver's ground terminal down the wood and taped in place at several places. Now I had a handy walking stick that was easy to carry and use! The base can be stuck into any convenient hole, jammed into a rock pile, clamped onto a fence or vehicle, or even held by hand.

For the best chance of hearing whistlers and related phenomena, you will have to put some distance between the whistler receiver and the AC power grid. The bare minimum distance is about one quarter mile from any AC power line; the more distance you can put between the receiver and AC power lines, the better. You'll need to do some exploration to discover quiet sites near you. Once you arrive at a potential listening site, set up your receiver, put in a ground connection, and see what happens. What you will hear depends to some extent

on the time of day, but you can always expect some sharp, crackling static. The intensity and volume of this static will depend on propagation conditions and where thunderstorms are in relation to your location. Chances are that you'll also hear some power line hum, but hopefully it won't be very loud. If your listening site is too noisy, you need to try another listening site.

If your ears have good high frequency response, you will probably hear a continuing sequence of one-second tones. These are from the OMEGA radio-navigation system. OMEGA is transmitted from 10 to 14 kHz, and OMEGA transmitters are very powerful. You may also hear anything that can produce an electrostatic discharge, particularly if the humidity is low. These miscellaneous noise sources can include wind noise, the buzz of insects flying near the antenna, dry leaves or grass moving, and even the electrostatic charges that build up on your clothing. Passing vehicles will often produce noise from their electrical and ignition systems. And if you have a digital watch, keep it away from the antenna or you'll be listening to it instead of whistlers!

Anything you hear other than whistlers and related phenomena or OMEGA signals are likely to be the result of extraneous signals "overloading" your receiver. Burbling sounds (possibly mixed with OMEGA tones) are caused by military signals in the 15 to 30 kHz range, perhaps overloading the receiver. A "ticking" sound at a 10 Hz rate is from Loran-C radio-navigation signals at 100 kHz. In general, don't be surprised if you experience "overloading" from transmitters operating on any frequency if they are within sight of the location where you're using your whistler receiver! Table 14-3 illustrates some very low frequency stations around the world that broadcast low frequency signals, these signals are located at the upper edge of the VLF receiver's range.

Table 14-3
Very low frequency radio stations

Site	*ID*	*Frequency kHz*	*Power KW*
Cutler, ME	NAA	24.0	1000
Jim Creek, WA	NLK	24.8	250
Lualualei, HI	NPM	21.4	566
LaMoure, ND	NML4	25.2	
Aquada, Puerto Rico	NAU	40.75	100
Keflavik, Iceland	NRK	37.5	100
Niscemi, Italy		39.9	25
Harold E. Holt, Australia	NWC	19.8	1000
Rhauderfehn, Germany		18.5	500
Rosnay, France	HWU	15.1	400
St. Assie, France	FTA	16.8	23
Bombay, India		15.1	
Tavolara, Italy	ICV	20.27	43
Ebino Huyshu, Japan		23.4	
Noviken, Norway	JXN	16.4	45
Arkhanghelsk, Russia	UGE	19.4	150* input pwr
Batumi, Russia	UVA	14.6	100* input pwr
Kaliningrad, Russia	UGKZ	30.3	100* input pwr
Matotchkinchar, Russia	UFQE	18.1	100* input pwr
Vladivostok, Russia	UIK	15.0	100* input pwr
Anthorn, United Kingdom	GQD	.019	42

Time of listening

Most of the VLF signals, such as clicks, pops, and tweeks, can be heard almost at any time of the day or night. Whistler occurrence is a function of both thunderstorm occurrence and propagation conditions through the ionosphere. The rate is higher at night than during the day because of the diurnal variation in the D-region absorption, which is highest when the Sun is above the horizon. At night, the D-layer does not exist since it is ionized by solar ultraviolet rays. The whistler rate, or the number of whistlers heard per minute, has a marked dependence on sunspot activity, the rate increasing with the sunspot number. Whistlers are heard only when sufficient ionization exists along the path to guide the waves along the Earth's magnetic field. This ionization is assumed to be supplied from the Sun during a solar. To hear a whistler or other signals such as *dawn chorus*, you will no doubt have to get away from the power line and industrial noise. The listening time for these signals will be from near local midnight to early morning hours.

Observing and recording hints

Remember the best location to observe VLF signals is out in the countryside, in an area where few cars or trucks are likely to pass. You will want to get as far away from power lines as possible for optimum results. The lower the power line noise is, the stronger the VLF emission signals will be.

Some whistlers are related phenomena and so short-lived and impossible to predict that you might want to consider using a tape recorder to record the signals in the field unattended. Take a portable, battery-operated, cassette tape recorder with you and use a long audio cable to run to the tape recorder from the audio output of the VLF receiver. Any tape recorder with an external microphone input can be used. Best results are obtained with a recorder which has no ALC or automatic level control. The VLF receiver shown has an output jack which can be coupled to a recorder input for field recording. You may have to place the tape recorder away from the receiver to avoid picking up motor noise.

After returning home with your recording, if your receiver was out in the field, you can "play" your recording back into the sound card of your personal computer using an FFT or DSP sound recording program to analyze the recording. For those who are going to use their whistler receiver as a stationary receiver at home, you could use your PC to record on a continuous basis. Audio recording and FFT programs are available on the Internet for free. Good luck and happy exploring!

Additional notes

You can view spectrograms of whistlers as well as hear excellent recordings of many more whistlers than we used in generating the audio clip for this article, courtesy of NASA: http://image.gsfc.nasa.gov/poetry/inspire/advanced.html

A free Fast Fourier Transform (FFT) Waveform Analyzer program and an Audio Waveform Generator program can be downloaded for use on your own computer at:
FFT discussion:
http://www.dataq.com/applicat/articles/an11.htm

Some US Government agencies doing whistler research are:

NASA's Godard Space Flight center invites participation in a program called "INSPIRE" (an acronym for Interactive NASA Space Physics Ionosphere Radio Experiments) http://image.gsfc/poetry/inspire

NOAA: http://ngdc.noaa.gov/stp/stp.html
http://www.ngdc.noaa.gov/stp/stp.htm
gopher://proton.sec.noaa.gov

Some of the university labs involved with whistlers are:
University of Alaska Geological Institute
University of Iowa: http://www-w.physics.uiowa.edu/~/jsp/polar/sounds/whistlers.html
Stanford University: http://www.stanford.edu/~vlf/Science/Science.html
[An excellent site, but I could only access it via the "Google" search engine]
UCLA: http://www.physics.edu/plasma-exp/Research/TransportWhistlers
Kyoto University, Kyoto, Japan

Chapter 15

Induction Loop Receiving System

Parts list

Induction Loop Transmitter I

TX Mono amplifier or receiver – 5–10 watts output

R1 10 ohm 10 watt 10% resistor

L1 loop coil around room (see text)

Induction Loop Transmitter II

R1 10k ohm potentiometer chassis mount

R2 220 ohm ¼ watt resistor, 5% (red-red-brown)

R3 2.2k ohm ¼ watt, 5% resistor (red-red-gold)

R4 1 ohm ½ watt, 5% resistor (brown-black-gold)

R5 10 ohm 10 watt, 10% resistor

C1 10 µf, 25 volt electrolytic capacitor

C2,C5 100 nF, 35 volt poly capacitor

C3 100 µF, 35 volt electrolytic capacitor

C4 470 µF, 35 volt electrolytic capacitor

C6 2200 µF, 35 volt electrolytic capacitor

U1 TDA2002/3 6 to 10 watt audio amplifier module

HS heatsink for U1

L1 loop coil (see text)

Misc PC board, wire, hardware, chassis, etc.

Induction Loop Receiver

R1 1 megohm ¼ watt, 5% resistor

R2 10k ohm ¼ watt, 5% resistor

R3 1000 ohm potentiometer (tone)

R4 470 ohm ¼ watt, 5% resistor

R5 10k ohm potentiometer (volume)

R6 10 ohm, ¼ watt, 5% resistor

C1 39 nF, 35 volt mylar capacitor

C2 1 µF, 35 volt electrolytic capacitor

C3,C7 .1 µF, 35 volt disk capacitor

C4 4.7 nF, 35 volt poly capacitor

C5 10 µF, 35 volt electrolytic capacitor

C6 220 µF, 35 volt electrolytic capacitor

Copyright © 2008 by The McGraw-Hill Companies, Inc. Click here for terms of use.

Q1 BC548 transistor

U1 LM386 audio amplifier IC

L1 800 turns on a 9 × 70 mm ferrite rod (see text)

S1 SPST on-off switch

B1 9volt transistor radio battery

PH 8 ohm headphones

Misc PC board, wire, ⅛″ phone jacks, battery clip, case

Induction loop technology has been around for many years, for use with the hearing impaired. Induction loop communication systems were originally designed to provide assistance in the school classrooms for the deaf, but today induction loop communications technology is now used for many other applications, such as museum displays, theater communications, mine and cave communication systems, and signal tracing. Induction loop systems have been installed in churches, public halls and auditoriums, schools, lecture halls, cinemas, service counter windows, drive-thru order and pick up windows, information kiosks, offices, airports, train stations, parks, tour and guide buses, automobiles, boats, riding academies, and homes.

Induction loop amplification operates on the basic principle of electronics called magnetic induction. When an electrical current is amplified and passes through a loop of wire, a magnetic field is generated around the wire. The field varies in direct proportion to the strength and frequency of the signal being transmitted. When another wire is placed close to the field of the first wire, an identical electrical current is induced within it. The second current can be amplified and converted into an exact duplicate of the original sound signal.

In technical language, a current is said to be "induced" in the second wire. Hence the term "induction." In an induction loop system, the induction loop coil in the transmitter sends an electromagnetic signal, which is "induced" to the receiver's induction loop coil in the receiving unit. An Induction Loop System consists of an amplifier and a loop, the amplifier is connected to a sound source such as a TV, a radio, a public address system or a dedicated microphone. It then amplifies this sound signal and sends it out, in the form of an alternating current, through the loop. The loop itself consists of insulated wire, one turn of which is placed around the perimeter of the room in a simple loop system. When the alternating current from the amplifier flows through the loop, a magnetic field is created within the room. The magnetic field "induces" the signal into the Induction loop coil in the induction receiver unit.

In the portable induction receiver, the induction coil picks up the induced signal from the transmitting loop coil. The fluctuations in the magnetic field are converted into alternating currents once more. These are in turn amplified and converted by the induction loop receiver into sound. The magnetic field within the loop area is strong enough to allow the person with the hearing aid or Induction Loop Receiver to move around freely in the room and still receive the sound at a comfortable listening level.

Many modern day hearing aids incorporate a telecoil into the hearing device. So if a hearing aid user switches to the T or MT position on their hearing aid, the telecoil in the hearing aid picks up the induced signal from an induction loop transmitter and amplifies the signal for the hearing aid user to hear. This is a convenient feature for hearing aid users, in classrooms, churches, and museums with induction coil transmitters.

The listener can receive an audio signal without being physically or electrically connected to the loop, so in effect induction loop transmission is a form of wireless telephony. The listener receives the sound in one of two ways; either through the use of the T-coil or telephone switch on a hearing aid instrument or through an induction receiver that can work with earphone, which we will discuss in our project.

The basic induction loop system consists of a "transmitter" section and a "receiver" section, as shown in Figure 15-1. The "transmitter" section consists of a microphone or signal source, an audio amplifier to boost the signal, and a large loop or wire around the room or listening area. The "receiver" section consists of a smaller loop coil, an audio amplifier which boost the incoming audio and a pair of headphones.

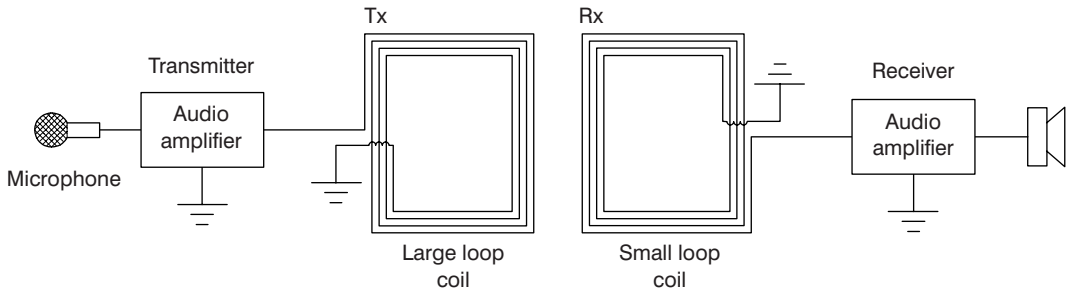

Figure 15-1 *Induction loop communications system block diagram*

"Transmitter" loop unit

You can easily build your own induction loop communication system. First we will begin by describing the "transmitter" section of the system, as shown in Figure 15-2. In its simplest form an induction loop "transmitter" can consist of a mono or stereo Hi-Fi receiver, a resistor and a large loop coil placed around the perimeter of a house, room, or your easy chair. If you have a stereo receiver with a speaker output A-B switch, you can select the (B) output for your induction loop system. You would place an 8 ohm, 10 watt resistor across the output of the left channel's output and then place an 8 ohm, 10 watt resistor in series with a large loop coil as shown. When you wanted to use the induction loop system, you would switch to the (B) speaker output; it's that simple.

If you wanted to construct your own amplifier specifically for an induction loop audio system, you could utilize the 6 to 10 watt audio amplifier shown in Figure 15-3. In order to drive an induction loop, you would need an amplifier with at least about 5 watts of power or more to have a workable system. The amplifier shown in this diagram would work just fine for driving a large loop coil. An audio input signal is fed into the audio input section at the point marked (A) on the schematic. Your audio source could be adjusted via the potentiometer at R1. Note, that you may need an additional pre-amp ahead of the amplifier if you use a low output microphone. You can feed a radio or TV signal directly into the potentiometer at R1 to drive the induction loop "transmitter." The audio amplifier module shown is an 8 watt National Semiconductor LM2002 module, but you could also use a higher power module such as their LM2005. The output of the audio amplifier is wired in series with an 8 to 10 ohm, 10 watt

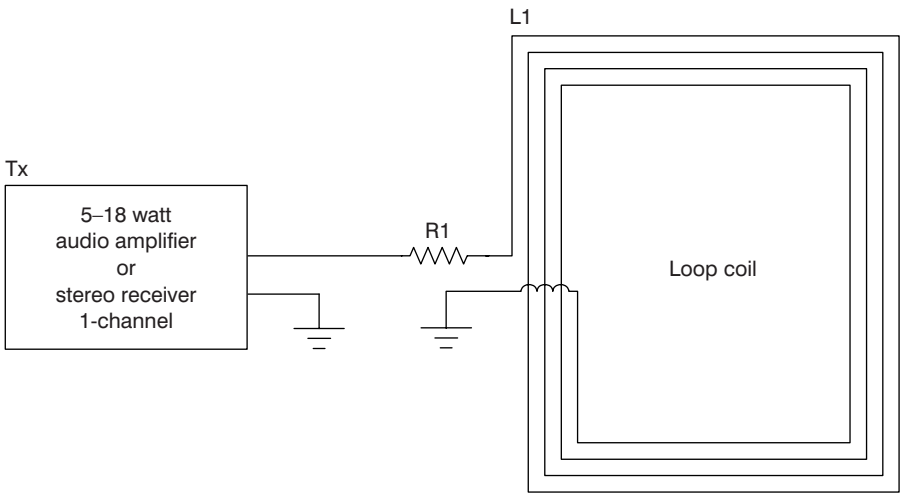

Figure 15-2 *Induction loop transmitter I*

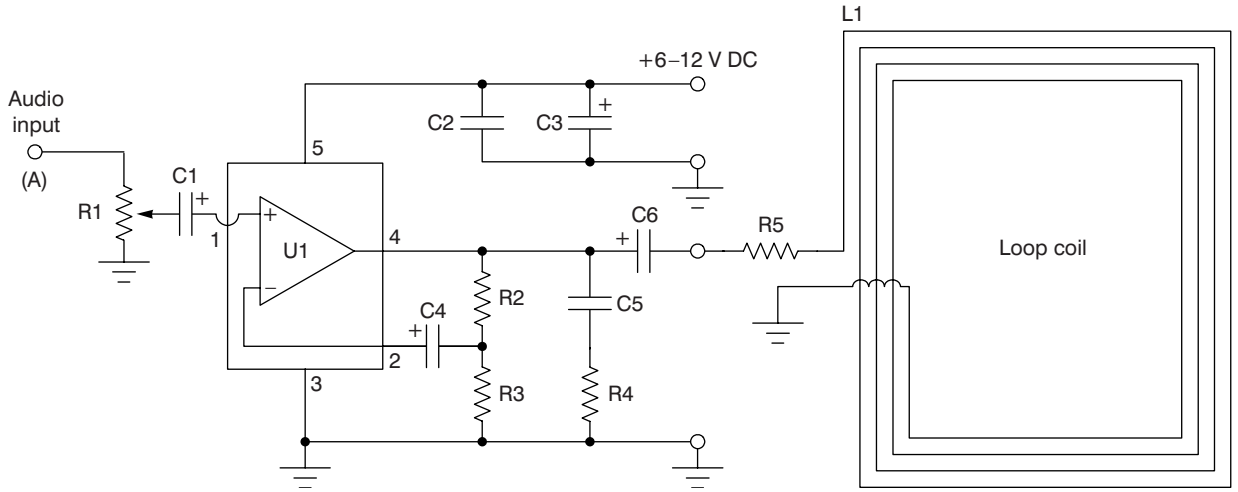

Figure 15-3 *Induction loop transmitter II*

resistor in order to drive the coil. This resistor also protects the output of the audio amplifier.

The inductive loop is a winding of wire through which an audio signal passes, which creates a field within which the audio signal can be detected by appropriate equipment, either a telecoil in a hearing aid or an induction loop receiver. The loop coil is basically a simple 4 or 5 turn loop placed around the room fed from an audio amplifier. The loop then converts the sound to a magnetic field that can be received by a second loop coil and amplified. Note that more turns in the transmission coil result in a stronger transmitted signal. The loop should have a DC impedance of at least 8 ohms, or you can add a resistor in series with the coil to reach 8 ohms.

Pick a path around the room on the ceiling, or under the carpet. A room measuring 15′ × 20′ will have a perimeter of 70′, which will require a minimum of four complete turns of 22 gauge wire, six turns of 20 gauge wire, or nine turns of 18 gauge wire. Pick a path around the room near the ceiling, and wind (or hang) your "coil," or loop, starting and ending at the amplifier. If the back of your amplifier says something like "8 ohms minimum," double the required wire length (load). Buy 120% of the wire you'll need to ensure that you can complete the loop. You should add a power resistor to ensure an appropriate load and reduce wire length, but the amplifier output will be divided between the loop and the resistor, proportionately, which means less radiated energy. This solution requires a lot of energy so try not to compromise. If required, get 4 ohms at 10 watt minimum. There's another and simpler approach: I have a coil built into my favorite chair. It's only 18″ in diameter, but includes 120′ of 28 gauge wire (0.071 ohms per foot). That's about 25 turns of that relatively thin wire.

Another approach to constructing a large loop is to take a long length of 25 pair telephone cable 'Inside Wire' that's long enough to go around the perimeter of a room. Then get a 66 block (or some other kind of punch down block) and punch down the wires so they connect in a multiple turn loop. In this way you can add or subtract turns as you wish if you need that later. You could tack this "telephone" cable to the ceiling of the basement underneath the room you choose.

Connect either end of the loop coil wire to the plus (+) or red terminal and the other end to the minus (–) black terminal, on the audio amplifier's speaker terminals. Most amplifiers or stereo receivers have SPEAKER A and B switches; put your coil circuit on the unused output (B). Remember to place an 8 to 10 ohm, 10 watt resistor in series with the speaker output and the coil loop windings.

"Receiver" loop unit

The induction loop receiver, shown in the photo Figure 15-4 and the schematic diagram in Figure 15-5, is very sensitive and can be the basis for a monaural

induction loop wireless headphone system. The induction coil receiver is used inside the area of transmission loop. The receiver coil at L1 consists of 800 turns of #26 ga. enamel wire wound on a 9 × 70 mm ferrite core.

Another approach to constructing a small loop coil for your inductive loop receiving coil is to obtain a "telephone pickup coil" if available or a suitable coil from some other device. The coil in the prototype was salvaged from a surplus 24 volt relay. Actually, two relays were needed since the first was destroyed in the attempt to remove the surrounding metal so that a single solenoid remained. Epoxy putty was used to secure the thin wires and the whole operation was a bit of a challenge. A reed relay coil will give reduced sensitivity but would be much easier to use. The experimentally inclined might try increasing the inductance of a reed relay by replacing the reed switch with soft iron. Avoid shielded inductors or inductors with iron pole pieces designed to concentrate the magnetic field in a small area or confine it completely (as in a relay or transformer) unless you can remove the iron. The resulting coil should be a simple solenoid like wire wrapped around a nail. Don't try to wind your own—it takes too many turns. Evaluate several coils simply by listening. Coils with too little inductance will sound "tinny" with poor low frequency response, and other coils will sound muffled, especially larger iron core coils. This prototype was tested with a large 100 mH air core coil with superb results but the 2″ diameter was just too big for this application. The induction receiver develops a 1–2 mV signal across its internal coil from the fluctuating magnetic field. Transistor Q1 provides pre-amplification to drive a headphone amplifier. The tone at R3 control varies the amount of gain in the high frequencies. Capacitors C1 and C2 block AC hum (C2 also blocks DC to the amplifier input). C3 functions as a low-pass filter to prevent oscillation. The output of the volume control at R5 is fed to the input of an LM 386 audio amplifier IC. In this configuration the amplifier has a gain of 200. Capacitor C7 and R6 form the output "boost" circuit which drives the output to the speaker through C6. The output of the LM385 at pin is used to drive an 8 ohm headphone. The induction loop receiver circuit can be powered from a 9 volt DC power supplies or batteries.

Figure 15-4 *Induction receiver*

Are you ready to begin constructing the induction receiver circuit? First you will need to locate a clean, well lit work table or work bench. You will want a large table so you can spread out all the components, the diagrams and tools that you will need to build the project. Next you will need to locate a small pencil tipped 27 to 33 watt soldering iron and some 60/40 tin/lead rosin core solder for the project. Try and locate a small container of "Tip Tinner," a soldering iron tip cleaner/dresser which conditions the soldering iron tip; this is available from your local Radio Shack store. You should also locate a few small hand tools such as a pair of end-cutters, a pair of needle-nose pliers, a pair of tweezers, a small flat-blade and a Phillips screwdriver and a magnifying glass.

The induction loop receiver prototype was constructed on a small glass-epoxy circuit board which measured 2¼″ × 3″. A circuit board makes for a more reliable and professional circuit. Place all the diagrams in front of you on the work table along with all of the components for the induction loop receiver and we will begin building the project.

The induction loop receiver project contains about four resistors and two potentiometers. Locate the resistors using the color chart in Table 15-1, this will help you identify each of the resistors. Place the resistors into their respective locations on the circuit board, then solder them in place on the PC board. Locate your end-cutters and trim the excess component

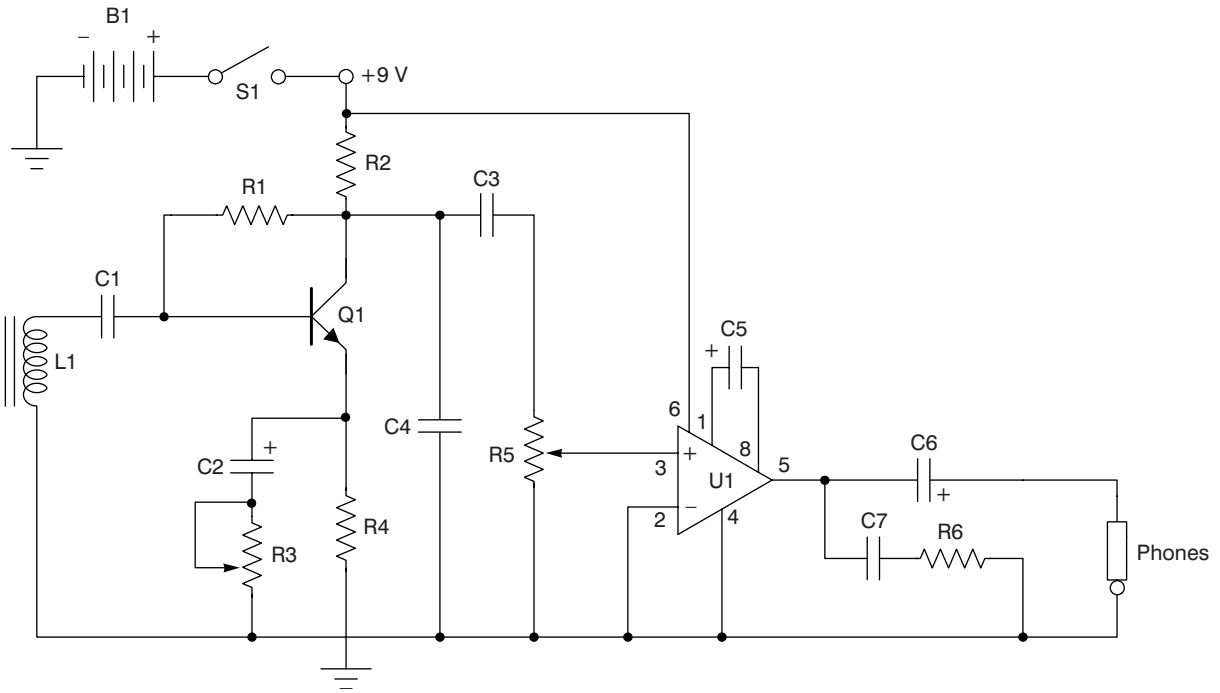

Figure 15-5 *Induction loop receiver schematic*

leads, by cutting them flush to the edge of the circuit board. Potentiometer R3 is a CP board mounted type, you can go ahead and install it on the board and then solder it in place; you can remove any excess leads if necessary.

Next we are going to move to installing the capacitors for the project. There a two distinct types of capacitors—small ceramic, mylar or polyester capacitors and larger electrolytic types. The small capacitors will most likely have a three-digit code stamped on them and not their actual value, since often the capacitor body is very small. Refer to the chart shown in Table 15-2, which illustrates the capacitor codes. You can search through the parts pile and try and identify the capacitors against the code chart and place the correct value into its respective location on the circuit board. After all of the small capacitors have been placed on the PC board, you can solder them in place. Remember to cut the excess leads from the components. Now, locate the larger electrolytic capacitors and place them in front of you and determine where they will go on the circuit board. Once you are certain where the capacitors should be placed on the board, you should take another look to make sure that you have installed the capacitors correctly with respect to its polarity. If an electrolytic capacitor is not installed correctly the circuit will not work properly and may be damaged upon power-up. So you will want to install them correctly the first time through.

Note, there are a number of capacitors in this project, and in looking over the schematic, you will notice that a few of the capacitors will have polarity marking on them. These capacitors are electrolytic types and you must observe the polarity when installing them on the circuit board in order for the circuit to work properly. Electrolytic capacitors will have either a white or black band at one side of the capacitor body or they may be marked with a plus (+) or minus (–) marking on the capacitor body and this denotes the polarity. Refer to the schematic and parts layout diagrams when installing electrolytic capacitors in order to install them correctly with respect to their polarity markings.

Before we go ahead and install the semiconductors, take a brief look at the diagram depicted in Figure 15-6. The semiconductor pin-out diagrams will help you orient the semiconductors when building the induction receiver. The induction loop receiver also incorporates one transistor at Q1 which is connected to R1/R2 and R4 and C2. Transistors generally have three leads protruding from the bottom of the body. A Base lead,

Table 15-1
Resistor color code chart

Color Band	*1st Digit*	*2nd Digit*	*Multiplier*	*Tolerance*
Black	0	0	1	
Brown	1	1	10	1%
Red	2	2	100	2%
Orange	3	3	1,000 (K)	3%
Yellow	4	4	10,000	4%
Green	5	5	100,000	
Blue	6	6	1,000,000 (M)	
Violet	7	7	10,000,000	
Gray	8	8	100,000,000	
White	9	9	1,000,000,000	
Gold			0.1	5%
Silver			0.01	10%
No color				20%

a Collector lead and and an Emitter lead. Referring to the schematic you will note that the vertical line on the transistor symbol is the Base lead, while the Collector lead is connected to the junction of R1 and R2. The Emitter lead has the small arrow pointing downwards which connects to the junction of C2 and R4. Refer to the actual transistor pin-out diagram to see where each lead exits the transistor case. Generally small plastic TO-92 transistor case bodies will have all three leads in-a-row with the Emitter at one end, the Base lead in the center, and the Collector lead at the opposite end of the device.

The induction loop receiver has one integrated circuit at U1, this is an LM386 audio amplifier chip, which has eight leads in a dual in-line package. Prior to installing the IC, you should install a good quality IC socket. An IC socket is good insurance in the event of a possible circuit failure at some point in time. Since most people cannot successfully un-solder an integrated circuit without damaging the PC board, an IC socket makes good sense. Place the IC socket on the circuit board and solder it in place on the PC board. Locate the LM386 and take a look at the chip. You will note that the IC package will have either a cut-out, a notch or small indented circle at one end of the IC package. Pin 1 of the IC will be just to the left of the notch or cut-out. Orient the IC correctly into the socket, while referring to the schematic and layout diagrams. Place the IC into the socket.

The receiver loop coil at L1 can be either the 800 turn coil wound on a plastic form, an old "high" impedance relay, or one of the black plastic suction cup-telephone pickup devices. Solder the coil in place between the circuit ground and the capacitor at C1. You could also elect to use a second 1/8″ phone jack to allow the coil to be plugged into the circuit using a 6″ to 8″ length of coax cable.

The volume control used for the prototype was a chassis mounted miniature 10k ohm potentiometer. We used a mini 1/8″ PC style phone jack on the circuit board at the output of the audio amplifier at C6; this will allow you to plug in a headphone for listening.

Take a short well deserved rest and when we return we will check the circuit board for possible "short" circuits and "cold" solder joints. Pickup the circuit board with the foil side of the circuit board facing upwards toward you. Look the circuit board over carefully to see if there are any "cold" solder joints. The solder joints should look clean, smooth and shiny. If any of the solder joints look dull, or "blobby," then you

Table 15-2

Capacitance code information

This table provides the value of alphanumeric coded ceramic, mylar and mica capacitors in general. They come in many sizes, shapes, values and ratings; many different manufacturers worldwide produce them and not all play by the same rules. Some capacitors actually have the numeric values stamped on them; however, many are color coded and some have alphanumeric codes. The capacitor's first and second significant number IDs are the first and second values, followed by the multiplier number code, followed by the percentage tolerance letter code. Usually the first two digits of the code represent the significant part of the value, while the third digit, called the multiplier, corresponds to the number of zeros to be added to the first two digits.

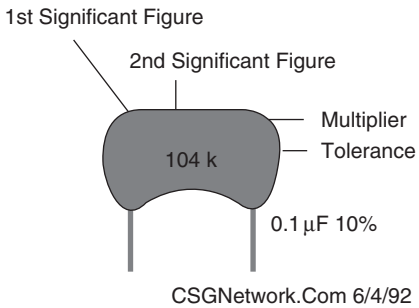

Value	*Type*	*Code*	*Value*	*Type*	*Code*
1.5 pF	Ceramic		1,000 pF /.001 µF	Ceramic / Mylar	102
3.3 pF	Ceramic		1,500 pF /.0015 µF	Ceramic / Mylar	152
10 pF	Ceramic		2,000 pF /.002 µF	Ceramic / Mylar	202
15 pF	Ceramic		2,200 pF /.0022 µF	Ceramic / Mylar	222
20 pF	Ceramic		4,700 pF /.0047 µF	Ceramic / Mylar	472
30 pF	Ceramic		5,000 pF /.005 µF	Ceramic / Mylar	502
33 pF	Ceramic		5,600 pF /.0056 µF	Ceramic / Mylar	562
47 pF	Ceramic		6,800 pF /.0068 µF	Ceramic / Mylar	682
56 pF	Ceramic		.01	Ceramic / Mylar	103
68 pF	Ceramic		.015	Mylar	
75 pF	Ceramic		.02	Mylar	203
82 pF	Ceramic		.022	Mylar	223
91 pF	Ceramic		.033	Mylar	333
100 pF	Ceramic	101	.047	Mylar	473
120 pF	Ceramic	121	.05	Mylar	503
130 pF	Ceramic	131	.056	Mylar	563
150 pF	Ceramic	151	.068	Mylar	683
180 pF	Ceramic	181	.1	Mylar	104
220 pF	Ceramic	221	.2	Mylar	204
330 pF	Ceramic	331	.22	Mylar	224
470 pF	Ceramic	471	.33	Mylar	334
560 pF	Ceramic	561	.47	Mylar	474
680 pF	Ceramic	681	.56	Mylar	564
750 pF	Ceramic	751	1	Mylar	105
820 pF	Ceramic	821	2	Mylar	205

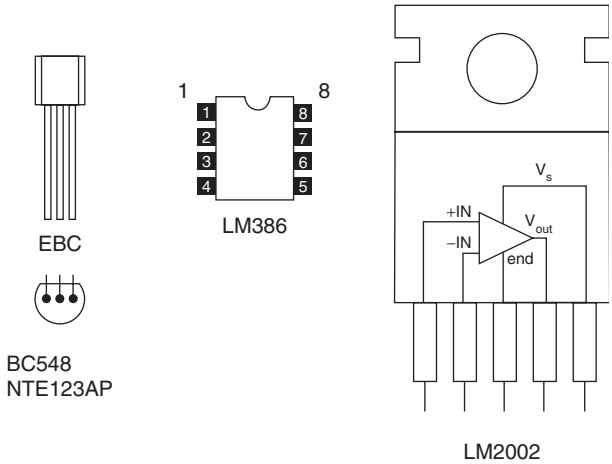

Figure 15-6 *Semiconductor pin-outs*

should remove the solder from the joint and re-solder the connection point over again until it looks good. Next we will inspect the PC board for any possible "short" circuits which may be the result of "stray" component leads which may have stuck to the foil side of the PC board. These "stray" components leads often "stick" to the board by solder residue. Solder blobs are often a cause of "short" circuits, so look the board over carefully for any solder blobs as well. Once the circuit board has been inspected, we can move on to installing the circuit board into a case or enclosure.

We mounted the induction loop receiver in a 3″ × 6″ by 1½″ metal chassis box. We placed one ⅛″ jack at the rear of the case for coil L1, then we placed the second ¼″ phone jack, power on-off switch and volume control on the front side of the chassis box. Locate a 9 volt battery clip and solder the black or minus (–) lead to the circuit ground. Next you will want to wire the red or positive (+) battery clip in series with the On-Off switch to the two power junction points on the PC board, one at R2 and the other at pin 6 of the LM386 IC. Once the circuit is inside the enclosure, you can begin testing the induction loop system. First you will want to make sure that the "transmitter" portion of the system is up and running. If you elected to use an existing stereo receiver or amplifier, make sure that the large coil is connected through a series resistor to the speaker terminals of the amplifier. Set the receiver or amplifier to MONO. If you elected to build your own audio amplifier to drive the large loop, again connect up the coil via an 8 ohm 10 watt series resistor. Once the "transmitter" is ready, with your music or audio source connected, we can move on to testing the induction loop receiver.

Switch the induction receiver to the "On" position. When you first turn on the unit you will probably hear a lot of buzzing from the wiring in the room. Rotate the receiver in a horizontal plane to find a "null" where the hum is minimal. If you can get a reasonable null, you should be able to hear the source material from the "transmitter" loop or at least some hum coming from the earphone. If your "transmitter" loop is "broadcasting" then you should hear the source music or speech on the headphone of your induction loop receiver. If all goes well, both your transmitter and receiver section will be working and you will be hearing the source material in your remote headphones.

In the event that the induction receiver does not work when first power-up, you will have to remove the battery and carefully examine the circuit board for any errors. The most common cause for failure are improper placement of resistors, electrolytic capacitors and diodes installed backwards, and semiconductors such as transistors installed incorrectly. Have a knowledgeable electronics friend provide a second pair-of-eyes to help you examine the circuit for errors. It is very easy to miss a problem since, as the builder, you will continue to see the same circuit, the same way over and over. Once the error has been found and corrected, you can re-connect the battery and test the circuit once again.

As mentioned earlier, you can use the system for hard of hearing people, for museum displays and demonstrations, for theater personnel, late night TV listening, etc. You could wind a transmitter loop around your easy chair and use the system to "broadcast" TV sound to your earphones for late night listening. This is a great Boy Scout project for helping old folks who live in nursing homes to better enjoy TV, radio and music.

You can also use the induction loop receiver by itself without the transmitter loop, to trace power wires behind a wall or ceiling by listening for a sharp increase in hum as the coil passes near the wire. Make sure that current is flowing in the wires to be traced by turning on a lamp or other appliance. Other wires can be traced if they are carrying alternating current in the audio

range or a signal generator can be connected to produce the current. Connect the generator to the wire to be traced and connect the generator's "ground" to the house wiring ground. Also ground the far end of the wire you are tracing so that current flows in the wire. This ground connection can also just be a temporary wire laying on the floor running from the generator ground to the far end of the wire you wish to trace. Have fun using your new induction loop receiver!

Chapter 16

Lightning Storm Monitor

Parts list

Lightning Storm Monitor

R1 47k ohm ¼w, 5% resistor

R2,R4,R7 10k ohm ¼w, 5% resistor

R3 5.6k ohm ¼w, 5% resistor

R5 470k ohm ¼w, 5% resistor

R6,R10,R11 22k ohm ¼w, 5% resistor

R8 390 ohm ¼w, 5% resistor

R9 4000megohm or greater (see text)

R12 220k ohm ¼w, 5% resistor

R13 1 megohm ¼w, 5% resistor

R14 100k ohm ¼w, 5% resistor

R15 10 ohm

VR1 500k ohm potentiometer (chassis mount)

VR2,VR9 1 megohm potentiometer (trimmer)

VR3 3k ohm potentiometer (trimmer)

VR4,VR5,VR6 10k ohm potentiometer (chassis mount)

VR7 25k ohm potentiometer(trimmer)

VR8 10 megohm potentiometer (chassis mount)

VR10 10 megohm potentiometer (trimmer)

C1,C9 2.2 pF, 50 volt mica capacitor

C2,C10 180 pF, 50 volt mica capacitor

C3,C4,C6,C8,C11,C12,C22, C23 10µF, 50 volt electrolytic capacitor

C5 .01µF, 50 volt disk capacitor

C7,C21 100 pF, 50 volt mica capacitor

C13 .22µF, 50 volt disk capacitor

C14,C15,C16,C19,C24 .1µF, 50 volt disk capacitor

C17 .47µF, 50 volt disk capacitor

C18 220µF, 50 volt electrolytic capacitor

C20 470µF, 50 volt electrolytic capacitor

D1,D2 1N914 silicon diode

L1 coil optional - 3000 turns on 2′ × 6″ PVC form

Q1 J176 P-Channel JFET

Copyright © 2008 by The McGraw-Hill Companies, Inc. Click here for terms of use.

U1 LF355 (JFET)

U2,U3,U5 LM741N op-amp

U4 LM380 audio amplifier

S1 SPDT switch (Hi/Lo)

S2 SPST switch (load) ceramic high voltage type

M1 500 ua meter (RM1200 ohm)

M2 250-0-250 FS meter (RM450 ohm)

J1 ⅛" switches jack

J2 RCA jack - signal output jack for data collection

J3 SO-239 - Antenna-2 input jack

J4 Antenna-1 - RCA jack for whip or outdoor Ant.

CT Capacitive Hat (see text)

Misc IC and transistor sockets, wire, PC board.

Multi-voltage Power Supply

R1 5 k potentiometer - (trimmer)

R2 240 ohm, ¼watt, 5% resistor

C1,C4,C7 4700µF, 50 volt electrolytic capacitor

C2,C5,C8 .1 µF, 50 volt ceramic disk capacitor

C6,C6,C9 10 µF, 50 volt electrolytic capacitor

BR1 4-diode bridge rectifier - 3 amp, 100 volt

U1 LM317 - (+) voltage adjustable regulator

U2 LM7805 - (+) voltage regulator

U3 LM7905 - (–) voltage regulator

T1 24-VCT transformer 2-amp-center tapped

S1 SPST toggle switch - On-Off

F1 2-amp fast blow fuse

Misc PC board, wire, connectors, etc.

Intense electrical storms created by unstable weather conditions frequently occur all around the world. At any given point in time there is likely to be an electrical storm occurring somewhere in the world. Most people would really appreciate having an advance warning of an approaching electrical storm, especially hikers, boaters or backyard party goers. Why not construct your own lightning monitor to obtain an advance warning of an approaching storm before it arrives, thus giving you ample time to seek shelter from the elements. The lightning detector will give you ample warning of an approaching electrical storm before you see and hear the lightning. The sensitive lightning detector project will alert you to an oncoming storm over 50 miles away, giving you time to take cover or to go inside to safety.

During a lightning strike, is the Earth considered positive or negative, is a question often asked. In an electrical storm, the storm cloud is charged like a giant capacitor. The upper portion of the cloud is positive and the lower portion is negative. Like all capacitors, an electrical field gradient exists between the upper positive and lower negative regions. The strength or intensity of the electric field is directly related to the amount of charge build-up in the cloud. This cloud charging is created by a colliding water droplets.

As the collisions continue and the charges at the top and bottom of the cloud increase, the electric field becomes more intense—so intense, in fact, that the electrons at the Earth's surface are repelled deeper into the Earth by the strong negative charge at the lower portion of the cloud. This repulsion of electron causes the Earth's surface to acquire a strong, positive charge.

The strong electric field also causes the air around the cloud to break down and become ionized (a plasma).

A point is reached (usually when the gradient exceeds tens of thousands of volts per inch) where the ionized air begins to act like a conductor. At this point, the ground sends out feelers to the cloud, searching for a path of least resistance. Once that path is established, the cloud-to-earth capacitor discharges in a bright flash of lightning.

Because there is an enormous amount of current in a lightning strike, there's also an enormous amount of heat (in fact, a bolt of lightning is hotter than the surface of the sun). The air around the strike becomes super heated, hot enough in fact that the air immediately close to the strike actually explodes. The explosion creates a sound wave that we call thunder. A typical high energy lightning strike is shown in Figure 16-1.

Cloud-to-ground strikes are not the only form of lightning though. There are also ground-to-cloud (usually originating from a tail structure) and cloud-to-cloud strikes. These strikes are further defined into normal lightning, sheet lightning, heat lightning, ball lightning, red sprite, blue jet, and others that are lesser defined. For more information on lightning, see: http://science.howstuffworks.com/lightning.htm.

Satellites are more often used to follow lightning strikes around the world but haven't advanced to the point where they can accurately map local areas. There are two major types of sensors commonly used—magnetic direction finders and VHF Interferometery.

The National Lightning Detection (NLDN), which is operated by Global Atmospherics, Inc., (GAI) in Tucson, AZ, is a network of more than 130 magnetic direction finders that covers the entire USA—more than twice the coverage of existing weather radar networks.

Figure 16-1 *Lightning*

Each direction finder determines the location of a lightning discharge using triangulation and is capable of detecting cloud-to-ground lightning flashes at distances of up to 250 miles and more. Processed information is transmitted to the Network Control Center where it's displayed in the form of a grid map showing lightning across the USA: (www.lightningstorm.com/tux/jsp/gpg/lex1/mapdisplay_free.jsp).

Recently, NASA has improved the resolution of the system by adding acoustical measurements to the mix. Although the flash and resulting thunder occur at essentially the same time, light travels at 186,000 miles per second, whereas sound travels at the relative snail pace of one-fifth of a mile in the same time. Thus, the flash—if not obscured by clouds—is seen before the thunder is heard. By counting the seconds between the flash and the thunder and dividing by 5, an estimate of the distance to the strike (in miles) can be made.

In the NASA lightning sensor, a low frequency receiver detects the lightning strike. The leading edge of the electric-field pulse is used to start a timer and the leading edge of the thunder pulse is used to stop the timer. A microcontroller in each receiver transmits the time measured to a processing station, where the times are converted to distances that are used to compute the location of the lightning strike to within l2 inches. However, the NASA sensors have to be located within a 30 mile radius of the strike to be accurate.

If you are interested in monitoring static levels around you in stormy weather, and the ability to have some advance warning of an impending storm, then this circuit will be of great interest to you especially if you are involved in the radio hobby and have antennas high in the air. The Lightning Storm Monitor has proven to be very reliable and useful for advanced storm warning activities.

The Lightning Monitor circuit is shown in the schematic in Figure 16-2. The Lightning Monitor is actually two receivers in one, a spheric monitor and a static electricity monitor. The static monitor portion of the circuit begins at the outdoor Antenna-2, a capacitive hat type antenna which is fed with coax from the antenna to the receiver. The gate of the P JFET is tied

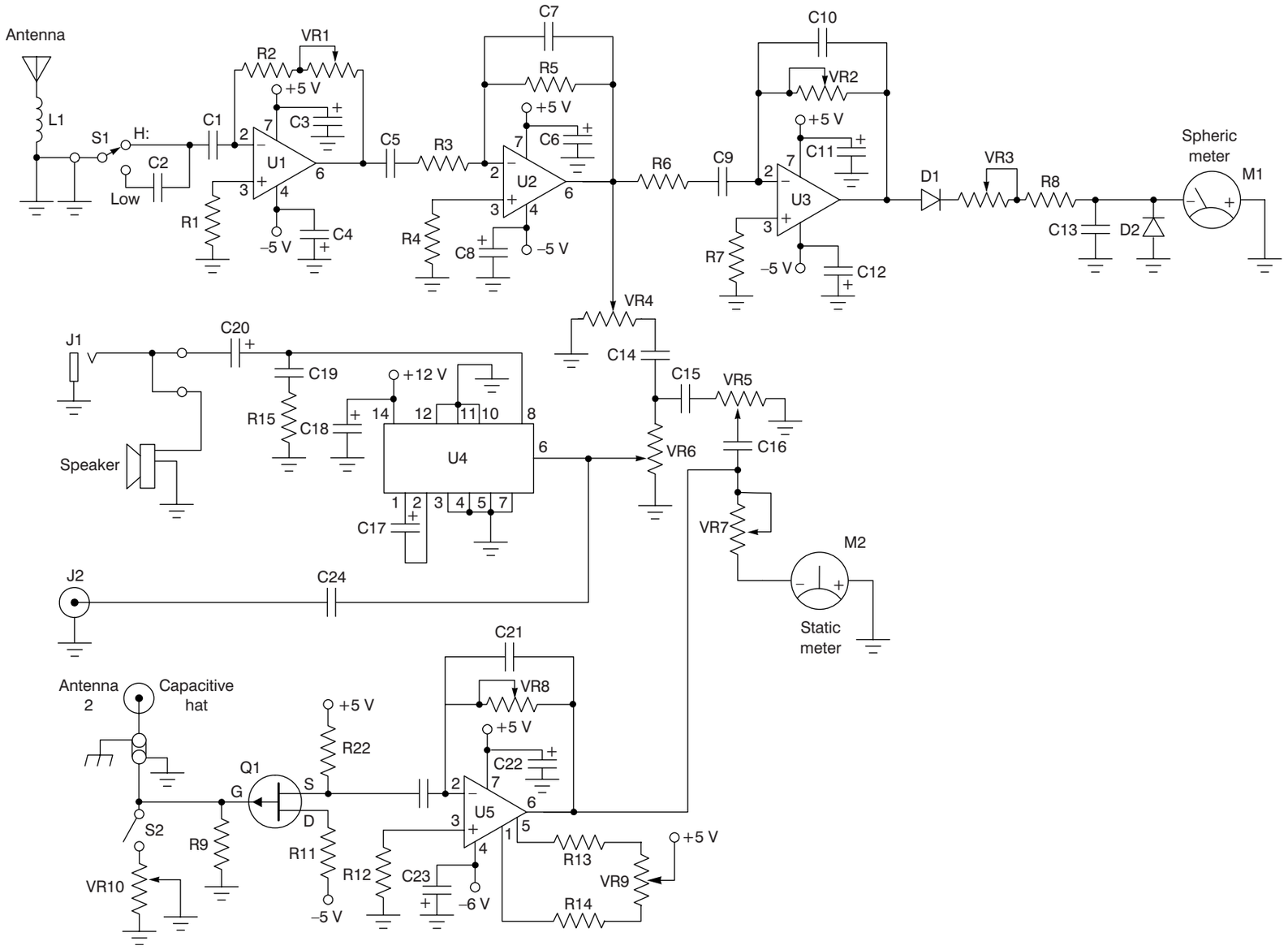

Figure 16-2 *Lightning monitor. Courtesy of Russell Clit*

to ground since a dual polarity supply is used, through a very high resistance. In the original prototype, I experimented with an 11,000 megohm resistor. These high value resistors are hard to find; you may notice that it is a moot point if there is too much leakage in your circuit. In that light, it is best to standoff the gate and use a high quality new coax to your outside antenna, usually a capacitive hat type. You must also come up with a mount design which keeps rain from the point on the mount where current could flow to ground, or you will notice that your meter becomes very insensitive as it starts raining.

The prototype used a 22″ shaft from an amateur radio antenna in a mobile antenna mount, with two nuts on top to hold the capacitive hat and a plastic umbrella to protect the mount from moisture. Likewise the coax connection must be well sealed from moisture, an SO-239 type connectors at the antenna and on the chassis for the meter inside the house. As far as the resistance load goes, if you cannot locate a high value for R9, you can fabricate a high value type if need be, for the strong field load. A 10 meg potentiometer which could be switched out of circuit was used in the prototype. For the switch at S2, you could use a ceramic high voltage type to minimize leakage. The FET type is not critical; in the prototype a J176 came from All Electronics, also the meter and the 10 meg potentiometer came from them as well.

Through experimentation it was found that controlling the offset of an op-amp gave a very sensitive way to control meter balance, far superior to trying to shift the meter itself. If you cannot locate a zero center meter you might ground the end, or put it on a trimmer tap where the ends of the pot are on the plus and minus of the supply, say a 5 or 10 K pot. If you can find it, a 250-0-250 µA meter is suggested. In the maximum gain mode you can notice field gradient changes in clear weather from morning to night, as well as detect storms more than a state away. One problem you will notice with this circuit, especially at high gain settings, is that you have to re-zero the meter often as the polarity changes overhead in stormy weather.

The higher the gain of the op-amp or the higher the input impedance of the FET gate, the more this becomes a problem, which is why a provision was made to lower the impedance of the gate circuit and reduce the op-amp gain in strong fields. Note the provision for audio to be taken from the op-amp, and mixed with separate levels for the static and RF signals, as well as a master volume.

In the Spheric, or RF section of the Lightning Monitor, the whip antenna at Antenna-1 was fed to a coil consisting of a 4′ foot long 6″ inch diameter PVC pipe, the coil consists of about 3000 turns of insulated wire on it. You will find that just a straight whip antenna works fine, so it was found that the large coil is not mandatory. The original thought for using the coil at the antenna was to have a lot of signal at low frequencies with a high Q inductor, to give more signal while trying to reduce the overall gain of the circuit, to minimize 60 cycle hum. On that note, long whips or especially long wires are not very desirable here, so stay with a 5′ to 6′ vertical whip antenna.

The input signal is amplified with a JFET input op-amp at U1, with selectable input range through a small value capacitor to allow high gain to be achieved with minimum 60 cycle hum. A LM741 op-amp gives gain to provide audio signal and then another LM741 is used to drive a 500 µA single ended meter for a reading of RF levels. You may find it easier to make the series resistance control for the meter to be a front mounted control as well as the gain control for the meter driver, i.e. the 741 op-amp, as it give much more flexibility under differing weather conditions. This meter is very helpful in determining the number of lightning strokes per unit time in severe weather.

The audio output from the Spheric monitor section is derived form an LM380 IC circuit; you will notice interaction between controls if you build it as shown. A buffer and mixer circuit might be helpful here, but in the original design we decided to keep the parts count low. Also, an equalizer circuit for the signal out is a very good addition, so you can tailor the output response and reduce unwanted signals such as line power noise. A signal output is provided so the output can be fed to a digital multi-meter with PC interface, if desired to log readings of the Lightning Monitor over time.

Building the lightning monitor

Prior to constructing the Lightning Monitor, you will want to locate a well lit and well ventilated work area. A large clean work bench or work table would be suitable for building the project. Grab a 27 to 33 watt

pencil tipped soldering iron, a roll of 22 gauge 60/40 tin/lead rosin core solder. You should also have a small jar of "Tip Tinner," a soldering iron tip dresser which is available from your local Radio Shack store. You'll probably want to gather a few tools, such as a pair of end-cutters, a small pair of needle-nose pliers, a pair of tweezers, a magnifying glass, a small Phillips screwdriver as well as a small flat-blade screwdriver. Place your schematic diagram along with your circuit layout diagram and various charts and tables in front of you on your work table. Place your project components and circuit board in front of you and we can begin constructing the Lightning Monitor. A printed circuit is highly recommended for building this project rather than trying to use perf-board construction to permit more reliable operation from your circuit. Warm up your soldering iron and we will begin construction!

Let's begin building the monitor by first identifying the project resistors. Locate the resistors from the parts pile. Refer to the chart in Table 16-1, which illustrates the resistor color codes and their values. Resistor R1, for example, is a 47k ohm ¼ watt 5% resistor. Try and locate it from the parts pile. The first color band at one edge of the resistor body should be yellow, which is the number (4). The second color band should be violet or number (7) on the chart. The third color band is the multiplier and should be orange in color and represents a multiplier value of 1000, so 47 times 1000 is 47,000 ohms or 47k ohms. The fourth color band on resistors represents the resistor's tolerance. A silver band denotes a 10% tolerance, a gold band represents a 5% tolerance resistor and no color band denotes a 20% tolerance resistor. Once you have found R1, you can try and locate resistor R2 and so on. You can place the resistors on the circuit board in groups of four or so in their respective locations on the circuit board. Once you have the first four resistors placed on the PC board, you can go ahead and solder them in place on the board. After the resistors have been soldered onto the circuit board, you can cut the excess component leads flush to the edge of the circuit board using your end-cutters. Now, you can locate the next batch of four resistors and place them in their respective locations on the circuit board, then go ahead and solder them in place. Remember to trim the excess component leads. Finish up installing the resistors and then we will move on to installing the two silicon diodes.

There are two silicon diodes in this project, and they are located in the meter range and display circuit. Diodes have two leads, a cathode lead and an anode lead. Take a look at the resistors and you will notice that there will be either a black or white color band at one edge of the diode's body. The color band denotes the cathode lead of the diode. It is important that you install

Table 16-1
Resistor color code chart

Color Band	*1st Digit*	*2nd Digit*	*Multiplier*	*Tolerance*
Black	0	0	1	
Brown	1	1	10	1%
Red	2	2	100	2%
Orange	3	3	1,000 (K)	3%
Yellow	4	4	10,000	4%
Green	5	5	100,000	
Blue	6	6	1,000,000(M)	
Violet	7	7	10,000,000	
Gray	8	8	100,000,000	
White	9	9	1,000,000,000	
Gold			0.1	5%
Silver			0.01	10%
No color				20%

the diode correctly with respect to this polarity. One you have installed the two diodes in their proper place, you can solder them in place on the circuit board. Don't forget to cut the extra component lead lengths.

Next, we will try and locate the capacitors for the Lightning Monitor project. This project uses two types of capacitors, small ceramic disk types and the larger electrolytic types which have polarity. The small capacitors come in many different styles and shapes and sometimes they are so small that there is not enough room to print their actual value on the component, so a three-digit code is used. Refer to the chart shown in Table 16-2 when installing the small capacitors. For example, a .1 µF capacitor would have a code value of (104). The Lightning Monitor also utilizes larger value electrolytic capacitors, these capacitors are usually large and have polarity marking on them, such as a black or white color band or a plus (+) or minus (–) marking on them. These polarity markings must be observed when installing the capacitors on the circuit board. Failure to observe the correct polarity could result in either a damaged component or a damaged circuit when first power-up.

Look through your component parts pile and let's try and identify some capacitors. Let's begin with some of the small types such as C1 and C2. Capacitor C1 may be marked 2.2 or 2n2, while Capacitor C2 will most likely be labeled 181. Try and locate the lower value capacitor from the parts stock and place about four components at a time on the PC board in their respective locations. After placing four or so of the first lot of capacitors, you can go ahead and solder them in place. Remember to trim the excess component leads from the board. Take the next grouping of four capacitors and install them on the PC board while referring to the schematic and parts layout diagrams. Go ahead and solder the next group of four capacitors and trim the excess lead lengths. Install the remaining smaller capacitors and then we will move on to installing the larger value electrolytic capacitors. As mentioned, electrolytic capacitors will have polarity markings on them and they must be installed correctly in order for the circuit to work properly. Take your time when identifying the electrolytic capacitors. Observe their polarity marking and then make sure you orient them correctly and in their proper location on the PC board. Refer to the schematic and parts layout diagram. Install a few electrolytic capacitors at one time, and them solder them in place, follow up by removing the excess lead lengths. Install the remaining electrolytic capacitors and solder them in place. Use your end-cutters to remove the extra lead lengths by cutting them flush to the edge of the circuit board.

The Lightning Monitor uses a single FET transistor at Q1, which is connected to antenna-2. The P channel J-FET at Q1 is a J176 FET, which must be handled with care using an anti-static wrist band to avoid damage. This component is very sensitive to static electricity and can be easily damaged in handling. The three leads of the transistor Q1 are all in a single row with the Drain lead at one end and the Gate lead in the center and the Source lead at the opposite end of the plastic case of the transistor. Refer to Figure 16-3, which illustrates the semiconductor pin-outs.

Before we install the integrated circuits in this project, we would highly recommend using IC sockets. Integrated circuit sockets are good insurance in the event of a possible circuit failure at some possible distant point in time. It is much easier to simply unplug a defective IC, rather than trying to un-solder a 14-pin IC from the circuit board. Integrated circuit sockets are inexpensive and easy to locate. There a number of integrated circuits in this project, from 8-pin to 14-pin dual in-line types. In order to install the integrated circuits correctly, you must observe the correct orientation. Failure to install the integrated circuits correctly can cause serious damage to the IC and to the circuit itself, so you must get it right the first time! Each plastic IC package will have either a cut-out, a notch or small indented circle at one end of the plastic package. Looking just to the left of the notch or cut-out you will find pin 1 of the IC. You must align pin 1 of the IC to pin 1 of the IC socket when installing the chip on the PC board. Take a look at U1, this is an 8-pin dual in-line IC. Since we will not be using pin 1 on this IC, you will have to make sure that pin 2 or the minus (–) input is connected or aligns with C1 and R2, while pin 3 of U1 is connected to resistor R1 and so on. Now, go ahead and insert the integrated circuit into their respective sockets.

There are a number of potentiometers in this project, some of which are chassis mounted controls, while other potentiometers will be circuit board mounted types. Refer to the parts list below and Table 16-3. You can locate the circuit board trimmer type potentiometer and install them at their respective locations on the

Table 16-2
Capacitor code information

This table is designed to provide the value of alphanumeric coded ceramic, mylar and mica capacitors in general. They come in many sizes, shapes, values and ratings; many different manufacturers worldwide produce them and not all play by the same rules. Most capacitors actually have the numeric values stamped on them; however, some are color coded and some have alphanumeric codes. The capacitor's first and second significant number IDs are the first and second values, followed by the multiplier number code, followed by the percentage tolerance letter code. Usually the first two digits of the code represent the significant part of the value, while the third digit, called the multiplier, corresponds to the number of zeros to be added to the first two digits.

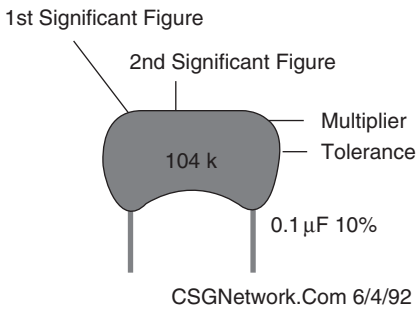

Value	*Type*	*Code*	*Value*	*Type*	*Code*
1.5 pF	Ceramic		1,000 pF /.001 µF	Ceramic / Mylar	102
3.3 pF	Ceramic		1,500 pF /.0015 µF	Ceramic / Mylar	152
10 pF	Ceramic		2,000 pF /.002 µF	Ceramic / Mylar	202
15 pF	Ceramic		2,200 pF /.0022 µF	Ceramic / Mylar	222
20 pF	Ceramic		4,700 pF /.0047 µF	Ceramic / Mylar	472
30 pF	Ceramic		5,000 pF /.005 µF	Ceramic / Mylar	502
33 pF	Ceramic		5,600 pF /.0056 µF	Ceramic / Mylar	562
47 pF	Ceramic		6,800 pF /.0068 µF	Ceramic / Mylar	682
56 pF	Ceramic		.01	Ceramic / Mylar	103
68 pF	Ceramic		.015	Mylar	
75 pF	Ceramic		.02	Mylar	203
82 pF	Ceramic		.022	Mylar	223
91 pF	Ceramic		.033	Mylar	333
100 pF	Ceramic	101	.047	Mylar	473
120 pF	Ceramic	121	.05	Mylar	503
130 pF	Ceramic	131	.056	Mylar	563
150 pF	Ceramic	151	.068	Mylar	683
180 pF	Ceramic	181	.1	Mylar	104
220 pF	Ceramic	221	.2	Mylar	204
330 pF	Ceramic	331	.22	Mylar	224
470 pF	Ceramic	471	.33	Mylar	334
560 pF	Ceramic	561	.47	Mylar	474
680 pF	Ceramic	681	.56	Mylar	564
750 pF	Ceramic	751	1	Mylar	105
820 pF	Ceramic	821	2	Mylar	205

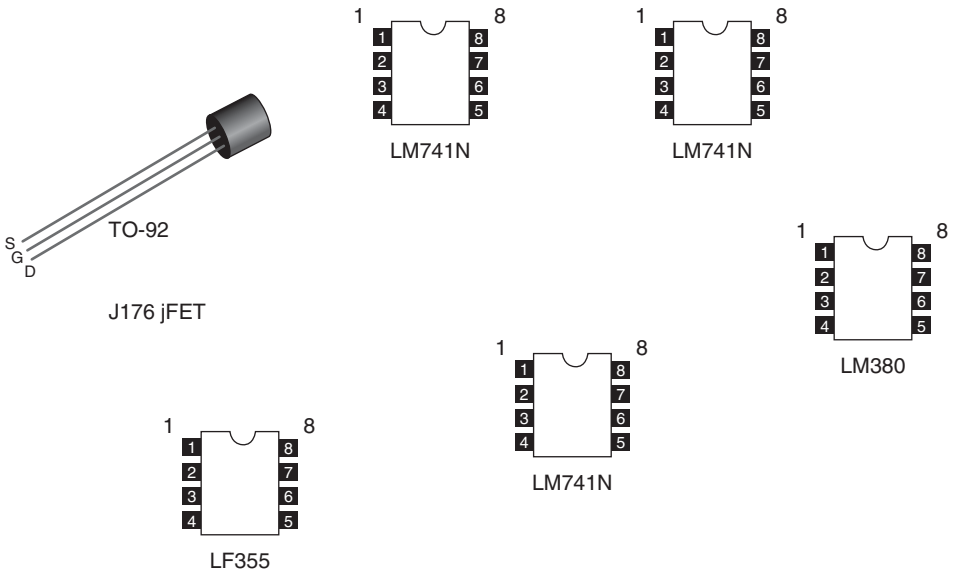

Figure 16-3 *Semiconductor pin-outs*

circuit board. Solder them in place and then trim the excess leads if necessary.

Let's take a well deserved break and when we return we will inspect the circuit board for possible "short" circuits and "cold" solder joints. Pick up the Lightning Monitor circuit board with the foil side of the board facing upwards towards you. First we will inspect the PC board for possible "cold" solder joints. Take a look at the solder joints, they should all look clean, shiny and bright. If you see any solder joints that appear dull, dark or "blobby," then you should remove the solder from the joint and re-solder the joint all over again until it looks good. Once you are confident that all looks well, we can move on to inspecting the PC board for possible "short" circuits. There are two main causes for "short" circuits, small round solder blobs laying across a PC "trace" can cause a circuit to "short-out." The second cause of "short" circuits is a "stray" component lead. Often when cutting excess component leads, they will "stick" to the circuit board from rosin core solder residue. Make sure that there are no "stray" leads bridging between the circuit board traces. Once you are confident that there are no "shorts," we can move on to finishing the project.

Now, let's move on to mounting the larger components and hardware on the chassis box. The chassis mounted

Table 16-3
Potentiometer functions

Potentiometer	*Function*	*Type*
VR1	Spheric Gain Control	500k chassis mount
VR2	Meter Gain Control	1 megohm trimmer
VR3	Meter Range Control	3k trimmer
VR4	Spheric Volume Control	10k chassis mount
VR5	Static Volume Control	10k chassis mount
VR6	Main Volume Control	10k chassis mount
VR7	Static Range Control	25k trimmer
VR8	Static Gain Control	10M chassis mount
VR9	Static Meter Balance Control	1 megohm trimmer
VR10	Load Control	10 megohm trimmer

potentiometers were all mounted on the front of the metal chassis used to house the project, and wired to the circuit board with 20 ga. insulated wire. The two toggle switches, S1 and S2, were also mounted on the front panel of the chassis and were wired to the circuit board using 22 ga. insulated wire.

The Lightning Monitor utilizes two analog meters, one for each monitoring circuit. The meter for the Spheric circuit at M1, was a 500 µA meter, while the Static meter circuit uses a 250-0-250 µA center reading meter at M2. Both of these meters were found surplus and were mounted on the front panel of the metal chassis.

The speaker was mounted on the rear panel of the chassis and wired to the circuit board using two 6″ lengths or #22 ga. insulated wire. A ⅛″ switched mini audio panel jack for headphone use was mounted on the front panel. An RCA jack was provided for antenna-1; you can use a whip antenna or an outdoor whip antenna. An SO-239 antenna connector was mounted at the rear panel to allow the Capacitive Hat antenna-2 to connect to the circuit board, via a small piece of coax cable. The Capacitive Hat antenna is shown in Figure 16-4, it can be built with an antenna bracket mounted on a pole outdoors. An SO-239 jack was mounted on the small antenna bracket. A threaded shaft was silver soldered to the center terminal of the connector with a small rain guard on it. At the top of the threaded shaft a metal coffee can lid is held in place with two nuts. The antenna can be placed outdoor on a pole near the house with a length of coax cable leading from the antenna to the antenna jack on the Lightning Monitor.

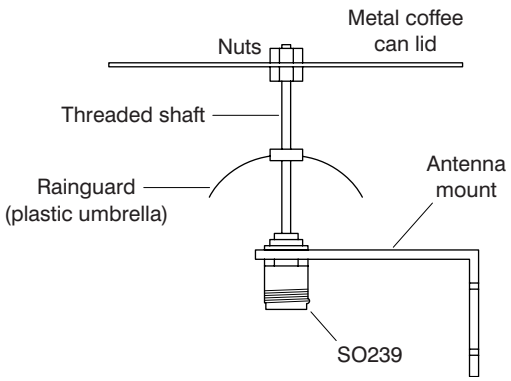

Figure 16-4 *Antenna-2 – Capacitive hat antenna*

If you wish to experiment, you can try an indoor 5′ whip without the coil and see how the circuit performs. You could also experiment with an outdoor whip antenna without the coil and you could build the coil and place it in series with an outdoor whip antenna if desired.

The Lightning Monitor needs a power supply which can provide a 12 volt source for the audio amplifier circuit as well as a plus and minus power supply for the op-amps. The diagram in Figure 16-5 illustrates a 12 volt and dual plus/minus 5 volt power supply which can be used to power the Lightning Monitor. The prototype Lightning Monitor incorporated the power supply in the same chassis as the actual monitor. You will need to locate a 12 volt, 250 mA center-tapped transformer ahead of the rectifier circuit. The rectifier circuit is fed directly to the regulator integrated circuits as shown. You will need to connect the dual voltage power supply to the Lightning Monitor. The plus voltage is connected to pins 7 on both the LM741 and the LF355 op-amp as well as to the J-FET at Q1. The negative voltage supply is connected to pin 4 of both the LM741 and the LF355 op-amp, as well as to the JFET at Q1. The 12 volt power supply is used to power the LM380 audio amplifier.

Once the power supply and Lightning Monitor have been completed, you connect the whip antenna-1 and the Capacitive Hat antenna-2 and prepare for testing the Lightning Monitor. To best test the circuit you will need to wait for a thunderstorm. However, you can do some testing of the circuit. First, apply power to the Lightning Monitor circuit, turn the Off-On switch to the "On" position. Make sure both antennas are connected. Turn up the main volume and the Static Volume controls past the ½ position and adjust VR7 to past ½. You will need to generate some static electricity by rubbing a lucite rod with some animal fur to create a static charge. Bring the lucite rod near the Capacitive Hat antenna and you should see the Static Meter at M2 swing into action. This will give you a good indication that the Static portion of the meter is working. You may be able to test the Spheric Meter portion of the circuit if you have an RF broadband noise generator.

If the Lightning Monitor doesn't seem to work at all or appears DEAD, then you will want to turn "Off" the circuit and remove the power and inspect the circuit board once again. While inspecting the circuit board

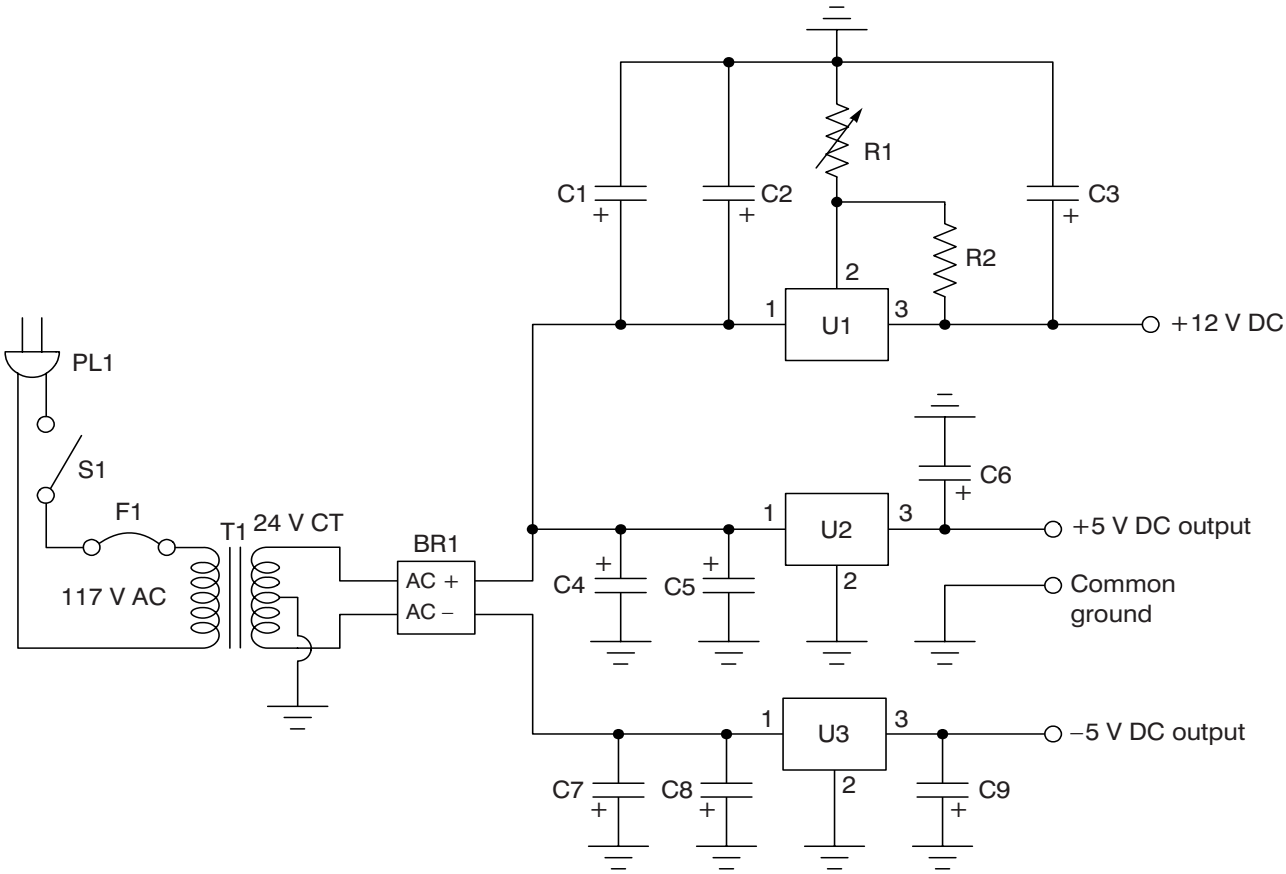

Figure 16-5 *Multi-voltage power supply*

you will be looking to make sure that the electrolytic capacitors have been installed correctly, to be sure that the diodes and the JFET have been installed correctly as well. Have a knowledgeable electronic hobbyist inspect the circuit, since it is easy to overlook something and not catch it the second time. Make sure that your power supplies are connected to the correct points and that the op-amps have been installed correctly. Once you are confident of your inspection and hopefully you found your error, you can re-apply power and re-test the circuit again. Good luck and be safe when experimenting with outdoor antennas, keeping them away from power lines.

Chapter 17

Ambient Power Receiver

Parts list

Original Ambient Power Module I

C2,C3 .047 µF, 50 volt capacitor

C1,C4 40 µF, 50 volt electrolytic capacitor

D1,D2 1N34 diodes

D3,D4 1N34 diodes

ANT 50+ foot broadband monopole antenna

GND Earth ground stake

Misc PC board, wire, hardware, enclosure

Ambient Power Module II

D1,D2,D3,D4,D5,D6 1N60 germanium diodes

D7,D8,D9,D10,D11,D12 1N60 germanium diodes

C1,C2,C3,C4,C5,C6 470 µF, 50 volt electrolytic capacitors

C7,C8,C9,C10,C11,C12 470 µF, 50 volt electrolytic capacitors

L1 480 turns #22 wire on 3″ plastic tube

ANT 50+ foot broadband monopole antenna

GND earth ground stake

Misc printed circuit board, wire, hardware, case

In 1979, Joe Tate began experimenting with methods of turning radio energy in the air into usable electric power. He first developed a clock which drew its power from an antenna that was just a long piece of wire stretched out horizontally about 20 feet above the ground. The power supply for the clock worked something like an old-style crystal radio, except that it did not have a tuning circuit. Because of this, the "Crystal Clock" was able to absorb a wide spectrum of radio noise from the antenna and yield electric power. The power supply was able to deliver much more current than was developed in a crystal radio, although its output was just still just a few millivolts.

Joe began recording the power supply's output over a long period of time to determine its dependability. After all, the device relied completely on whatever stray signals happened to be in the air. Using an Atari computer, the output of the clock's power supply was measured continuously and recorded on floppy disk. This was done by feeding the unregulated voltage output directly into the computer's joystick port.

Joe began calling this power supply the "Ambient Power Module" (APM) because it extracted power from ambient background radio noise. This small circuit, when connected to antenna and ground, used the potential difference between air and ground to generate a small direct current continuously. Joe's original claims stated that the APM could produce up to 36 volt/9 watts. Joe applied for a US Patent and was later granted patent #4,628,299. As he studied the recorded data, mild fluctuations were noted in a daily cycle. The patterns were consistent over long periods of time, though they differed in different locations. Aside from that, the APM looked like a very dependable source of power. In the spring of 1984, he discovered an interesting correlation between voltage fluctuations from the APM and a local earthquake event; this point will be discussed later.

The APM operates, as a broadband receiver of energy in the lower portion of the radio spectrum, receiving

Copyright © 2008 by The McGraw-Hill Companies, Inc. Click here for terms of use.

Figure 17-1 *Ambient power module*

most of its power from below 1 MHz. The basic circuit may be combined with a variety of voltage regulation schemes.

The original Ambient Power Module is shown in Figure 17-1 and the schematic diagram circuit in Figure 17-2 is used to convert the ambient RF energy to a direct voltage which can be used and handled by data processing equipment. This design makes use of doubler, splitter and rectifier circuit configurations. Designated as an ambient power module (APM), the circuit is connected to an antenna, preferably a 50 foot or greater broadband monopole antenna. The antenna is connected to the APM circuit via two capacitors C2 and C3, each being in series with the antenna input line for coupling and each having a value of 0.047 microfarad. Taking the left or negative side of the circuit first, it comprises two rectifiers (diodes) D3 and D4 (1N34 type) and a filter capacitor C4 (40 microfarads). Rectifier D2 is connected in parallel to the signal path and rectifier D1 is connected in series, in the well-known voltage multiplier arrangement. Capacitor C1 is connected in parallel across the output of the APM to smooth the rectified output. The right or positive side of the circuit is similar, except for the polarity of the diodes.

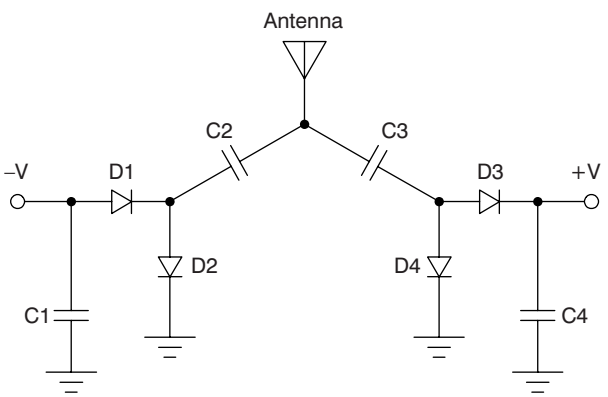

Figure 17-2 *Ambient power module 1*

In operation, an RF voltage is developed across the antenna; this voltage is voltage multiplied by the two rectifiers on each side of the circuit. The resultant voltage output is smoothed or filtered by capacitors C2 and C4. The circuit is very symmetrical with the plus side mirroring the minus side of the circuit. The output of the APM is ideal for low voltage, high impedance devices, like digital clocks, calculators, radios and smoke alarms, which are the most likely applications for this power source.

One possible application for the APM is to charge small NiCad batteries which provide effective voltage regulation as well as convenient electrical storage. Charging lead acid batteries is not practical because their internal leakage is too high for the APM to keep up with. Similarly, this system will not provide enough power for incandescent lights except in areas of very high radio noise. The APM could also be used to power small electronic devices with CMOS circuitry, like clocks and calculators. Smoke alarms and low voltage LEDs, and small emergency power/lighting circuits can also be powered by the APM. Use your imagination to devise an application for the APM.

Building the APM circuit

The builder has a choice of wiring techniques which may be used to construct the module. It may be hand wired onto a terminal strip, laid out on a bread board, experiment board, or printed circuit. We chose to build the original circuit on a small printed circuit board. Locate a clean well lit work table to build the APM. Find a small 27 to 33 watt pencil-tipped soldering iron, as well as some "Tip Tinner." "Tip Tinner" is a soldering iron tip cleaner/dressing compound which helps to clean the soldering tip after use and can be obtained at your local Radio Shack store. Try and locate a pair of end-cutters, a pair of small needle-nose pliers and a set of screwdrivers. Grab your schematic

diagram and look closely at it, before we begin construction.

The APM power receiver consists mainly of diodes and capacitors and you will recall that both of these type of components have polarity which must be observed for the circuit to function correctly. The diodes used in the APM circuit are germanium diodes and NOT silicon diodes which have a voltage drop. Diodes will have either a white or black band at one side of the diode's body. This colored band denotes the cathode end of the diode. When installing the diodes on the PC board make sure you observe the correct placement of all the diodes.

The APM circuit utilizes various capacitors, both electrolytic and non-electrolytic types. Electrolytic capacitors are often larger size capacitors with larger values. Electrolytic capacitors have polarity and may have either a black or white color bands with plus or minus marking at one end of the capacitor body. When installing the electrolytic capacitors make sure that you orient the capacitors correctly with respect to the circuit diagram. The chart in Table 17-1 may help you to identify the small value capacitors. In many instances, small value/size capacitors often use a three-digit code to represent a capacitor value.

Once all the components have been placed on the PC board, you can take a short break and when we return we will inspect the circuit board for possible "short" circuits and "cold" solder joints. Pick up the circuit board with the foil side facing upwards toward you. Look over the board carefully and inspect the solder connections. The solder joints should all look clean, smooth and shiny. If any of the solder joints look dull, dirty or "blobby" then remove the solder from the joint and re-solder the connection over again so that it looks good.

Next we will inspect the circuit board for any "short" circuit which could result from solder blobs or remaining component leads left from the building process. A component lead resting across a PC trace can result in a "short" circuit which could cause the circuit to fail.

Once you are satisfied that your circuit looks good, you can move on to testing the APM receiver. First you will need to attach a good antenna ground connection to the APM receiver module.

Antenna requirements

The antenna needs to be of sufficient size to supply the APM with enough RF current to cause conduction in the germanium diodes and charge the ground coupling capacitors. It has been found that a long horizontal antenna wire works best. A fifty foot monopole, or long-wire antenna will work well, but a small antenna should work, and of course you can experiment with your own antenna ideas. The antenna will work best when elevated to 20–30 feet. Lower elevations will work, but a longer wire may be necessary for best results.

In most locations, possible supporting structures already exist. The wire may be stretched between the top of a building and some nearby tree or telephone pole, see Figure 17-3. If live wires are present on the building or pole, care should be taken to keep your antenna and body well clear of these hazards. To mount the wire, standard commercial insulators may be used as well as homemade devices. Plastic pipe makes an excellent antenna insulator. Synthetic rope also works very well, and has the advantage of being secured simply by tying a knot. It is convenient to mount a pulley at some elevated point so the antenna wire may be pulled up to it using the rope which doubles as an insulator.

Grounding the APM

The APM requires a good ground circuit in order to operate efficiently. Usually a good ground can be established by connecting a wire to the water or gas pipes of a building. Solder or screw the wire to the APM ground terminal. In buildings with plastic pipes or joints, some other hookup must be used. A metal rod or pipe may be driven into the ground in a shady location where the earth usually is damper. Special copper coated steel rods are made for grounds, which have the advantage of good bonding to copper wire. A ground of this type is usually found within the electrical system of most buildings. Conduit is a convenient ground provided that the conduit is properly grounded. This may be checked with an ohmmeter by testing continuity between the conduit and system ground (ground rod). Just as with the antenna, keep the ground

Table 17-1

Capacitance code information

This table provides the value of alphanumeric coded ceramic, mylar and mica capacitors in general. They come in many sizes, shapes, values and ratings; many different manufacturers worldwide produce them and not all play by the same rules. Most capacitors actually have the numeric values stamped on them; however, some are color coded and some have alphanumeric codes. The capacitor's first and second significant number IDs are the first and second values, followed by the multiplier number code, followed by the percentage tolerance letter code. Usually the first two digits of the code represent the significant part of the value, while the third digit, called the multiplier, corresponds to the number of zeros to be added to the first two digits.

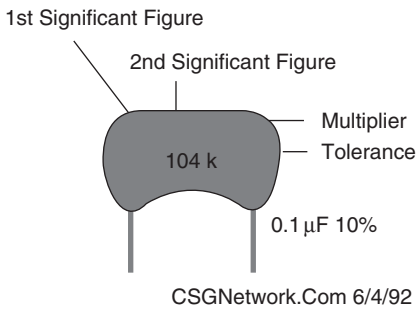

Value	*Type*	*Code*	*Value*	*Type*	*Code*
1.5 pF	Ceramic		1,000 pF /.001 µF	Ceramic / Mylar	102
3.3 pF	Ceramic		1,500 pF /.0015 µF	Ceramic / Mylar	152
10 pF	Ceramic		2,000 pF /.002 µF	Ceramic / Mylar	202
15 pF	Ceramic		2,200 pF /.0022 µF	Ceramic / Mylar	222
20 pF	Ceramic		4,700 pF /.0047 µF	Ceramic / Mylar	472
30 pF	Ceramic		5,000 pF /.005 µF	Ceramic / Mylar	502
33 pF	Ceramic		5,600 pF /.0056 µF	Ceramic / Mylar	562
47 pF	Ceramic		6,800 pF /.0068 µF	Ceramic / Mylar	682
56 pF	Ceramic		.01	Ceramic / Mylar	103
68 pF	Ceramic		.015	Mylar	
75 pF	Ceramic		.02	Mylar	203
82 pF	Ceramic		.022	Mylar	223
91 pF	Ceramic		.033	Mylar	333
100 pF	Ceramic	101	.047	Mylar	473
120 pF	Ceramic	121	.05	Mylar	503
130 pF	Ceramic	131	.056	Mylar	563
150 pF	Ceramic	151	.068	Mylar	683
180 pF	Ceramic	181	.1	Mylar	104
220 pF	Ceramic	221	.2	Mylar	204
330 pF	Ceramic	331	.22	Mylar	224
470 pF	Ceramic	471	.33	Mylar	334
560 pF	Ceramic	561	.47	Mylar	474
680 pF	Ceramic	681	.56	Mylar	564
750 pF	Ceramic	751	1	Mylar	105
820 pF	Ceramic	821	2	Mylar	205

Figure 17-3 *Horizontal long-wire antenna*

wire away form the hot wires. The APM's ground wire may pass through conduit with other wires but should only be installed by qualified personnel. Grounding in extremely dry ground can be enhanced by burying some salt around the rod. The salt will increase the conductivity of the soil and also help retain water content around the ground rod. Some researchers have found that it is much better to get the largest surface area of metal in contact with the ground as possible, and have tried digging a hole and planting aluminum foil sheets in the ground.

Once you have tested the operation of the APM, you can disconnect the antenna and decide how you wish to enclose the APM circuit. You may want to experiment with the housing, since researchers have discovered that the germanium diodes are sensitive to sunlight and the voltage output is increased when the circuit is in sunlight. If you want to experiment along these lines, then you may wish to enclose the circuit in a clear plastic box. You can drill holes for two terminals posts for the plus and minus output connections, an RCA jack for the antenna input connection, a terminal for the ground connection, and your APM is complete and ready for operation.

The APM-II

The original APM is a great circuit for experimentation. It has been found that the germanium diodes are also sensitive to light, so if you house the APM in a clear plastic box and have it exposed to sunlight it will produce more output. Have fun experimenting with the APM receiver and you may find the perfect application for it, such as powering another receiver or night light, clock, emergency radio/lighting, etc.

Over time experimenters have improved upon the original APM design and claim increased output from the original design, so the reader is free to experiment and build both versions of the APM if desired. The second APM receiver, shown in Figure 17-4, illustrates the newer version of the APM with increased output voltage and current. The APM-II has quite a few more stages and has many more diodes and capacitors. You will note that the APM-II also uses germanium diodes which have more output than trying to use silicon diodes. Also note the higher capacitance values in the second design which were used to increase the output considerably. When constructing the APM-II be sure to pay careful attention to mounting the diode and capacitors; since there are many more components and they all have polarity marking on them, it is much more possible to make a mistake in orientation. Take your time when constructing the circuit. The APM-II also uses an input coil, which is said to improve the output. Some experimenters claim that the antenna can be eliminated and that the antenna connection can be connected to another separate ground, but this has not been verified. The APM-II is also sensitive to light which can increase the output if used outside. Some users claim that the power produced by the APM also seems to improve near bridges, ships and anything containing a great deal of metal.

Over time many scientists and researchers have reported bright flashes in the sky during strong earthquakes, as well as computer breakdowns during severe tremors. Scientists have long suspected that seismic activity is associated with a variety of electrical effects. Researchers have been taking a careful look at this link, with an eye toward using it to predict earthquakes.

Joseph Tate and William Daily of Lawrence Livermore National Laboratory in Livermore, CA. created a system of radio wave monitors distributed along California's San Andreas fault using the APM design. Tate and Daily recorded two kinds of changes in atmospheric radio waves prior to earthquakes that occurred between 1983 and 1986. Joe was able to witness and record the output of the APM during the earthquakes that followed, since he continuously monitored the output of the APM on a computer, so he could go back and look at the output on any given day.

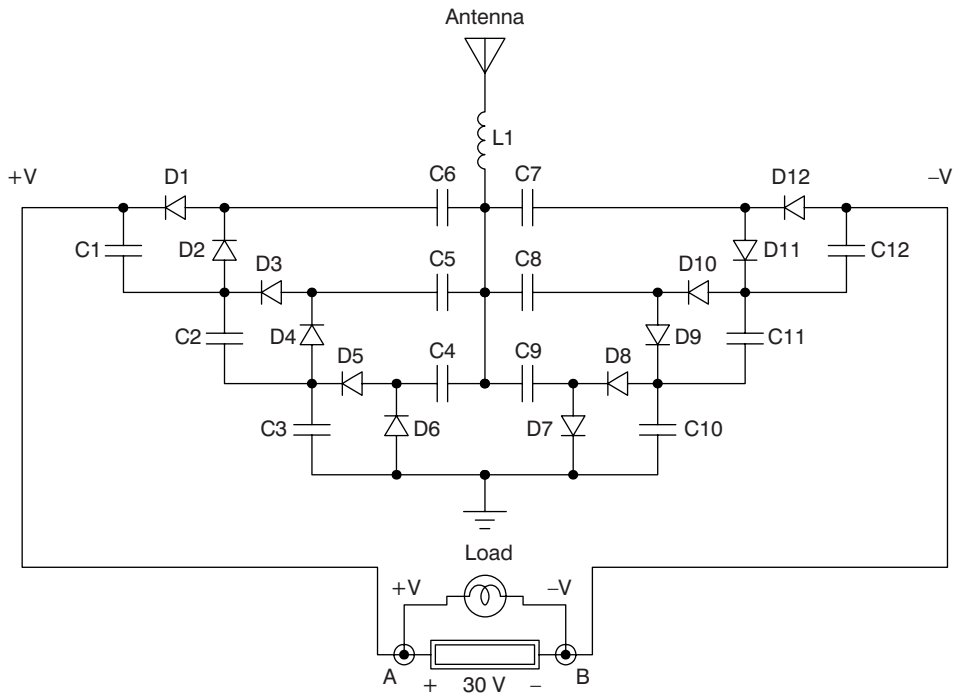

Figure 17-4 *Ambient power module II*

The most common change is a drop in the radio signals that normally pervade the air as a result of lightning and human sources such as car ignition systems and electric power grids. This reduction typically occurs one to six days before an earthquake and can last for many hours. For example, a magnitude 6.2 earthquake that shook Hollister, CA, in April 1984 was preceded six days earlier by a 24-hour drop in radio signals being monitored 30 miles from the quake's epicenter. Tate and Daily have found that the larger the earthquake, the longer the time between the radio wave depression and the quake.

Laboratory studies have shown that the electrical conductivity of rocks increases as they are stressed. Based on this and their electrical modeling of the ground, Tate and Daily think the increased conductivity of stressed rocks near the fault causes more radio waves to be absorbed by the ground rather than their traveling through the air. They also plan to test a possible link between radio wave drops and the emission of radon gas, which itself is thought to be a quake precursor. The radon may ionize the air, making it temporarily more absorptive than the detector antenna.

The researchers have also found, in addition to these drops, another pre-quake phenomenon in which short pulses of increased radio wave activity are emitted. For example, five days before the magnitude 6.5 earthquake hit palm Springs, CA, in July 1986, a station 15 miles from the epicenter detected a rise in radio signals. This sort of emission is consistent with laboratory work showing that cracking rocks release electromagnetic signals.

Tate says that in their first attempts at predicting earthquakes, they did not miss a single event, so he is optimistic about using this technique for short-term forecasting of San Andreas quakes.

If you live in an earthquake prone area such as California, you could use you APM not only for small low voltage emergency power/lighting system but you could connect the APM to an analog to digital converter card in a personal computer and record the fluctuations during earthquakes. The APM will provide many avenues for the builder and/or researcher. Disconnect your APM during thunderstorm activity to avoid damage to the APM and other household devices. Have fun and be safe.

Chapter 18

Earth Field Magnetometer Project

Parts list

Earth Field Magnetometer

R1,R3,R4,R5 4.7 kohm, ¼ w, 5% resistor

R2 100 ohms, ¼ w, 5% resistor

R6 10k ohm ¼ w, 5% resistor

C1,C2 15 pF, 35 volt capacitor

C3,C4 47 nF, 35 volt electrolytic capacitor

C5 10 µF, 35 volt capacitor

C6,C8 1 µF, 35 volt capacitor

C7 22 µF, 35 volt electrolytic capacitor

C9 10 µF, 35 volt Tantalum capacitor

D1,D2 1N914 silicon diode

D3 1N4001 silicon diode

X1 10 MHz crystal

U1 SCL006A - magnetometer output IC

U2 AD-557 - digital to analog converter chip

U3,U4 LM7805, 5 volt regulator

J1,J2 wire jumpers

S1 4-position rotary gain switch

S2 normally open pushbutton switch

S3 SPST toggle power switch

Logger HOBO H08-002-02 (ONSET)

Misc PC board, wire, IC sockets, chassis, etc.

Optional Field Magnetometer Power Supply

C1 470 µF, 50 volt electrolytic capacitor

C2 1 µf, 50 volt ceramic capacitor

C3 15 µf, 50 volt electrolytic capacitor

BR1 diode bridge rectifier 100v/2-amp

T1 24 volt center tapped transformer -.5 A

U1 LM7809 IC regulator 9 volts

S1 SPST power switch

PL1 115 VAC power plug

MISC PC board, wire, hardware, etc.

1. Speake & Co. Ltd. (Elvicta Estate, Crickhowell, Powys. Wales, UK; http://www.speakesensors.com).

Copyright © 2008 by The McGraw-Hill Companies, Inc. Click here for terms of use.

2. Fat Quarters Software (24774 Shoshonee Drive, Murieta, CA 92562; Tel: 909-698-7950; Fax: 909-698-7913; Web: http://www.fatquarterssoftware.com)
3. ONSET Computers, PO Box 3450 Pocasset, MA 02559-3450 (1-800-564-4377) http://www.onsetcomp.com

Magnetic fields are all around us. The Earth itself produces a magnetic field, which is why compasses work. Anytime an electrical current flows in a conductor, a magnetic field is generated. That is why transformers, inductors, and radio antennas work. There are several different devices that could be used to sense a magnetic field. One of the most familiar to electronics hobbyists is the Hall-effect device. However, in this chapter we'll take a look at a magnetic sensor that is as easy to use, but is more sensitive, more linear, and more temperature stable than typical Hall-effect devices. And just like Hall-effect devices, it can be used to make a variety of instruments, including magnetometers and gradiometers.

For those unfamiliar with them, magnetometers are used in a variety of applications in science and engineering. One high-tech magnetometer is used by Navy aircraft to locate submarines. Radio scientists use magnetometers to monitor solar activity. Earth scientists use magnetometers to study diurnal changes in the Earth's magnetic field. Archeologists use magnetometers to locate buried artifacts, while marine archeologists and treasure hunters use the devices to locate sunken wrecks and sunken treasure.

The Earth Field Magnetometer that we will be exploring uses a "flux-gate magnetic sensor." The device, in essence, is basically an over-driven magnetic-core transformer which the "transducible" event is the saturation of the magnetic material. These devices can be made very small and compact, yet will still provide reasonable accuracy.

In its most simple form the flux-gate magnetic sensor consists of a nickel-iron rod used as a core, wound, with two coils. One coil is used as the excitation coil, while the other is used as the output or sensing coil. The excitation coil is driven with a square-wave signal with an amplitude high enough to saturate the core. The current in the output coil will increase in a linear manner so long as the core is not saturated. But when the saturation point is reached, the inductance of the coil drops and the current rises to a level limited only by the coil's other circuit resistances.

If the simple flux-gate sensor was in a magnetically pure environment, then the field produced by the excitation coil would be the end of the story. But there are magnetic fields all around us, and these either add to or subtract from the magnetic field in the core of the flux-gate sensor. Magnetic field lines along the axis of the core have the most effect on the total magnetic field inside the core. As a result of the external magnetic fields, the saturation condition occurs either earlier or later than would occur if we were only dealing with the magnetic field of interest. Whether the saturation occurs early or later depends on whether the external field opposes or reinforces the intended field.

Flux-gate magnetometer

The Earth Field Magnetometer project is illustrated in Figure 18-1 and the remotely located FM-3 flux-gate sensor is depicted in Figure 18-2.

The heart of the magnetometer is of course the flux-gate sensor. A compact low-cost line of flux-gate sensors are manufactured by Speake & Co. Ltd. and distributed in the United States by Fat Quarters Software. The FGM-3 sensor is the device used in

Figure 18-1 *Magnetometer*

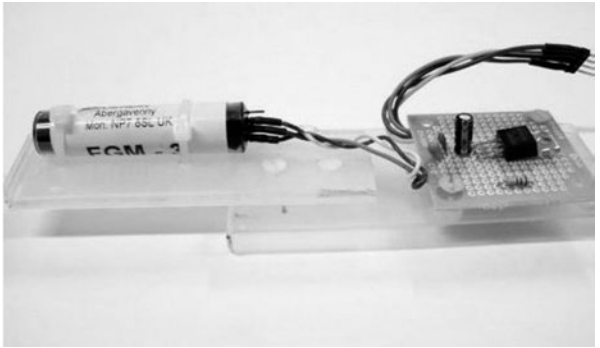

Figure 18-2 *FGM-3 Magnetometer sensor*

this project. It is a 62 mm-long by 16 mm-diameter (2.44 by 0.63 inch) device. Like all the devices in the line, it converts the magnetic field strength to a signal with a proportional frequency. The FGM-3 sensor has only three leads: Red: +5 VDC (power), Black: 0 volts (ground), and White: output signal (a square-wave whose frequency varies with the applied field). The output signal is a train of TTL compatible pulses with a period that ranges from 8 to 25 mS, or a frequency range of 40 to 125 kHz. The detection sensitivity of the FGM-3 device is +/– 0.5 oersted (+50 utesla). That range covers the Earth's magnetic field, making it possible to use the sensor in Earth-field magnetometers. Using two or three sensors in conjunction with each other provides functions such as compass orientation, three-dimensional orientation measurement systems, and three-dimensional gimbaled devices such as virtual-reality helmet display devices. It can also be used in applications such as ferrous metal detectors, underwater shipwreck finders, and in factories as conveyer-belt sensors or counters. There are a host of other applications where a small change in a magnetic field needs to be detected.

The FGM series also includes two other devices, the FGM-2 and the FGM-3h. The FGM-2 is an orthogonal sensor that has two FGM-1 devices on a circular platform at right angles to one another. That orthogonal arrangement permits easier implementation of orientation measurement, compass, and other applications. The FGM-3h is the same size and shape as the FGM-3, but is about 2.5 times more sensitive. Its output frequency changes approximately 2 to 3 Hz per gamma of field change, with a dynamic range of +/– 0.15 oersted (about one-third the Earth's magnetic field strength).

The output signal in all the devices in the FGM series is +5 volt (TTL-compatible) pulse whose period is directly proportional to the applied magnetic field strength. This relationship makes the frequency of the output signal directly proportional to the magnetic field strength. The period varies typically from 8.5 µs to 25 µs or a frequency of about l20 kHz to 50 kHz. For the FGM-3 the linearity is about 5.5% over its +/– 0.5 oersted range.

The response pattern of the FGM-x series sensors is shown in Figure 18-3. It is a "figure-8" pattern that has major lobes (maxima) along the axis of the sensor, and nulls (minima) at right angles to the sensor axis. This pattern suggests that for any given situation there is a preferred direction for sensor alignment. The long axis of the sensor should be pointed towards the target source. When calibrating or aligning sensor circuits, it is common practice to align the sensor along the east-west direction in order to minimize the effects of the Earth's magnetic field.

The flux-gate sensor is coupled directly to a special interface chip, manufactured by Speake. This special SCL006A integrated circuit is shown in the main schematic diagram shown in Figure 18-4. It provides the circuitry needed to perform the Earth field magnetometry sensing. It integrates field fluctuations in one-second intervals, producing very sensitive output variations in response to small field variations. The magnetometer is of special interest to people doing radio-propagation studies, and those who want to monitor for solar flares. It also works as a laboratory magnetometer for various purposes. The SCL006A is housed in an 18-pin DIP IC package and is shown at U1. The FGM-3

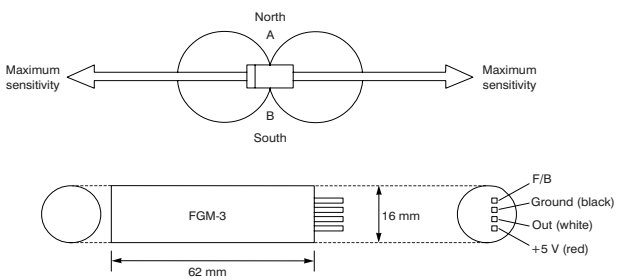

Figure 18-3 *FGM-3 Magnetometer sensor*

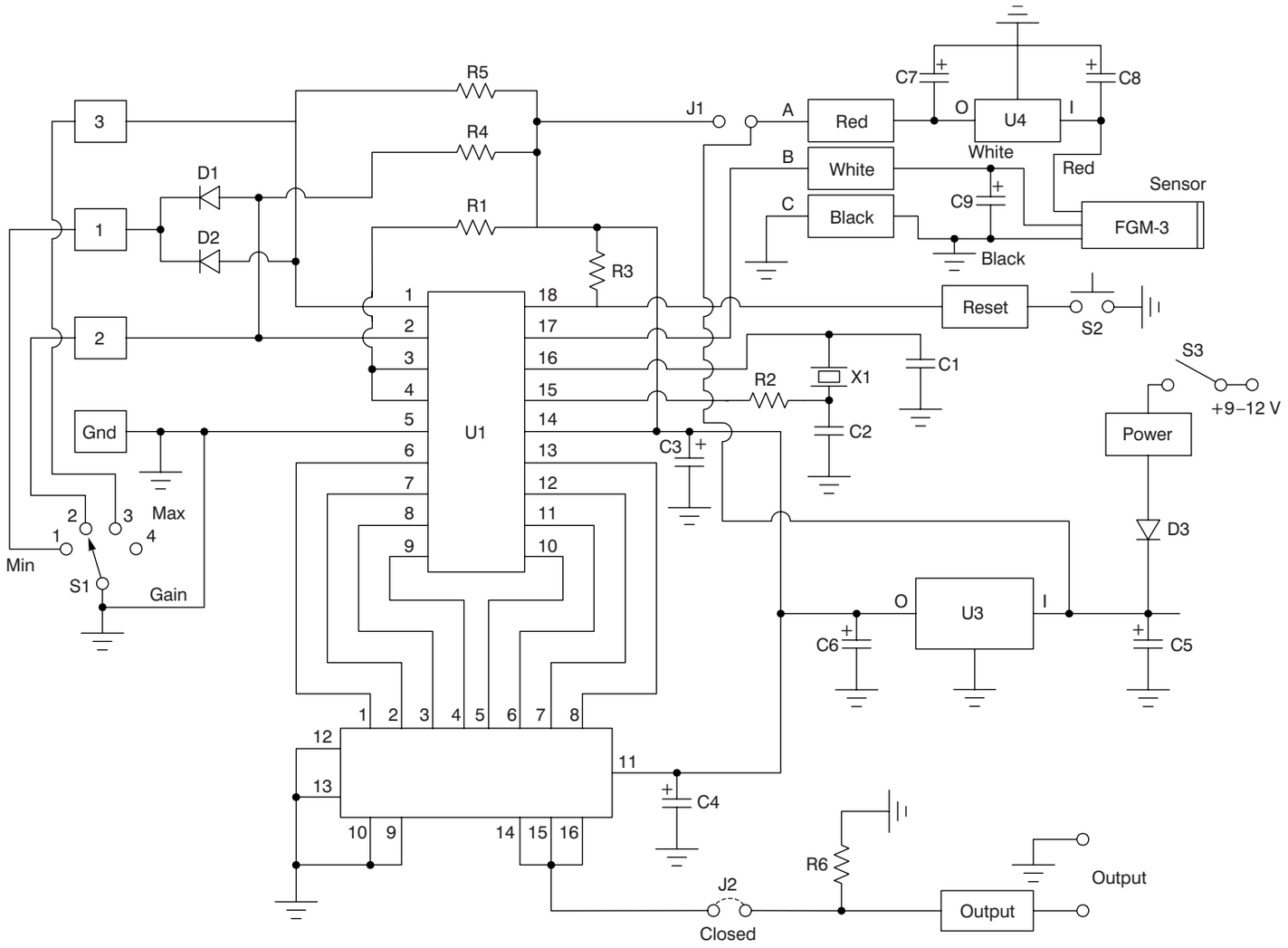

Figure 18-4 *Main magnetometer circuit*

flux-gate sensor is coupled to the input pin at pin 17 of U1. The reference oscillator of the SCL0006A is controlled by components X1, C1, C2 and R2. A sensitivity switch, S1, provides four positions, each with a different overall sensitivity range. Switch S2 is used to reset the SCL0006A, when applied for about two seconds.

The second op-amp at U2, is an Analog Devices AD557 D/A converter. The magnetometer circuit is designed so that it could be run from a 9 to 15 volt battery for use in the field. Power supplied from the battery is controlled by power switch S3 which supplies 9 volts to the regulator. For stationary research, the magnetometer should be powered from an 110 volt AC to 9–15 volt DC power supply. The regulator U3 drops the 9 volt input supply power down to 5-volts to power the magneto-meter circuit. The output signal is a DC voltage that can be monitored by a strip-chart or X-Y paper recorder, a voltmeter or the signal can be fed into a computer using an A-to-D converter. In the prototype we used the output to drive a portable mini data-logger such as the ONSET corporation HOBO H08-002-02. You will want to select the 2.5 volt model logger. You could also elect to use a digital multi-meter with RS-232 output which can be fed to a computer's serial port for data-logging.

Construction

The Earth-field magnetometer project was built on two printed circuit boards. The main circuit board is shown in Figure 18-5, was constructed on a 3½″ × 4½″ PC board, while the remotely located FGM-3 sensor was paired with a second 5-volt regulator shown in Figure 18-6. Regulator U4 was mounted on a 2″ × 3″ PC board, which was attached to a sheet of flexible plastic using plastic screws. The FGM-3 sensor probe was then mounted on the 2″ × 4½″ plastic sheet. The plastic sheet was used to mount the probe, ahead of the regulator in order to give the flux-gate probe some isolation from surrounding metal. The flux-gate probe is mounted length-wise and parallel to the length of the PVC pipe. The FGM-3 sensor and remote regulator were then housed in a 2½″ diameter × 12″ long PVC pipe, which is separated by a length of three-conductor cable. Note that you could also elect to purchase a flux-magnetometer kit including PC board, the FGM-3

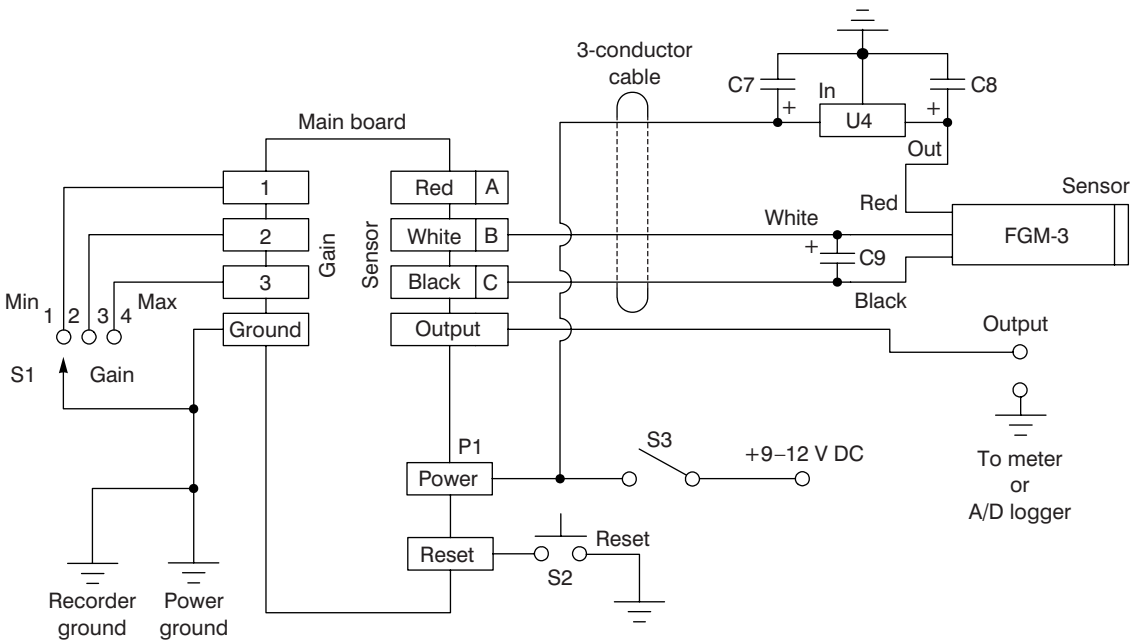

Figure 18-5 *Magnetometer connection diagram*

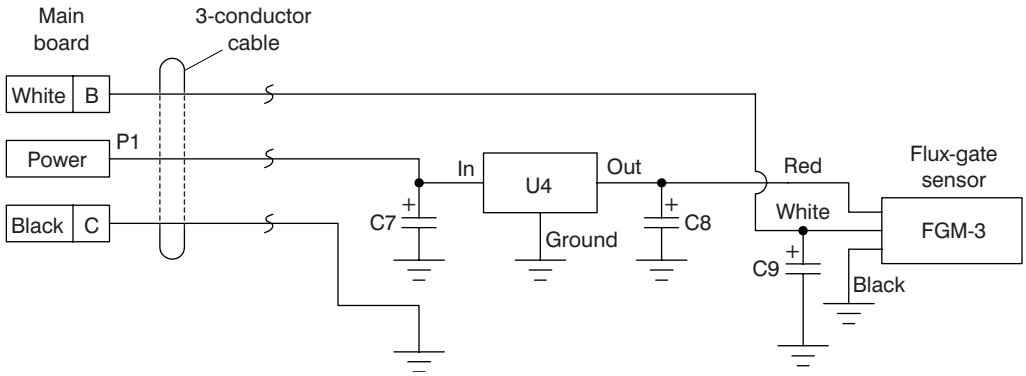

Figure 18-6 *Flux-gate sensor board*

sensor, ICs, and most other parts, but less the gain switch, can be from Fat Quarters Software for about $80.00.

Are you ready to begin constructing the flux-gate magnetometer? Before we begin you will want to secure a well lit and well ventilated work area, as well as a bench or large table for assembling your magnetometer project. Locate a small pencil-tipped 27 to 33 watt soldering iron, as well as a roll of 22 ga. 60/40 tin/lead rosin core solder. Go to your local Radio Shack store and purchase a small jar of "Tip Tinner"; this is a soldering iron tip cleaner/dresser compound, which works wonders. You will also need a few hand tools for the project. You will need a pair of small end-cutters, a pair of needle-nose pliers, a pair of tweezers, and a magnifying glass. A small flat-blade screwdriver and a small Phillips screwdriver should round out your tool requirements.

While you could build the magnetometer project on a perf-board or you could use point-point wiring it is recommended that you build the circuit on a printed circuit board for most reliable circuit operation and long life. Prepare your circuit board, and then we will be able to go ahead and build the magnetometer receiver project.

Locate all of the project diagram, such as the schematic, parts layout diagrams and the component pin-out sheets as well as the resistor and capacitor identification tables and we will be almost ready to begin. Place all of the magnetometer project components on the work bench in front of you, warm up your soldering iron and let's get going.

First, refer to the chart in Table 18-1, which illustrates the resistor color code. The resistor for this project will have three or four color bands on them. The first color band is closest to one end of the resistor body. The first color band represents the first digit of the resistor's value, the second color represents the second digit of the resistor value, the third color band represents the resistor's multiplier value, and the fourth band denotes the resistor's tolerance value. A silver fourth band denotes a 10% tolerance value, while a gold band represents a 5% tolerance value; no fourth color band denotes a resistor with 20% tolerance. Resistors R1, R3, R4 and R5, for example, are 4.7k ohm types. The first color band is yellow, which represents a four (4), while the second color band is violet or seven (7), and the third color band is red denoting a multiplier of (100), so you see (4) (7) times (100) equals 4700 or 4.7k ohms. Identify all of the 4.7k ohm resistors and place them on the circuit board at their correct location. Next, solder these resistors to the circuit board. Then follow-up by cutting the excess component leads flush to the edge of the circuit board with your end-cutters. Now locate R2 and R6 and install them in their proper locations, then solder them in place on the PC board. Remember to trim the excess resistor leads with your end-cutter.

Next we will move to identifying and installing the capacitors for the project. Capacitors are available in two major categories—electrolytic and non-electrolytic types. Electrolytic capacitors are generally both larger in size and larger in value than non-electrolytic types. Electrolytic capacitors have polarity and hence, they will have polarity marking on them to identify

Table 18-1
Resistor color code chart

Color Band	*1st Digit*	*2nd Digit*	*Multiplier*	*Tolerance*
Black	0	0	1	
Brown	1	1	10	1%
Red	2	2	100	2%
Orange	3	3	1,000 (K)	3%
Yellow	4	4	10,000	4%
Green	5	5	100,000	
Blue	6	6	1,000,000 (M)	
Violet	7	7	10,000,000	
Gray	8	8	100,000,000	
White	9	9	1,000,000,000	
Gold			0.1	5%
Silver			0.01	10%
No color				20%

their leads. You will usually find a black or white colored band or a plus (+) or minus (–) marking near one of the capacitor leads; this denotes the polarity. You will have to orient an electrolytic capacitor onto the circuit board with respect to the capacitor's polarity. When you mount electrolytic capacitors on the circuit board, you will have to refer to both the circuit schematic and the parts layout diagrams in order to install the capacitor properly. Failure to install electrolytic capacitors correctly may result in damage to the capacitor itself and perhaps damage to the circuit as well. Non-electrolytic capacitors will generally be smaller in value and physical size. Sometimes the non-electrolytic capacitors will have their value printed on them, and at other times the capacitor may be physically very small when a three-digit code is used to identify the capacitor. The chart in Table 18-2, helps to identify capacitors based on this code. Use the chart to help identify the capacitors. You will want to make sure that you install the correct value capacitor into the right location on the circuit board in order for the circuit to work correctly. For example, a capacitor marked with (102) denotes a value of .001 µF, while a capacitor with a marking of (103) denotes a capacitor value of .01 µF.

Look through the component pile and identify the capacitors and what type they are and then refer to the parts layout diagram and capacitor code chart before installing them on the circuit board. Go ahead and place a few of the capacitors at their respective locations on the PC board and solder them in place. Remember to trim the extra component lead length with your end-cutters.

The magnetometer main circuit board utilizes three silicon diodes. Diodes have polarity and they must be installed correctly for the circuit to operate correctly. Each diode will have either a black or white colored band at one end of the diode body. The colored band represents the diode's cathode lead, the opposite lead is the anode. Remember the diode's electronic symbol is an arrow or triangle pointing to a vertical line. The vertical line is the cathode of the diode. Refer to the schematic and parts layout diagram when mounting the diodes onto the circuit board. Place the diodes on the circuit board and solder them in place. Trim the excess leads as necessary.

The magnetometer project employs a 10 MHz crystal which is connected to pin 16 of U1. The crystal has no polarity so it can be placed in either direction on the board. Handle the crystal carefully so as to not break off the leads from the crystal body.

Before we begin placing the semiconductors on the PC board, you will want to refer to the semiconductor

Table 18-2
Capacitance code information

This table provides the value of alphanumeric coded ceramic, mylar and mica capacitors in general. They come in many sizes, shapes, values and ratings; many different manufacturers worldwide produce them and not all play by the same rules. Most capacitors actually have the numeric values stamped on them; however, some are color coded and some have alphanumeric codes. The capacitor's first and second significant number IDs are the first and second values, followed by the multiplier number code, followed by the percentage tolerance letter code. Usually the first two digits of the code represent the significant part of the value, while the third digit, called the multiplier, corresponds to the number of zeros to be added to the first two digits.

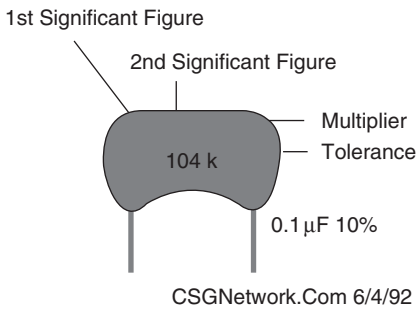

Value	*Type*	*Code*	*Value*	*Type*	*Code*
1.5 pF	Ceramic		1,000 pF /.001 µF	Ceramic / Mylar	102
3.3 pF	Ceramic		1,500 pF /.0015 µF	Ceramic / Mylar	152
10 pF	Ceramic		2,000 pF /.002 µF	Ceramic / Mylar	202
15 pF	Ceramic		2,200 pF /.0022 µF	Ceramic / Mylar	222
20 pF	Ceramic		4,700 pF /.0047 µF	Ceramic / Mylar	472
30 pF	Ceramic		5,000 pF /.005 µF	Ceramic / Mylar	502
33 pF	Ceramic		5,600 pF /.0056 µF	Ceramic / Mylar	562
47 pF	Ceramic		6,800 pF /.0068 µF	Ceramic / Mylar	682
56 pF	Ceramic		.01	Ceramic / Mylar	103
68 pF	Ceramic		.015	Mylar	
75 pF	Ceramic		.02	Mylar	203
82 pF	Ceramic		.022	Mylar	223
91 pF	Ceramic		.033	Mylar	333
100 pF	Ceramic	101	.047	Mylar	473
120 pF	Ceramic	121	.05	Mylar	503
130 pF	Ceramic	131	.056	Mylar	563
150 pF	Ceramic	151	.068	Mylar	683
180 pF	Ceramic	181	.1	Mylar	104
220 pF	Ceramic	221	.2	Mylar	204
330 pF	Ceramic	331	.22	Mylar	224
470 pF	Ceramic	471	.33	Mylar	334
560 pF	Ceramic	561	.47	Mylar	474
680 pF	Ceramic	681	.56	Mylar	564
750 pF	Ceramic	751	1	Mylar	105
820 pF	Ceramic	821	2	Mylar	205

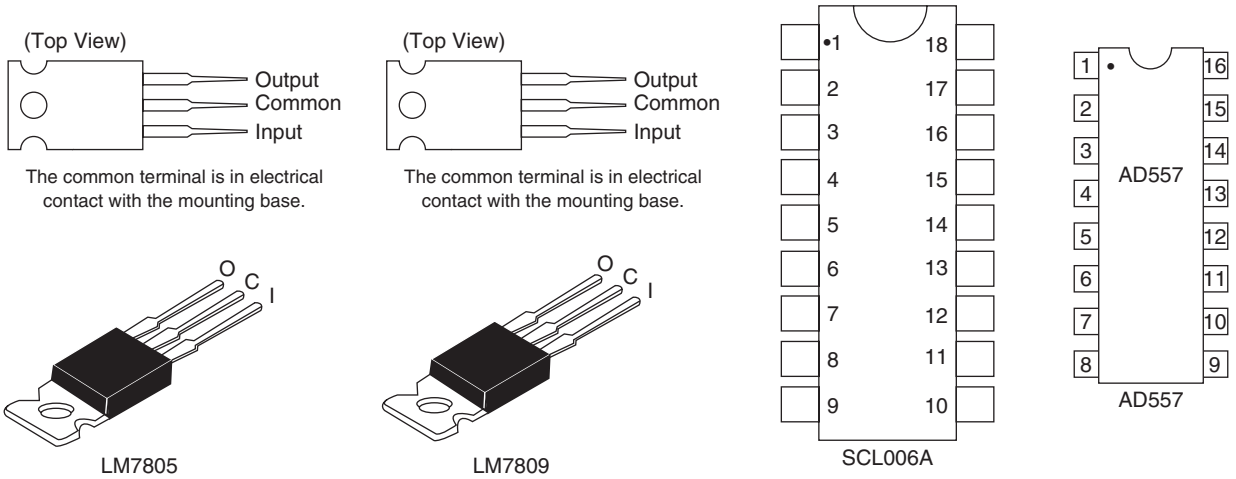

Figure 18-7 *Semiconductor pin-outs*

pin-out diagram shown in Figure 8-7, which will assist you in orienting the ICs. The magnetometer project utilizes two main integrated circuits which are rather expensive, so we recommend using IC sockets. As a good insurance policy locate two IC sockets and solder them in place for U1 and U2. If an IC fails at some later date 'down the road', you can simply unplug the defective one and replace it with a new one. Note that the IC sockets will usually have a notch or cut-out at one end of the plastic package. The lead just to the left of the notch is pin. You will have to make sure that pin one (1) of each socket is connected to the correct components; refer to the schematic and parts layout diagrams. Note pin one (1) of U1 goes to the anode of diodes D1 and D2, while pin one (1) of U2 is connected to pin six (6) of U1. When installing the ICs into their respective sockets, you will have to make sure pin one (1) of the IC is placed into pin one (1) of the socket to prevent damage to the integrated circuits.

It is a good time to take a short, well deserved rest and when we return we will examine the main circuit board for any possible "cold" solder joints or "short" circuits. Pick up the main circuit board with the foil side facing upwards towards you. Look over the main circuit board, we will be looking at the solder joints for possible "cold" solder joints. The solder joints should all look clean, bright and shiny, if you see any solder joints that look dull, dark or "blobby," you will need to un-solder the joint and remove the solder with a solder-sucker and then re-solder the connection, so that the new solder joint looks good. Next we will examine the PC board for possible "short" circuits. Often "short" circuits can be caused by "stray" component leads or solder "blobs" which may have stuck to the underside of the PC board from solder residue. Look for solder blobs or solder bridges which may be "shorting" or bridging between circuit traces on the PC board. With the PC board free from any defect, we can continue on and prepare for connecting the sensor and power-up the circuit.

The main magnetometer board was mounted on standoffs in a metal chassis box, as seen in Figure 18-8. The on-off power switch and sensitivity rotary switch were mounted on the front panel of the chassis box, along with the meter binding posts. A 3-position screw terminal block or 3-circuit connector can be mounted on the side of the chassis box to allow the main circuit to connect to the remote sensor board.

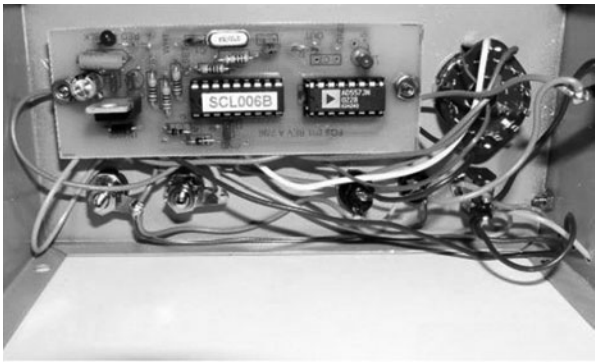

Figure 18-8 *Magnetometer – inside view*

Now refer to the sensor power supply circuit diagram shown in Figure 18-6. This diagram illustrates the remote flux-gate sensor and power regulator PC board. The sensor and regulator were placed on a small circuit board, and in a water proof PVC cylinder so it can be buried below the frost-line at about 4 feet underground. The sensor should be placed well away from your house, buried level in the ground with the ends of the sensor facing East-West. The remote sensor is powered from the main circuit board. You will want to place the remote sensor and power supply in a non-metallic PVC case and waterproof the case so water cannot leak inside the case. The sensor will need to be facing the outside of the PVC cylinder away from the other electronics inside the package. Use no metal fasteners to secure the circuit to the PVC enclosure. You will have to make provisions to allow the three conductor to exit the opposite end of the PVC case away from the sensor end.

The main magnetometer circuit board was placed in a metal chassis which measures 6″ × 3″ × 2″ as shown in the photo. The power switch, power LED, gain switch and reset switch along with the output binding posts, were mounted on the front of the chassis box. A four position terminal strip was mounted along the side of the chassis box to allow the remote sensor to be connected to the main circuit. A coaxial power jack was also mounted on the side of the chassis box to allow a 12 volt "wall wart" power supply to plug-in and power the circuit.

If you wish to construct your own power supply for the magnetometer project, refer to the diagram in Figure 18-9, which illustrates a 12 volt power supply from line-voltage. A 24 volt center tapped transformer feeds AC to the 4-diode bridge rectifier package at BR1. The DC output from the rectifier is filtered via C1 and C2 and then sent to a 9 volt IC regulator chip at U1. The output of the regulator chip is filtered at its output. This optional power supply will provide 9 volts which can be used to power the magnetometer circuit, if you choose not to use a 9 to 12 "wall wart" power supply.

The main circuit board was mounted on standoffs inside the bottom of the chassis box. Once you have mounted the main circuit board and the controls, you can locate a length of 20 to 24 gauge, three or four conductor cables and connect the sensor board to the main circuit board. Connect a digital voltmeter to the output terminal binding posts and set the meter to read 5 volts to 10 volts. Connect up your power supply to the main circuit board and we can now test the magnetometer to see if it is working. Turn the power switch to on, and set the meter range or gain switch to maximum sensitivity. With the sensor away from the main circuit board and chassis, bring a small magnet within rage of the sensor to say about 2 feet away. After about eight or ten seconds, you should see the effects of bringing the magnet near to the sensor. The reading will NOT be instantaneous, but you should see the meter read up to 2 volts or so. Move the magnet away and you should see the meter respond in 8 or 10 seconds. If all is well you will have a working portable flux-gate magnetometer, which can be used for many applications such as monitoring diurnal magnetic Earth variations or solar storms. You can even use the magnetometer as a UFO detector or driveway monitor.

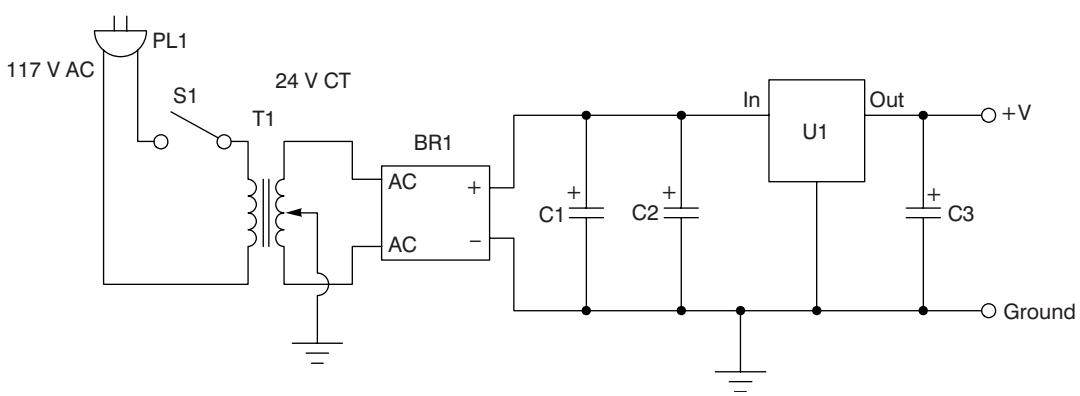

Figure 18-9 *Magnetometer power supply*

If your magnetometer did not "spring-to-life" then you will have to turn off the circuit and remove the power supply, and look the circuit over carefully to make sure you didn't install a component incorrectly. Grab your schematic, parts layout diagrams and charts and let's take a closer look at the circuit board. Remember we talked about certain components, like capacitors and diodes having polarity. Make sure that you installed the electrolytic capacitors and diodes with respect to their proper polarity; this is common cause for error. If need be, have another person, such as a parent or skilled technician or engineer or knowledgeable friend, look over the circuit for you. The same person looking over the same circuit numerous times often prevents you from finding your errors; you need a fresh look from another person to catch mistakes. Another cause for error is placing the integrated circuits in the wrong socket or in the wrong direction in the socket. After looking the board over carefully, you can re-apply the sensor and power supply connections and test the circuit once again, hopefully it will work fine this time around.

Once you know the magnetometer and sensor circuits are working properly, you can make provisions for mounting the sensor in a water-tight PVC case. The remote flux-gate sensor probe was mounted in a 2½″ × 12″ length of PVC pipe. Circuit board guides were epoxied to the inside of the PVC pipe to allow the circuit board to be slid into the PVC pipe. One 2½″ end cap was cleaned and cemented to the outside probe end of the PVC pipe. A ½″ hole was drilled and tapped in the center of the second PVC end cap. Try to use as little metal as possible when mounting the sensor in the PVC pipe, use brass or plastic screws where possible. A brass nipple fitting cemented in the tapped hole allows the three conductor cables to exit the probe assembly in the PVC pipe. Before cementing the final end cap to the PVC pipe you will want to test the Earth-Field magnetometer before burying the sensor probe assembly. Since the sensor is NOT an expensive temperature referenced or compensated type sensor it is subject to extreme temperature variations, so if you live in the northern climate zones, it will be necessary to mount the sensor underground, below the frost-line, to prevent temperature swings from affecting the reading of the meter. In most frost-prone areas, you will need to mount the water-proof sensor assembly about 4′ to 4½′ underground. The sensor should be mounted as far away from metal objects and traffic as possible to ensure the best results. The sensor package should be mounted so that it will face North-South as shown in Figure 18-3.

The output of the magnetometer can be connected to a logging digital multi-meter, so the imported data can be later analyzed by your personal computer. You could also use an inexpensive portable data-logger such as the HOBO series from Onset Computers, or you could use an analog to digital converter card in your PC to collect the data sample over time. If your meter is set to the most sensitive position, and everything is in working order, you should easily be able to monitor the Earth's diurnal variations twice a day. You should also be able to detect strong magnetic storms on the Sun, with your new magnetometer.

Chapter 19

Sudden Ionospheric Disturbance (SIDs) Receiver

Parts list

SIDs Receiver

R1,R2,R3,R4 3.3 k ohm ¼ w resistor

R5 10 kohm potentiometer (chassis mount)

R6 1k ohm ¼ w resistor

R7 100k potentiometer (PC mount)

R8 100 ohm ¼ w resistor

R9 10k ohm ¼ w resistor

R10 470k ohm ¼ w resistor

R11 56k ohm ¼ w resistor

R12 22k ohm ¼ w resistor

R13 5k ohm potentiometer (PC mount)

C1 100 pF, 35 v ceramic capacitor

C2 1500 pF, 35 v mylar capacitor

C3 .001 µF, 35 v ceramic capacitor

C4 1 µF, 35 v tantalum capacitor

C5 10 µF 35 v tantalum capacitor

C6,C7 10 µF, 35 v electrolytic capacitor

C8,C9 0.1 µF, 35 v ceramic capacitor

C10,C11 1000 µF, 35 v electrolytic capacitor

D1,D2 1N914 silicon diode

D3,D4 1N34 germanium diode

U1 LM353 op-amp (National Semiconductor)

U2 RC4136 op-amp (Texas Instruments)

U3 79L09 - 5 volt regulator (– volts)

U4 78L09 - 5 volt regulator (+ volts)

T1 600 to 600 ohm inter-stage/ matching transformer

L1 Loop antenna (see text)

S1 DPST toggle switch (on-off)

F1 .50 amp fast-blow fuse

BR1 bridge rectifier - 50 v DC/2 amp

PL1 117 VAC plug

Misc PC board, IC sockets, wire, solder, solder lugs, chassis hardware, screws, standoffs, etc.

Copyright © 2008 by The McGraw-Hill Companies, Inc. Click here for terms of use.

A sudden ionospheric disturbance (SID) is an abnormally high plasma density in the ionosphere caused by an occasional sudden solar flare, which often interrupts or interferes with telecommunications systems. The SID results in a sudden increase in radio-wave absorption that is most severe in the upper medium-frequency (MF) and lower high-frequency (HF) ranges.

When a solar flare occurs on the Sun, a blast of ultraviolet and X-ray radiation hits the day-side of the Earth after 8 minutes. This high energy radiation is absorbed by atmospheric particles raising them to excited states and knocking electrons free in the process of photo-ionization. The low altitude ionospheric layers (D region and E region) immediately increase in density over the entire day-side. The Earth's ionosphere reacts to the intense X-ray and ultraviolet radiation released during a solar flare and often produces shortwave radio fadeout on the day-side of the Earth as the result of enhanced X-rays from a solar flare.

Shortwave radio waves (in the HF range) are absorbed by the increased particles in the low altitude ionosphere causing a complete blackout of radio communications. This is called a Short Wave Fadeout. These fadeouts last for a few minutes to a few hours and are most severe in the equatorial regions where the Sun is most directly overhead. The ionospheric disturbance enhances long wave (VLF) radio propagation. SIDs are observed and recorded by monitoring the signal strength of a distant VLF transmitter. As the fadeouts occur, reception of the station strength varies thus creating a fluctuating voltage output at the receiver which can be recorded and observed using a computer with a chart recorder program.

You can build and investigate the phenomena of SIDs with a special receiver and a low cost data-logger setup. You can not only observe when solar flares are occurring but you can collect and analyze the data and display it on your computer. The SIDs receiver is a great opportunity to observe first-hand when a solar event occurs, but you can use it to predict when radio blackouts will affect radio propagation, which is extremely useful for amateur radio operators.

VLF signal propagation

Why do VLF signals strengthen at night instead of getting weaker? If propagation is basically via the waveguide effect, why doesn't the signal drop DOWN at night when the waveguide disappears with the D layer? Is there some kind of reduced absorption at night? If so, where is it taking place and why? Also, what accounts for the big fluctuations in signal strength at night, apparently more or less at random?

The strength of the received signal depends on the effective reflection coefficient of the region from which the radio wave reflects in its multi-hop path between Earth and the ionosphere. In daytime the reflecting region is lower, the air density is higher, and the free electron density is controlled strongly by the solar radiation, etc. At night time the reflecting region is higher, the air density is lower, and the free electron density is controlled by variable ambient conditions as well as variable influences from electron "precipitation" from above, etc.

At noon the electron density is about 10 electrons/cm^3 at an altitude of 40 km, 100 electrons/cm^3 at an altitude of 60 km, 1000 electrons/cm^3 at an altitude of 80 km and 10,000 electrons/cm^3 at an altitude of 85 km.

At night these figures become 10 electrons electrons/cm^3 at 85 km, 100 electrons/cm^3 at 88 km and 1000 electrons/cm^3 at 95 km and then remains somewhat the same up to at least 140 km. At night the electron density in the lower part of the D region pretty much disappears. At 40 km the electron collision frequency is about 1,000,000,000 collisions per second whereas at 80 km the collision frequency drops to 1,000,000 collision per second. The reflection coefficient depends on (among other things) the number density of free electrons, the collision frequency, and the frequency of the radio signal. It is found by a mathematical integration throughout the entire D-region and of course the result depends on what time of the 24 hour day one performs the integration.

We can think of the E-Layer propagating the signal at night. Then the prominent sunrise pattern we see is a shift from E-Layer propagation back to D-Layer as the sun rises and forms the daytime D-Layer.

Figure 19-1 *Sudden ionospheric disturbance receiver*

The sunset pattern is the reverse. An interesting feature of waveguide mode propagation was that the signal was split into two components which can form an interference pattern.

You can build your own Sudden Ionospheric Disturbances (SIDs) receiver, shown in Figure 19-1, and begin your own investigation of solar flares and their effects on radio propagation. The SIDs receiver is a simple VLF receiver designed to be used with a loop antenna which can be placed either inside or outside. The receiver monitors the strong VLF signal from the US Navy NAA 24 kHz transmitter in Cutler Maine.

The Sudden Ionospheric Disturbance (SID) receiver is a modified Stokes' Gyrator tuned VLF receiver based on the circuit from Communications Quarterly Spring 1994 pp. 24–26. The main circuit diagram shown is Figure 19-2, it illustrates SIDs receiver which consists of two integrated circuits, a Texas Instruments RC4136 and a National LF353 operation amplifier. The SIDs receiver is fed from a loop antenna at L1. The antenna is coupled to the SIDs receiver via a miniature 600 to 600 ohm matching transformer at T1. The output from the secondary of T1 is fed to two protection diodes at D1 and D2 at the front end of the receiver. The output of the diode network is then coupled to a 100 pF capacitor at C1. Capacitor C2 is connected from the

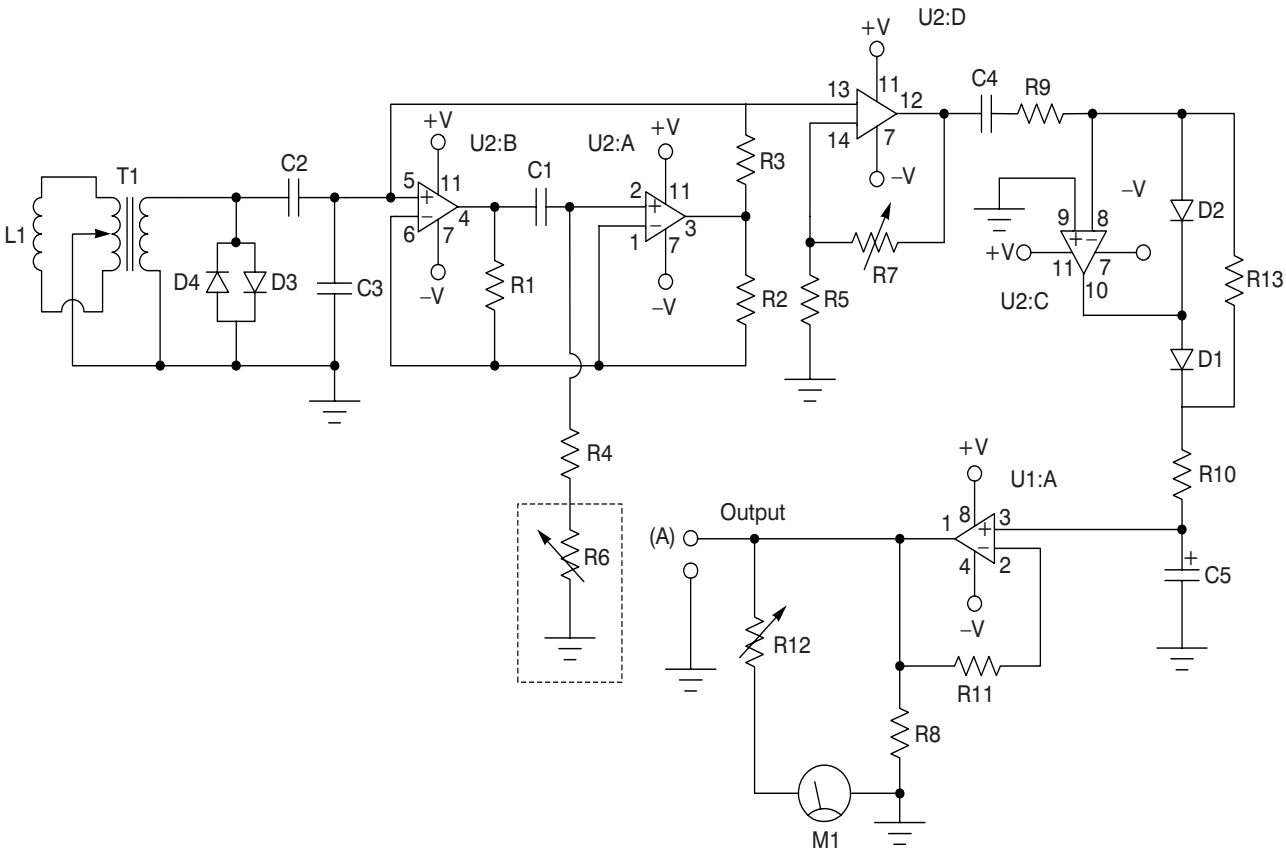

Figure 19-2 *Sudden ionospheric disturbance receiver*

output of C1 to ground at the input of the first op-amp stage U2:B. Integrated circuit sections U2:A and U2:B form an amplifier/filter and tuning. The "tuning" is controlled via R6, which is placed in a shielded enclosure to prevent circuit oscillation. The potentiometer is kept separate in a small shielded box formed by some scrap pieces of thin circuit board soldered together. The output from U2:A is next fed to IC:D and U2:C which forms an amplifier/integrator section. A final buffer amplifier section at U1 is used to drive the 0-1 mA meter at the output. The output of the SIDs receiver at (A) can be coupled a low cost data-logger in order to record signals over time.

The SIDs receiver was built on a circuit board circuit board, for most reliable operation, but other types of RF building techniques could be used. The circuit board is available from FAR Circuits—see Appendix. Before we begin building the circuit take a few minutes to locate a clean well lit work table or work bench. You will want to locate a small 27 to 33 watt pencil-tipped soldering iron, a roll of 60/40 tin/lead rosin core solder, and a small jar of "Tip Tinner," a soldering iron tip cleaner/dresser. "Tip Tinner" is available at a local Radio Shack store. You will also need some small hand tools, such as a small flat-blade screwdriver, a Phillips screwdriver, a pair of small needle-nose pliers, a pair of tweezers, a magnifying glass and a pair of end-cutters.

Once you have gathered all the tools, locate all the circuit diagrams, such as the schematics, the parts layout diagram, the resistor and capacitor code charts, etc. Place all the component parts, along with all your tools and diagrams, in front of you, warm up your solder iron and we will start building the SIDs receiver project.

First we will identify the resistors for the project. Refer to the chart shown in Table 19-1, which will help you to identify the resistor color codes. Resistors usually have three or four color bands on the body of the resistor which denotes the resistor value. The color bands begin at one end of the resistor body close to the edge. The first color band on resistor R1 is orange, this denotes the digit three (3). The second color band is also orange, which is the digit number three (3), and the third color band is the resistor's multiplier value which is red, and this suggests a multiplier value of 100. So the resistor value for R1 is (3) times (3) times (100) or 3.3k or 3300 ohms. The tolerance value of a resistor is noted in the four color band. A fourth color band which is silver is a 10% tolerance resistor, while a gold fourth band denotes a 5% tolerance value. If there is no fourth color band then the resistor will have a 20% tolerance value. Once you have identified resistor R1, you will note that resistors R1, R2, R3 and R4 all have the same color codes, therefore they all have the same value. Check your parts layout diagram and the schematic to

Table 19-1
Resistor color code chart

Color Band	*1st Digit*	*2nd Digit*	*Multiplier*	*Tolerance*
Black	0	0	1	
Brown	1	1	10	1%
Red	2	2	100	2%
Orange	3	3	1,000 (K)	3%
Yellow	4	4	10,000	4%
Green	5	5	100,000	
Blue	6	6	1,000,000 (M)	
Violet	7	7	10,000,000	
Gray	8	8	100,000,000	
White	9	9	1,000,000,000	
Gold			0.1	5%
Silver			0.01	10%
No color				20%

see where these resistors are to be placed on the circuit board. Once you verify where the resistors are placed, you can install all four resistors on the circuit board and solder them in place on the board. Now locate your end-cutter and trim the excess component leads. Cut the extra component lead lengths flush to the edge of the circuit board. Now go ahead and identify another group of three or four resistors and place them on the circuit board. Once you are sure of their respective locations you can solder the next grouping of resistors onto the circuit board, remember to trim the excess component leads from the board. Place all the remaining resistors on the circuit board and solder them all in place, trim the extra leads as necessary.

Now we will move on to installing the capacitors for the SIDs receiver project. Capacitors come in two major flavors, non-polarized and polarized types. First, we will talk about non-polarized capacitors. Usually non-polarized capacitors are smaller value types which could take form as ceramic disks, mica, tantalum or polyester types. Often the capacitors are small in size and frequently the capacitor values are printed as three-digit codes rather than their actual values, since this code system takes less space to print. We have included a chart in Table 19-2, which lists the actual capacitor values and their respective codes. For example, a capacitor with a value of .001 µF will have a code designation of 102, a .01 µF capacitor will have 103, and a 0.1 µF capacitor will have a code of 104 marked on it. The SIDs project has a number of non-polarized type capacitors which you will need to install. Take a look through the component pile and see if you can identify the small non-polar capacitors before attempting to install them on the PC board.

Polarized capacitors are called electrolytic capacitors, and they are often larger in physical size. Electrolytic capacitors will always have some sort of polarity marking on them. You will see either a black or white band or a plus (+) or minus (–) marking somewhere on the capacitor body. It is very important that you install these types of capacitors with respect to their polarity in order for the circuit to work properly and to not be damaged upon power-up. You will need to refer to the schematic and parts layout diagrams when installing electrolytic capacitors to make sure that you have installed them correctly. The plus (+) marking on the capacitor will point to the most positive portion of the circuit.

Let's go ahead and identify the non-polarized capacitors first. Check the capacitor code chart and make sure that you can identify each of the non-polarized capacitors. In groups of two or three capacitors install them on the PC board. When you have determined that you have installed the correct values into their respective location on the circuit board, you can solder the capacitors in place on the board. Remember to trim the excess capacitor leads from the circuit board. Once you have the first grouping of capacitors installed you can move on to installing another group of non-polarized capacitors, until you have installed all of the non-polarized capacitors.

Next, find the electrolytic capacitors from the parts pile and we will install them in their proper locations. Refer now to the schematic and parts layout diagrams so that you can orient the capacitors correctly when mounting them on the PC board. Install two or three electrolytic capacitors and then solder them in place on the PC board. Remember to cut the extra lead lengths flush to the PC board. Identify and install the remaining electrolytic capacitors on the board and solder them in place. Trim the component leads as necessary.

The SIDs receiver employs two silicon diodes at the "front-end" and two germanium diodes near the final output stage. Diodes have polarity so they must be installed in the proper orientation for the circuit to function properly. Diodes will generally have either a white or black band on the side of the diode's body. The colored band denotes the cathode of the diode. Remember that a symbol for a diode is a triangle pointing to a vertical line. The vertical line is the cathode of the diode. Make sure you install the proper diodes in their proper locations with respect to polarity: you will need to refer to the schematic and parts layout diagrams.

The SIDs receiver uses two integrated circuits at U1 and U2. Integrated circuit sockets are highly recommended as an insurance policy against any possible failure in the distant future. Before we go ahead and install the semiconductors, take a quick look at the semiconductor pin-out diagram shown in Figure 19-3. The pin-out diagram will assist you install the integrated circuits. IC sockets are inexpensive and will greatly be appreciated in the event of a circuit failure, since most people cannot un-solder a 14 or 16 pin integrated circuit

Table 19-2

Capacitance code information

This table provides the value of alphanumeric coded ceramic, mylar and mica capacitors in general. They come in many sizes, shapes, values and ratings; many different manufacturers worldwide produce them and not all play by the same rules. Most capacitors actually have the numeric values stamped on them; however, some are color coded and some have alphanumeric codes. The capacitor's first and second significant number IDs are the first and second values, followed by the multiplier number code, followed by the percentage tolerance letter code. Usually the first two digits of the code represent the significant part of the value, while the third digit, called the multiplier, corresponds to the number of zeros to be added to the first two digits.

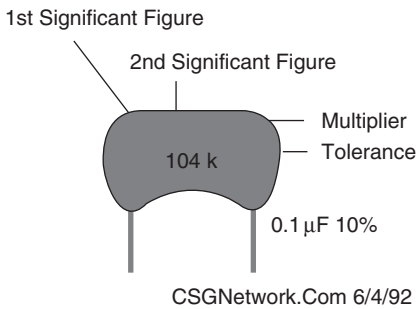

Value	*Type*	*Code*	*Value*	*Type*	*Code*
1.5 pF	Ceramic		1,000 pF /.001 µF	Ceramic / Mylar	102
3.3 pF	Ceramic		1,500 pF /.0015 µF	Ceramic / Mylar	152
10 pF	Ceramic		2,000 pF /.002 µF	Ceramic / Mylar	202
15 pF	Ceramic		2,200 pF /.0022 µF	Ceramic / Mylar	222
20 pF	Ceramic		4,700 pF /.0047 µF	Ceramic / Mylar	472
30 pF	Ceramic		5,000 pF /.005 µF	Ceramic / Mylar	502
33 pF	Ceramic		5,600 pF /.0056 µF	Ceramic / Mylar	562
47 pF	Ceramic		6,800 pF /.0068 µF	Ceramic / Mylar	682
56 pF	Ceramic		.01	Ceramic / Mylar	103
68 pF	Ceramic		.015	Mylar	
75 pF	Ceramic		.02	Mylar	203
82 pF	Ceramic		.022	Mylar	223
91 pF	Ceramic		.033	Mylar	333
100 pF	Ceramic	101	.047	Mylar	473
120 pF	Ceramic	121	.05	Mylar	503
130 pF	Ceramic	131	.056	Mylar	563
150 pF	Ceramic	151	.068	Mylar	683
180 pF	Ceramic	181	.1	Mylar	104
220 pF	Ceramic	221	.2	Mylar	204
330 pF	Ceramic	331	.22	Mylar	224
470 pF	Ceramic	471	.33	Mylar	334
560 pF	Ceramic	561	.47	Mylar	474
680 pF	Ceramic	681	.56	Mylar	564
750 pF	Ceramic	751	1	Mylar	105
820 pF	Ceramic	821	2	Mylar	205

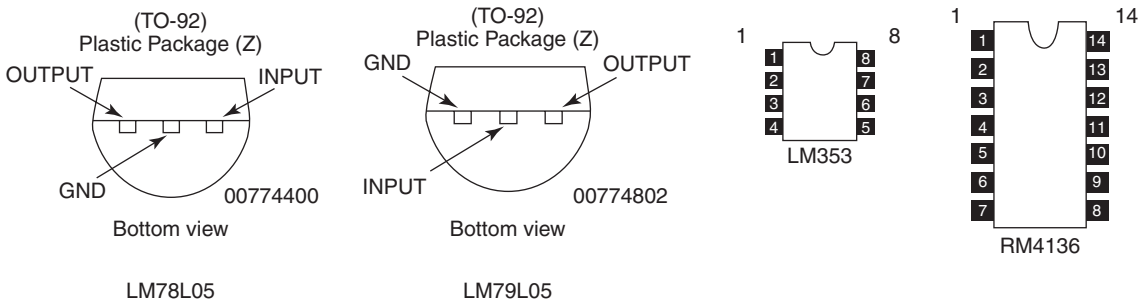

Figure 19-3 *Semiconductor pin-outs*

without damage to the circuit board. Integrated circuits must be installed correctly for the circuit to work properly. Looking at the IC, you will notice a small notch or cut-out or small indented circle at one end of the IC body. Pin one (1) of the IC will be just to the left of this cut-out or notch. The IC socket will often appear the same way with a notch or cut-out with pin one (1) to the left of the notch or cut-out. You must orient pin of the IC with pin 1 of the IC socket, and you must them be sure to orient pin of the IC socket to match up with the proper components on the circuit board. For example, pin one (1) of U1 is connected to the output of the circuit at the junction of R8 and R11. Note that pin 8 is the plus power supply input, while pin 4 is the ground on U1. Pin one (1) of U2 corresponds to the minus (–) INPUT #1 at U2:A, which is connected to the junction of R1 and R2.

A small metal compartment should be placed around the main tuning potentiometer R6 in order to shielded this control. This can be done with the use of some scrap circuit board material which can be soldered together to form a small box. You will have to use a soldering gun or a higher temperature soldering iron, in order to solder large areas of circuit board material.

The output of the SIDs receiver is fed to the 0-1 mA analog meter at M1. The output of the SIDs monitor can also be fed to the input of an analog to digital converter place in a personal computer, for recording over long lengths of time.

Since the SIDs receiver utilizes integrated circuits which require the use of a dual power supply providing both a plus and minus voltage to the circuit, and since the circuit is meant to be left on for long periods of time the use of a dual voltage AC power supply is recommended. The diagram shown in Figure 19-4 illustrates a simple dual plus and minus voltage power supply which can be used to power the SIDs receiver. A 9 volt 500 mA center tapped transformer was used to drive a bridge rectifier, which provides both a plus and minus voltage that is sent to a 9 volt plus regulator. An LM78L09 regulator and the minus leg of the bridge is sent to an LM79L09 minus 9 volt regulator. The power supply could be built on perf-board or on a printed circuit board if desired. The power supply and SIDs receiver could be mounted alongside one another in the same chassis.

Take a short break and when we return we will inspect the circuit board for any possible “cold” solder joints or “short” circuits. Pick up the circuit board so that the foil side of the PC board faces upwards toward you. Look over the foil side of the board very carefully. The solder joints should all look clean, bright and shiny. If you see any solder joints that look dull, dark, dirty or “blobby” then you should remove the solder and re-solder the joint so that it looks clean, bright and shiny. Next we are going to inspect the PC board for any possible “short” circuits. Sometimes “cut” component leads will “stick” to the board from solder residue left on the board. These “stray” wires can often cause a “short” between the solder traces. Also look closely for any solder “blob” or “solder balls,” which may have stuck to the underside of the PC board.

The SIDs receiver and power supply can both be installed in a metal chassis box enclosure. The prototype receiver was mounted in a sloping cabinet as in Figure 19-1. The power supply was mounted alongside

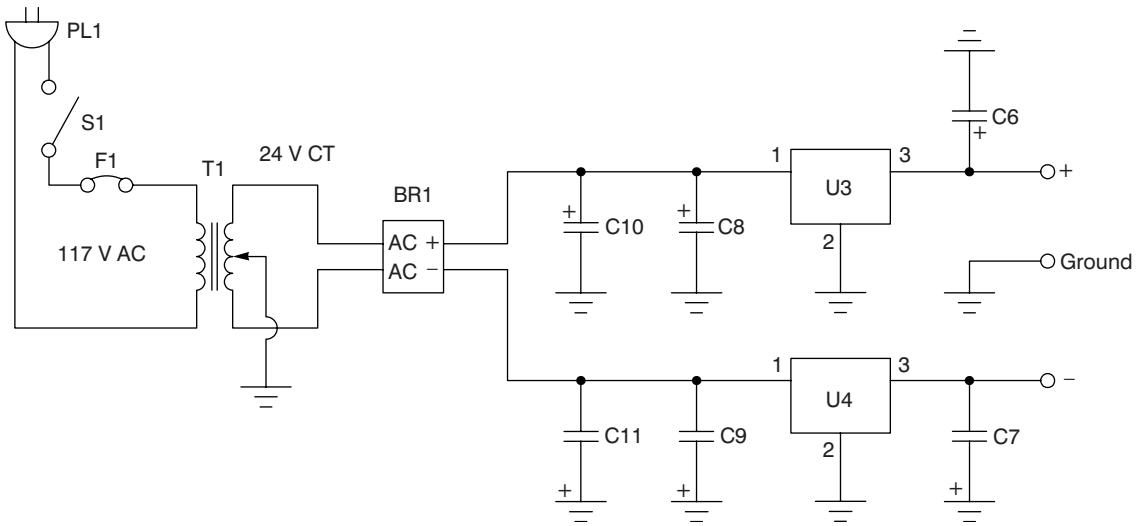

Figure 19-4 *Dual voltage power supply*

the SIDs receiver. The tuning control as well as the power on-off switch and meter were all mounted on the front panel of the enclosure. The power cord was led out of the rear panel through a stain-relief. A power fuse was installed inside a chassis mounted fuse holder on the rear of the panel. A dual binding post/banana chassis jack was mounted on the top of the chassis to connect the antenna loop to the SIDs receiver. An RCA jack was placed on the rear of the chassis to allow the receiver to connect to an analog to digital converter.

The SIDs receiver requires a rather large loop antenna, which can be placed inside your attic or placed outside away from large metal structures or aluminum siding, in a sheltered area. The coil at L1 is a diamond shaped loop antenna as shown in Figure 19-5. The loop consisting of 50 turns of solid #24 enameled or plastic coated wire, on a PVC pipe square or diamond form. The loop has an enclosed area of about 9 square feet. Locate four 2½″ diameter × 24″ long pieces of PVC pipe and form a square or diamond shape coil form as shown. A PVC elbow was placed on top and both sides of the loop form as shown, while a PVC "T" was used at the bottom of the loop form to allow winding of the coil around the four protrusions at each leg of the loop. The four hole center hub holds the loop form together. The main vertical PVC pipe was secured into a flange which was fastened to a wooden block at the base of the loop antenna. The lead-in from the loop antenna should form a loose twisted pair. This balanced lead-in is routed as far away from metal as possible to the 600 to 600 ohm matching transformer at T1. This transformer arrangement reduces 60 Hz hum interference from entering the SIDs receiver.

The output of the SIDs receiver can be coupled to a solid state data-logger from the output of the receiver at point (A) at the receiver output terminals. In order to save and later view and correlate your recorded data you will need to acquire some form of data-logger. There are three good options for saving your data. The first option is the Onset Computer HOBO series of data-loggers. Onset offers a number of different models from 8-bit to 12-bit models which are reasonably priced from around $60.00. The data-loggers are powered by a small button battery which will last for a long time. Onset also offers low cost software for up/downloading information to the data-logger. Starting times and dates can be preset as well as voltage parameters and timing between samples. These are a great alternative. Another data-logger option is the new introductory "starter package" from Dataq DI-194RS 10-bit resolution PC data-logger kit for $24.95. This data-logger option is a real bargain, providing both hardware and software and it can get you started recording data in just a short time. The company offers many other data recorder options as well. Check their website for details http://www.dataq.com.

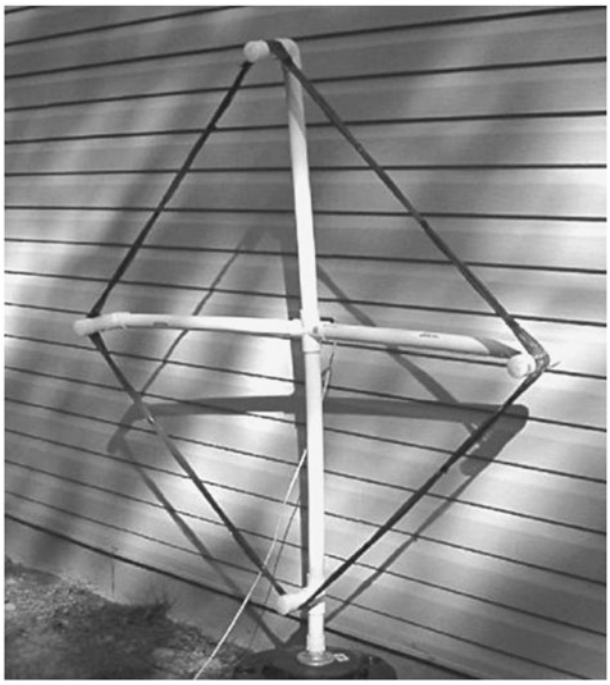

Figure 19-5 *Loop antenna*

In normal operation, the SIDs receiver would be permanently tuned to a powerful VLF station such as (NAA), the powerful US Navy 24 kHz VLF transmitter station in the state of Maine, and your data-logger or A/D converter would constantly monitor the signal from NAA to record propagation changes on your personal computer for study. Once the receiver has been completed, you can attach the antenna, power supply and data recorder. Connect the output of the data recorder to your personal computer and you are ready to begin recording. Now turn on the receiver and you should see a signal on your computer chart recorder display. If you remove the antenna from the circuit the output should go to zero or base-line. If your SIDs receiver does not appear to work, then you will need to disconnect the power supply and data recorder and antenna and inspect the circuit board for possible errors. The most common cause for circuit failure after building a new circuit is the improper installation of components, such as electrolytic capacitors, diodes and semiconductors such as transistors or integrated circuits. You may also want to check the placement of resistors on the circuit board. Ask a knowledgeable electronics enthusiast to help you inspect the circuit board for errors. Having completed the inspection, and hopefully an error was found, you can reconnect the antenna and power supply and then re-test the receiver.

SIDs research opportunities

You can join the foremost group involved with SIDs research. The AAVSO or American Association of Variable Start Observers SID Program consists of solar observers who monitor very low frequency (VLF) radio stations for sudden enhancements of their signals. Earth's ionosphere reacts to the intense X-ray and ultraviolet radiation released during a solar flare. The ionospheric disturbance enhances VLF radio propagation. By monitoring the signal strength of a distant VLF transmitter, sudden ionospheric disturbances (SIDs) are recorded and indicate a recent solar flare event. All SID monitoring stations are home built by the observers. The SID station operates unattended until the end of each month. Recordings are then analyzed for the beginning, end, and duration of SID events. A simple A/D converter design for specific use with the VLF receivers is available by contacting the chairman. SID observers submit strip-charts or computer plots to the SID coordinator for visual inspection at the end of each month. Many observers analyze their own stripcharts and computer plots. Analyzed results are submitted via e-mail to the SID Analyst for correlation with other observers' results. The final SID report combines individual observers' reports with the SID Coordinator visual analysis. SID event results are sent monthly to the National Geophysical Data Center (NGDC) for publication in the Solar-Geophysical Data Report where they are accessed by researchers worldwide. The reduced SIDs data and particularly interesting plots are reproduced in the monthly AAVSO Solar Bulletin mailed to all contributing members.

Chapter 20

Aurora Monitor Project

Parts list

Aurora Monitor: Sensor Head Unit

R1,R2 1.5 megohm ¼ watt, 5% resistor

R3 5.6 megohm, ¼ watt, 5% resistor

R4 100 k potentiometer PCB trimmer

R5 10 megohm ¼ watt, 5% resistor

C1,C2,C3 .1 µF, 35 volt disk capacitor

D1 1N914 silicon diode

LM4250 low noise/high gain op-amp

L1 sensing coil, see text

B1,B2 1.5 volt "C" cell battery

J1 RCA input jack

Misc PC board, coil form, wire, coax, etc.

Control/Display Unit

R6 18 k ohms, ¼ watt, 5% resistor

R7 12k ohms, ¼ watt, 5% resistor

R8,R9,R12,R20 10k ohms, ¼ watt, 5% resistor

R10 30k ohms, ¼ watt, 5% resistor

R11 50k ohms, panel-mount potentiometer

R13 200k ohms, ¼ watt, 5% resistor

R14 3 megohm, ¼ watt, 5% resistor

R15 1 megohm, PCB trimmer potentiometer

R16 1 megohm, ¼ watt, 5% resistor

R17 1 megohm, panel-mount potentiometer

R18,R19 5k ohm panel-mount potentiometer

R21 1k ohm, ¼ watt, 5% resistor

R22 100 ohms, ½ W, 5% resistor

R23 4.7k ohms, ¼ watt, 5% resistor

C4 0.005 µF, 25 volt ceramic disk capacitor

C5,C7,C9,C10 0.1 µF, 25 volt ceramic disk capacitor

C6 0.02 µF, 25 volt ceramic disk capacitor

C8 4.7 µF, 25 volt aluminum electrolytic capacitor

C11 .010 µF, 25 volt disk capacitor (optional)

C12 1 µF, 35 volt

Copyright © 2008 by The McGraw-Hill Companies, Inc. Click here for terms of use.

aluminum electrolytic capacitor

D1,D2,D3,D4 1N914 silicon diodes

Q1 2N2907 PNP transistor

Q2,Q3 2N394, NPN transistor

U1 LM4250 low noise op-amp (National Semiconductor),

U2 LTC1062 (Linear Technology)

U3 LM201A dual op-amp (National Semiconductor)

U4 LM747 op-amp (National Semiconductor)

S1 DPDT toggle power switch

S2,S4 SPST toggle switches

S3 3-position rotary switch, break before make

M1 100-micro-ampere moving-coil panel-mounted meter

SPKR1 8 ohm speaker, 2" dia.

B1,B2,B3,B4 1.5v (AA) or (C) cells (+) plus voltage supply

B5,B6,B7,B8 1.5v (AA) or (C) cells (-) minus voltage supply

J2,J3 RCA jack

Misc PC board, chassis, wire, coax, hardware, standoffs, RTV compound, washers, etc.

The Aurora Borealis is one of nature's most spectacular nighttime displays. Shimmering curtains of green, white, and even red light dance in the northern skies. Visible effects of charged particles from the Sun raining down on the Earth's ionosphere, northern lights or auroras, are visible in the northern night sky during high sunspot activity. The Aurora Australis, the southern hemisphere's counterpart of the Aurora Borealis, can be seen at night by looking toward the south pole.

These displays of undulating light are formed when flares from the Sun's surface (sunspots) launch showers of high-energy ionized particles and X-rays into space. Mostly electrons, the showers stream out from the sun and are attracted by the Earth's magnetosphere, an invisible magnetic field around the Earth.

Shaped like a pumpkin, the magnetosphere terminates at both magnetic poles but is many miles thick above the equator. Dimples at both poles form "sinks" that funnel the particles toward the poles where they ionize the gas in the ionosphere. Those collisions induce the gases to emit their characteristic light wavelengths—as in neon signs and fluorescent lamps.

The charged particle bombardment of the magnetosphere initially compresses it, temporarily increasing the strength of the Earth's geomagnetic field. The aurora monitor described here is sensitive enough to detect changes in the field caused by those "magnetic storms." Thus it can indirectly sense sunspots and predict the presence of auroras in the night sky.

The monitor also senses changes or anomalies in the magnetic field caused by large metal objects such as cars or trucks moving near the monitor. This permits it to act as an intrusion detection monitor able to detect the approach of vehicles at night in restricted areas. The monitor can also detect the presence of permanent magnets (such as those in speakers), and stray fields from AC-power lines.

Early warning of auroras will both permit you to observe them in the night sky or use them for boosting the range of your amateur radio transmissions. Auroras and their accompanying magnetic storms generally block or scramble the lower radio frequencies, but the higher frequencies can overcome this interference. Radio amateurs aim their antennas north during those storms, thus taking advantage of the phenomena to reach other hams on the opposite side of the Earth that

Figure 20-1 *Aurora monitor*

could not be contacted during periods of low sunspot activity.

In addition to scrambling low-frequency radio communications, the magnetic storms caused by auroras can induce large currents in power transmission lines. Those currents can cause overload, plunging large regions of the country into darkness. Auroras and related magnetic storms are quite common during the decreasing parts of the 11-year sunspot cycle such as the period we are now in.

The Aurora Monitor consists of two main components, a sensing head and the control/display unit which are connected by a coaxial cable. The sensing head contains a sensing coil, a DC nano amplifier capable of current amplification of 500, and a separate power pack, all enclosed in the tubular case shown on the right side of Figure 20-1. Figure 20-2 illustrates the interior of the Aurora Monitor prototype. The Aurora Monitor is sensitive to a pulse of one ampere at distance of one meter, which corresponds to one milligauss. (The Earth's magnetic field is about 0.5 ga.)

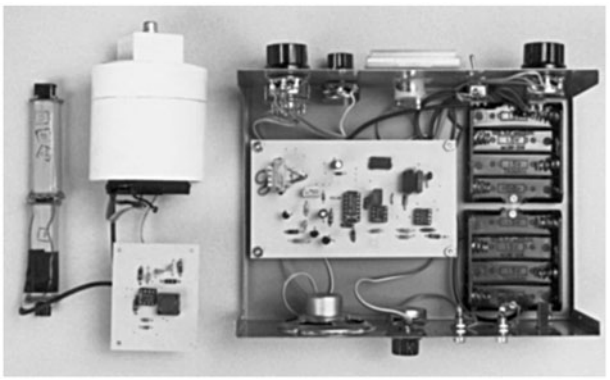

Figure 20-2 *Aurora monitor console and sensor*

The control/display unit contains an active filter, additional amplification circuitry, a moving-coil ammeter, and an audio oscillator with speaker. Figure 20-1 shows the front-panel controls and indicators of the monitor: moving-coil ammeter, SENSITIVITY, RATE, and ALARM ADJUST potentiometers as well as power (OFF), filter-in and RANGE switches.

The sensor head unit

The sensor head schematic circuit is illustrated in Figure 20-3. Gain is provided by U1, a National Semiconductor LM4250 programmable operational amplifier. It is protected from over voltage and transients by diode D1 and D2, and its overall gain is set by resistors R1 and R2. The output of U1 is driven to zero or balanced by network R3 and R4. Its output should remain at zero as long as no changes occur in the ambient magnetic field.

Bypass capacitors C2 and C3 are placed across the positive and negative power supply. Power for the sensing amplifier is obtained from two "C" cells. The sensor circuit draws very little current, so it can be left on at all times, thus eliminating the power switch.

The control/display unit

The control/display circuit schematic is depicted in the schematic in Figure 20-4. It provides an additional gain of 200 over that of the sensor circuit. The control/display circuit includes an adjustable low-pass notch filter, U2, a Linear Technology LTC 1062. By adjusting the clock frequency of the filter with resistor RI1 and the capacitors C4, C5 and C6, the filter cancels interference frequencies and noise in the 2 Hz to 10 kHz band. The notch filter can also screen out 60 Hz noise. Switch S2 inserts or removes the filter. U3, an LM201A general purpose op-amp, filters out the clock noise generated within the filter chip. The output of U3 is fed into the non-inverting input of U4-A, half of a dual 747 general purpose op-amp. The overall gain of U4-A is adjusted by resistor R16. Trimmer potentiometer R15

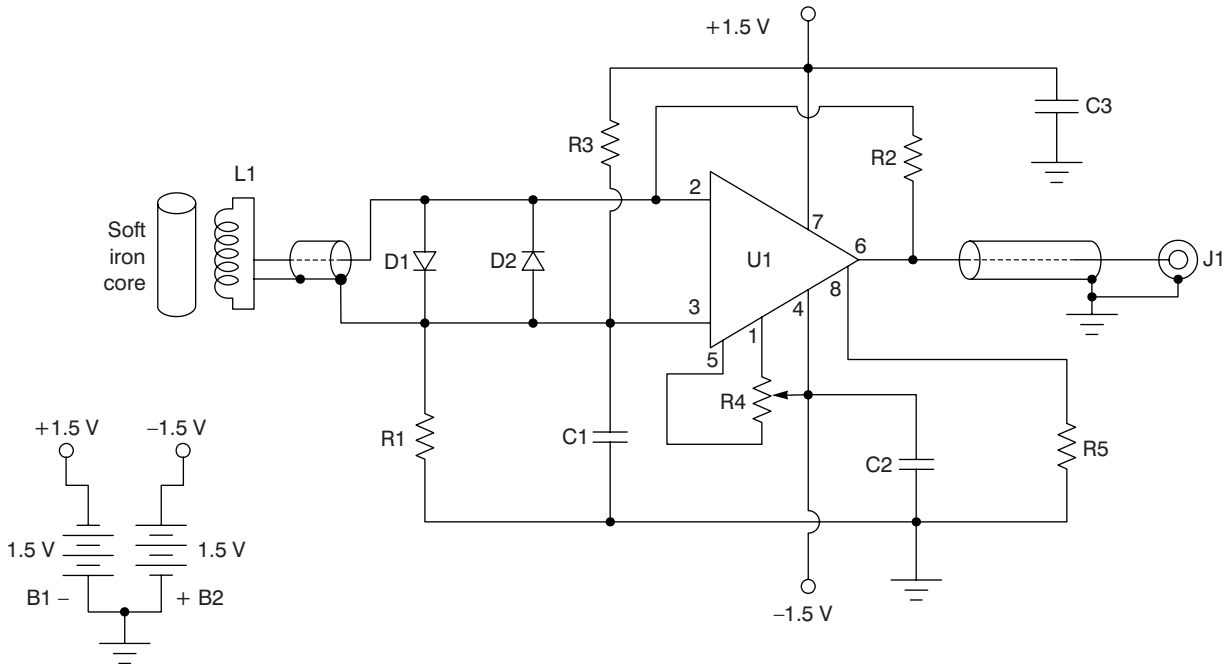

Figure 20-3 *Aurora monitor sensor head*

adjusts the offset or balance. PULSE SHAPE potentiometer R17 and capacitor C5 form an optional pulse-shaping network for coupling the Aurora Monitor to a chart recorder or an analog-to-digital conversion board of a personal computer.

The output of U4-A is coupled to a voltage follower at U4-B. The output of U4-B is divided into two channels. One channel is fed through 5000-ohm SENSITIVITY potentiometer R18, which adjusts the output level of the signal fed to the 100-microampere panel meter MI. Movement of the meter's needle shows changes in the local magnetic field. Potentiometer R18 also adjusts the output signal that can be fed to a chart recorder for data-logging.

The other channel is fed through ALARM ADJUST 5000-ohm potentiometer, R19, which sets the threshold or set-point for the reflex oscillator circuit that follows it. The oscillator consists of transistors Q1, Q2, and Q3 and associated components. Speaker SPKR1 gives an audible indication of changes in the local magnetic field. The network of diode D3 and aluminum electrolytic capacitor C8 performs additional filtering for the input signal to the reflex oscillator section.

Transistor Q1 controls the audible alarm by clamping the negative voltage returning through the ground path. When a magnetic event occurs, the speaker emits an audible alarm, and the meter gives a visual indication of a changing magnetic field. The adjustment of ALARM ADJUST potentiometer R24 can remove distortion from the sound of the speaker.

The author's prototype control/display unit is powered by eight AA cells: four cells provide positive voltage and four cells provide negative voltage. As an alternative, the monitor can be powered by rechargeable nickel-cadmium cells.

Construction

In order to begin constructing the Aurora Monitor, you will need to secure a clean will lit work table or work bench so you can spread out all the tools, project components, charts and diagrams. You will need to locate a small 27 to 33 watt pencil-tipped soldering iron, a small roll of 60/40 rosin core solder, a small jar of "Tip Tinner," soldering iron tip cleaner/dresser, from your local Radio Shack store. A few small hand tools

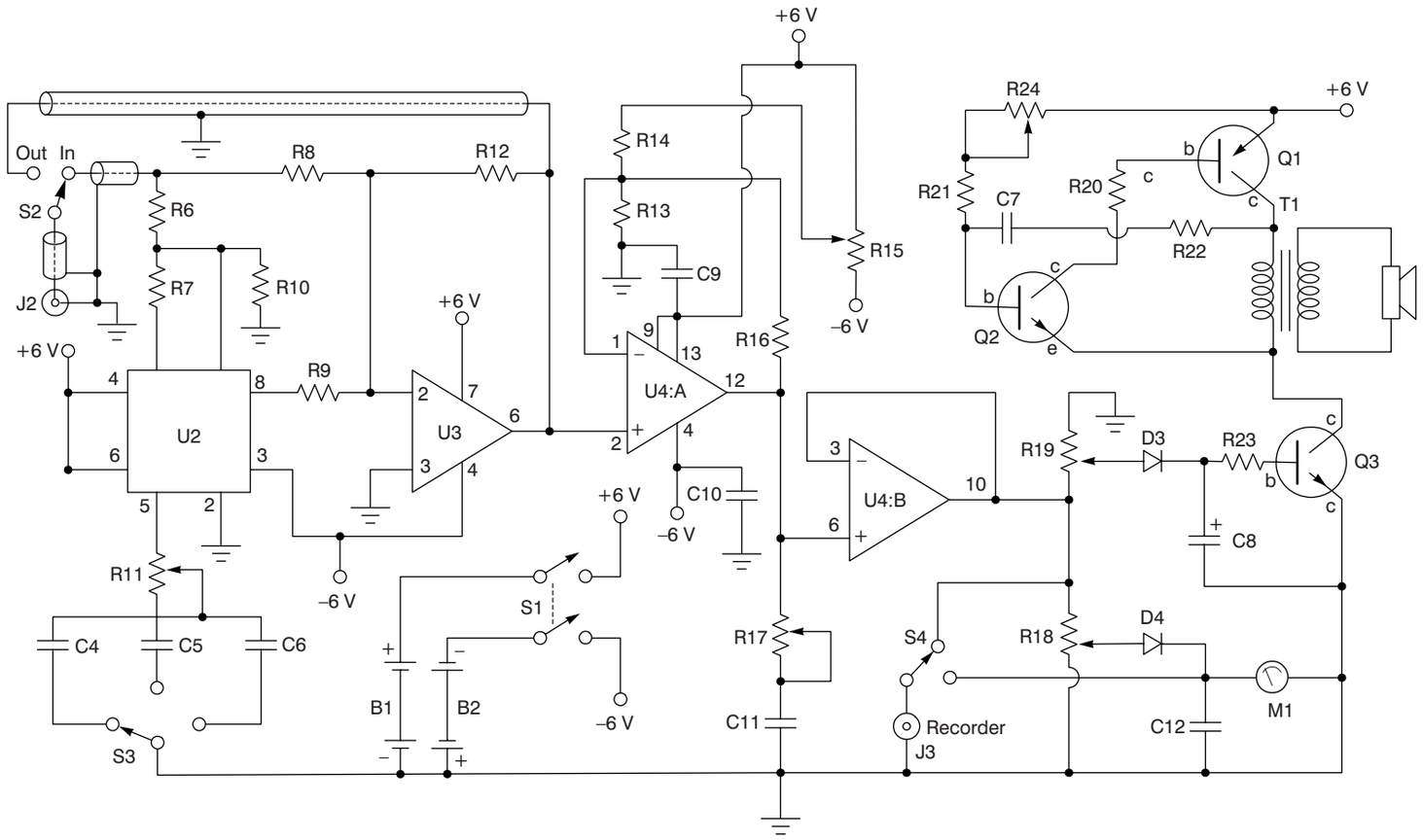

Figure 20-4 *Aurora monitor display/control unit*

are also required to construct the project. You should locate a small pair or end-cutters, a pair of needle-nose pliers, a pair of tweezers, a magnifying glass a small flat-blade screwdriver and a small Phillips screwdriver.

The Aurora Monitor project was constructed on two circuit boards, one for the sensor head unit and a second PC board for the control display unit. We will begin constructing the sensor head unit first, see the schematic in Figure 20-3. The sensor head board measured 2 1/16 by 2 5/16, it was housed along with the sensor head coil in a suitable PVC pipe housing.

Place the project components in front of you on the table, locate the resistor and capacitor identifier charts in Tables 20-1 and 20-2, heat up your soldering iron and we will begin. First refer to the resistor identifier chart, it illustrates the resistor color codes and their representative values. Most resistors will have three or four color codes on the body of the resistor. The color codes begin at one end of the resistor's body. The first color band denotes the first digit of the resistor value, while the second color band represents the second digit of the resistor code. The third color band on the resistor denotes the multiplier value of the resistor, and the fourth color code represents the tolerance of the resistor. A silver band notes a 10% tolerance value, while a gold band denotes a 5% resistor, and the absence of a fourth band implies a 20% tolerance for the resistor. For example, resistor R1 has a 1.5 megohm value. The first color band would be brown or one (1), the second color band would be green or five (5), and the third color or multiplier would be green or (100,000). Go ahead and locate resistors R1 and R2 which are used in the sensor head unit and place them on the sensor head PC board in their respective locations. Solder them in place and then trim the excess component leads with your end-cutter. Cut the excess leads flush to the edge of the circuit board. Next locate the remaining resistors on the sensor head unit and populate the board. Solder the resistors to the board and trim the excess leads.

Next we are going to install the capacitors on the sensor head unit of the Aurora monitor. Capacitors are listed as electrolytic or non-electrolytic types. Non-electrolytic types are usually small capacitors, often they are so small that their actual value is not printed on the body of the capacitor but a three-digit code is used, see Table 20-2. For example, a .01 µF capacitor would be marked (103) while a .1 µF capacitor would be marked (104). Locate capacitors C1, C2 and C3 which are .1 µf values. Place them on the sensor head PC board and solder them in place on the board, remember to trim the excess component leads with your end-cutters. There are no electrolytic type capacitors on the sensor head unit but there are some on the control/display PC board. Electrolytic capacitors are usually larger in size and value, and usually they will have a polarity marking of some kind on the body

Table 20-1
Resistor color code chart

Color Band	*1st Digit*	*2nd Digit*	*Multiplier*	*Tolerance*
Black	0	0	1	
Brown	1	1	10	1%
Red	2	2	100	2%
Orange	3	3	1,000 (K)	3%
Yellow	4	4	10,000	4%
Green	5	5	100,000	
Blue	6	6	1,000,000 (M)	
Violet	7	7	10,000,000	
Gray	8	8	100,000,000	
White	9	9	1,000,000,000	
Gold			0.1	5%
Silver			0.01	10%
No color				20%

Table 20-2

Capacitor code identification information

This table is designed to provide the value of alphanumeric coded ceramic, mylar and mica capacitors in general. They come in many sizes, shapes, values and ratings; many different manufacturers worldwide produce them and not all play by the same rules. Most capacitors actually have the numeric values stamped on them; however, some are color coded and some have alphanumeric codes. The capacitor's first and second significant number IDs are the first and second values, followed by the multiplier number code, followed by the percentage tolerance letter code. Usually the first two digits of the code represent the significant part of the value, while the third digit, called the multiplier, corresponds to the number of zeros to be added to the first two digits.

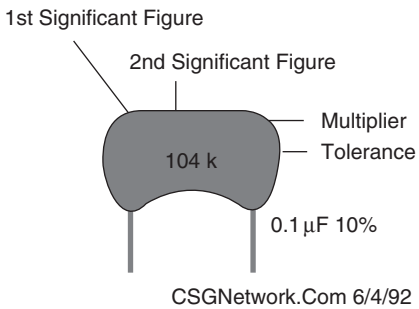

Value	*Type*	*Code*	*Value*	*Type*	*Code*
1.5 pF	Ceramic		1,000 pF /.001 µF	Ceramic / Mylar	102
3.3 pF	Ceramic		1,500 pF /.0015 µF	Ceramic / Mylar	152
10 pF	Ceramic		2,000 pF /.002 µF	Ceramic / Mylar	202
15 pF	Ceramic		2,200 pF /.0022 µF	Ceramic / Mylar	222
20 pF	Ceramic		4,700 pF /.0047 µF	Ceramic / Mylar	472
30 pF	Ceramic		5,000 pF /.005 µF	Ceramic / Mylar	502
33 pF	Ceramic		5,600 pF /.0056 µF	Ceramic / Mylar	562
47 pF	Ceramic		6,800 pF /.0068 µF	Ceramic / Mylar	682
56 pF	Ceramic		.01	Ceramic / Mylar	103
68 pF	Ceramic		.015	Mylar	
75 pF	Ceramic		.02	Mylar	203
82 pF	Ceramic		.022	Mylar	223
91 pF	Ceramic		.033	Mylar	333
100 pF	Ceramic	101	.047	Mylar	473
120 pF	Ceramic	121	.05	Mylar	503
130 pF	Ceramic	131	.056	Mylar	563
150 pF	Ceramic	151	.068	Mylar	683
180 pF	Ceramic	181	.1	Mylar	104
220 pF	Ceramic	221	.2	Mylar	204
330 pF	Ceramic	331	.22	Mylar	224
470 pF	Ceramic	471	.33	Mylar	334
560 pF	Ceramic	561	.47	Mylar	474
680 pF	Ceramic	681	.56	Mylar	564
750 pF	Ceramic	751	1	Mylar	105
820 pF	Ceramic	821	2	Mylar	205

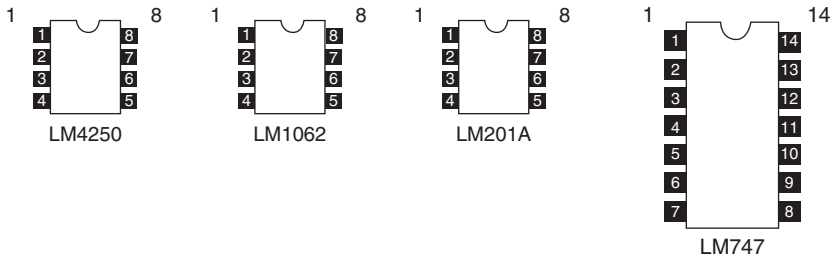

Figure 20-5 *Semiconductor pin-outs*

of the capacitor. You will find either a plus (+) or minus (–) marking near one of the leads on the capacitor body. Both the sensor head and control/display board utilize silicon diodes. Diodes also have polarity, so they must be installed correctly in order for the circuit to work properly. Look closely at a diode and you will see either a white or black color band near one end of the diode body. The colored band indicates the cathode end of the diode. Go ahead and install D1 on the sensor head board.

The sensor head and the display boards both have integrated circuits on them, so before we begin installing the ICs, take a quick look at the pin-out diagram depicted in Figure 20-5, which will help you orient the integrated circuits. Integrated circuits are highly recommended as an insurance against possible circuit failure at some later date. It is much easier to simply unplug an IC and place a new one in the socket rather than trying to un-solder a 14 or 16 pin IC from a circuit board. Integrated circuit sockets will usually have a notch or cut-out at one end of the plastic IC socket. To the immediate left of the notch or cut-out you will see pin one (1) of the socket. Pin (1) of U1 is connected to one end of potentiometer R4. The IC package itself will also have a notch or cut-out at the top end of the IC. When placing the IC into its respective socket make sure you align pin one (1) of the IC with pin one (1) of the socket. The integrated circuits must be inserted into the socket properly aligned or the circuit will not work and may damage the components. Go ahead and place U1 into its socket on the sensor head PC board.

Sensor coil assembly

The sensor coil at L1 detects changes in the local magnetic field. You will need to wind approximately 50,000 turns of 28 AWG magnet wire over a soft iron core ½″ in diameter and 10″. (The iron core concentrates the flux lines by offering a lower reluctance path than air.)

Wind the fine insulated magnet wire carefully on the iron core to avoid kinks and breakage. Tape the ends of the winding temporarily to the core and carefully solder hook-up wire at each end to form permanent terminals. The terminals can be secured to the core with room-temperature vulcanizing (RTV) adhesive to relieve any strains that might develop in the fine magnet wire.

In the prototype, the sensing circuit board, coil, and battery pack, consisting of two “C” cells were housed in a case made from standard diameter PVC water pipe cut to a length that will accommodate all of those elements as shown in Figures 20-6.

The covers for the sensing head housing are PCV end-caps that press-fit over the 2⅜″ outside diameter of the pipe. The upper cap is a simple cup, but the lower cap is a sleeve with a threaded insert at its end. Drill a hole in the square base of the threaded insert for jack J1 and fasten it with a ring nut. Then close the cover on the empty pipe and drill two pilot holes 180° apart in the sleeve for self-tapping screws to clamp the cap in position after the sensor head is assembled.

Cut about a 6″ length of RG-174/U coaxial cable, strip both ends and solder the inner conductor of one end to the jack terminal and its shield to the jack lug. Solder the inner conductor and shield of the other end to the sensor circuit board.

Attach the coil to the sensor circuit board with about a 6″ length of RG-174/U coaxial cable as shown. Connect the inner conductor to one terminal and the shield to the other and solder both in position. The prototype includes a twin “C” cell holder that, with cells in position, has a maximum width dimension of

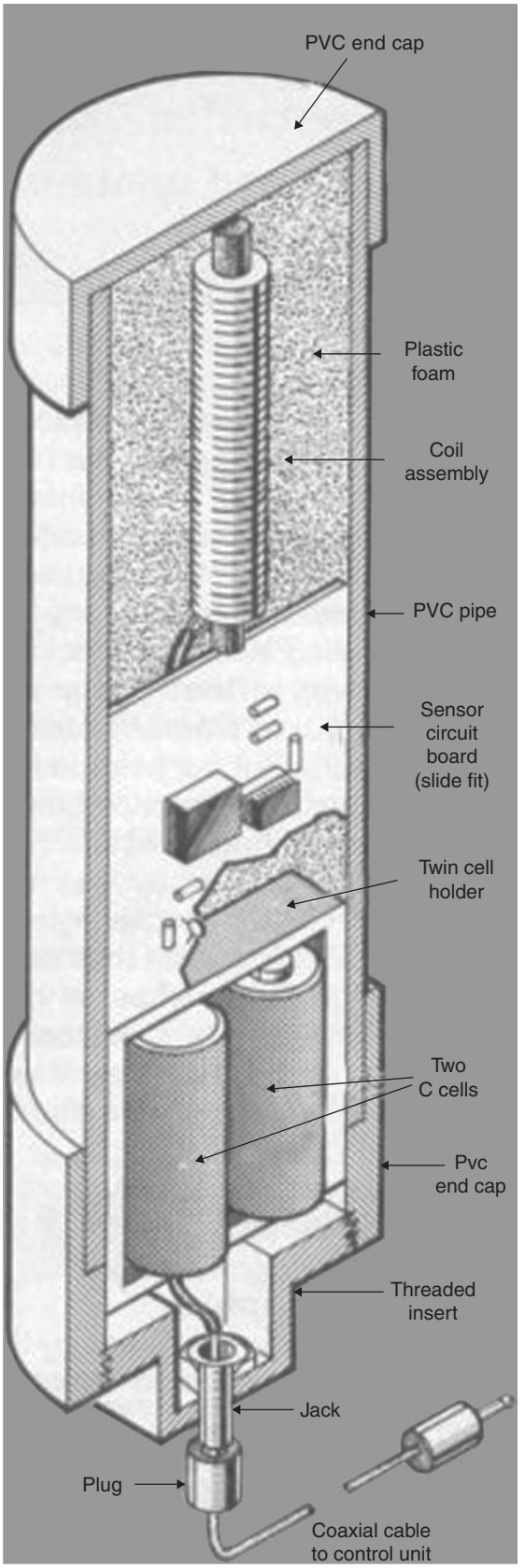

Figure 20-6 *Sensor*

less than 2″ permitting it to slide easily into the sensor head pipe section.

Cut three lengths of hook-up wire to extend the lengths of the positive, negative and ground leads of the battery pack. Solder one end of those wires to the holder leads and the other ends to the sensor circuit board.

Bond the upper cap to the PVC pipe section with PVC cement. Then position U1 in its socket, making certain that pin 1 is located correctly. Finally, insert the "C" cells in the holder. Wrap a layer of polyurethane foam around coil L1 to center it within the pipe section and insert both in the pipe section with the cover at the end. Then assemble the completed circuit board and battery pack to make sure that all of these parts will fit in the pipe section. Set the assembly aside until you are ready to perform the checkout steps.

Control/display unit

The control/display prototype circuit board measured 2⅞″ × 5″ to fit inside the instrument case selected. The schematic for the control/display board is shown in Figure 20-4. The dimensions of the circuit boards can be modified for packaging in the instrument and sensor head cases of your choice. Place the control/display circuit board in front of you, along with all its respective components, and we will begin constructing the control/display board.

First we will begin by placing the resistors on the PC board; locate R6, an 18k ohm resistor, and R7 a 12k ohm resistor, and place them on the board and solder them in place in their respective locations on the board. Next locate and install resistors R8, R9, R12, and R20; these are all 10k ohm resistors, solder them in place and cut the excess component leads with your end-cutter. Locate and install the remaining resistors, solder them in place and trim the excess component leads afterward.

Next, you can locate the capacitors C4, a .005 µF disk capacitor, and it may be marked (502). Install C4 on the PC board and solder it in place, remember to cut the excess lead lengths. Now, locate capacitors C5, C7, C9 and C10; these are all .1 µF capacitors and may be

marked (104). Install these capacitors and solder them in place and then trim the extra leads. Now, locate C8, a 4.7 µF electrolytic capacitor. Capacitor C8 has polarity, so it must be installed with respect to these marking. Look at the schematic, and you will see that the plus (+) side of C8 is connected to the junction of resistor R23 and diode D3. Install C8, and then solder it place, trim the excess leads as necessary. Go ahead and install the remaining capacitors and solder them in place on the PC board.

The control/display section of the Aurora Monitor employs two silicon diodes, and they must be installed with respect to their polarity. The colored band denotes the cathode end of the diode. The cathode end of D3 is fed to R23, while the cathode end of D4 is sent to C12 and M1.

Transistors are generally three-lead devices, with a Base lead, a Collector lead, and an Emitter lead. The Base lead is depicted as a straight vertical line with two arrows pointing to it. The Emitter lead will have a small arrow pointing towards or away from it. When the arrow points toward the Base lead the transistor is a PNP type. If the arrow is pointing away from the Base lead then the transistor is an NPN type. Transistor Q1 is a PNP type, while Q2 and Q3 are NPN types. Identify the transistor leads and install them in their respective locations on the PC board, trim the leads as necessary.

The control/display portion of the Aurora Monitor utilizes three integrated circuits. Integrated circuits are highly recommended in the event of a circuit failure at a later date. Be sure to install the ICs correctly: pin one (1) of U2 is connected to R7, while pin one (1) of U3 is not used, pin two (2) is jointed with R9 and R8 and R12. Integrated circuit U4 has pin one (1) connected to the junction of R13 and R14. Failure to install the integrated circuits correctly may result in damage to the IC or to other components as well.

Finally you will need to connect the small audio transformer to the circuit. The higher impedance (1K) end of the transformer is connected to the junction of Q1 and R22, and the other 1k lead is connected to the collector of Q3. The secondary or 8 ohm winding of T1 is sent to the small 8 ohm speaker. The transformer can be mounted on the circuit board or on the bottom of the chassis box. The 100 uA panel meter is wired between the Emitter of Q3 and ground.

The control/display assembly is housed in a standard 7″ × 5″ × 3″ aluminum electronics instrument case with a removable cover. Drill the holes in the front panel of the case for power ON switch S1, FILTER IN switch S2, RANGE switch S3 and (if used) optional recorder switch S4. Also drill the holes for SENSITIVITY, ALARM ADJUST, and RATE potentiometers (R18, R19, and R11 respectively). Cut out the hole for mounting meter M1. Note: If you want to use the monitor strictly as a security monitoring system the meter can be omitted.

Drill the holes in the back panel for jacks J2 and J3, and PULSE SHAPE potentiometer R17. Drill a series of holes in a circular pattern for the speaker SPKR1. Drill holes in the bottom of the case for mounting the control/display circuit board and two quad “C” cell holders. Remember the circuit uses both a plus (+) 6 volt supply and a minus (–) 6 volt supply. We chose to power the circuit from batteries, but you could use a dual 6 volt power supply to power the control/display unit.

Assemble the panel-mounted switches, jacks, potentiometers, meter and speaker to the front and back panels of the case as shown in Figure 20-2. (You might prefer to bond the face of the speaker to the inside of the back panel with RTV adhesive rather than bolts and nuts.)

Determine the length of speaker wires needed to permit assembly of the circuit board in the instrument case, cut the wires to length and solder them to the board. Cut and solder all leads from panel-mounted components to the circuit board, allowing sufficient lengths to permit unimpeded circuit board assembly, yet not allowing too much slack.

Cut about a 6″ length of RG-174/U coaxial cable to connect INPUT jack J2 and the FILTER IN Switch S2 and two other lengths about 6″ long to connect S2 to the FILTER-IN and FILTER-OUT pads on the control/display board. Strip all cable ends and solder and trim all connections.

Assemble the control/display board to the base of the case with screws and ½″ insulating standoffs, lock washers and nuts. Bolt the two quad AA cell holders to the base of the case. Position the ICs in their sockets on the control-display board, making sure that all pin 1’s are in their correct positions. Insert the eight AA cells in the spring-loaded holders, observing the correct polarity.

Cut a length of RG-174/U coaxial cable to the length that will suit your installation. Strip the wire ends and attach phono plugs PL1 and PL2 to cable ends and solder or crimp them in position.

Before applying power to the Aurora Monitor, you may want to inspect the two circuit boards for "cold" solder joints and "short" circuits. Look carefully at the foil side of the sensor head unit and examine the solder joints. The solder joints should all look clean, bright and shiny. If any of the solder joints look dark, dull, or "blobby" then remove the solder from the joint and re-solder the connection. Next examine the control/display board for "cold" solder joints. Now, we will inspect the two boards for possible "short" circuits. "Short" circuits are usually caused by "stray" component leads which get stuck to the board from the sticky residue left from rosin core solder or from small solder balls which may "short" across the circuit traces. Examine both circuit boards for "stray" leads and solder balls and remove them if you see any. Now, you are ready to apply power to the circuits in order to "test" the circuits.

Test and checkout

Test the sensing circuit first. Connect a general purpose oscilloscope or multi-meter to the output of U1. Position a permanent magnet near coil L1 and the oscilloscope display should show a pronounced pulse. If a multi-meter is used, its readout should jump.

Next, move L1 away from the magnet and the reading on the multi-meter should fall to zero. If the reading does not go to zero, adjust trimmer potentiometer R4 in the sensor circuit. When the sensing head is adjusted and working correctly, close the lower cap and fasten it with two non-magnetic stainless steel self-tapping screws to complete the assembly. Connect one end of the plug-terminated coaxial cable to the sensor head jack 1 and the other end to the control/ display unit jack J2.

Turn on the power toggle switch of the control/display unit and turn SENSITIVITY potentiometer R18 full clockwise. The meter should remain at zero. Rotate ALARM ADJUST potentiometer R19 clockwise until the alarm just begins to sound. Then turn it back slightly so that no sound is heard to obtain the maximum sensitivity setting. Next, turn potentiometer R19 full clockwise. There should be no sound from the speaker.

Position a small magnet or piece of metal next to coil L1 in the sensor head and the unit should now be activated: the speaker should emit sound, and the meter should read full scale. If everything checks out, you can now start observing magnetic field disturbances or anomalies.

In a quiet magnetic environment it might be necessary to adjust potentiometer R4 in the sensor head to the threshold of the meter movement. This fine adjustment eliminates any small dead zones in sensitivity. Test the instrument's ability to detect the Earth's magnetic field by rotating the sensing head with short, quick, snapping motions in a counter-clockwise direction. The meter movement should jump off scale.

As rotation is continued, a direction will be found where the meter will have its lowest response. This nulling point is the north-south direction. Any objects containing permanent magnets such as speakers or meters that are brought into close proximity to the Aurora Monitor's sensing head coil L1 will affect the accuracy of the instrument's readings.

In the event that the Aurora Monitor does not work upon power-up, you will need to disconnect the power supply and sensor head unit and inspect the circuit board for possible errors which might have occurred while building the Aurora Monitor. The most common cause for error when constructing the circuit is the incorrect installation of the electrolytic capacitors, the diodes and semiconductors such as transistors and integrated circuits. You may have installed one of these components backwards, so you will need to carefully inspect the circuit board. A second pair of eyes could be very helpful in locating potential errors of this sort. Have a knowledgeable electronic enthusiast help you inspect the circuit for errors. Another cause for error is mis-locating resistors. You may have placed the wrong value of resistor in a particular location, this would cause the circuit to malfunction. After carefully inspecting the Aurora Monitor circuit boards, you may quickly find your error and correct it. Once the error has been located, you reconnect the sensor head unit, and then re-apply power and then you can test the Aurora Monitor once again.

The Aurora Monitor can be connected to a chart recorder or it can pass signals to a personal computer with an analog-to-digital converter board. The recorder or PC can collect data for the study of magnetic fields, magnetic storms, and sunspot activity over long periods of time for further analysis. A set of high-impedance (greater than 1 kilohm) headphones can be plugged into jack J3 if you wish to "hear" the changes in magnetic fields.

If you want a permanent installation, mount the sensing head assembly so that it is directed away from any large metal obstructions, oriented on a north-south axis, and pointed slightly upwards. It's a good idea to fasten it to a heavy wooden post to prevent wind-induced vibrations.

Chapter 21

Ultra-Low Frequency (ULF) Receiver

Parts list

ULF Receiver

R1,R4 50kohm trim potentiometer

R2 50kohm - 20 turn pot

R3 100kohm trim pot

R5,R6,R10 10k ohm, ¼w, 5% resistor

R7,R8,R9,R12,R21 33k ohm, ¼w, 5% resistor

R11,R16 1k ohm, ¼w, 5% resistor

R13,R20 22k ohm, ¼w, 5% resistor

R14,R15,R18,R19 47k ohm, ¼w, 5% resistor

R17 50k ohm pot

R22 2.2k ohm, ¼w, 5% resistor

C1,C2,C3,C4,C5,C6 .1µF, 35 volt disk capacitor

C11,C12,C13,C14 .1µF, 35 volt disk capacitor

C8,C9 1µF tantalum, 35 volt electrolytic capacitor

C10 .01µF, 35 volt disk capacitor

C7 .05µF, 35 volt disk capacitor

D1 Zener diode

U1,U2 LTC1063 IC

U3,U4 TL074 op-amp IC

U5 INA114 Differential amplifier IC

J1,J2,J3 3-terminal screw terminal strips

S1 SPST power switch

F1 1-amp fast-blow fuse

Misc PC board, chassis, wire, hardware, power cord, etc.

ULF Receiver Power Supply

C1,C4 2200µF, 35 volt electrolytic capacitor

C2,C5 .33µF, 35 volt ceramic capacitor

C3,C6 .1µF, 35 volt ceramic capacitor

U1 LM7805 - fixed positive voltage regulator

U2 LM7905 - fixed negative voltage regulator

D1,D2,D3,D4 50 volt, 2 amp silicon diode

T1 110v-12v center tapped transformer - 2amp

Misc circuit board, wire, terminals, plug, fuse, etc.

Copyright © 2008 by The McGraw-Hill Companies, Inc. Click here for terms of use.

If you are interested in monitoring the ultra-low frequency spectrum from .001 Hz to 30 Hz, the ULF receiver will allow you to do some serious research into earthquake monitor and Earth field studies. This project is intended for curious individuals who want to participate in the research and experimentation of the study of extremely low frequency signals which travel through the interior of our Earth. This project will allow you to construct a ULF receive station to be used to collect data for later analysis and compare it with others who belong to the ELFRAD group and those researchers involved with the Public Seismic Network.

The ELFRAD low frequency group coordinates a research group which studies the low frequency spectrum and reports to one another the research that individual members do and makes available the information for comparison through their central website. In order to achieve their goal, it is necessary to have most of the equipment and construction parameters standardized as much as possible, so the ELFRAD Group will furnish software and support.

A complete standardized ELFRAD monitoring station consists of a ULF receiver, an antenna array, and interface card and a personal computer, and in this project we will discuss how to put a receive station together in your home workshop.

The Ultra-Low Frequency Receiver allows the desired ultra-low frequency signals to be recovered from the Earth. The signals are directed to a conditioning circuit which not only protects the receiver equipment from transients caused by lightning and other sources but attenuates the ambient 60 or 50 Hz frequency caused by commercial power, with the receiver's power-line notch line filter. The signals then pass through a circuit which removes any ground loop problems which may occur at your computer interface. The low frequencies of interest are then passed through a series of filters to remove most of the noise and unwanted signals above 25 Hz. This desired band of signals is then coupled to the analog-to-digital interface in your personal computer to be recorded on the hard drive. The interface used in the prototype accepted up to eight channels of data samples and was able to collect 200 samples per second, record them and then display them on the computer screen in either real time or compressed time format.

Figure 21-1 *ULF receiver*

At any time it is possible to take any period of data previously recorded, generate a file and display the data for analysis. You are also able to post filter the data, with band pass, notch, low pass, and high pass capability.

The Ultra Low Frequency Receiver project is shown in Figure 21-1. This ULF receiver circuit was designed as an all purpose ULF and ELF receiver with a frequency range from DC to 30 hertz. The signals from both leads of the non-polarized antenna array are connected to J3, as seen in the schematic diagram in Figure 21-2 and 21-3, a two sheet diagram The antenna input signal travels to pins 2 and 3 on U5, which is a high impedance differential instrumentation amplifier. This chip's gain is controlled by a single variable resistor at R3.

The combined signals then travel from pin 6 of U5 on to U3:A which is a buffer amplifier, followed by a 2 pole low pass filter at U3:B and U3:C and signal amplifier at U3:D. From pin 14 on U3, the partially filtered signal travels on to integrated circuit U2 and U1 which are 5 pole Butterworth low pass filters in cascade. The LTC1063 ICs at U1 and U2 are clock controlled and the frequency is set at 3000 hertz by R9. This configures the two LTC1063 chips to have a cut-off frequency of about 30 hertz. The clock ratio is 1/100.

The integrated circuit at U4 consists of a X5 gain amplifier at U4:D, a buffer at U4:C and another 2 pole analog low pass filter at U4:B and U4:A. Trim potentiometer R17 is the final gain control for the desired output voltage at U4:A. IC section U4B is a 2 pole low pass filter which removes any residual clocking pulses from the signal which may have been caused by U1 and U2. The amplified output signal at J1 can be routed to your analog-to-digital converter card in your PC. Power is supplied to the ULF receiver at the terminals of J2. The output from the ULF receiver can be routed to an analog-to-digital

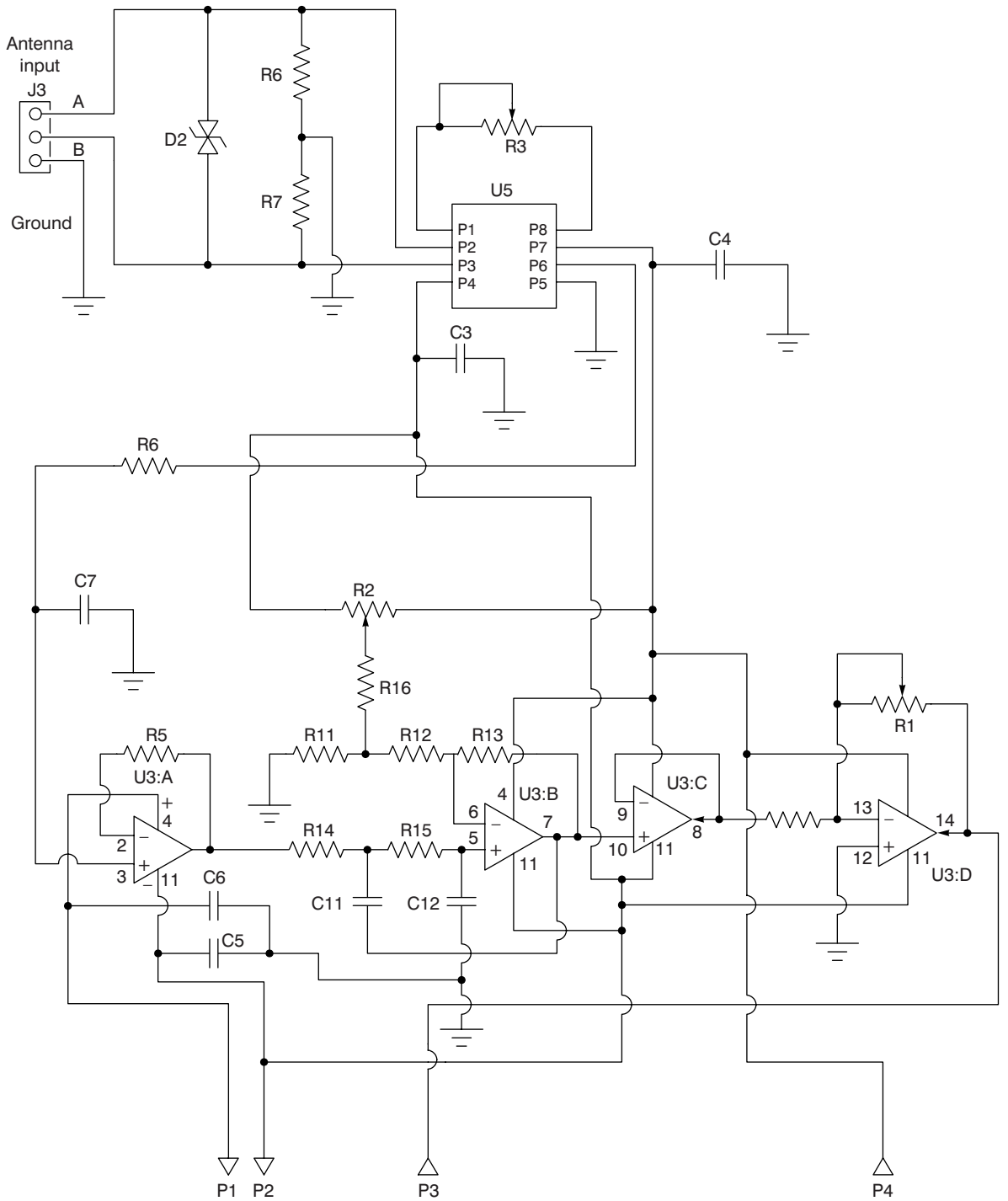

Figure 21-2 *ULF receiver schematic – Part I*

converter card in a personal computer for recording and displaying the receiver's output in real time or for later viewing.

The ULF receiver circuit is powered from a dual plus/minus 5 volt power supply, shown in the schematic at Figure 21-4. The power supply will furnish plus and minus 5 volts DC for all of the op-amps in the receiver. A 110 to 12 volt center tapped transformer is fed directly to a four diode bridge rectifier. The resultant DC signal is then coupled to two 2200 µF filter capacitors at C1 and C4. The plus voltage output from C1 is then fed to the input of an LM7805. The output of U1 is then sent to a .1 µF capacitor at the positive output terminals. The minus voltage output from C4 is sent to a

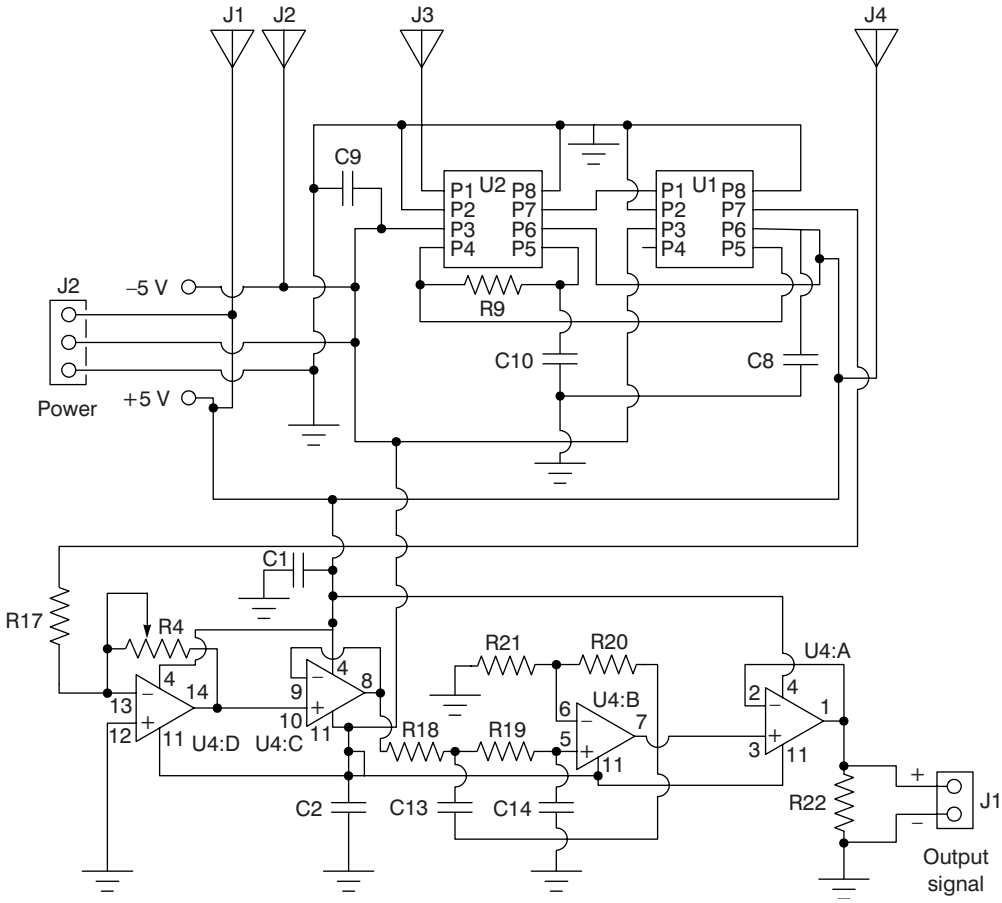

Figure 21-3 *ULF receiver schematic – Part II*

negative voltage regulator at U2, an LM7905. The output from U2 is then sent to capacitor C6, at the minus voltage output terminals.

Let's get started building the ULF receiver! Before we begin building the ULF receiver, you will need to locate a clean well lit and well ventilated work area. A large table or workbench would be a suitable work surface for your project. Next you will want to locate a small 27 to 33 watt pencil-tipped soldering iron, as well as a roll of #22 ga. 60/40 tin/lead solder and a small jar

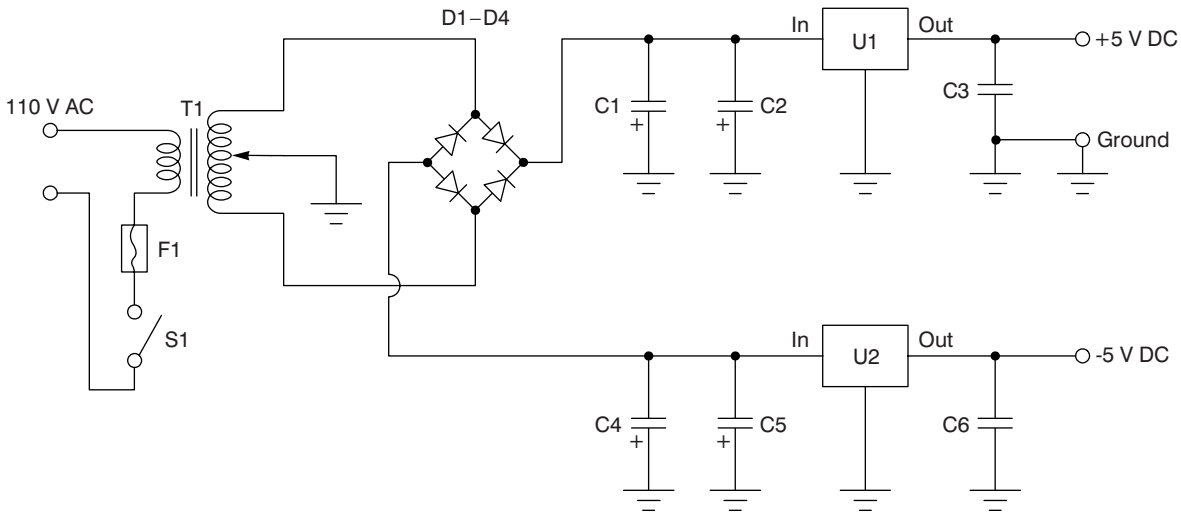

Figure 21-4 *ULF receiver power supply*

of "Tip Tinner," a soldering iron tip cleaner/dresser from your local Radio Shack store. You will also want to secure a few hand tools for the project, such as a pair of small end-cutters, a pair of tweezers and a pair of needle-nose pliers. Locate a small Phillips and a small flat-blade screwdriver, as well as a magnifying glass to round out your tool list. Grab the schematic, parts layout diagram as well as the resistor and capacitor identifier charts and we will begin our project. Place all the project components on the table in front of you. The ultra-low frequency receiver is an RF or radio frequency project and it is best constructed on a printed circuit board with large ground plane areas covering the board for the best RF grounding techniques. Once you have all the parts and PC board in front of you, heat up the soldering iron and we'll get started!

First, find your resistor identifier chart in Table 21-1, which will help you select the resistors from the parts pile. Resistors used in this project are mostly small ¼ watt carbon composition type resistors, which have colored bands along the resistor body. The first color band should be closest to one end of the resistor body. This first color band represents the first digit of the resistor value. For example, resistor R5, R6 and R10 has four color bands, the first one is a brown band followed by a black band followed by an orange band. The fourth band is gold. The first band is brown which denotes a digit one (1), the second band is black which represents a digit five (0) and the third band is orange, which represents a multiplier of zero (000), so the resistor value is 10,000 or 10k ohms with a tolerance value of 5%. Identify the remaining resistors for the project and we can begin "populating" the PC board. Place a few resistors on the board at one time, so as not to confuse the process. Make sure that you place the correct resistor into the correct PC location before soldering it in place. Once you solder a few resistors in place on the PC board, you can use your end-cutter to trim the excess component leads. Cut the excess leads flush to the edge of the circuit board. Then place a few more resistors on the PC board and solder them on to the board. Remember to trim the component leads as necessary.

Next we will locate the capacitors for the ULF receiver. Capacitors are listed as electrolytic and non-electrolytic types. The non-electrolytic types are generally smaller in value and size as compared with the electrolytic types. Non-electrolytic capacitors in fact can be so small that their actual value cannot be printed on them, so a special chart was devised as shown in Table 21-2. The chart illustrates the three-digit codes which are often used to represent capacitors. For example a .001 µF capacitor will have (102), while a .01 µF capacitor will have (103) marked on it to represent its true value. Use the chart to identify the

Table 21-1
Resistor color code chart

Color Band	*1st Digit*	*2nd Digit*	*Multiplier*	*Tolerance*
Black	0	0	1	
Brown	1	1	10	1%
Red	2	2	100	2%
Orange	3	3	1,000 (K)	3%
Yellow	4	4	10,000	4%
Green	5	5	100,000	
Blue	6	6	1,000,000 (M)	
Violet	7	7	10,000,000	
Gray	8	8	100,000,000	
White	9	9	1,000,000,000	
Gold			0.1	5%
Silver			0.01	10%
No color				20%

small capacitors in the project. Non-electrolytic have no polarity markings on them so they can be installed in either direction on the PC board.

Electrolytic capacitors are usually larger in size and value and they will have a white or black band on the side of the capacitor body or a plus (+) or minus (–) marking on the body of the capacitor near the leads. These markings are polarity markings and that indicate the direction in which the capacitor must be mounted on the PC board. Failure to observe polarity when installing the capacitor may result in damage to the capacitor or to the circuit itself, so pay particular attention to capacitor polarity when placing the capacitors on the board.

Let's go ahead and place some of the non-electrolytic capacitors on the PC board. Identify a few small capacitors at a time and place them on the PC board and solder them in place. Trim the component leads after. Go ahead and install the remaining non-electrolytic capacitors after choosing your desired band. Install the capacitors and solder them in place, remember to cut the extra leads flush to the edge of the circuit board. Now, you can go ahead and install the electrolytic capacitors onto the circuit board. Go ahead and solder them in place and trim the leads as necessary.

The ULF receiver utilizes five integrated circuits and two regulators integrated circuits. Locate the semiconductor pin-out diagram illustrated in Figure 21-5, which will help you install the ICs. When constructing the project it is best to use IC sockets as an insurance against a possible circuit failure down-the-road; it's much easier to unplug an IC rather than trying to un-solder an IC from the PC board. IC sockets will have a notch or cut-out at one end of the plastic socket. Pin one (1) of the IC socket will be just to the left of the notch or cut-out. Note, pin 1 U1 connects to pin 7 of U2, while pin 1 of U2 connects to the output of U3:D. Now take a look at U3, pin 1 of U3 is connected to R14, while pin 1 of U4 is fed to the output through R22. Finally, pin 1 of U5 is connected to potentiometer R3. Now place each of the integrated circuits into their respective sockets.

A protection Zener diode is placed across the antenna input pins between resistors R6 and R7. Note that all diodes have polarity, including Zener diodes. Diodes will have either a black or white colored band at one end of the resistor body. The lead closest to the colored band is the cathode lead of the diode.

The main ULF schematic diagram is broken into two diagrams, since the schematic is rather large. You have most likely noted that along the bottom of diagram (A), you will see designations of P1, P2, P3 and P4. These are not connectors as such but merely to help separate the two diagrams for illustration purposes. The receiver was constructed on a single printed circuit board. In the original prototype, the antenna input shown at J3 was a screw terminal strip, but this could be changed to an SO-238 antenna jack mounted on the chassis enclosure. The power connection was made at a second screw terminal jack at J2, which had three terminal posts for plus/minus and ground connections. The output of the ULF receiver was connected to a third screw terminal jack at J3, this could be changed to an RCA jack if desired.

The ULF receiver contains a number of variable resistors or potentiometers in the circuit. Potentiometer R1, R3 are PC board trimmer types, while R2, which is a 20 turn precision chassis mounted potentiometer, and R4 is a conventional chassis mounted linear taper potentiometer.

The ULF receiver is now almost completed, so take a short well deserved break, and when we return we will inspect the circuit board for any possible "cold" solder joints and "short" circuits before we apply power to the circuit. Pick up the PC board with the foil side of the board facing upwards toward you. Examine the foil side of the board carefully, take a look at the solder joints. All of the solder joints should look clean, bright, shiny and smooth; if any of the solder joints look dark, dull or "blobby" then you should remove the solder from the joint with a solder-sucker and then completely re-solder the joint all over again so that the solder joints all look good. Next we will examine the PC board for any possible "short" circuits, which may be caused from "stray" component leads which were cut from the board. Another possible cause of short circuits are solder blobs which may have stuck to the foil side of the board. Rosin core solder often leaves a sticky residue which can cause leads and solder blobs to stick to the board and possibly "bridge" across circuit traces.

Next we will need to build the dual voltage power supply circuit board. The power supply was built on the circuit board as well. The transformer was mounted off

Table 21-2
Capacitance code information

This table provides the value of alphanumeric coded ceramic, mylar and mica capacitors in general. They come in many sizes, shapes, values and ratings; many different manufacturers worldwide produce them and not all play by the same rules. Some capacitors actually have the numeric values stamped on them; however, many are color coded and some have alphanumeric codes. The capacitor's first and second significant number IDs are the first and second values, followed by the multiplier number code, followed by the percentage tolerance letter code. Usually the first two digits of the code represent the significant part of the value, while the third digit, called the multiplier, corresponds to the number of zeros to be added to the first two digits.

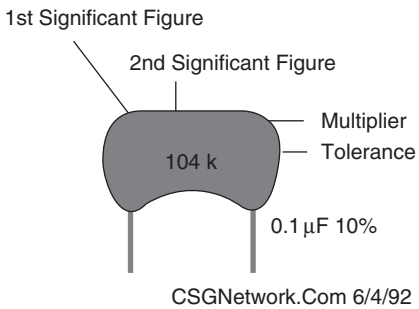

Value	*Type*	*Code*	*Value*	*Type*	*Code*
1.5 pF	Ceramic		1,000 pF /.001 µF	Ceramic / Mylar	102
3.3 pF	Ceramic		1,500 pF /.0015 µF	Ceramic / Mylar	152
10 pF	Ceramic		2,000 pF /.002 µF	Ceramic / Mylar	202
15 pF	Ceramic		2,200 pF /.0022 µF	Ceramic / Mylar	222
20 pF	Ceramic		4,700 pF /.0047 µF	Ceramic / Mylar	472
30 pF	Ceramic		5,000 pF /.005 µF	Ceramic / Mylar	502
33 pF	Ceramic		5,600 pF /.0056 µF	Ceramic / Mylar	562
47 pF	Ceramic		6,800 pF /.0068 µF	Ceramic / Mylar	682
56 pF	Ceramic		.01	Ceramic / Mylar	103
68 pF	Ceramic		.015	Mylar	
75 pF	Ceramic		.02	Mylar	203
82 pF	Ceramic		.022	Mylar	223
91 pF	Ceramic		.033	Mylar	333
100 pF	Ceramic	101	.047	Mylar	473
120 pF	Ceramic	121	.05	Mylar	503
130 pF	Ceramic	131	.056	Mylar	563
150 pF	Ceramic	151	.068	Mylar	683
180 pF	Ceramic	181	.1	Mylar	104
220 pF	Ceramic	221	.2	Mylar	204
330 pF	Ceramic	331	.22	Mylar	224
470 pF	Ceramic	471	.33	Mylar	334
560 pF	Ceramic	561	.47	Mylar	474
680 pF	Ceramic	681	.56	Mylar	564
750 pF	Ceramic	751	1	Mylar	105
820 pF	Ceramic	821	2	Mylar	205

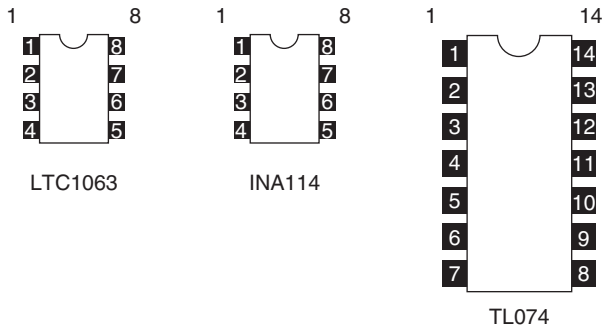

Figure 21-5 *Semiconductor pin-outs*

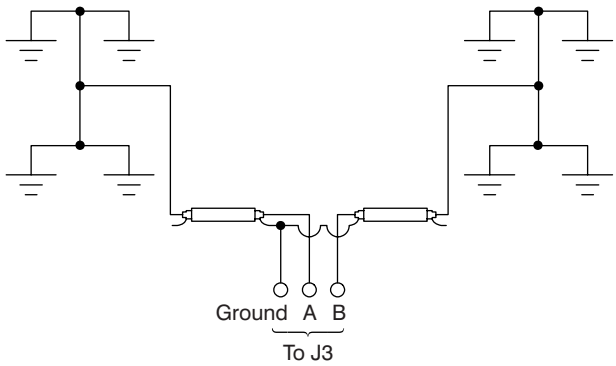

Figure 21-6 *ULF receiver antenna circuit*

the circuit board and on the bottom of the chassis. The diode bridge was placed on the circuit board, paying careful attention to the polarity of the diodes. You could elect to individual diodes or one of those four diode bridge rectifiers all in one package. If you choose the second option again you must observe the polarity of the plastic package. The AC input section will be marked with two wavy lines, the AC side has no polarity. The DC side of the bridge will have a plus (+) and a minus (–) marking. When installing the six capacitors be sure to observe polarity since four of them are electrolytic types. Note that there are two power supplies and the polarity placement orientation is different for the two power supply sections. The LM7805 is the plus voltage regulator, while the LM7905 regulator is the minus voltage regulator; don't mix them up, and take your time to install them at the correct locations to avoid damage to the circuit. A fuse was placed in series with the power switch to the transformer input leads. A power line-cord with a 110 volt plug was used to supply power to the transformer. Once the power supply circuit has been completed, you can carefully inspect the circuit board for any "cold" solder joints and "short" circuits before applying power for the first time.

The Ultra-Low Frequency Receiver requires an antenna "site" for proper operation. This is not the usual conventional type of antenna that you encounter with most receivers, since this is a special type of receiver project. The array is designed to be built completely underground. Space for construction is necessary and may be anywhere from 100 to 1000 linear feet, see Figure 21-6.

Due to the fact that we will be dealing with extremely long wavelengths on the order of miles rather than feet, you are going to need a little space. As long as you have a strip of property at least one 100 or more feet in length you will be able to detect the signals. There are several items of interest in determining your location. You will be building two arrays widely separated from each other. The further apart the better. Also if you have a choice, a damp location is better than dry rocky soil.

The first step in constructing your antenna/detector is to determine the magnetic orientation. Take an ordinary pocket compass and locate magnetic North. The line of sight between the two points should be aligned with North-South. The next step is to obtain some copper clad ground rods at least eight feet in length, put on some gloves and start driving one into the ground. We found that a standard metal fence post driver purchased from the local farm store was ideal for the job. It helps also to take a pair of post diggers and dig out a hole about 18″ deep. Then drive the rod down into the ground below the surface of the hole leaving enough room to make a connection.

Next measure out a distance as far as possible, at least 30 meters (98 ft) in a North or South direction and repeat the procedure above, driving a copper clad eight foot ground rod into the soil. Then connect the two widely spaced rods together using a length of wire. Obtain an ohmmeter, and open the wire conductor and measure the resistance. Make a note of the reading, then reverse the ohmmeter leads and measure again. Then take this reading, average it with the other reading and you will have a close indication of the DC resistance between the two probes (ground rods). Very likely, unless you have excellent soil conductivity in your area, the reading will be several thousand ohms. The point is to lower this reading as much as possible.

The lower the better. A workable resistance is 50 to 500 ohms but the ideal resistance would be around 5 to 10 ohms. In most cases, however, this would be unobtainable unless you used many ground rods or copper strapping at each end.

Keep adding rods at each probe site, spaced 20 feet apart from one another connected together with #6 copper bare wire, until the resistance gets down to between 25 and 500 ohms. Keep in mind two items. The further apart the probe sites, the lower the resistance, and the more rods driven into the ground, the lower the resistance. We have found that on the average, five grounds at each end of the site are sufficient to obtain this reading.

Another option rather than using ground rods, in rocky or extremely hard soil, you may use a ditch trencher and bury #6 or #4 copper wire at least 24 inches deep. The copper wire should be placed in an "X" fashion with a length of at least 25 feet. The lead cable will then be connected to the center point of the "X."

Now obtain a length of CATV lead in wire such as RG-11 or RG-59, from your local electronic parts store. A good source to try is the local Cable TV company. Sometimes they have lengths of scrap lying around their warehouse and will be happy to get rid of it. Connect the center conductor only (not the outside shield) to each antenna array using copper clamps. Take each piece of co-ax to the location of your receiver. Then install a suitable connector to the two ends. These two cables will be the input leads to the receiver. The shield should be connected to earth ground using a single copper clad ground rod. Do not use the power ground and make sure the ground connection is at least 20 feet from power ground.

With the ULF receiver, power supply and antenna constructed and ready to go, we just have one more detail left to complete our ELFRAD ULF monitoring station. The most expensive components will be the computer and analog-to-digital interface device. A PC type of computer is recommended using Windows 98, NT, Win2000, or XP software will work nicely. Since most of everyone owns a computer or laptop these days, the only thing left to be purchased is the A/D interface. The software for the A/D converter is available from the supplier of the A/D interface listed below. You will need at least a two channel A/D board, since it is recommended that you also record a short wave radio tuned to WWV, which keeps computer synched to within plus or minus 2 milliseconds. Also if desired, a GPS type of time standard is available. The A/D converter is available at http://seismicnet.com/ serialatod.html.

For more information on Earthquake monitoring you may finds these sites helpful.

ELFRAD Research Group

The low frequency radio research group, which provides support to interested researchers.
Helps researchers in correlating and comparing data.

http://www.elfrad.com/

Public Seismic Network

A seismic research group dedicated to earthquake monitoring.
Helps researchers in correlating and comparing data.

http://psn.quake.net/

Chapter 22

Jupiter Radio Telescope Receiver

Parts list

Jupiter Radio Telescope

R1 68 ohm

R2 294 ohm

R3 17.4 ohm

R4 294 ohm

R5 100 ohm

R6 2.2k ohm

R7 10k ohm linear potentiometer

R8 2.2k ohm

R9, R19 100k ohm

R10 220 ohm

R11 1.5k ohm

R12,R20,R21,R27 1k ohm

R13,R18 27k ohm

R14 100k ohm

R15 10k ohm potentiometer/ switch

R16 10k ohm

R17 1.5k ohm

R22,R23 2 ohm

R24 1 ohm

R25 220 ohm

R26 47 ohm

R28,R29,R30,R31,R32 10 ohm

C1 39 pF, 35v disk ceramic

C2 4-40 pF, variable capacitor

C3 56 pF, 35v disk ceramic

C4 22 pF, 35v disk ceramic

C5,C8,C11,C14 .01 mF, 35v dipped ceramic

C6 4-40 pF, variable capacitor

C7 not used

C9,C12,C13 47 pF, 35v disk ceramic

C10 270 pF, 35v disk ceramic

C15 10 pF, disk ceramic

C16,C24,C25 10 mF, 35 vdc, electrolytic

C17,C18,C21,C23,C26C29 .1 mF, 35v dipped ceramic

C19 1 mF, 35v metal polyester

C20,C22 0.068 mF, 35v 5% metal film

C27 10 mF, 35 vdc, tantalum, stripe,

C28 220 pF, 35v disk ceramic

C30,C31,C33 10 mF, 35 vdc, electrolytic

C32 330 mF, 35 vdc, electrolytic

C34,C35,C36 0.1 mF, 35v dipped ceramic

C37 10 pF, 35v disk ceramic

Copyright © 2008 by The McGraw-Hill Companies, Inc. Click here for terms of use.

C38 10 mF, 35 vdc, electrolytic

C39 100 mF, 35 vdc, electrolytic

C40,C41,C42,C43 0.1 mF, 35v dipped ceramic

C44 10 mF, 35 vdc, electrolytic

D1 1N4001

D2,D3 1N914

LED Red LED

VD1 MV209, varactor diode

ZD1 1N753, 6.2v, Zener diode, 400 mw

ZD2 1N5231, 5.1v, Zener diode, 500mw

L1 0.47 mH, (gold, yellow, violet, silver)

L2 1 mH, (brown, gold, black, silver)

L3 3.9 mH, (orange, gold, white, gold)

L4,L5 1.5 mH, adjustable inductor

L6,L7 82 mH, fixed inductor

Q1 J-310, junction field effect (JFET)

Q2 2N-3904, bipolar, NPN

Q3 2N-3906, bipolar, PNP

U1 SA602AN, mixer/oscillator IC

U2,U3 LM387 or NTE824 - audio pre-amplifier IC

OSC1 20 MHz crystal oscillator module

J1 Power jack, 2.1 mm

J2 F female chassis connector

J3,J4 3.5 mm stereo jack, open ckt

Misc PC Board, enclosure, knobs, solder lugs, wire

Jupiter is the fifth planet from the Sun and is the largest one in the solar system. If Jupiter were hollow, more than one thousand Earths could fit inside. It also contains more matter than all of the other planets combined. It has a mass of 1.9 × 1027 kg and is 142,800 kilometers (88,736 miles) across the equator. Jupiter possesses 28 known satellites, four of which—Callisto, Europa, Ganymede and Io—were observed by Galileo as long ago as 1610. Another 12 satellites have been recently discovered and given provisional designators until they are officially confirmed and named. There is a ring system, but it is very faint and is totally invisible from the Earth. (The rings were discovered in 1979 by Voyager 1.) The atmosphere is very deep, perhaps comprising the whole planet, and is somewhat like the Sun. It is composed mainly of hydrogen and helium, with small amounts of methane, ammonia, water vapor and other compounds.

Colorful latitudinal bands, atmospheric clouds and storms illustrate Jupiter's dynamic weather systems, see Figure 22-1. The cloud patterns change within hours or days. The Great Red Spot is a complex storm moving in a counter-clockwise direction. At the outer edge, material appears to rotate in four to six days; near the center, motions are small and nearly random in direction. An array of other smaller storms and eddies can be found throughout the banded clouds.

Auroral emissions, similar to Earth's northern lights, were observed in the polar regions of Jupiter. The auroral emissions appear to be related to material from Io that spirals along magnetic field lines to fall into Jupiter's atmosphere. Cloud-top lightning bolts, similar to super-bolts in Earth's high atmosphere, were also observed.

The Jupiter Radio Telescope is a special shortwave receiver which will pick up radio signals from the planet Jupiter and also from the Sun, and it is a very exciting project, see Figure 22-2. This project will allow

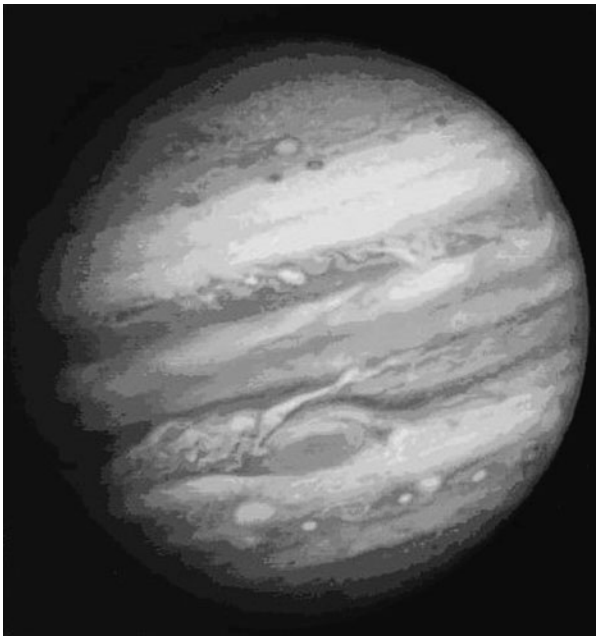

Figure 22-1 *Jupiter*

you to do amateur research into radio astronomy in your own back yard.

Radio signals from Jupiter are very weak—they produce less than a millionth of a volt at the antenna terminals of the receiver. These weak radio frequency (RF) signals must be amplified by the receiver and converted to audio signals of sufficient strength to drive headphones or a loudspeaker. The receiver also serves as a narrow filter, tuned to a specific frequency to hear Jupiter while at the same time blocking out strong Earth based radio stations on other frequencies. The receiver and its accompanying antenna are designed to operate over a narrow range of shortwave frequencies centered on 20.1 MHz (megahertz). This frequency range is optimum for hearing Jupiter signals.

The block diagram shown in Figure 22-3 illustrates the various components of the Jupiter Radio Telescope. First shown the antenna intercepts weak electromagnetic waves which have traveled some 500 million miles from Jupiter to the Earth. When these electromagnetic waves strike the wire antenna, a tiny RF voltage is developed at the antenna terminals. Signals from the antenna are delivered to the antenna terminals of the receiver by a coaxial transmission line. Next the signals are delivered to the RF Bandpass Filter and Preamplifier, they are filtered to reject strong out-of-band interference and are then amplified using a junction field effect transistor (JFET). This transistor and its associated circuitry provide additional filtering and amplify incoming signals by a factor of 10. The receiver input circuit is designed to efficiently transfer power from the antenna

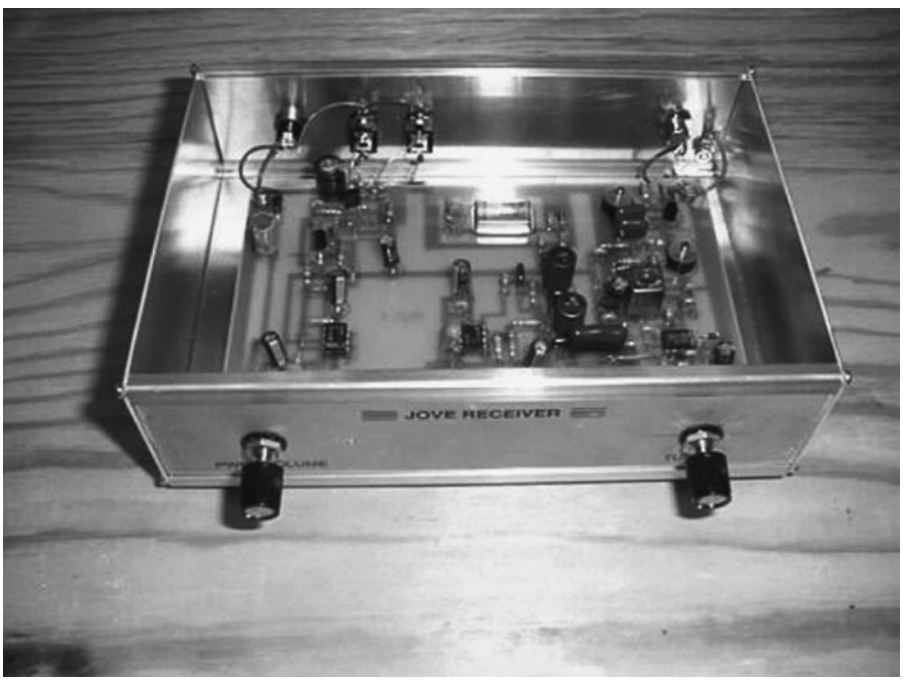

Figure 22-2 *Radio Jupiter receiver project*

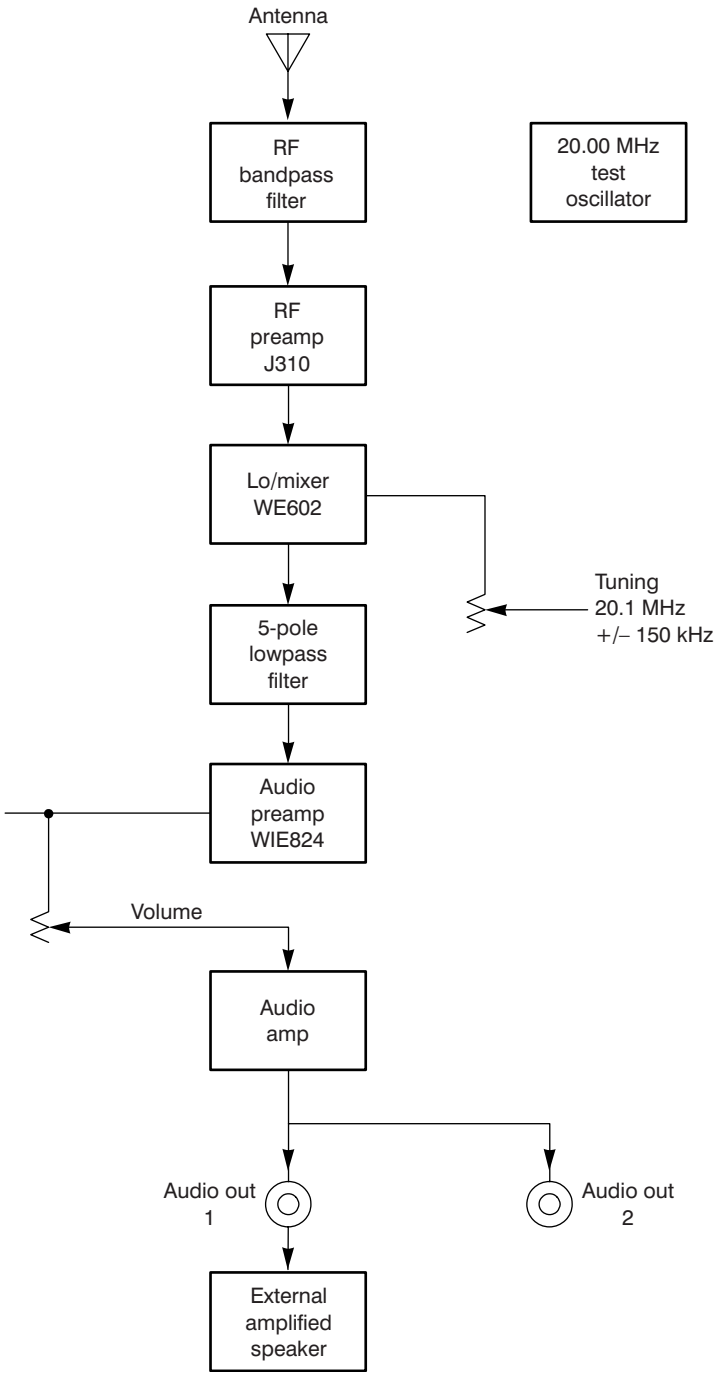

Figure 22-3 *Jupiter radio block diagram*

to the receiver while developing a minimum of noise within the receiver itself.

Next the signals move to the local oscillator (LO) and mixer to perform the important task of converting the desired radio frequency signals down to the range of audio frequencies. The local oscillator generates a sinusoidal voltage wave form at a frequency in the vicinity of 20.1 MHz. The exact frequency is set by the front panel tuning control. Both the amplified RF signal from the antenna and the LO frequency are fed into the mixer. The mixer develops a new signal which is the arithmetic difference between the LO and the incoming signal frequency. Suppose the desired signal is at 20.101 MHz and the LO is tuned to 20.100 MHz.

The difference in frequency is therefore 20.101–20.100 =.001 MHz, which is the audio frequency of 1 kilohertz. If a signal were at 20.110 MHz, it would be converted to an audio frequency of 10 kHz. Since the RF signal is converted directly to audio, the radio is known as a direct conversion receiver.

To eliminate interfering stations at nearby frequencies, a low pass filter is next used, which is like a window, a few kilohertz wide through which Jupiter signals can enter. When listening for Jupiter or the Sun, the radio will be tuned to find a "clear channel." Since frequencies more than a few kilohertz away from the center frequency may contain interfering signals, these higher frequencies must be eliminated. This is the purpose of the low pass filter following the mixer. It passes low (audio) frequencies up to about 3.5 kHz and attenuates higher frequencies.

Finally the low pass filter feeds an audio amplifier stage which takes the very weak audio signal from the mixer and amplifies it enough to drive headphones directly, or to drive an external amplified speaker assembly.

Circuit diagram

We have already seen a block diagram of the Jupiter radio receiver which shows the radio as a group of functional blocks connected together. While this type of diagram does not show individual components like resistors and capacitors, it is useful in understanding signal flow and the various functions performed within the radio. The next level of detail is the schematic diagram. A schematic is used to represent the wiring connections between all of the components which make up a circuit. The schematic diagram uses symbols for each of the different components rather than pictures of what the components actually look like.

A schematic diagram of the complete receiver is seen in Figure 22-4. On this schematic, the part types are numbered sequentially. For example, inductors are denoted L1 through L7, and resistors are denoted R1 through R31. Signal flow as shown in the schematic is as follows. The signal from the antenna connector (J2) is coupled to a resonant circuit (bandpass filter L1, C2, C3) and then to the J-310 transistor (Q1), where it is amplified. The output of the J-310 goes through another resonant filter (L3, C6) before being applied to the resonant input circuit (L4, C9, C10) of the SA602 integrated circuit (U1), which serves as the local oscillator and mixer. The center frequency of the local oscillator is set by inductor L5 and adjusted by the tuning control R7. The audio output from U1 passes through the lowpass audio filter (L6, L7, C20, C21, and C22). The audio signal is next amplified by U2 (an NTE824) before going to the volume control R15. The final audio amplifier stages comprise U3 (another NTE824), and the output transistors Q2 (2N-3904) and Q3 (2N-3906). After the receiver has been assembled, the variable capacitors C2 and C6 and variable inductors L4 and L5 will be adjusted to tune the receiver for operation at 20.1 MHz.

PC board assembly

Before we begin building the circuit, take a few minutes to locate a clean well lit work table or work bench. You will want to locate a small 27 to 33 watt pencil-tipped soldering iron, a roll of 60/40 tin/lead rosin core solder, and a small jar of "Tip Tinner," a soldering iron tip cleaner/dresser. "Tip Tinner" is available at a local Radio Shack store. You will also need some small hand tools, such as a small flat-blade screwdriver, a Phillips screwdriver, a pair of small needle-nose pliers, a pair of tweezers, a magnifying glass and pair of end-cutters.

Once you have gathered all the tools, locate all the circuit diagrams, such as the schematics, the parts layout diagram, the resistor and capacitor code charts, etc. Place all the component parts along with all your tools and diagrams in front of you, warm up your solder iron and we will start building the Radio Jupiter receiver project.

First we will identify the resistors for the project. Refer to the chart shown in Table 22-1, which will help you to identify the resistor color codes. Resistors usually have three or four color bands on the body of the resistor which denotes the resistor value. The color bands begin at one end of the resistor body close to the edge. The first color band on resistor R1 is blue, this denotes the digit six (6). The second color band is

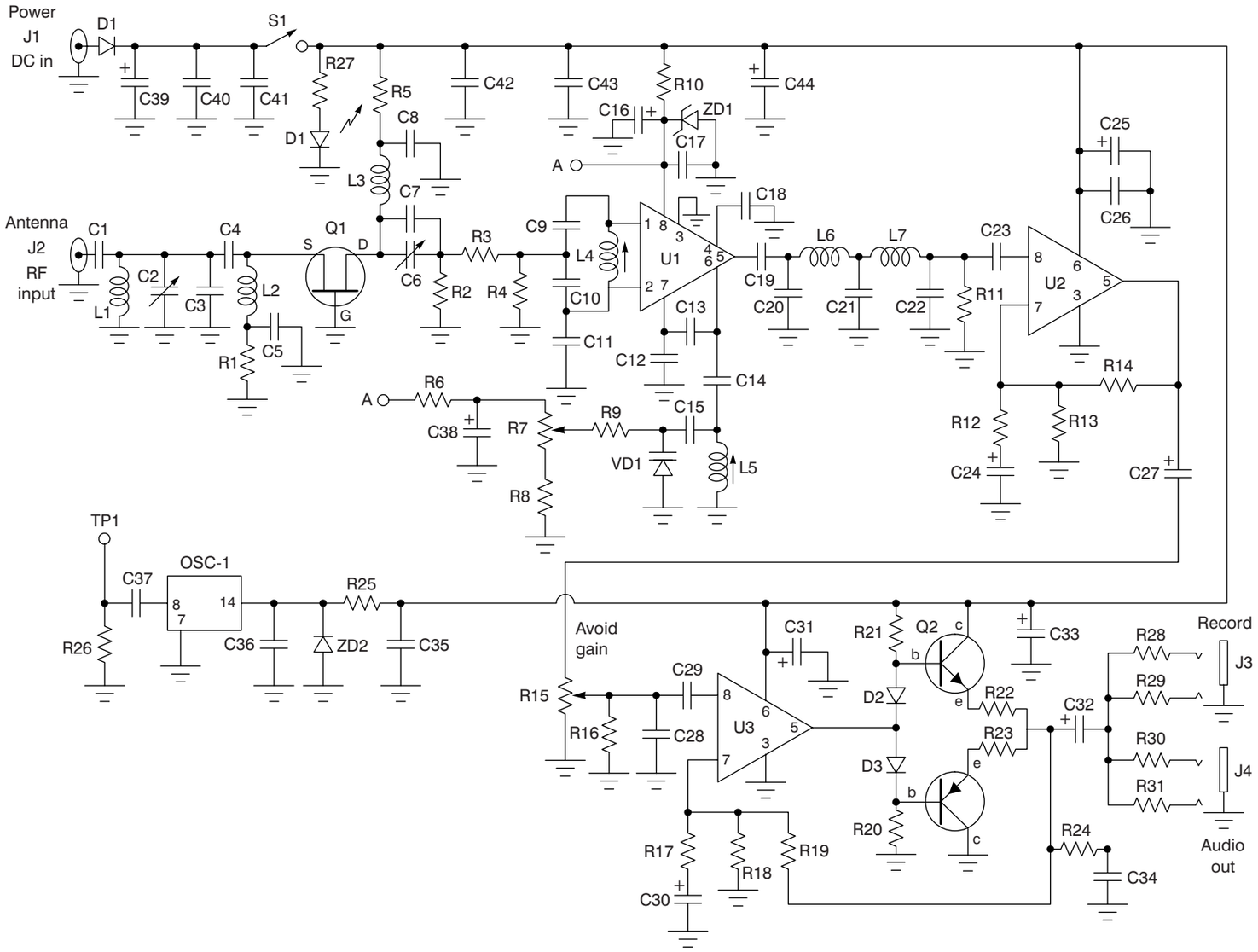

Figure 22-4 *Radio Jupiter receiver schematic*

Table 22-1
Resistor color code chart

Color Band	*1st Digit*	*2nd Digit*	*Multiplier*	*Tolerance*
Black	0	0	1	
Brown	1	1	10	1%
Red	2	2	100	2%
Orange	3	3	1,000 (K)	3%
Yellow	4	4	10,000	4%
Green	5	5	100,000	
Blue	6	6	1,000,000 (M)	
Violet	7	7	10,000,000	
Gray	8	8	100,000,000	
White	9	9	1,000,000,000	
Gold			0.1	5%
Silver			0.01	10%
No color				20%

gray, which is the digit number eight (8) and the third color band is the resistor's multiplier value which is black and this suggests a multiplier value of 1. So the resistor value for R1 is (6) times (8) times (1) or 68 ohms. The tolerance value of a resistor is noted in the fourth color band. A fourth color band which is silver is a 10% tolerance resistor, while a gold fourth band denotes a 5% tolerance value. If there is no fourth color band then the resistor will have a 20% tolerance value. Next, locate R2, R3 and R4, then check your parts layout diagram and the schematic to see where these resistors are to be placed on the circuit board. Once you verify where the resistors are placed, you can install these resistors on the circuit board and solder them in place on the board. Now locate your end-cutter and trim the excess component leads. Cut the extra component lead lengths flush to the edge of the circuit board. Now go ahead and identify another group of three or four resistors and place them on the circuit board. Once you are sure of their respective locations you can solder the next grouping of resistors onto the circuit board, remember to trim the excess component leads from the board. Place all the remaining resistors on the circuit board and solder them all in place, trim the extra leads as necessary.

Now we will move on to installing the capacitors for the Radio Jupiter receiver project. Capacitors come in two major flavors, non-polarized and polarized types. First, we will talk about non-polarized capacitors. Usually non-polarized capacitors are smaller value types which could take form as ceramic disks, mica, tantalum or polyester types. Often the capacitors are small in size and frequently the capacitor values are printed as three-digit codes rather than their actual values, since this code system takes less space to print. We have included a chart in Table 22-2, which lists the actual capacitor values and their respective codes. For example, a capacitor with a value of .001 µF will have a code designation of 102, a .01 µF capacitor will have 103 and a 0.1 µF capacitor will have a code of 104 marked on it. The Radio Jupiter project has a number of non-polarized type capacitors which you will need to install. Take a look through the component pile and see if you can identify the small non-polar capacitors before attempting to install them on the PC board.

Polarized capacitors are called electrolytic capacitors, they are often larger in physical size. Electrolytic capacitors will always have some sort of polarity marking on them. You will see either a black or white band or a plus (+) or minus (–) marking somewhere on the capacitor body. It is very important that you install these types of capacitors with respect to their polarity in order for the circuit to work properly and to not be damaged upon power-up. You will need to refer to the

Table 22-2

Capacitance code information

This table provides the value of alphanumeric coded ceramic, mylar and mica capacitors in general. They come in many sizes, shapes, values and ratings; many different manufacturers worldwide produce them and not all play by the same rules. Some capacitors actually have the numeric values stamped on them; however, many are color coded and some have alphanumeric codes. The capacitor's first and second significant number IDs are the first and second values, followed by the multiplier number code, followed by the percentage tolerance letter code. Usually the first two digits of the code represent the significant part of the value, while the third digit, called the multiplier, corresponds to the number of zeros to be added to the first two digits.

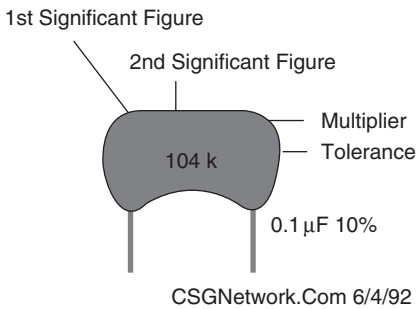

Value	*Type*	*Code*	*Value*	*Type*	*Code*
1.5 pF	Ceramic		1,000 pF /.001 µF	Ceramic / Mylar	102
3.3 pF	Ceramic		1,500 pF /.0015 µF	Ceramic / Mylar	152
10 pF	Ceramic		2,000 pF /.002 µF	Ceramic / Mylar	202
15 pF	Ceramic		2,200 pF /.0022 µF	Ceramic / Mylar	222
20 pF	Ceramic		4,700 pF /.0047 µF	Ceramic / Mylar	472
30 pF	Ceramic		5,000 pF /.005 µF	Ceramic / Mylar	502
33 pF	Ceramic		5,600 pF /.0056 µF	Ceramic / Mylar	562
47 pF	Ceramic		6,800 pF /.0068 µF	Ceramic / Mylar	682
56 pF	Ceramic		.01	Ceramic / Mylar	103
68 pF	Ceramic		.015	Mylar	
75 pF	Ceramic		.02	Mylar	203
82 pF	Ceramic		.022	Mylar	223
91 pF	Ceramic		.033	Mylar	333
100 pF	Ceramic	101	.047	Mylar	473
120 pF	Ceramic	121	.05	Mylar	503
130 pF	Ceramic	131	.056	Mylar	563
150 pF	Ceramic	151	.068	Mylar	683
180 pF	Ceramic	181	.1	Mylar	104
220 pF	Ceramic	221	.2	Mylar	204
330 pF	Ceramic	331	.22	Mylar	224
470 pF	Ceramic	471	.33	Mylar	334
560 pF	Ceramic	561	.47	Mylar	474
680 pF	Ceramic	681	.56	Mylar	564
750 pF	Ceramic	751	1	Mylar	105
820 pF	Ceramic	821	2	Mylar	205

schematic and parts layout diagrams when installing electrolytic capacitors to make sure that you have installed them correctly. The plus (+) marking on the capacitor will point to the most positive portion of the circuit.

Let's go ahead and identify the non-polarized capacitors first. Check the capacitor code chart and make sure that you can identify each of the non-polarized capacitors. In groups of two or three capacitors install them on the PC board. When you have determined that you have the installed the correct values into their respective location on the circuit board, you can solder the capacitors in place on the board. Remember to trim the excess capacitor leads from the circuit board. Once you have the first grouping of capacitors installed you can move on to installing another group of non-polarized capacitors, until you have installed all of the non-polarized capacitors.

Next, find the electrolytic capacitors from the parts pile and we will install them in their proper locations. Refer now to the schematic and parts layout diagrams so that you can orient the capacitors correctly when mounting them on the PC board. Install two or three electrolytic capacitors and then solder them in place on the PC board. Remember to cut the extra lead lengths flush to the PC board. Identify and install the remaining electrolytic capacitors on the board and solder them in place. Trim the component leads as necessary.

In order to avoid damaging the receiver, it is important to install the capacitors, diodes as well as the semiconductors with respect to proper polarity marking on each of the components. Electrolytic capacitors have either a plus or minus marking on them and must be installed correctly by observing the polarity of the capacitor with respect to the PC board.

Next, we will install the semiconductors. Locate the semiconductor pin-out diagram shown in Figure 22-5, which will help you install the semiconductor devices properly. There are a number of diodes in the Radio Jupiter project, including Zener and varactor diodes and they all have polarity. In order for the circuit to work properly, these devices must be installed with respect to their polarity. Diodes will generally have a white or black colored band at one edge of the diode body. The band usually denotes the cathode end of the diode. Transistors generally have three leads—a Base, Collector and Emitter; pay particular attention to these leads when installing the transistors. Integrated circuits always have some type of markings which indicate their orientation. You will find either a plastic cut-out on the top of the integrated circuit package or an indented circle next to pin 1 of the IC. Be sure to use these markings when installing the integrated circuits. It is a good idea to incorporate integrated circuit sockets as a low cost insurance policy, in the event of a circuit failure, if it ever happens. It is much easier to remove an old dead IC, and simply insert a new one rather than trying to undo many pins and risk damage to the circuit board.

There are a number of coils in this project, and although there is no polarity to the coils, you will need

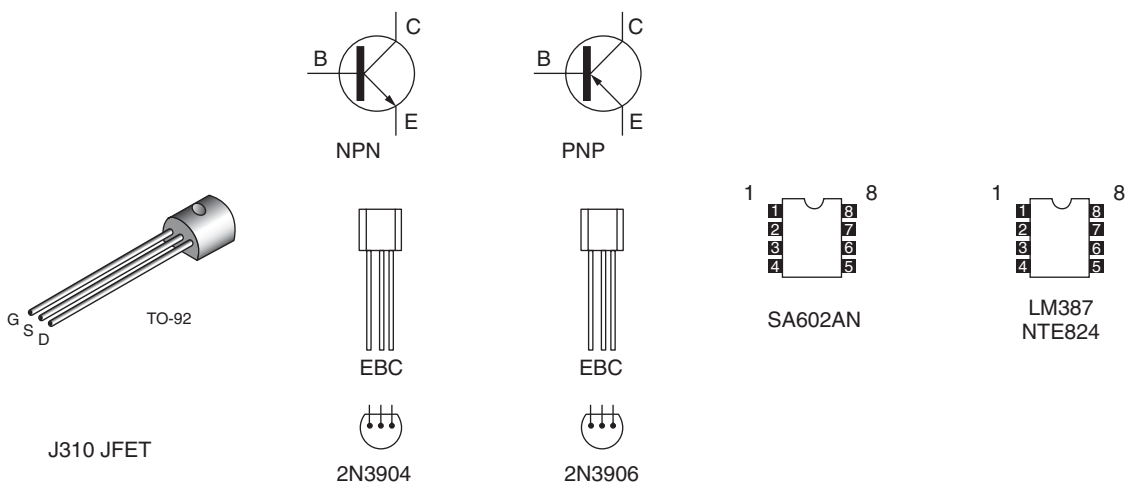

Figure 22-5 *Semiconductor pin-outs*

to pay attention to the values of the coils as well as which ones are adjustable and which are fixed before installing them on the PC board. Note, on the schematic there are two points marked (A), one is at R6 and the other at C16, both of these points are connected together. Note, there is a test point marked (TP1) at the OSC-1 module which can be used to ensure that the oscillator module is working correctly.

Power is brought to the circuit via the coaxial power input jack at J1. The antenna connection is shown at J2. This connector can be either a BNC or an "F" type chassis mounted connector. The receiver circuit has two audio output jacks both at J3 and J4. Two circuits of mini ⅛″ stereo jacks were used in the prototype.

Once the printed circuit has been assembled, you will need to recheck the solder joints to make sure they are smooth and that there are no cold solder joints. Also observe the PC circuit lines to ensure that there are no bridges or "shorts" formed by cut component leads. Once the circuit has been checked, you are ready to install the circuit board in the chassis.

A metal enclosure was chosen, since this is a sensitive RF receiver and you will want to keep outside interference from affecting the circuit operation, see Figure 22-2. You will have to wire the four jacks J1 through J4 to the circuit board. We elected to mount the power and antenna jacks on the rear panel of the chassis box. One audio jack was mounted on the front panel, while the second audio jack was mounted on the rear chassis panel. The power switch S1 was wired to the PC and mounted on the front panel of the receiver along with the power indicating LED. The tuning control R7 and volume control R15 were both mounted on the front panel of the chassis box.

Once you are satisfied that your circuit board is wired correctly. You are ready to apply power to the circuit and begin testing the circuit for proper operation.

Testing and alignment

The receiver requires 12 volts DC (vdc) which may be obtained from a well regulated power supply or from a battery. Current drain is approximately 60 milliamps (ma). The power cable supplied with the kit has a female power plug on one end and stripped leads on the other. Notice that the power cable has a black stripe, or tracer, along one of the wires. This is the wire that is connected to the center conductor of the plug and must be connected to the (+) side of the power source. The Radio Shack RS 23-007 (Eveready) 12 volt battery or equivalent is suitable.

Next, turn the Jupiter receiver's power switch to OFF. Connect either headphones or an amplified speaker (Radio Shack 277-1008C or equivalent) to the receiver audio output (J3 or J4). These jacks accept 3.5 mm (⅛″) monaural or stereo plugs.

If you are using a Radio Shack amplified speaker, turn it ON and adjust the volume control *on the speaker* up about ⅛ turn. If you are using headphones, hold them several inches from your ear as there may be a loud whistle due to the internal test oscillator. Turn the receiver ON. The LED should light. Set the volume control to the 12 o'clock position. Allow the receiver to "warm-up" for several minutes.

Set the TUNING control to the 10 o'clock position. *Carefully* adjust inductor L5 with the white tuning stick until a loud low frequency tone is heard in the speaker (set volume control as desired). *Caution*: Do not screw down the inductor slugs too far, as the ferrite material could crack. By adjusting L5 to hear the tone, you are tuning the receiver to 20.00 MHz. The signal which you hear is generated in OSC1, a crystal controlled test oscillator built into the receiver. Once L5 has been set, DO NOT readjust it during the remainder of the alignment procedure. (When the receiver tunes 20.00 MHz with the nob set to the 10 o'clock position it will tune 20.1 MHz with the knob centered on the 12 o'clock position.) The following steps involve adjusting variable capacitors (C2 and C6) and a variable inductor (L4) to obtain the maximum signal strength (loudest tone) at the audio output. For some, it is difficult to discern slight changes in the strength of an audio tone simply by ear. For this reason three different methods are described, each using a form of test instrument. In the event that no test equipment is available, then a fourth method—simply relying on the ear—is possible. In all cases, adjust the receiver tuning knob so that the audio tone is in the range of about 500 to 2000 Hz. Use procedure A as a method to use in

tuning up your receiver. Procedures B-D are optional tuning methods.

If no test equipment is available, then simply tune by ear for the loudest audio signal. Listen to the tone and carefully adjust the tuning knob to keep the pitch constant. If the pitch changes during the alignment, it indicates that the receiver has drifted off frequency. As you make adjustments, the signal will get louder. Reduce the receiver volume control as necessary to keep the tone from sounding distorted or clipped.

To test the receiver on the air, simply connect the antenna. For best performance, use a 50 ohm antenna designed to operate in the frequency range of 19.9–20.2 MHz. At certain times of the day, you should be able to hear WWV or WWVH on 20.000 MHz. These are standard time and frequency stations, located in Colorado and Hawaii, which broadcast the time of day as well as other information related to propagation and solar-terrestrial conditions. The Jupiter Radio Telescope direct conversion receiver design does not allow clear reception of amplitude modulated (AM) stations like WWV, so the voice will probably be garbled, unless you tune very precisely. The receiver does work well on single sideband (SSB) signals and code (CW).

In the event that the Jupiter receiver does not appear to work, you will need to disconnect the power supply and antenna and examine the circuit board for errors. The most common cause for building errors are the incorrect installation of the electrolytic capacitors and diodes which may have been installed backwards, since the components have polarity which must be observed. Another possible cause for errors are the incorrect placement of resistors. Often color codes are read wrong and the wrong resistor may be installed at a particular location. Finally one of the most common causes for errors is the incorrect installation of transistors and integrated circuits. Make sure that you can identify the manufacturer's pin-out diagrams and pay particular attention to if the pin-outs are for top or bottom views. Have a knowledgeable electronics enthusiast help you scan the circuit for possible mistakes; a second pair of eyes always helps to find errors you may have missed as the builder. Once you have located and fixed the problem, you can apply power and re-test the circuit for proper operation.

The jupiter radio telescope antenna

The antenna intercepts weak electromagnetic waves that have traveled some 500 million miles from Jupiter to the Earth or 93 million miles from the Sun. When these electromagnetic waves strike the wire antenna, a tiny radio frequency (RF) voltage is developed at the antenna terminals. A basic dipole antenna is shown in Figure 22-6. The recommended antenna for the Jupiter Radio Telescope is the dual dipole shown in Figure 22-7. Signals from each single dipole antenna are brought together with a power combiner via two pieces of coaxial cable. The output of the power combiner is delivered to the receiver by another section of coaxial transmission line. The antenna system requires a fair-sized area for setup: minimum requirements are a 25 × 35 ft. flat area that has soil suitable for putting stakes into the ground. As the antenna system is sensitive to noise it is best not to set it up near any high tension power lines or close to buildings. Also for safety reasons, please keep the antenna away from power lines during construction and operation. The best locations are in rural settings where the interference is minor. Since many of the observations occur at night it is wise to practice setting up the antenna during the day to make sure the site is safe and easily accessible.

If you want to locate your receiver indoors and your antenna is outside or on the rooftop, and your antenna lead will not reach, you must use a longer

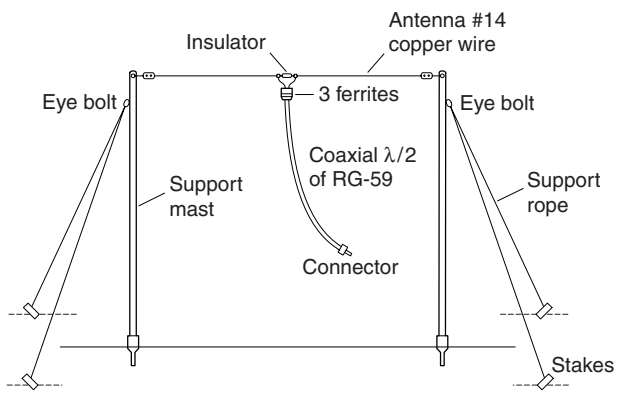

Figure 22-6 *Basic dipole antenna diagram. Courtesy Wes Greenman, Charles Higgins*

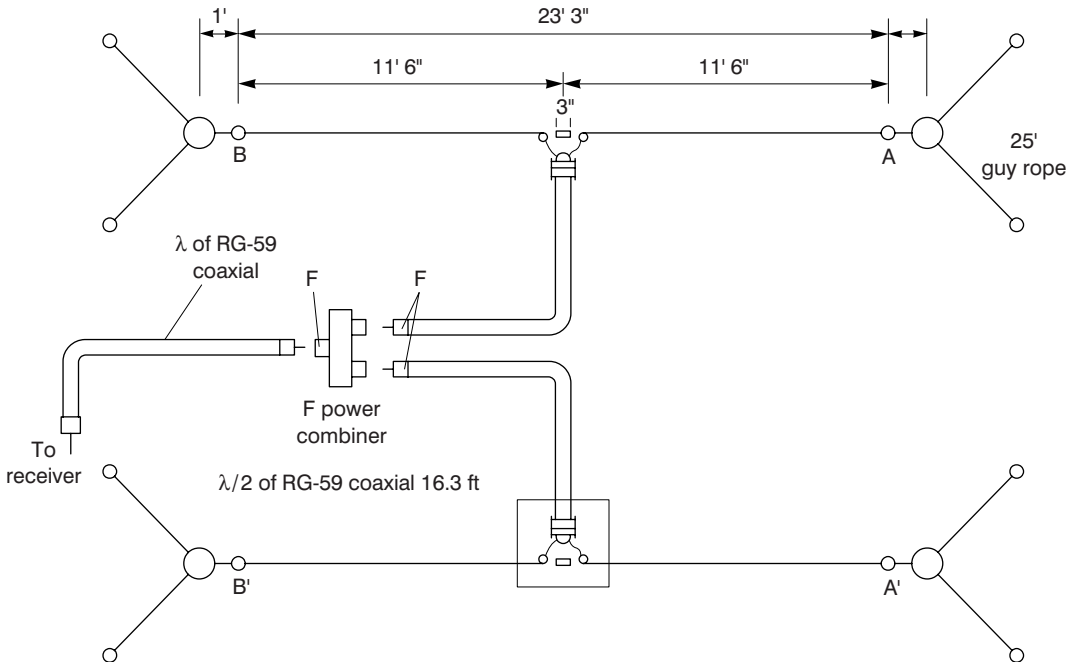

Figure 22-7 *Antenna combiner diagram. Courtesy Wes Greenman, Charles Higgins*

coax cable. Do not use just any length of coax for the combiner assembly. The cable going from the power combiner harness assembly to the receiver should be a multiple half wavelength long. The cable supplied with the kit is one wavelength—that is 9.85 meters long (taking into account the 66% velocity factor of the RG-59/U cable). The maximum recommended cable length is 5 wavelengths. There are many different manufacturers and qualities of coaxial cable. The 75 ohm cable supplied with the kit is manufactured by Belden and has a solid center conductor and velocity factor of 66%. Radio Shack does not carry RG-59/U cable but they do have RG- 6 and the higher grade RG-6QS (quad shield), which is also 75 ohm cable. Both of these cables have a velocity factor of 78%. One wavelength at 20.1 MHz in RG-6 cable is 11.64 meters. If you are going to put in a longer feedline we recommend that you completely replace the existing one wavelength piece—rather than splicing another length of cable onto the end.

Observing tips—jupiter's radio emissions

Most Jovian radio storms, received with the Jupiter radio telescope, will likely not be very strong. You will need to maximize your chances of receiving the Jovian storms by picking the best opportunities, selecting a good observing site, and using good observing techniques.

During the daytime, the Earth's Ionosphere blocks Jupiter's radio emissions, so therefore you will have to confine your investigations to night time listening. Radio noise from electrical sources, such as power lines, fluorescent lights, computers, and motors, can mask the signals from Jovian storms.

If possible, try to select an observing sight away from buildings and power lines, also try to use portable power supplies such as a battery power supply. Note that Jovian radio storms may be short in duration, so persistence and luck are needed to capture Jupiter's radio signals.

Night time observing from a temporary field setup can be dangerous, so PLAN CAREFULLY!! Get permission in advance to use the site, set up before dark, and use caution when walking around the site at night. The Jupiter Radio Telescope has two audio outputs, one channel can be used for ordinary listening and the second output jack can be used for recording. You can elect to use a portable audio tape recorder, however, note that nearly all common portable tape recorders use an automatic recording level control circuit (ALC). The ALC can mask the variations in the Jovian L bursts.

Use a tape recorder that allows you to SWITCH OFF the ALC. Keep the ALC turned off.

Another alternative for recording Jovian storms is the use of a computer or laptop to record the signals from your Jupiter radio telescope. Using a laptop computer to record the Jovian storms has the distinct advantage that you can analyze the audio recording with special spectral software which can help you make sense of the complex signals received.

Note you could also elect to use an audio tape recorder to record the Jovian signals in the field and later when you return home play the tape recording into your laptop or personal desktop computers. There are many audio analyzing software programs out there on the Internet, many are free. Many programs allow FTT and frequency division analysis.

Chapter 23

Weather Satellite Receiver

Parts list

Weather Satellite Receiver

R1 22 ohm, ¼watt, 5% resistor

R2 150 k ohm, ¼watt, 5% resistor

R3 110 k ohm, ¼watt, 5% resistor

R4,R10,R11 22 k ohm, ¼watt, 5% resistor

R5 47 k ohm, ¼watt, 5% resistor

R6 1.8 k ohm, ¼watt, 5% resistor

R7 360 ohm, ¼watt, 5% resistor

R8 100 ohm, ¼watt, 5% resistor

R9 470k ohm, ¼watt, 5% resistor

R12,R13,R16,R27 1 k ohm, ¼watt, 5% resistor

R14 240 ohm, ¼watt, 5% resistor

R15 1.2 k ohm, ¼watt, 5% resistor

R17 5.6 k ohm, ¼watt, 5% resistor

R18 39 k ohm, ¼watt, 5% resistor

R19,R21 10 k ohm, ¼watt, 5% resistor

R20,R31 2.2 k ohm, ¼watt, 5% resistor

R22 100 k ohm, ¼watt, 5% resistor

R23 220 ohm, ¼watt, 5% resistor

R24 390 k ohm, ¼watt, 5% resistor

R25 10 ohm, ¼watt, 5% resistor

R26 1.5 k ohm, ¼watt, 5% resistor

R28 4.7 k ohm, ¼watt, 5% resistor

R29 300 ohm, ¼watt, 5% resistor

R30 47 ohm, 14watt, 5% resistor

VR1 50 k linear pot, 16mm PC board mount

VR2 25 k linear pot, 16mm PC board mount

VR3 50k log pot, 16mm PC board mount

VR4,VR5 50 k 10-turn trimpots, PC board mount

C1,C2,C3,C5 2.2 nF, 16v, disk ceramic capacitor

C6,C7,C8,C12 2.2 nF, 16v, disk ceramic capacitor

C4,C10 3-10 pF trimcaps

C9 1 nF, 16v, disk ceramic capacitor

Copyright © 2008 by The McGraw-Hill Companies, Inc. Click here for terms of use.

C11,C34,C35 10µF, 16v tantalum capacitor

C13,C27 10pF, 16v, NPO ceramic capacitor

C14,C19,C21,C23,C25 10nF, 16v, mono ceramic capacitor

C15,C16 15pF, 16v, NPO ceramic capacitor

C17 10µF, 35v Tantalum capacitor

C18a,C18b,C20,C22 100nF, 16v, mono ceramic capacitor

C24,C26,C28,C32 100nF, 16v, mono ceramic capacitor

C29 390pF, 16v, NPO ceramic capacitor

C30 4,7nF,16v, metal polyester capacitor

C31 1nF, 16v, metal polyester capacitor

C33 470nF, 16v, metal polyester capacitor

C36 330µF, 16v, electrolytic capacitor

C37 47nF, 16v, metal polyester capacitor

C38 22nF,16v, metal polyester capacitor

C39 2200µF, 25v, electrolytic capacitor

C40 470µF, 35v, electrolytic capacitor

RFC1 4.3µH slug tuned coil – see Table 23-3

RFC2 10µH slug tuned coil – prewound

RFC3 68µH slug tuned coil – prewound

L1 see Table 23-3

L2 see Table 23-3

L3 see Table 23-3

L4 see Table 23-3

D2 5.1V 400mW Zener diode

D3,D4 3mm red LED

D1 ZMV833ATA varicap

X1,X2 5.5MHz ceramic filters, Murata SFTRD5M50AF00-B0

Q1 BF998 dual-gate MOSFET

Q2 PN100 NPN transistor

U1 SA605D mixer/IF amplifier/FM detector

U2 TL072 dual op-amp

U3 LM386 audio amp

U4 78L05 +5V regulator

J1,J2 BNC type jacks

J3 ⅛, 3.5mm stereo headphone jack

J4 1 2.5mm concentric power socket, PC-mount

S1 SPDT miniature toggle switch

Misc PC board (double-sided, not plated through)

TO-220 heatsink,

1 coil former, 4.83mm OD with F16 ferrite slug

1 F29 ferrite bead (for RFC1)

1 short length of 0.8mm tinned copper wire for L1

1 length of 0.8mm enameled copper wire for L2, L3

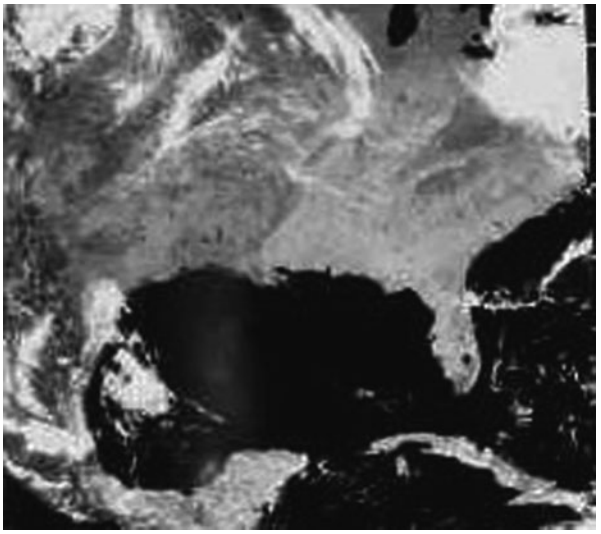

Figure 23-1 *Satellite view – USA*

The days of guessing the weather by looking at the clouds overhead have just ended. Now you can look at the clouds from above! This satellite receiver/decoding project will allow you to receive pictures from satellites 600 km overhead, see Figure 23-1. A typical NOAA satellite can cover nearly one-sixteenth of the Earth in a single pass! Living in New York, for example, we can clearly capture images from mid-Hudson bay (where there was still ice in late spring), all the way down past Cuba, as well as spanning from Wisconsin to far out in the Atlantic Ocean. The clarity of the image was enough to see the individual Finger Lakes (in New York), and shadows on the underside of thunderstorms. With the weather satellite receiver and a personal computer, you can easily receive and decode weather satellite pictures from overhead satellites.

The US National Oceanographic and Atmospheric Administration (NOAA) operates both GEO and LEO polar satellites. Here we concentrate primarily on the polar orbiters. The NOAA polar satellites orbit at 850 km and pass within view of all areas on Earth at least twice day. The satellite carries a number of instruments including cameras for both visible and infrared light.

The cameras scan back and forth at right angles to the ground path, like a broom sweeping side-to-side as you walk forward, taking picture strips that cover an area 3000 km wide. The satellite thus makes a continuous picture as if it were a tape reeling out from an endless roll. The image, however, is not recorded on the satellite. Each image strip is immediately broadcast to the ground at a frequency just above 137 MHz. The satellite will be in range for up to 12 minutes as the satellite passes from horizon to horizon.

The broadcast uses the APT (Automatic Picture Transmission) analog format for the imagery. (A digital format High Resolution Picture Transmission (HRPT) signal is also transmitted but it is more difficult to receive and decode and we did not try to receive it in this project.) Currently, there are six operational NOAA polar orbiters but usually only two or three have the APT activated at a given time. (In this report, only images from NOAA-14 and NOAA-15 were received.) See NOAA satellite status.

The Russian METEOR series of satellites also broadcast with the APT format. In addition, the remote sensing SICH and OKEAN radar satellites occasionally broadcast images but only over Russia (scanners in nearby countries have picked up some of these images).

The APT system

The APT satellites give about 12 good images a day, wherever you are in the world. The resolution is 4 km per pixel and there are visible and infrared sensors. This is a simple system where the satellite is in low Earth orbit and very easily received at 137 MHz. The two frequencies in main use are 136.50 for NOAA 12 and 15 and 137.62 MHz for NOAA 14. A simple crossed dipole antenna can be used, or for marine use a stainless steel quadrifilar helix antenna. These simple omni-directional antennas do not need moving or tracking to receive the satellite. The satellite is so strong that when is about 20° above the horizon perfect results will be obtained. The APT signal is easily recognizable by its modulated frequency (FM) and carrier tonality ranging between 1500 and 2500 Hz. New satellites have a 2400 Hz carrier like this NOAA 14 APT signal.

In APT mode, satellites transmit at the rate of 120 LPM (lines per minute) alternating two channels, one for the visible image, the other for the infrared image. This is through the decoding software that you select one or another channel.

Russian weather satellites only transmit infrared images at 120 LPM. The sound of their transmission is

thus slightly different from the other weather satellites like on this record of a RESURS 01-N4 signal with an IOC of 382. On their side, METEOR 3-05 uses a higher carrier closer to 2500 Hz with an IOC of 382 as well.

The WX satellite receiver project will allow you to receive weather satellite transmissions on the VHF band, where most of the polar-orbiting satellites are located. You will recognize these transmissions on the news when you see the time lapse of the clouds darting across the countryside. The weather man in this case has taken multiple images on the computer, aligned and pieced them together, and then run through one image after the other. It is possible to do this same thing with this kit and the proper software.

The way in which a weather satellite works is fairly simple. Just think of your office fax machine as an example. The satellites circle the Earth going north to south back to north again almost directly over the poles, which is why they call it a polar orbit. This means that the satellite will cover every location on the Earth at least twice per day. With a good antenna, and partly because of overlap of consecutive orbits, you can conceivably receive the same satellite up to six times a day! Notice though that the image received from polar orbits will be upside down on every other pass.

The satellite retrieves the data in a linear fashion, one line at a time using a *scanning radiometer*. The scanning radiometer transmits the equivalent of a single television horizontal line as the satellite circles the earth. The system uses a series of optics and a motor driven rotating mirror system to receive a very narrow line of the image of the Earth. Each line is received at a right angle to the satellite's orbital track, so as the satellite circles the Earth, a line is received from west to east or east to west depending on the orbit of the satellite. The total image is received from north to south or south to north, depending on the orbit also, and this motion is what relays the equivalent of the vertical scan in a television. You can continue receiving this satellite as long as it is within the line of sight.

Since all of the receivable satellites are similar, we will describe the ones you will most commonly receive. The NOAA/TIROS satellites, during the first half of the transmission, send visible light data to the receiver at the same time they are taking in the view. Meanwhile during the same part of the scan, they are recording the infrared view. During the second half of the scan, while the sensors are facing away from the Earth, it sends the infrared data. The user then sees the data as two images side by side, on the left the visible light data is seen, and on the right, infrared data is seen. In between the images are synchronization pulses that help computers to align the individual lines precisely.

These particular satellites continuously transmit an FM signal modulated with a 2400 Hz tone. This tone is very precise in frequency so the image seen is aligned properly. The 2400 Hz tone is AM modulated with the intensity of the current view of the Earth. The brighter or colder the point on the Earth, the higher in amplitude the 2400 Hz signal is.

The receiver demodulates the FM signal and retrieves the 2400 Hz tone. The detector board in the computer will then find the peak amplitude of each wave of the 2400 Hz tone, and each peak, upper and lower, now represents a single pixel on the screen. For the NOAA/TIROS satellites, each horizontal line represents 2400 pixels, since the incoming frequency is 2400 Hz, and the scanning radiometer rotates twice per second. The full 12 minute pass of a NOAA satellite requires approximately 3.5 MB (3.5 million 8 bit pixels) of storage! This is much more data (pixels) than can be seen on a super VGA screen at any one time.

Many people mistakenly think that they can easily utilize a conventional VHF scanner as an APT satellite picture receiver. Most scanners and communications receivers usually only provide a choice of two bandwidth settings for VHF FM reception: "narrow" and "wide." The narrow setting gives a bandwidth of ±15 kHz or less, which is fine for NBFM reception, and the wide bandwidth setting usually gives a bandwidth of about ±100 kHz, so this is the setting that must be used. Unfortunately, this "wide" bandwidth is actually too wide for weather satellite signals and, as a result, the demodulated audio level is relatively low. At the same time, the wider reception bandwidth allows more noise through, so the signal-to-noise ratio can become quite poor. Only a few scanners have the correct bandwidth and these currently include the AOR5000 and Icom IC-PCR1000. The second problem with all scanners,

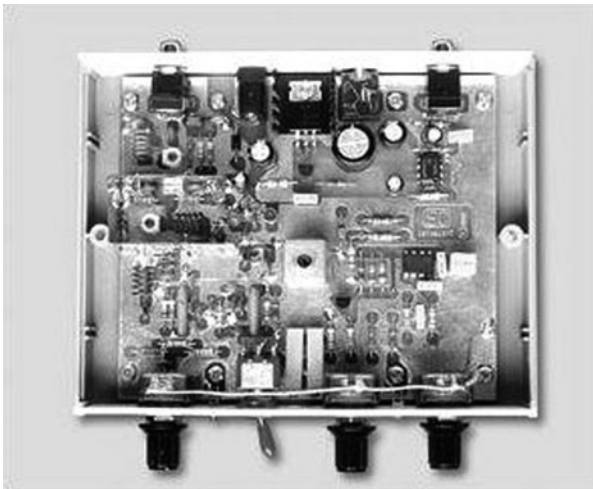

Figure 23-2 *Weather satellite receiver*

including the ones mentioned, is that a weather satellite system needs a very good performance receiver, one that provides high sensitivity, good signal to noise and high immunity to other adjacent transmissions. So, you may get a scanner to work, but it will not provide the optimum results.

Ideally, in order to obtain the best results you really need to have a receiver with a ±30 kHz bandwidth. This type of specialized VHF receiver is available but fairly pricey. Hence the motivation for developing the low-cost weather satellite receiver described here.

The weather satellite receiver project in this chapter features good sensitivity, at about 0.7V for 12 dB of quieting. At the same time, the effective bandwidth is approximately ±35 kHz, which is quite suitable for weather satellite reception. The satellite receiver is built into a very compact plastic instrument box, as shown in Figure 23-2. All of the circuitry is mounted on a double-sided PC board, so it's quite easy to build. It has switch tuning between two preset frequency channels, for ease of use. There are RF Gain, Audio Muting and Audio Gain controls and the receiver can drive a small monitor speaker or headphones, as well as providing a line level signal to feed into your PC for recording and decoding.

The heart of the receiver is a Philips SA605D IC high-performance low-power FM mixer and IF system on a single chip. As you can see from the block diagram of Figure 23-3, it contains a local oscillator transistor and balanced mixer, plus a high-gain IF amplifier and IF limiter, a received signal strength (RSSI) detector, an

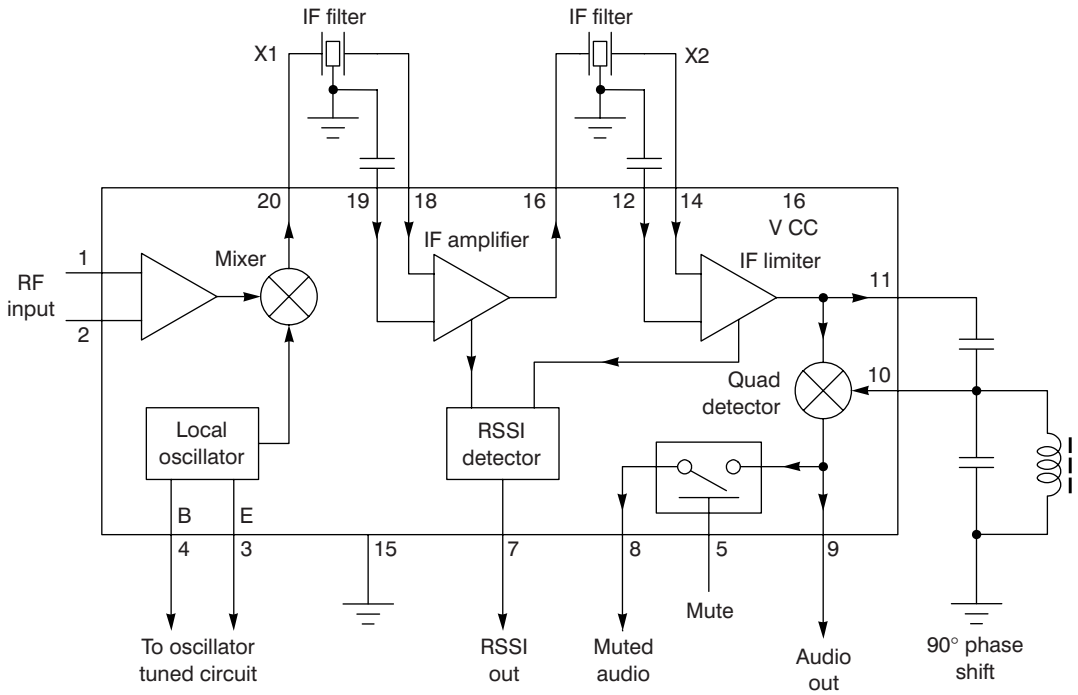

Figure 23-3 *Weather satellite receiver block diagram*

FM quadrature detector and finally an audio muting circuit. The local oscillator transistor can operate at frequencies up to about 500 MHz in an LC circuit, or up to 150 MHz with a suitable crystal. The mixer can operate up to 500 MHz as well, while the IF amplifier and limiter can operate up to about 25 MHz with a combined gain of about 90 dB.

The main receiver diagram illustrated in Figure 23-4 depicts the complete weather satellite receiver circuit details. In this receiver project, we're using the SA605D in a fairly conventional single-conversion superhet configuration, with the IF amplifier and limiter working at 5.5 MHz. This allows us to take advantage of high selectivity 5.5 MHz TV sound IF ceramic filters to provide most of our bandwidth shaping. The two filters in question are X1 and X2, which are both Murata SFT5.5MA devices.

As shown in the receiver schematic, X1 is connected between the mixer output and the IF amplifier input, while X2 is connected between the IF amplifier output and the limiter input. The resistors connected to the filter inputs and outputs are mainly for impedance matching, while the 10 nF capacitors are for DC blocking. The 90° phase shift required for U1's quadrature FM detector is provided by coil L4 and its parallel 390 pF capacitor, which are tuned to 5.5 MHz.

The local oscillator transistor inside U11 is connected in a Colpitts circuit. This includes coil L3, together with the two 15 pF capacitors (which provide the emitter tap) and a 10 pF capacitor in series with the Varicap diode D1.

The Varicap diode D1 is the receiver's tuning capacitor. Its tuning voltage for each of the two channels is set by 10-turn trimpots VR4 and VR5, with switch S1 selecting between them. We can tune the receiver simply by changing the local oscillator frequency because we only need to tune over a relatively small range (i.e. 137.3–137.85 MHz maximum), which is within the selectivity curve of the "front end" tuned circuits.

The satellite receiver's front end uses a BF998 dual-gate MOSFET (Q1) connected in a standard cascode amplifier configuration. The incoming VHF signals are fed into a tap (for impedance matching) on antenna coil L1, which is tuned to about 137.55 MHz using trimmer capacitor VC1. The signal from the top of this tuned circuit is then fed directly to gate 1 of Q1, while gate 2 is bypassed to ground but also fed with an adjustable DC voltage via VR1 for RF gain control. The amplified VHF signal on Q1's drain is fed to pin 1 of U1 via a 1 nF coupling capacitor. Additional RF selectivity is provided by coil L2 and trimmer capacitor VC2, which are again tuned to about 137.55 MHz. The 100 ohm resistor and 10 µH RF choke form an untuned high-impedance load for Q1.

Notice that as well as being coupled to the tap on L1 via a 2.2 nF capacitor, the antenna input is also connected to the +12V supply line via RFC1 and a series 22 ohm resistor. As you may have guessed, these components are there to provide "phantom" DC power for the masthead pre-amplifier. At the output end of U1, we take the demodulated APT signals from the "muted audio" output at pin 8. This allows us to take advantage of the SA605's built-in muting circuit, which works by using comparator stage U2b to compare U1's RSSI output from pin 7 (proportional to the logarithm of signal strength) with an adjustable DC control voltage from muting pot VR2. When the RSSI voltage rises above the voltage from VR2, U2b's output switches high and this is fed to pin 5 of U1 via a 2.2 k ohm series resistor to un-mute the audio. D2, a 5.1V Zener diode, limits the swing on pin 5 of U1 to less than 6V.

Transistor Q2 and LED1 form a simple signal strength indicator. This also uses the RSSI output from U1. In operation, the voltage across the 390 k ohm resistor and 100 nF capacitor rises from about +0.26V under no-signal conditions to about +5V with a very strong input signal. So with Q2 connected as an emitter follower and LED1 in its emitter load, the LED current and brightness are made to vary quite usefully with signal strength.

The demodulated APT signal from pin 8 of U1 is first fed through op-amp U2a, which is configured as an active low-pass filter. This has a turnover frequency of 5 kHz and is used for final de-emphasis and noise reduction. From there, the signal is fed to audio gain control VR3 and then to audio amplifier stage U3. This is a standard LM386 audio amplifier IC, configured for a gain of about 40 times. Its output is fed to both the monitor speaker socket and to a line output socket for connection to your PC's sound card.

Most of the receiver's circuitry operates from +12V, with the exception of U1 which needs +6V. As a result,

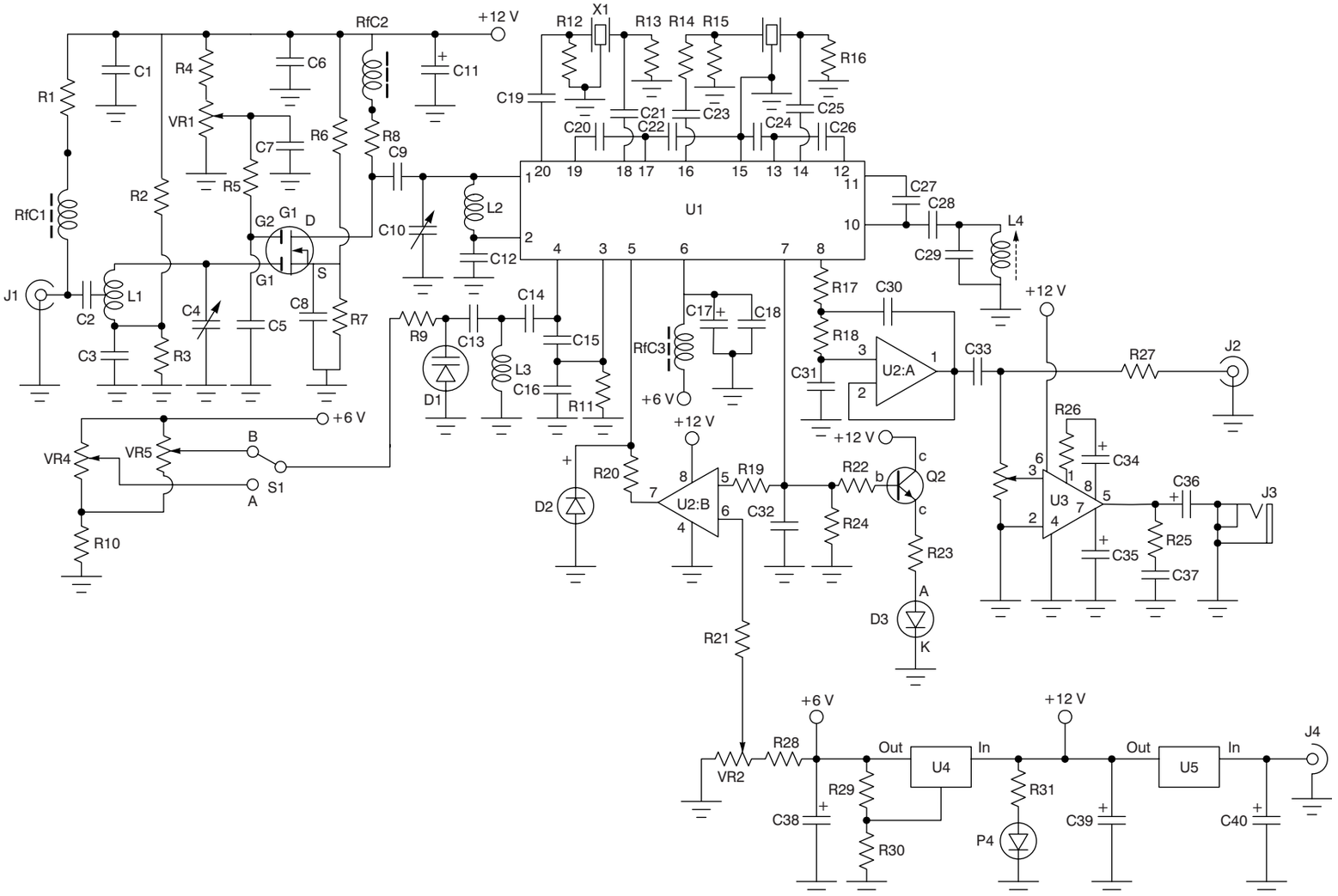

Figure 23-4 *Weather satellite receiver schematic. Courtesy of Silicon Chip Magazine*

the power supply circuitry includes U5 to provide a regulated and smoothed +12 V supply from an external supply such as a 14.5–18 V "wall-wart." This is followed by 5V regulator U4 which has its output "jacked up" using 300 ohm and 47 ohm resistors to provide close to +6 V for the SA605D (U1). Note that if you want to run the receiver from a 12 V battery, this can be quite easily done by replacing REG1 with a wire link. In addition, the 2200 µF capacitor should be replaced with a 16 V Zener diode (ZD2) for over-voltage protection.

Construction

Before beginning the project make sure that you have a clean well lit and well ventilated work space for constructing your satellite receiver. Locate all the diagrams and place them in front of you on the table or work bench. Locate a 27 to 30 watt pencil-tip soldering iron, along with some "Tip Tinner," which is used to prepare and clean your soldering iron tip. Locate a roll of 60/40 tin/lead rosin core solder as well as a few small hand tools such as a pair of small end-cutters, a needle-nose pliers, a pair of tweezers, and some small screwdrivers.

Construction of the weather satellite receiver is straightforward with virtually all of the parts mounted on a small PC board. The board is double-sided but the top copper pattern is used mainly as a ground-plane. This means that the board doesn't need to have plated-through holes but there are quite a few component leads which do have to be soldered on both sides of the board. There are also a number of "pin-through" or "hole-through" wires which have to be soldered to both sides of the PC board around U1. These connect the Earth patterns on both sides of the board and ensure that this high-gain chip operates in a stable manner.

The various input and output connectors are mounted along the rear edge of the circuit board, while the controls and indicator LEDs mount along the front edge. The only component not actually mounted on the board is S1, the channel select toggle switch. This mounts on the front panel, with its three connection lugs wired to PC board terminal pins directly underneath using very short lengths of insulated hookup wire.

Start the assembly by mounting these three terminal pins first, they are the only pins used in the receiver project. Next, mount the four connectors CON1-CON4 along the rear edge, followed by the resistors. Table 23-1 shows the resistor color codes but it's also a good idea to check each value using a digital multi-meter before

Table 23-1
Resistor color code chart

Color Band	*1st Digit*	*2nd Digit*	*Multiplier*	*Tolerance*
Black	0	0	1	
Brown	1	1	10	1%
Red	2	2	100	2%
Orange	3	3	1,000 (K)	3%
Yellow	4	4	10,000	4%
Green	5	5	100,000	
Blue	6	6	1,000,000 (M)	
Violet	7	7	10,000,000	
Gray	8	8	100,000,000	
White	9	9	1,000,000,000	
Gold			0.1	5%
Silver			0.01	10%
No color				20%

soldering it in position. All resistors are mounted to the top of the PC board but note that some of them have one lead soldered to the top copper as well as the bottom copper. Once the resistors are in place, you can use excess resistor leads to allow connection from one side of the board to the other side, since this project uses a two-sided circuit board. Each "pin-through or through-hole" is fitted by simply passing a wire through the hole in the board, then soldering it on both sides and trimming off the excess lead lengths.

The small ceramic capacitors can now all be installed on the left-hand side of the board. Note that some of these also have their "cold" leads soldered on both sides of the board, as indicated by the red dots. Once they're in, install the MKT capacitors and the electrolytic capacitors, making sure that the latter are all correctly orientated. Use the chart shown in Table 23-2 to help locate the small capacitors from the parts pile. Often small capacitors do not have their actual value printed on them but instead use a three-digit code to represent the actual value.

Finally go ahead and mount the trimmer capacitors VC1 and VC2. These should be mounted so that their adjustment rotors are connected to earth (this makes it much easier to align the receiver later). It's simply a matter of orientating them on the board.

Next, we will move on to installing the RF chokes. RFC2 and RFC3 are both pre-wound (10 µH and 68 µH respectively) but RFC1 needs to be wound on an F29 ferrite bead. It's very easy to wind though, because it requires only three turns of 0.25 mm enameled copper wire.

Winding coils

At this point in time, it's a good idea to wind and mount the remaining coils. Table 23-3 gives the winding details of the coils. As shown, L1–L3 are air-cored types, each consisting of five turns of 0.8 mm diameter wire wound on a 5 mm mandrel. Note, however, that L1 is wound using tinned copper wire, while L2 and L3 are both wound using enameled copper wire. Don't forget to scrape off the enamel at each end, so they can be soldered to the board pads.

Coils L1–L3 should all be mounted so that their turns are about 2 mm above the board. After you've fitted L1, don't forget to fit its "tap" connection lead as well. This can be made from a resistor lead off-cut, since it's very short. It connects to a point ⅓ of a turn up from the "cold" (earth) end of the coil, i.e. just above half-way up the side of the first turn.

The final coil to wind is quad detector coil L4. Unlike the others, this is wound on a 4.83 mm OD former with a base and a copper shield can. It's wound from 20 turns of 0.25 mm enameled copper wire and tuned with an F16 ferrite slug. Coil formers with ferrite slugs are difficult to locate, check the Appendix. You could also experiment with a small "junk" IF transformer can. You could try and unwind the existing coil and re-winding your own coil over the plastic former. You must make sure that there is a ferrite slug in the center of the coil former. Once L4 is wound, and installed onto the board, cover it with its shield can. You can next mount the two ceramic filters X1 and X2. These devices can be fitted either way around but make sure that their pins are pushed through the board holes as far as they'll go before you solder them underneath.

The next step is to construct and install the small metal shield around coil L2, C10 and most of the components in the drain circuit of Q1. This shield is U-shaped and measures 20 mm high, with the front and back "arms" 36 mm long and the side section 20 mm long. The bottom edges of all three sides are soldered to the board's ground-plane in a number of places, to hold it firmly in position and to ensure it stays at earth potential.

The two 10-turn trimpots (VR4 and VR5) can now be soldered in position at the front-center of the board. They can then be followed by the three main control pots, which are all 16 mm diameter types. Trim each pot's spindle length to about 9 mm before fitting it and make sure you fit each one in its correct position as they are all different. In particular, note that VR1 and VR3 both have a value of 50 k ohm but VR1 is a linear pot while VR3 is a log type.

After installing the potentiometers, it's a good idea to connect their metal shield cans together and then run a lead to the board's top copper to earth them. This is done using a length of tinned copper wire, with a short length of insulated hookup wire then connecting them to the board copper at front right.

Table 23-2

Capacitance code information

This table provides the value of alphanumeric coded ceramic, mylar and mica capacitors in general. They come in many sizes, shapes, values and ratings; many different manufacturers worldwide produce them and not all play by the same rules. Some capacitors actually have the numeric values stamped on them; however, many are color coded and some have alphanumeric codes. The capacitor's first and second significant number IDs are the first and second values, followed by the multiplier number code, followed by the percentage tolerance letter code. Usually the first two digits of the code represent the significant part of the value, while the third digit, called the multiplier, corresponds to the number of zeros to be added to the first two digits.

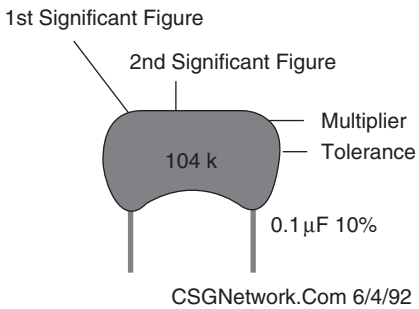

Value	*Type*	*Code*	*Value*	*Type*	*Code*
1.5 pF	Ceramic		1,000 pF /.001 µF	Ceramic / Mylar	102
3.3 pF	Ceramic		1,500 pF /.0015 µF	Ceramic / Mylar	152
10 pF	Ceramic		2,000 pF /.002 µF	Ceramic / Mylar	202
15 pF	Ceramic		2,200 pF /.0022 µF	Ceramic / Mylar	222
20 pF	Ceramic		4,700 pF /.0047 µF	Ceramic / Mylar	472
30 pF	Ceramic		5,000 pF /.005 µF	Ceramic / Mylar	502
33 pF	Ceramic		5,600 pF /.0056 µF	Ceramic / Mylar	562
47 pF	Ceramic		6,800 pF /.0068 µF	Ceramic / Mylar	682
56 pF	Ceramic		.01	Ceramic / Mylar	103
68 pF	Ceramic		.015	Mylar	
75 pF	Ceramic		.02	Mylar	203
82 pF	Ceramic		.022	Mylar	223
91 pF	Ceramic		.033	Mylar	333
100 pF	Ceramic	101	.047	Mylar	473
120 pF	Ceramic	121	.05	Mylar	503
130 pF	Ceramic	131	.056	Mylar	563
150 pF	Ceramic	151	.068	Mylar	683
180 pF	Ceramic	181	.1	Mylar	104
220 pF	Ceramic	221	.2	Mylar	204
330 pF	Ceramic	331	.22	Mylar	224
470 pF	Ceramic	471	.33	Mylar	334
560 pF	Ceramic	561	.47	Mylar	474
680 pF	Ceramic	681	.56	Mylar	564
750 pF	Ceramic	751	1	Mylar	105
820 pF	Ceramic	821	2	Mylar	205

Table 23-3
Coil winding details

L1	5 turns of 0.8 mm (20 ga.) tinned copper wire, 7 mm long (wound on 5 mm diameter mandrel). Tap at 0.3 turns. Air core, mounted 2 mm above board.
L2	5 turns of 0.8 mm (20 ga.) enameled copper wire, 9 mm long (wound on 5 mm diameter mandrel). Air core, mounted 2 mm above board.
L3	5 turns of 0.8 mm (20 ga.) enameled copper wire, 8 mm long (wound on 5 mm diameter mandrel). Air core, mounted 2 mm above board.
L4	20 turns of 0.25 mm (30 ga.) enameled copper wire, tight wound on 4.83 mm OD former with F16 tuning slug and shield can.
RFC1	3 turns of 0.25 mm (30 ga.) enameled copper wire wound on an F29 ferrite bead.

Mounting the semiconductors

Before we go ahead and install the semiconductors, let's take a brief look at the semiconductor pin-out diagram illustrated in Figure 23-5, which will assist you in orienting the integrated circuits. Now you can go ahead and mount the semiconductors. Begin by installing the Varicap diode at D1, and the 5.1V Zener diode at D2 and transistor Q2. Next, install regulator U5 and its associated heatsink. These parts are secured to the board using a 6 mm-long M3 screw, nut and lock-washer.

Note that U5's center pin should be soldered on both sides of the board but take care not to touch either of the two large adjacent electrolytic capacitors with the barrel of your soldering iron.

Go ahead and mount regulator U4, followed by U22 (TL072) and U3 (LM386). Note that pin 4 on both these devices should be soldered to the copper on the top of the board as well as the bottom. The two D3 and D4 are both mounted horizontally, so that they later protrude through matching 3 mm holes in the front panel. Note that they are both fitted with their cathode leads towards the left. Bend their leads down through 90° about 5 mm from the LED bodies, then solder them in position so that the axis of each LED is 5 mm above the board.

The final components to be mounted on the PC board include the Dual-Gate MOSFET at Q1 and the SA605D IC at (U1), U2 and transistor Q2. These components should be handled very carefully, using an anti-static wrist-band to avoid static charges building up on the components. The two integrated circuits should be mounted in IC sockets. IC sockets are an insurance policy against circuit failure at a later date. It is much easier to simply unplug a faulty IC, rather than trying to un-solder 14 or 16 pins from the circuit. Most people cannot un-solder 16 pins without damaging a circuit board. When mounting the IC sockets, observe a small cut-out at one edge of the socket. The cut-out will identify the top of the socket. Usually pin of the IC will be located to the left of the cut-out. Solder the sockets in their respective locations. Finally insert the ICs into their respective sockets, noting pin 1 is to the left of the small indented circle or cut-out on the top of the IC package. When handling the MOSFET be extremely

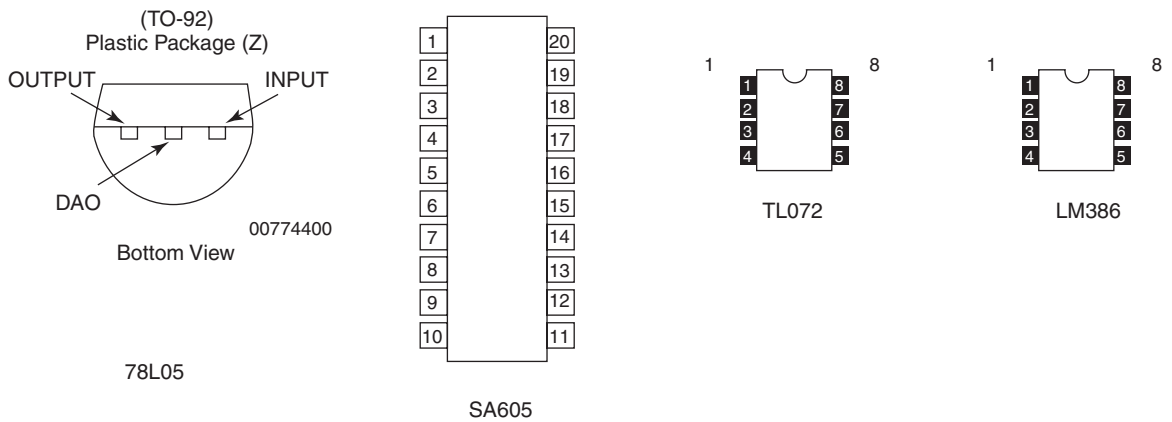

Figure 23-5 *Semiconductor pin-outs*

careful to avoid damage from static electricity. Do not move around when installing these static sensitive components and be sure to use an anti-static wrist band to avoid damage.

The completed PC board is housed in a suitable low-profile plastic instrument case.

First, you can mount switch S1 on the front panel and connect three 30 mm lengths of insulated hookup wire to the three pins on the PC board. That done, the front panel can be mated with the PC board by positioning it on the three pot ferrules and doing up the nuts. The three leads from the PC board pins can then be soldered to the switch lugs.

The rear panel is not attached to the board assembly. Instead, it simply slips over connectors CON1 and CON2 and is then slid into the rear slot when the assembly is fitted into the bottom half of the case. Now go ahead and mount the antenna connector onto the rear panel. Finally, the completed assembly is fastened in place using eight 6 mm-long 4-gauge self-tapping screws.

After completing the circuit board assembly, you should take a short rest and when we return we will inspect the circuit board for any possible "short" circuits or "cold" solder joints. Pick up the circuit board with the foil side of the circuit facing upwards toward you. First inspect the circuit board for possible "cold" solder joints. All of the solder joints should look clean, bright and shiny. If any of the solder joints look dark, dull or "blobby," then you should un-solder that particular joint, remove the solder then re-apply some solder and re-solder the joint all over again. After inspecting all of the solder joints, we can move on to looking for "short" circuits. Often sticky rosin core solder will leave a residue on a circuit board. When excess component leads are cut from the board during assembly, many times the "cut" leads will stick to the circuit board and they can "bridge" across the circuit pads and cause a "short" circuit which could damage the circuit when first powered-up. Another potential cause for a "short" circuit is a small solder ball which may have stuck to the circuit board, this too can cause a "short" circuit.

Once you have inspected the circuit board to your satisfaction, you can connect up the power supply leads to the power input jack and you will be ready to test the weather satellite receiver.

Circuit test

First, turn all three front-panel pots fully anticlockwise, connect up your antenna to the antenna input connector, and then apply power from a suitable 14–18V DC "wall-wart" power supply or a 12V battery. Check that the green power LED immediately begins glowing.

If it does, check the voltage on REG1's output lead (i.e. the right-hand lead) with your multi-meter, it should read close to +12V with respect to ground. Similarly, the voltage at REG2's (right-hand) output pin should measure very close to +6V.

If you now plug an 8 ohm speaker into CON3 terminals, and then turn up audio gain control VR3, you should hear a small amount of hiss and noise. When you turn up the RF gain control VR1 as well, this noise should increase a little further but LED1 shouldn't begin glowing except only very faintly when VR1 is turned fully clockwise.

Now turn VR1 fully anticlockwise again and use your multi-meter to measure the DC voltage at the top of the 390k resistor located just behind transistor Q2 (i.e. to the right of 5.1V Zener diode). The voltage across this resistor should be less than 0.30V and preferably about 0.26V. If it's any higher than 0.30V, the IF amplifier in IC1 may be unstable. Assuming that your receiver has passed all these tests, it should be working correctly and is now ready for alignment.

Receiver alignment

The final alignment of the weather satellite receiver is best done with a satellite signal. However, you need to give it a basic alignment first so that you can at least find the signal from a satellite when it's within range. For the basic alignment, you'll need access to a frequency counter capable of measuring up to 150 MHz and an RF signal generator which can be set to give an output at 137.50 MHz and at 137.62 MHz. It should be able to provide either unmodulated (CW) output or frequency modulation, with a modulating frequency of 2.4 kHz and a deviation of ±25 kHz or thereabouts. If the generator can't be accurately set to the above frequencies, you'll need to use the frequency counter to

help set its frequency. You'll also need your multi-meter during the "tuning-up" process, to monitor received signal level.

The first step is to set the local oscillator frequencies for the two reception channels. This is done by adjusting trimpots VR4 and VR5 respectively, while measuring the oscillator's frequency with the frequency counter. The oscillator signal is coupled to the counter via a "sniffer" coil which is connected to the end of a coaxial cable. The other end of this cable is then connected to the counter's input. Note that there is no direct physical connection between the oscillator coil and the counter's sniffer coil. Instead, the sniffer coil is placed about 9 mm in front of oscillator coil (L3) and roughly on-axis (i.e. just in front of the 10 pF capacitor).

The sniffer coil can be made by winding four turns of 0.8 mm enameled copper wire on a 5 mm drill shank. Its ends can then be soldered to a BNC socket which is then connected to the end of the counter input cable. This arrangement picks up enough oscillator energy to give reliable counter readings, without needing to be any closer to L3 (to avoid "pulling" the frequency).

Assuming you want to receive the NOAA satellites, set the oscillator frequency for channel A to 132.0 MHz (using VR4), and the frequency for channel B to 132.12 MHz (using VR5). These correspond to reception frequencies of 137.5 MHz for NOAAs 12 and 15 and 137.62 MHz for NOAA 17. If you want to try for other satellites, you'll need to find out their APT frequency and set the oscillator frequency to 5.5 MHz below that figure instead, and adjust the tuning controls.

Once the oscillator frequencies have been set, the next step is to peak up the RF stage tuned circuits. This is done by setting your RF signal generator to produce an unmodulated (CW) signal at 137.5 MHz, initially with a level of about 30 mV. That done, connect the generator's output to the antenna input of the receiver, using a series DC blocking capacitor if the generator doesn't have one (so that the generator doesn't short out the +12V phantom power for the masthead amplifier).

Next, connect your multi-meter (set to the 5V DC range) across the 390k ohm resistor just behind Q2 and make sure switch S1 is set to the channel A position. Now turn up RF gain control VR1 to about midway and use an alignment tool or a very small screwdriver to adjust trimmer cap C10 until you find a peak in the voltage reading on a multi-meter. If you can't find a peak, you may have to pull the turns on coil L2 slightly further apart to reduce its inductance. Once the peak is found, adjust VC2 carefully to maximize the meter reading (the multi-meter is reading the RSSI voltage from IC1, so it's essentially showing the received signal strength).

When you're certain that the L2/C10 circuit is tuned to 137.5 MHz, check the actual voltage reading of the meter. If it's more than 2.5V, reduce the output level from the RF generator until the multi-meter reading drops to about 2.0V. Now you're ready to peak the receiver's input tuned circuit—i.e. L1 and VC1. This is done in exactly the same way as for L2 and C10. Just adjust C4 slowly until the multi-meter indicates a peak and then carefully set C4 for the maximum peak reading. If you can't find another peak, you may need to pull the turns of L1 slightly further apart as before.

The final alignment step is to set the slug in quadrature detector coil L4 to the correct position for optimum FM demodulation of the 5.5 MHz IF signals. This is done by first switching the signal generator so that it's still producing a 137.5 MHz signal but this should now be frequency modulated—preferably with a 2.4 kHz tone and a deviation of about ±25 kHz.

Now, connect an 8 ohm speaker to the receiver's speaker socket (CON3) and turn up the audio gain control (VR3) to about the 10 o'clock position. You may not be able to hear the 2.4 kHz modulating signal at this stage but in any case, slowly and carefully adjust the slug in L4 using a non-magnetic alignment tool. Sooner or later you'll start to hear the 2.4 kHz tone and you should also be able to tune the coil for maximum audio level and minimum distortion and noise.

Once this has been done, the basic alignment of your weather satellite receiver is finished and it's ready for final alignment using the signals from a weather satellite. But before you'll be able to do this, you'll need to build or buy a suitable antenna and perhaps a small masthead pre-amplifier to boost the signal if necessary. The best antenna for APT weather satellite reception is either a turnstile or quadrifillar antenna.

Figure 23-6 *VHF turnstile antenna*

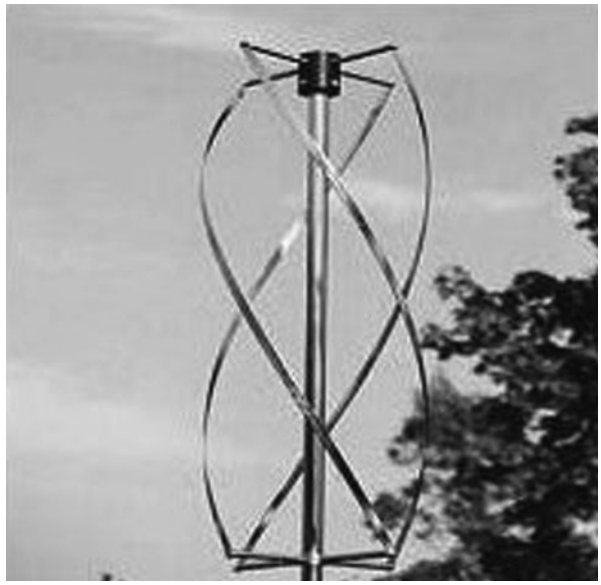

Figure 23-7 *Quadrifillar antenna*

APT antenna considerations

The crossed dipole or turnstile antenna is shown in Figure 23-6; it is recommended for nearly all APT weather satellite applications. It is made from aluminum and is strong and durable. It can be fixed onto a vertical mast and should be positioned as high as possible. The satellite signal will not go through trees or buildings and to get the best possible continuous signal it needs to be mounted onto a mast as high as possible. On the end or top of a building is preferred although, for test purposes, it can simply be stuck into the grass at ground level.

Another good choice for APT satellite reception is the quadrifilar helix antenna, see Figure 23-7. It offers slightly better performance than the crossed dipole but it is considerably more costly.

The success of weather satellite reception is very much dependent on having a good antenna. The ARRL *Weather Satellite Handbook*, is a good source of information on building antennas and low-cost antenna pre-amplifiers. You can either build a good antenna or readily purchase one from one of the vendors listed in the Appendix. Good quality, low-loss 50. coax should be used between the antenna and the satellite receiver, since satellite signals are generally weak. The coax should be plugged into the BNC jack on the rear of the receiver. If you are using large diameter coax, it may be necessary to use a UHF-BNC adapter. Another alternative is to use a short length of smaller diameter, more flexible, coax between the main cable and the receiver. That cable can have a BNC plug on one end and a UHF plug and double female adapter on the other. If you use a 137 MHz pre-amplifier, you can overcome some cable losses by installing the pre-amp right up at the antenna. This establishes a low noise figure before going through the loss of the cable. If you find you do need a 137 MHz mast-head pre-amplifier, you can build one or buy one from Hamtronics or Ramsey Electronics. We do not recommend trying to feed B+ to power the pre-amp through the coax as some enthusiasts do. It doesn't pay to try to save the small cost of lightweight hook-up wire and de-grade the performance of the pre-amp in the process.
Run a separate wire pair to power the pre-amplifier if needed.

Receiver operation

Operation of the receiver is fairly obvious, but we will comment on several features of interest. Normally, when used to drive a computer's sound card, you will want to listen on a speaker to hear what the signal sounds like. The VOLUME control can be adjusted to whatever level is comfortable for listening and proper

for the computer's sound card. This is especially true during the initial acquisition period. However, most times you probably want the ability to mute the speaker; so installing a switch in line with the receiver output to the speaker is handy.

To adjust the SQUELCH control, turn it clockwise just a little beyond the point where the squelch closes with no signal (just noise). The squelch circuit has adjustable sensitivity—the further clockwise you set the control, the stronger the signal must be to open the squelch. This is handy to set how strong you want the satellite signal to be before the tape recorder turns on. Be careful not to set it too far clockwise, though, because the squelch might not open even with a strong signal. The weather satellite receiver will allow you to select two different channels. Channel selection is done with switch S1. Use the selector switch to choose channel A or B, then use potentiometer VR4 or VR5 to "tune-in" the desired satellite frequency. The satellite receiver's audio is fed to the speaker output at J3 and also to a low-level output at J2 which can be fed to either a tape recorder or decoder card in a personal computer.

Setting up you APT receive station

In order to set up your own weather satellite receiving station you will have to acquire a few more items, as seen in Figure 23-8. In addition to the satellite receiver and antenna, you will need a personal computer, some sort of interface and a software package to display the satellite picture and a satellite tracking program if desired. A tracking program is not required, but it is fun to be able to know in advance when the satellite is overhead.

How to see satellite weather pictures on your personal computer, you must follow the steps below:

1. Track the desired satellite to find when it will appear and how long it will be in view (i.e. how high in elevation it will rise). (See NASA's online J-Track program for an example of NOAA satellite tracking.)
2. Tune the receiver to the right frequency, e.g. 137.620 MHz for NOAA-14 and 137.500 for NOAA-15 and pick off the AM signal that carries the image data. The 2400 Hz AM sub-carrier signal will produce a distinctive "tick-tock" sound from the speakers.
3. Receive the signal for as much of the satellite pass as possible.
4. Decode the signal into the image. (Depending on the system, this is done in real-time or the signal is saved to file that is decoded later.) Most new computers (i.e. running at 800 MHz to 3 GHz with WIN2000 or XP software) with a good sound card can be used to decode the software directly from the satellite receiver audio.

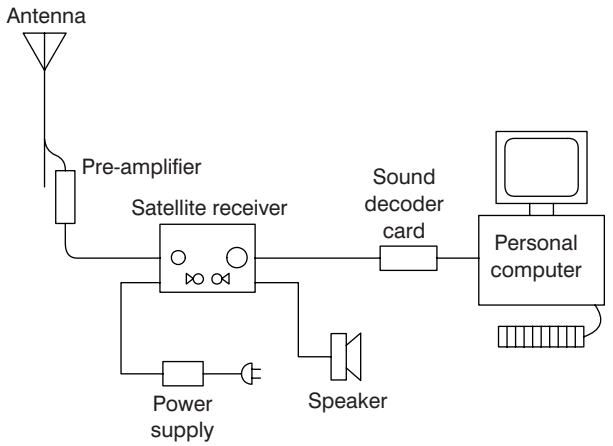

Figure 23-8 *Weather satellite receiving system diagram*

With your 137-138 MHz turnstile or quadifillar satellite antenna connected to your weather satellite receiver, and your WX receiver connected to your sound card in your PC, via a shielded audio cable, you will be able to get stunning color images directly from weather satellites.

In order to decode an APT weather satellite signal from your WX satellite receiver, you will need to load some WX decoding software into your personal computer.

There are number of choices for APT satellite decoding software, some of which are free for the download, such as WXtoImg which is a fully automated APT and WEFAX weather satellite (wxsat) decoder. The software supports recording, decoding, editing, and viewing on all versions of Windows, Linux, and

Table 23-4
137 MHz Weather satellite receiver frequencies

Country	*Satellite*	*Format*	*Frequency*
USA	NOAA - 12	APT	137.500 MHz
USA	NOAA - 14	APT	137.620 MHz
USA	NOAA - 15	APT	137.500 MHz
USA	NOAA - 17	APT	137.620 MHz
USA - 2008 launch	NOAA - 18	APT	137.9125 MHz
Russia	METEOR	APT	137.300 MHz
Russia	METEOR	APT	137.400 MHz
Russia	METEOR	APT	137.850 MHz
Russia	OKEAN	APT	137.400 MHz

MacOS X. The WXtoImg software supports real-time decoding, map overlays, advanced color enhancements, 3-D images, animations, multi-pass images, projection transformation (e.g. Mercator), text overlays, automated web page creation, temperature display, GPS interfacing, and control for many weather satellite receivers, communications receivers, and scanners. Check the download site at: http://www.wxtoimg.com/downloads/.

Another good source for the WXSAT satellite decoding software is the HF-FAX web-site located at http://www.hffax.de/html/hauptteil_wxsat.htm. Once your software is loaded and your system check completed, you can refer to the chart in Table 23-4, for the most popular satellite frequencies.

Additional APT weather satellite source information

137 MHz quadrifillar antenna construction info: http://www.askrlc.co.uk/

137 MHz turnstile antenna construction info: http://www.qslnet.de/member/pa1pj/turnstile.pdf

TimeStep – http://www.time-step.com

Hamtronics – http://www.hamtronics.com/

Ramsey Electronics – http://www.ramseyelectronics.com/

Dartcom – http://www.dartcom.co.uk

Swagur Enterprises, USA www.swagur.com

Vanguard Electronic Labs, USA www.cyberpad.com

Chapter 24

Analog To Digital Converters (ADCs)

Parts list

ADC - 1

C1 .1µF, 35 volt capacitor

C2 10µF, 35 volt electrolytic capacitor

C3 5µF, 35 volt electrolytic capacitor

U1 LM78L05 5 volt regulator IC

U2 MAX187 A/D converter IC

ADC - 2

R1-R8 100 k ohm, ¼ watt, 5% resistor

C1 1µF, 35 volt electrolytic capacitor

C2,C5 .1µF, 35 volt disk capacitor

C3 47µF, 35 volt electrolytic capacitor

C4 4.7µF, 35 volt electrolytic capacitor

D1 1N4001 silicon diode

U1 MAX186 A/D converter IC (Maxim Semiconductor)

U2 LM7805 - 5 volt regulator IC

P1 DB-25 - 25-pin parallel port connector

Misc PC board, wire, enclosure, terminal strip, etc.

A number of radio receiver projects in this book are based on collecting data from receivers rather than listening to sound coming from a radio. In this chapter we will discuss four different approaches to buying and/or building analog to digital converters which you can use to collect or save data for analyzing at a later time. By using an analog to digital converter, you can collect, save and later playback and analyze signals that were recorded over days or over weeks and then, using special software, you can analyze the signals to determine trends of specific signals. We will present two different A/D or analog to digital converter projects which you can build with inexpensive integrated circuits and connect to your personal computer's parallel port. Next, we will show you how you can purchase a low cost commercial analog to digital converter with software and finally we will describe a high quality A/D system which is used by members of the Public Seismic Network to record earthquake signals around the country. The PSN A/D converter is a true 16-bit multi-channel assembled A/D system which connects to your personal computer's serial port. These four A/D systems are great choices for collecting radio signals over an extended period of time. Examine each of these A/D solutions and see which one is best for your particular applications. Most of the A/D collections systems described below come with free software for recording data.

ADC – 1: single channel analog to digital converter

This single channel 12-bit analog to digital converter, shown in Figure 24-1, can be built with the minimum of

Copyright © 2008 by The McGraw-Hill Companies, Inc. Click here for terms of use.

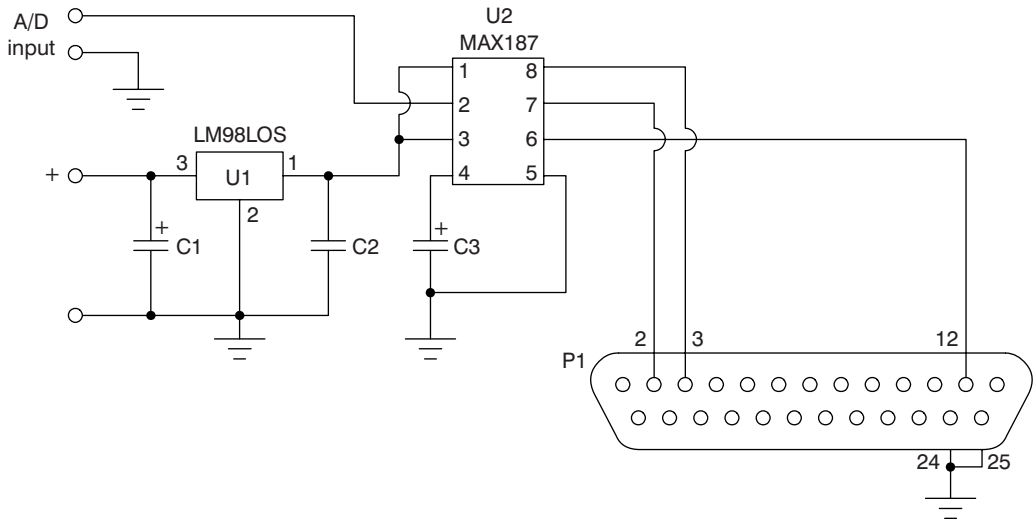

Figure 24-1 *Single channel A/D converter – ADC 1. Courtesy of Radio-Sky Publishing*

components and the software for it is free. The single channel A/D converter is built around the $14 low cost MAX187 A/D converter from MAXIM Semiconductors. The circuit consists of the A/D converter chip, a regulator chip, and a few capacitors; it can't get more simple than this! The single channel A/D converter readily connects to your computer's parallel port through a BD-25 connector. The analog input voltage can be from zero (0) to 4.095 volts as a maximum signal level. A 9 volt battery or small 9 to 12 volt DC "wall-wart" power supply can be used to power the A/D circuit, which can be housed in a small plastic case.

The A/D input from your signal source is fed to pin 2 of the MAX187 chip. The 5 volt regulator's output powers the MAX187 chip via pin 1. The MAX817 outputs to your personal computer are on pins 6, 7 and 8. Only three capacitors are needed for this A/D, two of which are used in the regulated power supply section of the circuit.

You will need a small 30 watt soldering iron, some 60/40 rosin core solder for building this project. A small jar of "Tip Tinner" from your local Radio Shack is used to clean and dress the soldering tip. Locate a few small hand tools, including a pair of small end-cutters and a needle-nose pliers and a flat-blade and Phillips screwdriver and we will begin building the A/D converter.

Heat up your soldering iron and let's get building. The ADC-1 circuit can be built on a small perf-board or direct prototyping board available at Radio Shack or you could make your own circuit board for the project. The circuit only utilizes capacitors, both polar and non-polar types. Non-polarized capacitors are usually smaller capacitor and sometimes they do not have their actual value printed on them. Often a three-digit code is used to represent their value. For example, a . 001 µF capacitor will have (102), while a .01 µF capacitor will have a (103) marked on it. This project also uses large polarized or electrolytic capacitors, these capacitors have polarity markings on them which must be observed if you want the circuit to work properly. Use the chart in Table 24-2 to help identify the project capacitors. Identify all of the capacitors before installing them on the circuit board. Once you have identified all of the capacitors, you can go ahead and install them on the circuit board. Trim the excess component leads flush to the edge of the circuit board with your end-cutters.

Take a quick look at the semiconductor pin-out diagram shown in Figure 24-2. This diagram will help you install the integrated circuits in the A/D projects. An integrated circuit socket for this project is highly recommended, as an insurance from a possible circuit failure if it ever happens. It is much easier to simply replace the IC rather than trying to un-solder the IC from the circuit board. The IC socket will have a cut-out or notch at one end of the package. Solder the IC socket onto the PC board. Pin one (1) will be assigned to the pin just to the left of the notch or cut-out. Pin one (1) of the IC socket is connected to the

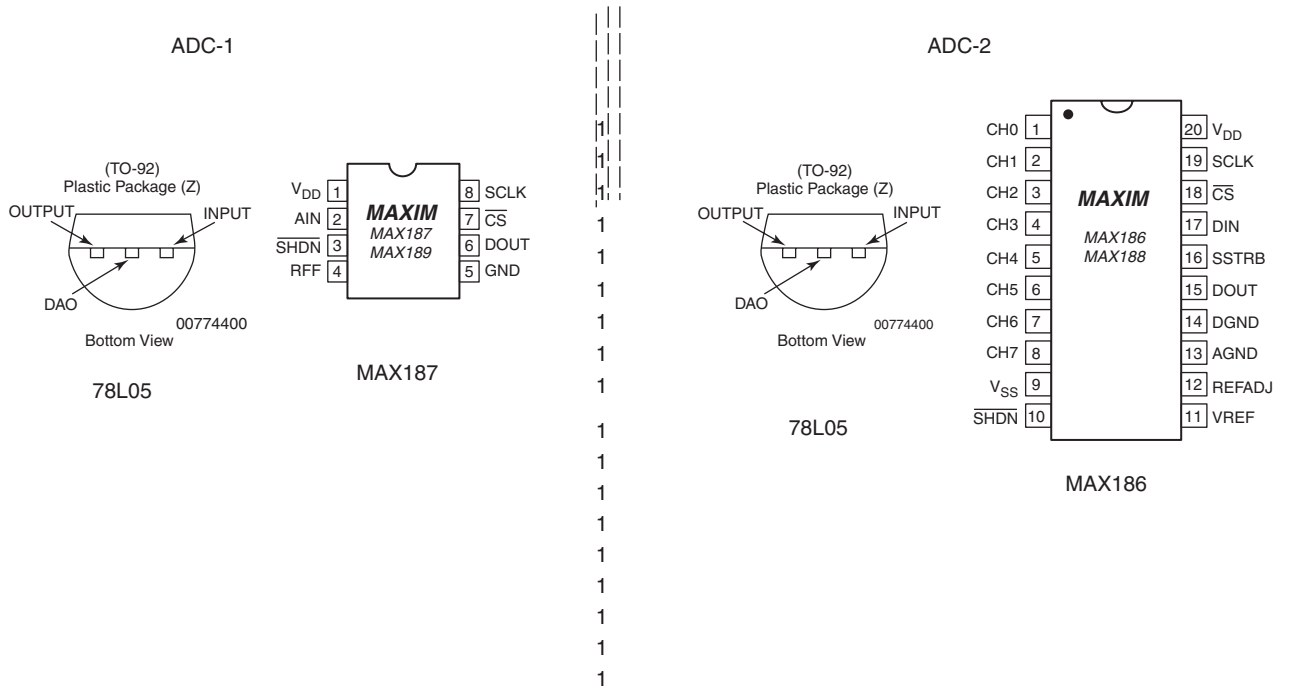

Figure 24-2 *Semiconductor pin-outs*

output of the regulator U1. When inserting the IC into its socket pay particular attention to the orientation. Pin one (1) of the IC must be inserted into pin one (1) of the IC socket. Note that there will be a notch or cut-out or small indented circle on the top of the IC package. Pin one (1) of the IC will be just to the left of the cut-out or notch.

One neat way to package the units is inside a two way parallel port manual switch box. These can be bought for about $10 at computer shows. One of the DB25 connectors is removed from the back of the switch and replaced with a power and a analog input jack. Leads 2, 3, 12, 24 and 25 from the removed DB25 are soldered directly to the appropriate places on the A to D board. The switch can then be used to pass through to the printer when the A to D is not in use. You could also elect to mount the A/D converter in a small plastic box if desired with a 25 pin connector on the rear of the enclosure.

Before applying power to the A/D circuit, take a moment to inspect the foil side of the PC board. Pick up the PC board with the foil side of the board facing upwards towards you. We are going to examine the PC board for possible "cold" solder joints and "short" circuits before applying power for the first time. Look carefully at the solder joints, they should all look clean, shiny and bright. If any of the solder joints look dark, dull or "blobby" then remove the solder from the joint and then re-solder the joint all over again. Next, we will examine the PC board for possible "short" circuits which are often caused by the sticky rosin residue left on the circuit board from the solder. Often "cut" components or small solder balls can adhere to the foil side of the board and "short" between the circuit traces. Once you have examined the PC board carefully, you can go ahead and power-up the circuit for the first time. Install the free A/D collection software, either Data Collect Lite or Radio-Sky Pipe from the Radio-Sky web-site, or see Appendix, and start collecting data from one of your new receivers. In the event the circuit does not work, check over the installation of the electrolytic capacitors and the polarity of the power supply connections. The MAX87 chip should be available from Digi-Key Corporation, see Appendix.

ADC – 2: 8 channel analog to digital converter

An 8 channel 12-bit analog to digital converter (ADC) project is shown in Figure 24-3, and connects to the

parallel port of your personal computer. This second low cost analog to digital converter circuit is one you can readily build yourself in a few hours from scratch. This A/D converter works with free software from a company known as Radio-Sky, which specializes in products for Radio Astronomy. Their free software, which works with the low cost ADC, is called Radio-Sky Pipe. The ADC is based on a single low cost integrated circuit from MAXIM Semiconductors. Pins 1 through 8 on the MAX186 A/D converted chip correspond to Channels 1 through 8. A 100 kilo-ohm resistor is placed across each input channel pin and is connected to ground. The A/D converter circuit connects to a personal computer via the parallel port. You will need to choose the appropriate parallel port address which is selected in the free Radio-Sky Pipe software. Note that all of the .1 µF (microfarad) capacitors are non-polarized types, typically disk ceramic capacitors. They should be rated for at least 15 volts. The A/D circuit may be powered by a battery or any well filtered external DC power supply. (You may order the MAX186 IC from Radio-Sky Publishing, or from Digi-Key or Mouser Electronics, see Appendix.)

The A/D circuit can be built on a small breadboard or on a printed circuit board. A circuit board and partial kit of parts (no case, connectors, or power supply) is available from Radio-Sky. Before we begin building the single channel A/D converter you will need to secure a clean well lit work area. You will need to locate a small 27 to 33 watt pencil-tipped soldering iron, a roll of 60/40 rosin core solder and small jar of "Tip Tinner," a soldering iron tip cleaner/dresser. Collect together a few small hand tools such as a pair of end-cutters, a pair of needle-nose pliers, a flat-blade and a Phillips screw-driver and a magnifying glass. Grab the schematic, parts layout diagram and the resistor and capacitor identifications charts below, and we will begin.

This project employs eight 100,000 ohm resistors at the input to each of the A/D channels. Take a look at the resistor identification chart in Table 24-1. Each resistor will have three or four color bands on the body of the resistor, which start at one end of the resistor body.

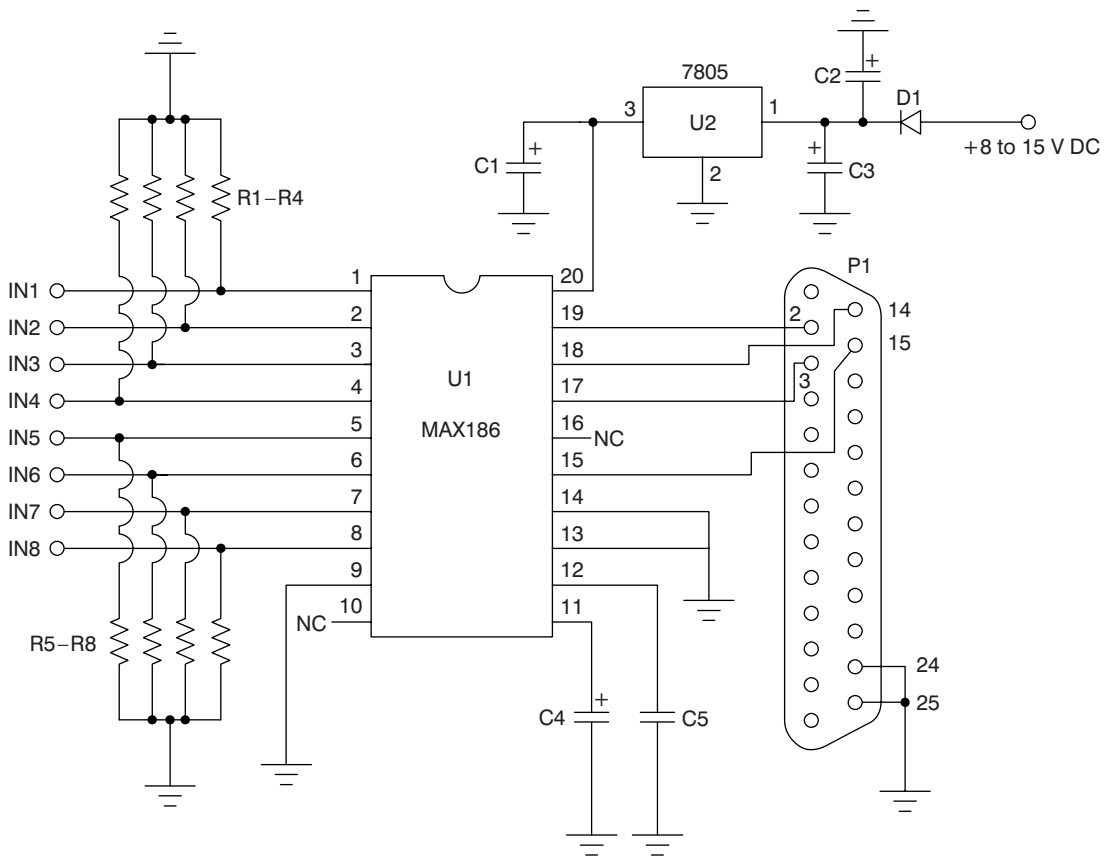

Figure 24-3 *8 channel A/D converter – ADC 2. Courtesy of Radio-Sky Publishing*

Table 24-1
Resistor color code chart

Color Band	*1st Digit*	*2nd Digit*	*Multiplier*	*Tolerance*
Black	0	0	1	
Brown	1	1	10	1%
Red	2	2	100	2%
Orange	3	3	1,000 (K)	3%
Yellow	4	4	10,000	4%
Green	5	5	100,000	
Blue	6	6	1,000,000 (M)	
Violet	7	7	10,000,000	
Gray	8	8	100,000,000	
White	9	9	1,000,000,000	
Gold			0.1	5%
Silver			0.01	10%
No color				20%

The first color band will represent the first digit of the resistor code, the second color band denotes the second digit of the code, and finally the third color code represents the resistor's multiplier value. Resistors will generally have a tolerance code which is the fourth color band. The absence of a fourth color band indicates a 20% tolerance value, while a silver color band denotes a 10% tolerance and a gold band represents a 5% tolerance resistor. A 100k ohm resistor's first band should be brown (1), its second color band is black (0) and its third band will be yellow (0000), so (1)(0) times (0000) = 100,000 ohms or 100k ohms. Place the eight resistors on the circuit board and solder them in place. Next, trim the excess component leads flush to the edge of the PC board with your end-cutters.

Capacitors are generally identified as polar and non-polar types. The polarized capacitors are also called electrolytic capacitors and they have polarity, as each of the two leads are labeled as plus (+) or minus (–) and this polarity must be observed when installing these capacitors in order for the circuit to work correctly. Non-polarized capacitors are usually small in physical size and in their actual value. Take a look at the capacitor identifier chart in Table 24-2, it illustrates the capacitor codes used to identify smaller sized capacitors. Many times small capacitors do not have room to print their entire details on the body of the capacitor, so a three-digit code is utilized to label them. For example, a .001 µF is labeled (102), while a .01 µF capacitor is labeled as (103). Identify all of the capacitors in the ADC-2 project and separate them into piles polarized vs. non-polarized and place them in front of you. Once identified you can go ahead and install the capacitors on the PC board in their respective locations. Pay particular attention to installing the electrolytic capacitors correctly. Once you have placed the capacitors on the board, you can solder them in place, then cut the extra component leads flush to the edge of the board.

The analog to digital converter contains a single silicon diode at D1. Remember that diodes have polarity and they must be mounted correctly for the circuit to work. Diodes will generally have an anode and cathode lead, they will have a white or black band closer to one end of the diode. The end closest to the colored band is the cathode lead, look at the schematic or part layout diagram and then install the diode.

This circuit employs two integrated circuits, the main A/D converter chip and a regulator chip. An integrated circuit socket for U1 is highly recommended, so in the event of a possible IC failure, you can simply plug-in a new chip without having to un-solder 20 pins or more from the foil side of the PC board. Integrated circuit sockets will usually have a notch or cut-out at one end of the package. The pin just to the left of the notch or

Table 24-2

Capacitance code information

This table provides the value of alphanumeric coded ceramic, mylar and mica capacitors in general. They come in many sizes, shapes, values and ratings; many different manufacturers worldwide produce them and not all play by the same rules. Some capacitors actually have the numeric values stamped on them; however, many are color coded and some have alphanumeric codes. The capacitor's first and second significant number IDs are the first and second values, followed by the multiplier number code, followed by the percentage tolerance letter code. Usually the first two digits of the code represent the significant part of the value, while the third digit, called the multiplier, corresponds to the number of zeros to be added to the first two digits.

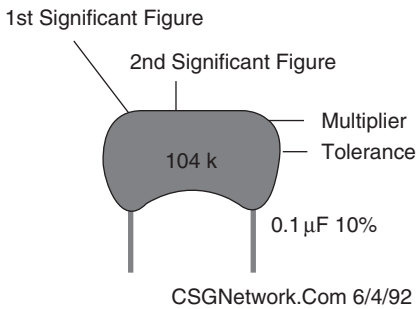

Value	*Type*	*Code*	*Value*	*Type*	*Code*
1.5 pF	Ceramic		1,000 pF /.001 µF	Ceramic / Mylar	102
3.3 pF	Ceramic		1,500 pF /.0015 µF	Ceramic / Mylar	152
10 pF	Ceramic		2,000 pF /.002 µF	Ceramic / Mylar	202
15 pF	Ceramic		2,200 pF /.0022 µF	Ceramic / Mylar	222
20 pF	Ceramic		4,700 pF /.0047 µF	Ceramic / Mylar	472
30 pF	Ceramic		5,000 pF /.005 µF	Ceramic / Mylar	502
33 pF	Ceramic		5,600 pF /.0056 µF	Ceramic / Mylar	562
47 pF	Ceramic		6,800 pF /.0068 µF	Ceramic / Mylar	682
56 pF	Ceramic		.01	Ceramic / Mylar	103
68 pF	Ceramic		.015	Mylar	
75 pF	Ceramic		.02	Mylar	203
82 pF	Ceramic		.022	Mylar	223
91 pF	Ceramic		.033	Mylar	333
100 pF	Ceramic	101	.047	Mylar	473
120 pF	Ceramic	121	.05	Mylar	503
130 pF	Ceramic	131	.056	Mylar	563
150 pF	Ceramic	151	.068	Mylar	683
180 pF	Ceramic	181	.1	Mylar	104
220 pF	Ceramic	221	.2	Mylar	204
330 pF	Ceramic	331	.22	Mylar	224
470 pF	Ceramic	471	.33	Mylar	334
560 pF	Ceramic	561	.47	Mylar	474
680 pF	Ceramic	681	.56	Mylar	564
750 pF	Ceramic	751	1	Mylar	105
820 pF	Ceramic	821	2	Mylar	205

cut-out will be designated as pin 1. Be sure to align pin one (1) of the IC socket with IN1 and pin twenty (20) with the output of the regulator at U2. The actual IC itself will also have a notch or cut-out and pin one (1) will also be just to the left of the notch. Make sure that when you place the IC into its socket that you align pin one (1) of the IC with pin one (1) of the socket. Failure to observe the correct orientation of the IC will result in damage to the IC and perhaps damage to the circuit when power is first applied.

Once the circuit board is built, you can wire a DB-25 connector to the A/D chip and ground and your analog to digital converter will be just about finished. Find a suitable small plastic or metal enclosure for the circuit board. The 10 inputs can be wired to a 10-position screw terminal strip or you could use the second 25 pin connector as the input connector to the circuit. Use whatever is convenient.

Before applying power to the circuit for the first time, you will need to inspect the circuit board for possible "cold" solder joints and "short" circuits. Pick up the circuit board, with the foil side facing upwards towards you. Examine the solder joints carefully. Each of the solder joints should look clean, shiny and bright. If any of the solder joints look dark, dull or "blobby", then remove the solder from the joint and then re-solder the joint over again so that it looks good. Next, we will inspect the board for possible "short" circuits. Many times sticky residue from the rosin core solder will cause "cut" component leads and small solder balls to adhere to the foil side of the board, thus "shorting-out" circuit traces. Remove anything that looks foreign.

Now you can connect the A/D circuit to the parallel port of your computer and apply power to the circuit. You can power the A/D converter from a small DC "wall-wart" power supply. Install the free Radio-Sky software and you are ready to begin collecting data. The A/D circuit will work in the Standard version of Radio-Sky Pipe, but only Channel 1 will be available. The Pro-Upgrade allows you to use any number of channels up to 8. The channels used must be sequential. Analog inputs should be restricted to the 0 to 4.095V range.

If the circuit doesn't work on power-up, disconnect power and re-examine the circuit board to make sure that you didn't make an error when constructing the circuit. Most common errors are installing the capacitor and diodes incorrectly. Also take note of the IC installation if the circuit does not initially work.

ADC – 3: Dataq DI-194RS/ DI-154RS starter kits

The Dataq DI-194RS is a low cost ready-made 10-bit ADC starter kit available for the low price of $24.00, while the **DI154RS** is a 12-bit ADC system priced at $39.00, see Figure 24-4. This A/D system has many features and includes a copy of WinDaq/Lite chart recorder software. This is a great budget ADC system for readers who want to begin collecting data immediately. These ADCs would go well with any of the receiver projects in this book.

4-Channel, 10-Bit, data acquisition starter kit - DI194RS

4-Channel, 12-Bit, data acquisition starter kit - DI154RS

- Compact Data Acquisition Starter Kit
- 4-Channel, 10-Bit, ±10V ADC
- Provided with a Serial Port Interface Cable

Figure 24-4 *Dataq data-logger*

- Two Digital Inputs for Remote Start/Stop and Remote Event Marker Control
- Includes WinDaq/Lite Chart Recorder Software, WinDaq Waveform Browser Playback and Analysis Software, and Documentation
- Provided Active X Controls allow you to program the DI-194 from any Windows programming environment
- Kids - Get a free Data Acquisition Starter Kit for your Science Fair Project.

The DI-194RS and DI-154RS, DATAQ's four-channel data acquisition starter kits, are a low-cost way to experience WINDAQ software, now with more features and capabilities than ever before. With these starter kits, you can digitize virtually any transducer's analog output signal and record it to your PC's hard disk. At the same time, view the transducer's output on your PCs monitor in a triggered sweep (oscilloscope-like) or scrolling (chart recorder-like) display format. The starter kits provide a taste of the exceptional power and speed possible with WINDAQ software. They provide 12-bit (DI-154RS) and 10-bit (DI-194RS) measurement accuracy, a ±10V analog measurement range, up to 240 samples/second throughput, and four analog input channels. A CD demonstrates WINDAQ Waveform Browser (WWB), our playback and analysis software, but to get a hands-on illustration of the data recording and display capabilities of WINDAQ/Lite, you need a DI-154RS or DI-194RS starter kit. When connected to your PC's serial port, these starter kits allow you to record, display, and analyze data using your own signals. The kits ship with WINDAQ/Lite (Recording Software and Playback and Analysis software). Data acquisition rates up to 240 samples per second are supported for Windows 2000 and XP.

The DI-154RS and DI-194RS derive their power directly from the RS-232 serial port to which it is connected. So there are no batteries to replace or external power supplies to connect. The DI-154RS and DI-194RS starter kits are equipped with two digital inputs for remote start/stop and remote event marker control. Both starter kits are provided with an ActiveX Control Library that allows you to program the starter kits from any Windows programming environment.

The included WINDAQ/Lite data acquisition software offers real time display and disk streaming for the Windows environment. Their real time display can operate in a smooth scroll or triggered sweep mode of operation, and can be scaled into any unit of measure. Event markers with comments allow you to annotate your data acquisition session with descriptive information as you're recording to disk. Raise your productivity to new heights with WINDAQ's unique multi-tasking feature. Record waveform data to disk in the background while running any combination of programs in the foreground—even WINDAQ Waveform Browser playback software to review and analyze the waveform data as it's being stored! The DI-194RS Module with the WINDAQ Resource CD, screwdriver, and cable—all included with each starter kit. DI-154RS module case is identical.

DI-194RS Starter Kit:

http://www.dataq.com/products/startkit/di194rs.htm

DI-154RS Starter Kit:

http://www.dataq.com/products/startkit/di154rs.htm

ADC – 4: PSN true 16-bit serial output analog to digital converter

The Public Seismic Network analog to digital board is a true 16-bit analog to digital converter for serious researchers who want high speed and high accuracy and excellent resolution. This ADC is used by the Public Seismic Network, a group of dedicated researchers based in California who collect earthquake events. Many researchers world-wide use this equipment to collect data. PSN ADC's are used to collect seismic, magnetic, radio and weather information. A free data collection software package is also available. The PSN board costs about $180, see Figure 24-5.

True 16-bit PSN A/D board

16-Bit ADC board features:

- Low Cost Analog to Digital Card for Seismic and Other Low Frequency Data Recording
- True 16-Bit Resolution with Oversampling (more information)

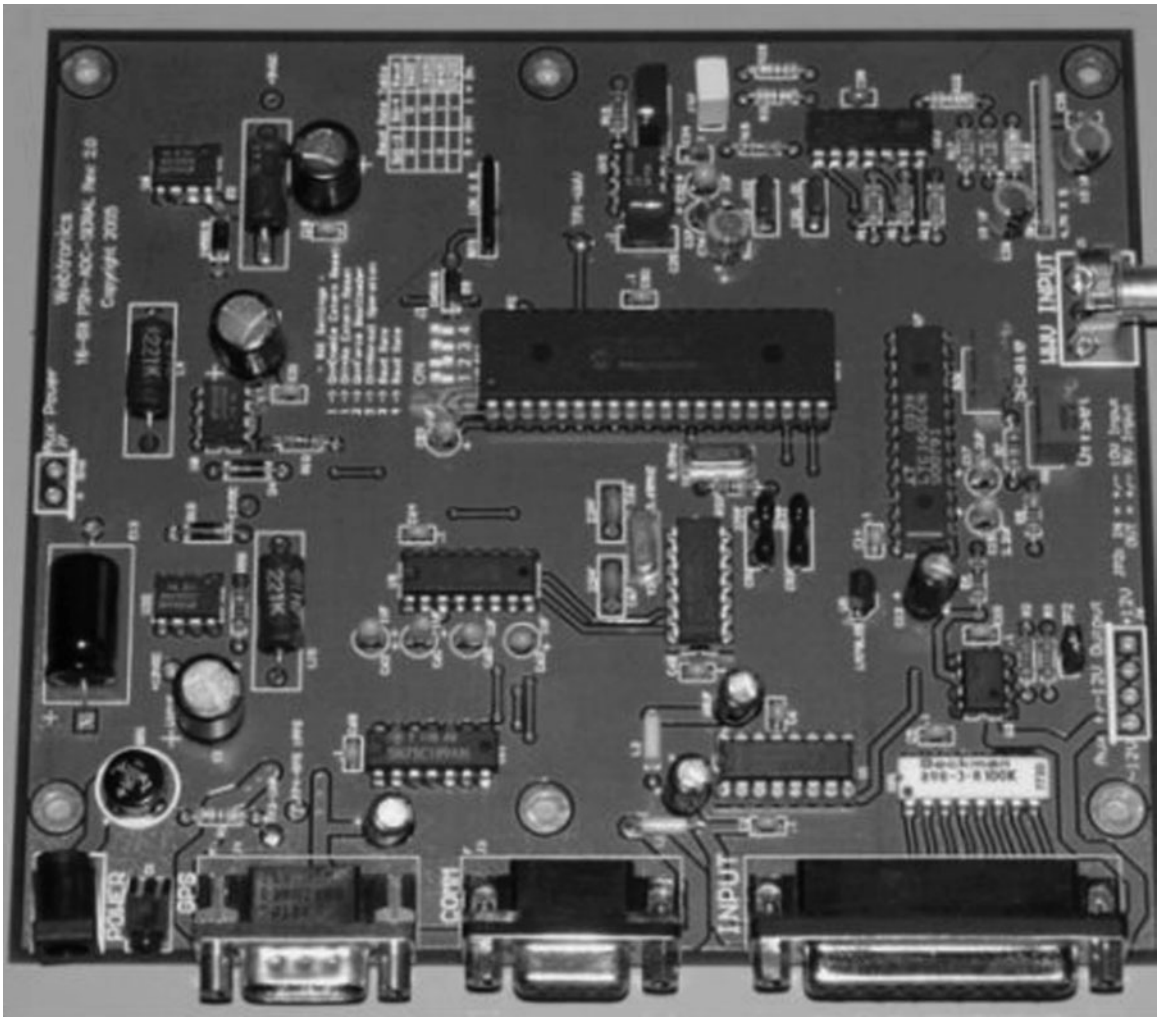

Figure 24-5 *16-bit analog to digital converter*

- Standalone ADC Board with RS-232 Serial Output
- 8 Single-Ended Analog Input Channels
- Compatible with WinSDR Datalogging Software
- Time Accuracy < 3 Millisecond with GPS Timing System
- Uses GPS, WWV, WWVB and Other Time References for Accurate Time Keeping
- Low power Requirement: < 1 Watt without Timing Reference; < 1.5 Watts with GPS Timing
- Uses Low Power High Speed PIC18F452 Microprocessor

Specifications

- Analog Inputs:
  - Channels: 8 Single-Ended Inputs
  - Resolution: 16-Bit Successive Approximation
  - Accuracy: 16 Bits
  - Dynamic Range: 96 dB
  - Input Range: ± 5 or ±10 Volts, Jumper Selectable
  - A/D Converter Chip: Linear Technology LTC1605CN
  - Input Impedance: 4.7k or 100k (Note 1)
- Sample Rates:
  - 200, 100, 50, 20 and 10 Samples Per Second
- WWV Time Correction Option:
  - Tone Detector and Bandpass Filter to Detect 800 ms Top of the Minute Tone Mark
  - ±20 Millisecond Time Accuracy when Locked to WWV Time Signal

- GPS Support:
  - Supports these GPS Receivers: Garmin GPS 16/18 Sensor or the Motorola ONCORE series of GPS receivers
  - ±3 Millisecond Time Accuracy when Receiver is Locked to GPS Time
- Board Size:
  - 6.500 × 5.750 inches or 16.51 × 14.605 centimeters
- Power Supply Requirements:
  - 16 to 28 VDC or 11 to 18 VAC at 100 MA or more
- PSN-ADC-SERIAL Version II Board without WWV Timing Circuitry and Power Supply - Cost: $185.00
- WWV Timing Option - Cost: $25.00
- Garmin GPS 18 Timing System - Cost: $98.00
- Power Supply Options:
  - 110 VAC 60 Hz Wall Mounted Power Supply - Cost: $10.00
  - Universal 110 VAC to 220 VAC 50 / 60 Hz Power Supply with one Adapter Plug - Cost: $25.00
- Six foot 9-pin Male / Female RS-232 Cable - Cost: $5.00
- Enclosures for the PSN-ADC-SERIAL Board.
- Plastic Box with Metal Front/Rear Panels - Cost: $15.00
  Box Size: L: 8.0 W: 7.8 H: 2.5 inches. This box can be used to hold the A/D and Amp/Filter boards. Note: This is just the box, you will need to drill any front/rear panel and mounting holes.

True 16-bit performance

The Analog to Digital converter chip on the PSN-ADC-SERIAL board has an internal noise level of ± 3 counts. With the use of over-sampling, the internal noise level of the chip can be averaged out to produce a true 16-bit (96 dB) dynamic range. The amount of oversampling depends on the sample rate. The number of samples that are averaged together at 200 samples per second is 16 and at sample rate below 200 sps the number of samples averaged together is 32.

Board differences

There are two versions of this ADC board. The boards are identical except for the Analog Input connector and location on the board. The board with the DB25 right angle connector is for customers who only need the ADC board. This version allows access to all of the connectors at the edge of the board. The board with the 26 pin ribbon connector header can be used with the PSN-ADC-EQAMP Amplifier/Filter board with mating 26 pin header connector. This arrangement produces a module that can be mounted in an off-the-self box.

Software

WinSDR (Download) can be used to record data using the PSN-ADC-SERIAL Version I or II ADC boards. This program is included with the purchase of the board. This Windows DLL Driver (pdf version) can be used by programmers who would like to write their own data-logger program or add the A/D board to an existing program. The DLL Driver zip file includes an example, written in VC++ 6.0, showing how to use the PSN A/D Board DLL file.

Earthworm, a powerful seismic software package that can run under various operating systems, can now receive data using the PSN-ADC-SERIAL board or WinSDR. See this link for more information. A device driver for the Windows version of Seislog is now available. Contact me for more information.

To order a board contact Larry at: 1.650.365.7162

16-Bit ADC system board: http://psn.quake.net/serialatod.html#16-Bit%20Performance

WinSDR software: http://psn.quake.net/winsdr/

This page intentionally left blank

Appendix

Electronic Parts Suppliers

We have listed some electronic parts suppliers. We cannot guarantee any particular level of service from these companies and supply this list only as a convenience to our readers.

Allegro Electronic Systems - Semiconductor manufacturer
3 Mine Mountain Rd. Cornwall
Bridge, CT. 06754
Phone: 1-203-672-0123
http://www.allegromicro.com/

AmaSeis Seismic Software - Free seismic software available from: Alan Jones
www.binghamton.edu/faculty/jones/AmaSeis.html

Amidon Associates Inc. - Toroidal cores
240 Briggs Ave
Costa Mesa, CA 92626
Phone: 714-850-4660 1-800-898-1883
http://www.amidoncorp.com/
Email: sales@amidoncorp.com

Analog Devices Inc. - Now selling their parts to individual semiconductors on the Internet
3 Technology Way
Norwood, MA - 02062
http://www.analog.com/

Centerpointe Electronics, Inc. - I-F can type inductors/transformers
5241 Lincoln Ave. Unit #A-7
Cypress, CA 90630
Email: cpcares@sbcglobal.net
http://www.cpcares.com/

Circuit Specialist Inc. - Good parts selection, test equipment, kits
220 South Country Club Drive #2
Mesa, AZ 85210
Phone: (800) 528-1417 +1-480-464-2485
http://www.cir.com/

C & S Sales - Some kits and test equipment
Wheeling, IL 60090
Phone: 1-800-292-7711
http://www.cs-sales.com/
sales@cs-sales.com

Dan's Small Parts and Kits - Low tech site, but nice parts selection
PO Box 3634
Missoula, Montana. 59806-3634
Phone: 406 258 2782
http://www.danssmallpartsandkits.net/

DATAQ Instruments, Inc. - A/D data-loggers
241 Springside Drive
Akron, OH 44333
Phone: 330-668-1444
http://www.dataq.com/
E-mail: info@dataq.com

Debco Electronics Inc. - Sometimes has some good bargains
4025 Edwards Road
Cincinnati, Ohio, USA, 45209
Phone: (513) 531-4499
http://www.debco.com/

Copyright © 2008 by The McGraw-Hill Companies, Inc. Click here for terms of use.

Digi-Key Corporation - Extensive selection of electronic parts on-line
PO Box 677
Thief River Falls, Minnesota 56701
http://www.digikey.com/

Downeast Microwave Inc - Microwave components and kits for amateurs
954 Rt. 519 Frenchtown
NJ 08825 USA
Phone: 908-996-3584 (Voice)
http://www.downeastmicrowave.com/

Edmund Scientific Company - Science items, parts and kits
101 E. Gloucester Pike
Barrington, New Jersey 08007
Phone: 800-728-6999
http://scientificsonline.com/

Electronic Goldmine - Many unique surplus parts
9322 N. 94th Way
Suite 104
Scottsdale, AZ 85258
http://www.goldmine-elec.com/

Electronix Express - Parts and kits
365 Blair Road
Avenel, New Jersey 07001
Phone: 1-800-972-2225
http://www.elexp.com/

Electus Distribution - Ferrite coil formers
100 Silverwater Road, Silverwater
Sydney, Australia
http://www.electusdistribution.com.au/productResults.asp?form=CAT&CATID=34&SUBCATID=83

Elenco Electronics Inc. - Radio and electronic kits
150 Carpenter Avenue
Wheeling, IL 60090 USA
http://www.elenco.com
email: sales@elenco.com
(847) 541-3800
(800) 533-2441

Fat Quarters Software - FM-1, FM-3 magnetometer sensors
24774 Shoshonee Dr.
Murieta, CA 92562
Phone: 909-698-7950
http://www.fatquarterssoftware.com

FAR Circuits - Circuit boards for many projects.
18N640 Field Court
Dundee, Illinois 60118
Phone: (847) 836-9148 Voice/Fax
http://www.farcircuits.net/

Freescale Semiconductor - Semiconductor manufacturer
7700 West Parmer Lane
Mailstop PL-02
Austin, TX 78729
http://www.freescale.com/

Hamtronics - Radio kits and parts
65 Moul Road
Hilton, NY 14468-9535
http://www.hamtronics.com/

Kits and Parts - Semiconductors and Toroids
http://partsandkits.com/

Linear Technology Corporate Headquarters - Manufacturer of high quality op-amps
1630 McCarthy Blvd.
Milpitas, CA 95035-7417
Phone: 408-432-1900
http://www.linear.com/index.jsp

Loadstone Pacific - Ferrite coil formers, inductors
4769 East Wesley Drive
Anaheim, CA 92807
Phone: 800-694-8089 714-970-0900
http://www.lodestonepacific.com/coilforms

Maplin Electronics - AM Radio chip ZN414/MK484
Maplin Electronics Ltd
National Distribution Center
Valley Road
Wombwell
Barnsley
South Yorkshire
S73 0BS
www.maplin.co.uk

Maxim Integrated Circuits - IC manufacturer - great documentation samples
120 San Gabriel Drive
Sunnyvale, CA 94086
Phone: 408-737-7600
http://www.maxim-ic.com/

Mincircuits - RF parts, MMICs, mixers, etc.
PO Box 350166,
Brooklyn, NY 11235 U.S.A.
Phone: (718) 934-4500
http://www.mini-circuits.com/

Mouser Electronics - Extensive electronics components, no minimum order
1000 North Main Street
Mansfield, TX 76063-1514
http://www.mouser.com/

National Semiconductor - Semiconductor manufacturer
2900 Semiconductor Dr.
PO Box 58090
Santa Clara, California
USA 95052-8090
Phone: (408) 721-5000
http://www.national.com/

Newark Electronics - Extensive inventory of electronic parts
4801 North Ravenswood Avenue
Chicago, Illinois 60640-4496
Phone: 1-800-342-1445
http://www.newark.com/

Ocean State Electronics - AM Radio chip ZN414/MK484
PO Box 1458
6 Industrial Drive
Westerly, RI 02891
Phone: 1-401-596-3080
http://www.oselectronics.com

Onset Computers - HOBO Data Loggers
PO Box 3450
Pocasset, MA 02559
Phone: 800-564-4377
www.onsetcomp.com

Public Seismic Network - 16-bit Analog to Digital converter
Larry Cochrane
http://psn.quake.net/serialatod.html
email: lcochrane@webtronicsc.oom

Radio Jove Project - Radio Jupiter project
c/o Dr. James Thieman
Code 633
NASA's GSFC
Greenbelt, MD 20771
Phone: 1-301-286-9790

Radio Shack - The Internet version of the omnipresent store
Riverfront Campus World Headquarters
300 Radio Shack Circle
Fort Worth, TX 76102-1964
Phone: (817) 415-3700
http://www.radioshack.com/home/index.jsp

Radio-Sky Publishing - Amateur radio astronomy, parts and publications
PMB 242
PO Box 7063
Ocean View, Hawaii 96737
http://www.radiosky.com/

Ramsey Electronics - Electronic kit supplier
590 Fishers Station Dr.
Victor, NY 14564 USA
Phone: 800-446-2295
http://www.ramseyelectronics.com/

RF Parts Company - Small RF parts
435 South Pacific Street
San Marcos, California 92078
http://www.rfparts.com/

RP Electronics
2060 Rosser Ave.
Burnaby B.C.
Canada V5C 5Y
Phone: (604) 738-6722
http://www.rpelectronics.com

Speake & Co Limited - Manufacturer of FM1, FM-3 magnetometer Elvicta Estate
Crickhowell
Powys NP8 1DF
United Kingdom

Texas Instruments Inc. - Semiconductor manufacturer
12500 TI Boulevard
Dallas, TX 75243-4136
Phone: 800-336-5236
http://www.ti.com/

Toko America, Inc.
1250 Feehanville Drive
Mt. Prospect, IL 60056
Phone: (847) 297-0070
1-800-PIK-TOKO
http://www.tokoam.com/

Vectronics - Radio kits
300 Industrial Park Road
Starkville, MS 39759
http://www.vectronics.com/

Vishay Intertechnology, Inc. - Dual matched N-Channel FETs
63 Lincoln Highway
Malvern, PA 19355-2143
http://www.vishay.com/

Interesting Web-sites

Amateur Radio Relay League - Ham radio organization
225 Main Street
Newington, CT, 06111-1494 USA
Phone: 860-594-0200
email: http://www.arrl.org/

ELFRAD Group - Low frequency research group
114 Artist Ln
Statesville, NC 28677
http://www.elfrad.com/
email: cplyler@elfrad.com

Radio Waves Below 22 kHz -Interesting low frequency web-site
http://www.vlf.it/

Index

Headings in *italics* indicate projects. Page numbers in *italics* indicate illustrations.

3-terminal regulators *14*, 16
6N2-meter Band Amateur Radio receiver 127–39
  6N2 meters *137*
  antenna 138–39
  appearance *128*
  band plan *139*
  coil winding information *135*
  diagram (block) *129*
  diagram (schematic) *131*
  frequency coverage (diagram) *130*
  receiver specifications *129*
  semiconductor pin-outs *136*
  single vs. dual conversion *130*
80/40 Meter Direct Conversion Receiver 94–103
  antenna 102, *102*
  appearance *95*
  band change components *100*
  band tuning range *100*
  diagram (schematic) *96*
  overload problems 102
  semiconductor pin-outs *99*
  tuning 102
  W1AW code practice sessions *103*

A

Aircraft Band Receiver (active) 140–50
  antenna 149
  appearance *142*
  audible communications 141–43
  coil winding information *147*
  diagram (schematic) *144*
  semiconductor pin-outs *147*
  tuning 150
Aircraft Band Receiver (passive) 150–52
  antenna 151–52
  diagram (schematic) *151*
aircraft frequencies 150
AM (amplitude) modulation 4–6
  wave-form *6*
AM radio broadcasting 1, 2, 4, 49–51
  carrier and modulation signals *51*
  diagram (block) *51*
AM radio receiver 49–58
AM/Shortwave Crystal Radio 39–40, 46–48
  appearance *46*
  diagram (block) *47*
  shortwave coil assembly *47*
AM Simple Crystal Radio 39–44
  amplitude modulation *40*
AM Simple Crystal Radio (Continued)
  antenna 40, 44, *44*
  appearance *42*
  coil winding 44
  detector 41
  diagram *41*
amateur radio receiver 127–39
  bands *10*
Amateur Radio Relay Ligue (ARRL) 103, 128
Ambient Power Receiver 186–91
  antenna 188, *190*
  appearance *187*
  diagram (schematic) module I *187*
  diagram (schematic) module II *191*
  earthquakes 191
  grounding 188, 190
amplifier 9–10
amplitude modulation *see* AM
Analog to Digital Converters (ADCs) 262–71
  16-bit converter 269–71
  16-bit converter (appearance) *270*
  8 channel converter 264–68
  8 channel converter diagram *265*
  Dataq kit (appearance) *268*
  Dataq kits 268–69
  semiconductor pin-outs *264*
  single channel converter 262–64
  single channel converter diagram *263*
  software 271
antennas 3, 9–10
  APM-II 190–91
  basic long-wire *44*
  capacitive hat *184*
  capacitive hat antenna 177, 179
  dipole *90*, *102*, *114*, 243, *243*
  Discone 126, 138
  dual-dipole *244*
  ground rods 231–32
  horizontal long-wire 188, *190*
  loop *210*
  loop antenna *211*
  power supply 184
  power supply schematic *185*
  quadrifillar 259, *259*, 261
  VHF scanner 138, 149
  VHF turnstile 259, *259*, 261
  whip 126, 138, 149, 151–52
Armstrong, Edwin H. 3
ARRL (Amateur Radio Relay Ligue) 103, 128
atomic clock 105–06

Copyright © 2008 by The McGraw-Hill Companies, Inc. Click here for terms of use.

aurora borealis 213–14
Aurora Monitor 212–23
appearance *214*
coil winding information 219–20
control/display schematic circuit *216*
control/display unit 214–15
semiconductor pin-outs *219*
sensor *220*
sensor head schematic circuit *215*
sensor head unit 214

B

Barkhausen, H. 155
Branly, Edouard 1
bugs (FM) 60, 68–69

C

cable *15*
capacitance code 25, *27*
capacitors 13–16, 42
ceramic *13*, 14–15
code chart *27*
disk 63–64
electrolytic *13*, 15, 64
identification 12, 25
MKT polyester *13*, 14
non-electrolytic 97
polarization 42
polyester (greencap) *13*, 14
preparing leads *28*
trimmer *13*
variable *13*, 16
variable (alternative) 22–24
circuits
integrated *14*
printed 34–36
Clapp Oscillator *see* Colpitts oscillator
coils 44 *see also* inductors
soldering to the pins 32
color code chart *26*
Colpitts oscillator *19*
circuit *20*
Conrad, Frank 50
converters, analog to digital 262–71
cristal oscillator 20
circuit *21*
pictorial diagram *21*
Cristal radio projects 39–48
AM/Shortwave Crystal Radio *39–40*
AM Simple Crystal Radio *39*
FM Crystal Radio *39*
cycles per second *see* Hertz

D

Daily, William 190–91
dawn chorus 156
de-solder 36–37
detector 41
deviation 132
diagrams, reading 18–24
Digital Radio Mondiale (DRM) 8
digital transmission 3
diodes 16
germanium 44
LEDs (light-emitting diodes) *14*
preparing leads *28*
silicon *14*, 44
zener *14*
disk capacitors 63–64
Doerle Receiver - 6SL7 *70–71*, 78–80
6SL7 tube 78
diagram (schematic) *79*
history 78
Doerle Receiver - Original 70–78
appearance *71*
coil winding *75*, *76–77*
diagram (schematic) *72*
history 71
original parts 73
short-wave band frequencies *75*
double-sideband (DSB) AM 6

E

Earth Field Magnetometer 192–202
appearance *193*, *200*
connection diagram *196*
diagram (schematic) *195*
flux-gate sensor *194*
flux-gate sensor board *197*
flux-gate sensor diagram (block) *194*
magnetic fields 193
power supply schematic *201*
semiconductor pin-outs *200*
earthquakes, predicting 191
Eckersley, Smith, Tremellen 156
electret microphone *15*
electric cables 18
electromagnetism 1–4
electronic components 12–24, *13*, *14*, *15*
installation 25–38
preparing leads 25, *26*, *28*, *29*
ELFRAD group 225, 232
extremely low frequency (ELF) *see* ELFRAD

F

Faraday, Michael 1
ferrite bead (slug) 17
Fessenden, Reginald 50
FET *see* transistors
firefighters VHF 117
flux 29, 30
FM broadcast receiver 59–69
FM Crystal Radio 39, 45–46
appearance *45*
circuit *45*

FM (frequency modulation) 6–7, *61*
radios 3
wave-form *7*
FM radio 3
Frazier, John 2
frequence modulation *see* FM
frequencies (spectrum) *2*, 4
frequency drift 61

G

galena crystal 41, 44
geophysical alerts 115
GPS (Global Positioning System) 3, 115
greencaps *13*, 14
grounding 188, 190

H

Ham Radio licence 9, 103, 128
Hartley oscillator 19, *19*
headphones 44
health and safety 38
heatsinks *15*, 16
Henry, Joseph 1
Hertz, Heinrich 1
High Frequency (HF) bands 4
history, radio 1–3

I

IC (integrated circuits) 16
3-terminal regulators 16
IC Shortwave Radio Receiver 81–93
appearance *82*
diagram (block) *83*
diagram (schematic) *84*
evening broadcast listings *92–93*
frequency range selection *89*
popular shortwave bands *91*
semiconductor pin-outs *88*
shortwave antennas 90–91
shortwave listening (SWL) 82–83, 91–93
Induction Loop Receiving System 165–74
appearance *169*
coil winding information 171
diagram (block) *167*
induction loop technology 166
receiver 168–74
receiver schematic *170*
semiconductor pin-outs *173*
transmitter 167–68
transmitter I schematic *167*
transmitter II schematic *168*
use 173–74
induction loop technology 166
inductors (coils) *15*, 16–17
integrated circuits (IC) *14*, 16
preparing leads *29*
ionospheric disturbance receiver 203–11

J

Jupiter 234, *235*
Jupiter Radio Telescope 233–45
antenna 243–44, *243*, *244*
appearance *235*
diagram (block) *236*
diagram (schematic) *238*
planet 234, *235*
radio storms 244–45
semiconductor pin-outs *241*

L

LDR (light-dependent resistor) 13, *13*
leads, preparing 25
LEDs (light-emitting diodes) *14*, 16–17
power indicator light 125–26
licenses 9, 103, 128
US amateur radio bands *10*
light-dependent resistor (LDR) 13, *13*
light-emitting diodes *see* LEDs
lightning 176–77, *177*
Lightning Storm Monitor 175–85
antenna 177, 179, 184
diagram (schematic) *178*
lightning 176–77, *177*
semiconductor pin-outs *183*
listening-in
aircraft communication 141–43
public service VHF 117
loop antenna 210, *211*
loudspeakers *15*, 17

M

magnetic
fields 193
induction 166
storms 213–14
magnetometers 193
Marconi, Guglielmo 2
marine storm warnings 115
marine VHF 117
Maxwell, James Clerk 1
McClelland, R.S. 2
medium wave (MV) *see* AM
microphones *15*, 17
MKT capacitor *13*, 14
MOSFETs *see* transistors

N

narrow-band FM transmission 60–61
National Institute of Standards and Technology (NIST) 105–06
Natural Radio *see* whistlers
NPN *see* transistors

O

ohm (Ω) 12
OMEGA Navigation System 106, 115
oscillation 3
oscillators 9–10, 18–24

P

parts suppliers 272–75
PNP *see* transistors
police VHF 117
potentiometer (pot) 12–13, *13*
power indicator LED 125–26
power transistors *14*, 16
printed circuit (PC) boards 34–36
public service VHF 116–26, *126*

R

radar frequency band 1
radio frequency (RF) spectrum 1, 3–4
  chart *5*
radio storms (Jupiter) 244–45
radio telescope 233–45
radio waves 4, *6*, *7*
railroad VHF 117
receivers 9–10
  diagrams *11*
relays *15*, 17
resistors 12–13, *13*, 42
  codes 25
  color code chart *26*
  light-dependent 13, *13*
  preparing leads *26*
  tolerance 12
  variable 12
Rosenberg, Leo 2
rosin flux 30

S

satellite navigation *see* GPS
schematics, electronic 18–24
seismic network, public (PSN) 232
semiconductors 16 *see also* capacitors; diodes; resistors; transistors
  substitution 18
SHF (Super High Frequency) 4
shortwave
  bands 1, 91
  broadcast chart *9*, 92–93
  fadeout 204
shortwave listening (SWL) 8–9, 82–83, 91–93
shortwave radio 8
  receiver 81–93
silicon diodes *14*
single-sideband *see* SSB
sniffer coil 258
solder 30, 33
soldering 25, 29–38
  check list soldering 34
  check list un-soldering 37
  flux 29
  guns 30, 31–32
  irons 30–31, 37
  joint quality *35*, *36*
  mechanical joints 33–34, *33*, *34*
  overheating 32
  preparation (iron) 32
  preparation (material) 32–33
  printed circuit (PC) boards 34–36
  remove solder 36–37
  solder 30, 33
  station 31, *31*
  temperature 33
  trimming leads *36*
  ventilation 38
  to wire 32–33
  wire gauges 33
Solid-state FM Broadcast Receiver 59–69
  diagram (block) *61*
  diagram (schematic) *62*
  inductor coil winding information *66*
  semiconductor pin-outs *66*
speakers *15*, 17
SSB technology 2–3
  modulation 7–8
  wave-form *8*
Storey, L.R.O. 156
storms, electrical 176–77
sub-carriers 69
Sudden Ionospheric Disturbance Receiver 203–11
  antenna 210, *211*
  appearance *205*
  diagram (schematic) *205*
  power supply schematic *210*
  semiconductor pin-outs *209*
  short wave fadeout 204
  use 211
  VLF signal propagation 204–05
Super High Frequency (SHF) 4
switches 17–18
  electronic 16
  slider *15*

T

Tate, Joseph 186, 190–91
temperature (soldering) 33, 35
Thomas, William 2
thunderstorms 176–77
time code receiver 104–15
tinning 33, 34, 41
tools and supply 41
  hexagonal plastic tool 67–68
transformers *15*
transistorized radio 3
transistors 16
  FET *14*
  MOSFET *14*

transistors *(Continued)*
NPN *14*
PNP *14*
power transistors *14*
preparing leads *28*
TRF AM Radio Receiver 49–58
appearance *52*
diagram (block) *52*
diagram (schematic) *53*
semiconductor pin-outs *56*
trimpot *see* potentiometer (pot)
tube #19 71–73

U

UHF (Ultra High Frequency) 4
ultra-low frequency spectrum 225
Ultra-Low Frequency (ULF) Receiver 224–32
antenna 231–32
antenna circuit *231*
appearance *225*
diagram I (schematic) *226*
diagram II (schematic) *227*
ELFRAD group 225, 232
power supply schematic *227*
semiconductor pin-outs *231*
ULF-spectrum 225
un-solder 36–37
check list 37

V

Variable Frequency Oscillator (VFO) *see* VFO
VCO (Voltage Controlled Oscillator) 22–24, *23*
circuit *23*
pictorial diagram *24*
ventilation 38
Very High Frequency *see* VHF
Very Low Frequency *see* VLF
VFO (Variable Frequency Oscillator) 22
circuit *22*
pictorial diagram *23*
VHF Public Service Receiver 116–26
antenna 126
appearance *117*
coil winding information *123*
diagram (block) *118*
diagram (schematic) *119*
power LED 125
semiconductor pin-outs *123*
VHF public service frequency bands *126*
VHF (Very High Frequency) 1, 4
VLF (Very Low Frequency) 4
VLF Very Low Frequency Radio Receiver 153–64
appearance *157*
dawn chorus 156
diagram (schematic) *158*
recording 164
semiconductor pin-outs *161*
times of listening 164
using the receiver 162–63
VLF radio stations *163*
whistlers 154–56
voltage controlled oscillator *see* VCO
volume control *see* potentiometer (pot)

W

W1AW on air code practice sessions *103*
Weather Satellite Receiver 246–61
antenna 259, *259*, 261
appearance *250*
coil winding information 254, *256*, 258
diagram (block) *250*
diagram (schematic) *252*
frequencies *261*
operation 259–60
satellite view (USA) *248*
semiconductor pin-outs *256*
set-up 260–61
set-up diagram (block) *260*
weather VHF 117
whistler receiver 156–64
whistlers 154–56
wide-band FM transmission 60–61
wire *15*, 18
soldering to 32–33
WWV broadcast schedule *115*
WWV Time Code Receiver 104–16
antenna 114, *114*
appearance (inside) *106*
appearance (outside) *105*
atomic clock 105–06
coil winding information *112*
diagram (block) *107*
diagram (schematic) *108*
LED power indicator 113
NIST (Nat.Inst.Standards and Technology) 106
semiconductor pin-outs *112*
WWV broadcast schedule *115*

Z

zener diodes *14*, 64

Everything a *just slightly wicked* electronics hobbyist could want!

101 Spy Gadgets for the Evil Genius
Brad Graham & Kathy McGowan
0-07-146894-3

50 Model Rocket Projects for the Evil Genius
Gavin Harper
0-07-146984-2

Electronic Sensors for the Evil Genius
Thomas Petruzzellis
0-07-147036-0

MORE Electronic Gadgets for the Evil Genius
Robert Iannini
0-07-145905-7

50 Awesome Auto Projects for the Evil Genius
Gavin Harper
0-07-145823-9

Bionics for the Evil Genius
Newton Braga
0-07-145925-1

Mechatronics for the Evil Genius
Newton Braga
0-07-145759-3

123 PIC Microcontroller Experiments for the Evil Genius
Myke Predko
0-07-145142-0

Other Books Available:

Electronics Circuits for the Evil Genius
Dave Cutcher
0-07-144881-0

Electronic Gadgets for the Evil Genius
Robert Iannini
0-07-142609-4

123 Robotics Experiments for the Evil Genius
Myke Predko
0-07-141358-8

TAB ROBOTICS

Learn more. McGraw Hill Do more.

ELECTRONIC CIRCUITS FOR THE EVIL GENIUS™

SECOND EDITION

64 LESSONS WITH PROJECTS

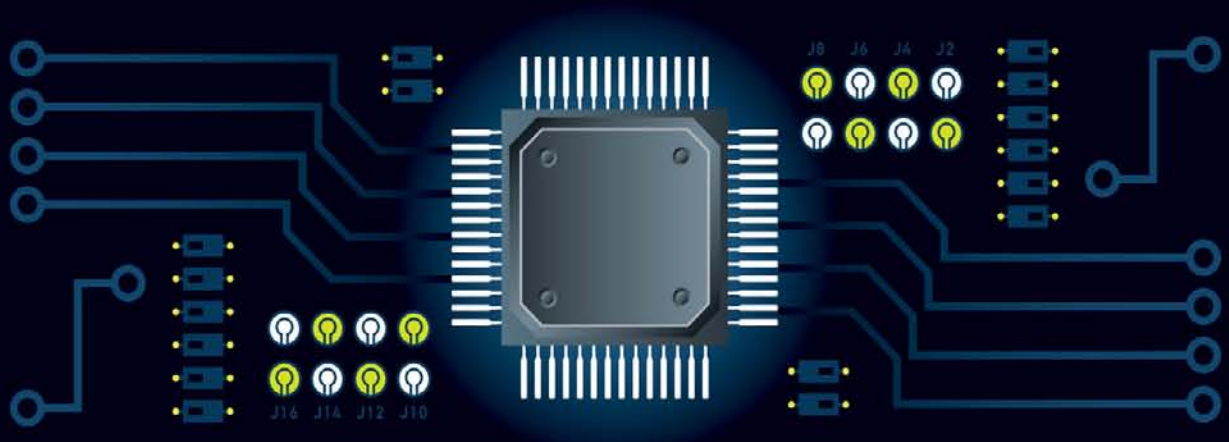

- Fun, hands-on projects cover circuits and circuit design
- Shows you how to build and modify your own electronic devices
- Filled with step-by-step instructions, illustrations, photos, and diagrams

TAB™

DAVE CUTCHER

Electronic Circuits for the Evil Genius™

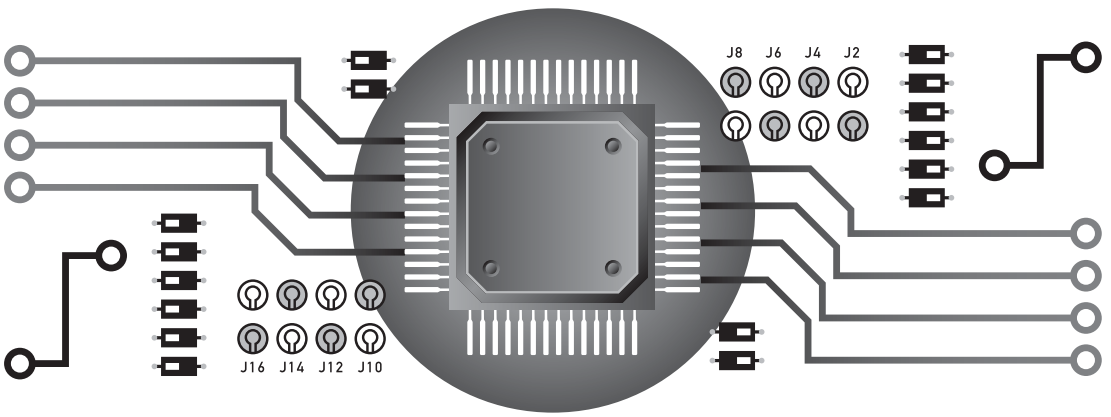

Evil Genius™ Series

Bike, Scooter, and Chopper Projects for the Evil Genius

Bionics for the Evil Genius: 25 Build-It-Yourself Projects

Electronic Circuits for the Evil Genius, Second Edition: 64 Lessons with Projects

Electronic Gadgets for the Evil Genius: 28 Build-It-Yourself Projects

Electronic Sensors for the Evil Genius: 54 Electrifying Projects

50 Awesome Auto Projects for the Evil Genius

50 Green Projects for the Evil Genius

50 Model Rocket Projects for the Evil Genius

51 High-Tech Practical Jokes for the Evil Genius

46 Science Fair Projects for the Evil Genius

Fuel Cell Projects for the Evil Genius

Holography Projects for the Evil Genius

Mechatronics for the Evil Genius: 25 Build-It-Yourself Projects

Mind Performance Projects for the Evil Genius: 19 Brain-Bending Bio Hacks

MORE Electronic Gadgets for the Evil Genius: 40 NEW Build-It-Yourself Projects

101 Outer Space Projects for the Evil Genius

101 Spy Gadgets for the Evil Genius

125 Physics Projects for the Evil Genius

123 PIC® Microcontroller Experiments for the Evil Genius

123 Robotics Experiments for the Evil Genius

PC Mods for the Evil Genius: 25 Custom Builds to Turbocharge Your Computer

PICAXE Microcontroller Projects for the Evil Genius

Programming Video Games for the Evil Genius

Recycling Projects for the Evil Genius

Solar Energy Projects for the Evil Genius

Telephone Projects for the Evil Genius

30 Arduino Projects for the Evil Genius

25 Home Automation Projects for the Evil Genius

22 Radio and Receiver Projects for the Evil Genius

Electronic Circuits for the Evil Genius™, Second Edition

64 Lessons with Projects

Dave Cutcher

New York Chicago San Francisco Lisbon London Madrid
Mexico City Milan New Delhi San Juan Seoul
Singapore Sydney Toronto

The McGraw-Hill Companies

Copyright © 2011 by The McGraw-Hill Companies, Inc. All rights reserved. Except as permitted under the United States Copyright Act of 1976, no part of this publication may be reproduced or distributed in any form or by any means, or stored in a database or retrieval system, without the prior written permission of the publisher.

ISBN: 978-0-07-174413-3

MHID: 0-07-174413-4

The material in this eBook also appears in the print version of this title: ISBN: 978-0-07-174412-6,
MHID: 0-07-174412-6.

All trademarks are trademarks of their respective owners. Rather than put a trademark symbol after every occurrence of a trademarked name, we use names in an editorial fashion only, and to the benefit of the trademark owner, with no intention of infringement of the trademark. Where such designations appear in this book, they have been printed with initial caps.

McGraw-Hill eBooks are available at special quantity discounts to use as premiums and sales promotions, or for use in corporate training programs. To contact a representative please e-mail us at bulksales@mcgraw-hill.com.

Trademarks: McGraw-Hill, the McGraw-Hill Publishing logo, Evil Genius™, and related trade dress are trademarks or registered trademarks of The McGraw-Hill Companies and/or its affiliates in the United States and other countries and may not be used without written permission. All other trademarks are the property of their respective owners. The McGraw-Hill Companies is not associated with any product or vendor mentioned in this book.

Information has been obtained by McGraw-Hill from sources believed to be reliable. However, because of the possibility of human or mechanical error by our sources, McGraw-Hill, or others, McGraw-Hill does not guarantee the accuracy, adequacy, or completeness of any information and is not responsible for any errors or omissions or the results obtained from the use of such information.

TERMS OF USE

This is a copyrighted work and The McGraw-Hill Companies, Inc. ("McGrawHill") and its licensors reserve all rights in and to the work. Use of this work is subject to these terms. Except as permitted under the Copyright Act of 1976 and the right to store and retrieve one copy of the work, you may not decompile, disassemble, reverse engineer, reproduce, modify, create derivative works based upon, transmit, distribute, disseminate, sell, publish or sublicense the work or any part of it without McGraw-Hill's prior consent. You may use the work for your own noncommercial and personal use; any other use of the work is strictly prohibited. Your right to use the work may be terminated if you fail to comply with these terms.

THE WORK IS PROVIDED "AS IS." McGRAW-HILL AND ITS LICENSORS MAKE NO GUARANTEES OR WARRANTIES AS TO THE ACCURACY, ADEQUACY OR COMPLETENESS OF OR RESULTS TO BE OBTAINED FROM USING THE WORK, INCLUDING ANY INFORMATION THAT CAN BE ACCESSED THROUGH THE WORK VIA HYPERLINK OR OTHERWISE, AND EXPRESSLY DISCLAIM ANY WARRANTY, EXPRESS OR IMPLIED, INCLUDING BUT NOT LIMITED TO IMPLIED WARRANTIES OF MERCHANTABILITY OR FITNESS FOR A PARTICULAR PURPOSE. McGraw-Hill and its licensors do not warrant or guarantee that the functions contained in the work will meet your requirements or that its operation will be uninterrupted or error free. Neither McGraw-Hill nor its licensors shall be liable to you or anyone else for any inaccuracy, error or omission, regardless of cause, in the work or for any damages resulting therefrom. McGraw-Hill has no responsibility for the content of any information accessed through the work. Under no circumstances shall McGraw-Hill and/or its licensors be liable for any indirect, incidental, special, punitive, consequential or similar damages that result from the use of or inability to use the work, even if any of them has been advised of the possibility of such damages. This limitation of liability shall apply to any claim or cause whatsoever whether such claim or cause arises in contract, tort or otherwise.

ABRA
ELECTRONICS INC.

IN USA: 1320 Route 9, Champlain, N.Y. 12919
Tel.:800-717-2272 / Fax: 800-898-2272
IN CANADA 5580 Côte de Liesse, Montreal, Quebec H4P 1A9
Tel.:514-731-0117 / Toll Free: 1-800-361-5237 / Fax: 514-731-0154

Who is ABRA?

- *One stop broad line electronic component distributors specializing in servicing the educational market*
- *#1 supplier of custom made electronic kits across North America.*
  - *We'll package and label your kits*
  - *You simply hand them out to your student*
  - *All at **NO EXTRA CHARGE!***

Optional + related products customers purchase with the Evil Genius:

Autorange Multimeter
DM-2900...$54.95

Soldering Iron
SI-3090...$5.49

Solder Tube
STube...$1.29

See our website for specials:
www.abra-electronics.com

Website: www.abra-electronics.com • E-mail: kevin@abra-electronics.com

McGraw-Hill

TAB BOOKS

Make Great Stuff!

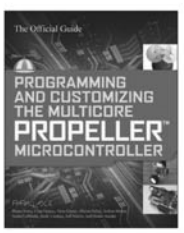

PROGRAMMING AND CUSTOMIZING THE MULTICORE PROPELLER MICROCONTROLLER: THE OFFICIAL GUIDE

by Parallax, Inc.

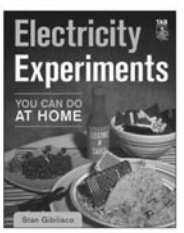

ELECTRICITY EXPERIMENTS YOU CAN DO AT HOME

by Stan Gibilisco

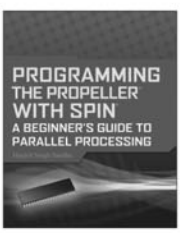

PROGRAMMING THE PROPELLER WITH SPIN: A BEGINNER'S GUIDE TO PARALLEL PROCESSING

by Harprit Sandhu

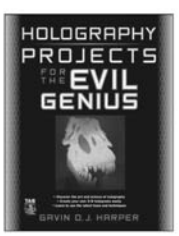

HOLOGRAPHY PROJECTS FOR THE EVIL GENIUS

by Gavin Harper

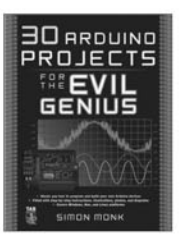

30 ARDUINO PROJECTS FOR THE EVIL GENIUS

by Simon Monk

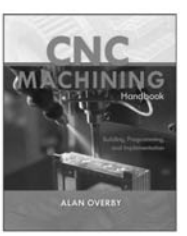

CNC MACHINING HANDBOOK: BUILDING, PROGRAMMING, AND IMPLEMENTATION

by Alan Overby

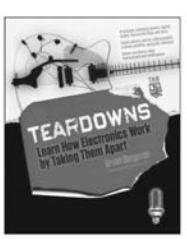

TEARDOWNS: LEARN HOW ELECTRONICS WORK BY TAKING THEM APART

by Bryan Bergeron

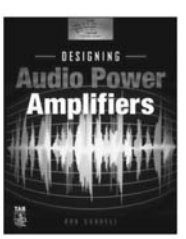

DESIGNING AUDIO POWER AMPLIFIERS

by Bob Cordell

ELECTRONIC CIRCUITS FOR THE EVIL GENIUS, SECOND EDITION

by Dave Cutcher

Learn more. Mc Graw Hill Do more.

MHPROFESSIONAL.COM

McGraw-Hill

TAB BOOKS

Make Great Stuff!

PICAXE MICROCONTROLLER PROJECTS FOR THE EVIL GENIUS

by Ron Hackett

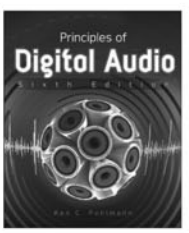

PRINCIPLES OF DIGITAL AUDIO, SIXTH EDITION

by Ken Pohlmann

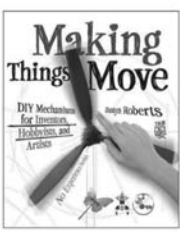

MAKING THINGS MOVE: DIY MECHANISMS FOR INVENTORS, HOBBYISTS, AND ARTISTS

by Dustyn Roberts

RECYCLING PROJECTS FOR THE EVIL GENIUS

by Alan Gerkhe

PROGRAMMING & CUSTOMIZING THE PICAXE MICROCONTROLLER, SECOND EDITION

by David Lincoln

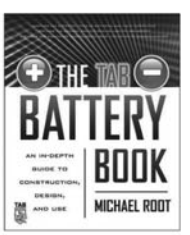

THE TAB BATTERY BOOK: AN IN-DEPTH GUIDE TO CONSTRUCTION, DESIGN, AND USE

by Michael Root

RUNNING SMALL MOTORS WITH PIC MICROCONTROLLERS

by Harprit Singh Sandhu

MAKING PIC MICROCONTROLLER INSTRUMENTS & CONTROLLERS

by Harprit Singh Sandhu

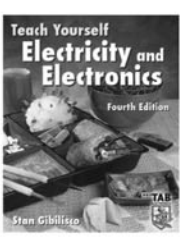

TEACH YOURSELF ELECTRCITY AND ELECTRONICS, FOURTH EDITION

by Stan Gibilisco

Learn more. Mc Graw Hill Do more.

MHPROFESSIONAL.COM

About the Author

Dave Cutcher is a retired high school shop teacher. He always coaxed his students to believe in themselves and that success in life was not limited to school. He taught young people and electronics was just the topic. Currently living in British Columbia, he teaches night school courses and does volunteer work within the community. People comment that he always thinks outside of the box. His reply, “What box?” As a life long learner and adult with ADHD, he is interested in everything because everything is interesting.

This page intentionally left blank

Contents at a Glance

PART ONE Components 1

1 Components 5
2 Resist If You Must 15
3 More Components and Semiconductors 25
4 Two Projects and Then Some More 43

PART TWO Introduction to Digital Electronics . . 57

5 Digital Logic 61
6 The First NAND Gate Circuit 77
7 Analog Switches for Digital Circuits 91
8 The NAND Gate Oscillator 99
9 How Do We Understand What We Can't See? 107
10 Digital Logic Project 127

PART THREE Counting Systems in Electronics . . 145

11 Introducing an Analog-to-Digital Converter 149
12 The 4017 Walking Ring Counter 159
13 Running a Seven-Segment Display 169
14 Define, Design, and Make Your Own Project 183

PART FOUR Amplifiers: What They Are and How to Use Them 195

15 What Is an Amplifier? 199
16 Exploring the Op Amp 215
17 Applying the Op Amp: Building the Intercom 235
18 Prototype and Design: Patience Has Its Rewards 247

PART FIVE Appendices 261

A Common Component Packaging 263

B Capacitors: Reading and Decoding 265

C Animations List 269

D Glossary 271

E Make Your Own Printed Circuit Boards 281

Index 287

Contents

Acknowledgments xiii

Preface xv

Common Components, Symbols, and Appearance xvii

PART ONE Components 1

1 Components 5
Lesson 1 Inventory of Parts Used in Part One 5
Lesson 2 Major Equipment 8
Lesson 3 Your First Circuit 11

2 Resist If You Must 15
Lesson 4 Reading Resistors 15
Lesson 5 The Effect Resistors Have on a Circuit 17
Lesson 6 The Potentiometer 19
Lesson 7 Light-Dependent Resistors 21

3 More Components and Semiconductors 25
Lesson 8 Capacitors and Push Buttons 25
Lesson 9 Introducing Transistors 31
Lesson 10 The PNP Transistor 34
Lesson 11 The Phototransistor: Shedding Some Light on Another Component . . 38

4 Two Projects and Then Some More 43
Lesson 12 Your First Project: The Automatic Night Light 43
Lesson 13 Specialized Transistors—The SCR 49
Lesson 14 The Regulated Power Supply 53

PART TWO Introduction to Digital Electronics . . 57

5 Digital Logic 61
Lesson 15 A Spoiled Billionaire 61
Lesson 16 The Basic Digital Logic Gates 66
Lesson 17 Integrated Circuits CMOS ICs 72

6 The First NAND Gate Circuit 77
Lesson 18 Building the First NAND Gate Circuit 77
Lesson 19 Testing the Input at Test Point 1 80
Lesson 20 Test Point 2—The NAND Gate Processor at Work 81

Lesson 21 Test Point 3—Introducing the Resistor/Capacitor Circuit 83
Lesson 22 Test Point 4—The Inputs Are Switches 86

7 Analog Switches for Digital Circuits 91
Lesson 23 Understanding Voltage Dividers 91
Lesson 24 Create a Light-Sensitive Switch 96
Lesson 25 The Touch Switch 97

8 The NAND Gate Oscillator 99
Lesson 26 Building the NAND Gate Oscillator. 99
Lesson 27 Understanding the NAND Gate Oscillator 103

9 How Do We Understand What We Can't See? 107
Lesson 28 Controlling the Flash Rate 107
Lesson 29 Create a Sound Output and Annoy the Person Next to You. 110
Lesson 30 Introducing the Oscilloscope 112
Lesson 31 Scoping Out the Circuit 119
Lesson 32 Using a Transistor to Amplify the Output 122
Lesson 33 The Photo Transistor: You Can't Do This with an LDR 124

10 Digital Logic Project 127
Lesson 34 Design—Systems and Samples 127
Lesson 35 Consider What Is Realistic 140
Lesson 36 Building Your Project 142

PART THREE Counting Systems in Electronics . . 145

11 Introducing an Analog-to-Digital Converter 149
Lesson 37 Introducing Possibilities—Electronics That Count 149
Lesson 38 RC1—Creating the Switch 150
Lesson 39 Introducing the 4046 Voltage-Controlled Oscillator 153

12 The 4017 Walking Ring Counter 159
Lesson 40 Introducing the Walking Ring 4017 Decade Counter 159
Lesson 41 Understanding the Clock Signal Used by the 4017 163
Lesson 42 Controlling the Count—Using the Chip's Control Inputs 166

13 Running a Seven-Segment Display 169
Lesson 43 Introducing the Seven-Segment LED 169
Lesson 44 Control the Seven-Segment Display Using the 4511 BCD 170
Lesson 45 Decimal to Binary—The 4516 174
Lesson 46 The Displays Automatically Fade Out 180

14 Define, Design, and Make Your Own Project 183
Lesson 47 Defining and Designing Your Project 183
Lesson 48 Your Project: If You Can Define It, You Can Make It!. 189

PART FOUR Amplifiers: What They Are and How to Use Them 195

15 What Is an Amplifier? 199
Lesson 49 Transistors as Amplifiers and Defining Current 199
Lesson 50 Defining Work, Force, and Power 205
Lesson 51 What Do I Have to Gain?: Definitions 210
Lesson 52 The World Is Analog, So Analog Is the World 212

16 Exploring the Op Amp 215
Lesson 53 Alternating Current Compared with Direct Current 215
Lesson 54 AC in a DC Environment 220
Lesson 55 Setting Up the Operational Amplifier 222
Lesson 56 Using Feedback to Control Gain 229

17 Applying the Op Amp: Building the Intercom 235
Lesson 57 Building a Power Amplifier Controlled by an Op Amp 235
Lesson 58 The Electret Microphone 238
Lesson 59 Using the Speaker as a Microphone 240
Lesson 60 Introducing Transformers and Putting It All Together 242

18 Prototype and Design: Patience Has Its Rewards 247
Lesson 61 Systems and Subsystems 248
Lesson 62 Switching to the Two-Way Door Phone 252
Lesson 63 Design and Applications: Exploring the Possibilities 255
Lesson 64 Assembling the Project 259

PART FIVE Appendices 261

A Common Component Packaging 263
Transistors 263
Potentiometers 263
Transformers 264

B Capacitors: Reading and Decoding 265
Reading Values 265
Tolerance: Quality and Accuracy of Capacitors 266

C Animations List 269
Related Animations 269

D Glossary 271

E Make Your Own Printed Circuit Boards 281

Index 287

This page intentionally left blank

Acknowledgments

For a variety of reasons, there are many people I need to thank.

First are my current guinea pigs, who chose to be caged in a classroom with me for three years running. Andrew Fuller who put together the game "When Resistors Go Bad." He and André Walther, two very original Evil Geniuses. I hope they understand the molar concept in chemistry now and won't raise a stink about me mentioning them. Eric Raue and Eric Pospisal, both for being the gentler geniuses they are. And Brennen Williams, who was more patient with me at times than I was with him. It was a difficult year.

I've had only one formal class in electronics, taught by Gus Fraser. He let me teach myself. Bryan Onstad gave me a goal to work toward and a platform to work on. Don Nordheimer was the first adult who actually worked through my material outside of the classroom environment. At the same time, he proofed the material from the adult perspective. I owe heartfelt thanks for the encouragement from Pete Kosonan, the first administrator who enjoyed the creative flow of the students as much as I did. For Steve Bailey, the second administrator I found who wasn't threatened by kids who knew more than he did. For the many others like Paul Wytenbrok, Ian Mattie, Judy Doll, and Don Cann, who continually encouraged me over the five years it took to develop this material. For Brad Thode, who introduced me to the necessity of changing careers within teaching back in 1989. For Mrs. Schluter and Mrs. Gerard, who taught me to believe in myself and recognize that there was room for creativity, not just what they wanted to hear.

Then to Dave Mickie who understood that conditions like ADHD cannot be cured, only managed. I'll be forever grateful for the encouragement and support he provided as I moved forward with my work.

To my parents, who knew they couldn't change me, so they encouraged me.

This page intentionally left blank

Preface

We casually accept electronics in our everyday world. Those who don't understand how it works are casually obedient. Those who take the time to learn electronics are viewed as geniuses. Do you want to learn how to control the power of electronics?

This text provides a solid introduction to the field of electronics, both analog and digital. *Electronic Circuits for the Evil Genius* is based on practical projects that exercise the genius that exists in all of us. Components are introduced as you build working circuits. These circuits are modified and analyzed to help explain the function of the components. It's all hands-on. Analysis is done by observation, using a digital multimeter, and using your computer as an oscilloscope.

You will build two major projects in the first part:

- An automatic night light
- A professional-quality alarm

The remainder of the text focuses on three major projects, one per part:

- Building a digital toy using logic gates
- Designing and building an application using digital counting circuits
- Applying transistors and Op Amps as you build a two-way intercom system

The lessons and prototype circuits built in the book are focused on developing a solid foundation centered on each of these major projects. You work from ideas to prototypes, producing a final product.

Additional materials for this book, including lesson quizzes and answers keys, are available online at **www.mhprofessional.com/computingdownload**.

I hope you enjoy building the projects and reading the book as much as I enjoyed developing them.

Dave Cutcher

This page intentionally left blank

Common Components, Symbols, and Appearance

Name	Class	Purpose	Symbol	Photograph
Electrolytic Capacitor	Capacitor Micro Farad (μF)	1. RC timer 2. Isolate AC 3. Buffer/filter	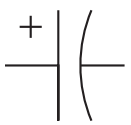	
Film Capacitor	Capacitor Nano Farad (nF)	1. RC timer 2. Isolate AC 3. Buffer/filter		
Disk Capacitor	Capacitor Pico Farad (pF)	1. RC timer 2. Buffer/filter		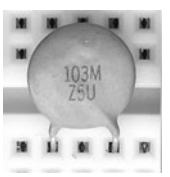
Power Diode	Diode	One way valve for high voltage	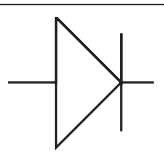	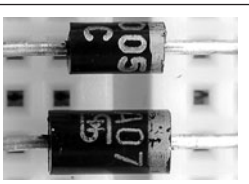
Signal Diode	Diode	One way valve for low voltage	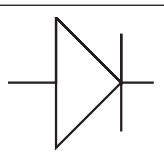	
Zener Diode	Diode	One way until voltage reaches preset breakdown	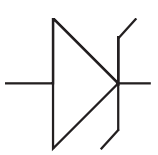	
Light Emitting Diode (LED)	Diode	1. Indicator 2. Light source 3. Signal transfer	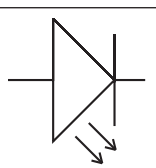	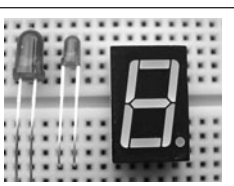

Name	Class	Purpose	Symbol	Photograph
Fixed Resistor	Resistor	Limits flow of current		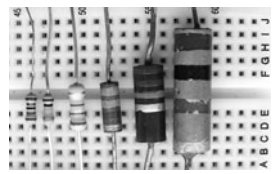
Potentiometer	Resistor	Adjustable resistor		
Light Dependent Resistor (LDR)	Resistor	General purpose light sensor	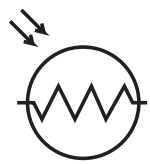	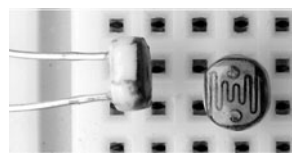
Push Button Normally Closed (PBNC)	Hardware	Momentary switch	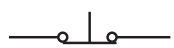	
Push Button Normally Open (PBNO)	Hardware	Momentary switch		
Single Pole Single Throw (SPST)	Hardware	Simple open/ close switch		
Single Pole Double Throw (SPDT)	Hardware	Controls single connection one of two directions		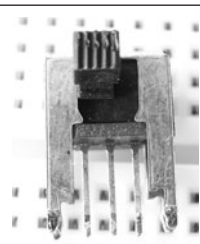
Double Pole Double Throw (DPDT)	Hardware	Matched control of two individual connections in two directions	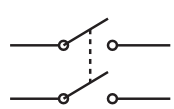	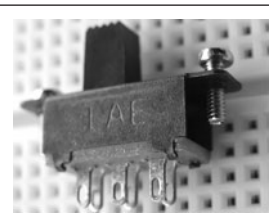

Name	Class	Purpose	Symbol	Photograph
Relay	Switch	Secondary switch controlled by primary circuit	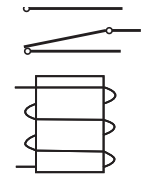	
Operational Amplifier	Amplifier	Very versitile, multipurpose component	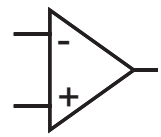	Available DIP and SIP Various packages
NPN Transistor	Transistor	Simple analog electronic switch. Needs both current and voltage to operate. Acts like PBNO.	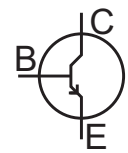	See Appendix A, Common Component Packaging
PNP Transistor	Transistor	Simple analog electronic switch. Needs both current and voltage to operate. Acts like PBNC.	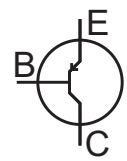	See Appendix A, Common Component Packaging
Photo Transistor	Transistor	Light sensitive analog and digital signal pickup.	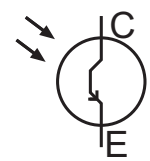	Various packaging
Silicon Controlled Rectifier (SCR)	Transistor latching circuit	Single event	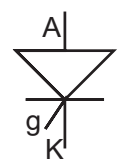	See Appendix A, Common Component Packaging
Power Regulator	Transistor	DC to DC power conversion.	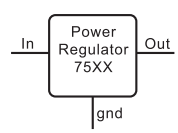	See Appendix A, Common Component Packaging
Field Effect Transistor	Transistor	Available in PNP and NPN configuration. Needs only voltage to operate.	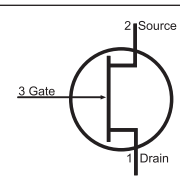	See Appendix A, Common Component Packaging

Name	Class	Purpose	Symbol	Photograph
Electret Microphone	Microphone	Sound pickup	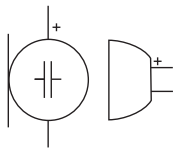	
Speaker	Speaker	Sound output		
Transformer	Transformer	Used to isolate or change AC voltage from a primary to secondary circuit.	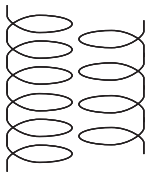	See Appendix A, Common Component Packaging
AND Gate	Logic Gate	InA InB Out H H H H L L L H L L L L	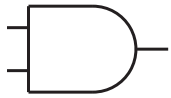	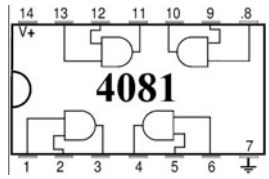
OR Gate	Logic Gate	InA InB Out H H H H L H L H H L L L	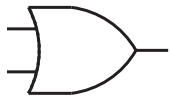	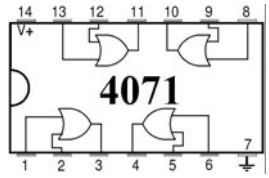
NAND Gate	Logic Gate	InA InB Out H H L H L H L H H L L H		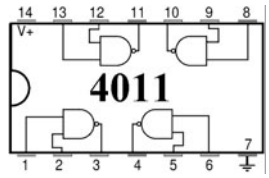
NOR Gate	Logic Gate	InA InB Out H H L H L L L H L L L H	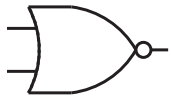	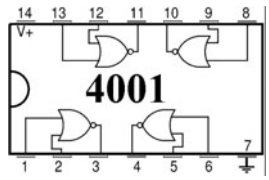

PART ONE

Components

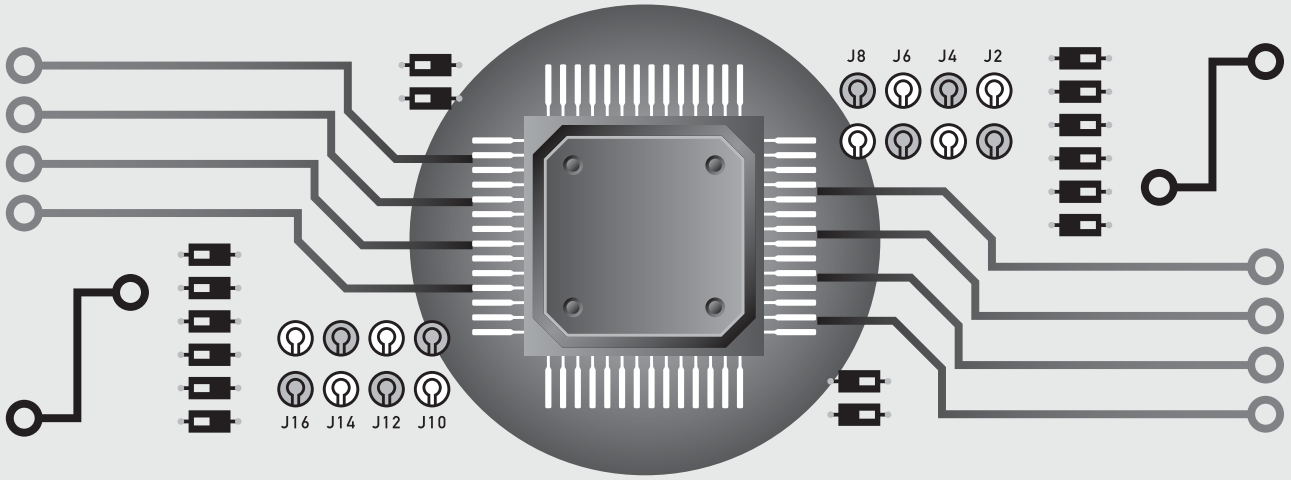

This page intentionally left blank

Building the Foundation

Imagine the solid foundation needed for the work being done on the construction shown here.

The Parts Bin on the following page has the complete parts list used in Part One. These are pictured in the front of the book in the section Common Components, Symbols, and Appearance.

Electronics is BIG. You need a solid foundation.

PARTS BIN FOR PART ONE

Description	Type	Quantity
Diode 1N4005	Semi(D)	3
LED	Semi(L)	3
2N-3906 PNP transistor	TO-92 case	1
2N-3904 NPN transistor	TO-92 case	1
Phototransistor	LTE 4206 E (darkened glass) 3mm diam: tuned to 940nm	1
Infra Red Diode	LTE 4206 (clear glass) 3mm diam: emits 940nm	1
SCR C106B	Various packages	1
7805 Power regulator	TO-220 case	1
Wall adapter 120vAC to 9vDC	Transformer	1
100 Ω	Resistor	1
470 Ω	Resistor	2
1000 Ω	Resistor	1
2,200 Ω	Resistor	1
10,000 Ω	Resistor	1
22,000 Ω	Resistor	1
47,000 Ω	Resistor	1
100,000 Ω	Resistor	1
220,000 Ω	Resistor	1
100,000 Ω 1/4 watt	Potentiometer	1
Light-dependent resistor	LDR	1
.1 μF film cap	Cap	1
10 μF Electrolytic	Cap	1
100 μF Electrolytic	Cap	1
1000 μF Electrolytic	Cap	1
470 μF Electrolytic	Cap	1
24 gauge wire	Hookup wire	Various colors
Battery clip	Hardware	2
Alligator clips (red and black)	Hardware	1 each
Buzzer 9v	Hardware	1
LED collars	Hardware	3
PCB for night light	Hardware	1
PCB for SCR alarm	Hardware	1
Solderless breadboard	Hardware	1
PBNC momentary	Switch	2
PBNC momentary	Switch	1

■ Not all components will be consumed by project work.

SECTION 1

Components

In Lesson 1, you will be introduced to many common components that are always present in electronics and many of the bits and pieces you will use in the course. It starts out as a jumble. As you use the parts, the confused mass becomes an organized pile.

In Lesson 2, you will become acquainted with the two major tools that you will use throughout the course.

In Lesson 3, you will build your first circuit on the solderless breadboard, a platform that allows you to build circuits in a temporary format.

You use your digital multimeter and get voltage measurements when you set up and test your first circuits.

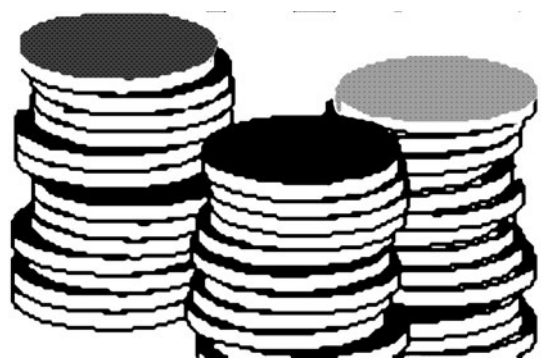

Figure L1-1

NOTE Do not remove the small integrated-circuit (IC) chips shown in Figure L1-2 from their antistatic packaging. They are packed in a special antistatic tube or special sponge material.

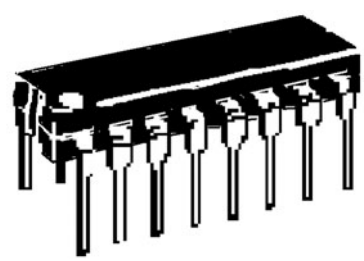

Figure L1-2

Lesson 1
Inventory of Parts Used in Part One

All components look the same if you don't know what they are. It's like when you first visit a different country. There's a pile of change, just like in Figure L1-1. You have to be introduced to the currency and practice using it, but you become comfortable with it quickly. Now you need to unjumble the pile and become familiar with your electronic components.

Semiconductors

These are the electronic components you will be using in Part One. As you identify them, set them aside into small groups.

Diodes

You will need three power diodes as shown in Figures L1-3 and L1-4.

Figure L1-3

Figure L1-4

The number on the side reads 1N4005. If the last number is not 5, don't worry. Any diode of this series will do the job.

Light-Emitting Diodes

Light-emitting diodes are also known as LEDs. You will need three. An example is illustrated in Figure L1-5.

Figure L1-5

They can be any color. The most common colors are red, yellow, and green.

Resistors

There should be lots of colorful resistors, nearly all the same size. Notice that in Figure L1-6 each resistor has four color bands to identify it. If you know the colors of the rainbow, you know how to read resistors.

Figure L1-6

Find these resistors:

- One brown-black-brown-gold 100 Ω
- Two yellow-violet-brown-gold 470 Ω
- One brown-black-red-gold 1,000 Ω
- One brown-black-orange-gold 10,000 Ω
- One red-red-orange-gold 22,000 Ω
- One yellow-violet-orange-gold 47,000 Ω
- One brown-black-yellow-gold 100,000 Ω

Capacitors

As you see in Figure L1-7, the capacitor shown is black and white. The colors of capacitors are different, depending on the manufacturer. Then again, all pop cans look alike, but each brand has a different label. Locate four small capacitors, different in size. Written on each are different values and other mumbo jumbo. Look for the information that specifically lists 1 μF, 10 μF, 100 μF, and 1000 μF.

Figure L1-7

There is another capacitor of a different shape to locate. Figure L1-8 shows the other capacitor used in Part One. Again, it is presented in black and white, because the color will change as the manufacturer changes. It is a 0.1 μF capacitor. It may be marked as any of the following: 0.1, μ1, or 100 nF.

Figure L1-8

Silicon-Controlled Rectifier

The ID number 1067X for the *silicon-controlled rectifier* (SCR) is written on the face, as shown in Figure L1-9. This SCR comes in this particular package. Not everything with this shape is an SCR, just as not everything in the shape of a pop can is your favorite flavor.

Figure L1-9

Transistors

You need two transistors, like that illustrated in Figure L1-10. They are identical except for the number 3904 or 3906. All other writing and marks are the manufacturer telling us how great they are.

Figure L1-10

Hardware

The solderless breadboard is shown in Figure L1-11.

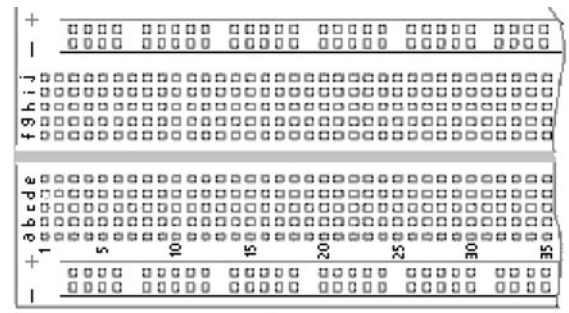

Figure L1-11

Figures L1-12 and L1-13 illustrate two push buttons—they are different, but you can't tell this by looking at them. Figure L1-12 is the normally open push button (push to close the contacts), and Figure L1-13 shows the normally closed push button (push to open the contacts).

Figure L1-12

Figure L1-13

You should have lots of 24-gauge solid wire with plastic insulation in many different lengths.

Two battery clips are shown in Figure L1-14.

Figure L1-14

A 9-volt buzzer is shown in Figure L1-15.

Figure L1-15

Two printed circuit boards are premade for your projects: Figure L1-16 shows the one that will be used for the night-light project; Figure L1-17 shows the one that will be used for your SCR alarm project.

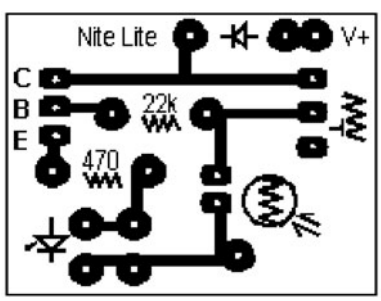

Figure L1-16

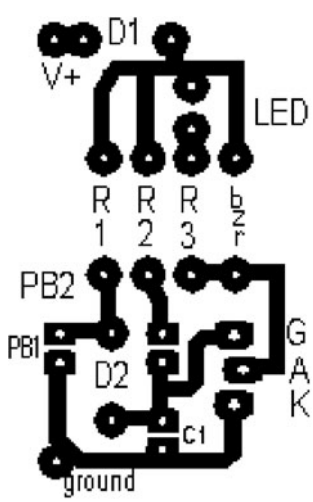

Figure L1-17

Two adjustable resistors are also supplied: The *light-dependent resistor* (LDR) is shown in Figure L1-18 and the potentiometer is shown in Figure L1-19.

Figure L1-18

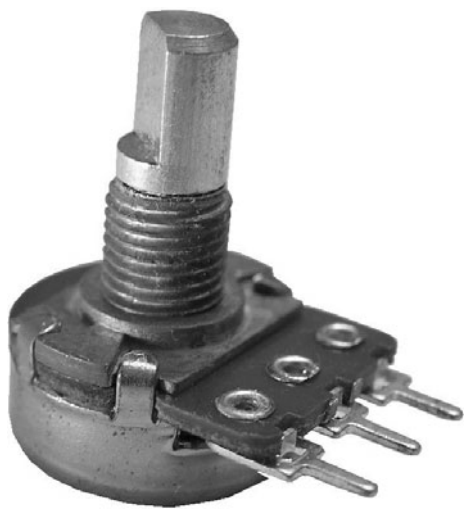

Figure L1-19

Lesson 2
Major Equipment

The solderless breadboard and digital multimeter are two of the most common tools used in electronics. Let's introduce you to them now.

The Solderless Breadboard

When smart people come up with ideas, first they test those ideas. They build a prototype. The easiest way to build prototypes and play with ideas in electronics is on the solderless breadboard, shown here in Figure L2-01.

The main advantage of the solderless breadboard is the ability to exchange parts easily and quickly.

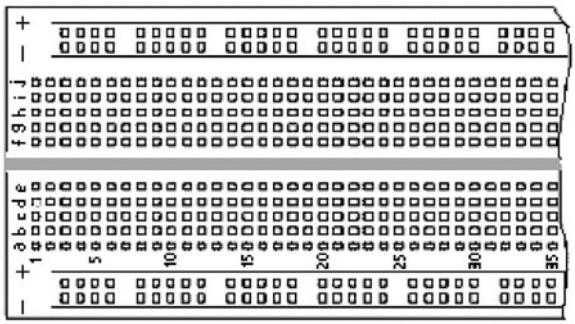

Figure L2-1

The top view in Figure L2-1 shows the many pairs of short five-hole rows and a pair of long rows down each side; each of these lines is marked with a strip of paint.

The Digital Multimeter

I recommend the Circuit Test DMR2900 displayed in Figure L2-2. The autoranging digital multimeter (DMM) offers beginners the advantage of being easier to learn. The second style of DMM is not autoranging. This style is easy to use after you become familiar with electronics, but it tends to be confusing for the beginner. A typical dial of a nonautoranging multimeter is confusing, as you can see in Figure L2-3.

Figure L2-2

Figure L2-3

I discourage the use of outdated whisker-style multimeters for this course. Figure L2-4 shows an example of what to avoid.

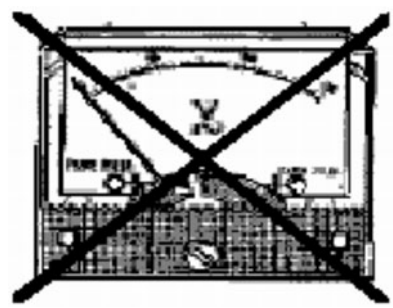

Figure L2-4

Connection Wire

A box of wire provided in the kit is displayed in Figure L2-5.

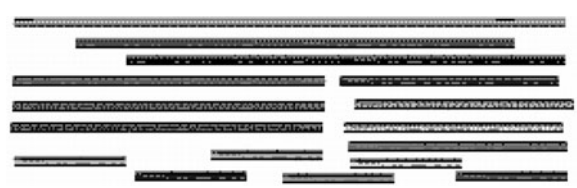

Figure L2-5

These are different lengths convenient for the solderless breadboard. However, if you need to cut the wire, wire clippers will work perfectly. Old scissors work as well.

Set the dial of the DMM to CONTINUITY. This setting is shown in Figure L2-6.

Figure L2-6

Touch the end of both red and black probes to the colored covering. The DMM should be silent and read OL, as in the readout illustrated in Figure L2-7, because the resistance of the insulation prevents any current from passing.

Figure L2-7

Be sure the strip of insulating plastic is removed from both ends of the piece of wire, as shown in Figure L2-8. If you don't have a proper wire stripper available, use a knife or your fingernails to cut the insulation. Be careful not to nick the wire inside the insulation.

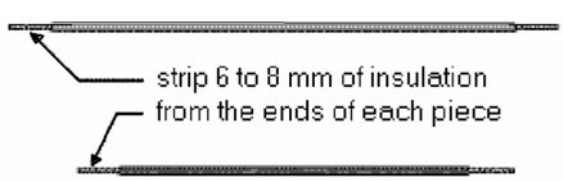

Figure L2-8

Now touch the end of both probes to the exposed wire. The DMM should read "00" and beep, just like the readout in Figure L2-9. The wire is a good conductor, and the DMM shows "continuity," a connected path.

Figure L2-9

Exercise: Mapping the Solderless Breadboard

Strip the end of two pieces of wire far enough to wrap around the DMM probes on one end and enough to insert into the solderless breadboard (SBB) on the other end, as shown in Figure L2-10.

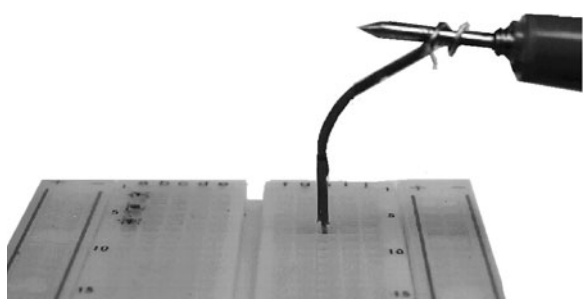

Figure L2-10

1. Set your digital multimeter to CONTINUITY. Now refer to Figure L2-11. Notice the letters across the top and the numbers down the side of the solderless breadboard.
2. Probe placement:
   a. Place the end of one probe wire into the SBB at point "h3" and mark that on the drawing.
   b. Use the other probe to find three holes connected to the first. The multimeter will indicate the connection.
   c. Draw these connections as solid lines.

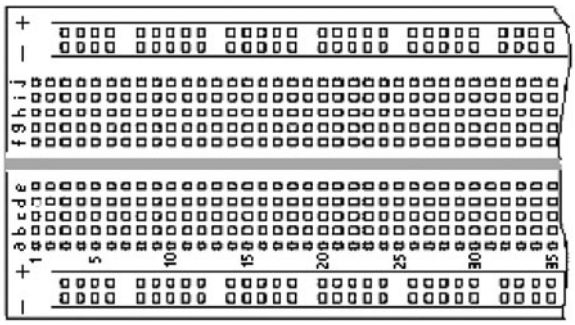

Figure L2-11

3. Base points:
   a. Create four more base points at e25, b16, f30, and c8.
   b. Use the other probe to find three holes connected to each of these points.
   c. Again draw these connections as solid lines.
4. Additional base points:
   a. Choose two more base points on the outside long, paired lines. These lines are not lettered or numbered but have a stripe of paint along the side. Mark them on the previous diagram.
   b. Find three holes connected to each of these points.
   c. Again draw these connections as solid lines.
5. Be sure that you can define the terms *prototype*, *insulator*, and *conductor*.
6. With your multimeter set on CONTINUITY, walk around and identify at least five common items that are insulators and five common materials that are conductors.

Lesson 3
Your First Circuit

You build an actual circuit on the breadboard, then measure and observe how the voltage is used while getting more experience with your multimeter.

The solderless breadboard has a definite layout, as shown in Figure L3-1. One strip of the spring metal in the breadboard connects the five holes. You can easily connect five pieces in one strip. The two long rows of holes allow power access along the entire length of the breadboard.

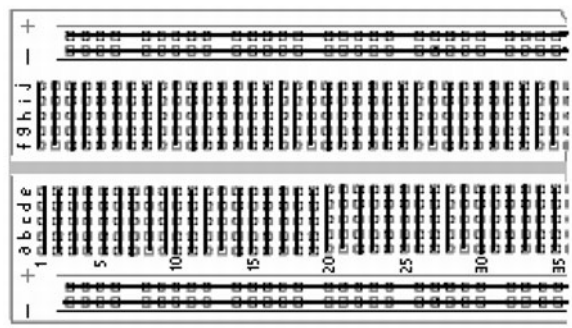

Figure L3-1

Setting Up the Solderless Breadboard

You will have a standard setup for every circuit. The battery clip is connected to one of the first rows of the breadboard, and the diode connects that row to the outer red line (see Figure L3-2).

Figure L3-2

Notice the gray band highlighted in Figure L3-3 on the diode. It faces in the direction that the voltage is pushing.

Figure L3-03

The voltage comes through the red wire, through the diode, and then to the power strip on the breadboard.

Why Bother?

This power diode provides protection for each circuit that you build in the following ways:

- The diode is a one-way street. You can view the animated version of Figure L3-4 at the website www.mhprofessional.com/computing download.

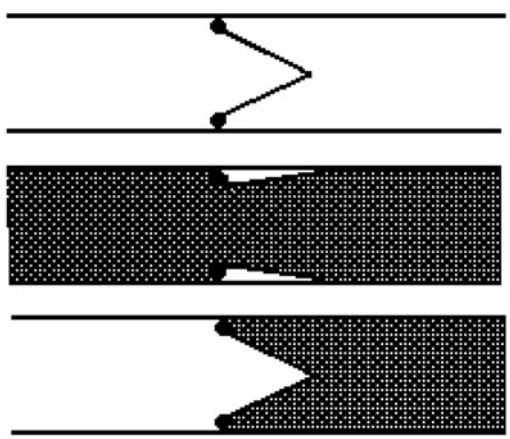

Figure L3-4

- Many electronic components can be damaged or destroyed if the current is pushed through them the wrong way, even for a fraction of a second.
- This standard breadboard setup helps ensure that your battery will always be connected properly.
- If you accidentally touch the battery to the clip backwards, nothing will happen because the diode will prevent the current from moving.

Breadboarding Your First Circuit

PARTS BIN
■ D1—Power diode 1n400x ■ LED1—LED any color ■ R1—470-ohm resistor

Your LED is a light-emitting diode. That's right, a diode that emits light. It has the same symbol as a diode, but it has a "ray" coming out, as shown here in Figure L3-5.

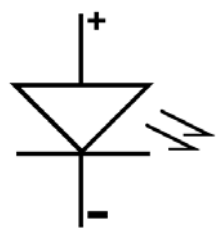

Figure L3-5

Figure L3-6 is a picture of an LED. Never touch your LED directly to your power supply. A burned-out LED looks just like a working LED. Note in the picture how to identify the negative side.

Figure L3-6

The shorter leg: This is always reliable with new LEDs, but not with ones that you have handled in and out of your breadboard. As you handle the components, the legs can get bent out of shape.

The flat side on the rim: This is always reliable with round LEDs, but you have to look for it.

Remember that the LED, as a diode, is a one-way street. It will not work if you put it in backward.

Figure L3-7 shows several resistors. The resistor symbol is illustrated in Figure L3-8. The resistor you need is the 470-ohm yellow-violet-brown-gold.

Figure L3-7

Figure L3-8

Resistance is measured in ohms. The symbol for ohms is the Greek capital letter omega: Ω.

The schematic is shown in Figure L3-9. Set up your breadboard as shown in Figure L3-10. Note that this picture shows the correct connections. The red wire of the battery clip is connected to the power diode that in turn provides voltage to the top of the breadboard. The black wire is connected to the blue line at the bottom of the breadboard.

NOTE

1. Always complete your breadboard before you attach your power to the circuit.
2. Attach your battery only when you are ready to test the circuit.

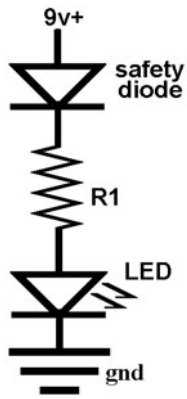

Figure L3-9

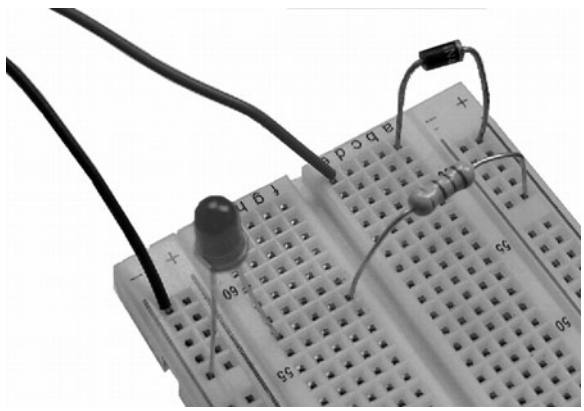

Figure L3-10

3. When you have finished testing your circuit, take your battery off.

Exercise: Measuring Voltage on Your First Circuit; Your First Circuit Should Be Working

Figure L3-11 shows what is happening. Like a waterfall, all of the voltage goes from the top to the bottom. The resistor and LED each use up part of the voltage. Together, they use all the voltage. The 470-ohm resistor uses enough voltage to make sure the LED has enough to work, but not so much that would burn it out.

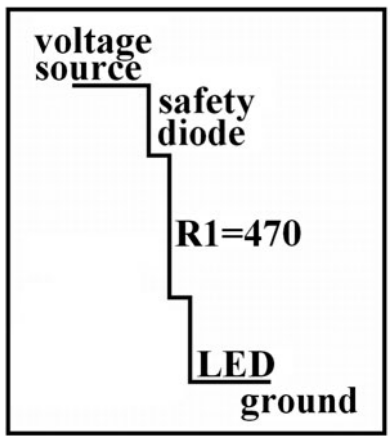

Figure L3-11

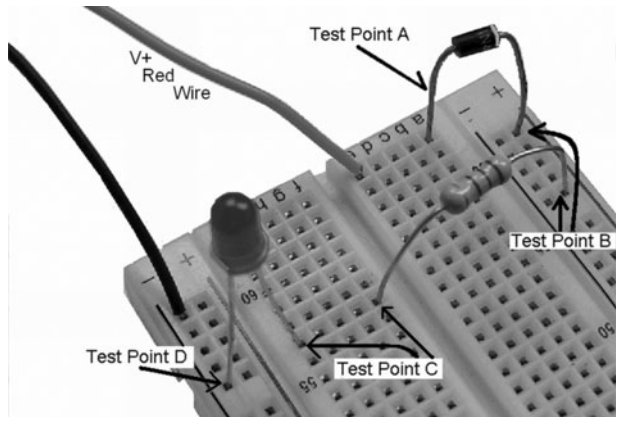

Figure L3-13

How the Voltage Is Being Used in the Circuit

1. Set the DMM to *direct current voltage* (DCV). If you are using a multimeter that is not autoranging, set it to the 10-volt range.
2. Measure the voltage of the 9-volt battery while it is connected to the circuit.
3. Place the red (+) probe at test point A (TP-A) and the black (–) probe at TP-D (ground). The arrows in the schematic shown in Figure L3-12 indicate where to attach the probes. Corresponding test points have been noted in Figure L3-13 as well.

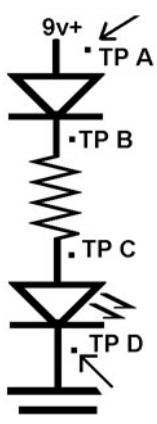

Figure L3-12

4. Record your working battery voltage. ____V
5. Measure the voltage used between the following points:
   - TP-A to TP-B across the safety diode ____V
   - TP-B to TP-C across the 470-ohm resistor ____V
   - TP-C to TP-D across the LED ____V
6. Now add the voltages from #5. ____V
7. List working battery voltage (recorded in item 2). ____V
8. Compare the voltage used by all of the parts to the voltage provided by the battery.

The voltages added together should be approximately the same as the voltage provided by the battery. There may be only a few hundredths of a volt difference.

SECTION 2

Resist If You Must

Resistors are one of the fundamental components within electronics. They are funny little things and come in all different colors. And just like a rainbow, they come in all sizes too.

To master electronics, you must first master the secret color code, unlocking the mystery of how to tell one resistor from another.

But beware! Can you handle the knowledge and power that lies beyond this task?

Lesson 4
Reading Resistors

Fixed resistors are the most common electronic components. They are so common because they are so useful. Most often, these are identified using their color code (Table L4-1). If you think the secret code is hard to remember, just ask any six-year-old to name the colors in the rainbow.

The gold bands are always read last. They indicate that the resistor's value is accurate to within 5 percent.

When using the digital multimeter to measure resistance, set the dial to Ω. Notice the two points of detail shown in Figure L4-1.

The first point is that when the dial is set directly to the Ω symbol to measure resistance, it also appears on the readout. Second, notice the M next to the Ω symbol. That means the resistor being measured is 0.463 MΩ, which is 0.463

TABLE L4-1 Resistor Band Designations

Color Band	First Band: Value	Second Band: Value	Third Band: Number of Zeros	Units
Black	0	0	No zeros	Tens ##
Brown	1	1	One zero "0"	Hundreds ##0
Red	2	2	Two zeros "00"	Thousands (k) #, #00
Orange	3	3	Three zeros "000"	Ten thousands (k) ##,000
Yellow	4	4	Four zeros "0,000"	Hundred thousands (k) ##0,000
Green	5	5	Five zeros "00,000"	Millions (M) #,#00,000
Blue	6	6	Six zeros "000,000"	Ten millions (M) ##,000,000
Violet	7	7	Not available	
Gray	8	8	Not available	
White	9	9	Not available	

Figure L4-1

million ohms, or 463,000 ohms. When the M is there, *never* ignore it.

As you use resistors, you quickly become familiar with them. The third band is the most important marker. It tells you the range in a power of 10. In a pinch, you could substitute any resistor of nearly the same value. For example, a substitution of a red-red-orange could be made for a brown-black-orange resistor. But a substitution of a red-red-orange with a red-red-yellow would create more problems than it would solve. Using a completely wrong value of resistor can mess things up.

Exercise: Reading Resistors

If you have an autoranging multimeter, set the digital multimeter (DMM) to measure resistance. If you do not have an autoranging DMM, you have to work harder because the resistors come in different ranges. Set the range on your DMM to match the range of the resistor. That means that you should have an idea of how to read resistor values before you can measure them using a DMM that is not autoranging. Thus, as you can see, an autoranging DMM really does make it much easier.

Your skin will conduct electricity, and if you have contact with both sides of the resistor, the DMM will measure your resistance mixed with the resistor's. This will give an inaccurate value.

Proper Method to Measure Resistor's Value

Figure L4-2 shows how to measure a resistor. Place one end of the resistor into your solderless breadboard and hold the probe tightly against it, but not touching the metal. You can press the other probe against the top of the resistor with your other finger.

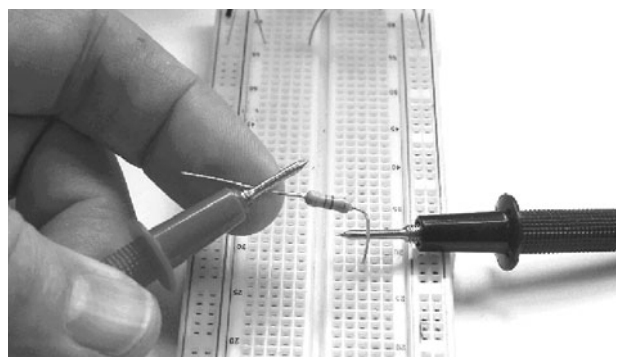

Figure L4-2

1. Table L4-2 lists some of the resistors that you will need to be able to identify, because you use them soon.
2. Don't be surprised if the resistor value is not exactly right. These resistors have a maximum error of 5 percent. That means that the 100-ohm resistor can be as much as 105 ohms or as little as 95 ohms. Plus or minus 5 ohms isn't too bad. What is 5 percent of 1,000,000?
   - What is the maximum you would expect to see on the 1,000-ohm resistor? _____ Ω
   - What is the minimum you would expect to see on the same 1-kilo-ohm resistor? ____ Ω
3. Measure your skin's resistance by holding a probe in each hand. It will bounce around, but try to take an average. _____ Ω
   - Did you know that this can be used as a crude lie detector? A person sweats when they get anxious. Have a friend hold the

TABLE L4-2 Resistors Needed

First Band: Value	Second Band: Value	Third Band: Number of Zeros	Resistor Value	DMM Value
Brown	Black	Brown	100 Ω	_____Ω
1	0	0		
	Violet	Brown	470 Ω	_____Ω
4	7	0		
Brown	Black	Red	1,000 Ω	_____Ω
____	____	00		
Brown	Black	Orange	10 kΩ	_____Ω
____	____	000	10,000Ω	
Red	Red	Orange	22 kΩ	_____Ω
____	____	____	22,000 Ω	
Brown	Black	Yellow	100 kΩ	_____Ω
____	____	____	100,000	

probes. Then ask them an embarrassing question. Watch the resistance go down for a moment.

4. Write each of these values as a number with no abbreviations.
   - 10 kΩ = _____ Ω
   - 1 kΩ = _____ Ω
   - 0.47 kΩ = _____ Ω
   - 47 kΩ = _____ Ω

Lesson 5
The Effect Resistors Have on a Circuit

Throughout electronics, resistors are used to control the voltage and flow of the current. Even though this lesson is not very long, it does take time. Do it properly and you will get proper results. You will observe, chart, and describe the effects of different strength resistors when they are all set up in identical circuits.

Let's go back to the breadboard and see how different resistors affect a simple circuit. Both the resistors and LEDs are loads. The resistor uses most of the voltage, leaving just enough for the LED to work. The LEDs need about two volts.

What would happen if you changed resistors on the circuit you just built, shown in Figure L5-1?

You measured the voltage used across the resistor from TP-B to TP-C and measured the voltage used across the LED from TP-C to TP-D.

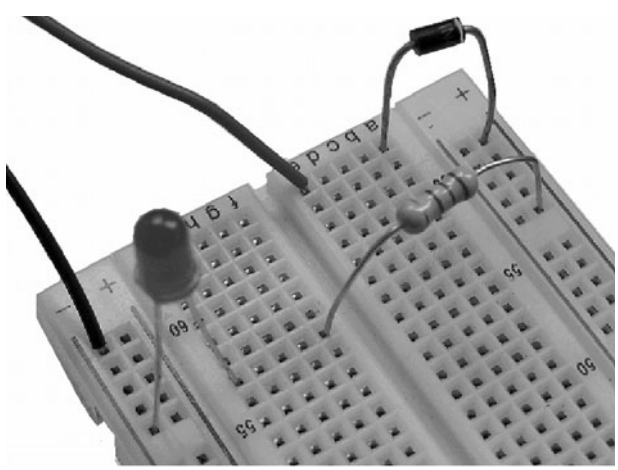

Figure L5-1

Figure L5-2 is the schematic of the circuit.

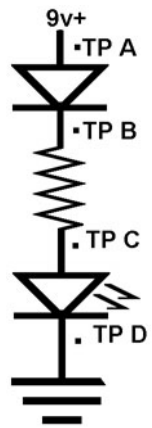

Figure L5-2

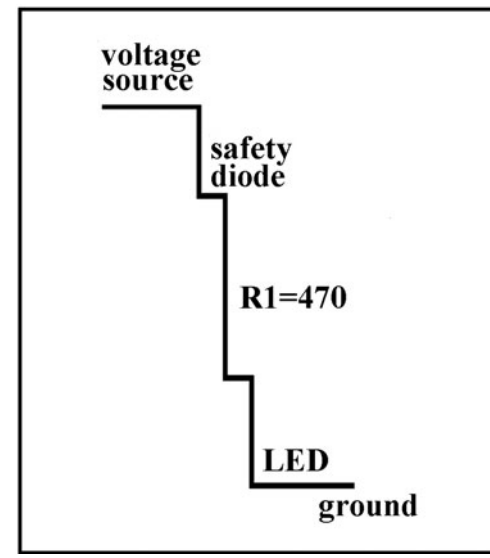

Figure L5-3

Figure L5-3 shows a waterfall. A waterfall analogy explains how voltage is used up in this circuit. The water falls over the edge. Some of the force is used up by the first load, the safety diode. More of the voltage is then used by the second load, the resistor. The remaining voltage is used by the LED.

This "waterfall" shows how the voltage is used by a 470-ohm resistor. If the resistor wasn't there, the LED would be hit with the electrical pressure of more than eight volts. It would burn out.

Remember, all the water over the top goes to the bottom, and all of the voltage is used between source and ground. Each ledge uses some of the force of the falling water. Each component uses part of the voltage.

What happens if there is more resistance? More of the voltage is used to push the current through that part of the circuit, leaving less to power the LED.

This is represented visually in Figure L5-4.

Exercise: The Effect Resistors Have on a Circuit

Your setup should look like Figure L5-5. Have your resistors arranged from lowest to highest value as presented in Table L5-1.

TABLE L5-1 Exercise Sheet

Resistor Value	Total Voltage Available	Voltage Drop Across Resistor	Voltage Drop Across the LED	LED Brightness (compared to 470 Ω)
100 Ω	_____V	_____V	_____V	_____
470 Ω	_____V	_____V	_____V	Normal
2,200 Ω	_____V	_____V	_____V	_____
10,000 Ω	_____V	_____V	_____V	_____
47,000 Ω	_____V	_____V	_____V	_____
220,000 Ω	_____V	_____V	_____V	_____

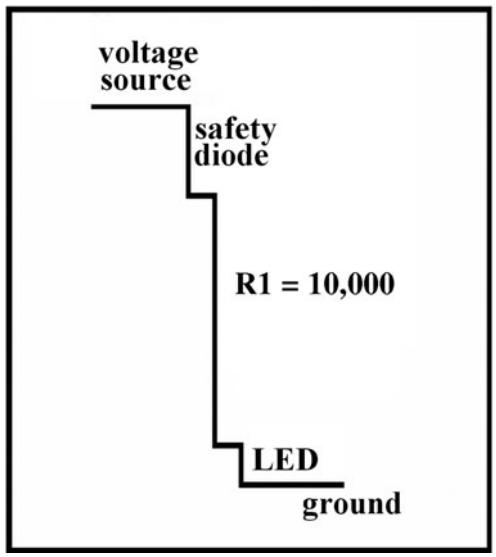

Figure L5-4

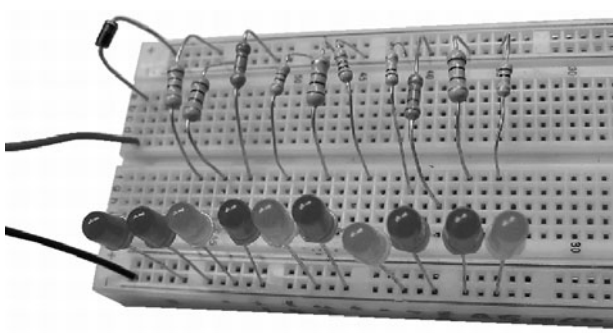

Figure L5-5

Lesson 6
The Potentiometer

Some resistors change resistance over a wide range. You use potentiometers daily as volume controls. Potentiometers are still widely used, though they are being replaced by digital push buttons.

Not all resistors are "fixed" like the small color-banded ones that you've already been introduced to. A common variable resistor is the potentiometer, pictured in Figure L6-1.

This useful device is often simply referred to as a *pot*. A smaller version is also shown. These are called *trim pots*. You have often used potentiometers

Figure L6-1

as volume controls. The maximum resistance value is usually stamped onto the metal case.

Figure L6-2 shows a picture of a potentiometer taken apart. The potentiometer works because the sweep arm moves across the carbon ring and connects that to the center. The leg on the left is referred to as A, the center leg as C (center), and the right leg as B.

Figure L6-2

The carbon ring shown in Figure L6-3 is the heart of the potentiometer. It is made of carbon mixed with clay. Clay is an insulator. Carbon is the conductor.

The action of the potentiometer is the sweep arm (copper on white plastic) moving across the carbon ring (Figure L6-4). The sweep arm allows the current to move between A and C as its

Figure L6-3

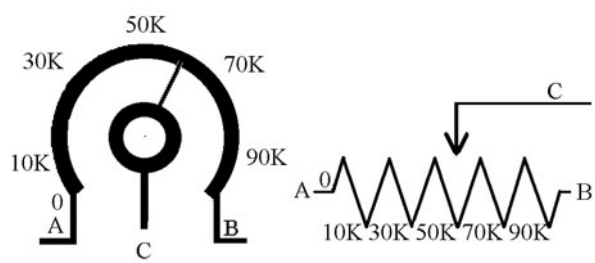

Figure L6-4

position changes. The resistance between A and C also changes with distance.

The distance between A and B is always the same, so the resistance between A and B is always the same. The value for this demonstration potentiometer is 100,000 ohm. The 100-kilo-ohm value means the set value between legs A and B is 100 kilo-ohm. Ideally, the minimum between A and C is 0 ohm (directly connected), and the maximum between A and C should be 100 kilo-ohm.

The ratio between carbon and clay determines how easily electrons pass through the resistor. More clay means less carbon. Less carbon means less conducting material. That creates higher resistance.

The carbon in the ring is similar to the carbon in a pencil. The pencil lead is also made of a mixture of carbon and clay. Soft pencils have less clay and more carbon. A mark by a soft pencil will have less resistance. Hard pencils have lead that contains more clay and less carbon. These provide higher resistance.

Exercise: The Potentiometer

1. Use a No. 2 soft pencil to draw a thick line on this piece of paper as demonstrated in Figure L6-5. A harder pencil has too much clay and will not give good results.

Figure L6-5

2. Set your multimeter to measure resistance Ω. If it is not autoranging, set it to maximum resistance.
3. As shown in Figure L6-6, press the probes down hard against the pencil trace about an inch apart. Be sure that you don't touch the tips of the probe. You want to measure the resistance of the pencil trace, not the resistance of your body.

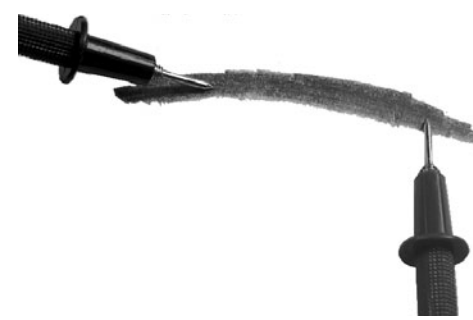

Figure L6-6

   a. Now record the resistance from the multimeter: _____ Ω. If the DMM says the resistance is out of range, move the probes together until you get a reading.
   b. Move the probes closer together and then farther apart. Write down what you observe.

4. Use the 100-kilo-ohm potentiometer. Record your results.
   a. Measure the resistance between the two outer legs A and B. _____ Ω
   b. Adjust the knob and check the resistance between A and B again. _____ Ω
   c. Adjust the knob about halfway. Measure the resistance between the left and middle legs—A and C. _____ Ω
   d. Turn the knob a bit and check again. Note any change. _____ Ω

   Explain what is happening, relating that to the carbon ring shown in Figure L6-3.

   _____

   _____

5. Make sure that you have the battery hooked up properly through the power diode as noted on the schematic.
6. As you turn the shaft of the potentiometer, the LED should brighten and dim. Explain what is happening.

   _____

   _____

7. Why is there a 470-ohm fixed resistor in this circuit?_____

Breadboarding the Circuit

Note the similarities of the schematic shown in Figure L6-7 and the picture of the circuit displayed in Figure L6-8.

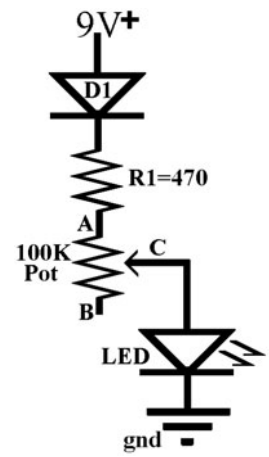

Figure L6-7

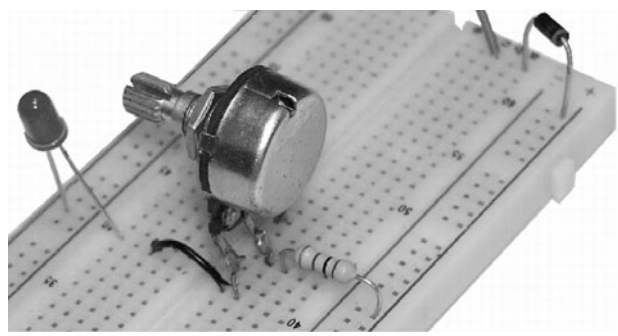

Figure L6-8

Lesson 7
Light-Dependent Resistors

Another variable resistor is the *light-dependent resistor* (LDR). The LDR changes its ability to conduct electrons with the change of light. It is commonly used to turn equipment on automatically as night falls. Some cars use it as the input to the switch that turns on headlights as conditions change, even as they drive through a tunnel. The symbol for the LDR is shown here in Figure L7-1.

There is no room to place a value on most LDRs. They are ordered and supplied in specific values. An easy way to measure the maximum resistance is to measure it in darkness.

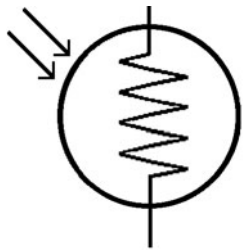

Figure L7-1

Insert the LDR onto the breadboard so the legs are not connected, as shown here in Figure L7-2. Measure the resistance using your DMM. The readout may be jumping around because LDRs are sensitive.

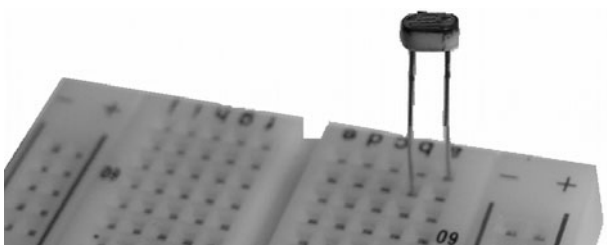

Figure L7-2

Look at Figure L7-3. Place the lid of a black pen over the LDR and measure the resistance again.

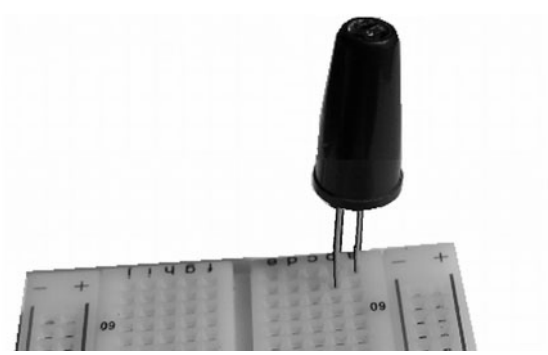

Figure L7-3

Breadboard the Circuit

Note the similarities of the schematic in Figure L7-4 and the breadboard layout in Figure L7-5.

PARTS BIN

- D1—Power diode
- LDR—1 MW dark
- LED—5 mm round

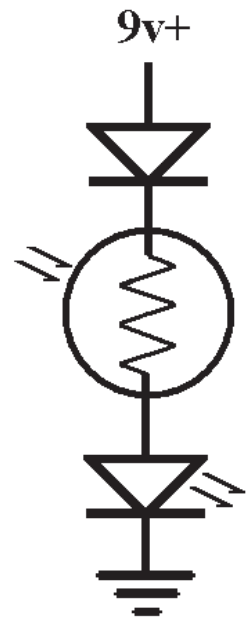

Figure L7-4

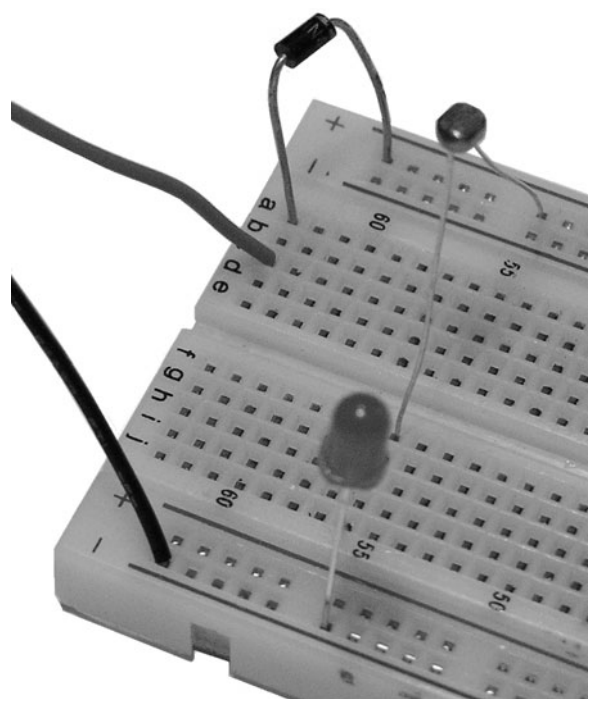

Figure L7-5

What to Expect

1. Attach the battery and note the brightness of the LED. It should be fairly bright.
2. Place the lid of the pen over the LDR again. The LED should dim to nearly nothing.
3. Consider this. What is the relationship between the amount of light on the LDR and the LDR's resistance?

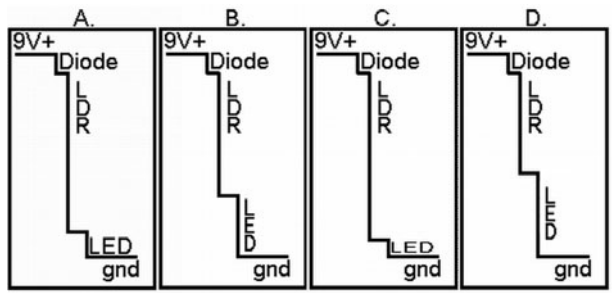

Figure L7-6

Exercise: Light-Dependent Resistors

1. Disconnect the power supply. Measure and record the resistance of the LDR in the light. It may be necessary to take a rough average because it will be jumping around wildly.
2. Place a dark black pen lid over the LED and measure the resistance again. Remember that your fingers can affect the readout.
3. Attach the power supply and note the brightness of the LED. Place the lid of the pen over the LDR again. State the relationship between the amount of light on the LDR and the resistance of the LDR.
4. Note the minimum resistance that occurs on the LDR in the light. Why is the 470-ohm resistor not used in this circuit?
5. Consider the "waterfall" diagrams presented in Figure L7-6. From brightest to darkest conditions, what would be the best order of these diagrams regarding the LDR's effect on the brightness of the LED?

This page intentionally left blank

SECTION 3

More Components and Semiconductors

Simple plumbing systems can be used to explain many components in electronics.

- Water flows like electrons flow.
- We can put pressure behind water.
- There are different size pipes.
- Valves control the flow of water.
- We can fill containers with water.
- We can drain the water from those containers.

Lesson 8
Capacitors and Push Buttons

Yes, there is more to electronics than resistors and LEDs. Capacitors are used to store small charges. Push buttons allow you to control connections to voltage. This lesson introduces both capacitors and push buttons. You then build a circuit that applies them together.

Capacitors

A capacitor has the capacity (ability) to store an electric charge. You can see in Figure L8-1 that the symbol of the capacitor represents two plates.

Figure L8-1

In Figure L8-2, the opened capacitor clearly shows that the capacitor is made of just two metal plates, with a bit of insulation between them. They come in three basic shapes and all sizes.

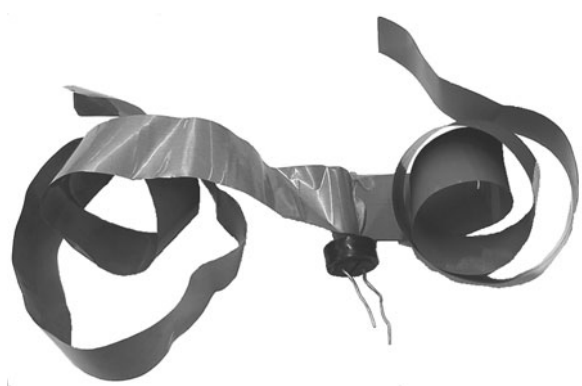

Figure L8-2

Capacitors in the upper range, 1 microfarad and higher, are electrolytic capacitors. They must be connected in the right direction. There are two indicators of the negative side. First, there is a colored stripe down the side that indicates polarity, and second, if both legs come out of the same side, one leg is shorter. That is the negative leg. It is "minus" some length. Only the electrolytic capacitors have a positive and negative side. The disk and film capacitors do not have a positive or negative side. A variety of capacitors are represented in Figure L8-3.

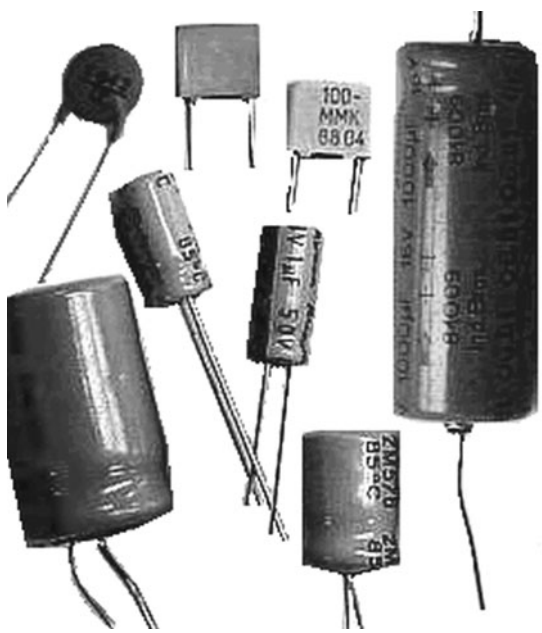

Figure L8-3

Remember that a backwards electrolytic is a dead electrolytic. These must be connected correctly. Figure L8-4 helps remind us.

Figure L8-4

When electricity was first being defined over 200 years ago, the measurements were done with crude instruments that were not sensitive. The people who defined the units missed the mark, but we still use them today. The farad is the basic unit of capacitance. One farad is so huge that today, the standard unit in electronics is one-millionth of a farad. The Greek letter μ (mu) represents micro for the unit. That is 0.000001 F or 1×10^{-6} farads, and is commonly written as 1 μF (1 μF = 1 microfarad = 0.000001 F = 1×10^{-6} F).

We'll go back to using the water analogy. If you think of the electric charge like water, the capacitors can be compared to containers able to hold that water. The amount of charge capacitors can hold depends on their purpose, just like varying size containers used to hold water. Such containers are pictured in Figures L8-5, L8-6, and L8-7.

Figure L8-5

Figure L8-6

As mentioned before, capacitors come in three standard types. Disk capacitors hold the smallest amount. They have a common shape shown in Figure L8-8. They are so small that their capacitance is measured in trillionths of a farad,

Figure L8-7

called *picofarads*. Their general range is from 1 picofarad to 1,000 picofarads. To look at that another way, that is one-millionth of a microfarad to one-thousandth of a microfarad.

Figure L8-8

To visualize the size of charge they are able to hold, think of water containers ranging from a thimble (Figure L8-9) up to a mug (Figure L8-10).

Figure L8-9

Figure L8-10

Film capacitors are box-shaped, as shown in Figure L8-11. They are midrange. They hold between a thousandth of a microfarad and a full microfarad.

Figure L8-11

Their capacitance range is 1,000 times that of the disk capacitor. A good analogy for the relative size of charge a film capacitor holds is to think of a range from a sink, shown in Figure L8-12, up to the size of a large bathtub, shown in Figure L8-13.

Electrolytic capacitors are small and can-shaped. Find the electrolytic capacitors in your inventory. They should look similar to the electrolytic capacitors pictured in Figure L8-14. There might be various colors.

Figure L8-12

Figure L8-13

Figure L8-14

These hold the larger amounts of 1 microfarad and above. Their capacitance abilities can be thought of in larger dimensions, from swimming pools (Figure L8-15) to lakes (Figure L8-16).

Figure L8-15

Figure L8-16

Push Buttons

There are two main types of push buttons, and they can look identical to the picture in Figure L8-17.

Figure L8-17

Push Button Normally Open (PBNO)

Push the button; a piece of metal connects with two metal tabs inside, as you can see in Figure L8-18. It creates a temporary path, and the charge can flow. Set your digital multimeter (DMM) to CONTINUITY and put a probe to each contact for the push button. CONTINUITY should show only when you are pushing the plunger down.

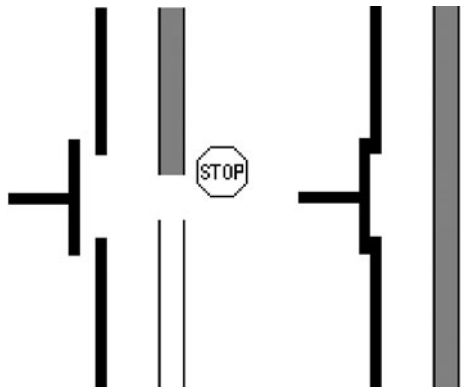

Figure L8-18

Push Button Normally Closed (PBNC)

Push the button; a piece of metal disconnects from the two metal tabs inside, as depicted in Figure L8-19. It creates a temporary break, and the charge cannot flow. Set your DMM to CONTINUITY and put a probe to each contact for the push button. CONTINUITY will show all the time, except when you are pushing the button down.

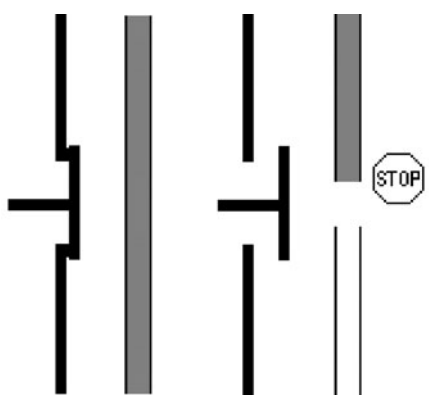

Figure L8-19

Build This Circuit

Build the circuit shown in Figure L8-20 (see also the Parts Bin). Note the similarity between the schematic in Figure L8-20 and the photograph in Figure L8-21.

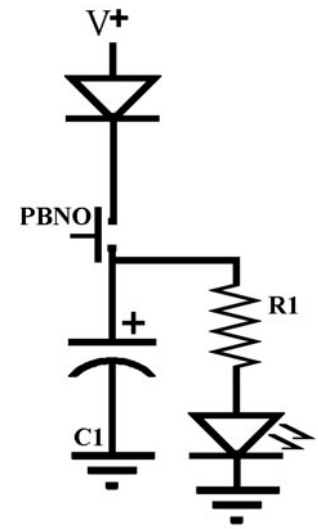

Figure L8-20

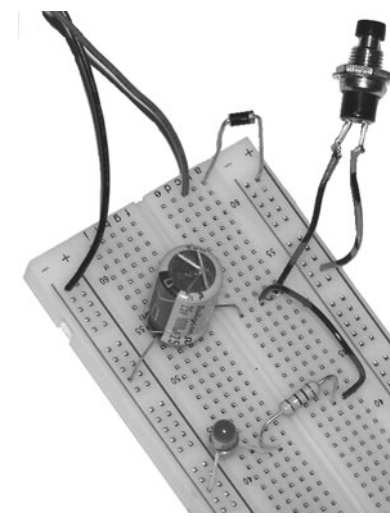

Figure L8-21

PARTS BIN

- PB1—Normally open solder connecting wire to the legs
- C1—1,000 μF electrolytic
- LED—5 mm round
- R1—470 Ω

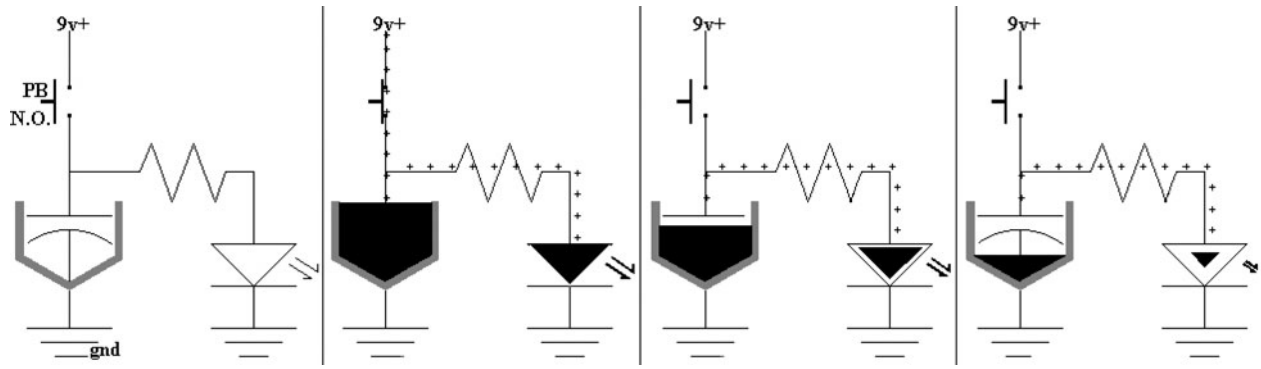

Figure L8-22

How It Works

Carefully note the sequence of actions in Figure L8-22.

1. The normally open push button closes.
2. Voltage fills the capacitor and powers the LED.
3. The PBNO opens, cutting off the voltage.
4. The capacitor drains through the LED.
   a. As the capacitor drains, the voltage decreases.
   b. As the voltage decreases, the LED dims.

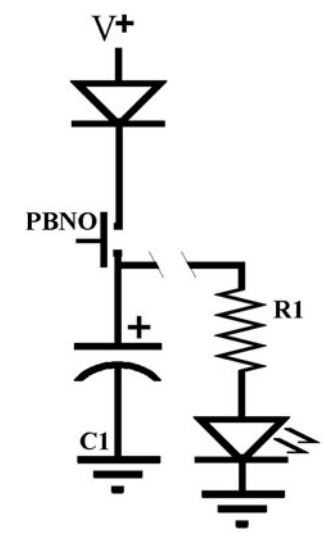

Figure L8-23

Exercise: Capacitors and Push Buttons

1. Look closely at the electrolytic capacitors. Be sure to note the stripe and the short leg that marks the polarity.
2. Describe what happens in your circuit as you push the button, then let go.
3. Disconnect the wire indicated in Figure L8-23 between the capacitor and R1.
   a. Push the button to charge the capacitor. Now wait for a minute or so.
   b. Set your DMM to the proper voltage range. Put the red probe to the positive side of the cap and the black probe to ground.
   c. Record the voltage that first appears. The capacitor will slowly leak its charge through the DMM. Reconnect the wire and describe what happens.
4. Use Table L8-1 to record your information as you play with your circuit.

TABLE L8-1 Information Record

Cap Value	Time
1,000 μF	
470 μF	
100 μF	
10 μF	
1 μF	

a. As you replace each capacitor and record the time, the LED stays on. Don't expect the time to be very exact.

b. Describe the pattern that you see here.

_____

5. Briefly describe what capacitors do.

_____

6. Place the 1,000-microfarad capacitor back into its original position. Now replace the normally open push button (PBNO) with the normally closed push button (PBNC). Describe the action of this circuit.

Lesson 9
Introducing Transistors

NOTE **Learning electronics is not hard. It is lots of new information, but it is not hard. Think about it, but not as hard as the guy in Figure L9-1.**

Figure L9-1

Considering that it has only been a bit more than 100 years since the first transatlantic radio message, electronics is a young technology. The invention of the transistor in 1947 was the first step towards the microsizing of all electronics we use today. The NPN (negative-positive-negative) is truly electronic. It acts like a normally open push button, but has no moving parts. The transistor is the basic electronic switch. It does have an interesting history that makes for good outside reading. Our entire electronic age is dependent on this device.

Transistors are commonly packaged in the TO-92 case shown in Figure L9-2. Notice how the legs correspond to the schematic symbol in Figure L9-3.

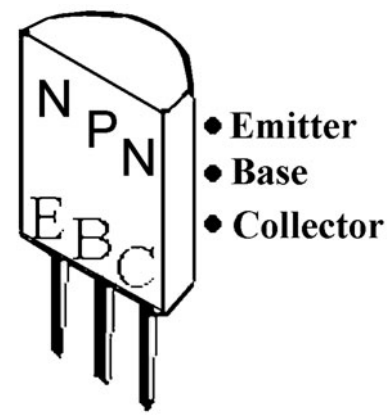

Figure L9-2

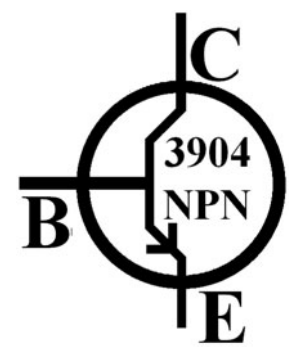

Figure L9-3

Note the arrow inside the schematic symbol. It indicates two things: First, it points in the direction of the current, towards ground. Second, it is always on the side of the emitter. It is important to identify the legs of the transistor. For this package, it is easy to remember. Hold the transistor in your fingers with the flat face toward you. Think of a high mountain in the rugged back country of British Columbia—a cliff face reaching skyward. Now, reading left to right, whisper "Enjoy British

Columbia." You have just identified the three legs. Cute, but it helps.

There are thousands of different types of transistors. The only way to identify them is to read the numbers printed on the face of the package itself. But even with thousands, there are only two basic types of transistors, the NPN transistor and the PNP transistor.

The NPN Transistor

This lesson introduces the NPN transistor, using the 3904 NPN. Lesson 10 introduces the 3906 PNP. They are opposites but evenly matched in their properties.

The NPN transistor is turned on when voltage and current are applied to the base. The NPN transistor acts very much like the water faucet pictured in Figure L9-4. A little pressure on the handle opens the valve, releasing the water under pressure.

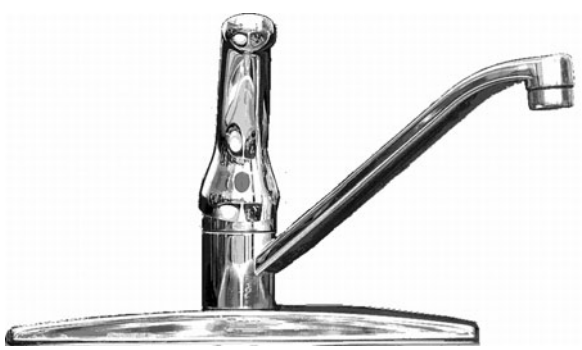

Figure L9-4

As you can see in Figure L9-5, a little voltage and current on the base of the NPN transistor leads to a large increase in the flow of current through the NPN transistor from the collector to the emitter.

Another way of thinking about it—the force needed to open the gates on the Grand Coulee Dam, pictured in Figure L9-6, is small compared to the amount of force that moves through those gates.

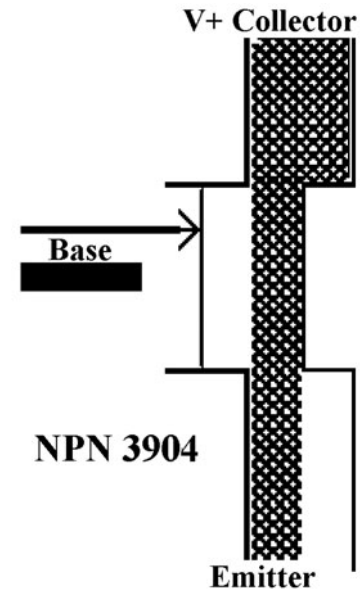

Figure L9-5

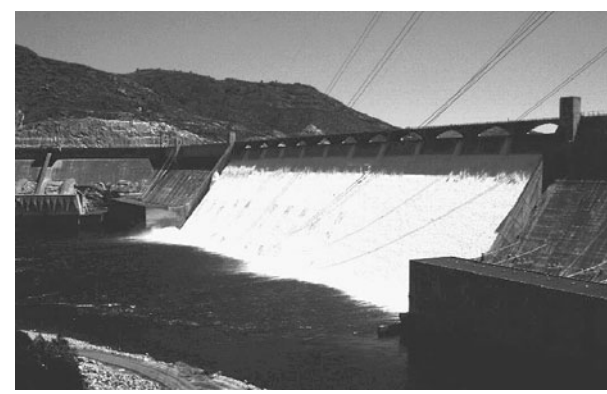

Figure L9-6

Build the NPN Transistor Demonstration Circuit

You have used the capacitor to store small amounts of electricity. It powered the LED directly, but could only do that for a brief moment. Here, we use the capacitor to power the transistor. Again, you need to note the similarity between the schematic in Figure L9-7 and the way the circuit is pictured on the solderless breadboard in Figure L9-8 (see also the Parts Bin).

PARTS BIN

- D1—Safety diode
- PB—PBNO
- C1—10 µF
- R1—22 kΩ
- R2—470 Ω
- Q1—NPN 3904
- LED—5 mm round

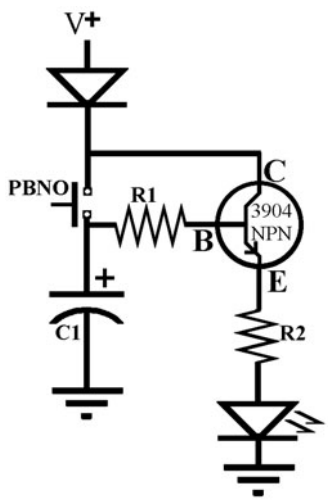

Figure L9-7

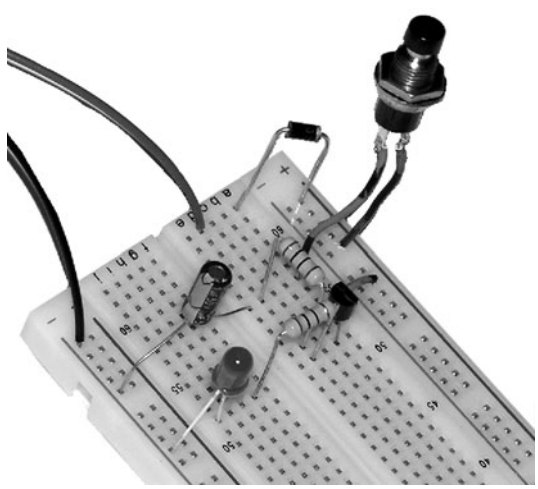

Figure L9-8

What to Expect

The LED stays off as you attach your battery. Push and release the push button. The LED will turn on immediately. It will dim and turn off. This action is faster with smaller capacitors.

How This Circuit Works

You are using the charge held in the capacitor to power the transistor. The transistor provides a path for the current to the LED.

Because the base of the transistor uses much less power than the LED, the voltage drains from the capacitor very slowly. The higher-value resistor of 22,000 ohms slows the drain from the capacitor significantly.

The LED staaaaaays on muuuuuuch looooooonger.

Exercise: Introducing Transistors

1. Briefly describe the purpose of the transistor.

   _____

2. What do you think? Anything that looks like a transistor is a transistor.
3. Describe how to tell which leg of the transistor is the emitter.

   _____

4. Which leg of the transistor is the base?

   _____

5. What two separate things does the arrow inside the transistor symbol indicate?

   a. _____

   _____

   b. _____

   _____

6. What is the only way to tell the type of transistor? _____

   _____

7. Regarding the water faucet analogy, is the water pressure provided by the water system or the handle? The pressure is provided by the

   _____

8. Press and release the push button. After you release the push button, what part provides the power to the base of the transistor?

_____

_____

9. Describe the path of the current that provides the power to the LED. Here is something to consider regarding the answer. The capacitor is not powering the LED. It is only powering the transistor.

10. Record three time trials of how long the LED stays on with the 10-microfarad capacitor.

Time 1	Time 2	Time 3	Average
_____ s	_____ s	_____ s	_____ s

Replace C1 with the 100-microfarad capacitor. Time the LED here for three times as well, and find the average.

Time 1	Time 2	Time 3	Average
_____ s	_____ s	_____ s	_____ s

Roughly stated, how much more time did the 100-microfarad capacitor keep the LED on for than the 10-microfarad capacitor?

a. Three times longer

b. Five times longer

c. Eight times longer

d. Ten times longer

Write down your prediction of how much time the 1,000-microfarad capacitor would *keep* the LED working.

Okay, now put in your 1,000-microfarad capacitor. Try it out three times, and average the time.

Time 1	Time 2	Time 3	Average
_____ s	_____ s	_____ s	_____ s

How accurate was your prediction?

11. Describe in detail how this circuit works. Consulting Figure L8-22 of the capacitor powering the LED once the push button is released, the voltage pressure to the base is provided by the_____.

Lesson 10
The PNP Transistor

We use only the NPN 3904 and PNP 3906. These represent the two general classifications of transistors. They are evenly matched but opposite in their action.

The identity of the legs on the TO92 package stays the same, as shown in Figure L10-1. But look closely at the symbol for the PNP in Figure L10-02.

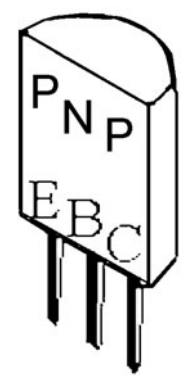

Figure L10-1

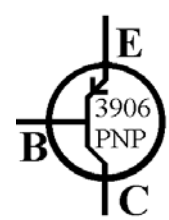

Figure L10-2

Note that the schematic symbol of the transistor holds some important information. The arrow inside the schematic symbol still points in the direction of the common current, but is on the top side now. Because it is always on the side of the emitter, that means the PNP emitters and collectors

have reversed positions relative to the NPN. The legs on the package are still the same, though. The emitter and collector have traded positions relative to the current flow.

Not only are the emitter and collector positions reversed, but the action is reversed as well. The PNP transistor's action is the opposite of the NPN's. As you increase the voltage to the base, the flow decreases; as the voltage to the base decreases, the PNP transistor is turned on more. The valve starts in an open position.

The PNP transistor still acts very much like the water faucet as shown in Figures L10-3 and L10-4.

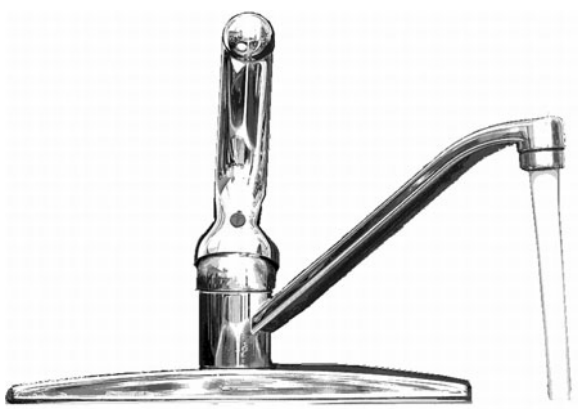

Figure L10-3

But now, a little pressure on the handle closes the valve, stopping the water. No pressure on the handle allows the water to push through the faucet. No pressure (voltage) on the base of the PNP

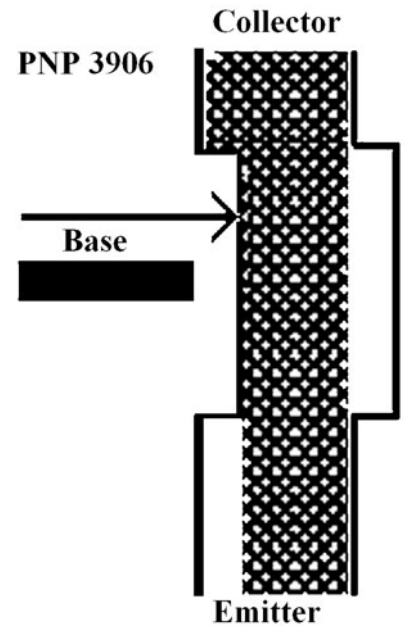

Figure L10-4

transistor allows the voltage and current to push through the transistor.

But just like turning the water faucet's handle will decrease the water flow, voltage to the base of the transistor will decrease the flow of current through the transistor. Enough pressure on the handle of the water faucet will shut it off. Enough voltage at the base will turn the PNP transistor off completely as well.

Surprisingly, the base has the same action for both the NPN and PNP transistors. It just has a different starting position, as shown in Figure L10-5.

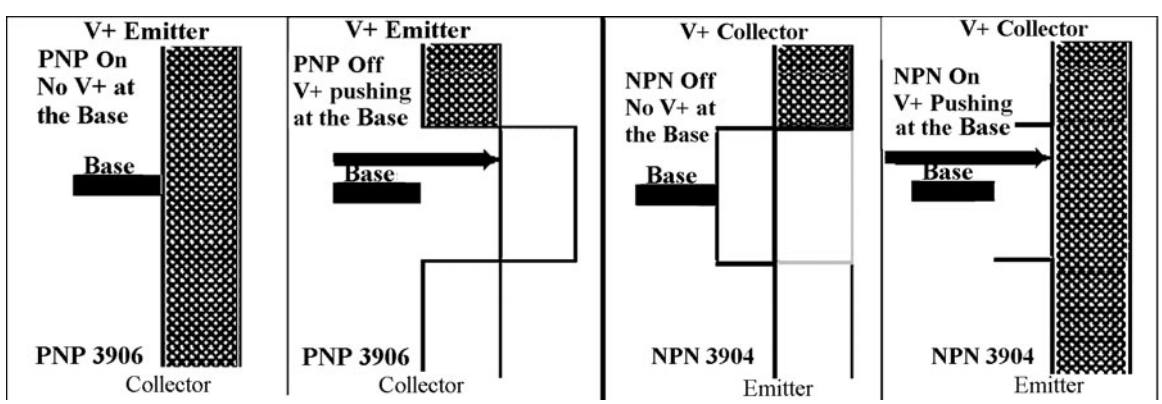

Figure L10-5

Breadboard the PNP Transistor Demonstration Circuit

The capacitor is powering the transistor. But remember for this PNP transistor that when the capacitor is charged, it is going to put pressure on the base of the transistor that will stop the flow.

Note the similarity between this schematic in Figure L10-6 and what the schematic was for the NPN transistor. Also, notice that the transistor in Figure L10-7 is physically reversed compared to the NPN transistor in the previous lesson.

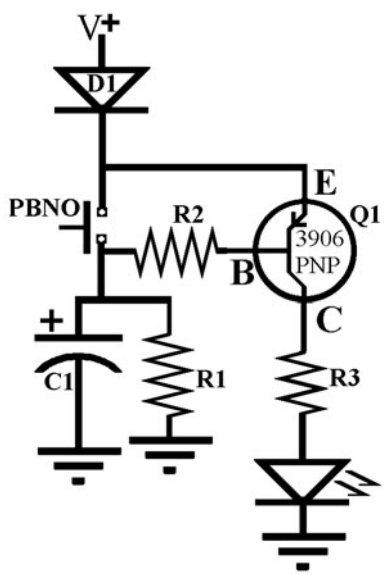

Figure L10-6

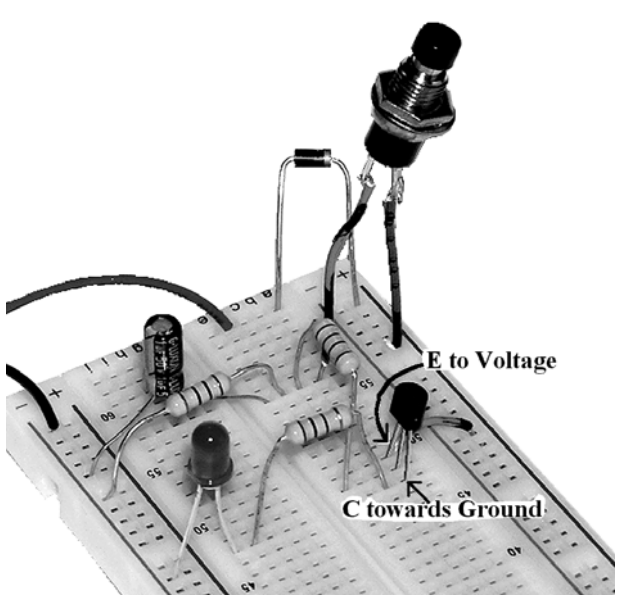

Figure L10-7

PARTS BIN
■ Q1—PNP 3906
■ R1—100 kΩ
■ R2—22 kΩ
■ R3—470 Ω
■ C1—10 μF
■ PB—N.O.
■ LED—5 mm round

What to Expect

The LED turns on as soon as you attach your battery.

1. Push and release the push button.
2. The LED will turn off immediately. It will slowly turn back on.

How It Works

1. When you first attach your battery, the LED turns on immediately because there is no voltage pressure pushing at the base, so the valve is in the opened position, allowing the current to flow from emitter to collector.
2. When you push the plunger down, the voltage immediately pushes against the base of the 3906 PNP transistor (Q1), closes the valve, and blocks the current flow. Voltage also fills the capacitor C1.

   After you release the push button, C1 holds the voltage pressure and keeps voltage on the base, keeping the valve closed and the current cut off.

3. As the voltage drains from C1 through R1, the voltage pressure against the base is released. The transistor starts passing current and voltage again slowly. The LED turns back on.
4. Why the extra resistor (R1)? (a) Before the push button is closed, both C1 and the base of the 3906 PNP transistor have no voltage. Because there is no voltage pressure on the base of Q1, the valve is open and current flows from emitter to collector; (b) when the voltage in the capacitor is high, Q1's valve stays shut; (c) the path for current to escape from C1 through the transistor is blocked because the valve is closed; (d) so, R1 is necessary to drain the charge from the capacitor. This allows Q1's valve to open again.

The capacitor is unable to drain and the transistor stays off because the voltage from the capacitor keeps the pressure on the base of the transistor, keeping the valve closed. The capacitor cannot drain through the base of the PNP transistor like it did in the previous 3904 NPN circuit. The extra resistor allows the cap to slowly drain, decreasing the voltage pressure on the base of the PNP transistor, allowing the valve to reopen and let current flow again.

Exercise: The PNP Transistor

1. In the schematic, Q stands for what component? Q represents the _____ _____.
2. The arrow in the transistor symbol represents what action?
   a. Direction of current flow
   b. Direction of the collector
   c. Direction of the base
   d. Direction of the emitter
3. The arrow is always on the side of which leg in the schematic?
   a. Voltage
   b. Emitter
   c. Base
   d. Collector
4. What would happen if R3 were not in the circuit and the LED was connected directly to the collector of the 3906 transistor?
   a. LED would burn out.
   a. LED would be bright.
   a. LED would not work.
   a. LED would flash.

   Explain your answer to the above.

   _____.
5. Replace C1 with the 100-microfarad capacitor. Describe what happens.

   _____.

   Why does changing the capacitor affect the circuit this way?

   _____.
6. Change C1 back to 10 microfarad. Now change R1 to 10 megohm (brown-black-blue). Describe what happens.

   _____.
7. Think of the capacitor as a sink, holding water. Think of the resistor as the drainpipe. Which of the following statements best explains how changing to a higher resistance has the same effect as changing to a larger capacitor?
   a. The drain is bigger and empties the water faster.
   b. The drain is smaller and empties the water slower.
   c. The volume of water is bigger and takes longer to drain.

d. The volume of water is smaller and drains faster.

8. Play a little.

   a. Replace R3 and the LED with the buzzer. Make sure the buzzer's red wire is getting voltage from the 3906's collector and the black wire is connected to ground.

   b. Push button and release. What happens to the sound as the capacitor discharges?

   _____.

9. Carefully describe in your own words how this circuit works.

   _____.

Lesson 11

The Phototransistor: Shedding Some Light on Another Component

All transistors are light-sensitive. Shortly after transistors were invented, engineers recognized that their new toys gave different results as lighting conditions changed. Lots of work went into shielding the guts of the early transistors. But at the same time, lots of effort was put into understanding and finding uses for this phenomenon.

The results of this research? The phototransistor. Figure L11-1 shows both the phototransistor (darkened glass) and its corresponding infrared (IR) LED (clear glass).

Many of the available phototransistors have been developed to react to specific wavelengths of light. This is important, because the intent is to control the transistor, leaving nothing to chance.

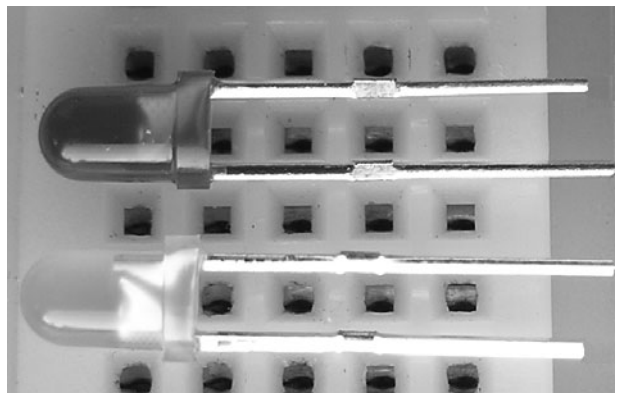

Figure L11-1

So how do we use this "tuned" phototransistor to our advantage? Here, I'm using a phototransistor that reacts specifically to IR light with a wavelength of 940 nanometers. Both sunlight and filament light bulbs create IR that will affect our phototransistor. Fluorescent lights don't have an infrared component in their spectrum.

So what to use as a light source? Hmmm? What color LEDs are readily available? Red, yellow, blue, green, and orange. Table L11-1 shows the wavelength of each color. Our eyes don't respond to the wavelengths above 750 nm, but digital cameras do respond to low-end IR.

LEDs that emit IR are also available. We use one that is specifically matched to the phototransistor we'll be using. Even the part numbers are the same, except for one added letter.

Let's start playing. The Parts Bin has a full parts list.

TABLE L11-1 We Need an Infrared LED for an Infrared Phototransistor

400nm	475nm	510nm	570nm	590nm	650nm	750 to 2,500nm
Violet	Blue	Green	Yellow	Orange	Red	Infrared

PARTS BIN

- R1, R2, R3, R4—470 Ω
- LED 1—Yellow or orange work best
- LED 2, 3, and 4—Whatever colors you want
- Infrared LED 3mm (clear glass)—LTE 4206/IR 3mm 940nM
- LDR—1 MΩ dark
- NPN phototransistor 3mm (darkened glass)—LTE 4206E/IR 3mm 940nM

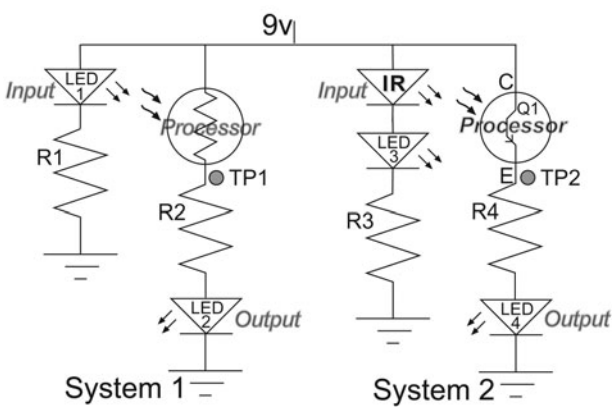

Figure 11-2

Figure L11-2 presents the basic schematic. Yes, there really are two separate circuits next to each other. Well, how else can they be compared? Each system has its own input, processor, and output. Build the two circuits. The second system has the two new components. The LDR responds best to a orange or yellow LED. The IR LED is paired with the phototransistor. Figure L11-3 shows the setup on the breadboard.

Each pair represents a separate system.

- LED 1 is the input to the LDR. The LDR is the processor. LED 2 is the output of the first system.
- IR LED is the input to the phototransistor. The phototransistor is the processor. LED 4 is the output of the second system.

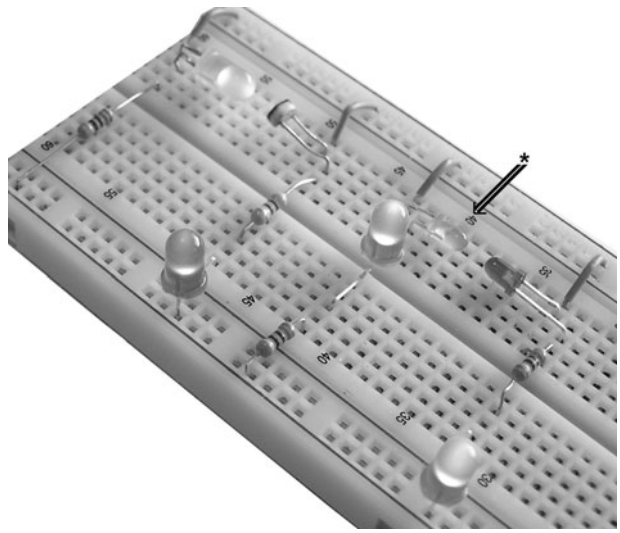

Figure L11-3

What to Expect

Do your work away from sunlit windows. Daylight provides a full spectrum that affects both the LDR and the phototransistor.

As you slide a piece of thick paper between the input and processor of each system, the outputs turn on and off. Does the phototransistor act like an NPN or PNP transistor? The output should be off when there is no input.

No big deal. Pretty much the same. Why bother?

But they aren't the same. Let's do some measuring. Why else would I have labeled a test point on each circuit? For each system, measure and record the test point voltage for both conditions. Record your results. System 1: TP1 _____volts. System 2: TP2 _____volts.

For System 1, the LDR uses a large amount of the voltage. However, the phototransistor uses about as much as the diode did back in Lesson 3. There is significantly more voltage available at System 2's test point.

"Yeah?" you say. "So what?" So let's play. Let's see if it means anything.

Modifying the Setup

Make a copy of Figure L11-4 and paste it onto some thick paper.

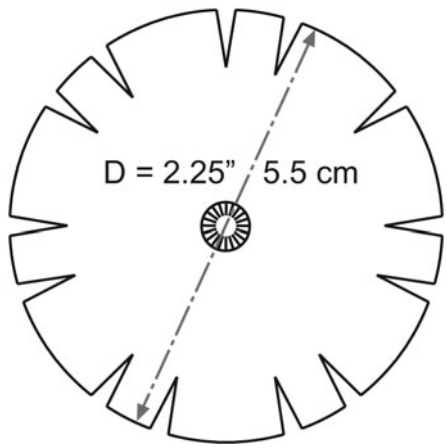

Figure 11-4

The complete setup is shown in Figure L11-5. Cut the disk and slots. Center your disk on a pencil so it spins evenly.

Now, as you spin the pencil, rate the responsiveness of each circuit on the “Mushiness Scale” (Table L11-2).

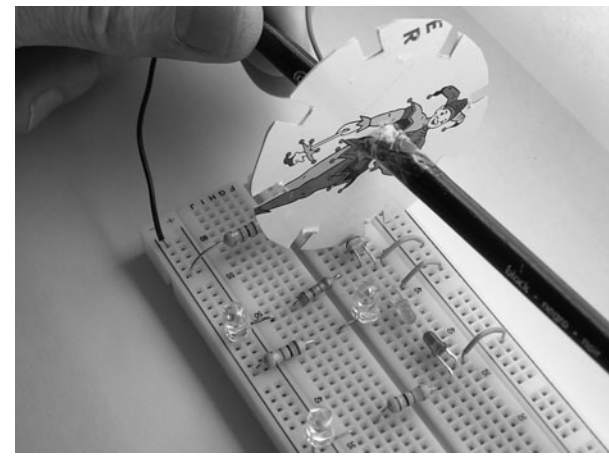

Figure 11-5

How It Works

The LDR’s response is limited. The photosensitive area does not instantly change resistance. It is measured in Ω per millisecond. Also, you’ve seen that the resistance does not go much below 1 kΩ.

However, the phototransistor’s response time is measured in microseconds. That’s 1,000 times faster than the LDR. It doesn’t need much input to “saturate” the base, opening the transistor’s valve quickly and completely. There is little resistance, providing a clean, fast, and accurate response.

TABLE L11-2 Does the LDR or Phototransistor Work Better, Even at Different Speeds?

Input through slot	Processor	Output	Slow									Very crisp
LED 1	LDR	LED2	1	2	3	4	5	6	7	8	9	10
IR LED	Photo Transistor	LED4	1	2	3	4	5	6	7	8	9	10

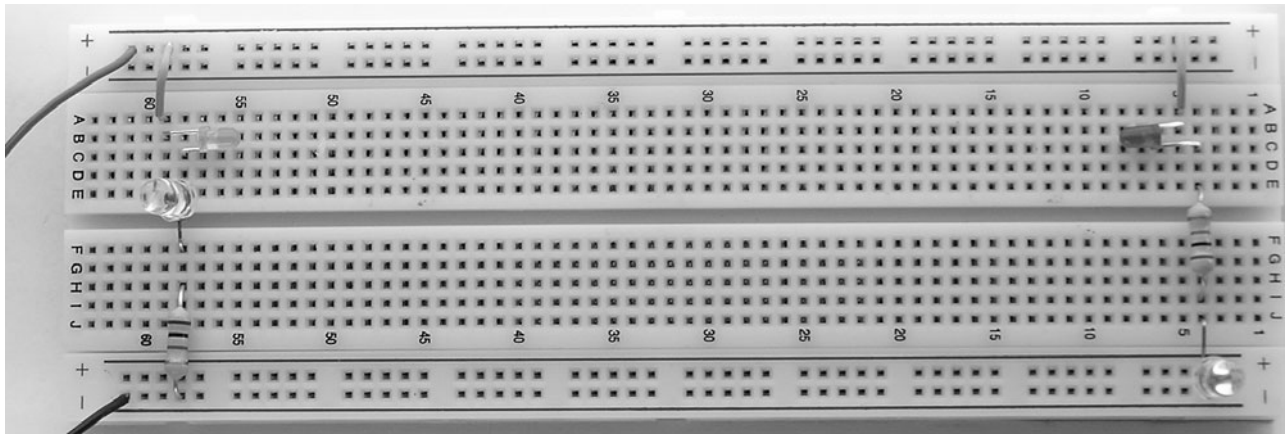

Figure 11-6

Modify It Some More

Take a moment. Compare the system response when the light source is a bit farther away. In Figure L11-6, the input half of the circuits has been moved to the opposite end of the breadboard. There will be a noticeable difference between the two systems.

Did you know that your TV remote uses infrared? See if your phototransistor responds to your remote control. Press a key. Any key will do. It should respond.

This page intentionally left blank

SECTION 4

Two Projects and Then Some More

Enough of this playing around. Let's do something.

Lesson 12

Your First Project: The Automatic Night Light

We combine our knowledge and the components to make an automatic night light. It dims in the light and brightens in the dark. Using the LDR, build the circuit shown in Figure L12-1 on your breadboard. The photograph of the circuit appears in Figure L12-2 (see also the Parts Bin).

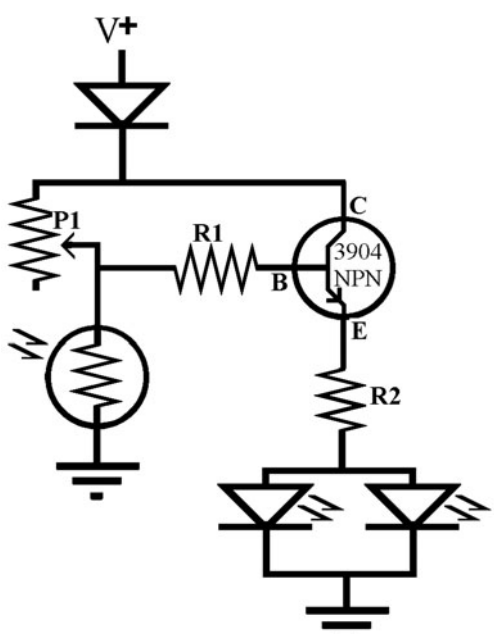

Figure L12-1

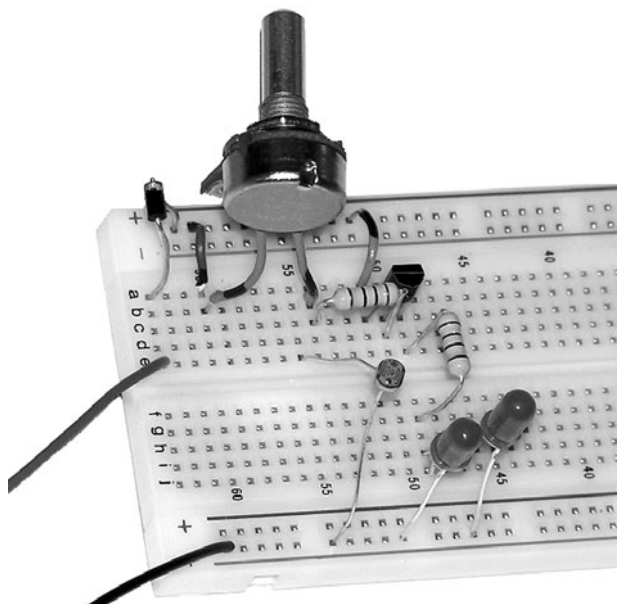

Figure L12-2

PARTS BIN

- D1—1N400X diode
- P1—100 kΩ pot
- R1—22 kΩ
- R2—470 Ω
- LDR—1 MΩ dark
- Q1—NPN 3904
- LEDs—5 mm round

What to Expect

1. Attach your power supply.
2. Turn the knob on the pot one direction until the light-emitting diodes (LEDs) are barely off.
3. Now darken the room or stand in a closet. The LEDs will turn on.
4. Move to a semi-lit area. The LEDs will dim as you move into the light. Adjust the pot so that the LEDs are again barely off. Any reduction of the amount of light will now turn the LEDs on. This is your automatic night light.

How It Works

Figure L12-3 shows the movement of current and voltage in the circuit as the light changes. Remember the NPN transistor needs positive voltage to its base to turn on.

1. The potentiometer adjusts the amount of voltage shared by the 22-kilo-ohm resistor and the LDR.
2. In light, the LDR has low resistance, allowing all of the voltage to flow through to ground. Because the base of Q1 gets no voltage, the valve from C to E stays closed.
3. The resistance in the LDR increases as it gets darker, providing more voltage to the base of the transistor, pushing the valve open.
4. As the voltage flows through the transistor, the LEDs turn on.

If P1 is set to a low resistance, more voltage gets through. The more voltage that gets through the potentiometer, the easier Q1 turns on, because the LDR cannot dump all of the voltage.

Exercise: Your First Project—
The Automatic Night Light

1. Set the pot so the resistance between legs A and C, the center leg, is close to 50 kilo-ohms. Figure L12-3 shows how the voltage and current move in the different conditions for this setup.
2. Now set your circuit under a fairly good light. Measure and record the voltage at the test point shown in Figure L12-4. _____ V
3. Now cover the LDR with a heavy, dark pen cap. Measure and record the voltage at the test point again. _____ V

   Did the LED output change at all?

   So here's a major question: Do you recall how much voltage is used from V+ to ground?

   - Does it depend on the amount of voltage available? NO!
   - Does it depend on the number or types of parts in the circuit? NO!

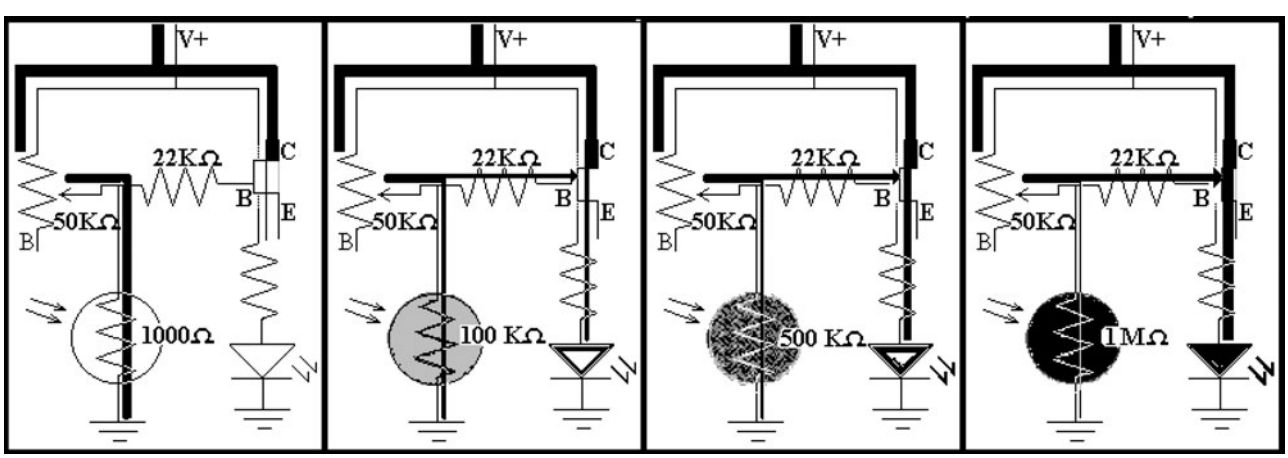

Figure L12-3

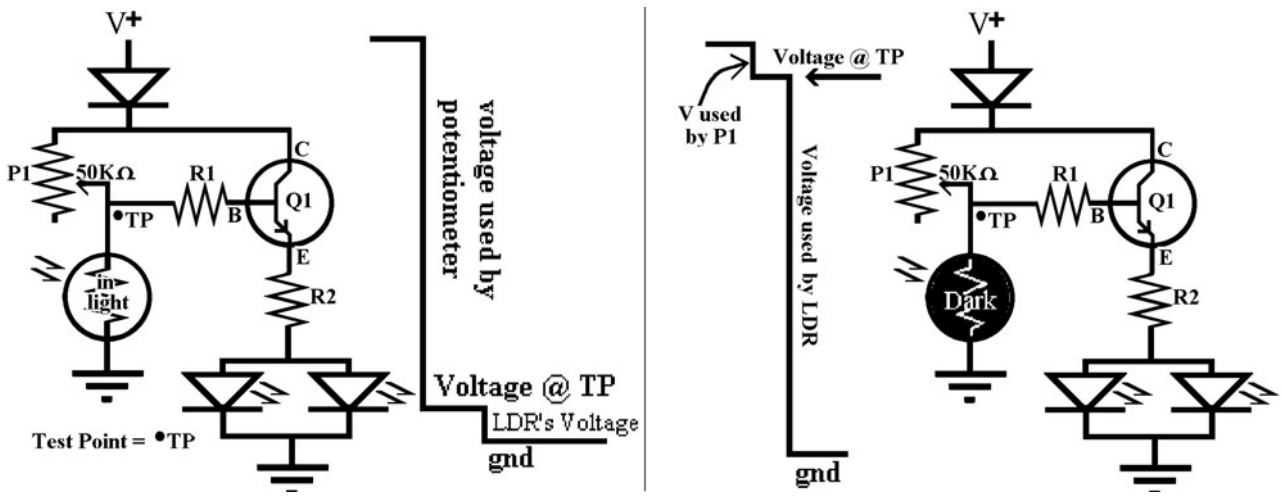

Figure L12-4

By definition, voltage used between V+ and ground doesn't relate to any circuit variables.

The question is like asking, "How much distance is there between this altitude and sea level?"

The answer is—whatever the altitude is—all the distance!

By definition, ground is 0 volts.

- How much voltage is used between V+ and ground?
- The answer will always be *All the voltage is always used between V+ and ground.*

4. Okay. Figure L12-5 will help explain how all the voltage in this circuit is used.

Remember the idea of the waterfall when we first looked at resistors. As the size of the load increased, the amount of voltage used increased *proportionately*. The same thing happens with two resistor loads in this circuit. More detail is given in Figure L12-6.

The pot uses some voltage because it is set near 50,000 ohm here.

The LDR uses a small amount of the voltage in the light because it has a small resistance. When it is in the dark, the LDR has a great deal of resistance. The base of the

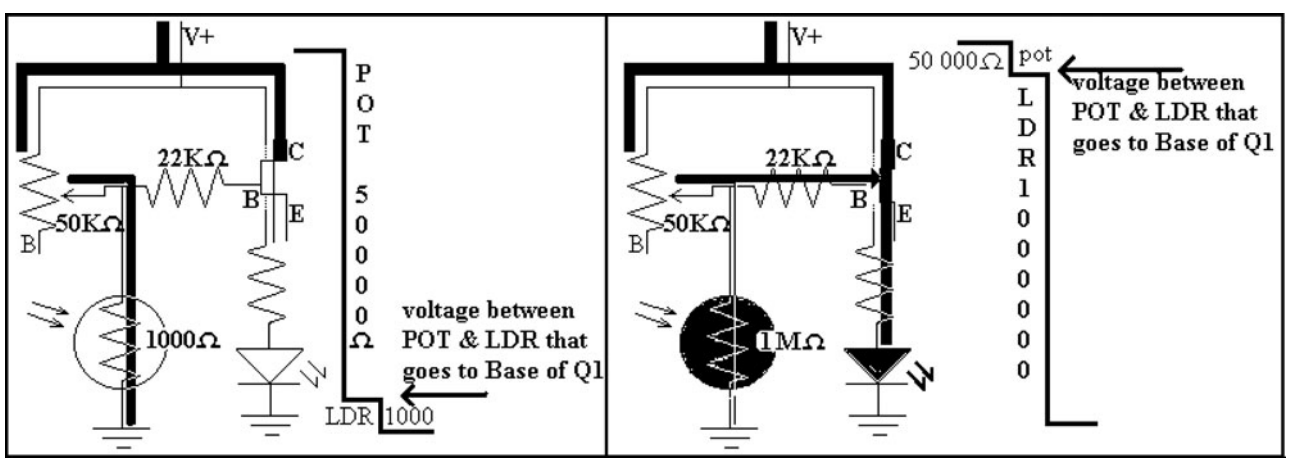

Figure L12-5

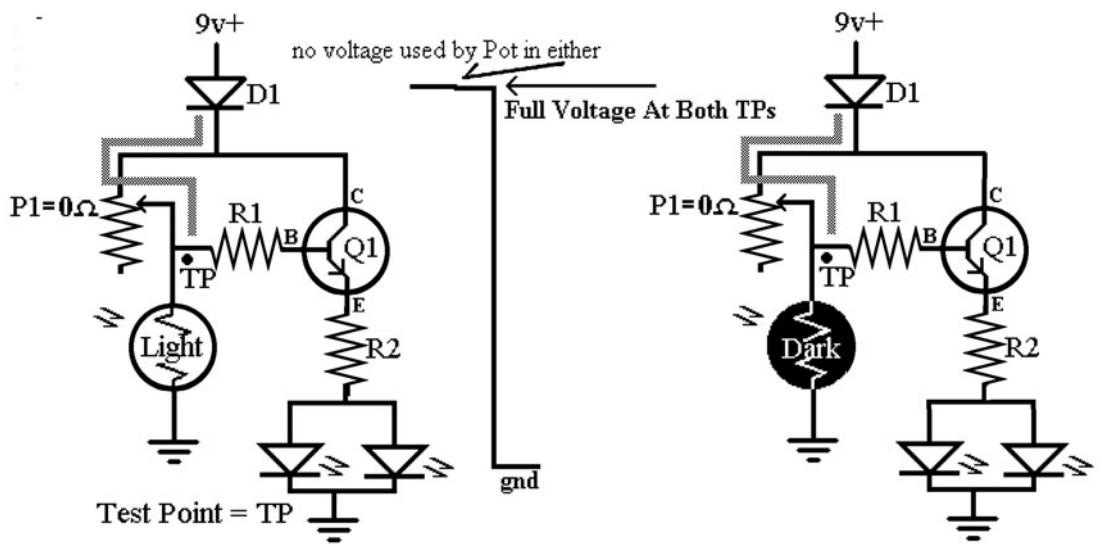

Figure L12-6

transistor reacts to the voltage available at that point where the LDR and pot connect. It becomes obvious which situation provides more voltage to the transistor's base.

5. Set the pot so the resistance between legs A and C, the center leg, is close to 0 ohms. Figure L12-6 shows how the voltage available to the transistor base is identical in both the light and the dark. The potentiometer uses none of the voltage, so the base of the transistor is exposed to nearly full voltage in both circumstances.

6. Now set your circuit under a fairly good light. Measure and record the voltage at the test point shown in Figure L12-6. _____ V

7. Now cover the LDR with a heavy, dark pen cap. Measure and record the voltage at the test point again. _____ V

   Did the LED output change at all? Did you expect the output to change?

8. Set the pot so the resistance between legs A and C, the center leg, is close to 100 kilo-ohms. Figure L12-7 shows how the voltage is responding to the changing resistance of the

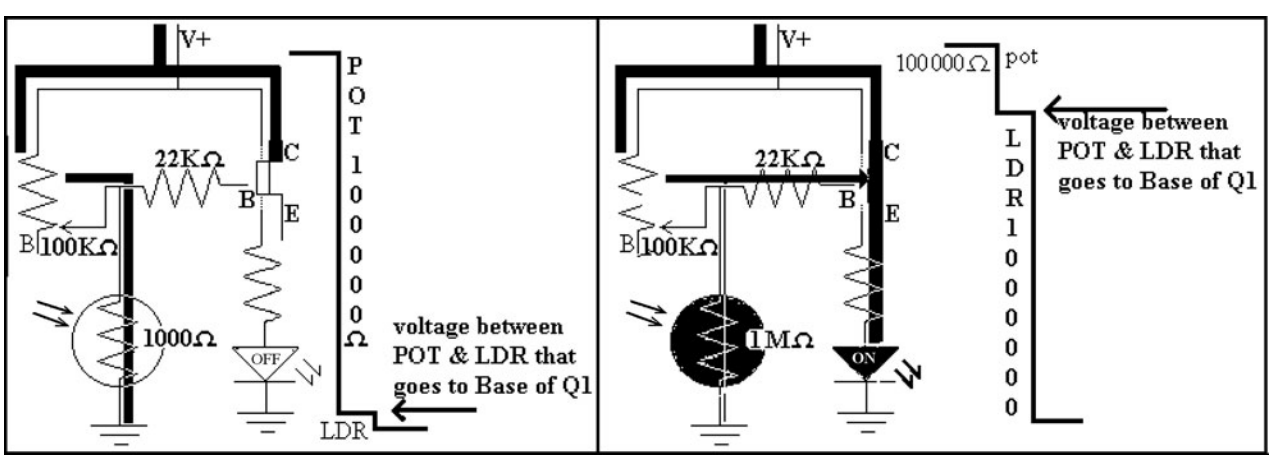

Figure L12-7

LDR, changing the voltage available to the base of the transistor. The pot here is adjusted to twice as much resistance as before, so it will use twice as much of the voltage available. The LDR must be set into nearly complete darkness or you will get muddy results.

9. Now set your circuit under a fairly good light. Measure and record the voltage at the test point. _____ V
10. Now cover the LDR with a heavy, dark pen cap. Measure and record the voltage at the test point again. _____ V

Did the LED output change at all?

Substitute the Phototransistor for the LDR

The LDR has been the traditional component used to respond to ambient light, commonly applied in a variety of circuits from toys to streetlights. However, this simple and useful component is falling out of favor because it contains cadmium, a highly toxic substance. Don't eat them. Import to the European Union is already restricted.

Here is a substitute night light circuit that uses the phototransistor. The few components are listed in the Parts Bin. Because this is a much simpler circuit, it is not useful for explaining the concepts just introduced.

With so few components, the schematic in Figure L12-8 is very simple.

PARTS BIN

- R1—22 kΩ
- R2—470 Ω
- Q1—NPN photo transistor LTE 4206 E (darkened glass) 3mm diam
- Q2—2N3904 NPN in a TO-92 package
- LED—Standard 5mm

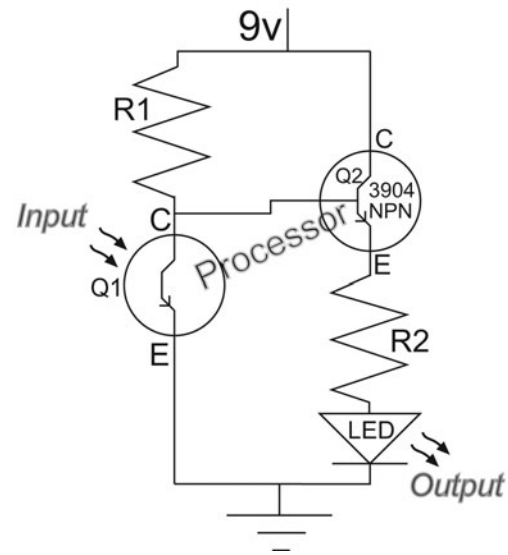

Figure L12-8

Make sure that the phototransistor is set in properly. The flat edge and short leg indicate the collector. This phototransitor acts like an NPN transistor. The collector is connected towards V+.

How It Works

Remember—sunlight has the complete spectrum, including infrared (IR). Incandescent light bulbs also produce some IR. Most fluorescent lights do not have an IR component, so the phototransistor night light will react to daylight and older "wire" light bulbs, but most likely will stay on whether the fluorescent lights are turned on or off.

1. Look at Figure L12-9. When there is IR input to the base of Q1, the phototransistor, voltage and current flow through it directly to ground. Nothing is left at TPA to tickle the base of Q2. So Q2 stays off. No voltage or current moves through Q2. As long as Q1 stays on, Q2 remains off. No power for the LED.
2. When there is no input to the base of Q1 (no infrared) the voltage and current cannot move through the phototransistor. Instead, they are rerouted to the base of Q2, turning on the

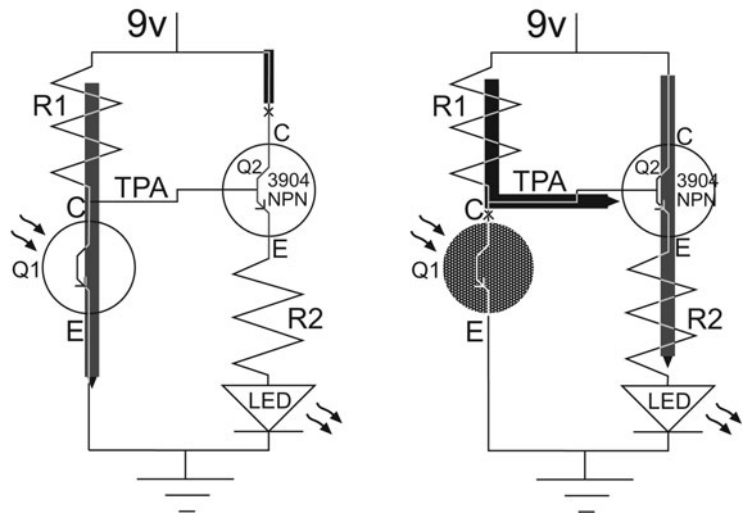

Figure L12-9

2N3904 transistor. Voltage and current move through Q2 from C to E, turning on the LED.

Like plumbing, it's all about controlling the flow. Once you understand the initial concept, it really is simple.

Building the Automatic Night Light Project

This is a top view of your *printed circuit board* (PCB). The traces on the underside are shown as gray in Figure L12-10.

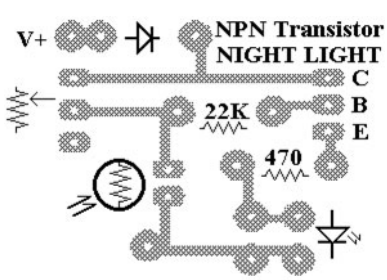

Figure L12-10

Figure L12-11 shows the view of the PCB looking directly at the bottom. The copper traces replace the wires used in the solderless breadboard.

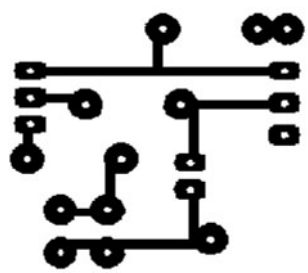

Figure L12-11

The series of frames in Figure L12-12 show how the PCB layout was developed. Creating such a layout is a relatively simple task.

Mounting Your Parts

Be certain to get your parts into the correct holes, as displayed in Figure L12-13. Your soldering technique is vital. Check out the soldering animation on the website www.mhprofessional.com/computingdownload. Each solder connection should look like a Hershey's Kiss. Just as one bad apple spoils the bunch, one bad solder can spoil your project (and your fun). The parts are mounted onto the board so that their legs stick out through the bottom. The copper traces are on the bottom. The soldering is on the bottom. This is a good job.

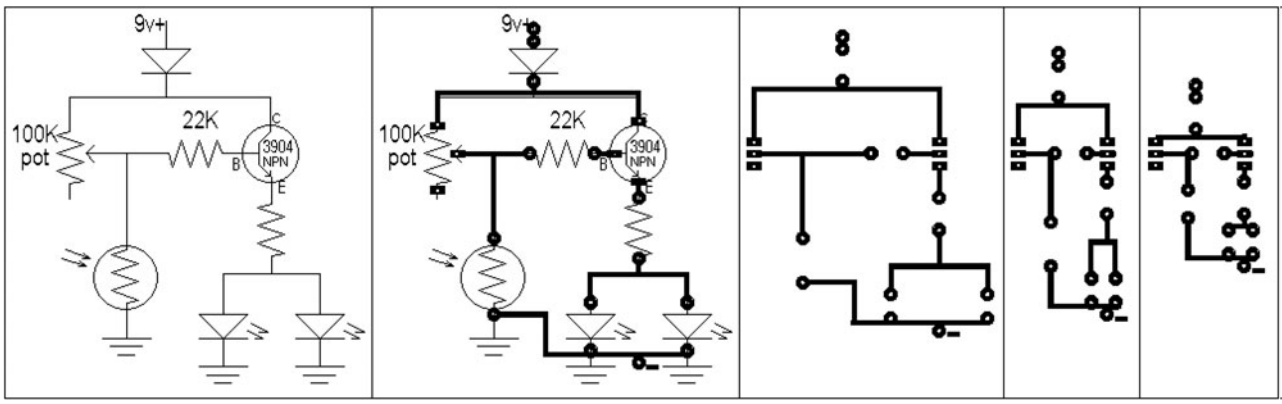

Figure L12-12

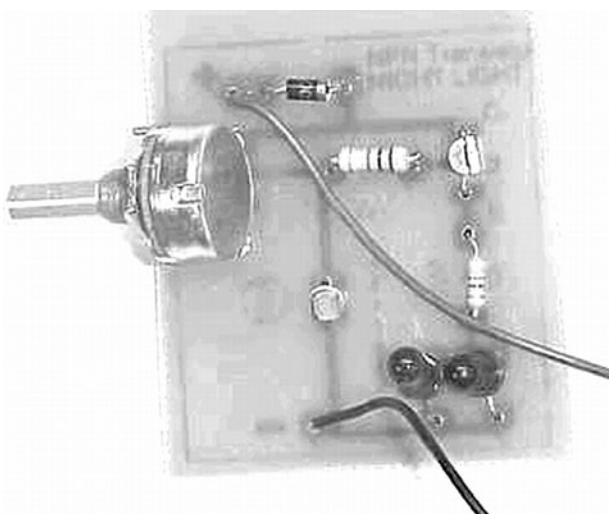

Figure L12-13

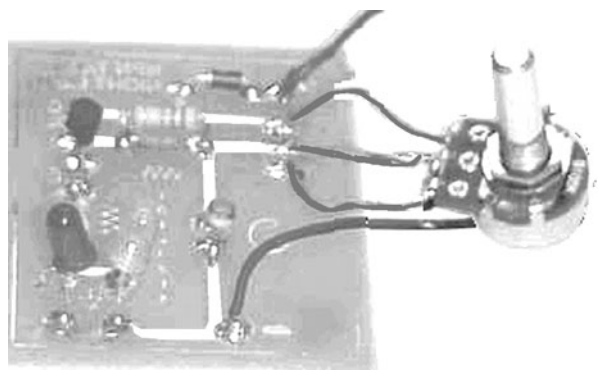

Figure L12-14

I got such a laugh when the circuit in Figure L12-14 was presented to me for troubleshooting. This person did not follow directions. They managed to mount the parts on the wrong side of the printed circuit board. They made a mess. It didn't work. There is never enough time to do it right, but there is always time to do it over.

Finishing Up

I would recommend using a touch of hot glue on each corner of the PCB and then pressing the circuit onto a thick piece of cardboard. You can mount it on anything that is an insulating material. Anything metallic would short-circuit your project, and probably destroy the transistor.

Lesson 13
Specialized Transistors—The SCR

There are many highly specialized types of transistors. Here we use a latching switch called a *silicon-controlled rectifier* (SCR). This component is also referred to as a *triode for alternating current* (TRIAC). The SCR acts like a "trapdoor." Once triggered, it stays latched open. You are familiar with this because it is the basic component

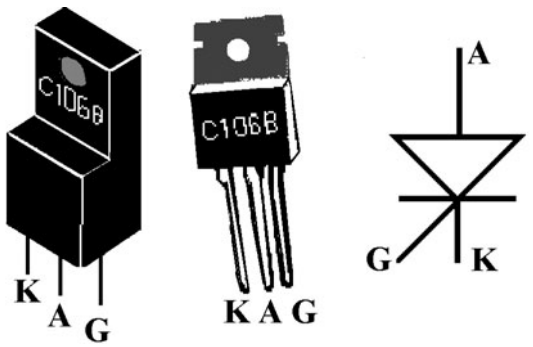

Figure L13-1

in fire alarms and burglar alarms. Once triggered, it stays on. This is your second project, a professional-quality alarm circuit.

Electronics is all about using an electrical pulse to control things or pass information. A commonly used solid-state switch (no moving parts) is the SCR. It is provided in a variety of packages, the most common ones are pictured next to their symbol in Figure L13-1.

Remember, not everything in this type of package is an SCR.

- "A" leg is anode, the positive side.
- "G" leg is gate; not to be confused with ground, "gnd."
- "K" leg is cathode, referring to the grounded side. "C" is already used for capacitor, for example, C1, C2.

The SCR is often used in alarm systems; once it is triggered, it stays on. Its action is best depicted in the series of frames shown here in Figure L13-2.

When V+ hits the G (gate) leg of the SCR, a latch releases, opening a "trapdoor" between A (anode) and K (cathode). This trapdoor remains open until the power is removed. In other words, it latches itself open. That is why an SCR is called a *latching circuit*. The only way to turn the SCR off is to shut off the power. Turn the power on again, and the SCR is reset.

Breadboard the SCR Circuit

There are four stages to building this professional-style alarm circuit. Each one will be considered individually.

Stage 1: The Basic System

Build the basic SCR circuit by carefully following the schematic presented in Figure L13-3. The parts layout is shown in the photograph in Figure L13-4 (see also the Parts Bin). Don't get too comfortable using the photograph. You will have to depend on schematics from now on to help you develop your alarm circuit.

PARTS BIN

- D1—1N400X
- R1—100 kΩ
- R2—470 Ω
- SCR—TRIAC C106B
- Buzzer—9v
- LED—5 mm round

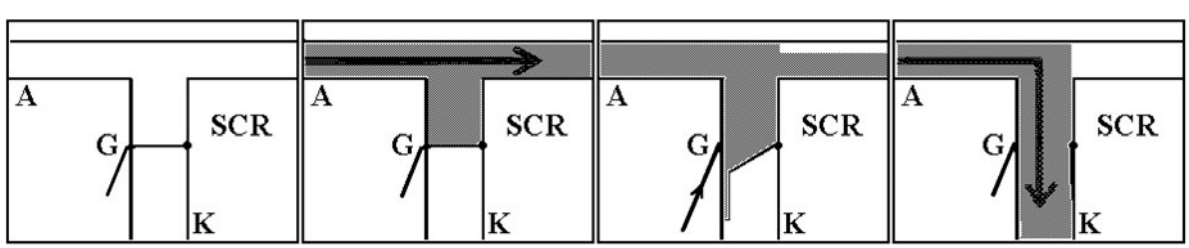

Figure L13-2

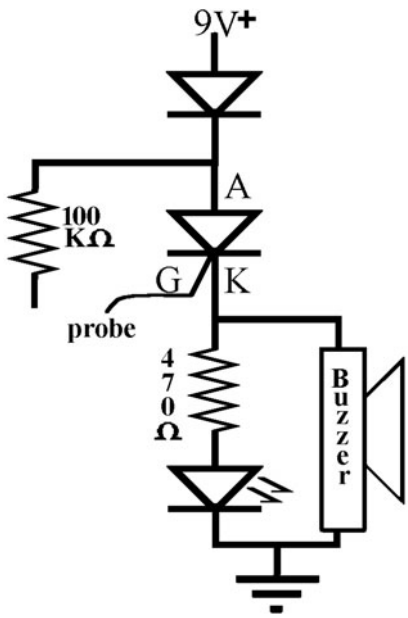

Figure L13-3

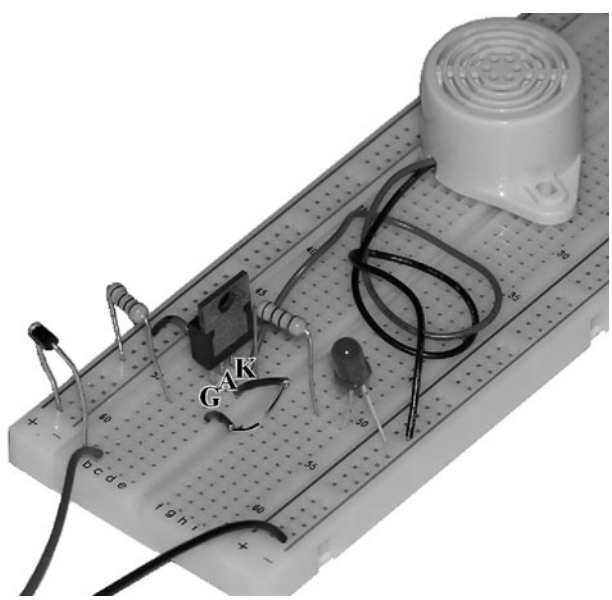

Figure L13-4

What to Expect

- When you attach the battery, it should be quiet.
- Touch the sensor probe to the end of R1. The buzzer should turn on.
- You need to disconnect the battery to reset the SCR.

How It Works

1. When you attach the battery, the LED is off and the buzzer is quiet. Voltage is not available to the LED and buzzer because the SCR has not been activated. The circuit path between A and K is not available until voltage is put to the gate.
2. When you touch the end of the probe to the bottom of the 100-kilo-ohm resistor, voltage is fed to the gate (G) leg.
3. The voltage activates the latch and opens the circuit path from A (V+) to K (gnd). Current moves on this path from A to K, through the SCR, providing voltage and power to the LED and the buzzer.
4. The buzzer and LED should turn on and stay on until you disconnect the power. When you reconnect the power, the LED should not light and the buzzer should be quiet.

Stage 2: Make Life Easier

It is a hassle to disconnect the battery each time just to reset the SCR. Wouldn't it be so much easier just to use a push button to reset the circuit? So go ahead and use the normally closed push button to do just that.

It does not matter where the voltage to the SCR is cut off. As you can see in Figure L13-5, any of the following suggestions work. Each one disconnects the voltage to the circuit and resets the SCR.

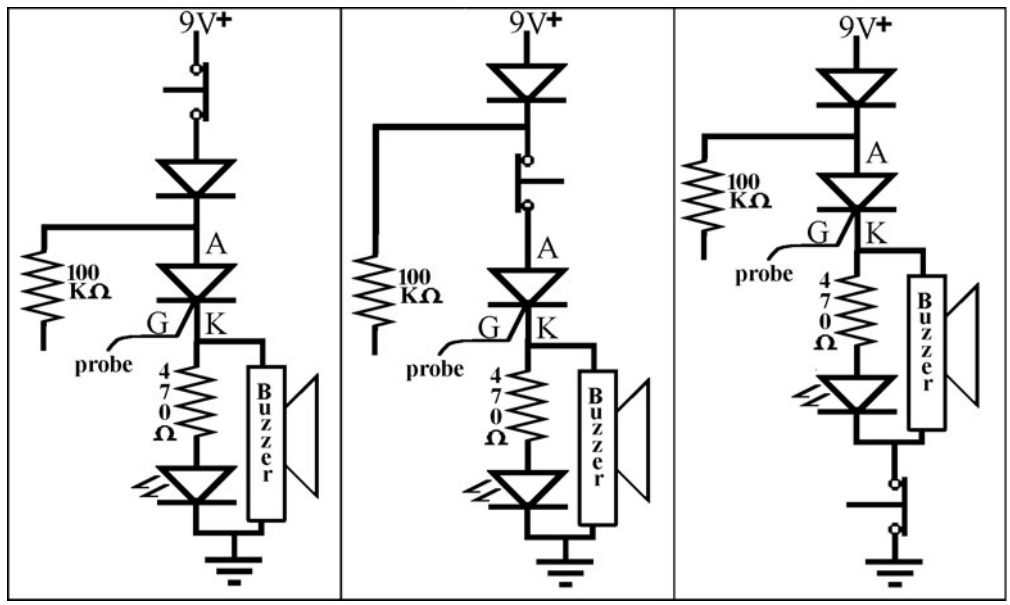

Figure L13-5

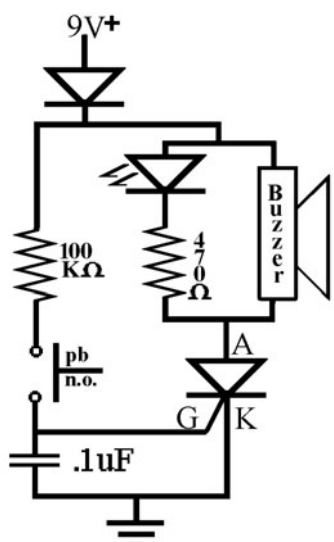

Figure L13-6

Stage 3: Avoid Static Buildup

Modify the SCR circuit with a few changes, shown in Figure L13-6.

1. Shift the SCR below the LED and buzzer. In most circuits, you can be flexible. It really doesn't matter which component comes first.
2. Add the 0.1-microfarad capacitor.
3. Add the PBNO for a trigger.

How It Works

1. When the push button is pushed, the capacitor fills "nearly" instantly because the 100,000-ohm resistor slows down the current. The capacitor acts like a cushion and dampens any small but annoying jumps in the voltage to the gate that might be caused by static electricity. It avoids false alarms by preventing any accidental triggering of the SCR.
2. The gate (G) of the SCR senses the signal when the capacitor is filled.

Stage 4: A Complete System

Now modify your circuit to make a simple but professional-quality alarm system by adding three more parts to your working breadboard, as shown in Figure L13-7.

PARTS BIN
■ D2—1N400X
■ R1—47 kΩ
■ PBNC—Normally closed push button

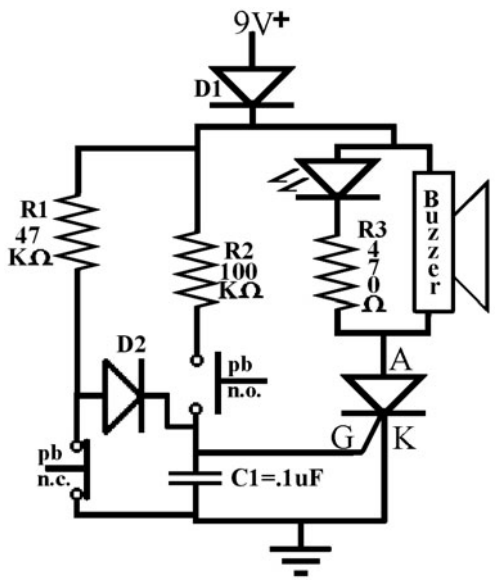

Figure L13-7

What to Expect

- Attach your power supply. The LED should be off and the buzzer quiet.
- Push the plunger on the PBNC. The buzzer will start, and the LED light will turn on.
- To reset, disconnect the power—count ten seconds—and then reconnect.
- Now push the plunger on PBNO. The buzzer and LED will turn on.

How It Works

As long as the PBNO stays closed, the voltage takes the "path of least resistance" and goes directly to ground. No voltage reaches G, the gate of the SCR.

When the PBNO is pushed, the connection to ground is broken and the voltage has to move through D2, activating G, and turning the SCR on.

As long as the PBNC stays open, the voltage cannot move across the gap. Air is a great insulator. No voltage reaches G. When the PBNC is pushed, the voltage travels through to the gate leg, turning the SCR on.

Exercise: Specialized Transistors—The SCR

1. If a component looks like your SCR, it is an SCR. True/false. Support your answer.
2. How can you tell if it is an SCR without putting it onto your breadboard?
3. Many alarm systems use an SCR. For example, a fire alarm, once triggered, keeps going. Describe what needs to be done to reset the SCR in the alarm.
4. Use Figure L13-7 to follow the current's path when the PBNC is in its normal position.
5. How does the path change when you push the plunger on the PBNC?
6. Follow the current's path when the PBNO is in its normal position.
7. How does the path change when you push the plunger on the PBNO?
8. Have you ever seen metal foil tape on the edge of store windows? There is a small current running through this tape. If the window breaks, the foil is torn. What component does the foil tape replace in your burglar alarm system?
9. Describe how a normally open type of switch would be used in a burglar alarm?

Assembling the Alarm

Figure L13-8 represents the SCR's printed circuit board when viewed from the bottom. Figure L13-9 shows lines that appear faded. This is the view of the PCB when you look at the traces through the fiberglass backing.

Consider this: If you mount your simple push buttons onto the PCB directly, you have a very cute demonstration circuit. If you mount the push buttons on a long wire, you still need to wait for someone to push one of the buttons. That still isn't much of an alarm. What you really need to do is create your own contact switches. When you do

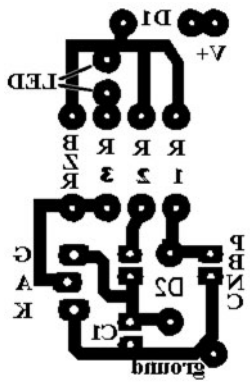

Figure L13-8

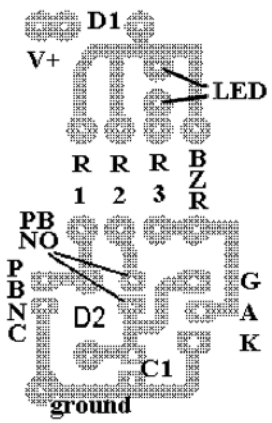

Figure L13-9

this, you can apply this as a real alarm system. The best setup for your power supply is to have both a wall adapter and a 9-volt battery. This way, the circuit still works even if your house has no power.

Lesson 14
The Regulated Power Supply

Have your batteries been feeling tired lately? Not what they used to be? All used up? Just don't have that push they used to have? There's a better way.

Here, we build a power supply that provides a stable 9v DC that you can always use as you continue to develop your skills. We'll use another specialized transistor, the voltage regulator, in conjunction with a basic wall adapter. Any 9v DC wall adapter will do—even the one provided in the Evil Genius Kit.

The few important things are highlighted in Figure L14-1.

1. Voltage input (120v AC) and output (9v DC)
2. Amount of output current (200mA)
3. The output plug wiring as a graphic

Figure L14-1

Now that you've looked at it, plug it into the wall. Don't worry about what you are about to do next. Any wall adapter in this range actually puts out less power than most 9-volt batteries. Set your DMM to vDC. Hold the red lead to one part of the output plug and the black line to the other. See the display in Figure L14-2.

Figure L14-2

Why does it show 13 vDC? Because it is unregulated. It will give more than 9 volts, depending on how hard it's working. What we're going to do is build a regulated power supply that will provide us with 9 volts all the time.

Let's Get to Work

The following directions will get you to Figure L14-3:

1. Remove the adapter from the wall (duh!).
2. Clip the wires as close as possible to the DC output plug. Separate and strip the output wires.
3. Plug the adapter back in. Use the DMM again to determine which line is V+.
4. Remove the sheaths from the alligator clips. Slide the red sheath onto the V+ line and the black onto the ground.
5. Double-check that you have the lines properly identified.
6. Unplug it while you solder the clips onto each line. Figure L14-3 shows the finished product.

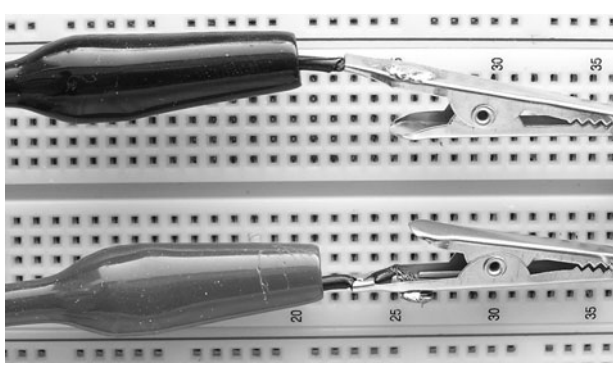

Figure L14-3

All that, and now we can get to the real workhorse of this circuit, the 7809 voltage regulator, proudly displayed in Figure L14-4.

The 7809 is only one of many in the 78XX and 79XX voltage regulator series. Table L14-1 shows what is available in the full series.

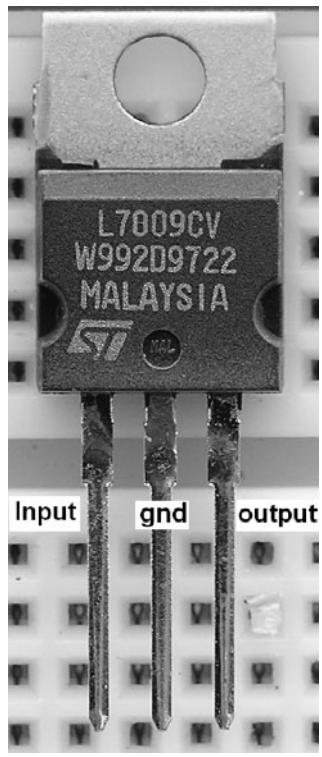

Figure L14-4

TABLE L14-1 Other Voltage Regulators Are Available, but the 78XX Series Is Most Popular

Positive Regulators		Negative Regulators	
7803	+3vDC	7903	–3vDC
7805	+5vDC	7905	–5vDC
7809	+9vDC	7909	–9vDC
7812	+12vDC	7912	–12vDC
7815	+15vDC	7915	–15vDC

Respectively, place a red hookup wire into hole E-60 of your SBB and a black hookup wire into the ground line on the bottom. The schematic in Figure L14-5 shows how to set up the circuit, and the photo in Figure L14-6 shows the layout.

The capacitor actually is part of the working circuit. The LED isn't necessary, but conveniently tells us when the circuit is powered up.

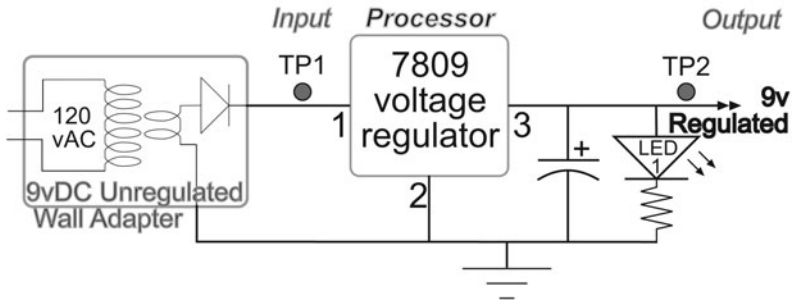

Figure L14-5

Figure L14-6

1. The V+ input line from the wall adapter should be wired directly to the 7809's input leg.
2. The adapter's ground wire is connected directly to the blue ground line across the bottom of your SBB.
3. The output leg is connected directly to the red V+ line that runs across the top of the breadboard.

What to Expect

Plug it in. First off, the LED should come on. If the LED does not turn on, unplug the wall adapter immediately and check your wiring.

Now, measure the voltage across the capacitor, because conveniently, it has exposed wires.

It should have a readout of 9v DC. This 7809 voltage regulator has a tolerance of 4 percent. So its maximum would be 9.36v and minimum 8.64v.

Okay, that's it for your quick, regulated power supply. Use this as your power supply for the rest of the book.

Like I've said before: Electronics is not hard. There's lots of new information, but it's not hard.

PART TWO

Introduction to Digital Electronics

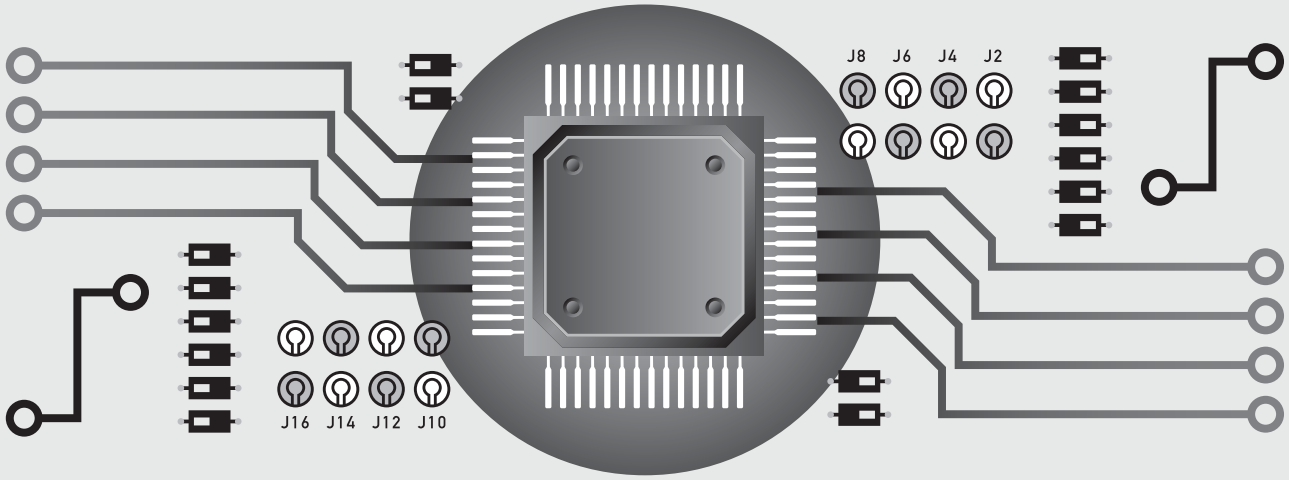

This page intentionally left blank

The Start of the Digital Revolution

Actually, the idea of "digital" was first introduced by the textile industry. It all started with an attachment to an existing loom. The Jacquard head attached to the large Dobby loom (figure below). A set of punched cards was connected to a chain. Once the cards were set, the up/down motion of a single lever moved them forward, advancing the pattern. Thus, digital as a functional technology was introduced over 200 years ago.

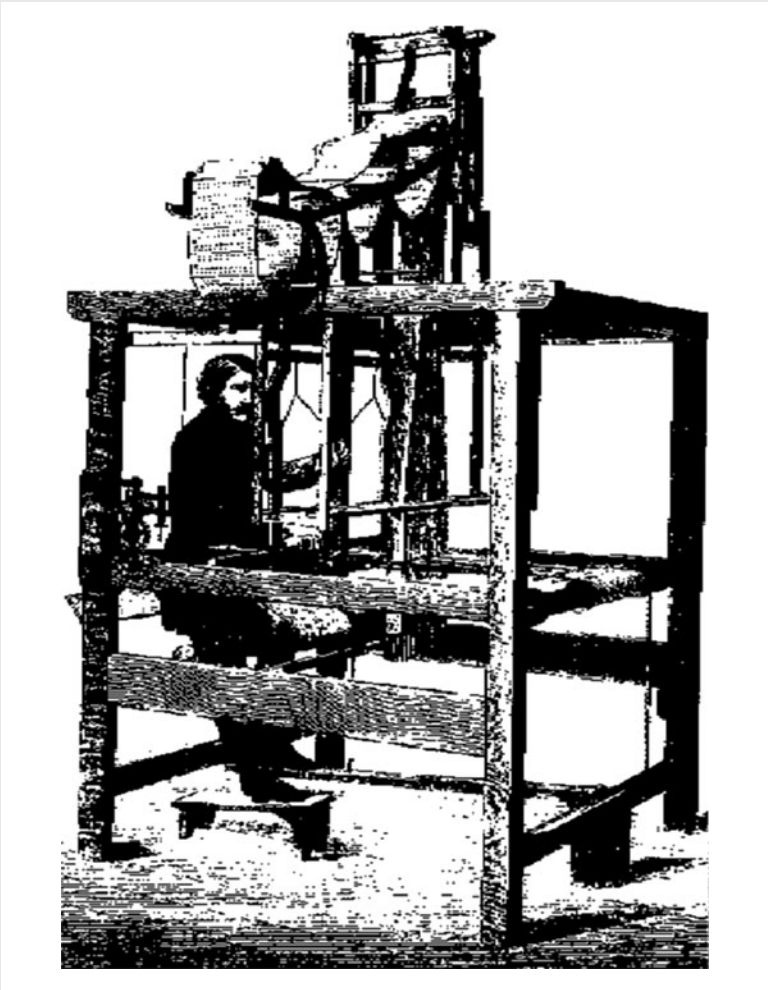

Digital technology circa 1801.

PARTS BIN FOR PART TWO		
Description	**Type**	**Quantity**
1N4148	Signal diode	1
2N-3906 PNP transistor	TO-92 case	2
2N-3904 NPN transistor	TO-92 case	2
Phototransistor	LTE 4206 E (darkened glass) 3mm diameter: tuned to 940nm	1
Infrared LED	LTE 4206 (clear glass) 3mm diameter: tuned to 940nm	1
LED	5 mm	2
100 Ω	Resistor	1
1,000 Ω	Resistor	2
10,000 Ω	Resistor	1
22,000 Ω	Resistor	1
39,000 Ω	Resistor	1
100,000 Ω	Resistor	2
220,000 Ω	Resistor	1
470,000 Ω	Resistor	2
1,000,000 Ω	Resistor	1
2,200,000 Ω	Resistor	1
4,700,000 Ω	Resistor	1
10,000,000 Ω	Resistor	2
20,000,000 Ω	Resistor	1
100 kΩ trim pot	Potentiometer	1
Light-dependent resistor	LDR	1
10 μF	Cap	
100 μF	Cap	
.01 μF disk	Cap	1
.1 μF film	Cap	1
1 μF radial	Cap	1
4011 quad NAND gate	IC	1
1″ × 1/8″ heat shrink	Hardware	4
1/8″ male plug	Hardware	1
14-pin DIP socket	Hardware	1
2″ × 1/4″ heat shrink	Hardware	1
Alligator clips (red and black)	Hardware	1 each
Battery clip	Hardware	1
PBNC	Hardware	2
PBNO	Hardware	2
Speaker 8 Ω	Hardware	1
24 gauge wire	Hookup wire	Various colors
Speaker wire 3’ 20 gauge	Hardware	1
Printed circuit board	PCB	1

■ Not all components will be consumed by project work.

SECTION 5

Digital Logic

THIS COURSE DEALS WITH a vast amount of new information. Remember that electronics is not hard; there's just lots of new information to learn.

Lesson 15
A Spoiled Billionaire

As we begin the "digital" electronics unit, this lesson shows us a system that we can use to be certain that all of the information is transferred all the time, perfectly. You must be able to count to 255 and know the difference between "on" and "off."

With apologies to Bill Gates, but inspired by his explanation in his book, *The Road Ahead*: There is an eccentric billionaire who lives near Seattle. He is particular about his lighting in different rooms of his homes, especially his den. He likes it set at exactly 187 watts. And when you're rich, you get what you like. But here's the real problem. His wife also uses the den and she "likes" 160 watts.

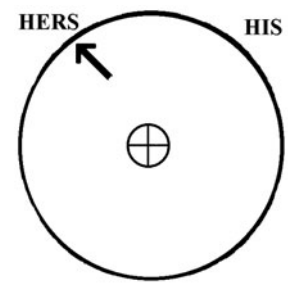

Figure L15-1

They asked their groundskeeper to come up with a solution they could use in all their homes around the world. He first installed a dimmer switch and put a mark next to the spot that represented their preferences, which is pictured in Figure L15-1.

On inspection, the groundskeeper was told that his solution was not acceptable. It was not exact enough. So he thought further and had an idea. Actually, eight ideas.

His idea is shown in Figure L15-2: a light bar with eight separate specific value lights. Each light

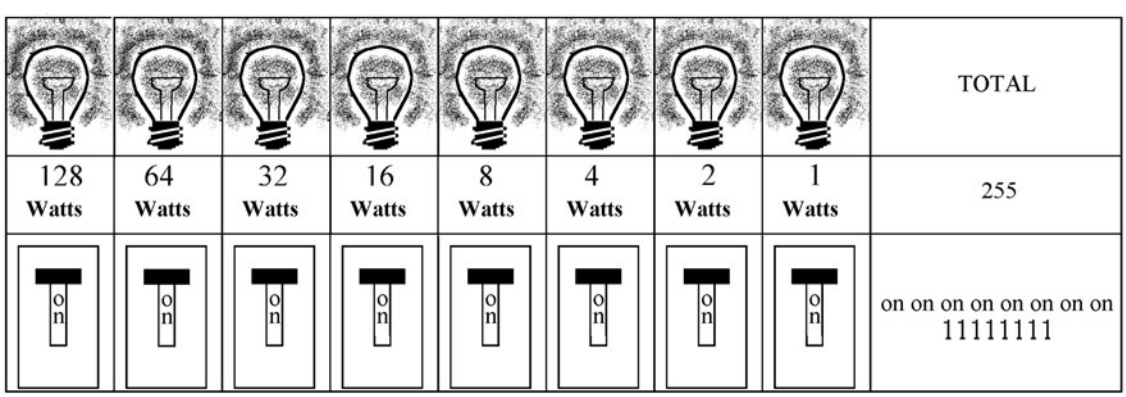

Figure L15-2

would have a different wattage rating, and each would have its own switch. To adjust the lighting for his own needs, the billionaire would only have to turn on a set of specific switches. Those are displayed specifically in Figure L15-3.

And to make the softer lighting situation for Mrs. Billionaire, she flips the switches shown in Figure L15-4.

So all the groundskeeper had to do was write a note under the set of switches in the den.

His = 10111011
Hers = 10100000

(*The Road Ahead*, Bill Gates, pg. 25)

By turning these switches on and off, you can adjust the lighting level in watt increments from 0 watts (all switches off) to 255 watts (all switches on). This gives you 256 possibilities.

If you want 1 watt of light, you turn on only the rightmost switch, which turns on the 1-watt bulb (shown in Figure L15-5).

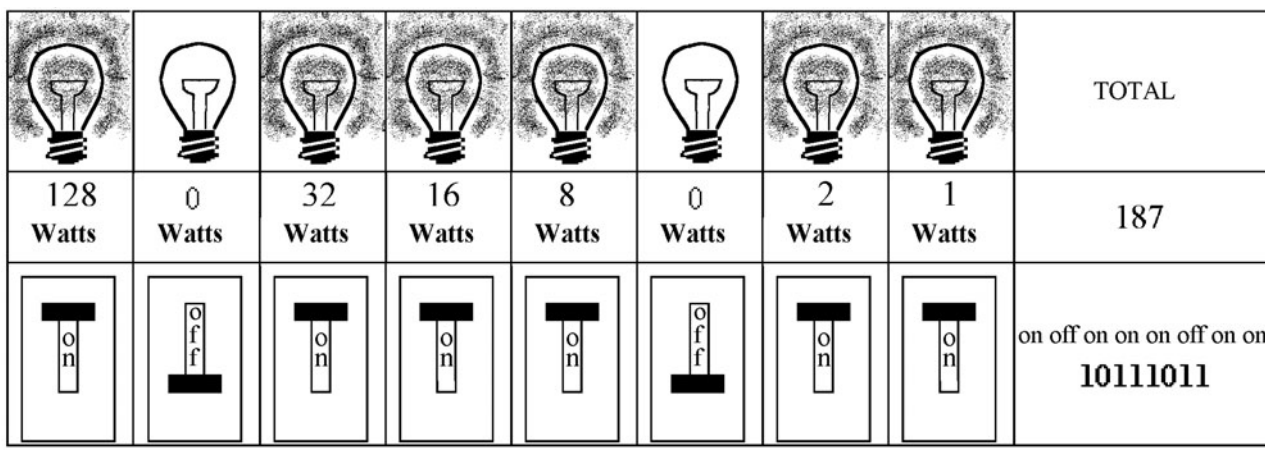

Figure L15-3

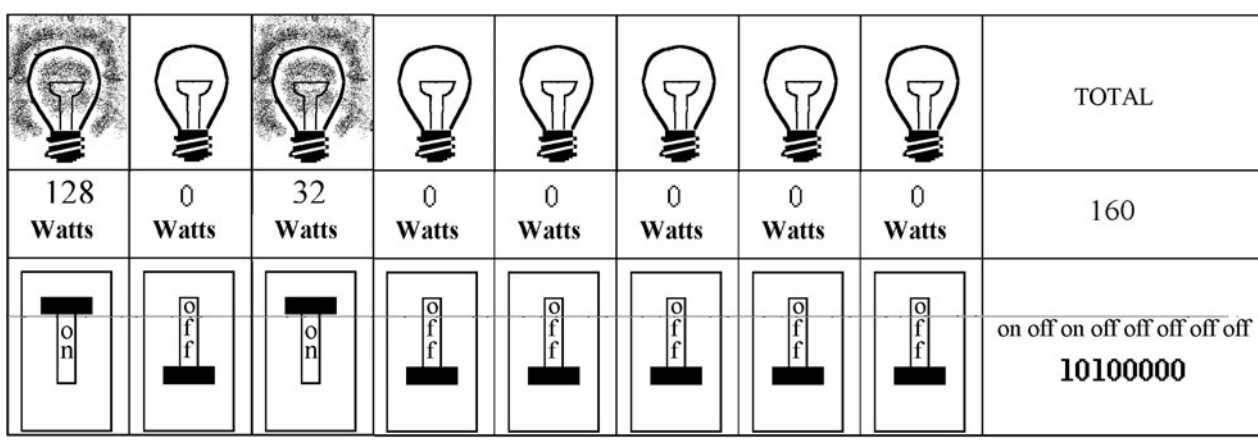

Figure L15-4

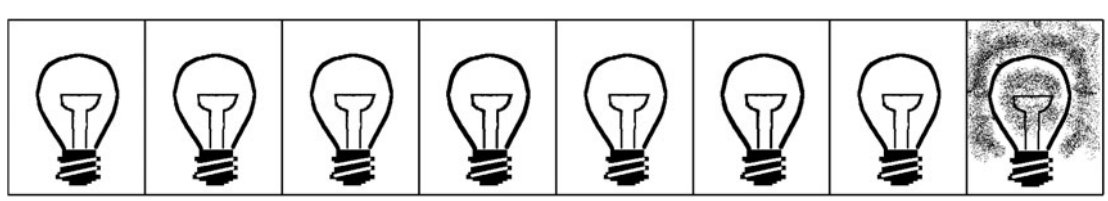

Figure L15-5

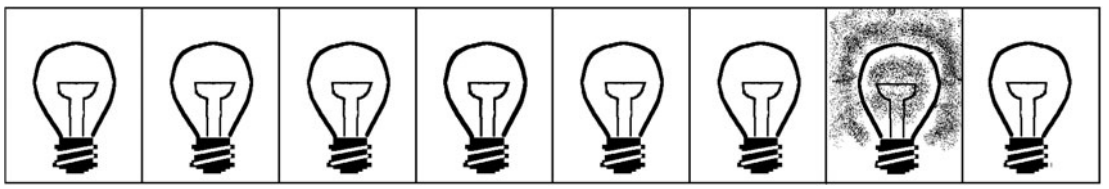

Figure L15-6

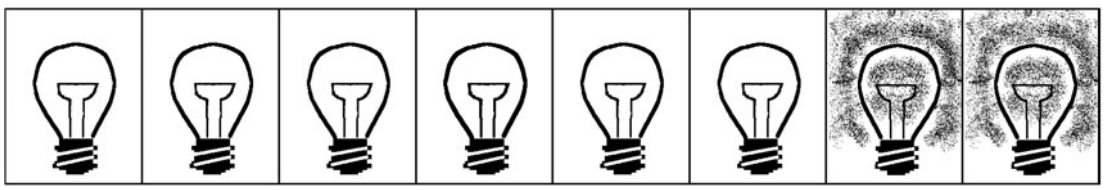

Figure L15-7

If you want 2 watts, you turn on only the 2-watt bulb (shown in Figure L15-6).

If you want 3 watts of light, you turn on both the 1-watt and 2-watt bulbs, because 1 plus 2 equals the desired 3 watts (shown in Figure L15-7).

If you want 4 watts of light, you turn on the 4-watt bulb.

If you want 5 watts, you turn on just the 4-watt and 1-watt bulbs (shown in Figure L15-8).

If you want 250 watts of light, you turn on all but the 4-watt and 1-watt bulbs (shown in Figure L15-9).

If you have decided the ideal illumination level for dining is 137 watts, you turn on the 128-, 8-, and 1-watt bulbs, like this (shown in Figure L15-10).

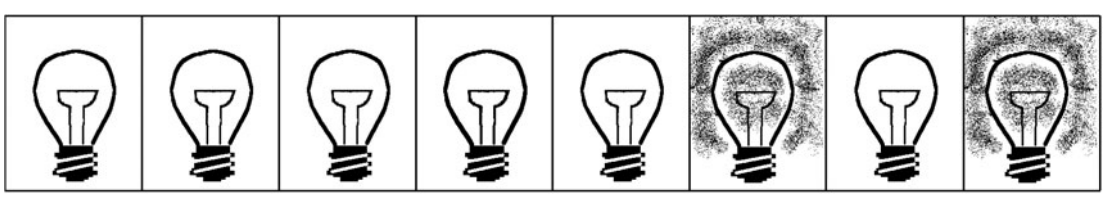

Figure L15-8

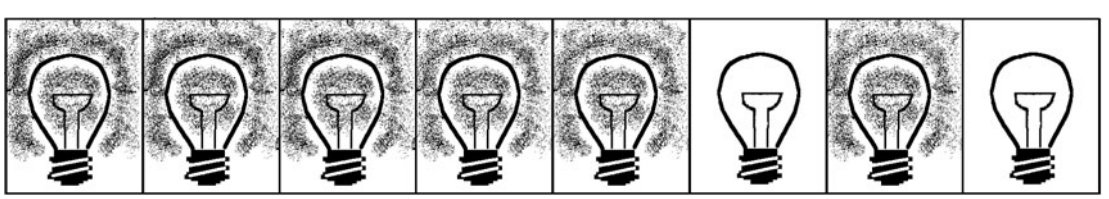

Figure L15-9

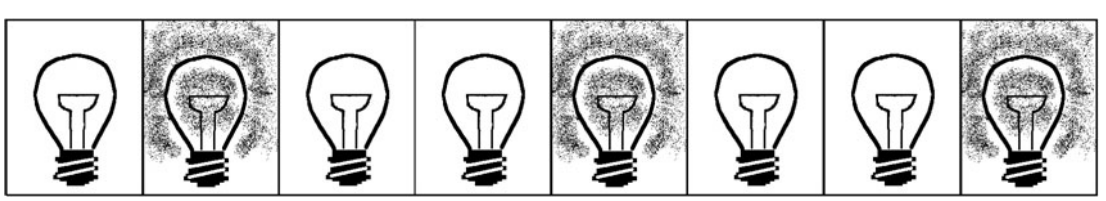

Figure L15-10

This system makes it easy to record an exact lighting level for later use or to communicate it to others who have the same light switch setup. Because the way we record binary information is universal—low number to the right, high number to the left, always doubling—you don't have to write the values of the bulbs. You simply record the pattern of switches: on, off, off, off, on, off, off, on. With that information, a friend can faithfully reproduce the 137 watts of light in your room. In fact, as long as everyone involved double-checks the accuracy of what they do, the message can be passed through a million hands; at the end, every person will have the same information and be able to achieve exactly 137 watts of light.

To shorten the notation further, you can record each "off" as 0 and each "on" as 1. This means that instead of writing down "on, off, off, off, on, off, off, on," meaning turn on the first, the fourth, and the eighth of eight bulbs and leave the others off, you write the same information as 1,0,0,0,1,0,0,1, or 10001001, a binary number. In this case, it's 137. You call your friend and say: "I've got the perfect lighting level! It's 10001001. Try it." Your friend gets it exactly right by flipping a switch on for each 1 and off for each 0.

This may seem like a complicated way to describe the brightness of a light source, but it is an example of the theory behind binary expression, the basis of all modern computers.

The simplest computers use an 8-bit system like the eight light switches. Each bit is a bit of information. The binary word of 8 bits makes 1 byte, as shown in the explanations earlier.

From the earliest days of computing, the alphabet and numerals have been assigned specific values (Table L15-1).

The real question for the rest of us becomes—Why use binary? It seems so confusing!

The answer is actually very simple. We are dealing with machines. The easiest thing for a machine to sense is whether something is on or off.

So we are forced to use a system that can count in on's and off's.

But still you ask, why bother?

Well, look at it (Table L15-2).

TABLE L15-1 The Binary Alphabet: The ASCII Table

Space = 20 = 00010100	
A = 65 = 01000001	a = 97 = 01100001
B = 66 = 01000010	b = 98 = 01100010
C = 67 = 01000011	c = 99 = 01100011
D = 68 = 01000100	d = 100 = 01100100
E = 69 = 01000101	e = 101 = 01100101
F = 70 = 01000110	f = 102 = 01100110
G = 71 = 01000111	g = 103 = 01100111
H = 72 = 01001000	h = 104 = 01101000
I = 73 = 01001001	i = 105 = 01101001
J = 74 = 01001100	j = 106 = 01101010
K = 75 = 01001101	k = 107 = 01101011
L = 76 = 01001110	l = 108 = 01101100
M = 77 = 01001101	m = 109 = 01101101
N = 78 = 01001110	n = 110 = 01101110
O = 79 = 01001111	o = 111 = 01101111
P = 80 = 01010000	p = 112 = 01110000
Q = 81 = 01010001	q = 113 = 01110001
R = 82 = 01010010	r = 114 = 01110010
S = 83 = 01010011	s = 115 = 01110011
T = 84 = 01010100	t = 116 = 01110100
U = 85 = 01010101	u = 117 = 01110101
V = 86 = 01010110	v = 118 = 01110110
W = 87 = 01010111	w = 119 = 01110111
X = 88 = 01011000	x = 120 = 01111000
Y = 89 = 01011001	y = 121 = 01111001
Z = 90 = 01011100	z = 122 = 01111010

TABLE L15-2 Compare Analog to Digital

	Analog	Digital
Advantages	1. Varying voltages. 2. Easy to record. 3. Easy to play back.	1. Precise transfer of information. 2. No generational loss. 3. Footprint of a bit can be done at the molecular level. 4. Common transfer rate is a billion bits per second. 5. Any material can be used for storing data: 0s and 1s.
Disadvantages	1. Not precise. 2. Signal loss with each generation recorded. Have you ever watched a copy of a copy of a videotape? Ugh! 3. Takes up large "recording" space. Compare the size of a videotape to a DVD or a memory stick. 4. Limited transfer time—how long does it take to record a video, compared to transfer of a CD or MP3 file? 5. Specific media used for storage doesn't translate from one media to another—for example, video to film. 6. Signal fades as media ages.	1. Needs special equipment to transfer, record, and read information.

Exercise: A Spoiled Billionaire

I am writing in binary code!

01001001000101000110000101101101000101000 1
1101110111001001101001011001110110100001 11
0100011010010110111001101110001010001101 00
1011011100001010001100010011010010110111 00
1100001011100100111100100010100011000110 11
01111011001000110010

1. What do you think is the most important advantage of using digital information?

Use Table L15-3 to help translate from binary to decimal, and back.

TABLE L15-3 Binary to Decimal and Back

Bit number	Bit 8	Bit 7	Bit 6	Bit 5	Bit 4	Bit 3	Bit 2	Bit 1
Value	128	64	32	16	8	4	2	1

2. Translate the following 8-bit binary codes to the decimal equivalent.

Binary	Decimal
10101100	
01100110	
10010011	
00110001	

3. Translate the following decimal numbers to the binary codes.

Decimal	Binary
241	
27	
191	
192	

4. Consider this. If 8 bits count up to 255 decimal, what is the maximum that a 9-bit binary word can count?

Lesson 16
The Basic Digital Logic Gates

You build prototypes of the five main types of logic gates in this lesson. Each gate can be built with individual transistors that act like normally open or normally closed push buttons. All these switches do is redirect the output to voltage (V) or ground.

The AND gate and NOT AND gate are perfectly opposite in their outputs. The OR gate and NOT OR gate are also perfectly opposite in their output.

Voltage States	
V+	Ground
1	0
High	Low

In digital electronics, the *voltage state* is named in three different ways:

- Each term for voltage has an alternate name for ground.
- These terms are generally interchangeable.
- The terms are usually paired. Terms like V+ and ground are used together just like the term *high* is used with *low*, and 1 with 0.
- Digital gives an *output* of high or low, but we often have to use a real-world *analog input*.

All gates have at least one input, but all gates have only one output.

Inputs are the analog "sensors." They compare the voltage they feel to the voltage of the chip. They sense if the input is to be seen as high or low.

Output is the result of the logic function, whether the gate provides a full V+ or ground at the output.

- The real world analog input usually never happens as a convenient high or low.
- So digital gates have been designed to compare the input against their own power source of V+.
- Anything above half of V+ is seen as a high input.
- Anything below half of V+ is seen as a low input.

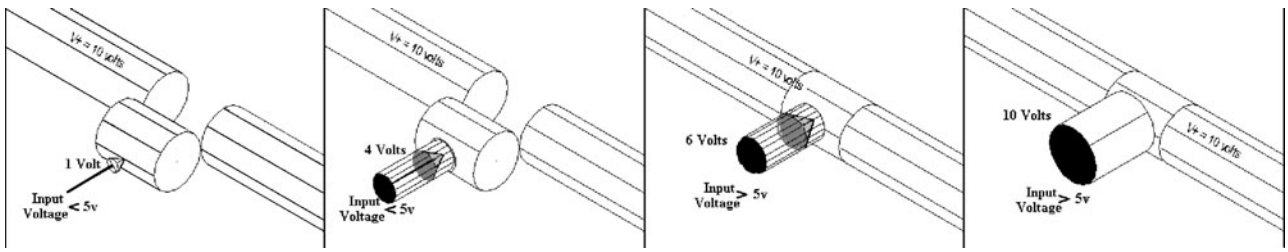

Figure L16-1

Inputs Are the Analog Sensors

- For example, as shown in Figure L16-1, the gate is powered by 10 volts.
- Anything connected to the input that is over 5 volts is seen as a high input.
- Alternatively, any input voltage that is below 5 volts is seen as a low input.

The chip contains inputs, processors, and outputs.

Each of these needs power. They are all powered from the same power source. The voltage source is shown as the line coming into the symbol marked with the V+.

The NOT Logic Gate

The input given is NOT the output. You can see this in Figure L16-2.

This is often referred to as an inverter. It "inverts" the input.

- You can see that the input is like a push button. It controls the voltage flow through the transistor switch inside the chip.
- The transistor processor inside is like the push button demonstration circuits. The transistor responds to the input, controlling voltage to the output.

For the purpose of this exercise, refer to Figure L16-3.

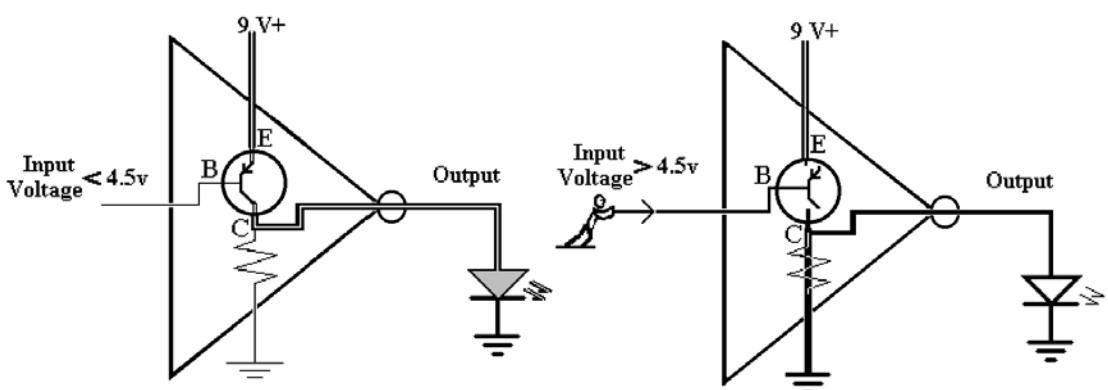

Figure L16-2

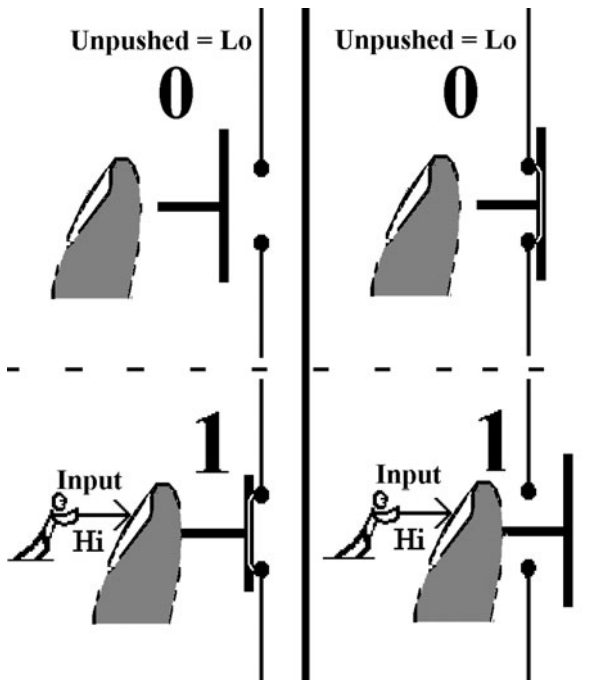

Figure L16-3

- The pushed button is high.
- The unpushed button is low.

Breadboard the NOT Gate Simulation Circuit

This circuit quickly demonstrates the action of the NOT gate (see Figure L16-4).

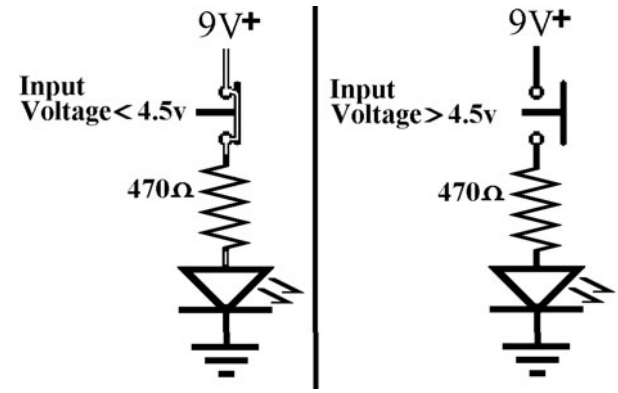

Figure L16-4

The input is the force of your finger. The binary processor is the push button's position (up = 0, down = 1). The output is the LED. On is high, and off is low (Table 16-1).

TABLE L16-1 NOT Gate: Complete the Logic Table for This Gate

Input	Output
High	_____
Low	_____

The AND Logic Gate

As shown in Figure L16-5, both input A AND input B have to be Hi to get an Hi output.

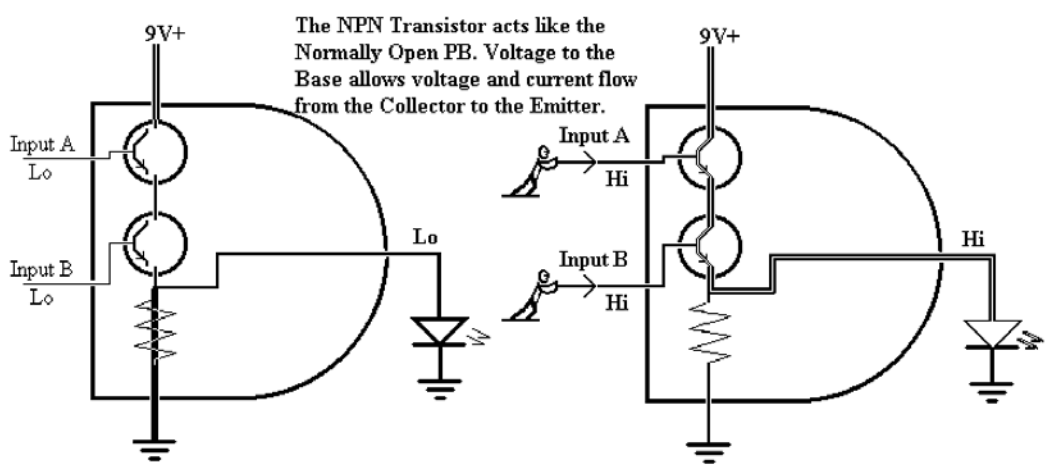

Figure L16-5

These inputs are like normally open push buttons. They control the voltage flow through the NPN transistors inside the chip. The transistor processors inside are like the push button demonstration circuits shown here. The transistors respond to the inputs, controlling voltage to the output.

Breadboard the AND Gate Simulation Circuit

Build the simulation circuit that demonstrates the action of the AND gate as displayed in Figure L16-6. Remember that for the purpose of this exercise, as shown in Figure L16-3:

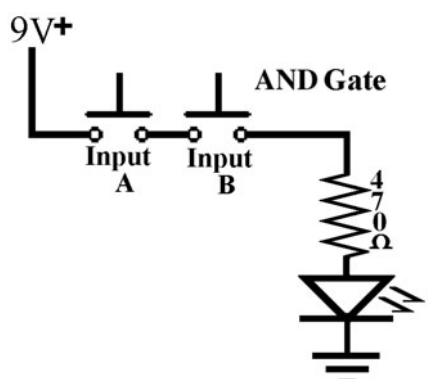

Figure L16-6

- The pushed button is high.
- The unpushed button is low.

The NPN transistors act like the normally open push buttons. Voltage at the base greater than half of V+ allows the voltage to move through (Table L16-2).

TABLE L16-2 AND Gate: Complete the Logic Table

Input A	Input B	Output
High	High	_____
High	Low	_____
Low	High	_____
Low	Low	_____

The OR Logic Gate

As shown here in Figure L16-7, input A OR input B has to be HI to get an HI output. The inputs still act like normally open push buttons. They control the voltage flow through the NPN transistors inside the chip. The transistor processors inside are like the push button demonstration circuit shown here. The transistors respond to the input, controlling the voltage to the output.

Breadboard the OR Gate Simulation Circuit

Build the simulation circuit that demonstrates the action of the OR gate as displayed in Figure L16-8.

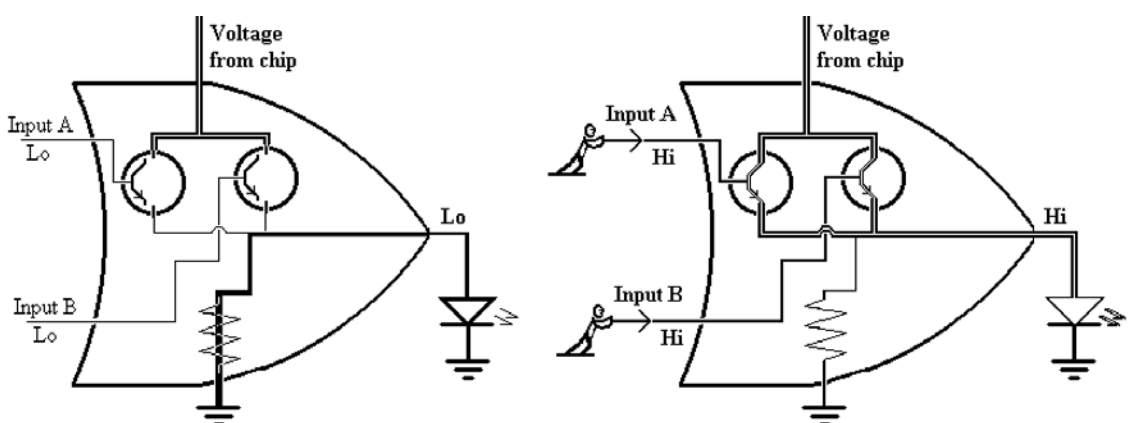

Figure L16-7

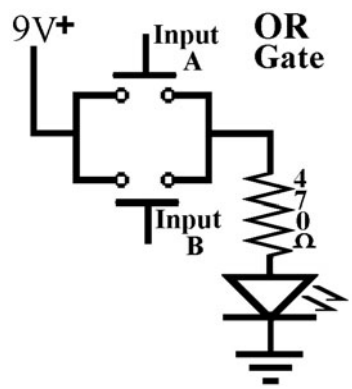

Figure L16-8

Remember that for the purpose of this exercise, as shown in Figure L16-8:

- The pushed button is high.
- The unpushed button is low.

The NPN transistors act like the normally open push buttons. Voltage at the base greater than half of V+ allows the voltage to move through (Table L16-3).

TABLE L16-3 OR Gate: Complete the Logic Table

Input A	Input B	Output
High	High	_____
High	Low	_____
Low	High	_____
Low	Low	_____

The NAND Logic Gate

As shown in Figure L16-9, the NAND gate looks a bit more complex. It really isn't. It is designed to give the exact opposite results of an AND gate. That is why it is referred to as a NOT AND gate.

Breadboard the NAND Gate Simulation Circuit

Build the simulation circuit that demonstrates the action of the NAND gate as displayed in Figure L16-10.

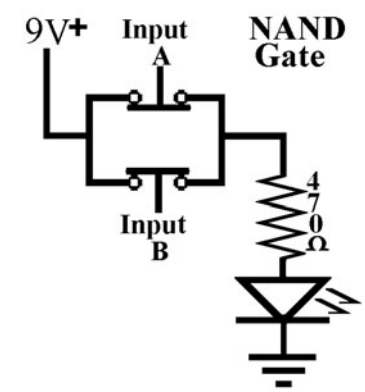

Figure L16-10

The PNP transistors act like normally closed push buttons. Voltage at the base greater than half of V+ stops the voltage from moving through (Table L16-4).

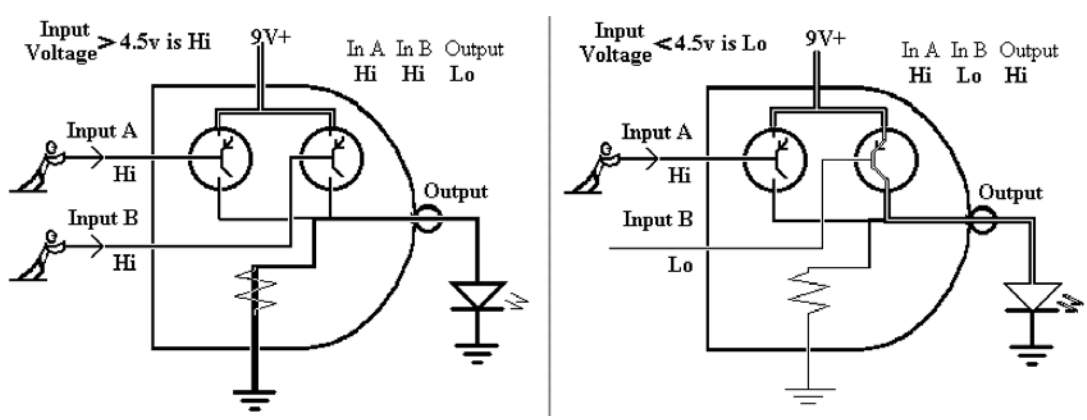

Figure L16-9

TABLE L16-4 NAND Gate: Complete the Logic Table

Input A	Input B	Output
High	High	_____
High	Low	_____
Low	High	_____
Low	Low	_____

The inputs act like normally closed push buttons. They control the voltage flow through the PNP transistors inside the chip. The transistor processors inside are like the push button demonstration circuit shown in L10-16. The transistors respond to the input, controlling the voltage to the output.

The NOR Logic Gate

The NOR gate is displayed in Figure L16-11. Just like the NAND gate, it looks overly complex. Relax. It, too, was designed to give the exact opposite results of an OR gate. That is why it is referred to as a NOT OR gate. The inputs act like normally closed push buttons. They control the voltage flow through the PNP transistors inside the chip. The transistor processors inside are like the push button demonstration circuit shown here. The transistors respond to the input, controlling the voltage to the output.

Breadboard the NOR Gate Simulation Circuit

Build the simulation circuit that demonstrates the action of the NOR gate as displayed in Figure L16-12.

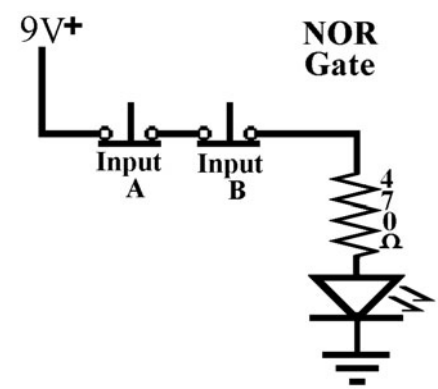

Figure L16-12

The PNP transistors act like normally closed push buttons. Voltage at the base greater than half of V+ stops the voltage from moving through (Tables L16-5 and L16-6).

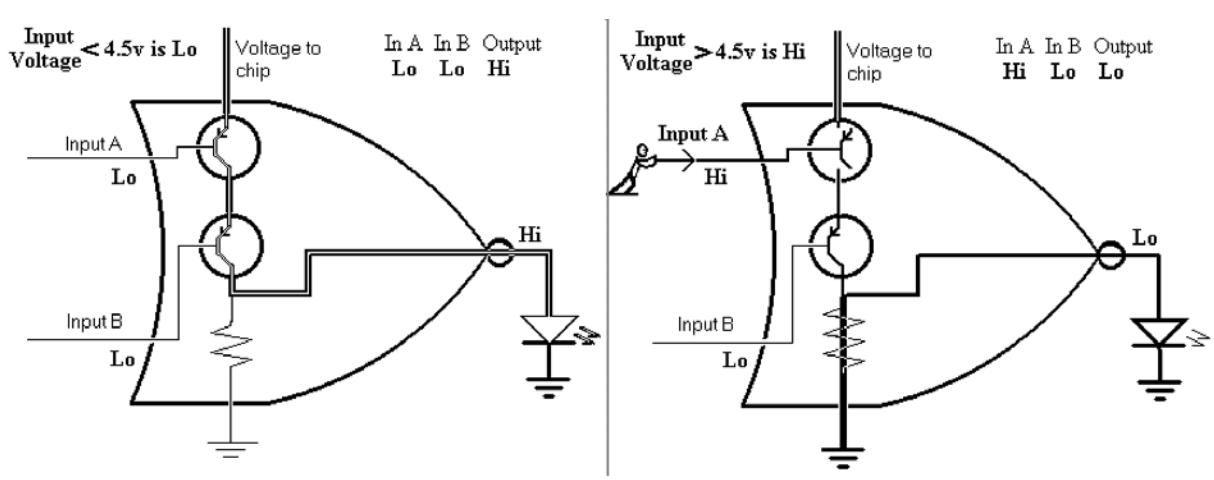

Figure L16-11

TABLE L16-5 NAND Gate: Complete the Logic Table

Input A	Input B	Output
High	High	_____
High	Low	_____
Low	High	_____
Low	Low	_____

Exercise: The Basic Digital Logic Gates

1. What did you use to represent the inputs?
2. What component is used to represent the processor?
3. What component is used to represent the output?
4. Where does the voltage powering the output come from?
5. When the push buttons were *un*pushed, that represented a state of high or low at the input?
6. When the push buttons were pushed, that represented a state of high or low at the input? Look again at the graphics of the logic gates.
7. What components are actually used in the integrated circuit (IC) chip as the processors?
8. The input is actually similar to which part of the transistor?

Lesson 17
Integrated Circuits CMOS ICs

There are thousands of *integrated circuits* (ICs). The 4000 series of complementary metal oxide semiconductor (CMOS) ICs are popular because they are inexpensive and work with as little as 3 volts and as much as 18 volts. With mishandling, however, they are easily destroyed by static electricity. So they go from packing material to your solderless breadboard. Some basic vocabulary is developed. Common layout for these chips is discussed. Handling instructions are given. And mentioned again. Did I already say that these things are static sensitive? Don't rub them in your hair. They won't stick to the ceiling like balloons afterward. They just won't work.

You need this information, because in the next chapter, you will:

- Build a prototype of a digital alarm system
- Learn to use a variety of events that can start the system
- Learn how to determine the system output
- Learn how to determine how long the system stays on after it is triggered.

The IC that you will use is the 4011 CMOS. The 4011 chip is set into a 14-pin *dual inline package* (DIP). Figure L17-1 shows an 18-pin chip in a DIP format.

TABLE L16-6 Comparing the Gates

NOT		AND			OR			NAND			NOR		
In	**Out**	In A	In B	**Out**	In A	In B	**Out**	In A	In B	**Out**	In A	In B	**Out**
	Put		**Put**		**Put**		**Put**		**Put**				
High	**Low**	High	High	**High**	High	High	**High**	High	High	**Low**	High	High	**Low**
Low	**High**	High	Low	**Low**	High	Low	**High**	High	Low	**High**	High	Low	**Low**
		Low	High	**Low**	Low	High	**High**	Low	High	**High**	Low	High	**Low**
		Low	Low	**Low**	Low	Low	**Low**	Low	Low	**High**	Low	Low	**High**

Figure L17-1

Precautions

The 4000 series CMOS IC has been used in electronics since the 1970s. They are versatile and widely used. They are used here because they work on a range from 3 to 18 volts. They are inexpensive, too! **But they are static sensitive.** Yes, I know I'm repeating myself. You know. Shuffle across the carpet and zap your friend. Even the smallest zap can toast a CMOS chip (see Figure L17-2).

Figure L17-2

CAUTION Ignore these precautions at your own risk!

1. Always store the IC in a carrying tube or in "static" foam until it is placed into the circuit.
2. Remove static from your fingers. Touch some type of large metal object to remove any static electricity from your fingers before you handle the CMOS chips.
3. Don't walk across the room with a CMOS chip in hand. Walking across linoleum or a rug in a dry room will build up a static charge.
4. Always check that the chip is set in properly. A backward chip is a dead chip ($$).
5. Always tie any unused inputs to ground. I'll note where we have done that in this circuit.
6. Having an unused input pin unconnected is not the same as tying it to ground. If an input is not connected, the small voltage changes in the air around us can affect the input.

Take a Moment and Look at the Partial List of CMOS Series

For a more complete idea of the chips available, visit www.abra-electronics.com.

- 4000 Dual 3-input NOR gate plus inverter
- 4001 Quad 2-input NOR gate
- 4002 Dual 4-input NOR gate (same as 74HC4002)
- 4006 18-stage shift register, serial-in/serial-out
- 4007 Dual CMOS pair plus inverter
- 4008 4-bit, full-adder arithmetic unit
- 4009 Hex inverter—OBSOLETE, use 4049 instead
- 4010 Hex buffer—OBSOLETE, use 4050 instead
- 4011 Quad 2-input NAND gate
- 4012 Dual 4-input NAND gate
- 4013 Dual Type D Flip-Flop
- 4014 8-stage shift register, parallel-in/serial-out
- 4015 Dual 4-stage shift register, serial-in/parallel-out (same as 74HC4015)
- 4016 Quad bilateral analog switch
- 4017 Decade counter, synchronous 1-of-10 outputs
- 4018 Programmable counter, walking ring
- 4019 4-pole, double-throw data selector
- 4020 14-stage binary ripple counter (same as 74HC4020)
- 4021 8-stage shift register, parallel-in/serial-out

- 4022 Octal counter, synchronous 1-of-8 outputs
- 4023 Triple 3-input NAND gate
- 4024 7-stage binary ripple counter (same as 74HC4024)
- 4025 Triple 3-input NOR gate
- 4026 Decade counter and 7-segment decoder with enable
- 4027 Dual JK Flip-Flop with preset and clear
- 4028 1-of-10 decoder
- 4029 Up-down synchronous counter, decade or hexadecimal
- 4030 Quake EXCLUSIVE-OR gate—OBSOLETE, use 4077 or 4507
- 4031 64-stage shift register, serial-in/serial-out
- 4032 Triple-adder, positive-logic arithmetic unit
- 4033 Decade counter and 7-segment decoder with blanking
- 4034 8-bit bidirectional storage register
- 4035 4-stage shift register, parallel-in/parallel-out
- 4038 Triple-adder, negative-logic arithemtic unit
- 4040 12-stage binary ripple counter (same as 74HC4040)
- 4041 Quad inverting/noninverting buffer
- 4042 Quad latch storage register
- 4043 Quad Flip-Flop, R/S NOR logic
- 4044 Quad Flip-Flop, R/S NAND logic
- 4046 Phase-locked loop, special device
- 4047 Astable and monostable multivibrator
- 4049 Hex inverter/translator (same as 74HC4049)
- 4050 Hex buffer/translator (same as 74HC4050)
- 4051 1-of-8 analog switch (same as 74HC4051)
- 4052 Dual 1-of-4 analog switch (same as 74HC4052)
- 4053 Triple 1-of-2 analog switch (same as 74HC4053)
- 4060 14-stage binary ripple counter with oscillator (same as 74HC4060)
- 4063 4-bit magnitude comparator arithmetic unit
- 4066 Quad analog switch, low-impedance (same as 74HC4066)
- 4067 1-of-16 analog switch
- 4068 8-input NAND gate
- 4069 Hex inverter
- 4070 Quad EXCLUSIVE-OR gate
- 4071 Quad 2-input OR gate
- 4072 Dual 4-input OR gate
- 4073 Triple 3-input AND gate
- 4075 Triple 3-input OR gate (same as 74HC4075)
- 4076 4-stage tri-state storage register
- 4077 Quad 2-input EXCLUSIVE-NOR gate
- 4078 8-input NOR gate (same as 74HC4078)
- 4081 Quad 2-input AND gate
- 4082 Dual 4-input AND gate
- 4089 Binary rate multiplier, special device
- 4093 Quad 2-input NAND Schmitt Trigger
- 4097 Dual 1-of-8 analog switch

The 4011 Dual Input Quad NAND Gate

The 4011 IC is a semiconductor that looks like Figure L17-3.

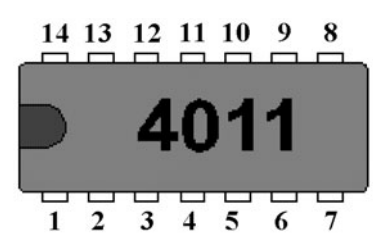

Figure L17-3

Notice the method of numbering the pins. All DIPs use this system.

Looking at the IC from the top, the reference notch should be to the left as shown. Then, pin 1 is on the bottom left. The numbering starts there and moves counterclockwise.

What happens when you flip the chip upside down? Where is pin 1 now?

Study Figure L17-4. The 4011 IC contains four separate NAND gates, each able to work independently. It has 14 pins. These pins are the connecting points.

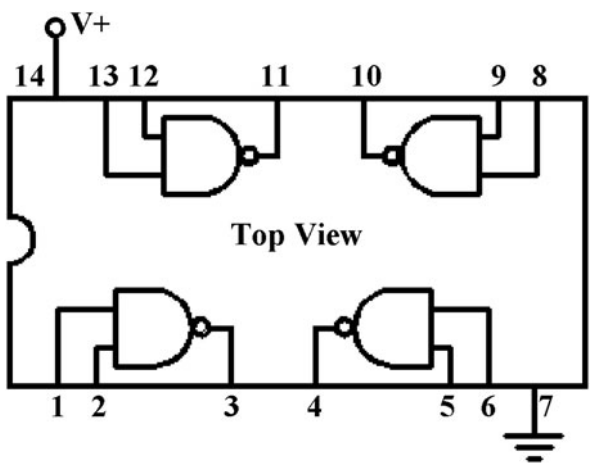

Figure L17-4

- Here is the pin-out diagram for the 4011.
- Each pin has a specific function for each IC. It is important to connect these pins correctly.
- Pins 1 and 2 are inputs to the NAND gate that has its output at pin 3.
- Power to the chip is provided through pin 14.
- The chip's connection to ground is through pin 7.
- The inputs redirect the output of each gate to voltage (pin 14) or to ground (pin 7).

Exercise: Integrated Circuits, CMOS ICs

1. What is a DIP?
2. State the functional voltage range of a CMOS IC. _____ to _____ V
3. Briefly state the six major precautions regarding the proper care and feeding of an IC.
   a. _____
   b. _____
   c. _____
   d. _____
   e. _____
   f. _____
4. Draw a picture of your 4011 chip.
5. Indicate on your drawing all writing on the chip.
6. Include the marker notch on your drawing.
7. Label pins 1 through 14.
8. From the diagram sheet, which pin powers the 4011 chip? _____
9. Which pin connects the chip to ground? _____
10. Describe clearly how to identify pin 1 on any IC. _____
11. What would happen if a wire connection of the 4011 was made to the wrong pin? _____ _____
12. Would your answer for the previous question be true for any IC? Look at the list of some CMOS ICs, mostly the 4000 series.
13. Look at the list of some of the CMOS ICs of the 4000 series. How many ICs shown are dedicated logic gate chips?

This page intentionally left blank

SECTION 6

The First NAND Gate Circuit

THIS IS GOING TO LOOK very messy and complicated at first. As you get used to it, you will see that it really is very simple. In this chapter, we will do the following:

- We will build and become familiar with a basic digital circuit.
- We will learn how an analog signal is translated into a digital output, using different input devices.
- We will be introduced to control timing in a resistor-capacitor circuit.

PARTS BIN

- R1—100 kΩ
- R2—10 MΩ
- C1—1μF axial or radial
- LED—5 mm round
- D1—Signal diode (skinny golden)*
- IC 1—4011 Quad NAND gate

* Don't use the fat golden diode. You can substitute the black power diode.

Lesson 18
Building the First NAND Gate Circuit

Enough talk, already. Back to the fun stuff.

Breadboard the circuit shown in Figures L18-1 and L18-2 (see the Parts Bin).

Even though they don't look the same, match the pin numbers in the drawing with the pin numbers on the schematic. Refer back to the 4011 pin-out diagram of Figure L17-4 to help you with this.

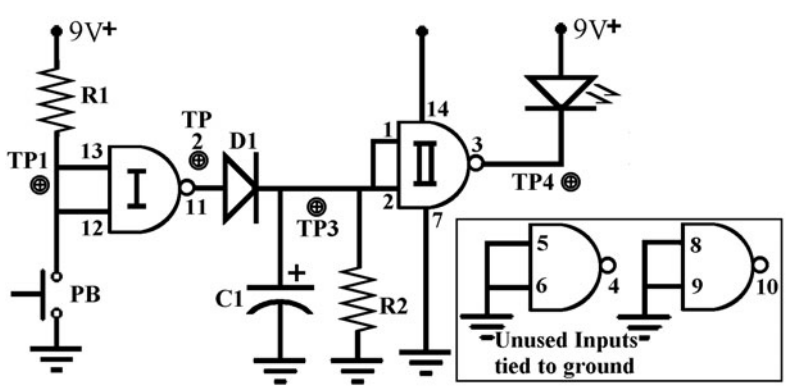

Figure L18-1

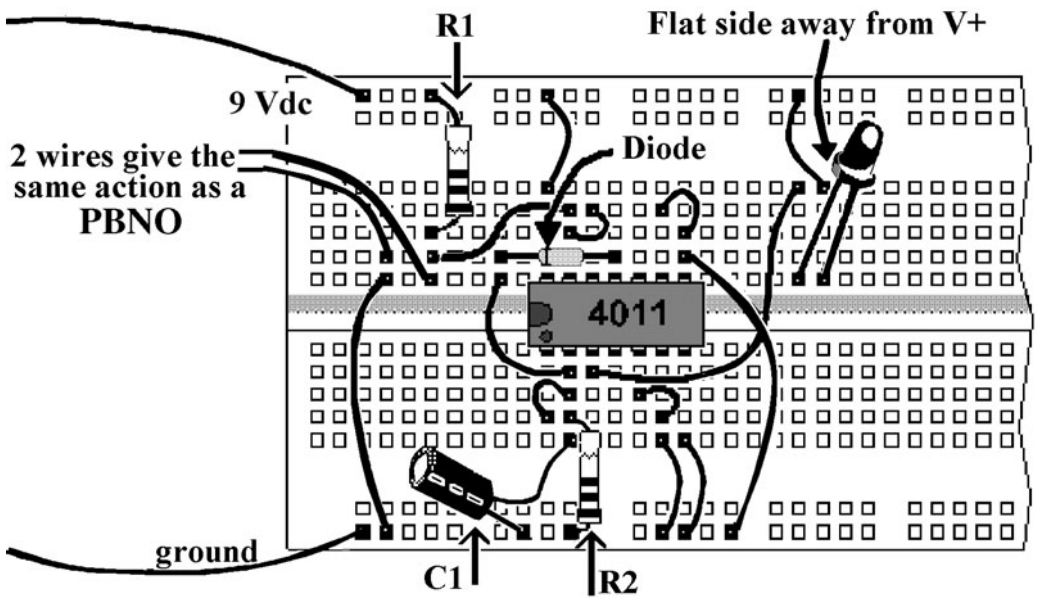

Figure L18-2

What to Expect

When you attach the power supply, the LED should stay off.

The circuit is working when you momentarily close the PBNO and the LED turns on for about eight seconds, and then automatically turns off again.

If the LED turns on as soon as you attach the power supply, immediately disconnect the power. Something is wrong. If the power remains connected, you could burn out your chip. Also, if all you wanted to do was turn an LED on, what's all the other stuff doing in the circuit? Just use an LED and resistor for that.

If the circuit refuses to work immediately, you need to refer to the Troubleshooting section.

Troubleshooting

Some general questions to ask as you look for errors:

1. Is the power connected properly? Are you positive about that? Check again!
2. Are your breadboard connections done properly? All connections need to be in the small rows of five dots. Look quickly for any side-by-side connections.
3. Are your parts in the right way?
   - Is your chip in the right way?
   - Is your diode going the right way, as shown in the schematic?
   - A backward capacitor won't help either.
   - A backward LED won't turn on, even if everything else is working.
4. Now examine Figure L18-3.
   - Set your DMM to voltage DC. Connect the black probe to ground.
   - Use the red probe to take two measurements of the voltage at each of the 19 checkpoints. The first measurement is when the circuit is at rest. That is, you have connected the power supply but not played with the push button. Record your results.
   - The second set of measurements is when the push button is being held down and pins 12 and 13 are being connected to

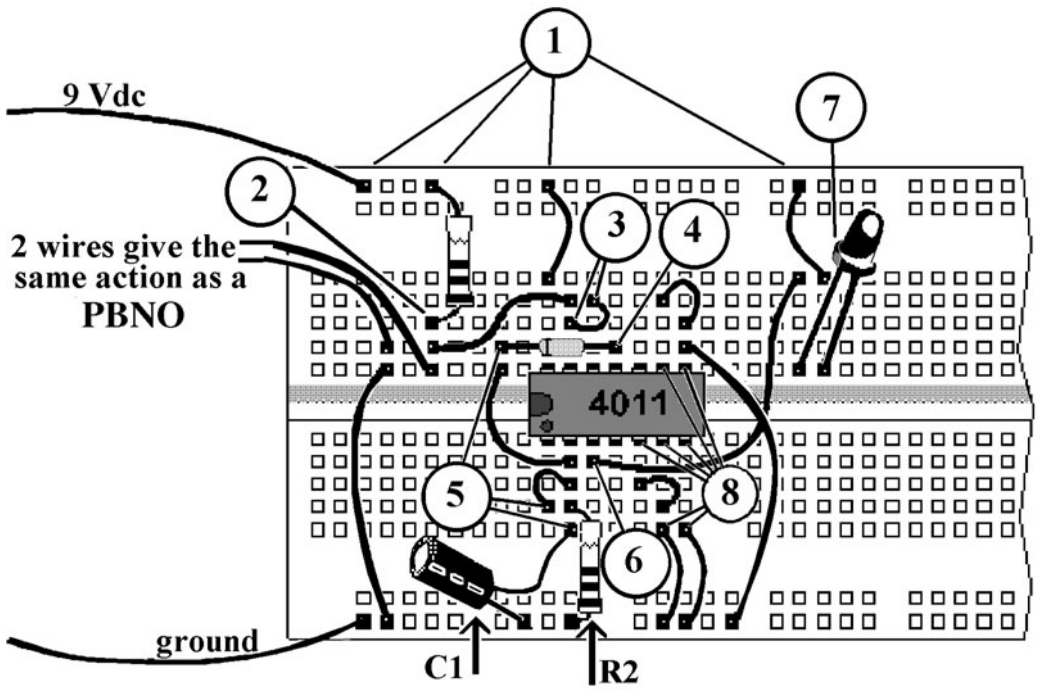

Figure L18-3

ground through the push button. This is to guarantee that you are measuring the circuit in its active state. See Table L18-1.

Focus on the area that does not match the expected results.

TABLE L18-1 Measurements for Figure L18-3

At Rest	Active *Pins 12 and 13 Connected to Ground*
1. V+ These points are connected directly to voltage.	V+ These points are still connected directly to voltage.
2. This is a bit less than V+.	0 volts because when the push button is closed, it is connected directly to ground.
3. This is the same as 2.	This is the same as 2.
4. Reading should be 0.0 V.	Reading should be V+.
5. 0 volts or close to it.	Reading should be V+.
6. The readout from pin 3 should read V+.	This should be V+ minus 2 V (LED uses 2 V). Remove LED and reading should change to V+.
7. LED flat side toward pin 3 LED should be off.	LED should be on and remain on for eight or so seconds after you release the push button.
8. Pins 5, 6, 8, and 9 should have 0.0 V.	These are connected directly to ground and should still have 0.0 V.

Lesson 19
Testing the Input at Test Point 1

You will measure the voltage at the inputs when the input (push button) is high and low. If the push button works, you will measure the voltage when it is not pushed. There will be no voltage when you push it, because you are connecting directly to ground when it is pushed.

Record all of your results on the data table at the end of Section 6.

Wrap a piece of wire around the common probe (black) and attach it to the ground line of your breadboard. Figure L19-1 shows clearly how to do it. This makes it easier to do all the other things you need to do as you use the red probe to measure the voltage at different test points.

Attach the power supply and measure the voltage at the test point 1 (TP1) shown in Figure L19-1.

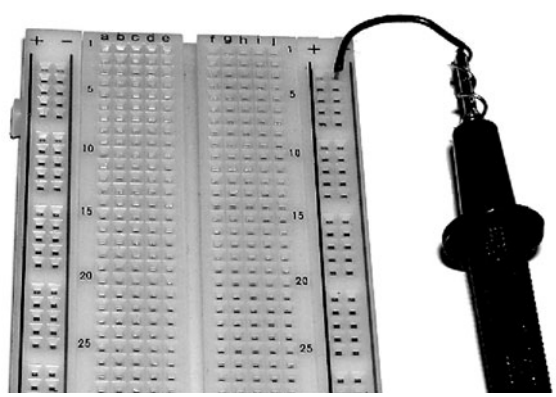

Figure L19-1

- Figure L19-2 shows that the voltage through R1 is putting pressure on pins 12 and 13, the connected pair of inputs to one of the 4011 NAND gates. The input voltage is seen as a high.

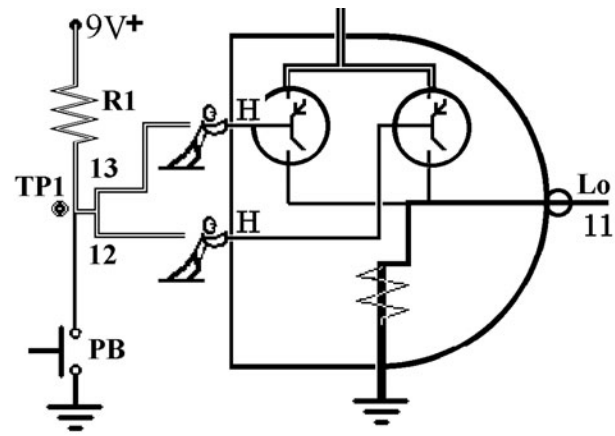

Figure L19-2

- When you measure the voltage at TP1 without pressing the normally open push button, you are measuring the actual voltage at the input to the NAND gate.

  Is that voltage greater than half of the power source voltage? _____

  It should be much greater than half of the voltage.

  Describe the *state* of the inputs to the first NAND gate when the system is at rest. _____

With the power supply still connected, push the plunger of the push button down. Record the voltage.

What Is Happening Here?

- Figure L19-3 shows that when you close the push button, the voltage through R1 flows directly to ground. Like water, the voltage and current always takes the easiest path.
- The connected pair of inputs 12 and 13 no longer have any voltage pressure on them. They are all connected to ground. Ground at 0.0 volts is definitely less than half of the voltage supplied to the chip. Remember that ground is just another word for a low

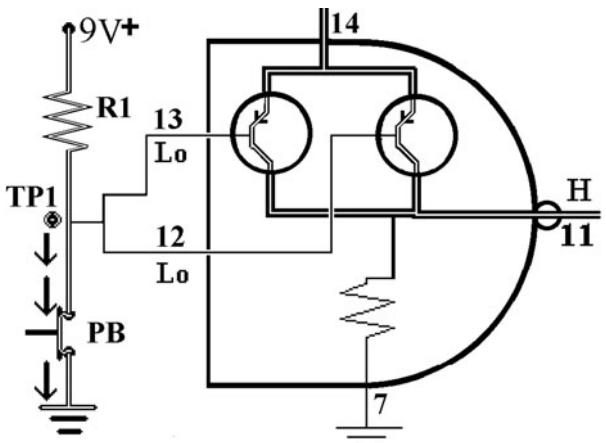

Figure L19-3

state. Is that voltage greater than half of the power source voltage?_____

It should read 0.0 volts. With the plunger down, it should be connected directly to ground.

Describe the *state* of the inputs to the first NAND gate when the push button is closed.

Describe what happens to the voltage on the DMM when you release the push button.

The other instrument reading shown in Figures L19-4 and L19-5 is an oscilloscope. Each horizontal line equals 2 volts. The line representing voltage is at 4.5 lines up. 4.5 3 2 represents 9 volts.

Don't worry if you don't have a proper oscilloscope available. Your computer can be used as a cheap "scope" with freeware available online. Soundcard Scope was developed by Proffessor Christain Zeitnitz.

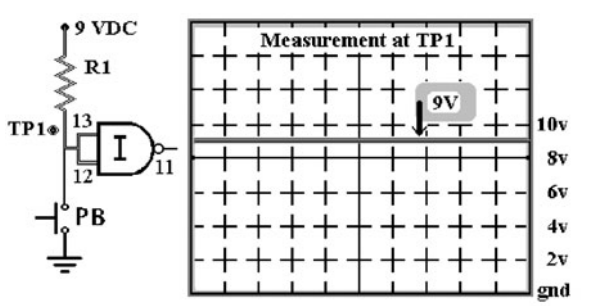

Figure L19-4

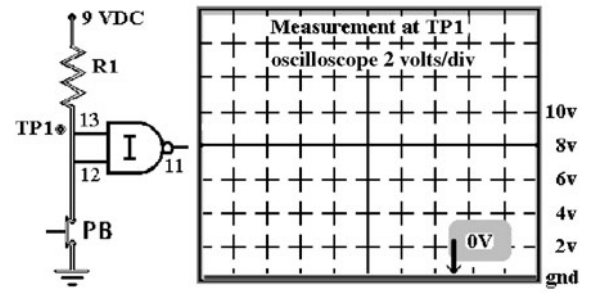

Figure L19-5

It is a wonderful tool and available at www.zeitnitz.de/christian/scope_en. The only failing is that it is limited to measuring rapidly changing signals. We'll be doing that soon enough. It will not measure a stable DC input.

Lesson 20

Test Point 2—The NAND Gate Processor at Work

When the inputs are connected to ground, the output will be internally connected to voltage. Try it out!

For the NAND gate, if the inputs are connected to voltage, the output should be connected to ground. Conversely, if the inputs are connected to voltage, the output is internally connected to ground. The results happen instantly. Take a minute and understand the NAND gate.

What to Expect

With the system at rest and the push button untouched, measure the voltage at the output of the first NAND gate at pin 11 (Table L20-1).

TABLE L20-1 NAND Gate Logic Table

Input A	Input B	Output
High	High	Low
High	Low	High
Low	High	High
Low	Low	High

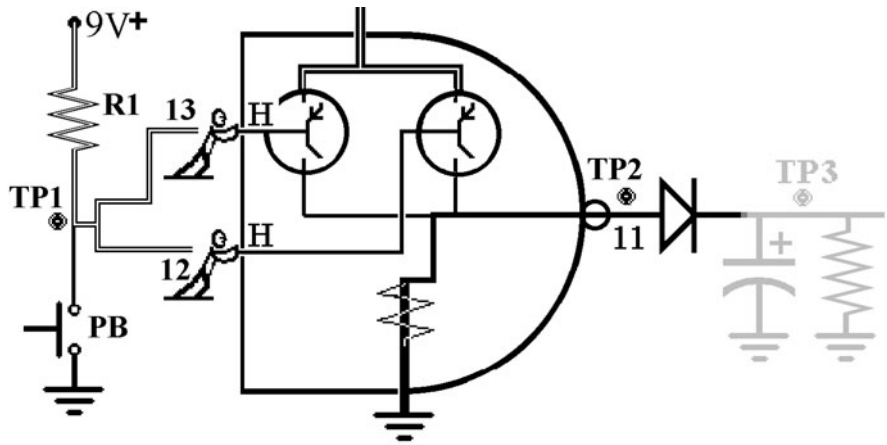

Figure 20-1

The measurement for TP2 is at pin 11. Referring to the schematic in Figure L20-1, this is right at the output of the first gate, but before the diode.

Record all of your results on the data table at the end of Section 6.

1. Measure the voltage at TP2 with the push button open and record your results.
   - Because pins 12 and 13, the inputs to the NAND gate, are high, the output at pin 11 is low.
   - This would be the expected value of the output when the circuit is "at rest."
2. Measure the voltage at TP2 with the push button held closed and record your results.
   - Both inputs of the NAND gate are now connected directly to ground; that is to say, they are *tied to ground*, as shown in Figure L20-2. Remember that in the NAND gate, if either input receives a low, it produces a high output.
   - This would be the expected value of the output when the circuit is just started, or "activated."

The output at pin 11 is normally low when the circuit is at rest. Remember low equals ground.

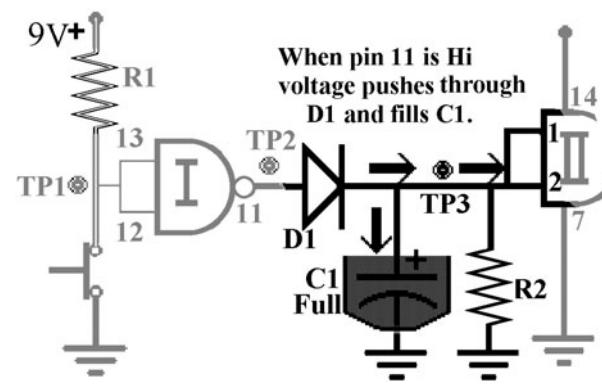

Figure L20-2

This is how the output at TP2 would look on an oscilloscope. Figure L20-3 shows where the voltage would be when the circuit is at rest. Figure L20-4 shows where the voltage would be when the plunger is held down and pin 11 is connected to ground.

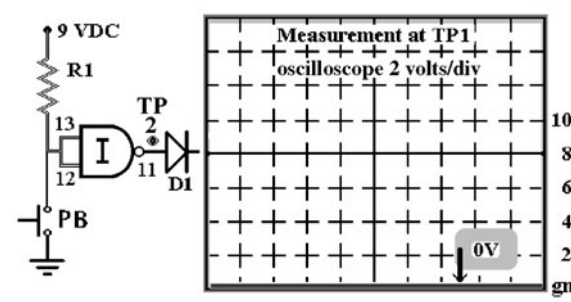

Figure 20-3

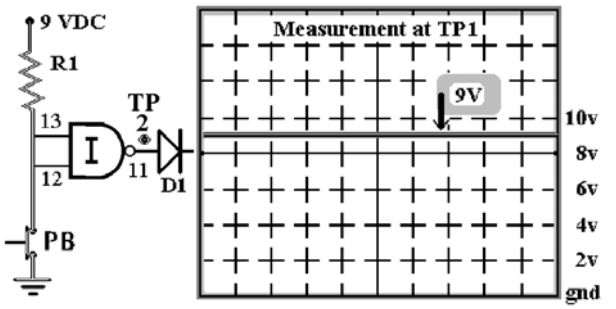

Figure 20-4

The voltage produced at pin 11 pushes through the diode and gets trapped on the other side. Referring to the schematic in Figure L20-4, it would be okay to say that the voltage and current are trapped on the right side of the diode and not able to drain to ground through pin 11. It reaches ground another way.

Lesson 21

Test Point 3—Introducing the Resistor/Capacitor Circuit

You are introduced to a resistor/capacitor working as a pair to control timing. You saw this briefly when you were introduced to capacitors in Part One. This is called a *resistor/capacitor* (RC) circuit. This is actually one of the major subsystems in electronics used to control timing. Here it is used to control how quickly the voltage to the second NAND gate drains, which controls how long the LED stays on. In an RC timing circuit, imagine this: The capacitor is like a sink and holds the charge. The resistor is like a drain pipe. It allows the charge in the sink to flow out.

Note that TP3 can be considered anywhere along the common connection of D1, R2, and C1 and pins 1 and 2. They are all connected together as they are shown in Figure L21-1.

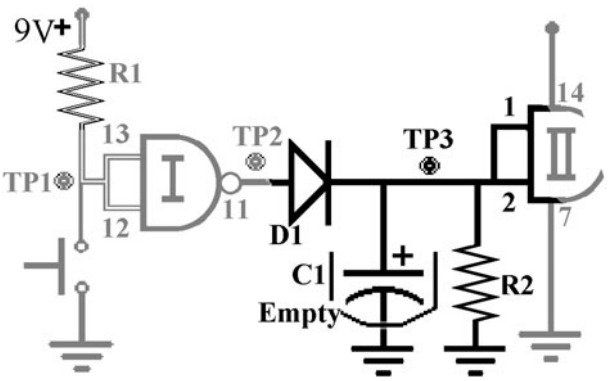

Figure L21-1

Record all of your results on the data table at the end of Section 6.

1. Before you take any measurements, allow the circuit to remain unused for at least a minute. Measure the voltage at TP3 with the push button plunger untouched and record your results.
2. Measure the voltage at TP3 with the push button held closed and record your results. Figure L21-2 shows that as long as the NAND gate's output at pin 11 is high, the voltage and current push through D1 and do two things. They influence the inputs of the second NAND gate and fill the capacitor.

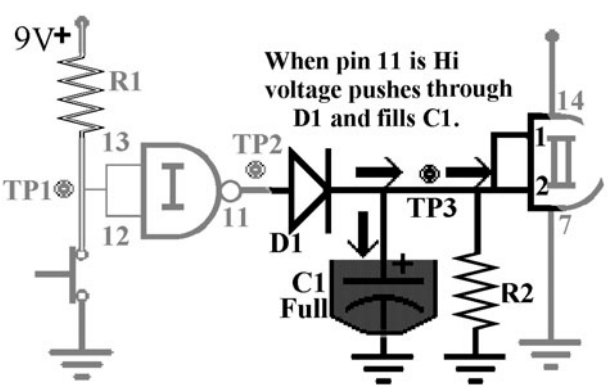

Figure L21-2

3. Now keep the probe at TP3. Release the push button (PB) and watch the DMM. What happens here is completely different from TP1 or TP2. The voltage slowly decreases. If you are using a poor-quality DMM, the voltage

will drain through the probe in less than 2 seconds. Ideally, it should take over 20 seconds to drain to near 0 volts.

What Is Happening Here?

The illustrations in Figure L21-3 and Figure L21-4 show that when the PB is released the output at pin 11 goes low. The diode traps the voltage on the "right" side. The capacitor holds the voltage that influences the inputs of the second NAND gate at pins 1 and 2. Meanwhile, the voltage is draining from C1 through R2.

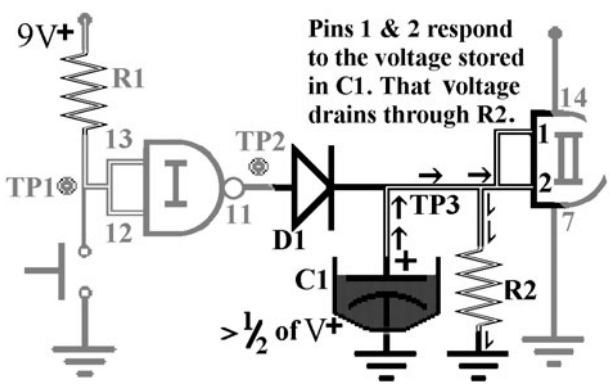

Figure L21-3

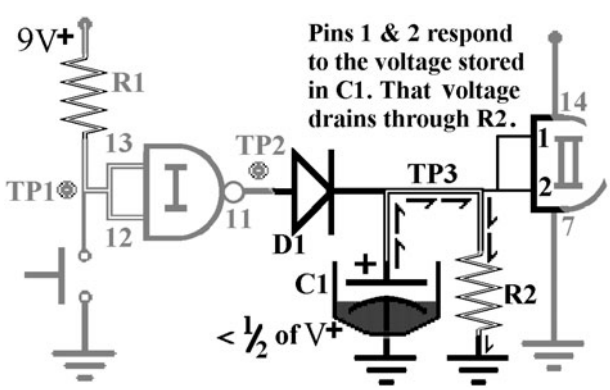

Figure L21-4

You can see the voltage draining on your DMM, too.

When a resistor and capacitor are used together like this for timing, this is referred to as an *RC circuit*.

Now consider how this affects the inputs to the second NAND gate:

- The voltage at pins 1 and 2 has just moved from 0 (low) to 9 volts (high) instantly. No problem.
- But the most important point here is that this is *digital*. It works in highs or lows, ons and offs.
- The RC's voltage is *analog*. Inputs are designed to respond to analog inputs. The input for the second NAND gate is sliding downward, controlled by the RC circuit. Where along that sinking voltage path do the second gate's inputs at pins 1 and 2 switch from sensing the voltage as high to sensing that input as low?

Start the circuit again and carefully watch the DMM. What is the voltage when the LED turns off?

What's that you say? It looks pretty close to 4.5 volts.

That's right, but only if you use precisely 9 volts here.

Note that Figure L21-5 shows how the falling voltage would be shown on an oscilloscope. The vertical lines are used to measure time. The time units here are very large for electronics, representing half-second units.

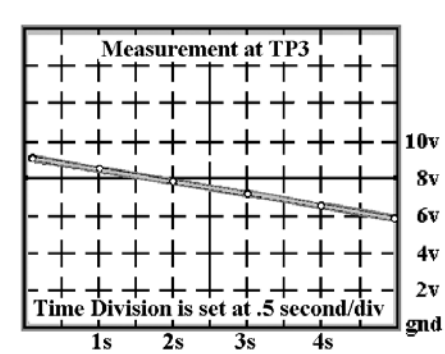

Figure L21-5

Remember that *digital inputs* are designed to:

- Sense anything above 1/2 of V+ as high.
- Sense anything below 1/2 of V+ as low.
- The state of the input changes at half of the voltage supplied to pin 14.
- If the voltage powering the chip through pin 14 is 9 volts, the state of the inputs to the gate changes from high to low at 4.5 volts.
- If the supply voltage is 12 volts, the inputs to the gate will change from high to low input at 6 volts.

Exercise: Test Point 3 and Introducing the RC Circuit

1. Record the "at rest" voltage of TP3 on the data sheet at the end of Section 6.
2. Push the button's plunger and hold it closed while you check and record on the data sheet the voltage at TP3.
3. How much voltage is used up by the diode (tp2@HI = tp3@HI = V used)? Diode voltage = ____ V
4. Describe what happens to the voltage on the DMM when you release the push button.
5. How long did the LED stay on for your circuit? _____ s
6. What was the voltage on your DMM for TP3 when the LED was turned off? _____ V
7. How much time does it take for the voltage to drain to 1 volt? _____ s
8. What is the capacitor in the RC circuit being compared to? A _____
9. What is the resistor in the RC circuit compared to? The _____
10. Replace R2 with a 20-megohm resistor. How much time does the LED stay on now? _____s
11. For R2 = 20 MΩ, what is the voltage when the LED turns off? _____V. Is the LED going off at almost the exact point when the capacitor is half drained? Yes or No? It should be very nearly the same as before. Why would you expect this? _____
12. With R2 = 20 MΩ, how much time does it take the voltage to drain to 1 volt? _____ s How does that relate to the time it took to drain when it was the 10-megohm resistor? _____
13. Reset R2 back to 10 megohms. Replace the capacitor with the value of 10 μF. What is the time for the LED to stay lit with the capacitor 10 times larger? _____ s

    Was that predictable?
14. Use this as a rough formula for RC timers. It gives an *estimate* of the time it takes an RC circuit to drain from being filled to when it is near the voltage that affects the digital inputs.

    R*C = T

    R is in ohms.

    C is in farads.

    T is time measured in seconds.

    Here

    $C = 1\ \mu F = 0.000001F = 1 \times 10^{-6}F$

    Also

    $R = 10\ M\Omega = 10{,}000{,}000\ \Omega$

    $R \times C = T$

    $(1 \times 10^{7}\ \Omega) \times (10^{-6}F) = 10^{1}s$

    See Table L21-1.

TABLE L21-1 Component Values

	Capacitor C1	Resistor R2	Expected Time On	Real Time
1	1 μF	10 MΩ	10 S	_____
2	1 μF	20 MΩ	20 S	_____
3	10 μF	1 MΩ	_____	_____
4	10 μF	2.2 MΩ	_____	_____
5	10 μF	4.7 MΩ	_____	_____

15. Now check each RC timer in your circuit.

    See if your predictions are close. They should be in the ballpark.

    This is not a precise timer. RC circuits are as accurate as the components that make them. Consider what affects their accuracy.

    - The resistors supplied have a tolerance of 5 percent.
    - Aluminum electrolytic caps generally have a tolerance of 20 percent.

16. Look at your predictions and results. There should be an obvious pattern. Describe the pattern you see developing.

Lesson 22

Test Point 4—The Inputs Are Switches

You now get a close-up view of the output of this circuit. The LED is removed so you can get "clean" voltage measurements. Also, you start to play with the circuit's output.

Remove the LED as shown in the schematic in Figure L22-1 for measuring the voltage at TP4. Remember to record all of your results on the data table at the end of Section 6.

Record the voltage at TP4 while the circuit is at rest.

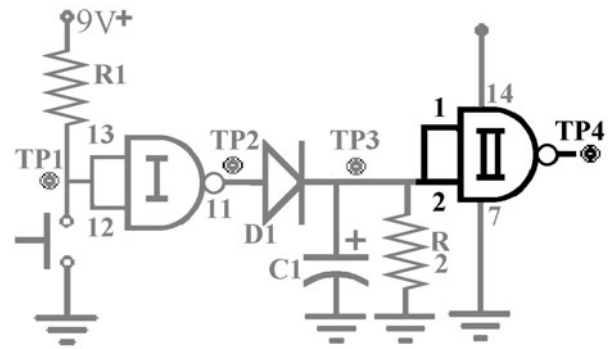

Figure L22-1

Now push the plunger of the push button. It isn't necessary to continue holding it down. Record the voltage while the circuit is active.

What Is Happening Here?

Figure L22-2 shows clearly what is occurring in the circuit when it is at rest. There is no voltage stored in C1. The inputs to the second NAND gate at pins 1 and 2 are low.

When the push button's plunger is pushed, the output of the first NAND gate goes high, filling C1 and providing a voltage nearly equal to V+ to the inputs of the second NAND gate. This is shown in Figure L22-3.

When the push button is released, as shown in Figure L22-4, the capacitor starts to drain through R2. But as long as the inputs at pins 1 and 2 sense a voltage greater than half of the voltage provided to the system, they continue to see this as a high input.

When the voltage stored in C1 drops below the halfway mark, as shown in Figure L22-5, the inputs now see the analog voltage as low. The internal circuit reacts appropriately. The switches reroute the voltage supplied to the chip to the output of the NAND gate. Pin 3 goes high.

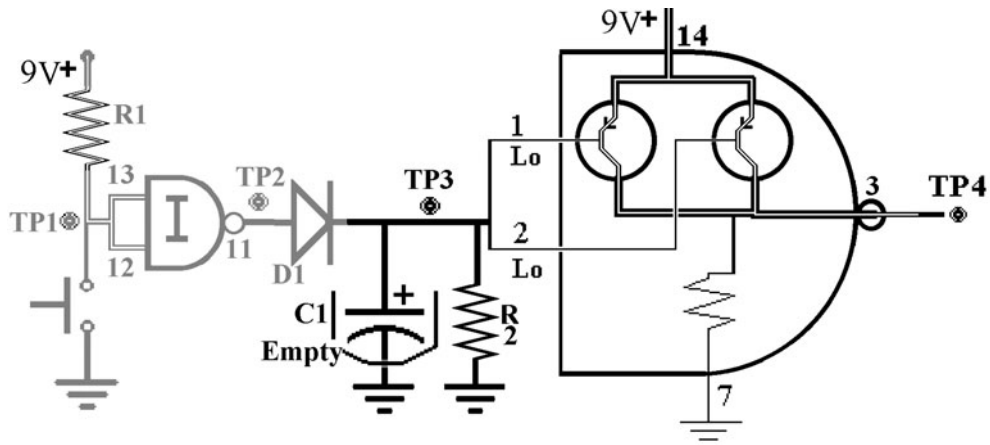

Figure L22-2

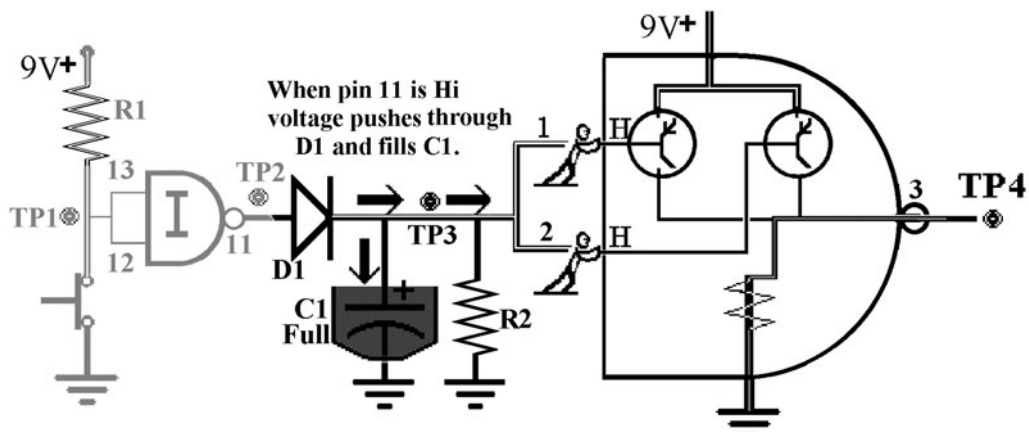

Figure L22-3

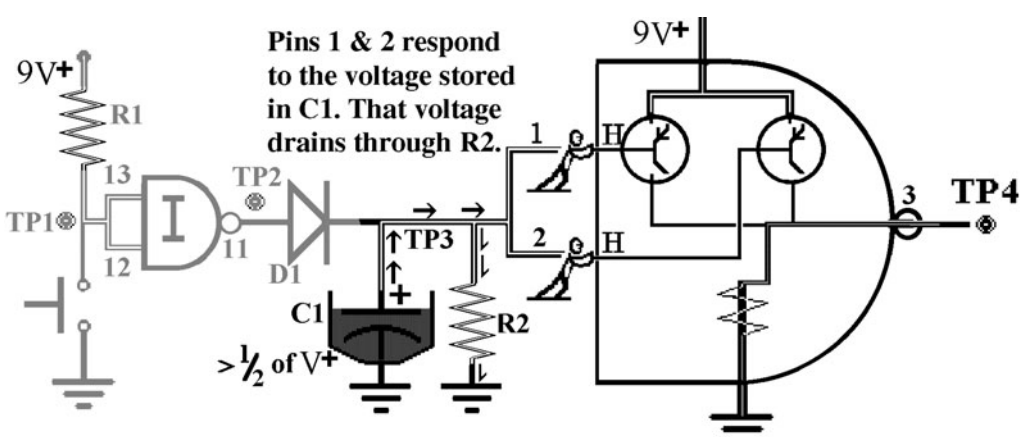

Figure L22-4

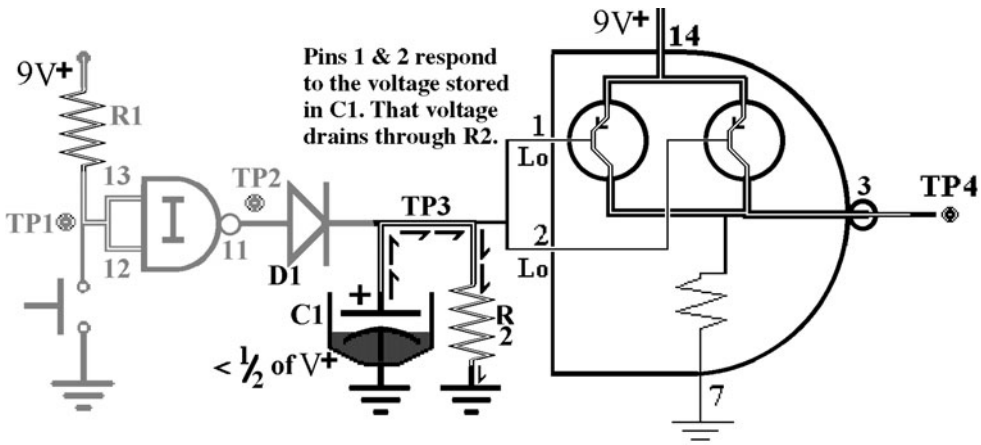

Figure L22-5

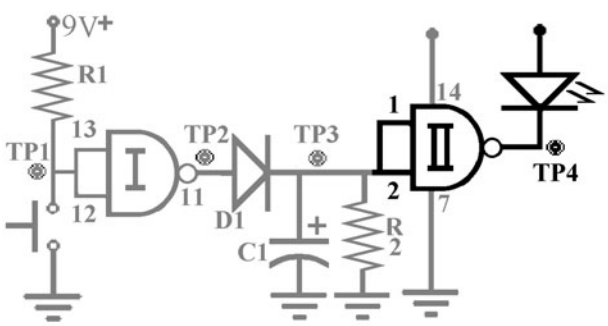

Figure L22-6

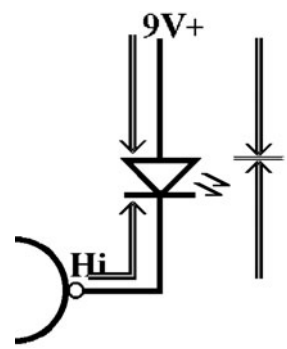

Figure L22-7

Now put the LED back into the circuit, as shown in Figure L22-6.

There is some further testing to be done, but first, a puzzling question in two parts.

Part 1: Why does the LED stay off when the output from the second NAND gate at pin 3 goes high?

In an effort to answer this question, try this:

1. Stand up.
2. Put your palms together in front of your chest.
3. Push them together with equal force.

Why don't they move? Because each hand has equal force pushing in opposite directions. One force cancels the other. There is no movement. This concept is also shown in Figure L22-7.

The LED stays off when the output at pin 3 provides an equal force to V+. It is like having both legs of the LED connected to voltage at the same time. Nothing is going to happen.

Part 2: Remember, there were two parts to the question.

How does a "low" output of 0 volts turn the LED on?

Look at the schematic diagram in Figure L22-4 closely. The inputs act only as switches. They reroute the output to voltage or ground, depending on the conditions. Here, when the output is connected to ground, the voltage moves from V+, through the LED, through the IC, to pin 7, which is connected directly to ground.

Think about the beauty of it.

- When a digital output is Hi, it can be used as a voltage source.
- And when the output of a digital system is low, it can be used as ground. Figure L22-8 gives pause for thought.

Figure L22-8

Exercise: TP4—The Inputs Are Switches

Table L20-1 is a detailed outline of the system at rest. Make a detailed outline for the active system.

1. Make a detailed outline for the ACTIVE system.

   Input

   Processor

   Output

2. Connect the LED as shown in Figure L22-9.
   a. Describe what the circuit does now when it is at rest.
   b. Describe what the circuit does now when it is active.
   c. Explain what is happening. Keep in mind the fact that pin 3 is the output of the second NAND gate.

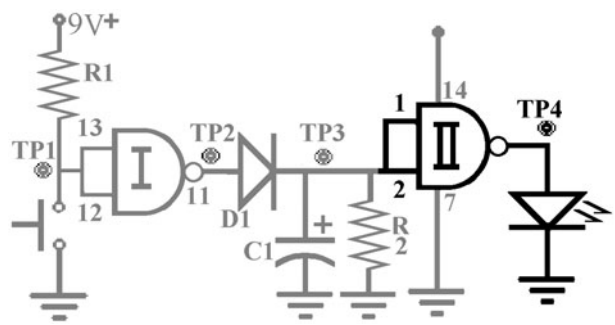

Figure L22-9

Section 6 Data Sheet

Record all of your results from Section 6 in the data table in Table L22-2. There appears to be a huge amount of information. This single table can be used for your convenient reference and review.

TABLE L22-1 Outline of System at Rest

Input	At rest, the inputs to the first NAND gate at pins 12 and 13 are tied to V+ through R1.
Processor	1. Because the inputs to the first NAND gate are both high, the output is low. 2. The capacitor has little or no voltage because it has drained through R2. 3. The inputs to the second NAND gate are both low. They are tied to ground through R2. 4. Because the inputs to the second gate are both low, the output from the second gate is high. The second gate acts as a source for voltage.
Output	Because there is no voltage difference between V+ and the high output of the second NAND gate, there is no pressure to push the current. The LED remains off.

TABLE L22-2 Data Table

	System at Rest	System Active	
	PB unpushed for 1 minute	PB pushed	Immediately upon release
TP1			
TP2			
TP3*			
TP4 A (no LED)			
TP4 B (LED In)			

*What was the voltage to the inputs of the second NAND gate when they sensed a change from a high input to low input and the LED was turned off?

SECTION 7

Analog Switches for Digital Circuits

Is there really gold at the end of a rainbow? That's *only wishing for power*. But the knowledge of how to use voltage dividers? THAT is POWER! There is real power in this knowledge! Knowing this gives you the power to control. Electronics is about control.

Lesson 23
Understanding Voltage Dividers

While playing with a potentiometer and one fixed resistor, we can adjust the pot's resistance to give us any voltage at the midpoint. We can use this flexibility to our advantage, but first, we have to understand what's happening so we can control it.

You know that voltage is used as it passes through resistor loads. The higher the value of the resistor, the greater the amount of voltage used. You already know, as well, that all the voltage is used from V+ to ground. So far, so good. Here, we use two resistors to give us any voltage we want at the midpoint. We divide the voltage. There is even a simple math formula to predict the outcome.

Here we will apply our knowledge to build switches that control the circuit. Some have moving parts, but others don't. The projects you will be building can use many types of switches. Here are some examples.

Figure L23-1 shows a simple motion detector. You can make many physical switches that work like a push button.

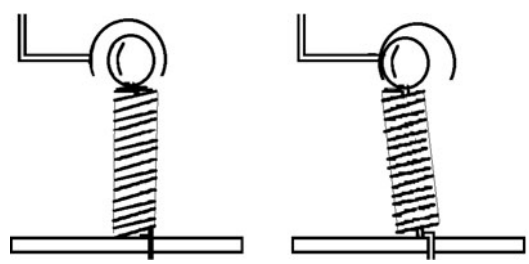

Figure L23-1

- It can be made small enough to be hidden in small boxes or cans.
- It can be made sensitive enough to trigger when a person walks by on a wooden floor.

Figure L23-2 uses what is referred to as a *break beam*. The sensor acts like a dark detector. It requires a source of light to keep the light-dependent resistor at a low resistance. If the beam of light is interrupted, the resistance increases. The changing voltage level triggers the inputs.

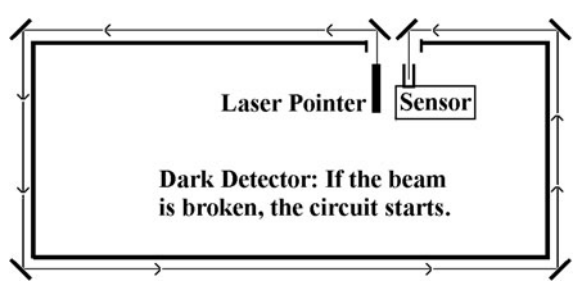

Figure L23-2

By trading positions of the resistor and LDR, you create a light detector. Such a device can be used to alert you when a car turns into your driveway. The headlights would trigger this unit.

At what voltage do digital inputs sense the change from high to low? Ideally, it would be right at half of the voltage supplied to the system.

That means that if V+ is 9 volts, the inputs sense the high-to-low change as V+ falls below 4.5 volts.

How do we get the inputs to change from high to low at the first gate? Right now, as you can see in Figure L23-3, you have the normally open PB to connect those inputs directly to ground when you push that plunger.

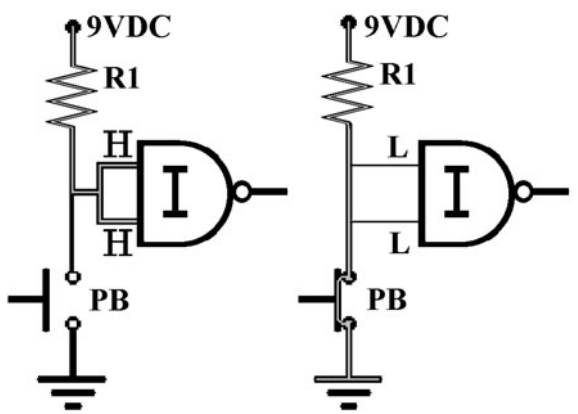

Figure 23-3

Modify the Circuit

Remember always to detach your power when making changes.

Make the three changes on your solderless breadboard that are shown in Figure L23-4.

1. Replace the PB with the trimming potentiometer.
2. Replace R1 with a 39-kilo-ohm resistor.
3. Remove C1. You remove the capacitor so that the circuit reacts instantly.

Now put the trim pot back into the circuit. Turn the trim pot backward until the LED goes off. Remove it again and measure the resistance at that point. Actually, it will be much less than 39 kilo-ohms. But this is an introduction to voltage dividers. Let's keep it simple.

What to Expect

1. Turn the trim potentiometer to full resistance.
2. Measure resistance between A and center. (B is unconnected.)
3. It should be near 100,000 ohms.
4. Attach the power.
5. The LED should be off.

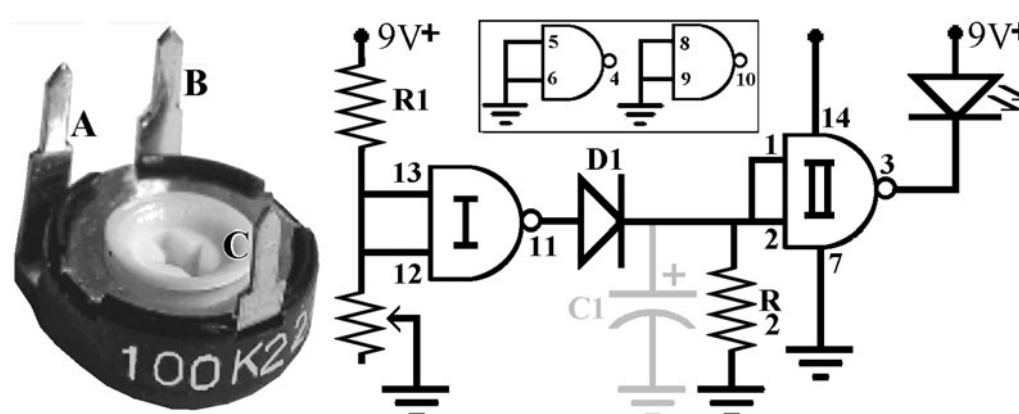

Figure L23-4

6. Adjust the trim pot until the LED goes on. It should stay on.
7. Disconnect the power; remove the trim pot.
8. Measure and note the resistance between A and center now.

How It Works

We can use different resistors and variable resistors to create changing voltages similar to what we did with the night light.

Remember the night light? This is for reference only. Don't rebuild it.

Think of how the night light worked. Use Figure L23-5 as a reference.

- The NPN transistor needed positive voltage to its base to turn on.
- The potentiometer adjusted the amount of voltage shared by the 22-kilo-ohm resistor and the LDR.
- In light, the LDR had a low resistance, allowing all of the voltage to flow through to ground. Because the base of Q1 got no voltage, the valve from C to E stayed closed.
- The resistance in the LDR increased as it got darker, providing more voltage to the base of the transistor, pushing the valve open.
- As the voltage flowed through the transistor, the LEDs turned on.

We can apply the same idea to the digital circuit inputs, as we can see in Figure L23-6.

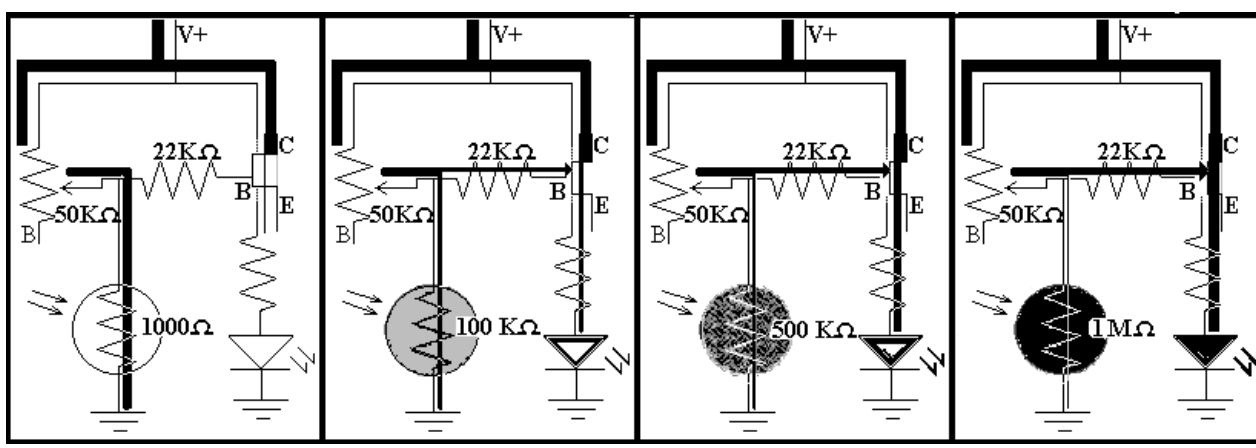

Figure L23-5

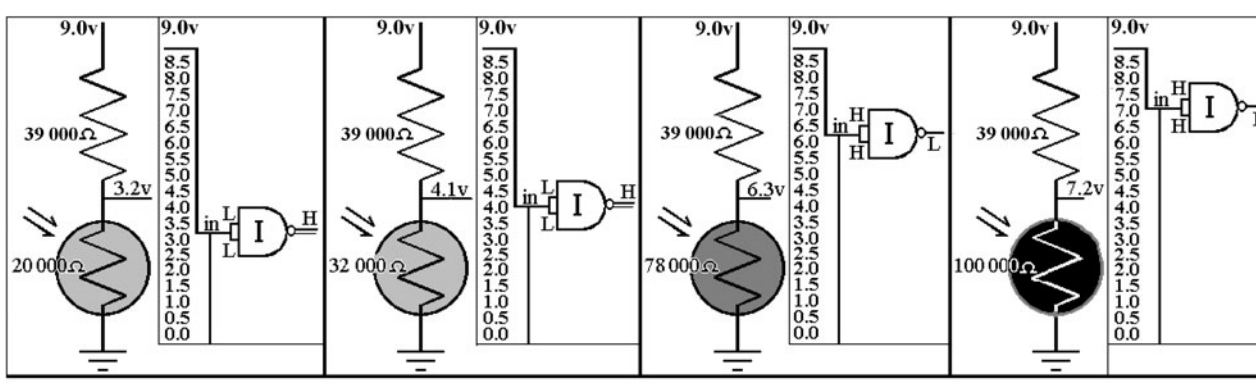

Figure L23-6

Remember: By simple definition, a circuit uses all of the voltage between the source and ground.

1. Two resistors set between voltage and ground use all of the voltage.
2. The first resistor uses some of the voltage, and the second uses the rest.
3. If you know the value of each resistor, you can figure the voltage used by each one using simple ratios. You compare the partial load to the whole load.

Look at Figure L23-7 as an example. Here R1 = R2.

R1 = 10 kΩ

R2 = 10 kΩ

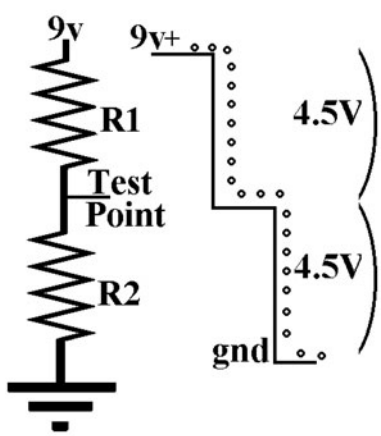

Figure L23-7

When R1 = R2, the voltage at the midpoint is exactly half of V+ because each resistor uses exactly half of the voltage.

$$V\left(\frac{R1}{R1 + R2}\right) = \text{voltage used}$$

$$9v\left(\frac{10\ k\Omega}{10\ k\Omega + 10\ k\Omega}\right) = 4.5v$$

This gives us a number of 4.5 volts used.

Why does the voltage split like this?

Simply because the resistor is a load. The larger the individual load when compared to the total load, the more voltage is used up. If there are two loads of equal value, they both use the same amount of voltage.

Build on Your Breadboard R1 = R2

Do not take apart your digital circuit.

Build the setup of two resistors on a separate spot of your solderless breadboard (SBB).

R1 = 10 kΩ

R2 = 10 kΩ

Measure and record the voltage at these points.

Voltage from V+ to ground_____ = total voltage.

Voltage across R1, from V+ to midpoint_____ = voltage used by R1.

Voltage across R2, from TP to ground_____ = voltage used by R2.

The voltage measured across R1 and R2 should be the same and equal to half of V+. It may be off by a few hundredths of a volt because of the following:

1. The voltmeter acts as a third load and affects the circuit.
2. The resistors have a range of accuracy of plus or minus 5 percent. That means a 10-kilo-ohm resistor could have a value of 9,500 ohms to 10,500 ohms.

The ideal statement for voltage at the midpoint when R1 = R2 is that the voltage is divided by half.

The load uses that portion of the voltage, in a ratio compared to the total load.

Build on Your Breadboard R1 > R2

What happens when we build a voltage divider of unequal parts?

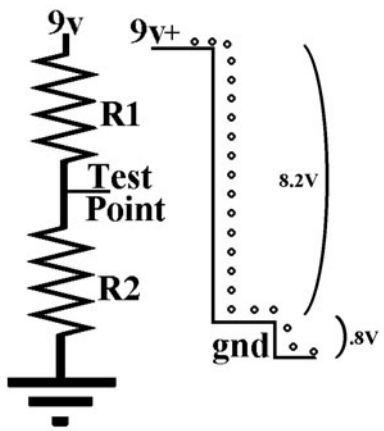

Figure L23-8

Here is what happens when R1 is 10 times the value of R2, as laid out in Figure L23-8. Replace R2 with a 1-kilo-ohm resistor.

If, for example:

V+ = 9.0 V

R1 = 10 kΩ

R2 = 1 kΩ

Again, figure the voltage used like this.

$$V_{total}\left(\frac{R1}{R1 + R2}\right) = V_{used}$$

$$9V\ (10\ k\Omega\ /\ 10\ k\Omega + 1k\Omega) = 8.2V$$

But remember that the important information really is the voltage remaining.

R1 uses up 10/11 of the total voltage. That is 8.2 volts to be exact. The voltage left at the midpoint should be about 1/11 of the total because:

Total volts – used volts = remaining volts

11/11 – 10/11 = 1/11

9 V – 8.2 V = 0.8 V

It is important to be able to predict the voltage at the midpoint.

This allows you to trigger a digital circuit with whatever switch you create.

Exercise: Understanding Voltage Dividers

Predict the voltage in a voltage divider if you have exactly 9 volts.

Don't breadboard these voltage dividers.

Use the formula. And don't forget:

Total − Used = Remaining.

1. R1 = 1 kΩ
   R2 = 10 kΩ
   Midpoint V = _____
2. R1 = 100 Ω
   R2 = 1 kΩ
   Midpoint V = _____
3. R1 = 1 kΩ
   R2 = 100 Ω
   Midpoint V = _____
4. R1 = 39 kΩ
   R2 = 100 kΩ
   Midpoint V = _____
5. R1 = 39 kΩ
   R2 = 2.2 MΩ
   Midpoint V = _____
6. R1 = 2.2 MΩ
   R2 = 100 kΩ
   Midpoint V = _____
7. R1 = 100 kΩ
   R2 = 20 MΩ
   Midpoint V = _____

Lesson 24
Create a Light-Sensitive Switch

Here, the trim pot is replaced by an LDR to create a light-sensitive switch to trigger the NAND gate. It is a voltage divider that uses a light-dependent resistor as one of the loads.

Remove the last section's two-resistor voltage divider setup from the SBB so they are no longer in the way.

The inputs to the first gate are held high via connections through R1. The circuit is at rest. No, it is not off. The circuit is off only when the power is disconnected (Table L24-1).

TABLE L24-1 NAND Logic Table

Input A	Input B	Output
High	High	Low
High	Low	High
Low	High	High
Low	Low	High

NOTE **Disconnect power when you change parts on the breadboard.**

Refer to Figure L24-1 as we do a quick review of how the trim pot worked as a switch.

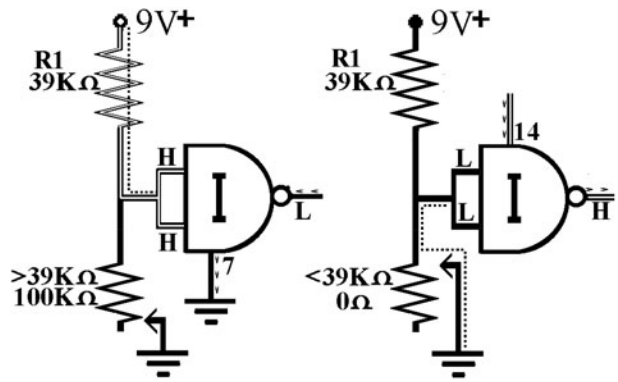

Figure L24-1

The 100-kilo-ohm trim pot replaced the normally open push button with a sliding resistance. As the trim pot changed resistance, the ratio of the voltage divider changed. Notice what happened to the output of the circuit as you adjusted the trim pot back and forth.

- As you increased the resistance, the voltage to the first NAND gate's inputs increased. It was harder for the voltage to reach ground because of the increased resistance of the trim pot.
- The inputs to the NAND gate were connected to voltage, giving a low output from the first gate.
- With the first gate inputs connected to a high, the system was at rest.

Modifying the Circuit: The Light Detector

The capacitor remains *out* (disconnected) for this lesson. Leaving it in will delay the change in output and confuse what you should see. Now try the other variable resistor, the LDR.

1. Remove the trim pot.
2. Place the LDR into your circuit as shown in Figure L24-2.

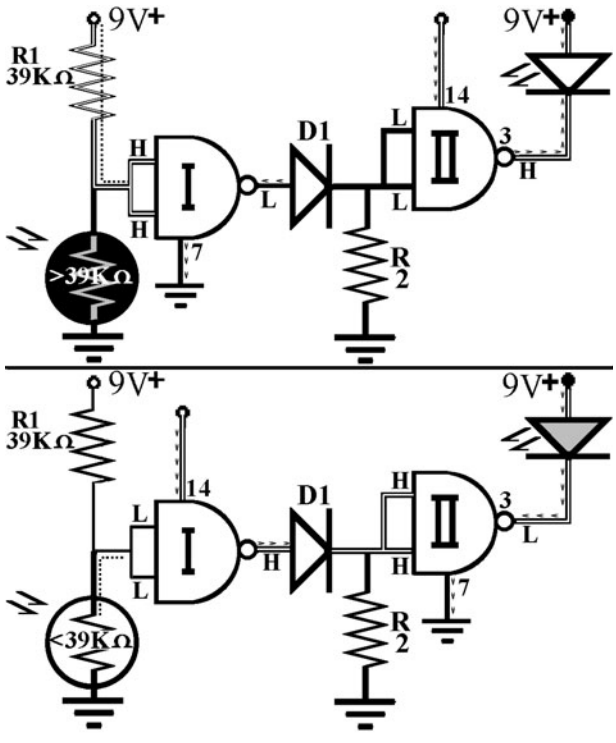

Figure 24-2

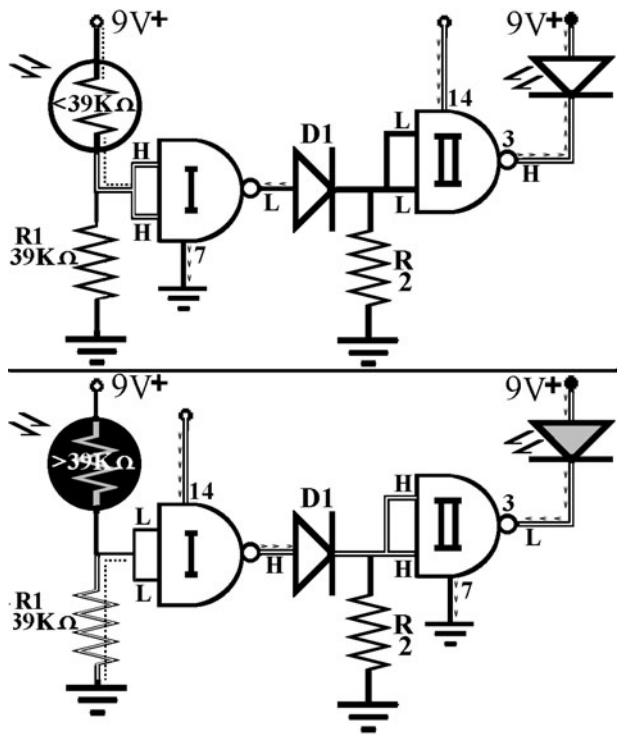

Figure 24-3

What to Expect

1. When you attach the battery, the LED should turn on instantly because this circuit is at rest in the dark.
2. Because this setup is *active* in the light, you will have to place the circuit into a dark situation for it to be at *rest*.
3. When the resistance of the LDR goes down in the light, the inputs to the first NAND gate sense that decrease in voltage. When it drops below half of the voltage from the power supply, they sense this as a low input.

Modifying the Circuit: The Dark Detector

Reverse the positions of R1 and the LDR as shown in Figure L24-3. This simple change creates a dark detector. It is at rest in the light, and becomes active if the resistance of the LDR goes above 39 kilo-ohms.

This setup needs to be in constant light to keep the circuit at rest. It will detect a break in a light source. If you put the circuit in the light and an object breaks the light source to the LDR, it will start the circuit. A common favorite is to put this switch onto a toy car. Its headlights turn on every time it goes under something.

Lesson 25
The Touch Switch

This switch depends on the fact that your skin has a resistance that is always between 100 kΩ and 2 MΩ, depending on how sweaty you are. We exploit this natural resistance in a voltage divider.

1. Set your digital multimeter to resistance.
2. Grasp a probe in each hand.

The resistance reading will constantly change, but should stay in the same range—somewhere between 100,000 ohms (100 kΩ) and 1,000,000 ohms (1 MΩ).

Now change the beginning portion of the circuit to resemble the schematic shown in Figure L25-1.

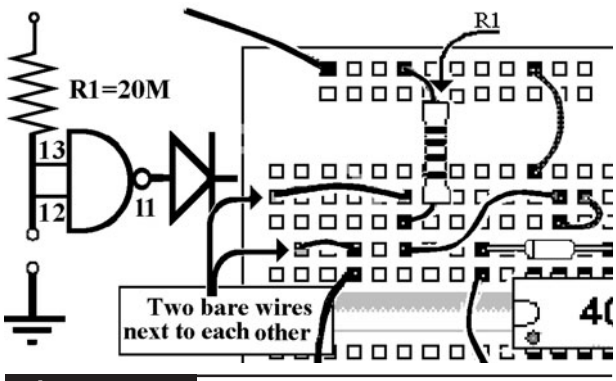

Figure L25-1

What to Expect

1. Attach your battery.
2. Touch your finger to both of the wires at the same time.

The LED turns on when your finger touches both wires that make the touch switch.

How It Works

Figure L25-2 demonstrates the effect of the finger's resistance when you become part of the circuit. The input pins 12 and 13 sense less than

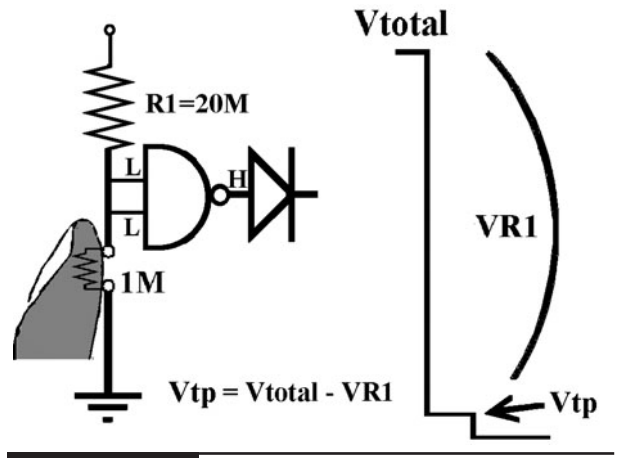

Figure 25-2

half of V+ when the finger touches. A voltage divider only exists when there are two resistors. So consider: Is there a voltage divider when you are not touching the contacts?

Figure the actual voltage at the inputs to the first NAND gate when the finger is touching. Assume you have a very dry finger and it has a resistance around 1 megohm.

$$V_{used} = V_{total} \times \left(\frac{R1}{R1 + R2}\right)$$

$$V_{total} - V_{used} = V_{midpoint}$$

SECTION 8

The NAND Gate Oscillator

Have you seen *The Wizard of Oz*? Don't be frightened, *and don't* "ignore the man behind the curtain." Any technology that one does not understand is often interpreted as "magic!"

Knowledge, Design, Control

As you start to learn how to control digital inputs, you actually start to understand how some of the "whiz-bang" electronics around you actually work. Go out and buy a copy of a monthly electronics magazine. You will actually understand more than you expect. Remember, electronics is not hard—just lots of new information.

Lesson 26
Building the NAND Gate Oscillator

Here, just like the title says, you will incorporate the two unused NAND gates of the 4011 and build an extension onto your existing circuit. That extension will create a flashing output.

Add to your breadboarded circuit. Don't strip your breadboard.

Here you will get some dramatic changes by adding three basic components and changing some wiring to use the other two NAND gates.

Note what is needed in Figure L26-1 and the Parts Bin.

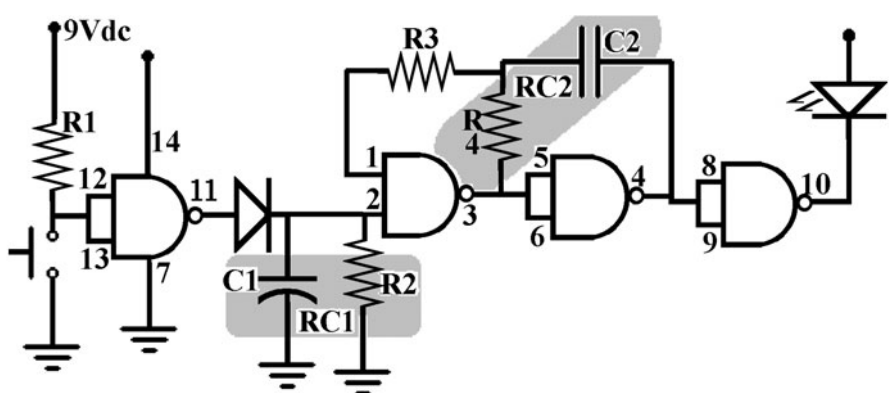

Figure L26-1 RC1 and RC2 are highlighted.

PARTS BIN

- R1—100 kΩ
- R2—10 MΩ
- R3—470 kΩ (new)
- R4—2.2 MΩ (new)
- C1—1 μF
- C2—1 μF (new)
- D1—4148 Signal diode
- LED—5 mm red
- IC1—4011 Quad NAND gate
- PB—Normally open

There are only four points connected to ground now. Make sure that inputs 5/6 and 8/9 are no longer connected to ground.

What to Expect

Press the button to make the circuit go "active." The LED should flash once a second for about eight seconds. It stops and automatically returns to its rest state.

If It Isn't Working: Problems and Troubleshooting

This troubleshooting guide will help you with the oscillator prototype on your breadboard and your finished project.

The intent of the troubleshooting guide is to help you locate the problem causing your circuit not to work. The hardest part of troubleshooting is finding the source of the problem. Once you find the cause of the problem, it's usually not difficult to fix it. I don't go into detail on how to fix it once you've located it. Upon closer inspection, that becomes self-evident.

Something to consider: If your LED is flashing faster than 24 frames per second, it looks like it is on steadily to you. *Did you know* that if the LED is blinking at 24 Hz or faster, your eyes tell you it is not blinking at all? That is why movies are shown at 26 frames per second. You are sitting in complete darkness for half of the time. You just can't notice it. Old silent movies are stuttering and jerky because they were often done at a rate just less than 24 frames per second. You can notice that.

There are usually four major problems that occur with this circuit.

1. Attach power, and the LED lights up but does not blink. Start at number 1 on the checklist below.
2. The LED blinks as soon as you attach the battery. Start at number 1 on the checklist below, but pay careful attention to the first gate. Something is triggering the inputs at pins 12 and 13.
3. The LED is off until you activate the circuit. The LED turns on but does not blink. It does time off properly. Problems at RC2. Check R3, R4, and C2 connections and values. Then start at 10. If you don't get half of V+, return to start at 1.
4. The LED is off and stays off. Is your power supply connected? Start at 1. Do not just insert a fresh 4011 chip into the circuit. If a physical error blew your chip, that same error will keep on blowing chips until you fix it.

Troubleshooting

If you find a step checks out OK, then move to the next step. If not, do what is recommended.

1. Visually inspect all connections.
   - All pins on the 4011 chip should be used. If you find an open pin, something is missing.
   - A wire left in from the previous setup could still be connecting pins 1 and 2.

- Pins 5 and 6 are connected, but the wire connecting these to ground needs to be removed.
- Pins 8 and 9 are connected, but the wire connecting these to ground needs to be removed.
- Make sure that none of the bare legs of the parts are touching at crossovers, creating a short circuit.

2. Look at all parts that have to be put in with polarity in mind. Positive must be toward V+ and negative toward ground.
   - Capacitors 1 μF and bigger
   - Chip
   - LEDs
   - Transistors (Lesson 32)
   - Diodes
   - Speaker (Lesson 29)
3. Check that the IC has power.
   - Note that V+ is being supplied to pin 14. Check that voltage is being supplied from the battery to the V+ line on the board.
   - Check that there is a wire connecting pin 14 to the V+ line.
4. Note that ground has only four connections. Check that there is continuity from the small button on the battery clip to the ground line.
   - Pin 7
   - R2
   - C1
   - Contact to the input switch
5. Here you are looking for short circuits in your wiring. This can also be caused by sloppy soldering.
   - Disconnect the power and replace the chip in the breadboard with a chip seat (empty socket).
   - Get a multimeter and start checking at points noted. Infinite or over limit means that there should be absolutely no connection between the two pins with the chip removed (see Tables L26-1 and L26-2).
   - Zero ohms means there is a direct connection.

TABLE L26-1 Measure the Resistance at Each Leg of the Chip with the Black Probe Connected to Ground

Red Probe at	Black Probe at	Expected Resistance
Pin 1	Pin 7	Infinite
Pin 2	Pin 7	Value of R2
Pin 3	Pin 7	Infinite
Pin 4	Pin 7	Infinite
Pin 5	Pin 7	Infinite
Pin 6	Pin 7	Infinite
Pin 8	Pin 7	Infinite
Pin 9	Pin 7	Infinite
Pin 10	Pin 7	Depends on the output; disconnect the output, and it should be infinite
Pin 11	Pin 7	Infinite
Pin 12	Pin 7	Infinite
Pin 13	Pin 7	Infinite
Pin 14	Pin 7	Infinite

6. Replace R1 with 100 kilo-ohms (20 megohms is too sensitive and will start the circuit).
   - With the battery connected, check that the voltage at pins 12 and 13 is well above half voltage when the switch is "open."
   - Check that the voltage at pins 12 and 13 is well below half voltage when the switch is "closed."

TABLE L26-2 Measure the Resistance from Each Pin to the Next; the Chart Assumes that RC2 Oscillator Is Installed

Red Probe at	Black Probe at	Expected Resistance
Pin 1	Pin 2	Infinite
Pin 2	Pin 3	Infinite
Pin 3	Pin 4	Infinite
Pin 4	Pin 5	Infinite
Pin 5	Pin 6	0 Ω
Pin 6	Pin 7	Infinite
Pin 7	Pin 8	Infinite
Pin 8	Pin 9	0 Ω
Pin 9	Pin 10	Infinite
Pin 10	Pin 11	Infinite
Pin 11	Pin 12	Infinite
Pin 12	Pin 13	0 Ω
Pin 13	Pin 14	Value of R1
Pin 14	Pin 1	Infinite

7. With the battery connected, check the voltage at pin 11 when the switch is "open." It should read 0.0 volts (low).
   - Close the switch and check the voltage at pin 11 when the switch is "held closed." It should be V+ (HI).
   - If pin 11 does not respond properly, either the gate is burnt out or pin 11 is accidentally connected to ground or somewhere else.
8. With the battery connected, check the voltage at pin 2 (RC1) when the switch is "open." It should be sinking toward 0 volts.
   - Check the voltage at pin 2 (RC1) when the switch is "held closed." It should be up at full voltage.
   - If RC1 does not fill, check the value of R2. Also, check if diode 1 is in the right way. Then replace D1 with a power diode 1N4005. The signal diode might have burnt out. Also, check for accidental connections to ground or somewhere else.
9. When pin 2 is low, pin 3 should be high. Conversely, when pin 2 is high, pin 3 should be oscillating.
   - Use a multimeter to check if the oscillator is working at pin 3.
   - If RC2 is set for slow pulse of 2 Hz or slower, the reading will swing from V+ to 0 volts.
   - If RC2 is set for a faster frequency, the reading will stay at half of V+.
   - For example, if V+ is 9 volts, the meter will read 4.5 volts because it will average the voltage swings between 9 and 0 volts.
10. The output at pin 3 should be directly connected to pins 5 and 6. The reading at pins 5 and 6 will be identical to the reading at pin 3.
11. The output of pins 5 and 6 is at pin 4. Check to see that the gate is working.
12. The inputs to the fourth gate, pins 8 and 9, are connected directly to pin 4. Check to see that the gate is working.
13. Is your output device working?
   - Is an LED burnt out? Test them singly in a 9-volt system with a 470-ohm resistor.
   - Perhaps your speaker is broken. Check continuity on the speaker wire.
   - Is your transistor the correct value? Maybe it is burnt out. Table L51-2 guides you through testing of transistors.

Lesson 27
Understanding the NAND Gate Oscillator

Table L27-1 describes the present system. It is an even closer look at how the NAND gate works. The NAND gate oscillator is widely used because it can be tuned easily using an RC. Watch for the new vocabulary. Master the material now or be a slave later.

TABLE L27-1 The System Diagram as It Exists Now

Input	Processors	Output
Push button	RC1-Push on/ timed off about 10 per second	LED flashing once per second
	RC2-NAND gate RCM oscillator	
	At 1 flash per second	

Recall the logic table for the NAND gate (Table L27-2).

In review, recall what happens at RC1. Gate 1 is used to start the RC1. RC1's C1 fills and drains through R2. These control the time the circuit stays on.

- Gate 1 output goes high.

TABLE L27-2 Logic Table for the NAND Gate

Input A (Pin 2)	Input B (Pin 1)	Output (Pin 3)
High	High	Low
High	Low	High
Low	High	High
Low	Low	High

- D1 traps the voltage on RC1 side.
- C1 fills.
- R2 drains the voltage.

The action of an RC circuit is always the same. The only difference is the speed that the circuit fills or drains. Figure L27-1 reviews that basic action.

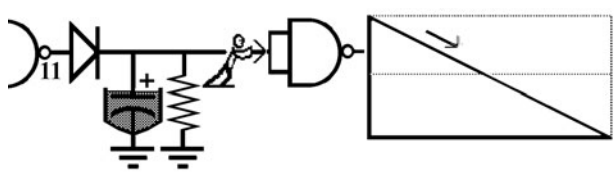

Figure L27-1

But we are interested now in RC2. RC2 is made of C2 and R4. They use gate 2 to make an oscillator. The oscillation action happens at gate 2.

Look at the setup of gate 2 shown in Figure L27-2. The high or low state of pin 3 determines

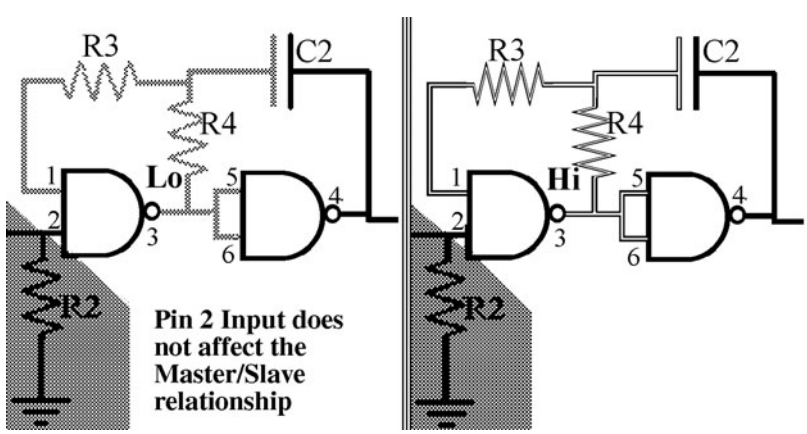

Figure L27-2

TABLE L27-3 System at Rest

Time (Seconds)	Input A at Pin 2	Input B at Pin 1	Output at Pin 3
The system remains at rest until pin 2 changes state when RC1 gets charged.		Slaved to pin 3	As long as one input is low, the output is high.
1	Low		High
2	Low	High	High
3	Low	High	High
4	Low	High	High

the state of pin 1. Pins 1 and 3 have a special relationship. Pin 3 is the master; pin 1 is the slave.

Table 27-3 shows the system at rest. There is no activity or changing voltage values happening within the circuit.

So pin 1 is a slave to pin 3. When the system is at rest, C1 has less than half of V+. Because pin 2 is low, pin 3 gives a high output. Note the NAND gate's logic in Table L27-2. In fact, if either input is low, the output is high. This is shown plainly in Figure L27-3.

But what happens when the circuit becomes active? Figure L27-4 clearly shows that when pin 2 goes high, because the capacitor is charged, pin 3 goes low.

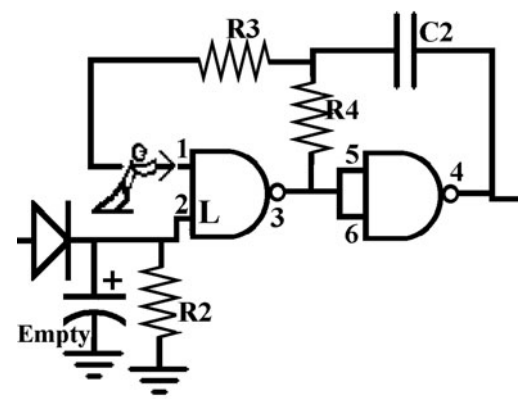

Figure L27-3

It takes a fraction of a second for the input at pin 1 to respond because C2 has to drain. Once it has drained, the voltage at pin 1 matches the output of pin 3. Wait!? Pin 3 is now low. So pin 3 makes pin 1 low, but pin 2 is high. One of the

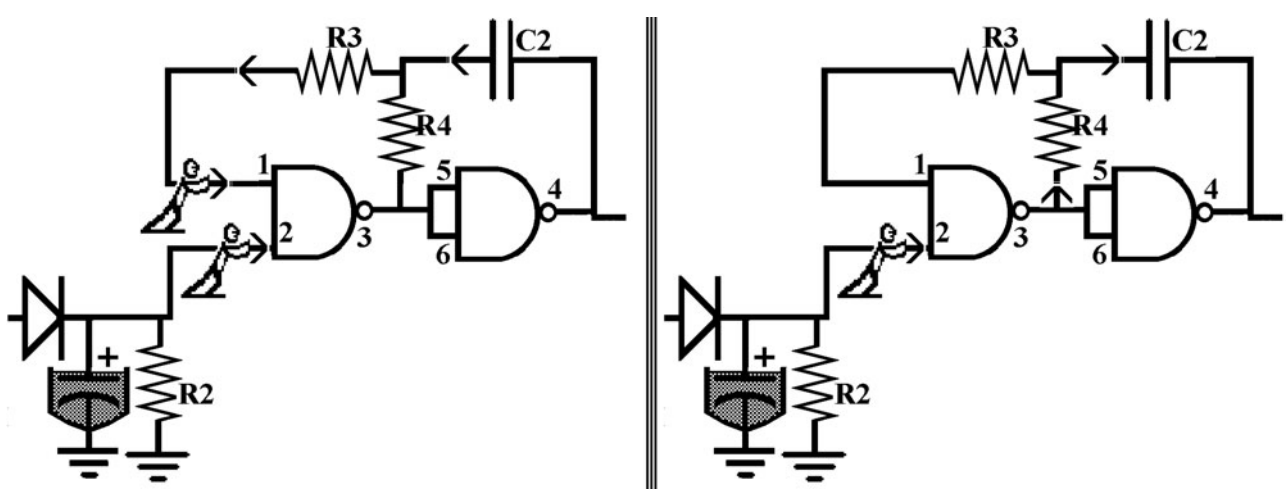

Figure L27-4

TABLE L27-4 Series of Actions

Voltage in RC1	System State	Time	Input A Pin 2	Input B Pin 1	Output Pin 3
0	Rest	0	Low		High
0	Rest	0	Low	High	High
0	Rest	0	Low	High	High
9	Active	1	High	High	Low
8.5	Active	2	High	Low	High
8.0	Active	3	High	High	Low
7.5	Active	4	High	Low	High
7.0	Active	5	High	High	Low
6.5	Active	6	High	Low	High
6.0	Active	7	High	High	Low
5.5	Active	8	High	Low	High
5.0	Active	9	High	High	Low
4.5	Active	10	High	Low	High
4.0	Rest	11	Low	High	High
3.5	Rest	12	Low	High	High
3.0	Rest	13	Low	High	High

inputs is low, which makes the output at pin 3 go high. This is better than a puppy chasing its tail.

The series of actions is actually laid out very neatly in Table L27-4.

The system starts at rest. When the system becomes active, oscillating start.

Animated version of this table is at www.mhprofessional.com/computingdownload. As you can see, the feedback loop at gate 2 creates the oscillation! All animated graphics are available online and are listed in Appendix C.

This page intentionally left blank

SECTION 9

How Do We Understand What We Can't See?

Even when we can't see what's happening, we can predict, measure, and visualize.

Lesson 28
Controlling the Flash Rate

This lesson explains how it is done and you get to do exactly that. You learn the relationship between the RC values and the frequency output.

The values of C2 and R4 that make RC2 determines the rate of oscillation. The rate of oscillation is properly called *hertz* (Hz). Hertz is frequency per second. Another way of saying this is how many beats per second. It is a standard unit.

How It Works

First, an explanation of how the second resistor/capacitor circuit (RC2) works. Then we'll play with it. This is not an exact representation of the circuit, but it will help you understand what is really happening.

Figure L28-1 shows your original RC2 setup where C2 = .1 μF and R4 = 2.2 megohms. R4 is represented by the pipeline feeding the capacitor.

Pin 2 is low. The system is at rest and stable.

The high output from pin 3 is defined by the inputs. The capacitor C2 is fully charged. There is no place for it to empty.

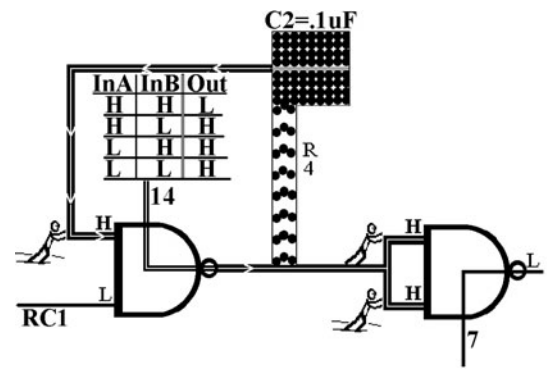

Figure L28-1

When RC1 gets charged, the system becomes active. You recognize that the high inputs at pin 1 and pin 2 create a low output. The low output at pin 1 allows the charge held in C2 to begin draining. It does so at a speed determined by the size of R4. Figure L28-2 shows the action of drainage from C2. As long as the voltage is above that magical half of the voltage mark, pin 1 sees its input as high.

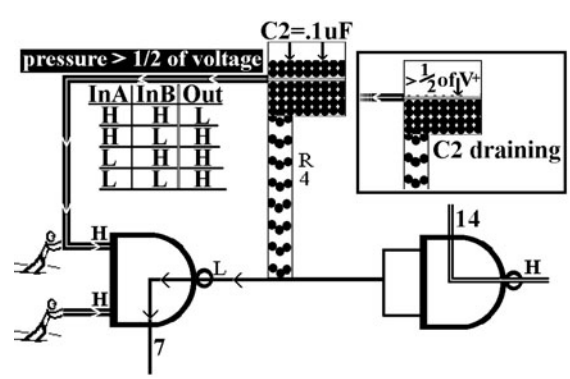

Figure L28-2

But as soon as the charge in C2 drops below a certain point, the input to pin 1 senses that input as low. HMM? Pin 2 is still high. NAND gate logic demands that the output at pin 3 become high, and C2 starts to fill (see Figure L28-3).

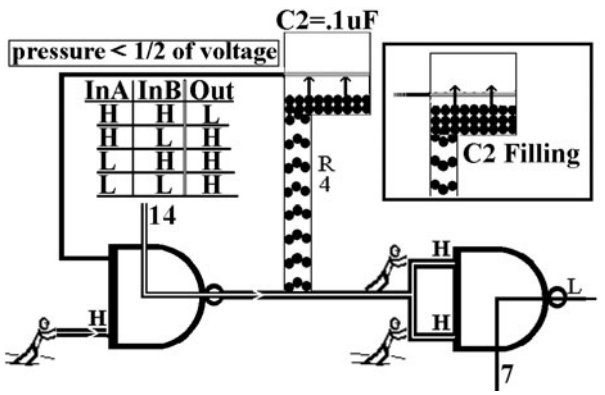

Figure L28-3

Of course, this continues until it goes above that magical marker, when the action reverses again. RC1 may be set for 10 seconds. RC2 might be set for 1 Hz. So by the time pin 2 goes low again, RC2 will have filled and drained 10 times.

RC2's rate of voltage charge/discharge is charted and shown in Figure L28-4.

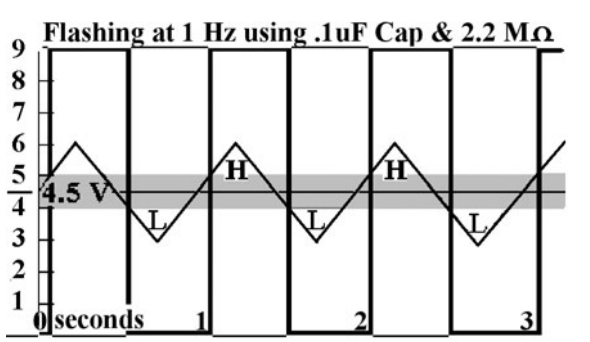

Figure L28-4

C2 fills and drains. This creates the analog input to pin 1. That sliding up and down input controls the digital high and low output shown as thick square waves.

I have made the assumption that the power supply is a convenient 9 volts. That makes the half-voltage mark 4.5 volts. Notice the grayed area around the half-voltage mark. In simplifying the explanation, I have referred to the magical point of half of V+. That's not quite true. There is a bit more of a range. If the voltage is moving upward, it has to rise above about 5 volts to be sensed as high. If the voltage is dropping, it has to drop below nearly 4 volts before it is registered by the inputs as low.

Modifying the Circuit

Make sure your power is disconnected.

Now replace C2 with a 0.01-μF capacitor. Use the DMM to check the capacitance. Ideally, the capacitor you have is marked the same way as the disk capacitor shown in Figure L28-5. There is no standard for marking capacitors. There are several generally accepted methods. You can expect to see the marking 103Z. That refers to 10 followed by three zeros. In other words, 10,000. Disk capacitors are measured in picofarads. That is a millionth of a microfarad. That is a thousandth of a nanofarad. 10,000 pF is 10 nF is 0.01 μF.

Figure L28-5

Or it might be marked with 0.01 or even u01. This refers to 0.01 μF. The label u01 uses the value marker as a decimal marker as well. Face it, there's not much space.

This capacitor is 10 times smaller than the one you have in the circuit right now. Capacitors this small do not have any polarity. There are no positive or negative legs. R4 is unchanged at 2.2 megohms.

Connect your power supply.

Notice the new setup shown in Figure L28-6.

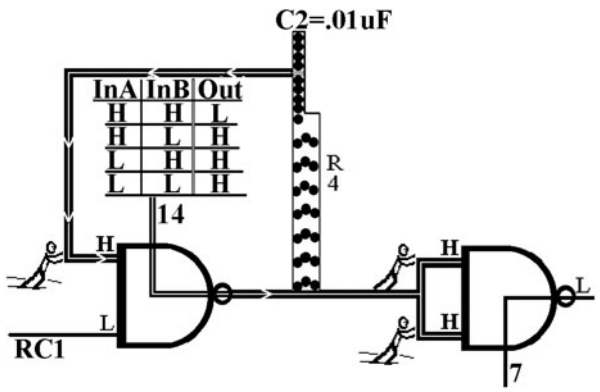

Figure L28-6

The system is at rest, but C2 is represented as a tenth the size as before. So what do you expect will happen?

The LED should flash very quickly for about 10 seconds, depending on your timing for RC1. Figure L28-7 shows the reaction by the NAND gate to the changing voltages on pin 1.

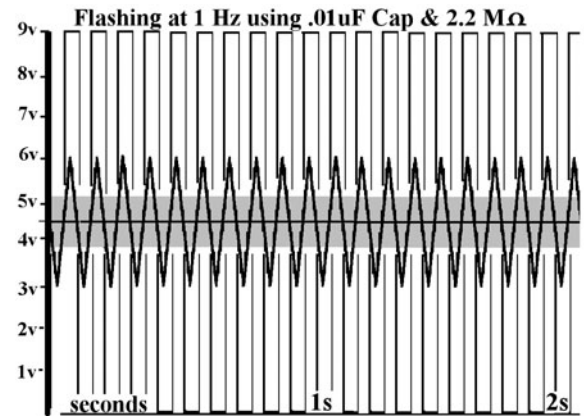

Figure L28-7

Ideally, it reacts exactly 10 times faster because the capacitor is 10 times smaller.

Exercise: Controlling the Flash Rate

Pull R2, the resistor, from RC1. That way you can count without worrying about the circuit timing out at the wrong time.

On your solderless breadboard, you will change components to affect the oscillation timing of RC2. Track your results in Table L28-1.

TABLE L28-1 Tracking Table

			Timing Flashes in 10 s			Average
R4	C2	Comment	1	2	3	
1 MΩ	0.1 μF					
2.2 MΩ	0.1 μF	Twice the resistance Expect half the rate				
4.7 MΩ	0.1 μF	Twice the resistance Expect half the rate				
10 MΩ	0.1 μF	Twice the resistance Expect half the rate				
10 MΩ	0.01 μF	Tenth the capacity Expect 10 times faster flash rate				
4.7 MΩ	0.01 μF	Half the resistance Expect twice as fast				
2.2 MΩ	0.01 μF	Half the resistance Expect twice as fast				
1 MΩ	0.01 μF	Half the resistance Expect twice as fast				

Is there a pattern when you compare it to the flashing rate using the 0.1 μF capacitor that was 10 times larger?

Lesson 29

Create a Sound Output and Annoy the Person Next to You

You adjusted the frequency of RC2. This is a direct continuation of the previous lesson, but the LED output has a flash rate too fast to see. Did you know that people see smooth motion if related pictures are presented at 24 frames per second? That is why movies are projected onto a screen at that rate. That is also why we have to move from the LED to a speaker. When the LED is 24 frames a second or faster, it might appear to dim a little, but you won't see it flash. Why does it dim? Because it is off half the time. Don't you realize you're sitting in complete darkness in the movies for half the time, too?

Modifying Your Circuit

Don't clear your breadboard. Figure L29-1 shows the schematic that you have been using (see the Parts Bin). Just replace the LED with the speaker and change the values of other components stated in the parts list.

PARTS BIN

- R1—20 MΩ
- R2—10 MΩ
- R3—470 kΩ
- R4—2.2 MΩ
- C1—1 μF electrolytic
- C2—0.1 μF
- D1—4148 Signal diode
- Speaker—8 Ω
- IC—4011 Quad NAND gate

Also, if you removed R1 for the exercise in Lesson 28, put it back in.

Disconnect your power to make these changes.

Going from left to right on the schematic.

1. You have a touch switch to activate the circuit.
2. The amount of time the circuit stays active is set by R2 and C1. R2 and C1 make the first resistor/capacitor circuit (RC1).
3. The rate of oscillation is determined by C2 and R4 (RC2).
4. Here, the voltage from pin 10 moves from V+ (high) to ground (low) at a frequency set by RC2.

   Be cautious. Don't connect your speaker directly to a battery or the power supply. Small speakers are made with very fine wire.

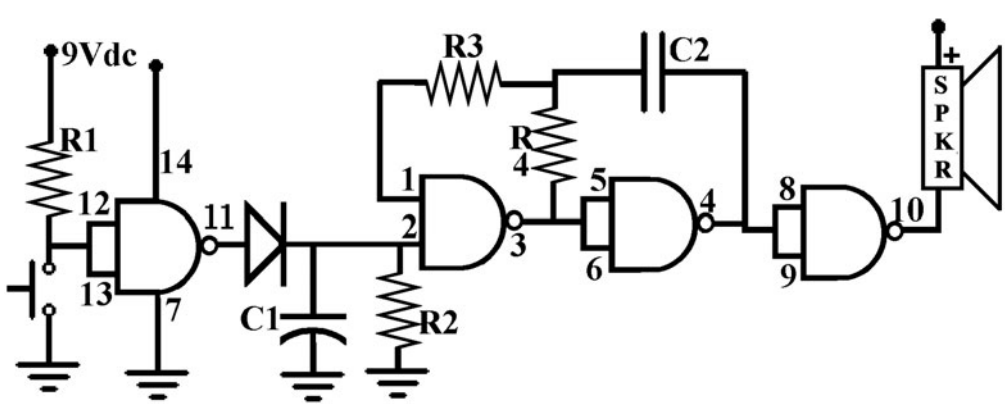

Figure L29-1

Too much current will heat the wire, possibly enough to melt it. Such a break would render the speaker useless.

5. Speakers respond only to voltage changes. Speakers do not produce sound just because V+ is applied to them. Buzzers have a circuit inside. They create their own noise. If you put your speaker to voltage, you hear a "crackle" as you connect and another as you disconnect. It is merely responding to changes in voltage. An excellent explanation about how a speaker works is posted at www.howstuffworks.com/speaker1.htm.
6. Replace the LED with the 8-ohm speaker. Note the polarity of the speaker.

   The speaker will click slowly and very quietly. You may have to use your fingers to feel the pulse. It should pulse about 15 to 20 times in five seconds.

   The speaker pulses each time the current is turned on, moving from low to high, and each time the current is turned off, moving from high to low. In the previous exercise you pulsed the LED at different speeds by changing the rate of oscillation in RC2.

Your exercise results should have shown this pattern (see Table L29-1).

Decreasing the resistance is like widening the drain. Figure L29-2 shows that by decreasing the resistor value we increase the oscillation speed because it takes less time to fill and drain the capacitor.

Exercise: Create an Annoying Sound Output

A quick definition. *Hertz* is a measurement of frequency, specifically defined as a measure of beats per second. For example, a system oscillating at 512 beats per second is more easily stated as 512 hertz.

As you do the following changes, note your observations in Table L29-2. Remember to detach power any time you make a change to your prototype on your breadboard.

TABLE L29-2 Observations

Resistor Value R4	Capacitor Value C2	Description
4.7 MΩ	0.01 μF	
2.2 MΩ	0.01 μF	
1.0 MΩ	0.01 μF	
470 kΩ	0.01 μF	
220 kΩ	0.01 μF	
100 kΩ	0.01 μF	
47 kΩ	0.01 μF	500 Hz
Now, one more change. Put your ear very close to the speaker. Listen for the quiet tone.		
22 kΩ	0.01 μF	1,000 Hz

It's annoying, but very quiet right now because the 4011 IC does not produce very much power at the output. So the volume is not much at all. But Figure L29-2 offers hope.

TABLE L29-1 Exercise Results

Resistor Values	Capacitor Values	Flashes in 10 s	Speed
10 MΩ	0.1 μF	1	Very slow
4.7 MΩ	0.1 μF	2	Double of previous
2.2 MΩ	0.1 μF	4	Doubled again
1 MΩ	0.1 μF	10	10 times faster than the 10 MΩ

Figure L29-2

Lesson 30
Introducing the Oscilloscope

This lesson:

- Introduces one of the most important tools in electronics
- Introduces you to the concept of what any oscilloscope can do
- Shows you how to build a probe to use with the Soundcard Scope
- Acts as an introduction to using the popular Soundcard Scope freeware

If you have an oscilloscope sitting on your desk at home, you are unique. If you have access to an oscilloscope, you are special.

Otherwise, I recommend the Soundcard Scope. You can download it from http://www.zeitnitz.de/Christian/scope_en. It was created Christian Zeitnitz, professor of physics at Wuppertal University.

Think of the Soundcard Scope as a special "skin" for your sound card. Different skins allow for different adjustable visual effects that show on your monitor as music plays. Soundcard Scope takes this idea forward a step. The Soundcard Scope skin reacts to the internal signals as well as "microphone" or "line" inputs to your sound card.

In the real world, we expect that as price increases, complexity and quality should increase. Soundcard Scope, however, is priceless. It still includes all of the major functions common to all

Disclaimer

Safety measures when using Soundcard Scope *and* the Soundcard Scope Probe:

The Soundcard Scope Probe is designed to be used only with your 9-volt systems and the proper probe. Make sure you follow testing procedures before you use it. Instructions for building the probe are given in this lesson.

Being software, Soundcard Scope itself cannot damage your hardware, but it is very easy to burn out at least your sound card when trying to investigate signals of unknown amplitude and DC offset.

So, you must always be extremely careful when establishing an electrical connection between your computer and external equipment. It is a good practice to use a conventional multimeter or real oscilloscope to find out whether signal levels are acceptable for your sound card.

Regarding connecting to things besides circuits produced in this book, it should be safe to connect to any audio/video equipment using standard line in jacks and cables. You may consider at least using the Scope Probe to decrease the voltage input. Make sure you have a stable signal source that allows you to control signal level manually, outside of the computer.

To avoid personal injury, always follow the usual safety rules when working with electric circuits.

SOUNDCARD SCOPE IS SUPPLIED TO YOU AS IS, AND IN NO CASE IS THE AUTHOR OF SOUNDCARD SCOPE OR THE ASSOCIATED PROBE RESPONSIBLE FOR PERSONAL INJURY, HARDWARE, AND/OR DATA DAMAGE, PROPERTY DAMAGE, OR PROFIT/LOSS ARISING FROM USE OR INABILITY TO USE THIS OSCILLOSCOPE SOFTWARE.

THE AUTHOR/DESIGNER DOES NOT GUARANTEE THE FITNESS OF SOUNDCARD SCOPE FOR ANY PARTICULAR PURPOSE. SOUNDCARD SCOPE IS NOT INTENDED FOR INDUSTRIAL OR COMMERCIAL USE.

IN GENERAL, USE SOUNDCARD SCOPE AND THE ASSOCIATED PROBE AT YOUR OWN RISK. ALWAYS CONSULT YOUR SOUND CARD MANUAL FOR DETAILS ON CONNECTING TO EXTERNAL DEVICES.

oscilloscopes, plus some added features. Its quality is adequate for our immediate needs. *One of its limitations is that it ignores stable DC voltage.* But it does respond to changing voltages in the audio frequencies 40 Hz to 15,000 Hz. Its biggest advantage is the price.

NOTE **For this particular oscilloscope software, the input is defined by Windows "Master Volume" sound mixer. The Soundcard Scope software does not communicate directly with the sound card. With this in mind, any Soundcard Scope problems should be dealt with through Windows' own sound card system. Check page 8 of the scope's manual.**

As the Digital Revolution became the digital standard, oscilloscopes changed too. The best-quality scopes still cost in excess of $20,000. An adequate beginner's scope would be a two-channel Velman handheld scope or external USB hardware, starting around $150. For classrooms, $2000 for a good quality scope is not unreasonable. Reconditioned analog equipment is an option frequently overlooked. Equipment that was "top of the line" 20 years ago can be purchased at reasonable cost. These older tools give quality outputs comparable to equipment that would cost over ten times as much new.

Your DMM measures voltage. It has no time component.

Oscilloscopes are used to give instant visualization of voltage compared to time. Its input clips to the system's output and displays a graph of the voltage represented on the Y axis (vertical) and time shown across the screen horizontally as the X axis. You are able to adjust the scales.

Oscilloscopes specifically create pictures of voltage changes over time. A good scope can show events that occur at a snail's pace, or it can freeze a frame to display microsecond variations.

Initial Walkabout

Enough of me blathering on. If you do not have alternative hardware, download, install, and start the Soundcard Scope now. At startup, the Soundcard Scope screen looks like Figure L30-1.

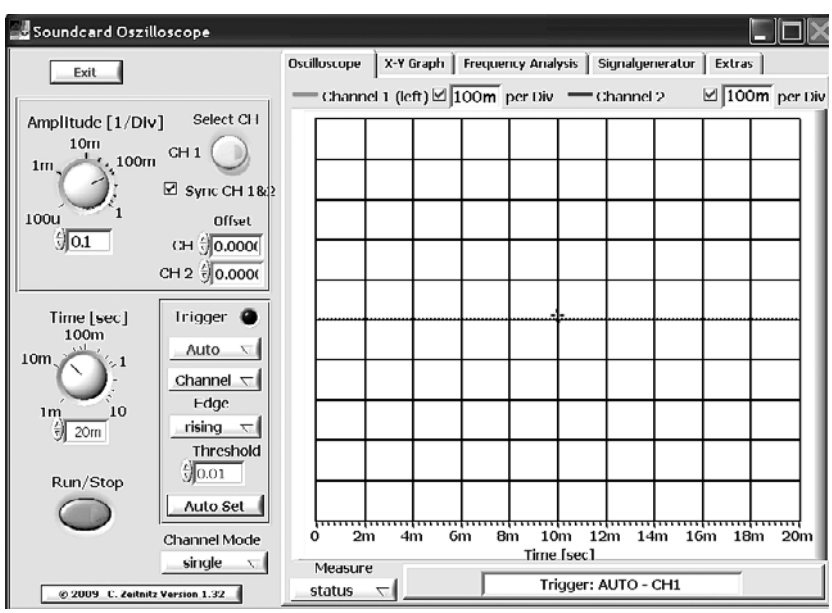

Figure L30-1

Be aware that this entire tool is not even a good doorstop unless you have a signal.

The Soundcard Scope has some valuable features that we are going to use immediately.

Open and adjust your master volume control to match Figure L30-2, and then close it.

Click the Signal Generator tab. Adjust the frequencies as shown in Figure L30-3.

Return to the oscilloscope screen. The left side of Figure L30-4 shows what to expect. It should be close, so don't worry if it's not exactly what you see. The signal might be too big to fit on the display screen. Don't change the signal size with the master volume control. Adjust the scale of the graph by inserting the number **.2** as indicated by #1 in the Amplitude control area. You can mouse over the knob on any of these to control them. Your display should now be similar to the right

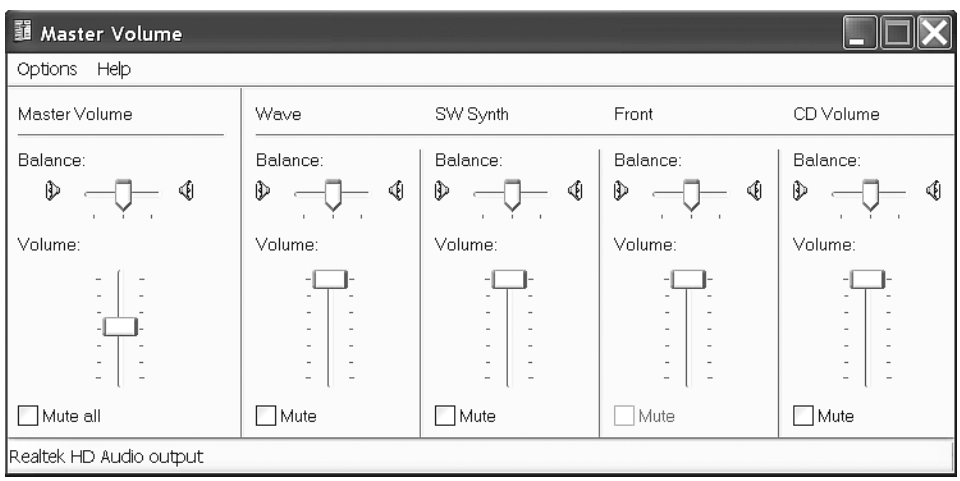

Figure L30-2

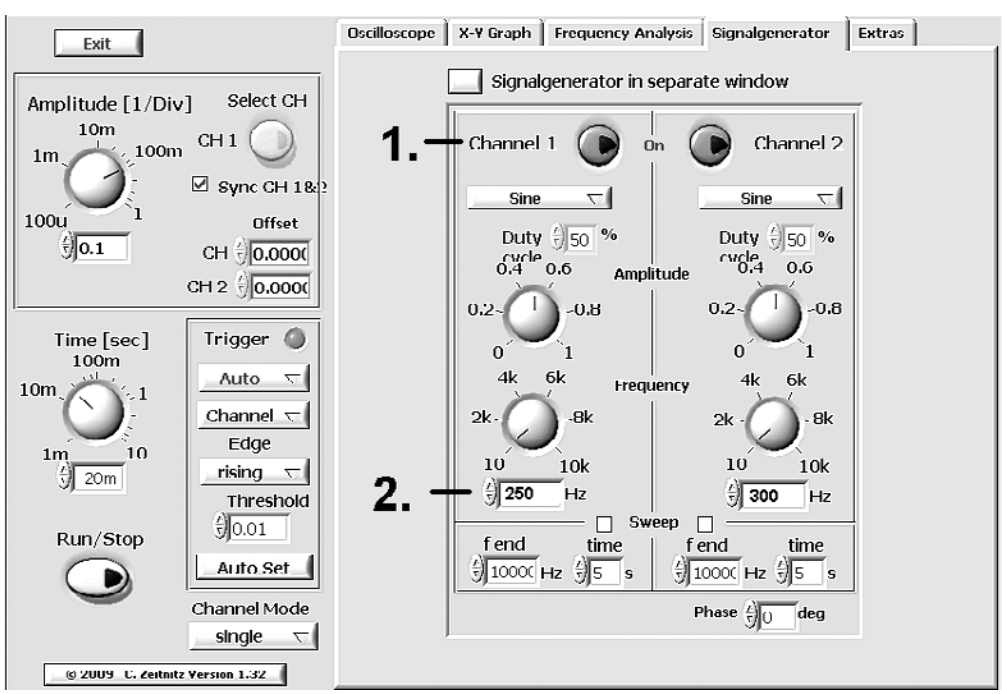

Figure L30-3 Set channel 1 as 250 Hz and channel 2 at 300 Hz.

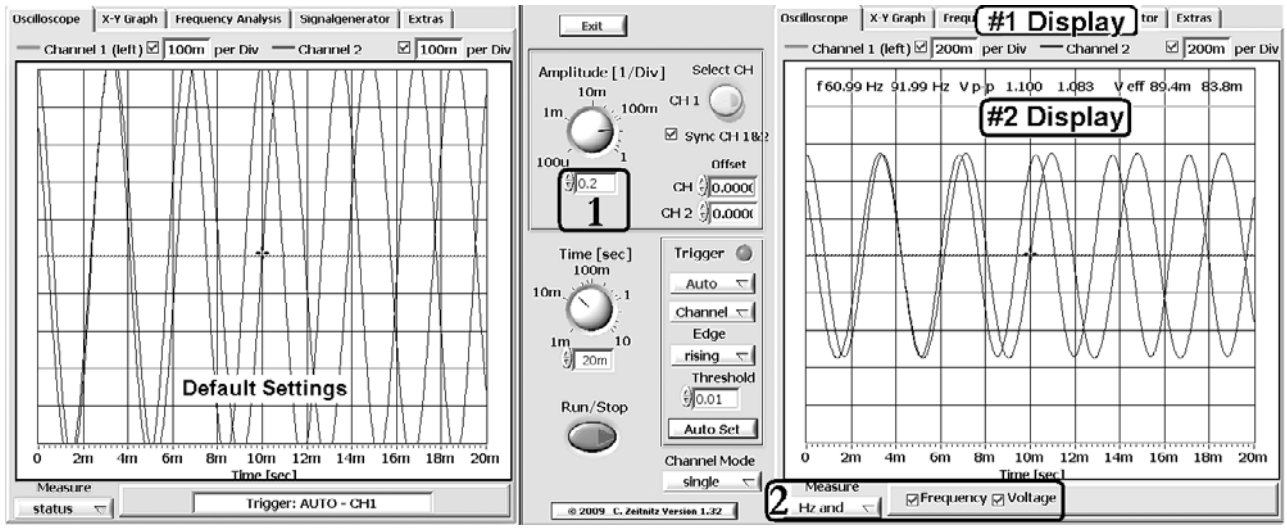

Figure L30-4

side of Figure L30-4. Just like on a piece of paper, the information in the graph doesn't change—just the scale. The notations in #1's display indicate that each division has doubled its value.

The more information you have, the better you can understand what is happening. Click the STATUS button under Measure, as indicated by #2 on Figure L30-4. Choose the Hz and Volts option. Check the Frequency and Voltage boxes that pop up next to it. An information bar appears at #2's display. The fact that the readout should be 250 and 300, respectively, doesn't matter. The first number is cut off because of limited space. The fact that the reading is off by .01 is irrelevant.

Wouldn't it be nice to play with one signal at a time? Again, it's not hard if you know how. In Figure L30-5, #1 shows the box next to Sync CH 1 & 2 has been deselected. Just above that, at #2, click the Select CH button, activating only CH 1. At #3, you can shift the amplitude of Channel 1 to further distinguish it from Channel 2's signal. Change its scale to .4 per division as noted by #3. Now you have the left screen of Figure L30-5.

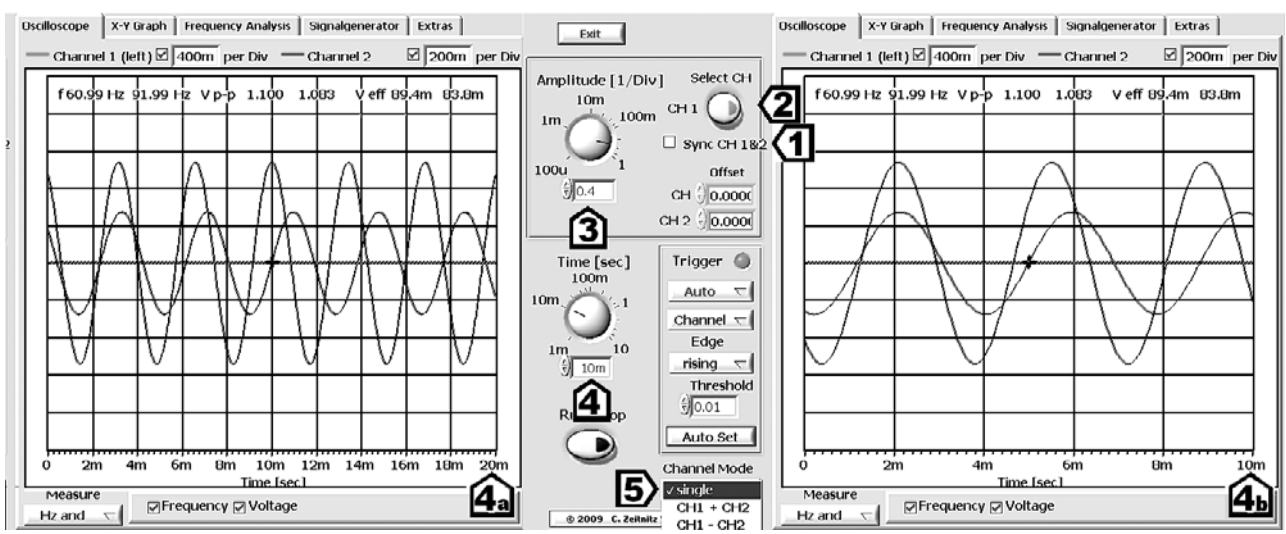

Figure L30-5

Wait a minute? Regarding the amplitude, have you noticed that the Y axis has no unit. We know it's voltage, but shouldn't it be showing .1 v/div or .4 v/div? Why just .1 or .4? Here's what's happening. As a generic program, it was designed to interact cleanly with a wide variety of software and hardware. There is no guarantee of accuracy. The intent of any scope is to picture voltage changes across time and to compare one signal's strength to another. Use your DMM if you want accurate voltage.

But there is a definite unit attached to the X axis. In Figure L30-5, the #4a display on the left screen shows all activity taking place in 20 ms. For those of you stuck on fractions, that's 1/50th of a second. If you want to get a closer look, change the value at #4 to 10 ms per division. The signal stretches as it is magnified across time. The screen now displays the voltage changes over 10 ms at #4b.

This scope is really capable. Here's one more thing to play with right now. At #5, click the Single button underneath *Channel Mode*.

Use the following settings, and you'll create the form in Figure L30-6:

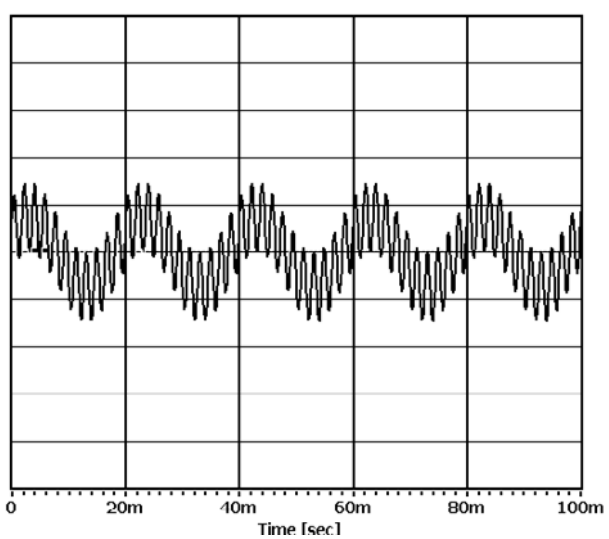

Figure L30-6

- Amplitude at .2/division
- Synchronize CH1 and CH2
- Time at 100 ms
- Channel Mode = CH1 × CH2

When you're finished playing, tab over to Frequency Analysis to see the screen shown in Figure L30-7.

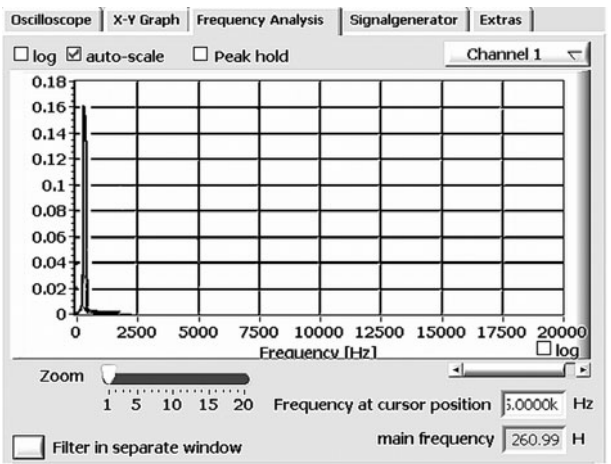

Figure L30-7

Sure enough, the Frequency Analysis feature has something to do with frequency analysis. Capable of only one channel at a time, this tool analyzes individual signals and displays component parts, showing relative strengths.

Building the Scope Probe

If you already have access to an oscilloscope, you don't need to build a scope probe. It is a piece of equipment that you need to be able to test your own circuits using the Soundcard Scope on your computer.

What the Probe Does

The probe takes any signal in your circuit, cuts out all but 1/11th using a simple voltage divider, and feeds that remaining fraction to your sound card. Your sound card feeds this signal to the Soundcard

Scope software, which interprets this signal and displays it on your screen.

Keep in mind that any sound card cannot accept more than 2 volts. Anything more than 2 volts will cause damage to your sound card. So if your output is 9 volts, only .8 volts is fed to your sound card.

There are three sections to the probe, as shown in Figure L30-8.

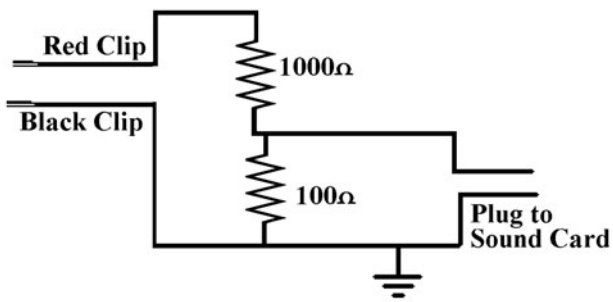

Figure 30-8

A more detailed set of photographs is available on the website www.mhprofessional.com/computingdownload.

The Connecting Clips

1. You need to have at least a three-foot length of speaker cord. Carefully remove one inch of insulation from both ends.
2. Mark one of the lines on both ends to identify it as the same line on both sides. Use this line for ground.
3. Disassemble the clips and slide the covers onto the wire.
4. Twist the end of each wire strand and push this strand through the hole at the base of the clip as shown in detail in Figure L30-9.

Figure L30-9

5. Lay the insulation into the saddle and use pliers to crimp the two sides of the saddle over the insulation. This physically holds the clip to the wire.
6. Now solder the wire strand at the bottom and clip the extra wire away. You should have something similar to Figure L30-10 now.

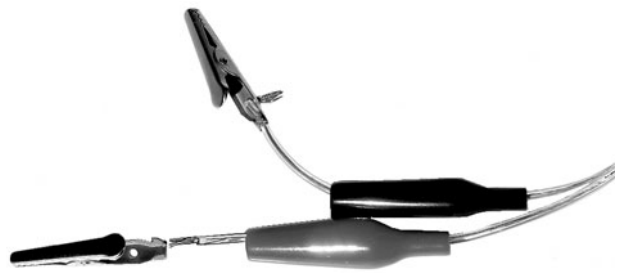

Figure L30-10

7. Slide the covers over the back of the clips. This is done easily if the jaws are clamped open onto something large.

That should finish the clips.

The Voltage Divider

The voltage divider is the heart of the probe. It is not a regular connector, but decreases the input voltage by a factor of 1:11.

Assembling the voltage divider for the scope probe requires the following:

1. Cut the dual cord six inches from the end opposite the clips.
2. Strip at least 1/4 inch (0.5 cm) of insulation off four ends.
3. Mark both sides of the ground line. This is the one connected to the black clip.
4. Figure L30-11 displays how to wrap the wire around the resistor leg before soldering. This is not critical, but it is very effective.

Figure L30-11

5. Slide skinny heat-shrink tubing onto each line before you solder. The heat-shrink tubing is easier to use than tape. The layout is shown here in Figure L30-12.

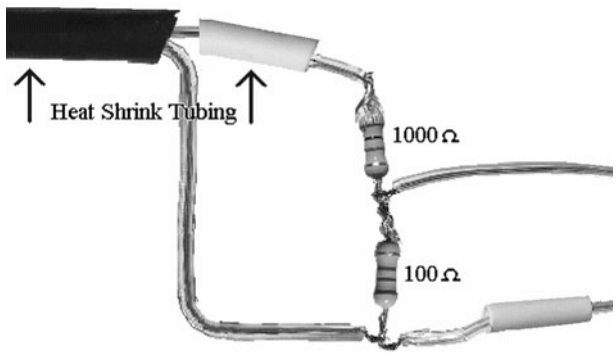

Figure L30-12

6. Move the heat-shrink tubing away from the heat of the soldering area until you are ready to shrink it into place. Test your parts placement immediately after you finish your soldering.

   Use the schematic diagram in Figure L30-13 as a guide to check that your scope probe is set up properly (see Table L30-1).

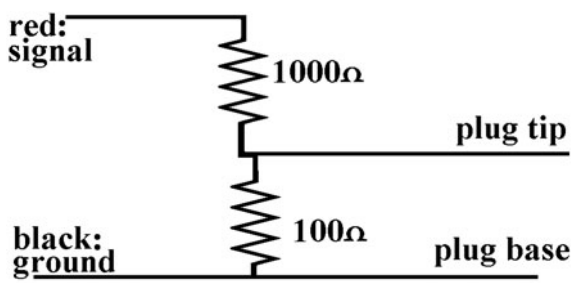

Figure L30-13

TABLE L30-1 Scope Probe Checklist	
Probe Values	
Red clip to plug tip	1 kΩ
Plug tip to plug base	100 Ω
Ground line to plug tip	100 Ω
Signal to ground	1.1 kΩ
Ground to plug base	0 Ω

Then you can move the heat-shrink tubing into place as displayed in Figure L30-14.

Figure L30-14

7. You can shrink the tubing either by using a hair dryer on its hottest setting or by caressing it with the hot solder pen.
8. Then slide the wider piece of heat-shrink tubing over your voltage divider. Shrink that into place over the other heat-shrink joints.

   DONE.

The Jack

Connecting the plug is the same as connecting the alligator clips.

Remember to slide the heat-shrink tubing onto the wire first.

1. Clamp and solder the ground wire to the long stem shown in Figure L30-15. The long stem is connected to the base, the lowest part of the plug. Now slide the heat-shrink tubing over the ground line connection. Make sure there are no stray wires.

Figure L30-15

2. Lead the signal line between both of the other leads. We are going to have only one signal feed to the sound card, so both tabs will be connected. Solder that line to both tabs. There is no need to cover the last connection with heat shrink.
3. Slide the cover back down and screw it over the back.

Again, make sure your readings match Table L30-1 before you try it out. A wrong connection here can be disastrous.

You will use the scope probe in Lesson 31.

Lesson 31
Scoping Out the Circuit

NOTE **When you do testing and measurements, don't set your circuit near the computer. The "noise" generated by its power supply will corrupt your readings.**

We'll start off with a comment about what we can realistically expect from the Soundcard Scope. First, this is a "low power" circuit. Even though the circuit works at 9V, the total power output is around .02 watts. Even at that low power, 9V threatens any sound card. Second, the scope probe reduces the signal's voltage by 90 percent. That reduces the power to less than .002 watts. Third, your sound card might not respond to these really small power signals. So no matter how high you set the volume control, at best, you still will not see signals at Test Point 1 or 2. If you do get a signal, it will be badly distorted.

What I'm saying is that you might not be able to get a signal to display for Test Points 1 and 2 because of the following combined factors:

1. The power output of the circuit at these test points
2. Scope probe (adds to the problem)
3. Sound card
4. Windows' sound control
5. The Soundcard Scope

We'll start off with the basic circuit shown in Figure L31-1. All of the following work will refer to these test points. Necessary modifications to the circuit are listed here.

1. Setup is with R4 = 47kΩ and C2 = 10 nF.
2. Remove any connections to pin 10 so there is a clean output.
3. Connect pins 12/13 directly to ground so the circuit is continuously active.
4. Now open the Soundcard Scope. Don't adjust anything.
5. Connect the probe's plug into the microphone (line in) connection of your computer. If your computer asks you to define the input as "line in" or "microphone," choose microphone because it is much more sensitive.

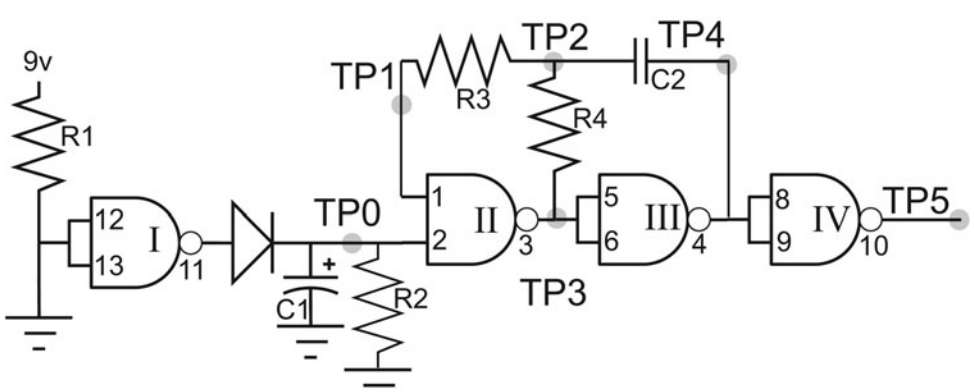

Figure L31-1

Connect your scope probe's clips as noted here:

- The black clip connects to ground and stays there.
- Place a piece of wire into the red alligator clip. Use that wire to touch the signal sources.

You will see something similar to Figure L31-2.

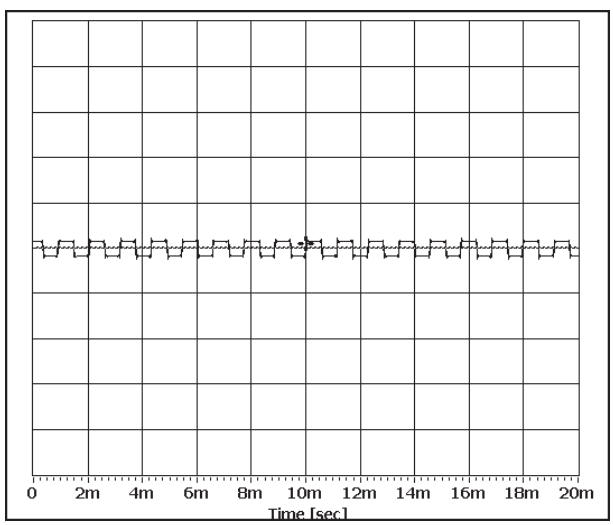

Figure L31-2

6. Now go directly to the Signal Generator. Make the adjustments shown in Figure L31-3
   - Set the channel you are using to 1000 Hz.
   - Adjust the amplitude knob to .1.
7. Shift over to the Frequency Analysis screen.
   - Increase the magnification by 5 to 10 times.
   - Scroll to the lower frequencies (left).
   - Figure L31-4 compares the signal from the circuit to the 1k Hz Signal Generator's signal.
   - Remember that the scope probe decreases the circuit's amplitude by 90.

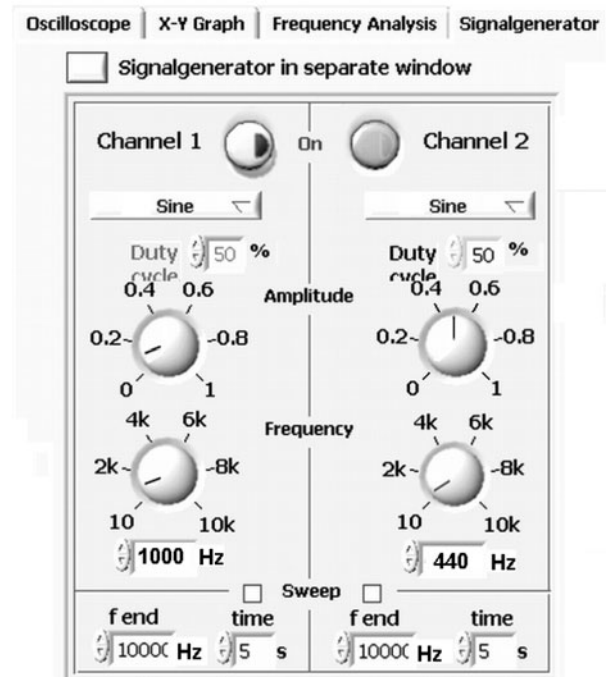

Figure 31-3

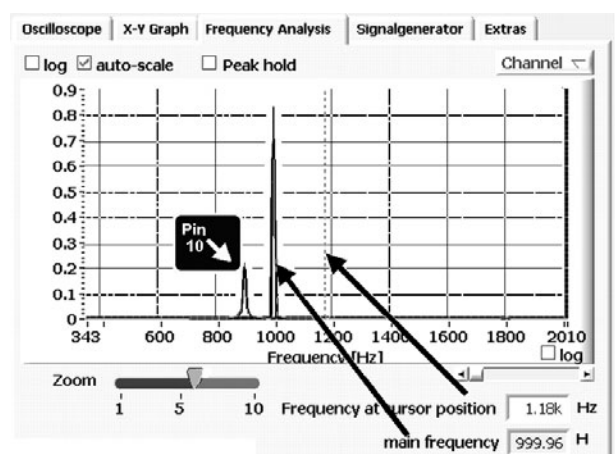

Figure 31-4

8. Return to the scope view and make the following adjustments to get the display on Figure L31-5:
   - Expand the time scale (X axis) by 10 times. Change the time/div from 20 ms to 2 ms.
   - Expand the amplitude scale by 10 times.
9. Now that you have a reasonable view of the circuit's output, scope out the rest of the circuit.

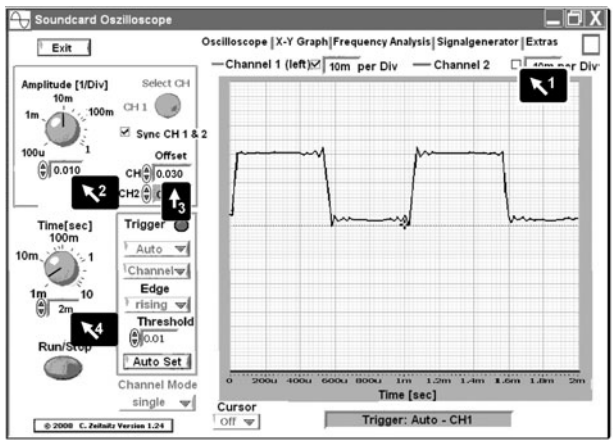

Figure 31-5

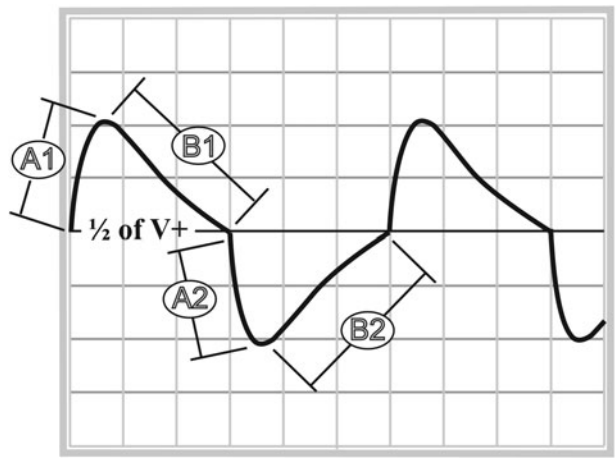

Figure 31-6

Test Point 0

It is important to understand the scope reading at Test Point 0. First, check out the voltage using your DMM. It should be steady between 8 and 9 volts. When you first touch the lead of your scope probe to TP0, the signal jumps, but then quickly settles back to the center and sits there.

Why? It's easy to understand what's happening. The Soundcard Scope responds only to electronic signals in the sound frequency range.

Is the signal at TP0 changing? No frequency = 0.0 Hz. Then why the sudden jump just as you connect? Obviously, the disconnected probe's input has no real voltage. The input voltage jumps as you connect. The scope is reacting to that voltage change. But with no more activity, there is no more signal.

Test Point 1

We know that the oscillating input to pin 1 actively changes the gate's output at pin 3. But remember: Pin 1 is an input, a gauge that compares its voltage to the voltage supplied to the IC. What we see in Figure L31-6 is the changing signal to a NAND gate's input.

The rising slope indicated by A1 shows the increase in voltage as the cap charges from the half V+ mark. The downward slide, B1, displays the capacitor's discharge as the voltage returns to the half V+ mark. As the signal passes the half V+ mark, Pin 1 interprets this as a Lo input. Pin 3 changes the phase from Lo to Hi. C3 starts charging, moving upwards until the signal passes the half V+ mark. The cycle then repeats itself.

Test Point 2

Test Point 2 is the junction of R3, R4, and C2. Even though the action in Figure L31-7 looks dramatic, it is actually showing the same action as Test Point 1, even though it has more amplitude. Each signal unit lasts the same amount of time, but the charging cycle is much faster, and the

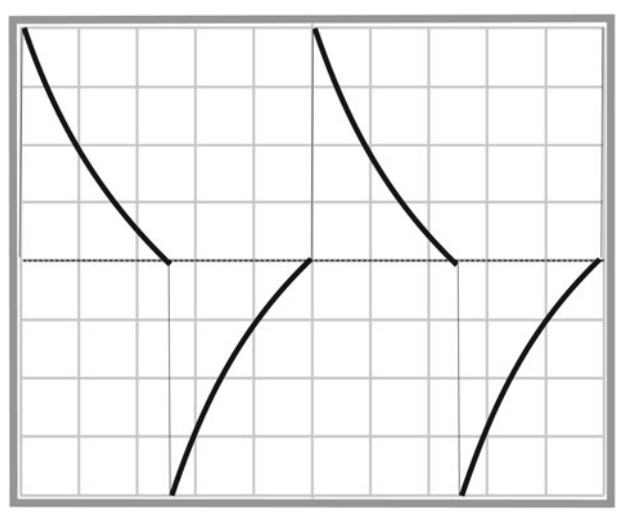

Figure L31-7

discharge takes up the rest of the time. The actual events take exactly the same amount of time. Because R3 is 10 times more resistant than R4, the charging action at that point is 10 times slower and the signal is smaller.

We'll overlay these test points in Figure L31-8 to examine how the signals relate to each other.

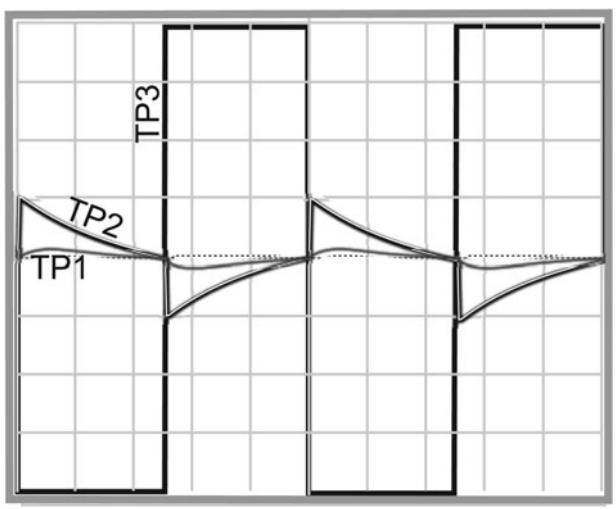

Figure 31-8

Remember what happens when pin 1's input reaches half V+? As a voltage comparator, pin 1 interprets that as Lo and kicks the NAND gate's output (pin 3) to Hi.

Test Point 4

The signal at Test Point 4 looks a bit smaller and wobblier. It's been affected by the action at RC2. Keep in mind that TP4 is both the *output* of the third NAND gate and *input* to the fourth NAND gate. Figure L31-9 compares Test Point 4 to Test Point 5, the last gate's output.

Two significant changes happened to the input signal.

- The output signal has been inverted, flipped upside down.

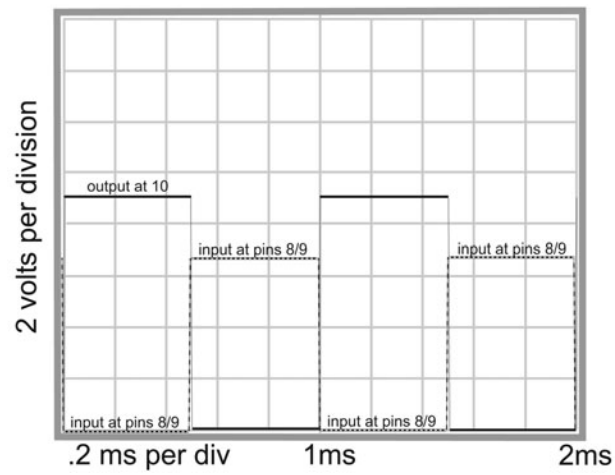

Figure L31-9

- The output signal has been refreshed. That means that the weak input signal has been restored to full strength.

Now, let's return to making annoying sounds.

Lesson 32

Using a Transistor to Amplify the Output

Transistors are a natural choice as amplifiers. Their action and application are explained. Either transistor would work, but the PNP is used because it offers certain advantages. You get a great response with dogs howling at 1,000 Hz. It "hertz" their ears.

Right now you have a very quiet alarm. The output from the 4011 NAND gate provides a small amount of power. It is enough to turn on an LED. You have already found it is definitely not enough power to give even a small speaker any volume. But it provides plenty of power to turn on a transistor.

Modifying the Circuit

Make the modification shown in Figure L32-1. Be sure to insert the PNP 3906 transistor the right way.

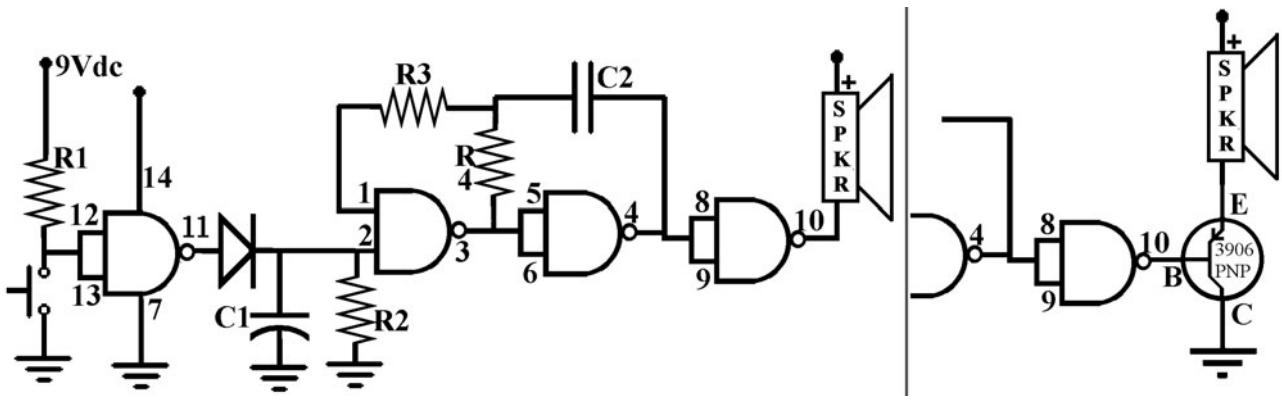

Figure L32-1

Why use the PNP 3906 transistor? Think . . . when the system is at rest, pin 10 is high. The two opposing voltages stopped any movement of current, and that's why the LED stayed off. Figure L32-2 shows how this action is used to our advantage. A high output keeps the voltage from moving through the transistor. The 3906 is turned off. This way, you don't drain the battery.

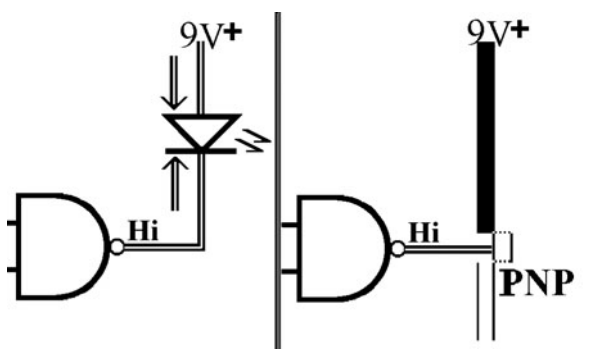

Figure L32-2

What to Expect

This circuit should be quiet when you connect the power. At most, it might squeak for a fraction of a second. If it continues, disconnect the power and check the circuit.

When you activate the circuit, the sound should be annoyingly louder. Don't worry if, as it returns to rest, the speaker "burps."

How It Works

When pin 10 goes low, the transistor turns on and the following happens:

1. This allows much more voltage and current to pass through.
2. That results in more power passing through the speaker coil.
3. The greater power produces more electromagnetic force in the coil.
4. That produces more movement of the coil and cone, producing a louder output.

If you chose to use the NPN 3904 transistor, here's what happens. While at rest, the high output from pin 10 would keep the current flowing from voltage directly through the speaker coil to ground. This is shown in Figure L32-3.

This would quickly drain the battery and annoy you.

How much better not to drain the battery quickly and go annoy some other people now.

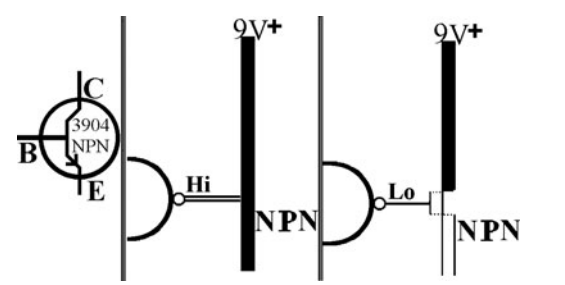

Figure L32-3

Lesson 33

The Photo Transistor: You Can't Do This with an LDR

Now is a good time to revisit the phototransistor and further examine its unique abilities. Many digital systems transfer data wirelessly, through the air or through optical cable.

Surprisingly simple substitutions are made in Figure L33-1 to change over to the infrared LED. Use the same values for RC2 as you did in Lesson 31, producing a frequency in the 1kHz range, and keep pins 12 and 13 connected directly to ground for an uninterrupted signal.

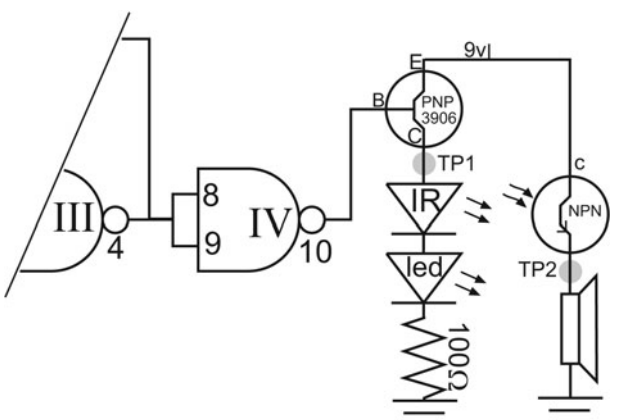

Figure L33-1

NOTE **Remember that the short leg/flat edge of the phototransistor represents "C."**

The speaker/phototransistor circuit is separate, at the far end of the SBB. Figure L33-2 indicates the actual distance I've given between the two circuits.

The power provided through a transistor will burn out our infrared LED, but we do want it as "bright" as possible. Also, we use the second LED to tell us that something we can't see is actually working. We could add three more regular or IR LEDs in series to cut the voltage. Each LED uses about 1.7 volts. That would work. But a single 100-ohm resistor will eat up the remaining voltage.

If you really want to see an IR LED working, look at a TV remote control's output through a digital camera, and then push a button. The IR LED might appear bright or hardly on at all.

1. Make sure the IR LED and phototransistor are lined up directly with each other. The best results come from having both components looking at each other through a straw.
2. Open the Soundcard Scope and plug in your scope probe.
3. Connect the scope probe to TP1, shown in Figure L33-1.

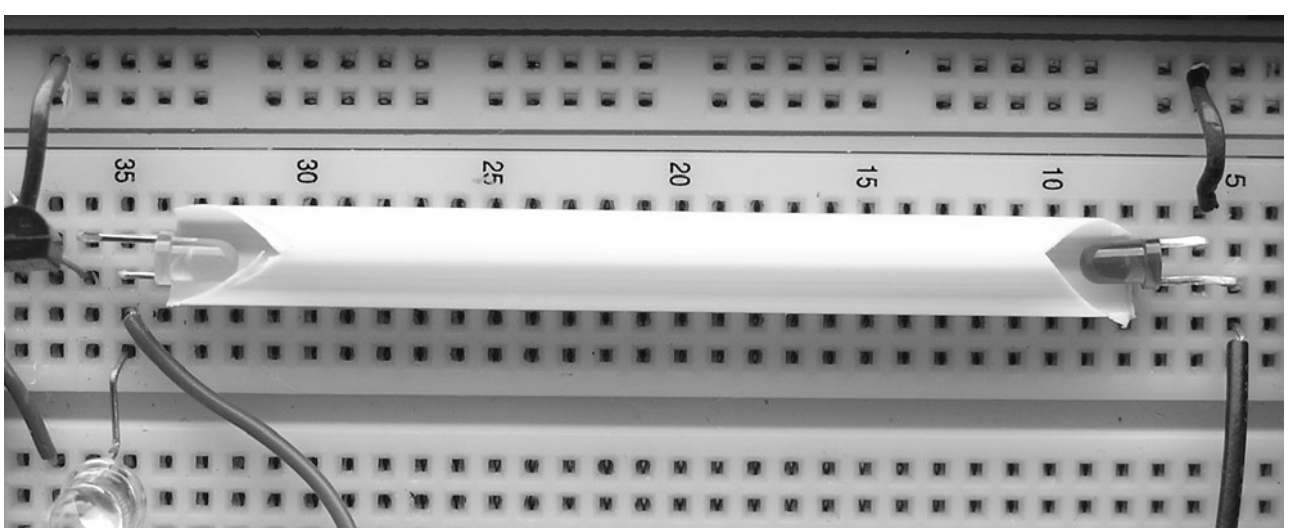

Figure L33-2

4. When you apply power to the circuit, you should get both sound and activity on the scope screen.

Shift over to the Soundcard Scope's Frequency Analysis tool, and you'll see something similar to Figure L33-3.

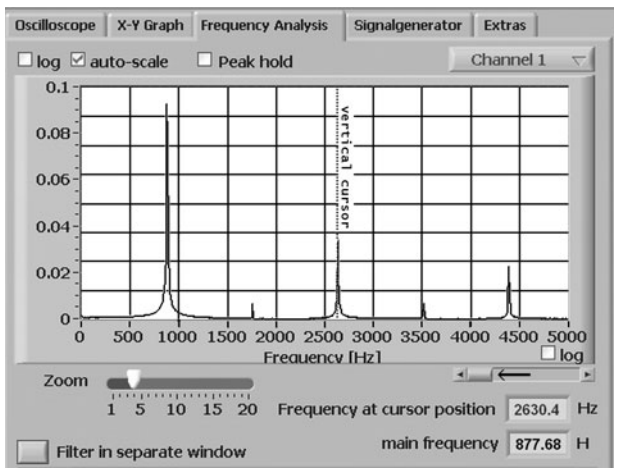

Figure L33-3

Two pieces of data give you valuable information:

1. The amplitude, marked on the left side.
2. The frequency. My circuit produces 878 Hz, which is within acceptable tolerance.

Shift the probe over to TP2, between the phototransistor and speaker. The sound continues, but you lose the signal. Real scopes are more sensitive and you would see the signal. To make the signal more available to us, match the partial schematic in Figure L33-4 by replacing the speaker with a 10 kΩ resistor.

Look at those two readouts again.

1. The amplitude has dropped significantly. You could tell that just from the volume of the speaker. That's to be expected.
2. But look at that frequency—it should precisely match the 4011's output.

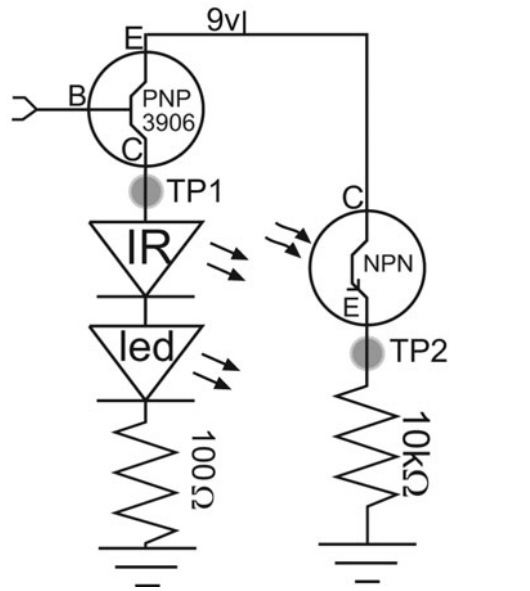

Figure L33-4

Put your finger between the IR LED and the phototransistor. The amplitude diminishes but the frequency remains unchanged.

Have you noticed that more than one frequency registers on the scale? What about those other frequencies? I've highlighted the first one in back in Figure L33-3. These are harmonics created by the main frequency. They resonate strongly enough to be picked up by the scope.

Use your mouse to move the dashed vertical line to directly cover the first harmonic.

The vertical cursor's readouts correspond to the vertical cursor's placement. It indicates a frequency of 2630 Hz. And you're saying "Yeah? So what?"

Multiply my base frequency by three.

$878 \times 3 = 2634$

After you check that out for your system, do the same for the second large harmonic. What number works? Is there a pattern?

The initial frequency and the harmonics are created at first by the 4011 circuit. That signal is transmitted by the IR LED. The phototransistor receives and reproduces that signal precisely.

Any analog transistor reacts precisely (I keep using that word) to the input at its base. The frequency is identical. The relative strength within the signal stays constant. If the received signal was amplified, it would be an accurate reproduction of the original signal.

My suggestion is that you don't use this component as part of the 4011 project. Save it as a design component for Part Four, where we play with amplifiers. It can be used to transmit voice or data signals and other neat things.

SECTION 10

Digital Logic Project

Wouldn't it be easier for projects just to give you a circuit board, tell you where you have to put the parts, and then solder them in? In fact, that's a great plan if your career goal is to be a solder jockey in a Third World country. However, that career opportunity is vanishing as such workers are being replaced by robots.

Lesson 34
Design—Systems and Samples

Design is the most interesting portion of the entire field of electronics. Different components build into specific unit parts. Like Lego, every part fits together. Have fun. Use your imagination.

1. The reader develops different applications by defining different inputs and outputs.
2. Common modifications to the processor are explored.
3. Examples of reasonable enclosures are provided and discussed.

Inputs

There are four main areas (see Table L34-1) to explore in designing your own project.

Contact Switches

Any of the contact mechanisms can be substituted for the push button shown in the schematic of Figure L34-1. The value of R1 should be 100 kΩ.

You do have the regular push button available shown in Figure L34-2. Aside from being boring, however, it is hard to rig these buttons to turn on with anything other than a push of the finger.

TABLE L34-1 Four Main Areas

	Processor		
Input	**RC1**	**RC2**	**Output**
Contact Switches	Turn On/Timed Off	No Oscillation	Low Power LEDs Music Chip
Light Detector	Time On Delay	Oscillation Rate	
Dark Detector	Touch Off		Amplified Power
Touch/Moisture	Turn Off/Time On		Buzzer Speaker Motors Relays

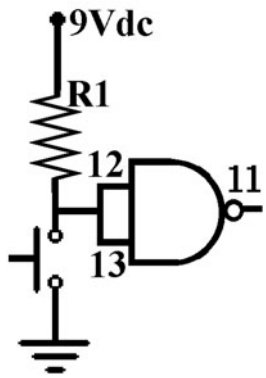

Figure L34-1

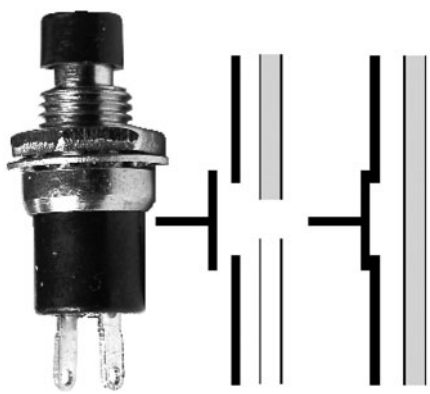

Figure L34-2

Then there is the motion detector, displayed in Figure L34-3. These can be made by balancing a weight on the end of a spring. Almost any metal weight will do, but a tapered screw is most easily attached. The best springs for this purpose are inside retractable pens. But you can't solder to spring steel. For the weight, turn the screw into the spring until it catches. For the bottom, wrap a piece of copper wire around the base. Solder the wire to the PCB. This style of switch can be made to be surprisingly sensitive.

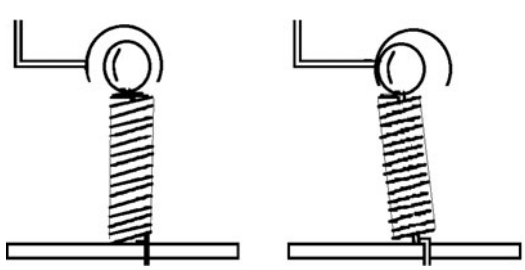

Figure L34-3

Turn the spring mechanism upside down. This pendulum setup shown in Figure L34-4 is not nearly as sensitive as the upright spring, but it uses the same concept.

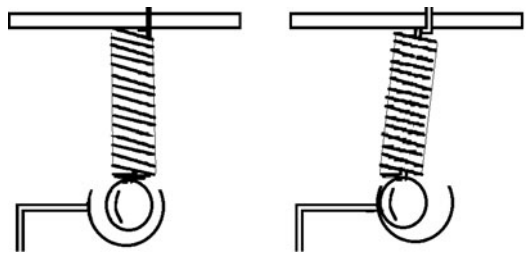

Figure L34-4

Two springs can be attached to a nonmetal support. They can pass over a metal contact bar, as demonstrated in Figure L34-5.

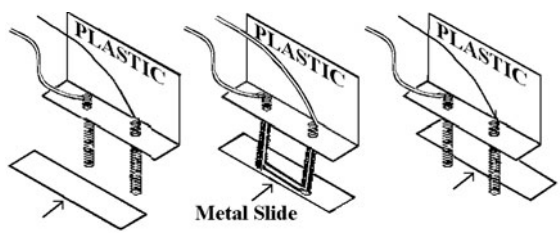

Figure L34-5

Either the spring support or the metal bar can slide. This is the perfect setup for doors or drawers.

Microswitches are exactly that. They are very small. They are readily available for free. Any broken mouse provides two of them. If you go out and try to purchase these new, they will cost upward of $4 each. Each switch has three contacts. Look closely at the photo in Figure L34-6. One is called the "common" because it is shared between the two other contacts. Like common property. Depending on your choice, this switch can act as a normally open or normally closed push button.

A coin-activated switch is a bit trickier to make. Vending machines often use a lever on a microswitch. The coin pushes the lever down, which in turn pushes the contact switch down. A simpler device is shown in Figure L34-7.

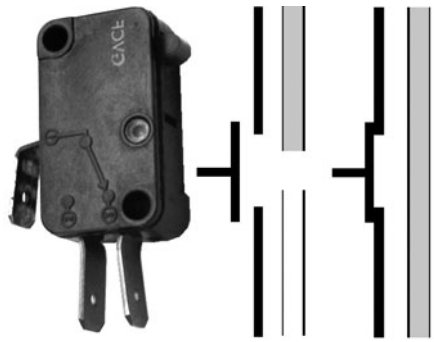

Figure L34-6

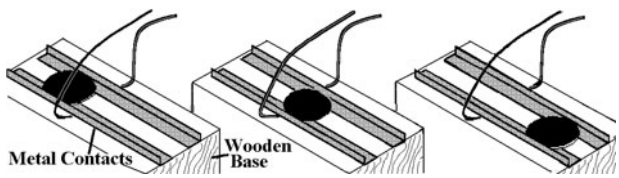

Figure L34-7

It works and is simple to build. Mount the two metal strips onto a simple wooden or plastic base.

Light-Dependent Resistor

The LDR can easily be set up to get triggered by lights turning on and off.

Light Detector

The LDR is the base of this light-sensitive switch. The circuit shown in Figure L34-8 will become active when it is exposed to light.

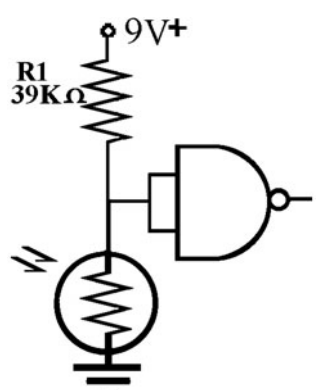

Figure L34-8

Unwanted light may turn it on rather than the event you intended. If the LDR is to be used in a generally well-lit area, it is best to use a cowling, as shown in Figure L34-9.

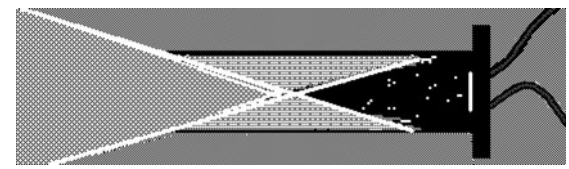

Figure L34-9

Depending on the light source, it might be necessary to use a lens to concentrate the light source onto the LDR. This is demonstrated in Figure L34-10.

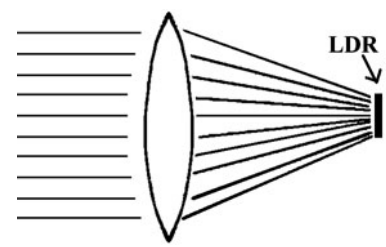

Figure L34-10

Just remember that a lens works only with a preset light source and won't successfully focus generalized light.

Dark Detector

The circuit shown in Figure L34-11 is identical to L34-8, except that the two components have traded places.

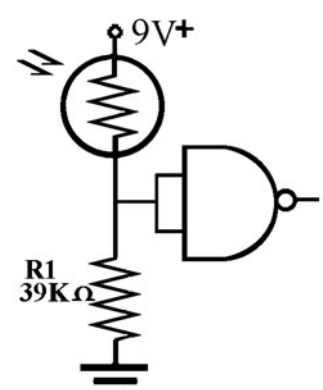

Figure L34-11

With the reversing of the LDR and 39-kilo-ohm resistor, the voltage divider is reversed as well. A cowling, shown in Figure L34-9, is even more important here. The circuit stays at rest as long as a steady light falls on the LDR. If you want to use a steady light source such as a laser pointer, the cowling guarantees the circuit will react to the breaking of that one light source.

The best source for light over a long distance is the laser pen. Using mirrors, the beam can even travel around corners. The system is shown in Figure L34-12. A laser pen can be powered with a wall adapter matched to the same power rating as the batteries that normally power it. Every cell inside a laser pen has 1.5 volts. For example, if it has three cells, you need to find a wall adapter that provides 4.5 volts.

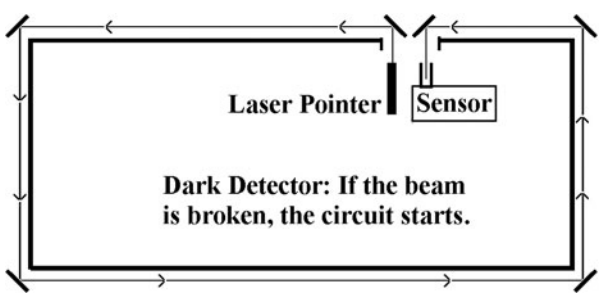

Figure L34-12

The beam here is shone from inside a window and travels around the outside of the house. A speaker in both next-door neighbors' homes was set off for 10 seconds at 1,000 Hz. The system was able to be keyed off outside by the owner.

CAUTION Be careful. Many laser pens claim to meet safety specifications, but really can damage your eyes if you are exposed over time.

Touch Switch

The schematic shown in Figure L34-13 works as a touch switch. This setup will also work with water spills. All it needs is two bare wires close together, but not touching.

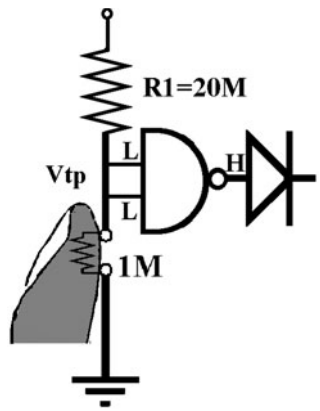

Figure L34-13

A clean, professional-looking, touch-sensitive switch can be made by connecting the wires to the underside of broad-headed pins or thumbtacks pushed through black plastic. These are displayed in Figure L34-14.

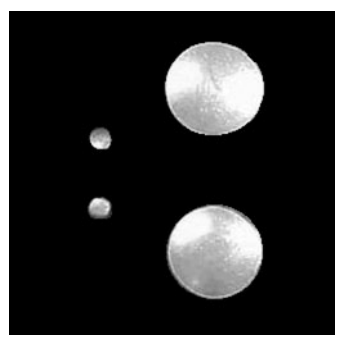

Figure L34-14

Processors

You can choose from several physical modifications and a wide variety of RC timing options or no RC timing at all.

Possibilities for the First Resistor/Capacitor Circuit—RC1

Figure L34-15 shows the basic RC1 setup.

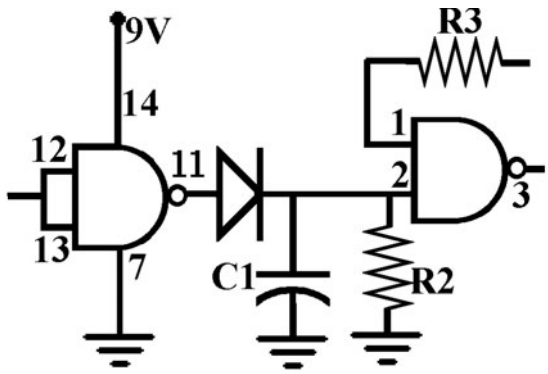

Figure L34-15

Table L34-2 provides a rough guide for timing RC1. Remember that this is only a rough guide. It is not a precise time.

TABLE L34-2 RC1 Timing

R2	C1	Time
20 MΩ	10 μF	120
10 MΩ	10 μF	60
4.7 MΩ	10 μF	30
20 MΩ	1 μF	12
10 MΩ	1 μF	6
4.7 MΩ	1 μF	3

The schematic in Figure L34-16 shows how to manually speed up the timed off. Use pinheads for the touch switch. Your finger acts like a 1-megohm resistor. If R2 is 10 megohms, it will drain C1 10 times faster. Or you could use a PBNO to drain C1 instantly.

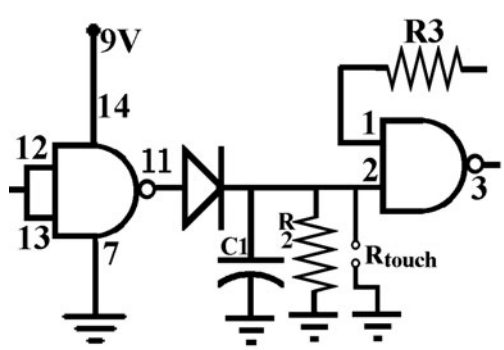

Figure L34-16

The next circuit is similar. As you can see in Figure L34-17, the simple modification causes several changes. This alarm stays active until you turn it off. C1 keeps the inputs of the second gate high until you touch the points to drain C1. Your finger is the only drain. A hidden touch point of two pinheads or a push button (normally open) is all that you need. Use a small capacitor at C1 (0.1 μF), and when you touch the pinheads, the alarm will appear to turn off instantly (about a half-second).

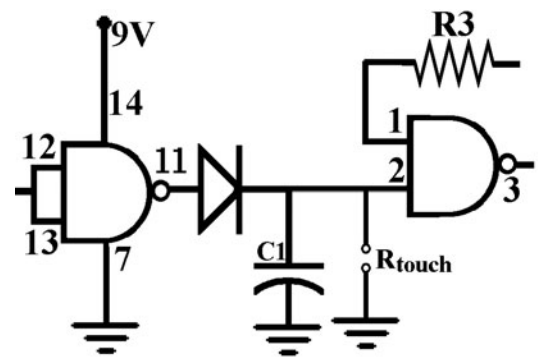

Figure L34-17

The schematic in Figure L34-18 is also impressive. It is a delayed time on. It can be used effectively in the light-sensitive switches to slow down the triggering speed.

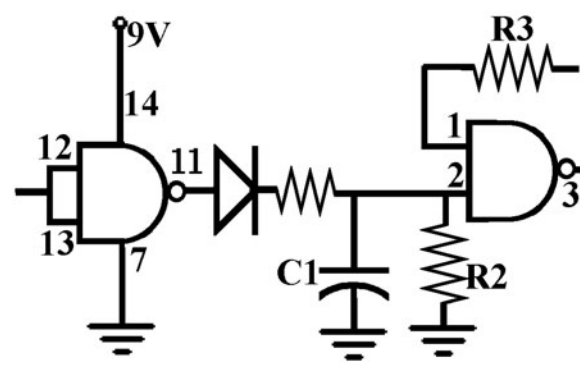

Figure L34-18

This modification can be used to delay the activation of the circuit. It can be used to give you time to set the circuit in a car alarm, for example, and give you time to close the door.

The value of the extra R must be, *at most*, a fifth the value of R2 to work because the extra R and R2 become a voltage divider. The input at pin 2 must rise clearly above the half-voltage mark. To give more time, use a larger capacitor.

If you choose, you can remove C1 as shown in Figure L34-19. This effectively destroys RC1. When the inputs are low at pins 12 and 13, the circuit is active. The circuit immediately turns off when the inputs go high.

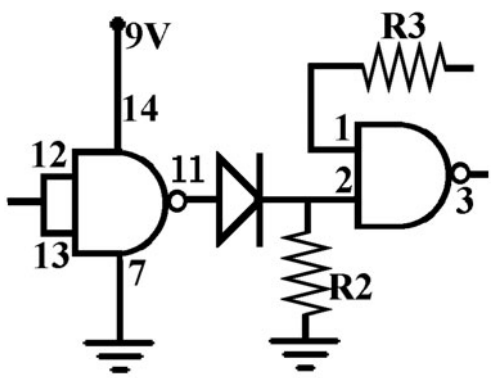

Figure L34-19

Timing and Modifications for the Second RC Circuit

There is limited potential for modifying RC2, as you can see in Figure L34-20. Either it is there and generating an oscillation at a preset frequency, or it is not there.

Table L34-3 provides preset values for RC2 that produce nearly specific frequencies. It is not a precise time. You won't be able to use it as a reliable pitch pipe for tuning.

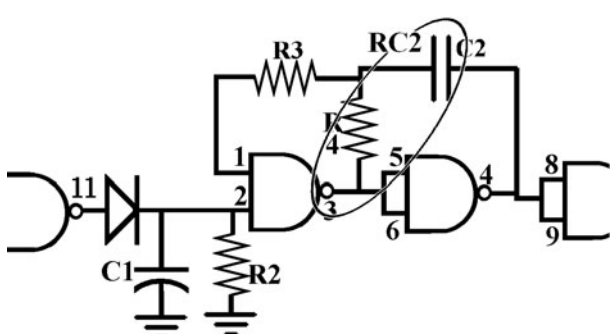

Figure L34-20

TABLE L34-3 Values for RC2

R4	C2	Frequency
2.2 MΩ	0.1 μF	1 Hz
2 MΩ	0.1 μF	2 Hz
470 kΩ	0.1 μF	4 Hz
220 kΩ	0.1 μF	10 Hz
100 kΩ	0.1 μF	20 Hz*
47 kΩ	0.1 μF	40 Hz
22 kΩ	0.1 μF	100 Hz
1 MΩ	0.01 μF	20 Hz
470 kΩ	0.01 μF	40 Hz
220 kΩ	0.01 μF	100 Hz
100 kΩ	0.01 μF	200 Hz
47 kΩ	0.01 μF	400 Hz
22 kΩ	0.01 μF	1,000 Hz
10 kΩ	0.01 μF	2,000 Hz
4.7 kΩ	0.01 μF	4,000 Hz
2.2 kΩ	0.01 μF	10,000 Hz

* The eye can't distinguish flashing from continuous motion for anything faster than 24 frames per second.

For certain applications, it is obvious that you want to remove RC2. No oscillating, please. For example, you don't want to listen to the first phrase of "happy birthday t'" (wait two seconds) "happy birthday t' . . . " as your circuit works through a two-second on, two-second off cycle. Figure L34-21 shows two details necessary to disable RC2.

The first detail is to reconnect pins 1 and 2 together. Second, remove R3, R4, and C2. Failure to do so will lead to confusion.

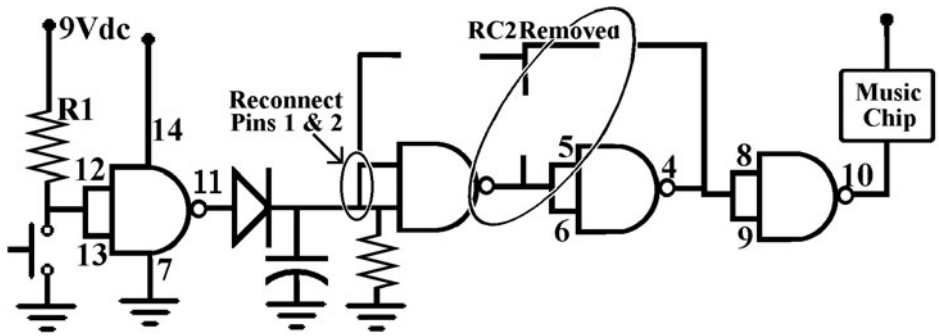

Figure L34-21

Outputs

Table L34-4 describes the outputs by comparing oscillation needs against power requirements.

TABLE L34-4 Comparing Oscillation Needs Against Power Requirements

	Low Power Output	High Power Output Needs a Transistor
Oscillating	Slow Flashing	Speaker for Alarm (1,000 Hz)
	LEDs	Buzzer (slow pulse @ 1 Hz)
		Relay (slow pulse @ 1 Hz)
Not Oscillating	Music Chip	Car Alarm
		Relay (no pulse)
		Low-Power DC Motor

Low Power

A low-powered output is good for only low-powered applications.

LEDs

The output of a 4011 chip can power more than 10 LEDs, but not many more. Even so, there are two ways to wire these up: the right way and the wrong way. Figure L34-22 shows the right way to connect more than four LEDs.

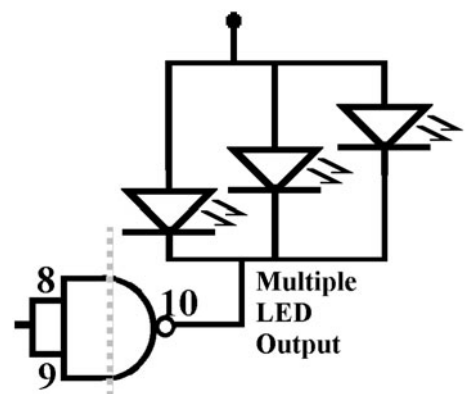

Figure L34-22

Music Chip

Carefully remove a music chip from a greeting card. Don't break any wires. Examine the music chip.

- Tape the wires to the speaker in place. Don't bend them.
- Note the circuit's connection to the "+" side of the battery.
- Remove the battery from the music chip. Remove the small stainless steel battery holder, crimped in place.
- Solder two wires, respectively, to the circuit's + and − battery connectors.
- Connect the ground side to pin 10.
- Connect the V+ side to voltage of your circuit.

- If the sound is scratchy, place two or three LEDs in line with the music chip, as shown in Figure L34-23. The music chips run off 1.5 volts. Too much voltage can keep them from working. The LEDs use up voltage, dropping it down to where the music chip can function properly.

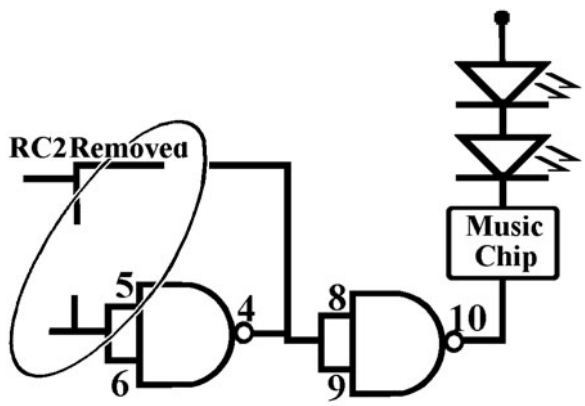

Figure L34-23

High-Powered Outputs

Adding a transistor to amplify the circuit's output is pretty easy too.

Buzzer

A buzzer has different needs than a speaker for output. All a buzzer needs is voltage. It produces its own signal. If you want the buzzer to turn on and off, use a slow oscillation of 1 Hz. It will "beep" once a second, on and off. A signal faster than 10 Hz will only confuse the buzzer and give muddled results at best. Figure L34-24 shows the setup.

An amplified output to a buzzer should oscillate at 1 Hz. That can be created with RC2 values of R4 = 2.2 megohms and C2 = 0.1 μF (see Table L34-3).

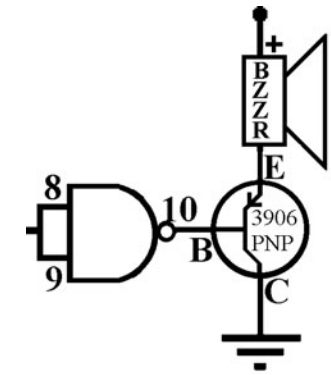

Figure L34-24

Speakers

Speakers need a signal to be heard. If you put only voltage to a speaker, you will hear a crackle as the voltage is turned on. Nothing more. The speaker needs a signal generated by RC2. A 1,000-Hz signal generated by using a 0.01-microfarad capacitor and 22-kilo-ohm resistor is a very noticeable sound. The PNP transistor shown in Figure L34-25 amplifies the strength of the signal.

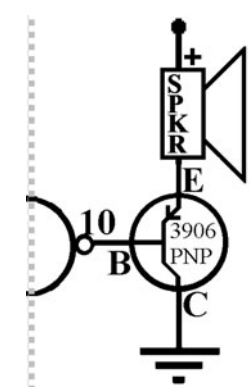

Figure L34-25

Relays

Relays allow us to use the 9-volt system to control power for another system. The on/off to the second system is connected through the relay.

Relays can be used in a variety of places, but they are best used in the following:

- Car alarms. A slowly pulsed relay connected to a squawker creates a sound unique from all the other car alarms we've come to ignore.

- Control the power to 120-volt circuit. This can be used for Christmas lights. The sun goes down; the lights automatically come on.
- Nonoscillating toy motor circuits, instead of direct connection to pin 10. The best results happen here when the motor uses a separate power supply and won't work off 9 volts.

This option presents easy rewiring. The on/off power to the motor is routed through the relay.

Here is a quick explanation of how a relay works. As the current flows toward ground, a magnetic field expands, creating an electromagnet that closes a switch. The *diode* shown in Figure L34-26 is *vital* because there is a close relationship between electric current and magnetism. When the electricity is turned off, the collapsing magnetic field actually pushes the current backward. The reversed diode across the relay helps to control the backward surge of voltage pressure and current created by the collapsing electromagnetic field. If it is not in place, the transistor will quickly burn out.

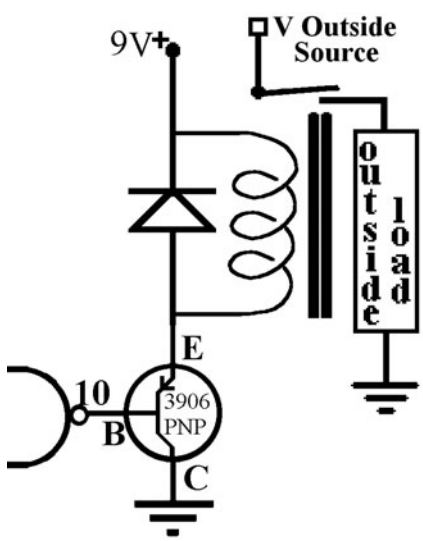

Figure L34-26

Motor

Depending on your needs, a small motor might work directly connected to a transistor, as shown in Figure L34-27. The best motors for this purpose

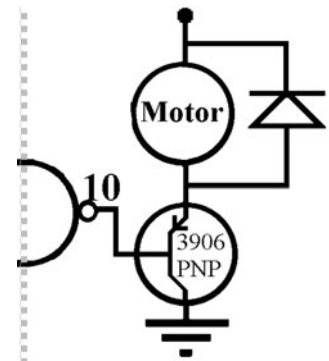

Figure L34-27

are the miniature vibrator motors made for cell phones. These can be purchased through electronics surplus suppliers found on the Internet.

For most small motors, a relay would provide much better results.

Electric motors use electricity and also generate electricity.

Try this with the motor outside of the circuit, if you are interested.

Connect the DMM across the motor leads and spin the shaft first one way and then the other. The motor also uses current and magnetic fields to create movement.

The reversed diode across the small motor helps to control the backward pressure of the extra voltage created by the motor. If it is not in place, the transistor would quickly burn out.

Examples

Each of the systems shown was conceived and designed by people just learning electronics.

A Pop Can Motion Detector

The weight on a spring input was "tuned" precisely so it would start as someone walked by the table that it was on. By the time they stopped and turned around to look where the noise was coming from, it would stop. All they would see was normal-looking junk on the table.

The pop had been removed via a hole in the bottom. The rim on the top had been sanded down so the lid was removed intact. A picture is shown in Figure L34-28. The related schematic is displayed in Figure L34-29 (see also Table L34-5).

Figure L34-28

TABLE L34-5 Related to Schematic Displayed in Figure L34-29		
Input	**Processor**	**Output**
Motion detector	RC1 = 5 s	Speaker (amplified)
	RC2 = 1,000 Hz	

The Gassy Cow

This is definitely a young man's idea of fun. An MPG file on the website www.mhprofessional.com/computingdownload shows the real action of this fun toy. Words simply don't do it justice. A picture is shown in Figure L34-30. The related schematic is displayed in Figure L34-31 (also see Table L34-6).

Figure L34-30

TABLE L34-6 Related to Schematic Displayed in Figure L34-31		
Input	**Processor**	**Output**
Light Detector	RC1 = Instant On/Off	Speaker (amplified)
	RC2 = 80 Hz	

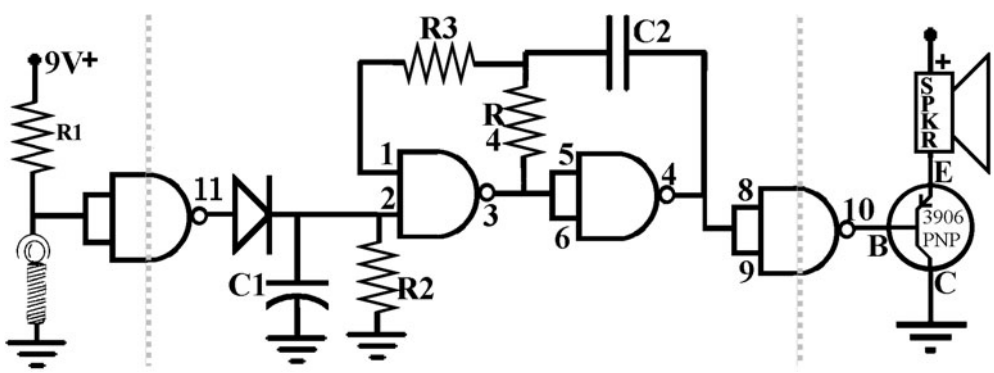

Figure L34-29

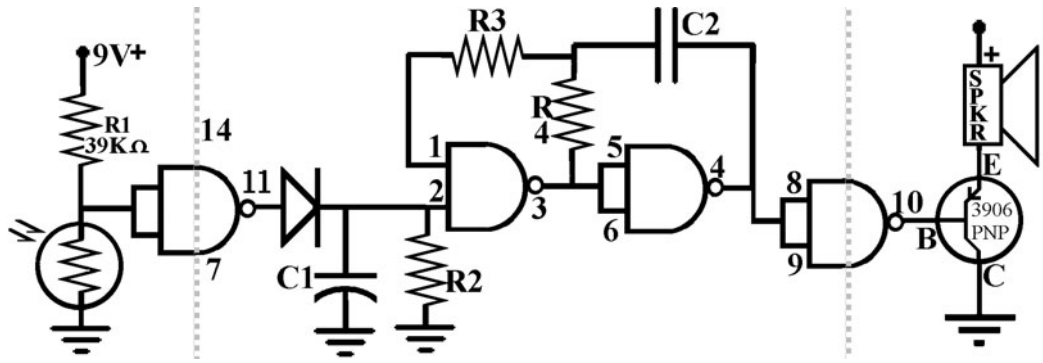

Figure L34-31

Shadow Racer

An MPG file on the website www.mhprofessional.com/computingdownload shows the action of this race car. Wave your hand over the top, and away it goes. It has an on/off switch; otherwise, it would want to go all night. A picture is shown in Figure L34-32. The related schematic is displayed in Figure L34-33 (also see Table L34-7).

Figure L34-32

TABLE L34-7 Related to Schematic Displayed in Figure L34-33		
Input	**Processor**	**Output**
Dark Detector	RC1 = 10 s	Small Motor
	RC2 = Disabled	

Jiggle Me Teddy

This one proves that other familiar toys are no great works of genius, just great works of marketing. A picture is shown in Figure L34-34. The special motor setup for creating the jiggle is shown in Figure L34-35. The related schematic is displayed in Figure L34-36 (also see Table L34-8).

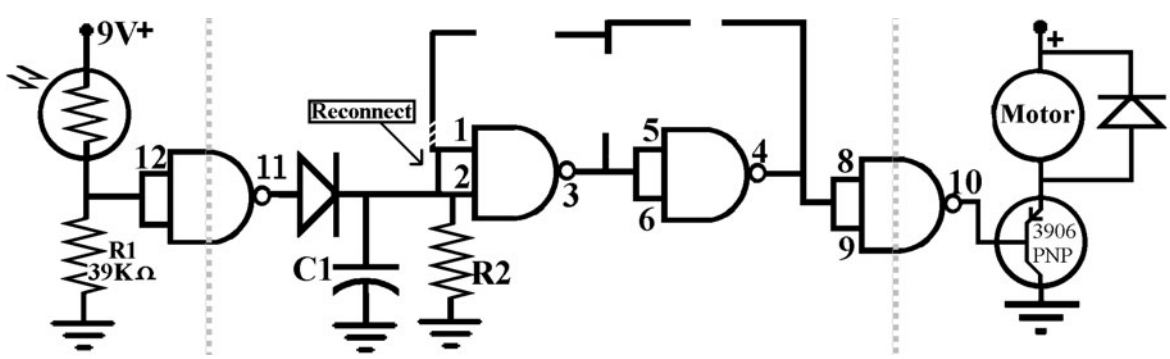

Figure L34-33

Figure L34-34

Figure L34-35

There are two film canisters inside the teddy bear. The motion detector is a spring in a loop. The motor has a weight soldered onto its shaft. Both are sealed inside film canisters that keep them from getting caught up in the stuffing.

TABLE L34-8 Related to Schematic Displayed in Figure L34-36		
Input	**Processor**	**Output**
Motion detector	RC1 = 10 s	Motor with Eccentric
	RC2 = Disabled	

Supercheap Keyboard

This is a particularly challenging application. An MPG demonstration is given on the website www.mhprofessional.com/computingdownload.

The initial input is a touch switch, just to make the circuit active.

The second input changes the value of R4 in RC2. That changes the output frequency. RC2 is given stability by having a 20-megohm resistor connected. A picture is shown in Figure L34-37. The related schematic is displayed in Figure L34-38 (also see Table L34-9).

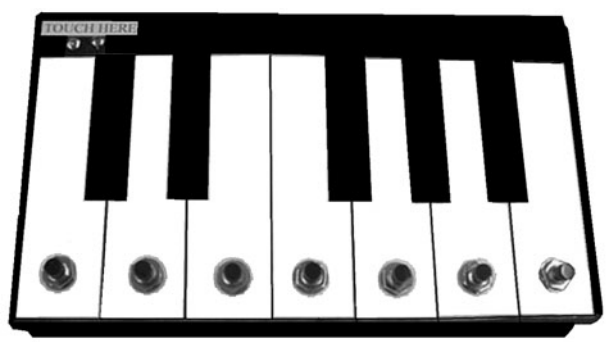

Figure L34-37

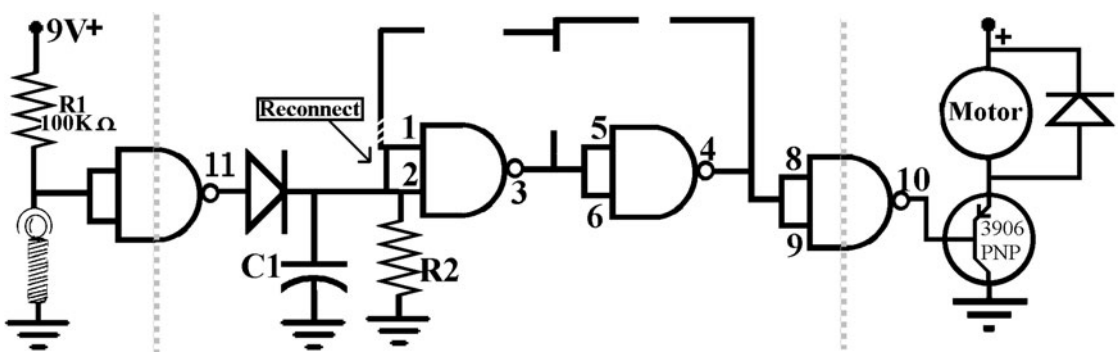

Figure L34-36

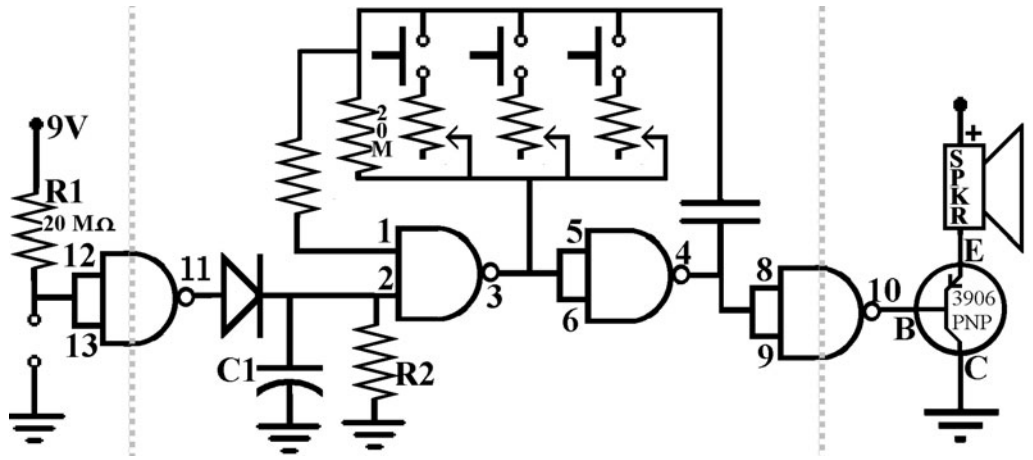

Figure L34-38

TABLE L34-9	Related to Schematic Displayed in Figure L34-38	
Input	**Processor**	**Output**
Touch Switch and push buttons (RC2)	RC1 = Instant On/Off	Speaker amplified
	RC2 = Various	
	C2 = 0.01 QF	
	R4 = Various	

Figure L34-39

Heartthrob Teddy

Even though this is a basic application, it is worth mentioning that as a child's toy, it is still a favorite. Kiss the bear on his nose and his heart throbs. A picture is shown in Figure L34-39. The related schematic is displayed in Figure L34-40 (also see Table L34-10).

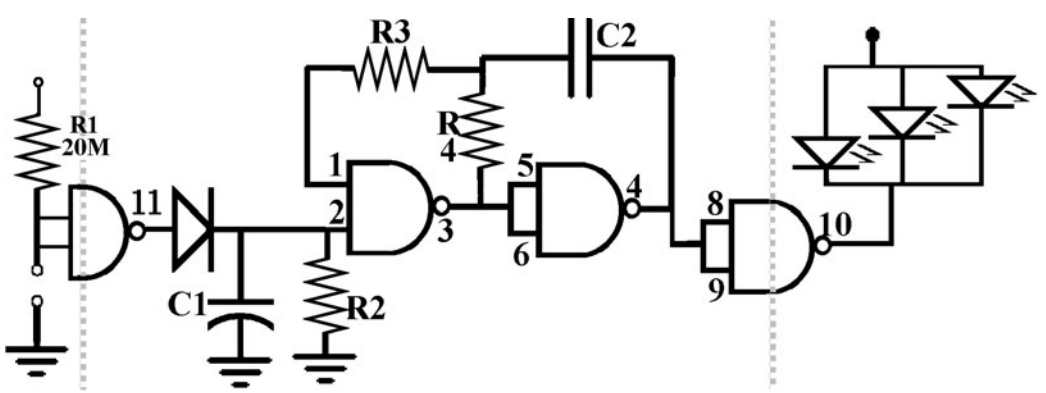

Figure L34-40

TABLE L34-10	Related to Schematic Displayed in Figure L34-40	
Input	**Processor**	**Output**
Touch Switch (pinheads on nose)	RC1 = 10 s	LEDs
	RC2 = 2 flashes/ second	

Lesson 35
Consider What Is Realistic

Completing this project should take no more than a few hours of applied time.

Designing the Enclosure

Use what is available around you. Consider the projects shown as examples. None of them required the students to "build" the enclosure. Each of these applications was designed with the idea of putting the circuit into something premade.

KISS

Remember the KISS principle: Keep It Simple, Students! Is your initial design realistic?

Can this circuit do what you imagine it can? It is not a clock! It is *not* a radio! If you want to have two different outputs, this system is severely limited. You could have a buzzer pulsing and an LED flashing easily, but it becomes too complex to have the circuit control a music chip and a motor at the same time.

Keep It Simple, Students! This is an application of your learning.

Parts, Parts, Parts

What parts are available to you?

If you purchased the kit through www.abra-electronics.com, you have what you need for the basic application, including the transistor. If you live in a larger city, there is probably an electronics components supplier near you. Look in the Yellow Pages. If you don't have a supplier in town, find and order your components over the Internet. An excellent source, reasonably priced, is www.abra-electronics.com.

The Level of Difficulty

Consider what is realistic when designing and building your project.

A simple idea applied with imagination will better impress people than a complex idea that is never finished.

What is a "counterproductive" design?

A motion detector in a toy car. It starts when you jiggle it and keeps going because it jiggles itself. It is like a screen door on a submarine. It helps keep the fish out.

If you find the material fairly easy, create a simple project now so you can keep moving.

If you find the material difficult, create a simple project now so you won't get bogged down here and can keep moving through the course.

Time

Real limitations have to be balanced against the available time.

There are two general things I have found in life.

Most people are always in such a rush. Do this! I gotta do that!

There is never enough time to do it right, but there is always time to do it over.

Note Regarding the LDR

Many items that use an LDR need an on/off switch. Think of your little brother or sister. Time for bed. Lights out—the doll's eyes just keep flashing.

Or you can just keep the lights on at night.

Safety

What if you want to use a relay to switch on a 120-volt AC circuit? My answers are:

1. Who do you know that is comfortable working with 120 volts? Get their help! Safety first!
2. If you don't have direct, knowledgeable help, modify your expectations. Use the relay to switch a smaller voltage! Safety last!
3. What you don't know can hurt you! Safety always!
   a. You need to have a proper relay and enclosure for the 120 volts.
   b. Mount the PCB properly into the enclosure. At 9 volts, you can be sloppy.
   c. Enclosure considerations need to meet certain standards for higher voltages.
   d. Remember soldering considerations for 120 volts. You can have messy soldering for a 9-volt system and have it work, or not, and still be safe.
   e. A messy 120-volt system could spark up an otherwise uneventful day.

Practice Designing Systems

Describe the two systems in Tables L35-1 and 35-2.

Assume that these sample systems use only a few parts you don't already have.

1. Given a musical doorbell, explain the system.
2. Your system can be used to create a car alarm. Support each description with a schematic.
3. Many car alarms turn off when they are tilted more than 20 degrees, allowing for quiet towing. Imagine some type of automatic input that could cut the power in this situation. Describe how this would work.
4. No matter how you apply this system, the electronics are similar. The application is defined by the inputs, outputs, and the enclosure.

Develop five applications for this project. Look at all of them carefully. Scribble a quick system diagram for each of them. Then toss three. Now commit to one of the two remaining. Move forward.

TABLE 35-1 The Music Chip Is Its Own System, Powered by the 4011's Hi Output

Input	Processor 1 (RC1)	Processor 2 (RC2) There is no oscillator (RC2) in this system.	Output Connect pin 10 to chip's V+
Push Button (N.O.)	Timed to the length of the music chip's tune.		Amplified to regular speaker.
	Schematic	Schematic	Schematic

TABLE 35-2 The Amplified Output Has Power to Turn on a Squawker Designed for Alarm Systems

Input	Processor 1 RC1	Processor 2 RC2	Output
Description	Description	Description	Description
Schematic	Schematic	Schematic	Schematic

Lesson 36
Building Your Project

Here you get to solder your parts onto the printed circuit board. Yes, the same PCB is being used for all of the many different applications. The processor is essentially the same. You have developed an application by defining and designing different inputs and outputs. You also have to find a reasonable enclosure to use for your defined application.

This lesson deals with parts placement. Close attention is paid to the different variations of inputs, processors, and outputs. Figure L36-1 shows the bottom view of the printed circuit board. Figure L36-2 shows the same PCB from the top view. Note that the voltage and ground lines have been displayed with different textures.

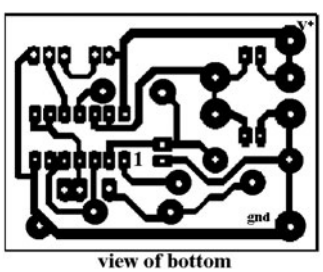

Figure L36-1

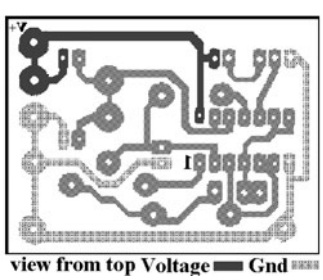

Figure L36-2

The parts placement shown in Figure L36-3 is for a standard application with low-power output. Note that the chip seat is soldered into the PCB. The 4011 can be inserted and removed as needed.

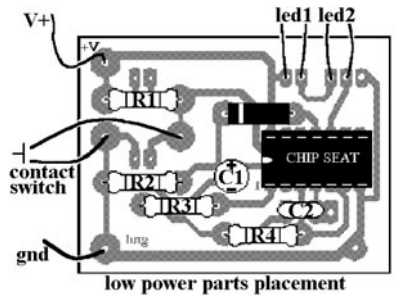

Figure L36-3

Parts are shown in place for high-powered output in Figure L36-4. Again, this is a standard application for the high-power output.

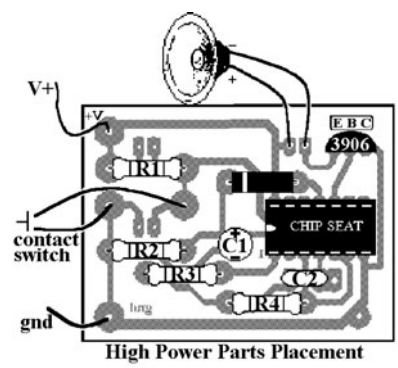

Figure L36-4

Inputs: Variations and Parts Placement

A close look at Figure L36-5 reveals the small difference in parts placement between the light detector and the dark detector. Use the same pads for hooking up the touch switch as shown in Figure L36-6.

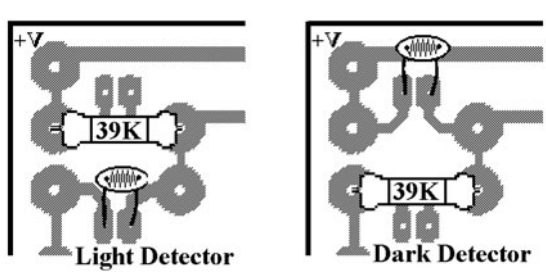

Figure L36-5

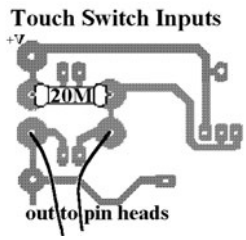

Figure L36-6

RC1: Variations, Timing, and Parts Placement

Remember that this is only a rough guide. It is not a precise timer (see Table L36-1).

TABLE L36-1 Rough Guide

Resistor	Capacitor	Time Output
20 MΩ	10 μF	120 s
10 MΩ	10 μF	60 s
4.7 MΩ	10 μF	30 s
20 MΩ	1 μF	12 s
10 MΩ	1 μF	6 s
4.7 MΩ	1 μF	3 s

If you want to add the ability to adjust the timed-off setting manually, Figure L36-7 shows where to connect the wires that would lead to the contact points that you would touch.

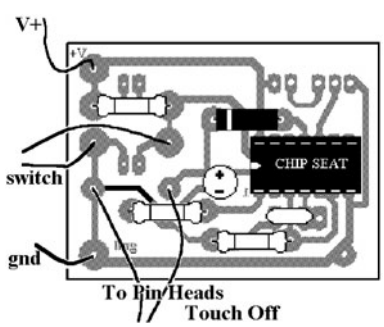

Figure L36-7

RC2: Variation and Timing

Remember that this is only a rough guide (see Table L36-2). The 4011 oscillator is not a precise timer.

TABLE L36-2 Rough Guide

Resistor	Capacitor	Time Output
2.2 MΩ	.1 μF	1 Hz
1 MΩ	.1 μF	2 Hz
470 kΩ	.1 μF	4 Hz
220 kΩ	.1 μF	10 Hz
100 kΩ	.1 μF	20 Hz*
47 kΩ	0.1 μF	40 Hz
22 kΩ	0.1 μF	100 Hz
1 MΩ	0.01 μF	20 Hz*
470 kΩ	0.01 μF	40 Hz
220 kΩ	0.01 μF	100 Hz
100 kΩ	0.01 μF	200 Hz
47 kΩ	0.01 μF	400 Hz
22 kΩ	0.01 μF	1,000 Hz
10 kΩ	0.01 μF	2,000 Hz
4.7 kΩ	0.01 μF	4,000 Hz
2.2 kΩ	0.01 μF	10,000 Hz

* The eye sees continuous action at anything faster than 24 Hz.

The most common option that people want, however, is to disable RC2. The most effective way to reconnect pin 1 and pin 2 is displayed in Figure L34-8.

If at first your circuit does not work, then it is time to do some troubleshooting. Refer back to Lesson 26.

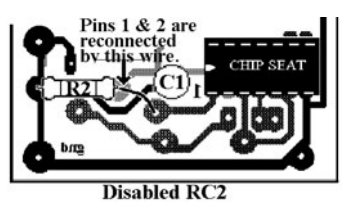

Figure L36-8

This page intentionally left blank

PART THREE

Counting Systems in Electronics

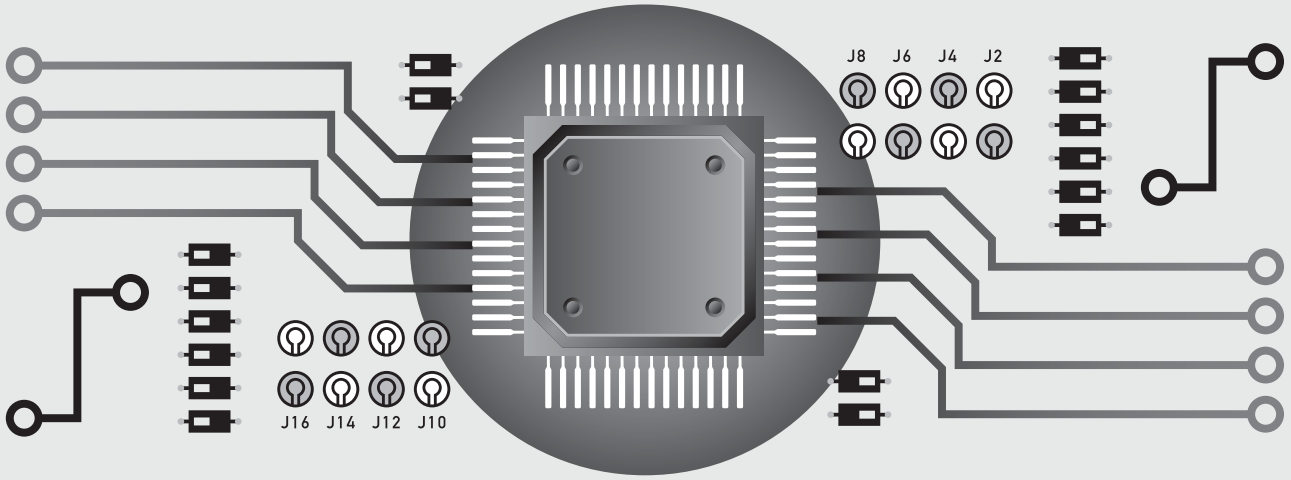

This page intentionally left blank

Systems within Systems

Remember that the intention of this course is to deepen your understanding of electronics. The best way to understand electronics is by thinking of it as "systems."

Systems can be simple, but they are usually complex, composed of multiple layers and subsystems, as shown in the figure below.

1. Visible subsystems include:
   a. Cars and trucks, and highways
   b. Trains and tracks
2. And the not so visible:
   a. Manufacturing
   b. Maintenance and repair
   c. Producing and transporting fuel
   d. Marketing

The Parts Bin on the next page has the complete inventory for Part Three. Make every part count.

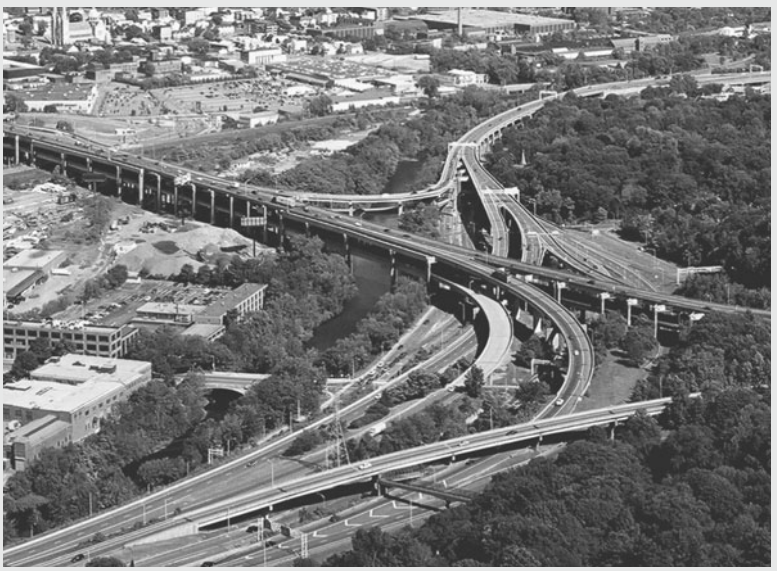

This small portion of the transportation system provides an appropriate analogy.

PARTS BIN FOR PART THREE		
Description	**Type**	**Quantity**
5.1 z 1N4133	Zener diode	1
1N4005	Power diode	5
2N-3904 NPN transistor	TO-92 case	1
LEDs	5 mm	15
7 SEG CC .56″	7-segment display	1
100 Ω	Resistor	1
470 Ω	Resistor	15
1,000 Ω	Resistor	1
22,000 Ω	Resistor	1
47,000 Ω	Resistor	1
100,000 Ω	Resistor	15
220,000 Ω	Resistor	1
470,000 Ω	Resistor	1
1,000,000 Ω	Resistor	1
2,200,000 Ω	Resistor	1
10,000,000 Ω	Resistor	5
20,000,000 Ω	Resistor	4
.1 μF disk or film	Cap	2
1 μF radial 15 v	Cap	3
22 μF radial 15 v	Cap	1
4017 Walking ring	IC	1
4046 VCO (A to D)	IC	1
4511 7-segment control	IC	1
4516 (D to A)	IC	1
4011 Quad NAND gate	IC	1
Oscillator input	PCB	1
Dual input	PCB	1
4046 + Timed Off	PCB	1
7-segment system	PCB	1
4017 Walking ring	PCB	1
PBNO momentary	Hardware	1
Battery clip	Hardware	1
LED collars set	Hardware	10
Socket (14 pin DIP)	Hardware	1
Socket (16 pin DIP)	Hardware	4

SECTION 11

Introducing an Analog-to-Digital Converter

HERE IS A PREVIEW OF SOME of the fun possibilities that can be designed with the knowledge you will learn in Part Three. You also get a reminder regarding the care and feeding of your CMOS ICs.

Lesson 37

Introducing Possibilities—Electronics That Count

The DigiDice shown in Figure L37-1 is the basic system that you will build as a prototype before you begin to design your own application.

Here, a varying analog voltage input is changed into a random number generator (see Table L37-1).

Thousands of applications and toys can be developed from these components. You've certainly seen some of these at the mall or casino.

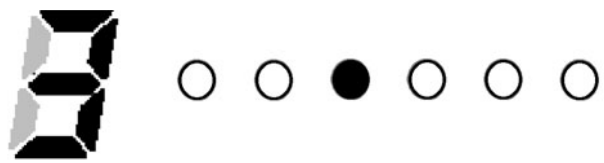

Figure L37-1

There are simple fortune tellers, lottery number generators, light chasers, animated signs, slot machines, and many more. You might have even spent some money on them. Ideas are explored in further depth in Lesson 47.

Your focus should be understanding how the components can relate to each other, much as smaller pieces shown in Figure L37-2 relate to larger structures and models they are used to build.

Each part is a piece of the larger unit, and each unit can be a piece of the larger system.

TABLE L37-1 Random Number Generator

Input	Processor	Output
Push button	**1.** Roll down (4046 IC) controlling 2 and 3	**1.** Fast cycling through 6 LEDs.
	2. Walking ring 6 LEDs (4017 IC)	**2.** Fast cycling through numbers 0 through 9 shown on the number display.
	3. Decimal-counting binary (4510 IC)	**3.** Cycling slows steadily to a completely unpredictable stop.
	4. Binary-counting decimal (4511 IC); seven-segment display	**4.** Displays of both fade about 20 s after the cycling stops, and the system waits to be triggered again.

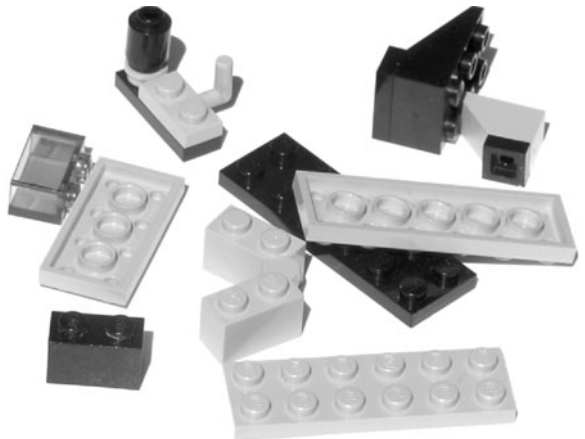

Figure L37-2

Safety First, Last, Always

From the *CMOS Cookbook* by Don Lancaster, page 50:

> "New CMOS ICs from a reliable source are almost always good and, with a little common-sense handling, practically indestructible. Possibly you will get two bad circuits per hundred from a quality distributor, maybe a few more from secondary sources unless you are buying obvious garbage. In general, the ICs are the most reliable part of your circuit and the hardest part to damage.
>
> "If your CMOS circuit doesn't work, chances are it is your fault and not the IC's. Typical problems include:
>
> 1. Forgetting to tie down inputs
> 2. Forgetting to debounce and sharpen input clocking signals
> 3. Getting the supplies connected wrong, totally unbypassed, or backward
> 4. Putting the ICs in upside down
> 5. Doing a PCB layout topside and reversing all the connections
> 6. Missing or loosening a pin on a socket or bending a pin over
> 7. Misreading a resistor (have you ever noticed the color-code similarity between a 15-ohm resistor and a 1-megohm resistor?)
>
> "And of course, causing solder splashes and hairline opens and shorts on a printed circuit board.
>
> "The key rule is this: Always BLAME YOURSELF FIRST and the ICs LAST. Always assume that there is something incredibly wrong with your circuits when you first power them up. You'll be right almost every time. In fact, if things seem to work perfectly on the first try, this may mean that the real surprises are hiding, waiting to get you later or when it is more expensive to correct them. Anything that 'has' to be correct is usually the mistake. And what seems like 'impossible behavior' is really the poor IC trying its best to do a good job. With a little help and the right attitude you can help the ICs along."

Remember: What seem like impossible outputs really are impossible outputs.

Lesson 38
RC1—Creating the Switch

Here you are introduced to the zener diode, used inside an RC circuit. It modifies the input to the 4046 IC.

The switch for this circuit is an RC that provides voltage from 4 volts to 0 volts as the resistor/capacitor circuit drains. But doesn't my power supply provide 9 volts? How do I get 4 volts? For this task, you will use a zener diode. Three common types of diodes are displayed in Figure L38-1 (also see Table L38-1).

A zener diode allows for two-way traffic, but only if there is enough voltage pressing backward. Here's what that means. When voltage is applied to

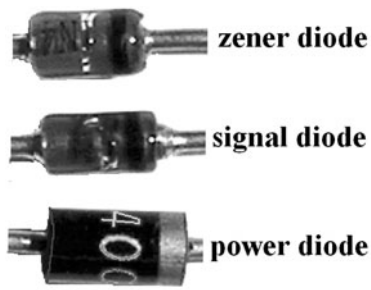

Figure L38-1

TABLE L38-1	Common Types of Diodes
Zener diode	One-way valve used as counterflow lane during rush hour. It is for light traffic.
Signal diode	One-way valve to handle light traffic (smooth, one-lane, unpaved road).
Power diode	One-way valve able to handle large traffic demands (four-lane highway). Marked as 1N400#.

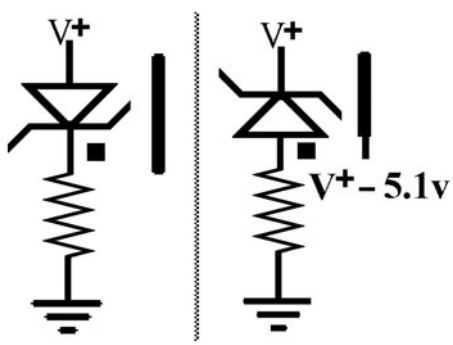

Figure L38-2

the positive side (anode) of the zener diode, all the voltage passes through. This is shown in the left side of Figure L38-2.

But on the right side of Figure L38-2 the voltage is applied to the negative side (cathode) of the zener. In that situation only a predetermined amount is blocked. That is called the zener diode's *breakdown* voltage. Simply put, that is when the diode's properties break down. The zener diode we are using has a breakdown voltage rated at 5.1 volts.

It is important to note that zener diodes are labeled the same way as other diodes, but they must be put in "backward." So even though the black line still refers to the diode's cathode, as shown in Figure L38-3, a zener cathode is pointed toward the positive. Note the extra squiggle on the cathode bar that identifies the diode as a zener.

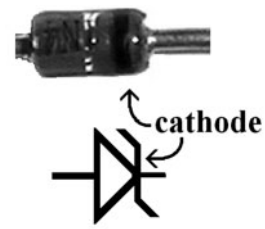

Figure L38-3

Zener diodes are available in ranges of 2 to 20 volts.

It is very important to note that your power supply must be 7 volts or more. If you use a power diode as a "protection" device, it will drop voltage by nearly 1 volt. And 7 volts minus 1 volt leaves 6 useful volts. Now the zener blocks 5 volts. Thus, 6 minus 5 volts leaves 1 volt; 1 volt left to play with. You can't do much with 1 volt. This is particularly a concern if you are using a 9-volt battery as your power source.

Exercise: RC1—Creating the Switch

1. You are going to measure the breakdown voltage of your zener diode. It is rated at 5.1 volts.

   Figure L38-4 has two different setups for you.

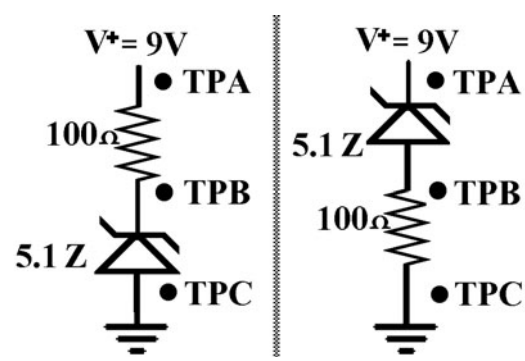

Figure L38-4

TABLE L38-2 Two Different Setups

For the setup on the left	For the setup on the right
Total V from TPA to TPC = _____	Total V from TPA to TPC = _____
V used from TPA to TPB = _____	V used from TPA to TPB = _____
Volts used across zener = _____	Volts used across zener = _____
How accurate is the rating? _____	How accurate is the rating? _____

The voltage used by any component in a circuit does not change because of its position in the circuit (see Table L38-2).

2. Now check out the actual effects of the zener diode (see Table L38-3). Figure L38-5 shows two circuits. Breadboard each separately and do the measurements. Note the LED in each.
3. Define "breakdown" voltage.

   _____

4. If a zener diode has a breakdown voltage of 7.9 volts, how much voltage remains after the diode when V+ is 12 volts? _____

Breadboard This Circuit

Build the circuit shown in Figure L38-6 on your breadboard (see the Parts Bin).

PARTS BIN

- PB—Normally open push button
- D1, D2—Power diodes
- R1—10 MΩ
- DZ—5.1 Zener diode
- C1—1 μF electrolytic

TABLE L38-3 Two Different Setups

For the setup on the left	For the setup on the right
TPA to TPD (voltage to ground)	TPA to TPD
TPA to TPB	TPA to TPB
TPB to TPC	How much voltage is available to the LED at this point?
How much voltage is available to the LED at this point?	TPB to TPC
TPC to TPD	TPC to TPD
Describe the brightness of the LED compared to the next setup. _____	Describe the brightness of the LED. _____
	Why is the LED a different brightness from the previous setup? _____

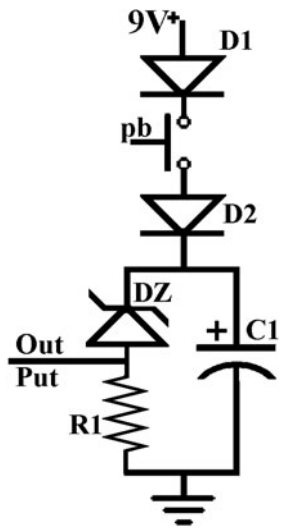

Figure L38-6

This is the switch that you will use for the larger system. But first, do some initial voltage testing at the output. Check for a few critical items.

1. What is the peak voltage?
2. How long does it take to drain to 0 volts?
3. How sensitive is it?
   a. Is any voltage fed through if you touch across the bottom of the push button?
   b. Substitute an LDR into the spot for the push button. Anything?
4. Change the values for R1 and C1. Does the RC act the way you would expect?
5. Take the zener diode out. Replace it with a wire. Do the measurements again. What is the biggest effect that the zener has on this switch?

Lesson 39

Introducing the 4046 Voltage-Controlled Oscillator

The 4046 chip takes the analog voltage from the RC switch and changes it directly into digital "clock" signals (Table L39-1). It is the "analog-to-digital" converter. How does it count? Digitally! 0 – 1 – 0 – 1 – 0 – 1 – 0

The voltage input at pin 9 determines the frequency output at pin 4. Breadboard this circuit (see the following Parts Bin).

Pay attention to the schematic in Figure L39-1. Only three pins are connected on the top side of the IC. Don't accidentally build on top of the 4046.

TABLE L39-1 System Diagram of Our Application of the 4046 IC

Input Pin 9 from RC1	Processor VCO	Output Rolldown Clock Signal
The rate of voltage drain is controlled by the value of R1 and C1 (RC1).	The VCO in the 4046 compares the input voltage at pin 9 to the supply voltage at pin 16.	The length of the rolldown is controlled by RC1.
The voltage from RC1 is moving from about 4 volts to ground.	There is a direct relation between the input voltage and the speed of oscillation at pin 4, the output.	The output starts quickly but "rolls down" to a complete stop.
	The higher the input voltage, the faster the oscillation output. The maximum oscillation is controlled by R2 and C2 (RC2).	**Definition:** A clock signal is a rise from 0 V to V+ in less than 5 μS (1 μ = 1 micro = 0.000001).

PARTS BIN

- R1—10 MΩ
- R2—220 kΩ
- C1—1 µF electrolytic cap
- C2—0.1 µF film or disk cap
- D1—1N400# power diode
- D2—1N400# power diode
- DZ—1N1N4733 5.1 Zener diode
- PB—Normally open PB
- LED—5 mm round
- IC1—4046 CMOS

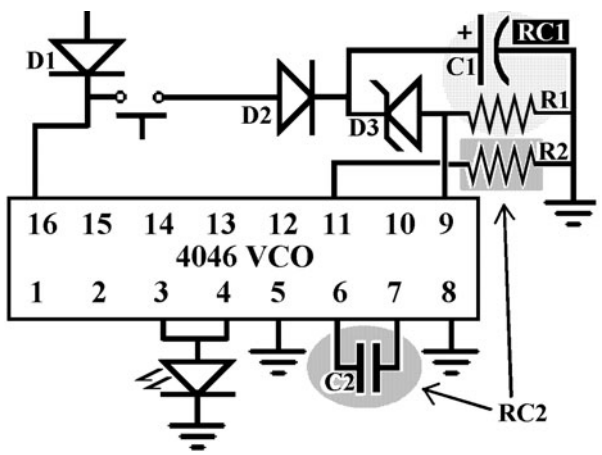

Figure L39-1

Also, note the space restriction that is being imposed. You should squish this initial circuit into the first 15 rows of the breadboard as noted in Figure L39-2.

What to Expect

The circuit should work like this. You push and release the plunger. The LED turns on. As you wait, you notice that the LED appears to be flashing, but it's so fast, you're not sure. As you patiently watch, the flashing becomes very obvious as it slows down. It should slow down to a crawl before it stops. It could stop with the LED on or off. But it will stop. To see an animation of what to

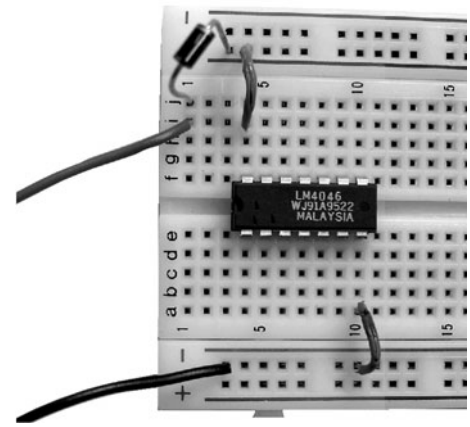

Figure L39-2

expect when the circuit is working, go to www.mhprofessional.com/computingdownload.

1. We are using only the voltage-controlled oscillator portion of the 4046.
2. Breadboard this circuit and briefly test that it is working.
3. Be sure to scrimp on the space as shown in Figure L39-2. This circuit should occupy only 15 rows of the SBB.
4. All components should be laid out north-south or east-west.
5. Wiring should not cross over the top of major components.
6. Wire length should be kept short enough so that your little finger can't fit underneath.

In this schematic, the wire connecting R2 to pin 11 jumps across the wire connected to pin 9.

4046 Data Sheet

Now is the time to look at the 4046 data sheet. Even if your circuit is not immediately successful, *work through the data sheet first*.

The diagram in Figure L39-3 is relevant to all ICs. Like any manufactured product, each chip is marked with all the important information. Who would have thought?

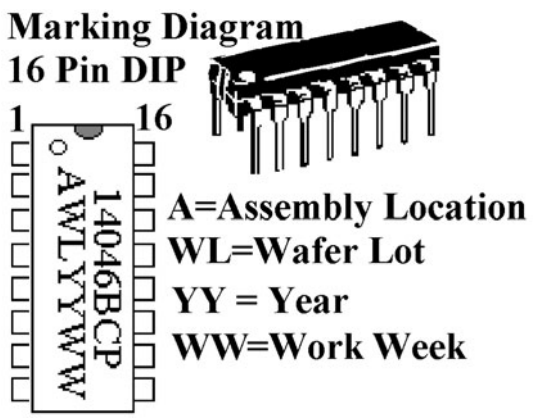

Figure L39-3

The system diagram and pin assignment are both shown in Figure L39-4. As with any data sheet, these are specific to the 4046 voltage-controlled oscillator and phase comparator IC.

1. The 4046 IC is a dual-purpose chip. It has two major processors that can be used independently of each other. For our purposes, we will use the 4046's VCO ability to convert analog voltage input to digital frequency output.
2. As with all ICs, unused inputs must always be tied to an appropriate logic state (either V+ or ground). Unused outputs must be left open.
3. The inhibit input at pin 5 must be set low. When the inhibit is high, it disables the VCO to minimize power consumption in a standby mode.
4. Analog input to the VCO is at pin 9.
5. Digital output of a square wave is at pin 4.
6. The frequency is determined by three factors.
   - The voltage value at pin 9 (as compared to V+ and ground).
   - Cx at pins 6 and 7 and Rmax make the RC that sets the maximum frequency.
   - Cx and Rmin make another RC that sets the minimum frequency. The higher the resistance, the slower the minimum flash rate. In this circuit Rmin is empty; and the resistance is infinite. The minimum flash rate is 0 (full stop) (see Table L39-2).

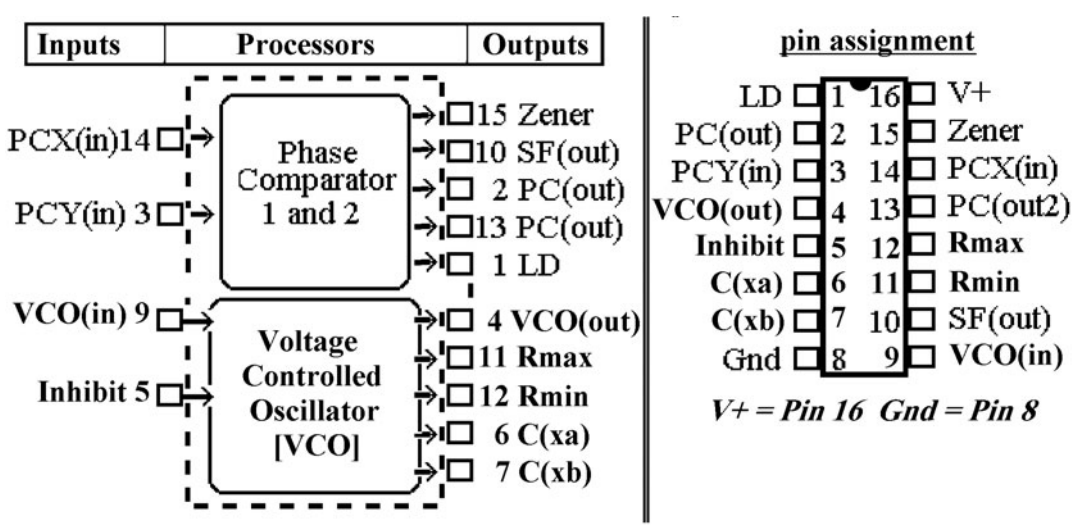

Figure L39-4

TABLE L39-2	Minimum Flash Rate	
Input	**Processor**	**Output**
Voltage fed to pin 9	Input voltage at pin 9	The VCO produces a square wave at pin 4 [VCO_{out}]
	[VCO_{in}] is compared to V+ and ground.	
	Maximum frequency output is determined by Cx and Rmx.	
	Minimum frequency output is determined by Cx and Rmn.	

An example of the expected output on an oscilloscope is provided online at www.mhprofessional.com/computingdownload. Examples are available for both real scopes and Soundcard Scope.

Troubleshooting PCCP

These are always the first four steps of troubleshooting:

1. **Power.** Check your voltage and ground connections. Use the DMM to check the power and ground to the chip. This inspection includes checking the power supply voltage, proper connections, and broken power connectors.
2. **Crossovers.** Visually inspect that there isn't any inappropriate touching in your circuit. Don't get your wires crossed. We're talking electronics here.
3. **Connections.** Check your connections against the schematic. For example, the schematic shows there are *only* three connections to the chip from pins 9 to 16. There are only five on the bottom, between pins 1 and 8. Did you miss one or get an extra one? Are they in the right place?
4. **Polarity.** What could affect the circuit if it were backward? Let's think about that. Hmm? Diodes, or the output LED. C1 is electrolytic, so it is polar. What about the chip? Do you think it would work if it were popped in backward? Don't try it out to see.

Ninety-five percent of all problems will be found if you work through the PCCP method. Predict what the output should be. Use your DMM to double-check the results that you expect.

Exercise: Introducing the 4046 VCO

1. Here's a question to think about. Look carefully at the system diagram for the 4046. Why is pin 3 connected to pin 4? _____
2. In digital logic, there are two states. They are not Hawaii or Alaska. What are the two logic states? _____ and _____
3. Why must unused inputs be conditioned high or low? _____
4. RC1 determines the length of the rolldown.

   R1 = ___

   C1 = ___

   RC1 timing ____

   Replace C1 with a value 10 times larger.
5. What is the voltage being provided to your circuit? Use the DMM and measure this at pin 16. _____ volts.
6. Remove the LED and set the DMM red probe directly to pin 4, black to ground.

   Start the rolldown. Record the reading of V+ pin 4 at the beginning of the rolldown. _____ V

   As the rolldown begins, the voltage reading at pin 4 should be half of the voltage at pin 16.

7. An oscilloscope (Soundcard Scope) is the best tool to help understand this. With the LED removed, attach the scope probe's red clip to the output at pins 3 and 4. The black clip goes to ground. The plug goes into the "Line In" connection of the sound card. The settings are shown in Figure L39-5.

   Figure L39-6 shows why the DMM reads half of the V+. The output is V+ half the time and 0 volts for the other half. The signal is switching quickly enough that the DMM averages the voltage and reads it as half of V+.

8. From the glossary, define "clock signal."

   _____

9. A square wave is made by a clock signal occurring at a steady frequency. Draw a representation of a square wave in the oscilloscope face presented in Figure L39-7.

10. Modify your breadboard slightly to represent the changes shown in Figure L39-8. This allows you to adjust the voltage using a voltage divider. If the voltage is kept stable at the input to pin 9, what happens to the output at pin 4? _____

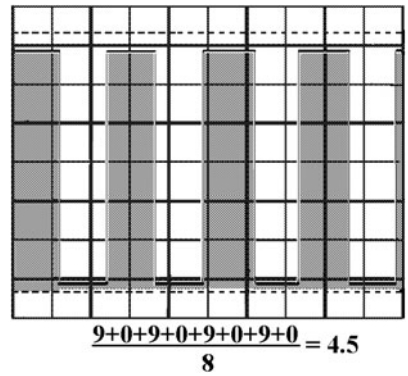

Figure L39-6

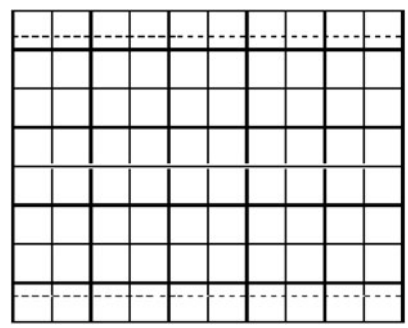

Figure L39-7

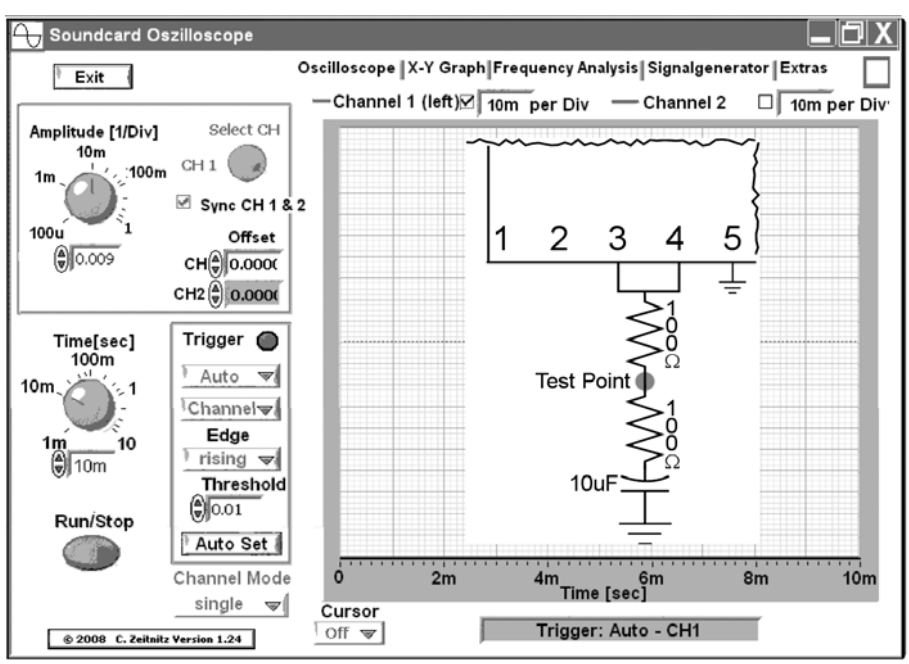

Figure L39-5

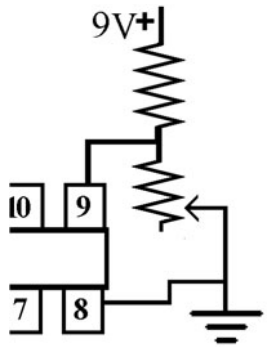

Figure L39-8

11. Consider the schematic presented in Figure L39-9.

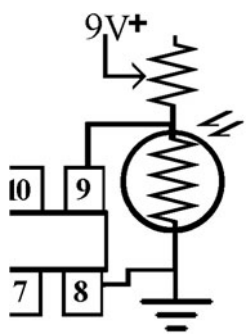

Figure L39-9

Input	Processor	Output
Amount of light	VCO	Frequency changes

12. RC2 controls the maximum frequency. It is made of Rmx and Cx, noted in the schematic as R2 and C2. Predict what would happen if the resistance were increased by 10 times.

    Frequency would be

    a. 10 × C faster

    b. 10 × slower

    Try it out. Change R2 from 220 kilo-ohms to 2.2 megohms. Did it make the frequency faster or slower? Did you predict correctly? Think about it. Did the increased resistance speed up or slow down the drain of C2? Reset R2 back to 220 kilo-ohms.

13. On the 4046 data sheet, pin 12 controls the minimum frequency, Rmn. Right now pin 12 is empty. No resistor means "infinite" resistance. Air is a pretty good resistor. Place a 10-M ohm resistor from pin 12 to ground. Start the rolldown. What is the result?

    If there is less resistance, predict whether the minimum frequency is going to increase (faster) or decrease (closer, to no flashing) when it stops.

SECTION 12

The 4017 Walking Ring Counter

So we have a clock signal output. It rolls down to a complete stop. Now to expand from 1 LED to 11 LEDs. They don't all go on at once. It actually counts: 1, 2, 3, 4, 5, 6, 7, 8, 9, 10, 1, 2, 3, . . . and higher if you want to use the carryout capabilities.

Lesson 40

Introducing the Walking Ring 4017 Decade Counter

Here is the system diagram for the prototype application of the 4017 IC (see Table L40-1).

Be very careful not to use too much space. There are still two major circuits to fit onto your board. All of the cathode sides of the LEDs can be ganged onto the unused line on the bottom as shown in Figure L40-1 (see the Parts Bin). The common resistor can connect the LED line to ground.

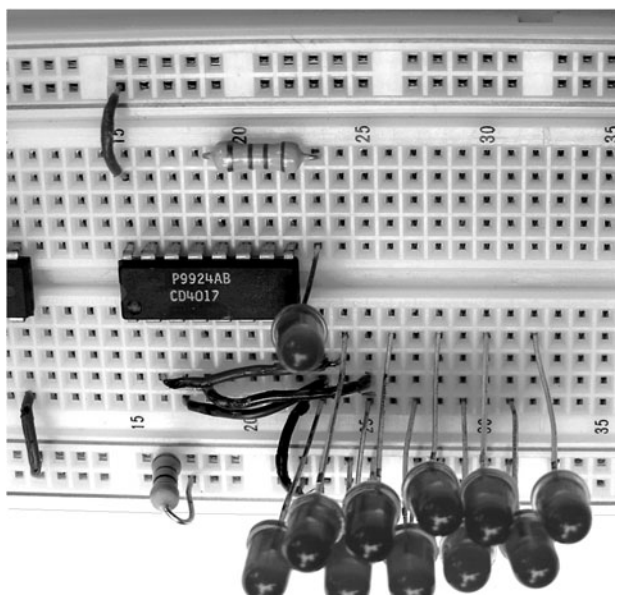

Figure L40-1

TABLE L40-1 Prototype Application

Input	Processor	Output
Roll down clock signal LEDs from the 4046 output	1. Each clock advances the high output sequentially, walking through outputs 0 through 9.	1. Fast cycling through 10.
	2. When the count reaches output 9, it starts counting from output 0 again.	2. Cycling slows steadily to a complete stop, randomly at any of the 10 outputs.

PARTS BIN

- IC2—4017 Walking ring decade counter
- R3—47 kΩ
- R4—10 kΩ
- R5—470 Ω
- R6—470 Ω
- LEDs—11

Add This Circuit to Your Breadboard

The 4017 is a very simple IC. As you can see by the schematic presented in Figure L40-2, it has one major input. That is the clock signal output from the 4046 VCO.

What to Expect

When you trigger the 4046 VCO by pushing and releasing the button, you will see the 10 LEDs lighting in sequence, appearing to have a light zipping down the series of LEDs. That is, in fact, exactly what is happening. As the VCO output slows, the zip slows as well. It will stop randomly, and one LED will be left on.

An animated schematic is available for viewing at www.mhprofessional.com/computingdownload. It shows the expected sequence of lights with a regular clock signal input. Even if your circuit does not immediately work to your expectations, now is the time to look at the data sheet.

4017 Data Sheet

The system diagram and pin assignments are shown in Figure L40-3.

For normal operation, the enable and the reset should be at ground.

For every clock signal input, the output increases from Out(0) to Out(9) by single steps. *The counter advances one count on the positive edge (ground to voltage) of a clock signal.* Only a

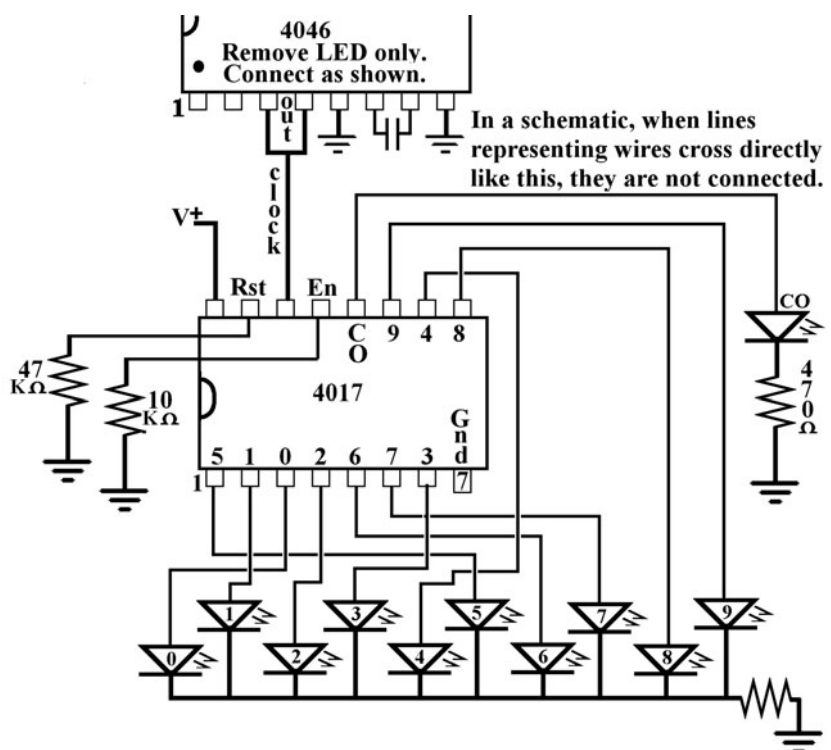

Figure L40-2

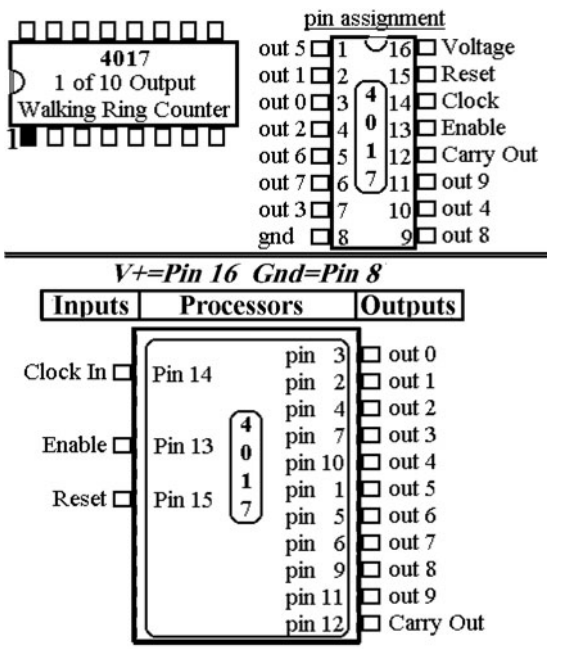

Figure L40-3

single output pin from Out(0) to Out(9) is high at any moment. By definition, if the output is not high, it will be low. When the count is at Out(9), the next clock input recycles output to Out(0), giving us the term "walking ring" because it is walking in circles.

Carryout

When Out(9) is reached, pin 12 carryout sets high. The carryout terminal is high for counts 0 through 4 and low for counts 5 through 9.

Because the carryout clocks once for every 10 clock inputs, the 4017 is often referred to as a "decade" or "divide by 10 counter." For example, it can be used to convert a 10,000-Hz signal input at pin 14 to a 1,000-Hz signal output at pin 12.

Making the reset high for a moment returns the counter to Out(0), setting pin 3 output to high. All other outputs drop to ground. The reset must be returned to ground to allow counting to continue. To stop the advance of the count, place a high on enable, pin 13. Returning enable to low will allow the count to continue.

As with any digital circuit, the inputs must be conditioned. That simply means they must be connected to either high or low at all times.

Of course, every input has its preferred state.

- Pin 13 enable should normally be set low; otherwise, the 4017 count will be frozen.
- Pin 15 reset should normally be set to low; otherwise, the 4017 will ignore the count. It will be stuck at 0.

The clock must be bounceless and have only one ground-to-positive movement for each desired count.

The 4017, like all CMOS chips, uses very little power. When it is at rest, it uses 0.002 watt of power at 5 volts.

Troubleshooting

What if the circuit is not working properly? Before you jump in, there are some bigger items to consider. Now is the time to start thinking systematically. Yes, you need to work through the circuit using the PCCP troubleshooting method, but the circuit just doubled in size. There are some necessary questions to ask first.

1. Do you have paper and pencil to record information down as you proceed?
2. What is working? Is there still a clock signal?
   - How can you tell? If there is no clock signal, then the problem is in the VCO.
   - If there is a clock signal and the LEDs are not working, then the problem is in the walking ring.
3. Once you have narrowed down the error to a single system area, start the PCCP process. And even though it may sound redundant, check the power anyway.

Here are some specific comments regarding the 4017 circuit:

- Make sure that pin 14 has the clock signal input from the 4046 (pins 3 and 4).
- Make sure that all of the LED cathodes (negative side) are connected together.
- Be certain that all LEDs are connected to ground through the single 470-ohm resistor.

The most common errors are as follows:

1. Reversing a single LED in the 4017 setup.
2. Not connecting pin 15 (reset) to ground. The schematic shows that it is tied to ground through a 47-kilo-ohm resistor. If pin 15 is connected to V+, output 0 remains high and nothing else moves. If pin 15 is not connected high or low, the input will react to static electricity in the air and give unstable results. An unconnected input creates "ghosts" that are difficult to explain.
3. Not connecting pin 13 (enable) to ground. This pin is also conditioned to ground through a 10-kilo-ohm resistor. If pin 13 is connected to V+, there is no output at all and the LEDs are all off. If pin 13 is not connected high or low, "ghosts" will be created from this as well.

Exercise: The 4017 Walking Ring Counter

The following drawings in Figure L40-4 show the most common styles used in schematics.

1. On the data sheet area, mention is made of the need to "condition" inputs. Explain what a conditioned input would look like.

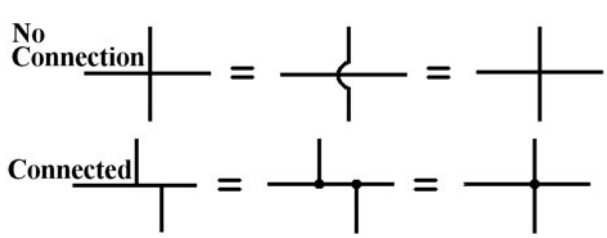

Figure L40-4

2. What controls any integrated circuit?
3. If the inputs are not conditioned, this creates "ghosts," so called because the circuit acts in an unreliable manner and the outputs are unpredictable and unexplainable.
   - Use your DMM as an "ectoplasm-meter" to find out where these ghosts come from.
     a. Set your multimeter to AC voltage.
     b. Keep the probe wires attached to the DMM.
     c. Keep an eye on the DMM display.
     d. Quickly move your DMM toward and away from an old style TV or computer monitor several times. Flat screens just don't leak enough to measure. Flourescent lights give good readings too.
     e. Place the DMM right up against the monitor and hold it still.
   - What was the highest AC voltage displayed? _____AC mV
   - Do this again with DC voltage. _____DC mV

   An unconnected input is not high or low. That input reacts with the signals and static in the air around us.

   Some of the signals are from:

   - Radio and television signals
   - Cell phones
   - The electrical wiring in the walls
4. Provide an explanation—what causes these ghosts at unconditioned inputs?

   _____
5. What is the result of having unconditioned inputs?_____

6a. There are three inputs to the 4017. What are they? (Here is some information from the 4017 data sheet.)

a. _____ at pin _____conditioned by its connection to the 4046 output.

b. _____ at pin _____ conditioned ____ in normal operation.

c. _____at pin _____ conditioned ____ in normal operation.

6b. State the purpose of each input. (Here is some information from the 4017 data sheet.)

a. _____/ purpose_____

b. _____/ purpose_____

c. _____/ purpose_____

7a. What is the strict definition of the clock signal?

_____

7b. Which shape in Figure L40-5 best shows a clock signal?

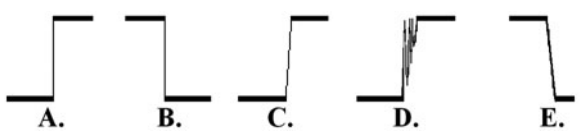

Figure L40-5

8. Set the DMM to VDC. With the red probe to 4017's pin 1, trigger the circuit. Are the results the same as the output of pins 3 and 4 of the 4046? _____

9. The output from the 4046 VCO on the oscilloscope should have been similar to the diagram shown in Figure L40-6.

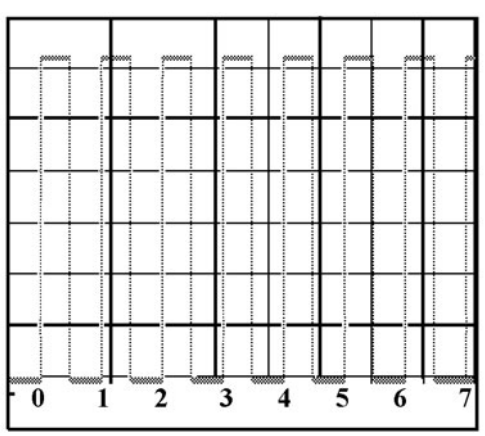

Figure L40-6

If you set up the oscilloscope just to measure at pin 1 of the 4017, what would you expect to see?

a. The same clock signal output frequency

b. Only half of the output frequency

c. High for the first five, low for the second five

d. Only one-tenth of the output

10. Consider the carryout (pin 12).

a. It is high for half the cycle and low for the other half.

When does the carryout of the 4017 change from low to high?_____

When does the carryout of the 4017 change from high to low?_____

b. Explain why the output of pin 12 (carryout) is so different from the other output pins 0 through 9. (Refer to the 4017 data sheet.)

_____

_____

Lesson 41
Understanding the Clock Signal Used by the 4017

Hickory dickory dock. The system responds to a clock.

A clock signal is widely used in electronics to trigger events throughout larger systems.

Definition: A *clock signal* is a clean digital signal that raises from zero to full voltage instantly. It must take fewer than 5 microseconds. That is 0.000005 second (1 microsecond = 10^{-6} second).

A clock signal is all of the following:

- Is a very clean signal
- Does not bounce or echo
- Triggers one event

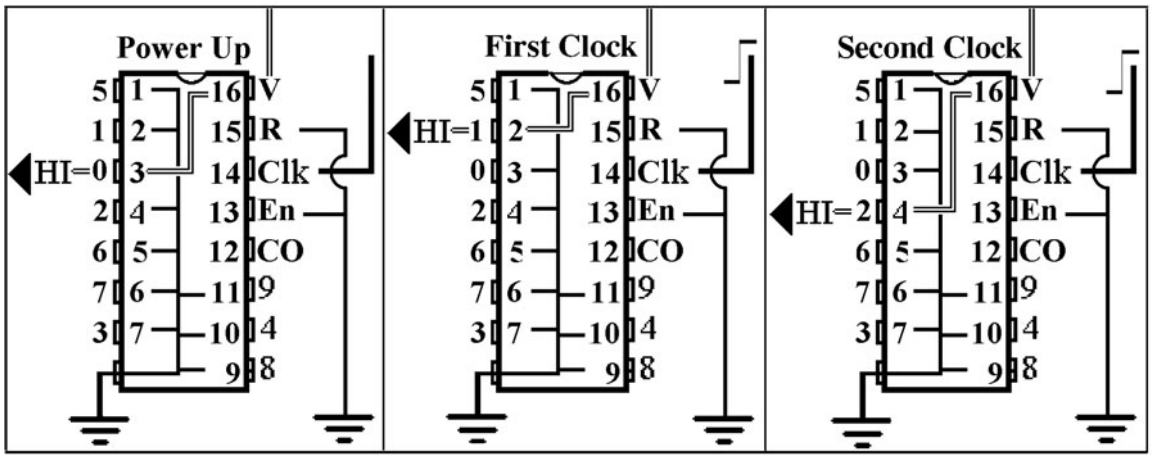

Figure L41-1

The clock signal is generated by the 4046 VCO circuit and is used to trigger the 4017 circuit. Each clock signal advances the "high" output by one as shown in Figure L41-1.

Each of the 4017's output provides a clean clock signal as it changes from low to high. When the output changes from 9 to 0, the carryout at pin 12 "clocks" and remains high until the count advances from Out(4) to Out(5). Any of the outputs can be used as clock signal inputs to trigger other circuits.

When reset is momentarily set to high, the count resets to 0.

When the enable is set to high, the count stops until it is returned to low.

Remember, all inputs need to be conditioned to either high or low.

Refer back to the data sheet provided in Lesson 40 as you work through this lesson.

To understand the circuit better, take one of the LEDs out and put it in backward.

- Trigger the circuit.
- How many LEDs are lit at one time? _____
- There is a rolldown . . . but *now* there are two lights on all the time: one of the other nine LEDs and the reversed LED.

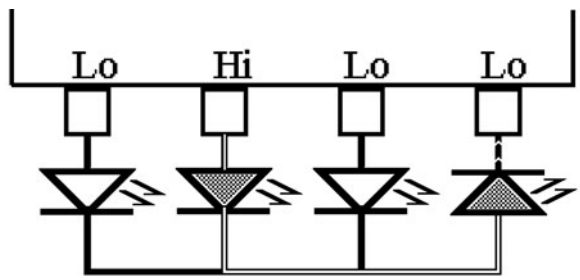

Figure L41-2

- The drawing in Figure L41-2 best explains what is happening.

Remember: Only one output is high at any time; the rest are low.

The reversed LED acts as ground. So the pin powering the LED in the count is draining through the backward LED connected to an output that is low. Return the LED to its proper position.

Exercise: Understanding the Clock Signal and the 4017

Here we will compare a PB switch to a clock signal input. This setup substitutes a single mechanical action for a clock signal. Remember that a clock signal is very fast (millionths of a second) and very clean. The LEDs advance by one per clock signal. Be sure to change back to the original setup when this exercise is done.

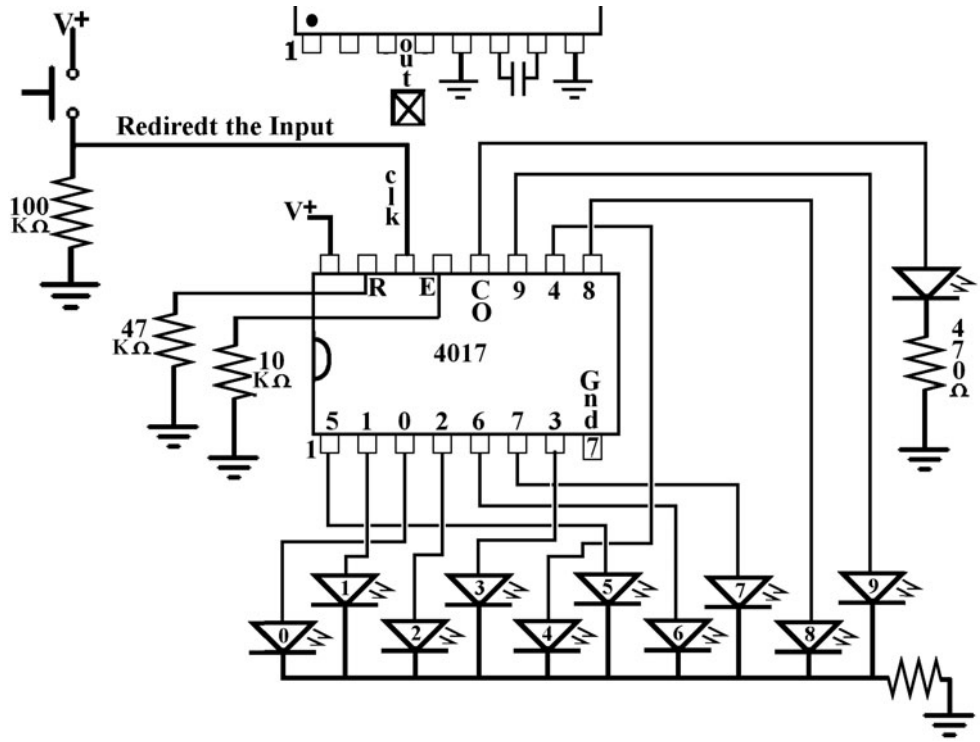

Figure L41-3

1. Attach a 100-kilo-ohm resistor and the PBNO to the clock input of the 4017 as shown in Figure L41-3.
2. Remove the wire that carries the clock signal from the 4046 (pins 3 and 4) to the 4017 (pin 14). When everything is set up, attach the power.
3. What LED is lit now? LED # _____
   - Press the plunger down in a definite movement.
   - Don't release it.
   - What LED is lit now? LED # _____
   - Release the plunger.
   - Did the count advance when you released the plunger? That was a voltage movement from V+ to ground.
4. You expect a push button to be a fast and clean movement from ground to V+. Is it a clock signal?____
   - You cannot use any mechanical device to provide a clock signal.
   - A clock signal must be generated electronically.
5. Push and release the plunger a few more times.
   - You can expect that the count will advance by a single step . . . sometimes by two or three steps.
   - The contacts of a physical switch like a push button do not provide a clean enough signal when a clock signal is required.
   - *An unclean input has bounce* as shown in Figure L41-4. Such a bounce is too fast to be noticed on inexpensive oscilloscopes. It would be impossible to see on Soundcard Scope. But you see the results of the bounce as the 4017 counts more than one step in each push of the plunger.

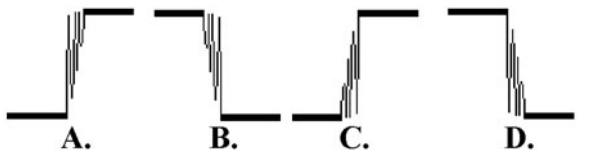

Figure L41-4

If an input says it needs a clock signal, only a clock signal will do. The CMOS 4093 is a specialized IC designed to "debounce" mechanical switches. It is nothing more than a fancy 4011 chip. It has been designed to react much more precisely to the inputs.

Lesson 42

Controlling the Count—Using the Chip's Control Inputs

You've seen that the major input is a clock signal. There are two other inputs. Let's visit them and see what they do.

Add two long wires to the breadboard as shown in Figure L42-1. These will be used as connections to V+ when needed. Leave the ends loose. Notice how pin 15 (reset) and pin 13 (enable) are each connected to ground through a resistor. That way the input is still conditioned, even if you do not have the probe connected somewhere.

Reset

1. Trigger the 4046 to start the rolldown. All 10 LEDs should flash in sequence. Now connect the reset probe to the anode (+) side of LED number 7. What happens?
2. Choose another LED and do the same thing. What happens? What does the reset do when it is set high for a moment?
3. Wait until the rolldown stops. Touch it to V+.
4. What happens if you keep the reset high and start the rolldown?

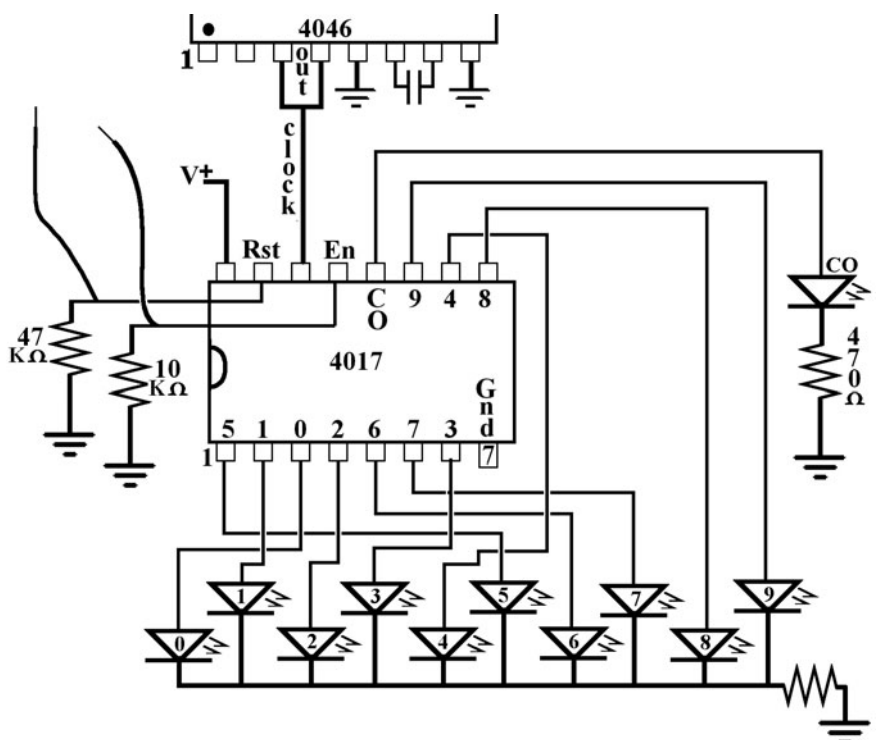

Figure L42-1

Take a look again at how the data sheet defines the purpose of the reset. It does exactly what it says it does. And the same is true for the enable function.

Enable

1. Pull the reset wire out while you play with the enable. Start the rolldown. Now connect the enable probe to the anode (positive) side of any LED. What happens?
2. Choose another LED. What happens? What does the enable do when it is set high for a moment?
3. Wait until the rolldown stops. Touch it to V+.
4. What happens if you keep the enable high and start the rolldown?

   So what good are these? That is up to you to decide. Maybe you don't want to count zero to nine all the time. Maybe you only want it to count to six, like rolling a die. Maybe you have a hexapod robot. It has a preset cycle for its six legs. You can use the 4017 to trigger this system. Figure L42-2 shows a really cheap, simple, yet effective idea for applying the 4017 in a video security surveillance system.

   The system needs to have the "high" produced by any source to reset the system. The reset does not need a clean clock signal. Any momentary high will do. The "high" from pin 10 is used here. Why don't we see the LED connected to pin 10 light up? Because of the speed, the circuit reacts in microseconds. That is too fast for us to notice any response in the LED.
5. Predict what happens when the reset wire is connected to pin 1. Pin 1 is related to what output?
   a. Out 0
   b. Out 2
   c. Out 4
   d. Out 5
   e. Out 10
6. Underline which LEDs light up. 0, 1, 2, 3, 4, 5, 6, 7, 8, 9
7. What is the state of the carryout for this setup?
   a. On all the time
   b. On for the first two, off for the second two
   c. Doesn't light up

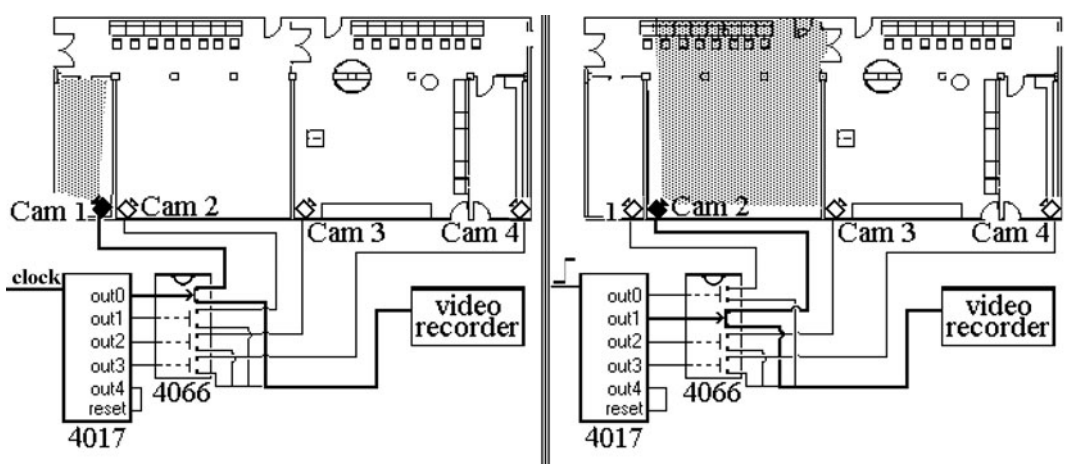

Figure L42-2

8. How are the three inputs conditioned so they are always connected to either high or low?
   a. Clock_____
   b. Reset_____
   c. Enable_____
9. Look at the schematic. The "enable" is conditioned to low through the 10-kΩ resistor. Start the circuit from the 4046. In the middle of this standard rolldown, connect the enable to V+. Note what happens. Leave it attached for 30 seconds, and then trigger the rolldown. Disconnect the enable from V+ so it is low again. The rolldown should pick up again in the middle. Describe what the enable does.

   _____

   _____
10. In the following system diagram, describe the processor for the video security system shown in Figure L42-2 (see Table L42-1).

TABLE L42-1 System Diagram

Input	Processor	Out
Video camera signal	Three items are necessary for this processor.	Video recorder
	1. A circuit that generates clock signals.	
	2. The 4017 does what? _____	
	3. The 4066* does what? _____	

* The 4066 is the equivalent of four high-quality NPN transistors in a single package. What does it do here in the circuit?

SECTION 13

Running a Seven-Segment Display

THE SEVEN-SEGMENT DISPLAY depends on two major chips. I introduce the "slave" 4511 first so you can understand how it is controlled. Then the 4516 "master" is introduced. You will investigate and play with most of the possibilities of each chip as they are presented. At the end of this chapter, you will have the prototype of the DigiDice and be able to explain it. Better than that, you will be able to control it. Remember, *binary*'s the word.

Lesson 43
Introducing the Seven-Segment LED

Here you have a real number output. It's just a set of LEDs set up to represent numbers.

Here is the system diagram from the beginning of Part Three (see Table L43-1).

Remember that there is to be a number output too. In this chapter we will add the number readout. Everything revolves around creating a number output using a seven-segment LED display. This simple device is created by using individual LEDs in rectangular shape, set into a package that creates a number, as shown in Figure L43-1.

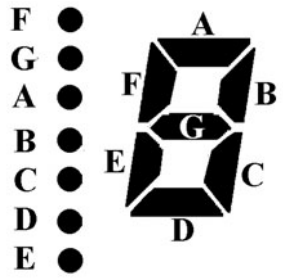

Figure L43-1

So you might have some seven-segment displays lying around. You try them out. They might work and they might not. That is because there are two major types of seven-segment displays: the CC and the CA. The type that is used here is referred to as a common cathode (CC). A proper schematic diagram for the CC is shown in Figure L43-2.

TABLE L43-1 System Factors

Input	Processor	Output
Push button	**1.** Rolldown (4046 IC) controlling 2	**1.** Fast cycling through six LEDs.
	2. Walking ring resets at 6 (4017 IC)	**2.** Fast cycling through numbers 0 through 6.
	3. Binary counting decimal (4511 IC)	**3.** Cycling slows steadily to a complete stop, randomly at points 1 through 6.

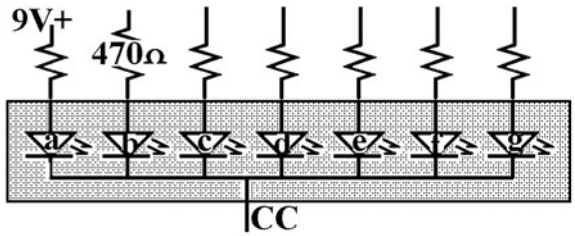

Figure L43-2

This type of seven-segment LED display is referred to as a common cathode because all of the LEDs share the same ground line. You have to add resistors on the anode (positive) side for each LED. The alternate type of seven-segment display is shown in Figure L43-3. Note that it is almost identical, yet completely opposite, of the CC layout.

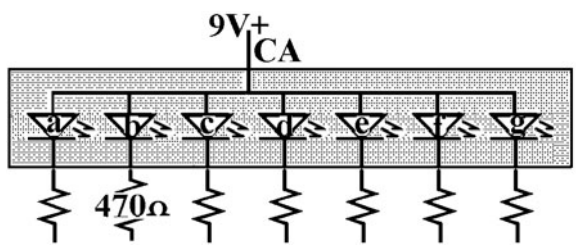

Figure L43-3

Just as with the CC, you still have to add resistors. This is done on the cathode (negative) side for each LED in this package. Just a further note: The two package styles are *not* interchangeable. A CC will not substitute for a CA (common anode) package in any circuit because it is the same as placing an individual LED in backward. It just doesn't work.

Right now, you need to map out your seven-segment display. Set the seven-segment display into your breadboard as shown in Figure L43-4.

Be sure to use a 470-ohm resistor to cut the voltage to the individual LEDs as you map out the pins. The center pin of each side is a common ground connection. Only one needs to be connected to ground.

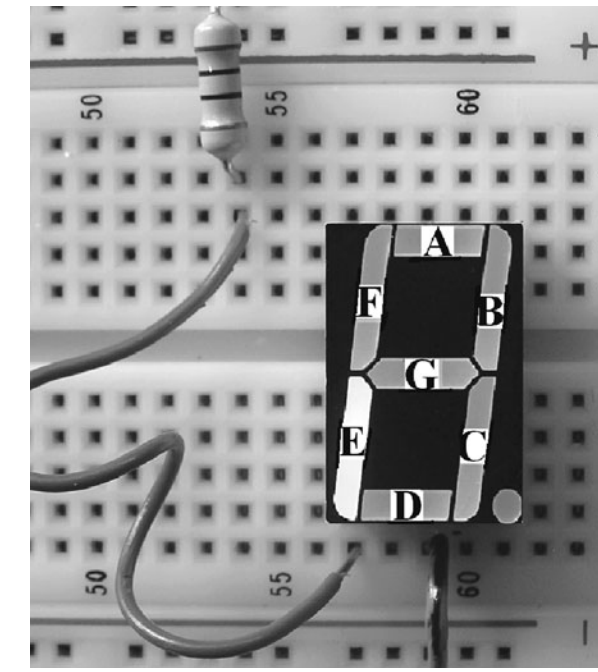

Figure L43-4

Now use a single wire to determine which pin powers which LED. Label your drawing. You will need this information to wire up your next circuit.

How would you create the number 7?

Lesson 44

Control the Seven-Segment Display Using the 4511 BCD

1. Getting numbers to present onto the seven-segment display has to be easier than rewiring all the time. Electronics is about control. Here is a chip that controls the seven-segment display.
2. Several IC processors are available to change inputs into number outputs.
3. The 4511 BCD CMOS IC used here is a basic binary-counting decimal processor.

4511 Data Sheet

The system diagram and pin assignments for the 4511 BCD are shown in Figure L44-1.

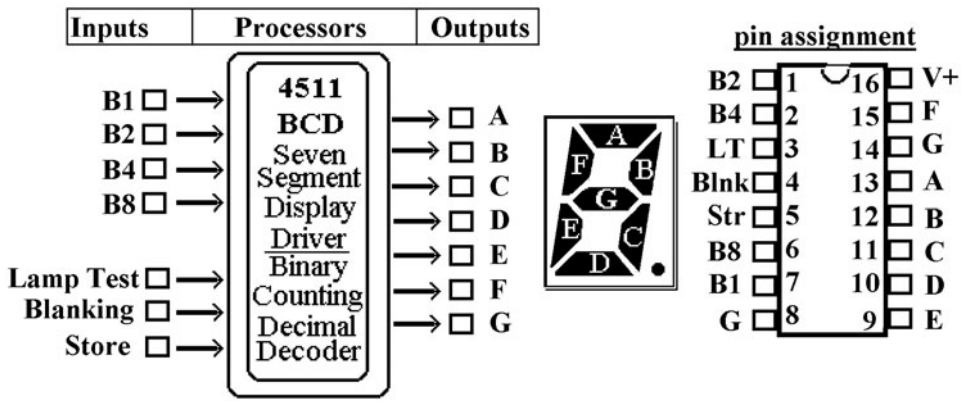

Figure L44-1

Basic Operation

The 4511 BCD accepts a binary input code and converts it to be displayed on a seven-segment, common cathode LED (all segments share the same connection to ground).

The binary code placed on B1, B2, B4, and B8 inputs is translated as a code for display on a CC seven-segment LED. For instance, if B8 is low, B4 is high, B2 is high, and B1 is low [0110], this input combination will make outputs c, d, e, f, and g high, while outputs a and b remain low, creating a decimal six.

In normal operation the lamp test and blanking are held high while store is connected to ground.

- **Lamp test:** If lamp test is grounded, all of the lettered outputs will go high.
- **Blanking:** If blanking input is made low, all lettered outputs go low, turning the display off.

Note as well that any input representing a number bigger than decimal nine will blank the display. Even though this 4-bit binary word can count from 0 (0000) to 15 (1111), the 4511 is designed to operate a seven-segment LED that cannot count above nine. Any binary word above 0101 is unreadable. The 4511 will blank, turning off all outputs to the display.

If the store input is made high, the value of the input code at that instant is held internally and can be used later.

The 4511 BCD system layout is described in the Table L44-1.

TABLE L44-1 4511 BCD System Layout

Input	Processor	Output
A binary word provides high signals at the binary inputs.	Binary code is converted for display by the binary-counting decimal processor.	Decimal value of binary input shown on the seven-segment LED.

Breadboarding the Seven-Segment Display and 4511 Display Driver

Set the chip and seven-segment display near the end of your breadboard as shown in Figure L44-2.

Now build this circuit from the schematic in Figure L44-3.

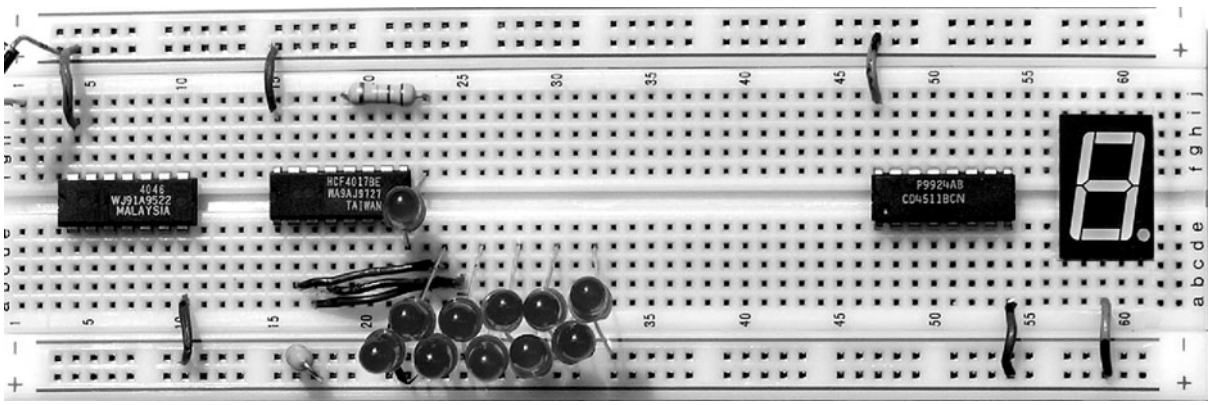

Figure L44-2

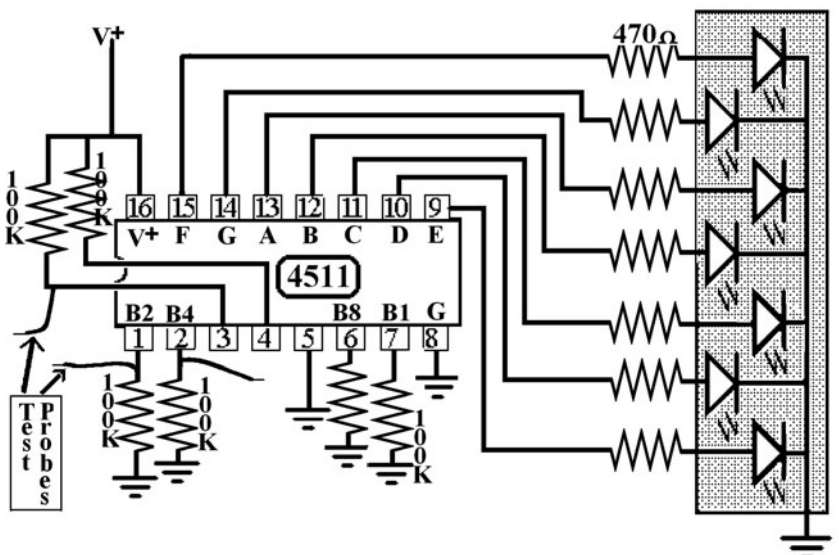

Figure L44-3

The wire probes are only needed for testing in this lesson.

Building this circuit on the breadboard can prove to be challenging. The picture in Figure L44-4 is provided to help guide you. There is a correct technique for breadboarding, and then there is a mess.

- Note that the resistors have had their legs clipped shorter on one side. Then they are placed upright.
- Insulated wires are used to make the long connections. Those wires are a bit longer than

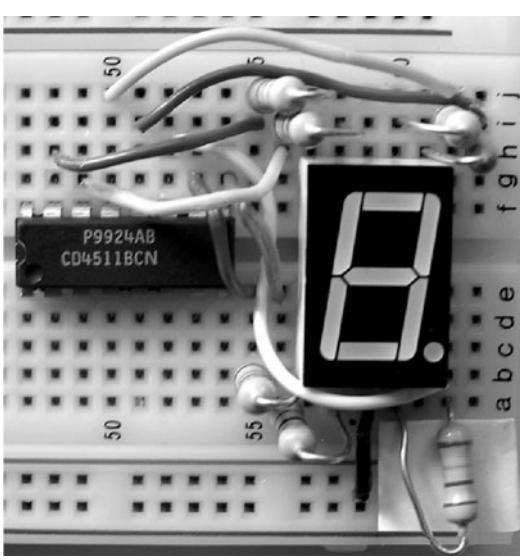

Figure L44-4

the actual connection. That relieves any strain that might cause the wire to spring out of its hole.

- The wires are gently bent. Sharp corners actually encourage the solid wire to break under the insulation. Such breaks are frustrating and hard to find.

What to Expect

When you attach power to this circuit, the seven-segment display should read ZERO. That is, segments A, B, C, D, E, and F are lit. Not the crossbar, G. If you have a backward "6," you have switched the outputs "F" and "G."

1. Touch the wire probes connected from inputs B1, B2, B4, and B8 separately to V+. This "injects" a high signal into the various binary inputs.
2. Touch both B2 and B4 to voltage at the same time.
3. Try different combinations.
4. What happens when you try to inject a high at B8 and B2 at the same time? It should blank the display.

Troubleshooting

Run through the PCCP. The most common problems in this setup are as follows:

- Crossed wires.
- Reversed display.
- Individually burned-out LEDs on the display.
- Blanking at pin 4 and lamp test at pin 5 are connected to V+. Either connected to ground would keep this circuit from working.

Exercise: Control the Seven-Segment Display Using the 4511 BCD

The inputs B8, B4, B2, and B1 represent binary inputs.

Together, all four binary inputs create a 4-bit binary word. Figure L44-5 presents an excellent representation of how the binary word input relates to the display driver outputs.

1. Use the wire probe to connect B1 (pin 7) to voltage. What is the readout of the display?
   _____
2. Use the wire probe to connect B2 (pin 1) to voltage. What is the readout of the display?
   _____
3. Use the two separate wire probes to connect both B1 and B2 to voltage. What is displayed?
   _____
4. Work through Table L44-2.

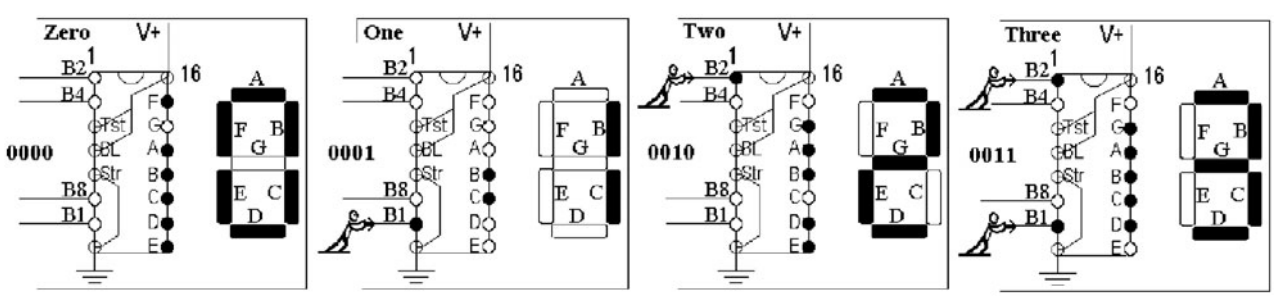

Figure L44-5

TABLE L44-2 Wire Probe

Number	B8	B4	B2	B1	Binary Word	Seven-Segment Display Output
Zero	Low	Low	Low	Low	0000	A B C D E F
One	Low	Low	Low	High	0001	C and D
Two						
Three						
Four						
Five						
Six						
Seven						
Eight						
Nine						
Ten						

The highest binary input that the 4511 recognizes is when inputs B8 and B1 are both high.

That means the highest it can count is 9. Anything over a binary input equal to "decimal 9" will cause it to blank out.

5. Why are inputs 1, 2, 6, and 7 connected to ground through 100kΩ resistors?

_____

_____

6. What is the maximum count of a 4-bit binary word? _____

7. What is the highest number that the 4511 seven-segment driver is able to display?

_____

8. BCD stands for binary-counting decimal: Binary in—decimal out.

   What is the binary word for decimal 7?

_____

9. Besides the binary word input, there are three other inputs to the 4511. What are they (from the 4511 data sheet)?

   a. _____ at pin_____ is conditioned _____ in normal operation. What is its purpose? _____

   b. _____ at pin_____ is conditioned _____ in normal operation. What is its purpose?_____

   c. _____ at pin_____ is conditioned _____ in normal operation. What is its purpose?_____

10. Test blanking and lamp test separately. Simply connect them to ground momentarily.

Lesson 45
Decimal to Binary—The 4516

The 4516's output is the binary word input to the 4511. It changes the decimal clock signal from the 4046 VCO to a binary output used by the 4511. This lesson explains the operation and application of the 4516 BCD IC.

Data Sheet: 4516 Binary Counting Decimal—Up/Down Zero to 15 Counter

The system diagram and pin assignment for the 4516 are shown in Figure L45-1.

Basic Operation

For each clock signal input, the binary word output changes by one. The binary word shows as a high signal on corresponding outputs. For example, for the decimal number "7," the output B8 is low, while B4, B2, and B1 are high [0111].

In normal operation the inputs carry-in, reset, and preload are held low.

The binary word increments one count on the clock signal at pin 15. The movement is dependent on the setting of the up/down control. The output appears as the binary word at the outputs B8, B4, B2, B1.

Up/Down Control

When the U/D control is set to high, the count proceeds upward. When decimal 15 [1111] is reached, the count cycles back to zero [0000] and carryout is triggered. When the U/D control is set to low, the count proceeds backward. When decimal zero [0000] is reached, the count cycles backward to 15 [1111], and carryout is triggered.

Carry-In

The carry-in must be held low to allow counting. Holding the carry-in high stops the count, making it function like the enable switch of the 4511.

When multiple stages are used, the chips share the clock signal, as shown in Figure L45-2. Carryout of each stage connects to the carry-in of the next level.

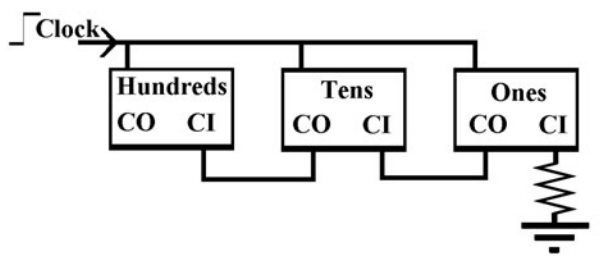

Figure L45-2

Reset

By momentarily connecting reset to V+, the count returns to zero [0000]. The reset must be returned to ground to allow counting to continue.

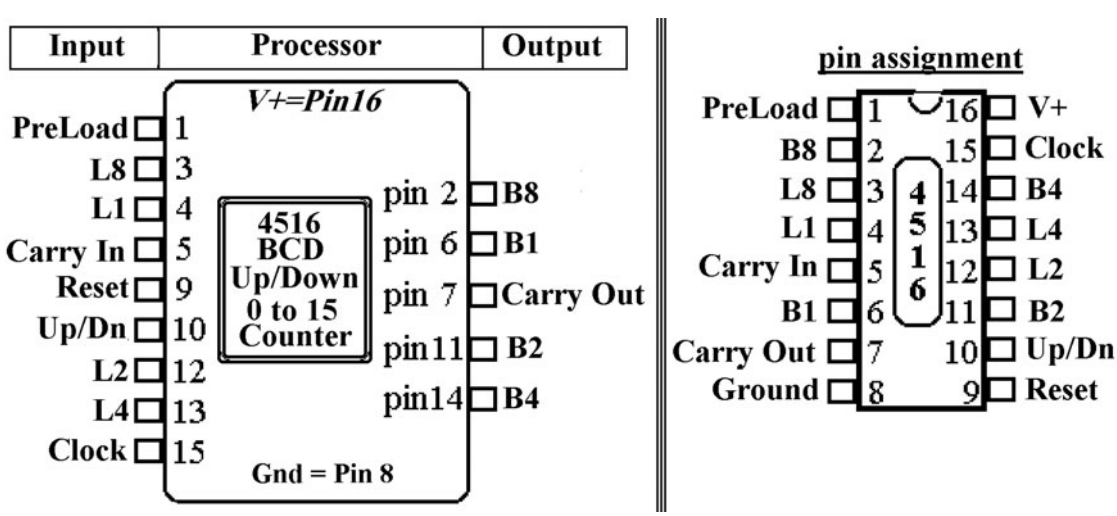

Figure L45-1

Preload

Any number can be preloaded into the 4516 by presetting the appropriate binary word to voltage through the preload inputs [L8, L4, L2, L1]. These preloaded inputs are loaded on to their corresponding binary outputs [B8, B4, B2, B1] by bringing the preload at pin 1 high for a moment. As with reset, the preload must be returned to ground to allow counting to continue.

NOTE **Pin 15 should be in a low state and there should be no clock inputs to pin 15 when preloading is done.**

Add to the System on the Breadboard

Leave a small patch of five free lines on one side for the last part of the system introduced in the next lesson.

As the schematic shows in Figure L45-3, the 4516 uses seven more 100 kΩ resistors and more wire. You also add a temporary display of the binary word using four extra LEDs.

1. Remove the 100 kΩ resistors from the 4511's inputs.
2. Preload control at pin 1, and the preload presets L8, L4, L2, and L1 are attached to ground through 100 kΩ resistors.
3. Carry-in is connected to ground, because it is an unused input.
4. Carryout can be left open. It is an output used to trigger another stage in counting.
5. Reset is attached to ground through a 100 kΩ resistor.
6. Start with the up/down control connected by a 100 kΩ to V+.

What to Expect

Here's what to expect before you start to play. Use the clock signal from the carryout of the 4017 as the INPUT clock signal to the 4516. The number will advance one for every run down all 10 LEDs. Note that this wiring is specific to where you are now. It is subject to being played with by curious fingers and nimble minds.

Also, at this point, the up/down control at pin 9 can be connected to V+ (counting up) or ground (counting down) through a 100 kΩ resistor.

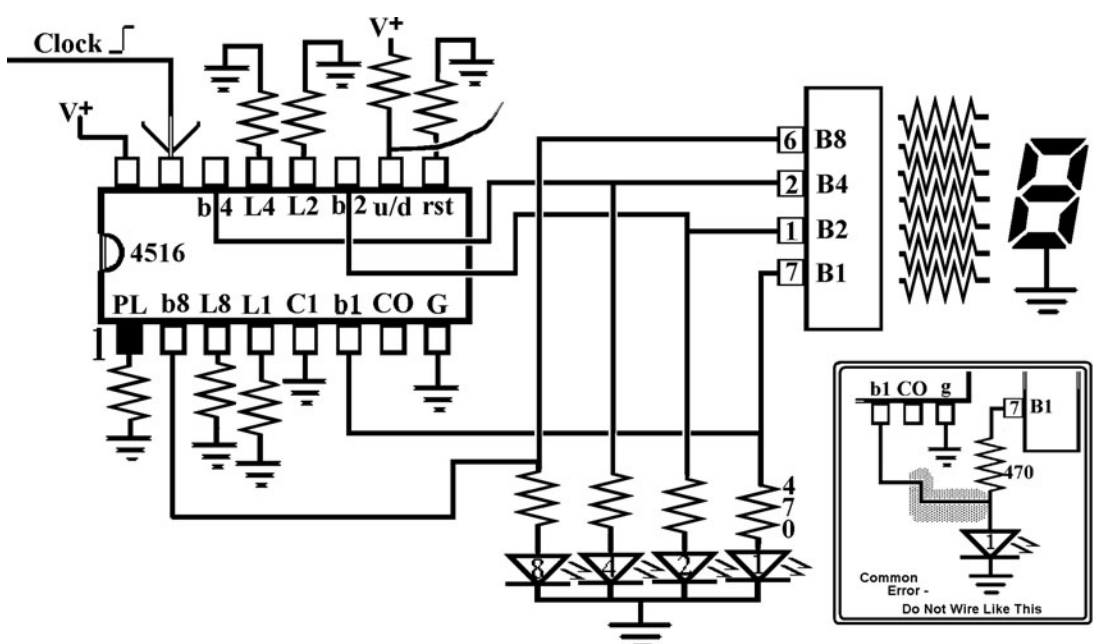

Figure L45-3 The insert shows the most common error—do not wire like this!

Exercise: Decimal to Binary—The 4516

A: Initial Setup

The 4516 acts as the interpreter. It changes the decimal clock signal source into the binary input used by the 4511 display driver.

The outputs of the 4516, B8, B4, B2, and B1 are *wired directly* to corresponding inputs of the 4511. The four LEDs display the 4516's binary word. It matches the decimal number displayed on the seven-segment LED. Now place a 10-megohm resistor from pin 12 of the 4046 to ground. This sets the minimum frequency output of the 4046 to about 1 Hz. This way, you don't have to continually trigger the roll down.

Make sure that the 4516's up/down counter (pin 10) is conditioned to V+ so it counts upward.

1. The shortened "DCB" stands for what?

   D_____ C_____

   B_____

2. The shortened "BCD" stands for what?

   B_____ C_____

   D_____

B: Inputs Inputs Everywhere

Be careful while you are exploring. You can accidentally connect V+ directly to ground. That shorts out the power supply. Even though it looks like everything turns off, a short circuit can damage your power supply.

- **Up/down counter.** First, try out the up/down counter at pin 10. Use a long wire as shown in Figure L45-4 to connect the up/down control to ground.
- **The reset.** Use a wire probe and momentarily touch the reset input to voltage as shown in Figure L45-5.
- **The preload.** This is easy to do. Don't remove the resistors. They allow flexibility. Pop a short wire into both L2 and L4 as shown in Figure L45-6, and connect them to V+. Connect a long wire to preload. Touch the preload wire to V+, just for a moment. Your display should now show the number "6." When the preload is set to high, the values preset on the load inputs are dumped onto their matching binary count outputs.

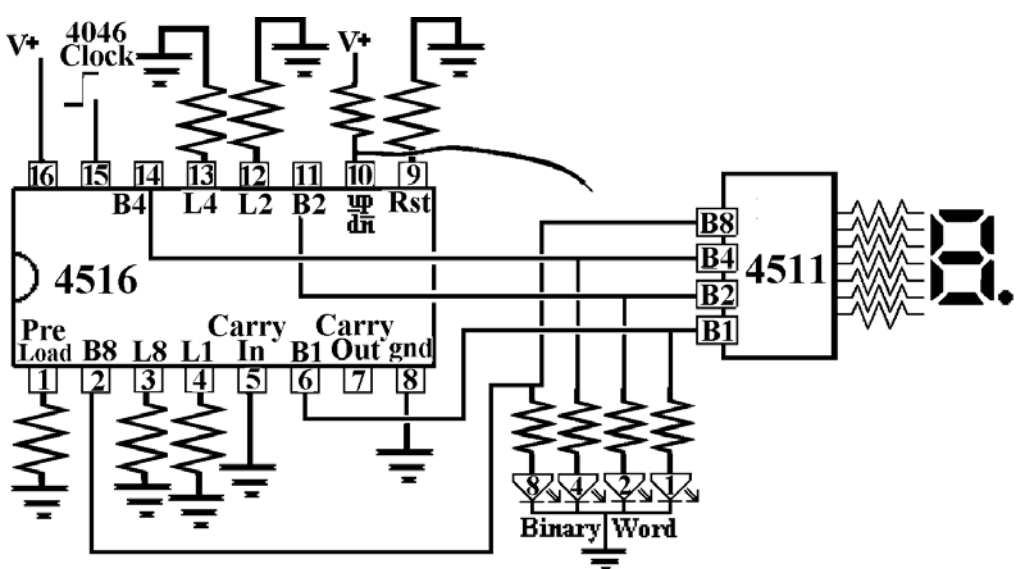

Figure L45-4

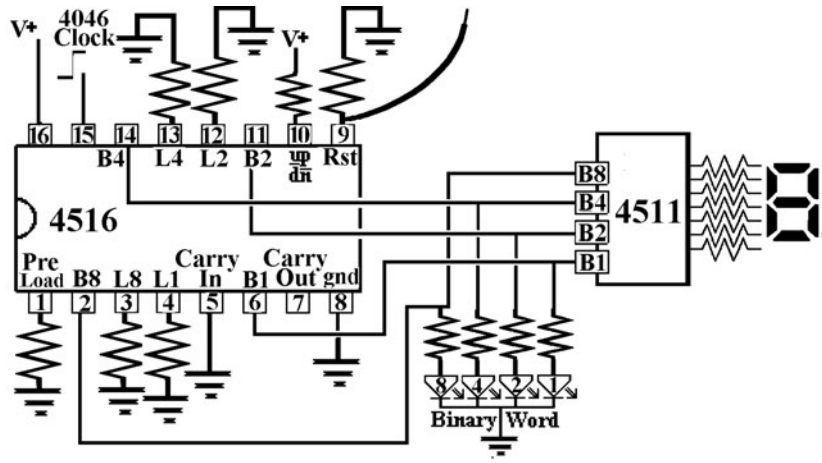

Figure L45-5

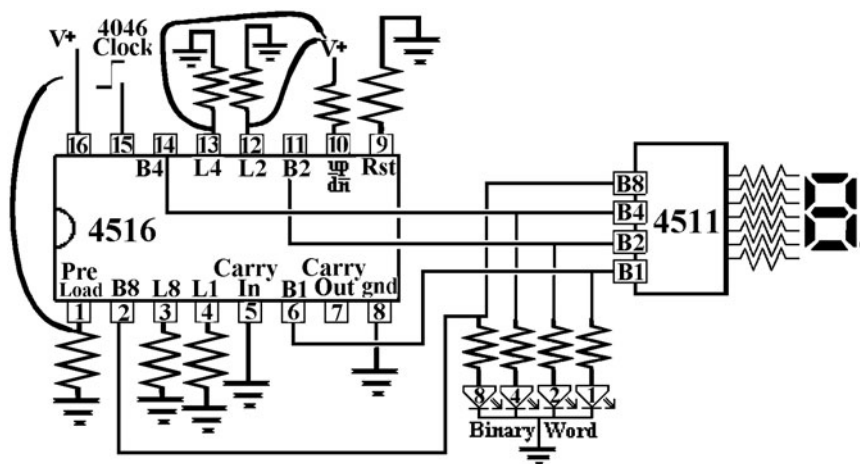

Figure L45-6

C: Now for Some Serious Playtime! Exploring the Possibilities

Right now, both the 4017 and 4516 are connected directly to the clock output of the 4046 as shown in Figure L45-7.

1. The 4046 clocks the 4017. Now connect the 4017's carryout to the clock input of the 4516 as shown in Figure L45-8. Think about it. Try to explain what is happening.
2. This is even better. The 4046 clocks to the 4516. Connect the carryout of the 4516 directly to the clock input of the 4017. The setup is shown in Figure L45-9. What is happening?

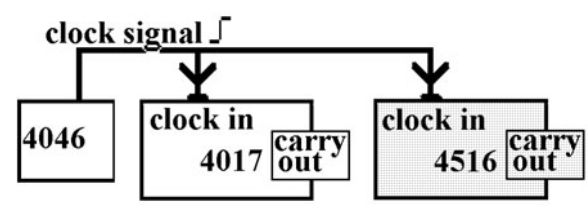

Figure L45-7

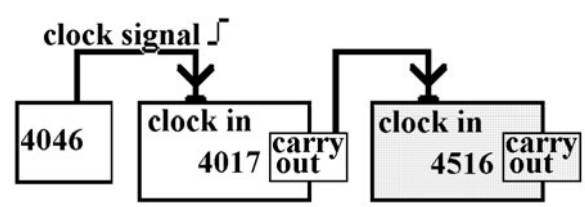

Figure L45-8

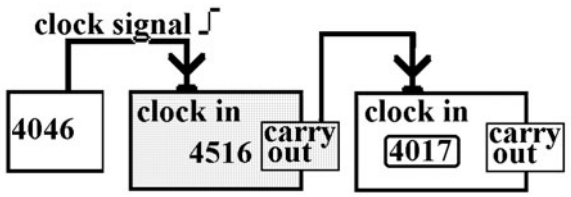

Figure L45-9

3. Will the 4516 still count zero to nine in this setup when you play with the reset or enable of the 4017? Try it out.
4. Remember the carryouts of the 4017? It is high for the first five numbers, and then goes low for the second five numbers. Try the setup shown in Figure L45-10. Connect the 4017 carryout to the up/down counter of the 4516. Predict what's going to happen. Were you right?

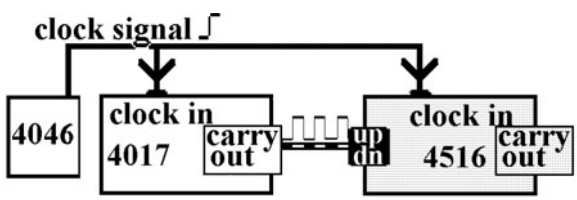

Figure L45-10

5. Any other ideas?

D. Setting Up the DigiDice

Figure L45-11 is the graphic system diagram that you can use to set up your prototype for DigiDice. Notice that some particular features have been incorporated into the system.

The 4046 clock feeds to both 4017 and 4516.

When "Out 6" of the 4017 goes high, this signal is used to trigger the following:

1. The reset of the 4017 (the first six LEDs light up in sequence)
2. The preload (pin 1) of the 4516
   - L1 (pin 4) must be set directly to voltage.
   - This will load the number "1" when it is triggered, effectively skipping "0."
   - Resulting in numbers displayed 1-2-3-4-5-6-1-2-3 . . .

At this time, you can remove both the 10-megohm resistor from the 4046's pin 12 and the LEDs used to display the binary word. The minimum frequency will return to full stop, and you will have room for one last addition to the entire system.

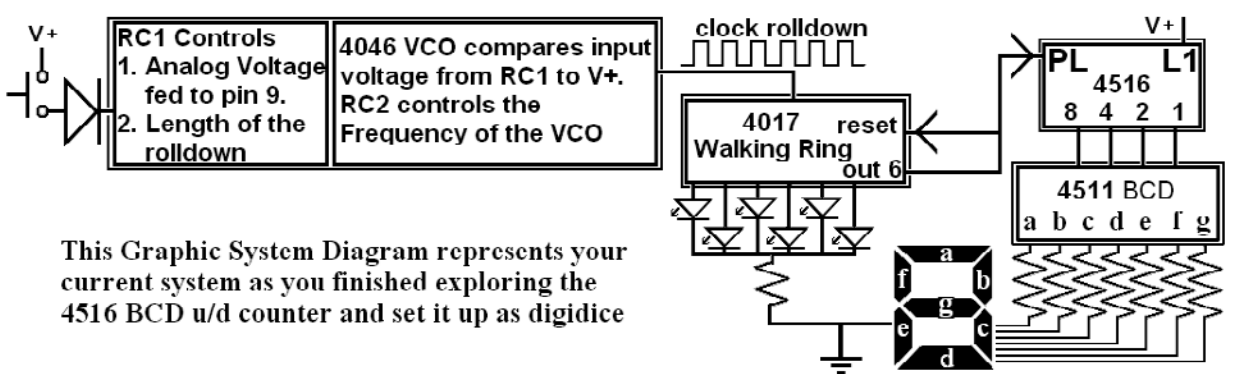

Figure L45-11

Lesson 46
The Displays Automatically Fade Out

Of course, your mother never reminded you, "Can't you remember to turn off the lights after you leave the room?" With the next step, you'll never have to worry about that with your circuit.

Hey! If you didn't do it yet, do it now. Remove those LEDs used to show the binary word.

Power consumption is important if you use batteries to power the system. CMOS electronics are popular because the systems use so little power. In comparison, the LEDs gobble energy in this system. In this lesson we apply a simple RC to the system that automatically cuts the power to the LEDs.

A basic system diagram is shown in Table L46-1. It includes the RC that automatically turns off the LEDs.

A detailed system diagram for DigiDice deals with the input/processor/output of each piece of the system (see Table L46-2).

Displaying the system this way can be confusing and long-winded. A "graphics system diagram" shows how all of that information can be displayed more efficiently. Such diagrams are more readily understood and infinitely easier to use when designing and troubleshooting systems. Figure L46-1 is the graphic system diagram showing how RC3 is set into the system.

But even a graphic system diagram does not show the full schematic. For that matter, at this point, I'm not going to show the full schematic either. All that needs to be shown is the specific schematic of interest and the notation of how it is connected into the system. Figure L46-2 is the schematic showing how RC3 controls the NPN transistor.

Everything used here should be fairly obvious, except for the extra diode. Why is the extra diode there? The diodes separate RC1 from RC3. Here is a complete explanation why it is necessary.

RC1 and RC3 are isolated from each other using the diodes to prevent any reverse flow of the current. If there were no diodes, the charges would be shared between the capacitors of RC1 and RC3. This is shown in Figure L46-3.

TABLE L46-1 Basic System Diagram

Input	Processor 1	Processor 2	Processor 3A	Processor 4	Output 1
A contact switch like a PBNO	RC1 controls the timing of the rolldown	4046 VCO RC2 controls max and min frequency of the clock signal	4017 Walking ring 1-10 counter. Seventh LED (out 6) is connected to reset and preload controls on the 4516	Timed off as a power saver. RC3 controls the transistor that cuts power to the LEDs	6 LEDs
			Processor 3B		**Output 2**
			4516DCB(P) 4511BCD		Seven-segment display counting 1-2-3-4-5-6

TABLE L46-2 Detailed System Diagram

Input	Processor	Output
First Section, Including the 4046		
Push button closes Voltage filling RC1	Falling voltage controlled by the RC1 drains from max to minimum. The voltage at pin 9 is compared to V+. This controls speed of voltage-controlled oscillator.	Length of rolldown controlled by RC1. Rolldown clock signal.
Second Section 4017		
Clock rolldown from the output of the 4046 Reset	1 of 10 counter reset at out 6.	Walking ring provides high to out 0 to out 6. Out 6 is used to reset 4017 to 0. Out 6 is used as controlling input to 4510.
Second Section LEDs		
Walking ring provides high to 1 of 6 LEDs in sequence.		Light
Third Section Starting with 4516		
Clock rolldown from 4046 High input from 4017 out 6 triggers preload of L1 U/D counter set up or down	Decimal counting binary	Advancing binary code
Third Section 4511		
Binary word Binary-counting Decimal	Converter for seven-segment LED	Decimal value of binary input shown on the seven-segment LED
Fourth Section Timed Off		
Voltage filling RC3	Transistor opens, then slowly closes the connection to ground as controlled by RC3	Displays fade-out1-2-3-4-5-6

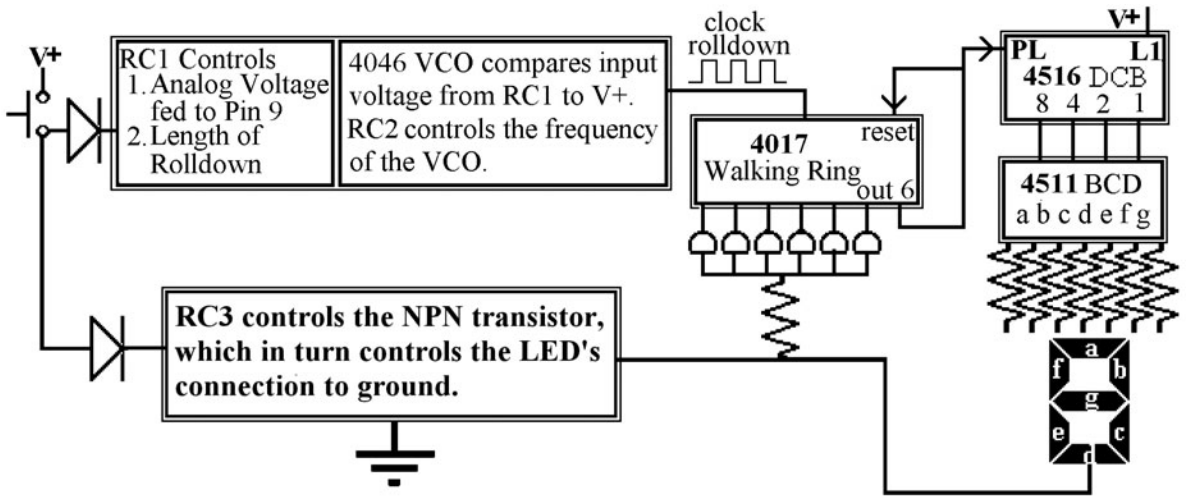

Figure L46-1

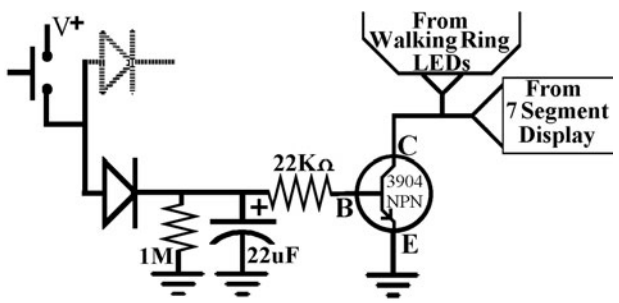

Figure L46-2

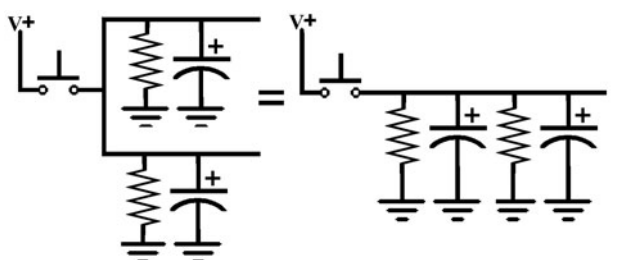

Figure L46-3

The resistors would act together, too. RC1 and RC3 would combine and act as a single RC.

If there were only one diode, the unisolated capacitor shares its charge first. This is demonstrated in Figure L46-4. The charge in the 1-μF capacitor of RC1 would push through the lower diode and add to the charge of the 22-microfarad capacitor of RC3. The reverse would also occur; if the bottom diode were not present, the charge stored in the 22-μF capacitor of RC3 would push through the upper diode and add to the charge of the 1-μF capacitor of RC1.

The complete and proper setup is shown in Figure L46-5. Each RC acts independently. The RC1 rolldown should finish 5 to 10 seconds before the fadeout really finishes. If the LEDs fade out before the rolldown is completed, adjust the timing of either RC1 to be shorter or the timing of RC3 to be longer.

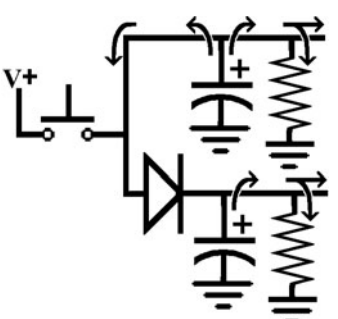

Figure L46-4

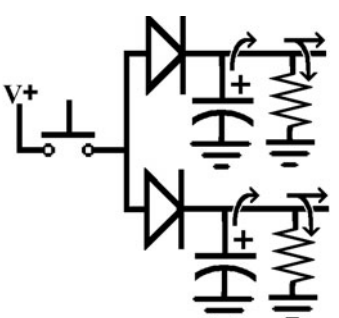

Figure L46-5

SECTION 14

Define, Design, and Make Your Own Project

Imagination is more important than knowledge.
—Einstein

It has been my experience that when people are given instructions to make something for themselves, they will complain. Either they are given far too much detail or what they perceive as not nearly enough. All this from the same audience. What I have done here is give examples. The more complex the example, the more I choose to talk in terms of concept, not detail. I do this on purpose. This is your project. If I gave you all of the details, it becomes my project and you copying my project.

Remember the earlier comment about Lego. That was a serious statement. Parts of one fit perfectly into the parts of another. That is one of the beauties of digital electronics. Think about it. You have learned enough that you could almost build the controller for an arena's scoreboard. You can develop your own applications using just a portion of the system. Next time you go to the mall, carefully look at those fancy gadgets that eat your quarters and tell you your fortune. What? You say you can't do that? Then why not?

Lesson 47
Defining and Designing Your Project

Ideas to keep in mind:

1. In an ideal world, the sky is the limit.
2. Murphy was probably right. Murphy's first law states, "If anything can go wrong, it will." Do an Internet search of "Murphy's law" + Technology.
3. In reality you will never have:
   - Enough time
   - Enough money
   - The right equipment for the job
4. Your expectations for this project should be reasonable.
   - Five printed circuit boards are provided in the kit for this unit. This provides you with maximum flexibility.
   - The biggest limitation that exists for this project is your inability to create your own enclosure.
   - The most reasonable and inexpensive premade enclosures are old plastic VHS cassette cases.
   - These are often available with plastic lining that allows you to insert labels, signs, and directions.

Notes Regarding Possibilities

This is digital electronics. The processors can be mixed and matched, or not used at all.

1. 4046 VCO:
   - Can be set to a specific frequency
   - Rolls down
   - Can roll up (think about it)
   - Can set minimum frequency
   - Can set maximum frequency
   - Has frequency range
2. 4017 walking ring:
   - Dependent on a clock signal, but any clock signal will do.
   - Don't underestimate reset or enable.
   - Can count 0 to 9, and reset or freeze on any predetermined number.
   - What about the carryout? High for half the count, low for the other half.
   - What about using two 4017s, counting 0 to 99 in rows?
   - The outputs are not limited to LEDs, as shown in Figure L47-1. They can control transistors to give power.

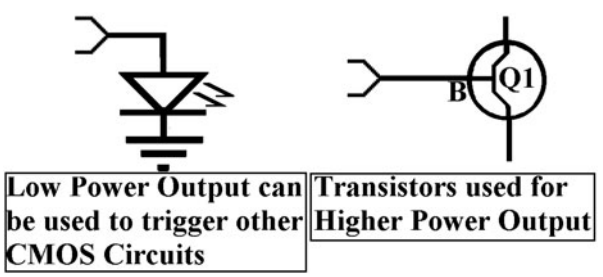

Figure L47-1

3. 4516/4511 BCD unit:
   - Like the 4017, it is dependent on a clock signal.
   - With a 1-Hz signal, you could make a binary clock.
   - The 4516 has more inputs than outputs.
   - The U/D control takes any digital input. It is not dependent on a clock signal.
   - What about having two 4516s counting 0 to 99 in digits?

Timing

There are only three separate RC timers right now. More are possible. RC1 and RC3 work together. If RC1 is longer than RC3, the displays fade before the rolldown is complete. Use Table L47-1 to set the timing of the RCs to your desires.

TABLE L47-1 Set Timing of RCs

Resistor	Capacitor	Time
20 MΩ	10 μF	200 seconds
10 MΩ	10 μF	100 seconds
4.7 MΩ	10 μF	50 seconds
20 MΩ	1 μF	20 seconds
10 MΩ	1 μF	10 seconds
4.7 MΩ	1 μF	5 seconds

Examples

Each of five examples presented has a unique twist in its application. New portions are explained in detail. Some of the design components, by their very nature, are identical between projects. When that happens, that portion is mentioned briefly.

The Ray Gun

The ray gun displayed in Figure L47-2 is a wonderful little project.

Figure L47-2

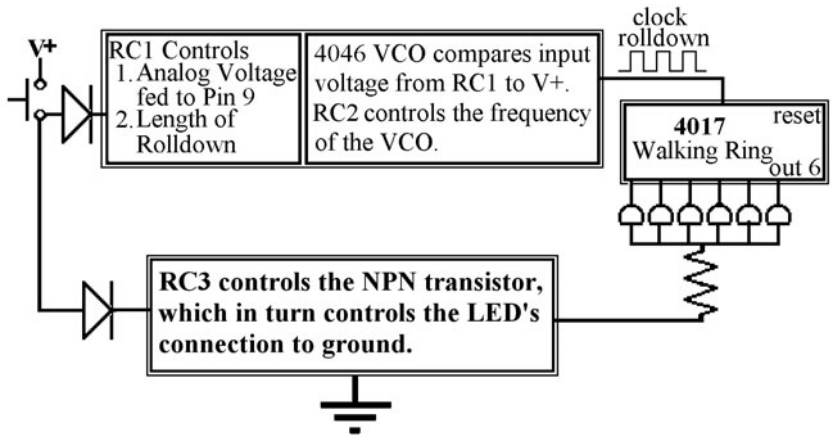

Figure L47-3

The entire system has been enclosed in a squirt gun. The unique idea here is that only a portion of the larger system has been applied as shown in the graphics system diagram of Figure L47-3.

The same system can be applied to a push button fortune teller or a 10-LED roulette wheel.

The "Whatever" Detector

The only unique quality here is the switch and the name you give it. In fact, this is the same system, but applied as a fake metering device. Fill in the word of your choice for "whatever." The beauty is that it actually changes frequency from person to person. Did you notice that you could get the circuit to work by just touching across the bottom of the push button? Try it. The packaging can be fancy, as shown in Figure L47-4, or you could use a simple box.

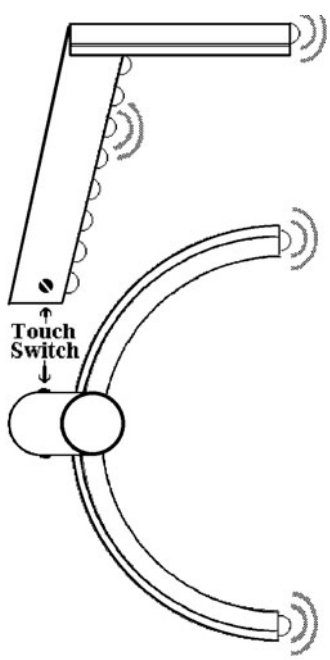

Figure L47-4

You could moisten your palm and pick up the "Ghost Detector," claiming all sorts of things as you point it toward a dark corner. Give it to your friend and watch as it goes dead. A little knowledge isn't dangerous. It's fun.

An Animated Sign

The animated sign shown in Figure L47-5 could be used for a variety of shapes.

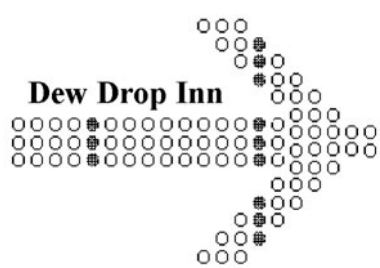

Figure L47-5

Both of the things that make this unique are shown in the graphics system diagram of Figure L47-6.

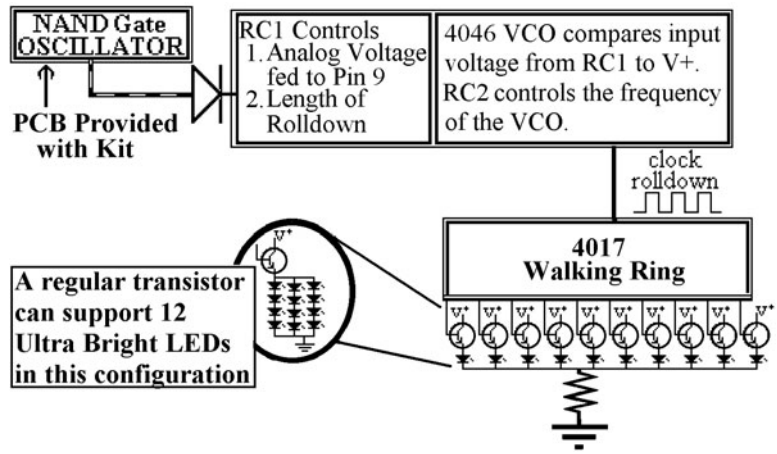

Figure L47-6

First is the subsystem that triggers the 4046. It is a 4011 oscillator set to pulse every 20 seconds. The maximum frequency is set to 20 Hertz. It rolls down almost to a complete stop before it kicks the oscillator high again. The schematic is shown in Figure L47-7.

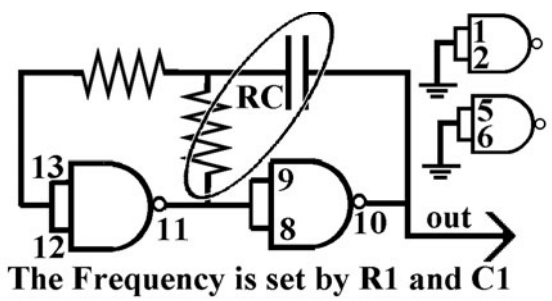

Figure L47-7

Second is the necessity for ultrabright LEDs to make the output visible from a distance. This requires the output of the 4017 to use transistors to amplify the power.

The IQ Meter

This is another wonderful gadget. It could just as easily be called a lottery number generator. You secretly control the first digit by a hidden touch switch made from two pinheads. Shown in Figure L47-8, when you hold it, you're guaranteed a number above 100.

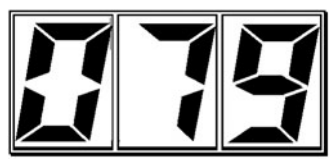

Figure L47-8

Everybody else gets a number under 100. It doesn't use the walking ring at all. To do it properly, though, does require two sets of the number display circuits and three seven-segment LEDs. Directions to make your own printed circuit boards are provided at www.mhprofessional.com/computingdownload. Figure L47-9 shows the graphic system diagram for the IQ meter.

Modify the dual NAND gate PCB, included in the kit, so it is a single-touch switch. You can figure out the wiring to get a high output to show 1 and a low output to show 0 on the seven-segment display.

Love Meter Fortune Teller

This wonderful gadget is popular in the malls. It takes two inputs to work. You pay a quarter and do one of several different things. You might put your palm on the outline of a hand or pass your hand over the hand of the plastic gypsy. You might touch one pad and your girlfriend touches the other; then you kiss. Then the lights flash, and you get your

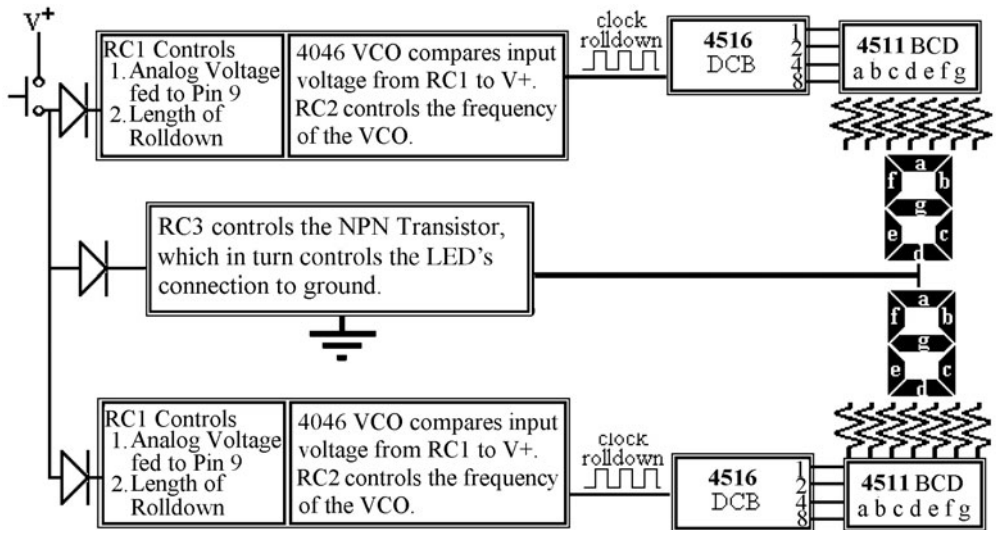

Figure L47-9

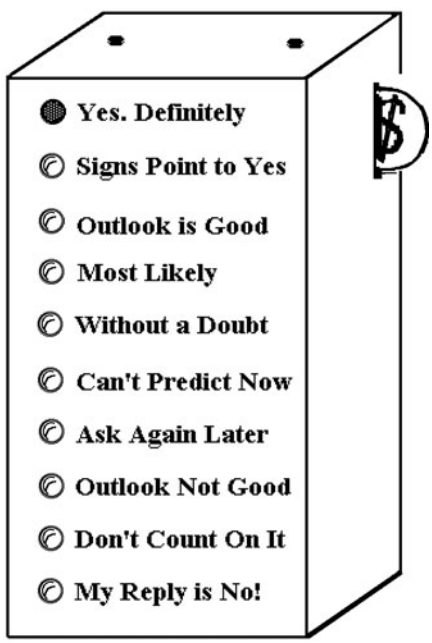

Figure L47-10

fortune told. The outcomes shown in Figure L47-10 come directly from The Magic 8-Ball toy made by Tyco Toys.

The graphics system diagram for the fortune teller is shown in Figure L47-11.

The schematic for the dual input trigger is shown in Figure L47-12. It is important to give plenty of time for the coin input to time out, so that by the time they trigger the second input, the first has not timed out.

Event Counter and Trigger

This device will count how many times something happens and then trigger an output. With two 4516 chips, the output can be set to trigger at any number between 0 and 255. The graphics system

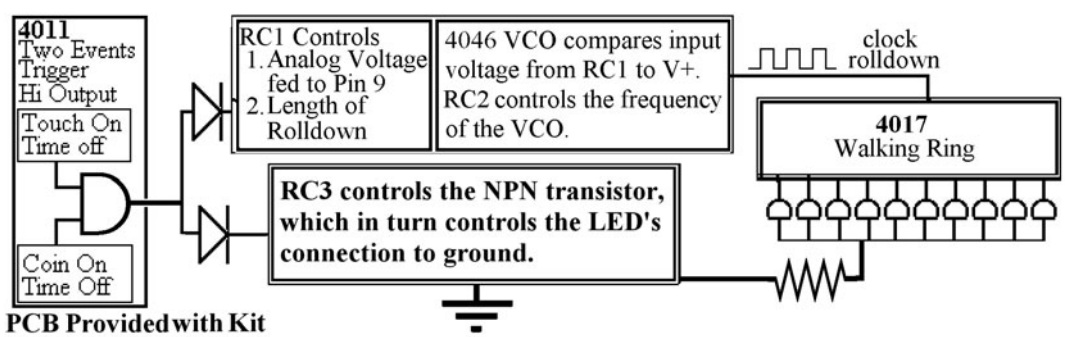

Figure L47-11

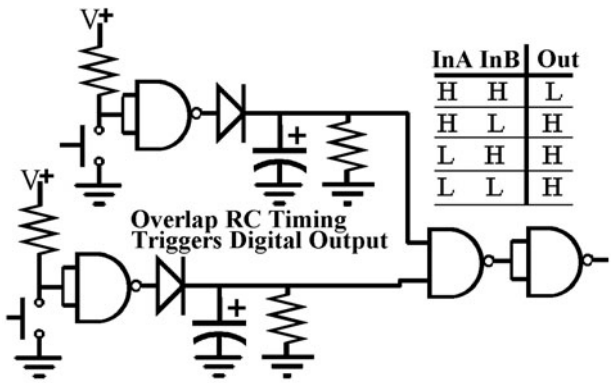

Figure L47-12

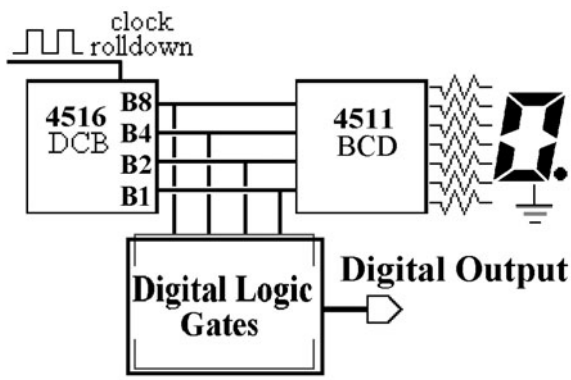

Figure L47-13

diagram in Figure L47-13 is set up for a single numbering system.

The 4516 can be preset to any number from 0 to 15. You don't have to feel confined to what the display can show. Set the up/down control to count backward. The output is triggered when everything

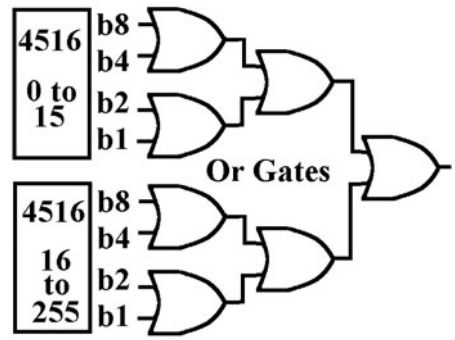

Figure L47-14

reaches zero. Figure L47-14 shows how to apply two 4071 quad OR gates to check to logic output.

The 0000 0000 can be made by the following:

- Counting up and rolling over the top number
- Counting down until you hit the bottom
- Triggering reset by an outside event

Slot Machine

It is possible to do this. What if I get two rows of walking rings and trigger them both? When the LEDs match, it can work like a slot machine and trigger a payout. What a simple concept. Move forward with this one only if you have confidence. It can work, but it takes work. The graphics system diagram for a two-line slot machine is shown in Figure L47-15.

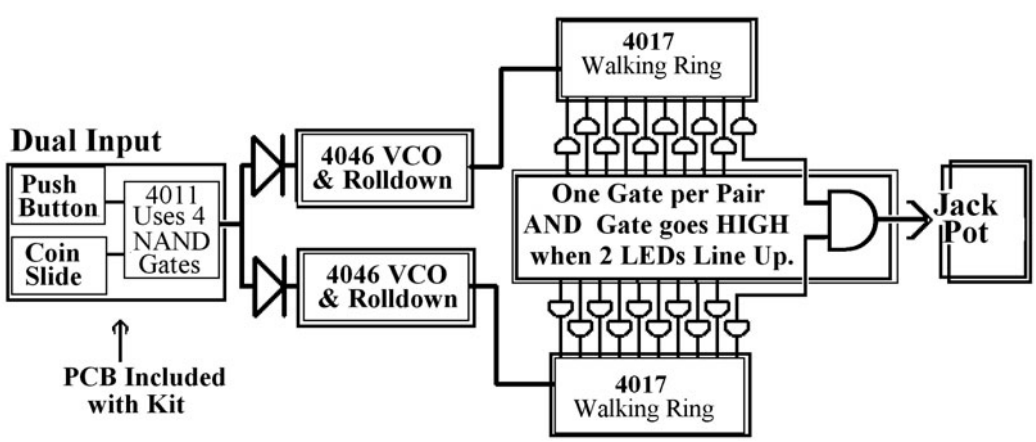

Figure L47-15

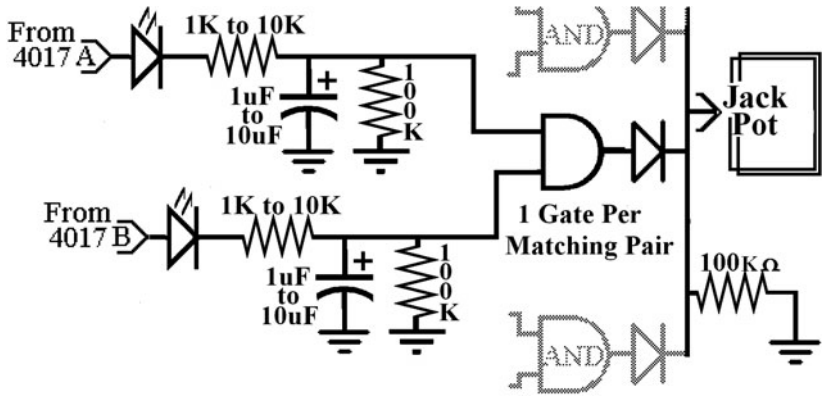

Figure L47-16

It appears obvious that you can compare the outputs using an AND gate. The 4081 dual input quad AND gate is ideal. But consider that a high output from the two walking rings might cross each other for a millisecond. That is enough to trigger the AND gate falsely. It is important to slow down the comparison to prevent false triggering. Such a circuit is displayed in Figure L47-16. This ensures that each LED in the pair must be high for a minimum of half a second before the AND gate input moves above the triggering voltage.

What about the payout? I'll be honest. Check your phone directory for any shop that repairs vending machines. Unless you are a skilled machinist and have time, you will save yourself many headaches by purchasing a used coin return mechanism. Usually, one clock signal in kicks one quarter out. It would be fairly safe to say the output from the 4081 will be a clean clock signal. Have fun.

One Last Word

Be creative. Be patient with yourself. Breadboard your prototype before you start building onto your printed circuit board.

Lesson 48
Your Project: If You Can Define It, You Can Make It!

Lesson 48 includes the following for building each subsystem of your project:

- The printed circuit board layout
- The schematic laid out onto the PCB
- The parts placement onto the PCB

The possibilities for creating different applications with the subunits of this circuit should be limited only by your imagination. But I have to apologize. There are real limitations to this course. I have strived to provide you with a wide range of printed circuit boards. You can control all of the various inputs for each processor. Be reasonable and realistic in your applications.

If you choose to expand your project beyond the components provided, they should be available at any electronics components store, or order them from www.abra-electronics.com. If you really want to play, there are instructions for creating your own printed circuit boards at www.mhprofessional.com/computingdownload.

WIRE TYPE: A comment is necessary regarding the type of wire that you are using as you start to build your project. Up to this point, you have been using 22- to 24-gauge solid-core wire for prototyping on your breadboard. Solid

wire is great for prototyping. But it breaks easily. Bend a piece back and forth 10 times. If it didn't already break, it will soon. As you build your subsystems, use stranded wire to connect them. Stranded wire will bend back and forth without straining itself. But it is difficult to use on breadboards. This wire is readily available at dollar stores, but is disguised as "telephone wire."

Inputs

There are four different types of input switches.

- **The contact switch:** Recall that basic mechanical switches were discussed in some detail in Part Two.
- **The touch switch:** The initial switch using the zener diode is sensitive enough to react to skin's resistance. This is not digital. Connect the push button's wires to pinheads instead.
- **Two Input Digital:** A coin or other action at the SW1 in Figure L48-1 will turn the output of the first gate high for about 20 seconds. You would then have that time to activate the second NAND gate using the SW2.

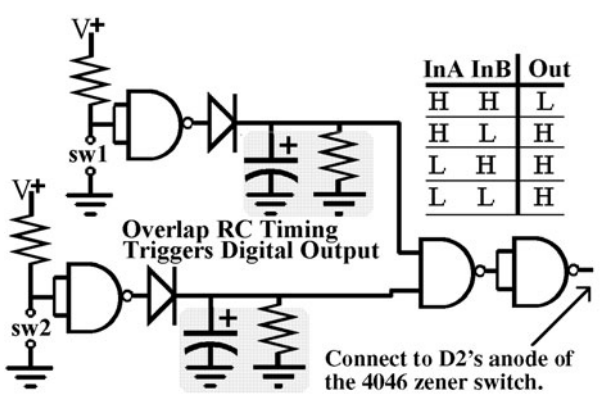

InA	InB	Out
H	H	L
H	L	H
L	H	H
L	L	H

Figure L48-1

The bottom view of the PCB is shown next to the top view parts layout drawing in Figure L48-2.

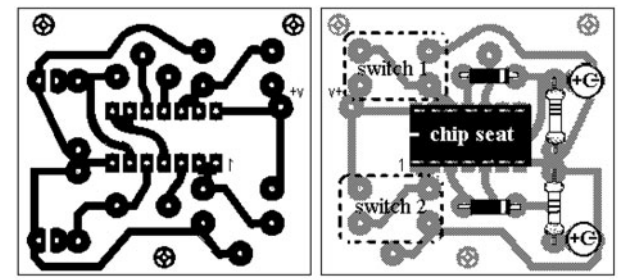

Figure L48-2

Many of the possible variations for these input switches are discussed in depth in Part Two. Use the same layouts and component values, depending on the type of switch you want to build.

- **The Self-Kicking Oscillator:** The schematic for the self-kicking oscillator is shown in Figure L48-3. Remember that the frequency is set by the RC. The inputs of the unused gates have been set to ground.

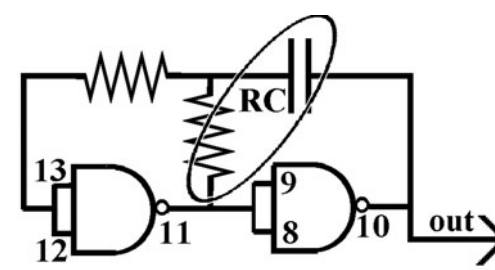

Figure L48-3

The timing for the rolldown can be adjusted, but the oscillation timing should be longer than the rolldown timing if you want the rolldown to stop completely before it gets kicked again. The schematic is shown in Figure L48-4.

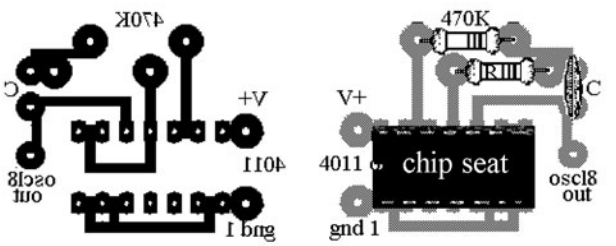

Figure L48-4

Processors

There are many processor systems and subsystems here. Each has its major input and a vairety of minor inputs. The potential combinations are limited only by your imagination.

VCO and Timed Off

The heart of the system's rolldown is the VCO's reaction to the voltage drop of RC1. To save space, three subsystems have been grouped together on one printed circuit board. Naturally, RC1 and the 4046 VCO would inhabit the same board. I've included the Timed Off circuit on this board as well. Figure L48-5 shows the individual schematics that exist on this one PCB.

This does make for a more complex PCB layout, as you can see in Figure L48-6. Note that the components that make up the Timed Off portion have been marked with an *.

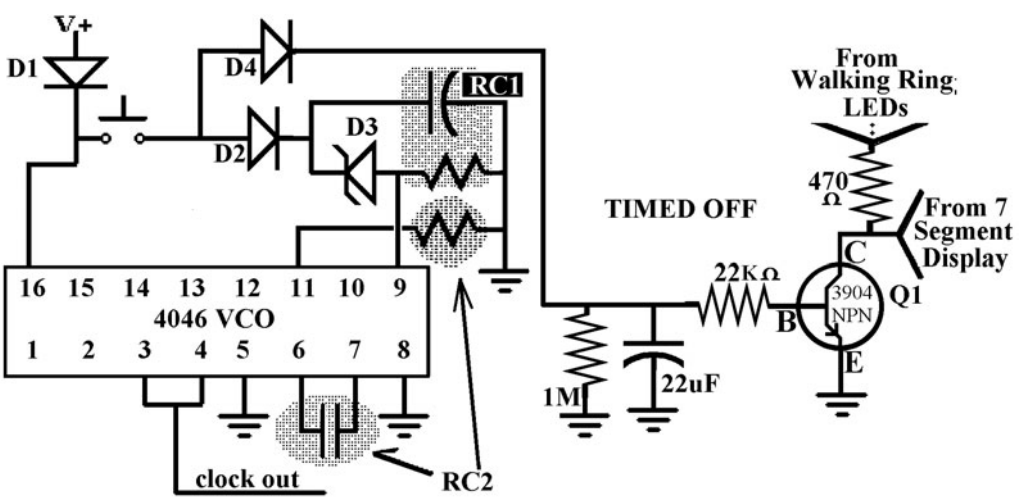

Figure L48-5

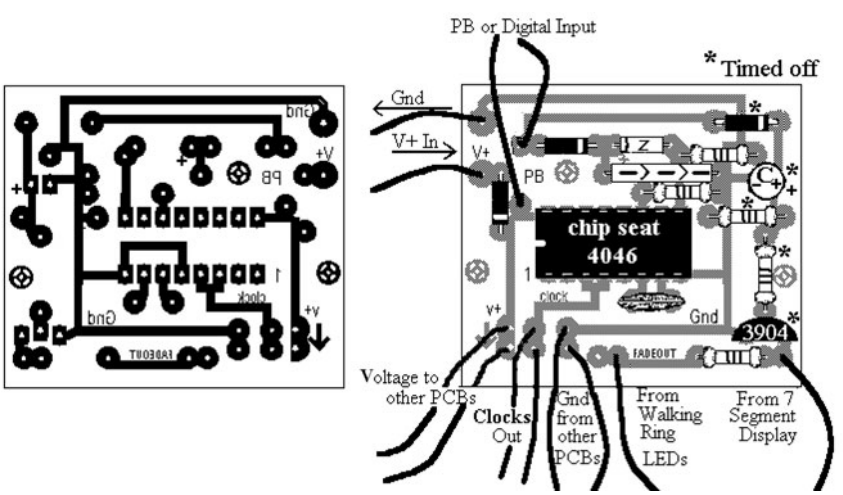

Figure L48-6

Because the PCB is fairly crowded, another view in Figure L48-7 is provided. This top view identifies each component by value and relation.

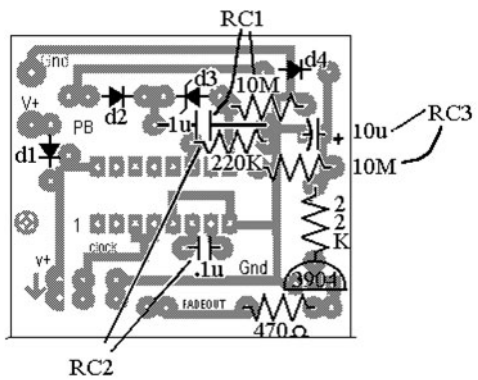

Figure L48-7

The Walking Ring

The schematic of the 4017 walking ring in Figure L48-8 says it all.

Remember that any digital high can be used to control the reset or enable. Otherwise, these inputs need to be held low. Figure L48-9 shows the PCB and parts layout.

Even thought this is not as complex as the previous PCB, Figure L48-10 emphasizes the extra control inputs available on the walking ring PCB.

The LEDs are not expected to live on this PCB. Remember to use stranded wire to connect the LEDs. Also, there is no ground connection for the

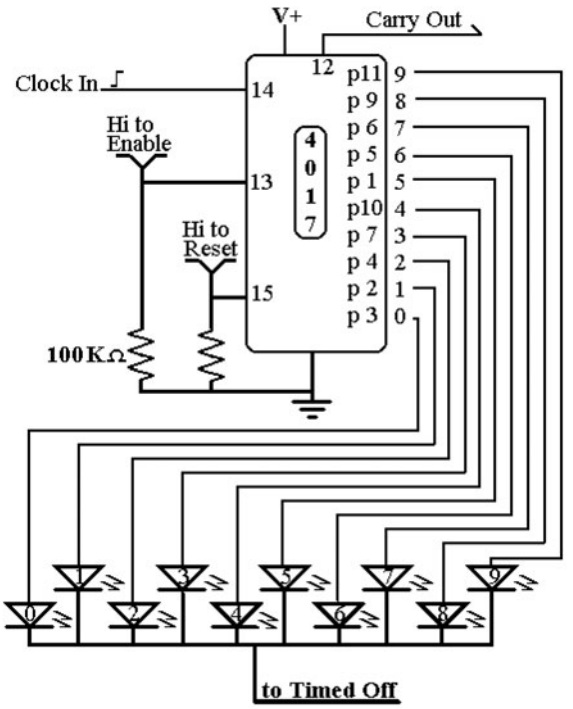

Figure L48-8

LEDs on the 4017 PCB. That is because each of the LED's negative legs (cathode) is wired together, as shown in Figure L48-11, and that one connection leads back to the Timed Off circuit.

So now you have 10 or so LEDs floating on wires. They can be neatly mounted onto an enclosure using the LED collars. The collars fit snugly into holes made by a 7-mm or 9/32" drill bit. Figure L48-12 shows how to use these marvelous little items.

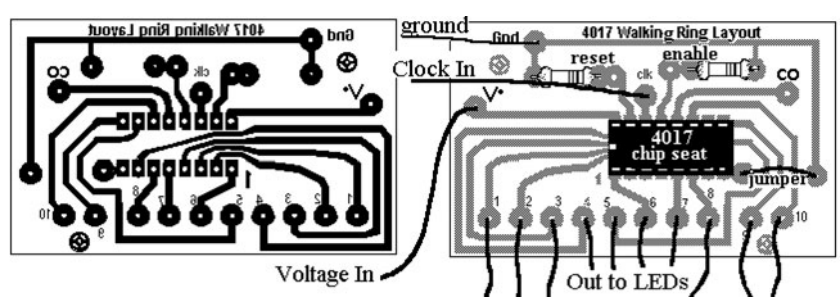

Figure L48-9

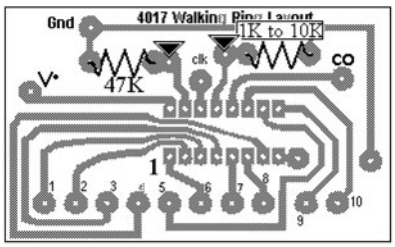

Figure L48-10

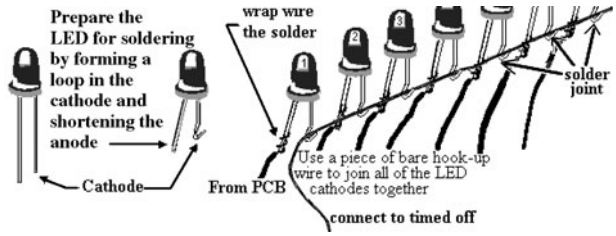

Figure L48-11

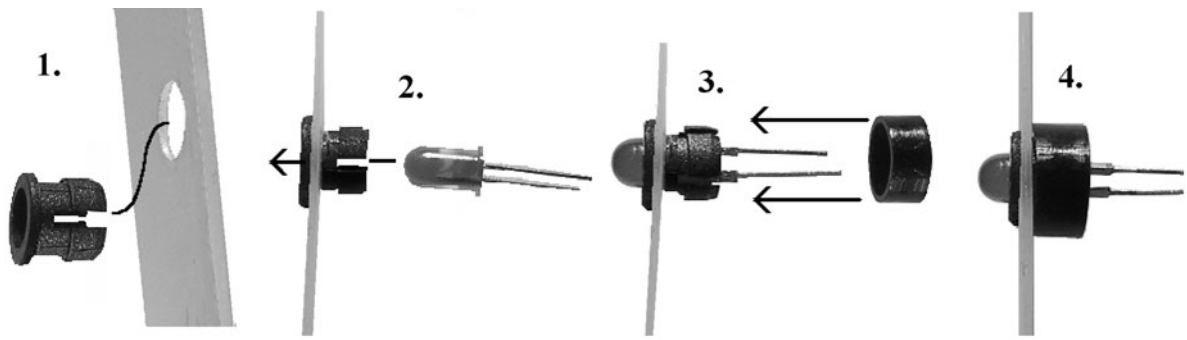

Figure L48-12

4516/4511 and Number Display

Examine the schematic in Figure L48-13.

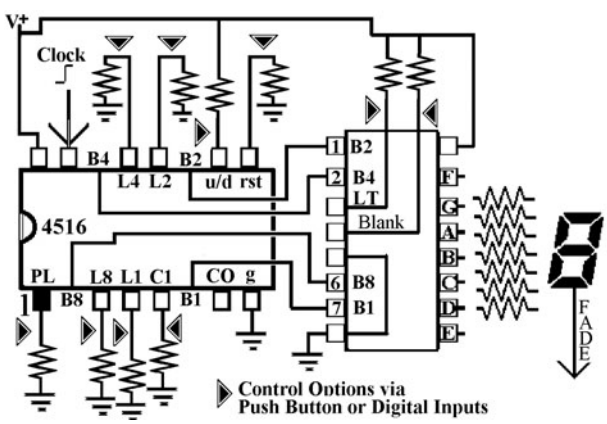

Figure L48-13

Inputs, Inputs Everywhere

Consider all of the preloads as a single input. They have to act together, and are controlled by pin 1 of the 4516. Also, ignore carry-in unless another 4516 feeds to it. So there are really only five inputs on this subsystem.

The printed circuit board layout and parts placement are all displayed nicely in Figure L48-14.

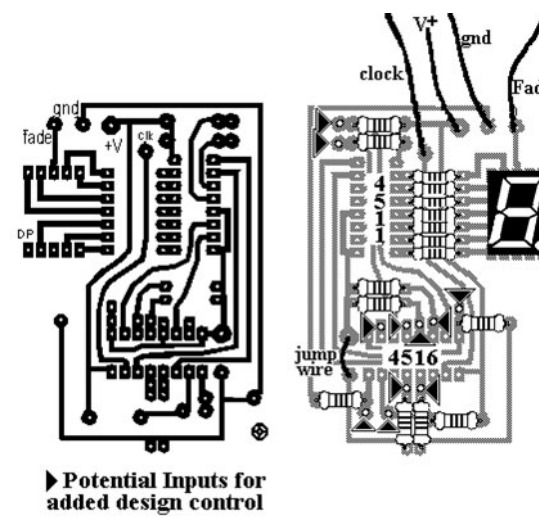

Figure L48-14

Remember to use stranded wire for all of the connections to the other subsystems. All of the resistors are marked either 100 kilo-ohms or 470 ohms in Figure L48-15. These are necessary to condition all of the many inputs that exist.

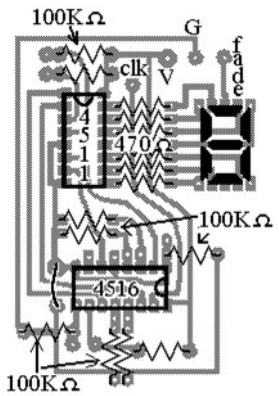

Figure L48-15

That's really all there is to it. The rest is up to you.

PART FOUR

Amplifiers: What They Are and How to Use Them

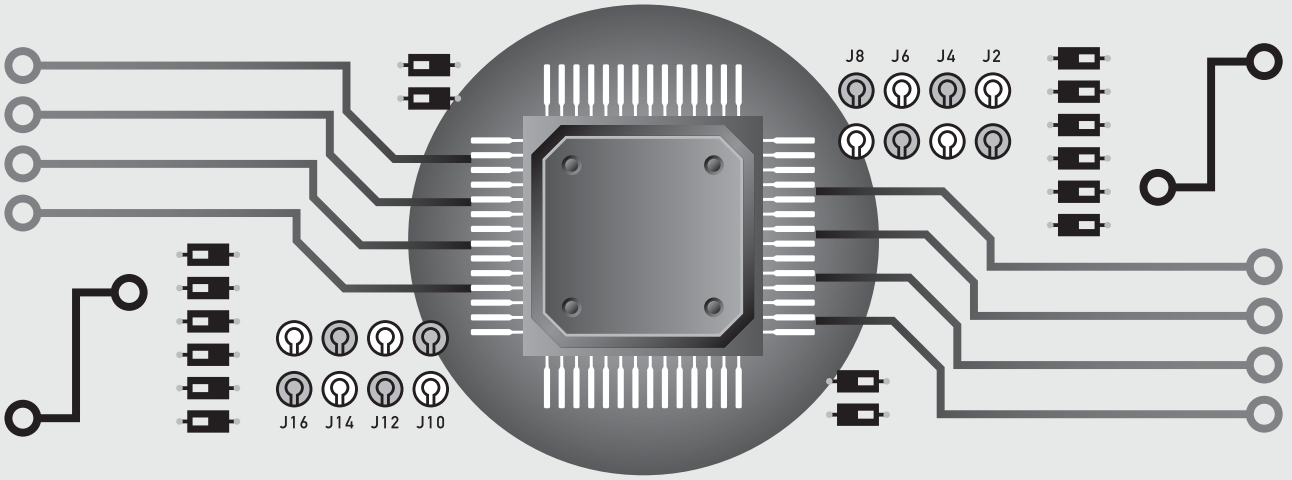

This page intentionally left blank

Pump Up the Volume

Where would we be without amplifiers? The telegraph system was invented in 1844 long before amplifiers existed. The figure below shows an early input key. The signal had to be relayed down the line from each station because it weakened with distance. Imagine our world without amplifiers. It would be a quiet place.

The Parts Bin on the following page has the complete parts list used in Part Four.

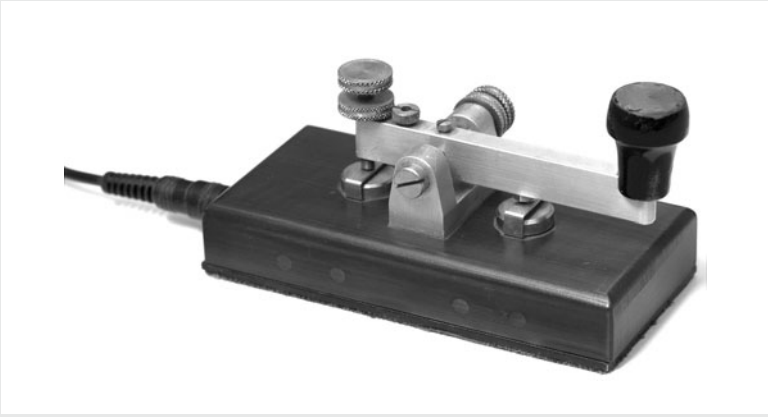

Imagine our world without amplifiers. It would be a quiet place.

PARTS BIN FOR PART FOUR		
Description	**Type**	**Quantity**
2N-3906 PNP transistor	TO-92 case	2
2N-3904 NPN transistor	TO-92 case	2
LED	5 mm	1
Electret microphone	Mic	1
10 Ω	Resistor	1
100 Ω	Resistor	2
100 kΩ	Resistor	2
1 kΩ	Resistor	2
4.7 μF	Capacitor	1
470 μF	Capacitor	1
1000 μF	Capacitor	1
8 ohm	Speakers	2
100,000 ohm 1/2 watt	Potentiometer	1
LM 741 op amp	IC	1
Audio transformer	Transformer	1
Alligator clips (red and black)	Hardware	1 each
1/8″ plug	Hardware	1
1″ heat shrink 1/8″ d	Hardware	2
Speaker wire	Hardware	4 meter 12′
4PDT	Switch	1
Door phone	PCB	1

■ Not all components will be consumed by project work.

SECTION 15

What Is an Amplifier?

Water is always a great analogy. A small amount of power on the handle allows a very large amount of power to flow from the source through the amplifier.

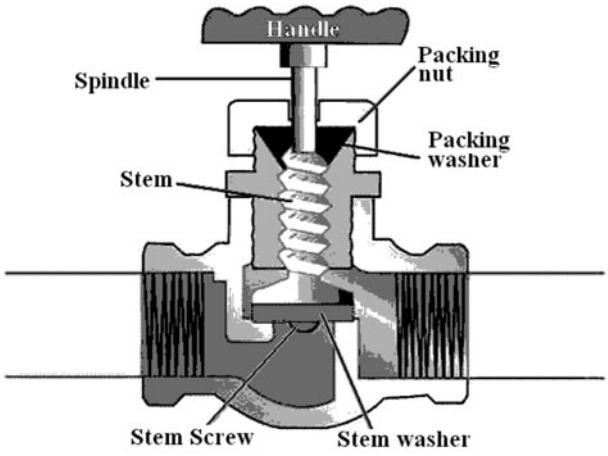

Lesson 49
Transistors as Amplifiers and Defining Current

So, what is an amplifier? It takes a small signal and makes it bigger. Signals are made of both voltage and current.

The definition from dictionary.com is very simple.

> **am·pli·fy**—verb. 1. To make larger or more powerful; increase. 2. To add to, as by illustrations; make complete. 3. To exaggerate. 4. Electronics—To produce amplification of or to amplify an electrical signal.
>
> **am·pli·fi·er**—noun. 1. One that amplifies, enlarges, or extends. 2. Electronics—A device, especially one using transistors or electron tubes, that produces amplification of an electrical signal.

Review

We've applied the transistors as amplifiers in a few ways. You may not have recognized it at the time. Let's review what you did.

Remember the Night Light

Its action is shown in Figure L49-1. The signal given to the base of the NPN transistor is amplified.

The voltage divider created by the potentiometer and the LDR control the voltage to the base of the transistor. Remember, the voltage at that point is dependent on the following:

1. The setting of the potentiometer
2. The amount of light on the LDR

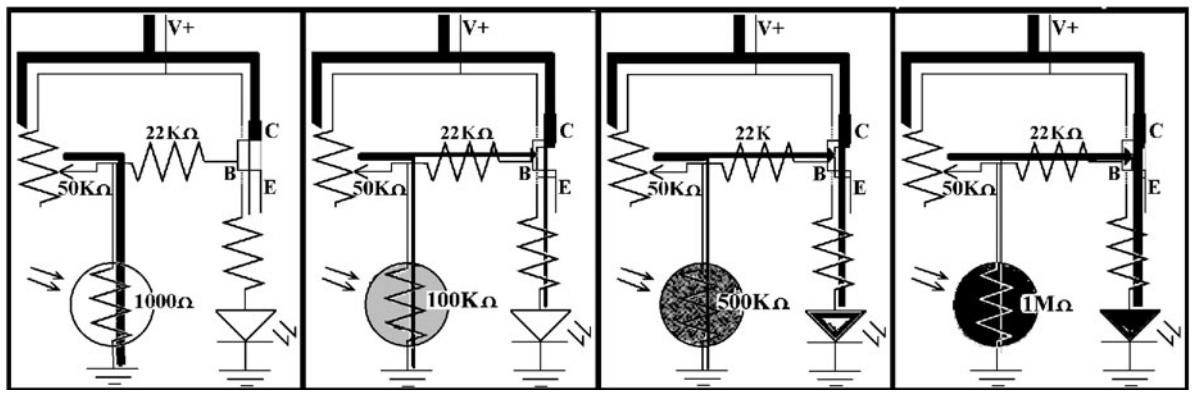

Figure L49-1

The signal to the base of the transistor has little power, not even enough to turn on an LED, because so little current gets through the 100-kilo-ohm potentiometer set at midrange.

The action of how the signal to the base is amplified by the NPN transistor is demonstrated in Figure L49-2. This action acts as a valve controlling the power source to the LEDs:

- The smaller signal controls the transistor's valve action.
- The resulting amplified signal from C to E is a much more powerful version of the original small signal.

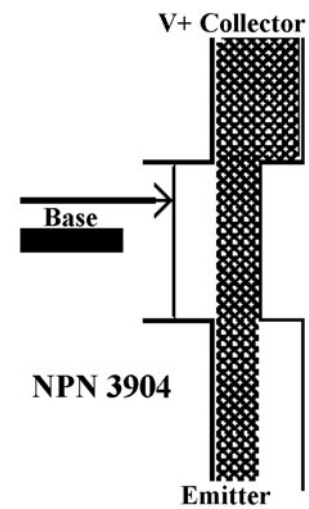

Figure L49-2

Audio for the NAND Gate Oscillator

Remember when you first connected your speaker directly to the NAND gate output? The signal was so quiet that you had to place your ear right on top of the speaker to hear it … and that was in a quiet room. The amount of current passing from V+ to pin 10 when it was low was enough to light an LED, but not enough to really shake the speaker. This is the schematic in the left side of Figure L49-3.

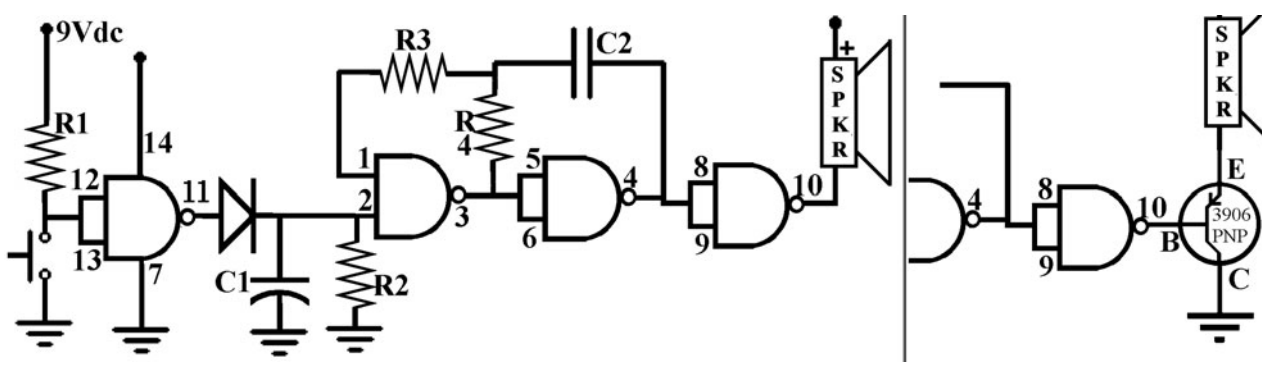

Figure L49-3

That small signal to the base was amplified by the PNP transistor, shown inserted into the schematic in the right side of Figure L49-3. The small signal was used to control the transistor valve action that controlled the power directly from the voltage source.

The weak signal to the base was amplified by the PNP transistor, providing plenty of power to the speaker coil to make an amazingly annoying loud sound.

"Wait a minute …," you say. "Didn't the digital gate provide 9 volts, and the transistor gave 9 volts as well, so why was the transistor output more powerful?"

Calculating the Current: Amperage

The difference was not in the voltage, the push behind the electrons, but in the quantity of electrons being pushed, the current.

Figure L49-4 starts a very practical way of picturing *current in an electrical system*.

Figure L49-4

In electronics, voltage is the push behind the flow, or the force.

For a creek, gravity is the push, the force behind the flow, as water runs downhill.

A creek, by definition, has little current. Current is measured by how quickly water passes by in liters per second or cubic feet per second. This creek has a current of 5 ft^3/s.

cur·rent (noun). 1. A steady, smooth onward movement: a current of air from a fan; a current of spoken words. Synonyms—flow. 2. The part of a body of liquid or gas that has a continuous onward movement: *rowed out into the river's swift current*. 3. A general tendency, movement, or course. Synonyms—tendency. 4. Symbol I, Impedance (a) A flow of electric charge. (b) The amount of electric charge flowing past a specified circuit point per unit time. (dictionary.com)

Now think of a stream like the one pictured here in Figure L49-5. It has a modest current, but you could walk across it.

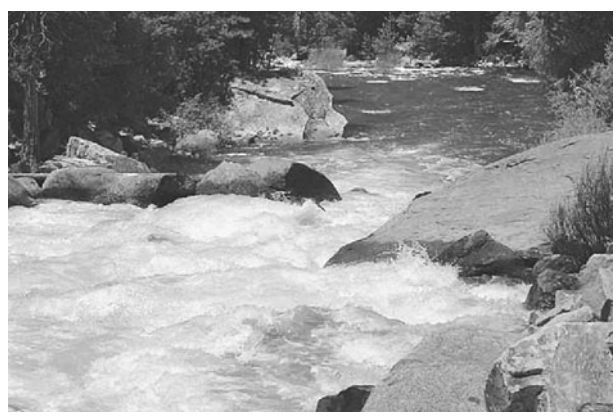

Figure L49-5

Consider that the downhill "slope" is the same as the creek. The force is the same, but the big difference is the "current," the amount of water. It is more powerful.

This stream has a current of 100 ft^3/s.

This river pictured in Figure L49-6 has a very large current. Even though it has less "slope" as the creek and stream shown, it has more water flowing by a single point, every second. If you tried to swim across, you would be swept away.

Figure L49-6

Obviously, the river is the most powerful. The force is the same, but the difference here is the amount of water. The river has a current of 20,000 ft^3/s.

In electricity, current is electrons passing through a wire.

The standard unit of current is an ampere (Amp or A, for short): 1 Amp = 1 Coulomb/second (1 Coulomb = 10^{18} electrons).

Current is the general term. *Amperage* is the unit of current. The common abbreviation for current is *I* (impedance). People new to electronics say, "It's such a pile of new words. 'I' looks odd." But think of the word *stampede* with a herd of electrons pounding through the wires. Now that's an "impede." There's a wild one shown in Figure L49-7.

Figure L49-7

So how much is a coulomb? How much current is moving through an electronic system? How could we look at the electrical equivalent to a creek in Figure L49-8 and figure the current used by an LED?

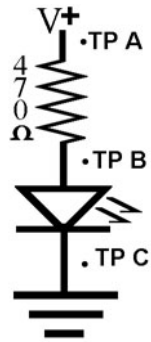

Figure L49-8

The current is a quantity we cannot measure directly with the tools at hand. But we can figure the amperage by using Ohm's law. Ohm's law simply states that V = IR, where George Ohm calculated that the amount of pressure in a circuit is directly related to the amount of current passing through the load.

Unit	Measuring
V = Voltage	Voltage is the unit of force.
I = Amperage	Amperage is the unit of current (impedance).
R = Ω	Ohm is the unit of resistance.

Here's how Ohm's law works. Think of a hose. A regular garden hose will do. The hose in Figure L49-9 has a fixed diameter, so the resistance is not going to change.

The higher the pressure, the more water flows through it. The lower the pressure, the smaller the current becomes.

But if you change the resistance as demonstrated in Figure L49-10 and Figure L49-11, that affects the amount of current, too.

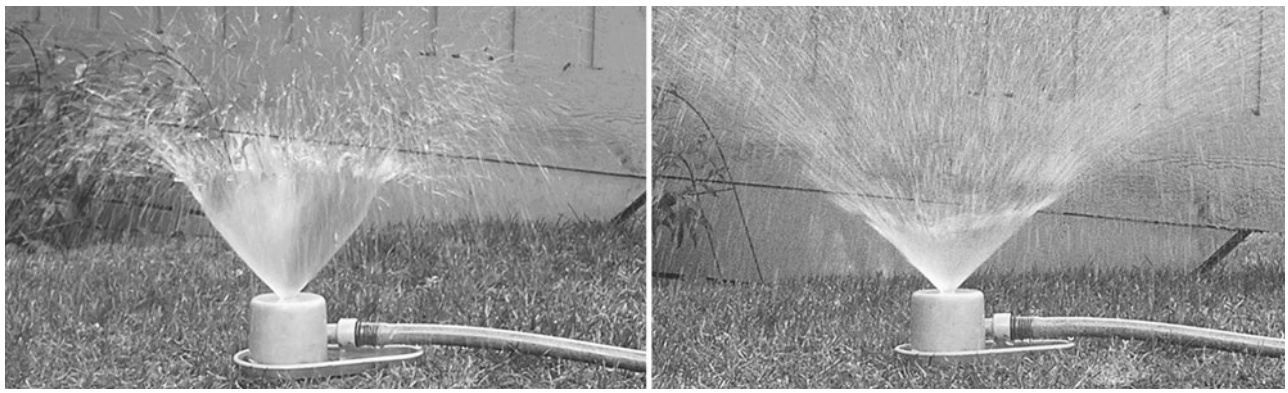

Figure L49-9

Figure L49-10

Figure L49-11

The fire hose shown in Figure L49-12 offers very low resistance because the hose is bigger. It is able to handle lots more current, but the pressure from the city supply is the same.

Figure L49-12

Back to Ohm's Law (V = IR)

This is a simple three-variable equation: $A = B \times C$. If you know two variables, you can figure the third. But how would you figure the current in the simple LED circuit shown in Figure L49-8?

To figure the current flowing through the LED's circuit, you need to know (a) the voltage used by the resistor (the pressure drop) and (b) the resistance.

Now, back to considering the basic circuit. Let's make some assumptions.

1. The power supply is a perfect 9 volts.
2. "R": The resistor's value is a perfect 470 ohms.
3. "V": Connect power and measure the voltage drop across the resistor—from TP a to TP b. The voltage drop across the resistor is 7.23 volts. V = IR so:

$$\frac{V}{R} = I$$

$$7.23\ V = I \times 470\ \Omega$$

$$I = 0.0153\ A$$

So we just figured out how much current passed through the resistor. Does that tell us how much passes through the LED? Yes, it does. Consider the following:

> A simple statement. Unless some is added or taken away:
>
> - The current in a hose is the same along the entire hose.
> - The current in a creek is the same along the entire creek.
> - The current in a simple circuit is the same throughout the entire circuit.
>
> For a simple circuit, the amount of current is the same throughout the system. The current (I) passing through the resistor is the same amount of current through the LED as well.

Exercise: Transistors as Amplifiers and Defining Current

1. Define amplifier as it relates to electronics.

   _____

2. Match these units to the terms they represent.

   V, A, W, hose width, force, coulombs per second, gravity, ft^3/sec, I, R, current

Pressure	Current	Resistance

3. Define the two combined factors that make a current.

   a. _____

   b. _____

4. What is a basic unit used to show current in the following?

   a. Water system

   _____

   b. Electrical system

   _____

5. Write without scientific notation how many electronics there are in a 1-coulomb charge.

   _____

6. There are 0.0153 amperes in the LED circuit. Write out exactly how many electrons pass a single point in the wire in 1 second.

   _____ = $1.53\ 10^{16}$ electrons

   Recognize that this is considered a very small current.

7. Now it is time to observe the actual effect that different resistors have on the current.

   In Lesson 5, you used the same circuit as the one shown in Figure L49-13. At that time, you observed what happened as you changed resistors. Now you get to understand what happened.

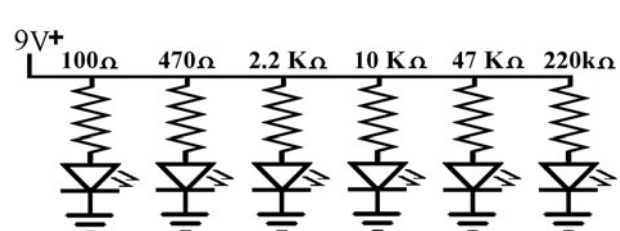

Figure L49-13

Measure the resistors used here with your DMM. Do all figuring here to three significant figures. This means that in terms of accuracy, all numbers have three digits. For example, a 10-kilo-ohm resistor has two significant figures because the color coding only shows two digits. On the DMM it might show 9.96 kilo-ohms. That shows three significant figures.

You can copy most of the information from the exercise you did for Lesson 5 to Table L49-1.

8. Think of your garden hose.

a. If you turn the hose on, the pressure comes from where?_____

b. Pressure in an electronic system is called what? _____

c. If you leave the pressure the same and squeeze the hose, this increases what? _____

d. As you increase the resistance, what happens to the current?_____

e. If voltage in a system remains constant, current will decrease if resistance is what?_____

f. Conversely, the current will increase when resistance is what?_____

Lesson 50
Defining Work, Force, and Power

What are we amplifying? Here you learn how work, force, and power are defined and measured in electronics. Amplifiers by their very nature are analog devices. The transistors you've worked with are analog. They responded to any voltage to the base in varying degrees. Remember, NPN was turned on by more voltage to the base, and the PNP was turned off as the voltage increased. Here you will be introduced to the two types of amplifiers that match the opposite actions of the transistors you've already dealt with.

What Is Force?

Force is the amount of energy exerted. In Figure L50-1, Atlas is exerting a force to hold up the sky. But by definition, no work is happening because there is no movement. If an object is not moved, no work is done, no matter how great the force.

TABLE L49-1 Information from the Exercise

Resistor in Order	DMM Resistor Value	Voltage Drop Across Resistor	Current in System Amps = $\frac{V_{drop}}{\Omega}$	Voltage Drop Across the LED
100 Ω	_____Ω	_____Volts	0._____ A	_____Volts
470 Ω	_____Ω	_____Volts	0._____ A	_____Volts
2.2 kΩ	_____Ω	_____Volts	0._____ A	_____Volts
10 kΩ	_____Ω	_____Volts	0._____ A	_____Volts
47 kΩ	_____Ω	_____Volts	0._____ A	_____Volts
220 kΩ	_____Ω	_____Volts	0._____ A	_____Volts

Figure L50-1

Force is measured in newtons. Roughly, 1 newton will move about 100 grams of mass upward against the force of gravity as demonstrated in Figure L50-2. Actually, it is 98 grams, but 100 is easier to remember.

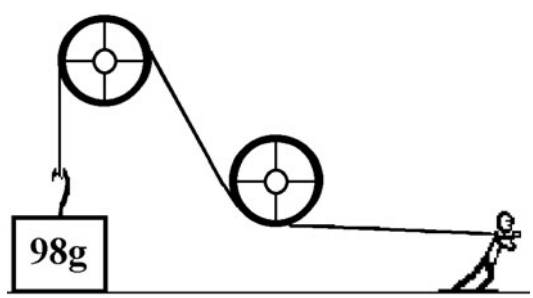

Figure L50-2

The force in electricity is measured in volts. The matter being moved is electrons. This is shown in Figure L50-3.

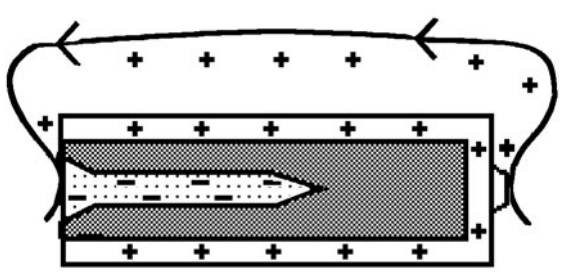

Figure L50-3

What Is Work?

Work is measured as the amount of force exerted on an object through a distance. There has to be both force and distance for work to be done. Work is measured in standard units of newton-meters or joules: 1 N-m = 1 J. The terms are interchangeable.

The distance can be done via a bottle rocket or a snail as shown in Figure L50-4. The speed doesn't matter.

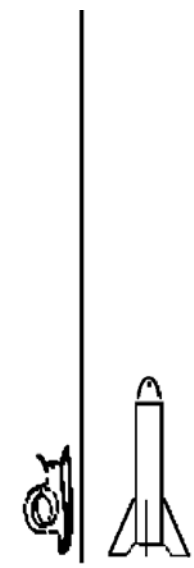

Figure L50-4

Watt Is Power?

Power is the *rate* that *work* is *done*. The standard unit of power in electricity is watts. One watt is the standard power unit defined by the force needed to move 98 g upward against gravity 1 meter in 1 second. This is graphically shown in Figure L50-5.

Two items can have the same force exerted on them, but can have different power. The bottle rocket may do 1 joule of work in 0.01 second. That works out to 100 watts. The snail may take 1,000 seconds to do the same work. It has a power of 0.001W.

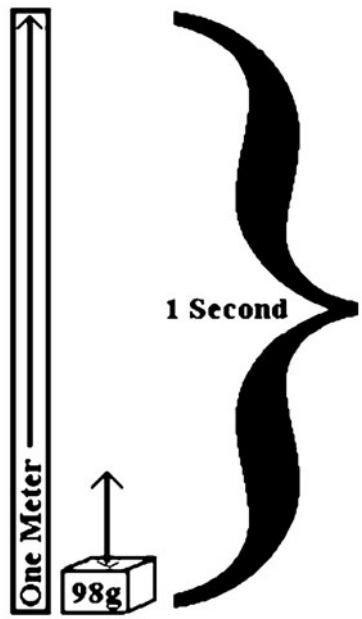

Figure L50-5

But look at the power in different water systems. The force of gravity pulls water over the edge of the cliff in both of the waterfalls shown in Figure L50-6. The current of both waterfalls has the same force of gravity on them. It is 180 feet at each of these falls. But power is defined by the current multiplied by the force. By definition, the current includes both quantity and rate. I would stand under only one of them.

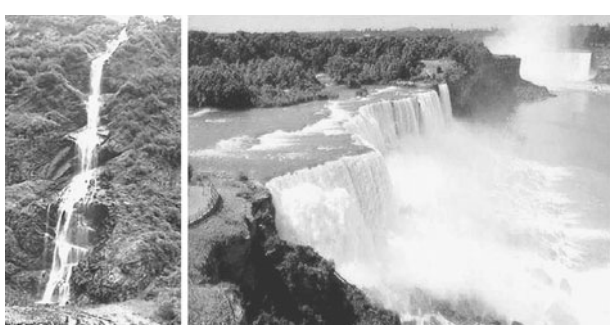

Figure L50-6

Multiply the current by the voltage, and that gives power. In any system, power is determined by how fast work is done.

- In these natural water systems:

  Power = current × force

  Current = ft^3/s = the amount of water passing by and how fast it is flowing

  Force = slope = the amount of push behind the current, the pressure
- In electrical systems:

  Power = current × force

  Force = voltage

  Current = amperage measured as a standard where 1 A = 1 C/s

  Remember that 1 C is a standard mass of electrons.

  Power is measured in watts.

  1 W = 1 A × 1 V

The LED is a low-power light output. How much power is used by the LED? Consider the basic circuit shown here in Figure L50-7.

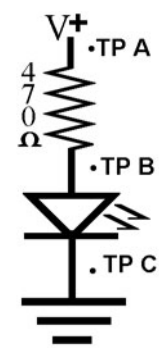

Figure L50-7

To figure the power used by the LED, you need to know both voltage and current.

Now this becomes a three-step process. But they are three simple steps.

1. You need to measure the voltage drops across the LED (TP B to TP C).
2. Then you have to calculate the current moving through the resistor. V = IR, where voltage is now the drop specifically across the resistor.

TP A to TP B. There is no way to measure the resistance of the LED to otherwise help figure out the current. Remember that the current moving through one component in series is the same current for all components along that line.

3. Then you calculate the power.

Voltage drop across the LED multiplied by the current in the system equals power used by the LED.

Your numbers should be close to the sample provided. Plug these numbers into the formula for power:

Watts = Volts × Amperes

0.0270 W = 1.77 V × 0.0153 A

Oooh! 27 milliwatts. Brilliant.

Exercise: Defining Work, Force, and Power

1. Force is the amount of energy exerted. It is measured in what units? _____
2. Roughly 1 N moves _____ grams upward against the force of gravity (specifically it is _____ g).

   Work = Force × Distance
3. Work is the amount of _____ exerted on an object over a _____.
4. If an object is not moved (or the distance equals zero), how much work is done?
5. The unit used to measure work is _____.

   Another name for the same unit is joules.

   1 joule = 1 _____.
6. Both are equal to the amount of work done when moving ____ g __m upward.
7. Power is the _____ that work is being done.
8. The common unit for power is _____, abbreviated as _____.
9. Provide an example where two items have different amounts of power output even though the same force is exerted on them.

   You probably already know that 1 W = 1,000 mW (milliwatts). The prefix "milli" represents a thousandth (0.001). You've seen it in chemistry (mL) and physics (mm).

   Power for electricity is figured using the formula watts = volts × amperes.
10. The LED sample power output is 0.027 watt.

    That is _____mW.
11. You have seen in the previous exercise how increasing resistance dampens current. The power output is directly proportionate to the current available. If the supply voltage remains constant and the resistance increases, the current decreases.

    Don't breadboard the setup in Figure L50-8. You did this same set of resistors early on, and you can copy the values directly from the exercise sheet you did in Lesson 5.

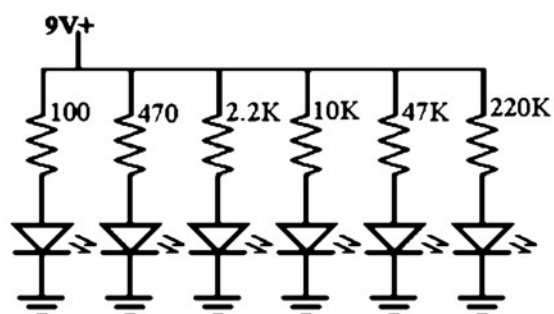

Figure L50-8

Calculate the power available to the LEDs for each setup (Table L50-1).

TABLE L50-1 Power Available

R Value Measure	V + to Gnd	Current in System $\frac{\Omega}{\text{Ohms}}$ = Amp	Voltage Drop Across the LED	LED Brightness	Power Used by LED
Copy	Copy	Calculate	$V_{total} - VR = V_{LED}$	Copy	W = (V) (I)
100 Ω	___Volts	0.____ A	____Volts	_____	_0._____W
470 Ω	___Volts	0.____ A	____Volts	Normal	_0._____W
2.2 kΩ	___Volts	0.____ A	____Volts	_____	_0._____W
10 kΩ	___Volts	0.____ A	____Volts	_____	_0._____W
47 kΩ	___Volts	0.____ A	____Volts	_____	_0._____W
220 kΩ	___Volts	0.____ A	____Volts	_____	_0._____W

12. John's car has a 150-watt amp working off 12 volts. His parents have a 22-watt home system that runs off 120 volts. Which system is more powerful?

(Hint: What is the color of George Washington's white horse?)

_____

13. What is the current in a 100-watt light bulb working off 120 volts? _____

People used to say the standard lighting needed to read was the light provided by a 100-watt incandescent light. The same amount of light can be provided by five ultrabright white LEDs at 50 mA each.

14. Compare LEDs for power usage (see Table L50-2).

15. Use Ohm's law to calculate the amount of current passing from C to E in Figure L50-9.

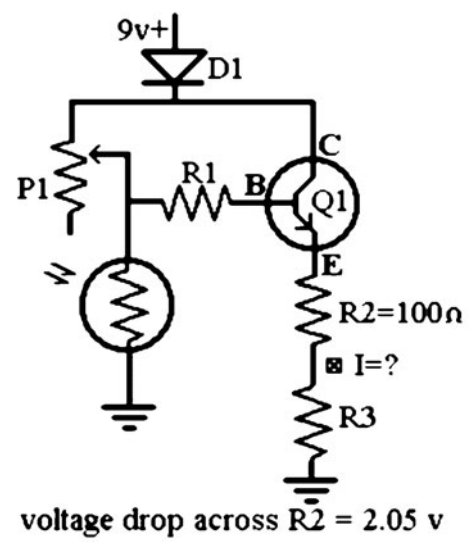

Figure L50-9

TABLE L50-2 Power Usage

Type	Voltage	Current	Brightness	Power
Regular red diffuse	1.8 v	30 mA	2,000 mcd	
Regular green diffuse	2.1 v	30 mA	2,000 mcd	
Regular yellow diffuse	2.3 v	30 mA	2,000 mcd	
High-intensity yellow	2.1 v	50 mA	6,500 mcd	
Ultrabright red	2.4 v	50 mA	8,000 mcd	

16. How much power is available at the point between R2 and R3? _____mW
17. Is this enough power to light up an LED? Yes / No

Lesson 51
What Do I Have to Gain?: Definitions

As you turn the volume control on your radio, the potentiometer's changing resistance isn't just using up some of the power to the speakers. Its actions are much more subtle. Amplifiers use an efficient method to control their power output. Read on and see what you have to gain.

Defining Gain

In an amplifier, the input signal is small and the output signal is big! *Gain* is the ratio that compares input to output.

- Gain = output/input
- Gain = $signal_{out}/signal_{in}$

Gain is a statement of a basic ratio. It has no standard unit because the ratio compares identical unit values, such as current.

- Gain = I_{out}/I_{in}

Gain in the NPN Transistor

Set up a modified version of the night light circuit. The schematic in Figure L51-1 shows a few changes needed to calculate the gain of the NPN 3904 transistor.

1. R1 at 47 kilo-ohms simulates the potentiometer set to midrange.
2. R2 will be various resistors simulating the LDR at different light levels. Bright light would have low resistance.

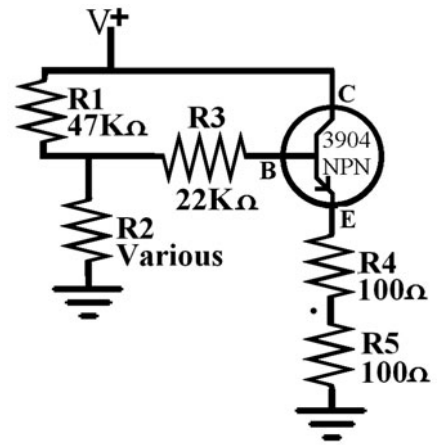

Figure L51-1

3. R3 is 22 kilo-ohms. I never did explain before what it did. It restricts current to the base (input) of the transistor.
4. In Figure L51-2, R4 and R5 make a voltage divider. Measuring the voltage drop across R4 makes it an easy task to calculate the current available at the emitter (output).

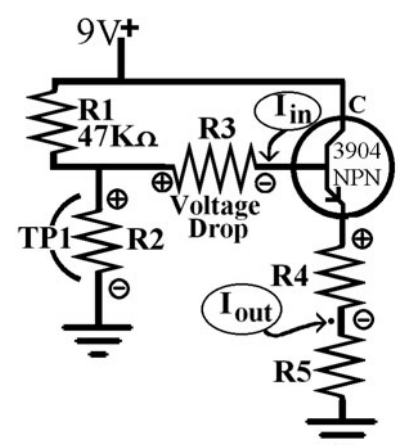

Figure L51-2

How would we calculate gain for this setup?

This is a matter of comparing the current input and current output.

They get set into a ratio, and there is your gain.

Gain = I_{out}/I_{in}

Table L51-1 was done with a 12-volt wall adapter as a power supply. The readings here will not necessarily match your readings.

TABLE L51-1 Ratio and Gain

	R2	VTP1	V_{drop} R3	I_{in} (base) V/Ω = A	V_{drop} R4	I_{in} @ R4 V/Ω = A	Gain = I_{out}/I_{in}	Power Used by R4 W = V x A	Power @ E P_{R4} + P_{R5} = P_{total}
1	1 M	7.54 V	2.83v	2.83 V/ 22,000 Ω = 0.129 mA	2.05v	2.05 V/ 100 Ω = 20.5 mA	20.5 mA/ 0.129 mA Gain = 159	2.05 V 20.5 mA = 0.042 W	0.082 W = 82.0 mW
2	470 K	7.39 V	2.73v	0.124 mA	2.0v	20 mA	161	0.040 W	80.0 mW
3	100 K	6.23 V	2.27v	0.105 mA	1.64v	16.4 mA	159	26.9 mW	53.2 mW
4	47 K	5.10 V	1.83v	0.083 mA	1.29v	12.9 mA	155	16.6 mW	33.2 mW
5	10 K	2.26 V	0.718v	0.033 mA	0.433v	4.33 mA	131	1.87 mW	3.74 mW
6	4.7 K	1.26 V	0.299v	0.013 mA	0.15v2	1.52 mA	116	0.231 mW	0.462 mW

For figuring the power output of the transistor, the following considerations have been made:

1. Since R4 = R5, they both use the same amount of power.
2. The voltage drop across both loads is identical.
3. The current on the same line is unchanged.
4. They use all the power available from the transistor.
5. Therefore $P_{R4} + P_{R5} = P_{Emitter}$

Remember that the LED used 27 mW of power. Based on the numbers developed in this sample, the LED begins to fade when there is a bit less than 50 kilo-ohms on R2 because from that point on, there is not enough power.

Exercise: What Do I Have to Gain: Definitions

1. Test the quality of your transistors using the DMM diode test. Record your readings in Table L51-2.

   For the circuit-test DMR 2900 multimeter, you first set it to "Continuity" and then press the DC/AC button. The symbol in the top-left corner changes from the "beeper" icon to a diode symbol. Many multimeters simply use the continuity tester to give the reading.

2. Before we move into measuring a complex circuit, let me prove to you that when you calculate the current in one portion of a circuit, that current is the same for the remainder of that circuit. You don't need to make the simple schematic shown in Figure L51-3. All the needed information is there.

TABLE L51-2 Readings

NPN 3904	The Readouts Are ± 5%	PNP 3906	
E_{re}d to B_{black}	(expect OL)	E_{red} to B_{black}	(expect 0.68)
B_{red} to C_{black}	(expect 0.68)	B_{red} to C_{black}	(expect OL)
E_{black} to B_{re}d	(expect 0.68)	E_{black} to B_{red}	(expect OL)
B_{black} to C_{red}	(expect OL)	B_{blac}k to C_{red}	(expect 0.68)

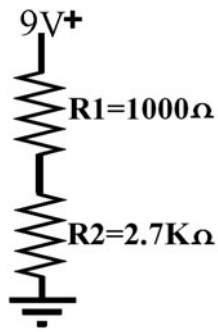

Figure L51-3

Now how much voltage is used across R1 and R2 individually?

Remember the formula to calculate this was:

$V_{drop} = V_{total}$ [R1/(R1 + R 2)]

V_{drop} across R1 = ____

V_{drop} across R2 = ____

3a. How much current is passing through R1?

Use Ohm's law: V = IR

$$\frac{V}{\Omega} = A$$

V_{drop} across R1/1,000 Ω = current at R1

3b. How much current is passing through R2?

V_{drop} across R2/2,700 Ω = current at R2

4. Is the current through R1 and R2 nearly identical? Does IR1 = IR2? Yes/No

5. If you want to set up a test circuit, go ahead and do the real measurements. Remember that you can use three significant figures if you measure the resistance with the DMM directly. Use only two if you don't measure the resistance but just use the color code.

6. Now, referring to the schematic in Figure L51-2, use the values shown for R2. R2 is the only resistor that changes values. R3 keeps the 22 kΩ value shown in Figure L51-1 (see Table L51-3).

Lesson 52

The World Is Analog, So Analog Is the World

Here we finally get to see how an amplifier relates to the real world. But keep in mind that this is not digital. Nothing in the real world is digital. Analog is the world.

Amplifiers are analog systems. They deal with changing voltage. Modern technology promotes the use of digital storage and transfer of information. As well, we have digital transmission of information on cable and the Internet. Good amplifiers feed digital information in and provide digital information out. But amplifiers, by and large, deal with sliding analog voltages to duplicate the sound and light as it occurs naturally.

TABLE L51-3 Readings

	R2	VTP1	V_{drop} R3	I_{in} @ B V/Ω = A	V_{drop} R4	I_{in} @ R4 V/Ω = A	Gain = I_{out}/I_{in}	Power Used by R4 W = V x A	Power @ E $P_{R4} + P_{R5} = P_{total}$
1	1 M								
2	470 K								
3	100 K								
4	47 K								
5	10 K								
6	4.7 K								

The Noninverting Amplifier

As shown in Figure L52-1, the NPN transistor works in a very direct manner. As the signal to the base increases, the valve opens. As one goes up, the other goes up in direct proportion. This is a direct relationship. The output is proportional with the same voltage as the input. More voltage in creates more voltage out. Voltage is not inverted.

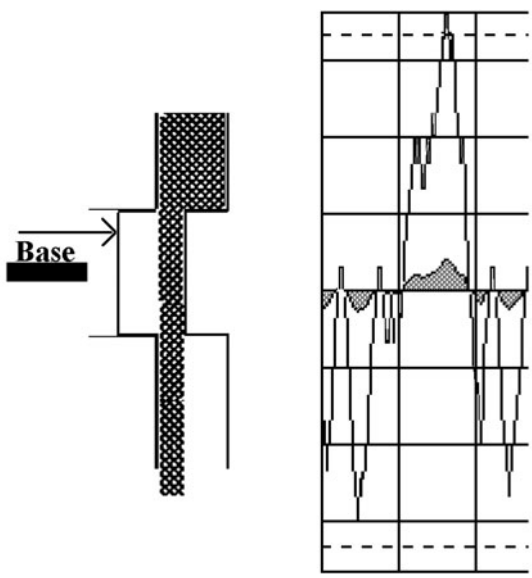

Figure L52-1

The Inverting Amplifier

Look at Figure L52-2. The PNP transistor has the opposite action of the NPN transistor. As the signal to the base increases, the valve closes. As one goes up, the other goes down in direct proportion. This is an opposing relationship. The output is proportional but opposite of the input voltage.

The voltage is inverted, but the *gain* is the same as the NPN because gain is always stated as an absolute value.

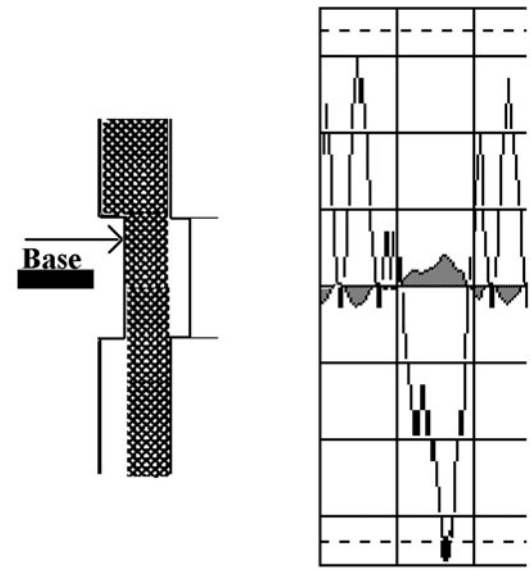

Figure L52-2

The NPN is a "noninverting" amplifier.

The PNP is an "inverting" amplifier.

Of course, in high tech, we have to use fancy words such as *noninverting*.

Definitions

Inverting—to turn upside down.

Noninverting—not to turn upside down. To leave right side up.

The Op Amp

We are going to be using an 8-pin DIP 741 amplifier on a chip. The basic hookup diagram is shown in Figure L52-3. These are called *Op Amps*, short for operational amplifiers. There are many more amplifiers than there are CMOS 4000 series IC chips. Just look at the partial listing at www.mhprofessional.com/computingdownload. Each Op Amp has its own features regarding:

- Power input and output
- Response time

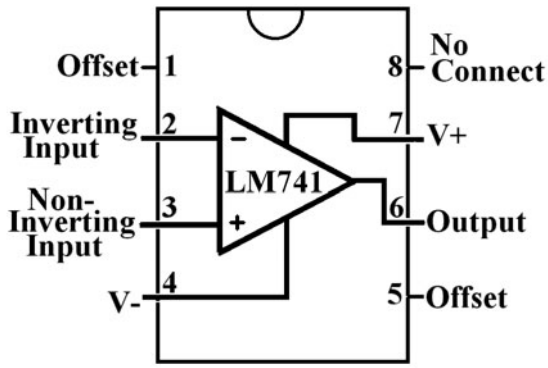

Figure L52-3

- Frequency
- Other factors

The main idea to keep in mind is how any Op Amp works. The Op Amp compares the voltage difference between the two inputs (pins 2 and 3 here) and responds to that difference.

Here we will use the LM741 because of its low power needs and simplicity.

Note that there are both inverting and noninverting inputs.

Exercise: The World Is Analog, So Analog Is the World

1. Which input pin of the LM741 has action similar to the NPN transistor? pin _____
2. That action is called what? _____
3. Define the term *inverting amplifier*.

   _____

4. For an inverting amplifier, what is the gain when the output is − 100 mV and the input was + 10 mV? Be aware that gain is always stated as an absolute value.

   a. − 10

   b. + 10

   c. − 0.1

   d. + 0.1

5. Look at www.mhprofessional.com/computing download for a partial list of amplifier ICs that are available on today's market. Would I be right in saying that there is a limited selection of amplifiers available to work with?

   Download a full LM741 data sheet at http://cache.national.com/ds/LM/LM741.pdf. You need to have Adobe PDF reader installed to be able to access this document.

6. On the LM741 data sheet, page 1, the LM741 is manufactured in how many package styles?

   _____

7. From the LM741 data sheet, page 2, examine the numbers on your chip. Determine if you are working with a 741, 741A, or 741C.
8. From the LM741 data sheet, page 2, what supply voltage is the LM741 expecting?

   _____

9. More interesting information from the LM741 data sheet, page 2—your solder pen gets up to 400°C—how long can the LM741 endure direct heat from a solder pen? _____
10. Now turn to page 3 of the LM741 data sheet. The LM741 is considered to be a low-power Op Amp. For example, at rest the typical current draw for this Op Amp is what?

    _____

11. And more info from the LM741 data sheet, page 3—when really pushed, the LM741 consumes a whopping _____mW of power.
12. Turn to page 4 of your LM741 data sheet. How many transistors are packaged into the LM741 IC? _____

SECTION 16

Exploring the Op Amp

THE CIRCUIT IN THIS UNIT is a "teaching" circuit. The job of amplifying can be done using a variety of methods, each one cleaner than the next. But this circuit allows the introduction of a pile of necessary concepts along the way.

Lesson 53
Alternating Current Compared with Direct Current

Here I explain the necessary analogy comparing alternating current as sound and direct current as wind.

Direct Current

We always hear the terms *direct current* (DC) and *alternating current* (AC). Direct current means that the current in the system is always flowing in one direction. Electronics depends on direct current. Naturally, flowing water has been a good comparison for positive DC voltage V+. Water always flows in one direction—downhill, toward the lowest point. Direct current is easily generated by chemical reactions in batteries. Figure L53-1 shows positive movement of electrons while the scope shows the voltage is above ground. So the voltage pushes the electrons one way. However, what happens when the voltage is reversed and pushes the electrons the "other way"? Figure L53-2 shows us how that really works.

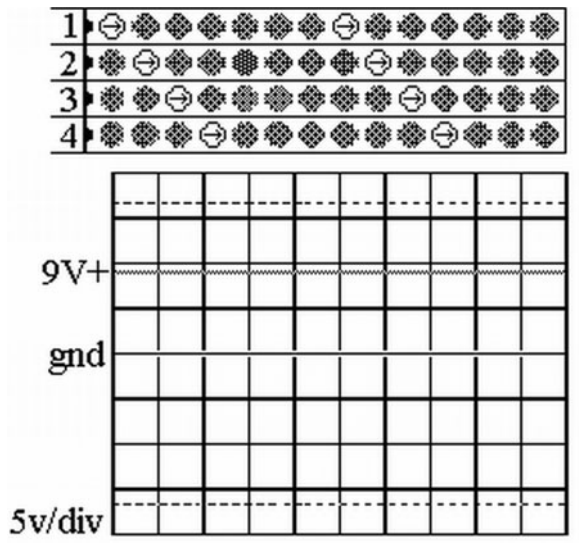

Figure L53-1

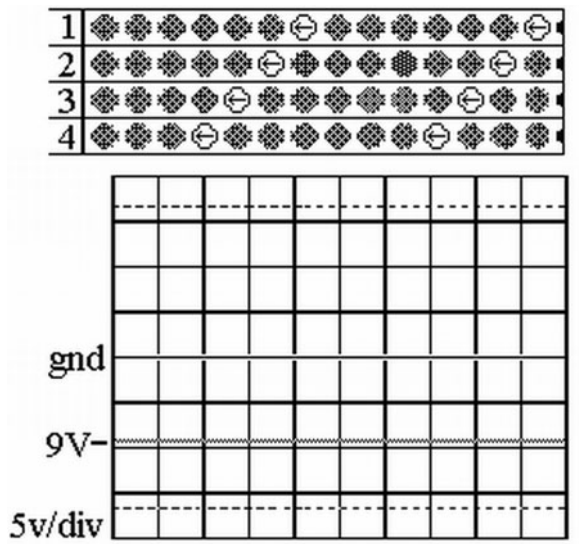

Figure L53-2

Just a note regarding the representations here of DC on a regular oscilloscope. Soundcard Scope does not respond to stable DC voltage as a regular oscilloscope would.

With direct current, you can have a positive voltage V+ or a negative voltage V–. Attach a battery backward, and you have created V–.

A more effective analogy for DC would be to think of water in a pipe or wind in a tunnel. It can move easily in both directions.

Alternating Current

Put simply, alternating current is a flow of electrons that keeps alternating and changing directions. The electrons don't get displaced, as they do in DC. Figures L53-3 to L53-5 are frame sets from animations available at the website noted in Appendix C. Those animations show far more clearly the action of what is happening.

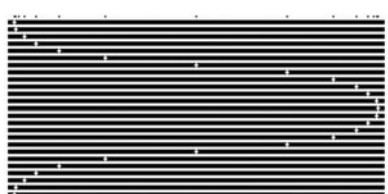

Figure L53-3

Figure L53-4

But if the electrons don't flow, how is the energy transferred? A great analogy for AC is sound waves. Air particles don't flow as sound travels through the air, but they do move; they vibrate. Sound is a pressure wave that moves through the air. A vibrating string sets one particle bumping into the next.

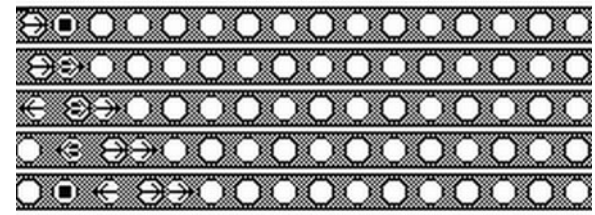

Figure L53-5

Simplified, the particles don't get displaced like they do in a wind. They vibrate in place. In fact, when sound is translated into an electronic signal, it is carried as an AC signal as shown in Figure L53-5.

Figure L53-6 represents a regularly oscillating action of electrons in an AC system. This shows a steady AC signal on the scope.

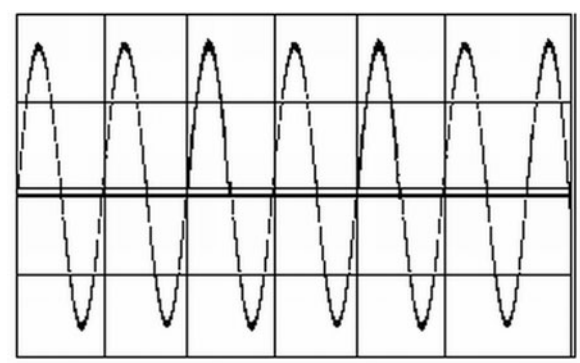

Figure L53-6

AC on the Oscilloscope

Why does a steady AC signal look like this on the oscilloscope screen? The following explains in detail the transformation of real electron movement into a sine wave:

1. This is the actual movement of the electrons, represented in Figure L53-3.
   - A lot of voltage exists as it speeds up in the center. The voltage decreases as it slows down.

- It actually has zero volts as it stops and reverses direction.

2. Figure L53-7 graphically shows the increase in the voltage of the electron as it speeds up and slows down. The voltage actually inscribes a circle.

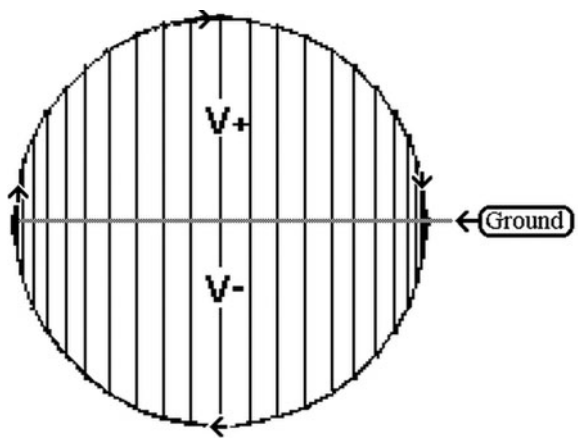

Figure L53-7

Notice two things here:

- The distance the electron moves along the base line changes as the voltage increases and decreases. Put simply, the bigger the push, the faster it moves. The smaller the push, the slower it moves.
- Each segment around the outside of the circle actually represents time.

3. It is not easy to show something that moves backward, because time moves forward. So Figure L53-8 shows the negative voltage movement happening after the positive voltage.

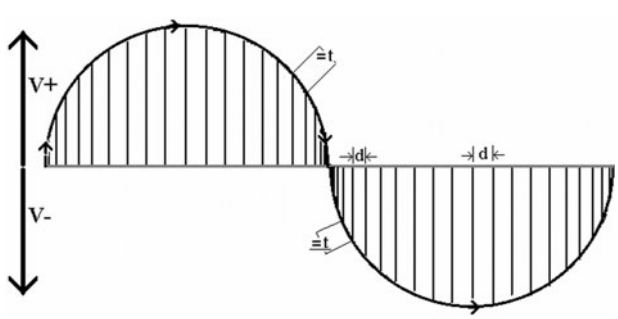

Figure L53-8

4. Time is important. How do we show time? Right now, time is chasing around on the outside of the circle and distance is marked across the horizontal ground line. But the distance the electrons move is not as important to us as timing. So the next thing to do is to impose a time measure onto the horizontal line, replacing distance as the measure. This is shown in Figure L53-9. The amount of voltage (energy or force) that defined the height remains in place. Obviously, time is marked in evenly spaced increments.

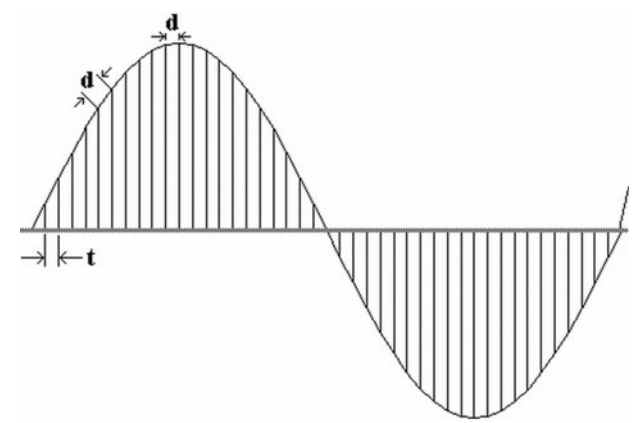

Figure L53-9

The result? The circular outline changes into the classic sine wave shape.

Note that ground is at the center of the action, the interplay between V+ and V–. As I said, our amplifier deals with sound. You will now learn how to measure with the tools at hand.

Getting Ready to Explore the Op Amp

Having a good source of a stable signal is vital when working with amplifiers. Signal generators, like the one in Figure 53-10, would be good to have available in a classroom. Otherwise, the Soundcard Scope's signal generator can create the

Figure L53-10

tones we need. A variety of other audio programs can record and blend these tones.

I use "Gold Wave" shareware. This complete audio editor exceeds our immediate needs, but I'd rather use a program you can grow into instead of a program that we'll outgrow quickly.

1. Open the Soundcard Scope. We will use default settings for our work here.
2. Set the Signal Generator's channel 1 to 250 Hz.
3. Use any software to record and save this frequency as a 30-second wave (*.wav) file.
4. Exit the Soundcard Scope.
5. Start up the 250-Hz wave file you just created. It does not matter what program you use.
6. Check this frequency out on the Frequency Analysis portion of the Soundcard Scope. When you are satisfied with the results here, make a 300-Hz and 1000-Hz wave file.

   Start up the 250-Hz signal again.
7. Plug the channel 1 cord into the earphone jack.

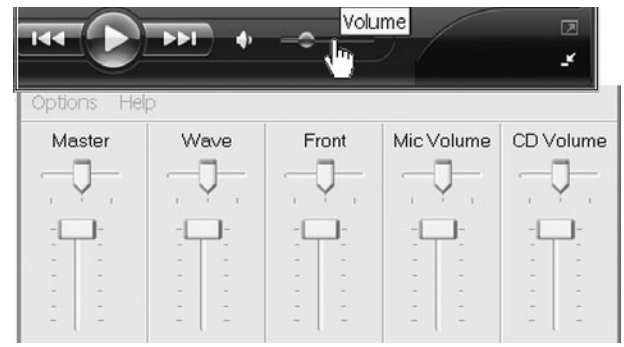

Figure L53-11

8. Use Figure 53-11 as a guide to make sure that all of the software controls are set to maximum.
9. Record the maximum output for this file. ____mVac.

   Figure 53-12 helps explain the best method for accurately adjusting the output a few millivolts at a time.

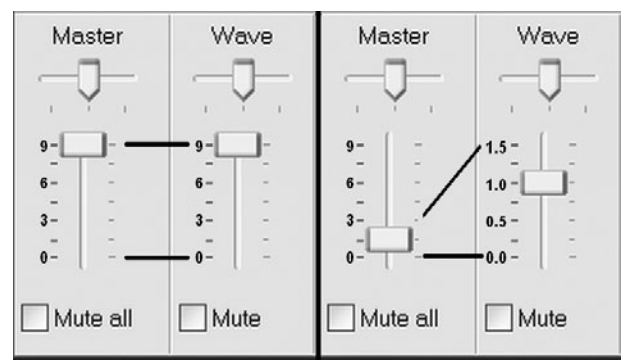

Figure L53-12

10. Now, while you are connected and the tone is running, adjust the volume controls to each of the voltage settings shown here. Check them off as you go.

___ 200 mVac	___ 100 mVac	___ 40 mVac
___ 15 mVac	___ 5 mVac	

11. Once you have that done, reset the 250 Hz to 40 mVac, and then stop the signal. Without touching the volume settings, load and start the 300 mVac signal. Record the mVac shown on the DMM. _____
12. Don't touch those dials or change any settings. Load up, start, and measure the voltage of the 1000-Hz signal. ____ mVac.

    Does the voltage remain constant as the frequency increases?

Why Doesn't DC Voltage Show Up on an AC Circuit?

Fair question, so let's check it out.

1. Okay, now you can readjust the volume back up to maximum.
2. Set your DMM to measure DC voltage. Connect the clips.

No matter how hard you try, you cannot get a measurement of DC voltage from an AC signal. Why doesn't the signal show any DC voltage? You've seen something like this before. Look at Figure 53-13.

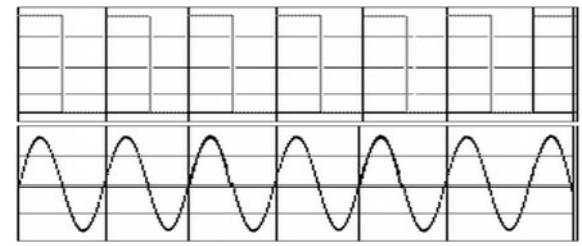

Figure L53-13

Remember when you used the DMM to record the rolldown output from the 4046? The voltage reading at pins 3 and 4 was half of the V+ fed to the IC at pin 16. The output is V+ half the time and 0.0 volts for the other half. The signal was switching quickly enough that the DMM averaged the voltage and read it as half of V+.

Consider that this is the same situation. The output is V+ half the time and V– the other half. The 200 mVac signal actually averages –.1 V for half the time, and +.1 V the other half. These two signals average out, and the DC voltage reading is ZERO.

Comparing Outies to Innies

Here are some last things to do with your recorded AC signal. Use the setup in Figure 53-14 to

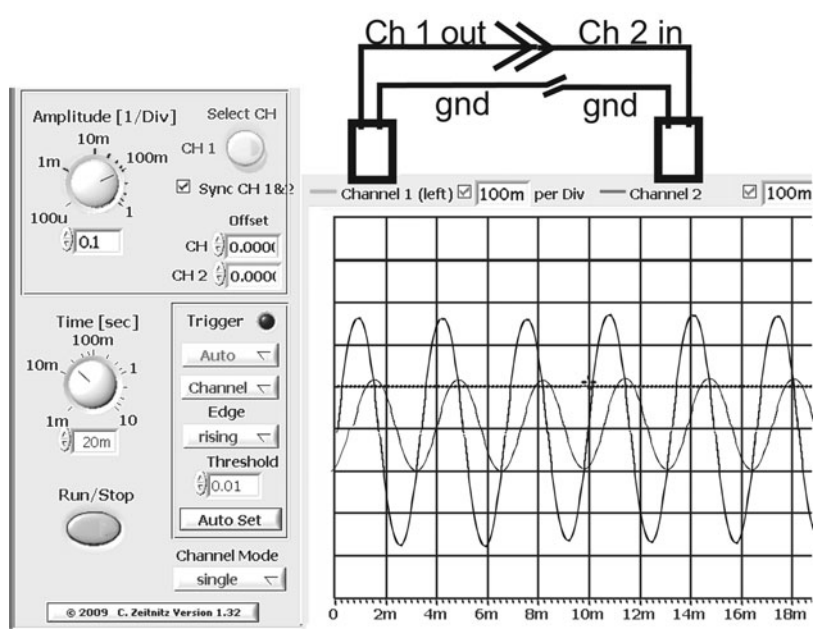

Figure L53-14

compare the computer's output (recorded wave signal on channel 1) to its matched external input on channel 2.

Ch1: Output—Headphone Jack at 40 mVac

Ch2: Input—microphone

1. Start the 250-Hz wave file and adjust the output to 40 mVac.
2. Turn on the Soundcard Scope.
3. Remove the check mark that synchronizes Ch1 and Ch2. They need to work independently.
4. Plug the channel 2 connecting cord into the microphone input.

Now you are able to compare the computer's output directly to its corresponding input. Any obvious differences you see here can be expected to show up in all of your tests.

Here's what you are looking for while you're comparing the two signals:

Compare the amplitude of output to input.

- You can expect the amplitude to drop—the question is by how much.
- Does the input even respond? The signal might be too small for the card to respond.
- Are the signals naturally aligned (lock-stepped so that the peaks and valleys match)?

Once you have observed this basic feedback:

1. Decrease the output signal's volume (Ch1) until the input on Ch2 stops responding.
2. Disconnect the two cords and use your DMM to measure the AC voltage from the output signal.

Be aware that any input signal smaller than this value will not register on your computer's input. These comparisons and results will vary from computer to computer because they are dependent on a variety of factors.

Lesson 54
AC in a DC Environment

But if alternating current goes forward and backward, how can it be used in a direct current system? How can AC be imposed onto a DC system? Relax. We can either eat on the ground, or we can pull out a table and use that raised surface. You know enough actually to set up that raised surface in electronics.

The AC Signal in a DC Environment

If AC goes forward and backward, how can we work with AC in a system that uses only V– from a single 9-volt battery?

To begin, recall the analogy comparing direct current to wind and alternating current to sound. Figure L54-1 shows how sound can be carried in the wind. The animation at the website in Appendix C shows the action much more clearly.

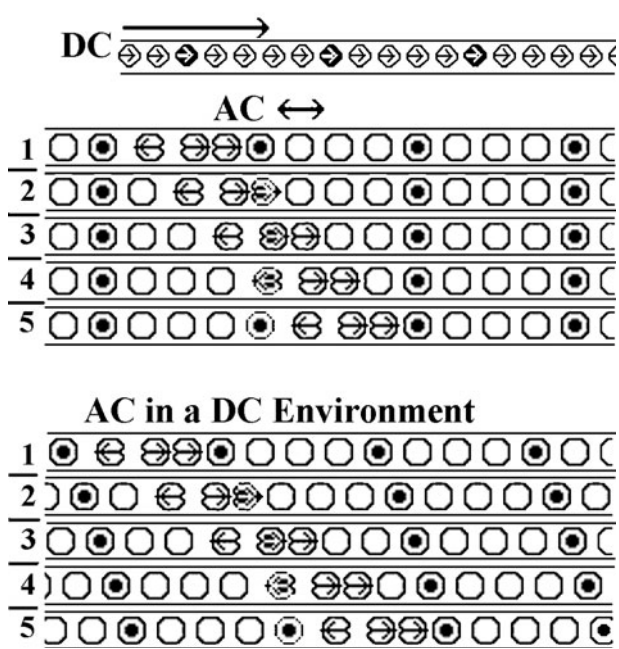

Figure L54-1

With this in mind, you can carry an AC signal in a DC environment. Here's a larger analogy to explain how. In electricity, you have above ground and below ground. As an analogy, when you go out for a picnic, you can use the ground as a convenient surface, as shown in Figure L54-2.

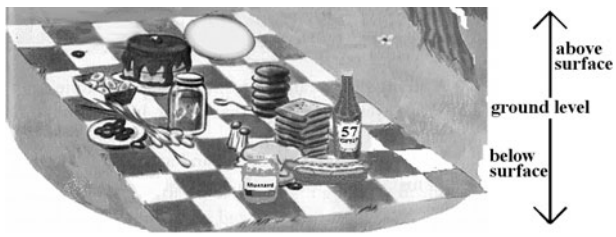

Figure L54-2

Or you can set up a table—and in that sense create an artificial surface above the ground as shown in Figure L54-3.

Even though the ground is a natural place to put a picnic, an artificial surface like the table is much more convenient. Adjusting the reference for the AC signal in a DC system is much more convenient, too, as you can see in Figure L54-4.

We can create an adjusted reference for an alternating current signal within a DC voltage environment by using a simple voltage divider.

If V + is 9 volts, then half of V + is 4.5 volts.

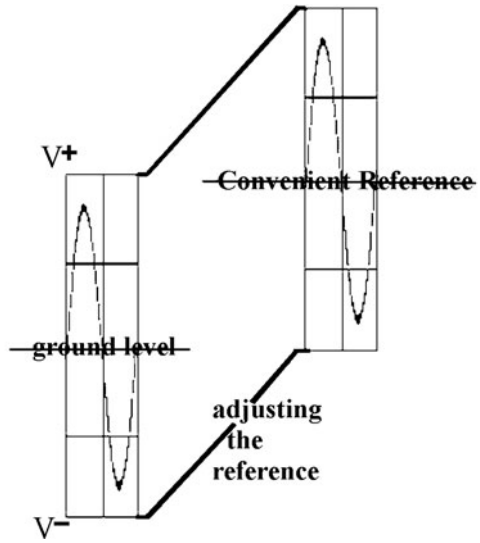

Figure L54-4

In the system shown in Figure L54-5, the adjusted reference acts identically as ground in a 4.5 VAC system.

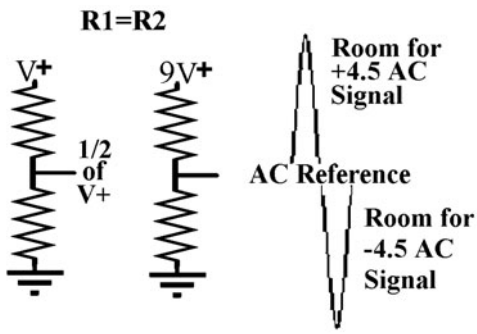

Figure L54-5

Figure L54-3

How does an AC signal move in a DC environment?

Look closely at the two drawings in Figure L54-6. The image on top shows the AC signal with ground as its natural reference.

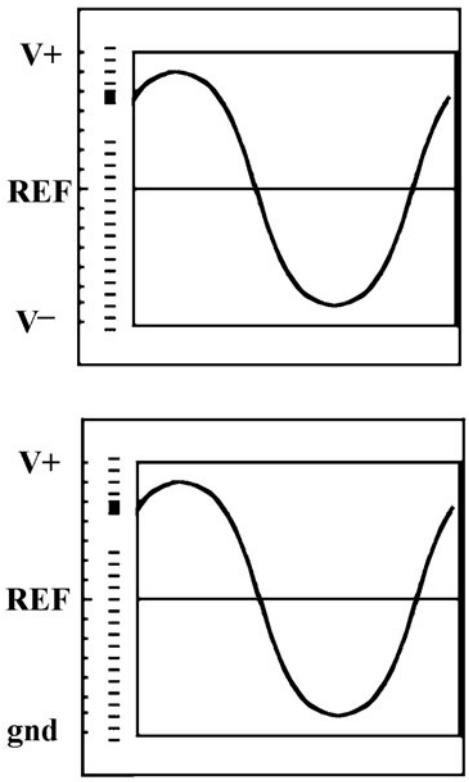

Figure L54-6

The image on the bottom shows the AC signal with an adjusted reference in a DC environment. The current does not affect the signal.

Lesson 55
Setting Up the Operational Amplifier

The Op Amps are, by far, the most versatile and valuable components in all of electronics. They are actually the heart of many digital systems. I can't pass up this opportunity to explore how they are applied and used in digital electronics.

Start Building the Circuit

As we just learned in Lesson 54, there needs to be a reference point for carrying the AC signal. Set up the two resistors as shown in Figure 55-1. These will be the voltage dividers used to set your reference point. It's best to use 5 band 1% resistors.

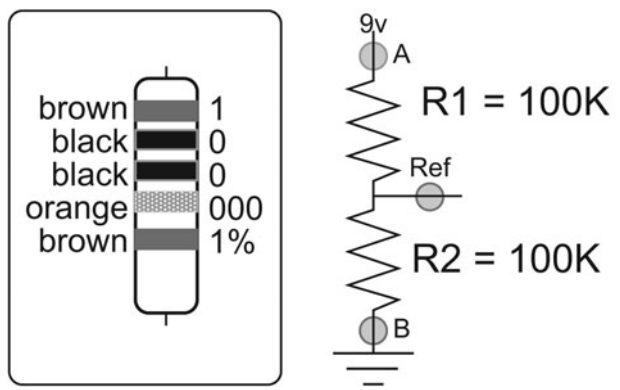

Figure L55-1

Take the following measurements:

- Total voltage _____
- The reference point voltage _____

This allows _____volts above the reference to act as the positive portion of the AC signal and _____volts below the reference to act as the _____ for the AC signal.

Now Add the Op Amp

Figure 55-2 moves us to the next step.

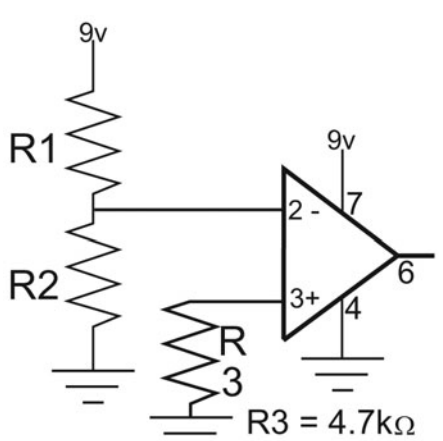

Figure L55-2

The midpoint of R1 and R2 is now simply referred to as V_{ref} (voltage reference).

Connect V_{ref} to the inverting input at pin 2 (–).

Being an input, pin 3(+) must be connected somewhere. The diagram above shows it connected to ground, injecting a Lo to the noninverting input.

The Op Amp's output at pin 6 reacts to the voltage difference between pin 2 and pin 3.

Because the *noninverting* input at pin 3 is lower voltage than V_{ref}, the output at pin 6 is also Lo.

Do your measuring.

Now shift the R3 to inject a Hi signal to pin 3. The Hi input should give a Hi output. Don't take my word for it. Check it out. Is it what you expected?

An important notice just arrived from our department of redundancy department.

The input to the non inverting input is ***not inverted*** *at the output.*

Moving Forward

Use Figure 55-3 as a guide and shift the V_{ref} connection from pin 2 to pin 3. Just to make sure we're on the same page, R3 should initially be set to ground, so pin 2 senses its input as Lo.

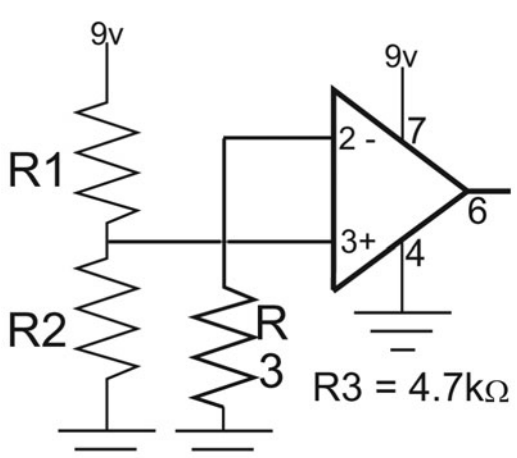

Figure L55-3

Check the output. Lo Input—Hi Output

Switch the R3 to inject a Hi input.

TAH DAH! The input is *inverted*.

The Voltage Comparator

Moving forward again with Figure 55-4, we see small but significant changes.

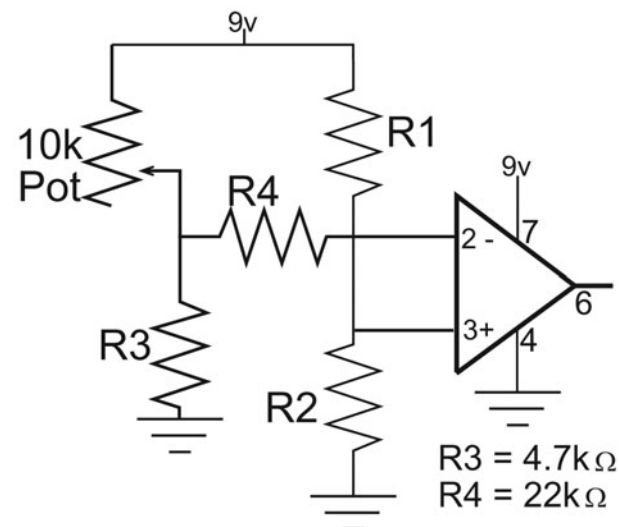

Figure L55-4

What we've seen so far is that the voltage comparator reacts to obvious voltage differences between the inverting input and V_{ref}. Using this setup, we can see how well the Op Amp compares minimal voltage differences. R3 is important. Because an Op Amp only compares voltages, current isn't important. R3 dampens the current that reaches the input.

1. Use your DMM to check $V_{re}f$. _____ volts
2. Attach the DMM's red probe to V_{invert} and the black probe to ground.
3. Follow the instructions in Table 55-1.

TABLE 55-1 No Matter How Small the Difference, Any Input Above V_{ref} Will Output Lo

Adjust the potentiometer so that the midpoint voltage (V_{invert}) is just a bit over V_{ref}.	**Adjust the potentiometer so that the midpoint voltage (V_{invert}) is even a bit higher.**
a. V_{ref} = _____	a. V_{ref} = _____
b. V_{invert} = _____	b. V_{invert} = _____
c. V_{out} = _____ (Speak Digital! Hi or Lo?)	c. V_{out} = _____

TABLE 55-2 Equal, but Opposite Reaction!

a. V_{ref} = _____	a. V_{ref} = _____
b. V_{invert} = _____	b. V_{invert} = _____
c. V_{out} = _____	c. V_{out} = _____

Do the same in Table 55-2, but with the voltage divider giving just a bit under V_{ref}.

4. When V_{invert} is less than V_{ref}, V_{out} becomes Hi or Lo?
5. When Vinvert is greater than V_{ref}, V_{out} becomes Hi or Lo?
6. Don't spend too much time on this, but try to adjust the voltage at pin 2 (V_{invert}) so that it is the same as V_{ref}.

   If you could get them to match, what voltage would you expect at pin 6, V_{out}? ____

WAIT! STOP! HOLD IT! Before we rush by, think of the power and beauty of little things, like in Figure 55-5. The voltage comparator really is the heart and workhorse of our digital world.

Figure L55-5

Really! This is your basic NOT gate. You have a reference voltage and an input to compare to it. The output responds instantly to the difference, giving a Hi output for any input less than half of V+ and a Lo output for any input greater than half of V+.

But enough of this talk. We're simply playing with adjusting a DC voltage, comparing that to another DC voltage. It's your turn again. Roll the dice and take another step forward.

Injecting an AC Signal into a DC Circuit (One Last Modification)

What we really want to be able to do is feed an AC signal related to sound into this circuit. Isn't that what we were talking about in Lesson 54?

As you recall, the AC's current moves positively and negatively. The center of an AC signal has no voltage. That point is ground. But with a bit of magic (applied technology) we can move that signal up off of the ground. We change it so that it is moving positively and "not so positively."

Get your SBB to match Figure 55-6.

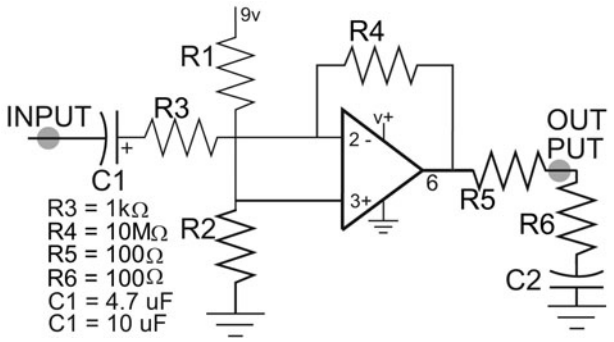

Figure L55-6

First, recognize that the capacitors are *Vital* in these positions. They are being used as audio couplers.

Audio Couplers

Capacitors have three main uses. So far, we've used them as part of RC timers. Here, we'll use the capacitor as an audio coupler. In this position, as it connects the audio signal to the circuit and it separates the AC signal (tiny voltage fluctuations) from the DC voltage:

- It isolates the Op Amp from any current input.
- The AC signal passes through the capacitor.
- The AC signal is automatically centered to the Op Amp's adjusted V_{ref}.
- Steady DC voltage does not get translated through the capacitor.

The following analogy offers the best explanation:

AC signals passing through a capacitor are similar to sound passing through a closed window, just like it is shown in Figure 55-7. Wind can't pass through a window. If the wind is steady, you don't even hear it. The wind is like the DC voltage and current. But the sound. Ahh. The sound itself is made of small vibrations; the window vibrates as well, if even just a little. And … the air on the inside of the window vibrates too, transferring the sound to other side. The sound represents the small fluctuations, variations in the voltage.

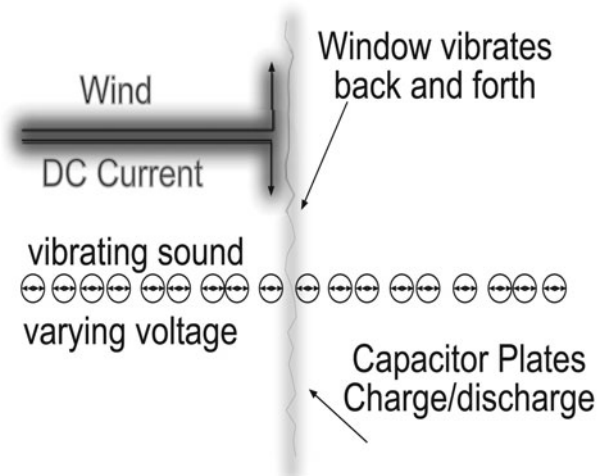

Figure L55-7

Simply stated, the active voltage changes created by the signal on one side of the capacitor affect the charge on the opposite plate of the capacitor.

Now Let's Have Some Fun

The diagram in Figure 55-8 describes what we're aiming for.

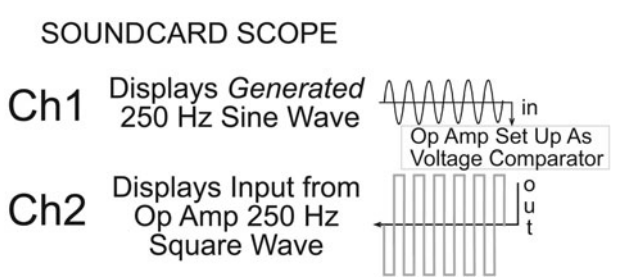

Figure L55-8

Power Up Your Circuit

1. Open Soundcard Scope's Signal Generator.
2. Set CH2 to 250 Hz. Tab over to the Scope screen.
3. Clear the Sync CH1 & 2 check box.
4. Plug the CH2 connector into your computer's headphone output.

5. Using your DMM, set CH2's signal strength to 40 mVac (.040 vac).
6. Connect CH2 connector's signal clip to the circuit's "input" and the black clip to ground.
7. Plug the CH1 connector into the "microphone" input.
8. Connect the CH1 connector's signal clip to the circuit's "output," again, black to ground.

Ideally, you will see results similar to Figure 55-9.

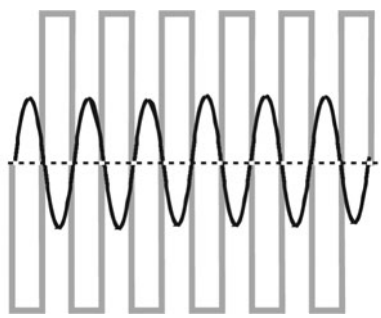

Figure L55-9

The concept here is more than just important. But before I continue, let's improve the harmony and play with the tempo.

Disconnect the power for a moment while you set up the new signal.

Take Another Step Forward

Tab over to the Signal Generator and make these changes:

1. Signal Generator
2. Channel 1 = 250 Hz
3. Channel 2 = 300 Hz
4. These two tones blend nicely. Good resonance. While you listen, go back to the scope view in Figure 55-10. Find the highlighted area at the bottom of the control screen.

They give you the ability to:

- Add the signal from each channel together.

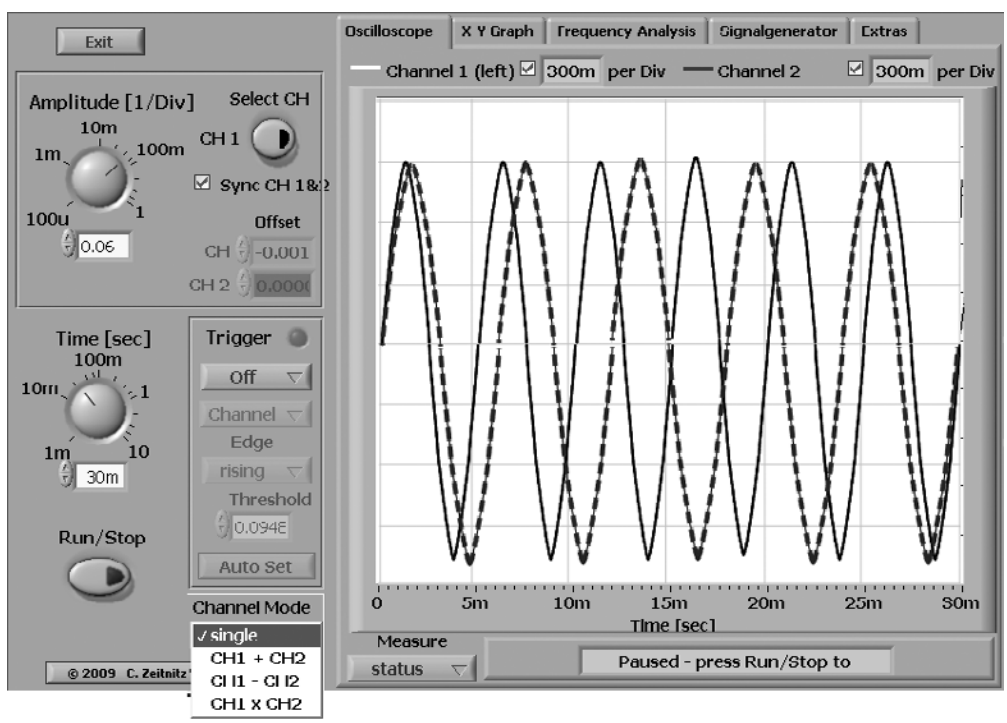

Figure L55-10

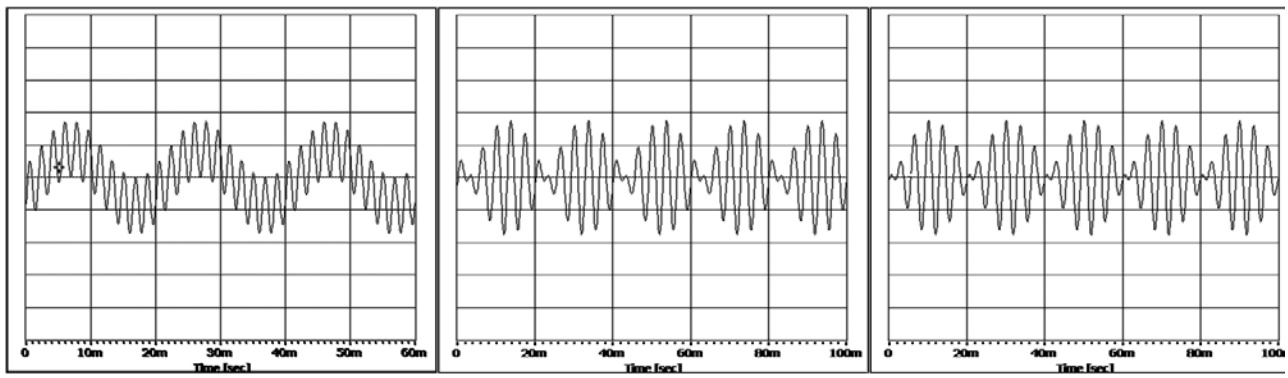

Figure L55-11

- Subtract the signals from each other: difference
- Multiply the two signals: product

Figure 55-11 provides screen shots of each function.

Now for Something Completely Different

1. Unplug the CH2 connector.
2. Plug in some earphones and listen to the tones created by the Signal Generator.

These are two separate signals.

We need to blend these two signals so they feed to your circuit from a single channel. The diagram in Figure 55-12 explains what needs to be done.

- You can create this 30-second wave file yourself, or download it (Lesson55Blended Tone.wav) from www.mhprofessional.com/computingdownload.

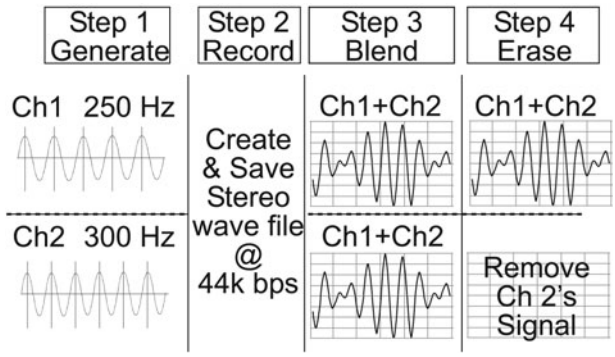

Figure L55-12

- You can't use the Soundcard Scope to play this file, but any music software will do it.
- You know you've done it properly when you hear the blended tone in just one ear when both channels are turned on.

Onwards

The circuit hasn't changed since Figure 55-6, and we're going to use exactly the same system setup as Figure 55-8.

Start the Soundcard Scope.

Make sure to clear the Sync CH1 & 2 check box.

Start the single-channel blended tone.

1. Use the CH2 connector (headphone output) to adjust the blended tone's strength to 40 mVac.
2. Connect the blended tone signal to the circuit's INPUT.
3. Connect the CH1 connector to the circuit's OUTPUT and microphone input.

Figure 55-13 compares the Soundcard Scope's signals and my real scope's signals.

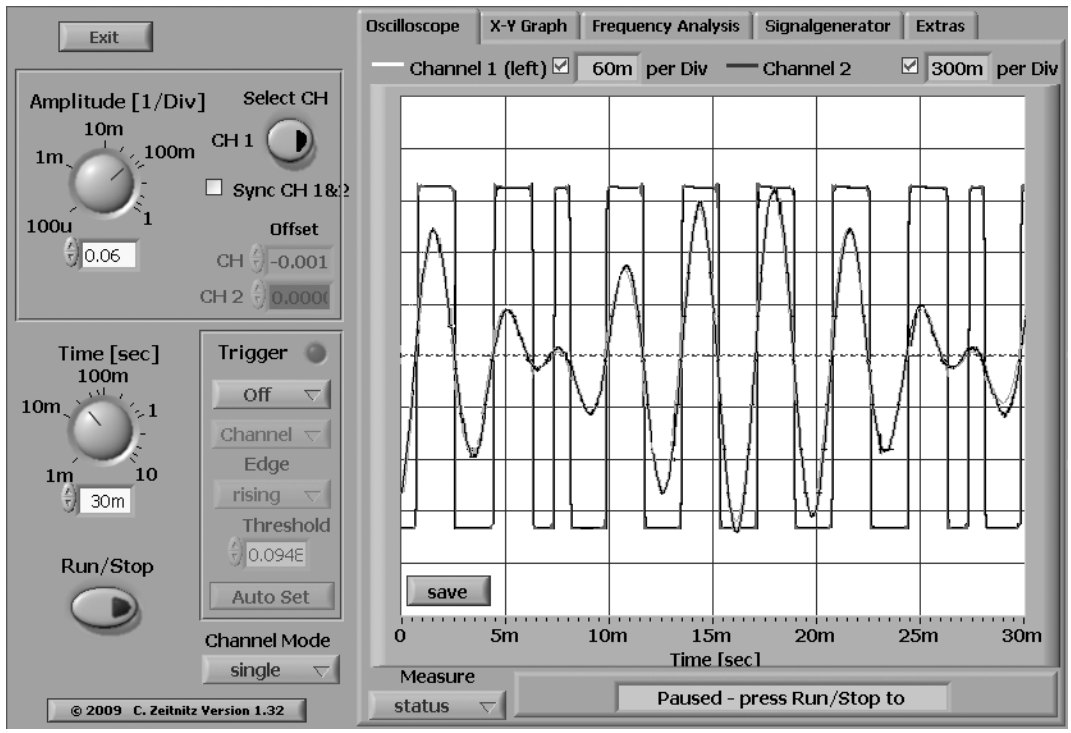

Figure L55-13

It does look pretty good, doesn't it? For the price, Soundcard Scope gives a great readout. But do you see the flaw?

Remember, this is an inverting Op Amp. Why does it show a "noninverting" output? When I checked this out on my real scope (Figure 55-14),

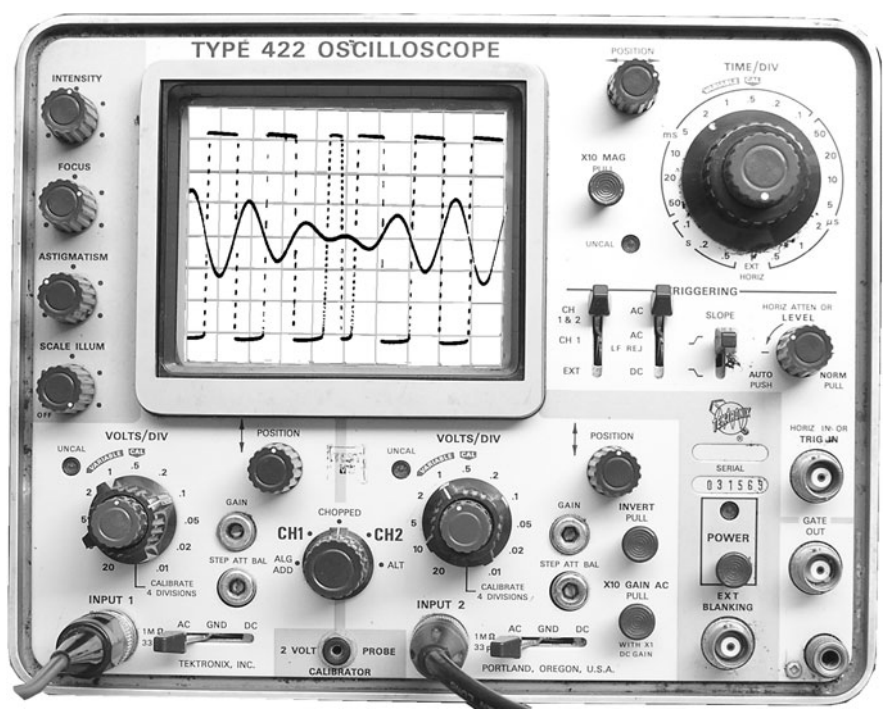

Figure L55-14

it gave me exactly what I expected. Honestly, I can't explain the error, but for our purposes, it's small. Recognize it for what it is, and move on.

Meanwhile, take a closer look at the settings on the real scope.

- Time/div =
- CH1 v/div =
- CH2 v/div =

As a voltage comparator, a millivolt's difference at the input produces an instant reaction at the output.

Lesson 56
Using Feedback to Control Gain

This lesson is dedicated to investigating and explaining the action of the potentiometer and how it acts as a volume control. The schematic is displayed in Figure L56-1.

Modify Your Breadboard (Again)

- Replace the 10 MΩ resistor with the 1 kΩ and 10 kΩ Pot in series to make a much more balanced feedback loop.
- Replace the two resistors and audio coupling capacitor at the end with the 100 Ω resistor and a 470 μF cap.

What we are using here is called "negative feedback." We will use this feedback to control the gain. You just built the Op Amp. Now you get to test it. You will set the gain through this unique feedback system. Actually, it's only a voltage divider applied in a familiar way.

This feedback loop is where things like volume and tone are controlled. Not only is it much easier to control the signal when it is small, but the components used to do it are smaller and less expensive. This is a half-watt intercom system. The potentiometer used here is rated for one-quarter watt. Using this potentiometer to control the signal to the speakers directly would create enough heat that it would burn out.

Again, refer to Figure L56-1 as we prepare to take some measurements needed as a foundation for some important concepts.

1. No power to the circuit yet.
2. Remove the potentiometer and set it to minimum resistance (0 Ω), and then set it back in.
3. Start up any of your prerecorded pure-tone frequency files.

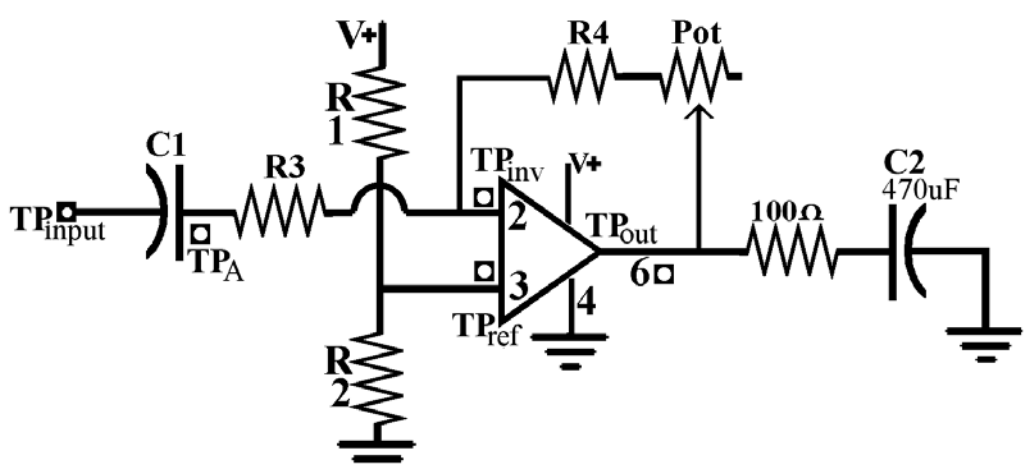

Figure L56-1

4. Use your DMM to adjust channel 1's output to a very small 10 mVac. Input = ____mVac.
5. Attach the colored clip of your CH1 connecting cord to your circuit's signal input. As usual, the black clip goes to ground.
6. Power up the circuit.
7. Directly at pin 6, check the signal's strength with your DMM. Output = _____mVac.

   Input's voltage should be identical (or at least very close) to the output's voltage. Output, Input = 1. Gain = 1.
8. Set the Pot to maximum resistance.
9. Measure the output directly at pin 6. _____mVac.

   The ouput voltage should be 11 times greater than the input (gain = 11).

   Recall that gain can be stated as a ratio of voltage to voltage, power to power, and even R_{total} to R1.

   Gain = Output/Input

What to Expect

Ideally, the input signal voltage for this circuit is between 0.010 and 0.015 V *AC*.

- When the Pot is set to 0 ohms, the output should equal the input.
- When the potentiometer is set to 0 ohms, then $\frac{R3 + Pot}{R2}$ gives a ratio of 1.
- The voltage divider has a ratio of 1. Gain should be 1.
- When the Pot is set to 10,000 ohms, the output should be 11 times greater than the input.

When the potentiometer is set to 10,000 ohms, then $\frac{R3 + Pot}{R2}$ gives a ratio of 11.

The voltage divider has a ratio of 11. Gain should be 11.

How It Works: Feedback to the Inverting Input

Here's are some questions: "Why does the volume go down when the potentiometer has lower resistance? Wouldn't less resistance mean more current passing? Doesn't more current passing mean more volume?"

The answer is in the fact that the output signal has been inverted and a portion of the inverted signal is now being directed back onto the original signal. It is the same as adding a negative number. Think of it as subtraction. Subtraction is exactly what is being shown in the graphic representation of the signal with feedback in Figure L56-2.

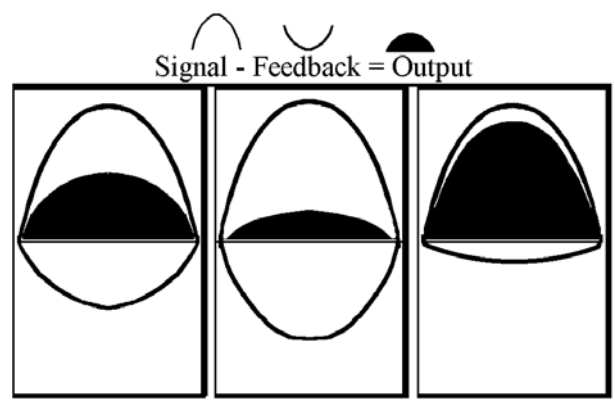

Figure L56-2

The size of the feedback signal increases as the resistance in the potentiometer decreases.

The original signal minus the larger feedback signal results in a smaller output signal.

$$Signal_{in} - Signal_{feedback} = Signal_{output}$$

The graphic in Figure L56-3 more accurately represents a real signal.

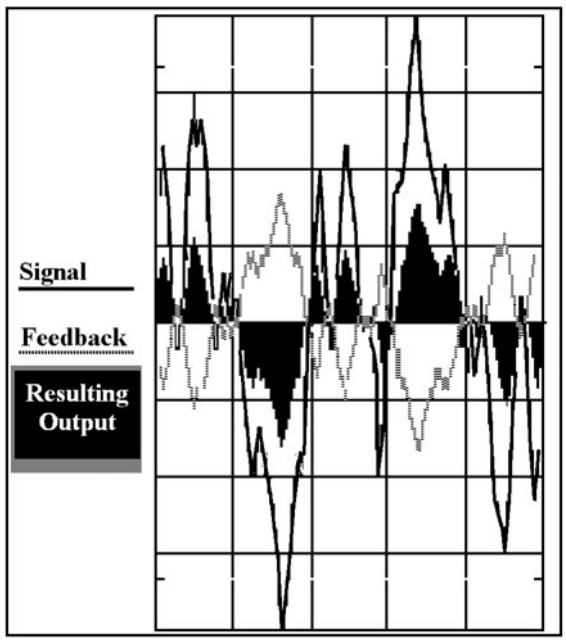

Figure L56-3

Exercise: Using Feedback to Control the Gain

1. What was the expected gain using the resistor ratios in the following?

   $$\text{Gain} = \frac{R4 + \text{Pot}}{R3}$$

   a. _____

   b. _____

   c. _____

2. What was the expected gain using the voltage output compared to the voltage input?

   $$\text{Gain} = \frac{V_{OUT}}{V_{IN}}$$

   a. _____

   b. _____

   c. _____

3. Consider what would happen if R3 were burnt out and had infinite resistance (>20 MΩ).

   a. Write out the expected ratio.

   _____

   b. Think about it. Would that mean the volume would be extra loud, or not at all?

   c. Would you be able to control the volume?

   _____

4. Consider what would happen if R3 were shorted out. In this case, R3 would have 0 ohm—no resistance.

   a. State the expected ratio. _____

   b. Would you be able to control the volume?

5. Feedback—here you will need to use a bit of math to help explain the real action at the inverting input (pin 2).

TABLE 56-1 Collect This Data from the Setup in Figure 56-1

VAC between	Input = 0.0 V_{AC}*	(A) Input = 10.0 mV_{AC} R4 + Pot = 1 kΩ	(B) Input = 10.0 mV_{AC} R4 + Pot = 5 kΩ	(C) Input = 10.0 mV_{AC} R4 + Pot = 10 kΩ
TP_{IN} to TP_A				
V_{input} = TP_A to TP_{REF}				
TP_{output} = TP_{OUT} to TP_{REF}				
TP_{INVERT} to TP_{REF}				
TP_A to TP_{INVERT}				
Across 100 Ω resistor				

* Input from the headphones output with the volume adjusted to 0.0 volts AC. If the input to the Op Amp is unattached, static in the air will give erroneous readings. Remember what happens when inputs to a digital system are not tied either Hi or Lo? We can get the same ghosts here.

At a gain of 1, you have the least resistance in the Pot. How does the "least resistance" provide the quietest volume? Shouldn't less resistance mean more signal?

And that is *exactly* what less resistance means. But it means more signal in the feedback. More signal *subtracted* from the original input.

a. So calculate the amount of current being allowed to "feed back."

Use Ohm's law V = IR. You know the voltage, and you know the resistance (see Table L56-2).

TABLE L56-2 Calculations
Current feedback to pin 2 When R4 + Pot = 1 kΩ
Current feedback to pin 2 When R4 + Pot = 5 kΩ
Current feedback to pin 2 When R4 + Pot = 10 kΩ

b. Now calculate the current that is available at the inverting input pin 2. That is a measure of TPA to reference with R4 disconnected so there is no feedback at all. You will get a measure of the full signal. The current at the inverting input pin 2 is _____.

c. A little subtraction is now in order. For each of the previous three settings, calculate the real signal at the inverting input pin 2. Use the simple formula:

full signal − feedback = signal at pin 2

See Table L56-3.

TABLE L56-3 Calculations		
Full signal	Feedback R4 + Pot = 1 kΩ	Signal at pin 2
_____	_____	_____
Full signal	Feedback R4 + Pot = 5 kΩ	
_____	_____	_____
Full signal	Feedback R4 + Pot = 10 kΩ	
_____	_____	_____

6. For this exercise, you need the following pieces from around the house:

- One long and skinny rubber band
- One short rubber band
- One large piece of cardboard
- Three tacks

Now cut the long rubber band in one spot, giving you one long strand.

Cut the short rubber band into two shorter pieces.

Gently stretch and tack the long strand across the cardboard surface. It should be tight enough to pluck.

Now tie a short piece to the center of the long one as demonstrated in Figure L56-4. Secure the end of that tack, too.

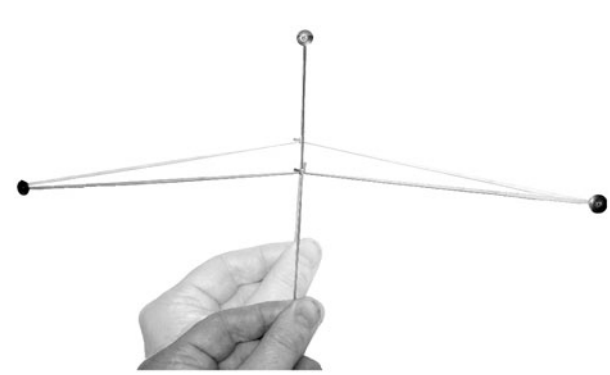

Figure L56-4

The long strand with the small connector altogether represents a signal.

Now attach the second short piece to the center of the long strand. As you tug gently on that loose strand, your input acts like the feedback; your force is being subtracted from the original force on top.

Just like this simple physical demonstration, both the original input and the "inverted" feedback combine to create the signal that is being fed into the Op Amp. The sum of these two combines to create the final output of the Op Amp at pin 6.

This page intentionally left blank

SECTION 17

Applying the Op Amp: Building the Intercom

Here you'll explore the individual portions of the intercom as you build the system. Consider radios. The system depends on amplifiers.

The microphone changes a voice into a small electric signal. This tiny signal from the microphone is amplified thousands of times before it is released as part of a modulated electromagnetic radio frequency.

A receiver is tuned to "resonate" to that frequency. Harmonics are a wonderful phenomenon. That weak harmonic signal is amplified in both voltage and current before it is directed to the speakers.

Lesson 57
Building a Power Amplifier Controlled by an Op Amp

So the Op Amp is now working as a preamp. The signal voltage has been increased, but there isn't much output at all. Time to crank up the power.

The preamp specifically boosts the voltage to a level that a power amplifier can use. Here we will employ transistors as the power amp. The voltage is already there. The power amplifier adds current to the voltage, effectively increasing the power.

Remember:

Power = current (I) × voltage (V) **or** P = IV

A huge variety of amplifier ICs are available to achieve the same purpose. But I use transistors because this is a "teaching circuit" that lends itself to explaining concepts common to all amplifiers.

The Power Amplifier

Still, many audiophiles swear that transistors are the best power amplifiers because they provide a different quality output than ICs. But before them, there were the audiophiles who swore by vacuum tubes.

Modify the Circuit

Add the components shown in Figure L57-1 to the preamp you have built. Note the rewiring of the Pot and the addition of C3 (470 μF).

The preamp created by the LM741 Op Amp effectively did three things:

1. It amplified the voltage.
2. It limited the amount of current by its very nature.
3. It still provided enough current for the transistors.

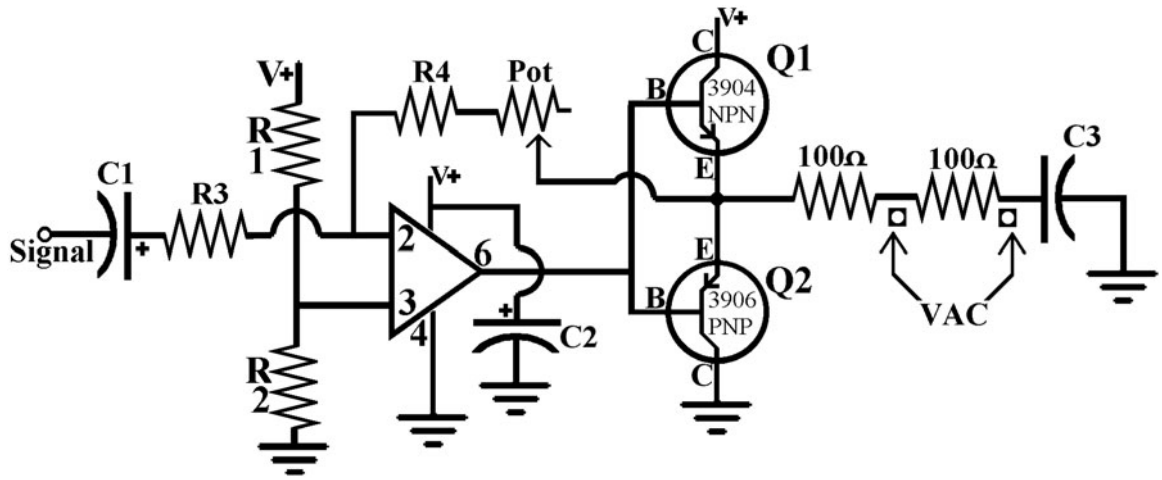

Figure L57-1

The pictures in Figure L57-2 show how the transistors act as power amplifiers. Animated versions of these drawings are available for viewing at www.mhprofessional.com/computingdownload.

The two transistors act in opposition to each other, controlling the signal output. As the valves open and close, they allow for much larger movement of current than allowed previously. The voltage and larger quantities of current create a much more powerful output than the LM741 could produce by itself.

Okay. So I have explained how the power amplifier works. Here is where you will find out how much power your amplifier is really producing. For all of the exercises, use a 1,000-Hz signal input at 10 to 15 mV.

1. Refer back to the measurements you did in Lesson 56. You took all the recordings needed and did all the calculations to get started.

   Remember:

   Power (watts) = voltage (V) × current (I)

   a. What is the VAC across R3?

   b. What is the current across R3? (V = I × R)

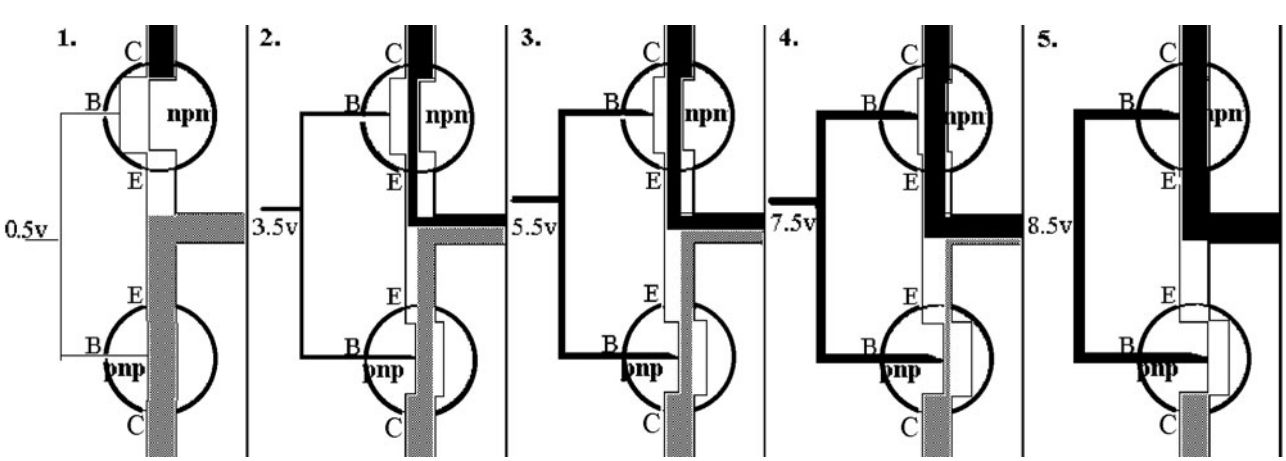

Figure L57-2

c. Figure the power across R3 when you had minimum volume (gain = 1).

Power at R3 = _____watts

d. Figure the power across R3 when you had maximum volume (gain = 11).

Power at R3 = _____watts

2. Now calculate the power output by measuring the VAC available across the 100-ohm resistor. Then measure the VAC across both 100-ohm resistors. The reading should double. What? A voltage divider in AC? With those measurements, you can now calculate the current. How does it feel knowing you are in control of all that power?

In comparing voltages used, always compare AC voltage to AC voltage. The same goes for comparing DC voltages to each other (see Table L57-1).

TABLE L57-1 Comparing Voltages

	Gain of 1 Minimum Volume	Gain of 11 Maximum Volume
VAC across the 100 Ω load	_____ V	_____ V
V/Ω = A	_____ A	_____ A
Watts = volts x amperes	_____W	_____W

3. In Lesson 56, without transistors, what was the power output at maximum volume? _____ W

4. In this exercise, with transistors, what was the power output at maximum volume? _____ W

C2—The Capacitor as a Buffer

What is a buffer? A buffer cushions the blow. You've been using a 1000 μF capacitor as a buffer for a while, ever since you set up the voltage regulator in Lesson 14. Refer to Figure L57-3.

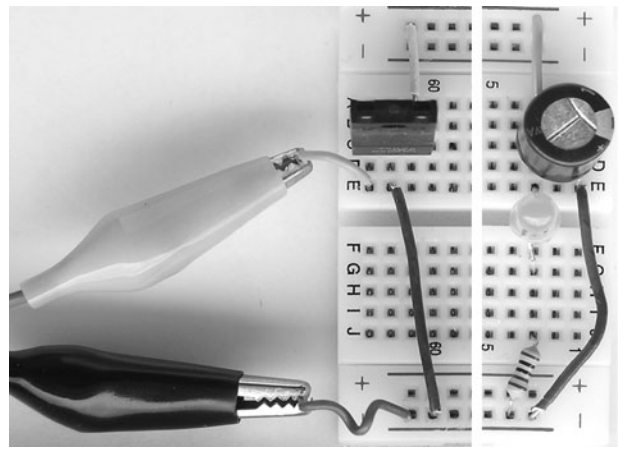

Figure L57-3

The voltage demands of the power amplifier draw quantities of power, but not steadily. This happens in quick bursts. A buffer, or reservoir in the form of a large capacitor, is necessary when using a small wall adapter or a 9-volt battery. As the power is tapped, the output fluctuates because the power supply cannot generate current quickly enough. This creates an unstable signal. The large capacitor keeps the current and voltage supply steady.

There is an interesting twist here. If you really want to hear this, you can't use our regular test frequencies. Their current draw is too stable.

- Connect the system to a 9-volt battery.
- Inject some music into your system.
- Adjust the volume to fairly loud.
- Pull out the 1000 μF cap.

The effect is quite noticeable.

The Second Audio Coupler

The second audio coupler is in place specifically to isolate the AC output from the DC voltage as shown in Figure L57-4.

In reality, if this capacitor were not in place and the speaker were connected between the output and ground, the entire signal would cease to exist. The AC output signal would be destroyed because

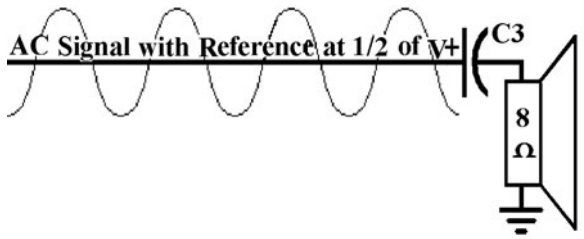

Figure L57-4

the signal and feedback at pin 2 would be referenced to ground in a DC system. They would no longer be floating artificially referenced to a redefined ground at half of the voltage. Take a moment and trace the circuit.

If you want to stop the circuit from working, go ahead and bypass C3 and connect the speaker directly to the connected emitters.

What? It stopped working? Don't say I didn't tell you so.

Lesson 58
The Electret Microphone

An electret microphone is a common component in audio systems. It is inexpensive and very sensitive. Microphones offer many design opportunities for this project.

Look carefully at the components inside the electret microphone (Figure L58-1).

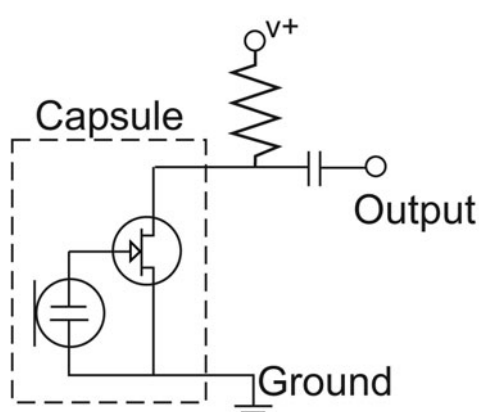

Figure L58-1

There are three types of microphones:

1. The coil microphone is similar to a speaker. It uses a magnet set inside a coil of wire. These can work independently of a powered circuit because they create their own voltage.
2. Piezo (crystal) microphones also create their own energy. These crystal structures respond to the compression and decompression of sound waves, releasing electrical energy. The crystals effectively translate the fluctuating energy into fluctuating voltage. This works in reverse, too. Feed voltage to the crystals and they vibrate. This effect is used to create quality, low-power speakers.
3. The electret microphone is an active capacitor. One of its plates is exposed to the air so that it vibrates as sound hits it. The plate's fluctuations disturb the steady DC voltage (pressure) by deforming the exposed plate ever so slightly. Those fluctuations in voltage match the sound. That becomes our signal. Because the electret microphone is an active capacitive component, it needs power to work.

The photo in Figure 58-2 shows one of the legs connected directly to the outer casing. That leg is ground.

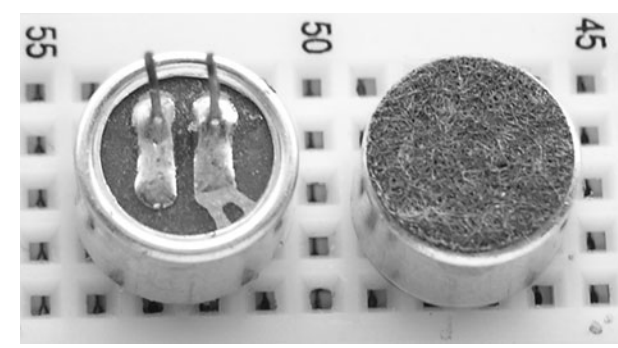

Figure L58-2

Build the Circuit

Set up Figure L58-3 as an independent circuit. Don't attach it to your Op Amp's input.

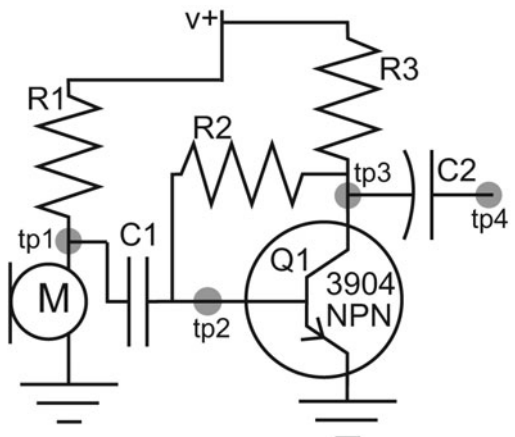

Figure L58-3

The parts needed are listed in the Parts Bin.

All of this looks new, but you're already familiar with it. Let's take a walk through.

PARTS BIN
■ R1 & R3—10 kΩ
■ R2—100 kΩ
■ M—Electret microphone
■ C1—.1 µF
■ C2—4.7 µF
■ Q1—2N3904 NPN

- R1. Because it is a single resistor, R1 only decreases the current, not the voltage.
- The microphone, like many capacitors, is balanced between DC voltage source and ground.
- C1 and C2 are audio couplers. They pass the AC signal but block the current.
- Q1 is your basic 2N3904 NPN transistor.
- R2 is the feedback loop, from output to input. It works exactly the same as in the Op Amp.
- The ratio of R2:R3 (100k:10k) dictates the gain created by this single transistor amplifier.

Checking It Out

Power it up and let's do some measuring. You will have to set up a speaker near the microphone while a recorded tone is playing. Check AC and DC voltages at all four test points and record these on Table L58-1.

TABLE L58-1 After You've Checked the Tone, Do It Again with Some Music

	DC Tone	DC Music	AC Tone	AC Music
TP1				
TP2				
TP3				
TP4				

You can use the Soundcard Scope's Channel 2 to see the tone's signal, but music output from the computer will occupy both channels. If you want to see the microphone's response to music, you'll have to use an outside sound source—something other than your computer.

To use the microphone as an input to the Op Amp, C2 acts as the output audio coupler for the microphone subsystem and the input audio coupler for the Op Amp circuit.

Lesson 59
Using the Speaker as a Microphone

An intercom has a microphone on one side and a speaker on the other. But then you would need two complete systems, each with a microphone input and a speaker output. You don't have a microphone? With some imagination and applied knowledge, we can do this with one system. You can use the speaker as a microphone. To do this, though, you have to understand a bit about how a speaker works. The speaker was designed as a speaker, not a microphone, as we will use it. It puts out a small signal—tiny.

When we use the speaker as a microphone, the following happens:

- Sound vibrates the cone.
- The cone moves the magnet.
- The magnetic field causes electron movement in the wire.
- This signal is used as the input to the Op Amp.

But still, the speaker is a poor microphone. It wasn't designed to be used as a microphone. But don't take my word for it.

Record this important information.

1. How much of a signal does the speaker produce on your DMM?
   a. Attach the DMM to the speaker. Set it to VAC. Red probe to V+ and black to V–.
   b. Speak into the speaker with your mouth about 2 inches (5 cm) from the cone. It's best to read from printed material rather than sit and repeat "Hellooooo." _____mV
   c. The best input signal you can produce is a "pucker" whistle. _____mV
2. How much of a signal does the speaker produce on your oscilloscope?
   a. Hook up your speaker to the test cord, and plug it directly into the computer's microphone input. Then open the Soundcard Scope. We are not using the oscilloscope probe. The signal is too small. If we used the voltage divider, it would not

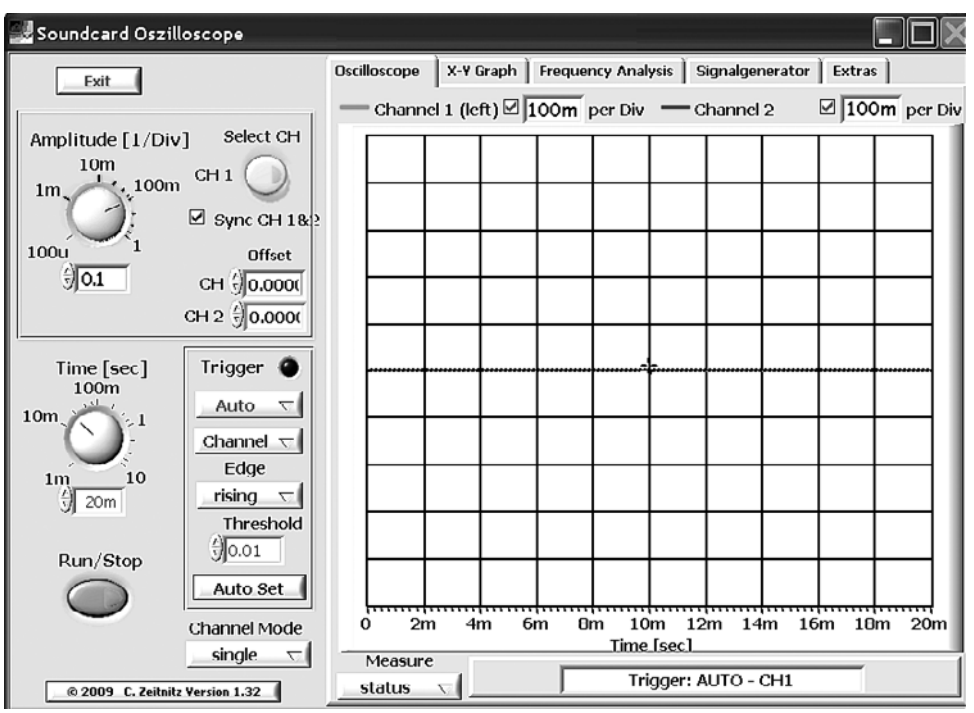

Figure L59-1

register. Use the oscilloscope setup shown in Figure L59-1.

b. Speak into the speaker. Make note of the maximum positive and negative voltages.

c. Now whistle into the speaker. You should see a beautiful sine wave. Did you know that your whistle is nearly a pure tone?

d. Draw a representation of your whistle signature onto the scope face provided in Figure L59-2.

3. Applying the speaker in the circuit.

a. Now set this second speaker into your SBB as shown in Figure L59-3.

b. Turn the gain down all the way and use your pucker whistle.

c. As you increase the volume, the circuit might start screeching at you. Notch the gain backward until the screeching stops. The screeching is caused by feedback demonstrated in Figure L59-4. Sound from the output is reaching the input and multiplying itself.

d. You can solve this problem in two ways. The first is to give more distance between the output and the input. But right now, you can remove the output speaker. This is an easy solution for the moment. After all,

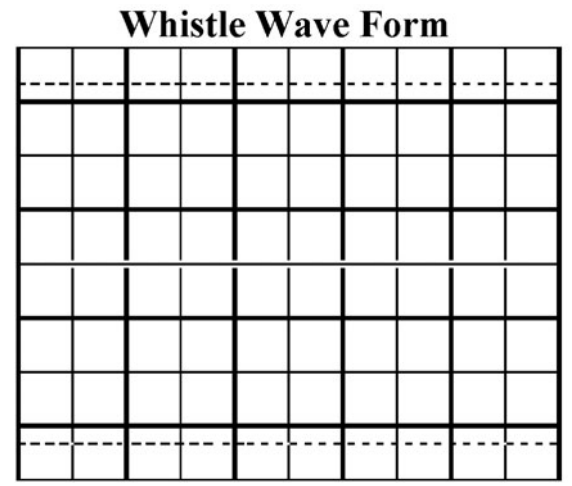

Figure L59-2

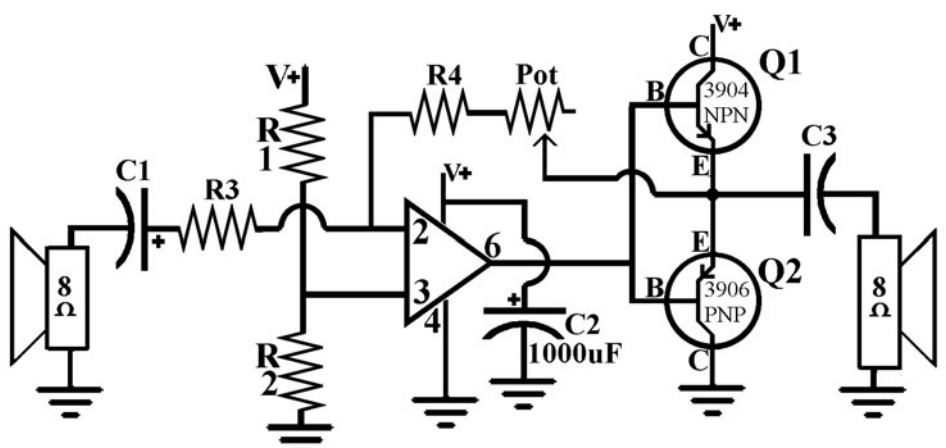

Figure L59-3

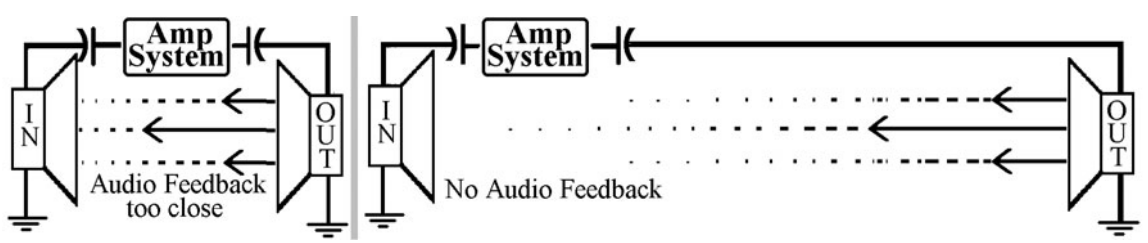

Figure L59-4

you will need to do some measuring at the output, and don't want the speaker to get in the way.

4. Scoping the circuit output.
   a. Replace the speaker with the connector cord clips, the red clip to C3 (neg), and black to ground. The cord is plugged into the sound card "line in," or microphone input.
   b. With the volume turned all the way down, whistle and look at the signal on the scope.
   c. It should be identical to the signal taken directly from the speaker earlier.
   d. Now turn the volume all the way up. Whistle again. Draw this on the scope face in Figure L59-5.

Amplified Whistle Wave Form

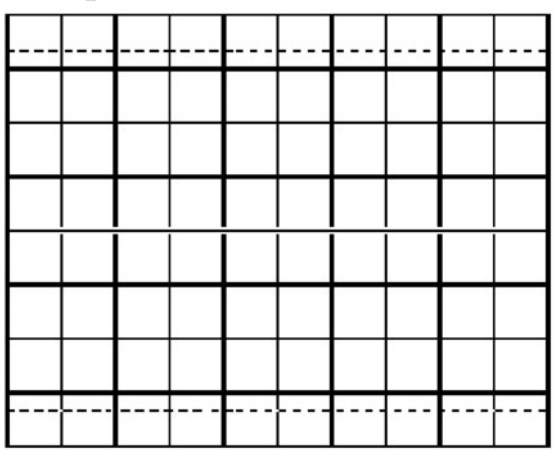

Figure L59-5

5. Check out the AC voltage of the maximum output of your whistling using the DMM. _____Vac Max.
6. Listen to the circuit output.
   a. Now before you put the output speaker back in, solder the ends of the dual-wire line to your speaker. That line should be at least five feet long. Place it back into the circuit.
   b. Place the input and output speakers as far from each other as possible.
   c. Whistle into the input speaker.

Hmm. The output is very quiet, even at full volume.

The last component will take care of that.

Lesson 60

Introducing Transformers and Putting It All Together

So you've seen that speakers aren't microphones. The small signals they produce need a different kind of preamp to get a clean signal from this subsystem to the next stage of the amplifier system. Right now, the output directly from the speaker is a paltry 1 millivolt. So the output from the amplifier is also very weak. Such a small signal needs to be cleanly amplified even before it is fed to the preamp. To restate, the signal needs to be preamplified before it gets to the preamplifier. Without having a two-stage preamplifier, there just isn't enough signal there to control the power amplifier.

Here I will introduce transformers as a method to preamplify the signal to the preamp. It is frequently done with microphones as well.

Here is a great place to use a transformer. See Figure L60-1.

Figure L60-1

What we have here is another basic electronic component. Transformers are used in homes in everything from wall adapters to microwaves. Larger versions are vital to the supply and distribution of electric power. You will use a miniature transformer like the one shown in Figure L60-2.

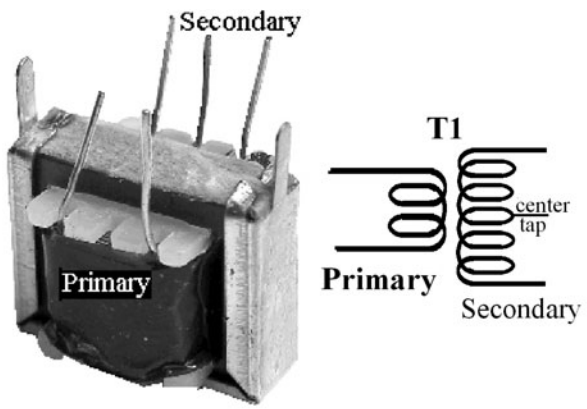

Figure L60-2

How a Transformer Works

Actually, there are two main questions here:

- How does a transformer work?
- What does it transform?

As you saw with the speaker, moving electrons create a magnetic field. What was not mentioned is that the reverse is also true. A moving magnetic field induces (encourages) electrons to move in a conducting wire. The moving electrons in one wire create a magnetic field that induces electrons in a nearby wire to move as shown in Figure L60-3.

Also notice that a second wire is too far away to be influenced by the magnetic field created in the first wire. Animated versions of these figures are available for viewing at www.mhprofessional.com/computingdownload.

Pretty fancy! But better yet, examine Figure L60-4. It depicts how this concept is applied so neatly in electricity and electronics.

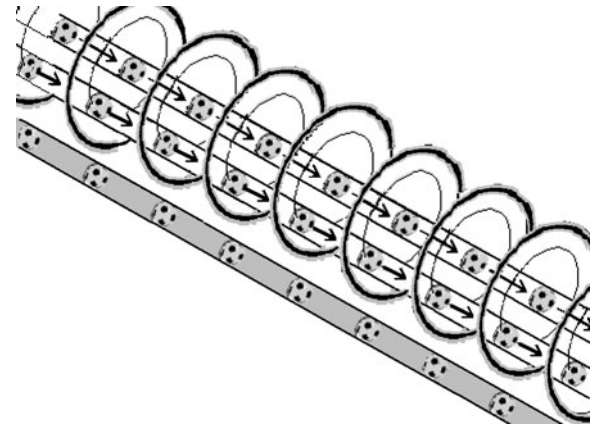

Figure L60-3

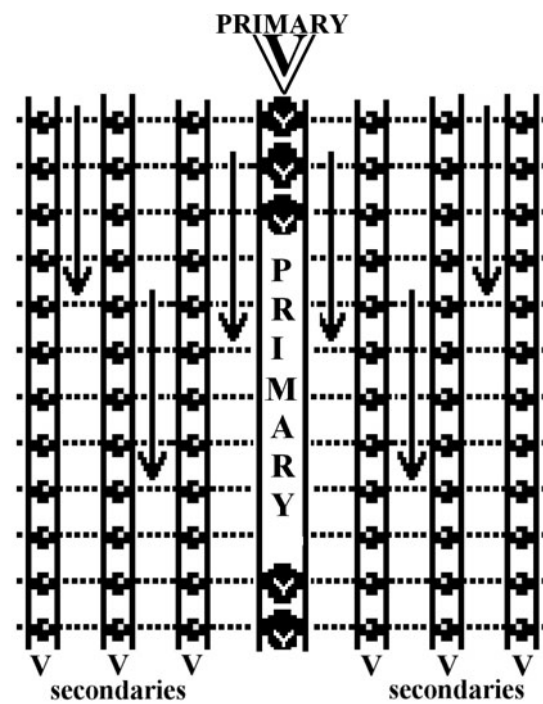

Figure 60-4

If we lay many wires next to the "primary" wire, it will induce (encourage) a voltage in each of the "secondary" wires. But wait. There's more. If each of those secondary wires is connected as one long wire, the voltage induced in each wire is added to the next. This is shown in Figure L60-5.

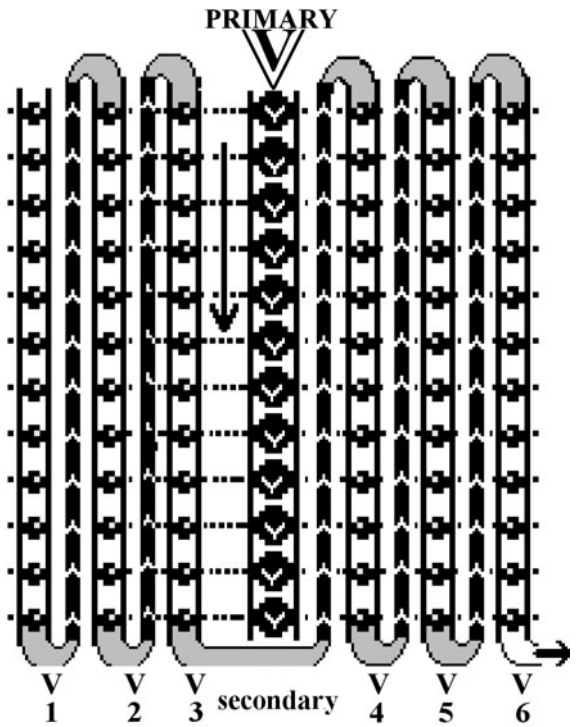

Figure L60-5

Checking Out the Audio Transformer

Pull out the miniature audio transformer. It should be wrapped in green. Various colors indicate various uses. Most likely there will be three wires on one side and only two on the other as shown previously in Figure L60-2.

If there are only two wires from each side, continue with the following exercise. It will become obvious which side is primary and which is secondary as you do the work.

The primary side has two wires. The secondary side has three wires. The middle wire on the secondary is referred to as the *center tap*. You can clip and tape it off. We won't use it at all.

Plug the test cord into the headphones output of your sound card. Use the software-based volume control to adjust the 1,000-Hz wave output to 5 mVac. Now attach the clips to the primary wires of the transformer as shown in Figure L60-6. Measure the output of the two outermost secondary wires (see Table L60-1).

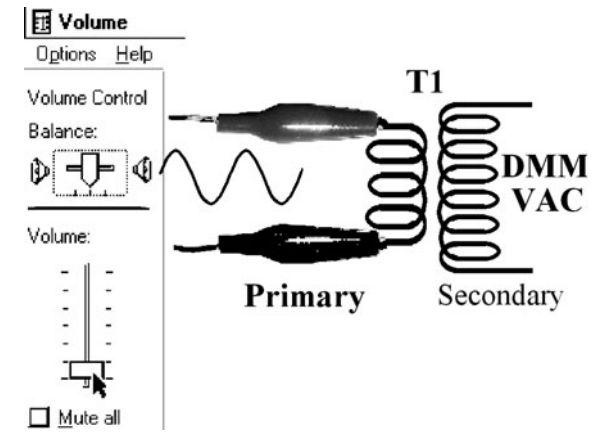

Figure L60-6

TABLE 60-1 Output Measurement

Input to Primary	Output at Secondary	Ratio of Output VAC/ Input VAC
5 mVAC		
10 mVAC		
25 mVAC		
50 mVAC		
100 mVAC		

$$\frac{\text{Output Signal}}{\text{Input Signal}} \quad \text{Average Ratio} = _____$$

In transformers, the fixed gain is referred to as a *step-up* or *step-down* ratio. This ratio actually reflects the physical relationship of the number of primary to secondary windings. A step up of 8 is created when you have 20 windings in the primary and 160 windings in the secondary. A wall adapter steps the voltage down. For example, one that provides 9 volts from a 120-volt system literally has a ratio of 120 windings in the primary for every 9 in the secondary. That's close to a ratio of 13:1.

The ratio on the audio transformer should be much greater than 1:1. If it is less than 1:1, you have your input connected to the secondary side of the transformer.

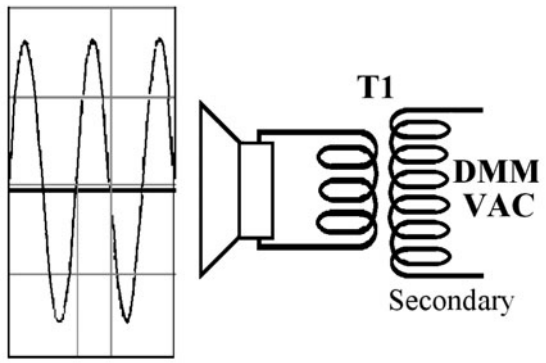

Figure L60-7

Now attach the speaker to the primary side of the audio transformer. Again, use the DMM to set the output at the secondary, measuring AC voltage as shown in Figure L60-7.

- Input at Primary = _____mVAC
- Output at Secondary = _____mVAC

Does this match the previous ratios? It should.

Insert the Audio Transformer into the Circuit

Insert the audio transformer into the circuit as shown in Figure L60-8.

Now test the entire system using the 1,000-Hz signal. Set the output of your sound card to 5 mVAC by first connecting it to the DMM. Use the software control to set the output signal strength precisely.

Measure the AC signal at different points indicated and record the readings in Table L60-2 provided.

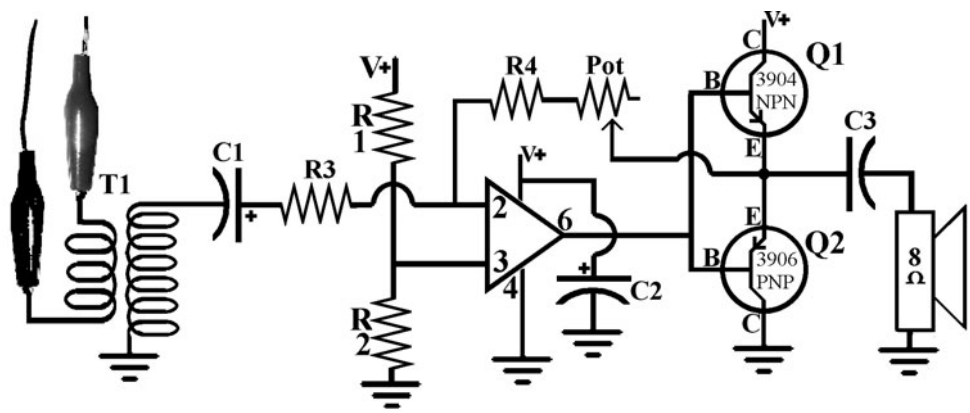

Figure L60-8

TABLE L60-2 AC Signal Measurements

1,000-Hz Sine Wave Tone	**5 mVac Gain = 1**	**5 mVac Gain = 11**	**10 mVac Gain = 1**	**10 mVac Gain = 11**
VAC TP input to reference				
VAC TP output to reference				
Favorite Music CD	**5 mVac Gain = 1**	**5 mVac Gain = 11**	**10 mVac Gain = 1**	**10 mVac Gain = 11**
VAC TP input to reference				
VAC TP output to reference				

Points to keep in mind.
1. This is not a high-fidelity system.
2. Any feed higher than 10 mVac will probably start sounding lousy because of clipping. The output signal is limited to 4.5 volts above the reference and 4.5 volts below the reference. You can't get more with this system. Try for bigger, and you lose most of the signal.

Parts list for reference:

- R1, R2 100 kΩ C1 = 4.7 μF
- R3, R4 1,000 Ω C2 = 1000 μF
  C3 = 470 μF

The Intercom System

Remove the test cord and put the speaker to be used as a microphone into place as shown in Figure L60-9.

Now you can use it as an amplifier. Talk into the speaker set up as the microphone. Adjust the gain to get the best quality and volume. At this point, you will find it necessary to separate the two speakers by at least five feet of wire. If they still squeal, turn down the gain or put one speaker on the other side of a sound barrier like a box or door. Take a few more measurements (see Table L60-3).

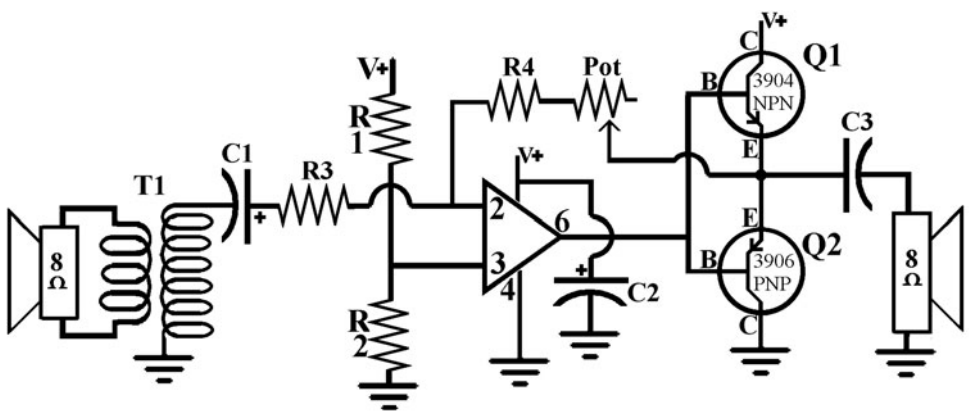

Figure L60-9

TABLE L60-3 Measurements

Pucker Whistle into Speaker	mVAC Gain = 1	mVAC Gain = 11	mVAC Gain = 1	mVAC Gain = 11
VAC TP input to reference				
VAC TP output to reference				

SECTION 18

Prototype and Design: Patience Has Its Rewards

1825: William Sturgeon invented the electromagnet.

1831: Michael Faraday's and Joseph Henry's electromagnetic phenomena research stimulated Sam Morse to devise a telegraph receiver.

1832: Morse conceived the idea of a single-circuit electromagnetic telegraph.

1835: Morse built the telegraph, only four years after Faraday explained magnetic induction.

1837: Morse solicited money and investments to build a test telegraph system. The great financiers of the age saw no future in sparks.

1838: The U.S. Congress turned Morse down. He tried to conjure up support in Europe with no success.

1843: Morse went on alone. He finally secured congressional support for a 41-mile (60-km) line between Baltimore, Maryland, and Washington, D.C.

1844, May 23: Morse sent the first telegraphic message, "Behold, What hath God wrought!"

Lesson 61
Systems and Subsystems

With an eye to upcoming design work, we make an in-depth tour of the amplifier's subsystems now and their possibilities. Currently, your breadboard should reflect the schematic in Figure L61-1. This setup is dealt with in Table L61-1.

The Systems We Take for Granted

There are two underlying systems that need to be recognized:

- The regulated and buffered power supply is vital. Figure L61-2 reminds us, and Table L61-2 discusses the power supply in detail.
- The audio couplers create an AC environment, necessary for the 741 Op Amp. These are non-negotiable.

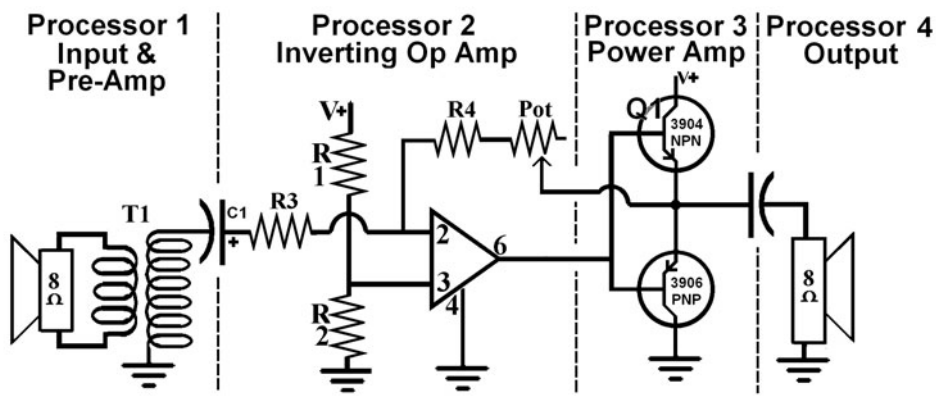

Figure L61-1

TABLE L61-1 The Basic System

Processor #1a	Processor #1b	Processor #2	Processor #3	Processor #4
Input determines type of pre amp	Pre amp dependent on type of input	Op Amp: Analog inverting amplifier	Power amplifier adds current	Speaker
1 to 5 mVac produced by the speaker itself	The audio transformer's set gain increases voltage but not the power	Feedback loop controls gain: Range 1 to 11	Classic dual transistor "push/pull" setup	.5 watt 8Ω

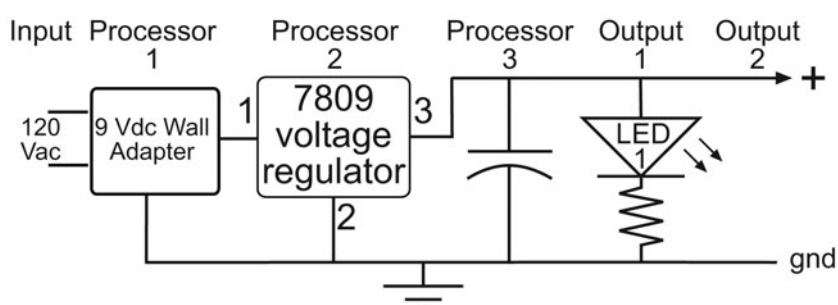

Figure L61-2

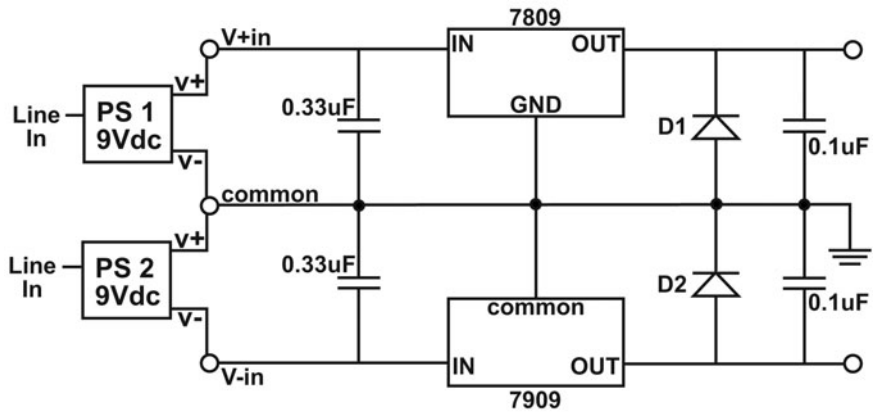

Figure L61-3

TABLE 61-2 Most Systems Take the Power Supply for Granted

Input	Processor 1 Wall Adapter	Processor 2 7809 (9v@1 amp)	Processor 3 Buffering Cap—1000 μF minimum	Output 1 Regulated 9VDC	Output 2 LED
120 VAC Line Voltage	Wall adapter AC to DC (unregulated) with rated power output	Provides a steady 9 VDC. Cannot exceed rated output of wall adapter.	Provides extra power for sudden demand	Very stable 9VDC within wall adapter ratings	LED indicates that power is available

The power supply suggested in Figure L61-3 is best for increasing this circuit's power without having to modify either the circuit or its components.

Processor #1a: Initial Input—Speaker as Microphone

Table L61-3 details the speaker as a subsystem.

Processor #1b: Initial Input—Pre Amp (Audio Transformer)

The audio amplifier is used here because the speaker creates its own voltage. The ratio of the primary coil to secondary coil can be roughly determined by the resistance readings shown in Table L61-4.

TABLE L61-3 Any Single Component Can Be Considered as an Entire Subsystem

Input	Processor	Output
Sound waves as pressure variations move the paper diaphragm.	The diaphragm moves the magnet inside the wire coil, inducing electron movement.	Small voltages created in the coil match the sound input.

TABLE L61-4 The Audio Amplifier Has a Set Gain

Input	Processor	Output
Small signal fed into primary coil (.85Ω).	The secondary coil's wire is so fine and long that it has 60Ω. Very sensitive.	Voltage increases but current decreases. The power out is the same as the power in.

TABLE L61-5 Remember, the Heart of This System Is the Summing of the Two Signals

Input	Processor	Output
7 to 15mVac	The feedback loop allows adjustable gain up to 11 times.	AC signal connects directly to the matched transistors' bases.

TABLE L61-6 Recall that Power Is Stated as Watts: Watts = Voltage (x) Impedance [W = VI]

Input	Processor	Output
Varying AC signal controls the matched transistors simultaneously.	Classic "push/pull" setup. The varying voltage controls the valving action that draws current directly from the power supply.	Output AC signal maximum = .5 watt. The output is limited by the power available from the supply and the capacity of the transistors.

Processor #2: The Operational Amplifier

Our basic system is an analog-inverting Op Amp. Table L61-5 gives details about it.

Processor #3: The Power Amplifier

The power amp (Table L61-6) is the section that "adds" current to the existing voltage.

I won't be redundant and discuss the "speaker as output." It is exactly the opposite of the "speaker as input." Voltages fluctuations in the coil move the diaphragm back and forth over the magnet. The moving paper diaphragm creates sound waves as pressure variations in the air. This is essentially how any speaker works.

Variation on a Theme

Here are some suggestions just to get you thinking. These are expanded in Lesson 63.

Processor 1—Inputs

Any method that creates a fluctuation of at least 1 mVac can be used as an input to this system. Table L61-7 lists the four general categories of inputs available to us.

Processor 2—Op Amp

This is the best place to modify the signal. Table L61-8 suggests some possibilities.

TABLE L61-7 Potential Modifications for the Initial Input (Processor 1)

Sound	Light	Radio Frequency	Direct Line Input
Electret microphone (transistor pre amp)	Phototransistor (transistor pre amp)	Antennae or pick-up coil (audio transformer)	A signal created from another source like an MP3 player (might not need re-amp)
Coil microphone (audio transformer)	Light-dependent resistor (audio transformer)		
Crystal (piezo) microphone (audio transformer)			

TABLE L61-8 Even with All These Options, We Can Still Use the System as Just an Intercom

Add filters so the system works as	Incident indicator	Voltage comparator	Movement
High-pass Filter (blocks lower frequencies) Low-pass Filter (blocks higher frequencies) Mid-range Filter (removes the voice range, e.g., karaoke) Hi/Low Filter (filters all except the voice range)	The Op Amp outputs a digital Hi or Lo when an input lasts longer than a predetermined length of time.	Analog–Digital converter	A special input directly at the Op Amp can indicate both movement and direction.

Processor 3—The Power Amplifier

If you want more out of your system, you have to put more in. Size does make a difference. But providing a larger power output brings its own complications.

1. A bigger wall adapter will provide higher voltage and more amps: W = V (×) A.
2. To handle the larger power supply, you will need a bigger voltage regulator that can handle more voltage and more amps.
   a. A different package 7809 can handle more power. Then there are the 7812 and 7815. These obviously provide more voltage.
   b. The 7909? Something new! What does it do? Thought you'd never ask. It's a negative voltage regulator.

You can have 9 V+ on top and 9V– on the bottom: a spread of 18 volts. That's close to the limit for the 741 Op Amp.

If you increase the power supply, you need bigger, but still matched, transistors for the power amplifier section. The 2N3904 and 2N3906 are available in only the TO-92 package, and they are really limited in power. My suggestion would be the 2N2222 NPN switching transistor and its PNP complement, 2N2907A. In the TO-18 metal package, these are rated for operating steadily with a draw of 500 mA @ 40 volts (20 watts), with a maximum of 800 mA @ 60 volts (48 watts).

Processor 4—The Output

It's the end of this system, but it could just be the beginning of another.

1. Analog
   a. Speaker and sound
   b. Modulated power to a light source (IR LED or laser pointer)
2. Digital
   a. Hi or Low output as a trigger for another circuit (not a clock output)
   b. Animatronics (motor control)
3. Feed amplified signals and events to the computer.

Don't just sit there—start playing!

Lesson 62
Switching to the Two-Way Door Phone

Yes, you now have the first half of the intercom system. But with a flick of a switch, you can reverse the signals, making two halves of an intercom. Then you can finish up.

The Evolution of Switches

Up until now, you have been using momentary contact switches like the ones shown in Figure L62-1.

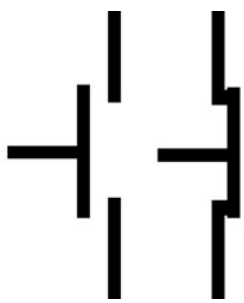

Figure L62-1

Normally open push buttons have contact only when they are pushed and held.

Normally closed push buttons have contact all the time, until they are pushed.

Examples of these can be found in items ranging from telephones to game controllers.

The single-pole single-throw (SPST) switch displayed in Figure L62-2 has definite on and off positions.

It is designed to be used with only one circuit pathway.

The single-pole double-throw (SPDT) switch splits one line into two paths. The example shown in Figure L62-3 shows how a single voltage can be used to power two different items. Sometimes there is an off position set into the middle.

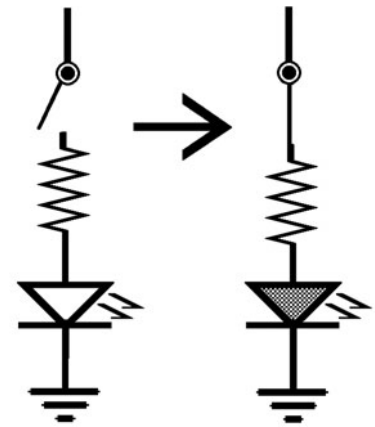

Figure L62-2

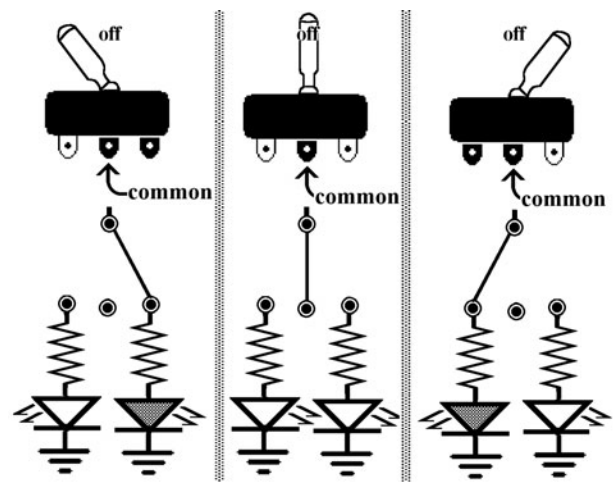

Figure L62-3

Notice that the center tab can have a connection to either side, depending on the position of the toggle.

The double-pull double-throw (DPDT) switch is like having two SPDT switches glued together side by side, sharing the same toggle. Figure L62-4 displays the commonly found package of the DPDT switch. Note the action of the switch in Figure L62-5. Except for the toggle, the two sides are completely independent of each other.

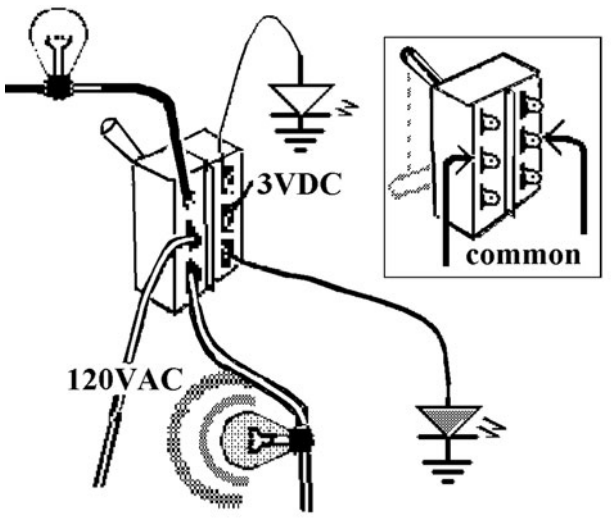

Figure L62-4

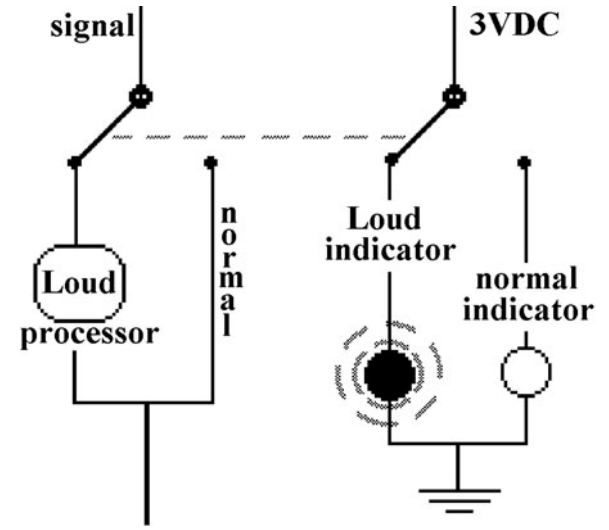

Figure L62-5

The DPDT is found frequently used on stereo systems. They are often paired with indicator lights to show the current function chosen.

But wait … aren't stereo systems just that? Stereo!

They have a left *and* a right signal. Each side is completely separate, too! Figure L62-6 shows how two DPDT switches can be made to work together in a big switch. It would be a double DPDT switch. But let's make life easier. Just call it a 4PDT switch. Figure L62-6 displays the four poles and double throw.

Now that's a switch! They don't come much bigger than that!

Making the Two-way Door Phone

So far, you have the complete system as shown in Figure L62-7.

It uses a speaker as a microphone and you can talk one way. By using the 4PDT switch, you can make it into a two-way system. This is done by rerouting the input and output signals. Figure L62-8 shows the numbering of the tabs for the 4PDT switch. Study the wiring diagram in Figure L62-9

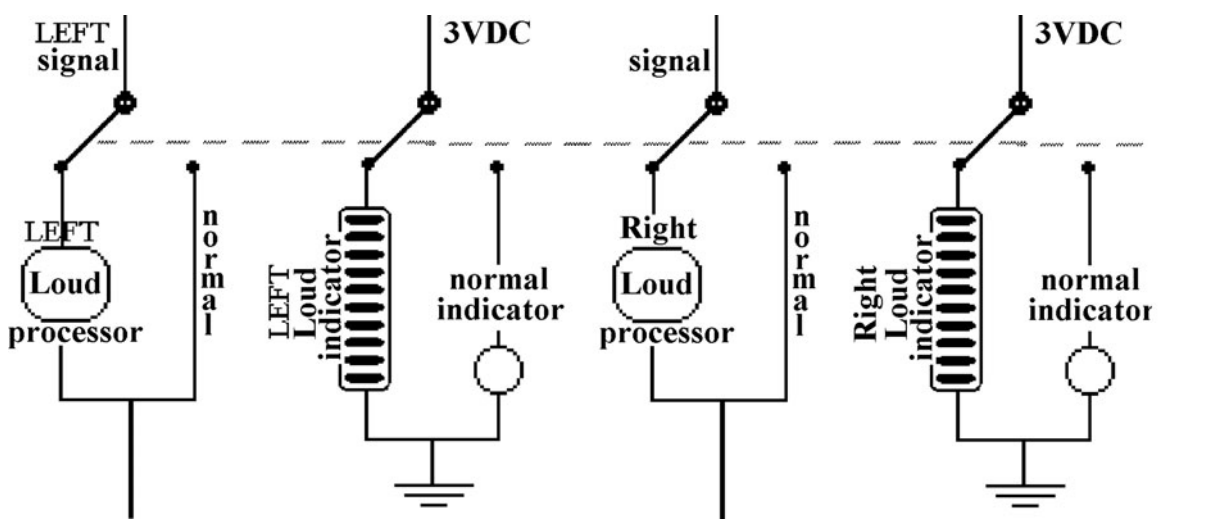

Figure L62-6

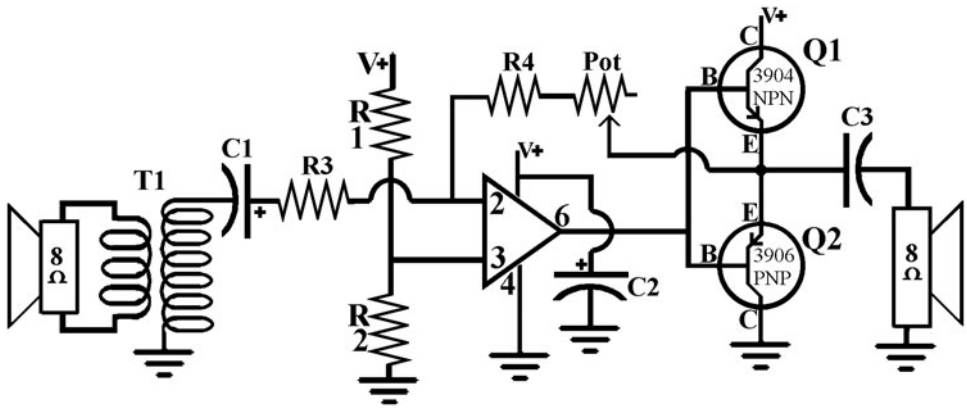

Figure L62-7

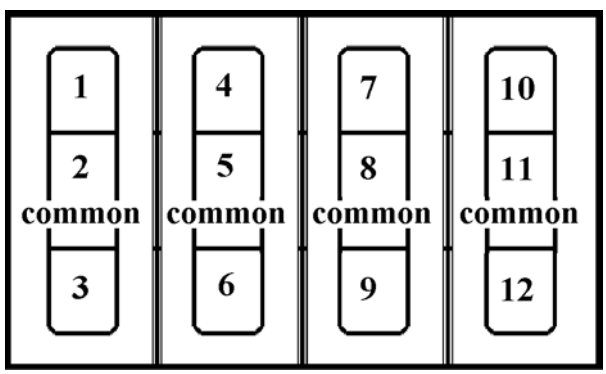

Figure L62-8

carefully. You don't want to make a mistake here. Each speaker will have four wires, two on each side.

Recognize that, depending on the position of the switch, only one on each side will be connected at any time. In one position, the speaker on the left acts as the microphone. In the other position, the speaker on the right acts as the microphone.

That is all there is to it!

There is only one switch, and you control it from the inside.

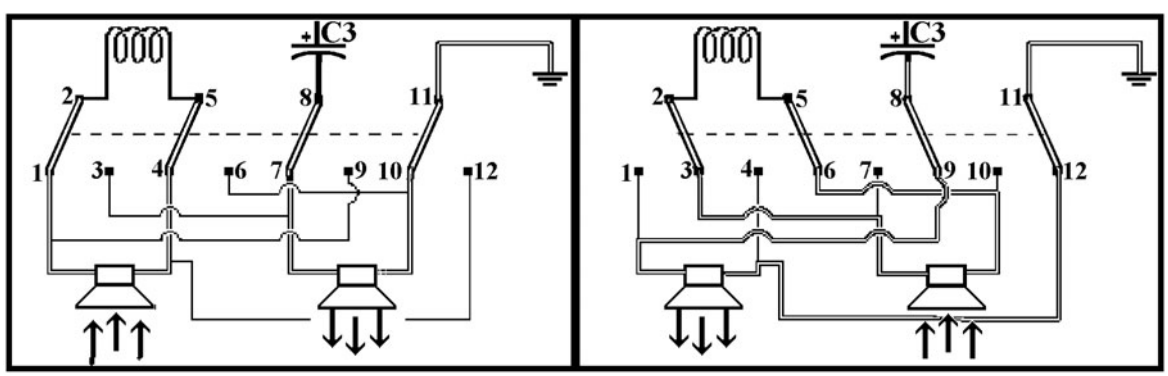

Figure L62-9

Lesson 63
Design and Applications: Exploring the Possibilities

Arthur C. Clarke formulated the following three "laws" of prediction:

1. When a distinguished but elderly scientist states that something is possible, he is almost certainly right. When he states that something is impossible, he is very probably wrong.
2. The only way of discovering the limits of the possible is to venture a little way past them into the impossible.
3. Any sufficiently advanced technology is indistinguishable from magic. Figure L63-1 is the old RCA logo "His Master's Voice." What we now consider simple used to amaze the world.

Figure L63-1

Here are five projects that provide examples of imaginative applications:

1. Amplitude modulation: Communication on a beam of light (Table L63-1)
   a. Laser listener: Remember that sound makes a window vibrate. Bounce a laser beam off the window and onto your phototransistor.
   b. Directly power the laser pointer with an amplified signal. A phototransistor and speaker will translate the beam back into sound.
   c. Communicating privately back and forth with two sets.
2. Animatronics: Talking and singing bivalve shell (Table L63-2)
3. Measuring density and vibrations: Water in a river, thickness of air pollution, heart monitor, or even a seismograph to measure traffic rumbling on a nearby road (Table L63-3).

TABLE L63-1 The High-Power Output Section Discusses Using the Power Amp as a Power Source

Input	Processor 1	Processor 2	Processor 3	Processor 4	Output
Sound source	Modulated laser beam pickup	Phototransistor or solar cell	Op Amp	Power amp	Speaker

TABLE L63-2 Making the World Your Oyster Is Easier than You Think

Input	Processor 1	Processor 2	Processor 3	Processor 4	Output
Sound source	Microphone and pre amp	Op Amp voltage comparator	Power amp	Power to a motor	Hinged movement

TABLE L63-3 This System Can Measure the Rate and Density of Any Flowing Fluid

Input	Processor 1	Processor 2	Processor 3	Line Out
Infrared LED or laser	Phototransistor or solar panel	Single transistor pre amp	Op Amp	Soundcard Scope and recorder

TABLE L63-4 This All Depends on the Input Antenna

Input	Processor 1	Processor 2	Processor 3	Output
Antennae loop (wire coil with an open center)	Audio transformer	Op Amp	Power amp	Speaker

For daytime and further distance, a laser is better input. To measure across distances, reflect the laser beam off a distant mirror. Make sure that all sections are solidly secured so they don't add to the shaking. This setup can be surprisingly sensitive. Also, the phototransistor can be protected from sunlight's IR by tucking it deep into a darkened tube.

4. Radio frequency pickup (Table L63-4): Use this as an electromagnetic energy detector.
5. Natural rhythms: Listen to the sunrise (Table L63-5).

Considerations for the Input

This circuit needs an input that creates at least a 1 mV fluctuation. Here are two suggestions that could help magnify that physical input if it is too small.

1. Specifically, when using a phototransistor during the daytime, you can protect it from the sunlight's IR by tucking it into a dark tube.
2. A parabolic surface works for both sound and light. Mini-umbrellas create a semi-rigid parabolic surface that works nicely for sound. Silvered Mylar film sold as emergency blankets at dollar stores reflect light. Figure L63-2 helps remind us that a parabola is not a semicircle. Large telescopes and small satellite dishes use the same concept for gathering and focusing.

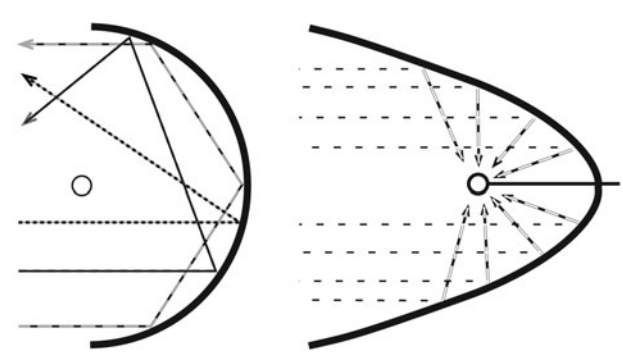

Figure L63-2

TABLE 63-5 Listen to the Sunlight Reflected Off Trees During a Windy Sunrise

Input	Processor 1	Processor 2	Processor 3	Processor 4	Output
Any reflected light	Lens to concentrate light	Phototransistor or solar cell	Op Amp	Power amp	Speaker

3. A lens inside a tube (Figure L63-3) works nicely for focusing a moderately strong light source. It is limited to light only and is not nearly as large as the parabolic surface.

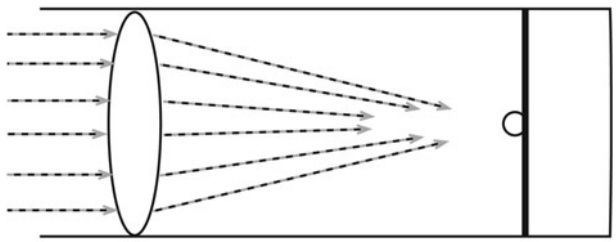

Figure L63-3

4. A cone made of rolled material (Figure L63-4) is the simplest of any focusing tools. Several factors make it less efficient than either of the previous options. The resulting signal is muddy, but it does work.

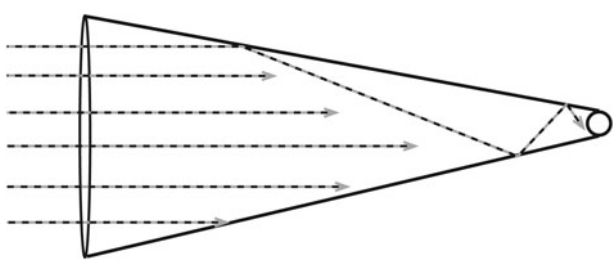

Figure L63-4

Consideration for the Output

The power amplifier's size is ultimately determined by your intended output. Even though a large power output will drive a smaller load, it could also burn it out. For example, a 2.0-watt output will eventually burn out a 0.5-watt 8 Ω speaker. After some heavy figuring using differential calculus, I suggest that a 2-watt speaker be used with a 2-watt power supply.

High-Power Output

1. Modulate power to directly power a laser pointer. Note the setup in Figure L63-5A. This works nicely over a few hundred meters.

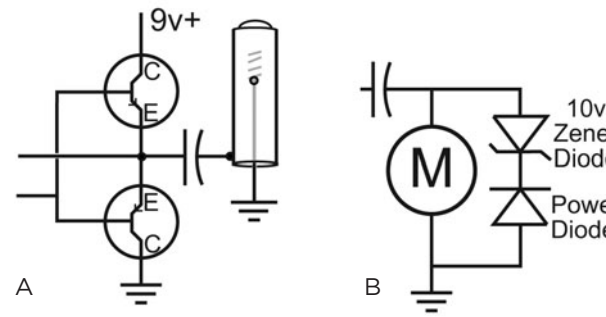

Figure L63-5

2. High-power digital signals can directly power motors. Figure L63-5B's setup can handle small motors. This setup provides short bursts in both directions. 5B's diodes prevent feedback, which would create disturbing power spikes that could damage the Op Amp. Remove the zener if you want movement in only one direction.

Low-Power Output

When I say low power, I mean "low power." To do this, the schematic in Figure L64-6 drops the power amplifier stage and places the second audio coupler directly after the Op Amp's output. A low-power output is necessary specifically for systems that have their own power supply.

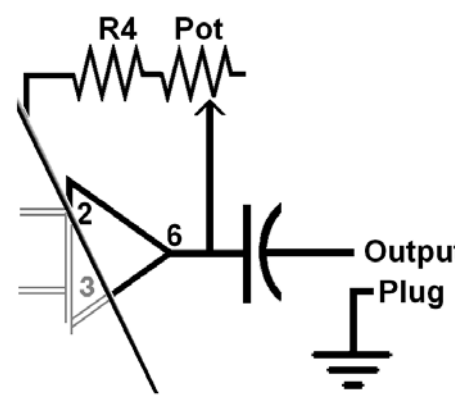

Figure L63-6

Considerations for the Main Processor

Brief descriptions are given here for the two different setups in Figure L63-7.

1. Figure L63-7A is the basic processor out with adjustable gain, maximum 1:11. This is good for voice or any basic mid-range signal.
   a. To listen to the sound of nature, or your friends at over 100 meters away, mount the electret microphone at the focal point of a simple parabolic reflector. This can be used as a basic audio amplifier. It is not high fidelity in any sense of the word. There are better Op Amps for this purpose. But it is excellent for voice communication.
   b. Blood flows. Treat this as an audio signal. What about a heart monitor? Use an IR LED and phototransistor that are both lensed sideways. Tape them onto the tip of your finger, on opposite sides, facing each other. Feed the output directly to the microphone input of the computer. Watch it on the Soundcard Scope. Record it using a high sampling rate and save it as a wave file (*.wav).
   c. A marvelous application is in your hands by simply replacing the electret microphone with a phototransistor. Make sure the lens is shiny enough to concentrate the diffused light. And I'm serious. At sunrise, point this device westward at trees in a soft breeze. There is no other sound like it as they come into the light. You can also listen to light reflecting off insect wings.
2. Figure L63-7B increases the gain to 1:1,000,000. The clipped output signals are as good as digital highs and lows. This circuit can be used for controlling small motors. Those motors, in turn, control a lever arm that lifts any small object on a hinge. This motion is counterbalanced by either gravity or a spring so the object returns to its original position when the circuit's output is low. There are lots of examples on the Internet.
3. Figure L63-8 is strictly a digital system. Its inputs can be physical, light, or sound. It will give a Hi output depending on the length and strength of the input signal. Also, this basic voltage comparator is a "voltage follower." This term refers to the fact that the output voltage state (Hi or Lo) matches that of the input. The input signal must last long enough and be strong enough to raise the voltage in the capacitor above half of V+ before the 1 MΩ resistor drains it. Vary the timing by changing the value of the capacitor. You can use the same single transistor amplifier from way back in Unit 2. Don't use the single transistor's pre-amp setup.

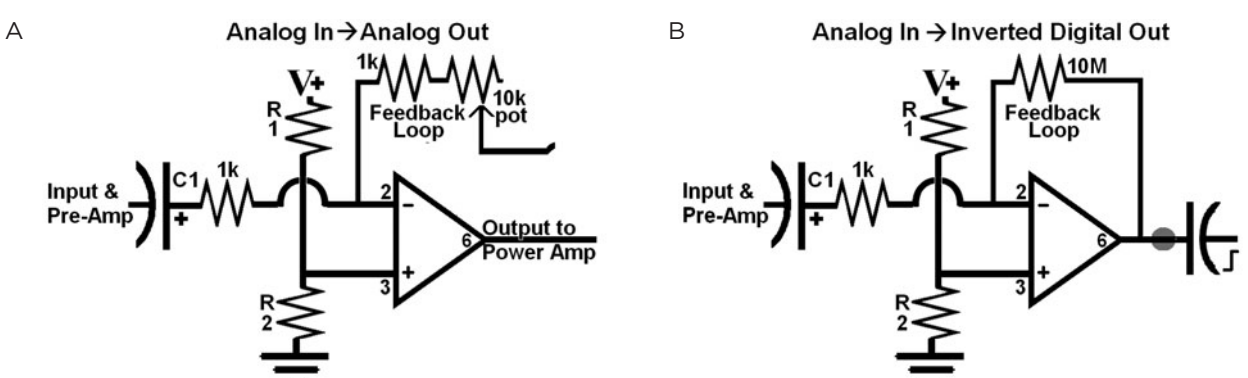

Figure L63-7

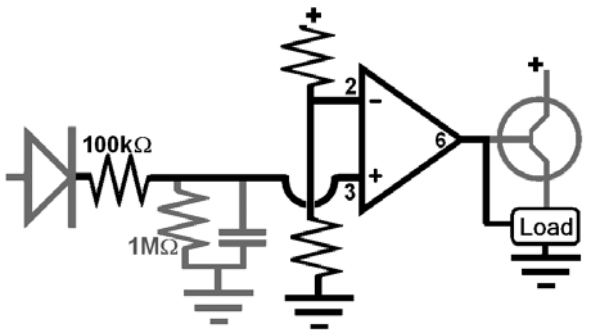

Figure L63-8

This high output is good as a trigger for starting any secondary system that depends on a Hi or Lo signal. Think wildlife and a digital camera. Or a basic security system.

4. Figure 63-9 presents an entirely different input to the circuit. Not sound. Not light. Electromagnetic radiation! This isn't the type of radiation most people think about when you say "radiation." It is a general term referring to the concept that electromagnetic energy moves in all directions—it *radiates* out from its source. In fact, we live in a world polluted by electromagnetic energy. All you need to sense it is a good antenna feeding into the audio transformer.

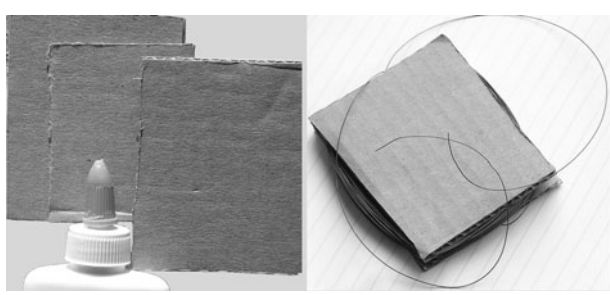

Figure L63-9

Use magnet wire that is 28 gauge or finer. Wind it at least 100 times around the outside of a 5-inch (13-cm) wide square of cardboard. Do not hold the antenna in your hand. You are a large capacitor and affect the small antenna. Place the antenna on the end of a plastic ruler. Do all of your initial testing with the audio transformer in place. Also, keep the volume very low when you start testing different things. My computer puts out about 4 mV noise. The microwave oven jumped from 0.0 volts to 15 mV as I turned it on. But the old TV leaked enough energy to boost the DMM's reading up beyond 150 mV. If I'd had earphones, I would have blasted myself through the roof.

Consider changing the shape of the antenna to meet your needs. The antenna shaped as a tube responds nicely to very small voltage fluctuations of any line passed through its open center. You can listen in on an active landline telephone conversation.

Lesson 64
Assembling the Project

See the Parts Bin for the project parts list.

PARTS BIN

- R1, R2—100 kΩ
- R3, R4—1 kΩ
- P1—10 kΩ
- C1—4.7 μF
- C2—1000 μF
- C3—470 μF
- T1—Audio transformer (1:50) green
- IC1—741 low-power Op Amp
- Q1—2N3904 NPN
- Q2—2N3906 PNP
- Speakers (2)—8 Ω
- Switch—4PDT

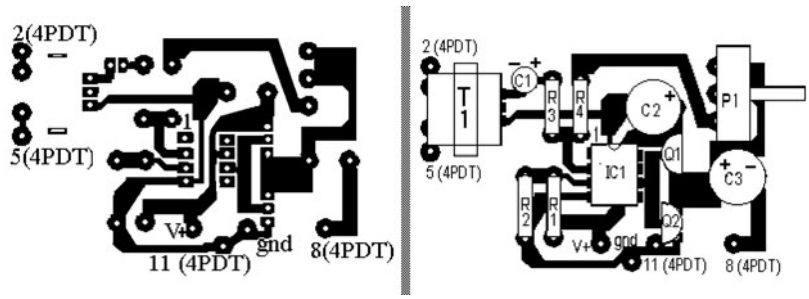

Figure L64-1

Figure L64-1 shows the PCB and parts placement for the door phone.

Assemble the project onto the printed circuit board.

The speaker wiring diagram is shown in Figure L64-2.

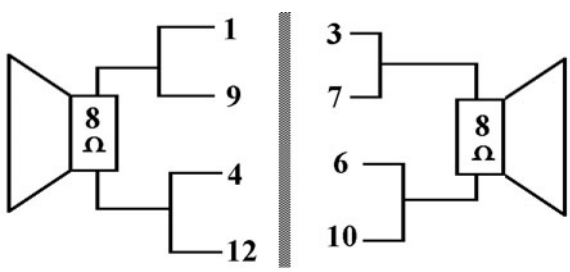

Figure L64-2

Remember to be careful as you do the assembly.

1. Solder the 8-pin chip seat for the 741. Do *not* solder the IC directly.
2. Note the placement of polar components. The only nonpolar components you have in this circuit are resistors.
3. The 3904 and 3906 transistors are not interchangeable in any circuit. Be sure they are properly placed. Overheating the transistors with a solder pen will destroy them. If the circuit doesn't work after soldering, check the transistors. Use the transistor check sheet provided in Table L51-2.
4. The potentiometer will not fit directly onto the PCB. Solder short wires to the legs of the potentiometer. Keep them short or they will act like antennas and be the source of a background hum that shouldn't exist.

What else is there to say? Seriously, if you've come this far, keep going. The big question is "Where to?" To begin with, get a subscription to *Nuts and Volts* or *Everyday Practical Electronics*. Or get some other Evil Genius books. Like I said earlier: Don't just sit there, start playing!

PART FIVE

Appendices

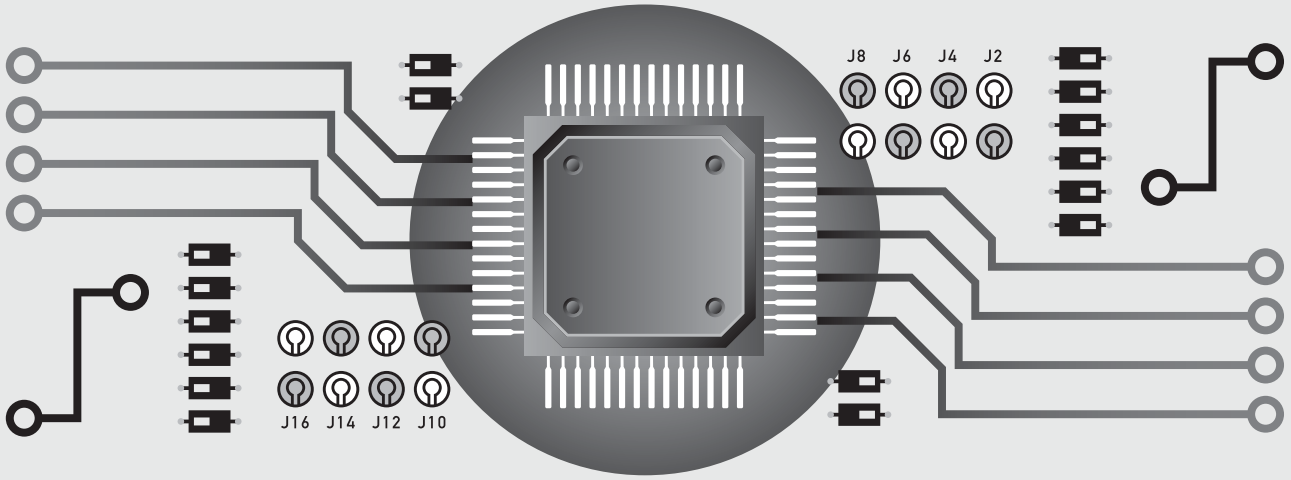

This page intentionally left blank

APPENDIX A

Common Component Packaging

You may have noticed that sometimes the components you work with do not match the pictures of the components shown in the book. This section gives an introduction to common packaging used for electronic components. A single component such as the SCR can be packaged in a variety of formats. Each package provides an advantage of one form or another. It might be how it fits on a circuit board or how it handles power.

This is an overview meant to help you be flexible. Get used to reading the labels. Just because it looks different does not mean that it is different.

Transistors

Transistors have, by far, the most variety in their packaging, as shown in Figure A-1.

Many components are available in a variety of packages. Others, like the 2N3094 and 2N3906 transistors, are available only in the TO-92.

Potentiometers

Many potentiometers are being replaced by digital counterparts. However, they are still very common. Figure A-2 shows their potential packaging.

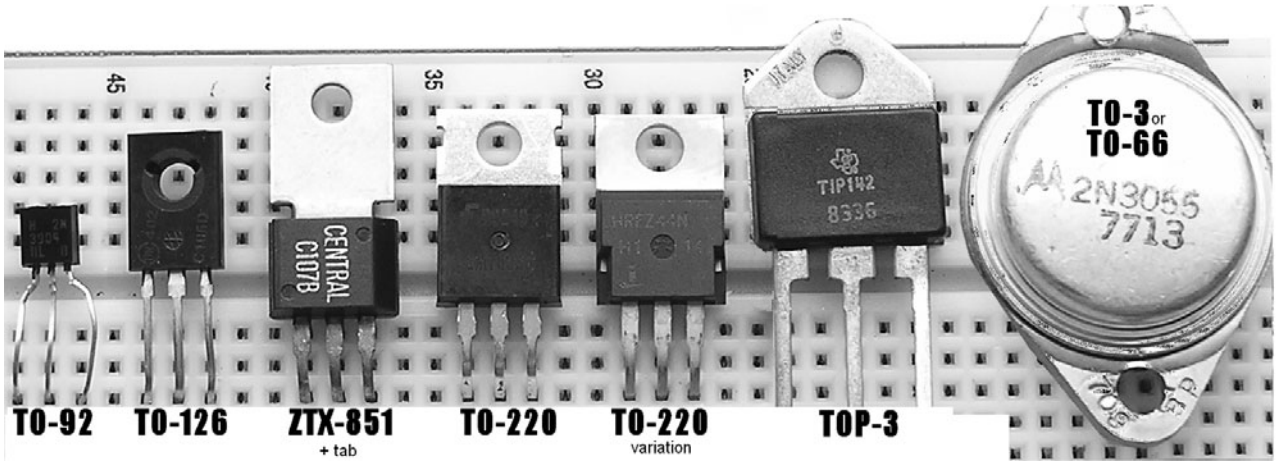

Figure A-1

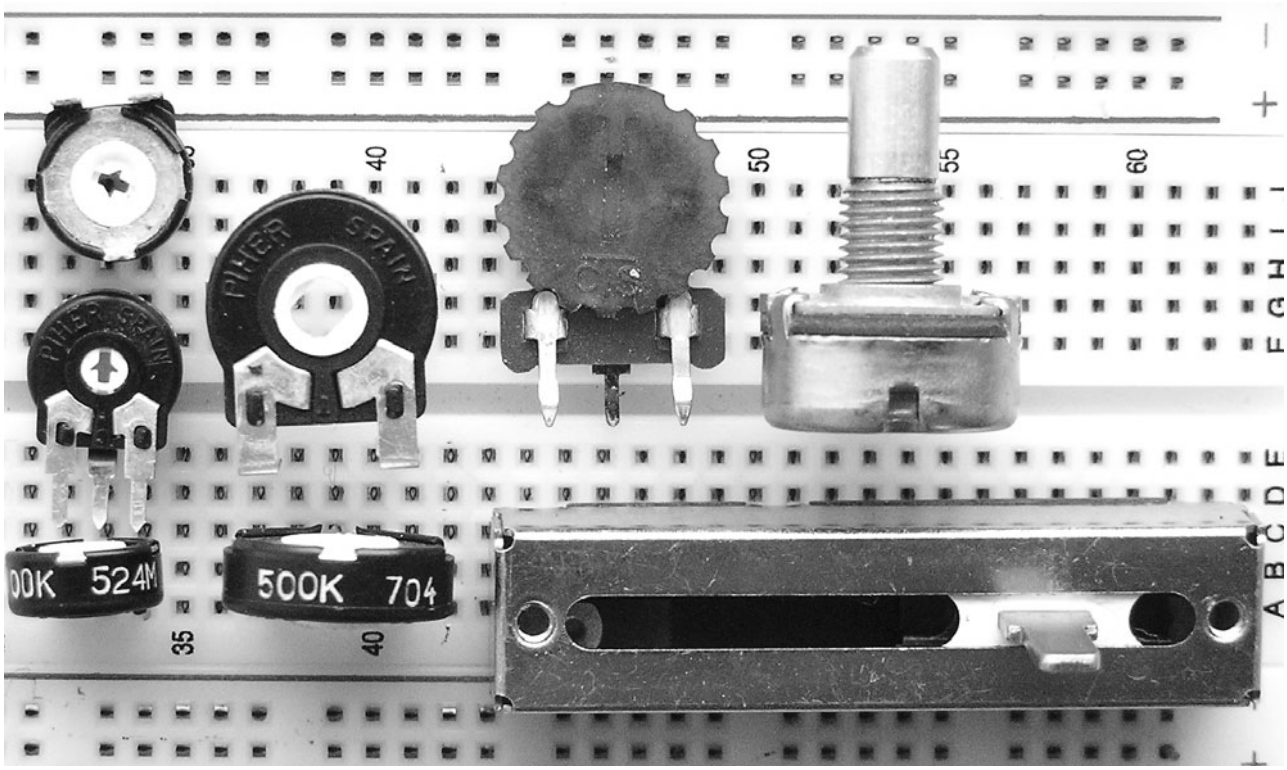

Figure A-2

Transformers

Transformer packaging sizes, like any other component, are determined by the power requirements. The largest transformer, shown in Figure A-3, is a small power transformer.

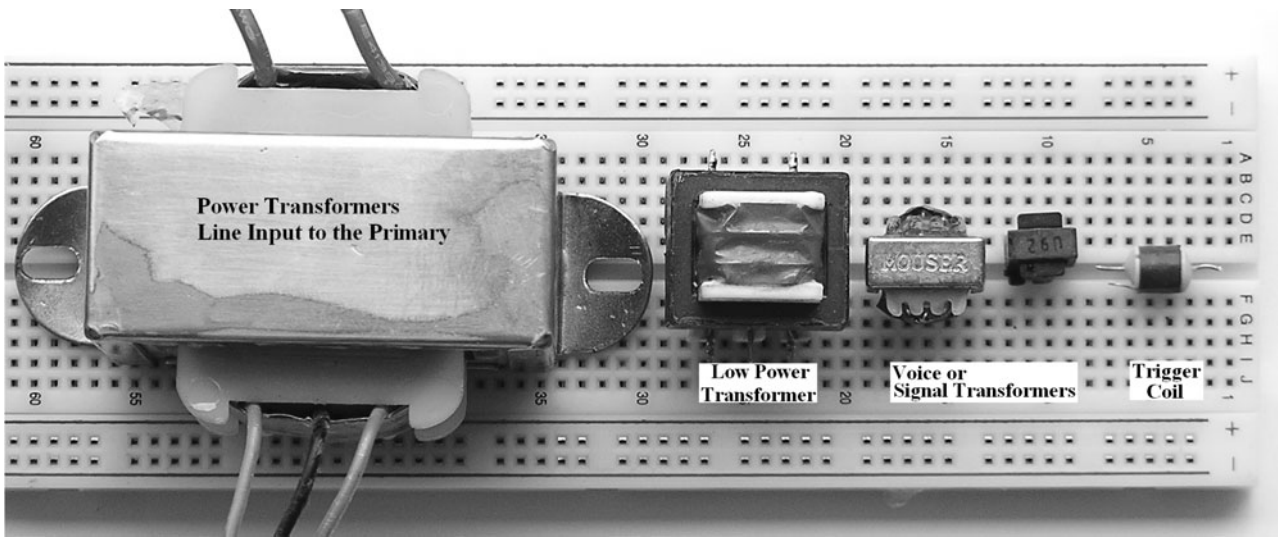

Figure A-3

APPENDIX B

Capacitors: Reading and Decoding

Capacitors tend to be confusing because there is no standard method of marking them. Even I get turned around when trying to decipher some creatively marked caps. If you are unsure, just use your DDM to verify what you think you see.

Reading Values

Each range of capacitors is packaged and referred to differently.

Remember! Coloring is nothing more than advertising for who made it.

- Electrolytic capacitors are easy. They have positive and negative connections. They must be placed properly. Polarity is clearly marked. Radial electrolytic capacitors have both leads from one end. Axial capacitors have a lead at each end. Figure B-1 shows that voltage ratings and capacitance are clearly marked.

TABLE B-1 The Farad Was Defined Over 200 Years Ago; Today, the Base Unit is the μF

Farad : F	Microfarad : μF	Nanofarad = nF	Picofarad = pF
1 F	= 1 million μF	= 1 billion nF	= 1 trillion pF
1 F	= 1,000,000 μF	= 1,000,000,000 nF	= 1,000,000,000,000 pF
	1 μF = 10^{-6} F	1 nF = 10^{-9} F	1 pF = 10^{-12} F
	1 μF	= 1,000 nF	= 1,000,000 pF
		1 nF	= 1,000 pF

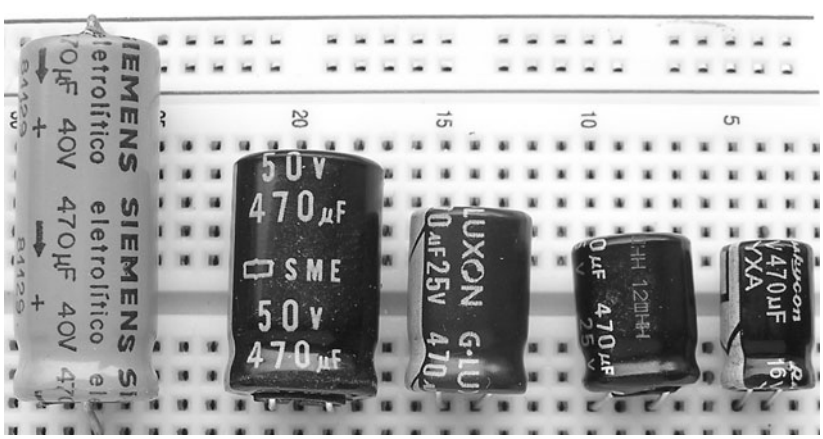

Figure B-1

- Film capacitors are usually standard boxy shapes. Assume they are marked in nanofarads, but don't bank on nanofarads or a boxy shape all the time. Sometimes they are dipped in plastic and lose their boxy appearance. These are made of stacked layers of conductive film.
- Disk capacitors dominate the picofarad range. They are usually made of two circular plates, dipped into ceramic material and baked. Good examples of both appear in Figure B-2.

The markings of disk capacitors appear cryptic. The numbers read sort of like a resistor. Figure B-3 shows a range of values, and Table B-2 shows how to read them. Regarding the cap marked n22, the unit marker substitues as the decimal. So its value is .22nF.

Any capacitor rated above the intended voltage can be used in a circuit. For example, a capacitor rated at 600 volts can be used in a 9-volt circuit. There's no problem as long as maximum voltage does not exceed the capacitor's rated maximum.

Tolerance: Quality and Accuracy of Capacitors

The marking for accuracy of capacitors is noted on each package. Look at the pictures. On each, there is a prominent letter "K," "M," etc. Shown in Table B-3, these letters note tolerance.

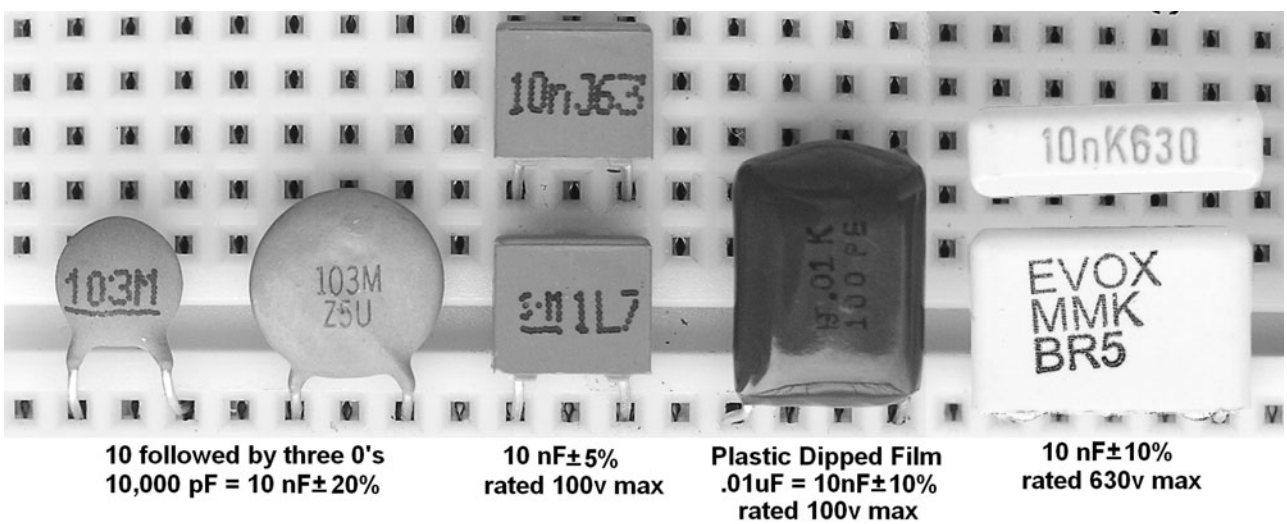

Figure B-2

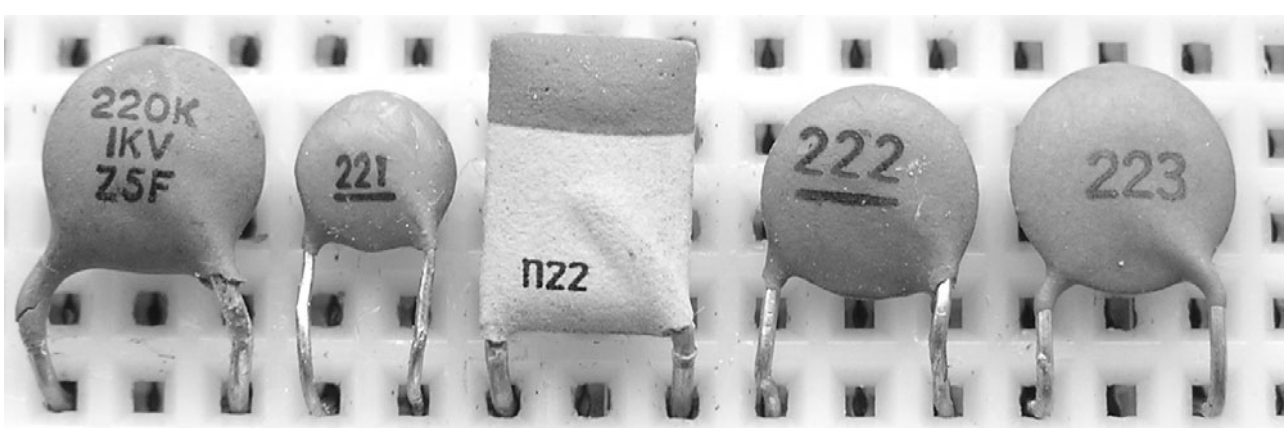

Figure B-3

TABLE B-2 The Third Number Denotes the Number of Zeros

Marking	Base Number	Number of Zeros	Results in pF	Results in nF
220	22	0	22 pF	.022 nF
221	22	1	220 pF	.22 nF
222	22	2	2200 pF	2.2 nF
223	22	3	22000 pF	22 nF

TABLE B-3 The Letter "K" Used Here Has Nothing to Do with 1,000

F	G	J	K	M	Z
±31%	±32%	±35%	±310%	±320%	−20% to +80%

This page intentionally left blank

APPENDIX C

Animations List

Related Animations

THESE ANIMATIONS CAN be found at www.mhprofessional.com/computingdownload

Part One

Figure L3-4

Figure L6-4

Figure L8-18

Figure l8-19

Figure L8-22

Figure L9-5

Figure L12-3

Figure L12-12

Figure L13-2

Figure L13-7 (a and b)

Part Two

Figure L15-1

Figure L16-1

Figure L16-2

Figure L16-3

Figure L16-4

Figure L16-5

Figure L16-7

Figure L16-9

Figure L19-4

Figure L20-1

Figure L21-2

Figure L21-5

Figure L22-7

Figure L23-5

Figure L23-6

Figure L23-7

Figure L24-1

Figure L24-2

Figure L24-3

Figure L25-2

Figure L27-1

Figure L27-2

Figure L27-3

Figure L27-4

Figure L28-1

Figure L28-2

Figure L28-3

Figure L28-4

Figure L28-6

Figure L28-7

Figure L32-2

Figure L32-3

Part Three

Figure L37-1

Figure L38-2

Figure L39-1

Figure L40-2

Figure L41-1

Figure L42-2

Figure L43-1

Figure L44-5

Figure L46-3

Figure L46-4

Figure L46-5

Part Four

Figure L49-1

Figure L49-2 (a, b, and c)

Figure L50-2

Figure L50-3

Figure L50-5 (a, b, and c)

Figure L52-2

Figure L53-1

Figure L53-2

Figure L53-3

Figure L53-4

Figure L53-5

Figure L53-7

Figure L53-8

Figure L53-9

Figure L54-1 (a, b, and c)

Figure L54-6 (a and b)

Figure L55-7

Figure L56-2

Figure L57-2

Figure L60-3

Figure L60-4

Figure L60-5

Figure L62-1

Figure L62-2

Figure L62-3

Figure L62-4

Figure L62-5

Figure L62-6

APPENDIX D

Glossary

AC
Alternating current (AC) is a current that pushes the electrons both forwards and backwards through a wire. AC is easily produced and transmitted for household and industrial use. Audio signals are AC because the sound wave creates a signal that pushes and pulls—creating a positive and negative voltage. AC is generally not used for digital electronic applications. *See DC (direct current).*

active
The state of a circuit, referring to whether the circuit is responding to an input. Alternatively, the other state is rest.

air capacitor
An air capacitor is an adjustable cap that works in the pF range, used for radio frequency tuning.

amp (ampere)
This is the basic unit of current (I) in electricity. It is a specific measure of electrons that flow past a point in one second.

amplifier
An amplifier uses a smaller signal to control the larger flow of voltage and current directly from the power source. *See pre-amp, power amp, Op Amp.*

amplitude
This is the strength of a signal. If the volume changes, the output amplitude changes. A 6-volt AC signal has six times the amplitude of a 1-volt AC signal.

analog
A signal that varies continuously over a given range, as compared to a digital signal where only discrete values of Hi (V+) and Lo (ground) are considered significant.

analog to digital (AD)
A device that changes a continuously variable signal, such as motion or electrical voltage, into digital values. Thus, it provides analog-to-digital conversion.

AND gate
Digital logic for the AND gate. When all inputs are Hi, the output is Hi.

anode
Commonly used term referring to the positive side of a polar component.

astable
An astable oscillator creates a continuous frequency as long as that portion of the processor is active. The frequency of the oscillator is set by the value of the components in the RC circuit.

battery
The term comes from a grouping of cells together in parallel or series. A 9-volt battery is made of a grouping of six 1.5-volt cells.

BCD (binary counting decimal)
A binary input is interpreted and then presented on a decimal seven-segment display output. The 4511 is a BCD interpreter.

bias
The general term means a tendency or prejudice towards a specific point of view. In electronics, a bias is created by using voltage dividers to create an artificial center point for an audio AC signal. If an audio system uses 12 volts, the bias is set to 6 volts. This method is easiest when only positive DC voltage is available.

binary
The counting system that depends on only two digits, used by computers and machinery because it is easier for these systems to sense an on/off setup, rather than partial voltages. Computers use a magnetic system of north/south polarity to store bits of information. *See bit, byte, digital.*

bit
A single piece of information that stores binary data. It is the individual piece (bit) that is turned on/off, or an area polarized north/south on magnetic media, or a dimpled/not dimpled spot on a CD/DVD disk.

bounce
Bounce is found in any mechanical switch connected to a digital system. Most digital circuitry is capable of responding in microseconds, but when a switch is thrown, the current change often fluctuates like a bouncing ball. If this fluctuation "bounces" above the digital response threshold of half of V+, it creates problems of counting an event twice instead of once. To take care of this problem, use a Schmitt trigger.

byte
A combination of 8 bits of information, capable of storing up to 256 pieces of data.

capacitor
A device composed of two conducting surfaces separated by an insulator called a dielectric. (1) It has the ability to store electrical energy and release it in an RC circuit—called sink and drain. (2) It can be used as a filter to smooth out a signal. (3) It can be used to block the flow of current, but still allow the changing signal to pass, as in an audio coupling—like a membrane across a drum. *See film capacitor, electrolytic capacitor, disk capacitor.*

cathode
Commonly used term referring to the negative side of a polar component.

cell
A single electrochemical generating unit. Usually zinc and copper are used in general-purpose and alkaline cells that produce 1.5 volts. Nickel and cadmium are used in rechargeable cells. They are ganged together in series or parallel to create a battery.

circuit
A course, pathway, tour, or journey. An electrical circuit is one that is a complete pathway and provides a path for the current.

clock signal
A clean digital signal that rises from zero to full voltage instantly in microseconds. A clock does not have any bounce. A circuit that produces a clock signal from a push button is often referred to as a Schmitt trigger.

CMOS
An acronym for complementary metal oxide semiconductor, pronounced see-moss, CMOS is a widely used type of IC.

conductor
A conductor carries electricity easily. It is made of any material that has unbound electrons that are able to freely flow when a voltage or pressure (electromotive force) is applied to it. All metals are conductors. Some nonmetals, such as silicon and carbon, also act as conductors. *See insulator.*

continuity
Continuity is a test done with the digital multimeter to check if there is a "continuous" connection between two points. Most multimeters are designed to give instant feedback in a YES/NO format: YES indicates there is a connection with very little resistance; NO indicates there is not a connection of very little resistance.

coulomb
Named for Charles de Coulomb (1736–1806), who devised a method of measuring electrical quantity. It is the quantity of electricity conveyed in one second by a current of one ampere.

coupling
A capacitor can be used for audio coupling, that is, to pass an AC signal but not pass any current. This is like sound passing through the head of a drum. No air passes through the drum head, but the signal still passes with ease and clarity. Audio coupling also applies capacitors as filters.

DC
DC (direct current) moves in only one direction. It may change voltage, but it does not reverse direction.

DCB
Decimal counting binary (DCB) happens when a processor has an input of a clock signal and changes its binary output by one step for each additional clock signal. The 4510 is an example of a DCB interpreter.

digital
(1) Relating to data that is represented in the form of discrete on's and off's, 1 or 0s; as opposed to analog (continuous voltage fluctuation). (2) An electronic circuit that uses digital logic in its input, processor, or output.

digital circuit
A circuit that has a processor and output that operate in only two states: on and off.

digital logic
The method of using analog and digital inputs to make digital decisions. The five most common gates are AND, OR, NAND, NOR, and NOT.

digital output
The output signal of a digital circuit represents a set value of conditions. The information is contained in a code consisting of a sequence of one or more discrete voltage or current levels, each representing a value of zero or one. The sequence 01000001 may then be interpreted as a byte with a value of 65 and then presented on your monitor as the letter A.

digital recording
Any recording in which the signal is first converted to digital format. A CD uses 16 bits of information for a single binary word, while a DVD uses 20 bits of information for a single binary word.

diode
A basic electronic device characterized by the ability to pass an electric current easily from positive to negative. They act as a one-way street. Three types of diodes are used in this course: (1) power diode designed for 1 watt at 400 volts, (2) the signal diode that passes miliamps, and (3) the zener diode.

DIP
Dual inline package. One of a series of acronyms referring to common packaging used in electronics. DIP packaging specifically has two rows of matching pins.

disk capacitor
Disk capacitors are designed to hold the smallest capacitance values in the picofarad (pF) range. They are usually light brown and disk shaped.

dumb
A dumb circuit does not have any way to determine if a specific event has occurred or when a particular number has been reached.

electrolytic capacitor
An electrolytic capacitor is a polarized capacitor, usually in the microfarad (μF) range. It has a positive and negative side. If it is put in backwards, it will not work effectively, and might fry itself (very messy).

electromotive force
(1) The amount of energy supplied by an electric current passing through a given source, as measured in volts. (2) The energy difference existing between the positive and ground that are provided by the same energy source. An electromotive force (electrons) passing through a wire will create a magnetic field. A magnetic field moving around a wire will create an electromotive force and push electrons.

electron
A negatively charged particle that is part of the structure of an atom. Free electrons flow in conductors to create current. An electromotive force—voltage—is needed to push electrons through a conductor. Electrons that are not bound to a specific atom or molecule are considered "free." A material with many unbound electrons is considered a good conductor, such as metals. A material that has all of the electrons tied up in chemical bonds will not conduct electricity. It is a good insulator.

energy
The ability to do work. Energy in electricity is measured in volts.

farad
The unit of capacitance named for Michael Faraday. The basic common unit is 1 μF, which equals 1 microfarad, that is, .000001 F.

film capacitor
Film capacitors are designed to hold the mid-range capacitance values in the nanofarad (nF) range. They are often shaped like a small box.

filter
A capacitor can act as a filter in two distinct ways. (1) It can be a buffer by acting as a reservoir of extra electrons. When a spike goes above the regular voltage, the sudden surge is softened because the capacitor fills up and dumps the extra back out slower than the actual surge. If there is a momentary drop in voltage, that is softened as well, because the capacitor discharges its content onto the line. (2) It can be a high pass or low pass filter by allowing only higher or lower frequencies to pass. Low-frequency sound passes through a .1 μF capacitor, while higher sounds are filtered out. High-frequency sounds pass through a .001 μF capacitor, while the lower sounds are filtered out.

force
In electricity, voltage (V+) is the unit used to measure the amount of electromotive force (push) in a circuit.

frequency
The number of cycles or events per unit time, commonly having units of sec-1 (hertz). In acoustics, this refers to the number of waves per unit time that are produced by a vibrating object.

gain
Gain is the basic measurement of the amplitude of signal output divided by the amplitude of signal input. It is set by resistor ratios to control feedback in an Op Amp.

gate
See digital, logic.

ghost
A ghost is troubleshooting a problem that cannot be defined, because an error is not regular. The most common causes of a "ghost" are (1) loose wires, (2) wires that cross and touch when they shouldn't, and (3) unused inputs to CMOS chips that have not been tied to V+ or ground.

heat sink
A heat sink is used to remove unused power from an amplifier or transistor. For example, if a 20-watt amplifier is being fed 20 watts of power but only using 5 watts because the music is quiet, 15 watts of power have to be dumped as heat. A heat sink allows the heat to move away from the amplifier chip. If the heat is not moved away, the amplifier chip will overheat and shut down, or overheat and melt.

hertz (Hz)
A unit of frequency equivalent to cycles per second. One kilohertz is 1,000 cycles per second.

hysteresis
Related to hysteria. In electronics, it refers to the output of a logic gate going hysterical as the voltage at one of the inputs passes slowly through the half V+ range. The gate tries to physically respond as both high and low at the same time, flip-flopping wildly. Sometime this results in a trailing blip of sound at the output.

IC
An integrated circuit (IC) is any miniature manufactured circuit made of many transistors and components working together in one package. The package is usually presented in DIP or SIP format. The technique for manufacturing ICs depends on using a photographic process. Tens of thousands of ICs are available on the market today.

input
The input is the action that starts the circuit. It is the first part of a system diagram.

insulator
An insulator cannot conduct electricity because it has all of the electrons bound into its chemical makeup. It does not have free electrons, so an electric force is not able to move through the material. *See conductor.*

invert
To turn upside down. For example, a NOT gate inverts a signal from Hi to Lo.

kilo
A measurement unit of 1,000 abbreviated as "K." For example 100 K ohms is easier to write than 100,000 ohms.

Kirchoff's law
Kirchoff's law is used to figure the resistance in a system that has many load levels set in parallel.

layout
The layout represents the trace of copper on the printed circuit board. Any layout is specific to one application. To change the specific circuit, you must effectively change the layout.

load
Any item that consumes electricity, such as a resistor, a speaker, household appliance, street lighting, or an industrial electrical motor.

logic
A logic circuit consisting of one or more diode gates connected to the base of a transistor, in which the AND or OR functions performed by the diode gates control the on-off status of the transistor.

mega
A measurement unit of 1,000,000 often abbreviated as "M." For example, 1 M ohms is easier to write than 1,000,000 ohms.

micro
A measurement unit of .000001 often abbreviated as "μ" or simply "u" referring to the Greek letter "mu." For example 47 μF is easier to write than .000047 F.

microprocessor
The central processing unit of a microcomputer, usually manufactured on a single semiconductor chip, containing anywhere from a few thousand to several million or more semiconductors on a single integrated circuit.

milli
A measurement unit of .001 often abbreviated as "m" and not to be confused with "mu" for micro. For example, 7 mW is easier to write than .007 watts. An average LED uses 20 mA.

monostable
A monostable oscillator is a "one-shot" timer—usually an RC circuit. When triggered by an outside event, it turns on a portion of a processor as the capacitor fills. As the resistor drains the voltage from the capacitor, the controlled processor turns off. The speed of the "one-shot" timer is set by the value of the components in the RC circuit.

NAND
Digital logic for the NAND date (not AND). When any input is Lo, the output is Hi.

nano
A measurement unit of .000000001 often abbreviated as "n." For example, 100 nF is easier to write than .0000001 F. Because film capacitors are produced widely in the nanofarad range, their measurements are often given in nF. .001 μF = 1 nF = 1000 pF.

NOR
Digital logic for the NOR gate (not OR). When all inputs are Lo the output is Hi.

normally closed (NC)
The two contacts are connected in an NC switch. Current passes easily because the two wires connect and there is no resistance. When activated, they become disconnected and the electrons cannot pass through the air.

normally open (N.O.)
The NO push button has infinite resistance between the two legs when the button is not pushed. When it is pushed, the two wires connect and there is no resistance.

NOT
Digital logic for the NOT gate. It inverts the input. A Hi input becomes a Lo output, and a Lo input becomes a Hi output.

NPN
An NPN transistor turns on more with more positive voltage to the base. The emitter is connected toward the ground. An NPN junction is formed by placing a thin layer of p-type semiconductor material between two layers of n-type semiconductor material. The p-type semiconductor becomes a conductor when a small voltage is applied to it.

ohm
A standard unit of electrical resistance, equal to the resistance of a circuit in which an electromotive force of 1 volt will maintain a current of 1 amp. Named for George S. Ohm.

Ohm's law
Simply stated, the amount of voltage pressure in a circuit is equal to the amount of current multiplied by the resistance of the load. V = I (×) R.

Op Amp
Shorthand for Operational Amplifier.

OR
Digital logic for the OR gate. When any input is Hi, the output is Hi.

oscillator
A circuit that creates a regular and predictable beat or frequency. *See astable, monostable.*

output
Output is the action resulting from the processing done by an electronic system. It is the last unit of a system diagram.

parallel
A parallel circuit happens when all the components or loads are connected to each other side by side. Each load is provided with the same amount of voltage, but the current is evenly shared between the loads. *See series.*

pico
A measurement unit of .000000000001 (10^{-9}) often abbreviated as "p." For example, 100 pF is easier to write than .0000000001 F. Because disk capacitors are produced widely in the picofarad range, their measurements are often given in pF. .001 μF = 1 nF = 1000 pF.

piezoelectric
This effect occurs in specific nonmetallic materials, such as quartz crystals, or in engineered ceramics and plastics. Piezos can be used as speakers and in sensors. (1) A voltage or electric field is produced in specific crystals when these crystals are compressed or decompressed rapidly. (2) When a voltage is applied to a piezo material, it will compress or decompress, relative to the size of the voltage.

PNP
A PNP transistor turns on more with less voltage to the base. The emitter is connected toward the voltage. A PNP junction is formed by placing a thin layer of n-type semiconductor material between two layers of p-type semiconductor material. The n-type semiconductor becomes an insulator when a small voltage is applied to it.

polarity
Some components need to be set in with attention to the direction of the current and voltage. These parts are "polar." If these parts are placed in backwards, the component will not function properly. They may even be damaged if voltage is directed through them the wrong way. Most electronic components have polarity. Resistors do not have polarity because the current and voltage can pass both ways.

power
Power is defined as the speed at which work is done. In electronics and electricity, power is measured in watts. 1 watt = 1 amp × 1 volt. Restated, that is the amount of electrons passing a specific point in one second, multiplied by the amount of force pushing the electrons.

power amp
A power amp is used to increase a signal's strength (amplitude) from the 1-watt range to whatever is needed for the speakers at hand. Common power amps provide anywhere from 20 watts to 300 watts. Power amps are rated by their range of response. The concern with power amps is the ability to provide enough power (12 volts × 25 amps = 300 watts) and being able to remove unused power through heat sinks.

pre-amp
A pre-amp is a low-power amplifier that increases a signal's strength (amplitude) from the milliwatt range to the 1-watt range. A pre-amp is often rated by its gain and clarity of signal. Most power amplifiers need to have a signal fed to them that is in the 1- to 2-watt range.

processor
(1) A device that interprets and executes instructions. (2) Referring to the center portion of a system diagram.

prototype
A prototype is a test product, built as closely to the real finished product as possible. A prototype is usually built in a fashion that allows easy and quick changes for testing purposes.

Q
Transistors are always noted with a "Q." Transistor is an awfully long word, and "T" is used for other things in electronics, like "transformer."

random
A result happening by chance. There should be no pattern in "random" events.

RC circuit
A resistor/capacitor (RC) circuit is used for capturing voltage and releasing it in a controlled manner. This allows the designer to control the time at which the digital input will sense the change above half voltage to below half voltage.

resistance
The fact of opposing or acting against. In electricity, resistance opposes the flow of current, generates heat, controls electron flow, and helps supply the correct voltage when set up as a voltage divider. Resistance depends on the material used, the length and cross-sectional area of the conductor, and the temperature. It is measured in ohms and follows Ohm's law. Resistance is measured in ohms, kilo-ohms, or megohms.

resistor
A component in an electric circuit that provides opposition to or limits the current flow according to Ohm's law. The carbon resistors used in this course are made by mixing carbon particles with a ceramic binder in measured amounts. These are baked into standard cylindrical shapes, marked with standard color-coding. They create resistance to current flow and act as a load in the circuit.

rest
At rest, power is provided to the system, but the system is not active. The 4011 chip needs microamps (.003 of a milliamp) to stay powered in its rest mode. At this rate, a 9-volt alkaline battery will power a 4011 chip for two to three years.

schematic
A plan, plot, and design of an electronic system, or portion of that system, using only symbols to represent the components and their connections to each other.

Schmitt trigger
A circuit that produces a clock signal from a push button is often referred to as a Schmitt trigger. It is designed to eliminate bounce. A common Schmitt trigger is available in the 4093 CMOS IC.

semiconductor
A material that has intermediate values of electrical resistivity, between the values for metals and insulators. It conducts electrons under certain situations, but resists their flow in other situations. The properties of such basic materials as silicon, carbon, and germanium are the heart of semiconductors. Semiconductors are the basic material of various electronic devices used in telecommunications, computer technology, control systems, and other applications.

series
A series circuit is one in which each component or load is joined end to end, successively with the next. The current flow is determined by adding the resistance of each component in the chain together. The current stays the same for each component, but the voltage drops in relation to the resistance of each load. *See parallel.*

SIP
Single inline package. One of a series of acronyms referring to common packaging used in electronics. SIP packaging specifically has a single row of pins.

smart
A smart circuit can use feedback to determine if a specific event has occurred. For example, a 4017 walking ring counter can be wired to sense when a specific number in a counting sequence has been reached.

solder
(1) An action that joins metal objects without melting them. The metal objects are fused together with an alloy that has been applied to the joint between them. (2) Any of several alloys used in this process. Electronics most often use a 60% tin plus 40% lead alloy.

state
(1) The state of a circuit is either "active" or "at rest." Active refers to the idea that the circuit has been turned on. At rest means that the circuit is waiting for an event to happen. A CMOS circuit at rest needs as little as a microamp of current to power the IC chip at rest. (2) Refers to the output of a logic gate. The output state is either Hi or Lo.

static electricity
Energy in the form of a stationary electric charge. This charge can be built up on your body when you walk across a nylon carpet. You reach for a doorknob, and a spark jumps the gap as an electrostatic discharge. Such a charge can be stored in capacitors and thunderclouds, or any nonconductive surface. It can be produced by friction or induction. This charge can build up huge voltage (but small current) and can fry many ICs.

system
(1) Referring to a large orderly arrangement of interconnected units such as a telephone system. (2) A system diagram that represents the inputs, processors, and outputs of an electronic unit, emphasizing their relationship in the circuit.

threshold
The amount of voltage needed for an input of a digital circuit to sense a change of state.

tie
To connect components together. For example, to tie pins 12 and 13 together means to connect them with a wire.

transistor
The basic electronic switch. These are analog switches—the voltage passed through the transistor is directly related to the amount of voltage applied to the base. It is an active semiconductor device, usually made from germanium or silicon, and possessing at least three terminals (typically, a base, emitter, and collector) and characterized by its ability to amplify current. They are used in a wide variety of equipment, such as amplifiers, oscillators, and switching circuits. *See NPN transistor, PNP transistor.*

Vcc
Vcc is another way of labeling ground.

VCO
VCO is shorthand for voltage-controlled oscillator. A complete VCO is housed in the 4046 CMOS IC.

Vdd
Vdd is another way of labling V+.

voltage
Voltage is the amount of "push" behind the current. It represents the potential energy or force in a circuit. The potential difference or electromotive force is measured in volts.

voltage divider
By using resistors as artificial loads, voltage can be set at a midpoint to any predetermined value desired. This technique is widely used in biasing audio systems and in sensors where an event causes one of the resistors to change value, therefore changing the midpoint voltage value.

watt
Power output is defined as how fast work is done. In electronics and electricity, power is measured in watts. 1 watt = 1 amp × 1 volt. Restated, that is the amount of electrons passing a specific point in one second, multiplied by the amount of electromotive force.

work
The measure of force times distance.

zener diode
A diode that "breaks down" at a specific voltage value, allowing current to move from cathode to anode. It can be used for voltage reference purposes or for voltage stabilization.

APPENDIX E

Make Your Own Printed Circuit Boards

THIS METHOD IS GREAT for prototypes and hobbyists.

I know that other people have developed this process. The only thing I can claim is that I independently developed this process and successfully used it in my classroom.

For your convenience, www.mhprofessional.com/computingdownload presents this section with large color photos providing clarity lacking in black and white.

This photo shows all of the materials needed to create your own printed circuit board (Figure E-1).

Figure E-1

Clean the copper clad material using scouring powder to remove the light plastic film that keeps the copper from tarnishing (Figure E-2). No fingerprints!

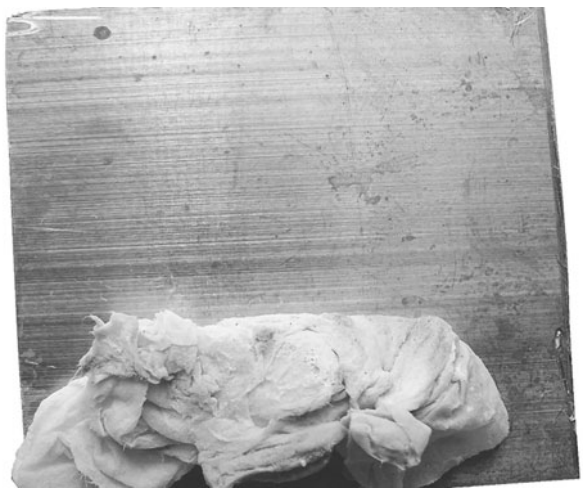

Figure E-2

I use photo-quality inkjet paper (Epson S041062). It is the best quality for the money ($17/100 sheets). The key is the clay base. This keeps the ink from absorbing into the paper fibers (Figure E-3).

Figure E-3

When looking at the paper, bend a corner of the sheet over on itself (don't crease it) to compare the brightness of each side. Don't think "white." That gets confusing. Compare "brightness." The brighter side is the one with the clay. Print onto the clay surface.

Remember, use a laser printer. The philosophy is to melt the plastic toner against the copper. I have had feedback that some brands of laser printers simply do not work, but I've had success with any laser printers I've used, including HPs, Lexmarks, and Canons.

This close-up shows the quality of traces that can be made using my inexpensive method (Figure E-4). Even beginners can create the .03-inch (.75-mm) width. With care and practice, you can get the .02-inch width just as regularly. The highlighted pad had paper debris covering the copper underneath, so it did not get etched properly.

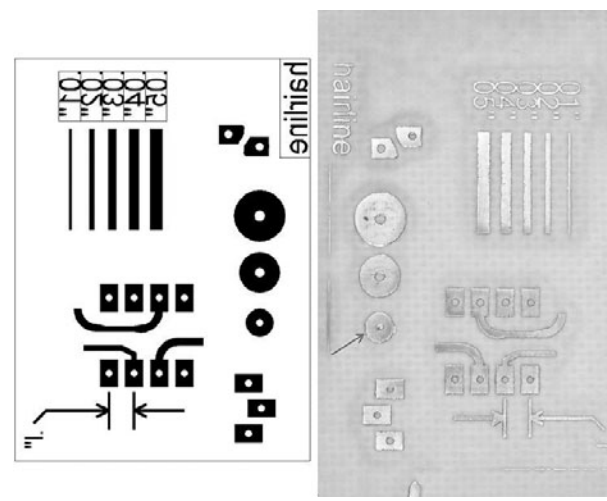

Figure E-4

With the image facing the copper side of the PCB material, fold the margins of the layout tightly around the edges of the PCB and secure with masking tape. Regular masking tape doesn't disintegrate when heated. The paper must be secured so that the image can't shift (Figure E-5).

Use a regular clothes iron (Figure E-6). Turn off the steam. Set to maximum temperature. Some irons are hotter than others. The paper should not discolor during this one-minute heating process.

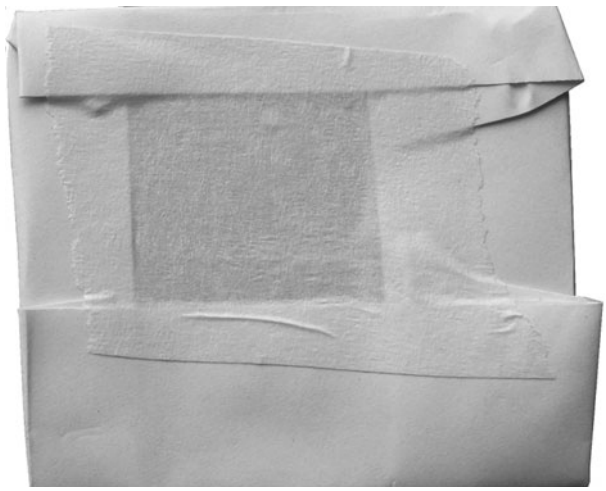

Figure E-5

Figure E-6

Use an ironing board or cutting board underneath. It should be a smooth, nonmetal, heat-resistant surface.

This photo attempts to show real strain in my hand as I apply pressure while moving in tight circles, about one per second for a minute.

Immediately apply pressure to the paper and copper clad board.

Without a vise at home, I place the hot PCB and paper between two small metal sheets. This then goes onto the floor, copper side up. I then place a book (to spread my weight evenly) on top of the setup. My foot is too big to show, but my

Figure E-7

daughter's Ken doll helps convey the idea (Figure E-7). Stand for a minute right on top of the board.

Use a vise for better results. Gently secure the board between metal plates and apply soft pressure. Don't squish. Just secure the board until it has cooled.

Place the cool wrapped board into water. Let it sit for a minute. This is important even though nothing appears to happen (Figure E-8).

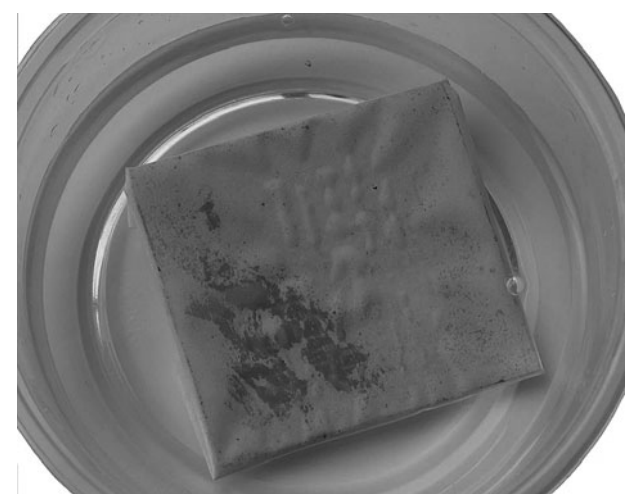

Figure E-8

DON'T SKIP THIS STEP! This is the one step that everybody forgets and then complains afterwards that the processes didn't work.

Spread a few drops of dish soap around on the wet paper (Figure E-9). The soap helps the water soak through. The paper becomes translucent and expands where it's not attached to the PCB.

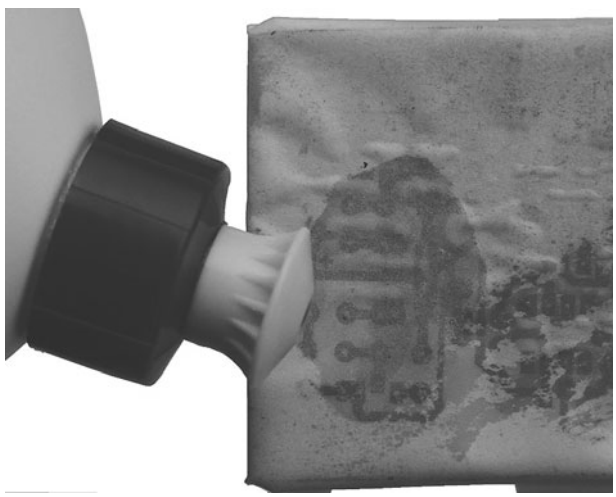

Figure E-9

Remove the tape from the back and peel the majority of the paper off. A good amount of paper does remain behind. Remember, you are separating the clay surface from the paper. This shows a good idea of what you can expect as you peel the paper off (Figure E-10).

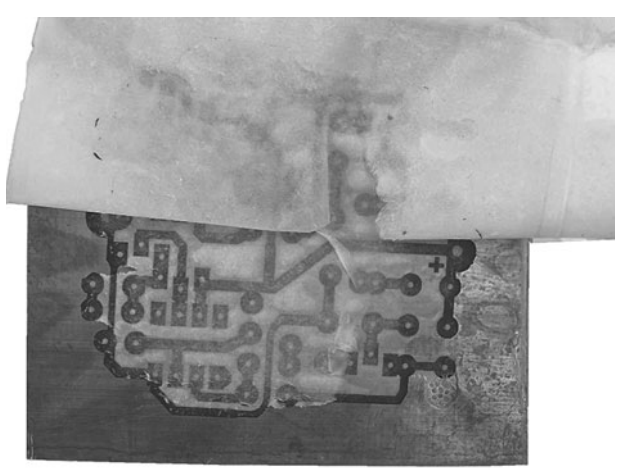

Figure E-10

Use a dripping wet paper towel to gently rub off the remaining paper (Figure E-11). The toweling will disintegrate as you do this. Don't rub too hard.

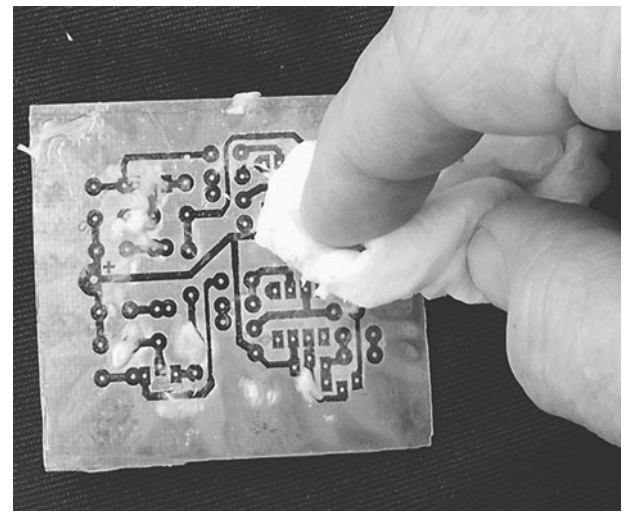

Figure E-11

You don't want to remove any of the toner now melted onto the copper.

This shows the dried results. Notice the paper remaining in some spots. Wet the area and use a sharpened point to clear it. Even fresh chemicals have difficulty etching through paper (Figure E-12).

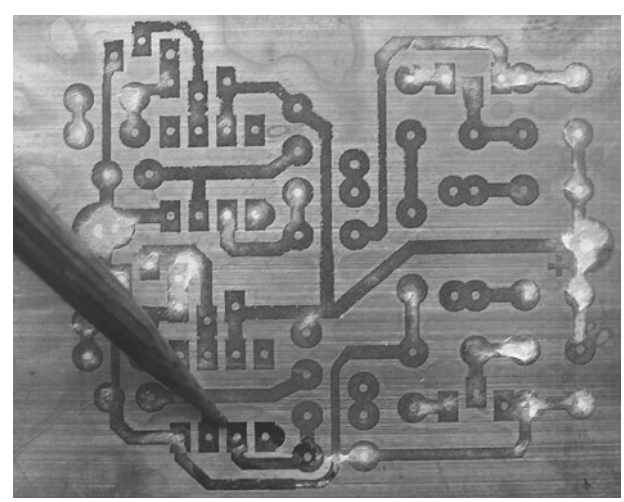

Figure E-12

These photos show progression from paper to finished PCB (Figure E-13).

- Before etching, carefully inspect the layout after the paper is removed and the board is cleaned.
- I used a "Staedtler Mars" permanent marker to reinforce areas that looked weak. Any color

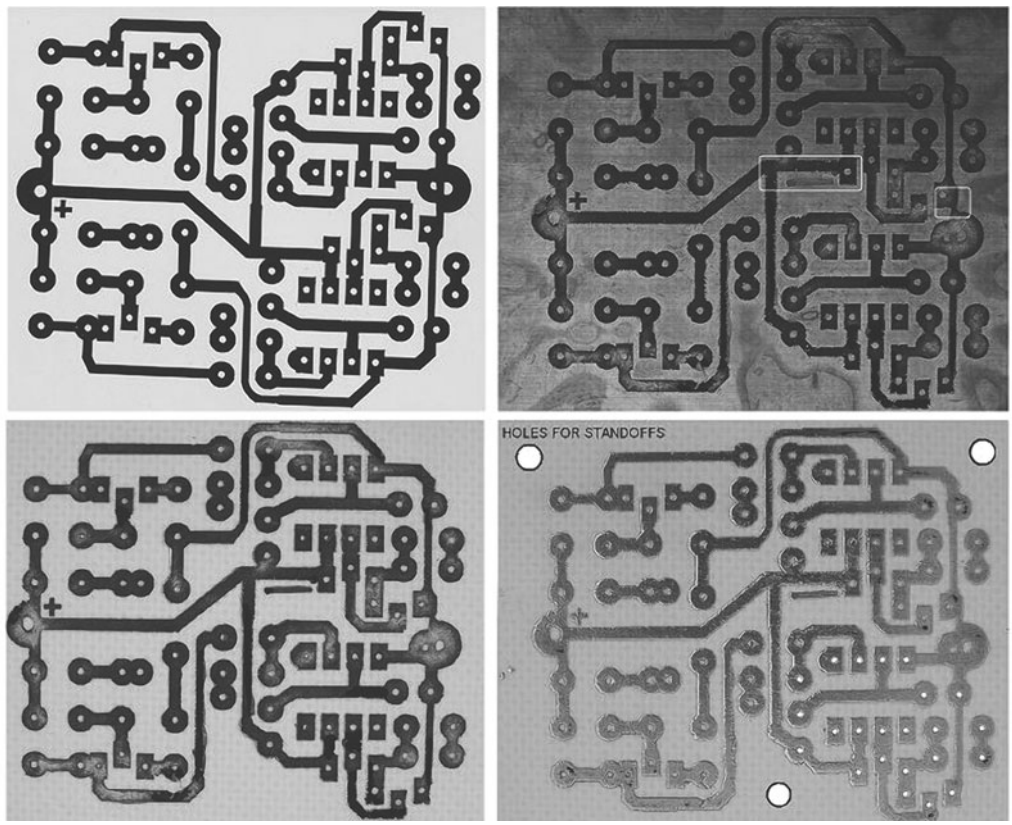

Figure E-13

works, but red highlights where it has been applied. I mention the brand name here only because the quality of the permanent ink does matter.

For etching, I prefer ferric chloride. It is inexpensive and doesn't lose potency with age. Read the safety information. Handled properly, it is safe enough. Use only plastic tools. Handled improperly, it is ***very nasty***.

- Use steel wool or finer grit sandpaper to remove the toner.
- This is a good board. If you have small breaks, those can be bridged with solder.
- Drill all holes with a #60 bit.

If you need to use support screws, be sure to drill the 1/8-inch-diameter holes before you populate the board.

This page intentionally left blank

Index

4046 voltage-controlled oscillator, 153–158
4511 BCD, 170–174
  number display, 193–194
4516 BCD, 174–179
  number display, 193–194

A

AC, 216
  in a DC environment, 220–222
  DC voltage on an AC circuit, 219
  defined, 271
  injecting an AC signal into a DC circuit, 224–225
  on the oscilloscope, 216–217
active, defined, 271
air capacitors, defined, 271
alternating current. *See* AC
amps (amperes), defined, 271
amperage, 201–203
amplifiers, 199–205
  analog, 212–214
  defined, 199, 271
  inverting, 213
  noninverting, 213
  Op Amps, 213–214
  systems and subsystems, 248–251
  transistors as, 199–205
amplitude, defined, 271
amplitude modulation, 255
analog, 84
  amplifiers, 212–214
  defined, 271
  vs. digital, 65
analog to digital (AD), defined, 271
analog-to-digital converter, 149–158
AND gates, 66, 68–69
  defined, 271
animated sign, 185–186
animations list, 269–270
animatronics, 255
Anode, defined, 271
antistatic packaging, 5
ASCII table, 64
astable, defined, 271
audio couplers, 225, 237–238
automatic night light, 43–49

B

battery, defined, 271
battery clips, 7
BCD (binary counting decimal), defined, 272
bias, defined, 272
binary, defined, 272
binary information
  "spoiled billionaire" example, 61–66
  See also ASCII table
bit, defined, 272
blanking, 171
bounce, 165
  defined, 272
breadboard. *See* solderless breadboard
break beams, 91
buzzers, 8, 134
bytes, defined, 272

C

capacitance, 26
capacitors, 6–7, 25–28
  as a buffer, 237
  defined, 272
  disk, 26–27, 108, 266, 267, 274
  electrolytic, 26, 27–28, 265, 274
  film, 27, 28, 266, 274
  marking, 108
  reading values, 265–266
  tolerance, 266, 267
carry-in, 175
carryout, 161
cathode, defined, 272
CC. *See* common cathode (CC)
cells, defined, 272
circuit boards, 8
circuits
  building a circuit on the breadboard, 11–14
  defined, 272
Clarke, Arthur C., 255
clock signal, 163–166
  defined, 272

CMOS, defined, 272
CMOS Cookbook (Lancaster), 150
CMOS integrated circuits (ICs), 72–75
  partial list of, 73–74
  troubleshooting, 150
coil microphones, 238
coin-activated switches, 128–129
common cathode (CC), 169–170
conductor, defined, 273
connecting clips, 117
contact switches, 127–129, 190
continuity, defined, 273
control inputs, 166–168
coulomb, 202
  defined, 273
coupling, defined, 273
current, calculating, 201–203

D

dark detector, 91, 97, 129–130
DC, 215–216
  AC in a DC environment, 220–222
  DC voltage on an AC circuit, 219
  defined, 273
  injecting an AC signal into a DC circuit, 224–225
DCB, defined, 273
DCV. *See* direct current voltage
density, measuring, 255
design, 127
  and applications, 255–259
  contact switches, 127–129
  defining and designing your project, 183–189
  designing the enclosure, 140–141
  gassy cow, 136–137
  heartthrob teddy, 139–140
  high-powered outputs, 134–135
  jiggle me teddy, 137–138
  low-powered outputs, 133–134
  pop can motion detector, 135–136
  safety, 141
  shadow racer, 137
  supercheap keyboard, 138–139
DigiDice, 149, 179
digital, 84
  vs. analog, 65
  defined, 273
digital circuit, defined, 273
digital inputs, 85
digital logic, defined, 273
digital logic gates. *See* logic gates
digital multimeter, 9
digital output, defined, 273
digital recording, defined, 273
diodes, 6
  common types of, 151
  defined, 273
  as protection for circuits, 12
DIPs, 72
  defined, 273
direct current. *See* DC
direct current voltage, 14
disk capacitors, 26–27, 108, 266, 267
  defined, 274
DMM. *See* digital multimeter
double-pull double-throw (DPDT) switches, 252–253
dual inline packages. *See* DIPs
dumb circuits, defined, 274

E

electret microphones, 238–239
electrolytic capacitors, 26, 27–28, 265
  defined, 274
electromotive force, defined, 274
electrons, 243
  defined, 274
enable function, 167–168
energy, defined, 274
event counter and trigger, 187–188
exercises
  the 4017 walking ring counter, 162–163
  the automatic night light, 44–47
  the basic digital logic gates, 72
  capacitors and push buttons, 30–31
  control the seven-segment display using the 4511 BCD, 173–174
  controlling the flash rate, 109–110
  create an annoying sound output, 111–112
  decimal to binary—the 4516, 177–179
  defining work, force and power, 208–210
  the effect resistors have on a circuit, 18–19
  the inputs are switches, 89
  integrated circuits, CMOS ICs, 75
  introducing the 4046 VCO, 156–158
  introducing transistors, 33–34
  light-dependent resistors, 23
  mapping the solderless breadboard, 10–11
  measuring voltage on your first circuit, 13–14

the PNP transistor, 37–38
the potentiometer, 20–21
RC1—creating the switch, 151–152
reading resistors, 16
specialized transistors—the SCR, 53
transistors as amplifiers and defining current, 204–205
understanding the clock signal and the 4017, 164–166
understanding voltage dividers, 95–96
using feedback to control the gain, 231–233
what do I have to gain: definitions, 211–212
the world is analog, so analog is the world, 214

F

Faraday, Michael, 247
farads, 26, 265
defined, 274
See also picofarads
feedback, using to control gain, 229–233
film capacitors, 27, 28, 266
defined, 274
filters, defined, 274
flash rate, 107–110
force, 205–206
defined, 274
frequency, defined, 274

G

gain
defined, 210, 275
in the NPN transistor, 210–211
using feedback to control, 229–233
gassy cow, 136–137
Gates, Bill, 61
ghost, defined, 275
glossary, 271–280
Gold Wave shareware, 218

H

heartthrob teddy, 139–140
heat sink, defined, 275
hertz, 107, 111
defined, 275
hysteresis, defined, 275
Hz. *See* hertz

I

ICs, defined, 275
inputs, 66, 67, 81, 250
comparing to outputs, 219–220
defined, 275
as switches, 86–90
insulator, defined, 275
integrated-circuit (IC) chips
antistatic packaging, 5
See also CMOS integrated circuits (ICs); ICs
intercom. *See* two-way door phone
invert, defined, 275
inverters. *See* NOT gates
inverting amplifiers, 213
inverting input, 223
IQ meter, 186

J

jack, 118–119
jiggle me teddy, 137–138

K

keyboard, 138–139
kilo, defined, 275
Kirchoff's law, defined, 275
KISS principle, 140

L

lamp test, 171
Lancaster, Don, 150
laser listeners, 255
laser pens, 130
latching circuits, 50
See also silicon-controlled rectifiers
laws of prediction, 255
layout, defined, 275
LDRs. *See* light-dependent resistors
LEDs, 6, 12–13, 133–134
flash rate, 100
vs. phototransistors, 40
seven-segment LEDs, 169–170
light detector, 129
light-dependent resistors, 8, 21–23, 129–130
on/off switches, 140
substituting a phototransistor for a LDR, 47–48
light-emitting diodes. *See* LEDs
light-sensitive switches, creating, 96–97
load, defined, 275
logic, defined, 276

logic gates, 66–72
  compared, 72
love meter fortune teller, 186–187

M

mega, defined, 276
micro, defined, 276
microphones
  coil, 238
  electret, 238–239
  piezo (crystal), 238
  using speakers as, 240–242, 249
microprocessors, defined, 276
microswitches, 128
mili, defined, 276
monostable, defined, 276
Morse, Sam, 247
motion detector, 128
  pop can motion detector, 135–136
motors, 135
music chip, 133–134

N

NAND gate circuits
  building, 77–79
  test point 2, 81–83
  testing the input at test point 1, 80–81
NAND gates, 70–71
  4011 dual input quad, 74–75
  audio for the NAND gate oscillator, 200–201
  building the NAND gate oscillator, 99–102
  creating a light-sensitive switch to trigger, 96–97
  defined, 276
  logic table, 103
  processor, 81–83
  understanding the NAND gate oscillator, 103–105
  See also NOT AND gates
nano, defined, 276
negative feedback, 229
  See also feedback
noninverting amplifiers, 213
noninverting input, 223
NOR gates, 70–71
  defined, 276
  See also NOT OR gates
normally closed (NC), defined, 276
normally open (NO), defined, 276
NOT AND gates, 66
  See also NAND gates
NOT gates, 67–68
  defined, 276
NOT OR gates, 66
  See also NOR gates
NPN transistors, 32–34, 44, 69, 70
  defined, 276
  gain in, 210–211
  See also transistors

O

Ohm, George, 202
ohms, 13
  defined, 276
Ohm's law, 202, 203–204
  defined, 277
Op Amps, 213–214, 250, 251
  building a power amplifier controlled by an Op Amp, 235–238
  defined, 277
  setting up, 222–229
operational amplifiers. *See* Op Amps
OR gates, 66, 69–70
  defined, 277
oscillators
  4046 voltage-controlled oscillator, 153–158
  building the NAND gate oscillator, 99–102
  defined, 277
  self-kicking oscillator, 190–191
  understanding the NAND gate oscillator, 103–105
oscilloscopes, 81, 112–119
  AC on, 216–217
  scoping out the circuit, 119–122
outputs, 66, 81
  comparing to inputs, 219–220
  defined, 277
  See also sound output

P

packaging
  potentiometers, 263–264
  transformers, 264
  transistors, 263
parallel, defined, 277
parts bin
  for Part Four, 198

for Part One, 4
for Part Three, 148
for Part Two, 60
parts placement, 142–143
PBNC, 29–30
PBNO, 28–29
PCBs. *See* printed circuit boards
PCCP, 156
phototransistors, 38–41, 124–126
vs. LEDs, 40
substituting for the LDR, 47–48
pico, defined, 277
picofarads, 27, 108
See also farads
piezo (crystal) microphones, 238
piezoelectric, defined, 277
PNP transistors, 34–38, 70–71
defined, 277
See also transistors
polarity, defined, 277
pop can motion detector, 135–136
pot. *See* potentiometers
potentiometers, 8, 19–21
packaging, 263–264
power, 206–208
defined, 277
power amp, defined, 277
power amplifiers, 250, 251
building a power amplifier controlled by an Op Amp, 235–238
power diodes, 151
power supply, regulated, 54–56
preamps, 235
defined, 278
prediction, laws of, 255
preload, 176
printed circuit boards
for automatic night light project, 48
making your own, 281–285
processors
considerations for main processor, 258–259
defined, 278
possibilities for the first resistor/capacitor circuit (RC1), 130–132
timing and modifications for the second RC circuit, 132
VCO and Timed Off circuit, 191–192
walking ring, 192–193
projects
automatic night light, 43–49
defining and designing, 183–189
making your project, 189–194
prototype, defined, 278
push buttons, 7
Push Button Normally Closed (PBNC), 29–30
Push Button Normally Open (PBNO), 28–29

Q

Q, defined, 278

R

radio frequency pickup, 256
random, defined, 278
random number generator, 149
ray gun, 184–185
RC circuits, defined, 278
regulated power supply, 54–56
relays, 134–135
reset, 175
resistance
decreasing, 111
defined, 278
measurement of, 13, 15–16
resistor/capacitor (RC) circuits, 83–86
creating the RC1 switch, 150–153
resistors, 6, 13
band designations, 15
defined, 278
the effect resistors have on a circuit, 17–19
measuring a resistor's value, 16–17
reading, 15–17
substituting, 16
rest, defined, 278
The Road Ahead (Gates), 61, 62

S

safety, 141
SBB. *See* solderless breadboard
schematic, defined, 278
Schmitt trigger, defined, 279
SCRs. *See* silicon-controlled rectifiers
self-kicking oscillator, 190–191
semiconductors, 5
defined, 278
series, defined, 278
seven-segment display
4516 BCD, 174–179

seven-segment display *(continued)*
controlling using the 4511 BCD, 170–174
displays automatically fading out, 180–182
LED, 169–170
shadow racer, 137
signal diodes, 151
Signal Generator, 120, 217–218, 225, 226
silicon-controlled rectifiers, 7, 49–54
single-pole double-throw (SPDT) switches, 252
single-pole single-throw (SPST) switches, 252
SIP, defined, 279
slot machine, 188–189
smart circuits, defined, 279
solder, defined, 279
soldering technique, 48–49
solderless breadboard, 7, 8–9
layout, 11
mapping (exercise), 10–11
setting up for a circuit, 11–12
sound output
creating, 110–112
using transistors to amplify, 122–123
Soundcard Scope, 112–116
safety measures, 112–113
See also oscilloscopes
Soundcard Scope Probe
safety measures, 112–113
See also oscilloscopes
speakers, 134
using as a microphone, 240–242, 249
state, defined, 279
static
and CMOS ICs, 73
integrated-circuit (IC) chips' antistatic packaging, 5
static electricity, defined, 279
Sturgeon, William, 247
sunrise, listening to, 256
supercheap keyboard, 138–139
switches
evolution of, 252–253
inputs as, 86–90
system, defined, 279
system, layout, 180, 181

T

telegraph, development of, 247
threshold, defined, 279
tie, defined, 279
Timed Off circuit, 191–192
timing, 184
touch switches, 97–98, 130, 190
transformers, 242–246
audio, 244–246, 249
packaging, 264
transistors, 7, 31–32
as amplifiers, 199–205
defined, 279
NPN transistors, 32–34, 44, 69, 70, 210–211, 276
packaging, 263
PNP transistors, 34–38, 70–71, 277
using to amplify the output, 122–123
TRIAC, 49
See also silicon-controlled rectifiers
trim pots, 19
See also potentiometers
triode for alternating current, 49
See also silicon-controlled rectifiers
two-way door phone
assembling, 259–260
switching to, 252–254

U

up/down control, 175

V

Vcc, defined, 279
VCO
4046 voltage-controlled oscillator, 153–158
defined, 279
and Timed Off circuit, 191–192
Vdd, defined, 280
vibrations, measuring, 255
voltage
DC voltage on an AC circuit, 219
defined, 280
measuring on your first circuit (exercise), 13–14
used between V+ and ground, 44–45
waterfall analogy, 18
voltage comparators, 223–224
voltage dividers, 91–96, 117–118
defined, 280
voltage follower, 258
voltage reference, 223
voltage regulators, 55
voltage state, 66
voltage-controlled oscillator. *See* VCO
Vref, 223

W

walking ring 4017 decade counter, 159–163, 192–193
  clock signal, 163–166
  control inputs, 166–168
waterfall analogy, 18
watts, 206
  defined, 280
wavelengths of colors, 38
“whatever” detector, 185
Winscope 2.5.1, 81
wire, 9–10
  type of, 189–190
work, 206
  defined, 280

Z

Zeitnitz, Christian, 112
Zeldovich, Konstantin, 81
Zener diodes, 150–153
  defined, 280

Copyrighted Material

RSGB

RADIO SOCIETY OF GREAT BRITAIN

RADIO & ELECTRONICS COOKBOOK

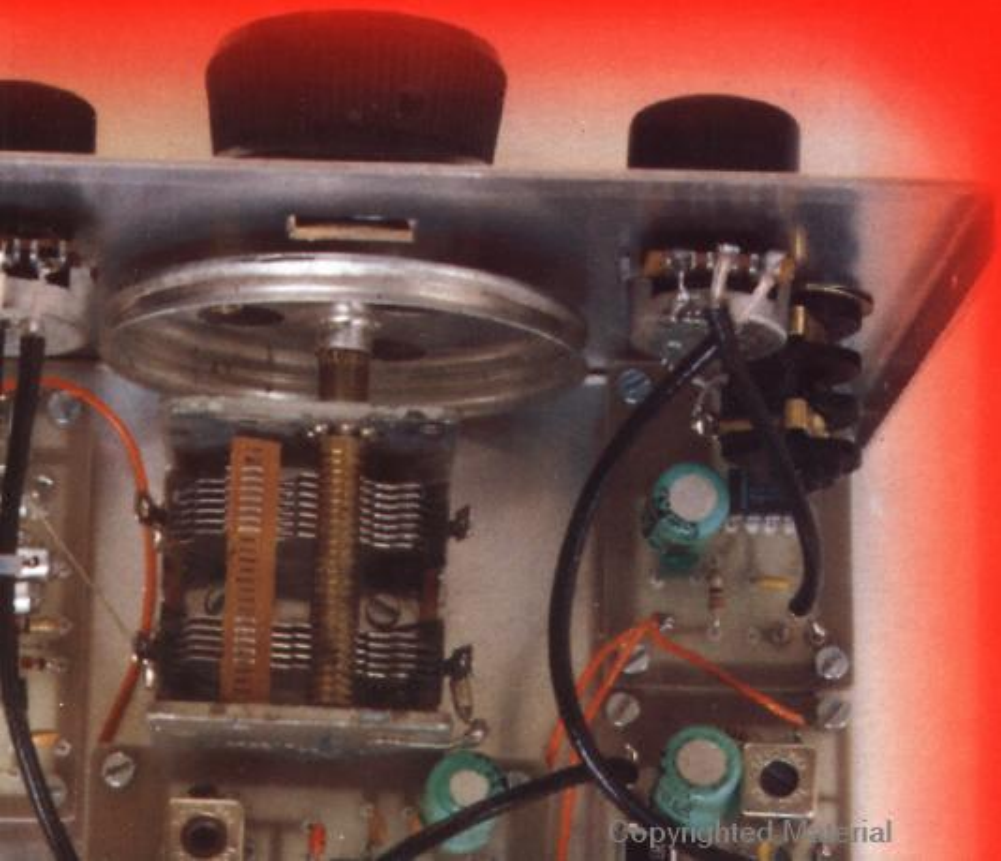

Newnes

Copyrighted Material

Radio and Electronics Cookbook

Radio and Electronics Cookbook

Edited by
Dr George Brown, CEng, FIEE, M5ACN

Newnes
OXFORD AUCKLAND BOSTON JOHANNESBURG MELBOURNE NEW DELHI

Newnes
An imprint of Butterworth-Heinemann
Linacre House, Jordan Hill, Oxford OX2 8DP
225 Wildwood Avenue, Woburn, MA 01801-2041
A division of Reed Educational and Professional Publishing Ltd

A member of the Reed Elsevier plc group

First published 2001

© Radio Society of Great Britain 2001

All rights reserved. No part of this publication may be reproduced in any material form (including photocopying or storing in any medium by electronic means and whether or not transiently or incidentally to some other use of this publication) without the written permission of the copyright holder except in accordance with the provisions of the Copyright, Designs and Patents Act 1988 or under the terms of a licence issued by the Copyright Licensing Agency Ltd, 90 Tottenham Court Road, London, England W1P 0LP. Applications for the copyright holder's written permission to reproduce any part of this publication should be addressed to the publishers

British Library Cataloguing in Publication Data
A catalogue record for this book is available from the British Library

ISBN 0 7506 5214 4

RSGB
Lambda House
Cranborne Road
Potters Bar
Herts
EN6 3JE

Composition by Genesis Typesetting, Laser Quay, Rochester, Kent
Printed and bound in Great Britain

PLANT A TREE
BTCV
British Trust for Conservation Volunteers
FOR EVERY TITLE THAT WE PUBLISH, BUTTERWORTH-HEINEMANN WILL PAY FOR BTCV TO PLANT AND CARE FOR A TREE.

Contents

Preface ix

1. A medium-wave receiver 1
2. An audio-frequency amplifier 4
3. A medium-wave receiver using a ferrite-rod aerial 9
4. A simple electronic organ 12
5. Experiments with the NE555 timer 17
6. A simple metronome 21
7. What is a resistor? 24
8. Waves – Part 1 27
9. A beat-frequency oscillator 31
10. What is a capacitor? 34
11. Waves – Part 2 38
12. An LED flasher 41
13. Waves – Part 3 44
14. Choosing a switch 46
15. An aerial tuning unit for a receiver 49
16. A simple 2 m receiver preamplifier 52
17. Receiving aerials for amateur radio 54
18. The Colt 80 m receiver – Part 1 58
19. A crystal radio receiver 62
20. The varactor (or varicap) diode 64
21. A portable radio for medium waves 65
22. The Colt 80 m receiver – Part 2 70

23. A simple transistor tester 73
24. An introduction to transmitters 77
25. The Colt 80 m receiver – Part 3 81
26. A two-way Morse practice system 88
27. The Colt 80 m receiver – Part 4 91
28. A simple crystal set 95
29. A crystal calibrator 100
30. A simple short-wave receiver – Part 1 104
31. A fruit-powered medium-wave radio 106
32. A capacitance bridge 109
33. A simple short-wave receiver – Part 2 113
34. A basic continuity tester 117
35. A charger for NiCad batteries 119
36. An 80 metre crystal-controlled CW transmitter 123
37. A solar-powered MW radio 129
38. A receiver for the 7 MHz amateur band 133
39. Diodes for protection 137
40. An RF signal probe 140
41. An RF changeover circuit 142
42. A low-light indicator 146
43. A J-pole aerial for 50 MHz 149
44. Measuring light intensity – the photometer 153
45. A 70 cm Quad loop aerial 156
46. A UHF field strength meter 160
47. Christmas tree LEDs 162
48. An audio signal injector 166
49. Standing waves 168
50. A standing-wave indicator for HF 170
51. A moisture meter 174
52. Simple aerials 177
53. A breadboard 80 cm CW transmitter 182

54. A 7-element low-pass filter for transmitters 186
55. Radio-frequency mixing explained 189
56. A voltage monitor for a 12 V power supply 192
57. A 1750 Hz toneburst for repeater access 196
58. A circuit for flashing LEDs 201
59. Digital logic circuits 205
60. A resistive SWR indicator 210
61. An audio filter for CW 213
62. An electronic die 215
63. The absorption wavemeter 222
64. An HF absorption wavemeter 224
65. A vertical aerial for 70 cm 228
66. A UHF corner reflector aerial 230
67. A switched dummy load 234
68. A simple Morse oscillator 238
69. A bipolar transistor tester 240
70. The 'Yearling' 20 m receiver 245
71. Adding the 80 metre band to the Yearling receiver 251
72. How the Yearling works 255
73. A field strength meter 258
74. Preselector for a short-wave receiver 261
75. An audible continuity tester 265
76. An experimental 70 cm rhombic aerial 268
77. Water level alarm 272
78. A delta loop for 20 metres 275
79. A simple desk microphone 279
80. Morse oscillator 284
81. A simple 6 m beam 287
82. An integrated circuit amplifier 291
83. A novice ATU 293
84. CW QRP transmitter for 80 metres 297

85. An audio booster for your hand-held 303
86. A grid dip oscillator 306
87. A CW transmitter for 160 to 20 metres 312
88. Matching the end-fed random-wire aerial 315

Preface

Although we are surrounded by sophisticated computerised gadgets these days, there is still a fascination in putting together a few resistors, capacitors and the odd transistor to make a simple electronic circuit. It is really surprising how a handful of components can perform a useful function, and the satisfaction of having built it yourself is incalcuable.

This book aims to provide a wide variety of radio and electronic projects, from something that will take a few minutes to a more ambitious weekend's worth. Various construction techniques are described, the simplest requiring no more than a small screwdriver, the most complex involving printed circuit boards.

Originally published by the Radio Society of Great Britain, the projects were all chosen to be useful and straightforward, with the emphasis on practicality. In most cases the workings of the circuit are described, and the projects are backed up by small tutorials on the components and concepts employed. In the 21st century it may seem strange that few of the published circuits use integrated circuits (chips). This is intentional as it is much easier to understand how the circuit works when using discrete components.

Anyone buying the *Radio and Electronics Cookbook* will find that it will lead to hours of enjoyment, some very useful and entertaining gadgets, and increased knowledge of how and why electronics circuits work, and a great sense of satisfaction. Beware, electronic construction is addictive!

WARNING: This book contains construction details of transmitters. It is illegal to operate a transmitter without the appropriate licence. Information on how to obtain an Amateur Radio Licence can be obtained from the Radiocommunications Agency, tel. 020 7211 0160.

1 A medium-wave receiver

Introduction

Let us start off with something that is really quite simple and yet is capable of producing a sense of real satisfaction when complete – a real medium-wave (MW) radio receiver! It proves that receivers *can* be simple and, at the same time, be useful and enjoyable to make. To minimise the confusion to absolute beginners, *no* circuit diagram is given, only the constructional details. The circuits will come later, when you have become accustomed to the building process. In the true amateur spirit of ingenuity and inventiveness, the circuit is built on a terminal strip, the coil is wound on a toilet roll tube (as amateur MW coils have been for 100 years!), and the receiver is mounted on a piece of wood.

Putting it together

Start by mounting the components on the terminal strip as shown in **Figure 1**, carefully checking the position and value of each one. The three capacitors are all the same, and so present no problem. They (and the resistors) may be connected either way round, unlike the two semi-conductors (see later). The resistors are coded by means of coloured bands. You can refer to Chapter 7 if you have difficulty remembering the colours and their values.

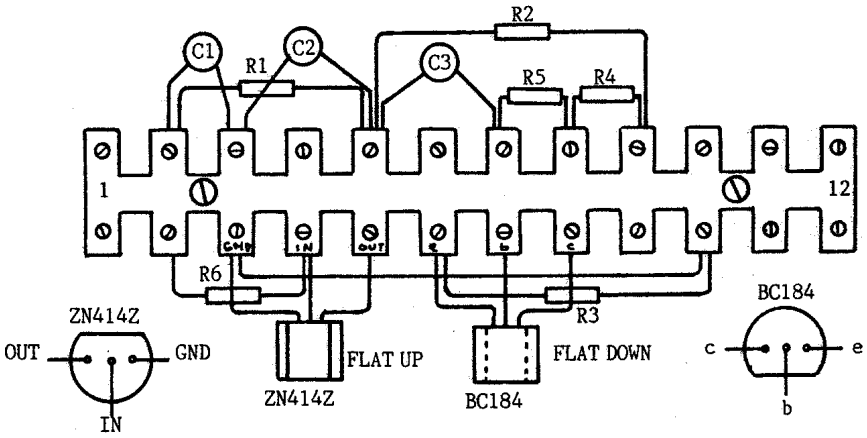

Figure 1 Terminal strip – position of components

1. Brown, Black, Yellow	100 000 ohms	(R1, R5, R6)
2. Green, Blue, Brown	560 ohms	(R2)
3. Red, Violet, Brown	270 ohms	(R3)
4. Brown, Black, Orange	10 000 ohms	(R4)

The integrated circuit (the ZN414Z) and the transistor (the BC184) *must* be connected correctly. Check Figure 1 carefully before fitting each device.

Now wind the coil. Most tubes are about 42 mm diameter and 110 mm long. Don't worry if your tube is slightly different; it shouldn't matter. Make two holes, about 3 mm apart, about 40 mm from one end, as shown in **Figure 2**. Loop your enamelled wire into one hole and out of the other, and draw about 100 mm through; loop this 100 mm through again, thus anchoring the wire firmly. Now wind on 80 turns, keeping the wire tight and the turns close together but not overlapping. After your 80th turn, make another two holes and anchor the wire in the same way as before. Again, leave about 100 mm free after anchoring. Using another piece of enamelled wire (with 100 mm ends as before), loop one end through the same two holes which contain the end anchor of the last winding, wind two turns and anchor the end of this short winding using another pair of holes. Figure 2 shows the layout.

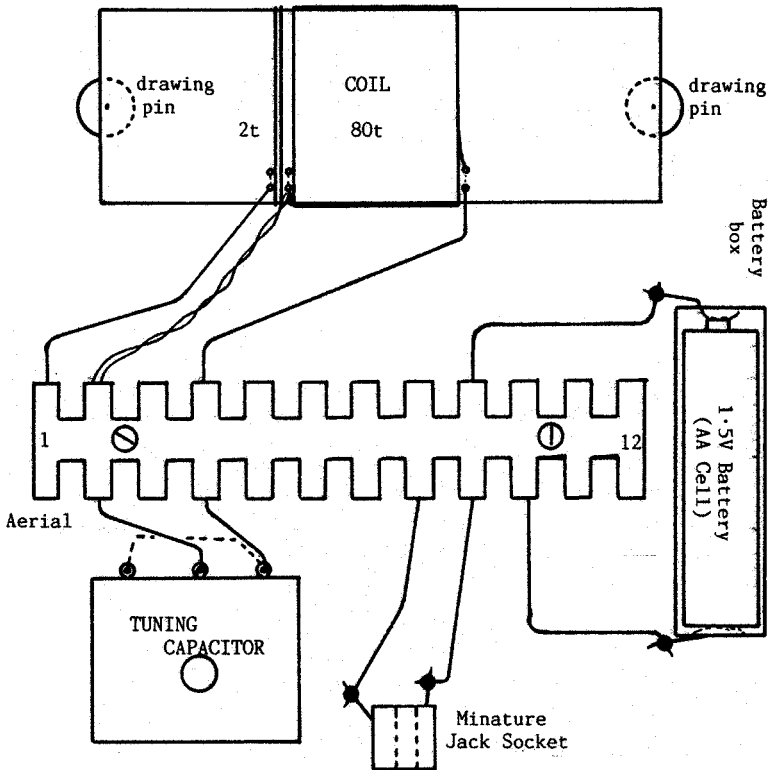

Figure 2 The layout of the parts on the wooden base

With some glass paper, remove the enamel from the ends of both pieces of wire which go through the same holes (i.e. the bottom of the large coil and the top of the small coil), then twist these bare ends together. Remove the enamel from the remaining ends of the coil. The coil is now finished!

The baseboard can be any piece of wood about 150 mm square. Fix the coil near the back edge using drawing pins and connect the wires from the coils to the terminal strip as shown in Figure 2. Using short pieces of PVC-insulated wire (and with assistance if you have never soldered before), solder one piece across the two outer tags of the variable capacitor, shown by the dotted line in Figure 2, and then two longer pieces to the centre tag and one outside tag. Connect these to the terminal strip. Then solder two more insulated wires on to the jack socket (into which you will plug your crystal earpiece), the other ends going to the terminal strip. The last two wires (one must be red) need to be soldered on to the battery box, their other ends going to the terminal strip also. Make sure the red wire goes to the *positive* terminal on the battery, and is connected to terminal 9. The other connection to the battery goes to terminal 10.

Attach the terminal strip to the baseboard with small screws or double-sided sticky tape. The other parts can be mounted the same way.

Listening is done ideally with the recommended crystal earpiece. Don't be tempted to use your Walkman earpieces; they are not the same and will not perform anything like as well. The receiver should work without an extra aerial, but one can be attached to terminal 1 if necessary. A long piece of wire mounted as high as possible is ideal. The *Audio-frequency Amplifier* project will enable you to use a loudspeaker with your receiver, using the signal from the jack socket. No circuit modifications will be needed!

Parts list

Resistors: all 0.25 watt, 5% tolerance

R1, R5, R6	10 kilohms (kΩ)
R2	560 ohms
R3	270 ohms
R4	10 kilohms (kΩ)

Capacitors

C1, C2, C3	100 nanofarads (nF)
	500 picofarads (pF)

Semiconductors

ZN414Z, BC184

Additional items
- 12-way 2 A terminal strip
- 22 metres of 28 SWG enamelled copper wire
- A few short pieces of coloured PVC-insulated wire
- Crystal earpiece
- 3.5 mm jack socket
- 1.5 V AA-size battery and box
- Toilet roll tube
- Double-sided sticky tape or selection of screws

Tools required

Small screwdriver, soldering iron.

2 An audio-frequency amplifier

Introduction

This simple amplifier can be built by anyone who is able to solder reasonably well. It doesn't require any setting up and, provided our instructions are followed exactly, will work very well. The circuit diagram is included for the benefit of our more advanced readers, but it is not needed in the construction process. Please practise your soldering before you start, and don't use a printed circuit board (PCB) until you are confident that your soldering is up to scratch.

The amplifier can be used with other projects; it will provide plenty of sound from the MW Radio or from the Morse Sounder projects. It will usually be built into other pieces of equipment, so a box is not supplied with the kit. There is no reason why it shouldn't be put into a box and used as a general-purpose amplifier to help test other projects.

The components

Before you start, you should check that you have *all* the components to hand. A list and some helpful hints are given below.

1. PCB. The plain side is the *component side* and the soldered side is the *track side*. **Figure 1** shows the track side full size. Make the PCB from the pattern given in Figure 1. Otherwise, build the circuit on a matrix board.
2. Three resistors. Locate the gold or silver band around the resistor, and turn the resistor until this band is to the right. There are three coloured bands at the left-hand end of the resistor. Find the resistor whose colours are YELLOW, VIOLET, RED, and look at the resistor colour code chart which you will find in Chapter 7. From this, you will see that YELLOW indicates the value 4, VIOLET the value 7, and RED the value 2. The first two colours represent real numbers, and the last value is the number of zeros (noughts) which go *after* the two numbers. So, the value is 47 with two zeros, i.e. 4700 ohms. In this way, the resistor coloured BROWN, GREY, BROWN has a value of 180 ohms, and the last one, BROWN, RED, GREEN, has a value of 1 200 000 ohms. The ohm (often written as the Greek letter omega (Ω)) is the unit of resistance. If you do not yet feel confident in identifying resistors by their colours, use the Resistor Colour Codes given in Chapter 7.
3. Four capacitors. The two small 'beads' are tantalum capacitors and will be marked 4.7 μF or 4μ7, with a '+' above one lead. A tubular capacitor with wires coming from each end should be marked 220 μF, with one end marked '+' or '–'. This is called an *axial* capacitor because the wires lie on the axis of the cylinder. This is in contrast to the final capacitor, where both wires emerge from the same end. This is a *radial* capacitor, and will be marked 47 μF. Again, one lead will be marked '+' or '–'. Capacitors marked like this are said to be *polarised*, and it is vital that these are placed on the PCB the right way round, so take notice of those signs!
4. Two diodes. These are tiny glass cylinders with a band around one end, and may be marked 1N4148; this is their type number. Like polarised capacitors, they *must* be put on the PCB the correct way round!

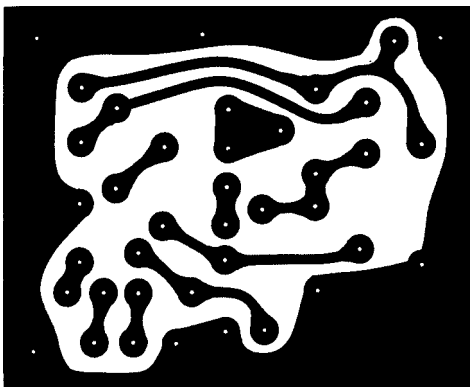

Figure 1 The toil pattern of the PCB – looking from the track side

5. Three transistors. One should be a BC548 (or a BC182), the other two should be BC558 (or BC212).
6. One volume control with internal switch.
7. One loudspeaker. This is quite fragile – don't let anything press against the cone.
8. One PP3 battery clip with red and black leads.

Putting it together

Lay the PCB on a flat, clean surface with the track side downwards. It is always useful to compare the layout with the circuit diagram, given here in **Figure 3**. Although you can't see it, the D-i-Y Radio sign should be at the top. Compare the hole positions with those shown in **Figure 2**. Bend the resistor wires at right angles to their bodies so that they fit cleanly into the holes in the PCB. Push each resistor towards the board so that it lies flat on the board. Then supporting each one, turn the board over and splay out the wires *just* enough to prevent the resistor falling out. Then, solder each wire to its pad on the PCB, and cut off the excess wire. When you have more confidence, you can cut of the excess wire *before* soldering; it often makes a tidier joint.

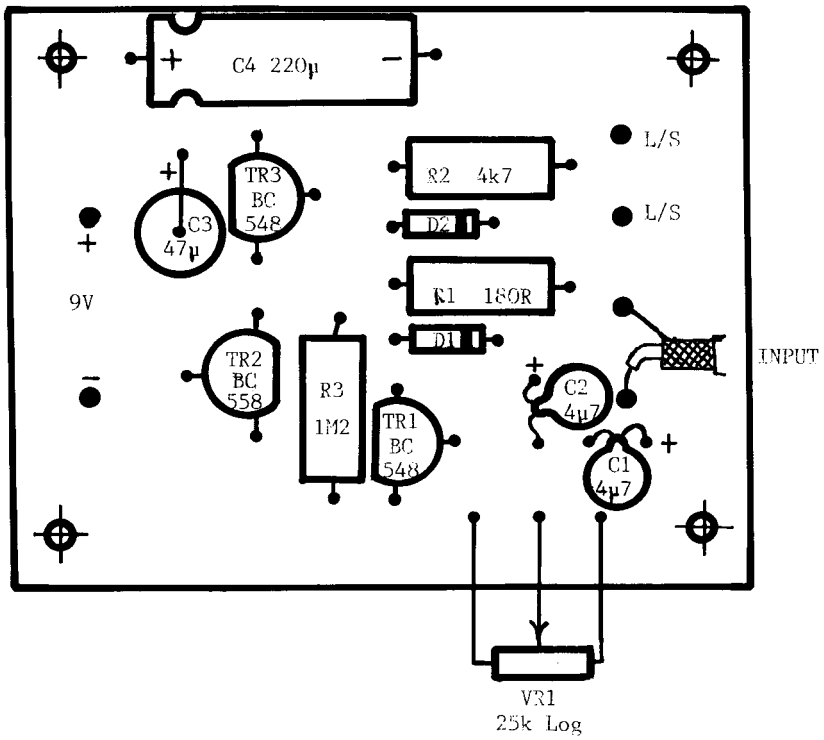

Figure 2 Positions of the components on the printed circuit board (PCB)

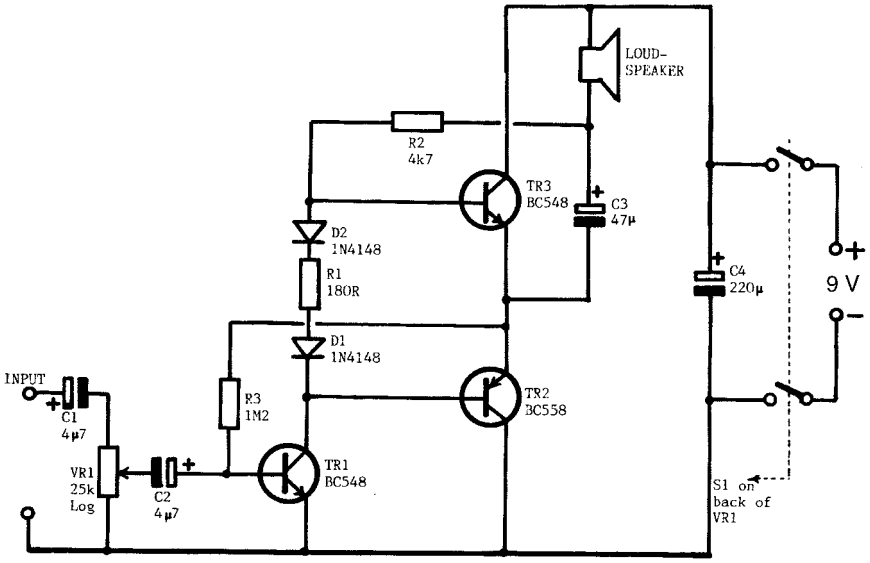

Figure 3 The amplifier's circuit diagram

Now fit the four capacitors. Each must be connected the right way round, so look at each component, match it up with the diagram of Figure 2, bend its wires carefully and repeat the soldering process you performed with the resistors, making sure that the components are close to the board and not up on stilts! Fit the two diodes the correct way round, and solder then as quickly as you can – they don't like to be fried!

Mount the transistors about 5 mm above the PCB. Make sure the correct transistors are in the correct places, and that the flats on the bodies match up with those shown in Figure 2.

Mount the volume control so that the spindle comes out from the front of the board. Use a piece of red insulated wire to the pad marked + on the PCB, and a black piece to the pad marked –, and solder these to the tags on the back of the control, as shown in **Figure 4**. Connect the two leads from the battery clip to the other tags on the switch; Figure 4 will help you. Finally, use two pieces of insulated wire about 100 mm long, twisted together, to connect the loudspeaker to the PCB.

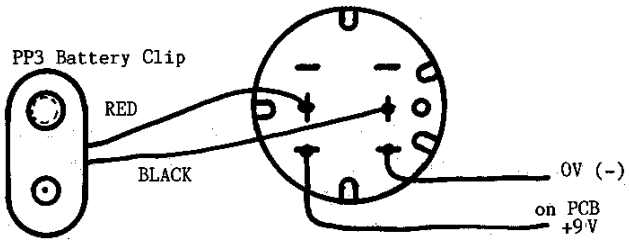

Figure 4 Connections to switch on back of VR1

Box clever!

If you wish to put the amplifier into a box, there is no problem; almost any box that is big enough will do. All that is needed is one hole big enough to accept the bush of the volume control; the PCB will be supported by the volume control. The prototype was not fitted into a box, but mounted on an odd piece of aluminium, bent into an L-shape and screwed on to a wooden base. The loudspeaker was mounted on the aluminium panel by two small pieces of aluminium with 3 mm holes drilled in them, which acted as clips around the edge of the speaker. Drill a few holes in the panel in the position of the speaker to let the sound get out!

Your input signal can be connected to the amplifier with two short pieces of wire, but if the connection needs to be long, use screened cable, with the braid connected as shown in Figure 2.

If you decide to use a different loudspeaker, make sure that its impedance (the resistance value marked on the back of the magnet) is at least 35 ohms. Anything lower may damage TR2 and TR3, and will certainly run down your battery very quickly. You will be surprised at the uses you can find for this little amplifier!

Parts list

Resistors: all 0.25 watt, 5% tolerance

R1	180 ohms (Ω)
R2	4.7 kilohms (kΩ)
R3	1.2 megohms (MΩ)
VR1	25 kilohms (kΩ) log with DPST switch

Capacitors: all rated at 25 V minimum

C1, C2	4.7 microfarads (μF)
C3	47 microfarads (μF)
C4	220 microfarads (μF)

Semiconductors

TR1, TR3	BC548 npn
TR2	BC558 pnp
D1, D2	1N4148

Additional items

PCB
Speaker >35 ohms
PP3 battery clip and battery

3 A medium-wave receiver using a ferrite-rod aerial

Introduction

This design came from the Norfolk Amateur Radio Club, and enables you to build a simple Amplitude Modulation (AM) receiver for frequencies between 600 kHz and 1600 kHz. It should take you around 2 hours to build, and can be used with Walkman-type earpieces. **Figure 1** shows the circuit diagram.

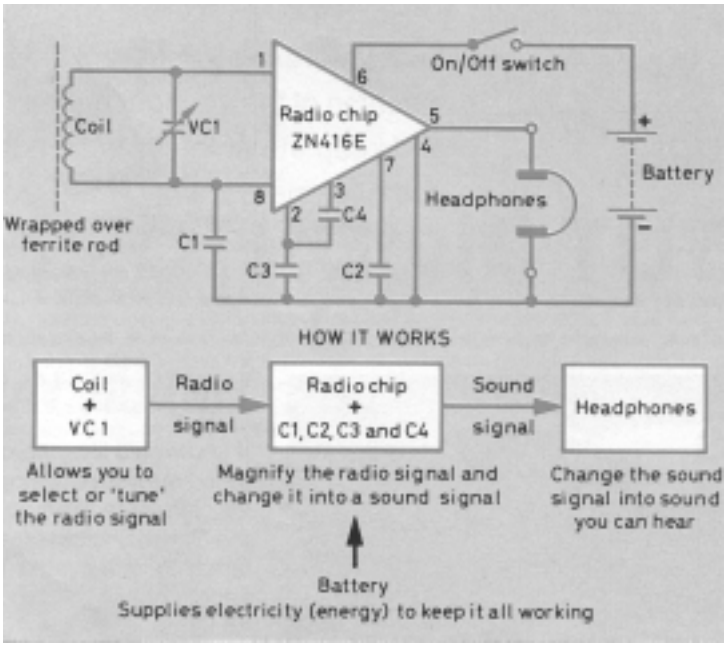

Figure 1 Circuit and block diagrams of the radio

Description

The whole circuit is built on a 50 mm by 50 mm printed circuit board (PCB) designed to fit on the inside of the lid of a plastic box, and is stuck there using sticky pads, the shaft of the variable capacitor going through a hole in

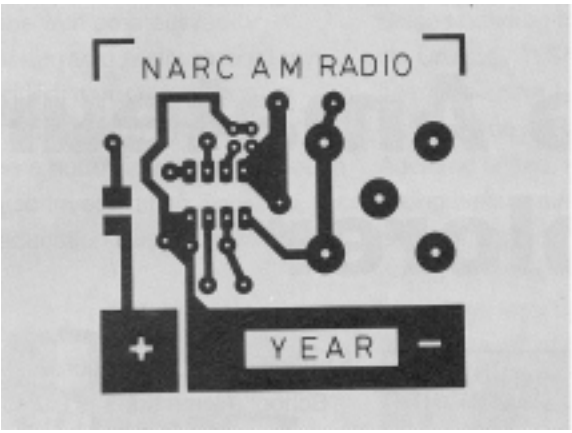

Figure 2a The PCB, solder side

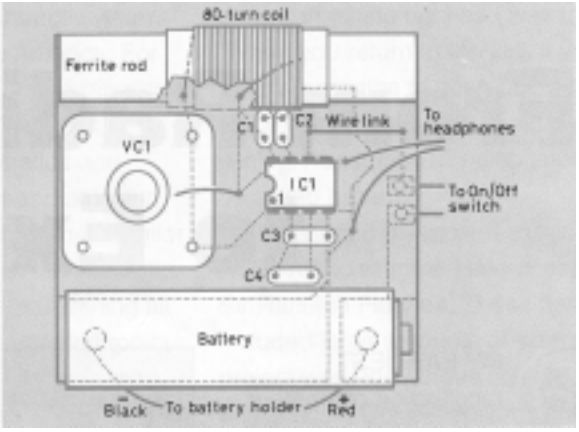

Figure 2b The PCB, component side

the lid. Only two pairs of leads are soldered to the board – one pair goes to the 1.5 V battery in its holder, and the other to the earphone socket. **Figures 2a** and **2b** show the printed circuit and the component layout double size for clarity. You are not obliged to build the circuit on a PCB.

Building it

1. **Check and identify components.** Tick the parts list.
2. **Carefully unwind the wire.** Use paper to make an insulating tube (called a 'former') around the centre of the ferrite rod and secure it with Sellotape. Now, close-wind *all* the wire (leave no gaps between adjacent turns) around the paper former. Secure the winding with more Sellotape, leaving 50 mm of wire free at each end for connection to the circuit. See **Figure 3a**.
3. **Solder in VC1.**
4. **Solder in the integrated circuit holder.** There is a notch in one end of the holder; this should face VC1. Solder also the wire link and the capacitors. Be careful to avoid solder 'bridges' between adjacent tracks on the PCB.
5. **Solder the battery leads.** These must be connected properly – the red battery lead to the + (positive) area and the black lead to the – (negative) area.
6. **Strip bare 1 cm of insulation from the ends of two wires.** Solder them between the PCB and the headphone socket (see **Figure 3b**). Use the end tabs on the socket. Using another pair of insulated wires connect the ON/OFF switch to the PCB tabs shown in Figure 2b.

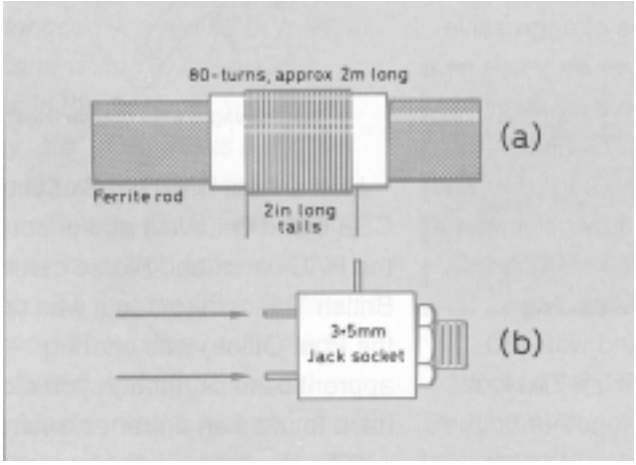

Figure 3 Details of coil and headphone socket

7. **Fix the elastic band**. This goes through the holes at the top of the PCB, with the ferrite rod being slipped through the two end loops. (Note: although the coating on the copper wire is designed to melt away during soldering, it is quite common for difficulty to be experienced in obtaining a good soldered joint; to be on the safe side, remove the coating *before* soldering (with a small piece of sandpaper).) Carefully place the wire ends of the coil through the PCB just above VC1, and solder on the track side.
8. **Fit IC1 into its holder**. This should be done carefully, making sure that *all* the pins are located above their respective clips *before* applying any pressure! Make sure also that the notch on the IC (as shown in Figure 2b) matches the notch in the holder, and faces VC1.
9. **Put battery in its holder**. Listen for some noise in the headphones as VC1 is rotated. Make sure the headphone plug is fully inserted into its socket.
10. **Fix the working board to the lid**. Use the sticky pads and apply *gentle* pressure. Fit the tuning knob, the ON/OFF switch and the earphone socket.
11. **Test again**. If all is still working, fit the lid screws and admire your completed radio!

Parts list

Capacitors

C1, C2	0.01 microfarad (μF)
C3, C4	0.1 microfarad (μF)
VC1	500 picofarads (pF)

Semiconductor

IC1	ZN416E

Additional items

- Plastic box (recommended size 76 × 64 × 50 mm internal)
- 8-pin DIL socket for IC1
- Printed circuit board
- Tuning knob for VC1
- Wire link for PCB
- 2 m of 30 SWG copper wire, self-fluxing
- Piece of paper 25 × 50 mm, to make the coil former
- Ferrite rod 70 mm long by 10 mm diameter, approximately
- Battery, AA size 1.5 V, with holder and attached wires
- Miniature earphone socket (3.5 mm stereo jack)
- ON/OFF switch (push-button SPST latched or slide switch)
- 4 off 100 mm insulated connecting wires, for jack socket and ON/OFF switch
- Pair Walkman-type earphones
- Elastic band, to attach ferrite rod to PCB
- 4 off sticky pads for securing PCB to box lid

Kits

Ready-made PCBs may be available from Alan J. Wright, G0KRU, Hewett School, Cecil Road, Norwich NR1 2PL.

4 A simple electronic organ

Introduction

This project has nothing to do with radio but, let's admit it, *any* electronics project is good experience! Why not build this little organ – it will keep the children amused at least! It uses the popular NE555 integrated circuit, which contains a circuit which will periodically switch the voltage on the output pin between the supply voltage and zero. Just how frequently this switching occurs depends upon the components external to the integrated circuit. If this switching occurs several hundred or thousand times a second, the change in voltage produced will generate a musical note when connected to a small loudspeaker. The circuit is shown in **Figure 1**.

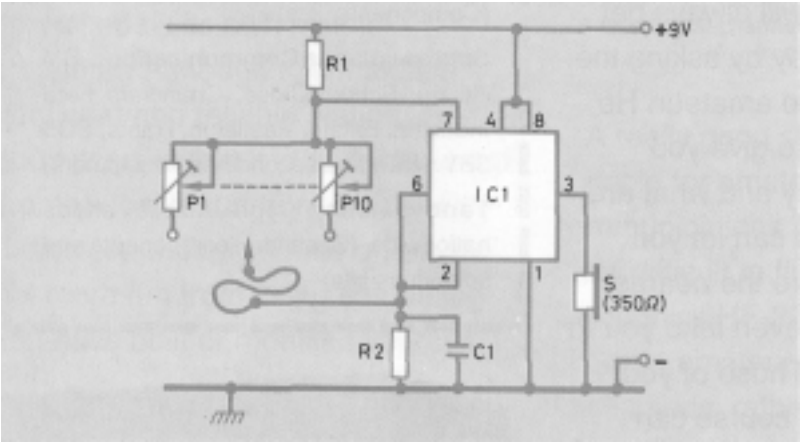

Figure 1 Circuit diagram

Putting it together

(a) Using a PCB. The job is very simple. The placement of components on the unsoldered side of the board is shown in **Figure 2** and the design on the copper track is illustrated in **Figure 3**. Put each component, in turn, on the board, making sure that it lies flat on the board with its tags or wires going cleanly through the holes provided for it; then, solder the wires to the board, cropping them before or after the soldering,

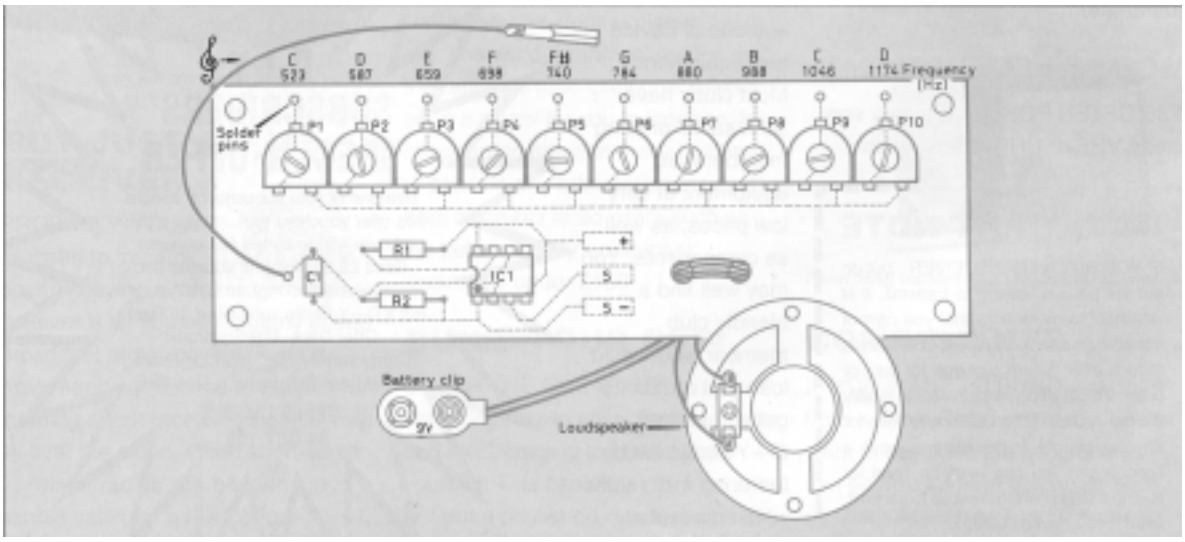

Figure 2 Position of components on the printed circuit board (PCB)

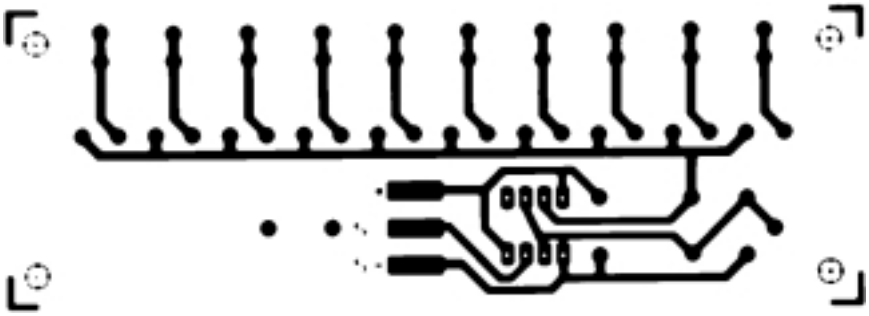

Figure 3 The connections

depending on your preference. If you choose to use a holder for your integrated circuit (highly recommended if your soldering is less than perfect), make sure that the end with a notch in it faces R1 and R2, as shown in Figure 2. Solder the two leads to the speaker to the tabs marked S (either way round), having looped them through the two holes to the right of the tabs in Figure 2. Looping them through the holes acts as a strain relief, ensuring that the soldered joints are not subjected to pulling and bending as you move the wires about. Do the same with the battery leads, the red lead going to the + tab and the negative lead to the – tab (which also has one speaker lead already attached to it). **Figure 4** shows this in detail. Treat the loudspeaker with care – the cone is quite fragile and must not be touched.

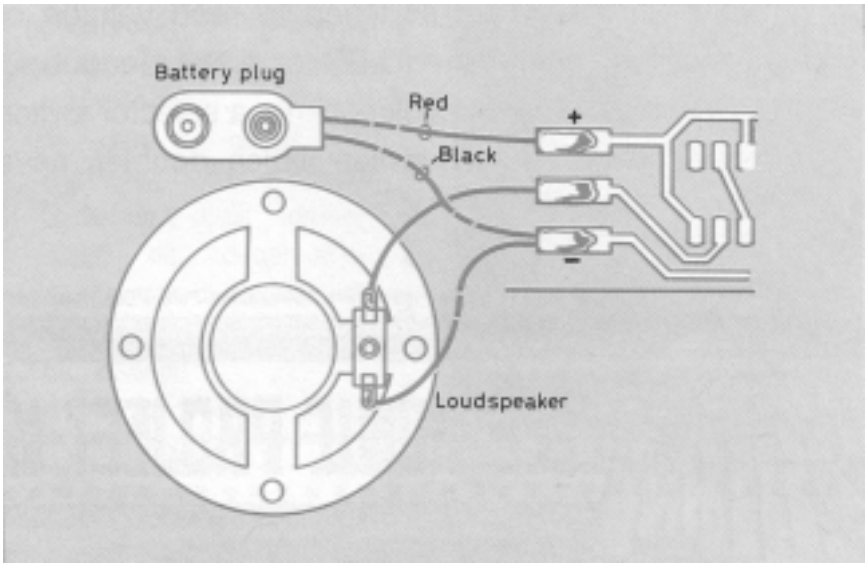

Figure 4 Battery plug and loudspeaker connections

(b) Without a PCB. This is more difficult, and you may need to enlist some help. Using some matrix board (such as Veroboard) is probably the best way of replacing the PCB. You could arrange your circuit in exactly the same way as in the PCB in Figure 3, using wires to replace the copper track.

A simple 'keyboard'

The keyboard is a row of solder pins along the rear edge of the PCB, one for each note covering the range shown in Figure 2. A flying lead with a small spade on it is provided to touch any of the pins in turn, producing any one of ten different notes.

Testing

Check first that each component is in the correct place. When inserting the NE555 chip, first make sure that the end carrying the notch lies over the end of the holder with the notch; then, make sure each pin of the chip lies directly above the hole into which it fits, before pressing *gently* to insert the chip into the socket. Make sure the battery connections are correct, and insert the battery into the clip. Nothing should happen, except for a click from the loudspeaker; touching the spade on any of the pins should produce a coarse note from the speaker. If nothing happens, check everything again; don't *assume* that wires go where you think they go!

After you get the first note, all the others should work, too, but they will sound off-tune at first. The organ needs tuning up by adjusting the 10 preset variable resistors P1 to P10. The approximate frequency to which each note should be tuned is given in Figure 2; if you can beg, borrow or steal a frequency counter, setting up is easy. If you have a piano, the organ can be tuned by comparison of the notes with those on the piano. The frequencies are given in Hertz (abbreviation Hz), and represent the number of times the IC switches on and off every second. If the sound coming from the loudspeaker is too loud or very distorted, then try putting an 330 Ω resistor (colour code orange, orange, brown) in series with the loudspeaker. This is done by taking the resistor and cutting its leads to about 5 mm; then, disconnect one speaker lead from the tab on the PCB (it doesn't matter which). Solder one end of the resistor to the vacated speaker tab, and the free speaker lead to the other end of the resistor. This will limit the volume of sound from the speaker, and lengthen the life of your battery. If it is still too loud, try a resistor of a larger value, or use a smaller resistor to make it louder.

Parts list

Resistors: all 0.25 watt, 5% tolerance

R1	2.7 kilohms (kΩ)
R2	1 Megohm (MΩ)
P1–P5	Preset resistor 100 kilohms (kΩ)
P6, P7	Preset resistor 50 kilohms (kΩ)
P8	Preset resistor 25 kilohms (kΩ)
P9, P10	Preset resistor 10 kilohms (kΩ)

Capacitor

C1	100 nanofarads (nF) or 0.1 microfarad (μF)

Integrated circuit

IC1	NE555 timer chip

Additional items

S	Loudspeaker >60 ohms (Maplin)
	1 off battery clip (for PP3 battery)
	1 off spade terminal
	12 off solder pins 'Veropins'
	3 off 10 cm lengths of 'hook-up' wire

(This article is based on projects originally designed by Radio Scouting, Netherlands.)

5 Experiments with the NE555 timer

Introduction

Several of the projects in this book use the NE555 timer, an integrated circuit which is at the heart of many circuits whose processes are determined by time intervals. **Figure 1** shows the circuit diagram of an audio oscillator using the 555. The timing voltages (governing the frequency of oscillation) are produced by R1, R2 and C2; a voltage appears at pin 3 which 'switches' at this frequency between zero and a voltage close to the supply voltage, which in this case can be anywhere between 6 V and 14 V. The output current, when applied through R3 to a small loudspeaker, produces an audible tone, provided that there is a DC path between the two test leads.

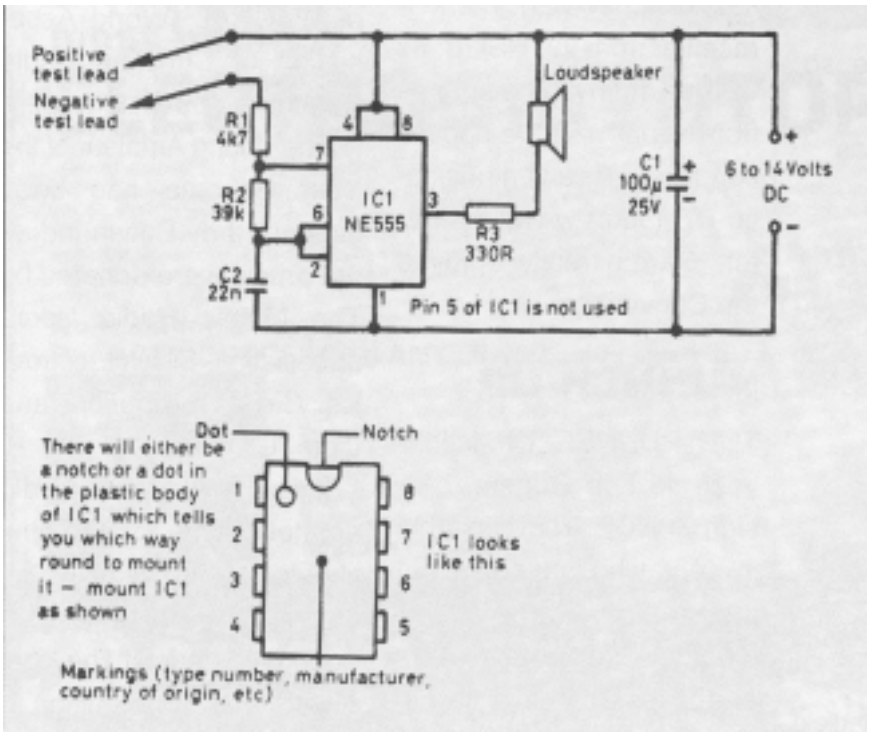

Figure 1 The circuit diagram

Construction

The simplest way to mount the components is on a piece of matrix board (Veroboard), available from any of the good suppliers. The prototype of this circuit used the type of board with copper strips along the underside; these strips are used like the copper tracks on a PCB, to join components together. Firstly, cut the four strips between the positions of the pins of the IC socket, as shown in **Figure 2**. You can buy a tool for this purpose, but a small twist drill (about 3 mm diameter) is just as good. Turn it between your fingers – if you use a drill you will end up with holes right through the board! Then solder in the IC socket (with the notch in the position shown), followed by the four links made with single-conductor insulated wire. Put in each component as shown, ensuring that C1 (an *electrolytic* or *polarised* capacitor) is connected correctly. When all the components have been soldered in, take the 555 chip and lay it on its socket, with its own notch lying above that of the holder. Then, making sure that each pin lies *directly* above its corresponding socket, press down *gently* on the chip, with the board supported on a flat surface.

Testing

Connect the circuit to a battery or small power supply, ensuring that the positive and negative leads are the right way round. Always use red and black leads here, then you are less likely to get it wrong! Switch on. Nothing

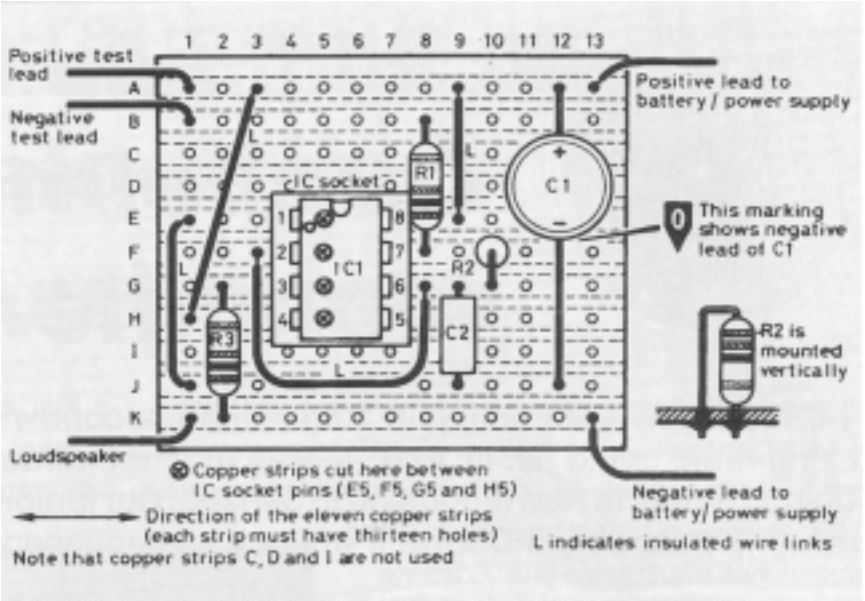

Figure 2 Veroboard layout. If you can read a circuit diagram, the project can be built using other methods

should happen until you short together the two test leads, when there should be a note from the loudspeaker. If this doesn't happen, switch off, disconnect the circuit and check your wiring and soldering. Is it exactly like Figure 2? Are the soldered joints round and shiny? If any are dull, then 'sweat' them briefly with a hot soldering iron until the solder runs, remove the iron, and check that they are as shiny as the rest. Check that there are no solder 'bridges' between adjacent tracks by holding your board up to a strong light. Then, reconnect, switch on and touch the test leads together. All should now work!

Uses of your circuit

1. As a Morse practice oscillator. Simply connect the two test leads to your key and, each time the key is pressed, you should hear a note from the speaker. The frequency of the note may be altered by putting a resistor in series with the key. To do this, remove one test lead from the key and select a resistor; connect one end of the resistor to the free test lead and the other to the empty terminal on your key. Selecting the value of resistor that you need will be a useful experiment in itself.
2. As a continuity tester. You can check fuses and lamp bulbs by connecting them across your test leads. If the speaker remains silent, the fuse or bulb has blown.
3. To indicate changes of resistance. Hold the ends of the test leads in each hand; you should hear a low note, because of the high resistance of your body. Squeeze the ends harder, and the frequency of the note should rise, because you are now making better contact. Repeat this with damp hands and the frequencies will be higher still.
4. As a thermometer. Connect the test leads to a thermistor (a device whose resistance changes with temperature) and warm it with a hair-dryer, or even in your hands, and you will hear the pitch changing with the temperature of the thermistor. A suitable 'bead' thermistor is available from Maplin (order code FX21).
5. As a diode tester. Use any diode, and connect the negative test lead to the end of the diode marked with the ring. This is the cathode of the diode. The other end, the anode, should be connected to the positive test lead, and a note should be heard from the speaker. This does not necessarily mean that the diode is working – yet. Reverse the connections and *nothing* should be heard. If this is the case, the diode *is* working.
6. As a light meter. Use a photoconductive cell (a device whose resistance changes with light intensity) connected between the test leads. A note should be heard. Shading the device with your hand will increase its resistance and the note should decrease in frequency. A suitable device is the ORP12 cell from Maplin (order code HB10).

There are many more applications. **Do not connect the test leads to other circuits that are switched on**. Your circuit, or the circuit you are connecting

it to could be damaged. Think of a *passive* device or circuit (i.e. one *not* requiring a power supply or battery) where changes of resistance occur, and you have found another application!

Parts list

Resistors: all 0.25 watt carbon film types

R1	4.7 kilohms (kΩ) – yellow, violet, red
R2	39 kilohms (kΩ) – orange, white, orange
R3	330 ohms (Ω) – orange, orange, brown

Capacitors

C1	100 microfarads (μF) 25 V radial electrolytic
C2	22 nanofarads (nF) or 0.022 microfarad (μF) polyester type with 10 mm lead spacing

Integrated circuit

IC1	NE555

Additional items

- Miniature loudspeaker (preferably 35, 40 or 80 ohm)
- 8-pin DIL socket for IC1
- 0.1 inch Veroboard ('stripboard'), size 11 strips by 13 holes
- PVC-covered stranded wire for test leads, loudspeaker and battery connections
- PVC-covered solid wire for links on the board
- A power source of between 6 V and 14 V, such as a 9 V battery (PP3)

Component sources

Cirkit
Tandy – many high street shops

6 A simple metronome

Introduction

A metronome is a device used by musicians to indicate the tempo of a piece of music. Until electronics came on the scene, this 'beating of time' was achieved in much the same way as a clock keeps time, i.e. with a pendulum device, the clicking of the escapement indicating the beats of the music.

Those of you who have already built the Morse Key and Buzzer from the designs in this book, will recognise the circuit of this metronome – it is exactly the same as was used to produce the note of the buzzer. This circuit is shown in **Figure 1**.

The circuit

Three components determine the speed at which the circuit oscillates – the speaker (LS), the resistors (VR1 + R1) and the capacitor (C1). VR1 is a variable resistor, so that the speed at which the oscillator operates can be varied. Compared with the component values of the Morse Buzzer (which operated at around 800 Hz), these components now give an oscillation frequency of around 1.25 Hz, which is far too low to be heard as a note. What we *do* hear, however, is a series of clicks, as the voltage across the speaker changes quickly from 0 to 9 V and back again.

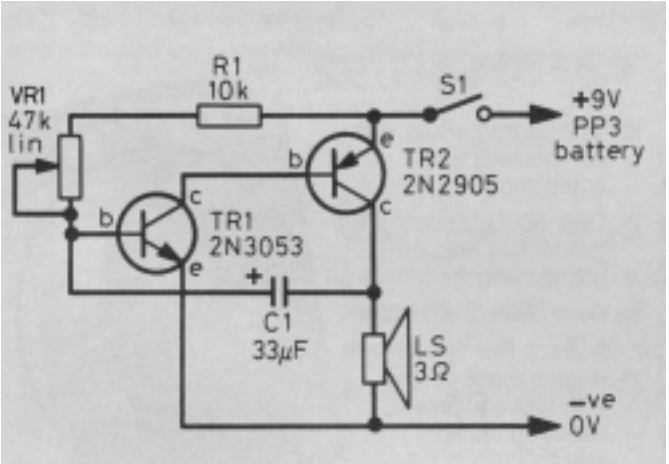

Figure 1 The metronome circuit is rather like the Morse oscillator

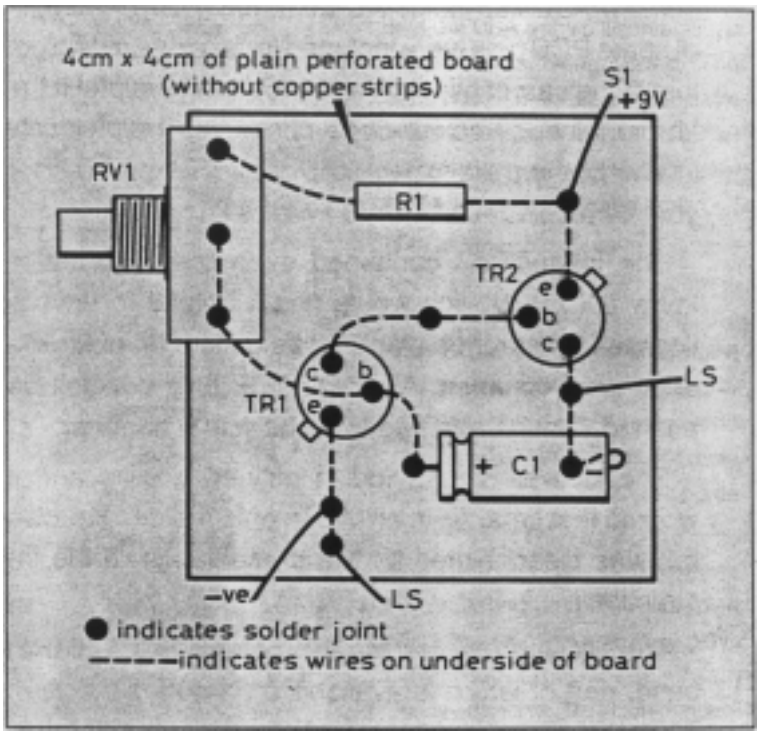

Figure 2 The component wires are pushed through holes in the circuit board and joined together underneath

Variation of speed could be achieved by varying resistance or capacitance. However, as you may already know, variable capacitors have values in the picofarad range, not the tens of microfarads used here, so it is very simple to employ a variable resistor (potentiometer) to control the oscillator. You could use a multi-way switch to switch in one of several capacitors, as well as having the variable resistor, but this was found to be an unnecessary complication. This design operates between about 100 clicks per minute and 200 clicks per minute.

Making the prototype

A single piece of plain matrix board (no copper strips) measuring about 40 × 40 mm is sufficient to hold all the components except the potentiometer and switch (see later). The case can be plastic or aluminium, and one measuring 65 × 100 × 50 mm is about right. Make sure there are holes in the case beside the speaker cone to let the sound out, and larger holes for the potentiometer and switch. If a potentiometer is used with a combined ON/OFF switch, then the extra hole for the switch is not necessary! It is advisable to construct the circuit *before* putting it in the

box, so that it can be tested to ensure that everything is working. If it is, then you can exercise your ingenuity in mounting the speaker, battery and board inside the box. A final test can be made before starting the calibration process.

Calibration

There is no 'easy' way to do this. The frequencies involved are too low to be measured with the average frequency counter, so you will need to resort to using a stopwatch and counting the number of clicks per minute.

Parts list

Resistors: 0.25 watt, 5% tolerance

R1	10 kilohms (kΩ)	
VR1	47 kilohms (kΩ) linear potentiometer	

Capacitor

C1	33 microfarads (μF) electrolytic	

Transistors

TR1	2N3053	npn
TR2	2N2905	pnp

Additional items

S1	SPST	ON/OFF switch
LS	3 ohms (Ω)	loudspeaker
	Knob with pointer for VR1	
	PP3 battery and connector	
	Aluminium case, 65 × 100 × 50 mm	
	Matrix board (plain), 40 × 40 mm	

7 What is a resistor?

Introduction

Materials that carry electricity easily are called **conductors**. They include all metals and salt water, for example. We use wire as a conductor, and the ease with which it passes an electric current depends upon the material, its thickness and its length. Silver (symbol Ag), gold (Au), copper (Cu) and aluminium (Al) are the best metallic conductors. Most wires are made of copper, although the best conductor, weight for weight, is aluminium.

Materials that *don't* carry current (or, at least, do so very badly) are called **insulators**, and they include dry wood, rubber, plastic and glass among their number. Wires are often coated with a layer of insulator to prevent adjacent wires touching and causing an accident.

Resistors

If there wasn't such a thing as resistance, the subject of electronics wouldn't exist; only infinite currents would flow and voltages wouldn't exist either! We need to reduce the flow of current if we are to make current do something useful for us. Components that resist the flow of current are called **resistors**, and they are said to have a **resistance** which is measured in ohms (Ω), named after Georg Ohm, who formulated the law (also named after him) by which the voltage and current through a conductor are related. His law gave rise to the formula *everyone* remembers:

$$I = \frac{V}{R},$$

where I is the current flowing, measured in amps,
V is the voltage across the conductor, and
R is the resistance of the conductor, measured in ohms.

From this equation, you can see that, for a constant value of voltage, V, if the resistance goes up, the current will go down, and vice versa. The circuit symbols for resistors are shown in **Figure 1**. You will find the upper symbol in older magazines; it is still preferred by many engineers. The lower symbol is the prevalent standard symbol.

Resistors are made in several ways, the cheapest using carbon; another type is usually made from a ceramic cylinder (used only as a support) on which

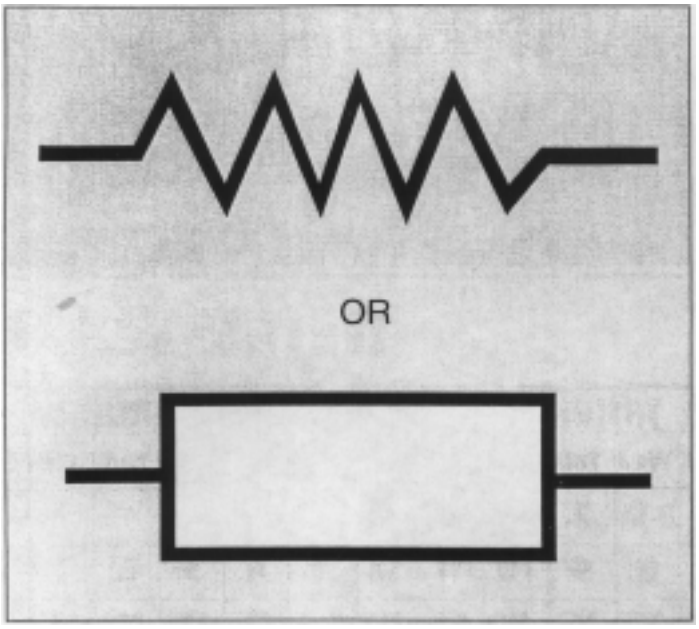

Figure 1 Circuit symbols for resistors

is placed a very thin film of metal – the thinner the film, the greater the resistance. All resistors are coated with a thin film of insulation, for the same reason we discussed earlier.

The colour code

Each resistor has coloured bands on it which enable us to see what value of resistance it has. There are normally three (but sometimes four) at one end, and a single one at the other (see **Figure 2**). The colours indicate figures, according to the list below.

Colour	*Value*	*Colour*	*Value*
Black	0	Green	5
Brown	1	Blue	6
Red	2	Violet	7
Orange	3	Grey	8
Yellow	4	White	9

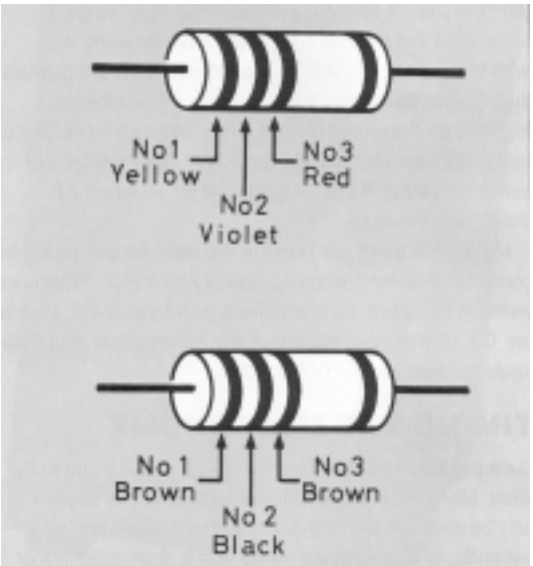

Figure 2 Some examples of resistor colour codes; top 4700 Ω (4.7 kΩ) and bottom 100 Ω

Using the colour codes is easy, once you see the logic behind it. Hold the resistor so that the single band is towards the right. The three colours on the left are read in the normal order from left to right. The first two bands *always* indicate numbers; the third band gives the number of zeros to add to the right of these two numbers. So, looking at the top resistor in Figure 2, yellow, violet, red means 4, 7, and two zeros, giving 4700 ohms! Looking at the lower resistor, brown, black, brown means 1, 0, and one zero, giving 100 ohms.

Remembering the order of the colours may be difficult at first. The colours from red to violet are the colours of the rainbow, in order, so if you know those, you're almost there! Around those colours are black and brown below the red, and grey and white above the violet, which you can imagine as getting brighter from black to white (well, almost!). It won't be long before you don't need to remember them at all.

The isolated band on the right-hand side is not part of the resistor's value; it indicates its *tolerance*, i.e. how close it might be to the indicated value. A brown band indicates ±1%, a red band ±2%, a gold band ±5% and a silver band ±10%. For example, a resistor marked as being 100 ohms with a ±5% tolerance will have an *actual* value somewhere between 95 ohms and 105 ohms.

8 Waves – Part 1

Introduction

Waves are responsible for most of the processes in life where energy is transferred from one place to another. Heat and light energy from the sun, for example, come to us as *electromagnetic waves*. Sound travels through the air as a wave; it is not the same sort of wave as light or heat, but it obeys many of the same properties. Damage is caused to coastal margins by the waves of the sea – again, another type of wave, but still obeying many of the same properties. Radio waves are of the same type as heat and light waves, as are gamma rays, X-rays, ultra-violet waves and infra-red waves. So, once we begin to understand what radio waves do, we are also learning about a huge chunk of physics at the same time! All these waves are part of the *electromagnetic spectrum*. The word 'spectrum' simply means a 'range', so what we have is a range of electromagnetic waves – that's all!

Sensing things

Light waves are invisible, but our eyes can detect the *effect* they have on different materials because the waves produce an effect on the retina of the human eye which the brain can interpret. We cannot see heat waves either, but we can feel the *effect* they have on our skin. Gamma rays and X-rays are also invisible, but their detrimental *effects* on human tissue are well known. It is not surprising, then, that we cannot see radio waves. We cannot sense them, either, until we produce a device upon which they have an *effect*. That device is a **radio receiver**; it is able to process certain characteristics of radio waves, and make these characteristics audible by generating sound waves from the loudspeaker or headphones. Other characteristics of the same waves may be turned into light as a TV picture on a cathode-ray tube, or as a fax image on a sheet of paper.

Visible waves

Let's start our description with some waves that we can actually see! When a small stone is thrown into a pond, we see circular water waves *radiating* from the point where the stone fell into the water, as **Figure 1** shows. (Notice that we use the word *radiating*, even with water waves; it is not a radio term, but one which describes any motion where the *radius* of a circle is increasing. In this case, it is the radius of the circular waves which is

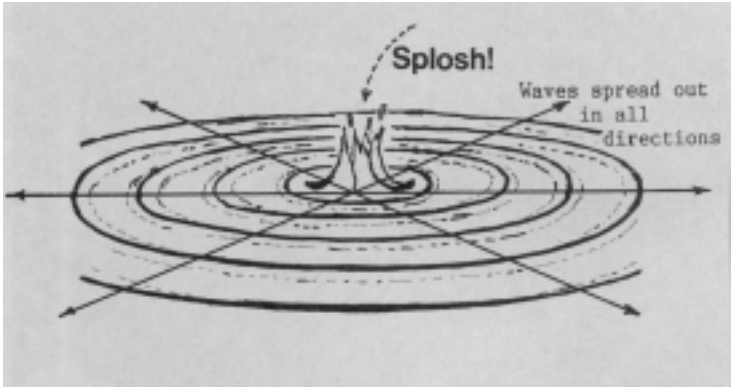

Figure 1 The waves move out from the point where the stone landed

increasing.) If you were to watch the water waves down at the water level, perpendicular to the direction in which they are travelling, you would see something like the illustration in **Figure 2**.

The horizontal line represents the water level before the wave started, and the vertical line represents the direction in which the water is displaced at any instant.

All waves are described in the same way

'Freezing' the motion of the water in this way allows us to define two very important characteristics of a wave, characteristics which we talk about every day – *wavelength* and *amplitude*. The wavelength of a wave is simply the distance (measured in metres) from any point on one wave to the same point on the adjacent wave. Look at the diagram and you will see what is meant by 'the same point on the adjacent wave'. The amplitude of a wave

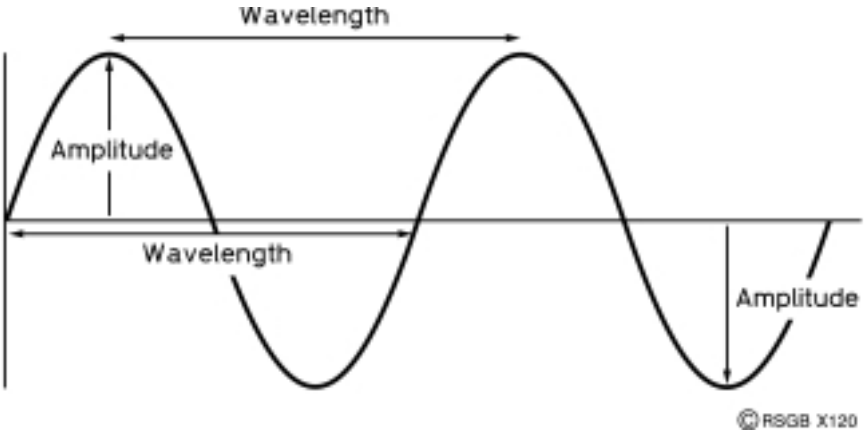

Figure 2 A water wave, viewed in cross-section

is always measured from the centre (undisturbed) position of a wave to the peak (or the trough) of the wave. Both these positions are shown, the arrow indicating that the measurement is taken *from* the centre *to* the peak or trough. The amplitude of a wave is defined as the maximum displacement of the wave from the centre position – the direction (up or down) of that displacement does not matter. Waves of greater amplitude carry more energy with them.

If we now 'unfreeze' the wave, we will see it travel from left to right (or right to left, depending on where we are looking). The speed at which it moves is called its *velocity*, and is measured in metres per second.

Another useful word is *propagate*; it means *travel*. We talk about radio waves propagating from a transmitter to a receiver. This velocity of propagation (for electromagnetic waves) is very fast indeed – they will cover 300 million metres in one second. This is virtually incomprehensible, so think of a radio wave travelling around the earth – it can travel 7½ times round the earth in one second! We use the symbol c for the velocity of radio waves (which is the same as the velocity of light, of course – all electromagnetic waves travel at this speed through air and space).

The last thing we need to know about the wave is its *frequency*. Imagine a cork floating on the water in the path of the wave; it will bob up and down. If we were able to count the number of times it went through its highest position in one second, then that number would be its frequency. Any periodic motion like this is said to go through one *cycle* each time one complete wave passes a point (in this case, our cork). We are thus counting the number of cycles per second of the cork's motion. The unit of frequency is thus 'cycles per second'; this unit is now named after Hertz, a radio pioneer, and is abbreviated to Hz.

Our description of the wave is now quite simple – we need only four quantities:

(a) **Frequency** symbol f – unit, hertz (Hz)
(b) **Wavelength** symbol λ (Greek letter lambda, pronounced 'lamb-da') – unit, metre (m)
(c) **Amplitude** symbol a – unit depends on application
(d) **Velocity** symbol c – unit, metres per second (m/s or ms^{-1})

The basic formula

Whatever may happen to a wave while it travels through different media (vacuum, air, brick, wood, etc.), one thing and **only** one thing remains constant – its frequency. Its wavelength, amplitude *and* velocity may change, but its frequency never does. Three of the four characteristics already identified are connected by the simple relationship

$$c = f \times \lambda.$$

Remember that c is constant if the wave travels in air or in a vacuum. This means that waves having higher frequencies (f large) must have smaller wavelengths (λ small) and vice versa. You can imagine frequency and wavelengths being on opposite ends of a see-saw!

Divisions of units

Because the frequencies of radio waves are so high (despite them having the lowest frequencies in the electromagnetic spectrum!) we have a problem with writing them down. Do you write in your log book that you have just heard a station on 14 100 000 Hz? Of course not, you write it as 14.1 MHz, knowing that the prefix mega (M) means 'one million'. The prefixes which you need to know (when applied to frequency) are:

kHz	kilohertz	meaning	1000 Hz
MHz	megahertz	meaning	1 000 000 Hz
GHz	gigahertz	meaning	1 000 000 000 Hz.

Notice that the 'k' in kilohertz is a lower case letter. It is **incorrect** to write it as an upper case letter. 'K' is a computer-related prefix meaning **not** 1 000 but 1 024!

When we come on to discuss heat and light waves, we will use wavelengths rather than frequencies, because of the see-saw effect – as the frequencies get larger and larger, the wavelengths get smaller, and hence are numbers which are more manageable, both to talk about and to write down!

Bands

Gamma rays, X-rays, ultra-violet waves, light waves, infra-red waves are all part of the electromagnetic spectrum, but we divide them up because they have different properties. This is why we divide up our radio frequencies into different bands. The radio waves of top-band signals (around 2 MHz) have completely different properties compared with those in the 20 metre band, so we are dividing up the *radio spectrum* in the same way – by property.

9 A beat-frequency oscillator

Introduction

Many readers will know that, although they have a short-wave radio which covers at least one of the amateur bands (e.g. 7 MHz or 14 MHz), they are unable to listen to SSB or Morse signals. This is because the receiver lacks a Beat-Frequency Oscillator (BFO). We need the 'carrier' frequency of a BFO to replace the carrier that has been removed from the signal at the transmitter. When listening to Morse signals, the BFO signal 'beats' with the incoming signal to produce a note in the loudspeaker. If you are a musician, you will be familiar with the method of using 'beats' to tune one musical instrument from another; in the BFO, the beat frequency produced is the tone signal you hear.

In the more complex amateur radio receiver, a BFO is incorporated as part of the whole system. In our model, it is an external circuit that sits alongside your radio. The circuit diagram is shown in **Figure 1**.

Construction

Built on a small piece of matrix board about 80 × 50 mm, the circuit can be fitted inside a small plastic box. For once, we *don't* want to screen the circuit to prevent it interfering with other equipment; we *want* it to interact

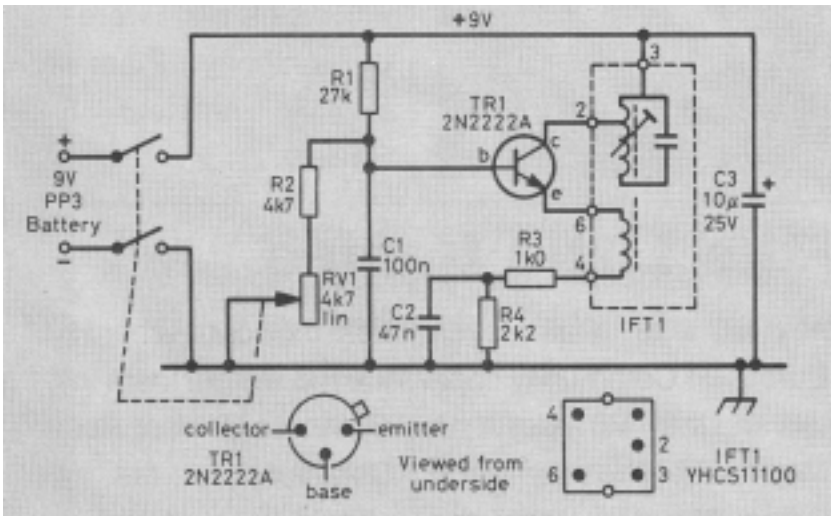

Figure 1 Circuit diagram of the BFO

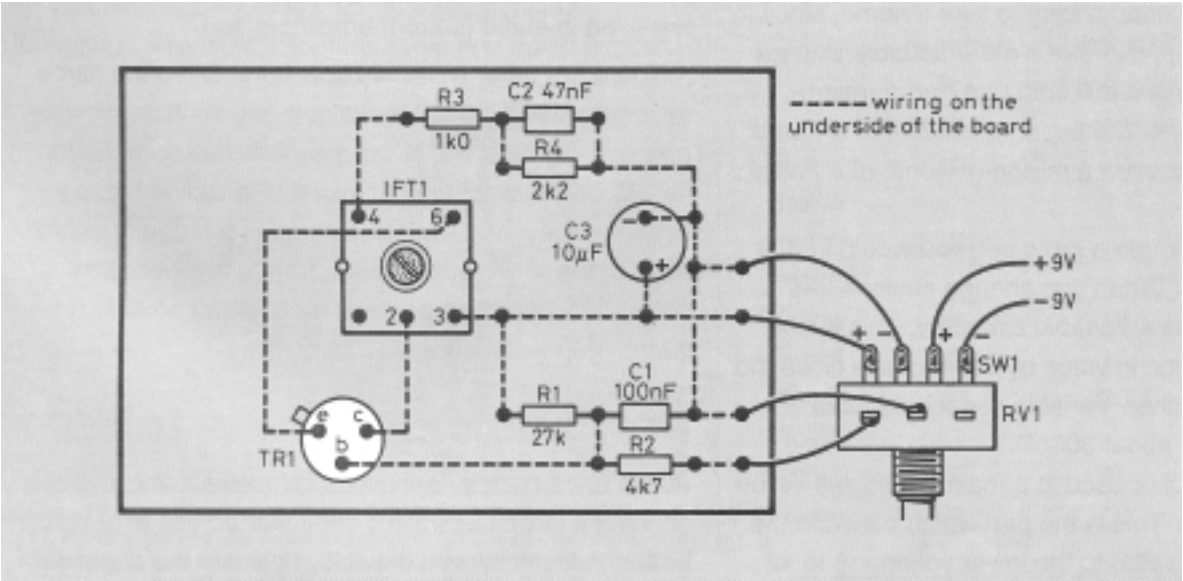

Figure 2 Matrix board layout shown from the component side. Adjust IFT1 carefully for the best results

with our receiver! This is why we use a plastic box. Maplin Electronic Components supply a suitable box, complete with the matrix board to fit inside (order code YU46).

Look at **Figure 2** carefully before you start to build the circuit, so that you can position the components correctly. Firstly, inspect the intermediate frequency (IF) transformer, IFT1, and remove its metal screening can very carefully. Again, this is to allow some signal to escape from our circuit and enter our radio. Having done this, solder the components, using the matrix board as a support. Underneath the board, the components are linked by single-conductor, insulated wire. Take particular care with the polarity of the electrolytic capacitor, C3, and the connections to the transistor, TR1 (see Figure 1).

The variable resistor, VR1, has a switch mounted behind the control itself, and the insulated leads to it from the battery should be about 10 cm long. Connect these before fitting VR1 into the case, so that the BFO can be calibrated (adjusted) correctly.

Calibration

After a final check that all the components have been fitted and soldered correctly, connect the battery, switch on, and hold the transistor between your fingers, to check that it is not getting hot. Place the circuit close to your

receiver, and set RV1 to mid-position. Tune your receiver to find an amateur SSB transmission; the frequencies listed below will help you in knowing where to look. It may sound very strange, but don't worry. *Slowly* turn the core of IFT1 with a small, non-metallic screwdriver or with the correct 'trimming tool'. The core into which the blade fits is very fragile, so attempt this process with care. When the speech sounds as natural as you can get it, leave the core at this position, and use RV1 to make the speech sound natural.

Using the BFO

For best results, you may have to move the BFO nearer or further away from your radio. At the lower end of most bands (for instance just above 7.000 MHz or 14.000 MHz) you should be able to resolve Morse code (CW) signals. If you find that the BFO signal is a little weak, solder a 15 cm length of insulated wire to pin 2 of IFT1, and place it alongside your radio. This should improve signal intelligibility. When you are happy with the performance, switch off, drill a 10.5 mm hole in the box and fit RV1, followed by the matrix board assembly. Screw the base to the box, fit the knob, and the BFO is complete!

Where to listen

Band	Frequencies (MHz)
15 m	21.000–21.450
17 m	18.068–18.168
20 m	14.000–14.350
30 m	10.100–10.150
40 m	7.000–7.100
80 m	3.500–3.800

Parts list

Resistors: all 0.25 watt, 5% tolerance

R1	27 kilohms (kΩ)
R2	4.7 kilohms (kΩ)
R3	1 kilohm (kΩ)
R4	2.2 kilohms (kΩ)
VR1	4.7 kilohms (kΩ), linear, with DPST switch

Capacitors

C1	100 nanofarads (nF) or 0.1 microfarad (μF), ceramic
C2	47 nanofarads (nF) or 0.047 microfarad (μF), ceramic
C3	10 microfarads (μF), 25 V radial, electrolytic

Additional items	
TR1	2N2222A npn
IFT1	Toko type YHCS11100
Box	plastic, approximate size 100 × 70 × 45 mm
Board	matrix, to fit inside the box
Connector	for PP3 battery
Knob	for RV1

10 What is a capacitor?

Introduction

A capacitor is a device that stores energy in the form of electricity. Much less energy than a battery, and for a shorter time, however. The simplest form of capacitor takes the form of two flat metal sheets separated by air; connections are made to each plate, as **Figure 1** shows. If you imagine a pair of these plates, 30 cm square and separated from each other in air by 1 mm, the capacitance of this device would be almost exactly 80 picofarads (pF), i.e. 80 million-millionths of the unit of capacitance, the farad. Now this is quite a small value, you will agree, and it comes about because the farad is such a large unit. Nevertheless, as you will probably know, we may have capacitors of value 10 000 microfarads (μF) in our radio equipment, and they can be smaller than your little finger, so they are obviously not made the same way!

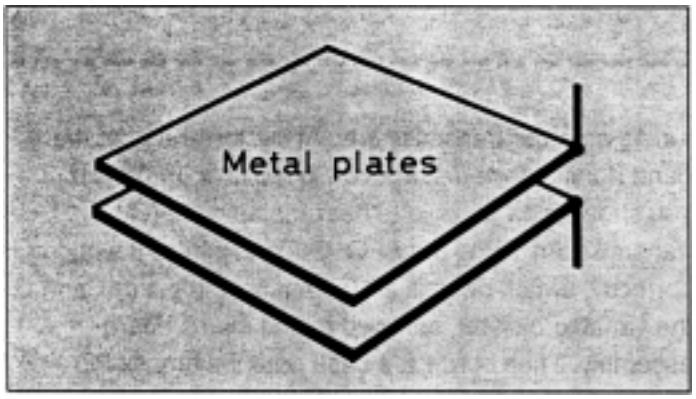

Figure 1

Large and small

We cannot go into the manufacture of capacitors here – after all, we are users of the devices, not the designers! First of all, beware of incorrect statements; the words 'capacitor' and 'capacitance' are *not* the same. For example, a large capacitor would be a description of one the size of a toilet roll. It need not have as large a capacitance as one the size of your little finger. A 'large capacitor' is one which is physically *big*, a 'large capacitance' refers to a capacitor which can store a larger amount of energy when a certain voltage is applied between its plates. The capacitors in a mains power supply are usually big **and** have large capacitances. High-power RF amplifiers may have large capacitors with small capacitances!

Electrolytics . . .

Electrolytic capacitors usually have capacitances of 1 μF or above. They differ from other capacitors in that they **must** be connected the right way round (i.e. they have positive and negative connections, just like a battery). They may explode if the connections are reversed!

. . . and the others

Other capacitors may be connected either way round, despite their names. We have *polystyrene*, *ceramic*, *silver-mica* and *tantalum*. Each has its own advantages and disadvantages, and the parts list for a project will always tell you which type is best.

Storing energy

If you were to connect a large capacitance across a 12 V power supply, nothing would appear to happen. Removing the capacitor from the supply and connecting it to a voltmeter would show that the capacitor has 12 V between its ends. This shows that, while the capacitor was connected to the supply, energy flowed from the supply into the capacitor. We say that the capacitor was *charged up* by the supply. If you are using an *analogue* voltmeter (i.e. one with a meter and pointer), you will notice that the indicated voltage slowly drops until, eventually, there is no voltage across the capacitor. This is because the capacitor has *discharged* its energy into the voltmeter. If you had used a smaller capacitance, the same would happen, except that the voltage would drop to zero more quickly – the capacitor stores a smaller amount of energy because its capacitance is smaller. Capacitors behave like other things in life – a small car can move more quickly than a large bus – a small piccolo emits a

higher note than a flute – the voltages in a circuit containing a small capacitance will change more quickly than those in a circuit with large capacitance.

Varying the capacitance

Some capacitors are capable of having their capacitance changed manually; these are called *variable capacitors*. They work like the basic capacitor of Figure 1. Imagine moving the top plate of the pair a little to one side; the capacitance is determined, not just by the size of the two plates, but by their *area of overlap*. As this decreases, so does the capacitance. Such devices are limited in their capacitance, about 500 pF being the maximum value.

AC and DC

Because the plates of a capacitor do not touch each other, a direct current (DC) cannot pass between them. However, an alternating voltage on one plate can induce an identical alternating voltage on the opposite plate, and thus a capacitor appears to pass an alternating signal, even though currents as such, do not pass between the plates. This property of passing AC and not DC is very important, and a capacitor used in this way is called a *DC blocking capacitor* or, simply, a *blocking capacitor.* A blocking capacitor can be used at the same time, to couple a signal from one circuit to the next; here it would be known as a *coupling capacitor. Decoupling capacitors* are to be found where the capacitor is employed to remove an AC signal while retaining a DC component.

Finally . . .

Unlike resistors, the manufacture of capacitors renders them susceptible to excess voltage, so if you find a capacitor labelled 10 μF 16 V, it means that operating it above 16 V may fatally damage the device (and the circuit around it). This voltage is called the *working voltage* of the capacitor; on some electrolytics, you may find it expressed as *volts working* (i.e. 8 μF 450 V WKG).

Many smaller capacitors have their properties marked on them in a colour code, like resistors. **Figure 2** shows these codes, and their meaning, and the table below summarises the values of the colours.

Table 1

Colour	*Value*	*Voltage (tantalum capacitor)*	*Voltage (polyester capacitor)*
Black	0	10	–
Brown	1	–	100
Red	2	–	250
Orange	3	–	–
Yellow	4	6.3	400
Green	5	16	–
Blue	6	20	–
Violet	7	–	–
Grey	8	25	–
White	9	3	–

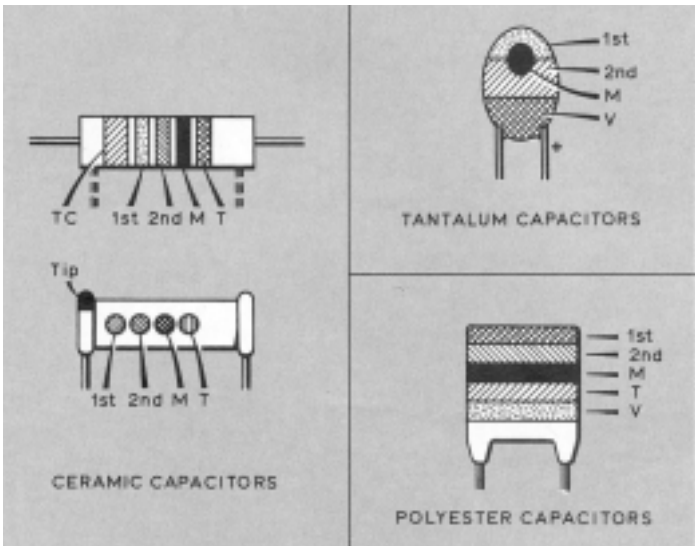

Figure 2 Some capacitors have coloured bands or stripes, rather like resistors. The colour code, which is the same as the resistor code, is shown in Table 1. The band shown on the chart as '1st' is the first number of the capacitor's value in pico-Farads, '2nd' is the second number and 'M' is the Multiplier or number of noughts. For example, a capacitor reads from the top: Brown, Black, Yellow, Black, Red. Its value is One, then Nought, then Four more noughts = 100 000 pF (also referred to as 0.1 μF or 100 nF). Its tolerance (Black) is 20% and the working voltage (Red) is 250 V. The 'V' means the maximum working voltage. The band marked 'T' shows the tolerance, just like resistors, and the one marked 'TC' is only used on special capacitors designed to change their value with temperature

11 Waves – Part 2

Introduction

We left Part 1 with the concept that radio waves are divided up into bands which have different properties. Not *all* the properties are different, though. We need to discuss several wave properties, so we will start with what happens to waves as they propagate over long distances.

Getting weaker

Imagine a torch battery connected to a bulb by wires about 1 metre long. The bulb lights normally. If we now take the bulb 100 metres away from the battery and wire it up, we would expect the bulb to be somewhat dimmer, which is exactly what would happen. It happens because of the resistance of the wires – the wires do not form a perfect conductor. A similar situation occurs with radio waves.

All waves suffer from *attenuation* – they get weaker the further they travel. In cases of extreme attenuation, we need to apply some *amplification* before the attenuated wave can be used in a receiver.

Carrying information

When we speak over the telephone, the range of frequencies in our voices extends from very low frequencies up to about 15 or 20 kHz. In audio terms, this is quite a large *bandwidth* (meaning a wide band of frequencies). For communications purposes, however, most of this bandwidth is not needed, and in the telephone system (and in our transceivers), this is cut down so that it extends from about 200 Hz to 3 kHz, a reduction in bandwidth from 20 kHz to about 3 kHz. A bandwidth of 3 kHz has been found to be sufficient to convey speech intelligibly which, after all, is just what we need!

The radio waves coming from an amateur transmitter convey our speech signals over long distances. By themselves, the speech signals do not travel very far, so they have to be combined with a radio signal that *will* travel long distances. This extra signal is called the *carrier wave* (or just the *carrier*), because its job is to *carry* the speech signals along with it! The process of combining the speech (or Morse code) with the carrier is called *modulation*.

Wider and wider

Sending Morse code is achieved simply by switching (or *keying*) the carrier on and off. The bandwidth of the transmitted signal is only about 100 Hz. Speech, with its reduced bandwidth of 3 kHz, will produce a *single-sideband* (SSB) transmitted signal with a bandwidth of 3 kHz. If the same speech signal were used to produce an *amplitude-modulated* (AM) signal from the transmitter, it would have a bandwidth of about 6 kHz. Perhaps you can now understand why the bandwidths needed to produce hi-fi broadcasts need to be so large. TV signals need bandwidths running into tens of megahertz!

Waves need aerials

Radio waves are produced whenever changing currents flow through a wire, and when that wire is made in such a way as to maximise the *radiation* from the wire, it is called an *aerial* or *antenna*. The same piece of wire will receive radiation from other aerials; an aerial will transmit and receive. This is an important property of the aerial: when a current flows through it, electromagnetic waves are launched into the air; when electromagnetic waves in the air encounter the aerial, currents are produced in it.

From the simplest transmitting aerial, waves travel in all directions, like the waves on the pond that we considered in Part 1. They will travel a long way through air and space before they become too week to be received. They won't travel very far into the earth, however! The earth will *reflect* some of the wave and will *absorb* the rest. That portion of the wave which is reflected will again travel through air and space until it is totally attenuated.

Look at **Figure 1**; A represents a radio transmitter, with B1, B2 and B3 being receiving stations. The two arrows pointing 'downwards' from A represent two of the waves from A which just graze the earth's surface. Waves above

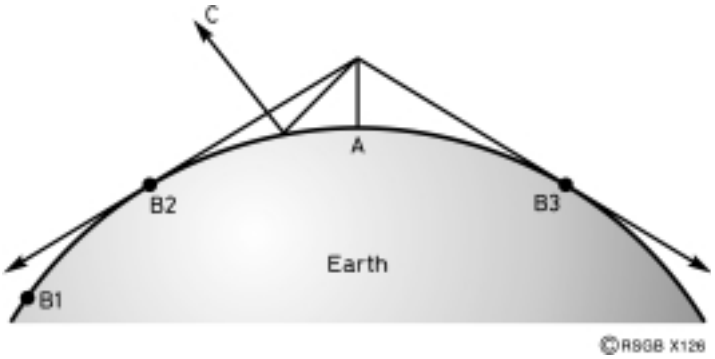

Figure 1 Stations between B2 and B3 receive the *ground wave*

these will travel on into space; waves below them will either be absorbed and reflected by the earth or received by aerials. B1 will not receive any signals from A, because it is below A's horizon. B2 and B3 can receive A's signals because they are *just* on A's horizon. Any stations between B2 and B3 will also receive A's signals, which are known as *ground-wave signals*. The wave at C represents one which is reflected by the ground and travels into space.

This description begs the question of how signals are received from stations well beyond the ground-wave range.

Mirrors in space

Suppose that there was something, out in space, that would reflect radio waves. Waves from A that travel out into space could be reflected off it and return to earth, enabling stations such as B1 to receive A's signals. The situation just described is illustrated in **Figure 2**.

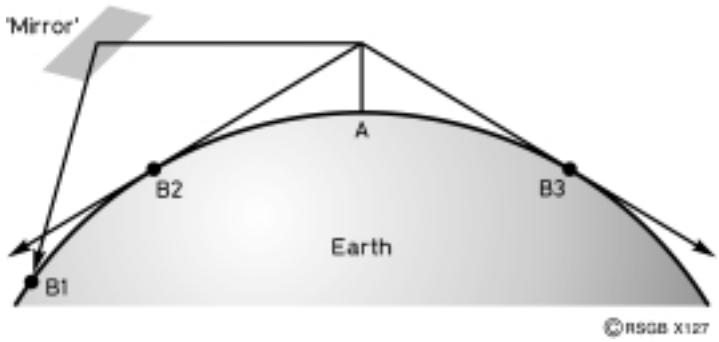

Figure 2 Reception of A's signals at B1 using the *sky wave*

Just such a mirror in the sky really *does* exist. It is not man-made, of course! The earth is surrounded by the atmosphere, a mixture of many gases, such as nitrogen and oxygen. The energy contained in the radiation from the sun is more than sufficient to *ionise* these gases, thus making them into electrical conductors. When a gas is ionised, some of its electrons are physically stripped out of the atoms and are free to move about, just as the electrons of a metal do in a wire. Consequently, we can regard this part of the atmosphere (the part illuminated by the sun) as acting like a sheet of metal, which *reflects* radio signals! It is not a perfect reflector, but is sufficient to produce long-range (DX) radio propagation via the *sky wave* under the right conditions. (A more down-to-earth example of ionised gases conducting electricity can be found in the fluorescent tube and the neon sign – many gases glow when they are continuously ionised.)

This conducting region at the extremity of the atmosphere is called the *ionosphere*, and it exists in layers between 60 km and 700 km above the earth's surface. When the ionosphere is sufficiently ionised, it glows; this is the natural phenomenon known as the *aurora borealis*, or the *northern lights*.

The property of the ionosphere that enables radio waves to be reflected does not act in a uniform way; it is very selective about which waves it reflects, and which waves go straight through it and into outer space. In general, it reflects only those waves with frequencies below about 30 MHz – the HF bands!

In Part 3 we will look at families of waves.

12 An LED flasher

Introduction

The LM3909 is an integrated circuit (IC) which will flash a light-emitting diode (LED). Using only two extra components and a battery, the circuit is cheap and has a very low current drain from a 1.5 V cell. The circuit can be used as a novelty flasher, an indicator for a dummy alarm bell box, or it could be attached to a torch so that it could be found easily in the dark! The simple circuit is shown in **Figure 1**.

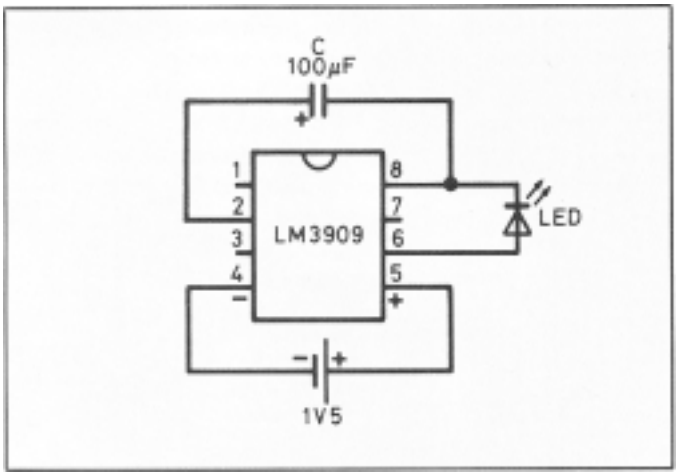

Figure 1 Circuit diagram of the LED Flasher. Pins 1, 3 and 7 of the IC are not used

Assembly

The circuit can be built on a small piece of Veroboard (the piece shown in **Figure 2** measures 15 holes by 10 strips). Using such a board, follow these instructions.

1. Depending on how far away you want the LED from the circuit board, solder a length of insulated wire to each lead of the LED. Use different colours of insulation – say, red and black, connecting the *red* lead to the *anode* (a) lead (the longer one) of the LED, and the black one to the *cathode* (k). Figure 2 shows these leads.
2. Cut the copper tracks as shown in Figure 2, using a 3 mm (⅛ inch) diameter drill, rotated between thumb and forefinger, or use the proper tool. Make *absolutely* sure that the tracks are completely broken!
3. Fit the IC holder in the correct position, using the cut tracks as guides, and make sure the small notch is facing towards the top of the board. Solder the pins to the copper tracks.
4. Mount the capacitor, positive end to the left, so that the positive lead is soldered to track F, which connects it to pin 2 of the IC; the negative lead is soldered to the right-hand side of track E, this being connected to pin 8 of the IC.
5. Solder on the battery leads, positive to the right, and the extended LED leads, positive downwards.

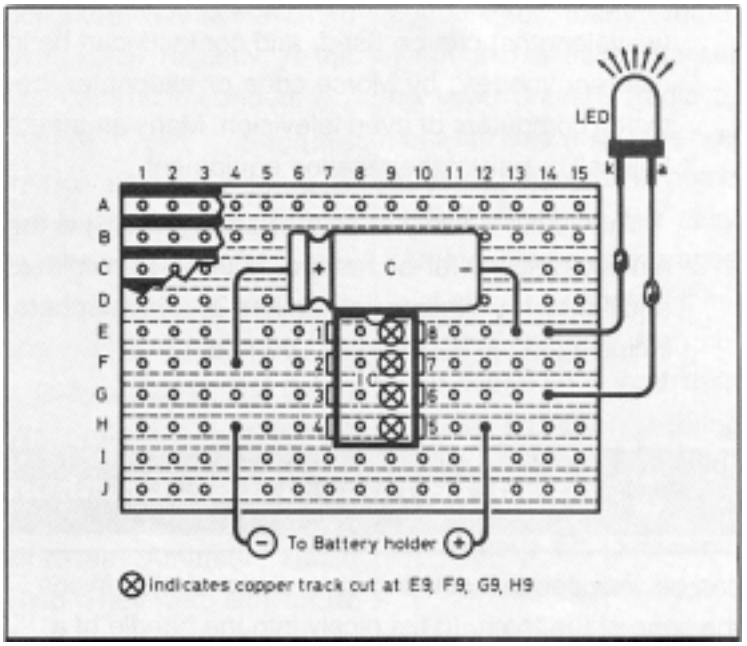

Figure 2 Board layout viewed from the component side. The tracks are cut under the board where shown

6. Check the circuit, and hold up the board to a bright light and look carefully for solder bridges between the tracks and pieces of copper swarf which may have escaped your inspection in 2 above! Remove whatever you find.
7. When all seems well, put the IC into the socket, ensuring that the notch or dot on the upper surface of the IC lines up with the notch on the holder. Line up each pin on the IC with the hole below it before pressing *gently* on the IC with the board supported on a firm surface.
8. Connect the battery; the LED should start to flash. The circuit is complete and working!

If you prefer, the whole circuit (battery included) can be mounted in a small plastic box, with the LED mounted on a clip and protruding through the panel. There are many other possibilities, and it is up to you to find an application for your own use.

Parts list

		Maplin code
LM3909	Integrated circuit	WQ39N
IC socket	8-pin DIL	BL17T
LED	5 mm diameter	WL27E
100 microfarad (μF)	Electrolytic capacitor (10 V)	FB48C
Battery holder	For AA-size cell	YR59P
Battery	1.5 V AA cell	

Small piece of Veroboard (15 holes by 10 strips)
Small plastic box (if required)
LED clip (if required)
Two lengths of coloured, insulated wire for LED (as required)

Availability

All parts can be obtained from Maplin Electronics Ltd.

13 Waves – Part 3

Introduction

When we talk about the spectrum being divided up into bands, this is just for our convenience; there are no natural divisions although, as we have seen, some of the properties of different bands really *are* different! Let's look at **Figure 1**, and see how the frequencies are divided up.

The divisions

- **Very low frequencies** (VLF) cover the range from a few kilohertz up to 30 kHz. Very long-range communication is possible, but at *very* small bandwidths. It is used for special purposes.
- **Long waves** (LW) are used for medium-distance commercial broadcasting and have frequencies from 30 kHz to 300 kHz.
- **Medium waves** (MW) are used for commercial broadcasting, and use frequencies from 300 kHz to about 1.5 MHz (1500 kHz). Typical range is about 200 km.
- **Short waves** (SW) encompass both the low-frequency (LF) and high-frequency (HF) amateur radio bands. There are nine narrow amateur bands in the SW spectrum between 1.8 MHz and 30 MHz. Some of these bands give round-the-world communication.
- **Very high frequencies** (VHF) span the range between 30 MHz and 300 MHz. Relatively short-range communication is possible. They were once used for broadcast TV before it moved to UHF. There are now three

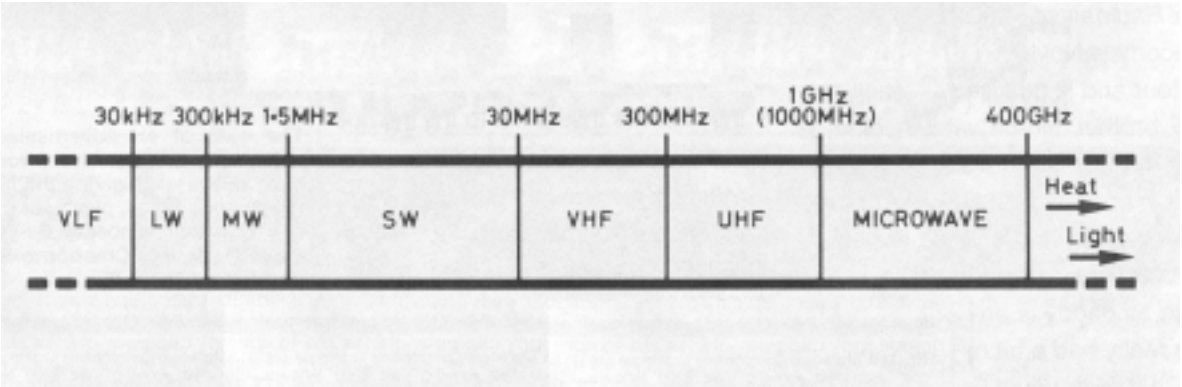

Figure 1 Diagram of radio frequency spectrum

amateur bands here – 6 m, 4 m, and 2 m. Repeaters are used to extend the usable range of mobile stations. VHF waves are not usually reflected by the ionosphere, but when they are, ranges of several thousand kilometres are possible. Weather affects these waves on a regular basis, however. In addition to amateur users, the VHF part of the spectrum is also used by the police, the fire and ambulance services, weather satellites, and many others,

- **Ultra-high frequencies**, sometimes called *centimetre waves*, cover the range from 300 MHz to 1000 MHz (or 1 GHz). The only amateur band in this range is the 70 cm band, and we share it with radar, TV and cellular telephone users as well.
- **Microwaves** begin at 1 GHz and extend to about 400 GHz. They are *never* reflected by the ionosphere, are partially attenuated by buildings, and are reflected from aircraft and cars. Microwave absorption in the atmosphere is quite significant, and rain and fog can attenuate microwaves quite heavily.
- **Heat, light** . . . Above 400 GHz we run into the infra-red bands and on into the visible light and ultra-violet bands. We generally take 400 GHz as being the limit of what we class as radio waves.

Bandwidth again

Complex signals need more bandwidth than simple signals. Even if it were possible, we would not be able to transmit a single television channel in the whole of the MW broadcast band! When TV used part of the VHF band, only five channels were possible in the range from 45 MHz to 68 MHz. By moving TV to the UHF band, we now have 47 channels between 470 MHz and 855 MHz!

It's your choice!

The number of permutations you have amongst all the modes and all the bands is enormous! Only you can decide what you are interested in and what you want to learn about. That is the attraction of amateur radio!

14 Choosing a switch

Simple, but be careful!

A switch is the simplest electronic component, but care is needed in choosing the correct one for the job. Here is a list of the main characteristics of a switch, which will help you to select what you want.

1. **Rating**. This gives the maximum voltage and current that a switch can handle. For example, a 250 V 1.5 A switch will switch mains voltage at a current not exceeding 1.5 A. If the current is greater than 1.5 A, the switch may get hot and fail. If the voltage is too great, the switch may arc each time it is switched off, thus wearing away the contacts.
2. **Number of poles**. A single switch can control many circuits; the number of poles tells you *how many* different circuits it can handle. See **Figure 1**.
3. **Number of throws**. This tells you the number of positions each pole can have. This is best illustrated in Figure 1. The simplest ON/OFF switch is a Single-Pole, Single-Throw (SPST) switch. A Single-Pole,

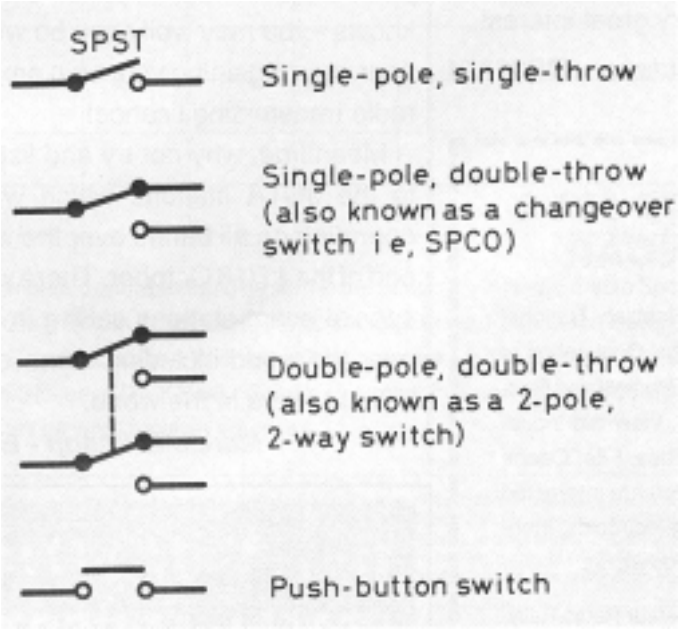

Figure 1 Some circuit symbols for different types of switch

Double-Throw (SPDT) switch may also be used as an ON/OFF switch, but is used mainly to change between two parts of a circuit, and is commonly known as a Single-Pole Change-Over (SPCO) switch. Two or more SPCO switches can be operated at once; Figure 1 shows an example. The two switches are said to be *ganged*. See also 'Types of switch' below.

4. **Number of ways**. When a switch has more than one throw, we tend to use the word 'ways' instead. This means that if a switch has one pole and six throws, we would normally call it a '1-pole 6-way' switch. Such switches tend to be rotary switches, as are described below.

Types of switch

(a) **Push-button**. These are found on calculators, telephones, electronic games and most equipment with a digital display.

(b) **Rotary**. These are switches controlled by a knob, and are turned instead of moved up and down. **Figure 2** shows the rear of such a switch and its circuit symbol. The commoner types of rotary switch are: 1-pole, 12-way; 2-pole, 6-way; 3-pole, 4-way; 4-pole, 3-way; 6-pole, 2-way. All these switches have 12 click positions, as you may have guessed, but each one comes with an adjustable end-stop so that you can set the correct number of ways according to the contacts on the switch.

(c) **Slide**. This switch is common on the cheaper types of radio, mainly as an ON/OFF or band-changing switch. They are not very rugged, but are small and cheap to produce. Very small types are manufactured for use on PCBs.

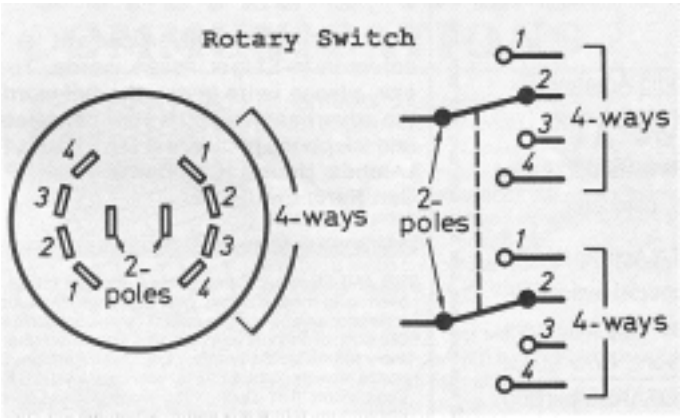

Figure 2 The rotary switch can select several different circuits at once

(d) **Toggle**. Available as two-way types or three-way, with a centre-off position. Can be manufactured to handle very high currents.

(e) **Micro-switch**. These are devices which are usually operated indirectly, such as when the cover is removed from a high-voltage power supply, or when the door of a fridge is opened. The 'micro' part of the name doesn't refer to the size of the switch, but to the *small* movement that is required to activate it.

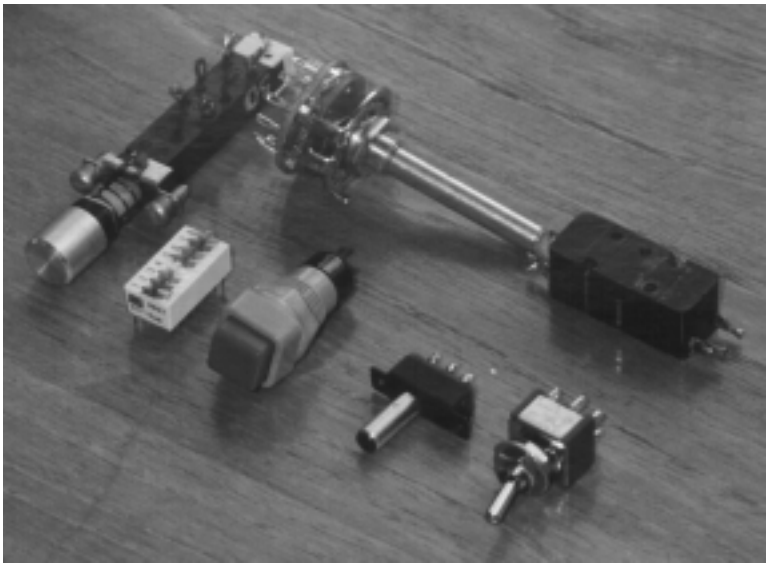

15 An aerial tuning unit for a receiver

Introduction

Any length of wire will act as an antenna (or aerial) but, to get the best results from a transceiver or receiver, an aerial tuning unit (ATU) is required. This matches the *impedance* of your aerial to the impedance at the aerial socket of your radio. Impedance is like resistance, and is measured in ohms, but it is used for alternating currents, and hence is common in audio and RF engineering. Most receivers have an impedance at the aerial socket of about 50 ohms (Ω); aerial impedance, on the other hand, can be anywhere between 20 Ω to over 1000 Ω, depending on its length and its height above ground.

Fortunately, you don't *need* to be able to calculate your aerial's impedance; all you need is a device that will perform the matching operation for aerials with a large range of impedances, and this is exactly what is described here! The subject of *matching* is a complex one, but all you need to know is that most signals will become clearer, and that there will be less noise and interference. Stations will become louder, so you will probably be able to reduce the setting of your RF gain control (always a good thing to do).

This design of ATU covers all amateur and broadcast bands from 10 m (28 MHz) to 80 m (3.5 MHz), and is very easy to build. The circuit is shown in **Figure 1**.

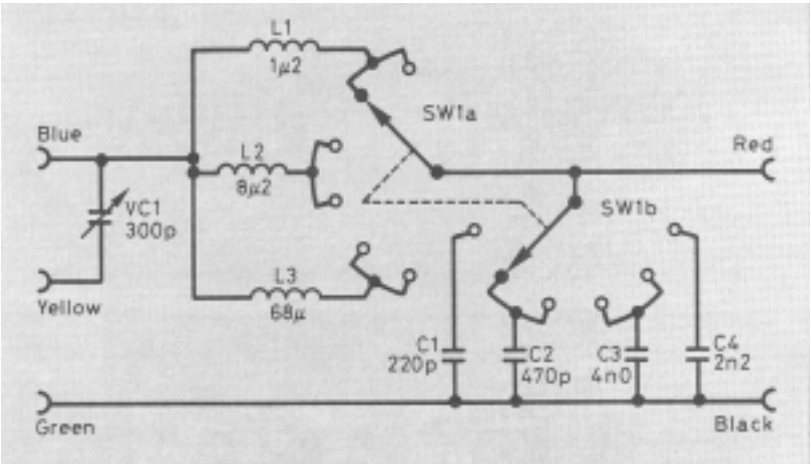

Figure 1 Circuit diagram of the Antenna Tuning Unit, showing the use of a 2-pole, 6-way rotary switch to select inductors (L) and capacitors (C)

Construction

1. Firstly, you will need a simple plastic case in which to house the ATU. The size should be approximately 85 × 145 × 50 mm.
2. Start by drilling two 10.5 mm holes in the front of the case; these are for the 6-way switch and the tuning capacitor.
3. Drill three 8 mm diameter holes in the left-hand side of the box, for the three sockets, coloured blue, yellow and green.
4. On the right-hand side of the box, drill two 8 mm diameter holes for the red and black sockets.
5. Now, fit the 6-way switch (SW1), the tuning capacitor (VC1), and all the sockets to the case. Check that the vanes of the capacitor rotate smoothly when the shaft is turned.
6. Wire up the inductors (coils). Figure 1 and the wiring diagram of **Figure 2**, will help with this. As you can see, each one side of each coil is connected to two switch connections, the other end going to VC1.
7. Solder in the fixed capacitors. One end of each goes directly to the ground socket (black), and the other end goes to the switch.
8. Solder a wire between the green and black sockets. The output from the ATU comes from the red socket, and this is connected to the two tags in the centre of the switch, as Figure. 2 shows clearly.
9. Finally, connect the blue and yellow sockets to the tuning capacitor, and the ATU construction is complete.

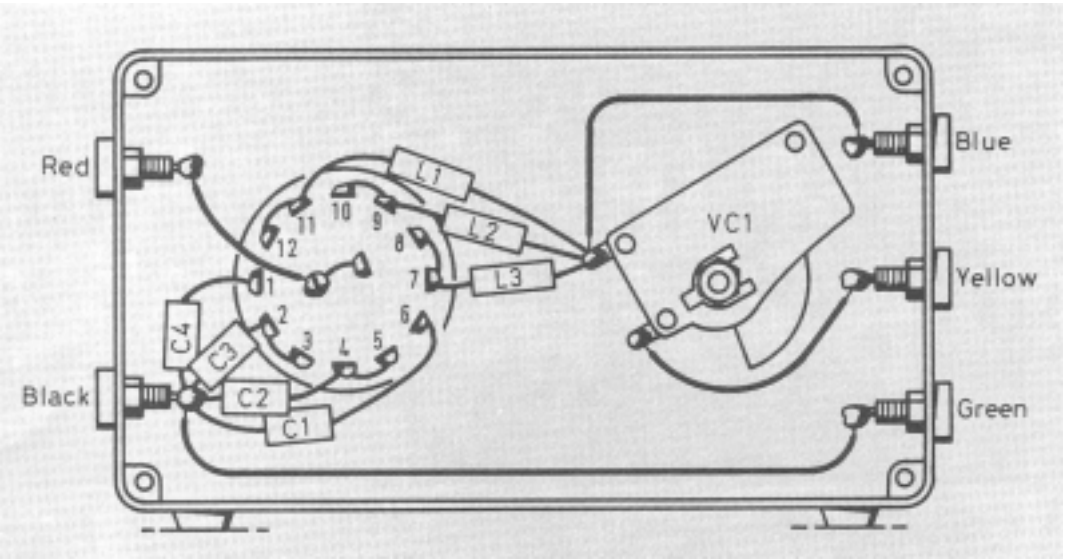

Figure 2 The internal view of the case shows the main tuning capacitor, VC1. This is a solid dielectric type, which has adjustable brass plates

In practice . . .

Figures 3 and **4** show two different ways of connecting your aerial to your ATU. In each case you will need to select each switch position in turn, and rotate the tuning capacitor through its full range while listening to a station. You should find that one switch position enables VC1 to produce a peak in the signal strength in the loudspeaker. At this point, your aerial and receiver are said to be *matched*. Stations in the same band will probably peak with VC1 at the same setting of SW1, but different bands will almost certainly require different positions of SW1.

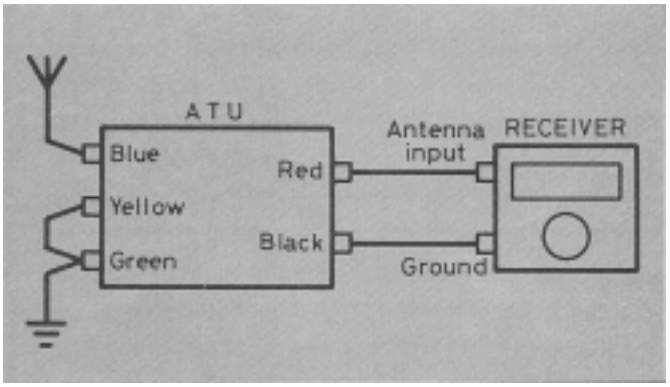

Figure 3 You may find that parallel tuning gives best results with your antenna

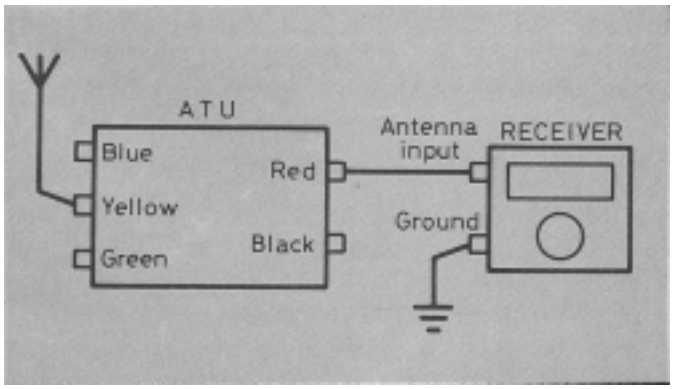

Figure 4 In other cases, series tuning could be the most effective arrangement

Parts list

Capacitors (all rated at 16 V or more)

C1	220 picofarads (pF) polystyrene
C2	470 picofarads (pF) polystyrene
C3	1000 picofarads (pF) or 1 nanofarad (nF) polystyrene
C4	2200 picofarads (pF) or 2.2 nanofarads (nF) polystyrene

Inductors

L1	1.2 microhenries (μH)
L2	8.2 microhenries (μH)
L3	68 microhenries (μH)

Switch

SW1	2-pole 6-way rotary

Sockets

4 mm type, one each of red, black, yellow, blue, green

Additional items

Plastic or metal case, e.g. Maplin type YU54
Two large knobs for SW1 and VC1

16 A simple 2 m receiver preamplifier

Introduction

Designed specifically to complement the modified air-band portable (also described in this series), this can be used with some success on many receivers suffering from 'deafness' on VHF.

The circuit

An RF preamplifier is a device which improves the input signal to an existing receiver, enabling it to work more effectively. Because of the noise which is added to the signal by the preamplifier, *very* weak signals may not be usefully enhanced, but stronger signals will be improved considerably.

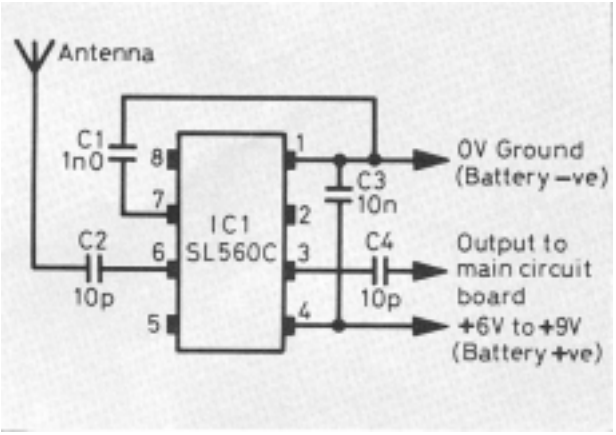

Figure 1 The integrated circuit is mounted upside down. Make sure you identify pin 1 which has a small dot next to it

This little circuit (shown in **Figure 1**) uses a GEC/Plessey integrated circuit type SL560C. With the addition of four capacitors, it is used between your aerial and the aerial input of the radio's PCB.

Putting it together

1. Use a small piece of prototype (matrix) board about 25 mm square. Use an 8-pin DIL socket for the integrated circuit (don't risk soldering the chip – it is seldom a risk worth taking). Figure 1 shows the connections to the socket, *looking from underneath*.
2. Make special note of the pin numbers, so that you know how to put the chip into the socket when you have finished. The positive and negative connections to the circuit are taken from the main PCB *after* the ON/OFF switch – so that the switch operates the preamplifier, too.
3. Unsolder the lead to the radio's telescopic aerial and connect it to the free end of C4, as shown. Then solder a short lead between the telescopic aerial and C2.
4. Sometimes it is possible to cajole your little preamplifier into the radio's plastic case, provided there is room and that you make sure that none of the soldered joints on your little board touch any of the metal inside the case when you replace the back and screw it on again.
5. If there is not enough room inside, then put the preamplifier into its own box, with battery and switch, and its own aerial. Keep the lead from the preamplifier to the aerial connection of the radio as short as possible – perhaps using screened cable.

Because your preamplifier is untuned, you will find not only that it helps with reception on 2 metres, but also that reception on the FM broadcast band is improved!

Parts list

Integrated circuit

IC1	GEC/Plessey SL560C

Capacitors

C1	1 nanofarad (nF) ceramic
C2, C4	10 picofarads (pF) ceramic
C3	10 nanofarads (nF) ceramic

Additional item

Prototype broad approx. 25 × 25 mm

17 Receiving aerials for amateur radio

Introduction

For any radio receiver to work well, it must have some form of antenna, or aerial. In almost all domestic transistor radios, the aerial is built into the set, either as a ferrite rod (which looks like a rod of dark grey metal) on which are wound coils of wire, or as a chromium-plated telescopic metal rod. Some radios have both forms of aerial, using the ferrite rod aerial for long waves (LW) and medium waves (MW) and the metal rod for very high-frequency (VHF) stations using frequency modulation.

There's broadcast reception . . .

No aerial is perfect, and these two types are *far* from perfect! As in most mass-produced equipment, *they serve their purpose*, which is not critical, and they allow the radio to be carried around easily, because they are not

big and bulky. The broadcast stations are very powerful, usually quite close, and the circuits in the radio are quite sensitive, so the need for large aerials disappears.

. . . and there's amateur DX

Here we have an application which, in comparison with the broadcast situation, couldn't be much more different. The stations do not use much power, they may be half the world away, and the requirement for good aerials and very sensitive receivers is paramount. The aerials must be large and they must be as high as possible, away from buildings and trees, which cause reduction in signal strength, and away from man-made sources of interference.

You may not have thought about this but, in general, the larger an aerial becomes, the longer the cable (or 'feeder') must be in order to reach your shack and the receiver inside it. Cables reduce the received signal, so what your aerial gains by being large, the feeder (if you're not careful) will lose!

A simple aerial . . .

We now know that a 'good' aerial is essential. But what is a 'good' aerial? It depends on your purse, your property and your enthusiasm! One of the simplest (and, incidentally, one which is *not* subject to the cable loss problem discussed above) is the **Long Wire**, shown in **Figure 1**. This is, quite literally, a long piece of wire going from a chimney stack to a tree or pole

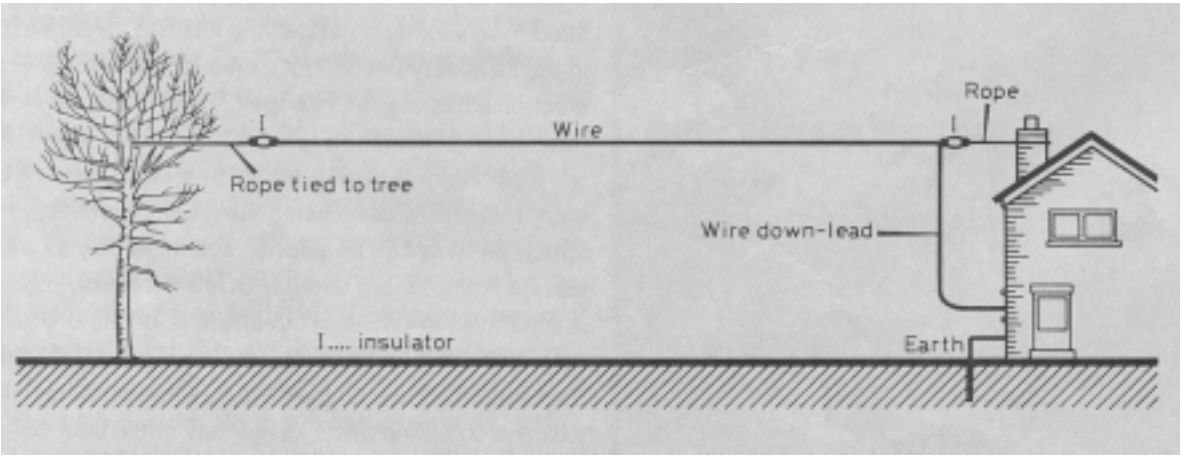

Figure 1 A tree at the bottom of the garden can provide a useful antenna support. Insulators can usually be obtained from Tandy stores or TV aerial suppliers

at the end of the garden. The longer it is, the better. Notice that the wire itself is *not* used to loop around the tree or chimney. Rope is used for both, and is secured to the end of the wire using an insulator of the 'dog bone' or 'egg' variety, to be found in profusion at rallies.

The wire is brought into the house through a window into the shack where the receiver is situated. The long wire aerial is best used with an aerial tuning unit (ATU), which is also described in this book. One of the advantages of the long wire is that it can be used on several frequency bands.

. . . and more complicated ones

Next up the ladder of complexity is the **dipole** (meaning two poles, or two elements). One form of dipole for lower frequencies would take the same basic form as the long wire, except that the feed to the receiver is taken, not from the end, but from the centre. The wire is essentially cut into two halves, and the two ends at the centre are connected to one end of a coaxial cable, which is then taken to the receiver. A smaller form of this is shown in **Figure 2**, which is conveniently mounted in a house loft. Aerials should always be mounted outside for best results, but will work when mounted inside, and the loft space is the logical situation.

The total length of the dipole should ideally be one-half of the wavelength of operation – hence the term 'half-wave dipole'. For example, a dipole for use on 20 m should be about 10 m long. Dipoles are thus 'single-band' aerials. They can be modified for use on several bands, and then become known as 'trapped dipoles', having coils and capacitors at certain points along their lengths.

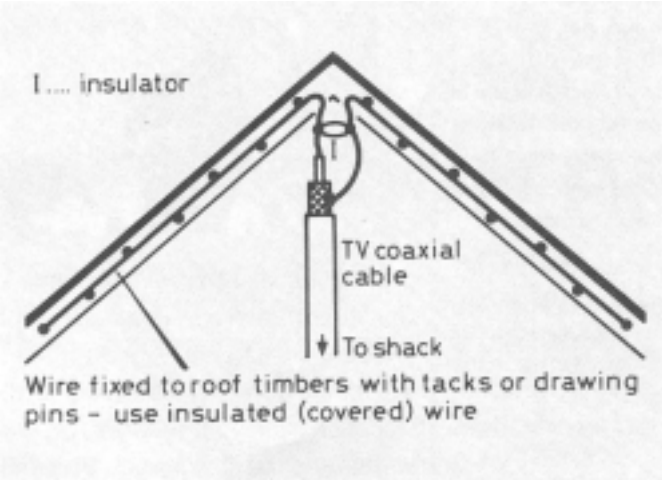

Figure 2 An indoor antenna should be mounted as high as possible

Indoor aerials

For flat- or apartment-dwellers, an indoor aerial is often the only solution, in which case the dipole of Figure 2 may be of great use. Other popular types include the **loop aerial**, of which several types are shown in **Figure 3**. The shape of the loop is of secondary importance, but it should be as large as possible.

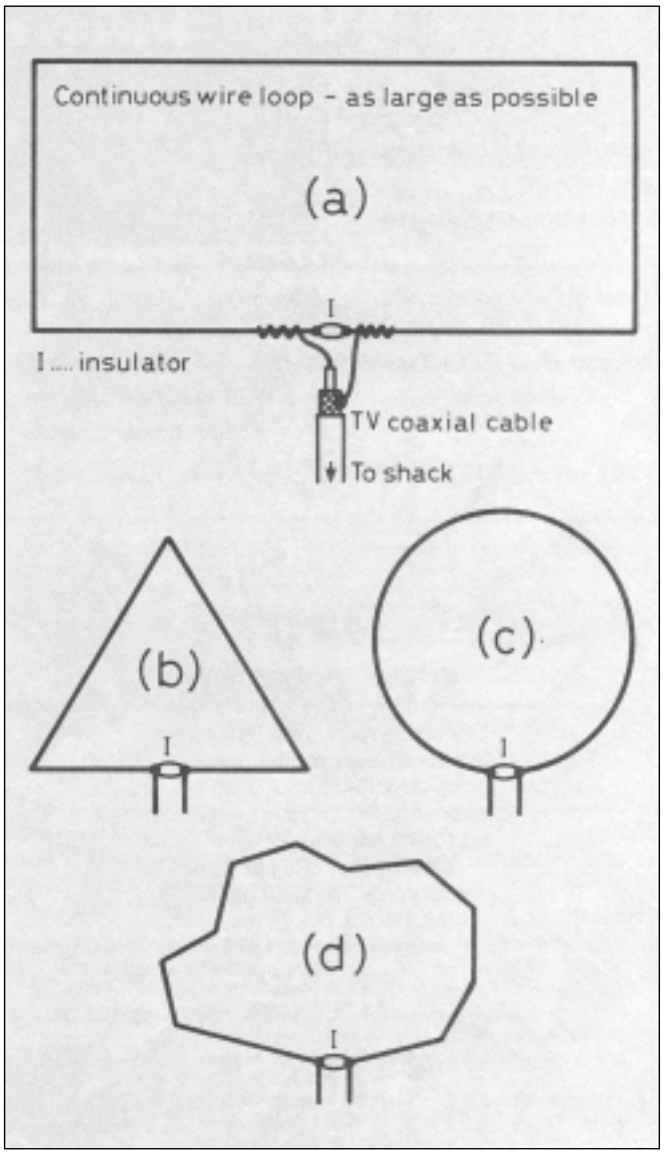

Figure 3 Try different shapes of loop antenna to see which works best

Ingenuity is called for when considering indoor aerials. A dipole can be mounted along a picture rail or pelmet. A vertical loop of aluminium foil can be stuck to an inside wall and covered with wallpaper! The designs are limited only by your imagination, and will give you hours of listening pleasure

Outdoor aerials

If you want to venture beyond the simple long-wire discussed earlier, then the erection of outdoor aerials can be a bit tricky; they can be more than a one-man job, and can involve seeking planning permission. Get some help advice from someone who has done it before – what about your local radio club? Plenty of designs for aerials appear in *RadCom*, so you should never be short of ideas!

18 The Colt 80 m receiver – Part 1

Introduction

This is the first of four parts detailing the design and construction of a simple radio capable of good reception of amateur radio signals on the 80 metre band. If you can solder and have some basic hand tools, at the end of Part 4 you will have a working receiver, in which you can take pride, and start some serious listening on 80 m! For testing, all you will need is another receiver and a multimeter.

Description

The radio will be built in three modules, or stages, as illustrated in **Figure 1**. Each of these is built on a printed-circuit board (PCB) or matrix board and can be tested in its own right. The case will need some holes drilled, and care will be needed to mount the PCBs in the case.

Get to it!

Surprisingly enough, when you are building a radio section by section (which is *always* the best way), it is easiest to start at the output and work

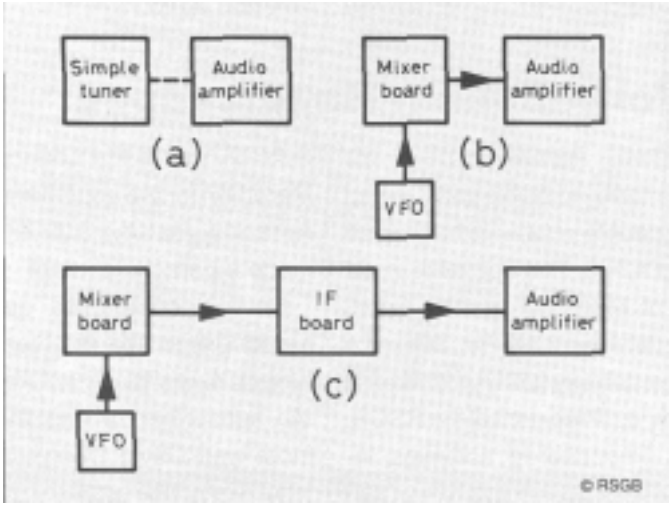

Figure 1 Build your Colt and watch it grow. A simple crystal set (a) becomes a direct conversion receiver (b) and finally an 80 metre amateur band superhet (c)

towards the input, and you can test what you have done stage by stage. You will see what this means as you progress with your construction.

Every receiver needs some audio frequency (AF) amplification to make the sound signals big enough for you to hear. The circuit for the AF amplifier is shown in **Figure 2**. It uses the TDA7052 integrated circuit (IC) plus a handful of extra components. R1 in conjunction with C2 and C3 *decouple* the battery supply, preventing any audio signals getting through to it and affecting other parts of the radio, when they are connected. C1 acts to prevent high frequencies (above the 3 kHz bandwidth) going into the amplifier input. A volume control, VR1, is connected across the amplifier input, so that the amplifier can accept signal inputs over a wide range. **Figure 3c** shows the connections, which are made with screened cable. The

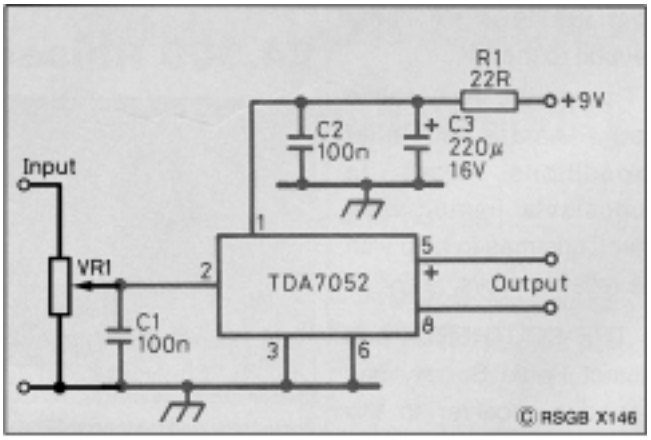

Figure 2 The Philips TDA7052 integrated circuit (IC) used in the audio amplifier needs very few extra components. It has a signal voltage gain of 100 times and the output is suitable for a loudspeaker or headphones

centre conductor of the left lead goes to the point marked 'input' in Figure 2, the braid being connected to the amplifier earth (0 V) tag. The right lead to VR1 goes to whatever signal source you have for testing – see later. VR1 is *not* mounted on the PCB.

The circuit is constructed on a small PCB or matrix board. Make sure that the electrolytic capacitor, C3, is soldered into the board the correct way – its positive and negative connections are shown in **Figure 3b** for reference. If you are **at all** concerned about soldering the IC into the board, enlist some help, *or*, obtain an 8-pin DIL socket, which you can solder in and then carefully insert the chip into the socket, making sure that is the correct way round. The markings on the chip are shown in **Figure 3a**.

The output leads from the amplifier go to a plastic 6.3 mm (¼ inch) mono jack socket, so that *neither* output lead is connected to the metal case. The amplifier will drive a pair of headphones or a small 8 Ω loudspeaker.

The battery leads must be the right way round also; the battery itself can be a PP3 or PP9, or you can use a small DC power supply.

Testing

First, check that all the components are in the right places, that your soldering is good, and that you have headphones or a loudspeaker connected. Set VR1 about halfway along its travel. Connect the battery.

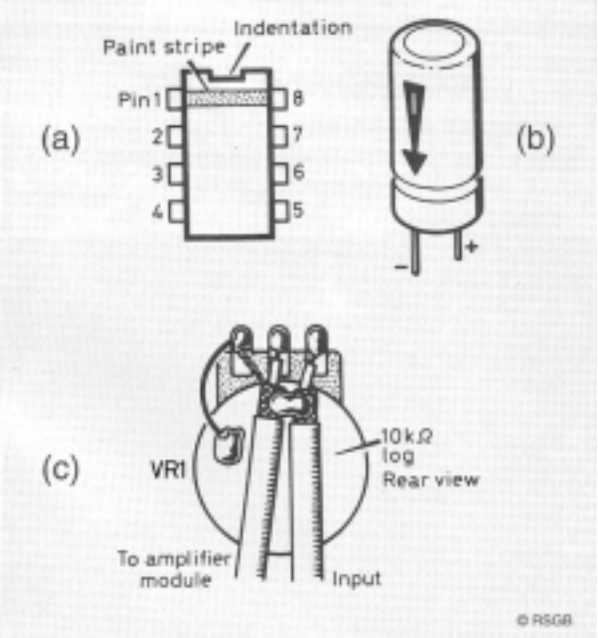

Figure 3 It is important to check the component connections carefully. The diagram shows (a) top view of the IC, (b) electrolytic capacitor and (c) volume control (VR1) connected across the input of the amplifier

A slight hissing noise should be heard; touching the input lead to the amplifier (the centre of the three connections on VR1) should produce a loud buzz. Touching the shaft at the same time will make the buzz quieter. This is the quickest way of confirming that your amplifier *seems* to be working. The only real test is to give it something meaningful to amplify! See the design of our *Crystal Radio Receiver* for full details.

Parts list

Resistors: all 0.25 watt, 5% tolerance

R1	22 ohms (Ω)
VR1	10 kilohms (kΩ) log

Capacitors

C1, C2	0.1 microfarad (μF)
C3	220 microfarads (μF) electrolytic 16 V

Integrated circuit

IC1	TDA7052 audio amplifier

Additional item

PCB	(see below)

Component suppliers:
Maplin

The next part . . .

The metal case will be marked out ready to receive the completed modules.

19 A crystal radio receiver

Introduction

Here's a quick project to fill in a winter's evening! It was originally designed as a piece of test gear for the *Colt* receiver, but can be successfully used by anyone as a first radio project. Another use for it would be as test gear for any audio amplifier project requiring an audio input for test purposes; this is ideal, as it does not require any power supply!

Details

The initial rough-and-ready test for the audio amplifier of the *Colt* receiver will have whetted your appetite; you will want to prove more conclusively that your amplifier works, and in a way that others in the household will appreciate. Buzzing noises are not convincing in this respect! You are going to put together a simple crystal set – the simplest type of radio that there is – and use it as a signal injector for your amplifier. In this way, you build a real medium-wave (MW) receiver which drives a loudspeaker, as an intermediate product of the construction of an 80 metre amateur band receiver!

The circuit diagram is shown in **Figure 1**. It has a 60-turn coil mounted on a small piece of paper or card wrapped round a ferrite rod. The coil has a connection made to its centre-tap (the middle turn of the coil). The tuning capacitor, VC1, is the most expensive part of the circuit but don't worry, it will be used in the final design of the receiver also! Connect the diode, D1, from the centre-tap to the input to the potentiometer of the amplifier circuit of the *Colt*. Be careful to connect the aerial to the *vanes* of VC1, and not to its *frame*, or you will experience some strange effects when you are tuning. If your amplifier is working correctly, you should be able to receive local stations on medium-waves quite well.

If you think the crystal set will be of use to you in the future as a signal injector, all you will need will be another variable capacitor! If you do not intend to use the amplifier, a small crystal earpiece will allow you to listen. Walkman-type headphones will *not* work!

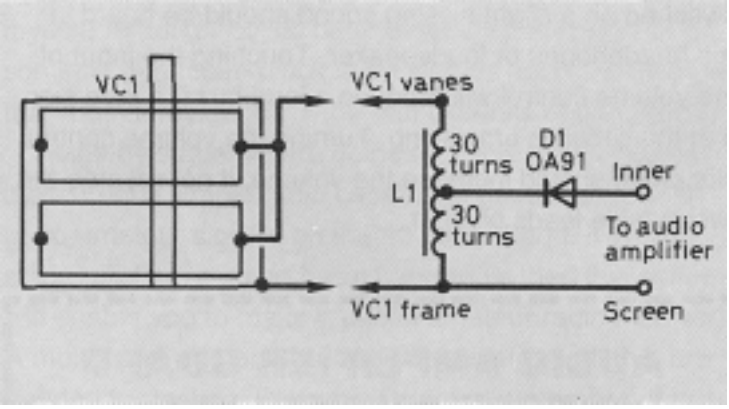

Figure 1 Both sets of moving vanes are joined as shown. L1 is wound on a ferrite rod with 32 SWG wire and centre-tapped. A single winding (no tap) can be used, joining D1 to the top of the winding

Parts list

Variable capacitor

VC1	125 + 125 picofarads (pF) twin-gang

Ferrite rod

About 100 mm to 140 mm long

Diode

D1	OA91 germanium diode

Additional items

Wire	2 m of enamelled copper wire, between 23 SWG and 32 SWG
Earpiece	High-impedance crystal type (only needed if you are not using the amplifier)

20 The varactor (or varicap) diode

Introduction

Many of the circuits for receivers and transmitters presented in this series rely upon the variable capacitor as a means of tuning. Another method of varying capacitance (without any moving parts) is provided by the *varactor diode*, sometimes called a varicap diode. This is a component which changes its capacitance as the voltage across it is varied.

The details

Figure 1 shows how a varactor diode might be connected to demonstrate its operation. Its symbol is that of an ordinary diode, with a capacitor symbol next to it. A variable voltage is applied across it in such a way that the diode is *reverse-biased*. This means that virtually no current passes through it – the positive voltage is applied to the cathode. Varactors are cheaper than variable capacitors, and they are tiny in comparison, very suitable for today's miniature circuits. If A and B were connected across the tuning coil in a simple receiver (with a series capacitor to block the DC from the battery reaching the coil), the tuning operation would be accomplished by turning the knob on the 10 kilohm potentiometer.

Varactors are available with different values, from less than 20 picofarad (pF) for VHF applications to 500 pF for medium-wave radios. They are

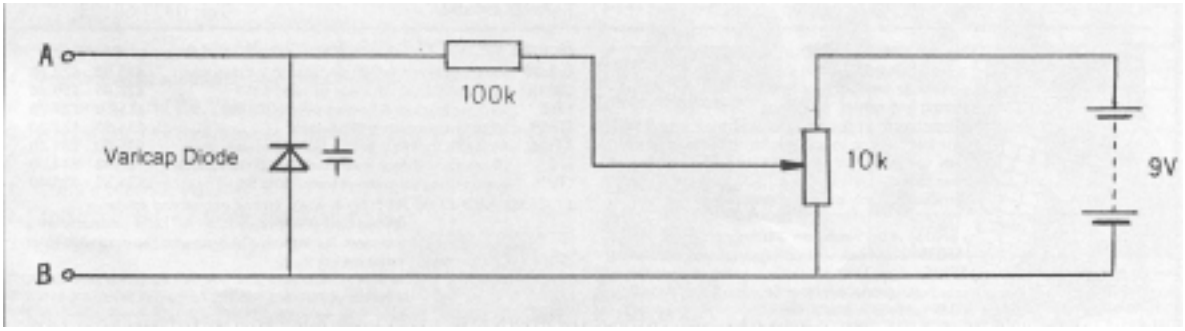

Figure 1 The capacitance of the varicap diode (between A and B) increases as the voltage is reduced, using the variable resistor

tuned usually by voltages between 2 V and 9 V. For a real application of varactors, you should consult the circuit diagram of the *Yearling* 20 metre receiver, elsewhere in this book.

In some circuit designs, several circuits are all tuned to the same frequency in order to improve the overall *selectivity* (the ability of the circuit to reject signals very close in frequency to the wanted signal). Special dual- and triple-varactors are available for circuits like this. Having been made at the same time from the same materials makes their individual characteristics virtually identical. Like all other diodes, they must be correctly wired into the circuit – their *polarity* is important.

Changes in temperature will cause the capacitance to change which, if it were part of an oscillator circuit, would cause the oscillator to drift – you would have to keep retuning the radio! This can be corrected by using a special integrated circuit called a *phase-locked loop* (PLL). Modern TV sets and satellite receivers use varactors and PLLs in this way.

Some useful varactor types

Type No.	*Tuning range*		*Description*
	pF/V	*pF/V*	
BB204B	42/2.0	15/12	Dual VHF
BB212	560/0.5	22/8	AM tuning
KV1235	450/2.0	30/8.5	Triple AM
KV1236	450/2.0	30/8.5	Dual AM
MV1404	120/2.0	9/10.0	HF tuning

21 A portable radio for medium waves

Introduction

The ZN415E integrated circuit (IC) can be used to make a very efficient AM portable MW broadcast radio with a built-in loudspeaker. Here's how!

The circuit

Figure 1 shows the circuit diagram of the portable radio. It's not as complicated as it may appear, especially after you have got started. L1 is a coil of wire mounted on a ferrite rod, acting as an aerial; VC1 is a variable capacitor which works, with L1, to tune in different stations. IC1 contains circuits of its own which boost the selected signal and it includes a *detector* which extracts the audio signal from the incoming RF signal. Earphones could be connected to the output of IC1 (between pins 4 and 5), but the output would not be powerful enough to drive a loudspeaker.

More sound

This is where IC2, an LM386 comes in. This is a small audio *power* amplifier which produces audio signals with enough power to drive a small

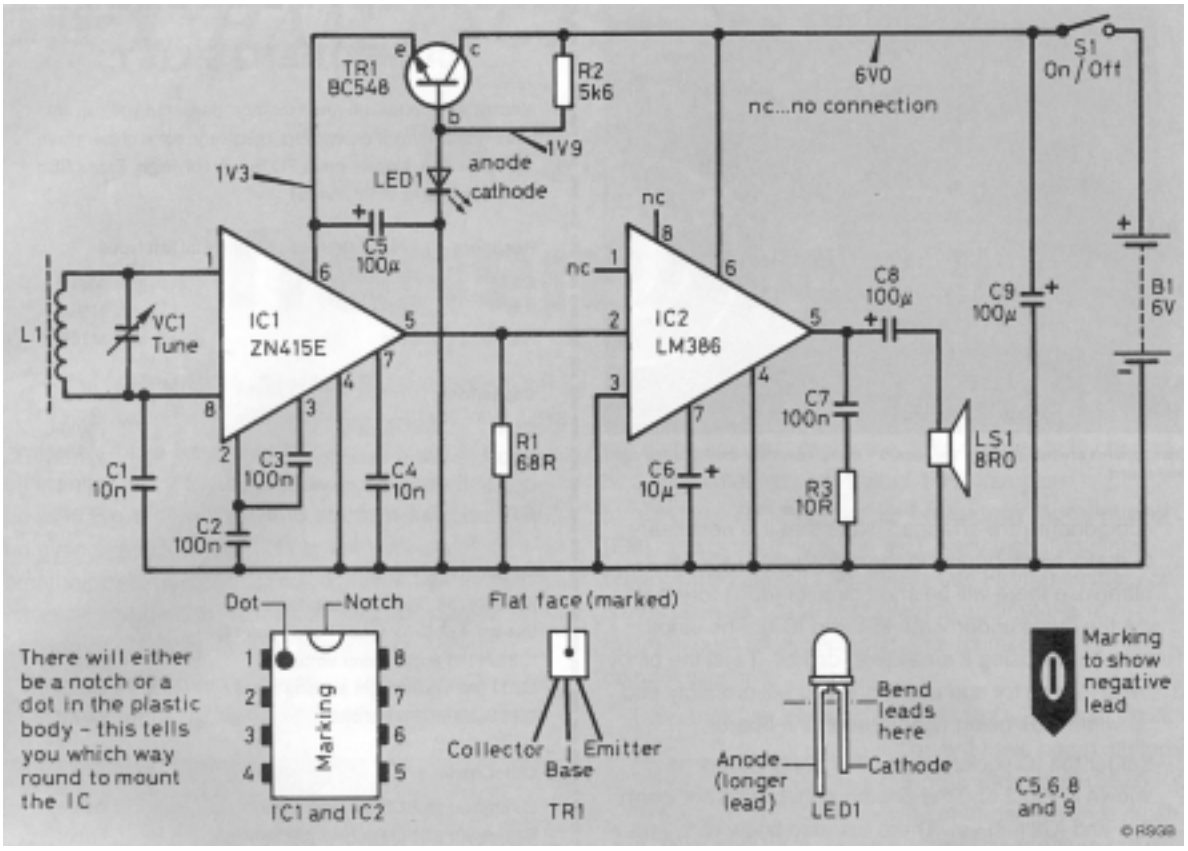

Figure 1 The circuit diagram of our easy-to-build portable radio. Take care to mount the ICs and LED the correct way round

loudspeaker, LS1. The radio uses a 6 volt battery, which is made by connecting four 1.5 volt AA cells in series (4 × 1.5 V = 6 V) using a battery holder designed for this purpose. Although a 6 V supply is ideal for IC2, it is far too great for IC1, which needs only about 1.3 V. This lower voltage is provided from the 6 V supply by TR1 (an npn transistor), R2 and LED1 (a light-emitting diode). When current passes through an LED (see the description of the LED in this series) a reasonably constant voltage of 1.9 V appears between the anode and the cathode. Because of the voltage (0.6 V) that *always* exists between the base and emitter of a working transistor, the voltage on the emitter is about 1.9 V – 0.6 V = 1.3 V, and this is used as the power supply for IC1.

To keep the radio as simple as possible, no volume control has been fitted. Instead, you can use the directional properties of the ferrite rod aerial (see the information on ferrites in this book) to reduce the volume by rotating the set about a vertical axis using the handle provided.

Putting it all together

1. Start by covering the ferrite rod with Sellotape, or alternatively wrap a piece of paper tightly around it, and secure it with Sellotape. Then, with at least 2 metres of 24 SWG enamelled copper wire, wind 75 turns tightly around the rod. To be safe, leave about 50 mm of wire at the ends of the coil, then wrap the whole coil with Sellotape to hold the turns in place, leaving only the ends free. Then, using a small piece of sandpaper, remove the enamel from the last centimetre of each end of the coil.
2. Most of the components are mounted on a piece of Veroboard (the type with parallel copper strips on one side). The piece used on the prototype measured 32 holes by 10 strips, as **Figure 2** shows. Before you start fitting components, cut the copper strips as shown. It is easier to do it now than when the board is littered with components! The strips may be cut with a 3 mm (⅛ inch) twist drill rotated between thumb and forefinger. Resist the temptation to use a hand drill – the idea is just to cut the copper, **not** to drill right through the board!
3. Solder the IC sockets and the other components on the board as shown in Figure 2. Make sure that the IC sockets are fitted with their notches towards the *top* of the board, as viewed in Figure 2. Do not insert the chips yet. Always keep the wires left over from cropping resistors and capacitors, they will come in handy at times like this: make the wire links that are clearly shown in Figure 2. Connect the electrolytic capacitors (C5, C6, C8 and C9), the transistor and the LED the correct way round; then check it again when you have done it!
4. Finally, solder lengths of stranded insulated wire to act as 'flying leads' for future connection to L1, VC1, LS1, S1 and the battery connector.
5. Apart from the battery holder, everything is mounted on the case *lid*. This makes assembly and testing much easier, and eases fault-finding if

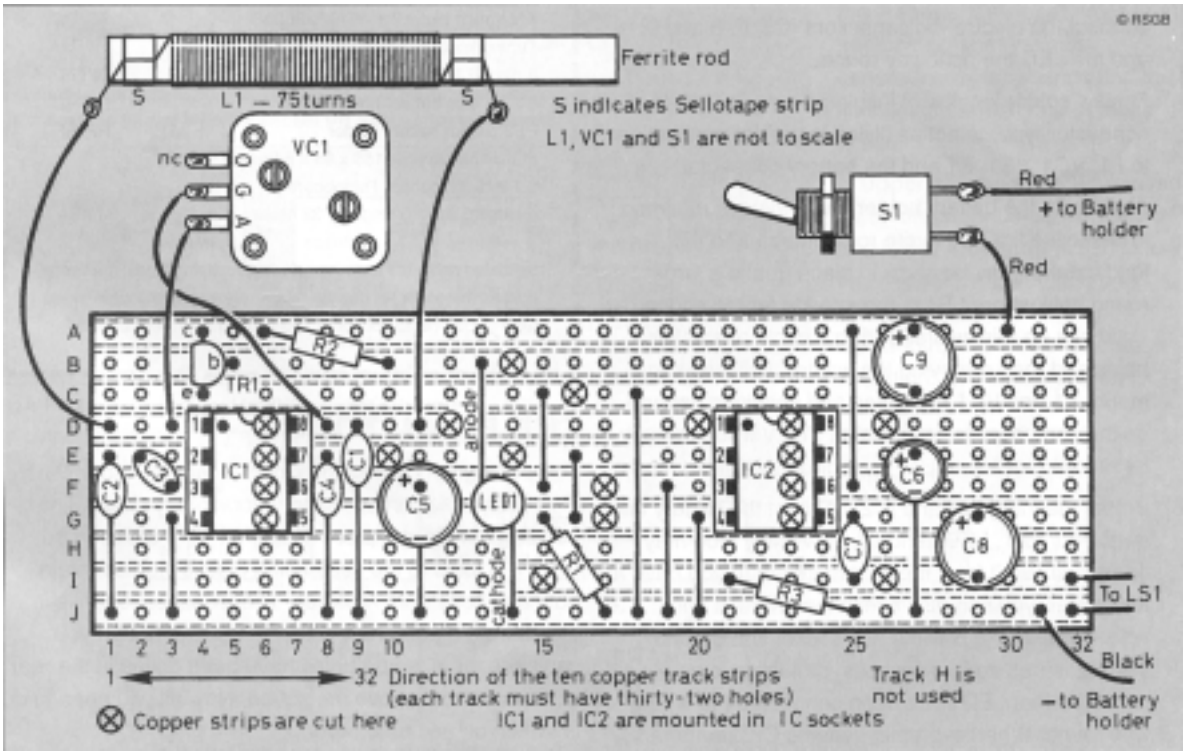

Figure 2 Veroboard layout for the Portable Radio. Make sure that all the wire links are included

the need arises! At the speaker position, make one large hole or a series of small holes to let the sound out. The ferrite rod may be stuck to the lid, as may the loudspeaker. Drill holes of the correct size to fit the particular types of variable capacitor (VC1) and switch (S1) that you are using. The Veroboard may be held in position by Blu-Tack or double-sided sticky tape.

6. Before inserting IC1 and IC2, connect the battery and switch S1 on. The LED should glow dimly (you may have to shield it with your hand in order to see it). If you have a test meter, check that there is about 1.3 V between pins 6 and 4 of IC1. If the reading is around 6 V or there is no glow, you may have connected the LED the wrong way round! When everything seems normal, switch off and disconnect the battery. Insert IC1 and IC2, making sure that the pins are straight and lie immediately above their corresponding holes in the sockets, and that the notches line up with the notches in the holders. Then push *gently* downwards on each IC in turn until the chip is firmly seated in its socket.
7. Switch on! By rotating the tuning capacitor, VC1, you should now be able to tune in many stations, rotating the radio to give you some volume control.

Final touches . . .

The handle was made with part of an old leather belt, secured to the case with 'number plate' nuts and bolts from Halfords. The loudspeaker grille is the lid from a *pot-pourri* container, and some extra holes were drilled in the back to improve the sound. See what you can find to finish off your radio!

Parts list

Maplin order codes are given for most of the parts, but you should get used to using the 'beg, borrow or steal' technique, or to use your ever-expanding junk box.

		Maplin code
Resistors: all 0.25 watt, 5% tolerance		
R1	68 ohms (Ω)	M68R
R2	5.6 kilohms (kΩ)	M5K6
R3	10 ohms (Ω)	M10R
Capacitors		
C1, C4	10 nanofarads (nF) or 0.01 microfarad (μF) ceramic	BX00A
C2, C3, C7	100 nanofarads (nF) or 0.1 microfarad (μF) ceramic	YR75S
C5, C8, C9	100 microfarads (μF) electrolytic, at least 10 V	FF10L
C6	10 microfarads (μF) electrolytic, at least 25 V	FF04E
Semiconductors		
IC1	ZN415E radio chip	
IC2	LM386 audio power amplifier	UJ37S
LED1	3 mm green LED	WL33L
TR1	BC548 npn transistor	QB73Q
Additional items		
LS1	Miniature 8 ohm loudspeaker	WB08J
S1	Miniature SPST toggle switch	FH97F
Ferrite rod	Length approx. 100 mm	YG20W
	24 SWG enamelled copper wire	BL28F

Additional items (*continued*)		
VC1	Tuning capacitor 140 to 300 picofarads (pF)	FT78K
	Tuning knob	FK41U
	8-pin DIL IC sockets (two required)	BL17T
	4 × AA-size battery holder (long)	HF94C
	PP3-type clip for battery holder	HF28F
	Plastic box approx. 158 × 95 × 54 mm	LH51F
	0.1 inch Veroboard, min. size 32 holes × 10 strips	JP46A

Plus
- Stranded insulated conductor for flying leads
- Multicore solder
- Materials for handle and speaker grille
- Double-sided sticky tape or Blu-Tack
- Sellotape
- Glue
- Four AA-size 1.5 V batteries

22 The Colt 80 m receiver – Part 2

Introduction

In Part 1 we constructed the audio amplifier module for the system and tested it in a very simple way. If you did what was suggested and built the simple Crystal Set to use as a signal source, you will know just how well the amplifier works.

The case

Metal cases for the project are available from Maplin, telephone 01702 554 161 (code XB67). From the photograph on p. 72 you can see the way the components are mounted. The audio amplifier is seen at the top right of the base, to the right of the tuning capacitor VC1. The next in this series will deal with the variable-frequency oscillator (VFO) and VC1. The current part deals with preparing the case to receive the components.

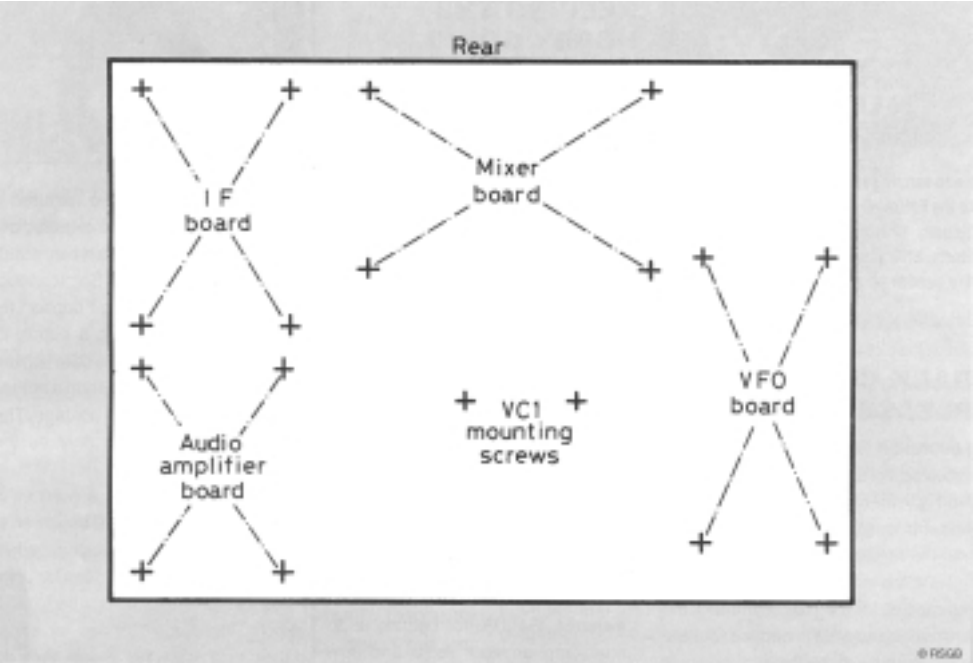

Figure 1 Fixing holes for each module are best measured from each printed circuit board or matrix board

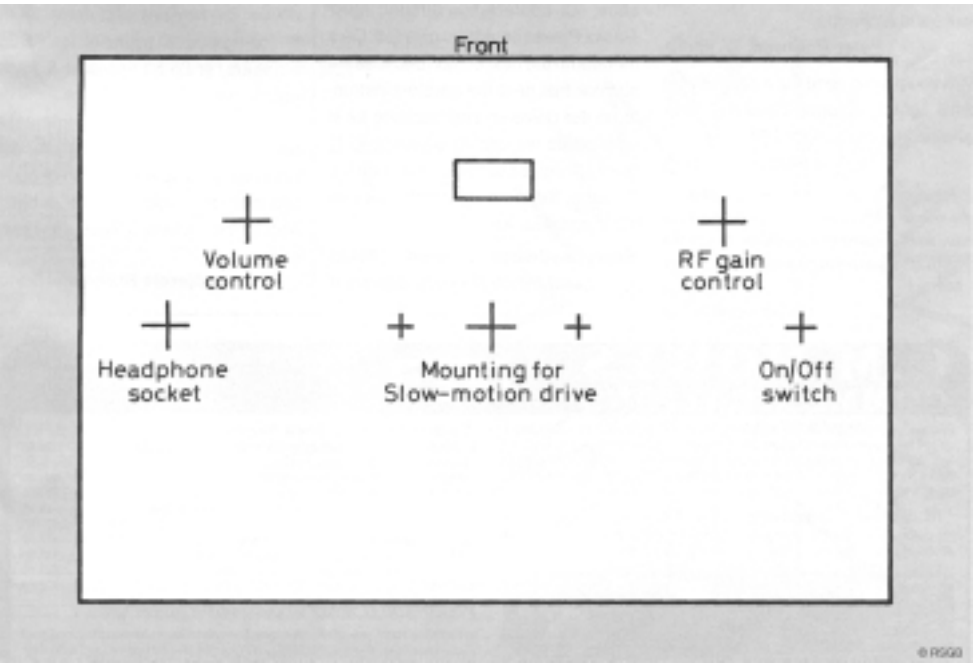

Figure 2 Position the slow motion drive to allow viewing of the tuning dial

Figures 1 and **2** show the markings for preparing the front panel and base. All the circuit boards and the tuning capacitor are mounted on the base using 10 mm stand-off pillars with 6BA bolts. The board locations are shown in Figure 1. The front panel control positions are shown in Figure 2, together with the small rectangular hole for viewing the tuning dial.

The best way to mark out the holes for the boards is to lie the boards flat on the base (before you've started soldering the components in) and marking the base through the holes in the boards. This minimises the scope for errors!

A *reduction drive* is used between the tuning knob and the capacitor shaft. This is simply a gear mechanism that slows down the capacitor shaft by a factor of six compared with the tuning knob, and makes tuning very much easier. The recommended variable capacitor also has a pulley wheel mounted on the shaft. Glued to this wheel will be a scale marked with frequency and is visible through the rectangular hole in the front panel.

The next part . . .

The variable-frequency oscillator and mixer will be added to the project.

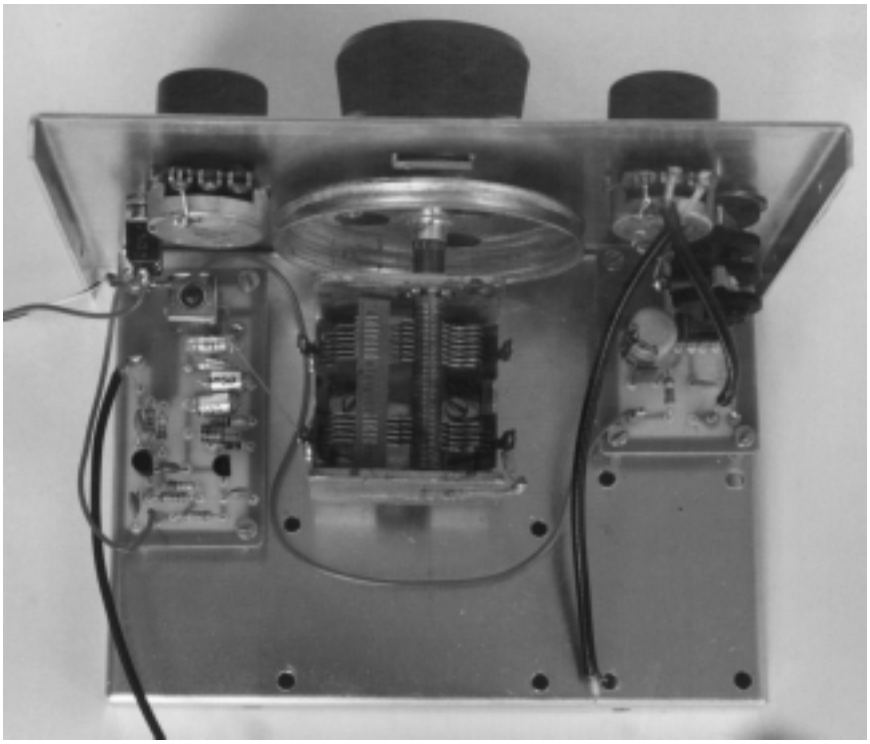

23 A simple transistor tester

Introduction

Although transistors aren't used as much as they were before integrated circuits came along, a transistor tester is still a useful piece of test equipment to have around the shack. This design is about the simplest possible and will produce an indication of whether a transistor is giving any current gain; this does not necessarily mean that the transistor is perfect but that it is working to a certain extent. This tester will **not** test field-effect transistors (FETs). If you buy a bag of transistors at a rally, this tester is useful for giving a yes/no indication of which ones go straight in the bin and which are kept for further use.

How it works

Figure 1 shows the simple wiring circuit. In order to explain the working of the circuit, a circuit diagram is shown in **Figure 2**, with the npn transistor, TR1, under test shown as part of the circuit. The pnp/npn selector switch, SW1, is omitted for clarity.

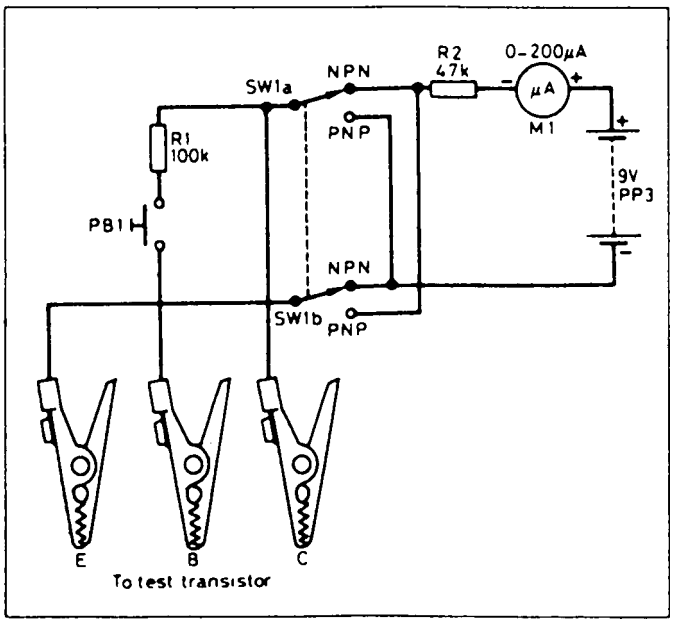

Figure 1 Circuit diagram of the transister tester

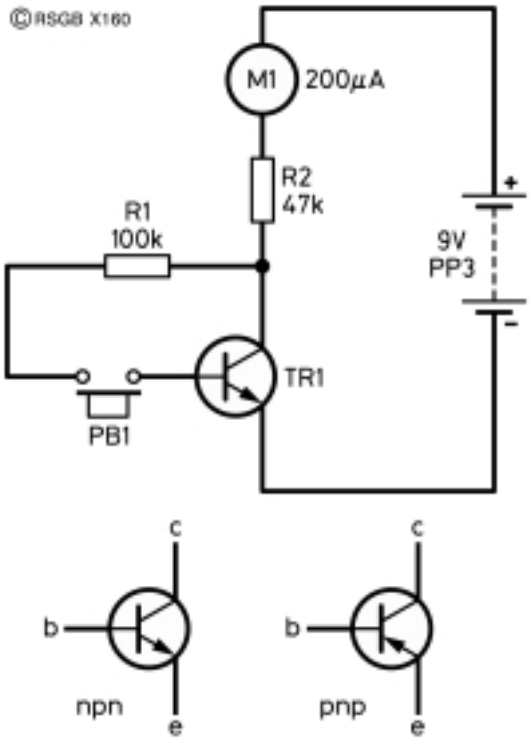

Figure 2 Testing an npn transistor

Any current that flows through the transistor, TR1, must flow from the battery, through the meter, M1, and through the protective resistor, R2. R2 prevents excessive current flowing through the meter and damaging it. Even if there is a short-circuit between emitter and collector, the maximum current that will flow is given by the simple equation

$$I = \frac{V}{R},$$

where I is the current flowing in amps,
V is the battery voltage, and
R is the total circuit resistance in ohms.

Putting in the correct values, gives

$$I = \frac{9}{47\,000} = 0.000191 \text{ A, or 191 microamps } (\mu\text{A}).$$

The resistance of the meter, M1, will cut this down a little more, but it is within the indicating range (200 μA) of the meter.

As shown, with the push-button switch, PB1, *open*, a good transistor will not draw any current from the battery, and M1 will thus remain at zero. When PB1 is *pressed*, a *very small* current is injected into the base of the transistor. If the transistor is working, it will produce a much larger current between the collector and emitter, and this current will also flow through M1 and R2, giving a significant reading on M1, showing that all appears to be well. If an appreciable current flows when PB1 is *open*, then your transistor is suspect.

Don't be put off by the apparently complicated switch, SW1. It is there to allow the other type of transistor, the pnp type, to be tested. All it does is reverse the battery connections, so that the emitter goes to the *negative* battery terminal for testing an npn transistor, and to the positive terminal for a pnp type!

Most transistors in common use are of the npn type, which is why Figure 2 shows the testing of an npn type. The connections to the different transistor *encapsulations* (shapes) are given in any good component catalogue. Avoid the trial-and-error method to discover the connections to a transistor. This is unscientific, and can be very frustrating, particularly if the transistor is faulty in the first place!

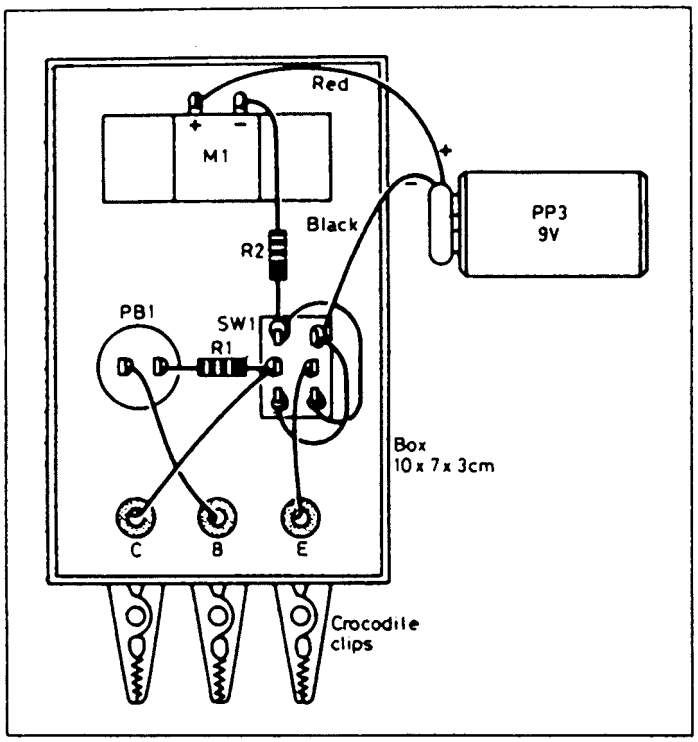

Figure 3 This shows how to wire up the tester

Construction

The unit can be built into a small plastic box, the components being soldered directly to the fixed terminals of the meter and the two switches; no circuit board is necessary! Use different colours of wire for the three test leads, and make sure you know which is which! Check the connections against the wiring diagram of **Figure 3**. When you are confident that all is correct, connect the battery and make sure there is no reading on the meter when nothing is connected to the crocodile clips!

Find any transistor for which you know the connections and the type (npn or pnp). Set the npn/pnp switch accordingly. Connect the three clips, making sure that they do not touch each other. A small reading on the meter at this stage means the transistor is suspect; a large reading means it is not working and should be thrown away! Press PB1 and watch the meter; a reading greater than half of full-scale indicates a good transistor. If it is less than half, you may have a transistor with 'low gain'; it may be usable for non-critical applications, but if you are in any doubt – throw it away!

Parts list

Resistors: all 0.25 watt, 5% tolerance

R1	100 kilohms (kΩ)
R2	47 kilohms (kΩ)

Additional items

PB1	Push-button switch
SW1	DPDT (double-pole double-throw) switch
M1	Micro-ammeter – *not* less than 200 μA full-scale deflection
	Crocodile clips (3 needed)
	PP3 battery and connector
	Plastic box about 10 × 7 × 3 cm

Common types of transistor

BC108, BC109, 2N2369A

These are small-signal npn types, used in audio amplifiers. They are in metal cases (called TO18) and have a tab next to the emitter lead. Common types have a B or C suffix (e.g. BC109C). The C suffix indicates a higher current gain than those with a B suffix. The 2N2369A is specially designed for radio use at high frequencies.

2N3703, BC212L, BCY71
These are pnp transistors, and so must be used with the collector and base *negative* with respect to the emitter. These three types are used in small amplifiers and audio oscillators. The first two have plastic encapsulations (TO92), while the BCY71 has a metal case (TO18).

BFY50, BFY51, BFY52
For slightly higher powers, these are ideal. They have been used in novice transmitters up to 600 milliwatts (mW). The TO5 case is a scaled-up version of the TO18 case. They are all npn types.

2N3055, 2N3773, TIP35C
These are high-power transistors in bigger encapsulations. The thick metal TO3 case of the 2N3055 and 2N3773 is designed to bolt to a heat sink, a large piece of metal which conducts the heat into the air more rapidly than the transistor itself can. The TIP35C is made of plastic but has a thick metal tab by which it, too, can be bolted to a heat sink.

24 An introduction to transmitters

Introduction

We usually think of a transmitter as being a 'black box'. However, that is the form a transmitter takes for our use on the amateur bands. Many electrical circuits are transmitters, even though transmitting may not be their primary function!

Anything that emits electromagnetic energy at *any* frequency is a transmitter, from radio at the low-frequency end of the spectrum, to gamma rays at the high-frequency end. We all know that a magnet will attract certain metals and that a comb rubbed on your coat sleeve will pick up small pieces of paper. The former is an example of the effect of a magnetic field, the latter of an electric field. Electromagnetic fields are combinations of both types of field, and are produced whenever an electromagnetic wave is transmitted.

What frequency?

Many everyday objects have a natural frequency of oscillation. This is called their *resonant frequency*. A wine glass will ring when struck gently; an

empty wine bottle will sound if you blow across the top; a guitar string will vibrate when plucked. These are all examples of resonance, and the resonant frequencies will **not** change unless the objects themselves are changed physically in some way. These are resonances in *sound*; we are primarily interested in electrical resonances.

The basic electrical resonant circuit is the combination of an inductor (coil) and a capacitor, as shown in **Figure 1**.

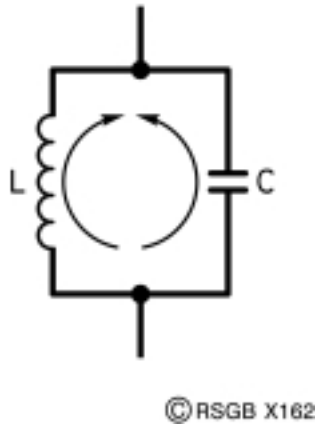

Figure 1 The basic electrical resonator. The energy in the circuit alternates between the inductor and the capacitor

A pulse of energy applied to this *tuned circuit* will make it *ring* (oscillate) at its resonant frequency. The energy in the circuit transfers between the inductor and the capacitor every cycle of the oscillation. Just like the wine glass, its oscillation dies away because it is losing some energy to its surroundings – it is transmitting! The frequency of the resonance depends on the values of L and C.

Keeping it going

If we want to keep the circuit oscillating, rather than having it die away, we must supply the circuit with just enough energy to replace the energy lost both by radiation and by losses in the circuit itself. Because of this, you will find in all oscillator circuits, a transistor, valve or FET working with the tuned circuit to provide this extra energy.

As it stands, of course, even with its transistor, our oscillator will not radiate very far. Connecting an aerial to it, and a Morse key to interrupt the power supply, it would become a very low-power CW transmitter. Add a couple more transistors to form a radio-frequency (RF) amplifier, and you have the basis of a simple low-power (QRP) transmitter.

Resonant circuits can also be made using quartz crystals; these work at the crystal frequency only, and this is marked on the crystal case.

A tiny spark transmitter

This is a simple piece of test gear that will increase your knowledge and understanding of resonance. You can use it to estimate the resonant frequency of most of the inductor/capacitor (LC) tuned circuits that you build. The circuit is shown in **Figure 2**. It operates around a relay. Any relay that operates from a 6 V to 9 V source and has contacts which are normally closed (i.e. closed when the battery is not connected). Fit the relay, a toggle switch and the battery in a metal box, and connected up as shown in the diagram. Some foam rubber inside the box may help to reduce the escaping noise of the relay. A small hole in the side of the box enables the 2-turn loop to emerge. This should be about 40 mm diameter, made with insulated wire. Switch on; there should be a loud buzzing noise from the relay. If not, you have probably chosen the wrong contacts on the relay!

When it is working, bring the loop close to the aerial of a radio – it should produce a loud noise from the speaker!

How it works

When you switch on, current flows through the relay contacts and through the relay coil. The relay operates and opens the contacts, causing the relay to 'drop out'. When it does, the circuit is completed again and the contacts are opened, and the cycle repeats. Each time the relay contacts open, there is a small spark between them, causing very rapid current surges through the wire loop. This makes the loop transmit RF energy, very briefly. In the early days of radio, this type of circuit was known as a *spark transmitter*.

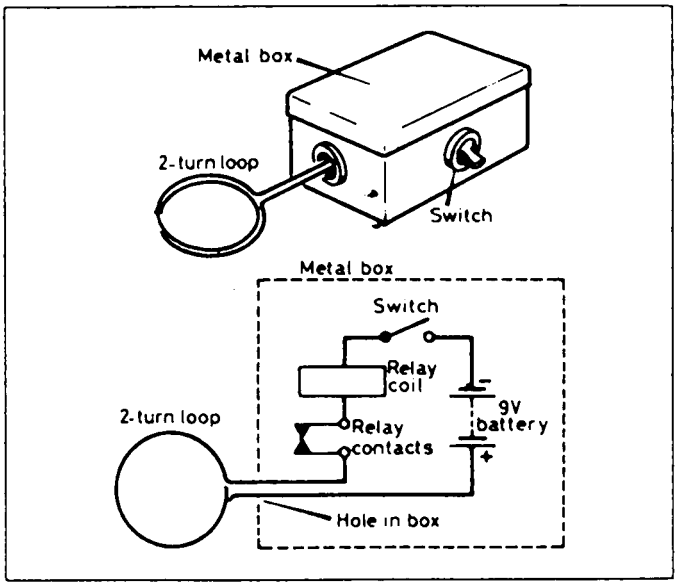

Figure 2 The current path is interrupted when relay is energised as shown above

Make a tuned circuit

Use a discarded toilet-roll centre, and wind about 10 turns of enamelled copper wire round it, keeping each turn close to the next. Scrape off the enamel for about 1 cm at each end, and solder a 100 picofarad (pF) capacitor (or a variable capacitor of about the same value) between the ends. The resonant frequency should be about 10 MHz. If you have used fewer turns or a smaller capacitor, the frequency will be higher.

Measuring the resonant frequency

Set up the buzzer as shown in **Figure 3**, with the loop around one end of your coil. Then make a similar loop, solder it to the end of a piece of coaxial cable going to the aerial socket of a calibrated receiver. Set the buzzer going, tune the receiver around 10 MHz, and search for the maximum noise level from the speaker. When you have found it, move the two loops as far away as possible from the main coil. This is called reducing the *coupling* between the coils, and it may result in a slightly different, but more accurate, resonant frequency.

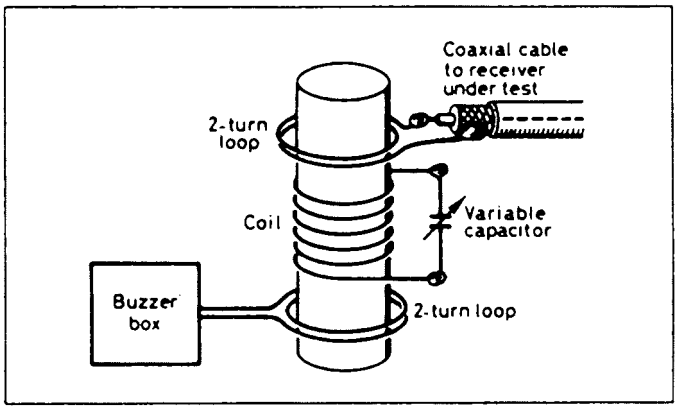

Figure 3 Experiment with the spacing between the loop and the tuned circuit

Parts list

Any small relay which operates between 6 V and 9 V
Metal box – do not use a plastic box!
9 volt battery and connector
On/off (SPST) toggle switch
Plastic foam, as required

25 The Colt 80 m receiver – Part 3

Introduction

In Part 2 we marked out the case ready for installation of the modules when they are completed. In this part, the building of the variable-frequency oscillator (VFO) and mixer will be described. This will produce a type of receiver known as *direct-conversion*, because it converts the radio-frequency (RF) signal directly into an audio-frequency (AF) signal which we can hear in a loudspeaker after amplification. A block diagram of the system is shown in **Figure 1**. The modifications needed to make a full superheterodyne receiver will be left until later.

The direct-conversion receiver covers the 80 metre amateur band and will receive both Morse (CW) and speech (SSB) signals. The audio amplifier was covered in Part 1, so your *Colt* is rapidly taking shape! By the time your construction has reached the end of this part, you will have a receiver ready to use, even if the project is not yet complete!

The direct conversion process

Like most things in radio, the principles of direct conversion are not difficult. From the aerial, the signal we want to hear is selected by the *tuned filter*, which rejects the signals we don't want. The signal then enters the

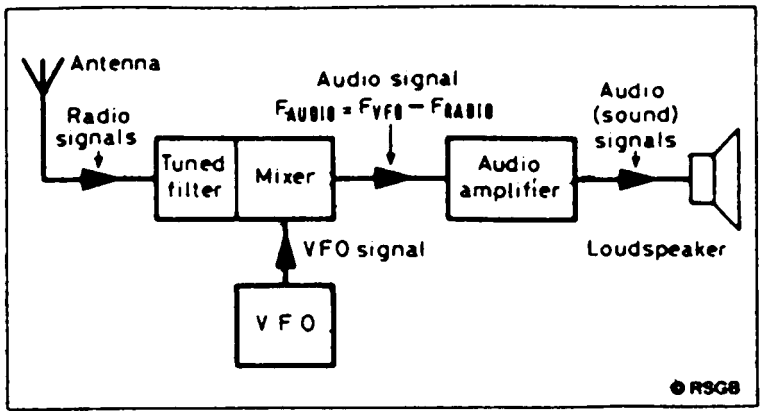

Figure 1 Stages of direct-conversion receiver

mixer, along with the signal from the *VFO*. The VFO produces a sine wave whose frequency can be varied across the whole of the 80 metre amateur band (3.5–3.8 MHz), by turning the knob on the tuning capacitor, VC1. The mixer produces, at its output, *two* signals; one signal is at the frequency of the **sum** of the signal and VFO frequencies, the other is at the **difference** of the two frequencies. It is the latter that we want. Let's look at the numbers involved. If the signal is at 3650 kHz and the VFO is at 3651 kHz, then the sum frequency is 7301 kHz, and the difference frequency is 1 kHz. If we feed the output of the mixer into our audio amplifier, the 7301 kHz signal is automatically removed (it is far too high to be considered an audio signal!) and the resulting 1 kHz signal is amplified and fed to the speaker, producing a note which we can hear!

Building the VFO

Figure 2 shows the circuit of the VFO. It is a tried and tested circuit, and should work first time. It uses a *field-effect transistor* (FET) for TR1, the oscillator itself. RFC is a *radio-frequency choke*, a coil of wire which will pass a direct current (DC) but which will prevent radio-frequency (RF) signals getting through.

All VFOs have a tuned circuit which, in this case, is formed by the coil L1 and the capacitors C1 and VC1. The frequency will also be affected to some extent by C2, C3, C4 and C5. Transistor TR2 is an *emitter follower*, a stage which gives no voltage gain but provides a good *buffer* stage, isolating the VFO from the effects of the stages that follow it. When building a VFO, the

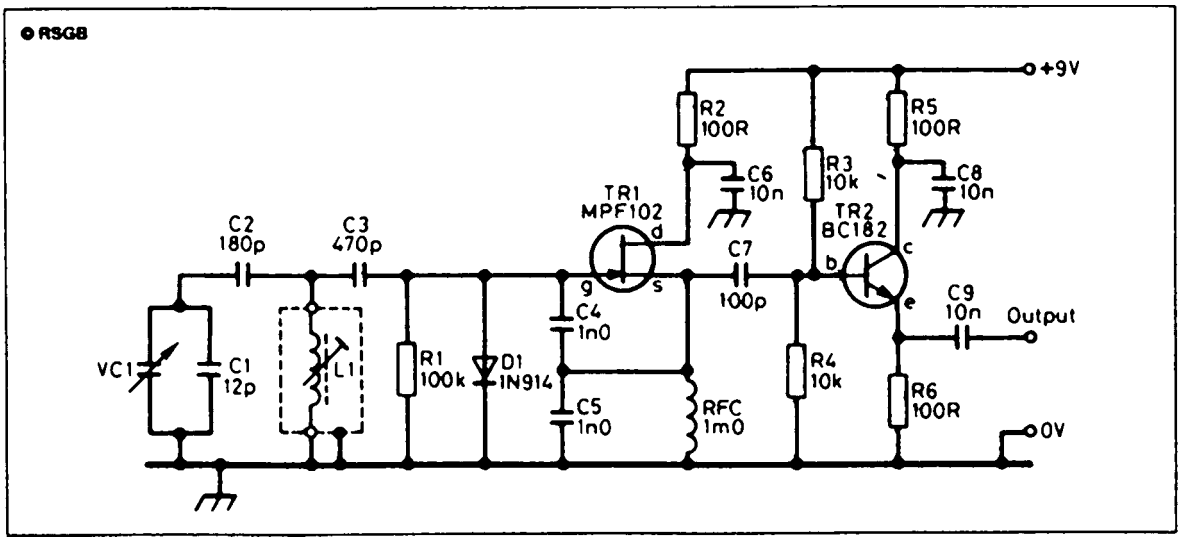

Figure 2 The variable-frequency oscillator uses a field-effect transistor (FET)

parts must be securely mounted. If components move, so does the frequency! At worst, the oscillation will become unstable and the VFO will be useless. Keep the component leads as short as possible – this improves their mechanical stability as well as their electrical stability!

Mount the parts on the printed-circuit board (PCB) or matrix board and, when completed, the VFO should look like the one shown on the left in the photograph on p. 72. Make sure that TR1, TR2 and D1 are the right way round.

On completion, check the component positions then mount it in the case as shown in the photograph, to the left of the tuning capacitor when viewed from the rear. The VFO coil, L1, will need some adjustment, but that will have to wait until the mixer is built. Connections to the other boards are made with screened cable.

The mixer board

So far, we have an audio-frequency (AF) amplifier and a VFO; the addition of a mixer board gives us a complete direct-conversion receiver for 80 m. The mixer circuit diagram is shown in **Figure 3**. Let's follow the signal path.

- From the aerial, the RF signal goes to the gain control potentiometer, RV1. This reduces very strong signals, to prevent them overloading the mixer.
- To select the required band of signals, a *bandpass* filter is made up of RF transformers T1 and T2; these are tuned by C1 and C3, and are coupled together by C2.

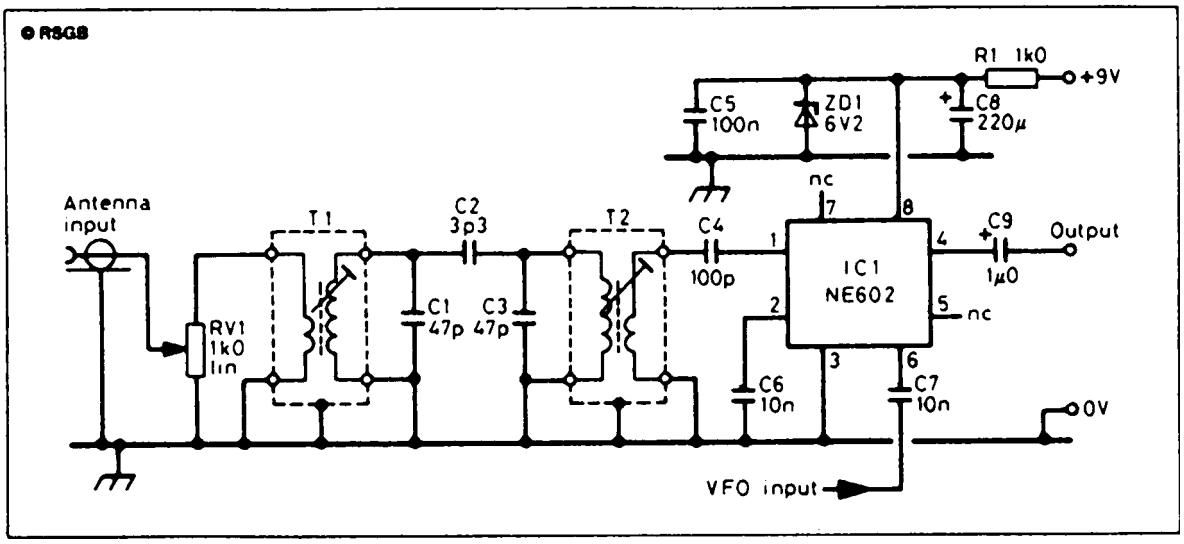

Figure 3 The mixer board has a bandpass filter and stabilised supply

- After the filter, the signal is coupled into the integrated circuit (IC) mixer type NE602, by the capacitor C4. Capacitors C5 and C8 *decouple* the supply line, to prevent unwanted signals on the supply from disturbing the VFO operation. The use of the term *decouple* is exactly the opposite of *couple*; when two circuits are *coupled* together, the signal passes from one to the other; when two circuits are *decoupled*, signals **cannot** pass from one to the other.
- The NE602 works with a 6 V supply; it is produced here from the 9 V supply by the *Zener diode* ZD1 and the resistor R1. ZD1 operates at 6.2 V, and gives a steady output for the mixer. The audio output from the mixer appears at pin 4 or IC1. This is taken to the audio amplifier board via C9 and the volume control (see Part 1).

Care must still be taken to insert some components the right way round. These are the electrolytic capacitors, C8 and C9, the Zener diode, ZD1, and the integrated circuit, IC1. Check all component positions and make sure all your soldered joints are bright and shiny.

Putting it together

The interboard wiring, shown in **Figure 4**, uses screened cable; ideally, this should be thin coaxial cable, but screened microphone cable is suitable. The diagram shows how the two controls, the RF Gain and Volume, are connected to the boards. The leads marked '+9 V' are all connected to the battery supply via a miniature on/off toggle switch. Double check all connections before connecting the battery.

Setting the VFO

Very little adjustment is needed to get the receiver going. Firstly, the VFO must be adjusted to cover the required band, in this case 3.5–3.8 MHz.

If you have a frequency counter, connect it to the output of the VFO. If you haven't, read this part anyway so you understand the process, then another means of setting the VFO will be given especially for you! Rotate VC1 until the vanes are fully meshed. Very carefully, adjust the core of the VFO coil (L1) with a plastic trimming tool so that the frequency approaches and settles at 3.500 MHz. When you rotate VC1, the frequency should increase to **at least** 3.800 MHz at the far end of its travel.

In the absence of a frequency counter, borrow a communications receiver, set it for SSB reception (USB or LSB) on exactly 3.500 MHz. Set VC1 with the vanes fully meshed and turn the core of L1 in both directions until you hear a whistle in the communications receiver. Rotate the core so that the whistle reduces in frequency. It will eventually fade out at around 200 Hz;

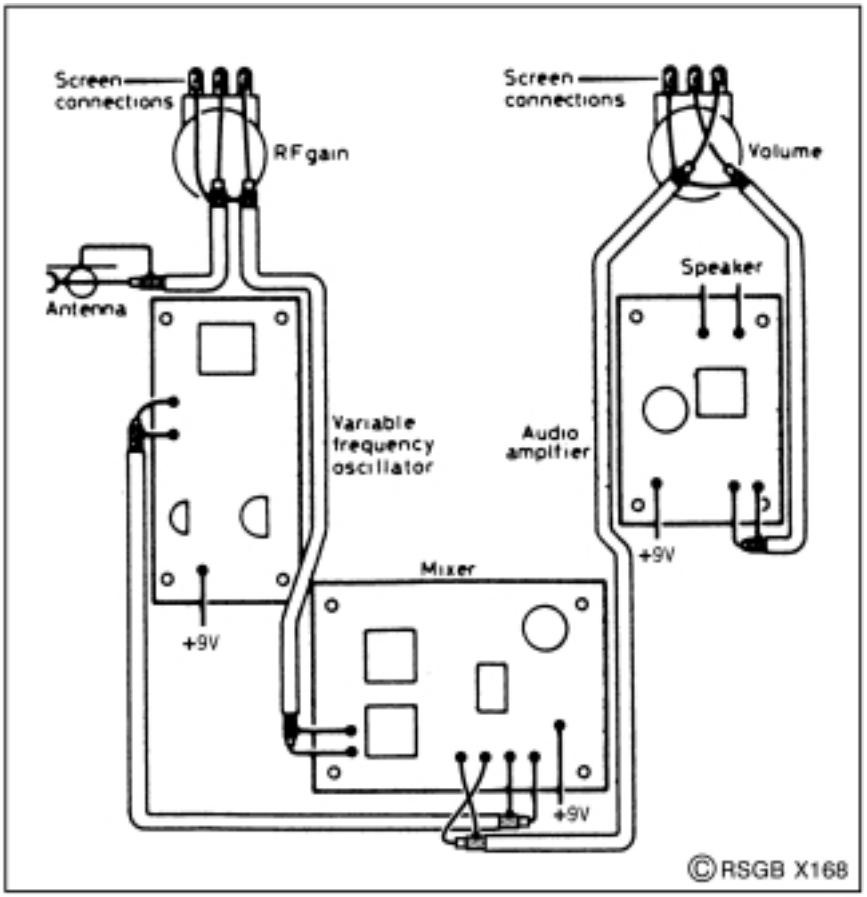

Figure 4 Make sure that interconnections between the boards are correct, including cable screens

turn the core a little further and then leave it at that position. Rotate VC1 right to the other end of its travel, and search for the whistle with the tuning knob of the communications receiver. Check that the VFO frequency is at least 3.800 MHz.

Then, whichever method you are using for frequency measurement, mark the dial with frequency steps of 50 kHz. Setting and calibration are finished!

Setting the mixer

Again, there are various ways of doing this. If you have a signal generator, inject a signal at a frequency within the 80 m band, and adjust the cores of T1 and T2 sequentially for maximum output.

If you haven't a signal generator, connect an aerial to the mixer input, set the RF Gain to maximum (fully clockwise), and find a consistent signal. Adjust the volume control to a comfortable level. Rotating the core of T2 with your trimming tool, maximise the output. Then do the same with T1, although this will have much less effect. Find another station, and check that the positions of the cores aren't too different for a maximum signal.

You may find that your receiver benefits from the insertion of an aerial tuning unit (ATU) between the aerial and the input, to compensate for the impedance of your aerial not being 50 Ω. A design for such an ATU is presented in another part of this series. If the signals are still weak, connect the ATU to the junction of C1 and C2 via a 100 pF capacitor.

Try listening!

Remember that 80 m is a variable band. During daylight hours, your will hear Morse signals at the lower end of the band, and some British and closer continental stations between 3.7 and 3.8 MHz. In the evenings, stations up to 1000 miles away should be heard. Look for Novices around 3.7 MHz!

Parts list – VFO board

Resistors: all 0.25 watt, 5% tolerance		
R1	100 kilohms (kΩ)	
R2, R5, R6	100 ohms (Ω)	
R3, R4	10 kilohms (kΩ)	
RV1	1 kilohm (kΩ) linear	
Capacitors		
C1	12 picofarads (pF) polystyrene	
C2	100 picofarads (pF) polystyrene	
C3	470 picofarads (pF) polystyrene	
C4, C5	1 nanofarad (nF) polystyrene	
C6, C8, C9	10 nanofarads (nF) polystyrene	
C7	100 picofarads (pF) min. ceramic	
VC1	140 + 140 picofarads (pF) variable	
Semiconductors		
TR1	MPF102	FET
TR2	BC182	npn
D1	1N914	silicon
Inductors		
L1	Toko KANK3334	
RFC	1 mH	RF choke

Parts list – mixer board

Resistors: 0.25 watt, 5% tolerance

R1	1 kilohm (kΩ)
VR1	1 kilohm (kΩ) potentiometer (linear)

Capacitors

C1, C3	47 picofarads (pF) min. ceramic
C2	3.3 picofarads (pF) min. ceramic
C4	100 picofarads (pF) min. ceramic
C5	100 nanofarads (nF) min. ceramic
C6, C7	10 nanofarads (nF) min. ceramic
C8	220 microfarads (μF) electrolytic 16 V
C9	1 microfarad (μF) electrolytic 16 V

Integrated circuit

IC1	Philips NE602 or NE602A

Additional items

T1/T2	Toko KANK3333
	On/off switch
	Miniature toggle switch

The next part . . .

The IF amplifier and the Beat-Frequency Oscillator will be added to convert the *Colt* into a superheterodyne receiver.

26 A two-way Morse practice system

Introduction

It is said that the pleasure of sending and receiving Morse code more than compensates for the learning effort needed. Transmitters for Morse code can be much simpler than those needed for any of the speech modes.

Many people choose to learn sending and receiving on their own. It can be much more fun if you have someone to learn with you, and it is for this reason that the following project arose. It comprises just one small circuit, and you build an identical circuit for each of the people who want to learn with you. All the individual circuits are connected with their output leads in *parallel*, as the two-way circuit of **Figure 1** shows.

A simple circuit

This diagram shows two identical circuits, as would be used if two people wanted to learn together. The circuit centres around our old friend the NE555 integrated circuit (IC). As it is connected here, it works as an *astable multivibrator*, a daunting name for what is essentially an oscillator. Each circuit is self-contained, having its own battery, Morse key, sounder and

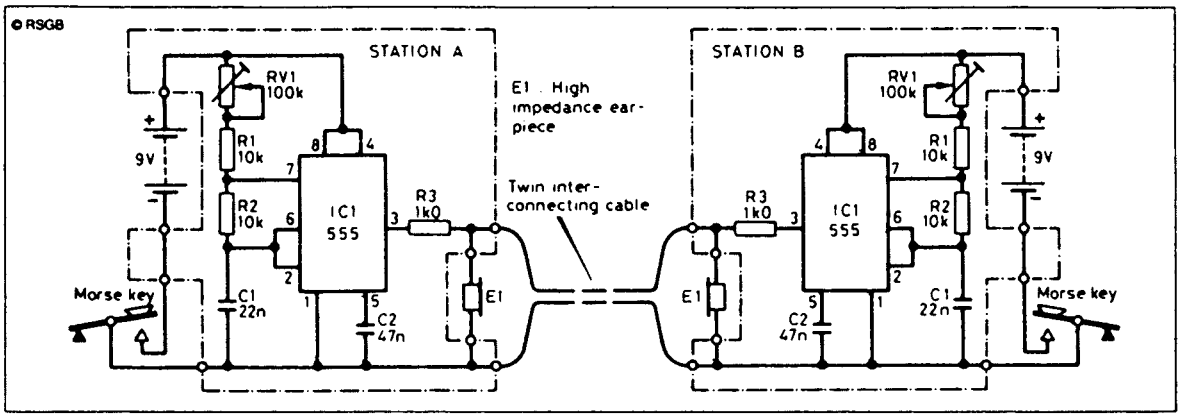

Figure 1 The circuit diagram shows two stations, but you could connect several more if needed

plastic box. The Morse key makes and breaks the power supply to the circuit, thus turning on and off the note emitted by the earpiece. The frequency of the note is controlled by the variable resistor RV1, resistors R1 and R2, and the capacitor C1. The range given by RV1 is approximately from 500 Hz to 2200 Hz.

R3 protects the output of the IC against accidental shorting either to the 0 V or to the 9 V supply rails. For best results, a crystal earpiece or high-impedance headphones should be used. You could try Walkman-type headphones, but the volume may be too low for you.

The units may be interconnected with thin twin cable (the sort used for wiring doorbells) and can be comfortably separated by 25 m, more than enough to communicate between rooms, or even with a neighbour!

In use

When an operator presses his key, the note is heard by himself and by everyone else who is connected. If more than one key is pressed at the same time, two or more notes are heard by everyone! It helps if each person adjusts his own potentiometer, RV1, to give a note which is different from the others. When one operator stops sending, the other can start immediately, without pausing to change from transmit to receive. In practice, this technique is known as *full break-in*.

The current drawn by the circuit is only 10 milli-amps (mA) when the key is down, meaning that the life of a typical PP3 battery will be virtually its shelf-life! No switch is needed, because the key acts as the switch. The current drain will be even less if the NE555 is replaced by an ICM7555 IC. It has exactly the same pin connections as the NE555, so no circuit modifications are needed.

The circuit board

The circuit is constructed easily on a small piece of Veroboard of the copper-strip type. **Figure 2** shows the layout of the prototype, the board measuring 18 holes by 10 strips. **Be aware that there is no row 'I' when you are transferring mental images of where the parts are to real positions on the board!** Break the copper tracks where shown with a 3 mm (⅛ inch) twist drill, rotated carefully between thumb and forefinger. Hold the board up to a bright light to make sure that the tracks are completely broken and that there are no fragments of copper swarf shorting adjacent tracks. Then, solder in the wire links shown in Figure 2, followed by the resistors, RV1, and the capacitors, C1 and C2. Solder the battery connector leads to tracks A and G, G being positive. Use insulated wire to connect from the board to the jack sockets used as connectors for the key and the earphones. If you use

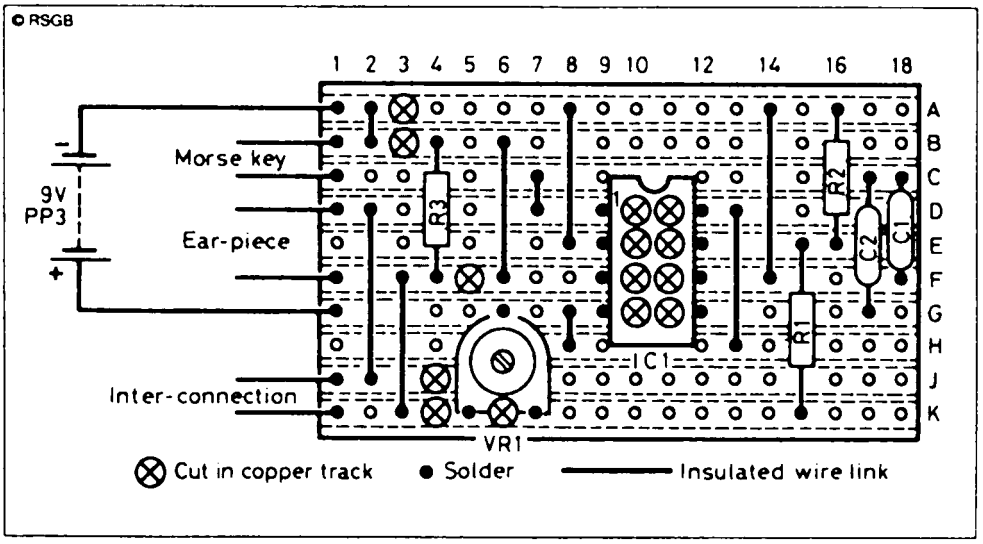

Figure 2 The Morse Duet is an easy project to build on stripboard (Veroboard)

different sized jack sockets (i.e. 2.5 mm and 3.5 mm) you won't plug the earphones into the key socket! A two-screw terminal strip is useful to connect the cable runs between operators.

The key

The circuit is designed to be used with a *straight key* (one that moves up and down). It is a requirement of the UK Morse test that a straight key is used, so it is very sensible to learn sending with a straight key before you try anything more complex! You will find many to choose from at rallies.

Parts list

For each board, you will need:		Maplin order codes
Resistors: all 0.25 watt, 5% tolerance		
R1, R2	10 kilohms (kΩ)	M10K
R3	1 kilohm (kΩ)	M1K0
RV1	100 kilohm (kΩ) min. preset (horizontal mounting)	UH06G
Capacitors		
C1	22 nanofarads (nF) ceramic, 25 V	WX78K
C2	47 nanofarads (nF) ceramic, 25 V	RA47B

Integrated circuit	
IC1 NE555	QH66W
Additional items	
8-pin DIL socket	BL17T
Jack plug and socket 2.5 mm	HF76H, HF78K
Jack plug and socket 3.5 mm	HF80B, HF82D
Battery type PP3	
Battery connector	HF28F
Plastic box with lid 114 × 76 × 38 mm	LH14Q
Veroboard 0.1 inch with copper strips	
18 holes × 10 strips	JP46A
Terminal strip (two section)	FE78K
Crystal earpiece	LB25C
Morse key	

27 The Colt 80 m receiver – Part 4

Introduction

In Parts 1 to 3 of this series, the design of an 80 metre direct-conversion receiver has been described. In this final part, we are going to change the circuit to operate as a superheterodyne receiver, or *superhet*. Most radio receivers are superhets, and they change the incoming signal to another frequency, known as the *intermediate frequency*, or IF, before producing an audio signal. The use of a superhet in a good receiver is mandated by the requirements for good *sensitivity* and *selectivity*.

Sensitivity and selectivity

Figure 1 shows the block diagram of the receiver. If you look closely, you will see that it is two similar circuits, one after the other. The incoming

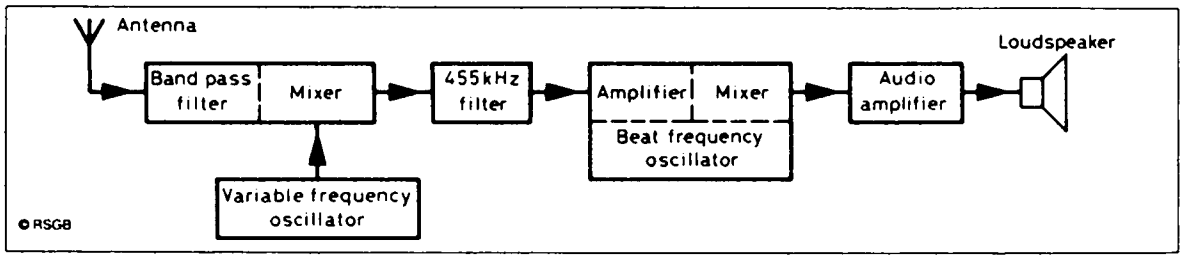

Figure 1 This is how the different stages of the Colt go together to make a superhet receiver

signal is filtered and fed to a mixer where it is combined (mixed) with the signal from the variable-frequency oscillator (VFO). This oscillator operates at a frequency which is 455 kHz higher than the incoming signal from the aerial, and the mixer output is therefore at a frequency of 455 kHz. If you are not sure about this, please refer to the section 'The direct conversion process' in Part 3 of this project. This new frequency is called the *intermediate frequency*, or IF. This frequency doesn't change; the tuning is accomplished by the VFO, and the mixer output is *always* at 455 kHz. The extraction of the audio signal from the IF signal is identical with the direct conversion process which is used in your existing receiver.

This may seem a long-winded way of doing things, but it has its advantages. A receiver must have a good *sensitivity*, or gain, so that it can receive very weak signals. In very general terms, it is easier to handle low-frequency signals than it is to handle high-frequency signals. We are changing our signal frequency from around 3.6 MHz down to 0.455 MHz (455 kHz), which is much lower and can be filtered and amplified relatively easily. A second advantage is that it is easier to provide gain at a fixed frequency than at a variable frequency. Remember that the IF is fixed, and providing gain is, again, relatively simple.

Our receiver also needs good *selectivity*, the ability to separate (or select) one station from another very close to it in frequency. This requirement is significantly simplified by the fact that the IF is fixed, and a good filter in the IF circuits can do wonders for the rejection of adjacent-frequency stations! Several stages of IF amplification and filtering are possible in more adventurous designs.

The filtered signal at 455 kHz passes to another mixer which has an associated oscillator, usually called a *beat frequency oscillator* (BFO). When receiving CW (Morse) signals, the BFO is usually tuned about 1 kHz above or below the IF (i.e. at 454 or 456 kHz) to produce a 1 kHz beat note as the audio signal. This signal is then amplified and fed to a loudspeaker or headphones.

The circuit

Figure 2 shows the circuit of the IF section shown in the photograph on p. 94; this section is added to the existing circuit to make it a superhet. The existing mixer board (described in Part 3) is used as the first mixer. Between it and the audio amplifier is connected the new IF board.

The signal output from the first mixer (at 455 kHz IF) is fed into a *crystal filter*, the most expensive part in the whole receiver. It provides the selectivity which makes the Colt such a good receiver. Another NE602 mixer/oscillator chip follows the filter. The oscillator section is controlled by the tuned circuit in T1, the frequency of which can be altered by rotating the core inside the coil. Once set, it remains fixed.

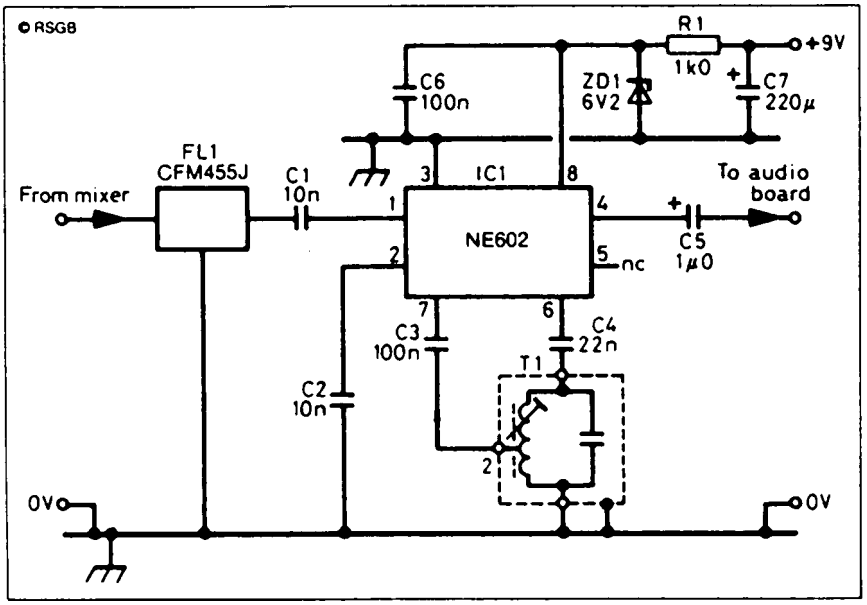

Figure 2 The IF board is connected between the mixer and audio amplifier

At this stage you should have built the first mixer and the audio amplifier, and proved that they *both* work by using the circuit as a direct-conversion receiver. When you have finished constructing and checking the IF board, you will need to add it to your existing circuits.

Adjusting and testing

There are three pairs of connections to the IF board – the 9 V supply leads, the input leads and the output leads. The IF board should be mounted on the metal baseplate, along with the other boards. **In making the following connections, make absolutely sure that the braid of each piece of coaxial**

cable is soldered to the correct connection on each board. The same applies to the polarity of the 9 V leads. Disconnect the screened lead which presently goes from the first mixer board to the AF amplifier at the amplifier end. Connect it instead to the *input* of the IF board. Connect a new piece of screened cable from the IF output to the vacated AF input. Now connect the 9 V supply leads to the same points as the supply leads from the other boards. Check these newly made connections.

You should have confidence at this point that things should be right. After all, you *have* tested the direct-conversion process and you *know* it works. All that you are now testing is the IF board. This is the attraction of building a receiver in modules, working from the speaker backwards, and testing as you go!

The VFO and BFO need to be correctly adjusted. Mesh the vanes of the tuning capacitor and, using the same frequency measurement method as you did originally, set the VFO frequency to 3.955 MHz (which is 3.500 MHz + 0.455 MHz, if you hadn't guessed!). The BFO can be set using a frequency counter, but it is just as good to set it by listening to SSB or CW signals. A high-pitched hissing sound should be heard in the speaker. As you rotate the core, the pitch should reduce, go through a minimum, then increase again. Set the core at the minimum pitch position. You may want to readjust the two cores a little as your listening skills improve but, once you are happy, they will never need to be altered again!

In conclusion . . .

You should now have built a superhet receiver capable of excellent results. It uses the same type of circuit as that found in far more advanced receivers.

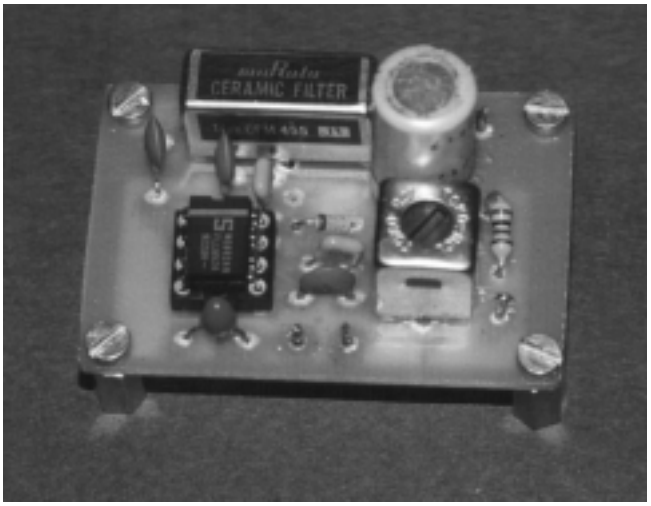

The superhet is far more sensitive than the direct-conversion type, and can weed out those elusive DX stations. You may have found that a station will appear at two places on the dial of the direct-conversion receiver; you will have no such problem with the superhet.

Parts list

Resistor	
R1	1 kilohm (kΩ), 0.25 watt, 5% tolerance
Capacitors	
C1, C2	10 nanofarads (nF) min. ceramic
C3, C6	100 nanofarads (nF) min. ceramic
C4	22 nanofarads (nF) min. ceramic
C5	1 microfarad (μF) 16 V electrolytic
C7	220 microfarad (μF) 16 V electrolytic
Integrated circuit	
IC1	NE602
Additional items	
ZD1	Zener, 6.2 V 0.5 watt
FL1	Crystal filter, Murata CFM455J
T1	Tuned inductor, Toko YHCS11100AC

28 A simple crystal set

Introduction

There are many designs of crystal set – they are all 'simple', and even the most seasoned radio amateur will build one of these every so often because it is something that never ceases to amaze! Although using modern components, the design is a period piece!

Design and construction

The circuit diagram of **Figure 1** shows the simplicity of the circuit. The prototype was constructed on a wooden baseboard with an aluminium front panel, although this could be made of wood if you prefer.

Winding the coil always causes the most groans but when finished, gives the most satisfaction. The construction of the coil is detailed in **Figure 2**. A discarded toilet roll centre is an ideal *former* on which to wind the coil. The coil will take up about 7 cm of the length of the tube, so assuming the tube is about 11 cm long, the ends of the coil will be about 2 cm in from each end of the tube.

The aerial coil, the *primary winding* of this radio-frequency (RF) transformer, is made from about 30 turns of 26 SWG enamelled copper wire, wound on the matchstick ribs. These ribs should be about 2 cm long, and are glued on **top** of the end of the secondary coil *after* the secondary coil has been wound. The *secondary winding* has 140 turns with *taps* every 10 turns for 70 turns. This coil covers most of the length of the cardboard tube. To make your coil-winding easier, here are some tips for completing the coil and still having some hair left at the end!

- Support the reel of wire on a dowel rod or pencil, clamped in a vice or held rigid in a vertical position by some other means. Don't leave it to trail around on the floor.
- Have a small piece of sandpaper handy to remove the enamel from the copper wire, starting with the end coming from the reel. Remove about 1 cm only, until the shiny copper is visible all round the end of the wire.

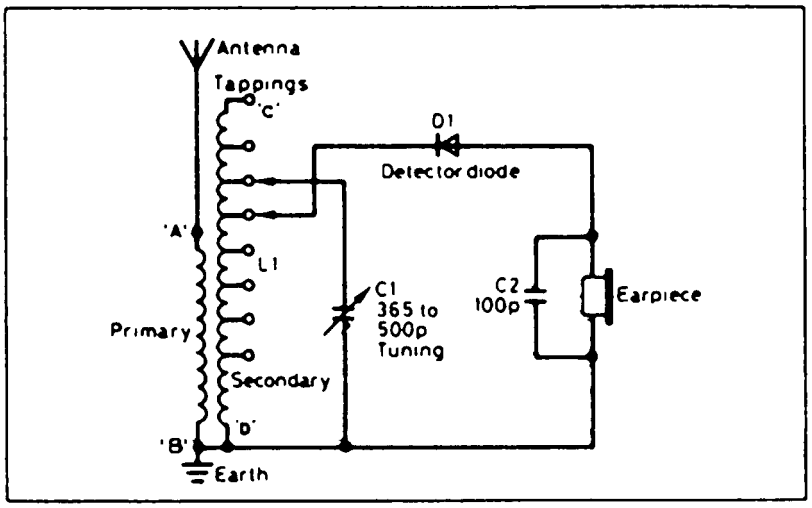

Figure 1 Circuit diagram of the crystal set

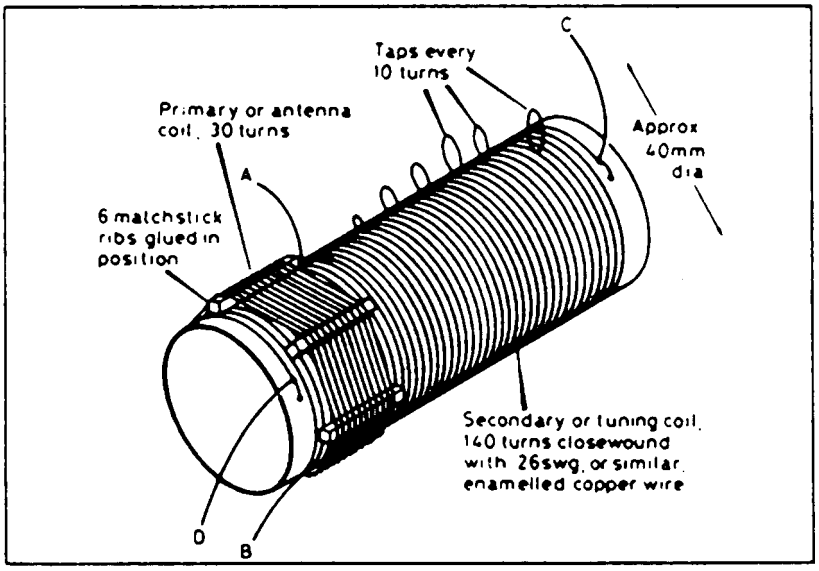

Figure 2 The coil is mounted on a cardboard tube as shown. Exact size is not too important. Try different taps for best results

- This part is the most difficult of all. Seasoned coil winders may have their own favourite ways of doing this, but for first-timers, play it safe and do it this way! Have a second bobbin (or a piece of stout card) ready, on which you will need to wind the wire loosely while you prepare the taps. Then, starting from the free end of the wire, measure 125 cm and, at this point, remove about 2 cm of the enamel with the sandpaper. Bend the wire firmly back on itself in the middle of the bared area, and *tin* (cover with solder) the exposed copper. This is your first tap. Then repeat this six more times at 125 cm intervals, thus giving you seven taps; wrap the wire as you go, on to the second bobbin or piece of card. After the seven taps, you are half-way down your coil so, to begin winding it in earnest, wind the wire carefully from the second bobbin or card **back** on to the original reel of wire.
- Looking at Figure 2, make two small holes about 3 mm apart, about 2 cm down from the top of the tube, where wire C will be entering. Poke the end of the wire into one hole, then bring it out again through the other; leave about 10 cm of wire on the free end. Loop this wire in and out once more, thus anchoring the wire firmly.
- Then, begin winding; keep the wire tight and make adjacent turns touch neatly. As you pass each tap, make sure it sticks outwards while avoiding flexing the wire too much; the wire is inherently weak at each tap.
- When you reach the last 10 cm of wire, stop. Put two more holes, like the first, beside your stopping point, and anchor the end, D, of the coil in the same way as you did with end C. The secondary winding is complete. Take a break *after* you have completed the next step!

- Prepare the six matchsticks for supporting the primary coil and glue these every 60 degrees around the end of the coil at D. Remove the enamel from the free end of the new copper wire on your reel and, using your favourite quick-drying cement, put a drop over the wire on one of the matchsticks, leaving 10 cm free as before. If you are using 26 SWG enamelled copper wire, its diameter is 0.46 mm, so 30 turns should occupy 14–15 mm of the 20 mm matchstick length. This will allow you to position the glued point such that the coil will be roughly in the centre of the matchsticks. When the glue has set, wind the 30 turns and anchor this end of the coil in the same way. Then remove the enamel at the end of the 10 cm lead.

Assembly

The coil former can be screwed to the baseboard at each end, *before* the front panel is screwed to the baseboard! As the photograph on the next page shows, the tuning capacitor is mounted in the centre of the front panel. Five solder tags (or drawing pins as a last resort) should be screwed into the baseboard. The two to the left of the photograph are the connections to the earphones, the two along the rear edge have the diode, D1, soldered to them. One end of the diode (and, for once, you can connect the diode either way round!) is connected to one earphone tag. The other end has a flying lead of about 10 cm attached to it and terminated in a crocodile clip which is used to connect to one of the taps on the coil. The fifth tag secures the end, A, of the primary coil, to which you will attach the aerial. The earth tag on the tuning capacitor, C1, serves as an anchor point for the ground connections to B and D and to the other earphone tag.

Use

The longest piece of wire you have available to use as an aerial should be connected to the aerial tag just mentioned. If you can connect the earth tag of the tuning capacitor to a good electrical earth, this will help also. You should be able to hear something as you turn the tuning knob. Try adjusting the tapping connections on the coil – change only one at a time, or you will never find the optimum positions. You now have a fully operational crystal set!

Simple it may be, but this circuit illustrates some important principles which are used even in the most expensive receivers. Firstly, the coil, L1, and the capacitor, C1, form a *tuned circuit* which *resonates* at the frequency of the station you have tuned in. This *selects* the signal you want to hear. The *modulation* on this signal is removed by the *detector*, D1, and fed to the earphones, which act as *transducers*, turning the electrical energy into sound energy which you can hear. It doesn't need a battery or other power supply either!

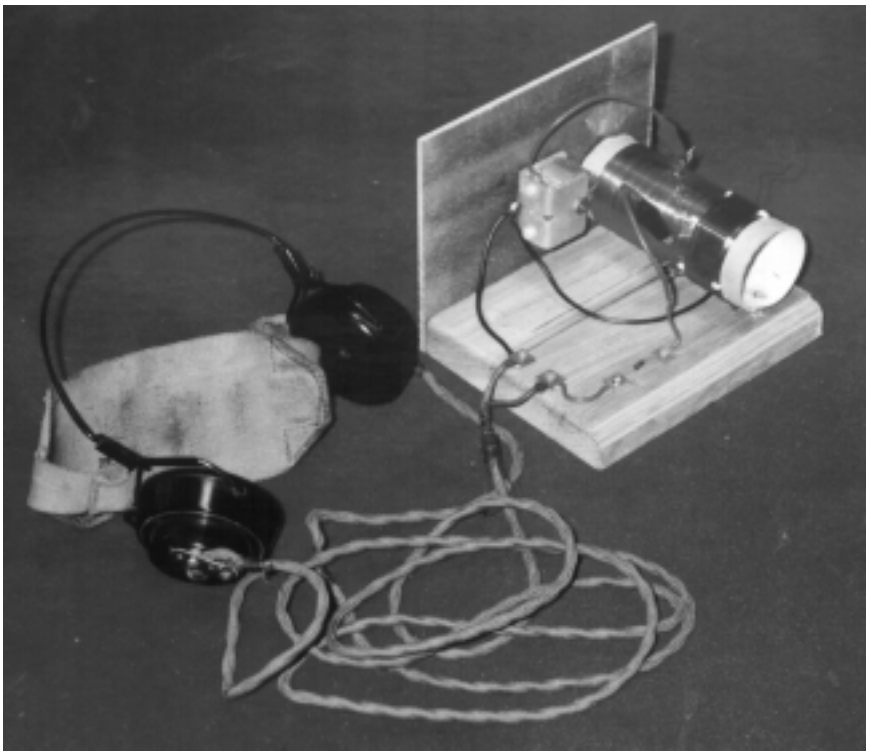

Parts list

Capacitors

C1	Variable capacitor of between 200 and 500 picofarads (pF) maximum
C2	100 picofarads (pF) min. ceramic

Additional items

D1	Germanium, type OA47 or OA90
	High impedance crystal earphone (not Walkman type)
	Tuning knob
	Wooden base, approx. 110 mm square
	Aluminium (or wood) front panel, approx. 80 × 100 mm
	Cardboard tube (toilet roll centre), about 110 mm long, 40 mm diameter
	Reel of 26 SWG enamelled copper wire for both windings of L1

29 A crystal calibrator

Introduction

A crystal calibrator is a device that produces oscillations of a precise frequency which are rich in *harmonics*. A harmonic is an integer multiple of the fundamental frequency; for example, if our fundamental frequency was 100 kHz (as it is in this circuit), there would be harmonics of this frequency at 200 kHz, 300 kHz, 400 kHz, and so on. These harmonics can be used, when picked up by any receiver, to calibrate that receiver, as the harmonics are quite accurate in frequency (see later for an assessment of accuracy). However, a gap of 100 kHz between harmonics is rather wide for most purposes, so we reduce this frequency to 25 kHz, so that the harmonics are then 25 kHz apart, thus producing a much more useful set of *marker points*. A calibrator such as this is often called a *crystal marker*, producing these marker points from 25 kHz to beyond 30 MHz.

The circuit

The circuit diagram is shown in **Figure 1**. The circuit around TR1 is the fundamental oscillator, and its frequency is controlled by the quartz crystal, X1. Even crystal oscillators are not 100% accurate, and the small trimmer capacitor, TC1, is able to 'pull' the frequency to one which is nearer the

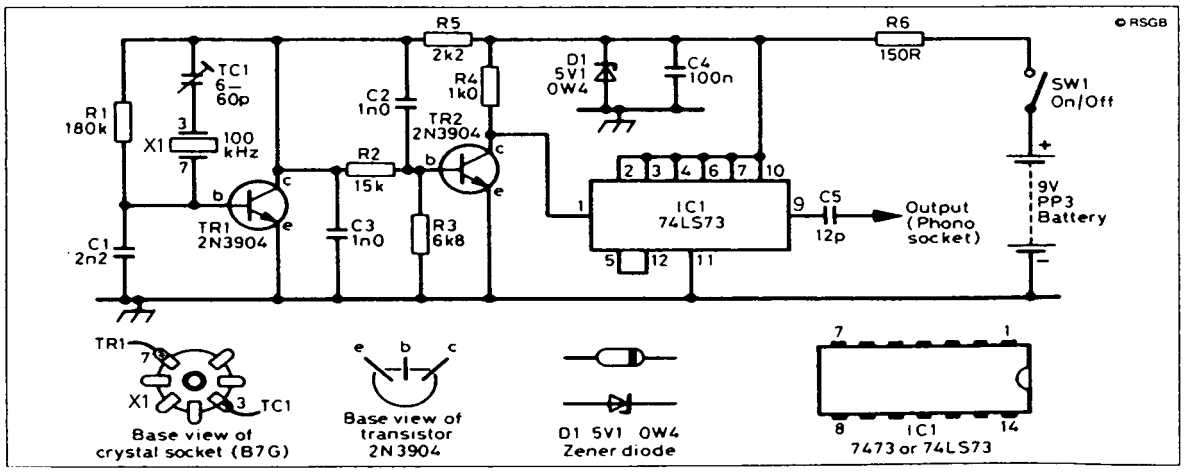

Figure 1 Circuit diagram of the calibrator which uses easily obtainable components

correct one. TR2 is a *buffer* stage, which isolates the oscillator from the rest of the circuit. It acts as a switch, and applies a good signal (switching between 0 and 5 V) to the input of IC1.

IC1 is an integrated circuit which can be connected to do several things. It is connected here to divide the incoming frequency by a factor of 4, producing on pin 9 an output frequency of 25 kHz.

The combination of R6, C4 and D1 produces a supply of 5 V for IC1; it would be damaged if the battery voltage were applied to it. You will no doubt be ready to assemble the circuit, so here is some information for you.

Construction

If possible, always build a circuit in individual stages, which you can test as you go along. It is not always easy in small projects like this, but even the crystal calibrator can be split into two for construction and testing.

It is an ideal project for assembly on Veroboard of the copper-strip type; the prototype layout is shown in **Figure 2**, on a board measuring 11 holes by 24 strips. First of all, remove the copper strip at the locations shown, using a 3 mm drill rotated between the fingers. Hold the board up to the light to ensure that there are no pieces of copper swarf bridging adjacent strips, and that the copper is completely removed where it should be! Assemble the circuit from left to right, but do not wire up anything around IC1. Be aware that the diagram shows the board *from the component side*. Although you

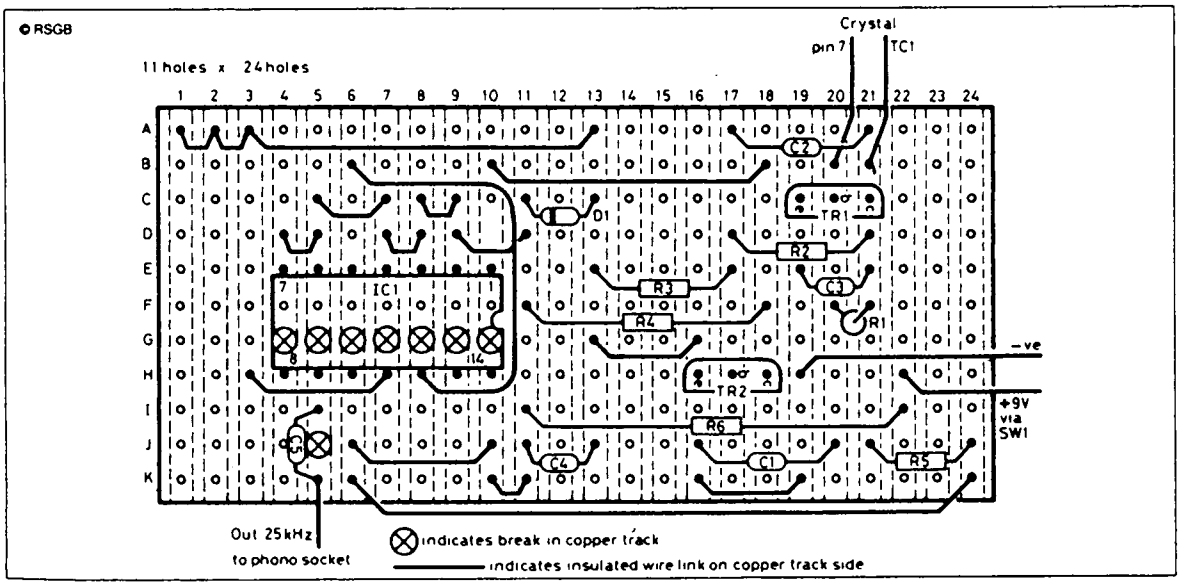

Figure 2 Stripboard, such as Veroboard, should be cut as shown to approx. 62 × 28 mm

can use virtually any kind of crystal, you will need to mount it firmly. If you use a small one, it can be soldered directly in position on the board. With one in a valve envelope, you will need a B7G valveholder. Be prepared to mount the circuit in a **metal** container; the prototype used an (empty) tin of tuna! The valveholder mounts well on any metal case.

Disconnect the aerial of your receiver, and replace it with about 30 cm of wire laid near your oscillator circuit. Connect the battery and switch on. Tune the receiver around until you can hear a whistle on SSB. Rotate the tuning knob to reduce the frequency of the whistle and, as the whistle becomes too low to hear, you have reached one of the calibration markers, and your frequency will be an integer multiple of 100 kHz. If you are already using a calibrated receiver, you will be able to verify this. Going up or down in frequency should locate another marker 100 kHz away, and so on right through the receiver's tuning range. If the signals coming from the circuit are very weak, switch off the calibrator and connect another 30 cm piece of insulated wire to the collector of TR2, and lay it close to (but *not* touching) the wire from the aerial connector. Switch on an try again; you should not now have a problem! If you have access to a multimeter, check that the voltage at the collector of TR1 is very close to 5 V. If it is close to 9 V, you have connected the diode, D1, the wrong way round!

Having verified that the oscillator is working, you can now wire up the integrated circuit socket, being careful to put the notched end of the socket pointing towards R4, the collector resistor for TR2.

Check your connections around IC1, and when you are satisfied that they are correct, line up IC1 with its socket, making sure that the notched ends are together, and press down *gently* to insert the IC into its socket. Insert the 30 cm piece of insulated wire into the output socket, connect the battery and switch on. You should still hear whistles in your receiver, but now they should be 25 kHz apart, rather than 100 kHz apart.

All that now remains to be done is to mount the circuit rigidly inside whatever casing your have chosen. Make sure that none of the connections under the board touch the metal case, and secure the valveholder, on/off switch and output connector to the case. You now have a completed crystal calibrator.

Calibration

The simplest way to calibrate your circuit is with a frequency counter. Most clubs will have one of these and, if not, will know someone who has! Connect it to the collector of TR2, where the frequency should be 100 kHz. Do *not* connect it to any part of the circuit around TR1, or you may alter the frequency you are trying to measure! If the frequency is not exactly 100.000 kHz, rotate TC1 until it is (or is as close as you can get it). Now your calibrator is as accurate as the counter with which you have calibrated it.

Accuracy

Despite your best efforts at calibration, by whatever means, your crystal will *never* have a constant frequency. Such a thing is a scientific impossibility. It is usual to express the accuracy of a crystal in parts-per-million (ppm), and it is governed by many things, principally its temperature. You will be *very* fortunate if your circuit maintains an accuracy better than about ±10 ppm. Expressed in figures, it means that the true frequency can be anywhere between 99.999 kHz and 100.001 kHz, i.e. within 1 Hz of the correct frequency.

Although this may seem more than adequate, it is as well to remember that the accuracy degrades as the frequency increases. At 1 MHz the error will be ±10 Hz and at 10 MHz it will be ±100 Hz. At 30 MHz it will be 300 Hz. Even so, this should be acceptable for most non-critical applications.

Parts list

Resistors: all 0.25 watt, 5% tolerance		**Maplin code**
R1	180 kilohms (kΩ)	M180K
R2	15 kilohms (kΩ)	M15K
R3	6.8 kilohms (kΩ)	M6K8
R4	1 kilohm (kΩ)	M1K0
R5	2 kilohms (kΩ)	M2K0
R6	150 ohms (Ω)	M150R
Capacitors		
C1, C2, C3	1 nanofarad (nF) or 1000 picofarads (pF)	WX68Y
C4	100 nanofarads or 0.1 microfarad (μF)	YR75S
C5	12 picofarads (pF)	WX45Y
TC1	60 picofarads (pF) trimmer	WL72P
Semiconductors		
TR1, TR2	2N3904 npn	QR28F
IC1	7473 or 74LS73N dual JK flipflop	YF30H
D1	5.1V 500 mW Zener	QH07H
Additional items		
100 kHz crystal		
B7G valveholder (found at most rallies)		
14-pin DIL IC socket		BL18U
Phono socket		YW06G
PP3 battery connector		HF28F
PP3 battery		
On/off switch		FH00A
Veroboard		JP47B
Metal case as required		

30 A simple short-wave receiver – Part 1

Introduction

No apologies for yet another design of short-wave radio. This is the beauty of our hobby – there is always something new to try. Not all circuits operate in the same way; not all circuits work equally well; sometimes a simple design suits the operator better than a complicated design. So here is another one for your consideration; it's a good project for a novice, *and* a good one-evening project for someone more experienced.

A basic description

Figure 1 gives the block diagram of the receiver, which employs a *regenerative detector*, one of the earliest techniques by which excellent *selectivity* (the ability to separate two stations very close in frequency) could be combined with good *sensitivity* (the ability to pick up very weak stations) using a very simple circuit. The receiver falls into the category known as *tuned radio frequency* (TRF), meaning that the whole circuit (prior to the extraction of the modulation from the carrier) operates at the incoming radio frequency. In other words, it is *not* a superhet.

As you can see, the regenerative detector has what is called a *feedback loop*, which feeds a small amount of the output signal back to the input. You have heard the effects of feedback with a public address system, when the microphone gain is too great – everything becomes very loud and then bursts into a deafening squeal! This is exactly what the feedback does here, except that it is carefully controlled, thus providing both gain and selectivity. The resulting audio is then amplified for use with headphones.

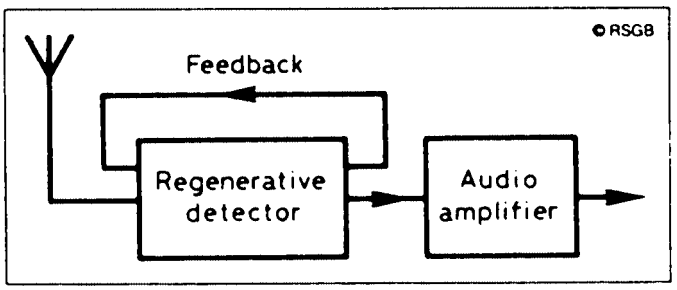

Figure 1 Just two simple stages make up the circuit

The circuit

The circuit of **Figure 2** shows the complete system. TR1 is an untuned *field-effect transistor* (FET) stage, and is used to match the aerial to the next stage. Occasionally, a regenerative detector produces unwanted signals, and TR1 also prevents them from reaching the aerial and being transmitted! The smaller of the two windings on T1 (the *primary* winding) will match a low-impedance aerial, the capacitor input matching a high-impedance aerial.

Ignore TR2 for the moment – the next stage in the signal path is TR3, the detector, using another FET. The tuned circuit is formed by T2, VC1 and VC2 (remember TR1 is untuned). The primary winding on T2 taking the output from TR1. The reason for having two variable tuning capacitors, one large, the other small, is that the large capacitor is the main tuning capacitor, while the small one is used as a *bandspread* control (for very fine tuning). The tuned signals are then detected (converted to audio frequencies) by TR3.

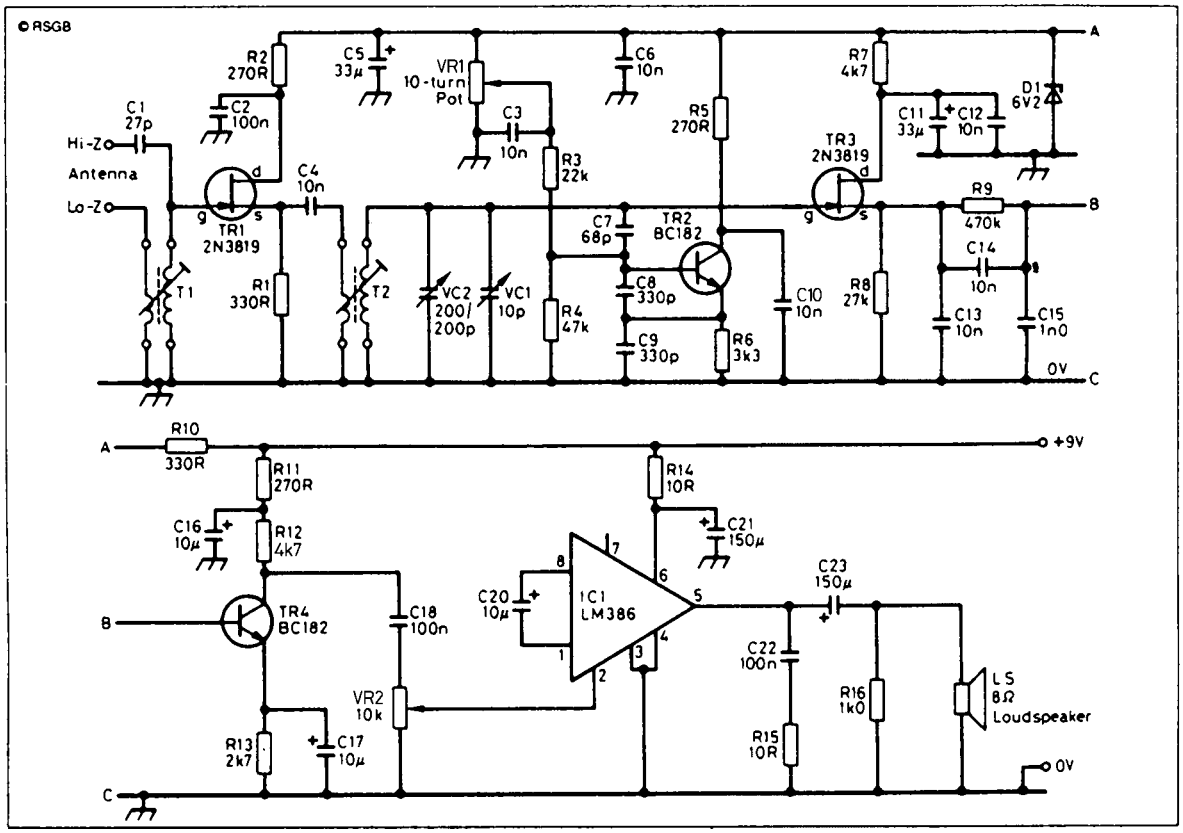

Figure 2 The circuit diagram showing the 10-turn potentiometer VR1. This is the regeneration control for the circuit

TR2 is a *Q-multiplier* stage. It is a Colpitts-type oscillator which uses C8 and C9 to give feedback and produce the oscillation. C7 couples the tuned circuit (and the input to TR3) to TR2. The tuned circuit thus controls the frequency of oscillation of TR2 and the signal passed on to TR3.

The secret of the ease of operation of this receiver is VR2, a 10-turn potentiometer (or *helipot*). The resistance wire is wound in the form of a helix, giving a much greater wire length than in a normal potentiometer, and the shaft must be turned ten times to cover the whole length. Helipots are very useful when very fine adjustments have to be made. Here, VR2 sets the regeneration (or *reaction*) level, depending on the type of signal you are receiving, as will be discussed in Part 2.

TR4 provides the first stage of audio amplification and, after the volume control, VR2, the audio amplifier integrated circuit, IC1, will drive a small loudspeaker or headphones.

In Part 2, the construction will be discussed, together with the choice of aerial, the parts list, and advice on using the receiver.

31 A fruit-powered medium-wave radio

Introduction

This is a one-evening project that will result in a working medium-wave (MW) radio, and will also teach you a little about the way electricity can be generated from the right metals and a little (safe) acid. All you need are three lemons or other citrus fruit, three pieces of copper and three pieces of zinc (or galvanised metal) for your power supply.

Construction

Figure 1 shows the circuit and **Figure 2** its layout on a simple 'plug-in' prototype board. The six pieces of metal are connected as shown, to wire the three lemons in series; use ordinary wire between each lemon and the next. If you have a meter to measure the total voltage, it should be about 1.8 V. Use a standard ferrite rod, and wind on it about 40 turns of single-conductor PVC-insulated wire.

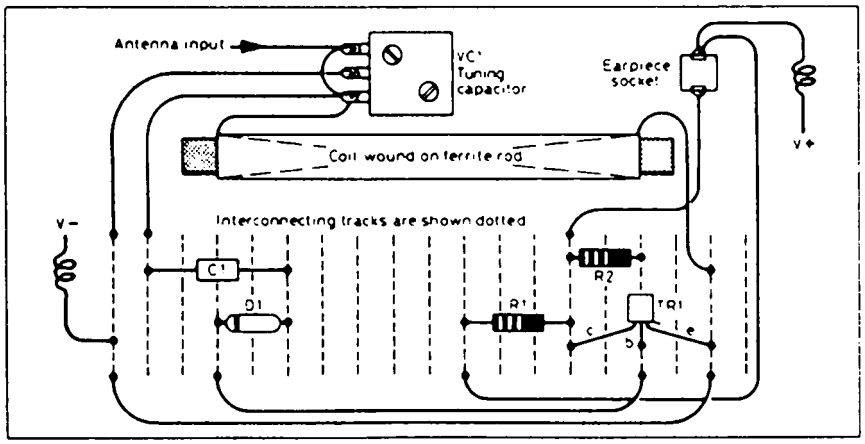

Figure 1 Most parts are plugged into the board as shown – soldering is not required

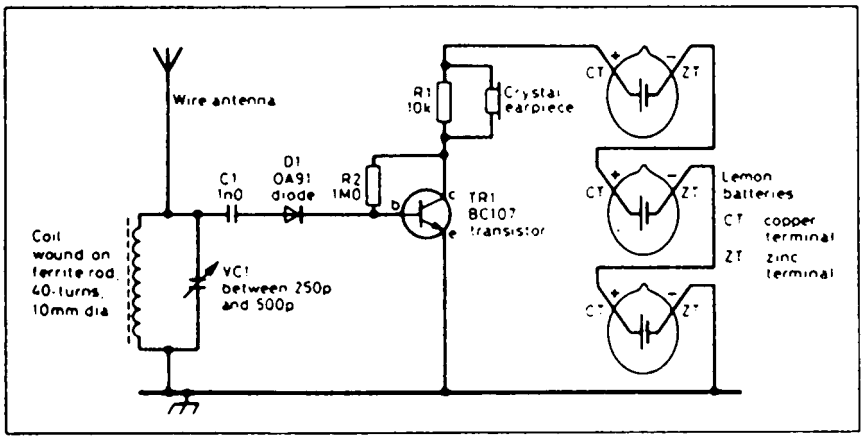

Figure 2 Three lemons power the radio, which gives good results for such a simple circuit

Wire up the circuit on the board as illustrated in Figure 2. Soldering is not required with this type of board – just plug in the components and the wires. Only one transistor is needed. The tuning capacitor, VC1, selects the station you want to hear, and D1 helps to remove the carrier from the RF signal. The resulting audio signal is fed to TR1, a small transistor audio amplifier, which makes the signal big enough to drive a crystal earpiece comfortably. Walkman-type earphones will not work, so invest in a crystal earpiece which you can use in several other projects, too! If you use a smaller capacitor than that specified for VC1, you will need more turns on the aerial coil.

Tests on the prototype indicated that the radio will run for about a week on three lemons!

Parts list

Resistors: all 0.25 watt, 5% tolerance

R1	1 megohm (MΩ)
R2	10 kilohm (kΩ)

Capacitors

C1	1 nanofarad (nF) min. ceramic
VC1	250–500 picofarad (pF) variable

Semiconductors

TR1	BC107 npn (or BC108, BC109C)
D1	OA90, OA91 germanium (not silicon)

Coil

L1	2 metres of single-conductor insulated wire on a standard ferrite rod

Additional items

Plug-in prototype board, e.g. Maplin YR84F
Wire aerial at least 3 m long
Crystal earpiece
Three juicy fruits

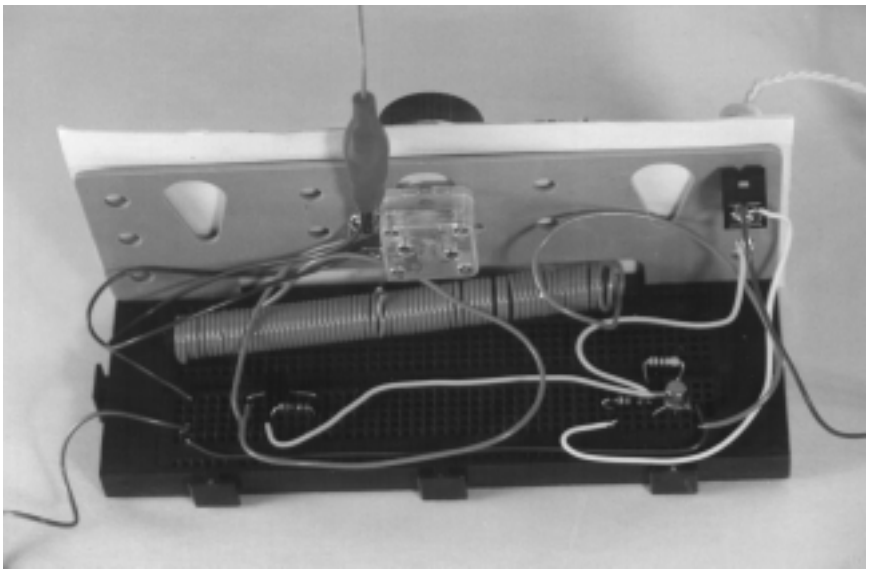

32 A capacitance bridge

Introduction

It is always valuable to have a means of measuring capacitors amongst your test gear. Universal LCR bridges (i.e. systems that can measure inductance, capacitance and resistance) can be found at most rallies, and you can work your way up to owning one of these. In the meantime, a piece of home-made equipment gives you experience as well as resulting in a useful measuring instrument.

The circuit described here is called a *capacitance bridge*, because it balances the effects of one resistor/capacitor pair against another; if one capacitor has an unknown value, then the other can be calculated. The basic bridge circuit is shown in **Figure 1**. To avoid having calculations to perform, this instrument will be calibrated by using capacitors of known values. The bridge is a useful way of performing measurements, because a knob is turned until there is a null in the signal from an earpiece or loudspeaker. The ear is very precise in being able to perceive nulls, which makes the bridge easy to use and reasonably accurate. At the null, the bridge is said to be *balanced*.

How does it work?

Figure 2 is the circuit diagram for this capacitance bridge. Transistors TR1 and TR2 form an oscillator. This is the audio oscillator shown in Figure 1, and produces an alternating voltage which is fed to the bridge. RV1 (in the collector lead of TR2) replaces both R1 and R2 in Figure 1 – that part of

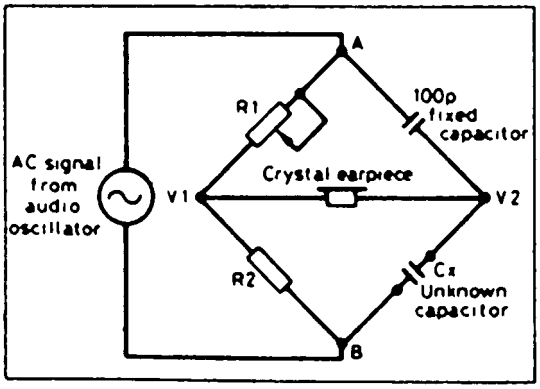

Figure 1 Simplified circuit of a capacitance bridge. R1 is adjusted for minimum sound

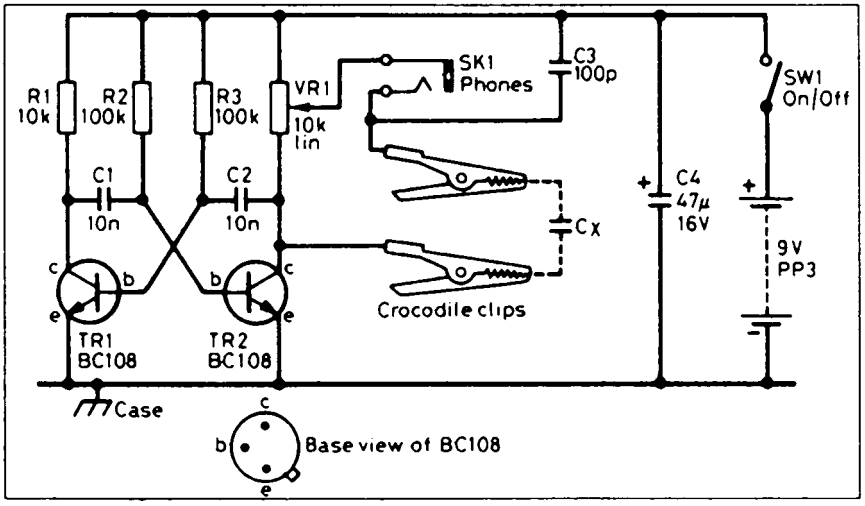

Figure 2 Transistors TR1 and TR2 give an audio signal which is adjusted by variable resistor RV1

RV1 *above* the wiper represents R1, while that part *below* the wiper represents R2. The voltage on one side of the earpiece is determined by the ratio of these values, and is adjusted by rotating RV1. The voltage on the other side of the earpiece is determined by the ratio of C3 to Cx, where Cx is the unknown-valued capacitor. When these two voltages are the same, the bridge is balanced and there is no current through the earpiece.

Figure 3 shows the layout of the components on the matrix board of the prototype. It measures 10 holes by 14 holes, and is of the plain type, i.e. no copper strips. All earth connections are taken to a single solder tag. When

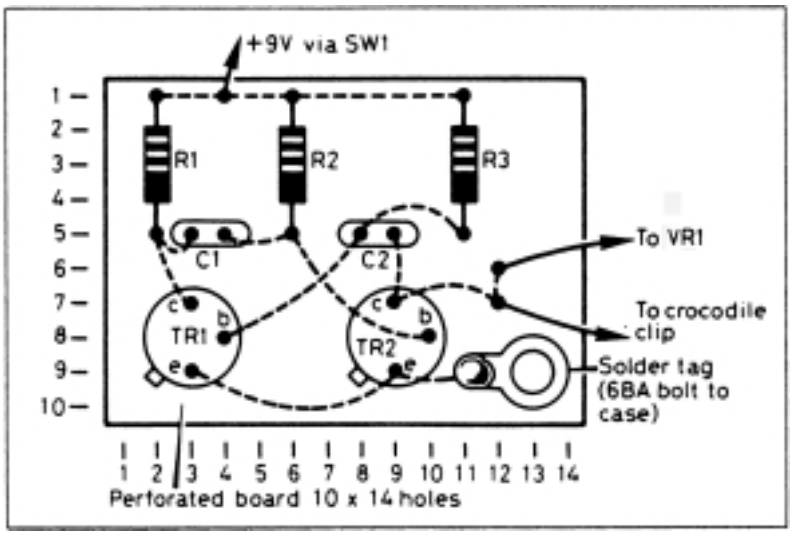

Figure 3 Components are soldered together on a small prototype board

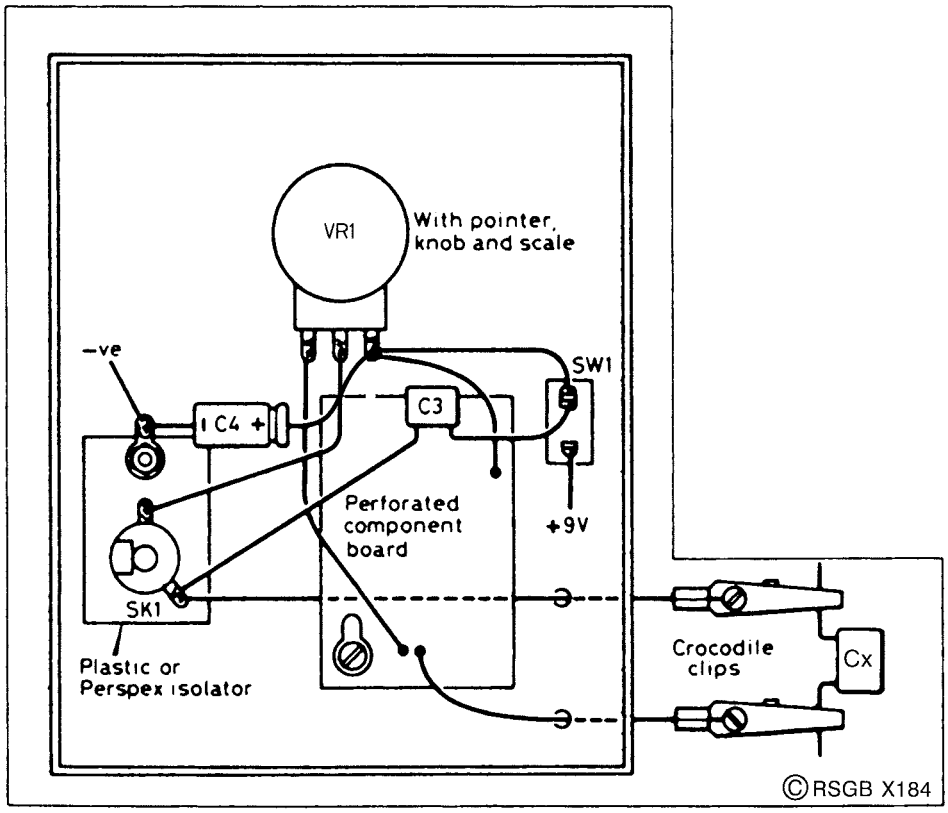

Figure 4 Layout of the parts inside an aluminium box. The earpiece socket is insulated from the case

mounting the board inside a metal box, a long screw is used with extra nuts, to earth the board to the case while providing a stand-off, thus preventing any unwanted short-circuits between the board connections and the case. Be aware that a *crystal* earpiece must be used; low-impedance headphones of the Walkman type are not satisfactory. Solder two flying leads as shown in **Figure 4**, about 15 cm long, terminated in small crocodile clips for attaching to the unknown capacitor.

Calibration

After checking the circuit carefully, attach the battery and switch on; a buzzing noise should be heard in the earpiece. This is the first sign that everything should be OK. If there is no buzz, switch off and recheck the connections.

You will now need a range of close-tolerance (1%) silver-mica capacitors covering the range 10 to 1000 picofarads (pF). Arrange the capacitors in ascending order and connect them to your bridge in sequence. After having prepared a neat piece of card or paper mounted behind the knob on the front panel, mark the dial at the positions of the nulls for all the capacitors. You have now calibrated your capacitance bridge. If you are more likely to want to measure larger capacitors, replace C3 by a 1 nanofarad (nF) capacitor, and the bridge will measure up to 10 nF approximately.

Parts list

Resistors: all 0.25 watt, 5% tolerance	
R1	10 kilohms (kΩ)
R2, R3	100 kilohms (kΩ)
RV1	10 kilohms (kΩ) linear
Capacitors	
C1, C2	10 nanofarads (nF) ceramic
C3	100 picofarads (pF) silver mica or polystyrene
C4	47 microfarads (μF) 16 V electrolytic
Semiconductors	
TR1, TR2	BC108 npn
Additional items	
SW1	SPST on/off switch
	Battery connector, PP3 type
	Earpiece, crystal type
SK1	3.5 mm jack socket for earpiece
	Battery, 9 V PP3
	Matrix board, approx. 10 holes by 14 holes
	Aluminium case, approx. 10 × 8 × 5 cm

33 A simple short-wave receiver – Part 2

Introduction

In Part 1, the design of this receiver was discussed in some detail. Now we are going to put it all together and see how it works. The receiver is laid out on a printed-circuit board (PCB) or on a matrix board.

Construction

The layout of the components is shown in **Figure 1**. Identify each part separately, insert it into the holes in the board and solder carefully. Long leads may be cropped before or after soldering, depending on your skill and preference. All electrolytic capacitors, T1, T2 and IC1, must be connected correctly. The front-panel controls are connected to the PCB terminals shown in Figure 1.

The layout of the controls and the placing of the board inside the case are matters of personal preference. The size of the prototype front panel is shown in **Figure 2**. The prototype had a slow-motion drive fitted to VC2, the main tuning capacitor. This required the capacitor to be fitted on its own small panel. The bandspread control does not need any form of

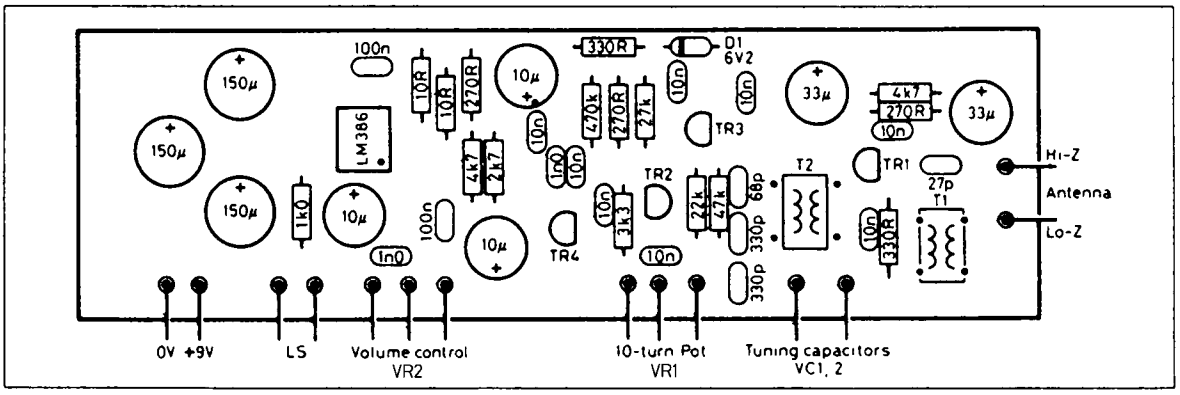

Figure 1 Layout of the receiver circuit board

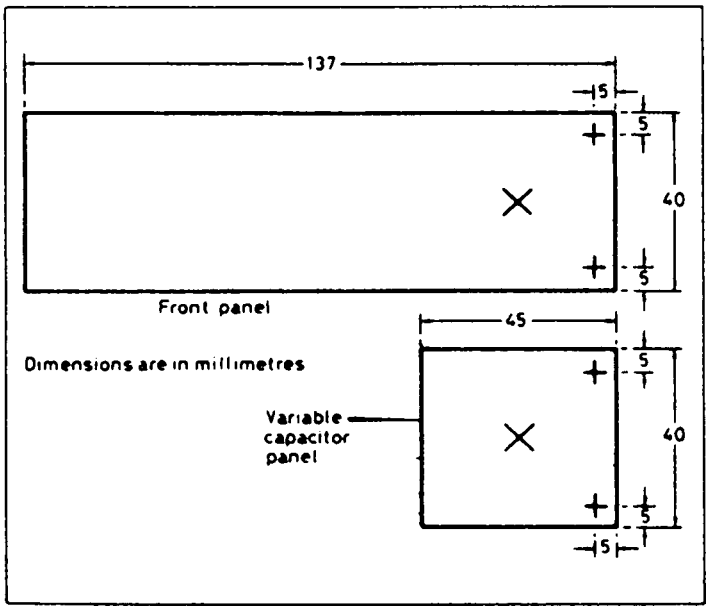

Figure 2 The case can be metal or made from PCB material

slow-motion drive. A tuning dial may be fitted behind the tuning knob on VC2 if required. The volume control, VR2, has its own on/off switch for the battery, which can be mounted behind the back panel, on which are mounted the aerial input sockets and the headphone/speaker socket. Check your soldering carefully, together with all the wiring between the board, the potentiometers and variable capacitors. When you are confident that everything is perfect, connect the battery and switch on.

The first tests

If you have a good aerial and are using an aerial tuning unit (ATU), use the low-impedance input. Excellent results are possible, though, with about 3 metres of wire connected to the high-impedance input. Set the volume control to give a gentle hiss in the headphones or speaker. Advance the reaction control to give a definite hiss. As you tune in an AM station, the hiss will change to a whistle; back off the reaction until the oscillation *just* stops. The receiver is now correctly set for AM reception.

On the amateur bands, the stations will be SSB or CW, and the reaction needs to be set *just above* the oscillation point, and will need slight adjustment from time to time for different qualities of signal. Juggling with the volume, reaction and tuning is part of the pleasure of using regenerative receivers!

In action

Practice is needed for best results. The regenerative receiver is renowned for its versatility in being able to be set up *exactly* for all types and strengths of signal. The basic receiver tunes from 6.5 MHz to 11 MHz approximately; this includes two amateur bands at 7.0 MHz and 10.1 MHz and two broadcast bands.

Parts list

Resistors: all 0.25 watt, 5% tolerance

R1, R10	330 ohms (Ω)
R2, R5, R11	270 ohms (Ω)
R3	22 kilohms (kΩ)
R4	47 kilohms (kΩ)
R6	3.3 kilohms (kΩ)
R7, R12	4.7 kilohms (kΩ)
R8	27 kilohms (kΩ)
R9	470 kilohms (kΩ)
R13	2.7 kilohms (kΩ)
R14, R15	10 ohms (Ω)
R16	1 kilohm (kΩ)
VR1	10 kilohm (kΩ) linear 10-turn potentiometer
VR2	10 kilohm (kΩ) log potentiometer

Capacitors

C1	27 picofarads (pF)
C2, C18, C22	100 nanofarads (nF)
C3, C4, C6, C10, C13, C14	10 nanofarads (nF)
C5, C11	33 microfarads (μF) 16 V electrolytic
C7	68 picofarads (pF)
C8, C9	330 picofarads (pF)
C15	1 nanofarad (nF)
C16, C17, C20	10 microfarads (μF) 16 V electrolytic
C21, C23	150 microfarads (μF) 16 V electrolytic
VC1	10 picofarads (pF) variable
VC2	200 picofarads (pF) variable

Semiconductors

TR1, TR3	2N3819
TR2, TR4	BC182
IC1	LM386
D1	6.2 V 0.5 W Zener

Inductors	
T1	3 turns primary, 15 turns secondary, wound on 2-hole ferrite bead, with 28 SWG wire
T2	2 turns primary, 17 turns secondary, wound on a T68-2 toroidal former, with 28 SWG wire

Additional items
- Printed-circuit board
- Battery connector
- PP3 battery
- 8-pin DIL socket
- 8 ohm speaker or headphones (Walkman type)
- Case to suit

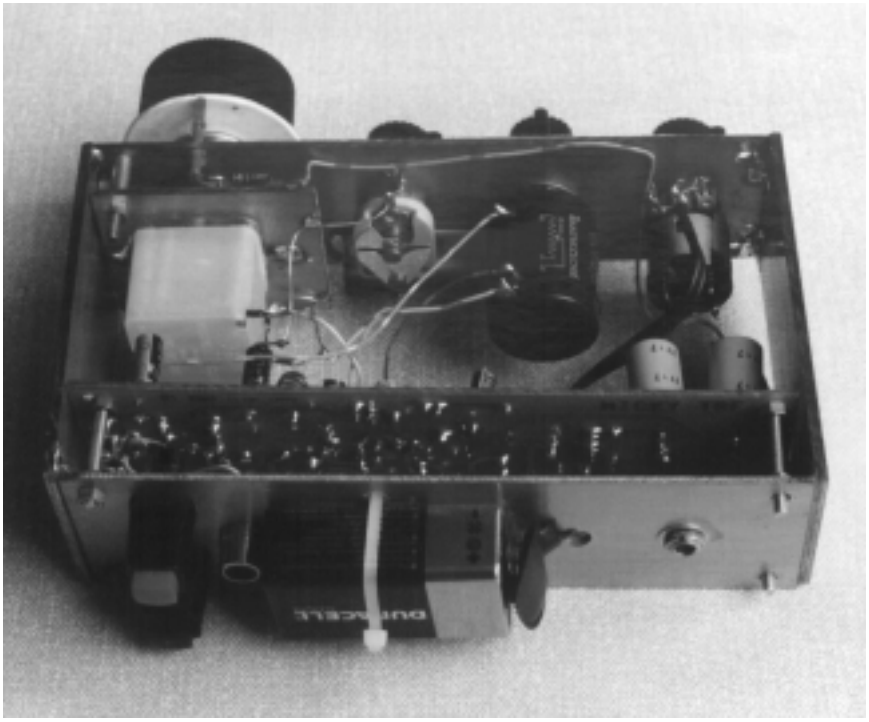

34 A basic continuity tester

Introduction

This little device can be built on a plug-in breadboard, and is ideal for testing fuses and cables, as well as doubling as a signal source for testing amplifiers, etc. It can even be used for testing npn transistors by replacing either of the transistors in the circuit, and seeing if the circuit still works!

Simple and quick to build

Using a plug-in breadboard, this circuit is so simple it could almost be built when you need it, and then dismantled again! If you want the circuit to make a different sound, the components to change are R2, R3, C1 and C2. Always make sure that R2 = R3 and C1 = C2, or the sound may be excessively 'edgy' and lacking in volume.

Basically, the circuit is an oscillator which drives a little loudspeaker directly. The fuse or cable you are testing is connected between the crocodile clips. If there is a current path between the two clips, the current also flows through the circuit, thus operating the oscillator and producing a sound from the loudspeaker.

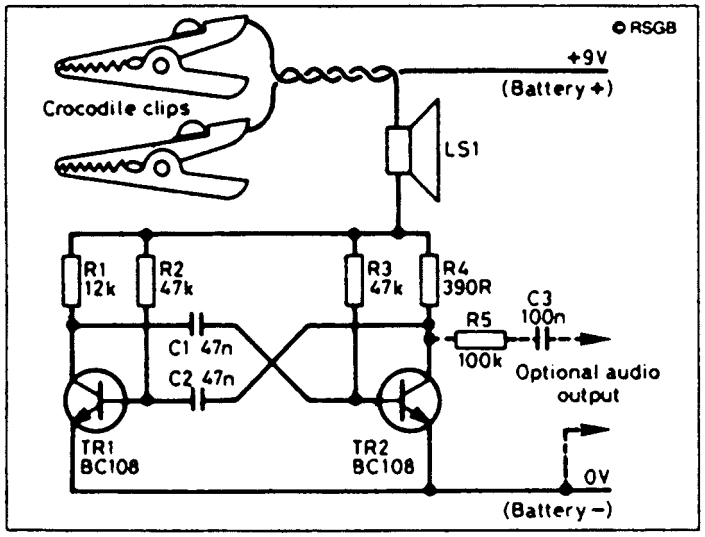

Figure 1 The circuit diagram of the continuity tester

If you want to use the circuit to produce a signal to test an amplifier, for instance, connect the croc clip which comes directly from the battery to the junction of R1, R2, R3 and R4. This supplies current to the circuit while, at the same time, bypassing the loudspeaker. Use the two components R5 and C3 between the oscillator and your amplifier. The loudspeaker is bypassed because you will want to listen to the output from your amplifier, *not* from the oscillator!

Remember, NEVER test any equipment which is still connected to the mains electricity supply. Avoid testing anything which is switched on and has its own power supply. You may damage both your tester ***and*** the circuit you are 'testing'!

Parts list

Resistors: all 0.25 watt, 5% tolerance	
R1	12 kilohms (kΩ)
R2, R3	47 kilohms (kΩ)
R4	390 ohms (Ω)
R5	100 kilohms (kΩ) optional
Capacitors	
C1, C2	47 nanofarads (nF) ceramic
C3	100 nanofarads (nF), 0.1 microfarads (μF) ceramic optional
Semiconductors	
TR1, TR2	BC108 npn
Additional items	
LS1	Loudspeaker (8 Ω)
	2 crocodile clips
	Prototype circuit board
	PP3 battery connector
	PP3 battery

35 A charger for NiCad batteries

Introduction

The cost of replacing dry batteries can be alleviated to a great extent by the use of rechargeable batteries such as those containing nickel and cadmium (called *NiCads*). They are more expensive than the batteries they replace, but they can be charged hundreds of times and thus prove cheaper in the long run.

NiCads produce only 1.2 V per cell, compared with the 1.5 V of ordinary cells, so before you rush out and buy lots of these, please make sure that the equipment on which you plan to use them will work on the reduced voltage! For example, if you are using four cells to give you a 6 V supply, NiCads will give you only 4.8 V, which is quite a reduction. Using six cells to replace a 9 V battery will give you only 7.2 V. Not all equipment is happy with these reductions!

However, we all use them when we can, and they save substantial amounts of money. Here is the circuit of a charger to keep them in prime condition.

Charging NiCads – the ampère-hour

NiCads require charging at constant current, which means that connecting one across a normal power supply (constant *voltage*) is useless and can destroy it. They need pampering to the extent of needing a long charge (around 16 hours) at a rate dependent upon the *capacity* of the battery. By the capacity of a battery, we mean how much energy it can store. You will probably know that energy is measured in joules. For the purposes of storing energy in batteries, the joule is *not* the ideal unit, so we use one that is! This unit is the ampère-hour (Ah), and must be interpreted with some realism. For example, if the battery is rated at 2 Ah, it will deliver a current of 0.5 amp for 4 hours, or 0.25 amp for 8 hours. Provided the current is not too high, the product of the current (in amps) and the time for which it will flow (in hours) before the battery is flat will always be around 2 Ah. A workable 'rule of thumb' for calculating the charging current is that its value should be around one-tenth of the numerical value of the capacity; so, for our 2 Ah battery, a charging current of around 200 mA (2 ÷ 10 = 0.2 A or 200 mA) would be used.

Constant voltage to constant current

Many integrated circuit (IC) chips are available for use as voltage regulators, i.e. they supply a constant voltage. Most of these can be persuaded to become constant current supplies with one external resistor!

The voltage regulator IC usually has only three connections – 'input', 'output' and 'common'. It is designed (in the case of the LM7805) to produce a constant 5 V output between the 'output' and the 'common' connections, at currents of up to 1 A. If a resistor is connected between these, the IC will maintain 5 V across it. If you look at **Figure 1**, you will see the circuit performing this conversion.

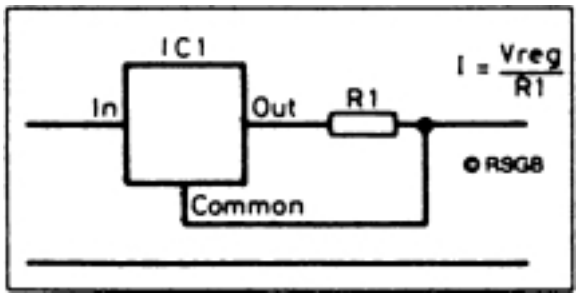

Figure 1 Voltage regulator arranged to produce a constant current

For the previous example, we derived a charging current of 200 mA, so we now need to calculate the value of resistor that will produce this current. Using the equation which is derived from Ohm's law:

$$I = \frac{V}{R}, \text{ from which } R = \frac{V}{I},$$

where R = R1, the resistance in ohms that we are calculating,
V is the voltage across R1 (5 V), and
I is the current flowing (200 mA).

So,

$$\text{R1} = \frac{5}{0.2} = 25\,\Omega.$$

25 ohms is not a 'common' or 'preferred' resistor value, so we must choose the next *largest* value, which is 27 Ω. This reduces the current, but only slightly – it is now 185 mA. When calculating resistor values in power supply circuits, we must *always* check the power that they dissipate and make sure we specify and fit a suitable resistor.

Power (in watts) is the product of the voltage across and the current through a device, so in this case it is given by:

$$\text{Power} = V \times I = 5 \times 0.185 = 0.925\,\text{W}.$$

Rather than use a 1 watt resistor operating very near its limit, it is safer to use a 2 watt resistor operating well within its limits.

Looking again at Figure 1, we now have a constant-current source producing 185 mA, when R1 is a 27 Ω, 2 W resistor. For use with NiCads requiring charging currents other than 200 mA, you will need to repeat the two equations above, using a new value for *I*.

The full circuit and its assembly

This is shown in **Figure 2**, and can be broken down into two parts. The first is the AC to DC conversion produced by the mains transformer, T1, the bridge rectifier, BR1, and the smoothing capacitor, C1. The second is the constant-current section already discussed.

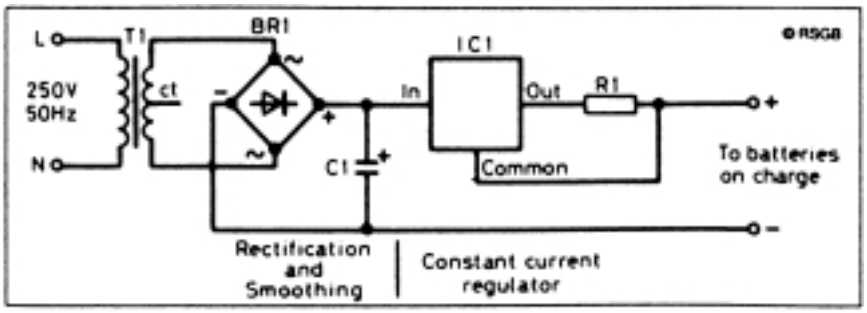

Figure 2 The complete circuit including mains components

The prototype was assembled on matrix board measuring 18 holes by 12 strips, although, as **Figure 3** shows, this is much larger than is strictly necessary. No strip cutting is needed, but make sure that IC1 and C1 are inserted correctly.

Warning! Before you attempt to wire up the transformer and the bridge rectifier, be aware that you will eventually be connecting the circuit to the mains supply, so there are three possibilities for you: (1) get a qualified friend to supervise your completion and testing of the circuit; (2) get your qualified friend to complete and test the circuit for you; (3) replace the transformer and bridge rectifier with a mains adapter.

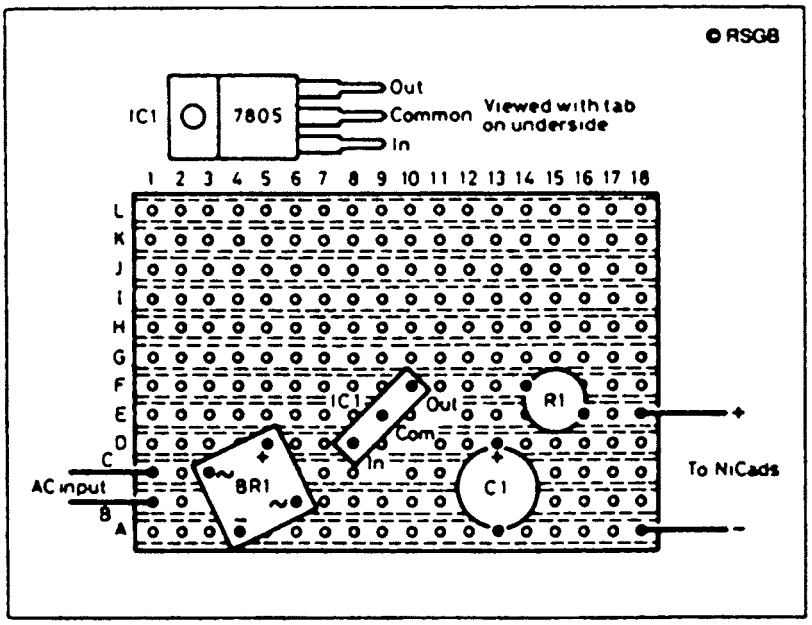

Figure 3 The charger can be built on Veroboard

If you decide to use the mains adapter, its output is connected directly across C1, because T1 and BR1 are now no longer needed. Make sure the polarity (positive and negative) is correct and that the adapter output is set to 12 V.

A quick test

If you have built the mains version, make sure all connections are correct, and that there are no soldered joints which will touch other parts of the circuit. The box must be securely closed before tests begin. The RSGB cannot be held responsible for damage to equipment or batteries! The version using the mains adapter need not be closed during tests.

Switch on. With nothing connected to the output, the unit should run cold. If this is not the case, switch off and recheck your circuit. If all is well, switch on again and connect a DC multimeter (on the current range) across the output. It should indicate only a slight difference from the calculated value of 185 mA. You can now charge your NiCads!

Other charging currents can be set by having different values for R1, perhaps selectable by a rotary switch. Remember to make sure that the values of both resistance *and* power dissipation are correct, and don't exceed the 250 mA rating of the transformer (or the 1 amp rating of the IC if you are using a bigger transformer).

Parts list

		Maplin code
Resistor		
R1	As required – see text	
Capacitor		
C1	1000 microfarads (μF) 35 V electrolytic	FF18U
Semiconductors		
IC1	LM7805 5 V, 1 A regulator	CR14Q
BR1	W005 50 V, 1 A full-wave rectifier	QL37S
Transformer		
T1	9–0–9 V, 250 mA sub-min. transformer	YN15R
Additional items		
Case		FG41U
Veroboard, 18 holes by 12 strips		
Plug to suit NiCads		
Double-sided sticky tape as required		
Insulated wire for battery connections		

36 An 80 metre crystal-controlled CW transmitter

Introduction

A simple transmitter is ideally suited to anyone venturing into our marvellous hobby for the first time. If you are put off by the complexities and prices of the 'black boxes' then this is the transmitter you've been looking for!

The circuit

The complete circuit is shown in **Figure 1**. It is a single-transistor crystal oscillator which is *keyed* (switched on and off) by the Morse key in the +12 V supply rail. The circuit first appeared in *QST* (the American equivalent of *RadCom*) in 1982, and has since appeared in a modified form in the *ARRL Handbook*. The circuit can produce about 2 watts on 80 m, and can be constructed on a piece of plain matrix board; the prototype board measured 7 cm by 3 cm, and its layout is shown in **Figure 2**.

Note that a bare copper wire runs along the bottom edge of the board to act as an earth wire for the relevant components. The only 'difficult' part of the construction is the winding and wiring of T1. The main winding is 38 turns of 26 SWG enamelled copper wire, and there are two link windings of four turns each. Make sure that all windings are wound the correct way round the toroid – Figure 1 shows this and should be studied carefully. If the windings do not have the correct *sense* (i.e. a clockwise coil has been wound anticlockwise, or vice versa), or have been connected incorrectly to the rest of the circuit, the oscillator will not work!

When putting components on the board, wire in the crystal socket *without the crystal in it*. Crystals do not like to be subjected to the horrors of a soldering iron, so keep your crystal to one side during the construction process!

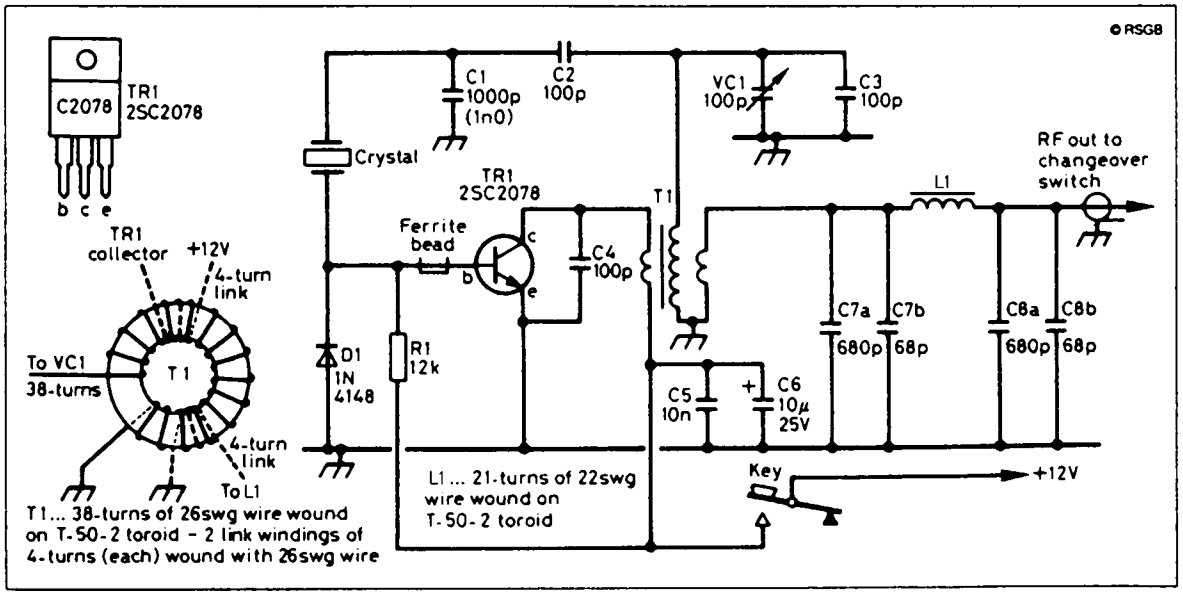

Figure 1 The simplest form of transmitter is a keyed crystal oscillator. Note that L1, C7 and C8 make up a *low-pass filter* which reduces unwanted *harmonics* (outputs at the transmitter frequency multiplied by 2, 3, 4, etc.)

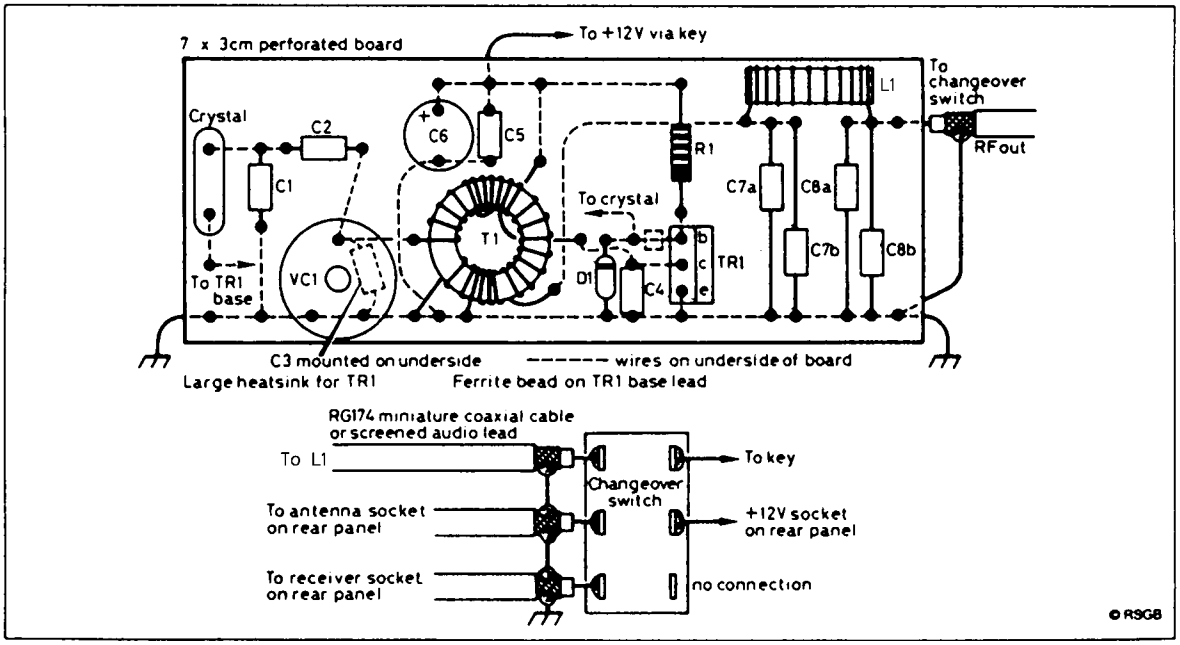

Figure 2 Component layout is straightforward on a 'matrix board' (it has holes but no copper strips). The dotted lines are the connecting wires. The lower part shows the connections for the transmit/receive switch

The output filter, which comprises C7, C8 and L1, is a *low-pass* filter, which helps reduce any *harmonics* present in your signal. Harmonics are integral multiples of your transmitter frequency, so if you are transmitting on a frequency, *f*, harmonics will be present at frequencies 2*f*, 3*f*, 4*f*, . . . and so on. L2 is another inductance using 22 SWG enamelled copper on a ferrite toroid. The changeover switch is external to the transmitter board, and is used to switch your aerial between the transmitter and the receiver; its wiring is shown in Figure 2.

Use a dummy load

A dummy load enables you to test your circuit without actually transmitting a signal. If you haven't such a thing already, it is easy to construct one to use with this transmitter. Don't use it for transmitters of more than 2 watts output, though. Use two 100 ohm, 1 watt resistors, connected in parallel across the end of a short piece of coaxial cable, terminated in a BNC, PL259 or N-type free plug, as shown in **Figure 3**. Plug this into the aerial socket on your transmitter, plug in your crystal and connect the transmitter to a 12 V supply. Have another receiver switched on and tuned to the crystal frequency. Although the radiation from your dummy load is minimal, it will

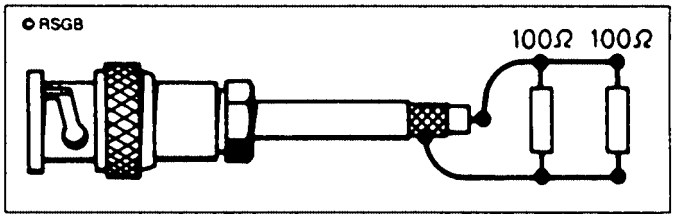

Figure 3 A simple 2 W dummy load can be made from two 100 Ω (ohm) resistors in parallel. The plug should match the socket on your transmitter

be enough to be picked up by a receiver in the same room. Send dashes with the Morse key, and adjust VC1 until the received note is *clean*. It should not sound rough, or have a *chirp* (change its frequency during a dash or dot). Avoid tuning for maximum power; this is seldom the correct setting!

You will need to put your completed transmitter in a metal box, using sockets for the power supply, aerial, receiver and Morse key. The sockets can be chosen to match your existing equipment.

Figures 4–7 are taken from the RSGB book *Practical Antennas for Novices*, and may give you some ideas on the type of aerial to be used with your transmitter.

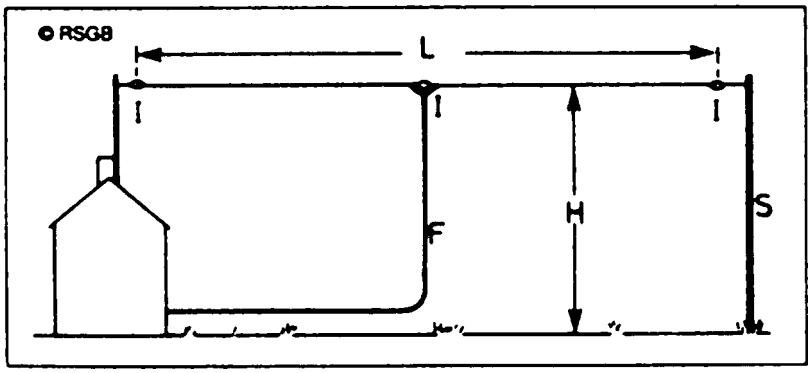

Figure 4 A simple dipole can be very effective. For the 3.5 MHz band, length L is 40 metres and height H should be as large as possible. The far support S can be a tree, pole or building. Insulators I may be home made from strong plastic and the feeder F should be 50 Ω (ohm) coax cable

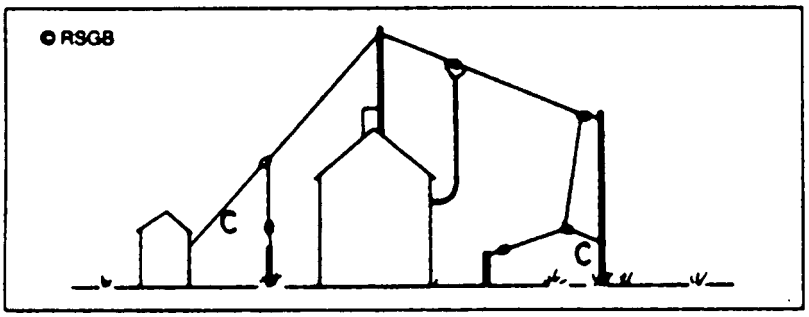

Figure 5 Your signal is radiated mostly from the centre of the dipole so the ends can droop or even be bent but the length may need shortening by a few centimetres because the ground and the bends will detune the dipole. Cords C are best made from strong plastic rope from a sailing or camping shop

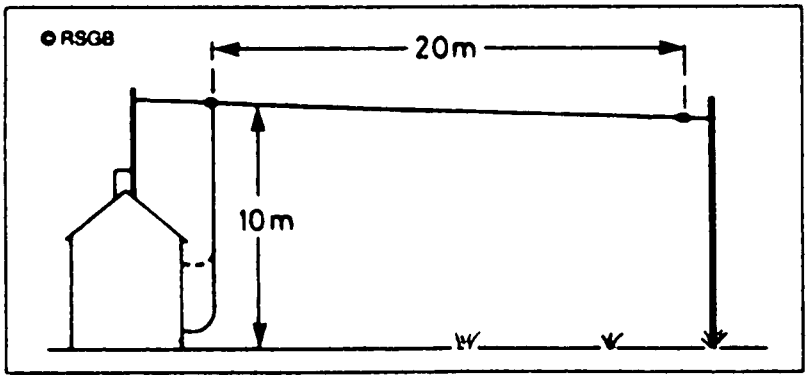

Figure 6 An 'inverted-L' takes up less space than a dipole and doesn't need coax cable. Like the dipole, the end can droop or be bent to save space as in this case most of the radiation comes from the area around the top of the vertical part

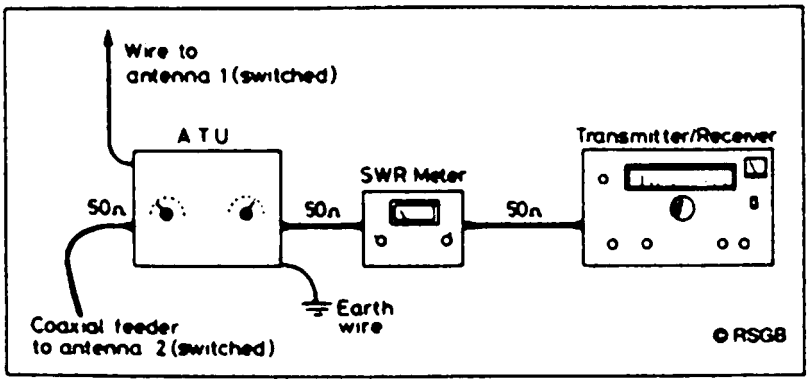

Figure 7 Almost any length of wire more than 10 m or so long will work (though it will work better the longer and higher it is) but an Aerial System Tuning Unit (ASTU or ATU) will be needed

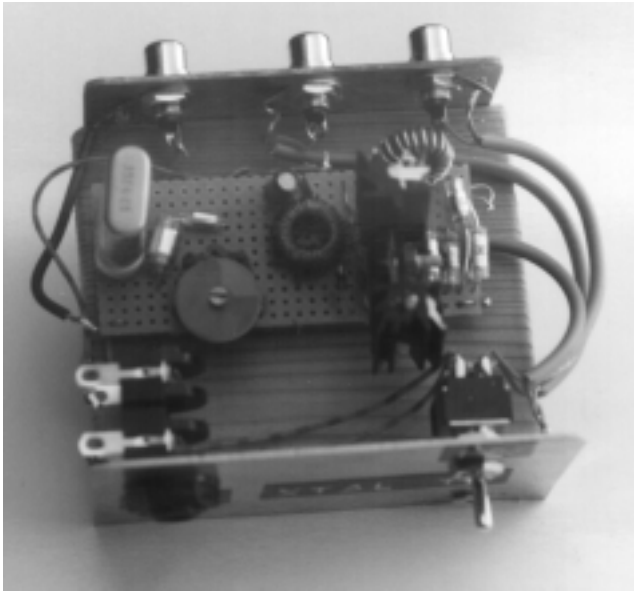

Parts list

Resistor

R1	12 kilohms (kΩ), 0.25 watt, 5% tolerance

Capacitors

C1	1000 picofarads (pF) polystyrene
C2	100 picofarads (pF) polystyrene
C7a, C8a	680 picofarads (pF) polystyrene
C7b, C8b	68 picofarads (pF) polystyrene
C3, C4	100 picofarads (pF) ceramic
C5	10 nanofarads (nF) polyester
C6	10 microfarads (μF) electrolytic 25 V
VC1	100 picofarads (pF) trimmer

Semiconductors

D1	1N4148
TR1	2SC2078 (see sources list)

Inductors

T1	38 turns 26 SWG enamelled copper on T–50–2 toroid, with two link windings of four turns
L1	21 turns 22 SWG enamelled copper on T–50–2 toroid

Additional items

Ferrite bead
Crystal (e.g. 3.579 MHz) and holder
Metal box
Socket for Morse key.
This must be totally isolated from the metal of the box, as *both* connections can be at +12 V.
Sockets for 12 V supply, aerial and receiver
Switch – DPDT
Heat sink for TR1
RG174 miniature coaxial cable for signal leads (see Figure 2)

Component sources

Special components

2SC2078	Cricklewood Electronics Ltd, 40 Cricklewood Broadway, London, NW2 3ET.

37 A solar-powered MW radio

Introduction

What could be more ecologically friendly than a radio powered by the sun's energy? This design is quite standard, and if you have built any of the other medium-wave radios in this series, then this one should present few problems.

The solar panel

The solar panel is to the solar cell as the battery is to the cell; in other words a solar panel is several solar cells connected in series. The solar panel quoted for this radio will generate about 9 V at a current of around 30 mA on a sunny day. The circuit will operate on a supply of around 2 V, so bright sunshine is *not* necessary for satisfactory operation. The volume will be less, of course.

The circuit

The radio uses the ZN415E integrated circuit (IC), connected as shown in **Figure 1**, the complete circuit diagram. The signal is tuned in by the combination of L1 and VC1. L1 is made by winding about 35 turns of 24 SWG enamelled copper wire on a ferrite rod. A standard ferrite rod of 10 cm length and 1 cm diameter is used.

Signals selected by the tuned circuit are passed to IC1, which amplifies the signals and removes the audio component, which is then amplified further by IC2 for driving a small loudspeaker. The removal of the audio component is the process we call *detection*. In addition to this, IC1 provides *automatic gain control* (AGC), which helps to keep the audio signal constant, even when the incoming RF signal may vary due to fading.

The prototype board

Veroboard (also known as matrix board or stripboard) is ideal for the construction of the radio. The layout is shown in **Figure 2**. The board size is 11 strips by 30 holes (**please note that there is no row 'I', so take care with your counting!**). Using a 3 mm (⅛ inch) twist drill rotated between

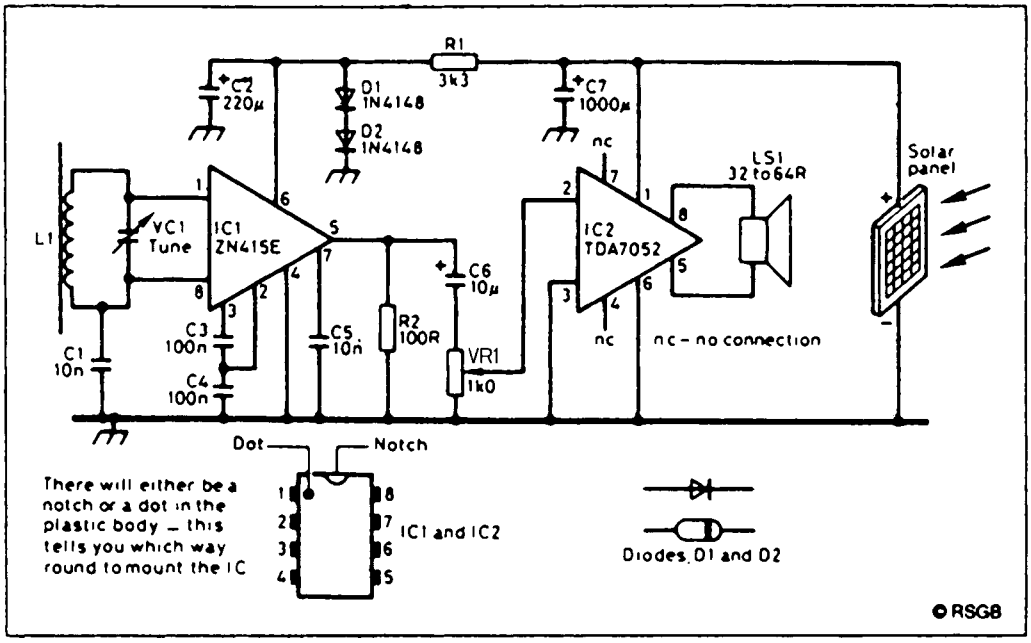

Figure 1 The radio uses just two integrated circuits (chips) and operates at any voltage from 2 to 9 V

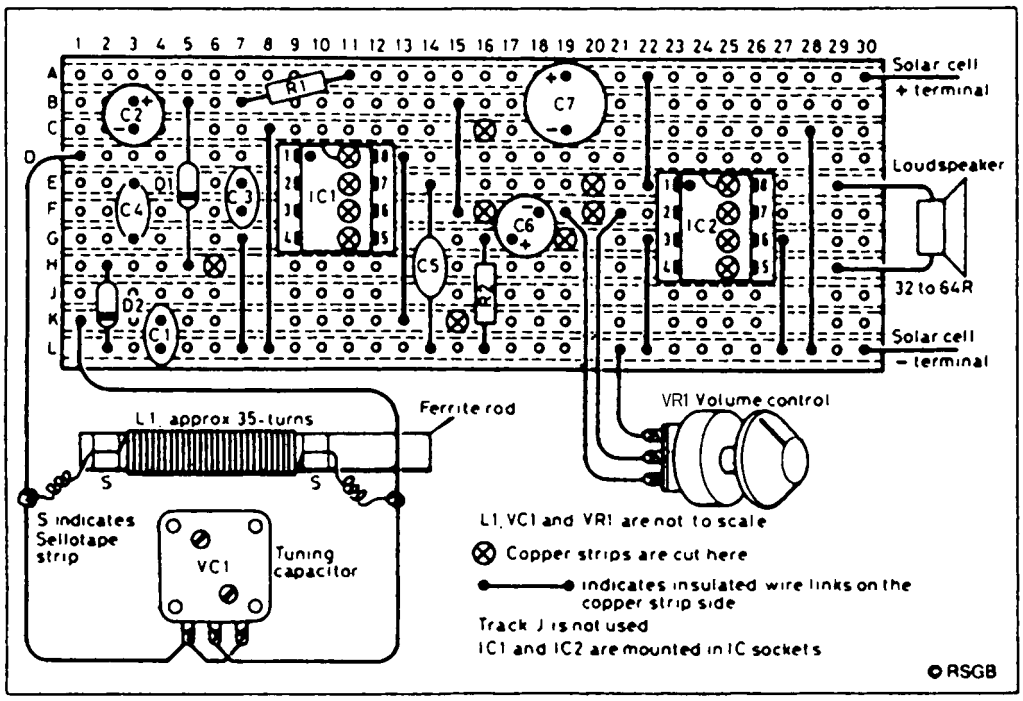

Figure 2 Follow the layout carefully, making sure that all connections are neatly soldered

your thumb and forefinger, break the strips at the points marked with a cross inside a circle. Hold the board up to the light to ensure that the tracks *have* been broken and that there is no copper swarf shorting tracks together.

Firstly, solder in the 8-pin DIL sockets for the ICs, making sure that the notches in the sockets are facing upwards, as shown on the diagram. Then, solder in the wire links, resistors, capacitors and diodes, making sure that the electrolytic capacitors (C2, C6 and C7) and the diodes (D1 and D2) are connected the correct way round. Use different colours of wire for the connections to the volume control, VR1, to avoid incorrect connections. Note the wiring of the tuning capacitor (VC1) shown in Figure 2; a two-section type is used, and both sections are wired in parallel to give twice the capacitance of a single section.

There is no on/off switch – just turn the volume down when you are finished using the set! The solar panel can be mounted parallel to the top of the case, or angled to receive the maximum energy from the sun, as shown in the photograph. You could have a battery available as a standby source to use the radio after dark; any battery of between 6 V and 9 V will do. Wire it with a simple changeover switch, so you can switch between solar and battery power. Ask a friend for help with this if you are not sure how to do it.

You may need to adjust the number of turns on L1 to get the best results, but it should be possible to receive at least five stations at good volume with your sun-powered radio!

Parts list

		Maplin code
Resistors: 0.25 watts, 5% tolerance		
R1	3.3 kilohms (kΩ)	M3K3
R2	100 ohms (Ω)	M100R
VR1	1 kilohm (kΩ) log	FW21X
Capacitors		
C1, C5	10 nanofarads (nF) ceramic	BX00A
C2	220 microfarads (μF) electrolytic (10 V)	FB60Q
C3, C4	100 nanofarads ceramic	YR75S
C6	10 microfarads (μF) electrolytic (10 V)	FB22Y
C7	1000 microfarads (μF) electrolytic (10 V)	FB81C
VC1	140–300 picofarads (pF)	FT78K
Semiconductors		
IC1	ZN415E (or ZN416E)	UR70M
IC2	TDA7052	UK79L
D1, D2	1N4148	QL80B
Solar panel	9 V at 50 mA	RK23A
Additional items		
LS1	32–64 ohm miniature loudspeaker	YT28F
	Ferrite rod	YG20W
	24 SWG enamelled copper wire	BL28F
	Plastic box, approx. 220 × 140 × 70 mm	YN39N
	Veroboard, cut to size	JP47B
	8-pin DIL sockets, 2 required	BL17T
	Knobs, 2 required	FD67X
	Material for speaker grille	
	Connecting wire	

38 A receiver for the 7 MHz amateur band

Introduction

Listening on the 40 metre band (from 7.0 to 7.1 MHz) can be very rewarding – it is a popular haunt for HF Special Event stations, and at night there are signals to be heard from all over Europe. This receiver is designed purely for the 40 m band, and is ideal for those who have built the simpler receivers and are looking for something a little more challenging. The more experienced constructor may prefer to build this on prototype board.

The circuit and its construction

Figure 1 shows the circuit diagram. The receiver will work well with headphones or loudspeaker. Walkman-type headphones and speakers are ideal for use here.

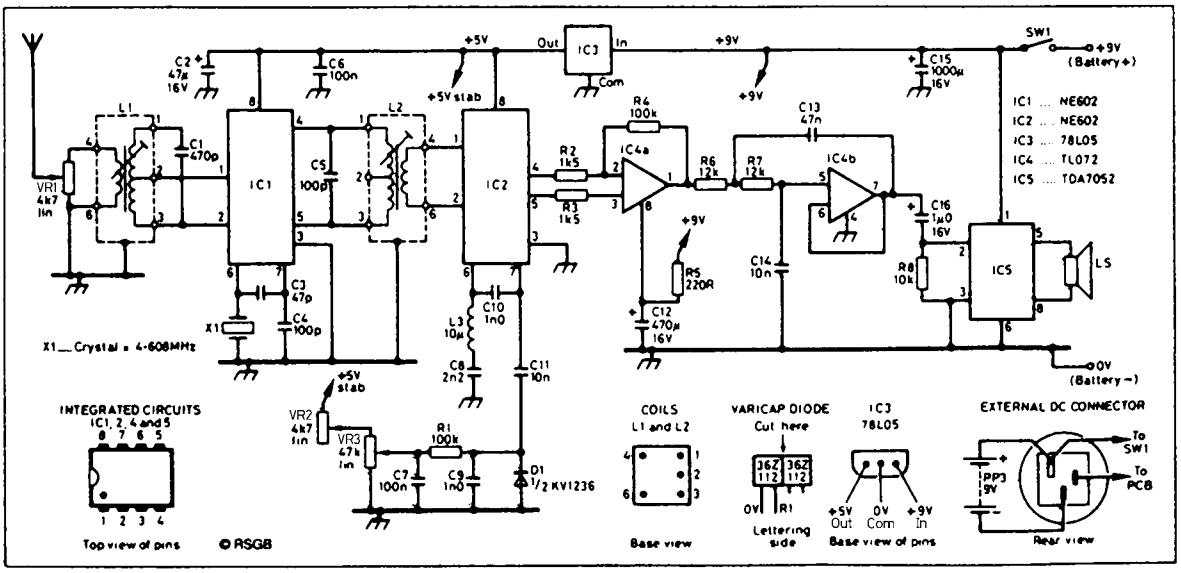

Figure 1 The receiver gives good performance on the 7 MHz amateur band as well as being simple to construct and align

Signals arriving at the aerial are coupled into IC1 via gain control VR1, which also functions as the on/off switch. Tuning is provided by varying the voltage on the *varactor diode* (or varicap), D1. VR3 is the main tuning control, and VR2 is the *bandspread* (fine tuning) control. The varactor diode is supplied as a dual device, which must be cut down the middle *carefully* with a sharp knife; with the lettering upwards, the ground lead (0 V) is on the left-hand side, as Figure 1 illustrates.

Solder in the IC sockets first, followed by the coils. After this come the links, resistors, capacitors and varactor diode. Ensure that IC3, the voltage regulator, is wired correctly, and check the polarity of the electrolytics. The crystal, X1, is very fragile, so take extra care with it. The wiring of the three controls is shown in **Figure 2**.

Before putting the ICs in their sockets, connect up the battery and check the following voltages with the negative voltmeter lead connected to the negative terminal of the battery:

Pin 8	IC1	5 V
Pin 8	IC2	5 V
Pin 8	IC4	9 V
Pin 1	IC5	9 V

When all these have been found to be correct, switch off and put the ICs carefully into their sockets. Use wire of different-coloured insulation to wire up the front-panel controls.

The case can be a small plastic box of size 22 cm by 15 cm by 8 cm, with three 10.5 mm holes drilled in the front and two 8 mm holes in the side for the aerial and earth connections. On one side are a 6 mm hole for the speaker socket and an 11 mm hole for the optional external power supply.

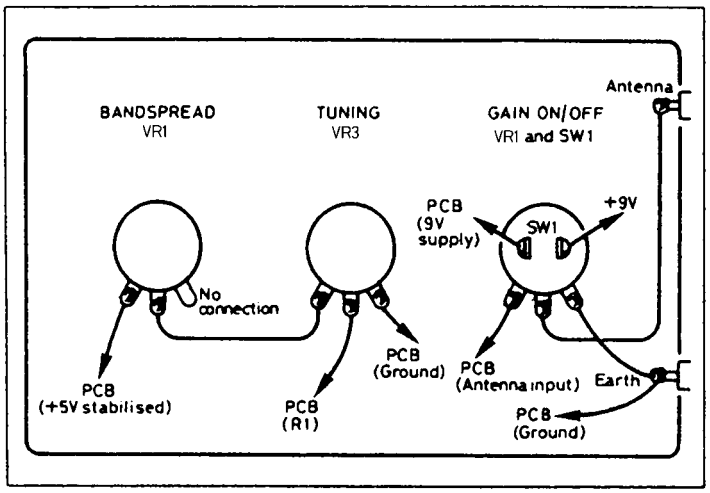

Figure 2 Rear view of the variable resistors. Check the connections carefully to make sure the wires are fitted correctly

Testing and tuning

The aerial for the receiver should be between 30 and 70 feet of wire, mounted as high as you can make it, away from trees and buildings if possible. Connect the battery and switch on. Adjust L1 and L2 for the best results. Tune slowly with VR3; you should find CW stations at the lower end of the band (anticlockwise) and SSB stations at the upper end (clockwise). You may find that it is easiest to make these adjustments *before* mounting the board in the case with double-sided sticky tape or pads. If you are planning to use an external DC supply, make sure it is a safety approved stabilised 9 V type, and **disconnect the battery before you use such a supply!**

If you suspect that the tuning doesn't quite cover the lower CW end of the band, try increasing C9 to 1200 pF. If it is the upper SSB end which is missing, decrease C9 to 820 pF.

It is always advisable to use an aerial tuning unit (ATU) between your aerial and the receiver. A suitable design of ATU is included as a project in this book.

Parts list

Resistors: all 0.25 watt, 5% tolerance

R1, R4	100 kilohms (kΩ)
R2, R3	1.5 kilohms (kΩ)
R5	220 ohms (Ω)
R6, R7	12 kilohms (kΩ)
R8	10 kilohms (kΩ)
VR1	4.7 kilohms (kΩ) linear, with SPST switch
VR2	4.7 kilohms (kΩ) linear
VR3	47 kilohms (kΩ) linear

Capacitors: all rated 16 V or more

C1	470 picofarads (pF) polystyrene 5%
C2	47 microfarads (μF) electrolytic
C3	47 picofarads (pF) polystyrene 5%
C4, C5	100 picofarads (pF) polystyrene 5%
C6, C7	100 nanofarads (nF) ceramic
C8	2.2 nanofarads (nF) polystyrene 5%
C9, C10	1 nanofarad (nF) polystyrene 5%
C11, C14	10 nanofarads (nF) ceramic
C12	470 microfarads (μF) electrolytic
C13	47 nanofarads (nF) ceramic
C15	1000 microfarads (μF) electrolytic
C16	1 microfarad (μF) electrolytic

Inductors

L1	Toko KANK3335R
L2	Toko KANK3333R
L3	10 μH 5%, e.g. Toko 283AS–100

Semiconductors

IC1, IC2	NE602 or NE602A
IC3	78L05 5 V, 100 mA
IC4	TL072
IC5	TDA7052

Additional items

D1	Toko KV1236 cut into two sections (one half used)
X1	4.608 MHz (available from Cirkit)
	3 × silver knobs, one with pointer
	Plastic case approx. 22 × 15 × 8 cm
	Speaker 8–32 Ω, or headphones
	4 × 8-pin DIL sockets for IC1, IC2, IC4, IC5
	2 × 4 mm sockets (red and black) for aerial and earth
	3.5 mm chassis-mounting jack socket for speaker
	DC power socket for external supply (if required)
	Prototype board

Kits

A complete kit is available from JAB Electronic Components.

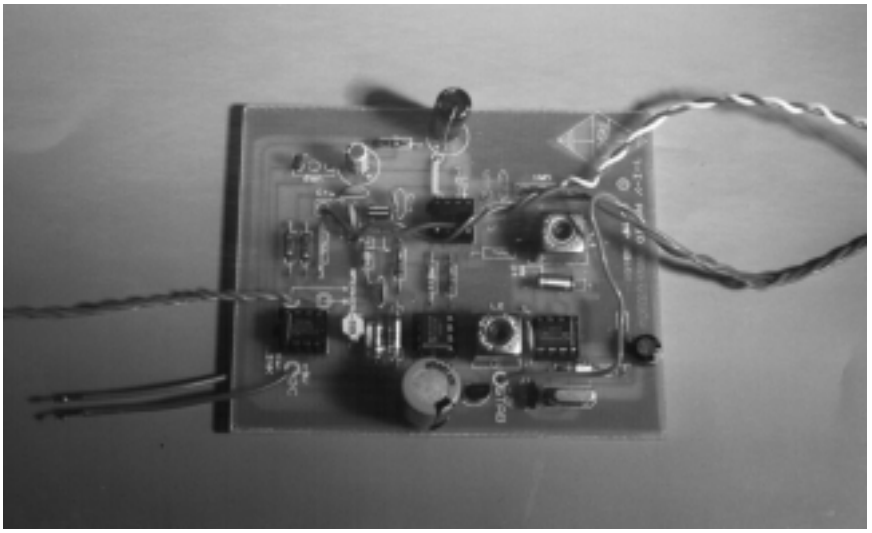

39 Diodes for protection

Introduction

Many semiconductor devices can be destroyed in an instant if their supply is reversed. With the use of batteries as power sources, it is quite common for the battery to be connected 'the wrong way round', and the scope for damaging equipment is significant and very real. Diodes can protect equipment in several ways, and you may do worse than to consider one of these approaches to protect your next expensive project.

Choose wisely!

All the diode circuits given here are so simple as to invite calamity. The circuits are not foolproof but, with a little care, will work first time. Remember that a semiconductor diode has a forward voltage drop of between 0.5 V and 0.7 V, depending on its type and the current flowing. This will be mentioned later.

The first thing you need to do is to insert a good multimeter *in series* with the circuit you want to protect; set the range to Amps DC, and switch on. Check that the circuit works properly. Then, decrease the current range on the meter until a good reading is indicated. Make a note of this current, as it is the normal running current of your circuit.

To choose a diode, you must consult the catalogues or data sheets and find one where the quoted *maximum forward current* exceeds the current you have measured; preferably it should be at least twice your measured current. Secondly, the diode will have a *peak inverse voltage* (PIV); this is the maximum voltage it can withstand when the cathode is made positive with respect to the anode, i.e when it is *reverse-biased* and not conducting. This voltage must be greater than your battery voltage, again by a factor of about 2. Except in the case of the bridge rectifier (see later), these criteria will enable the selection of a suitable diode to be made easily.

The series diode

The simplest and most obvious way to protect equipment is to insert a diode in the positive supply lead, as shown in **Figure 1**, with the diode passing current *only* when the supply is of the correct polarity. Because of the 0.6 V that exists across the diode, your equipment will normally operate on a

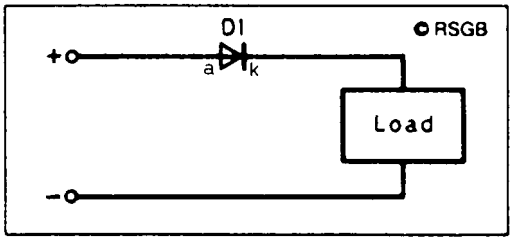

Figure 1 Series diode protection

slightly lower voltage. If you imagine reversing the supply to this circuit, you will see that the negative terminal of the battery is connected to the anode of the diode; the diode becomes reverse-biased and will not conduct any current, thus protecting the load. Your equipment will not operate when the battery connections are reversed.

The parallel diode

The circuit of **Figure 2** overcomes this voltage drop. It places the diode in parallel with the load (your equipment) but in a normally reverse-biased condition so that it draws no current when the battery is correctly connected. Reverse the battery connections, however, and a very large current will flow through the diode, thus blowing the fuse! For this technique to work successfully, the current drawn by the diode when the battery connections are reversed *must* be much greater than the maximum current drawn by the equipment, in order to blow the fuse. This is usually not a problem, however.

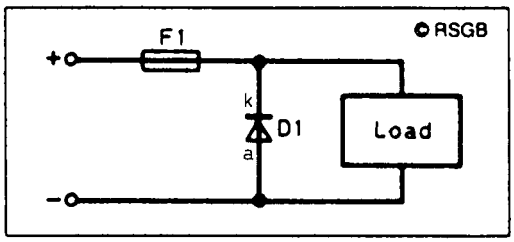

Figure 2 Parallel diode and fuse

The diode bridge

For sheer elegance, the circuit of **Figure 3** takes the biscuit! It uses four diodes connected in the form known as a *bridge rectifier*. Such rectifiers exist, and do not have to be made up from four discrete diodes.

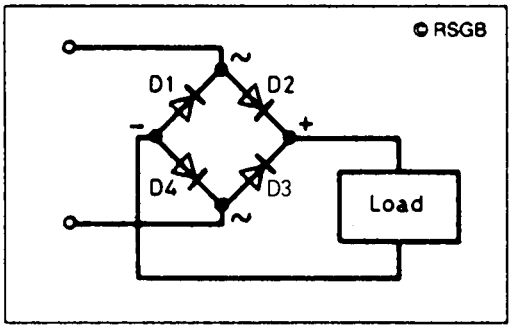

Figure 3 The diode bridge

Follow the current round the circuit from the supply, assuming initially that the top wire is positive and the bottom wire negative. It flows from the positive supply

(a) through D2
(b) through the load (top to bottom)
(c) through D4

and back to the negative of the supply.

Now assume that the bottom supply lead is positive and the top lead negative. The current flows from the positive supply

(a) through D3
(b) through the load (top to bottom)
(c) through D1

and back to the negative of the supply.

So, whichever way round the battery is connected, the current will *always* flow the same way through your equipment!

The circuit does have a drawback, however. Whichever way round the battery is connected, there are always **two** diodes conducting the current at any time. In the first case it is D2 and D4; in the second case, D1 and D3. This means that there is a total voltage drop of about 1.2 V. If your equipment can tolerate that reduction in voltage, then you will not have a problem.

Decoupling

Whenever the supply rail to a piece of equipment, or even to an individual stage of a circuit, is broken for the insertion of a device that will drop voltage, strange things can happen. This is because the supply for any circuit is assumed to have a low resistance to DC and a low *impedance* to AC. (Impedance is the AC equivalent of DC resistance.) These two are not the same, and the insertion of a diode or diodes is certain to make a big

difference to them both. To overcome any irregularities in the operation of the circuit you are protecting in any of the ways described previously, the protected supply needs to be *decoupled* with a capacitor.

If the circuit handles audio frequencies only, placing an electrolytic capacitor directly across the load in all three circuits should solve the problem. The parallel circuit of Figure 2 is less at risk than the other circuits. The size of the capacitor will be determined by the current taken by the circuit, and may need to be chosen within the range 100 μF to 10 000 μF, with a working voltage greater than the supply voltage.

If the circuit is mainly handling RF currents, placing a capacitor of 0.01μF across the load should prevent any problems. A second capacitor, also across the load, of between 10 μF and 100 μF may be needed. Again, the parallel circuit of Figure 2 is less at risk than the other two.

Don't be afraid to experiment, but confine your experimenting (at first) to small equipment and low currents, until you get a 'feel' for the technique.

40 An RF signal probe

Introduction

A radio-frequency (RF) diode probe is a simple device which, when used with a conventional multimeter, enables the measurement of RF voltages in a circuit. When constructed, this will be one of the most useful pieces of test equipment for the experimenter who revels in the construction of transmitters and receivers.

The circuit

Figure 1 shows the simple circuit diagram. It is *almost* the same as a common diode rectifier circuit, but with a simple change to make it more sensitive. The circuit is known as a *voltage-doubler*, and is often found in high-voltage supplies, with beefier capacitors and diodes, of course! Because we are dealing with high frequencies and smaller voltages, the diodes and capacitors can be physically very small. The diode circuit of D1 and D2 *rectifies* or *detects* the RF from the probe, and any remaining AC is removed (short-circuited to ground) by C2. This produces, at the output, a constant voltage proportional to the peak-to-peak RF voltage present at the input; the output voltage is fed to an ordinary multimeter (on a voltage range).

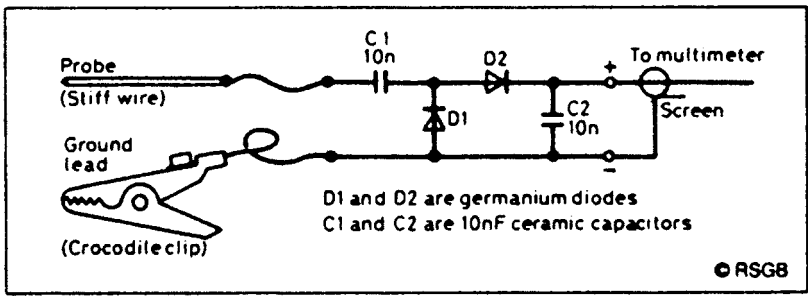

Figure 1 The diode probe can be made from four electronic components

Construction

Although the circuit layout is not critical, a description of the prototype is given here for your information. **Figure 2** has the details. The components are soldered to square pieces of copper-clad printed-circuit board (PCB) glued to a larger piece of PCB. The larger piece serves as a ground connection. Use a stiff copper wire as the probe, and an insulated flexible wire with a crocodile clip to connect the probe to the ground of the circuit under test.

Cut a piece of plain PCB, 30 mm by 45 mm and another of 15 mm by 45 mm. Cut the smaller piece into three measuring about 15 mm square. Stick the three small pieces to the larger piece, ensuring that there are small gaps between each, as Figure 2 shows. Solder the components in place. The connection to the multimeter should be thin coaxial cable or screened microphone cable. If you use unscreened cable, there may be RF pickup here which can lead to false readings.

Simple to use

Using the probe is simple. Connect it to the multimeter and set the meter to around 10 V DC – you may need to reduce this, depending upon the magnitude of the RF voltage you are trying to measure. Hold the probe by

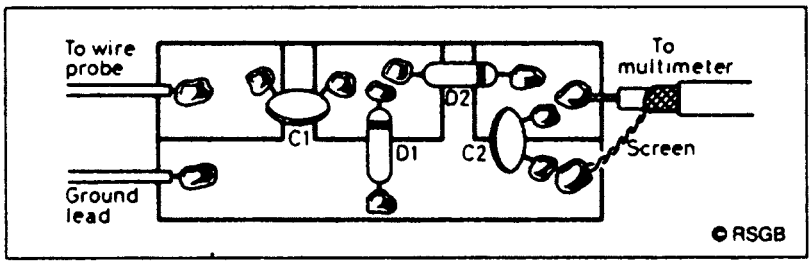

Figure 2 The components are mounted on a copper-clad PCB

its base, being careful *not* to touch any of the components. Connect the croc clip to a ground point on the circuit and touch the probe on the circuit point to be tested. If an RF signal is present, there should be a reading on the multimeter. That's all there is to it!

Parts list

Capacitors
C1, C2 10 nanofarads (nF), or 0.01 microfarad (μF) ceramic

Semiconductors
D1, D2 Any *germanium* signal diode, e.g. OA91 or AA119

Additional items
Stiff copper wire
Insulated flexible wire
Copper-clad PCB
Crocodile clip
Coaxial or screened cable

Source

All components are available from Maplin.

41 An RF changeover circuit

Introduction

The simplest entry route to operating an HF station is to buy or build a receiver, and to add a simple CW (Morse) transmitter. In theory, this sounds so simple, yet in practice there is one significant hurdle to be overcome. How can they both share the same aerial? A manually operated changeover switch is the obvious solution, but it takes time to perform the switching operation, by which time someone else has squeezed in before you and contacted the DX station! This small circuit accomplishes the changeover automatically, as soon as the transmitter is keyed.

How it's done

The circuit is shown in **Figure 1**, and uses the signal from the transmitter to operate a relay. A relay is a switch which is operated electrically in the following way. A coil of wire with an iron core is used as an electromagnet. When current flows through the coil, it produces a magnetic field which, in turn, is used to pull a set of switch contacts. These contacts will be used to switch the aerial from transmitter to receiver and vice versa. The relay used here has a double-pole changeover (or DPDT, or DPCO) switch. If you are confused by the different types of switch, look at the basic descriptions elsewhere in this book. The *pole* of a switch is the part that doesn't move; in Figure 1, one pole is connected to L1 and the other to the aerial output. In a circuit diagram, the switch contacts are always shown in their *normal* state, i.e. when *no* current flows in the relay coil. The changeover switch is normally in the receive position, so we say the receive switch is *normally closed*, and the transmit switch is *normally open*. We choose to have the circuit in the receive position normally, because everyone spends a lot more time receiving than transmitting. The relay is energised only when you are transmitting.

There are three RF sockets – one for the transmitter, one for the aerial, and one for the receiver. When the transmitter is not in use, there is a direct connection (via the Rx normally closed contacts of the relay) between the aerial and the receiver. The transmitter (which is not keyed at this time) is connected to a 50 ohm dummy load, R1.

When the transmitter is activated by pressing the Morse key, an RF signal appears at the transmitter socket. The wire carrying the signal to the relay

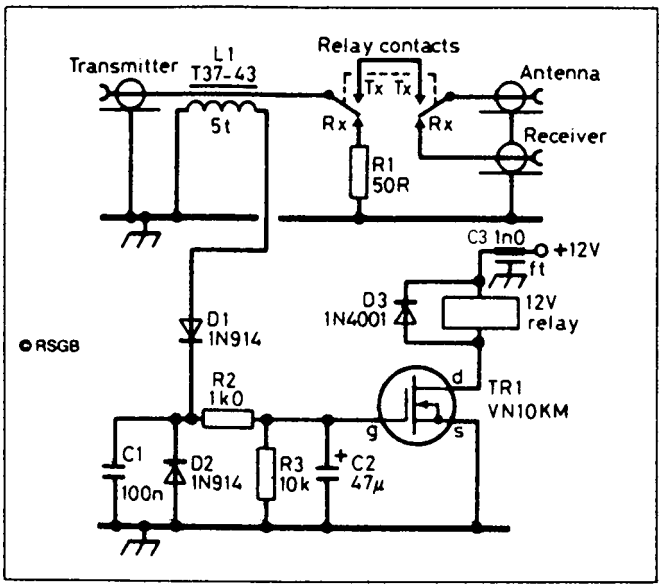

Figure 1 RF activated relay

Tx contacts passes through a toroid (a ferrite coil former, looking like a black Polo mint), which has a five-turn coil wrapped around it. This five-turn coil picks up the signal, which is then detected by D1 and D2, and converted to a steady voltage. C1 removes any remaining RF and C2 provides *hang*. Without it, the circuit would detect the gaps between every dot and dash being sent, and switch the aerial over very rapidly and very frequently! This is *not* what we want. We need the relay to remain in the transmit condition at normal Morse keying speeds, and then return to receive when the sending is complete. The combination of C2 and R3 achieves this.

The voltage appearing across C2 is fed to a VMOS field-effect transistor (FET), TR1, which acts as an electronic switch. When a voltage appears across C2, the FET switches on and passes a current through the relay coil, changing the contacts from receive to transmit. The diode, D3, across the relay winding protects the FET from being damaged by the large reverse-voltage spike which occurs across the coil when the FET switches off.

Construction

This is very simple – a circuit board is not required. The prototype was built into an old 50 g tobacco tin. All ground leads are soldered directly to the tin, thus supporting the components automatically. Phono sockets were used for the aerial, receiver and transmitter; you could use whatever connectors matched the rest of your station. The 12 V supply is fed through the tin using a 1000 pF feed-through capacitor, C3.

The 'dummy load', R1, must be able to withstand the RF output power of the transmitter. For novice use, 4 watts is adequate. Two suggestions for making up R2 from standard resistors are shown in **Figure 2**. Six 330 ohm, 1 watt resistors in parallel have a combined resistance of 330/6 = 55 Ω at 6 W. Two 100 ohm, 2 watt resistors in parallel have a combined resistance of 100/2 = 50 Ω at 4 W.

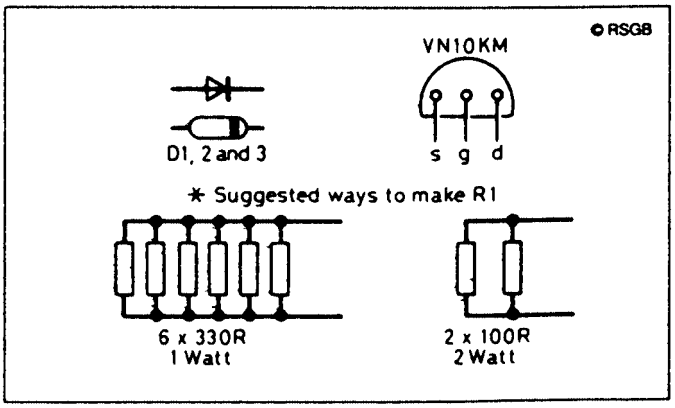

Figure 2 Component details

Make sure all the contacts to the relay are correct; also ensure that TR1, C2, D1, D2 and D3 are correctly wired.

Winding the toroid, L1, is very simple. It is made from PVC-insulated hook-up wire. Each time the wire passes through the centre of the toroid counts as one turn. The wire from the transmit socket to the relay simply passes through the centre! Use thin 50 Ω coax for the leads to the three sockets.

What happens to the receiver?

On transmit, the receiver is not connected to the aerial, but is only the separation of the switch contacts (about 0.5 mm!) away from the transmit lead. The receiver *will* pick up the transmitted signal, and there is a possibility that this signal will be enough to damage the receiver's sensitive input circuits. This can be prevented with the simple addition shown in **Figure 3**. Two diodes are connected back to back across the receiver socket. These act as a *limiter*, reducing the amount of signal that can enter the receiver. Solder these directly between the receiver socket and the tin.

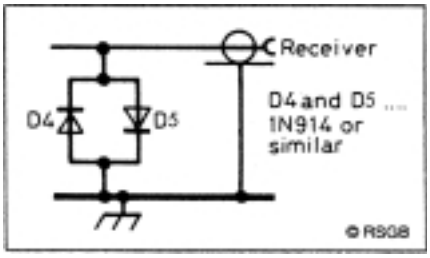

Figure 3 Receiver input protection

Warning

The wiring **must** be thoroughly checked. If the relay switch connections are wrong, there is a **great probability** that the full RF power will be applied to your receiver! You can check these connections as follows. With the 12 V supply connected, check that the relay energises (clicking sound heard) when the FET drain (d) is shorted to earth. Check the aerial and receiver connections with an ohmmeter or continuity tester. Disconnect the 12 V supply, and check that there is continuity between the centre pins of the aerial and receiver sockets. Reconnect the 12 V supply, short the FET drain to earth again (this will not damage the FET) and check that there is continuity between the centre pins of the aerial and transmitter sockets. If these tests show correct operation, disconnect the drain shorting wire (*most* important!) and your aerial auto-changeover is ready for use! Avoid using the device without the lid fitted.

Parts list

Resistors: 0.25 watt, 5% tolerance, unless otherwise stated

R1	50 ohms (Ω) – see text and Figure 2
R2	1 kilohm (kΩ)
R3	10 kilohms (kΩ)

Capacitors

C1	100 nanofarads (nF), 0.1 microfarad (μF)
C2	47 microfarads (μF) 15 V electrolytic
C3	1000 picofarads (pF) feedthrough

Semiconductors

D1, D2, D4, D5	1N914
D3	1N4001
TR1	VN10KM

Additional items

L1	T37–43 toroid
	Relay 12 V DPDT (DPCO) relay
	Three sockets to suit (phono, SO239, etc.)
	Thin coax cable and hook-up wire

42 A low-light indicator

Introduction

This is a simple one-evening project that can be built for the pure fun of it, or to use as the basis of a more complex project to switch your shack lights on when it gets dark! In its prototype form, it simply flashes an LED when the ambient light level drops to a preset point.

Operation

The heart of the circuit shown in **Figure 1** is a *photo-conductive cell*, also called a *light-dependent resistor* (LDR), a device whose resistance changes according to the amount of light falling on it. In bright light, the resistance is low (about 1 kΩ), whereas in the dark, its resistance is very high (up to 10 MΩ). The cell is made from a semiconducting material known as cadmium sulphide (CdS), and is enclosed in a small plastic container. The semiconductor is laid on a flat insulating surface in the form of a small flat ribbon. The ribbon construction gives a good area of surface for a given

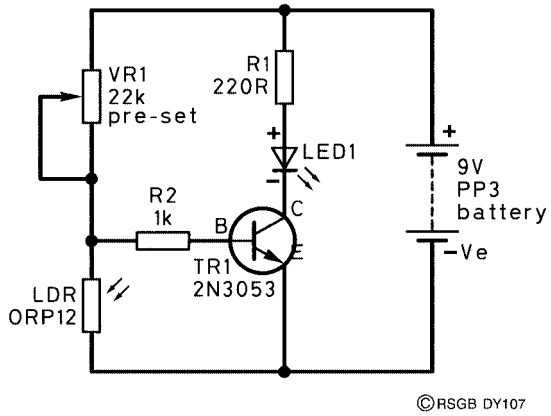

Figure 1 Circuit diagram

length of ribbon, and the length of the ribbon is maximised by laying it out in a zig-zag pattern, as can be seen diagrammatically in **Figure 2**. In the dark, CdS is an insulator; when light falls on it, electrons are released inside the CdS, making it conduct. The more light there is, the more electrons there are, and the resistance falls.

In this circuit, the LDR is connected across the 9 V supply in series with a variable resistor, VR1. In this arrangement, the voltage that exists across the LDR will be determined by the light level. As the light intensity increases, the resistance of the LDR falls, dropping a smaller voltage across it. The

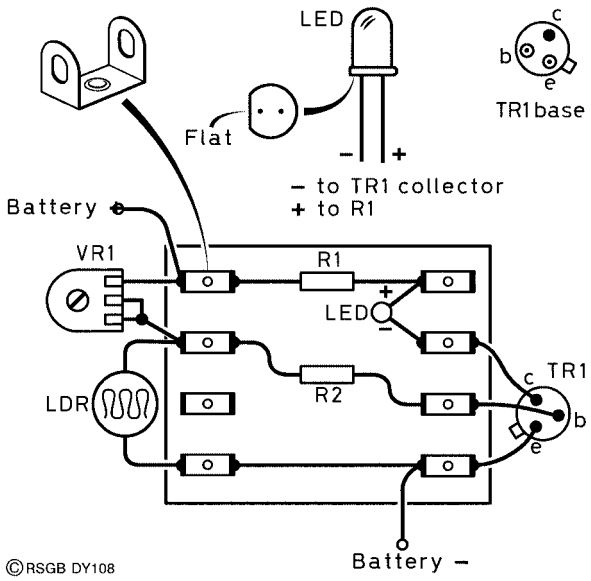

Figure 2 Component layout on tagstrip

reverse happens when the light intensity falls – the voltage across the LDR increases. This voltage is used to drive an npn transistor, TR1, connected as an electronic switch. As the voltage on the base (B) rises, it will reach a point where TR1 will suddenly start to pass current, just as an ordinary switch does when pressed. The current flowing through TR1 also flows through a flashing light-emitting diode (LED), D1 and its series resistor, R1. D1 can be a steadily glowing type, if preferred. If you want to make the circuit switch the LED on at a different ambient light level, adjust VR1.

Construction

The prototype was made on an eight-tag tagboard (Figure 2). The resistors R1 and R2 can be laid on the tagboard for soldering, the rest of the components lying above or to the side of the board. Check the circuit after you have soldered everything on, then connect the battery. The LED should flash if you put your hand over the LDR, and VR1 can be adjusted to vary the point at which the LED lights. The project can be housed in a small plastic box with holes provided for the LDR and LED and an on/off switch if you want one.

Parts list

Resistors: all 0.25 ohm, 5% tolerance

R1	220 ohms (Ω)
R2	1 kilohm (kΩ)
VR1	22 kilohms (kΩ) linear pre-set

Semiconductors

LDR	ORP12
TR1	2N3053 npn
LED1	Flashing LED

Additional items

- Plastic box
- Tagboard with 8 tags
- PP3 battery connector

43 A J-pole aerial for 50 MHz

Introduction

For FM communication (i.e. voice and data) on the VHF bands, a vertical aerial is used to give all-round (non-directional) coverage. This is a half-wave aerial which can be fed at the end, thus removing the principal problem with the conventional vertical centre-fed half-wave dipole, which is that the feeder should leave the dipole at right angles. This is no problem when the dipole is horizontal, but can be difficult for the vertical dipole.

Basic facts

A feeder must be connected to an aerial at a point where the *impedance* (AC 'resistance') of the aerial closely matches that of the feeder. The difference between the two impedances gives rise to the voltage standing-wave ratio (VSWR), which is unity only when the two impedances are the same. With 50 Ω feeders, the feed point of a half-wave aerial is at the centre, where the aerial impedance is around the same value. At the end of a half-wave aerial, the impedance is high, so it is *not* a suitable point to connect a 50 Ω feeder.

Connection at this point can be effected using an RF transformer. RF transformers act in the same way as ordinary transformers, except that they are much smaller, and usually comprise wires of particular lengths adjacent to each other. **Figure 1** is a good starting point. It shows the aerial in its diagrammatic form. Notice that the aerial is in the form of an elongated letter 'J'; this shape gives rise to its nickname – the *J-pole*. The quarter-wave RF transformer is the lower 'U' section below the half-wave element. At the bottom of the U section, the impedance is zero (this may become clearer later) and at the top of the U section it is high, thus matching the aerial impedance. The coaxial feeder cable is connected part-way up the U section, where the impedance is around 50 Ω.

The practicalities

Figure 2 shows the aerial as constructed. As it is about 4.5 metres high, it may be too high for the average house loft, but is ideal for mounting outside, supported by a non-metallic pole or hung from a tree branch. The upper half-wave section is made from 1.5 mm insulated copper wire, as used in domestic mains wiring. The quarter-wave transformer below the half-wave section is made from 300 Ω balanced line ('ribbon cable'). The

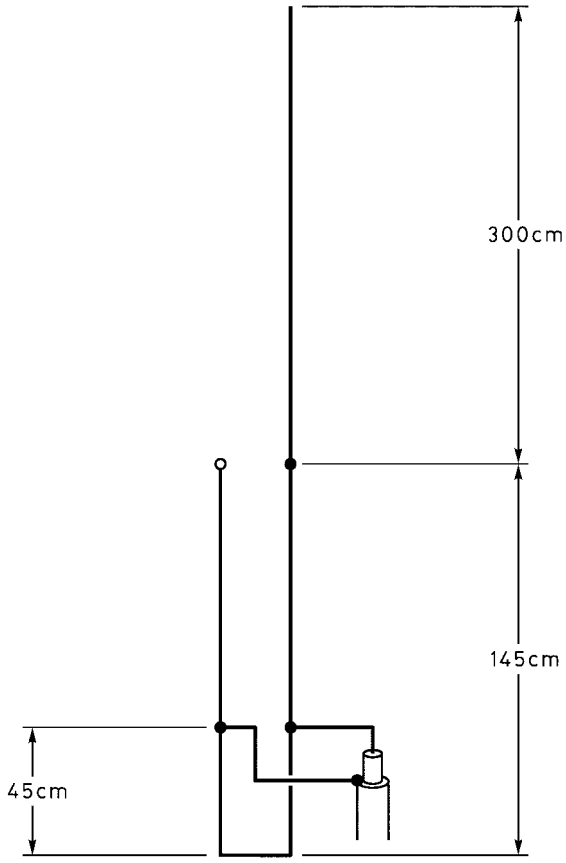

Figure 1 Overall dimensions of the 6 metre J-antenna

wires at the bottom of the transformer section are stripped of their insulation, twisted and soldered. At the upper end, only one wire of the balanced line is soldered to the bottom of the half-wave section. The other wire of the pair is not connected and is left insulated.

At the feed point of the transformer, the insulation needs to be carefully stripped from the balanced line. You will need a standing-wave meter (VSWR meter) in the coaxial line between your transmitter and the aerial, and you will need to adjust the position of the feed point. 45 cm from the bottom was the best point on the prototype, but this position is dependent upon the immediate surroundings of the aerial, and *must* be done when the aerial is in its final operating position. **Warning: *Never* make adjustments to the feed point when the transmitter is on. Make a VSWR measurement, switch off, move the feed point, switch on again, make another measurement, and so on.** You will need to aim for the lowest VSWR you can – certainly better than 2:1. Having found the best position, wrap all the exposed wires with self-amalgamating tape, to seal them against the ingress of moisture.

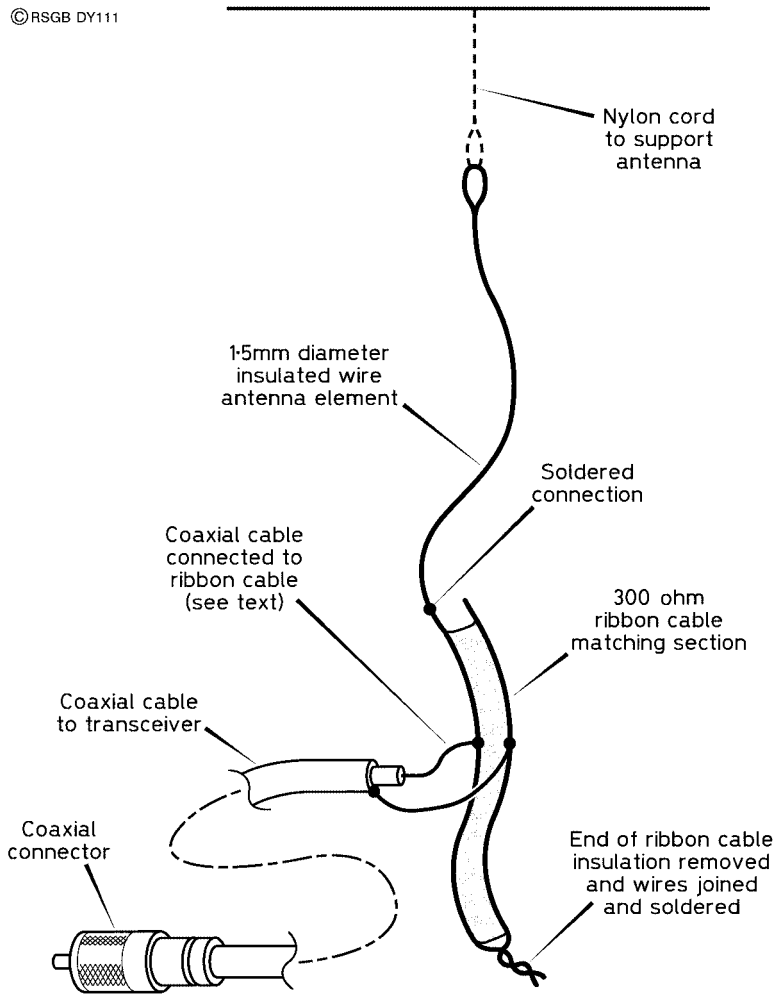

Figure 2 Construction details

How it performs

Figure 3 shows a computer prediction of how the J-pole radiates. It is called a *polar diagram*, and shows the distribution of your transmitted power when viewed 'from the end of your garden'. Most of your signal is sent at a fairly small angle to the horizontal; very little signal goes upwards, which is a good thing, of course. This also shows why the J-pole (or any other vertical aerial) should not be called 'omnidirectional', which means it radiates in all directions. It is omnidirectional *only* in the horizontal plane.

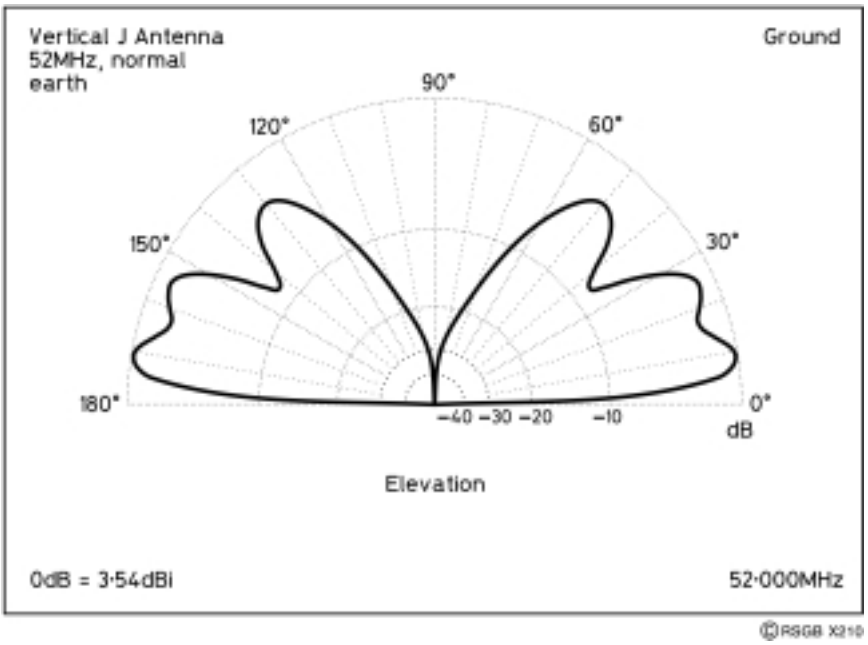

Figure 3 This polar diagram computed for the J-pole

Safety

Where you mount your aerial is a matter of personal preference and the restrictions of height and space, but the following safety rules *must* be applied.

1. Never fix an aerial where it may come into contact with power lines or telephone lines.
2. When climbing a ladder to put up an aerial outside, make sure the ladder is safe and that it is secured.
3. Don't do this alone. Preferably have someone with you. If this is not possible, make sure someone knows where you are.

Parts list

3.00 metres	1.5 mm insulated copper wire
1.50 metres	300 ohm balanced line
As required	50 ohm coaxial cable
As required	Self-amalgamating tape

44 Measuring light intensity – the photometer

Introduction

Before the days of automatic 'point-and-shoot' cameras, a photographer would use a light meter or *photometer* to measure the light level, then manually convert this reading into shutter speed and lens aperture settings to ensure a correctly exposed negative. Modern cameras have quite sophisticated photometers, which control the shutter speed and iris settings automatically.

A short explanation

A simple photometer circuit is shown in **Figure 1**, and is based on a device called a *light-dependent resistor*, or LDR. As its name tells us, its resistance depends upon the amount of light falling on it. In bright light, the resistance is relatively low (about 1 kΩ), whereas in the dark, its resistance is very high (up to 10 MΩ). The cell is made from a semiconducting substance known as cadmium sulphide (CdS), and is enclosed in a small plastic container. The semiconductor is laid on a flat insulating surface in the form of a small flat ribbon. The ribbon construction gives a good area of surface for a given length of ribbon, and the length of the ribbon is maximised by laying it out in a zig-zag pattern. In the dark, CdS is an insulator; when light falls on it, electrons are released inside the CdS, making it conduct. The more light there is, the more electrons there are, and the resistance falls.

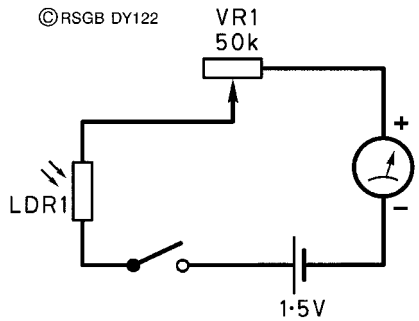

Figure 1 Circuit diagram of photometer

The photometer circuit

The circuit is simply a series connection of four things – the battery, the LDR, a variable resistor and a meter. A switch is also provided. The combination of the LDR resistance and that of VR1 determines the current flowing, which is indicated on the meter. Altering the resistance of VR1 sets the *sensitivity* of the photometer – you may want full-scale deflection of the meter needle for a bright light, or for a dim light.

It is simple to make, and a plug-in type matrix board is ideal to test the circuit, so that you can decide if you want to make a permanent version. Connect all the components in series; the only change you may want to make is the connection to VR1. If you find that the sensitivity control seems to work 'backwards', simply unsolder the wire from the end tag of VR1 and solder it to the opposite end tag. Problem solved!

In use

As soon as you connect up the battery, you will probably have a meter reading because of the daylight falling on the LDR. Shading it with your hand should reduce the reading. If the meter needle is hard over against the end-stop, turn VR1 until it indicates about half-scale. The LDR is very sensitive, and will read zero only in a dark room. If you put on a torch to see what the meter reading is, the LDR will detect the torch light, and will give a reading!

Here is a simple project where you can use the photometer in an experiment which has an analogy in radio. Draw a circle on a large (A3 or bigger) sheet of paper and divide it up into 30-degree sectors, as shown in **Figure 2**. Draw a series of smaller circles which divide the maximum radius into five. Look at the figure if you're not sure about this. Bring the LDR away from the circuit by using two long, flexible wires. The experiment must be performed in a darkened room (preferably in total darkness). Prepare a table with two columns, the left-hand one headed 'Angle (degrees)' and the right-hand one 'Meter reading'. Fill in the left-hand column 0, 30, 60 . . . and so on up to 360°.

Place the torch in the position shown, with its lens at the centre of the circle and pointing along the 0° line; switch it on. Place the LDR facing the torch and adjust VR1 until you have full-scale deflection of the meter needle. Suppose the meter indicates 10 units at this point. Enter this into your table in the 0° row. Keeping the torch the same distance from the circle centre, and pointing at it, move the LDR round all 30° positions and record the meter readings. Switch off the torch and take the sheet of paper and your tabulated results into daylight!

Lay the large sheet of paper on a table with your results beside it; then, at each 30° interval, plot the point along the radius corresponding to the meter

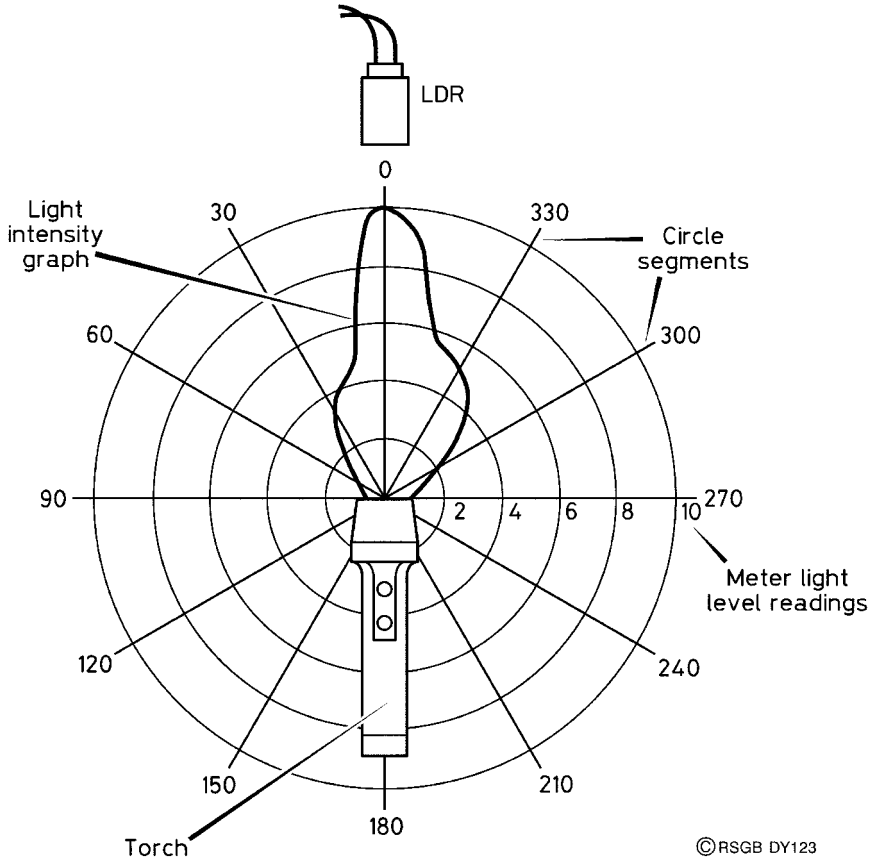

Figure 2 Torch light intensity pattern plotted at RSGB HQ

reading. Then, join up all the points and you have what is called a *polar diagram* of light intensity. The use of the word 'polar' implies that the readings have been taken in a circle and plotted that way.

Light waves and radio waves are both examples of *electromagnetic radiation*. The torch is designed to 'beam' its radiation in a particular direction, just like an aerial does. Hence the use of the word 'beam' for a directional aerial. If a similar polar diagram is drawn for a Yagi-type aerial, it will show the same general characteristics as does Figure 2, namely a main direction (or 'lobe') where most of the energy is concentrated, with evidence of *sidelobes*, indicated by 'lumps' on the otherwise smooth main lobe.

Also in this book you will find a project for the construction of a UHF field-strength meter, which you could use to carry out a measurement of the polar diagram of a UHF aerial.

Parts list

Resistor
VR1 50 kilohms (kΩ) linear

Semiconductor
LDR1 ORP12

Additional items
Meter, 50 or 100 μA
Battery clip for single AA cell
AA cell

45 A 70 cm Quad loop aerial

Introduction

This is a description of how to make an aerial for the 70 cm band which has gain compared with the 'rubber duck' or the dipole aerial. It can easily be dismantled and reassembled, making it ideal for contest use.

The principles

Most aerials which comprise several similar *elements* arranged along a *boom* are variations of the design originated by Yagi and Uda, and which takes the name (for historical reasons) of the former, and is know as the Yagi array. Let us suppose we have a Yagi aerial beaming left to right in front of us. The elements get progressively shorter from the left (look at almost any TV aerial to see this). All the elements on a Yagi aerial are classified as follows:

- The *reflector* – the leftmost element as we look at the array. It is the longest. Next to it is:
- The *driven element* – this is the element connected to the feeder, which in turn runs down to the transceiver. It is slightly shorter than the reflector.
- All the elements beyond the driven element are called *parasitic elements*, or *directors*. They are shorter than the driven element and usually get progressively shorter as we progress to the right along the boom. The directors are mainly responsible for the *directivity* (or *beamwidth*) of the array.

The progression from a simple dipole (a driven element in isolation) to a Yagi array is simple, but is nevertheless important. To make an aerial of two elements, a reflector (*not* a director) is added to the driven element. For three or more elements, directors are added to the two-element design. Adding more and more directors soon becomes impractical, the reduction in beamwidth (such as it is) does not warrant the extra expense, weight and wind resistance that is incurred.

Instead of using linear (straight) elements, as in the generic Yagi, this design uses loops. Designs using squares of wire instead of loops are known as *Quad* aerials, and HF designs require large X-shape frames to support the large squares of wire. At 70 cm, however, the use of wire loops is easier, and they are self-supporting.

Construction

This is quite simple. Any type of material (metal, plastic, wood) can be used for the *boom* (the support for the elements) and for the mast. The elements are made from 14 SWG enamelled copper wire. 16 SWG hard-drawn aerial wire, which is not enamelled, has also been used with success. Thinner wire might result in a rather 'floppy' aerial! The separate parts of the aerial are held together with *jubilee clips* (hose clips).

The driven element is secured to the boom with a jubilee clip and a three-connector plastic connector block as shown in detail in **Figure 1**, and in the photograph. Cut the wire for the driven element 70 mm longer than the 700 mm indicated in Figure 1. Then, using sandpaper, remove the enamel from one end to a distance of 20 mm, and from the other to a distance of 50 mm. After forming the loop of the driven element, bend both stripped ends through 90°, and insert them into the first to holes of the plastic connector block (Figure 1). Do not tighten the screws yet. Push both ends into the block as far as they will go, then bend the 50 mm end back on itself and pull the ends back through the connector block so that the end you have just bent goes into the third hole in the block. Now tighten the screws in the block and in the jubilee clip.

Each director and the reflector should be made 40 mm longer than the circumferences shown in Figure 1. Strip the enamel, as before, from the last 20 mm at each end. Form the wire into the loop, slip the ends under the jubilee clip (Figure 1) and tighten it. You may find that it helps to solder the stripped ends together before securing the jubilee clip.

The boom is fixed to the mast using jubilee clips and wire, as shown in Figure 1. Solder the feeder cable to the driven element, with the braid soldered to the end of the driven element which is connected to the boom (this applies to metal booms; with plastic or wooden designs, the feeder connections are not critical).

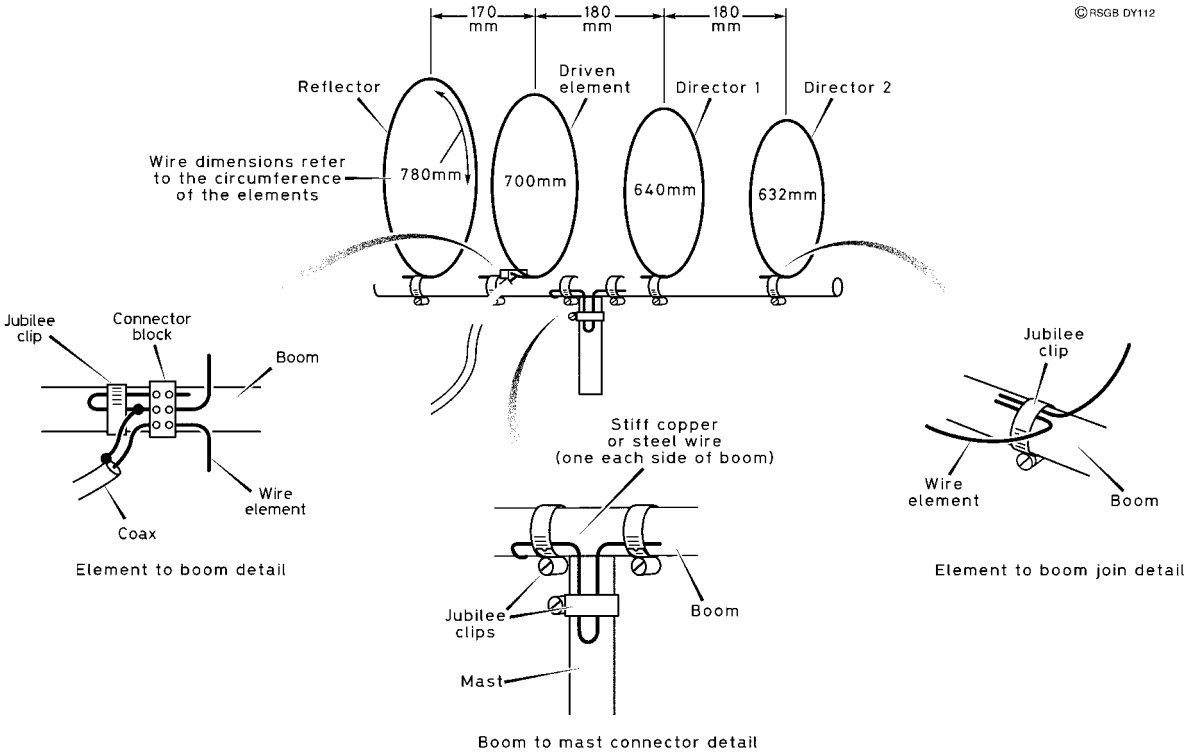

Figure 1 70 cm 4 element quad construction, with detail of how hose clamps are used in the construction

You will need a plug on the shack end of your feeder to suit the transceiver, aerial tuning unit (ATU) or the standing-wave meter (SWM) you are using. Always connect these in the order: transceiver – SWM – ATU – aerial.

Testing

Always test aerials outside and away from buildings (if possible!). This avoids getting misleading results.

Use a rubber duck, or whatever aerial you usually use, and tune around to find a repeater or beacon signal which is consistent. Note the reading on the S-meter. Then, connect your new Quad loop. Rotate it to give the strongest S-meter reading (don't forget it is directional). Verify that the meter reading varies as you rotate it. How does the S-meter reading compare with the original reading? Much depends on the siting of your original aerial; if you are comparing your Quad loop at ground level with a vertical on the chimney, you wouldn't expect your new aerial, even with its gain, to outperform a vertical which is well elevated!

Now a test on transmit is called for. The use of an SWR meter is essential here. Find a clear frequency and check that it *really is clear* before announcing your presence and carrying out the test. A reading of 1:1 is excellent, but any value less than about 1.8:1 would be acceptable. You can measure the directivity of your aerial using the field strength meter, also described in this series.

Materials

4 metres of 14 SWG enamelled copper wire
Material for boom and mast
15 amp connector block
7 Jubilee clips

The enamelled copper wire is available from AA&A Ltd, Sycamore House, Northwood, Wem, Shropshire SY4 5NN. Everything else is available from most hardware stores.

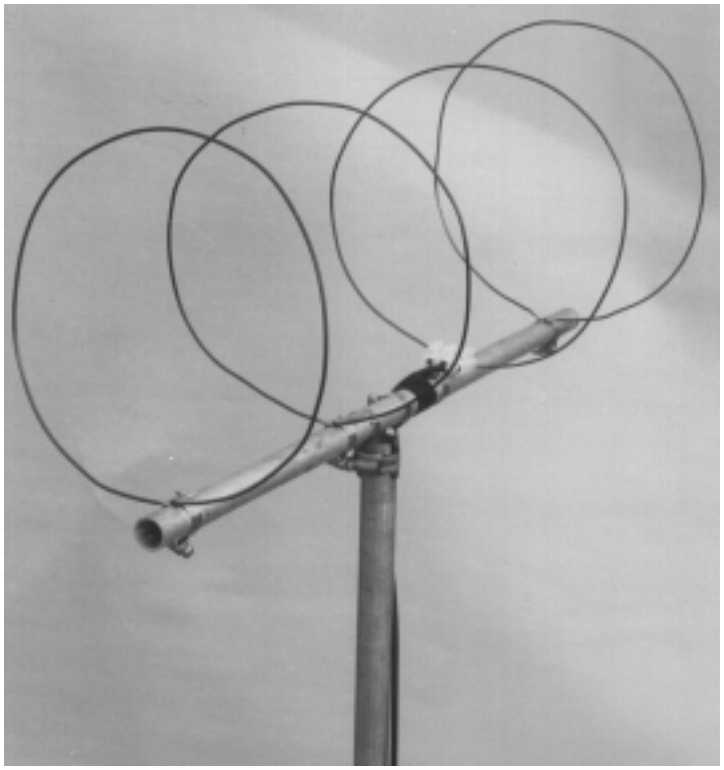

46 A UHF field strength meter

Introduction

It is always interesting, and often useful, to know just *where* the radiation is going from your aerial. How much of your radiated energy is going in the general direction of the station you are in contact with, and how much is being effectively wasted? Some of these questions can be answered with the use of a *field strength meter*. A field strength meter is simply a receiver, stripped down to its bare essentials, such that it responds only to the magnitude of the carrier. The use of a field strength meter assumes that the aerial under test is radiating a continuous carrier. Don't forget to find a clear frequency and identify your transmissions at least every quarter-hour, in order to comply with the terms of your licence.

Description

Two types of field strength meter are shown in **Figure 1**. You will recognise both circuits (Figure 1b particularly) as being types of 'crystal set' with a meter replacing the headphones. Figure 1a is a broad-band HF design (there is no tuning provision) and Figure 1b is tuned in the same way as the crystal set; with a loop of wire as an aerial, it will perform well in the VHF/UHF range.

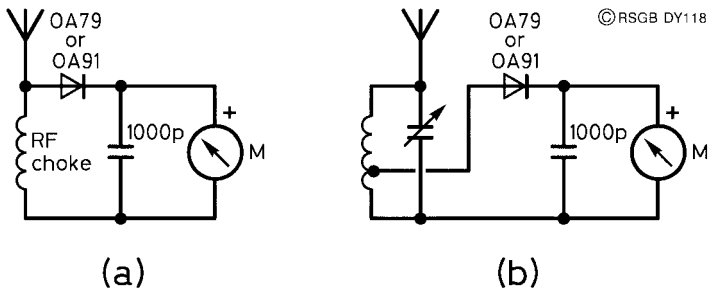

Figure 1 Construction of the UHF field strength meter

A tuned field strength meter also doubles as an *absorption wavemeter* if it is well calibrated. Such devices are useful for detecting transmitter harmonics also. This design is intended for use in the UHF band, so it will have to be sensitive around 432 MHz.

Construction

The field strength meter comprises a loop of wire, 600 mm long, which acts both as aerial and as the tuning inductance, a diode, a capacitor, a connector block, a meter and a length of twin wire. All the components, with the exception of the meter, are fixed to a pole with a jubilee clip, as shown in **Figure 2**. The meter should have a sensitivity of between 50 μA and 100 μA, or a multimeter can be used. The multimeter is more flexible, as you can select different current ranges, giving you a range of sensitivities.

Using the field strength meter

Connect your meter to the ends of the twin wire from the pole. Place a hand-held transceiver about 2 metres away, and press Transmit. If there is no meter reading switch off the transmitter and check the wiring. If the needle attempts to go negative, simply reverse the wires to the meter. If the reading is too high, either move the transmitter further away, or increase the current range on the multimeter. Try changing the orientation of the transmitter aerial, and note how the signal varies.

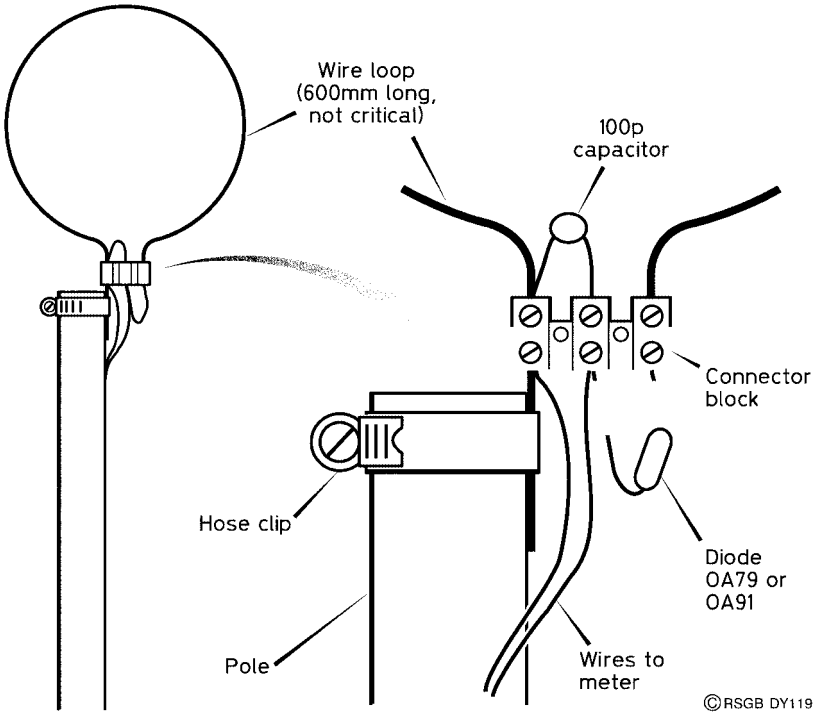

Figure 2 Assembly of the field strength meter

To measure the *polar diagram* (a graph of the signal strength against the angle between the aerial boom and the field strength meter, plotted on polar axes) of a beam aerial, mount the loop as far away from the aerial as you can, preferably at the same height, and rotate the aerial, say 15 degrees at a time, and record the signal strength, until the aerial has been turned through 360 degrees. If you need help plotting the graph, enlist the help of a friend who has done it before, or one who knows about polar graphs! If you have already built the Photometer project, you will have measured and plotted the polar diagram of the light intensity from a torch. Now you will see the great similarity!

Parts list

Capacitor	100 picofarads (pF)
Diode	Germanium, OA79 or OA91
Connector block	10 A, 3-way
Wire	600 mm of 16 SWG enamelled copper
	Length of twin cable for meter connection
Clip	Jubilee (hose) clip

47 Christmas tree LEDs

Introduction

A novelty ideal for the festive season, this circuit causes one LED at a time to light up around a small cardboard Christmas tree.

Warning

This circuit uses members of the integrated circuit family known as CMOS (complementary metal-oxide semiconductor). These use very little current and can be completed destroyed if they come into contact with the magnitudes of static electricity that most of us carry about when we walk on carpets and wear rubber shoes. You will never know if this wanton destruction has happened – all you will discover is that your circuit doesn't work and that you have tested *everything*. To avoid this problem do the following things:

1. **Before you open the little packet in which each IC is supplied, touch something which you *know* to be earthed – the metalwork of any equipment which is mains-earthed, for example. Then open the packet.**
2. **Let the IC fall gently on the bench – don't pick it out with your fingers. Touch your earthed metalwork again. Pick up the IC and insert it gently into its holder.**
3. **Repeat the process with the second IC.**

The circuit is safe from destruction while it is connected to the battery. However, when the battery is removed, the same care should be exercised with its handling, because there are no supply decoupling capacitors across each IC.

Description

Figure 1 shows the layout, and how the wires are connected from the circuit board to the LEDs around the tree. The circuit, shown in **Figure 2**, is quite complicated, so you need to be confident in your logical approach to circuit-building before you attempt this one! It uses two common integrated circuits (ICs). IC1 is simply an oscillator which provides timing pulses for IC2, which 'counts' up to a maximum of 10. The outputs of the counter are indicated by light-emitting diodes (LEDs); red, orange, yellow and green are common colours which you can use.

The circuit is built on a single piece of Veroboard measuring 29 holes by 12 strips. **Be aware that there is no strip labelled 'I', so don't make mistakes in your counting!**

First of all, cut the tracks in the positions shown in Figure 1 using a 3 mm (⅛ inch) twist drill rotated between thumb and forefinger. Then, solder in the IC sockets, the notches facing row M. Wire up and solder in the links and then the Veropins for the connections to the LEDs and battery. Having done this, the resistors and the capacitor should be fitted. When wiring the LEDs, each cathode (the lead adjacent to the 'flat' on the LED encapsulation) is connected to R4, and the anodes go to separate pins on IC2.

Testing

Hold up your circuit board to the light and check carefully for solder bridges between adjacent tracks. Then check again that the wiring is correct. Place the ICs in their holders, with the notched ends lining up with those on the holders. Connect the battery, and the LEDs should illuminate in sequence.

If you have no success, you are now wishing you had checked the circuit more carefully! Learn something from your mistake and it will not have

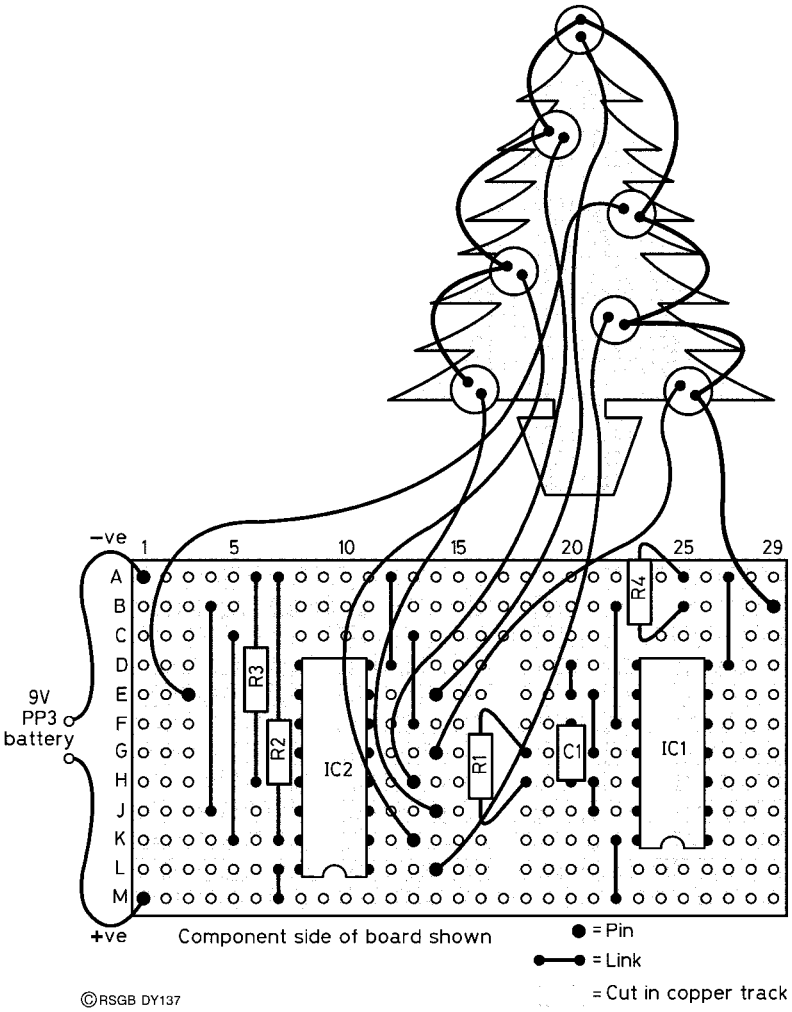

Figure 1 Christmas tree, component layout

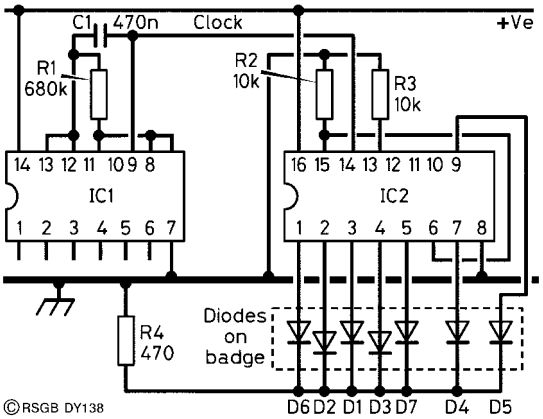

Figure 2 Christmas tree, circuit diagram

been in vain! The first thing to check is that the LEDs are the correct way round. If that is OK, then check the positions where the tracks are broken (intentionally!). After that, are the wire links in the right places – had you forgotten there is no row 'I'? Check *all* the wiring, then check *again* for solder bridges, and switch on again. One of these tests should have revealed a fault. If it *still* refuses to work, perhaps one (or both) of your ICs were damaged by static electricity, despite your precautions – or did you choose to ignore them?

Parts list

Resistors: all 0.25 watt, 5% tolerance

R1	680 kilohms (kΩ)
R2, R3	10 kilohms (kΩ)
R4	470 ohms (Ω)

Capacitor

C1	0.47 microfarad (μF) min. metallised polyester film

Semiconductors

IC1	4011
IC2	4017

Additional Items

D1–D7	5 mm LEDs in choice of colours
	14-pin DIL socket for IC1
	16-pin DIL socket for IC2
	PP3 battery clip and battery
	Veroboard, Veropins
	Insulated wire for links

48 An audio signal injector

Introduction

An audio signal injector is a device used to test audio frequency circuits. It is simply an oscillator running at a frequency in the audio range, so that when its output is fed to the input of an amplifier, it will produce a sound in the loudspeaker if the amplifier is working. The oscillation is so rich in harmonics that the signal can also be heard (sounding rather different) when injected into an RF circuit.

The design

The circuit is shown in **Figure 1**, and is a basic *astable multivibrator*, a free-running oscillator producing a roughly rectangular-wave output. The two transistors, TR1 and TR2, operating as switches, switch on and off alternately at a frequency around 500 Hz. The prototype was constructed on plain matrix board (no copper strips), as illustrated in **Figure 2**.

Both transistors are type BC108, which are only a few pence each new, and can be found at almost any rally. You can add an on/off switch, or simply disconnect the battery when you are finished using it. To make the unit in one piece, the battery can be taped to the board, as the diagram shows.

The probe itself is made from a short piece of stiff insulated wire, soldered to a tag on the board; an earth lead is also soldered to the board, and terminated in a crocodile clip to attach to the ground lead of the equipment under test.

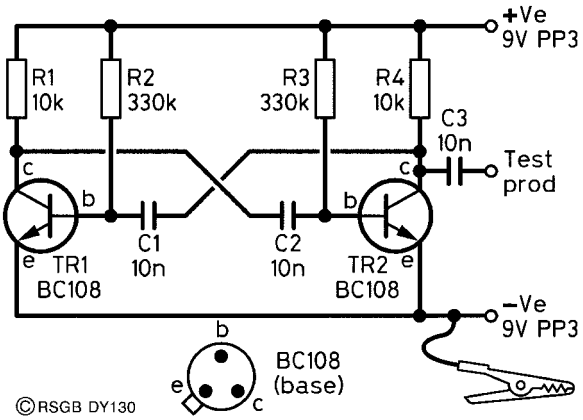

Figure 1 Circuit diagram of the signal injector

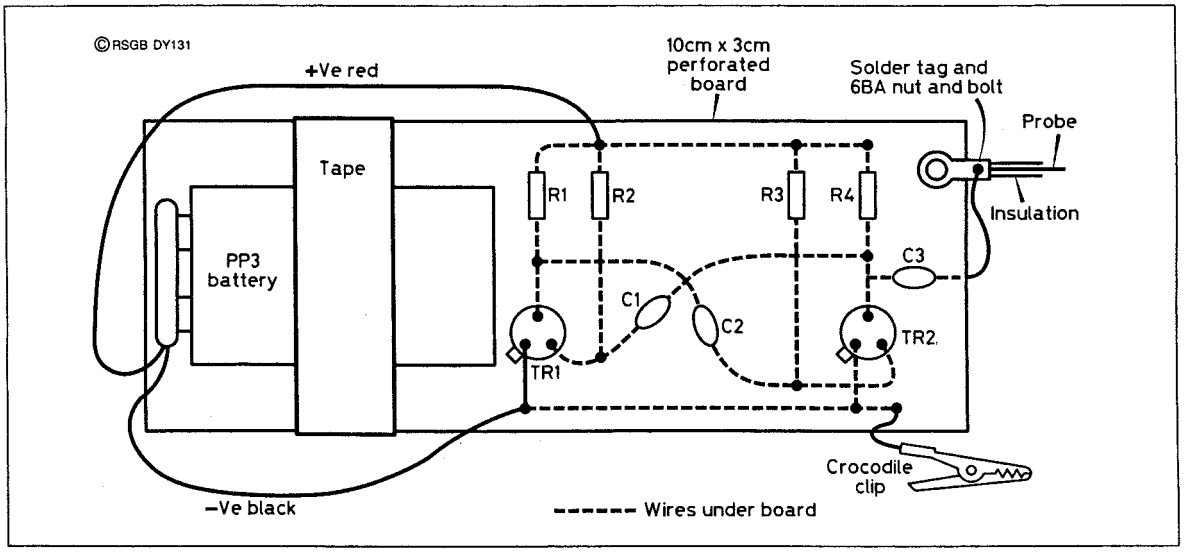

Figure 2 Component layout of the signal injector

Using it

After checking the wiring of the circuit, connect the battery. Find a transistor radio that is known to work. Carefully remove the case, switch on and apply the probe to the centre tag of the volume control. A *very* loud buzz should be heard from the speaker, indicating that the audio circuits of the radio are working. Using the injector to fault-find equipment you have made yourself is rather more instructive and rewarding, because you *know* where to inject the signal, and you should *know* what to expect when you do.

Warning

Do *not* work on any equipment connected to the AC mains. Work only on battery-powered circuits, for your own safety.

Parts list

Resistors: all 0.25 watt, 5% tolerance

R1, R4	10 kilohms (kΩ)
R2, R3	330 kilohms (kΩ)

Capacitors

C1, C2, C3	10 nanofarads (nF) or 0.01 microfarad (μF) ceramic

Semiconductors
TR1, TR2 BC108

Additional items
PP3 battery and connector
Matrix board 10 cm by 3 cm
6BA solder tags
Thick insulated wire for probe
Crocodile clip

49 Standing waves

Introduction

Everyone has, or *should* have, a standing-wave ratio (SWR) meter as part of his/her array of test gear. Most people know how to use it, but what does it really do?

Before attempting to answer that question, we need to look at some aerial fundamentals. An aerial is a *transducer*, the word meaning 'to lead across'. We use it whenever one form of energy is converted into another form. A bulb is a transducer; it converts electrical energy in the filament to radiated heat and light energy. **Figure 1** shows the situation.

An aerial, or antenna, is also a transducer; it converts radio-frequency (RF) energy in the feeder (or *transmission line*, to give it its proper name) into radiated electromagnetic energy, in the manner shown in **Figure 2**. The aerial has resistance, just like the bulb filament, and if the filament had zero resistance, there would be no radiated energy. In the same way, if the aerial had no resistance, there would be no radiation from it.

Transmission lines should convey RF energy from transmitter to aerial with the minimum power loss. A common form of transmission line is the *coaxial*

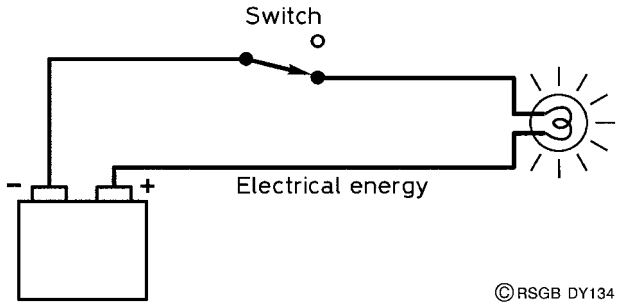

Figure 1 The light bulb converts electrical energy to electromagnetic light energy

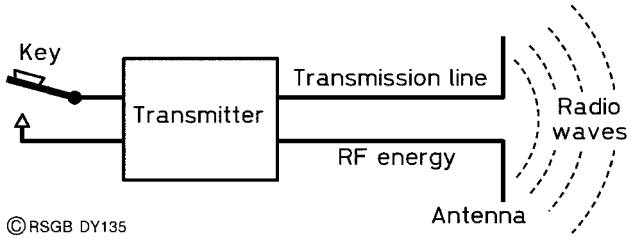

Figure 2 The antenna converts RF current to electromagnetic radio waves

cable. As you might expect, any feeder cable has a DC resistance caused by the resistance of the copper wire from which it is made. It also has an AC resistance, caused by the capacitance between the centre conductor and the braid, and by the inductance of the cable itself. This means that the feeder has an *impedance*, which is constant for the particular type of cable. This is what we call the *characteristic impedance* and, for the cables used in most amateur radio applications, it is 50 Ω.

If this impedance can be made the same as that of the aerial (it is already the same as the impedance of the transmitter output), then the transfer of energy will occur with minimum loss. If the aerial and cable impedances are *not* the same, then there is a *mismatch*, which causes some of the RF energy to be reflected back towards the transmitter. We now have a situation where RF energy is flowing along the cable from the transmitter to the aerial (the *forward* wave) and, at the same time, flowing from the aerial to the transmitter (the *reflected* wave). The two waves interact along the cable and form a stationary pattern of voltage and current. The pattern is known as a *standing wave*, and can be visualised from the waveforms in **Figure 3**. The ratio of the maximum voltage to the minimum voltage on a given wave defines the *voltage standing-wave ratio* (VSWR), or just *standing-wave ratio* (SWR) for short.

The SWR meter is easy to use. It is positioned in the feeder between the transmitter and the aerial tuning unit (ATU) if there is one, or between the transmitter at the aerial otherwise. Most meters have a single meter and a four-position switch. The transmitter is first keyed and, with the switch in

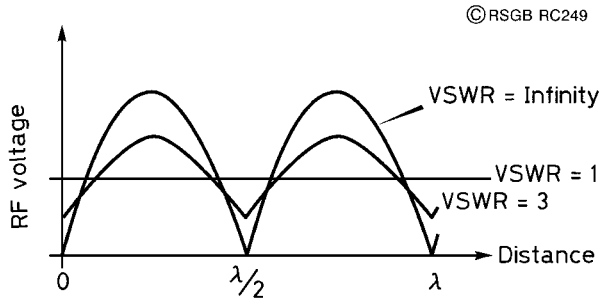

Figure 3 Standing waves on a transmission line

the 'calibrate' position, the sensitivity control is adjusted to give full-scale deflection on the meter. The switch is then changed to 'forward' to read the forward power, to 'reflected' to read the reflected power, and to 'SWR' to read the value of the standing-wave ratio. When there is no reflection (see Figure 3), the meter should read 1:1 or, simply, 1.

Most SWR meters remain in the feeder line while the transmitter is operating, so the condition of the aerial and feeder can be constantly monitored. Problems with the aerial (such as water entering the feeder at its junction with the driven element) are immediately shown up. Without the use of the SWR meter, the situation would slowly deteriorate over several months and you would be left wondering why so few stations were answering your calls!

50 A standing-wave indicator for HF

Introduction

The standing-wave ratio (SWR) meter shows how well the aerial system, including the feeder, is *matched* to the output of the transmitter. This design does not *measure* SWR, but it gives an indication of when the SWR is minimum for a given system of aerial and feeder. The design is usable on the HF bands from 1.8 to 28 MHz, and can be used at 50 MHz with reduced sensitivity.

How it works

There are two types of wave in any feeder: the *forward* wave, which travels from the transmitter to the aerial; the *reflected* wave, which travels back to the transmitter from the aerial. The presence of a reflected wave is evidence that some of your transmitted power is not being radiated, but is being returned to the transmitter to be lost as excess heat. When aerial and feeder are perfectly matched, there is *no* reflected wave, and all the power from the transmitter is radiated.

Referring to the circuit of **Figure 1**, a tiny fraction of the signal is removed by the transformer, T1, and by the capacitors, VC1 and C1. It is then detected by the germanium diodes, D1 and D2, and any residual RF removed by the capacitors, C2 and C3. The currents through the diode and meter (depending on the position of switch, S1) represent the forward and reflected signals. VR1 acts as a sensitivity control for the meter.

It pays to shop around for a suitable meter. Surplus types from tape recorders and hi-fi equipment are usually ideal for this purpose. A new one would cost several pounds. The more sensitive the meter, the more sensitive your indicator will be. Meter sensitivity is given by the current required to give full-scale deflection (FSD) of the pointer. One with an FSD of between 50 and 200 micro-amps (μA) is suitable for this circuit. The higher the FSD, the less sensitive the circuit.

Construction

The meter circuit and the sampling transformer (see **Figure 2**) are built and mounted on Veroboard of the copper-strip variety. It simplifies construction

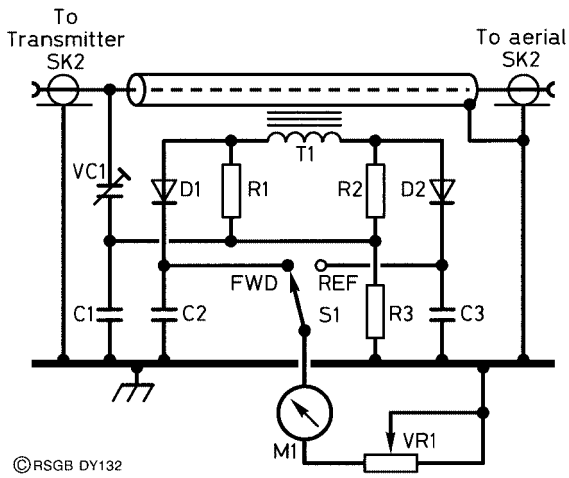

Figure 1 Circuit diagram of the SWR meter

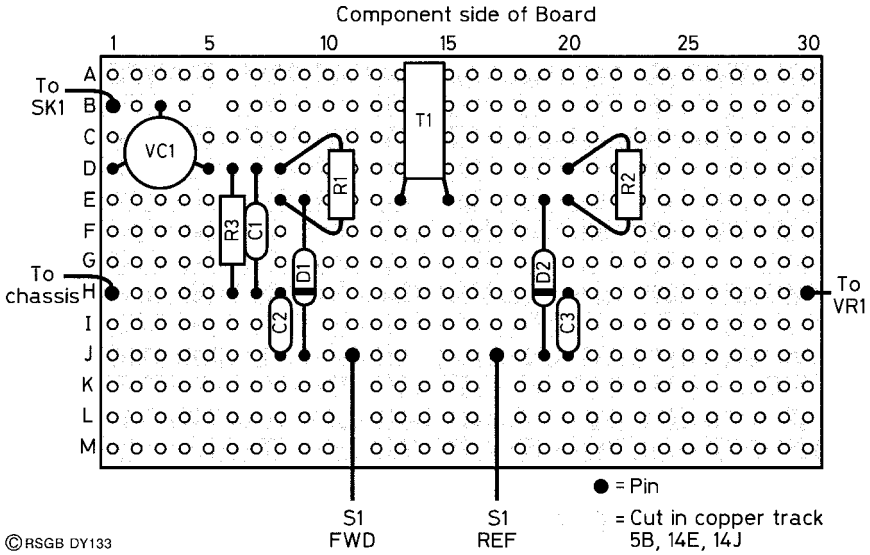

Figure 2 Component layout of the SWR meter

but reduces the operational range of the meter to below 30 MHz because of the capacitive coupling between strips. The board has 13 strips by 30 holes, although you can reduce this if you have a smaller case.

Firstly, cut the tracks at the three points shown. Then insert and solder Veropins for connections to the external components, the switch, variable resistor and the meter. Solder in the components starting with the resistors and followed by the capacitors and the diodes, ensuring that the diodes are inserted correctly.

Now you have to wind the transformer, T1, on a small toroidal ferrite core. Wind the secondary with 15 turns of 36 SWG enamelled copper wire, spaced evenly over about two-thirds of the former. The turns should not overlap, and considerable care must be taken; the wire is very thin, will kink easily and will break if you apply too much tension. The 'primary' is an 8 cm length of 50 Ω coaxial cable which passes through the toroid on its way between the input and output connectors. The braid of the cable is connected to the case at only *one* of the connectors (see Figure 1); this prevents the screen and the metal case between the two sockets forming a single, shorted turn.

The ends of the secondary winding must be carefully stripped of their enamel with sandpaper, before attaching the toroid to the board with cotton or nylon fishing line. On no account must wire be used for this!

Solder the secondary connections of T1 to the board and thread through the coaxial cable ready for soldering to the connectors.

The case used was an aluminium box (Maplin LF02C), but any suitable metal box could be used. Aluminium is preferable, as it is easily drilled with simple tools. Use standoff insulators to mount the board in the case. Once this has been done, the leads from the board to the chassis-mounted components can be soldered. So can the coaxial cable passing through the toroid. Make the lead from the input socket to VC1 as short as possible.

Setting up

You will need a 50 Ω dummy load and a transmitter to set up your indicator. Connect the transmitter to SK1 and the dummy load to SK2. Set the toggle switch, S1, to *forward* and the sensitivity control, VR1, to mid-travel. Switch on the transmitter, and set VR1 for maximum meter deflection. Switch to *reflected* and adjust VC1 until the reading is minimum (ideally zero). This completes the setting up!

Using the indicator

For setting up an aerial, connect your circuit between the transmitter and the cable leading to the aerial. With S1 in the *forward* position, key the transmitter and adjust VR1 for maximum reading on the meter. Switch to *reflected*, and then adjust your ATU to give minimum reflected power. If your adjustments are to be made to the aerial itself, to give minimum reflected power, you must make a note of the reflected reading, switch off the transmitter, make a change to the aerial, key the transmitter, and note whether the reflected power is greater or less than before. Then, make more changes to the aerial. **Never adjust your aerial with the transmitter on.** Make your adjustments on an unused frequency, and do it as quickly as possible, thus avoiding (or minimising) interference to other stations.

Parts list

Resistors: all 0.25 watt, carbon 5% tolerance
(or Maplin 0.6 watt metal film)

R1, R2	27 ohms (Ω)
R3	2.2 kilohms (kΩ)
VR1	10 kilohms (kΩ) linear

Capacitors

C1	220 picofarad (pF) disc ceramic 50 VDC
C2, C3	0.1 microfarad (μF) disc ceramic 50 VDC
VC1	20 picofarad (pF) trimmer

Semiconductors	
D1, D2	OA91 germanium
Additional items	
S1	Single-pole changeover (SPDT or SPCO)
SK1, SK2	Coaxial sockets to suit station standards
	Veroboard – 13 strips by 30 holes
	Veropins (7 off)
	Amidon FT 50–43 ferrite toroid
	Meter, less than 200 μA FSD
	36 SWG enamelled copper wire
	Short length of UR43 or RG58 coaxial cable
	Insulated stranded wire
	Aluminium box
	Standoff insulators for mounting the board
	Knob for the sensitivity control

51 A moisture meter

Introduction

Dry rot (*Merulius Lacrymans*) can strike havoc in buildings, causing the timbers to decay and crumble to dust – hence the term *dry rot*. Wood is attacked only if its moisture content rises above 20%.

Construction

The circuit of the moisture meter is shown in **Figure 1**. The two probes touch the wood, and the current that flows between them depends on the moisture content of the wood. If the moisture is sufficiently high, the current, after amplification, will be enough to light the LED.

The meter can be made on a piece of plain matrix board (no copper strips), as **Figure 2** shows. The board is big enough (10 cm by 2.5 cm) to accommodate the PP3 battery, taped on. No case is needed, unless you want

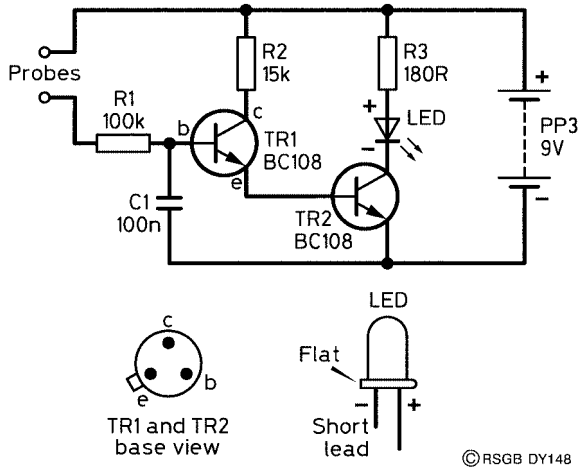

Figure 1 Circuit diagram of a moisture meter

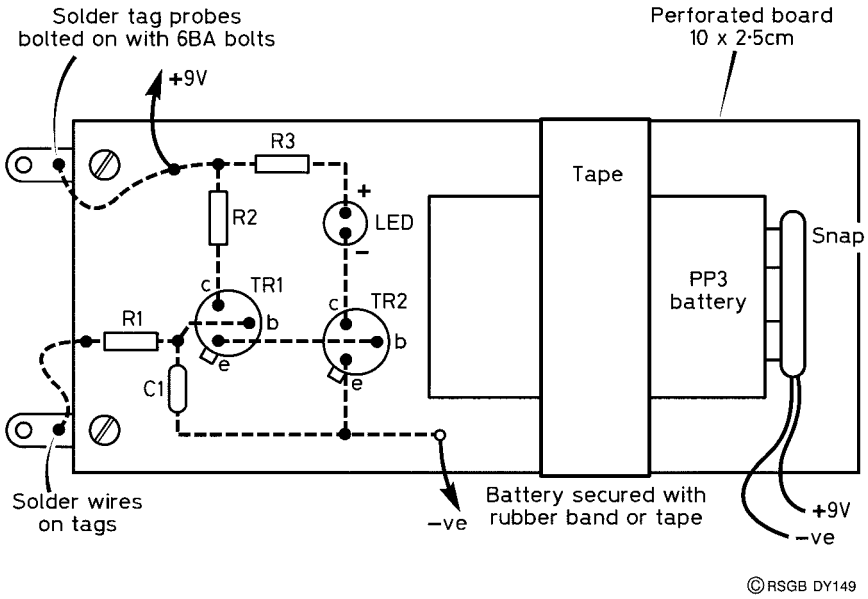

Figure 2 Moisture meter, component layout

to leave the meter in a damp location for a protracted period! Make sure that the transistors and LED are mounted correctly. In Figure 2, the connections as shown to TR1 and TR2 are illustrated as if the transistors were transparent. An on/off switch is not really necessary, as only a very small current flows when the probes do not touch anything. Use solder tags, screwed to the board, to act as probes.

After the assembly is completed, check your circuit one final time, and then connect the battery. Nothing should happen at first. If you lick your forefinger and hold it across the probes, the LED should light.

Using it

The prototype was compared with a commercial moisture meter, and the LED lit when the moisture was around 20%. This was quite fortuitous, as the point at which the LED lights depends both on the separation of the probes and on the gain of the two transistors.

In addition to searching for dry rot, the instrument may be used to monitor the moisture in the soil of household plants. In this case, probes made of 16 SWG copper (*not* enamelled) should be soldered on to the two tags, and should penetrate the soil to a depth of several centimetres, and R1 may require adjusting so that the LED extinguishes if the soil is too dry, and lights if the soil is sufficiently moist. If you wanted to leave the meter with the probes in the soil, an on/off switch *would* be necessary.

Parts list

Resistors: all 0.25 watt, 5% tolerance

R1	100 kilohms (kΩ)
R2	15 kilohms (kΩ)
R3	180 ohms (Ω)

Capacitor

C1	0.1 microfarad (μF) polyester

Semiconductors

TR1, TR2	BC108
LED	Any shape or colour will do

Additional items

PP3 battery and connector
Solder tags (2 off) for probes
Matrix board 10 cm by 2.5 cm

52 Simple aerials

Introduction

The performance of *any* receiver or transceiver, no matter how expensive it is, is limited by the aerial that feeds it. Two of the most frequently asked questions are:

- Which is the best sort of aerial to use?
- Where is the best place to locate an amateur radio aerial?

To answer these questions, you must ask yourself what sort of operation you want to do. Are you interested in local, chatty contacts on the lower bands or VHF, or are you more disposed towards long-distance (DX) contacts, and on what band?

A house with a moderately sized garden is assumed in the diagrams here, to illustrate the configurations of some simple aerials. You would not need all these aerials festooned around your house, because one or two would be sufficient for your needs. The problems incurred by properties with more restricted space will be covered later.

VHF aerials

For VHF operation, the aerial should be mounted as high as possible, either on a mast or on a chimney. For all-round coverage on FM and the local repeaters, a vertical colinear is a good choice. For SSB and CW DX operation, a horizontal rotatable beam is needed. If satellite working is envisaged, you will need to contemplate mounting an elevator on top of your rotator, so that your beam can point in *any* direction, including vertically upwards! An advantage of satellite working is that the aerials do not *necessarily* have to be up in the air, provided you have a relatively uncluttered site. Your rotator and elevator can be at ground level, which is good!

If the VHF aerial is mounted on the chimney, use a double mounting bracket, particularly if you have a beam and rotator. Keep the TV, broadcast FM and amateur aerials as far apart as possible, and keeping the feeders separated is also a good plan.

The dipole aerial

One of the simplest types of aerial for single-band operation is the half-wave dipole. (The name ‘dipole’ simply means ‘two poles’ or ‘two elements’, and

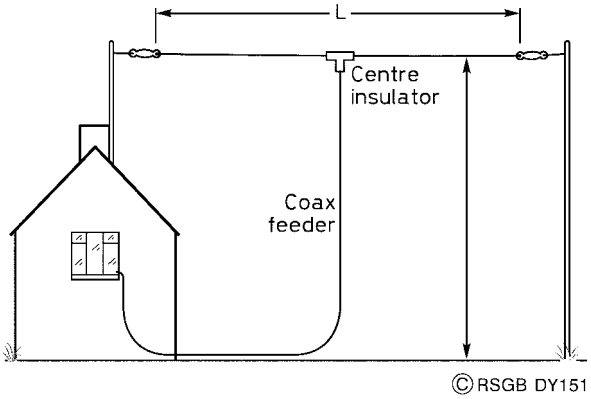

Figure 1 Layout for a dipole aerial

in this case the total length of the dipole is approximately half a wavelength at the operating frequency.) It is usually fed in the centre by coaxial cable as shown in **Figure 1**. The length of the dipole for the lowest frequency in each band is shown in **Table 1**. Normally, the length of the aerial will be 'trimmed' to be tuned to the centre frequency of the part of the band in which you will operate. This is done using the data in the right-hand column of Table 1. As an example, suppose you wanted your aerial to be resonant at 3.7 MHz. The table gives an overall dipole length of 42.86 m for 3.5 MHz. To resonate the aerial 200 kHz *higher*, then this length must be shortened by 2 × 0.595 m = 1.190 m. Your dipole would thus be 41.67 m long. Remember to allow extra wire for fixing the dipole ends to the insulators.

Table 1 Dipole lengths for lowest frequency of each band and the length to be trimmed from each to raise the resonant frequency by 100 kHz

Band (MHz)	*Dipole length (m)*	*Trim each end (mm/10 kHz)*
1.8	83.33	2190
3.5	42.86	595
7	21.43	150
10	14.85	70
14	10.71	35
18	8.33	20
21	7.14	15
24	6.03	12
28	5.36	10
50	3.00	6

On the lower-frequency bands, the lengths become rather large. In this case, you can 'bend' your dipole, as illustrated in **Figure 2**. The length of wire required to give an acceptable value of SWR (less than 2:1 on transmit) may need to be different from the calculated value, so be prepared to experiment!

Dipoles are single-band aerials, although they will often work acceptably on the third harmonic of their design frequency: a 7 MHz dipole often operates reasonably well on 21 MHz. It is possible to operate several dipoles in parallel, as **Figure 3** shows. Interaction between the elements can occur if the spacing between them is less than about 10 cm. A multi-band dipole, as shown in Figure 3, has the elements separated with plastic spacers, and drooping ends to produce maximum spacing between the elements' ends.

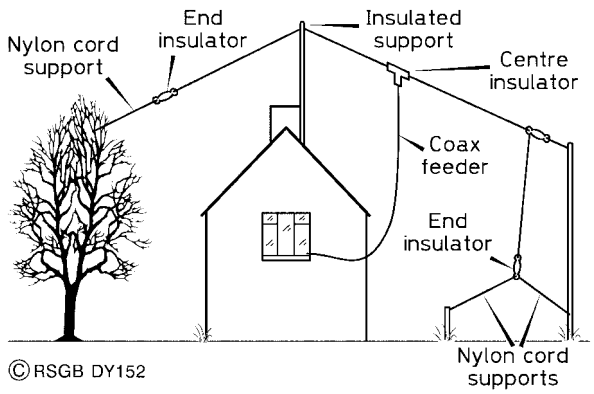

Figure 2 Possible layout for a dipole aerial in a confined space

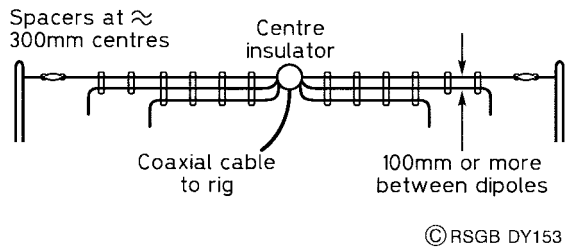

Figure 3 Multi-band dipole aerial

The long-wire aerial

This aerial is simple, cheap, easy to erect, and suits most houses and gardens, as **Figure 4** shows. Using an aerial tuning unit (ATU), an end-fed long wire can function on several bands when used with a set of radials or a counterpoise. **Figure 5** illustrates the setup. The length of the aerial will determine the bands which will be covered.

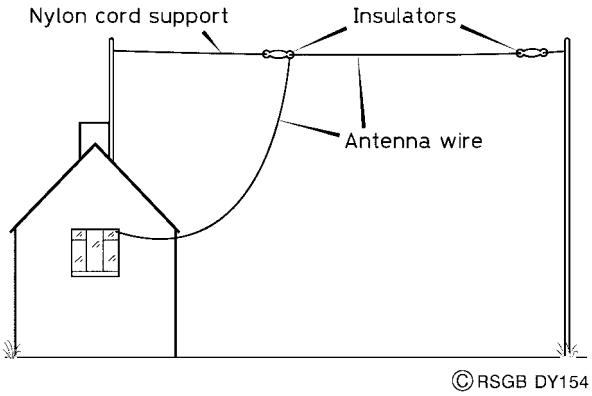

Figure 4 Long-wire or inverted-L aerial

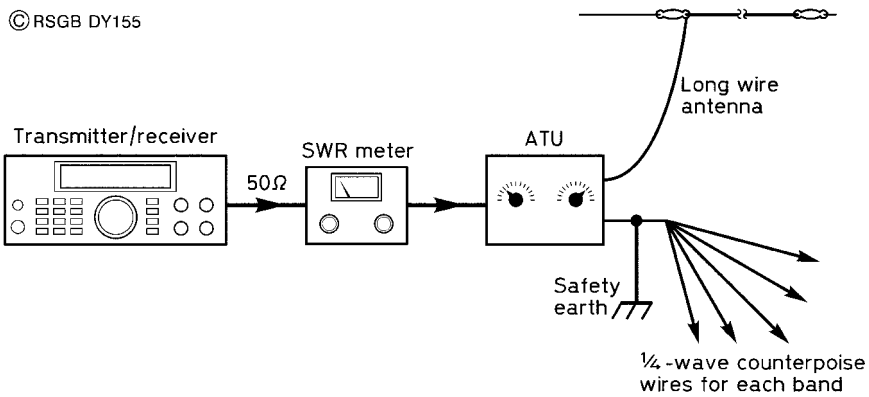

Figure 5 How to connect a radio to a long-wire aerial

A wire length of 10.5 m will work on the 40, 30, 17, 15 and 12 m bands.

A wire length of 15.5 m will work (with an ATU) on the 80, 40, 20 and 12 m bands and possibly (depending on your ATU) on the 17 and 15 m bands.

A wire length of 26.5 m will operate on all bands, but may be difficult to load on 10 m.

The wire lengths given here may need some adjustment because of the geometry of your particular house and garden. For receive-only purposes, the lengths are far less critical.

In general, you cannot get a good radio-frequency (RF) earth from a first-floor (or higher) shack. Unless a good RF earth exists within a small fraction of a wavelength of the transceiver, an *artificial ground* comprising a single $\frac{\lambda}{4}$ radial or counterpoise will be needed. You will need one counterpoise for each band you intend to use, and the wire can be concealed around the skirting-board of the shack, or under the carpet. Make sure that the free end

Table 2 Lengths of elements for vertical antennas, radials for verticals and counter-poises for end-fed long wire antennas

Band (MHz)	*Element length (m)*
1.8	39.66
3.5	20.40
7	10.20
10	7.14
14	5.1
18	3.96
21	3.4
24	2.95
28	2.55

of each counterpoise is well insulated; this point can carry a *very high voltage* when you transmit; anyone coming into contact with this can suffer very severe RF burns. Counterpoise lengths can be read from **Table 2**.

The vertical aerial

The single-band vertical aerial is sometimes used by DX operators because it has a low angle of radiation, which favours long-distance propagation. However, it must be sited clear of obstructions and must have a *good* counterpoise or radial system. Illustrations of the vertical aerial are shown, and the lengths of the vertical and radial sections are given in Table 2. The centre of the coaxial feeder is connected to the vertical section, and the braid to the counterpoise or radial system, which is made up of four or more wires buried just below the surface and joined together near the base of the aerial.

Cable entry to the house

Bringing coaxial cable into the house by an open window must be regarded as a temporary measure. Wooden window frames can be drilled, one hole for each feeder. Make the holes slope downwards from inside to out to prevent rain entering, and treat these with wood preservative. Leads from long-wire and inverted-L aerials should be kept separate from other cables.

Alternatively, a plastic pipe large enough to take all your feeders could be fitted into the brickwork (again, sloping downwards towards the outside). You may want to let a friendly builder do this for you.

53 A breadboard 80 m CW transmitter

Introduction

In the early days of radio, many circuits were built on a wooden baseboard, the parts being screwed down on the board. This was called breadboard construction, because it was a breadboard that was frequently commandeered for the process! Wives have always been generous in this respect, it appears!

This circuit was originally designed by GM3OXX, and became known as the *Oner*, because it was built on a circuit board one inch square! The circuit appeared in the G QRP Club journal *Sprat* and, since that time, many hundreds of *Oner* circuits have been built and used on the air. It is a well-proven circuit.

The transmitter has no tuned circuits in the power amplifier (PA) and thus has a rather high *harmonic* content. It **must** be used with the ***low-pass filter*** described elsewhere in this book. Without the low-pass filter, interference will be caused to other stations.

Simple aerial changeover switching is provided, which allows this circuit to be used with any of the 80 m receivers, such as the *Colt*, described in this book. It can also be used with any kit or commercial receiver for the 80 metre band.

The circuit

The transmitter circuit is shown in **Figure 1**. TR1 is a crystal oscillator, the frequency of which is controlled by crystal X1. A small trimmer capacitor, TC1, is added to allow the frequency of X1 to be varied by a small amount. If adjustment of this trimmer is made possible from the front panel, it is useful to adjust the transmit frequency to avoid other stations already on the crystal frequency. The collector load resistor, R2, of the oscillator transistor, TR1, determines the power output; a value of 3.3 kΩ seems to work well in producing an output of 3 watts.

TR1 is directly coupled to TR3, a VMOS transistor (a type of field-effect transistor (FET)). This acts as the power amplifier (PA) stage. TR3 should

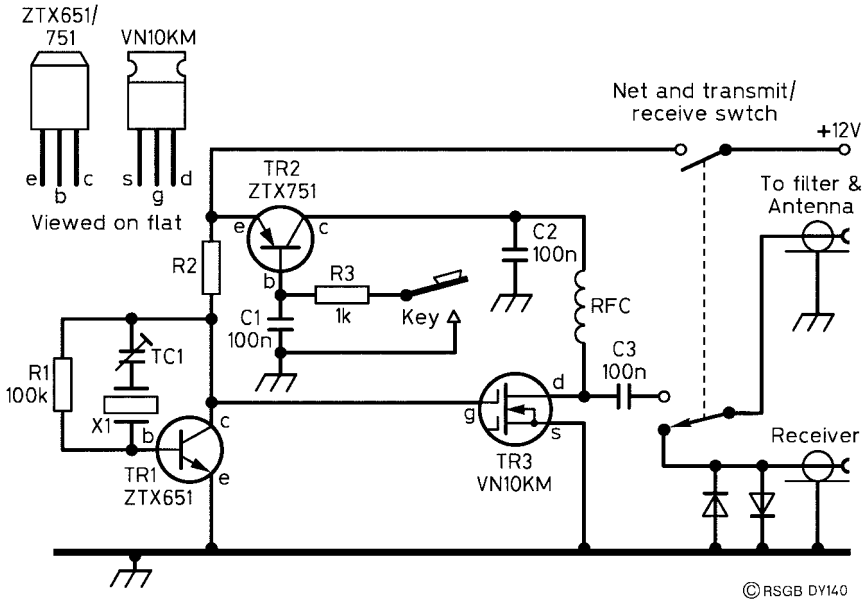

Figure 1 Circuit diagram of the breadboard transmitter

give about 3 W output, which is then coupled to the output by C3. The radio-frequency choke (RFC) providing the drain load of TR3 is simply a few turns of wire on a ferrite bead.

TR2 is an interesting addition to the circuit. It is used as a switch to 'key' the PA, TR3. The transmitter *could* be built without TR2, just placing the Morse key between the top of the RFC and the 12 volt supply. Adding TR2 is helpful, because it means that one side of the Morse key can be grounded (always a good thing), and some degree of *shaping* of the output RF waveform is provided by R3 and C1. This makes the transmission sound a little better and reduces the possibility of spurious frequencies being generated and transmitted. TR2 is a pnp transistor; note that it is the *emitter* of this transistor which is connected to the positive side of the supply.

Some form of changeover switching is needed for the aerial. A double-pole changeover toggle switch can be used. See the chapter on switches, later on in this book. One pole is used to switch the aerial between transmitter and receiver; the other pole is connected in the 12 volt supply line, and is labelled RECEIVE/TRANSMIT – NETTING. Its use will be described later. In this simple circuit, the PA cannot work when the key is open, because the key breaks its supply (via the RFC). When the key closes, TR2 switches on and applies the 12 volt supply to the top of the RFC. C2 is a *decoupling* capacitor, which prevents any residual RF signals at the top of the RFC reaching TR2.

Building

The prototype was put together as follows. Take a piece of plain printed-circuit board (PCB) measuring 5 cm by 4 cm. Then, with a *new*, *sharp blade* in a junior hacksaw, draw the blade horizontally across the surface of the copper in order to make a pattern of 6 squares along the 5 cm side and 5 squares along the 4 cm side. No more pressure should be applied than is necessary to cut through the copper! All the parts will be soldered on these pads in a form of surface-mount construction. To do this, each active pad (i.e. one that is going to have a component soldered to it) needs to be *tinned*. This means coating the pad's surface with solder, and is carried out as follows. Place the hot tip of the soldering iron on to the pad, and hold it there for a second or so. Then, with the tip still in place, touch the end of your reel of solder *on the pad*, not the tip of the iron. The solder should flow evenly all over the pad, and you can remove the iron. The solder should solidify in a rounded, shiny blob! This provides a good surface for making soldered joints.

To join component leads to the pads, cut each lead about 1 cm long, and then bend the last 2 mm at right angles to the rest of the lead. As you did before, tin the 2 mm length of each lead. Place the tinned portion on to the pad, and place the tip of your iron *on the pad*, close to the lead. The solder on the pad and on the lead will melt and run together; remove the iron and *hold the component still* until the solder solidifies. When the joint has cooled, give the lead a gentle tug to make sure you have a good joint (a good *mechanical* joint is usually a good *electrical* joint, too!). Each transistor straddles three pads, so the centre lead will need to be shorter than the other two. Take care here to get the lead lengths right – if you do, you will be surprised how much more firmly the transistor is held than if you just botched the lead lengths by bending them to fit! Make sure the connections to the transistors are correct.

Winding the RFC is quite simple. Seven (or more) turns of thin (32 SWG) enamelled copper wire are threaded through a small ferrite bead. This requires care, because the bead is small and the wire is thin. Trim the ends to within about 1 cm of the bead, remove the enamel carefully with sandpaper and tin the bare ends, prior to soldering the choke to the board.

After completion of the wiring, check the circuit against Figure 1. Bread-boarding a circuit like this has its advantages, but it can have disadvantages, too. One of these disadvantages is that it can make circuit checking difficult. For a simple circuit like this, it is not too bad! Check that no solder has run between the pads. Plug in your crystal for the 80 m band, and connect up the 12 V power supply. Do not connect the Morse key yet and do not switch on the power.

Testing and operating

Clear your workbench of all metallic objects, slivers of copper, bits of wire, etc., switch on your power supply. With an external receiver, listen on and

around your crystal's frequency for a signal. Remember that the oscillator runs all the time and, because you haven't yet connected the Morse key, your receiver is close enough to pick up the signal from the oscillator. This confirms that your oscillator is running. Switch off.

Connect the station aerial to the transmitter's aerial socket, and the receiver to the transmitter's receiver socket. Connect the Morse key, put the Receive/Transmit–Netting switch in the receive position and switch on. You should be able to hear stations in the normal way. Now put the switch in the Transmit–Netting position. Signals in the receiver should almost disappear, as the circuit has disconnected the receiver's aerial.

Tune the receiver until you can hear your own crystal oscillator signal. This is known as *netting*, tuning your receiver and transmitter to the same frequency. Pressing the key will now transmit your signals when the switch is in the Transmit–Netting position; switch back to the receive position to listen for stations answering your call. As soon as you are happy that your circuit is functioning properly, **you must build the low-pass filter circuit** before using the transmitter regularly.

Parts list

Resistors: all 0.25 watt, 5% tolerance

R1	100 kilohms (kΩ)
R2	See text
R3	1 kilohm (kΩ)

Capacitors

C1, C2, C3	100 nanofarads (nF), or 0.1 microfarad (μF)
TC1	3–60 picofarads (pF) trimmer

Semiconductors

TR1	ZTX651
TR2	ZTX751
TR3	VN10KM

Additional items

RFC	7 turns of 32 SWG enamelled copper on a ferrite bead
Switch	Double-pole changeover (DPDT or DPCO) toggle
Crystal	For 80 m band
Crystal holder	HC25 type
Sockets	According to station fittings

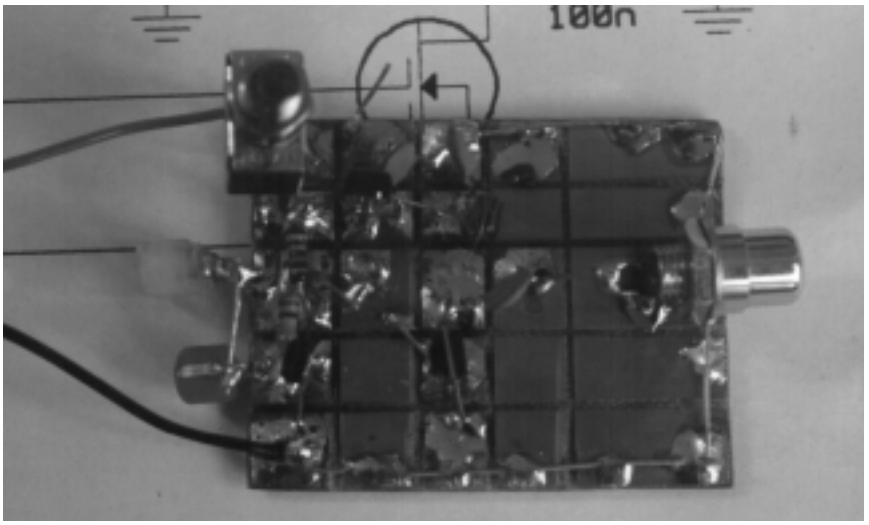

54 A 7-element low-pass filter for transmitters

Introduction

The simpler the transmitter, the more likely it is to radiate *harmonics* of its fundamental frequency. Harmonics are integral multiples of the frequency on which the transmitter is *designed* to operate. If you think you are transmitting on a frequency, *f*, for instance, you will also be radiating the harmonics of *2f*, *3f*, *4f*, . . . and so on. This results in your signals being heard on *several frequencies*, spread over a very wide frequency range. You are also contravening the terms of your licence. To avoid this, it is always advisable to use a *low-pass* filter between your transmitter and aerial. This is a filter which will *pass* your signal frequency, *f*, and all frequencies *below* it, but will *not pass* (attenuate) frequencies above *f* to any significant extent. The value of *f* is known as the *cutoff frequency* of the filter.

A design of 7-element low-pass filter

A 7-element low-pass filter (LPF) is so called because it has seven components, as the circuit diagram of **Figure 1** shows. Filters containing any odd number of elements are possible: a 3-element filter would

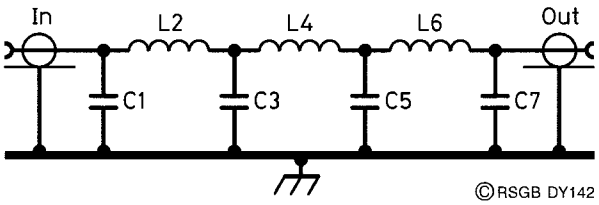

Figure 1 Circuit diagram of filter

comprise C1, L2 and C3 only, and is sometimes called a pi-network because the element disposition resembles the Greek letter pi (π); a 5-element filter would comprise C1, L2, C3, L4 and C5 only, and so on. In general, the more elements the filter has, the more effectively it attenuates signals above *f*.

The circuit of Figure 1 is designed to have an input and an output impedance of 50 Ω, which means that it can be placed in the aerial feed of any common transmitter. Filter design is a very complex business, and is best left to the experts. One such expert is W3NQN, who produced a number of computer designs of LPF using commonly available (*preferred value*) capacitors, and aimed specifically for use on amateur frequencies. The results of this work are condensed into **Table 1**. The inductors are wound on standard toroidal cores, and their details are included in the table.

Table 1 Filter component values for each brand

Band metres	*C1,7 pF*	*C3,5 pF*	*L2,6 turns*	*L4 turns*	*Core type*	*Wire SWG*
80	470	1200	25	27	T37-2	28
40	270	680	19	21	T37-2	26
30	270	560	19	20	T37-6	26
20	180	390	16	17	T37-6	24
15	82	220	12	14	T37-6	24
10	56	150	10	11	T37-6	22

Making the filter

The filter was made originally as an adjunct to the *Breadboard 80 m CW transmitter*, which you will also find in this book. It uses the same constructional technique, based on a single piece of plain, copper-clad

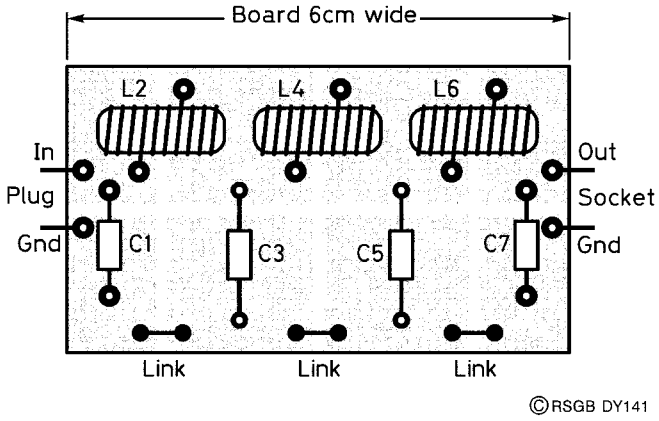

Figure 2 Layout and construction of filter

PCB, with 'pads' created by using a sharp blade in a junior hacksaw. The cuts in the copper are shown in the layout diagram of **Figure 2**. There are two ways of mounting the components: the first way is to drill small holes in each pad, as shown in Figure 2, and mount the components through the holes in the normal PCB manner; the second way is to solder the components directly to the pads, in the way that was described for the *Breadboard transmitter*.

Winding the inductors is quite simple. All you need to remember is that each time the wire passes through the core counts as one turn. Cut off the spare wire at each end of each coil to about 1 cm, scrape off the enamel with sandpaper, and tin the exposed copper. See the transmitter description if you are unsure of how to do this. Note the wire links between each of the lower pads, forming a solid 'ground' for the elements. The prototype had a plug and socket on the ends, to match the transmitter and aerial terminations.

The type of capacitor used in the design is not critical; the polystyrene type works well.

55 Radio-frequency mixing explained

Introduction

Mixers find widespread use in electronic circuitry. Many of the projects in this book, together with every TV set and radio in the home, contain mixer circuits – a good indication of their usefulness.

Confused?

Audio mixers (as used in recording studios and radio broadcast stations) are used to **add** or 'balance' the signals from various sources such as microphones, CD players, etc. These have nothing whatsoever to do with radio-frequency (RF) mixers, and should never be confused with them.

RF mixers and beat frequencies

Instead of **adding** signals (as in the audio mixer), the RF mixer **multiples them together.** As you might expect, this has an entirely different effect. The two signals entering the mixer *beat* or *heterodyne* with each other to produce *signals on other frequencies*. One example of this occurs in sound, when two musical notes of almost the same frequency are heard together. Instead of hearing two separate notes, the listener hears one note whose *intensity* (*loudness*) appears to increase and decrease. This intensity variation is called a *beat*, and its frequency is equal to the difference in the frequencies of the two original notes. The technique is used by musicians to tune their instruments. If one note is known to be a correct frequency, the other can be tuned to it by making the beat frequency as close to zero as is possible.

Multiplying together

The process of mixing presupposes that we have a device which will automatically multiply two signals together. Fortunately, this is easy; so easy, in fact, that it often occurs when we do not want it! Multiplying is achieved by any device which is *non-linear*; this means a device whose output is not a constant factor larger than its input, something that can be achieved by many electronic devices and circuits.

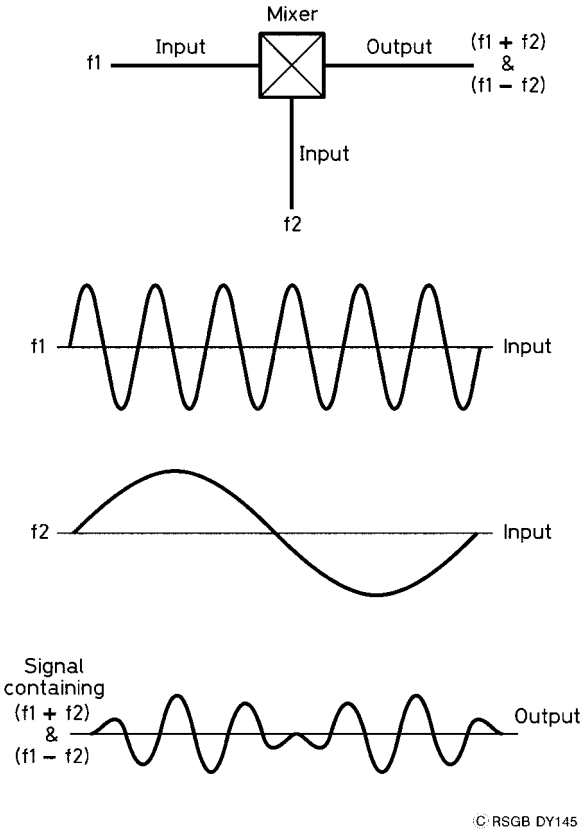

Figure 1 The effect of multiplying (or mixing) two signals together

Let us look now at what a mixer does in concrete terms. Suppose two signals, of frequencies *f*1 and *f*2 go into our mixer. These signals are shown in **Figure 1**. Putting numbers in, to make the situation clearer, suppose *f*1 is 1.000 MHz and *f*2 is 160 kHz. The beat frequency is the *difference* of these: 1.000 MHz – 0.160 MHz = 0.840 MHz, or 840 kHz. A mixer *also* produces an output at the *sum* of these frequencies; in this case the new frequency would be 1.000 MHz + 0.160 MHz = 1.160 MHz.

Suppose you fed the output of your mixer, operating with these input frequencies, into a receiver and tuned around to find what frequencies were present. You would find two signals, one at 840 kHz and one at 1.160 MHz, showing that the two 'new' frequencies were very real!

In addition to drawing out the waveform of the resultant signal, as in Figure 1, we can draw the inputs and outputs on a frequency axis, to form a *spectrum* of the signal components. This is done in **Figure 2**. The top two diagrams show the input signals at *f*1 and *f*2. The bottom diagram shows the output signals in relation to the input signals. Depending on the type of mixer used, one or both of the input signals would be removed.

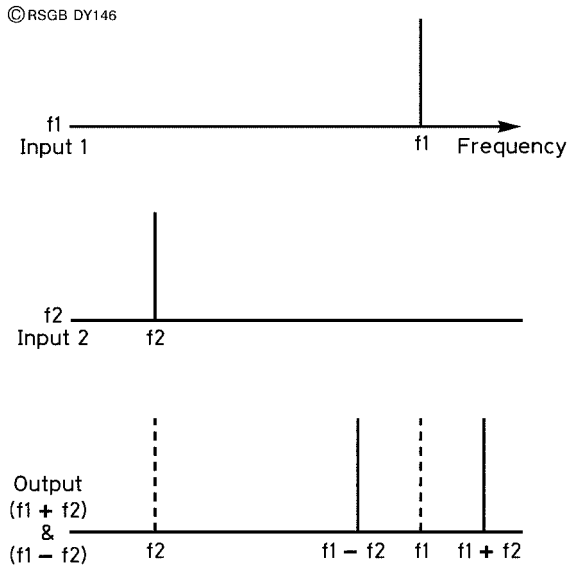

Figure 2 The result of multiplying or mixing two signals together as seen on a spectrum analyser

A mixer in every radio

Basically, a mixer is used to change a signal from one frequency to another, something it does without altering the characteristics of the incoming signal. If the incoming signal is amplitude modulated (AM), then the frequency-changed signal would be AM also. The same applies to FM, SSB, CW, and all other modulation forms you can think of. This explains why mixers are often called *frequency changers*.

Frequency changing is the key process in the type of radio known as a *superheterodyne* (or *superhet*). By mixing the incoming signal with a variable-frequency *local oscillator* as **Figure 3**, shows, the signal can be converted to the fixed frequency of a filter and amplifier. This is useful

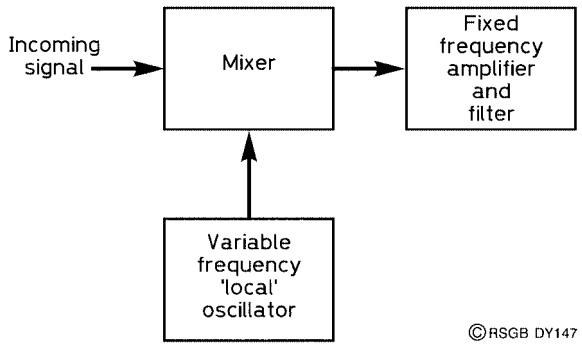

Figure 3 The basic idea of a superhet receiver

because it is easier to make a very high-quality filter and amplifier at a single fixed frequency, than at a variable frequency.

All TV receivers and virtually all radio receivers (and transmitters) use mixers. Both the *Yearling* and *Colt* receivers (see the relevant projects) are superhets, and use mixers.

56 A voltage monitor for a 12 V power supply

Introduction

If for any reason, the stabilisation of your main 12 volt power supply unit (PSU) breaks down, it is possible that a voltage much higher then the nominal 13.8 V will be applied to your precious equipment. If you would like to know the instant that this occurred, and hence be able to switch things off before it was too late, then this circuit is what you need. It will give audible *and* visual indications if the voltage rises above 14.4 V, and a visual indication only if the voltage is reduced.

The circuit

The circuit uses three ICs and is shown in **Figure 1**. The circuit is powered by the PSU whose output is being monitored, and the circuit's immunity to supply line variations is secured by the 6 volt regulator, IC1. The heart of the circuit is IC2, an LM3914; it is a *bargraph driver*, which operates ten LEDs in a display resembling a thermometer – the string of lit LEDs increases in length as the voltage on pin 5 increases.

The input voltage range on pin 5 is 1.2 V maximum, making each LED correspond to one-tenth of this, which is 0.12 V, the *step size*. R1 and R2 act as a voltage divider, so that voltages of up to the maximum of 14.4 V may be applied to R1 without exceeding 1.2 V at pin 5. R3 sets the brightness of the LEDs and R4 determines the step size.

IC3 is an *opto-isolator*, a device containing an LED and a phototransistor in one package. This enables the piezoelectric sounder to operate without affecting the operation of the bargraph driver. The input to IC3 is provided by the voltage on D8, so that if any of the LEDs at or above D8 are lit, the

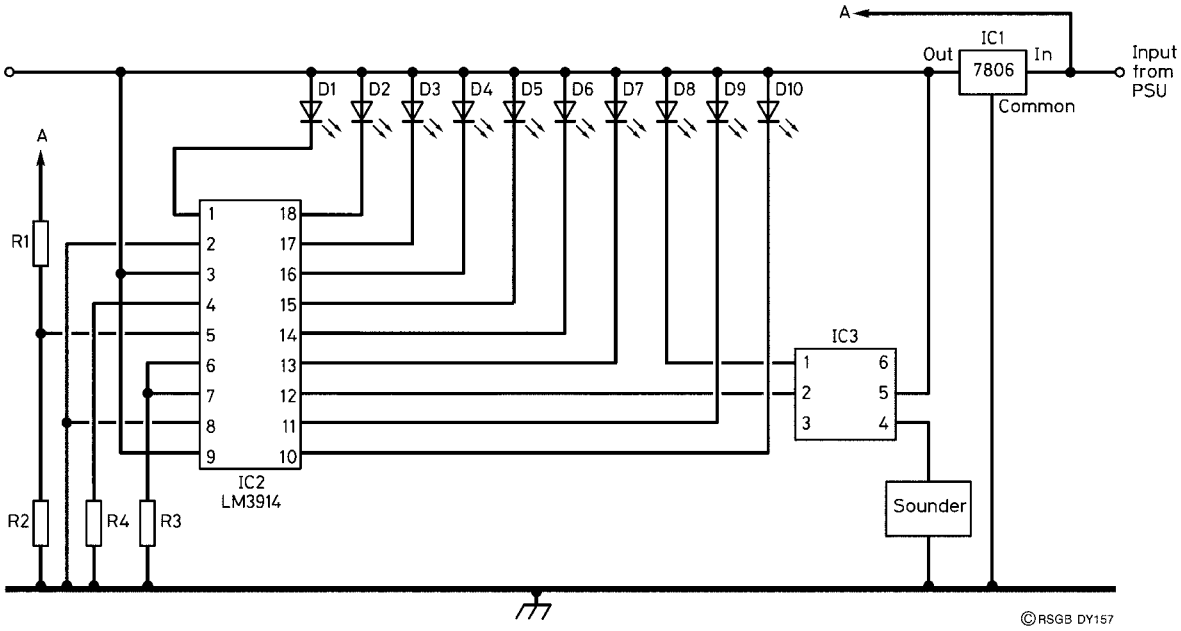

Figure 1 PSU monitor, circuit diagram

sounder will operate, indicating overvoltage. Despite the fact that some of your other equipment might be damaged by this overvoltage, the monitor circuit itself is unaffected.

Construction

The prototype was built on two pieces of Veroboard of the copper-strip variety. The main (circuit) board measured 15 strips by 25 holes, and the display (LED) board measured 4 strips by 30 holes. Track cuts are necessary in each board. The correct places are shown for the main board in **Figure 2**, but there is sufficient flexibility in the layout of the display board for a prescriptive layout not to be needed. All the anodes of the LEDs are connected to the same strip, which makes things comparatively simple!

For the main board, insert the Veropins and the wire links first, and solder them to the copper strips. Then fit the IC holders and the resistors. Fit the IC holders with their notches towards the top of the board. When fitting the voltage regulator, IC1, note than the centre lead (the 'common' lead in Figure 1) does *not* go to position A3; the track should be cut at A3, and the common lead soldered at B3. This is indicated in Figure 2.

Wire up the LED board with its ten LEDs and 11 connecting wires, each about 10 cm long. This length depends on how far away from the main

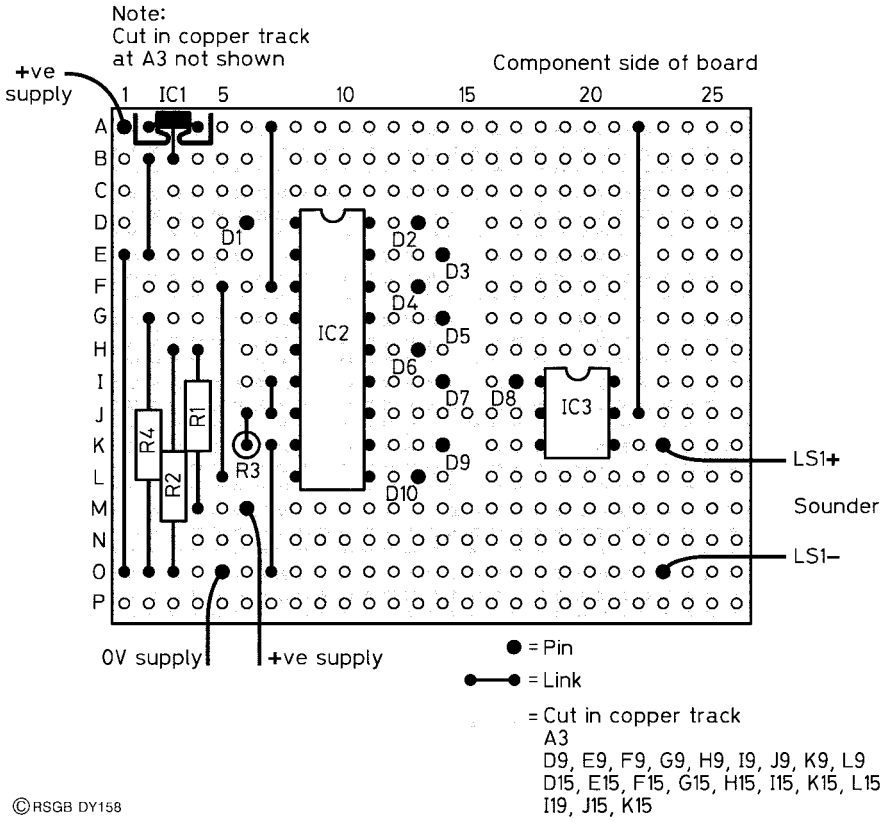

Figure 2 PSU monitor, PCB layout

board you are planning to mount the display. The LEDs should have different colours: three orange, four green and three red, to indicate 'low', 'medium' and 'high' voltage.

Now solder the other ends of these leads to the Veropins on the main board, making sure that the order is correct. Finally, connect the piezoelectric sounder to the main board; the polarity is important, so make sure the red lead goes to pin 4 of IC3 and the black lead to the ground rail. If you were careful to fit the IC holders with their notches in the correct positions, match these up with the notches on the ICs before pushing home the ICs *gently*. Check your circuit for solder bridges and unwanted pieces of copper swarf before screwing the small heat sink to the voltage regulator, IC1.

Testing

(a) **With a variable-voltage PSU**. Set the PSU for 10 V, connect the circuit and switch on. Increase the voltage slowly, and check that each LED lights up after the one before it. As the voltage exceeds about 14.4 V, the

first red LED should light and the sounder should operate. If an LED does not illuminate, you should immediately suspect either a dry joint or an incorrect LED polarity. The voltage at which the first red LED lights can be adjusted by varying R1; increase R1 if the LED comes on too early; decrease R1 if the LED comes on too late.

(b) **Without a variable-voltage PSU**. For your 'variable supply', you can use several AA-type 1.5 V cells (or 1.2 V NiCad cells) in series. The voltages produced by a range of cells is shown in **Table 1** – because of the lower voltage of NiCad cells, more of them are needed to produce a given voltage.

Once the operation of the circuit has been checked, it can be fitted into a plastic or metal box. Only two connections are needed for the PSU. You may want to drill some holes in the case to increase the apparent loudness of the sounder.

Table 1 Test voltages available from batteries in series

No. of batteries	*Voltage, nicads*	*Voltage, dry cells*
7	8.4	10.5
8	9.6	12
9	10.8	13.5
10	12	15
11	13.2	–
12	14.4	–
13	15.6	–

Parts list

Resistors: all 0.25 watt, 5% tolerance

R1	11 kilohms (kΩ) – see text
R2	1 kilohm (kΩ)
R3	1.2 kilohms (kΩ)
R4	18 kilohms (kΩ)

Semiconductors

IC1	L7806
IC2	LM3914
IC3	Opto-isolator – Maplin code WL35Q
D1–D3	3 mm LED, orange
D4–D7	3 mm LED, green
D8–D10	3 mm LED, red

Additional items
LS1 Piezoelectric sounder, wire leads
6-pin DIL socket for IC3
18-pin DIL socket for IC2
Veroboard – two pieces for main and display boards, see text for sizes
Veropins
Heat sink for IC1
Single-core insulated wire for links
Insulated stranded wire for interconnecting the boards
Case as required

57 A 1750 Hz toneburst for repeater access

Introduction

Repeaters across the UK and much of Europe need an access tone to switch the transmitter from standby ready for use. Commonly, this is a 1750 Hz tone of duration no greater than half a second. Although many UK repeaters may now be accessed using the *continuous tone-coded squelch system* (CTCSS – see the *RSGB Yearbook*), you may wish to access a repeater whose CTCSS frequency you don't know; in this case, using the universal 1750 Hz tone will gain you access. Commercial transceivers are usually fitted with an automatic toneburst, but if you are using a home-made design, then you may want to incorporate this little circuit.

Warning

This circuit uses a member of the integrated circuit family known as CMOS (complementary metal-oxide semiconductor). These use very little current

and can be completed destroyed if they come into contact with the magnitudes of static electricity that most of us carry about when we walk on carpets and wear rubber shoes. You will never know if this wanton destruction has happened – all you will discover is that your circuit doesn't work and that you have tested *everything*. To avoid this problem do the following things:

1. **Before you open the little packet in which the IC is supplied, touch something which you *know* to be earthed – the metalwork of any equipment which is mains earthed, for example. Then open the packet.**
2. **Let the IC fall gently on the bench – don't pick it out with your fingers. Touch your earthed metalwork again. Pick up the IC and insert it gently into its holder.**

The circuit is safe from destruction while it is connected to the battery.

Circuit description

The circuit is shown in **Figure 1**. The tone is generated by an integrated circuit oscillator (IC1), whose frequency is controlled by a *ceramic resonator*, XL1. Its frequency is very high, and is divided down to the 1750 Hz needed by the same chip. The ceramic resonator is designed to operate at 455 kHz, the intermediate frequency of many receivers. Because all divider circuits use powers of 2, we need the oscillator to run at 448 kHz so that when it is divided by 256 ($256 = 2^8$), we end up with 1750 Hz. Try it on your calculator:

$$\frac{448\,000}{256} = 1750.$$

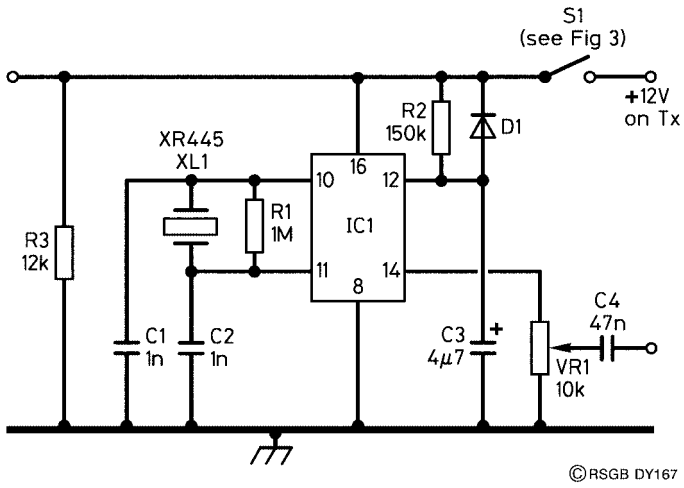

Figure 1 Toneburst module, circuit diagram

We use C1, C2 and R1 to *pull* the frequency of the oscillator away from 455 kHz to 448 kHz. The divider chain has eight *counters* in it, and each counter divides the frequency of the signal it sees by two, giving the final division of 256.

This counting process can be stopped at any time by taking the voltage on the *reset* pin (pin 12) up to the supply voltage. When the circuit is switched on by closing S1, pin 12 is at 0 V because C3 is discharged. The oscillator runs, producing the output frequency of 1750 Hz. As time progresses, C3 charges up through R2 and the voltage on pin 12 rises. When this has risen sufficiently, and in a time determined by the values of C3 and R2, the counter resets and stays in the reset state; no division takes place and there is no output. The duration of the toneburst is thus governed by C3 and R2.

When S1 is opened, the circuit is switched off, and C3 is discharged through D1 and R3, ready for the next toneburst. If you have used a repeater, you will know that a toneburst is needed **only** to activate a repeater in the standby condition; it is not needed once a contact has been established.

VR1 adjusts the amplitude of the tone fed to the microphone, and C4 prevents any voltage that may be present on your microphone connector from damaging the integrated circuit.

Construction

The prototype circuit was built on Veroboard of the copper-strip variety, measuring 20 holes by 14 strips. The layout is shown in **Figure 2**. Make the track cuts first, and check that there are no slivers of copper wedged between adjacent tracks. Then, solder in the IC socket (with the notched end

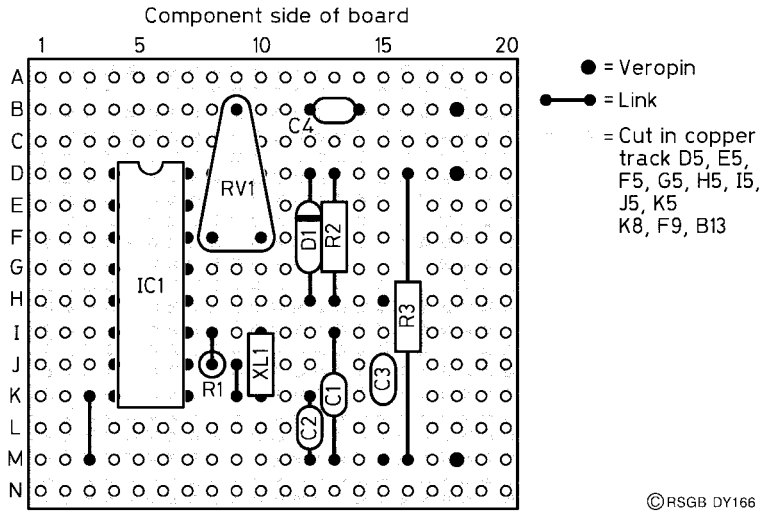

Figure 2 Veroboard component layout

facing towards track A), the wire links and the three Veropins. Having done this, solder in the resistors, capacitors and diode, making sure that D1 and C3 are the right way round! Using your best soldering technique, solder in the ceramic resonator quickly, to prevent heat damage. Recheck your circuit, check for solder splashes and bridges, and then gently insert IC1 into its socket, matching up its notch with that of the socket.

Testing

Set VR1 to half-way and connect a crystal earpiece to the output; apply power to the circuit. You should hear the tone, lasting for about half a second. If there is no tone, disconnect your circuit from the power supply, and check for dry joints in the vicinity of pin 12. Is the diode, D1, the correct way round? Is C3 the correct way round? Did you choose to ignore the CMOS safety precautions given earlier?

Once the circuit is working, you need to decide how you are going to connect it to your transmitter. Two options are shown in **Figure 3**. If you have access to a point in your transmitter circuit that has between 9 V and 12 V positive on it during transmit, you can use this to power your circuit. As the toneburst is needed only for repeaters, the switch, S1, disconnects it when not needed, as shown in Figure 3a. If you want the circuit to be self-powered, then a 9 volt PP3 battery may be used; Figure 3b shows this configuration.

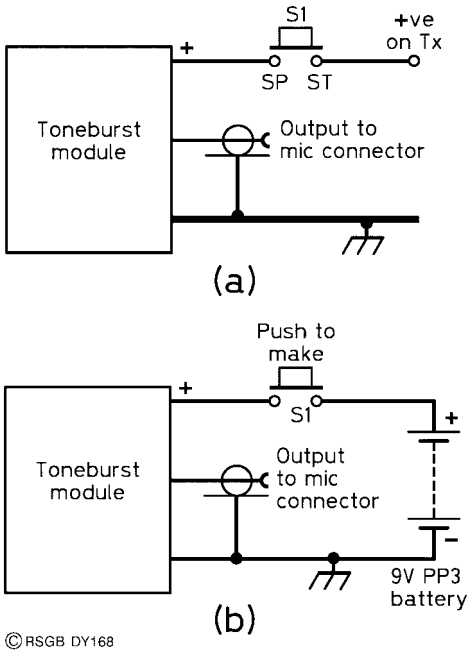

Figure 3 Toneburst module: two alternative switching arrangements

The output from the circuit board is fed directly into the microphone socket, in parallel with the microphone itself; use thin coaxial or screened cable for this lead, or you may induce hum into the microphone circuit and suffer from RF breakthrough into the audio circuits. To adjust the setting of VR1, start with it at the zero output position and connect a dummy load to your transmitter. Slowly, increase the output while monitoring your transmitted signal on another nearby receiver. Make sure you do **not** increase the output so far that the signal sounds distorted. If you would prefer that the tone was on continuously while you made this adjustment, simply connect a wire across C3 remembering, of course, to remove it as soon as you have completed the test!

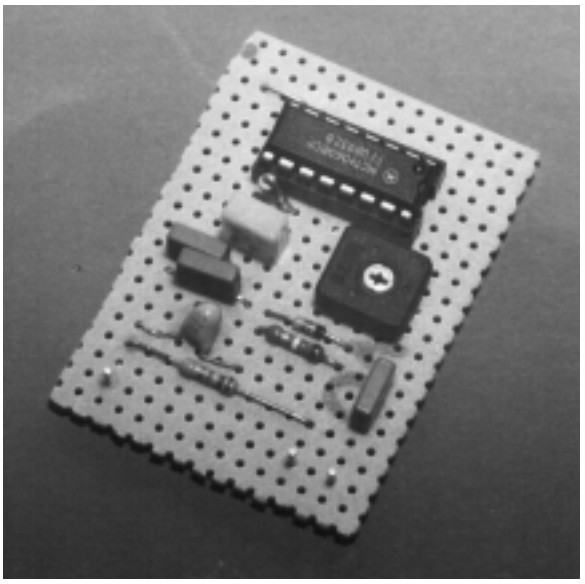

Parts list

Resistors: all 0.25 watt, 10% tolerance (or better)

R1	1 megohm (MΩ)
R2	150 kilohms (kΩ)
R3	12 kilohms (kΩ)
VR1	10 kilohms (kΩ) horizontal preset

Capacitors: all 16 V WKG or higher

C1, C2	1 nanofarad (nF) disc ceramic
C3	4.7 microfarad (μF) tantalum bead
C4	47 nanofarads (nF) disc ceramic

Semiconductors
IC1 4060
D1 1N4148

Additional items
XL1 XR455
Veroboard (see text for size)
Veropins (3)
S1 Switch (momentary action push-to-make SPST)
16-pin DIL socket for IC1
Single-core insulated wire for links
Coaxial or screened cable for microphone connection

58 A circuit for flashing LEDs

Introduction

There are many occasions when one's attention needs drawing to the fact that something important has happened. A single red light coming on is seldom sufficient to attract attention, particularly if it is surrounded by other lights and indicators. The eye is known to be very sensitive to *changes* in its peripheral vision; such changes can be brought about by movement or by differences in light level – a flashing light, for example. So, a circuit that flashes a single LED or a pair of LEDs finds plenty of uses in the amateur station.

Warning

This circuit uses a member of the integrated circuit family known as CMOS (complementary metal-oxide semiconductor). These use very little current and can be completed destroyed if they come into contact with the magnitudes of static electricity that most of us carry about when we walk on carpets and wear rubber shoes. You will never know if this wanton

destruction has happened – all you will discover is that your circuit doesn't work and that you have tested *everything*. To avoid this problem do the following things:

1. **Before you open the little packet in which the IC is supplied, touch something which you *know* to be earthed – the metalwork of any equipment which is mains earthed, for example. Then open the packet.**
2. **Let the IC fall gently on the bench – don't pick it out with your fingers. Touch your earthed metalwork again. Pick up the IC and insert it gently into its holder.**

The circuit is safe from destruction while it is connected to the battery. However, when the battery is removed, the same care should be exercised with its handling, because there is no supply decoupling capacitor across the IC.

Basic description

LEDs can be made to flash (switch on and off) by driving them from sources that switch on and off. Such a source is an *astable multivibrator*. If you have built or read about *A basic continuity tester*, elsewhere in this book, you will have come across such a beast before. That circuit used an astable multivibrator made from two transistors. This new circuit achieves the same behaviour from a single integrated circuit, the CMOS 4011. To give it its full description, the 4011 is a *quad 2-input NAND gate*. Quite a mouthful, but all it means is that inside the chip are four NAND gates, each with two inputs.

A NAND gate needs a positive voltage (known as a *logic 1*) on *both* inputs in order to produce zero volts (known as *logic 0*) at the output. Two NAND gates can be connected, as are A and B in **Figure 1**, to make our astable multivibrator. The combination of A and B has been described as the most perverse circuit in electronics; as soon as the output goes to logic 1, the circuit decides that it would prefer to have a logic 0 there, and switches over. With logic 0 at the output, the circuit now prefers to have logic 1 there, and so it goes on! We are going to use this continuous switching backwards and forwards to flash two LEDs. The rate at which A and B 'change their minds' is the frequency at which our LEDs will flash, and is controlled by the charging and discharging times of C1 through R2 and C2 through R1. As the values of R1 and R2 are the same, and those of C1 and C2 are the same, the ON and OFF states of the circuit are the same.

Gates C and D do not contribute to the flashing action; they act as *buffers* to isolate the LEDs from the multivibrator circuit itself. You will find in electronics that an oscillator is seldom used to drive another device *directly*; there is usually a buffer between it and the stage it drives.

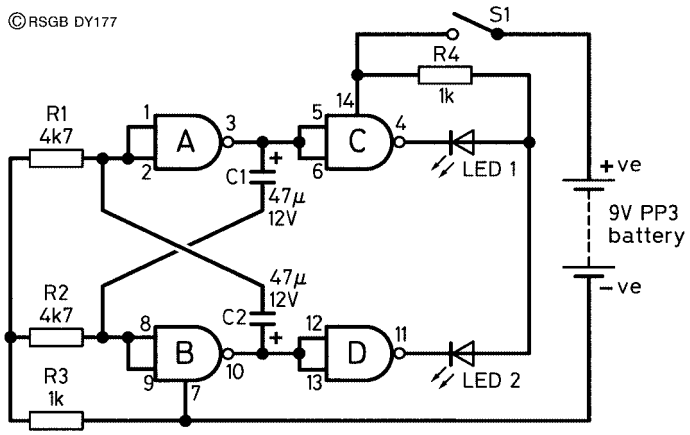

Figure 1 Flashing LEDs, circuit diagram

A characteristic of all multivibrators, astable or not, is that they have two outputs. In this case, those outputs are at pins 3 and 10, which are then buffered and appear at pins 4 and 11, respectively. When one output is at logic 1, the other is at logic 0, and vice versa. This means that LED1 is off when LED2 is on, and LED1 is on when LED2 is off, the two states switching backwards and forwards at the frequency of the oscillator.

Construction

Read the warning at the beginning of this article again. It is not intended to scare you off from building this, but is a genuine piece of advice which can save you time and irritation when all your labours result in a circuit that doesn't work! That extra bit of care can make all the difference!

Veroboard (the copper strip type) is used for the layout, shown in **Figure 2**. It measures 20 holes by 12 strips. **Be aware that there is no row 'I' in the layout, so don't miscount when you are placing components on the board!**

Firstly, cut the tracks using a 3 mm (⅛ inch) twist drill held between thumb and forefinger; check that there are no slivers of copper bridging any of the tracks, and that the tracks have been completely cut by the drill. Solder in the components carefully. Leave the IC in its carrier for the time being, and solder in the IC socket, with the notched end facing row A. On completion, check the circuit carefully. If you are happy that it is correct, follow the instructions given earlier and fit IC1 into its socket, matching up the two notches. Connect the battery and switch on. The two LEDs should flash on and off alternately. If only one LED flashes, you have probably connected the other one the wrong way round. Switch off, check and correct if necessary. If neither LED flashes, you must have a significant error in your circuit, which will need checking *again*! Or did you choose to ignore the handling precautions for the CMOS chip?

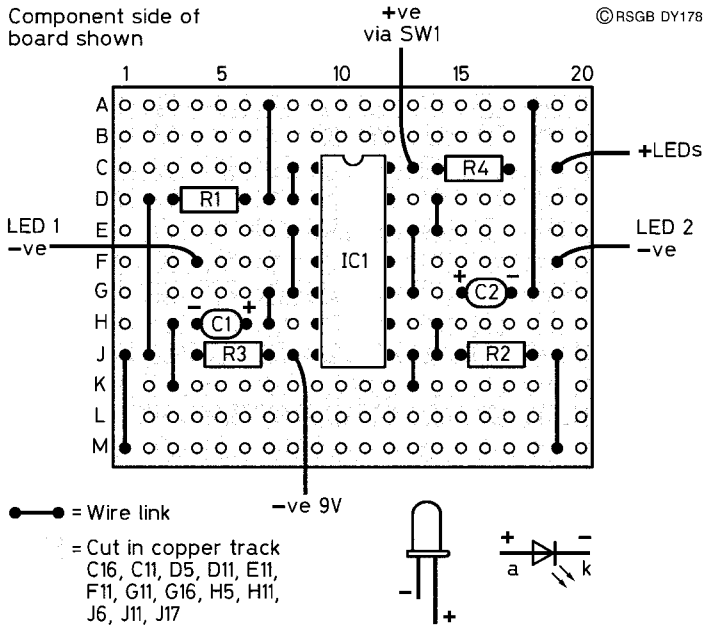

Figure 2 Flashing LEDs, component layout

The board can be mounted near to the point where you want your flashing LEDs to be seen, although long leads to the LEDs are acceptable. The LEDs can be different colours – it's all up to you now!

Parts list

Resistors: all 0.25 watt, 10% tolerance or better

R1, R2	4700 ohms (Ω)
R3, R4	1 kilohm (kΩ)

Capacitors

C1, C2	47 microfarads (μF) 12 V WKG

Semiconductors

IC1	4011

Additional items

LED1, LED2	Any size of LED, any colour
S1	SPST on/off
	Plastic box if needed, 8.5 by 5 by 2.5 cm

Source

Components are available from Maplin.

59 Digital logic circuits

Introduction

Logic circuits form the backbone of even the most advanced computer, yet their basic operation can be demonstrated by a couple of switches, a battery and a bulb.

Logic using switches

Everyone reading this article will look at **Figure 1** and know immediately how it works and be able to write down something like 'When switch A and switch B are closed, the light will come on'. Without knowing it, you have written down a logic statement involving the so-called **AND** operation; the light comes on only when switches A **AND** B are ON. Below the circuit in Figure 1, is a table showing the only possible positions of the two switches and the state of the bulb for each position. This is called a *truth table*, and is frequently used in logic analysis.

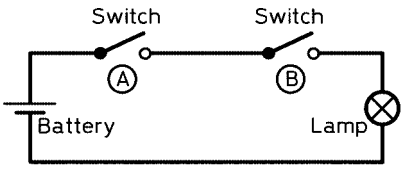

A	B	Lamp
Off	Off	Off
On	Off	Off
Off	On	Off
On	On	On

©RSGB DY182

Figure 1 Switches and lamp AND gate

Figure 2 shows a different circuit. Here, the two switches are in parallel rather than in series, as was the case in Figure 1. Again, if you analyse the circuit in words, you would say that the light will be on when switch A **OR** switch B is ON. This is an example of the **OR** operation, and its truth table is shown in Figure 2. The statement above is not complete, however; can you see why? The truth table will show you. The light comes on if A is ON, **OR** if B is ON, ***OR*** if A **AND** B are both ON. That third condition is easy to miss, but don't worry about it!

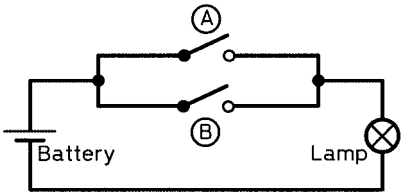

A	B	Lamp
Off	Off	Off
Off	On	On
On	Off	On
On	On	On

©RSGB DY184

Figure 2 Switches and lamp OR gate

Believe it or not, some very complicated logic is possible (in theory) using switches and lights, but it is highly impractical and would be very slow. This is where electronic logic circuits come in.

Switches with no moving parts

You may have come across projects in this book where a statement is made such as '. . . the transistor is being used as a switch . . .'. Transistors *can* be used as switches, as were thermionic valves in the world's first programmable computer *Colossus*, at Bletchley Park. However, technology has moved on from valves, through transistors to *logic gates*, combinations of electronic switches designed specifically to perform logic functions.

These act on voltage levels as their inputs and produce changes in voltage levels as their outputs. A positive voltage is called *logic 1*, and corresponds to a switch being ON in our previous descriptions; a zero voltage is called *logic 0*, and corresponds to a switch being OFF. The output from a logic gate (normally labelled Q) is also logic 1 or logic 0, corresponding to our light being ON or OFF, respectively, in our switch analogy.

Many logic devices operate from a stabilised 5 V supply, and this determines the *ideal* voltages corresponding to the two logic states:

logic 0 ≡ 0 V,

logic 1 ≡ 5 V.

The world isn't an ideal place, so the *real* voltage ranges used by the logic gates are:

logic 0 ≡ 0.0 to 0.4 V,

logic 1 ≡ 3.0 to 5.0 V.

The **AND** circuit of Figure 1 is now called an **AND gate**, and requires logic 1 inputs on A **AND** B to produce a logic 1 at the output. **Figure 3** shows this. The truth table is identical with that of Figure 1 – logic 1 replaces ON and logic 0 replaces OFF. Now compare Figure 2 with **Figure 4** – circuits and truth tables for the **OR** function. Again, we have exact similarity.

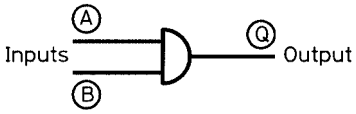

Inputs		Output
A	B	Q
0	0	0
0	1	0
1	0	0
1	1	1

©RSGB DY183

Figure 3 Electronic AND gate

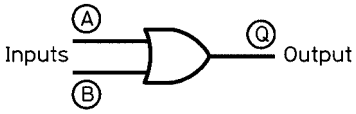

Inputs		Output
A	B	Q
0	0	0
0	1	1
1	0	1
1	1	1

©RSGB DY190

Figure 4 Electronic OR gate

There is another very common logic gate, which performs the **NOT** function. It is easy to understand. Just ask yourself the question 'What is **NOT** logic 0?', and the answer is obviously 'logic 1'. Similarly, logic 0 is **NOT** logic 1. A **NOT** gate simply changes the logic state of the input; it is also known (because of this behaviour) as an *inverter*. Its symbol and truth table can be found in **Fig 5**. Note the little circle on the output of the gate in Figure 5. In logic circuits, this symbol always implies inversion, or the presence of a **NOT** gate. Keep an eye open for it!

So far, the logic functions we have discussed have all been words which we use in everyday language, which has made the electronic interpretation of them relatively easy. Now we must introduce a function for which there is *no* analogy in normal speech – the **NAND** function. This means a

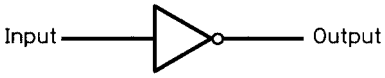

Input	Output
1	0
0	1

©RSGB DY185

Figure 5 Electronic NOT gate

combination of an **AND** gate and a **NOT** gate, and the sharp-eyed reader will have spotted the little circle added on to the normal **AND** gate symbol in **Figure 6**!

To make things easier to understand, the truth table in Figure 6 has four columns, not three as in previous tables. The third column is the standard **AND** output – compare it with the third column in Figure 3. That is the output from the **AND** gate *before* it encounters the little circle that inverts it, so the final output from the **NAND** gate is the output of the **AND** gate, inverted! The third and fourth columns are the inverse of each other.

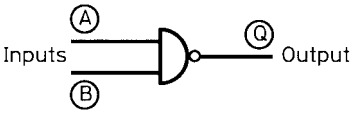

Inputs		and	Output
A	B		Q
0	0	0	1
0	1	0	1
1	0	0	1
1	1	1	0

©RSGB DY186

Figure 6 Electronic NAND gate

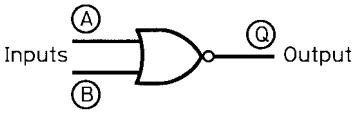

Inputs		or	Output
A	B		Q
0	0	0	1
0	1	1	0
1	0	1	0
1	1	1	0

©RSGB DY187

Figure 7 Electronic NOR gate

We can add the inverting operation to the output of an **OR** gate also, producing a **NOR** gate! The symbol and its truth table are shown in **Figure 7**. Again, notice that the final output is that of the ordinary **OR** gate, inverted!

These new functions of **NAND** and **NOR** are used more than the **AND** and **OR** functions because it makes other circuits easier to design using combinations of these gates.

A taste of Boolean algebra

The design of circuits using combinations of logic gates usually begins with a little mathematics, where the functions to be implemented are analysed. The mathematics used is surprisingly simple, and is a slightly changed version of ordinary algebra called *Boolean algebra*, which allows manipulation of logic functions to be made. Normal algebra has operations in it such as addition, subtraction and multiplication and division. The mathematician Boole found that the logical **AND** operation could be handled by the algebraic operation of *multiplication* (symbols × or •), and the **OR** operation by the algebraic operation of *addition* (symbol +). The **NOT** operation involved a new symbol, that of a bar over the input being inverted, such as $\overline{A}$.

So, our five basic logic operators can now be written in a mathematical form:

AND	$Q = A \times B$
OR	$Q = A + B$
NOT	$Q = \overline{A}$
NAND	$Q = \overline{A \times B}$
NOR	$Q = \overline{A + B}$.

Using logic operations in a mathematical form enables the most complex logic to be designed, simplified and converted into circuit diagram form in a very efficient and rapid way. There are more logic operators than the five we have considered here but, in general, they can all be broken down into combinations of these gates alone!

60 A resistive SWR indicator

Introduction

When a transmitter produces some output power, we want to make sure that as much as possible of this power is radiated by the aerial. This often requires the use of an *aerial tuning unit* (ATU), which matches the aerial impedance to that of the transmitter.

How do you know when this matching has been achieved? The most usual way is to use a *standing-wave ratio* (SWR) indicator. If the impedance of the aerial does not match that of the transmitter output, some of your transmitter power (also known as the *forward* power) is reflected back along the aerial feeder and back into the transmitter, where it causes excess heating. The forward and reflected waves interact along the feeder to produce a wave whose position remains constant, and which is therefore called a *standing wave* or a *stationary wave*. An SWR meter simply indicates forward power and reflected power, and adjustments are made to your ATU until the reflected power is as small as possible (ideally zero, of course). If there is no reflected power then, by a process of elimination, all your forward power is reaching the aerial!

Sampling the RF

Whatever type of SWR indicator you use, it must use some sort of sampling circuit to pick up the forward and reflected waves. The project *A standing-wave indicator for HF*, elsewhere in this book, uses a toroidal transformer to separate the readings for the forward and reverse waves. This design differs in that it measures the voltages across resistors through which the RF current is passing. Its advantages are:

(a) it uses cheap parts – four resistors, two capacitors and a diode, together with a rotary switch, a surplus meter, a preset potentiometer and two sockets;
(b) within this SWR indicator, there is always a resistive path for the RF current from the transmitter, formed by R1, R2 and R3; this can prevent damage to simpler home-made transmitters, which may be damaged during adjustment of the ATU when using more conventional SWR indicators.

The only disadvantage of this form of indicator is that it must be switched out of circuit once the ATU has been adjusted for a particular band.

Construction

The SWR indicator is very simple to build, as most of the components can be mounted on the back of the 3-way rotary switch. This is shown in **Figure 1**. The switch is a 4-pole, 3-way rotary type, of which only two poles are used.

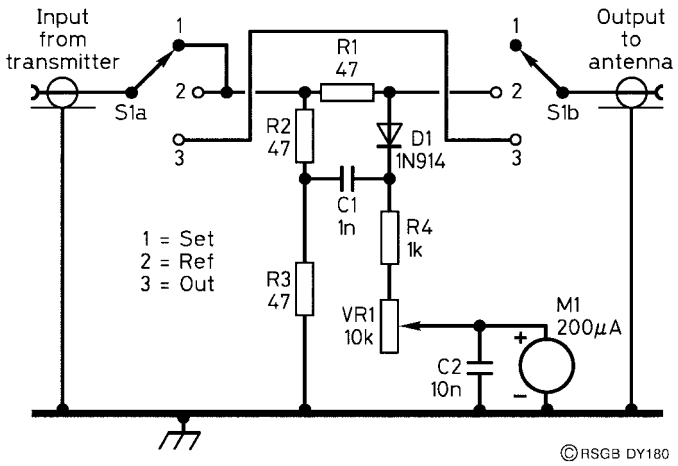

Figure 1 Resistive SWR meter, circuit diagram

Because the other switch contacts are not being used, they can be employed as support tags for other components. The ground wires are all soldered on to the metal frame of the switch. If your switch frame is of all-plastic construction, then a 12 SWG copper wire run around the switch will make a good earth connection to the metal case for the leads shown in Figure 1. The preset potentiometer used to control the sensitivity of the circuit can be mounted directly on the meter tag.

Resistors R1, R2 and R3 handle the RF power during the tuning-up process. If you have them, use 1 watt resistors; otherwise, you can use two 100 ohm half-watt resistors in parallel for each of R1, R2 and R3. The meter, M1, can be any DC type of sensitivity around 200 μA.

In use

First, find a clear frequency, and without the indicator in circuit, check that the frequency really *is* clear by asking and identifying yourself. If it is,

connect the indicator between the transmitter and the ATU which, in turn, is connected to your aerial. Turn SW1 to the SET position and key the transmitter. Adjust VR1 until the meter reads full scale. Switch off the transmitter. Turn SW1 to the REF position and key the transmitter again. Adjust the ATU until the lowest reading is obtained on the meter. Switch off the transmitter. For the chosen frequency, you have adjusted your ATU for minimum reflected power and hence the lowest SWR. You will need to repeat the process when you change bands, and possibly when you change frequency within the same band. Switching SW1 to the OUT position, you are ready to transmit. You may have noticed that it is good practice to switch the transmitter off when operating SW1. Get into that habit!

Parts list

Resistors	
R1, R2, R3	47 ohm (Ω) 1 watt (or 2 × 100 Ω, ½ watt, see text)
R4	1 kilohm (kΩ) 0.25-watt
VR1	10 kilohms (kΩ) preset
Capacitors	
C1	1 nanofarad (nF)
C2	10 nanofarads (nF)
Semiconductors	
D1	1N914 or similar
Additional items	
SW1	4-pole 3-way rotary switch, of which only 2 poles are used
M1	200 μA DC
	Case

61 An audio filter for CW

Introduction

This is a simple passive circuit (it has no power supply) that adds some audio selectivity for Morse code reception and also includes a very simple noise limiter that gives a visual indication of when noise spikes are being removed!

The circuit

Figure 1 shows the complete circuit. The tuned circuit of C1 and L1 resonates very close to 800 Hz, so initially you will have to tune a signal in carefully until it sounds loudest – you will soon be able to do this without thinking. The two LEDs connected back to back across the signal path act as a noise limiter, reducing the amplitudes of static crashes and noise from car ignition systems, etc. The LEDs blink when they conduct – this is not necessary to the operation of the circuit, but adds a little colour to your listening! The noise limiter *does* make listening more comfortable, though.

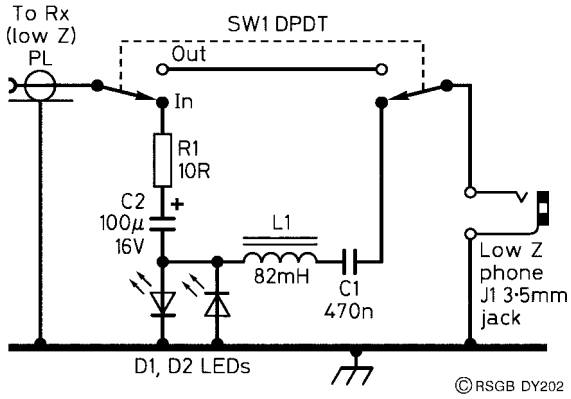

Figure 1 CW filter, circuit diagram

Construction

The circuit layout is shown in **Figure 2**. Point-to-point wiring is used, with a small tag-strip being the only item used for the extra support of C2 and R1. The LEDs and SW1 support the other components. An aluminium box (**Figure 3**) is used to make the circuit tidy and usable.

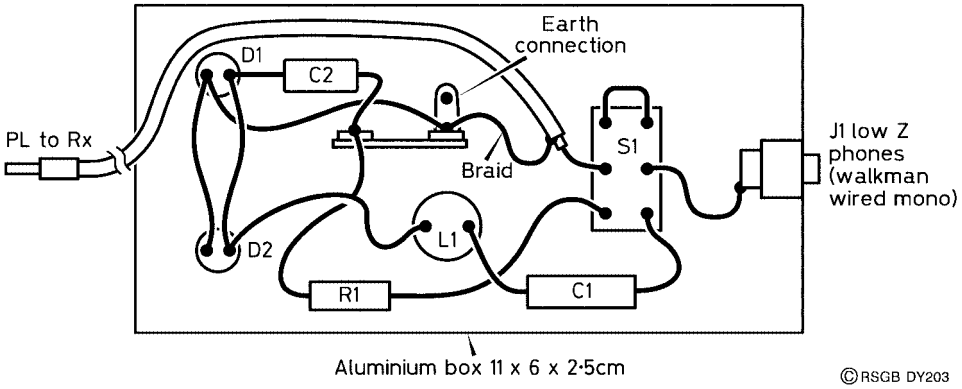

Figure 2 CW filter, component layout

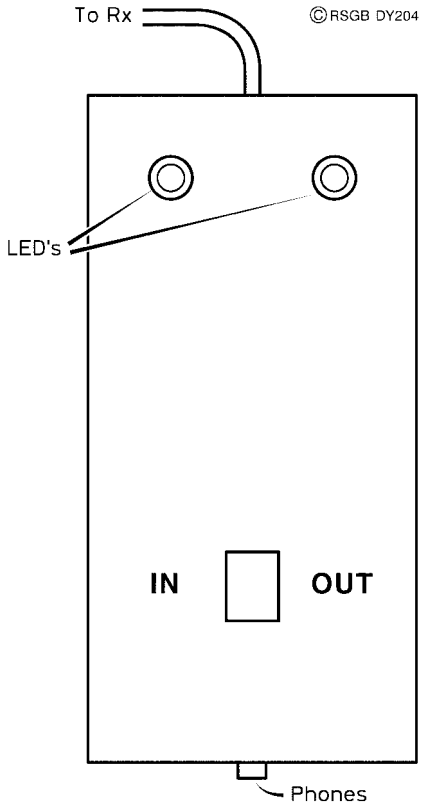

Figure 3 CW filter, front panel

You must use low-impedance headphones for the circuit to perform properly. Plug the completed unit into the headphone socket of your receiver and adjust the volume so that the LEDs are just *not* blinking on normal audio. The unit should be switched out of circuit for speech listening; this is the purpose of the toggle switch, SW1.

Parts list

Resistor
R1 10 ohms (Ω), 0.25 watt, 10% tolerance

Capacitors
C1 470 nanofarads (nF)
C2 100 microfarads (μF) electrolytic, 16 V WKG

Inductor
L1 82 millihenries (mH)

Semiconductors
D1, D2 LEDs

Additional items
SW1 DPDT
J1 3.5 mm jack socket
PL Jack plug to suit receiver
Aluminium box, approx. 11 by 6 by 2.5 cm

Source

Components are available from Maplin.

62 An electronic die

Introduction

Throwing a die is a venerable way of generating a 'random' number between 1 and 6. A die is easy to lose, so here is an electronic die-throwing circuit which brings the technique up to date and serves as another application of logic circuits. If you need a reminder of the basics of logic, refer to *Digital logic circuits*.

Warning

This circuit uses members of the integrated circuit family known as CMOS (complementary metal-oxide semiconductor). These use very little current and can be completed destroyed if they come into contact with the

magnitudes of static electricity that most of us carry about when we walk on carpets and wear rubber shoes. You will never know if this wanton destruction has happened – all you will discover is that your circuit doesn't work and that you have tested *everything*. To avoid this problem do the following things:

1. **Before you open the little packet in which the IC is supplied, touch something which you *know* to be earthed – the metalwork of any equipment which is mains-earthed, for example. Then open the packet.**
2. **Let the IC fall gently on the bench – don't pick it out with your fingers. Touch your earthed metalwork again. Pick up the IC and insert it gently into its holder.**

The circuit is safe from damage while it is connected to the battery.

Description

The circuit is shown in **Figure 1**. IC1a and IC1b form an *astable multivibrator*, similar to that used in 'An LED Flasher' also in this book. It runs constantly, and its output is fed to IC2 via a single NAND gate, IC1c. The other input of IC1c is held at 0 V by R3 and C3. Whenever one input of a NAND gate is logic 0 (or 0 V), there can be *no output* from the gate, irrespective of what is happening at other inputs. So, despite the fact that the oscillator (or *clock*) is running all the time, its square-wave output never

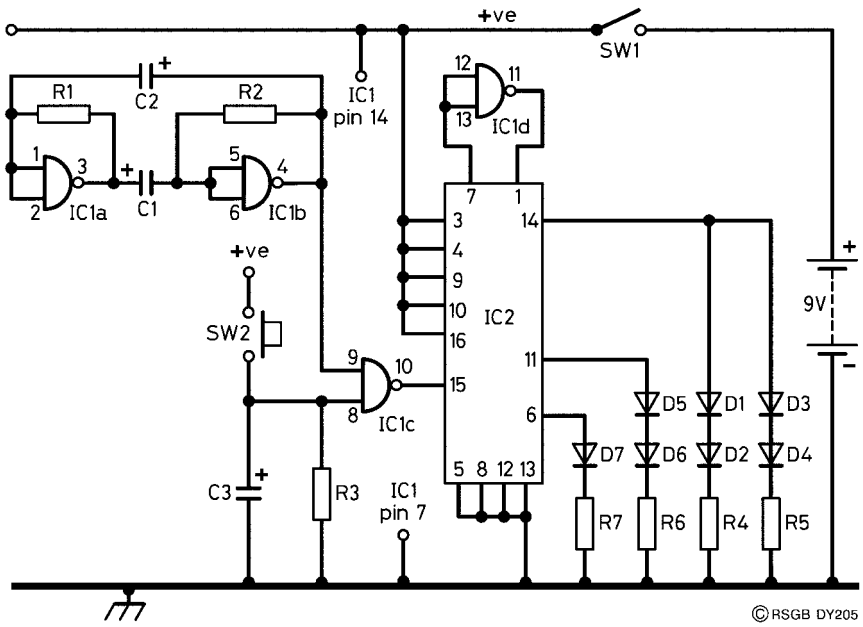

Figure 1 Electronic dice, circuit diagram

reaches IC2 until the 'other' input of IC1c is brought away from logic 0. This happens when SW2 is pressed. Pressing SW2 momentarily, as is normally done, charges up C3 to 9 V, putting a logic 1 on the second input of IC1c and allowing the clock signal through to IC2. As the switch is released, C3 begins to discharge through R3, gradually lowering the voltage on pin 8 of IC1c. As this voltage crosses 4.5 V (half the supply voltage), IC1c then treats this input as logic 0, which cuts off the clock signal from IC2 again. Thus, when SW2 is momentarily pressed, the clock signal is fed to IC2 for a short interval of time, before being blocked again.

IC2 is a binary counter, and the outputs that concern us are from pins 14, 11 and 6. Pin 14 is the *most significant bit* and pin 6 the *least significant bit*. See the panel for an explanation of what happens here.

To understand these outputs, you should be able to count in binary, using three bits. At the start of the counting process, all the bits have zero values, i.e. 000. The left-most bit is called the *most significant bit*, and the right-most bit is called the *least significant bit*. (When we write numbers normally, a number 1 in the left-hand position represents one hundred, 1 in the middle column represents ten, while the number 1 in the right-hand position means one. One hundred is a more significant number than one, hence the nomenclature.)

The three bits of our binary number have values, from left to right, of 4 ($=2^2$), 2 ($=2^1$) and 1 ($=2^0$). This means that a number 1 in the left-hand column signifies the normal number four, in the middle column it would represent two, and in the right-hand column, it would represent one. This should help you understand the patterns of bits which emerge as the clock waveform is counted, as the next paragraph explains.

As each cycle of the clock enters IC2, it increments its internal counter and the values of that counter are shown by the states of pins 14, 11 and 6. After the first pulse, these three pins would have states corresponding to 001; after the second, 010; after the third, 011; after the fourth, 100; after the fifth, 101; after the sixth, 110. This sequence of 3-bit numbers represents a binary count from 1 to 6 in 'normal' parlance. These six states are used to illuminate the conventional pattern of dots on a die, using LEDs.

As the clock cycles are counted, the LEDs flicker as the die is 'rolled'. Resistors R4 to R7 are used to limit the current through the LEDs. When the counter stops, it can be in any of the positions shown in **Table 1**. Because of

Table 1 Dice number relative to counter output

Step	*Pins*			*Dice number*
	14	*11*	*6*	
1	0	0	1	4
2	0	1	0	2
3	0	1	1	6
4	1	0	0	1
5	1	0	1	5
6	1	1	0	3

the way in which the dots are grouped on the faces of a die, the wiring of the LEDs is simpler than it might otherwise be. You can see from Figure 1 that there are really only three sets of connections to the LEDs – one from each bit of the counter output. When pin 14 is at logic 1, four LEDs are lit, corresponding to the number four. For the number five, pins 14 and 6 will be at logic 1. For the number one, only pin 6 is at logic 1. For three, pins 11 and 6 are at logic 1, for six, pins 14 and 11 are at logic 1, and for two, only pin 11 is at logic 1. These conditions are summarised in Table 1.

Construction

Two pieces of Veroboard (of the strip type) are needed – one for the main circuit (**Figure 2**) and the other for the display LEDs (**Figure 3**). The display board is easier to build, so we will do that first. It measures 20 holes by 18 strips.

Cut the tracks as shown in Figure 3, using a 3 mm (1/inch) twist drill rotated between thumb and forefinger. Insert and solder the Veropins, resistors and the wire links. Then solder the LEDs in place, making sure their polarities are correct. The LEDs are mounted proud of the board (**Figure 4**, which will help when you come to fix the board into a case.

The main board measures 32 holes by 18 strips. As before, remove the tracks in the places shown in Figure 2. Note that track 'L' is *not* broken under the position for IC2. Solder in the IC holders and the links. Solder in R1 and R2 vertically, and R3 horizontally. Then solder in C1, C2 and C3; these all being electrolytics, check their polarities. Solder in the Veropins and prepare the connections to those components not on the main board, using stranded, insulated wire. Check the circuit carefully, and read the handling precautions given earlier before carefully inserting the two ICs.

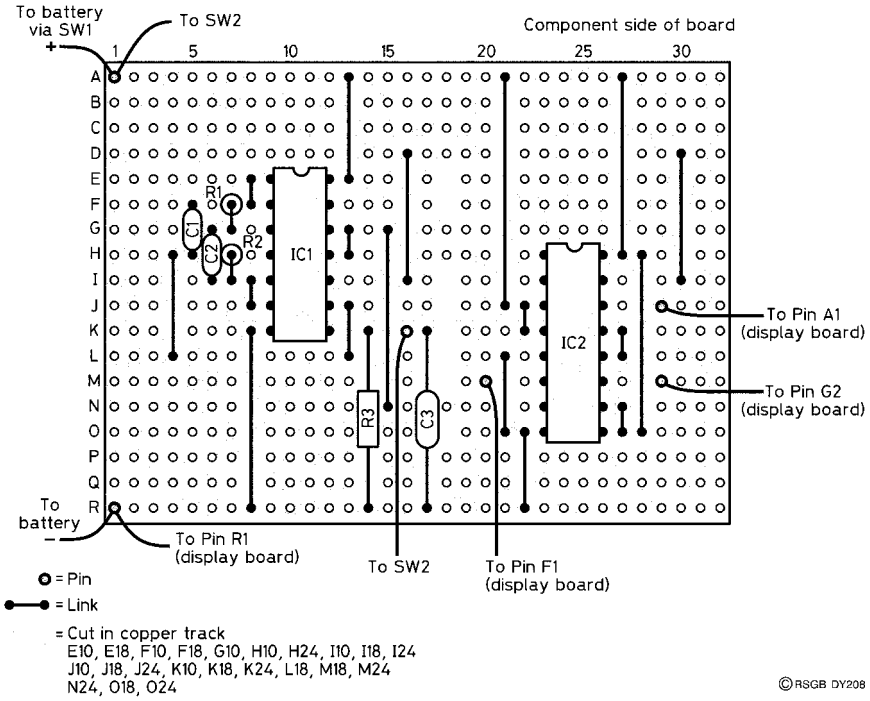

Figure 2 Main board, component layout

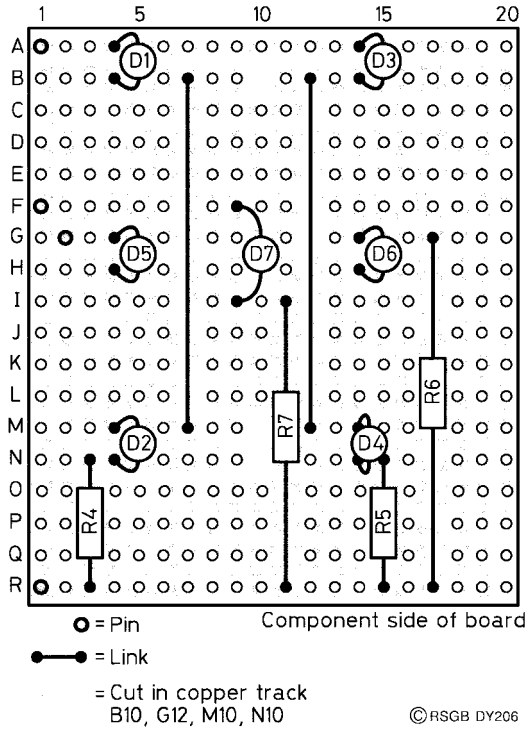

Figure 3 Board for the six LEDs

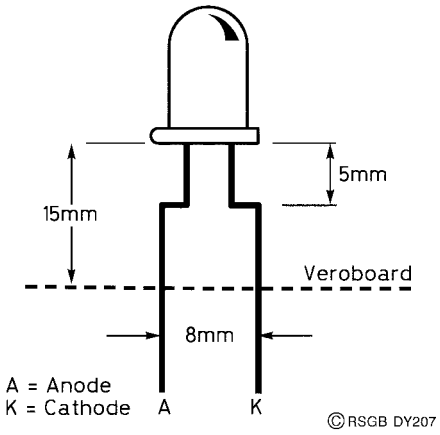

Figure 4 D7 lead bending

Testing and use

When the circuit is switched on, it is likely that the centre LED only will be lit. Press SW2, the 'throw' switch. All the LEDs should flicker, even after the switch is released, but only for a second or so. Then a standard pattern should show, signifying numbers between one and six. If this does not happen, switch off and check your circuit again. Are there any missing links? Are there any obvious dry joints (usually dull instead of shiny)? Can you see any solder bridges between tracks? Did you choose to ignore the handling precautions? If none of these results in a working circuit, try some fault-finding.

- Disconnect the lead to D7 on the main board (marked 'to pin F1' on Figure 2). Touch the lead on to the positive supply rail. D7 should light. Now transfer this lead on to pin 4 of IC1. If it flickers, then the oscillator is running (which it should).
- Transfer this lead to pin 10 of IC2. D7 should flicker when SW2 is pressed, but should be on permanently when it is released. This means that the correct signals are reaching IC2 from IC1.
- If one of the chains of LEDs (i.e. D1 and D2, D3 and D4, D5 and D6) does not light, you may have one *or both* LEDs the wrong way round.

When the die is working, you may care to experiment with the values of R1 and R2, but you should keep their values the same, i.e. R1 = R2. The larger the values of these, the more slowly the die will appear to 'roll'.

Finishing touches

On completion of the project, you will want to mount it in a smart case; any plastic box is suitable for this, with the display board mounted so that the

LEDs protrude through the top and are fixed to it using LED clips. The way in which you mount both boards to the case is entirely up to you.

Parts list

Resistors: all 0.25 watt, 10% tolerance, or better

R1, R2	5600 ohms (Ω)
R3	15 kilohms (kΩ)
R4–R7	470 ohms (Ω)

Capacitors

C1, C2	1 microfarad (μF) electrolytic, 16 V WKG
C3	68 microfarads (μF) electrolytic, 16 V WKG

Semiconductors

IC1	4011
IC2	4029
D1–D7	LEDs, any size and colour

Additional items

SW1	On-off switch SPST toggle
SW1	Push-to-make, non-latching
	Veroboard, 2 pieces, see text for sizes
	Veropins, 10
	Stranded insulated wire for general wiring
	Single-core insulated wire for links
	PP3 battery clip
	PP3 battery
	Plastic box to suit
	LED mounting clips (7)
	Means of mounting boards to box

Source

Components are available from Maplin.

63 The absorption wavemeter

Introduction

The purpose of the absorption wavemeter is to check that a transmitter is radiating within the correct waveband, and to detect any spurious *harmonic* emissions. A harmonic frequency is an integral multiple of the carrier frequency – e.g. if the carrier is at a frequency *f*, the harmonics are at frequencies 2*f*, 3*f*, 4*f* . . . and so on.

It can also be employed as a relative field-strength indicator, being used in experimentation with aerials. What it *cannot* do is to measure the transmitted frequency accurately; all it can do is to place the signal within a particular band, say the 7 MHz or the 18 MHz band (or their harmonics).

How it works

You may recognise the circuit of **Figure 1** as a crystal set with a meter replacing the headphones. It is simply the parallel combination of an inductance with a variable capacitance, which constitutes a resonant circuit with a variable frequency. A dial on the variable capacitor can be roughly calibrated with frequency. The fixed capacitor across the meter helps to improve the meter reading by making it read the peak value of the carrier wave rather than the average value.

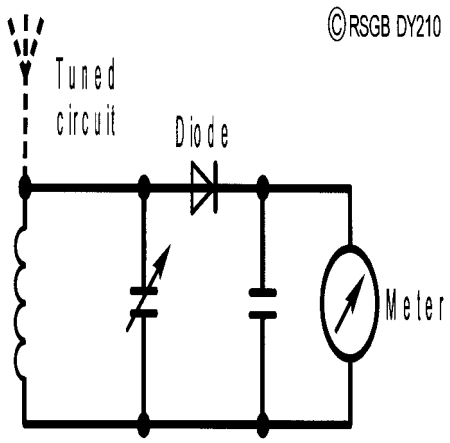

Figure 1 Absorption wavemeter circuit

When the wavemeter is situated in the vicinity of a relatively strong radio-frequency (RF) field, the inductor absorbs a small amount of energy from that field. If the circuit is resonant at the same frequency as that of the transmitter, an RF voltage is produced across the coil and is proportional to the strength of the RF field. The RF voltage is *rectified*, or *detected* (turned from AC into DC) by the diode and the second capacitor, and is displayed by the meter.

The tuned circuit

The formula for calculating the resonant frequency of a coil and capacitor is relatively simple. It is

$$f = \frac{1}{2\pi\sqrt{LC}},$$

where f is the resonant frequency (Hz),
L is the inductance (H), and
C is the capacitance (F).

If this formula puts you off, there is this slightly easier version:

$$f = \frac{159}{\sqrt{LC}},$$

where f is the frequency in **MHz**,
L is the inductance in **microhenries** (**μH**), and
C is the capacitance in **picofarads** (**pF**).

When a variable capacitor is specified, it is usual to quote its maximum capacitance, i.e. the value when the vanes are fully meshed. When the value of the capacitor is small, it is usual to quote its minimum capacitance also, the value when the vanes are fully open. If you use a variable capacitor of 10–100 pF with a 100 μH inductor, you will use the value of 10 pF to calculate the maximum resonant frequency, and the value of 100 pF to calculate the minimum resonant frequency, giving a tuning range of 1.6 MHz to 5 MHz. Check it yourself!

64 An HF absorption wavemeter

Introduction

An absorption wavemeter is basically a simple tunable detector circuit, such as would be used in a crystal set, but with the headphones replaced by a meter, in order to indicate the strength of the received signal.

The circuit

Figure 1 shows the circuit of the wavemeter. It is designed to cover all the HF bands from 1.8 MHz to 28 MHz in four switchable ranges. There is no built-in method of amplification, so a sensitive meter is needed in order to indicate sufficiently using the available absorbed energy. The meter does not need calibrating, it serves to produce only an indication of the absorbed power, *not* its absolute value.

An absorption wavemeter does not have outstanding selectivity, mainly because of the loading effect of the meter. This problem is ameliorated here (but only slightly) by the inclusion of R1 in series with the meter. It gives

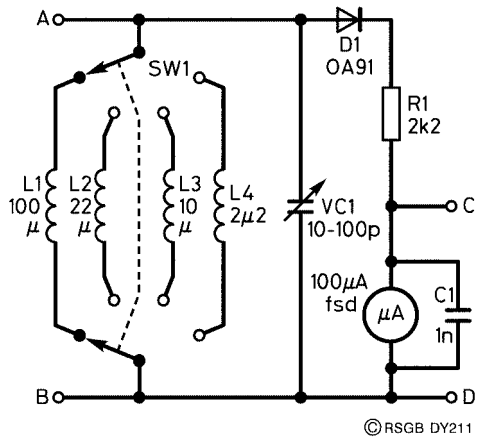

Figure 1 HF absorption wavemeter, circuit diagram

improved selectivity at the expense of a slight loss of sensitivity. The appearance of capacitor C1 across the meter is discussed in *The Absorption Wavemeter*, in the previous section.

Coils

These can be purchased (see the parts list) or hand-wound on short lengths of PVC water pipe or conduit, and the coil-winding details are given in **Table 1**. In theory, the 100 pF tuning capacitor would cover all the HF bands with only three coils, omitting the 22 μH coil. Sample calculations are explained in the previous article. However, its inclusion avoids the common problem of having some bands cramped at the extreme edges of the tuning scales.

Table 1 Close-wound coil values

L (μH)	No of turns	Span (mm)	SWG
PVC FORMER OF OUTSIDE DIAMETER 25 mm			
2.2	9	9	20
10	24	24	20
22	44	44	20
100	110	60	26
PVC FORMER OF OUTSIDE DIAMETER 20 mm			
2.2	10	10	20
2.2	9	5	26
10	32	32	20
10	24	12	26
22	63	62	20
22	41	21	26
100	134	70	26
PVC FORMER OF OUTSIDE DIAMETER 19 mm			
2.2	11	11	20
2.2	9	5	26
10	35	34	20
10	25	13	26
22	68	67	20
22	44	22	26
100	157	79	26

Construction

Hand-wound coils, using 19–25 mm PVC formers, have single-layer windings, with their ends secured by threading the wires through two small holes drilled in the formers at each end of each winding.

You may have wondered about the use of the two-pole switch SW1, as all the lower ends of the coils are grounded anyway. The answer lies in the ease of construction. Each coil can be mounted on the tags of the switch for support. If you are using the commercial coils, they are small enough to be accommodated on a miniature rotary switch; a larger rotary switch is required for hand-wound coils. The specification of a 6-way switch allows for the addition of extra frequency ranges at little extra cost. Rotary switches such as the 2-pole, 6-way variety have an adjustable end-stop which allows the number of ways to be set anywhere between 2-ways and 6-ways. Remove the nuts from the switch, and a 'washer' will fall out. It is not a washer, really, and has a little piece of metal bent over at right angles to the washer. This fits into one of 12 holes in the body of the switch, and prevents the shaft from turning through 360° and selecting the number of ways.

Calibration

This process needs a commercial amateur-bands transceiver, if it is to be done quickly and accurately.

- Connect the transceiver to a dummy load, and connect a piece of flexible wire from point A in Figure 1 and wrap two or three turns around the cable between the transceiver and the dummy load.
- Turn the transceiver power level control to minimum, and set the frequency at 1.81 MHz and the mode to FM or AM. Switch to transmit.
- With the wavemeter set to its lowest frequency range (i.e. 1.8–3.5 MHz), rotate the tuning capacitor until maximum deflection is obtained from the meter needle. Write the frequency on the inner ring of the wavemeter scale at that point.
- Switch off and retune the transmitter to 3.5 MHz. Repeat the above process.
- Repeat, using switch range 2 for 3.5, 7 and 10 MHz, range 3 for 7, 10 and 14 MHz, and range 4 for 14, 18, 21, 24 and 28 MHz.

An alternative source of calibration signal could be an HF signal generator, with a single-turn loop of wire at the remote end of its cable, and the wire from the wavemeter brought close to the loop.

Remember that the marks on the scale represent frequency *bands*, not precise frequencies.

Extending the range

If you would like to experiment with increasing the range to the lower VHF band, then 50 MHz should be achievable with an additional self-supporting coil (no former). Try three turns of 20 SWG enamelled copper wire of 25 mm ID (internal diameter). Wind it on some 25 mm PVC pipe, as before, then slide out the pipe! The same result could be achieved with four turns of 19 or 20 mm ID, or 12 turns of 7.1 mm ID.

Parts list

Resistor	
R1	2200 ohms (Ω) 0.25 watt, 10% tolerance
Capacitors	
C1	1 nanofarad (nF) min. ceramic
VC1	100 picofarad (pF) variable
Inductors	
L1	100 microhenries (μH)
L2	22 microhenries (μH)
L3	10 microhenries (μH)
L4	2.2 microhenries (μH)
Semiconductors	
D1	Germanium OA91 or 1N4148
Additional items	
SW1	Rotary 2-pole, 6-way
	Moving-coil meter, 50 or 100 μA FSD (any meter of this sensitivity will do)
	Plastic box, approx. 150 by 80 by 50 mm
	Connecting wire, coloured

65 A vertical aerial for 70 cm

Introduction

If the range of your hand-held transceiver is very limited, what you need is a vertical aerial mounted outside. This design is a half-wave dipole fed at the end instead of the middle. Because the impedance of the dipole is high at its ends (and low in the centre), a matching circuit is needed so that this high impedance can be matched to that of the low-impedance coaxial cable. All that is needed is a coil, which increases the *electrical length* of the aerial to $\frac{5}{8}$-wavelength. (Note that the *electrical* length (i.e. the length as it appears to an RF signal) is not necessarily the same as the *actual* length.)

Construction

The aerial element and the coil are made from a single piece of 1.5 mm welding (brazing) rod, and the dimensions are given in **Figure 1**. Wind the coil around a 4 mm rod or the shank of a twist drill. The lower end is filed to a point and then soldered into the centre conductor of a 4-hole panel-mounting BNC socket. (Try to obtain a good-quality BNC socket with PTFE insulation – the insulation of cheaper sockets is easily damaged.) Trim the element to 427 mm (top of element to top of coil) *after* the wire has been soldered to the socket.

The base coil causes the aerial to be rather 'whippy', so a piece of 5 mm plastic knitting needle can be cut to the length of the coil and then forced into it.

The radials are made from four lengths of 3 mm welding rod. These are bent and soldered into the four mounting holes of the socket, and then cut to the lengths shown in Figure 1.

Testing

Using a standing-wave-ratio (SWR) meter connected between your aerial and the transceiver, measure the SWR (or obtain some indication of the reflected power) on transmit. If it is greater than 1.5, switch off the transmitter, trim about 3 mm off the end of the element, and try again. Repeat the process until the measured SWR (or the reflected power) is as low as you can get it.

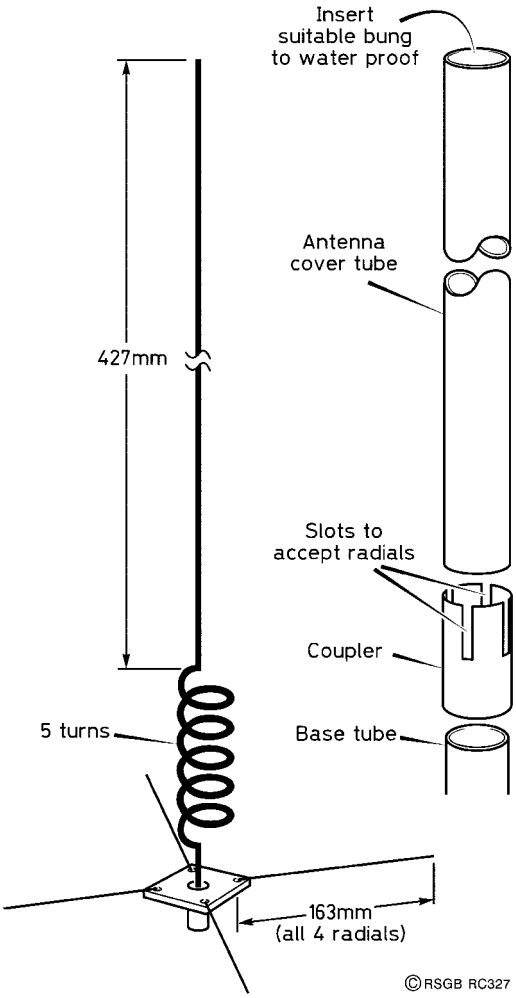

Figure 1 Construction of the 70 cm antenna

Installation

The aerial is made waterproof by enclosing it in a 22 mm diameter PVC waste water pipe. It is 'weldable', and available at plumbers' merchants, usually by the metre. A coupler is slotted to take the radials (Figure 1). File the BNC socket as required, so that it slides inside the coupler until the radials poke out of the slots. Cut a length of plastic tubing which is 30 mm longer than the aerial, and push it into the coupler. You will then need a plastic bung or screw-top to waterproof the top end.

Plastic welding solution is now applied to the joints, sealing the aerial inside the tube. The coupler has been weakened as a result of making the slots, so it is worthwhile applying PVC tape around this joint until the welding solution sets.

A support for the aerial is made from an off-cut of tube pushed into the lower end of the coupler and held with a self-tapping screw.

Parts list

1	4-hole panel-mounting BNC socket
1 m	3 mm brazing rod (may be available from a small garage)
1 m	1.5 mm brazing rod
1 m	22 mm PVC waste water pipe
1	22 mm straight coupler
	Plastic welding solution

66 A UHF corner reflector aerial

Introduction

The corner reflector is a well-known design and is capable of good performance on the VHF and UHF bands. At UHF, the practical implementation of the corner reflector is an ideal constructional project.

Some details

Expressed quite simply, the aerial consists of a $\frac{\lambda}{2}$ dipole (where λ is the standard symbol for wavelength, making a '$\frac{\lambda}{2}$ dipole' a half-wave dipole).

Nothing new in that, you might say. However, the interesting feature is the reflector, which is not the usual single element, but a 90° metal 'corner', acting rather like a parabolic dish as used for satellite signal reception. The wind resistance of this type of reflector makes it impractical so, to reduce the 'windage' quite significantly, we make the 'corner' from closely spaced rods, as illustrated in **Figure 1**.

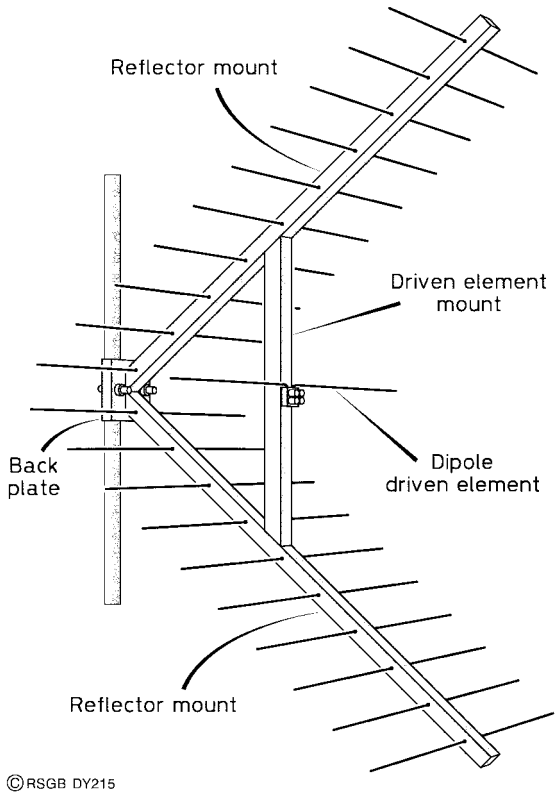

Figure 1 70 cm corner reflector antenna

The reflector consists of a number of 0.6λ rods, spaced from each other by 0.1λ. The aerial frame can be made of metal or wood, but wood is easier to work with, and mounting the elements to the frame is simpler. The prototype was made with wood of 20 mm by 15 mm cross-section, as **Figure 2** shows. The wood was varnished for protection. The elements were made from 1.5 mm diameter copper wire, because a large reel of the wire happened to be available. The wire diameter is not critical; tubing could be used just as successfully. 14 SWG hard-drawn copper aerial wire would be even better than that used in the prototype.

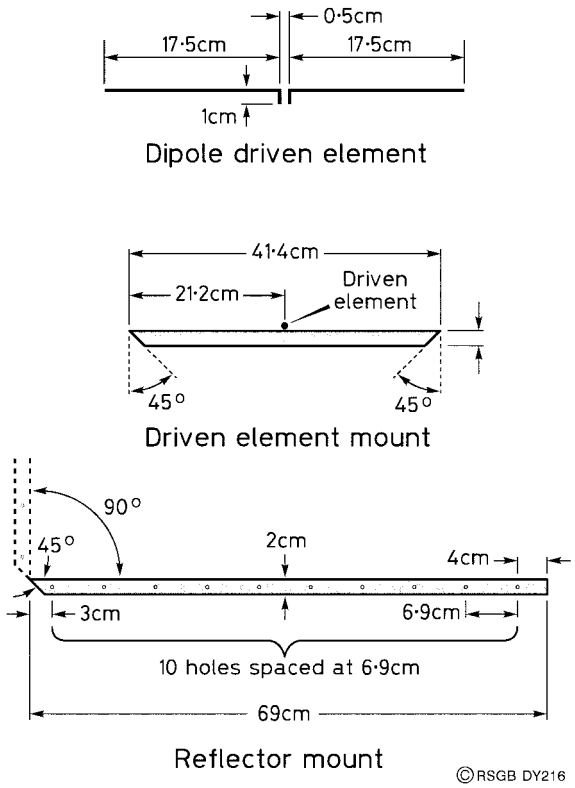

Figure 2 Driven element dimensions, together with boom dimensions for driven element and reflectors

Construction

This project is just as much a woodworking project as a radio project! Follow the instructions carefully, and you should have little trouble.

- Cut the booms for the reflectors, as shown in Figure 2. A mitre block is invaluable here in producing the 45° corners.
- Using the dimensions given on the diagram, mark the hole positions for the reflector elements, and then drill holes of a size which holds the elements firmly.
- Cut the driven element boom according to the diagram, and mark the point midway along the longer side, which will assist you later in positioning the driven element.
- Cut the back plate to size (about 120 mm by 80 mm). You may need to alter this size depending on the size of the U-bolt you will be using to clamp the aerial to the mast.

- If you want to be extra cautious in your construction, use the belt-and-braces approach, commonly known as 'screw-and-glue' to fix the booms to each other and to the back plate.
- Fix the reflector booms to the back plate first, then slide in the driven-element boom until it will go no further, then apply the wood glue and screw the two ends tightly to the reflector booms. Leave for the period prescribed by the glue manufacturers for the glue to harden.
- Varnish the whole structure.
- Cut the driven element to the correct size plus a couple of centimetres (the reason for this will be evident in the *Testing* section), and fix it to the centre of its boom (at the position you marked earlier) with a 'chocolate block' connector to which the coaxial feeder cable will eventually be connected.
- Cut and fix the reflector elements in place. If you find that these are a loose fit in the holes then, *for each element*, drill a pilot hole through the boom to intersect the hole for the element. File off the point of a woodscrew, and screw it gently into the pilot hole until it meets the element and grips it in place. You will now see why the point was filed off! Alternatively, you can glue the elements in place.

Testing

Place the aerial on a mast, clear of obstructions. Connect it to a transceiver with a length of coaxial cable, with a standing-wave-ratio (SWR) meter in circuit. Find a clear frequency, identify your transmission and ask if the frequency *really is* clear. If so, key the transmitter again and note the SWR. **Do not stand in front of any aerial when it is radiating!** The length of the driven element must be adjusted to obtain an SWR of less than 2. If you have to shorten the dipole, bend the ends over rather than cut them off. That way, if you go too far, your can lengthen them again! The dipole was initially cut too long intentionally, to allow for adjustment here! Bending the ends over also reduces the risk of physical damage to clothing, skin and eyes. You may like to consider applying the same technique to the reflector elements for that reason alone.

Moving on . . .

Once you have warmed to the idea of the corner reflector as an aerial, you might like to ring the changes regarding the reflector. How about replacing the 20 reflector elements with a wire mesh, such as garden centres sell as 'chicken wire'? Choose the finest mesh if there is a choice. Some extra support may be needed around the edges of the mesh, but you could go on to make a comparison of aerial gain between the two types, using the *UHF Field Strength Meter* described elsewhere in this book.

Materials

Stiff wire or thin-walled tubing for dipole and reflector
Frame – wood, 15 mm by 20 mm cross-section, lengths given in text
Back plate – stout plywood, dimensions given in text
U-bolt to suit mast
Wood screws
Wood glue
50 W coaxial cable for feeder
2-terminal 'chocolate block' for dipole connection to feeder
Varnish

67 A switched dummy load

Introduction

A dummy load is a pure resistor of value 50 ohms which can replace your transmitting aerial and enable you to operate the transmitter for test purposes without radiating a signal. It sounds simple enough, but there are two main problems. Firstly, it is impossible to delve into your junk box and emerge with a resistor that will dissipate 100 W PEP and still retain its marked resistance value. Secondly, a 'pure resistance' is very difficult to achieve. A pure resistance is a device which has resistance but no reactance. All common resistors have significant reactance at radio frequencies, particularly the wire-wound varieties, which have a helical (i.e. wound like a coil) construction. This is particularly annoying, because wire-wound construction is normally used for large-wattage resistors.

Although all resistors have *some* reactance, not all are quite as bad as the wire-wound type. Carbon film resistors are made by depositing a thin film of carbon on the surface of a small, hollow ceramic cylinder, the thickness of the film of carbon determining the value of the resistor. Provided the lead lengths are kept short, these resistors have a tolerably small reactance, and will be used in this project.

Bearing the load

A 2 W carbon film resistor is hardly going to withstand our 100 W PEP of SSB, so it is obvious that the design of our dummy load must be a little more

complex than a single resistor and a switch, despite what **Figure 1** might suggest! In fact, it uses 20 resistors, each of value 1000 Ω (1 kΩ). How does this solve our problem?

Perhaps a little theory is in order here, but no more than is required by the Radio Amateurs' Examination.

When two *equal* resistors of value r are combined in parallel (i.e. side by side), the total resistance, R_T, is given by:

$$\frac{1}{R_T} = \frac{1}{r} + \frac{1}{r}.$$

Adding $1/r$ to $1/r$ gives $2/r$, therefore:

$$\frac{1}{R_T} = \frac{2}{r}, \quad \text{i.e. } R_T = r/2.$$

So, by connecting *two* equal resistors in parallel, we get a combined resistance which is *half* the individual resistances. If we combine *three* in parallel, we get a *third* of the resistance, and so on.

Here, we are connecting *20* resistors of 1 kΩ in parallel, so we will produce an overall resistance of *one-twentieth* of the individual resistance, i.e. 1000/20 = 50 Ω, which is what we set out to achieve!

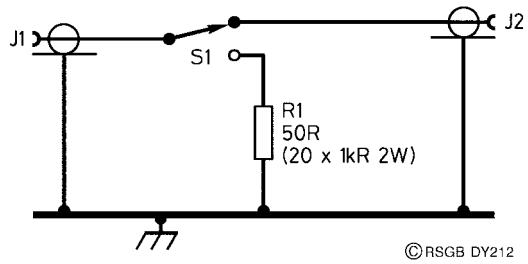

Figure 1 Basic circuit diagram

This is not the only advantage, though. Each resistor is capable of dissipating 2 W, so 20 of them will safely dissipate 40 W, for short periods at least. This power dissipation is approximately the same as 100 W PEP of normal speech, so the design should be capable of use in an 'average' amateur station. The power-handling ability of any dummy load can be improved by providing a 'heat sink' which helps to conduct the heat energy away from the resistors, thus lowering their temperature. One popular heat sink is a can of transformer oil, into which the resistors are immersed. This design uses a rather more mundane heat sink, but which is adequate for the job in hand.

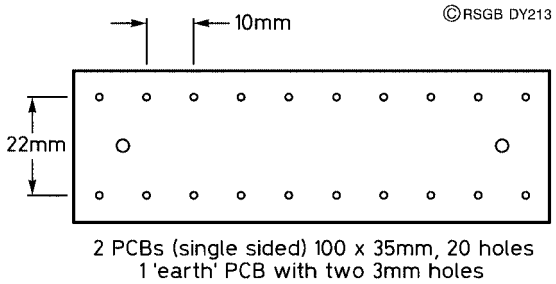

Figure 2 PCB resistor supports

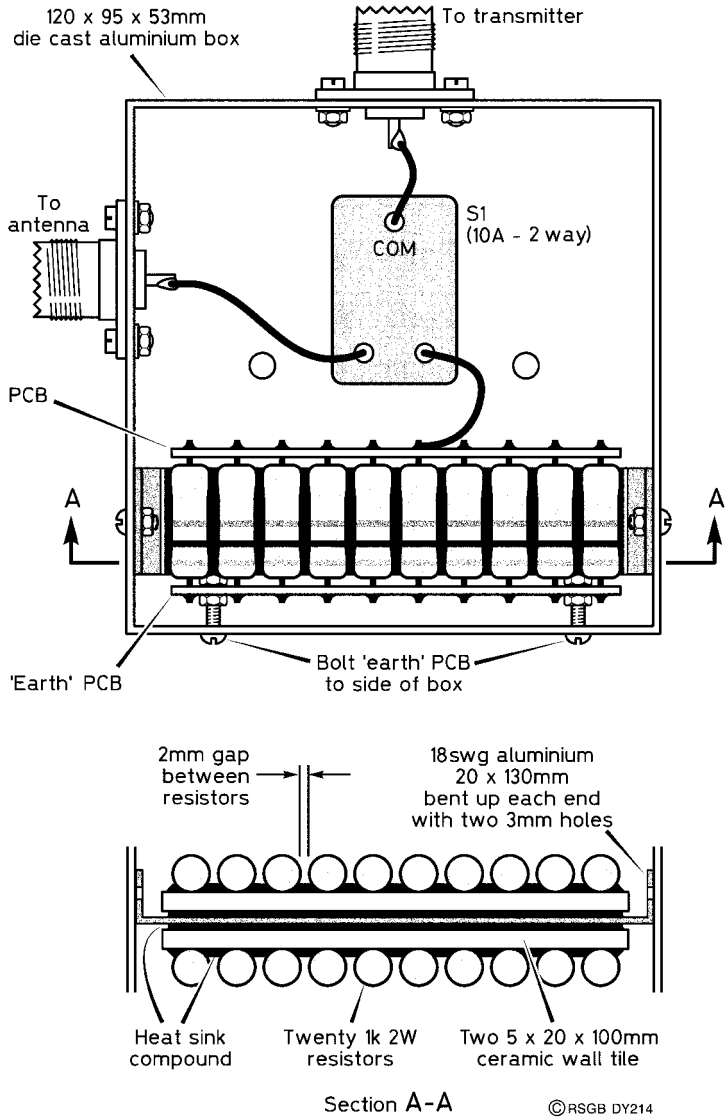

Figure 3 Switched dummy load, component layout

Pouring the heat away

Two basic PCBs are needed, the details being given in **Figure 2**. Both measure 11 × 35 mm. Each has a set of 20 holes of diameter about 1 mm to take the ends of the resistors. Only one of them has two 3 mm holes which are used for mounting the completed load. **Figure 3** shows how the heat sink is assembled. Solder one end of each resistor into the 'earth' PCB, and then mount this to the box using the two bolts as shown in the diagram. Between each rank of resistors is a 'sandwich' consisting of an aluminium strip and two pieces of ceramic wall tile, to act as a heat sink for the resistors. Heat sink compound is used to provide good thermal contact between the resistors and the tiles, and between the tiles and the aluminium strip. This is shown in the lower part of Figure 3. Thread the loose wires of the resistors through the holes in the second PCB, solder into place, and crop the protruding wires.

Switching

A changeover switch must be used so that the transceiver can be switched between the dummy load and the aerial without unscrewing connectors. For most purposes, an ordinary 10 A 230 V changeover switch will suffice, as found in many electrical shops and DIY stores.

Wire this into the circuit as shown in Figure 1 and Figure 3. Check your wiring. Put S1 in the 'dummy load' position. If you have a multimeter which includes an ohmmeter, measure the resistance across the socket, J1, before connecting it to the transceiver. It should be very near 50 Ω. With S1 in the 'aerial' position, there should be an infinite resistance across J1. Move your ohmmeter to read the resistance across J2. It should be infinite for both positions of S1. If all seems correct, close the box and your dummy load is ready for use!

Parts list

Resistors
- 1000 Ω (1 kΩ) 2 W carbon film, 20 required

Additional items
- 10 A 230 V changeover (SPDT) switch
- SO–239 sockets, 2 required
- Aluminium box 120 × 95 × 53 mm or similar
- Ceramic wall tile cut as required
- Aluminium strip, 18 SWG
- Nuts and bolts as required

68 A simple Morse oscillator

Introduction

This is an excellent project which uses the 'junk box' as its source of components. If you have trouble in finding the bits for this one, a good source of the components for this and many other similar projects is to be found with the parts list at the end of the project.

The circuit

This is shown in **Figure 1**, and uses an 'unknown' Plessey chip, which makes the overall circuit extremely easy to build. A 0.1 μF capacitor is connected between pins 7 and 8, a speaker (in the popular 8 to 25 Ω impedance range) is connected between pins 8 and 9. If a 9 V battery is connected with its positive terminal to pin 8 and its negative terminal to pin 1, 3 or 5, a tone will be produced in the speaker.

To make this circuit into a good Morse practice oscillator, it is necessary only to insert a Morse key into the supply rail from the battery.

However, there is another refinement which you may care to build into the circuit. The tone from the loudspeaker is different, depending upon which of pins 1, 3 or 5 you use. In the prototype, a single-pole changeover switch was used to select the tones from pin 1 or pin 3, and the Morse key would be connected to the circuit via a small jack socket. There is no need for an on/off switch, as the Morse key performs that function. The switch and the jack socket can be seen in the photograph.

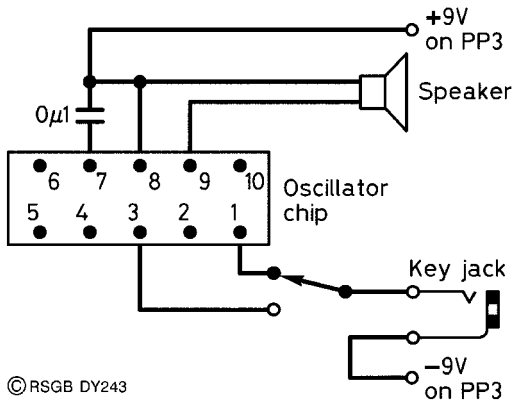

Figure 1 Morse oscillator, circuit diagram

The case

Almost any small loudspeaker will do; the higher the impedance the better. The 'impedance' is the figure usually printed on the rear of the speaker magnet. It is a value given in ohms (Ω). For simple circuits like this, you will usually find that the higher the impedance (within reason), the louder the sound it will produce. Speakers from old transistor radios will work, although their impedances can be rather low sometimes.

Any case big enough to house the components and the battery will be suitable. The prototype used a 'Walkman'-type speaker and case, and is shown in the photograph.

To use the circuit, simply attach a 3.5 mm jack plug to your Morse key, and insert it into the socket. Nothing should happen until you press the key, when a tone should be heard from the loudspeaker.

Another application

Try soldering the two wires of a 'twisted pair' to the 3.5 mm jack plug. Touching the wires together produces a tone from the speaker. This simple circuit can then be used as a 'continuity tester'. Touch the two wires to the ends of a fuse. If there is no sound, then the fuse is blown. There are many other such tests you could perform with this device – to check whether there really *is* a connection between one end of a wire and the other, for example.

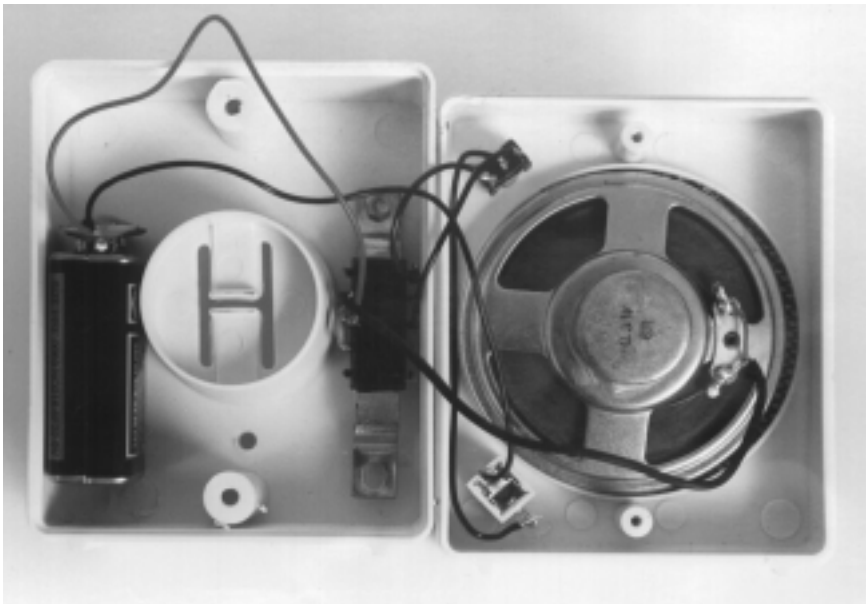

Warning

You must **never** make such tests on any equipment which is connected to the mains supply, even if it is switched off. If you want to make any such tests, make sure you are supervised by someone who understands what you are doing and is competent to advise and supervise you.

Parts list

Plessey oscillator chip
0.1 μF capacitor (disc ceramic)
Loudspeaker 8 to 25 Ω
3.5 mm jack socket (and 3.5 mm jack plug if needed)
Single-pole changeover switch

The Plessey oscillator chip is available from J. Birkett, 25 The Strait, Lincoln LN2 1JF, tel: 01522 520 767.

John Birkett may also provide a kit of parts (the chip, capacitor and loudspeaker).

69 A bipolar transistor tester

Introduction

This is a circuit which will test normal transistors, i.e. npn or pnp. It has the advantage of being able to test devices while they are still connected in their original circuits. However, when such tests are made, **the circuit containing the transistor under test must not be switched on**.

The circuit and how it works

The circuit runs from a 9 V battery such as a PP3 or six AA-type 1.5 V cells. Alkaline cells are to be preferred, as their electrolyte leakage properties are better. The circuit shown in **Figure 1** uses a single CMOS integrated circuit type 4001 or 4011. CMOS circuits require special handling precautions which are described in the project *Christmas Tree LEDs*, elsewhere in this book.

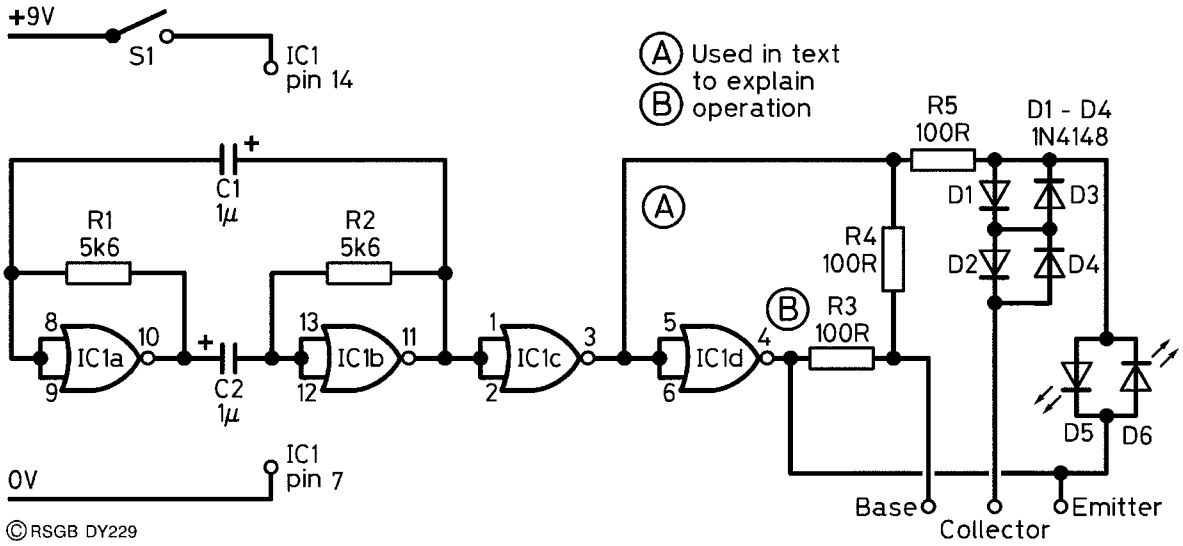

Figure 1 Transistor tester, circuit diagram

Inside the IC are four logic gates (see *Digital Logic Circuits*) which are all connected as inverters, which means that the output signal is always the logical 'opposite' of the input. The first two gates are connected as an oscillator; the circuit being the same as that used in *An Electronic Die*.

The output of the oscillator, at pin 11, is connected to the input of a buffer stage, IC1c, which helps to isolate the oscillator from the circuit that follows it. The buffer output appears on pin 3, which we shall label as *test point A* for future use. Another inverter, IC1d, follows this, its output at pin 4 being labelled *test point B*.

There are two LEDs connected back to back at the circuit output. These are D5 and D6, D5 being red and D6 being green. Whatever the output of the oscillator at any instant, one of the LEDs must be lit and the other unlit. With point A positive and point B zero, the red LED is lit, when A is zero and B is positive, the green LED is lit. Because the oscillator output is repeatedly switching from one polarity to the other, the lit LED is alternately red and green. They switch between the two colours much faster than we can see, so what we think we see are both LEDs lit together.

The two 100 ohm resistors, R3 and R4, provide the bias to the base of the transistor under test. When A is positive and B is zero, the base-emitter junction of the transistor will be forward-biased, and the transistor will switch on (if it is a working npn type). When the transistor is on, it effectively short-circuits D5 (the red LED) and it extinguishes. When point A is zero and B is positive, an npn transistor will be switched off and the

green LED (D6) will light. Thus, for a working npn transistor, only the green LED is lit.

If the transistor under test is a pnp type, it will switch on when A is zero and B positive, thus short-circuiting the red LED (D6). When A is positive and B zero, the transistor is off and the red LED (D5) is lit. Thus for a working pnp transistor, only the red LED is lit.

To summarise, the states of the LEDs indicate the following conditions:

- Both LEDs apparently lit: no transistor connected, or transistor permanently open circuit.
- Neither LED lit: a collector-emitter short-circuit is almost certain.
- Red LED alone: pnp transistor in working order.
- Green LED alone: npn transistor in working order.

Construction

The prototype tester was built on a piece of Veroboard measuring 15 strips by 18 holes. Cut the tracks using a track-cutting tool or a 3 mm (⅛ inch) twist drill, as shown in **Figure 2**. Notice that, in this diagram, there is no

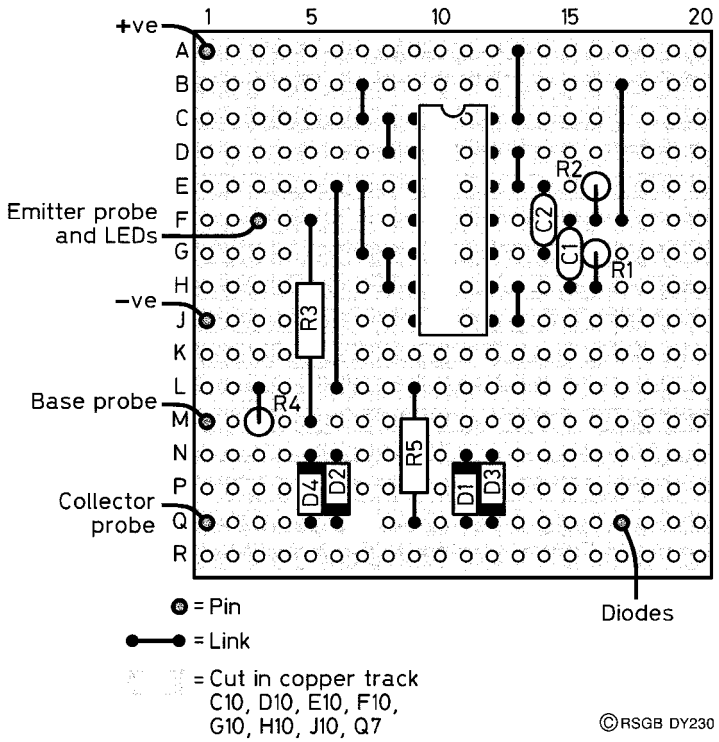

Figure 2 Transistor tester, component layout

track 'I', so try to avoid miscounting when you translate diagram positions to real positions on the board. Hold the board up to a strong light to ensure that there is no copper swarf shorting adjacent tracks together, and that you have made the cuts in the correct places.

Having done this, insert and solder Veropins for all the connections to be made to components not on the board itself. Then solder in the IC holder and the wire links. Then insert the other components in the order resistors, capacitors and diodes D1–D4. Some resistors are mounted vertically so that their connections are on adjacent tracks. Double check the diode polarities – it is easy to make a mistake when wiring diodes in anti-parallel! Next, connect up the off–board components, again making sure that the LEDs have the correct polarity. The probe leads for the emitter, base and collector should be made from different colours of wire and terminated in probe clips (small insulated crocodile clips).

Check carefully for dry joints and errant blobs of solder. Plug the IC into its holder, ensuring that it is inserted the right way round, as shown in Figure 2.

Testing

Without a transistor in circuit, and the battery connected, both LEDs should be lit. Connect a known good npn transistor and verify that the green LED lights. Now simulate two transistor faults: disconnect the base lead and both LEDs should light; remove the transistor and connect the emitter and collector leads together. Neither LED should light.

Repeat the tests with a known good pnp transistor. The results should be the same, except that the correct indication should now be a lit red LED. On your computer, make a small label of the bulleted list above, to fit on your tester showing the states of the LEDs and what they mean. It will act as a useful *aide mémoire* when you use the tester in future.

Using

The circuit will test transistors in isolation or in an existing circuit, i.e. prior to use. You can check the lead identifications in component catalogues such as the Maplin catalogue. The tester is ideal for going through the large bags of unmarked transistors that you can buy for a song at rallies. You can sort them into three piles – npn, pnp and dud!

Parts list

Resistors: all 0.25 watt, 10% tolerance or better

R1, R2	5600 ohms (Ω)
R3, R4, R5	100 ohms (Ω)

Capacitors

C1, C2	1 microfarad (μF) electrolytic, 16 V WKG

Semiconductors

D1–D4	1N4148 general-purpose silicon diodes
D5	Red LED
D6	Green LED

Integrated circuit

IC1	CMOS 4001 or 4011

Additional items

- Veroboard, 15 strips by 18 holes
- Veropins
- PP3 battery and connector (or 6 × AA cells in PP3 clip holder)
- Switch, SPST
- Connecting wire
- One each of known working npn and pnp transistors for test purposes.

Source

Components are available from Maplin.

70 The 'Yearling' 20 m receiver

Introduction

Published to celebrate the first anniversary of *D-i-Y Radio,* this excellent receiver design forms a suitable 'second receiver project' for those who have successfully completed the MW receivers earlier in this series. The receiver is powered from a PP3 battery or from a mains adaptor, and can be built with the help of an experienced constructor, on a prototype board. The circuit diagram and some of the components used are shown in the separate diagram. Headphones or a loudspeaker can be used and, once the radio is completed, a few simple adjustments will make the *Yearling* spring to life!

Building the receiver

Before starting the constructional process, start by identifying all the parts. One by one, tick them off against the parts list. Are their values correct? The varactor diode is a twin type (see circuit diagram overleaf), and must be cut *carefully* down the middle, producing two devices, D1 and D2, with two wires each.

First, solder the IC sockets, followed by the coils (inductors); L1 is pink inside the top, and L2 is yellow inside. Then, solder in the varactors; the lettering on D1 should be next to coil L1, and the lettering on D2 should face resistor R7. After those, the capacitors, wire links and resistors should be soldered to the board. Take care to wire the voltage regulator, IC3, correctly. Solder in the crystal X1 as quickly and deftly as you can – crystals do *not* take kindly to having their leads bent and being fried with a soldering iron! Make sure that the electrolytic capacitors C2, C12, C15 and C16 are fitted the right way round. Most electrolytic capacitors have only the negative lead marked.

Figure 1 shows the rear of the front panel, illustrating the connections from the board and antenna socket to the controls. All normal connecting wires are 22 SWG or thereabouts, with insulation. Their lengths should be about 15 cm, except for the battery lead to the switch, which is about 8 cm. It is recommended that you use different-coloured wire for each connection to a control. **Figure 2** shows this. The variable resistor section of VR5, the AF gain control, uses single screened cable connected to 0 V (ground) at the

Amateur Radio

D-i-Y

Year

Antenna Socket

Variable Inductor

Crystal

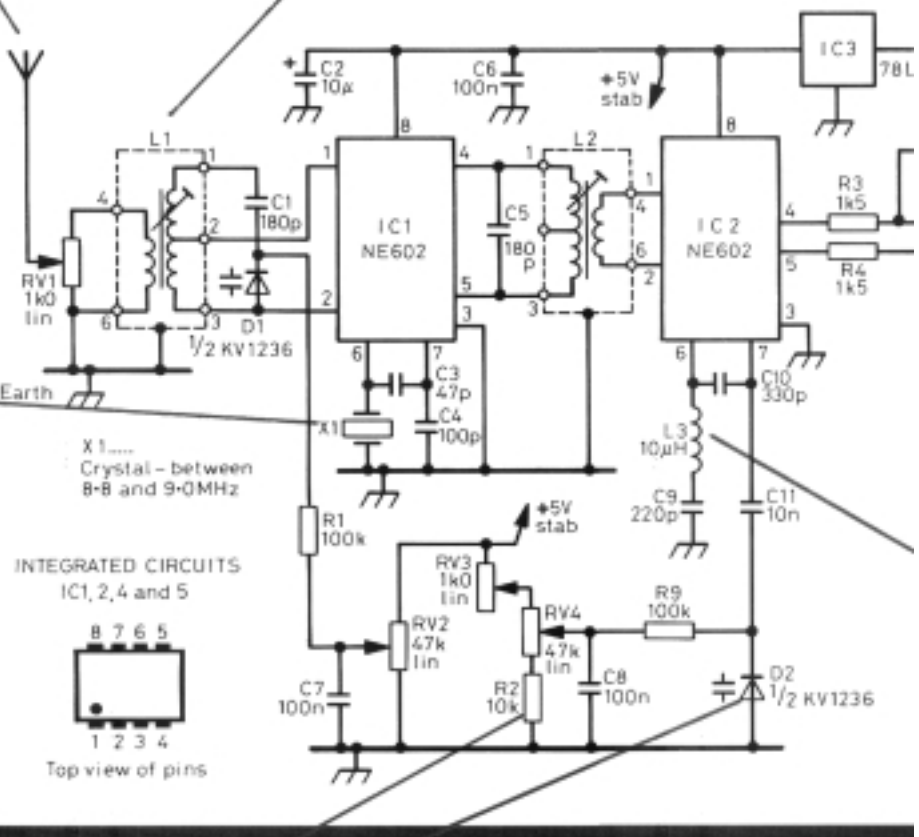

Resistor

Varicap Diode

Most radio amateurs enjoy building par
is Do-it-Yourself (D-i-Y) Radio, and it is
successfully built yourself. Licensed
allowed (by the Government) to use ho
can see how radio components are dra
circuit diagram for the

D-i-Y Radio, RSGB, Lambda House, Cra

– Do It Yourself

RADIO

ling

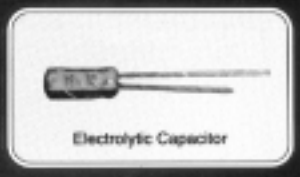

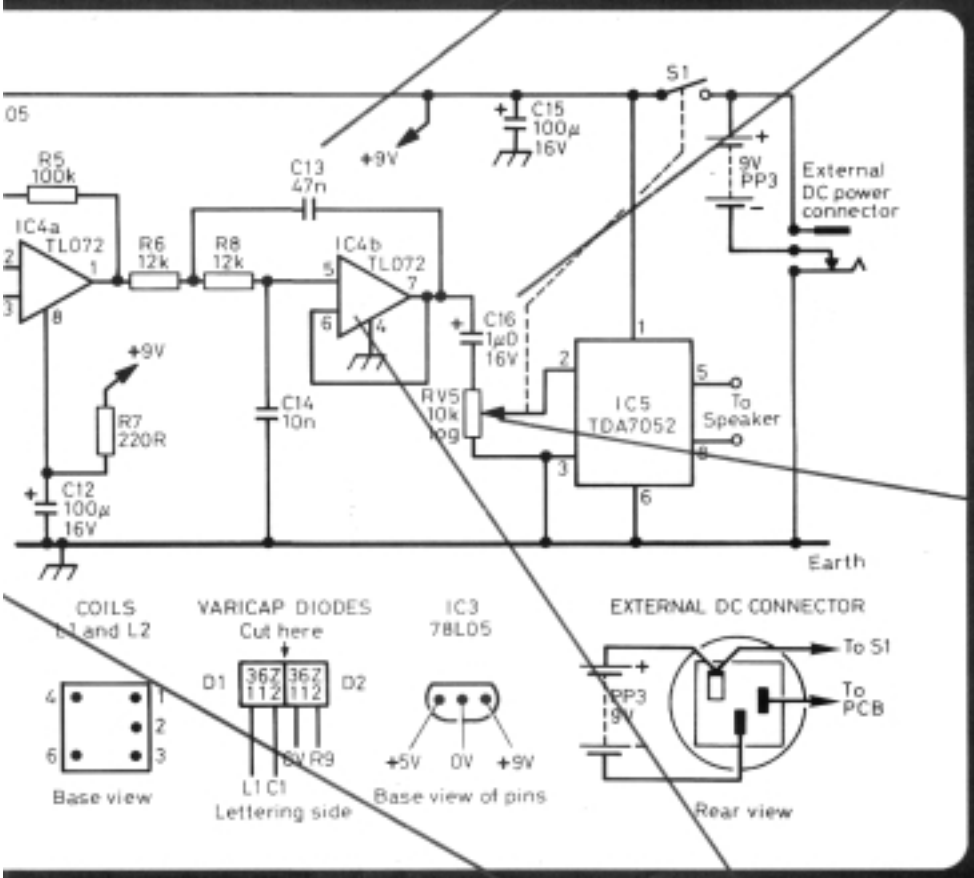

of their radio stations themselves, this
very satisfying to use a radio you have
radio amateurs are the only people
me-built transmitters. On this page you
wn on a circuit diagram. This is the full
D-i-Y Radio Yearling.

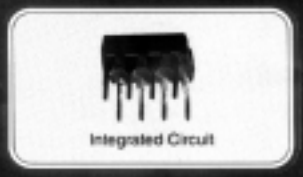

nborne Road, Potters Bar, Herts. EN6 3JE

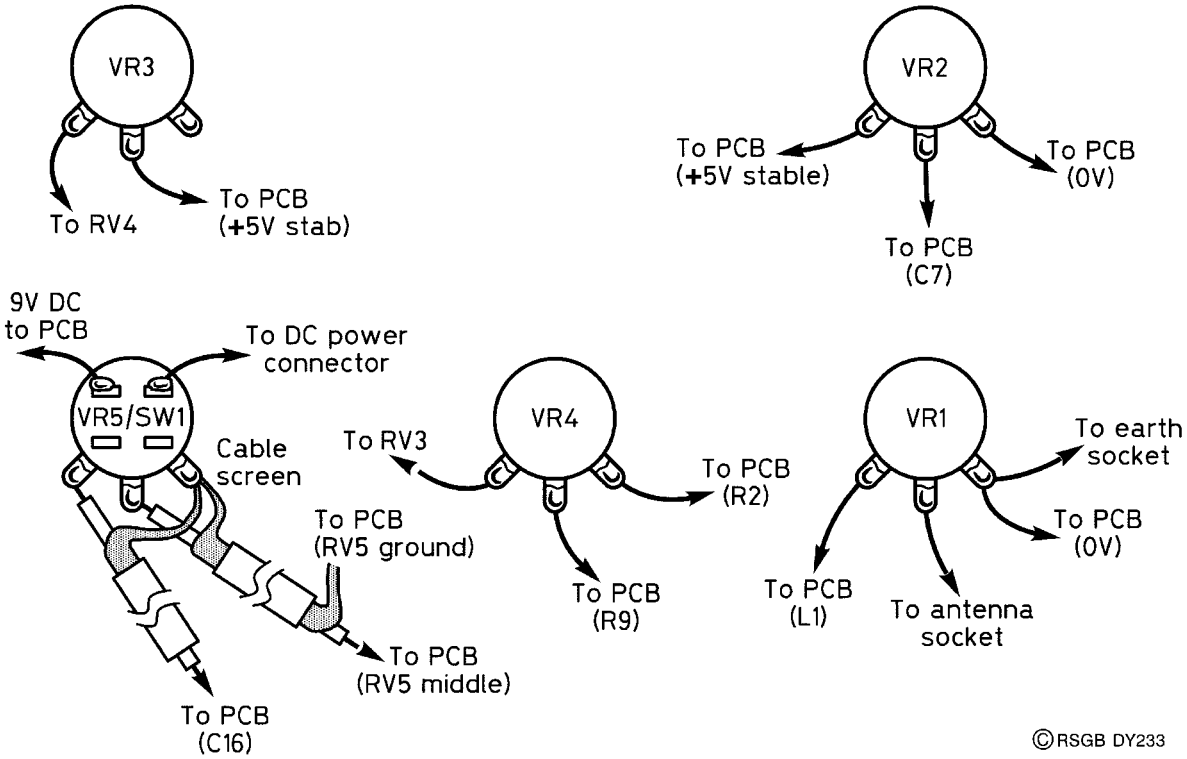

Figure 1 Rear view of the variable resistors. Check the connections carefully to make sure the wires fit the correct holes

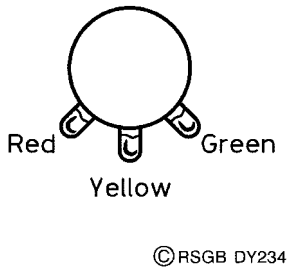

Figure 2 It is helpful to use different colour insulated connecting wires. Wires between each variable resistor and the board should be twisted together to give a neat wiring outfit.

board end. Now fit the ICs into their sockets. Make sure that they are the right way round (see circuit diagram) and that each pin lies directly above its corresponding socket before applying *gentle* pressure with the back of the board firmly supported.

Check that all the connections are correct (don't *assume* this – check the ends of each wire against the circuit diagram) and that all your soldered joints are shiny. Lastly, drill the five 10.5 mm diameter holes for the main controls. On the side of the case, a 6.3 mm diameter hole is needed for the speaker socket, and 8 mm holes for the antenna and earth sockets. The external power socket requires an 11 mm diameter hole.

Adjusting it

Before you can make adjustments, and in order to hear *anything* on your *Yearling*, you will need to connect an antenna (aerial) to the antenna socket. About 8 metres of wire, preferably outdoors and as high as possible, is all you need to connect to the socket. Connect the 3.5 mm jack socket for the speaker, and a 3.5 mm jack to your speaker leads. Connect a battery and switch on.

1. Using a very small screwdriver or, better still, a non-metallic 'trimming tool', *gently* screw in the core of L2 as far as it will go, but *don't force it*. Then unscrew it by three turns anticlockwise.
2. Set VR1, VR2 and VR4 to mid-position and rotate the core of L1 anticlockwise until the hissing noise you hear reaches a maximum intensity. Then adjust L2 for maximum noise.
3. If you now tune carefully with the main tuning control, VR4, you should hear some amateur Single-Sideband (SSB) speech signals. You may have to adjust the bandspread (fine tuning) control, VR3, to make the speech sound normal.
4. Having verified that everything is working, switch off and mount the controls on the front panel and the sockets on the side. To do this, it is much safer to disconnect all the controls and sockets, mount them in their final positions, and then wire them up again.
5. Fit the front panel knobs, connect your aerial and switch on again, checking that everything is working. Then, locate the cluster of CW (Morse) signals to be found at the bottom of the 20 metre band, set the bandspread control to mid-position and slacken off the main tuning knob. Turn the knob (but *not* the control!) until the pointer lies a little clockwise of 14.0 MHz. The SSB signals should now lie roughly between the dial centre and 14.35 MHz. Tighten up the knob.
6. Finally, fix the board to the rear panel, and secure the battery (if you are using one). Attach the rear panel to the back of the box, and you are finished!

Listening!

Make a habit of keeping the bandspread control in its centre position when searching for stations; then you can adjust it either way to make the signals readable. Unless you have a very big aerial, it is best to have the 'RF Gain' control, VR1, at maximum. Use the 'Antenna Tune' control, VR2, to give the best signal, and control the volume with the 'OFF/AF Gain' control. You will find some excellent DX stations with your *Yearling* receiver, and it will serve you well.

Parts list

Resistors (all 0.25 W, 5%)

R1, R5, R9	100 kilohms (kΩ)
R2	10 kilohms (kΩ)
R3, R4	1.5 kilohms (kΩ)
R6, R8	12 kilohms (kΩ)
R7	200 ohms (Ω)

Capacitors (all rated at 16 V or more, tolerance *at least* what is quoted)

C1, C5	180 picofarads (pF) polystyrene 5%
C2	10 microfarads (μF) electrolytic
C3	47 picofarads (pF) polystyrene 5%
C4	100 picofarads (pF) polystyrene 5%
C6, C7, C8	100 nanofarads (nF) or 0.1 microfarad (μF) ceramic
C9	220 picofarads (pF) polystyrene 2%
C10	330 picofarads (pF) polystyrene 2%
C11, C14	10 nanofarads (nF) or 0.01 microfarad (μF) ceramic
C12, C15	100 microfarads (μF) electrolytic
C13	47 nanofarads (nF) or 0.047 microfarad (μF) polyester, 5%
C16	1 microfarad (μF) electrolytic

Variable resistors

VR1, VR3	1 kilohm (kΩ) linear
VR2, VR4	47 kilohms (kΩ) linear
VR5	10 kilohms (kΩ) log with switch

Inductors

L1	Toko KANK3335R
L2	Toko KANK3334R
L3	10 microhenries (μH), 5%

Semiconductors

IC1, IC2	Philips/Signetics NE602 or NE602A
IC3	78L05 5 V 100 mA regulator
IC4	TL072 Dual Op-Amp
IC5	Philips TDA7052 audio amplifier

Additional items

D1, D2	Varactor diode Toko KV1236 (cut into two sections – see text)
X1	Crystal 8.86 MHz type (from Maplin, etc.)
4 off	8-pin DIL sockets for IC1, IC2, IC4 and IC5
2 off	4 mm sockets aerial (red) and earth (black)
1 off	3.5 mm chassis-mounting speaker jack socket
1 off	DC power socket for external supply (if required)
4 off	Red knobs with pointers
1 off	Tuning knob with pointer (e.g. 37 mm PK3 type)
1 off	Printed-circuit board or prototype board
1 off	Plastic case approx 170 × 110 × 6 mm (e.g. Tandy number 270-224)
1 off	Speaker 8–32 Ω impedance (or headphones)

71 Adding the 80 metre band to the Yearling receiver

Background

You will have noticed that your *Yearling* receiver has a dial which shows coverage of the 80-metre amateur band (3.5–3.8 MHz). This band is used for local contacts during the day, and contacts up to about 1600 miles in darkness. Longer distances are possible, particularly in the middle of winter.

The modifications

Only a few extra parts are required, as you may have noticed from the parts list. A low-pass filter, FL1 (one which passes low frequencies and rejects higher frequencies), is switched into the circuit on 80 m. The circuit of the

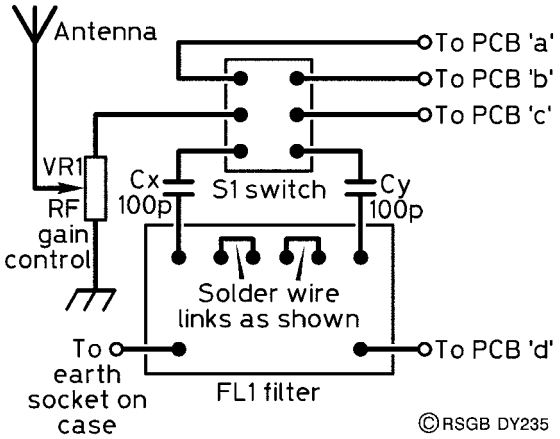

Figure 1 The circuit diagram shows the extra components for 80 m operation. Note the connections to the PCB 'a', 'b', 'c' and 'd'

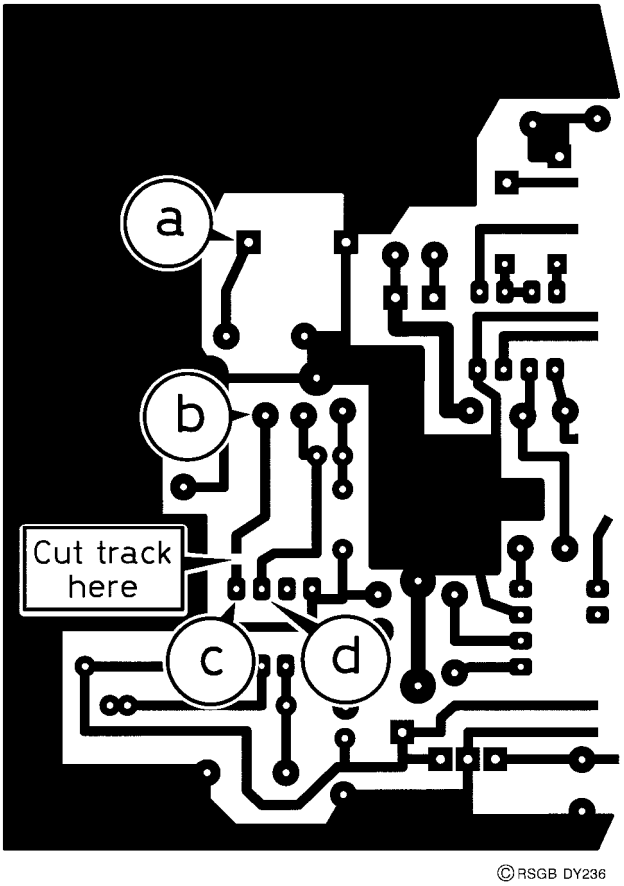

Figure 2 The underside of the PCB. Wires are connected from the switch and filter as shown

switch and its connections is shown in **Figure 1**. Before making the modifications, dismantle the receiver so that you have easy (and safe) access to the case and the track side of the PCB.

1. The first thing to do is to drill a 6.5 mm diameter hole in the side of the case into which the switch fits.
2. Then, using a sharp Stanley knife or scalpel, carefully cut the track on the PCB as shown in **Figure 2**, making a gap about 1 mm wide.
3. Using 10 cm lengths of different-coloured insulated wire, make the four connections, a, b, c and d, to the PCB, as shown in Figure 2.
4. Solder the two links on the filter, and then make the connections to the switch, capacitors and PCB. You will have to disconnect the existing wire between the RF gain control, VR1, and pin 4 of L1 on the PCB.
5. Lastly, check your new connections carefully, then mount the switch in the new hole and fix the filter to the bottom of the case with a little glue, as shown in **Figure 3**. Reassemble the circuit, and replace the back of the case.

More testing!

Firstly, switch your new switch, S1, into the 20 m position, to check that the original circuit still works! If you find that the 'Antenna Tune' control peaks at a slightly different position, don't worry.

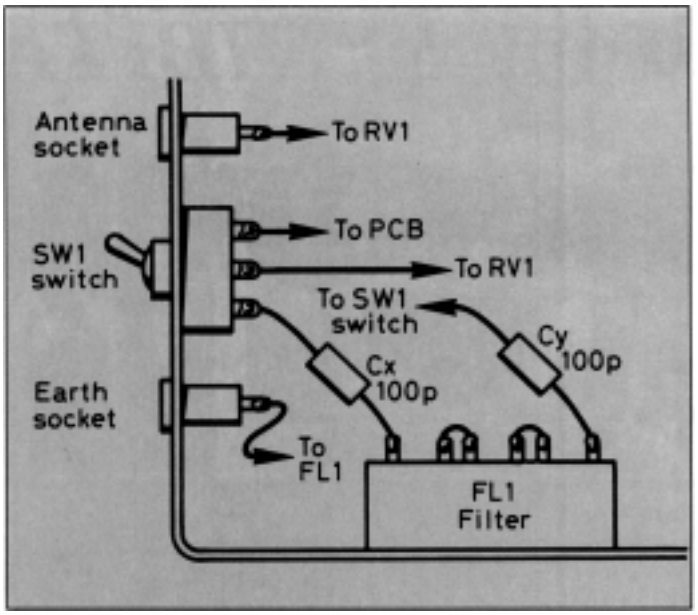

Figure 3 Internal view of the Yearling case. The filter FL1 is attached to the base with glue

Now switch to 80 m, and tune around the anticlockwise end of the dial; you should hear some SSB stations, particularly in the evenings and at weekends, when may people are on the air. At the other end of the travel of the tuning control, you should hear CW (Morse) stations.

The Radio Society of Great Britain broadcasts amateur radio news every Sunday morning on or about 3.65 MHz; the table below has the details. Finally, a good antenna is more important than ever for 80 metre reception – aim for more height and length, and then consider the project concerned with making an Antenna Tuning Unit (ATU)!

Parts list

Capacitors (all rated at 16 V or more, tolerance 10% or better)

Cx, Cy	100 picofarads (pF) polystyrene

Filter

FL1	Toko 237LVS1110 low-pass filter

Additional items

SW1	2-pole 2-way (changeover) toggle switch
7 off	Short lengths of insulated wire of different colours

The RSGB news broadcasts, GB2RS – Sunday mornings

Frequency (MHz)	*Local time*	*Reception area*
3.650	0900	SE England
3.650	0930	Midlands
3.650	1000	SW England
3.650	1100	Yorkshire
3.640	1130	Aberdeen
3.660	1130	Glasgow

The Midlands transmission is repeated at 1800 (6pm) local time on 3.650 MHz. All frequencies are approximate in order to avoid interference, and use lower sideband (LSB). If you also have a 40 metre receiver, there are GB2RS news broadcasts on 7.048 MHz at 0900 local time from Northern Ireland and from 1100 local time from the north midlands.

72 How the Yearling works

Introduction

The *Yearling* was designed to provide an introduction to *Amateur Radio* on the 20 m amateur band. Let's look at how the different sections (or 'stages') of a radio work, and how they fit together to form a complete receiver. **Figure 1** shows a block diagram which you can follow and compare with the circuit diagram of your *Yearling* receiver.

The antenna (or aerial)

Connected to your receiver, it will pick up not only amateur signals, but all other signals as well! This means that the receiver has to select the one signal that interests you, while rejecting all the others. The following stages do just that.

The RF filter

This stage (centred around L1) selects the band of radio frequencies (RF) containing the signal you want, in this case, those having wavelengths around 20 m. Signals from the 40 m band, for example, would not get through.

The crystal oscillator

This is an oscillator circuit designed around a quartz crystal (X1), and has a very stable frequency. It produces a single, very pure frequency to feed into the mixer. A crystal having a frequency between 8.800 MHz and 9.000 MHz is suitable for this circuit. The oscillator and mixer functions are both carried out inside IC1.

The first mixer

Yes, this stage 'mixes' two signals together. In this case, the two signals are (i) from the aerial via the RF Filter, and (ii) from the crystal oscillator. Two

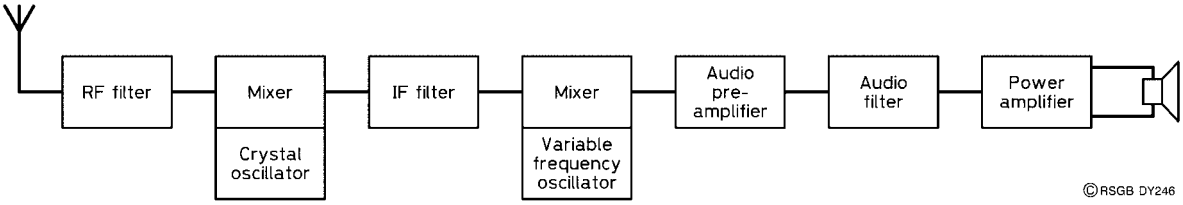

Figure 1 Block diagram of the Yearling, showing how the various stages fit together to make a complete radio receiver

bands of signals emerge from the mixer. The first is centred upon a frequency equal to the incoming signal frequency **added** to the crystal frequency, and the second is centred upon a frequency equal to the incoming signal frequency **subtracted** from the crystal frequency. Look at an example – if the signal is at 14 MHz and the oscillator at 9 MHz, then the mixer outputs will be 14 + 9 = 23 MHz and 14 – 9 = 5 MHz.

Intermediate frequency (IF) filter

It is the purpose of the IF filter (centred around L2) to select only one of these two bands of frequencies emerging from the mixer. In this case, it is the lower band of frequencies (around 5 MHz) which we select. This is because, in general, lower frequencies are easier to handle than higher ones.

Variable-frequency oscillator (VFO)

The VFO (part of IC2) enables us to tune into a particular station, and operates over a band of frequencies between 5 MHz and 5.35 MHz in this receiver. You will notice that IC1 and IC2 are the same type of chip, so that you will be expecting another mixer stage to be associated with the VFO. You are quite right!

The second mixer

This mixer obeys exactly the same rules as those of mixer 1. Sum and difference frequencies are produced, like this. Mixing is between the incoming IF signals (around 5 MHz) and the VFO signals (around 5 MHz), producing output frequency bands centred upon 10 MHz and 0 MHz. The use of the words 'band of frequencies' throughout this explanation is intentional. If all the signals were pure, there would be no bands; the bands are produced because of one thing – the modulation imposed on the pure

frequencies at the transmitter. So, the 'bands' contain the one thing that we want to extract from the signal, and that is the speech or Morse code that the signal contains. The band of frequencies at 0 MHz is just that – the audio frequencies we want in the loudspeaker. Because of this, the audio frequency output of the second mixer is selected and passed on for amplification.

The audio preamplifier

Preliminary amplification of the minute audio signal which emerges from the second mixer is provided by IC4a, which will respond only to audio signals, automatically rejecting the 10 MHz signal.

The audio filter

The bandwidth of normal speech when transmitted by an amateur station is around 3 kHz, so there is no advantage to be gained in amplifying frequencies greater than this. IC4b is known as a low-pass filter, because it passes (lets through) lower frequencies and rejects higher ones.

The power amplifier

IC5 produces the final audio amplification and provides enough power (about 350 milliwatts (mW) to drive a small speaker.

How does it work on 80 m?

If you have fitted the 80 m modification to your receiver, you are probably wondering how the circuit works at this different frequency. Firstly, the filter which you fitted selects the 80 m band instead of the 20 m band. The only other slight difference lies in the way the first mixer stage works. Its job is to produce sum and difference frequencies from the incoming signal and crystal frequencies. On 20 m, it did this by subtracting the crystal frequency (9 MHz) from the incoming frequency (14 MHz) to produce an IF output of 5 MHz. On 80 m, the incoming frequency (3.5 MHz) is subtracted from the crystal frequency (9 MHz) to produce an IF output of 5.5 MHz, which is still within the tuning range of the VFO in the next stage.

73 A field strength meter

Introduction

Having a reliable field strength meter is always useful. There are two basic types – the tuned variety (also known as an absorption wavemeter) and the broad-band variety. A project centred on the tuned variety can be found in this book (*An HF absorption wavemeter*), and the way it works is also presented (*The absorption wavemeter*). This project describes an untuned or broad-band type which is every bit as useful as the tuned type, when it is the level of RF in which you are principally interested.

With the possible exception of the meter, you may have all the parts needed in your junk box. The prototype was distinguished by its meter, found at a rally, and marked 'Safe', 'Dangerous' and 'Explosive' on its scale.

How it works

The basic field strength meter uses the circuit of a crystal set, but with a meter replacing the headphones. A better design, which is used here, is that of a voltage doubler, giving more sensitivity. **Figure 1** illustrates the voltage doubler circuit.

The AC input shown will be our RF input, which will be explained soon. Diode D1 will pass the positive half of the signal and use it to charge up C1 to the peak value of the signal. D2 uses the negative half of the signal to charge up C2 to the same value. Because C1 and C2 are in series, the peak voltage appearing across *both* of them (which is the DC output voltage) is equal to *twice* the peak input voltage, hence the name voltage doubler. If you're wondering why DC is present at the output when AC comes in at the

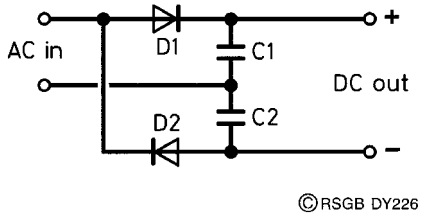

Figure 1 Voltage doubler circuit

input, remember that capacitors pass AC (RF) but block DC; thus the RF is shorted out through C1 and C2, but the steady voltage (DC) remains across the two capacitors. The voltage is thus proportional to the size of the RF signal applied at the input.

The circuit

The voltage doubler is converted into a field strength meter using the circuit of **Figure 2**. A piece of wire serves as the aerial to provide an RF signal across the radio-frequency choke (RFC). A choke is an inductor which is large enough to prevent the RF passing through it – it 'chokes' the RF. This produces the maximum RF signal at the input to the voltage doubler, and the DC output from it is measured on the meter.

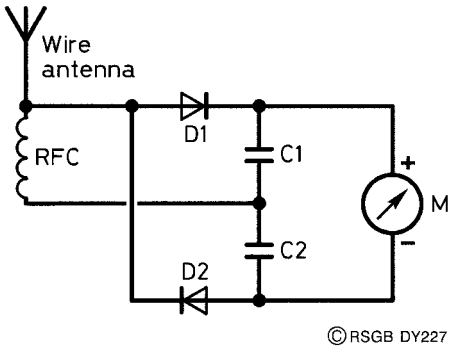

Figure 2 Field strength meter

The parts used are not very critical. The RF choke can have any value between about 1 mH and 2.5 mH. Almost any common diode such as the 1N914 or 1N4148 can be used for D1 and D2. The two capacitors could be any value between 1 nF and 100 nF (0.001 μF and 0.1 μF). The meter should be reasonably sensitive, with a full-scale deflection (FSD) in the range 50 μA to 100 μA. Look for VU meters at rallies – these are ideal.

Construction

The prototype circuit was made on matrix board. If you don't want to use pins with the board, simply push the component leads through the holes and make the connections on the underside of the board, either with the excess component leads themselves, or with ordinary connecting wire.

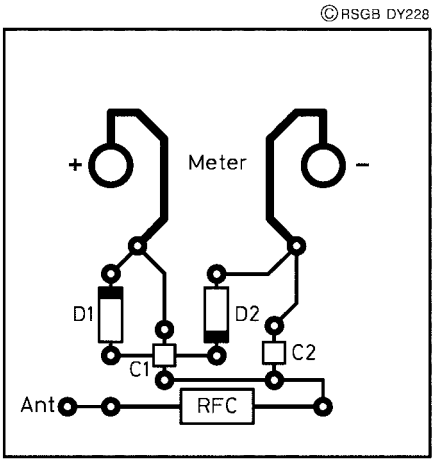

Component side of board shown.
All connections are under board

Figure 3 Board layout and interconnections

Figure 3 shows how the parts are placed and connected. The matrix board can be mounted directly on the meter using its terminal bolts!

In use

Needing no power supply other than an RF signal, just connect it all up and leave it to work! A short length of insulated wire is enough to pick up some RF and display it on the meter. Using a 200 μA meter, about 3 metres of wire gave a good deflection on the meter. To increase deflection, the wire can be wrapped around the aerial lead, provided that the wire is PVC covered and doesn't come into contact with the aerial wire.

This requires a little experimentation. Try a long piece of wire first and adjust its position until the meter needle kicks whenever there is a transmission. It is very reassuring to see the meter moving during a transmission. Although SWR meters also indicate power, they are usually set to read reverse power, and show little or no movement during transmission.

Parts list

D1, D2	1N914, 1N4148 or similar
C1, C2	10 nF disc ceramic
RFC	Miniature axial choke (1 mH)
Meter	Surplus VU meter or similar
Matrix board or similar	

Components are available from Maplin.

74 Preselector for a short-wave receiver

Introduction

A preselector is a simple RF tuned amplifier which is inserted between the aerial and the receiver. It provides some extra gain and may improve the overall performance of the receiver. This project uses a Field-Effect Transistor (FET) amplifier in grounded-gate mode.

The design has a tuned circuit at both the input and output which, with excessive gain and poor construction, would produce only one thing – oscillation! So, to avoid this happening, we will have only a low gain, and use a circuit which provides good isolation between input and output. The grounded-gate FET amplifier fulfils both these criteria. It will also cover a frequency range from about 7 to 30 MHz, which includes most of the HF amateur bands.

The circuit

This is shown in **Figure 1**. The signal from the aerial arrives at an RF transformer, the secondary of which is tuned with capacitor VC1a. The output from the tuned circuit is taken from a tap on the secondary to the source of the FET. The gate is grounded (earthed) and the amplified signal appears at the FET drain, which is then fed to the primary of another RF transformer, which is tuned by VC1b. The output to the receiver comes from the secondary of the RF transformer.

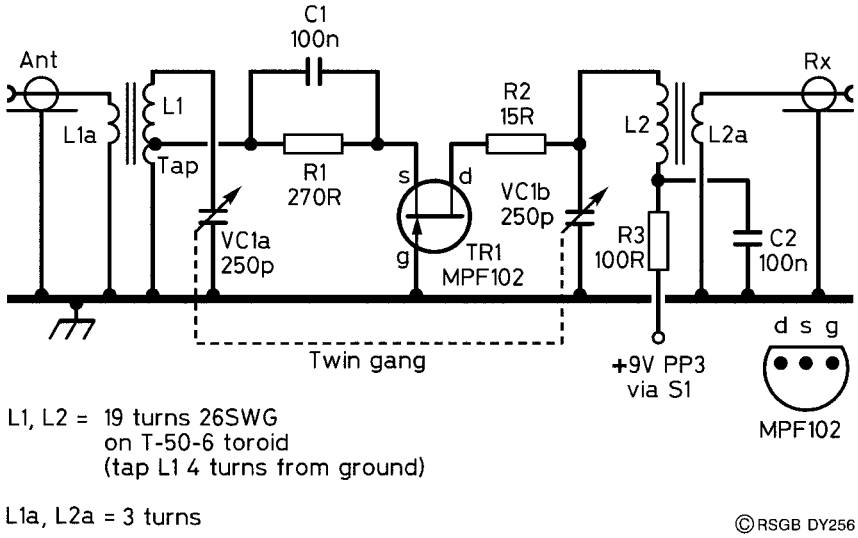

Figure 1 HF preselector, circuit diagram

Notice that the two RF transformers are identical, but they are used 'back to back', with the secondary of the first and the primary of the second being tuned. They are tuned with identical capacitors, fitted on the same shaft of a variable capacitor. We say that the two capacitors are 'ganged'. Because L1 and L2 are the same, and VC1a and VC1b are the same, both RF transformers should be resonant at the same frequency, no matter what that frequency is.

Construction

The final layout should look something like that shown in **Figure 2**. The external connectors and controls being two SO-239 sockets for connection to your receiver and aerial, a tuning control and its associated scale, and an on/off switch.

The circuit can be put together on a plain matrix board, using pins to anchor the components, or simply by pushing the component leads through the board and making connections on the underside. The layout of the prototype is shown in **Figure 3**. Mounting the board to the aluminium box is accomplished with bolts, solder tags and stand-off insulators.

Check your construction against the circuit diagram and against the layout diagram. Wire in the PP3 battery clip, put the switch in the 'off' position, and fit the battery. Testing can be carried out without fitting the top of the box.

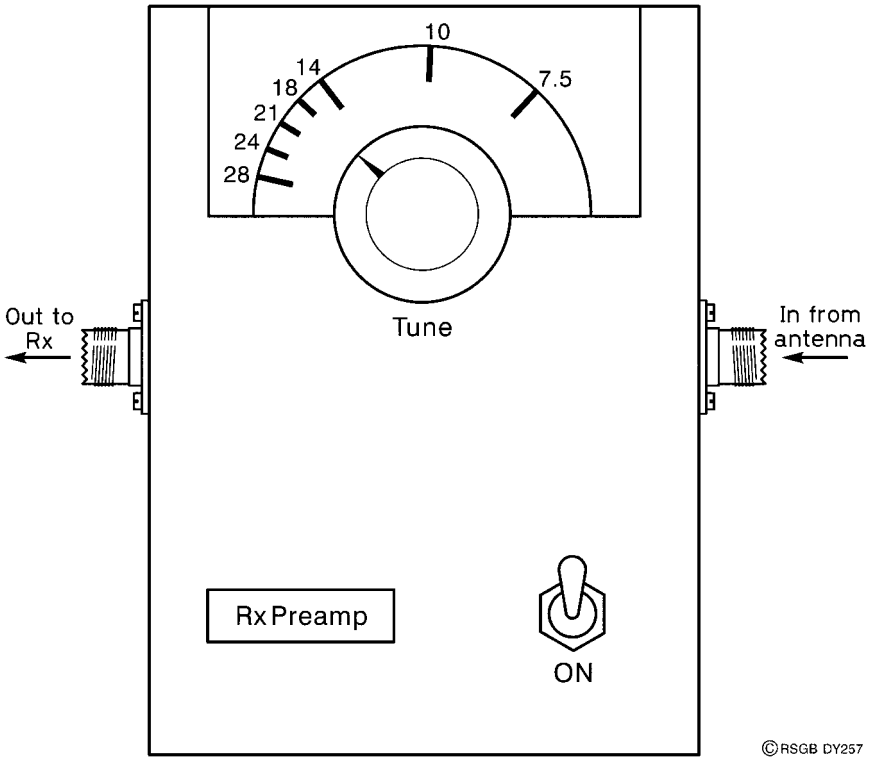

Figure 2 HF preselector, front panel layout

Testing

Don't fit your preselector yet. Tune your radio to a broadcast station, preferably a fairly weak one. Disconnect the aerial and fit your preselector between the aerial and receiver. Switch it on and rotate the tuning knob slowly. You should find a position where your original station is received more clearly than before. If it doesn't work at all, recheck your wiring. Is there a positive voltage on the drain of the FET? If not, work back towards the positive battery terminal. Is there a voltage at the junction of L2 and R2? Is there a voltage at the junction of L2 and R3? Is there a voltage at the junction of R3 and the battery lead? If there isn't a voltage at that point, then you have probably mounted your switch upside down, and it is off, not on! It's a common mistake.

Calibration

This is not obligatory, surprisingly enough. However, if having a frequency scale appeals to you, then using an RF signal generator (or using the services of a friend who has one) is the simplest solution. Feed in a weak modulated

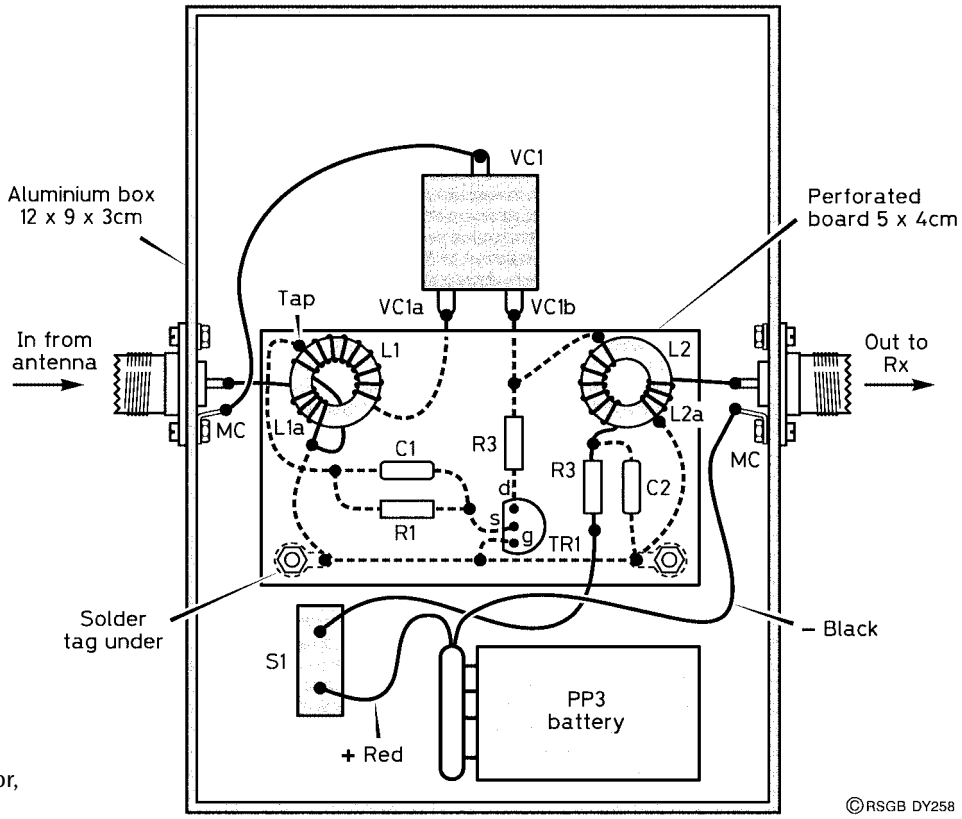

Figure 3 HF preselector, component layout

signal from the generator to the preselector, and rotate VC1 until the signal is maximum. Mark this frequency on your dial. Repeat the process for the frequencies shown on the dial in Figure 2.

If you have a commercial transceiver, feed its output into a dummy load (such as the type described in *A Switched Dummy Load*, elsewhere in this book) using a distinctive modulating signal such as an idling RTTY signal. Set the receiver to the same frequency with the preselector out of circuit. Insert it into the aerial lead, and search for the signal with VC1 until it gives the maximum deflection on your S-meter, then mark the frequency on your dial.

Parts list

Resistors: all 0.25 W carbon film or better

R1	270 Ω
R2	15 Ω
R3	100 Ω

Capacitors

C1, C2	100 nF (0.1 μF) ceramic
VC1	250/250 pF polyvaricon

Inductors

L1, L2	19 turns 26 SWG enamelled copper on T.50.6 toroid L1 has a tap 4 turns from ground end L1a and L2a – 3 turns wound over previous winding

Semiconductors

TR1	MPF102 FET

Additional items

Matrix board	To fit aluminium box (see Figure 3)
Aluminium box	12 × 9 × 3 cm
Battery and connector	PP3 9 V
S1	SPST on/off switch
Knob	As required
SO239	Sockets – 2 required

75 An audible continuity tester

Introduction

This is not the only continuity tester in this book. This alone attests to their use, so you may well want to experiment with several designs, then come up with one of your own! The very simplest form of continuity tester is probably a battery and a bulb in series, with the circuit being closed by connecting it to a fuse or other object being tested for continuity. The bulb could be replaced by a buzzer to give an audible indication. The current taken by the buzzer could damage some components, however. An ohmmeter can also be used, and is very popular for the purpose, as it indicates whether the circuit is low, medium or high resistance. This project has the advantages of indicating whether there is no continuity, some resistance or good continuity, and making an audible sound, so that you don't have to move your eyes from the circuit while making the test.

The circuit

Using only one integrated circuit, four components and a battery, this is a particularly simple circuit, as **Figure 1** shows. IC1 is usually used to flash an LED from a 1.5 V source, and to have a low current consumption. By changing the component values, IC1 is made to oscillate at audio frequencies, and we can hear these through the loudspeaker, LS1. Low-impedance speakers can be used, but result in an increased current drain, so the higher the impedance, the better.

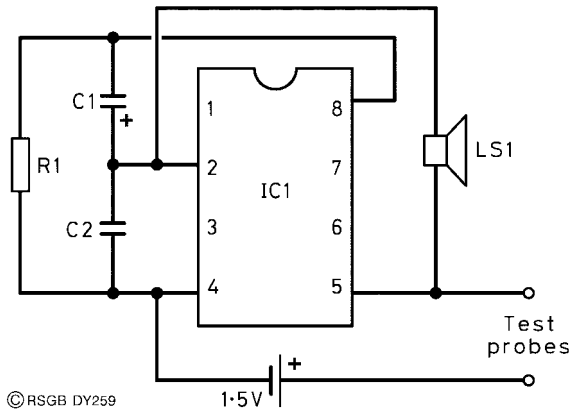

Figure 1 Continuity tester, circuit diagram

Construction

The layout of the circuit on Veroboard measuring 7 strips by 15 holes is shown in **Figure 2**. Start by making the four track cuts which will lie underneath the IC. Use a track cutter or a 3 mm (⅛ inch) twist drill rotated between thumb and forefinger for this. Solder the Veropins in place, followed by the wire link. Then solder in the IC holder, the resistor and the capacitors, making sure that the electrolytic capacitor, C1, is connected the correct way round.

Check, with the board against a bright light, that there are no shorted tracks, either by large blobs of solder or by copper swarf from the track-cutting process. Then insert IC1 into its holder the right way round. The probes can be ordinary connecting wire, the free ends being tinned with solder to prevent wire whiskers from touching components other than the one you are testing.

If you are happy that the circuit and the wiring appear to be correct, fit the battery into its clip. Nothing should happen until the probes are touched together, when you should hear a note from the loudspeaker. If nothing happens, all you can do is to recheck your circuit, as there is nothing else to go wrong!

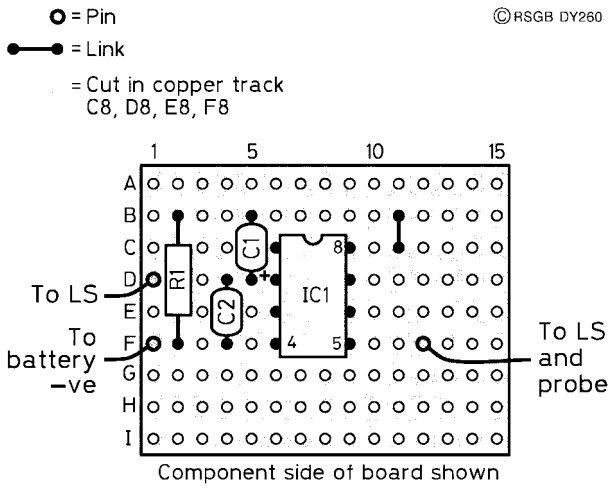

Figure 2 Continuity tester, component layout

Any box can be used; there is no justification for a metal case, unless you want to make use of something, which is to hand, such as a tobacco tin. Alternatively, any suitable plastic box will do.

Use

The tester will give different pitch notes for resistances of different values. The higher the resistance, the higher the pitch from the speaker. Try it with small inductors, and you will learn to recognise the different tones produced by the IC.

Safety notice

Using the continuity tester on components *in situ* is not advisable, as the results could be misleading. It can be dangerous to make measurements *in situ* on equipment, which is operating. If you must make such tests, always disconnect the equipment form its power source first.

Parts list

Resistor
R1 1000 Ω (1 kΩ), 0.25 W carbon, 10% or better

Capacitors
C1 10 μF electrolytic, 16 V
C2 0.1 μF subminiature polyester or ceramic

Integrated circuits

IC1	LM3909N

Additional items

	Veroboard 7 strips by 15 holes
LS1	64 Ω miniature loudspeaker
	IC holder
	Veropins
	Connecting wire
	Test leads
	1.5 V AA alkaline battery

76 An experimental 70 cm rhombic aerial

Introduction

Most commonly used aerials can be classed as *resonant* or *standing-wave* aerials. There is another class known as *non-resonant* or *travelling-wave*. Resonant aerials, such as the dipole, are narrow-band; this occurs because resonance occurs only over a narrow band of frequencies. Travelling-wave aerials, on the other hand, can operate over a wide band of frequencies.

The *rhombic* is an example of a non-resonant or travelling-wave aerial. It is often employed for fixed commercial and military short-wave radio links. Made with wire, it has a diamond shape when looking down on it from above. The four corners are supported on four masts. It is a very effective aerial, and has good gain, a quality which can be judged from the *polar diagram* shown in **Figure 1**. This has been obtained from a computer program, and so is the perfect shape for a rhombic aerial.

Theory (but only a little)

A polar diagram shows graphically the ability of an aerial to radiate (or receive) more effectively in one direction at the expensive of the radiation in other directions. Figure 1 shows the polar diagrams of two aerials, a simple 70 cm dipole and the rhombic described in this project. The dipole has the

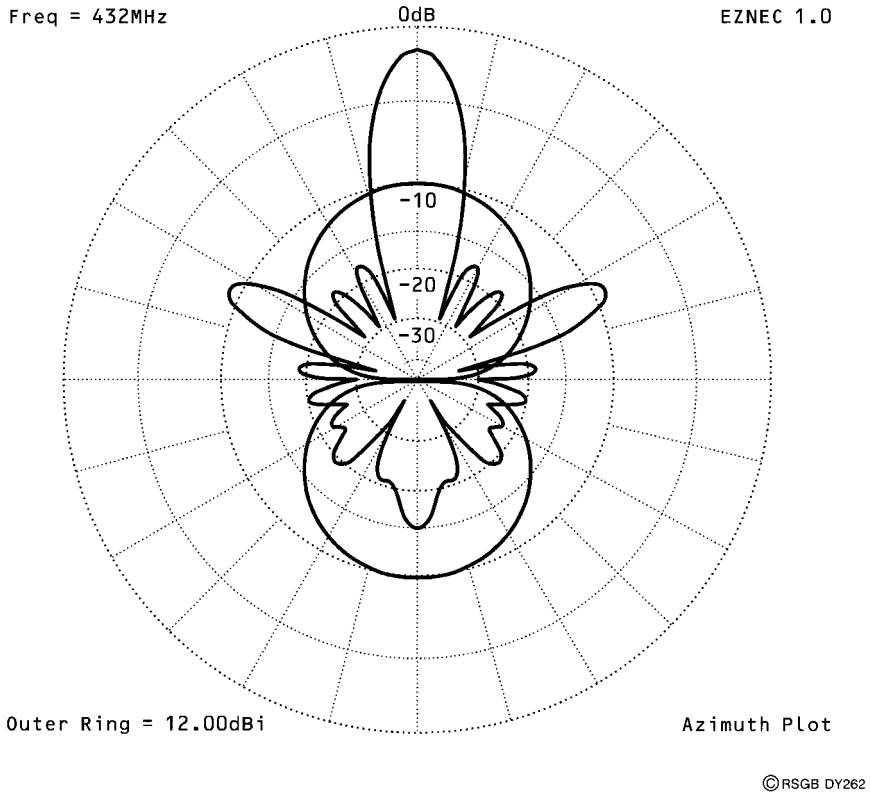

Figure 1 The horizontal polar diagrams of the small rhombic antenna and a dipole compared

well-known figure-of-eight shape, showing a symmetrical angular behaviour about the direction of the aerial and about a direction perpendicular to the aerial. That of the rhombic, on the other hand, is quite irregular by comparison, but is still symmetrical about one axis only, not two. It's this asymmetry that gives the rhombic its gain, by virtue of its *front-to-back ratio*. This is the ratio of the power radiated forwards to that being radiated backwards. Notice the large *lobe* (lump) at the top of the polar diagram; this is the direction in which the aerial transmits best. The lobe in the opposite direction has been reduced significantly, allowing more power to be directed forwards, not backwards

Problems

The rhombic is not found in every amateur's back garden, despite its attractions. To work best each edge of the diamond shape should be about two wavelengths long. Hence, a rhombic for the 20 metre band could be about 80 m from tip to tip! Another disadvantage is that, because of its size, it cannot be rotated.

It will operate well over a range of frequencies. An HF rhombic could work on the 7, 10, 14, 18, 21 and 28 MHz bands. One for the lower VHF frequencies could operate on the 50, 70 and 144 MHz bands.

Its large size is less of a problem at UHF. A portable rhombic can be made for 70 cm which can be used with a hand-held transceiver. The aerial design to be described here will give a gain of up to 9 dB relative to a dipole. This is written as 9 dBd, the second 'd' meaning 'relative to a dipole'. This is equivalent to improving your signal by 1.5 S-points at the receiver or (and you may be surprised by this) by fitting a linear amplifier to your transceiver that would take 5 W input and produce 40 W output to a normal dipole! Consider the relative costs of the two approaches to producing the same received signal. You will also receive everyone else's signals 1.5 S-points better than before!

Unlike the popular Yagi aerial, this design has no critical dimensions and can be folded up for transport by car or bicycle. It has a fairly high input (or feed) impedance, being fed usually by balanced twin feeder. To feed it with standard 50 Ω coaxial cable, a matching transformer in the form of a *balun* is required. A balun will convert the *bal*anced (symmetrical) aerial impedance to the *un*balanced and lower impedance of the coaxial cable. The details of how to build the balun, which in this case is a half-wave transformer, are included in the constructional details.

Construction

The aerial frame is made up of 1 cm × 2 cm strips of wood fixed to a plywood centre using 30 mm long M4 bolts, as shown in **Figure 2a**. The outer bolts fixing the front and side supports can be removed for folding prior to transportation, as shown in **Figure 2b**.

The wires are fixed to the front and rear supports using screw connectors, sometimes called 'chocolate block' connectors. Detail X and Y of Figure 2 show how this is done. The side supports have holes in the ends through which the wire is threaded.

The aerial must be mounted in the horizontal plane using a small shelf bracket attached to the centre plate, using the same bolts that hold the rear support. The other half of the bracket may be mounted to a vertical mast using screws or jubilee clips (hose clips).

The balun

Cut a 23 cm length of coaxial cable; this is to be our half-wave transformer. Cut and remove 2 cm from each end of the sheath. Make the braid into a pigtail at each end. Cut and remove 1 cm of the inner insulator from each

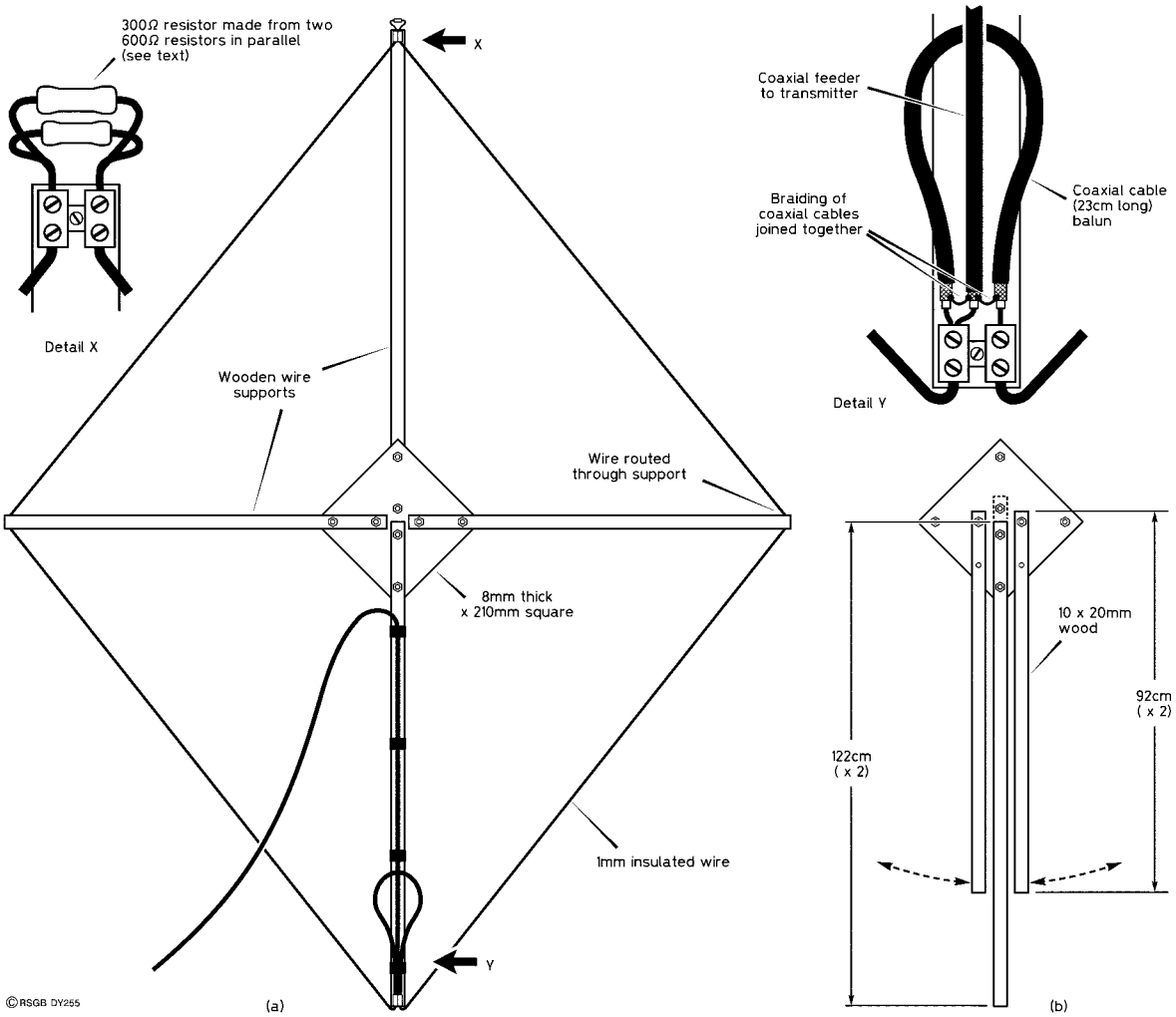

Figure 2 Construction of the UHF rhombic antenna

end, leaving 1 cm of the centre conductor exposed. Fasten this piece of cable to the chocolate block connector together with the coaxial feeder cable as shown in Detail Y of Figure 2. The braids of all three prepared ends are soldered together, but are not connected to anything else. The inner conductor of the feeder from the transceiver is soldered to one end of the centre conductor of the 23 cm piece, and is connected to one end of the rhombic by one side of the chocolate block. The other end of the half-wave transformer also goes to the chocolate block, where it is connected to the other side of the rhombic loop.

The opposite corner of the rhombic, as shown in Detail X of Figure 2, shows that the loop is broken at the chocolate block, and is 'terminated' by two 600 Ω resistors in parallel. This makes the aerial a broad-band travelling-wave device, and gives it its directivity and gain. There is a rule of thumb, which includes a safety factor, which says that the terminating resistor must be able to absorb one-half of the maximum transmitter output power. So, if you use two 2 W 600 Ω carbon resistors (*not* wire-wound resistors) in parallel, you can use a transmitter with an output of 8 W, which is more than adequate for 70 cm hand-helds.

Using the rhombic

Fit the aerial to a pole or mast in the horizontal plane, if you intend to use CW or SSB, but in the vertical plane if you want to concentrate on FM work. In the latter case, a wood or fibreglass pole is mandatory. Tune to a local repeater, whose signal strength you know. Rotate the aerial to face the repeater, and you should see that the signal strength is greatly improved! Verify the directional properties of the aerial by rotating it and observing the changes in signal strength on your S-meter.

77 Water level alarm

Introduction

This is a simple device which, when you have built it, you begin to wonder how you ever managed without it! It will sound a buzzer when the level of water reaches a particular point, which you can set and vary at will.

Detecting water

Water is not too difficult to detect electrically, because it is a conductor of electricity. Not a good one, but sufficiently so to carry enough current to control a warning circuit.

The circuit is shown in **Figure 1**. If you imagine a resistor placed between the ends marked 'water detector', the circuit is then recognisable as a transistor used as an electronic switch. Whether the switch is off or on depends on the value of this resistor. If the resistance is low, the transistor switches on and the buzzer sounds. If the resistance is high, the transistor switches off and the buzzer stops.

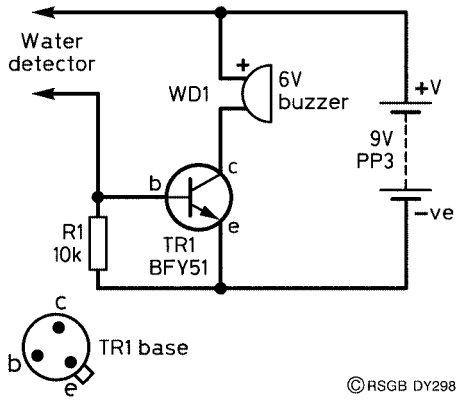

Figure 1 Circuit diagram of the water level detector

Construction

The unit is made in two separate sections – the detector board (**Figure 2**) and the main board (**Figure 3**). The main board is plain perforated board (without copper strips). The components are pushed through holes in the main board and connected together on the underside. The battery is held on with sticky tape. No on/off switch is used, as the circuit consumes virtually no current when it is not sounding the buzzer.

Unlike some buzzers, this type is polarised, and the red lead must go to the supply as shown in Figs 1 and 3.

The detector board is a piece of standard matrix board – the type with copper strips along one side. It measures 9 strips by 15 holes, and is wired in such a way that alternate strips are connected together, as Figure 2 shows. This gives a greater surface area for the water to touch, thus increasing the sensitivity of detection.

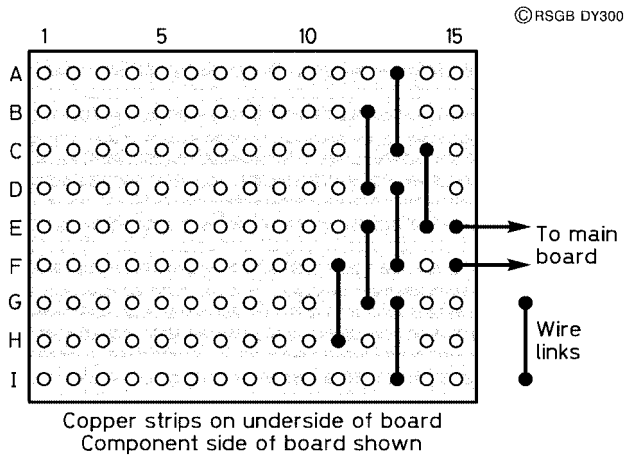

Figure 2 Layout of the main board

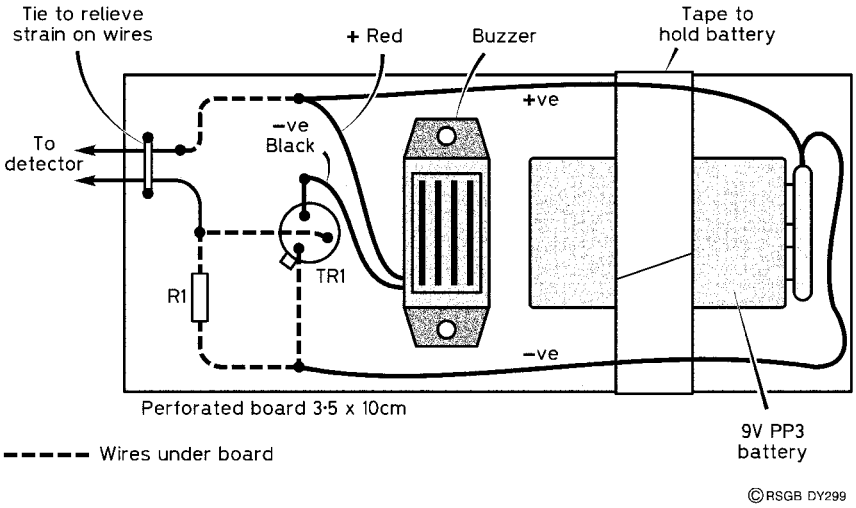

Figure 3 Water detector constructed from stripboard

The two boards are connected by ordinary twisted pair, enabling the detector to hang over the edge of the water container, with the buzzer circuit safely out of the way. When positioning the detector board, the left-hand edge (as shown in Figure 2) should face downwards, with the connecting-wire edge facing upwards. When the water level rises, the water causes current to flow between adjacent strips, and the higher the water, the lower the resistance between them. Eventually, the resistance will be low enough to turn on the transistor and sound the alarm.

Parts list

Resistor
R1 10 000 Ω (10 kΩ), 0.25 W

Semiconductor
TR1 BFY51

Additional items
WD1 6 V miniature buzzer (polarised)
Battery PP3
Battery connector
Strip board 9 strips by 15 holes
Perforated board 3.5 × 10 cm

78 A delta loop for 20 metres

Introduction

HF aerials take up a lot of room when they are straight. Space can be saved by bending them and, at the same time, giving them properties which are quite different from their original linear forms. The delta loops shown in the accompanying diagrams have the shape of the Greek upper-case letter delta (Δ) upside down. It can be upright, except that it is more practical to have the feed point at the bottom than at the top.

Putting the loop together

This is the design for a loop to be used on the 20 metre band. It is a very popular band and carries most of the amateur radio DX traffic. The aerial is light in weight and operates best if the top section is at least 30 ft above the ground, with the feeder point being about 6 ft above ground. All you need is some good wire, some polypropylene rope, some insulators and a method of matching the output of this 75 Ω balanced aerial to the 50 Ω unbalanced coaxial input of your transceiver or receiver.

Each of the three sides must be 7.2 m long. Using tent pegs or six-inch nails, mark out the three corners on the lawn, making sure that each pair of pegs or nails is exactly 7.2 m apart. Put the wire around the nails, together with two insulators on the wire for the two top corners. These insulators can be of the 'dog bone' variety, or of the home-made type, using a piece of flat plastic with holes in each end. The use of these is shown in **Figure 1**. Located at the positions of two of the tent pegs or nails, they must be secured at those points by any convenient means.

Now attach a support rope to the free end of each of the insulators, ready for suspension, as shown in the diagrams, from any convenient supports (house, tower, tree, etc.). The top section of the loop could be taped to a continuous piece of rope between the two supports. You might like to try this if you think it is easier. Then, when you find some dog-bone insulators, you can change the design and see if there is any noticeable change of performance.

Connecting to the radio

If you are the proud possessor of an aerial tuning unit (ATU) with a balanced output, all you will need is a length of twin cable soldered to the

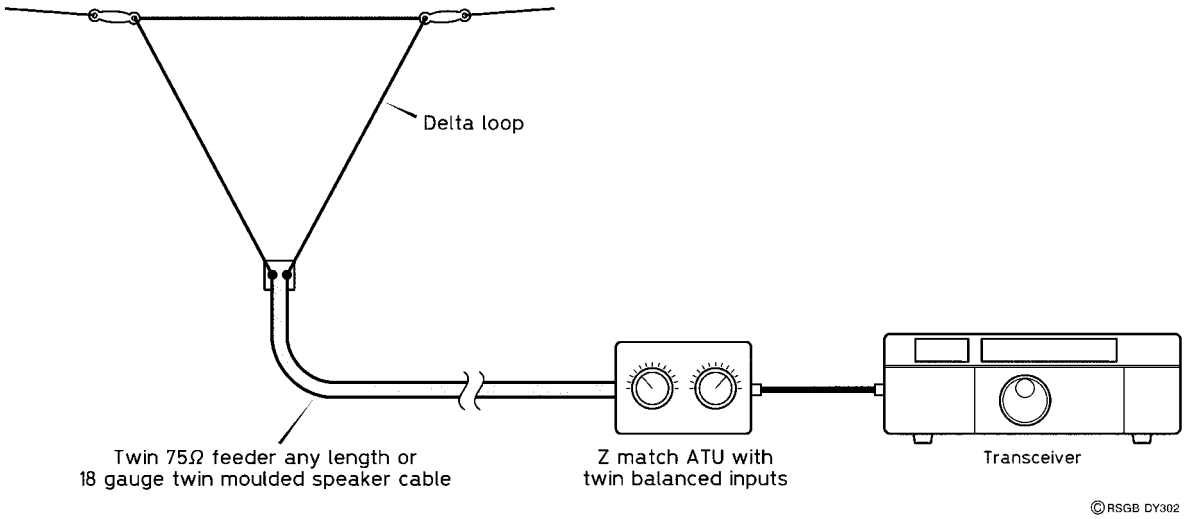

Figure 1 Multiband version of the delta loop connected to the ASTU using 75 Ω twin feeder

ends of your delta loop and connected to the balanced output terminals on the ATU, as Figure 1 shows.

Another way is to buy a ferrite-cored 1:1 balun, and use it as indicated in **Figure 2**. This produces an aerial which will operate over the whole range of amateur and commercial short-wave frequencies, when used with an ATU.

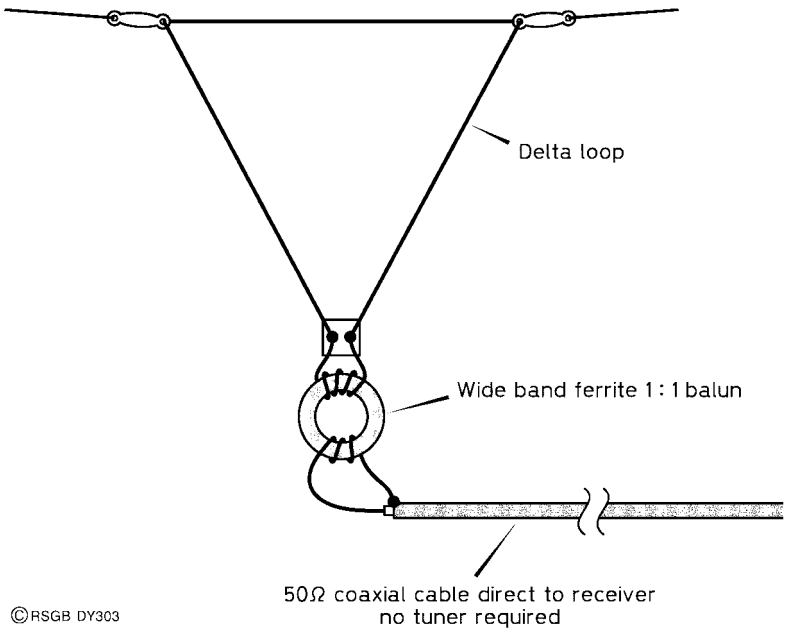

Figure 2 Multiband version of the delta loop using 75 Ω coaxial cable. This arrangement requires an ASTU if used with a multiband antenna

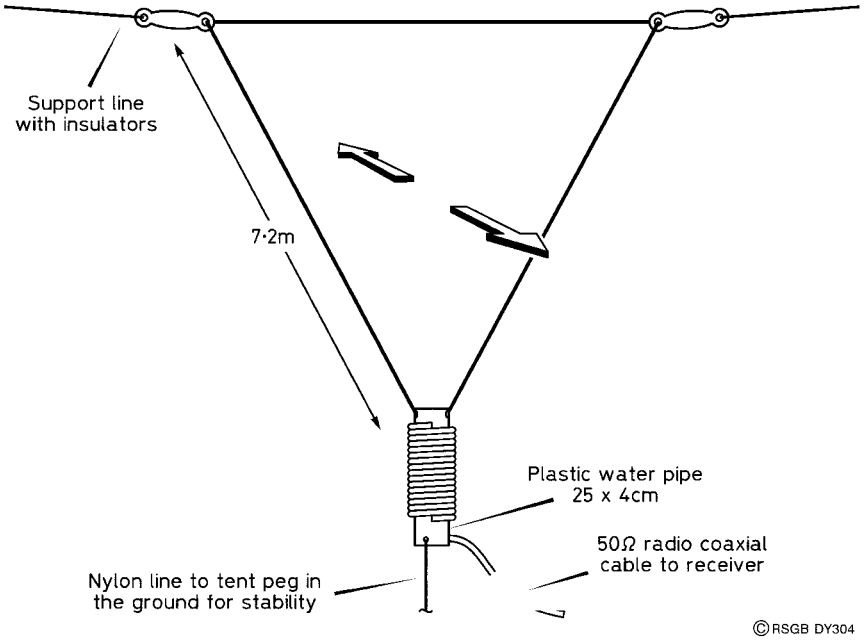

Figure 3 Single band version of the loop antenna using a coaxial balun. The direction of maximum signal strength is indicated by the arrows

However, since this aerial is designed to be a single-band type, there is a simpler answer to the problem of matching the aerial to your 50 Ω coaxial cable – **Figure 3** shows this. Make a tuned balun with a length of plastic water pipe, 25 cm long and 4 cm diameter and a piece of good-quality TV aerial cable. TV aerial cable has a characteristic impedance of 75 Ω, compared with the 50 Ω of the coaxial feeder that we usually use with amateur radio equipment. Use the type with a brown sheath and a closely knit earth braid, not the type having an earth foil inside the sheath.

The length we need for the balun is 3.8 m, but always allow between 3 and 4 cm extra for preparing the ends. Drill two small holes diametrically opposed in the top of the tube; these will be used to anchor the two ends of the delta loop, as shown in Figure 3. Drill another single hole in the bottom end of the tube, which will be used to anchor a nylon line going to the ground to add stability to the loop. Then, after drilling a pilot hole, drill a 5 or 6 mm hole near the top end of the tube, as shown in **Figure 4**. Prepare both ends of the coaxial cable, then feed one end into the tube, far enough for its ends to be soldered to the ends of the loop when the assembly reaches that stage.

Now, close-wrap the cable around the tube until only about 3 cm remain. Holding the cable tightly, drill another 6 mm hole beside the free end of the cable and feed it into this hole. At this point, feed the two ends of the loop into the top two holes and twist it back on itself. Figure 4 shows how this is done. Then, solder the ends of the coaxial balun to the ends of the loop.

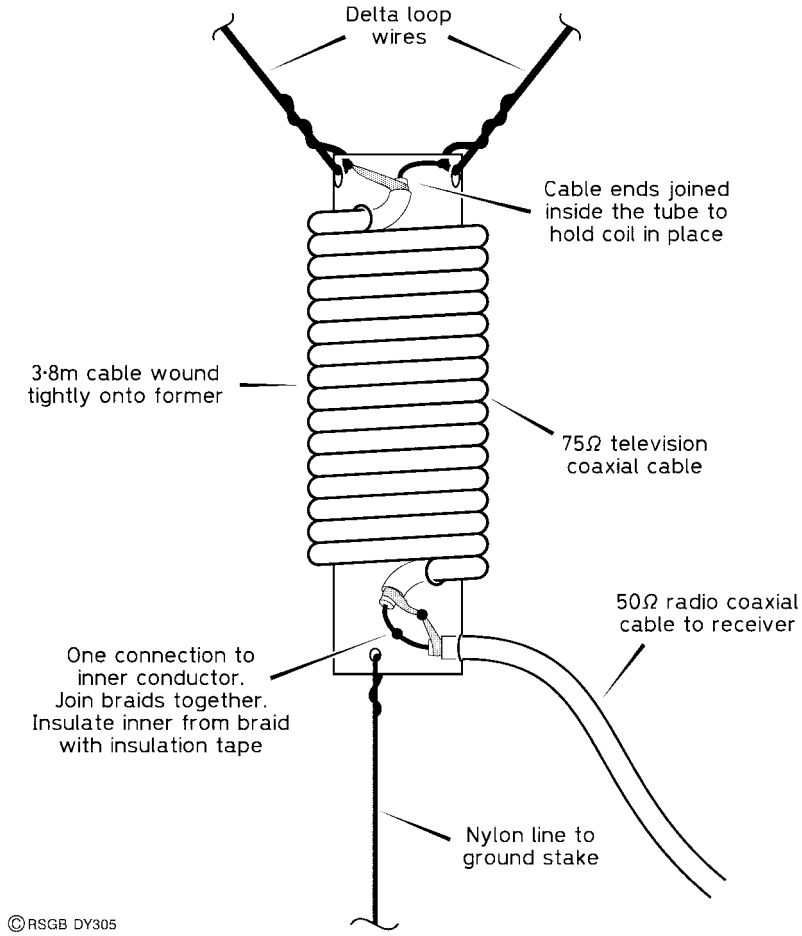

Figure 4 Construction of the balun

The bottom ends of the balun are then soldered to the 50 Ω coax which goes to your shack and to the transceiver.

Hoist the aerial into position carefully, being careful not to pull too hard on the support lines. Then, take the nylon line from the bottom of the balun to a peg in the ground. This adds stability to the aerial.

Using the delta loop

It is a directional aerial, as Figure 3 shows. It produces maximum power (and has maximum receive sensitivity) along a direction perpendicular to its own plane. Don't be too concerned with which direction it is pointing at first. Give it a try 'on the air' and see how it performs. Then you can contemplate how to point it in your favourite direction, to the USA, or Australia, for example.

Experimenting

You may want to enclose the balun in some sort of weatherproof container. Plastic ice cream containers are favourites for this sort of job. Seal all the holes where wires enter it with silicone sealant or self-amalgamating tape.

If you have used ordinary single-strand or multi-strand wire for your aerial, it will stretch over time under its own weight and that of the balun. Its operating frequency will fall slightly as a result. If you notice a significant difference, then dismantle it, remeasure and fix the sides and erect it again, perhaps facing a different direction. You can buy pre-stretched or hard-drawn wire for such purposes, if you feel that periodic tweaking of your aerial is a chore.

You can make a delta loop for different frequencies simply by scaling the lengths of wire for the loop and for the balun according to the design frequency. If your maths isn't quite up to this, enlist the help of someone well versed either in maths or aerial design!

79 A simple desk microphone

Introduction

A hand-held transceiver is usually the first type used by most novices. It is ideal when used out of doors, in the shack or mobile. However, using one in the shack with an outside aerial is not the best of solutions.

This article describes the design of a desk microphone which can be used either for transceivers using a common microphone and push-to-talk (PTT) line, or for those using a separate PTT line.

It is a simple design, using the barrels of two plastic pens, the lid of an old coffee jar, and the plastic sheath of a DIN plug.

Construction

The end caps and the ink tubes should be removed from two ball-point pens, leaving only the two plastic shells. One of them is used for the vertical microphone support, while the other is used to hold the microphone element.

The vertical support should have the pointed end shaped so that it holds the microphone support at a convenient angle, as **Figure 1** shows.

The base should be prepared next – see **Figure 2**. Four holes are required. Two, A and B, are small holes for the cable to be fed through. A third, C, is slightly larger and is used to take one of the plastic end caps. The fourth hole, D, is determined by the type of switch that you want to use for the PTT function.

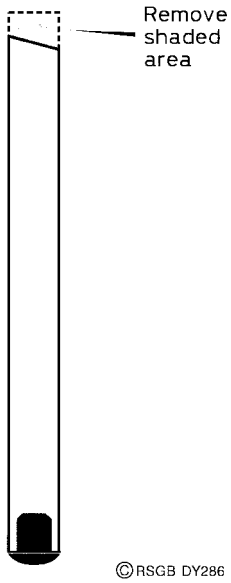

Figure 1 Vertical support made from ball-point pen shell

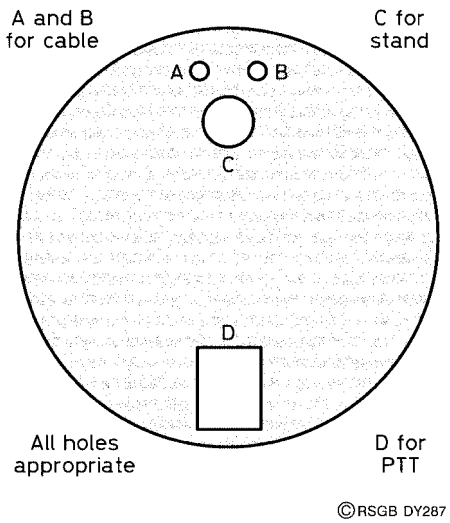

Figure 2 The microphone stand base

Some epoxy resin such as Araldite Rapid is used to mount the separate parts. Mix only a small amount at a time, and glue each part of the base assembly and allow to harden before moving on. Be sure to read and follow the instructions for the use of the glue to prevent accidents.

Firstly, glue the end cap to the base, feeding it underneath and pushing it up through hole C. Then, the vertical pen body is placed over the protruding end cap and glued into place, making sure that the top (shaped) end is pointing in the right direction to hold the other plastic tube carrying the microphone. While the glue hardens, place the DIN plug sheath on the second pen body. Place and glue this pen body on the shaped top of the vertical support, making sure that the whole assembly is supported while the glue sets. What you should have now ought to resemble **Figure 3**, but without the microphone and wiring. Leave everything to set for 24 hours.

Any switch of the press-to-make variety can be used for your PTT switch, but choose one which does not apply too much force to operate! If you find the whole assembly is too light and slides over your table, some plasticine can be pushed into the base when all the wiring has been completed.

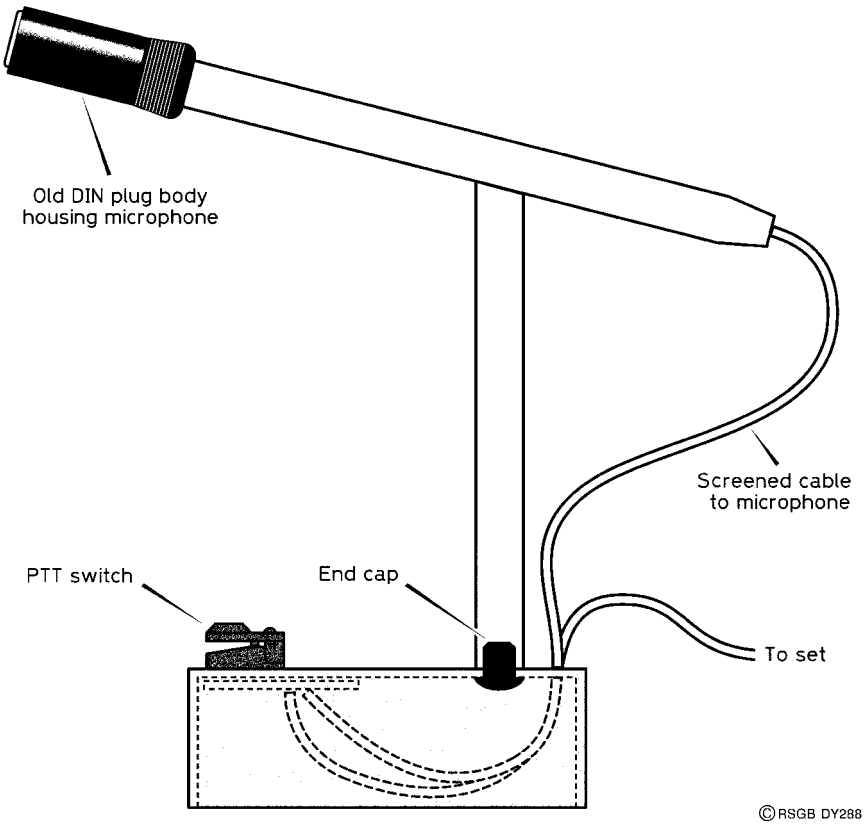

Figure 3 Complete microphone stand assembly

The circuit

A small electret condenser microphone is used, powered by a DC supply. Most hand-held radios use a single screened lead for both the PTT line and the microphone audio lead. In such cases, the circuit of **Figure 4** will operate the PTT function. Note that the PTT switch is in series with the audio lead from the microphone. If you find that the PTT switch does not switch your radio into transmit, reduce R1 from its normal value of 33 kΩ to 27 kΩ. You should find that the original value works with most hand-helds.

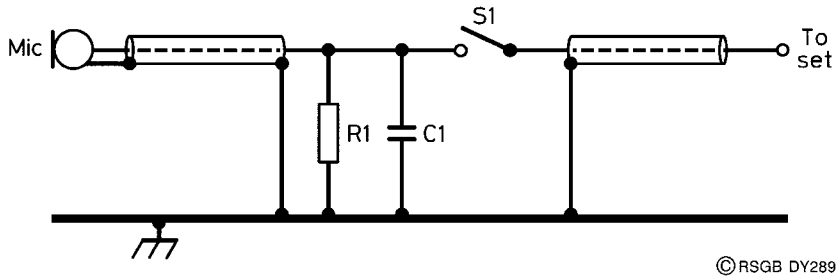

Figure 4 Wiring diagram for hand-held radios

For radios with a separate PTT lead, the circuit of **Figure 5** is used. However, a power supply is needed for the electret microphone. This can be a PP3 battery, or can (in most cases) be derived from the microphone socket on the transceiver. You will need to consult the makers' handbook for this information. Figure 5 shows the PTT switch wired in a 'ground-to-transmit' configuration, which is correct for most base-station transceivers. If you're in any doubt about what your radio needs, consult an experienced friend.

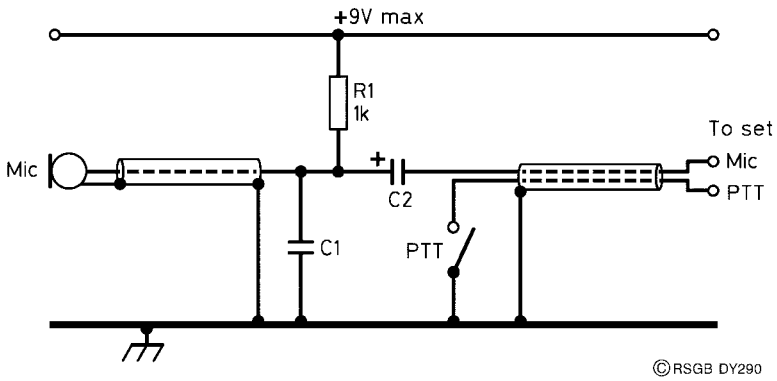

Figure 5 Wiring diagram for radios which use separate PTT lines

The last connections

The microphone element should be connected with screened cable. Tape (masking or insulating) should be wound around the electret insert until it is a snug fit inside the DIN plug sheath. Feed the screened cable through the barrel of the pen until it emerges from the far end. Poke it through hole B and make the connections under the coffee jar lid. The components can all be mounted on the PTT switch or on a small piece of Veroboard mounted under the top surface. The output lead emerges through hole A and is of sufficient length to reach your transceiver. A suitable plug needs to be fitted to it.

Parts list

Resistors: all 0.25 W carbon, 5% tolerance

R1 (Figure 4)	33 000 Ω (33 kΩ)
R1 (Figure 5)	1000 Ω (1 kΩ)

Capacitors

C1 (Figure 4 and 5)	0.1 microfarads (0.1 μF) disc
C2	10 microfarads (10 μF) electrolytic

Additional items

S1	Push-to-make
Mic	Electret microphone (Maplin type FS34W)
Screened cable	As required
Plug	As required by your radio
Veroboard	If required
PP3 battery and clip	If required

Two old plastic ball-point pens
Lid of coffee jar
Plastic sheath from DIN plug
Araldite or similar epoxy resin glue

80 Morse oscillator

Introduction

This is not the simplest Morse oscillator to build, but it differs from the simple circuits in that it produces a pure note, not a coarse, rasping sound. People who have practised Morse using a non-sinusoidal oscillator sometimes find that they have trouble copying Morse code with a pure tone. As the pure tone is the correct way to receive Morse code, it is important that you should learn to listen to the code from a pure oscillator – so here's one!

The twin-T

There are many oscillator circuits, and there are many variations of the twin-T oscillator that we are going to use. **Figure 1** shows one version of a very useful circuit. All oscillators must have positive feedback in order to work. The feedback determines the frequency of the note produced by the oscillator.

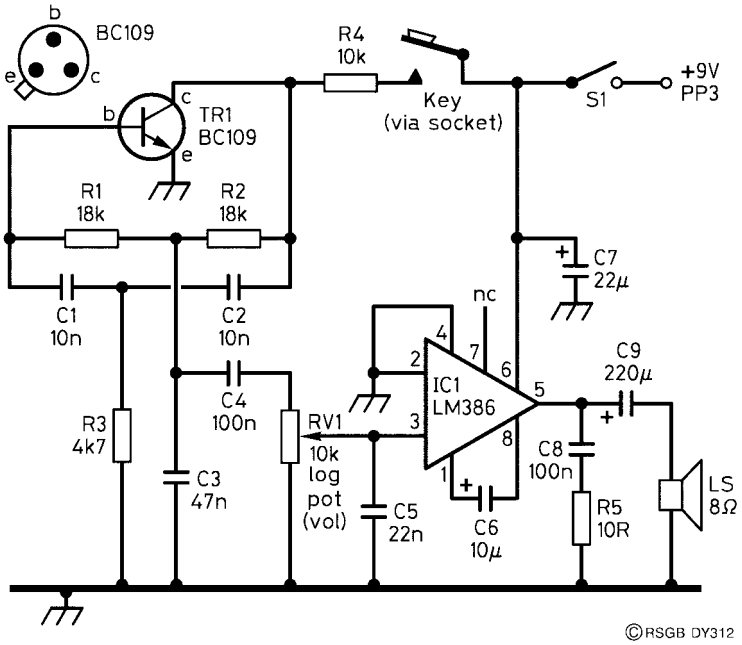

Figure 1 Circuit diagram of the sinewave oscillator and amplifier

Here, the feedback circuit looks like two letter Ts. If you look at Figure 1, one T is formed by R1, R2 and C3, the other by C1, C2 and R3 – hence the name 'Twin-T'. Notice that the two Ts are connected in parallel between the collector and base of TR1, so any signal appearing at the collector is fed into both Ts. What emerges is then fed back into the base, producing in turn a signal at the collector. And so it goes on, producing a sine wave output.

The oscillator output is fed into an integrated circuit amplifier for output via a small loudspeaker.

Putting it together

The prototype was constructed on plain matrix board (the type *without* the copper strips), as shown in **Figure 2**. The components have their leads pushed through the holes in the board, and connections are made underneath.

Build the amplifier circuit first, using a socket for IC1. Connect the 9 V supply and touch pin 3 with an ordinary piece of wire. If a buzz is heard from the speaker, all should be well. If not, check your circuit and make changes until it does.

Build the oscillator circuit, and connect its output to the volume control VR1 via C4. Set VR1 half-way along its travel and switch on. A note should be heard from the speaker when the Morse key is depressed. The component values making up the twin-T determine the frequency of the note. Try varying them if you think your note is too high or too low. Whatever changes you make, either to the resistors or the capacitors, always ensure that R1 = R2 and that C1 = C2.

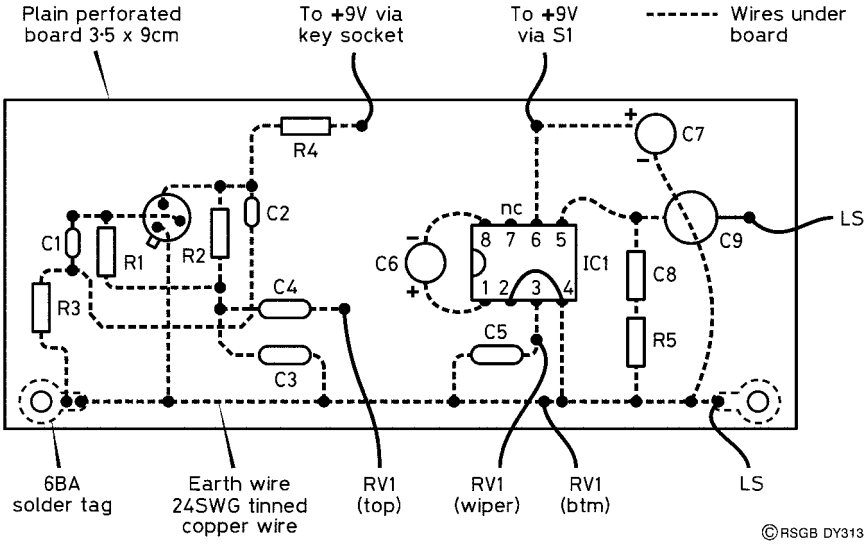

Figure 2 Component layout and interconnection diagram

Parts list

Resistors: all 0.25 W carbon film

R1, R2	18 000 ohms (18 kΩ)
R3	4700 ohms (4.7 kΩ)
R4	10 000 ohms (10 kΩ)
R5	10 ohms (10 Ω)

Capacitors

C1, C2	10 nF (0.01 μF)
C3, C8	47 nF (0.047 μF)
C4	100 nF (0.1 μF)
C5	22 nF (0.022 μF)
C6	10 μF electrolytic, 16 V WKG
C7	22 μF electrolytic, 16 V WKG
C9	220 μF electrolytic, 16 V WKG

Semiconductor

TR1	BC109

Integrated circuit

IC1	LM386

Additional items

VR1	10 kΩ log potentiometer with switch
LS	8 Ω loudspeaker

Matrix board 3.5 × 9 cm
Small jack socket for key input
Box
PP3 battery and clip

81 A simple 6 m beam

Introduction

The attraction of building your own aerials is an abiding feature of our hobby. You can *buy* almost any shape or size of aerial, but one you have made yourself can often work every bit as well as a commercial device costing ten times as much.

The design

This aerial, designed for use on the 6 m band, is essentially a two-element Yagi, with the elements bent in order to reduce the physical size. It is known

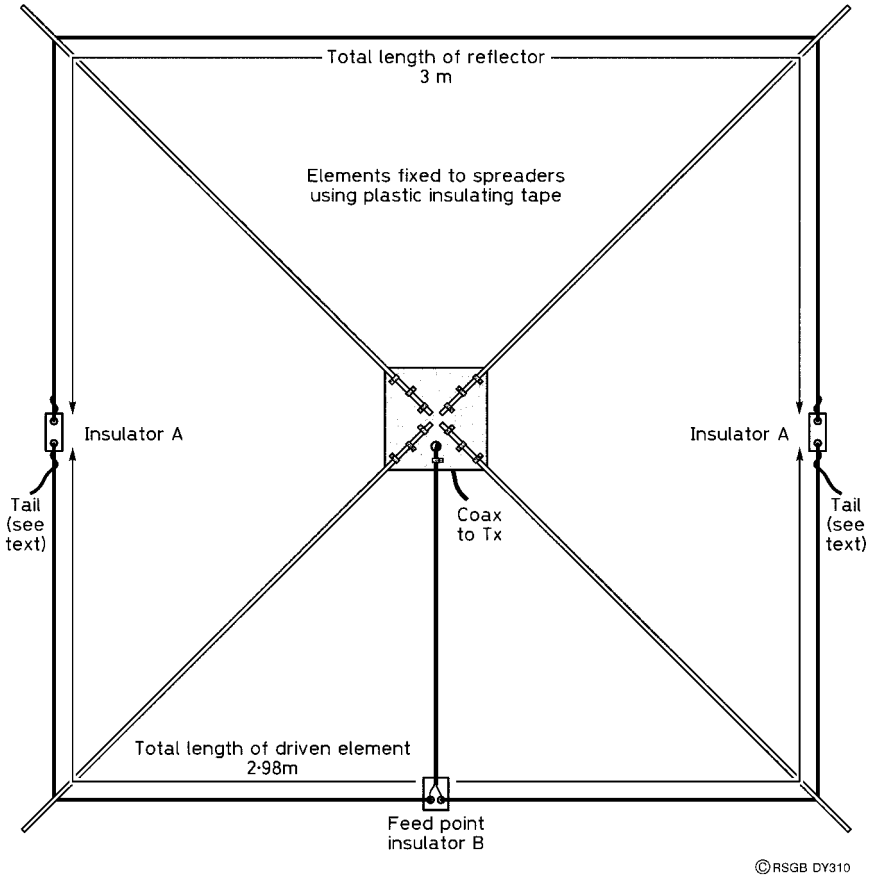

Figure 1 Plan view of the complete 50 MHz VK2ABQ antenna

as the VK2ABQ beam, and was designed originally for the 20, 15 and 10 m bands, principally because of its space-saving qualities. It is made using a wooden frame and wire elements, and is ideal for portable operation.

Tools ready?

The beam is shown in **Figure 1**. The driven element is the one whose centre is fed by the coaxial cable, and lies between the two insulators marked A and the feedpoint at B. The reflector is also anchored at the points A, and lies over the upper half of the frame.

The wooden centrepiece is used to support the cross-pieces and to mount the aerial on the mast, using a common shelf bracket. The cross-pieces, known as *spreaders*, can be wooden canes or dowelling, and are mounted to the centrepiece using cable clips and adhesive. **Figure 2** shows how this is done.

If the aerial is to be a permanent installation, the spreaders should be weatherproofed using a good-quality exterior varnish. The wire elements are PVC covered and fed through holes in the spreaders.

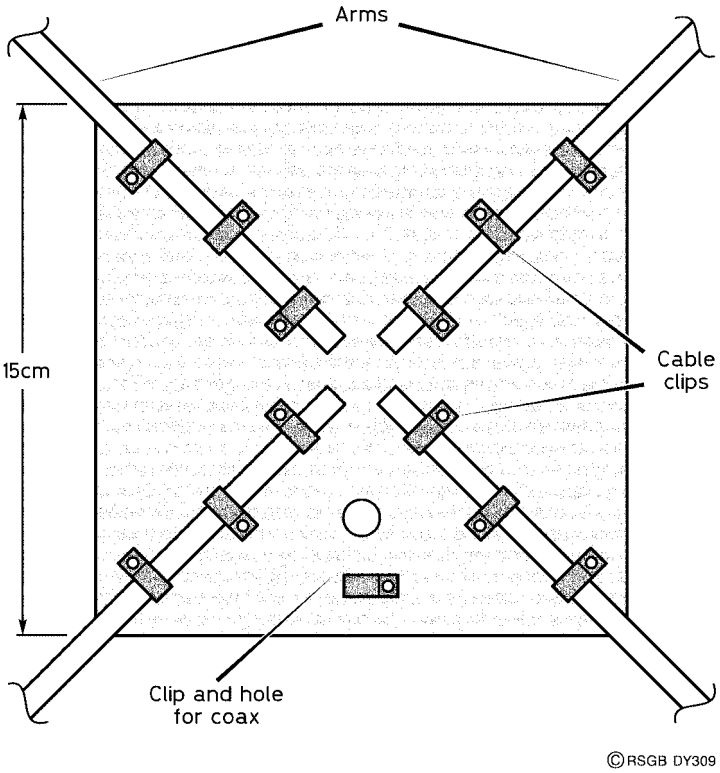

Figure 2 Centre support piece

The end insulators are made of drilled perspex, and the wire passed through the two holes and twisted, as shown in **Figure 3**.

Note: if you have not drilled holes in perspex before, take care! The drill bit must be well-lubricated because it generates a lot of heat (enough to melt the perspex and jam the drill). Never turn the drill for more than a few seconds at a time, and moisten the bit in between. Start with a pilot hole and use bits of increasing size until the hole is the size you want.

Another perspex insulator is used to secure the feeder to the aerial, as shown in Figure 3. The feeder then passes directly to the centrepiece, where it is fastened with a cable clip and then passes down the mast.

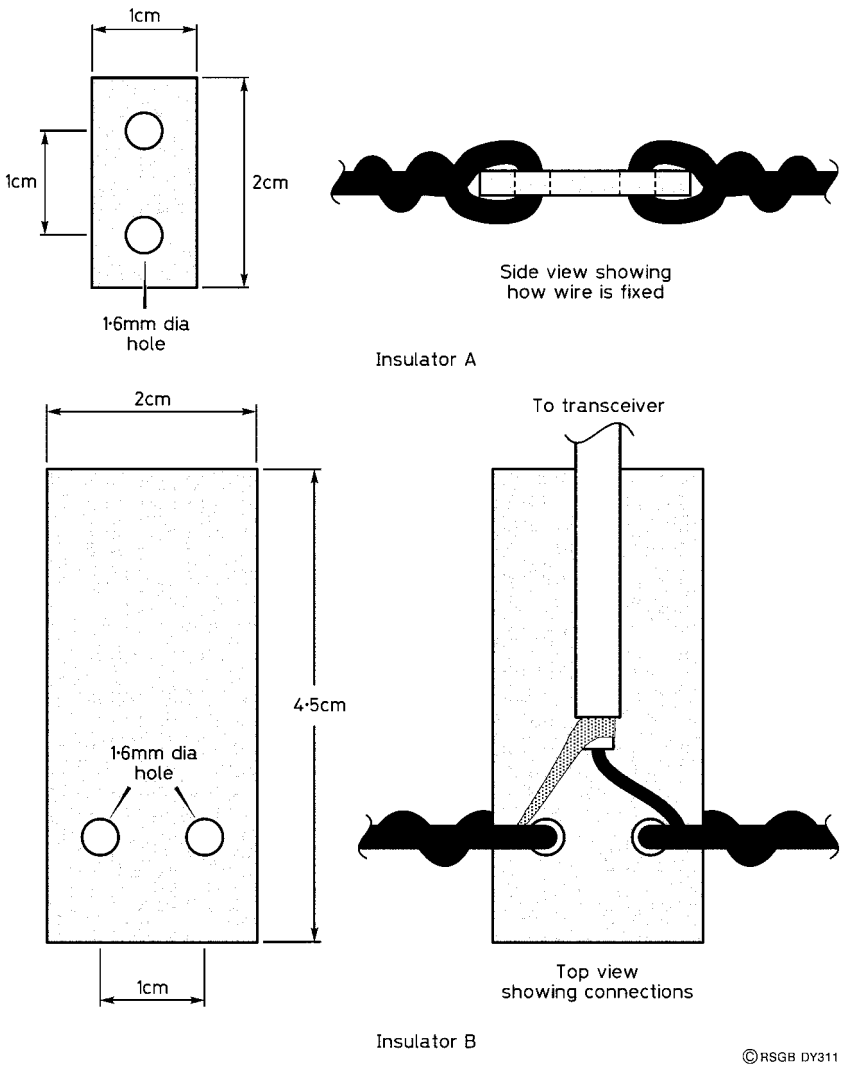

Figure 3 Details of insulators

Adjustment

The driven element (A–B–A) in Figure 1 is fixed to the end insulators in such a way as to have 'pigtails' which are about 10 cm long. Using an SWR meter between the aerial and the transmitter, trim the pigtails equally at each end for minimum SWR in that portion of the 6 m band in which you plan to work. Make sure that the transmitter is off when you trim the ends, as high voltages can be present there. Always listen on the frequency before you transmit and, when you do, ask if the frequency is in use and identify yourself. Use as little power as possible.

The prototype had an SWR of 1.2 at 50.2 MHz and performed well. If you look at Figure 1, which is a view of the aerial from above, you will immediately see that when the aerial is horizontal, it radiates with horizontal polarisation in a direction from the top of the page to the bottom. A metal pole or mast can be used for horizontal polarisation, but if you intend to use the aerial for vertical polarisation, it is much better to use a wooden or fibreglass pole.

Portable use

If you plan to operate portable with this aerial, the only real modifications you need are to the centrepiece and how it supports the spreaders. Instead of using glue and cable clips, nuts and bolts through the spreaders and centrepiece would allow the spreaders to be 'hinged' closed for transport.

Materials

Centrepiece	Hardwood, 15 × 15 × 25 mm
4 spreaders	110 cm long (cane or 6 mm dowel)
Wire	1.5 mm PVC-covered copper
50 Ω coaxial cable	RG58 or similar
Cable clips	6 mm (12 off)
Varnish	Polyurethane for waterproofing
Tape	Self-amalgamating, to waterproof all soldered joints
Insulators	See text

82 An integrated-circuit amplifier

Introduction

A simple audio-frequency amplifier is a very useful building-block in many more advanced electronic circuits. It is also a very useful piece of test equipment. To have one spare in the shack can be a life-saver at times.

Planning

Get into the habit of planning your project. How do you want it to look when it is finished. Do you want it in a box? Do you want it 'open-plan', with all the components on view?

The 'minimalist' approach to any project is simply a front panel and a baseboard, on to which all the components are fitted. In this case, the front panel would accommodate the loudspeaker, the volume control and the input and output jack sockets, and the baseboard would support the circuit board. Once you have decided these things, and know the size of the board, speaker and volume control, you can decided how big the panel and baseboard should be.

The amplifier

Instead of building the amplifier from discrete components (i.e. transistors), as was done in the project *An audio-frequency amplifier* (which you will find elsewhere in this book), we are going to use an integrated-circuit (IC) amplifier. External resistors and capacitors are still needed but, compared with the number of components *inside* the chip, these are very few indeed!

The IC we are going to use is the TBA820M. The circuit may look complicated, but with the use of a matrix circuit board it becomes quite simple. **Figure 1** shows the circuit diagram and **Figure 2** the layout on the board. The external connections to the PCB are shown in **Figure 3**.

To avoid having a separate switch to switch off the power supply when the amplifier is not being used, a volume control which incorporates a switch is used.

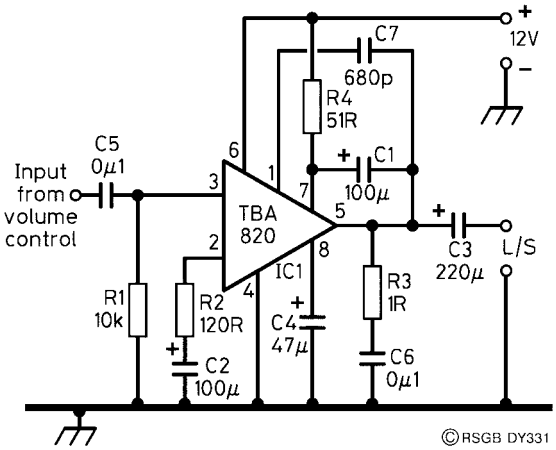

Figure 1 Audio amplifier, circuit diagram

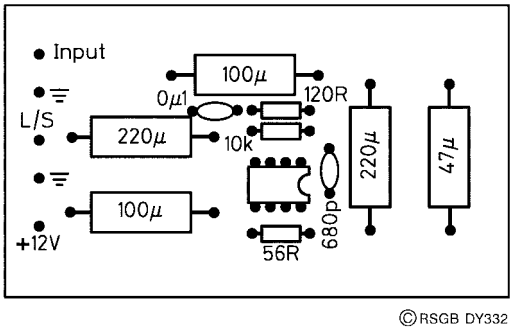

Figure 2 Audio amplifier, component layout

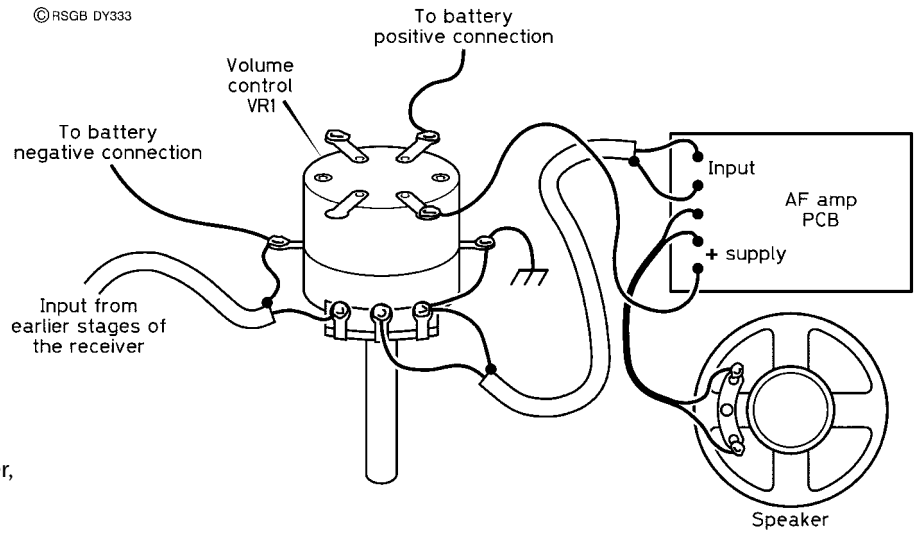

Figure 3 Connecting the circuit board to the speaker, volume control/switch and battery

What power supply?

If the amplifier is to be used only for short periods, as a test instrument, for example, then it can be run from a PP3 battery, which can be mounted on the baseboard. If you intend to use it often, then a connection to an external power supply is preferable. For this option, you may want to consider fixing two terminals to the baseboard for this connection.

83 A novice ATU

Introduction

Having an aerial tuning unit (ATU) is always useful. It is used for adjusting the aerial impedance, as 'seen' by the transceiver, to be the same as that of the transceiver itself, usually 50 Ω. This process is called *matching*, and ensures that the receiver and the power amplifier (PA) stage of the transmitter work efficiently.

This design is due to the late Doug DeMaw, W1FB, and uses readily available components. It will handle up to about 5 W, and operates over the frequency range 1.8 to 30 MHz.

Circuit evolution

The basic circuit of one type of ATU is shown in **Figure 1**. On transmit, the input signal at L1 is coupled into L2, which forms a resonant circuit with C1. The signal across the resonant circuit is fed to the aerial by C2. The combination of L2 and C1 helps to remove signal harmonics, because they are not at the resonant frequency and are shunted to earth. On receive, only those signals which are within the pass-band of L2 and C1 will pass into the receiver. This improves receiver performance by rejecting many out-of-band signals which the simpler receiver doesn't like.

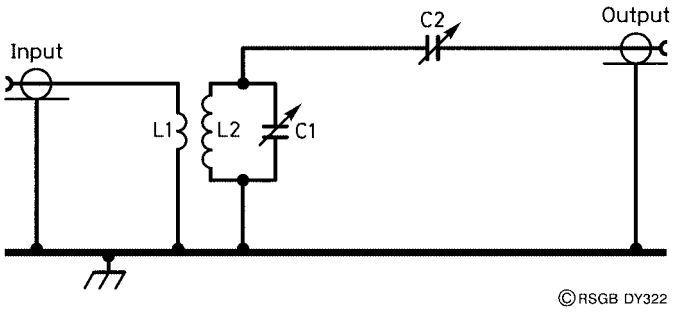

Figure 1 Basic circuit of the ATU

For this design, the all-important resonant frequency is chosen to be in the 80 metre band. If we want to make the circuit operate on other bands, we need to change either L2 or C1. It is easy to change L2 by using a set of switched inductors (L3–L5) as shown attached to S1 in **Figure 2**. Forget about S2 and L6 for the moment.

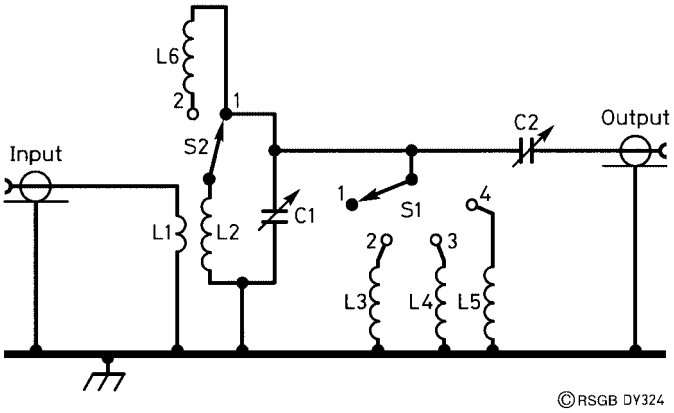

Figure 2 L6 added for 160 m

When S1 is in position 1, the circuit reverts to that of Figure 1. S2 should be brought into circuit only when S1 is in position 1. Looking at the way the circuit is drawn, you can see that when S2 is in position 2, we have two coils in series, which is equivalent to adding more turns to L2. More turns means more inductance, which lowers the resonant frequency still more, and gives coverage of the 160 m band.

Rather than having to remember to flick S2 to the correct position *and* move S1 to position 1 when we want to operate on 160 m, both functions can be combined into one rotary switch with two wafers. This circuit is shown in **Figure 3**.

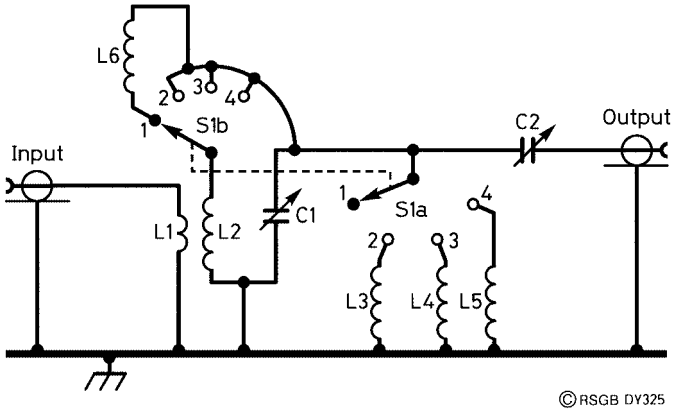

Figure 3 Two-pole switch for all bands

In all positions of S1a *except* position 1, the extra coil, L6, is shorted out. The two halves of the switch, S1a and S1b, move together, as the shaft is turned, so both halves are in position 1 at the same time, position 2 at the same time, and so on. The two switches, S1 and S2, are said to be *ganged*.

Construction

L1 is formed by winding four turns of 22 SWG enamelled copper wire over L2, as in **Figure 4**. L2 already exists on the purchased former. After scraping the enamel off the ends of the wire (with a sharp knife or sandpaper), one end of L1 must be soldered to one end of L2, as shown in Figure 4. The free end of L1 goes to the transceiver aerial socket.

All components except the capacitors are assembled on the switch. Note that the rotor of C1 is earthed, but neither side of C2 is earthed. This means that the metal shaft of C2 is not earthed, and touching it will detune the ATU. Using a plastic knob for C2 will minimise this effect. If you decide to use a metal box, take precautions to ensure that no part of C2 is in electrical contact with the box.

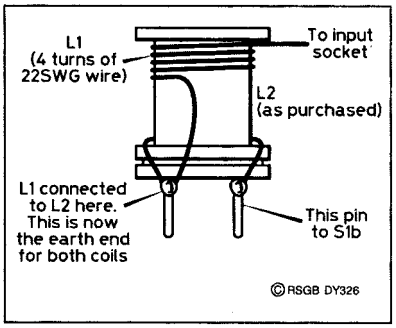

Figure 4 L1 is wound over L2 as shown

The capacitors are mounted using M2.5 screws. Make sure that the screws do not foul the vanes of the capacitor. If your screws are too long, a few washers between the box and the capacitor will solve the problem!

In use

The best indication of a good match is obtained with a standing-wave meter between the ATU and the transceiver. The controls are adjusted alternately to 'feel' your way to a better and better match.

For receive-only use, the same alternate adjustments are used, watching for the maximum signal strength on the S-meter or, for a very weak signal, making the signal from the loudspeaker as large as possible.

Parts list

Capacitors

C1, C2	350 pF variable

Inductors

L1	See text
L2	27 μH
L3	10 μH
L4	2.2 μH
L5	1 μH
L6	65 μH

Additional items

SO239 sockets (2 off)	
S1	2-pole 6-way rotary
Box	as required
Plastic knobs (2 off)	
Stick-on feet (4 off)	
M2.5 screws for capacitors	
Screws, nuts and washers for mounting the input and output sockets.	

84 CW QRP transmitter for 80 metres

Introduction

This is a relatively simple transmitter design having an output of 1 W. The design is not new, having been described before in other amateur radio publications. The components are all available new and the total cost should not exceed £15.

The circuit

Like other simple transmitters (see *An 80 Metre Crystal-Controlled CW Transmitter* and *A Breadboard 80 m CW Transmitter* elsewhere in this book) this one is crystal controlled. This assures frequency stability, but limits the usefulness of the transmitter. The key to increased frequency coverage without a conventional Variable Frequency Oscillator (VFO) is the use of a low-cost 3.58 MHz *ceramic resonator*. The 'pulling' range of a 3.58 MHz ceramic resonator covers the UK novice 80 m sub-band and some of the CW segment below 3.525 MHz.

A ceramic resonator is like a crystal, but not quite as stable in frequency. Its main advantage is its large pulling range.

The block diagram is shown in **Figure 1**. It is very similar to a crystal-controlled transmitter, and includes an oscillator, buffer and final amplifier.

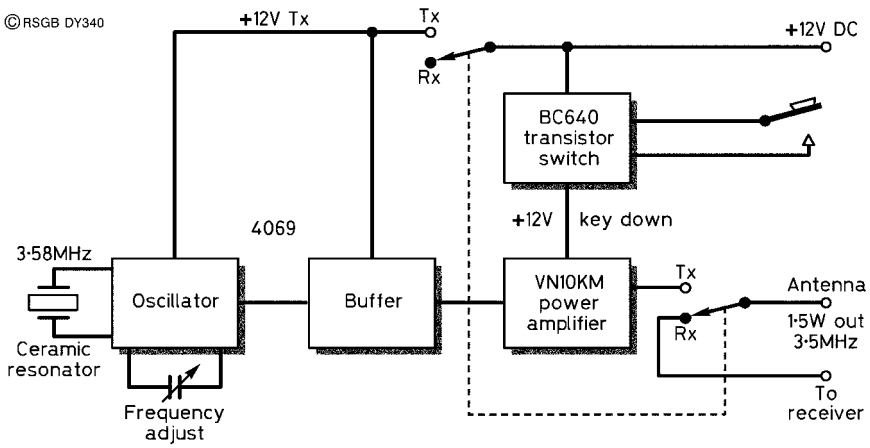

Figure 1 Block diagram of the ceramic resonator controlled 80 m CW transmitter

This amplifier is keyed, the oscillator remaining running all the time. This improves frequency stability because the oscillator is not being continuously stopped and started by the key. It is switched off while receiving, though, to avoid interference with the received signal. Transmit/receive switching is accomplished by a panel-mounted switch controlling both the aerial, oscillator and buffer switching.

Figure 2 shows the transmitter circuit diagram. An unusual aspect of this transmitter is the use of a digital CMOS integrated circuit (IC) type 4069 for the buffer and oscillator stages. The IC houses six inverters, four of which are used in the circuit. One is used as the oscillator, two are used for the buffer stage, and the fourth provides an output for a direct-conversion receiver, should one be added at a later date.

The frequency of the oscillator is changed by varying the capacitance in the ceramic resonator circuit. This is provided by VC1.

The power amplifier (PA) is a small MOSFET (metal oxide semiconductor field-effect transistor), TR1. This is capable of providing an output power of 2 W but, in this circuit, it is run conservatively to give 1.5 W. The output can be varied by changing the resistance (R5 + R6) in the gate circuit. Attempts

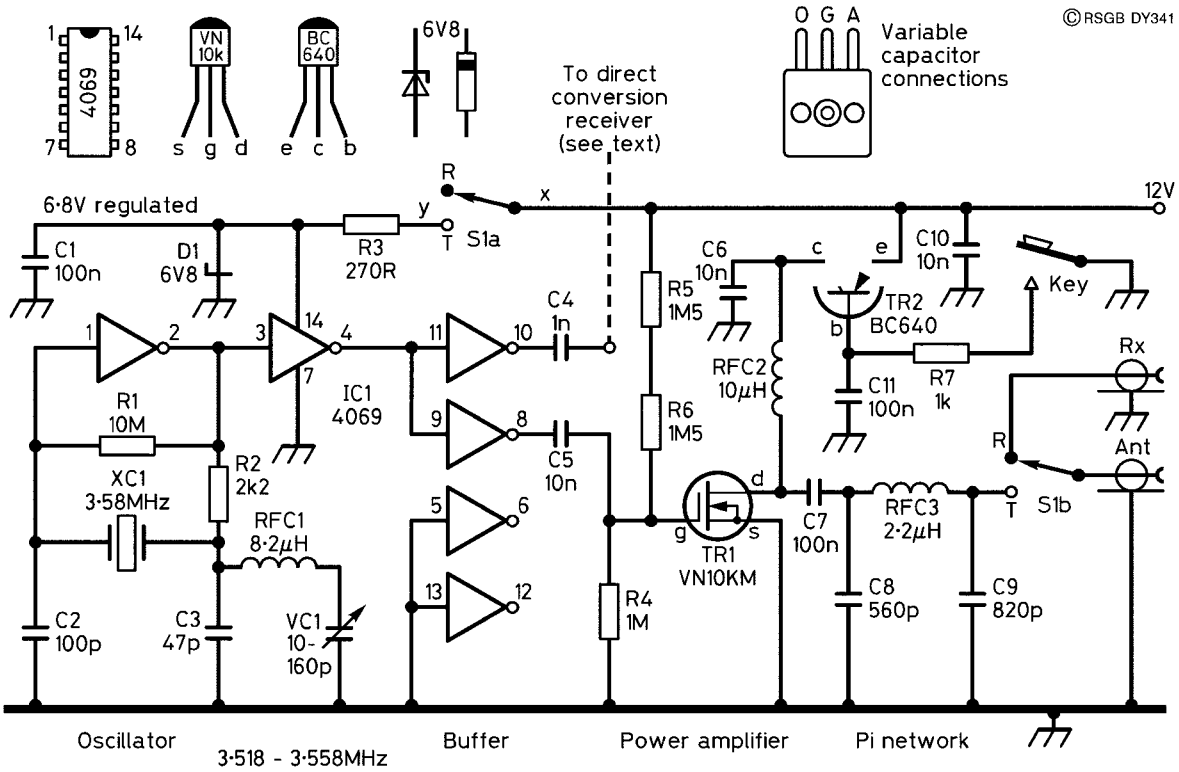

Figure 2 Circuit diagram of 80 metre transmitter

to raise the output power by decreasing the values of these resistors may result in immediate MOSFET failure.

A pi-network (C8, RFC, C9) provides impedance matching to 50 Ω, together with harmonic suppression. Like all inductors in this transmitter, the pi-network inductor is a pre-wound RF choke. A pi-network is so called because the components are arranged in the shape of the Greek letter pi (π).

Keying is carried out by a pnp transistor switch, TR2. Closing the key earths the base and supplies 12 V to the collector of TR2 and to the drain of the MOSFET, TR1, allowing the PA to operate.

Construction

You must house your transmitter in a metal box, to avoid hand-capacity effects and the radiation of spurious frequencies. Size is not important, provided it is large enough to accommodate the transmitter without cramping the components. You may want to allow space for future additions such as a direct-conversion receiver, break-in keying, sidetone or a small power amplifier. A good size is 5 × 15 × 15 cm. You can make your own box, buy it, or even use a biscuit tin!

Front and rear panel connectors can be fitted first. The choice of these is a personal matter, but a good working choice would be:

(a) Power socket – 2.1 mm panel socket – centre pin positive.
(b) Key socket – ¼ inch jack socket.
(c) Aerial and receiver connectors – panel-mounting SO239 type.

Particular attention must be paid to the mounting of the variable capacitor, VC1. Make sure the hole for the shaft is amply big enough, and if you use screws to mount the capacitor on the front panel, then make sure they are not too long, otherwise they will touch the vanes of the capacitor! Mounting can be by means of glue, sparingly applied and kept well away from the shaft.

A board size of about 6 × 10 cm is adequate. Component layout on the board is suggested in **Figure 3**. The prototype used ordinary matrix board, which is preferable to stripboard for a design like this; stripboard has undue capacitance between adjacent strips. Component leads are fed through holes in the board and are connected underneath. Make sure that leads and connections are rigid because, if they can move, there is always the danger of short-circuiting, and capacitance changes.

To facilitate construction, servicing and testing, it is advisable to use Veropins for connections to the variable capacitor, transmit/receive switch,

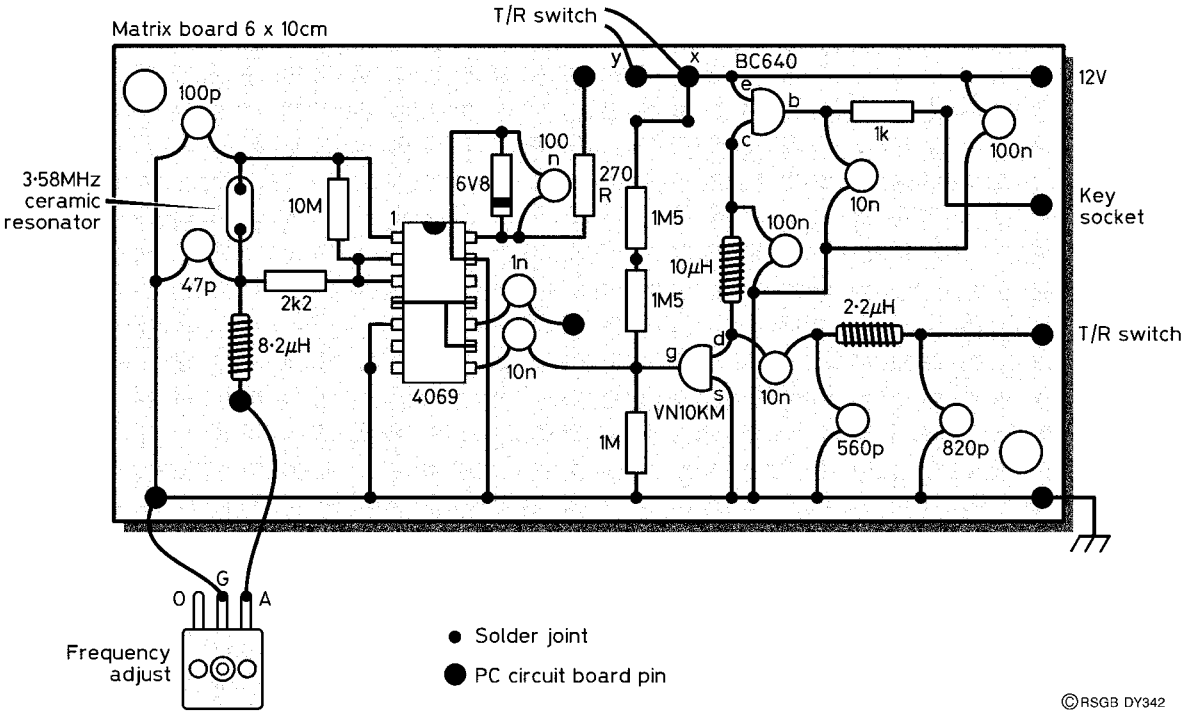

Figure 3 Component layout of the 80 metre transmitter. The transmit/receive switch is not mounted on the board and is not shown in this diagram

aerial and power sockets. Use screws and spacers to mount the circuit board to the box. Mounting the board horizontally assists troubleshooting.

Use a socket for the IC, and observe the CMOS handling precautions given in *An Electronic Die*, elsewhere in this book. When soldering the leads to the ceramic resonator, do it quickly – excessive heat damages the device. The earth lead running acoss the bottom of the board must be connected to the metal case by a short length of stout wire.

Testing

After carefully checking your wiring, both against the circuit diagram and the layout diagram, it is time to test your circuit. You will need a multimeter, an 80 m SSB receiver and a 50 Ω dummy load. A good design of dummy load can be found in the project *A Switched Dummy Load*, also in this book. An RF power meter and frequency counter will also be useful, although if your receiver has a digital frequency readout and S-meter, the latter two items are not really necessary. You will also need a 12 V 1 A power supply unit (PSU) to power the transmitter.

Switch the transmitter to receive and switch on the transmitter. No current should be consumed. Switch to transmit and check that pin 14 of IC1 is 6.8 V positive. With the dummy load connected to the aerial socket, press the key. The voltage on TR2 collector should now be 12 V, dropping to zero when the key is released.

Now check the operation of the oscillator. In transmit mode, you ought to be able to find a strong carrier signal with the receiver, even though the dummy load is connected. Adjusting the variable capacitor should change the frequency. At the lower end of the frequency range, you may find that the oscillator is unreliable in starting, because the circuit is attempting to pull the resonator too low in frequency. If this is the case, set the trimmer at the back of VC1 to minimum capacitance. If your version of VC1 has two trimmers, and you don't know which one to set, set them *both* to minimum capacitance. If there is still a problem, reduce the value of RFC1 to 6.8 or 4.7 μH.

In all probability, the unmodified circuit of Figure 2 will not require any of the changes outlined here. A coverage of 3.518 to 3.558 MHz should be possible, while preserving good frequency stability and reliable oscillation.

A signal probe (see *An RF Signal Probe*, elsewhere in this book) is useful for checking the operation of the oscillator and PA. Alternatively, an RF power meter or the receiver's S-meter can be used. With the PA running, the unit should draw between 200 and 300 mA. If TR1 becomes too hot to touch after a few seconds of transmitting, increase R5 or R6 to limit the transistor's heat dissipation. A small 6.3 V bulb connected across the aerial output is a simple way to check that the PA is working. An orange/white glow when the key is pressed is indicative of correct operation.

The final test is to monitor keying 'quality'. With your dummy load connected, press the key and listen to the note on the receiver's loudspeaker. Then operate the key, sending a string of dits, for example. What you hear should be free of chirps and clicks, as well as being stable in frequency. This test is sometimes better performed with no aerial connected to the receiver, thus preventing receiver overload and its associated plops. No problems should be encountered here.

Frequency tuning

A peculiarity of ceramic resonators is that, every now and again, their frequency changes abruptly by 100 Hz or so, then remains stable for some time. This is certainly noticeable in the received signal, but does not detract from the QSO and no characters are lost as a result. Try to keep the area around the ceramic resonator cool, to avoid temperature variations.

Parts list

Resistors: all 0.25 W, 5% tolerance

R1	10 megohms (MΩ)
R2	2200 ohms (2.2 kΩ)
R3	270 ohms (270 Ω)
R4	1 megohm (1 MΩ)
R5, R6	1.5 megohms (1.5 MΩ)
R7	1000 ohms (1 kΩ)

Capacitors

C1, C7	100 nF
C2	100 pF
C3	47 pF
C4	1 nF
C5, C6, C10	10 nF
C8	560 pF
C9	820 pF
VC1	10–160 pF variable

Inductors

RFC1	8.2 μH
RFC2	10 μH
RFC3	2.2 μH

Semiconductors

IC1	4069
TR1	VN10KM
TR2	BC640
D1	6V8 Zener

Additional items

- Matrix board (see text)
- 14-pin DIL socket
- Pointer knob
- Sockets (see text)

85 An audio booster for your hand-held

Introduction

The audio output from many hand-held transceivers and receivers usually leaves much to be desired, so this little amplifier was designed to increase the output at minimal expense.

All that is needed is a separate amplifier and bigger loudspeaker. This is accomplished using a single integrated circuit (IC), a few components, and a loudspeaker from the junk box. This circuit will enable the output from your hand-held to be heard easily in a car.

The circuit

This is shown in **Figure 1**. It uses only those components necessary to operate the IC amplifier. VR1 is the preset volume control, and varies the signal coming from the 'External speaker' jack on the hand-held before feeding it into the IC for amplification. C1 blocks any constant voltage present on the input.

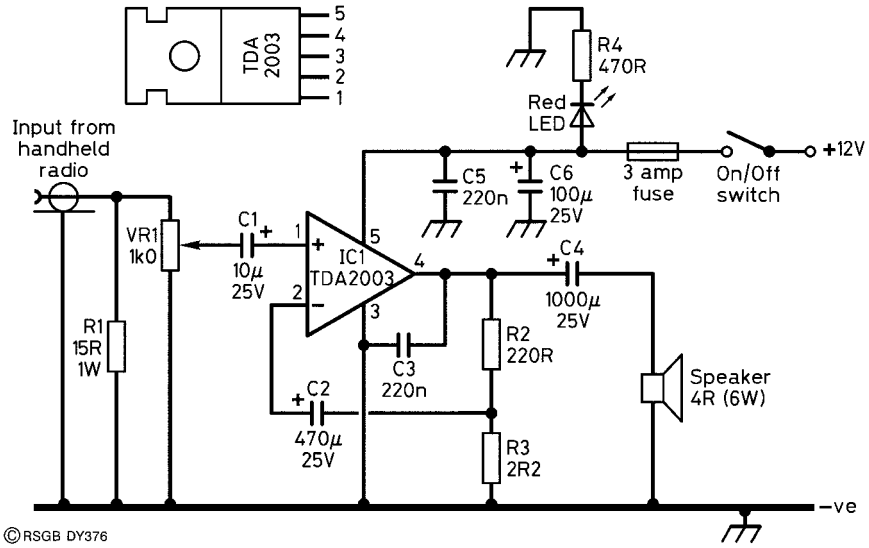

Figure 1 Circuit diagram of the audio amplifier. The power is derived from the cigarette lighter socket and the fuse is in-line with the lead

The IC output comes from pin 4 and is fed via the electrolytic capacitor, C4, to the loudspeaker. The circuit is provided with an on/off switch, fuse and LED to indicate when the circuit is switched on.

Construction

The box is made of aluminium. This is necessary to help to dissipate some of the heat generated by the IC. Do not build the circuit inside a plastic box unless you take special precautions! The IC has a metal mounting tab with a hole, specifically designed to be mounted to a metal box or other metal heat sink. Apply plenty of heat sink compound between the tab and the box, tighten the nut and bolt, and then wipe off any excess compound. The box will get slightly warm in operation.

The size of the box is not specified. You may want to decide on this when you find a loudspeaker. Choose one which will be able to handle 6 W

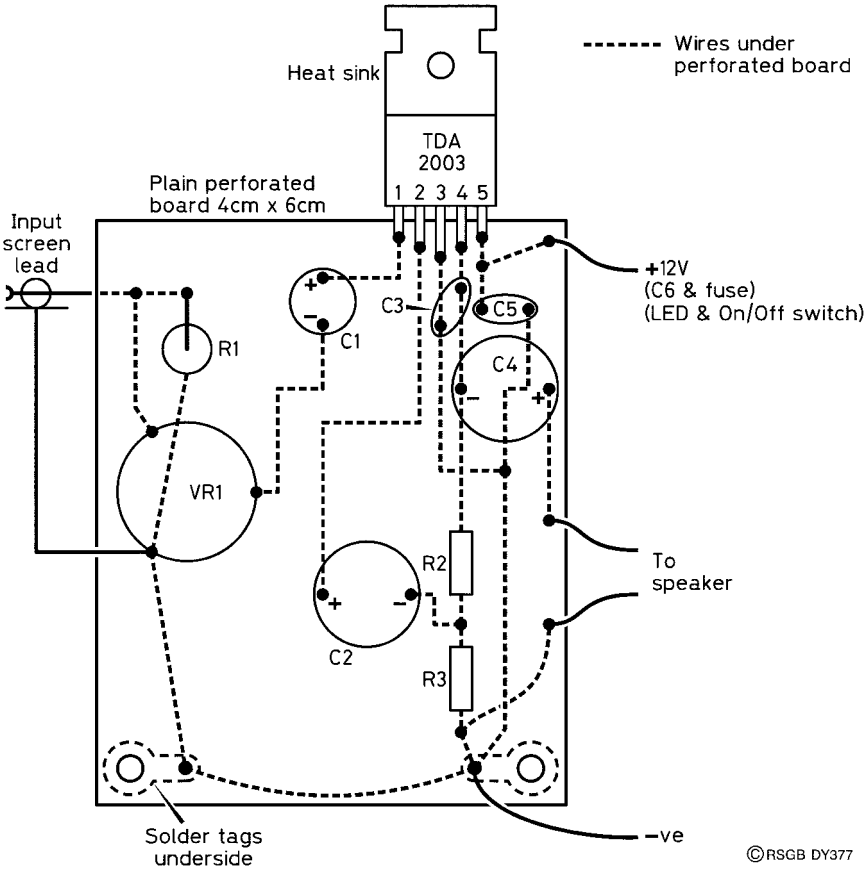

Figure 2 Layout of the components within the box

output. Drill all the holes in the box first. Holes for the speaker, input phono socket and the LED. The amplifier can be constructed on ordinary matrix board, which can be mounted inside the box with screws and spacers.

The layout is shown, for your guidance, in **Figure 2**. The components are mounted by pushing their leads through the holes in the board and making connections on the underside. The preset volume control, VR1, is set such that the hand-held's volume control is sufficient to control the final output over a good volume range. Use a screened lead from the 'External speaker' jack socket to the phono plug.

An external power supply is needed for this circuit. The normal dry battery which we usually use for small projects in this book will *not* work here, so you will need a proper mains power supply producing a stabilised 12 V. If you are going to use the unit principally in a car, then the cigar lighter socket can supply this voltage easily. Do make sure that the polarity is correct before you switch on!

When you plug the jack plug from your booster into the 'External speaker' socket on your hand-held, its internal speaker will be muted, so don't think that something dire has gone wrong! Adjust VR1 for a good volume range on your booster, when the volume control is turned on the hand-held.

Parts list

Resistors: all 0.25 W, 5% tolerance, unless otherwise stated

R1	15 ohms (15 Ω) 1 W
R2	220 ohms (220 Ω)
R3	2.2 ohms (2.2 Ω)
R4	470 ohms (470 Ω)
VR1	1000 ohms (1k Ω)

Capacitors

C1	10 μF 25 V
C2	470 μF 25 V
C3, C5	220 nF (0.22 μF) Mylar
C4	1000 μF 25 V
C6	100 μF 25 V

Semiconductor

LED	5 mm Red

Integrated circuit

IC1	TDA2003

Additional items
- Heat sink compound
- Nuts and bolts
- Loudspeaker 4 Ω 6 W
- 3 A fuse
- On/off switch (SPST)
- Matrix board 4 × 6 cm
- Solder tags
- Plugs and screened cable for connecting lead
- Aluminium box

86 A grid dip oscillator

Introduction

When an inductor and a capacitor are connected, whether in series or parallel, they form a circuit with a natural (or *resonant*) frequency. The circuit stores energy, and this energy is being constantly shifted from the inductor to the capacitor and back again.

The dip oscillator is a simple instrument used to measure the resonant frequency of a tuned circuit without having to make any direct connection to the circuit. The circuit is more commonly known as the *grid dip oscillator* (GDO), from the days when the active device in the circuit was a valve. The FET or Field-Effect Transistor operates in a way which is very similar to that of the valve, so it is not quite a misnomer to call this instrument a grid dip oscillator, too.

The circuit

The GDO uses a calibrated, tunable FET oscillator in the circuit of **Figure 1**. It has a frequency range of 1.6 to 35.2 MHz in four ranges using a set of plug-in coils, shown in **Figure 2**. When the oscillator coil, L1, is placed near an external resonant circuit, some of its RF energy is coupled into the external circuit. A gain in energy of the external circuit must mean a loss of energy in the GDO circuit, resulting in a change of current through TR1, which is measured by the meter, M1.

The current through TR1 is of the order of 5 to 8 mA, but the change of current may be only a few microamps. To measure a very small

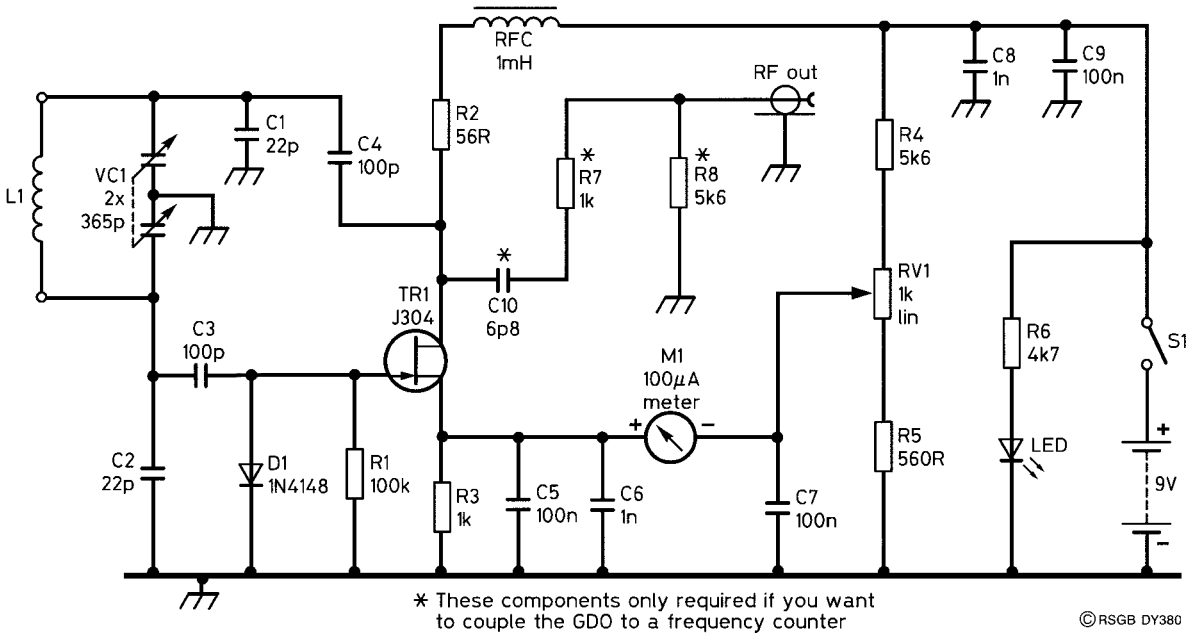

Figure 1 Circuit of an FET GDO. The coils are wound on DIN speater plugs, which provide both a plug-in base and a coil former

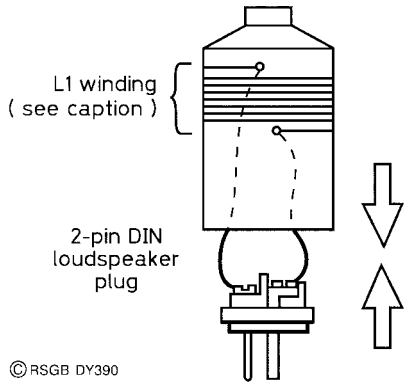

Figure 2 Details of coil construction:
Range 1: 1.6–4.0 MHz 55 turns of 30 SWG
Range 2: 3.3–7.9 MHz 27 turns of 30 SWG
Range 3: 6.3–4.0 MHz 14 turns of 26 SWG
Range 4: 11.9–4.0 MHz 7 turns of 24 SWG.

change superimposed on a much larger standing current, the method of *offset* can be used.

One connection to the meter goes to the source of the FET, while the other goes to a variable offset voltage set by VR1. M1 has a full-scale deflection (FSD) of 100 μA. If the current through TR1 changes, the voltage across R3 changes. When there is no resonance, the voltage at the wiper of VR1 is set to be very slightly greater than that across R3, and there is a 75% FSD meter deflection. When the voltage across R3 decreases very slightly, due to

external circuit resonance, a significant 'dip' in the meter deflection is produced, hence the name of the instrument.

The circuit is not difficult to make on standard matrix board. Provided you can follow a circuit and translate it into a good component layout, then this project is probably only an evening's work.

The most important part of the GDO is the tuning capacitor and its associated frequency-calibrated dial. New, air-spaced tuning capacitors can cost you up to £20, so it is worth delving around in junk boxes, or scouring the tables at a local boot sale or rally. The tuning capacitor from an old transistor radio should be perfect. It may even have a slow-motion drive and a dial which can be remarked for the project.

Choose a coil plug and socket arrangement that is practical. Think about crystal holders or phono plugs and sockets. The prototype shown in Figure 1 and Figure 2 used 2-pin DIN plugs, with the coil wound on the outside of the plastic plug cover. Figure 2 shows the coil construction and the winding details.

If you use a variable capacitor, VC1, with a value different from that shown in the parts list, then the frequency ranges will be different. This does not matter, as it will be taken into account during calibration.

Position VC1 so that the dial will be easy to see and to operate, while locating the coil socket as close to it as possible. **Figure 3** shows the traditional layout of the GDO.

Calibration

Because the GDO also radiates a very small amount of energy, a general coverage receiver can be used to calibrate the dial. Don't try to aim for great accuracy and clutter the dial with marks and figures! If you include C10, R7 and R8 in your circuit, you can connect a frequency counter directly to the GDO and leave it in circuit all the time.

The GDO in use

Always try to place the external tuned circuit with its coil coaxial with the plug-in coil, as shown in Figs 1 and 3. If the coils are at right angles, the GDO may not produce any resonance. Set the offset control to give about 75% FSD and slowly tune L1 through its whole range. If no dip occurs, you may have the wrong coil plugged in. When you eventually find a dip, move the external coil further away until only a minute dip is seen. You may have to retune the dip meter as you do this, but it gives a much more accurate reading of frequency.

Remember that you cannot 'dip' a coil by itself – there must always be a capacitor present.

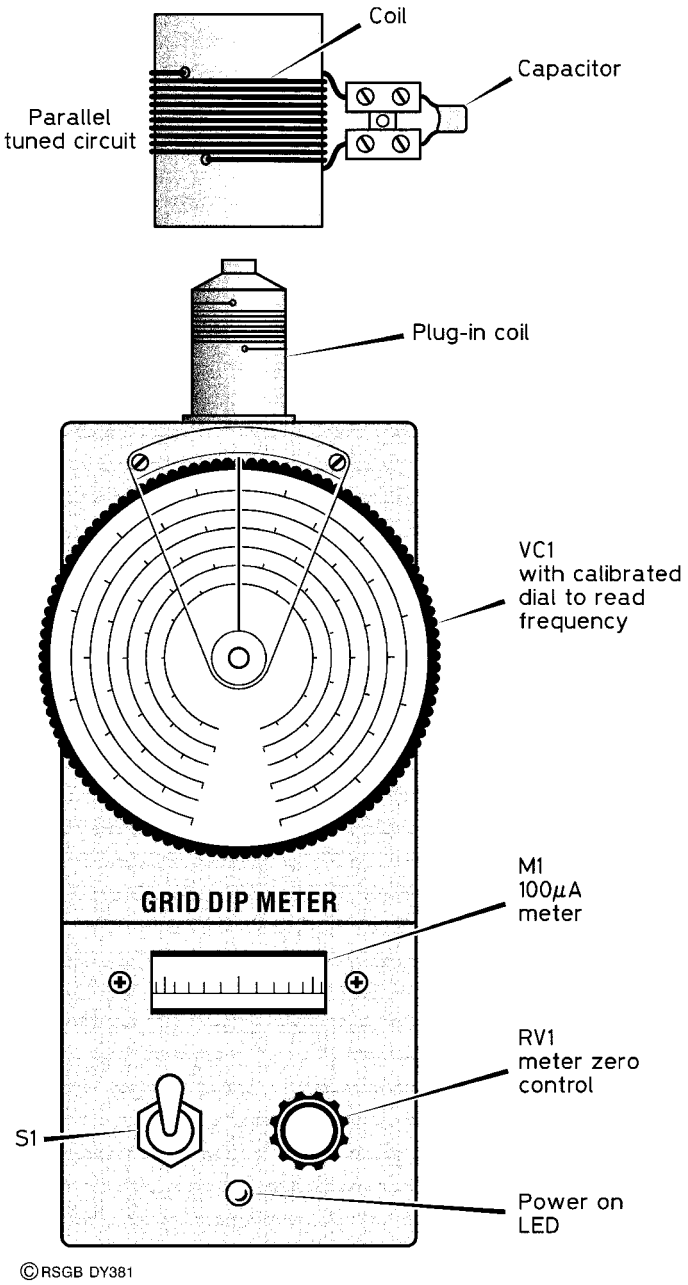

Figure 3 Layout of a typical GDO. The dial, meter and the location of the coil to the circuit under test can all be viewed at the same time. It is shown measuring resonance of a tuned circuit

Aerial resonance

Figure 4 shows how to check the resonance of a dipole aerial. Disconnect the coax feed at the aerial and place a short piece of wire, terminated with crocodile clips, across the centre insulator to short together the two ends of the aerial. By placing the GDO close to the shorting link, a dip should be seen on the meter while VC1 is turned. Alternatively, a loop in the element can be made around the coil, as in Figure 4, or the shorting link can be made long enough to loop over the coil. The latter method does not require tampering with the mounting and tensioning of the dipole wires.

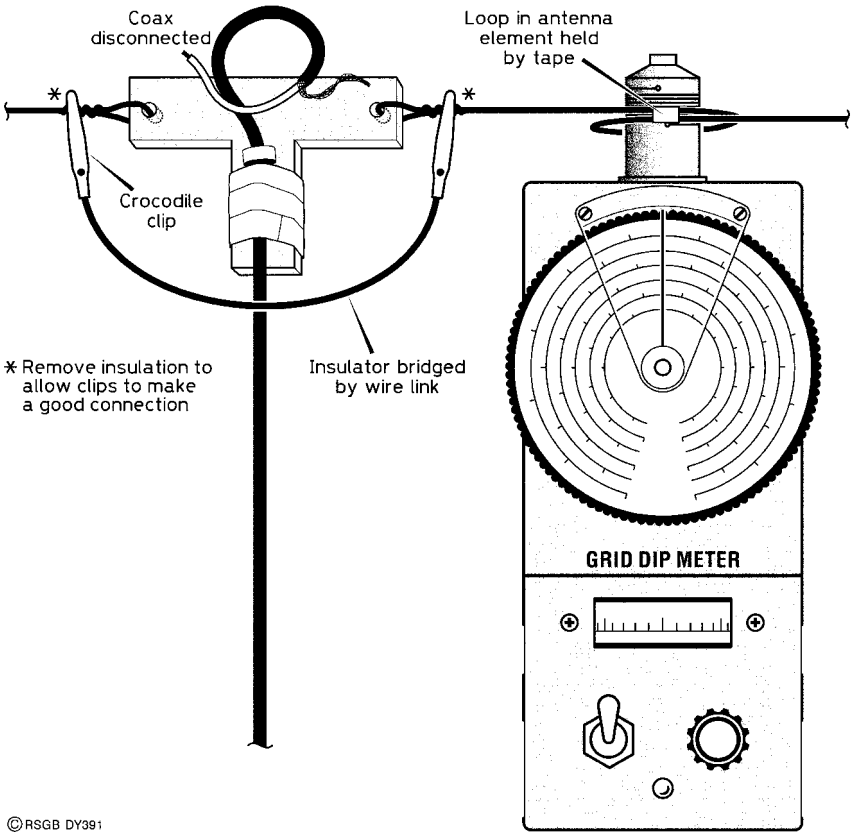

Figure 4 A wire antenna element can be looped into a single turn coil for increased coupling to the GDO

Parts list

Resistors: all 0.25 W, 5% tolerance

R1	100 000 ohms (100 kΩ)
R2	56 ohms (56 Ω)
R3	1000 ohms (1 kΩ)
R4	5600 ohms (5.6 kΩ)
R5	560 ohms (560 Ω)
R6	4700 ohms (4.7 kΩ)
R7	1000 ohms (1 kΩ)
R8	5600 ohms (5.6 kΩ)
VR1	1000 (1 kΩ) linear

Capacitors

C1, C2	22 pF
C3, C4	100 pF
C5, C7, C9	100 nF (0.1 μF)
C6, C8	1 nF (1000 pF)
C10	6.8 pF
VC1	2 × 365 pF

Semiconductors

TR1	J304 or similar
D1	1N4148
LED	

Additional items

L1	See Figure 2
RFC	1 mH
S1	SPST
M1	100 μA

Source

Components are available from Maplin.

87 A CW transmitter for 160 to 20 metres

Introduction

This very small transmitter is designed to work on any band from top band (160 m) to 20 m, with an RF output of 1 W. It will work on higher frequencies but with a reduced output.

The circuit

The three-transistor circuit is shown in **Figure 1**. It comprises a crystal oscillator using a BC182 transistor which drives a 2N3866 power amplifier (PA) keyed by a ZTX750 PNP transistor. The oscillator and PA are coupled by a capacitor and resistor; this provides a very small amount of positive bias to the PA.

The oscillator can be used as a basic crystal oscillator but, by including a variable series capacitor as shown in Figure 1, the crystal frequency can be 'pulled' slightly, making the oscillator a *variable crystal oscillator* (VXO).

Construction

The PCB layout is shown in **Figure 2** and in the photograph. Although the prototype was built around a PCB, this circuit is equally amenable to

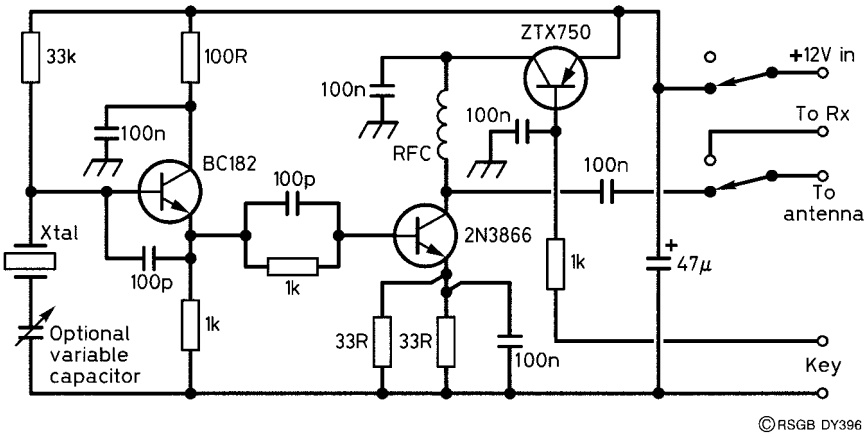

Figure 1 Transmitter circuit diagram

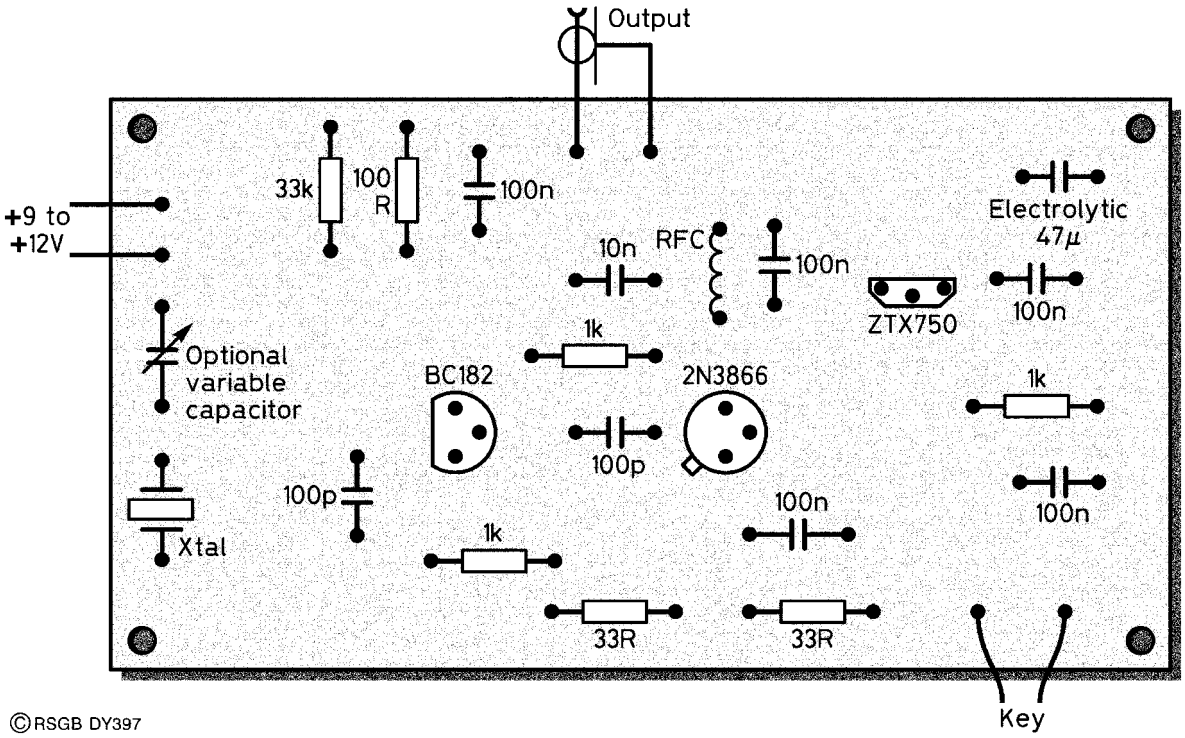

Figure 2 Component placing on the PCB. The external connections are also shown

construction on a matrix board. Populating the PCB is very simple, and you can expect to be able to do this in about one hour. The radio-frequency choke (RFC) is made by winding 10 turns of 33 SWG wire on a ferrite bead. The enamel coating of the wire is intended to vaporise when soldered into the board, thus obviating the need to remove the enamel manually with a knife or sandpaper. However, if you do have problems with the PA either not working or keying intermittently, it is suggested that you investigate the RFC connections immediately!

If you decide to make the VXO version, you will have to cut the track between the crystal and earth, and connect the variable capacitor (250 pF) across the break.

In use

After performing the usual checks on the accuracy of your circuit building and the wiring of the external components, it is time to connect a 12 V battery between the points shown in Figure 2. Do not switch on yet. An aerial needs to be connected to the output via an ATU and a crystal, of frequency matching that of the aerial, fitted. The variable capacitor should

give you a tuning range from about 14.058 to 14.064 MHz. 'Netting' (the process of tuning your transmitter to the same frequency as that of a received station) is achieved simply, because the oscillator is always running, and the leakage of the signal (despite the fact that the PA is not powered) is sufficient to bring the two frequencies to zero beat.

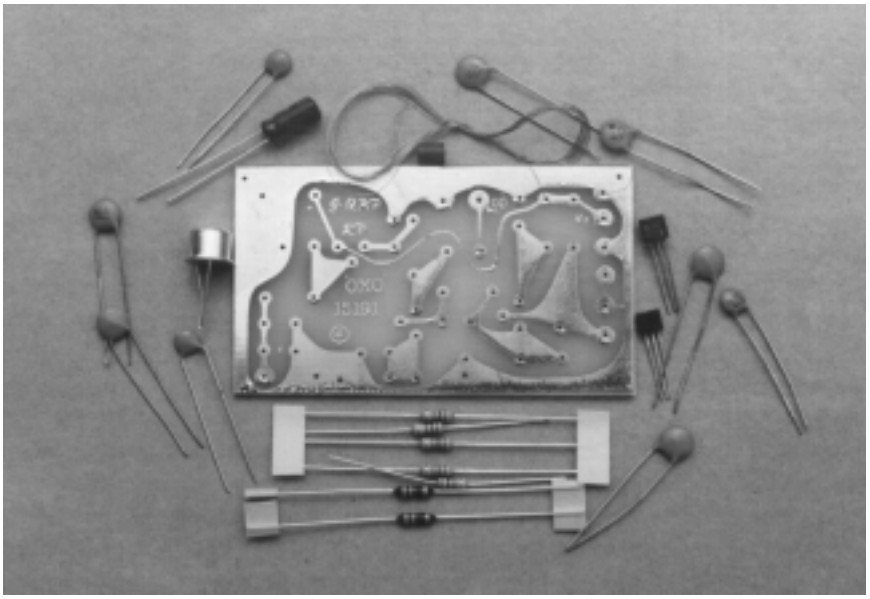

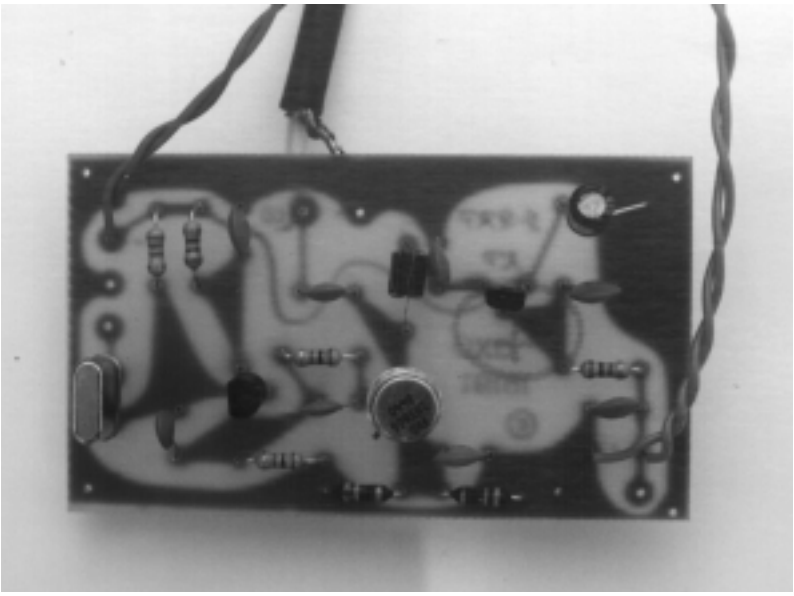

Warning

Note that the transmitter has no filtering; harmonics are not suppressed. It is strongly recommended that you use this transmitter in conjunction with the excellent low-pass filter described in the project *A 7-element low-pass filter for transmitters*, described elsewhere in this book.

88 Matching the end-fed random-wire aerial

Introduction

Many amateurs who do not have the space (or money) for a multi-band beam aerial, make use of the simplest possible alternative – the longest piece of wire that they can erect, with its end connected to the transceiver or receiver by an aerial tuning unit (ATU).

The length of the wire is not of major importance. Any length between 10 m and 80 m, with bends if necessary, will suffice. A good earth connection to the radio is just as important. Bends in the aerial wire can have some interesting effects on the directional properties of the aerial; V- or L-bends, or even a square shape are permitted. The only thing *not* permitted is to fold the wire back on itself in a tight hairpin bend!

Longish wire aerials

The term 'long wire' is usually used (incorrectly) to describe an end-fed aerial. How long is a piece of string? It depends what you mean by 'long'. In aerial parlance, it means 'long with respect to one wavelength'. Again, this depends on the band you are using. A long wire at 20 m is somewhat different from a long wire at 160 m. However, if you have sufficient real estate for a long wire on the 160 m band it must, by definition, be a long wire on all the other bands, too!

This should put you on your guard when analysing published data about feed-point impedance and the directional properties of a long wire aerial. Such theoretical data relate to a *real*, *ideal* long wire which is straight, horizontal, very high above perfect (conducting) ground, and not obstructed in any way. So your aerial doesn't quite match these criteria? Join the club!

Don't let this dampen your ardour when it comes to evaluating what the longish wire can do for you. The following should explain why.

Feed-point impedance

The impedance at the end of a longish-wire aerial can vary from a few tens of ohms to several thousand ohms, depending on the frequency in use and the wire length. It is also affected by factors such as bends, height above ground, proximity to buildings and wire diameter.

The actual value doesn't matter, provided we can make the aerial *appear* to have a 50 Ω impedance at the aerial socket of the transmitter. This process is what we call *impedance matching*, or simply *matching*. It maximises the power transfer from the transmitter to the aerial, and from the aerial to the receiver.

That is why an aerial tuning unit, or ATU, is almost (but not necessarily) obligatory.

The ATU

Many commercially produced HF receivers and transceivers have single 50 Ω coaxial sockets as their one and only means for connecting an external aerial. This means that an external aerial should have a 50 Ω feed impedance if it is to work efficiently, and it rules out most of the aerials being used by amateurs on the HF bands. Some means is necessary to change the aerial feed impedance to 'match' that of the transceiver. Such impedance-matching, or Z-matching (because Z is the symbol for impedance, just as L is the symbol for inductance) is the rôle of the ATU.

These can be bought and will accommodate either an end-fed or a coax-fed aerial. They can be bought ready for use or in kit form. Whether you want one for receiving only, or for use with a low-power (QRP) or high-power (QRO) transmitter, will determine what you need and how much you pay.

A simple single-band ATU

The simplest form of ATU is shown in **Figure 1**. It is simply a parallel LC (coil and capacitor) circuit, resonant at the chosen frequency, with taps on the coil for the aerial and the coaxial feed to the transceiver. If we assume the circuit is resonant, a high impedance exists at the top of the coil, and a low impedance at the bottom.

We said earlier that the end-fed longish wire presented an impedance which was high (or at least higher than 50 Ω). This explains why the aerial is tapped to the coil near the top, where the impedance is high, and the 50 Ω coax is tapped near the bottom, where the impedance is low.

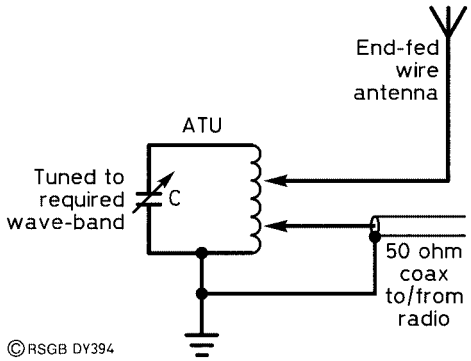

Figure 1 Parallel tuned circuit as single-band ATU for end-fed longish-wire antenna

Because the feed-point impedance of the aerial changes with frequency, so must the point at which the aerial is tapped to the coil to achieve impedance matching. The value of C must be changed also, to ensure that the circuit is resonant, and the 50 Ω tap will require tweaking also.

Setting up an ATU is quite simple. Make up an LC parallel-tuned circuit consisting of 50 turns of enamelled copper wire on an empty 35 mm film plastic container (or similar), tuned with a 500 pF variable capacitor. Make sure the enamel is removed from the ends of the wire before soldering.

Solder the inner wire of the coaxial cable from the radio to the first or second turn of the coil from its grounded end. Then solder the braid to the grounded end. Connect the aerial about one-third of the way down the coil from the top, removing the enamel at the connection point.

Adjust the variable capacitor for maximum noise or signal strength in the receiver. Then, try different tapping points from the aerial, to maximise the signal again. This matches the aerial impedance to that of the tuned circuit. Repeat the process with the coax tap, thus matching the impedance of the radio and the cable to that of the tuned circuit.

You will no doubt find that the tapping process on the coil was not easily accomplished, especially when the enamel must be removed at each tapping point without shorting adjacent turns together. It is therefore logical to produce a design where the taps have been prepared during the winding of the coil, and are selected with a rotary switch. To this end, the following multi-band design is described.

A multi-band ATU

The same type of coil design around a 35 mm film container is used (see **Figure 2**). The tapping points can be prepared in advance by a little judicious planning. Dismantle your original coil and measure the length of wire on it. It will be a little more than a calculation of $50 \times \pi D$ would suggest (where D is the diameter of the film container), due to the lack of tension in the coil and the wire diameter itself. You will need aerial tapping points at turns 1, 2, 3, 5, 10, 15, 20, 25, 30, 35, 40 and 45, corresponding to all the bands from 28 MHz to 1.8 MHz. The coaxial cable tap is fixed at turn 2 (an acceptable compromise). All the turns are counted from the earthy end.

Cut another piece of enamelled copper the same length as you used originally. Then, with the aid of an ordinary calculator, work out the positions of the points where the enamel must be removed for the taps. For example, turn 15 will have to be made $\frac{15}{50}$ of the way along the wire, turn 20 tap made at $\frac{20}{50}$ of the way along. So, if the length of wire is, say 4.7 metres, the two taps in question will be made at $\frac{15}{50} \times 4.7 = 1.41$ m and $\frac{20}{50} \times 4.7 = 1.88$ m from one end. This must be repeated for each of the tap positions, and the enamel removed ready for the wire to be soldered to it. With a

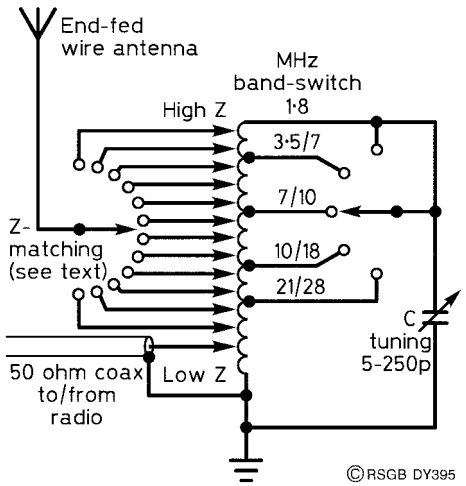

Figure 2 Simple multi-band ATU for end-fed longish-wire antennas

soldering iron, tin each tap point while the copper is shiny, thus ensuring a good, low-resistance connection. Do not solder on the taps yet.

The coil can now be wound as before. The taps can be soldered on, taking the lead from each one to the wafer of a single-pole 12-way rotary switch, the pole being connected to the aerial.

The tuning of the ATU is carried out by the same 250 pF capacitor, with a single-pole 5-way rotary switch used to select the band. Its tapping points will need to be chosen manually, using the method described earlier. Don't attempt to make new tapping points on the coil for this – use the taps available on the wafer of the other rotary switch, and find which is optimum for each band.

Notes

- For the aerial, use PVC-covered stranded tinned copper, of size 16/0.2 mm or 24/0.2 mm.
- Make the wire as long as possible, but anything over 10 m should be OK.
- Keep the wire as high as you can, in the clear and away from obstructions.
- Don't worry about bends, but don't use hairpin bends.
- Use a good insulator to attach your aerial – anything plastic will do.
- Anchor the wire near the point of entry to the building, but use a U-bend to prevent ingress of water.
- The wire can be brought in through the corner of a window, the PVC acting as an insulator. If you must drill a hole in the brickwork, make sure it slopes upwards from outside, so that water is deterred from entering.
- Use a good RF earth (as opposed to an electrical earth) such as half a dozen bare copper wires buried under the lawn in a fan shape. They should be joined together at the point of the fan and strapped to the earth connector of your ATU.

MORE ELECTRONIC GADGETS FOR THE EVIL GENIUS

40 NEW BUILD-IT-YOURSELF PROJECTS

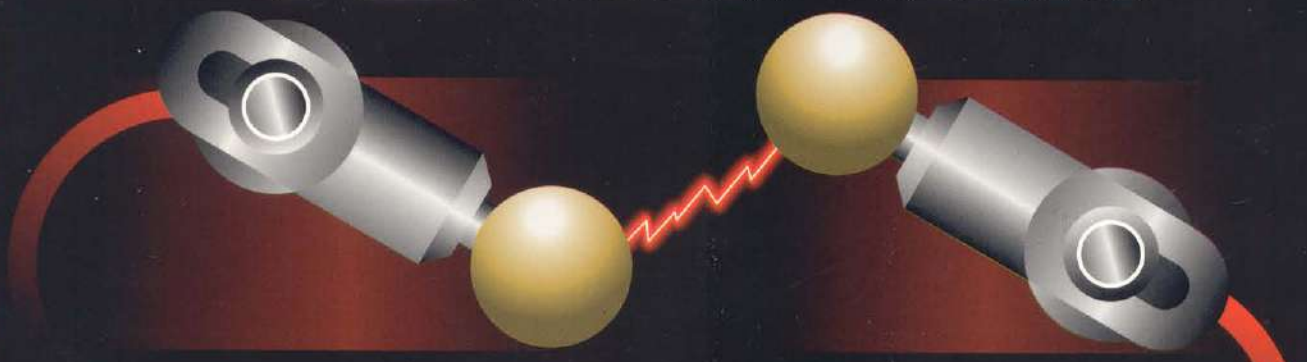

- Every project includes a list of materials, sources for obtaining parts, schematics, documentation, and clear instructions
- Projects are fun and inexpensive, but challenging enough for an electronics wiz
- Build your own lasers, surveillance devices, ultrasonic generators, display and detection devices

TAB ELECTRONICS

BOB IANNINI

Contents

Chapter One Battery-Powered Infrared Pulsed Laser 1
Theory of Operation 2
Circuit Theory of Operation 2
Current Monitor 5
Charging Circuits 5
Chassis Assembly 5
Assembly Testing 7
Final Assembly 8
Special Note 8

Chapter Two High-Speed Laser Pulse Detector 11
Circuit Description 12
System Assembly 13
Assembly Testing 15
Final Assembly 16
Special Note 17
Special Note on Photo Detectors 17

Chapter Three Ultra-Bright Green Laser Project 19
Assembly Steps 20

Chapter Four 115 VAC, 5- to 50-Watt Pulsed Infrared Laser 25
Theory of Operation 25
Circuit Theory of Operation 26
Notes on SCR 28
Notes on the Storage Capacitor 28
Notes on Layout Wiring 28
Notes on Circuit Monitoring 30
Assembly Steps 30
Assembly Testing 33
Final Assembly Steps 35

Chapter Five Laser Property Guard 37
System Installation Suggestions 39

Chapter Six 30-Milliwatt, 980-Nanometer Infrared Laser 43
Assembly 44
Collimator and Final Assembly 47

Chapter Seven High-Voltage, High-Frequency Driver Module 51
Electrical and Mechanical Specifications 51
Circuit Description 52
Construction 52
Board Assembly Steps 52
Testing Steps 56

Chapter Eight Negative Ion Machine with Reaction-Emitting Rotor 59
Benefits of Negative Ions 59
Circuit Description 60
Assembly Steps 61
Notes 62

Chapter Nine Kirlian Imaging Project 65
Assembly Steps 66
Testing Steps for the Circuit 66
Notes 67

Chapter Ten Plasma Etching and Burning Pen 69
Driver Circuit Description 69
Drive Circuit Assembly 70
Driver Board Testing 71
Mechanical Assembly 72
Sample Demonstration 72

Chapter Eleven How to Electrify Objects and Vehicles 75
Supplementary Electrification Data and Information 76
Assembly of Suggested Power Sources 81
Circuit Description of Pulsed Shocker 81
Construction Steps for Pulsed Shocker 81
Notes Pulsed Shocker 85
Construction of Continuous Shocker 85

Chapter Twelve Electromagnetic Pulse (EMP) Gun 87
Basic Theory Simplified 87
Circuit Description 89
Circuit Assembly 89
Notes 89

Chapter Thirteen Microwave Cannon 93

Chapter Fourteen Induction Heater 103
Circuit Operation 103
Project Assembly 104
Project Testing 108
Using the Heater Project 108

Chapter Fifteen 50-Kilovolt Laboratory DC Supply 113
Basic Description 113
Circuit Operation 114
Assembly of the Driver Section 114
Pretesting the Driver Section 116
Assembly of the Multiplier Section 121
Final Testing 125
Applications 129

Chapter Sixteen Magnetic High-Impact Cannon 133
Theory of Operation 133
Circuit Theory 134
Assembly Steps 136
Circuit Testing 136
Assembly of the Completed System 137
Testing and Operation of the Cannon 143

Chapter Seventeen Vacuum Tube Tesla Coil Project 151
Basic Description 153
Assembly Steps 154
Testing and Operating 167
Notes 167

Chapter Eighteen Universal Capacitance Discharge Ignition (CDI) Driver 169
Circuit Description 169
Assembly Steps 170
Test Steps 175
Notes on Operation 175

Chapter Nineteen Long-range Telephone Conversation Transmitter 177
Circuit Description 177
Assembly of the Circuit Board 179
Notes 180

Chapter Twenty Line-Powered Telephone Conversation Transmitter 183
Circuit Description 183
Assembly of the Circuit Board 185
Notes 186

Chapter Twenty-One Remote Wireless FM Repeater 187
Circuit Description 187
Assembly 188
Notes 189

Chapter Twenty-Two Tracking and Homing Transmitter 191
Circuit Description 191
Assembly of the Circuit Board 192
Notes 194

Chapter Twenty-Three Snooper Phone Room-Listening Device 195
Circuit Operation 195

Construction Steps 196
Final Assembly 197
Testing Steps 198
Notes 199

Chapter Twenty-Four Long-Range FM Voice Transmitter 201
Circuit Description 201
Assembly Steps 202
Notes 204

Chapter Twenty-Five FM Pocket Radio and TV Disrupter 205
Circuit Theory 206
Assembly Steps 206

Chapter Twenty-Six Ozone Generator for Water Treatment 209
Introduction to the Benefits of Ozone 209
Ozone for Water Applications 210
Ways to Generate Ozone 210

Chapter Twenty-Seven Therapeutic Magnetic Pulser 213
Circuit Description 214
Assembly 215

Chapter Twenty-Eight Noise Curtain Generator 219
Circuit Description 220
Assembly Steps 220
Testing Steps 221

Chapter Twenty-Nine Mind-Synchronizing Generator 223
Information on Mind Control 223
Operating a Mind Machine 225
Circuit Theory 226
Assemble the Board 227

Chapter Thirty Alternative Health Multiwave Machine 231
Theory of Operation 231
Construction of the Multiwave Coil and Antenna 233
Operation 234

Chapter Thirty-One Mind Mangler 237
Circuit Operation 237
Construction Steps 238
Testing 239

Chapter Thirty-Two 500-Milligram Ozone Air Purification System 241
The Story of Ozone 241
Ozone for Treating Air 242
Construction Steps 242
Special Notes 244

Chapter Thirty-Three Invisible Pain-field Generator 249
Circuit Description 250
Construction 251

Chapter Thirty-Four Canine Controller 257
Device Description 257
Circuit Description 258
Circuit Assembly 260
Testing the Circuit 263

Chapter Thirty-Five Ultrasonic Phaser Pain-Field Generator 265
Basic Device Description 265
Circuit Theory 266
Construction Steps 267
Testing the Assembly 268
Basic Operating Instructions 269
Information on the System 272
A Word of Caution 272
General Information on Ultrasonics 272
Application Supplement 272

Chapter Thirty-Six Magnetic Distortion Detector 275
Circuit Description 276
Assembly Steps 277
Pretesting the Sense Head 278

Construction of the Control Box 279
Control Box Protesting 279
Applications 281
Optional Ultra-Sensitive Vibration and Tremor Detector 283

Chapter Thirty-Seven Body Heat Detector 285
Description 285
Body Heat Detector Modes 286
Circuit Description 286
Assembly Instructions 288
Operating Instructions 290
Final Notes 291

Chapter Thirty-Eight Ion and Field Detector 293
Circuit Description 293
Construction Steps 294
Applications 298

Chapter Thirty-Nine Light Saber Recycling Stand 301
Circuit Description 301
Assembly 302
Parts Fabrication 302
Operation 303

Chapter Forty Andromeda Plasma Lamp 309
Circuit Description 309
Assembly Board Wiring 310

Index 317

Contents

Chapter One

Battery-Powered Infrared Pulsed Laser

This project shows how to construct a low-powered, portable, solid-state, pulsed infrared laser. The system uses a gallium arsenide laser diode and provides pulse powers from 10 to 100 watts, depending on the diode used. The device operates from batteries and is completely self-contained. It may be built in a pistol, rifle, or a simple tubular configuration. The device is intended as a source of adjustable-frequency pulses from 10 to 1,000 repetitions per second of infrared energy at 900 nanometers

The system is shown in Figure 1-1 as being built on a perforated board assembly and combination copper ground plane that all fits into a tubular enclosure with a lens and holder for a collimator. The housing serves as the enclosure for the batteries and contains the control panel at its rear. It may be fitted with a handle that can hold an optional trigger switch when the device is designed in a gun configuration. A conventional sighting system is also easily adapted to the device.

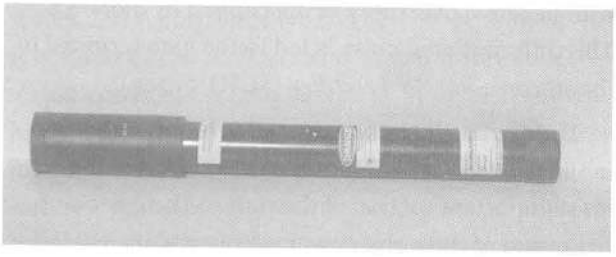

Figure 1-1 *Photograph of laser*

The laser is intended as a rifle-type simulated weapon, whose range can be several miles or as a long-range, laser-beam protection fence with a similar range of several miles. It is intended to be used with our high-speed laser pulse detector described in Chapter 2.

The laser, when assembled as shown, is a class 3B FDA certified device and requires the appropriate labeling and several included safety functions, as described in the assembly instructions. At no time should it be pointed at anyone without protective eyewear or at anything that could reflect the pulses. Never look into the unit when the power is on. The device is intended to be used for ranging, simulated weapons practice, intrusion detection, communications and signaling, and a variety of related scientific, optical experiments and uses.

This is an intermediate- to advanced-level project requiring electronic skills and basic electronic shop equipment. Expect to spend $100 to $150. All parts are readily available, with specialized parts obtainable through Information Unlimited (www.amazing1.com), and they are listed in Table 1-1.

Theory of Operation

A laser diode is nothing more than a three-layer device consisting of a *pn* junction of *n*-type silicon, a *p* type of gallium arsenide, and a third *p* layer of doped gallium arsenide with aluminum. The *n*-type material contains electrons that readily migrate across the *pn* junction and fill the holes of the *p*-type material. Conversely, holes in the *p* type migrate to the *n* type and join with electrons. This migration causes a potential hill or barrier consisting of negative charges in the *p*-type material and positive charges in the *n*-type material that eventually ceases growing when a charge equilibrium exists. In order for current to flow in this device, it must be supplied at a voltage to overcome this potential barrier. This is the forward voltage drop across a common diode. If this voltage polarity is reversed, the potential barrier is simply increased, assuring no current flow. This is the reversed bias condition of a common diode.

A diode without an external voltage applied to it contains electrons that move and wander through the lattice structure at a low, lazy average velocity as a function of temperature. When an external current at a voltage exceeding the barrier potential is applied, these lazy electrons increase their velocity so that some of them, by colliding, acquire a discrete amount of energy and become unstable. They eventually emit the acquired energy in the form of a photon after returning to a lower-energy state. These photons of energy are random both in time and direction; hence, any radiation produced is incoherent, such as that of an LED.

The requirement for coherent radiation is that the discrete packets of radiation must be in the form of a lockstep phase and in a definite direction. This demands two essential requirements: first, sufficient electrons at the necessary excited energy levels, and second, an optical resonant cavity capable of trapping these energized electrons to stimulate more electrons and give them direction. The amount of energized electrons is determined by the forward diode current. A definite threshold condition exists where the device emits laser light rather than incoherent light, such as in an LED. This is why the device must be pulsed with high current. The radiation from these energized electrons is reflected back and forth between the square-cut edges of the crystal that form the reflecting surfaces due to the index of refraction of the material and air.

The electrons are initially energized in the region of the *pn* junction. When these energized electrons drift into the *p*-type transparent region, they spontaneously liberate other photons that travel back and forth in the optical cavity interacting with other electrons, commencing laser action. A portion of the radiation traveling back and forth between the reflecting surfaces of these mirrors escapes and constitutes the output of the device.

Circuit Theory of Operation

Figure 1-2 shows the inverter section increasing the 12 volts of the portable battery pack to 200 to 300 volts performed by the circuit, which consists of a switching transistor (Q1) and step-up transformer (T1). Q1 conducts until saturated for a time until the base reverse biases and can no longer sustain it at an on state and Q1 turns off. This causes the magnetic field in its collector winding (COL) to collapse, thus producing a stepped-up voltage in the secondary (SEC) of proper phase. The variable resistor (R3) controls the charging current to the capacitor (C2), the transistor turnoff time, and consequently system power.

The stepped-up square wave voltage on the secondary of T1 is rectified by diode (D1) and integrated onto the storage capacitor (C3). The trigger circuit determines the pulse rep rate of the laser and uses a timer (I1) whose pulse rate is determined by the timing resistor and capacitor (R9 and C6). R9 is adjustable for changing the laser pulse rate. The output trigger pulse is differentiated by capacitor (C4) with negative overshoot being clipped by diode D2. This differentiated pulse is fed to the gate terminal of the *silicon controlled rectifier* (SCR) switch.

The discharge circuit generates the current pulse in the laser diode (LD1) and consequently is the most important section of the pulser. The basic configuration of the pulse power supply is shown in the system schematic. The current pulse is generated by the charging storage capacitor C3 being switched through the SCR and laser diode LD1. The rise time

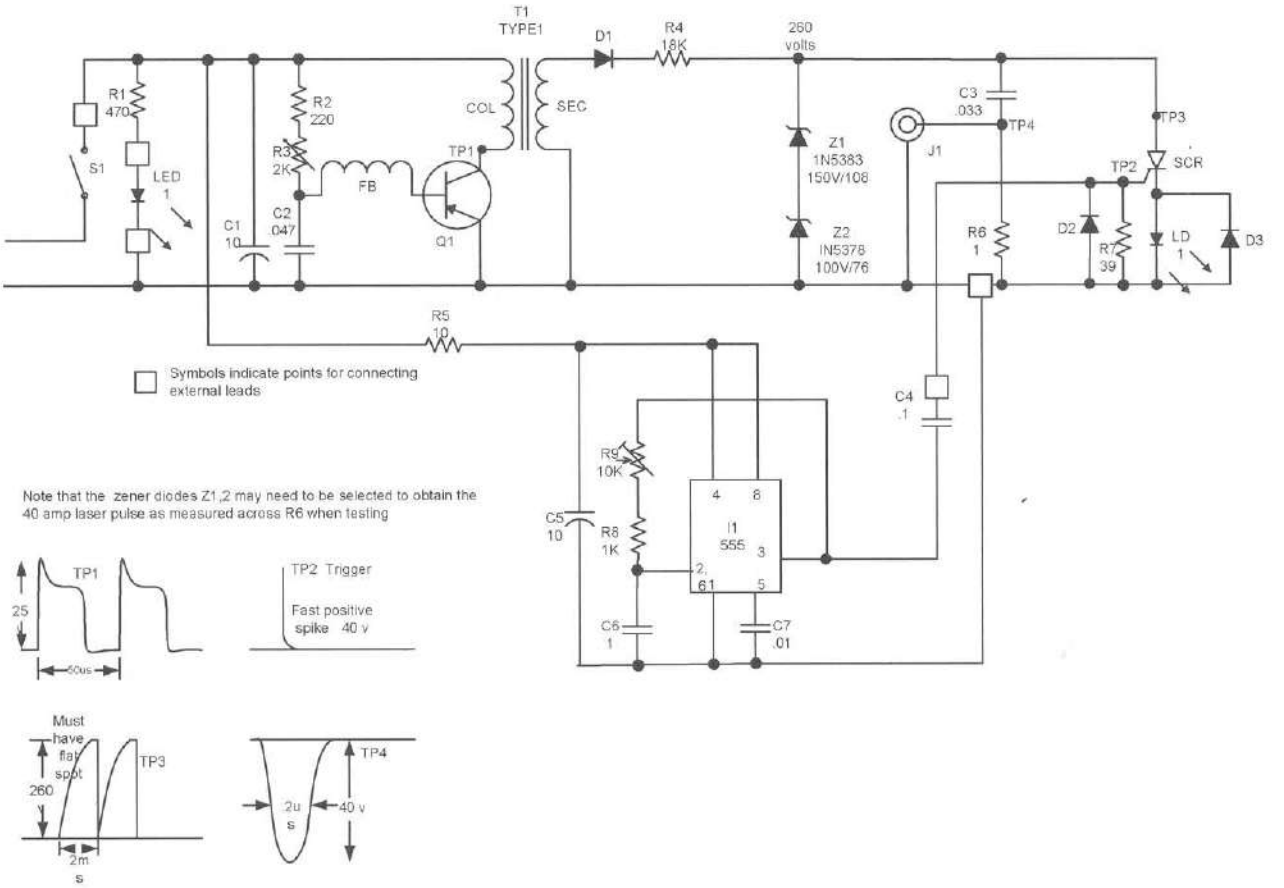

Figure 1-2 *Circuit schematic*

of the current pulse is usually determined by the SCR, while the fall time is determined by the capacitor value and the total resistance in the discharge circuit.

Figure 1-3 shows the typical anode voltage and current waveforms of the SCR during the current pulse through the diode laser. The peak current, pulse width, and voltage of the capacitor discharge circuit are related for various load and capacitance values. The peak laser current and charged capacitor voltage relationships are given for several different capacitor values and typical laser types. The voltage and current limits of the SCR are also shown. Short pulse widths provide less time for the SCR to turn on than longer pulse widths; therefore, the SCR impedance is higher and more voltage is required to generate the same current. Also shown are the current pulse waveforms for the three different values of the capacitance. The capacitor is charged to the same voltage in all three cases, that is, 400 volts.

In conventional SCR operation, the anode current, initiated by a gate pulse, rises to its maximum value in about 1 microsecond. During this time, the anode-to-cathode impedance drops from an open circuit to a fraction of an ohm. In injection laser pulsers, however, the duration of the anode-cathode pulse is much less than the time required for the SCR to turn on completely. Therefore, the anode-to-cathode impedance is at the level of 1 to 10 ohms throughout most of the conduction period.

The major disadvantage of the high SCR impedance is that it causes low circuit efficiency. For example, at a current of 40 amps, the maximum voltage would be across the SCR, while only 9 volts would be across the laser diode. These values represent very low circuit efficiency.

The efficiency of a laser array is greater due to its circuit impedance being more significant. Because the SCR is used unconventionally, many of the standard specifications such as peak current reverse

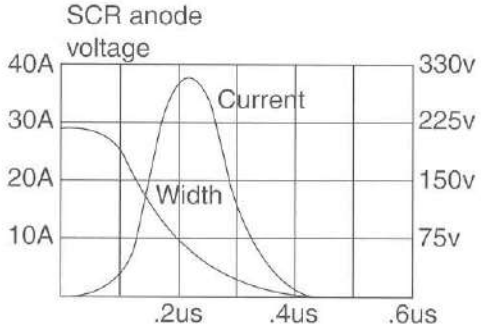

SCR operating curves

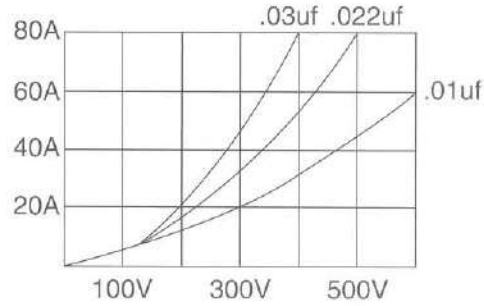

Capacitor voltage versus current peak

Typical curves and parameters for laser pulses using SCR silicon controlled rectifier and capacitor discharges

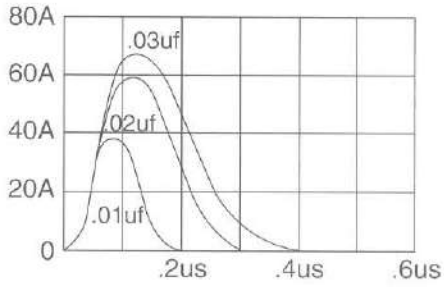

Capacitor value versus current peak

Figure 1-3 *SCR operating curves*

voltage, on-state forward voltage, and turn-off time are not applicable. In fact, it is difficult to select an SCR for a pulsing circuit on the basis of normally specified characteristics. The specifications important to laser pulser applications are the forward-blocking voltage and current rise time. A *use test* is the best and often the only practical method of determining the suitability of a particular SCR.

The voltage rating of the storage capacitor must be at least as high as the supply voltage. With the exception of ceramic types, most capacitors (metallized paper, mica, etc.) will perform well in this circuit. Ceramic capacitors have noticeably greater series resistance but are usable in slower speed pulsing circuits.

Lead lengths and circuit layout are very important to the performance of the discharge circuit. Lead inductance affects the rise time and peak value of the current, and it can also produce ringing and undershoot in the current waveform that can destroy the laser. A well-built discharge circuit might have a total lead length of only 1 inch and therefore an inductance of approximately 20 nanohenries. If the current rises to 75 amperes in 100 nanoseconds, the inductive voltage drop across this lead can be 15 volts. It is now obvious that if proper care is not taken in wiring the discharge circuits, high-inductive voltage drops will result.

A 1-ohm resistor in the discharge circuit will greatly reduce the current undershoot in single-diode lasers. Laser arrays usually have sufficient resistance to eliminate undershoot. The small resistance in the discharge circuit is also useful in monitoring the laser current, as described in the following section.

A clamping diode (D3) is added in parallel with the laser to reduce the current undershoot. Its polarity should be opposite that of the laser. Although the clamping diode is operated above its usual maximum current rating, the current undershoot caused by ringing is very short and the operating life of the diode is satisfactory.

Current Monitor

The current monitor in the discharge circuit provides a means of observing the laser current's waveform with an oscilloscope. A resistive-type monitor (R6) reduces circuit ringing and current undershoot, but the lead inductance of the resistor may cause a current reading that is higher than it actually is. A current transformer such as the Tektronix CT-2 can also be used to monitor the current and is not affected by lead inductance. Because the transformer does not respond to low-frequency signals, it should be used with fast waveforms that have a short pulse width and a fast fall time.

Charging Circuits

The second major section of the pulser is the charging circuit. This circuit charges the capacitor to the supply voltage during the time interval between the laser current pulses. It also isolates the supply voltage from the discharge circuit during the laser current pulse, thereby allowing the SCR to recover to the blocking state. Because the response times of the charging circuit are relatively long, lead lengths are not important and the circuit can be remotely located from the discharge circuit.

The simplest charging circuit is a resistor-cap combination. The resistor must limit the current to a value less than the SCR holding current, but it should be as low as practical, because this resistance also determines the charging time of the capacitor, C3.

Chassis Assembly

The following is a list of steps to construct the laser project.

1. Fabricate the copper chassis, as shown in Figure 1-4. This part is shown in Table 1-1 as being available.

2. Assemble the board as shown in Figure 1-5. Lay out and identify all the parts and pieces. Separate the components that go to the assembly board and fabricate the (PB1) perfboard from a 1.4 × 5-inch piece of .1 × .1 grid. Note the two holes for attachment to the copper chassis section from Figure 1-6.

3. Assemble the components as shown and observe the polarity of the capacitors and semiconductors.

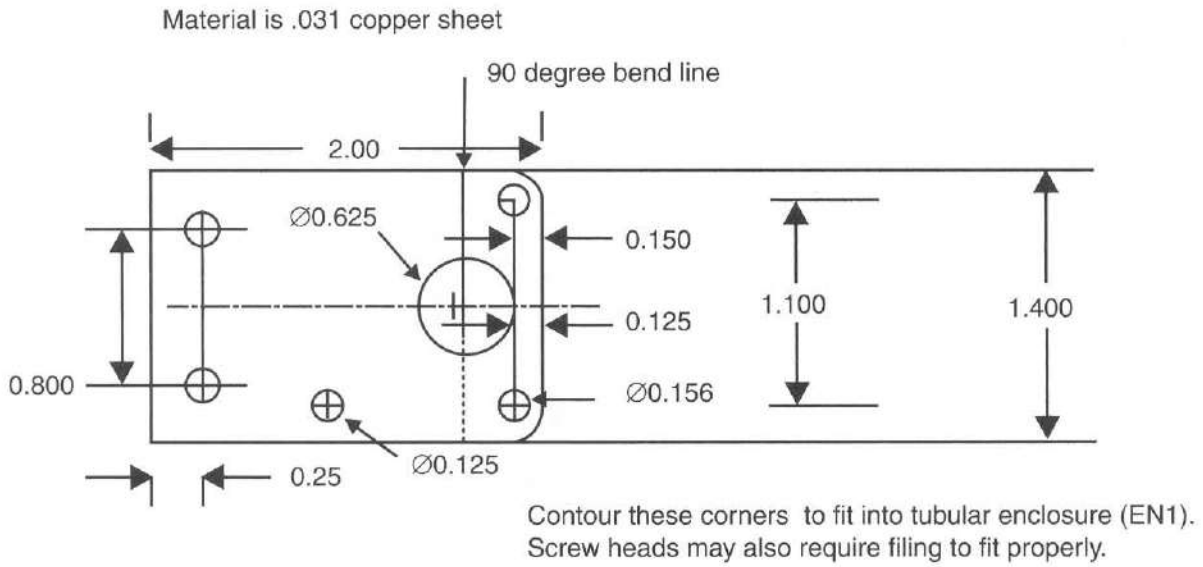

Figure 1-4 *Fabrication of laser chassis*

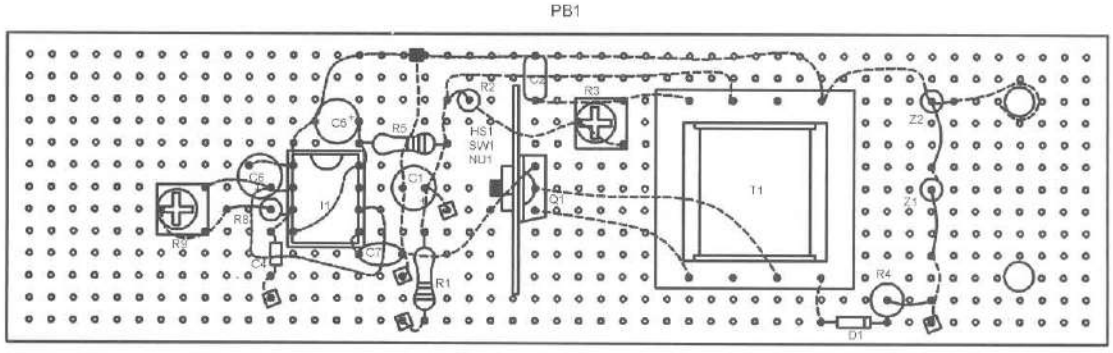

Fabricate the heatsink for Q1 from a piece of .06 aluminum 1 x .65"' with a .15 hole for SW1. Round off corners for clearance when fitting into the tubular enclosure.

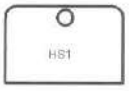

Drill two .155 holes on .8" centers for mating to copper chassis from figure 1-4

Dashed lines are connections on underside of perforated circuit board using the component leads. These points can also be used to determine foil runs for those who wish to fabricate a printed circuit board.

- Small dots are holes used for component insertion.
- Black squares are solder junctions
- Squares with dots are holes that may require drilling for component mounting and points for external connecting wires indicating strain relief points. It is suggested to drill clearance holes for the leads and solder to points beneath board.

Figure 1-5 *Assembly board parts identification*

4. Connect the components using their actual leads wherever possible. Follow the layout and avoid bare-wire bridges.

5. Figure 1-6 shows the wiring of the copper chassis (COPCHA1). This type of wiring is preferred for high-frequency, sensitive, low-noise circuitry. It is used in this circuit due to the high-current pulses with fast rise times.

   Start by forming the leads and soldering to the copper plate. You will need a good hot soldering iron to do this correctly. The components themselves serve as anchor points and will be self-supporting when soldered to one another.

6. Figure 1-7 shows the interconnection of the copper chassis and the perforated assembly board via the two screws and nuts. Attach and connect the external leads and components as shown.

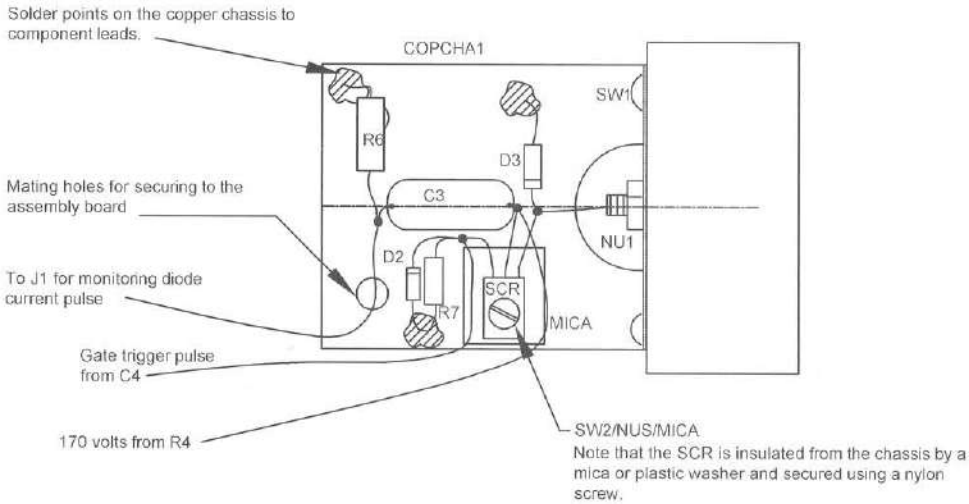

Figure 1-6 *Assembly of laser chassis*

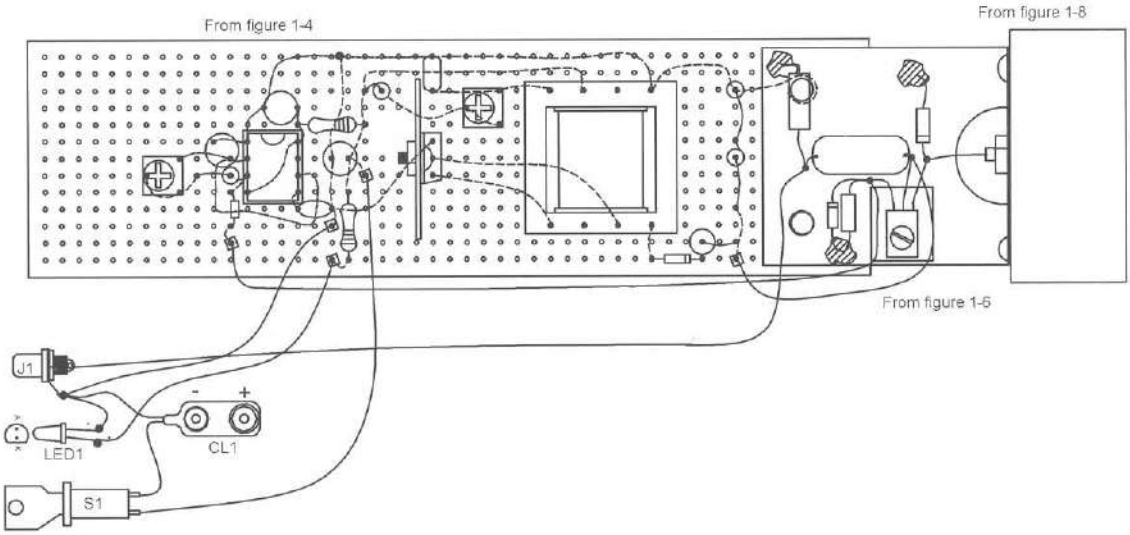

Figure 1-7 *Interconnecting the assembly board to the laser chassis*

7. Fabricate the LAHOLD1, as shown in Figure 1-8. Mount laser diode LD1 into the center hole and secure via a nut (NU1). Secure this assembly to the bent-down flange of the copper chassis. Use two 1/4-inch screws as shown.

8. A collimator adapter is shown and is optional.

Assembly Testing

The following steps will require basic testing equipment.

1. It is assumed at this point that the assembly is complete, as shown in Figure 1-7. Verify the circuit and preset the two trimpots R3 and R9 to midrange.

2. Obtain a 12-volt bench power supply and connect the 12 volts to the battery clip CL1. Turn on the key switch and note the LED coming on. A current meter on the bench supply should read approximately 300 milliamps.

3. Connect a scope to TP1, as shown in Figure 1-2, and adjust R3 for the waveshape as shown.

4. Connect the scope to TP2 and note a spiky waveform that verifies the trigger pulse to the SCR.

5. Connect the scope to TP3 and note the waveform, which is the voltage across the SCR. Note the flat spot indicating that capacitor C3 has reached full charge before the SCR is triggered. The top of this waveshape is affected by the pulse repetition rate and should support 500 repetitions per second when set by R9.

6. Connect the scope to TP4 and set it for a negative-going fast pulse, indicating the current waveform through the LD1 laser diode. If you have followed the instructions and your assembly of the copper chassis is secure with short leads, you should see a picture-perfect waveform as shown.

   Note that the current pulse is 40 amps and corresponds to 1 amp for every volt read at TP4. If you find the pulse is less, you can increase the voltage ratings on one of the zener diodes. The laser diode specified requires 40 amps for full output. Any value over 40 amps will greatly shorten the useful life of this part.

7. Verify the laser output by using a night vision scope or a video camera. You should see an indication of the output. Screw in LEN1 so it is flush with the holder and adjust for the smallest footprint at over 50 feet. Our lab model adjusted to about two turns below being flush with the holder for the best results. The output should be a sharp, narrow bar shape with the diode specified.

Material can be preferably aluminum or fabricated from a PVC rod.

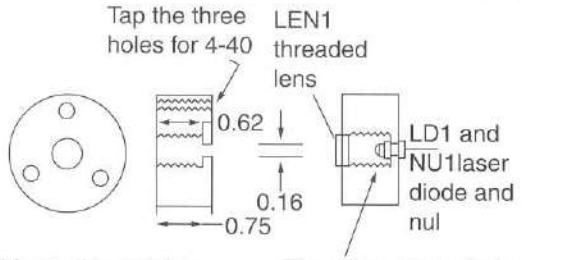

This section can be mated to section B when using a collimator with a C mount fitting.

Thread to .5" depth to mate with lens as supplied.

Optonal "C" mount collimator adapter fabricated from aluminum

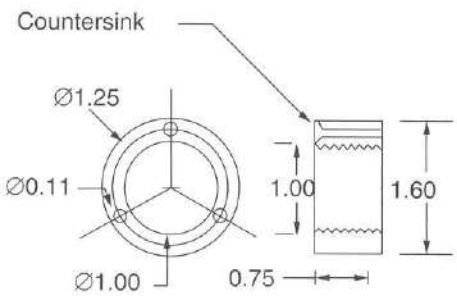

Section B adapter for fitting to the lens holder when using the optional collimator

Three mounting holes of .11 on a 1.25" diameter reference 120 degrees are mated to those in above

Thread for C lens at 1" diameter 32 tpi to a minimum of .375"

Figure 1-8 *Laser diode and lens holder*

Final Assembly

Create the EN1 enclosure from a 12 × 1.5-inch inner diameter plastic or aluminum tube (see Figure 1-9). Enclose the assembly and label it as shown in Figure 1-10. You may want to construct a mounting block or another assembly to mechanically connect the laser to a good, sturdy video tripod for future use.

Special Note

This laser is rated at 10 to 20 watts and is not to be confused with a continuous-output device rated at this power level. The advantage of this system is that the pulses are optically equivalent to 10 to 20 watts, and a suitable detection system will see them at this power level.

The equivalent energy output is related to the repetition rate times the peak power times the pulse duration and is approximately equal to joules. A joule is a watt second and is energy. If that energy is released in 1 microsecond as a pulse, the power of that pulse is now 1 megawatt.

A very suitable detector for this pulsed laser is our laser light detector described in Chapter 2, and a useful application for it as a laser property security fence is described in Chapter 5. Note that a laser pointer is 5 milliwatts, meaning the pulsed laser is 5,000 times more detectable.

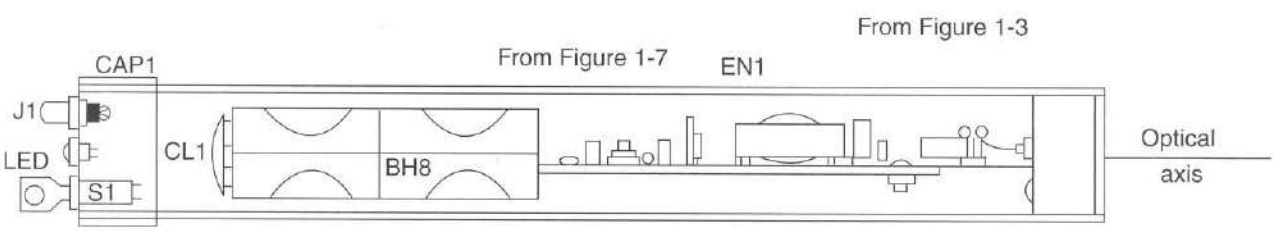

Figure 1-9 *X-ray view of enclosure*

CAUTION: Viewing of laser beam of direct reflections require the use of protective eye wear available through Information Unlimited at www.amazing1.com

Instruction

1. Turn key switch counterclockwise to verify unit is off. Note key is easily removed in the "off" position

2. Remove CAP1 and insert 8 AA batteries into holder.

3. Turn key clockwise and note LED lighting. If not, check the battery holder. Note key cannot be removed in the on position. Laser energy is infrared and can not be seen with the eye. You must use infrared detection devices such as our laser pulse detector or suitable night vision devices. Video cameras will often detect the laser.

4. Adjust collimator for desired effect if you are using.

Compliance tests
1. Verify correct labels as shown
2. Key switch — nonremoval in off position
3. Beam indicator LED indicates beam emission

Note that collimator will expand beam at near field but greatly reduce it at far field.

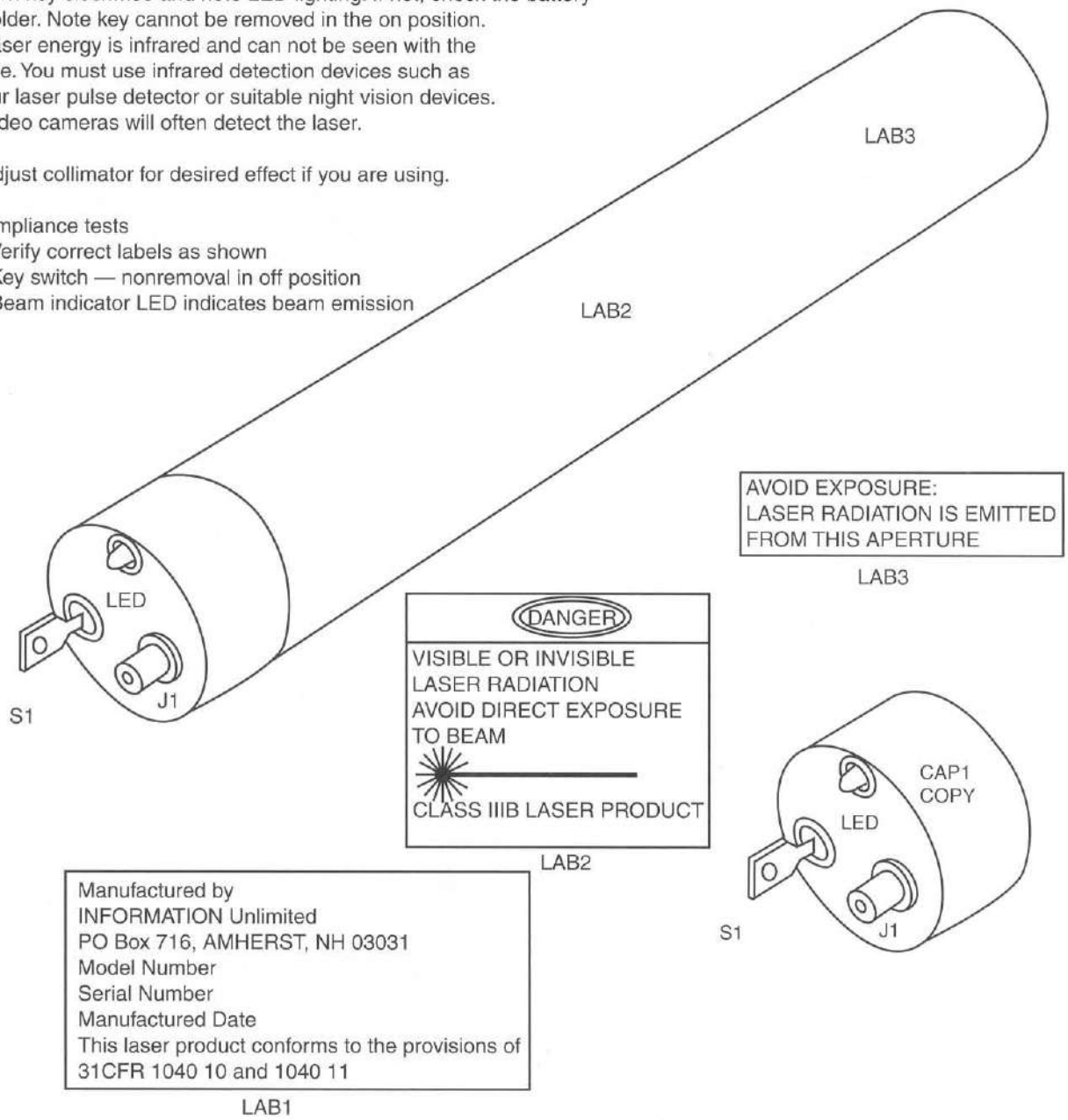

Figure 1-10 *Final assembly view and labels*

Table 1-1 Battery-Operated Infrared Laser Parts List

Ref. #	*Description*	*DB Part #*
R1	470 1/4-watt resistor (yel-pur-br)	
R2	220 1/4-watt resistor (red-red-br)	
R3	2K horizontal trimmer resistor	
R4	18K, 3-watt metal oxide resistor	
R5	10-ohm, 3/4-watt resistor (br-blk-blk)	
R6	1-ohm, 1/2-watt carbon resistor (br-blk-gold)	
R7	39 1/4-watt resistors (or-wh-blk)	
R8	1K 1/4-watt resistor (br-blk-red)	
R9	10K horizontal trimmer resistor	
C1,5	Two 10-microfarad, 50-volt vertical electrolytic capacitors	
C2	.047-microfarad, 50-volt plastic capacitor 473	
C3	.033-microfarad, 250-volt polypropylene capacitor	
C4	.1-microfarad, 50-volt plastic capacitor	
C6	1-microfarad, 50-volt vertical electrolytic capacitor	
C7	.01-microfarad/50-volt plastic capacitor (103)	
D1,3	Two 1N4937 1-kilovolt, 1-amp diode	
D2	IN914 silicon diode	
LED1	Bright green *light-emitting diode* (LED)	
LD1	40-amp, 10- to 20-watt, 904-nanometer TO18 pack laser diode	DB# LD650
SCR1	C106M 600-volt, 4-amp *silicon-controlled rectifier* (SCR)	DB# C106M
Z1	100/76-volt, 5-watt zener diode 1N5378	
Z2	150/108-volt, 5-watt zener diode 1N5383	
Q1	MJE3055T NPN power transistor in TO220 case	
I1	555 *dual inline package* (DIP) timer	
T1	400-volt square-wave-switching transformer	DB# TYPE1PC
PB1	1.4 × 5-inch, .1 × .1 grid perforated board	
S1	Key switch with non-removable key in on position	DB# KEYSWSM
J1	RCA phono jack	
COPCHAS1	Copper chassis, created in Figure 1-4	DB# COPCHAS1
LAHOLD	Laser and lens holder, created in Figure 1-8	DB# LAHOLD1
LENS13	Threaded lens	DB# LENS13
EN1	1 1/2-inch inner diameter × 1/32-inch wall × 12-inch plastic or aluminum housing tube	
CAP1,2	1 5/8-inch plastic caps, reworked as shown in Figure 1-9	
BH8	Eight AA cell holder	
SW1	Five 6-32 × 1/4-inch screws	
NU1	Four 6-32 hex nuts	
SW2	4-40 × 3/8-inch nylon screw	
MICA	Mica insulating washer	
NU2	4-40 hex nut	
HSINK	Heatsink tab for Q1	

Chapter Two

High-Speed Laser Pulse Detector

This project shows how to build a specialized device capable of detecting fast, high-speed optical pulses. A suitable laser generating these pulses is described in Chapters 1 and 4 and can have a range, limited only by the curvature of the earth. Its uniqueness is its ability to resolve these pulses with rise times in the nanosecond range. This capability makes it possible to transmit large amounts of information within a small period of time.

The heart of this device is the actual front-end detector, in this case a PIN diode device. PIN comes from *positive negative* (PN) junction with intrinsic layer (I). The characteristics of this detector are low capacitance, high resistance, and low leakage when operating in the reverse bias mode. It may also be used as a photo cell when operated in the forward mode.

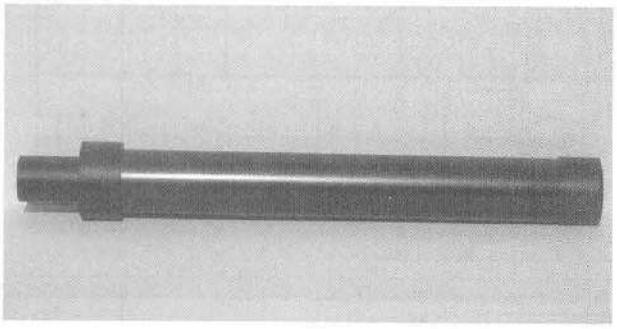

Figure 2-1 *The high-speed laser pulse detector*

The first part of the circuit is built on a piece of thin copper and uses discrete components. The builder may choose to build on a fully copper-clad circuit board if available, and a facsimile output can be set up via a phono jack or a BNC connector. A signal-conditioning circuit is shown built on a normal perforated circuit board and is designed to actuate a relay in the absence of the laser pulses. This mode of operation allows its use as a long-range laser perimeter or invisible fence intrusion detector, as described in Chapter 5.

Optics are shown for those wanting to operate at long ranges. Machined fittings are shown to mate with the 1.5-inch inner-diameter plastic enclosure used for the housing.

This is an intermediate- to advanced-level project requiring certain electronic skills, and one should expect to spend $35 to $70. All parts are readily available, with specialized parts obtainable through Information Unlimited (www.amazing1.com), and they are listed in Table 2-1.

Circuit Description

The circuit in Figure 2-2 utilizes a pin photodiode (LPIN) reverse biased by resistor R3. The reverse-biased photodiode produces a voltage across bias resistor R2. The response of the PIN photo detector is determined by the resistance of R2 and is relatively low due to the nanosecond rise time of the laser pulses detected. Capacitor C3 couples the positive-going detected laser pulses to the gate of a preamplifying *field effect transistor* (FET) Q1 where the negative-going pulse is amplified and fed into a second FET (Q2) for further amplification. NPN transistor Q3 again amplifies the positive-going pulse for Q2 to a negative pulse. This amplified signal is a reasonably good facsimile of the actual laser pulse and can be monitored or further processed via phono jack J1.

The negative-going pulses are also fed to a Schmidt discriminator that is in an untriggered state, providing that transistor Q4 continues to see these pulses. When the pulses are interrupted by an object in the laser path, Q4 turns on due to a positive bias set by trimpot resistor R15 and turns transistor Q5 off, regenerating the trigger state of the Schmidt discriminator. R15 allows the adjustment of a trigger threshold if required. The triggering time of the circuit also helps prevent false triggering such as flying birds, windblown debris, and insects.

The output of the Schmidt is DC coupled into the base of the emitter-follower transistor Q6 where the signal is inverted by transistor Q7. The negative-going level at the collector of Q7 now triggers timer I1 on for a preset time that controls an alarm or another function resulting from a qualified laser beam interruption. A relay (RE1) is shown in the circuit and can be used as normal open or normal closed contacts for control of external circuit functions. This is shown in the phasor pain field generator in Chapter 35.

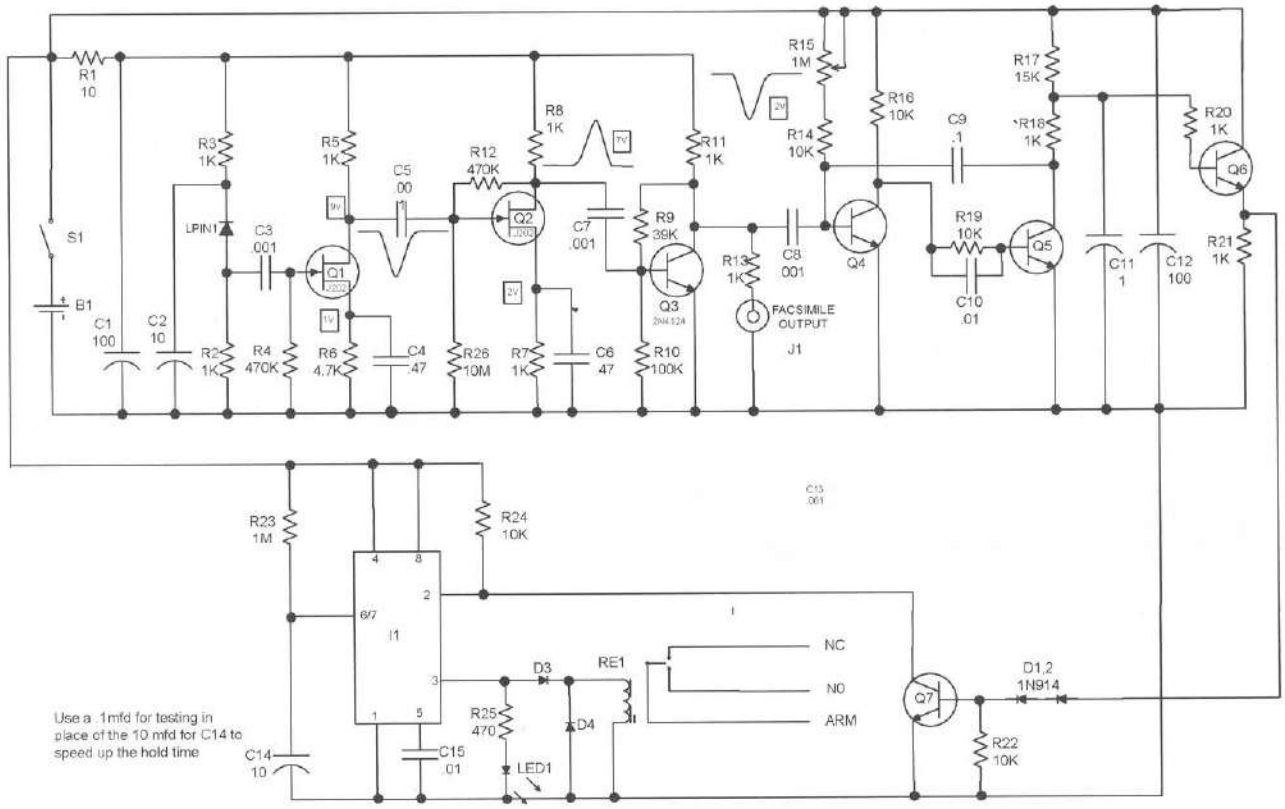

Figure 2-2 *Circuit schematic*

System Assembly

1. Assemble the board, as shown in Figure 2-3. Lay out and identify all the parts and pieces. Separate the components that go to the assembly board and create the PB1 perfboard from a 1½ × 5½-inch piece of .1 × .1 grid. Note the two holes for attachment to the copper chassis section.
2. Assemble the components as shown and observe polarity of the capacitors and semiconductors.
3. Connect the components using their actual leads wherever possible. Follow the layout and avoid bare-wire bridges. Note that Figure 2-3 shows pieces of #20 bus lead used as VC+ and COMMON rails. This approach is easier for wiring as it gives a direct route for the component leads.
4. Create the copper chassis as shown in Figure 2-4. This part is listed as a fabricated piece in Table 2-1.
5. Figure 2-5 shows the wiring of the COPCHA1 copper chassis. This type of wiring is preferred for high-frequency and sensitive, low-noise circuitry. It is used in this circuit due to the fast-rise-time, low-level-voltage pulses.

   Start by forming the leads and soldering to the copper plate. You will need a good, hot soldering iron to do this correctly. The components themselves serve as anchor points and will be self-supporting when soldered to one another.
6. Figure 2-6 shows the connection of the copper chassis and the perforated assembly board via the two screws and nuts. Attach and connect the external leads and components as shown.

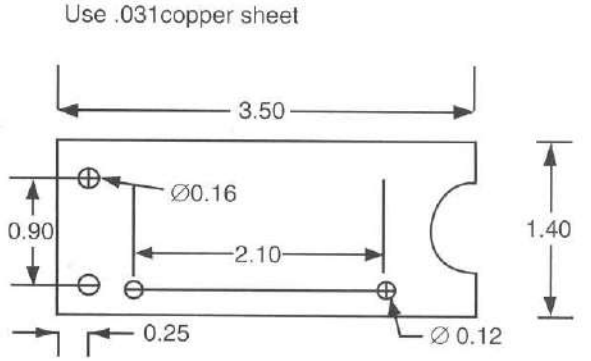

Figure 2-4 *Fabrication of the laser chassis*

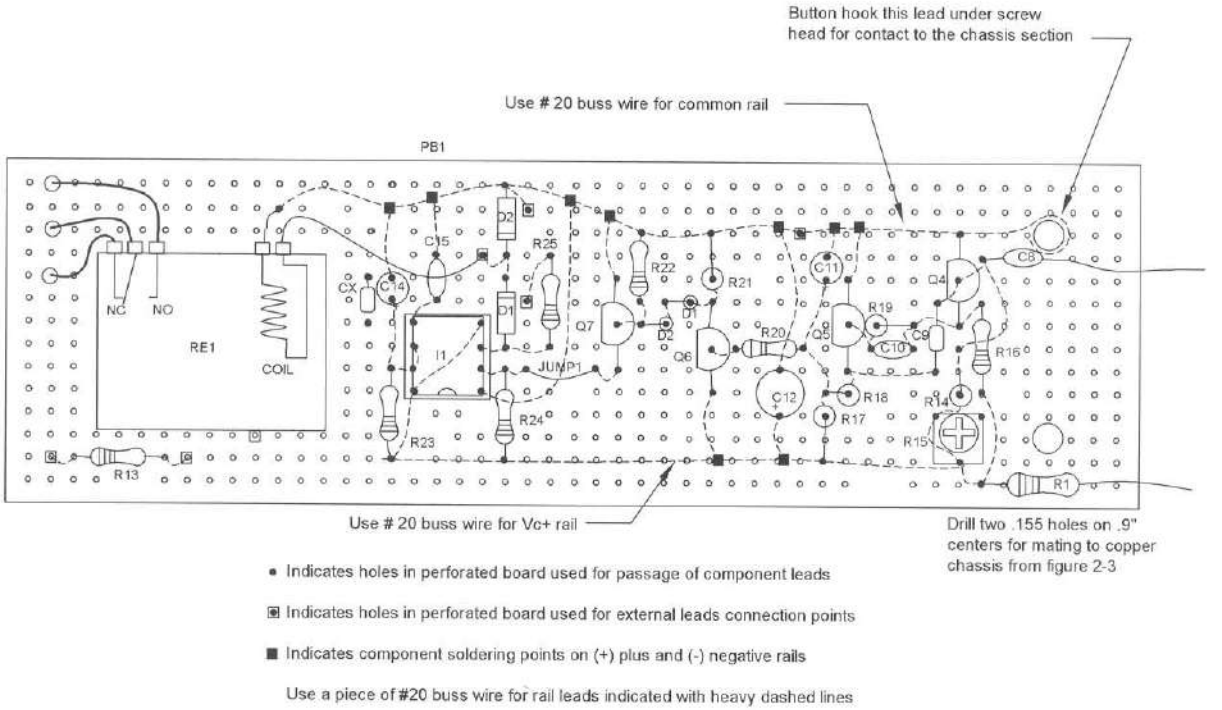

Figure 2-3 *Assembly board parts identification*

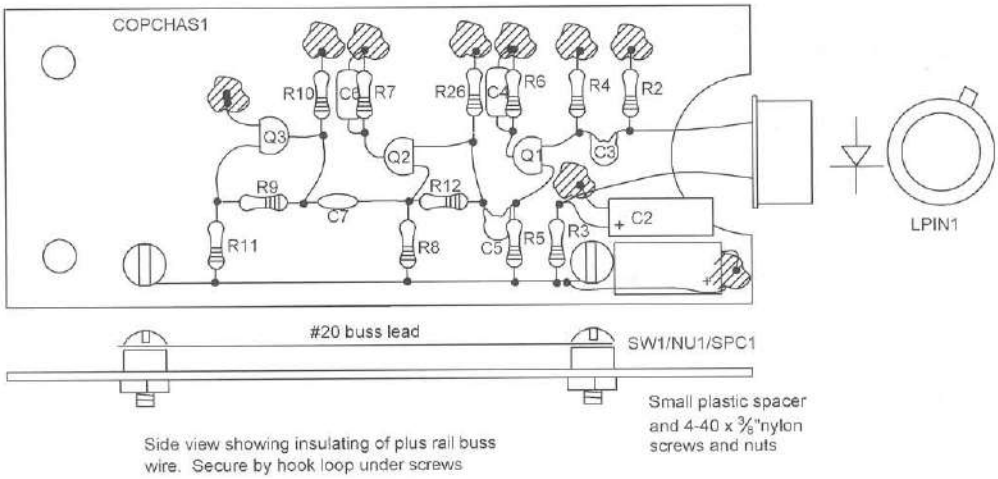

Figure 2-5 *Assembly of the laser chassis*

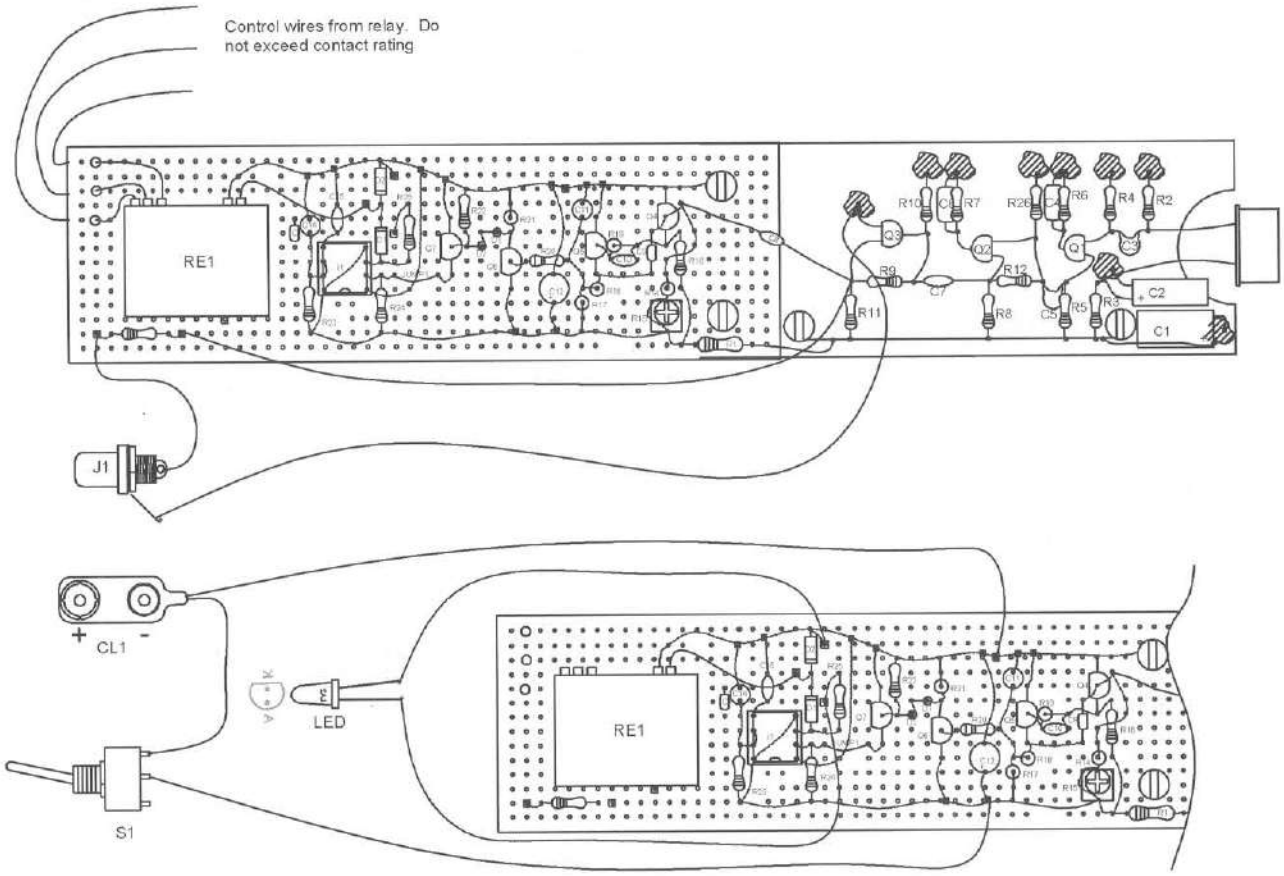

Figure 2-6 *Connection of board to chassis*

Assembly Testing

Testing of the laser receiver involves the use of a compatible laser transmitter to provide the necessary high-speed pulses. The laser described in Chapter 1 is recommended.

1. It is assumed at this point that the assembly is complete, as shown in Figure 2-6. Verify the circuit and preset the R15 trimpot to midrange. This test is performed *without* the circuitry installed and without a lens. You should temporarily replace C14 with a .1-microfarad value.
2. Obtain a 12-volt bench power supply and connect the 12 volts to the battery clip CL1. Turn on the S1 switch and note the LED coming on and flashing erratically. A current meter on the bench supply should read approximately 10 milliamps.
3. Measure the DC voltage levels, as indicated in Figure 2-2, noted in the squares. These values should be within 10 to 15 percent of those indicated.

   At this point, you will need an optical laser pulse transmitter, such as that described in Chapter 1. Any suitable laser or optical transmitter will work with a fast pulse rise of 1 usec or so. The detector, as shown, uses a silicon PIN diode with a spectral sensitivity peak at 960 nanometers. This is very close to the spectral output of the lasers described in Chapters 1 and 4.
4. Position the laser pulse generator source so that it is pointing in the direction of the laser receiver being tested. You will need to connect a scope at the drain of Q1 and then attempt to position the receiver so it is receiving the pulses and is secure in this position. This may be tricky and require patience. When the laser is perfectly aligned with the receiver, the signal will block the Q1 and produce an overloaded waveshape. Carefully adjust the receiver off axis until the scope indicates the negative-going facsimile pulse as shown. Continue through the circuit and observe the waveshapes as shown, again adjusting the receiver off axis to obtain the required waveshape.

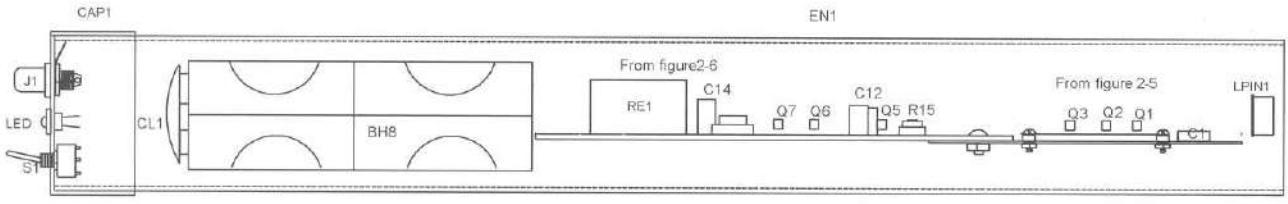

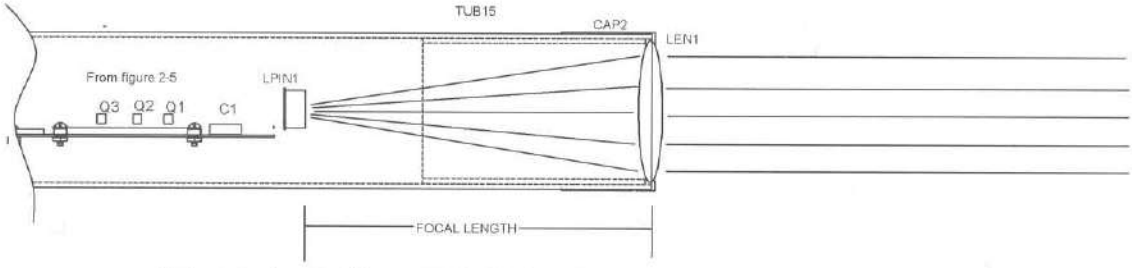

The lens system shown uses a 38 mm diameter 100 mm focal length. A 2" x 1.5" diameter tube (TUB15) is sleeved into the main enclosure EN1 and is positioned to abut to the lens on it's shoulders. A plastic cap (CAP2) retains the lens against TUB15. Acenter hole of over 1" is removed for the light aperture.

Figure 2-7 *X-ray view of enclosure*

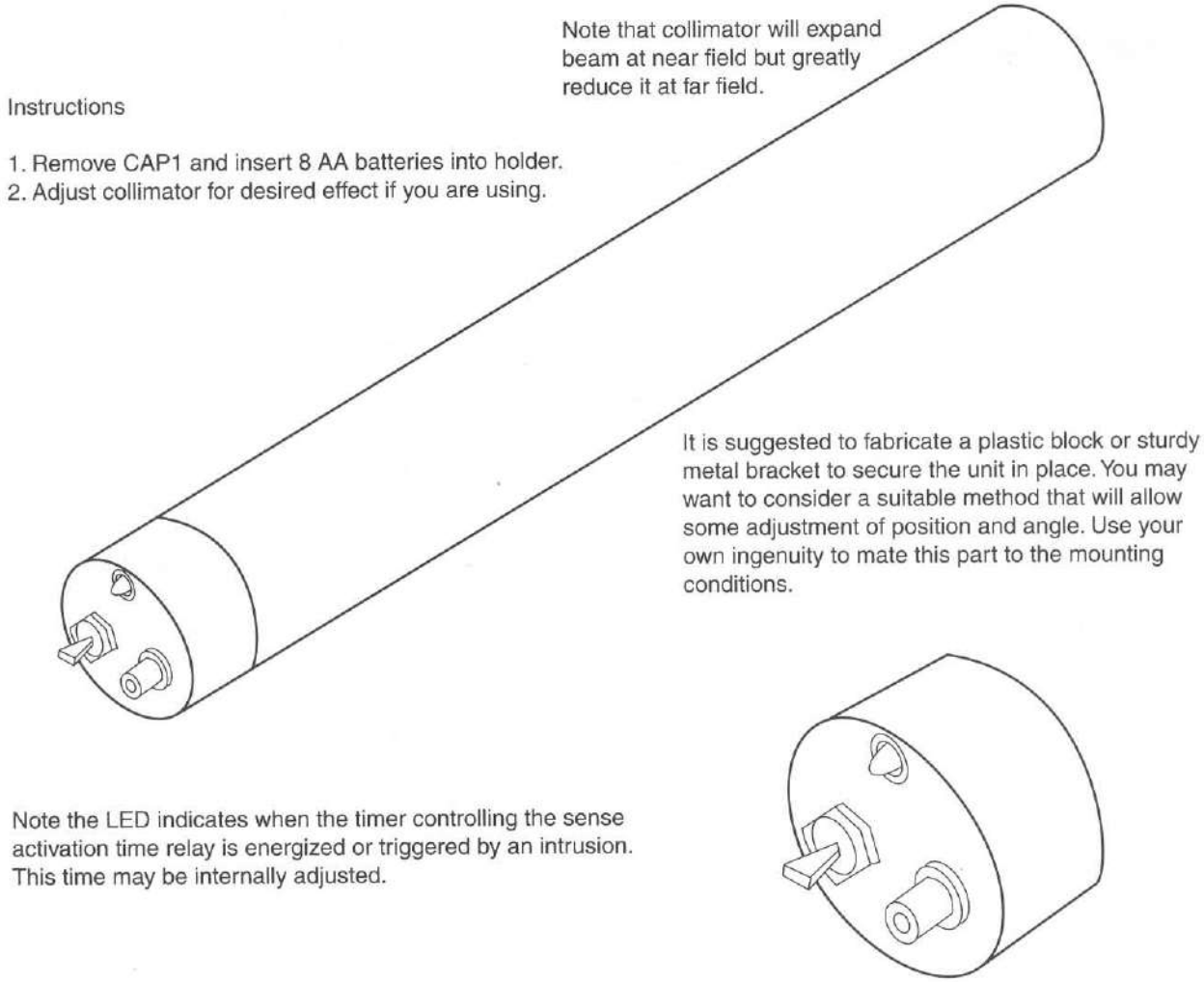

Figure 2-8 *Final assembly view*

Note that the LED will be off if the circuit is working and will come on if you block the light with a solid object.

5. Verify that the discriminator works and you can set the sensitivity trip level via R15. Verify the timer trips when the light beam is broken, activating the relay for a preset time as determined by the value of C14. This feature now allows external circuitry to be activated when the laser beam is broken, powering alarms or deterrents. The relay as shown provides a normally closed and open circuit that can be selected by the user. Do not switch loads that exceed the relay contact rating.

Final Assembly

Fabricate the EN1 enclosure from a 15 × 1.5-inch ID plastic or aluminum tube. Enclose the assembly as shown in Figure 2-7. You may want to create a mounting block or another assembly to mechanically connect the laser to a good, sturdy video tripod for future use

The system as shown is enclosed in a long tube that includes the batteries. You may separate the batteries and relay control circuits from the actual detection section consisting of the copper chassis and optics. This approach will be a two-part system that is connected via a cable or cord.

Special Note

This laser pulse detector receiver, when used with a pulsed laser like that described in Chapter 1, can have a control range exceeding that allowed by the curvature of the earth when used with suitable optics. Alignment is about as critical as sighting a high-powered rifle and requires extreme mechanical stability once set. The alignment of a long-range system requires patience, perseverance, and a little black magic.

Chapter 5 describes how to use both the laser pulser from Chapter 1 and the above assembly in a multiple-reflection property protection device with an ultrasonic shock deterrent.

Special Note on Photo Detectors

Two photo detectors are referenced in Table 2-1. LPIN is the low-cost piece that will usually provide the necessary operating parameters for most hobbyist laser projects. LPINX is more expensive and has a much lower dark current rating. It is used for lower noise and more sensitive circuitry.

Table 2-1 Laser Pulse Detector Parts List

Ref. #	Description	DB Part #
R1	10 ohms, 1/4 watt (br-blk-blk)	
R2, 3, 5, 7, 8, 11, 13, 18, 20, 21	Ten 1K, 1/4-watt resistors (br-blk-red)	
R4, 12	Two 470K, 1/4-watt resistors (yel-pur-yel)	
R6	4.7K, 1/4-watt resistor (yel-blk-red)	
R9	39K, 1/4-watt resistor (or-wh-or)	
R10	100K, 1/4-watt resistor (br-blk-yel)	
R14, 16, 19, 22, 24	Five 10K, 1/4-watt resistors (br-blk-or)	
R15	1M horizontal trimmer resistor	
R17	15K, 1/4-watt resistor (br-blk-or)	
R23	1M, 1/4-watt resistor (br-blk-grn)	
R25	470-ohm, 1/4-watt resistor (yel-pur-br)	
R25	10M, 1/4-watt resistor (br-blk-blue)	
C1, 12	Two 100-microfarad, 50-volt vertical electrolytic capacitors	
C2, 14	Two 10-microfarad, 50-volt vertical electrolytic capacitors	
C3, 5, 7, 8	Four .001-microfarad, 100-volt disc capacitors	
C4, 6	Two .47-microfarad, 50-volt plastic capacitors	
C9, 13	Two .1-microfarad, 50-volt plastic capacitors	
C10, 15	Two .01-microfarad, 50-volt plastic capacitors (103)	
C11	1-microfarad, 50-volt vertical electrolytic capacitor	
Q1, 2	Two J202 N-channel FET transistors	
Q3	2N4124 *negative positive negative* (NPN) high-frequency transistor	
Q4,5,6,7	Four PN2222 NPN general-purpose transistors	
D1,2	Two IN914 silicon diodes	
D3,4	Two IN4007 1-kilovolt, 1-amp diodes	
I1	555 *dual inline package* (DIP) timer integrated circuit	
LED1	High-brightness *light-emitting diode* (LED)	
*LPIN1	Silicon PIN photodiode dark current less than .10 nano-amp (see text)	DB# PIN
*LPIN1X	Silicon photo diode dark current less than .02 nano-amp (see text)	DB# PINX
RE1	12-volt coil, 400-ohms, 120 VAC 15-amp contacts	DB# RE12115
COPCHAS1	1.4 × 3.5-inch .031 copper plate (see Figure 2-4)	
SW1/NU1	Four 4-40 × 3/8 nylon screws and metal hex nuts	
SPC1	Two 1/4-inch plastic spacers	
PB1	5½" × 1½" .1 × .1 grid perforated circuit board	
J1	Chassis mount RCA phono jack	
S1	Small *single pole, single throw* (SPST) toggle switch	
CL1	Battery clip	
BH8	Holder for 8 AA cell battery	
EN1	1 1/2-inch inner diameter × 1/32-inch wall plastic or aluminum tube	
CAP1, 2	Two 1 5/8" plastic caps reworked as shown in Figure 2-8	
LEN1	38 mm × 100 mm focal length DCX glass lens	DB# 38100
RET1	Reworked 1 1/2-inch plastic cap for retaining lens	
TUB15	2-inch length of 1.5-inch outer diameter plastic or aluminum tube	

Chapter Three

Ultra-Bright Green Laser Project

This ultra-bright green laser project, as shown in Figure 3-1, is intended for the laser experimenter who desires to add a simple optical system that provides far-field focusing, beam collimation, or beam expanding.

Construction parts such as tubing, handles, brackets, and hardware are all readily available from most local hardware stores (see Table 3-1). Our suggested lab approach is to locate some telescopic tubing of metal or plastic, or a combination of both, and fabricate the laser and lens holders from a suitable sized plastic rod or equivalent. The center holes of the holders must be as true as possible or the optical system's integrity will be greatly degraded.

Figure 3-1 *Photo of green laser project*

The grip or handle is created from a 1-inch-thick piece of finished pine that has a section carefully removed for the battery holder and push-button switch. Passage holes for the power leads are drilled as shown. You may also use a suitable sized plastic box. A clear piece of Lexan (polycarbonate) sheet is formed with a flange at a 90-degree bend and is the surface for mounting the switch. This cover is screwed to the wooden handle and makes an attractive design if done with care and precision. The handle can be constructed with a contoured shape to match the curvature of the tube, and you may also add rings, fins, and other décor to make a space-age optical ray gun.

The operation of the laser allows usage without any optics, providing similar performance to a high-quality laser pointer. The addition of the lens system allows far-field focusing, close range expansion, and far-field collimation where the beam spot impact will be reduced by the collimating power of the system. As an example, the bare foot beam diameter (or operation without external optics) at 300 meters will be approximately a 50-centimeter diameter spot. With an ×10 collimator, the diameter can be reduced to 5 centimeters.

This is a class iiia beginner's laser project that uses a working laser module. Class iiia is a classification for lasers under 5 milliwatts of output power

Never point it at vehicles, aircraft, or directly at people. Expect to spend $40 to $50 for this very rewarding laser project.

Assembly Steps

1. Rework the laser module (LM1) as shown in Figure 3-2.
2. Wire the laser module with pushbutton switch (SW1) and battery clip (CL1) as shown in Figure 3-3.
3. Make final assembly as shown in Figure 3-4.
4. Connect batteries and activate SW1. Note a green impact point. Adjust lenses as shown for desired beam profile.

The green laser module has a built in push button switch that may be bypassed by adding a connection lead as shown. This added lead is the negative input. The spring connection is also the negative input but now requires activation of the built in switch. The positive input can be a mechanical connection to the brass housing by wrapping a bare lead around the slot. You may also carefully solder a lead as shown for this positive input point.

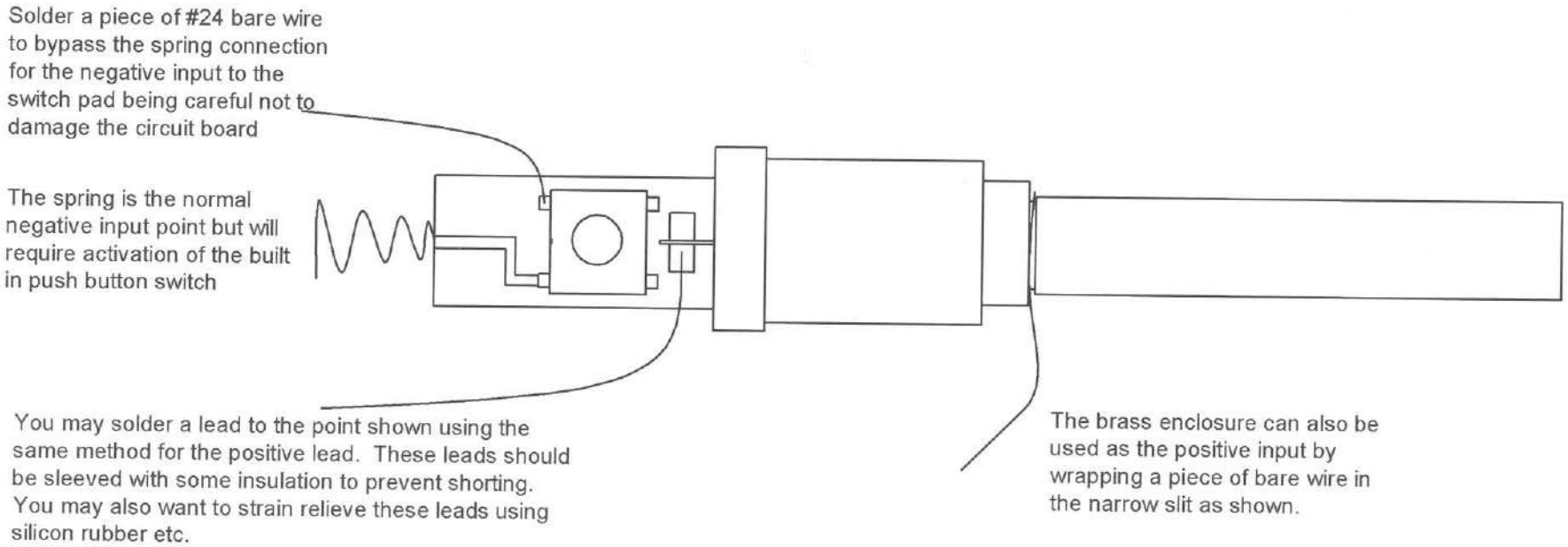

Figure 3-2 *Laser module rework*

LEN2 position will depend on focal lengths and focus distance of target. LEN1 lens distance from module is not critical, but attempt to get close to module as this will limit overall length of system. Lenses are mounted inside of fabricated bushings/holders and secured in place by small trace amounts of glue. Lenses must be perfectly centered for proper operation. The magnification value of the system is determined by the focal length of the convex lens divided by that of the concave lens. This value expands the beam width but decreases the beam divergence by the same factor greatly increasing the range capability producing a much smaller spot size at far field.
Approximate position shown for lenses supplied with kit. Adjustment is by varying the seperation distance between LEN1 and LEN2. Start at a distance (fx) of approx 6.25mm (2.5")

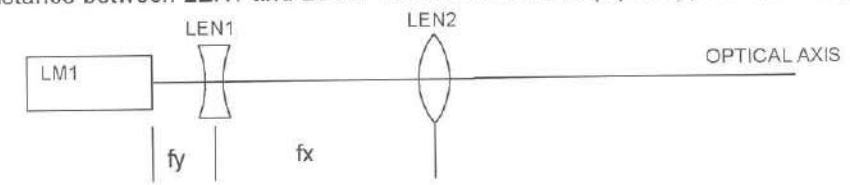

Collimination=fx/{fy}

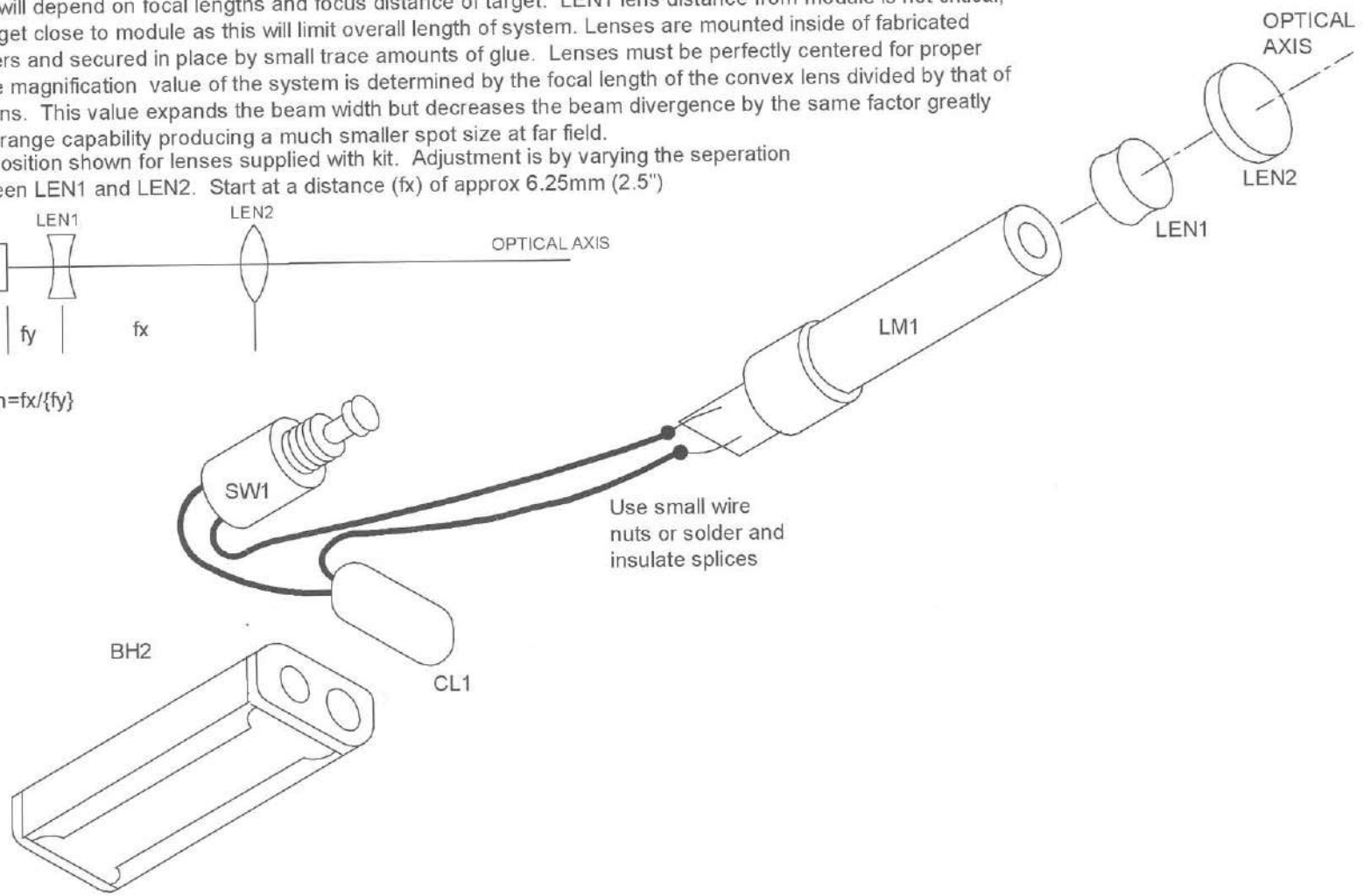

The green laser module has a built in push button switch that may be bypassed by adding a connection lead as shown. This added lead is the negative input. The spring connection is also the negative input but now requires activation of the built in switch. The positive input can be a mechanical connection to the brass housing by wrapping a bare lead around the slot. You may also carefully solder a lead as shown for this positive input point.

Figure 3-3 *Ultra bright green isometric assembly*

Holders for laser module and lenses may be made from fabricating wooden or plastic dowels to the required dimensions.

Fabricate OD to a snug sliding fit to ID of housing tube

Fabricate ID to snug fit to OD of lens or laser module

The BRK1 is formed over TUB1 and secures this assembly to the wooden handle via four small #6 screws

Tubing pieces should telescopically fit for easy adjustment of collimator. Start with around a 1" diameter section for TUBE1 and obtain a suitable size for TUBE2. You may ream out the larger tube or turn down the smaller for a suitable sliding fit. Note that clear plastic tube provides a good transparent housing that may enhance your science project.
Note the dimensions may be varied to fit available sizes of lenses etc.

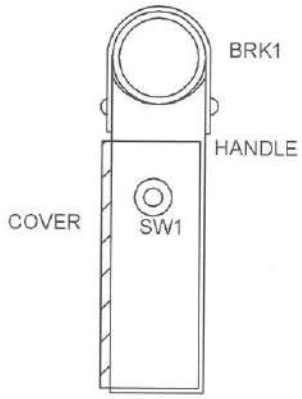

Front view looking into laser.

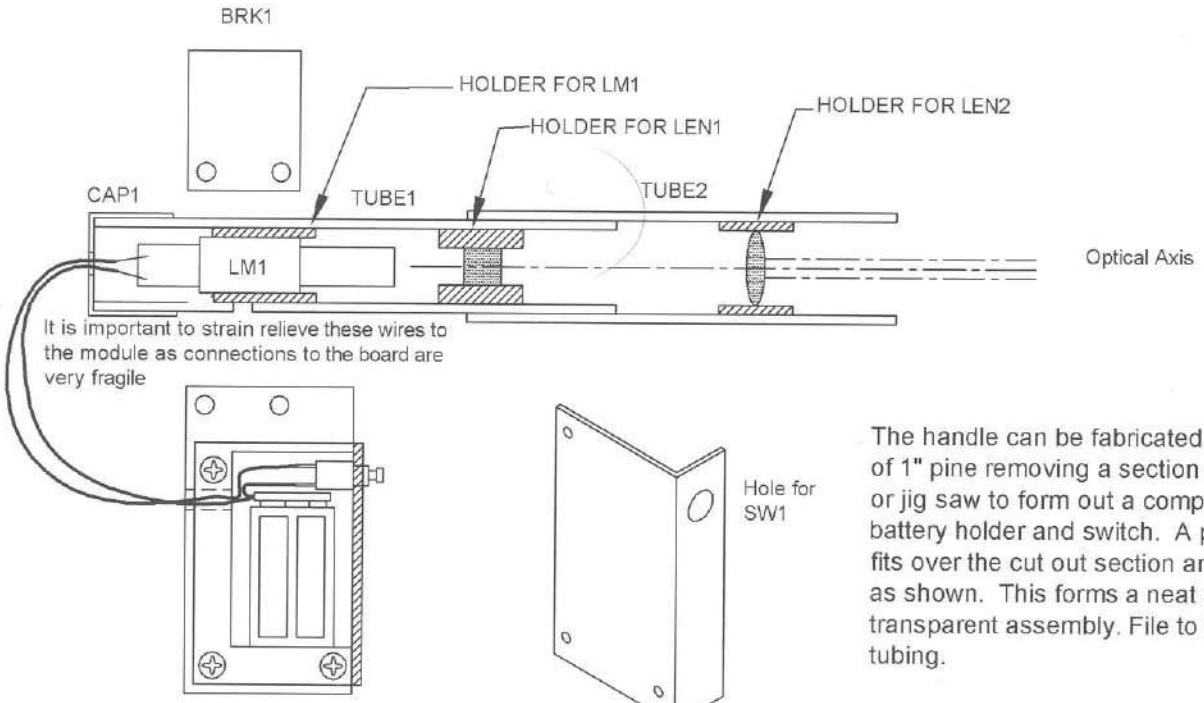

The handle can be fabricated from a piece of 1" pine removing a section with a chisel or jig saw to form out a compartment for the battery holder and switch. A plastic cover fits over the cut out section and is fabricated as shown. This forms a neat appearing and transparent assembly. File to fit contour of tubing.

Clear piece of formable plastic such as lexan or equivalent. Fab as shown

Figure 3-4 *Ultra bright green optical laser gun suggested final design*

Table 3-1 Ultra-Bright Green Laser Parts List

Ref. #	*Description*	*DB Part #*
SW1	Pushbutton NO switch	
BH2AA	Two-cell AA battery holder	
CL1	Battery snap clip	
LM1	5-milliwatt green laser module	DB# LM-532-P5
LEN1	Concave lens .6 × -.75-inch focal length	DB# LE15
LENS	Convex lens .9 × 3.5-inch focal length	DB# LE2475
LAB1	Class 3a danger laser label	
LAB2	Certification label	
LAB3	Aperture label	
The mechanical parts you get yourself; they are not critical and those shown represent our finalized lab approach.		
TUBE1	1-inch OD thin-walled plastic tubing	
TUBE2	Tube for telescope over TUBE1	
HANDLE	2 × 4 × 1-inch piece of soft pine	
COVER	Piece of 1/16-inch clear plastic sheet	
BRK1	1/32 × 1/2-inch aluminum bracket	
LENS HOLDERS	Wood or plastic dowels	
SCREWS	Small wood	

Chapter Four

115 VAC, 5- to 50-Watt Pulsed Infrared Laser

This project shows how to construct a laboratory-use, solid-state, pulsed infrared laser (see Figure 4-1). The system utilizes a gallium arsenide laser diode providing pulse powers of 10 to 100 watts depending on the diode used. The device operates from the 115 VAC line via an isolation transformer and is constructed in two parts. The laser is an excellent source of variable-frequency pulses adjustable from 10 to 2,500 repetitions per second of infrared energy.

The laser, when assembled as shown, is a class iiib device and requires the appropriate labeling and several included safety functions, as described in the assembly instructions. At no time should it be pointed at anyone without protective eyewear or at anything that could reflect these pulses. Also, never look into the unit when the power is on. It is intended to be used for ranging, simulated weapons practice, intrusion detection, communications and signaling, and a variety of related scientific, optical experiments and uses.

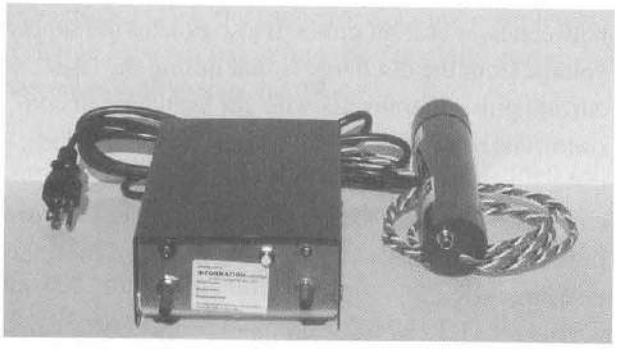

Figure 4-1 *IR laser*

This is an intermediate- to advanced-level project requiring electronic skills and basic electronic shop equipment. Expect to spend $100 to $150. All parts are readily available, with specialized parts obtainable through Information Unlimited (www.amazing1.com), and they are listed in Table 4-1.

Theory of Operation

A laser diode is nothing more than a three-layer device consisting of a *pn* junction of *n*-type silicon, a *p*-type of gallium arsenide, and a third *p* layer of doped gallium arsenide with aluminum. The *n*-type material contains electrons that readily migrate across the *pn* junction and fill the holes of the *p*-type material. Conversely, holes in the *p*-type migrate to the *n*-type and join with electrons. This migration causes a potential hill or barrier consisting of negative charges in the *p*-type material and positive charges in the *n*-type material that eventually cease growing when a charge equilibrium exists. In order for current to flow in this device, it must be supplied at a voltage to overcome this potential barrier. This is the forward voltage

Table 4-1

INFO #	*Pulse width*	*Package*	*Diodes*	*Peak current*	*Emitting area*	*Peak power*	*Duty factor*	*Beam symmetry*	*Spectral width*
LD660	200 ns	TO18	1	40 amps	9 × 1	12 watts	.1%	15 × 20	3.5 nm
LD780	200 ns	TO5	2	40 amps	21 × 1	20 watts	.1%	15 × 20	3.5 nm
LD1630	200 ns	TO5	2	40 amps	21 × 1	30 watts	.1%	15 × 20	3.5 nm

drop across a common diode. If this voltage polarity is reversed, the potential barrier is simply increased, assuring no current flow. This is the reversed bias condition of a common diode.

A diode without an external voltage applied to it contains electrons that move and wander through the lattice structure at a low, lazy average velocity as a function of temperature. When an external current at a voltage exceeding the barrier potential is applied, these lazy electrons now increase their velocity to where some, by colliding, acquire a discrete amount of energy and become unstable, eventually emitting this acquired energy in the form of a photon after returning to a lower energy state. These photons of energy are random both in time and direction; hence, any radiation produced is incoherent, such as that of a *light-emitting diode* (LED).

The requirements for coherent radiation are that the discrete packets of radiation must be in the form of a lockstep phase and in a definite direction. This demands two essential requirements; first, sufficient electrons at the necessary excited energy levels and, second, an optical resonant cavity capable of trapping these energized electrons for stimulating more and giving them direction. The amount of energized electrons is determined by the forward diode current. A definite threshold condition exists where the device emits laser light rather than incoherent light, such as in an LED. This is why the device must be pulsed with a high current. The radiation from these energized electrons is reflected back and forth between the square-cut edges of the crystal that form the reflecting surfaces due to the index of refraction of the material and air.

The electrons are initially energized in the region of the *pn* junction. When these energized electrons drift into the *p*-type transparent region, they spontaneously liberate other photons that travel back and forth in the optical cavity interacting with other electrons commencing laser action. A portion of the radiation traveling back and forth between the reflecting surfaces of these mirrors escapes and constitutes the output of the device.

Circuit Theory of Operation

AC power, as shown in Figure 4-2, is obtained via polarized plug CO1 through fuse FH1. Proper grounding of the green cord lead is a necessity to prevent an unnecessary shock hazard along with usage of grounded test and measuring equipment. S1 is a key switch type where the key can be removed only in the off position. Transformer T1 provides a one-to-one ratio and isolation from the power line, while step-down transformer T2 provides the low voltages necessary for the control circuits. The power indicator lamp consists of neon lamp NE1 and associated current-limiting resistor R1.

Diodes D1 and D2, along with capacitors C1 and C2, comprise a voltage doubler. The voltage across C1 and C2 is 1.4 × 230 or approximately 340 volts.

A major section of this laser pulser is the charging circuit. This circuit charges the pulse discharge capacitor (C10) to the supply voltage during the time interval between laser current pulses. It also isolates the supply voltage from the discharge circuit during the laser current pulse, thereby allowing the switching *silicon-controlled rectifier* (SCR) to recover to the blocking state. Because the response times of the charging circuit are relatively long, lead lengths are not important, and the circuit can be remotely located from the discharge circuit.

The simplest charging circuit is a resistor-capacitor combination. In this simple case, the resistor must limit the current to a value less than the SCR holding

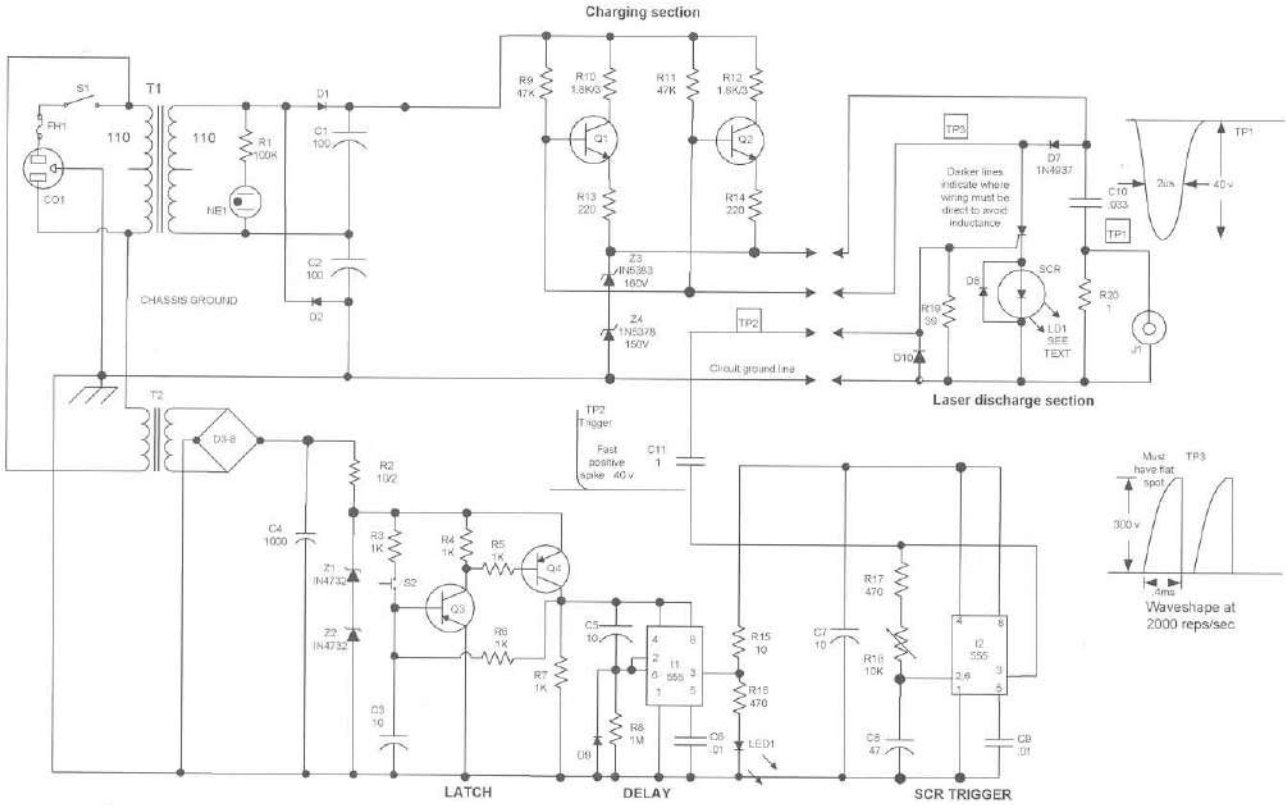

Figure 4-2 *Circuit schematic*

current but should be as low as practical because this resistance also determines the charging time of the capacitor C10, thus determining the available laser pulse repetition rate at full energy. For example, a resistance of 40 kilo-ohms limits the current to 10 milliamps from a 400-volt supply. This current value is just at the holding level of an average SCR. A time of almost 4 milliseconds is required to charge C10, a 0.033-microfarad capacitor, to the supply voltage in three time constants through a 40-kilo-ohm resistor. Therefore, the *pulse repetition rate* (PRR) of the pulsing circuit is limited to less than 250 Hz. If the PRR exceeds this value, the capacitor does not completely recharge between pulses and the peak laser current decreases with increasing PRR.

Varying the supply voltage may control the peak current in the discharge circuit, provided the PRR is low enough to allow the capacitor to fully recharge between current pulses. Both the supply voltage and the PRR determine the peak laser current. A considerable risk exists in increasing the supply voltage to compensate for an insufficient recharge time. If the PRR is decreased while the supply voltage is high, the capacitor again recharges completely, and the laser pulse current increases to a value that may damage or destroy the laser diode.

The needs for a variable voltage supply and the low PRR limit are the major disadvantages of the resistive-type charging network. Therefore, the limitations of the simple resistor drivers are that a resistor large enough to keep the current below the holding current of the SCR also limits the pulse repetition rate.

The frequency capability of the pulse power supply can be greatly improved with the charging circuits, as described. Capacitor C10 is charged to the supply voltage when the SCR is not conducting. Diode D7 is in the off state, because no current flows through it during this period. At the onset of a pulse trigger at the gate, the impedance of the SCR drops rapidly and capacitor C10 discharges toward ground potential. During this period, current is surging through diode D7, causing zero biasing of the current-control transistors (Q1, Q2) by shorting the bias resistors (R9, R11). The SCR now turns off when the current drops below its holding current. The voltage across capacitor

C10 then charges back to the supply voltage. During the capacitor charge cycle, diode D7 passes no current, and Q1 and Q2 are forward biased into the saturation region. Obviously, the charging time of C10 is now shorter due to being charged through the smaller-value resistors (R10, R12). The emitter resistors R13 and R14 balance the current through Q1 and Q2.

Zener diodes (Z3, Z4) are selected to regulate and provide the proper required current pulse for the laser diode in operation. The zener diodes provide a maximum charge voltage of 310 volts that produces 40 amps through laser diode LD1 for up to 2,500 laser pulses per second.

Other laser diodes may require a selection of other voltage-rated zener diodes. The builder may wish to provide a multiposition switch to select these various combinations of zener diodes externally via a front panel control.

The trigger circuit consists of an astable timer (I2) that derives its power through the output of timer I1, which provides a delay time required for FDA laser compliance. The trigger and delay circuitry, as well as the timers, are powered by 12 VDC from transformer T2 and rectifier diodes D3 through D6. Capacitor C4 filters the rectified wave and steps up the voltage to 15 VDC. Resistor R2 drops the 15 volts to the zener voltage of zener diodes Z1 and Z2 of regulated 12 VDC.

Operation of the laser requires activating pushbutton switch S2, which latches transistor Q4 upon supplying power to timer I1. The timer must time out to 10 seconds, as determined by resistor R8 and capacitor C5. The emission indicator LED1 comes on simultaneously with power to the trigger timer I2, which pulses the laser diode LD1. The laser pulse rate is determined by external pot R18.

Notes on SCR

In the conventional operation of an SCR, the anode current, initiated by a gate pulse, rises to its maximum value in about 1 microsecond. During this time, the anode-to-cathode impedance drops from open circuit to a fraction of an ohm. In injection laser pulsers, however, the duration of the anode-cathode pulse is much less than the time required for the SCR to turn on completely. Therefore, the anode-to-cathode impedance is at the level of 1 to 10 ohms throughout most of the conduction period. The major disadvantage of the high SCR impedance is that it causes low circuit efficiency. For example, at a current of 40 amps, the maximum voltage would be across the SCR, while only 9 volts would be across the laser diode, which represents very low circuit efficiency. The efficiency of a laser array is greater due to its circuit impedance being more significant.

Because the SCR is used unconventionally, many of the standard specifications such as peak current reverse voltage, on-state forward voltage, and turn-off time are not applicable. In fact, it is difficult to select an SCR for a pulsing circuit on the basis of normally specified characteristics. The specifications important to laser pulser applications are forward-blocking voltage and current rise time. A usage test is the best and many times the only practical method of determining the suitability of a particular SCR.

Notes on the Storage Capacitor

The voltage rating of the storage capacitor must be at least as high as the supply voltage. A high-quality metallized capacitor must be used for this part as peak currents are in the tens of amps.

Notes on Layout Wiring

Lead lengths and circuit layout are very important to the performance of the discharge circuit. Lead inductance affects the rise time and peak value of the current and can also produce ringing and undershoots in the current waveform that can destroy the laser. A well-built discharge circuit might have a total lead length of only 1 inch and therefore an inductance of approximately 20 nanohenries. If the current rises to 75 amperes in 100 nanoseconds, the inductive voltage drop will be $e = L\, di/dt$. If proper care is not taken in wiring the discharge circuits, high-inductance voltage drops will result.

A 1-ohm resistor (R20) in the discharge circuit will greatly reduce the current undershoot in single-diode lasers. Laser arrays usually have sufficient resistance

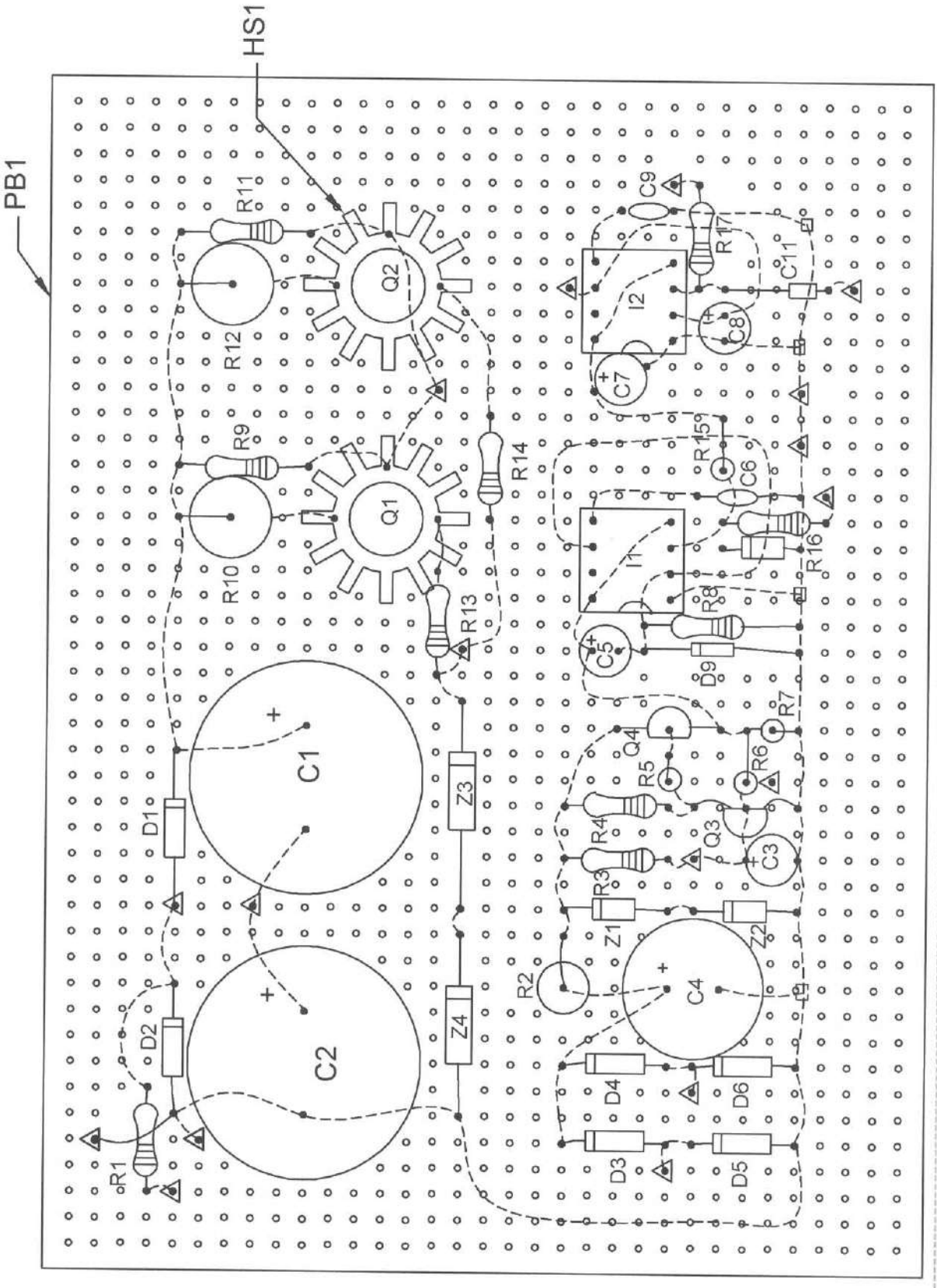

Figure 4-3 *Board assembly*

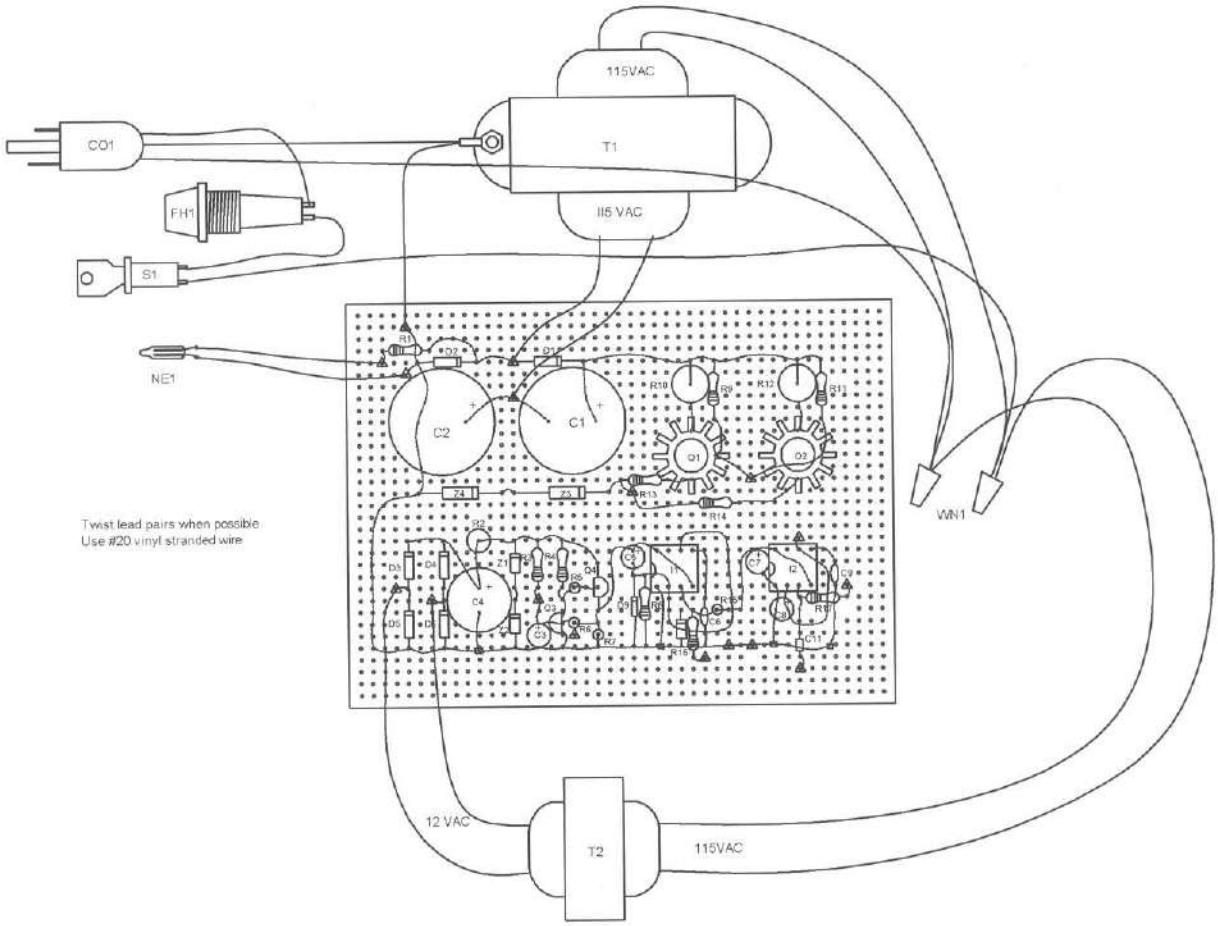

Figure 4-4 *Board input power wiring.*

to eliminate an undershoot. The small resistance in the discharge circuit is also useful in monitoring the laser current, as described in the following section.

A clamping diode (D8) is added in parallel with the laser to reduce the current undershoot. Its polarity should be opposite that of the laser. Although the clamping diode is operated above its usual maximum current rating, the current undershoot caused by ringing is very short and the operating life of the diode is satisfactory.

Notes on Current Monitoring

The current monitor in the discharge circuit provides a means of observing the laser current waveform with an oscilloscope. A resistive-type monitor (R20) reduces circuit ringing and current undershoot, but the lead inductance of the resistor may cause a higher than actual current reading. A current transformer such as the Tektronix CT-2 can also be used to monitor the current and is not affected by lead inductance. Because the transformer does not respond to low-frequency signals, it should be used with fast, short-pulse-width, fast fall-time waveforms.

Assembly Steps

Assembly of the laser system is straight forward and will require basic tools and test equipment.

1. Lay out and identify all parts and pieces. Verify them with the parts list, and separate the resistors as they have a color code to determine their value. Colors are noted on the parts list.
2. Cut a piece of .1-inch grid perforated board to a size of 5.8 × 3.5 inches, as shown in Figure 4-3.

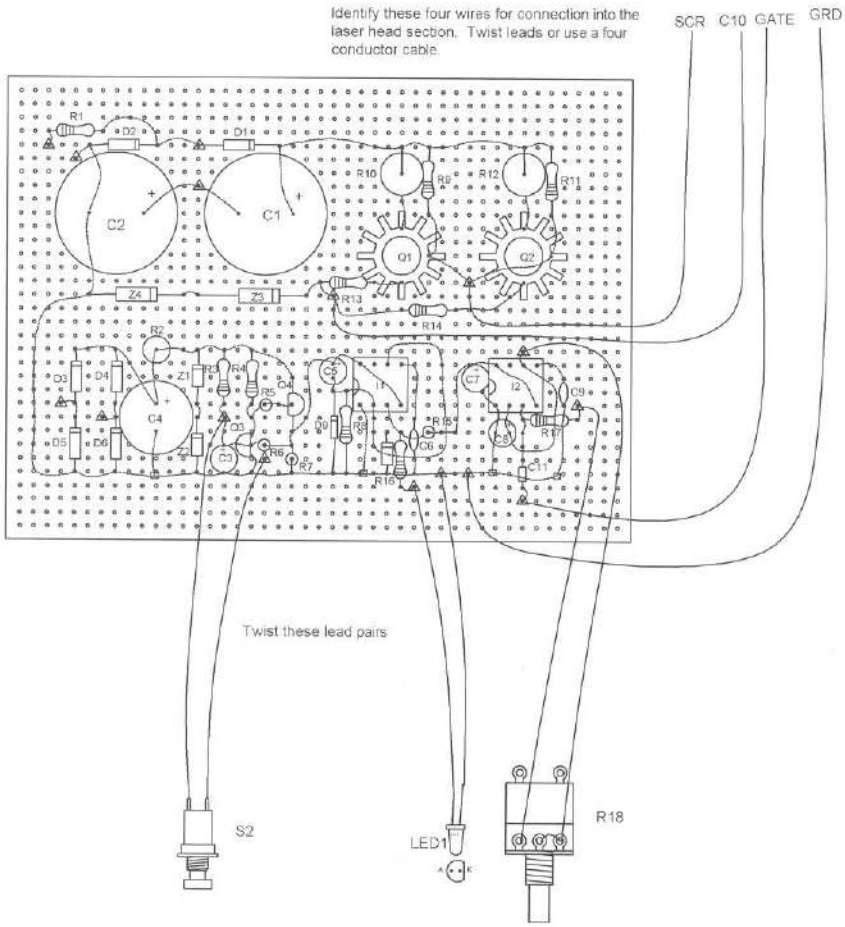

Figure 4-5 *Board output and control wiring*

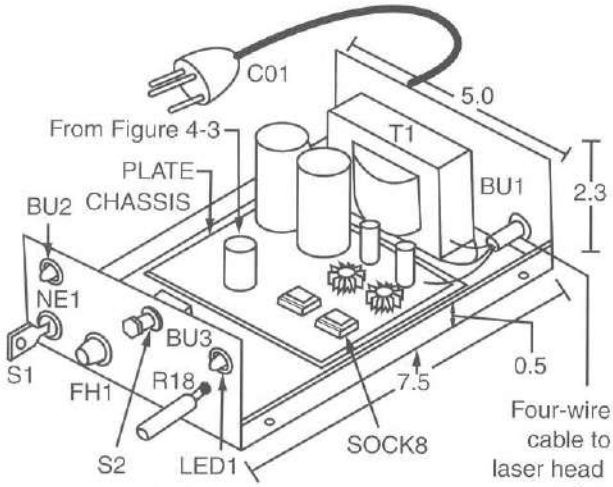

Figure 4-6 *Fabrication and chassis assembly*

3. If you are building from a perforated board, insert the components, starting in the lower left-hand corner as shown. Pay attention to the polarity of the capacitors that have polarity signs and all semiconductors. Use eight-pin sockets for I1 and I2.

   Route the leads of the components as shown and solder as you go, cutting away unused wires. Attempt to use certain leads as the wire runs or use pieces of the #24 bus wire. Follow the dashed lines on the assembly drawing as these indicate the connection runs on the underside of the assembly board. The heavy dashed lines indicate the use of thicker #20 bus wire, as this is a high-current discharge path.

4. Attach the external leads as shown in Figure 4-4 to the external components. Note the chassis grounding to the green lead of the power cord (CO1) and the use of wire nuts (WN1) for the junction of the transformer's primary inputs.

5. Attach the external leads as shown in Figure 4-5 to the external components. Note the four leads that go to the laser head assembly. These

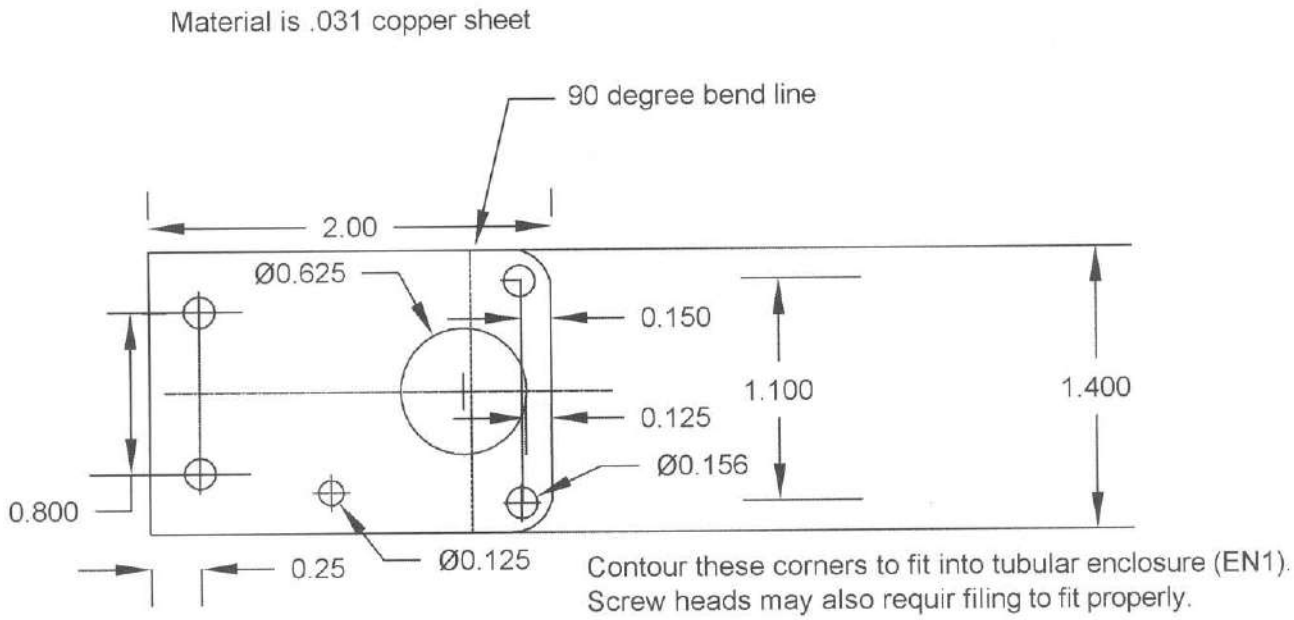

Figure 4-7 *Assembly of laser chassis*

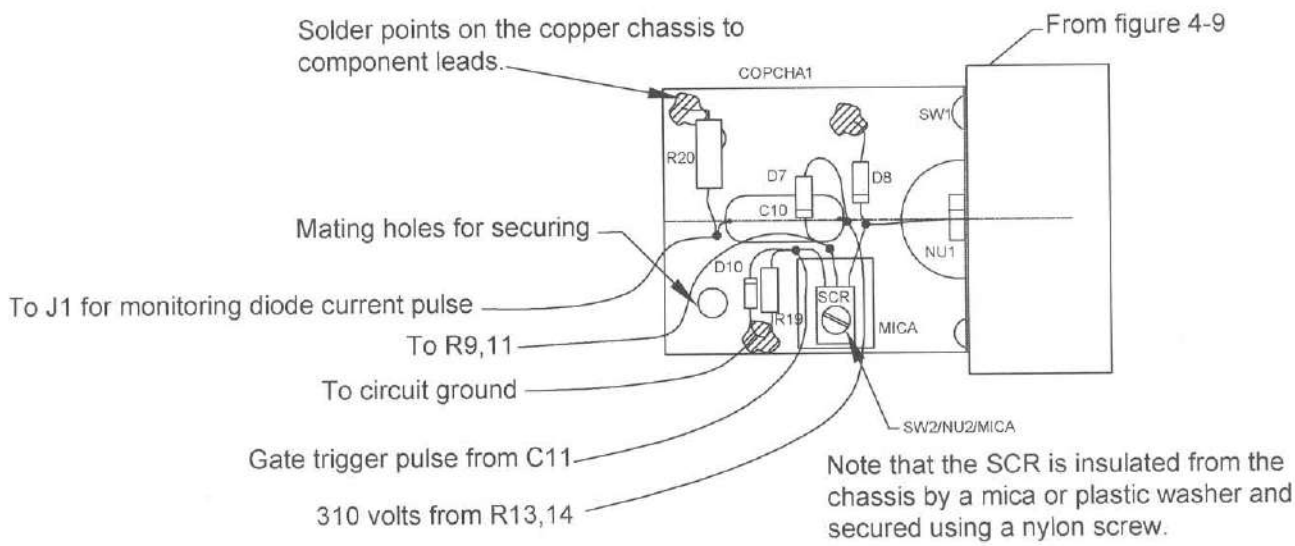

Figure 4-8 *Fabricate the laser holder*

are suggested to be 24 to 36 inches in length as well as twisted and identified. You may use a four-conductor cable.

6. Double-check the accuracy of the wiring and the quality of the solder joints. Avoid wire bridges, shorts, and close proximity to other circuit components. If a wire bridge is necessary, sleeve some insulation onto the lead to avoid any potential shorts.

7. Fabricate the chassis, as shown in Figure 4-6. Then position and drill the front and rear panel holes to fit the necessary external components. Use appropriate bushings for the power cord and wires to the laser head. Also, place an insulating piece (PLATE) under the assembly board to prevent contact with the metal chassis.

8. Fabricate the laser chassis, as shown in Figure 4-7, from a .031 piece of copper sheet metal.

9. Assemble the laser chassis, as shown in Figure 4-8. This section takes advantage of the ground plane effect of using the copper for

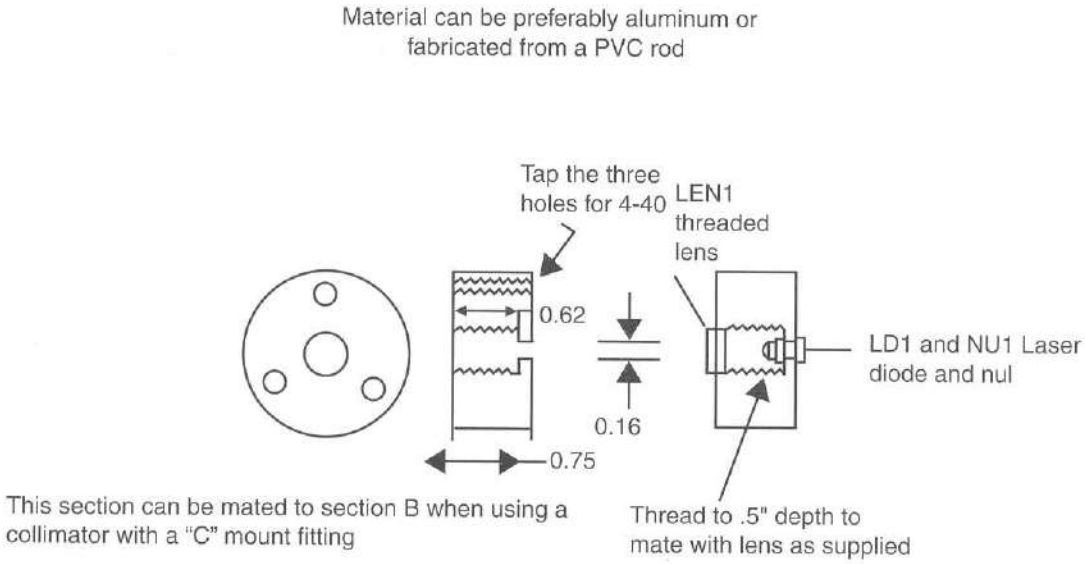

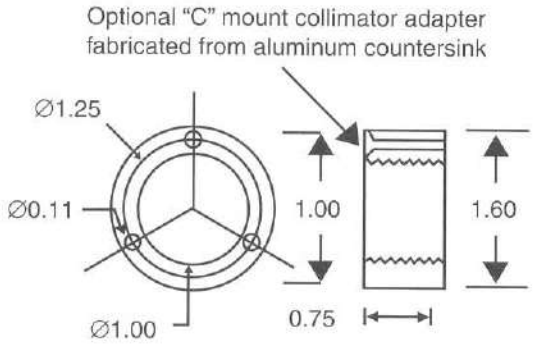

Section B adapter for fitting to the lens holder when using the optional collimator.

Three mounting holes of .11 on a 1.25" diameter 120 degres are mated to those in above.

Thread for "C" lens at 1" diameter 32 tpi to a minimum of .375".

Figure 4-9 *Laser diode and lens holder*

direct solder points. It is important to maintain a good waveshape because the switching currents are 40 amps and any undershoot is undesirable across the laser diode. Do not install the laser diode at this point.

10. Create the laser holder (LAHOLD), as shown in Figure 4-9. This assembly is attached to the bent-up lip of the chassis section by two small screws.

Assembly Testing

Testing will involve the use of an oscilloscope with a 100 MHz bandwidth and infrared detection equipment such as a night vision scope or camera.

1. It is assumed at this point that the electronic assembly is complete. Verify the circuit and preset the two trimpots, R3 and R9, to midrange.

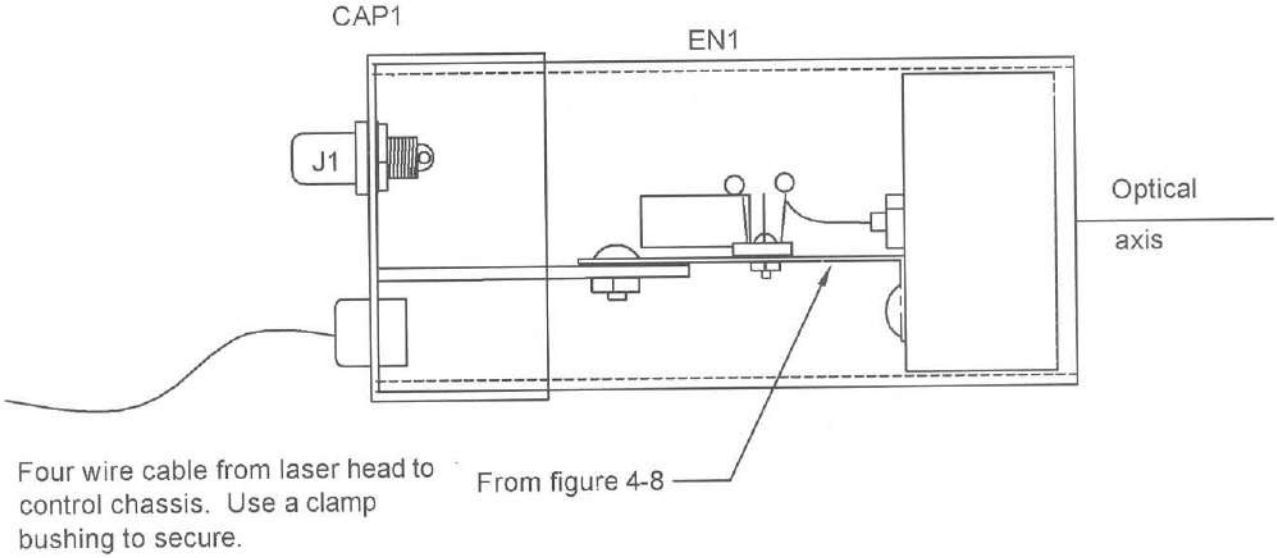

Figure 4-10 *Final head assembly*

2. Insert a .5-amp fuse into the fuse holder. Verify that the key switch is off and R18 is fully counterclockwise. Plug in a ballasted, 25-watt, 115-volt, 60 Hz power source. This is nothing more than the cord with a 25-watt lamp in series with the black lead. It protects the circuitry from the catastrophic currents of the power line should a major fault occur. Obtain a 1N4007 power diode and temporarily wire it in place of the laser diode LA1. The diode simulates the actual laser diodes and avoids costly replacement should a gross error exist. The actual laser diode is not to be wired in at this point. Turn on the key switch and note the NE1 coming on. The ballast lamp should not be lit.

13. Connect the scope to TP2 and note a spiky waveform that verifies the trigger pulse to the SCR, as shown in Figure 4-2.

14. Connect the scope to TP3 and note the waveform, which is the voltage across the SCR. Notice the flat spot indicating that capacitor C10 has reached a full charge before the SCR is triggered. The top of this waveshape is affected by the pulse repetition rate and should support 2,500 repetitions per second when set by R18 (see Figure 4-2).

15. Connect the scope to TP1 and set it up for a negative-going fast pulse, indicating the current waveform through the LD1 laser diode. If you have followed the instructions and your assembly of the copper chassis is secure with short leads, you should see a picture-perfect waveform, as shown.

    Note that the current pulse is 40 amps and corresponds to 1 amp for every volt read at TP1. If you find the pulse is less, you can increase the voltage ratings on one of the zener diodes, Z3 or Z4. The laser diode specified requires 40 amps for full output. Any value over 40 amps will greatly shorten the useful life of this part. The range of the pulse rep rate should be 200 to 2,500 pulses per second. The pulse amplitude should only vary several percent throughout this range. You will note that the amplitude will slightly decrease as the rep rate is increased.

16. At this point, you should be wearing your safety glasses. Remove the test diode D5 and connect the laser diode. Place an infrared indicator several inches from the diode and note an orange glow when the unit is turned on. Then recheck the pulse shape and amplitude.

17. Verify the laser output by using a night vision scope or a video camera. Screw in LENS13, so it is flush with the holder. Adjust it to find the smallest footprint at over 50 feet. Our lab model adjusted to about two turns below being flush with the holder for the best results. The output should be a sharp, narrow bar shape with this diode specified.

Please note that laser diodes are very easily destroyed by current pulses that are too large and overshoot. Pay attention to the correct current pulse shown in Figure 4-2.

The recommended laser diodes are available from Information Unlimited and are shown in Table 4-1.

Final Assembly Steps

Final assembly of head section as shown in Figure 4-10. For final assembly place the label as shown and verifying the compliance tests in Figure 4-11

Compliance Tests

1. Verify correct labels as shown.
2. Key switch — nonremoval in off position.
3. Beam indicator LED indicates beam emission.

Instruction

1. Turn key switch counterclockwise to verify unit is off. Note key is easily removed in the off position.
2. Plug unit into 115 vac.
3. Turn key clockwise and note NE1 lighting. Note key cannot be removed in the on position Laser energy is infrared and cannot be seen with the eye. You must use infrared detection devices such as our laser pulse detector or suitable night-vision devices. Video cameras will often detect the laser.
4. Adjust collimator for desired effect if you are using.

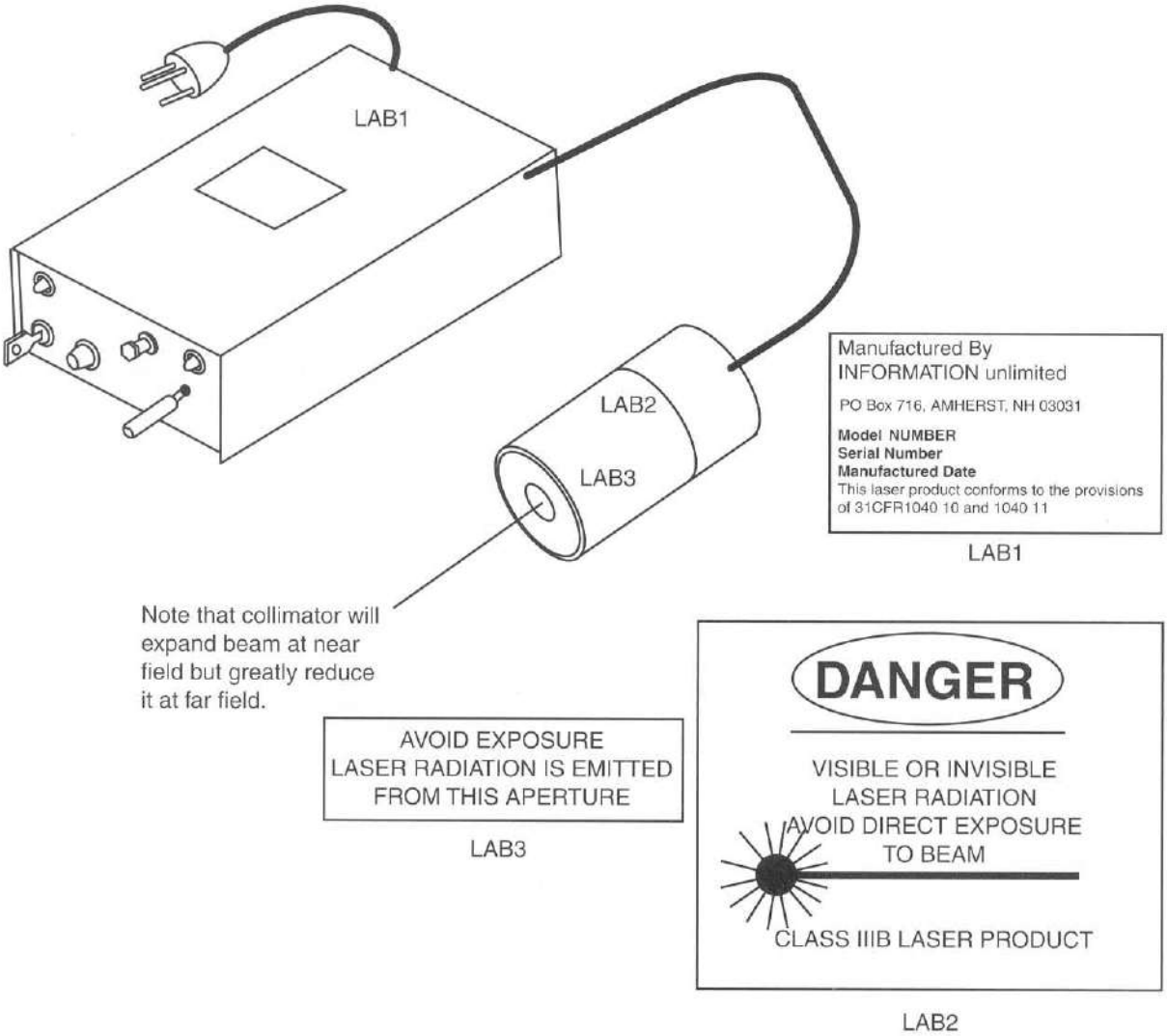

Figure 4-11 *Isometric of final view*

Table 4-2 Parts List for Pulsed Laser

Ref #	Description	DB Part #
R1	100K, ¼ –watt resistor (br-blk-yel)	
R2	10-ohm, 1-watt resistor (br-blk-blk)	
R3, 4, 5, 6, 7	Two 1K ¼-watt resistors (br-blk-red)	
R8	1M, ¼-watt resistor (br-blk-gr)	
R9, 11	47K, ¼-watt resistor (yel-pur-or)	
R10, 12	1.8K, 3-watt mox resistor	
R13, 14	220, 1/2-watt resistor (red-red-br)	
R15	10-ohm, ¼-watt resistor (br-blk-blk)	
R16, 17	470-ohm, ¼-watt resistor (yel-pur-br)	
R18	10K, 10 mm potentiometer	
R19	39-ohm, ¼-watt resistor (or-wh-blk)	
R20	1-ohm, ½-watt carbon resistor (br-blk-gold)	
C1, 2	Two 330 mfd, 16-volt vertical electrolytic capacitor	
C4	1,000 mfd, 25-volt vertical electrolytic capacitor	
C3, 5, 7	10 mfd, 25-volt vertical electrolytic capacitor	
C6, 9	.01 mfd, 50-volt disc capacitor	
C10	.033 mfd, 400-volt polypropylene capacitor	
C11	.1 mfd 50-volt plastic capacitor	
D1, 2	1N4007 1KV, 1-amp rectifier diodes	
D3–6	Four 1N4001 50-volt 1-amp rectifier	
D7, 8	1N4937 fast recovery 1KV, 1-amp diode	
D9, 10	Two 1N914 signal diodes	
Z1, 2	1N4735 6.2-volt zener diode	
Z3	1N5383 150-volt, 5-watt zener diode	
Z4	1N5384 160-volt, 5-watt zener diode	
Q1, 2	Two 2N3439 NPN high-voltage transistors	
Q3	PN2907 PNP general-purpose transistor	
Q4	PN2222 NPN general-purpose transistor	
I1, 2	Two timer dip integrated circuits LM555	
LED1	Green LED	
NE1	Neon indicator lamp	
SCR1	12-amp, 800-volt SCR S8012R	DB# S8012R
LD1	Laser diode 40-amp, 10–20-watt, 904 nm TO18 package	DB# LD650
LAHOLD	Laser and lens holder fabricated as shown in Figure 4-9	
LENS13	Threaded lens	
T1	115/115 volt, 15-volt-amp isolation transformer	DB# TR115/115
T2	115/12 volt, 1-amp transformer	DB# 12DC/.1
J1	RCA phono jack	
CO1	Three-wire #18 power cord	
S1	Compliant key switch	DB# KEYSWSM
S2	Pushbutton no switch	
FH1	Panel-mount fuse holder	
FS1	1-amp fuse	
WN1	Two small Hi3 wire nuts	
PB1	4.8 × 3.5-inch .1 × .1 perforated circuit vector board	
SOCK8	Two 8-pin integrated circuit sockets	

Chapter Five

Laser Property Guard

This project, as shown in Figure 5-1, allows the user to protect a perimeter of over 1,000 meters. The system utilizes a laser transmitter, as described in Chapter 1, and a laser receiver, described in Chapter 2. The system can easily control any deterrent to an invader, such as flood lighting, alarms, man-trap systems, or our phaser pain field generator, as described in Chapter 35.

The operation of the laser property guard is simple. The laser beam is directed through the area to be protected, using front-surface mirrors located on sturdy and secure mounts and at the points necessary to obtain the required coverage (see Figure 5-2). The receiver is normally quiescent when receiving this beam. Once the beam is broken by an intrusion, the receiver now processes the interruption as a fault and powers the desired deterrent or alarm.

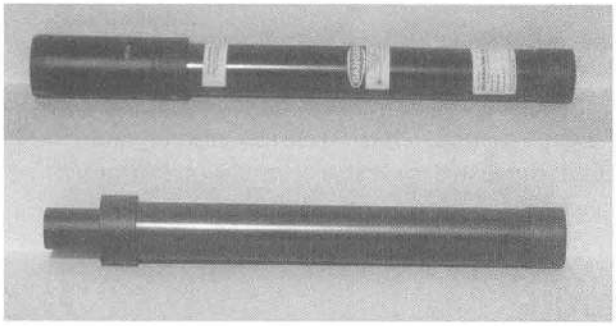

Figure 5-1 *Laser property guard protector components*

This project requires assembly of the laser devices, as described in Chapters 1 and 2. The setup requires basic mechanical skills and installation of the optical reflecting mirrors, and the hookup requires basic electrical skills. Expect to spend $25 to $50 after the assembly of the necessary components. All parts are readily available, with specialized parts obtainable through Information Unlimited (www.amazing1.com) and listed in Table 5-1.

The laser property guard system, as shown in Figure 5-3, utilizes a pulsed infrared laser to provide a perimeter path of programmed light pulses that, when interrupted, will sound an alarm, create an alert, or trigger a deterrent. The trigger fault signal actually triggers a timer or a latching circuit, which drives a switch for the external control of other functions. The timer mode allows the adjustment of the alarm period and automatically resets. The latch mode requires a manual reset.

Even though the laser pulses are rated in tens of watts, the overall energy over a period of 1 second is in the milliwatts. Installing the system at short ranges of only one to two reflection points is reasonably simple. Longer ranges requiring multiple reflections can be challenging.

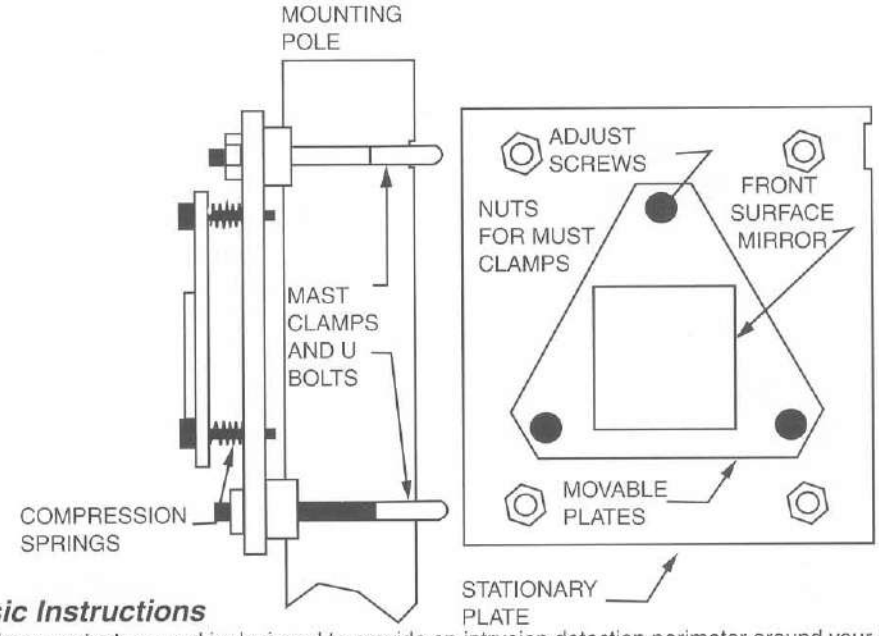

Basic Instructions

Your laser protector guard is designed to provide an intrusion detection perimeter around your home or target area. It uses a Class iiia pulsed diode laser to minimize but not eliminate any optical hazard. A low-liability sonic shock field generator such as that described in Chapter 35 is suggested as a deterrent. Caution: Check local laws for proper posting of this equipment on your property. Remember if you injure a criminal, even if he is robbing you, it can result in a stiff penalty in certain states for violating his rights.

System Setup

1. Obtain the following equipment listed in the latest Information Unlimited catalog.
   - ❑ Class iiia pulsed diode laser as described in Chapter 1.
   - ❑ Optical light detector and controller with built-in alarm as described in Chapter 2.
   - ❑ Low-liability sonic shock pain field generator as described in Chapter 35.

2. Examine the area you want to protect. Attempt to position beam travel over level terrain to eliminate possible easy-to-sneak-under points.

3. Establish corner points of property where mirrors are to be positioned. Note that a clear view of adjacent mirrors, laser and receiver must be maintained in all weather conditions for reliable operation.

4. Determine the corner where you want to position the actual laser and laser detector at. Note: There should be access to these devices for powering and control.

5. Construct mirror mounts using your own ingenuity. Allow for adjustment and stability. Rough align mirror to approximate position.

6. Turn on laser and position to hit center of first mirror. Secure laser in place.

Adjust first mirror to hit center of second and repeat for remaining mirrors all the way back to the optical receiver. Secure in place as you go.

Special note: Large areas may require an optical collimator at the laser output to reduce beam width at longer ranges. The collimator can be a rifle scope, telescope, binocular, etc., positioned in axial alignment with the laser. Beam divergence will be reduced by the magnification factor of the system used, however the actual beam will be expanded by same factor. The net result is a smaller cross-section at longer ranges.

Figure 5-2 *Low-cost, adjustable mirror mount*

System Installation Suggestions

There are many ways to align an optical system of this type. The use of a visible laser module as listed in Table 5-1 can simplify the initial setup and positioning of the mirrors. Those fortunate to have night vision equipment will find this a considerable advantage.

- Determine the area you want to protect. Flat land is the most desirable, as gullies and hills are difficult to cover without using more mirrors.
- You must also consider the position of the laser transmitter and receiver, noting the power and connection into the alarm or the deterrent section. Weather exposure and convenience must also be taken into consideration, and mounting must be stable and somewhat adjustable.
- Determine the path that the light must travel to provide acceptable coverage. Always attempt to use as few mirrors as possible and consider the laser transmitter's and receiver's positions. If you are lucky, you may have some objects to mount the mirrors to. They must be stable and allow placement at the required height for your application.

  The mirrors used for this project must be the front-surface-coated type if multiple reflections are required. Regular household mirrors can be used up to two reflection points, but they will cause multiple reflections. A low, adjustable-cost mirror mount is shown in Figure 5-2. You may in certain cases use a good-quality automotive mirror, as they are easily adjustable.
- Evaluate the wildlife in your area and determine the best laser height that will provide minimal false alarms from the animal population. Obviously, deer will always be a problem, as their height may be close to that of the target intruder.
- Determine the deterrent you wish to use against the intruder. You can activate bright lights, sonic pain generators (described in Chapter 35), alarms, or just alerts so you can take further action. For more serious applications, you can activate shocking devices, such as those described in Chapter 11, nonlethal kinetic devices, or explosive charges for shock and surprise. Very serious deterrents can consist of deadly force, such as high-powered kinetic devices, shotgun traps, high-powered shocking devices, and buried explosives for lethality.

Caution: As man trapping is illegal in the United States, it may also be so in your country. Always check your laws before ever implementing a deterrent that can cause injury.

- The quality of the mirrors and their mounts cannot be overstressed when designing a high-integrity system. Here we discuss a low-cost system that may suffice in smaller installations but may be limited for use in larger, more reliable systems.

The initial alignment requires a visible, low-power laser to align the mirrors. The laser may have to be collimated for larger multiple reflection systems.

Optics on the laser light transmitter and receiver, as shown, may be sufficient for small systems. They do not have to be high-cost precision devices, as the only objective is to establish a properly aligned, position-stable beam spot.

Once the preliminary alignment is accomplished, you can put the laser transmitter in place and, with a night vision scope, recheck the alignment. The laser receiver, as constructed here, has an indicating *light-emitting diode* (LED). This function can be eliminated if required. The actual control of external functions is via a set of normally open or closed relay contacts that can handle 115 VAC at 10 amps AC.

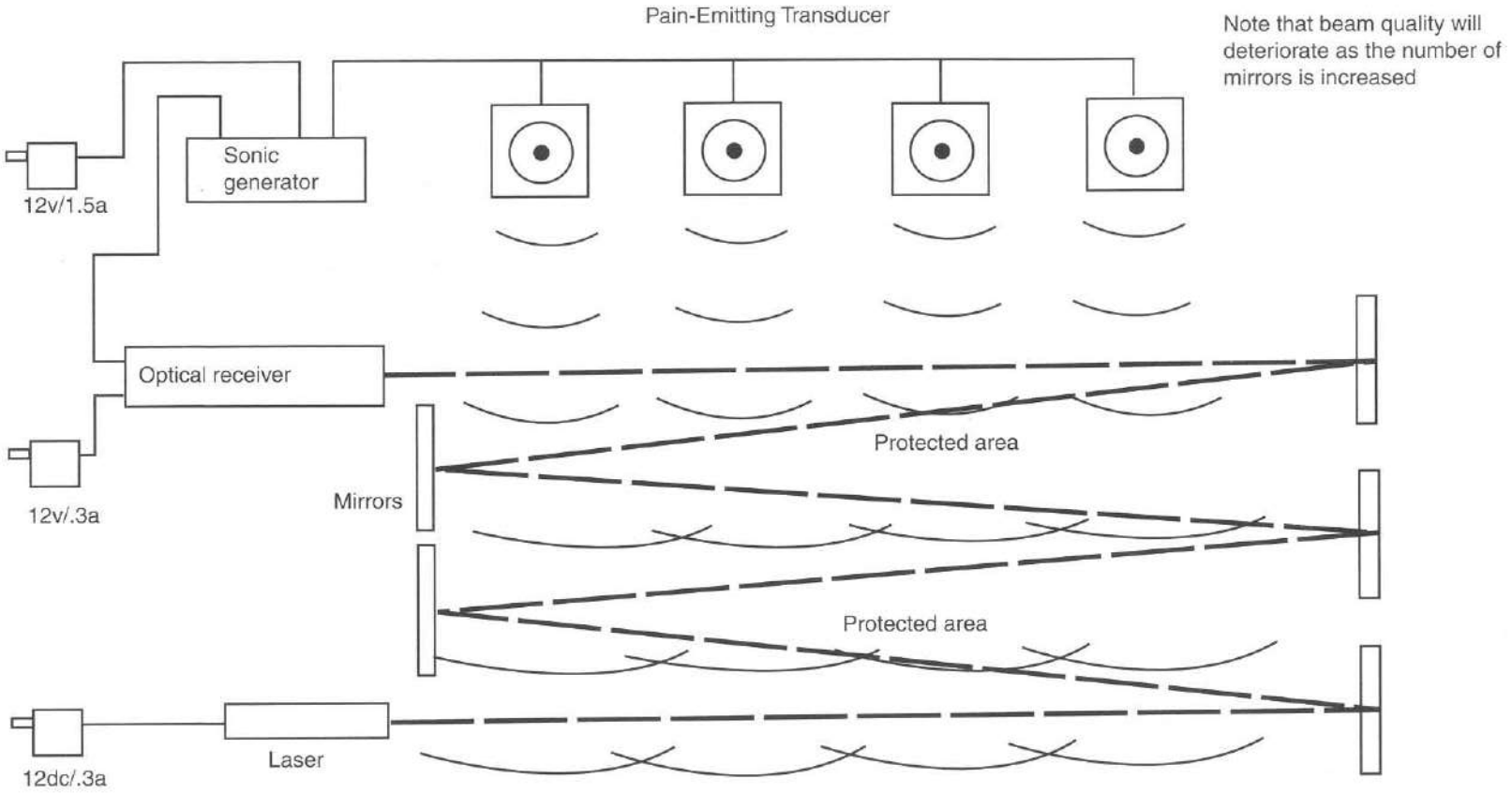

Laser beam is reflected back and forth in the protected area via strategically placed mirrors. Once the beam is broken by an intruder the optical receiver detects and sends a level to the sonic generator where the transducers are activated producing an intolerable sonic pain field discouraging the intrusion.

Even though there is no lasting effect from exposure to the transducers, it is always best to check with local laws before implementing this system.

Figure 5-3 *Example of system layout*

Table 5-1 Laser Property Guard Parts List

Ref. #	*Description*	*DB Part #*
MIRROR	3 × 4-inch front surface mirrors	DB# MIR FRSUR
LRG4K	Pulsed infrared laser kit, as in Chapter 1	DB# LRG4K
LRG40	Assembled pulsed infrared laser, as in Chapter 1	DB# LRG40
LSD4K	Laser detector kit, as in Chapter 2	DB# LSD4K
LSD40	Assembled laser detector, as in Chapter 2	DB# LSD40
PPF4K	Pain field generator kit, as in Chapter 35	DB# PPF4K
PPF40	Assembled pain field generator, as in Chapter 35	DB# PPF40
SHOCK1K	Kit of shockers, as in Chapter 11	DB# PFSHK1K
SHOCK10	Assembled shockers, as in Chapter 11	DB# PFSHK10
LM650-3	Visible red laser module for alignment aid	DB# LM650-Description P3System

Chapter Six

30-Milliwatt, 980-Nanometer Infrared Laser

The laser project shown in Figure 6-1 is a continuous infrared device providing a continuous 30-milliwatt output at 980 nanometers. The laser, when built as shown, should comply with a class 3 laser-compliant system. The completed laser can be very optically dangerous, and eye protection must be worn to prevent direct or scattered reflections to the eyes.

The project can be used for many optical applications, including illuminating a surface, such as a window, for laser listening. Laser listening is were a laser beam illuminates a window and a sensitive receiver picks up the light reflections and processes them into audio signals similar to the picked-up voices that vibrate the illuminated window glass. A system such as this is described on www.amazing1.com. It should be noted that using a class 3b laser for this application can be an optical hazard to anyone in the target area.

Converting illumination using night vision cameras and spectrally compatible viewers is another potential application, again being fully aware of a possible optical hazard. Other applications are invisible target identification, voice and data communication, and optical signaling and experimenting.

Figure 6-1 *The infrared laser module*

This is an intermediate-level project requiring basic electronic skills. Safety glasses are strongly advised, as the laser can cause eye damage if viewed directly or via direct reflections. Expect to spend $75 to $150. All parts are readily available, with specialized parts obtainable through Information Unlimited (www.amazing1.com), and they are listed in Table 6-1.

For those wanting to use this project as an illuminating laser for window bounce listeners, it is suggested that you refer to Chapter 13 in *Electronic Gadgets for the Evil Genius*, published by McGraw-Hill, ISBN 0-07-142609-4.

Circuit Description

Figure 6-2 shows the laser module LM1 and associated support circuitry. The system is powered by batteries B1 and B2 and is controlled by an internal key switch (S1) or external enabling control leads. A light-emitting diode (LED1) and a current-limiting resistor (R1) indicate the presence of laser emission.

The system will require S1 to be a key switch with a nonremovable key in the activated position if the assembly is integrated as a fully functional laser system. The power line or bench operation will require a

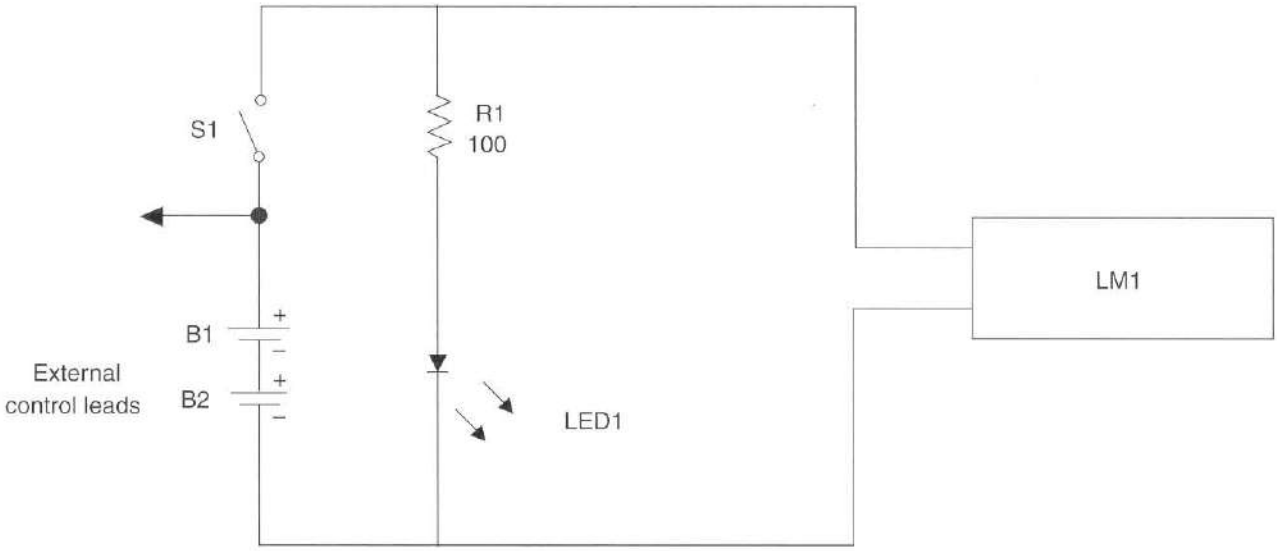

Laser current should be 50 to 60 milliamps at 3 volts input.

Warning: If you overvolt or reverse polarity on your laser module, you will ruin it!!

Assembly shows a battery-operated compliant laser system. You may wire direct to a 3-volt source that now contains the key switch and a built-in time delay necessary for compliance and safety.

Figure 6-2 *Circuit schematic*

key switch for external enabling and associated control circuitry that may require an emission delay and automatic resetting should a loss of power occur.

Assembly

1. Rework the laser module, as shown in Figure 6-3. This step requires care as it is easy to damage the module if one is not very careful.
2. Connect the soldered leads to a source of 3 volts, paying attention to the correct polarity. If you have a current meter, you can measure 40 milliamps.

   Output can be detected using infrared photosensitive paper or a night vision scope. Certain video cameras may also detect the laser output.

   Danger! Do not view directly or indirectly without safety glasses.
3. Fabricate the laser holder (HOLD1), as shown in Figure 6-4.
4. Fabricate the laser module tube (TUB1) from a piece of 3-inch × 1-inch OD × 1/16-inch wall plastic tubing, as shown in Figure 6-5.

   Fabricate the two spacing washers (WASH1, 2) from 1/16-inch plastic. Note the inner hole is 1 inch to allow for the sleeving onto TUB1 as shown. The outer diameter fits into the inner diameter of the main enclosure (EN1). It is these two spacer washers that position and secure TUB1 into the center of EN1. Space the two washers as shown.
5. Insert the laser module LM1 as shown and wire it up to the circuitry as shown. It is a good idea to leave enough lead length to allow one to pull out the battery holder for battery replacement by removing the rear cap (CAP1). Use a piece of foam to secure the battery holder in place.
6. Verify the proper circuit operation so that when the key switch is activated, the LED emits, indicating laser emission.

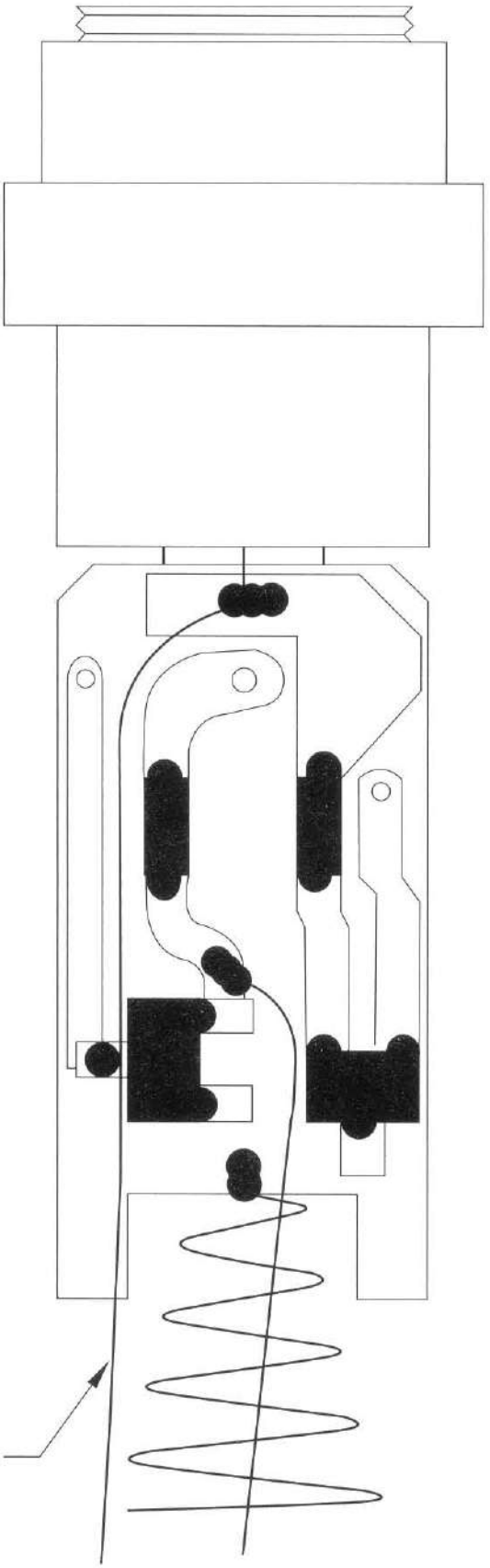

Very carefully attach #24 bare bus leads to the solder pads as shown. It is necessary to insulate the positive lead using a piece of insulation stripped from a piece of wire or insulated tubing.

Note that the brasshead of the laser is the positive connection and the spring the negative. Activation will require now depressing the on-board pushbutton switch. You may connect to these points if unsure of soldering to the small foils on the printed circuit board.

Warning: If you overvolt or reverse polarity on you laser module, you will ruin it!!

Figure 6-3 *Laser module rework*

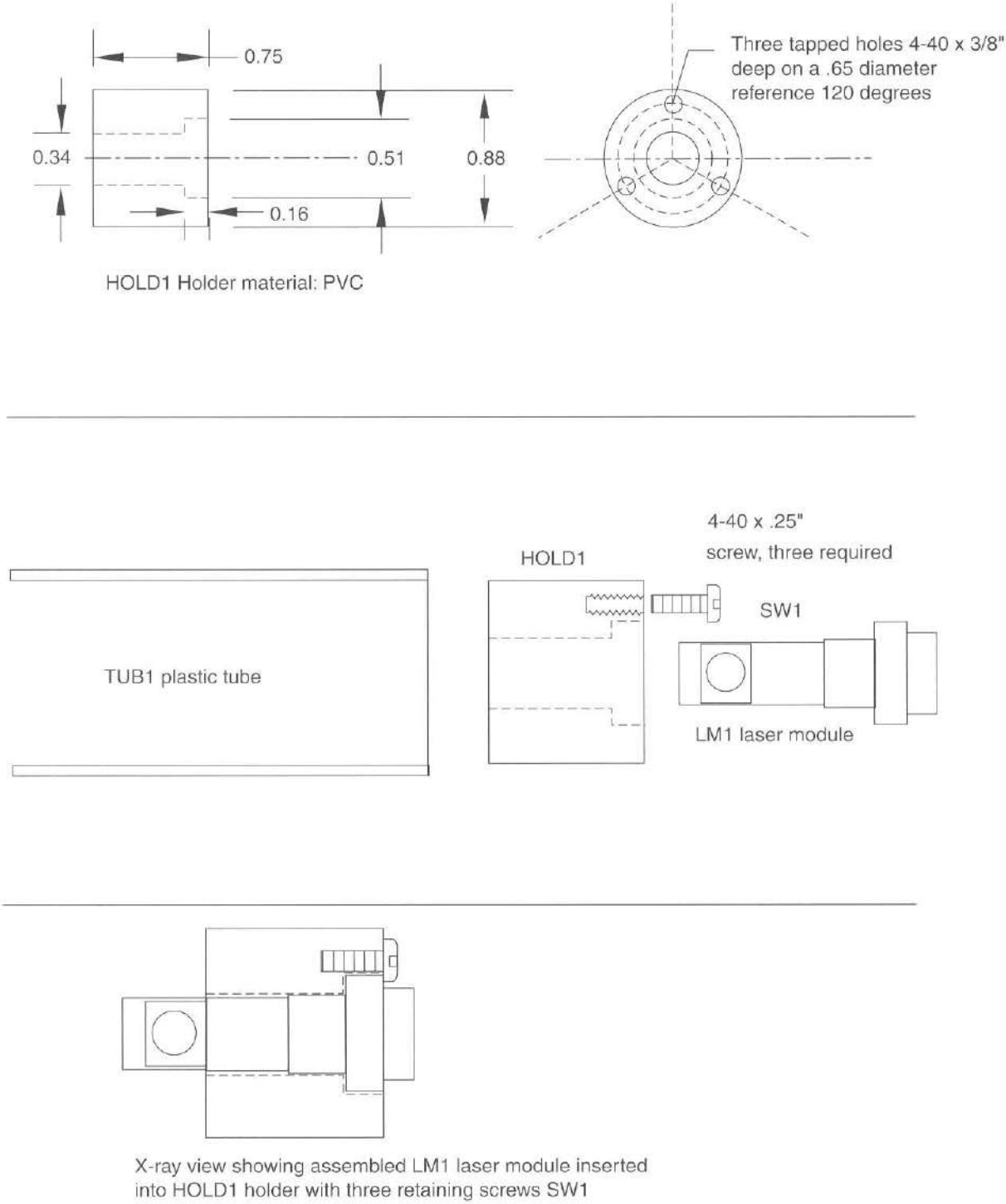

Figure 6-4 *Creation of laser module holder and retaining washer*

This is our approach to assembling this laser project with external optics. The builder may use his own ingenuity noting that the objective is optical stability and safety.

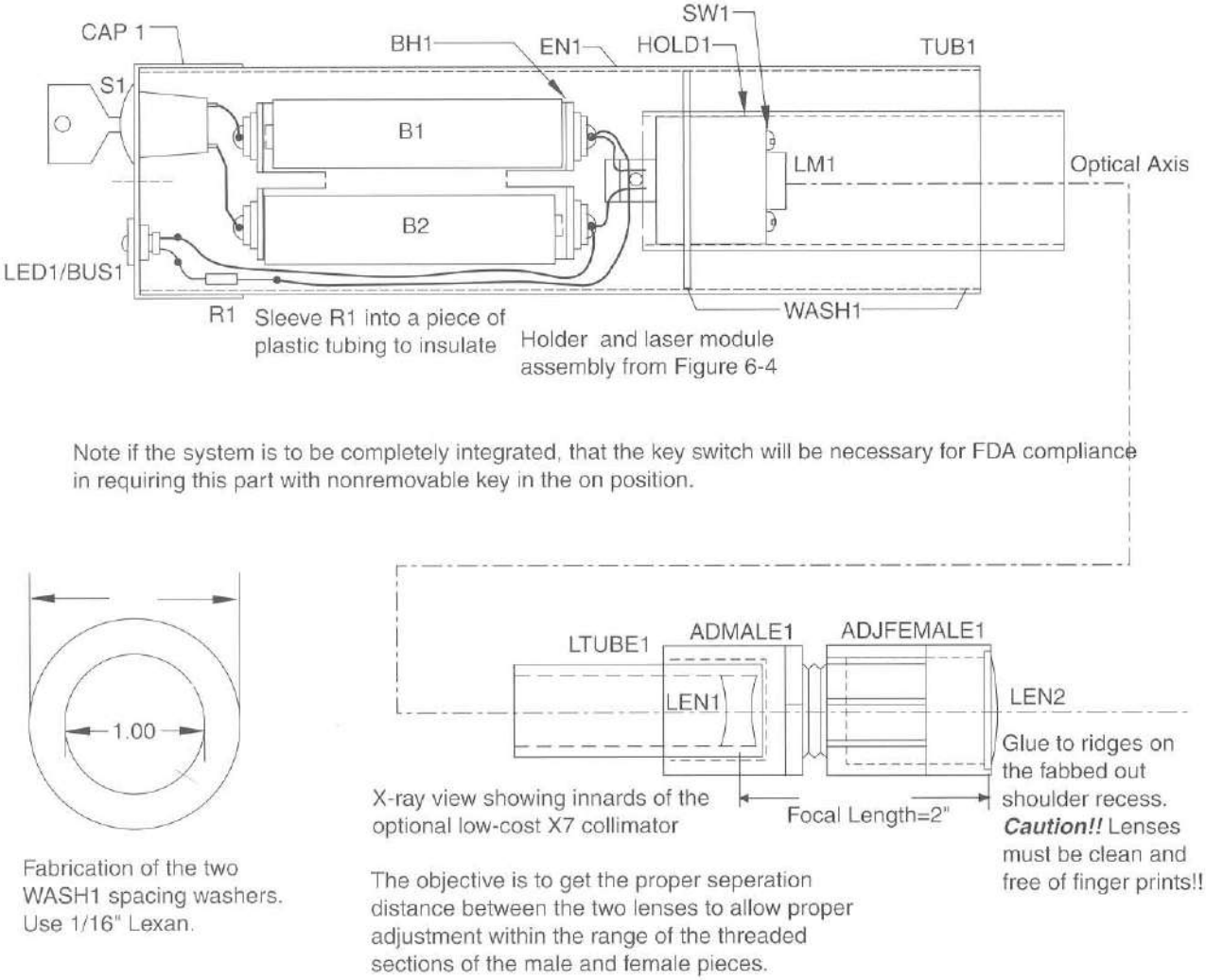

Figure 6-5 *X-ray of complete assembly*

Collimator and Final Assembly

1. Glue the larger lens LEN2 into ADFE-MALE1 as shown, using silicon rubber glue or an equivalent. Clean the lens before gluing.
2. Insert LEN1 into the laser output end of the LTUB1 assembly as shown. Do not glue at this time.
3. Fully insert the LTUB1 into the 1-inch tube TUB1. Shim it with tape for a secure but removable fit.
4. Finish the assembling and label it as shown in Figure 6-6.
5. Point the laser at a target around 100 meters away and adjust the collimator to the smallest spot. This should be done in low light, preferably at night, using a night vision device and only looking at the beam impact point. Note

Instructions

1. Turn key switch full ccw. Note switch has several positions–only two are used in this version.
2. Remove CAP1 and insert 2 AA batteries into holder.
3. Turn on key two positions cw and note LED lighting. If not check the battery holder.
4. Adjust coliminator for desired effect.

Note that coliminator will expand the beam at near field but greatly reduce it at far field. Laser module may require beam adjustment over time using the special tool.

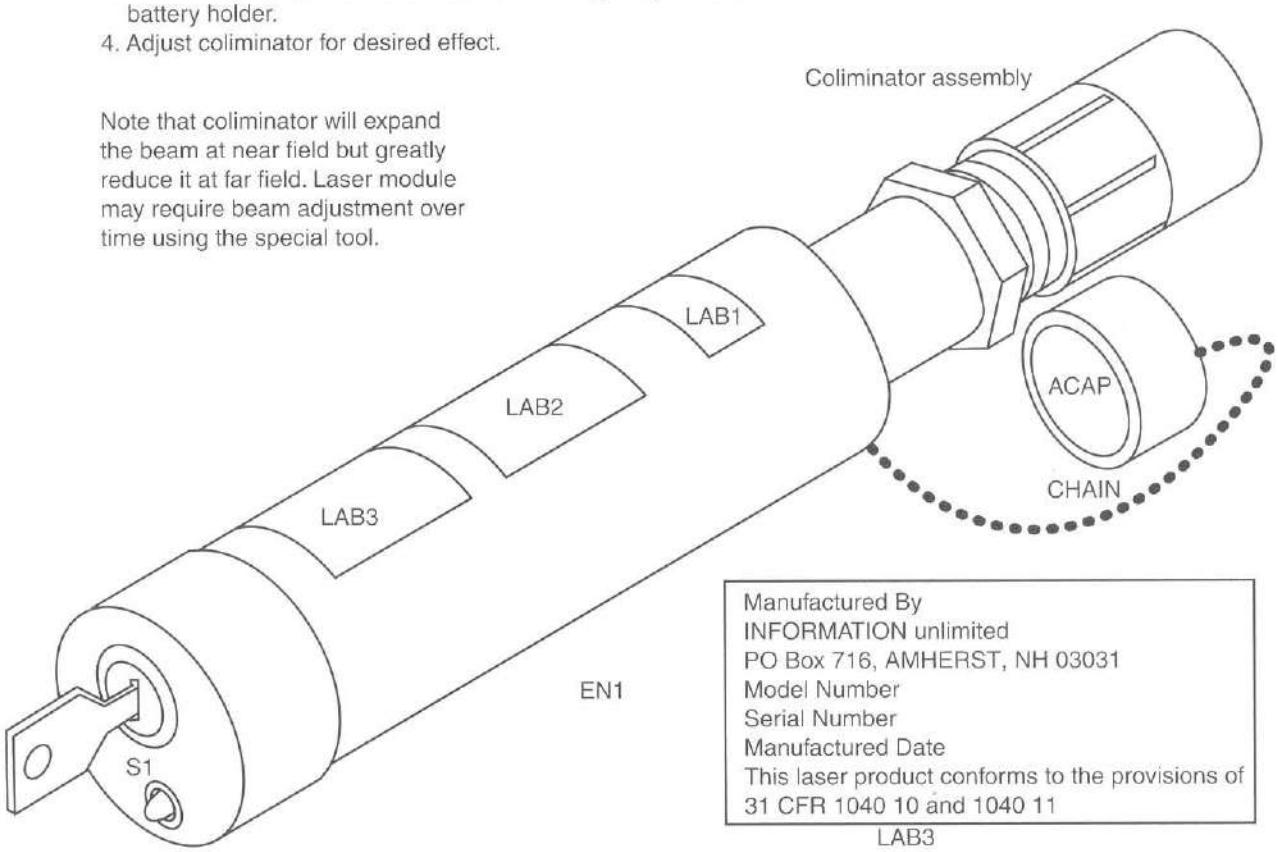

Manufactured By
INFORMATION unlimited
PO Box 716, AMHERST, NH 03031
Model Number
Serial Number
Manufactured Date
This laser product conforms to the provisions of 31 CFR 1040 10 and 1040 11

LAB3

DANGER

VISIBL AND/OR INVISIBLE LASER RADIATION
AVOID DIRECT EXPOSURE TO BEAM

30 Milliwatts @ 980 nm

CLASS 3B LASER PRODUCT

LAB2

AVOID EXPOSURE

INVISIBLE LASER RADIATION IS EMITTED FROM THIS APERTURE

LAB1

Compliance test

1. Verify correct labels as shown
2. Key switch–nonremoval in off position
3. Beam indicator LED indicates after delay
4. Aperture cap included

WARNING: Do not under any circumstances point this device at people, vehicles, or especially aircraft. YOU WILL BE PROSECUTED IF CAUGHT!!!

Figure 6-6 *Final assembly view*

that the adjustment should be about 1/2 to 3/4 turns from being fully tight for a mechanically stable operation. If it is too far out, the assembly will be loose. You may have to use a wire brush on the threads and lube with dry teflon for smooth action. You may compensate the distance between lenses by changing the length of TUBE1. You may now glue LEN1 in place as noted.

The collimator will expand the beam width but decrease the divergence by the same ratio. This greatly reduces the far-field beam diameter.

Note that the laser module is at a wavelength of 980 nanometers and is invisible to the eye. Also, note that most of the mechanical parts used in this project can be obtained through most hardware stores.

Table 6-1 Infrared Laser Parts List

Ref. #	Description	DB Part #
R1	220-ohms, 1/4-watt resistor (red-red-br)	
LED1	High-brightness green LED	
LM1	30-milliwatt, 980-nanometer infrared laser module	DB# LM980-25
S1	Key switch with nonremovable key in "on" position	
BH1	Dual, side-by-side two-AA battery holder	
WR24	12-inch #24 bus wire	
WR22	24-inch #22 vinyl hookup wire	
HOLD1	Fabricated holder with washer for laser module	DB# HOLD1
SWI/NU1	Two 4-40, 1.25-inch machine screws and nuts	
TUB1	3 × 1-inch OD × .875-inch plastic or metal tube	
WASH1	Two fabricated plastic spacing washers, 1.5 OD with 1-inch center hole	
EN1	6-inch × 1.625 OD × 1.5-inch ID plastic or metal tube	
CAP1	1 5/8-inch plastic slip on cap	
Parts for low-cost collimator		
LEN1	6 mm × (-1) double-concave negative glass lens	DB# LENS13
LEN2	24 mm × 75 mm plano/convex glass lens	DB# LE2475
*LTUB1	625-inch ID × 2-inch schedule 40 PVC tube	
*ADMALE1	1/2-inch PVC schedule 40 slip fit to male thread, GENOVA 30405	
*ADFEMALE1	1/2-inch PVC schedule 40 slip fit to female threads, GENOVA 30305	
*ACAP1	Plastic cap and chain for aperture cap	
LAB1	Aperture label	
LAB2	Classification label	
LAB3	Certification label	

*Available in most hardware stores

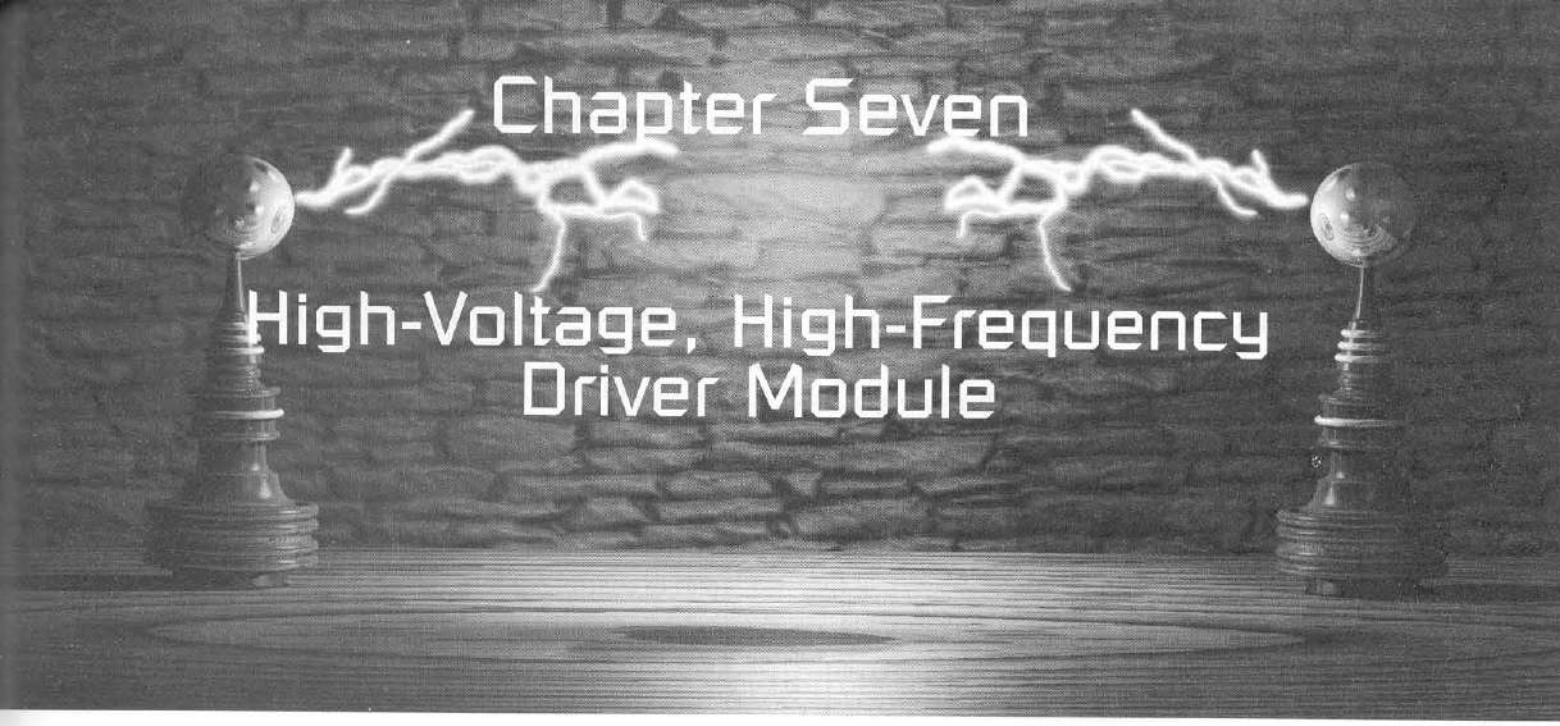

Chapter Seven

High-Voltage, High-Frequency Driver Module

Figure 7-1 shows that a universal, high-voltage, modular power supply project will provide you with many options. This "sweetheart" of a circuit has features that make it a priceless tool for the high-voltage researcher and experimenter.

The circuit operates on 11 to 15 volts DC, drawing 3 amps under a full load, allowing a portable battery or 115 volts AC via a converter. The output voltage is a 60 KHz, high-frequency current that is fully short-circuit protected. The high-frequency output also makes it possible to use low-energy voltage multiplier stacks for high-voltage DC sources, and it can also serve as an excellent plasma driver when used directly. The output current is fully adjustable via a control pot.

The unit is excellent for powering neon and all types of gas-filled vessels using one or two electrodes, or it can power objects simply by proximity. It easily retrofits to our voltage multipliers' modules that provide DC voltages up to 100 kilovolts and currents of up to .3 milliamperes. The current-limiting and control features make this combination an excellent choice for charging capacitors for low loss charging, utilizing 12-volt portable or 115 vac line operation. Also, the device is an excellent choice for powering large and small antigravity craft, ozone air purification, and other applications requiring a high-voltage current-controlled source. The module is shown built on both a rugged *printed circuit board* (PCB) and a vector perforated box. It is mounted in a plastic channel.

Figure 7-1 *Completed assembly module*

The module is used for several projects in this book. In order not to waste a lot of space, we show it as a common subassembly for the following chapters:

- Chapter 12, "Electro-magnetic (EMP) Gun"
- Chapter 32, "100-Milligram Ozone Machine"

Electrical and Mechanical Specifications

- Open-circuit voltage, 7,500 peak at 60 KHz
- Short-circuit current, 10 milliamperes short-circuit protected
- Input 11 to 15 volts DC at 3 amps fully loaded

- Adjustable current by duty-cycle-controlled pulse
- Compact size, 7 × 2⅛ × 1⅛ inches, weighing less than 5 ounces
- Easily retrofits to our voltage multipliers

This is an intermediate-level project requiring basic electronic skills and should cost between $25 and $50. All parts are readily available, with specialized parts obtainable through Information Unlimited (www.amazing1.com), and they are listed in Table 7-1.

High-voltage DC output is obtained from this module using a Cockcroft-Walton voltage multiplier with multiple stages of multiplication as required. Note that this method of obtaining high voltages was used in the first atom smasher that ushered in the nuclear age.

The multiplier section requires a high-voltage AC source for input supplied by the circuit transformer (T1) producing 6 to 8 kilovolts at approximately 60 KHz. You will note that this transformer is of a unique design, being owned by our company Information Unlimited. The part is very small, versatile, and lightweight for the power produced.

Circuit Description

The primary of T1 is current driven through inductor L1 and switched at the desired frequency by FET switch Q1. Capacitor C6 is resonated with the primary of T1 and zero voltage switches when the frequency is properly adjusted. (This mode of operation is very similar to class E operation.) The timing of the drive pulses to Q1 is therefore critical to obtain optimum operation (see Figure 7-2).

The drive pulses are generated by a 555 timer circuit (I1) connected as an astable multivibrator with a rep rate determined by the setting of trimpot R1 and the fixed-value timing capacitor C2.

The timer circuit is now turned on and off by a second timer, I2. This timer operates at a fixed frequency of 100 Hz but has an adjustable duty cycle (a ratio of on to off time) determined by the setting of control pot R10. I1 is now gated on and off with this controlled pulse now providing an adjustment of output power.

When the unit is interfaced with a DC voltage multiplier, an over-voltage protection spark gap is placed across the output and is easily set to break down at a preset voltage level for circuit protection. Even though the output is short-circuit protected against continuous overload, constant hard discharging of the output can cause damage and must be limited. A pulse-current-limiting resistor (R17) helps to protect the unit from these catastrophic current spikes.

Power input is controlled by switch S1, which is part of control pot R10. Actual power can be a small battery- capable of supplying up to 2 amps or a 12-volt, 2 to 3-amp converter for 115-volt operation.

Construction

The circuit is shown using the more challenging *perforated circuit board* often required for a science fair project. A *printed circuit board* is also individually available, requiring that you identify only the particular part and insert it into the respective holes as noted. The PCB is plainly marked with the part identification, and soldering is now very simple as you solder the component leads to the conductive metal traces on the underside of the board.

The perforated board approach is more challenging, as now the component leads must be routed and used as the conductive metal traces. We suggest that the builder closely follow the figures in this section and mark the actual holes with a pen before inserting the parts. Start from a corner, using it as a reference, and proceed from left to right. Note that the perforated board is the preferred approach for science projects, as the system looks more homemade.

Board Assembly Steps

If you are a beginner it is suggested to obtain our *GCAT1 General Construction Practices and Techniques*. This informative literature explains basic practices that are necessary in proper construction of electromechanical kits and is listed in Table 7-1.

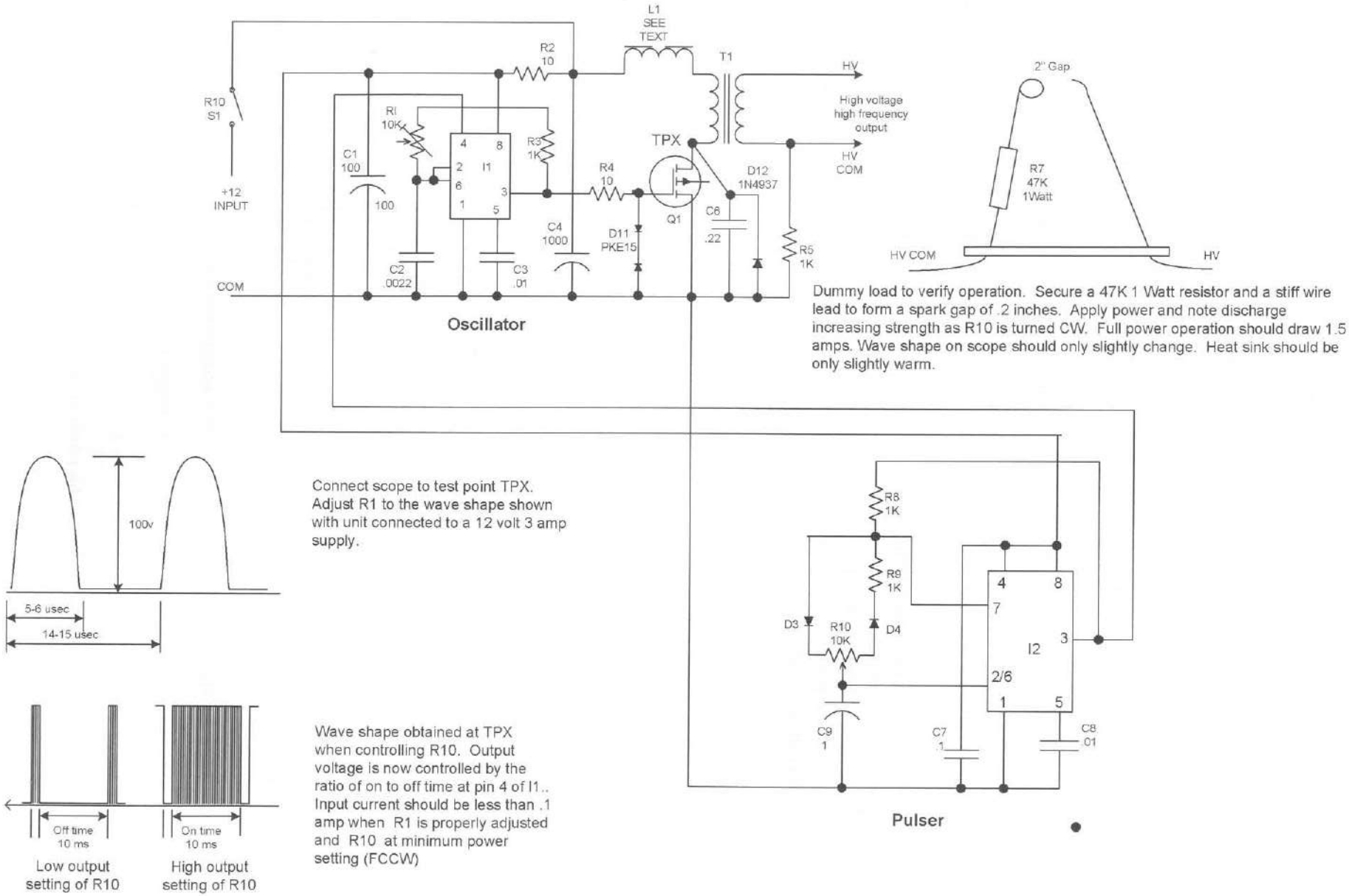

Figure 7-2 *Circuit schematic*

1. Lay out and identify all the parts and pieces. Verify them with the parts list, and separate the resistors, as they have a color code to determine their value. Colors are noted on the parts list.

2. Cut a piece of .1-inch grid perforated board to a size of 5 × 3 inches. Locate and drill the holes, as shown in Figure 7-3. An optional PCB is individually available (refer to Table 7-1).

3. Fabricate a metal heatsink for Q1 from a piece of .063 aluminum, at 1.5 × .75 inches, as shown in the inset of Figure 7-4.

4. Assemble L1 as shown in the Figure 7-4 inset. This part is individually available and listed in Table 7-1

5. If you are building from a perforated board, it is suggested that you insert components starting at the lower left-hand corner, as in Figure 7-5. Pay attention to the polarity of the capacitors with polarity signs and all semiconductors. Route the leads of the components as shown and solder as you go, cutting away unused wires. Attempt to use certain leads as the wire runs or use pieces of the #24 bus wire. Follow the dashed lines on the assembly drawing, as these indicate connection runs on the underside of the assembly board. The heavy dashed lines indicate the use of thicker #20 bus wire, as this is a high-current discharge path.

   Figures 7-6 and 7-7 show the available PCB, which is also listed as an available part in Table 7-1.

6. Attach external leads as shown in Figure 7-5.

7. Double-check the accuracy of the wiring and the quality of the solder joints. Avoid wire bridges, shorts, and close proximity to other circuit components. If a wire bridge is necessary, sleeve some insulation onto the lead to avoid any potential shorts.

These three holes for attaching optional multiplier board

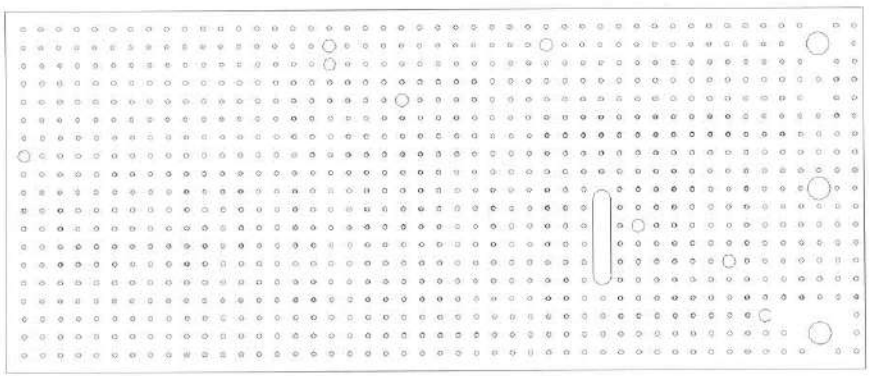

The circuit section is 4.8" x 2.9" .1 x .1 perforated board. Drill eight .063" holes in this perforated section and eleven in the

Drill the three .125" holes for attaching to the optional multiplier board used for high voltage dc applications.

Drill and drag the .125" slot as shown. This cutout and the enlarged holes are for mounting transformer T1.

Hole diameters are not critical.

Always use the lower left hand corner of perf board for position reference.

Figure 7-3 *Perforated board*

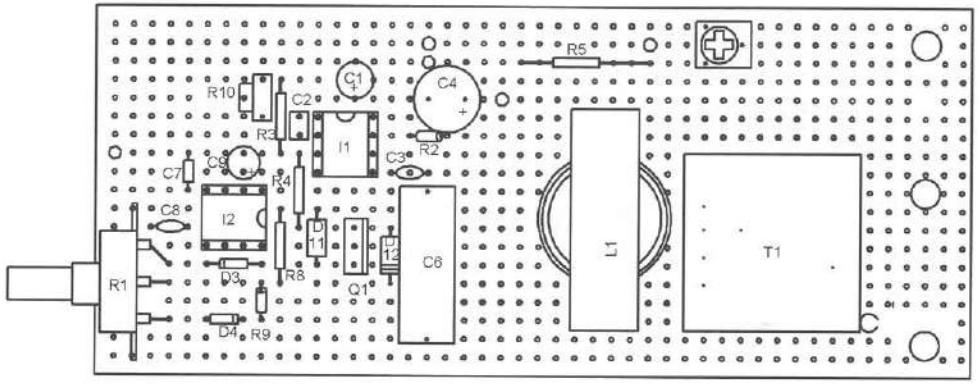

Note polarity of C1,C4,C9,D3,D4, D12 and D20A-D20J

Note position of I1,I2,Q1

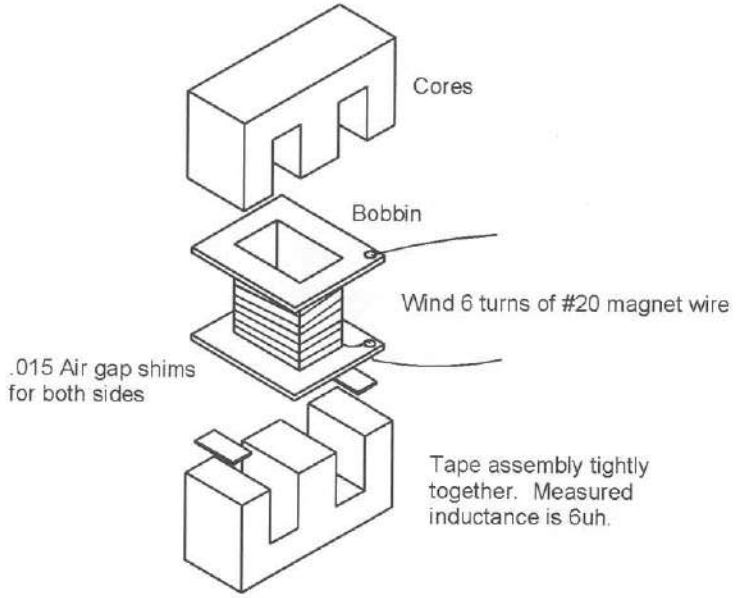

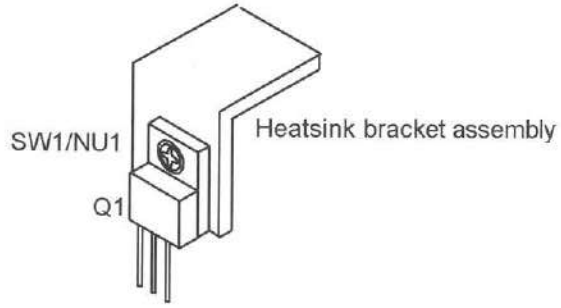

HSINK Bracket fabricated as per
step 3 from 1/16" aluminium piece.
Note hole for attaching tab of Q1

Figure 7-4 *Parts assembly and fabrication*

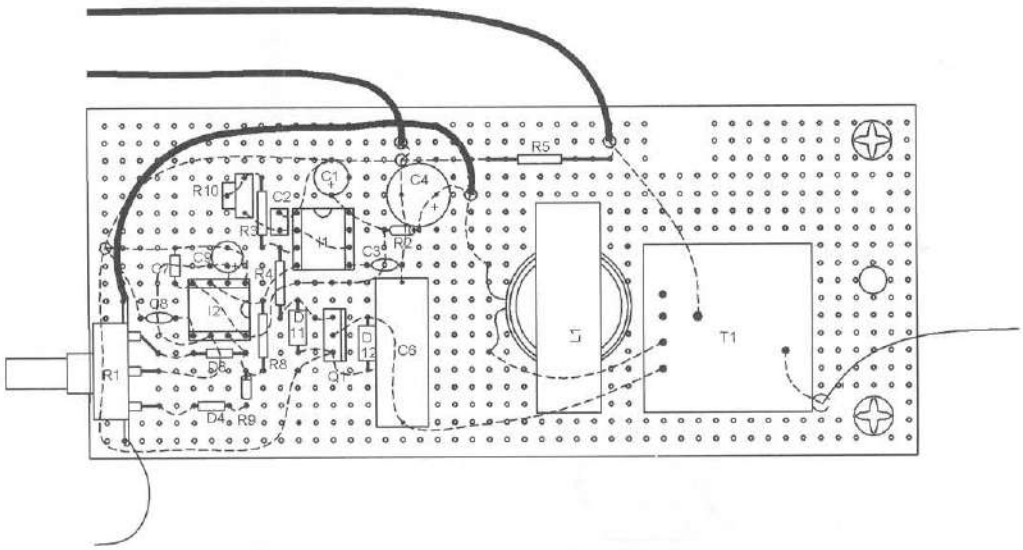

Thick dashed lines are direct connection runs beneath board of #20 buss wire (WR20BUSS) and are extended for the spark switch electrodes.

Thinner dashed lines are #24 buss wire (WR24BUSS) and component leads wherever possible.

Triangles are direct connection point junctions.

Solid black lines are external leads for input and output lines. Use red (WR20R) for +12 input. Use green (WR20G) for lifter - connection. Use black (WR20B) for com -12 input

Use 1/8-3/16 wide smooth globular solder joints for connections to C20A-J and D20A-J, R7 and HV output points. Thisis contrary to normal soldering but is necessary to prevent corona leakage.

Figure 7-5 *Wiring connections and external leads*

8. Fabricate a channel from a piece of 1/16-inch plastic material. Place it in the assembly and secure it at the corners using silicon rubber adhesive. You may also enclose it in a suitable plastic box.

   This step may not be required when used for another project referenced in this book.

Testing Steps

This step will require basic electronic laboratory equipment including a 60 MHz oscilloscope.

1. Preset the trimpot R1 to midrange and R10 to full counterclockwise. Short out the output leads using a short clip lead.
2. Obtain a 47K, 1-watt resistor and construct the spark gap "dummy load," as shown in Figure 7-2.
3. Obtain a 12-volt DC, 3-amp power converter* or a 12-volt, 4-amp rechargeable battery.*

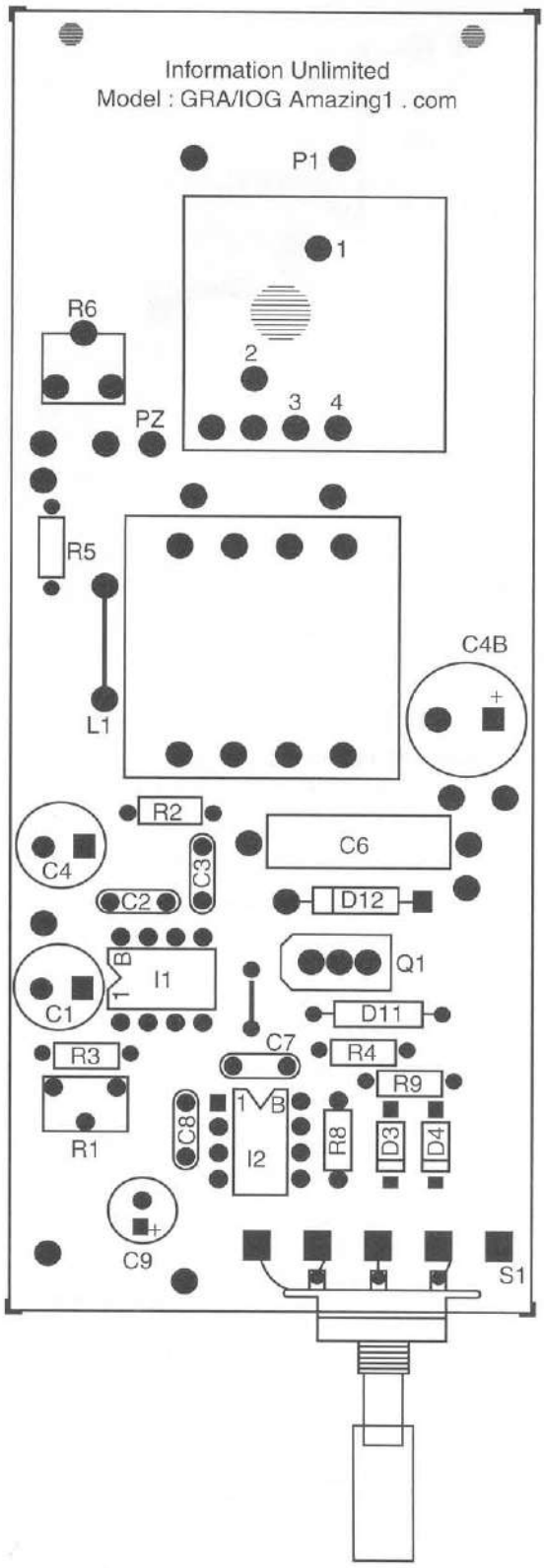

Figure 7-6 *PCB part identification*

4. Connect the input to the power converter and connect the scope, set to read 100 volts and with a sweep time of 5 usecs, to the drain of Q1.

5. Apply power and quickly adjust R1 to the waveshape shown in the inset of Figure 7-2. Note an input current dip of 100 milliamps or less. Check the heatsink of Q1, noting only warm to touch or slightly above 110 degree F.

   Note our laboratory-built units usually tune in with the pot set to 11 o'clock.

6. Remove the clip lead short in step 9 and connect the dummy load. Apply power and rotate R10 clockwise, noting the input current smoothly increasing to 1.5 amps and the spark increasing in energy. This control varies the ratio of off to on time and nicely controls the system current. Note that this system can easily provide 30 watts of usable power.

Table 7-1 High-Voltage, High-Frequency Driver Module Parts List

Ref. #	*Description*	*DB Part #*
R1	10K vertical trimpot	
R2, R4	Two 10-ohm, 1/4-watt resistor (br-blk-blk)	
R3, 5, 8, 9	Four 1K, 1/4-watt resistor (br-blk-red)	
R7	47K, 1-watt resistor (yel-pur-or)	
R10/S1	10K, 17 millimeter pot and switch	
C1	100-microfarad, 25-volt vertical electroradial leads	
C2	.0022-microfarad, 50-volt green plastic cap (222)	
C3,8	Two .01-microfarad, 50-volt disks (103)	
C4	1,000-microfarad, 25-volt vertical electrolytic capacitor	
C6	.22-microfarad, 250-volt metallized polypropylene	
C9	1-microfarad, 25-volt vertical electro cap	
C7	.1-microfarad, 50-volt cap, INFO#VG22	
D3, 4	Two IN914 silicon diodes	
D11	One PKE15, 15-volt transient suppressor	

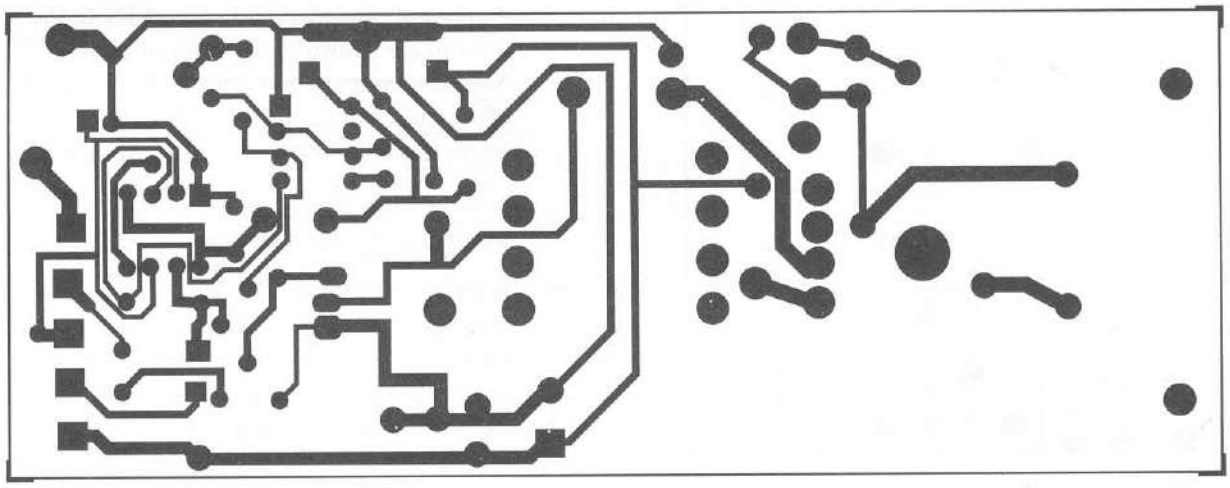

Figure 7-7 *PCB foil traces*

D12	1N4937 fast-switching 1-kilovolt diode	
Q1	IRF540 *metal-oxide-semiconductor field effect transistor* (MOSFET) transistor TO220	
I1, 2	Two 555 DIP timers	
T1	7-kilovolt, 10-milliamp mini-switching transformer	DB# IU28K089
L1	6 uH inductors (see text on assembly)	DB# IU6UH
PBOARD	5 × 2.8 × .1-inch grid perforated board; build to size per Figure 7-2	
PCGRA	Optional PCB	DB# PCGRA
WR20R	12-inch #20 vinyl red wire for positive input	
WR20B	12-inch #20 vinyl black wire for negative input	
WR20G	12-inch #20 vinyl green wire for output ground to craft return	
WR20KV	Four 20 kilovolt silicon high-voltage wires for output	
WR20BUSS	18 inches of #20 bus wire for spark gap and heavy leads (see Figure 7-5)	
WR24BUSS	12 inches of #24 bus wire for light leads (see Figure 1-5)	
HSINK	1.5 × 1-inch .063 AL plate created as per Figure 7-4	
SW1	One 6-32½ Philips screw	
NUT	Four 6-32 keep nuts	
12DC/7	115 VAC to 12 VDC, 3-amp converter	DB# 12DC/7
BAT12	12-volt, 4-amp, hour rechargeable battery	DB# BAT12
BC12K	Battery charger kit for above BAT12	DB# BC12K
GCAT1	*GENERAL CONSTRUCTION PRACTICES*	DB# GCAT1

Chapter Eight

Negative Ion Machine with Reaction-Emitting Rotor

Figure 8-1 shows a new concept in negative ion generation. A spinning rotor powered by the emitted ions themselves generates copious amounts of beneficial ions. Large volumes of ions can now be produced, as the area circumscribed by the rotor greatly reduces the local charge flux. This feature allows many times more ions without ozone-producing voltages.

Negative ions are highly beneficial and cause a sense of well-being, as well as rid the air of pollen and other breathable irritants. This is an excellent device for people suffering from asthma and other bronchial problems. It is also a nice conversation piece with a desktop unit's spinning rotor silently reaching a relatively high rotational velocity. The device operates from 115 VAC/12 VDC or a battery. The project utilizes a 25-kilovolts negative output power module requiring 12 volts DC at 500 milliamps along with our proprietary rotating emitter.

This is a beginner- to intermediate-level project requiring basic electronic skills, and one should expect to spend $25 to $50. All the parts are readily available, with specialized parts obtainable from Information Unlimited (www.amazing1.com), and they are listed in Table 8-1.

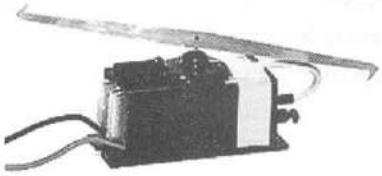

Figure 8-1 *The ion machine*

Precautions: Do not use this device in explosive or flammable atmospheres, as spark discharges may cause dangerous ignitions.

Benefits of Negative Ions

In the last several decades, a medical controversy has evolved pertaining to the beneficial effects of these minute electrical particles. As with any device that appears to affect people in a beneficial sense, there are those who sensationalize and exaggerate these claims as a cure for all aliments and ills. Such people manufacture and market these devices under these false pretenses and consequently give the products an adverse name. The Food and Drug Administration now steps in on these claims, and the product, along with its beneficial facets, goes down the tubes.

People are affected by the property of these particles, which increase the activity rate of cilia, whose function is to keep the trachea clean from foreign objects, thus enhancing oxygen intake and increasing the flow of mucus. This property neutralizes the

effects of cigarette smoking, which slows down this activity of the cilia. Hay fever and bronchial asthma victims are greatly relieved by these particles, and burn and surgery patients are relieved of pain and heal faster.

Tiredness, lethargy, and general worn-out feelings are replaced by a sense of well-being and renewed energy. Negative ions destroy bacteria and purify the air with a country-air freshness. They also cheer people up by decreasing the serotonin content of the blood. As can be seen in countless articles and technical writings, negative ions are a benefit to humans and their environment.

Negative ions occur naturally from static electricity, the wind, waterfalls, crashing surf, cosmic radiation, radioactivity, and ultraviolet radiation. Positive ions are also produced from some of these phenomenon and both of them usually cancel each other out as a natural statistical occurrence. However, many manmade objects and devices have a tendency to neutralize the negative ions, thus leaving an abundance of positive ions, which create sluggishness and most of the opposite physiological effects of its negative counterpart.

One method for producing negative ions is by obtaining a radioactive source rich in beta radiation (negative electrons). Alpha and gamma emissions from this source produce positive ions that are neutralized electrically. The resulting negative ions are directed by electrostatic forces to the output exit of the device and are further dispersed by the action of a fan (this method has recently come under attack by the Bureau of Radiological Health and Welfare for the use of tritium or other radioactive salts). This approach appears to be the more hazardous of the two according to the Consumer Product Safety people. The second method is to produce a potential level of negative high-voltage electricity without ozone and allow the creation of negatively charged particles by the high voltage.

Your negative ion generator produces ions via a high-potential, low-current source of DC power. The high potential causes negative charges to be produced at the sharp emission points of the rotor blade. The reactionary force of the emitted particles now causes the rotor to spin, allowing these negative ions to escape into the air stream due to the high-charge density at the sharp, pointed rotor tips. (The point of a pin will have a much higher charge density than a larger diameter spheroid for the same potential.) Ozone is kept at a minimum by keeping the voltage relatively low while allowing a sufficient charge density lets the negative particles escape into the air.

Circuit Description

The circuit (MOD25KV) consists of a high-frequency, high-voltage oscillator being fed into a multistage Cockcroft-Walton multiplier. This energy is converted into a potential of up to a negative 25,000 volts. The high-frequency stage consists of a transistor connected as a simple oscillator where its collector drives the primary winding of the resonant transformer (T1).

The high-frequency output of T1 is fed into a voltage multiplier stage consisting of a diode string (D1 to D5) and a capacitor string (C1 to C5). A 12-volt DC wall adapter (T2) powers the unit. A separate ground is required for optimum performance and involves connecting the negative 12 volts to earth ground. This is done by connection to the AC receptacle plate or ground pin. This ground provides a virtual ground for the ions.

A charge concentration occurring at the ends of the rotor blade's points now produces ions, and reactionary forces move the rotor at a high speed. Ions are produced at a high rate as the effective emitter area is equal to that of the rotating rotor. Also, charge neutralization is minimal using this method and a high ion current is generated.

The output of the unit can be approximated by the fact that a Coulomb charge equals the current multiplied by the seconds. There are also $6.25 \times E18$ negative chargers per Coulomb and the maximum current to the emitters is 400 microamps. Therefore, the unit can produce $6.25 \times E18 \times 200 \times E\text{-}6 = 2.5 \times 10E15$

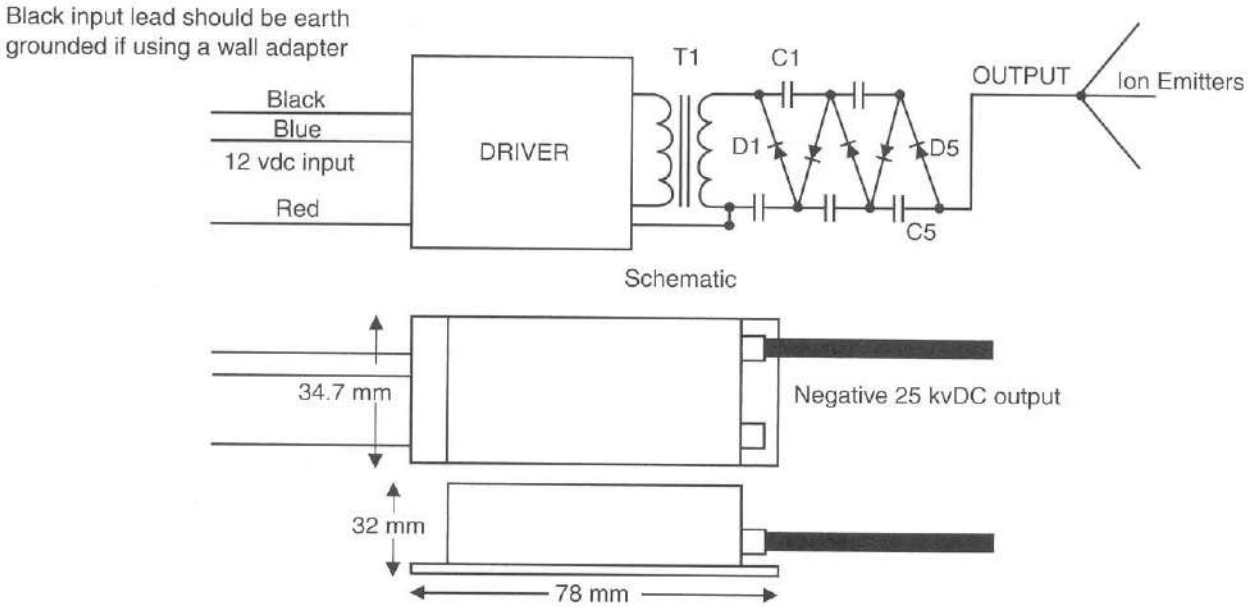

Function	Value	Notes	Other
Input Voltage	12 vdc		
Input Current (No load)			
Input Current (load)	400 ma		
Input Watt (No load)			
Input Watt (load)			
Output Volts	–20 kvDC		
Output Configuration	Single Output		
Internal Operating Frequency	35 KHz		

Use a 12 vdc/.5 amp DC wall adapter or other suitable power supply.
Always check entire system for any excessive heating.

Figure 8-2 *Circuit schematic*

negative charges per second. This is usually sufficient for a large room.

Assembly Steps

1. Lay out and identify all parts and pieces. Verify them with the parts list.
2. Carefully fabricate the rotor blade as shown in Figure 8-3 and note that it must be balanced for optimum rotational velocity and ion emission.
3. Position a common plastic pushpin (PIN1) and hot glue or epoxy to the module as shown. Glue is more forgiving if should you ever wish to replace the pin.
4. Carefully strip about 3/4 of an inch of insulation from the output lead. Tin and solder it to the bottom of the actual pin. This connection point must allow complete clearance of the entire bearing section of the rotor assembly when in place.
5. Wire up the wall adapter (T2) and ground the lead using (WN1) wire nuts, as shown in Figure 8-4.

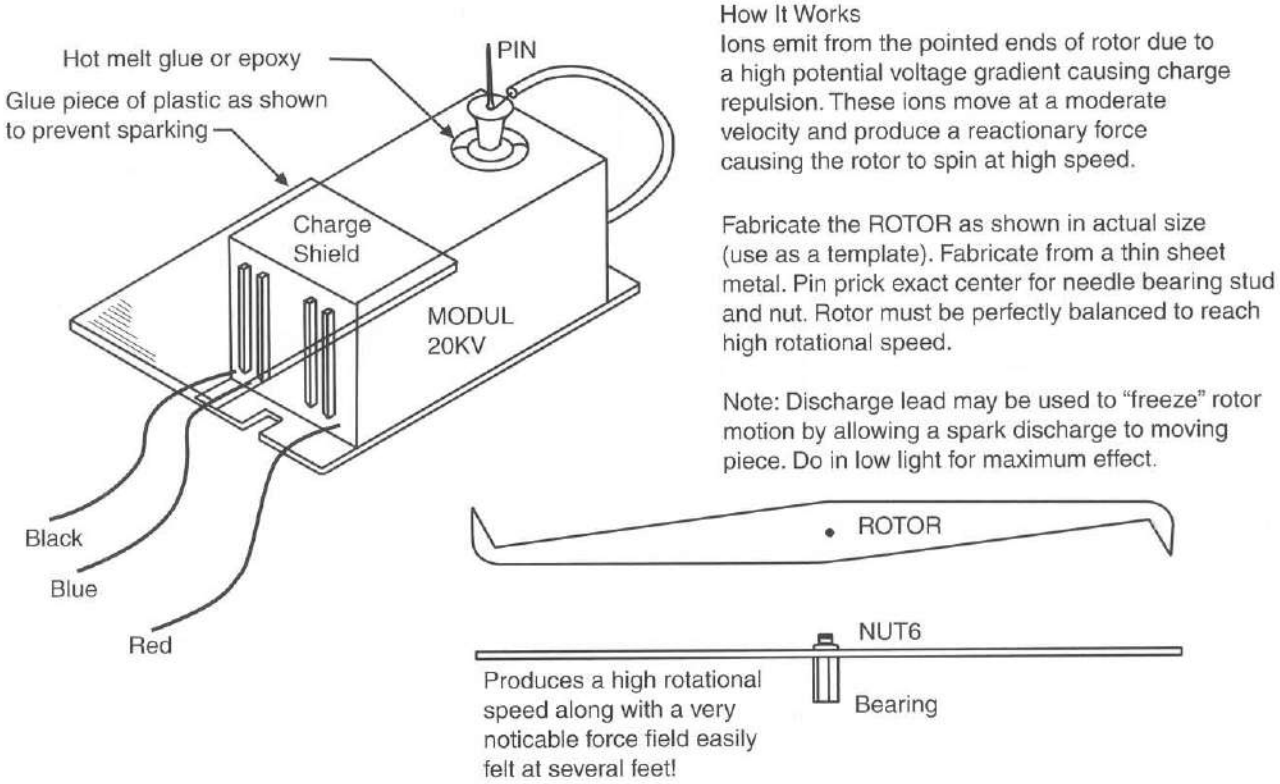

Figure 8-3 *Isometric view of the overall unit*

6. Glue on the CS1 charge shield plate to prevent premature sparking to the metal heatsink of the module. Also, stick on the rubber feet.
7. The unit is perfectly usable. However, you may want to enclose it in some sort of plastic box. Always use good ventilation and make sure the box is large enough or about 1½ times the diameter of the rotor.
8. Find a suitable location, such as a nonmetallic table, to place the unit on. Place the rotor blade on the pin and verify it is unobstructed. Then connect the grounding lead to the receptacle mounting screw and plug in the T2 adapter. The rotor should begin rotating and quickly reach a high speed.

Notes

Ions are now being emitted into the air and can easily be detected by holding a fluorescent tube or a small neon indicating lamp (LA1) near the unit, noting a flashing. This must be done in the dark. You can also place a piece of paper near the base of the unit and note the force field generated that tries to pull the paper.

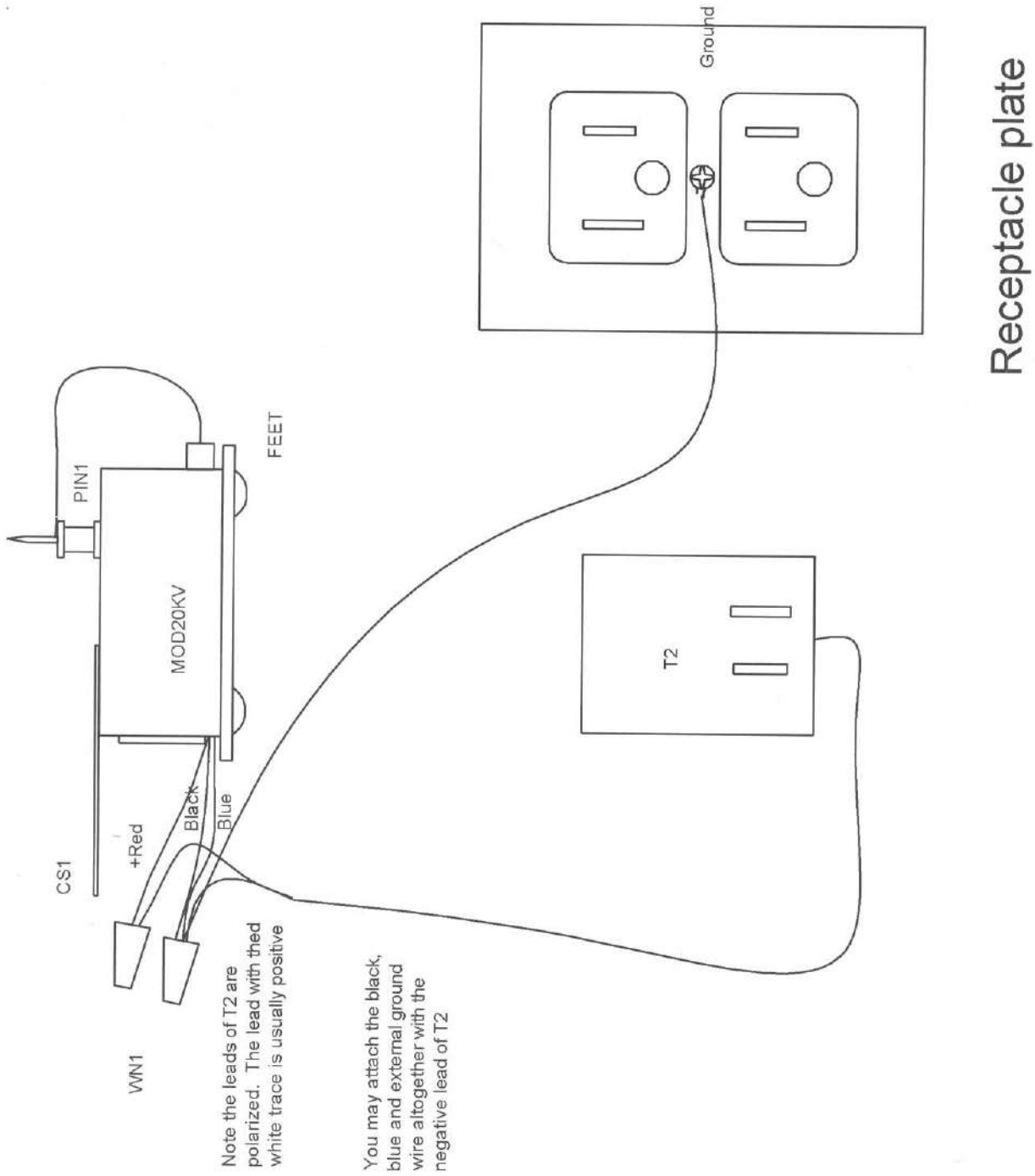

Figure 8-4 *Side view showing power connections*

Table 8-1 Negative Ion Machine Parts List

Ref. #	*Description*	*DB Part #*
MODULE	Negative 20-kilovolt module reworked	DB# MOD20KV
T2	12-volt DC, 500-milliamp wall adapter	DB# 12DC/.5
ROTOR	Metal fabricated rotor	DB# ROTOR
PIN	Common plastic pushpin	
BEARING	#6-32 threaded standoff	
NUT6	6-32 hex nut	
CS1	$2\frac{1}{4} \times 1\frac{1}{2}$-inch-thin, $\frac{1}{16}$ to $\frac{1}{8}$-inch-thick plastic	
WN1	Small wire nuts	
FEET	Four stick-on rubber feet	

Chapter Nine

Kirlian Imaging Project

Kirlian photography uses *cold electron emission* to expose a photographic film. Cold electron emission is the result of electrons accelerating in an electric field. These accelerated electrons ionize the air and recombine producing ultraviolet light that is mostly invisible to the naked eye. This phenomenon is commonly known as *corona*. Many living objects are claimed to emit this radiation that will vary according to the health and condition of the object being exposed. This in itself is now subject to scientific research in material analysis. A more "psychic application" can be seen in the practice of radiation being referred to as an aura and being dependent on other more metaphysical functions. This project describes a simple method of producing Kirlian images of small objects and is an introduction to those who want to explore this interesting field. Kirlian imaging ranges from the psychic to materials analysis. Often it is used for experiments in which it is claimed that objects all possess a unique aura signature. This depends on the subject's mental makeup and condition at the time. Basically, it is a form of corona discharge that occurs as a precursor to a dielectric breakdown by most conductive objects when placed in a high-frequency, high-voltage field. Corona is a form of electrical leakage occurring without actual air breakdown such as a spark discharge. A corona discharge possesses ultraviolet emissions that easily develop film and thermographic paper, producing an image print.

This is an intermediate-level project requiring basic electronic skills and one can expect to spend $25 to $50. All parts are readily available, with specialized parts obtainable through Information Unlimited (www.amazing1.com). The parts are listed in Table 9-1.

The system is simple and built from readily available parts (see Figure 9-1). The builder may deviate from what is shown as long as the basics are adhered to. The system requires a high-voltage, high-frequency module, as shown in Chapter 10 where it will be used to supply the burning plasma for the plasma pen project.

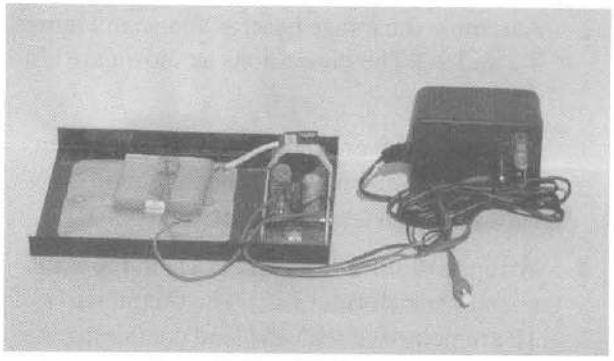

Figure 9-1 *A complete unit*

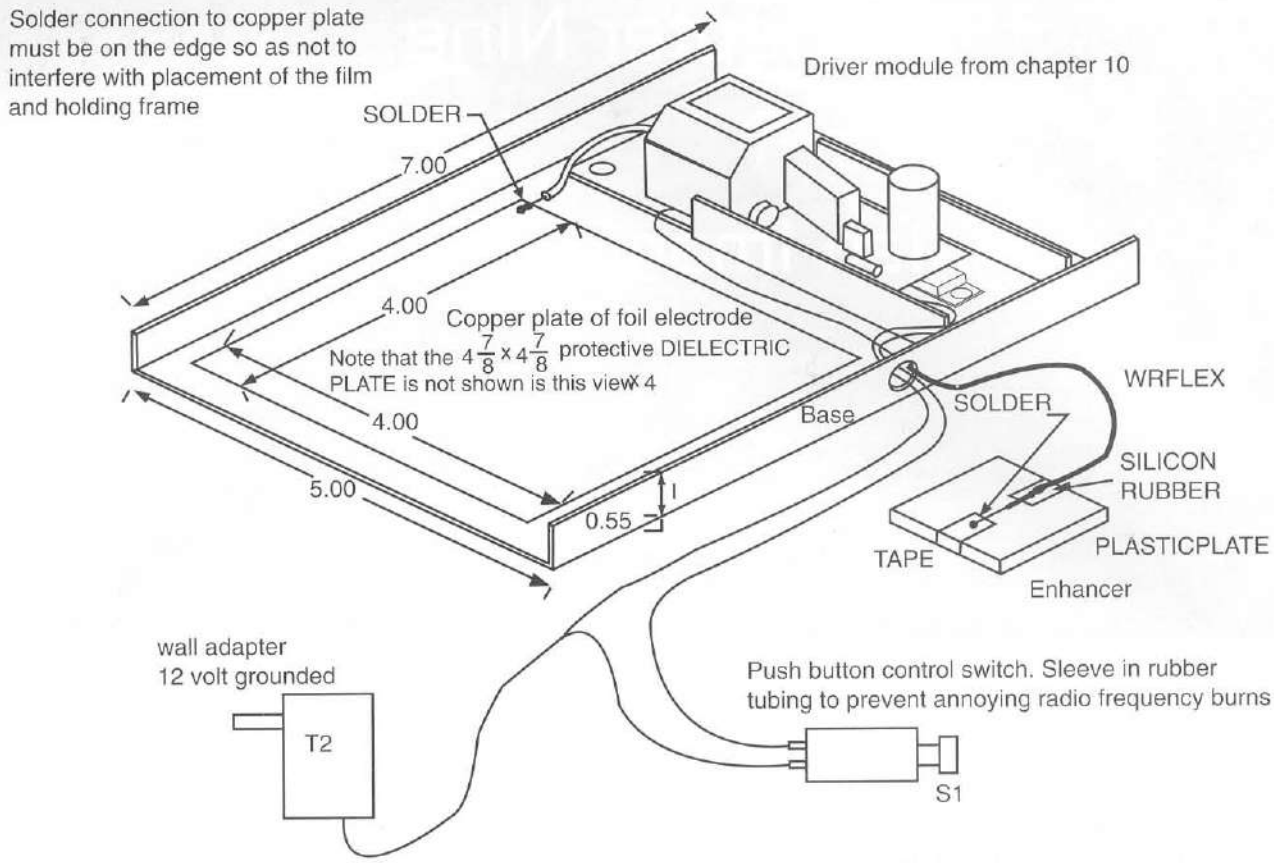

Figure 9-2 *Isometric of the image base and charge plate*

Assembly Steps

If you are a beginner, it is suggested to obtain our *GCAT1 General Construction Practices and Techniques*. This informative literature explains basic practices that are necessary in proper construction of electromechanical kits and is listed in Table 9-1.

1. Assemble the driver module, as shown in Figures 10-2 and 10-3 in Chapter 10. Verify proper operation before using.
2. Assemble the image base, as shown in Figures 9-2 and 9-3. The dimensions as shown are not critical.
3. Mount the driver module and solder the output lead as shown. Route the input and high-voltage return lead to the ENHANCER.
4. Wire the pushbutton switch (S1) to the wall adapter transformer (T2). The output wires of T2 are polarized with the lead containing the white trace, usually the positive. It is a good idea to cover the entire body of S1 except the plastic actuator; any contact to metal will result in small, very annoying burns. The wall adapter recommended has a third pin being an isolated ground for the high-frequency return.

Testing Steps for the Circuit

These steps usually will not require any special testing equipment.

1. Power up the unit and activate S1. Place your finger on the insulated plate and note a bluish corona discharge occurring under your finger. You may feel some heat or a tingling sensation. Try this for only up to 20 seconds.
2. Obtain some thermographic fax paper and place it on the dielectric plate. Place your finger on the paper and energize the circuit for 10 to 20 seconds. You will note an image on the paper.

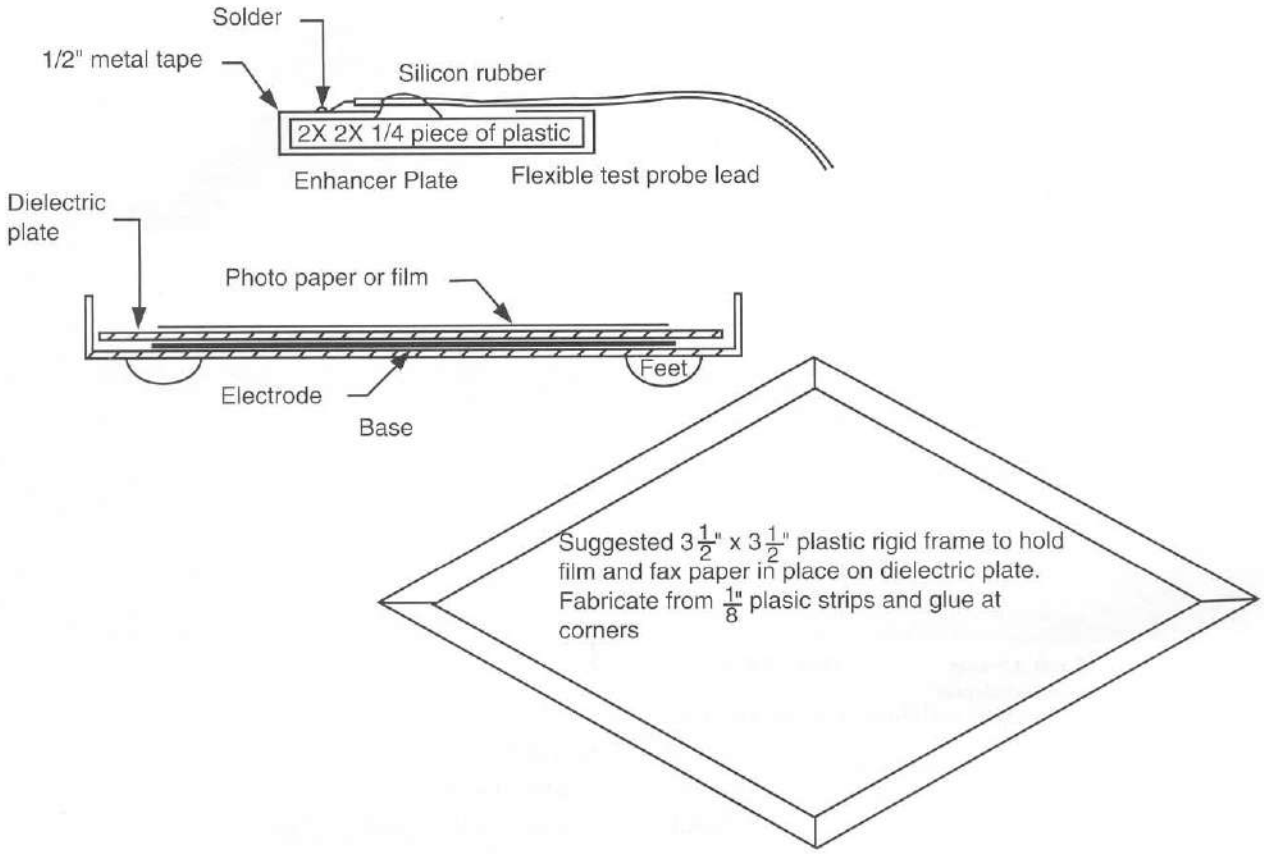

Figure 9-3 *Image base and charge plate*

Try it again with a metal object such as a coin on the dielectric plate and place the enhancer on the object. Push the button for 5 to 10 seconds and note an image forming.

3. You can upgrade your image to an actual photograph by using actual camera film. The old Polaroid 600 or other similar instant film will work. You must work entirely in the dark to avoid film exposure to any ambient light. The objective is to place the film on the dielectric plate along with the object to be photographed and the enhancer placed on top.

Notes

You will note that a few variables here can affect performance: the output voltage of the driver module and the dielectric plate's thickness and dielectric properties. The dielectric plate is important because it must form a high enough capacity between the object and the contacts to allow an adequate corona current to flow to create an image. The thinner the plastic dielectric plate, the more corona current. However, you must not allow a breakdown to occur by using material that is too thin, as this can produce a painful burn.

Many different sources of information, including some excellent books, are available on the applications, methods, and uses of Kirlian photography. You are encouraged to continue to investigate this unusual electronic phenomenon.

Table 9-1 Kirlian Imaging Parts List

Ref. #	*Description*	*DB Part #*
DRIVER	Driver module from Chapter 10	DB# MINIMAX7
BASE	6 × 7-inch plastic piece, formed as shown in Figure 9-2	
COPPER ELECTRODE	4 × 4-inch, thin piece of copper	
DIELECTRIC PLATE	5 × 5 × .02-inch piece of polypropylene sheet	DB# POLYP20
PLASTIC PLATE	2 × 2 × 1/4-inch plastic plate	
TAPE	Four inches of 1/2-inch solderable metal sticky tape	
FEET	Four sticky rubber feet	
T2	12-volt, 1.5-amp groundedadapter with third pin	DB# 12DC/1.5G
FRAME PIECES	Four strips of 1/8-inch plastic to fabricate the frame as shown in Figure 9-3	
WRFLEX	12 inches of flexible test lead wire	
S1	Push-button switch reworked as shown to prevent burns	
GCAT1	General construction practices	DB# GCAT1

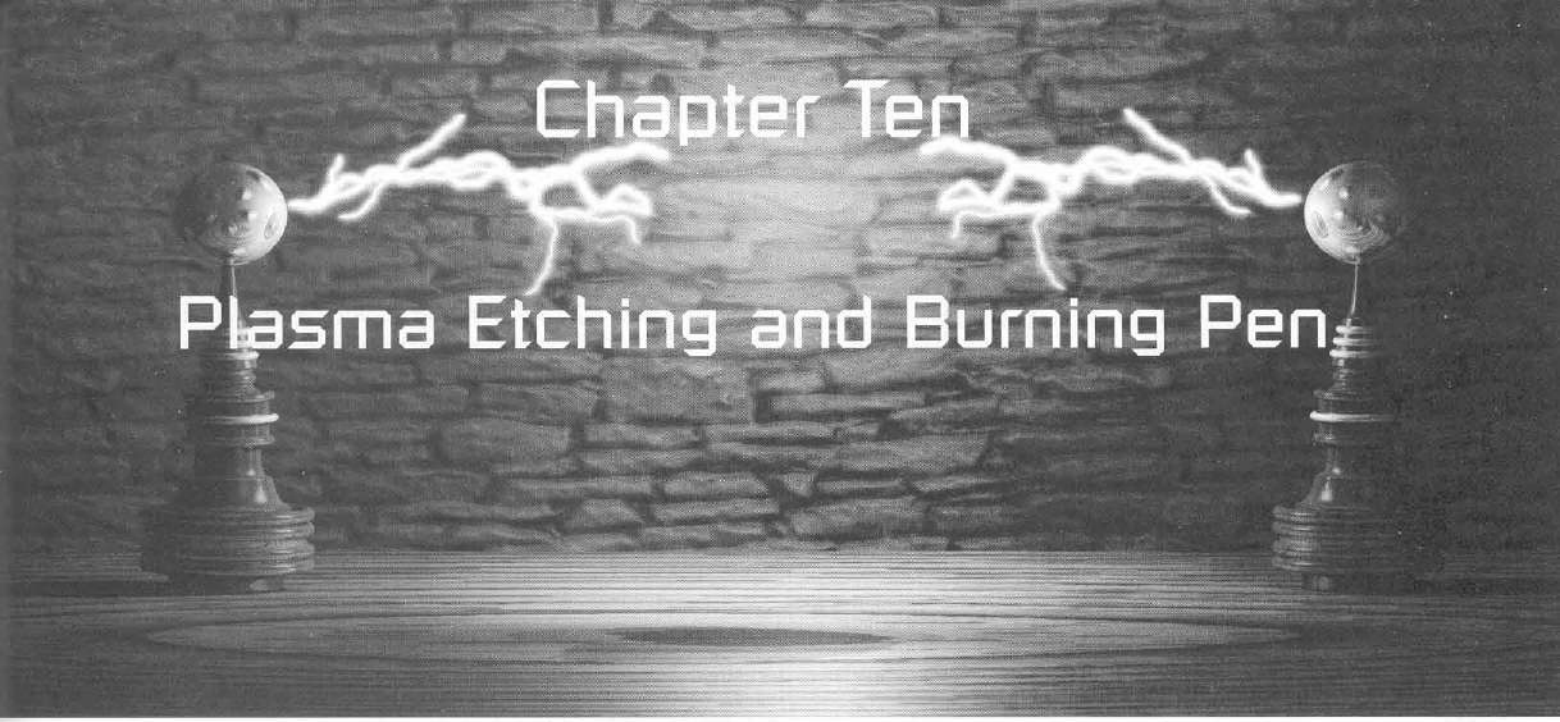

Chapter Ten

Plasma Etching and Burning Pen

A plasma pen uses high frequency, high voltage to burn or etch permanent markings into many different materials (see Figure 10-1). With a little practice, the user can create many intriguing designs of fine, lace-like etches. Names and other text can easily be etched into almost any organic material. Wood, paper, plastics, pumpkins, gourds, eggs, and leaves can all be marked with fine and fancy designs or inscriptions. The pen's other applications include Kirlian photography, aura enhancing, and magically lighting household fluorescent and neon tubes, all without any connecting wires, providing a great magic act. You can also use this for plasma experimentation or even removing warts.

This is an intermediate-level project requiring basic electronic skills. Expect to spend $25 to $35. All parts are readily available, with specialized parts obtainable through Information Unlimited (www.amazing1.com), and all of them are listed in Table 10-1.

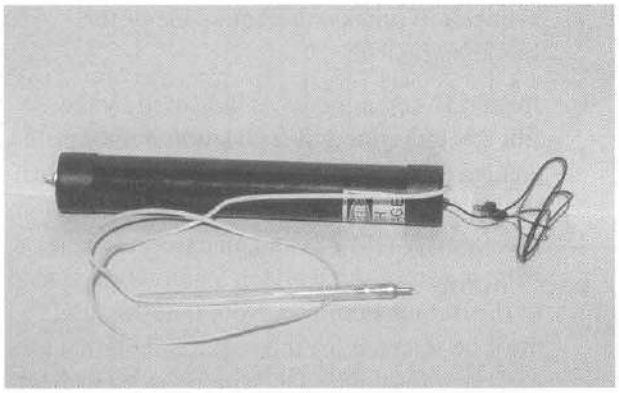

Figure 10-1 *Photo of assembly*

The system is shown in two parts: the power driver and the pen or etching section. These are connected together via a suitable, flexible, high-voltage wire. The power driver consists of the electronics module and the internal batteries for portable use. A jack is provided for external use from a 12 VDC wall adapter or another suitable source. This section is housed in a tubular enclosure with plastic end caps as shown.

Driver Circuit Description

The circuit is a frequency, high-voltage oscillator that consists of transistor Q1 connected as a simple oscillator where its collector drives the primary winding PR1 of the resonant transformer T1. Feedback is obtained via a second winding (FB) and fed to the base of Q1 through a current-limiting resistor (R1). Resistor R2 biases Q1 into conduction and initiates the oscillation (see Figure 10-2).

Capacitor C3 speeds up the turn-off time of Q1, while resistor R3 and capacitor C5 provide a filter to prevent oscillation at the self-resonant frequency of T1. Resonating capacitor C4 resonates the transformer

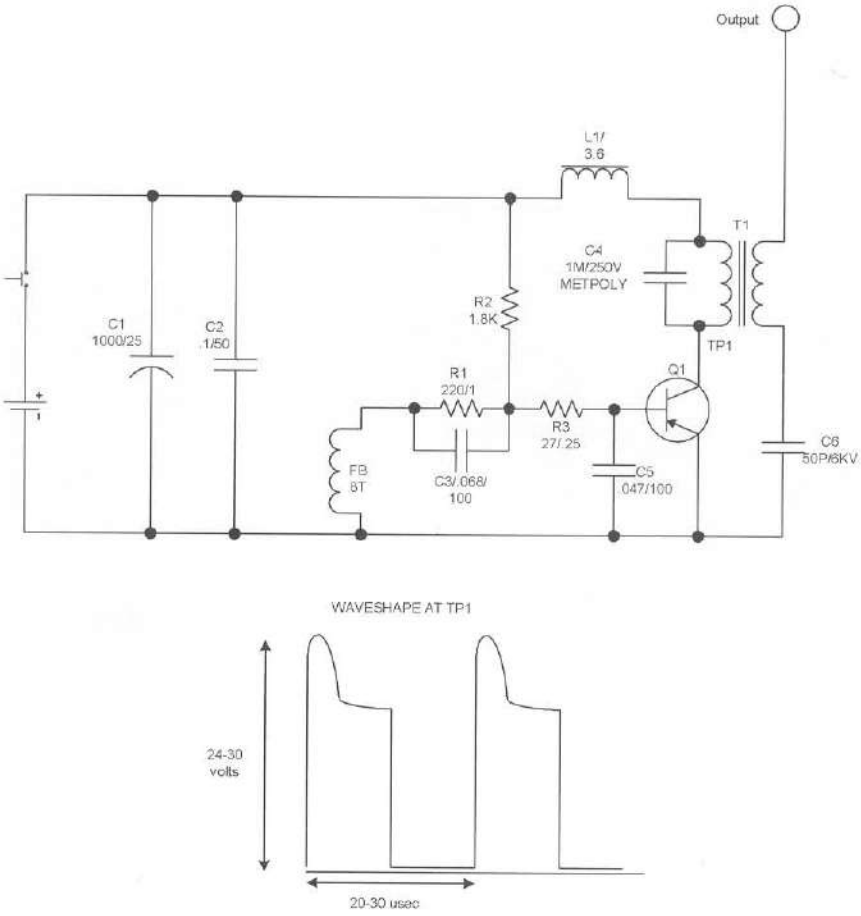

Figure 10-2 *Circuit schematic*

to around 35 KHz. The current-limiting inductor L1 limits the short-circuit current to a noncatastrophic value, and capacitors C1 and C2 bypass any signal to ground.

Driver Circuit Assembly

1. Lay out and identify all the parts and pieces. Verify them with the parts list, and separate the resistors as they have a color code to determine their value. Colors are noted on the parts list.
2. Obtain the available *printed circuit board* (PCB), as shown in Figure 10-3, or fabricate a piece of perforated circuit board to the PC as laid out on the PCB. Note the size of the PCB is $3\frac{1}{2} \times 1\frac{3}{8}$ inches and contains the silk screening that shows the positioning of the mounted parts.
3. If you are building from a perforated circuit board, it is suggested that you insert the components starting in the lower left-hand corner. Pay attention to the polarity of the capacitors that have polarity signs and all semiconductors. Route the leads of the components as shown and solder as you go, cutting away unused wires. Attempt to use certain leads as the wire runs and follow the foil traces on the drawing as these indicate the connection runs on the underside of the assembly board.
4. Insert the components as indicated by the silk-screen printed identification numbers and compare this with the bill of materials. Attach three 6-inch, #22-20 leads as shown for the input power (P1, P2) and an external high-voltage return. Also attach a high-voltage lead to the output as shown. Note that this lead must be selected for the required length. Use a silicon, 20-kilovolt DC wire or an equivalent.

Note the ground lead that connects to the metal frame under the screw head as shown.

5. Double-check the accuracy of the wiring and the quality of the solder joints. Avoid wire bridges, shorts, and close proximity to other circuit components. If a wire bridge is necessary, sleeve some insulation onto the lead to avoid any potential shorts.

6. Cut the metal bracket (BRK1) from a piece of .062 sheet aluminum and make the final assembly, as shown in Figure 10-4. Note that the metal tab of Q1 must be insulated from the bracket as shown on the mounting scheme. This piece is also the heatsink for Q1.

Driver Board Testing

This step will require basic electronic laboratory equipment. A 60 MHz oscilloscope is suggested.

1. Obtain a 12-volt DC source, preferably with a volt and ammeter. Leave the output leads as open circuit and apply power. Note a current draw of less than 250 milliamps. If you have a scope, observe the waveshape at the collector of Q1, as shown in Figure 10-2.

2. Contact the high-voltage output lead to the bracket and note that you can draw a ½-inch arc with the input current going to 1 amp. This completes this module.

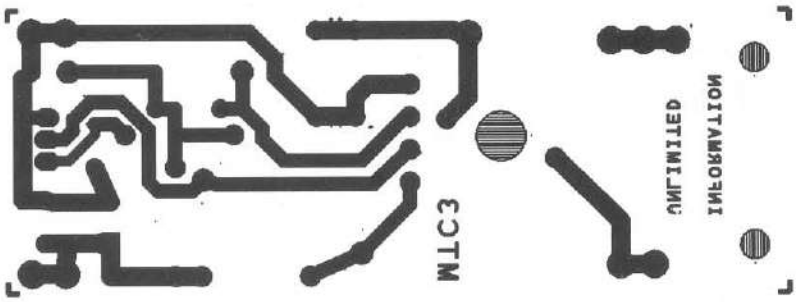

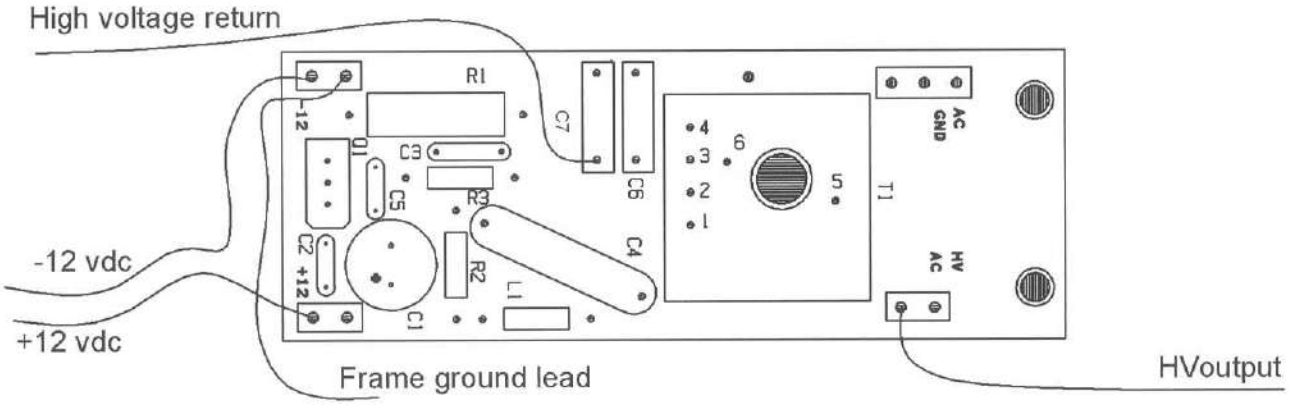

Figure 10-3 *Assembly board*

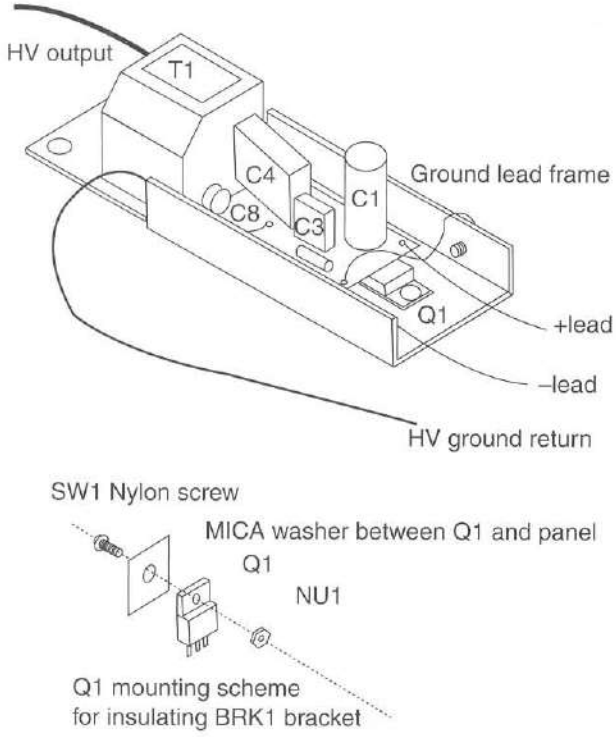

Figure 10-4 *Isometric of assembly*

Mechanical Assembly

You will need some basic cutting tools for the following steps.

1. Fabricate TUB2, as shown in Figure 10-5, and then make the caps CA1 and CA2 for passage of the output leads and for switch S1, jack J1, and indicator lamp LA1.
2. Insert the components and wire them up as shown. Note the current-limiting resistor R10. The exiting leads should be tied in a knot to relieve any strain.
3. Assemble the pen section as shown and solder the lead to the brass POINT. Shim the lead and POINT, and mechanically secure them in place.

Sample Demonstration

1. Obtain a 4 × 6-inch square piece of 1/4-inch masonite plywood, as shown in Figure 10-6. Moisten it with a sponge and place it on top of an approximately equal-size metal plate attached to the ground lead.
2. Contact the surface with the plasma pen and note the burning action. Experiment for the best results with other materials.

Note that your pen will light fluorescent lamps in your house just from its proximity to them, and it can also be used for Kirlian photography.

Switch S1 selects either internal batteries or external 12 volts, jack J1 is for the external 12 volts. LED indicates when the system is powered up. Resistor R1 limits the LED current. These components are mounted on the rear cap CAP2.

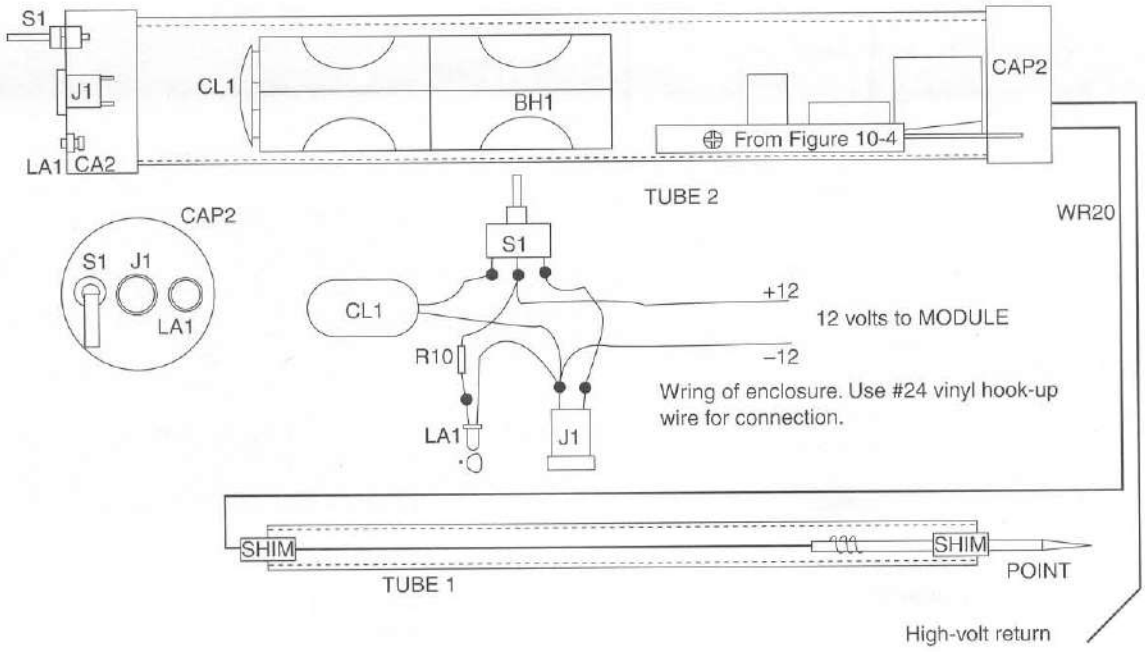

The POINT can be a 1/5 to 1/4 brass rod that can be soldered to. The SHIMS can be rubber tubing that strain relieve and position the feed lead and burning point. TUBE1 can be a 3/8" diameter plastic tube.

Figure 10-5 *Final enclosure and wiring*

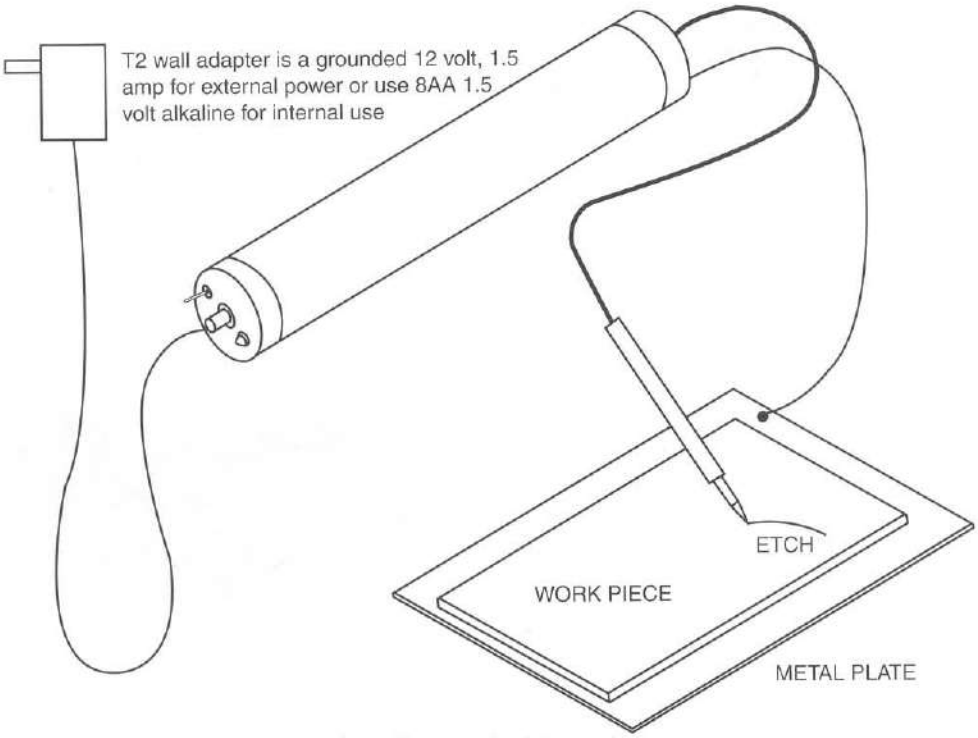

For optimum performance, use a piece of mansonite, thin wood, etc.
Place on top of metal plate connected to the high-voltage ground lead.
You may moisten the beginning area to start the etch.

Figure 10-6 *Sample demonstration*

Table 10-1 Plasma Etching and Burning Pen Parts List

Ref. #	Description	DB Part #
R1	220 ohms, 1 watt (red-red-br)	
R2	1.8K, 1/4-watt (br-gray-red)	
R3	27 ohms, 1/4-watt (red-pur-blk)	
C1	1,000-microfarad, 25-volt vertical electrolytic capacitor	
C2	.1-microfarad/50-volt small, plastic, capacitor	
C3	.068-microfarad, 50-volt plastic capacitor (683)	
C4	1-microfarad, 250-volt metallized foil large, blue, plastic capacitor	
C5	.047-microfarad, 100-volt plastic capacitor (473)	
C6, 7	Two 25-picofarad, 6-kilovolt ceramic capacitors or a single 50-picofarad, 6-kilovolt unit	
Q1	MJE3055T TO220 power tab NPN transistor	
T1	Special high-frequency transformer	DB# 28K089
WR20	24-inch #22-20 vinyl stranded hookup wire	
PCMTC	MTC3 printed circuit board or use a 3 1/2 × 1 1/2 × .1-inch grid perf board	DB# PCMTC
BRKT1	Create as shown in Figure 10-4	
TUBE2	12 × 2-inch ID schedule, 40 PVC tubing	
TUBE1	3/8 × 1/4-inch ID length of plastic tubing	
CA1, 2	Two mating flat-end caps for TUBE1	
POINT	1/8 × 3-inch brass rod filed to shape	
LA1	*Light-emitting diode* (LED), any color	
R10	220 1/4-watt resistor (red-red-br)	
CL1	Battery snap clip	
BH8	Eight-AA-cell battery holder	
S1	*Single pole, double throw* (SPDT) small toggle switch	
J1	Chassis-mounting DC power jack	
WR24	48-inch, #24 vinyl hookup wire	
WR20	24-inch, 20-kilovolt, silicon, high-voltage wire	
NEONX21	Assembled high-voltage module (see Figure 10-3)	DB# NEON21

Chapter Eleven

How to Electrify Objects and Vehicles

Figure 11-1 shows two board-level devices capable of producing electrical shocks. The larger circuit generates low-energy, 20,000-volt pulses similar to an automotive ignition system. Although these pulses are nonlethal, they can still be very painful when contacted. The smaller circuit generates a steady 5-milliamp, low current at 2,000 volts. By itself, it is not lethal but again can produce a painful shock. If the output is allowed to charge a capacitor to a sufficient energy level, then the rules change and a potentially lethal situation exists. This level usually is any value over 25 joules as computed from W (joules) = half of C (capacitance in farads) $\times$ V^2 (in volts) that the capacitor is allowed to charge too.

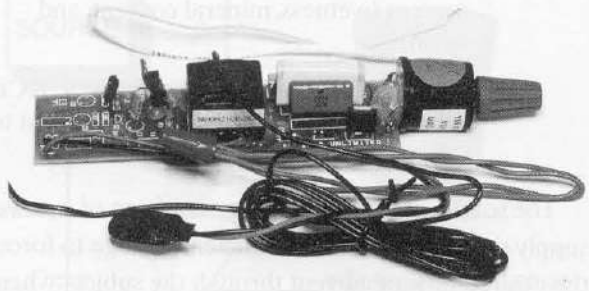

Figure 11-1 *Photograph of devices*

Caution: The use of electrification to prevent human intrusion is illegal. This application is legally referred to as "man trapping." Consult legal advice before using this if human contact is intended!

Warning: Never expose any person wearing a pacemaker or having a known physical condition to any form of electrical shock.

Data shows how to use several shocking systems with different types of outputs and applications. Even though the energy levels may be well below dangerous levels, secondary reactions can cause severe injury. Use caution if intended for human contact, and never connect the DC output version to a capacitor as a lethal charge may exist.

The following information is intended to serve as a guide to those contemplating using our equipment or other devices capable of producing a mild, severe, or possibly lethal electric shock. Any device of this nature, if used against people, may be considered a potential weapon. Remember that what may be a mild shock to one person could be harmful to another. Secondary effects, resulting from involuntary action, must also be considered.

The devices sold are intended for laboratory experiments or for use against animals. They should only be used for intimidation purposes to prevent an encounter. Human contact must be totally justified,

as serious consequences can result from the illegality of their use.

Even though our electronic devices provide an average current below what is considered lethal to the average person, circumstances such as a person's heart condition or other physical parameters can influence both the immediate effect and after contact reaction.

Table 11-1 shows certain effects from various electrical currents. Remember that the indicated current must have an appropriate voltage behind it to flow through a given resistance, such as the human body. When working with sources that have storage capacitors (especially dangerous sources), one must take into account the high peak current that can result for a period of time and result in possible electrocution if this duration of time is sufficient.

Table 11-1 Electrical current scale

Voltage	*Degree of pain*	*Examples*
.01 to 1 ma	Tingling to annoying	Static electric shocks
1 to 5 ma	Annoying to painful	Spark plugs, TV picture tubes, trip current of GFI
5 to 20 ma	Painful to very painful	Oil burner ignition, bug killers, stun guns
20 to 50 ma	Very painful to possibly lethal	Neon sign transformer, old tube radios
50 to 100 ma	Possibly lethal to lethal	Low-powered transmitters, capacitor charges for lasers
100 to 500 ma	Lethal to deadly	Medium-powered transmitters, laboratory power supplies
500 ma to 1amp (+)	Deadly, with usually no second chance	Electric chair, 220-volt house current under certain circumstances

Supplementary Electrification Data and Information

The following information explains how to place an electrical charge on an object to protect against animal damage, intrusion, or theft, and the construction of several energy sources is referenced. These must be treated with caution and never be used on human beings without proper discretion due to potential injury or electrocution. Accidental contact must also be avoided. Many laws unfortunately are made to protect the criminal, and therefore any attempt made to protect oneself or property using these devices could result in a suit by the criminal if he or she can prove injury.

The methods for electrifying objects and areas will be shown as several examples that the user may adapt to his or her own needs. To successfully electrify, an object requires the following conditions to exist. Note that the following pertains to flowing electric current and not to static or super-high voltages. Figure 11-2 provides the basic explanation.

- The object of contact must be of a conductive nature such as metal, conductive paint, or wet ground.
- The subject (the intruder or animal) must supply the link to complete the circuit; that is, his or her physical extremities must come in contact with the object, along with a second common surface such as the ground, water, or another object anticipating simultaneous contact. No current flows unless contact is made to complete the circuit by the subject physically touching the object.
- The electric current flows from the +lead of SOURCE to the −lead. In doing so, it flows from the object to the point of contact by the subject to the ground and back to SOURCE via the −lead. This produces a current flow through the subject, developing an electrical shock. The severity of this shock is dependent on:
    - How well the ground will conduct this current (wetness, mineral content, and so on)
    - The electrical parameters of the SOURCE, that is, the voltage and available current to support this voltage

The source of electrical energy is a form of a power supply made to generate a sufficient voltage to force the desired flow of current through the subject when contact is made. This can take on many different forms depending on the applications and the desired results. If a system was built to kill a human being, a power supply with a current supply capability of ½ to 20 amps would be necessary to support a voltage high

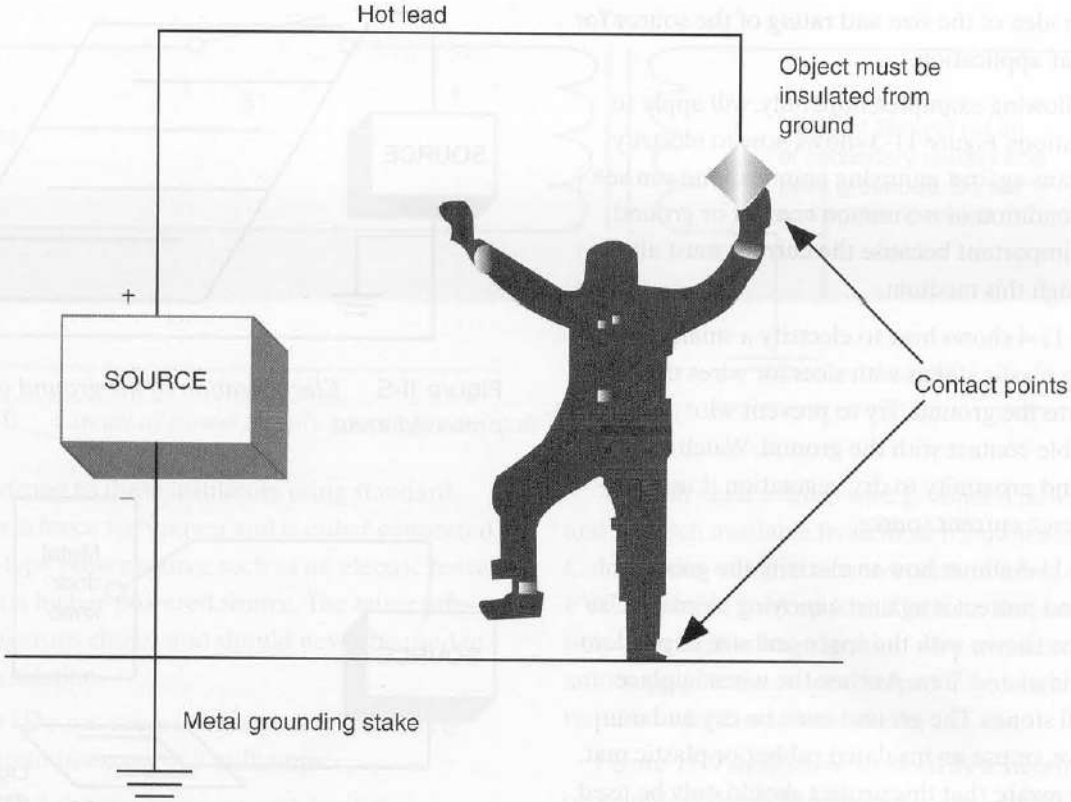

Figure 11-2 *Electrification principle*

enough to cause this current to flow, usually several thousand volts. (These parameters are similar to those used in electric chairs.) Currents of more than 1/10 of an amp are considered lethal to the average human under certain circumstances, 1/100 of an amp produces intense pain, and 1/1,000 of an amp is felt with no difficulty and is very annoying.

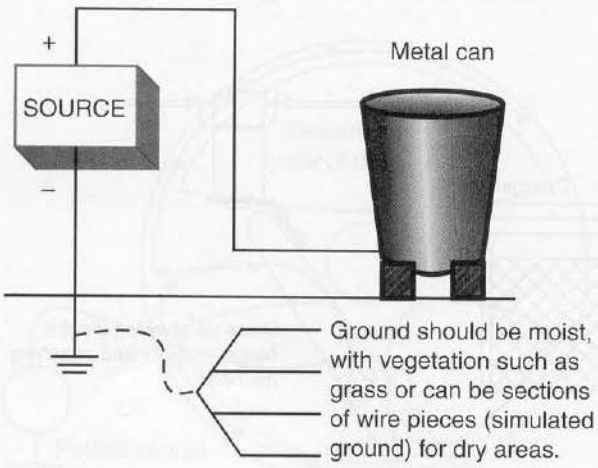

Figure 11-3 *Electrification of a garbage can or similar object*

Special pulse-type energy sources, similar to capacitor discharge ignitions, can be used relatively safely as peak currents are high, yet the average is low. A source of this type is the pulsed model described in this project. This source is capable of generating the high-peak current pulses and maintaining a substantial voltage on the body of a vehicle in spite of leakages due to steel-belted tires and so on. The source is also relatively safe to exposure but will produce moderate shocks. With these parameters, one

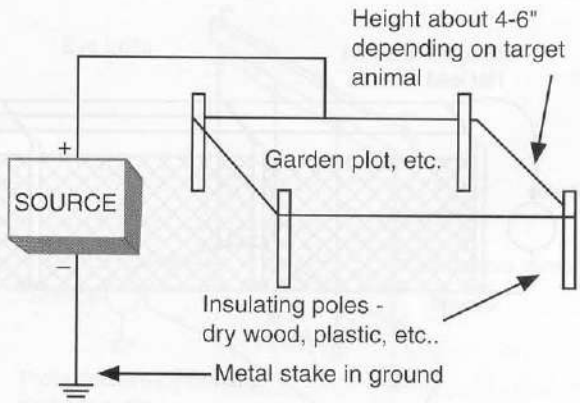

Figure 11-4 *Electrification of a small area*

can get an idea of the size and rating of the source for a particular application.

The following examples, hopefully, will apply to most situations. Figure 11-3 shows how to electrify garbage cans against annoying animals. One can see that the condition of a common contact or ground system is important because the current must also flow through this medium.

Figure 11-4 shows how to electrify a small garden area using plastic stakes with slots for wires that are pushed into the ground. Try to prevent wire droop and possible contact with the ground. Watch for fire hazards and proximity to dry vegetation if using a high, average current source.

Figure 11-5 shows how to electrify the ground of an area and protect it against annoying animals. Use #20 wire as shown with the space and size dependent on the animal and area. Anchor the wires in place with small stones. The ground must be dry and non-conductive, or use an insulated rubber or plastic mat. Please be aware that this project should only be used with a low-energy pulsed system or a hand-cranked magneto. Do not create this system if you have a heart condition.

Figure 11-6 shows a prank, but this is only to be done using a low-energy pulsed system or a hand-cranked magneto. The victim stands on a rug to open a door and zap! You turn the power on.

Figure 11-7 shows the electrification of a fence. This method is for educational use only, as serious injury can result either from the electric shock or the physical reaction. The intended use would be for military or other high-security situations.

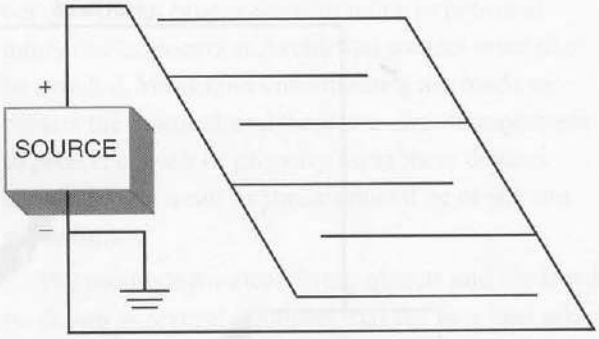

Figure 11-5 *Electrification of the ground or protected areas*

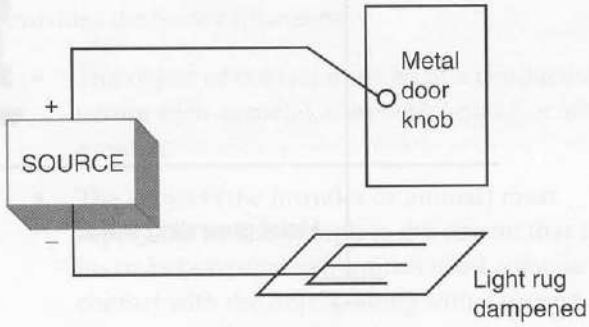

Figure 11-6 *Door knob prank*

The object here is to electrify the top-most wire of a chain-link fence, as anyone attempting to crawl over will no doubt come in contact with the top wire. This is a very effective method and can cause severe injury and even death from electrocution or physical injury from falling. The best method is to simply replace the original top-most wire with a standard, electrical farm fence insulator, as shown in Figure 11-7. The wire is

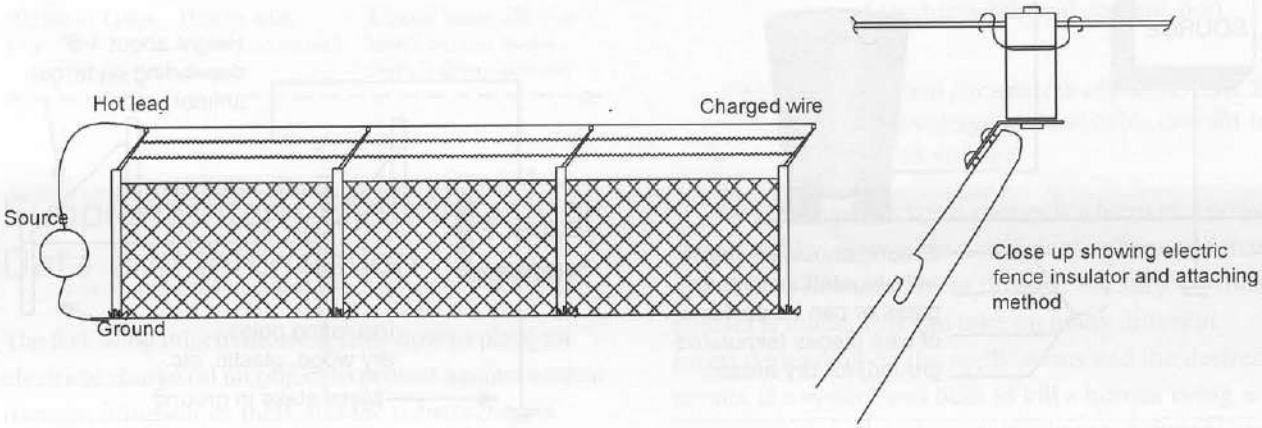

Figure 11-7 *Electrification of a chain-link or similar fence*

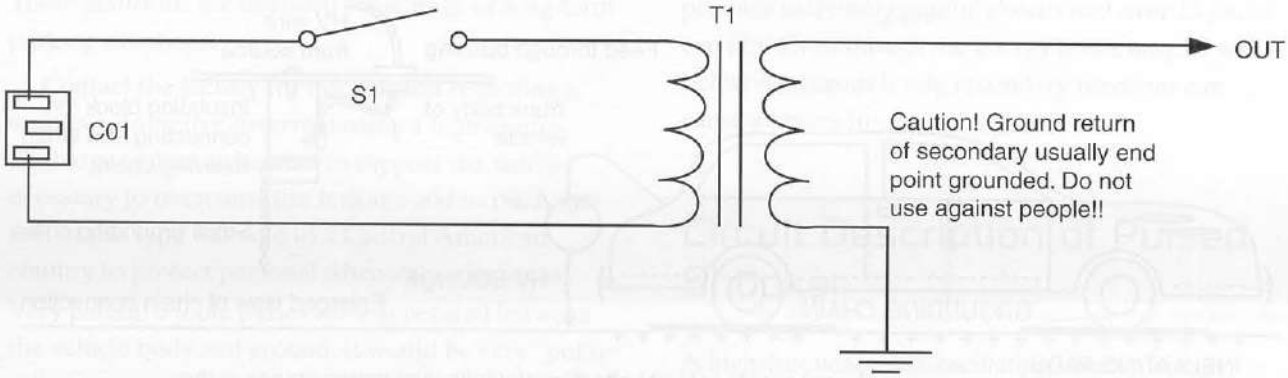

Figure 11-8 *Circuit of power supply source for animals only*

then just strung to these insulators using standard, electric farm fence techniques and is either connected to a farm-type power source such as an electric fence charger or a higher-powered source. The latter presents a dangerous choice and should never be used in a normal situation.

Danger! Do not use a transformer with a short-circuit current in excess of 9 milliamps.

Figure 11-8 shows using a current-limited transformer powered by 115 VAC. The following are suggested power sources for the circuit shown in Figure 11-8.

4KV/009: T1 −4 KV, 9 ma, 115 VAC, current-limited floating secondary Database #4 KV/.03 A

6KV/02: T1 6.5 KV, 20 ma, 115 VAC, current-limited floating secondary Database #6 KV/.02 A

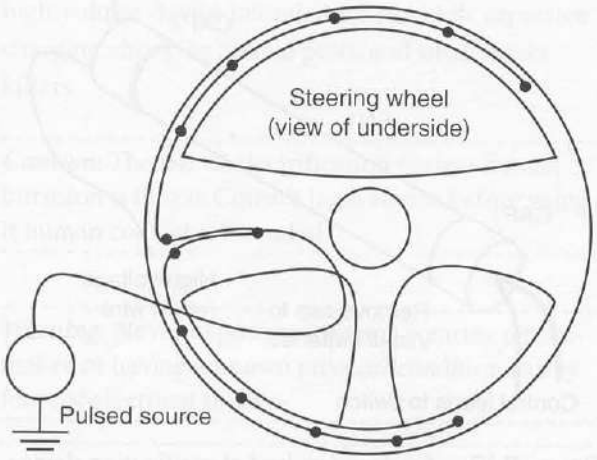

Figure 11-9 *Electrification of a steering wheel or similar object*

You will need a three-wire grounded power cord and a switch available from most hardware stores. Connect the −connection to common using standard PVC or plastic hookup wire. Connect the +connection via a high-voltage ignition wire available from an auto supply house. A weatherproof system is required when installed outside.

Figure 11-9 shows how to electrify a steering wheel or a similar object. The project is intended as a theft or unauthorized use deterrent. Use a low-energy, pulsed, high-voltage source.

The subject sits in the seat and activates the pressure switch to the source. When he grabs the steering wheel, he experiences a mild pulse-type shock between his hand and rear end. The voltage return is via metal springs in the seat. To create this project, please follow these steps:

1. Tape some thin, bare wire on the underside of the steering wheel. Secure it with small pieces of tape, wax, or silicon rubber.

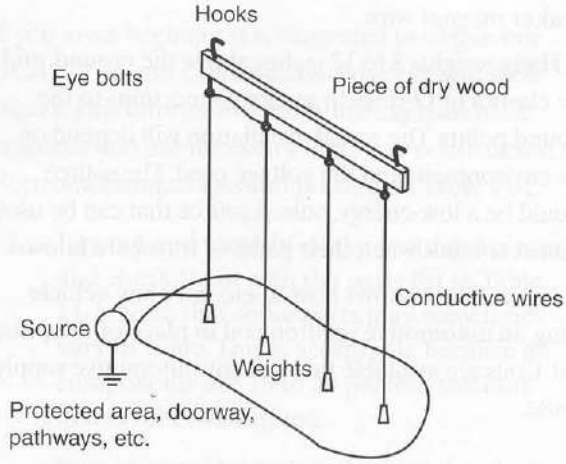

Figure 11-10 *Space or field electrification*

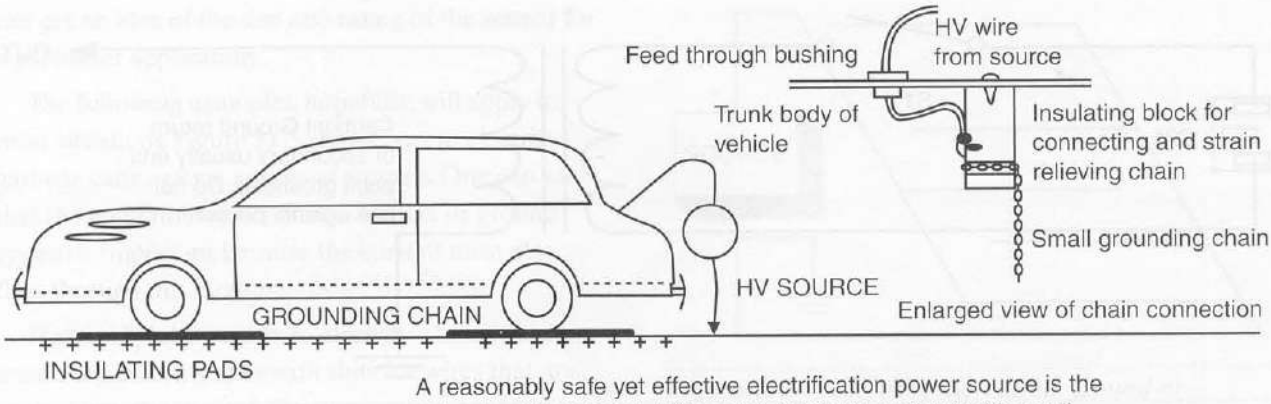

A reasonably safe yet effective electrification power source is the pulsed version shown, with a standard automotive ignition coil replacing the small trigger coil. This approach lengthens the pulse to overcome the electrical capacity of the vehicle body and provides a better overall effect.

Figure 11-11 *Electrification of a vehicle or similar object*

2. Run a concealed connecting wire up the steering column to the bare wire. This wire should be insulated and connect to the output of the source.
3. Conceal an activation switch as desired and don't forget to de-energize it before entering the car. You may want to rig up a pressure-sensitive switch on the seat so when the thief gets in the unit it activates before he starts the car. Important caution: The unit must be activated without the car being in motion or serious accidents may result.
4. The use of our pulsed low-power source is suggested.

Figure 11-10 shows how to protect an area, doorway, or paths using space or field electrification. Hanging supports use ultra-thin steel wire for strength or weaker magnet wire.

Hang weights 8 to 12 inches above the ground, and use elastics or O-rings to secure connections to the ground points. The actual installation will depend on the environment and the voltage used. The source should be a low-energy, pulsed source that can be used against animals when their paths of travel are known.

Figure 11-11 shows how to electrify any vehicle using an automotive ignition coil in place of the pulse coil. Coils are available through any automotive supply house.

A remote switch must be mounted so that it is accessible from the outside of the vehicle. This may be actuated via an insulating object such as a plastic comb or something similar. An override switch may be installed to actuate this system while one is inside the vehicle in order to discourage certain encounters involving contact while driving or stopped at a light.

The suitable method for connecting to earth ground as the common terminal is accomplished via a grounding chain. This is shown strain relieved via a plastic insulating block. The user is asked to use his or her own ingenuity to create other methods of implementation.

Insulated platforms for wheels should be used if the tires have steel-belted radials or if roads are salty.

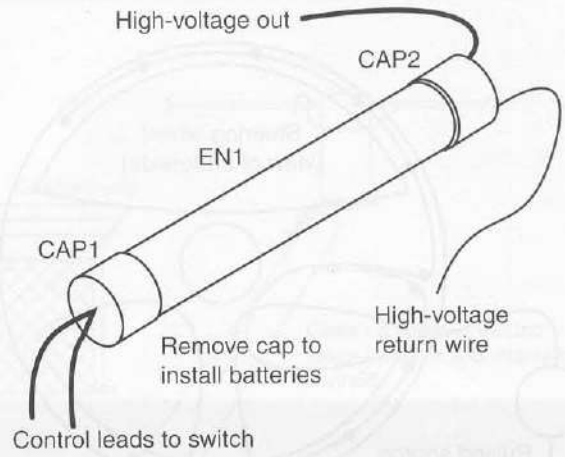

Figure 11-12 *Enclosed pulsed electrification device*

These platforms are intended for storage or long-term parking situations.

Contact the factory for information regarding a serious automotive deterrent using a high-energy discharge system to be able to support the voltage necessary to overcome tire leakage and so on. A system of this type was sold to a Central American country to protect personal when in hostile areas. Very painful 5 joule pulses were generated between the vehicle body and ground. It would be very "politically incorrect" if it were used in this country. This system produces high-current pulses of several tens of amperes for short durations. This is necessary as most tires offer considerable leakage at these high voltages, and a steady-state supply would no doubt burn off the tires and be very lethal to the perpetrator.

Assembly of Suggested Power Sources

The *pulsed version* shown in Figure 11-12 can also be used as a high-voltage trigger for triggering spark gaps, flash tubes, chemical igniters, Kirklian photography, and for electrification in animal control. The unit is housed in a tubular enclosure and powered by built-in batteries or by an external 12 VDC wall adapter. The device produces 20,000-volt pulses for electrifying objects, fences, and so on. Dual-mode operation produces low-energy pulses of .02 joules at a repetition rate of 30 per second or medium-energy pulses of .2 joules at a repetition rate of 4 per second.

The *continuous version* generates a steady, high-voltage device intended for research, capacitor charging, shocking animal pests, and small insect killers.

Caution: The use of electrification against human intrusion is illegal. Consult legal advice before using if human contact is intended.

Warning: Never expose any person wearing a pacemaker or having a known physical condition to any form of electrical shock.

Danger! Never charge a capacitor and use it for shocking humans. Energy storage over 5 joules can produce extremely painful shocks and over 25 joules can kill! Even though the energy levels may be well below dangerous levels, secondary reactions can cause a severe injury.

Circuit Description of Pulsed Shocker

A high-frequency, self-oscillating inverter circuit comprised of switching transistor Q1 and stepup transformer T1 produces a high-voltage high frequency at the secondary winding. This high-voltage AC is rectified by diode D1 and charges up storage capacitor C3 or C4 through isolation resistor R3. When this voltage charges up to the breakdown potential of SIDAC (SID1), the energy stored in the capacitors is "dumped" into the primary of the high-voltage pulse transformer T2, producing a high-voltage pulse at the output terminals (see Figure 11-13).

The oscillator circuit utilizes a winding on T1 to produce the necessary positive feedback to the base of Q1 to sustain oscillation. Resistor R1 initiates Q1 to turn on while resistor R2 and C2 control the base current and operating point.

A charging circuit consisting of the current-limiting resistor R4 and rectifier diode D2 allows external charging of battery B1 when *nickle cadmium* (NiCad) or other rechargeable batteries are used.

Construction Steps for Pulsed Shocker

If you are a beginner it is suggested to obtain our *GCAT1 General Construction Practices and Techniques*. This informative literature explains basic practices that are necessary in proper construction of electromechanical kits and is listed on Table 11-2.

1. Lay out and identify all the parts and pieces, and check them with the parts list in Table 11-2. Note that some parts may sometimes vary in value. This is acceptable because all components are 10 to 20 percent tolerant unless otherwise noted.

   Some kits contain a length of insulated wire.

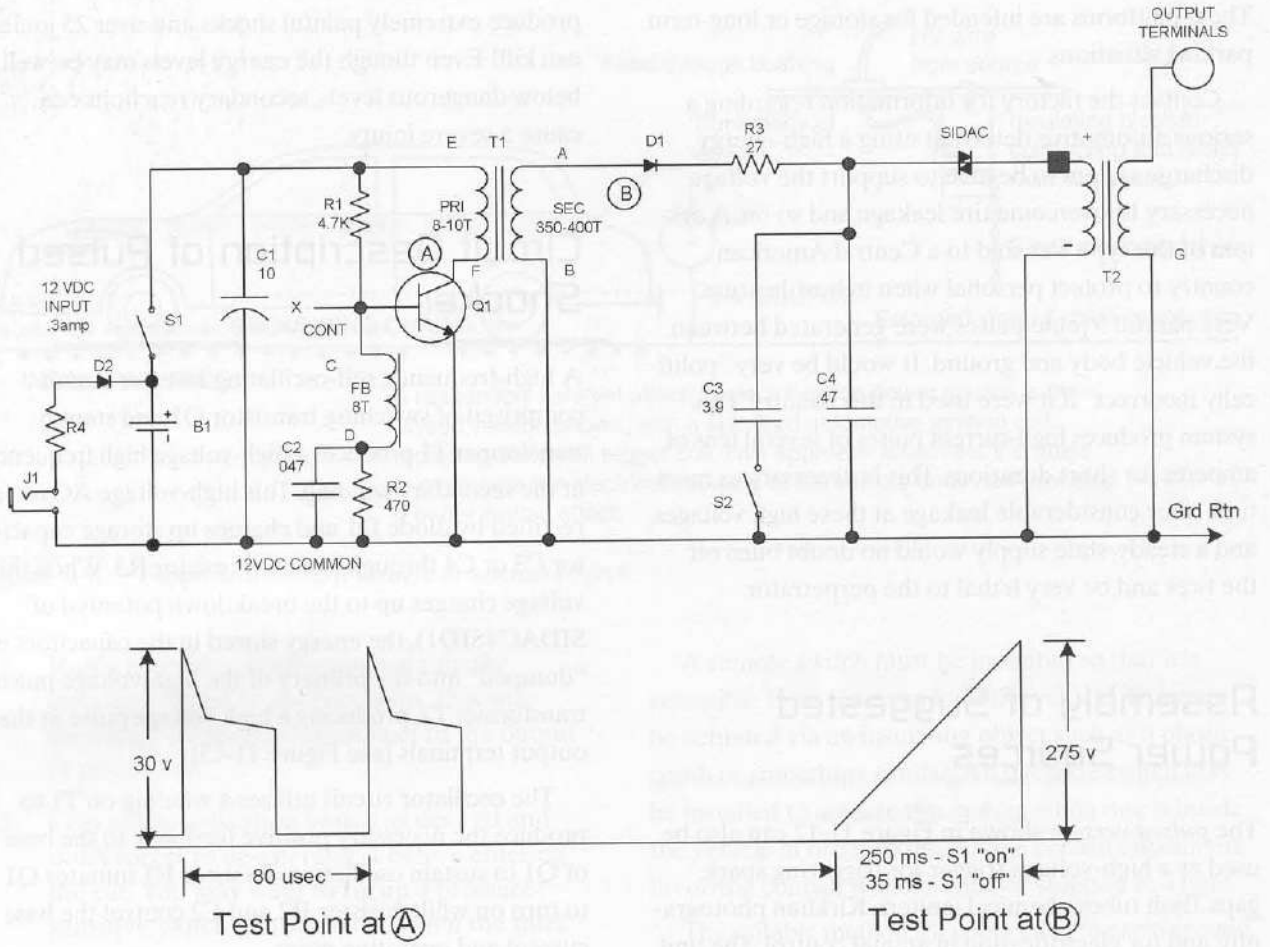

Figure 11-13 *Circuit schematic*

This must be cut, stripped, and tinned according to where it is used.

2. Assemble the board as shown in Figure 11-14. Insert the components into the board holes as shown, proceeding from left to right. Note the polarity of the components.

Note: Certain leads of the actual components will be used for connecting points and circuit runs. Do not cut or trim them at this time. It is best to temporarily fold the leads over to secure the individual parts from falling out of the board holes for now.

3. Verify the wiring, proper components, and polarity to the schematics. Check for cold solder, excess solder, and bare-wire bridge shorts. Now the unit is ready to test.

4. Test the unit as per the following:

A. Position the bare end of the ground return lead (GRD RTN) to allow a ½- to ¾-inch air gap between the output pins of T2.

B. Connect 12 volts from a bench power supply or use eight AA NiCads at 1.25 volts each or eight AA alkalines at 1.5 volts for 12 volts.

C. Note with S2 open a fast pulsing action will produce a thin, bluish discharge. This can cause a very mild electrical shock and could be safely used within reason as a prank.

D. Note a thick, slow pulsing discharge when S2 is closed. This can produce a painful shock and is intended for use against animals.

E. The current draw with the unit properly operating should be approximately 250 milliamps.

F. Check the power tabs of both Q1 and SIDAC. These should be cool to warm to the touch.

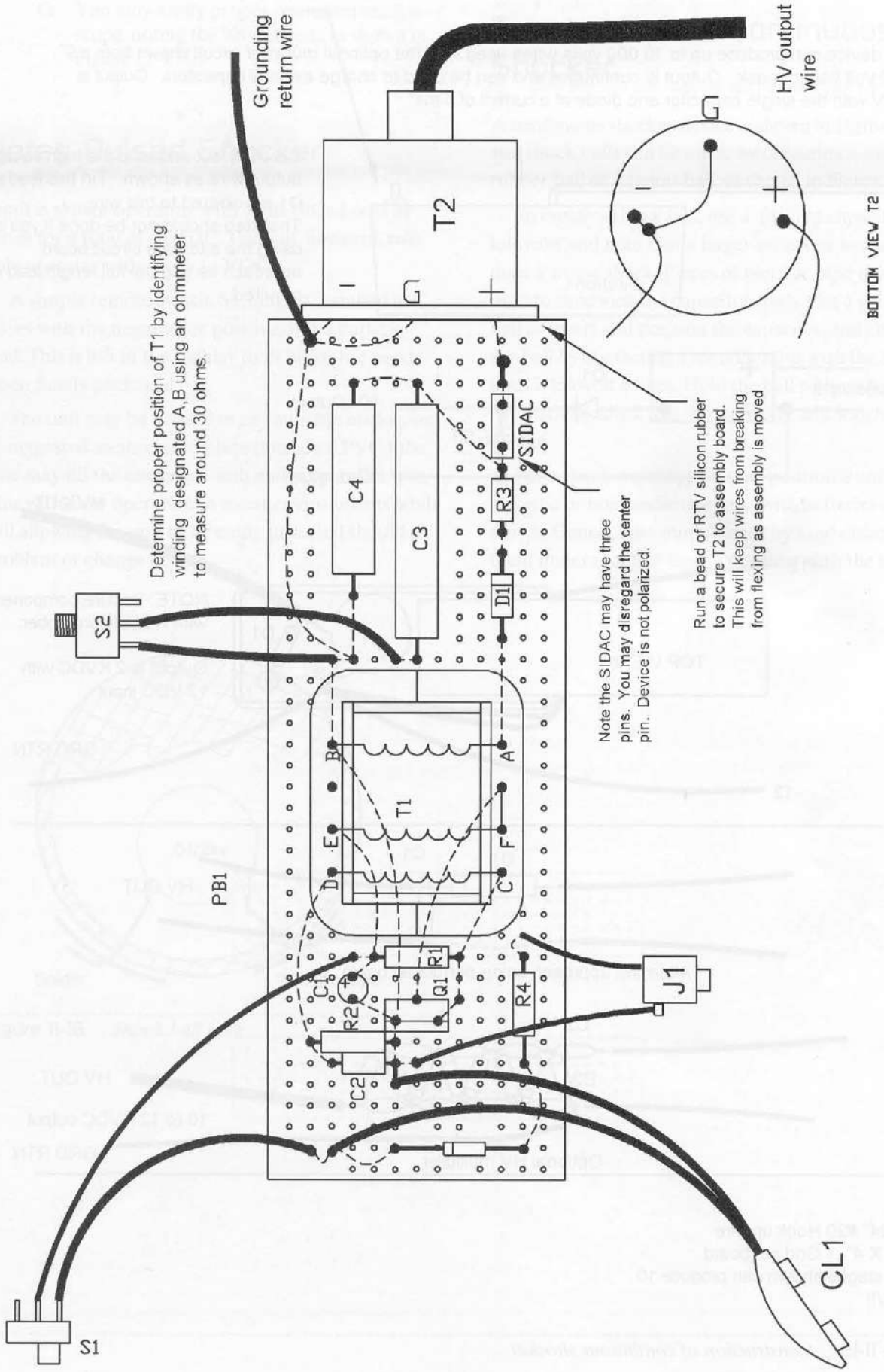

Figure 11-14 *Assembly board*

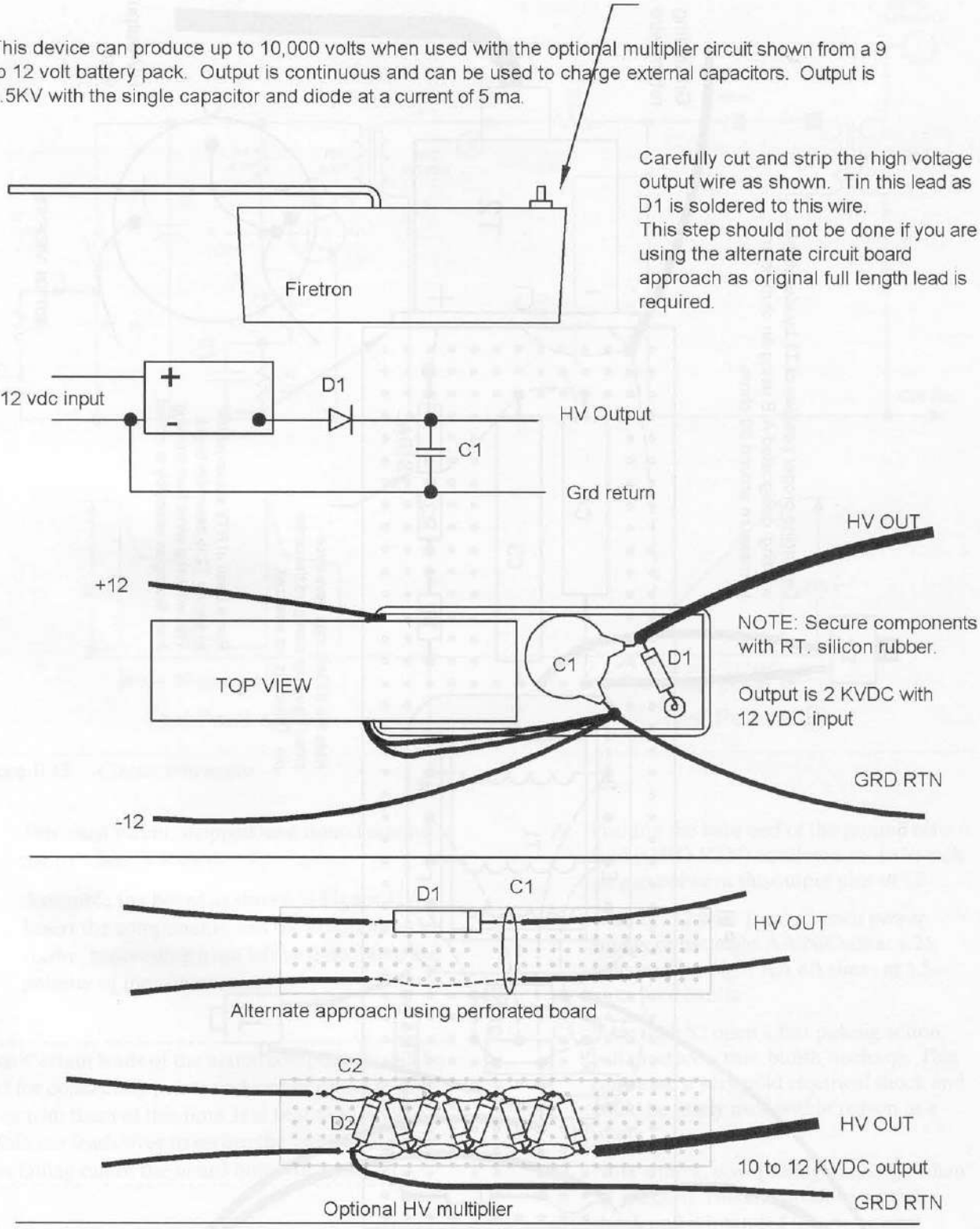

WR1 24" #20 Hook up wire
PB1 1 X 4" .1 Grid perfboard
Note 4 stages shown can produce 10 to12 KV!!

Figure 11-15 *Construction of continuous shocker*

G. You may verify proper operation using a scope, noting the waveshapes as shown in Figure 11-13.

Notes Pulsed Shocker

Input is shown operating with eight NiCad cells in series for a total of 10 VDC. The unit, however, reliably operates within 8 to 14 VDC.

A simple remote switch, S1, may be installed in series with the negative or positive of the battery lead. This is left to the builder to fit his or her needs when finally packaged.

The unit may be housed in any suitable enclosure. A suggested method is to place it inside a PVC tube You may fill the enclosure with melted paraffin wax. This will allow operation in moist environments while still allowing the unit to be easily unsealed should a problem or change occur

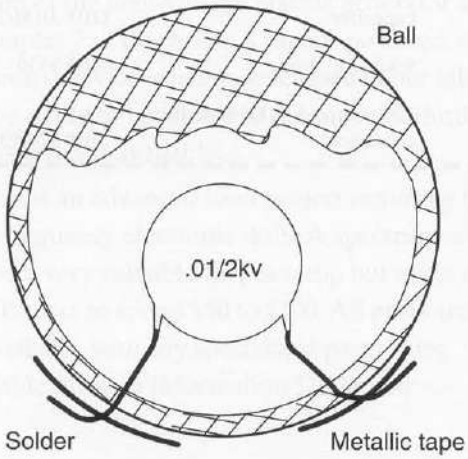

Figure 11-16 *Shock ball joke*

Construction of Continuous Shocker

A continuous shocker device is shown in Figure 11-15, and shock balls can be made by obtaining a small rubber ball or a tennis ball, as shown in Figure 11-16.

To create a shock ball, use a .01-amp capacitor at 2 kilovolts and note that a larger capacitor would produce a worse shock. Pieces of metallic tape must be used to sandwich the capacitor leads. Cut a slit in the ball to insert and position the capacitor, and charge the ball by contacting a metallic strip with the continuous 2-kilovolt source. Hold the ball without touching the metallic strips, toss it to a buddy, and watch the results.

For a shock wand application, position a unit inside a plastic or nonconductive tube with batteries and a switch. Connect the output leads by sandwiching them under metallic tape for contact with the target subject.

Table 11-2 Parts List for Shockers

Ref. #	Description	DB Part #
R1	4.7K, 1/4-watt carbon film resistor (yel, pur, red)	
R2	470 ohm, 1/4-watt carbon film resistor (yel, pur, br)	
R3	27-ohm, 1/4-watt carbon film resistor (red, pur, blk)	
R4	100-ohm, 1/4-watt carbon film resistor (br, blk, br)	
C1	10-microfarad, 25-volt electrolytic capacitor vertical mount	
C2	.047-microfarad, 50-volt polyester capacitor	
C3	3.9 to 4-microfarad, 350-volt polyester capacitor	
C4	.47-microfarad, 250-volt polyester capacitor	
Q1	MJE3055 NPN transistor TO220	
D1, 2	Two IN4007 1-kilovolt rectifier diode	
SIDAC	300-volt Sidactor switch	SIDAC
T1	400-volt switching square-wave transformer	DB# TYPE1PC
T2	25-kilovolt pulse transformer	DB# CD25B
S1, 2,	Two *single pole, single throw* (SPST) 3-amp toggle switch or equivalent	
PB1	5 × 1.5 × .1-inch grid perforated circuit board	
PCLITE	Optional *printed circuit board* (PCB)	DB# PCLITE
WR20B	36-inch #20 vinyl stranded hookup wire, black	
WR20R	36-inch #20 vinyl stranded hookup wire, red	
WRHV20	12-inch 20-kilovolt wire	
CL1	Battery clip	
CAP1, 2	Two 1 5/8-inch plastic caps	
EN1	12 inches of 1 5/8 × 1 1/2 × 12 plastic tube	
BH1	Eight-AA-cell battery holder	
J1	3.5-millimeter mono jack	
12DC/.3	Optional 12 VDC, .3-amp wall adapter	DB# 12DC/.3

Parts for the continuous version

FIRETRON	Firetron 2,000-volt module	DB# FIRETRON
C1	.01-microfarad, 2,000-volt disc capacitor	DB# .01M/2KV
D1	6-kilovolt diode	DB# VG6
C2	270-picofard, 3,000-volt disc capacitor	DB# 270P/3KV

Chapter Twelve

Electromagnetic Pulse (EMP) Gun

Figure 12-1 shows the construction of a low-power pulse gun that will provide kilowatts of peak power at frequencies up to 100 MHz with harmonics. The unit shown is battery powered and uses a modified version of the high-voltage plasma generator shown in Chapter 7 of this book. A higher powered, more functional device is being developed in our labs and will be ready to be copied at the time the third book of this series is available.

This is an advanced level project requiring basic high-frequency electronic skills. A spectrum analyzer can be a very valuable tool in setup but is not necessary. Expect to spend $50 to $100. All parts are readily available, with any specialized parts being available through Information Unlimited (www.amazing1.com) as listed in the parts list at the end of this chapter.

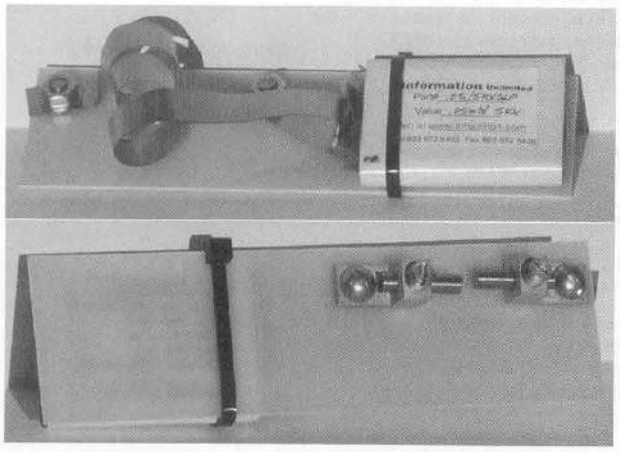

Figure 12-1 *Electromagnetic pulse gun*

Basic Theory Simplified

The ability of a signal to disrupt sensitive circuitry requires several properties. Most microprocessors consist of *field effect transistors* (FET) operating at very low voltages. Once these voltages are exceeded, catastrophic failure becomes imminent. Forgiveness to an overvoltage fault is practically nonexistent due to a microthin metal oxide between controlling elements. Any overvoltage generated across these elements consequently produces permanent damage or, in some less severe cases, causes deprogramming. To generate these damaging voltages from an external source requires a wave that can produce a standing wave of energy across circuit board traces, components, and other key points. The external signal energy therefore must be high enough for the circuitry geometry to be a significant part of energy at the wavelength. Therefore microwaves having fast rise times (high Fourier equivalents) and burst duration help to maximize the effect. The energy required is great, as it must be sufficient to enhance damage. A good measure would be the quotient of energy/wavelength. A high-power pulse of microwaves can be generated in several ways.

Explosive flux compression-driven virtual cathode oscillators and their generic relatives can produce gigawatts of peak power from only hundreds of kilojoules. This is where a seed current is pulsed into an inductor and at its peak is compressed by a shaped explosive charge thereby trapping the flux and creating a source of high energy. The coil must be compressed both along its axis and along its radius using a high-detonation velocity explosive such as the cyclotrimethyltrinitramine, its derivatives PETN, or some other equivalent energetic explosive. This trapped flux now produces an energy gain that is conditioned into the final peak-powered pulse of microwave power (HEPM). Flux compression like that of a nuclear initiation requires precise timing of the explosive chargers. For flux compression, Krytron switches or similar can be used instead of the more radiation-hardened Sprytrons that are used in nuclear initiations where ionizing radiation is produced from the inherent fissionable materials.

A virtual cathode oscillator can also easily be energized from a small Marx impulse generating 200 to 400 kilovolts. The fast current rise and high peak power can produce a powerful burst of microwaves.

Other methods include exploding wires where energy is allowed to flow into a LCR circuit and then is rapidly disrupted by the explosion of the feed wire as it vaporizes at near the peak injection current. A very fast and energetic pulse is produced, which is capable of generating an *electromagnetic pulse* (EMP).

Microwave pulses are excellent candidates for damaging sensitive electronic circuitry. But much lower frequencies are better for disrupting power grids and other similarly sized systems, as now the lengths of the conductive elements are more conducive to generating the high standing voltage waves. Obviously more energy is now required, as breakers, switches, and transformers require more energetic pulses

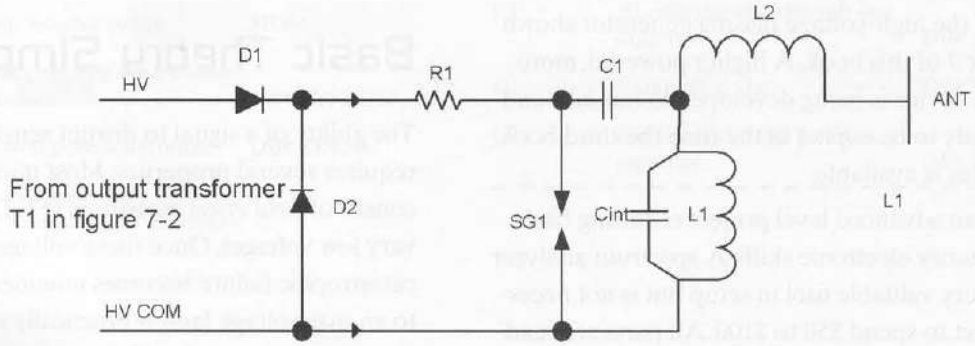

The ideal peak power of this circuit can be approximated by evaluating the product of the charge voltage across C1 x the peak current as determined by Ipk = Epk x the square root of the capacitance of C1/the total inductance of the discharge circuit. This expression implies no resistance (R) in the discharge circuit that now is only in an ideal situation. In all actuality the resistance in the real world will now be a factor in where e to the -(pi/square root of L/C) / R must be a factor in the above ideal condition. This now implies a damped waveform.

Diodes D1,2 are 10 kv 10 ma fast recovery
Resistor R1 is three 47k 1 watt resistors in series and isolate the diodes from the dv/dt of the discharge.
L2 inductor tunes out the capacitive reactance of the antenna at the desired resonant frequency

Capacitor C1 is a "slapper" capacitor. These are used to produce a very fast rise time necessary to detonate initiators necessary for initiating high explosive. Its claim to fame is the high peak current discharge current. The capacitor is constructed as strip lines with the connection leads exiting a common end.

Figure 12-2 *Circuit schematic*

Circuit Description

The circuit shown in Figure 12-2 shows a simple method of obtaining a high-power pulse with Fourier equivalents above 100 MHz. Even though the power and frequency are relatively low, close range effects are possible on many target circuits.

The project uses a high-frequency plasma source, which is converted to a direct current charging source and is short circuited functionally by the use of lossless reactive ballasting. This means that the capacitor can be charged without the use of an energy-robbing resistor, as only the real part of the complex current is seen by the battery supply.

The modified source now supplies a current charge to the reservoir capacitor (C1) to a value where the spark discharges across SG1. Current through L1 rapidly rises and rings along with the circuit and lumped capacitance (Cint). Spark gap SG1 must turn off and allow the energy to circulate in the discharge in order to generate a resonant peak of power that is now coupled into the system emitter. Experimentation of the gap settings is necessary to obtain an optimum effect.

Circuit Assembly

1. Fabricate a piece of Lexan plastic or G10 circuit board, as shown in Figure 12-3, to a 7 × 2 inch plate for PL1. Locate the two 1/4-inch spark-gap-holder (SGH1, 2) screws holes as shown. The holes are spaced 2 3/4 inches from one another.

2. Form a three-turn 1-inch diameter coil (L1) from 1/2-inch sheet copper or #14 solid copper wire, as shown in Figure 12-4. Note the leads as attached to the capacitor (C1) and the end gap holder.

3. Connect an output port at the junction of C1 and L1 as shown. This point is now considered the output and can be connected to the radiating emitter.

4. Connect it to the converted plasma driver in the manner shown in Chapter 7 to the generator (see the schematic Figure 12-2). Note the added diodes D1 and D2 for converting the output to direct current

5. You will note a coil (L2) connected in series with the output lead. This inductor tunes out the capacitive reactance of the lead and the end capacitance. Experiment using a radio wave or absorption wave meter to determine the resonant frequency of L1/C1. Select a value for L2 to provide maximum radiation from a distance.

6. Experiment on various electronic devices and observe the effects at various distances.

Notes

A low-cost spectrum analyzer would be a great aid in setting up this system. Please note this is a low-power device intended as an introductory project for those desiring to experiment with shock pulse and EMP research. Several more functional and sophisticated devices will be featured in the next book in this series.

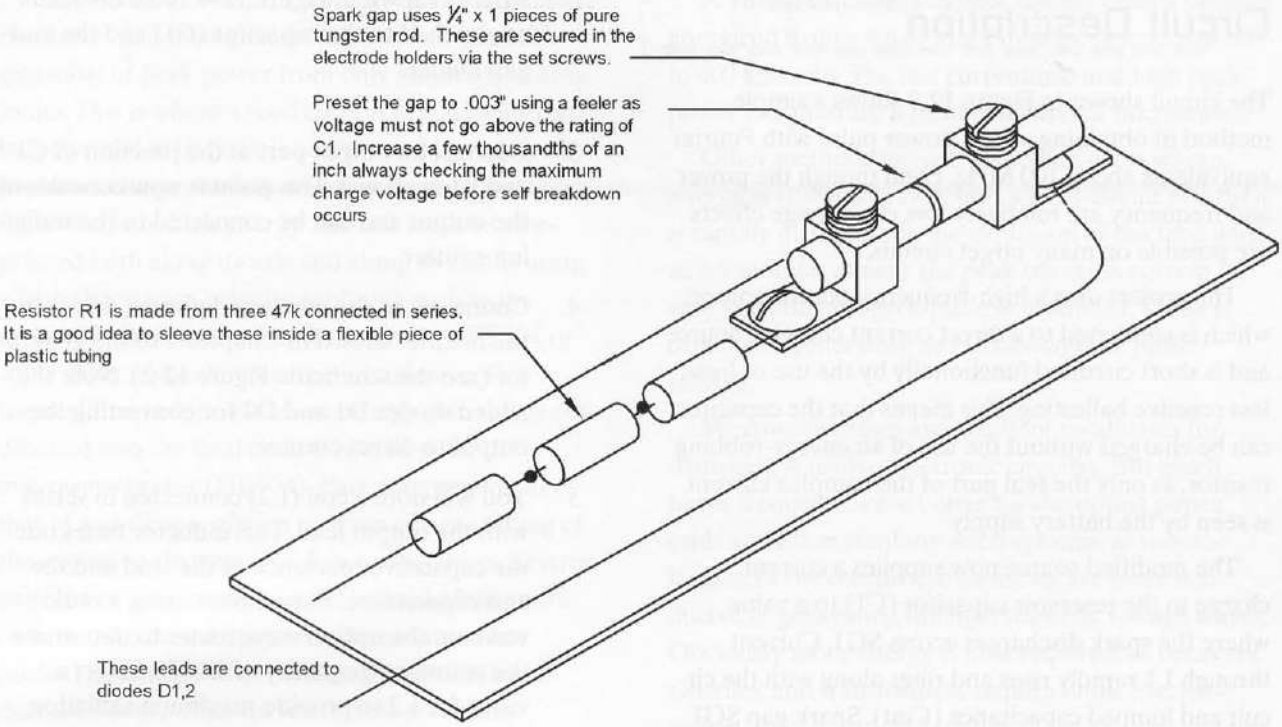

Figure 12-3 *Generator board bottom view*

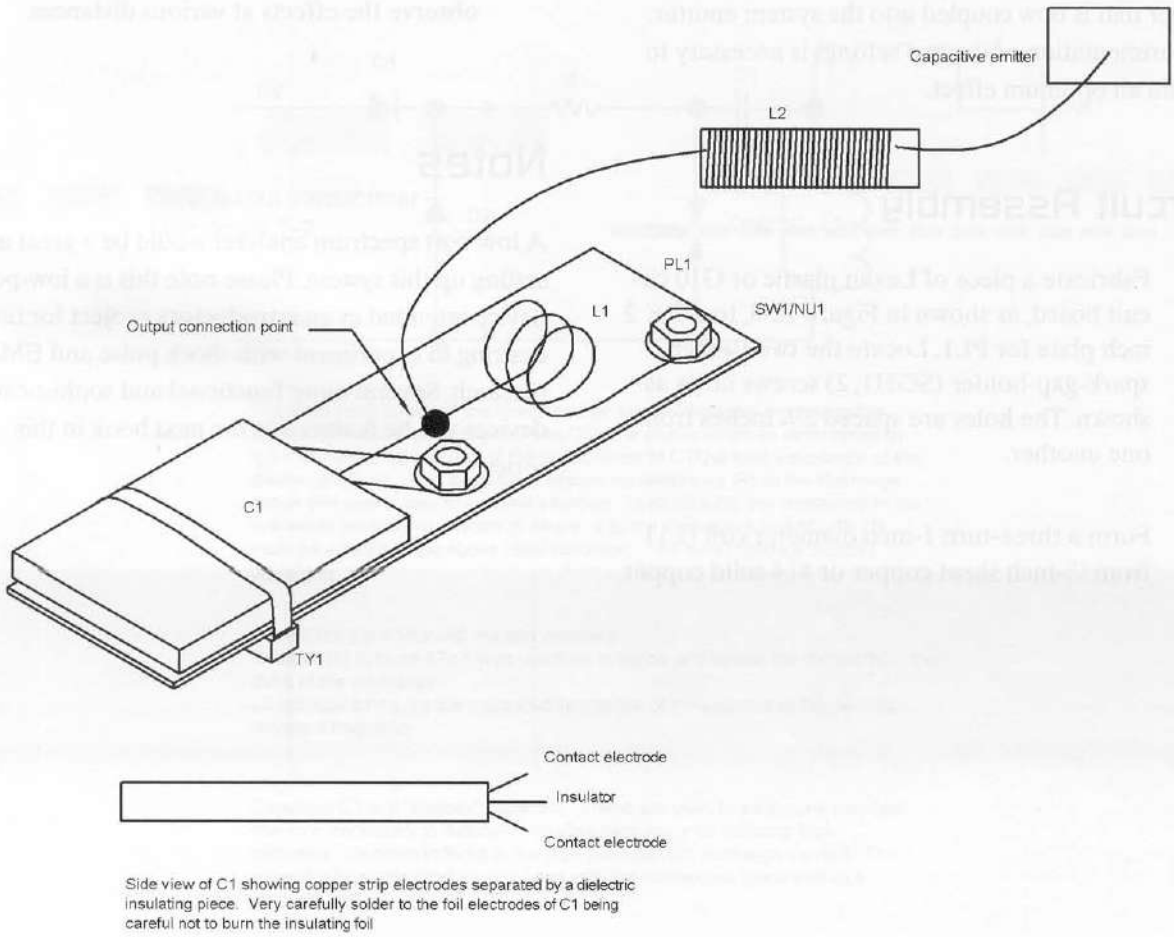

Figure 12-4 *Generator board bottom view*

Table 12-1 EMP Gun Parts List

Ref. #	*Description*	*DB part #*
R1	Three 47K, 1-watt resistors (yel-pur-or) connected in series	
D1, D2	Two 16 KV, 10 ma fast-recovery high-voltage rectifiers	DB# VG16
C1	.05 mfd, 5 KV stripline capacitor	DB#.05M/5KV
L1	Inductor 3-turn, 1-inch diameter use #12 copper wire	
L2	Inductor wind, as directed in text	
ELECTRODES	Two ½ × 1 inch pure tungsten electrodes	DB# TUNG141B
PL1	7 × 2 inch × .063 Lexan or G10 plastic	
TYE1	10-inch nylon tie wraps	
SW1/NU1	Two ¼ × 1 inch brass screw and nuts	
GRAVDRIV1K	Plasma driver kit	DB# GRAVDRIV1K
GRAVDRIV10	Plasma driver assembly	DB# GRAVDRIV10

Chapter Thirteen

Microwave Cannon

This project shows how to build a powerful microwave transmitter intended to be a useful laboratory resource or as a device for disrupting bothersome stereos, boom boxes, and other annoyances perpetrated by inconsiderate hip-hop miscreants. This chapter was prepared by Dr. Barney Vincellete, who holds several doctorate degrees in the electrical sciences. It is a very useful tutorial involving the design of a microwave system, going into basic mathematical details for those who are interested. The system can be built from the parts of a microwave oven.

Warning: The project uses dangerously high voltages and can be a radiation hazard at close range if not used with protective shielding. This is an advanced project intended for experienced builders and must not be attempted by anyone unfamiliar with high voltages or high-power radio frequency circuitry.

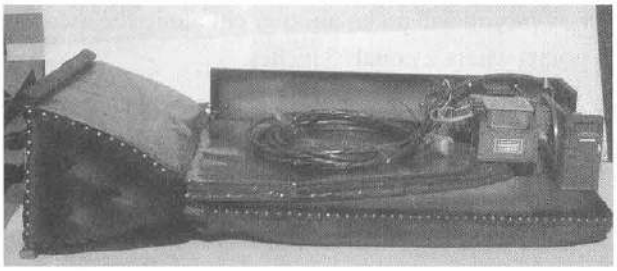

Figure 13-1 *Microwave cannon*

The microwave cannon consists of three parts: the parabolic reflector horn, the electric field focusing lens, and the magnetron. The horn focuses the magnetic oscillations that circumscribe the magnetron antenna into a narrow beam in order to concentrate the radiation into a two-dimensional space. It also prepares the electric field oscillations for the lens to concentrate the radiation in the third dimension. Because the electric field and magnetic field are orthogonal, calculations upon them and the modifications that we will perform upon them can be done on one without altering the other.

In designing the horn, we will assign the Cartesian coordinate system with the z axis along the longitudinal axis of the horn; that is, the z axis will occupy the center of the shaft of radiation that will be fired into your cultural tyrants' stereos. The Poynting vector will be on the z axis, and the x axis will be directed horizontally to the left and right of the z axis. The x axis will, during the calculations for the shape of the horn, be given an absolute value; that is, it will be endowed with a positive value whether it increases to the left or right of the z axis. This is because its values will be the square root of x squared, and it will be symmetrical to the left and right of the z axis. The origin will be located at the vertex of the parabola that will define the sides of the horn.

The y axis will be in the vertical direction to complete the basic vectors in our discourse and

calculations. It will pass through the z axis at the mouth of the horn, rather than through the vertex, as the x axis does. It too will have only positive values because, due to its symmetry about the z axis, there is no need to consider negative values of y (see Figure 13-2).

The dimensions of the sides of the horn will be performed first. In building the wooden mold upon which the sheet copper will be formed, an adjustment will be made to correct for the flare that can be seen in Figure 13-3.

The horn will be made of 20-inch-wide sheet copper that can be purchased from a roofing supply house. Because the dimensions of the parabolic sides shown in Figure 13-2 are fixed by the top and bottom pieces of copper that will be soldered to the copper side pieces, the top and bottom pieces will be cut to a parabolic shape with an extra 1/4-inch margin on the sides that will be bent into a ridge that will be soldered to the side piece. The actual parabola will have a maximum width of 19.5 inches, or the maximum value of x will be 9.75 inches. Also, for structural rigidity, a half-inch lip will be bent along the front edge of the top and bottom pieces.

The parabola will contain the magnetron antenna aligned parallel to the y axis and positioned at the focal point of the parabola. The focal point will be one-eighth of the wavelength of the magnetron frequency, which, when the wavelength is computed by dividing the speed of light by the frequency or 2.45 GHz, gives us a wavelength of 2.45 inches and a focal length of 0.6 inches. The parabola is described by the equation x squared = 4 pz, where *p* equals the focal length. When *p* equals .6 inches, *r* equals 2.4 z. From this, we construct Table 13-1.

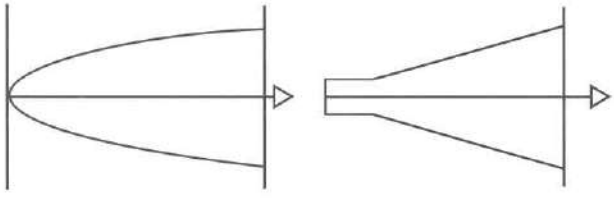

Figure 13-2 *Top and side horn templates*

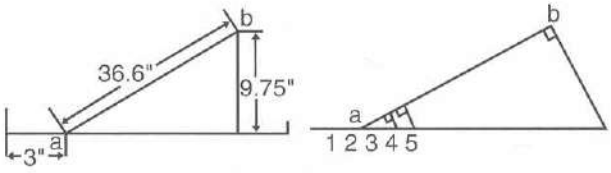

Figure 13-3 *Flair angle template*

Table 13-1 Parabolic Dimensions (measurements in inches)

z	x	z	x	z	x	z	x	z	x
.125	.55	3	2.68	8	4.38	16	6.2	29	8.34
.25	.77	4	3.1	9	4.65	18	6.57	32	8.76
.5	1.1	5	3.46	10	4.9	20	6.93	35	9.17
1	1.55	6	3.79	12	5.37	23	7.43	38	9.55
2	2.19	7	4.1	14	5.8	26	7.9	39.6	9.75

When regarding the side view of the horn (Figure 13-2), it can be seen that plotting the parabola, which is done by cutting the wooden sheets used for making a mold of the horn, will require an adjustment so that the sides of the parabola are not distorted where z is greater than 3 inches. The dimensions of z, if projected from the z axis to the top and bottom of the horn where z is greater than 3 inches, will have to be enlarged by dividing each inch by the direction cosine of the angle between the z axis and the top (also the bottom) of the horn. This can be done by drawing upon a sheet of 2 by 4 foot particle board, as shown in Figures 13-3.

After you have marked the board, as shown in Figure 13-3, you will begin plotting dots measured above and below the z axis at distances of x from Table 13-1 measured with a carpenter's square. You will connect these dots with a ruler, and when you cut out the parabola, the saber saw that you use will make a curved path that will very closely approximate the parabolic shape needed. After you cut out the parabola, you will make another cut along the locus of points where z equals 3 inches.

You will trace these pieces and cut duplicates from another piece of particle board, as shown in Figure 13-4. With nails, screws, glue, and two trapezoidal-shaped pieces of particle board, you will put together

the form that you will use to build the copper horn (see Figure 13-5).

Stand the wooden form on its end, where z is 39.6 inches against the floor, and make a template from poster paper that has been taped together to form large enough pieces. Make a template that will wrap about the sides, and trim it to fit so that it matches the sides. Make another template for the top (also the bottom) piece the same way, as shown in Figure 13-6.

You will need 15 feet of copper roofing sheet metal to cut the pieces that you will solder together. Trace and cut the long piece from the template you made from the sides and rear of the wooden form. Add a half-inch to the length of each side so that you can bend a lip that will make the front of the sides rigid. This lip will also provide a place where you can attach the sides of a wooden frame that will make the horn more stable. Then trace the top and bottom pieces against the copper and draw a 1/4-inch additional margin surrounding the parabola you just traced. Also add a half-inch to the front that you can bend into a lip to make the top and bottom more rigid. Cut out two of these pieces, one for the top and one for the bottom.

With a pair of pliers, bend a 90-degree lip from the 1/4-inch margin you traced. You can cut notches in this lip to make this bending easier. This lip will be soldered to the piece that will form the sides of the horn. Bend the half-inch lip at the front edges of the pieces that you will solder together, and clean the insides of the lip that you will be soldering to the sides of the horn using steel wool or sand paper. Clean the exterior 1/4-inch sides of the horn to which you will be soldering the top piece. Apply a thin coat of soldering paste and clamp the sides and top securely into place on the wooden form you built. Hammer the side lip against the sides of the horn for a tight fit. You do not need a sharp crease where the horn begins to flare out where *z* is 3 inches; a modest bend will do. You are now ready to begin soldering the seam, as shown in Figure 13-7.

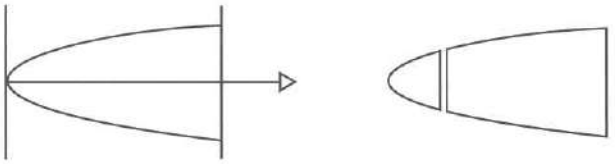

Figure 13-4 *Templates for forming the horn pieces*

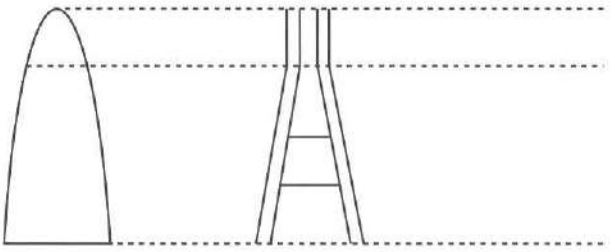

Figure 13-5 *Poster paper template*

Begin with a propane torch and plumber's solder. Apply the flame to a spot and, as soon as it is hot enough to draw in some solder, let just enough solder draw into the seam to fill the gap. Use more hammer taps to close any open spots where the lip is not tightly against the side piece. As soon as you have an inch or two soldered, remove the flame and solder another place a few inches away. Do not use enough solder to cause it to form drips or beads on the inside of the horn. Continue until the entire seam is soldered. After this is done, remove the clamps and sheet copper structure you soldered together. If you see any lumps of solder on the interior seam, you can melt it away by applying a flame.

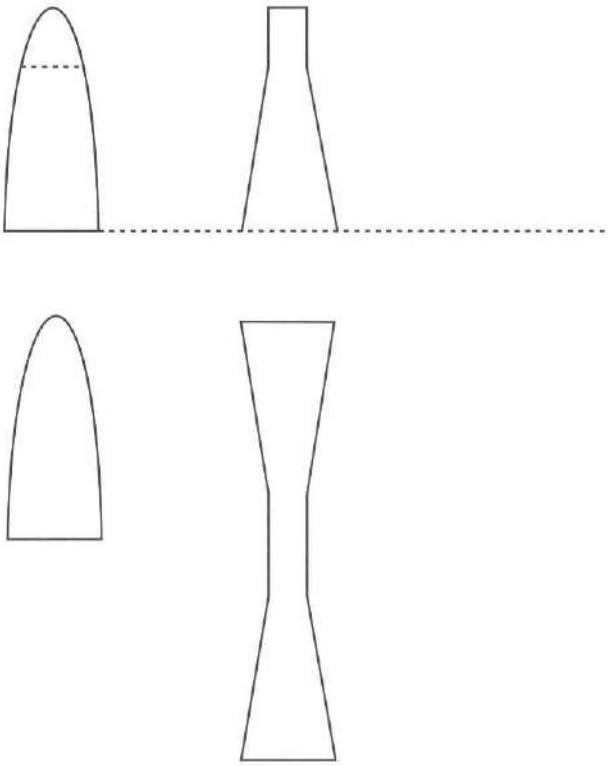

Figure 13-6 *Top template*

Now you must locate the point on the center axis at the top of the horn. This can be done by measuring the center of the front of the top section of the horn, measuring 2 feet along each side of the horn's interior, drafting a line between these points that are 2 feet back from the front, and bisecting it. You bisect the width of the front to find one point. You then measure 2 feet back on each side and draw a line between the ends. You bisect the line for the second point. This will provide two points to extend back to the vertex of the parabola's interior.

Now measure, as punctiliously as you can, 0.6 inches from the vertex. Drill a pilot hole and cut a circle that is $1\frac{3}{16}$ inches in diameter. With a hammer and a piece of pipe, tap on the interior of this hole so that its edges flare outward to make a good seal with the brass wool gasket on the magnetron you will be using (see Figure 13-8).

At this point, solder the bottom piece into place and complete the construction of the copper horn. A wooden frame must be built to make the front edges of the horn more rigid, to provide a structure for mounting the lens, and to provide a place for the front of an aluminum rail where a telescopic rifle sight will be mounted.

Here you have great artistic liberty in how you will build this cabinetry. Half-inch plywood is the most practical material to use, and cedar has the most pulchritudinous finish to stain, varnish, and paint. You can paint or carve artwork upon this frame, and you can also upholster the rear or sides with velvet and sunken buttons. In the most unlikely event the cannon becomes an exhibit in court, these characteristics will humor the jury, many of whom will be as hostile as you against the music the neighbors were forcing into your home. If it becomes newsworthy enough to attract a television crew, it will be a splendid show for the millions of people whom you will inspire to follow your example and join the revolution against cultural tyranny.

The rear of the frame will protect the operator from the deadly 4,500-volt wires between the power supply and the magnetron. It will also provide a place to mount the rear of the aluminum rail for the telescopic rifle sight.

Let us digress to a disquisition on the flair angle formed by the sides of the cannon. In order to form the best possible cancellation of standing waves, due to the impedance vicissitudes where the horn begins to flair at the mouth of the horn, the following equation must be emulated within approximately 10 percent. The dimensions of the horn must match this within a percent.

$$0.25 = [a/(2\lambda)]\tan(\theta/2)$$

where a is the dimension of the mouth in the horn in the y direction: 20 inches. λ is the wavelength in

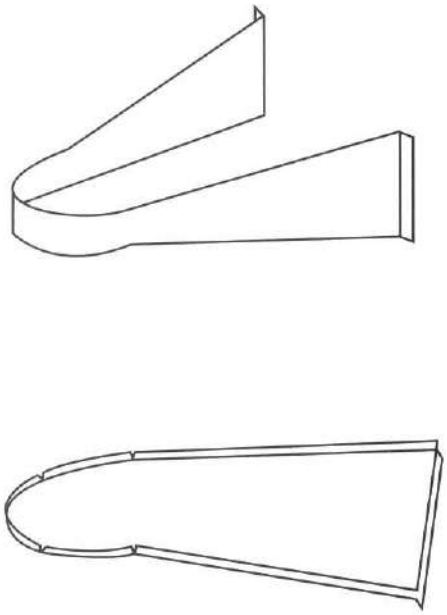

Figure 13-7 *Copper side with top and bottom pieces*

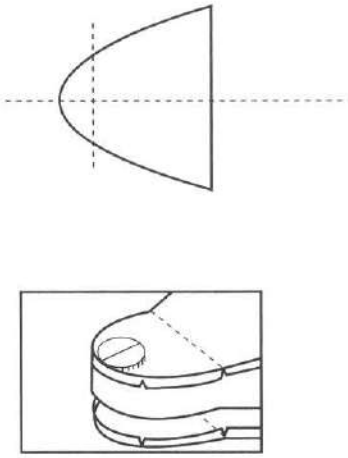

Figure 13-8 *Position of aperture hole for magnetron probe*

inches. θ is the angle between the z axis and the top (or bottom) side of the horn.

Let us now examine the efficiency of the parabolic sides of the horn for their focus of the magnetic field. The antenna is circumscribed by a magnetic field that propagates from a line source at the center of the antenna. The radiation either reflects off the sides of the parabola formed by the horn or it radiates directly from the antenna out the mouth of the horn. The latter is not useful because it dissipates rapidly with distance from the cannon. The former, the reflected radiation, is projected parallel to the zy plane, and because it originates from a line source parallel to the y axis, no diffraction occurs off the sides of the horn's mouth. The fraction of the radiation that is reflected is 92.2 percent of the total from the antenna. This is far superior to the typical 40 percent efficiency given by radar dishes that use large sizes to achieve gain.

The focusing of the electric field can now be performed by placing a lens in front of the cannon's mouth, and a description of the electric field must be provided. On the surface of a conductor there can be no voltage parallel to the surface of that conductor, because any voltage would be short-circuited out. This makes the components of the gradient of any voltage parallel to that surface zero. Since the electric field is the negative gradient of the voltage, the electric field near a conducting surface must perforce be perpendicular to that surface. As the electric field propagates forward, it forms a cylindrical-shaped wavefront in the flared part of the horn. At the mouth of the horn, this cylinder has a radius of 41 inches. A lens will convert this cylindrical wavefront to a flat wavefront, and that will complete the focusing of the radiation.

The lens will be constructed of metal plates that will be aligned parallel to the y and z axis 4 inches apart. Between these plates, any wave vector, $k = 2n/\pi$, can be the vector sum of two components, kx and kz. In the x direction, the sine wave of the wave vector will be zero every 4 inches, because at the plates the electric field in the y direction must be zero. Taking recourse to the Pythagorean theorem, the wavelength in the z direction is dilated by the inverse of the refraction index, that is, the refraction index, $n = [1-(\lambda/8 \text{ inches})E2]E-.5 = 0.8$ ($\lambda = 4.8$ inches). See Figure 13-9.

The cylinder formed by the cylindrical-shaped wavefront plus the refraction index times the distance parallel to the z axis between the lens elements to a flat plane in front of the lens is to be constant so that the electric field will be in phase on the flat front of the lens. The y axis is shifted to the most concave depth of the lens elements, and the z axis is directed rearward. The algebra for calculating the concave curve to cut into the rear of the lens plates is rudimentary. From the following equation, the dimensions of the lens are shown in Figure 13-10.

$$[(47'' - z)E2 + y]E.5 + 0.8\,z = 47'' \text{ from which } z = \{18.8 - [(18.8)E2 - (1.44y)E2]\,E.5\}\,\{1/.72\}$$

The lens plates mounted against the far right and far left sides of the lens frames should be cut from leftover sheet copper and glued to wooden sides, also cut to the shape of the lens element. The other lens elements should be made from 0.025-inch sheet aluminum. They should be 21 inches long in order to mount them to the wood lens frame you will build. Small wooden blocks can hold the ends of lens plates in place. Pieces of wood with grooves cut into them will also work.

The efficiency of the lens can also be calculated. This efficiency is due to the reflection of radiation that takes place when radiation passes from a medium of one refraction index into a medium of a different refraction index where the space impedance is changed. Two reflections occur, one when the radiation enters the rear of the lens and a second reflection when the radiation exits the front of the lens. The second reflection is in opposite phase with the first reflection, so it is 2π radians out of phase with the first reflection. The appropriate Fresnel equation for calculating the power reflected when the electric field

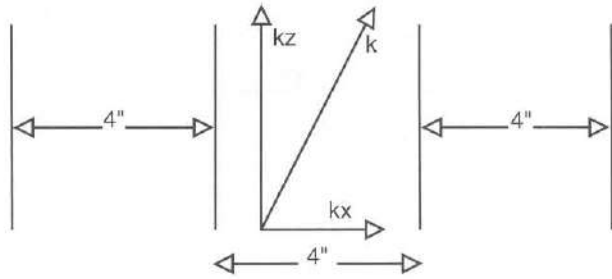

Figure 13-9 *Focus plate geometry*

is parallel to the plane containing the angle of incidence, θi, and the angle of transmission, θt, is as follows:

$$R = \{[-\cos\theta i + (n1/n2)\cos\theta t] \div [\cos\theta i + (n1/n2)\cos\theta t]\}E2$$

θt is arctan dz/dy, as can be seen in Figure 13-11. θi is θt − arctan $[y/(47 - z)]$.

In the second reflection, θi and θt are both zero. n1 is 1 and nt is 0.8. The second reflection that must be subtracted from the first one is cos $[2\pi$ radians $2(z + .25'')\lambda z]T$, where T is the fraction of the power transmitted into the lens and λz is 4.8 inches/0.8. Since the total reflected power is almost everywhere less than a percent, we can make the approximation that T equals 1. If the reflected power is calculated every inch for y, the average power reflected is approximately half a percent. Thus, the gain of the horn is

$$4\pi A/\Lambda E2 = 218 \text{ or } 23.4 \text{ db}$$

With the ideal horn and lens system having been designed so that the common man can build it without having to know all the electromagnetic laws of physics that make it work, we direct our attention to the choice of a microwave source. The cardinal rule of electronic warfare is that the radiation must convey noise in order to disrupt the signals in the circuits you will be attacking. This requires modulation that will drown out enough of the unwanted music and interfere with the digital signals in disc players to make them useless. Half-wave rectification of the current through the radiation generator is subjectively the most disrupting. The lower frequencies promoted by stereo manufacturers and music producers seem to be designed to most effectively penetrate the walls of apartments and homes for the purpose of destroying the privacy and cultural autonomy of all but the wealthiest who can afford the enormous cost of solitude.

The 60-cycle voltage from a household wall socket offers a nearly ideal source of modulation to create this disruption, because in a microwave oven it is half-wave rectified by a voltage-doubling circuit. This provides a splendid spectrum of Fourier frequencies that concentrate upon the lower frequencies but distribute themselves upward through the audio range, and it gives the utmost modulation of amplitude. It also reduces the duty cycle of the magnetron while preserving the maximum power in each pulse it shoots into the neighbor's stereo for the best range.

The first inclination is to choose a magnetron that will have the highest output power. The best choice would be a radar magnetron, which might offer 30 to 100 kilowatts in pulses that are only a microsecond or two in duration. However, tests using radar against a compact disc player yield disappointing results. The Fourier series expansion on a series of microsecond-long pulses modulates less than 1 percent in the audio band. The series of ticking sounds that it introduces into a stereo amplifier is scarcely noticeable, and not enough pulses occur to put sufficient errors in the digital circuits of the compact disc player to do any good. Also, audio circuits are not as sensitive to the

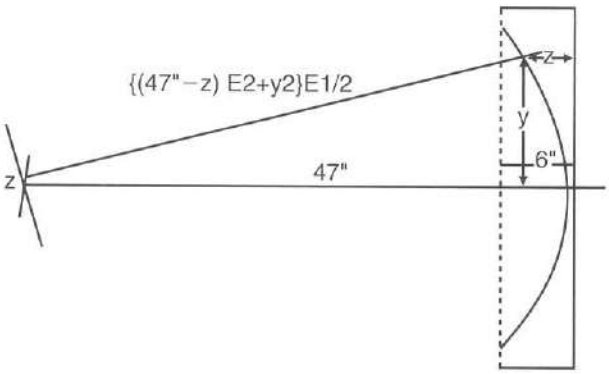

Figure 13-10 *Wavefront and electric lens geometry*

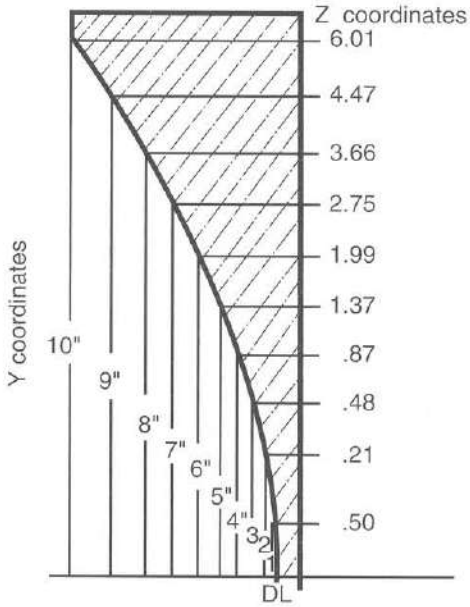

Figure 13-11 *Calculated lens dimension*

higher frequencies of radar as they are to microwave oven frequencies.

We might also be inclined to consider the higher-powered magnetrons used in industrial heaters and plasma generators, but this can be problematic. First, higher power is achieved more by increasing the duty cycle than by increasing the peak output power we desire. The 3,000-watt Panasonic 2M265 magnetron has a 7-kilowatt peak output power, but it runs on pulse-modulated direct current for a longer duty cycle than the half-wave voltage doubler of a microwave oven. Its operation is more critical; the cathode heater must have its voltage adjusted to the power output, and the cathode is more brittle in these more powerful magnetrons. It also costs as much as $1,000 and the power supply is even more expensive. The 6,000-watt Toshiba E3328 magnetron runs on filtered direct current and it has even more expensive computer controls that adjust an electromagnet to control the current. The peak output power is less than that of the 3,000-watt magnetron.

Another problem occurs with these magnetrons as well. They are so unforgiving of such things as a large metal object near the cannon in which they might be installed that reflections could mismatch the impedance enough to shorten the service life. The manufacturers recommend that they have a branch off of a waveguide to a dummy load that will absorb any energy due to such an impedance mismatch in order to protect the magnetron. This makes the parabolic horn impossible to use because it is not practical to feed with a waveguide. A pyramidal horn would be needed and it only has two-thirds of the gain of the parabolic horn. Thus, the 6,000-watt magnetron would be as good as a 4,000-watt one in a parabolic horn, and the 3,000-watt magnetron would be as good as two-thirds of 7,000 watts in a parabolic horn. Several vastly cheaper household oven magnetrons can easily outclass the more expensive and difficult-to-operate choices that appear more attractive until they are examined with greater perspicacity.

Another difficulty with purchasing industrial magnetrons also exists. Companies will not sell them to private individuals out of fear that they might be used for negative or hateful enterprises, such as in machines designed to sabotage overly loud stereos. Although almost any magnetron and power supply from any microwave oven will work, the best oven magnetron for our purposes is the 2M121A, which has its number conflated with the number 53 or 57. These last two numbers make no difference in the choice of editions of the 2M121A you procure. They are used in the following ovens: the Panasonic 1030, the Brother MF5000 and MF7000, and the Merrichef models 136M, 165M, and 206M. It has a peak output power of 5,800 watts, better than the 2,000-watt magnetrons that cost more than twice as much. It can be ordered from the Expert Appliance site (www.expertappliance.com) under the part number Z9-Panasonic NEI 030-412 if you type in Panasonic NEI 030 for the type of oven for which you are purchasing parts. The transformer number is 210 Panasonic NEI 030-5414. Global Microwave Parts has voltage-doubling capacitors that are 0.85 microfarads rated at 2,500 volts AC and diodes. You should use one rated at half an ampere. Magnetrons and parts are available and listed in Table 13-2. You will need copper and aluminum sheeting, along with mat-erials available from hardware or building suppliers.

The magnetron is attached to the antenna, as shown in Figure 13-12. Follow the instructions closely and observe that the brass washer is flush with the copper conductive surface.

The power supply is a simple voltage-doubler circuit, shown in Figure 13-13. It must be understood that the voltages in the wires will be in the thousands and can produce a spark that can jump through the air and through an insulator, conveying enough current that it would probably cause electrocution. Accordingly, the wires should be positioned where they will not be approached or touched. The magnetron and horn must be securely grounded or it will be 4,500 volts above ground potential. The frame that you must build around it will keep people's hands away from these wires. Also, after the cannon is shut off, four of the capacitors can hold a charge that would inflict a shock unless it is discharged, either through a bleeder resistor that may be built into the capacitor or it can be discharged with a safety discharge probe.

The magnetron must also have a fan to cool it during operation. The 2M121A requires at least 85 cubic feet per minute of air directed through its fins for best operation.

When your microwave cannon is completed, testing it is little more than a matter of switching on the power and aiming it at a fluorescent tube or a

small 120-volt lightbulb. The lightbulb should be no more than 25 watts and should glow slightly when it is within a few feet of the mouth of the cannon. Fluorescent lamp tubes should light up as far as 10 feet away.

You should not put any body parts directly in front of the cannon at close range because, after a few seconds to a few minutes, you could burn yourself, but a distance of over 50 feet away would provide safety. However, prolonged overheating of internal organ tissue is remotely possible and the cornea of the eye can be damaged by overheating. Also, testicles can overheat, and at close enough range for the *root mean square* (RMS) microwave field to exceed 4,000 watts per square meter, a 5-minute uninterrupted exposure is supposed to build up enough internal steam pressure to cause the testicles to explode. However, the possibility of having a hot spot this intense a few inches in front of the cannon is marginal.

When testing or using your microwave cannon, you can do so with utmost safety to yourself by constructing a gown out of metal screen from a hardware store. The gown should include a hood that completely covers the head and should extend over the torso down to just below the vaudevillian parts of the body. The sex organs should be stuffed into a tin can, the mouth of which can be lined with fake fur to make it more comfortable. (Obviously, the ladies need not take recourse to this expedient.) This is more than enough to prevent any harm when performing experiments that last half an hour or more and is probably hundreds of times the protection you will need.

It can be advantageous to test the cannon in your backyard. Sooner or later the neighbors will see it, and if they see a mysterious-looking machine that lights up fluorescent tubes 10 or more feet away and they see you dressed in a wire screen gown complete with a tin can, it will frighten the emunctory indiscretions out of them. Further, when they complain to the authorities they will sound much the same way mental patients sound as they describe exotic macrunes, stereos malfunctioning, strange costumes complete with tin cans, and the like. It is even slightly possible

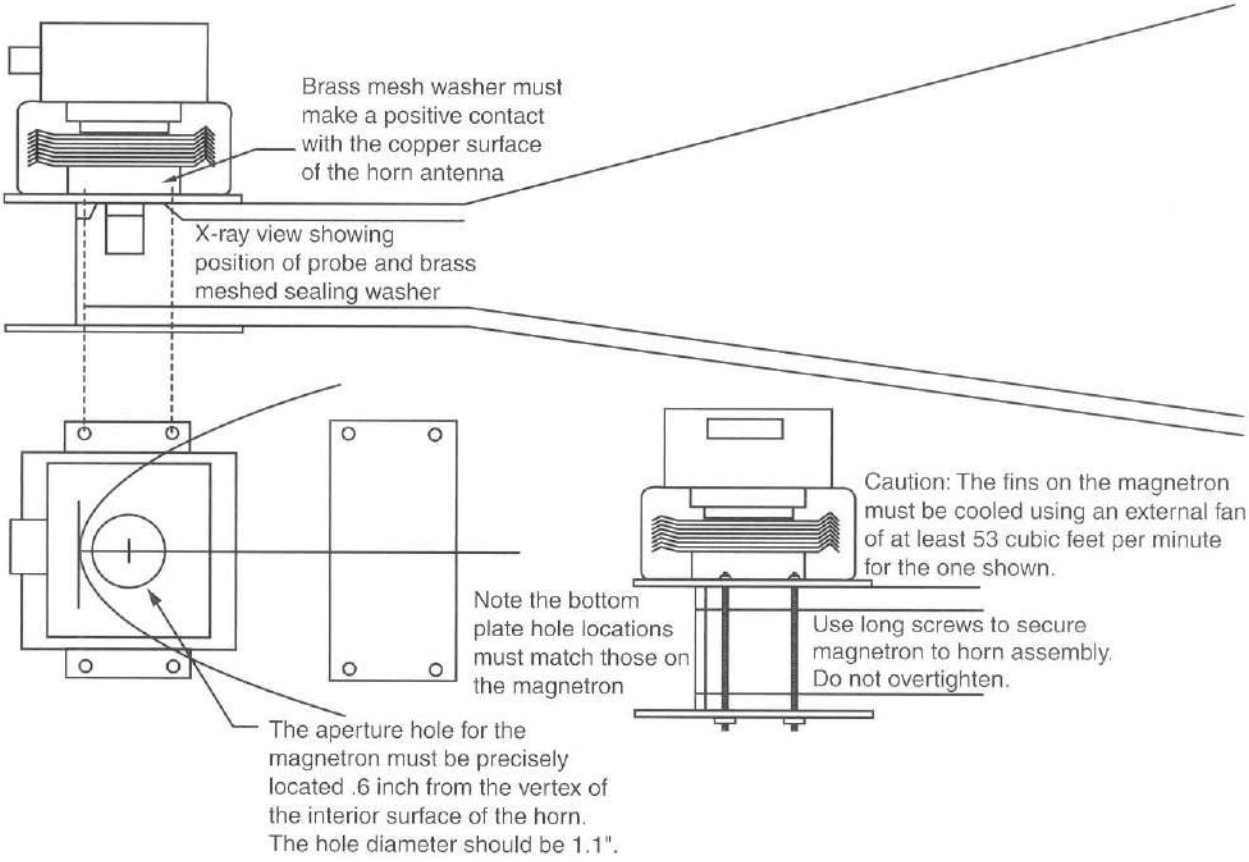

Figure 13-12 *Attaching the magnetron*

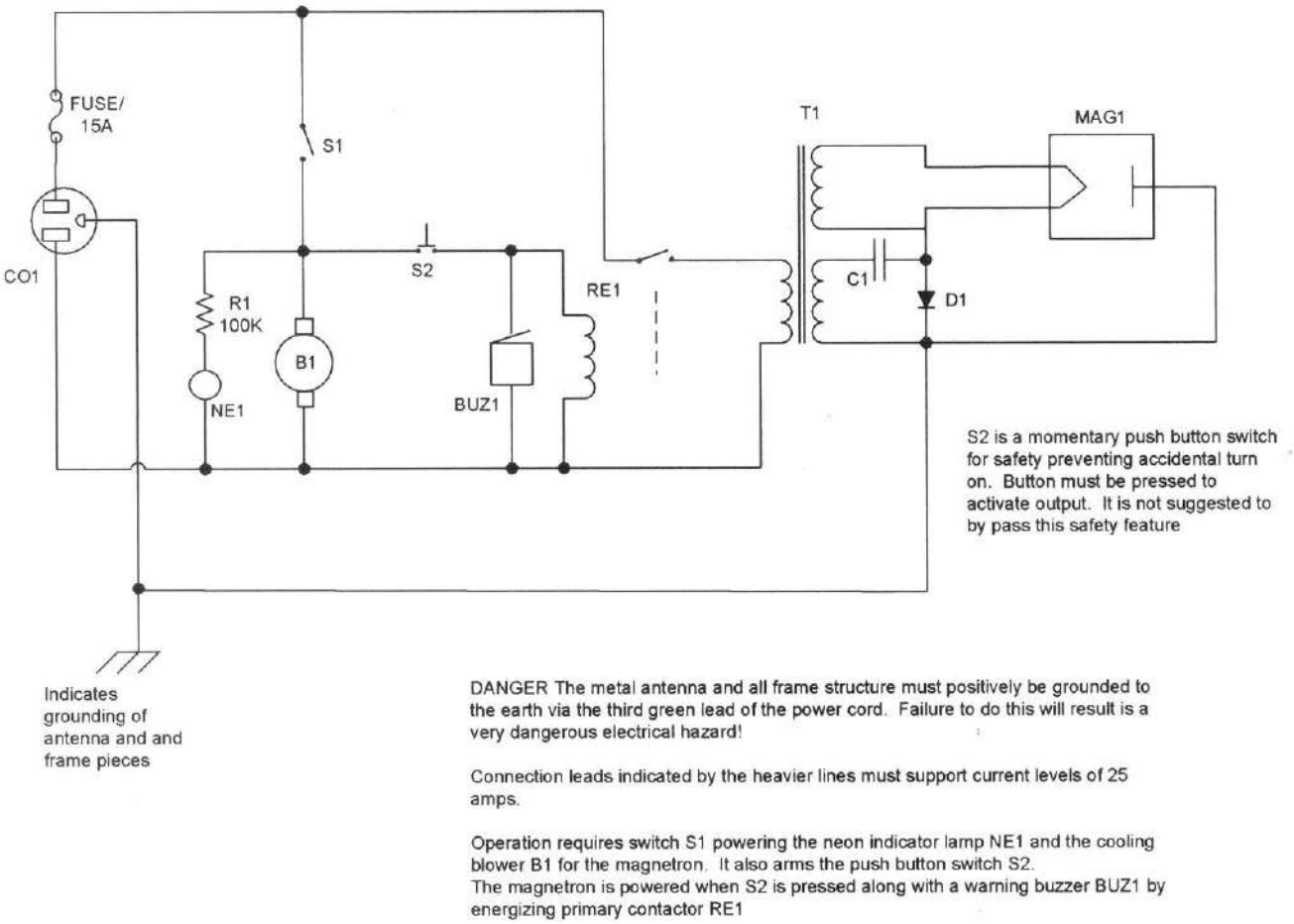

Figure 13-13 *Microwave cannon schematic*

that they might be invited to undergo observation at the local state psychiatric hospital, where, if you are really ambitious, you could locate their room, aim your microwave cannon, and make their stereo buzz whenever the psychiatrist's back is turned and cause a diagnosis that will keep them out of the neighborhood for a longer time. But in the remote case you get caught doing this, it will be almost impossible to prosecute you because no state legislature has the time to write and process special laws against shooting microwaves into peoples' stereos. The television publicity possible if the state attempts to prosecute you will be a disaster for the system that supports cultural tyranny because it will inspire countless television viewers to join in the revolution to make the world a better place by building more microwave cannons and shooting down more obnoxious stereos. And even if they can win a battle in court, they will ultimately lose the war that they started against human dignity.

Table 13-2 Microwave Cannon Parts List

Ref. #	*Description*	*DB Part #*
R1	100K 1/4-watt resistor (br-blk-yel)	
CO1	Heavy-duty, 15-amp, three-wire power cord	
FUSE/15	15-amp fuse and holder	
B1	85 cubic feet/minute or better cooling fan for magnetron fins	
S1	*Single pole, single throw* (SPST), 5-amp, 115 VAC toggle switch	
S2	Momentary push-button switch (see note on Figure 13-13)	
NE1	Neon indicator lamp with leads or equivalent	
BUZ1	120 VAC high output safety buzzer	
RE1	10- to 20-amp contacter or relay	
T1	Magnetron power transformer NEI030-5414	DB# MAGTRAN
C1	.85-microfarad, 2500 VAC voltage-doubler capacitor	DB# MAGCAP
D1	5 kilovolt, 1/2-amp diode	DB# MAGDIODE
MAG1	2M121A magnetron	DB# MAGNETRON

Chapter Fourteen

Induction Heater

This device shown in Figure 14-1 shows an induction heater capable of heating metals to over 1,500 degrees Fahrenheit. It can be used in the processing of gas discharge tubes often used for plasma, neon displays, laser discharge tubes, and spectrum tubes. These tubes usually require electrodes that must be heated to drive out the impurities that are now sucked out by a vacuum system. The induction heater heats these electrodes directly through the glass.

The completed system consists of a donut-shaped heating coil head connected via an umbilical cord, which is in turn connected to the power-conditioning and control box. The system is powered directly from 115 VAC and requires caution when building and using. The head is a coil of wire that surrounds the target area to be heated. As shown, it is an air-cooled system that requires a waiting time for processing between operations because the coil will get hot. The common circuit ground is above ground and requires an isolation transformer or an ungrounded scope to view the waveforms from a grounded scope.

This is an advanced-level project requiring electronic skills and the use of an oscilloscope. Expect to spend $35 to $75. All the parts are readily available, with specialized parts obtainable through Information Unlimited (www.amazing1.com), and they are listed in Table 14-1.

Figure 14-1 *Induction heater*

Circuit Operation

The power cord CO1 supplies 115/220 VAC from a wall receptacle where the third, green wire, grounding lead must be securely attached to the metal chassis (CHASSIS) for safety (see Figure 14-2).

Switch SW1 energizes the primary circuits, and fuse FUS1 protects the main circuit from any catastrophic faults. Indicator lamp NEON1 requires the current-limiting resistor R12 and lights up when SW1 is turned on. The peak charging current to capacitors C10 and C11 is limited by in-rush resistor Rx. The rectifiers D1, D2, D3, and D4 are shown in a

full-bridge configuration when used for 220 VAC input. For 115 VAC operation, only D1 and D3 are used along with the JUMP jumper in a voltage-doubler configuration. The output voltage across C10 and C11 is 300 volts DC and is referred to as the positive and negative rails.

Dropping resistors R2 and R3 provide voltage to the oscillator driver IC1 with zener diode Z1 regulating the voltage at 15 volts. Switch SW2 is normally closed, shorting out this voltage across Z1. Capacitor C2 provides the high instant of current for the output pulses and must be physically close to IC1. Operation requires SW2 being pressed, allowing 15 volts to be applied to the oscillator driver generating the drive pulses.

These drive pulses turn the main MOSFET switches, Q1 and Q2, off and on. The switching frequency is determined by the time constant of power control pot R10 and timing capacitor C3. A limit resistor, R11, prevents driving the circuit beyond the intended limits.

The switching circuit is in a half-bridge configuration where the MOSFET connected to the positive end (+ rail) must be driven with its source pin referenced at 150 volts above the common end (− rail). This is accomplished by biasing a bootstrap capacitor (C4) through an ultrafast diode (D5), providing the correct DC level to fully control Q1. Resistors R6 and R7 eliminate the high-frequency parasitic oscillation that occurs as a result of rapidly switching the capacitive load of the MOSFET gates. Capacitor C40 limits the current flow to a second neon indicator light, NEON2, which is connected in series and is energized by the output frequency when the heating cycle is activated by SW2.

A network consisting of capacitor C7 and resistor R8 slows down the transition time of the switched pulses across Q1 and Q2. The resultant time constant limits the rate of voltage rise, dv/dt, that could cause a premature turn-on at the wrong switch, creating a catastrophic fault mode.

Capacitors C5 and C6 provide a voltage midpoint and produce the necessary storage energy to maintain the voltage level of the individual pulses. The output is taken at the junction of Q1/Q2 and C5/C6 and is a square wave fed to the induction heating coil L1. A current rise through L1 now commences as a function of Et/L where E is the voltage of the drive pulse, t is the applied time, and L is the inductance of L1. This changing current now induces eddy currents in the target piece to be heated as a function of $E = L\ di/dt$. These circulating currents quickly heat up the target piece.

Project Assembly

1. Assemble the heating head coil, as shown in Figure 14-3. This coil must be tightly and evenly wound for optimal performance. It may be difficult for the beginner and is available in three sizes, as indicated in Table 14-1.

2. Assemble the circuit board, as shown in Figure 14-4. Note that you should allow a half-inch for the Q1 and Q2 pins. This is necessary to allow these parts to be placed flat against the chassis when mounting as they exit at the midsection of the part.

   It is also strongly suggested that you use an eight-pin IC socket (SO8) because IC1 is very sensitive to static electricity and possible errors during the assembly.

   Note that if you are building from a perforated or vector circuit board, it is suggested that you use the indicated traces for the wire runs and insert components starting in the lower left-hand corner. Pay attention to the polarity of capacitors with polarity signs and all semiconductors.

   Route the leads of the components as shown and solder as you go, cutting away the unused wires. Attempt to use certain leads as the wire runs or use pieces of the #24 bus wire. The heavy foil runs should use the thicker #20 bus wire because these are the high-current discharge paths.

3. Double-check the accuracy of the wiring and the quality of the solder joints. Avoid wire bridges, shorts, and close proximity to other circuit components. If a wire bridge is necessary, sleeve some insulation onto the lead to avoid any potential shorts.

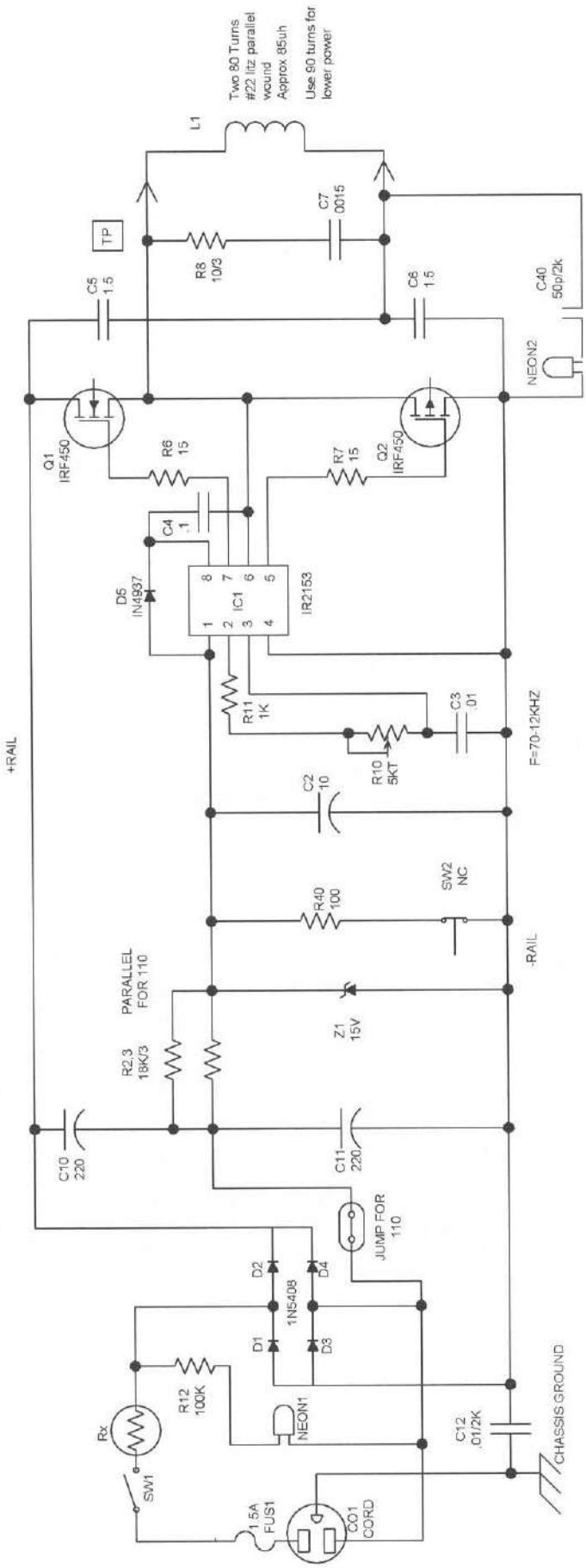

Figure 14-2 *Induction heater schematic*

4. Connect the external components as shown in Figure 14-5. Use 6-inch lengths of the wire size as noted.

5. Create the chassis, as shown in Figure 14-6, from a piece of .065-inch 5052 bendable aluminum. Note to trial-fit and measure the diameters of the components before drilling the holes. Pay attention to the holes for mounting Q1 and Q2 because these must be reasonably accurate to align with the layout of the PCB. Also, there must be at least 1/8 inch of clearance between the board and the chassis for sandwiching in the PLASTPL plastic plate. This prevents grounding out of the board wiring traces to the metal chassis.

6. The final assembly is shown in Figure 14-7. Note the mounting scheme for Q1 and Q2, as they must be insulated from the chassis using the thermo pads, THERM1. These pads allow heat transfers and provide electrical insulation from the metal chassis.

   Drill the hole for grounding lug LUG1 and solder the green grounding lead from the power cord and circuit board's earth ground.

The heating head coil assembly can be built to accommodate a diameter from a 1/2" to a 1" object. The assembly with the material shown is intended for using enclosed electrodes in glass tubes such as those used in neon tubes, laser tubes, and spectrum tubes. High-temperature materials may be used if you are anticipating using for other applictions.

The coil should be wound with high-frequency wire to limit heating losses. Use #22 litz wire consisting of multiple strands of #36 magnet wire.

1. Fabricate the winding bobbin from 1.25" lengths of 1/16" wall GT fiber glass tubing of your diameter choice of 1/2, 5/8, 3/4, 7/8 or 1".
2. Wind an even 1" layer of the #22 litz wire. Glue the start wire with a fast-curing glue. Tape the finished winding using a single layer of high-temperature glass tape.
3. Continue winding layers and repeat step 2 until there are 80 turns. You may truncate the successive layers by several turns at each end to keep from slipping off or use a quick-curing glue.
4. Attach the input leads and attach by gluing and taping into place.

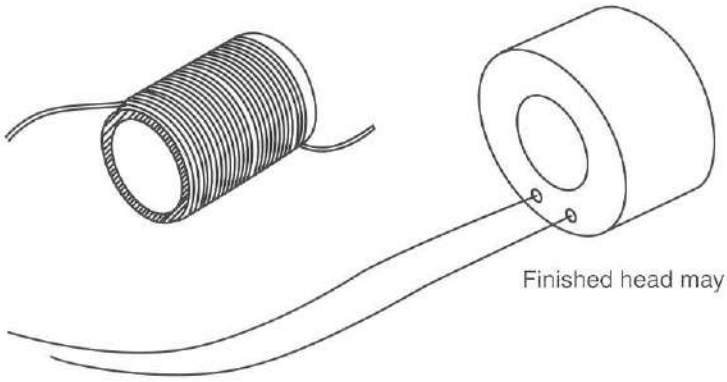

Finished head may be potted in epoxy or sealed in plastic caps

The inductances of the various heads will vary as a function of the diameter. Ideal current through the head is 20 amps peak. You should therefore adjust the frequency of R10 to maintain this value when changing the head sizes as the following:

1/2" head	50 uh	75 KHz
5/8" head	75 uh	50 KHz
3/4" head	100 uh	40 KHz
7/8" head	125 uh	35 KHz
1" head	150 uh	30 KHz

These heads are available assembled for those not wanting to attempt winding their own. They are listed in Table 14-1.

Figure 14-3 *Heater head coil assembly*

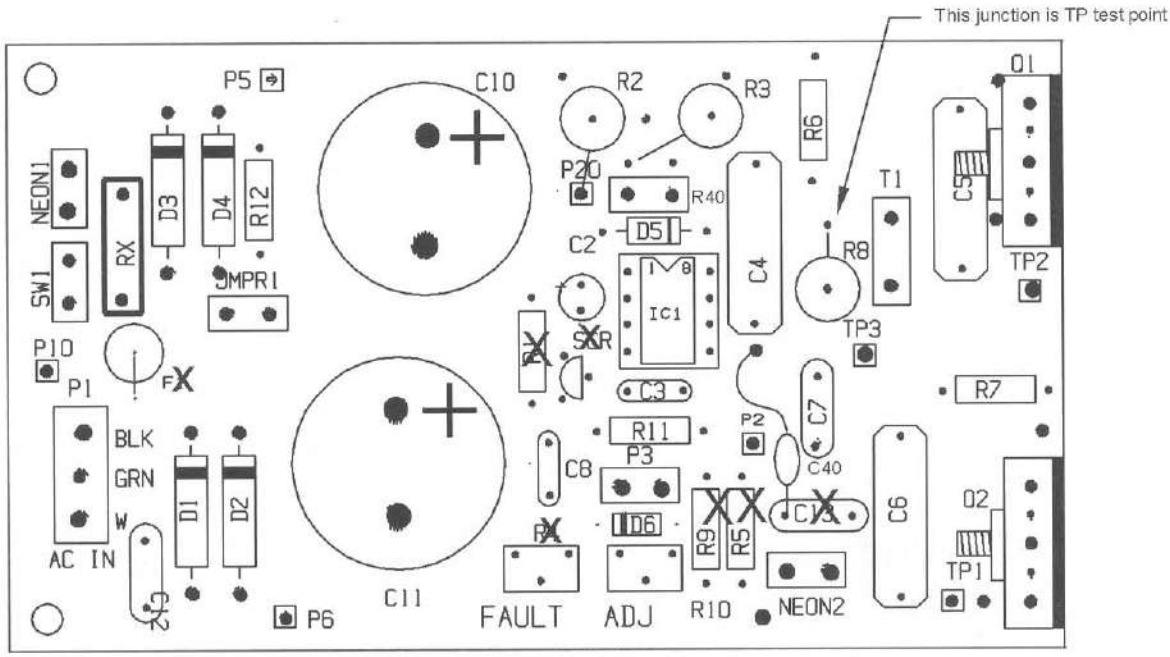

1. Black dots are connections points to external leads as shown figure 14-5

2. The PC board as shown is used in several projects and does not use all the components as indicated. Those indicated by an X are omitted for this project. R40 and C40 are added to the pads as shown and are not identified on the PC board printing

3. This circuit uses a 8 pin socket for IC1 as it is prone to failing if there are circuit faults

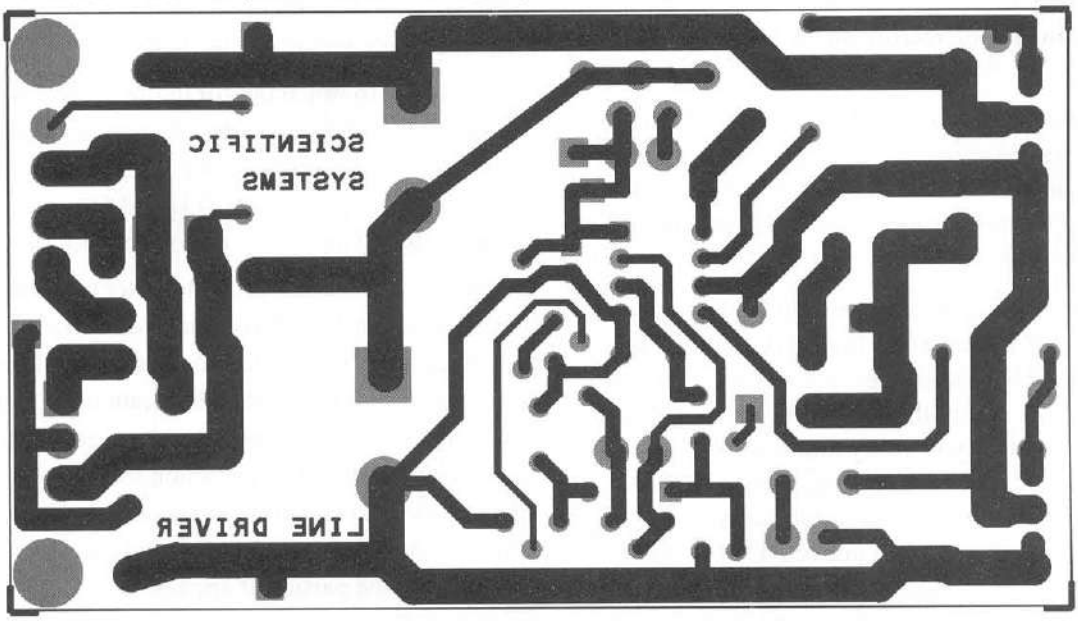

JUMP

Assembly of the board assembly is shown using a printed circuit board available through www.amazing1.com Builders may use a vector board and use the component leads to duplicate the foil traces as shown.

On all IND40 assembly boards this jump lead is to be the first part on the board. Once the unit is final assembled with the heating head connected in place the jump now can now be disconnected. This step prevents static electric damage to the semiconductors.

Figure 14-4 *Assembly of the circuit board*

Note that we have shown the use of plastic bushings (BU38) for the neon indicator lamps and output leads, and also BU58CL clamp bushing for the line cord.

7. Assemble the test jig as shown in Figure 14-8. This is a very useful fixture for any 115 VAC project up to 300 watts.

8. Now fabricate the cover to fit the chassis section. Use bendable plastic or a thin, perforated aluminum sheet. Secure it to the chassis via four screws (SW1) on the folded-up lip in this section.

Project Testing

Caution: The circuit commonly noted as −RAIL is electrically above earthground by over 150 volts. It is strongly recommended that you obtain a 200-watt isolation transformer before proceeding and testing this or other similar direct line powered circuits. Experienced experimenters working on dry, wooden floors may choose to unground their test equipment. This can be a dangerous shock hazard!

1. Connect the ungrounded scope to the TP test point, as noted in the Figure 14-2 schematic or in Figure 14-4. The lead of R8 is shown connected to the junction of the drain and the source of Q1 and Q2 respectively.

2. Verify that the main power switch S1 is off and insert a 2-amp fuse into FH1. Then adjust trimpot R10 to midrange and connect CO1 to the female end of the cord on the test jig. It is important that you verify that the test jig is not shorting the ballast lamp. Plug the jig into the output of the isolation transformer. Quickly turn on S1 and notice NEON1 lighting up and the ballast lamp not lighting. If it lights, you must troubleshoot and find your error before proceeding.

Press and hold PB1, noting a picture-perfect square wave on the scope with the lamp only dimly lighting. Quickly adjust R10 for a 20-usec pulse period. This corresponds to 50 kHz. NEON2 will indicate when PB1 is activated. Experienced builders may wish to monitor the current to the head using a current probe attachment to the scope. This wave shape should be another picture-perfect sawtooth of 20 amps maximum.

Using the Heater Project

Obtain a gas discharge tube with an electrode to fit into the head size you chose in assembly.

At this point, it is a good idea to have a meter capable of measuring the AC line current, as this value is very dependent on the object that you place into the head and should not exceed 2 amps. You can drop this value by increasing the frequency, which is done by adjusting R10. When heating electrodes, you will note the ampmeter dropping in level when the electrode is red hot. This is due to the change in the magnetic characteristics of the heated material.

Something to watch out for in this project is overheating the head coil. You may implement a cooling fan stand when using the device for multiple tasks. Also, the chassis panel where Q1 and Q2 are mounted should not be uncomfortably hot to touch.

Those experienced can create other heads for different heating tasks and you can even make a "quick" heat solder pot. Just make sure you keep the switching current below the maximum of 20 amps. The inductance of the head should not go below 80 uh. Alternate head construction must always take into consideration heating fatigue and the eventual failure of the head wires, bobbin, and construction materials for the particular application.

Notes:
1. The parts on the printed circuit board with an X are not used for this project.
2. C40 and R40 are added components not indicated on the board
3. Lead lengths can be shortened in final assembly

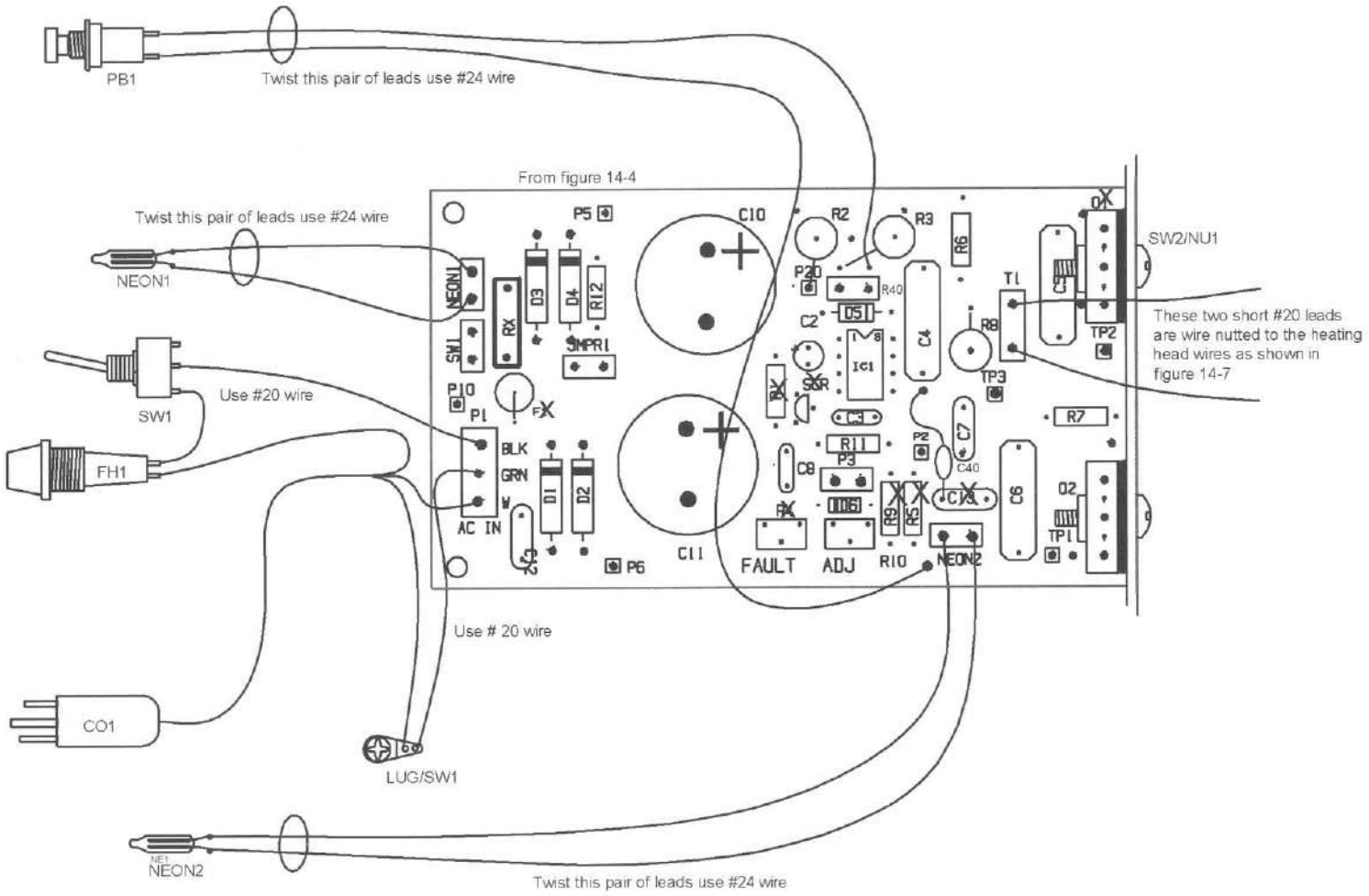

Figure 14-5 *External wiring*

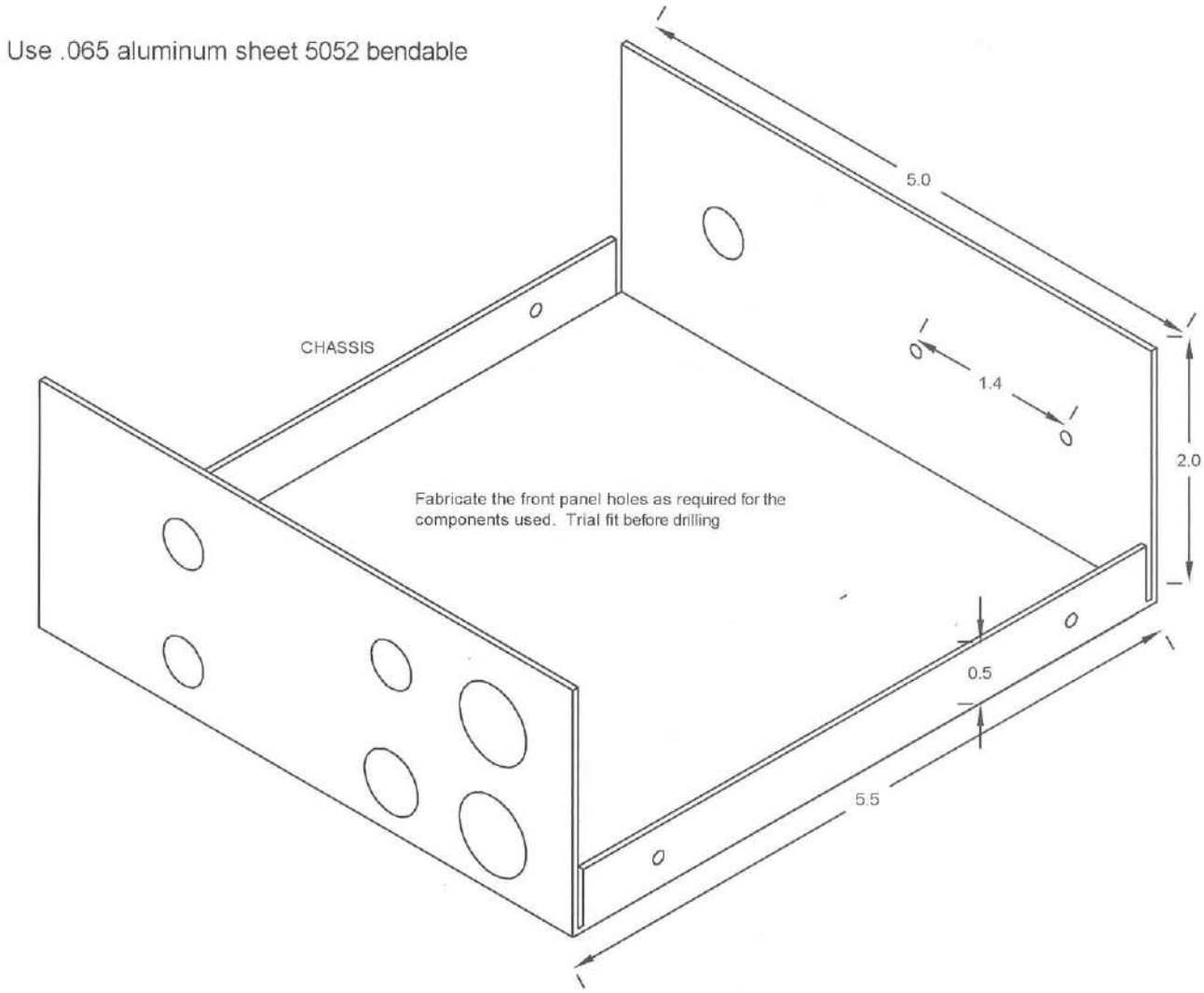

Figure 14-6 *Chassis fabrication*

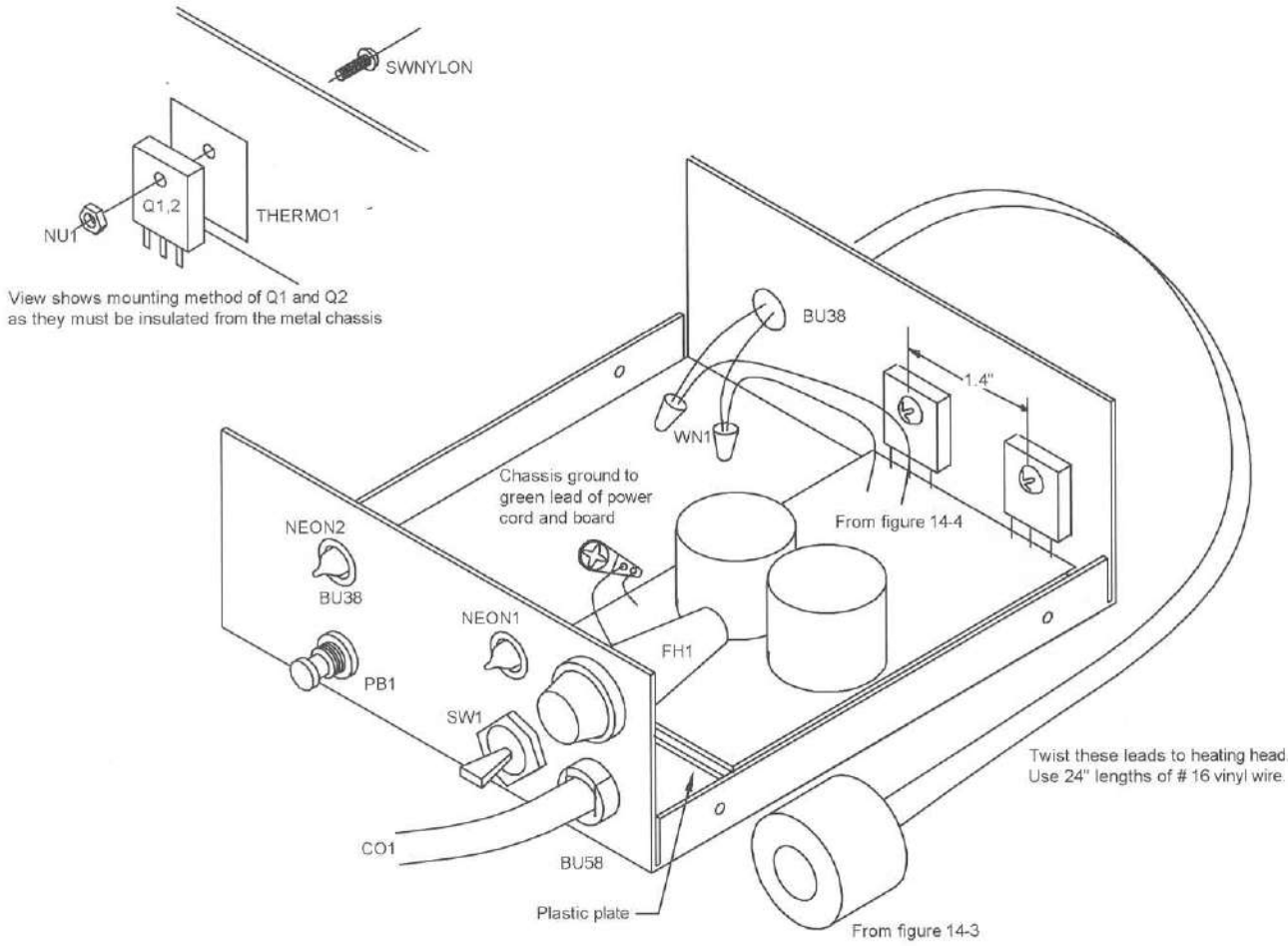

Figure 14-7 *Isometric of final assembly*

This test jig as shown prevents catastrophic damage to AC powered circuitry in the event of a fault when first assembled. Basically it uses a 60-watt lamp as a ballast, connected in series with the hot wire of the AC line. The lamp will usually allow ample current to flow for operational circuit verification yet limit short circuit current to that of the lamp should the circuit have a catastrophic fault. It is suggested that the serious experimenter construct this test jig and enclose it in a suitable container with receptacle for plugging in any AC circuit under test.

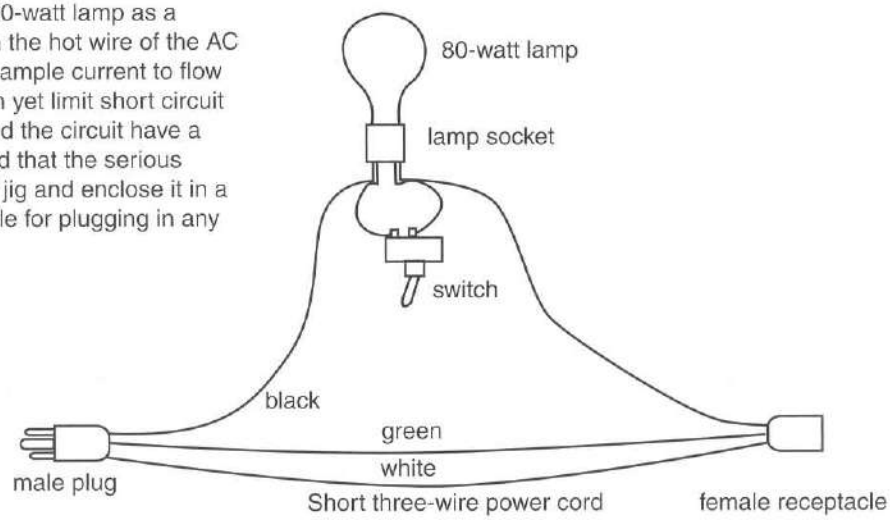

Figure 14-8 *Useful test jig for line-drive circuits*

Table 14-1 Induction Heater Parts List

Ref. #	Description	DB Part #
R2, 3	Two 18K 3-watt resistor	
R4	100-ohm, 1/4-watt resistor (br-blk-br)	
R6, 7	Two 15 1/4-watt resistor (br-grn-blk)	
R8	10-ohm, 3-watts metal oxide resistor	
R10	5K vertical trimmer	
R11	1 K 1/4-watt resistor (br-blk-red)	
R12	100 K 1/4-watt resistor (br-blk-yel) or 10-ohm 3-watt metal oxide resistor	
Rx	5-amp in-rush limiter (KC006L-ND)	
C2	10-microfarad, 50-volt vertical electrolytic capacitor	
C3	.01- microfarad, 50-volts plastic capacitor (103)	
C4	.1-microfarad, 600-volt plastic capacitor	
C5, 6	Two 1.5-microfarad, 400-volt metal polyester capacitors	
C7	.0015-microfarad, 600-volt polypropylene capacitor	
C10, 11	Two 200- to 800-microfarad, 200-volt vertical electrolytic capacitors	
C12	.01-microfarad, 2-kilovolt disc capacitor	
C40	50-picofarad, 6-kilovolt ceramic capacitor	
D1, 2, 3, 4	Four 1,000-volt, 3-amp rectifiers (1N5408)	
D5	1-kilovolt, 1-amp fast diode (1N4937)	
Z1	15-volt, .5-watt zener diode (1N5245)	
Q1, 2	IRFP450/460 *metal-oxide-semi-conductor field effect transistors* (MOSFET)	
IC1	IR2153 half-bridge driver	
NEON1, 2	Two neon indicator bulbs with leads	
FH1	Fuse holder panel mount	
FUS1	2-amp slow blow 3AG fuse	
PB1	Normally closed push-button switch	
SW1	*Single pole, single throw* (SPST) toggle switch	
CO1	Three-wire line cord	
LUG1	#6 solder lug	
SO8	Eight-pin *integrated circuit* (IC) socket	
THERM1	Two thermo mounting pads for Q1 and Q2	
PCLINE	*Printed circuit board* (PCB)	DB# PCLINE
WN1	Two small wire nuts	
CHASSIS	Chassis fabricated from .065-inch aluminum sheet per Figure 14-6	
COVER	Cover fabricated from plastic sheet to fit chassis (see Figure 14-6)	
BU38	Three 3/8-inch plastic bushings	
BU58CL	5/8-inch clamp bushing for cord CO1	
SW1	Five #6 × 3/8-inch sheet metal screws for cover and LUG1	
SW2/NU1	Two 6-32 × 1/2-inch nylon screws and nuts	
WR24	24 inches of #24 vinyl stranded hookup wire	
WR20	24 inches of #20 vinyl stranded hookup wire	
WR16	48 inches of #16 vinyl stranded hookup wire	
PLASTIC	2 × 4-inch plastic insulating plate for under PC board	
HEAD12	Head with 1/2-inch clearance hole	DB# HEAD12
HEAD58	Head with 5/8-inch clearance hole	DB# HEAD58
HEAD34	Head with 3/4-inch clearance hole	DB# HEAD34
HEAD78	Head with 7/8-inch clearance hole	DB# HEAD78
HEAD10	Head with 1-inch clearance hole and head parts for those wanting to attempt assembly	DB# HEAD10
WR22LITZ	#22 LITZ of multiple strands of #36 enamel wire	
BOBBIN	1.25 inches of 5/8-inch GT tubing	

Chapter Fifteen

50-Kilovolt Laboratory DC Supply

This project, as shown in Figure 15-1, provides the high-voltage experimenter or researcher a DC source of 5 to 60 kilovolts at 5 milliamps. The system is short-circuit protected and current limited by inductive ballasting. This circuitry is excellent for high-energy capacitor charging intended for high-power applications. The charging current is fully adjustable and easily converts to a voltage source by the addition of load resistors. It is an excellent device for large gravity and lifter research, as well as normal, high-voltage laboratory functions.

This is an advanced-level project requiring electronic skills and high-voltage experience. Expect to spend $100 to $250. All parts are readily available, with specialized parts obtainable through Information Unlimited (www.amazing1.com), and they are listed in Table 15-1.

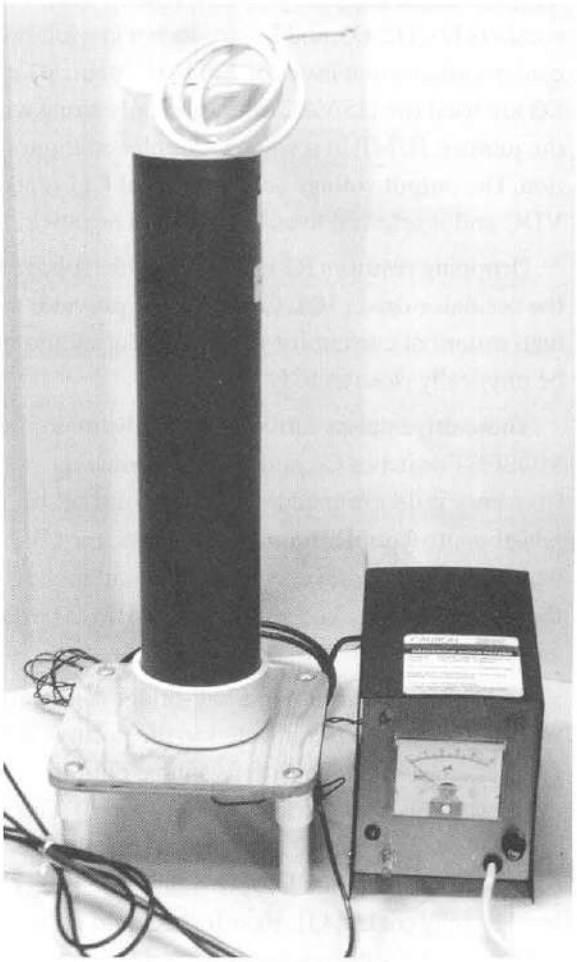

Figure 15-1 *50-Kilovolt power supply*

Basic Description

This project is shown constructed in two sections. The first section is the power conditioning and control circuitry. This is where the 115 VAC level is converted to a variable-frequency, high-voltage current source between 15 and 30 kHz. The second section is the high-voltage multiplier circuitry interconnected via a short umbilical cable from the power control section.

The multiplier section is a Cockcroft-Walton half-wave circuit consisting of 10 capacitors and diodes connected in the ladder configuration, along with a peak-current, high-voltage-limiting resistor.

Circuit Operation

The power cord (CO1) supplies 115/220 VAC from a wall receptacle where the third, green, grounding lead wire must be securely attached to the metal chassis (CHASSIS) for safety (see Figure 15-2).

Switch S1 energizes the primary circuits and fuse FUS1 protects the main circuit from any catastrophic faults. The indicator lamp NEON1 requires current-limiting resistor R12 and lights up when SW1 is turned on. The peak charging current to capacitors C10 and C11 is limited by in-rush resistor Rth. The rectifiers D1, D2, D3, and D4 are shown in a full-bridge configuration when used for 220 VAC input. D1 and D3 are used for 115 VAC operation only along with the jumper, JUMP, in a voltage-doubler configuration. The output voltage across C10 and C11 is 300 VDC and is referred to as the plus and negative rails.

Dropping resistors R2 and R3 provide voltage to the oscillator driver IC1. Capacitor C2 provides the high instant of current for the output pulses and must be physically close to IC1.

These drive pulses turn off and on the main MOSFET switches Q1 and Q2. The switching frequency is determined by the time constant of power control pot R21 and timing capacitor C3. A limit resistor R11 prevents driving the circuit beyond the intended limits. You will note that R21 is part of switch S1.

The switching circuit is in a half-bridge configuration where the MOSFET connected to the positive end (+ rail) must be driven with its source pin referenced at 150 volts above the common end (− rail). This is accomplished by biasing a bootstrap capacitor C4 through ultrafast diode D5, providing the correct DC level to fully control Q1. Resistors R6 and R7 eliminate the high-frequency parasitic oscillation that occurs as a result of rapidly switching the capacitive load of the MOSFET gates. The transition time of the switched pulses across Q1 and Q2 is slowed down by a network consisting of capacitor C7 and resistor R8. The resultant time constant limits the rate of voltage rise dv/dt rate, which could cause premature turn-on at the wrong switch, creating a catastrophic fault mode.

Capacitors C5 and C6 provide a voltage midpoint and produce the necessary storage energy to maintain the voltage level of the individual pulses. The output is taken at the junction of Q1/Q2 and C5/C6 and is a square wave fed to the primary of transformer T1, inducing the high-voltage output in the secondary winding.

A safety shutdown circuit, consisting of a spark breakover switch, fires when the voltage exceeds a certain level and is fed to isolation transformer T2. The output is now rectified by diode D6 and integrated onto capacitor C8. When this voltage exceeds a preset level controlled by trimpot R4, a trigger level now turns on the silicon switch, SCR, and crowbars the voltage to the drive chip IC1, shutting it down and disabling the high voltage until reset by power removal.

The 15,000-volt, high-frequency output is fed to the voltage multiplier stack, consisting of capacitors C14 through C21 and diodes D7 through D14. The resultant 50,000-volt DC output is in series with peak-current-limiting resistors (R17 through R20).

Assembly of the Driver Section

1. Assemble the circuit board as shown in Figure 15-3. Note to allow a length of a half-inch for the pins of Q1 and Q2. This is necessary to allow these parts to be placed flat against the chassis when mounting.

   It is also strongly suggested that you use an eight-pin integrated circuit socket (SO8) because IC1 is very sensitive to static electricity and possible errors during assembly.

   Note that if you are building from a perforated or vector circuit board, it is suggested that you use the indicated traces for the wire runs and insert components starting in the lower left-hand corner. Pay attention to the polarity of the capacitors with polarity signs and all the semiconductors.

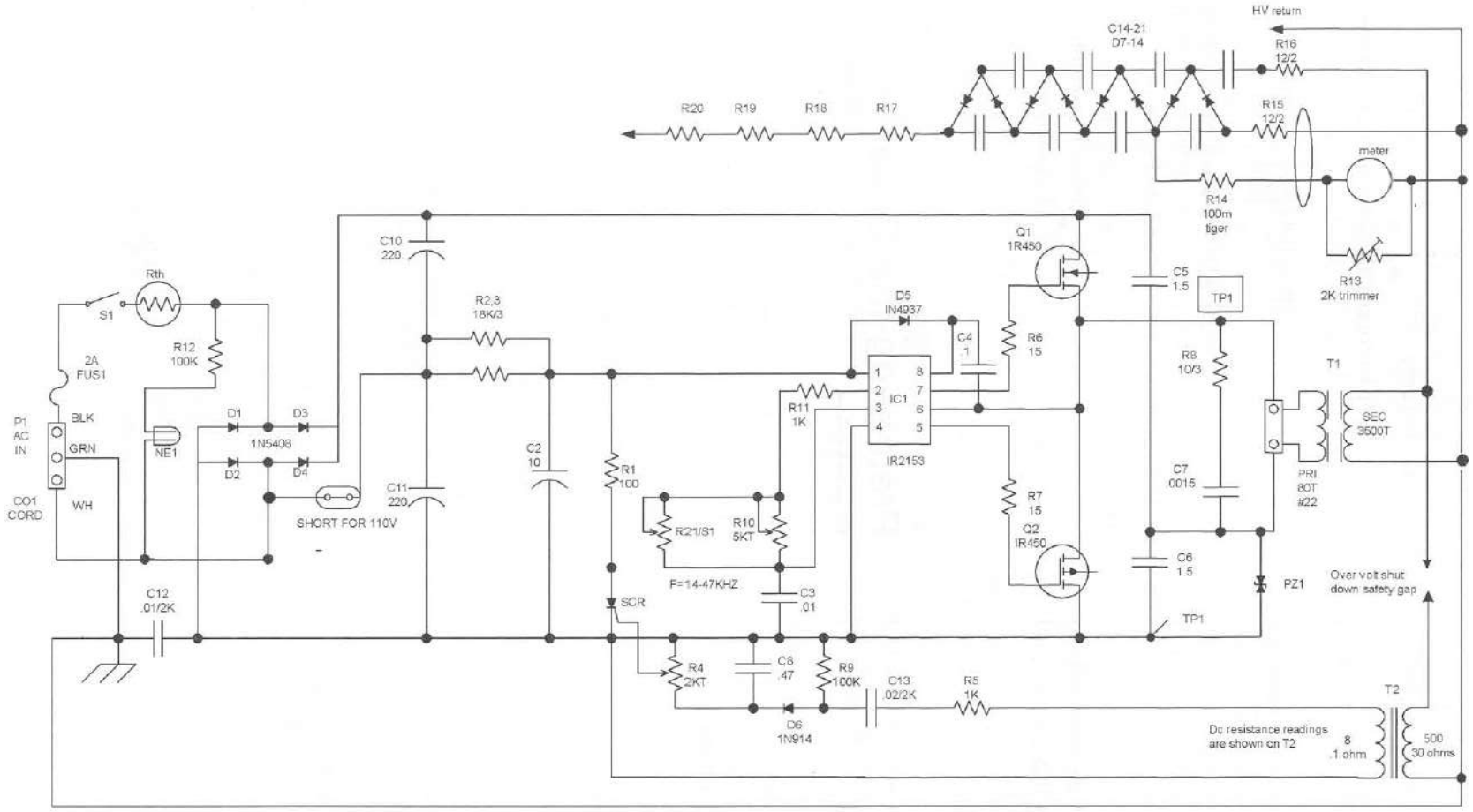

TRANSFORMER				
PRIMARY	80	#22 LITZ	9MH	4.75MH
XFMR	TURNS	WIRE	Lsc	Loc
SECONDARY	3500	#39 MAG	3HY	9H
AIR GAP=	2 MILS/SIDE			

Figure 15-2 *Circuit schematic*

Route the leads of the components as shown and solder as you go, cutting away unused wires. Attempt to use certain leads as the wire runs or use pieces of the #24 bus wire. The heavy foil runs should use the thicker
#20 bus wire as these are the high-current discharge paths.

2. Double-check the accuracy of the wiring and the quality of the solder joints. Avoid wire bridges, shorts, and close proximity to other circuit components. If a wire bridge is necessary, sleeve some insulation onto the lead to avoid any potential shorts.
3. Assemble the transformer as shown in Figure 15-4, or you may purchase this part as noted on the parts list.
4. Connect the external components as shown in Figure 15-5.
5. Fabricate the chassis as shown in Figure 15-6 from a piece of .035-inch 5052 bendable aluminum. Note to trial-fit and measure the diameters of the components before drilling the holes. Pay attention to the holes for mounting Q1 and Q2, as these must be reasonably accurate to align with the layout of the PCB. Also, there must be at least 1/8 inch of clearance between the board and chassis for sandwiching in the PLASTPL plastic plate. This prevents grounding out of the board's wiring traces.
6. Fabricate the plastic base from a 9 × 6-inch piece of 1/16-inch Lexan sheet, as shown in Figure 15-7.
7. Fabricate the parts as shown in Figure 15-8 for the over-voltage shutdown switch.
8. Attach the metal chassis to the plastic base via four screws and nuts, SW12/NU1 (see Figure 15-9).
9. Attach the shutdown switch assembly from Figure 15-8 using sheet metal screws SW1.
10. Mount the assembled PCB, as in Figure 15-3. Note that Q1 and Q2 are mounted using the insulating THERMO1 pads with the nylon screws. Mount the prewired front panel components, as in Figure 15-5.
11. Mount transformer T1 via an 8-inch tie wrap. Note the cores of T1 are wrapped with a single turn of #18 bus wire and this is connected to the ground lug electrically grounding the core.
12. Mount transformer T2 using a piece of double-sided foam tape or glue it in place.
13. Mount the remaining hardware, wiring lugs, and so on.
14. Proceed to wire everything as shown in Figure 15-10. Use twist pairs where noted or tie-wrap to neaten its appearance (see Figure 15-11).
15. Double-check the wiring for any obvious errors. You should have a finished assembly resembling Figure 15-12. The unit is now ready for the basic pretest.

Pretesting the Driver Section

This step will require basic electronic laboratory equipment including a 60 MHz oscilloscope

1. Assembly the test jig as shown in Chapter 14 Figure 14-8. This fixture is a very useful for any 115 VAC project up to 300 watts.

Caution: The circuit commonly noted as −RAIL is electrically above ground by over 150 volts. It is strongly recommended that you obtain a 200-watt isolation transformer before proceeding and that you test this or similar direct-line-powered AC circuits. Experienced people working on dry, wooden floors may choose to unground their test equipment. This still can be a dangerous shock hazard!

2. Connect the scope to the test points as noted in the Figure 15-2 schematic or as shown in Figure 15-4. The lead of R8 is shown connected to the junction of the drain and the source of Q1 and Q2 respectively.
3. Short out the output leads.

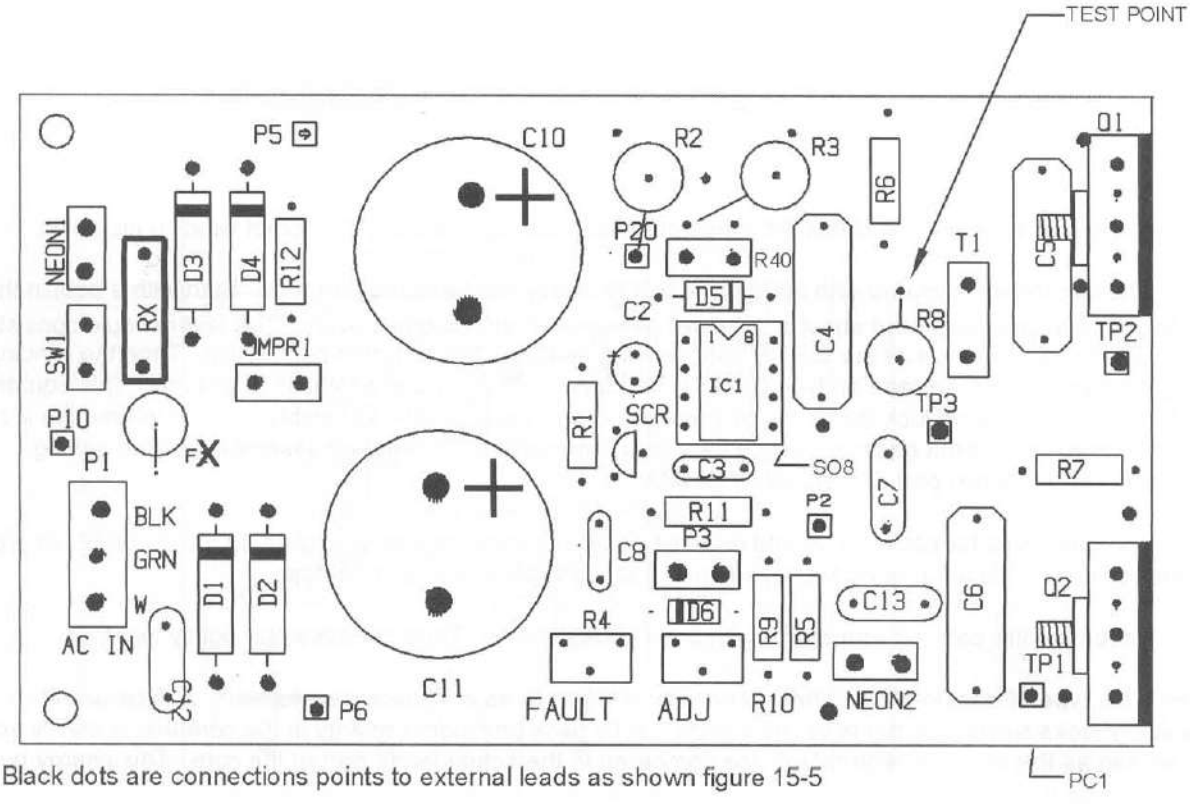

1. Black dots are connections points to external leads as shown figure 15-5

2. The PC board as shown is used in several projects and may not use all the components as indicated.

3. This circuit uses a 8 pin socket for IC1 as it is prone to failing if there are circuit faults

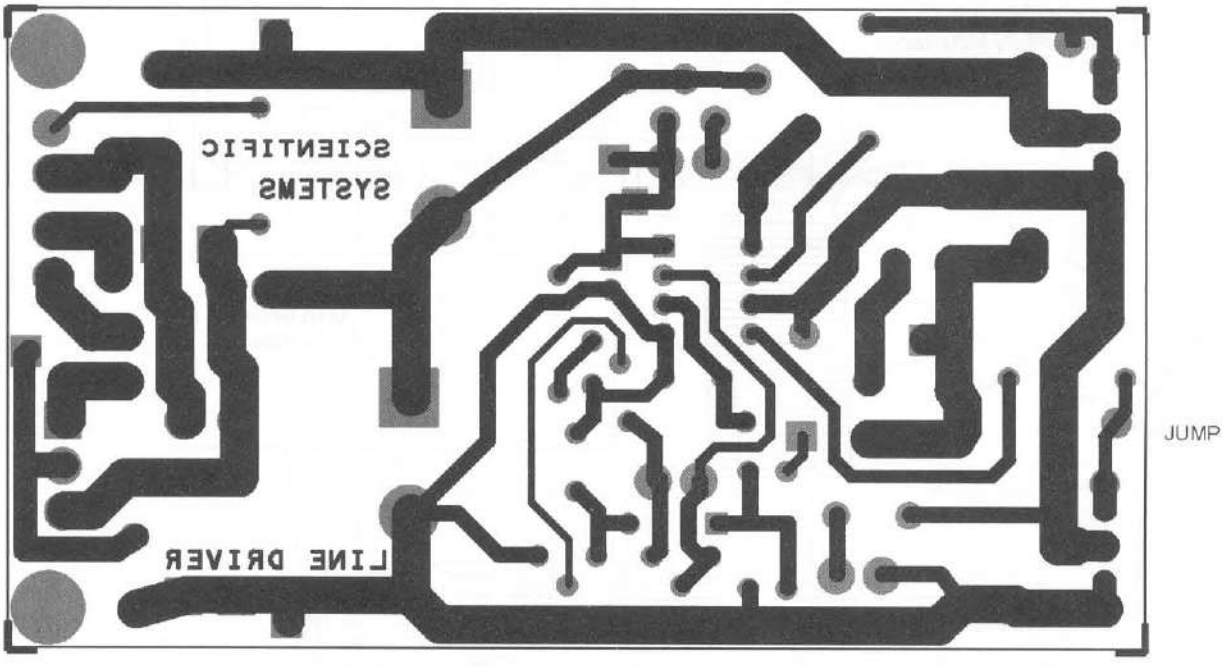

Assembly of the board is shown using a printed circuit board available through www.amazing1.com Builders may use a vector board and use the component leads to duplicate the foil traces as shown.

Figure 15-3 *Assembly of the circuit board*

The special ferrite transformer used in this project is available ready to use and is listed on table 15-1. The transformer is designed with a certain amount of leakage reactance between the primary and secondary winding to allow limited short circuit current. This approach allows charging capacitors without the use of lossy resistors. While this is an advantage in circuit protection is has the disadvantage of requiring transistor switches (FETS) that now must switch the reactive leakage current in addition to the real load current. We show our circuit using high current switches that alleviate this problem.

The design specifications are shown for those advanced builders desiring to attempt winding their own.

1. The secondary is wound with 3500 turns of #39 heavy insulated magnet wire. Start with a bobbin that will fit over the cores and wind about a ¾" layer evenly and without cross overs. The layer should consist of about 200 turns. Note to exit the start of your winding as this is the common connection. Tape the winding using 2 mil polypropylene tape and wind the second layer until you have a total of 3500 turns. This equates out to 18 layers!! (good luck doing this by hand) You now must pot the assembly and this will require a cup to hold the windings and out gassing using a vacuum pump on both the winding assembly and the potting material. We use a two part silicon rubber GE#627.

2. The primary is far easier to do and requires another bobbin now only winding 80 turns of #22 Litz high frequency wire. This will require two layers and is taped together using mylar tape.

3. Assemble the core set and space with 5 mil (.005)" shims. Tape the assembly tightly together.

Note: This type of transformer is often incorrectly referred to as a "flyback transformer". A flyback unit physically looks similar but this is where it ends. A fly back unit stores energy in the core that is mainly across the air gap as this is a very high reluctance compared to the actual ferrite part of the core. This energy builds up as long as the transistor is on and then "flies back" when the transistor switches off.

Measured parameters:

Open circuit primary inductance.....5.5 mH
short circuit primary inductance..... 1 mH
Open circuit secondary inductance.....10 H
Short circuit secondary inductance..... 2 H

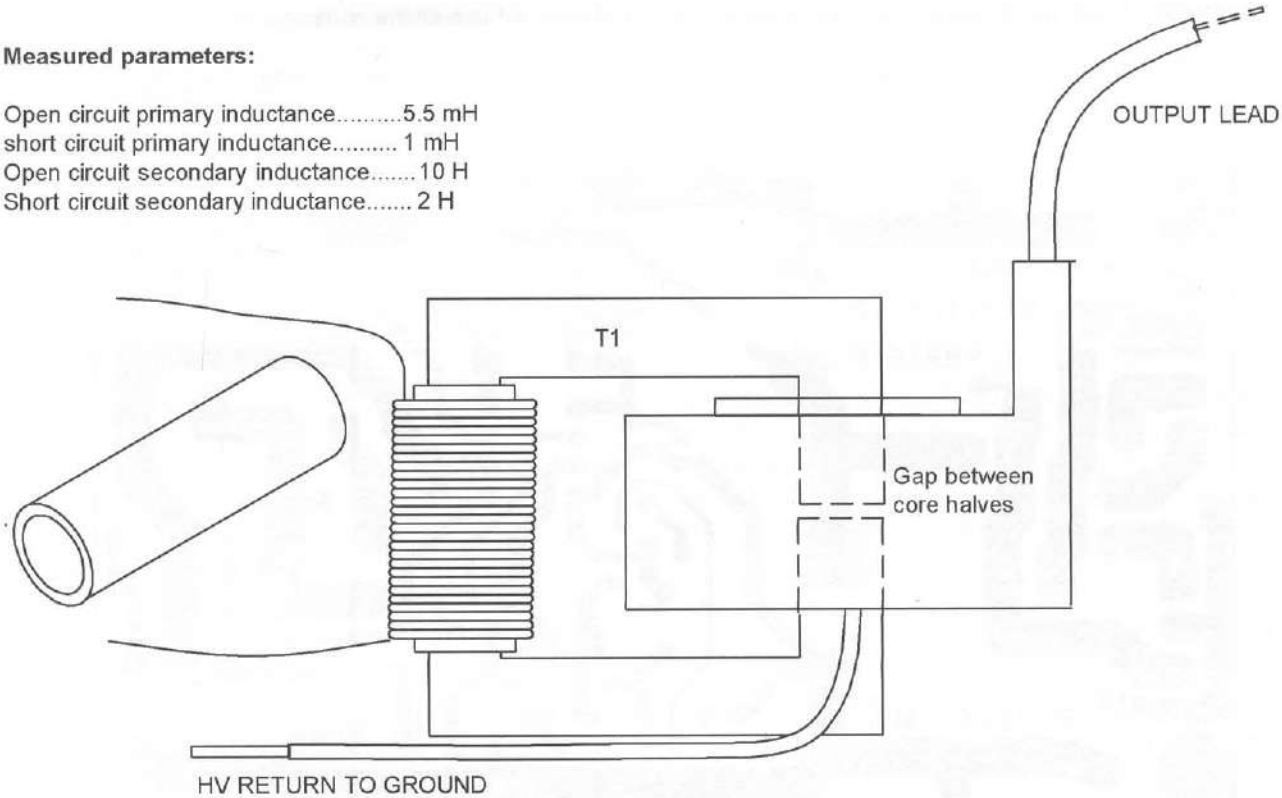

*#18 solid magnet wire can be used however high frequency LITZ wire will give a slight improvement. You can make this wire by obtaining 6 pieces of #26 magnet wire and twist together as a single wire.

Figure 15-4 *Assembly of transformer*

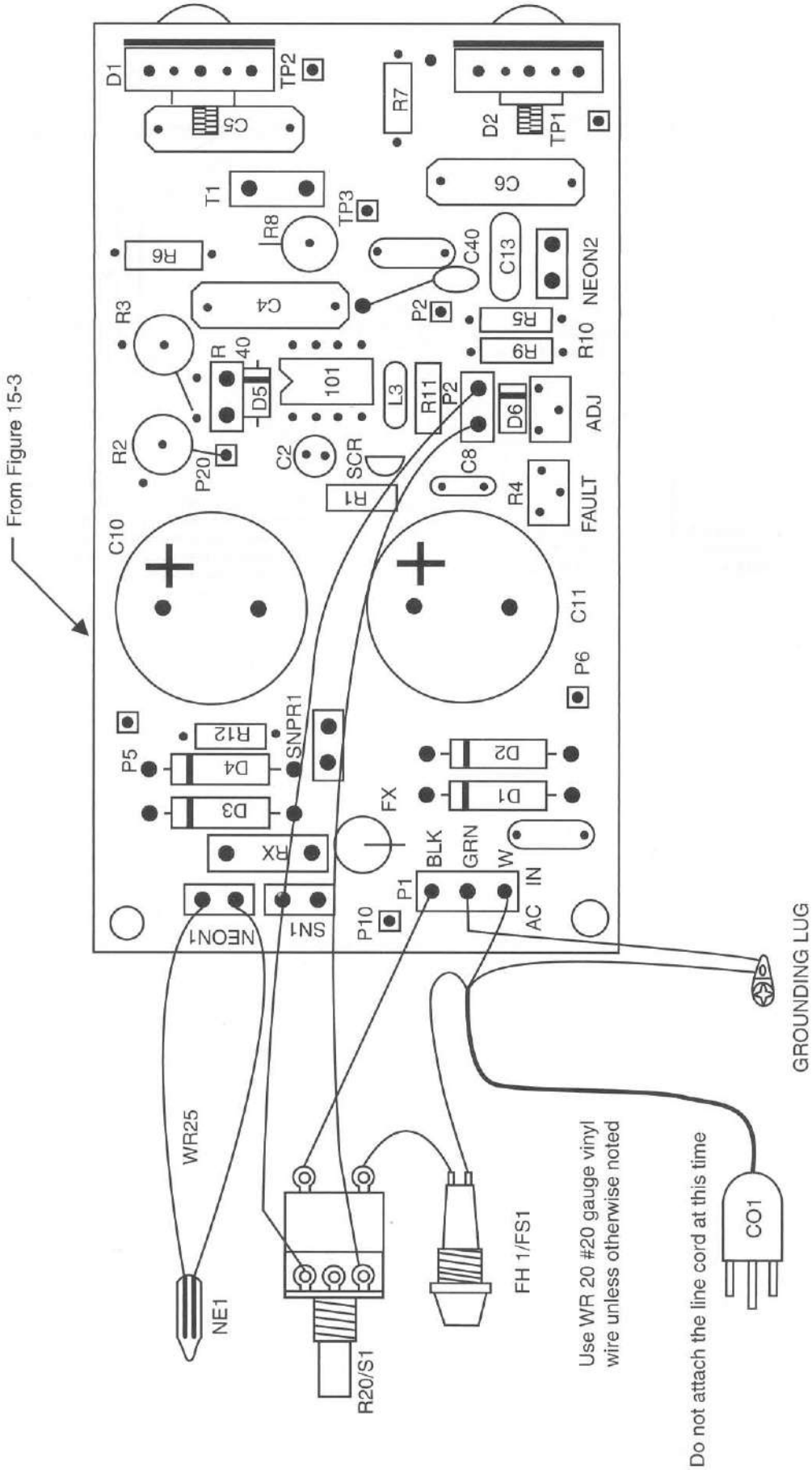

Figure 15-5 *External wiring*

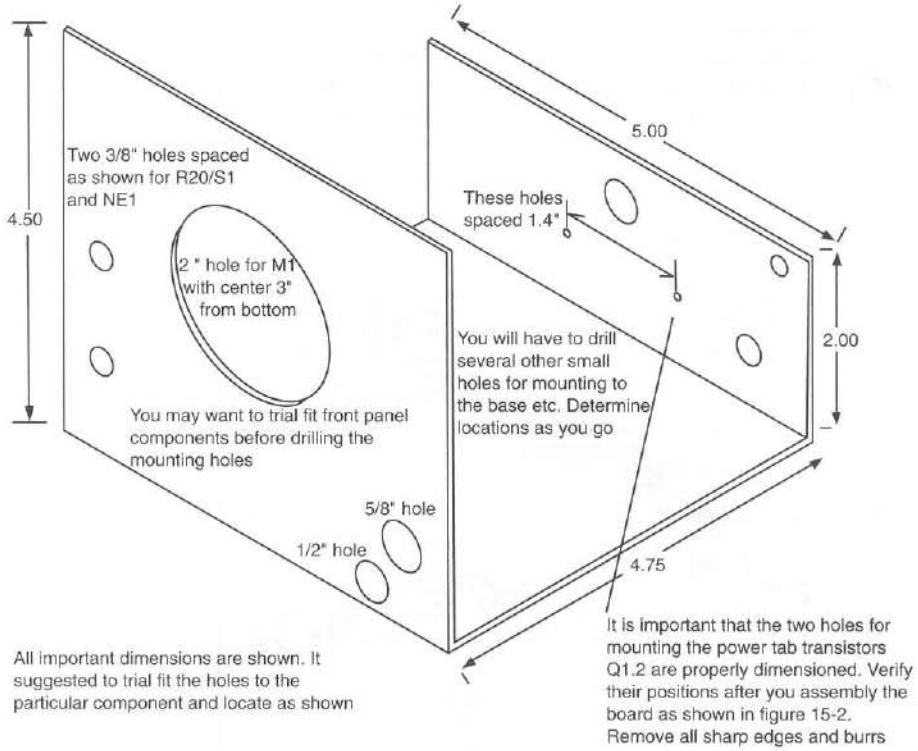

Figure 15-6 *Chassis fabrication*

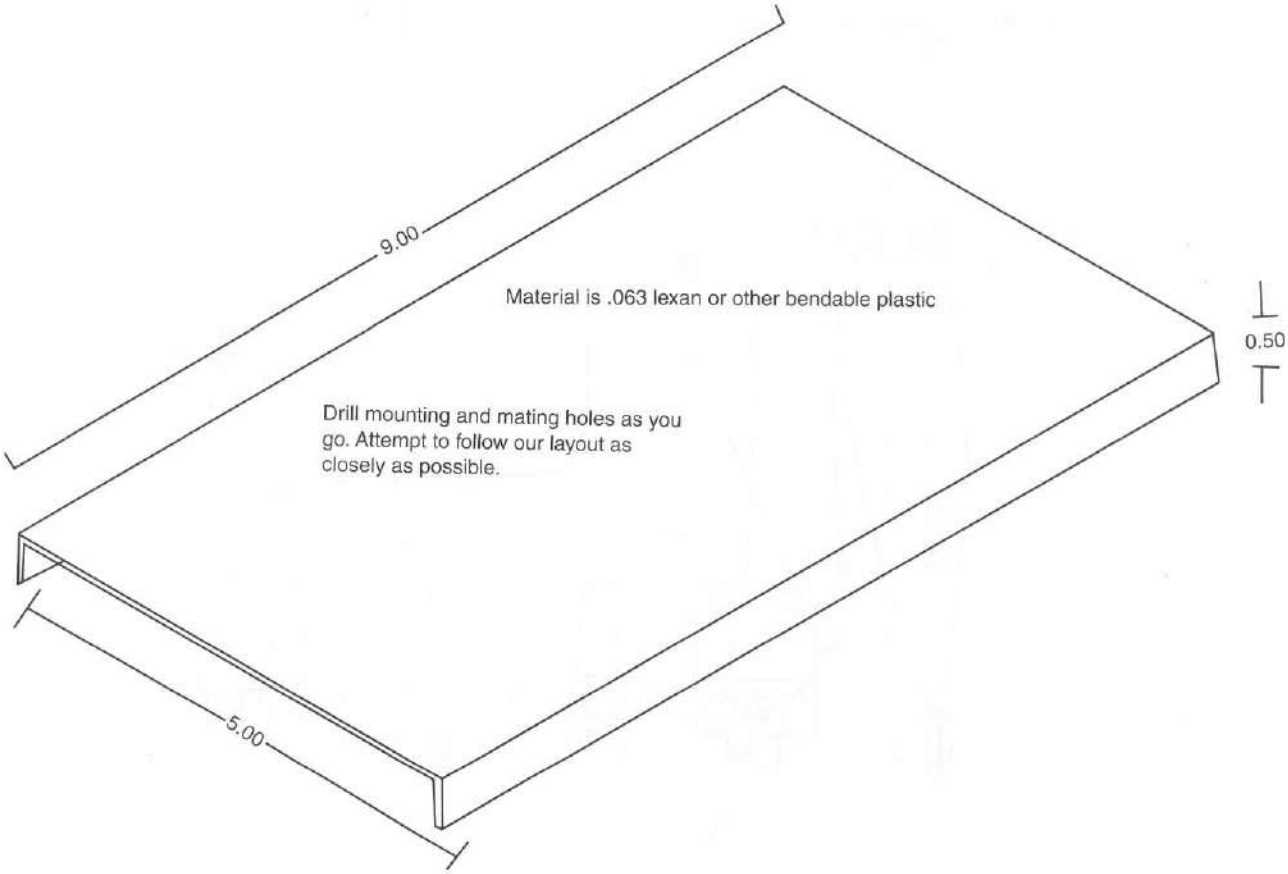

Figure 15-7 *Plastic base fabrication*

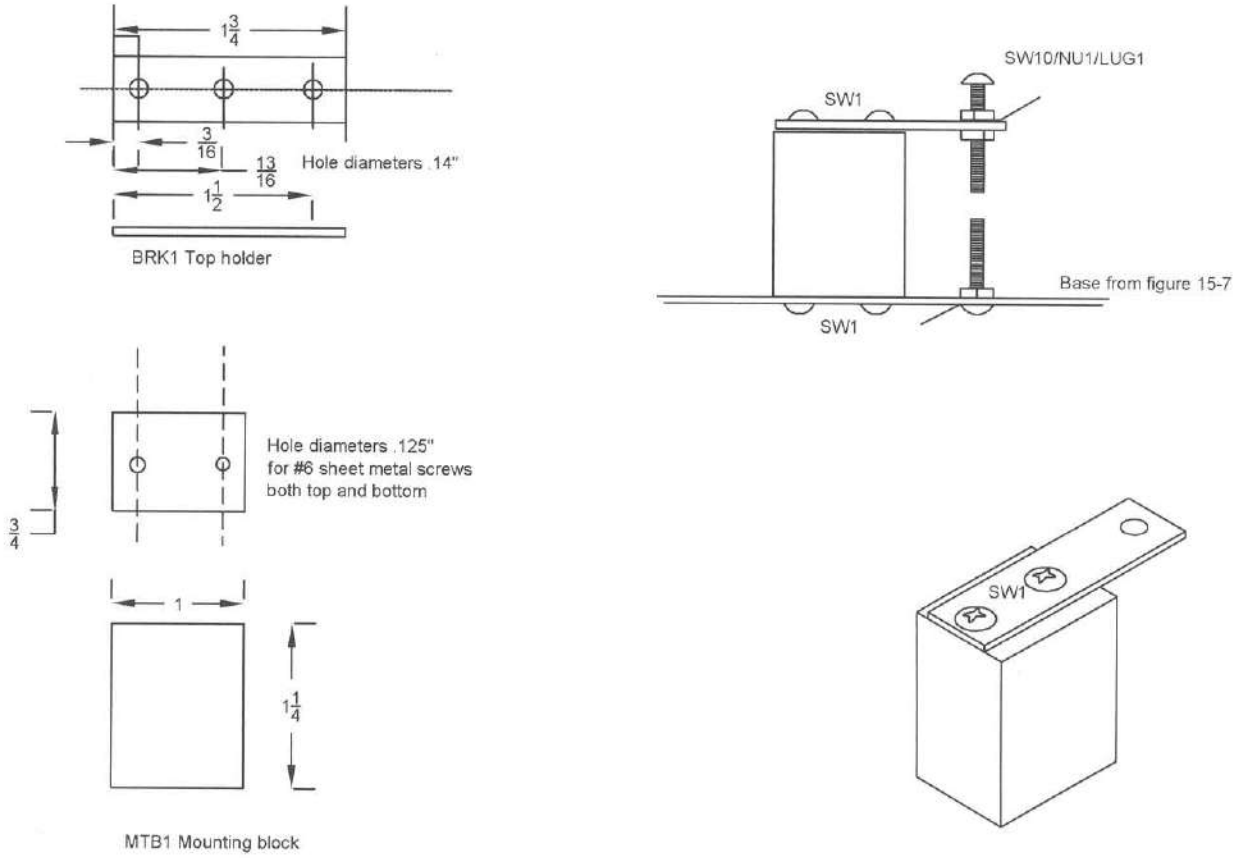

Figure 15-8 *Creating the shutdown switch*

4. Verify the main power switch S1 is off and insert a 2-amp fuse into FH1. Connect CO1 to the female end of the cord on the test jig and adjust both trimpots to midrange. Verify the test jig is not shorting the ballast lamp and plug the jig into the output of the isolation transformer. Quickly turn on S1 and note NEON1 lighting and the ballast lamp not lighting. If it brightly lights up, you must troubleshoot and find your error before proceeding. Otherwise, note a picture-perfect square wave on the scope with the lamp only dimly lighting. Adjust R21 full clockwise and adjust trimpot R10 for an 80-usec pulse period. This corresponds to 12.5 kHz. Experienced builders may wish to monitor the current to T1 using a current probe attachment to the scope. This waveshape should be another picture-perfect saw tooth of 8 amps maximum. This is a reactive current and is not reflected as an input current due to the phase angle.

5. Turn the unit off and unshort the output leads. Adjust the spark switch screws 1/8 of an inch.

6. Turn on R21/S1 and very quickly rotate clockwise, noting the unit shutting down as apparent by the absence of the waveshape at the test point. If this does not occur instantly, you will need to readjust the switch gap or trimpot R4 clockwise until the shutdown activates. If it does not, you must troubleshoot the circuit. This completes the driver section of this system.

Assembly of the Multiplier Section

Assembly of this section requires solder joints to be large, smooth, and globular. This is contrary to normal soldering practices but is necessary to reduce hv leakage.

1. Fabricate the MULTIBOARD board and two BRK2 brackets, as shown in Figure 15-13.

2. Assemble the diodes and components as shown in Figure 15-14, but do not solder at

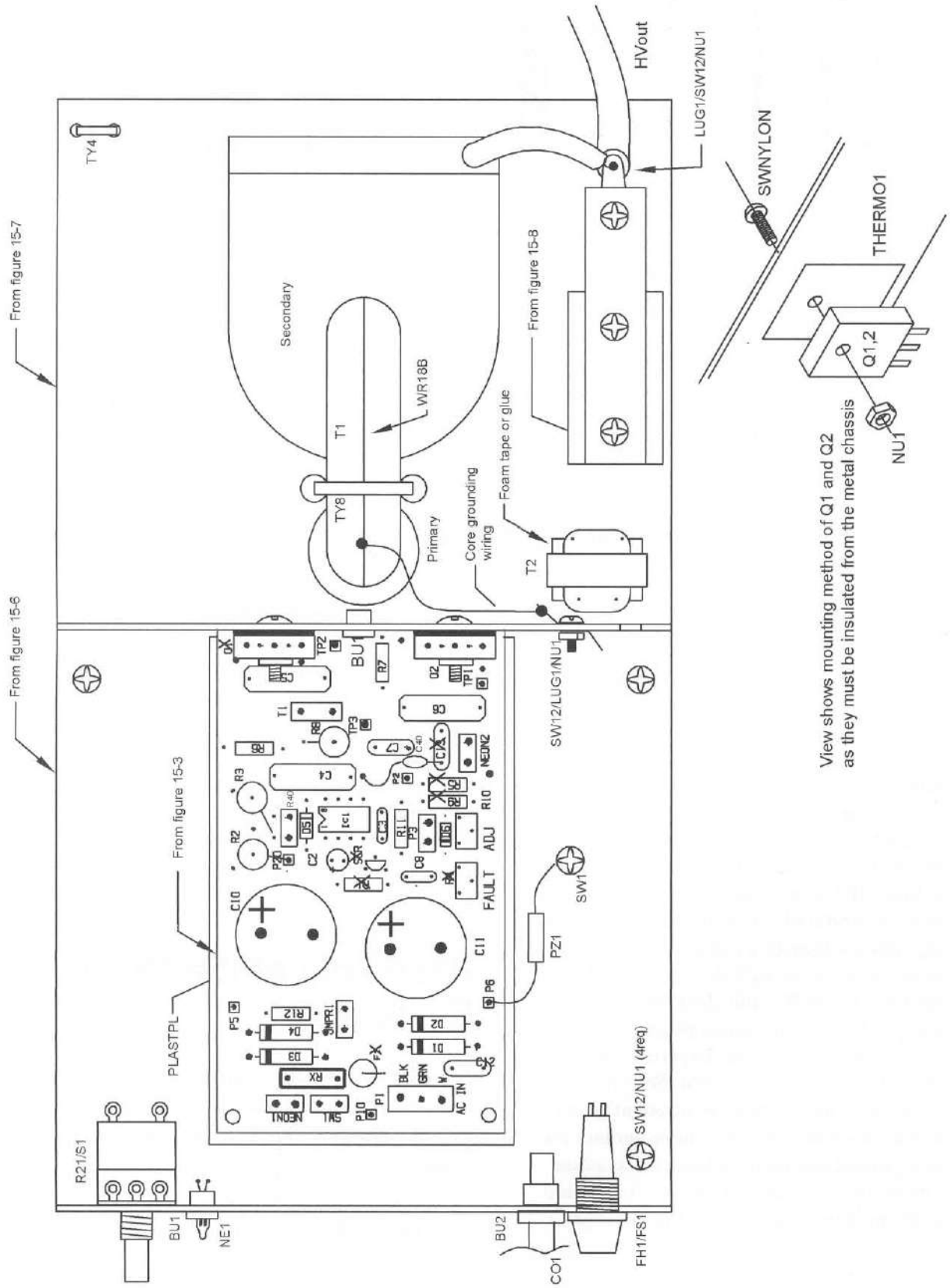

Figure 15-9 *Parts layout to driver*

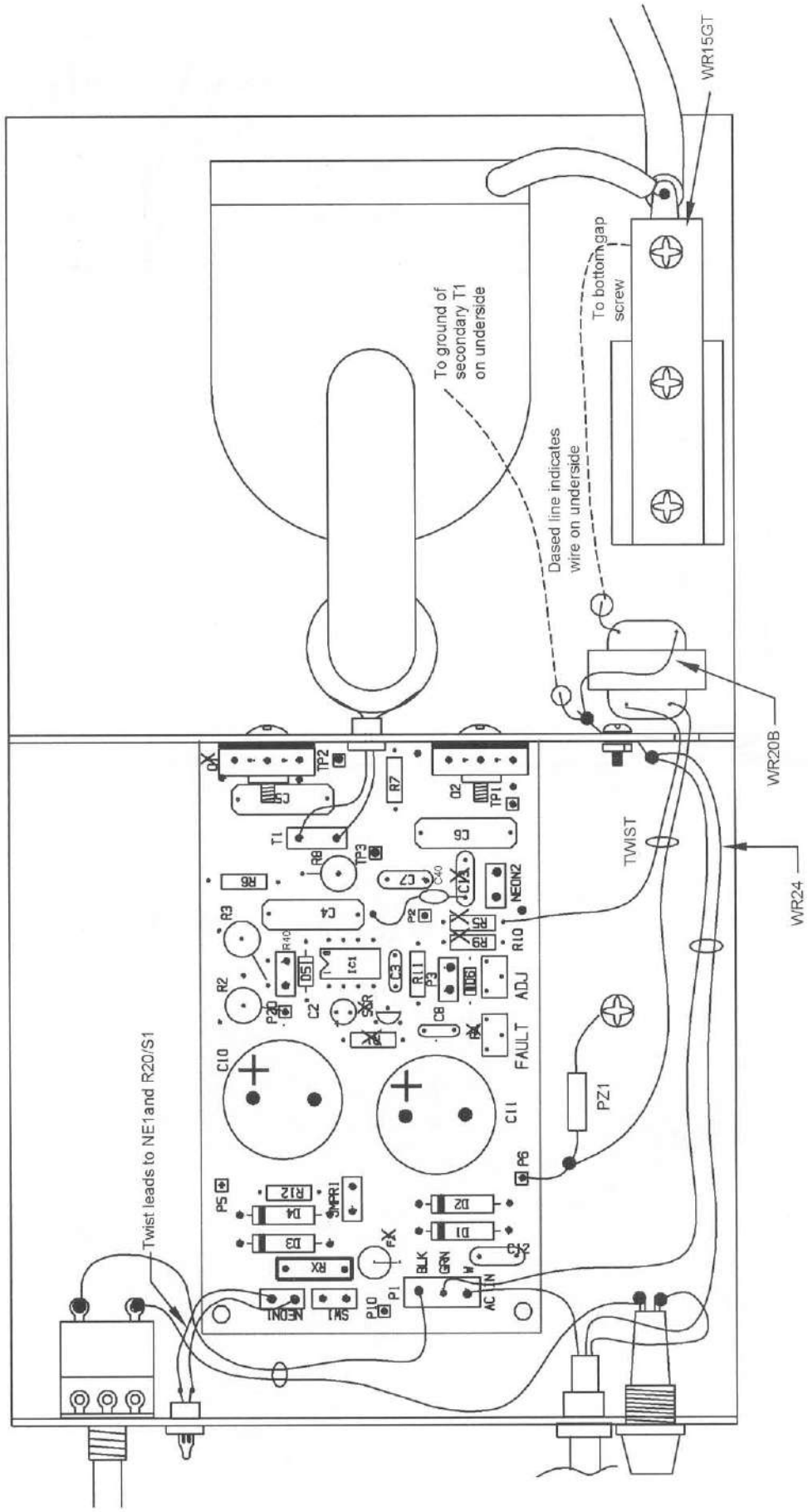

Figure 15-10 *Primary wiring aid*

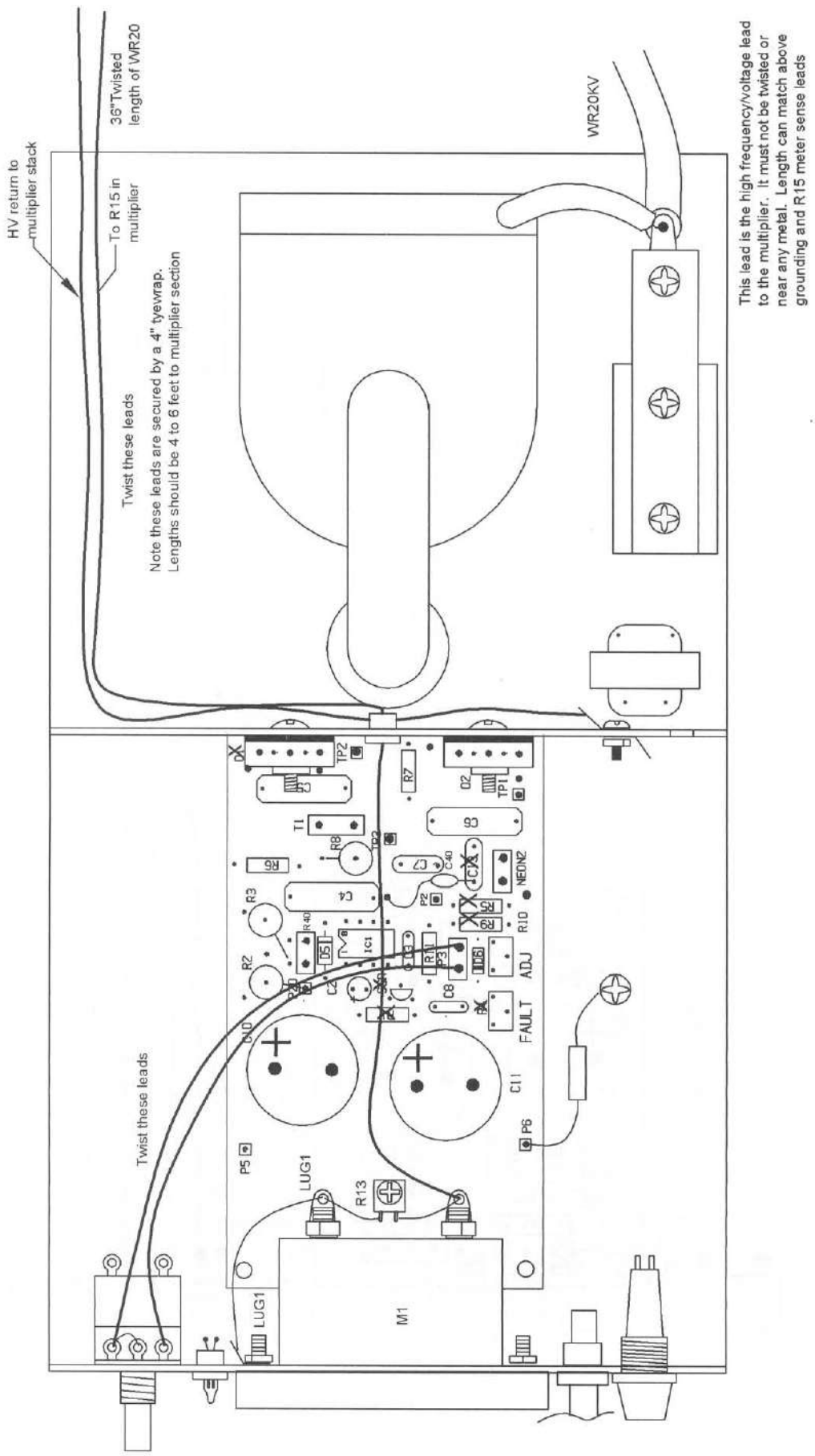

Figure 15-11 *Secondary wiring aid*

this time. Assemble the resistor tube for R17-20 as shown.

3. Mount the capacitors C14 through C21 and the remaining components as shown in Figure 15-15. Insert the BAF1 baffle plate to insulate and separate the left and right rows.

   Proceed to solder all the joints, noting that the capacitor and diode connections should be smooth, round balls of solder 1/8 to 3/16 of an inch wide. This may be tricky with all the leads but should be done to avoid leakage, especially the last four capacitors.

4. Sleeve resistor R14 into a plastic sleeve, as shown in Figure 15-16.

5. The final assembly is shown in Figure 15-17. Note you have a choice of an output lead or a spherical terminal.

Final Testing

This step requires basic electronic laboratory equipment including a 60 MHz oscilloscope along with a high-voltage meter with a 40 kilovolt dc rating. You will need a high-voltage load resistor to verify output power capabilities.

1. Connect the driver and multiplier sections together and separate them by at least 3 feet. Keep the high-voltage wire from the driver away from other conductive objects. Follow Figure 15-11 for the driver and Figure 15-17 for the multiplier interconnecting wiring.

2. Obtain a load resistor of around 10 megohms of at least 100 watts. This resistor must be able to support at least 50,000 volts. Our laboratory load resistor consists of 180 47k, 1-watt resistors connected in series and then inserted into

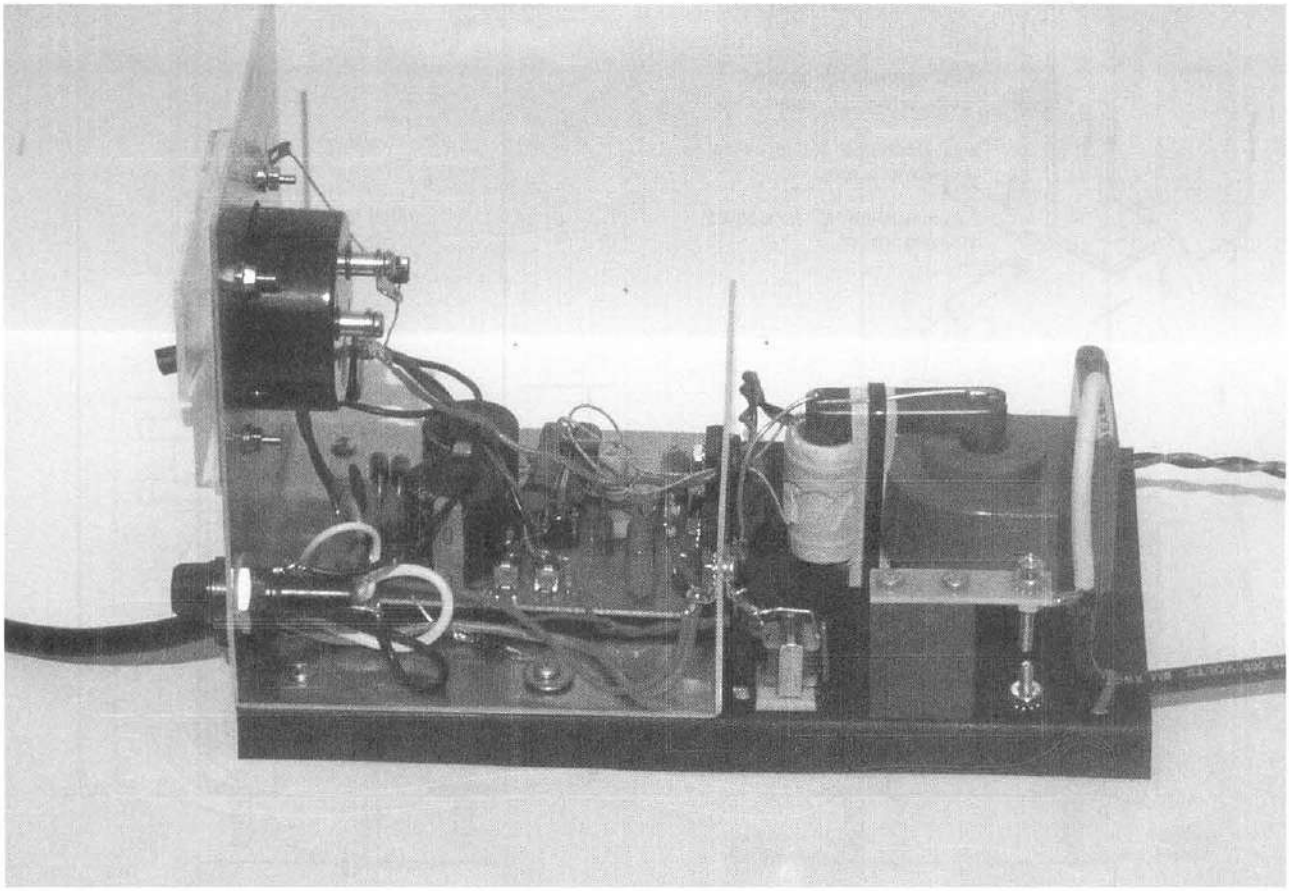

Figure 15-12 *Driver section*

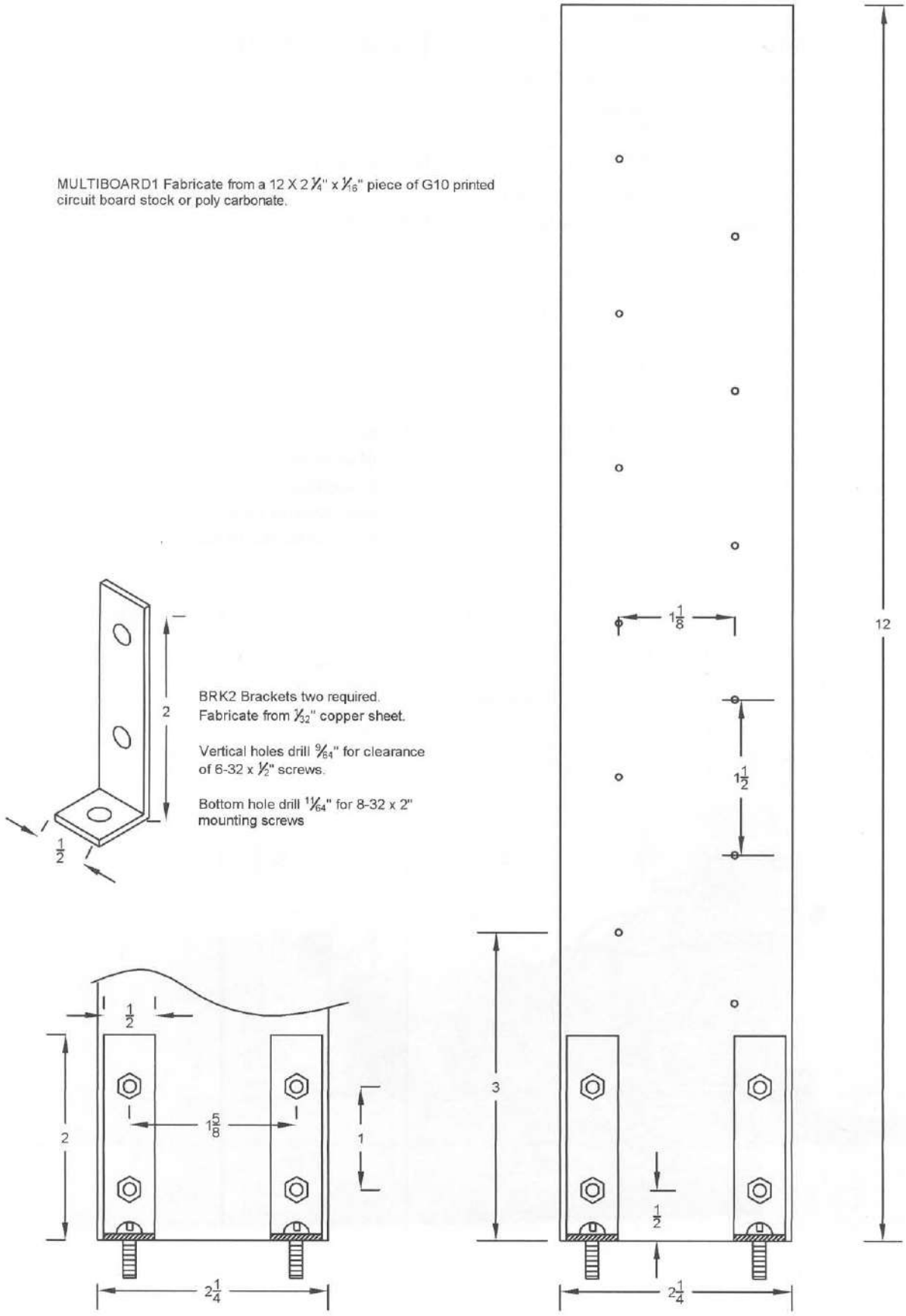

Figure 15-13 *Creating the multiplier board*

some polyethylene tubing, along with the terminating high-voltage leads. The tubing is then coiled, maintaining adequate clearance of the terminating leads. This is a very tedious assembly but works well for powers up to 300 watts at 100 kilovolts. Connect the load to the output and common leads.

3. Assuming that the driver is properly functioning, proceed to apply power and slowly turn the power control pot R21 to full clockwise, noting a line current draw of about 2 amps. Very carefully measure around 35 kilovolts at the output using a 40-kilovolt probe such as an HV44 or similar. The load resistors should start to get warm.

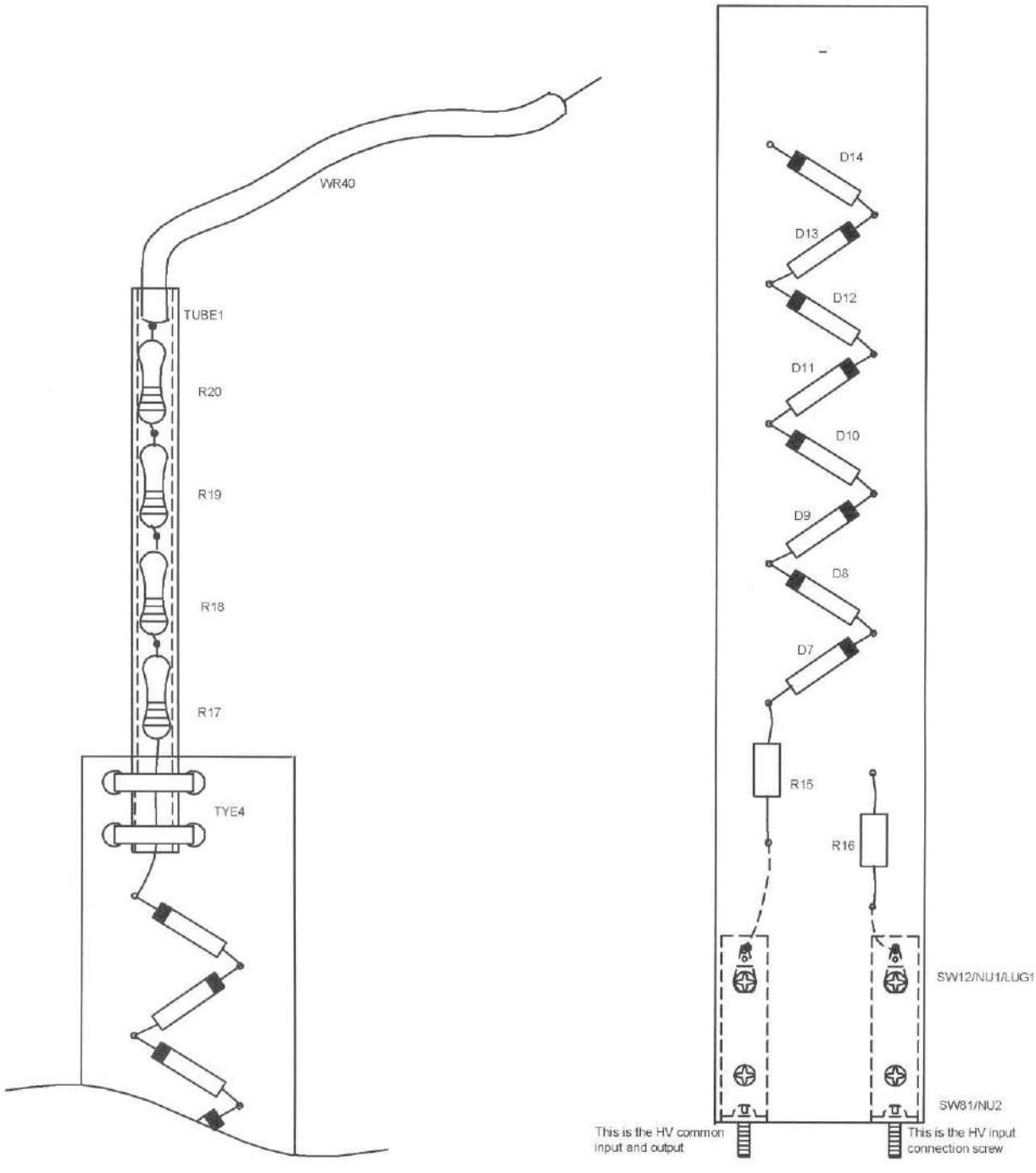

Figure 15-14 *Diode layout and wiring*

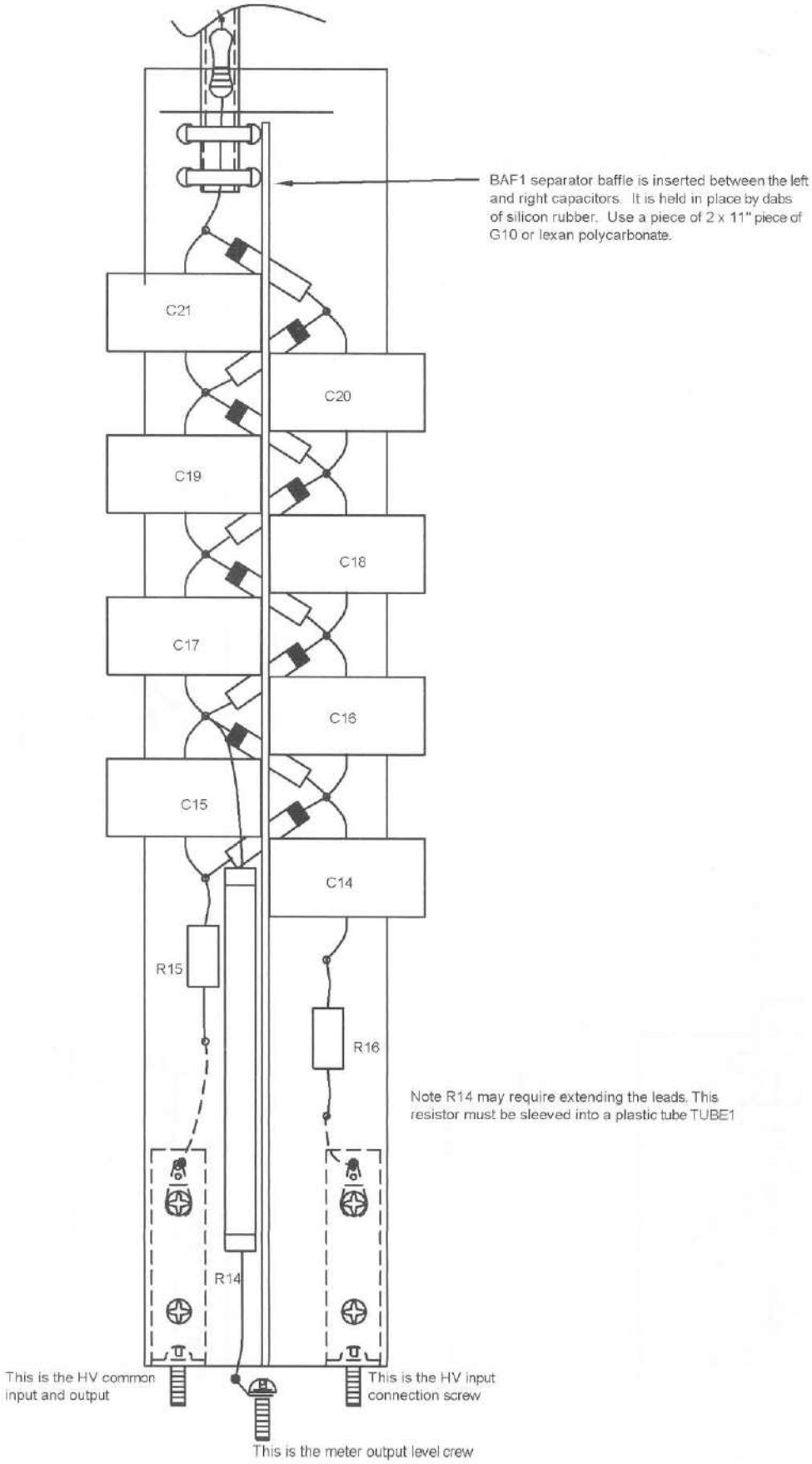

Figure 15-15 *Mount capacitors and remaining components as shown here.*

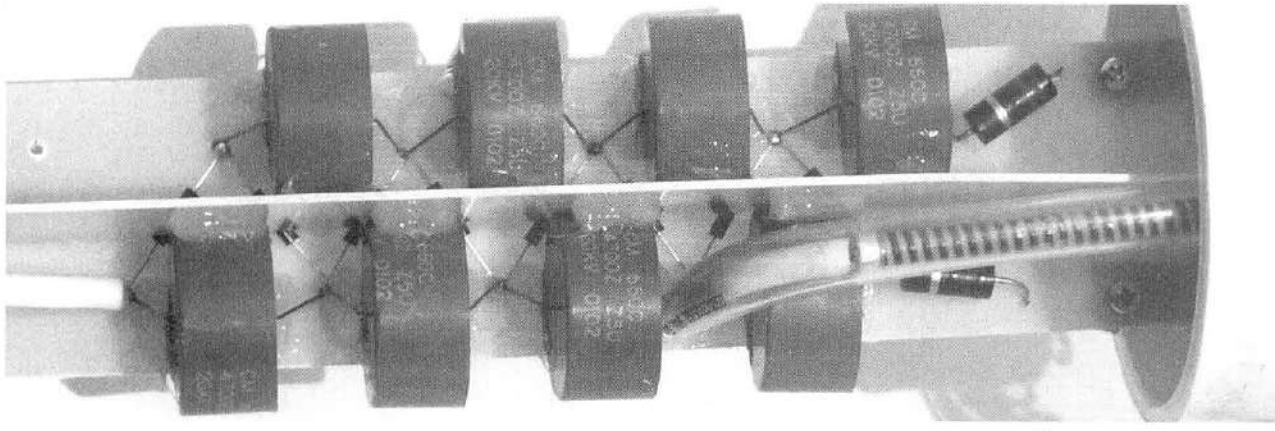

Figure 15-16 *Multiplier internal photo*

4. Allow to it run for several minutes and note that Q1 and Q2 are only slightly warm to the touch.
5. Reverify the operation of the shutdown circuit to prevent damage to the circuit components in the event of over-volting.

Applications

This unit is excellent to use for powering large anti-gravity lifters because it is not damaged by short-circuiting the output. It can also be used for charging capacitors up to 50,000 volts or as a voltage source with a load resistor of 20 megohms. The charging current is 4 to 5 milliamps and charges as a current source.

DANGER! Improper contact or use of high-energy capacitors can result in death by electrocution or injury due to explosive discharges.

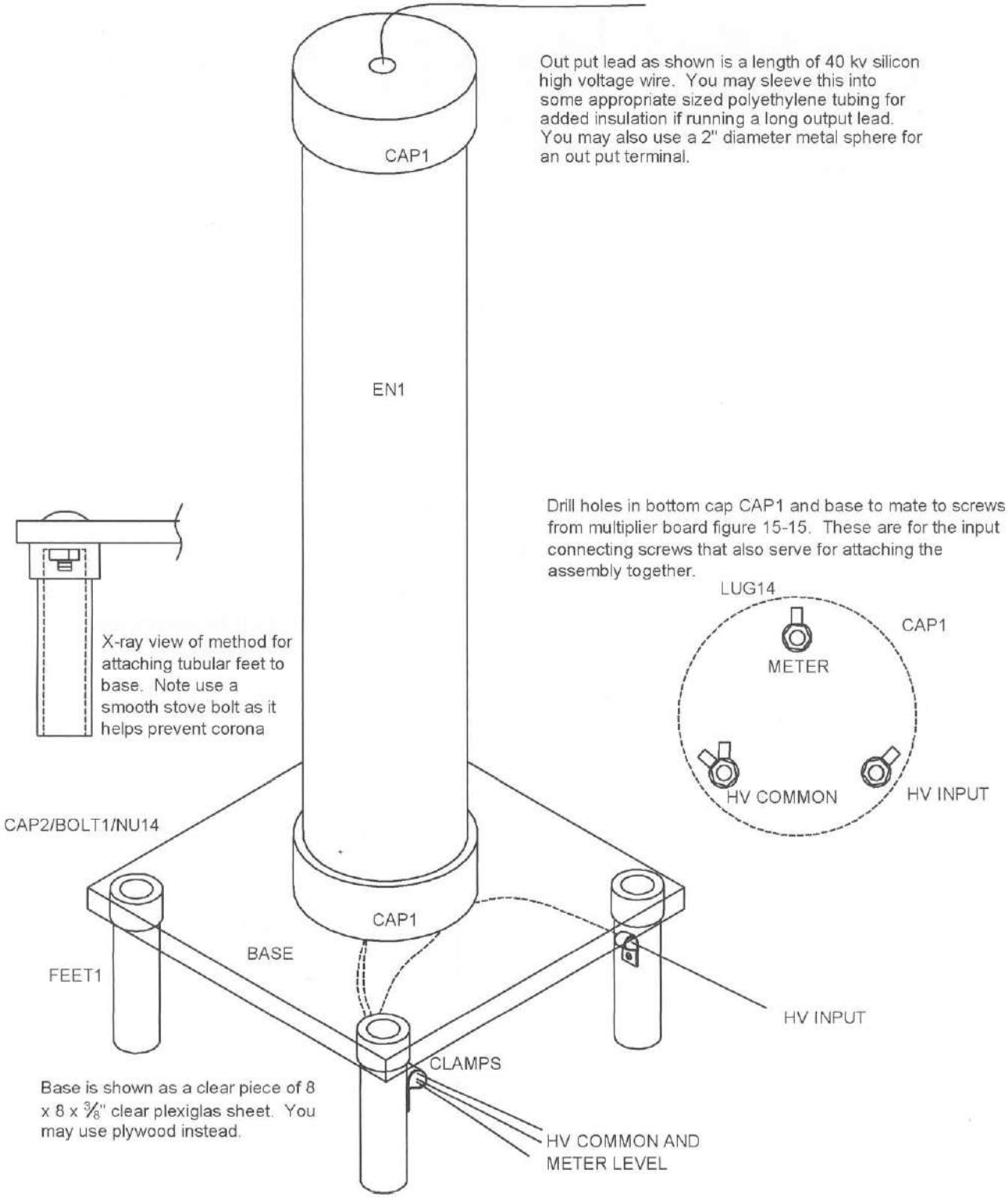

Figure 15-17 *Final assembly*

Table 15-1 50-Kilovolt Power Supply

Ref. #	Description	DB Part #
R1	100-ohm, 1/4-watt resistor (br-blk-br)	
R2, 3	Two 18K, 3-watt resistors	
R4, 13	Two 2K vertical trimmers	
R6, 7	Two 15 1/4-watt resistors (br-grn-blk)	
R8	10-ohm, 3-watt metal oxide resistor	
R10	5K vertical trimmer	
R5, 11	Two 1K 1/4-watt resistors (br-blk-red)	
R9, 12	Two 100K 1/4-watt resistors (br-blk-yel)	(KC006-LND)
Rth	limiter 5-amp in-rush	
R15, 16	Two 12-ohm, 2-watt carbon resistors (br-red-blk)	
R14	100 meg, 20-kilovolt tiger resistor	
R17–20	4 100K, 2-watt ceramic resistor	DB# 100KCER
R21/S1	10K pot and 115 VAC switch	
C2	10-microfarad, 50-volt vertical electrolytic capacitor	
C3	.01-microfarad, 50-volt plastic capacitor (103)	
C4	.1-microfarad, 600-volt plastic capacitor	
C5, 6	Two 1.5-microfarad, 400-volt metal polyester capacitors	
C7	.0015-microfarad, 600-volt polypropylene capacitor	
C8	.47-microfarad, 50-volt plastic capacitor	
C10, 11	Two 200- to 800-microfarad, 200-volt vertical electrolytic capacitors	
C12, 13	Two .01-microfarad, 2-kilovolt disc capacitor	
C14–21	Eight .0047-microfarad, 20-kilovolt ceramic capacitors	DB#.0047/20 KV
PZ1	420-volt suppressor	
D1, D2, D3, D4	Four 1,000-volt, 3-amp rectifier (1N5408)	
D5	1-kilovolt, 1-amp fast diode (1N4937)	
D6	1N914 small-signal diode	
D7–14	Eight 30-kilovolt, 5-milliamp fast-recovery diodes	DB# 3VG30
SCR	EC103 A, 12 uamp sensitive gate *silicon-controlled rectifier* (SCR)	
Q1, 2	IRFP450/460 *metal-oxide-semiconductor field effect transistor* (MOSFET)	
IC1	IR2153 half-bridge driver	
T1	High-volt transformer assembled as shown in Figure 15-4	DB# FLYPVM
T2	8/500-ohm audio transformer	
SO8	Eight-pin DIP socket	
NE1	Neon indicator bulb with leads	
FH1	Fuse holder panel mount	
FUS1	3-amp slow blow 3AG fuse	
METER	50 uamp, 3-panel meter	DB# METER50L
CO1	Three-wire line cord	
LUG1	Eight #6 solder lugs	
LUG14	Three 1/4-20 lugs	
THERM1	Two thermo mounting pads for Q1 and Q2	
PCLINE	*Printed circuit board* (PCB)	DB# PCLINE
BU38	Three 3/8-inch plastic bushings	
BU58CL	5/8-inch clamp bushing for cord CO1	
WR15GTO	4 feet of 15-kilovolt GTO flexible wire	
WR40KV	12 inches of 40-kilovolt high-voltage silicon wire	DB# WR40KV
WR20	10 feet of #20 vinyl hookup wire	
WR24	12 inches of # 24 vinyl hookup wire	
WR20B	12 inches of # 20 bus wire	
WR18B	24 inches of #18 bus wire	

Table 15-1 *continued*

Fabrication

Ref. #	*Description*	*DB Part #*
CHASSIS	Chassis created from .065-inch aluminum as per Figure 15-6	
COVER	Cover created from plastic sheet to fit chassis	
BASEPLATE	Base plate created from .065-inch Lexan per Figure 15-7	
BRK1	Bracket created from .035-inch copper per Figure 15-8	
BRK2	Two brackets created from .035-inch copper per Figure 15-13	
MTB1	Mounting block created from .75-inch PVC plastic	
PLASTPL	4.5 × 2.5 piece of insulating plastic, shown in Figure 15-9	
MULTIBOARD1	Multiplier board created from .065-inch Lexan per Figure 15-13	
BASE	Base created from 8 × 8 × 3/8-inch Plexiglas per Figure 15-17	
BAF1	Baffle separator created from .065-inch Lexan per Figure 15-15, available from a hardware store	
SW1	Five #6 1/4-inch sheet metal screws for cover and MTB1	
SWNYLON	Two 6-32 1/2-inch nylon screws	
SW12	Ten 6-32 1/2-inch screws	
SW10	Two 6-32 × 1-inch screws	
SW81	Three 8-32 × 2-inch screws	
BOLT1	Four 1/4-20 × 1 1/2-inch stove bolts	
NU1	Sixteen 6-32 keep nuts	
NU2	Six 8-32 keep nuts	
NU14	Four 14-20 hex nuts	
CAP1	Two 3-inch PVC flat caps (GENOVA# 70153)	
CAP2	Four 1/2-inch PVC flat caps (GENOVA# 30155)	
FEET1	Four pieces of 1/2 × 3-inch PVC tubing	
EN1	3 × 15-inch PVC tubing	
TUBE1	10 inches of 3/8 ID × 1/2 OD flexible plastic tubing	

Chapter Sixteen

Magnetic High-Impact Cannon

This very advanced project (shown in Figure 16-1) is intended for the experienced experimenter and researcher in the field of high-voltage and high-energy circuitry. The magnetic cannon accelerates a projectile at high velocities with considerable kinetic energy; this is accomplished strictly from a magnetic pulse. Not only is this project a dangerous electrical device, it is also kinetically hazardous, as the accelerated projectile can cause serious injury and even death. The same consideration and respect given to a firearm must be given to this project. A video demonstration of this device blasting large holes through a wall can be seen at www.amazing1.com.

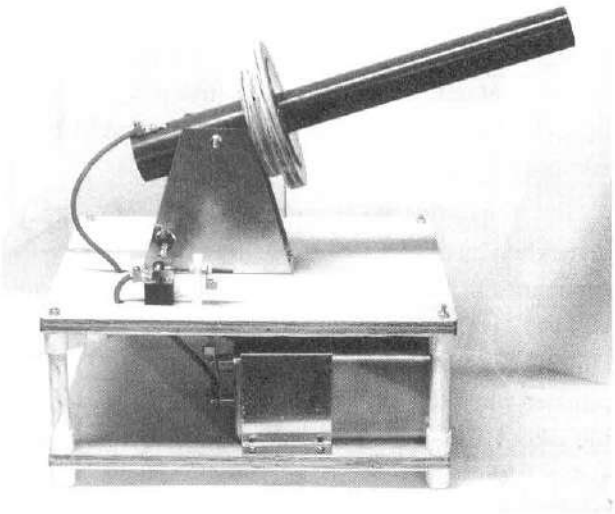

Figure 16-1 *The magnetic cannon*

Under the correct supervision, the magnetic cannon can provide a high-action science project demonstrating several important electrical laws that involve electromagnetic reactions. Lenz's law and the Lorentz JXB forces are clearly utilized in this device. The system as shown can provide the experienced hobbyist hours of fun and entertainment by experimenting with its effect (its impact) on various objects.

This is an advanced level project requiring electronic skills and high-voltage experience. Expect to spend $300 to $500 unless you have access to the surplus market. All parts are readily available and any specialized parts are available through Information Unlimited (www.amazing1.com) and are listed in the parts list at the end of the chapter.

Theory of Operation

A nonmagnetic conductor such as aluminum is placed in a time-variant magnetic field. Induced currents in the aluminum produce currents that, in turn, produce opposing magnetic fields thereby causing a moment of acceleration of the aluminum piece. In this project the aluminum piece is in the form of a large flat washer that is the projectile. The aluminum projectile has a hole in its center with a mandrel guide to keep it traveling in a straight line.

The heart of this project is the accelerating coil. It is what couples the energy (the electrical current) to the aluminum ring (the projectile). Optimum efficiency is dependent on the coupling to achieve maximum projectile kinetic energy. This requires a minimal proximity of the projectile to the coil along with minimal air gaps (such as the spacing between the wires of the coil and the geometry of the coil as related to the dimensional format of the projectile). Also the inductive value of the coil is related to the storage capacity to provide the current rise over a time period that is dependent on the physical parameters of the projectile. The associated second-order differential equations that mathematically determine these parameters are beyond the scope of this material. Although the mathematical purist will find a deviation from maximum efficiency by using different materials, practically speaking, there are materials of different sizes and materials that offer a cost-effective compromise. An example is the use of square magnetic wire in place of conventional round stock wire. Using square magnetic wire for the coil, when properly wound, will provide more kinetic energy to the projectile due to reduced air space (reluctance); however it is quite difficult to wind and usually requires purchasing a significant amount at a healthy price.

The shape and timing parameters of the coil-magnetizing pulse must be related to the projectile to achieve optimum efficiency. A current rise that is too fast will cause slippage (magnetic cavitation). Note that one definite disadvantage of this method of acceleration is that the projectile is influenced over a very short distance. Velocity, now being the square root of the acceleration times the distance, is limited. To achieve high resultant velocities requires a very high moment of acceleration. Projectiles using conventional explosives current detonators and boosters could be prone to sympathetic initiation by these high g accelerating forces at the time of launching.

Circuit Theory

This project as shown in Figure 16-2 is constructed operating from 115 vac household current. It also can be built to operate from 12 volts or built-in batteries.

A high-voltage current-limited 60 Hz transformer (T30) steps up the 115 vac to 6,500 vac and is rectified by high-voltage diodes (D31 through D34). DC current now charges the energy storage capacitors (C30) through the isolation resistor (R30) to a programmable value, as selected by the operator. It is this stored energy that is discharged into the accelerator coil (L1) as it is switched by the spark gap (GAP1). Once switched into the coil, the now rapidly rising current wave induces a current into the aluminum ring projectile (PROJ1). It is this induced current that now generates a very high magnetic moment and repels the initial field in the accelerator coil, causing a moment of intense accelerative forces. Those not familiar with this concept often ask why an aluminum ring? The answer is that a magnetic material would now be attracted and thus would neutralize the repulsion.

The initializing of the circuit commences by turning on the key switch (S2). This switch is intended to keep unauthorized personnel from powering up the system. The key switch controls 12 volts of DC power necessary to energize the relay (RE1), with normally open contacts controlling power to the high-voltage transformer (T30).

The controlling system, as shown, consists of momentary pushbutton switches that start the charging action (S4) and can stop this action via switch (S5). Triggering the momentary pushbutton switch (S3) supplies power to the trigger module (TRIG10) and firing trigger gap (GAP2), thereby initiating the main gap GAP2 and switching the energy from the storage capacitors C30 into the accelerator coil L1. Charging voltage to C30 is controlled by the potentiometer R14. Once set, the voltage will maintain its preset level until triggered or readjusted. Meter M1 indicates the charge voltage and is calibrated by the trimpot (R16).

The transformer (T1) supplies 12 volts of AC that is rectified by diodes (D1 through D4), filtered by capacitor C4, and regulated by zener diodes (Z1 and Z2) to 12 volts dc in order to power the control circuits. The indicator *light-emitting diode* (LED1) illuminates when the key switch is energized. The second indicator LED (LED2) illuminates when charging of C30 is taking place. A buzzer (BUZ1) sounds whenever there is a charge voltage on C30. This is a safety

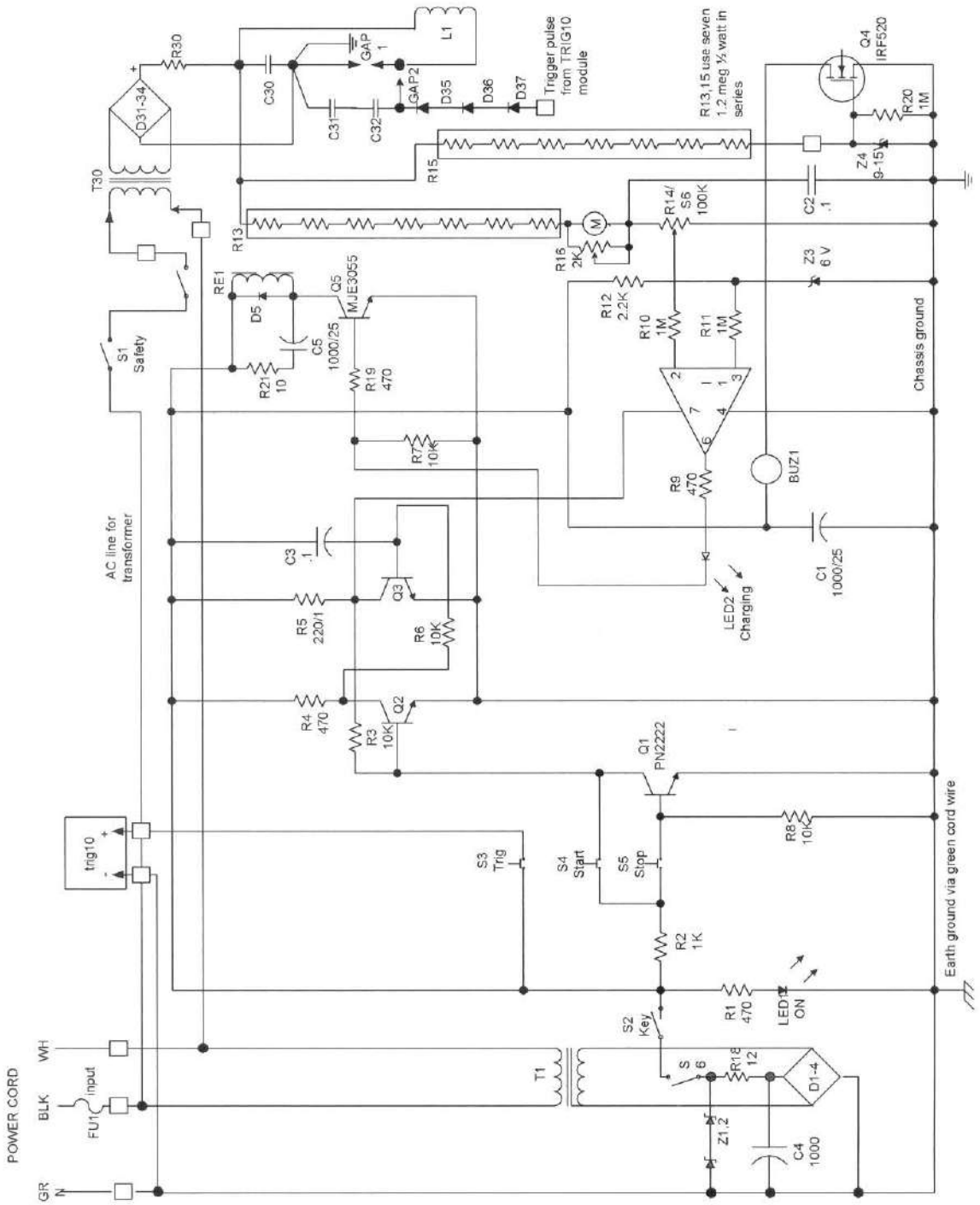

Figure 16-2 *Schematic*

device to warn the operator that a voltage exists on the storage capacitors. Sense voltage is obtained for the meter and charge voltage control circuit via string resistor R13. The safety level voltage is obtained through the resistor string (R15).

Assembly Steps

1. Cut a piece of .1 × .1 grid perforated circuit board (PB1) 6 × 4½ inch. You will have to drill holes for transformer T1 and relay RE1.
2. Insert the components as shown in Figure 16-3, starting from the lower left-hand corner. Count the perforated holes as a guide. Note the polarity marks on capacitors and diodes. It is suggested that you use a socket (SO8) for the LM741 integrated circuit (I1).
3. Wire the components as shown in Figure 16-3 using the leads of the actual components as the connection runs. These are indicated by the dashed lines. Always avoid bare-wire bridges and globby solder joints. Check for cold or loose solder joints. Note the symbols indicating wires to external components and to solder junctions beneath board.
4. Assemble the resistor dividers (R13 and R15) as shown in Figure 16-4 from seven 1.2 meg, ½-watt resistors that are all connected in series and sleeved into a ¼-inch ID flexible plastic tubing. Place these along with the connecting leads. The leads connected to R30 must be rated for 10 kilovolts. Connect the external components using #20 vinyl-jacketed, stranded wire. Attach and solder shunt resistor R16 across meter M1. Sleeve in the connection.
5. Connect the three high-voltage diodes (D35, D36, and D37) in series as shown in Figure 16-5. Make sure there are no sharp edges on solder joints and then sleeve into a plastic tube with a short piece of high-voltage wire lead.

   Connect the remaining components, noting that some may have to be unsoldered when routing through the panel, as shown. Verify proper lengths of connecting leads with other figures in the project.
6. Fabricate the chassis from a sheet of .063 aluminum as shown in Figure 16-6. The front panel holes are shown to approximate layout and size. These should be verified with all parts for hole size and location.
7. Fabricate a 6 × 7½ inch sheet of plastic (PLATE1) to insulate the assembly board connections as shown in Figure 16-7. Assemble T30 to the chassis using screws and nuts. Include solder lugs for grounding the power cord and assembly board.
8. Fabricate a 2¼ × 7 inch piece of plastic (PLATE2) for mounting the four rectifiers (D31 through D34) and resistor R30. Use two-sided sticky tape or silicon rubber to secure. Use a long screw or piece of threaded rod with an insulating washer on top side of resistor.
9. Assemble components to the front panel, as shown in Figure 16-8, and then finalize the wiring to complete assembly. Use pieces of 10 kilovolt-rated wire for those that are shown as heavy traces. Other leads are made from #20 vinyl-jacketed, stranded wire. The grounding leads shown are from the power cord, assembly board, and D33/D34 to the lug on T30. Output leads are shown as the TRIGGER, COMMON GROUND, and HV OUTPUT. Observe all notes on this figure.

Circuit Testing

10. Obtain a ballasted 115 vac power source. You can make this simply by placing a 60-watt lightbulb in series with the hot side of the power line, which is usually designated by the black lead. Do not eliminate the green earth ground connection.
11. Verify all switches are off and then insert a 3-amp fuse into FU1. Temporarily connect the high-voltage output to the chassis ground. Output is current limited by the leakage inductance of T30.

12. Plug into the ballasted 115 vac source. Turn on S6 and the key switch. Note LED1 lighting. Check control of both these switches as they are connected in series.

13. Push S3 and note a high-voltage spark at the trigger output lead.

14. Push S4 and note the relay latching and 60-watt lamp starting to light. The unit may chatter in this mode. LED2 should light in coincidence with the relay.

This concludes the basic test of this circuit but does not verify the programming voltage function, meter reading and calibration, or the safety buzzer.

Assembly of the Completed System

15. Fabricate the upper and lower deck pieces, as shown in Figure 16-9. Fabricate four pieces of 5½-inch PVC tubing for the pillar spacers located at each corner.

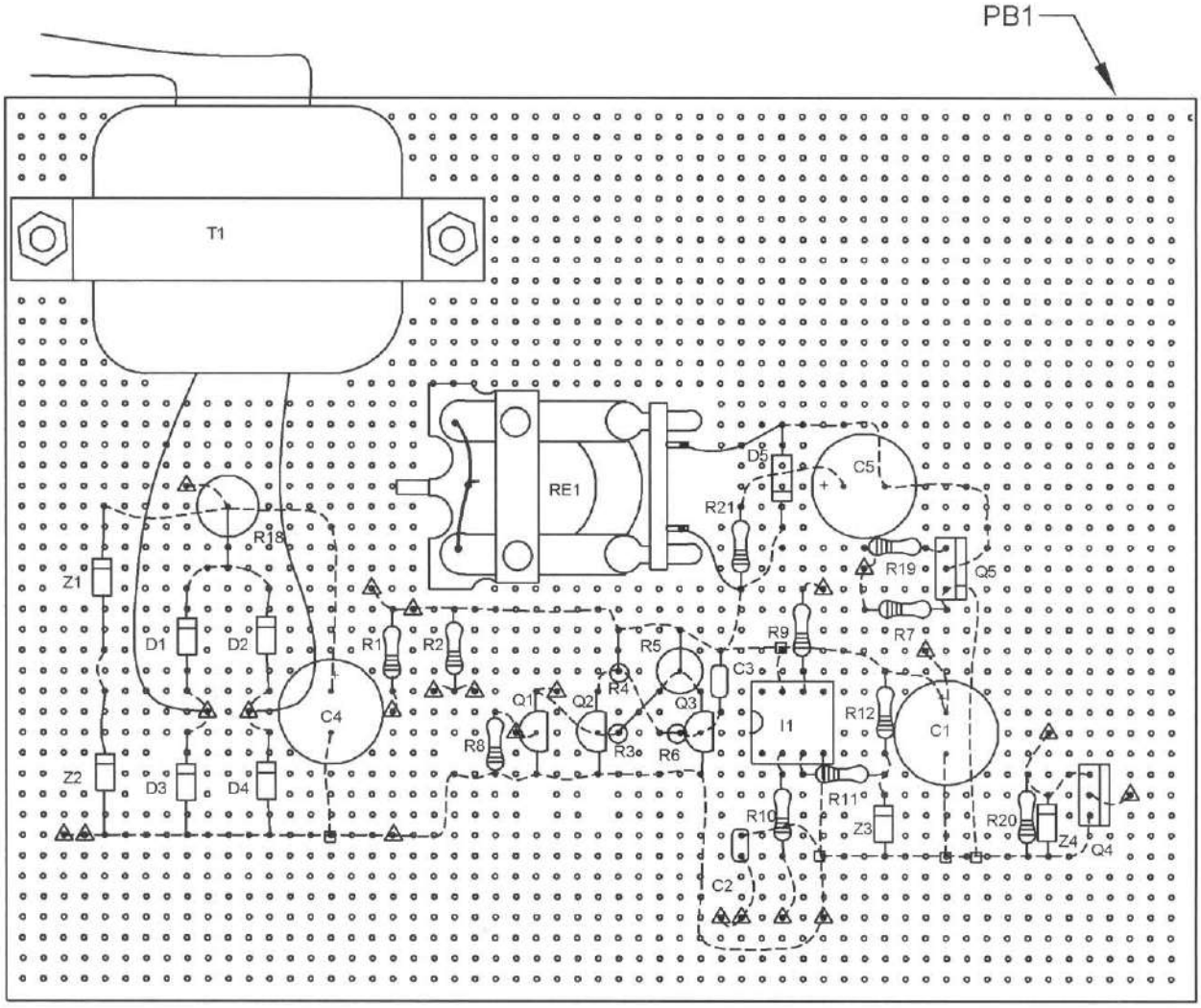

▲ This symbol indicates points for wires to external components
□ This symbol indicates solder junction of leads
This symbol indicates wiring on underside of board

Figure 16-3 *Assembly board parts layout*

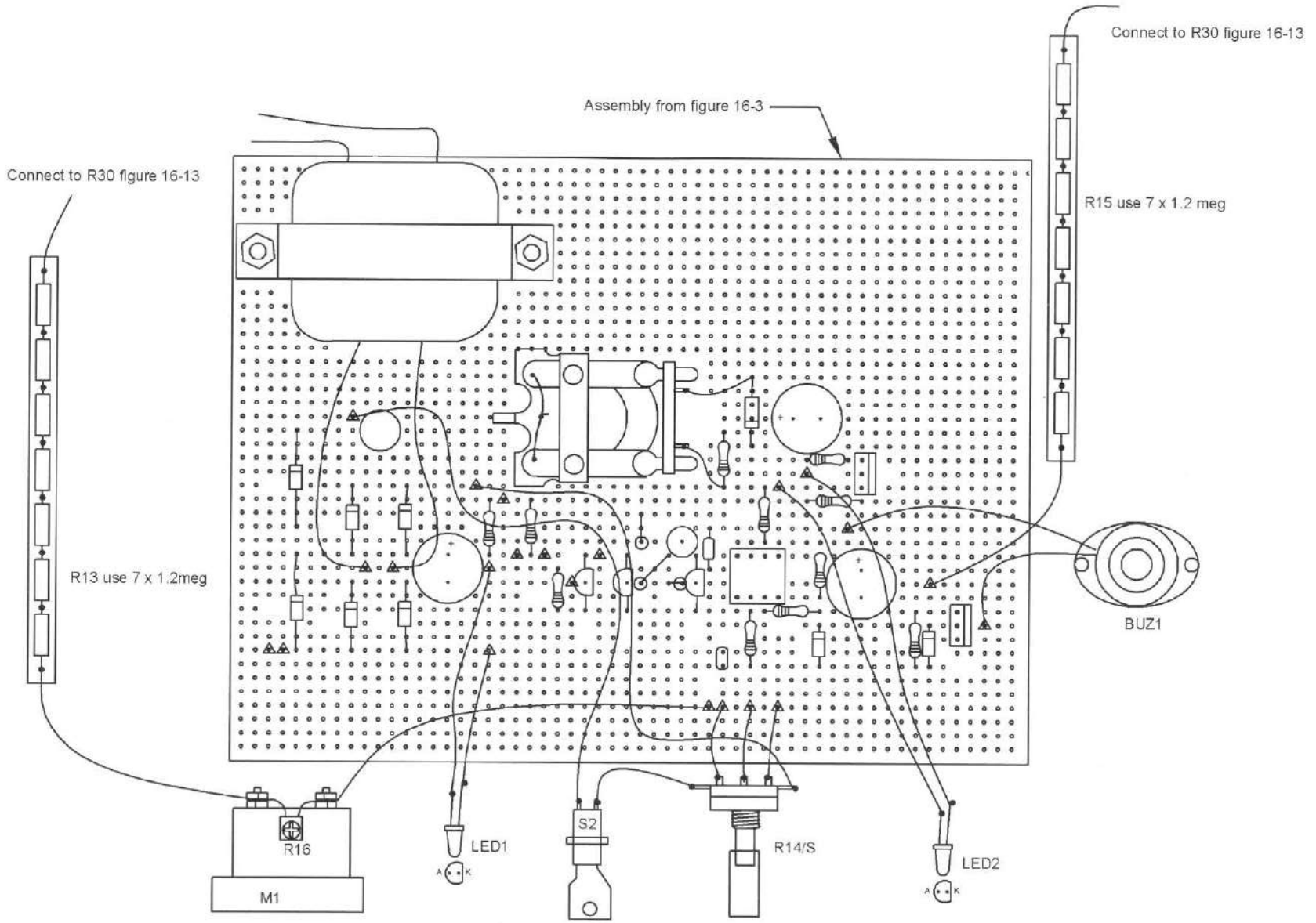

Figure 16-4 *Assembly board external wiring first level*

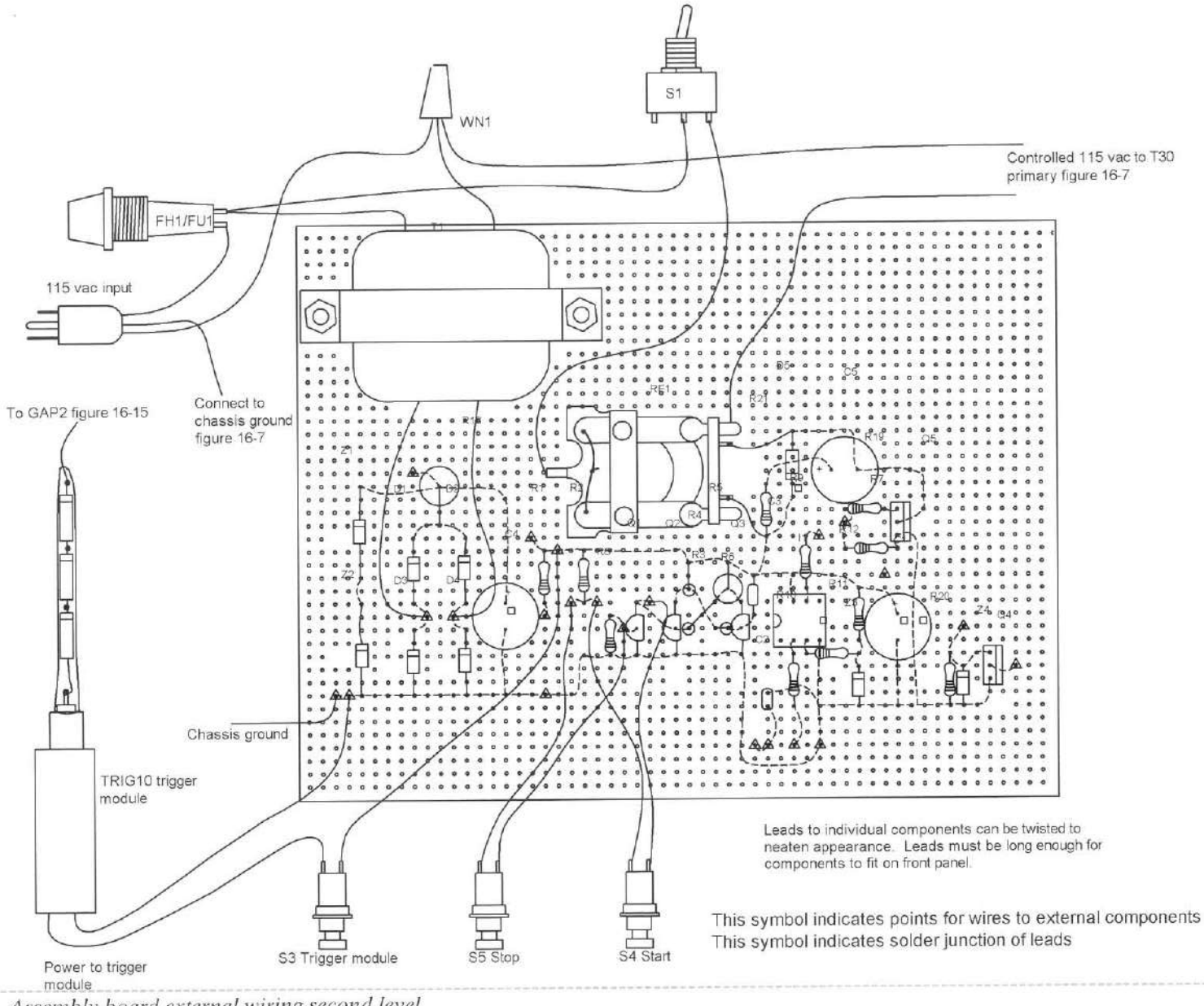

Figure 16-5 *Assembly board external wiring second level*

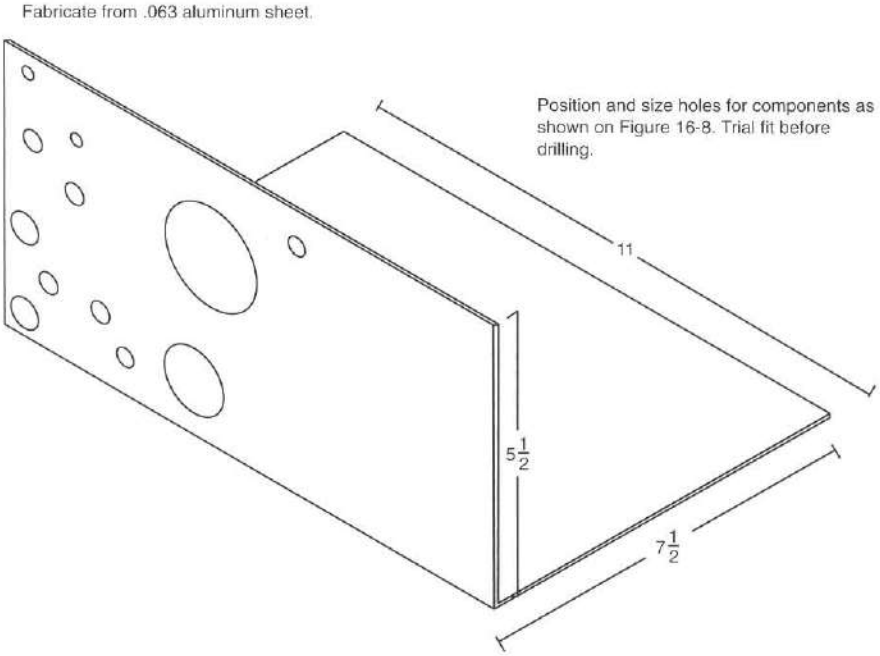

Figure 16-6 *Fabrication of chassis*

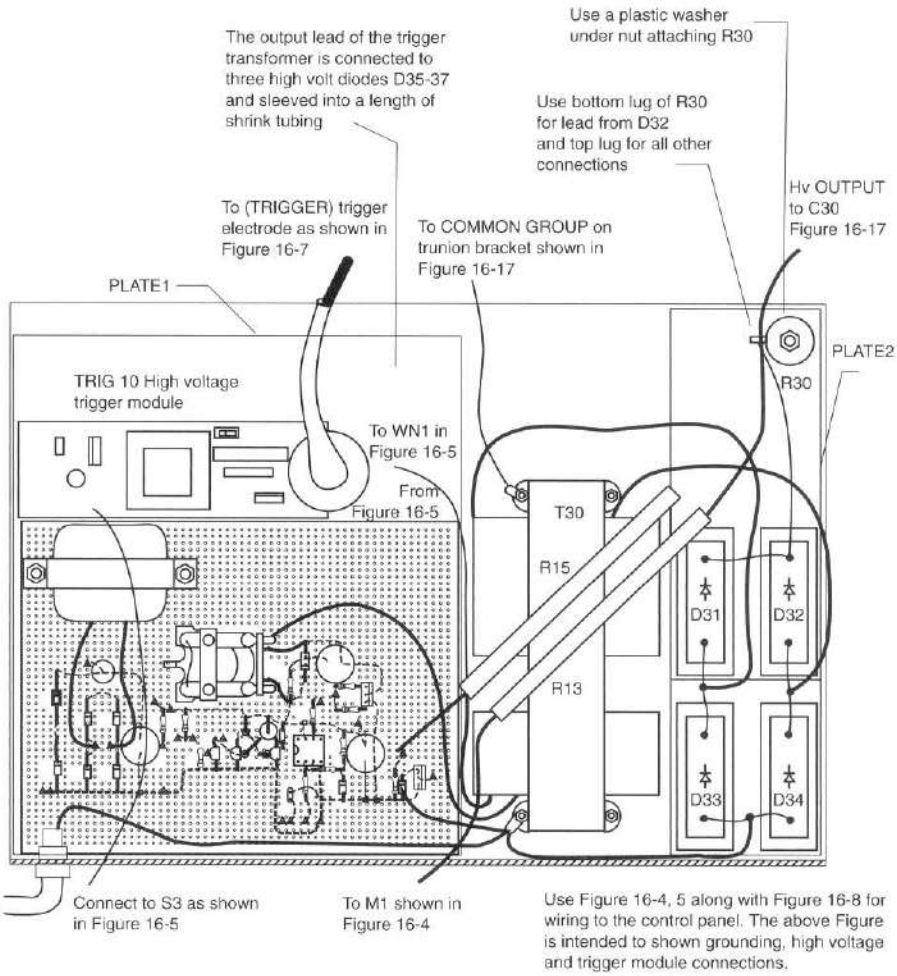

Figure 16-7 *Assembly and wiring of chassis*

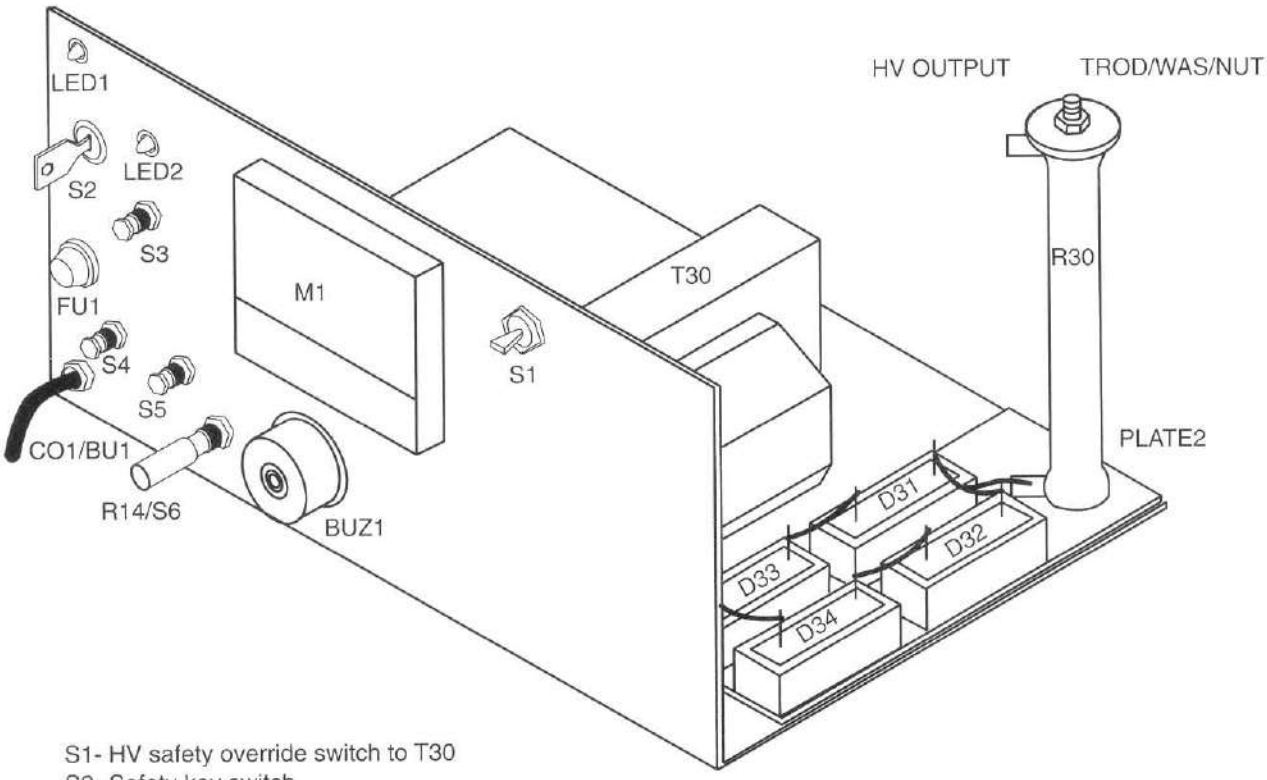

S1- HV safety override switch to T30
S2- Safety key switch
S3- Trigger "fire" switch
S4- Charge start switch
S5- Charge abort switch
S6- Low control voltage switch
LED1- Power "on" indicator
LED2- Charging cycle "on" indicator
R14- Programmed charge voltage level control
FU1- 3 amp fuse holder
BUZ1- High voltage presence audible warning
M1- Charge voltage meter.. 5 kilovolt full scale
CO1/BU1- Clamp bushing for power cord CO1

Note that it is a good idea to label the controls

Figure 16-8 *Front-panel controls and wiring*

16. Fabricate the capacitor bracket, as shown in Figure 16-10. This piece secures the three energy storage capacitors C10A, C10B, and C10C on the bottom deck.

17. Fabricate the trunion bracket, as shown in Figure 16-11. This piece secures the actual flyway and accelerating coil and therefore must be able to withstand the kinetic recoil from the accelerating reaction of the projectile. This bracket is the central electrical grounding point of the discharge circuit and must also be actively grounded to earth ground via the power cord green wire. There is also a 3/8-inch hole for the electrode holding collar (COLLAR1) for the ground electrode (TUNG38) of the main spark switch (GAP1). This part must be centered and carefully soldered in place using a propane torch.

18. Fabricate the front and rear disk section, as shown in Figure 16-12. You may also fabricate the projectile (PROJ1) from a piece of aluminum, as shown.

19. Wind the coils, as shown in Figure 16-13. It is a good idea to study Figures 16-12, 16-13, and 16-14 before attempting this step. Make sure to leave connection leads that are a minimum of 10 inches long.

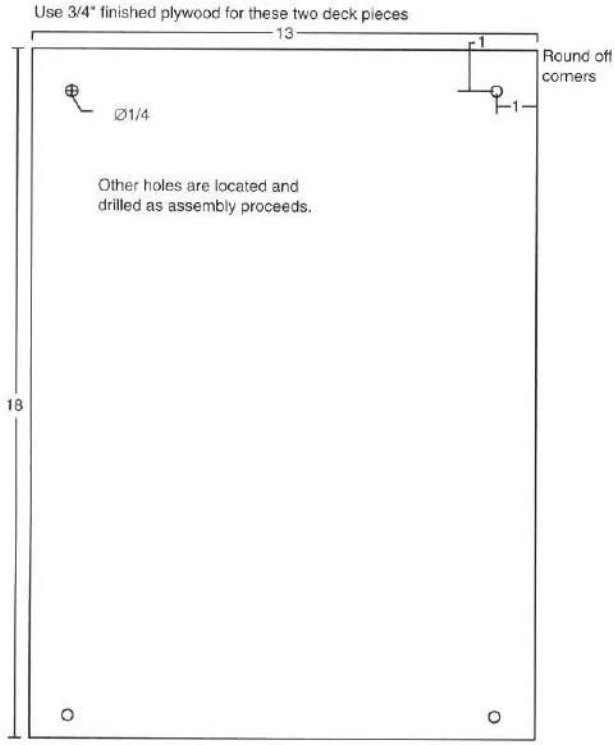

Figure 16-9 *Fabrication of deck sections*

20. Assemble the flyway and breech, as shown in Figure 16-14. Study the notes on this figure.

21. Fabricate the two plastic blocks (PVCBLK and TFBLK), as shown in Figure 16-15, to the suggested dimensions. Note that the heights of these pieces must allow close alignment of the electrodes as dictated by the position of the soldered collar on the trunion bracket. C31 and C32 are wired in place and must be spread apart to prevent sparking. The blocks are secured to the top deck using sheet metal screws. Use two screws for the PVC block. Do not allow these screws to penetrate more than 1/2 inch into the plastic material. Note the clearance hole in the deck for the high-voltage lead from the trigger module, shown in Figure 16-7.

22. Assemble the three energy-discharge capacitors (shown in Figure 16-16) along with the charger and control module.

23. Make the final assembly steps and wire, as shown in Figure 16-17. Note the direct and

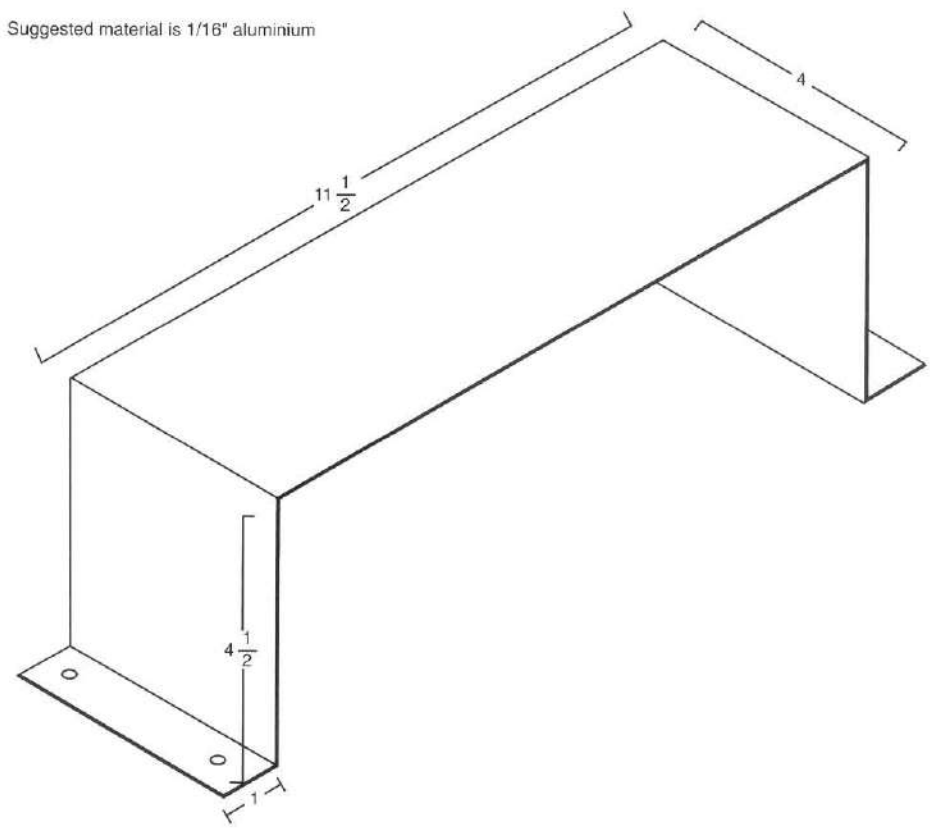

Figure 16-10 *Fabrication of the capacitor bracket*

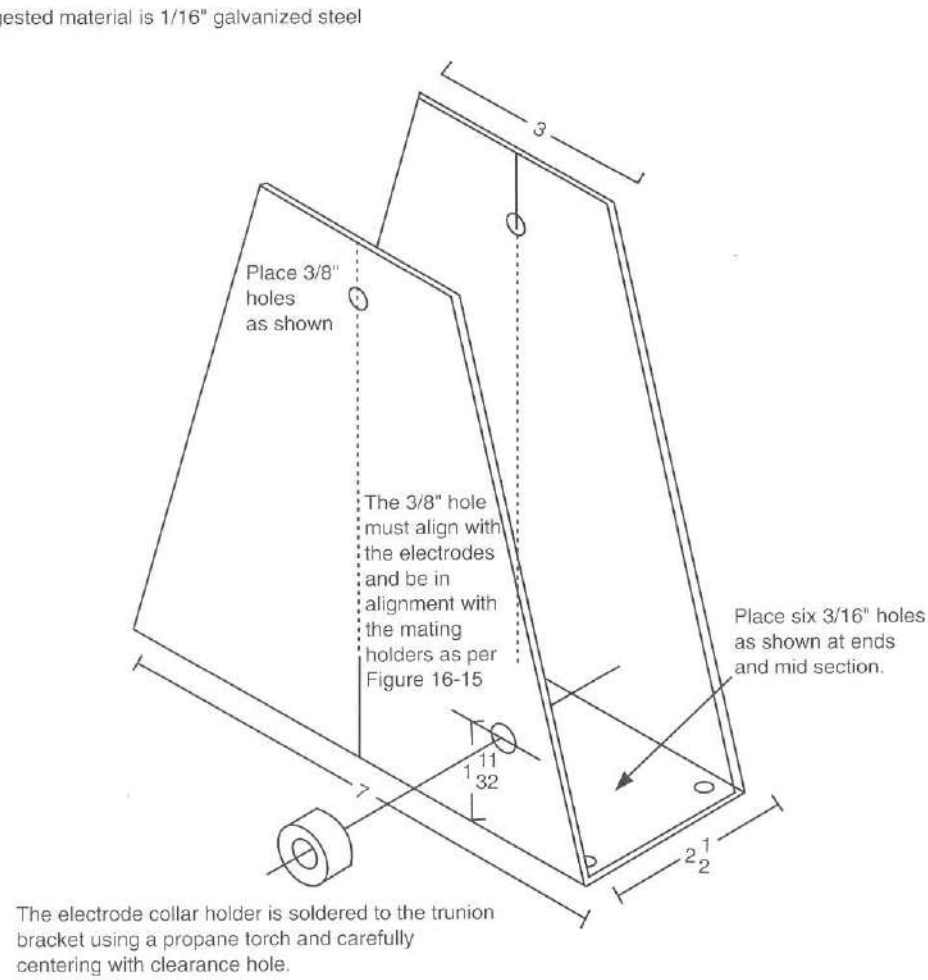

Figure 16-11 *Fabrication of the trunion bracket*

heavy leads for the discharge path. You may want to sleeve some plastic tubing over these leads, as they are rated only for 600 volts.

Note: The trunion bracket is the common grounding point for the system. It is very important that the earth ground green lead of the power cord be firmly attached at this point to ensure system operating safety.

24. Verify and use the diagram shown in Figure 16-18 as a wiring aid and reconfirm grounding and general circuitry and integrity.

Testing and Operation of the Cannon

25. Locate a test site with a backstop capable of stopping the projectile. Obtain a 5,000 volt DC reading meter to set M1. It is assumed that the circuitry is correctly assembled and the basic electrical pretest as described in steps 10 through 14 was successively performed. Preset the main gap to 1/16 inch and the trigger gap to 1/8 inch.

26. Preset all switches shown back in Figure 16-8 to the off position. Familiarize yourself with these controls

Suggested material is 3/4" plywood or machined PVC

The accelerator coil construction is very important to the overall performance and efficiency of the system. These pieces as shown are fabricated from a high grade birch plywood. You may use polycarbonate for strength or PVC for cost. The objective is to provide a cavity for the flat pan cake shaped windings. The parts shown are 7 inch overall diameter of 3/4" thickness. Both pieces have all holes as shown and must be accurately aligned with one another. The front piece has the 5/16" deep cavity milled out for nesting of the coil windings. Leave a 1" shoulder allowing a 5 inch winding diameter. Both center holes should allow a reasonably tight sliding action for the 1 7/8" PVC fly way tube. Note the two feed through holes for the accelerat or coil leads.

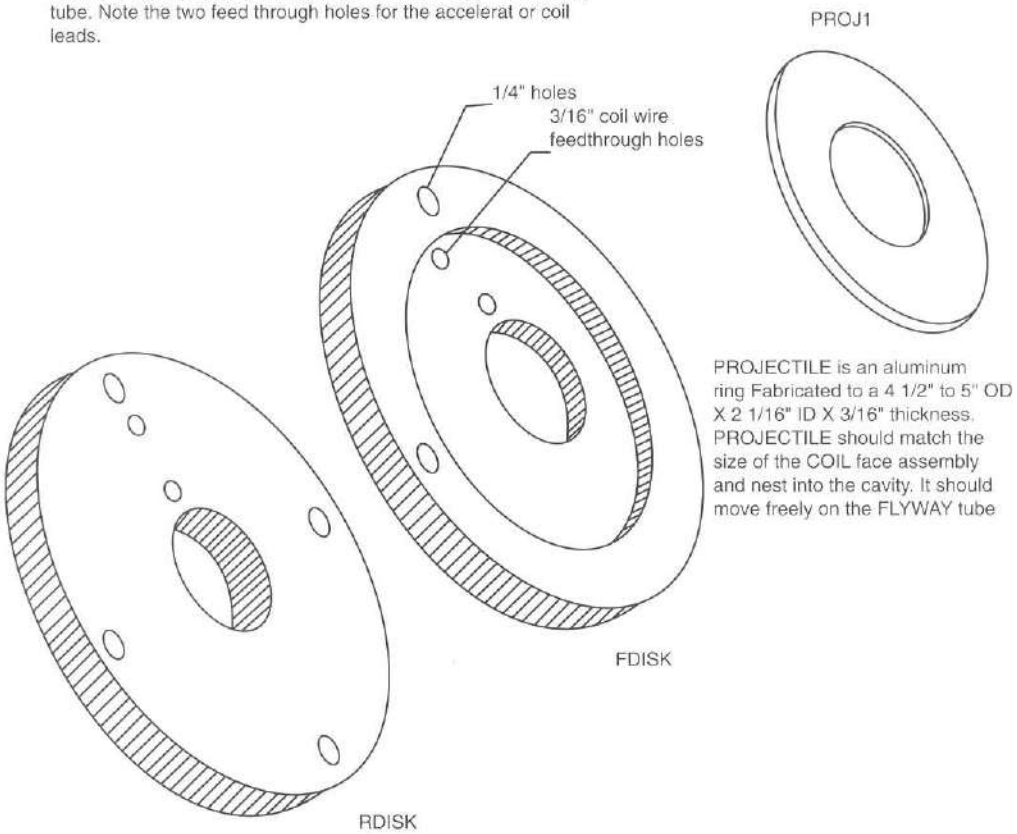

Figure 16-12 *Fabrication of the accelerator coil holder*

Danger: The next steps involve exposure to dangerous high voltages. Failure to take any of the following described steps will require a complete shutdown and power removal, along with a shorting of C30 before performing any trouble shooting.

27. Connect the test meter from chassis ground to the output end of resistor R30. Plug the unit into 115 vac and turn on S6. Turn on the key switch S2 and note LED1 lighting. Place the projectile over the accelerator coil.

28. Depress pushbutton switch S3 and note a spark occurring in both gaps.

29. Verify S1 safety switch is off. Depress pushbutton switch S4 and note the relay RE1 energizing and LED2 lighting. Depress pushbutton switch S5 and note RE1 de-energizing and LED2 turning off. Verify these on and off functions of S4 and S5 several times before the next steps.

    S5 is important as it must stop the charging action in the event that you choose to quickly abort the cycle.

30. Turn on toggle switch S1. Restart the system by again depressing R4, noting a voltage reading on both the panel meter M1 and the external test meter. This voltage will build up to a level as set by the charge-voltage level control R14 and then shut down, only to restart the charge cycle when the voltage charge level

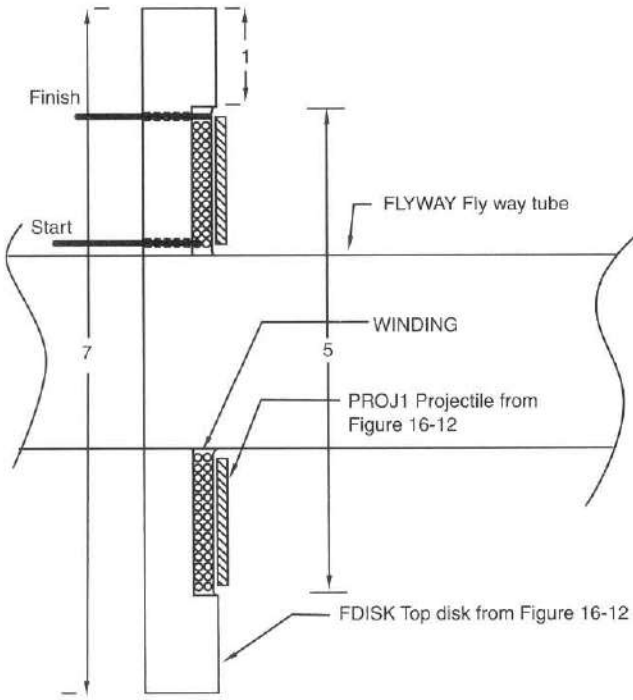

1. Fabricate the FLYWAY from a 18" piece of 2" PVC tubing
2. Wind a coil of 30 turns of #12 in fifteen layers of 2 turns each. Finished coil must be in a tight pancake configuration and have 10 inch connection leads. *You may have to make up a temporary bobbin jig for this step.* Hold together with tape etc.
3. Place COIL section into cavity routing the leads as shown. COIL section should nest into cavity and be positioned flat.
4. Seal all points that can leak as epoxy must be carefully poured over the COIL forming a 1/16" layer on top.

Figure 16-13 *Side view showing winding*

Suggested material is ¾" plywood or machined PVC

You will note that the front disk housing the accelerator coil is allowed to move over the flyway tube and against the springs to absorb some of the recoil. The rear disk abuts to the shoulder of the breech tube that is non movable along with the flyway tube.

This feature in important if you are intending to repetitively fire high energy shots..

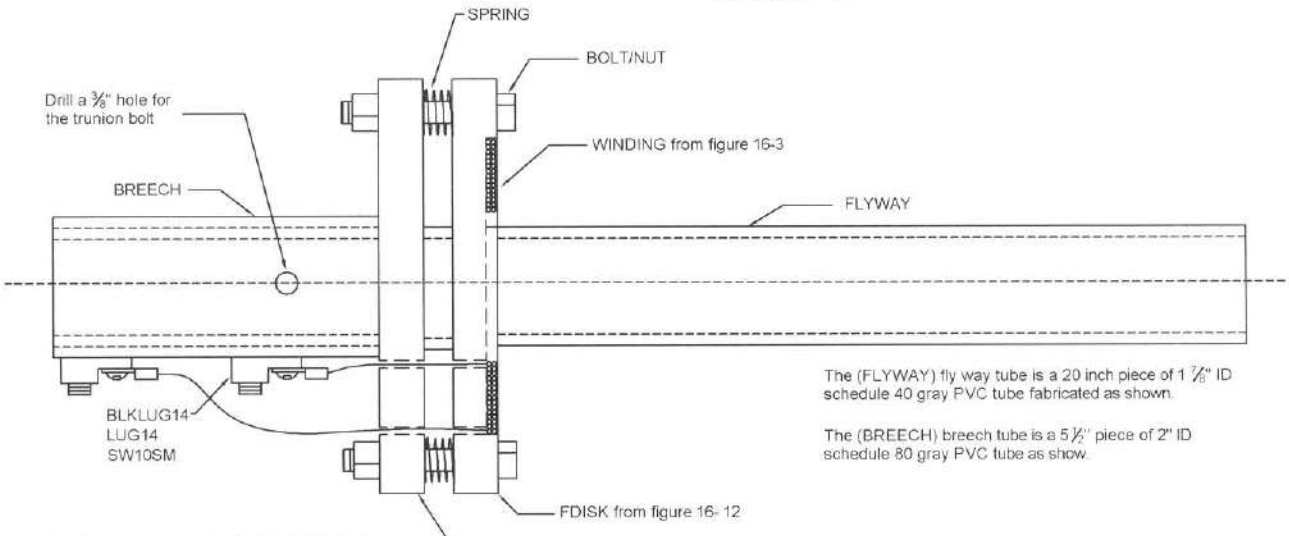

The (FLYWAY) fly way tube is a 20 inch piece of 1 ⅞" ID schedule 40 gray PVC tube fabricated as shown.

The (BREECH) breech tube is a 5½" piece of 2" ID schedule 80 gray PVC tube as show.

Discharge wires are attached to ¼" block lugs (BLKLUG) via the set screw. The coil wires are soldered to ¼" spade lugs that are secured to the block lugs via #10 x ⅜" sheet metal screws, screwed into both the FLYWAY and BREECH tube.

The bare leads from the coil should be individually sleeved into plastic tubing to prevent catastrophic contact

Figure 16-14 *Assembly of the breech and flyway*

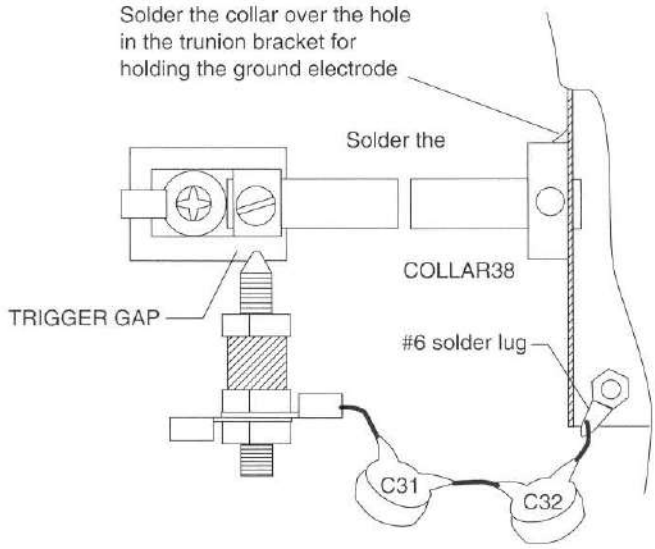

Solder gap switch assembly top view

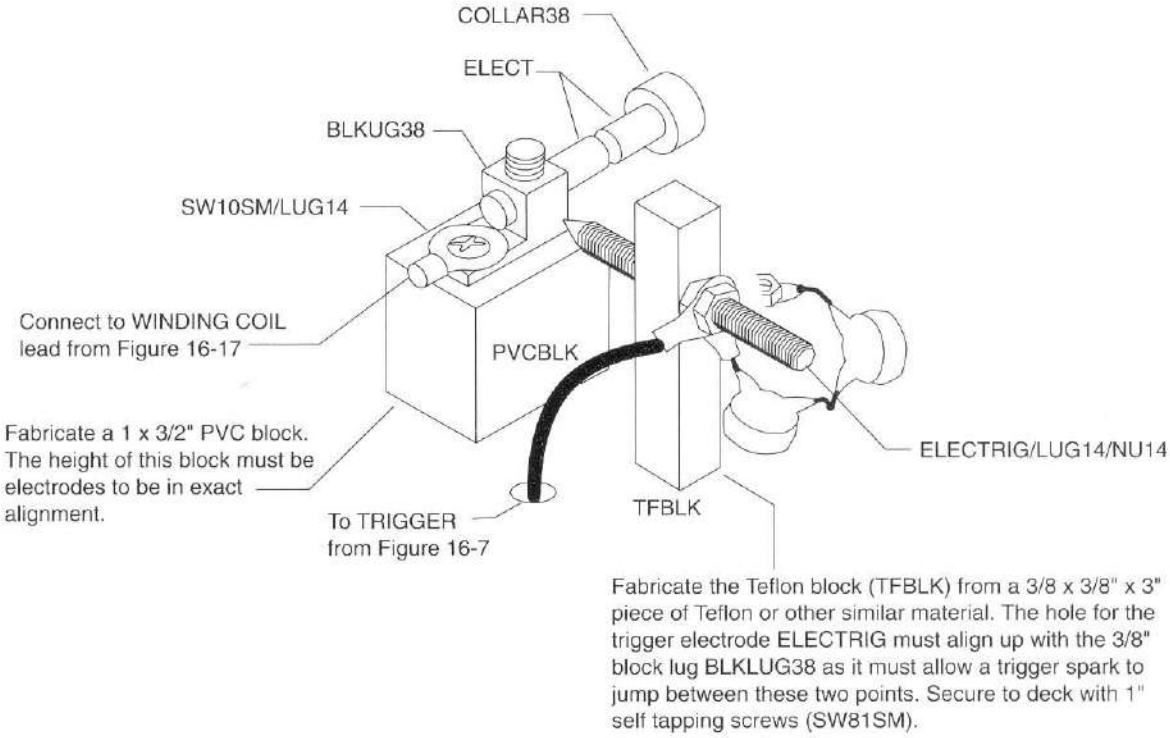

Spark gap switch is o view

Figure 16-15 *Details of the spark and trigger switches*

falls below the set level. Obviously there is an amount of hysteresis that prevents off-and-on chatter. With R14 set to full counterclockwise (CCW), this voltage should reset at less than 1,000 volts. The buzzer BUZ1 should be producing an annoying sound, thus alerting you to a charge presence on the capacitors.

31. Slightly turn R14 clockwise and allow it to cycle, repeating up to 1,500 volts as read on the external test meter. Depress the trigger

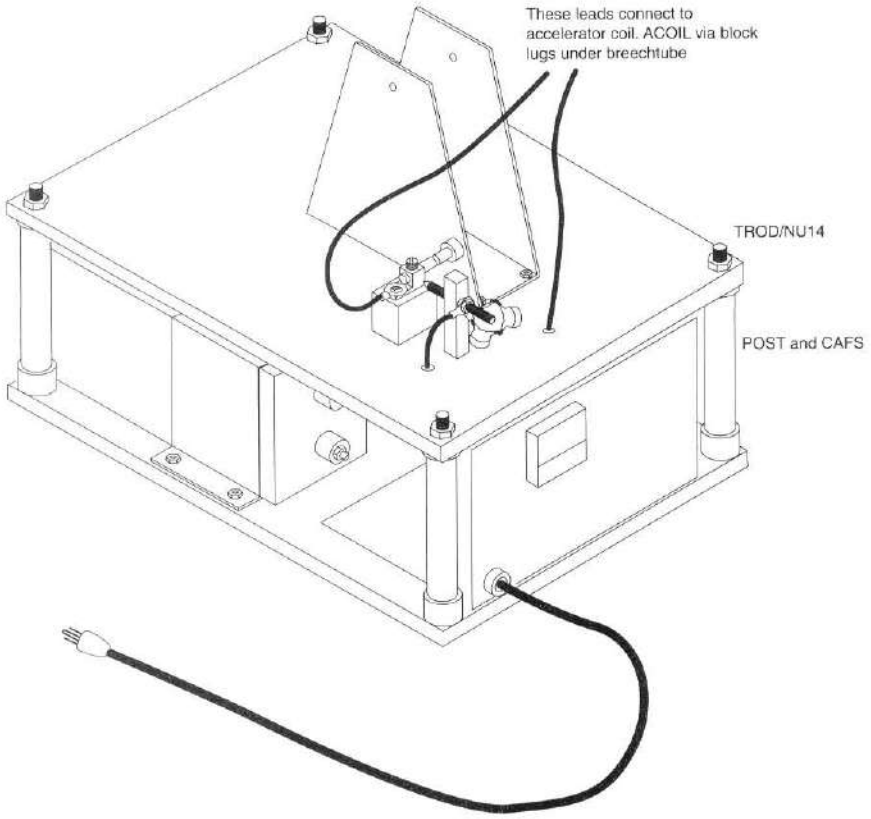

Figure 16-16 *Final assembly isometric view*

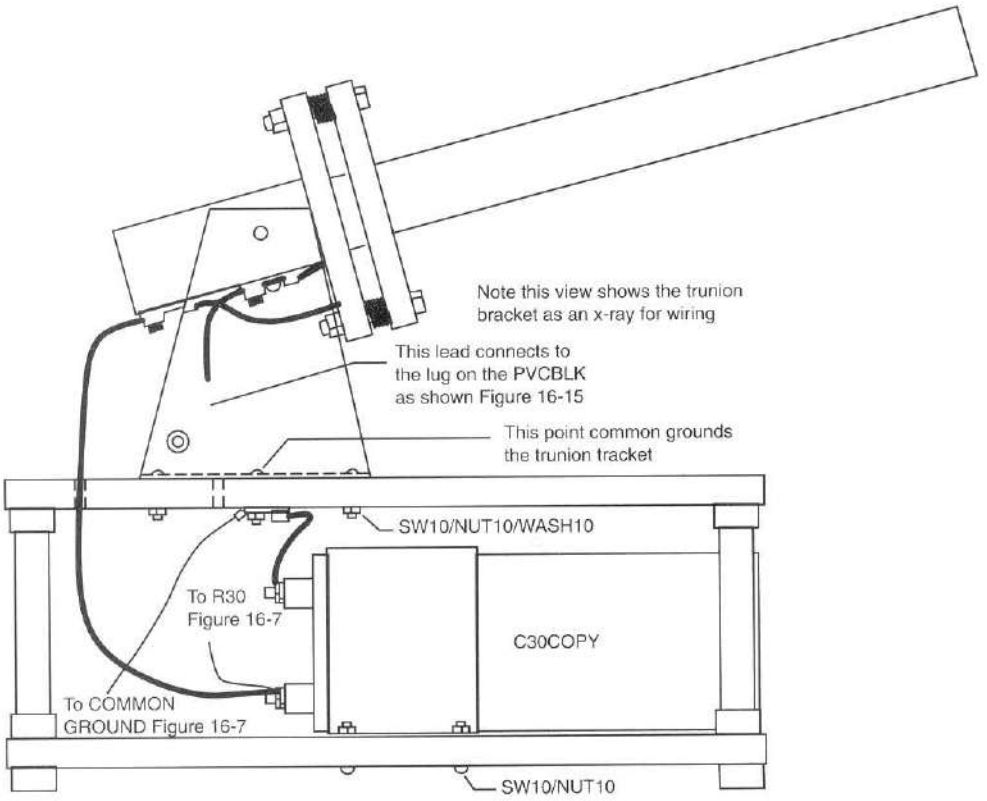

Figure 16-17 *Final assembly side view*

fire pushbutton S3 and note the projectile shooting into the backstop. Immediately press the stop switch S5 unless you want it to charge up for the next shot.

Note: The system will automatically recharge to the 1,500-volt present level unless the stop switch is activated.

32. Repeat the cycle, increasing the charge voltage up to 2,500 volts, and then adjust the trimpot R16 on the meter M1 to agree with the test meter.

33. Repeat this step allowing the charge voltage to go up to 5,000 volts, noting the impact of the projectile.

34. Verify the unit is not breaking apart as a result of recoil. Rethink the recoil springs if a problem exists.

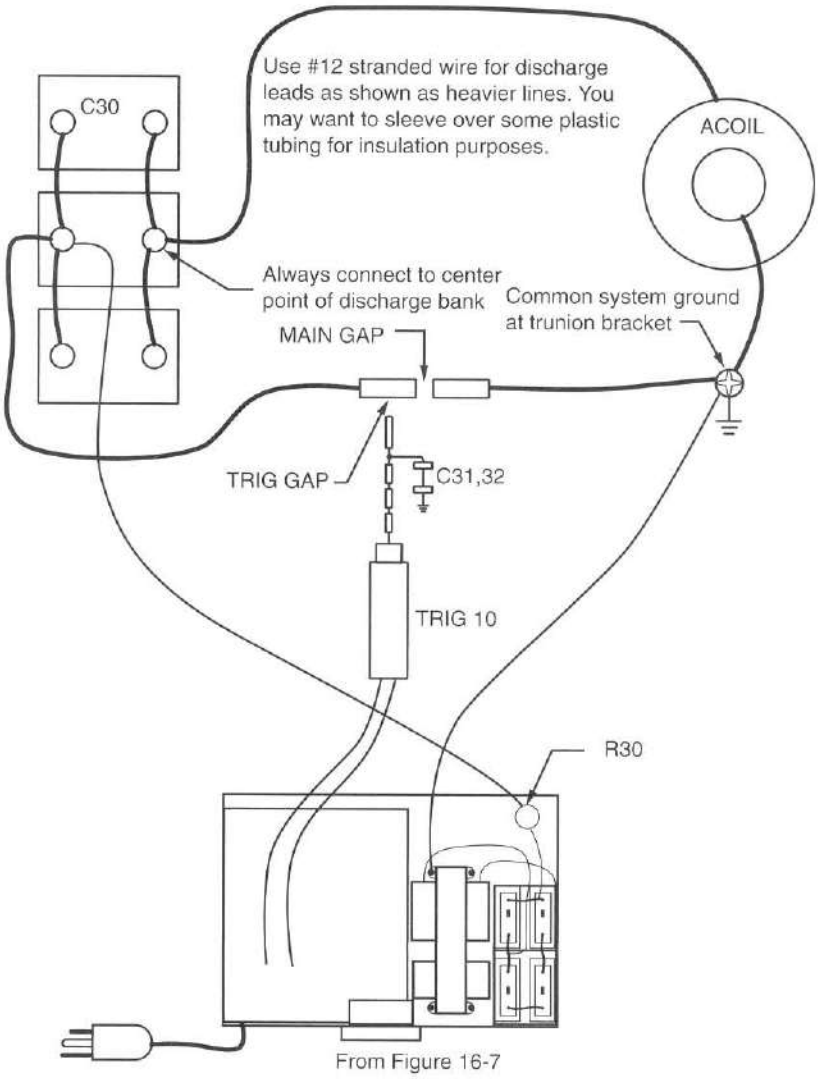

Figure 16-18 *Overall system wiring diagram*

Table 16.1 Magnetic Cannon Part List

Ref. #	Description	DB Part #
R1, 4, 9, 19	Four 470, 1/4-watt resistors (yel-pur-br)	
R2	1K, 1/4-watt resistor (br-blk-red)	
R3, 6, 7, 8	Four 10 kilohm, 1/4-watt resistors (br-blk-or)	
R5	220, 1/4-watt resistor (red-red-br)	
R10, 11	Two 10M, 1/4-watt resistors (br-blk-bl)	
R12	2.2K, 1/4-watt resistor (red-red-red)	
R13, 15	Fourteen 1.2M, 1/4-watt resistors (br-red-gr) (see schematic in Figure 16-2)	
R14/S6	100K potentiometer, 17 mm with low-volt switch	
R16	2K trimpot	
R20	1M, 1/4-watt resistor (br-blk-gr)	
R21	10-ohm, 1/4-watt resistors (br-blk-blk)	
R18	12-ohm, 3-watt resistor	
R30	16K, 50-watt power resistor	DB# 16K50W
C1, 4, 5	Three 1,000 mfd, 25-volt vertical electrolytic capacitors	
C2, 3	Two .1 mfd, 50-volt plastic capacitors	
*C30A	Three 32 mfd, 4,500-volt oil-filled cans in parallel for 96 mfd/4.5 kv	DB# 32m/4500
*C30B	Four 24 mfd, 5,200-volt oil-filled cans in parallel for 96 mfd/5 kv	DB# 24m/5200
I1	741 op-amp DIP IC	
Q1, 2, 3	Three PN2222 GP NPN transistors	
Q4	IRF520 Mosfet	
Q5	MJE3055 NPN power transistor	
D1-4	Four 1N4001 50-volt 1-amp diodes	
D5	1N4007 1,000-volt, 1-amp diode	
D31-34	Four 8-kilovolt, 100 ma standard recovery diodes	DB# H407
D35-37	Three 30 kilovolt, 10 ma diodes	DB# VG30
Z1, 2, 3	Three 1N4733 6-volt zener diodes	
Z4	1N4745 15-volt zener diode	
LED1	Red LED indicator	
LED2	Green LED indicator	
S1	SPST toggle switch	
S2	Key switch	
S3, 4, 5	Three pushbutton NO switches	
RE1	12-volt, 5-amp relay	
BUZ1	12-volt buzzer	DB# BUZROUND
Q1	100-volt IRF540 MOSFET	
T1	12-volt, 100 ma transformer	DB# 12/.1
T2	6,500-volt, 20 ma current-limited transformer	DB# 6kv/20
*L10	Accelerator coil assembly, as shown in Figures 16-12 and 16-13	DB# ACCOIL
*GAP1	Main gap assembly, as shown in Figure 16-15	DB# GAPMAIN
*GAP2	Trigger gap assembly, as shown in Figure 16-15	DB# GAPTRIG
CHASSIS1	Metal chassis fabricated as shown in Figure 16-6	
PLATE1	6 × 7 1/2 × 1/16 inch plastic insulating plate	
PLATE2	2 1/4 × 7 1/2 × 1/16 inch plastic insulating plate	
TAPE1	12 inches of 1-inch wide, thin sticky tape	
PLTUBE	18 inches of 1/4-inch ID vinyl flexible tubing for R13, R15, and trigger diodes	
CO1	6 feet of 3-wire #18 power cord	
HVWIRE	12 inches 20 kv silicon high-voltage wire	DB# WIRE20KV
BUSSWIRE	24 inches #20 bare busswire	

WR20	10 feet #20 vinyl stranded hook-up wire	
WN1	Medium wire nut	
BU2, 3	Two bushings for LEDS	
BU1	Power cord clamp bushing	
SW6	Six 6-32 × 3/4-inch screws	
SW1	6-32 × 1/4-inch screw for mounting relay	
NU6	Six #6 hex nuts	
LUG6	#6 solder lug	
TROD	5-inch length of 1/4-20 threaded rod, 2 nuts, and plastic washers	
TRIG10	Assembled trigger pulse module	DB# TRIG10
TRIG1K	Kit of trigger pulse module	DB# TRIG1K

Parts List to Final System

DECKS	Two fabricated pieces of 7/8-inch birch plywood 13 × 17 inches
POSTS	Four fabricated pieces of 5 3/4 × 7/8 inch PVC tubing
PLATE1	Fabricate a piece of 1/16-inch plastic sheet 6 × 7 inches
PLATE2	Fabricate a piece of 1/16-inch plastic sheet 2 1/4 × 7 inches
BRKCAP1	Fabricate the capacitor bracket seen in Figure 16-10
BRKTRUN1	Fabricate the trunion bracket seen in Figure 16-11
RDISK	Fabricate the rear disk seen in Figure 16-12
FDISK	Fabricate the front disk seen in Figure 16-12
PROJ1	Fabricate the projectile seen in Figure 16-12
BLKELECT	Fabricate the electrode holding block seen in Figure 16-15
BLKTRIG	Fabricate the trigger electrode holding block seen in Figure 16-15
FLYWAY	Fabricate the flyway tube seen in Figure 16-14
BREECH	Fabricate the breech tube seen in Figure 16-14
CAPS	Twelve 7/8-inch PVC caps for posts and feet seen in Figure 16-1
SPRINGS	Four 1/2-inch diameter × 3/4-inch stiff compression springs
COLLAR	3/8-inch shaft collar
BLKLUG25	Three 1/4-inch block lugs for breech connections
BLKLUG38	3/8-inch block lug for electrode
LUG14	Five 1/4-inch wide solder lugs
ELECTRGAP	Two 3/8 × 2-inch tungsten or tool steel electrodes
ELECTRTRIG	1/4-20 × 3-inch threaded rod with point
TROD	Four 1/4-20 × 8-inch threaded rod
BOLT/NUT	Five 3 1/2 × 3/8-inch bolt and nut
NUT14	Eleven 1/4 × 20 nuts for trigger gap and posts
SW10M	Five #10 × 1/2-inch sheet metal screws
SW10	Ten #10-32 × 1.5-inch machine screw
NU10	Ten #10-32 nuts
WASH10	Twenty #10 wide shoulder washers
WIRE12	4 feet #12 stranded, vinyl-covered wire
WIRE12	30 feet #12 heavy-coated, magnetic wire for winding ACOIL

Chapter Seventeen

Vacuum Tube Tesla Coil Project

This advanced project, as shown in Figure 17-1, is similar to a coil made by John Weisner some years ago. The geometry of the secondary not being the most efficient is a good compromise for wireless energy transmission and also provides a reasonable output display. The project is intended for the experienced experimenter and researcher in the field of high-voltage and high-frequency circuitry. Not only is this project a dangerous electrical device, but it can also be a bothersome source of radio interference, especially in the standard AM broadcast band and should be used in a shielded enclosure or a Faraday cage if operated on a continuous basis. A gas discharge lamp such as a standard household fluorescent lamp will glow up to 10 feet away when this device is used. Annoying burns are experienced when contact is made with conductive objects up to similar distances.

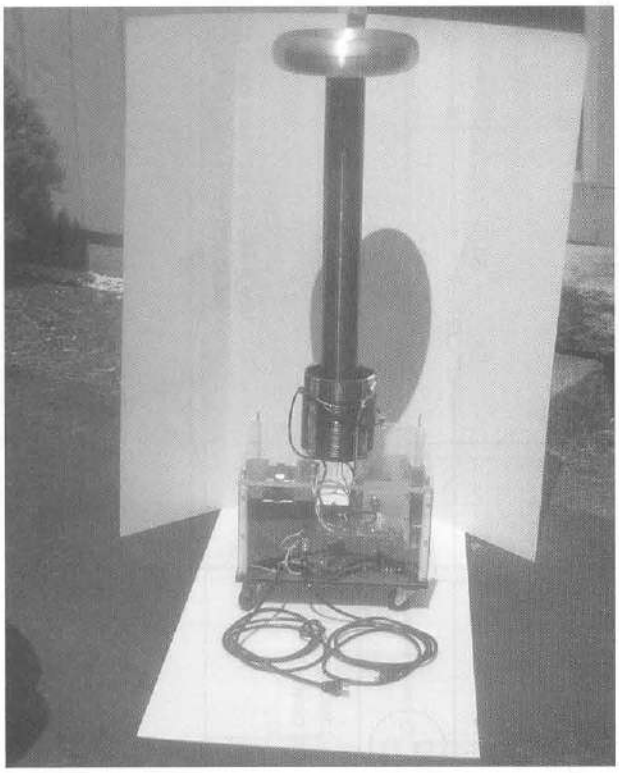

Figure 17-1 *The vacuum tube Tesla coil*

We also have built coils using 304TH, 450TH, and parallel 2500THs with a full 5,000 watts of plate dissipation. This coil produced spectacular flaming arcs up to 8 feet long with 8 kilowatts of input. A video showing the operation is on our web site. The coil shown here will easily produce 1 to 2 feet of flaming arcs.

This system can provide the experienced hobbyist with hours of fun and entertainment experimenting with terminals and settings to generate wireless energy as well as output arcs and sparks. This is an advanced-level and potentially expensive project requiring electronic skills and high-voltage experience. Expect to spend $300 to $750. All the parts are readily available, with specialized parts obtainable through Information Unlimited (www.amazing1.com), and they are listed in Table 17-1.

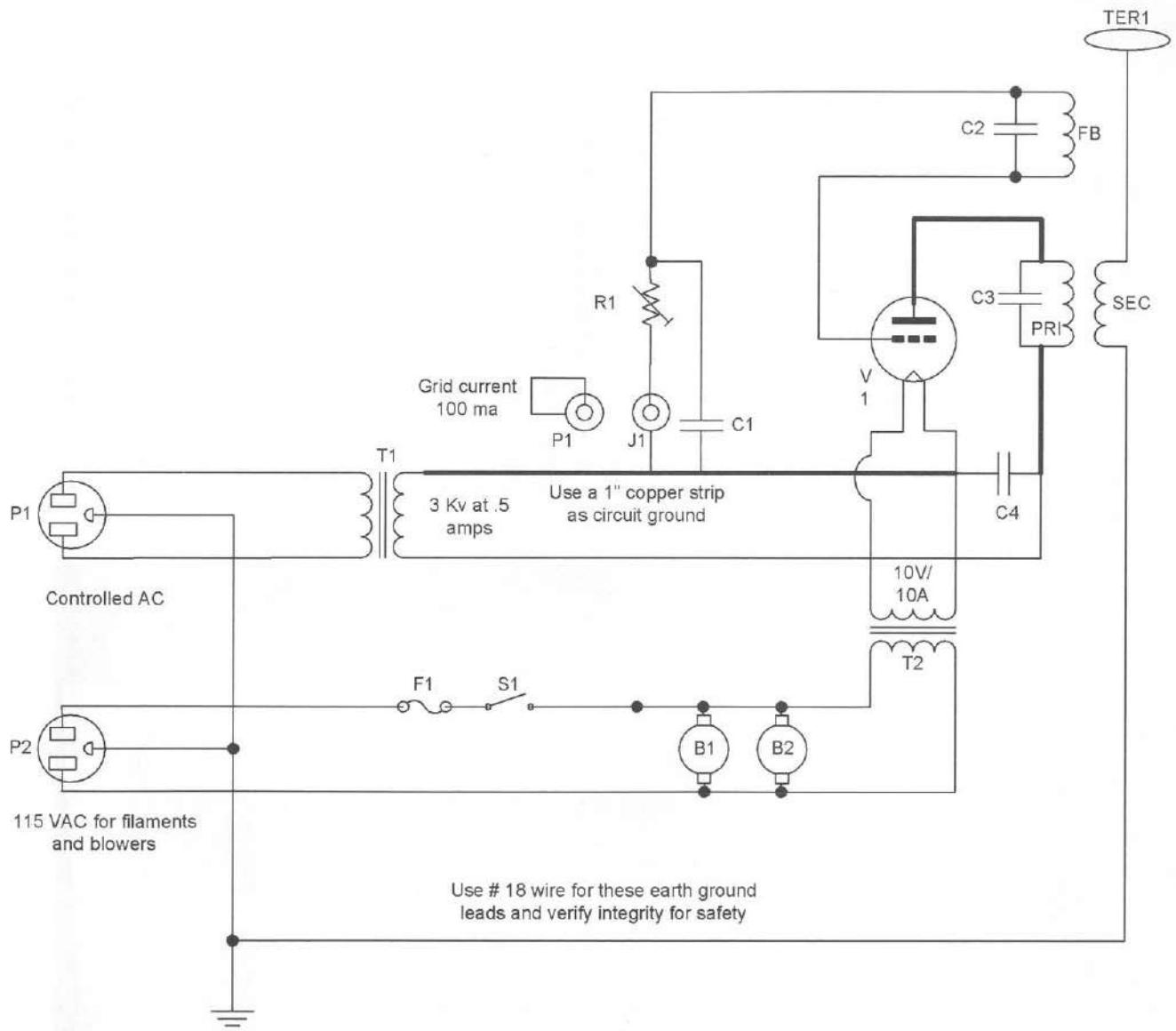

Feed back winding is 10 to 20 turns of #18 stranded vinyl wire. Open circuit inductance is approximately 75 micro-henries

Primary windings are 20 to 22 turns of #8 insulated wire. Open circuit inductance 55 micro-henries

Secondary winding is a 33" length of tightly wound #28 magnet wire for about 2000 turns. Free standing resonant frequency is approximately 200 kHz.

Resistor R1 is 5000 ohms at 100 watts

Figure 17-2 *Circuit schematic*

Basic Description

These spectacular display devices produce arcs and sparks quite unlike the undamped spark gap-driven Tesla coils. Operation does not require a noisy spark gap that produces copious amounts of *radio frequency interference* (RFI) but operates efficiently at the quarter-wave frequency of the secondary coil. Vacuum tubes, while large and requiring filament power, do offer robust and forgiving operation and are intended as a good starter approach to solid-state Tesla coils.

This approach is far less temperamental than the solid-state *metal-oxide-semiconductor field effect transistors* (MOSFET) or *insulated gate bipolar transistor* (IGBT) drivers. However, once these FET devices are debugged and tweaked, one can obtain some excellent results. Our lab FET coil generates over 4-foot sparks using only 3 kilowatts. The output frequency tracks within 5 percent of the resonant point using one of our proprietary circuits that will be on our site in the late spring of 2006 with the complete system scheduled for publishing in the third edition of this book series.

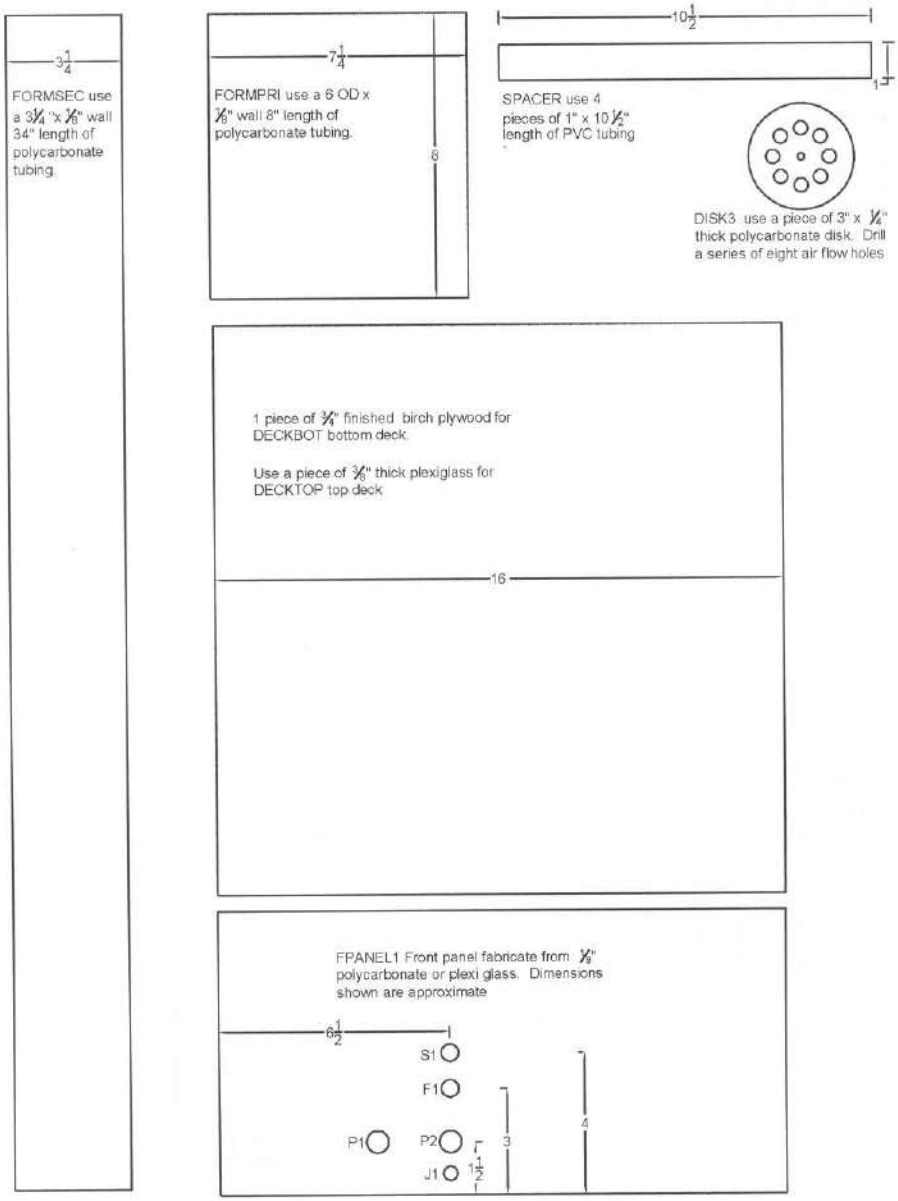

Figure 17-3 *Creating the major parts*

The circuit as shown on the schematic in Figure 17-2 of the vacuum tube device is nothing more than a medium-powered Hartley radio frequency oscillator tuned to the resonant frequency of the secondary coil. The circuit uses a medium-powered, readily available 833A triode transmitting tube that inherently has a high grid to plate capacitance necessary for self-oscillation. The plate load is a resonant transformer with both the primary and secondary tuned to the approximate identical frequencies. The output potential is now a function of the secondary-to-primary coil inductances times the peak primary plate voltage. This system generates voltages at frequencies sufficient to cause air breakdown, thus producing the sparks and arc jumping into open air.

The output of the oscillator is relatively closely coupled to the secondary coil designed for high Q performance and self-resonant to the quarter-wave of the oscillator frequency. The voltage distribution is now that of a quarter section with a current node at the base and voltage node at the top. The input power to the coil is raw, unrectified AC at 3,000 volts *root mean square* (rms) with a current of .5 amps. The peak voltage is over 4,000 volts and is supplied by a conventional plate transformer being fed by a voltage-adjustable variac, which allows you to adjust the output voltage of the system. A pulse signal is also shown that controls the grid of the tube, allowing a wide range of spark texture variation by changing the duty cycle and frequency.

Assembly Steps

1. Fabricate the secondary coil form (FORMSEC) from a $3\frac{1}{4} \times \frac{1}{8}$-inch wall polycarbonate tubing, as shown in Figure 17-3. It is not suggested that you use PVC tubing due to moisture retention and breakdown.

   Fabricate the primary coil form (FORMPR1)as shown in Figure 17-3 from a length of $7\frac{1}{2} \times \frac{1}{4}$-inch wall plastic tubing. Polycarbonate tubing is preferred.

   Fabricate two 3-inch diameter discs (DISK3) as shown in Figure 17-3 from $\frac{1}{4}$-inch polycarbonate. These pieces are for the ends of the secondary coil and are secured via three #6 × $\frac{3}{8}$-inch brass wood screws. Drill air passage holes as shown for the blower (B2).

   Fabricate four 10.5-inch spacers (SPACER) as shown in Figure 17-3 from lengths of 1-inch OD PVC tubing.

   Fabricate the 16 × 16-inch square bottom deck (DECKBOT) as shown in Figure 17-3 from a piece of $\frac{3}{4}$-inch finished plywood and paint it black.

   Fabricate the 16 × 16-inch deck top (DECKTOP) as shown in Figure 17-3 from a $\frac{3}{8}$-inch-thick Plexiglas or you may use plywood.

2. Fabricate the parts as shown in Figure 17-4. Note to use $\frac{1}{16}$-inch G10 or another high-temperature plastic for the actual tube

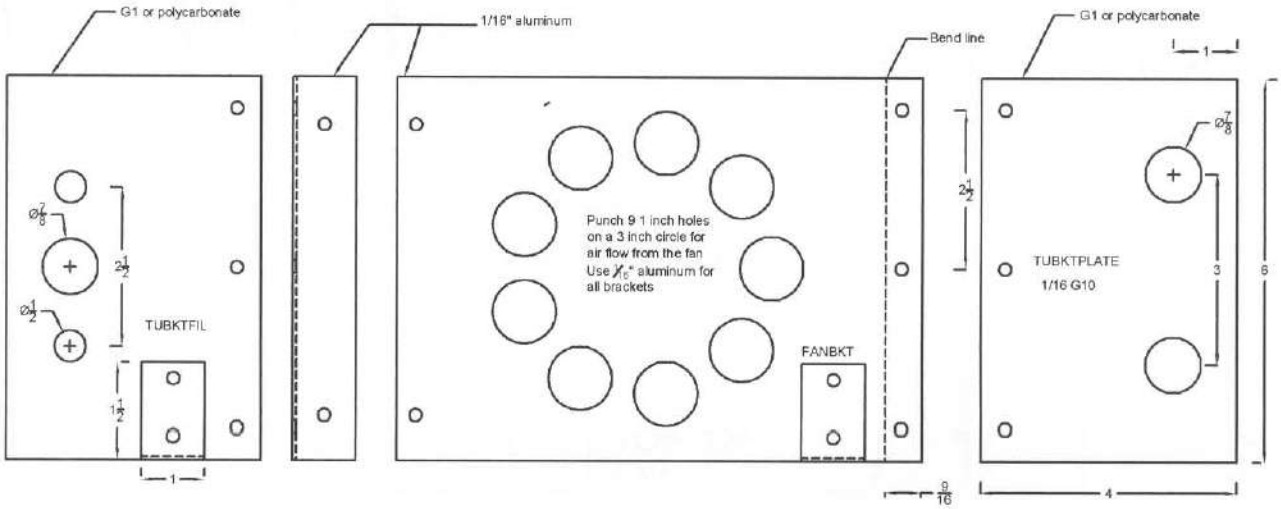

Figure 17-4 *Assembly of the tube and mounting bracket*

holders (TUBKTFIL and TUBKTPLATE). Use 1/16-inch aluminum for the other parts. Note the mating holes for assembling them together, as shown in Figure 17-4.

3. Assemble the fan and tube-mounting bracket from the parts in Figure 17-5. Use thirteen 6-32 × 1/2-inch screws and nuts. Foot brackets secure the assembly to the wooden deck via four #8 × 1/2-inch wood screws. TUBKTPLATE must be disassembled to insert the tube V1 in place. The blower fan B1 is centered to maximize air flow across the plate section of V1. It is mounted using four 8-32 × 1/2-inch screws and nuts. The entire assembly

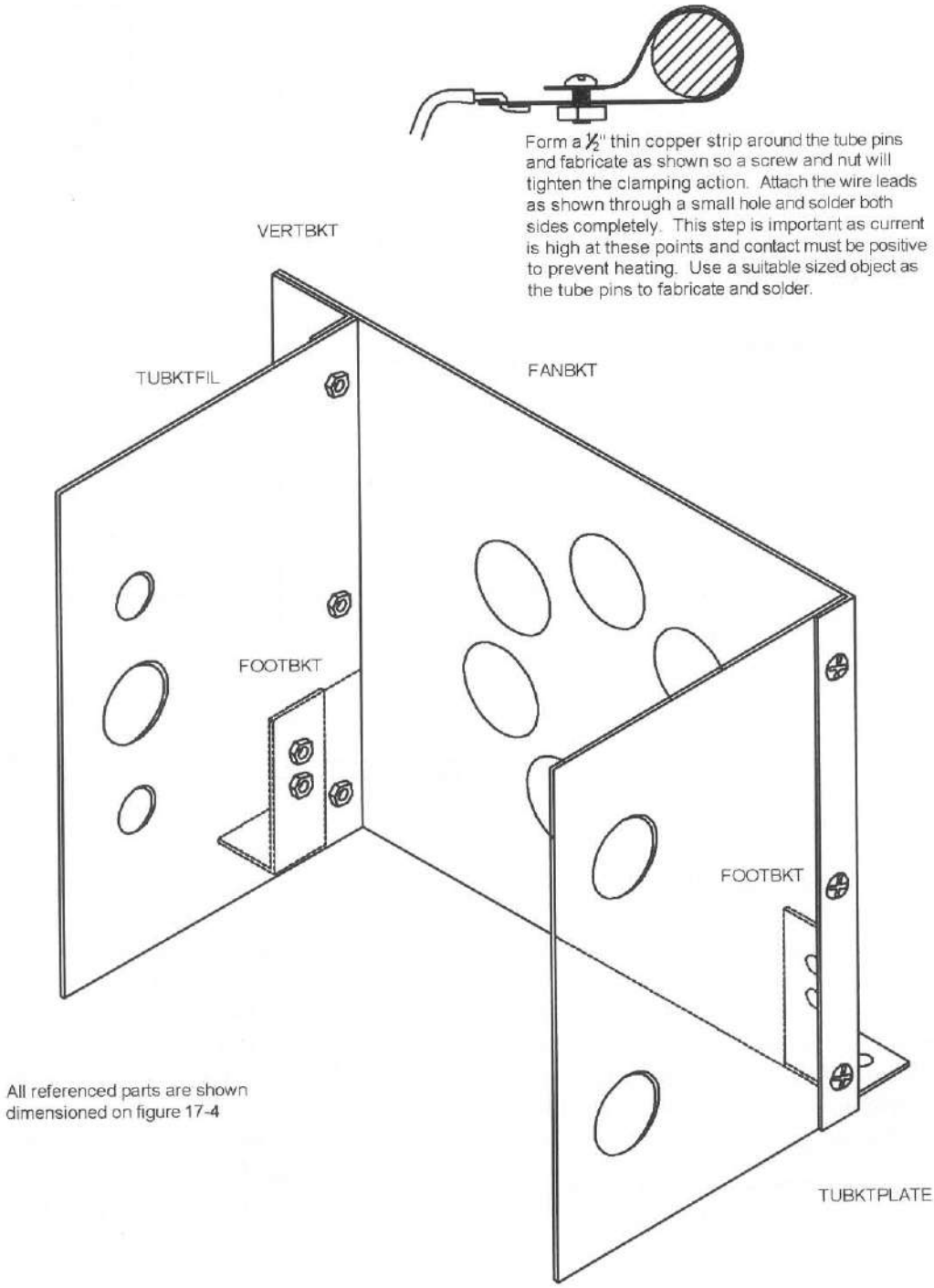

Figure 17-5 *Assembly of the tube-holding bracket*

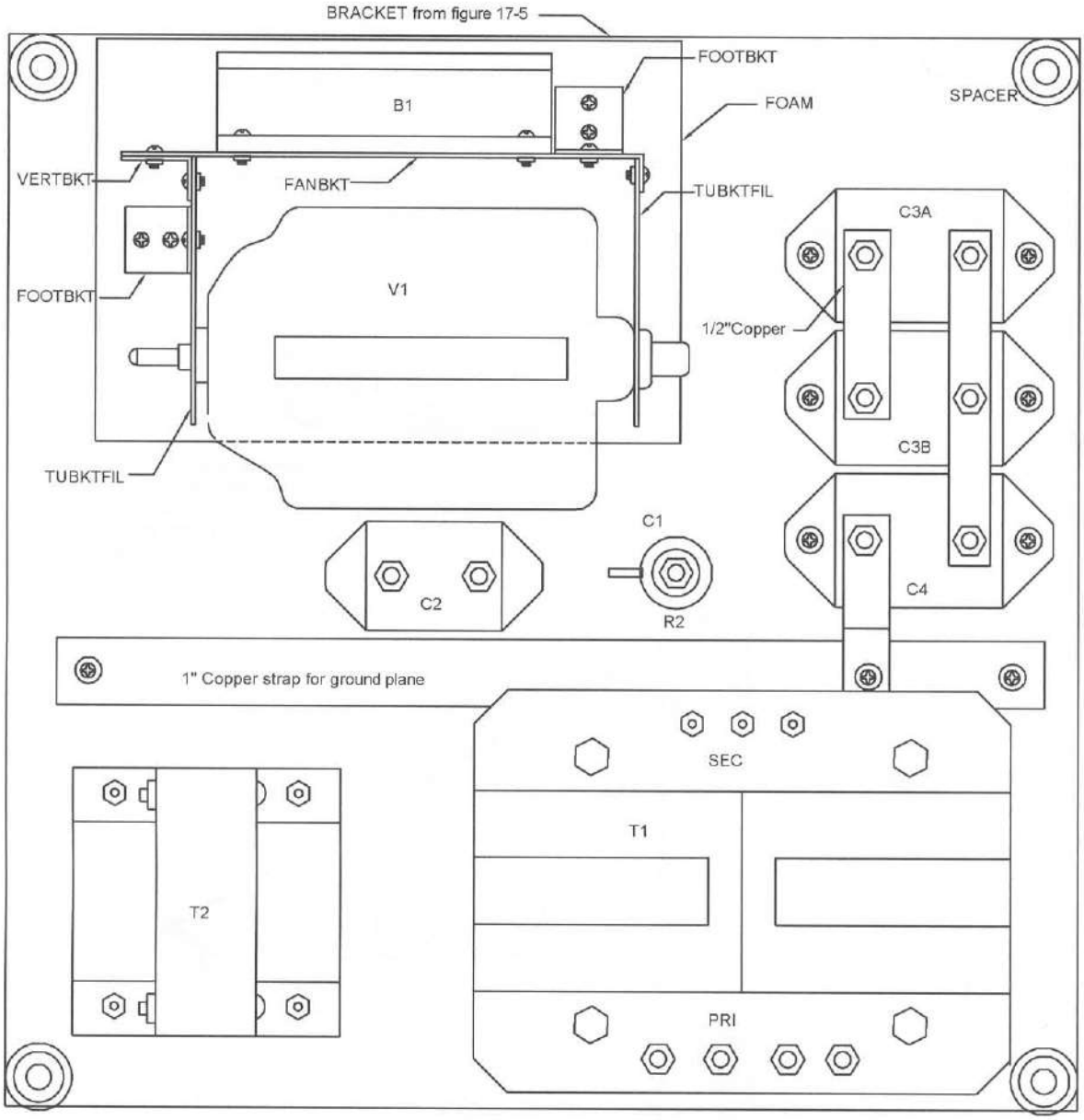

Figure 17-6 *Bottom deck assembly*

must set on a 1/4-inch foam rubber pad to avoid any vibration. Fabricate the tube pin connections from 1/2-inch strips of thin copper in the form of clamping connectors. Use screws to tighten the clamps securely around the tube pins. Crimp the connecting wires in place and carefully solder the connecting leads completely. This is important as the tube pins must pass a high current.

4. Lay out the bottom deck DECKBOT and trial-fit the components, as shown in Figure 17-6. (You may want to consider castors at the corners for system mobility.) Cut a 14-inch length of a 1-inch-wide copper strip for the main ground plane. Secure it via two wood screws at the end points. Secure the plate transformer (T1) using four 1/4-20 × 1 1/2-inch bolts with flat washers on the bottom side of the wooden deck. Mount the three mica capacitors (C3A, C3B, and C4) using 6-32 × 1 1/2-inch screws, nuts, and washers. Cut 1/2-inch lengths of copper straps and attach them as shown. Note the grounding piece on C4 must be shaped and formed to have a flat surface abutting the ground plane strap and fitting as shown.

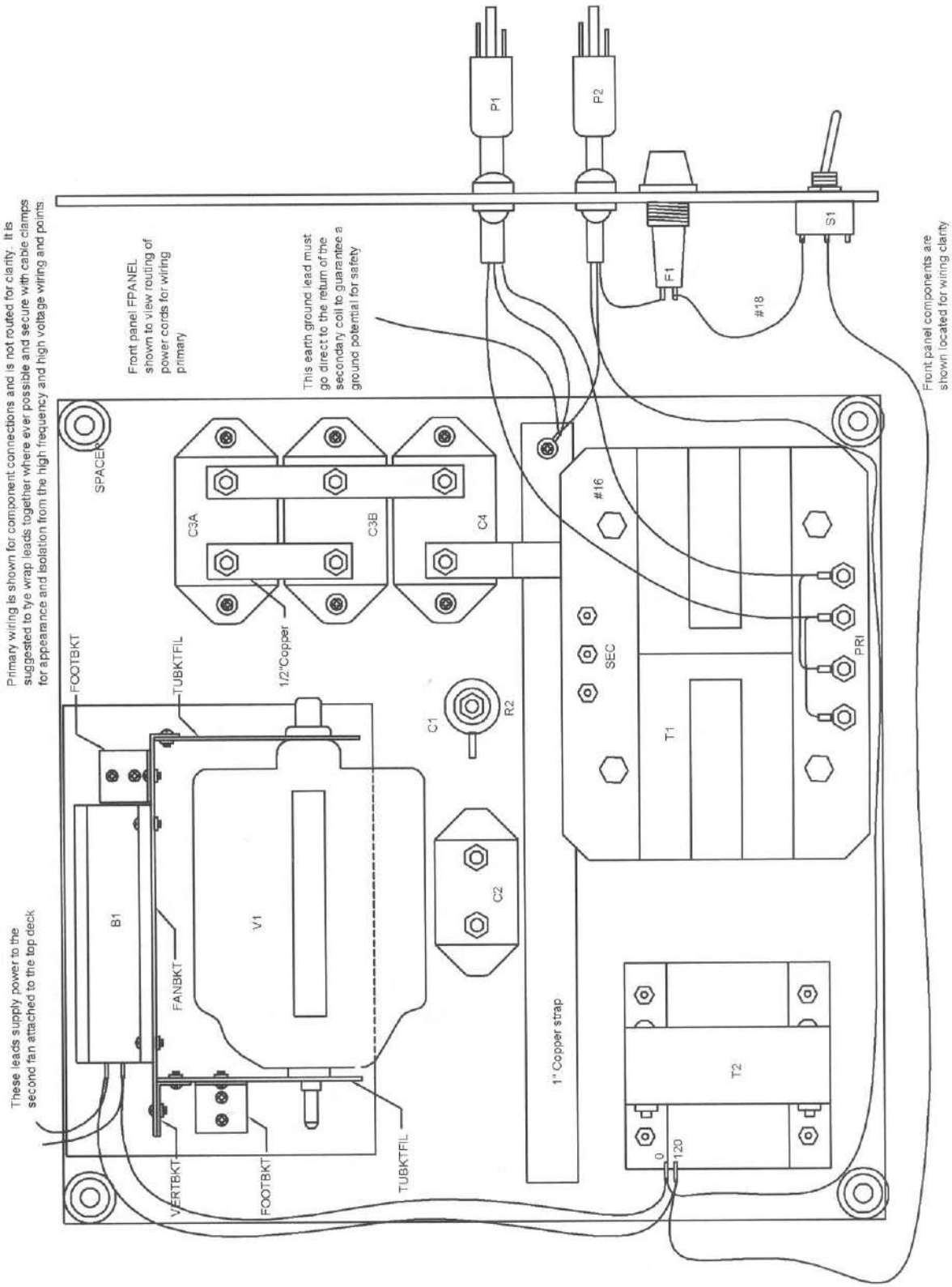

Figure 17-7 *Bottom deck primary wiring*

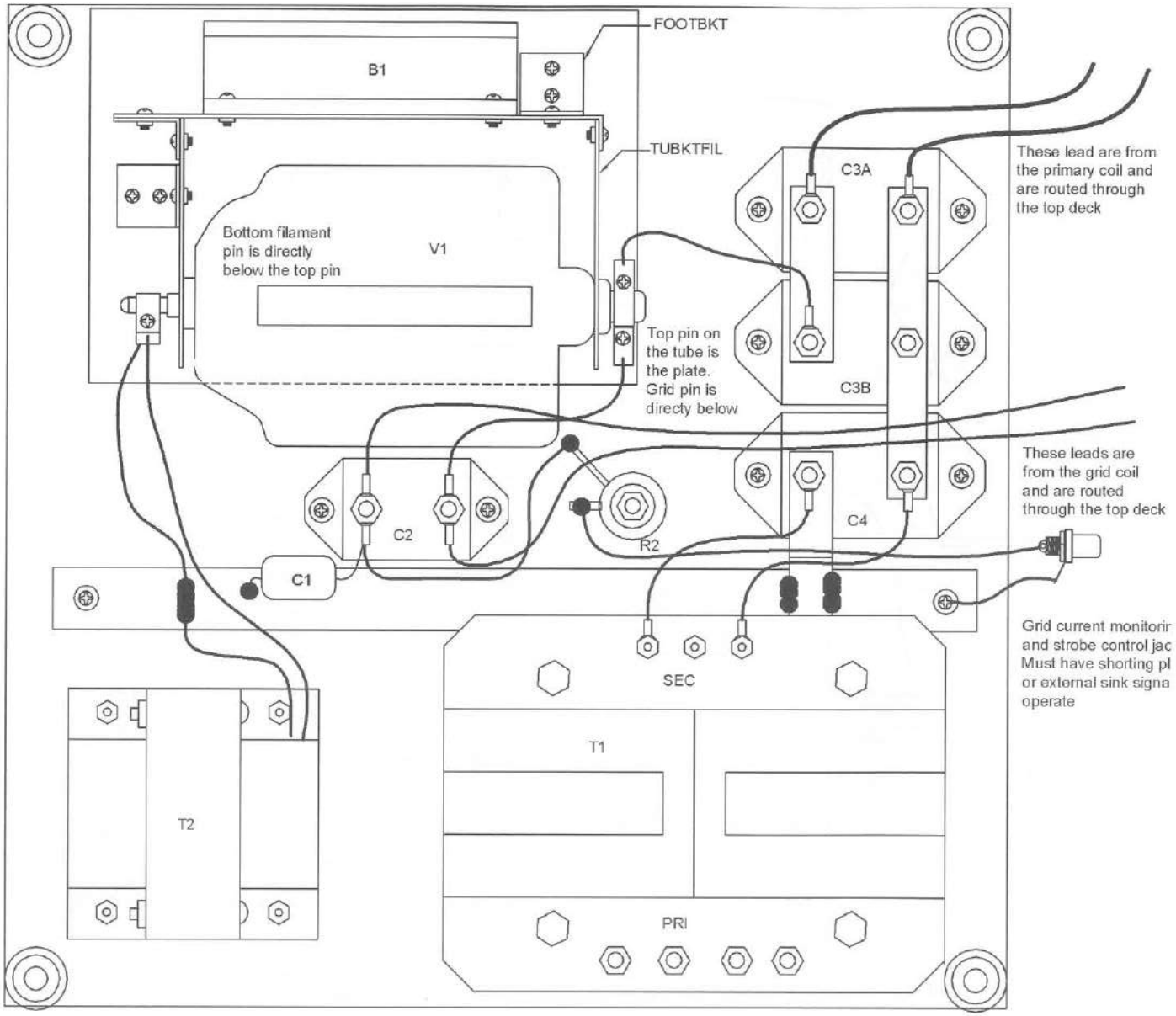

Figure 17-8 *Bottom deck high-voltage wiring*

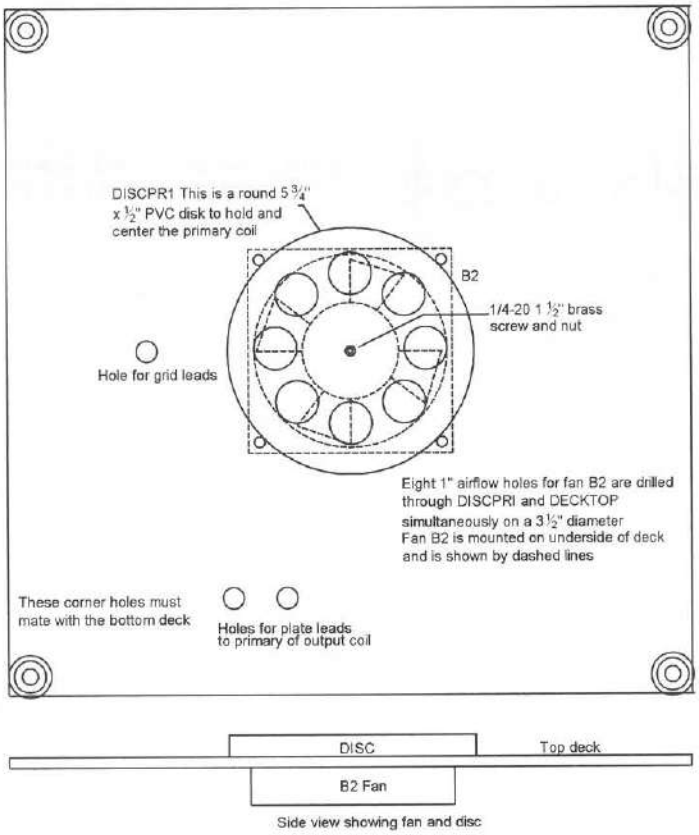

Figure 17-9 *Top deck fabrication and assembly*

Do not tighten the nuts at this time. Mount mica capacitor C2 using similar hardware and grid resistor R2 vertically using a long 1/4-inch bolt or a threaded rod. Do not overtighten. Secure the filament transformer T2 using four 8-32 × 1 1/2-inch screws and nuts. Secure the tube and fan bracket via four #8 × 1/2-inch wood screws through the two foot brackets FOOBKT. Also note the foam rubber mount FOAM. Drill holes for the 1/4-inch −20 threaded rods for the deck spacer.

5. Thread the power cords (P1, P2) through the clamp bushings (BU1, BU2) as shown in Figure 17-7 on the front-panel section (FPANEL). The actual location on the panel section is shown in Figure 17-3. Figure 17-7 is shown to clarify the wiring. Power cord P1 must be a heavy-duty, #16, three-wire cord, with P2 being a #18, three-wire cord. Connect the two green ground leads to a crimp lug along with a 24-inch piece of #18 stranded wire that eventually connects to the center ground lug of the secondary coil. Solder this lug and verify the integrity as this is mandatory for electrical safety. Proceed to wire as shown using #18 stranded wires. Note that the two leads eventually connect to the second blower (B2) mounted on the top deck. Use crimp lugs and solder wherever shown. Route the wires, tie wrap, and clamp into place for appearance and isolation from other components.

6. Wire the filament clips to the 10-volt output leads of T2 as shown in Figure 17-8. These clips are shown in Figure 17-5. You will note that insulation is removed from one of these leads, and the uncovered section is soldered to the 1-inch copper strip. Solder in the bypass resistor (C1) to the copper strip and to a lug with the other leads to R2. High-voltage wire should be used from transformer T2 to capacitor C4. Proceed to complete the wiring using crimp lugs and soldering. Two pairs of wires are shown from the primary and grid coil. These are not actually connected at this time as they are part of the top deck assembly (DECKTOP). Jack (J1) is attached to the front panel shown located in Figure 17-3.

7. Fabricate the DECKTOP, as shown in Figure 17-9. This piece was originally shown as being

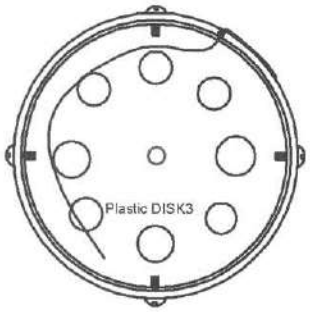

The secondary is wound on the form as shown for FORMSEC in figure 17-3.
Special note: The coil form must be totally clean both inside and out. Use isopropyl alcohol and allow the form to completely dry. Coat with a layer of orange shellac should do this on a dry day or in a dehumidified area.

Start by inserting the polycarbonate disk DISK3 into the output end of the coil form flush with the end. Secure using 3 or 4 small plastic screws. Do not use metal on the coil output end as arcing will occur.

Insert a 1" width aluminum bracket into the base end with a 1/4-20 tapped hole for screwing on to the brass screw from figure 17-9. Bend down ½" 90 degree ends to attach to inner diameter of coil via brass screws and nuts.

Position roll of #28 heavy magnet wire and thread into holes on base end of form. Attach free end to bracket via one of the screws. Drill small holes at each end of the coil form ½" from ends for threading the "start" and "finish" leads of the windings.

Start to wind the turns and continue for 33" in length being careful to keep the wire tight, free of kinks and avoiding any overlaps. Do approximately several inches at a time and shellac in place using orange shellac. Always secure lead with a piece of good adhesive sticky tape as an "unwind" will be disastrous. Winding this coil with two people is much easier.

Completed coil should contain approximately 2400 turns and tune to around 200 khz when free standing. Note winding should be in the same direction as primary coil LP1

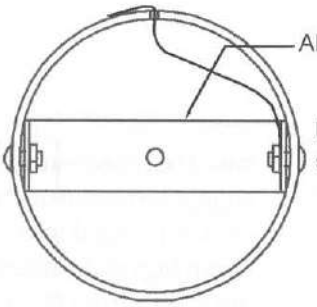

Figure 17-10 *Assembly of the secondary coil*

a 3/8-inch Plexiglas square from Figure 17-3. Fabricate a 5¾-inch PVC disc (DISCPRI) from ½-inch-thick sheet. This piece is for securing and centering the primary coil assembly, shown later in the plans. Secure it in place on the deck via a ¼-20 × 1-inch brass screw and nut. This will be the grounding point for the bottom of the secondary coil and

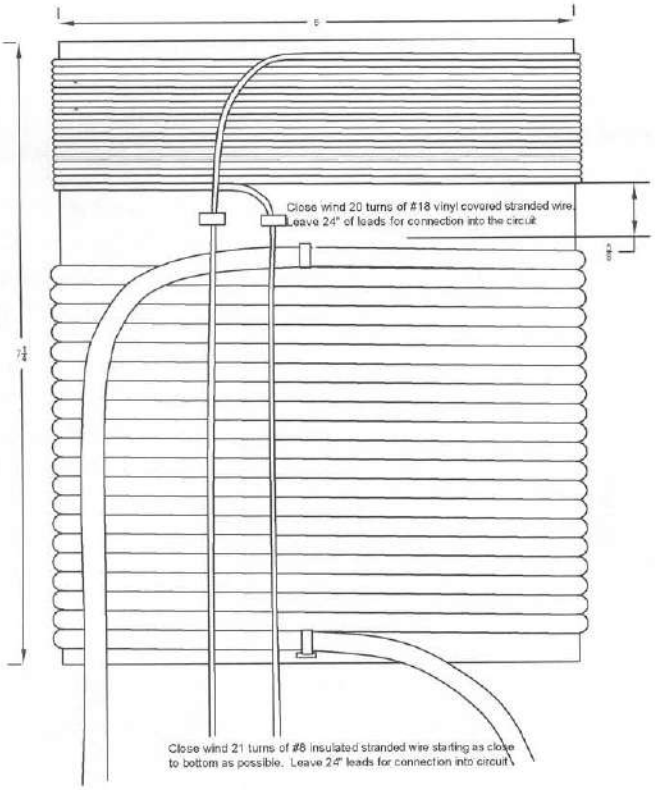

Figure 17-11 *Assembly of the primary coil*

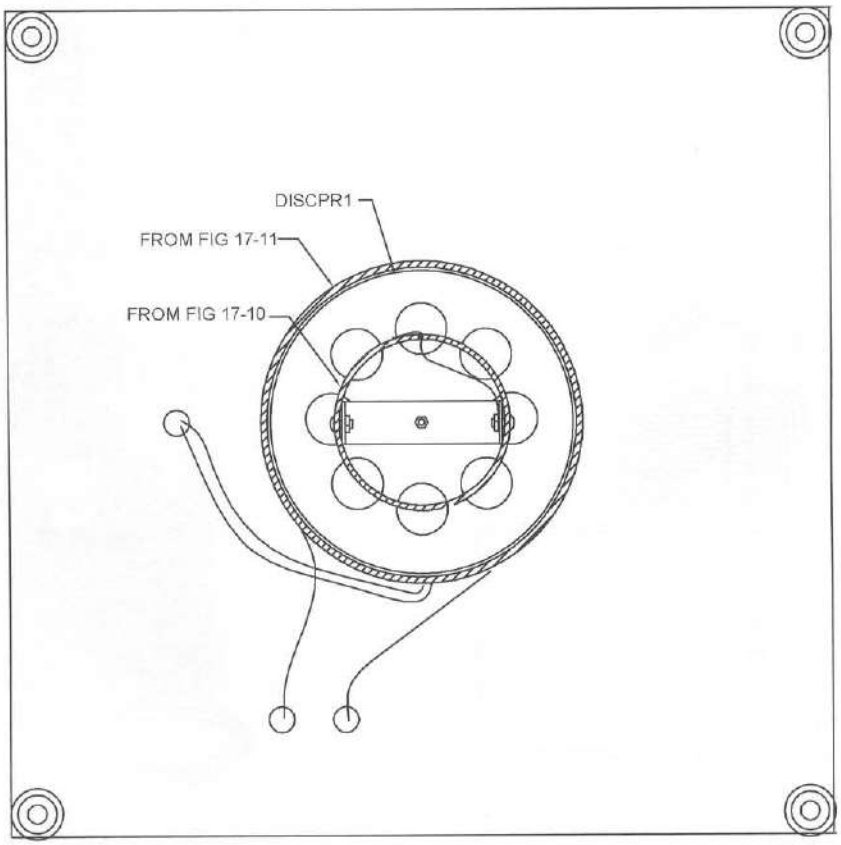

Figure 17-12 *Final assembly of top deck*

goes to earth ground, as shown in Figure 17-7. Proceed to drill the eight 1-inch air flow holes.

At this time, the builder should be aware that if his or her coil is to be used on a continuous basis, the second blower mounted on the underside of the top deck is necessary to keep the bottom of the coils cool. They will heat up over time due to the resonant rise of current associated with the base of a quarter-wave resonator. If your coil is to be used for a short-time operation of several minutes, the part involving the drilling of the air flow holes and the second fan may be omitted.

8. Assemble and wind the secondary coil as shown in Figure 17-10. Proper winding of the coil is mandatory for achieving optimal operation. Kinks and overlaps will seriously affect output.

9. Assemble the primary coil assembly, as shown in Figure 17-11. Start at the bottom and tightly wind the turns. Use tie wraps to secure the start and finish of this heavier 21 turns of the #8 stranded wire. You may want to place dabs of silicon rubber to secure them in place. Start

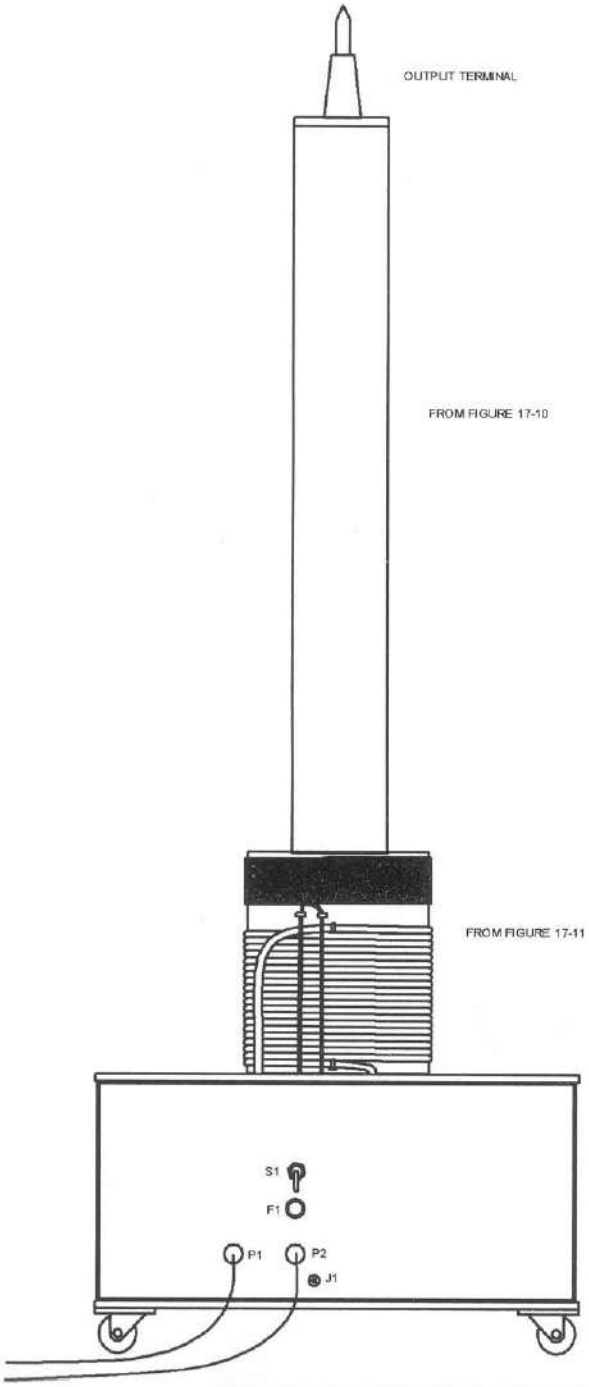

Figure 17-13 *Side view of final assembly*

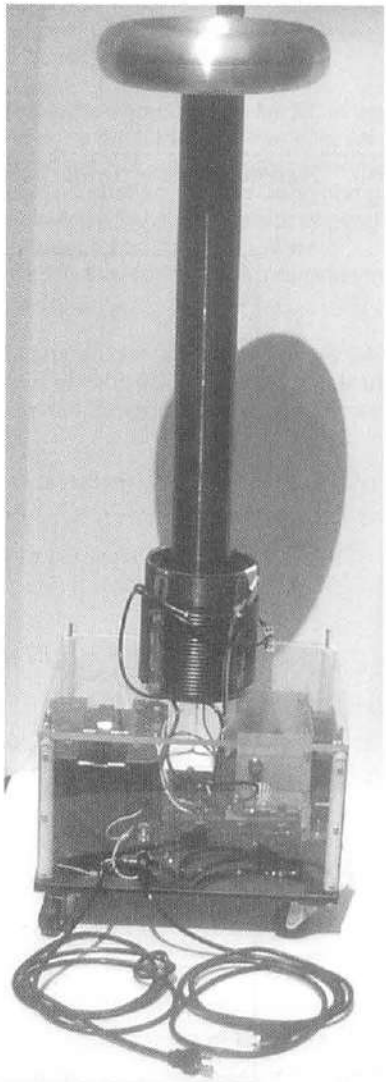

Figure 17-14 *The final assembly*

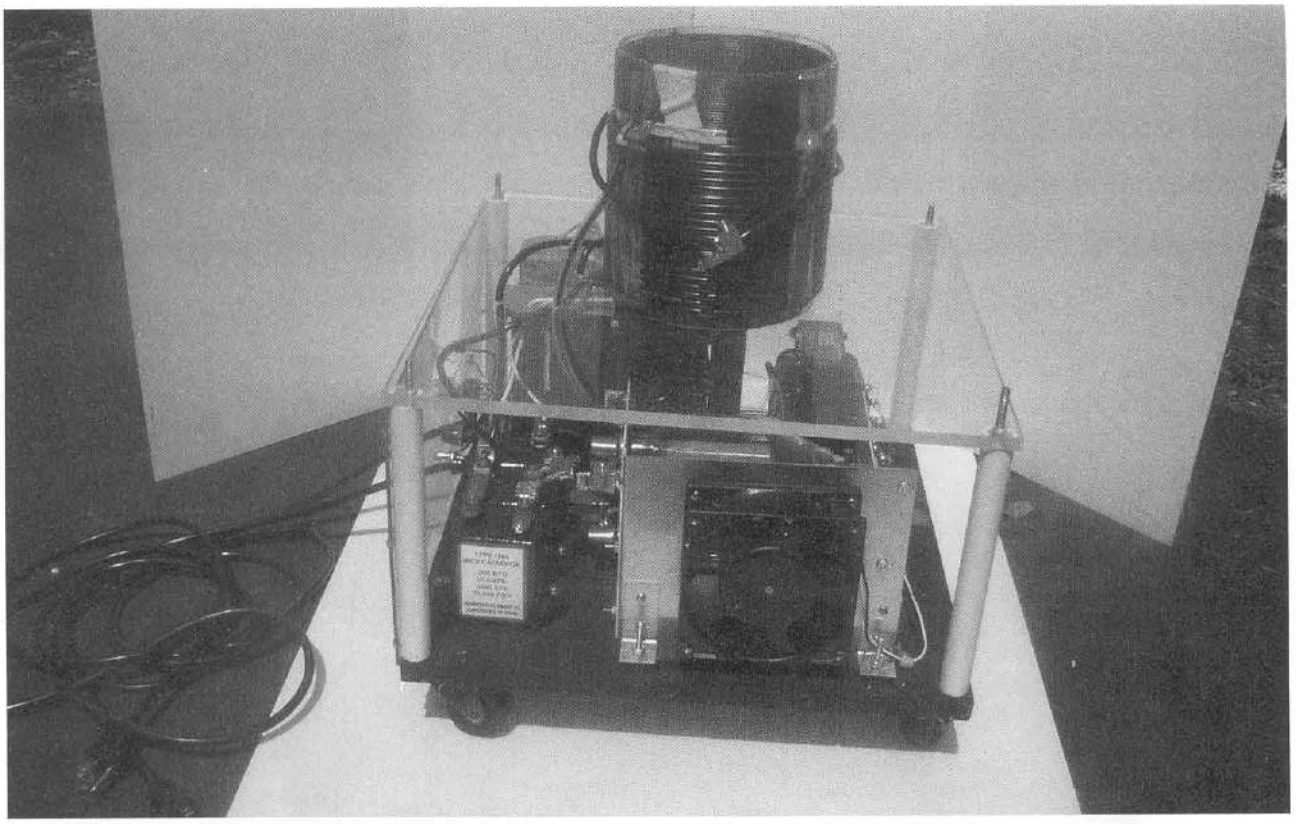

Figure 17-15 *The right-side view*

from the top and wind 20 turns of #18 vinyl-covered stranded wire and tie wrap it in place. Note that there must be at least ½-inch between the closest proximities of these two coils as a flashover (or spark break) could damage the vacuum tube. Leave at least 2 feet of extra leads for connections, as shown in Figure 17-8.

10. Finally, assemble the top deck, as shown in Figure 17-12. The primary coil section slips over the disc DISCPRI, as shown in Figure 17-8. The tapped hole in the bracket of the secondary coil screws onto the center brass screw shown in Figure 17-8. It is this screw that grounds and secures the secondary coil.

    Route the leads from the coils through their respective holes for connection into the circuit. You will note back in Figure 17-8 that the heavy plate leads are shown connected to C3A via heavy crimp lugs and are also soldered. The same applies for the smaller grid leads that connect across C2. These leads may require switching during the test steps. Both sets of these leads carry high-frequency energy with the heavier leads carrying high-radio-frequency voltages and currents. These heavier leads must be as short and direct as possible and not be in close proximity to other objects.

    Figure 17-13 shows the completed graphic of the coil assembly with an insulator and a pointed discharge pin. Any suitable feed through the insulator around 2 to 3 inches in height can be used. You may also use a piece of polycarbonate or Teflon rod for this part. Other plastics may carbonize and burn.

    The following figures are actual photos showing different views of the assembly apart and intact. They are intended as assembly aids.

Figure 17-14 shows a 12 × 3-inch toroid as the output terminal. You will note the two power cords exiting through the front panel.

Figure 17-15 shows the right side with a view of the blower B1 and tube-mounting bracket.

Figure 17-16 shows the left side with a view of the filament and plate transformers.

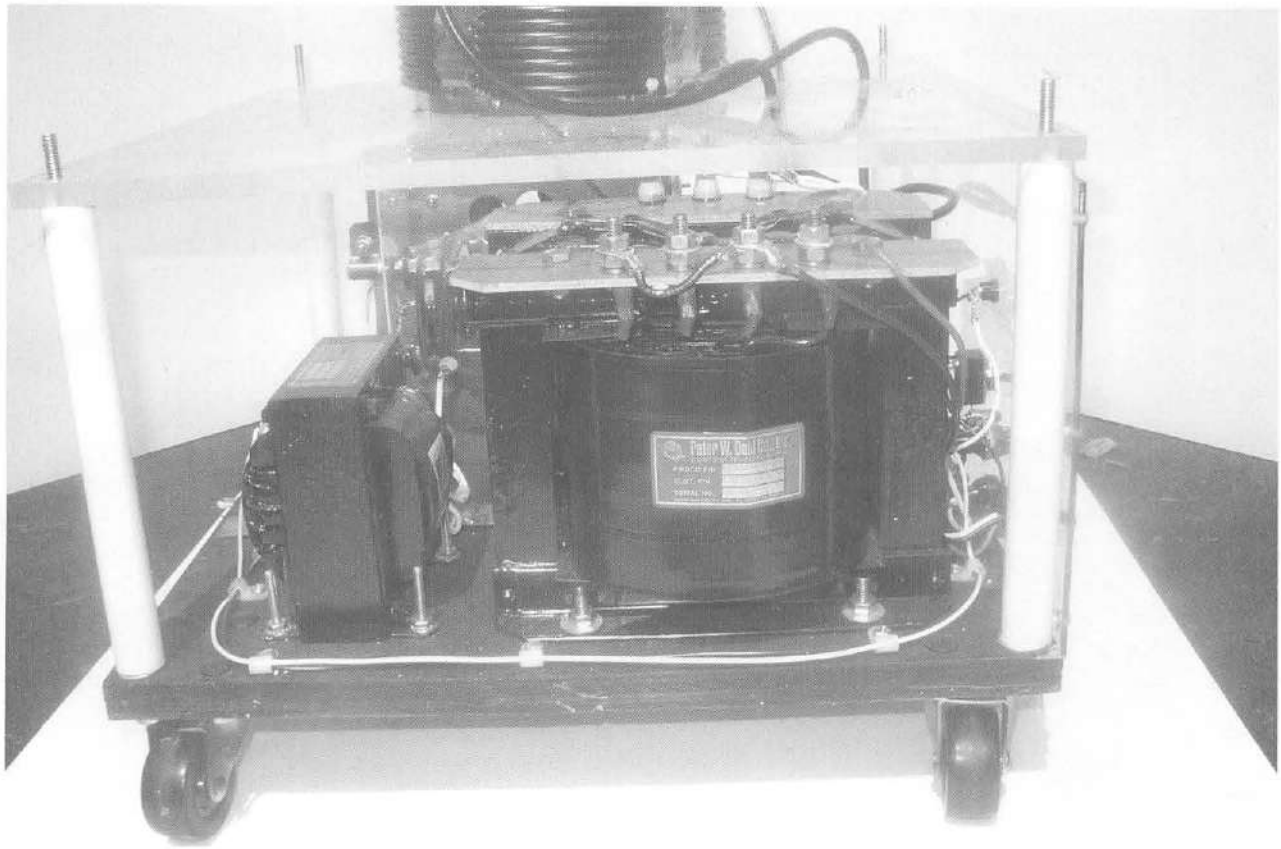

Figure 17-16 *The left-side view*

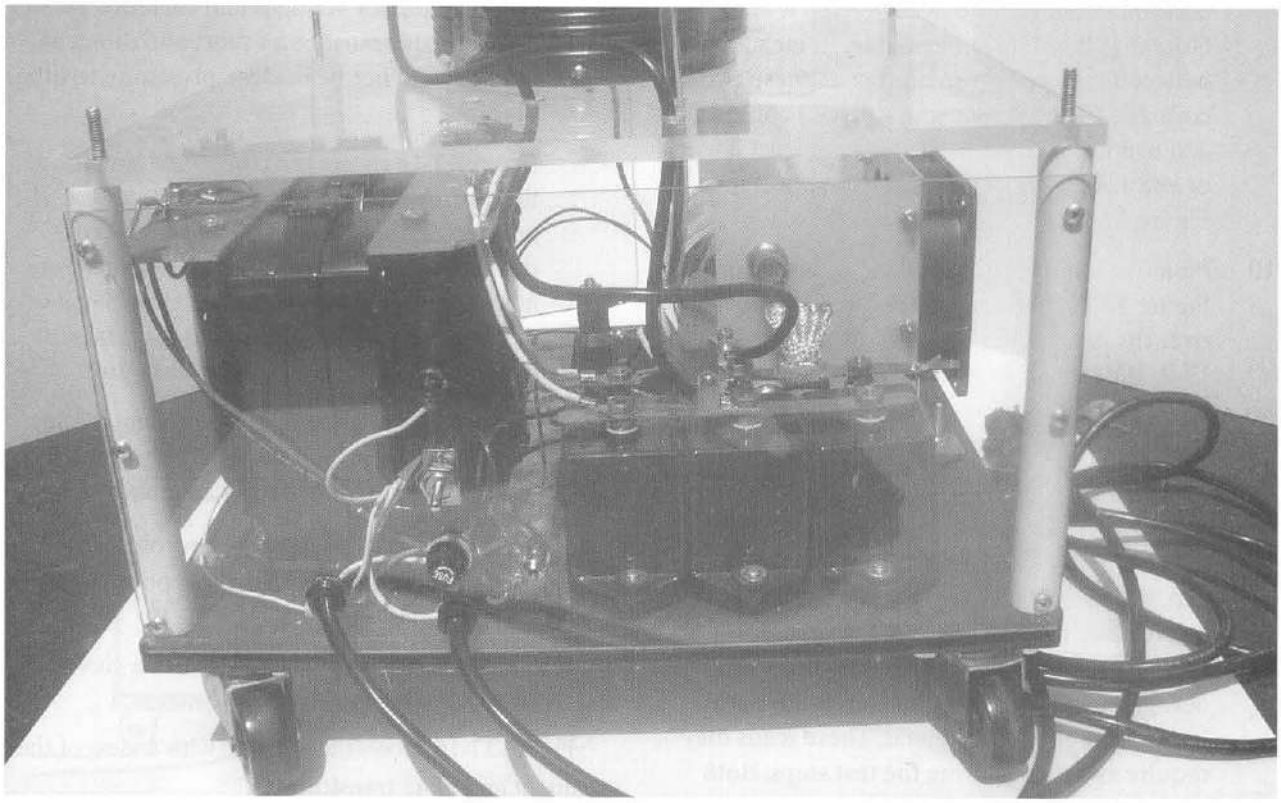

Figure 17-17 *The front view*

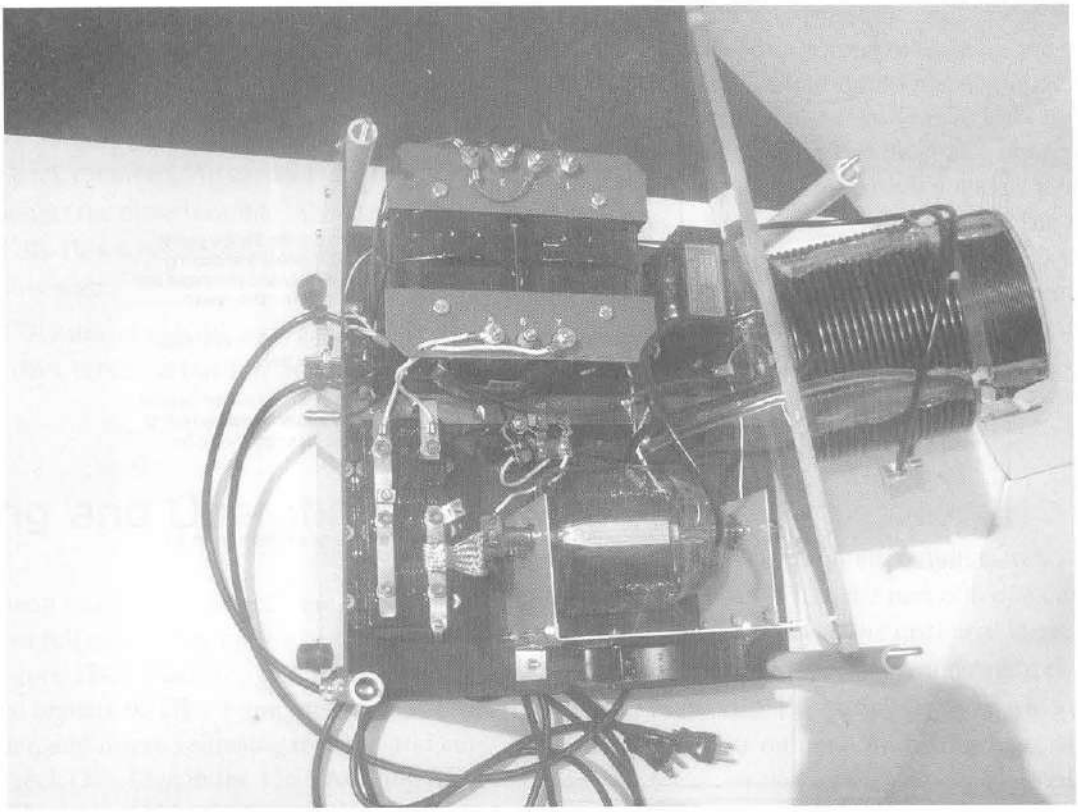

Figure 17-18 *The top view*

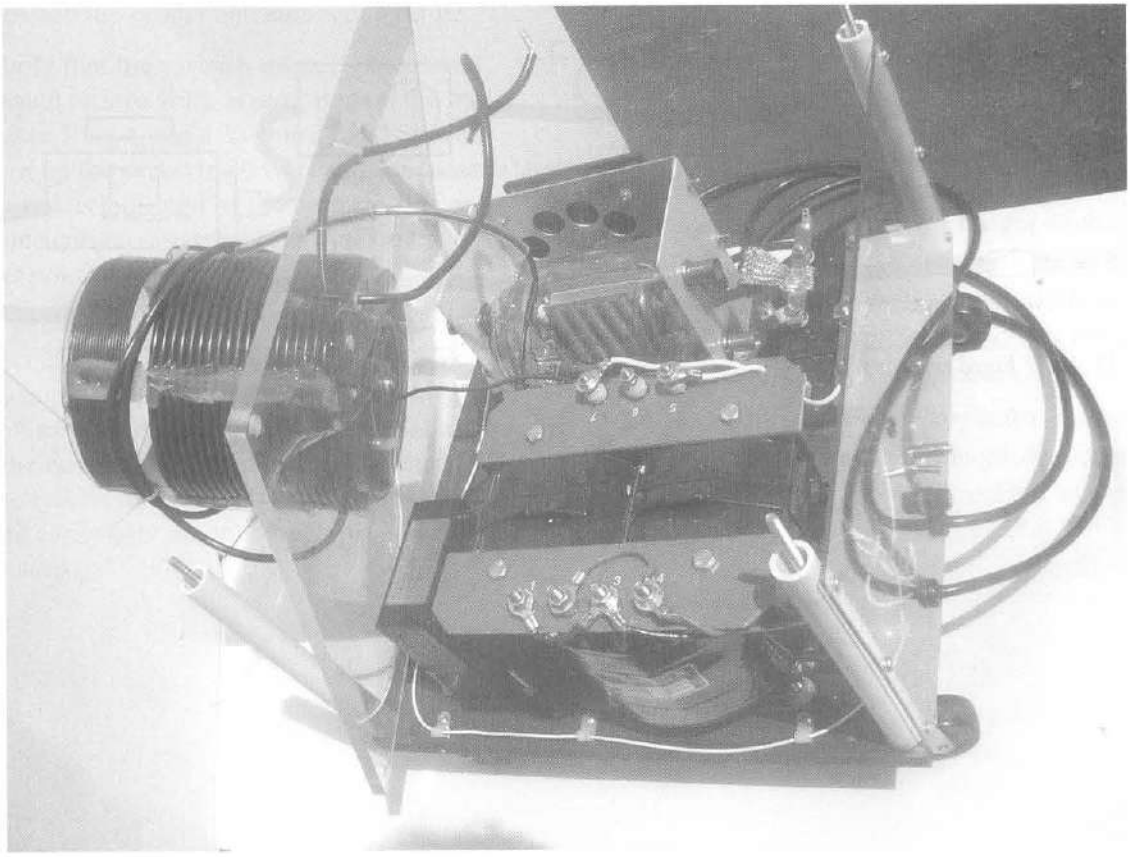

Figure 17-19 *Another top view*

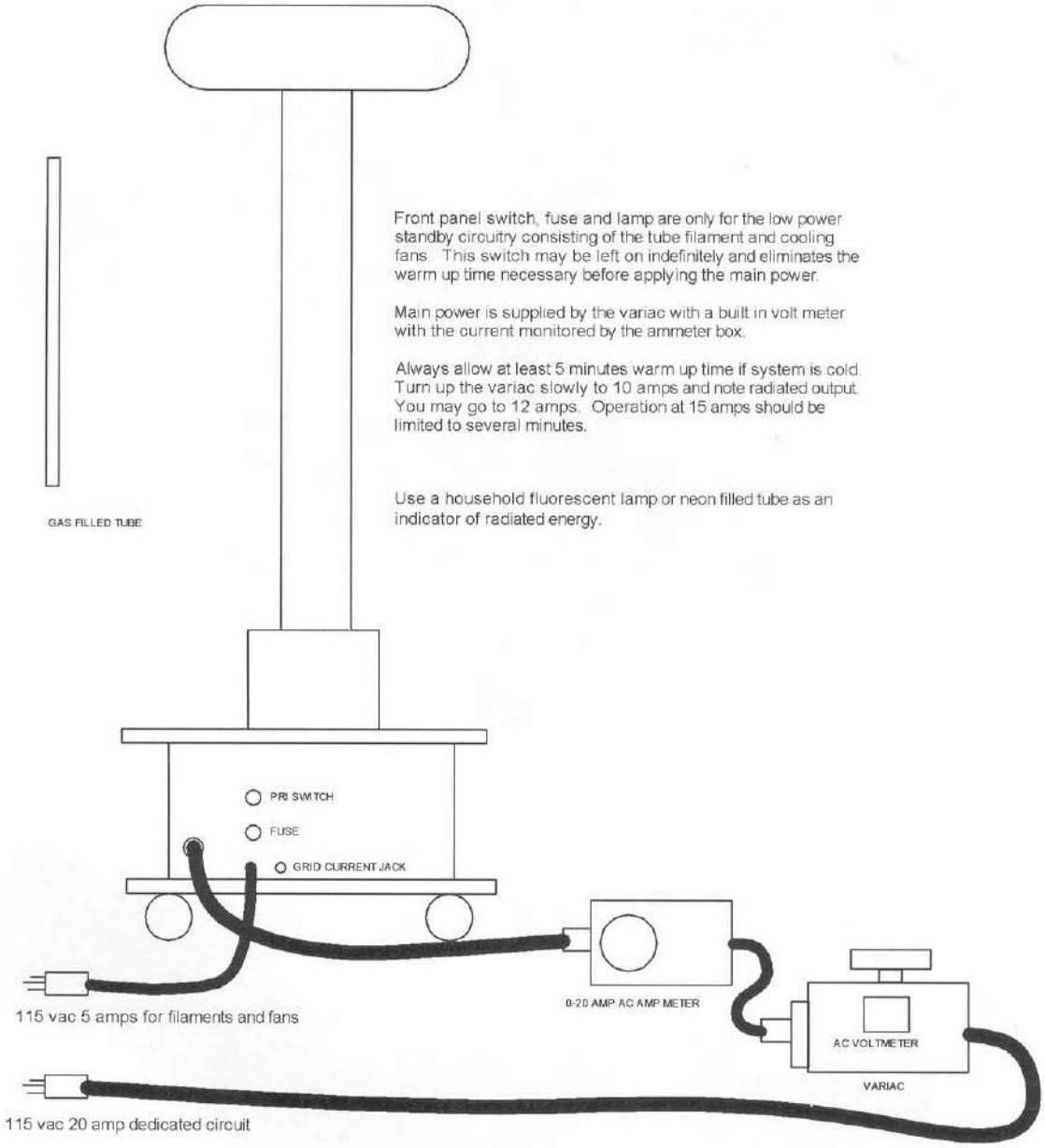

Figure 17-20 *Final system setup*

Figure 17-17 shows the front view through the clear plastic panel. Note the three mica capacitors C3A, C3B, and C4.

Figure 17-18 shows the top view with the clear plastic top deck removed. We used a piece of shielded strap to connect the plate terminal of the tube to C3A and C3B. This is not necessary and may be heavy flexible wire.

Figure 17-19 also shows the top view with the clear plastic top deck removed but at a different angle.

Testing and Operating

1. You will need a dedicated 20-amp line to obtain full output. Set up the system as shown in Figure 17-20. Place the unit away from metal objects, insert a 7-amp fuse in the holder, and insert a shorting into the grid current jack (J1). Plug in the 115 VAC plug for the filament and blower fans, and wait for the tube to glow and the fans to blow. Always allow at least 3 minutes for the tube filament to reach the proper emission temperature.
2. Verify that the variac is properly wired and turned to zero volts, as indicated on the voltmeter. Plug it into a 20-amp circuit. Slowly turn up the variac to 30 volts and verify some output as indicated by the bulb glowing or some corona discharge occurring on the output pin.

   If you do not observe some output, it will be necessary to completely shut the system down by unplugging both plugs, reversing the grid coil wires that attach to C2, and repeating the previous step. This is referred to as phasing the system. You should get substantial output and easily light the tube when properly phased.
3. Once you verify that the coil is properly phased, you may start to increase the voltage, noting the output discharge, the input current, and the applied AC voltage as indicated on the variac meter. You must also observe that the plate of the tube does not start to glow, as this is an indication of mistuning. The tube may have a very soft glow at full 120 VAC where the output should be 15 inches or more. The input current will approach 20 amps.

Notes

Tuning the coil for maximum output is tricky and may take some effort on the part of the builder. The tuning values will vary as the discharge increases due to the virtual capacitance of the ionization cloud at the top of the coil. The output terminal will also greatly effect the output tuning. Try adding or subtracting a turn or two on the primary plate coil, as this will change the resonant drive signal. You will need more inductance as the output increases, and the trick is to select the optimum value at the desired input power.

A 12-inch toroid or another large capacitive terminal will cause larger circulating currents within the coil and greatly enhance the wireless transmission of energy, as can be demonstrated by observing the distance that is possible for lighting the gas discharge tube without a wire. This will eliminate the air breakdown discharge when operating in this mode as the terminal voltage drops unless you increase the input power to overcome this loading effect.

The geometry of the secondary coil as shown is not the optimum for maximum length discharges. A squatter size would be more efficient but would radiate less.

Table 17-1 Vacuum Tube Tesla Coil Parts List

Ref. #	*Description*	*DB Part #*
R2	5K, 100-watt wire-wound resistor	
C1	.004-microfarad, 1,000-volt polypropylene capacitor	DB# .0039/400
C2	.003-microfarad, 3-kilovolt mica capacitor	DB# .003/3 KVM
C3A, B, C4	Three .01-microfarad, 10-kilovolt mica capacitors	DB# .01/10 KVM
V1	833A Triode vacuum tube	DB# 833A
T1	3,000-volt, .5-amp plate transformer	DB# 3KV/.5A
T2	10-volt, 10-amp filament transformer	DB# 10V/10A
B1, 2	5 × 5-inch muffin fan and 5 × 5-inch high-output muffin fan	DB # FAN1
S1	*Single pole, single throw* (SPST) 5-amp toggle switch	
F1/FS1	Panel-mount fuse holder and 5-amp fuse	
P1	8-foot #16 three-wire power cord	
P2	8-foot #18 three-wire power cord	
AMPMETER	20-amp AC panel mount ammeter	
VARIAC	18-amp variac with built-in meter	DB# VARIAC18A
TUBE	15-inch neon tube	DB# NE15
TER1	12 × 3-inch toroidal terminal	DB# TO12

Chapter Eighteen

Universal Capacitance Discharge Ignition (CDI) Driver

Figure 18-1 shows how to construct a very useful driver circuit that can be used to pulse most induction and ignition coils in the forward direction. High-quality automotive ignition coils can produce 50- to 75,000-volt pulses capable of jumping several inches. The system allows control of the pulse repetition rate up to 100 reps/second and individual pulse energy up to .3 joules. A maximum power output of over 30 watts is possible. Our laboratory model has generated discharges of up to 10 inches from some high-performance ignition coils.

The advantage of a *capacitance discharge ignition* (CD) system is its ability to produce high peak currents and voltages simultaneously. This property is well understood and appreciated in the automotive industry where fouled spark plugs are prevented by the brisance of the discharge. Electric fences burn away vegetation growth from contacting the wire by using high current pulses. Stun guns use these high peak current pulses to thwart the neuromuscular system. All this peak power with very low resultant energy allows many useful applications where battery-operated systems can be efficiently utilized.

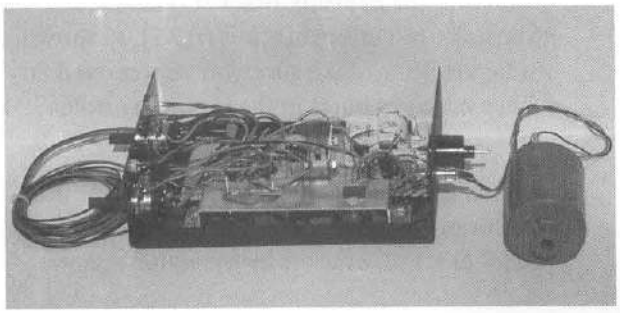

Figure 18-1 *The capacitor discharge driver*

This is an intermediate-level project requiring basic electronic skills and one should expect to spend $25 to $50. All the parts are readily available, with specialized parts obtainable through Information Unlimited (www.amazing1.com), and they are listed in Table 18-1.

Circuit Description

Figure 18-2 shows the complete circuit schematic of the adjustable energy and repetition rate capacitor discharge driver. The adjustable voltage regulator I2 controls the operating voltage to the system via control pot R9/S1 from 6 to 12 volts. Input to I2 is a 12-volt DC wall adapter transformer with a current rating of 1 to 2 amps being controlled by switch S1. This adjustable voltage is fed to the switching transistors Q1 and Q2 via the center tap of stepup transformer T1. The switching action of these transistors is controlled by a complementary pulse driver circuit I1 with its frequency controlled by trimpot R3. This circuit generates a high-frequency signal that alternates between the two primary windings, in turn inducing a higher voltage in the secondary winding.

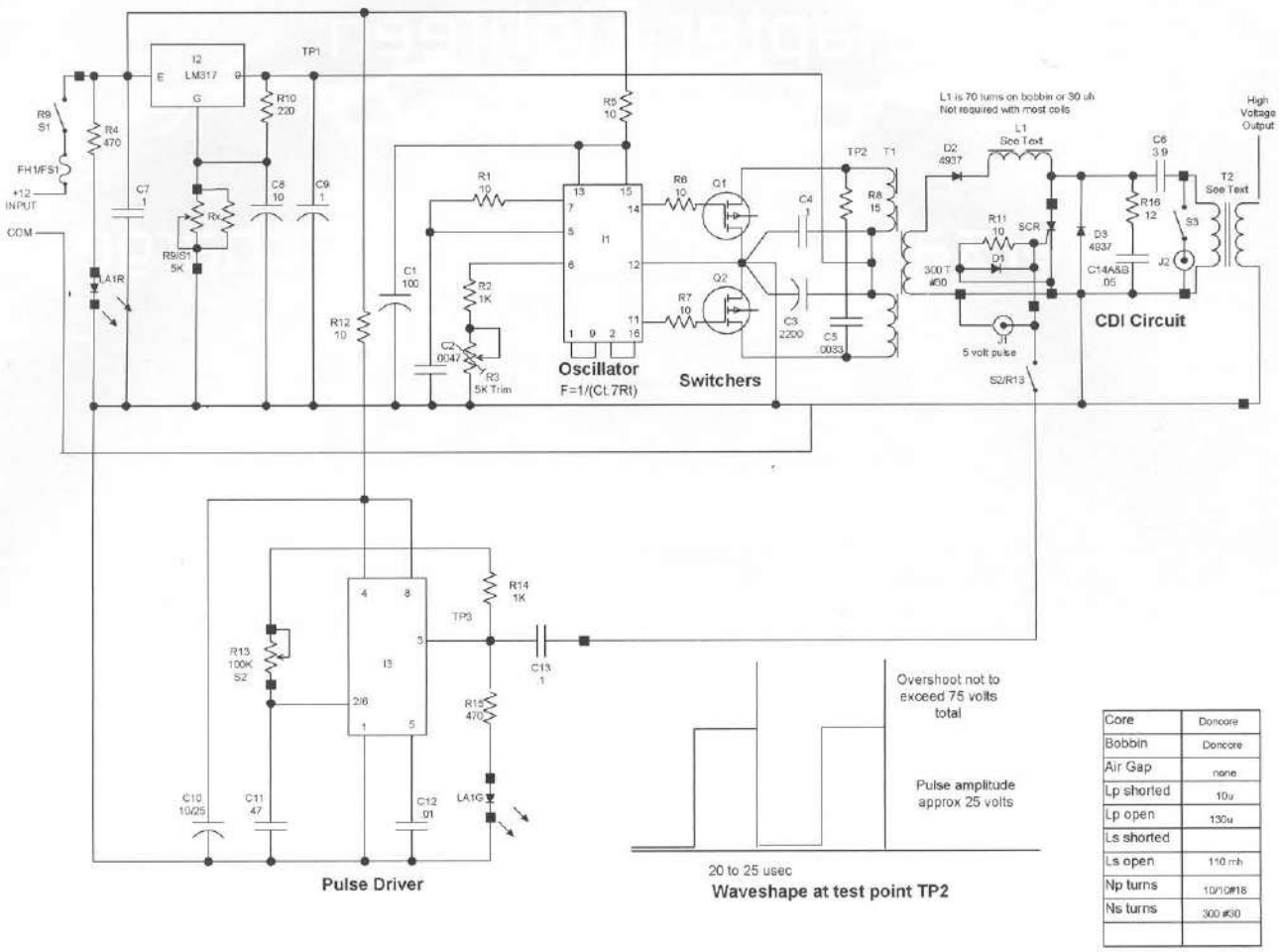

Core	Doncore
Bobbin	Doncore
Air Gap	none
Lp shorted	10u
Lp open	130u
Ls shorted	
Ls open	110 mh
Np turns	10/10#18
Ns turns	300 #30

Figure 18-2 *Circuit schematic*

T1 is a transformer with a preset, built-in leakage reactance that controls the short-circuit-charging current to discharge capacitor C6 through rectifying diode D2. Once C6 is charged, it can be discharged by the silicon controlled rectifier switch (SCR) through the primary high-voltage pulse transformer T2. The SCR is controlled by timer chip I3, connected as a variable pulse generator via pulse rate adjust pot R13/S2. It is these pulses that trigger the SCR to switch energy from C6 into T2, generating the high-voltage output pulses. You may also externally switch the SCR via a pulse signal at input jack J1. R13/S2 must be off for this external function. The pulse transformer is shown as a low-power unit in the parts list.

The real intention of the circuit is the ability to pulse-drive many different ignition coils at different energy levels as selected by R9 and pulse repetition rates as selected by R13. We have obtained sparks up to 4 inches with conventional automotive coils.

Assembly Steps

1. Assemble the switching transformer as shown in Figure 18-3.
2. Fabricate the heatsink bracket (HS1) and transistor-mounting bracket (BR1), as shown in Figure 18-4. Make sure you've removed any sharp edges or burrs in the mounting holes that could break through the insulating pads.
3. Attach Q1 and Q2 as shown, noting that the mounting tabs are insulated from the actual metal heatsink bracket by the nylon screws.

1. Bifilar (parallel) wind two different color #18 magnet wire for 10 turns on the primary bobbin. Tape in place leaving 8" leads. Note that different colors will help identifying the lead ends.
   #18 solid magnet wire can be used however high frequency LITZ wire will give a slight improvement. You can make this wire by obtaining 6 pieces of #26 magnet wire and twist together as a single wire.

2. Wind 300 turns of #30 magnet wire in the 10 segments of the secondary bobbin. Wind 30 turns per segment and attach the start and finish leads to the connection lugs

3. Place the wound coils onto the cores as shown and tape tightly into place.

4. You may verify the inductance as follows secondary open:
   A to B&C are around 130 micro henries.
   D to B&C are around 130 micro henries
   Secondary winding 110 millihenrys

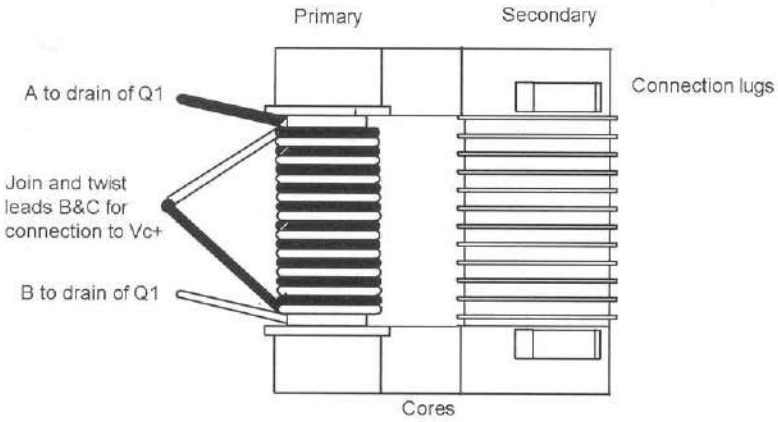

#18 solid magnet wire can be used however high frequency LITZ wire will give a slight improvement. You can make this wire by obtaining 6 pieces of #26 magnet wire and twist together as a single wire.

Figure 18-3 *T1 Transformer construction*

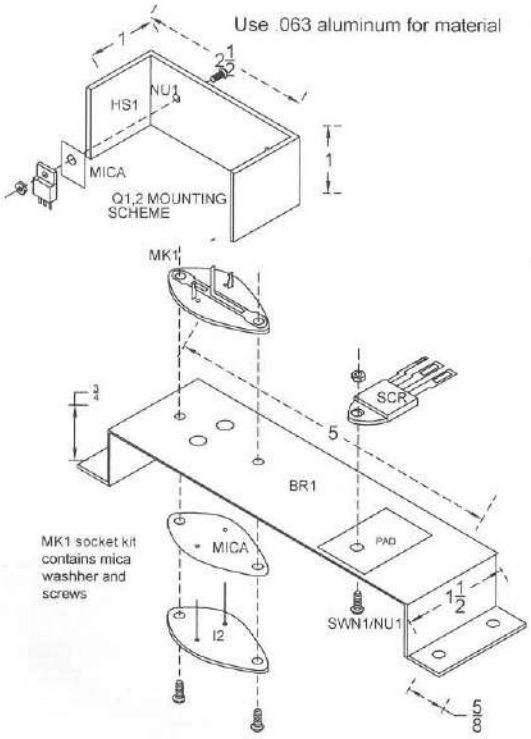

Figure 18-4 *Assembly of brackets*

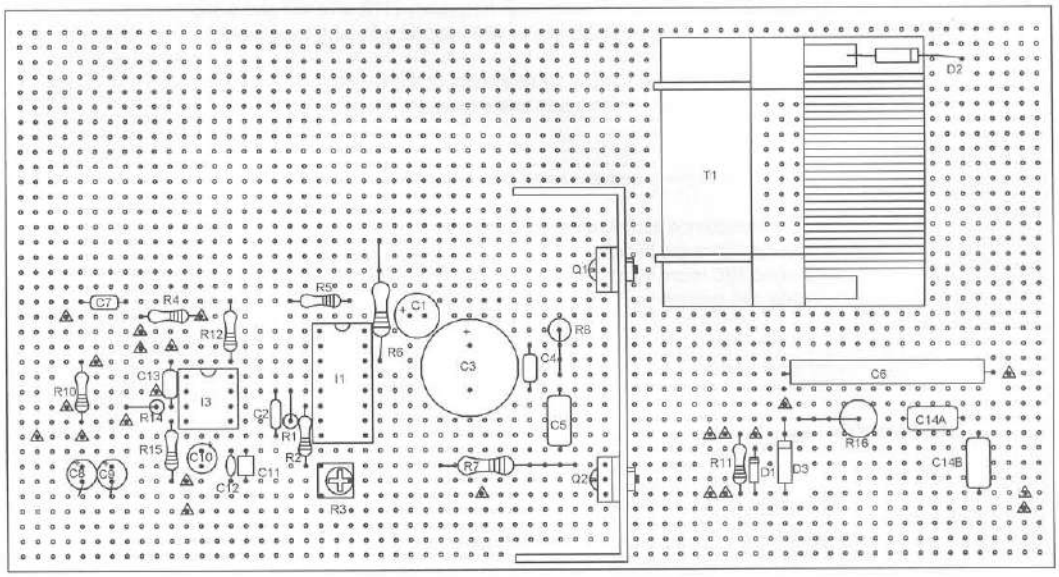

Figure 18-5 *Assembly board and parts location*

Attach I2 using the socket assembly kit (MK1) and attach the SCR using a nylon screw and an insulating pad (PAD).

4. Cut a piece of .1 × .1 grid perforated circuit board (PB1) at 7 × 3.8 inches.

5. Insert the components as shown in Figure 18-5, starting from the lower left-hand corner. Count the perforated holes for a guide. Note the polarity marks on C1, C3, C8, C9, and C10 and diodes D1, D2, and D3. It is suggested that you use sockets SO16 for I1 and SO8 for I3.

6. Wire the components as shown in Figure 18-6 using the leads of the actual components as the connection runs, which are indicated by the dashed lines. Always avoid bare-wire bridges and messy solder joints. Check for cold or loose solder joints and secure T1 using double-sided sticky tape or plastic tie wraps.

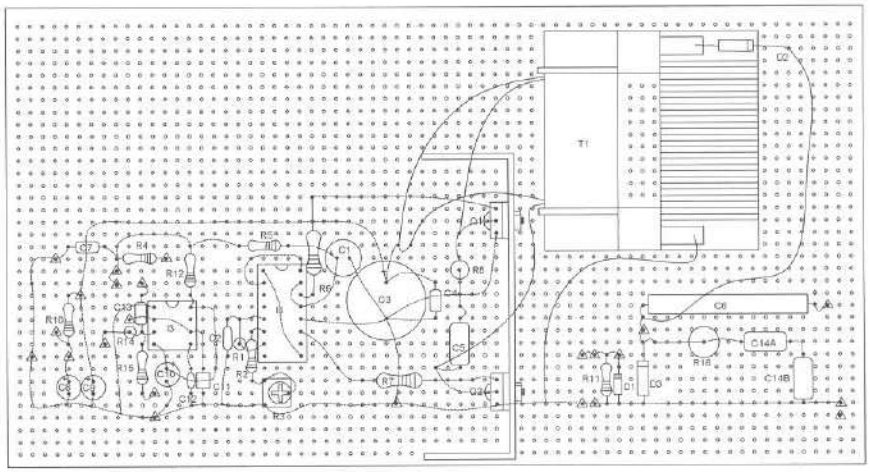

Figure 18-6 *Internal onboard wiring*

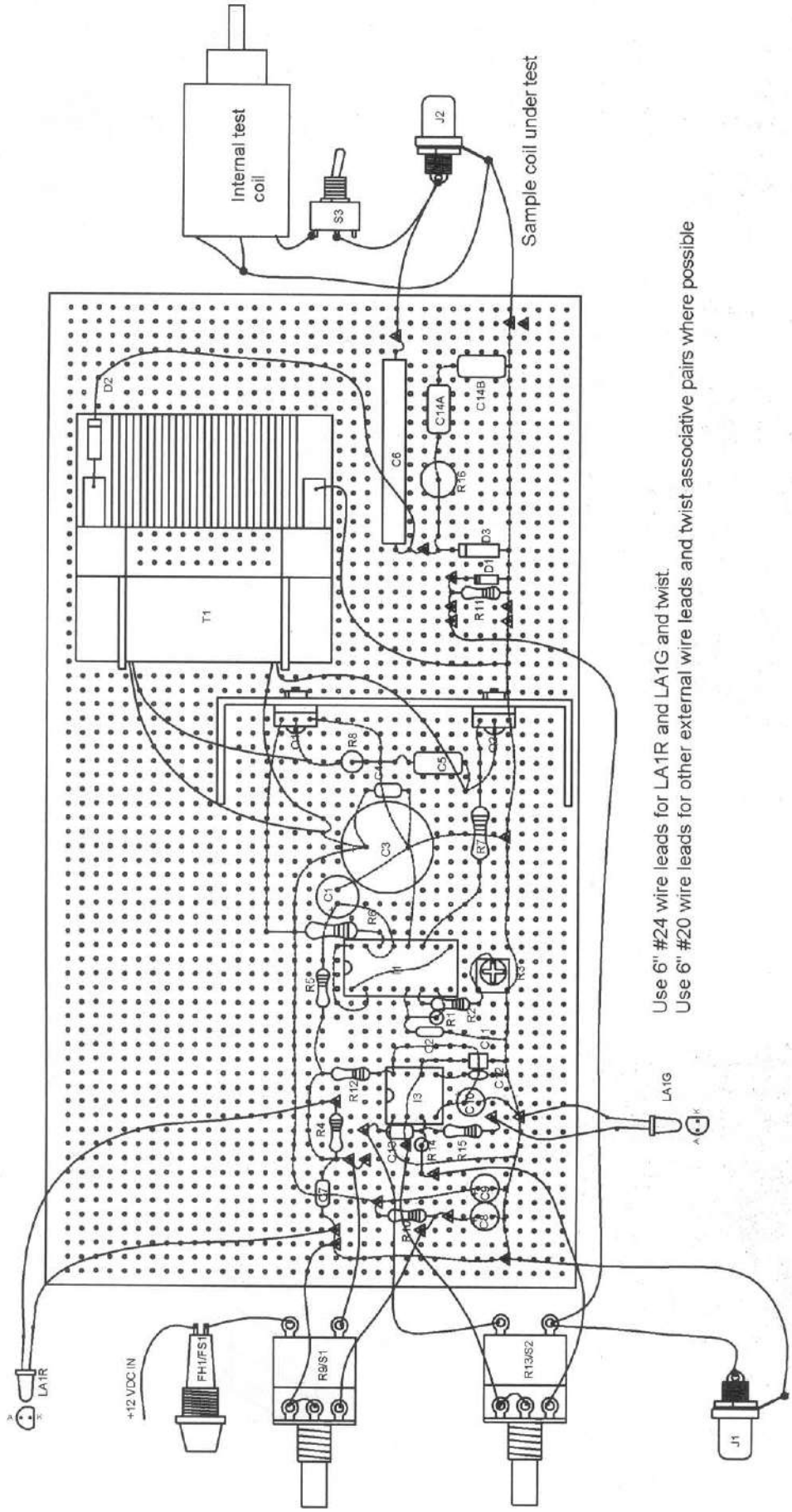

Figure 18-7 *External wiring to controls and input*

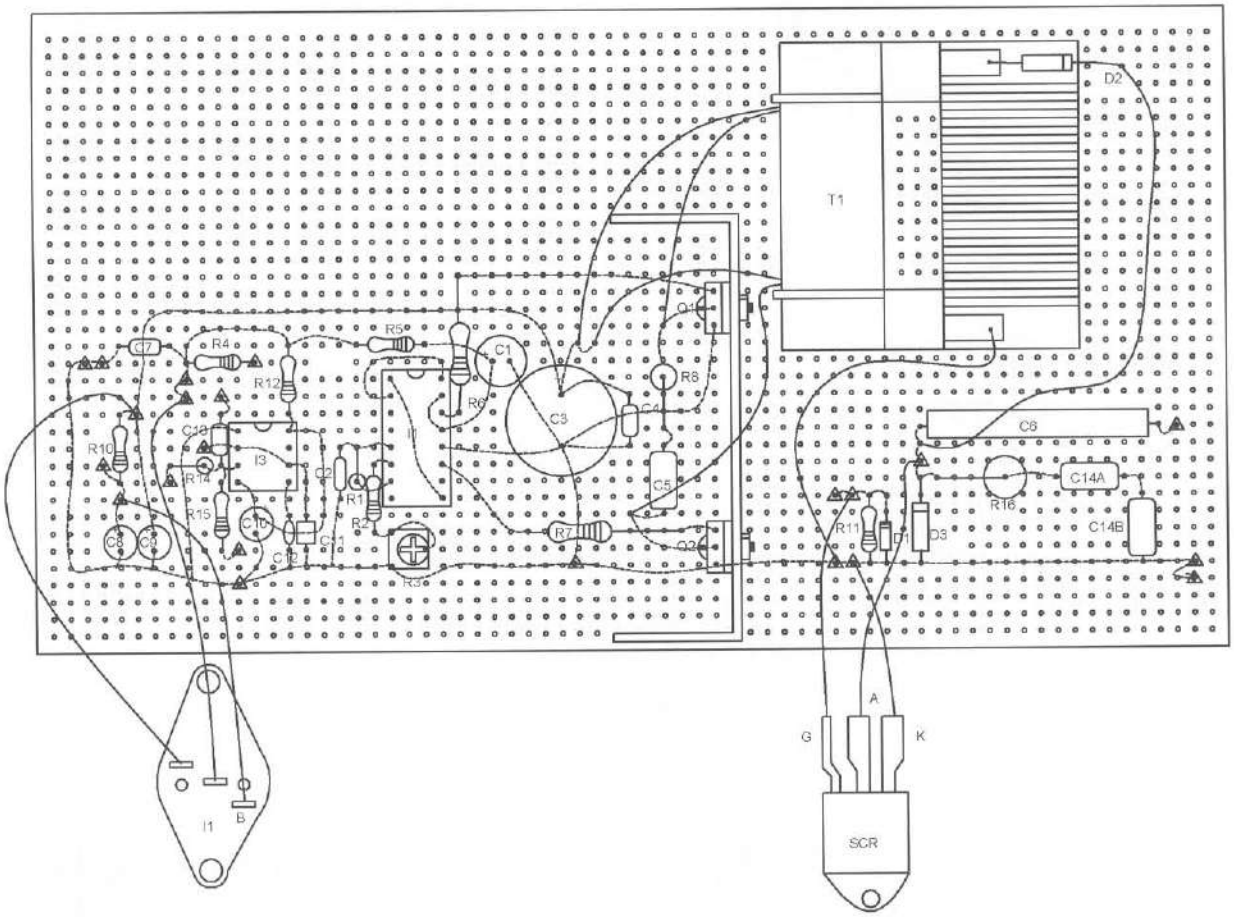

Figure 18-8 *External wiring to transistor modules*

The external coil of choice is connected to J3 using short lengths of #18 wire. It is a good idea to rig a ground return for the output spark to jump to. Always use one of the primary leads of the external coil as the ground return point. Other points used for ground may cause voltage loops that can damage the unit. We use a dedicated gap with connection leads containing clips. The gap is adjustable from ½ to 3".

S3 disables the internal test coil.

J1 is intended for input from an external trigger and requires R13 to be fully off.

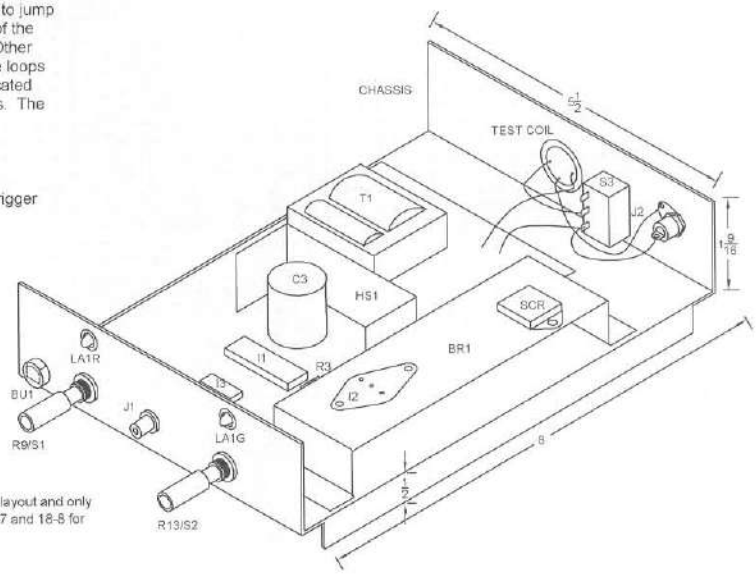

Note this view is intended to show the general layout and only indicates certain components. Use figures 18-7 and 18-8 for wiring of the specific parts as shown

Figure 18-9 *Final assembly*

7. Wire the external components as shown in Figure 18-7.

8. Wire the transistors from the assembled bracket, as shown in Figure 18-8 and detailed in Figure 18-4.

Fabricate the mounting chassis at the overall dimensions shown in Figure 18-9. Trial-fit the remaining components, proceeding to drill and locate with the proper sized holes. Attempt to follow the figure and note the position of the BR1 bracket assembly and front panel controls. Route and twist all lead pair to neaten appearance. You may want to splice in some output leads to replace the connections to the test pulse transformer T2. These should be #18 wire and as short as physically possible to the external ignition coil. Also create a suitable cover if required and ventilate it with holes for air cooling.

Test Steps

This step will require basic electronic laboratory equipment, including a 60 MHz oscilloscope.

1. Turn off both controls R9 and R13. Set the R3 trimpot at midrange.

2. Connect a scope to TP2 and a voltmeter to TP1.

3. Apply 12 VDC to the input leads and turn on R9/S1. Adjust the meter for 5 volts and adjust the period of the waveshape at TP2 to a 25 us period. The input current should be less than .2 amps on a 12-volt power supply.

4. Note that the LED indicators are on with LA1G flashing at the pulse repetition rate determined by the R13 setting. This occurs even with R13/S2 fully off.

5. Turn on R13 and adjust it for 10 volts. Note the test coil sparking over its outer surface. Rotate R13 and notice the pulse rate increasing. Only operate the test coil to test circuit performance.

Notes on Operation

The unit is intended to drive larger ignition and induction coils. Jack J2 is intended as the output to the external coil under operation.

Note that the test coil must be disabled for external operation and may be disconnected by unsoldering or using a suitable high-current switch that may be mounted on the rear panel adjacent to J2.

When using unknown coils, it is advised that you monitor the DC voltage across the SCR. It should never exceed 400 volts, as the storage capacitor will be overrated. The SCR can handle up to 800 volts.

A change occurs in the charging voltage as the pulse repetition rate is changed. It decreases as the repetition rate increases. You can compensate for this by adjusting R9, but you must be careful to turn it down before lowering the repetition rate. Always start with the voltage control R9 at the lowest setting and increase as necessary. Additionally, jack J1 is intended for external triggering and must be used with R13/S2 in the off position.

Table 18-1 Parts List for CDI Driver

Ref. #	Description	DB Part #
R1, 5, 6, 7, 11, 12	Six 10-ohm 1/4-watt resistors (br-blk-blk)	
R2, 14	Two 1K, 1/4-watt resistors (br-blk-red)	
R3	5K horizontal trimmer	
R4, 15	Two 470 ohm, 1/4-watt resistors (yel-pur- br)	
R8	15-ohm, 3-watt metal oxide resistor	
R9/S1, R13/S2	Two 10K pots and switches	
R10	220-ohm 1/2-watt resistor (red-red-br)	
R16	12-ohm, 2-watt metal oxide resistor	
Rx	Select a 1/4-watt resistor to shunt R9 to improve range	
C1	100-microfarad, 25-volt vertical electrolytic capacitor	
C2	4,700-picofarad, 50-volt polyester capacitor	
C3	2,200-microfarad, 25-volt vertical electrolytic capacitor	
C4, 7, 13	Three .1-microfarad, 50-volt polyester capacitors	
C5	.0033-microfarad, 250-volt polypropylene capacitor	
C6	3- to 5-microfarad, 350-volt polyester capacitor	DB# 3.9M/350
C9	1-microfarad, 25-volt vertical electrolytic capacitor	
C8, 10	Two 10-microfarad, 25-volt vertical electrolytic capacitors	
C11	.47-microfarad, 50-volt polyester capacitor	
C12	.01-microfarad, 50-volt disc capacitor	
C14	.05-microfarad, 400-volt metalized polypropylene	
I1	*Integrated circuit* (IC) driver and pulse-width modulator (LM3525)	
I2	1.5-amp adjustable voltage regulator (LM317)	
I3	Timer *dual inline package* (DIP) IC (LM555)	
Q1, 2	Two 100-volt *metal-oxide-semiconductor field effect transistors* (MOSFETS) (IRF540)	
SCR1	70-amp, 700-volt *silicon-controlled rectifier* (SCR)	DB# S8070W
D1	IN914 small-signal diode	
D2, 3	Two IN4937 fast-recovery, 1,000-volt, 1-amp diodes	
LA1R	Red *light-emitting diode* (LED)	
LA1G	Green LED	
T1	Inverter high-voltage transformer, as shown in Figure 18-3	DB# TRANCDI
T2	20-kilovolt pulse transformer (see text)	DB# CD25B
FH1	Panel-mount fuse holder	
FS1	3-amp fuse	
J1, 2	RCA phono jack	
S3	*Single pole, single throw* (SPST) 5-amp or more toggle switch	
PB1	7 × 3.8 × .1-inch perforated circuit vector board	
SOCK8	Eight-pin IC socket	
SOCK16	16-pin IC socket	
MK1	TO3 transistor mounting kit	
PAD	Thermo pad insulator	
CHASSIS	#20-gauge aluminum chassis, as shown in Figure 18-9	
HS1	Heatsink, as shown in Figure 18-4	
BR1	Transistor-mounting bracket, as shown in Figure 18-4	
MICA	Two Mica insulating pads for Q1 and Q2	
SWN1	Two 6-32 × 1/2-inch nylon screws	
SW1	6-32 × 1/2-inch screws	
NU1	Seven 6-32 nuts	
WIRE20B	12 inches of #20 bus wire	
WR20	Six feet of #20 vinyl hookup wire	
BU1	Small clamp bushing	
BU2, 3	Two 3/8-inch plastic bushings for LED	

Chapter Nineteen

Long-range Telephone Conversation Transmitter

Figure 19-1 shows a device that allows the user to monitor a phone's incoming and outgoing calls without any connecting wires. The system is intended to transmit both sides of a telephone conversation to any FM radio or headset-type receiver, such as a Walkman radio. It allows the user to perform outside activities such as mowing the lawn or working outside the house while completely monitoring the telephone over the radio.

The unique feature of this device is that activation occurs only when the phone is off the hook. This eliminates transmitting a continuous signal, thus preventing potential interference and unnecessarily wearing down the batteries. It also eliminates dead-tape listening time, as now the tape only records voices when the telephone is used. You may also listen to a radio station while monitoring the telephone. When the phone is used, the radio station is replaced by the transmission of the unit.

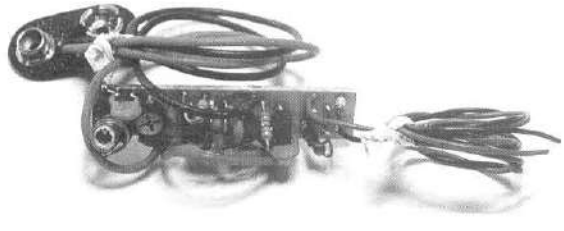

Figure 19-1 *Wireless circuit*

The device is shown assembled on a perforated circuit board and may be housed in a small plastic enclosure. Potting (or encapsulating with epoxy) and sealing is at the discretion of the builder.

Circuit Description

This chapter shows how to build a mini-powered FM transmitter that transmits both sides of a telephone conversation to a nearby FM radio. The circuit consists of a *radio-frequency* (RF) oscillator section combined with a telephone-activated switch section that controls the oscillator power (see Table 19-1). Transistor Q1 forms a relatively stable RF oscillator whose frequency is determined by the values of coil LI and tuning capacitor C4. The C4 setting determines the desired operating frequency and is in the standard FM broadcast band with tuned circuit design, favoring the high end up to 110 MHz. Capacitor C2 supplies the necessary feedback voltage developed across resistor R3 in the emitter circuit of Q1, sustaining an oscillating condition. Resistors R1 and R2 provide the necessary bias of the base emitter junction for proper operation, while capacitor C1 bypasses any RF to ground fed to the base circuit. Capacitor C3 provides an RF return path for the tank circuit of L1 and C4 while blocking the DC supply voltage fed to the collector of Q1 (see Figure 19-2).

You will note that the junction of the base bias resistors R1 and R2 is a feed point consisting of capacitor C5 and resistor R4. This point is where the speech voltage from the telephone is applied. Because of the nature of the oscillator frequency being subject to change by varying the base bias condition, a varying AC voltage superimposed at this point causes a corresponding frequency shift (FM) along with an amplitude-modulated (AM) condition. It is this property that allows the circuit to be FM modulated by the speech occurring on the telephone lines. The signal is clearly detected by any FM receiver when properly tuned.

Be aware that before the phone receiver is lifted off the hook, a DC voltage of approximately 50 volts along with some AC hum is measured across the green and red wires of the phone line. This 50 volts is used to keep transistors Q2 and Q3 "off" by preventing forward biasing of the Q2 junction. The zener diode Z1 reverse voltage is exceeded as long as the voltage on the telephone lines remains above the zener voltage. When the phone is off the hook, the voltage is now below the zener voltage, and resistor R5 now biases Q2 "on," which turns Q3 on and clamps the common return of the oscillator to the negative of the battery, commencing operation by turning on.

Note that Q2 and Q3 make a simple DC switch that produces a minimal battery current during the on-hook conditions. When the receiver is lifted, commencing normal conversation, this DC voltage drops to less than 10 volts, and an existing AC voltage corresponding to the speech conversation now modulates the oscillator as described. You will also note Q2 and Q3 being a simple DC switch that only allows a minimal battery current during the on-hook condition.

Capacitor C5 is necessary to block the DC component of the phone line when an on-hook condition exists and allows little attenuation of the varying AC speech voltage. Resistor R4 is necessary for attenuation of this speech voltage that could cause overmodulation and unnecessary serious sidebands if not properly selected.

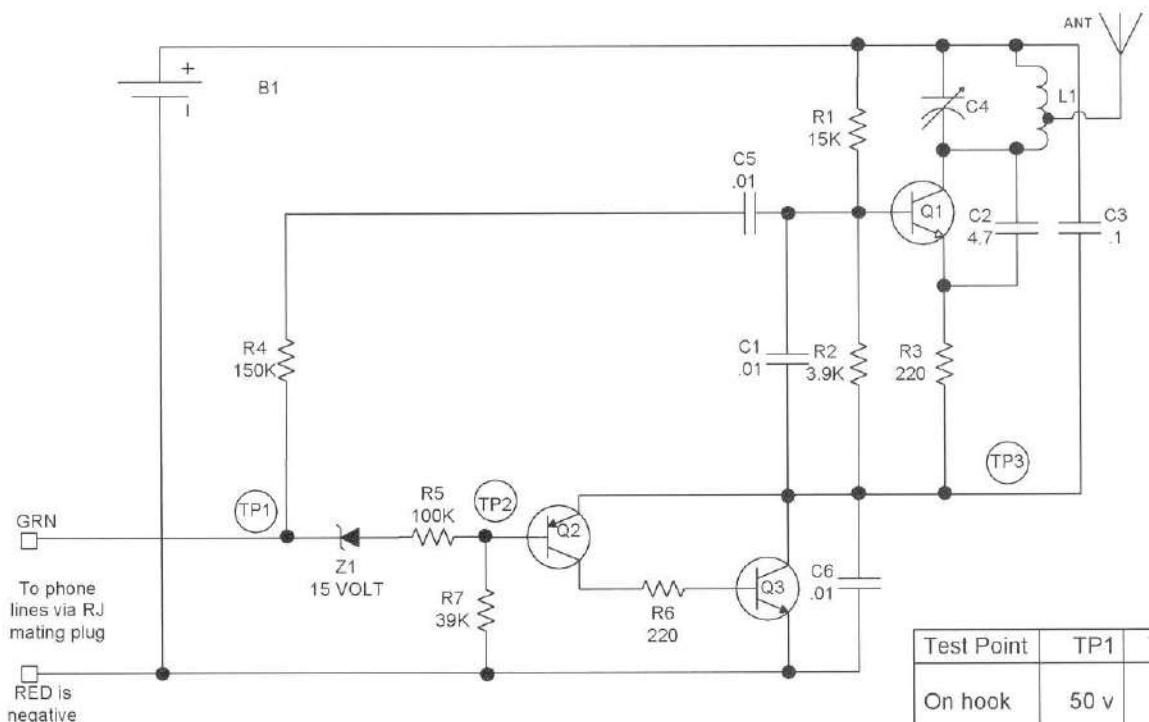

Test Point	TP1	TP2	TP3
On hook	50 v	10 v	9 v
Off hook	8 v	.7 v	.1 v

Measured from negative battery lead

Figure 19-2 *Circuit schematic*

Assembly of the Circuit Board

Assemble the circuit as shown in Figure 19-3.

1. Fabricate a piece of .1-inch grid perforated board to a size of 2 × 1 inches.
2. Form L1 by tightly wrapping eight turns of #16 bus wire on a #8 wood screw. This produces an eight-turn coil with an inner diameter of approximately .135 inches and is about .625 inches in length. Insert it in the proper hole and solder as shown.
3. Insert trimmer capacitor C4 into the holes as shown. You may put this component on either side of the PC board. This choice is up to you and should be determined by the final packaging scheme you require. Three holes are available for the part, with two of them electrically the same point. This is necessary as some trimmers may have three pins. Make sure that the common pins are connected to the same electrical points with the odd pin to the other point.
4. If you are building from a perforated board, it is suggested that you insert components starting in the lower left-hand corner. Pay attention to the polarity of the capacitors with polarity signs and all the semiconductors. Route the leads of the components as shown and solder as you go, cutting away unused wires. Attempt to use certain leads as the wire runs or use pieces of the #24 bus wire. Follow the dashed lines on the assembly drawing as these indicate connection runs on the underside of the assembly board.
5. Attach the external leads of battery clip CL1 and the RJ cable and plug them into the phone connection jack.
6. Double-check the accuracy of the wiring and the quality of the solder joints. Avoid wire bridges, shorts, and close proximity to other circuit components. If a wire bridge is necessary, sleeve some insulation onto the lead to avoid any potential shorts.
7. Tune an FM receiver to a fairly strong station at the high end of the band (108 MHz or higher). Turn up the volume and position it at a distance of 25 to 50 feet.
8. If a multimeter or 50-milliamp meter is available, connect it in series with the battery lead.

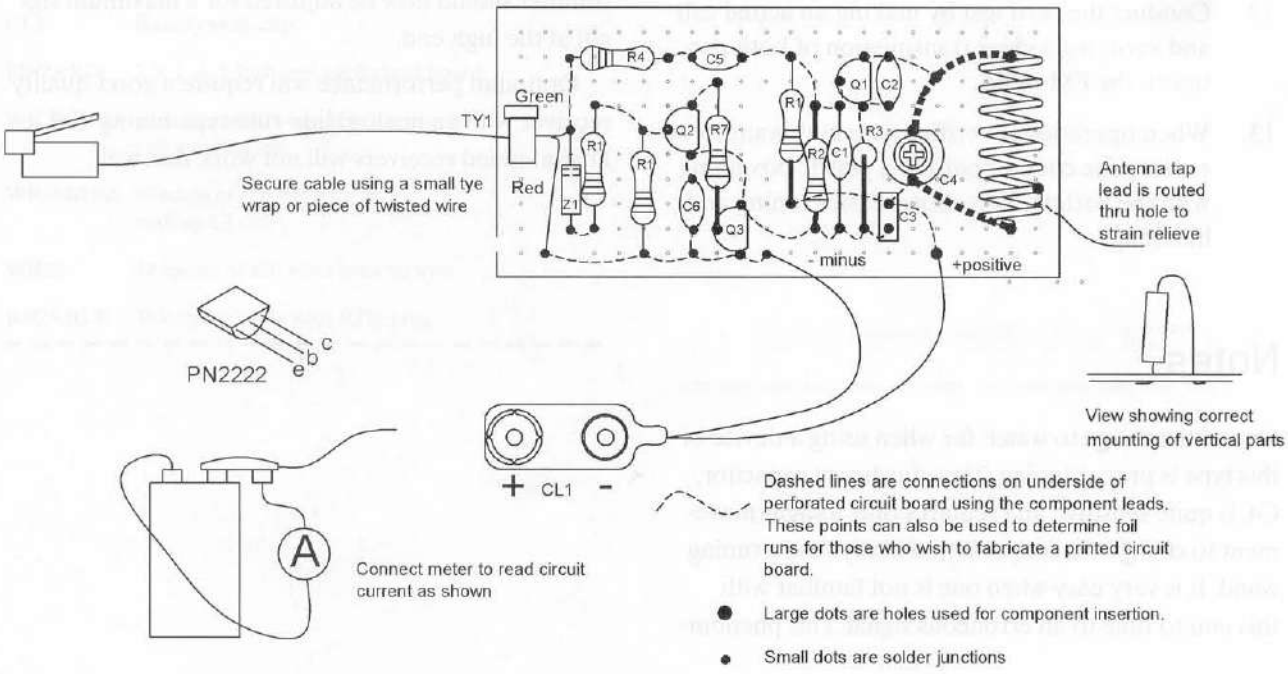

Figure 19-3 *Assembly of circuit board*

This can be done by removing one of the clip fasteners and connecting the meter to the free contacts, as shown in Figure 19-3. The meter should read 5 to 7 milliamps. Use a short piece of bare wire to touch the coil L1 a turn at a time, starting from the C3 end. Note that as you progress turn by turn away from C3 that the indicated meter current will drop or change.

9. Connect the operating unit to the phone line with the phone on hook and notice the meter reading dropping to almost nothing. You may have to reverse the connections to the phone lines. Check the following voltage points indicated on the schematic to verify proper circuit operation, as shown in Figure 19-2.

10. Take the phone off the hook and tune C4 with a tuning wand until you hear the telephone tone. It may be difficult at first to spot the signal as this adjustment is very touchy. It is important to know that several spots in the adjustment may be erroneous and will be weak and unstable. The correct signal will be strong, stable, and clear, and it can be verified by distance-of-transmission testing.

11. Once the desired setting of C4 is found, the position should be marked on the adjustment capacitor with the frequency noted.

12. Conduct the final test by making an actual call and verifying a clear transmission of both parties to the FM radio.

13. When operation is verified, you may want to enclose the circuit board in a plastic box along with the battery. This allows easier tuning and handling.

Notes

One of the things to watch for when using a device of this type is proper tuning. The adjustment capacitor, C4, is quite sensitive and requires only a slight movement to change the frequency, so always use a tuning wand. It is very easy when one is not familiar with this unit to tune to an erroneous signal. This phenomenon is likely to occur when the unit is close to the monitoring receiver. As stated previously, an erroneous signal will be weak, distorted, and unstable (often it is mistaken for the main signal and the unit is blamed for poor performance), and the main signal will be strong, stable, and undistorted, if modulated.

Several experiments in tuning the unit should be done before attempting to use it for the desired application. Also, whenever possible, the unit should be used around 108 to 109 MHz, which is at the boundary of the aircraft band and upper FM broadcast band. When the approximate desired spot is found, final touchup tuning should be done at the receiver end for clarity. In most areas, these upper frequencies are clear and allow uninterrupted use in contrast to the lower ones in the FM band where a slight change in frequency from a clear spot results in the unit being drowned out by a strong broadcast station. Do not go above 108 MHz if near an airport or air traffic lane.

Most available FM radios can easily be detuned slightly to shift the dial readings down to where the dial reading of 108 MHz is actually 109 MHz. This is accomplished by carefully adjusting the "oscillator," the padding trimmer located on the main tuning capacitor, and "walking" a known station down the necessary megahertz or two. An antenna-peaking trimmer should now be adjusted for a maximum signal at the high end.

Optimum performance will require a good-quality receiver with an analog slide-rule-type tuning dial. Digital tuned receivers will not work that well.

Table 19-1 Long-Range Phone Conversation Transmitter Parts List

Ref. #	Description	DB Part #
R1	15K, 1/4-watt resistor (br-gr-or)	
R2	3.9K, 1/4-watt resistor (or-wh-red)	
R3, 6	Two 220 ohm, 1/4-watt resistor (red-red-br)	
R4	150K, 1/4-watt resistor (br-gr-yel)	
R5	100K, 1/4-watt resistor (br-blk-yel)	
R7	39K, 1/4-watt resistor (or-wh-or)	
C1, 5, 6	Three .01-microfarad, 50-volt disc capacitors	
C2	4- to 6-picofarad small silver mica disk (4.7)	DB# 4.7P
C3	.1-microfarad, 50-volt disc capacitor	
C4	6- to 35-picofarad trimmer capacitor	DB# 635P
Z1	15-volt zener diode (1N5245)	
Q1, 3	Two PN2222 NPN general-purpose transistors	
Q2	PN2907 PNP general-purpose transistor	
L1	Coil wound as described in assembly steps	DB# COIL8T
CL1	Battery snap clip	
PBOARD	2 × 1 × .1-inch grid perforated board	
WR24BUSS	12 inches of #24 bus wire for wiring and antenna tap	
WR16BUSS	6 inches of #16 bus wire for making L1 coil	
WR20	24 inches of #20 vinyl hookup wire	
RJCABLE	Telephone cable with RJ11 plug	

Chapter Twenty

Line-Powered Telephone Conversation Transmitter

This project shown in Figure 20-1 is similar to that described in Chapter 19, but this one can be permanently implanted in a telephone and can operate indefinitely, as it does not require batteries. The circuit as shown derives its power from the phone lines once the receiver is lifted off of the hook. Operating range is limited to several hundred feet, far less than the battery-powered version.

The unique features of this device is that it does not require a battery, and activation occurs only when the phone is off the hook. This eliminates transmitting a continuous signal, thus preventing potential interference and eliminates dead-tape listening time. You may also listen to a radio station while monitoring the telephone. When the phone is used, the radio station is replaced by the transmission of the unit. The device is shown assembled on a perforated circuit board and may be housed in a small plastic enclosure. Potting and sealing is at the discretion of the builder.

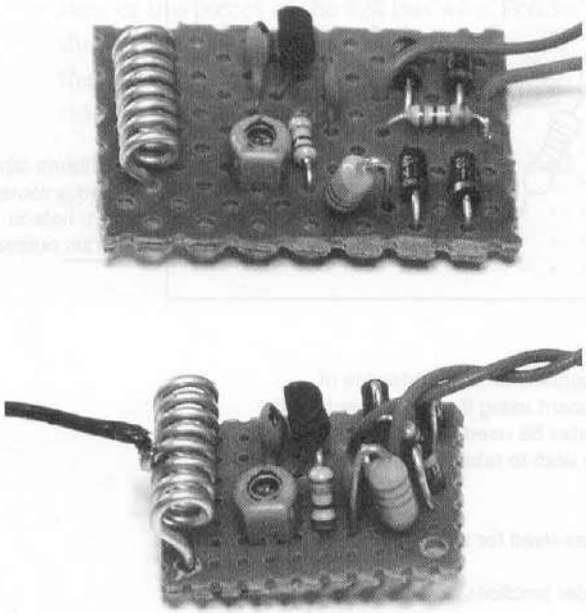

Figure 20-1 *Photograph of circuit*

Circuit Description

This chapter shows how to build a mini-powered FM transmitter that transmits both sides of a telephone conversation to a nearby FM radio. The circuit consists of a *radio-frequency* (RF) oscillator section combined with a telephone power conditioner that powers the oscillator (see Table 20-1). Transistor Q1 forms a relatively stable RF oscillator whose frequency is determined by the value of coil LI and tuning capacitor C3. The setting of C3 determines the desired operating frequency and is in the standard FM broadcast band with tuned circuit design favoring the high end up to 110 MHz. Capacitor C2 supplies the necessary feedback voltage necessary to sustain oscillation. Resistor R2 provides the necessary bias of the base emitter junction for proper operation, while

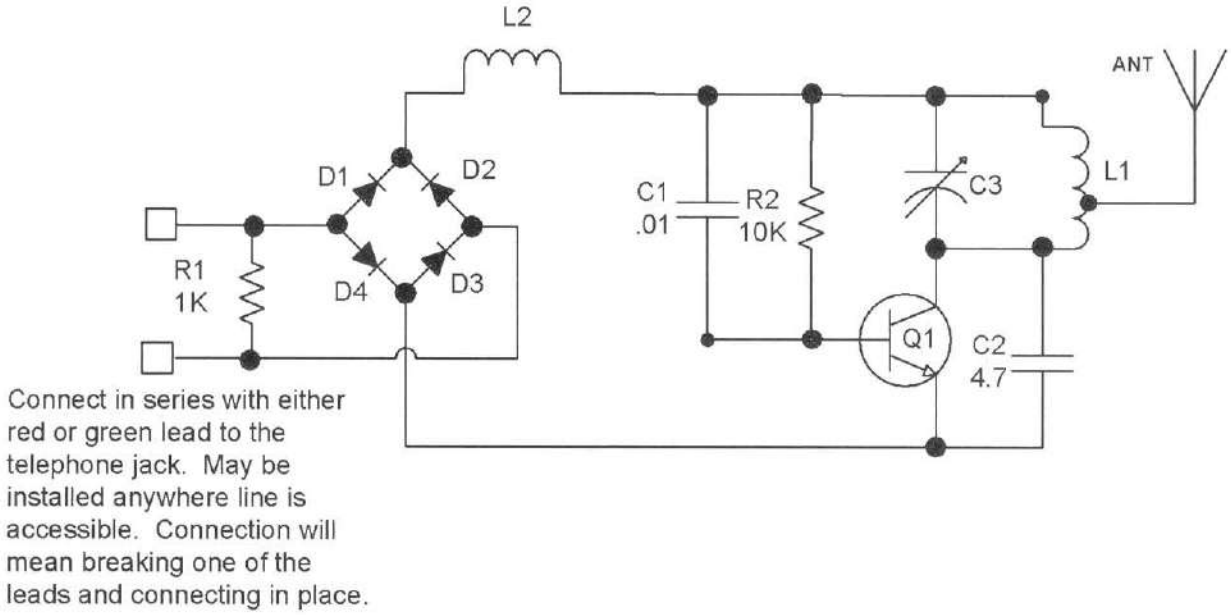

Figure 20-2 *Circuit schematic*

capacitor C1 bypasses any RF to ground. Choke L2 blocks the signal energy from going back to the phone lines yet allows DC power to Q1 (see Figure 20-2).

Connecting the circuit requires breaking one of the lines and connecting the input leads in series with the telephone. It is this method that leaches voltage from the series load resistor R1 when the telephone is in use, as current now flows across R1. The bridge diodes consisting of D1 through D4 polarize the audio voltages necessary to modulate the oscillator.

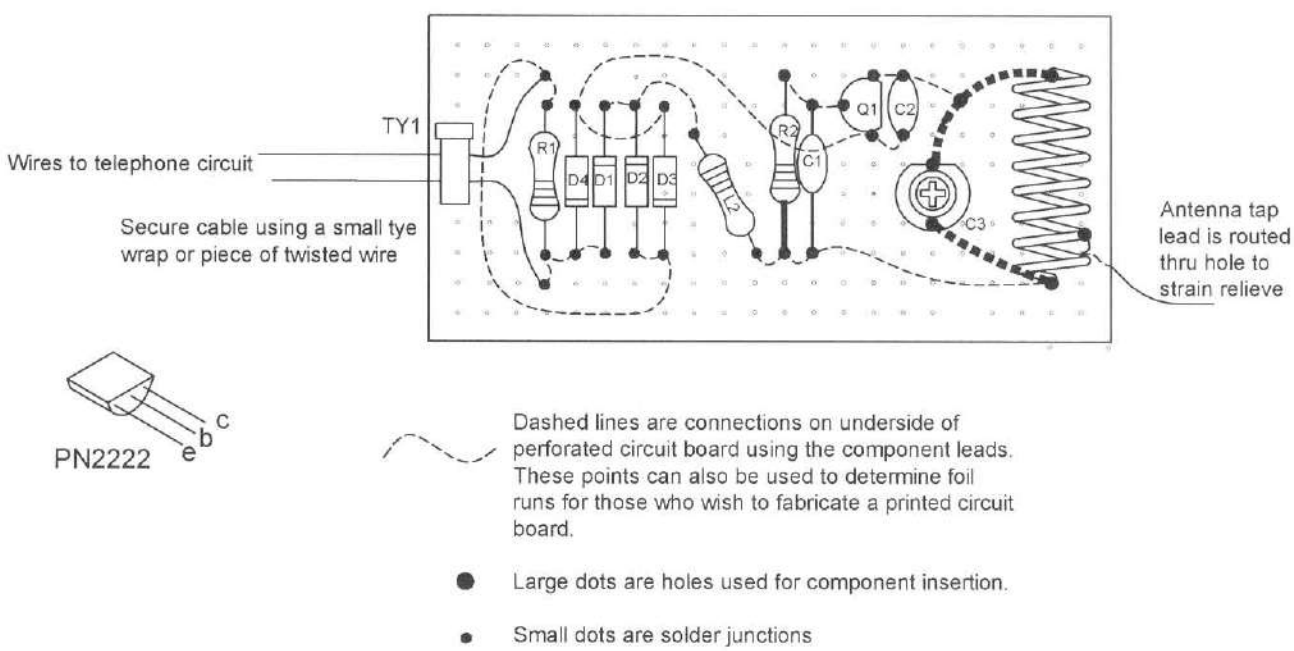

Figure 20-3 *Assembly of circuit board*

Assembly of the Circuit Board

Assemble the circuit as shown in Figure 20-3:

1. Cut a piece of .1-inch grid perforated board to 2 × 1 inches.
2. Form L1 by tightly wrapping eight turns of #16 bus wire on a #8 wood screw. This produces an eight-turn coil with an inner diameter of approximately .135 inches and is about .625 inches in length. Insert it in the proper hole and solder as shown.
3. Insert trimmer capacitor C4 into the holes as shown. You may put this component on either side of the PC board. The choice is up to you and should be determined by the final packaging scheme you require. Three holes are available for the part, with two of them electrically the same point. This is necessary, as some trimmers may have three pins. Make sure that the common pins are connected to the same electrical points, with the odd pin to the other point.
4. If you are building from a perforated board, it is suggested that you insert the components starting in the lower left-hand corner. Pay attention to the polarity of the capacitors that have polarity signs and all the semiconductors. Route the leads of the components as shown and solder as you go, cutting away unused wires. Attempt to use certain leads as the wire runs or use pieces of the #24 bus wire. Follow the dashed lines on the assembly drawing as these indicate connection runs on the underside of the assembly board.
5. Attach the external leads that are connected to the telephone lines.
6. Double-check the accuracy of the wiring and the quality of the solder joints. Avoid wire bridges, shorts, and close proximity to other circuit components. If a wire bridge is necessary, sleeve some insulation onto the lead to avoid any potential shorts.
7. Tune an FM receiver to a fairly strong station at the high end of the band (108 MHz or higher). Turn up the volume and position it 25 to 50 feet away from the transmitter.
8. Connect the operating unit to the phone line with the phone on the hook. Remove the phone and adjust C3 until you hear the dial tone. Tuning the trimmer must be done with an insulating tuning wand. It is best to tune the unit by placing it on a nonconductive surface and securing it with a sponge or a piece of rubber.

   It may be difficult at first to spot the signal as this adjustment is very touchy. Also note that several spots in the adjustment may be erroneous and will be weak and unstable. The correct signal will be strong, stable, and clear and can be verified through distance-of-transmission testing.
9. Once the desired setting of C4 is found, it should be marked, with the frequency noted.
10. Conduct a final test by making an actual call and verifying the clear transmission of the FM radio to both parties.
11. When operation is verified, it may be a good idea to enclose the circuit board in a plastic box. This allows easier tuning and handling.

Notes

Please see notes in Chapter 19.

Table 20-1 Line-Powered Telephone Conversation Transmitter Parts List

Ref. #	*Description*	*DB Part #*
R1	1K 1/4-watt resistor (br-blk-red)	
R2	10K 1/4-watt resistor (br-blk-or)	
C1	.01-microfarad, 50-volt disc capacitor	
C2	4- to 6-picofarad small silver mica disk (4.7)	DB# 4.7P
C3	6- to 35-picofarad trimmer capacitor	DB# 635P
D1–4	100-volt diodes IN4002	
Q1	PN2222 NPN general-purpose transistor	
L1	Coil wound as described in assembly steps	DB# COIL8T
L2	3.6 microhenry inductor	DB# 3.6U
PBOARD	2 × 1 × .1-inch grid perforated board	
WR24BUSS	12 inches of #24 bus wire for wiring and antenna tap	
WR16BUSS	6 inches of #16 bus wire for making L1 coil	
WR20	24 inches of #20 vinyl hookup wire	

Chapter Twenty-One

Remote Wireless FM Repeater

Figure 21-1 shows a wireless FM transmitter designed to transmit the output of a tape recorder, VCR, DVD, or any device having composite audio and video outputs to a nearby radio or TV tuned to the unit's frequency. Assembly is built on a piece of circuit board and may be placed in any suitable plastic container along with a 9-volt battery.

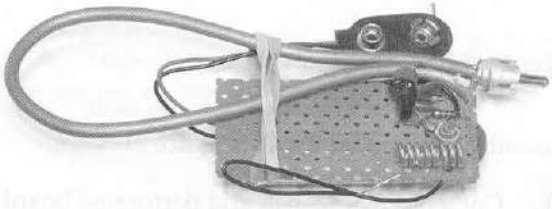

Figure 21-1 *The completed device*

Circuit Description

The parts for this project are listed in Table 21-1. Transistor Q1 forms a relatively stable *radio-frequency* (RF) oscillator whose frequency is determined by the value of coil L1 and tuning capacitor C4. The C4 setting determines the desired operating frequency and is in the standard FM broadcast band with tuned circuit design favoring the high end up to 110 MHz. Capacitor C2 supplies the necessary feedback voltage developed across emitter resistor R3 in the emitter circuit of Q1, sustaining an oscillating condition. Resistor R1 and R2 provide the necessary bias of the base emitter junction for proper operation, while capacitor C1 bypasses any RF to ground fed to the base circuit. Capacitor C9 provides an RF return path for the tank circuit of L1 and C4 while blocking the DC supply voltage fed to the collector of Q1 (see Figure 21-2). R4 is connected in series with DC-blocking capacitor C5 to the input cable and plug.

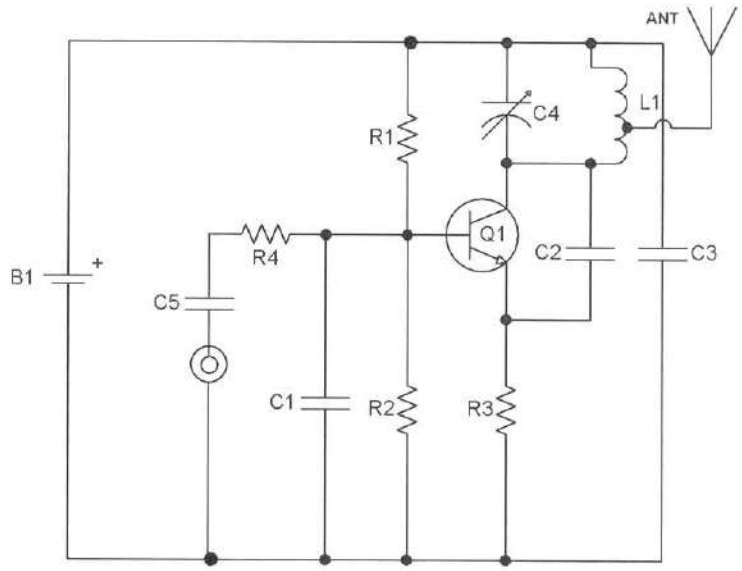

Figure 21-2 *Circuit schematic*

Assembly

Assemble the circuit as shown Figure 21-3.

1. Cut a piece of .1-inch grid perforated board to a size of 2 × 1 inches.
2. Form L1 by tightly wrapping eight turns of #16 bus wire on a #8 wood screw. This produces an eight-turn coil with an inner diameter of approximately .135 inches and a length of .625 inches. Insert it in the proper hole and solder as shown.
3. Insert trimmer capacitor C4 into the holes as shown. You may put this component on either side of the PC board. This choice is up to you and should be determined by the final packaging scheme you require. Three holes are available for the part with two of them electrically the same point. This is necessary, as some trimmers may have three pins. Make sure that the common pins are connected to the same electrical points with the odd pin to the other point.
4. If you are building from a perforated board, it is suggested that you insert components starting in the lower left-hand corner. Pay attention to the polarity of the capacitors that have polarity signs and all the semiconductors. Route the leads of the components as shown and solder as you go, cutting away unused wires. Attempt to use certain leads as the wire runs or use pieces of the #24 bus wire. Follow the dashed lines on the assembly drawing as these indicate the connection runs on the underside of the assembly board.
5. Attach the external leads of the battery clip (CL1) and shielded cable (WR10).
6. Double-check the accuracy of the wiring and the quality of the solder joints. Avoid wire bridges, shorts, and close proximity to other circuit components. If a wire bridge is necessary, sleeve some insulation onto the lead to avoid any potential shorts.
7. Tune an FM receiver to a fairly strong station at the high end of the band (108 MHz or higher). Turn up the volume and position the receiver about 25 to 50 feet from the transmitter circuit.
8. If a multimeter or 50-milliamp meter is available, connect it in series with a battery lead. This can be done by removing one of the clip fasteners and connecting the meter to one of the free contacts, as shown in Figure 21-2. The meter should read 5 to 7 milliamps. Pick up a short piece of bare wire and touch coil L1. Touch it a turn at a time, starting from the C3

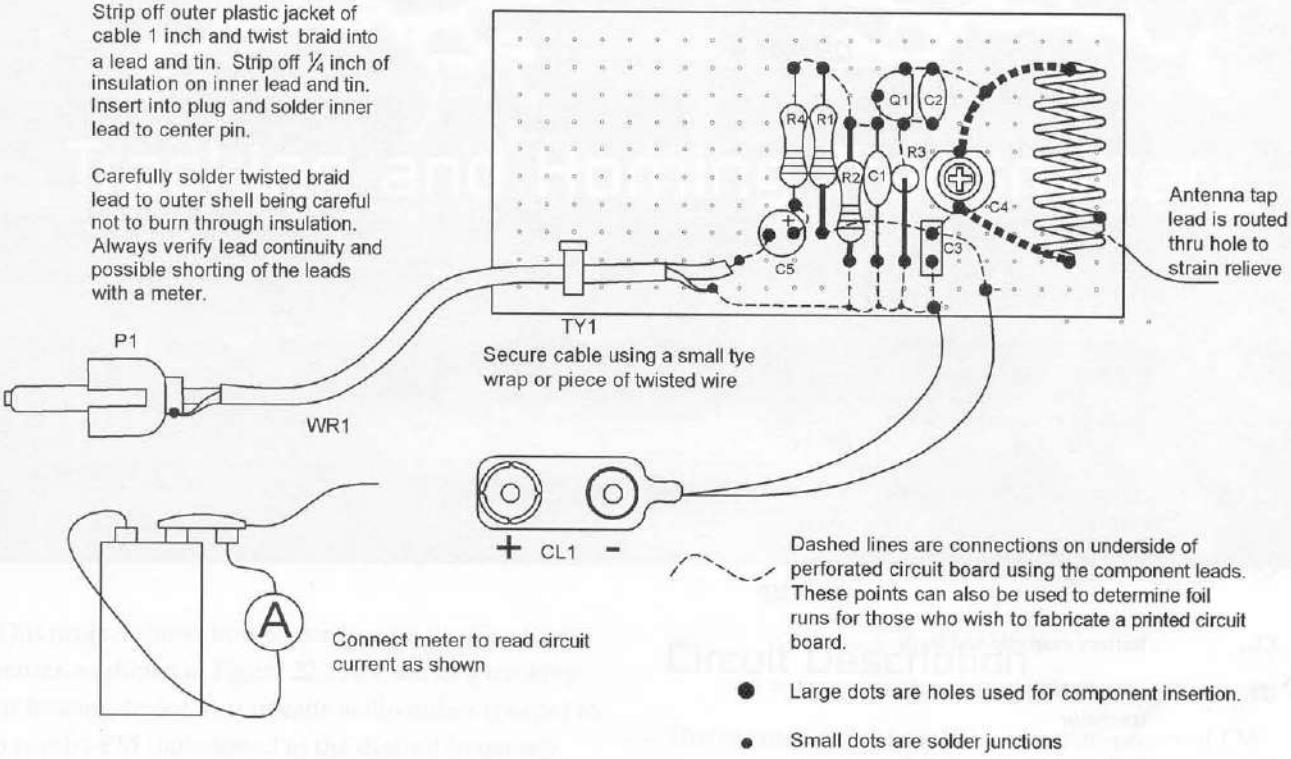

Figure 21-3 *Assembly of board*

end. Note that as you progress turn by turn away from C3 that the indicated meter current will drop or change.

9. Connect the cable into an audio source such as a recorder or another radio. Slowly rotate C4 with an insulated tuning wand until the station being received by the radio is at approximately 108 MHz. It may be difficult at first to spot the signal, as this adjustment is very touchy. Also note that several spots in the adjustment may be erroneous and will be weak and unstable. The correct signal will be strong, stable, and clear and can be verified by distance-of-transmission testing.

10. Once the desired setting of C4 *is* found, it should be marked with the frequency noted.

11. When the operation is verified, it may be desired to pot the assembly as shown. This allows easier tuning and handling.

Notes

Please refer to the notes in Chapter 19 on operation of wireless circuits.

Table 21-1 Remote Wireless FM Repeater Parts List

Ref. #	*Description*	*DB Part #*
R1	15K, 1/4-watt resistor (br-gr-or)	
R2	3.9K, 1/4-watt resistor (or-wh-red)	
R3	220-ohm, 1/4-watt resistor (red-red-br)	
R4	1K, 1/4-watt resistor (br-blk-red)	
C1, 5	Two .01-microfarad, 50-volt disc capacitors	
C2	Small 4- to 6-picofarad silver mica disk (4.7)	DB #4.7P
C3	.1-microfarad, 50-volt plastic capacitor	
C4	6- to 35-picofarad trimmer capacitor	DB #635P
CL1	Battery snap clip and leads	
Q1	PN2222 NPN general-purpose transistor	
L1	Coil wound as described in assembly steps	DB #Coil8T
PBOARD	2 × 1 × .1-inch grid perforated board	
WR24BUSS	12 inches of #24 bus wire for wiring and antenna tap	
WR16BUSS	6 inches of #16 bus wire for making L1 coil	
WR1	12 inches of shielded cable	
P1	RCA phono plug	

Chapter Twenty-Two

Tracking and Homing Transmitter

This project shows how to construct a beeping transmitter, as shown in Figure 22-1, for use as a tracking or homing device. It transmits audio pulses (beeps) to a nearby FM radio tuned to the desired frequency. The unit is intended to be used in transmitter hunt games or as a homing beacon for hunters or hikers. It is suggested that you mark a bearing heading on a small but good-quality FM radio and use it as a low-cost receiver for determining the direction of the signal pickup. The range of the device, when used as a homing device with a quarter-wave vertical placed on top of a metal roof, such as a vehicle, can be in excess of 3 miles when using a quality analog FM receiver.

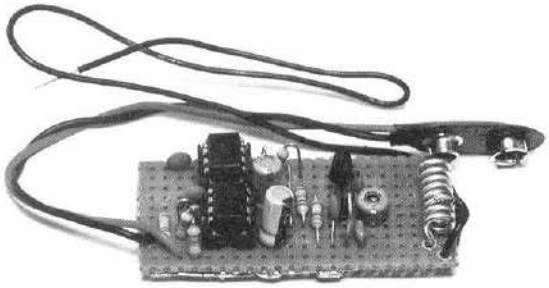

Figure 22-1 *Transmitter circuit*

Circuit Description

This chapter shows how to build a mini-powered FM transmitter that transmits audio pulses for tracking and homing applications (see Figure 22-2). The circuit consists of a *radio-frequency* (RF) oscillator section interfaced with a tone modulator and a pulse-switching section that controls the oscillator power. Transistor Q1 forms a relatively stable RF oscillator whose frequency is determined by the value of coil LI and tuning capacitor C4. The C4 setting determines the desired operating frequency and is in the standard FM broadcast band with the tuned circuit design favoring the high end up to 110 MHz. Capacitor C2 supplies the necessary feedback voltage developed across resistor R3 in the emitter circuit of Q1, sustaining an oscillating condition. Resistors R1 and R2 provide the necessary bias of the base emitter junction for proper operation, while capacitor C1 bypasses any RF to ground fed to the base circuit. Capacitor C3 provides an RF return path for the tank circuit of LI and C4 while blocking the DC supply.

You will note that the junction of the base bias resistors R1 and R2 is a feed point consisting of resistor R4. This point is where the beeping tone from the tone generator chip I2 is applied. Because of the

nature of the oscillator frequency being subject to change by varying the base bias condition, a pulsed voltage superimposed at this point causes a corresponding frequency shift (FM) along with an amplitude modulated shift (AM) condition. It is this property that allows the circuit to be FM modulated, producing the tone frequency. The signal is clearly detected on any FM receiver when the receiver is properly tuned. The tone frequency is the pulse repetition rate of I1 wired as an astable pulse generator. This repetition rate is determined by timing resistor R5 and capacitor C6.

The ratio of beeping on to off time is controlled by chip I1, wired as a free-running astable device with duty cycle control. This function is determined by the ratio of resistors R7 and R8 and timing capacitor C8. The output of I1 controls the bias voltage of oscillator Q1 through resistor R1, turning the oscillator on and off (see Figure 22-2).

Assembly of the Circuit Board

Assemble the circuit as shown in Figure 22-3.

1. Cut a piece of .1-inch grid perforated board to a size of 2 × 1 inches.
2. Form L1 by tightly wrapping eight turns of #16 bus wire on a #8 wood screw. This produces an eight-turn coil with an inner diameter of .135 inches and a length of .625 inches. Insert it in the proper hole and solder as shown.
3. Insert trimmer capacitor C4 into the holes as shown. You may put this component on either side of the PC board. The choice is up to you and should be determined by the final packaging scheme you require. Three holes are available for the part, with two of them electrically the same point. This is necessary, as some trimmers may have three pins. Make sure that the common pins are connected to the same electrical points with the odd pin to the other point.
4. If you are building from a perforated board, it is suggested that you insert components, starting in the lower left-hand corner. Pay atten-

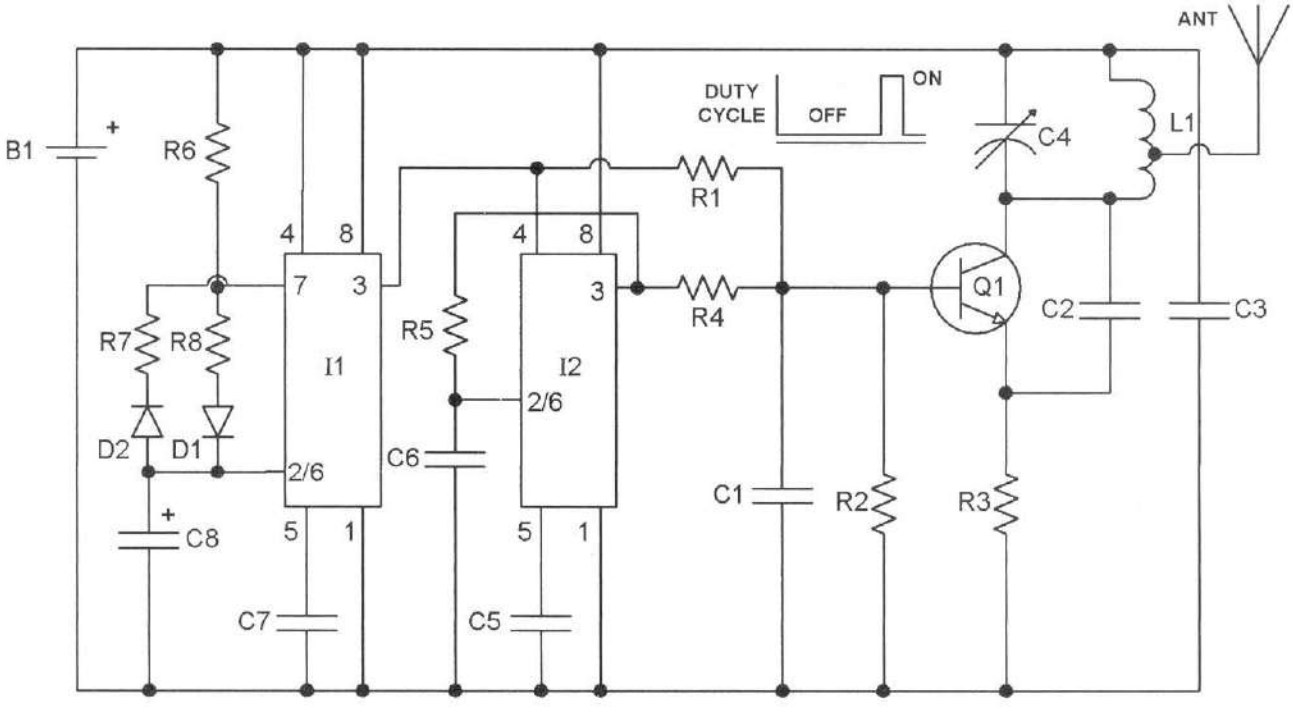

Figure 22-2 *Circuit schematic*

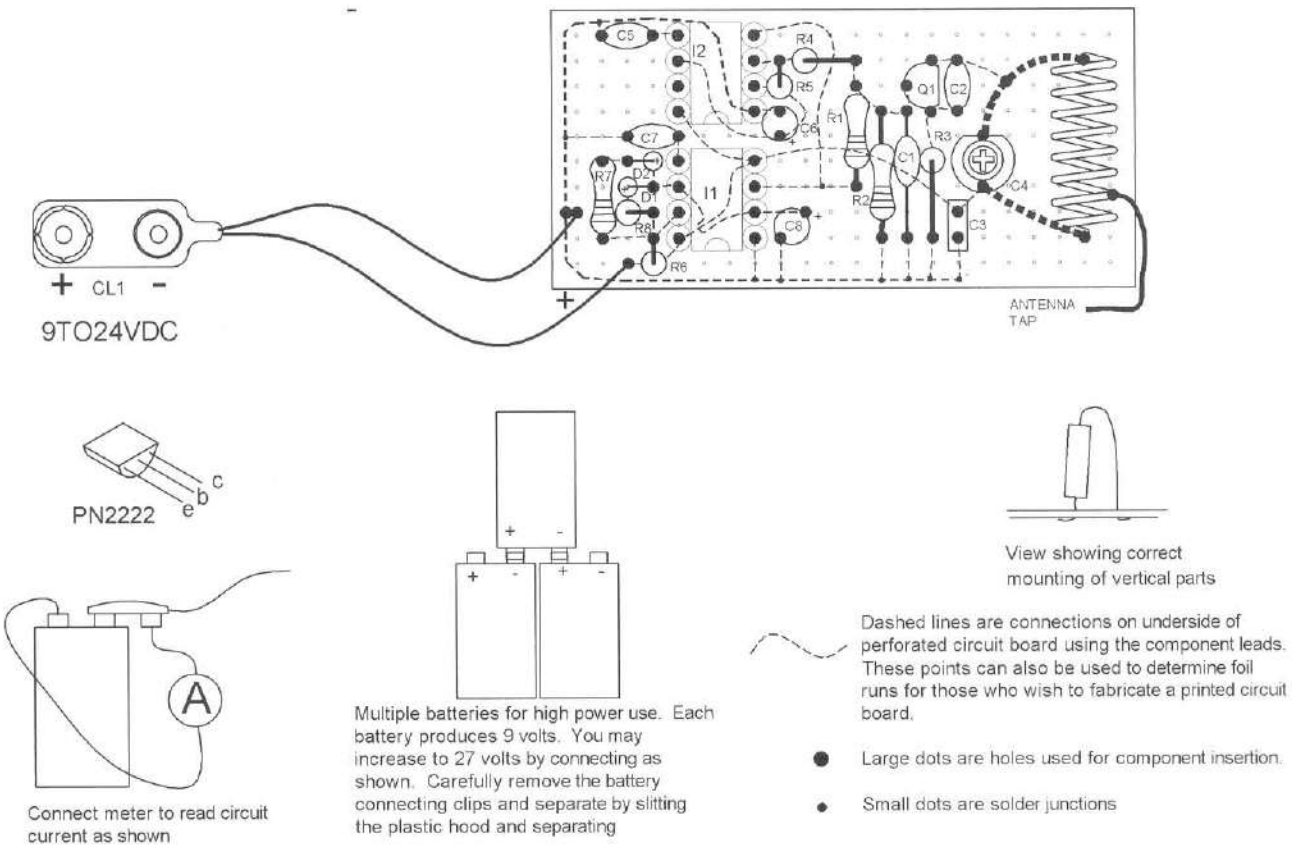

Figure 22-3 *Assembly of the circuit board*

tion to the polarity of the capacitors with polarity signs and all the semiconductors. Route the leads of the components as shown and solder as you go, cutting away the unused wires. Attempt to use certain leads as the wire runs or use pieces of the #24 bus wire. Follow the dashed lines on the assembly drawing as these indicate the connection runs on the underside of the assembly board.

5. Attach the external leads of battery clip CL1.

6. Double-check the accuracy of the wiring and the quality of the solder joints. Avoid wire bridges, shorts, and close proximity to other circuit components. If a wire bridge is necessary, sleeve some insulation onto the lead to avoid any potential shorts.

7. Tune an FM receiver to a fairly strong station at the high end of the band (108 MHz or higher). Turn up the volume and position the receiver 25 to 50 feet from the transmitter circuit.

8. If a multimeter or 50-milliamp meter is available, connect it in a series with a battery lead. This can be done by removing one of the clip fasteners and connect the meter to the free contacts, as shown in Figure 22-2. The meter should read a pulsing of 5 to 7 milliamps. Use a short piece of bare wire to touch the coil L1 a turn at a time, starting from the C3 end. Note that as you progress turn by turn away from C3 that the indicated meter current will drop or change.

9. Tune C4 with an insulated tuning tool until you hear the beeping tone. It may be difficult at first to spot the signal, as this adjustment is very touchy. Also note that several spots in the adjustment may be erroneous and will be weak and unstable. The correct signal will be strong, stable, and clear and can be verified by distance-of-transmission testing.

10. Once the desired setting of C4 is found, it should be marked with alignment marks, with the frequency noted.

11. Finally, test the unit using a good-quality FM analog receiver. Note to place an arrow on the radio once you determine the proper positioning to obtain the maximum signal strength. Do this step from a distance of at least several hundred feet.

12. When operation is verified, it may be desired to enclose the circuit board into a plastic box along with the battery. This allows easier tuning and handling.

Notes

Please see the notes in Chapter 19 on operating.

Table 22-1 Tracking and Homing Transmitter Parts List

Ref. #	*Description*	*DB Part #*
R1	Two 10K, 1/4-watt resistor (br-gr-or)	
R2	3.9K, 1/4-watt resistor (or-wh-red)	
R3	220-ohm, 1/4-watt resistor (red-red-br)	
R5	1K, 1/4-watt resistor (br-blk-red)	
R6	39K, 1/4-watt resistor (or-wh-or)	
R7	100K, 1/4-watt resistor (br-blk-yel)	
R8	22K, 1/4-watt resistor (red-red-or)	
C1, 5, 7	Three .01-microfarad, 50-volt disc capacitors	
C2	Small, 4- to 6-picofarad, silver mica disk (4.7)	DB# 4.7P
C3	.1-microfarad, 50-volt plastic capacitor	
C4	6- to 35-picofarad trimmer capacitor	DB# 635P
C6	.47-microfarad, 25-volt vertical electrolytic capacitor	
C8	4.7-microfarad, 25-volt vertical electrolytic capacitor	
D1, 2	Two 1N914 small-signal diodes	
I1, 2	Two 555 timers in a *dual inline package* (DIP)	
CL1	Battery snap clip and leads	
Q1	PN2222 NPN general-purpose transistor	
L1	Coil wound as described in assembly steps	DB# COIL8T
PBOARD	2 × 1 × .1-inch grid perforated board	
WR24BUSS	12 inches of #24 bus wire for wiring and antenna tap	
WR16BUSS	6 inches of #16 bus wire for making L1 coil	

Chapter Twenty-Three

Snooper Phone Room-Listening Device

Figure 23-1 shows a simple electronic device intended to be an intrusion detector and listening device for checking a home or office while away or on vacation. It may also be used to trigger other electrical devices. The circuitry does not require a tone encoder, so it does not provide selected activation by a particular caller. Thus, it limits the device from being used for illegal purposes and allows the sale of the kit or fully assembled unit without the requirement of special authorization.

This is an intermediate-level project requiring basic electronic skills. Expect to spend $25 to $40. All parts are readily available, with specialized parts obtainable through Information Unlimited (www.amazing1.com), and they are listed in Table 23-1.

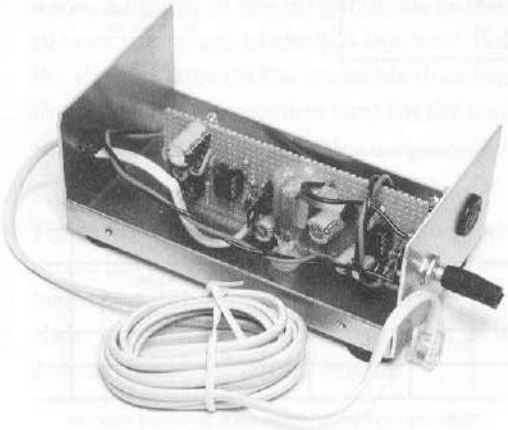

Figure 23-1 *The snooper phone*

Unlike the controversial Infinity transmitter, our system does not utilize decoder and encoder circuitry. Once connected to the phone lines, it will open a microphone to anyone who happens to dial the number. This feature obviously reduces the potential use of the device for illegal interception of oral communication. Even though the phone does not ring, it would not be long before the potential victim of an illegal surveillance would be aware of the setup. It is therefore quite obvious that the applications are strictly limited to use as a security device that checks for unauthorized intrusion or checks household appliances by placing a pickup device in certain favorable locations to overhear these desired sounds and noises. I am sure that anyone with this capability would breathe a sigh of relief to be able to dial his or her home or office phone while being away and hear the familiar sounds of appliances and other systems properly performing their duties and functions.

Circuit Operation

Your circuit consists of a high-gain amplifier (I1) fed into the telephone lines via transformer T1. The circuit is initiated by the action of a voltage transient pulse occurring across the phone line at the instant of

a telephone circuit connection being made. This transient is a voltage change of about 48 to 5 VDC and usually occurs before the ring signal. It is this change that immediately forward-biases diode D1 and triggers pin 2 of timer I2, whose output pin 3 goes positive, turning on transistors Q1 and Q2. Timer I2 now remains in this state for a period depending on the values of timing resistor R12 and the selected value of the capacity determined by the activated time of switch S2. This four-position switch allows time selections of 10, 30, 100, and 1,000 seconds by the selection of the respective capacitors C12 through C15 (see Figure 23-2).

You will note that when Q2 is turned on by timer I2 that a simulated off-hook condition exists by the switching action connecting the 500-ohm winding of the transformer directly across the phone lines. Simultaneously, Q1 clamps the ground of the I1 amplifier to the negative return of battery B1, enabling this amplifier section. System power is controlled by switch S1 being part of the pickup sensitivity control R1.

Electret microphone M1 picks up the sounds fed to operational amplifier I1 with the output coupled by capacitor C6 to the 1,500-ohm winding of T1, and R1 controls the pickup sensitivity of the system. The system described will operate when any incoming call is received without the phone ever ringing.

Construction Steps

If you are a beginner, it is suggested to obtain our *GCAT1 General Construction Practices and Techniques*. This informative literature explains basic practices that are necessary in proper construction of electromechanical kits and is listed in Table 23-1.

1. Lay out and identify all the parts and pieces. Verify them with the parts list, and separate the resistors as they have a color code to determine their value. Colors are noted on the parts list.
2. Cut a piece of .1-inch grid perforated board to a size of 4.2 × 1.5. Locate and drill the holes as shown in Figure 23-3.

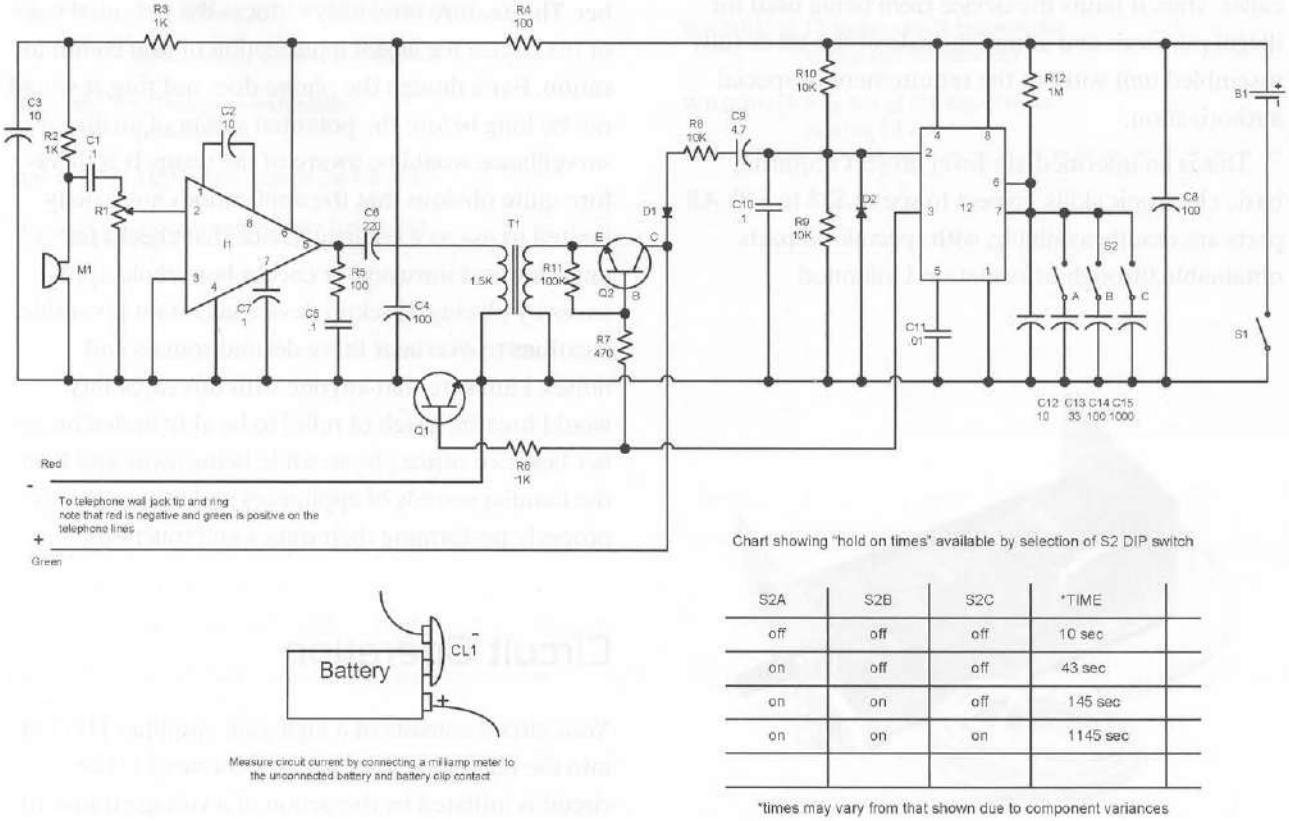

Chart showing "hold on times" available by selection of S2 DIP switch

S2A	S2B	S2C	*TIME
off	off	off	10 sec
on	off	off	43 sec
on	on	off	145 sec
on	on	on	1145 sec

*times may vary from that shown due to component variances

Figure 23-2 *Circuit schematic*

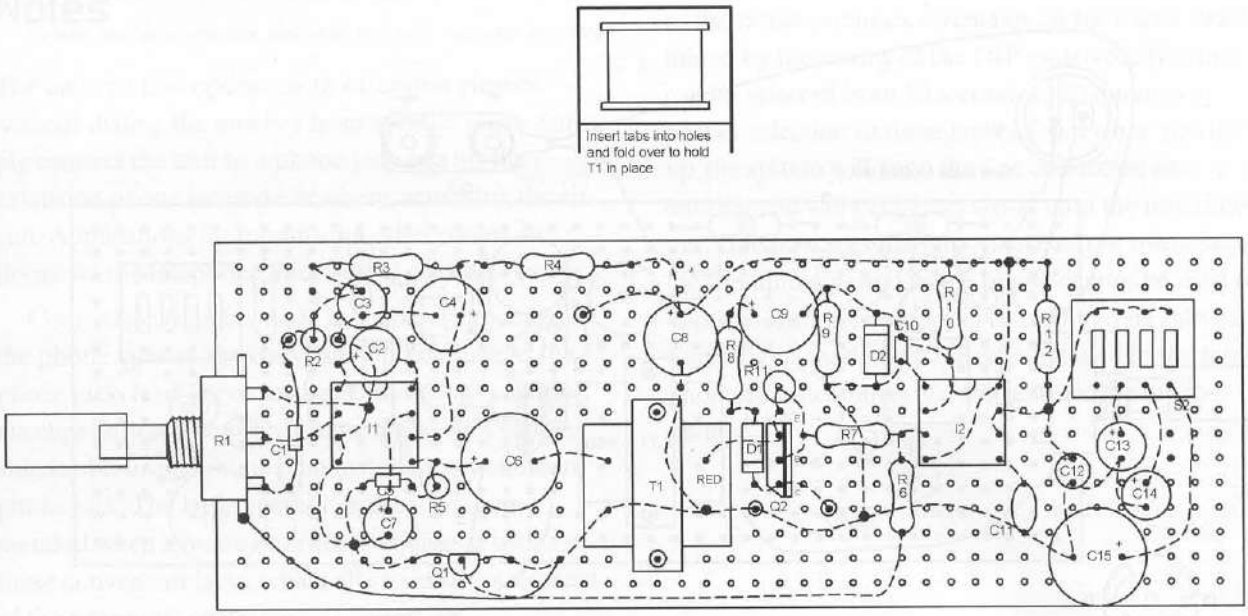

Dashed lines are connections on underside of perforated circuit board using the component leads. These points can also be used to determine foil runs for those who wish to fabricate a printed circuit board.

- Small dots are holes used for component insertion.
- Large dots are solder junctions
- Circles with dots are holes that may require drilling for component mounting and points for external connecting wires indicating strain relief points. It is suggested to drill clearance holes for the leads and solder to points beneath board.

Figure 23-3 *Assembly board layout*

3. If you are building from a perforated board, it is suggested that you insert the components starting in the lower left-hand corner (see Figure 23-3). Pay attention to the polarity of the capacitors with polarity signs and all the semiconductors.

   Route the leads of the components as shown and solder as you go, cutting away unused wires. Attempt to use certain leads as the wire runs or use pieces of the #24 bus wire. Follow the dashed lines on the assembly drawing as these indicate connection runs on the underside of the assembly board.

4. Attach the external leads as shown in Figure 23-4. You may relieve any strain they might have by drilling holes to allow the insertion of the entire wire. Note that the short pieces of bus wire are soldered to R1 for connection to the circuit board.

5. Double-check the accuracy of the wiring and the quality of the solder joints. Avoid wire bridges, shorts, and close proximity to other circuit components. If a wire bridge is necessary, sleeve some insulation onto the lead to avoid any potential shorts.

Final Assembly

Create a suitable housing from a piece of aluminum or purchase a ready-made aluminum box approximately 5 × 3 × 2 inches. Drill the holes as required for the microphone grommet GR1, gain control R1, and strain relief bushing for the phone line cable assembly RJ11. The metal box should be grounded to the circuit common line to reduce hum pickup. Note that a piece of Velcro sticky tape can be used to secure the battery or use your own ingenuity.

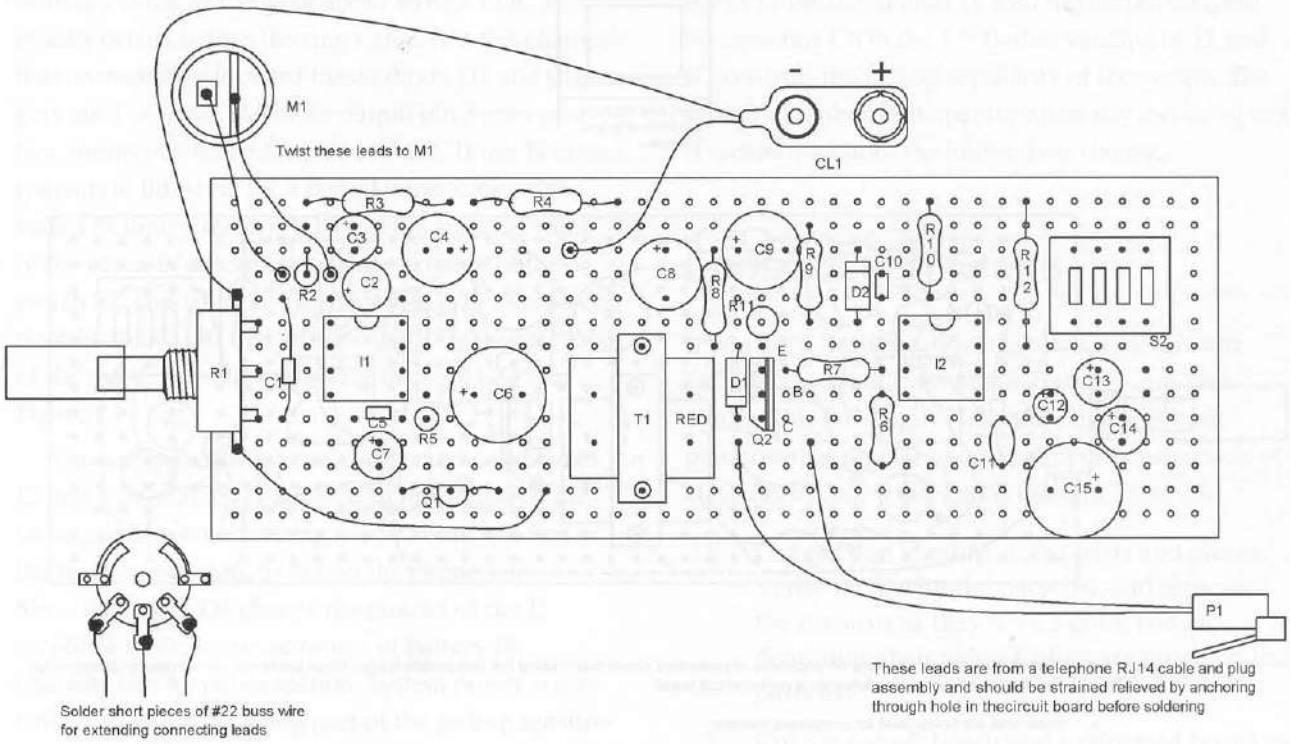

Figure 23-4 *External connection and parts identification*

Testing Steps

This step will require basic electronic laboratory equipment including a 60 MHz oscilloscope if trouble shooting the circuit is necessary.

1. Turn the unit off by rotating R1 full counter-clockwise, noting the click of the switch. Verify that all the DIP switch levers of S2 are down (off). Connect the battery as shown in series with a current meter and note zero current flow. Turn the unit on and note a current of 5 milliamps, which may momentarily jump to 30 milliamps as the unit times out.
2. Locate a phone jack so that you can monitor the DC voltage. Connect a meter across the tip and ring leads (green and red), and note the 40 to 50 volts with the phone on the hook. Also note the green lead is positive and the red is negative. This is the opposite of conventional wiring. Lift the phone and notice the 40 to 50 volts dropping down to 8 to 12 volts. This step verifies a properly working phone line.
3. Turn the unit off and connect it to the phone line. Rotate the R1 so that it just clicks on, and note the voltage remaining as or timing out to read the on-hook 40 to 50 volts. Preset R2 to midway.
4. Call the target phone using a cell or another telephone. The unit should connect at the beginning of the ring signal before the phone has a chance to ring. You should clearly hear sounds until the unit times out, at which time the device disconnects and restores the phone to normal operation. Adjust R1 for desired pickup sensitivity. The timeout time should be only about 10 seconds for the presetting of S2, as instructed in step 1. You may lengthen these times as shown in Figure 23-2.

Notes

The unit can also operate with extension phones without dialing the number from another place. Simply connect the unit to a phone jack and lift the extension phone located elsewhere, activating the circuit. Applications for monitoring other rooms and floors via the telephone lines now is possible.

Connections can be made in simple ways across the phone lines at any convenient point, such as the phone jack, lead-in box, or inside the telephone itself via clips or lugs. They can also be made via a simple, standard four-pin phone plug mated to any standard phone jack. The latter method is usually recommended when a home or office is equipped with these convenient jacks, which allow simple placement of the telephone or device.

When the phone activates, allowing you to listen to the target premises, it remains on for a time determined by the setting of the DIP switch S2. This time can be selected from 10 seconds to 20 minutes by proper selection of these levers. Even when you hang up, the system will keep the line connected so another call will get a busy signal until the unit times out. One now sees the importance of not overselecting the timing period as the phone cannot be used for either incoming or outgoing calls. Outgoing calls can normally be made with the unit installed to the target phone, but incoming calls will activate the microphone.

Table 23-1 Snooper Phone Room-Listening Device Parts List

Ref. #	Description	DB Part #
R1/S1	10K, 17-millimeter pot and switch	
R2, 3, 6	Four 1K, 1/4-watt resistors (br-blk-red)	
R4, 5	One 100-ohm, 1/4-watt resistor (br-blk-br)	
R7	470 1/4-watt resistor (yel-pur-br)	
R8, 9, 10	Three 10K, 1/4-watt resistors (br-blk-or)	
R11	100K, 1/4-watt resistor (br-blk-yel)	
R12	1M 1/4-watt resistor (br-blk-gr)	
C1, 5, 10	Three .1-microfarad, 50-volt caps	
C2, 3, 12	Three 10-microfarad, 25-volt vertical electro radial leads	
C4,8,14	Three 100-microfarad, 25-volt vertical electro radial leads	
C6	.22-microfarad, 250-volt metalized polypropylene	
C7	.1-microfarad, 50-volt cap	
C9	1-microfarad, 25-volt vertical electro cap	
C13	33-microfarad, 25-volt vertical electro radial leads	
C11	.01-microfarad, 50-volt disk (103)	
C15	1,000-microfarad, 25-volt vertical electrolytic capacitor	
C6	.22-microfarad, 250-volt metallized polypropylene	
C9	1-microfarad, 25-volt vertical electro cap	
C7	.1-microfarad, 50-volt cap (INFO#VG22)	
D1, 2	Two 1N4007 1-kilovolt diodes	
I1	LM386 operational amplifier *dual inline package* (DIP) *integrated circuit* (IC)	
I2	555 timer DIP IC	
Q1	PN2222 NPN small-signal transistor	
Q2	D40D5 high-voltage transistor	
TI	1.5K, 500-ohm audio interstage transformer	
M1	Electret microphone	
S2	4PST DIP switch	
PBOARD	4.2 × 1.5 × .1-inch grid perforated board, sized per chapter	
GR1	1/2-inch rubber grommet	
BUSCLP	1/4-inch Heyco clamp bushing	
CL1	9-volt battery clip with leads	
RJ11	RJ11 telephone plug and cable assembly	
WR20R	12 inches of #20 vinyl red wire for positive input	
WR20B	12 inches of #20 vinyl black wire for negative input	
ENC1	5 × 3 × 2-inch aluminum box and cover	

Chapter Twenty-Four

Long-Range FM Voice Transmitter

This project shows how to construct an electronic device that can transmit low-level sounds over a considerable distance (see Figure 24-1). It is intended for use as a security system when entry sounds are broadcasted over a standard FM radio, providing an early warning of an intrusion. It may be used to monitor children, swimming pools, sick and invalid people, and animals. The device can also be used for nature listening, which is made possible by the wide frequency response of the audio section, allowing good-quality reproducibility of rare bird calls, for example. An excellent application, when one is living in hostile areas, is to install the unit in one's home. This allows monitoring of the premises before possibly being surprised by a burglar.

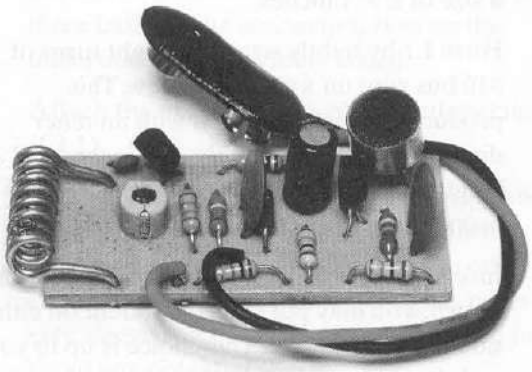

Figure 24-1 *Long-range FM voice transmitter*

The assembled transmitter is small enough to be placed at the foci of a sonic reflector, creating a highly directional wireless mike for targeting particular areas of interest. (The Audubon Society purchased 25 of these systems for monitoring bird and animal calls in mosquito-infested swamp areas.)

Circuit Description

This circuit shows how to build a super-sensitive, mini-powered FM transmitter consisting of a *radio frequency* (RF) oscillator section interfaced with a high-sensitivity, wide pass-band audio amplifier and capacitance mike with a built-in *field effect transistor* (FET) that modulates the base of the RF oscillator transistor (see Figure 24-2). Transistor Q1 forms a relatively stable RF oscillator whose frequency is determined by the value of coil L1 and tuning capacitor C4. The setting of C4 determines the desired operating frequency and is in the standard FM broadcast band with the tuned circuit design favoring the high end up to 110 MHz. Capacitor C2 supplies the necessary feedback voltage developed across resistor R3 in the emitter circuit of Q1, sustaining an oscillating condition. Resistors R1 and R2 provide the necessary bias of the base emitter junction for proper operation, while capacitor C1 bypasses any RF to ground fed to the base circuit. Capacitor C3 provides an RF return path for the tank circuit of L1 and C4 while

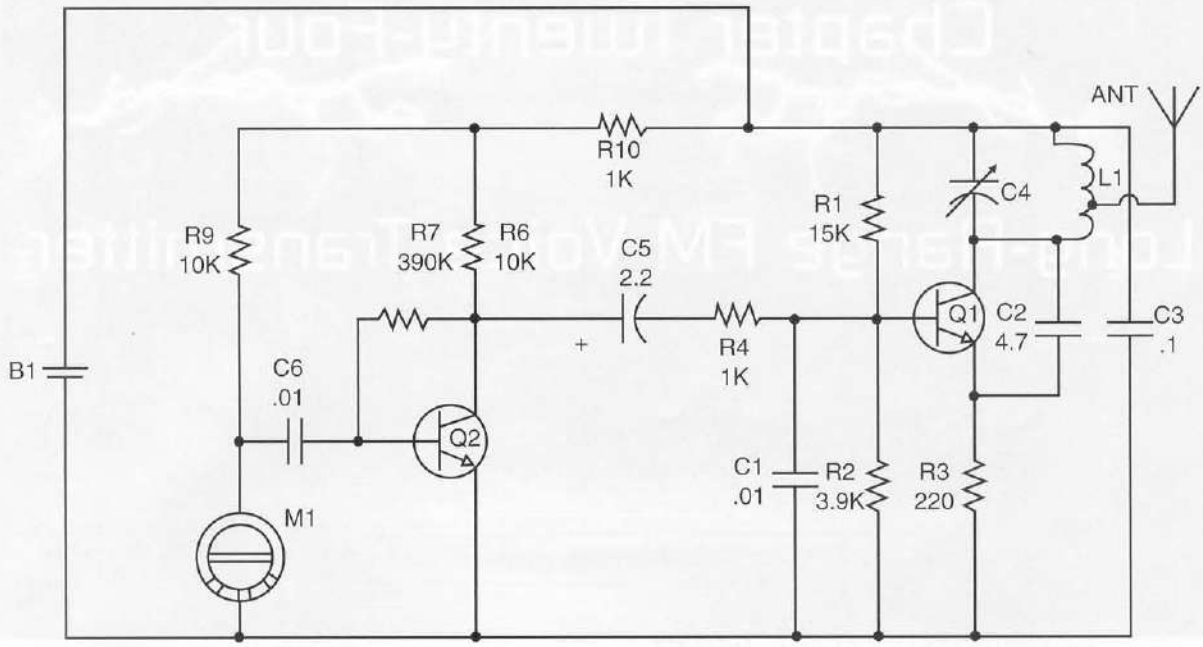

Note that the microphone M1 has polarity. You can identify the ground pad by the connection tabs to the outer shell.

Figure 24-2 *Circuit schematic*

blocking the DC supply voltage fed to the collector of Q1.

The audio section utilizes a high-sensitivity capacitance mike (M1) and built-in FET transistor (field effect) and will clearly pick up all low-level sounds in the speech audio spectrum. The speech voltage developed across resistor R9 by M1 is capacitively coupled by C6 to the base of audio amplifier transistor Q2. You will note the base of oscillator transistor Q1 is biased by resistors R1 and R2. A signal voltage now developed across resistor R6 is capacity coupled through nonpolarized capacitor C5 to the base of Q1 through resistor R4. The gain of Q2 is controlled by the ratio of R7 and R6. The operating point is set to allow full excursion of the collector to the amplified signal. The amplified speech signal now causes FM and AM modulation of the oscillator circuit by slight shifting of the operating point of the base section. Resistor R10 decouples the oscillator and audio circuits and is necessary to prevent feedback and other undesirable effects.

When properly assembled, the circuit should produce crystal-clear quality when the receiver is properly tuned to the unit. Note that a shunt capacitor may be connected across the base lead of Q1 to reduce sensitivity. The circuit with the components listed operates best in the upper FM band. This is a clear spot without interference from FM radio stations. However, satisfactory performance is obtained above 110 MHz for limited range use. Use caution as this is the aircraft band and should not be used if near an airport (see Table 24-1).

Assembly Steps

Assemble the circuit as shown in Figure 24-3.

1. Cut a piece of .1-inch grid perforated board to a size of 2 × 1 inches.
2. Form L1 by tightly wrapping eight turns of #16 bus wire on a #8 wood screw. This produces an eight-turn coil with an inner diameter of approximately .135 inches and a length of about .625 inches. Insert it in the proper hole and solder as shown.
3. Insert trimmer capacitor C4 into the holes as shown. You may put this component on either side of the PC board. This choice is up to you and should be determined by the final packaging scheme you require. Three holes are available for the part with two of them electrically the same point. This is necessary as some

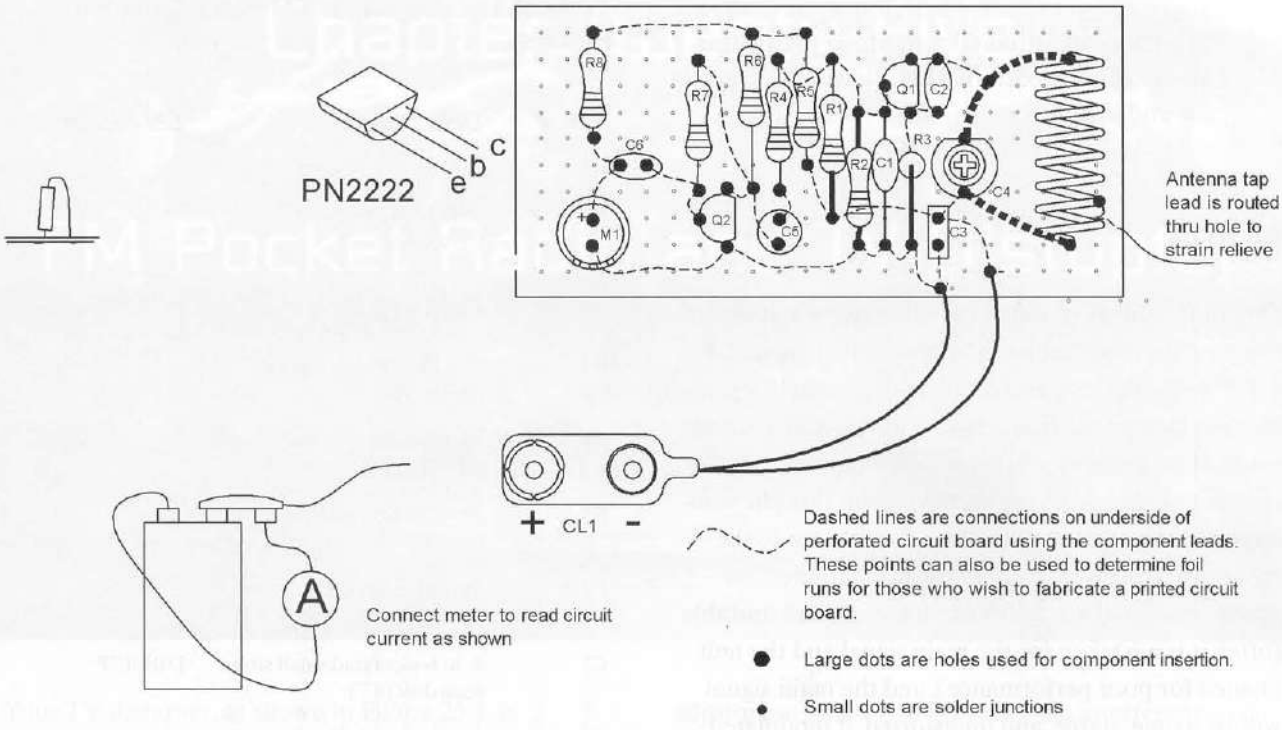

Figure 24-3 *Assembly board*

trimmers may have three pins. Make sure that the common pins are connected to the same electrical points with the odd pin to the other point.

4. If you are building from a perforated board, it is suggested that you insert components starting in the lower left-hand corner. Pay attention to the polarity of the capacitors with polarity signs and all the semiconductors. Route the leads of the components as shown and solder as you go, cutting away unused wires. Attempt to use certain leads as the wire runs or use pieces of the #24 bus wire. Follow the dashed lines on the assembly drawing as these indicate the connection runs on the underside of the assembly board.
5. Attach the external leads of the battery clip (CL1).
6. Double-check the accuracy of the wiring and the quality of the solder joints. Avoid wire bridges, shorts, and close proximity to other circuit components. If a wire bridge is necessary, sleeve some insulation onto the lead to avoid any potential shorts.
7. Tune an FM receiver to a fairly strong station at the high end of the band (108 MHz or higher). Turn up the volume and position the receiver 25 to 50 feet from the circuit.
8. If a multimeter or 50-milliamp meter is available, connect it in series with a battery lead. This can be done by removing one of the fasteners of the clip and connecting the meter to the free contacts, as shown in Figure 24-3. The meter should read 5 to 7 milliamps. Use a short piece of bare wire to touch the coil L1 a turn at a time, starting from the C3 end. Note that as you progress turn by turn away from C3 that the indicated meter current will drop or change.
9. If the device performs as follows with the battery connected, slowly rotate C4 with an insulated tuning wand until the station being received by the radio at approximately 108 MHz breaks out in audio feedback or is blocked out. It may be difficult at first to spot the signal as this adjustment is very touchy. Also note that several spots in the adjustment may be erroneous and will be weak and unstable. The correct signal will be strong, stable, and clear and can be verified by distance-of-transmission testing.
10. Once the desired setting of C4 is found, it should be marked with the frequency noted.

11. When operation is verified, it may be desired to enclose the circuit board into a plastic box along with the battery. This allows easier tuning and handling.

Notes

One of the things to watch for when using a device of this type is proper tuning. The adjustment capacitor, C4, is quite sensitive and requires only a slight movement to change the frequency, so always use a tuning wand. It is very easy when one is not familiar with this unit to tune to an erroneous signal. This phenomenon is likely to occur when the unit is close to the monitoring receiver. As previously mentioned, an erroneous signal will be weak, distorted, and unstable (often it is mistaken for the main signal and the unit blamed for poor performance), and the main signal will be strong, stable, and undistorted, if modulated. Several experiments in tuning the unit should be done before attempting to use it for the desired application.

Also, whenever possible, the unit should be used around 108 to 109 MHz, which is at the boundary of the aircraft band and upper FM broadcast band. When the approximate desired spot is found, final touchup tuning should be done at the receiver end for clarity. In most areas, these "upper" frequencies are clear and allow uninterrupted use in contrast to the lower ones in the FM band where a slight change in frequency from a clear spot results in the unit being drowned out by a strong broadcast station. Do not go above 108 MHz if near an airport or air traffic lane.

Most available FM radios can easily be detuned slightly to shift the dial readings down where 108 is 109. This is accomplished by carefully adjusting the "oscillator," the padding trimmer located on the main tuning capacitor, and "walking" a known station down the necessary megahertz or two. An antenna-peaking trimmer should now be adjusted for maximum signal at the high end.

Optimum performance will require a good-quality receiver with an analog slide-rule-type tuning dial. Digital tuned receivers will not work that well.

Table 24-1 Long-Range FM Voice Transmitter Part List

Ref. #	*Description*	*DB Part #*
R1	15K, 1/4-watt resistor (br-gr-or)	
R2	3.9K, 1/4-watt resistor (or-wh-red)	
R3	220-ohm, 1/4-watt resistor (red-red-br)	
R4, 5	Two 1K, 1/4-watt resistors (br-blk-red)	
R6, 9	Two 10K, 1/4-watt resistors (br-blk-or)	
R7	390K, 1/4-watt resistor (or-wh-yel)	
C1, 6	Two .01-microfarad, 50-volt disc capacitors	
C2	4- to 6-picofarad small silver mica disk (4.7)	DB# 4.7P
C3	.1-microfarad, 50-volt plastic capacitor	
C4	6- to 35-picofarad trimmer capacitor	DB# 635P
C5	2.2-microfarad, 25-volt vertical nonpolarized electrolytic capacitor	
CL1	Battery snap clip and leads	
Q1, 2	Two PN2222 NPN general-purpose transistors	
L1	Coil wound as described in assembly steps	DB# COIL8T
PBOARD	2 × 1 × .1-inch grid perforated board	
WR24BUSS	12 inches of #24 bus wire for wiring and antenna tap	
WR16BUSS	6 inches of #16 bus wire for making L1 coil	
M1	Special FET-bypassed microphone	DB# FETMIKE
PCXFM1		DB# PCXFM

Chapter Twenty-Five

FM Pocket Radio and TV Disrupter

Your TV disrupter, as shown in Figure 25-1, is designed and built on a piece of perforated circuit board that can fit inside a small plastic case. It operates using two standard, 9-volt transistor batteries in series. A unique pulsing circuit causes carrier deviation at 1,000 Hz, which creates a highly effective interfering device. The unit is tuned to a certain channel or frequency via a miniature tuning capacitor and then is controlled by a slight action of hand movement for further control.

This device is intended as a barroom joke and must not be abused. No attempts should be made to add an antenna because the range can be excessive and become a highly illegal device. When used as a harmless gag, such as in a bar, you can drive the bartender crazy because just as he is about to make an adjustment to a TV to get rid of the interference, you simply detune the device to make an adjustment to get rid of the interference and take the disrupter off the channel. When he thinks the problem is solved and continues his other duties, you hit it again. You can only begin to imagine the enjoyment (as a gag) of creating such havoc and being completely unnoticed.

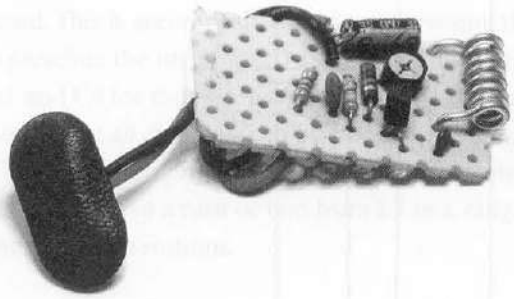

Figure 25-1 *Assembly board*

Also, any FM radio station can be interrupted with a 1,000 Hz tone that is many times louder than the normal received station. Obviously, a fun-loving person can use his or her imagination and come up with many harmless uses for the device.

It must be stated that using a device of this nature could be considered illegal, and discretion should be used at all times because a good gag can become a hateful nuisance. Also note that when cable TV is used, it may be necessary to get as close to the set as possible for maximum effect.

The following plans show how a miniature, simple, inexpensive electronic circuit can disrupt TV and radio communications in a very limited area. The unit can also be used to blank out those tiresome commercials.

Circuit Theory

The I1 timer generates positive pulses that occur across R4. The frequency of those pulses is a function of R1 and C1 and consequently establishes the pulse repetition rate of the device. This frequency modulates the base of Q1, which is a variable oscillator whose frequency is determined by C6 (see Figure 25-2). See Table 25-1 for the parts list.

Assembly Steps

Lay out and identify the parts with the bill of materials. Insert the components as shown in Figure 25-3, starting from one end of the perforated circuit board, and follow the locations using the holes as guides. Use the leads of the actual components as the connection runs, which are indicated by the dashed lines. It is a good idea to trial-fit the parts before actual soldering. Always avoid bare wire bridges and globby solder joints, and check for cold or loose solder joints. Always pay attention to the capacitors with polarity signs and all the semiconductors.

To adjust for frequency, set the TV to channel 2 and turn C6 for maximum capacitance (for a preliminary frequency, when adjusting, it is advisable to use a lower voltage due to the possibility of interfering with other than TV or radio stations such as police or aircraft bands). Adjust L1 by compressing turns until the interference is noted on channel 2. Turn to other channels, turn on C4, and note the complete coverage. Channels above 6 are covered by the harmonic output of the device.

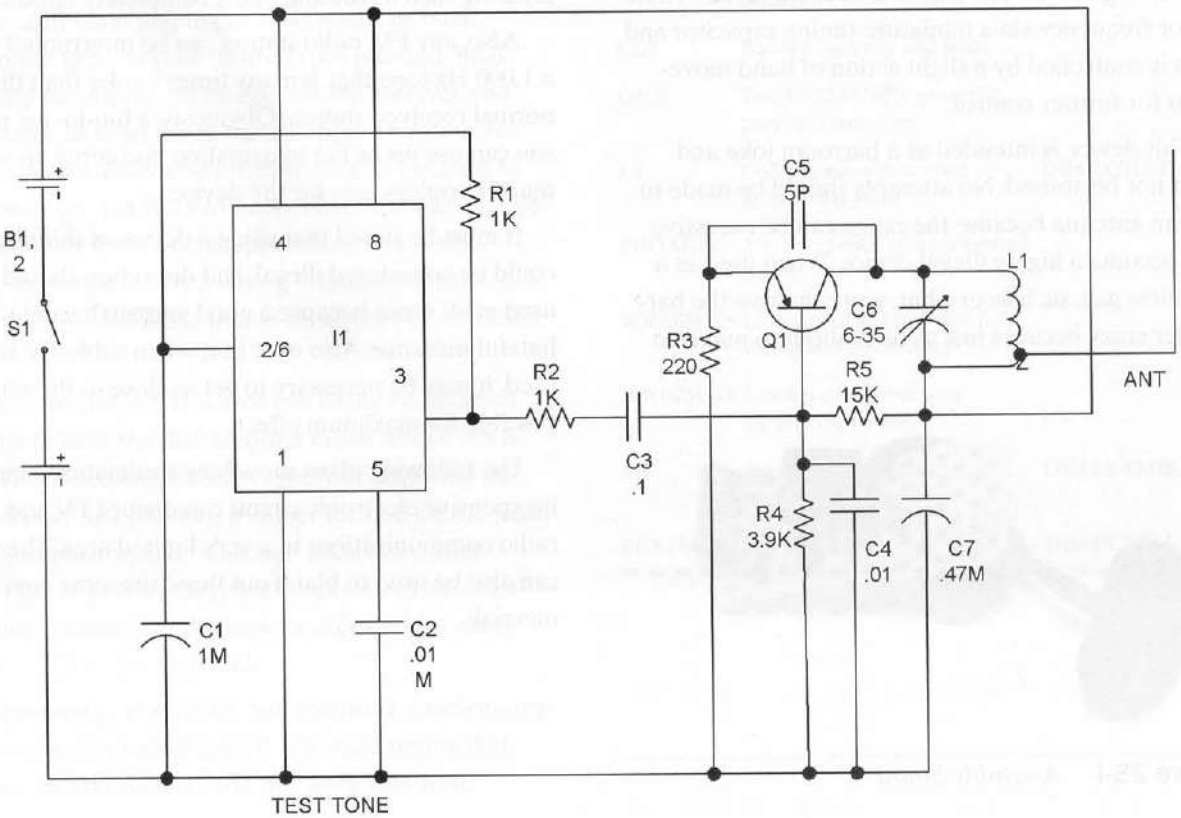

Figure 25-2 *Circuit schematic*

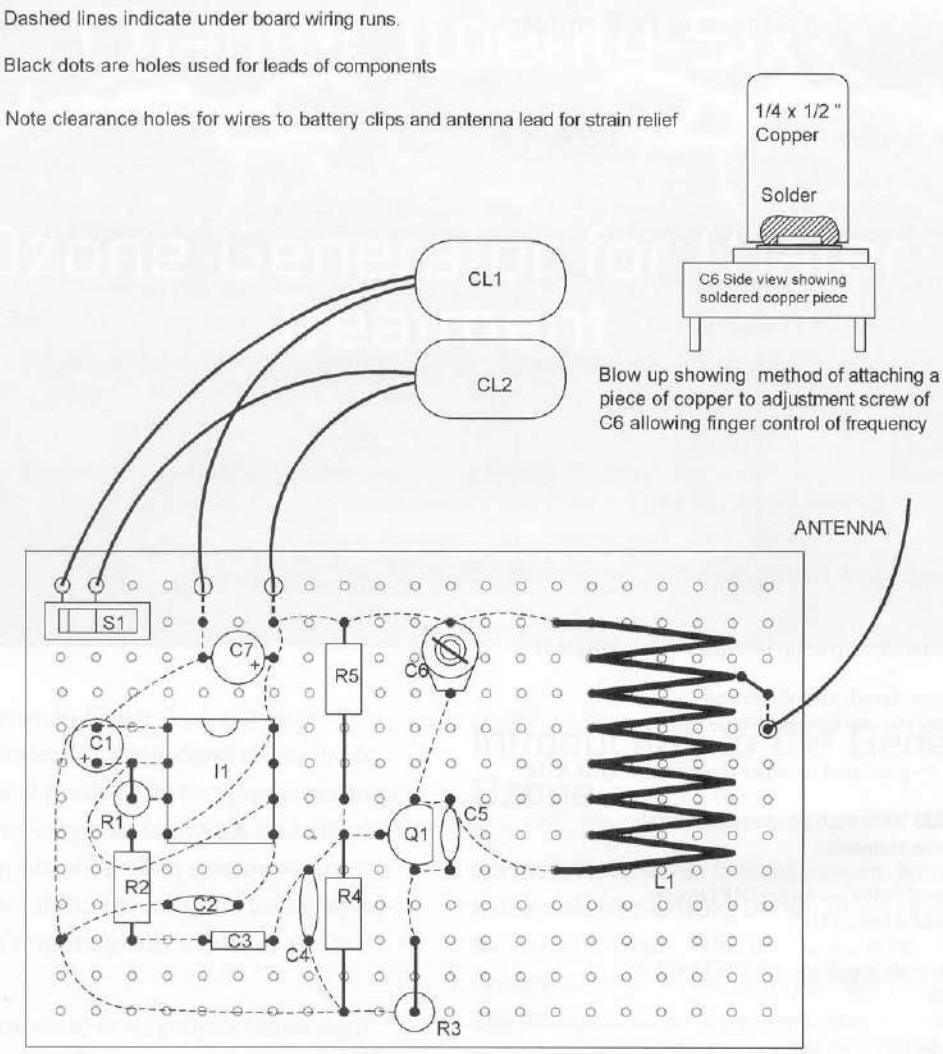

Figure 25-3 *Assembly board*

Several points of interest should be mentioned here, one being the ability to tune the unit on or off of a particular channel with just hand capacity (slight movement near L1); that is, the ability to detune the circuit with your hand creates a virtual capacitance. The other is the ability to also cover the FM radio band. This is accomplished by decompressing the coil (spreading the turns apart) and eventually adjusting L1 and C4 for the necessary coverage. It should be noted that all channels can be covered along with the FM band when properly adjusted. It may be necessary to remove a turn or two from L1 to a range on the FM radio stations.

Cable and satellite TV will often require the unit to be very close to cause an effect. There is no control over this, as the unit is designed to interfere with the actual frequency of the station being received, as was the case before cable and satellite services.

Table 25-1 FM Pocket Radio and TV Disrupter Parts List

Ref. #	Description	DB Part #
R1, 2	Two 1K, 1/4-watt resistors (br-blk-red)	
R3	220-ohm, 1/4-watt resistor (red-red-br)	
R3	100-ohm, 1/4-watt resistor (br-blk-br)	
R4	3.9K, 1/4-watt resistor (or-wh-red)	
R5	15K, 1/4-watt resistor (br-gr-or)	
C1	1-microfarad, 35-volt vertical electrolytic cap (green or blue can)	
C2, 4	Two .01-microfarad, 25-volt disk caps (103)	
C3	.1-meter, 50-volt ceramic cap (blue tablet .1)	
C5	6-picofarad, zero temp (4.7 disk)	DB# 4.7P
C7	.47-microfarad, 35-volt vertical electrolytic cap (green or blue can)	
C6	6- to 35-picofarad trimmer tuning Cap	DB# 635P
Q1	PN2222 NPN high-frequency, general-purpose transistor	
I1	555 *dual inline package* (DIP) timer *integrated circuit* (IC)	
S2	*Single pole, single throw* (SPST) slider switch	
CL1	Two-battery snap clip	
WR1	9 inches of #16 buss wire; wind seven turns on a pencil-sized object	
WR2	12 inches of #24 vinyl hookup wire	
PB1	2.5 × 1.5 × .1-inch grid perforated circuit board	
L1	Coil as shown	DB# COIL8T

Chapter Twenty-Six

Ozone Generator for Water Treatment

This project, as shown in Figure 26-1, can very effectively purify water for use around the home or farm. The system will produce up to 5 grams per hour sufficient for swimming pools, laundries, and other medium-volume applications. The system covered here is shown in five different sizes and uses easy-to-construct modules requiring only a flow of air for operation.

This is an intermediate-level project requiring a basic electrical hookup. Expect to spend $50 to $250 depending on the size of the system chosen and the availability of the required air source. All parts are readily available, with specialized parts obtainable through Information Unlimited at www.amazing1.com, and they are listed in the parts list at the end of the chapter.

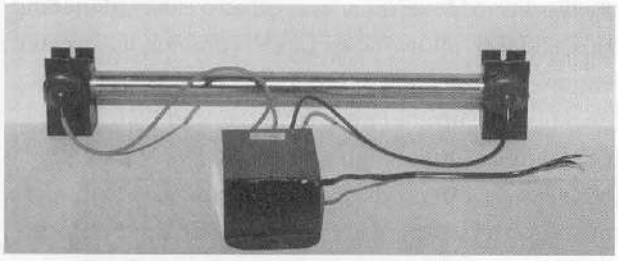

Figure 26-1 *The water treatment system*

Introduction to the Benefits of Ozone

Ozone is an unstable form of oxygen. Normal oxygen is diatomic (0_2), existing as two atoms of oxygen that form the molecule. Whereas ozone is tri-atomic (0_3), existing as three atoms of oxygen for the molecule. The tri-atomic form of oxygen is very unstable, wanting to lose the third oxygen atom and combine with whatever atom it can (oxidization). This property makes it the most active oxidizer known, with the exception of the very hazardous fluorine gas.

Ozone at normal pressures is colorless and produces a pleasing, fresh-air odor often like that after an old-fashioned thunderstorm. Under pressure, it becomes a bluish gas.

Ozone is also a very powerful bactericide. It is not affected by pH, as is chlorine, thus making it an excellent candidate for pools, spas, laundries, and general water treatment applications. It is many times more soluble in water, further enhancing its purifying effect. Ozone will combine with diatomic nitrogen N^2, forming nitrous oxide, 2NO. This oxide quickly combines with water, forming nitric acid, HNO_3. This is often a very undesirable effect when used with straight air. Pure oxygen greatly minimizes this effect and is often required in many applications. However, those requiring a supply of concentrated nitric acid

for nitration may wish to consider ozone and air with a condensing apparatus to obtain this useful acid. A condensing apparatus takes vapor from the ozone gas along with water and nitrogen to form a liquid by contacting them with cooler surfaces. The liquid (now nitric acid) flows down into a collection container by gravity. In the same way the old timers made moonshine, this uses a simple and basic chemical reaction where $2O^3 + 2N^2 + 2H_2O$ yields $2H(NO^3) + H_2O + 2NO$.

Ozone for Water Applications

It is estimated that 20 percent of all ground water is contaminated by pesticides, benzene, and phenol derivatives along with other undesirable organic substances. Ozone can oxidize many of these compounds, along with deactivating many viruses and harmful bacteria. Ozone will also oxidize certain inorganic compounds, such as iron and manganese, making them more easily removable by filtration.

Chlorine and bromine are often the choice of disinfectant for swimming pools and spas. The effect of these halogens is often dictated by pH, temperature, and agitation. Extreme heat and agitation can produce chloroform, a very toxic carcinogenic. The *Environmental Protection Agency* (EPA) is already taking a look at these chemicals for this use.

Ozone-treated water will destroy fungus, mold, and many pathogens found in water when used for washing fruits and vegetables in packing lines. When discharged, ozone causes little change to the beneficial bacteria in sewage treatment facilities.

Additionally, freshly caught fish will last longer when washed with ozone-treated water, and ozone's oxidizing action can eliminate odors from stored cheese. Egg storage time is increased, and wine can be aged faster. The removal of odors produced by the bleaching of beeswax, starch, flour, straw, bones, and feathers are all aided by ozone treatment. Also, the grease and wax on cotton and wool fibers can be decomposed by ozone, and gray mold on the surface of fruits and vegetables can be controlled by ozone.

Ways to Generate Ozone

Ozone can be produced by an electrical discharge or by a high-frequency electromagnetic wave. A high frequency requires the wave to be in the ultraviolet spectrum where Planck's energy formula, $W = hc/v$, starts to become effective. This is where energy in a wave packet in ergs is equal to Planck's constant times the speed of light in centimeters divided by the wavelength in centimeters. It is this energy that causes the stable O_2 to break up and recombine with other O_2 to form unstable O_3. Germicidal lamps operating at 253.7 nanometers can produce ozone.

The method presented here utilizes the ozone-producing properties of an electrical discharge. We have all, at one time, smelled the by-products of ozone. After a thunderstorm, it can be detected, as well as on certain days where electrical activity is spawning a storm. A sparking electric discharge such as brushes on a motor will create ozone also.

Our method uses a metal tube with a conductor running down the center. The conductor and the tube are insulated by one another and must support the high frequency and high voltage necessary to create a corona without breaking down into an arc. The ozone produced in the tubular cavity must be made to flow using moving air for cooling and replenishing air to be converted.

This method, while producing usable ozone, has several disadvantages. First, normal air contains nitrogen that likes to combine with the ozone to produce nitrous oxides. Second, air contains water in the form of moisture. Without getting into basic chemistry, we know that water plus nitrous oxide forms nitric acid, which is corrosive and undesirable for air purification applications. However, a very effective way of making this acid is to allow the oxides to combine with water vapor or steam and condense in a cooling tube, producing concentrated nitric acid that can be used in the manufacture of high explosives. The 5 gram per hour system can produce enough nitric acid that, when mixed with battery acid (sulfuric acid), can produce usable amounts of high explosives by the simple nitration of many organic compounds.

Select the system you require from Figure 26-2. Note that each is complete with the mating power supply.

Wire up the system as directed in Figure 26-3. Obtain a suitable air supply and connect up the hoses as shown. Use ozone-resistant material for connections to the cell.

Turn on the air supply and note a bubbling from the output hose immersed under the water. Apply power to the high voltage and note a distinct smell coming from the hose when pulled out of the water. Reinsert and rig the hose end to stay under the water. The unit is now ozonating the water.

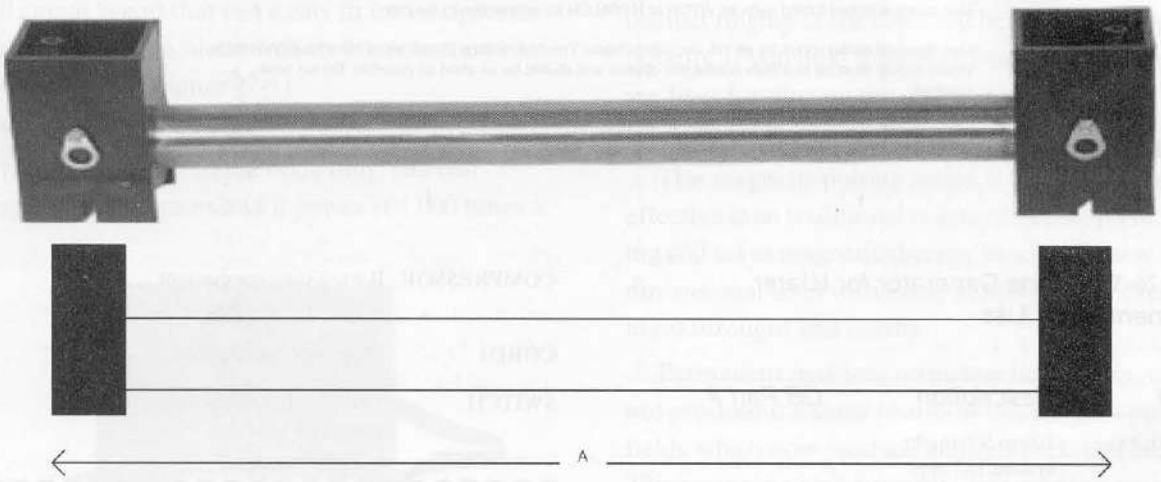

DATA BASE#	LENGTH A	OZONE OUTPUT/HR	AIR/O3 FLOW/MIN	INPUT V	INPUT I
OZONE300	182mm	100-500 mg/hr	.25-.55 CFM*	115 Vac	.2 Amps
OZONE800	282mm	500-1000 mg/hr	.35-.7 CFM*	115 Vac	.6 Amps
OZONE2000	382mm	1000-2500 mg/hr	1-1.5 CFM*	115 Vac	.9 Amps
OZONE5000	482mm	2500-5000 mg/hr	1.5-3 CFM*	115 Vac	1.2 Amps

* Multiply CFM by 28.3 to get Liters per minute

Each DATA BASE# system is complete with a matching power supply and ready to connect up as shown on figure 26-3

Figure 26-2 *System selection specifications*

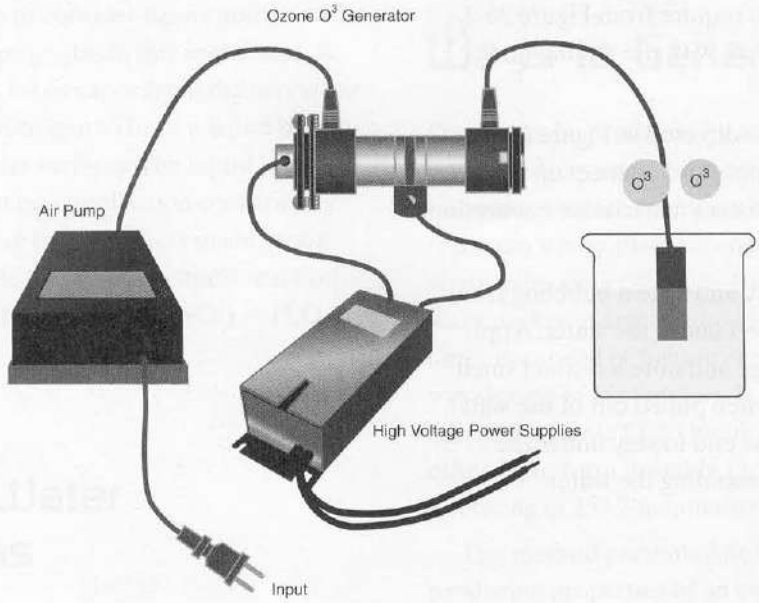

The high voltage power supplies used in these systems operate from normal 115 Vac 60 Hz. They are listed with the appropriate ozone cell on figure 26-2

The air pumps used can be that appropriate for the volume of the particular syste. A flow meter should be used when first setting up the system to verify proper air flow. Pure oxygen works the best and is available in cylinders with regulator valves and optional flow meters. Large aquarium air pumps may be used with the smaller systems while rotary vane air compressors are suggested for the larger systems. Note to multiply cubic feet per minute (CFM) by the factor 28.3 when converting to liters per minute.

Use ozone resistant tubing such as VITOR or HYPALON for connection to the cell

Use standard wiring codes for all 115 vac connections. The high voltage output wires from the high voltage power supply must be free from conductive objects and should be as short as possible. Do not twist together.

Figure 26-3 *Ozone system diagram*

Table 26-1 Ozone Generator for Water Treatment Parts List

Ref. #	*Description*	*DB Part #*
OZONE300	100 to 500 mg/hr system/182 mm/ 115 VAC @ .2 amps	DB# OZONE500
OZONE800	500 to 1,000 mg/hr system/282 mm/ 115 VAC @ .6 amps	DB# OZONE800
OZONE2000	1,000 to 2,000 mg/hr system/382 mm/ 115 VAC @ .9 amps	DB# OZONE2000
OZONE5000	2,500 to 5,000 mg/ hr system/482 mm/ 115 VAC @ .2 amps	DB# OZONE5000
HOSE	Connecting hoses, use ozone-resistant VITOR or HYPALON	
COMPRESSOR	Rotary vane compressor at required airflow	
CORD1	Three-wire power cord	
SWITCH	Two switches to control air compressor and high-voltage supply	

Chapter Twenty-Seven

Therapeutic Magnetic Pulser

This project shows how to build a battery-powered magnetic pulser that can provide relief from aches and pains, as well as improve upon many different health concerns and conditions. The unit is built on a small circuit board that can easily fit into a cigarette pack-size enclosure, along with its 9-volt battery or wall adapter (see Figure 27-1).

This magnetic pulser is designed so the magnetic north pole is applied to the body only. The coil strength is 10,000 gauss and it pulses at 1,000 times a second. A small switch can be used to turn the device off or you may simply unsnap the battery clip.

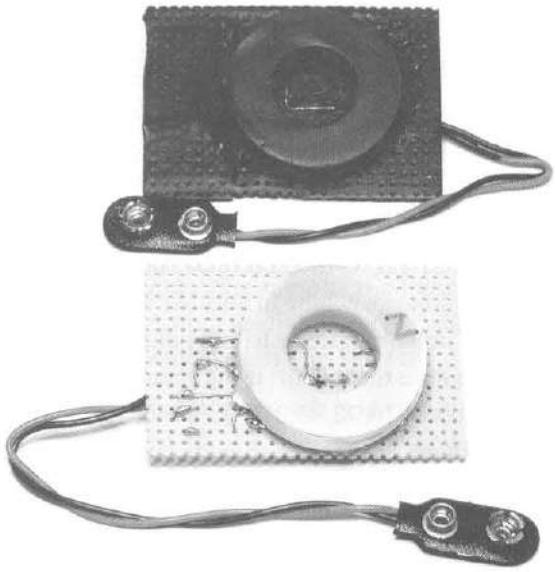

Figure 27-1 *The thermomagnetic pulser*

When an aluminum beer or pop can is held between your ear and this pulser, you hear a strong, distinct ringing as the can itself becomes the opposing polarity. If you hold the coil in front of a TV, you can see lines forming on the screen. On some TVs, the lines are visible when it's held as far away as 3 inches.

This magnetic pulsing action is more powerful and effective than traditional magnetic therapy. The pulsing coil takes magnetic therapy to a whole new dimensional level with many yet-to-explore exciting breakthroughs and results.

Permanent magnets, no matter how strong, will not produce the same results as this device's pulsed fields, which now produce induced back-emf currents. This requires a high-intensity, time-varying, magnetic impulse, not just a steady-state magnetic field.

Permanent magnets have their uses, but they work in different ways with different results. Equally important is the fact that we have "electric-powered" brains: All our thoughts and perceptions consist of complex networks of electrical signals and electromagnetic fields that pulse and sweep throughout the brain. So it then makes sense that harmonic electrical revitalization of the brain can harmonically influence your mental state and positively alter mental effectiveness.

Externally applied magnetic pulses to the lymphatic system, spleen, kidney, and liver help neutralize germinating, latent, and incubating parasites of all types, helping to block reinfection. This speeds up the elimination of disease, restores the immune system, and supports detoxification. The movement of the lymphatic system is essential in purifying, detoxifying, and regenerating the body, supporting the immune system, and maintaining health. Normally, the lymph is pumped by the movement of our body's electromagnetic field with vigorous exercise and physical activity. However, a clogged, sluggish, or weak lymphatic system prevents the body from circulating vital fluids and eliminating toxic wastes, thus weakening the immune system. It makes us vulnerable to infections and diseases. In order to be healthy, it is essential to keep the energy balanced and fluids moving so that the body's natural intelligence may operate at its full healing capacity. In addition, each cell must be enlivened with its own unique energetic frequencies and harmonic energy state and be harmonically connected to the life-force energy throughout the rest of the body.

Pulsed electromagnetic fields influence cell behavior by inducing electrical changes around and within the cell. Improved blood supply increases the oxygen pressure, activating and regenerating cells. Improved calcium transport increases the absorption of calcium in bones and improves the quality of cartilage in joints, decreasing pain dramatically. Acute and even chronic pain may disappear completely.

This device uses complex energy pulses of magnetic waves to stimulate certain body functions. It accelerates the production of vitally important hormones often providing miraculous effects. Magnetic pulsing aids in human growth hormone production and neotransmitter production. The results are remarkable, increasing vitality, sexuality, and accelerated healing. It also helps learning and the reduction of memory loss with reports of increased psychic ability for some people. The magnetic pulser also revitalizes and rejuvenates. As we get older, hormone production drops off considerably and is a reason why we age.

Users are experiencing faster healing of injuries, including bone fractures, carpal tunnel, and arthritis. The pulsed magnetic field stimulates blood flow and cellular respiration in the area applied. Reports have also documented that people's migraine headaches have ceased after magnetic therapy has been applied.

This pulser can be worn, held, or wrapped to any part of the body or held in place with a tension bandage. You can use your pulser while driving and on the go, rather than having to stop and apply it when sitting or lying down, as is necessary when using a 110-volt, standard magnetic pulser. The product is currently being sold only for experimental research and testing.

This is a simple, basic-level project requiring minimal electronic skills. Expect to spend $15 to $20. All parts are readily available, with specialized parts obtainable through Information Unlimited (www.amazing1.com), and they are listed in the parts list at the end of the chapter.

Circuit Description

Figure 27-2 shows a 555 timer (I1) connected as a free-running, astable pulse generator. The output pulses are nonsymmetrical with a ratio of low to high time of 10 to 1. Discharge resistor R3 and forward-conducting diode D2 control the low time, whereas charge resistor R2 and forward-conducting diode D1 control the high time. Timing capacitor C2 is common to both states of the pulse being alternately charged and discharged.

Magnetic energy is produced when the timer I1 turns on transistor Q1. The current now has the "on" time of the pulse to build up and then collapse in the flux coil L1 when Q1 is turned off. The stored energy is returned to the circuit by diode D3. The result is a steady train of magnetic pulses at 1,000 pulses per second.

The switch S1 allows the unit to be turned on and off and also allows switching in another range, dropping the pulse repetition to 100 per second. It is interesting to note that claims using specific pulse repetition rates of 20, 72, 95, 100, 125, 146, 440, 600, 660, and 727 have proven very beneficial. Do not attempt to extend the frequency without first determining the current rise in the coil. Current may be excessive and will require more turns as the frequency is lowered.

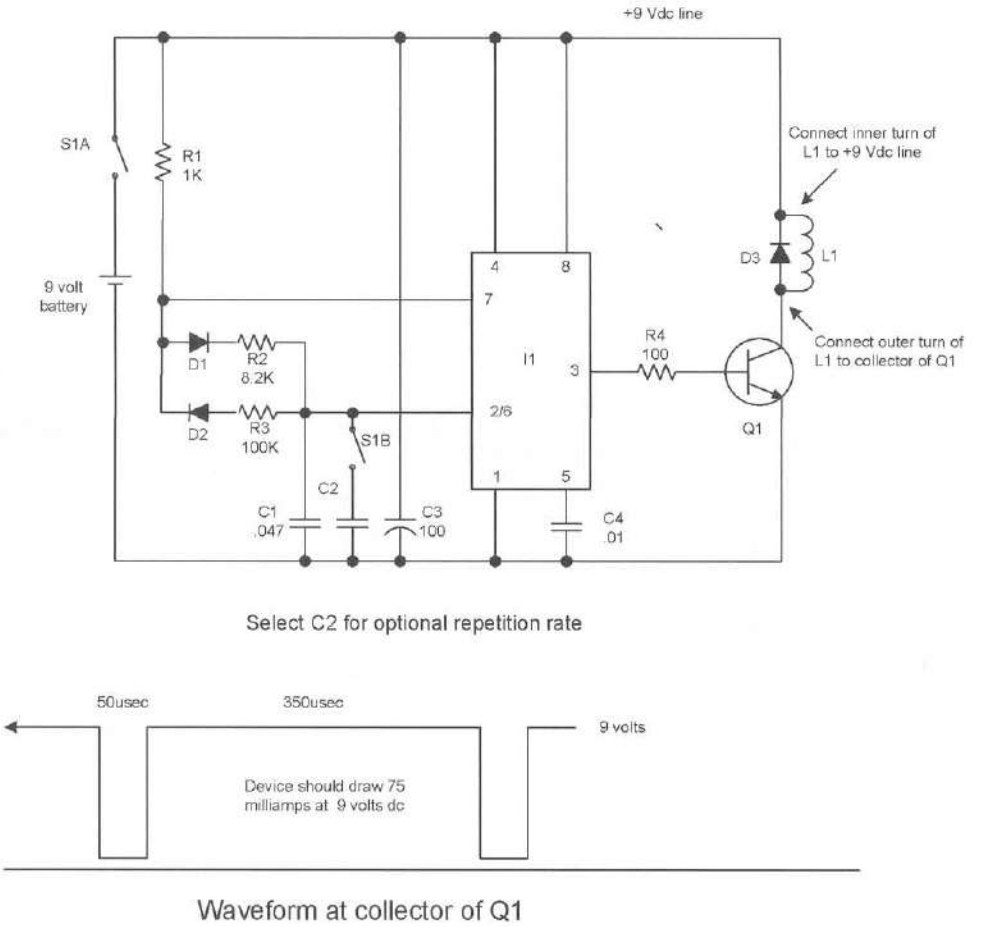

Figure 27-2 *Circuit schematic*

Assembly

1. Assemble the flux coil as shown in Figure 27-3 by first drilling a small hole adjacent to the inner diameter so that the "start" lead can exit the winding. Carefully wind 100 turns of #24 magnet wire in even windings. This is not necessary but makes for a neat-looking construction. Note to wind the wire so that its direction is the same as the figure with the leads routed as directed. This will guarantee the correct polarity as shown.

2. Cut a piece of .1-inch grid perforated board to a size of 2.6 × 1.8 inches, as shown in Figure 27-4. Locate and drill the holes as shown for the leads of battery clip CL1.

3. When building from a perforated board, it is suggested that you insert the components starting in the lower left-hand corner as shown. Pay attention to the polarity of the capacitors with polarity signs and all the semiconductors.

   Route the leads of the components as shown and solder as you go, cutting away unused wires. Attempt to use certain leads as the wire runs or use pieces of the #24 bus wire. Follow the dashed lines on the assembly drawing as these indicate the connection runs on the underside of the assembly board.

4. Attach the external leads from the battery clip and flux coil. Note the polarity of the leads on this part as indicated in Figures 27-2 and 27-4.

5. Double-check the accuracy of the wiring and the quality of the solder joints. Avoid wire bridges, shorts, and close proximity to other circuit components. If a wire bridge is necessary, sleeve some insulation onto the lead to avoid any potential shorts.

6. You are now ready to test the unit. Connect it to a 9-volt battery and note a current draw of 60 to 80 milliamps. Place the coil of the unit

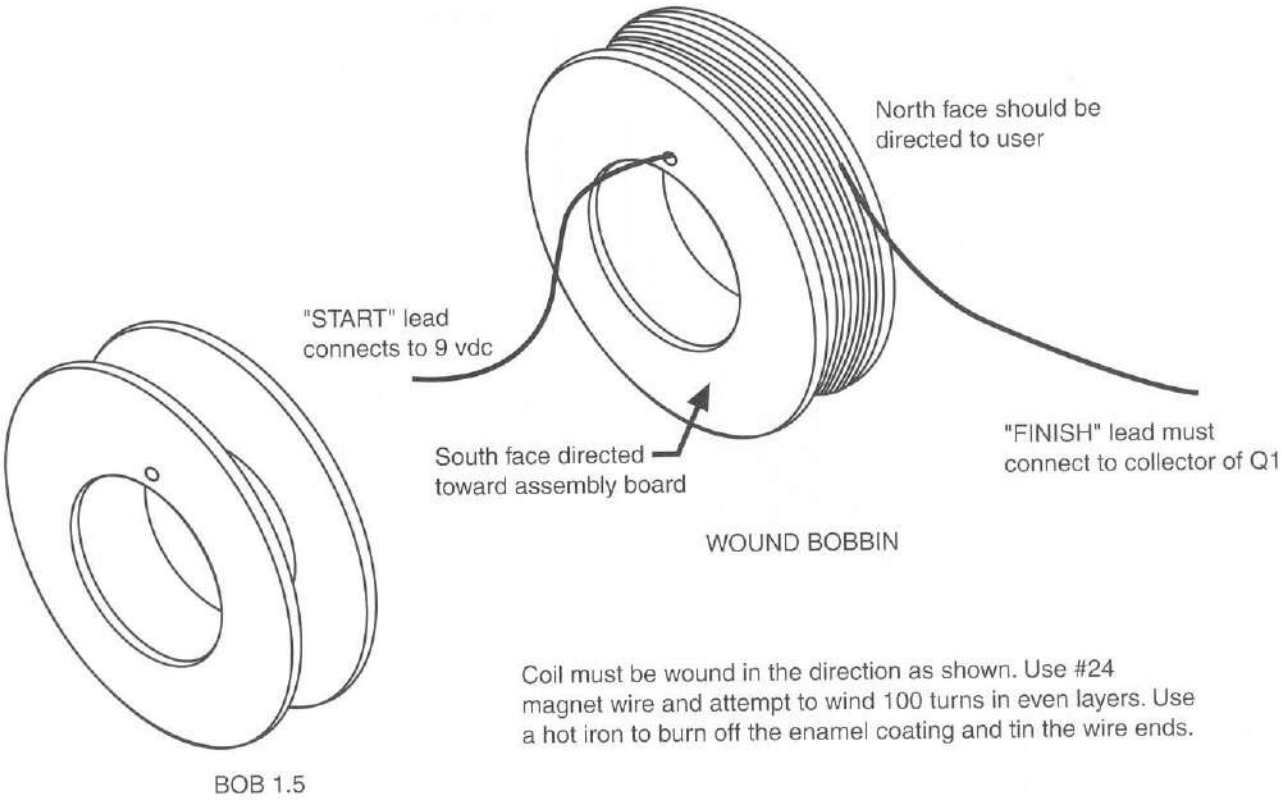

Figure 27-3 *Flux coil assembly*

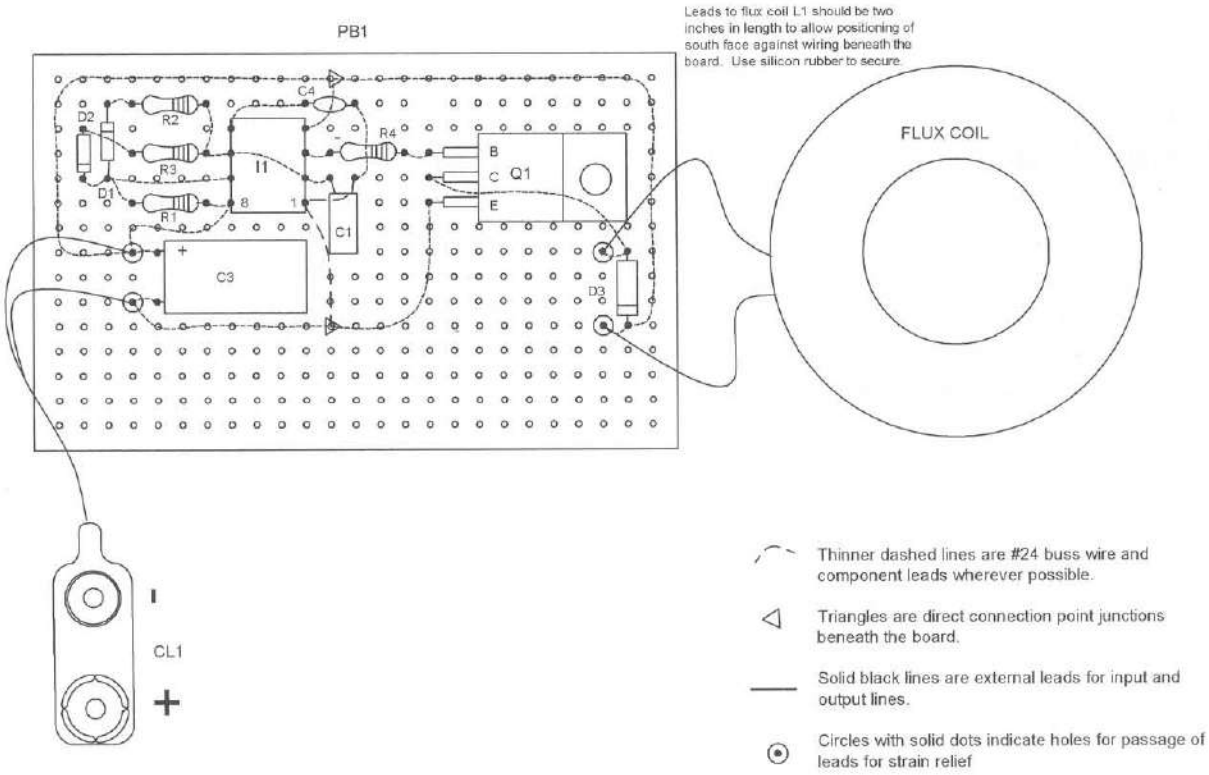

Figure 27-4 *Board assembly*

near a television screen and note the lines appearing. You may also put a metal can onto the coil head and place your ear to the can, noting a 1 to 2 KHz tone. If you have a scope, note the waveshape shown in Figure 27-2.

7. To use the unit, simply place the north face of the coil to the target area and allow exposure for several hours.

Table 27-1 Therapeutic Magnetic Pulser Parts List

Ref. #	*Description*	*DB Part #*
R1	1K, ¼-watt resistor (br-blk-red)	
R2	8.2K, ¼-watt resistor (gray-red-red)	
R3	100K, ¼-watt resistor (br-blk-yel)	
R4	100-ohm, ¼-watt resistor (br-blk-br)	
C1	.047-microfarad, 50-volt plastic capacitor	
C2	1-microfarad, 25-volt vertical electrolytic capacitor	
C3	100-microfarad, 25-volt vertical electrolytic capacitor	
C4	.01-microfarad, 50-volt disk capacitor (103)	
D1, 2	Two IN914 silicon diodes	
D3	1-kilovolt, 1-amp diode 1N4007	
Q1	TIP31 NPN TO-220 power transistor	
I1	555 dual inline package (DIP) timer	
BOB1.5	1.5 × .3 × .75-inch ID nylon bobbin (see Figure 27-3)	DB# BOB1.5
L1	Flux coil (see Figure 27-3)	DB# FLUXCOIL
PBOARD	2.6 × 1.8 × .1-inch grid perforated board as shown in Figure 27-4	
CL1	9-volt battery snap clip	

Chapter Twenty-Eight

Noise Curtain Generator

This unique circuit shown in Figure 28-1 is designed to produce a relaxing sound like that of a breaking surf. It is technically known as pink noise, being defined as a random distributor of equal sounds in the audible spectrum, favoring the higher-frequency end.

Pink noise has a spectral intensity that is inversely proportional to frequency for a given range. Therefore equal power is dissipated into a fixed resistance in any octave bandwidth in that range. White noise is random noise, which is typically thermal and shot noise, has a constant energy per unit bandwidth, and is independent of the central frequency at the band.

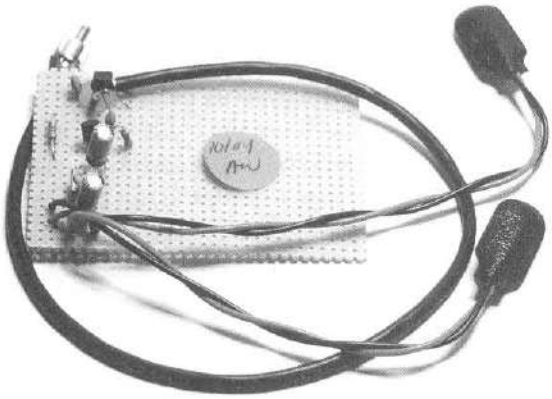

Figure 28-1 *The board-level generator*

This device is intended for use as a relaxing source of sound and also as a mask for certain types of surveillance equipment. Crashing surf is an excellent example of naturally produced pink noise that has a great relaxing effect. Due to the nearly equal amplitude of all the frequencies generated, the electronic equipment of an acoustical nature becomes easily overloaded and saturated, whereby normal voice sounds of varying amplitude and of limited bandwidth are much more finite and are unable to be processed by the equipment. In other words, the noise jams the microphone and audio preamplifier circuitry, thus rendering it unable to detect normal voices. (It should be noted that in certain instances a running shower will sometimes help simulate pink noise.)

The signal from the device is intended to be fed into the input of any amplifier, radio, or tape deck. It is easily connected to the center arm of the volume control if an input jack is not provided in a regular radio. (You will note the phono plug attached.) Also, the two batteries used are left on permanently, due to the fact that so little power is used.

The optional "speaker amplifier" reference schematic in Figure 28-2 is built on a piece of perfboard using standard audio-frequency wiring techniques. When used as a totally self-contained system, the electronics may be housed along with all batteries into a case or enclosure determined by the builder. This approach provides a convenient portable unit.

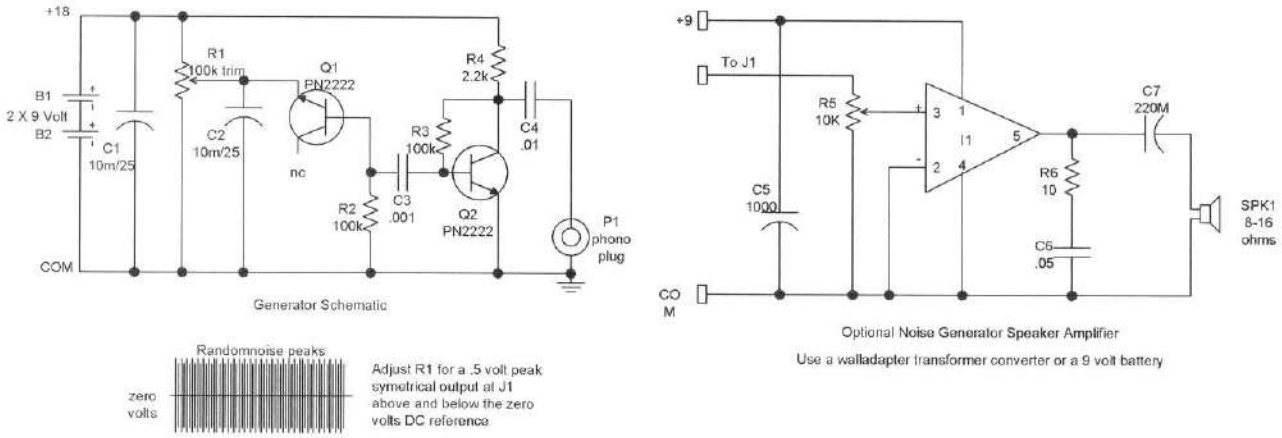

Figure 28-2 *Circuit schematic*

Circuit Description

Pink noise is a form of white noise that is the Gaussian distribution of all possible frequencies, the difference being that pink noise is more weighted to the audio spectrum. This form of noise has some very interesting properties, one being the ability to cause relaxation and a sense of well-being. Another property is that it provides a background that will completely mask an annoying device, rendering it unable to affect normal conversation. The device described is designed to work with any sound system with an audio input or is easily adapted to drive a loudspeaker by connecting it to a normal radio or building an optional speaker amp, as shown in the accompanying plans, making a complete system (see the parts list at the end of the chapter).

The circuit works in the following manner: A base emitter junction of transistor Q1 is reversed biased through a current-limiting resistor into breakdown (avalanche) condition. The random shot noise created is fed to the common emitter amplifier transistor, Q2, and to a filter, which in turn provides a low-level signal output. The unit module board and the batteries are placed in a plastic case with pieces of foam rubber or plastic. The outlet leads are fed out per the builder's requirements. The batteries are permanently installed and left on because the operating current is so low that there is no reason for a switch. Note that Jl is *not* required if using the optional speaker and amplifier circuit.

Assembly Steps

If you are a beginner it is suggested you obtain our *GCAT1 General Construction Practices and Techniques*. This informative manual explains basic practices that are necessary in the proper construction of electromechanical kits and is listed in Table 28-1.

1. Lay out and identify all the parts and pieces. Verify them with the parts list, and separate the resistors as they have a color code to determine their value. Colors are noted on the parts list.
2. Cut a piece of .1-inch grid perforated board to a size of 3 × 2.4 inches. Locate and drill the holes as shown in Figure 28-3 for the leads of the battery clips.
3. If you are building from a perforated board, it is suggested that you insert the components starting in the lower left-hand corner as shown in Figure 28-3. Pay attention to the polarity of the capacitors with polarity signs and all the semiconductors. Route the leads of the components as shown and solder as you go, cutting away unused wires. Attempt to use certain leads as the wire runs or use pieces of the #24 bus wire. Follow the dashed lines on the assembly drawing as these indicate connection runs on the underside of the assembly board.

4. Attach the external leads as shown in Figure 28-4. Notice the special note on the shielded cable.
5. Double-check the accuracy of the wiring and the quality of the solder joints. Avoid wire bridges, shorts, and close proximity to other circuit components. If a wire bridge is necessary, sleeve some insulation onto the lead to avoid any potential shorts.

Testing Steps

Insert the two battery clips and plug the output cable into the microphone or auxiliary jack of the existing system. Note the rushing sound and adjust the trimpot R1 to the desired effect. If you have a scope, make the adjustment as shown in Figure 28-2. If you build the speaker amplifier section, simply connect it as shown for a self-contained system suitable for nightstand use.

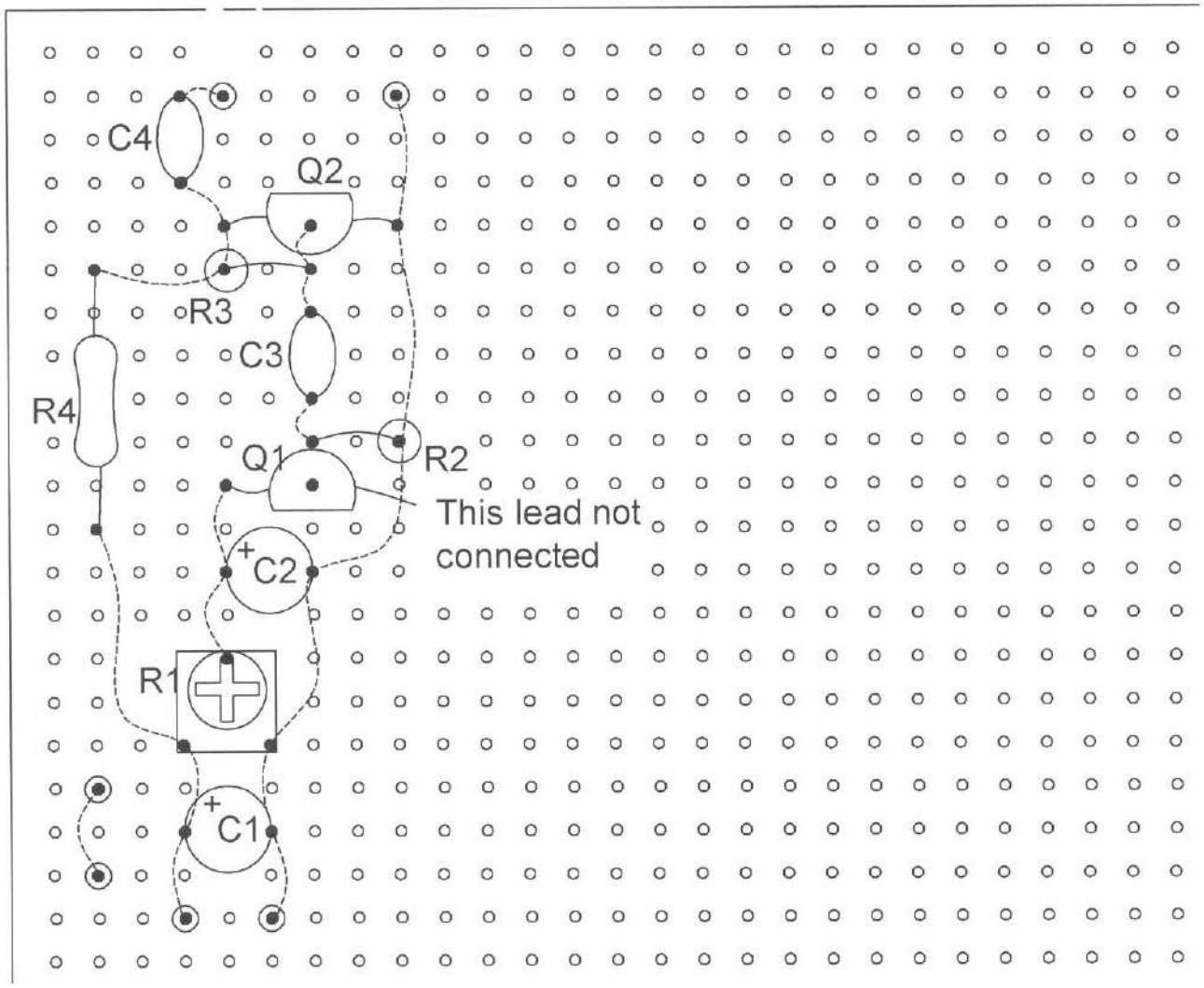

Figure 28-3 *Assembly board layout*

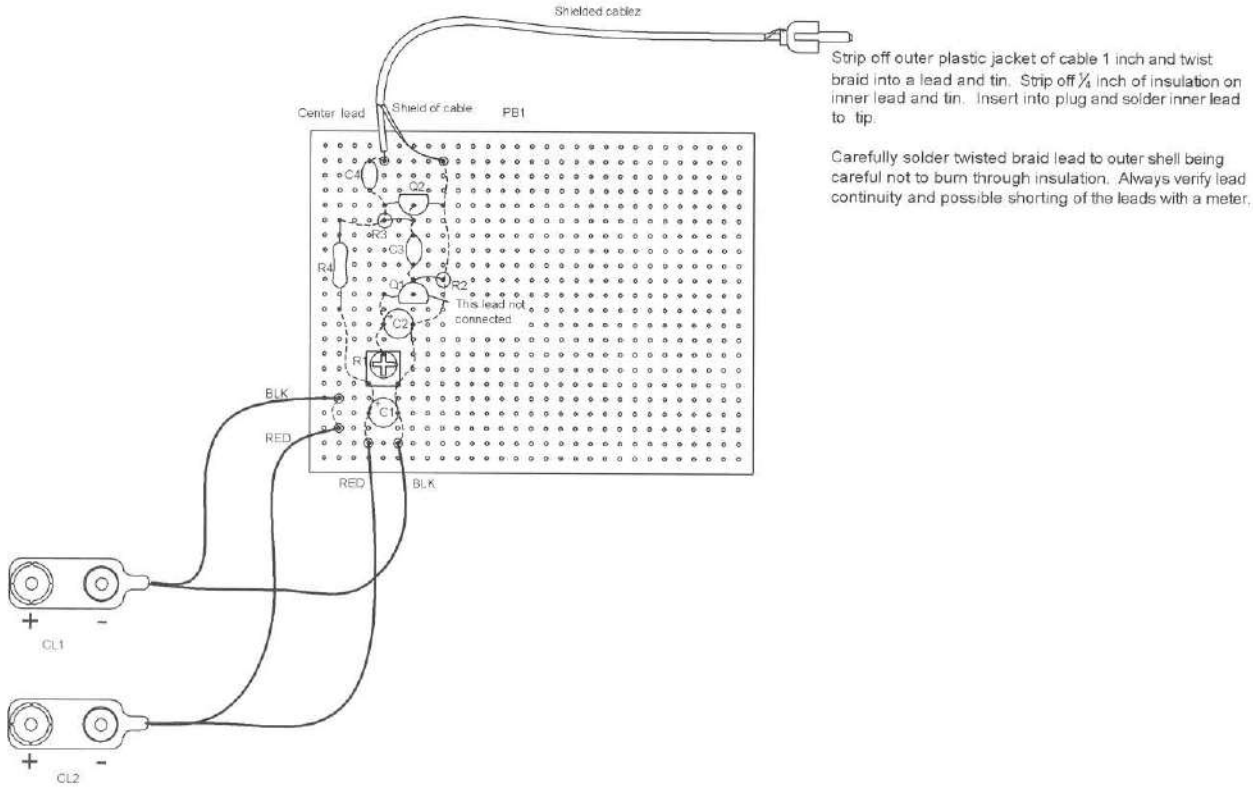

Figure 28-4 *Assembly showing external leads*

Table 28-1 Noise Curtain Generator Parts List

Ref. #	Description	DB Part #
R1	100K trimpot vertical mount	
R2, 3	Two 100K, ¼-watt resistors (br-blk-yel)	
R4	2.2K, ¼-watt resistor (red-red-red)	
R5	10K trimpot vertical mount	
R6	10-ohm, ¼-watt resistor (br-blk-blk)	
C1, 2	10-microfarad, 50-volt vertical electrolytic capacitor	
C3	.001-microfarad, 50-volt disc capacitor	
C4	.01-microfarad, 50-volt disk capacitor	
C5	1,000-microfarad, 25-volt vertical electrolytic capacitor	
C6	.047-microfarad, 50-volt plastic capacitor	
C7	220-microfarad, 25-volt vertical electrolytic capacitor	
Q1, 2	Two PN2222 NPN general-purpose transistors	
I1	LM386 dual inline package (DIP) operational amplifier	
PB1	2.25 × 3 × .1 × .1-inch grid perforated circuit board	
SPK1	Small 8- to 16-ohm speaker	
CL1, 2	Two 9-volt battery clips and leads	
P1	RCA phono plug	
SHC1	12-inch shielded microphone cable	

Chapter Twenty-Nine

Mind-Synchronizing Generator

Caution: This machine can trigger epileptic seizures and should be avoided at all costs by anyone who suspects even slightly that they are epileptic.

Your mind synchronizer is designed to be a completely self-contained unit with built-in batteries (see Figure 29-1). The system produces a variable-rate, flashing, monochromatic, directional, "shaped" light source (a light source with a variable ratio of off to on times), and a complementary synchronized audio pulser with tone-shaping control. The unit may be used so that a group can be exposed to light and sound pulses. For individual use, headphones can be used, along with special assembled light glasses. These are shown made from an existing pair of sunglasses. Optimum performance requires a quiet and reasonably low light condition, and distractions must be at a minimal. The mind-synchronizer can produce strange and bizarre hallucinations, as well as provide a sense of relaxation and well-being.

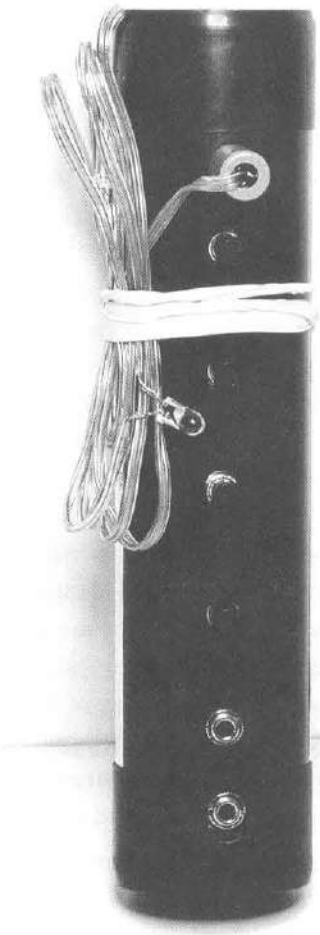

Figure 29-1 *Photograph of unit*

Information on Mind Control

Today's work environment demands that we have the ability to excel, to compete, and to resolve problems. Hence, the most important tool we possess is our mind. To optimize our potential, we now offer our low-cost mind-synchronizing unit.

After 25 years of research, Dr. Axel Bruck of Berlin, Germany, created a machine that can enhance, develop, and perfect the qualities within you in order to attain the goal of mental fitness. It has been found that external stimulation evokes a mental reaction in people that is either active or passive. The mind synchronizer can determine automatically the kind of person you are. An evaluation is performed via the means of a hand sensor using a technique called biofeedback, which is sensitive to the flow of blood. This knowledge is very important for providing optimal stimulation to the users.

Having determined the kind of person you are, the mind synchronizer now uses "programmed" light pulses and "shaped" sound to help you reach a required mental condition, be it relaxation or efficiency. It has been known for hundreds of years that an external rhythm of light and sound has an effect on your mental condition. The mind synchronizer is a modern version of a drum and a flickering fireplace.

Through extensive scientific measurements, experiments, and results, the mind synchronizer can improve your performance level by using the right stimuli:

- Deep relaxation to the point of sleeping
- Relaxation
- Equilibrium
- Activation of muscles doing physical movements
- Efficiency

Whether in sports, professions, or personal lives, the development of personality and identity is vital to personal success and satisfaction. The mind synchronizer trains and perfects your mental and psychic abilities so that you have a stable way of thinking with a healthy outlook. The mind synchronizer teaches you the technique of concentration, stress handling, focusing, visualization, relaxation, and self-awareness

When using the mind synchronizer, you learn to set a goal and concentrate on this goal completely. You eliminate all distractions and thereby maintain your concentration over a long period of time. By doing so, you improve your power of concentration. In the long run, you will think clearly, make better decisions, and deal more effectively with life itself.

The program of relaxation combats stress, tension, and direct pressure. Almost everything we do causes stress. Stress means that the body is in a chaotic condition. The opposite of stress is relaxation. The right kind of relaxation is an optimization of mind, concentration, learning ability, performance, and health.

In reality, a relaxed person saves more than half a billion heartbeats over a nervous or hectic person, according to Professor Prinzinger's theory of the Quiet Pulse. Professor Prinzinger performed much research into the various relaxed states of the body and the relationship of relaxation to heart rate and blood pressure. The body consumes less energy, organs are burdened less, and life expectancy increases.

The program of efficiency is a newly developed psycho-active technique: the indication of unconscious eye movement and the employment of rhythm displacement. Certain stimulating rhythms such as that of a strobing light can produce nausea when strobing at 20 repetitions per minute. Other stimulating rhythms of lower repetitions per minute can produce relaxation and the feeling of well being. In such a case, eye movement usually follows at the lower repetition rates. The combination of visual effects (flashing *light-emitting diodes* [LEDs]) with audio input (via a headset) produces high-efficiency performance. The mind synchronizer establishes physical and mental readiness to attain this goal of high performance.

The program of activation involves more optic, visual patterns than acoustic ones to provide "imagination journeys." To experience associations with your own history and your own personality, you will be able to discover your emotional condition and personality.

The program of equilibrium allows for meditation with your eyes open. You would observe attentively, simply, and exactly each individual light source and its changes. The mind synchronizer will bring you the healthy balance you desire through light and sound.

Mind machines are available from a wide variety of sources today. Often referred to as hemispheric synchronizers or cortical-frequency entertainment devices, they all basically perform one basic function: They lead the brain to synchronize both hemispheres and then lead those synchronized hemispheric frequencies to a specific target frequency. In order to

understand why anyone would want to do such a thing, let's examine what frequencies the brain produces and what people experience when the brain is at these frequencies.

Generally, brain waves are broken down into four different levels. They are referred to as beta, alpha, theta, and delta. With respect to frequency, they are as follows:

Beta: 13 cycles per second or more

Alpha: 8 to 12 cycles per second

Theta: 5 to 7 cycles per second

Delta: 1 to 4 cycles per second

Profound changes take place in a person's conscious experience at each of these levels. The beta frequency is the "normal" waking frequency, the drive-in-the-city, go-to-work, drink-coffee frequency, and it can range as high as 40 cycles per second. It is *not* a relaxing frequency.

The alpha frequency is a realm of relaxed awareness. It has been shown in a concrete fashion that this frequency is associated with an increased capacity for learning, comprehension, and retention. It is in the alpha state that the best learning occurs.

Theta is a hypnotic state often associated with meditation, a zen-like state of waking dreaminess. It can be a profoundly relaxed state where internal associations and thoughts can form ideas with clarity that could never have emerged in the normal, high-noise environment of the beta state. This is also the range that many native shamans have been found to enter when engaging in healing trance work. It is a state of profound tranquility.

The delta state is much simpler to define; you're asleep. When your brain waves are in the delta range, you're in a sound and restful sleep.

A number of studies have been done that indicate that a flashing light has a profound impact on the entire brain, more so than a pulsing sound or feeling. When the brain is exposed for a time (as short as 2 to 5 minutes) to a flashing light at a speed close to the brain's existing operating frequency, the brain will begin to synchronize with the stimulation. Moreover, both hemispheres, which are often operating at different frequencies, will harmonize. This has also been shown clinically and statistically to be an aid to mental functioning. Many books are available on the market on this subject for anyone who would like more detailed information on these studies.

Operating a Mind Machine

Now with the previous information in mind, the operation of the mind machine in all of its forms is basically the same. Start the machine off at a frequency that is roughly equivalent to the operating frequency of your brain at the time. (Use your own feelings as a gauge. If you're frazzled, start at maximum frequency; if you're pretty mellow, start at about half-frequency.) Allow yourself about 3 to 4 minutes at this frequency, and then slowly begin bringing the frequency down, very slowly. You should take about 7 to 10 minutes to bring the control all the way down. When you reach a minimum, leave it there for about 5 to 7 minutes.

After you've gotten to the bottom range, you can either lead yourself back to normal, in which case you will feel what you may consider a "good normal." If you so choose, you can exit directly from the lowest setting. If you do, have taken your time getting to it, and stayed there for several minutes, you will notice that it may be very hard to begin to move. Your limbs may feel very heavy, as if your body were asleep. If you manage to get to your feet, you may notice that things won't feel as solid; they'll seem to have a rubbery quality to them. These sensations can be quite pleasant as long as you're prepared and expect them (and don't have to drive or operate heavy machinery afterward!).

The visual effects are the most stunning and can only be likened to the experience of ingesting certain mind-altering substances. As the frequencies change, you will notice colors. Yes, two little flashing red lights in front of your closed eyes will create the illusion of fantastic, swirling colors and geometric designs ranging from ultimate simplicity to incredible complexity. One effect will be observed as myriads of little shapes that form and begin to slowly spiral around your field of vision, first clockwise, then counterclockwise, then back again. You will see dreamy, smooth, cloudlike fields of frosty blue-white, deep blues, deep reds, electric greens, yellows, whites, and purples, all in balls,

stripes, stars, and triangles, dancing and moving like the most intense kaleidoscope you can imagine. The imagery is absolutely fascinating and can transfix you with the dazzling display. You will be absolutely amazed and impressed with the fact that it is your brain that produces this light show.

This unit is designed to take you from a medium-level beta down to a low theta. You can use these states as you desire. You may wish to stop the frequency decrease early and remain in the alpha state before an exam, prior to entering a class, or when trying to learn something important. You can continue on down and enter the theta level and create healing imagery in your mind to assist your body's own natural healing processes.

Most of all, play with your unit and enjoy the show. Built right, it will provide many years' worth of reliable service. Through usage, you can become familiar with the settings and be able to use the machine in a way that's exactly right for you. Always leave yourself plenty of time to use the machine and at least a half-hour after to "normalize." Use the unit to help you drift off to sleep; you can actually lead your brain down into relaxation and turn the unit off after you've gone into a deep theta, and if you're ready to sleep away, it's only a short slide from theta into the peaceful slumber of delta.

Circuit Theory

Integrated circuit I1 is an astable oscillator with a pulse rate being controlled from approximately 3 to 40 reps per second by external pot R2. The output of Ul now triggers integrated circuit I2 being connected as a monostable circuit that controls these pulses' ratios of on to off time. This duty cycle control is via external pot R5. Light-emitting diodes (LEDl and LED2) are connected to the output pin 3 of I2 through brightness control pot R7. These are the diodes you install in the sunglasses or they can be a single ultrabright LED for group use. The result is a variable flash rate from 3 to 40 pulses per second with a variable duty cycle rate (ratio of on to off time).

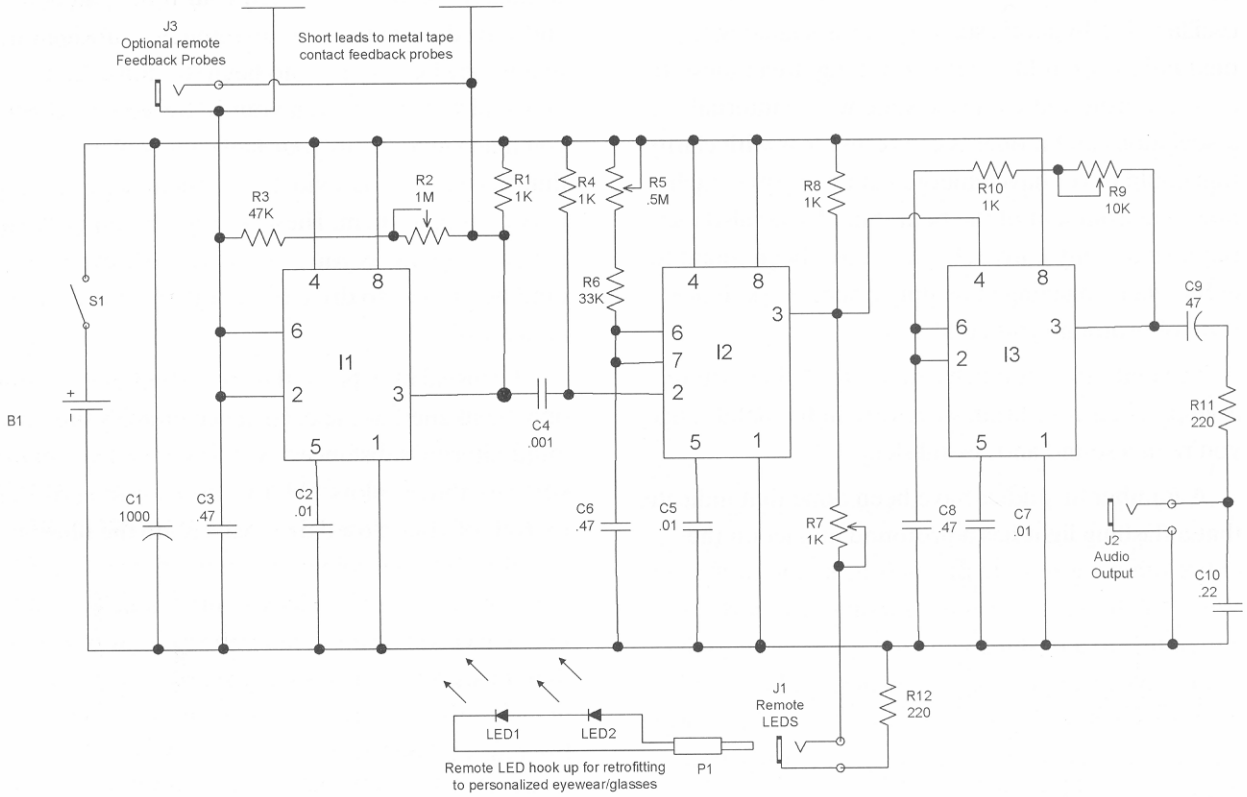

Figure 29-2 *Circuit schematic*

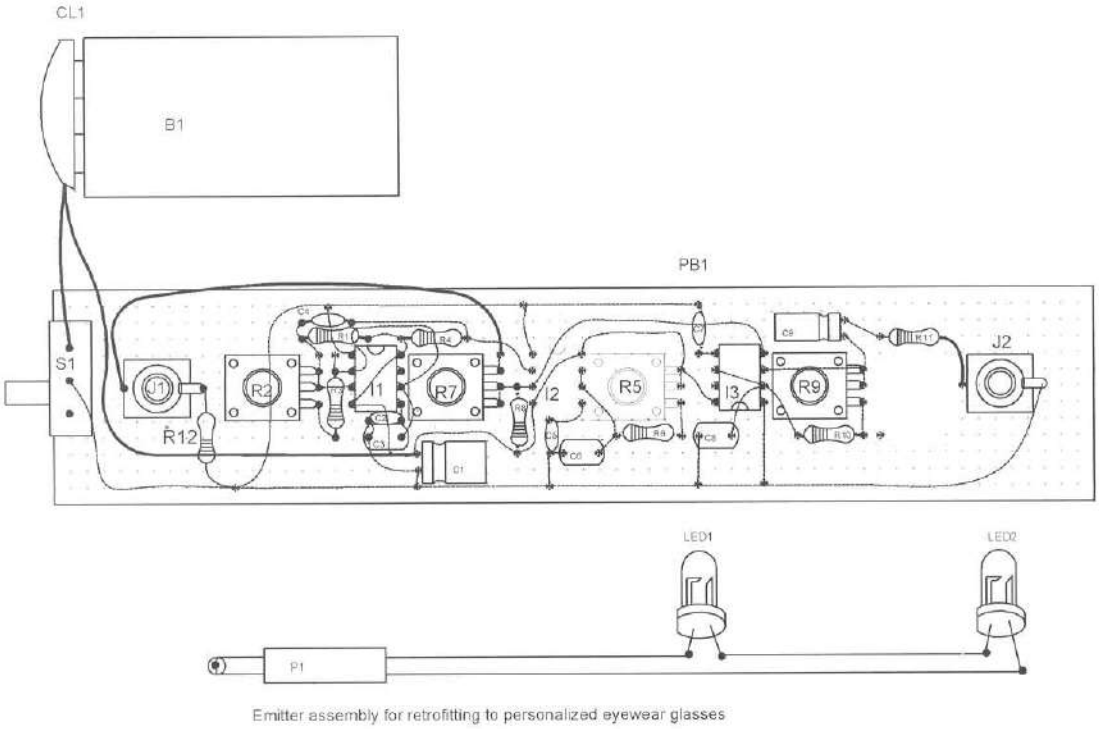

Figure 29-3 *Assembly board*

Note it is best to experiment with and record the duty cycle settings and their effects (see Figure 29-2).

The circuit also includes integrated circuit I3 connected as a variable-rate, sonically "shaped" audio oscillator. The output is via jack J2 driving a set of 32-ohm headphones.

The feedback circuit consists of two external pieces of metallic tape providing points of contact for the user's hand. Body resistance now partially controls the pulse rate of I1. An uptight situation provides lower contact resistance and consequently raises the pulse rate. As one relaxes, this resistance becomes higher and lowers the pulse rate. An external jack (J3) provides a connection for other bodily contact probes to the feedback system. These contact probes are left to the discretion of the user. This jack is omitted when using the external tape probes. Switch S1 controls power to the circuit and should be off when not in use to conserve the internal batteries.

Assemble the Board

If you are a beginner, it is suggested to obtain our *GCAT1 General Construction Practices and Techniques*. This informative manual explains basic practices that are necessary in proper construction of electromechanical kits and is listed in Table 29-1.

1. Lay out and identify all the parts and pieces. Verify them with the parts list, and separate the resistors as they have a color code to determine their value. Colors are noted on the parts list at the end of the chapter.

2. Cut a piece of .1-inch grid perforated board to a size of $6^1/_4 \times 1^1/_4$ inches, as shown in Figure 29-3. An optional PCB is individually available.

   The circuit is shown with the more challenging perforated circuit board often required for a science fair project. A PCB is also available and requires that you only identify the particular part and insert it into the respective holes as noted. The PCB is plainly marked with the part identification. Soldering is very simple as you solder the component leads to the conductive metal traces on the underside of the board.

   The perforated board approach is more challenging as now the component leads must be routed and used as the conductive metal traces. We suggest that the builder closely follow the drawings on this section and mark the actual holes with a pen before inserting the

Obtain a pair of sunglasses preferably the ones with side shields. Measure the distance between your eye centers. This is usually about 2½". Drill the two holes just a bit smaller than the LEDS to provide a secure fit. Press into the holes and glue if necessary to further secure.

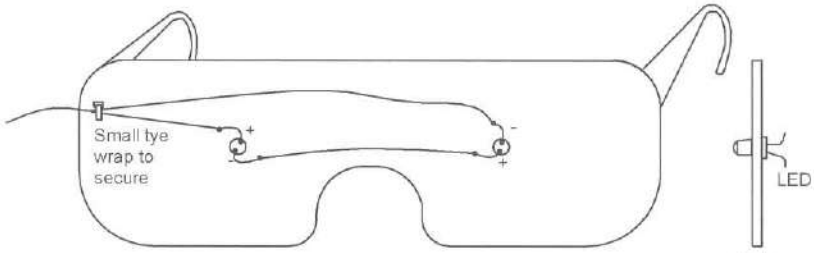

Front view showing wiring and strain relief of wire to unit. Use a small tye wrap and dabs of silicon rubber to hold wires in place. Carefully solder the leads from the LEDS to extension leads and observe polarity as shown on the emitter assembly on figure 29-5

Side view

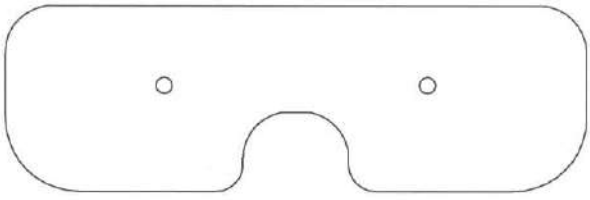

View towards the eyes. Secure the leads to the frames of the assembly to keep out of the way. You may also use pieces of duct or electrical tape to hold all in place.

Figure 29-4 *Assembly of glasses*

parts. Start from a corner, using it as a reference, and proceed from left to right. Note that the perforated board is the preferred approach for science projects as the system looks more homemade.

3. If you are building from a perforated board, it is suggested that you insert the components, starting in the lower left-hand corner, as shown in Figure 29-3. Pay attention to the polarity of the capacitors with polarity signs and all the semiconductors. Resistor RI2 is connected from the pin of 11 to the PC board. Note the control pots R2, R5, R7, and R9 and jacks J1, J2, and J3 should be positioned to closely match the holes, as shown in Figure 29-5. Route the leads of the components as shown and solder as you go, cutting away unused wires. Attempt to use certain leads as the wire runs or use pieces of the #24 bus wire. Follow the dashed lines on the assembly drawing as these indicate the connection runs on the underside of assembly board.
4. Attach the external leads to the battery holder as shown.
5. Double-check the accuracy of the wiring and the quality of the solder joints. Avoid wire bridges, shorts, and close proximity to other circuit components. If a wire bridge is necessary, sleeve some insulation onto the lead to avoid any potential shorts.
6. Assemble an LED to cable P1 as shown. Also, retrofit to the eyewear as per Figure 29-4.
7. Fabricate the enclosure tube (TUB1) as shown in Figure 29-5 and insert the assembly board and battery. Verify that the controls mounted on the assembly board will match the drilled holes with the dimensions as shown. Note the dimensions are shown for use with the optional PCB and may be changed. The unit is secured attaching the adjustment pots via nuts.
8. The final assembly is shown in Figure 29-6 and should be operated as instructed.

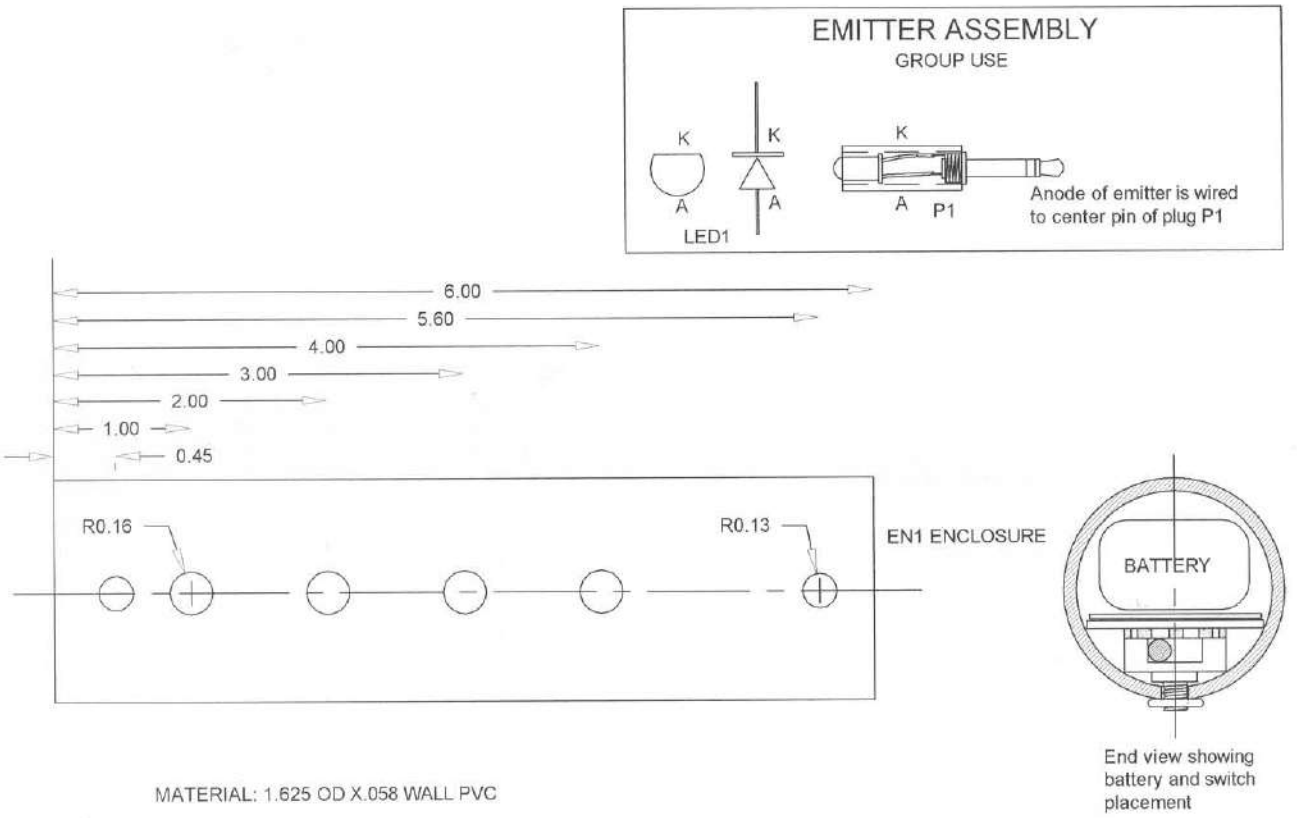

Figure 29-5 *Fabrication of enclosure*

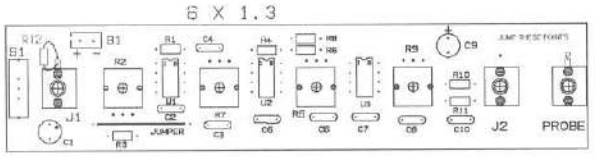

Figure 29-6 *Final assembly on PC Board*

Table 29-1 Mind-Synchronizing Generator Parts List

Ref. #	*Description*	*DB Part #*
R1, 4, 8, 10	Four 1K, ¼-watt resistors (br-blk-red)	
R2, 5	.5-1 meg potentiometer resistor	
R3	47K, ¼-watt resistors (yel-pur-or)	
R6	33K resistor (or-w-or)	
R7	1K pot resistor	
R9	10K pot resistor	
RI1, 12	Two ¼-watt 220- to 330-ohm, resistors (red-red-br)	
CI	1,000-microfarad, 25-volt vertical electrolytic capacitor	
C2, 5, 7	Four .01-microfarad, 50-volt disc capacitors	
C4	.001 mfd, 50-volt disk capacitor	
C3, 6, 8	Three .47-microfarad, 50-volt mylar capacitors	
C9	47-microfarad, vertical electrolytic capacitor	
C10	.22-microfarad, 50-volt mylar capacitor	
Il, 2, 3	Three 555 dual inline package (DIP) timers	
*LED1, 2	Two bright-red LEDs or use single, optional 15,000 mcd assembled as shown	
S1	Single pole, single throw (SPST) PC switch	
CLI	9-volt battery snap	
11, 3	Two 3.5 mm mono jacks	

Operation and explanation of controls

1. Slide of bottom cap and insert a 9 volt battery

2. Plug in 30 ohm headsets into J2

3. Plug in cable to LEDS in glasses

4. Identify and study the functions of the four controls

   R2-Frequency control allows setting from 1-24 reps

   R7-Allows setting of LED brightness

   R5-Sets the ratio of "off to on" time. Will interact with R2 if set to long "on" time. Suggest to preset full CW and then set for desired effect

   R9- Allows tone adjustment or sound shaping.

5. Adjust the unit to produce a test tone of about 3 pulses per second. Grab feed back probes being the metal strips along the side of the unit and note pulse rate increasing. It is suggested to become familiar with the operation and resulting effects before attempting to use the feedback functions.

6. Unit is easily hand held with all controls accessible

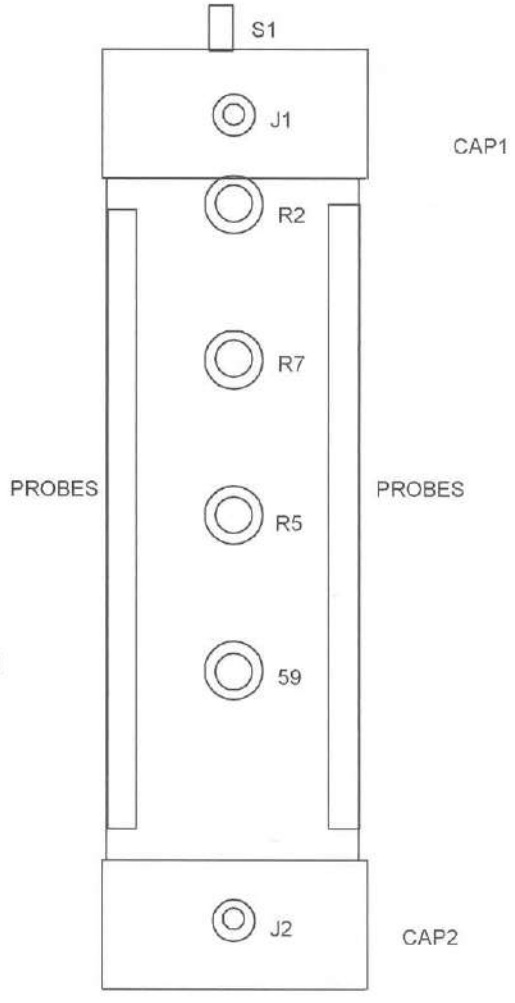

Figure 29-7 *Operation and Explanation of Controls*

J2	3.5 mm stereo jack
WR1	12 inches of #24 hookup wire
WR2	24 inches of #24 bus wire
WR3	48 inches of two-cord speaker wire
PB1	.1 × 6¼ × 1¼-inch grid perforated board
PCBOARD	Optional printed circuit board (PCB) with printing DB# PBMIND
EN1	Enclosure, sized at 1⅝ OD × 1 7/16 ID × 7 inches
CA1, 2	Two 1⅝ inch plastic caps #A 1⅝
P1	3.5 mm plug for LED cable to eyewear
HEADSETS	Stereo or mono, 32-ohm, cushioned headphones
TAPE	4 × ½-inch metallic silicon tape229

Chapter Thirty

Alternative Health Multiwave Machine

Figure 30-1 shows how to construct a Lakhovsky multiwave alternative health system. Dr. Lakhovsky was a Russian researcher who experimented with the effects of high-frequency electromagnetic radiation on various parts of the living organism. This controversial system is claimed to cure many health ills, including cancer. Its claim to fame is that all cells in a living body possess an intrinsic, vibrating resonant frequency that can be energized by an external means. Diseased cells appear to have a weaker and different frequency that can be brought back into step with the adjacent nondiseased cells. Antiaging appears to occur when cells are exposed to this full-spectrum electromagnetic vibratory energy. It is of special interest that this method of cellular regeneration has generated considerable interest in several research fields as a possible cure for cancer.

This project shows how to construct the multiwave radiating coil and antenna from readily available parts and pieces. System operation will require a working BTC30 12-inch-spark Tesla coil, as described in Chapter 14 of *Electronic Gadgets for the Evil Genius*. This Tesla coil is also available through plans, a kit, or as a complete and ready-to-use coil on the Information Unlimited Web site at amazing1.com.

It is suggested that the builder obtain the Lakhovsky handbook as listed in the parts list at the end of this chapter and study the methods of application and testimonials on the use of this controversial health machine before using it on one's self or others.

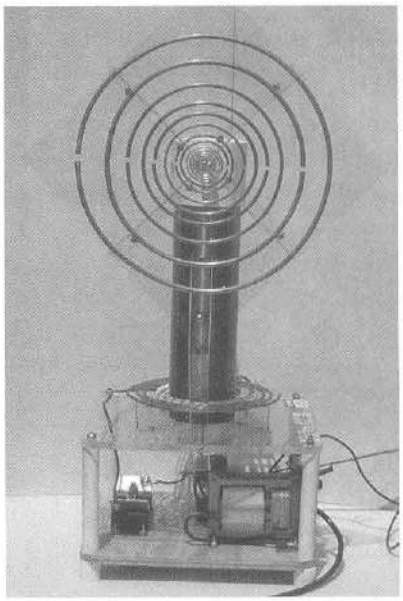

Figure 30-1 *The multiwave antenna*

Theory of Operation

Figure 30-2 shows a block diagram of the radiating coil and Tesla driver. The antenna coil contains a series of concentrically wound coil rings mounted in a flat plane. These coils all possess an inherent resonant

L1 to Ln represents the inductance of all of the coils.
C1 to Cn reprasents the capacity of all of the coils.
R1 to Rn is the radiation resistance of each section.
Frequency are the sum of the resonant sections ranging up to the gigahertz.

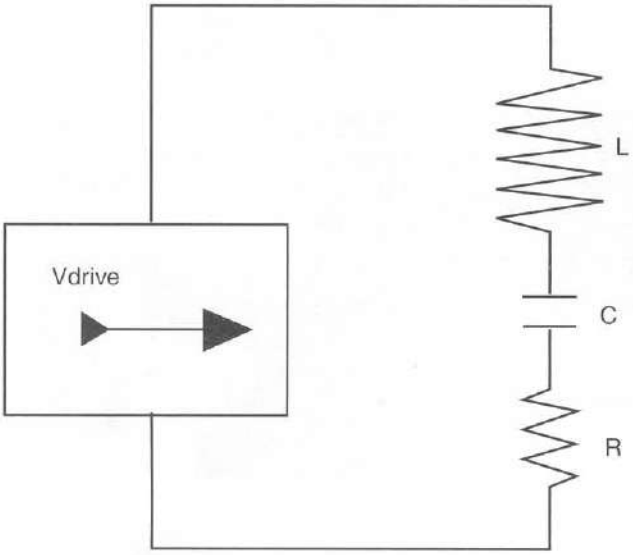

L is the sum of L1 to Ln
C is the sum of C1 to Cn
R is the sum of R1 to Rn and is mainly the radiation resistance.

The undamaged current wave from the output of the Tesla driver induces voltages at many frequencies into the multicoils of the antenna.

Figure 30-2 *Diagram of system*

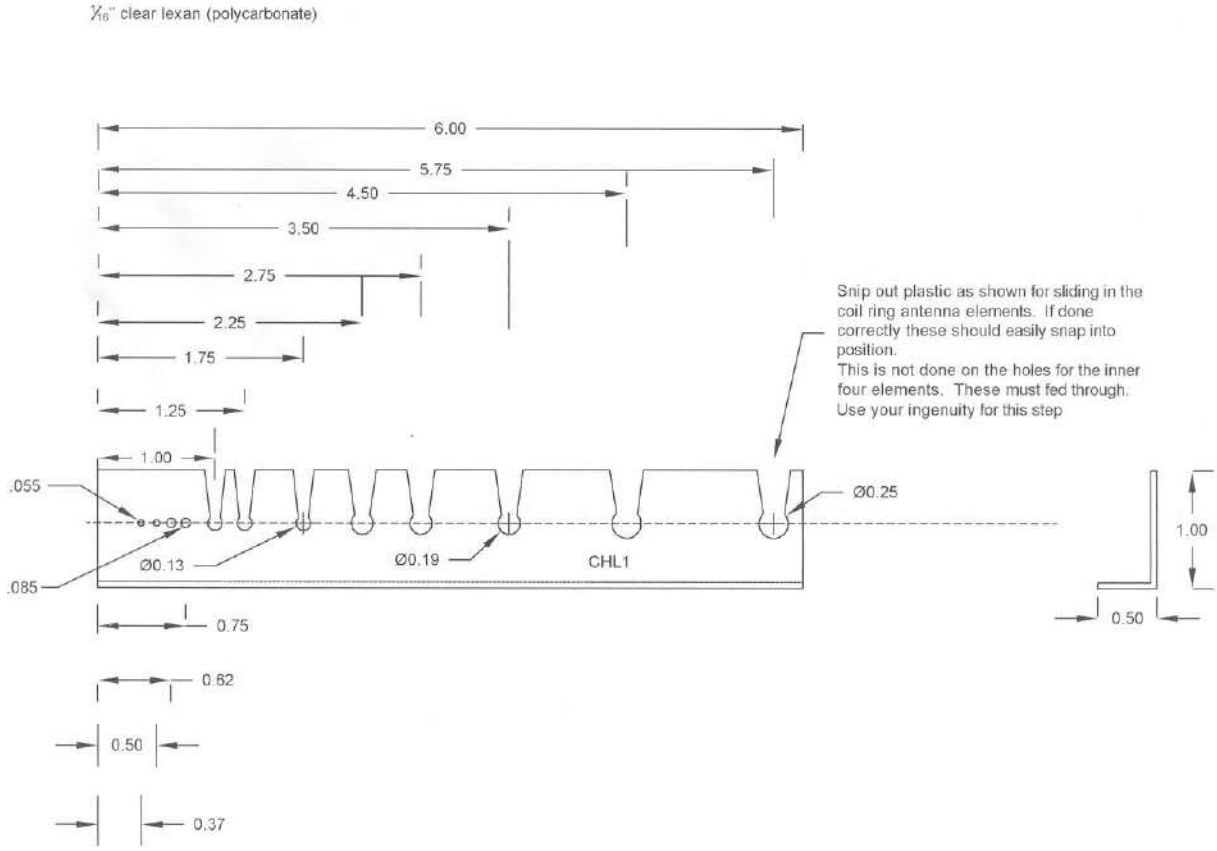

Figure 30-3 *Fabricating the four coil holders*

frequency as a function of their physical parameters. Harmonics are also produced and with all the coils oscillating they create a near-continuous spectrum of radio-frequency energy. A spark-driven Tesla coil is required for optimum results, as it generates many fast steps of current rich in harmonic content that drives the antenna coil.

Construction of the Multiwave Coil and Antenna

1. Create the four coil holders (CHOLD1) as shown in Figure 30-3. Use 1/16-inch Lexan polycarbonate.
2. Create the 12 × 12-inch main plate (MP1) from a piece of 1/16-inch Lexan sheet, as shown in Figure 30-4.
3. Mount the coil holders as shown and carefully drill the mounting holes. Use nylon or brass screws and nuts for mounting the holders to the plate. It is very important to have these holders as exact as possible or the wound coils will not fit properly in their predrilled slots.
4. Form the circular coil rings from the appropriate diameter copper tube and snap the tubing into place. Again attempt to form circles as perfect as possible for proper operation and esthetics. The inner coil rings are formed pieces of bus wire and are threaded through their respective holes. Note a 1/8-inch gap at the coil ends.
5. Attach a PVC cap (CAP1) using a small metal screw, solder lug, and nut. This screw is the high-voltage feed point to the antenna and is connected to a piece of wire soldered to the innermost coil ring (see Figure 30-5).
6. The antenna may be used with any suitable high-voltage, high-frequency generator. It is shown in Figure 30-6 with our BTC30 250-kilovolt Tesla coil, as described in Chapter 14 of *Electronic Gadgets*. It is available as a kit or completed system as noted in Table 30-1.

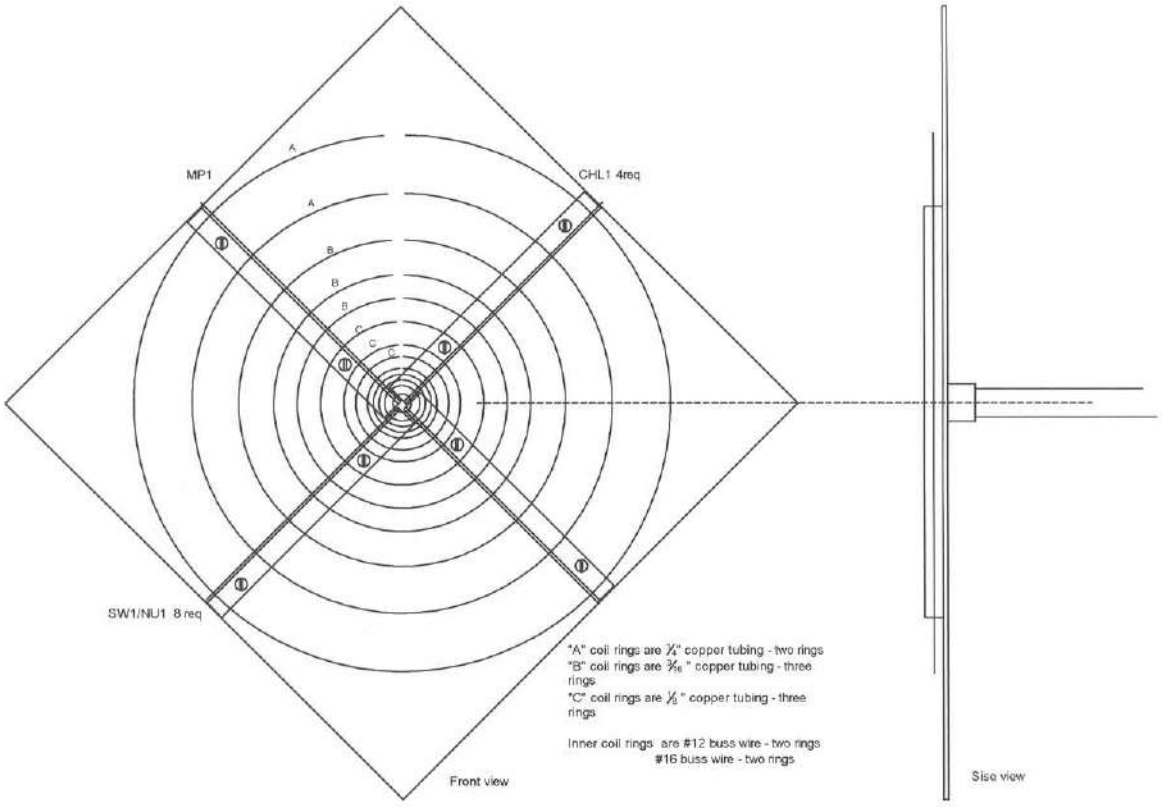

Figure 30-4 *Creating the base*

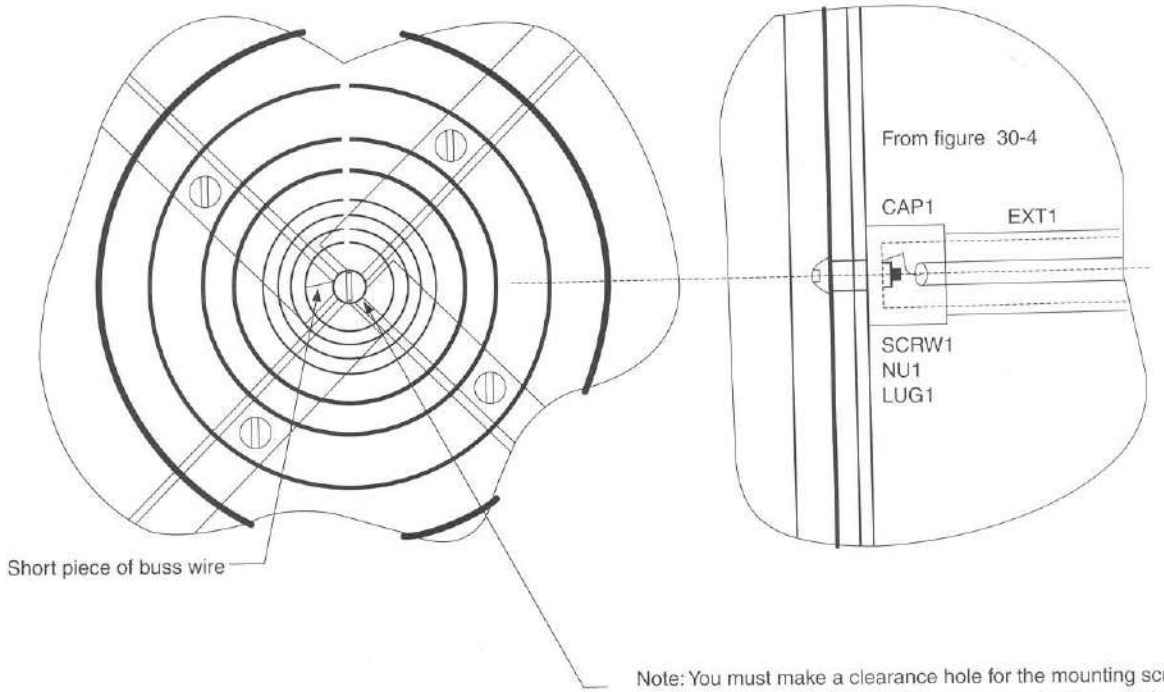

Note: You must make a clearance hole for the mounting screw SCRW1 exactly in the center. It may be necessary to heat up a suitable size diameter metal rod and carefully melt a clearance section out of the four coil holders for the head of this screw. You must now connect a short piece of buss wire from this screw to the inner most ring and solder in place.

Figure 30-5 *Mounting and feeding details*

7. If you intend to use our coil, you will need to obtain a 3-inch slip cap (SLP1) and drill a hole for the extension arm tube (EXT1). You will also need the plastic stabilizing bracket (BRK1) required to keep the coil assembly upright.
8. The connection between the output of the Tesla coil and the antenna is made via the wire sleeved through the extension tube that connects to the mounting screw and exits through the rear to make contact with the Tesla coil output lead.

Operation

The following instructions reference the use of our 250-kilovolt Tesla coil as listed in Table 30-1 or as described in Chapter 14 of *Electronic Gadgets*.

1. Preset the spark gap on the Tesla coil to no more than 1/16 of an inch. Connect the tap lead for maximum inductance.
2. Turn on the switch on the Tesla coil and note all the antenna coil rings adjacently sparking and arcing between one another. Note that the outer ring may be grounded to the chassis to increase output activity.

At this point, it is recommended that you obtain the referenced book (LSK1), the *Lakhovsky Multiple Wave Oscillator Handbook*, as referenced in the parts list and familiarize yourself with the potentials, treatments, and experiments possible with this system.

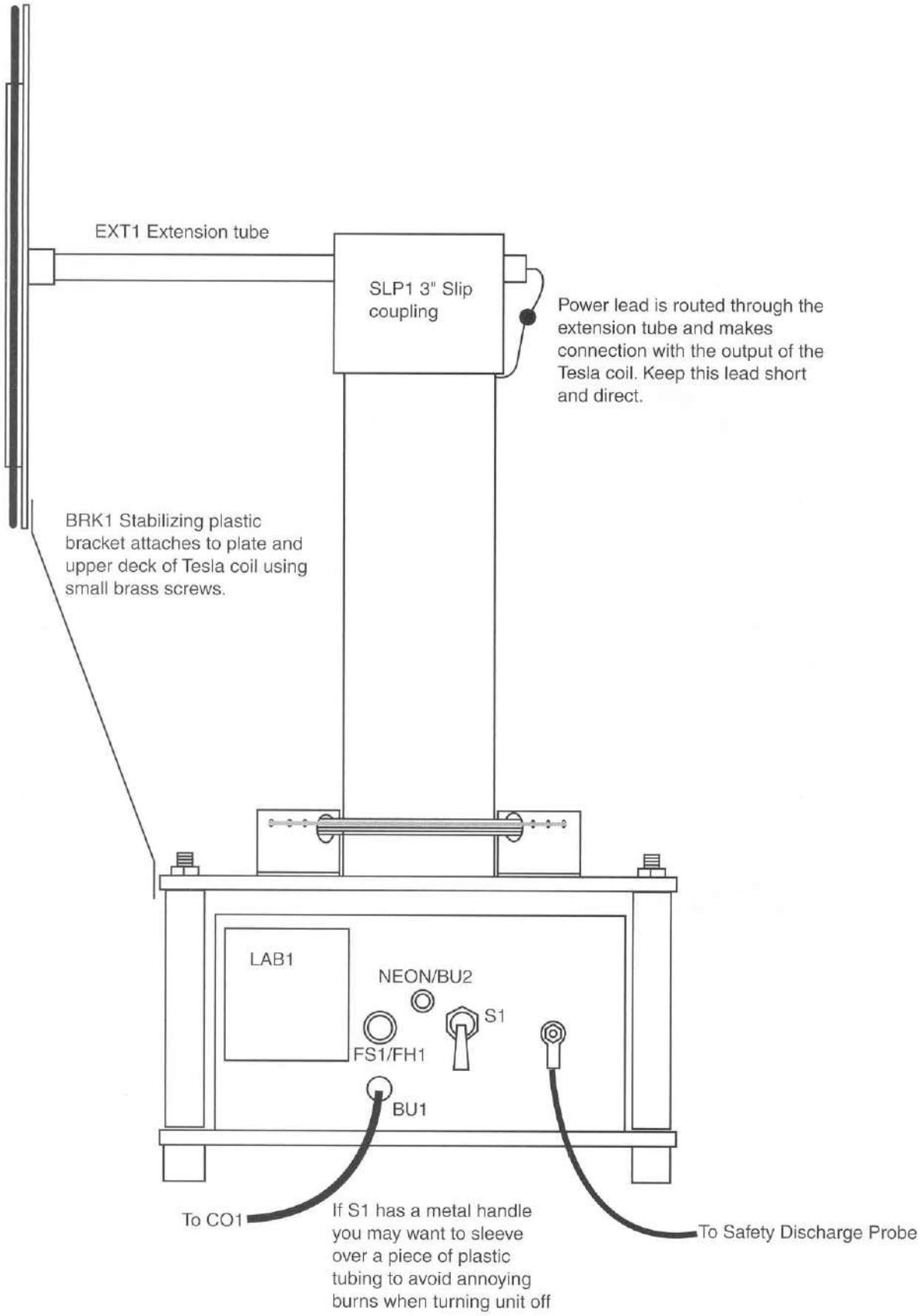

Figure 30-6 *Completed system*

Table 30-1 Multiwave Machine Parts List

Ref. #	*Description*	*DB Part #*
CHL1	Four coil-ring holders shown in Figure 30-3	DB# CHL1LAK
MP1	Mounting plate shown in Figure 30-4	
ARING	Two ¼-inch copper, soft drawn tubings	
BRING	Three 3/16-inch copper, soft drawn tubings	
CRING	Three ⅛-inch copper, soft drawn tubings	
INNERRING	Two #12 bus wire circular rings	
INNERRING SMALL	Two #16 bus wire circular rings	
SW1/NU1	106-32 × ½-inch brass or nylon screws and nuts	
SCRW1/NU1	6-32 × ¾-inch brass screw and nut	
LUG1	#6 solder lug	
WR20	24 inches of #20 bus wire	
BRK1	Stabilizing bracket shown in Figure 30-6	
CAP1	½-inch PVC slip cap	
SLP1	3 inches of PVC slip coupling	
EXT1	18 inches of ½-inch PVC tubing	
BTC3K	250-kilovolt Tesla coil generator kit and plans	DB# BTC3K
BTC30	250-kilovolt Tesla coil generator ready to use	DB# BTC30
LSK1	Book on Lakhovsky, 144 pages	DB# LSK1

Chapter Thirty-One

Mind Mangler

This board-level device, as shown in Figure 31-1, when properly assembled, can be a great prank. When placed in one's bedroom under normal light condition, it does nothing. As soon as the lights are turned off, it comes to life, producing pulses of high-frequency sound much like an insect. These control pulses can be timed to occur about every minute. When the unsuspecting victim attempts to locate it by turning on the lights, it ceases operation. Even using a flashlight will disable it. The long time between pulses also makes it very difficult to detect. Properly hidden, it can take a long time to locate and may turn a prank into a nasty situation.

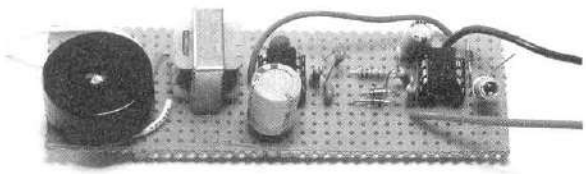

Figure 31-1 *Board-level view of the mind mangler*

Circuit Operation

Figure 31-2 shows a timer, I1, as a free-running, astable pulse generator producing a symmetrical 10-second, off and on pulse controlling the second timer, I2. Timer I1 has a phototransistor Q1 connected in series with the reservoir capacitor C1. As long as there is light on Q1, C1 can never discharge due to the conductance of Q1. Therefore, pin 3 is at a low and I2 is disabled. When the lights go out, C1 now is allowed to discharge and pin 3 goes high, turning on I2 and producing the high-frequency sound to the output transducer TD1. The high-audio frequency is determined by resistor R3 and C3, and can be changed by altering these values. The output signal from I2 is stepped up by transformer T1 (see the parts list at the end of the chapter).

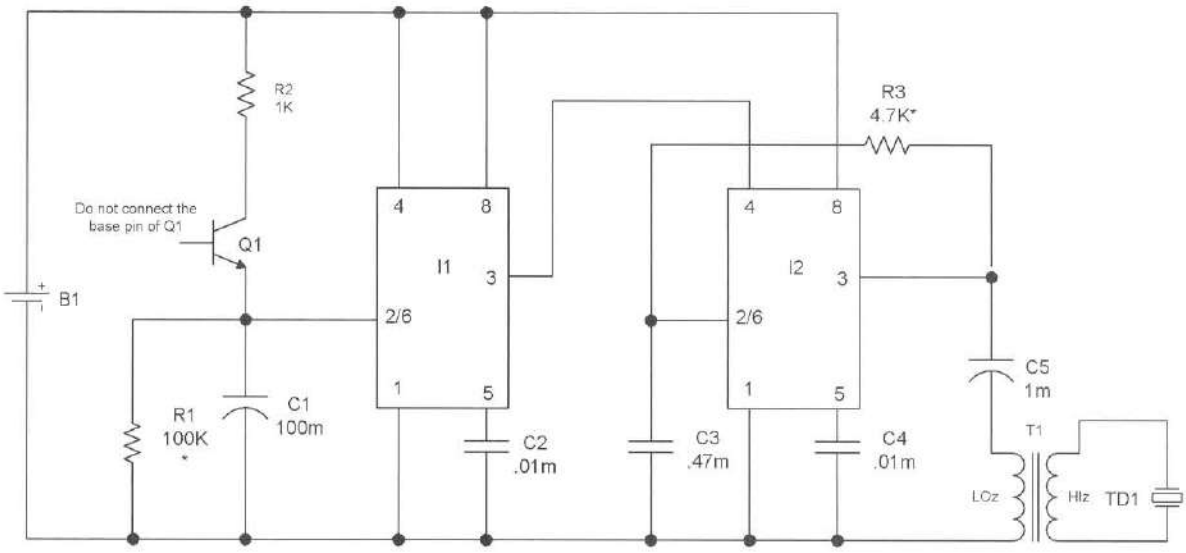

*The value of R1 May be changed to adjust for dark and light conditions. You may want to replace with a 500 K trimpot

Figure 31-2 *Circuit schematic*

Construction Steps

1. Identify all the parts and pieces and verify them with the bill of materials.
2. Insert the components starting from one end of the perforated circuit board and follow the locations shown in Figure 31-3 using the individual holes as guides. Use the leads of the actual components as the connection runs, which are indicated by the dashed lines. It is a good idea to trial-fit the larger parts before actually starting to solder. Always avoid bare wire bridges, globby solder joints, and potential solder shorts. Also check for cold or loose solder joints.

Additionally, pay attention to the polarity of the capacitors with polarity signs and all the semiconductors. The transformer position is determined using an ohmmeter.

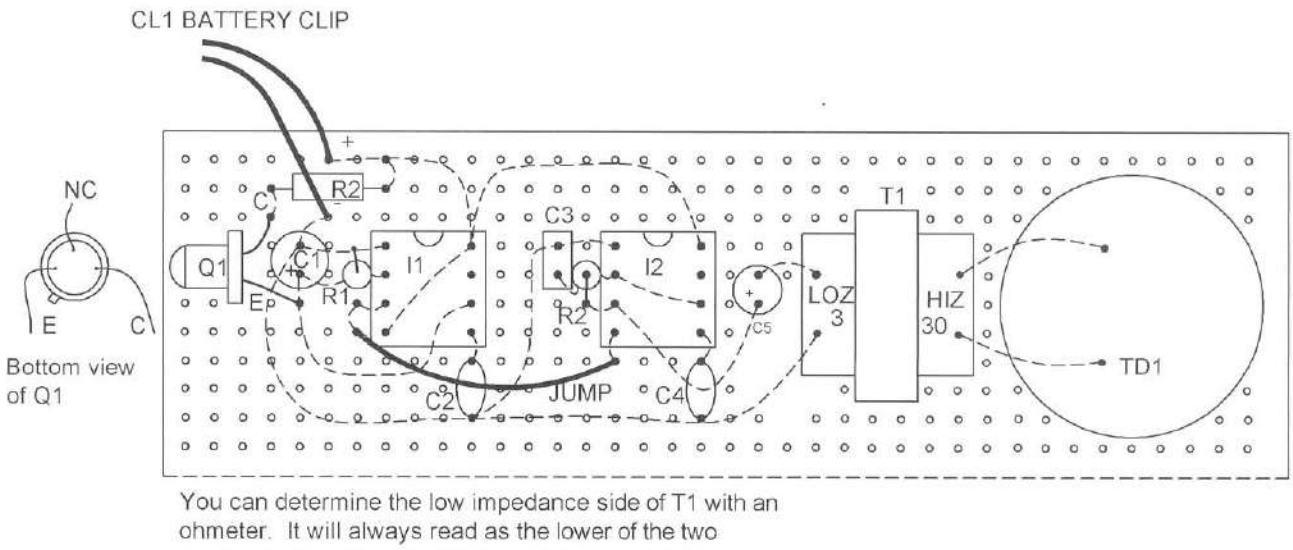

You can determine the low impedance side of T1 with an ohmeter. It will always read as the lower of the two

Figure 31-3 *Assembly board*

Testing

Verify the wiring accuracy and connection. Insert a 9-volt battery into the clip, cover the lens of Q1 or turn off the lights, and note the unit emitting a low-level, raspy, clicking tone like a sick cricket. Uncover the lens of Q1 and note the circuit shutting down. There will be a delay that is dependent on the level of light and dark. You may vary the response by changing the value of R1. Decreasing its value will require more light to shut down and vice versa.

Table 31-1 Mind Mangler Part List

Ref. #	*Description*	*DB Part #*
R1	100K, ¼-watt resistor (br-blk-yel)	
R2	1K, ¼-watt resistor (br-blk-yel)	
R3	4.7K, ¼-watt resistor (yel-pur-red)	
C1	100-microfarad, 25-volt vertical electrolytic capacitor	
C2, 4	Two .01-microfarad, 50-volt plastic capacitors (103)	
C3	.47-microfarad, 50-volt vertical electrolytic capacitor	
C5	1-microfarad, 50-volt vertical electrolytic capacitor	
I1, 2	Two 555 timer dual inline packages (DIP)	
Q1	L14P phototransistor	
CL1	9-volt battery clip	
TD1	Small piezo transducer	
T1	Small audio transformer, 8 to 1K	
PB1	4 × 1.5 × .1-inch grid perforated circuit board	

Chapter Thirty-Two

500-Milligram Ozone Air Purification System

Figure 32-1 shows a useful home device that generates ozone for eliminating odors, killing bacteria and mold, and disinfecting unsanitary areas such as pet boxes and bathrooms.

This project shows how you can build a system that could cost over $300 for less than $50. Its simple and basic design uses two 12-volt fans to blow air over a unique ozone-producing cell that is powered by a variable-output, high-voltage, high-frequency power supply. The power supply is featured in Chapter 7 of this book and is used in several other projects.

This is a beginner- to intermediate-level project requiring minimal basic electronic skills. Expect to spend $40 to $60. All the parts are readily available, with specialized parts obtainable through Information Unlimited (www.amazing1.com), and they are listed in Tables 32-1 and 7-1 at the end of this chapter and Chapter 7.

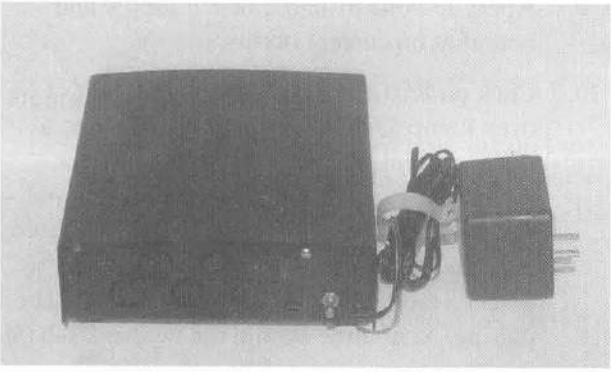

Figure 32-1 *Ozone purification system*

The Story of Ozone

Ozone is an unstable form of oxygen. Normal oxygen is diatomic (0_2), existing as two atoms of oxygen making up the molecule. Ozone is triatomic (0_3), existing as three atoms of oxygen for the molecule. The triatomic form of oxygen is very unstable, wanting to lose the third oxygen atom and combine with whatever atom it can (oxidization). This property makes it the most active oxidizer known, with the exception of the very hazardous fluorine gas. Ozone at normal pressures is colorless and odorless, yet it produces a pleasing, fresh-air odor as a result of the nitrous oxides it produces. The odor is usually noticeable after an old-fashioned thunderstorm. Under pressure, it becomes a bluish gas.

Ozone is also a very powerful bactericide. It is not affected by pH, as is chlorine, thus making it an excellent candidate for pools, spas, laundries, and general water treatment applications. It is many times more soluble in water, further enhancing its purifying effect. Ozone will combine with diatomic nitrogen, N_2, forming nitrous oxide, 2NO. This oxide quickly combines with water, forming nitric acid, HNO_3. This is often a very undesirable effect when used with

straight air. Pure oxygen greatly minimizes this effect and is often required in many applications.

However, those requiring a supply of concentrated nitric acid for the nitration of many carbohydrates, such as cellulose, glycerine, hexamine, phenol, and toluene, may wish to consider combining ozone and air with a condensing apparatus to obtain this useful acid.

Ozone for Treating Air

Air pollution is one of the most serious environmental issues that we face. Visible and detectable smoke, dust, mildew, mold, and toxic odors, bacteria, pollen, and static electricity, along with the more elusive and invisible chemicals, have become a serious health threat. As buildings and homes are constructed with tighter air sealants for energy conservation, the problem will become even more severe. Often the effects from these problems include burning eyes, headaches, dizziness, depression, allergies, and general lethargy, all of which are usually attributed to colds and viruses. Air filters, such as the overpriced Sharper Image unit currently being advertised, are only partially effective, with some producing undesirable positive ions.

Ozone purifies the air from these undesirable pollutants by oxidization, as most pollutants readily combine with this highly reactive tri-atomic form of oxygen and break down into water and other non-toxic compounds. Ozone is produced artificially by electricity and is many times more antiseptically effective than oxygen.

Construction Steps

1. The system is shown using the high-voltage, high-frequency driver shown in Chapter 7. It is built on a printed circuit board or a more difficult perforated board. The PCB version is the easiest, as construction involves placing the correct components into the correct holes and soldering. The more difficult approach is also shown and uses a perforated circuit board. This is far more challenging and is intended for the experienced assembler. Figure 32-2 shows the board with the necessary changes for use with this circuit.
2. Create the base section, as shown in Figure 32-3. You can use sheet aluminum or bendable plastic sheets. Design a mating cover with a slight overhang over the front and rear panels. Use similar material and mount using #6 sheet metal screws along the lip of the base.
3. Fabricate the fan and cell mounting bracket as shown in Figure 32-4. Use clear 1/16-inch polycarbonate plastic and initially layout the piece, marking off the bend and cutting lines. You may fabricate separate pieces for the cell brackets and fans if you do not have access to the necessary equipment. Note dimensions and cuts must result in a single piece, as shown.
4. Cut out a piece of window screen large enough to cover the input air holes and secure it from the inside of the base enclosure using screws and silicon rubber cement.
5. Mechanically assemble the components, as shown in Figure 32-5. Verify all proper fittings and the clearance of components, especially the high-voltage points on the cell. Finally, wire everything as shown and verify the accuracy and any potential errors. Note: Figure 32-6 shows the wiring using the perforated board approach. Do not connect the 12 DC/1.5 adapter wall transformer at this time.
6. Obtain a 12-volt, 3-amp bench power supply with a voltage and current meter. Connect it to where the adapter's plus and minus wires go.
7. Connect a scope to the test points, as shown in Figure 32-5.
8. Preset the trimpot R1 to midrange and control pot R10 to full counterclockwise and click off.
9. Apply 12 volts from the bench supply and note that no current occurs.
10. Click on R10 and note a pulsing current of over 1 amp. Quickly adjust the trimpot to a dip in current, as noted on the meter. Our model was tuned correctly when the trimpot was set to one to two o'clock. The fans should both be in full operation and you should detect a faint, bluish glow coinciding with the pulsing. At no time should the heatsink tab on the power transistor Q1 be hot.

It will be necessary to construct the printed circuit assembly board as shown in chapter 7 with the following below list of revisions.

Wind L1 using 10 turns of #22 magnet wire. Air gap core with .007 (7mils) shims. Measured inductance should be between 15 -16 micro-henries.

Trimpot R6 is not used

Replace R5 with a wire jump

Replace C2 from a .0022 to a .0047 microfarad capacitor

Replace C6 from a .22 to a .47 microfarad 250 volt capacitor

Capacitor C4 is not used. insert a short piece of buss wire for a test point ground

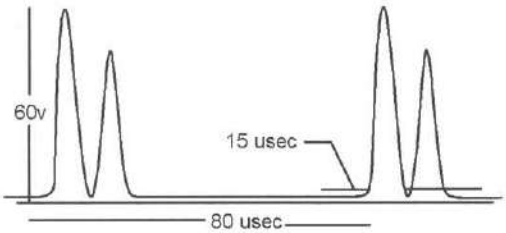

Correct wave shape measured at the drain of Q1 and test ground point

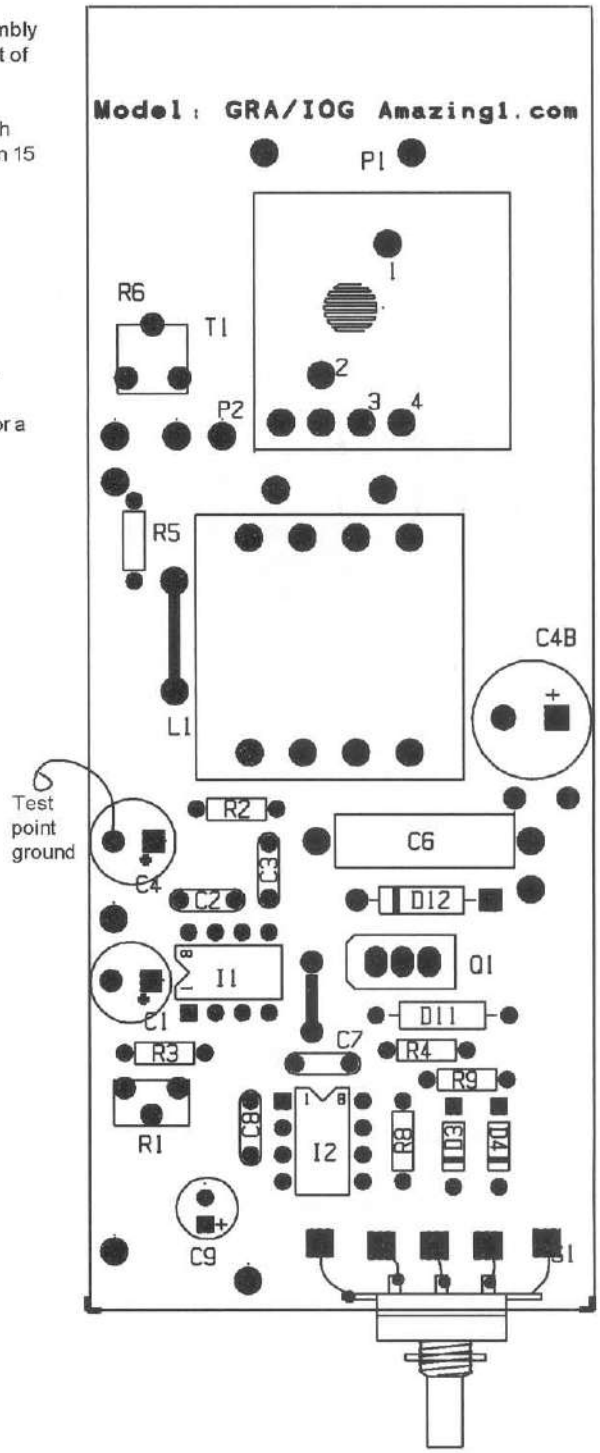

Figure 32-2 *PCB rework*

11. Turn R10 full clockwise and note the on time of the pulse increasing with the current but not exceeding 1.5 amps at these pulse peaks. Allow it to operate for 30 minutes and note ozone being produced, a soft, bluish, even glow on the cell, and the heatsink not getting too hot to touch.

12. Once this is verified, you can hook in the 12 VDC/1.5-amp adapter transformer. Allow it to operate and verify that the adapter does not get hot.

13. Attach the cover and place the unit in the target area.

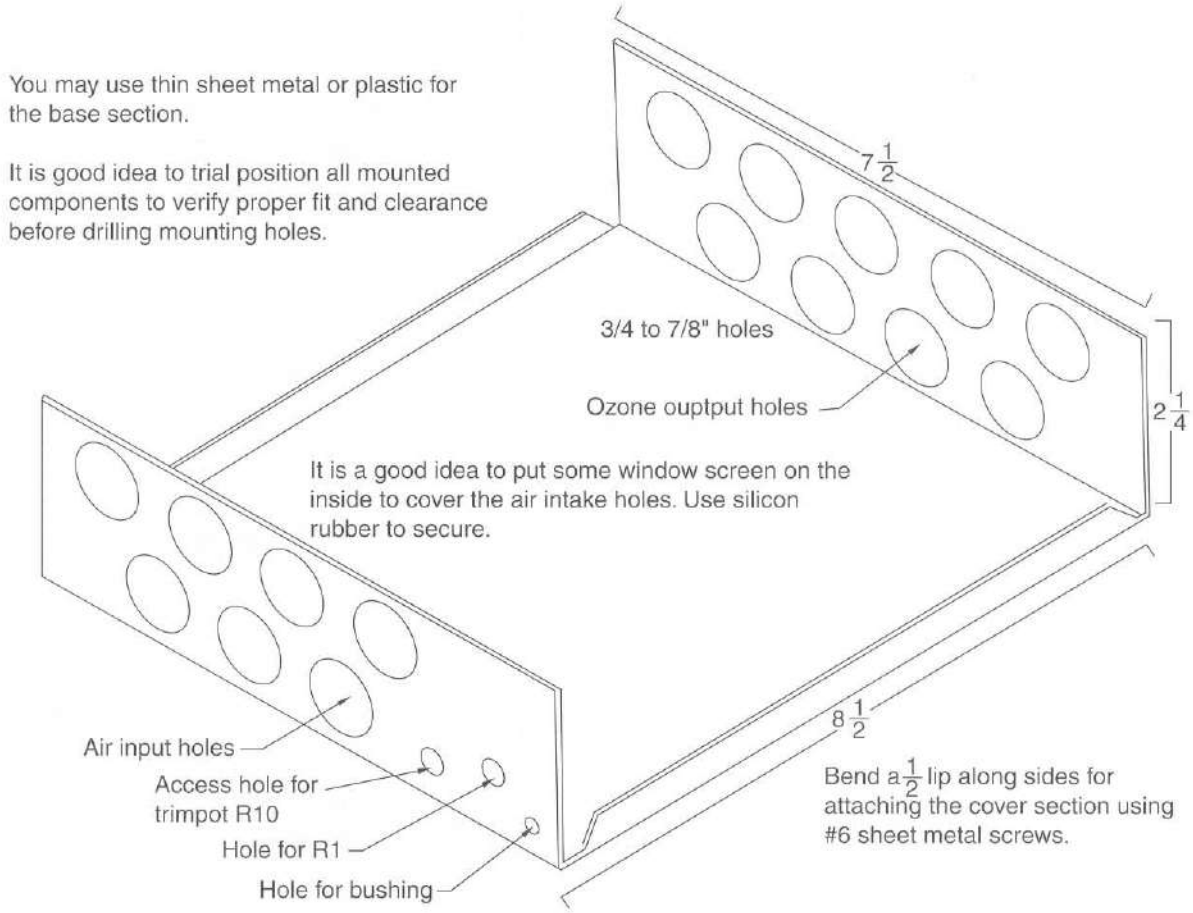

Figure 32-3 *Base section creation*

14. Place the unit with the output directed toward the center of the area.
15. Plug in the wall adapter and rotate the control switch to on. Note the fan rotating and freely turning without obstructions. It should produce a good air flow.
16. Adjust the control a full clockwise turn and note a smell of fresh air emitting from output ports. You will observe a purplish glow around the cell when viewed in darkness.
17. Allow it to run for several hours and adjust the control to where the fresh air smell is just detectable.
18. Check both the unit and the wall adapter for excessive heating. They should only be warm to the touch.
19. This unit may need cleaning from dust. Use compressed dry air or a soft cleaning brush.

Special Notes

You should never operate the unit when the odor becomes pungent or domineering. Ozone is a colorless, odorless gas composed of unstable diatomic oxygen. The smell of fresh air is not the ozone, but the result of secondary reactions with other chemicals.

The unit can be adapted to 12 VDC operation for vehicle or battery use. Simply remove the adapter and splice in some 12-volt connections. Use caution when observing the polarity. You may request a factory modification for this step.

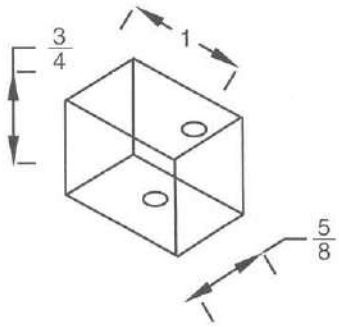

Ozone cell-mounting blocks (2) use PVC or another suitable insulting plastic. You will note the position of the bottom hole mounting the blocks of the base is at their geometrical center. The top hole is offset to this location so as not to be adjacent to one another avoiding possible voltage breakdown.

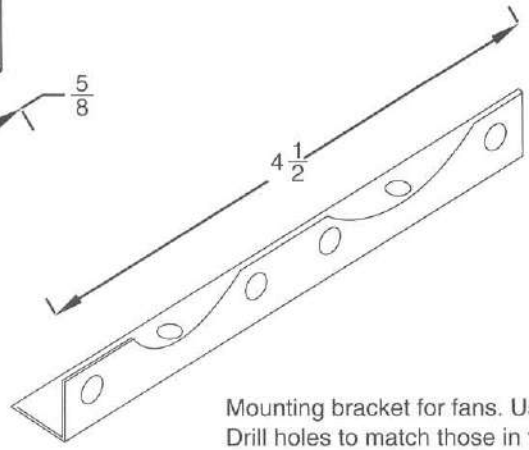

Mounting bracket for fans. Use $\frac{1}{32}$ aluminum or plastic. Drill holes to match those in the fan assemblies.

Figure 32-4 *Fabricated parts*

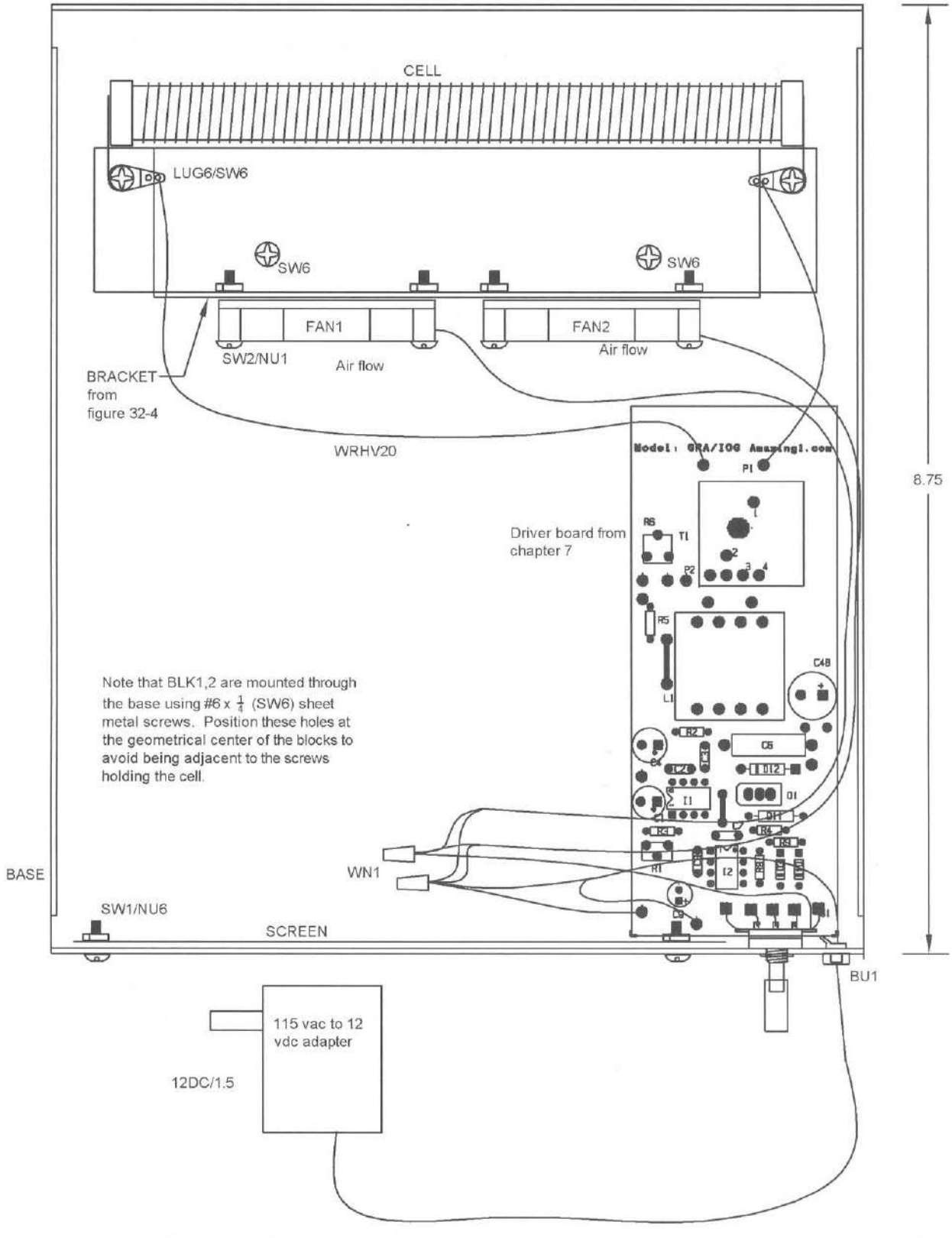

Figure 32-5 *Mechanical layout showing wiring when using the PCB*

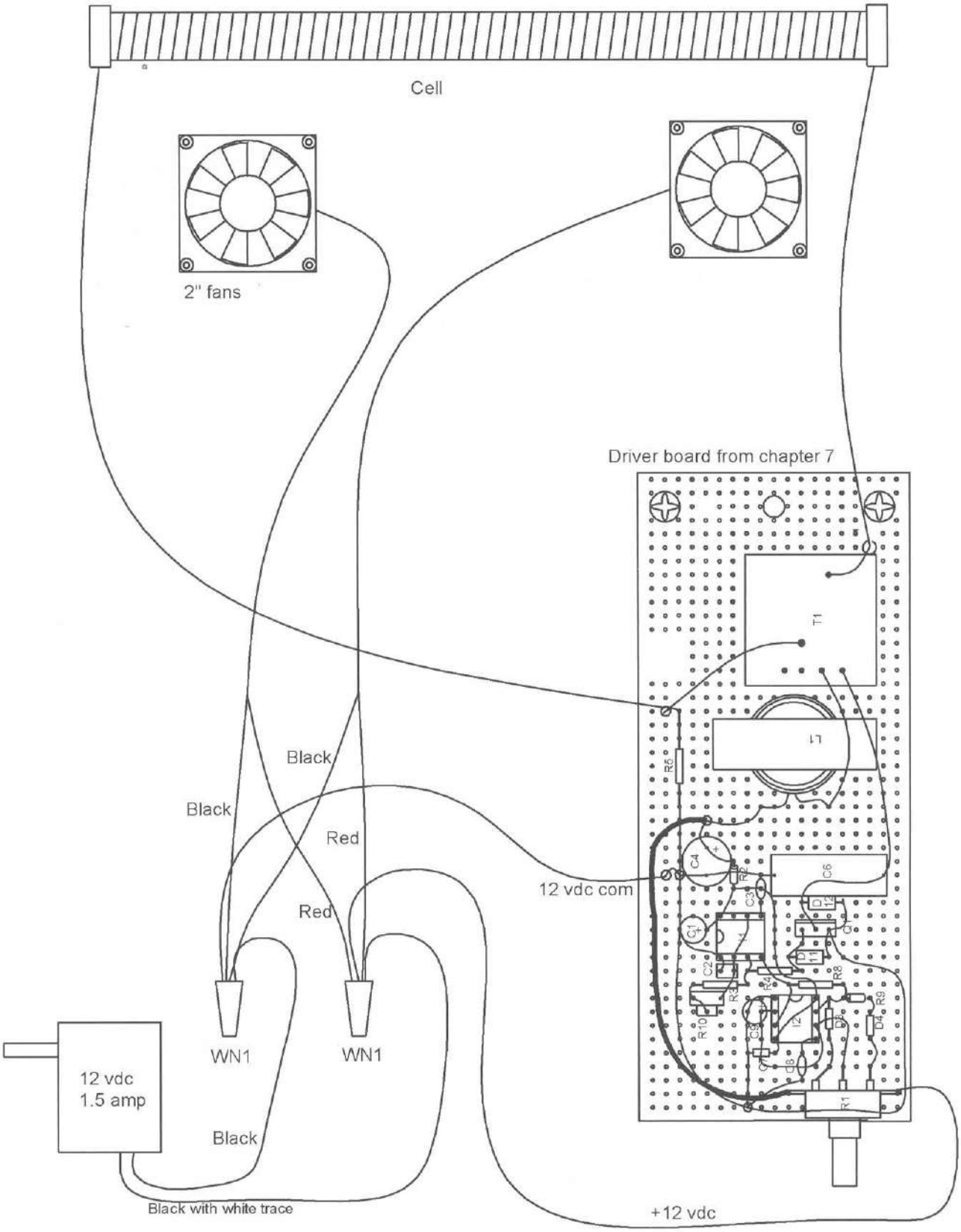

Figure 32-6 *Final wiring using a perforated board*

Table 32-1 500-Milligram Ozone Machine Parts List

Ref. #	*Description*	*DB Part #*
DRIVER	Modified high-voltage assembly from Chapter 7	DB# GRADRIV10
BASE	Base section fabricated per Figure 32-3	
COVER	Fabricated to fit BASE section	
BLOCKS	Two blocks fabricated per Figure 32-4	
BRACKET	Bracket fabricated per Figure 32-4	
FAN1, 2	Two small, 2 × 2-inch, 12-volt fans	DB# FAN2
CELL500	500-milligram ozone corona cell	DB# CELL500
SCREEN	2 × 5-inch piece of window screen	
12DC/1.5	12-volt, 1.5-amp wall adapter transformer	DB# 12 DC/1.5
WRHV20	6-inch, 20-kilovolt, high-voltage wire	
WN1,2	Two small wire nuts	
BU1	Small Heyco bushing #2P-4	
SW6	10 #6 × ¼-inch sheet metal screws for cover and blocks	
SW2/NU2	Four #4-40 × ¾-inch machine screws and nuts for fans	
SW1/NU1	Two #6-32 × ½-inch machine screws	
LUG6	Two #6 solder lugs	
WR22	12 inches of #22 vinyl hookup wire	
FEET	Four stick-on rubber feet for base section	

Chapter Thirty-Three

Invisible Pain-Field Generator

The invisible pain-field generator device shown Figure 33-1 is a handheld, battery-operated sonic, shock-wave generator that produces a *sound pressure level* (SPL) of up to 125 decibels (db) at 30 centimeters. The shock wave frequencies are user presettable at 25, 16, and 12 KHz. A sweep function is included in the circuitry where the selected center frequency varies between two set limits at an adjustable rate, providing a complex sonic signal that further enhances the effect.

Applications of the device can range from the routing out of agricultural pests in silage bins, chicken houses, grain bins, or wherever rats are a problem. The optimum frequency for this particular application is 16 KHz or just above that of human hearing. Many farmers use these devices for determining the effectiveness of pesticides, noting the reduction in infestation levels. Other applications include spooking birds and animals from unwanted areas and discouraging dogs and deer from decimating shrubs and ornamentals.

Figure 33-1 *Pain-field generator*

Adjustment of the frequency down to 12 KHz (within the range of human hearing) will produce extremely painful and annoying affects. The unit is excellent for disbursing crowds of potentially unruly people. A simple test is to point the device at an unsuspecting subject and momentarily push the button. You will notice a very positive response. Unfortunately maximum affect seems to favor younger women; older men seem to be less sensitive.

The unit is very directional when used outside, but it looses this property when used inside due to reflections from walls, ceilings, and furniture.

The unit is shown assembled into a small plastic enclosure that includes the electronics emitter transducer and the 9-volt battery. A removable plastic cover allows access in order to change the battery. Controls include a pushbutton emission control and sweep-activation pushbutton switches located on the top of the enclosure. The size of the main enclosure is $4 \times 2 \times 1$ inches. The weight is only about 6 ounces with batteries installed

The unit can be used as a research tool for producing an effect on certain animals for their control and experimentation. The device has been successfully used for controlling certain dogs or other vicious animals by joggers or other outdoors enthusiasts. The unit has also been used in flushing out rats.

Caution: Caution must be used, as the effect on most people causes pain, headache, nausea, and extreme irritability. (Younger women are especially affected.) Do not, under any circumstances, point the unit at a person's ears or head at close range, as severe discomfort and possible ear damage may result. This also applies to dogs and other animals.

Include a caution label on the device to avoid exposure over 105 db for any continuous period of time. When using the device around people, you must be careful, as unjustified harassment is illegal and can result in prosecution.

This is an intermediate-level project requiring basic electronic skills. Expect to spend $25 to $50. All parts are readily available, and any specialized parts are available through Information Unlimited (www.amazing1.com) and are listed in Table 33-1 at the end of the chapter.

Circuit Description

A timer (IC2) is connected as an astable free-running multivibrator whose frequency is internally controlled by trimpot (R9). Resistor R8 selects the range limit of R9. The square-wave output of IC2 is via pin 3 and is directly coupled to power amplifier Q2. The drain of Q2 is DC biased through audio-frequency blocking chokes (L1A and L1B), providing a high impedance to the AC component of the signal.

DIP switches (S1,2,3) preselect the internal frequency for the required application and are shown in Figure 33-2. These switches select resonating inductors L2 and L3 connected in series with the output transducer TD1. The resonant action between the inherent capacity of TD1 and these selected inductances now produces a sinusoidal-shaped wave

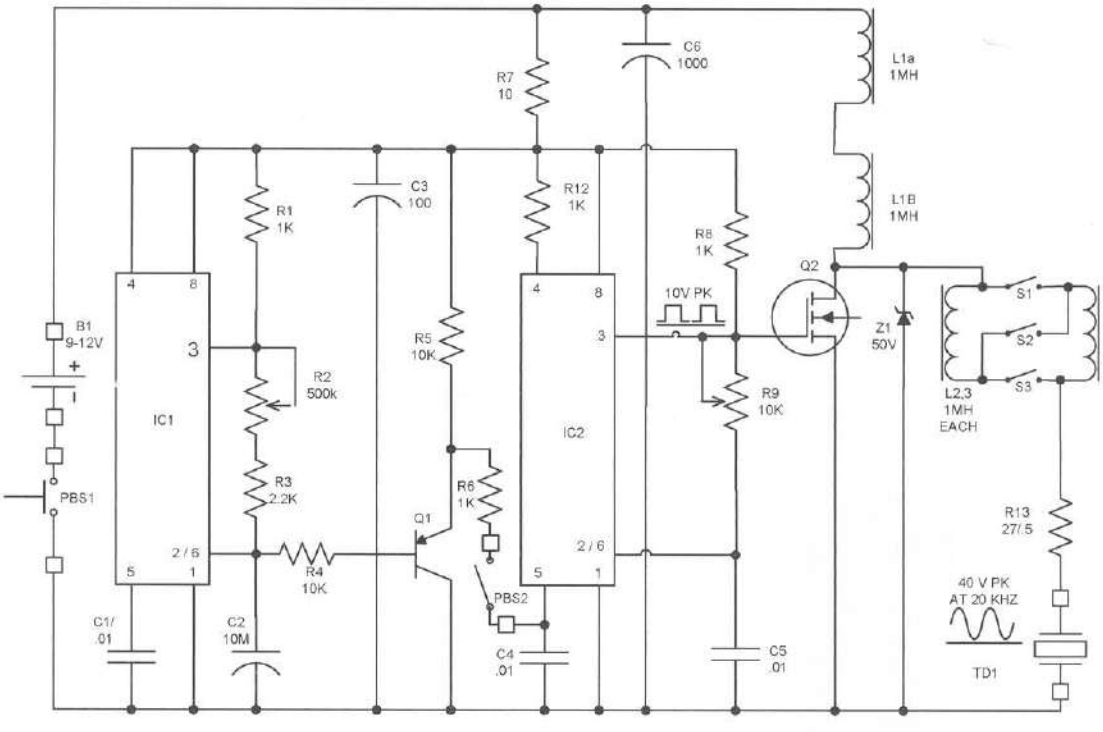

ma	freq	1	2	3	usec
225	25khz	on	off	on	tune max 40-50 u
175	16khz	on	off	off	tune max 60-70 u
150	12khz	off	on	off	tune max 80-90u

Figure 33-2 *Pain-field generator circuit schematic*

peaking around the upper limit of the tuning range. This *signal* waveform now has a peak-to-peak voltage several times that of the *original* square wave. Transducer TD1 now can take advantage of these peak voltages to produce the high sound-pressure levels necessary without exceeding the high RMS ratings of an equivalent voltage-level square wave. Zener diode Z1 clips any excessive overshoots across Q2.

Timer IC1 is similarly connected as an astable running multivibrator and is used to produce the sweeping voltage necessary for modulating the frequency of IC2. This sweep repetition rate is controlled by trimpot R2. Resistor R3 limits the range of this repetition time. C2 sets the sweep time range. Output for IC1 is via pins 6 and 2, where the signal ramp function voltage is resistively coupled to inverter transistor Q1 via resistor R6. The output of Q1 is fed to pin 5 of IC2 and provides the output modulation voltage necessary to vary the frequency as required. Note that the modulation signal is enabled by pushbutton PBS2.

Power to the system is via battery B1 and pushbutton PBSl. Capacitor C6 guarantees an AC return path for the output signal. Power to the driver circuits IC1 and IC2 is thru a decoupling network consisting of resistor R7 and capacitor C3.

Construction

1. Layout and identify all parts and pieces. Verify with parts list. Separate resistors, as they have a color code to determine their value. Colors are noted on the parts list.

2. If you are building from a perforated board, use Figure 33-3 as a parts placement guide and insert components starting in the lower left-hand corner as shown. Pay attention to polarity of capacitors and all semiconductors. It is suggested you use sockets for integrated circuits IC1 and IC2.

   Route leads of components, as shown, and solder as you go, cutting away unused wires. Attempt to use certain leads as the wire runs or use pieces of the #24 buss wire. Follow dashed lines on assembly drawing, as these indicate connection runs on underside of assembly board. The heavy dashed lines indicate use of thicker #20 buss wire, as this is a high-current discharge path.

   Please note that this circuit is very cramped, and it is suggested you obtain the optional printed circuit board shown in the parts list.

3. Attach external leads to components as shown in Figure 33-4, noting the individual lengths and twisted pairs.

4. Double-check accuracy of wiring and quality of solder joints. Avoid wire bridges, shorts, and close proximity to other circuit components. If a wire bridge is necessary, sleeve some insulation onto the lead to avoid any potential shorts.

5. Connect an ohm meter between CLI contacts and pushbutton PBSl. Note a reading of several thousand ohms. This may vary but should not indicate a short circuit. Preset trimpots R2 and R7 to midrange.

6. Connect a 9-volt battery and note a current of 200 to 250 milliamps when R9 is set to midrange. The meter can be connected across PBSI for this step.

7. Simultaneously press both PBS2 and PBSI and note a piercing sweeping tone coming from the transducer TD1. Turn R9 fully ccw and note the decrease in signal tone.

8. Frequency range should be approximately 10 to 25 KHz, with a sweep of approximately 1 to 20 times per second selectable by trimpot R2.

9. Check the waveshapes as shown at pin 3 of the output timer IC2. This is determined by the following formula: $F = 1/(1.57 \times R9 \times C5)$.

10. Check the waveshapes as shown across transducer TD1. This waveshape is approximately 40 to 50 volts, peak to peak, and approaches a sine wave. This is the approximate resonant frequency point of the selected values of series inductances within the inherent capacitance of the transducer. A voltage-peaking effect will be noted, as the frequency is varied by trimpot R9. As the frequency is varied off of resonance, this wave will severely distort but will not damage the circuitry. Note the chart in Figure 33-2 showing the selection

It may be a good idea to use SOCK 1, 2 sockets for IC1, 2 to avoid unsoldering if you make an error.

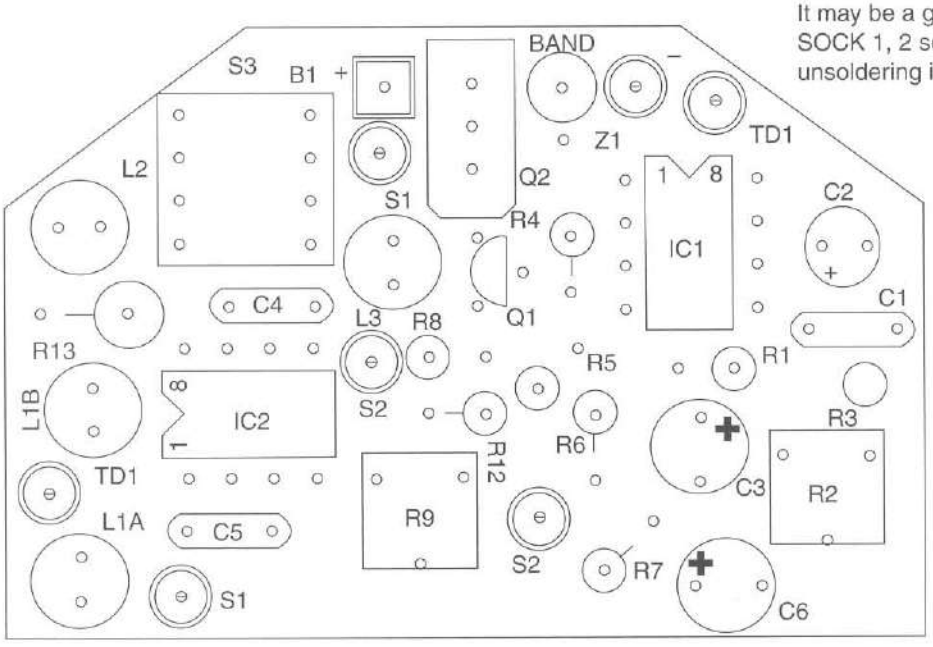

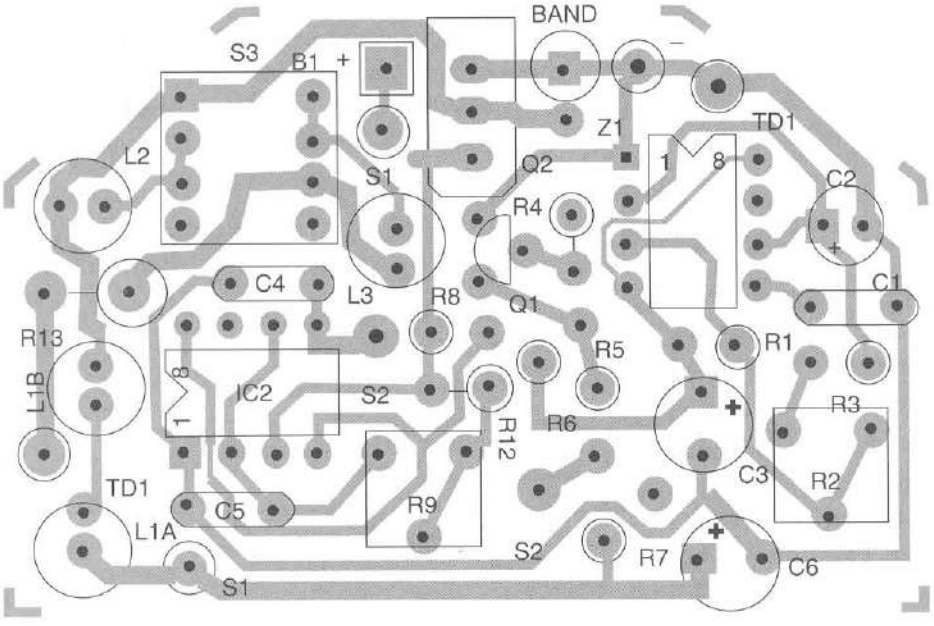

Figure 33-3 *Printed circuit board parts and wiring*

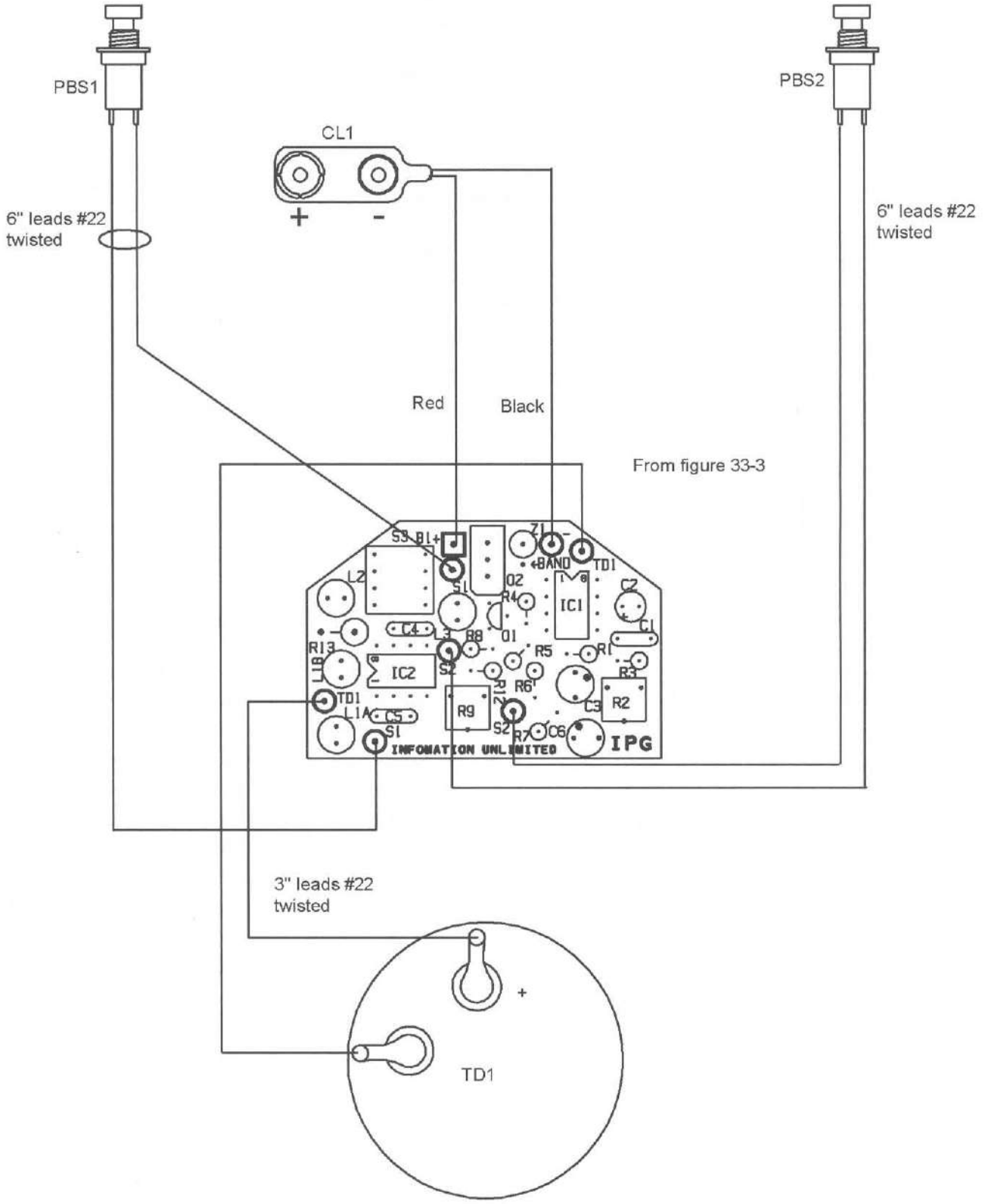

Figure 33-4 *External wiring*

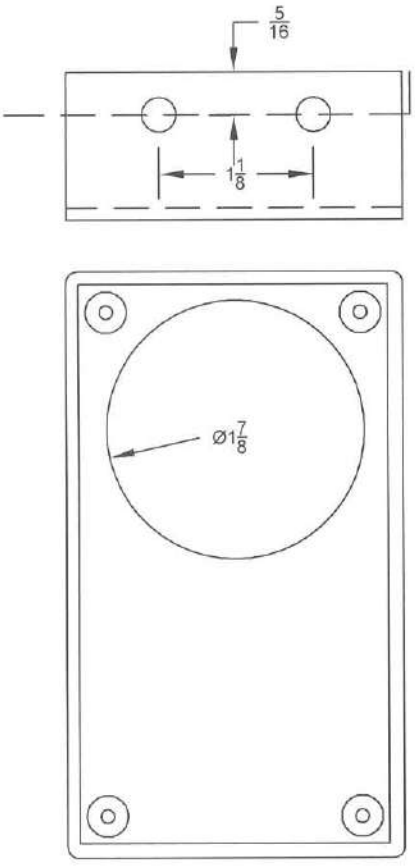

Operating instructions:

Remove rear cover and insert a 9 volt alkaline battery. Note that proper positioning is required for cover to properly fit without bowing.

Default settings of the two trimpots is midrange. To change for obtaining the maximum effect on the target you may adjust trimpots using a small plastic tuning tool or screw driver.

Simply direct unit transducer opening towards the target and push the control button. You should notice an immediate effect. The range will depend on the acoustical sensitivity of the target subject.

Use the sweep button to possible enhance the effect on the target.

This unit is designed for generating intermittent bursts of ultrasonic and high frequency acoustical energy.
Do not direct at people.
Use out side as walls and ceilings will cause the signal to loose directional characteristics and effect the user.
Use in 2 to 5 second bursts.

Figure 33-5 *Fabrication of plastic case*

of the inductances for the choice of operating frequencies that provide the maximum output.

Use a scope for these measurements. These steps are not necessary if the unit appears to function as described.

11. A sound pressure measurement of approximately 125 db was measured at 10 KHz at a distance of 16 inches on our model. Voltage across TD1 was measured at 40 volts peak.

This completes the electronic testing of the unit.

12. Fabricate the EN1 enclosure, as shown in Figure 33-5. Note 1⁷/₈-inch hole for the aperture of TDI. This hole should be made with a large punch or hole saw using a drill press. The hole may also be cut out with a sharp knife. Drill ¹/₄-inch holes for PBSI and PBS2, as shown.

13. Cut a piece of 2¹/₈ × 2¹/₈-inch window screen and secure it along with transducer TDI. Use RTV or suitable adhesive.

14. Make final assembly, as shown Figure 33-6, and secure assembly board with two-sided foam tape.

15. Attach the battery and position as shown. Note: The battery must be up against the enclosure with all leads properly routed or the rear cover will not fit properly.

16. See Figure 33-5 for operating instructions.

Figure 33-6 *Final assembly into EN1 enclosure*

Table 33-1 Invisible Pain-Field Generator Parts List

Ref#	*Description*	*DB Part #*
R1,6,8,12	Four 1 K, ¼-watt resistors (br-blk-red)	
R2	500 K vertical trimpot	
R3	2.2 K, ¼-watt resistor (red-red-red)	
R4,5	Two 10 K, ¼-watt resistors (br-blk-or)	
R7	10-ohm, ¼-watt (br-blk-blk)	
R9	10 K vertical trimpot	
R13	27-ohm, ½-watt resistor (red-pur-blk)	
C1,4	Two .01 mfd, 50-volt disc capacitors	
C2	10 mfd, 50-volt vertical electrolytic capacitor	
C5	.01 mfd, 50-volt plastic capacitor	
C3	100 mfd, 50-volt vertical electrolytic capacitor	
C6	1,000 mfd, 25-volt vertical electrolytic capacitor	
IC1,2	Two 555 timer DIP integrated circuits	
Q1	PN2907 PNP TO92 transistor	
SOCK1,2	Two 8-pin DIP sockets for above IC1,2 (Not shown)	
Q2	IRF540 Mosfet TO220	
L1AB,2,3	Four 1-millihenry inductors	DB# 1MH
Z1	50-volt, 1-watt Zener diode	
PBS1,2	Two pushbutton switches	
S1,2,3	3 or 4 section DIP switch	
CL1	Battery snap clip	
TD1	Special polarized transducer	DB# 1020A
PCB1	Printed circuit board	DB# PCIPG9
CASE	4 × 2 ⅜ × 1⅛-inch plastic enclosure	
SCREEN	2.5 × 2.5 inch piece of window screen	

Chapter Thirty-Four

Canine Controller

This very useful device, as shown in Figure 34-1, is intended for those who are bothered by nearby barking dogs. The control section is a modification of a circuit made by Bob Gaffigan in 1993. The project is intended to detect the dog's bark, which triggers a high-output, pain-field sonic generator, as described in Chapter 35, producing very uncomfortable sounds to the animal's sensitive hearing.

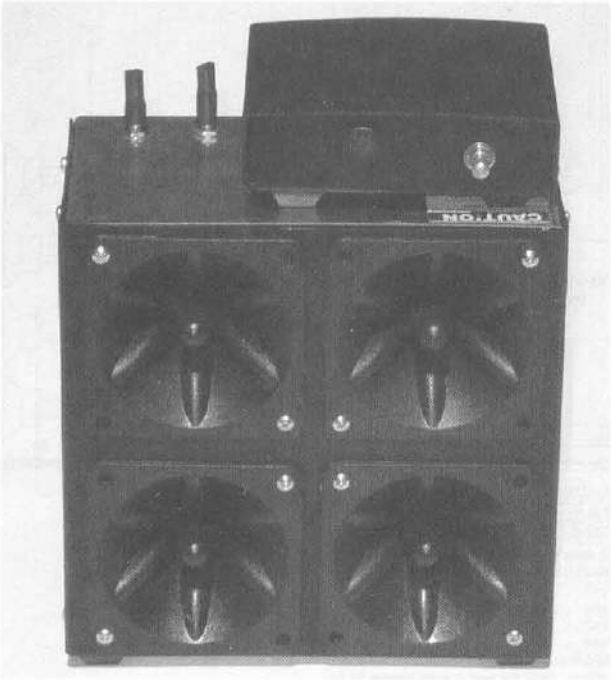

Figure 34-1 *The canine controller system with our sonic blaster*

The system may be covertly used without the dog owners knowing or it can even be tuned to bother the owners every time their mutt goes into a barking frenzy. The user can implement many options to discourage these constant barkers or give some of these inconsiderate owners a taste of their own medicine.

This is an intermediate-level project requiring basic electronic skills. Expect to spend $25 to $50. All the parts are readily available, with the specialized parts obtainable through Information Unlimited (www.amazing1.com), and they are listed in the parts list in Table 34-1 at the end of the chapter.

Device Description

A directional device picks up the dog's bark and processes it so that it turns on the sonic burst pain-field generator pointed in the offending animal's direction. The animal now experiences a very uncomfortable sound, much like a person would find the scratching of chalk on a blackboard. Eventually, the animal associates this sound with his barking, thus conditioning him to stop. The device contains adjustments that actually count the number of yelps so that it can be set not to trigger, thereby discouraging the animal from a normal barking trend that may be the warning of an intrusion or other important event.

The unit is easily mounted in any convenient location and operates from internal batteries, an external 12 volts, or 115 VAC via a wall adapter converter. The detection system contains adjustments for bark-level sensitivity, the number of barks detected before triggering, and the length of the triggered on time of the sonic burst. The pain-field generation section, as described in Chapter 35, has controls for the frequencies of the burst, sweep rate, sweep on/off, and main power control. The canine controller section is designed to easily connect to the existing jacks on the sonic generator section via a three-conductor cable. It may be mechanically attached as a single unit for a compact integrated system. The pickup microphone may even be placed at the focal point of a parabolic dish, providing very discrete selection of the target. As in any device such as this, many variables will enter into the equation that defines the overall performance. The suggested effective range will vary but can be up to 100 feet.

Special Note: In some circumstances, the owner is more to blame than the actual animal. As previously stated, the unit may be tuned to a frequency that the owner him- or herself finds very uncomfortable.

Circuit Description

Figure 34-2 shows the block diagram where the mic picks up the bark and amplifies it. A filter favors the assumed frequencies of the bark and feeds them to a bark counter. This circuit contains a selector switch to preset the necessary number of barks to trigger the bark period timer. The time of the bark period is also selectable by a switch. The bark period timer gates on the MOSFET switch transistor turns on the sonic generator, which drives the four transducers that now produce the directional, uncomfortable sound pain-field shockwaves.

Figure 34-3 shows the complete schematic of the controller section circuit, and the sonic pain-field generator section schematic is shown in Chapter 35. The bark is detected by microphone M1 and amplified by operational amplifier IC2A. The DC follower IC2D sets the midpoint bias, and resistor R2 sets the gain of this stage. The output level at this stage is controlled by potentiometer R5 and fed to amplifier/filter IC2C with a passband set by resistors R8 and R9 and capacitors C8 and C9. Schmidt discriminators

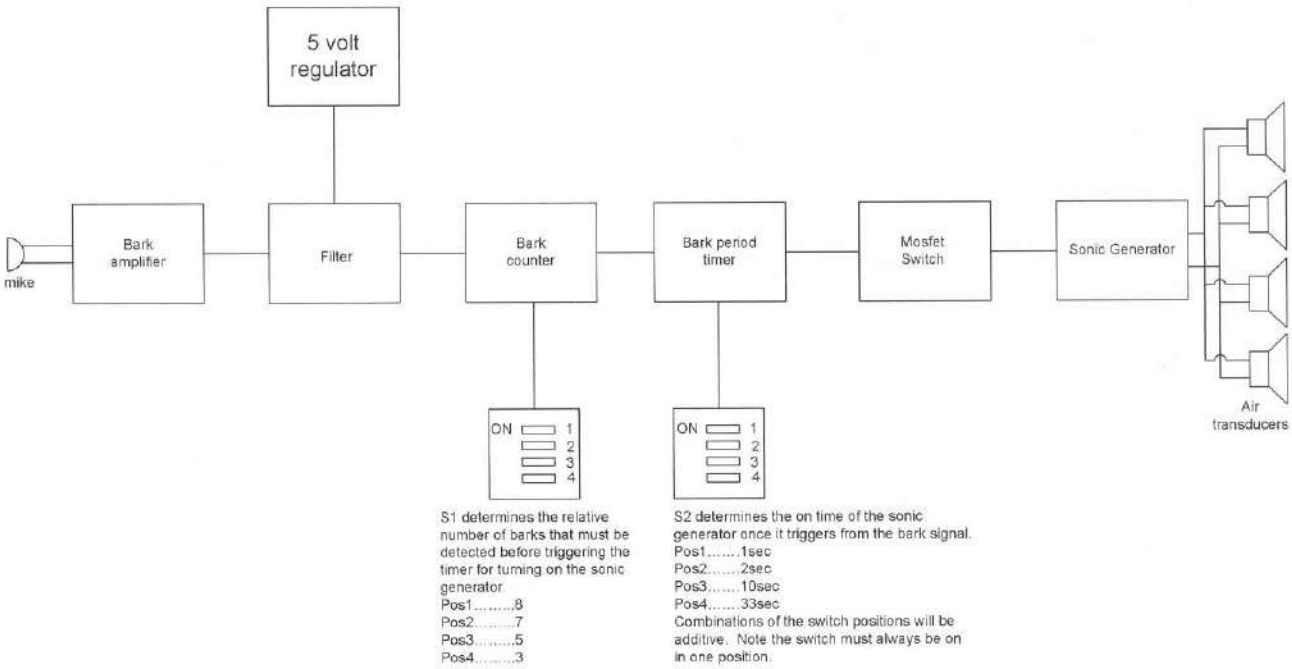

Figure 34-2 *Circuit block diagram*

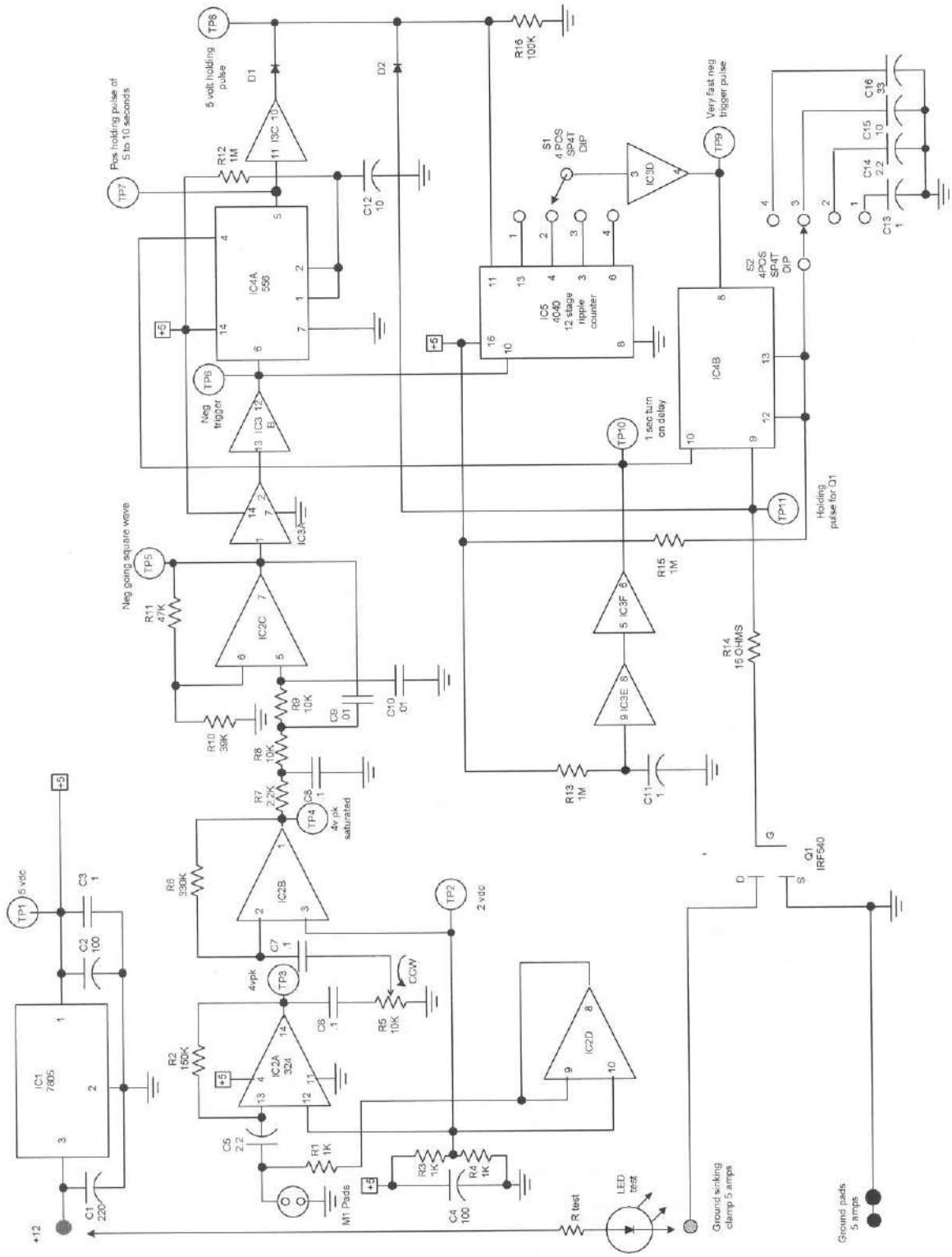

Figure 34-3 *Circuit schematic*

IC3A and IC3B trigger the signal, provide a defined level of the correct polarity to initiate timer IC4A, and enable ripple counter IC5 to count the barks within a time period determined by IC4A. If the number of barks exceeds a limit set by bark count switch S1, timer IC4B is initiated, turning on MOSFET switch Q1 for a predetermined amount of time selected by switch S2, enabling the sonic pain-field deterrent signal to be sent toward the target and then resetting. You will note that control of the sonic pain-field generator is made by sinking the negative return lead into the ground.

Circuit Assembly

1. Assemble the circuit board as shown in Figure 34-4. Note that Figure 34-5 shows the foil traces of the printed circuit. It is not recommended that you assemble this circuit on a perforated vector board unless you are an advanced assembler.

   Note that if you are building from a perforated or vector circuit board, it is suggested that you use the indicated traces for the wire runs and insert components starting at the lower left-hand corner. Pay attention to the polarity of the capacitors with polarity signs and all the semiconductors. It is a good idea to use sockets for all the integrated circuits.

   Route the leads of the components as shown and solder as you go, cutting away unused wires. Attempt to use certain leads as the wire runs or use pieces of the #26 bus wire. The heavy foil runs should use the thicker #24 bus wire, as these are the high-current discharge paths.

2. Double-check the accuracy of the wiring and the quality of the solder joints. Avoid wire

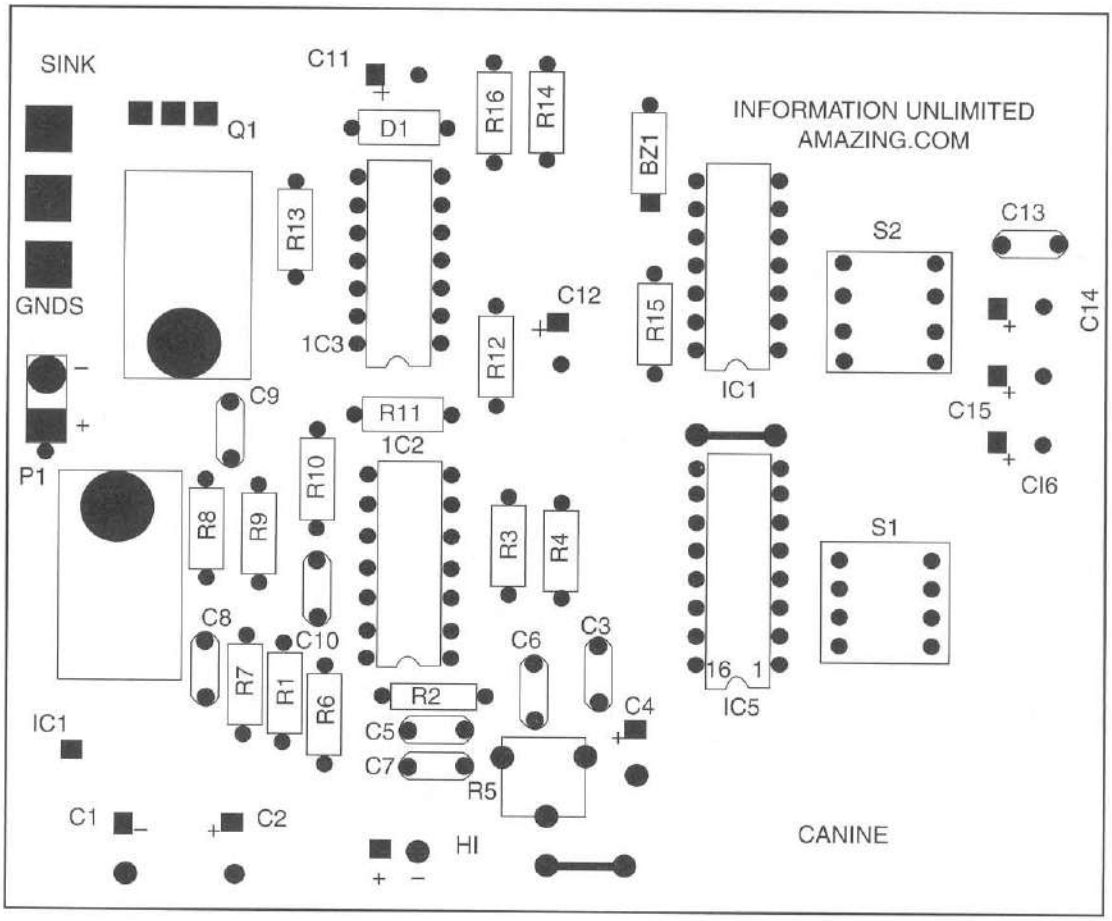

Figure 34-4 *Assembly of the circuit board*

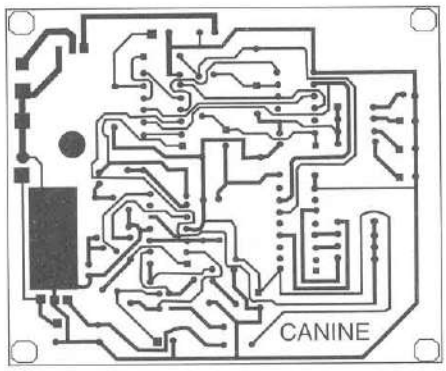

Figure 34-5 *Assembly circuit board traces*

bridges, shorts, and close proximity to other circuit components. If a wire bridge is necessary, sleeve some insulation onto the lead to avoid any potential shorts.

3. Connect the external components as shown in Figure 34-6. Use shielded microphone cable if you are not installing it on the actual board.
4. Fabricate the chassis as shown in Figure 34-7 from a piece of .035-inch 5052 bendable aluminum or plastic. If you use metal, you will need a piece of plastic material under the assembly board to prevent shorting the foil traces.
5. Create a mating cover and finally assemble everything as shown in Figure 34-8. Note the hole for the microphone with a screen. Wire the P1 plug and cable for interconnecting the controller and the sonic blaster using desired lengths per your requirements. Leave the other end with leads that will eventually connect to the sonic blaster.

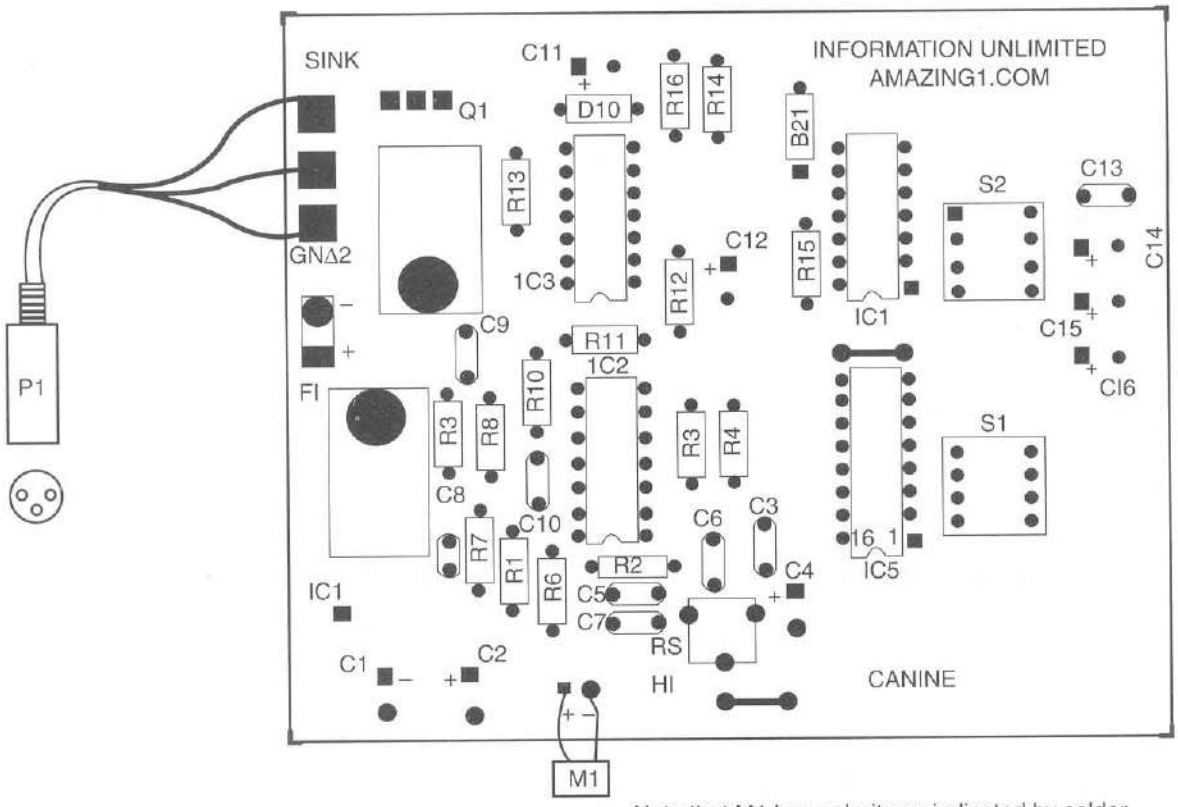

Bottom view showing pads

Note that M1 has polarity as indicated by solder pad connected to the main enclosure. This contact is ground indicated by the – sign. Be very careful when soldering o these pads. Use #22 wire or smaller. If leads are longer than one several inches it is suggested to use shielded microphone cable.

Figure 34-6 *External wiring*

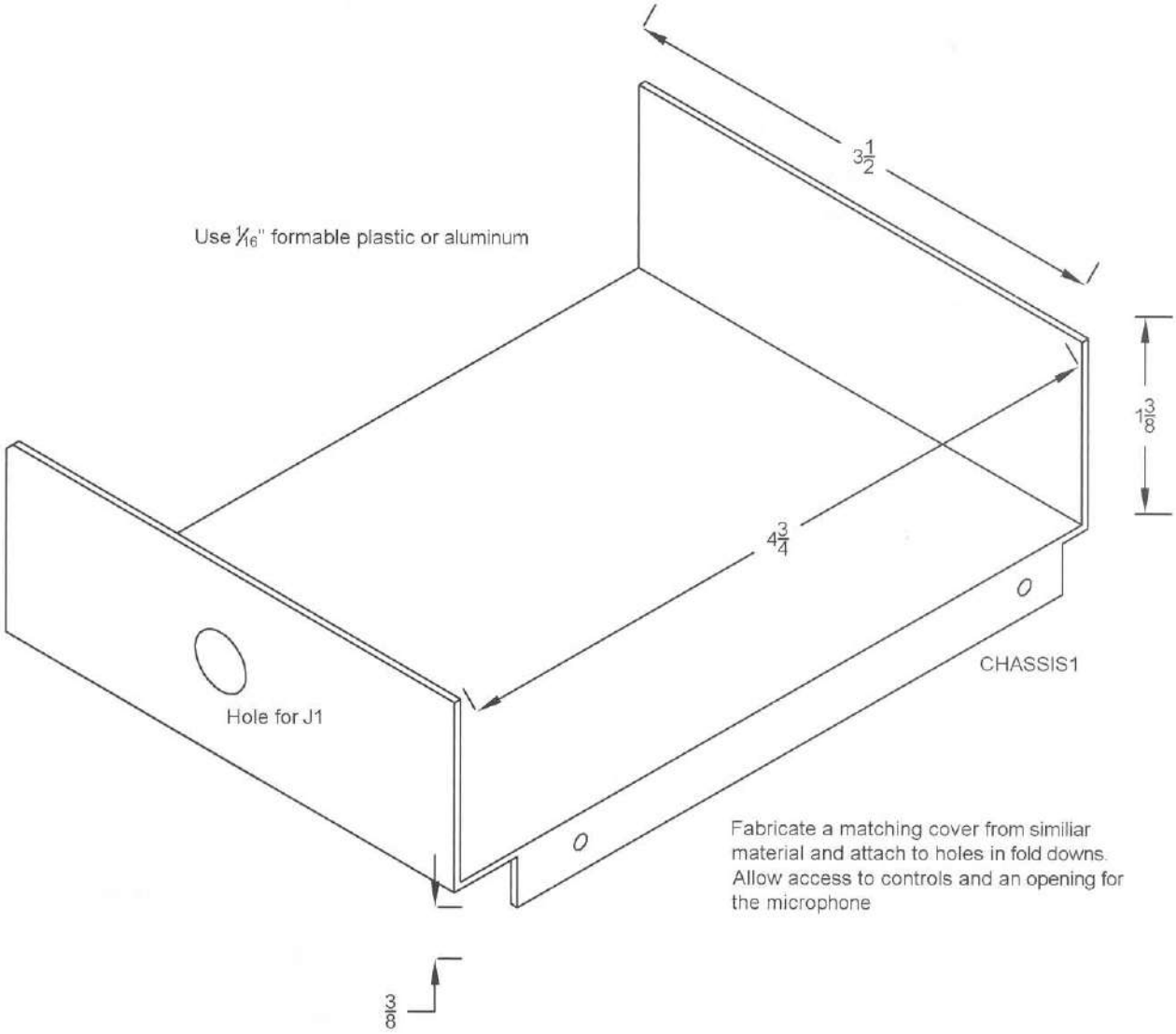

Figure 34-7 *Chassis fabrication*

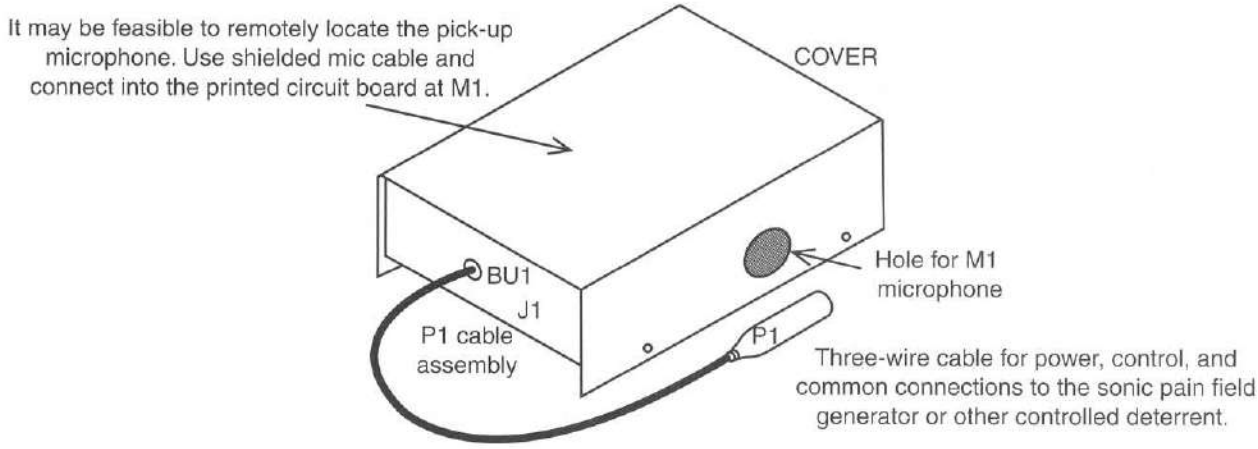

Figure 34-8 *Isometric of final assembly*

Testing the Circuit

1. Assemble the test jig, referring back to Figure 34-3. If the circuit is correct, you may go right to the connection of the test jig as shown and perform the following steps:

   a. Preset S1 to position 4 (the lowest number of barks for activation).

   b. Preset S2 to position 1 (the shortest time for the sonic generator).

   c. Preset R5 to midrange.

2. Apply a 12 VDC input and note a low-current draw of less than 10 milliamps, which is the same value as the quiescent operating current. C cell batteries will work approximately 30 days before requiring replacement.

3. Simulate a bark and note the test LED momentarily coming on. If this occurs, you may want to test the various positions of S1 and S2. Also verify the sensitivity control, R5.

4. If the circuit does not work, you may need a scope to test the various test points as shown in Figure 34-3. They should have the following values:

   TP1: +5 volts DC

   TP2: 2 to 3 volts DC

   TP3: 4-peak-volt audio level

   TP4: Saturated audio signal

   TP5: Negative-going pulse

   TP6: Negative-going square wave

   TP7: Positive 10-second holding pulse

   TP8: Positive holding pulse

   TP9: Very fast negative trigger pulse

   TP10: 1-second turn-on delay

   TP11: Holding pulse for Q1

10. Once the controller operation is verified, you may connect the system as shown in Figure 34-9. You will need a properly working sonic pain-field generator, as described in Chapter 35.

    It is suggested that you experiment with the system before actually installing it. Once familiar with it, you may position the system for the best effect. You also have the option of adjusting the sonic generator when the dog starts barking so that it can also be very annoying to the animal owners when their mutt goes into an uncontrolled barking rage. Use your own judgment as you can get tagged for harassment!

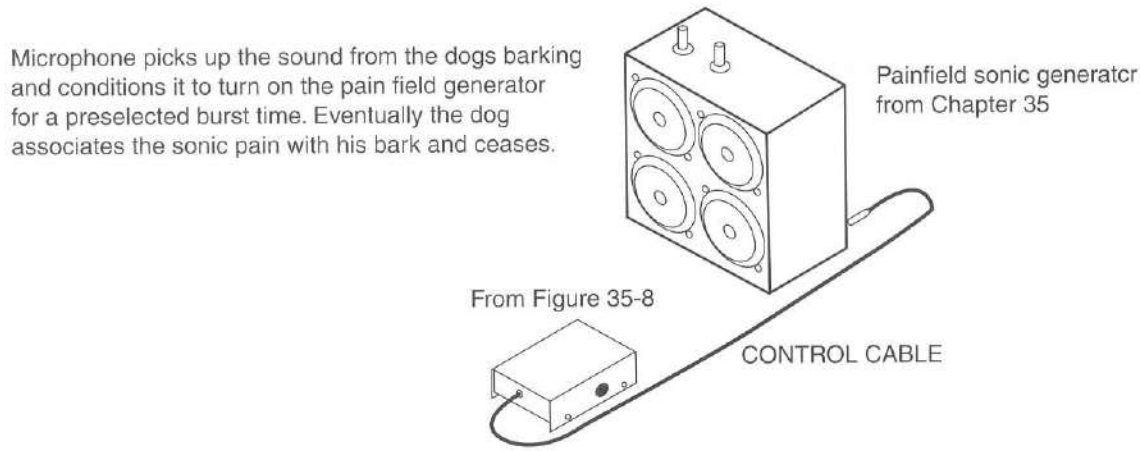

Figure 34-9 *Systems view*

Table 34-1 Canine Controller Parts List

Ref. #	Description	DB Part #
R1, 3, 4	Three 1K, ¼-watt resistors (br-blk-red)	
R2	150K, ¼-watt resistor (br-gr-yel)	
R5	10K pot and 12-volt switch, 17 mm	
R6	330K, ¼-watt resistor (or-or-yel)	
R7	2.2K, ¼-watt resistor (red-red-red)	
R8, 9, 10	Three 10 kilo-ohm, ¼-watt resistors (br-blk-or)	
R11	47 kilo-ohm, ¼-watt resistor (yel-pur-or)	
R12, 13, 15	Three 1M, ¼-watt resistors (br-blk-gr)	
R14	15-ohm, ¼-watt resistor (br-gr-blk)	
R16	100K, ¼-watt resistor (br-blk-yel)	
C1	220-microfarad, 25-volt vertical electrolytic capacitor	
C2, 4	Two 100-microfarad, 25-volt vertical electrolytic capacitors	
C3, 6, 7, 8	Four .1-microfarad, 50-volt plastic capacitors	
C5, 14	Two 2.2-microfarad, 50-volt vertical electrolytic capacitors	
C9, 10	Two .01-microfarad, 50-volt plastic capacitors	
C11, 13	Two 1-microfarad, 50-volt vertical electrolytic capacitors	
C12, 15	Two 10-microfarad, 50-volt vertical electrolytic capacitors	
C16	33-microfarad, 50-volt vertical electrolytic capacitor	
D1, 2	Two IN914 silicon diodes	
IC1	7805 5-volt regulator TO220	
IC2A, B, C, D	LM324 quad amp in dual inline package (DIP)	
IC3A, B, C, D, E, F	40106 hex Schmidt in DIP	
IC4	556 dual timer in DIP	
IC5	4040 complementary metal oxide semiconductor (CMOS) PLL phase lock loop in DIP	
Q1	100-volt IRF540 metal-oxide-semiconductor field effect transistor	MOSFET
M1	FET mic element	DB# FETMIK
S1, 2	Two four-position single-throw DIP switches	
PCCANINE	Printed circuit board (PCB)	DB# PCCANINE
CHASSIS1	Metal or plastic chassis as shown in Figure 34-7	
COV1	Cover fabricated as shown in Figure 34-8	
J1/P1	Three-pin chassis mount jack and mating plug	
WR3C	3-inch three-conductor cable for interconnecting	
PPF4K	Pain-field generator kit as described in Chapter 35	DB# PPF4K
PPF40	Pain-field generator assembled as described in Chapter 35	DB# PPF40

Chapter Thirty-Five

Ultrasonic Phaser Pain-Field Generator

This project, as shown in Figure 35-1, shows how to construct a moderately high powered sonic generator that can be used for tasks that range from animal control to discouraging personal encounters. It can be used as part of our laser property protection guard described in Chapter 5 or as the deterrent for use with the canine controller, as described in Chapter 34. The unit can generate a variable rate of complex waves from 5 to 25 kHz well into the ultrasonic range. These waves can be very painful or disorientating to animals and people, depending on where the controls of the unit are set.

This is an excellent device for use in animal control as well as a low-liability deterrent in anti-intrusion alarms and detection systems. This is an intermediate-level project requiring basic electronic skills. Expect to spend $50 to $75. All parts are readily available, with specialized parts obtainable through Information Unlimited at www.amazing1.com, and they are listed in the parts list at the end of the chapter.

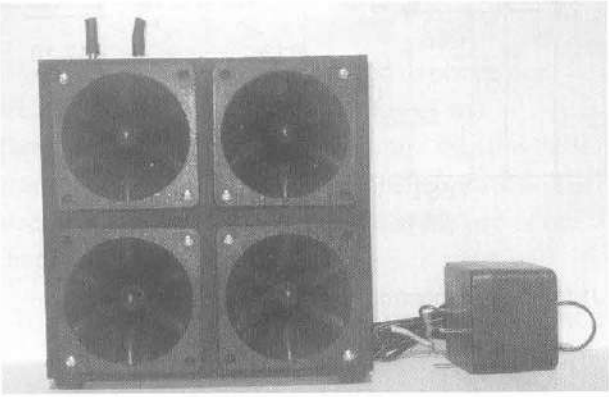

Figure 35-1 *The phaser pain-field generator*

Basic Device Description

This chapter demonstrates how to create a variable-sweep-frequency, ultrasonic, pain-field generator capable of producing the equivalent of 400 watts of resultant power such as that obtainable from a conventional dynamic transducer system. This is possible due to recently developed piezoelectric ceramic devices. The high efficiency requires very little driving power, consequently resulting in a lightweight, portable, handheld device that is battery driven and capable of producing high sound pressure. It is a directional device and can be set up in a target area such as a field or garden to discourage any sound-sensitive animals. It is also capable of being powered by a car's 12-volt system and can be mounted on the hood or roof of the vehicle. Transducers are mounted in an array for a concentration of energy in one direction.

It should be understood that certain people subjected to different degrees of exposure are affected more than others, some to a point where they may vomit or experience severe headaches and cranial

pains. Some people will experience severe pain in the ear, teeth, or lower head. Statistically, women and younger children are many times more sensitive to this device than the average male adult. With this in mind, the user must exercise consideration when testing and using the device for animal control, as many people will not be aware of the source of this pain and attribute it to a headache or other physical ailment. Also, certain people are affected mentally to a point of actually losing their tempers completely or becoming extremely quick-tempered. Some will experience a state of extreme anxiety when overly exposed. Therefore, consideration must be used at all times when testing or using this or similar devices.

It should also be noted that using the transducers in an array configuration may be damaging to hearing at close range. The array approach produces high sound-pressure density occurring on or near the output axis.

Circuit Theory

Figure 35-2 shows a timer, IC2, connected as an astable free-running multivibrator whose frequency is externally controlled by pot R9. Resistor R10 selects the range limit of R9, and capacitor C5 determines the frequency range of the device along with the previous resistors.

The square wave output of IC2 is via pin 3 and is directly coupled to power amplifier Q2. The drain of Q2 is DC biased through choke L1.

The square wave output signal is then fed into transducer TD1 in series with parallel combination of resonating coils L2 and L3. The resonant action between the inherent capacity of TD1, the C7 tuning capacitor, and the inductance now produces a sinusoidal-shaped wave peaking around 25 kHz or the

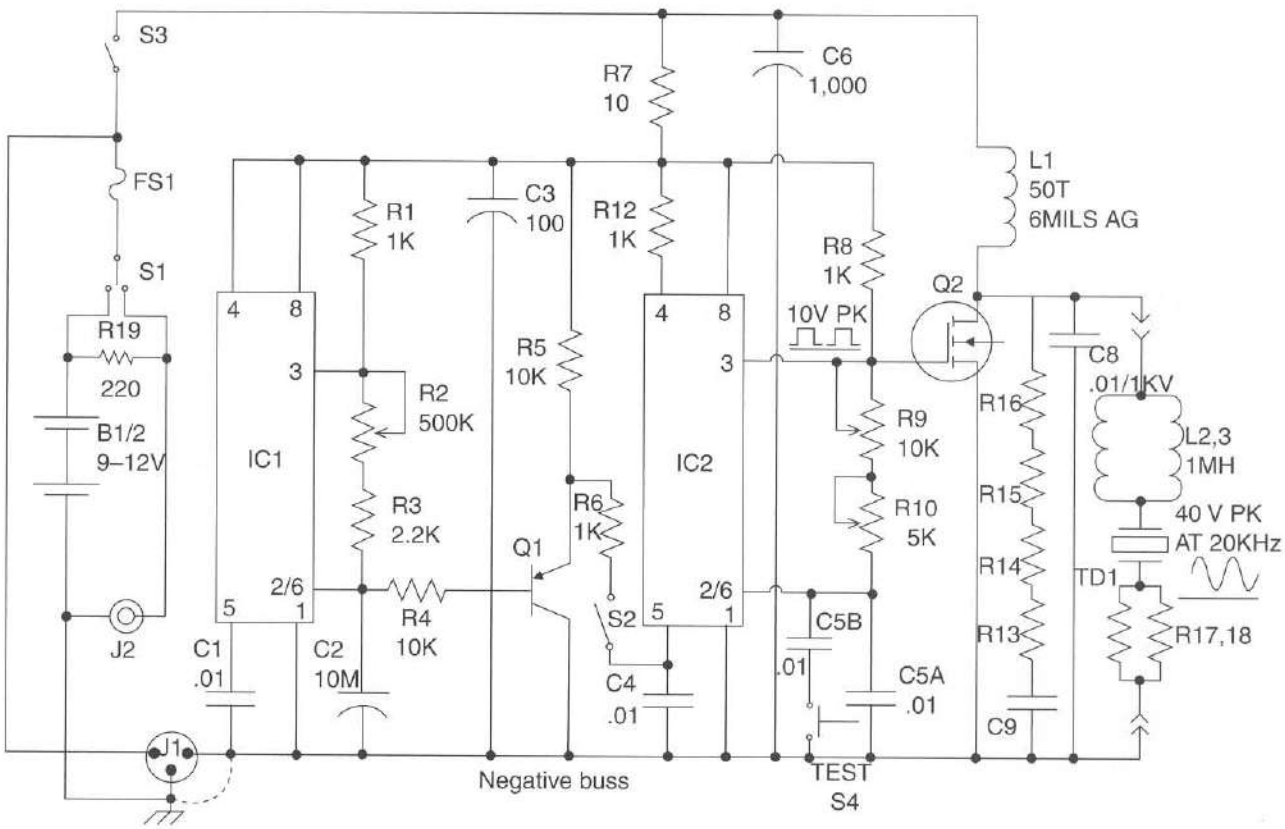

Dashed line indicates bypass connection when not using J1 for external control. You may also short these pins using a mating plug with pins connected together.

Note four transducers and associated networks.

Figure 35-2 *Schematic of the phaser pain-field generator*

upper limit of the tuning range. This signal waveform now has a peak-to-peak voltage several times that of the original square wave. Transducer TD1 now can take advantage of these peak voltages to produce the high sound-pressure levels necessary without exceeding the high *root means square* (rms) ratings of an equivalent voltage-level square wave.

Timer IC1 is similarly connected as an astable, running multivibrator and is used to produce the sweeping voltage necessary for modulating the frequency of IC2. This sweep repetition rate controlled by pot R2 and resistor R3 limits the range of this repetition time. Resistor R1 selects the duty cycle of the pulse, while capacitor C2 sets the sweep time range. The output for IC1 is via pins 6 and 2 where the signal ramp function voltage is resistively coupled to inverter transistor Q1 via resistor R4. The output of Q1 is fed to pin 5 of IC2 and provides the output modulation voltage necessary to vary the frequency as required. Note that the modulation signal is easily disabled via R2/S2.

Capacitor C6 guarantees an AC return path for the output signal. Power to driver circuits IC1 and IC2 is through a decoupling network consisting of resistor R7 and capacitor C3.

Power to the system is via internal battery B1 or an external 12 VDC such as from a vehicle. Three-way switch S1 selects between these two power sources or shuts the unit off in the center position. Resistor R19 provides a trickle charge to the internal battery when using an external source. Jack J1 allows a connection that is similar to our canine controller, turning on the unit when it detects a barking dog.

Construction Steps

If you are a beginner it is suggested to obtain our *GCAT1 General Construction Practices and Techniques*. This informative literature explains basic practices that are necessary in proper construction of electromechanical kits and is listed at the end of the chapter.

1. Lay out and identify all the parts and pieces, and check them with the parts list. Note that certain parts may sometimes vary in value. This is acceptable as all components are 10 to 20 percent tolerant unless otherwise noted.
2. Fabricate the heatsink bracket (HS1) as shown in Figure 35-3 from a .75 × 2 × .065-inch aluminum piece. Bend it 90 degrees at its midsection and drill a hole for the SW1/NU1 screw and nut. Attach it to Q2 as shown.
3. Assemble the L1 choke coil as shown in Figure 35-4 by wrapping 50 turns of #24 magnet wire on the nylon bobbin as evenly as possible. Leave 2 inches of leads for a connection to the circuitry. Assemble the E core as shown and shim each side with pieces of yellow cardboard strips of 3 mils each for a total of 6 mils. If you have an LCR bridge, measure 1 millihenry.
4. Assemble the PCB as shown in Figure 35-5. Note the two wire jumps and component polarity. Wire in inductor L1 and secure it to the board with *room temperature vulcanizing* (RTV) silicon rubber or another suitable adhesive.

   If you are building from a perforated or vector circuit board, it is suggested that you use the indicated traces for the wire runs and insert the components starting in the lower left-hand corner. Pay attention to the polarity of the capacitors with polarity signs and all the semiconductors.

   Route the leads of the components as shown and solder as you go, cutting away unused wires. Attempt to use certain leads as the wire

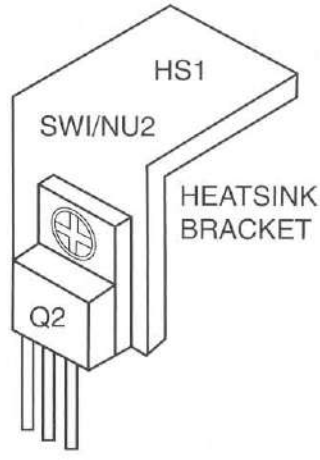

Figure 35-3 *Fabrication of heatsink*

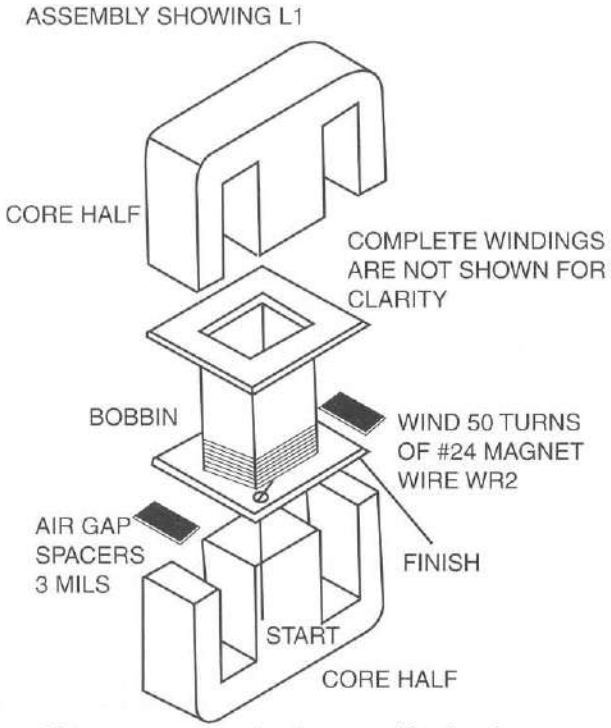

Figure 35-4 *Assembly of L1 inductor*

runs or use pieces of the #24 bus wire. The heavy foil runs should use the thicker #20 bus wire as these are the high-current discharge paths.

It is suggested that you use an 8-pin integrated circuit socket (SO8) for IC1 and IC2.

5. Double-check the accuracy of the wiring and the quality of the solder joints. Avoid wire bridges, shorts, and close proximity to other circuit components. If a wire bridge is necessary, sleeve some insulation onto the lead to avoid any potential shorts.

6. Fabricate the chassis and cover, as shown in Figure 35-6 from 1/16-inch Lexan plastic or aluminum. Use a large punch or circle saw to cut out the four holes for the transducers. Drill the remaining holes as you assemble it, verifying the proper clearances and sizes with components.

7. Complete the final assembly shown in Figure 35-7 and mount the assembly board, battery holders, switch S1, jacks J1 and J2, and fuse holder FS1. It is a good idea to trial-fit all the parts in this section before actually drilling or making any mounting holes. Note a piece of plastic (SPACER) that insulates the bottom solder connections of the PCB from shorting out to the metal chassis base. Also note resistor R19 across S1. Secure the battery holders using pieces of two-sided foam sticky tape (TAPE). Wire using #20 vinyl wire as shown.

8. Mount the transducers as shown in Figure 35-8 using SW2/NU2 6-32 × 1/2-inch screws and nuts.

   Twist the leads of the two inductors L2 and L3 together, effectively paralleling these components. Repeat this for resistors R17 and R18. You should end up with four sets of these parallel components. These components should be self-supporting by being connected to stiff pieces of bus wire. Take caution to observe any potential shorts. Solder the two 18-inch connecting leads and connect them to point P6 on the assembly board.

9. The final assembly is shown in Figure 35-9. Do not attach the cover until you have tested the unit.

Testing the Assembly

10. Turn the pots counterclockwise, set the switch to mid position (off), and install eight fresh batteries into the battery holders. If you have access to a bench supply of 12 VDC at 2 amps, it may be connected to J2 via a mating plug, eliminating the need for the batteries in the preliminary test. Short out the chassis ground and negative bus pins of J1. This jack is for connection to the canine controller module or other remote control devices.

Note: A variable bench supply capable of 12 VDC at 2 amps with a voltmeter and current meter can be a great convenience for the remaining steps and the testing of other similar circuits.

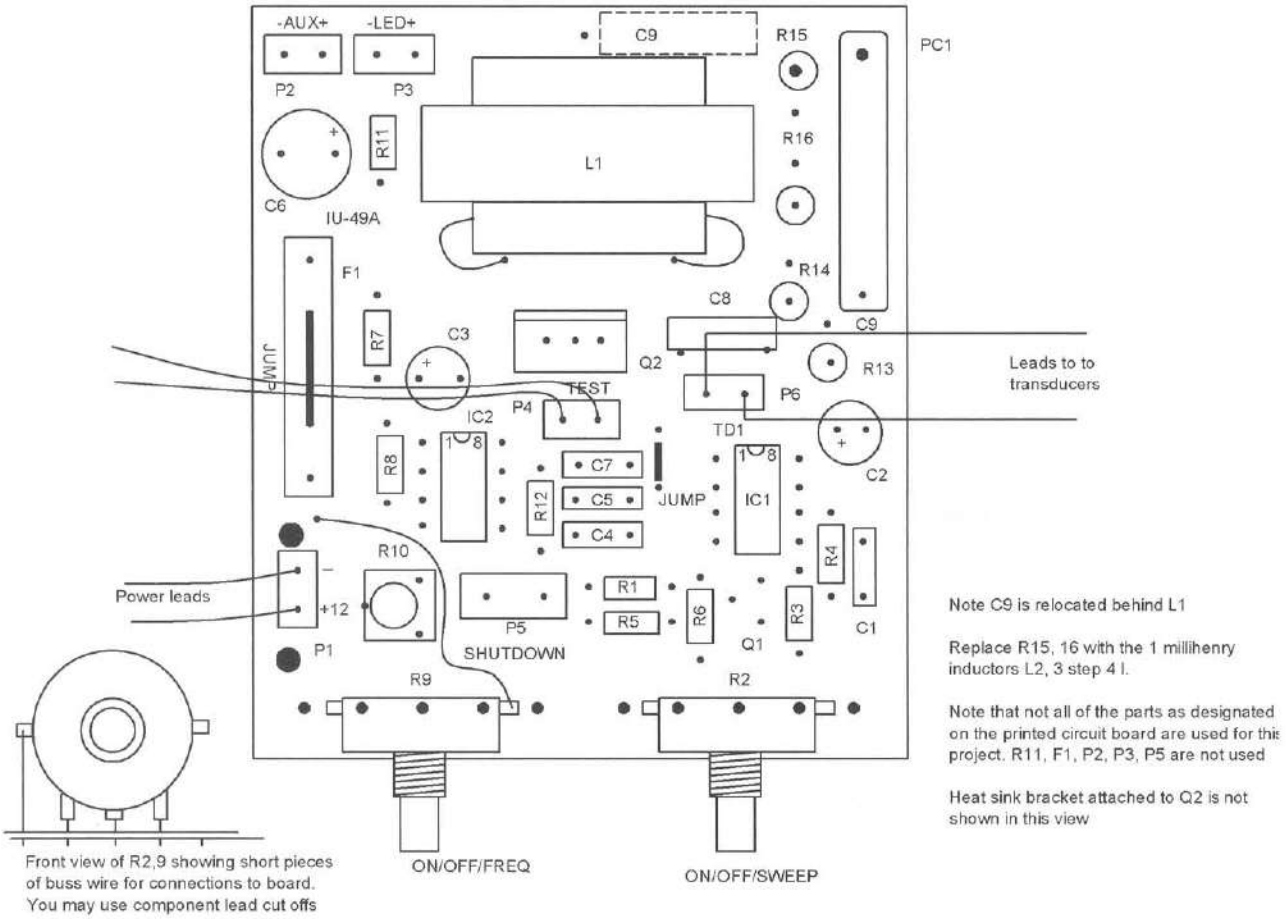

Figure 35-5 *Assembly of PCB*

11. Press push button S1 and note a loud, piercing wave coming from TD1. Measure a current of 500 to 600 milliamps in series with a battery or bench supply. Note that the switch position when up should be power supplied by internal batteries, and the down position being supplied by the external 12 VDC supply. This function may be reversed but should be noted, as the external position will automatically trickle charge the internal batteries.

12. Rotate R9 and note the frequency increasing to above the audible range; measure a current of 400 to 800 milliamps. You may preset the limit of the high range by the R9 setting. The normal factory setting is 25 kHz maximum with R10 full clockwise. Note the wave shapes shown in Figure 35-2 for those who have a scope.

13. Turn on sweep control R2/S2 and note the frequency being modulated by a changing rate as this control is adjusted. Use caution as certain sweep rates may cause epileptic seizures and other undesirable effects. Sweep rates between 7 to 20 per sec should be used with caution.

Basic Operating Instructions

14. Connect a 12-volt source capable of supplying 2 amps of current to designated leads or use internal *nickel cadmium* (NiCad) batteries that are type C cells. These will provide approximately 3½ hours continuous operation at slightly reduced output.

15. The battery-charging function occurs when the system is connected to an external power source and will charge the NiCad batteries at a 100-milliamp rate, taking about 14 hours to fully charge.

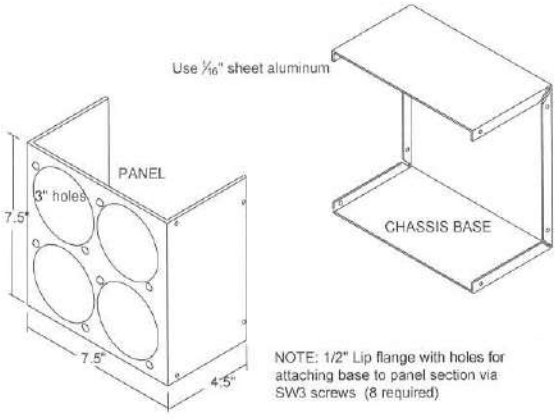

Figure 35-6 *Chassis fabrication*

16. If continued use is anticipated via the external 12 volts, it is a good idea to remove the internal batteries' connections as overcharge may occur that will ruin the batteries or actually cause them to explode. The recommended method of setting the controls is the following:

    a. Determine the frequency limits per the application. These types of devices have two basic applications. When used as an anti-intrusion device to discourage unauthorized entrance, adjustments are made for maximum human annoyance, usually with frequencies from 10 to 15 kHz.

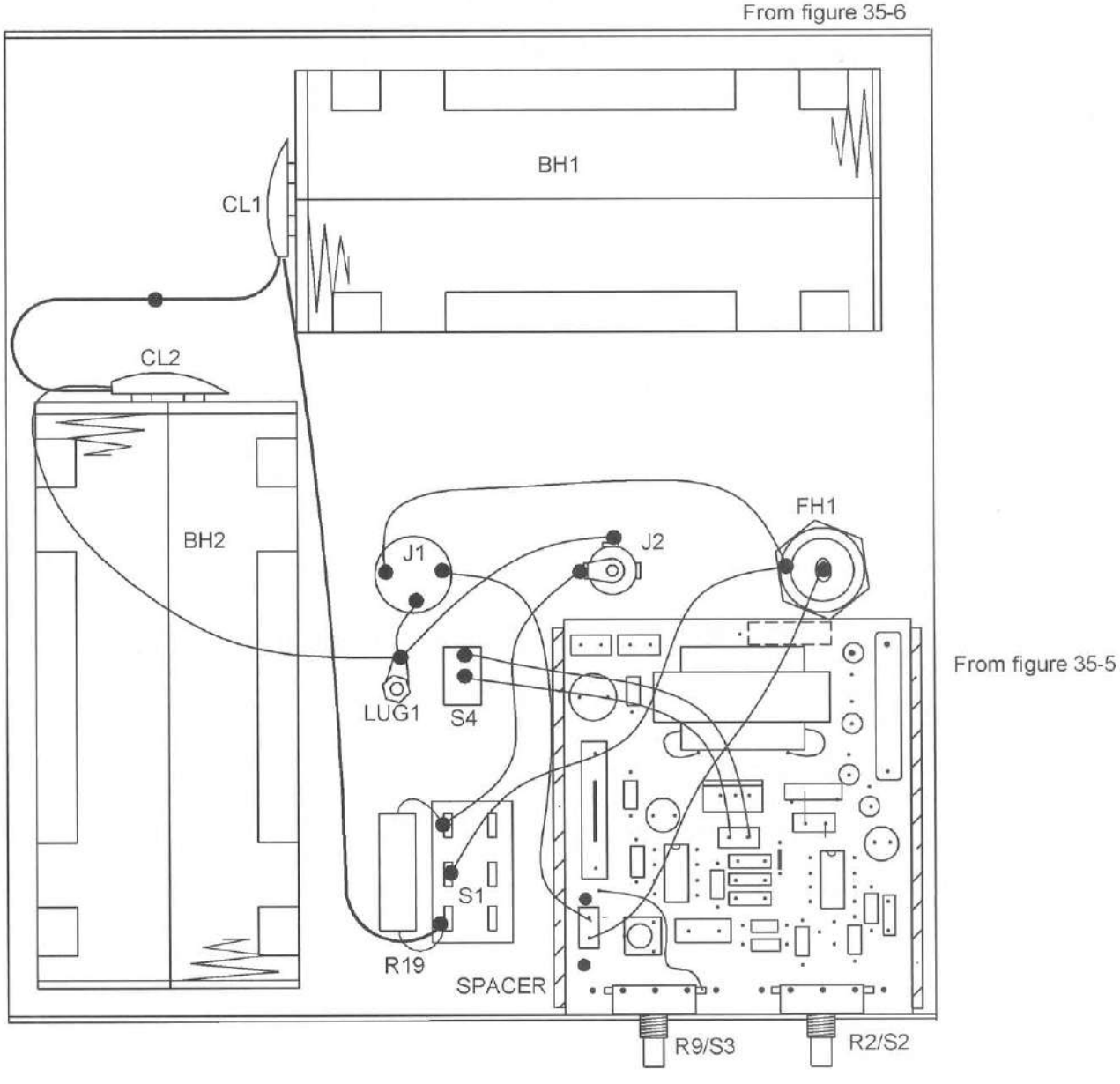

Figure 35-7 *Chassis wiring*

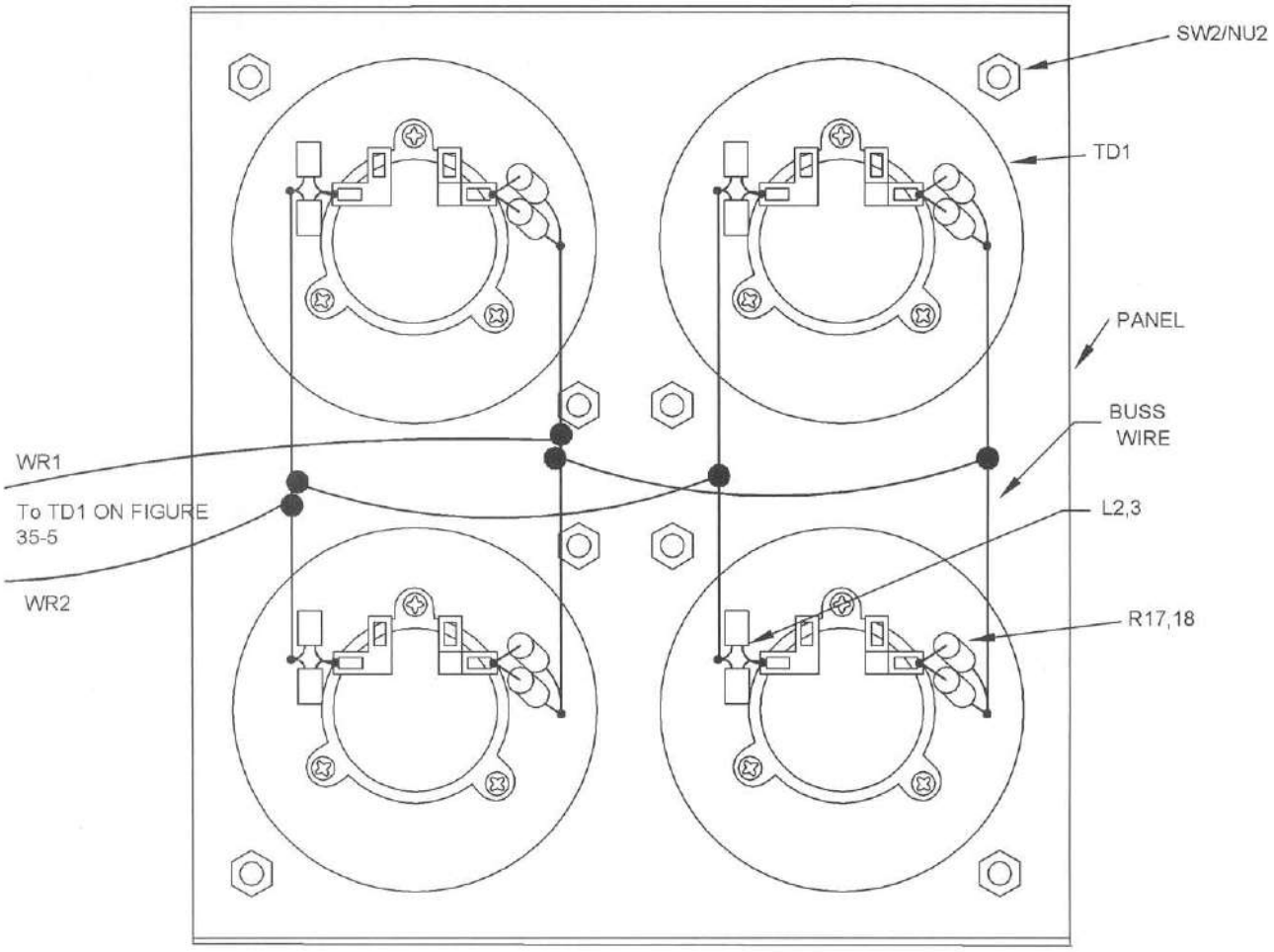

Figure 35-8 *Transducer panel wiring*

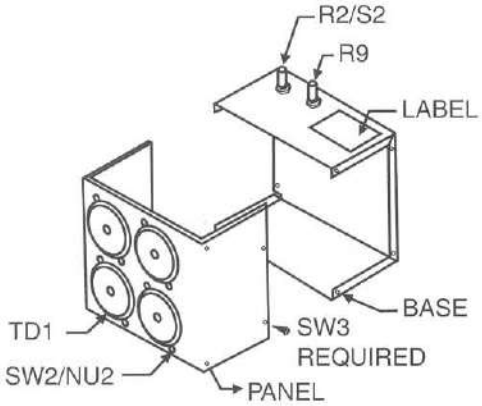

NOTE: 1/2" Lip flange with holes for attaching base to panel section via SW3 screws (8 required)

Figure 35-9 *Final assembly*

When used as a rodent device, we have found that the lowest tolerable frequency to humans usually has the greatest effect on the common species of rats. This is not always true but serves as a starting point in initially setting the adjustments. A frequency setting of 15 to 20 kHz for nonhuman living areas and 20 to 25 kHz for areas where people are present usually suffices for good rat control. Note that at no time should the unit be set higher than 25 kHz.

Dog control is usually around 18 kHz, but experimenting with the target animal may be necessary for optimum effect. Stubborn dog owners fall into the category of anti-intrusion if they will not cooperate.

b. Turn the SWP control off. Adjust the TONE control so that the output is detectable by the human ear or just above the point of annoyance.

c. Set the TEST switch to an audible verification. Note that experimentation is required for optimizing any effect on a given set of target applications.

Information on the System

Your phaser system is capable of operating in two modes. Mode one is at a frequency that is known to produce paranoia, nausea, disorientation, and many other physiological effects. Mode two allows using the system as an audible alarm to frighten off intruders or warn the user of an intrusion. Both modes may be used in combination and are easily rear-panel-controlled by the user.

A Word of Caution

Ultrasonics is a grey area in many respects when an application involves the control of animals or even a deterrent to unauthorized intrusion. It is always best to consult with local municipal and state laws before using this device to protect home or property. Remember many state laws lean more towards the right of the criminal rather than the victim.

General Information on Ultrasonics

Numerous requests have been made for information on the effect of these devices on people. First, let us make it clear that no device such as this should purposely be used on humans, and we discourage this use due to the possibility of acoustically sensitive people being highly irritated.

None of these devices has the ability to stop a person with the same effect as a gun, club, or more conventional weapon. They will, however, produce an extremely uncomfortable, irritating, sometimes painful effect in most people. Everyone will experience this effect to some degree. Unfortunately, younger women are much more affected than older men due to being more acoustically sensitive. The range of the device depends on many variables and is normally somewhere between 10 and 100 feet depending on the acoustical sensitivity of the target.

One possible use of the device (which deserves careful consideration) is the installation of all transducers in an area to protect against unauthorized intrusion. This would produce an irritating and painful feeling for the intruder, along with a condition of paranoia of not knowing what to expect next.

Application Supplement

The following describes an acoustical, ultrasonic device for dispersing potentially unruly crowds or gatherings. The reason for using the higher-frequency energy is that it is easily directed without being diffracted in all directions. Therefore, the use of directional-type transducers producing a front-to-back relative signal ratio of 20 to 30 dbs is easily achieved. The higher-frequency sound can produce nausea, headaches, and depression without the subject necessarily being able to determine the source. This effect no doubt presents an advantage to law enforcement when using these devices.

It is a known fact that the development of any type of demonstration in "psychological crowd control" follows the natural laws of growth and decay, in that a positive influx of people encourages a crowd growth, whereas a negative outflux creates a diminishing situation. One must realize that differences exist among most people regarding sound level and frequency sensitivity. When sampling a group or crowd as to the overall sensitivity of these devices, it is usually found that certain ones may not be affected to the same degree as others. However, taking into consideration that those who find the effect intolerable does generate the negative outflux that usually terminates the gathering.

This method, to this date, produces no permanent, lasting effects or symptoms and therefore becomes a more humane means of dispersing potentially unruly crowds. It should also be mentioned that younger people appear to be many times more sensitive to this effect. This usually goes hand in hand in most

demonstrations, since younger people are more apt to become unruly.

This section encompasses many of the methods for applying this device via a permanent installation where transducers can be placed and adjusted to produce the necessary sound-pressure levels at distances to achieve the desired effects. This method could prove effective as an intrusion deterrent for a certain protected area.

Another method could be a handheld directional device similar to a megaphone where the amount of transducers used would be determined by the affects desired. This device would take into consideration the highly directional characteristics of this energy, being able to be directed at problem areas as a handheld portable system.

Another method for effective control would be clusters or arrays of transducers with these systems being mounted to vehicles via conventional roof mounts or on the hoods of these vehicles. Operation could take further advantage of the fair to good soundproofing found in most automobiles and vehicles could approach problem areas, taking advantage of close-proximity situations.

It has been found that certain frequencies also can be made to produce intense irritability in certain types of people. This method could justify the eventual use of more severe methods of restraint, assuming that the target subjects would eventually become more aggressive or violent, thus warranting this action. This is only to be considered as a potential extreme use of the device.

The objective here is to describe a similar method whereby the sound-pressure levels and frequencies can be obtained economically and efficiently, using state of the art methods and easily available parts, yet they can still be portable and easily handled for complete operational flexibility. Construction is based around the use of the piezoelectric tweeter transducers. These lightweight devices are easily driven and produce a conversion efficiency of over six times their electromagnetic counterpart. Being lightweight, economical, and easy to use when driving, they are an excellent candidate for this type of system. Higher driving impedance versus frequency is the inverse of the electromagnetic type.

The system, as described, contains several modes of operation. The first mode is a steady state of a certain frequency determined by the operator. This mode is termed *manual frequency control* and is adjusted by its appropriate control. The next mode is *low speed sweep*, which consists of the unit starting at a low frequency and automatically increasing to its higher limit where it again repeats itself. The remaining modes are controlled rates of this sweep, determined by the appropriate control referred to as *sweep rate control*. It is these controls that can be remotely operated from the inside of a vehicle when high-powered, outside arrays in clusters are used. As was mentioned before, certain frequencies combined with certain sweep rates can cause different degrees of effectiveness. It is not the objective of this information to analyze the potential types of effect and behavior versus control setting, but to describe the working system as a generator of these controlled sounds.

Table 35-1 Pain-Field Generator Parts List

Ref. #	Description	DB Part #
R1, 6, 8, 12	Four 1K, ¼-watt resistors (br-blk-red)	
R2/S2	500K, 1 meg pot/switch, 17 mm	
R3	2.2K, ¼-watt resistor (red-red-red)	
R4, 5	Two 10K, ¼-watt resistors (br-blk or)	
R7	10-ohm, ¼-watt resistor (br-blk-blk)	
R9/S3	10K pot/switch, 17 mm	
R10	5K horizontal trimpot	
R13–16	Four 4.7-ohm, 3-watt resistors (yel-pur-sil-gold)	
R17, 18, 19	Nine 120-ohm, 5-watt resistors (br-red-br); use two per transducer and one across S1	
C1, 4	Two .01-microfarad, 50-volt disk capacitors (103)	
C3	100-microfarad, 25-volt vertical electrolytic capacitor	
C2	10-microfarad, 25-volt vertical electrolytic capacitor	
C5A, B	Two .01-microfarad, 50-volt polyester capacitor	
C6	1,000-microfarad, 25-volt vertical electrolytic capacitor	
C8	.01-microfarad, 2-kilovolt disk capacitor	
C9	.22-microfarad, 250-volt polypropylene capacitor	
L2, 3	Eight 1 mh inductors (6080), 2 used per transducer, in place of R15 and R16 as marked on PC board	DB# 1MH
L1	Inductor: two Hitachi 30.48 E cores and mating bobbin assembled and wound L1 inductor	DB# PPPL1L1
Q1	PN2907 PNP GP transistor	
Q2	IRF530 or 540 N-channel metal-oxide-semiconductor field effect transistor (MOSFET)	
IC1, 2	Two 555 dual inline package (DIP) timers	
HS1	Heatsink bracket, created as shown	
SW1	6-32 × ¼-inch screw	
SW2	Eight 6-32 × ½-inch screw	
SW3	Eight #8 × ¼-inch sheet metal screw	
NU2	Nine 6-32 hex nuts	
FH1/FS1	Fuse holder and 2-amp fuse	
J1	Three-pin din chassis mount jack	
J2	DC 2.5 mm jack panel mounting	
CL1, 2	Two battery 9-volt clips	
BH1, 2	Two four-C-Cell holders	
S1	Single pole, single throw (SPDT) power switch	
S4	Small SPST toggle switch	
PC1	Printed circuit board (PCB) or use perforated vector board	DB# PCSONIC
TD1	Four polarized 130 db piezo transducer	DB# MOTRAN
WR1/2	36 inches of #20 vinyl hookup wire, red and black	
CHASSISBASE	Create as shown in Figure 35-6	
PANEL	Create as shown in Figure 35-6	
TAPE	8 inches of two-sided 1-inch foam tape for securing battery holders to base	
SPACER	3 × 3-inch piece of plastic sheet to insulate assembly board from metal BASE	
LABULTRA	Label, ultrasonic warning	

Chapter Thirty-Six

Magnetic Distortion Detector

The following project, as shown in Figure 36-1, describes an excellent, low-cost device that has amazing sensitivity in its ability to detect magnetic disturbances down into the microgauss. A microgauss is one millionth of a gauss. The earth's magnetic field is 500 milligauss where a milligauss is one thousandth of a gauss. The unit easily detects sunspot activity and auroras, and it can even be used as a vibration sensor that can detect a person's finger tapping on a rock. It can also detect moving aircraft and vehicles, as well as other changing electric and magnetic phenomena.

Actual detection is accomplished via an analog meter that responds to the relative strength of the changing magnetic fields. An audible alarm also allows the presetting of an activation level where it will alert the user of certain activity. An output port is included for connecting to a chart recorder.

The magnetic fields produced by many devices, both manmade and natural, are detectable by this system. Interesting results are produced when this unit is placed near anything electrical or magnetic such as a car, motor, or TV. The sensitivity is impressive when one sees the results of a 1-amp pulse of electrical current through a wire located a meter away from the unit. (This corresponds to a milligauss. Earth's magnetic field is .5 gauss). When the system is properly installed, it will detect passing automobiles, aircraft, or any moving, ferrous source that will cause the terrestrial magnetic field to distort. The unit is an excellent science fair project and can supply the amateur scientist with hours of knowledgeable entertainment in listening and detecting magnetic fields and their abnormalities.

Figure 36-1 *The magnetic distortion detector*

Construction is shown to be as flexible as possible. It is built in two sections: the sensing head and the control box, which are interconnected via a length of shielded cable. The maximum usable sensitivity requires the sensing head to be placed away from power lines and other potential disturbances. The sensing head, which must be securely mounted to prevent interference from mechanical movement due to wind and vibration, can cause erroneous signals as it shifts position through the earth's magnetic field. The unit can also be made as a sensitive magnetic probe by installing the sensing head and the control box together, bearing in mind that the usable sensitivity will be decreased due to erroneous movement near magnetic materials when moving its position. The detection of field changes produces a moderately loud alarm along with a relative indication from an analog meter located on the panel. An optional jack

is used for an X/Y chart recorder, and the system is fully battery powered.

This is an intermediate to advanced-level project requiring basic electronic skills. Expect to spend $45 to $65. All parts are readily available, with specialized parts obtainable through Information Unlimited at www.amazing1.com, and they are listed in the parts list at the end of the chapter.

Circuit Description

Figure 36-2 shows a coil (L1) consisting of many thousands of turns is wound on a 2-inch bobbin and placed over a soft iron core of about 1 to 2 feet in length. Any magnetic changes induce small voltages to occur at the output of this coil. This output signal is fed into a nano-amp, sensitive DC amplifier (I1), providing a current gain of 500 times the original. The iron core of L1 serves to concentrate the magnetic flux lines by offering a lower reluctance path than that of air. The input of I1 is protected by overvoltage and transients via clipping diodes Dl and D2. The output of I1 is forced to near zero via a multiturn trimpot (R4) for balancing and compensating any offset.

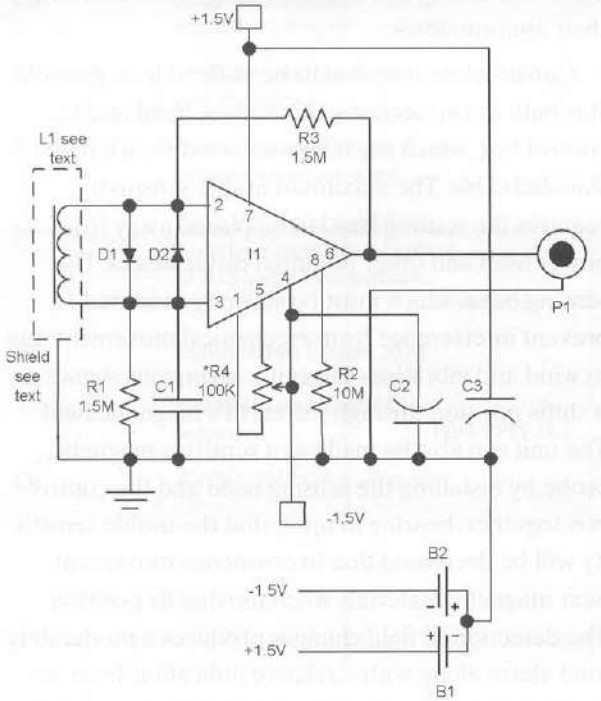

Figure 36-2 *Sense head schematic*

Power for I1 consists of batteries Bl and B2, which are left in the circuit permanently as current drain is very low and replacement can be on a yearly basis. It should be noted that if the sensing head is to be located in a hard-to-get area the builder might use D-size cells, as these will last that much longer.

The sense head output is fed to the control box via any reasonable length of shielded cable, WR10. As mentioned before, the sensing head should be located away from any potential magnetic interfering devices, such as anything electrical and large, ferrous objects.

Aluminum foil can be wrapped around the sense coil and is connected to the circuit common line. This reduces the capacitive pickup of unwanted signals.

Again, the sensing head and control box may be assembled together and used as a probe. This configuration may reduce the system's sensitivity due to erroneous movements and interaction of the circuits such as magnetic speakers and meters. This method is not encouraged due to these erroneous readings.

Figure 36-3 shows the control box providing another amplifier, I2, with a gain of 200 times the original amount, which gives the system an overall gain of 100,000. Full-scale meter deflection of the 50 ua meter (M1) occurs when a current of .5 nano-amp is obtained from L1. It is obvious that with the many thousands of turns on L1 that a detectable signal can occur with very minute flux changes, such as the result of changes in the microgausses. It should be noted that the earth's magnetic field is only .5 gauss.

I1 is connected as a conventional DC operational amplifier with its output DC coupled to I2 via a shielded cable. This cable is necessary to separate the sense head and the control box by at least 6 feet. This is necessary to prevent magnetic coupling from the speaker SPK1. Sensitivity control pot R5 controls the system gain and is usually set at maximum.

You will note that meter deflection pot R11 also is ganged with switch S1, which controls the +6-volt power to the control box section. R11 controls the deflection of meter M1 with diode D3 and capacitor C6, serving to smooth out and average the signal. The voltage level at jack J2 is also controlled by R11 and is an auxiliary jack intended for a chart or other recorder. The audible alarm activation point is controlled by pot R12 that is ganged with switch S2.

Switch S2 controls the −6 volt power to the control box.

The alarm is nothing more than a reflex-type oscillator consisting of transistors Q2 and Q3 with its feedback paths consisting of resistor R15 and capacitor C8. Trimpot resistor R16 is set for a reliable, clean-sounding signal.

Assembly Steps

1. Figure 36-4 shows coil L1 wound with thousands of turns of fine magnet wire. This may be difficult to do and it is suggested that the builder locate a high-voltage oil burner ignition, neon sign, bug killer, or other similar transformer and carefully remove the high-voltage secondary winding. The parameters of these transformers are usually around 5,000 volts at 10 to 20 milliamps. These are available from junkyards and other places. Many are rejected due to radio and TV interference and yet have intact secondary winding suitable for this project.

   The objective is to obtain one with as many turns as possible; however, most will work quite well. A quick test is to measure the DC resistance of between 5 and 20K across the coil. A relay coil of high impedance such as 5 to 10K may also work. The coil must have connecting leads and these should be secured with *room temperature vulcanizing* (RTV) adhesive, wax, or something similar to prevent breaking that may render the coil useless. A soft iron core of 1 to 2 feet is inserted through the coil and serves to offer a lower reluctance to the magnetic flux lines. It is these lines that, as they change in the core, induce a voltage due to magnetic induction. Note to shield the coil from electrical and capacitive pickup by wrapping it in aluminum foil and connecting the foil to the circuit ground. A special custom-made coil is available from Information Unlimited and is noted in the parts list.

2. Lay out and identify all the parts and pieces, and check them with the parts list. Note that some parts may sometimes vary in value. This is acceptable as all components are 10 to 20 percent tolerant unless otherwise noted.

3. Assemble the board by inserting components into the board holes as shown in Figure 36-5.

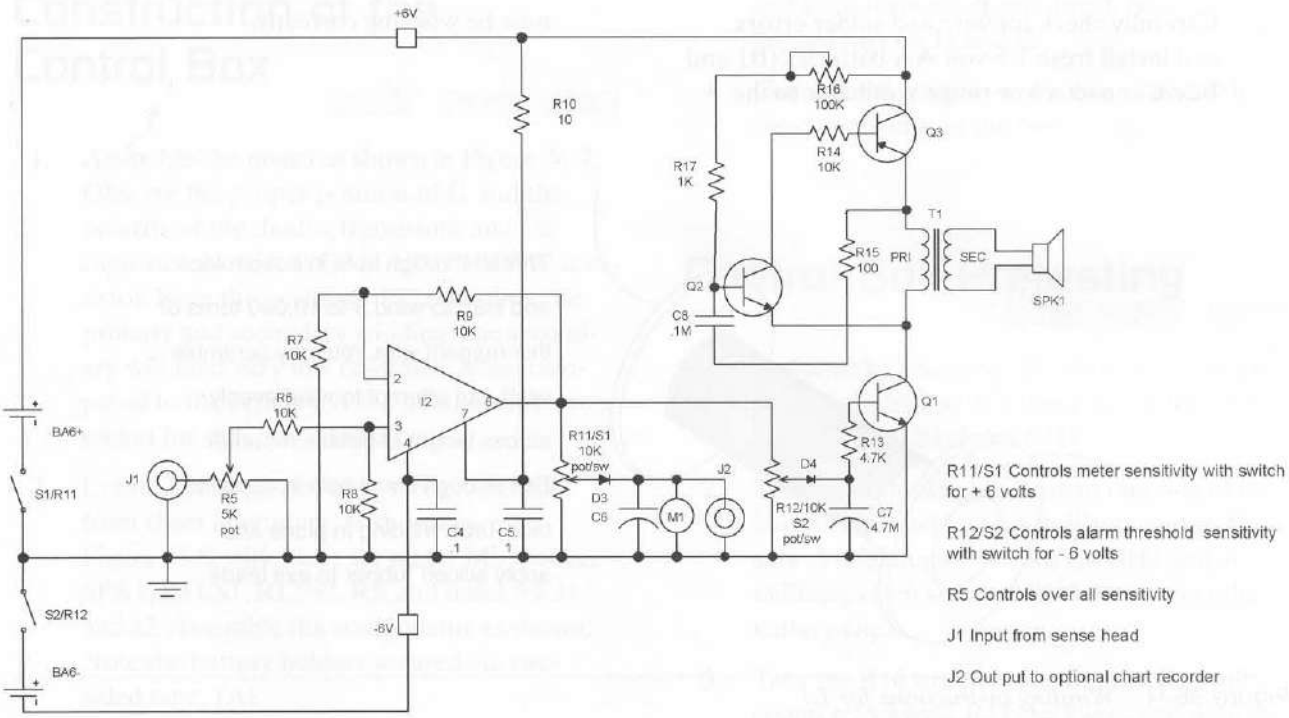

Figure 36-3 *Control box schematic*

Proceed from left to right, attempting to obtain the layout. Note the polarity of the components as indicated. Certain leads of the actual components are to be used for connecting points and circuit runs. Do not cut or trim them at this time. It is best to temporarily fold the leads over to secure the individual parts from falling out of the board holes for now. Solder as required and clip off excess leads. Some kits contain a length of insulated wire. This must be cut, stripped, and tinned according to where it is used.

4. Wire in the 6-foot length of shielded cable, being careful not to burn through the insulation and short out the cable.
5. Attach the battery clip HOLD1 using silicon rubber.
6. Attach the L1 coil to the PB1 perforated board as shown in Figure 36-5 and secure it with RTV adhesive. You will have to drill a hole for the iron core. The core should fit snuggly and can be glued in place in the final assembly.

Pretesting the Sense Head

1. Carefully check for wire and solder errors, and install fresh 1.5-volt AA batteries (B1 and B2). Connect a low-range voltmeter to the leads of the output cable and adjust the 25-turn pot (R4) for as close to a near-zero reading as possible. Finally, adjust the lowest range of the meter, preferably the 50 microamp range. This should be done outside away from power lines.
2. With the meter still connected, observe a reading when a piece of iron is moved near sensing coil L1 and moved about. If the piece of iron contains any magnetism, the effect will be enhanced.
3. Wrap the sense coil with several layers of aluminum foil and ground the foil to the negative circuit. Diodes D1 and D2 will require shading against light sources as the junction behaves like photodiodes at these low signal levels.
4. Create enclosure EN1, as shown in Figure 36-6, from an 8 × 3½-inch outer-diameter piece of plastic tubing.

   Note the small, ⅜-inch access holes for adjusting R4 are drilled when all is in place. Create the brackets as required for mounting the sense head.
5. Install the assembly into EN1 with caps CP1 and CP2 as shown. Recheck it by connecting the meter across P1. Readjust R4 through the access hole if needed. The sense head should now be working correctly.

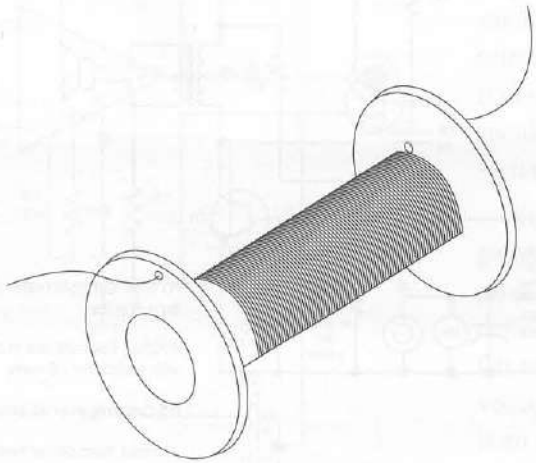

Figure 36-4 *Winding instructions for L1*

Strip off outer plastic jacket of cable 1 inch and twist braid into a lead and tin. Strip off 1/4 inch of insulation on inner lead and tin. Insert into plug and solder inner lead to lin tip.

Carefully solder twisted braid lead to outer shell being careful not to burn through insulation. Always verify lead continuity and possible shorting of the leads with a meter.

Dashed lines are connections on underside of perforated circuit board using the component leads. These points can also be used to determine foil runs for those who wish to fabricate a printed circuit board.

• Small dots are holes used for component insertion.

◉ Circles with dots are holes that may require drilling for component mounting and points for external connecting wires, indicating strain relief points. It is suggested to drill clearance holes for the leads and solder to points beneath board.

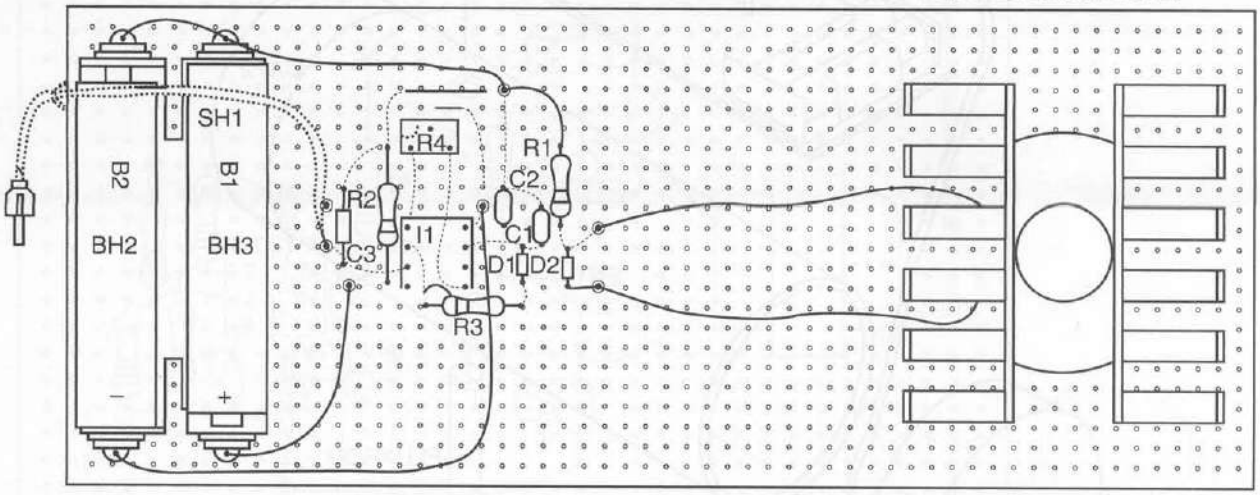

Note: The sense head as shown in this sketch is wound from a transformer bobbin. Any plastic bobbin 2"x1" will usually suffice. See Figure 36-4.

Figure 36-5 *Assembly of the sense board section*

Construction of the Control Box

1. Assemble the board as shown in Figure 36-7. Observe the proper position of I1 and the polarity of the diodes, transistors, and C6 capacitor. Note that Q3 is a PNP PN2907 transistor. Note the position of Tl regarding the primary and secondary winding. The secondary will read very low resistance when compared to the primary. It is a good idea to use a socket for the integrated circuit.
2. Create the enclosure base section (BASE) from sheet aluminum, as shown in Figure 36-8, with holes for meter Ml, speaker SPK1, R11/S1, R12/S2, R5, and holes for J1 and J2. Assemble the components as shown. Note the battery holders secured via two-sided tape, TAl.
3. Attach the interconnecting leads, as shown in Figure 36-9. Twist the leads whenever possible and keep them short and direct. Note the ground lugs on J1 and J2.
4. Connect the leads from the board assembly to the components in the box.

Control Box Pretesting

1. Position the board, but do not secure it at this point. Turn S1 and S2 off and insert four AA batteries into BH2 and BH3.
2. Turn on both switches, unsnap one side of the battery clip, and insert a milliamp meter. Measure .5 milliamps (−6 volts) at BH2 and .8 milliamps (+6 volts) at BH3. Reconnect the battery clips.
3. Turn the R16 trimpot to midrange, R11 full counterclockwise, R12 clockwise, and note the meter remaining at zero and the alarm

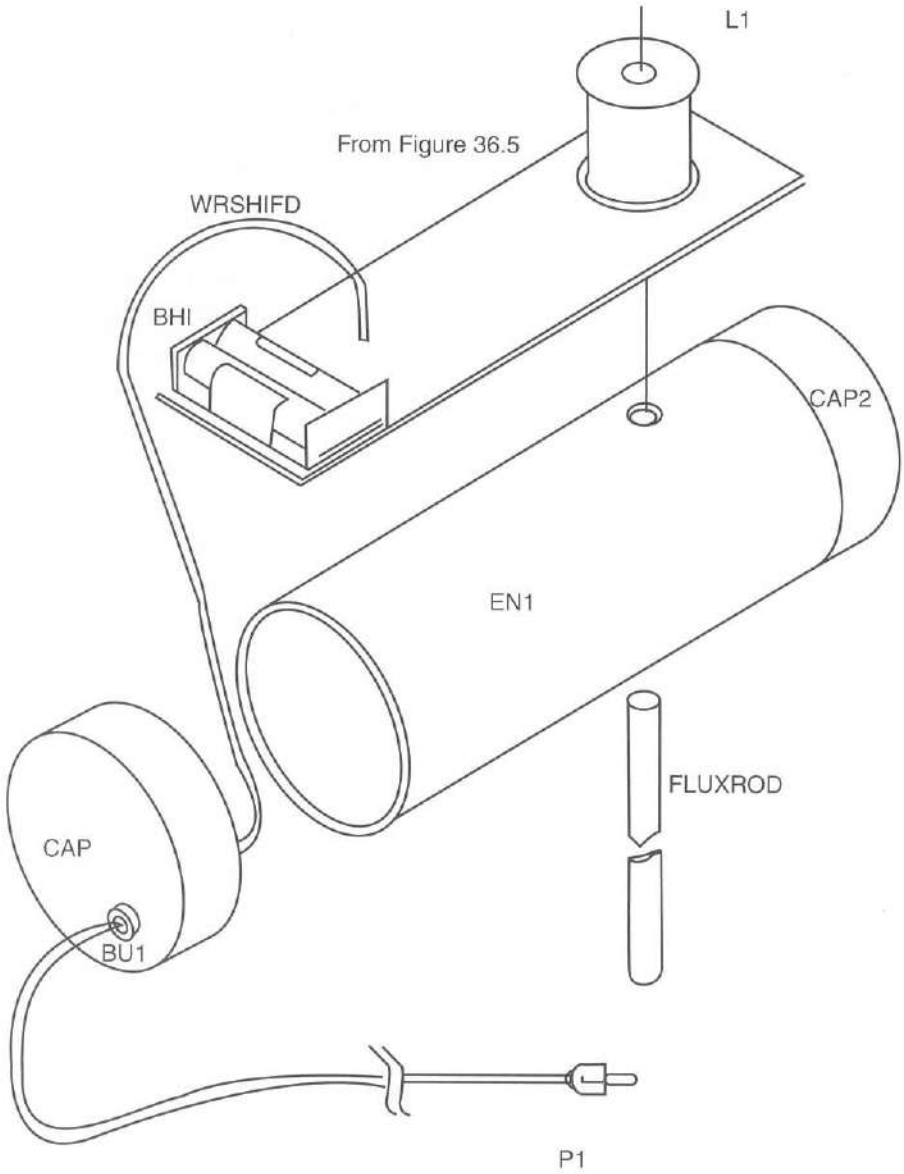

Figure 36-6 *Sense head enclosure assembly*

remaining silent. Now turn R11 clockwise and note the meter deflecting to full scale.

The following steps will require the sense head located away from electrical wiring and other potential sources of magnetic interference. The distance should be at least 5 feet from the control box to avoid feedback from the meter and speaker magnets.

4. Turn both R11 and R12 full clockwise. Plug in P1 from the sense head J2. Note the meter may pin, or jump off scale, and the alarm may sound. Have a friend slowly rotate R4 on the sense head to attempt to bring the meter into range. You may have to desensitize the circuit by turning R11 counterclockwise until the meter reads midrange and turn R12 to deactivate the alarm as it can be annoying during testing. Note that R5 is an overall sensitivity control and should be turned fully on in most applications for maximum sensitivity. The meter and alarm can be ranged by their respective controls, R11 and R12.

When properly set, the reading will constantly fluctuate and is the result of sunspots or other phenomena distorting the earth's magnetic field.

Dashed lines are connections on underside of perforated circuit board using the component leads. These points can also be used to determine foil runs for those who wish to fabricate a printed circuit board.

Small dots are holes used for component insertion.

Circles with dots are holes that may require drilling for component mounting and points for external connecting wires indicating strain relief points. It is suggested to drill clearance holes for the leads and solder to points beneath board.

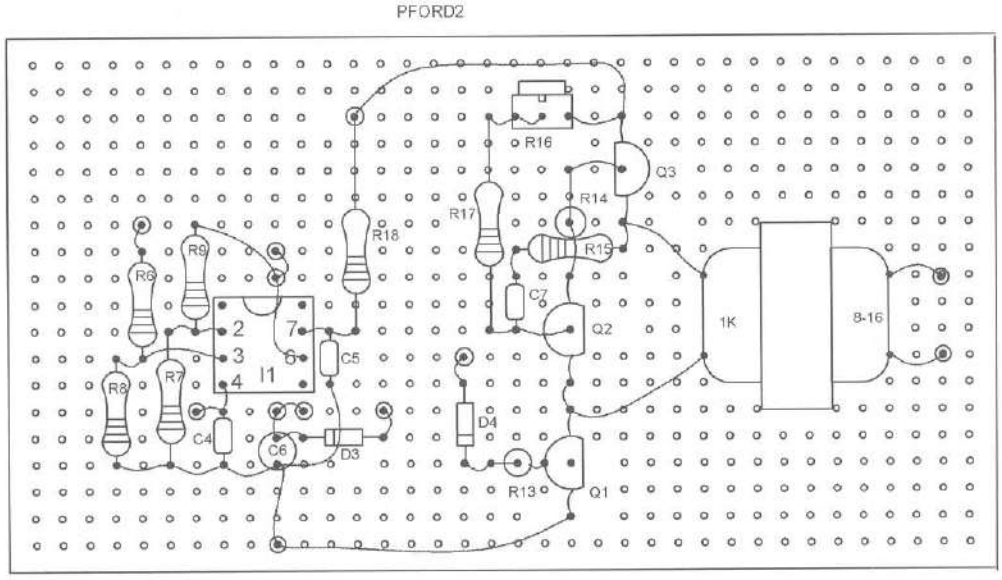

Figure 36-7 *Assembly control board*

If you choose a magnetically noisy location, you will have an added signal as the result of power lines, motors, and other magnetic disturbance. Note that if R11 cannot bring the meter into range without overly desensitizing it, it may be necessary to internally readjust R4 for proper ranging.

5. Preset R14 at midrange and adjust R12 until the alarm sounds. Readjust R16 for a clean, desirable-sounding tone if necessary.

Appreciating the sensitivity of this unit requires operation in a magnetically quiet location where all the controls can be advanced fully. Under the conditions of a low magnetic background, the unit can detect automobiles, manmade devices, and natural magnetic disturbances. Also, simply moving a piece of iron near the sensing head should produce an indication. (Note low-level-detection sensitivity may be difficult during the peak of the sunspot cycle due to the high background signal fluctuations.)

Jack J2 may be used to drive an XY recorder when observing sunspots or other time-related disturbances.

Note: No steps were taken to filter out 60 HZ disturbances, as it appears that many uses of this device involve the detection of power lines and other related equipment.

Applications

The uses of this device are obviously only appreciated by those who can understand its sensitivity to a minute change in magnetic flux. The unit can be made to detect the motion of large steel bodies as they distort the existing earth's magnetic field. Many applications and experiments are therefore possible with the device. Any high-impedance headphones

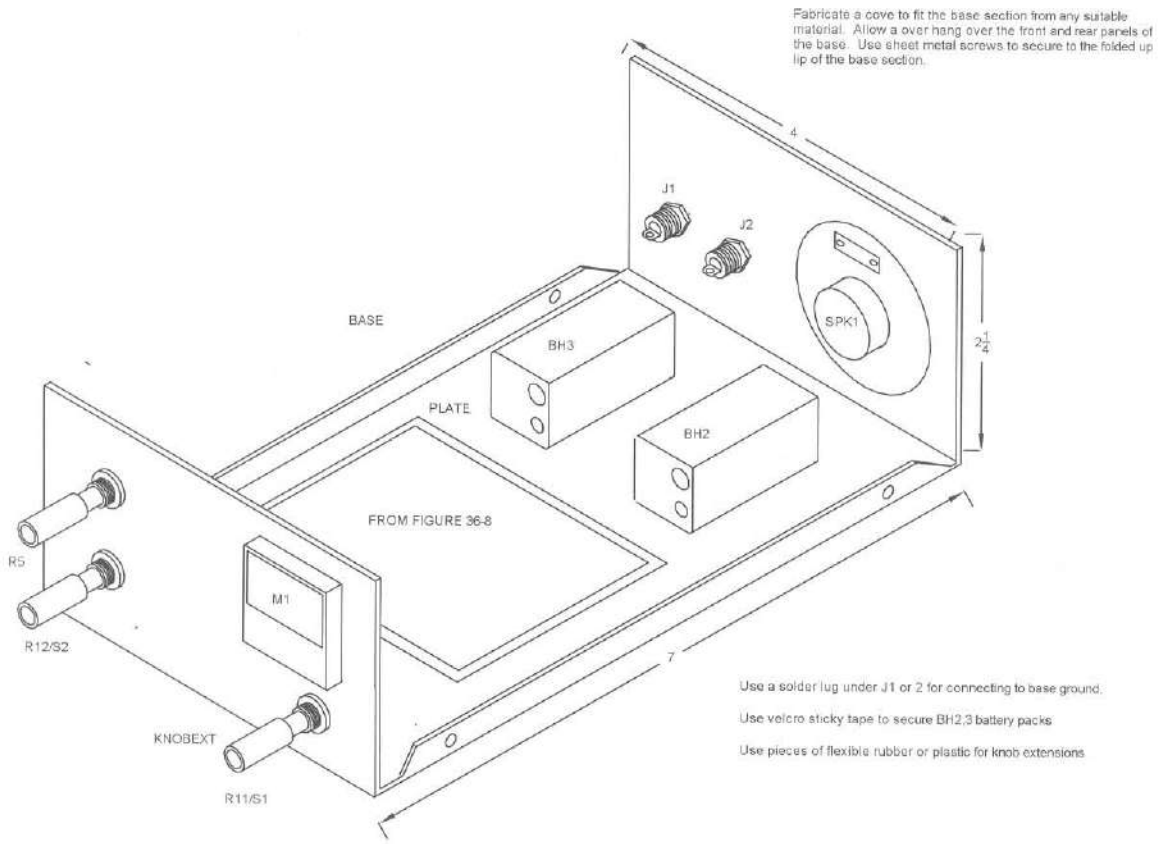

Figure 36-8 *Control box base section fabrication and layout*

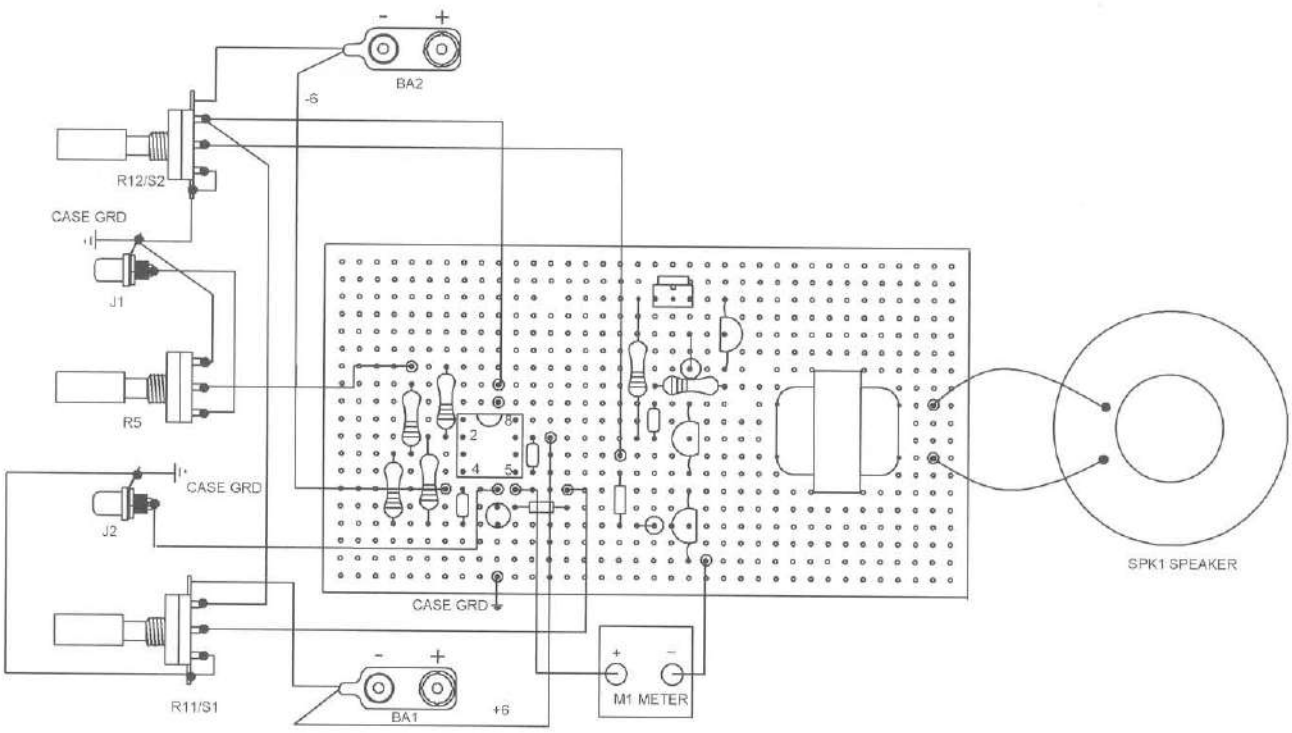

Figure 36-9 *Final assembly control box*

can be plugged into J2 where the experimenter can actually "listen in" and hear the field changing.

One verifying test that is easily done to determine the system's ability to detect the earth's magnetic field is the following. Rotate the sensing head with short, quick jerks in a clockwise direction. Note the meter pinning, and as rotation is continued a point will be found where the meter will respond less. This nulling point should occur with the fluxrod pointed in a north/south direction. If rotation is continued, it will be found that the short, quick jerks must occur in a counterclockwise direction to obtain a positive meter movement. This is similar to an electrical generator using the earth as its field magnet and the sensing head core as the moving armature.

Optional Ultra-Sensitive Vibration and Tremor Detector

You may easily convert this device to a vibration detector by simply modifying the sense head so it can be mounted to a rigid object such as a rock. The trick now is to place a magnet adjacent to the end of the sense coil, L1. The magnet should be held in place by elastic or other means whereby it is mechanically isolated relative to the sense coil. It should be very close to the sense coil for optimum sensitivity.

The theory is simple. Positioning a powerful magnet near a coil with many turns produces a signal. It is now the relative motion between this magnet and the coil that produces a voltage by the familiar equation $E = Nd0/dt$, where E is volts, N is the coil turns, 0 theta is the flux of the magnet, and t is the rate of relative motion in seconds. The combination of the high-resultant signal volts and the amplification sensitivity of the circuit provides amazing results.

Many variations are possible with the common objective being to obtain the highest reading for a given tremor. This unit will easily detect earthquakes occurring anywhere on the planet; however, the builder must experiment with motion dampening and other schemes to differentiate between manmade vibrations in order to isolate these signals. This is an excellent, low-cost project for any interested individual to learn by experimentation.

Table 36-1 Magnetic Distortion Detector Parts List

Ref. #	Description	DB Part #
R1, 3	Two 1.5M, ¼-watt resistors (br-gr-gr)	
R2	Two 10M, ¼-watt resistors (br-blk-bl)	
R4	100-kilo-ohm, 10-turn vertical trimmer	
R5	5K linear pot	
R6, 7, 8, 9, 14	Five 10K, ¼-watt resistor (br-blk-or)	
R10	10-ohm, ¼-watt resistor (br-blk-blk)	
R11/S1, 12/S2	Two 10K linear pots and switches	
R13	4.7K, ¼-watt resistor (yel-pur-red)	
R15	100-ohm ¼-watt resistor (br-blk-br)	
R16	100-kilo-ohm vertical trimmer	
R17	1-kilo-ohm, ¼-watt resistor (br-blk-red)	
C1, 2, 3, 4, 5, 8	Six .1-microfarad, 50-volt plastic capacitors	
C6	1-microfarad, 50-volt vertical electrolytic capacitor	
C7	4.7-microfarad, 50-volt vertical electrolytic capacitor	
I1	LM4250 nano-amp operational amplifier in a dual inline package (DIP)	
I2	LM741 operational differential amplifier in DIP	
D1, 2, 3, 4	Four IN914 small-signal diodes	
Q1, 2	Two PN2222 NPN GP silicon transistors	
Q3	PN2907 PNP GP silicon transistor	
TI	1K to 8-ohm, small audio transformer	
M1	50 uamp panel meter	DB# METER50S
SPK1	2-inch, 8- to 16-ohm speaker	
J1, 2	Two RCA panel-mount phono jacks	
P1, 2	Two RCA mating phono plugs	
CL1, 2	Two 9-volt battery clips	
SH1	3 feet of single-conductor, shielded mike cable	
WIRE24	4 feet of #24 vinyl stranded hookup wire	
BH1	Two-AA-battery holder	
BH2, 3	Two 4-AA-battery holders	
BU1	Small, plastic feed-through bushing	
L1SENSE	Sense coil per Figure 36-4	DB# SENSE
PBORD1	6¼ × 2½-inch, .1 × .1-inch grid perforated vector board	
PBORD2	4½ × 2-inch, .1 × .1-inch grid perforated vector board	
EN1	7½ × 3-inch schedule 40 PVC tubing	
CAP1	Two 3½-inch black plastic caps	
TAP1	4 inches of 4 × 1-inch strips of Velcro sticky tape	
KNOBEXT	4 inches of 3/16-inch inner-diameter plastic or rubber tubing for shafts	
FLUXROD	6 inches of ¼ × 20-inch steel-threaded rod and two mating nuts	
BASE	Created as shown in Figure 36-8 from .063 aluminum	
COVER	Cut to fit BASE section	
PLATE	5 × 2½-inch piece of insulating plastic to mount under board	

Chapter Thirty-Seven

Body Heat Detector

This project, as shown in Figure 37-1, shows how to construct a useful device that can detect human or animal motion up to several hundred meters. It provides a narrow field of view and can be used for paths and walkways. Farmers use these devices to detect when a predator comes into range, taking the necessary action when the alarm sounds. It may also be used as a medium-sensitive thermal detector for lab and research use. The device is an excellent science project demonstrating medium-sensitivity detection of relatively low temperatures.

This is an intermediate-level project requiring basic electronic skills. Expect to spend $30 to $45. All the parts are readily available, with specialized parts obtainable through Information Unlimited at www.amazing1.com. These are listed in the parts list at the end of the chapter.

Figure 37-1 *Body heat detector*

Description

Your body heat detector is a device capable of sensing an object at a temperature increase slightly over ambient. It is this property that allows it to detect a living body at a considerable distance. The sensitivity of the device corresponds to a black body wavelength of 10 microns, corresponding to a temperature of 100° Fahrenheit. Black-body radiation defines color temperature in wavelengths below what is visible to the naked eye. All objects above absolute zero radiate energy as a function of their temperature to the fourth power. This radiation decreases in wavelength as the radiating body becomes hotter. This radiation will consist of the visible color spectrum for a given range of temperatures. Hotter bodies will show visible color such as blue being on the hotter side of red. A body hot enough to glow red is around 900 degrees F. Black bodies radiate in the infrared (invisible) and lower as the generating temperatures are near ambient being above 70 degrees F. All objects above absolute zero radiate energy as a function of the fourth power of temperature, and body heat energy is in the infrared region at around 100° degrees F.

The applications for this device are numerous and as an example you could a create motion detection system for home security. These are normally short-range, wide-angle detection systems and are limited in performance. Our system would be mounted similar to an optical scope on a rifle or a tripod. A living target now can easily be ferreted out in darkness or under moderate cover due to heat reflections. A predator, as it approaches its target victim, is easily detected, alerting the farmer or rancher to take the next step of action. Garden pests, as they emerge from their burrow, and downed game can easily be detected by the device.

The ability to detect hot spots is an extremely useful function. An example of sensitivity can easily be demonstrated by the following. Obtain a piece of cardboard or plastic approximately 6 × 12 inches. Place your hand on one end of this piece for several seconds to produce a hot spot of your hand print. Then place the piece in front of the unit, noting a detected signal increase on the surface previously touched by your hand due to the heat stored. (Don't touch the other end of the piece). Note that as time continues, the hot spot dissipates into the object thereby reducing the temperature differential and the signal pickup on the cardboard piece becomes evenly distributed. The differences in temperature detection capability is in the millidegrees. You can now realize the many useful applications of this unit.

Body Heat Detector Modes

Your body heat detector operates in two modes:

- **MODE A:** This mode is used to detect moving bodies such as animals, people, and so on. It is intended for sensing intrusions along pathways and into areas where a narrow field of view is necessary at long ranges (100 meters or so). This mode is the most stable of the two and rejects steady background sources of thermal energy. Detected bodies, however, must be moving.
- **MODE B:** Operation in this mode allows the detection of stationary hot spots and is most useful with a "cold background" such as at night. It is useful for ferreting out thermal sources such as hidden persons and animals. Hot object spots and areas are easily detected, but unfortunately this mode is so sensitive that often signals appear to be erroneous and mask the target object.

Both modes of operation require a camera tripod for reliable and simple operation. Very often a panning action can be used to reject or detect the desired targets.

Circuit Description

The heart of the detector is a pyroelectric detector (PYR1) capable of detecting very minute temperature changes. This device is responsive to temperatures of 100° Fahrenheit equivalent to approximately 10 microns. Unfortunately, its response speed is relatively slow, peaking at about .1 Hz. This is shown in Figure 37-2.

The pyroelectronic effect utilizes dual crystals of lithium tantalum oxide (LiTa 02). These crystals are polarized in an electric field below the Curie point. Electrodes attached to the crystal become electrically charged and eventually neutralize due to the surroundings. When the neutralized crystal is exposed to an infrared signal, its temperature changes, producing a charge on the electrodes and hence a detected signal. This signal is amplified by a built-in, low-noise *field effect transistor* (FET) and becomes the output. It is important to note that only a changing infrared signal can produce output; therefore, a chopper must be used for stationary sources. A chopper is nothing more than a mechanical wheel that has vanes to periodically interrupt the heat radiation signal to the pyrodetector, simulating a moving object. A moving source obviously produces a changing signal. The dual crystals will also cancel out signals produced from sunlight as they are oppositely polarized in the detector.

The output of the detector is connected to the input of a low-frequency, dual-stage amplifier and filter (U1) with a gain of approximately 2,500. This amplifier is designed to respond to a frequency of .1 to 10 Hz, peaking at about 1 Hz. This matches the response of the pyrodetector and the signal commonly generated by a living, moving body in the field of detection.

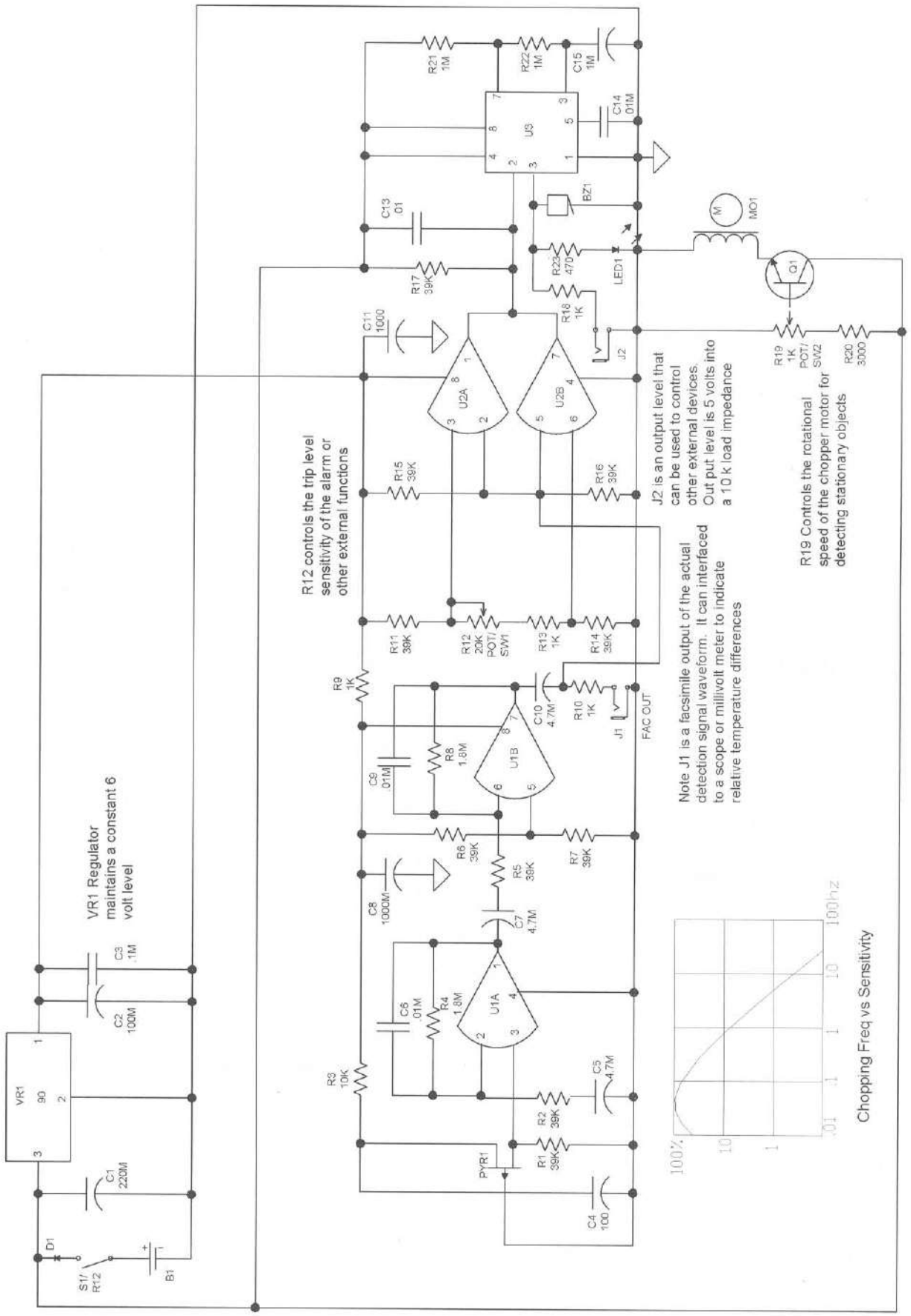

Figure 37-2 *Circuit schematic*

The changing AC output of the dual-signal amplifier (U1A and U1B) is capacitive coupled to output jack J1. It is this signal that is measured by an external AC millivolt meter and provides an analog indication of signal strength. This signal may be further processed for ultra-low-sensitive detection or maybe demodulated where the resulting DC level can control a VCO for audible detection via a changing tone. This AC signal is also fed to the dual plus and minus ("window") comparator (U2A and U2B). A threshold control (R12) presets the trip voltage or sensitivity of activation. The output of these two comparators is "anded" together and fed to the trigger input of the timer (U3). The output of U3 now activates audible buzzer BZ1 and visual indicator LED1. The buzzer on time is controlled by timing resistors R21 and R22 and capacitor C15.

An optional motor speed control for the chopper consists of Q1 and speed control pot R19. Jack J2 provides a 5-volt level through 1K resistor R18 and is used to trigger other systems.

Assembly Instructions

1. Lay out and identify all the parts and pieces, and verify them within the parts list at the end of the chapter.
2. Examine the PC board, as shown in Figure 37-3 and 37-4.
3. Proceed to assemble the device by inserting and soldering all the fixed resistors.
4. Insert and solder the capacitors, carefully noting the polarity on all the electrolytics: C1, C2, C4, C5, C7, C8, C10, C11, and C15. The other capacitors are not polarized.
5. Insert and solder in the semiconductors (D1 and VR1) and Q1. Note the polarity.
6. Identify and note the position marks on the integrated circuits U1, U2, and U3. Insert and carefully solder them, avoiding solder shorts between the pins. It is suggested to always use sockets for these components.
7. Identify the pots R12 and R9 and solder them in place. Note the switch section, S1, of R12. These connections are made using short pieces of cut leads to the pads directly beneath. Note these pots must be properly installed to allow final alignment with the PANEL plate.
8. Insert the wire jumps using short pieces of the cut leads of components that were used priorly.

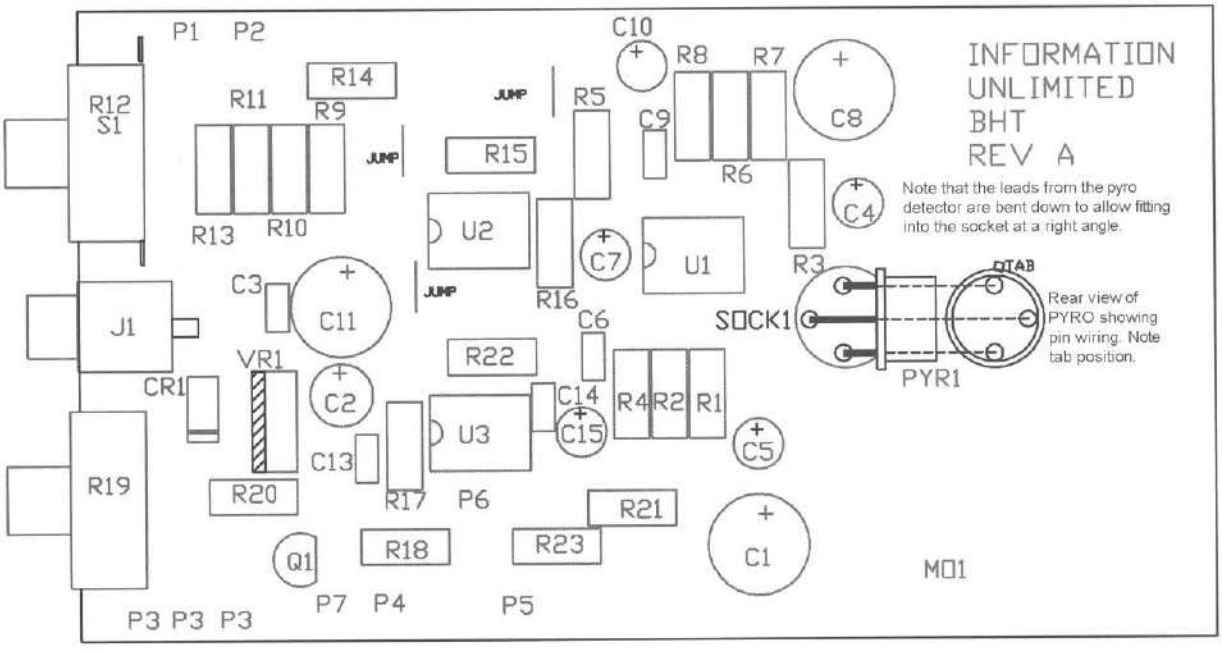

Figure 37-3 *PCB wiring and assembly*

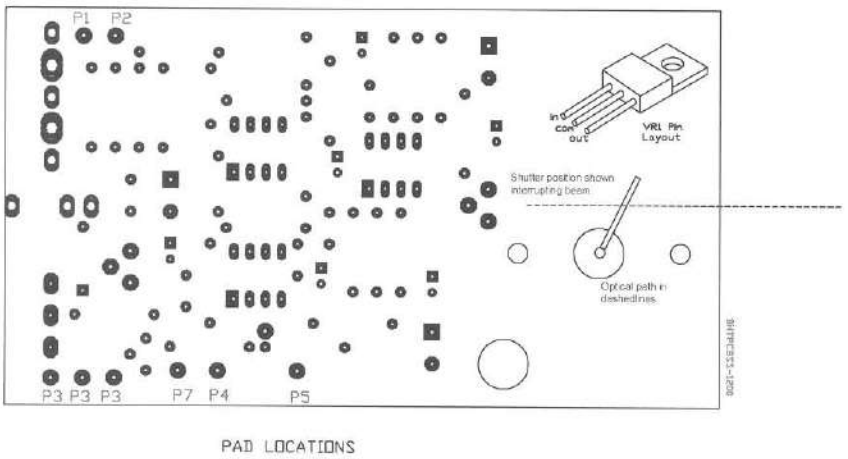

Figure 37-4 *Pad and connections*

9. Insert J1 and note the rear connection lead requiring a short piece of bare wire to connect to the board pad directly beneath.

10. Insert the SOCK1 pyrodetector socket as shown. Carefully form the three leads of the pyrodetector at 90°. Do not sharply bend it. Note the proper leads, and position the tab as shown. This part must be at the optical center of the system for proper operation.

11. Connect the BZ1 buzzer using its leads, as shown in Figure 37-5.

12. Connect output control jack J2 and indicator light-emitting diode (LED1) using a 3-inch length of #22 vinyl wire. Note the cathode lead of LED1 directly connecting to the ground lug of J2. Note these parts eventually will be mounted to the panel.

13. Connect the leads from the chopper motor MO1 and battery clip CL1 as shown.

14. Create the panel, as shown in Figure 37-6. Attach it to the PC board via the two pots and the jack. The panel and PC board should be flush to one another. Attach the remaining J2 and LED1 to the panel. Note to use a bushing for the LED.

15. Create the shutter flap (FLAP), as directed in Figure 37-6.

16. Recheck all wiring for shorts, accuracy, and correctness of parts. Also check for solder joints. You are now ready to bench test the assembly.

17. Connect a 9-volt supply to the battery clip.

18. Rotate R12 to on, and note the shutter flap rotating with R19 full counterclockwise. It should slow down as R12 is turned in a clockwise direction. This rotation should be variable in the range of 10 *revolutions per second* (rps), down to stalling at less than 1 rps. The motor will stall if there is any obstruction.

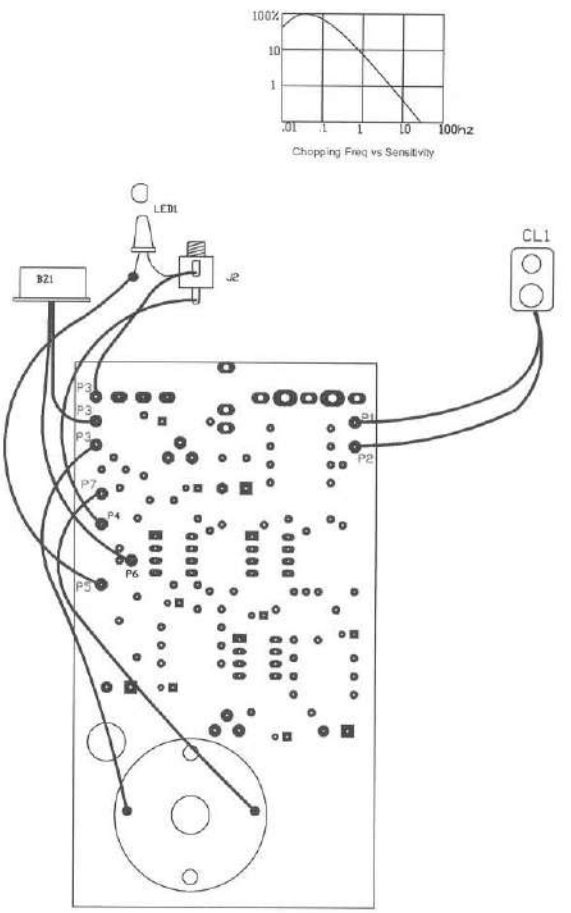

Figure 37-5 *Final wiring to external components*

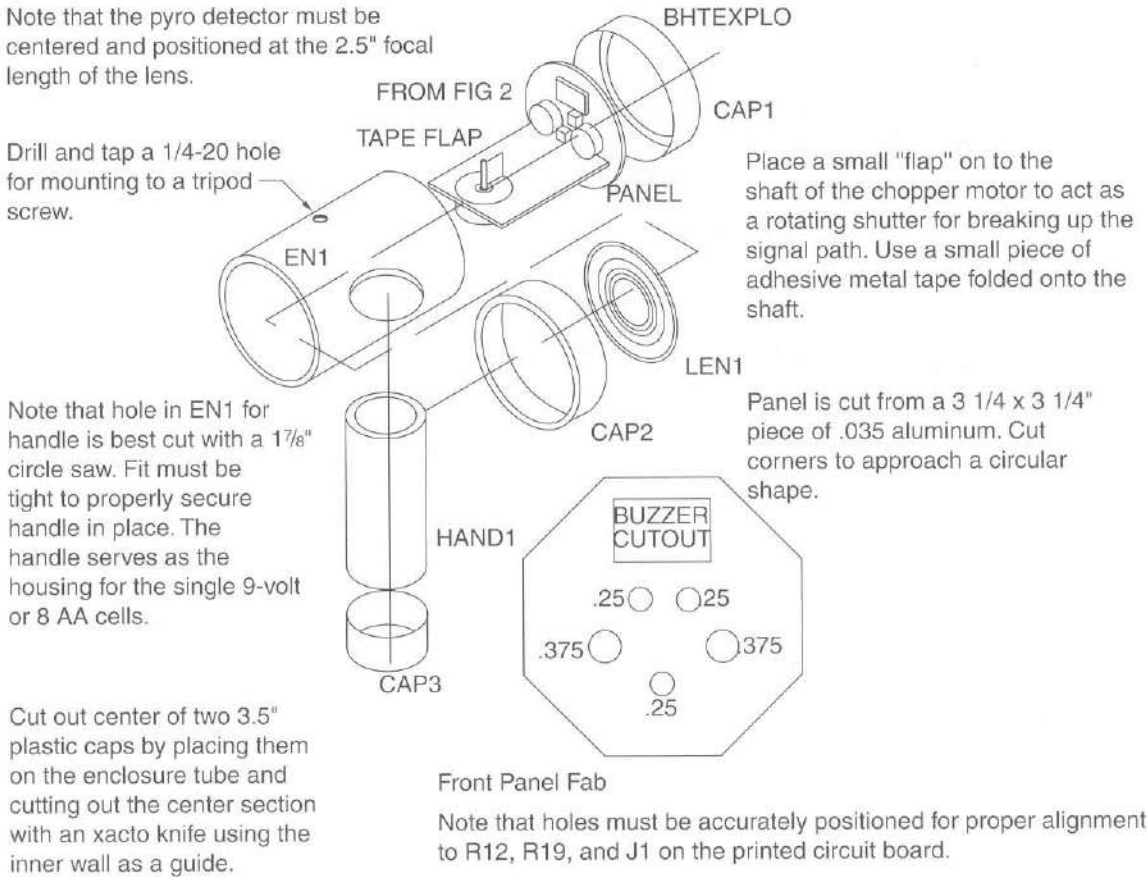

Figure 37-6 *Final housing setup*

Make sure the flap is clear and not touching the bearing bottom.

19. Connect a scope to J1 and note a changing level as your hand or another warm object is waved in view of the detector. Note the signal responding to a stationary source with the shutter flap or to some form of motion with the shutter flap stopped. Check the sensitivity control pot R12 and then verify a DC output level at J2, occurring when a body is detected. This function is for control of external alarms and alerts.

20. Check that the buzzer and light emitter activate when detecting a thermal source. Use your solder iron as a heat source and experiment with different sources.

21. Finally, assemble the device as shown in Figure 37-7 and proceed to use it as outlined in the instruction section.

Operating Instructions

1. Turn all controls fully counterclockwise to off.

2. Remove the battery compartment cover and slide out the eight-cell holder. Insert fresh batteries and reinstall.

3. Rotate the chopper control fully clockwise. View the shutter through the access hole and note how it is positioned in the figure.

4. Slowly turn the sensitivity control clockwise until the alarm sounds. If the unit does not respond, try moving your hand in front of it, noting its response. Turn the control back, just to the point where the unit does not respond.

5. Turn the chopper control until the unit starts to respond. You are now measuring the thermal background as indicated by the periodic sounding of the alarm as the shutter interrupts the heat path.

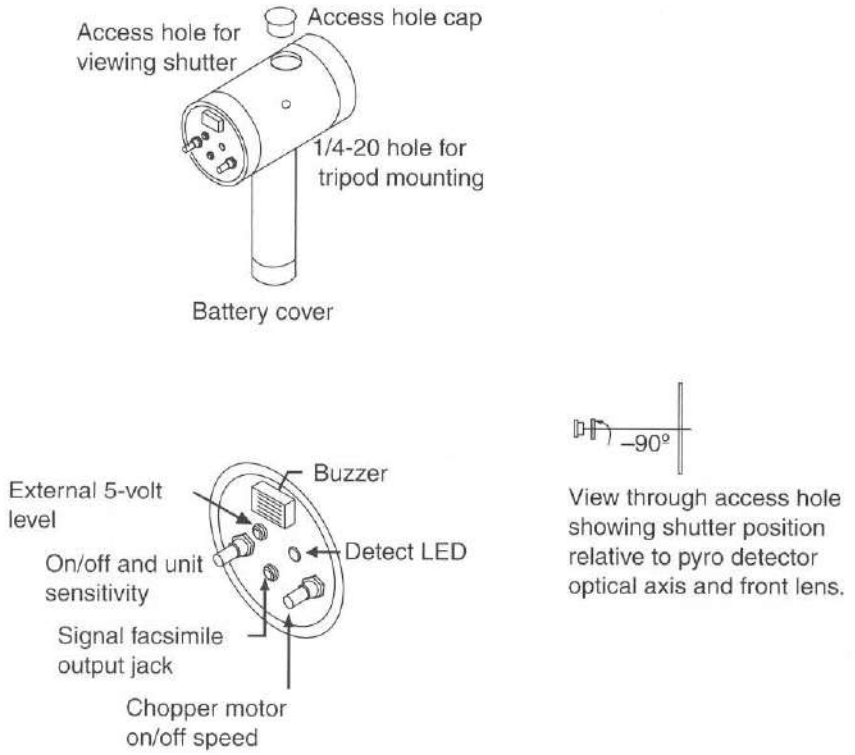

Figure 37-7 *Final assembly view*

6. Connect a standard 3.5-millimeter plug into the 5-volt level jack and measure a positive 5-volt level every time the alarm responds. This output is through a 1K resistor and is intended for triggering other alarms or external functions.

7. Connect a standard 3.5-millimeter plug into the signal facsimile jack and connect it to a scope input set on the AC millivolt scale. Note the changing voltage level indicating the slightest amount of differential thermal energy. Check this level with and without the chopper and try it with various thermal sources, noting the voltage levels. This output port is intended for the lab technician desiring to explore low-level thermal sources. It requires a scope or a sensitive AC millivolt meter capable of measuring 10 to 100 millivolts.

The previous steps are performed without considering the thermal stabilizing of the unit or its immediate surroundings. Maximum sensitivity will not be obtainable under these conditions.

8. Select a target area and mount the unit on a tripod, using the 1/4-20 mounting hole located on the side of the unit. This scheme will place the handle in the horizontal plane (off to the side) but should not pose a problem. The access hole will be opposite the handle.

9. Point the unit at the target area and allow it several hours to thermally stabilize. Do not touch the enclosure and try not to get too close to the front of the system, as this can destabilize the system for low-level detection.

10. Point and pan the unit at some known source to verify the anticipated range of operation. Experiment with the chopper speed or no shutter to obtain the optimum results for your application.

11. Handheld operation will vary considerably due to the many variables in the thermal background. We can only suggest that you get accustomed by trial and error to determine your application.

Final Notes

The access hole for the chopper shutter is necessary in order to prevent the blockage of the thermal path when the chopper motor is off. There is no guarantee

that the shutter will not randomly stop at the wrong place, blocking the detector and preventing normal operation. In such cases, the shutter must be manually moved with a pencil or some object.

The unit must be temperature stable to optimize maximum sensitivity. This usually takes about an hour if the unit has been recently handled or placed near radiant sources.

For actual body detection, the best performance will occur on a cold night. This does not mean that the unit will not work on a warm night, but that it might be less sensitive.

The detection of stationary objects may vary with chopper motor speed and background temperature. The maximum response of the pyrodetector is around .1 chops per second. This is very slow for many applications and we suggest increasing it to 1 to 3 per second.

The field of view may be narrow due to the Fresnel lens used, but you may change to other suitable lenses of polyethylene. Also, a panning action allows zeroing in on certain target subjects.

Table 37-1 Body Heat Detector Parts List

Ref.#	*Description*	*DB Part #*
R1, 2, 5, 6, 7, 11, 14, 16, 17	Ten 39K, ¼-watt resistors (or-wh-or)	
R3	10K, ¼-watt resistor (br-blk-or)	
R4, 8	Two 1.8-megohm ¼-watt resistors (br-gray-gr)	
R9, 10, 13, 18	Four 1K, ¼-watt resistors (br-blk-red)	
R20	4.7K, ¼-watt resistor (yel-pur-red)	
R21, 22	Two 1-megohm, ¼-watt resistor (br-blk-gr)	
R12/S1	20K pot and 12 VDC switch	
R19	500 to 1-kilohm pot	
R23	470-ohm, ¼-watt resistor (yel-pur-br)	
C1	220-microfarad, 25-volt vertical electrolytic capacitor	
C2, 4	Two 100-microfarad, 25-volt vertical electrolytic capacitors	
C3	.1-microfarad, 50-volt plastic capacitor	
C5, 7, 10	Three 4.7-microfarad, 25-volt vertical electrolytic capacitors	
C6, 9, 13, 14	Four .01-microfarad, 50-volt plastic capacitors (103)	
C8, 11	Two 1,000-microfarad, 25-volt vertical electrolytic capacitors	
C15	1-microfarad, 25-volt vertical electrolytic capacitor	
PC1	Printed circuit board (PCB)	DB# PCBHT
SOCK1	Three-pin TO5 socket	
Q1	PN2222 NPN transistor	
U1	LM358 dual-operational-amplifier integrated circuit	
U2	LM393 dual-comparator integrated circuit	
U3	LM555 timer integrated circuit	
VR1	7805 5-volt regulator TO220 package	
MO1	Low-voltage chopper motor	DB# CHOPMOT
PYR1	Pyroelectric detector	DB# PYR1
BZ1	Piezoelectric buzzer	
LED1	High-brightness light emitter	
J1, 2	Two 3.5-millimeter panel-mount jacks	
CL1	Battery clip and 9-inch leads	
PANEL	3.25 × 3.25-inch aluminum as shown	
EN1	6 × 3.5-inch OD schedule 40 PVC tubing as shown	
HANDLE	6 × 1.875-inch schedule 40 PVC tubing as shown	
CAP1, 2	Two 3 ½-inch plastic caps, as shown in Figure 37-6	
CAP3	2-inch plastic cap for retaining batteries in handle section	
LEN1	3-inch Fresnel polyethylene lens	DB# FRELEN3
BU1	Lens holder for LED1 or use a ⅜-inch bushing	
BHOLD1	8-AA-cell, 4 × 2 battery holder with snaps	
WR20B	24 inches #22 black vinyl hookup wire	

Chapter Thirty-Eight

Ion and Field Detector

This chapter focuses on a device capable of detecting and indicating the relative amount of free ions in the air (see Figure 38-1). It can determine the output of ion generators, high-voltage leakage points, static electrical conditions electric field gradients, and any other application where the presence of ions or a measurement of their relative flux density is required. It can also be used as a very sensitive lightning indicator, showing dangerous electric field levels.

Figure 38-1 *Ion and field detector*

The unit is handheld and enclosed in a plastic enclosure about the size of a king-size pack of cigarettes. A sensitivity control with an on/off switch, a high flux indicator lamp, and a meter are located on the front panel. A telescoping antenna exits a hole in the top of the unit and is used as a moving probe or a stationary pickup point for these charge fields. Grounding the unit is a strip of metallic foil on the outside of the enclosure that contacts the user's hand or may be directly connected to earth ground via a wire. Please note that the performance of this unit can be seriously affected by high humidity conditions.

Circuit Description

As shown in Figure 38-2, ions are accumulated on the collector probe ANT1 and cause a minute, negative base current to flow in transistor Q1 connected as a PNP Darlington pair with transistor Q2. Capacitor C1 and resistor R1 form a time constant to eliminate any rapid fluctuations. The response of the time constant can be changed for various applications and is discussed in Figure 38-2. Diodes D1 and D2 prevent excessive voltage from destroying Q1 by clamping any transients to ground. The collector of Q2 is DC

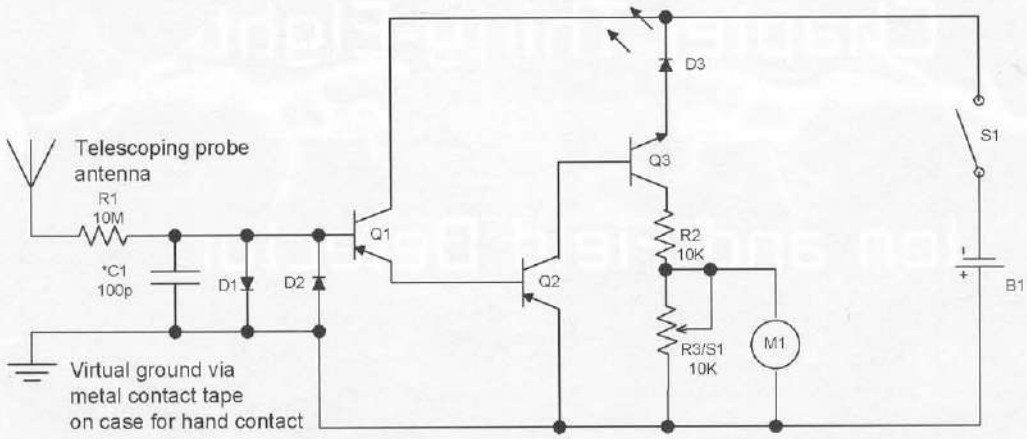

C1 is used to slow down the response and can be eliminated when detecting fast discharge fields such as lightning etc

Unit is shown wired for positive ion detection. You may change to negative by replacing the PN2222 transistors with PN2907 and the opposite. For a quick indication you may grab the antenna and use the body of the unit to detect the negative ions

Please note that the antenna probe on you unit is a telescoping antenna properly secured and electrically isolated. It is important to remember that any type of leakage around the input of QI can reduce the sensitivity. You may wish to coat the circuitry with a good quality varnish etc. Make sure unit is dry and clean before sealing.

Figure 38-2 *Circuit schematic*

coupled to the base of NPN transistor Q3 in series with current-limiting resistor R2 and meter sensitivity pot R3. Current flowing through Q3 now causes a voltage to develop across R3, driving the indicator meter M1. *Light-emitting diode* (LED) D3 is connected in series with the emitter of Q3 and serves as a visual indicator of strong charge fields. It should be noted that the meter serves only as a relative indicator of ion flux and is not totally that linear.

A threshold voltage, as a result of the base emitter, drops off Q1 and Q2 is only noticeable at almost non-detectable levels. It should be noted that in order for the unit to operate properly, some sort of ground is usually required. Metallic tape is used as shown and provides contact to the operator's hand, providing a partial ground. If the unit is placed remotely, it should be earth grounded to a water pipe, for example.

Measuring positive ions simply involves holding the antenna, using the body of the unit as the probe, or reversing the polarity of the transistors. A *double pole, double throw* (DPDT) switch may be optionally installed for polarity reversal, allowing reversal at the flick of a switch. Be aware that a ceramic or quality switch must be used to avoid leakage in high humidity conditions.

Construction Steps

1. Lay out and identify all the parts and pieces. Verify them with the parts list, and separate the resistors as they have a color code to determine their value. Colors are noted in the parts list at the end of the chapter.

2. Cut a piece of .1-inch grid perforated board to 2 × 1 inches. Locate and drill the holes as shown in Figure 38-3. If you are building from a perforated board, it is suggested that you insert the components starting in the lower left-hand corner as shown. Pay attention to the polarity of all the semiconductors. Route

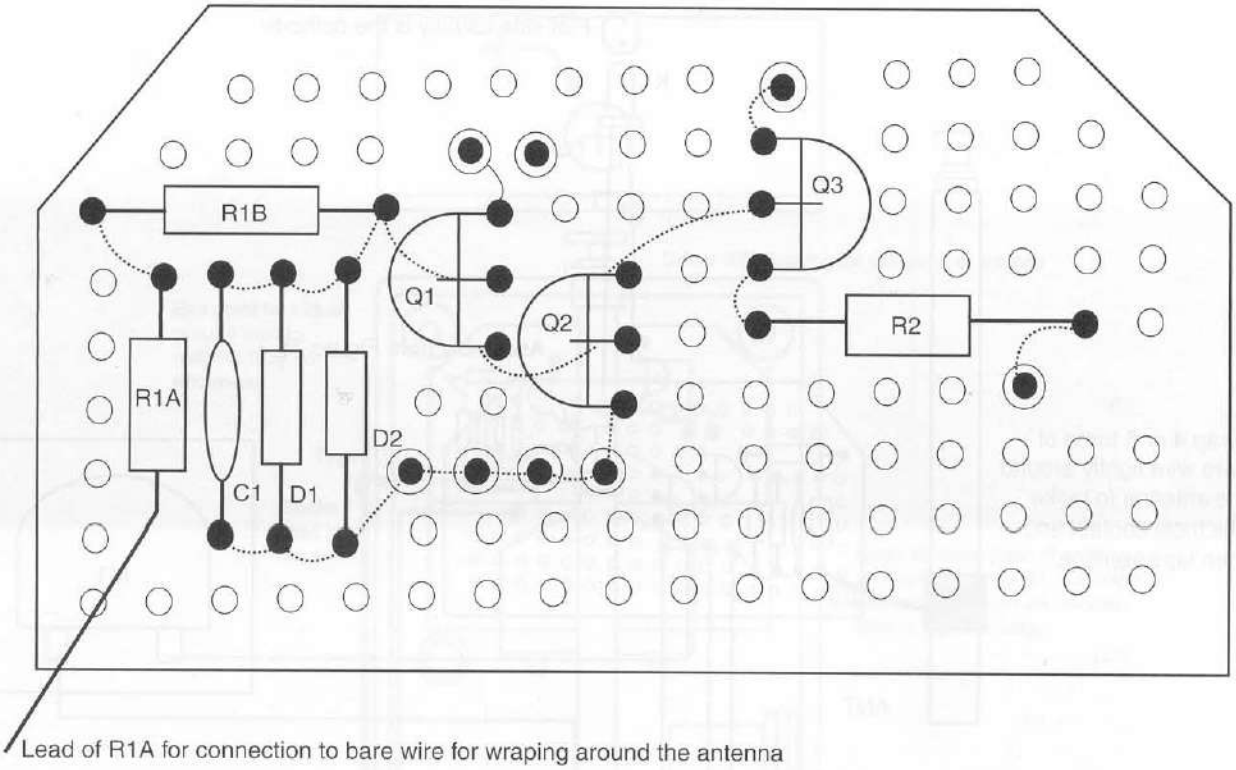

This symbol indicates holes used for leads of components.

This symbol indicates holes used for connection points of external leads.

Dashed line indicates wiring performed on underside of board. Use the leads of the components whenever possible for these wire runs.

Board size is 1.9 x 1 inch and is .1 x .1 centers.

Figure 38-3 *Assembly board wiring*

the leads of the components as shown and solder as you go, cutting away unused wires. Attempt to use certain leads as the wire runs or use pieces of the #24 bus wire. Follow the dashed lines on the assembly drawing as these indicate the connection runs on the underside of the assembly board.

3. Attach the external leads and components as shown in Figure 38-4.

4. Double-check the accuracy of the wiring and the quality of the solder joints. Avoid wire bridges, shorts, and close proximity to other circuit components. If a wire bridge is necessary, sleeve some insulation onto the lead to avoid any potential shorts.

5. Create the plastic case, as shown in Figure 38-5. Note the 1-inch meter hole centered and located approximately 1½ inch from the top as shown. Holes for the switches are centered and located 1 inch below the meter line. Location is not critical, but make sure everything is clear and fits together.

6. Place a strip of foil tape as shown, noting a hole for the connection to the common circuit

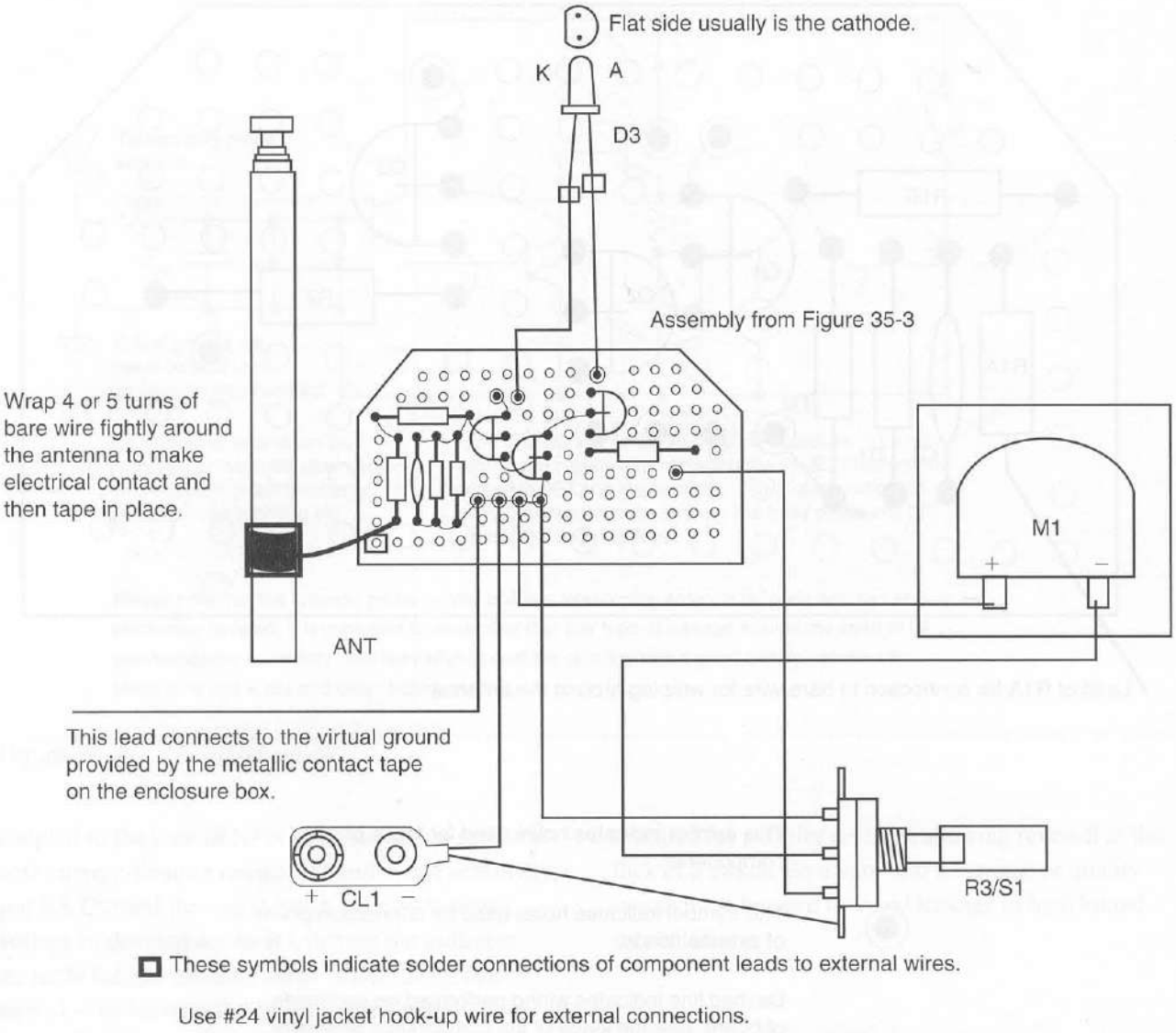

Figure 38-4 *Final wiring and assembly*

point. Secure the assembly board with double-sided tape after circuit operation has been verified.

7. Install battery B1 as shown and turn on the control. Rotate R3 fully clockwise and note the meter showing a slight indication. This is due to transistor and circuit leakage and should not be considered an indication of the ions. If meter sensitivity responds in the opposite way, you may have to reverse the wires across the outer terminals of R3 or the meter leads.

8. Extend the antenna about 6 inches and adjust R3 fully clockwise. Obtain a plastic comb and run it through your hair or rub a plastic object with a dry cloth. Place it near the probe and note the meter indicating a strong charge and the diode lighting. This effect may be reduced if the air is damp or moist.

9. Make the final assembly, as shown in Figure 38-6.

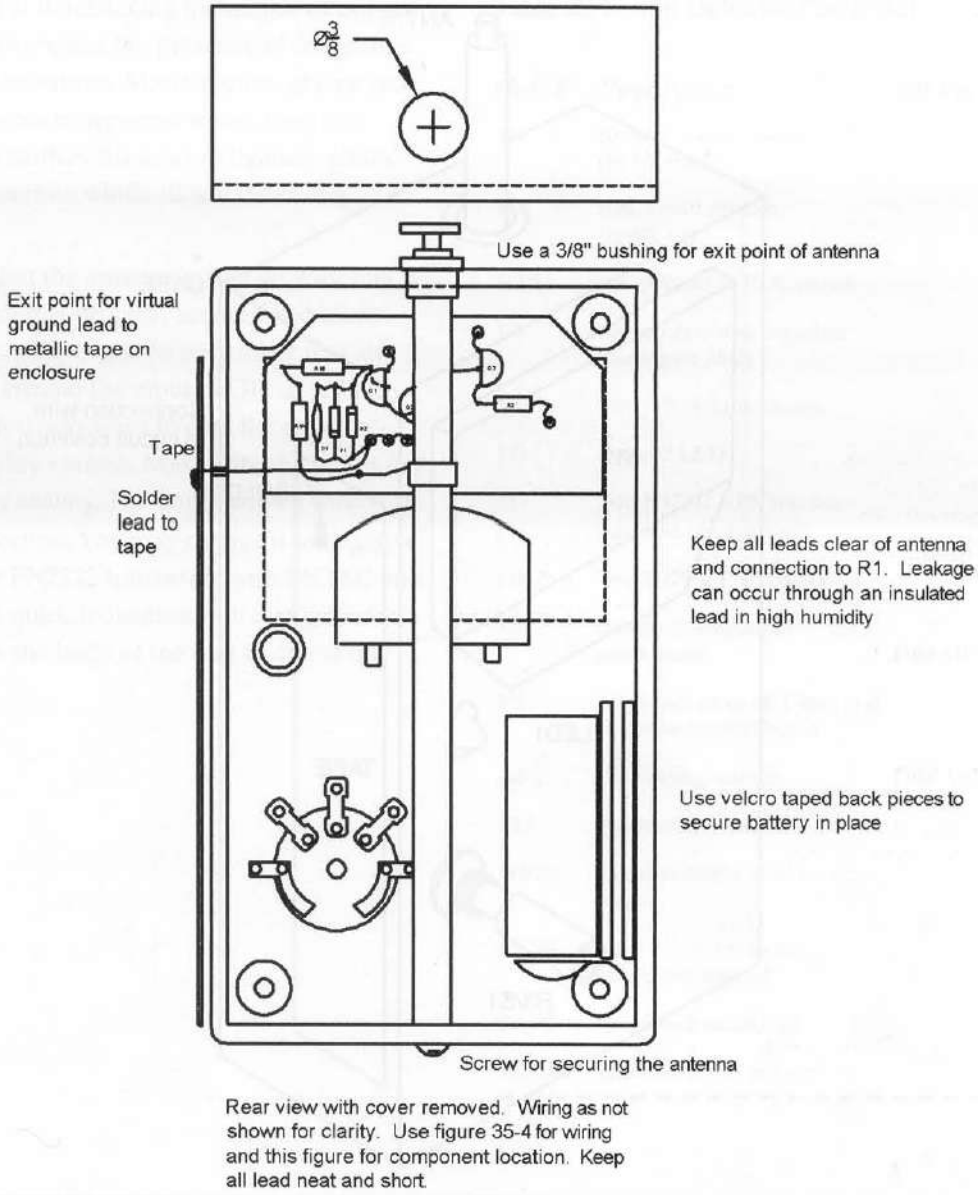

Figure 38-5 *Final assembly*

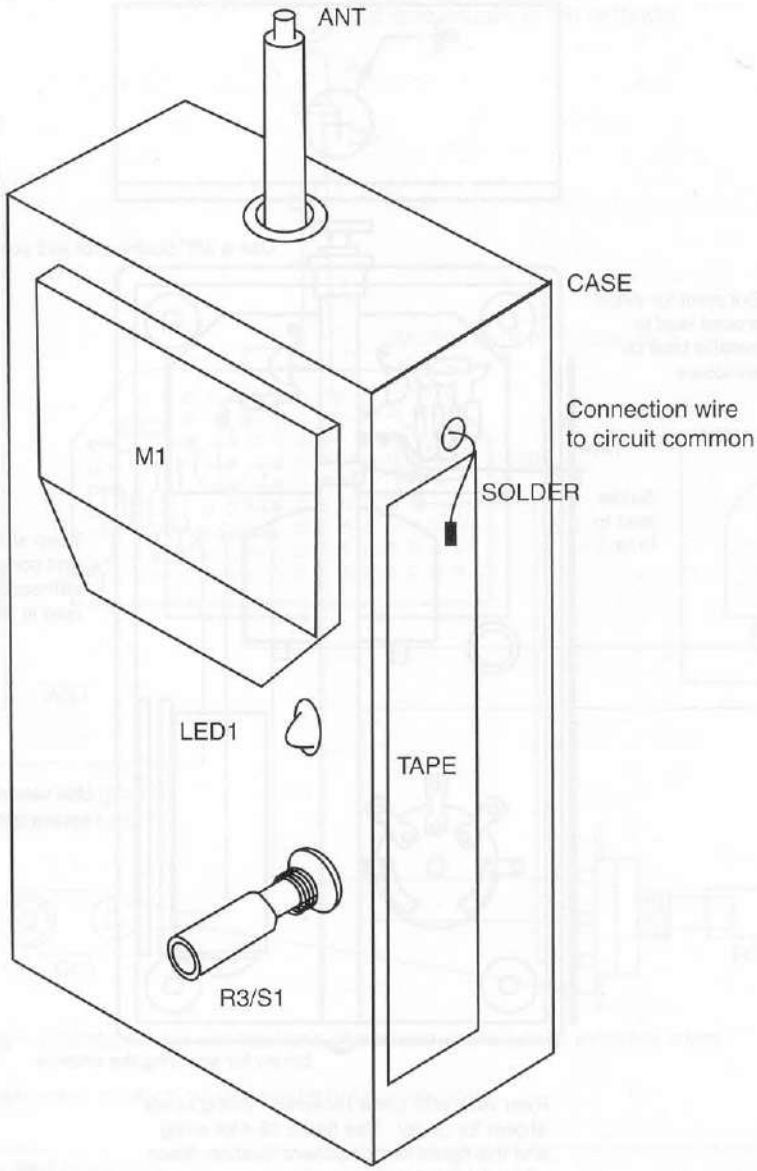

Figure 38-6 *Completed unit*

Applications

Your ion detector is a very, very sensitive ion-measuring device. It can be used for relative measurement but is not designed for absolute measurement.

For quick indications of the presence of a negative ion field, the unit may be handheld and actually used to determine where the source is. The sensitivity of this device can be realized by the simple experiment of running a plastic comb through one's hair and laying it near the probe, as described above.

Those who are familiar with the metallic leaf electroscope will soon realize the advantage of portability and sensitivity. When used for indicating or testing the relative strength of ion sources, the unit should be hard wire grounded for the best results. Adjustments to an ion source to determine the ion output may be made, noting the meter reading and then readjusting R3 to bring the meter reading to scale.

A very interesting phenomenon will be noted when using this device for detecting residual ion fields, the shielding of ions, field direction, static charges, resultant polarity, and the intensity of static charges, as well as a host of others. The unit is an

invaluable tool for determining the output of ion generators, any purifiers, and the presence of dangerous static electricity situations. Many sources of charged particles soon become apparent when using the device. People's clothes, fluorescent lighting, plastic containers, and certain winds all will indicate a charge.

Please note that the antenna probe on your unit is a telescoping antenna properly secured and electrically isolated. It is important to remember that any type of leakage around the input of Ql can reduce the sensitivity. You may want to coat the circuitry with a good-quality varnish. Make sure the unit is dry and clean before sealing. The unit is shown wired for positive ion detection. You may change it to negative by replacing the PN2222 transistors with PN2907 and vice versa. For a quick indication, you may grab the antenna and use the body of the unit to detect the negative ions.

Table 38-1 Ion Detector Parts List

Ref. #	Description	DB Part #
R1	10 meg, ¼-watt resistor (br-blk-blue)	
R2	10K, 1-watt resistor (br-blk-or)	
R3/S1	10K pot and 12 VDC switch	
C1	100-picofard disk capacitor (see Figure 38-2)	
D1, 2	Two 1N914 signal diodes	
D3	Colored LED	
Q3	Two PN2222 NPN transistor (see note on reversing)	
Q1, 2	Two PN2907 PNP transistors	
M1	100-micro-amp, small panel meter	DB# METER50S
PB1	1 × 2-inch piece of .1-inch grid perforated circuit board	
ANT	Telescoping antenna	DB# ANT1
CL1	9-volt battery clip	
WR24	24 inches of #24 vinyl hookup wire	
CASE	4⅜ × 2⁷⁄₁₆ × 1¼-inch plastic box with lid	
TAPE	4 × ½-inch metal tape	
WR24B	12 inches of #24 bus wire	

Chapter Thirty-Nine

Light Saber Recycling Stand

This project is intended for those who have built or purchased a light saber from Information Unlimited or who have built one from our first book as directed in Chapter 21 in this series of three.

The saber stand recycles your saber where the plasma display travels up the tube, appearing to evaporate into open space (see Figure 39-1). It then retracts into the hilt and continues repeating until power is removed. The effect is very relaxing and provides an excellent display piece or prop for a bar, a point-of-purchase display, an attention getter, a conversation piece, or just a nightlight for a bedroom.

Operation is powered from a 12-volt wall adapter and is completely safe for children. This is an intermediate-level project requiring basic electronic skills. Expect to spend $20 to $30. All the parts are readily available, with specialized parts obtainable through Information Unlimited (www.amazing1.com), and are listed in the parts list at the end of the chapter.

Circuit Description

Figure 39-2 shows a 12-volt wall adapter (T1) being fed into a voltage regulator chip (I2) where a regulated 9 volts is applied to the remaining circuitry. Capacitors C1 and C2 smooth out the voltage waveform. An astable pulse generator using a timer (I1) provides an uneven "on to off" time determined by the ratio of resistors R2 and R3. The output pulse repetition rate is a function of timing capacitor C3 with

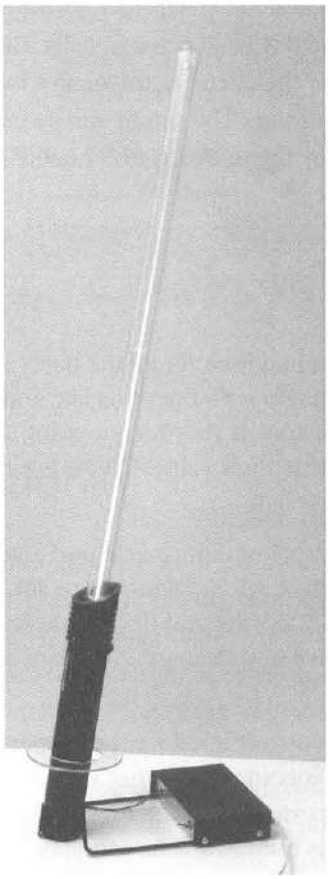

Figure 39-1 *The saber recycling stand*

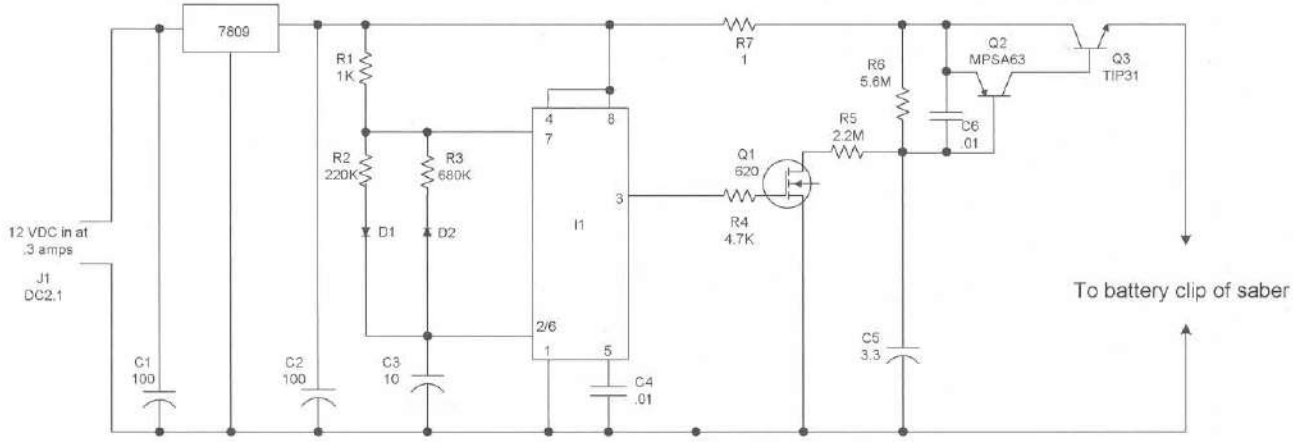

Figure 39-2 *Circuit schematic*

output at pin 3 of I1. The pulse output serves as a gate for MOSFET switch Q1, creating a charging and discharging of low-leakage capacitor C5. A quasi-linear voltage ramp now appears across C5, controlling the current through a high beta Darlington transistor (Q2) in turn controlling the main-current pass transistor Q3. It is this ramping up and down of current that now powers the saber electronics, allowing the plasma to flow up and down, all automatically. The cycling action is set by the circuit to travel up a half-second and down 3 seconds. This timing can be changed to some extent by the selection of R2 and R3.

Assembly

1. Lay out and identify all the parts and pieces. Verify them with the parts list, and separate the resistors as they have a color code to determine their value. Colors are noted on the parts list.
2. Cut a piece of .1-inch grid perforated board to a size of 3.1 × 1.8 inches, as shown in Figure 39-3. Locate and drill the holes as shown to relieve any strain on the input and output leads.
3. When you are building from a perforated board, it is suggested that you insert the components starting in the lower left-hand corner, which is used as a reference, and proceed to the opposite corner.

   Pay attention to the polarity of the capacitors with polarity signs and all the semiconductors.

   Route the leads of the components as shown and solder as you go, cutting away unused wires. Attempt to use certain leads as the wire runs or use pieces of the #24 bus wire. Follow the dashed lines on the assembly drawing as these indicate the connection runs on the underside of the assembly board.
4. Attach the external leads for battery clip CL1 and the leads to input power jack J1. *Important!* The battery clip CL1 must be wired in reverse by connecting the red lead to the circuit ground and the black lead to the emitter of Q3.
5. Double-check the accuracy of the wiring and the quality of the solder joints. Avoid wire bridges, shorts, and close proximity to other circuit components. If a wire bridge is necessary, sleeve some insulation onto the lead to avoid any potential shorts.

Parts Fabrication

1. Create the chassis shown in Figure 39-4. This is attached to the BASE section using four #6 sheet metal screws.
2. Create the base section from a piece of plastic or aluminum, as shown in Figure 39-5. Note

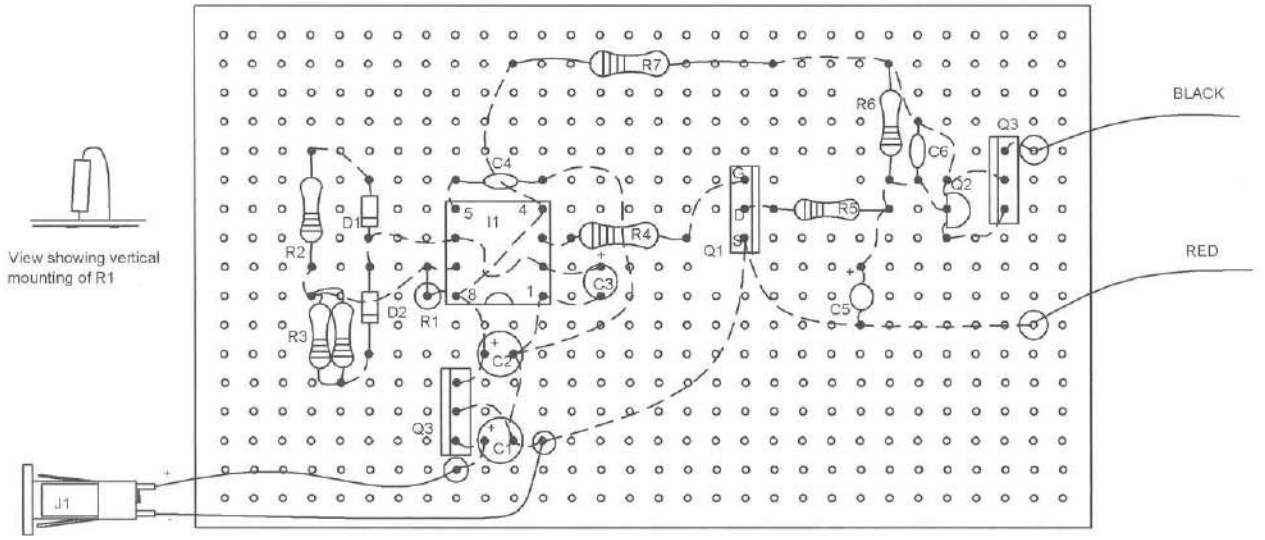

Notes

The looped dashed lind connecting pins 2 and 6 of I1 must have a sleeve of insulated tubing to prevent shorting the lead between pins 4 and 8.

Dashed lines are connections on underside of perforated circuit board using the component leads. These points can also be used to determine foil runs for those who wish to fabricate a printed circuit board.

Small dots are holes used for component insertion.

Large dots are solder junctions

Circles with dots are holes that may require drilling for component mounting and points for external connecting wires indicating strain relief points. It is suggested to drill clearance holes for the leads and solder to points beneath board.

Figure 39-3 *Board assembly*

the four holes for mounting the chassis section, two holes for the holder section, and two holes for the tie wraps.

3. Create the holder from a piece of 2³/₈-inch, schedule 40 gray PVC tubing. Note the slight angle cut for aesthetics being congruent with the light saber when in the stand. This piece is mounted to the base using two #6 × ³/₈-inch sheet metal screws.

4. Form the frame as shown in Figure 39-6 from ³/₁₆-inch cold roll steel rod or an equivalent. The frame must be formed to provide a stable assembly with the saber in place in the stand. The longer 36-inch blade unit is the most critical, requiring the most attention. Attempt to follow the dimensions as shown and determine the base angle as a final adjustment with the saber in place.

   The frame is secured in place by inserting the horizontal members through the corner holes in the chassis section. The front section of the frame is secured in place by two small tie wraps, as shown in Figure 39-5.

10. Finish the assembly, as shown in Figures 39-7 and 39-8.

Operation

Remove the cap at the rear of the saber hilt and remove both batteries. Take out one of the battery clips and snap it into the mating clip of the saber stand. Position the saber in the stand and verify its mechanical stability. Plug in the wall adapter and turn on the switch. The plasma should immediately go to the end and then drop down into the hilt. Recycling should commence and continue until power is removed.

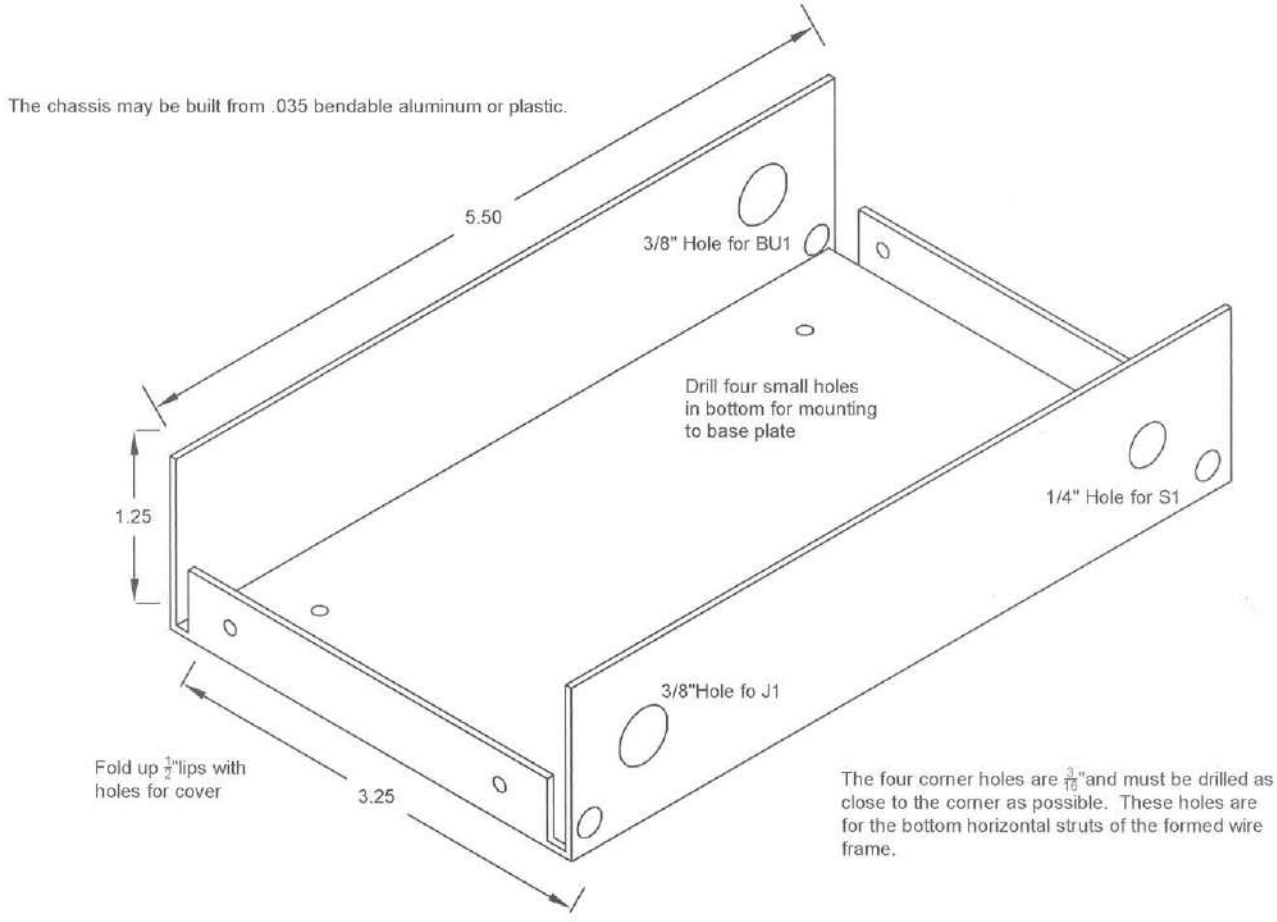

Figure 39-4 *Chassis fabrication*

Light sabers are available from Information Unlimited at www.amazing1.com in 24- or 36-inch lengths in colors of phasor green, photon blue, starfire purple, neon red, or solar yellow.

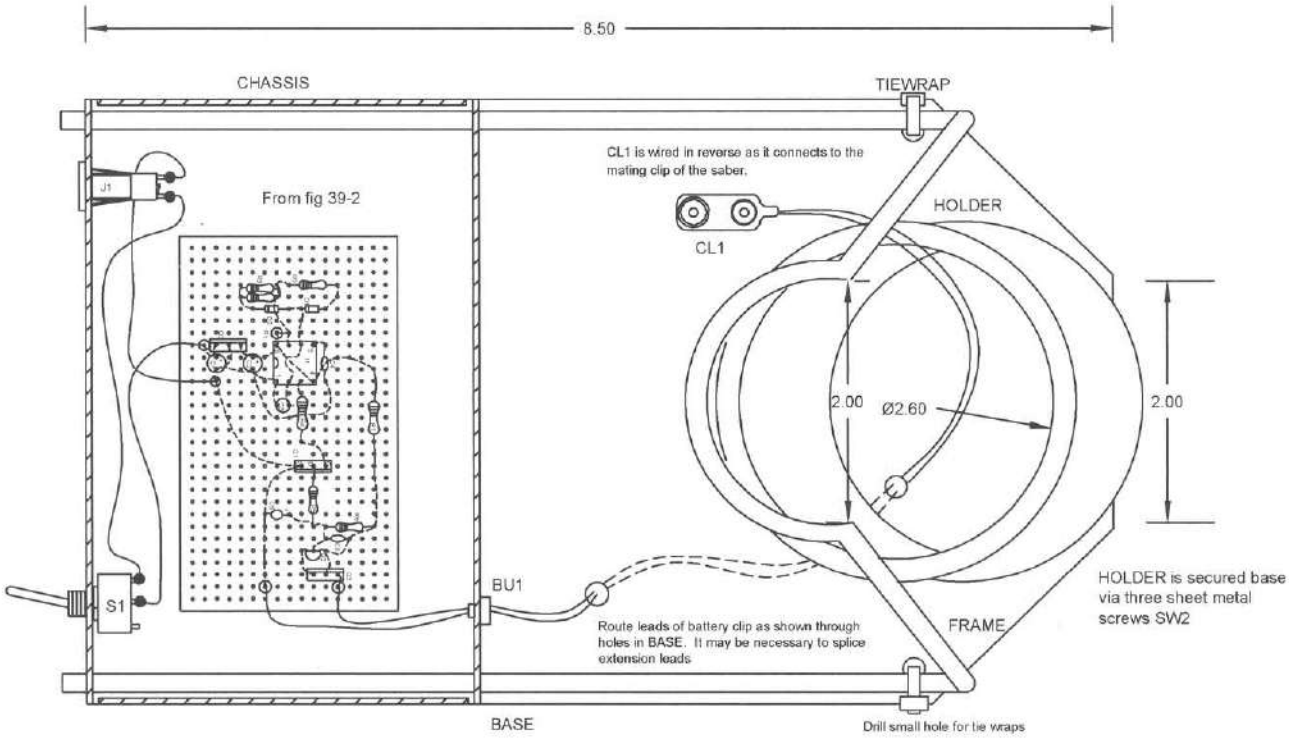

Figure 39-5 *Base fabrication*

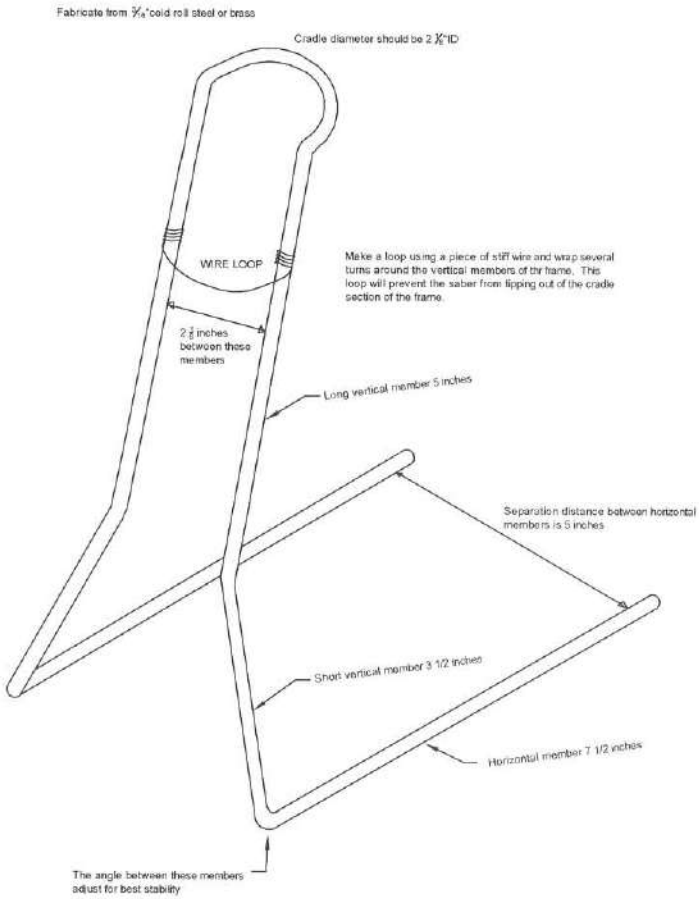

Figure 39-6 *Frame section*

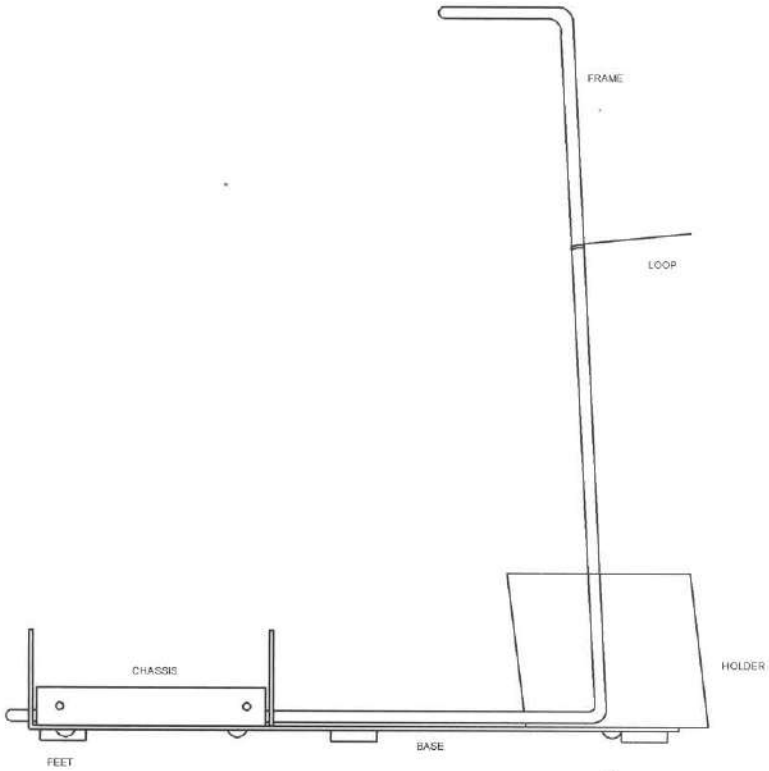

Figure 39-7 *Side view of assembly*

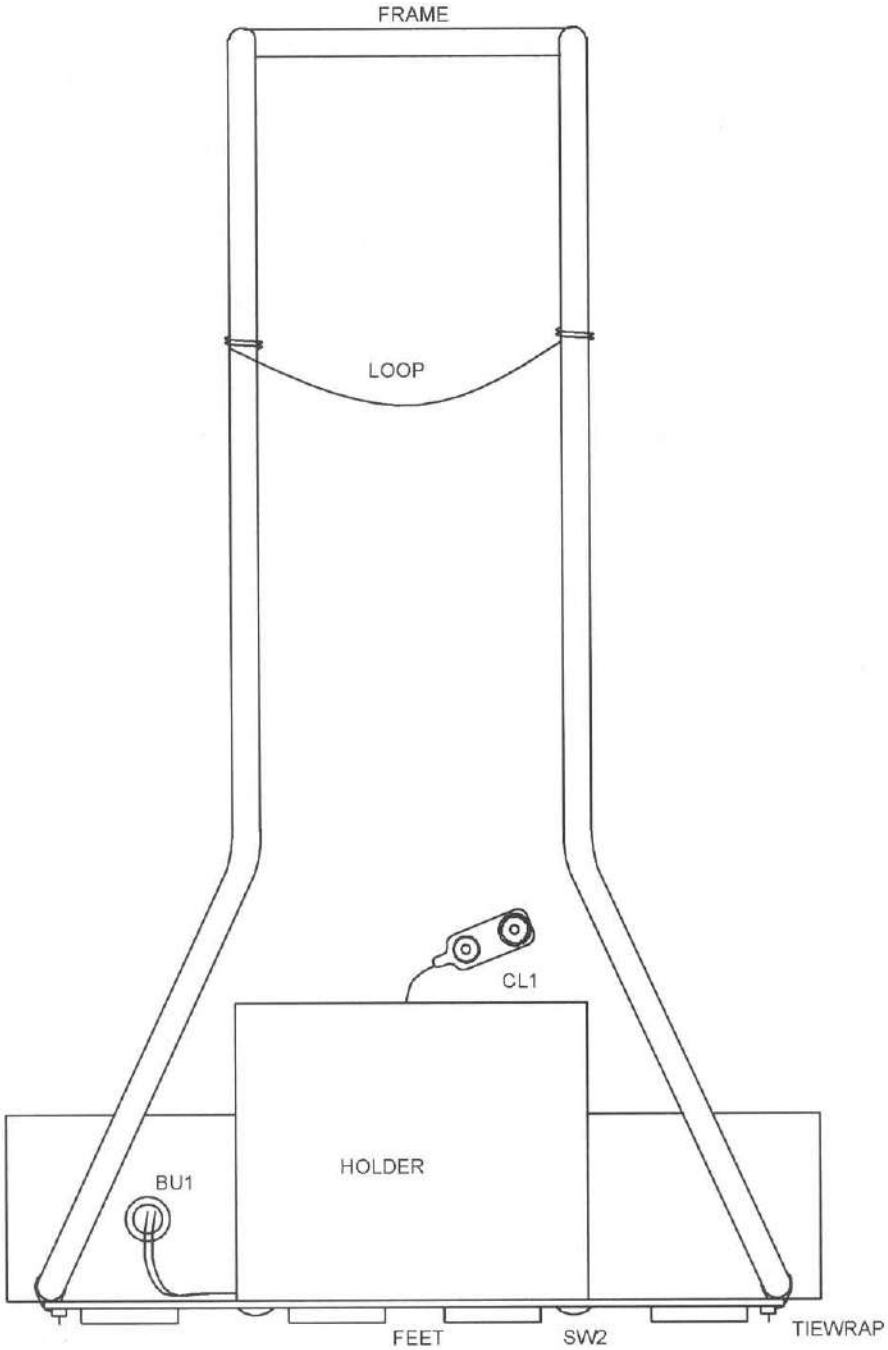

Figure 39-8 *Front view of assembly*

Table 39-1 Light Saber Stand Parts List

Ref. #	Description	DB Part #
R1	1K, ¼-watt resistor (br-blk-red)	
R2	220K, ¼-watt resistor (red-red-yel)	
R3	680K, ¼-watt resistor (blue-gray-yel)	
R4	4.7K, ¼-watt resistor (yel-pur-red)	
R5	2.2 m, ¼-watt resistor (red-red-gr)	
R6	5.6 m, ¼-watt resistor (gr-blue-gr)	
R7	1-ohm, ¼-watt resistor (br-blk-gold)	
C1, 2	Two 100-microfarad, 25-volt vertical electrolytic capacitors	
C3	10-microfarad, 25-volt vertical electrolytic capacitor	
C4, 6	Two .01-microfarad, 50-volt disc capacitors	
C5	3.3-microfarad, 35-volt tantalum capacitor	
D1, 2	Two IN914 silicon diodes	
I1	555 dual inline package (DIP) timer integrated circuit	
I2	7809 T0220 9-volt regulator	
Q1	IRF620 metal-oxide-semi-conductor field effect transistor (MOSFET)	
Q2	MPSA63 PNP Darlington transistor	
Q3	TIP31 T0220 NPN transistor	
J1	Snap-in DC panel, 2.5 mm jack	
S1	Single pole, single throw (SPST) small toggle switch	
PB1	3.5 × 2 .1 × .1-inch grid perforated board; trim to size	
CL1	Battery clip with 12-inch leads or extend shorter leads	
TIEWRAP	Two small tie wraps	
CHASSIS	Create as shown in Figure 39-4 from .035-inch aluminum	
BASE	Create as shown in Figure 39-5 from .035-inch plastic	
HOLDER	Create from a length of 2⅜-inch schedule 40 gray PVC	
FRAME	Create as shown in Figure 39-6	
FEET	Six large, rubber stick-on feet	
SW2	Six #6 × ⅜-inch sheet metal screws	
BU1	Two ⅜-inch plastic bushings	
LIGHT SABER	36- or 24-inch saber in blue, green, red, or purple	

Chapter Forty

Andromeda Plasma Lamp

This project shows how to build a unique type of outside lamp suitable for illuminating driveways, pools, gardens, walkways, docks, or any place where colorful or functioning illumination is desired. The lamps are patented by the author and are currently in preproduction.

The lamp's features are high efficiency as five individual lamps can be powered by a single, conventional, 12-volt wall adapter as the lamps require only 3 watts each. The lamps provide a high amount of useful illumination and must not be compared to the low-light, solar-powered accent lamps.

Another feature of the lamp is that it never needs replacing and should last a lifetime. Other lamps such as incandescent ones are always burning out filaments, whereas conventional fluorescents darken and fail to start due to metallic sputtering.

The third feature is that the lamps are available in pure spectral colors of green, blue, purple, yellow, red, and cool and warm white. These are vivid colors and not the result of filters or paint. Their color is the result of the true spectral emission.

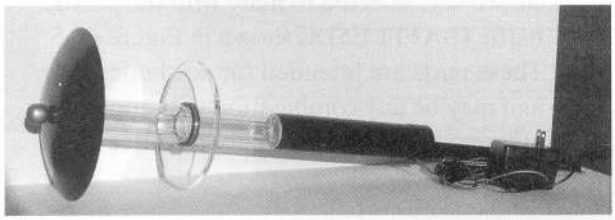

Figure 40-1 *The Andromeda plasma lamp*

This is an intermediate-level project requiring basic electronic skills. Expect to spend $25 to $35. All the parts are readily available, with specialized parts obtainable through Information Unlimited at www.amazing1.com, which are listed in the parts list at the end of the chapter.

Circuit Description

Transistor Q1 forms a self-oscillating circuit where current rises in the collector, COL, winding transformer T1 and inducing a voltage in the feedback (FB). This also causes a winding that keeps Q1 on until T1 saturates and the feedback voltage can no longer be induced. The collector current rapidly falls and forces the base to go negative further, turning Q1 off. When the collector current falls to zero, Q1 is turned on by bias-set resistors R1 and R2, which must charge up timing capacitor C2. The setting of trimpot R1 determines the power output by controlling the number of cycles per second, and capacitor C1 bypasses any residual signal voltage to ground (see Figure 40-2).

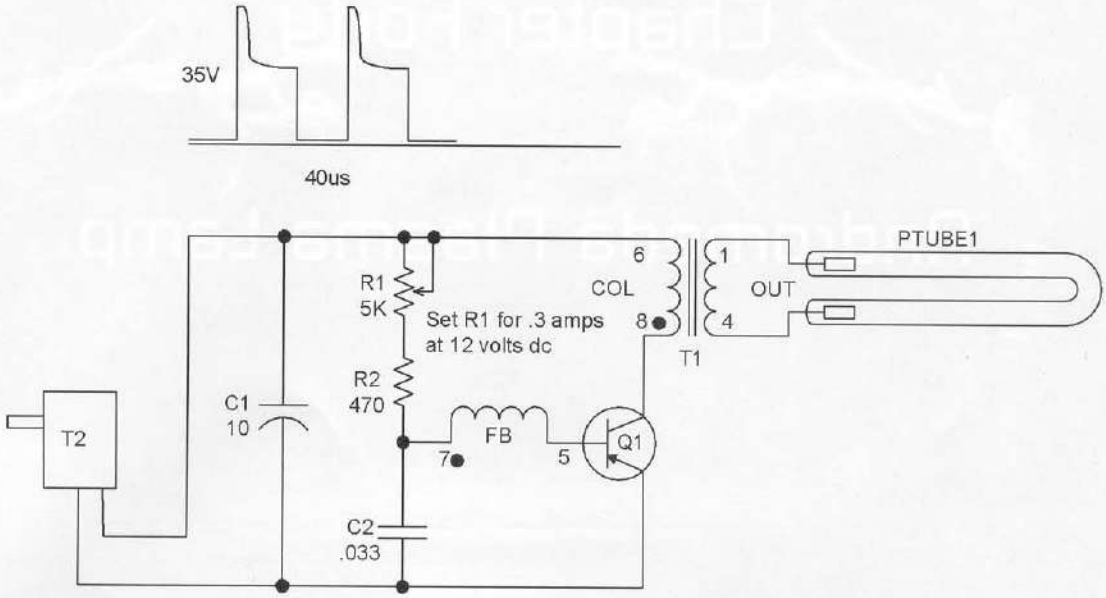

Figure 40-2 *Circuit schematic*

Assembly Board Wiring

1. Cut a piece of .1 × .1 grid vector circuit board to 1 × 4.5 inches, as shown in Figure 40-3.
2. Whenever you are using a perforated board, it is suggested that you insert components starting in the lower left-hand corner. Pay attention to the polarity of the capacitors with polarity signs and all the semiconductors. Route the leads of the components as shown and solder as you go, cutting away unused wires. Attempt to use certain leads as the wire runs or use pieces of the #24 bus wire. Follow the dashed lines on the assembly drawing as these indicate the connection runs on the underside of the assembly board.
3. Double-check the accuracy of the wiring and the quality of the solder joints. Avoid wire bridges, shorts, and close proximity to other circuit components. If a wire bridge is necessary, sleeve some insulation onto the lead to avoid any potential shorts.
4. Attach leads from the plasma tube PT1, being careful not to stress the glass enclosure. Note the small tie wraps (TY1) securing the tube to the perforated board. Again, do not cause any stress to the glass. Make sure that when tightening the wraps they do not stress the tube. When soldering, you must not allow the glass or metal seal to get too hot. Leave at least a half-inch lead between the tube and the connection. Use flux and make the solder joints quickly.
5. Connect the input power leads to a 12-volt DC source and note the lamp lighting. Quickly adjust trim pot R1 to 300 milliamps of current. The lamp should be very bright and the heatsink tab on Q1 should only be warm. Allow it to run for several hours and check adapter transformer T2 for excessive heating.
6. Create the EN1 enclosure tube and the STK1 mounting stake, as shown in Figure 40-4. Note the two mating holes for attaching the stake and the 5/16-inch hole for the rubber tubular bushing for routing the input power leads.
7. Obtain a top canopy (CANOPY7). The one shown was selected to mate with the plastic baffle (BAFFLE5) as shown in Figure 40-5. These parts are intended for aesthetics only and may be any combination that appears pleasing to the builder. A good source is a

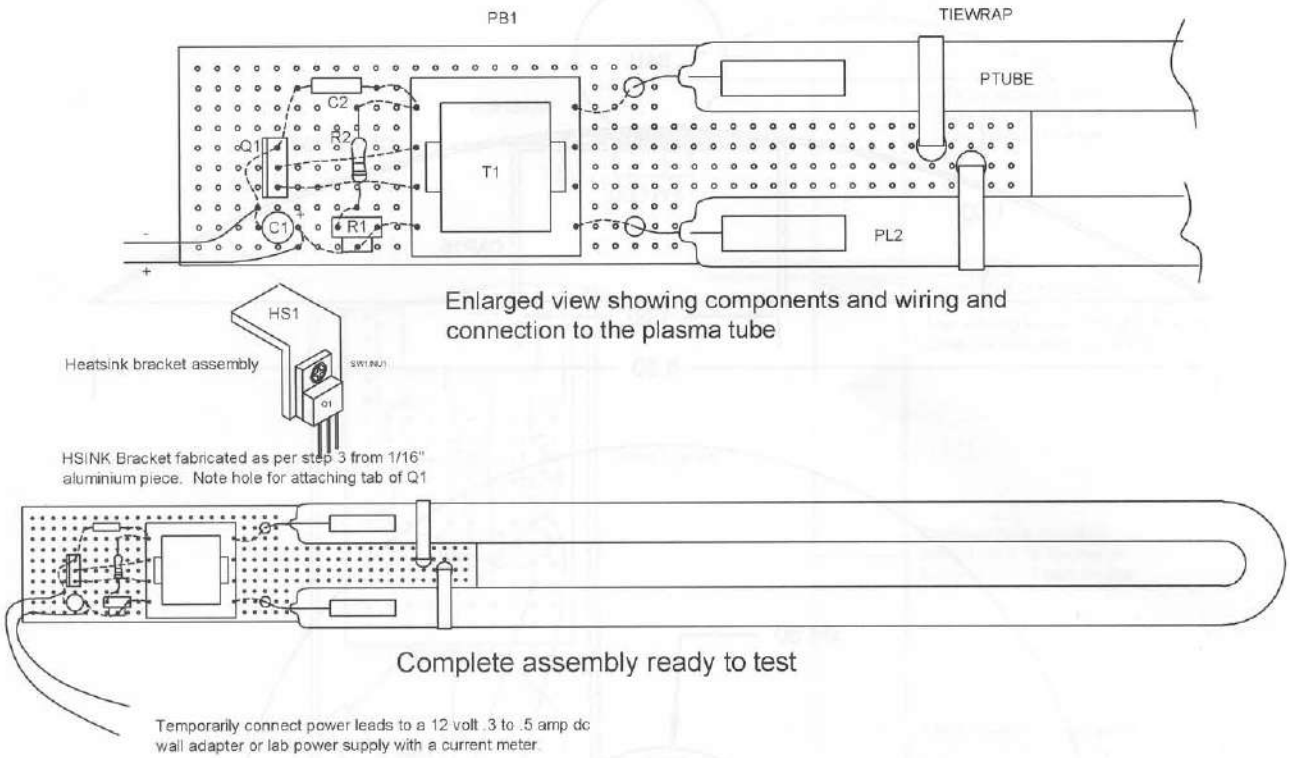

Figure 40-3 *Assembly board*

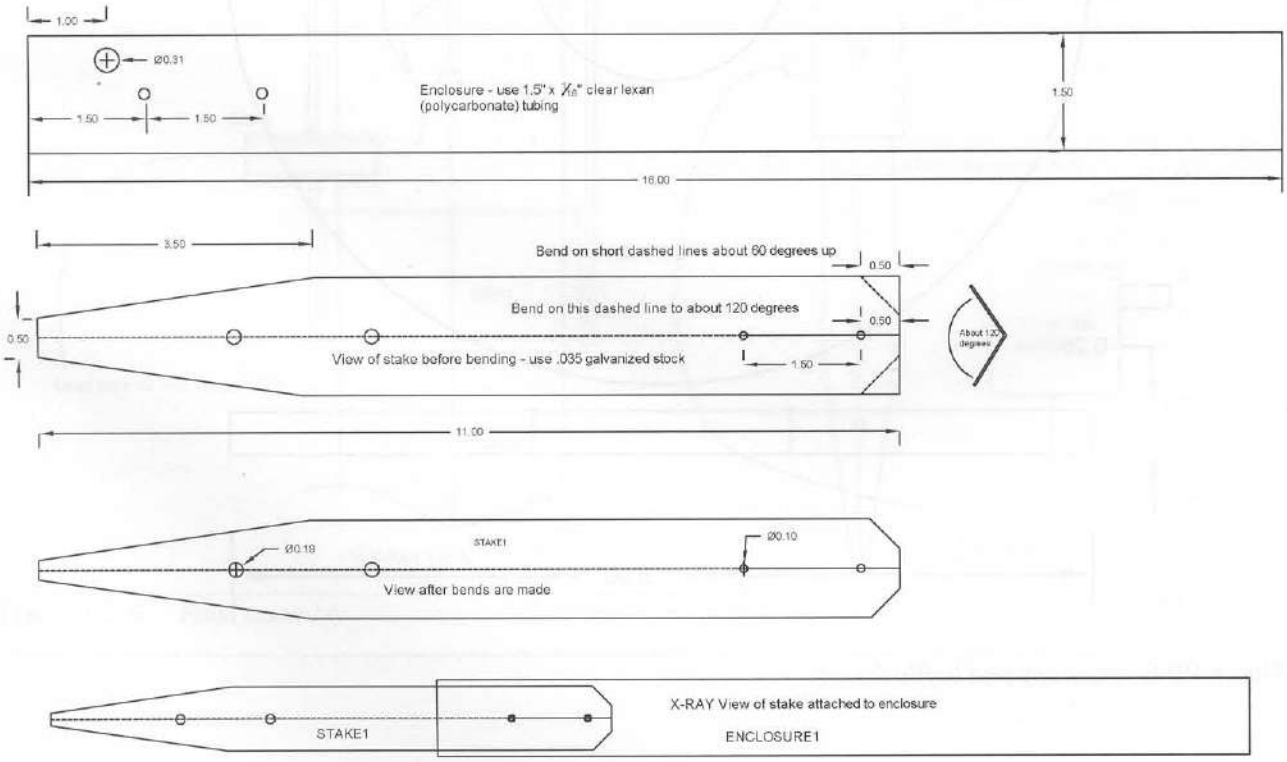

Figure 40-4 *Creating the mounting stake and enclosure*

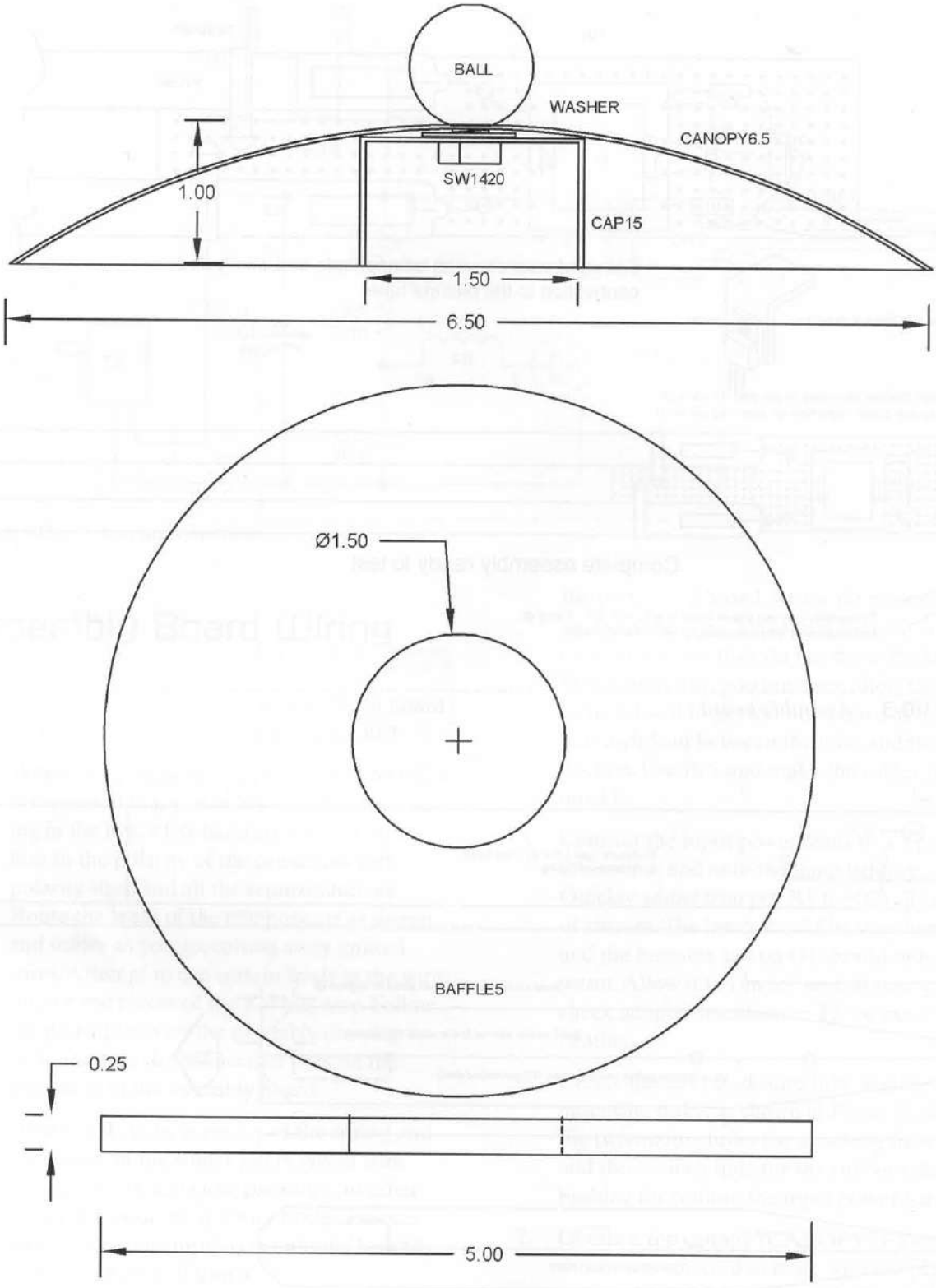

Figure 40-5 *Canopy and baffle design*

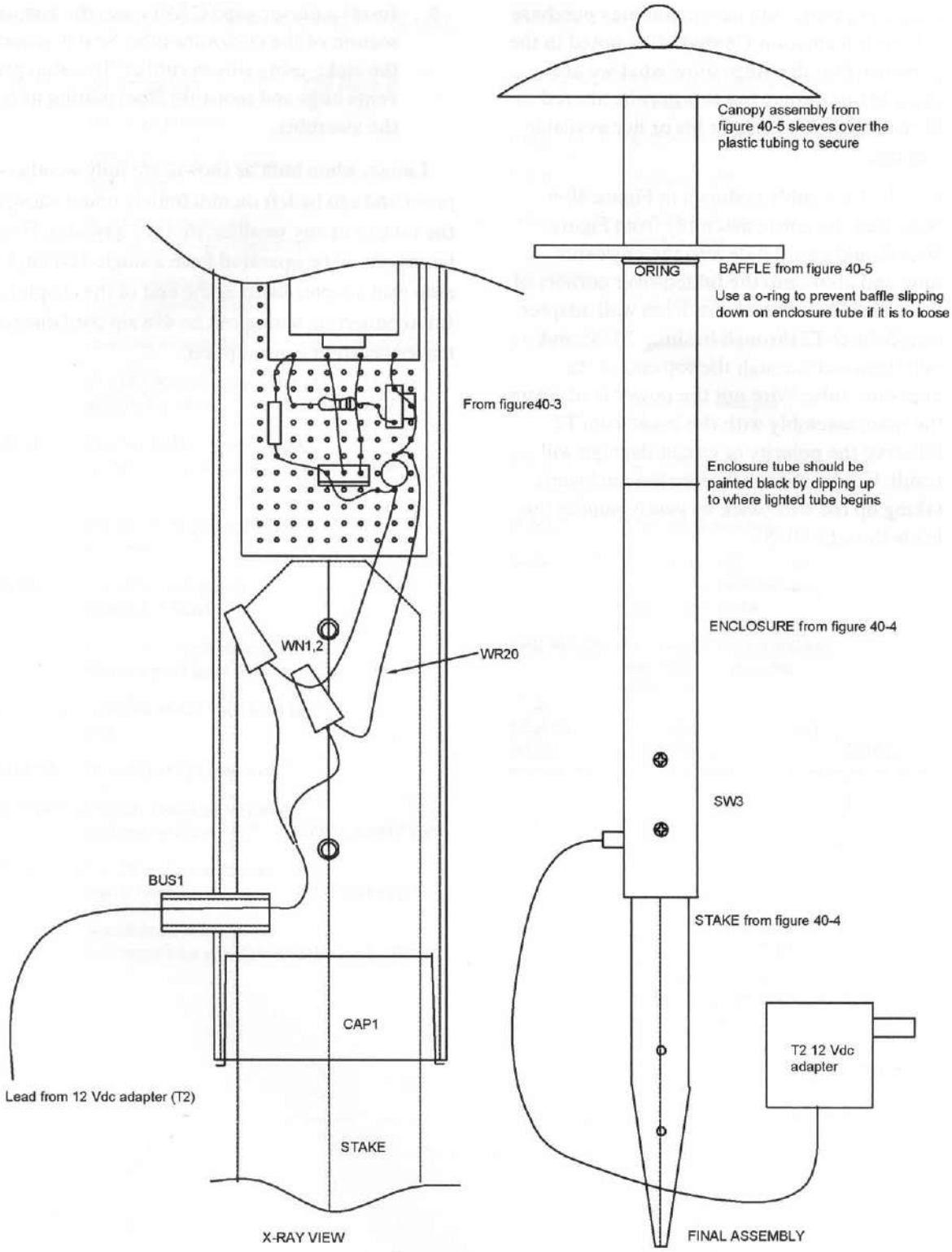

Figure 40-6 *Final assembly*

lamp or lighting supplier or you may purchase it from Information Unlimited, as noted in the parts list. Our drawings show what we are using in our design, but this may be altered to fit the builder's choice or his or her available sources.

8. The final assembly is shown in Figure 40-6. Note that the entire assembly from Figure 40-3 should easily slide into the enclosure tube and abut onto the folded-over corners of the stake. Thread the leads from wall adapter transformer T2 through bushing BUS1 and pull them out through the top end of the enclosure tube. Wire nut the power leads from the main assembly with the leads from T2. Observe the polarity or circuit damage will result. Gently slide them into the enclosure, taking up the wire slack by gently pulling the leads through BUS1.

9. Insert a plastic cap (CAP1) into the bottom section of the enclosure tube. Seal it around the stake using silicon rubber. This step prevents bugs and moisture from getting into the assembly.

Lamps, when built as shown, are fully weatherproof and can be left on indefinitely under snow, in the rain, or in any weather, short of a twister. Five lamps can all be operated from a single 12-volt, 1.5-amp wall adapter listed at the end of the chapter. Interconnecting wiring can be #18 zip cord due to the low-current consumption.

Table 40-1 Andromedia Plasma Lamp Parts List

Ref. #	*Description*	*DB Part #*
R1	5K vertical trimmer	
R2	470-ohm, ¼-watt resistor (yel-pur-br)	
C1	10-microfarad, 50-volt vertical electrolytic capacitor	
C2	.033-microfarad, 50-volt plastic capacitor (332)	
T1	Inverting transformer	DB# ANQP2824
T2	12 VDC, 300-milliamp wall adapter transformer	DB# 12 DC/.3
PTUBE-C	Cool white/blue/green/purple/red/yellow plasma tube	DB# PTUBE-COLOR
Q1	PN3055 NPN power T0-220 transistor	
PBOARD	1 × 4.5 × .1-inch grid perforated board	
HS1	1.5 × 1 × 1/16-inch aluminum heatsink per Figure 40-3	
WR20	12 inches of #20 vinyl hookup wire	
WR24BUSS	12 inches of #24 buss wire	
CANOPY6.5	6.5-inch, round metal canopy, as shown in Figure 40-5	DB# CANOPY65
BAFFLE	5 × .25-inch, round, clear plastic baffle	DB# BAFFLE5
BALL	⅞-inch brass ball with a hole tapped for a ¼-20 bolt	DB# BALL78
STAKE1	Metal stake created as shown in Figure 40-4	
ENCLOSURE	Plastic tube created as shown in Figure 40-4	
SW1	6-32 ¼ Phillips screw	
NUT	6-32 keep nut	
SW3	Two #6 × ¼-inch sheet metal screws	
SW1420X1	¼-20 × 1-inch hex bolt for attaching the ball (see Figure 40-5)	
TIEWRAP	Two tie wraps used per Figure 40-3	
CAP1	Plastic cap used per Figure 40-6	
CAP1.5	1.5-inch plastic cap shown in Figure 40-6	
WN1, 2	Two small wire nuts	
BUS1	5/16 OD × 3/16 ID × 1-inch length of rubber tubing (see Figure 40-6)	
ORING1.25	1¼-inch O-ring for holding the baffle in place per Figure 40-6	
5 LAMP ADAPTER	12 VDC, 1.5-amp adapter for five lamps	DB# 12/1 .5

ELECTRONICS & BRAIN CONTROL

We are learning more about our gray-matter computers

BY L. GEORGE LAWRENCE

IT IS TIME that we closely examined brain control, now that scientists are actively seeking to unravel the mysteries that shroud that miniature bioelectric giant known as the human brain. Elements of brain control can already be found in anti-collision radar technology involving birds. It has also been substantiated that, by pumping energy in the gigahertz range of frequencies through human heads, subjects can suddenly "hear" without using their ears.

Much remains to be done to correlate and sift out concealed facts. We still know very little about the all-important coding events that take place in the brain's neuron-synaptic complex. How can we measure and reinforce such significant human capacities as love, will, and character? Does uncontrolled electromagnetic pollution affect the brain? These and other questions remain to be answered as scientists delve deeper and deeper into the human brain with the help of electronics.

What Is the Brain? The theory that the brain is a true electronic machine has often been proposed. To a point, the theory is true. As Dr. Wilder Penfield demonstrated some years ago, the electrical stimulation of brain tissue during skull surgery triggers lucid audio-visual recalls of past events in patients. The patient "sees" and "hears" complete increments of true life experiences, all in correct sequence.

But consider Fig. 1. Studies are enormously complicated by the fact that the human brain contains an estimated 10 billion nerve cells called "neurons" and another 100 billion of a second type called "glial" cells. The fluid bath in which these cells are suspended is a vital element in their electrochemical interactions. Is it here where emotional components and memory are stored and where we have susceptance to microwave and other electromagnetic frequencies?

Such questions guide us into the subject of "synaptic" transmission. The term "synapse" is derived from the Greek phrase "to clasp" and was introduced in 1897 by a Dr. Sherrington who used it to describe the junctional region between two nerve cells. In many cases there is a gap or cleft across a synapse. (In other cases, as in fish, a synapse is a real physical joint.)

One big neuron might have on its surface as many as 10,000 points of contact (synaptic knobs) with other neurons. When the latter are stimulated, some of the millions of ribonucleicacid (RNA) molecules inside them give orders to the glial cells to manu-

facture new proteins. The nature and pattern of these proteins contain an imprint of something that has been perceived and apparently gives rise to a molecular "engram."

We also find electrical dipoles in synaptic mechanisms which, when oriented and arranged in a large array, apparently can produce an electric field strong enough to drive positive ions over the junction barrier of the postsynaptic membrane (in a manner similar to that in a transistor) and thereby initiate excitation or produce depolarization. So, one comes to believe that the nature of synaptic transmission is essentially electrical, be it mediated by electrical or chemical transmitters.

By inference, then, the possibility arises of human brain control by electromagnetic forces directed at it from the outside. If such radiations can be suitably coded to elicit a synchronous response in the neuron-synaptic complex, the brain will trigger motor functions which, in turn, cause man or animal to execute a programmed act. Here we have some fascinating experiments that hold great hopes for the immediate future.

In the case of hearing, for example, we have been taught that our auditory system can respond only to acoustic energy. This "fact" is far from correct. Experiments conducted by Dr. Frey and others clearly indicate that the audio sense in man—and probably in animals, too—can respond to electromagnetic energy in at least a portion of the r-f spectrum. Data shows that, at very low power levels (to preclude biological damage) in tests like that shown in Fig. 2, there are audio sensations at frequencies as low as 200 MHz and at least as high as 3 GHz. When low-level energy was directed at them, the test subjects reported "hearing" a buzzing sound. However, they found it almost impossible to match r-f sounds to a sine wave. The apparent source of the buzzing, clicking, knocking, or hissing sounds is described as being within or immediately behind their heads. This localization persists no matter how a person rotates or twists his head in the r-f field.

It was during these studies that a profoundly important discovery was made: deaf subjects often had the ability to *hear* r-f sound. The clinical criterion was that, if a given person could hear audio above 5 kHz either by bone or air conduction, then r-f sound could be heard as well. This and related work has resulted in the manufacture of r-f type hearing aids for the deaf, one of which is made by Listening, Inc., 6 Garden St., Arlington, Mass., and is known as the Neurophone Model GPF-1. It operates at 100 kHz and employs crystal control.

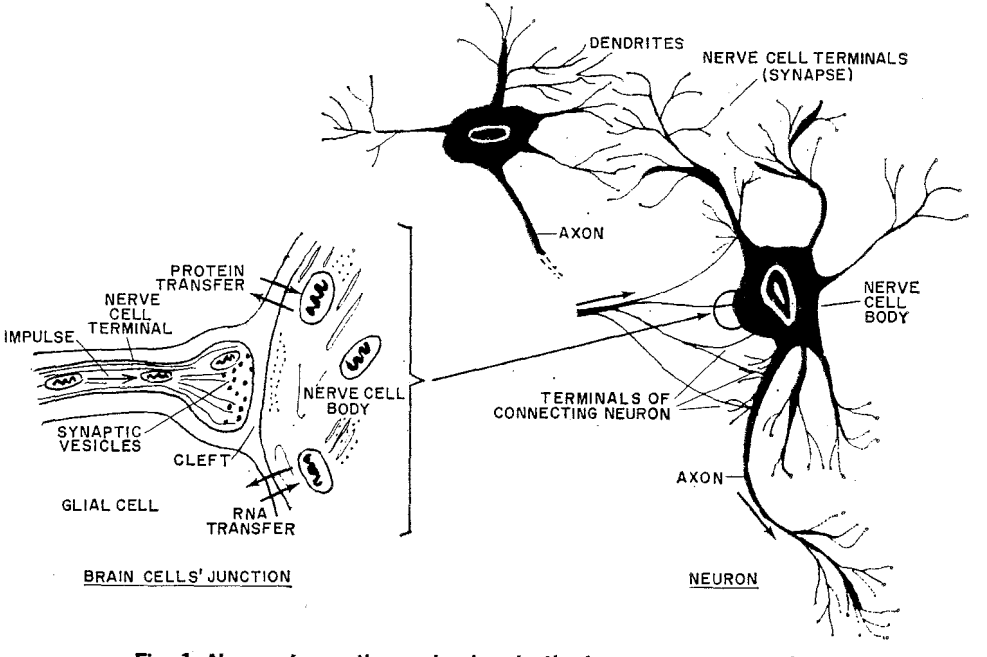

Fig. 1. Neuron/synaptic mechanism in the human nervous system.

These observations tie in with the fact that some individuals can detect radio programs through the fillings in their teeth. This phenomenon was technically verified by interposing shields between respective people who exhibited it and the modulated r-f sources. When the lower half of the head was covered, including the maxillary dental area, the r-f sound was perceived. The sound ceased upon covering the top half of the head. While the mechanism responsible for this phenomenon is only imperfectly understood, it can be assumed to be the result of direct cortical nerve fiber stimulation.

We also have another form of hearing sensations that come about when the human head is placed between two large capacitor plates that are excited by varying electrostatic potentials. "Electrophonic hearing," as it is called, apparently acts on the ear's tympanic membranes in a quasi-mechanical manner. It is useful as a new research tool in specialized psycho-physiological studies on the auditory or vibrotactile system.

Unavoidably, data of this sort begs application. Pilot studies are under way to apply effective electrodynamic brain control to animals and man himself. Consider, for example, the brain-wave proposal based on ideas put forth by the late Dr. Norbert Weiner, the acknowledged father of cybernetics.

According to Weiner, a sheet of tin suspended from the ceiling of a room and connected to a 10-Hz electrostatic generator can cause unpleasant sensations in human subjects. With a field strength of 1 or 2 volts per sq cm, the oscillating field roughly coincides with the human brain's alpha-rhythm frequency but attempts to lock it to a *fixed* frequency—that of the generator. Electronic sleep machines employ similar principles, with currents of fixed amplitude and pulse width (usually square waves) being fed by conductive face masks through the cranium and brain.

Brain Control of Birds. Radar technology is now being used to deal with the problem of birds getting in the way of fast flying aircraft. The idea is to trigger a flying bird's (or a whole flock's) brain into motor functions to initiate collision avoidance by having the bird(s) veer off the flight path of the plane. This area of research was triggered by the staggering incidence of plane/bird collisions that result in equipment damage estimated to be in the millions of dollars each year and the human lives that continue to be lost as a result of such collisions.

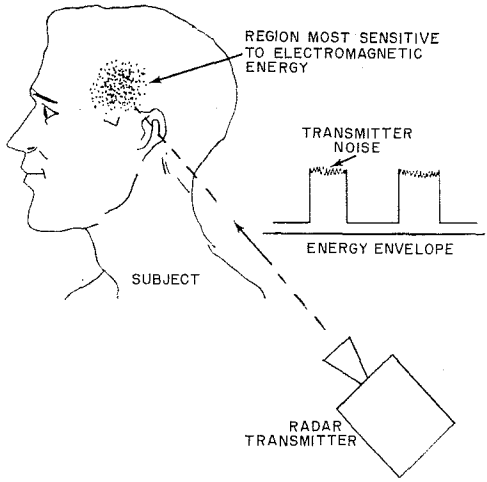

Fig. 2. Microwave susceptance area in brain.

The work being carried out by the National Research Council of Canada bears much promise in bird-brain control. The NRC's test system takes the form of a carousel of bird cages containing live chickens. (Fig. 3) Only one of the many cones suspended above the cages contains a microwave antenna. The program, headed by Dr. Alan Tanner, aims to evolve microwave brain-control systems that will have the greatest possible effect on birds while at the same time deploying the least amount of power.

When exposed to microwave radiation, birds in general exhibit escape reactions. This fact became clear during World War II. Investigators also found that in each case the microwave field through which birds were flying was of very low intensity —too low, in fact, to account for confusion and escape reactions on the basis of heat generated in the animals' bodies.

Different species of birds have different behavioral patterns. In the laboratory, a few seconds after the microwave field has been initiated, the given bird's wing outside the field of radiation became collapsed and the opposite wing became extended. Similar phenomena were observed with the legs. Sometimes the birds heeled over to the outside of the field. In the turning reaction, the outer side of the bird becomes paralyzed. In short, the microwave beam interacts with the nervous system of the test birds. Seagulls and pigeons reacted similarly,

though the gulls are more inclined to initiate flight.

It is interesting to note that a bird's feathers appear to play a much greater role in the sensory complex than has been realized before. Defeathered chickens, for example, give little or no reactions to microwave fields until the twelfth day, at which time new feathers start to grow and tips protrude from the surface of the skin. In the case of fully feathered chickens whose tail feathers were exposed to microwave radiation, the birds immediately ceased exploration of their cages and exhibited mounting signs of distress after a period of 10-20 seconds. When the microwave field was switched off, the birds responded by fluffing their body feathers and active preening.

The Canadians believe that the physical properties of quill tissue—particularly the piezoelectric properties that are fundamental to living tissue—suggest mechanisms that have heretofore been overlooked. However, work carried on by Dr. Tanner and his staff as well as research conducted elsewhere should in time yield a microwave beam of the proper wavelength and modulation to cause birds to activate collision avoidance with all possible haste.

Brain-Wave Detection. Some 40-odd years ago, university professor F. Cazzamalli started publishing papers on the subject of brain-wave detection and implied that he had detected radiations from the mind. As shown in Fig. 4, he placed subjects in a shielded room (or Faraday cage), emanated vhf radiowaves through their heads, and claimed to have recorded "beat frequencies" obtained with an untuned receiver consisting of a galena crystal or diode tube, a fixed capacitor, an antenna, and a sensitive light-beam galvanometer.

The trouble is that Cazzamalli never mentioned transmitter power in his somewhat unprofessional papers. His oscillograms meant to show variations of the "beat" when his subjects were emotionally aroused or engaged in creative tasks when they were in the Faraday cage. Later, he told an astounded world that his subjects would hallucinate when under the influence of his "oscillatori telegrafica," its frequency being about 300 MHz at the time.

Tom Jaski, a noted science writer and engineer, duplicated some of Cazzamalli's work with a modern low-power oscillator that was swept from 300 MHz to 600 MHz. His subjects could not see the dial. They were told to sound off as soon as they felt something unusual. At a certain frequency range—varying between 380 MHz and 500 MHz—the subjects repeatedly indicated points with exact accuracy in as many as 14 out of 15 trials. At these "individual"

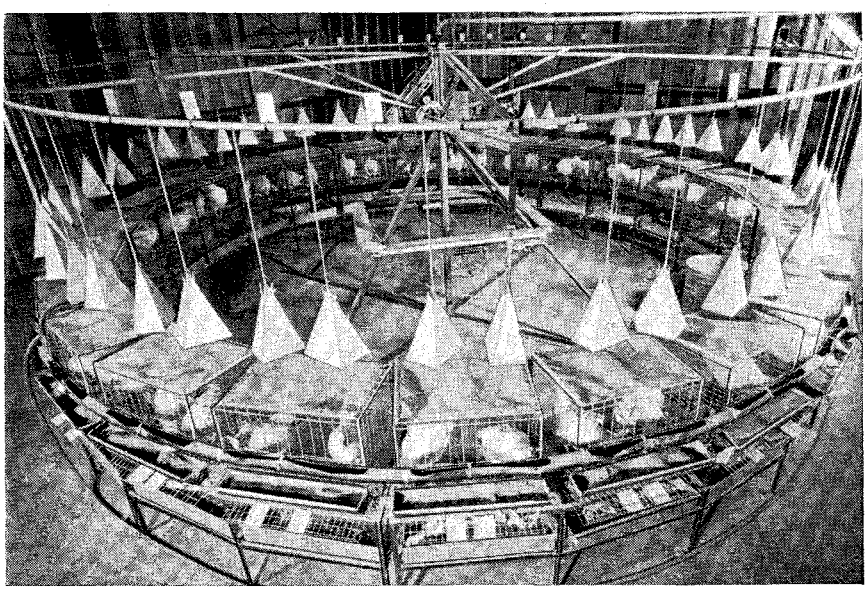

Fig. 3. Microwave test carousel to determine reactions in live birds. Only one cone is active; all others are dummies. (Courtesy National Research Council of Canada)

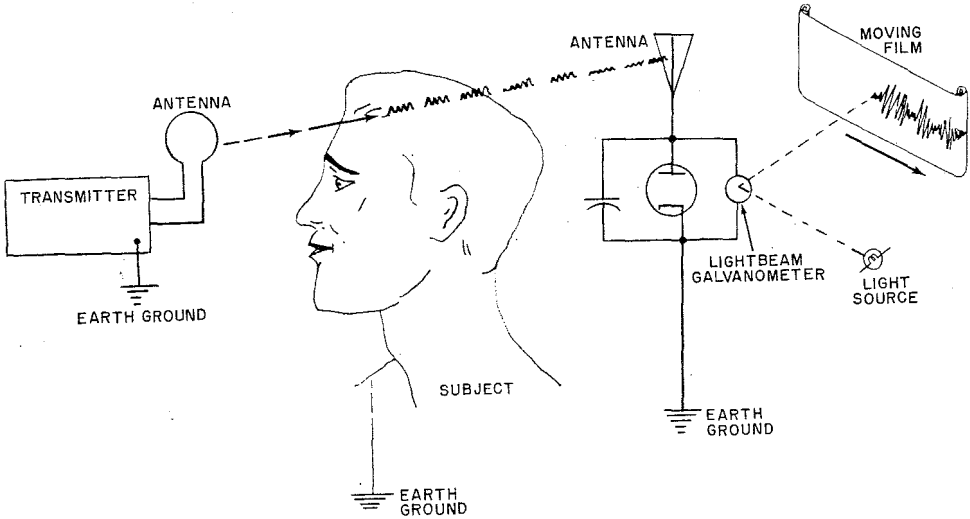

Fig. 4. Cazzamalli's brain-wave detector of some years ago is illustrated here.

frequencies, the same subjects announced having experienced pulsing sensations in the brain, ringing in the ears, and an odd desire to *bite* the experimenters. The oscillator's output power was only a few milliwatts, while the oscillator itself was located several feet away from the subjects.

The Conclusions. Considering the ingredients of the few sample discussions presented above, it appears that both humans and animals have brains sensitive to r-f energy. The correlating mechanisms are only imperfectly known, but they apparently reside within the neuron-synaptic complex. Nor will we know how this susceptance affects our longevity without proceeding with a great deal more research.

Just how electromagnetic radiation affects our social structure has led to a great deal of speculation in the past. For example, the late Dr. Goldman once insisted that r-f energy allows the id, or primitive brain, to take control over human affairs. Such considerations might open a Pandora's box when applied to an explanation of our sharply increasing crime rates and decline of social fidelity. So, before we rush pell-mell into electromagnetically contaminating our environment, it would serve us well once and for all to discover what adverse effects, if any, it will have on our lives. ◈

T V COMMERCIAL KILLER

FEATURES:
- No interconnecting wires—use a flashlight to key relay
- Low battery drain
- Auto reset

PARTS LIST:
1 HEP 312
1 HEP 156
1 HEP 55
1 Resistor, 1.5K, 1/2 Watt
1 Relay, Potter-Brumfield RS5D, 6VDC
1 Battery, 9VDC

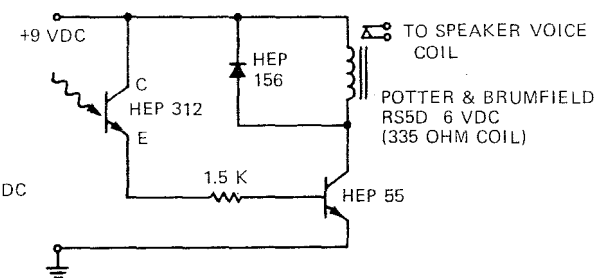

50 GREEN PROJECTS FOR THE EVIL GENIUS

Foreword by PAUL MARTIN, PC Former Prime Minister of Canada

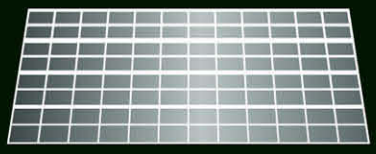

- Filled with fun, environmentally focused projects
- Covers energy-efficiency, alternative fuels, solar, wind, and hydro power, and more
- Includes plans, schematics, materials lists, and sources

JAMIL SHARIFF

TAB ELECTRONICS

50 Green Projects for the Evil Genius

Evil Genius Series

Bike, Scooter, and Chopper Projects for the Evil Genius

Bionics for the Evil Genius: 25 Build-It-Yourself Projects

Electronic Circuits for the Evil Genius: 57 Lessons with Projects

Electronic Gadgets for the Evil Genius: 28 Build-It-Yourself Projects

Electronic Games for the Evil Genius

Electronic Sensors for the Evil Genius: 54 Electrifying Projects

50 Awesome Auto Projects for the Evil Genius

50 Green Projects for the Evil Genius

50 Model Rocket Projects for the Evil Genius

51 High-Tech Practical Jokes for the Evil Genius

Fuel Cell Projects for the Evil Genius

Mechatronics for the Evil Genius: 25 Build-It-Yourself Projects

MORE Electronic Gadgets for the Evil Genius: 40 NEW Build-It-Yourself Projects

101 Outer Space Projects for the Evil Genius

101 Spy Gadgets for the Evil Genius

123 PIC® Microcontroller Experiments for the Evil Genius

123 Robotics Experiments for the Evil Genius

PC Mods for the Evil Genius

Programming Video Games for the Evil Genius

Solar Energy Projects for the Evil Genius

Telephone Projects for the Evil Genius

22 Radio and Receiver Projects for the Evil Genius

25 Home Automation Projects for the Evil Genius

50 Green Projects for the Evil Genius

Jamil Shariff

New York Chicago San Francisco Lisbon London Madrid
Mexico City Milan New Delhi San Juan Seoul
Singapore Sydney Toronto

Copyright © 2009 by The McGraw-Hill Companies, Inc. All rights reserved. Except as permitted under the United States Copyright Act of 1976, no part of this publication may be reproduced or distributed in any form or by any means, or stored in a database or retrieval system, without the prior written permission of the publisher.

ISBN: 978-0-07-154960-8

MHID: 0-07-154960-9

The material in this eBook also appears in the print version of this title: ISBN: 978-0-07-154959-2, MHID: 0-07-154959-5.

All trademarks are trademarks of their respective owners. Rather than put a trademark symbol after every occurrence of a trademarked name, we use names in an editorial fashion only, and to the benefit of the trademark owner, with no intention of infringement of the trademark. Where such designations appear in this book, they have been printed with initial caps.

McGraw-Hill eBooks are available at special quantity discounts to use as premiums and sales promotions, or for use in corporate training programs. To contact a representative please visit the Contact Us page at www.mhprofessional.com.

Information contained in this work has been obtained by The McGraw-Hill Companies, Inc. ("McGraw-Hill") from sources believed to be reliable. However, neither McGraw-Hill nor its authors guarantee the accuracy or completeness of any information published herein, and neither McGraw-Hill nor its authors shall be responsible for any errors, omissions, or damages arising out of use of this information. This work is published with the understanding that McGraw-Hill and its authors are supplying information but are not attempting to render engineering or other professional services. If such services are required, the assistance of an appropriate professional should be sought.

TERMS OF USE

This is a copyrighted work and The McGraw-Hill Companies, Inc. ("McGraw-Hill") and its licensors reserve all rights in and to the work. Use of this work is subject to these terms. Except as permitted under the Copyright Act of 1976 and the right to store and retrieve one copy of the work, you may not decompile, disassemble, reverse engineer, reproduce, modify, create derivative works based upon, transmit, distribute, disseminate, sell, publish or sublicense the work or any part of it without McGraw-Hill's prior consent. You may use the work for your own noncommercial and personal use; any other use of the work is strictly prohibited. Your right to use the work may be terminated if you fail to comply with these terms.

THE WORK IS PROVIDED "AS IS." McGRAW-HILL AND ITS LICENSORS MAKE NO GUARANTEES OR WARRANTIES AS TO THE ACCURACY, ADEQUACY OR COMPLETENESS OF OR RESULTS TO BE OBTAINED FROM USING THE WORK, INCLUDING ANY INFORMATION THAT CAN BE ACCESSED THROUGH THE WORK VIA HYPERLINK OR OTHERWISE, AND EXPRESSLY DISCLAIM ANY WARRANTY, EXPRESS OR IMPLIED, INCLUDING BUT NOT LIMITED TO IMPLIED WARRANTIES OF MERCHANTABILITY OR FITNESS FOR A PARTICULAR PURPOSE. McGraw-Hill and its licensors do not warrant or guarantee that the functions contained in the work will meet your requirements or that its operation will be uninterrupted or error free. Neither McGraw-Hill nor its licensors shall be liable to you or anyone else for any inaccuracy, error or omission, regardless of cause, in the work or for any damages resulting therefrom. McGraw-Hill has no responsibility for the content of any information accessed through the work. Under no circumstances shall McGraw-Hill and/or its licensors be liable for any indirect, incidental, special, punitive, consequential or similar damages that result from the use of or inability to use the work, even if any of them has been advised of the possibility of such damages. This limitation of liability shall apply to any claim or cause whatsoever whether such claim or cause arises in contract, tort or otherwise.

About the Author

Jamil Shariff is a writer, educator, multidisciplinary freelancer and consultant. His passion is for environmental technology, especially the obscure but useful, like biogas digesters, sandbag houses, or velomobiles. He has been educated in music, English, and politics, and received his Masters in energy and the environment in architecture.

Jamil has worked with well-known environmental groups, like the Sierra Club, and the more obscure, like the Boiled Frog Trading Cooperative, and currently serves on the Board of Directors of the Toxics Watch Society of Alberta. He delights in writing to disseminate his experiences with new technologies, and designing and delivering technology-based courses.

His chronicled experiences range from sucking up used grease from restaurants to fuel the car he converted himself, to building parts of the fiber-glass weather protection on his velomobile himself. The courses he taught range from postgraduate classes on Stirling heat engines, to training sessions on biodiesel production for a local cooperative.

Jamil currently works with a sustainable innovation incubator in Ottawa, Ontario called the Boxfish Group, named for the angular yet rigid fish that car designers are mimicking. He works to bring deep technical understanding to policy conversations that can help government and businesses foster the innovations we need.

To my tenth grade English teacher, who wanted to fail me:

ttthhhbbbbbbbbbbbbbbbbbbbbbbth!

Contents

Foreword by The Right Honourable Paul Martin PC **ix**

Acknowledgments **xi**

1 Introduction **1**

2 Transportation **7**

Project 1: Estimating Your Existing Transportation Related Emissions 9

Project 2: Finding Another Way Around 11

Project 3: Flat Isn't Phat 12

Project 4: Round and Round 18

Project 5: Driving Smart 20

3 Staying Inside **21**

Project 6: Fabric Walls 23

Project 7: Fixing Your Windows 27

Project 8: Using Thermal Mass 28

Project 9: Testing Methods of Insulating 29

4 Waste and Value **33**

Project 10: A Worm Compost Bin 34

Project 11: Making a Bit of Methane 35

Project 12: Return Your Trash 38

Project 13: Ant Rules 39

Project 14: Seed Bombs 41

5 Efficiency **43**

Project 15: Installing an Energy-Efficient Light Bulb 45

Project 16: Calculating Your Energy Savings from Project 15 46

Project 17: Auditing Your Appliances with an Energy Meter 49

Project 18: Getting Used to "Better Than Off" 50

Project 19: A Responsible Shopping List 52

6 Using Water **55**

Project 20: A Simple Water Purifier 56

Project 21: Evaporative Cooling 58

Project 22: Saving Water around the House 60

Project 23: Collecting Rainwater 62

7 Heating with the Sun **65**

Project 24: A Simple Solar Cooker 67

Project 25: Simply Heating Water with the Sun 69

Project 26: A Circulating Water Heater 71

Project 27: Solar Thermal Panels on your Roof 74

Project 28: Solar Thermal Hot Water on the Roof of Your House 76

8 Water and Air **81**

Project 29: A Model Water Wheel 81

Project 30: A Model-Sized Water Wheel 84

Project 31: The Spiral Water Pump 87

Project 32: Making a Fire Piston 90

9 Heat and Power **95**

Project 33: Demonstrating the Power of Hot Air 100

Project 34: The Energy of a Hot Cup of Tea 101

Project 35: Concentrated Solar Thermal Motion 104
Project 36: A Thinking Man's Cold 107

10 Electricity 111
Project 37: The Homopolar Motor 113
Project 38: A Coin Battery 115
Project 39: Take One Room Off-Grid 119

11 Solar Electricity 121
Project 40: Assembling a Solar Module from PV Cells 123
Project 41: PV Panels on Your Roof 130

12 Wind Power 137
Project 42: A Plastic Cup Vertical Axis Drag Turbine 139
Project 43: Raising a Guyed Tower 140
Project 44: Installing the Turbine 145

13 Alternatives to Your Car 147
Project 45: Traveling with a Leitra 151
Project 46: Frame and Fabric Tops 155
Project 47: A Zotefoam Fairing 157

14 Alternative Fuels for Transport 163
Project 48: A Blender Batch of Biodiesel 166
Project 49: Tearing Up Your Fuel System and Feeding in Waste 171

15 Spaces and Structures 175
Project 50: Building with Earth 178
Project 51: The $500 House 181
Project 52: Attend a Public Consultation or Planning Meeting 185

Index 189

Foreword

People the world over are beginning to realize that a clean environment and a strong economy are two sides of the same coin. This realization, together with some ingenuity, will help to drive the next industrial revolution. We will see the creation of new environmentally friendly industries and buildings. We will set the foundations of a sustainable future.

Everyone can contribute to the global effort to reduce carbon emissions. By getting going we can make improvements in both our environment and our quality of life. New ideas and projects are emerging every day, including some of the technologies you will read about in this book. With more people reading and experimenting along these lines, we will see broader support for change at the individual and social levels. Many people want to make this change and start real progress on the road to a sustainable and prosperous society.

While I was Prime Minister, the Canadian government started the long road with Project Green. We need to make strides now down that road towards getting useful environmentally friendly technologies into the hands of all Canadians. As Jamil mentions, neither politics nor technology alone will, in the end, be sufficient to meet the enormous challenges that our changing climate will pose.

Innovation and the commitment of millions of Canadians, the inventiveness of many so-called "evil geniuses" working away in labs and shops—that is what will make it possible to come out ahead and even more prosperous. But we do need to get serious about this now. Climate change is one of the biggest challenges humankind has ever faced. It challenges us to work together as a planet and as a nation as never before. But we need to make light work with millions of hands. We all need to get interested in seeing what can be achieved in our own households and businesses. Each of us needs to start somewhere getting on the road to a sustainable lifestyle, and there is something in this book for all. I hope you enjoy the book as much as I have.

The Right Honourable Paul Martin PC

Former Prime Minister of Canada

This page intentionally left blank

Acknowledgments

There are always a great many people to thank for their contributions to any work of this nature. To begin with, I am indebted to Gavin Harper for thinking of me for this project and for putting my name forward.

I'm grateful to everyone at the Falls Brook Centre in New Brunswick, for building an interesting learning center and for their help in preparing parts of this book, specifically Terri, Jean Arnold, and Brent Crowhurst. I'd like to thank Dries Callebaut at WAW in Belgium, Bar De Wert of Aerorider in the Netherlands, Rod Miner at Lightfoot Cycles in Montana, and Krash for images of the velomobiles. I owe a debt to John Tetz for pictures and help with the steps involved in building with Zotefoam, and to Dave Eggleston at Pedal Yourself Healthy for help with sections on the Alleweder, as well as to Jurrian Bol at Dutch Speed Bicycles for images of the same. Gary Whitfield at Whispergen was very helpful in providing prompt information and really neat pictures and Stirlingengine.com was kind enough to send a model for my use.

Carl Georg Rasmussen is an inspiration to me for his years of dedication to building a desperately needed vehicle by hand, and I'd like to thank him for teaching me his methods and inspiring me, as well as providing timely photos for the book. Myles Kitagawa has also been an inspiration to me for years, for this as well as permission to quote him, I am grateful. Raphael Khoudry gave eager assistance in compiling images of some projects. Richard Hampton's forethought in keeping a tin-can engine around for years until needed is deeply admired, and his comments on early drafts were greatly appreciated. Vinay Gupta, as always, was ready to do what it took to help have the Hexayurt widely adopted, and Rob and Sky Bicevskis went out of their way to make sure images of the fire piston were good enough for print. I'm very grateful for all of their help.

As ever, my family has been great throughout this journey, and alternately supported me and left me alone when needed. Thanks to all of you, especially to Nashina who looked over some chapters to make sure her older brother wasn't saying silly things.

I'm grateful to Judy Bass, my awesome editor, and Andy Baxter at Keyword, for their expert assistance throughout the publishing process, and to David Fogarty, Pamela Pelton, and David Zielonka, and the other members of the team at McGraw-Hill that guided me and contributed to this work. Last, but certainly not least, I would like to acknowledge the work of Brian Guest, who made the awesome Foreword possible, and the rest of the Boxfish team who are ensuring that my life remains full of interesting technologies and projects.

I'm sure I've missed a couple very important people to thank, and I'm sorry I did, but greatly appreciate their assistance nonetheless. Of course, none of this would have been possible without hundreds of inventive souls who were experimenting and exploring issues and technologies that will be crucial to a sustainable future long before me, and thanks is not enough for their persistence.

This page intentionally left blank

Chapter 1

Introduction

The environment

During the last couple of years, the environment has become a popular topic in the media. In particular, global climate change has been receiving increased attention, due to the mounting evidence that its impact will be global and could be severe—even catastrophic—if mitigating action is not taken quickly.

In the past, topics such as acid rain have received a lot of attention. This in turn spurred action to address the problem, and while the problem hasn't been solved, a lot has been done to address it over the years. The current media focus on climate change may lead to the same kind of increased action, helping to avoid some of its most severe impacts.

Climate change

According to scientists, the warming of the climate, known as global climate change, is now unequivocal. It is increasingly clear that much of this warming is the result of human activity since the Industrial Revolution. Climate change results from the release of particular gases into the atmosphere, called "greenhouse gases" (often abbreviated GHGs); they act not unlike the glass on a greenhouse and trap the sun's heat on earth. These gases exist naturally as part of systems in the earth's cycle and scientists estimate that the earth would be about 30°C colder than it is today if these gases did not exist. The same scientists also note that human activity over the past 100 years has led to a perceptible rise in global temperatures. In 2008, the news is filled with stories about northern ice caps melting and glaciers receding, which are the result of the excess greenhouse gases that are emitted into the atmosphere as a result of human activity.

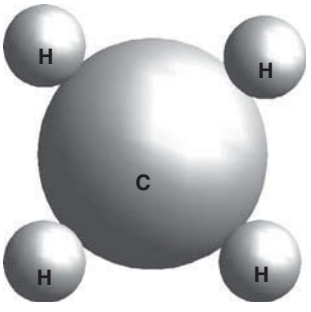

Figure 1-1 *Molecular structure of methane (CH_4), a powerful greenhouse gas.*

The major greenhouse gases include methane (scientifically notated as CH_4—meaning one atom of carbon and four atoms of hydrogen bonded together in a single molecule of methane–see Figure 1-1), nitrogen oxides (NO_x—one nitrogen atom and one or more oxygen atoms), water vapor (H_2O—two hydrogen atoms and one oxygen atom) and carbon dioxide (CO_2—see Figure 1-2). Moreover, there are a number of entirely human-made greenhouse gases in the atmosphere, such as the *halocarbons* and other chlorine- and bromine-containing substances. These gases are emitted in varying amounts through all sorts of natural and human activities; the largest single human source is the

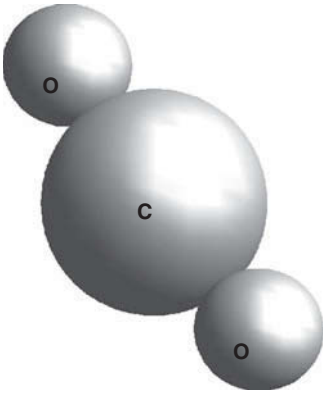

Figure 1-2 *Molecular structure of carbon dioxide (CO_2).*

burning of fossil fuels. These are currently our prime sources of energy, and include coal, gasoline and diesel fuels, and natural gas. We use them to heat our homes, power our cars, and in giant power stations that provide the electricity needed to power our electronics.

The problem

The problem with releasing too many GHGs into the atmosphere is that when the gas rises into the atmosphere it creates a sort of heat blanket, as we mentioned. The effect has been likened to what happens inside a greenhouse—where the glass walls trap the sun's heat—but in this case the greenhouse is the entire planet. Since the earth is an extremely complicated system, this doesn't necessarily mean warmer temperatures everywhere in the world, but that the earth's average temperature will rise, causing an increase in extreme weather events and potentially drastic changes to weather patterns such as droughts and hurricanes.

Recent scientific reports have shown that the projected impacts of climate change could be quite severe. Some expected changes include:

- shrinking Arctic and Antarctic sea ice
- more frequent heat waves
- more intense tropical cyclones (typhoons and hurricanes)
- plant and animal extinctions
- increased flooding due to sea level rise
- increased drought.

There are also sharp differences in how climate change will affect people across regions: those in the weakest economic position are often the most vulnerable to climate change and are frequently the most susceptible to climate-related damages.

Upsetting the balance

The atmospheric balance is being upset by the extra amounts of carbon dioxide and other greenhouse gases being emitted into the atmosphere, largely as a result of human activity. Figure 1-3 shows, very generally, the trend in our yearly emissions over the last century. The problem with the carbon dioxide that we are releasing into the atmosphere is that most of it comes from sources under the earth's crust (e.g., oil), where it has been stored for billions of years. Before we humans started digging into the ground looking for this black flammable material, most people used wood and other sources that came from recently living things. Trees absorb carbon while they are growing, and when they are burnt the carbon that they release is carbon that was recently in the atmosphere to begin with, so it is a relatively short cycle. On the other hand, when we burn fossil fuels we release carbon into the atmosphere that has been stored away by the earth for billions of years. This extra carbon is causing the earth's temperature to rise, resulting in serious environmental impacts.

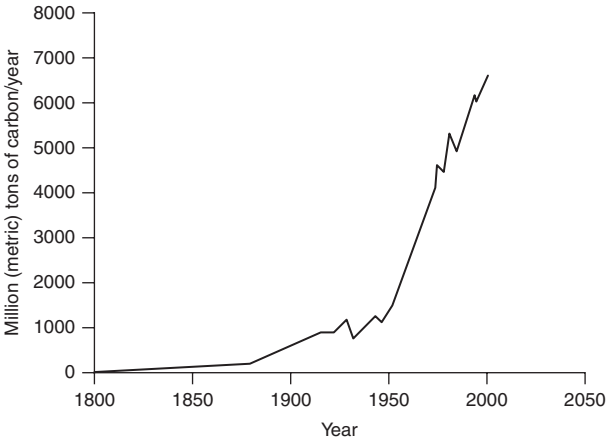

Figure 1-3 *General trend in global emissions over the past century. Used with permission from Gavin Harper's* Solar Energy Projects for the Evil Genius, *McGraw-Hill, 2007.*

So, what's to be done about it?

Doing many things at once

There have been several international agreements related to climate change. The most famous of these is the Kyoto Protocol (named for the Japanese city in which it was signed), which committed all industrialized countries that signed on to collectively reduce their emissions below 1990 levels by the 2008–2012 period. While not all industrialized countries ratified the protocol, most notably the United States, and some countries that did ratify and commit to reductions are not on track to meet their commitments, the Protocol is considered by many

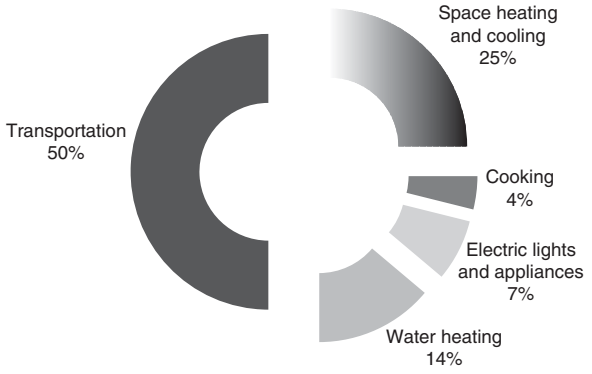

Figure 1-4 *A general idea of the average North American's energy consumption pattern.*

to be an important first step towards avoiding dangerous climate change.

What else can be done, you might ask? Well, the truth is that each of us as individuals has been responsible for emitting several tons of GHGs in the atmosphere each and every year we've been alive. Figure 1-4 shows an approximate breakdown of how the average modern consumer uses energy. This gives us an idea of what areas of our life we should approach first, if we are serious about becoming green. We are each likely to feel the effects of changes to the climate, so it seems reasonable then that each of us should play a part in reducing and managing the changes to the climate. No sustainable change can take place unless we begin and end at the individual level.

There are a great many things that each of us as individuals can do, which can complement actions taken by our governments and the companies that support our lifestyle. We can start with small actions (Figure 1-5 is an example), to help us remember that we are concerned. These will be a start to becoming

Figure 1-5 *Small actions to reduce energy are* part *of the solution, so long as they don't distract from the larger changes that need to be made.*

"light green," or a little green. We will discuss these simple options early on in the book, and then move on to looking at larger things we can do. Many simple actions, like installing energy-efficient showerheads or looking for local food producers, have groups that have formed around promoting these actions in their area. Readers could think about joining and supporting these groups—and if there isn't one operating where you live, perhaps starting one of your own.

From small to consequential

Small actions are just the beginning, and shouldn't distract us from the big picture. Getting enough environmentally friendly and efficient technology around us that will make a difference to the climate will require us to explore and install new technologies, like solar and wind energy. But, we also need to make good use of our existing technology and act on legislation that is relevant to technology, like feed-in tariffs or innovative bicycle policies.

The first section of the book concentrates on the smaller everyday actions that each of us can take to reduce our own emissions. We then move on to more in-depth projects, in hopes of providing the inductee into green living with an idea of where these little actions are leading. Throughout, we try to acknowledge that technology does not exist in a vacuum, and is therefore only as good as society knows how to put it to use.

Many of the countries that did sign up to the Kyoto Accord did so because they felt pressured by their citizens to react to what was commonly perceived as an urgent issue. An important way in which individuals can bring about change is through popular action designed to put political pressure on government representatives. In the United States, there are established methods of pressuring elected representatives, through elections or lobbying representatives. There are also other, less established ways to get attention, such as those pictured in Figure 1-6. Getting involved with local environmental activism is a good way to let your government know that this is an important issue to you, and that their time in power may be dependent on how much they are paying attention to this issue.

Figure 1-6 *Sometimes the only way to get your voice heard is to use any means at your disposal, including taking it to the streets.*

> Never doubt that a small group of thoughtful, committed citizens can change the world. Indeed, it's the only thing that ever has.
>
> Margaret Mead

Corporations can also be pressured in this way, through campaigns that communicate the importance of this issue. Large and small companies have the ability to dramatically alter their behavior and choose less-polluting alternatives, but they often need incentives to do so. Sometimes this happens because of governments that set the regulations which determine how they operate, and other times by customers who can use their leverage (the threat to cease to buy products from a company) to effect changes. As the title of this section mentions, it is important to do many things at once, because it is unlikely that any one of these actions alone is going to meet the very severe challenges posed by a changing climate. Together they might have a chance.

Lessons learned

The phenomenon of acid rain affected large parts of Canada and the United States, making headlines everywhere about 30 years ago. Acid rain is partly a result of the sulfur in the fuel used in coal-fired electricity-generating stations across the continent. Released as sulfur dioxide (SO_2) into the atmosphere when burnt, it is transformed into sulfuric acid (H_2SO_4) while traveling over long distances in the air, and is then deposited as acid rain over large areas. Acid in the rain reduced the ability of a variety of living organisms to grow, causing long-term effects on populations of fish and animals, and damaging trees and agricultural products.

Online Resources

www.epa.gov/region1/eco/acidrain/history.html—the Environmental Protection Agency gives a good introduction to the problem of acid rain and some of the measures that have been useful in combating the problem.

Because the problem of acid rain crossed state boundaries in the United States, the federal government passed a series of regulations that have changed the way all coal-fired power plants in the country deal with their atmospheric emissions. Through international agreements—among the first international environmental agreements ever—both Canada and the United States agreed to pollution reduction targets through the mandatory introduction of new technologies. The agreement has prevented about 10 million tons of SO_2 from being released into the atmosphere by industrial electricity generators since it was signed. A common technology used to achieve this monumental environmental feat is called flue gas desulfurization (FGS), which is pretty neat. A wet scrubber type of FGS system uses a limestone slurry (think wet concrete), injected into a tall reaction tower where a fan sucks the heated gases from the combustion process. The sulfur dioxide reacts with the limestone slurry and becomes calcium sulfate ($CaSO_4$), which is no longer acidic and is useful for lots of chemical processes. Some power plants are now able to sell their calcium sulfate to other industries and recover some costs.

So a dangerous pollutant is removed from the chimneys of our power plants in a useful and profitable form. Nice to know that not everything that helps the environment has to cost us money. The other important thing to remember is that we had to know that sulfur was a problem in order to have something done about it. Most of us don't think very much about how our car's engine works, but that might change as fuel becomes more expensive and harder to come by. Or, maybe, it will be because we become more aware of what

pollutants are coming out of our tailpipes. Other common acid rain causing emissions include nitrogen oxides (NO_x), which are emitted by, among other things, your cars. Because of similar legislation as that described above for power stations, most cars produced in the last decade came fitted with catalytic converters that use platinum and other metals to reduce the emissions that contribute to acid rain. Catalytic converters have been implicated in slightly lower fuel economy, so there is a tradeoff. However, the result is still that what is coming out of the tailpipe of an old car probably has more pollutants than a newer car, regardless of the fuel consumption.

What have we learned? It is not just about what type of engine or prime mover is used to turn one type of energy into another; it is important to be aware of the details. When burning wood in a fireplace, for instance, one might be tempted to feel good and green about using a renewable fuel. Many people will call using wood for heat carbon neutral, because the carbon being released by the wood was very recently taken out of the atmosphere (unlike the carbon contained in fossil fuels). But if wood is burnt in the absence of oxygen, a lot of that carbon-neutral carbon goes up the chimney as methane gas (CH_4) rather than carbon dioxide (CO_2), which results from a complete burn in the presence of oxygen. Let us focus for a minute on methane, because it is a pretty neat gas.

Depending on how much methane is in a mixture and where it came from, it can have a lot of names. Probably the one most people are familiar with is "natural gas," which is common in parts of North American cities as a home heating fuel, supplied through an underground pipe network. The natural gas supplied through these networks is almost universally a fossil fuel, which is found in the same wells as crude oil that is refined into gasoline. To some oilfield operators it was considered a waste product and vented directly into the atmosphere, until regulations stipulated that the gas should be flared—i.e., burnt like a torch. In parts of Alberta, Canada—where there are a large number of oil and gas deposits under development—it was possible to see flares scattered across the dark skies until recently. In many cases the gas is now captured and used, which is much better for the planet and better for us too, because we have another fuel source available. Contrary to what most people think, natural gas happens to be pretty clean in comparison with some of the other petroleum-based alternatives.

The deal with methane

The problem with releasing methane gas into the atmosphere is that this particular gas has a really big impact on the greenhouse effect we discussed in the first section of this chapter. The Intergovernmental Panel on Climate Change, possibly the most influential group of scientists around the world, estimates that methane gas has over 20 times the greenhouse effect of carbon dioxide in the atmosphere. 20 times! That is really big, especially when you look at what methane and carbon dioxide are composed of (see Figures 1-1 and 1-2).

Note that in both methane and carbon dioxide, there is only one atom of carbon. Remember that methane has 20 times the greenhouse potential of carbon dioxide. Now think back to the wood fireplace you have at the cottage and try to remember what the dampers do: they reduce the air supply. When there is less air reaching your wood fire, more methane is produced. The carbon that the tree absorbed during its lifetime was probably carbon dioxide, but by turning the fire down for the night you could be re-releasing that carbon in a much more dangerous form back into the atmosphere.

Technology and society

When companies and governments are pressured to change the amount of GHGs that they release for their activities, technology is often seen as the most expedient and relevant way to make those changes: e.g., switching to lower carbon-content fuels—from coal to natural gas (which contains less carbon and other pollutants for each unit of useful energy it delivers). The social aspects of using energy, for example driving less by choosing to use other modes (such as biking, walking or taking the bus) for some trips, can be equally important.

Failing to adequately heed both social and technological aspects of technology use can result in unintended consequences. Because we are trying to

make fairly specific changes to our collective impact on the environment, it is necessary to be aware of both sides and not concentrate on either one too heavily.

For example, a more efficient car is only better for the environment if the person driving it continues to drive the same amount as they did before the fuel savings. Consider a person who was driving 100 km per week and spending $50 on fuel, who buys a new fuel-efficient car that allows them to travel 150 km on the same amount of fuel. The environment only benefits if that person continues to drive 100 km a week (saving money on fuel) rather than starting to drive 150 km a week because they can now afford it. Similarly, a more efficient furnace only benefits the environment if the occupants of the building don't use the fuel savings to raise the temperature during the winter.

Starting now

So, while this book's focus is nominally on the technologies that can help you to reduce your emissions, it is important to realize that technology alone is not sufficient. Neither are legislation or social action likely to be enough on their own, but together, by doing many things at once, we might just start to make a significant impact. So, turn down the thermostat, put on a sweater, ride your bike back from the store, and then settle in to read the rest of this book by an energy-efficient light bulb. But if you don't have an energy-efficient light bulb handy, and your bike has a flat, don't panic. You would not be the first to have faced this problem, and it only takes a little evil genius to get going, so keep reading and we'll get there together.

Chapter 2

Transportation

Getting about

Transportation accounts for about half of the energy consumed by the typical North American household. If we are serious about reducing our energy consumption and doing something about this climate change thing, we are going to have to do something about our transportation-related energy consumption. This is one of those things that is going to involve more than just a change in technology, like a hybrid or even hydrogen fuel cell. In addition, we also need to become smarter both about how we as individuals travel, and how we as a society accommodate different types of travel in general. Consideration of this large chunk of emissions is far too often shied away from by otherwise environmentally conscious people, because the scale of change required seems to boggle some minds. It need not be so.

Think about how you got this book. You may have traveled to a bookstore to buy it, perhaps you drove. Could you have walked instead? Why not? In too many cases the answer is because the distances are too great. This is particularly true in suburban and rural areas of the country. The widespread and growing use of the automobile for the past 50 or so years has closed what were once small but thriving rural and suburban commercial centers and increased the distance between locations people frequent, such as their home, office, and shopping centers. When there is not an alternative to a car available for people to use to reach those locations, a condition of automobile dependence is created. The alternative is to increase density and have those common locations we all visit spaced closer together (see Figure 2-1). Urban centers, by their nature, have a greater concentration of people and services, and people who live in such centers might have had a greater chance to buy this book from a store they walked to.

Figure 2-1 *This scene from the busy metropolis of Istanbul shows what transportation options in an urban center look like: trains, cars, and pedestrians.*

Green cities

Studies that looked at individual energy consumption patterns have found that the typical urban (living in a high-density city) dweller's energy consumption is far below his suburban or rural counterpart. The efficiencies in living in urban centers come from many areas, including transportation. Having many people on a train is far more efficient than having many cars on the road (see Figure 2-2), and having shops and houses close together means that people don't have to travel so far in the first place. This flies in the face of my early exposure to what being an environmentally conscious person meant. Like many Canadian children, our family spent the summers camping in the national and provincial parks. We lived in tents, with bugs, carried our own water to the campsite, went fishing, and enjoyed the great outdoors. When I started exploring the environment as an issue later on in life, I, like many

Figure 2-2 *Stuck in traffic? Think about whether you* really *needed to make the trip. Reducing our car travel is more important than improving the emissions of individual vehicles in order to reduce scenes like this.*

others, found a connection between my experiences in nature and this idea of an environment that should be protected. However, living in, playing in, and even seeing places where nature abounds, in the forest and the periphery of urban centers, can have particularly large impacts on our transportation-related energy consumption.

Tip

You don't have to hug a tree to be green: urban centers may not get all the credit they deserve for being environmentally friendly places to live. Benefits include lower transportation emissions, as well as lower infrastructure and service costs, and lower heating costs because heat radiates between buildings and apartments.

If the scientists are right, reducing the amount of carbon that we emit into the atmosphere should be the top priority for modern societies. If we do not manage to reduce the concentration of greenhouse gases in our atmosphere soon, we may one day face the prospect of runaway climate change. Scientists speculate that when a certain concentration of CO_2 in the atmosphere is reached, the rising heat of the planet will lead to more heat-trapping gases being released from natural sources. This creates a sort of feedback loop in the climate that kicks in after a certain tipping point. Such a feedback loop would decimate most of the life on the planet, along with the majority of us. So, while I enjoy the forests and the parks, I think twice about going to drive there, alone in my car, for the weekend. That is certainly part of being smart about transportation and a start on the road to becoming "green."

Anyone today could have ordered the book online and had it delivered, potentially saving a trip for you, but also possibly helping to create a more efficient distribution system. Retail stores aren't always the most efficient way of keeping a large warehouse of products in terms of energy consumption. Often, retail stores need to be located near to customers, with good transportation access, while warehouses can be located in more inconvenient locations. Sending goods directly from warehouses in regular shipments can at times be more efficient than sending goods to a store first to be collected. But that would have meant your knowing about it, or finding it before hand, rather than just stumbling across it on the shelves. I think this is an example of the social side to sustainability, which is the foundation of this whole "green" thing. Sustainable development proposes that we should give equal consideration to social, economic, and environmental aspects of everything (Figure 2-3). It tries to stand in contrast to everyday development, which is often concerned solely with the economic aspects and tends to miss the others.

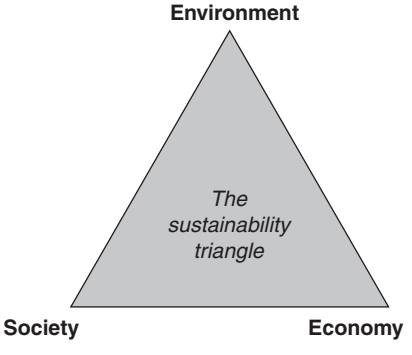

Figure 2-3 *The concept of sustainable development.*

Project 1: Estimating Your Existing Transportation Related Emissions

You will need

- A pen and paper.
- A calculator, maybe.

Steps

1. It is a good idea to find out where we are now, so that we know that we got somewhere, when we get there. Start by taking account of all the travel that you do. Note the distance you travel and the frequency of your trips, as well as what mode of transport you use (how you travel). The following list might help:
   - Travel to office or school ____ miles per week, by ____.
   - Travel for groceries ____ miles per week, by ____.
   - Travel for entertainment ____ miles per week, by ____.
   - Travel for vacations ____ miles per week, by ____.
2. Next, use these very rough estimates (or research your own) to assign emission factors to your current travel habits:
   - Travel by mid–large-sized gasoline-powered passenger car—500 g (1.1 lb) of CO_2 equivalent per mile traveled (or around 300 g or 0.7 lb per km). These are rounded up to try to get an easy number. Variation can be large: e.g., an efficient car could be as low as 200 g per mile (~125 g per km). If you have a smaller car, you could adjust this to better reflect your circumstances. The emissions figure is for the car, so if you travel with one or more passengers for many trips, you could reduce the number proportionally for those trips.
   - Travel by plane—start with an estimate of 500 g (about 1.1 lb) of CO_2 equivalent per person per mile traveled (around 300 g or 0.7 lb per km). Emissions from airplanes are contentious, because many people believe that emissions made high in the atmosphere have a greater effect than emissions at ground level. This effect is called radiative forcing and is thought to multiply the effect of emissions by a factor of 2 or more. Emissions from short flights (like short car rides) are also considered more polluting and less efficient. Of course the actual emissions from your flight will depend on things beyond your control (like how many people are on the flight), but this ballpark figure will get us started.

Tip

Use the following conversion figures when looking up emissions data for your particular vehicle:
1.6 km (kilometers) = 1 mile;
1 lb (pound) = 454 g (grams).

   - Bus and train travel—100 g (0.2 lb) per mile (62 g or 0.1 lb per km) of bus or train travel is again rounded up. This also depends on several factors beyond your control, such as how full the bus is and what fuel the locality you live in has decided to use. For example, the city of Calgary, Canada powers its urban train system entirely through wind power, so it would not have direct emissions associated with it. If you take a boat or ferry on a regular basis, you could use this factor as a rough estimate.

- Walking and cycling have very few emissions associated with them, so it is safe to leave them out from the carbon impact calculations. They create a large number of social, health, and environmental benefits though, so don't forget them.

3. Next, add up all of the travel you do for various reasons, by each mode of transport. As an example, let's look at a person who travels 20 miles roundtrip to work 5 days a week, but does their grocery shopping locally and only goes to the movie theater 5 miles away for entertainment once a week, sharing a ride with a friend. Assume also that the person takes two yearly vacations on a long-haul flight—assume these are 2000 miles (3200 km) each way—and six short flights for work—estimated at 1000 miles (1600 km) each way—per year. The weekly travel total looks something like this:
   - Car trips: 100 miles for work (5 days × 20 miles per day) + 5 miles for entertainment (10 miles/2 passengers) = 105 miles of weekly driving-related emissions
   - Plane trips: 8000 miles in long-distance trips (four flights × 2000 miles each) per year and 12,000 miles in short flights (12 × 1000 miles each) = 20,000 miles of airplane emissions per year. Divide by 52 weeks in the year to get a figure of 384 miles of weekly (equivalent) airplane-related travel emissions.
   - No walking or cycling emissions from collecting groceries.
   - No bus or train emissions.
4. Finally, multiply your weekly travel emissions totals by the emissions conversion figures:
   - Car trips: 105 miles per week × 500 g/mile = 52,500 g of CO_2 equivalent per week. Divide by 1000 for kilograms and multiply by 52 weeks for a yearly estimate of 2730 kg of CO_2 from car travel.
   - Plane trips: 384 miles per week equivalent or 20,000 miles per year multiplied by the 500 g/mile figure (ignore radiative forcing for the moment) results in 10,000 kg of CO_2 from air travel per year.
   - Find the yearly total of your car and plane emissions: 10,000 kg + 2730 kg = 12,730 kg CO_2.
   - No emissions from other modes. In our example, the yearly total of 12,730 kg is nearly four-fifths air travel (from eight flights) and one-fifth car travel (over 90% is travel to and from work).
5. Think twice before driving to the store next time, and three times before heading for the airport. Being green does not necessarily mean not flying, but it does mean being conscious of these things, and adjusting your behavior where possible.

Locked-in

It is common for people who own a car to use it for the vast majority of their activities. Part of the reason for this is economic, because once the cost of purchasing and insuring a car for your exclusive use has been paid for, the increased cost to you of using a car for the minute-long drive to the store is very small. Among the problems from a pollution perspective is that short trips by car tend to have the highest emissions of all trips, and make up almost three-quarters of all car trips in North America. Cars run more efficiently and have fewer emissions when they are warm, but using a car for short trips (less than about 5 km or 3 miles) doesn't give it the chance to warm up. The economic reality of owning a car tends to work against its most efficient use, but if gas prices rise, we may see that change. Car clubs are another way of changing the financial incentive to take short trips, because they tend to charge a per kilometer (or per mile) charge that reflects all of the costs that go into running a car while the member is using it. Car clubs can have their own host of problems and are not suitable for everyone, but they are one alternative, among many, to the personal automobile.

Project 2: Finding Another Way Around

Reducing our collective emissions is going to involve a lot of creative thinking. This project challenges readers to try a new way of getting around their city, without a car. Maybe this means taking the bus into work one day, or taking your bike to the store, or maybe taking the extra time to walk with your kids to school. What is important for this project is for readers to understand that there are very often several alternatives to taking a car. There are certainly times when it is necessary, and these will be different to everyone, but it is far too easy (and common) for complacency to become the dominant motive behind short car trips.

You will need

- A day to try something new. Try to make it a day that is not stressful in its own right. Communicate to those around you (your boss, family, etc.) what you are trying and why. Ask them to support you by being understanding: things might not go like clockwork the first time.
- Maps of the bus routes in your area, or possibly maps of walking and cycling routes from your home to office, school or the shops. You may be surprised to find that there are cycling and walking routes that, though not necessarily direct, would allow non-automobile traffic to travel in relative comfort and undisturbed by the air and noise pollution of automobiles. Often these paths are not obvious to accustomed drivers, so be prepared to do a little bit of looking around. Talk to others in your area, as many trails and networks in cities and the suburbs are informal routes rather than designated cycle paths. These follow quieter streets and alleys rather than riding alongside traffic and can be safer for the inexperienced biker.
- If there are no non-automobile alternatives, try carpooling. See if you can find others in your neighborhood and community making similar journeys to yourself and try to combine trips. You could save money and make a new friend.
- A pen and paper (to record and later communicate your experiences); a computer could work equally well.
- Appropriate tools for your new travel journey: a drink and change of clothes if you are riding to work; maybe a magazine if you are taking the bus or train for the first time (you'll be surprised how much time you have if you're not driving).
- If you don't drive, maybe you fly. Think hard about whether you could take a bus or train, or avoid the trip altogether. Because airplanes are able to cover great distances in a short time, flying has some of the highest per trip emissions of all forms of travel, even though people only tend to take a few flights per year.

Steps

1. Take it slow. Assess your options and their relative benefits before deciding one way or another. There might be a bus route you don't know of, a cycle path that goes to the door of your office, or a neighbor driving by your office everyday.
2. If you don't succeed at first, try again, then try something else. If there are no buses near you, perhaps you could drive part of the way, or start talking to the local government and transit providers to see why there is not transit and whether that could change. If the weather is a problem for the prospective cyclist, look at later projects in this book, where we build weather protection for human-powered vehicles.
3. Try your new mode one day per week to start. When that becomes a habit, move onto bigger things. Remember to move onto bigger things; it can be easy to become complacent after starting to ride your bike once a week in the summer. That is a start, but not a solution.

4. Once you have a routine that better reflects your concerns, try making a renewed effort at estimating your personal carbon emissions. You could be surprised at how much you have reduced them without introducing hardly any "new" technology at all.

DIY or not, just get it done

When I was 11 years old, I got my first new bike for my birthday. It was a white BMX bike and it worked perfectly from the day I got it, until it was stolen not long after. I didn't get to go back for another new bike, but instead went to where our family had always purchased our bikes: the City of Edmonton police auction. The police auction sold all varieties of bikes that had been found abandoned in the city or confiscated for whatever reason. The bikes were never in very good shape, and always needed some repairs before I could ride them. As a young evil genius, I thought this was half the fun. My dad would take us down to the Edmonton Bicycle Commuters Club, where for a small yearly membership fee we could use their wonderful bike garage and get advice from expert bike mechanics on how to fix your own bike. Yep, this was (and still is) a place where people can come to fix their own bikes, rather than have someone else do it for them. The skills I learnt there have been some of the most valuable of my life, and I have consistently been astonished that not everyone in the world has had the experience of straightening a bent frame, nevermind fixing a flat tire on their bicycle.

I get the same sort of astonishment when I see the number of bicycles in various states of disrepair sitting in people's back yards. It occurs to me when I start to talk to people that even basic bicycle mechanic skills are not commonly available. If we are going to start using bicycles more often, something needs to be done about that. Which doesn't mean that everyone should be able to swap a rear derailleur in 40 seconds or less, because the reality of going on longer-distance bike rides with experienced cyclists is that not all of them can fix a flat tire either. Some people in larger centers have realized that cyclists are not mechanics, and are reacting. For example, a group of Torontonians is (or at least were) offering a sort of emergency bike-side assistance for city riders. For a small fee, they are dispatched by a phone call, with tools to repair your bike, and a trailer to tow it away if they can't fix it right away. This eliminates the inconvenience of bicycle maintenance for those who are less technically proficient, and is a tremendous step on the road to getting more people riding their bicycles. For the real evil genius, I don't expect technical proficiency to be an issue, but a few hints and notes on what to do couldn't hurt. This is, after all, the first step in getting the most efficient vehicle on the road moving. And possibly, the start of a series of emergency bicycle repair services across the country (wink-wink, nudge-nudge).

Project 3: Flat Isn't Phat

You will need

- A flat tire on your favorite bicycle (or one of your best friend's, your uncle's or little sister's).
- A deluxe patch kit from your local bike store that contains at minimum the following parts (see Figure 2-4 for details of what you are looking for):
  - three plastic tire irons (yes, you should actually use iron tire irons, but they are getting harder to find)
  - rubber patches of various sizes
  - rubber cement
  - small metal scraping tool.

Figure 2-4 *A typical deluxe bicycle tube repair kit.*

Figure 2-5 *Detail of a common tire iron (now made out of plastic), showing the end (pointing down) that interacts with the tire.*

- A bucket (or sink) filled with water.
- A bicycle air pump.

Steps

1. The first thing to do is to flip your bike upside down (or raise the tire if it is a three or more-wheel vehicle). For a bicycle, this avoids scratching the rims on the ground once you take the tire off, and makes the bike relatively stable while you work on the flat tire.
2. Next, gently push the tire back from the rim at one point.
3. Using the end of the tire iron that has the bend in it already (see Figure 2-5; not the end with the hook), push the tire first away from the rim (toward the far edge) then lift up (see Figure 2-6).
4. You should be able to pull the tire far enough over the rim to enable you to hook the other end of the tire iron to one of the spokes (see Figure 2-7). Hook it there and leave it.
5. Next, take a second tire iron and do the same thing about 15 cm (6 inches) along the rim (see Figure 2-8). If it is tight, try closer to the first tire iron, but as far apart as you can manage. The two tire irons should both be pulling the tire over the edge of the rim.
6. Use the third tire iron in the same manner on one side of the other two irons, about the same distance away as before. Using three tire irons is best: if you only have two and it is not a tight tire, it is often possible to remove one of the two tire irons and insert it a little further along without the tire sliding back onto the rim. You may also be able to simply slide the second tire iron along to the rim to free the tire.
7. When you insert the third tire iron, the middle one should start to become free of the rim.

Figure 2-6 *Pushing the flat end of the tire iron under the edge of the tire.*

Figure 2-7 *Hook the tire iron to the spokes once the flat side is inserted under the tire.*

8. Pick it up and insert it under the edge of the tire further along the rim from either of the other two. Now the tire should be loose enough that you can slide the tire iron around the entire rim and pull one edge of the tire off (see Figure 2-9).

Figure 2-8 *Insert a second tire iron; then, slide it along the rim to free one edge of the tire.*

Figure 2-9 *Pull the tire back to reveal the inner tube.*

9. Reach into the tire and feel the inner tube, find the valve (see Figure 2-10) and gently pull it out of the hole in the rim. Then you can remove the tube from inside the tire (Figure 2-11). There is no need to take the tire entirely off the rim, just leave it hanging half on (unless in the case pictured, your bicycle is actually a recumbent tricycle, shown in more detail in a later chapter).

Figure 2-10 *Detail of the valve; push it back into the rim before trying to remove the inner tube.*

Figure 2-11 *Pull the inner tube from the tire.*

10. Your inner tube won't be completely free of the bike unless you took the wheel off. The front or rear fork will keep it attached, but you should be able to fix it without removing the wheel from the frame.
11. With your air pump, fill the inner tube with a small amount of air, until the tube gets its circular shape back (see Figure 2-12). You don't want to put too much air in or it will get hard to maneuver the tube while it is still attached to the bike.

Figure 2-12 *Filling air into the inner tube with a hand pump.*

Figure 2-13 *Place the inner tube in a bucket or a sink with some clear water in it. Look for bubbles, which indicate where there is a leak. Mark the spot once you find it.*

12. Run your hand around the inner tube to see if you can feel any air leaks. If you do, make a note of the location by keeping your thumb on it. Keep checking to see if there are more leaks.
13. If you don't find any air leaks with your hand, grab the bucket of water and put the tube (bit by bit) into the bucket (or a sink, see Figure 2-13). If you see any bubbles coming out of the tube, you have found your leak!
14. Keep track of the hole with your thumb and dry the inner tube a bit. Scrape the area around your puncture with the metal tool provided (see Figure 2-14). This cleans the area and gives the rubber cement something to grip onto. Don't be too rough because you could create another puncture.
15. Find a patch that is big enough to completely cover the puncture and peel the plastic covering off of it (Figure 2-15).
16. Apply some rubber cement to the tube and to the underside of the patch (Figure 2-16).
17. Wait a minute for the rubber cement to cure a little before your press the inner tube and patch together.

Figure 2-14 *Scrape the tube gently, to clean the surface and give the glue a rough area to adhere to. Be careful, as it is possible to create a bigger puncture at this stage.*

Figure 2-16 *Apply some glue to the tube over the patch you previously scraped.*

18. Place the patch onto the inner tube and press down (Figure 2-17). If some of the rubber cement squeezes out the sides, spread it around with your thumb. Spread a little extra rubber cement around the edges of the patch to make sure that there are no air leaks out the sides.
19. Let it dry for an hour or more (Figure 2-18). You can check the condition of your tire and rim while you are waiting. Look at the inside of the rim. Your rim should have a thin strip of rubber upon which the tube sits. Oftentimes, punctures are caused by one of the spokes pressing through this rubber layer and poking through the tube. Repair or replace the rubber strip if it is damaged, and look for other foreign objects in the rim and tire.
20. Once the inner tube is dry, you'll want to briefly fill it up with air and run it through the bucket to make sure you got all the leaks.
21. Then, to begin putting your inner tube back onto the rim, line up the valve with the hole in the rim and push it through (Figure 2-19).

Figure 2-15 *Peel both sides of protective packaging off of the patch. Start by rolling the patch away from the aluminum backing at one corner and then peel diagonally to avoid tearing the patch.*

Figure 2-17 *Press the patch onto the inner tube and hold for a second. If some glue leaks out the sides, spread it around the edges and make sure they are securely stuck to the tube. The edge of the patch is a common place for leaks to reoccur.*

Figure 2-18 *The completed patch job drying in the sun.*

22. Place the inner tube inside the tire (Figure 2-20) and then start pushing the tire back onto the rim.
23. When you get about three-quarters of the way around the rim, it might start to feel difficult to stretch the tire over the rim (Figure 2-21). You may be tempted to reach for the tire irons that were so handy when removing the tire. Don't do it! It is very easy to puncture your tube again when putting the tire on.
24. Despite what you might think at this point, it *is* possible to put the tire back on without using any tools. This is the safest and correct way to put a tire back on the rim. Grab the back-side of the rim with the fingers of both hands and use your thumbs in a rolling action to push the tire back onto the rim (Figure 2-22), little by little.

Figure 2-19 *Feed the valve stem on the inner tube through the hole on the rim.*

Figure 2-20 *Place the inner tube back into the tire.*

Just start at one end and keep working down until the entire tire has squeezed itself back on the rim.

25. Grab your air pump, fill up your tire (Figure 2-23), and test out your repair job.

Figure 2-21 *With the newly repaired inner tube inside, start pushing the tire back onto the rim.*

Figure 2-22 *Use your thumbs in a rolling action to coax the last parts of the tire onto the rim. No tools are needed at this point!*

Figure 2-23 *Fill the tire with air, and check the pressure (read on to the next project if you are unsure how to do this).*

Driving smart

Reducing the amount that each of us travels, particularly by car and airplane, can go a long way towards using energy efficiently. There are, however, many situations that today are too difficult to consider not using a vehicle for, particularly in the North American context. For this reason it is important to consider the efficiency of the vehicle(s) you drive. There are many things that affect how efficiently you use energy while driving. Occupancy, or how many people there are in the car, is obviously one of the most obvious ways of increasing the efficiency of fuel use around the world. There are simply far too many single-occupant vehicles traveling around our roads and highways today. Carrying four empty seats is simply not smart; try to fill them up when you can. Some cities encourage this by providing carpool lanes for higher-occupant vehicles. If these aren't in place in your city, ask why not? If your government representative can't answer your questions, ask a reporter. They may find a story in it, which will help bring the environment even more into the public domain and carpool lanes to your highway.

Project 4: Round and Round

Just before you have a full car rolling down the road, it is important to consider the state of your vehicle. Questions you should ask about the state of your car include: Has the car been maintained lately? Was the air filter and oil changed? Did I check the tire pressure? Do I even know where to find the correct information? Each of these details about your car can have a significant effect on the fuel economy and performance of your vehicle. For example, studies show that about one in three vehicles on the road have at least one

tire under-inflated. One under-inflated tire has been shown to reduce fuel efficiency by up to 5%, but only takes a few minutes to correct. Poorly maintained tires will also cost more money in tire maintenance, and could be dangerous. Also, 5% of your fuel bill goes up in smoke because of too little free air. That doesn't seem very ingenious to me, so checking your tire pressure once a week is highly recommended. If you don't know how to check your tire pressure—nevermind where to find the correct pressure to fill it to—you are not alone.

You will need

- Your reading glasses (maybe even a magnifying glass).
- A tire gauge and potentially an air pump (the one at your gas station will do).

Steps

1. The first step is to find the correct tire pressure for your vehicle.
2. If you went to look at the tire itself, you are wrong, sorry. Tires typically have the maximum safe pressure rating stamped on their side. This is not necessarily the appropriate pressure for your specific vehicle.
3. The correct tire pressure is typically found on a small metal sticker affixed to the frame on the edge of the driver's side door (see Figure 2-24). Alternatively, look in your owner's manual. If that sounds like a lot of work, think about what five percent of your fuel bill could buy.
4. Now that we know the correct pressure we're looking for, we can check each tire individually. Remove the dust cap from the valve stem and press the tire gauge flat onto the stem (see Figure 2-25).

Figure 2-24 *Location of the label on the inside of the car door, showing the correct tire pressure for the vehicle.*

5. If the pressure indicates that the tire is low, fill it by pressing the nozzle straight down onto the stem, just like we did with the pressure gauge. Some compressors require a handle to be pushed to start the air.

Figure 2-25 *Using a tire gauge to check the correct pressure.*

Project 5: Driving Smart

Real evil geniuses will know everything they can possibly do to increase the efficiency of their energy use, but sometimes even the most efficient of us can't help but drive. There are, of course, heaps of other things that the average driver can do to squeeze ever more miles out of each gallon of gas.

You will need

- You (the driver) and a car.
- Some fuel in your car.

Steps

1. Turn your car off when you are not moving. Idling your car for more than 10 seconds wastes gas and gets you nowhere. The average car in North America idles for about 10 minutes a week, not counting time spent idling in traffic. The least a green genius could do is to turn off the engine while waiting to pick up friends. In many European countries, drivers are in the habit of turning off their engine while waiting at particularly long traffic lights. The lights there even indicate (through an advance amber) that the light is about to turn green, to give drivers a chance to start their engine. It reminds me of a Formula One race, and I like it.
2. Carpool. We mentioned this already, but it is so important that there is no issue doing it again. When you travel alone in your car, you are using it at less than a quarter of its possible (per passenger) efficiency.
3. Buy the smallest and most efficient vehicle that is appropriate to your needs. Car companies post the mileage of their vehicles, so it is up to us as consumers to pay attention and buy fuel-efficient vehicles. Not everyone will find a hybrid suitable (maybe only those who spend a lot of time in urban areas) and not everyone can live without a truck either. What is important is choosing the most efficient vehicle among those that fit your needs, and then using it only when appropriate. Not really genius, just smart.
4. Slow down. Speeding wastes an enormous amount of gas, and doesn't tend to get us places much faster. Modern vehicles are said to travel most efficiently at around 56 miles (90 km) per hour. Test it out: this one is easy.
5. Learn about and practice efficient driving styles. Individual driving habits can result in up to 40 percent more fuel being used for the same trip. Efficient driving techniques include accelerating slowly off of stoplights, never speeding, not accelerating up hills, and reducing the amount of braking needed by looking ahead in traffic. Search the Internet for "hyper-milling" to get started.

Chapter 3

Staying Inside

When we are not in our cars, many of us spend the vast majority of our lives inside buildings: often without giving them too much thought. They are protection from rain, snow or sunshine, and we expect them to be warm in the winter and cold in the summer. Often monuments of our achievements, they are frequently things of extreme beauty. Different buildings achieve their varied purposes in different ways and, because we have been building for centuries, there are many types to choose from.

Energy is used in all parts of the building cycle: during construction, in use, and at the end of its life. In addition, the occupants of a building will usually consume energy traveling to and from the location, and their activities while in the building typically have their own energy requirements that must be provided to the site. An environmentally sensitive building should minimize the amount of energy that goes into a building during each phase. We mentioned in the previous chapter that transportation accounts for about half of the energy consumption of the typical North American family. Space heating and cooling (using our buildings) then accounts for a little more than half of what is left, or a quarter of the total energy consumed. Like other places where energy is used, we can account for it. Because they are the next largest consumer of energy, the evil genius who is serious about reducing energy use will need to have an understanding that buildings can be heated and cooled.

Building design has a large effect on the amount of energy consumed in operation during its lifetime. The process of accounting for the energy used in constructing a building has been well developed in the building industry. In the United States this has resulted in the creation of the Leadership in Energy and Environmental Design (LEED) program that offers different levels of certification depending on how many of the program's criteria the structure meets. They are great places to get a feel for the broad range of issues you'll have to consider if you want to reduce the environmental impact of a new building or a space you are occupying. There are also a number of ways that energy-efficient technologies and habits can lower the ongoing energy costs of a building that is already in use. These include altering occupant behaviors as well as retrofitting older buildings to improve their energy efficiency and adjusting to the changing occupant needs and habits.

Around the house

Our homes are often the buildings that we have the most control over, and are therefore the places where we can begin to make changes in our energy consumption patterns with the most ease. It is useful to think about how we can reduce energy consumption there first, and then move on to other areas, such as work and community.

The air around us plays the biggest part in keeping our homes habitable and comfortable to live in. Humans need oxygenated fresh air circulated around us pretty much all the time. We prefer it to be about 20° C (68° F) for the most part, though we can tolerate a larger range of temperatures, with some adjustment. Allowing for a greater amount of fluctuation in the range of temperatures that are considered acceptable can have a significant effect on the amount of energy that a building consumes. This is particularly relevant in the shoulder seasons, spring and fall, when heating and cooling systems are being switched over. On a day where the outside temperature is a seasonal 16° C (60° F), if the inside thermostat is set to 18° C (64° F) exactly, the heating system is using energy that day. If, instead, a 2° C leeway on either side of that temperature is allowed, the day passes without any energy expended on heat.

During the rest of the year, lowering the usual temperature by as little as a few degrees can lower your bill by 10 percent or more. It has long been a mantra of the environmental movement to save energy by putting on another sweater (or jumper) instead of raising the thermostat. Altering everyday behavior certainly does have a part to play in reducing energy consumption, especially if it is the beginning of a more substantial change. Dealing with a slightly colder room with a sweater might be OK today, but increasing the insulation in your home or a more efficient furnace are longer-term goals that such small actions should be progressing toward.

Long- and short-term actions

Many aspects of life, from small everyday things, through to large important purchases, have an environmental aspect to them. It is useful to get into the habit of thinking about energy and its use over a long period of time when making all range of decisions and adjustments. For example, if you are sitting in a cold room right now, the first step to reducing your energy consumption might be to put on a sweater rather than turn up the thermostat. But in the medium term your goal should be to look into where energy is being lost or used inefficiently in your house. It could be that the insulation in the roof, walls, and the windows all combine to let a lot of your heat out. A short-term improvement could be to install a plastic double-pane window for about five dollars. A medium-term idea could be to look at improving your loft insulation, then replacing leaky windows (see Figure 3-1). Often, these will pay for themselves in reduced fuel bills over a short period of time.

Over a slightly longer period it might be worthwhile to look at replacing the furnace with a more efficient one. Over the even longer term, it is probably wise to look into collecting solar thermal energy through retrofitting your existing property, or building a passive solar house. In cold parts of Europe, zero energy homes are possible and becoming common, using only the sun's heat to maintain a comfortable temperature all year round. These houses take full advantage of the sun's energy and are super-insulated to maintain their temperature. It is not a dream: it is now. But for most of us, it is the future.

Figure 3-1 *Old single-pane windows with many gaps around the edges visible. Keep reading for both long- and short-term improvements if they look familiar to you.*

In the next few projects, we build crude models of a house (OK it's just a room; but feel free to expand), in order to demonstrate how hot and cold move around. We do it this way rather than point you at your house right away, because there is a lot of value to understanding the concepts behind why something works rather than just doing it.

Project 6: Fabric Walls

Little things can make a huge difference. My mother used to tell me to close my curtains at night, but I never understood why. When I moved out on my own, it was not until I started to pay the heating bills living in a drafty room that I figured it out. It was to keep the heat in on those frigid –30° C (–22° F) nights. Fabric walls, or curtains, are a useful and inexpensive energy-saving tool, but can also be effective in short- and long-term energy conservation strategies. Let's prove it, so you'll never forget to close them again (because let's face it, I still forget all the time). If you're like me, you'll be inspired to dream of automatic systems that rely less on human intervention to save energy. These exist in commercial form already, but are primarily available for large construction projects rather than a home scale or are focused on security rather than making energy savings.

You will need

- Four boxes or cubes, to imitate the four walls of your house. They should all be the same in size and material. You could use wood to make cubes, or find cardboard boxes, or something else that is handy. Large "test cells" would ideally be around 1 meter (or 40 inches) square, and a scaled-down version could be closer to 10–15 cm (4–6 inches). A medium-sized "test box" is shown in Figure 3-2.
- We will cut a square hole about half a meter across on one side of three of the cubes, so make sure you can cut through the material. See Figure 3-3 for a diagram of what we are trying to achieve.
- Four panes of glass, each a little bigger than the hole you'll cut in the boxes. An alternative is to use Plexiglas, or even plastic wrap (film) from the kitchen, particularly if making a smaller version (though this gets tricky with the last variation).

Figure 3-2 *A medium-sized test box under construction.*

- Several window coverings, each at least as big as the glass. In an ideal world you'll have:
  - a set of light curtains
  - a dark heavy fabric.
- Four hot water bottles or reused plastic water bottles (as in the example) but be careful to use only warm water as boiling water will collapse the plastic.
- A thermometer (digital oven thermometers work well) or four to avoid moving the thermometer between boxes.

Figure 3-3 *Diagram showing where to cut the box.*

Steps

1. Cut a square hole in one face of three of the four cubes, removing about half of the wall. You will also want to have a means of accessing the interior of your crudely modeled home, probably through the top. The holes you just cut are the windows of our "model home." Alternatively, create an external frame window and fix it to one side, replacing a wall so it can double as an access point.
2. Mount windows into three of the boxes. Try to get as good a seal around the edges as possible; thick tape is useful and if strong enough can hold the window in place on its own. It is very important that the fit is about the same among all four boxes, as you will be comparing the thermal performance of modifications to the boxes and assuming they are otherwise the same.
3. Through the opening, mount curtains inside two of the windows (see Figure 3-4). Leave the third one without a curtain
4. Fill up your hot water bottles with boiling water, all at the same temperature (you can take the temperature to be sure, see Figure 3-5).
5. Place one hot water bottle in each of the cubes; make sure that in the ones with curtains they stay closed (see Figure 3-6).

Figure 3-4 *A thick curtain being mounted behind the plastic wrap "window."*

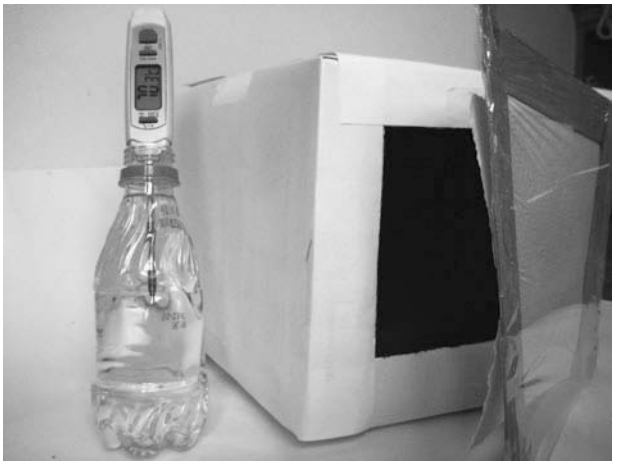

Figure 3-5 *Taking the temperature of the warm water with a digital oven thermometer before it is put into the "model room" with a light curtain.*

6. Leave outside for a few hours *at night or in the evening as the sun wanes* (not bright sun or the heat of the day—very important as we are exploring heat loss).
7. After several hours (it will vary depending on what you used to make your box out of, where you are in the world, and what season it is) record the temperatures of the water inside each of the four hot water bottles.

Figure 3-6 *Four model rooms with reused hot water bottle "heat sources" inside, cooling down in the waning sun. The model room on the far left has no curtains, to its right is the model room with no window, followed by a thick curtain in the window, and a thin curtain (kitchen towel) in the last window. All windows are made from plastic wrap, on a cardboard frame mounted on identical cardboard boxes.*

8. The cube with no window at all should be the warmest. The cube with the thick curtains should be next, followed by the thin curtain and finally no curtain at all. If you don't see a great enough difference between the four, try shortening the time you leave the water bottles out.

Variations for hot climates and seasons

1. A variation, for hot climates or seasons, is to place the boxes in the sun with the curtains closed but with a cold water bottle, and check which bottle takes the longest to heat up. In many hot areas it is equally important to remember to keep the drapes closed during the day to reduce the amount of solar heat that comes into spaces that we would like cool (see Figure 3-7).
2. Experiment with different window coverings, both internal and external, and also try shortening the curtains and lengthening them. External shutters are common in hot climates, ever wonder why? (see Figures 3-8 and 3-9).

Figure 3-7 *Curtains being used to shade the sun, and let in light, in the hot season.*

Figure 3-8 *External shutters in a hot country.*

3. Try covering one of the windows with a second layer of clear material, like plastic wrap. You can easily build a square frame slightly bigger than your window, stretch the plastic wrap over it to make a clear frame, and then affix it (preferably) on the inside of one box. Repeat the tests to see what the impact of adding an inexpensive double pane can be.

Figure 3-9 *Roll down shutters can be automated to close at certain times.*

Habits and upgrades

The last experiment hopefully encouraged the reader to take his or her bike out for a spin to pick up some new heavyweight curtains for the winter time, at least. You should have proved the impact that simple, inexpensive tools, and little changes of behavior can have on the energy needed to moderate the temperature in a poorly insulated space. The next step is to put those ideas into practice around the house. Start by closing your drapes at night (or the day if you're in a hot climate) and make sure they hang all the way down to the ground (you can test the effect of this using your test boxes too). But even further down the line, let's not forget that closing and opening the drapes at a particular time, and adjusting other ways in which a building can operate to save money, don't have to be done by people everyday if they are thought about at the outset. New eco-friendly buildings often incorporate automatic vents or windows that can open on hot days, and an insulative blanket to pull down in the night. These technologies mostly haven't made it into the housing market yet, but watch for them and ask about options if you are looking to buy or build.

The next relatively painless action you could try is to lower your thermostat slightly for a few days, and see if it is still acceptable to you. If you find it quite cold and have a drafty home, draft proofing strips are available at most hardware stores and are very easy to install (see Figure 3-10). Leaky door and windows are some of the worst culprits for energy waste. If you are serious about reducing the energy that your house consumes, you might at some point hire an energy assessor. In many countries these are technicians licensed by the government and trained, among other things, to do a blower test. In this test, a large fan is attached to the door and air is pumped into the house. An airtight, efficient house should have a pressure build-up during the blower test and a less airtight house would have less pressure build-up

Figure 3-10 *Draft proofing strips of various sizes, with adhesive tape and without.*

Windows

Leaks are often found around windows in old buildings. Before our ability improved to make inexpensive double-pane glass, the vast majority of buildings were constructed with just single-pane glass. The problem with this, as we saw in the last project, is that glass is not a terribly good insulator. A double-pane of glass overcomes this limitation by sandwiching a layer of air or other gas in between two layers of glass (see Figure 3-11). Air is a fantastic insulator, among the best we know of. The problem with using air is that it tends to seep away from where you want it to stay, and mix with the other cooler or hotter air, and so insulation tries to keep that air sealed. Older-style double-pane windows used two individual panes of glass, on two separate tracks, which kept a layer of air sealed in between them while the windows were closed. They are better than single-pane glass, but worse than modern sealed double-pane windows, which trap air (and more recently other gases) in between two layers at the factory (see Figure 3-12).

Figure 3-11 *Newer-style airtight double-pane windows.*

Figure 3-12 *Sealed double-pane glass windows awaiting assembly in a factory. A layer of gas is trapped in between panes of glass at the factory, resulting in significant energy savings compared with a single-pane window.*

Project 7: Fixing Your Windows

Not all of us are in a position to be thinking about replacing the windows of our house. It is, after all, an expensive proposition that usually requires a professional installer to get a good seal and fit. A particularly attractive alternative, if on a budget, is to make your own double-pane windows. We did a small version in the last project and saw the impact that just a small layer of Clingfilm and a layer of air had on the heat retained in our boxes (or kept out). The layer of plastic tends to block air leaks, and the layer of air trapped in between the glass and plastic becomes an insulating layer.

You will need

- To buy the specially designed packages that come with heat-sensitive plastic and double-sided tape (your local hardware store is bound to have them).
- An alternative is to buy a roll of double-sided tape, and a roll of heat-shrink plastic (ask to make sure).
- Ordinary plastic stretched over a large frame works on a large scale as well, and is useful if you have

a large window or a sliding door that leaks. You will want some draft proofing pieces and probably nails to hold your makeshift window in place on the inside or outside (either can work).

Steps

- Prepare for installation by cleaning the windowsill of dirt and dust.
- Stick one side of the double-sided tape to your windowsill and peel off the other layer protecting the second sticky side.
- Place the plastic covering along the tape, starting at the top corner and pulling it as tight as you can while pressing it along the rest of the plastic tape.
- Use a hairdryer to shrink the plastic over the glass and tight to the frame.

Variations

- To test the value of adding a layer of plastic on a small scale is fairly easy with our test boxes. Simply build a simple frame with a stretch plastic cover over it, then affix it to the window with a gap of air between the two. We also explore this effect on a small scale with a solar oven later on.

Project 8: Using Thermal Mass

Once all the drafts are sealed, and the windows double-paned, it is time to start looking deeper into the building for places to save energy. We saw already that a layer of air in between two panes of glass helps maintain a temperature difference, but there are also other ways of modulating temperature. Some of the buildings and materials around us are bricks and other heavyweight materials (like water), and these behave (from a thermal perspective) quite differently to materials that insulate us. Used together, they can save us an enormous amount of energy (see Figure 3-13). One way is by storing energy (which sometimes arrives when we don't need it, like on a hot sunny day) for when we do (like late at night).

Figure 3-13 *Thermally massive concrete flooring being installed on top of a layer of insulation in a geothermal (earth as a source of heat) building, described more later in the book.*

You will need

- Two of the boxes from the earlier project, both with windows.
- Some bricks or stones. You'll want to be able to line the outside wall somewhat, or surround the hot water bottle, so appropriate to the size of your box.
- You thermometer from the last experiment, and the hot water bottles.

Steps

1. Stack the bricks inside the walls of one of the boxes, and place the hot water bottles in the center of each (see Figure 3-14).
2. Place your test cells outside and take the temperature of the hot water bottles.
3. Leave the boxes for a few hours (see Figure 3-15); then take the temperature of the water again and feel the rocks with your hand. When they feel warm to the touch, go on to the next step.
4. Remove the hot water bottles from both boxes, leave your thermal mass inside, and continue monitoring the temperature.
5. The box without any thermal mass will cool down almost immediately, whereas the box with thermal mass should retain the heat inside our model room for some time.

Figure 3-14 *Thermal mass (large rocks) surrounding the warm water bottle in a "model room."*

Figure 3-15 *"Model rooms" with and without thermal mass inside.*

Project 9: Testing Methods of Insulating

We have just seen that something with a thermal mass can store and release heat slowly over time. This can be very useful in a variety of situations. Many modern passive solar houses take full advantage of this concept and store the sun's heat during the day to be released at night. In those houses, there is only so much heat from the sun, so they are also very efficient in keeping the heat where it is useful, inside the walls. We also know that thin layers of air can help maintain a temperature difference through glass. In order to keep

in scarce heat, the same concept can be applied to the walls and roof.

You will need

- Two boxes from Project 6.
- Something to use as insulation, such as straw, shredded paper, or fiberglass home insulation. Use the same material to insulate all the boxes, for now (a variation could be to try other types of insulation).

Steps

1. Place the insulation around the outside of Box 1, and on the inside of Box 2.
2. Place some thermal mass (like some rocks) inside Box 1 surrounding your heat source (water bottle), and surrounding the outside of Box 2.
3. Leave them outside for a few hours. When you come back, take all the hot water bottles out and measure their temperature. Record any difference.
4. The box with insulation inside (Box 2) should have the warmest hot water bottle, but the one with insulation outside (Box 1) should have the warmest air temperature inside (feel it with your hand), and will retain some heat after the heat source (the hot water bottle) is removed.

Variations

Remove the thermal mass and then remove the insulation from the top of one box. Compare how long it takes for the temperature in the water bottle to drop, to a second case with insulation all around, and a third with insulation left off of one side. Because heat tends to rise, the box without insulation on top should lose heat faster. Think about your attic after this, and go have a look at the insulation up there. Attics are often the most effective places to begin insulating.

What's going on?

When you place a hot object next to something that has a high thermal mass, like a brick, the brick absorbs some of the heat and stores it. When that heat source is removed, the brick will slowly start to release some of that stored heat into the surrounding environment. When you place insulation outside of the bricks, it slows the heat from radiating out in that direction, so more of it stays inside of the box. In the boxes where you place the insulation on the inside of the bricks, the insulation worked to keep the heat from the bottle close to the bottle, and the bottle should have stayed pretty warm. The bottle would have kept the inside air temperature pretty warm. In contrast, the box with insulation outside the brick would have been colder, because the brick was absorbing heat from the water bottle, which it will continue to release once the bottle is cold or is removed. Insulation outside the brick prevents heat from radiating away.

Why is this important?

The first step of looking around a house with an eye to efficient heating and cooling is to look at the drafts. Air leaks, as we discussed, are a dreadful waste of heat energy. Next, fixing the windows is usually the most effective and cost-effective way of reducing energy consumption around your house. The householder who has already got this far probably starts looking at the walls and roof as the next step, and they would be right. Insulation can dramatically decrease the amount of energy that must go into heating a given space. Where insulation is placed can have an equally dramatic effect on how the building performs thermally, and should be appropriate to the building's use.

Take the example of a cottage house that is only used infrequently, maybe a weekend or two each month. If the walls of the cottage were brick, and the owner wanted to reduce the amount of fuel that the heating system consumed during each of the weekends they visited, it would not be prudent to place the insulation on the outside of the cottage. The reason is that the brick would tend to act as a heat store for the time that

the building was being occupied, because it is only for a couple of days at a time. When the vacationers arrive on a Friday and turn on the heat, the brick walls would immediately start to absorb this heat. Depending on how thick the brick was, it might take a day or more for all the bricks to heat up to a comfortable room temperature, and for most of that time the heating system will have been working very hard to keep the air temperature above the temperature of the walls. After a day or two, the walls would have absorbed all the heat they could, but by then it is Sunday and everyone has left. Before the owner-installed insulation, the walls would have started to slowly radiate heat both outwards and inwards on Sunday when the heat was turned off. This would probably keep a reasonable temperature inside till Monday evening or Tuesday, when no one was around. If the insulation were to be installed on the outside (see Figure 3-16), after 2 days of heating up, the insulation would prevent the stored heat from escaping to the outside. This would result in the inside staying reasonably warm until maybe Wednesday, without any more heat put in. But that hardly does anyone any good, because the vacationers are not there. By the time they arrive the next Friday, the cottage is cold again, and they start the process of heating up the brick walls.

Figure 3-16 *Insulation and siding being retrofitted over a top of a layer of heavyweight material, on an apartment structure that is constantly heated and occupied.*

The alternative is to insulate the inside of this occasionally used cottage (see Figure 3-17). In that case the insulation would keep the warm air away from the brick and prevent it from warming up in the first place. The cottage would be lightweight and would not take very long to heat up. It would also cool down much faster, but in this case the owner would not be worried about that. If the same cottage were to be used by a family living there full time, then the decision to insulate the outside or inside would be less crucial. A heavyweight building will not fluctuate in temperature as quickly as a lightweight building, so the governing factor in the decision may be the use or habits of the occupants. If this were a space that was occupied throughout the day, for example by a young family with a parent who stays home, then having a thermal mass that takes a long time to heat, like brick walls, or insulation on the outside, would not be an issue, as the house is kept nearly constantly heated. If the same

Figure 3-17 *Cavities left for the insulation along the inside are visible, along with the thermally massive outside wall. Heat radiating from the thermally massive floor (see Figure 3-13) will be trapped by the insulation, and any heat getting through will first have to heat the brick wall before escaping.*

house belonged to a young couple who both worked, and were only usually home in the evenings, a thermally light building would be more appropriate. The couple could go so far as to install a timed furnace that brought the temperature of the air inside up to a comfortable level right before they arrived home, by turning on a few minutes earlier. A thermally heavy building, on the other hand, might need several hours to raise the temperature and is more likely to have the heat left on throughout the day to prevent it cooling down.

Chapter 4

Waste and Value

Waste to energy

Though we don't often perceive it, much of what we think of as waste is actually a source of energy or, at least, useful for another purpose. Remember always that there are no "waste" products in nature.

For example, when food or feces is left in place to compost, the nutrients from the parts of the food that we don't eat or don't digest gets broken down by bacteria and other living organisms in an aerated compost pile, eventually becoming useful food for a new plant. So long as a pile is aerated (with air) there should be little smell as useful aerobic bacteria will thrive and "fix" (basically store) most of the carbon in the food scraps back into the soil. This is a pretty good use of energy. Too often, the alternative is to have that useful "waste" trucked away (using energy) and thrown into a landfill site far away. Because waste in a landfill tends to have other waste piled on top of it, there isn't a lot of air to help those little organisms in the compost pile break down the waste. Other organisms, which tend to be anaerobic (meaning without air), break it down instead. They do a similar job and also produce a sort of compost when finished; however, they have a side effect, producing methane gas.

Methane gas, as we discussed in Chapter 1, is a powerful greenhouse gas: 20 or so times as potent as CO_2. It is also a very valuable fuel source, which some people will be familiar with as natural gas (from a petroleum source), often pumped into our houses and cars and used as a fuel. As a fuel, it is one of our cleanest-burning fossil fuels. As a wasted gas, it is one of the more potent at changing our atmosphere. Sounds like common sense that we ought to use more of it, eh?

Whether we use our food scraps for composting or something else, it seems clear that the last thing we should probably be doing is making methane gas from them, by putting them in landfills and letting gas escape. And some cities and regions are doing their part to capture what is often called "landfill gas," and feed electricity produced from it back into the grid. Other places are doing similar things to another waste product that humans produce a lot of, manure. Manure from animals and humans, when processed anaerobically, produces a similar methane-rich gas.

Several biogas digestors are in operation around the world, from city-sized plants to family-sized pits that not only process manure into a useful gas that can be used for cooking, eating, and lighting but also produce a by-product from the process that is a char still rich in nutrients to return to the soil, which can be used for compost.

Composting

There are a fair number of choices available to the composter who wants to explore the process, from apartment-dwelling worms in a homemade or store-bought wormery, to a giant pile out behind the barn. The composting projects in this book are obviously just a start, because once you have compost, you'll need to do something with it. There are often many local resources available through gardening clubs and organizations. We'll also discuss gardening projects a little more because, not only should you be worrying about what happens to your food once you've finished with it but also you should be worrying about where it comes from. The energy that goes into transporting food to our dinner plates can be enormous, and while there are often local farms and businesses you can choose to support, nothing is as close as your own back yard.

Project 10: A Worm Compost Bin

Certain types of worms are able to digest large amounts of organic waste if kept in a suitable environment. It's possible to buy a complete wormery, or live worms, and have them delivered to your door—check Evilgeniusonline.com for more details—or you can build your own. Probably the most important thing to know about worm composting is that not everything can go into your composter. Meat and cheeses, for example, will tend to go bad before the worms can eat them, and start to smell something fierce. Eggshells and vegetables, on the other hand, are great worm food. There are complete lists and discussions all over the Internet about what you can feed worms as well as what doesn't work so well.

You will need

- A plastic bin. A 20-liter bin will suffice for two people and a small number of worms. The size of the bin will depend on how many worms you plan to house, and how much food you'll be trying to dispose of.
- Two lids, one to place over your bin and the other underneath.
- A drill.
- Some rocks.
- Newspaper, cardboard, and other food scraps to start.
- A piece of carpet, a little larger than the top of your bin, or some other moisture-trapping layer (which still lets in air).

Steps

1. You'll want to drill holes through the bottom of the bin and about a third of the way up the sides.
2. Fill the bottom of the bin with rocks, then layer some newspapers, a little soil, and some food scraps to start.
3. On top, place layers of moistened newspaper, covered with some damp cardboard.
4. Last, a layer to help keep the moisture in, such as a small square of carpet, fuzzy side down.
5. When your worms arrive (or you dig them up) bury them fairly deep in the pile and place a handful of food scraps on one side of the box. The worms will migrate to the food and leave behind their castings.
6. Feed the worms once or twice a week, rotating around the box each time. Some people try to feed them on one side for a week, then alternate; there are few hard and fast rules, so experiment!
7. When it is time, you'll want to harvest the worm castings (a pretty word for worm poop. Your plants will love it). One method is by feeding on only one side of the box for about 10 days to draw the worms over, then lifting up the cover on one side of the box to scoop out the castings.

Project 11: Making a Bit of Methane

This project demonstrates the concept behind producing methane gas from your food scraps. Be aware while you are doing this that methane gas is very explosive, so take the appropriate precautions. We're not using the methane for anything, and though we won't have produced a lot of it, we will have created a little bit of a powerful greenhouse gas, which you'll want to get rid of safely. It is sufficient, for this small an amount, to release it outdoors away from any sources of open flame. Not terribly green of us for the moment, but by understanding a little more of how this works, I'm trusting that you will go out into the world and try capturing and using more of this valuable resource. If you are very, very concerned about this small amount of methane being released, you could put it in the middle of an empty field and throw a lit match at it from a distance. Better to plot a second system that incorporates use of the gas for your next attempt, than fret too much about it though.

You will need

- Several plastic bottles, all the same size.
- Some plastic bags with mouths bigger than the top of the bottle, but not too big: the thin vegetable bags from the grocery store will work, as long as they don't have holes in them.
- Some tape.
- Food scraps (vegetable scraps ground in a blender would be ideal).
- A little bit of water.

Steps

1. Cut the tops off of each of the bottles (see Figure 4-1).
2. Mix some food scraps and a little water together and put some in each of the bottles (see Figure 4-2). Each bottle will be a slightly different experiment, so it is best not to vary the amount of water or food scraps in each bottle for the moment (see Figure 4-3 for example).
3. If you are using a balloon, stretch the opening over the cut mouth of the bottle. Otherwise, place the bag over the bottle and tape it on so that most of the bag is hanging limp (see Figure 4-4).

Figure 4-1 *The materials you will need to make a bit of methane.*

Figure 4-2 *Adding water to some food scraps, once the top has been cut off a reused plastic bottle.*

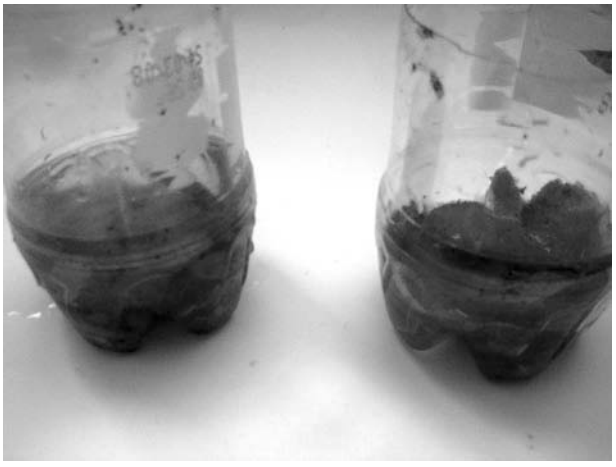

Figure 4-3 *About equal amount of food scraps and water in two trials.*

4. Place your bottles in several locations. Try a cool place, or in the sun, or near another heat source (see Figure 4-5). Be creative!
5. Leave your experiment for several days.
6. Bottles in the warmer locations should have started to gather some gas in the bag. The balloon will inflate slightly. You've produced methane! Be careful when disposing of it, because it is explosive.

Figure 4-4 *Attaching the bag.*

Figure 4-5 *A warm place for the methane: at the exhaust vent of a refrigerator.*

Larger systems

Larger-scale methane digestion systems are in operation around the world, primarily in hot countries because, as you've just found out, methane is produced best between fairly specific and warm temperatures.

Online Resources

India and China have a large number of rural systems in place, and groups like Practical Action (formerly the Intermediate Technology Development Group—see www.itdg.org/) publish free booklets describing their operation in enormous detail based on years of experience. (Author's warning: the group's website is an addictive source of information on nearly every technology imaginable.)

Biogas systems (as they are called) are not trouble free, but they are relatively maintenance light as long as they are fed fresh ingredients regularly. If the microorganisms are kept in a stable and comfortable environment, small biogas systems processing human and animal manure and other wastes can provide a stable and low-cost source of renewable heating and lighting for families and villages.

The rest of your trash

OK, so we've been pretty positive about the ability to extract energy from the organic waste that the average household produces. What about the rest of the waste? Because that trash is hauled away by truck, and processed and stored—each step requiring additional energy—it is wise to reduce your trash. One of the oldest mantras of environmentalism is: reduce, reuse, recycle. It is important to keep the processes in that order, and to actually pay attention to them throughout your daily life.

For example, the easiest place to reduce the amount of waste that is produced by your house isn't necessarily on trash day; it's on shopping day. The choices you make about which products come home in the grocery cart can have a large impact on the trash produced by your household. Most of the waste from your food products is a result of excess packaging, which is mostly unnecessary. Try to choose bulk foods over prepackaged ones, as they require less packaging (and thus energy) to get to the store, leave you with less waste, and usually cost less too. Some types of packaging are easier to deal with than others. You can also choose to leave the packaging behind at the store. You are buying a product, not more garbage. Making retailers responsible for disposing of product packaging is a most effective way of promoting less packaging in the first place. It is also efficient, so we talk about that more in the next chapter.

Your trash no longer contains your food and vegetable scraps (right?) so no need to worry about those. Separate your paper and cardboard if you haven't recycled it already; they can also be reused for gardening and in the compost. Glass jars can be useful to start germinating seeds and for storing fruits and jams you might make from the plants growing because of the nutritious compost.

Dangerous goods, including batteries, should be separated from your trash and taken to a hazardous waste disposal site. If you have old electronic equipment, try and find a good use for it by donating it to charity if it works. If it is broken and too expensive to repair, think about whether it was a useful expenditure of resources, and look into longer-lasting products next time. A life-cycle assessment, discussed in the next project, can help in this evaluation of larger items.

An obvious source of value in your trash is refundable containers if offered in your area. Make sure you pick these out and turn them in for the refund, it adds up quick. (Hint: remember this as a potential "Ant rule" for an upcoming project.)

What's left? A lot of plastic probably. Look on the undersides of the containers. There is usually a triangle of arrows with a number inside it, indicating the type of plastic. Based on this, you can figure out if you can recycle it in your area. Visit your local recycling station to find out what they accept. Your experience is likely to be that they do not accept much. Most of these plastics can release harmful toxins if burnt without pollution controls on the exhaust, so it is best not to do that.

Recycling

It is likely that your community recycles cardboard, because the recycled product tends to have a value to paper producers, but not all types of plastics. Cardboard can in most cases be turned into more cardboard, while plastics, even when they are recycled, tend to be degraded by the recycling process. That means that when you return that 2-liter clear beverage bottle for example, it does not come back to you as another clear beverage bottle. Clear plastic bottles require a higher-quality resin than recycled bottles provide, so new resin is usually used. The recycled plastic will often go into a different product, such as plastic wood for outdoor benches, whose manufacture requires a lower grade of plastic resin. When possible, it is good to avoid packaging which when recycled loses value, though it can often be a funny trade-off.

Take glass for example, which can be almost entirely returned to more glass without losing much material value. However, glass is a heavy container. Depending on where your beverage was manufactured and transported from, it might be more energy efficient to get the plastic bottle, because of the amount of energy that can go into shipping glass over great distances. It's not always easy to consider these things when you are just trying to get a cold drink, but it is something to ponder for the longer term.

Project 12: Return Your Trash

Briefly auditing your trash, as we've just described, often results in a pile of plastic that is not accepted by your local recycling depot. Too often this plastic is a result of overpackaging of goods, which probably didn't need it in the first place.

Your options for getting rid of it in a responsible way are limited and it might be easier to start thinking about why you have it in the first place? Many of the products we buy have a large amount of excess packaging, and it is in part of our responsibility as consumers to make it clear to those companies that we would rather not have to deal with disposing of it at the end. Dealing with that packaging costs us all money. If you do not have municipal trash services, you may already have to take it to a dump yourself. The taxes you pay go into ever-larger dumps, many of them filled with unnecessary plastics.

Legislation exists in some places that forces a company to take back all their packaging: you could try sending yours back. Another option is to make an effort not to buy overpackaged goods. An upcoming project goes into this in more detail. If it is something you very much want, write to the company and tell them why you are not buying their product. You might be surprised at how fast not spending your money can get results.

Often, letter writing is an effective way to get companies to consider the impact of their products and search out more responsible alternatives on their own, so you don't have to. But if you have no results, or would just like a faster response, this is a project for you.

You will need

- Packaging: the sort that you didn't want in the first place.
- To know the store where you bought the item in the first place.

Steps

1. Collect the excess packaging from items you recently purchased. They can be food, electronics, it is of no consequence, so long as you feel, having now thought about it a little, that the packaging was excessive or inappropriate or difficult to dispose of, or some other reason.
2. Return to the store where you purchased this item, with the packaging in hand.
3. Ask to speak to a manager or person in charge.
4. Give them the packaging and tell them politely what you are doing. Be firm that you are leaving the packaging at the store, because you do not feel that you or your municipality should bear the consequences of the packaging choices made. Encourage them to tell their superiors about the encounter, and to get back to you with a resolution.

Small steps and giant leaps

One of the people who has often inspired me—as I've explored the subjects of the environment and life—started a blog a few years ago called the Ephemeral Tourist 2.0. Lately, it described the process he is taking to build-up the driveway of his house, as "Ant Rules." The premise is that ants can collectively do marvelous tasks by doing one of very few simple tasks it knows how to do, like look for food, or clear waste. Their "thoughts," as it were, have to be simple and have defined triggers, yet ants are capable of complex and amazing tasks working together. However, the number of "thoughts" an ant can have is so limited that it is incapable of surviving on its own. By contrast, humans could be considered "as the pinnacle of evolution. The creative potential of every individual human is marvelous. But the collective behavior of humanity is suicidal insanity."

The Ephemeral Tourist 2.0 considers, and I agree, that simple rules, like the ones we think ants follow, might be able to help us on our path to becoming better environmental citizens. One of his "ant rules," to improve the gravel content of the road crush (a blend of sand and gravel) that is his driveway, comprises the following:

1. Pick up a littered cup—like a McDonald's fountain drink cup, or a Slurpee cup—and place in [the] bottle cage of [his bike].
2. Fill with gravel-size rocks found in the street.
3. Place rocks on driveway.
4. Dispose of cup in proper receptacle.

As a result of doing this everyday on his commute to and from work, the gravel driveway is slowly growing. The Ephemeral Tourist 2.0 has found that

> Building it this way has me constantly thinking about value; about how we arrive at the purely subjective opinion that something has it, and how this ephemeral perception affects our experience of life. Within the confines of this small, four-step paradigm, I find that it imposes perceptions of value that didn't seem to exist before.

For example,

> a couple of rocks on the asphalt doesn't make much of a difference one way or the other. Maybe picking up a stone will keep it from being kicked up into a windshield by a passing car, or prevent a roller-blader from stumbling on it. But relocated to my driveway, along with all the other stones from my trips, now that rock has identifiable positive value. Further, in sum, open pit gravel mining destroys more of Alberta's landbase than tarsands mining. When complete, my hand-picked driveway will have made no net contribution to that environmental impact.
>
> suite-mck.livejournal.com; August 9, 2008
> reprinted with permission

Project 13: Ant Rules

The objective of an ant rule is to make the attempt to see new value in something which either you or someone else has discarded. It proposes you create a "rule" for yourself that requires participating in revaluing that thing, whenever you come across it or are triggered into action. There are many examples throughout the book to help you think creatively about what can be an extended project. Try to provide a frequently reoccurring reminder that the value we ascribe to objects can change, and the label "waste" is subjective.

You will need

- Patience and a desire to see the world in a new light.
- No fear of looking through trash is useful, but not necessary.
- To try to find a "rule" that consists of multiple small steps. Plot out the expected benefit you hope to get from it, and the environmental impact.
- Ideally, a frequently occurring trigger for your "rule."

Steps

1. Look around you and think about how you can redefine or augment the perception of value in objects that surround you.
2. Start small. Picking up every refundable container and returning it to its appropriate space, as your first ant rule, is a good way to try this technique out.
3. Account for your actions and the impact (or avoided impact) those actions have. For example, we have discussed using discarded glass jars and compost to grow food. An ant rule could be that you will plant a new plant (and find a space for it) in every glass jar you would've otherwise thrown out. Your actions will have avoided the energy needed to recycle the glass (quite a few in a short time), as well as displaced transportation emissions from food that would've had to travel to you (if you grow edible plants).
4. Publicize your actions and be a positive example.
5. Your project, even if it takes a long time, not only serves a larger purpose but also serves as a positive and daily reminder of the positive changes you are in the process of making. Getting "green" is an ongoing process for all of us; no one has all the solutions yet. By thinking consciously about them and acting deliberately, we can make a conscious start.

Underused land

In many cases it is possible to grow a much larger portion of the food we consume closer to us than we are currently doing. Oftentimes, an alternative is right there in the same store, and it is just up to us to look for it and make that part of our normal shopping routine. If you are fortunate enough to have some land to work with, it is of course possible to plant a large plot, such as in Figure 4-6. If you are not so endowed, there are also more proactive ways you can go about reclaiming underused space for more productive uses and in this way contribute directly to increasing the productivity of your local area and reducing the distance your food travels to you.

Particularly in urban areas, there is a dearth of underused land and space available for small gardens and individual plants. It is often a matter of looking at a piece of lawn a little differently and wondering what else could grow there. This upcoming project encourages that. Alternatively, it could be fruitful to look more closely at what has already started to grow naturally on disused pieces of land—by the side of the road, for example. Collecting native

Figure 4-6 *Large garden plots, such as this one in rural New Brunswick that meets most of the vegetable needs of a family of four, are great for those who have the space.*

"weeds" is already a part of local tradition in many places. In Carelton County, New Brunswick, for instance, Fiddleheads—an immature type of fern classified as a weed—are a seasonal and local delicacy. There are local groups and sites, as well as books on the subject of what local varieties of plants are edible. You will likely want to talk to older residents who are also gardeners or farmers, as often the best knowledge of a particular area is only available orally.

Project 14: Seed Bombs

"Guerilla gardening," a term dating to the 1970s apparently, accurately describes the act of planting productive plants on underused public spaces. The "movement" has spread across the globe, and there may be people in your area reclaiming underused space for productive uses. "Seed bombs" are a popular manner of quickly encouraging the growth of new plants.

Tip

Non-native seeds can pose a risk to local species, so always make sure that you are not introducing a non-native species into your area.

You will need

- Seeds native to your region (you'll have to check into it and it is *very important to check*), and ideally producing edible or useful material as well. Remember also that many of the plants we consider to be weeds are actually edible, but do look into it first. Some resources to help get you started are listed on Evilgeniusonline.com.
- Some compost and soil.
- Rubber gloves.
- Some vacant or underused land spotted nearby. (A required warning: it is illegal to plant something on someone else's property, even most public spaces, even if they are going to waste. Do be aware of this, budding geniuses, and don't get too evil. Perhaps your first spot of vacant land might be on a piece of property you own: something as small as a reused pot near a window is a start.)
- A mixing bowl and spoon.

Steps

1. Mix your seeds with a small amount of compost and soil in the mixing bowl.
2. Add a small amount of water so that it will form into a ball and not fall apart.
3. Roll some balls, about the size of an egg. These are your "seed bombs." You may want to let them dry a little so they hold together, but not too much. It is ideal to do this pretty close to when you're ready to go out distributing your seed bombs (see Figure 4-7).
4. Ideally, dig a small hole with your spoon, and deposit the seed bomb inside. Cover it up with the soil you removed, and think about sprinkling some water on top as well.

Figure 4-7 *A completed "seed bomb" ready to be delivered to an unsuspecting plot of underused land.*

5. If you are using you seed bombs in a less than ideal location, you might just deposit it on some soft soil, and hope for the best.
6. Return in a while and check on your "intervention." Depending on what seeds you chose, you may have beautified your surroundings, or grown something that you could eat or use in another way. By producing it locally, you may have reduced the need to bring it in from somewhere else, whether that is a strawberry flown from California to New York, or one from the farm at the edge of the city you live in. Energy used to get that fuel into or to you has been reduced. There are lots of spaces to use more productively around us—it's up to us to use our genius to find them.

Chapter 5

Efficiency

Heat sources

We've talked so far about different ways to conserve heat and cold, without mentioning where they might come from. There are a wide variety of heating and cooling sources that are in use in different buildings around the world. What type typically depends as much on the available resources and their cost, as on the overall efficiency of the system. Too often, when the person paying for the upfront costs is a different person than the person who will pay the running costs, inefficient heat sources are chosen. Electric heat has long been vilified in the environmental community for being an inefficient way to produce heat. We'll look a little more at how electricity is made later, but part of the problem is that a lot of our electricity comes from heat sources originally—like burning coal and gas in big power stations—which is then used to turn water into steam, then fed into a turbine which spins a generator to finally produce electricity.

Only about a third of the heat energy produced by burning the coal or gas becomes electricity, and too often the rest of that heat is wasted. Electric heaters can deliver almost a full unit of heat into a full unit of electricity, but the problem is that the electricity they are using has often already wasted two-thirds of the energy we had to begin with. Heat pumps (which we will also discuss in more depth later) can improve this situation. In many cases it is more efficient to burn the fuel directly where the heat is needed; however, this can create a host of other problems, such as local air pollution and poor indoor air quality if there is insufficient air circulation where the fuel is being burnt. Having a thousand little fires rather than one big one can also create efficiency and quality control issues, so the solution isn't always cut and dry. Add to this the problem of infrastructure. To move a given house or apartment with electric heat to another heat source often requires many modifications to the building in order to distribute the new heat source by air or water, as well as a method of venting the exhaust from the burning process.

In some areas of the world, district heating systems try to centralize the burning of fuels and then distribute the heat to other locations. These often make good use of heat from electricity production that would have otherwise gone to waste. When the heat is used over a larger area, these are called district-heating systems, while when both heat and power are produced and used on a smaller scale, like in your house, it is called a combined heat and power (or CHP) system. These systems can be very efficient because they produce two things that we use, heat and electricity, at the same time. Home-sized systems (see Figure 5-1) are coming onto

Figure 5-1 *The Whispergen combined heat and power system is designed to integrate seamlessly as another appliance into your house. Photo courtesy of Whisper Tech Limited.*

the market, and we will talk about some of the technologies behind them a little later. These are all larger changes a person could think about making.

For most people in the immediate present, it is best to minimize energy use through conservation. Get aware of the inefficiencies around you, and plan to do something about eliminating those inefficiencies as fast as practically possible. Modern gas or oil furnaces are significantly more efficient than their predecessors, so think about upgrading if you can. Old wood stoves and open fires are now the largest cause of dioxins, which are carcinogenic and bioaccumulate in humans and other animals, so upgrading to a modern efficient pellet stove is also worth it. Heat pumps are getting more common for those with little alternative to electricity, but should always be combined with very energy-efficient building designs. Without any new fuel sources, just newly-insulated windows and walls, most buildings should already be seeing a drop in the amount of fuel in use, so congratulations. It's important to try not to spend that extra money on making the space warmer, but try to keep using it to make continual and gradual improvements to your space. If a plastic double-glazed window saves five dollars per month, for example, try saving it up for a winter season and having proper double-glazed windows installed by the next year.

Light

As we've noted, the sun is one of the most readily available resources and often provides free heat, as long as we pay attention to capturing it. It also provides free light, if you hadn't noticed. Opening your curtains during the day and closing them at night achieves both in a simple way, but there are many more ways that more solar energy can be captured. If done carefully enough, there is enough solar energy to meet all our space heating and cooling needs. Indeed there is enough to meet all our energy needs, if we just use a little evil ingenuity. But there are always times when the sun isn't directly around to light our way.

Electric lights are clean, convenient, and efficient. Their use has been linked to a significant jump in human life expectancy, as they are often one of the first uses of electricity sought by those who have not previously had access to it. The alternatives, either darkness, or solid or liquid alternatives, release local air pollutants including particulate matter, which are carcinogenic, especially when used indoors. Particulate matter is often discussed in the media, in relation to smog. It comprises tiny particles suspended in the air around us and is often abbreviated as PM, followed by a measure of the size of the particles in subscript. For example, PM_{10} is short for particulate matter of 10 microns (μm) in size, about 100 times smaller than a human hair. Particulate matter is bad for human health in general and contributes to changes in our climate.

Tip

Where there's smoke there's particulate matter! Particulate matter is harmful to humans and other animals, but reducing it may also contribute to global warming. Particulates suspended in the air (like smog) are thought to reflect more heat back into space than clean air.

Incandescent electric light bulbs have been common for the better part of a century, and their economical production was a significant factor in the spread of electricity in the United States during the last century. Lately, however, it is becoming more common to find compact fluorescent (see Figure 5-2) bulbs on store shelves around the world. Some governments have even

Figure 5-2 *An incandescent bulb and its package (right) and a compact fluorescent bulb with its package (left).*

gone to the somewhat extreme extent of banning the incandescent variety of light bulbs. What gives?

Well, the tried and tested incandescent-type light bulb has been implicated in doing something that a light bulb shouldn't really do: make heat. It's often more efficient to use heat directly than it is to make electricity (often from heat turning a turbine) and then use that electricity to make heat. This is especially true if the thing you are using to make heat, such as a light bulb, isn't designed to produce heat for our use. If you live in a part of the world where it is often very hot outside, and air conditioners are common, it is not hard to appreciate that having hundreds of little heat sources inside a space that is costing money to cool is not very efficient.

Project 15: Installing an Energy-Efficient Light Bulb

We are letting the genius off a little easy with this one, but just for fun go check around and see just how many incandescent light bulbs are still out there. Look in your school or office, and remember those locations for the next project. There are lots of good statistics on how many power plants can be turned off if only one in five incandescent bulbs were changed to compact fluorescents. Rather than just telling you about it, we'll show how the calculations are made in the next project, so you can do your own energy accounting. The responsible evil genius should also consider that it is not efficient to throw out a perfectly good light bulb, but instead wait till it burns out, then replace it with an efficient one. Also, these new compact fluorescent bulbs have their own problems, something we're only starting to become aware of.

Fluorescent bulbs use mercury in them, which is a very toxic and poisonous metal. This is the same substance found in mercury thermometers, and even a small amount is quite dangerous to humans and other animals. This means that these bulbs should not be thrown into landfills, because the mercury can be released and seep into undesirable places. It is therefore very important to take spent compact fluorescent bulbs to a hazardous waste disposal location or a recycling system that is ready to accept them. Because this is still a new technology, many recycling depots are not ready, so ask questions. The hazard caused by mercury in fluorescent bulbs is the danger of them breaking, which would release the mercury into the local area. A little research on the types of precautions you can take in this event will go a long way, but ultimately it will depend on the place it happens. You will in any case want to remove yourself from the room in which a bulb broke, and open some windows; then, vacuum the area where the bulb broke and collect the broken shards with gloved hands. Seal the vacuum bag in another airtight bag before disposing of it in a location that can contain the mercury. This is not pretty stuff, so be careful; the best thing to do is not break the bulbs in the first place. There are special high-impact compact fluorescent bulbs available that are stronger and won't break as easily for locations where they might be at risk of doing so.

You will need

- A compact fluorescent light bulb (see Figure 5-2).
- A working light socket in which the old incandescent bulb has burnt out.
- A good wrist.
- Possibly a ladder.

Steps

1. Get you ladder set up if needed.
2. Unscrew the old bulb by turning counterclockwise.
3. Screw in new bulb, turning clockwise.
4. Turn on the light.
5. Get busy calculating your energy savings.

Definition

What is a watt? A watt is a measure of the rate of energy use, and is not confined to measuring electricity. A person riding a bike up a moderate hill does work at a rate of about 200 watts (W). If they rode up that hill for 2 hours, we could express that as 400 watt-hours (Wh).

Project 16: Calculating Your Energy Savings from Project 15

This is the most amazing part of a very simple project, and something you can repeat and adapt to almost every project in this book. Try going forward with these basic ideas and apply them to the rest of your energy consumption. If you are intrigued by the idea that little actions can save a lot of money, go hunting for an energy meter (see Figures 5-3 and 5-4), which is an extra tool in this project but useful for the next one, too. Some municipalities distribute them for free, because it is a valuable tool to get residents aware of their power consumption habits. Other times they can be found at your local hardware store, or in energy-efficiency sites listed on Evilgeniusonline.com. Permanent systems that display the current rate of electricity use in a convenient location, like by the door, are coming on to the market. These permanent systems have been shown in studies to dramatically improve the likelihood that house occupants get aware and reduce their electricity use by turning appliances off before leaving.

Definition

A kilowatt-hour (1000 watts for 1 hour; abbreviated kWh) is a measure commonly used by electricity companies to bill residential customers for their power consumption. 1 kWh is, for example, consumed by 10 100 W light bulbs burning for 1 hour, or 10 25 W bulbs burning for 4 hours.

You will need

- A pen and paper, possibly a calculator.
- An electricity consumption meter (see Figures 5-3 and 5-4).
- A corded light.
- Your old light bulb, and the new energy-efficient one (if using the meter).

Figure 5-3 *A branded energy meter.*

Steps

1. Copy down and fill out the following table using the values you find on the light bulbs themselves:

   Energy consumption of old light bulb:____ watts (A)

   Energy consumption of new light bulb: ____ watts (B)

   Number of hours used per day: ____ hours (C)

Figure 5-4 *A generic UPM energy meter.*

2. On your piece of paper (or calculator, if needed): Multiply the energy consumption of the old bulb by the hours used (A × C) to obtain your old watt-hour consumption figure (call this D). Then multiply the energy consumption of the new bulb by your typical usage (B × C) and call this E.
3. Now subtract E from D, and you have the energy savings in watt-hours. Shown another way: (A × C) – (B × C) = ____ Energy savings in Wh
4. To turn this number into something that is meaningful, like money, have a look at your current electricity bill for a figure that shows the amount they charge you for a kWh of electricity. A typical value in the range of 5–10¢/kWh is normal in North America. United States residents can go to www.eia.doe.gov/fuelelectric.html for a profile of their state. Multiply that figure by your energy savings to estimate your savings.

Variations

5. Using the energy meter, plug the light with the old bulb into the meter and then into the wall. Turn the light on and record its consumption on the digital display. Most of you will note that the light consumes electricity at a faster rate when starting up, so you can leave it on for a little while and use the steady-state value. Repeat for the new bulb, and input your values into the equation above.
6. A more detailed meter will actually allow you to plug in the light for an hour, and estimate how much money that costs based on average electricity rates. Try cycling through the options on the meter.
7. If you are in a location where you would like to demonstrate the difference to a variety of people, a display like the one shown in Figure 5-5 is an excellent learning tool. An alternative, which employs muscle power to convey the impact of the extra work required to light an inefficient light bulb is shown in Figure 5-6. An old exercise bike is attached to a 12 V generator, shown in detail in Figure 5-7, which powers one of two bulbs the rider can switch between. It is immediately obvious when pedaling, which type of bulb needs more work done to provide the same light.

Figure 5-5 *A demonstration unit that shows the energy consumption of a variety of bulbs, and allows users to notice that the same amount of light can have large variations in energy use. Shown on Big Blue, the Climate Change Awareness bus run by the Falls Brook Centre.*

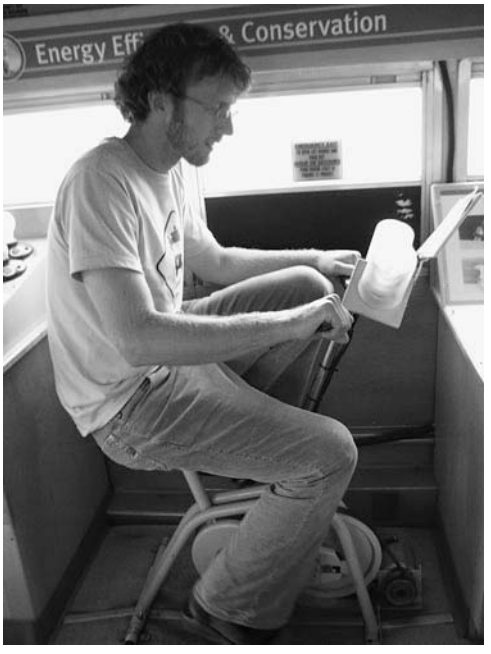

Figure 5-6 *A tactile demonstration of the amount of work needed to light a bulb, by pedaling an old exercise bike attached to an electric generator. The generator powers one of two lights in front of the rider. When the switch is flipped from the incandescent to compact fluorescent, the work the rider must do to light the bulb is much less.*

Figure 5-7 *Details of how the exercise bike is attached to the generator, for you truly evil geniuses who will undoubtedly try this at home.*

Project 17: Auditing Your Appliances with an Energy Meter

If you went out and got an energy meter and have it handy, why stop with the lights? Pull out your electronics and see just how many devices around the house are using electricity, often when you're not even looking!

You will need

- A Watt-Wise meter or something similar that measures the energy consumption through its provided outlet.
- Some electronics. To start, find a TV with a standby function (usually those with a remote control operate on standby functioning).

Steps

1. Plug your TV into the Watt-Wise meter. Leave the TV off.
2. Look at the number of watts used by the TV when it is off.
3. Turn it on if you are curious, but notice that some electricity is used when the TV is off. Go find another TV if that is not the case, or try your DVD player or stereo amplifier.
4. A typical TV consumes 4 W when it is turned off. Multiply that number by 10 hours, a typical length of time to leave a TV off waiting to be watched.
5. Recognize that an astonishing 40 Wh used by the TV when it is off is more than is used by the energy-efficient light bulb we installed earlier (typically 23 W) used for an hour a day.

Ghost loads

An enormous number of appliances and electronics use power when they are not on or being used. Some of them are useful, like the wireless router that allows you to connect to the Internet without having to remember to plug it in, but others are less so. Home entertainment systems and many other electronics around your home are often fairly poor performers when it comes to using power while turned off. This is often referred to as a ghost load. If you use the energy consumption figures from the last project and project them for the life of some appliances (microwave clocks are notorious) you might find that the ghost load (when it is waiting for you in standby) of your appliance uses more energy over its lifetime than when it is actually doing something useful for you. Astonishing, isn't it?

In the UK and many other parts of the world, people are accustomed to power outlets that have a small switch attached to them, which allows the power to be switched off while something is left plugged in. This is useful for energy-conscious consumers in those countries who have to "just" remember to turn off the switches around the house before they leave, or when they are not using something in particular, like the stereo. I have heard that the reason for these switches is that the 220 V power supplied to the outlets in the UK is a little more likely to kill a person if they were to get accidentally electrocuted while plugging or unplugging devices, so the switches are a safety precaution. For us in North America without these handy switches, minimizing ghost loads is a little more difficult, but certainly possible and just as important.

Project 18: Getting Used to "Better Than Off"

In the UK and other parts of the world, electricians tend to install switches at the outlets that allow a person to turn off appliances that tend to have ghost loads. This leaves a person in those parts of the world the not-inconsequential challenge of remembering to turn off those switches. Those of us in North America have an extra challenge in dealing with ghost loads directly. We could go around unplugging everything that is not being used, but some people find that inconvenient. So our evil genius will illuminate a third way. On a long-term basis, this should illuminate a fourth step, less dependent on the fragile and fallible human memory.

You will need

1. Power bars with switches on them, enough to plug all your electronics into, like the one pictured in Figure 5-8.
2. Reminder stickers or sticky paper and bright markers or a printer.

Figure 5-8 *A power bar in use. Note the power button to the right of the plugs, which is not normally perceived as an energy conservation tool, but if used correctly could save you money by eliminating "ghost loads."*

Steps

1. Unplug your TV, stereo, DVD player, and other appliances from their wall socket, and plug them instead into the power bar.
2. Plug the power bar into the wall.
3. Turn on the switch to watch TV.
4. When you are done, turn off the switch to get rid of ghost loads.
5. (Optional) Modify the table in Project 16 to calculate how much energy you are saving by turning off your electronics when they are not being used, and how long those power bars will take to be paid back.
6. If you are like me, you might forget to turn off those handy power bars we just installed. A solution is to make helpful "remember to turn this off" stickers and place them around your house. You might put a sticker around the light socket to remind people to turn off the lights, and another one by the door to remind you to turn off the power bar near the stereo before you leave the house for the day. Be creative!
7. A longer-term solution is to look into systems that can turn outlets on and off from a central location (like a main switch near the front door), or ones which can do so automatically based on your schedule.

Auditing

Auditing your energy consumption is not very difficult. In fact, we started the process in earlier projects. An audit can be as simple as taking account of all the uses of energy in our lives, usually (but not always) with a conservation purpose in mind. In our case the purpose is to reduce our energy consumption

so that the audit should reveal places where our energy consumption is particularly high. There are a number of tools available to the home energy auditor, especially those downloadable from the Internet (see Evilgeniusonline.com), but it is also possible to use some math to get a good approximation. One common type of online energy-conscious audit calculator goes by the name of a carbon footprint calculator, which converts energy consumption from a variety of common sources into a carbon equivalent. Many of these calculators make the point that North American consumers tend to use an average of five times as much energy, and consequently contribute that much more carbon, as most other citizens of the planet.

To start your own audit, whether on paper or online, start by going around your house and gathering the energy consumption figures for all the major appliances in your house. Then get a hold of your latest utility bills, provide fair estimations of about how much fuel you put into your car every week, and how often you take a national or international flight. For most Americans, transportation is almost half of their individual energy consumption, so small steps here can have a large overall effect. More projects are covered later in the book to help you cut your transportation pollution, but the very first step is to be conscious of the fact that every time you decide to drive rather than walk, or fly rather than take a train, you are contributing more carbon to the atmosphere than you have to. This is because driving uses fuel and therefore emits carbon into the atmosphere, while walking certainly does not, and a train tends to emit fewer tons of carbon per kilometer of passenger travel than an airplane. Even better is finding ways not to take unnecessary trips, by using video conferencing and other information and communications technologies more effectively.

Food miles

One aspect that will become apparent in your audit, where transportation contributes significantly to the energy we consume, is the distances that commodities have to travel to get to us. For goods we use on a regular basis, like food, which can be grown in many places, it can be astonishing to realize how far they now travel to reach our grocery store. We are privileged to be living in an era of high-speed air travel when Mexican bananas can reach supermarkets around the world before spoiling. However, it becomes an interesting question for an environmentally concerned genius to consider how much work went into growing and transporting the fruit, compared to how much work they would do after eating it. There are of course many other factors to consider when choosing your food from the grocery store, including how much enjoyment you (as an individual) get from eating particular types of food.

Some types of food that many people enjoy can only grow efficiently in certain climates, whereas others have a greater tolerance. Greenhouses can help extend the growing season, if heated throughout the year in many climates, but there is an energy cost involved. There are also certain perverse factors at play in the pricing of some foodstuffs, which I have never managed to fully understand. For example, I found that in the mountains of Wales, where sheep abound, New Zealand lamb was less expensive than its Welsh counterpart in the grocery stores. I understand New Zealand doesn't subsidize its farmers, and so I struggle to explain why such a large distance traveled doesn't increase the price more. It seems obvious that there would be a higher amount of energy consumed by eating meat from halfway across the world, but it is not always a simple matter.

There are also, in UK supermarkets, both locally grown tomatoes and tomatoes imported from Spain. Locally grown tomatoes are available year-round but, because of the British climate, they are grown inside heated greenhouses. In both cases energy went into producing the fruit, and some have estimated that less energy went into the imported tomatoes, because more energy went into heating the local greenhouse than was used to transport outdoor grown produce from abroad. It is sometimes a close call when large energy consumers like heated greenhouses are involved, and there are often no definitive answers, but it is important to open the debate and consider the implications of our consumption habits.

Life cycle assessment

It is possible to further broaden the scope of the assessment of your consumption patterns to account for the full life cycle of a product. For example, one level of audit or assessment of the light bulb from the earlier project would be to compare your monetary costs, as we began to do. Add up the cost of the bulbs, the estimated number of hours of light they will provide, and how much the electricity to power the bulb will cost. An incandescent bulb will cost less to purchase, but will also provide fewer hours of light and cost more in electricity, and over its lifetime will cost more money. Looking further into both bulbs, a life cycle assessment (LCA) could look into the impact of disposing of both products, including recycling and containing the mercury in the compact fluorescent bulb, as well as where the resources to produce the bulbs and where the electricity that powered the bulbs came from.

The LCA is a powerful tool to illuminate the cradle-to-grave impact of a variety of products and commonly employed by industry. Developed in the 1970s as an accounting practice for energy consumption, the LCA can quickly illuminate negative side effects in seemingly benign developments. However, LCAs must be put into perspective and balanced against the real joys and pleasures that we gain from some actions and products. For example, strictly limiting your personal food miles can severely restrict your diet. When I was first exposed to the notion that my eating habits had a large transportation energy impact, I reacted by dramatically curtailing my consumption of foods I truly enjoyed. Thankfully, I was not alone in having had this sort of pang of eco-guilt. “How I got over my Eco-Guilt and learned to love the banana: Lifecycle assessments reveal the true cost of products we use” has been reposted at the Ephemeral Tourist 2.0 (from the last chapter) at my request. The avid reader who may be on the verge of never again tasting a fresh guava is urged to read it.

Project 19: A Responsible Shopping List

A responsible shopping list can take many forms. It could be criteria you note down or have in your mind, by which you judge products on the spot in the store. It could equally be an actual list of products you either will or will not buy on the basis of the performance of the product or the company in meeting your standards, which you have researched beforehand. With the growth of mobile Internet access, there is also the potential do some research while you are shopping, and some interesting projects are trying to make that easier. Like the dreamers at one of my favorite sites, halfbakery.com, students at UC Berkeley are hoping to bring a mobile Responsible Shoppers Guide to the public, which scans barcodes and reports a score for the product based on ethical, social, and environmental criteria.

Online Resources

A responsible shopping guide idea, filled with useful resources on barcodes, and some links to responsible shopping websites: www.halfbakery.com/idea/X-ray_20specs_20for_20consumer_20products

The ibuyright program in development by UC Berkeley: www.ischool.berkeley.edu/programs/masters/projects/2006/ibuyright

Co-op America’s Responsible Shoppers Guide has many resources and is a good place to start looking into the effects of what you buy and alternatives: www.coopamerica.org/programs/responsibleshopper/

You will need

- A list of products you commonly buy or major purchases you are considering making.
- Some time to do research and digging, not only into the items you normally buy but also into their alternatives.
- The patience to try new things and upset your routine as well as the wisdom to realize that for some things, right now, there may not be an alternative that is suitable.

Steps

1. Start by looking into the products you normally buy. If you are accustomed to the products and have been a loyal customer who now finds something they are uncomfortable with, it is worth your while to communicate directly to the company. Be clear and concise about your issues and explain that you have been a loyal customer who has new concerns that may affect your future purchases.
2. If you find the company making the product inadequately addresses your concerns, start looking for options. Online resources are a starting point, but developing your own knowledge base on which to judge is invaluable, so do a lot of reading.
3. Once you have made a list of items or criteria for your purchases, refer to it and work at incorporating those values into small and large purchases. When the time comes to buy a new TV, for example, look for one that has no “ghost-load” when its off.
4. For those items where there isn’t an alternative, or where an alternative does not perform to the same standard, be judicious in its use. Continue to communicate with the manufacturers of both your current product and the potential alternatives. Either one might soon come up with something better, especially if a customer or potential customer asks.

This page intentionally left blank

Chapter 6

Using Water

Introduction to water

Water is essential to life, and has a great many uses that are both essential and non-essential (see Figure 6-1). We cook with water, bathe in water, and use water to transport away wastes we'd rather not deal with (like in our toilet). It is useful to heat water as it stores heat well. We use the properties of water to cool ourselves, as well as keep things we would like cooled cold as ice. We can also store and move energy around using water, which we'll look at later.

Providing clean water through pipes right to our house uses energy, different amounts depending on where that water comes from and how scarce a resource it is. In areas where there are bodies of water nearby, cleaning could occur through a variety of ways. If a city is close to the ocean without large freshwater sources nearby, it might require desalination plants, which may require large amounts of energy. One method of desalination is to heat the water to the point of evaporation, and to collect the evaporated water, leaving the salt behind.

Where a water source is not salty, it is often sufficient to heat water enough to kill any harmful bacteria or pathogens. In a large plant supplying water to many households it is probably economical to have a laboratory of some sort to test the purity of the water before it goes into the pipe network. If you are in a more remote location or somewhere else where the quality of the water supply isn't likely to be tested properly, there are still simple things you can do to improve water quality. This is a common problem in parts of the world where incomes are scarce, and some ingenious people have come up with several ideas and inventions to help provide clean drinking water using the sun's energy. Of course the sun can help us with boiling water, but that often times requires concentrating the sun's energy in some way. Pasteurizing water is another option, which involves raising the water temperature to less than boiling, which is easier to achieve using solar power without concentrating devices. Heating water directly with the sun's ultraviolet (UV) rays does something else useful to water: it kills organisms in it that are harmful to humans and makes pasteurization a safer, low-cost option for many situations.

Figure 6-1 *A water fountain in a hot city uses the evaporative cooling effect of water to moderate the temperature in a park. Photo courtesy of Valsa Shah.*

Project 20: A Simple Water Purifier

Pasteurization is a process that uses heat to destroy organisms in water that are harmful to humans. It uses less energy than boiling water for 10 minutes, which would result in sterilization of the water and the death of all organisms in the water. The difficulty of pasteurization is in knowing that the water has reached a sufficient temperature for all harmful organisms to be killed. You could use a thermometer to test the temperature of the water or, if you were going to do this a lot, a pasteurization indicator, which, when placed inside a simple solar pasteurizer, indicates that the water is safe for human consumption. Solar pasteurization adds one more layer of safety to the process, by exposing the water to UVA radiation (ultraviolet radiation of 320–420 nm), a particularly beneficial sort of radiation for destroying harmful organisms.

You will need

- At least two small plastic bottles (the recyclable kind) often used for water or soft drinks. Clear plastic ones work best, and various sizes could work, depending on your needs, so it would be good to have variety for experiments.
- Some black paint and a brush.
- A thermometer suitable for taking the temperature of water. An inexpensive digital oven thermometer works well in this role for those experimenting (see Figure 6-2).
- Alternatively, for those with a longer-term interest in this process, a water pasteurization indicator (WAPI) can be purchased for a minimal cost from Solar Cooker International or made with their directions (at solarcooking.wikia.com/wiki/Water_pasteurization) using the following materials:
    - Fishing line.
    - Stainless steel washers.
    - A thin plastic (or PVC) tube (about 1/4 inch) with end plugs or a method to seal the ends (such as melting the plastic together with a propane torch and pressing the tube flat together with pliers).
    - Some wax that has an appropriate melting point. This can be tricky, as the wax must melt at the correct temperature for the fluid that is being pasteurized, in this case water (so about 150° F (65° C)). The world experts in this field recommend Myverol 18-06 K wax. You may have to do some digging for this, or experiment with homemade waxes and a thermometer.

Steps

1. We are going to test two pasteurizers side by side, simultaneously exploring water pasteurization and the power of black to help catch more of the sun's heat.
2. Clean your recycled plastic bottles and remove the label.
3. Paint half (dividing the bottle vertically) of one bottle with black paint and let it dry (see Figure 6-3).
4. Fill two bottles with water, take the temperature of the water (see Figure 6-2), and then put the caps on them.
5. Place the two bottles in the sun. Put the black side down for the painted bottle.
6. Return after several hours (6 hours or more), and check the temperature of both bottles. In order to be considered pasteurized, they should have reached at least 65° C (150° F) for a period of time. If they have reached that temperature using direct sunlight alone, they have also received enough UVA rays to be an effective guard against water-borne disease and infection. The WAPI can tell you automatically if the water has reached that point, otherwise you can keep using a thermometer periodically.

Figure 6-2 *Taking the starting temperature, with an inexpensive digital oven thermometer, of the water inside one of two large solar water purifiers. A third smaller version is also visible on the left.*

Figure 6-4 *Two large solar water pasteurizers in the sun on the right, one black and one clear. To the left is a smaller version, then the solar cooker from the next chapter with a fourth pasteurizer inside.*

7. Depending on where you are in the world and how much sun is available, 6 hours may not be enough to raise the temperature sufficiently. Check to see if there is any difference between the painted and clear bottles: you might be surprised! If neither is warm enough, don't worry about moving to a warmer climate yet. Keep reading and we will reuse our water canisters in later projects with some solar reflection, concentration, and a bit of insulation to raise the heat a bit more (Figure 6-4).

Figure 6-3 *Two reused pop (soda) bottles, one has half of it painted with black paint to improve the rate of solar absorption.*

Cool water

When the sun is out, it can often get too hot for most of us to feel comfortable. One of the things that helps me feel better on a hot day is a cold drink; unfortunately, there are times when there isn't a cold fridge nearby, or if there is, maybe there is not electricity to power it.

Tip

Most people have experienced evaporative cooling but probably not noticed that was what was going on. On a hot day, pour some water over you head and feel yourself get colder. Evaporative cooling operates when water evaporates and takes some of the heat surrounding it with it, leaving what one of my professors called "coolth."

The idea for this project comes out of a trip I once took to the desert areas of Kenya. The town had once been prosperous owing to a successful lodge in the area that had it's own airstrip and electricity provided at the lodge and into the village. When the lodge owner moved back to Europe and there were no more foreign visitors, the electricity became sporadic and then one day stopped altogether. People in the village who had bought electronics had no use for them anymore, and those left with refrigerators they had bought to cool drinks for their European visitors, were left, presumably, without cold drinks.

Except that I got served a nice cool drink on a day that was 40° C (104° F) in the shade, by a man in a tin shack that had no electricity. He pulled it out from a fridge that was turned on its back, so the compressor was on the ground and the door opened up. He had built a second box, smaller than the refrigerator compartment and placed it inside the fridge, then filled the space in between the walls of the fridge and the box with water and some sand. The new and improved fridge worked without electricity on the principle of evaporative cooling, and worked pretty well on that 40° C (104° F) day. This easy but useful project is another way to demonstrate the same principle – I think I've given enough details for you to convert an old fridge already! (See Figure 6-5 if not.)

Figure 6-5 *An experimental, modified Zeer fridge made from common household mixing bowls. The vegetables inside stayed fresh until used.*

Tip

This sort of system is also known as a pot-in-pot or a *zeer* in Arabic. They are gaining in popularity in hot areas of the world with the advent of portable versions that allow food to be kept fresh longer without using any energy. H2G2 has an introductory article here: www.bbc.co.uk/dna/h2g2/A2116766.

Project 21: Evaporative Cooling

The materials and directions are purposefully vague in this project, to enable real evil geniuses to make adjustments for their own situation and to scavenge their own scrap materials. Reusing materials outside, or after their original use, is among the very first tenets of a responsible environmental lifestyle, easily remembered as the 3Rs: reduce, reuse, recycle (yes, in that order, it's important).

You will need

- A can of pop (soda) on a hot day.
- A wire cage bigger than the pop can (make your own out of coat hangers or other materials: a similar project calls for a bamboo basket). It is important that it is roughly a tube shape, and big enough to hold the material in shape around the can without touching the can.
- An old sock that is longer than the cage and can, or some loose fabric and a needle and thread (good to have handy).
- Some water, preferably in a spray bottle.
- An old plate or other base to put the can and cage on.
- Some pieces of a broken plate or flat stones, or other alternatives, which together should be smaller than the plate, but bigger than the can.

Steps

1. Fit the sock around the wire cage.
2. Place pieces of broken plates as a base on top of the unbroken plate.
3. Place the can of pop on top of the broken pieces of plate or other base (see Figure 6-6), and the wire cage with sock over the top (see Figure 6-7).
4. Fill the plate with a little bit of water and make sure the sock or fabric hangs down into the water.
5. Cut a small piece of sock or other fabric as a loose-fitting lid, or try just draping the fabric over the top (see Figure 6-8).
6. Spray the sock down with water until it is moist, not damp.
7. Leave outdoors in the heat (not necessarily the sun).

Figure 6-6 *Salvaged metal pieces form a base for the bottle of pop on top of a water-filled plate. A metal cage covered in damp fabric is being lowered over the top to induce evaporative cooling of the drinks.*

Figure 6-7 *The cage of the easy-to-build evaporative cooler is shown.*

Figure 6-8 *A simple evaporative cooler for two small pop bottles in use.*

8. Spray occasionally as needed to keep the cloth damp (the water is evaporating—this will make your drink cold).
9. Remove the caged sock after a few hours, and enjoy a cool drink!

Water efficiency

It is important to conserve water, whatever its source, because it is a valuable resource. So valuable is this resource, that some people predict that water will be the reason for future wars and conflicts. Energy goes into cleaning and purifying water, no matter what its source, and oftentimes in populated areas energy goes into cleaning water that has been soiled by human uses. We saw in the last project how a degree of clean water can be achieved without enormous energy use, but that is not usually the case.

Project 22: Saving Water Around the House

As we discussed in the last chapter, many environmentally friendly behaviors involve a technology component as well as a human element. Visual demonstrations such as the one pictured in Figure 6-9 can serve to help explain the ability of simple new technology to have a dramatic effect on consumption. However, it is often up to us to remember to also change our behavior in simple ways, in order for many new technologies to have all of their intended effect. In the case of water, little actions—like remembering to turn off the water while you brush your teeth or lather up in the shower—can dramatically lower the amount of water your house consumes. It sure does seem silly to spend a lot of energy and resources getting clean water all the way to your house, only for you to let it run straight back as dirty water, when it is still pretty clean. It's just a waste. Again, there are a lot of different organizations around the United States and the world that have produced helpful stickers and reminder notices that you can put up around your house and office to help you remember to turn off the water when you are not using it. There are lots of other places to look for water waste around the house: if you have an automatic sprinkler system, for example, think about adjusting it manually when it is raining outside because nature has already done the work for you!

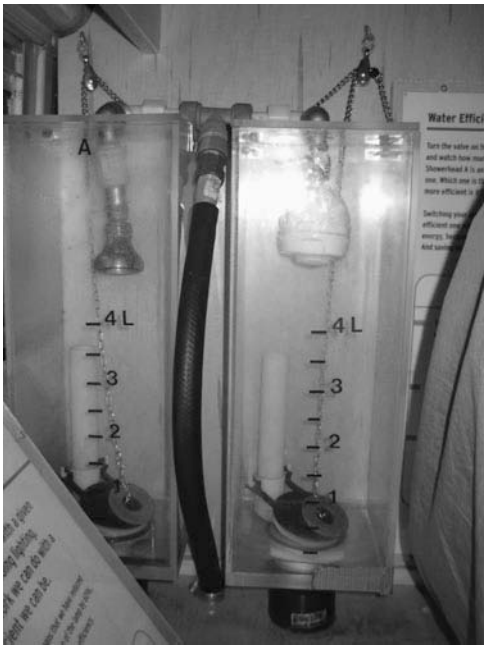

Figure 6-9 *A dramatic demonstration of how much less water is used by a low-flow showerhead, on the Climate Change Bus at the Falls Brook Centre, New Brunswick. Both showerheads empty into graduated sealed containers using the same water pressure. The message: for the same shower, a low-flow showerhead uses less water.*

You will need

- A low-flow showerhead (found at most hardware stores nowadays or given away by municipalities and water providers—read the Steps before calling them though).
- A toilet bag (also given away by municipalities, sold at hardware stores, or created yourself from a sealed bag and a clip).
- An adjustable wrench.
- Some silicon thread tape (also at the hardware store).
- More stickers or tape, paper, and markers.

Steps

1. A low-flow showerhead replaces your existing showerhead. You may already be using one without knowing it, so check first. One give-away sign is a little metal cylinder sticking out a little, just between the thread and nozzle (see Figure 6-10). This cuts the flow of water completely, so the very concerned genius can switch the water off while lathering up, without having to readjust the temperature to rinse.
   - Make sure the water is off, then use your wrench to unscrew the existing showerhead. Peel off any old silicon tape; then add a layer of fresh tape to prevent leaks, and screw on the new low-flow showerhead.
2. A toilet bag displaces a percentage of the water that is stored in the tank of your toilet, waiting to be released for a flush. Ordinary toilets can use up to 20 liters (5 gallons) of water per flush, while a low-flow toilet can use as few as 2 liters. A toilet bag simply reduces the amount of water that is used in each flush, by displacing it with water kept in a bag through many flushes.

Figure 6-10 *A low-flow showerhead installed. The on–off control is arrowed.*

- Fill up the bag with water from the sink. If there is a clip, use it to attach the bag to the edge of the toilet. The clip typically holds the bag out of the way. An alternative is simply to put a capped 2-liter bottle filled with water in a location in the tank where it will not interfere with the flush mechanism.

3. Contact your municipality or water provider and ask them about having a water meter installed, if you don't have one. Unmetered water is still common and contributes to wastage. Methods similar to the auditing process we have done for electricity can be applied to water as well.

Project 23: Collecting Rainwater

The water that reaches the taps in your home is energy laden, so you've made every effort to conserve it in the last project. Along the way, you might have wondered if you really needed the very clean water your water provider puts in the pipes, for everything you use water for. After all, we use water for a lot of things. If you live in an area where water is metered and charged for, you might have noticed that there is also an awful lot of it that literally just falls from the sky. It's only common sense to use something that is free if its just as good: right? For some purposes, rainwater is just as good. The system pictured in Figure 6-11 is used for watering the garden and washing up in a workshop, two excellent uses for rainwater.

Collecting rainwater can be as easy as giving the water somewhere to go and stay for a while. Often the roofs of houses have gutters and spouts, which typically deposit this water onto the ground, where it runs off to the drains. By collecting the water above ground level, you can let gravity work to provide some pressure in the pipe, to deliver the water where it is needed. If you have a roof to collect water from, you'll just need a rain barrel. They are common in hardware stores, or if you're keen

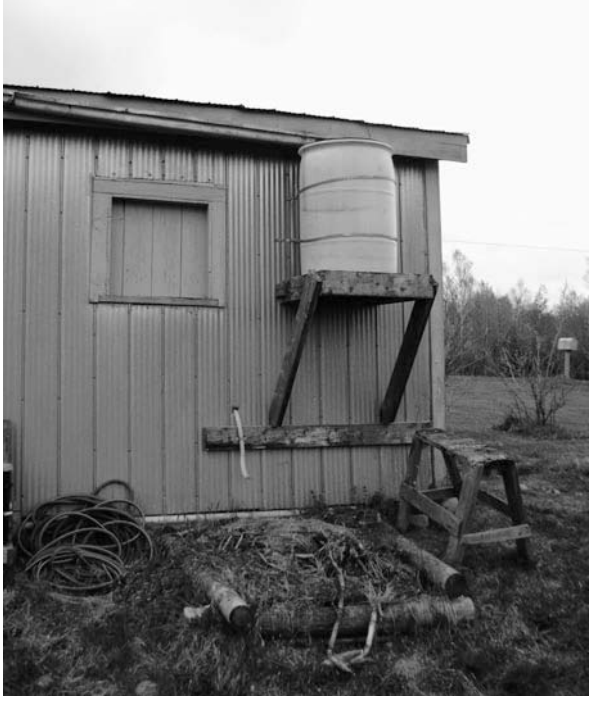

Figure 6-11 *A rainwater collection barrel mounted on the back of a workshop at the Falls Brook Centre, New Brunswick. The soak below the barrel catches the oily particles from the biodiesel workshop's gray water waste.*

Figure 6-12 *View of the rainwater barrel (left) outside and sink (right) inside the workshop. The bottom of the barrel is only slightly above the sink tap, but provides more than enough pressure for washing up.*

Figure 6-13 *This inexpensive commercially sold weather system can assist in understanding the rainwater resource available in the local area and is helpful when planning for a larger system.*

to find a reused one, olives are often shipped in containers about the size of the barrel in Figure 6-12 and a larger grocery store or restaurant may have a few around. Once you've collected the water, you'll have to think of a way to get it out of the barrel: either a pump or a spout drilled into the bottom (if its elevated) will do the trick.

If you do not have a roof to collect water from, then this project is designed to give you ideas. Usefully, it will also give you a simple way to measure the rainfall over a period of time, so you can make a better estimate of the size of container you will need for a larger system. The small collector pictured in Figure 6-13 would be not too different than what we used to take a spare room off-grid: compare the average resource (rainfall × surface area for water to be collected from) to your needs (number of liters required daily × days of independence required in between rainfalls).

You will need

- A (loosely) graduated container. A 2-liter (half-gallon or smaller if you live in a dry area) pop bottle will do. Take a marker and make eight equidistant marks up the side.
- A funnel or materials for its construction from:
  - stiff cardboard, preferably plasticized or waterproofed—a US letter-sized piece will likely be enough for a 2-liter bottle, depending on where you live
  - if you can find no waterproof paper, then a large garbage bag
  - and some tape
- A few rocks or a stand to support the bottle and funnel upright.

Steps

1. To construct your own funnel, make the two pieces of cardboard into individual cones by pulling corners along one long side together and over one another. Then slide one cone into the other, so the large ends spread out. Make sure there is a hole in the bottom of your funnel! If not, then poke one through the bottom.
2. Use tape to fasten your funnel together, and fasten it to the top of your collection vessel.
3. Stand it upright, and secure it so it won't fall down. It is certainly top heavy at the moment, but remember that a little water in the bottom can help it stay upright. Just make sure you note what you added before, so you know what came for free.
4. Leave your water collector outside through a rainstorm. If you find when you return that the bottle is full, try putting a smaller funnel on.
5. Once you have an appropriate-sized funnel and bottle to get you through at least 24 hours of an average day, start recording rainfall levels whenever you empty the container.
6. Average rainfall calculations are usually reported by weather stations as daily or monthly volumes. Knowing the diameter of your collector, and by measuring the volume of water collected, you could estimate the amount of rainwater you would be likely to collect on a larger surface such as a roof or a larger water collector.

Gray water

The water that runs down the drain from our shower is usually in much better shape than the water we flush down our toilet. The wastewater from the shower is called gray water, as opposed to black water, from the toilets. On its own, gray water requires little energy to treat, in order to return it to a pristine state. Once mixed with black water and other waste streams, those potential savings are lost. One solution is to use that water again, rather than send it for treatment. Because of the nature of both bath and kitchen wastewater, an ideal use for it is in the garden. Our shower water contains pieces of skin and other organic materials, while kitchen water is often filled with food scraps. Both of these are useful nutrients to gardens; however, there are certain risks involved with storing and using gray water that a person should be aware of before deciding to go down this route. It is often the case that the mixing of gray and black water happens almost immediately, so separating is something best thought of early in a new construction or large retrofit project, not as an afterthought.

The largest danger of using gray water occurs when it is left in a container for an extended period. As the water stagnates, the organic matter suspended in the water provides a good environment for harmful microorganisms, the source of disease. The best course of action is to use gray water immediately: as it is often used to water plants, simply have the gray water flow straight into the garden. It is easiest to think about this at the time when you are building or renovating, as the chore of separating and then applying the water is not typically worth the effort, except in areas where water is very scarce. It is advisable to take care which cleaning products are used if you decide to use gray water in a garden, as some chemicals can kill your plants. Look for products that are biodegradable.

Composting toilets

If individuals decide to go down this route, and divert for immediate use all of their gray water, they could realize that the vast majority of their water is used to transport their feces to be processed. A person very concerned about water use would look at the porcelain fixture of most American households as a problem. There are several well-designed professional compost systems that have increasingly dealt with the problems of sanitation and hygiene that tend to accompany home-built versions. The reader is encouraged to explore the resources on Evilgeniusonline.com and look at professional models of composting toilets, rather than attempt their own. Low standards of cleanliness and hygiene plague home-built systems, and those done for "environmental" reasons risk tarnishing the name.

Chapter 7

Heating with the Sun

The sun is a gigantic nuclear reaction happening frighteningly far away (about 150,000,000 km or 93,000,000 miles away). If there is going to be a nuclear reaction going on, that seems like just about the right distance away from me for it to be happening. Nuclear reactions tend to produce large amounts of energy and astonishing temperatures, and the sun is no exception. Only a fantastically small amount of that energy ever gets anywhere near the Earth, for many reasons. For one, each of us is only ever on one side of the sun at a time and the rest of the time all that energy radiates the wrong way (for us anyway!).

Of the part of the Sun's energy that does get to our planet, about half gets through a thick layer of gases, called the atmosphere, before reaching the ground. Much of the energy that hits the ground is radiated back out into space, by the oceans for example. Even so, there is more than enough solar energy reaching us today in useful places to meet many of our energy needs, as long as we learn how to use it wisely.

Our solar-powered society

The truth about the sun's energy is that it is everywhere, in almost everything around you, including the gasoline you're putting into your car and the wood in your house. What happened is that energy from the sun struck the earth and made it possible for things to grow, like plants and trees, and animals who ate the plants, and bigger animals that ate the smaller animals. This includes you and me! When this happened a long time ago and those plants and animals died, they fell onto the ground and were slowly buried by earth and water. Over time they were compressed, and those living things that had stored up the sun's energy a long time ago eventually turned into a gooey black substance (oil) that we now turn into petroleum products. When we dig it up and thin it out, it is sold as gasoline, diesel, and home-heating oil. Found alongside this oil is a gas—produced when you take living things (which used the sun's energy while they were alive) and put them away from oxygen for a period of time—called methane. It is commonly sold as "natural gas" when it comes from underground supplies formed long ago, but it can be produced from other sources too.

The problem with using up this stored solar energy is that the gases produced when we burn it are changing the atmosphere and the earth around us. It's also much better to make use of the solar energy that is striking us today than to rely on the stored energy from so long ago, because eventually it will run out. When that might happen is anyone's guess, but the theory is called peak oil (maximum rate of global petroleum extraction is reached); if you want to do more research there is plenty of information available. We'll just focus on the present day's sun for now, because there are literally thousands of different ways to put it to use. How you go about it really depends on what you are looking to do.

Different parts of the planet receive different amounts of sunlight at different times of the year, because the Earth is slightly tilted. The Earth spins on a slight (23.5°) angle off of what would be up from a horizontal plane formed by the earth's path around the sun. There's not really an "up" in space, so it's a bit tricky to get your head around, but the main thing to understand from the point of collecting solar energy is that because of this angle, the path of the sun through the sky will change through the seasons in predictable ways. (See Figure 7-1 for a visual representation.)

Living in some of the warmer parts of North America (or the world), you might often think that the most useful thing the sun could do would be to go away and leave some cool air behind. Solar shading is a building technique that creates shade in particular places in order to reduce unwanted heat from direct sunlight. It is particularly useful in locations where air leaks often occur, like windows and doors. By paying attention to how the sun moves, it is straightforward to reduce the cooling

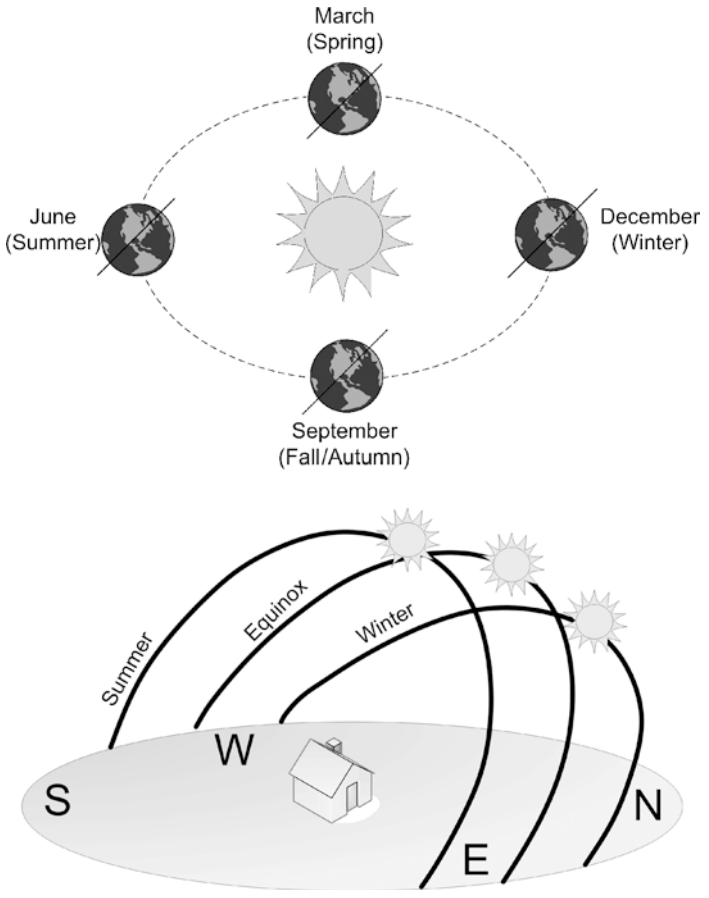

Figure 7-1 *How our slightly tilted earth results in the path of the sun through our sky changing through the seasons. Used with permission from Gavin Harper's* Solar Energy Projects for the Evil Genius. *McGraw-Hill, 2007.*

requirements of a space. Peak electricity demand in hot parts of the world tends to happen in the summer, as a result of air conditioner use, so besides shading, actually providing cool air seems like a common thing the sun could help us out with. Because of how heat machines operate (again more on that later), gathering heat is a useful step towards getting cool, so we concentrate on heat for now. Gavin DJ Harper showed us evil geniuses how to build a solar-powered cooling machine in *Solar Energy Projects for the Evil Genius* (check it out if you haven't already), and we have seen one that combines the sun's heat with water's ability to absorb and draw heat away when it evaporates.

In colder parts of the world, where the sun shines less often, the most important thing the sun is likely to be able to provide is heat. We saw in Chapter 1 that the average person spends about 14% of their energy budget on heating water. Too often that heat is provided by fossil fuel sources, when there are alternatives all around. Often, we just have to learn to use them better.

Making good use of the sun

There are several things you can do to help maximize the amount of solar energy you can capture and put to good use. Not only is the sun frighteningly far away but it is also the thing that our planet is orbiting, which means it will move in the sky through the day, but in predictable ways. If you are in the northern hemisphere, the sun is primarily in the southern sky. So in the previous experiments, if you chose a good location it probably had some southern exposure, meaning that nothing was blocking the sky to the south. While we were only heating up a bottle of water, it is possible that you have already found a good location for other solar-based activities. Trees and buildings commonly block the sun out from particular locations; getting higher sometimes helps.

Project 24: A Simple Solar Cooker

We are going to use some scrap materials found around your house to demonstrate how to capture a little of the sun's energy in order to heat some food or water. You can make this project as big or small as your materials permit (not everyone eats pizza so it's not a requirement to follow the pictures-exactly), and there are loads of freely available plans on the Internet for specific designs and improvements. For now, we're concerned with making sure the avid reader understands the concept of trapping the sun's warmth. We'll make use of this concept again later when we discuss environmentally sensitive building materials and energy-efficient building design.

You will need

- One large cardboard or wood box. We will be cutting it diagonally, so a material that you can work with is best. Alternatively, build your own from some material that can form a right angle and triangular corners. (See Figure 7-2 for materials needed for a super simple version using a pizza box and two scrap pieces of cardboard as the walls.)
- One slightly smaller box of similar proportions to the larger one.
- Scissors and some tape.
- A glass or plastic window (in a pinch you could use plastic wrap, too).
- Shredded newspaper (or something similar) as insulation.
- Aluminum foil.
- A vessel to cook in (preferably black or painted black).

Figure 7-2 *Two old pizza boxes, about to be repurposed as the base of a solar cooker. Other than the black bottle (which we'll use in the next project), these are the main parts of a low-tech solar cooker: plastic wrap, tin foil, newspaper for insulation, and pizza boxes.*

Steps

1. Slice both boxes diagonally from corner to corner so that two corner pieces remain (note: save the second corner piece for a second cooker!), or assemble the triangular piece in place to hold the back of the pizza box upright. Think about how you will access the inside, to place and remove food or water, at this point. It could be through the side, or by lifting the glass off.
2. Place a layer of shredded newspaper inside one of the larger corner pieces (see Figure 7-3).
3. Line the inside of one of the smaller corner pieces with tin foil (see Figure 7-4).
4. Place the smaller box inside the larger.
5. Affix your glass to the outside box, making sure that a seal with the inner box is maintained (see Figure 7-5). Add more insulation if necessary.

Figure 7-3 *Newspaper (insulation) inside a reused pizza box.*

Figure 7-5 *The glass in this case is just plastic wrap, covering both boxes. A makeshift door (facing the camera) allows access to the interior to place and remove food.*

Figure 7-4 *Tin foil lining the inside of the smaller pizza box, which will sit on top of the layer of paper insulation.*

Figure 7-6 *The completed pizza box solar cooker in the sun. The temperature inside reached a balmy 70°C (158°F) within 90 minutes on a partly cloudy day—temperature of 25°C (77°F)—in New Brunswick, Canada.*

6. Place your full pot into the cooker (with a thermometer); then close and seal the window to the box (see Figure 7-6).
7. Orient your solar cooker so that there is close to full sun on the clear angled wall of the cooker.
8. Cooking in the sun may take longer than a normal oven, so try to cook during the heat of the day.
9. If you were unsuccessful at reaching 65° C (150° F) with your water purifier, try placing the purifier in the oven and trying again.
10. Think about how to make your cooker more practical. Remember that both water and stones can maintain their heat for some time. Is it possible to cook at night over sun-heated stones? Don't be limited to cooking outdoors either; beautiful indoor kitchens could be built around solar cookers.

Heating water

There are literally thousands of ways to heat water with the sun. Our earlier project showed how even the small act of painting part of a plastic bottle black can increase the amount of thermal energy captured from the sun. Our solar cooker then showed the importance of insulating those areas that would tend to lose heat, while allowing a section for solar thermal energy to be captured. We can apply both of these principles to the task of heating water. Water is a really useful thing to heat! Not only do we like to have it at a comfortable temperature to use when bathing and washing, but also we can use it to move heat around to more convenient locations and radiate it away into a room.

Project 25: Simply Heating Water with the Sun

Our first water heating project combines the principles from earlier projects: basically, an insulated box containing a blackened vessel filled with water is used to capture the sun's heat. You could do this on a large or small scale; I am a big believer in doing things small before making them big, so we will consider both. Figure 7-7 shows a practically sized system using this principle. The main difference from the miniature ones that we built in earlier projects is that it has a piped connection to a showerhead below, to make some good use of the heated water. Shown in Figure 7-8 is an even simpler system that uses just a coil of black plastic tubing placed on top of an aluminum roof and again plumbed into an outdoor showerhead. Simple systems like this, which are useful in the summer when there is plenty of heat or in places where there is always a lot of sun, can be very cost-effective.

Figure 7-7 *A batch solar hot water heater, with a metal tank inside an insulated box functioning much like a solar cooker, feeding an outdoor shower (the cracked glass is about to be replaced).*

Figure 7-8 *A low-cost batch water heater that holds enough water in the coils of black plastic tubing on the roof to provide one or two outdoor showers at the end of a hot day. Photo taken at the Falls Brook Centre, Canada.*

Figure 7-9 *The insulated solar cooker with a clear plastic bottle of water being purified inside. To the right are the water purifiers from an earlier project, which were all worse at capturing the sun's heat than this simple pizza box cooker.*

You will need

- Either your solar cooker from Project 24, or a version of it, appropriate to contain the water holder you're planning to use.
- A vessel to contain the water you want to heat, preferably painted black. Because we're not trying to irradiate any of the water with the sun's rays, we don't need to worry about only painting half of the bottles black for this project, and can just spray-paint them all black.
- If you want to get fancy, or are trying to build a bigger system, you'll want to think about how to get the water out and into use. As in our examples, this could be by using a simple hose with a faucet or showerhead.

Steps

1. The basic idea of the solar cooker is to use two insulated half boxes, with insulation between them, and a glass wall to point at the sun, as we learnt in the last project.
2. Mount the (preferably blackened) water tank inside the solar cooker (see Figure 7-9).
3. Point the glass end of your solar heater towards the sun for a few hours; then enjoy a purified glass of water (as we did) or a hot shower! Users of the larger system based on this principle (see Figure 7-8) have found that a warm afternoon in Canada is all it takes to have a nice shower at the end of the day.

Project 26: A Circulating Water Heater

We didn't describe it as such, but the last solar water heater was what is called a "batch heater," because it heats one batch of water at a time. It is a pretty good way to heat a batch of fluid to a reasonable temperature, like 50–60°C (122–140°F), but you then have to worry about moving the batch water in and out once it is hot enough. The alternative is to heat moving water. Actually, this tends to be more efficient, because you can heat a larger quantity of water by constantly moving cold water into the area being heated by the sun. There are, again, multiplicities of ways to build a solar-powered circulating fluid heater, as well as an increasing number of commercial options. We'll start with a fairly simple home-built version in this project and then move onto some commercial systems later on. A professional system built on this principle is shown in Figure 7-10 on the roof of Sims House in Knowlesville, New Brunswick.

This project describes entries into a solar thermal design competition hosted by the Falls Brook Centre in New Brunswick. Each used a slightly different design, and the process of learning how to capture and raise the temperature inside the regulation 20-liter bucket most efficiently was the best part. None of these systems are terribly efficient, but they do the job reasonably well, were built from parts that included reclaimed materials, and encouraged learning. One (not the winner) of the systems has since been installed in an often-used shower and is performing admirably.

You will need

- A few meters of black plastic pipe (or another color and some paint) was used for the system pictured, but other sizes will do. This can sometimes be scavenged or reused, particularly as the size isn't terribly important. The opposing team used copper pipe, which worked equally well but requires some extra tools and know-how.
- Several T- and L-shaped plastic connectors.
- A sheet of aluminum or other rigid backing of about $1m^2$ (Figure 7-11).
- Some zip ties and (optionally) some silicon sealant.

Figure 7-10 *Professionally installed solar hot water system in New Brunswick. The small electric panel to the right on the large thermal panel powers a pump which circulates fluid through the collector and into the tank inside. The flat-plate collector is similar to the ones built in the upcoming project.*

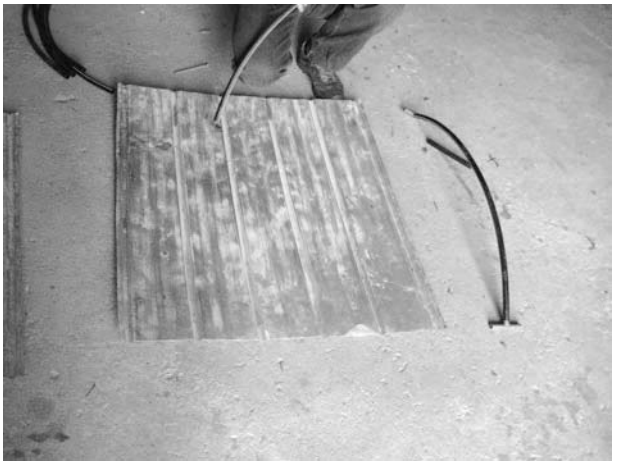

Figure 7-11 *A reclaimed aluminum sheet, length of cut plastic pipe, and some hose connectors ready to assemble into a homemade solar water collector.*

- A drill with a bit sufficient to get through your backing material (or a hammer and nail as a hole-punch).
- A power supply for the pump. Our example uses the solar electric system from a future project and you can too: just jump ahead. This has the advantage of only powering the pump when the sun is shining, precisely when it is useful to circulate water through the panel. Otherwise, use a battery or a 120 V pump.
- A small pump with fittings for the size of pipe used and appropriate to the power source chosen.
- A bucket to use as a tank. For the competition, a 20-liter bucket was required and a limit of 1 m^2 governed the collector size.
- Some insulation and black paint to improve the performance of your system (optional).

Tools

- Drill.
- Screwdriver.

Steps

1. Start by laying out the hose path of your planned collector (see Figure 7-12) and thinking through the system. An important concept to remember when determining the layout is that hot water will tend to rise. This is called the thermosiphon effect, and your collector can use this to make the pump's job easier (some systems even replace the pump by locating their tank above the collector). To take advantage of this in your system, position the water inlet near the bottom of the collector, and the outlet closer to the top. Because we'll have a pump, it is not necessary to be more precise than this.
2. The idea is to have water in the hoses flow over as much of the aluminum sheet as possible, and be touching the aluminum if possible (see Figure 7-13). The aluminum acts as part of the collector if it is touching the hose, because it too will gather some of the heat and transfer it through to the water.

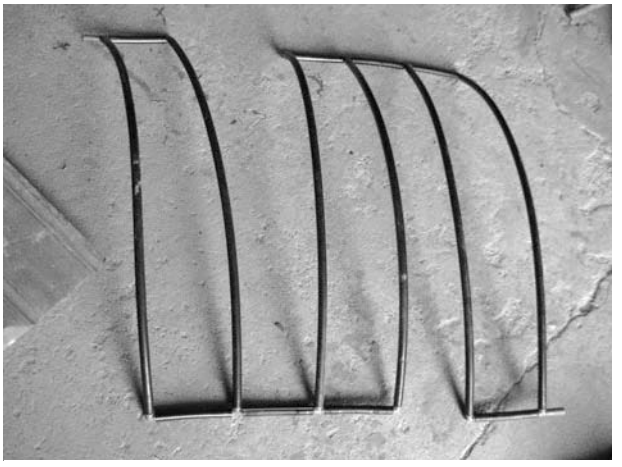

Figure 7-12 *The pipe connected in its proposed layout before being attached to the aluminum backing.*

3. There is a lot of room for creative problem solving here. For example, we had planned to have our hoses travel up and down the front of the aluminum sheet six times, but found that we didn't have enough of the right sort of T and L connectors. Rather than go to the hardware store to buy more (a waste of fuel), we figured out that sending the water up and down only three time in a set of two hoses worked just as well.
4. Once you have finished planning, cut your hose to the right length and join it up in the right shape by connecting it together with the T and L connectors. You might need hose clamps, or pipe tape, to stop leaks once you test it out.

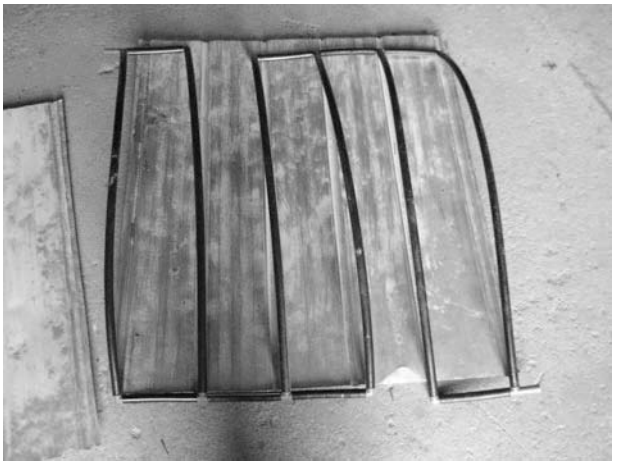

Figure 7-13 *The proposed layout of the hose across the aluminum sheet. The inlet and outlet connections are positioned to take advantage of a mild thermosiphon effect, but there will also be a pump.*

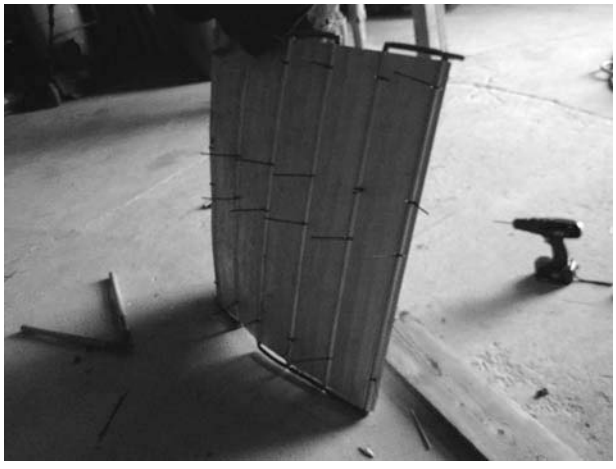

Figure 7-14 *Zip ties fed through holes drilled in the aluminum hold the plastic pipe securely in place.*

5. Drill holes in the aluminum and use the zip ties to fasten the hose to the aluminum backing (see Figure 7-14). You could more firmly affix the tubing to the aluminum backing using some silicon sealant if desired.
6. You should now have a functioning collector (see Figure 7-15). Much of what we do from here improves its efficiency, but this is the "guts" of it.
7. Get longer lengths of hose that will feed into your tank and attach it to your pump and tank.
8. Fill the bucket with water and try to siphon the water through into the collector.
9. Angle your collector facing the sun and power up the pump (see Figure 7-16).
10. Depending on how bright the sun is, you could see results within a few minutes.

Figure 7-15 *The completed basic collector. The inlet is visible at the bottom right, the outlet at top left.*

Figure 7-16 *The homemade solar collector in action! It has been painted black and has some (reclaimed hot water tank) insulation behind it. The tank is kept (out of the sun) in the container doubling as a stand, and the pump is powered by the solar panel mounted on the fence behind.*

11. It is a good idea to test your collector out in the sun before painting it black or putting any insulation on it, just so you can have a real experience of how much of a difference the color black and some insulation makes to the overall efficiency of your system.
12. Spray or apply your black paint, and attach some insulation to the back of your collector to improve its efficiency.

Alternative design

Another version of a solar thermal collector uses a wooden frame and some copper tubing to capture the sun's heat. The example in Figure 7-17 was built by students at Carleton North Secondary School and won the 2008 Energy Experience design competition at the Falls Brook Centre in New Brunswick. You'll notice from the image that it uses different principles to the last project. They chose to construct a wooden box and use copper piping, as well as a layer of glazing over top of, not unlike our earlier project

Figure 7-17 *Builders of the winning solar thermal collector check on its performance. The solar electric panel to the right powers the pumps, again hidden behind the thermal collector and doubling as a stand.*

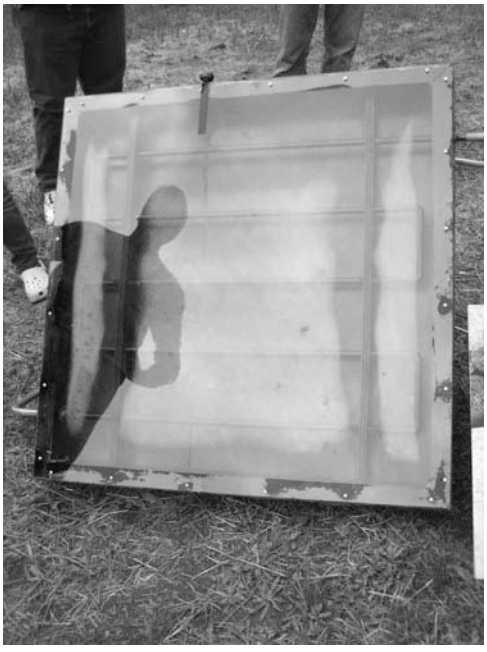

Figure 7-18 *Mist is seen on the inside of the thermal collector, reducing its efficiency. Also notice how the copper tubes are neatly held in the center of the casing, so the heat they collect gets moved to the water instead of the case.*

of putting water inside a solar cooker. One of the problems they encountered, which you can see in Figure 7-18, was that some of the water evaporated from the pipes and formed a misty cloud on the inside of the collector. This reduced its performance, but they still got enough heat into the water to win. I'll leave it to you evil geniuses to plan another competition and come up with improvements to both these designs.

Project 27: Solar Thermal Panels on Your Roof

Using solar thermal energy to supplement your current hot water heating source is an efficient and cost-effective method of getting familiar with larger-scale renewable energy systems. Home-scale solar thermal energy has the fastest cash payback of any of the home-sized renewable energy technologies covered in this book. The average 2008 model pays for itself within about 5 years, depending on your current fuel costs. As fuel costs rise, this number will get shorter and there are new programs by governments to subsidize the upfront purchase cost being created all the time. After 5 years, you will be collecting free energy to heat your water, and many systems have a warranty for up to 25 years.

Current models interact efficiently with a second heating source, such as mains electricity, by locating two heat sources inside the same water tank (see Figure 7-19). The electronic systems are smart and turn off circulation when the solar thermal collectors are colder than the tank, preventing your heat from rising up into space at night. The computer seamlessly turns a supplementary heater on and off to a schedule or based on a minimum tank temperature (the controller

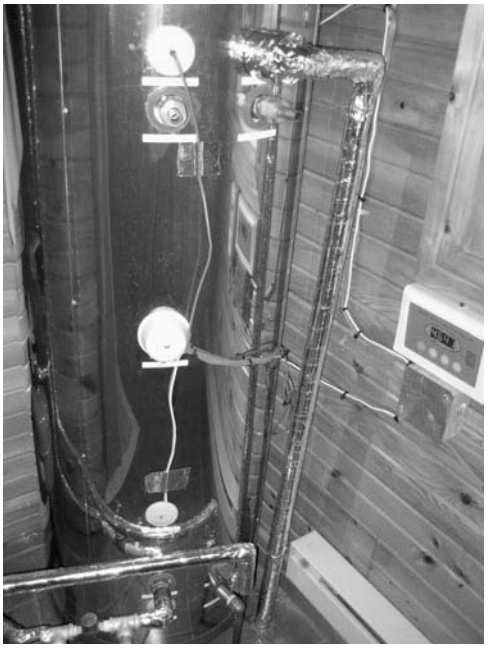

Figure 7-19 *An individual family-sized solar-electric hot water heater, installed. The electric element is midway up the tank, fed by electric cables from the right.*

is shown in Figure 7-20). Really, this is a painless way to reduce your energy costs at home, and have the experience of renewably heated water in your shower. If you are at all interested in having a green home, a solar thermal system is a very wise first project. It will function without maintenance for several years, and save you money. Real genius.

Figure 7-20 *Temperature sensors in the tank feed data to this computer, which then turns circulation on only when the sun is shining, and turns on the electric heater only when needed.*

Figure 7-21 *An affordable evacuated tube solar thermal collector mounted on the roof of a house in New Brunswick, and a solar electric panel on a frame on the ground in front of it. The solar thermal system is by far the more affordable option.*

The basic principles behind some commercial flat plate collectors are very similar to the systems we have already built. They have a fair level of efficiency and are often very cost-effective. The students from Carleton North who won the design competition, made a system that in many ways resembles the increasingly affordable evacuated tube collectors (see Figure 7-21). Evacuated tubes (detail in Figure 7-22) use the same principle of a dark area (or tube) surrounded by insulation in order to trap the maximum amount of thermal energy, but they use a small amount of a highly specialized fluid instead of water. Specialized heat transfer fluid runs inside thin tubes that are mounted inside a glass tube that has had all the air sucked out—a vacuum, which is a fantastic insulator. At one end of the evacuated tube (the end of the tube on the left in Figure 7-22, usually mounted at the top when installed) the inner heated fluid emerges from the vacuum and is transferred to another fluid (often glycol). The working fluid circulates through the heat exchanger in the tank, when the temperature probe indicates that the collectors are warmer than the tank.

Figure 7-22 *Evacuated tubes before installation. The end of the tubes on the left in the picture is where the heated fluid emerges from the vacuum.*

Figure 7-23 *Parts of an evacuated thermal collector frame mounted on a roof of a house, not quite ready for the tubes to be installed.*

Installation on your house is likely to require professional assistance, though there may be some areas where you might assist. Professional assistance will be crucial to ensuring the frame (Figure 7-23) that holds the tubes is secure enough to withstand weather and wind gusts, is angled correctly for your location, and the system is connected to your existing water line correctly.

Project 28: Solar Thermal Hot Water on the Roof of Your House

Depending on where you are and what sort of roof you have, the process of mounting a professionally built system will vary. Hire a professional if going with a ready-made collector; both it and your house are valuable. If you are installing on a roof that isn't as valuable, think about whether you need a ready-made system. The system from our last project was easily mounted (Figure 7-24) on a rooftop as a supplementary heater for a shower.

Frame and tubes

Mounting frames of this evacuated-tube system consist of light aluminum bars that bolt together and are secured to the roof. Supports run across the top and bottom to hold the tubes. Special holders for individual

Figure 7-24 *The homebuilt solar thermal panel from the previous project. It has been simply mounted in a more permanent place on a roof as a supplementary heater for a shower.*

Figure 7-25 *Specialized plastic tube holders (held right in foreground) are attached to an aluminum mounting-bracket (leaning on picnic table).*

evacuated tubes are attached onto an aluminum support member (Figure 7-25) in a test run on the ground to make sure it will all fit. A lower support member is bolted to the frame on the roof (Figure 7-26), before the row of specialized tube holders pictured (Figure 7-27) are individually put in place, with each evacuated tube. These will be different on each and every system and not interchangeable.

Figure 7-26 *Supporting bracket for the evacuated tubes is attached to a roof-mounted frame.*

Figure 7-27 *Lower support member of the evacuated tubes, ready to be lifted onto the roof.*

If you are not scared of heights, you might want to help installing the evacuated tubes into the finished frame. The tubes will probably come packaged in a box—carefully lift one out (Figure 7-28). Holding the evacuated tube away from your body and anything sharp, because it shatters easily, climb onto the roof (Figure 7-29). Orient the tube so the end of the tube where the superheated fluid emerges is pointing up, where it will be mounted into the heat exchanger across the top of the frame (Figure 7-30). Some systems are

Figure 7-28 *Gently lift the evacuated tube from the box.*

Figure 7-29 *Carry the evacuated tube onto the roof, holding it away from sharp objects that could shatter the glass.*

designed for a little paste to be smeared on the tube before mounting to ensure heat transfer (Figure 7-31): put some on if so. Place the top of the evacuated tube into the heat exchanger at the top of the frame (Figure 7-32). Push the tube securely into its socket, holding it with both hands and pushing straight in (Figure 7-33). With the top end securely in place, retrieve the lower mounting piece from a (hopefully) convenient location (Figure 7-34). Attach the plastic mounting cap to the lower end of the evacuated tube (Figure 7-35). Secure the capped tube to the frame with bolts and tighten (Figure 7-36). That's it. Go back down and get the next tube (Figure 7-37). You'll only have to repeat the process 20 times or so for each collector!

Figure 7-30 *Correctly orient the tube so the thin end (where the fluid emerges) will fit up into the heat exchanger.*

Figure 7-31 *Apply a small amount of thermal paste to improve heat transfer.*

Figure 7-32 *Slide the evacuated tube into the mounted heat exchanger.*

Figure 7-33 *Grasp the tube firmly and slide straight up into place.*

Figure 7-34 *Retrieve the special plastic mounting bracket from a convenient location.*

Figure 7-35 *Attach the mount to the bottom of the evacuated tube.*

Figure 7-36 *Insert mounting bolts and tighten.*

Figure 7-37 *That's it! Go back down and get the next tube.*

Tanks and pipes

You're almost certainly going to need a professional plumber, or at least someone who has done plumbing work before, to do this part for you. Leaks are common when new plumbing is installed, so keep a look-out the first few days after your new system is installed. Your plumber may not take the time to insulate the pipes carrying the hot water from your collector to the tank; you'll want to make the effort. There are tube-shaped packages of insulation you will find at the hardware store or through your installer. You'll almost certainly be getting a new tank, one that is superinsulated and often with a secondary heat source. The thermal collector we just saw getting installed will be plumbed into the tank pictured in Figure 7-38. The tank can operate completely on an auxiliary (electric in this case) heat source while your thermal panel is being installed, so there is no need to worry about going without hot water for long time while it is being installed. The solar-heated water will be fed in through the connection visible at the bottom of the tank in Figure 7-38; it was shown with plumbing in place in Figure 7-19. The computer to the right of the tank (also shown in Figure 7-20) controls when water is circulated through the tank and when the auxiliary heater turns on.

Figure 7-38 *Solar hot water tank, before plumbing from the thermal collector is installed.*

You'll be in charge of programming the computer's settings, so stop and think about how you use hot water. Is it really necessary to have 80° C (175° F)water all the time? Try lowering the temperature; then experiment with the timer. Remember that the sun will shine brightly at predictable times of the day, so setting the auxiliary element to come on in the morning before the sun rises (if you don't shower till later) might mean that you have electrically heated water in your tank already, when the sun comes out. During the day a lot of good solar heat would go to waste because it would have nowhere to go—the tank would be hot already. There's nothing wrong with using electricity, as we'll see in the next chapter, but if you didn't shower before the sun came out, all that electricity was not wisely used. No need to get up earlier—the opposite in fact. With your new solar thermal heater, you now have an ecological reason (if you wanted one) to stay in bed a little longer: you are waiting for the sun to heat up the water before you wander over for a real feel-good shower.

Chapter 8

Water and Air

We are surrounded by both water and air and the majority of the surface of the Earth is a boundary between the two substances. Each on its own has remarkable and useful qualities, many of which we use to a great degree already but which we could also stand to use more of. We have examined air as an insulator and a conductor of heat, and as a gas that expands when heated. We have also examined water as a heat store through time—a sort of battery—and something that can provide cooling. In this chapter we see how water and air can be used in a number of additional ways to provide useful work, heat, and electricity.

Water power

Hydroelectricity provides a huge percentage of global energy, often through large systems built on major rivers. There are several devices commonly employed to turn moving water into a force suitable for performing useful tasks. The oldest is probably the water wheel, which has paddles attached to the outside of a large wheel. In pre-electrical times the moving wheel was enough to be of use for grinding corn or milling wheat for farmers.

There are at least two configurations of the water wheel: the water goes over the wheel or under the wheel. Having the water go over the wheel (called an overshot wheel) might involve changing the river a little more than going under the wheel (called an undershot wheel), but the trade-off is that it is possible to get the wheel turning with more force using an overshot wheel. Whatever changes do need to be made to the river for an overshot wheel will not likely be significant. Some undershot wheels, like one of the kits we explore, can even just sit right on top of the river.

Some version of the same idea that lies behind a basic water wheel lies behind all sorts of systems built today: some pumps have a prime mover that resembles a water wheel and can be used in reverse to generate power, and some custom-built systems have slightly modified paddles and use nozzles to direct the water at all parts of a wheel simultaneously, to maximize the amount of power extracted from the falling water.

Project 29: A Model Water Wheel

Water wheels have been used throughout the world for a long time and there are countless examples of out-of-use hydro sites in small towns and villages in the United States, UK, and around the world (Figure 8-1). Often this is because towns and villages have traditionally gone up around rivers, both because they are good sites for river wheels and because rivers provide transportation and other amenities. It might seem quaint to look at this now, but we should remember that the alternative to big projects (which can have large environmental impacts) could be many smaller projects that have the potential to

Figure 8-1 *An old dam outside Florenceville, New Brunswick, which once powered a sawmill using a large water wheel. The wheel was fed through the chute, barely visible in the top left corner of the photograph.*

generate electricity and power for other purposes on a small scale for local consumption. Often these projects need not be complicated, but even when they are more complicated, modern systems are often based on the same principles as the model we build here.

An example of a slightly advanced version of the simple water wheel concept is the hydrogenerator constructed at the Centre for Alternative Technology in Wales, UK. This grid-tied hydrogenerator station has the turbine turned so the axis is vertical, and four nozzles of water are aimed to hit all four (custom-engineered) paddles simultaneously from four directions instead of from one. It is the same idea as the water wheel we will explore, just adjusted to ensure a higher efficiency.

You will need

- Four small rectangles cut from firm cardboard, each side a little shorter than the length of a cork from an average wine bottle.
- A cork from an average wine bottle or equivalent.
- Two sewing pins or screws.

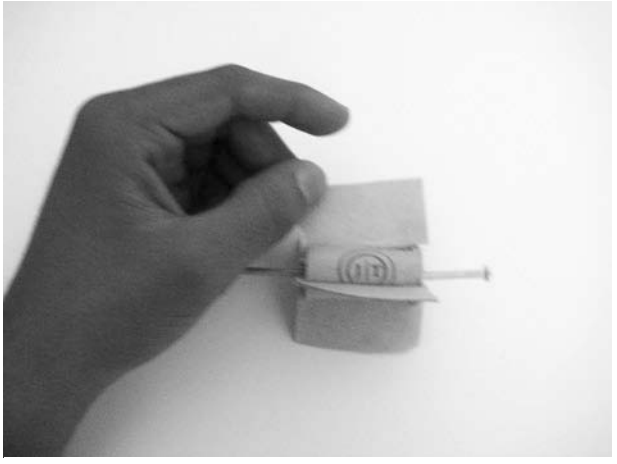

Figure 8-2 *Pushing the last paddle into a slit in the cork. The axles, made of screws, are already attached.*

Steps

1. Cut four slits equidistant around the outside, running lengthwise down the cork.
2. Round two of the corners on one side of each of the four pieces of cardboard.
3. Slide the rounded ends of the four pieces into the four slots in the cork (Figure 8-2).
4. Put the two pins in either end of the cork.
5. Rest the pins on your fingers and have the water strike the paddles (Figure 8-3).

Figure 8-3 *Testing the water wheel, held on a thumb and finger, using a kitchen tap.*

Variations

Mounted in even a simple frame it is possible to get real work from this simple machine. Attached to a 1.5 V motor it can recharge a small battery to power a light and, if it is fed from an elevated rainwater barrel draining into your garden, you can catch and make use of some spare gravity-fed water energy!

River courses

There are generally two kinds of river-based hydro systems, both of which modify the course of natural water flows to harness some of the naturally flowing energy. A dam system blocks the flow of a river completely and sends the entire contents of the river through a turbine, which turns an electric generator. A run of the river system sends only part of a river through the turbine and leaves the rest of the river undisturbed.

Hydro systems can be good for providing a stable source of non-polluting electricity in large quantities, but sometimes their impacts on the landscape, including people and animals, owing to the creation of large reservoirs to hold the water back (Figure 8-4) and during their construction, can be quite enormous. The well-known Three Gorges Dam in China is just one example of a dam-based project that displaced millions of people to create a holding pond for the enormous volume of water that would be fed through the hydroelectric generators. Similar examples can be found constructed throughout North America and Europe, often further into the past so their impacts are further from recent memory.

A third type of system for providing energy from water uses water and gravity together as a type of battery and is among the most efficient types of batteries known. A water battery uses two separate reservoirs that are at different elevations; e.g., one higher up a mountain than the other. The top reservoir

Figure 8-4 *Even the small holding pond (pictured) built up behind the dam shown in Figure 8-1 dramatically changed the existing landscape and river.*

can be pumped full, using the water from the lower reservoir—e.g., by using electricity from the grid during off-peak hours or from a wind system. The top reservoir can then be emptied through a turbine to generate electricity at times when it is needed, such as during peak hours or when the wind has died down.

Water batteries, while efficient, are only really suitable for a small range of places, where reservoirs or potential reservoirs already exist naturally. Disturbing those places could have a potentially large impact. A water battery also requires another source of power to move the water against gravity to the higher reservoir. In some cases surplus off-peak electricity can be used and then fed back onto the grid when needed. There are also other, non-electric, devices that can move water up great heights using only the force contained in moving water, without even blocking the flow of the rest of the water. The ram pump uses the pressure built up in a column of water by a stream of moving water, to push some of the water up great heights. The Online Resources have links to a ram pump project you could try, and an upcoming project explores a similar way to do the same job, which is easier to demonstrate and quite neat too—the spiral pump.

Project 30: A Model-Sized Water Wheel

To get a better sense of how water in a moving river can be used without modifying the river in any way, it is educational to construct a more practical model-sized water wheel. The kit pictured, made by Walter Kraul Gmbh (www.spielzeug-kraul.de/), is sold through many retailers around the world, and is an example of the fine sorts of learning tools that can be crafted from long-lasting wooden pieces.

You will need

- To order the Fluß-Wasserrad kir (River wheel at the Centre for Alternative Technology's store www.cat.org.uk), or a similar wooden wheel, or for the real genius, to construct something similar from spare parts. The Online Resources have some links to larger water wheel projects made from PVC pieces.
- The kit requires no extra parts and comes with complete instructions that are easy to understand. The company sells a variety of interesting wooden projects to experiment with and put your waterpower to use, including a model grain grinder and other useful tools. As their site is in German, it may be easier to search down an English-speaking retailer nearer you.

Steps—assembling the water wheel

1. Using the wooden kit as an example, slide two notched and drilled hexagonal hubs onto the axle (Figure 8-5).
2. Insert the 12 thin dowels (outriggers) that will hold the paddles (Figure 8-6).
3. Attach the paddles to the dowels using the provided elastics (Figure 8-7).

Figure 8-5 *The wooden axle and pre-drilled hexagonal hubs from the Walter Kraul kit.*

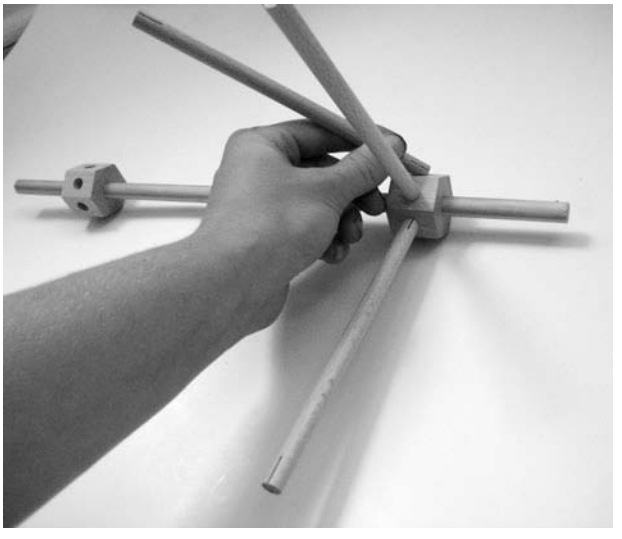

Figure 8-6 *Inserting the outriggers into the hub.*

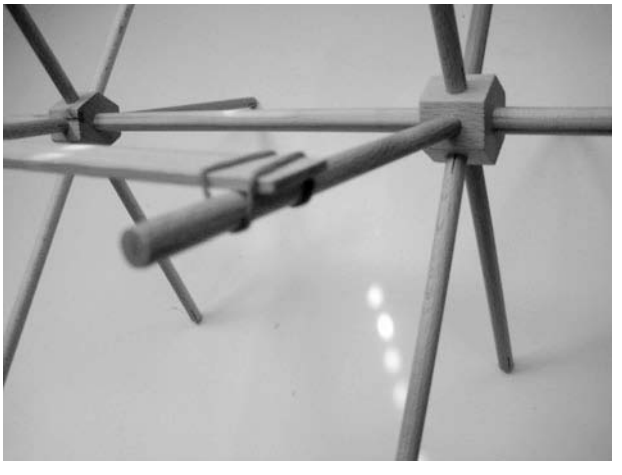

Figure 8-7 *The first of 12 thin boards to be attached to the outriggers with the supplied elastics.*

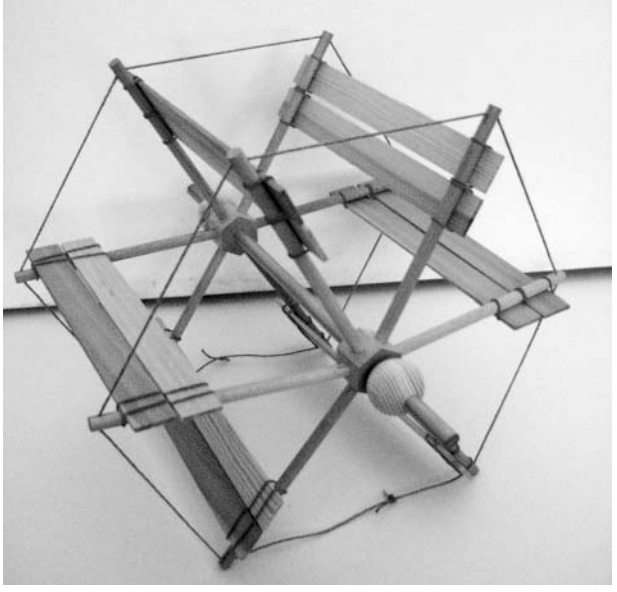

Figure 8-8 *String wrapped around the outside of the outriggers, and bead-shaped stabilizers in place.*

4. Once you have attached two pieces of wood to each pair of dowels, wrap a string around the outside of the paddles for support, and place the bead-shaped supports in place, to keep the paddles from sliding down the axle (Figure 8-8).
5. Use the supplied wing nuts and bolts (Figure 8-9) to assemble the base.

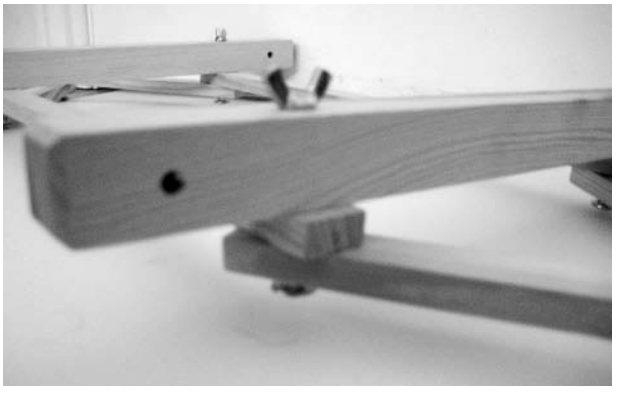

Figure 8-9 *The wing nuts are a tight fit on the base.*

Figure 8-10 *The completed river-wheel kit, ready to be tested.*

6. Finally fix the wheel into the base and attach the drive pulleys (Figure 8-10).
7. Test your water wheel out in a slow flowing river, making sure to put heavy rocks on the base to keep it from floating away (Figure 8-11). We will look at useful things to do with your moving wheel in a later project and in other chapters.

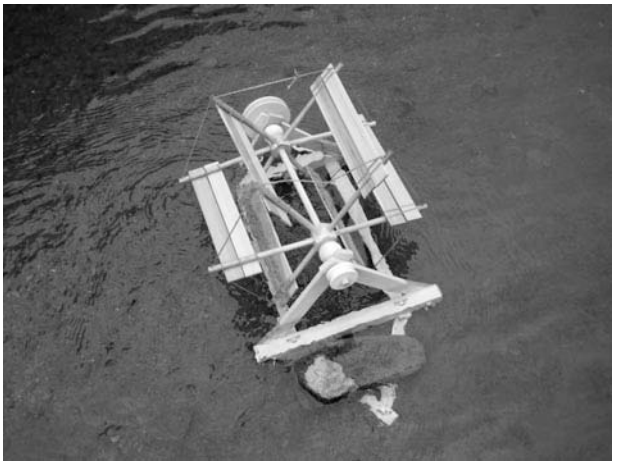

Figure 8-11 *Don't forget the rocks; the water wheel floats a little until the wood gets wet, and can get carried away easily. Because the paddles are widely spaced, the motion of the wheel is not completely smooth, and observers get a very good sense of when each paddle develops its force from contact with the water.*

Online Resources

- www.clemson.edu/irrig/equip/ram.htm—W Bryan Smith's ram pump project site.
- www.green-trust.org/2000/rampump.htm—a long-running weblog and resource for new and old technologies.
- builditsolar.com/Projects/WaterPumping/waterpumping.htm—in addition to providing information about many types of different types of water pumping systems, Builditsolar is a fantastic resource for the do-it-yourself renewable energy enthusiast.

Under pressure

An air compressor can be used to create many types of useful work and is a common industrial tool. Most of us are at least familiar with medium pressure air—the tires in your car. Air can be used in other ways with a fair degree of efficiency: e.g., by being put under pressure using a compressor, and then used as it is uncompressed.

Pressurized air is commonly used as a power source and effective battery in the construction industry (Figure 8-12) to power tools which have fewer moving parts than their electrical counterparts. With proper safety features in place, compressed air also has the potential to be a low-impact and high-efficiency storage medium. There are large-scale projects by utilities in Germany and the United States to use compressed air to store electricity from the grid at periods of low demand—like the night—and use the stored compressed air to improve the efficiency of gas-powered turbines by two-thirds, and in some proposed projects to feed electricity directly back on to the grid. The economics and practicality of large-scale pressurized air storage projects depends on the correct geological formations to store the compressed air: for example, underground salt caverns are often useful as they provide large spaces that can be sealed to contain pressurized air.

Figure 8-12 *A commercial electric air compressor and high-pressure tank, used on construction sites as a portable power source, like a chemical–electrical battery.*

It is not hard to explore the concept of making pressurized air useful, even on a small scale: just blow up a children's balloon or pump up the tire of your car and then let the air out into the path of a small wind turbine (which we'll soon build).

Hot air

We will explore another way in which air can be used when discussing the Stirling engine (see chapter 9), and during the solar projects. The Stirling engine depends on air expanding when heated to run; the same "feature" of air often leads to losses in air compressors, where putting air under pressure leads to heat losses. Conversely, when the air is expanded, it cools down and draws heat in. The efficiency of compressors in factories that power large systems and provide compressed air for cleaning and other functions can be improved dramatically by providing bigger heat sinks (such as using it to heat indoor spaces) and a cooler air intake temperature (such as in taking the air in shaded areas).

Some have started to think about improving the efficiencies by storing the heat produced by compression separately from the air, and reusing it to preheat the air as it is expanding and doing work, thus preventing energy losses. This is being done on a large scale, as well as potentially on a smaller scale too and, in combination with a flywheel, is being packaged by one company (see the Online Resources) as a non-chemical battery-based uninterruptible power supply (UPS).

There is a lot of potential for innovation in this area, especially now that we have very strong and light materials, such as carbon fiber, to build tanks. The underwater diving community has a history of portable and relatively lightweight tanks, which some have already put to use powering vehicles (see the Quasiturbine project and homebuilt car at Evilgeniusonline.com). Though there have been promises of air-powered cars since the 1990s, and new projects seem to get announced all the time, they haven't made it onto the market fast enough.

It should be noted that high-pressure air can be extremely dangerous to work around, so it is very important to have professional or at least knowledgeable advice when working with these sorts of systems.

Online Resources

- www.activepower.com—a commercial non-chemical, battery-based uninterruptible power supply that uses stored heat to improve the air pressure conversion efficiency.
- quasiturbine.promci.qc.ca—an innovative engine that runs off of compressed air without using traditional piston or turbines, rather a combination of the two, and which has been used to power a small go-cart.

Project 31: The Spiral Water Pump

The spiral water pump is quite an old idea that hasn't had much widespread use. It demonstrates several interesting concepts: water piston, air pressure, and air and water transmission over distances. There are two parts to this project: the first is a water wheel, the one from the last project will do nicely to demonstrate; the second part is to build a spiral pump and affix it to the water wheel. When completed, we will send the compressed air and water up a hill, and separate the compressed air and water, so they can each do some useful work. The compressed air can be used to turn an air motor and the water can be used either as a source of running water or sent down the incline through a turbine.

It is useful to understand the concept behind this pump before starting to build it. The pump intake and compressor are both formed by a large spiral that is attached to the side of the water wheel. The spiral can be made out of rigid plastic pipe. The end of the spiral at the large end of the spiral should be positioned so that it gathers water as the moving stream turns the wheel. As the wheel turns with the spiral attached to it, the spiral gathers water during the first half of the rotation, then air during the second part of the rotation. Each rotation of the wheel pushes successive alternating batches of air and water into the spiral, which are squeezed into a tighter and tighter space in the parts of the inner spiral that

have progressively smaller diameters. Because water doesn't compress very easily, the air compresses in the spiral.

At the center of the spiral, the alternating air and water "pistons" inside the plastic tube are turned 90° from the wheel and sent through a pipe up an incline. Air expands to push pistons of water up an incline, where the water and air can be separated. There may be enough air pressure to turn an air compressor and generate electricity. The water can either be used for other purposes, having been pumped up an incline, or can be sent back down the incline and used to generate power.

Online Resources

- lurkertech.com/water/pump/tailer/—Chris Pirazzi has collected a wealth of interesting and hard-to-find material on water-powered water pumps, including the spiral pump created by Peter Tailer and a mirror of Peter Morgan's hard-to-access tripod site on large-scale spiral pumps.
- www.wildwaterpower.com/—Denis Buller's site on his inexpensive homemade spiral pump.

You will need

- A medium-sized water wheel with a base. The pictured example (Figure 8-13) uses the water wheel from the previous project.
- Some flexible plastic tubing.
- A frame for the spiral pump that will enable it to stay on the side of the water wheel: e.g., long wooden boards and rope.
- Some right-angle hose connectors appropriately sized to the plastic tubing.
- A longer length of tube, in which the compressed air will expand and push the water up an incline.
- Optionally, a scoop to increase the water caught by each revolution of the spiral pump.

Steps—the spiral pump

1. The pump is a thin strip of the plastic tube held in a spiral. Coil the plastic and attach supports flat against the tubes with rope or anything else handy; bolts and wooden supports can be used on a larger scale. The Online Resources has links to pictures of larger versions.
2. It is possible to use a fairly lightweight method to attach the spiral to the wheel axle (Figure 8-13), but a permanent installation should consider durability. The tube on the large end of the spiral should point downstream and for maximum efficiency could include a scoop.
3. As the wheel is turned by the moving water, the open end of the spiral tube will be pushed underwater (Figure 8-14) and gather an amount of water. Once the open end of the spiral rises to the surface (Figure 8-15), the column of water in the tube has a column of air up against the water.
4. As the diameter of the spiral shrinks, the alternating columns of water and air have less space, and the air compresses (Figure 8-16). From the center of the

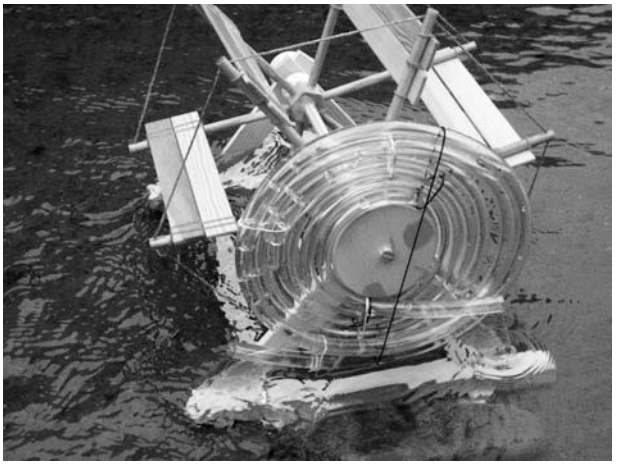

Figure 8-13 *Demonstrating how a spiral pump works using the water wheel from an earlier project. When finished, the tube at the center of the spiral will turn in a sliding-coupling at a right angle and send compressed air and water up an incline, without disturbing the course of the river.*

Figure 8-14 *The open end of the tube is pushed underwater by the wheel turning.*

spiral, attach a loose-fitting right-angle pipe fitting and a long tube to deliver the compressed air and water up an incline, where they can each be recovered and used.

Figure 8-15 *As the wheel continues to turn, the open end of the tube is lifted out of the water, and starts to gather a column of air.*

Figure 8-16 *Alternating columns of air and water gathered in the spiral pump. As the diameter of the spiral gets smaller, the air is compressed. The alternating columns of water and compressed air can then be turned away from the spiral and sent up an elevation to do work.*

Heat and air

A good place to start exploring compressed air is by looking at the primary source of inefficiencies. As much as compressed air can be a good way to store and use energy in ways that can be put together using relatively benign materials, inefficiency of the overall system could work against it working effectively. Compressing air creates an enormous amount of heat and that is a major source of perceived loss in pressurized air systems. In another application, the heat generated is also incredibly useful, like in a diesel engine, where pressure is used to ignite fuel inside the cylinders of the engine.

Project 32: Making a Fire Piston

The fire piston is a very old idea, recorded by Europeans passing through South-East Asia around 1500. The device uses a small cylinder and airtight piston to ignite a small piece of timber, reportedly used to light cigarettes when "discovered" by the Europeans. Several budding entrepreneurs are selling ready-made versions of these devices as educational and useful items and there are videos of them in operation on the web—see the Online Resources for some links.

The pressures generated by a fire piston can be very dangerous and are beyond the design limits of the common materials that can be used to build a demonstration version. The devices can also be made from more natural materials, but they tend to be somewhat more difficult to build. A safer experience will almost certainly be had by purchasing one of the beautiful ready-made models (see Figures 8-17 and 8-18), which demonstrate, without much danger, the concept of using pressurized air to provide sufficient heat to create a burning ember. The reader is advised to read the complete instructions on the web and take appropriate safety steps before proceeding with this project.

Figure 8-17 *A small Plexiglas fire piston, available from firepiston.com. Image courtesy of firepiston.com.*

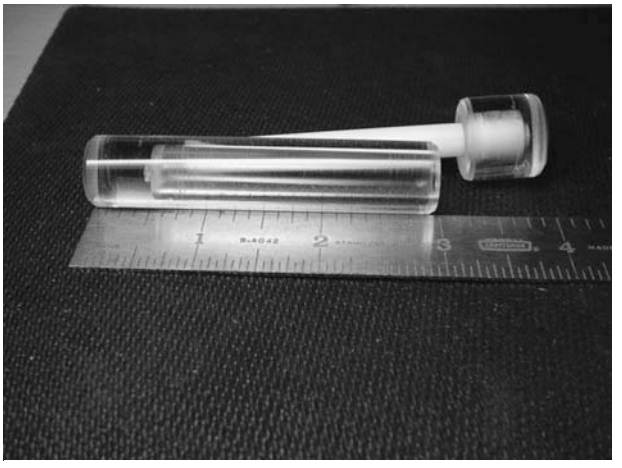

Figure 8-18 *A larger Plexiglas fire piston, available from firepiston.com. Image courtesy of firepiston.com.*

Online Resources

- www.wonderhowto.com/how-to/video/how-to-make-your-own-fire-piston-222301/
- wildwoodsurvival.com/survival/fire/firepiston/rbmodelt/—Rob Bicevskis' excellent site.
- www.firepiston.com/—a safer alternative to building your own fire piston.

Many thanks to Rob Bicevskis for providing images and guidance for this project.

You will need

- Patience, time, and an Internet connection to research options and improvements to the system outlined.
- A cylinder. About 9 inches (22 cm) of half inch (12 mm) CPVC tubes and the same-sized end cap to form the cylinder is suggested in the model T project. An alternative is to use a metal tube with

a smooth inside finish and outside bolt threaded end and screw on cover, also available from most hardware stores, or a polycarbonate cylinder.

- A piston. For the model T version, a wooden dowel that fits tightly inside the cylinder but is longer than the cylinder (11 inch or about 30 cm is suggested to enable a comfortable handle). As an alternative, a smaller metal version could use a 4 inch long metal bolt.
- An O ring that fits tightly into a groove you will make on the piston (either dowel or bolt), which forms a seal inside the cylinder.
- A space at the end of the piston to hold a small amount of starter material that will be set alight by the heat generated by compressing air. For the PVC model, a smaller PVC end cap that will be modified to hold the flammable starter material. A small indent should be drilled into the bottom of the bolt for the metal version.
- Some flammable starter material (such as cotton wool or small pieces of timber).
- Possibly some grease for the piston.
- A PVC version could use various CPVC T junctions to form a handle for the model T type design and that will make for a safer experience overall, as well as dabs of CPVC cement and epoxy glue. See Rob Bicevskis' site for a complete list.

Steps

1. There are three important parts to the fire piston: the cylinder, piston or plunger, and a strong and secure O ring to ensure a pressure build-up.
2. Creating a cylinder from CPVC tube is a relatively trivial matter of firmly affixing an end cap to one end of a length of tube with epoxy glue, which will be available with the CPVC tube at your local hardware store (see Figure 8-19). An alternative method is to use a metal tube from the nuts-and-bolts aisle with a screw end and securely screwed on metal cap.
3. The PVC model includes a T section that can be attached to the top of the wooden plunger (see Figure 8-20) to create a convenient storage space for Vaseline and starter material.

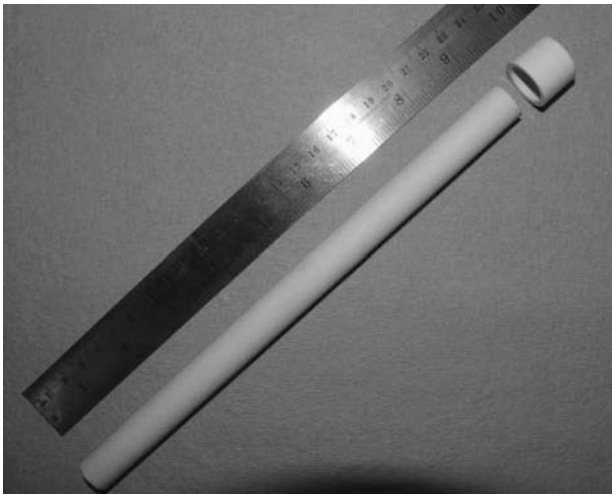

Figure 8-19 *Length of PVC pipe and cap used for the model T fire piston. Photo courtesy of Rob Bicevskis.*

4. If using a wooden dowel, it may have to be thinned down a bit to fit inside the cylinder. It should not be airtight as the O ring will do that. Try to avoid the need to make a bolt smaller than it is.

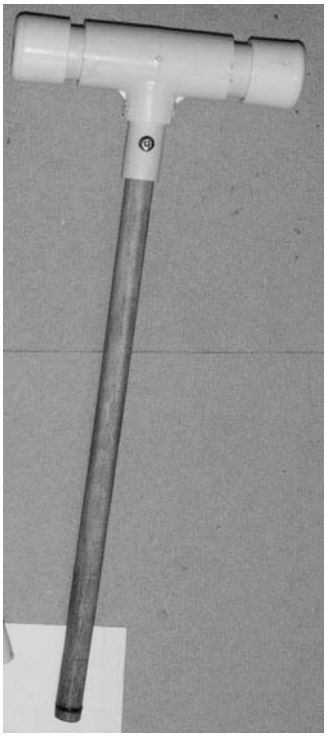

Figure 8-20 *The T-shaped handle with storage compartments in the short ends of the T. Photo courtesy of Rob Bicevskis.*

Figure 8-21 *Making the groove in the wooden dowel using a piece of string and some sandpaper. Photo courtesy of Rob Bicevskis.*

5. There are some variations on how to make a well-fitting O ring, which will not come loose when subjected to the pressures inside the fire piston. You may need to do some precision woodwork (Figure 8-21) or metal grinding into the bolt, to get a ring that is tight and doesn't slip. Two versions of the goal of the plunger and one cylinder, pictured in Figure 8-22, can be achieved in many ways. Rob's site is a good start for more complete directions and links to other similar projects.

Figure 8-22 *Two pistons on the left and PVC cylinder on the right. Photo courtesy of Rob Bicevskis.*

Figure 8-23 *Detail of the bottom of the piston, showing where the small amount of fire-starter will sit. Photo courtesy of Rob Bicevskis.*

6. A hole drilled in the bottom of the piston (Figure 8-23) holds the timber that will be ignited by the pressure of compressed air.

Figure 8-24 *The completed model T fire piston. Push down on the T while it is the cylinder; the O ring forms an airtight seal that results in air compressing at the bottom of the piston, setting the fire-starting material alight.*

Figure 8-25 *A smaller fire piston with its ember burning. Photo courtesy of Rob Bicevskis.*

7. One version of the fire piston should look like Figure 8-24 when complete. Fill the holder with a small amount of timber, grease the plunger, and in a swift motion push the plunger into the cylinder. Make sure you are ready for the reaction of the force of compressed air igniting the timber, which will push back at you. You can then remove the plunger and use the burning ember to light a fire! Another beautiful fire piston, also made by Rob, is shown in Figure 8-25, with its ember glowing.

This page intentionally left blank

Chapter 9

Heat and Power

There is the potential to use heat for a wide variety of purposes. The most common ways to use heat are space and water heating; however, heat can also be stored, as was seen in Chapter 7, or used to create useful work.

Although normally we think of heat in the high-temperature form found in a gasoline engine or a steam turbine, even relatively low-temperature heat like that found in a solar thermal panel can be useful. Theoretically, work can be extracted from any temperature difference; in practice, obtaining useful amounts of work from relatively small temperature differences is challenging. There are many different ways in which this is practically done. A device that turns heat into another type of useful work or vice versa is called a heat engine. Steam engines, air conditioners, and heat pumps are all heat engines, as is the gasoline or diesel engine in your car.

Heat engines

Some heat engines are internal combustion engines, like in your car, whereas others are external combustion engines, as in a steam engine. The main difference is that an external combustion engine depends on the heat itself—regardless of the fuel—whereas an internal combustion engine is pretty picky about its fuel.

External combustion engines

There are probably a number of external combustion steam engines around you right now, if you are anywhere near an electric power station. Most large electricity plants use steam engines to turn electric generators that power our homes. That is true regardless of whether they are nuclear, or coal- or gas-fired power plants.

The heat from whichever fuel is used turns water into steam, and then the steam is heated further in an enclosed container, which raises its pressure. The pressurized steam is then fed through a turbine, not unlike a fan blade but much stronger, or a piston engine.

A piston engine can take many forms: both diesel and gasoline engines are piston engines. A piston engine has two major parts, a cylinder and a closely fit piston inside. The hand-pumped air compressor you might've used to fill up the tire of a bicycle in an earlier project is a simple cylinder and piston device. A steam piston engine generally has the pressure built up externally; the steam is then injected into a cylinder and expands to push the piston. Like the piston engines in your car, there are a number of different ways that multiple pistons can be arranged, and a wide variety of innovations have been made over the years.

A turbine engine operates on a principle not unlike your desktop fan, but with air blown through it instead of moving the air forward. The angled blades mounted around an axle slows pressurized steam down as it passes from a high- to lower-pressure containers, and turns the blades backwards, which is often used to turn electric generators. Turbines are of course engineered precisely to maximize the force captured in a way that your fan is not.

Piston steam engines were once the power horses of the railway industry, powered by wood, then coal, and both piston engines and steam turbines are commonly found in power stations around the world. Modern steam-based systems are designed to reuse the steam several times by sending the waste steam from a large turbine or piston engine through a smaller one, and then sometimes a smaller one after that.

External combustion engines have several differences that make them potentially valuable from

an energy standpoint. For one, they rely on a temperature difference, rather than a specific fuel type. This can make it easier to combine heat sources, which is useful when you are working with an intermittent heat source, such as the sun. As we saw when installing a solar thermal system, having a backup heat source allows things to continue to function as normal when a renewable source isn't available.

So for example, an external combustion engine could use the sun's heat while it was around, and burn another fuel when it was not.

Internal combustion engines

Inside the cylinder of a reciprocating gasoline engine, a small amount of fuel is set alight and the explosion that results forces a piston, which fits tightly into the cyclinder, away from the explosion. A diesel engine does the same thing but uses pressure, instead of a spark, to ignite the fuel, like we explored in the fire-piston project.

The engine in a vehicle does more than just move the vehicle around, it does several things at the same time: it moves the car forward through gears attached to the wheels, it turns an alternator that generates electricity, and it can send waste heat into the cabin, or turn a compressor to cool the temperature inside the cabin. It makes me wonder, if a car can do so many things at once, why in the basement of so many houses are there water heaters, furnaces, and incoming electricity connections? Couldn't those be combined somehow?

It may not be ideal to have an internal combustion engine (like in our cars) sitting in our basement running all the time, though it is certainly possible. In many places, e.g., remote regions, before centrally provided electricity arrived, internal combustion spark engines did tremendous amounts of work (see Figure 9-1). Engines, like the 100-year old model pictured, are versatile and many were designed to run on multiple fuels depending on what was available. They are, however, a bit loud, and a continuous burn, like you find in a furnace, tends to be cleaner than an intermittent burn, like in an engine.

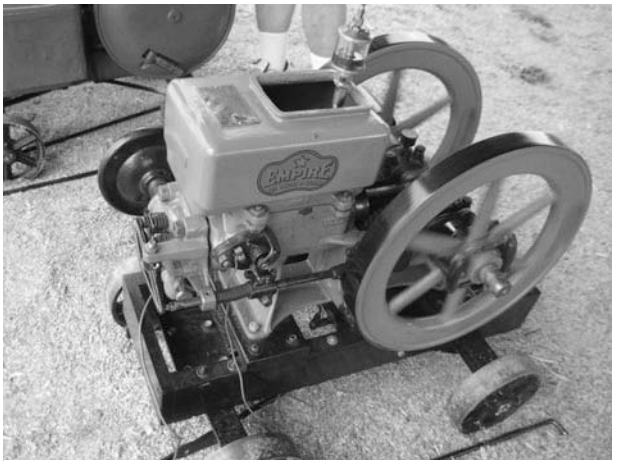

Figure 9-1 *An antique gasoline/kerosene-powered factory-type engine, which would have powered machinery and generated electricity before the grid reached these isolated areas. On display in New Brunswick at Home Week in Woodstock.*

Cleaning up combustion

As mentioned in Chapter 1, burning fuel releases toxic gases into the atmosphere, including greenhouse gases, but depending on the type of fuel, also contributes to acid rain and other problems. Although we aren't quite ready to stop burning everything, we should be as efficient with the fuel we do burn.

Some engines are cleaner than others: e.g., as mentioned, an engine with a continuous burn tends to be cleaner than one with an intermittent burn. A neat way to understand why is to light a match, let it burn for a second, and then blow it out. Pay attention to when smoke is created during this process: it is while the flame is growing, and then from the smoldering matchstick once blown out. The flame itself releases heat, and not much smoke in comparison.

A good general way to reduce pollution from combustion is to increase efficiency by finding more uses for the same energy. Heating systems which also produce electricity are called combined heat and power (CHP) systems. There are a number of ways in which this can be achieved: both steam and sealed-gas (Stirling) engines are contenders that may get more common in the near future; other possibilities are fuel cells and thermoelectronics.

Steam can be a little tricky to work with for the inexperienced, and it requires water heated to over 100°C (212°F). To get those temperatures from the sun we'd have to concentrate it: this is being done, both on a large scale and a scale small enough for us to explore in a later chapter. Below that temperature there is still enough energy to provide work. Not only is a hot air engine a good way to demonstrate that, but also it is being used in commercial heat and power systems that are now coming onto the market for homes and yachts.

Whispergen (Figure 9-2) is one of several companies working on Stirling heat engines for consumer-based

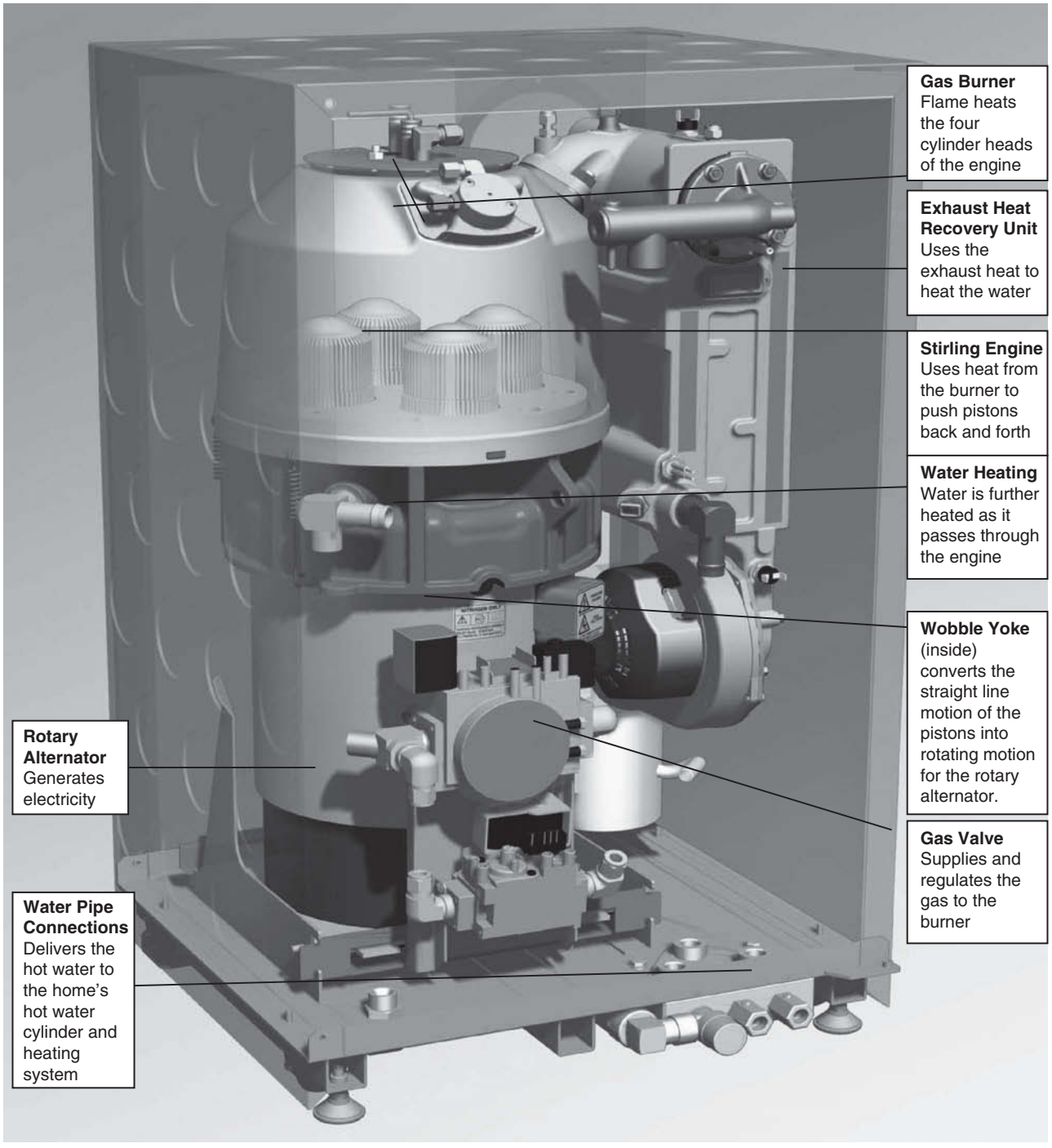

Figure 9-2 *An internal cutaway of the system behind the Whispergen combined heat and power system, shown mounted in its cabinet earlier. Image supplied and © Whispergen Ltd (www.whispergen.com/).*

CHP systems. The Whispergen uses an existing solid fuel source to generate both heat and power. Other companies have included renewable sources in the mix too, like Sunmachine (see the Online Resources for the link), which uses concentrated solar thermal when available and solid or gaseous fuels otherwise, to power a Stirling-based engine. There are also other companies working on steam version of CHP units, as well as plans for hydrogen or thermoelectric powered systems.

Regardless of the specific technology used, CHP systems increase the efficiency of fuel use because they enable electricity to be produced while fuel is being used for heat.

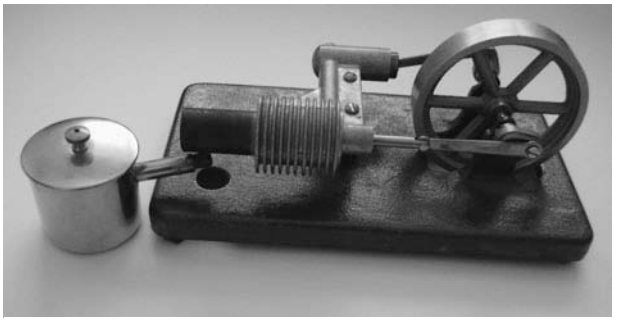

Figure 9-3 *The Thinking Man's Engine, available as a kit from PM Research Inc., is a gamma-type engine. It is shown with the optional burner under the hot end of the displacer piston. The separate power piston is seen attached to the far side of the flywheel, which regulates the phase of the piston movements inside the cylinders.*

Hot air

When a contained volume of air (or any gas) is heated, it will expand; when it is cooled down, it will contract. You can think of the molecules of air as billiard balls: they bounce around very fast when they are heated and slow down and pull close together when cooled. We can turn the energy from this change into useful work using a heat engine.

Among the first to design a heat engine was a man named Stirling who lived in Scotland about 200 years ago. His name is still often attached to machines that only slightly resemble his original engine, because they rely on a principle he first tried to put into practice.

There are three common piston arrangements in a Stirling heat engine. Gamma (Figure 9-3) and beta (Figure 9-4) engines, as the two more common are known, have the power and displacer cylinders either on top of one another (as one cylinder), or as separate cylinders but connected. Inside the cylinder(s) the large displacer piston shuffles a contained volume of air so that it is alternately heated then cooled. The second, usually smaller cylinder contains the power piston, where the expansion and contraction of air pushes or pulls an airtight piston.

The motion of the two pistons is 90° out of phase. This means that when the displacer piston is extended all the way in one direction with the air consequently moved to either all hot or all cold (see Figure 9-5), the power piston is in the middle of its stroke, ready to be acted upon.

The third somewhat less common type of engine is and alpha configuration, where there are hot and cold pistons in separate cylinders.

It is possible to demonstrate these concepts a little more clearly with simple materials, and possibly even create a running engine. You could also order a kit that will run off of a hot cup of water, or even a small burner, all based on the same principle.

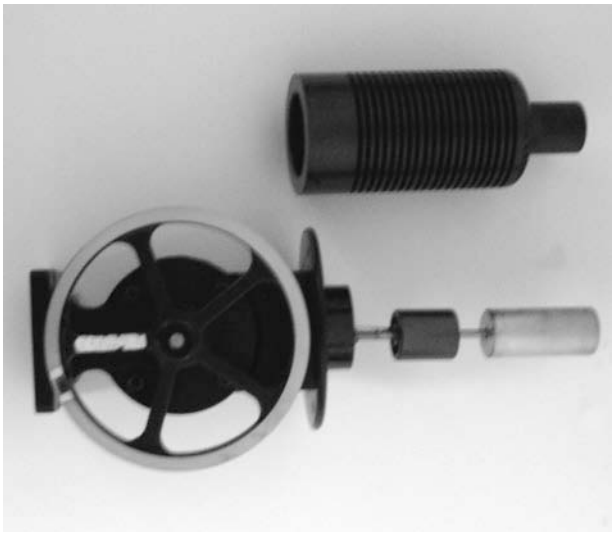

Figure 9-4 *Beta-type model Sun Runner engine, disassembled to show the displacer (top) and power pistons (bottom) to the right of the cylinder head, which has cooling fins built into it.*

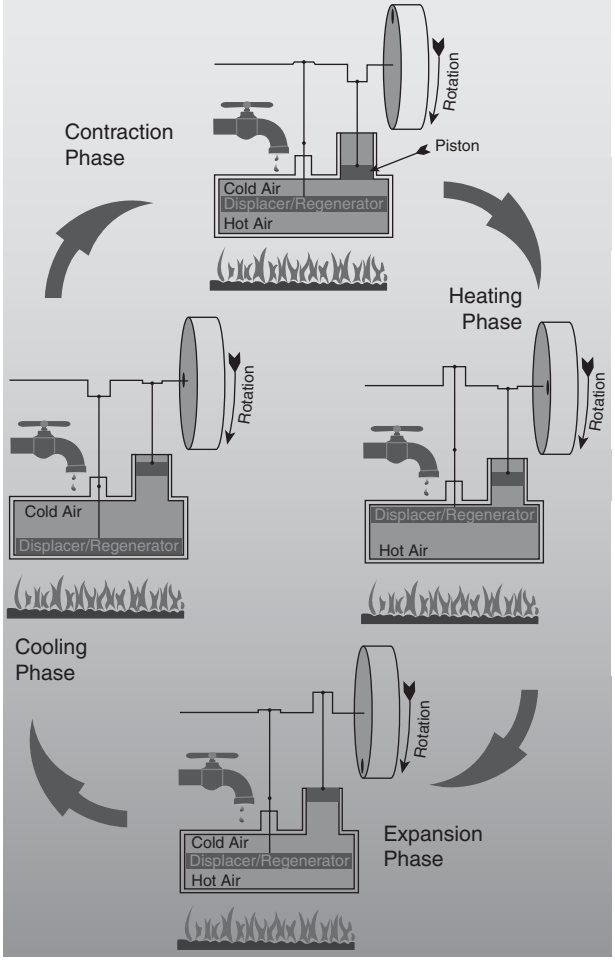

Figure 9-5 *Diagram of the Stirling cycle through all four phases. Adapted from image courtesy of Brent H Van Arsdell.*

Project 33: Demonstrating the Power of Hot Air

It is very easy to demonstrate the expansive and cooling forces that the Stirling heat engine takes advantage of.

Online Resources

- www.bekkoame.ne.jp/~khirata/english/mk_can.htm—the original tin can engine by Koichi Hirata, versions of which have been built around the world and instructions and modifications posted all over the net.
- members.aol.com/hstierhof/index.html—Hubert Stierhof has done some innovative work on useful but simple engines based on hot air and a moving cylinder.

You will need

- A tin can.
- A balloon that fits tightly over the top.

Steps

1. Take a small metal can that has one end completely removed, and stretch a balloon tight across the open end.
2. Put a heat source under the can and the balloon will start to inflate. The tin can acts as the heated displacer cylinder and the balloon as the power piston, with the force of expansion acting to inflate it or push it outwards.
3. If you then place the hot can (carefully) into a cold bowl of water, the balloon shrinks from its inflated state and, if the water is cold enough, sucks the balloon into the can.

The up-and-down motion can then be used for useful things. It could turn a wheel, or do a job that required an up-and-down motion, like power a pump. Both motions are useful for, among many other things, producing electricity. Of course it is not that convenient to be moving the can from the flame to a cold water bath, so these two temperatures are usually held separate in practice, while the air is moved back and forth between them.

It is possible to turn the demonstration tin can and balloon into an engine of sorts. To do this, we reduce the amount of air inside by a half, by displacing the other half with a lightweight piston. In instructions on a project along these lines, Koichi Hirata suggests using balsa wood as a displacer piston. Students at the Centre for Alternative Technology, Machynlleth, Wales, UK, built the engine pictured in Figure 9-6, relying roughly on those directions, but used other displacer materials (as well as coming up with the condom alternative on their own), with varying results.

Figure 9-6 *The model tin can engine built by students at the Centre for Alternative Technology.*

With a displacer roughly half the size of the cylinder, which is a loose fit, acting as a displacer piston, we can design the top half of the tin can as the cold side of the engine. Because the heat will be further away from it (relative to the hot side), it will be colder than the hot side. The displacer is expected to move up and down in the tin can, with the flame at the bottom (see Figure 9-7)

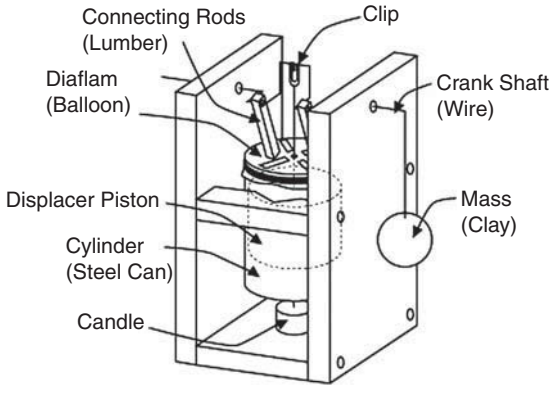

Figure 9-7 *A diagram explaining the major parts of the tin can engine you can try to build.*

You will need

- A fishing line.
- A wooden base and walls.
- A wire coat hanger.
- A displacer cylinder made from balsa wood or improvised (but be careful) from a lightweight material.
- A tea light or other heat source.
- A drop of oil.

Steps

1. Attach a small piece of fishing line to the top of the displacer, and fashion an axle with a 90° phase, from an old coat hanger. Search for alternative designs online if your materials don't match exactly, and be creative.
2. Fix the axle to an improvised stand.
3. Attach the other end of the fishing line to the axle, first feeding it through a very tiny hole in the balloon that is poked dead center.
4. Tape another piece of fishing line to the top of the balloon. On the end of the axle, either place a flywheel, or a 90° bend with a counterweight.
5. Put a small drop of oil on the fishing line that passes through the balloon to seal the hole.
6. Place a tea light under the can, and rotate the flywheel (or weighted axle) to cycle the engine. This engine does not start itself. Once the air inside is warm enough, and if the air in the room is cool enough, spinning the axle should start the engine turning. The directions must be followed precisely because the frictional forces are difficult to overcome.

Project 34: The Energy of a Hot Cup of Tea

The Eco-Power Stirling Engine Kit from Stirlingengine.com is designed to run off of a hot cup of tea. Order the kit along with the book and homopolar motor kit (a project elsewhere in this book) to save on shipping costs. It does take some work, but it can also be very educational. There are alternative engines listed on Evilgeniusonline.com, which will even run off the heat of your hand.

You will need

- The kit from Stirlingengine.com.
- A few items in addition to the kit, including:
  - a Hammer
  - 1/16 inch drill bit
  - epoxy
  - white glue
  - cyanocrylate glue
  - double-sided tape
  - a mug.

Notes

1. Simplified directions are difficult for this project, but we'll give you a good idea of what to expect if you do decide to order the kit. A diagram of the completed engine (Figure 9-8) compared to the parts that come with the kit (Figure 9-9) gives the reader an idea of the attention to detail that will be required.
2. There is a video that comes with the kit and is well worth watching. You probably want to watch the whole thing through once or twice before you start: it can get complicated, particularly if you are not sure of what the next step will be.

What's what

- The displacer cylinder (far left mid-way up in Figure 9-9) is thin plastic and the piston expanded foam (next right). The hot and cold ends of the engine are two pieces of cut aluminum (top left), which you will bend into the correct shape. The power piston is, as in the last engine, a piece of stretchy rubber and the axle is again a thin piece of wire.
- Most of the body and the flywheel are pre-cut cardboard pieces held together with glue and epoxy. After popping the parts out of the cardboard sheets, the included instructions show you exactly where to fold and tape (Figure 9-10) to make the body.

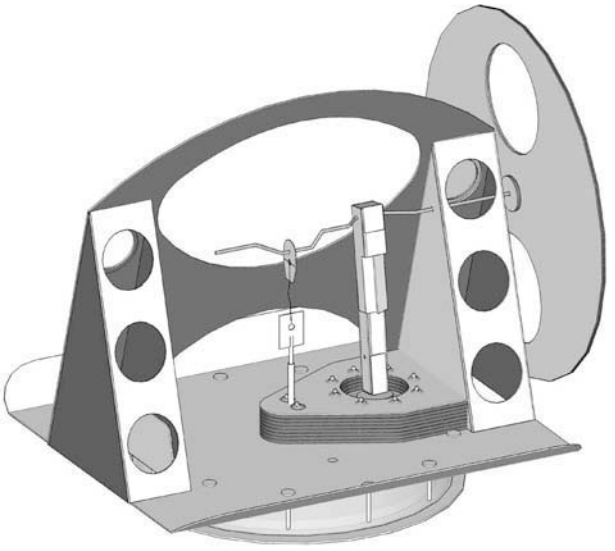

Figure 9-8 *Diagram of what the completed Eco-Power Stirling engine will look like. Image courtesy of www.stirlingengine.com.*

- The kit then guides you through seven easy-to-understand steps, including assembly of the connecting rod, diaphragm (Figure 9-11), cylinder, and displacer, then mounting the bottom plate, superstructure, crankshaft, and flywheel. This is followed by some testing and troubleshooting tips: as with most Stirling engine models, these include techniques on tracking down leaks and sources of friction in the engine.

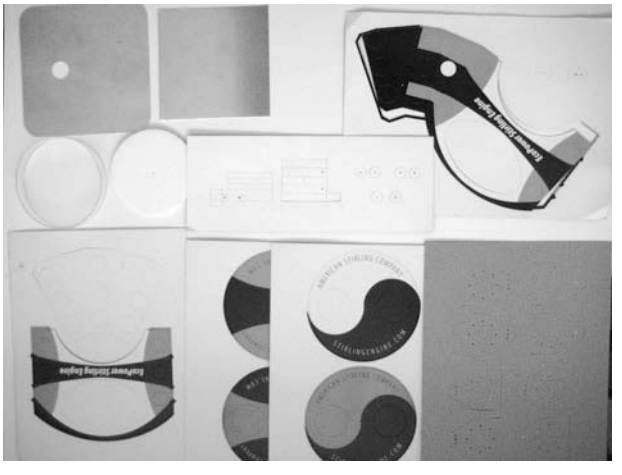

Figure 9-9 *Parts that come with the Eco-Power Stirling Kit, from American Stirling. Image courtesy of www.stirlingengine.com.*

Figure 9-10 *One of the diagrams from the Eco-Power Stirling Engine kit shows how to fold the superstructure. Image courtesy of www.stirlingengine.com.*

Heat pumps

Heat pumps and air conditioners are heat engines working in reverse: i.e., they draw energy from another source and use that energy to do work on a temperature difference. They often employ evaporation and compression cycles of a very specialized working fluid that has convenient vaporization and condensation temperatures. It is one of these working fluids that has been the cause of a problem many people have heard of: the release of CFCs (chlorofluorocarbons) from older refrigerators and air-conditioning units. Thought to be benign because they didn't seem to react with anything for many years, CFCs have been implicated in destroying the ozone layer and, precisely because they are fairly unreactive, they take a long time to clear up from the atmosphere. Though very few are released anymore, those that have already been released will be in the atmosphere well into the next century.

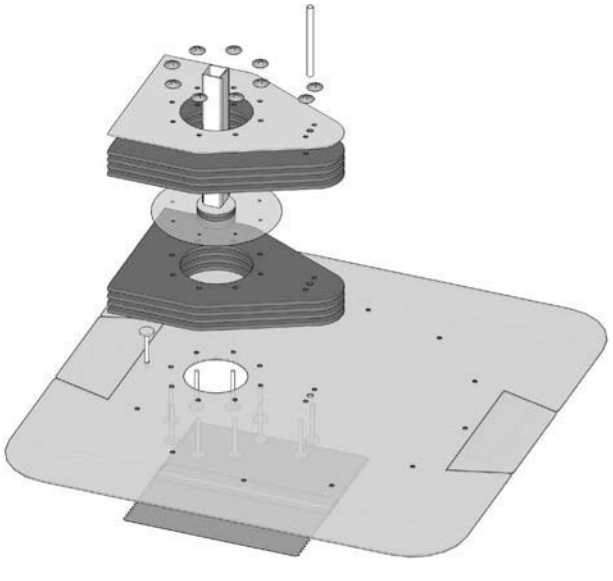

Figure 9-11 *Mounting the diaphragm onto the top plate. Image courtesy of www.stirlingengine.com.*

Thankfully there are alternatives, and they are now coming onto the market. The simple heat engines we examined in this chapter have shown that a small temperature difference can be turned into useable work, and we'll soon see in more detail how cold can be created by a Stirling engine. Cold can be created in many different ways. It is likely the reader who has taken a long car trip with a cooler that plugs into their electric socket is aware of another type of cooling device that also has few harmful chemicals used inside it: a thermocouple. The thermoelectric devices inside DC fridges are very robust cooling devices because they have no moving parts. They rely on different types of thermocouple material to generate a temperature difference and they can do the opposite—generate electricity from a temperature difference—too. They are typically designed for a specific temperature range and have some pretty precise manufacturing to them, so they are not that easy to play with. However, their function is similar to the heat engines in the projects.

Solar electric options

There are two common ways to use solar power to create electricity. The first and oldest is to use the heat of the sun in a heat engine of some sort. Early experiments tried steam and air engines with moderate success. One of the challenges is getting solar energy concentrated enough to be useful to heat engines, which tend to prefer high-grade heat—around 400°C (752°F). It is possible to get solar energy concentrated to this extent but high-quality materials are needed for economical performance.

There are several ways to go about concentrating solar energy to raise the temperature at a collector point: not all of them need be complicated. The idea is generally to take the sunlight hitting a large area and direct it onto a smaller area. This can be done with lenses, as Gavin Harper showed in *Solar Energy Projects*, or with mirrors placed and aligned on the ground pointed at a single higher point. Other systems are successful with parabolas or even just semi-circular pieces of reflective

material. There are designs available for concentrating dishes made out of pop cans (see Evilgeniusonline.com), as well as sites that can help you calculate the shapes of your dish. It is possible to reuse old materials, like a discarded satellite dish or soda cans. You can experiment with a couple of different mirrors and bouncing the light that strikes them onto a single point, and measure the temperature there—which can get a lot hotter than the 80°C or so collected as water earlier!

Concentrated solar energy can easily reach 400°C (752°F) and higher, so do be careful. Large-scale solar thermal plants exist around the world, powering both steam and Stirling engines that feed electricity onto the grid.

Project 35: Concentrated Solar Thermal Motion

This project would need the enthusiastic evil genius to hunt down the Sun Runner Stirling Engine Kit, or an equivalent. The concentrator (Figure 9-12) is available from www.pmresearchinc.com and success can be had using other engines such as the Thinking Man's Engine, shown earlier and still available from PM Research Inc., with the concentrator. The sun's energy is concentrated on the very tip of the engine and heats up the air inside the cylinder, which expands against the power piston, causing it (by turning the flywheel) to move the displacer cylinder. This shifts the engine into the cold cycle, where the same air that was just heated is cooled, and the compressive force it exerts pulls the power piston back into the cylinder, moving the displacer again and returning the engine to the heating cycle. The concentrated solar heat could, in theory, be used to turn water into pressurized steam that could be sent through a piston engine, like the model one shown in Figure 9-13, available from PM Research Inc. There are very large systems of this sort, but I have not come across small-scale experiments, yet.

Figure 9-12 *The Sun Runner Engine, made by solar engines with a solar concentrator sold through PM Research Inc., in action.*

Figure 9-13 *The Model #4CI working vertical steam engine, available from PM Research Inc. Image courtesy of PM Research Inc.*

Online Resources

- www.pmresearchinc.com is a wonderful retailer of all sorts of fantastic model engines, including the Sunmachine Engine used in this project.
- www.baileycraft.com is the original manufacturer of the Sunrunner engine and concentrator dish. They also make a variety of other interesting and educational engines.
- www.newenergyshop.com/ sells a direct sunlight demonstration Stirling engine and a variety of other very detailed experimentation kits.
- www.sunmachine.com/ takes the idea behind the Sun Runner model engine and has created a home-sized solar or biomass co-fired concentrating heat and power system around their Stirling engine technology.

You will need

- The Sun Runner or a similar heat engine.
- Solar concentrator.
- An electric generator that can be attached to the engine or an alternative way of measuring the power produced by the engine can be devised. An interesting low-tech way, shown in the images, is to use a breaking dynamometer constructed from:
  - a piece of a cotton string
  - a container attached to the string
  - a hanging scale
  - several equal weights (coins work well).
- To operate the dynamometer, the cord is attached to the scale on one end and wrapped once around the moving axle (Figure 9-14), such that the motion of the axle will lift the container that is attached to the other end. Known weights are gradually placed in the container (Figure 9-15), and the apparent weight recorded on the scale is used with the actual weight of the coins and the speed of the axle's rotation

Figure 9-14 *Scale and cotton cord wrapped around the axle of the solar Stirling engine, acting as a breaking dynamometer. Note that for accuracy, the scale should be held securely in place and a more accurate scale could be used.*

Figure 9-15 *Add a coin to the basket and record the apparent weight while the engine is running. Using a high-speed video camera (not shown), or other device to record the speed, will enable you to calculate the power produced by the engine under different loads.*

(counting revolutions from a video of the wheel spinning works), to estimate a power curve for the engine. You can use this to size an appropriate electric generator and load for a more permanent installation.

- A load or means of measuring the electricity produced.
- Optional: a method of drawing waste heat away from the cold side of the engine: be creative and explore different options (see below).

Steps

1. The Sun Runner Engine, like most Stirling engines, requires almost no maintenance. If you did just want to see how the inside worked (shown in Figure 9-4), you'll want to carefully slide the pistons back into the cylinder (Figure 9-16).
2. Set up the engine on a tripod and, if you forgot, tighten the small Allen bolt (Figure 9-17) on the side to hold the cylinder and heat sink onto the base.
3. Point the dish at the sun and align it so that a white strip is clearly seen across the tip of the engine.
4. Use one finger to gently spin the flywheel and start the engine turning (Figure 9-18).

Figure 9-16 *Sliding the cylinder and cooling fins onto the body of the Sun Runner model Stirling engine. concentrator dish.*

5. Once it is turning, attach the generator and load, or attach a dynamometer to measure the torque produced under simulated loads. You might also measure the temperature attained from just the sun's heat (Figure 9-19).
6. Marvel at one 100-year-old solar power!

Figure 9-17 *Tightening the tiny Allen bolts on the side of the cylinder body that hold it in place and keep a tight seal.*

Figure 9-18 *Use one finger to start the engine turning. On a larger system, an automatic starter would of course serve this function.*

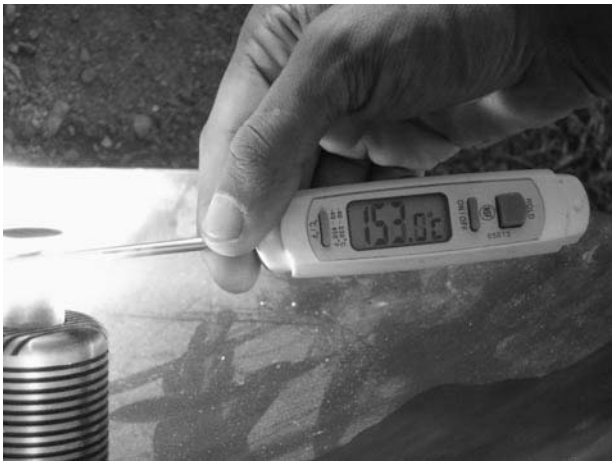

Figure 9-19 *Use a simple oven thermometer to measure the approximate temperature at the apex of the concentrator dish.*

Variation

Cool the cold side of the engine and try to increase the amount of power generated. The engine will function without extra cooling, using the fins on the cold side of the cylinder for cooling. To help more heat escape, try blowing more air past the cold side of the engine with a fan.

For a more advanced project, run copper tubes with cold water in them around the cold side of the engine, into a bucket of water. If the bucket is below the engine, a thermosiphon effect will draw the cold water up and return heated water. As we spend so much of our fuel heating water already, isn't this a great by-product of solar electricity? Take a second to compare the power produced before and after adding a cooling system: it should have increased.

Project 36: A Thinking Man's Cold

Low-temperature engines, like those in the first two projects of this chapter, are good demonstration tools of the energy that is available to be put to use from even very small temperature differences. The Thinking Man's Engine (available from PM Research Inc. and shown in Figure 9-3), one of several different models available from hobby-sized builders around the world that operate at a higher temperature difference, is more precisely machined. Some suppliers are listed on Evilgeniusonline.com but the list is not exhaustive. Look around and try to pick one made close by if you can find one. The project definitely isn't specific to the engine, but it is something that perhaps not every engine owner has done yet. The accompanying images show

the Sun Runner Engine from the last project and the water wheel from Chapter 8, although students in class at the Centre for Alternative Technology in Machynlleth, Wales inspired the project using the Thinking Man's Engine and an electric drill, with more success.

You will need

- A medium-temperature heat engine.
- A small electric engine or other mechanical rotary power source (a second heat engine driven by a heat source will suffice, as will the water wheel from a project in Chapter 8 if you can wait that long!).
- A belt or alternative.
- Possibly a pulley, particularly if the driving engine is not variable speed.

Steps

1. Ensure that the engine is securely held in place (one set of hands will do, but make sure there is another set around to hold the other engine).
2. If using the Thinking Man's Engine or an engine with a similar feature, you can remove the flywheel and attach the belt drive.
3. Fit the belt around the drive shaft of the Stirling engine and around the other power source, so the belt is tight.
4. Turn the stirling heat engine backwards using the second power source (Figure 9-20).
5. Create cold (Figure 9-21)!

Figure 9-20 *The Sun Runner Stirling engine, attached by a thin belt and powered by the model water wheel from Chapter 8.*

Figure 9-21 *A small but measurable temperature difference was created, though it did take some time!*

Efficient or convenient

One of the reasons why CFCs became so popular more than 50 years ago and heralded a new age of refrigeration for all, though there had been refrigerators before, is that CFCs were efficient at the job of moving heat from one place to another. They were also relatively inexpensive to produce and relatively safe for the user.

Now that we are looking around for the ability to reduce the use of harmful substances, it is comforting to know that it is possible with a correctly designed heat engine using nothing but air as a working fluid. However, if we do the math of the efficiency of the temperature difference produced in our earlier project, it is not good. This is a large part of why substances that have deleterious effects on the planet continue to be in use, because the alternative often does not have the technological maturity to compete commercially. The fundamental technology behind a Stirling cycle—a contained gas heated then cooled—is already widely used in the cryogenic freezing industry because it is an efficient way to create such a low temperature and has been producing electricity in space. The potential in the technology is there, and the inspiration for a designer to build an efficient consumer-grade version may just be waiting for us to want it.

Heat pumps operate on a similar principle, but they, like air conditioners, have a greater efficiency than the devices we have demonstrated so far. Heat pumps concentrate (or move) heat using another power source, such as an electric motor, and use an air or underground heat exchanger as an initial stable temperature. They also work best in particular temperature ranges, and mild climate tends to be best. Ground source heat systems often rely on the Earth remaining at a constant temperature below a certain depth, regardless of the season in most parts of the planet. A geothermal system, on the other hand, will depend on a relatively hot piece of ground that occurs naturally in only a few different places, for most of their heat, possibly using a heat pump to raise the temperature during part of the season but also potentially producing power when there is spare heat that is not needed. A ground source heat pump with no geothermal source will never do such a thing, but as we've seen, the ground can also be used to store heat. During times of plenty of heat, like the summer, developments like Drake Landing outside of Calgary, Alberta (www.dlsc.ca/) are storing solar heat through the seasons, and drawing it out during the winter when it is most needed. Genius, eh?

This page intentionally left blank

Chapter 10

Electricity

We have been using electricity for a long time. From the days of Thomas Edison, to the world of electronics engineering today, researchers continue to discover new and interesting characteristics of electricity. We'll discuss recent advances to generating electricity in later chapters, but for now we'll focus on more "traditional" ways of creating and storing electricity, which have changed only slightly in over 100 years.

The basics

Electricity is the flow of charge through a conductor. Basically, the world is made up of atoms. Each atom is made up of protons, neutrons, and electrons. Protons and electrons are positively and negatively charged, respectively, and neutrons have no charge at all. In an atom, protons and neutrons are large and bound tightly together, whereas electrons are small and bound loosely to the neutrons and protons. Most particles have no net charge because the number of protons in the atom equals the number of electrons. A particle becomes charged when electrons move from one atom to another. For example if two neutral particles get close together and electrons move from one to the other, then one particle becomes positively charged and the other negatively charged. If you walk along a carpet in your socks and see little sparks, this is particles becoming charged, or atoms taking on and loosing extra electrons. Now if we take such a charge and move it quickly through a conductor—that is a material made up of particles with loosely bound electrons, like a copper wire—we get electricity. The movement of electrons is known as a current—it can be described as a flow, in the way that a liquid flows, of electrons.

Voltage is the measure of electric potential. A common analogy is to a faucet of water on a bucket, where the voltage (in volts, abbreviated V) is analogous to how wide the faucet is open, and the current (measured in amps, abbreviated A) to how fast the water is flowing through that opening. The combination of the voltage and current gives an idea of the power of the stream of water. Multiplying the voltage by current results in a measure of energy use over time, known as power, measured in watts (W).

There are two types of current of electricity. Though we are not always aware of it, most people use a mixture of alternating current (AC) and direct current (DC) throughout their day. The light sockets in most houses provide AC from the power company, whereas your car battery and cell phone both use DC. The difference is that alternating current, as its name suggests, alternates the direction of current flow, typically many times per second. So while a battery has one positive terminal and another negative terminal, which makes it pretty easy to imagine electrons traveling from one to the other down a copper wire, AC gets a bit more difficult to imagine. If you had a chance to look at an oscilloscope of some AC current, you would see a sine wave traveling across the screen. The AC current coming out of the sockets in your house alternates between 50 and 60 times per second, meaning that the sine wave touches the positive or negative extremities at least every 1/100th of a second!

Generators and motors

A common way of creating electricity is to use a spinning power source, like a shaft, to turn coils of copper wire in between a magnetic field, often created by a pair of permanent magnets (see Figure 10-1 for a close-up of small version), alternately using an electromagnet—created by passing electrons through a second series of copper coils. When the coil spins, it creates a current.

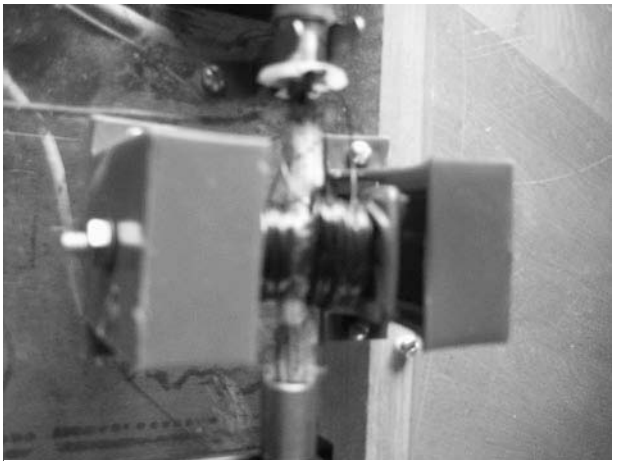

Figure 10-1 *A model electric generator. The coil of copper wire can be clearly seen on the axis (vertical down the image) and the magnets (encased in plastic) on either side.*

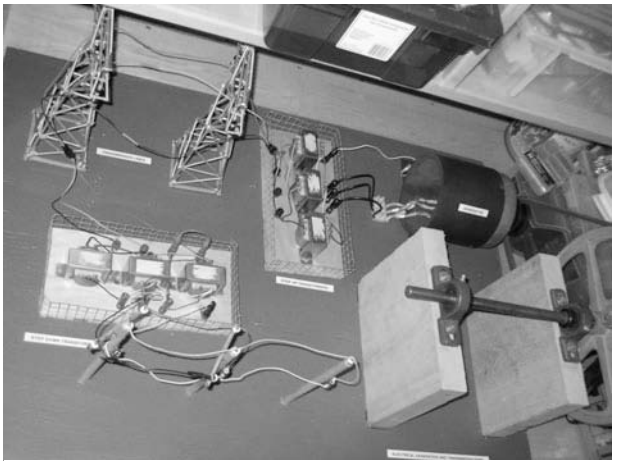

Figure 10-2 *A demonstration of the electric grid: a generator (top right) connects to a step-up transformer (center), feeding into high-voltage power (transmission) lines (top left), then stepped-down to power the street lights (bottom left).*

An electric generator will produce different levels of current and voltage, depending on how it is wired and how fast it is turned, and an electric motor will similarly be "tuned" to a particular power supply. For electricity to be useful, the voltage and current need to be well matched to the application or load on the circuit. For example, those who have crossed the Atlantic Ocean will know that the voltage used on either side is different, and that their appliances need to be able to accept different voltages, or have something that will adapt the voltage to their appliance, from the 220–230 V range to the 110–120 V range.

Different voltages of electricity have different properties and characteristics and, as a result, uses and locations where they are most appropriate. For example, very high voltages are used by electricity companies to transmit power over large distances, because less electricity is lost in transmitting high-voltage electricity than low-voltage electricity, through the same cables. Figure 10-2 shows the basic parts of a typical part of the grid: the hand-turned generator (not common on a large scale) feeds electricity to a step-up transformer, which feeds high-voltage electricity into the power lines, which is then sent through a step-down transformer—to turn very high voltage electricity into something that the light bulbs can use—before powering the street lights.

Medium-sized electric generators are found in places like the alternator of your car, which uses the force created by the engine running to recharge the battery of your car, and at the center of a wind turbine to turn the spinning motion of the blades into useful electricity. One of the neat things about electricity is that the same combination of magnets and coils of copper wire are found in many electric motors as well. Though the arrangement and number of coils of copper wire would be slightly different in something designed to be a generator compared to a motor, the concept is the same and many motors can be used as generators.

Simple demonstration kits can be found at a variety of stores; probably the local hobby shop is your best bet to keep the transportation emissions of your projects to a minimum (see Figure 10-3 for an idea of what to look for). If you are the adventurous type, you could take apart an old motor lying around to get a better understanding of how motors and generators work. I always found that hands-on tearing something apart is the best way to learn. You might find an old motor in a tape deck or eight-track player in your basement, but make sure no one will miss it before you take it apart! You could then attempt to attach it (via a belt or by direct drive) to some of the prime movers used in our later projects, and experiment with different sizes of electric generators. Another interesting way to get an understanding of how much work must go into providing even a small electric charge is to use, even just in an emergency, a hand- or pedal-powered electric device.

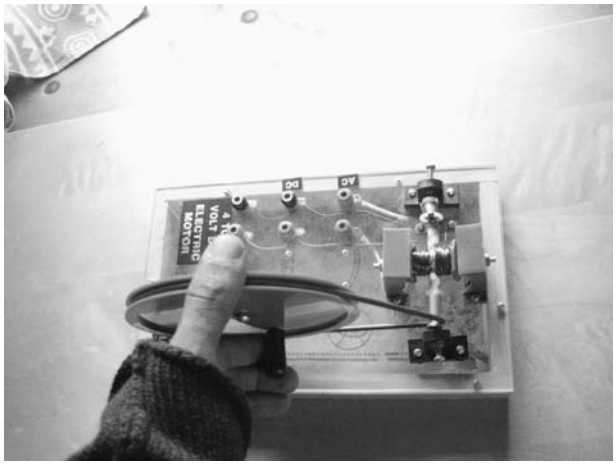

Figure 10-3 *The layout of a demonstration electric generator kit: a large wheel is hand-turned to drive an electric generator, creating current at the terminals.*

Online Resources

- www.magnet.fsu.edu/education/tutorials/java/faradaymotor/index.html—a good tutorial for those wishing to understand more about how this motor works.
- www.evilmadscientist.com/article.php/HomopolarMotor—Evil Mad Scientist Laboratories really do "make the world a better place, one mad scientist at a time."
- www.eia.doe.gov/kids/energyfacts/sources/electricity.html—the US Department of Energy has put together a wonderful refresher course, for anyone who isn't currently in a physics class.
- ocw.mit.edu/OcwWeb/Physics/8-02Electricity-and-MagnetismSpring2002/CourseHome/—The open courseware site of MIT is a treasure trove of useful information on a range of topics.

Project 37: The Homopolar Motor

The homopolar motor is a very simple motor that can help the reader to understand how electricity works. The concept behind it dates back to a device created in the 1800s and credited to Michael Faraday. The homopolar (or Faraday) motor does work spinning a screw using the charge created by a battery and the magnetic forces created by the magnet; it demonstrates how electric and magnetic forces can be used to create rotational movement.

You will need

- Order the kit from American Stirling to save yourself the trouble of hunting down the hard-to-find bits of parts; otherwise, look up some recommendations of sources using the Online Resources provided.
- The materials aren't very enormous really (see Figure 10-4). One AA battery, some copper wire, a screw, and a really special magnet (such as a neodymium disk magnet).

Figure 10-4 *Parts that arrive with the American Stirling kit (www.americanstirling.com).*

Steps

1. There are two easy ways to build a homopolar motor. The American Stirling kit suggests bending the copper wire so that it secures the magnet directly to the base of the battery, causing the magnet to spin. In practice, we have found that adding a common household screw to the motor provides a more satisfying demonstration.
2. Place the magnet on the base of the screw and the other end hanging (using the magnetic force acting through the screw—notice that there is a maximum size of screw and magnet that can be used, else the screw will not be held to the battery with the magnetic force) from the negative end of the battery.
3. Touch the copper wire to the positive battery terminal.
4. Lightly touch the opposite end of the copper wire to the end of the magnet without the screw hanging from it (see Figure 10-5).
5. The screw will start spinning. If not, check that there is a good contact at both ends of the copper wire.

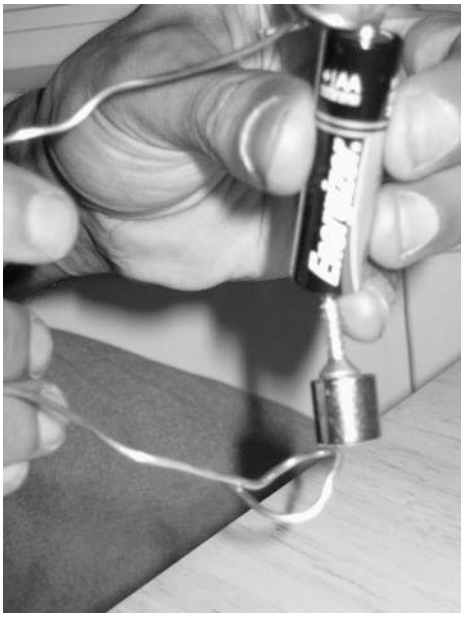

Figure 10-5 *The assembled spinning screw-type homopolar engine.*

Storing and transmitting power

Because renewable sources of power tend to be intermittent, energy storage quickly becomes an issue for those wishing to use the sun or the wind as their primary source of electricity. It is possible to use a battery to store some electricity, but as the most common and affordable chemical batteries have a not inconsiderable environmental impact, it is good to be prudent when deciding if this is for you.

Chemical batteries are formed by the interaction of two different chemicals. Some batteries are consumed by the process—known as single-use batteries such as common alkaline batteries—whereas others can accept and deliver a charge many times—such as the lead-acid battery in most cars—over their life. Lead-acid batteries are common and relatively affordable. There is also a well-developed system for recycling both the lead and the acid in many countries around the world. Most batteries have a certain lifetime: lead-acid batteries commonly last 5 years with good maintenance, whereas nickel-metal hydride (NiMH) batteries and other advanced batteries can last longer with proper care. At the end of their life, all chemical batteries need to be disposed of with care to the appropriate facility that can accept and handle the materials inside safely. Energy goes into all phases of chemical battery manufacturing. In many cases this can be quite a lot of energy, so choose batteries carefully and care for them well if you must use them. There are advanced benign alternatives, like fuel cells, which can also function as batteries, but there are challenges to commercialization (such as storing hydrogen safely) that prevent widespread adoption at the moment. Also, consider some of the more benign alternatives just covered in the last chapters—air and water—depending on the landscape around you.

If you are somewhere remote that has no other electricity supply, then installing and using chemical batteries might be the only option. In this case it becomes important to consider the size of the batteries and how much power is going to be required, for how long, when, and how critically. Battery systems typically require some trade-offs to reach a compromise between useability and cost.

Many people who have traveled in a motor home or camped with a trailer that had its own battery system may have experienced what a conservation lifestyle entails. Batteries only store a certain amount of energy, and they have a funny way of delivering it. If you draw a lot of power from a battery quickly, you will find that overall you get less energy back from it, than if you drew a small amount of power out over a smaller period of time. Batteries also only hold so much energy, so they require the people using them for necessities to be somewhat considerate of their energy requirements. Getting people to be conscious about their electricity consumption is useful for the environment, even if batteries are not always very good. Knowing that, it is a good idea to take account of your energy use, in much the same way as a person who was considering buying a battery-based electricity system for their home would think about what appliances they absolutely could not live without.

Project 38: A Coin Battery

It is common for us to have batteries of different sorts all around us and not really understand that part of what is happening is a chemical reaction between two metals. This super-simple battery is potentially useful to get an idea of a very simple device that produces a small electrical charge. We use really benign materials to make it (Figure 10-6) but that shouldn't detract from the reality that consumer-grade batteries often contain dangerous chemicals and should always be disposed of properly.

A battery is typically composed of cells wired together. In this project, the copper parts of the coin react with the aluminum sheets in the presence of an alkaline solution, which is soaked into layers placed between the copper and aluminum. Increasing the number of cells (i.e., coins) stacked in order will increase the voltage of the battery.

Online Resources

- www.users.globalnet.co.uk/~jchap/tvproba.html.
- brightest-kidz.squarespace.com/journal/2008/1/17/coin-powered-battery-project.html.
- www.sciencecube.com/Eng/education/mbl/mbl-coinemf1.asp.

You will need

- Six pennies or copper-coated coins. Pennies are reported to work in the United States, Canada, and the UK, and 50 paisa coins (among others) in India.
- A small dish.

Figure 10-6 *Simple materials for this project: a dish, coins, aluminum foil, wire, and salty water.*

- Some aluminum foil (enough to trace out six pennies). Another alternative is to use 10 cent pieces if you are in the United States or Canada, as they have some aluminum in them that can be a substitute. It is possible you can find other coins or materials as a substitute; it is important that they have some aluminum, as this will react with the copper in the saline solution.
- Scissors to cut the aluminum foil (if you are using it).
- Warm salty water (another alternative is lemon juice for a more potent battery).
- Two small pieces of wire and some tape or solder and a soldering iron.
- Paper kitchen towel or pieces of cardboard or paper to hold some saltwater or juice in between parts of the cells.
- A load (a small buzzer or LED light could work) and/or a multimeter.

Steps

1. Cut out circles of aluminum foil and paper kitchen towel as big as the pennies (Figure 10-7).
2. Tape the bare end of one piece of the wire in to one penny, and the bare end of another wire to a foil circle. These will be the positive and negative terminals of the battery.
3. Moisten one small paper towel with the salty water.
4. Place the foil circle with a wire in your dish and place one moistened piece of paper towel over the top (Figure 10-8).

Figure 10-7 *Cutting penny-sized circles from tin foil.*

Figure 10-8 *Layering coins, aluminum, and wet paper towel to form a battery.*

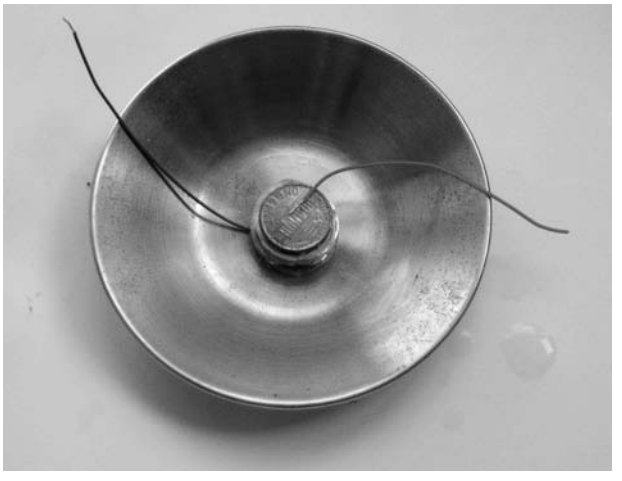

Figure 10-9 *The completed battery.*

5. Cover the paper towel with a penny, and the penny with a circle of tin foil. Repeat this layering; your top coin should have the wire taped to it (Figure 10-9).
6. Attach a (very small) load or multimeter to demonstrate your battery.

Moving it around

If you are not going to store electricity, then it either needs to be used or put somewhere where it can be used. The grid is a system of transmission and distribution that crosses the continent and covers many parts of the world.

In some places, where allowed by the utilities or body that controls the power grid, it is possible to act like a generator and feed power back onto the grid. In order to do that, the energy being put back must exactly match the grid; otherwise, lots of trouble could happen. Thankfully, there are some very good products that now enable everyday people like you and me to generate clean renewable electricity and sell it back to our power company (if they are willing) for our neighbor to use. You will need to have specialized equipment that interacts with the grid and which your electricity company will allow. Whether it is worth it for you to consider buying this sort of equipment very often depends on how much your power company is willing to pay for the electricity you are generating.

The most generous places will pay a premium for types of electricity they want to encourage, such as solar- or wind-generated electricity. Germany and Ontario pay very high rates for solar electricity produced and sold onto the grid in order to encourage customers to become generators as well as consumers. A middle of the road approach would allow the customer to rollback their consumption with production, which is called net metering. Net metering can have the advantage of increasing awareness by consumers of the amount of electricity they are using compared to what sort of resources are necessary to provide that electricity. The vast majority of electricity markets remain without real alternatives for customers to interact with the grid. This is a policy problem and, as we discuss elsewhere, getting active and making your voice heard to politicians and industry representatives is a very green evil genius project in itself. So do some reading, then add "net metering" to your lexicon and start pounding the pavement!

Charge controllers and inverters

In setting up renewable energy systems, electricity will need to be managed in order to move it from generators to storage devices or the grid. Charge controllers and inverters will likely form a part of most renewable energy systems.

Charge controllers deliver the appropriate amount of electricity, depending on the battery's state of charge and type of battery. They will often be specific to more advanced batteries. Lead-acid batteries can absorb a lot of charge when they are between half and mostly full,

Figure 10-10 *An Aurora grid-tied charge controller that is specific to the turbine shown in Figure 10-11 is connected to a net-metered system in New Brunswick, Canada.*

but like to be filled up slowly at the end. A smart charge controller will know this, and many other things about your battery, and often about the source of electricity you are charging it with. The controller pictured in Figure 10-10, for example, is specific to the turbine (Figure 10-11), and monitors windspeed so it can rectify

Figure 10-11 *The Aurora turbine tilting out of the wind to protect it from spinning too fast and damaging the turbine or electronics.*

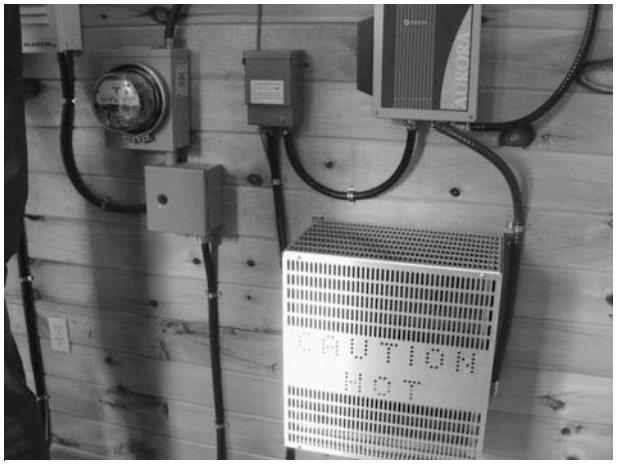

Figure 10-12 *A solar- and wind-powered net-metered electric system at the Falls Brook Centre in New Brunswick. Bottom right is the dump load, in case too much power is being produced, because there is no battery. Above the dump load is the Aurora wind controller, left of it is an emergency shut-off switch, and further to the left are the meter and junction box where the solar controller (top left, out of picture) is connected.*

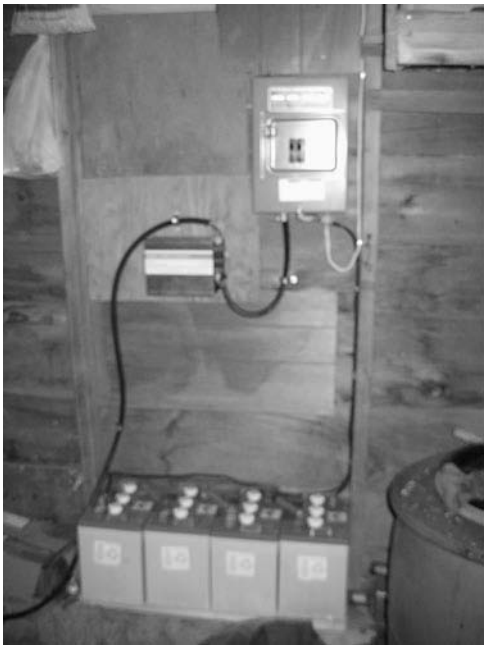

Figure 10-13 *Flooded lead-acid batteries on the floor of this educational setup at the Falls Brook Centre, New Brunswick. The small charge controller and fuse box are mounted on the wall above.*

Figure 10-14 *The door of the fuse box of the above system, open while attaching the solar electric panels from Chapter 11. Brent Crowhurst from the Falls Brook Centre is pictured.*

the current from the turbine and feed it onto the grid. It is part of a larger, more complicated, system (Figure 10-12) which has a metered connection to the grid. An alternative system, pictured in Figure 10-13, by contrast, is fairly simple and accepts only a fairly uniform charge from a turbine and solar panels. It does not interact with the grid, and the system as shown, has only a small inverter to power minimal workshop implements (and no power tools). This is the demonstration system that the wind and solar systems installed later will be wired into (Figure 10-14).

Inverter options

Many sources of renewable energy are produced as DC electricity, and will need an inverter to transform the current to AC to be useful to those of us accustomed to being "on-the grid." Your inverter can tie you into the grid, and it can give you some independence from it, combined with a few batteries, if you choose the right one. If you are fortunate enough to have a utility that lets you sell back onto the grid, you could start to pay for these systems from some electricity savings.

Smaller inverters (see Figure 10-15) are useful for small loads but, for a larger system (Figure 10-16), choosing an inverter can be a complicated process. If you are off-grid, it will depend largely on the types of appliances that will be used at the same time.

Figure 10-15 *Smaller inverters, like those pictured, can only run a few appliances at a time.*

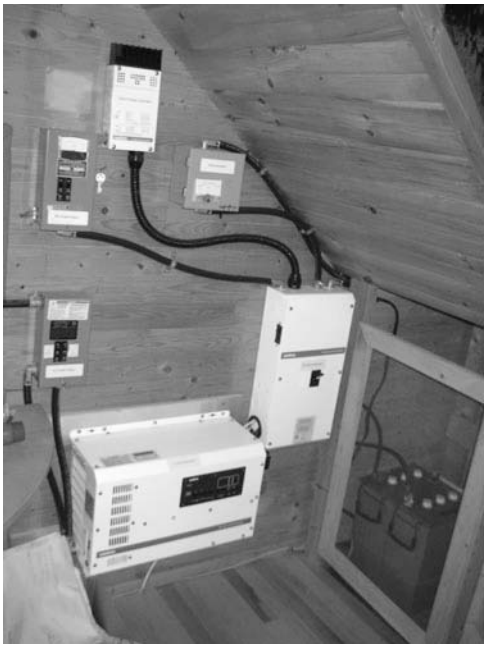

Figure 10-16 *A larger battery-based off-grid system: batteries are on the floor on the right; the small white box to the left is the solar charge controller; further left, the big box is the inverter.*

Project 39: Take One Room Off-Grid

Energy conservation is going to be the single most cost-effective way of reducing the costs of any battery system and reducing electricity costs and environmental impacts in general. Choosing to use the television for one hour less per day, to turn off the lights, and unplug your monitor will allow a smaller battery and lower cost. These habits are also valuable for those people who are not off the grid, and are not considering going off the grid, ever, because they teach conservation. Another way to do this would be through a meter, as we did earlier. I remember my father telling me about his days in London during the 1960s when the electricity was controlled by a meter in the hallway that he had to put coins into. For each coin he got so much electricity. Indeed, prepaid electricity cards are still common in many parts of the UK, forcing people to think about their electricity use in a very deliberate way.

You will need

- An energy meter or to know the electricity consumption of the appliances you are planning to use in your off-grid room.
- A pad and paper.
- The electricity consumption of every appliance in your house.
- The catalog of a good deep-cycle battery provider.

Steps

1. Add up rated (or real) consumption figures for the appliances you expect to run.
2. Multiply that by the time you would like to be able to run them. For example: taking my den off-grid would require one 23 W bulb for 8 hours, and 8 hours for 65 W laptop power: 88 W × 8 hours = 704 Wh.
3. Estimate how many days of energy independence you would like. Imagine the batteries are charged by the sun. If it doesn't shine for a week, how many days could you live without the Internet?
4. Multiply daily power consumption by days of independence.
5. Calculate battery requirements. Remember that batteries only like to be half discharged. Decide on your voltage and divide it by your energy requirements for your amp hour needs. For the example, one day of independence with a 12 V system would require a 60 amp hour battery if it was discharged all the way, really a combined 120 amp hours would be needed.
6. Calculate costs of batteries to meet current electricity consumption. (Also think about life-cycle impacts of the batteries.)
7. You can also use this number to calculate the amount of money that you could save from conservation if you are on the grid by multiplying the kilowatt hours saved by the cost of power where you live.
8. If you're really into saving the planet you can even calculate the tonnes of greenhouse gases not emitted to the environment by your conservation. Depending on where the power comes from in the area where you live, the emission intensity of power from the grid could be anywhere from close to zero for hydro or wind to as much as one tonne per megawatt hour if your power comes from old coal plants. If your power comes from natural gas it's probably somewhere around halfway between, so to find your avoided emissions multiply your kilowatt hours saved by the intensity you think corresponds to the kind of emissions for your grid.

Tip

Don't forget 1,000 kilowatt hours (kWh) makes a megawatt hour (MWh).

Chapter 11

Solar Electricity

We have already discussed how much solar energy is available to us and it is plenty. Turning some of that energy into electricity is a fairly old idea but recently we have learned some new ways to do so as well.

Electric options

There are two general ways to use solar power to create electricity. The first and oldest is to use the heat of the sun in a heat engine of some sort. Early experiments tried steam engines and air engines with moderate success. One of the challenges is getting solar energy concentrated enough to be useful to heat engines, which tend to prefer high-grade heat, around 400°C (752° F). It is possible to get solar energy concentrated to this extent but high-quality materials are needed for good performance. We discussed a model in the last chapter and commercial versions that are now coming onto the market, some of which may even be able to use low-grade heat to produce electricity.

The reader is probably more familiar with photovoltaic (PV) panels (see Figure 11-1), as their prices have dropped dramatically and popularity grown in recent years. Photovoltaic panels convert light directly into electricity. They have been around for a relatively short period of time; they are often found in small calculators and more recently are being used to power parking meters in cities around the world. Large retailers now stock ready-made solar modules that you can plug into the lighter socket of your car, to ensure that your battery receives a constant trickle charge. Changing one device over to be partly powered by solar electricity is a good way to get introduced to the ability of compact and durable PV panels. Using a very small panel to charge a battery that is charged every time the car is running anyways is probably not going far enough, but do start somewhere.

Figure 11-1 *Frame-mounted solar electric modules at the Falls Brook Centre, Knowlesville, New Brunswick.*

Selecting a small PV module appropriate to charging the battery from the off-grid room exercise earlier is a better start, and one that teaches conservation. Batteries tend to require that the voltage feeding them is slightly higher than their rated voltage, so to charge a 12 V battery you will probably need a module that produces closer to 18 V; they are often sold as 12 V modules because they will charge a 12 V system. How long it will take to charge a battery depends on the current produced by your panel: e.g., a 180 W 18 V panel will produce approximately 10 amps (180 W/ 18 V = 10 amps) at peak production and will take approximately 15 hours of full sun to fill a 150 amp hour battery, assuming no losses and full sunlight.

Losses occur in a number of places, most often in the cable leading from the panel to the battery, and the sun does not shine all the time. At full sun, the surface of the earth receives about 1,000 W of irradiance per m^2 and, at other times, when the sun is at an angle to the surface of the earth, there is less direct solar energy on a flat plane. Though the sun may be above the horizon for 14 hours or more, because of its angle and the extra layers of atmosphere, etc., the number of full hours of equivalent sun is less. A tracking device can improve this by pointing the panel directly at the sun, but these

devices can get complicated and expensive. To get the 15 hours of direct sunlight to charge the batteries without tracking the sun might actually take more than a full day, perhaps a few. A solution is to double the number of panels, but costs can rise quickly. Parts of the world, those near the equator, will have more hours of full sun per day than places further away from the equator, over the course of the year. The number of equivalent hours of full sun a place receives is a useful value you can look up: e.g., in most parts of North America it is common to get 4 hours or less of equivalent full sun per day over the course of a year. This means that the sun throughout the day, from morning till evening, is about equivalent to 4 hours of full sun.

To get a better understanding of how PV modules perform in different situations, there are a large number of kits on the market to help you experiment with wiring modules before pursuing a larger project. Prepackaged kits (Figure 11-2) are available, that can be assembled to, for example, power a fan (Figure 11.3) or a buzzer (Figure 11.4) as a demonstration before getting into larger projects. Small kits that might appear at first glance to be children's toys can contain enough useful gear to do valuable tasks, depending on your location, such as charge AA batteries (with an included battery holder!) to power a radio.

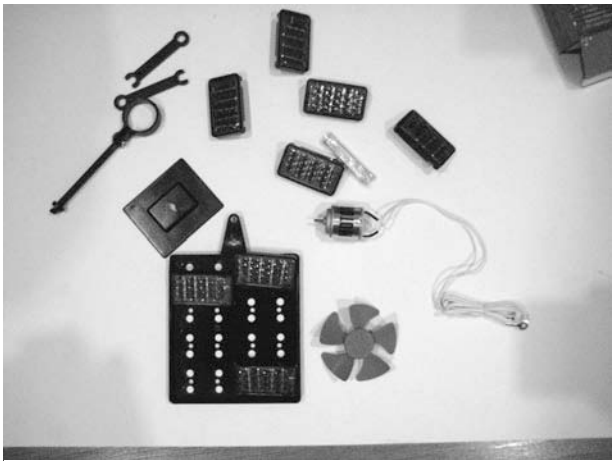

Figure 11-2 *Content of a solar electric kit available through the Centre for Alternative Technology (see Evilgeniusonline.com to order) or probably your local hobby store.*

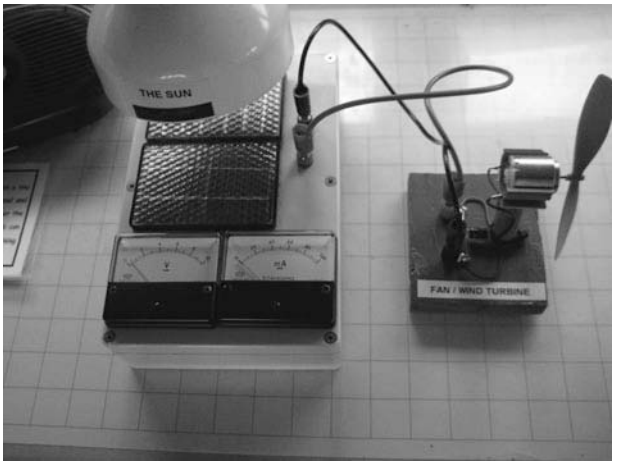

Figure 11-3 *Modules wired up in a demonstration with voltage and amperage meters and powering a fan.*

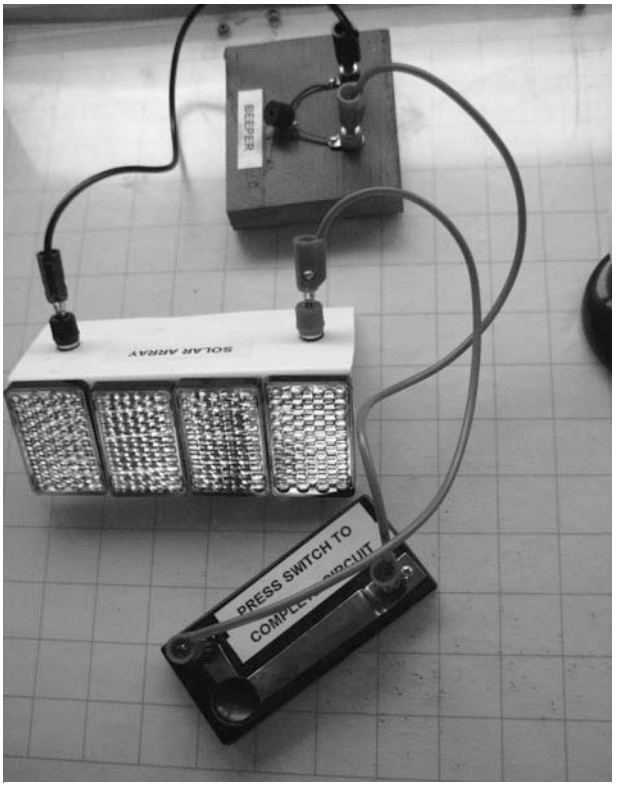

Figure 11-4 *A solar-powered noise-maker aboard the Climate Change Bus at the Falls Brook Centre, which younger visitors particularly enjoy.*

Project 40: Assembling a Solar Module from PV Cells

There are several places where you can pick up slightly damaged or imperfect photovoltaic cells (Figure 11-5). Surplus goods retailers on the Internet are a great inexpensive source, and some are listed in the Suppliers index. Assembling your own module has the advantage of potentially being much cheaper than preassembled solar modules, plus it is possible to integrate the cells into existing structures, like the shell of a building or a vehicle, as we'll see later, and to adjust the wiring of the cells to produce the optimum voltage and current for your application. Because you are likely to be buying slightly damaged or imperfect cells, the maximum amount of power produced by the completed module could vary from what was expected.

You will need to decide on a final voltage and current for your project, which will determine whether you'll need to cut the cells, and how you will wire them together, in series or parallel. This is a bit more of an involved project, which many people might skip in order to opt for a pre-built module. The process of configuring and installing a pre-built module can be tricky enough, depending on your location, but equally if you are in a place where money isn't very flush or where getting supplies in and out is difficult, then this might be for you! If you're not quite ready, you can follow along with one of the kits shown earlier (Figure 11-2) and assemble a few cells that can recharge a battery, for example.

Figure 11-5 *Two stacks of cut imperfect cells ordered in bulk at a discount.*

You will need

- Some imperfect or damaged solar cells.
- Depending on the size of module you decide to construct, you may need to cut the cells so that they fit your needs. In this case you will need a small handheld circular saw with a hard blade.
- A clean workstation with a solid desk, and good light.
- A piece of wood or other material to serve as the base. We show an ordinary piece of plywood being used to lay the cells out on; you can be creative, but be sure that you can attach a glass cover and frame to it when you are done.
- A cut piece of glass or other protective sturdy material that will fit your base.
- A frame: ours is made from reused aluminum with the corners pre-cut.
- Some silicon and hardener.
- A soldering iron and some solder.
- A multimeter.

Steps—cutting the cells

1. The first step is to plan out your module so that you know what voltage and amperage you'll need to try to achieve. The cells we are working with are 0.5 V each and we are powering a 12 V pump for a small solar thermal panel.
2. Solar cells are rather like glass in their texture and don't take to being cut very well, so some care must be taken at this stage. Use a straight edge (Figure 11.6) that is not precious.

Figure 11-6 *Using a straight edge to score a slightly damaged cell—practice first on one that is quite damaged, to get your skills up.*

3. Rather than cutting all the way through, score the cell in a straight line where you would like it to split (Figure 11.7). The cells we obtained had two sets of contacts, so splitting them down the middle enabled us to double the number of cells.
4. Once the cell is scored (Figure 11-8), grasp it firmly (Figure 11-9) and gently snap it in two (Figure 11-10), not unlike the action of splitting a graham wafer down the center. Use your thumbs on either side of the score, and be gentle.

Figure 11-7 *Scoring a less imperfect photovoltaic (PV) cell in half. Be gentle, they are very fragile!*

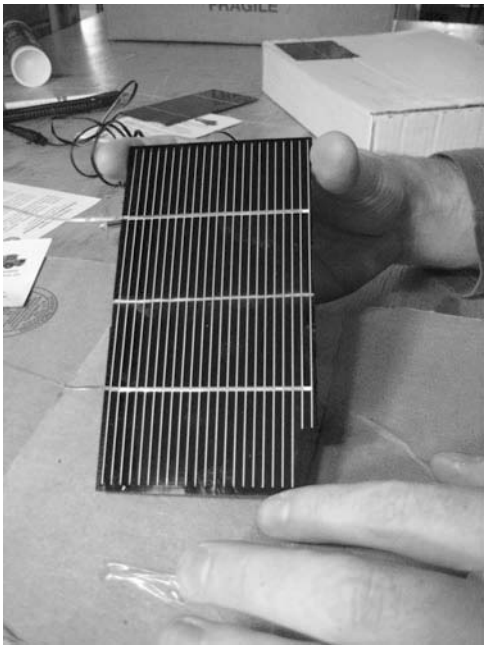

Figure 11-8 *A scored PV cell, ready to be split.*

5. If the cell doesn't seem to want to split nice and cleanly, try scoring it a little deeper, but be careful because too deep a score can crack the cell. An imperfect split is not the end of the world; but you

Figure 11-9 *Grasp the cell firmly with both hands, and press with all four fingers on the underside and your thumbs on top.*

Figure 11-10 *Gently "crack" the cells apart along the score line.*

should try to have a few spares in case this does happen.

6. Make sure you don't lean on the cell while cutting it (Figure 11-11) or you may crack the cell.

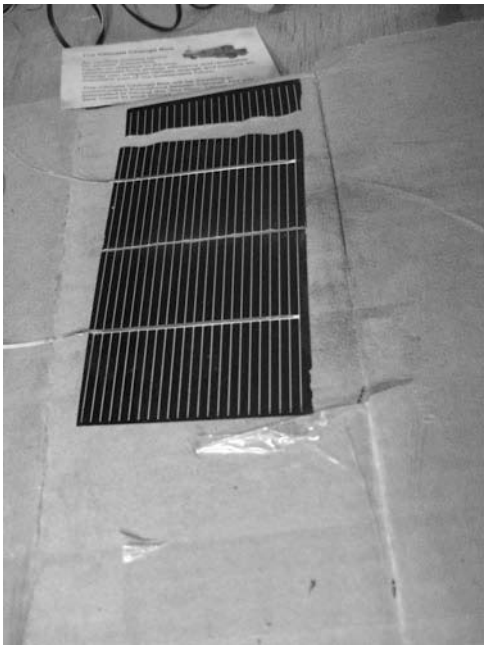

Figure 11-11 *Just a little too much pressure when scoring can easily crack the cell.*

Steps—wiring the cells together

1. Once you have cut a sufficient number of cells, lay them out face up on your plank of wood or other material, with a piece of soft protective material for now, to make sure they will all fit with a small gap (1 inch or so) around the edge of each cell. Be careful, as they are fragile and could break a little more.
2. Once you are sure they will fit, flip them over and place the electrical connections out. Most cells you will find will have a length of electrical ribbon attached to either the top or bottom layer of the cell, and a connection point to the other side of the cell (Figure 11-12). If the ribbon is not long enough, you will need to add some wire and solder a good connection to it.
3. Once you have laid out all the electrical connections and made sure that the wiring will meet your design specifications, it is time to start soldering (Figure 11-13).
4. Be careful when soldering the contacts as it is easy to put a little too much pressure on a neighboring cell and crack it inadvertently.
5. Typically, the cells will be soldered into rows, which will then all be wired together (Figure 11-14), in series or parallel as your application demands. Test each row of cells once you have finished soldering them together by taking them out into the

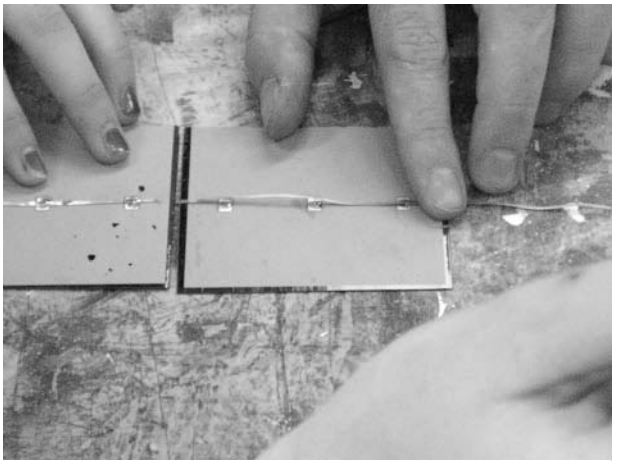

Figure 11-12 *Lay the electrical connection from one cell over the contacts from the next.*

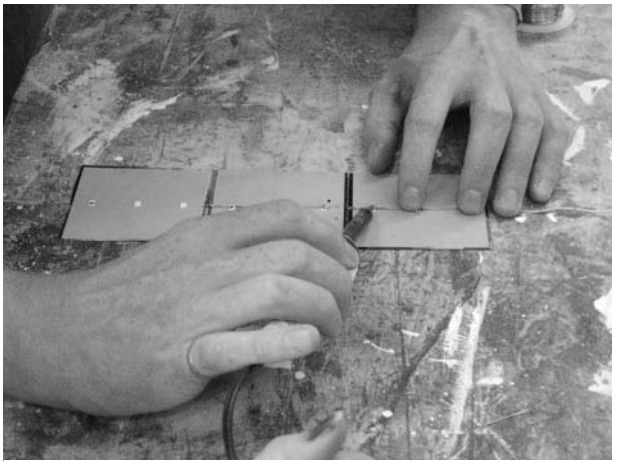

Figure 11-13 *Solder the connection together and be careful not to put any pressure on the cells.*

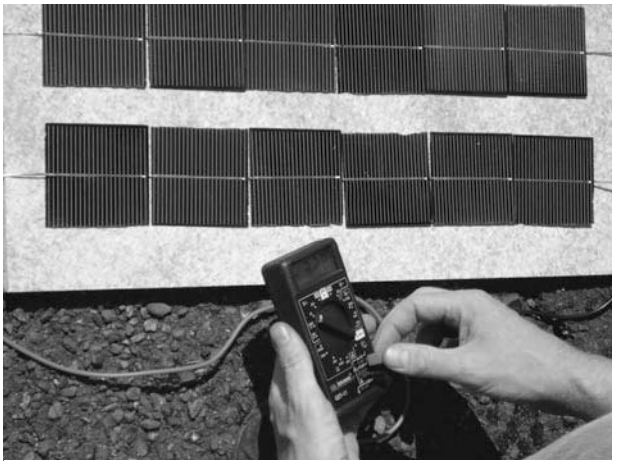

Figure 11-15 *Testing the electrical output of a strip of cells.*

sun and measuring the current and voltage produced (Figure 11-15). Five of our strings of cells produced acceptable current, but the sixth would not, until we replaced one of the cells.

Steps—assembling the module

1. Lay the strips of wired-up solar cells accessible, but out of the way.
2. Cover the plank of wood with an impermeable layer (a cut black garbage bag works; see Figure 11-16).
3. Place a thin layer of paper on top of the plastic (Figure 11-17).

Figure 11-16 *Prepare the base by covering it with an impermeable layer.*

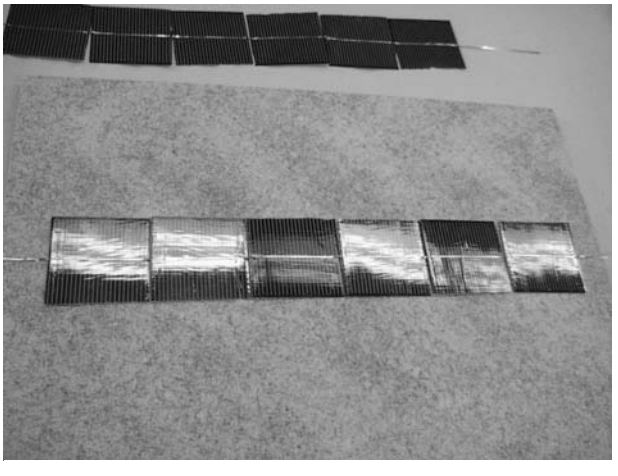

Figure 11-14 *A row of six cells soldered together.*

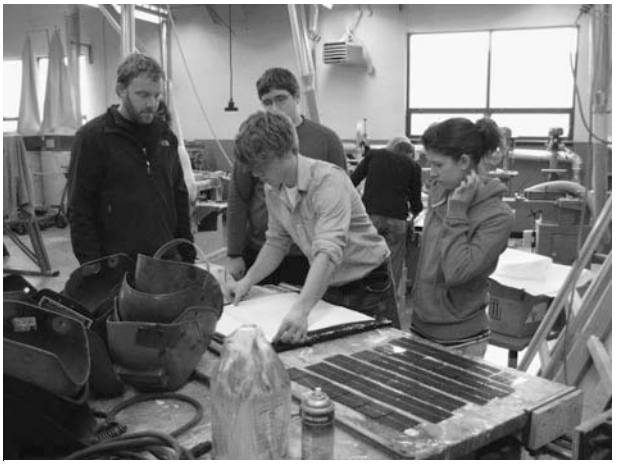

Figure 11-17 *Lay down a piece of paper to protect the connections behind the cells.*

Figure 11-18 *Solder the connections between rows of cells.*

4. Carefully move the rows of wired cells onto the base.
5. Wire the rows of cells together (Figure 11-18), being careful not to put any pressure on the cells (Figure 11-19).
6. Mix the hardener and the silicon solution in a pail that you won't need again.

Figure 11-19 *Take care not to put any pressure on the cells and check the electrical connection before going on to the next step.*

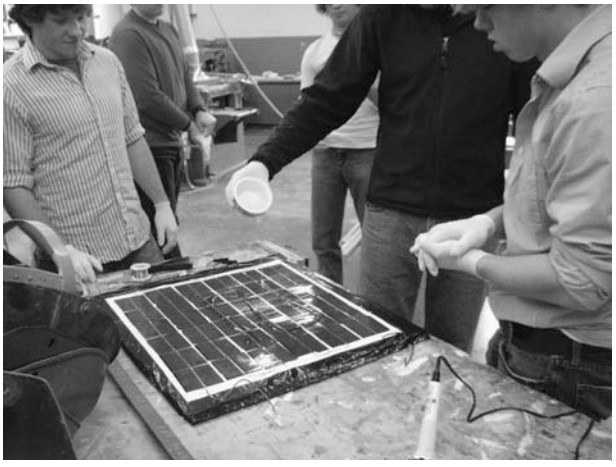

Figure 11-20 *Pouring silicon onto the wired module.*

7. Slowly pour the silicon out over the cells (Figure 11-20); then with gloved hands, spread it out (see Figure 11-21) evenly over the whole module.
8. Gently position the glass in place (Figure 11-22).
9. Press the glass down gently to spread the silicon around evenly (Figure 11-23) and remove any air bubbles, which will interfere with direct sunlight reaching the cells.
10. The nearly assembled module (Figure 11-24) can be weighted down (another good use for textbooks) and left to dry for 1 or 2 days.
11. When it is dry, you can size (Figure 11-25) and fit it into your frame, and test out the electrical output (Figure 11-26).

Figure 11-21 *Spread the silicon out evenly over all the cells.*

Figure 11-22 *Gently position the glass over the silicon and cells.*

Figure 11-24 *Nearly finished! Let it dry for a few days under some weight (but not too much).*

Installations

Now that you've built your own solar PV panels, it's only natural you want to think about a more permanent installation and their use. While we have been pretty casual so far about "point it towards the sun", if you are thinking about putting up a permanent, or even semi-permanent solar installation then positioning and location can have a large impact on how well your creation performs. You'll want to make sure that there is nothing shading your location during the day, and remember that shadows move, so just because a tree isn't shading your roof in the morning doesn't mean the same will be true in the afternoon. Remember also that the sun's path through the sky changes during the year, so some things might shade your collector at the time of year when you need it the most. You generally want to face your collector towards the equator and with an angle that reflects how far you are away from the equator. Many systems will have two points at which the angle of the solar collectors can be set, which are changed twice a year, before and after summer.

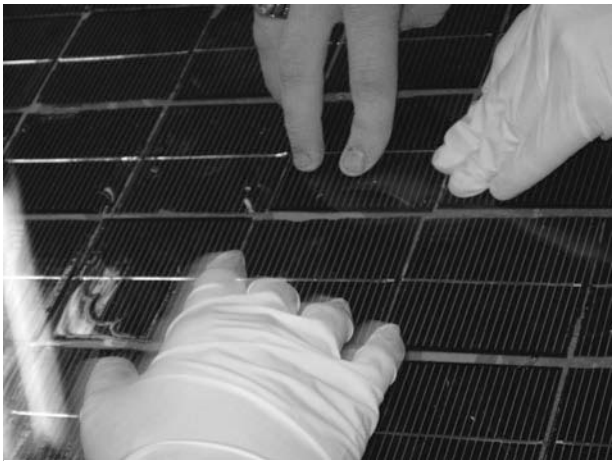

Figure 11-23 *Push the glass firmly down to clear air bubbles from the gooey silicon.*

Figure 11-25 *Sizing pieces of the (reclaimed) aluminum frame.*

Figure 11-26 *The completed module in action. Powering a pump for the solar thermal collector built earlier.*

Another option is to try to track the sun, as it does move in predictable patterns, but this can get somewhat involved for a small project.

If you are going to try to add your solar system to your existing AC electrical system, you will almost certainly need to seek out professional assistance. Depending on your skills and the willingness of your contractor though, it might be possible to assist in the process to some extent. As in the case of a solar thermal system, it is the wiring and interconnection that necessarily needs to be done by a licensed electrician, while actually mounting the brackets and system on your roof is less technically demanding.

Up or down

The choice of where to mount your PV panels is likely to be one of trade-offs. If you choose to mount the panels on the roof of your house, it could cost a fair amount to secure them, depending on the type of building. Something with a flat concrete roof will be fairly simple to fasten securely to and not very dangerous to work on, while a steep tiled roof would be more difficult and possibly require work to maintain the integrity of the roof while securing the panels and mounting brackets. Whether or not to install brackets to adjust the angle of your panels is another question of trade-offs you are likely to face. Mounting brackets can orient the panels at a better angle to catch the sun's energy through the seasons, but they can also get damaged, and may not have quite the visual appeal of flat-mounted PV panels.

It is important to choose a location where the panel is usually facing the equator if your concern is generating electricity using your PV panels. Considering the price and effort that has gone into them, I expect this be a primary consideration, but I continue to hear tales of north-mounted panels in northern countries. Too often the motivation is to look green rather than actually be green, and that is a shame because a lot of energy can go into producing a PV panel and it is a waste if that panel doesn't get the chance to produce all the useful energy that it could. Another factor of whether that energy is usefully consumed once it is produced from a suitable location, is where you plan to send it. Roof-mounted systems are nice because they are collecting energy where it is typically used—in the building. But there is sometimes only so much roof space, and a ground-mounted system is another alternative (Figure 11-27). Something to consider in this case is the length of cable run to the location where you will be using the electricity produced, as we discussed, and your electrician will tell you again, because cable losses can be significant, and vary depending on the voltage sent through them. So if you are thinking of using cheaper cable or running it a long distance, you may want to think about a higher-voltage system.

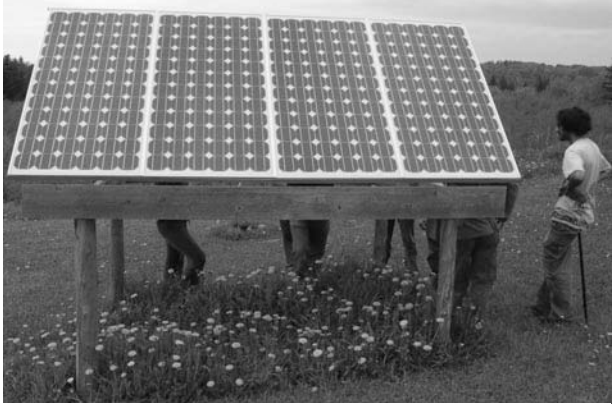

Figure 11-27 *A wood-frame-mounted, grid-tied photovoltaic system.*

Project 41: PV Panels on Your Roof

Much like the solar thermal installation, if you are going to go through the expense of purchasing PV panels to install on your house, it is likely that both the panels and your roof warrant the services of a professional. A professional installer will worry about the optimal angle to place the panels, roof loading, wind gusts, and other important things. If you have a less valuable roof, you may think about attaching the panels yourself. Do a lot of reading and use common sense before doing this yourself—maybe take a course if one is offered nearby, like the participants in the pictures that follow who are attending a class at the Falls Brook Centre in New Brunswick, Canada.

You will need

- To have thought through your system carefully. We are only covering one part of a complete installation, and these are brief steps. You will need to think about where the electricity you are going to generate will go: either into a battery or fed to the grid if possible, or used right away. You will have wanted to size your modules to your needs and assess your options before making a sizable investment.
    - For example, the modules installed in the accompanying pictures are being fed into an existing charge controller, which came with the wind turbine installation from an earlier project. Wiring requirements are small, as the panels are mounted on the roof of the workshop where batteries are storing the electricity to power some lights and tools.
- Appropriate gauge wire to connect your modules into a panel together, as well as sufficient lengths to send the electricity somewhere useful, and various electrical connectors.
- Nuts, bolts, and mounting brackets appropriate for the roof that's taking your installation. The example pictured was planned as an educational experience using a roof that had few valuable features.

Steps—preparing the modules

- Start by testing individual modules (Figure 11-28) so there are no surprises when they are wired together. The class pictured is installing six modules as part of a weekend Energy Experience workshop at the Falls Brook Centre in 2008.
- Lay your modules out, so the connectors on the back are accessible (Figure 11-29).
- Electrical connections on your modules are likely to be different, but usually straightforward to figure out (Figure 11-30). Make sure you have thought your system through or you will have to take it apart (Figure 11-31) and redo it.
- The frame to hold the modules together in a panel can be simple. In the case pictured (Figure 11-32) two pieces of timber per module were more than sufficient.

Figure 11-28 *Testing electrical current from an individual module: participants at the Energy Experience Class at the Falls Brook Centre.*

Figure 11-29 *Three modules set alongside one another; the first cable wiring them together is in place.*

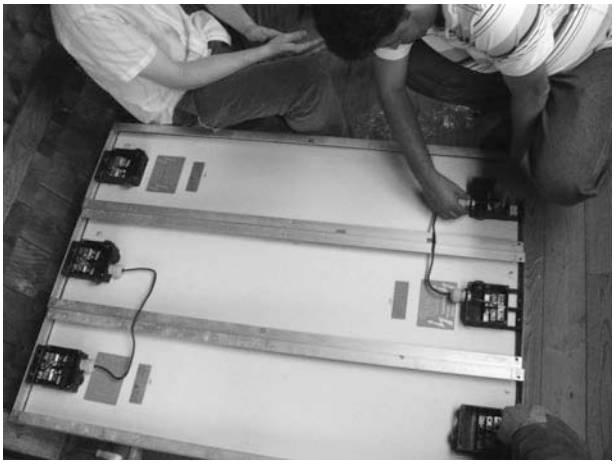

Figure 11-31 *Securing wires on a second set of three modules to be installed.*

Steps—Onsite

1. Ensure you have a safe way up to the roof, and make sure any loose articles of clothing are secure before clambering about (Figure 11-33).
2. Gather the required mounting brackets onto the roof before lifting your modules (Figure 11-34), and make sure the area is prepared. Go slow.
3. Carefully lift the modules we assembled earlier up onto the roof (Figure 11-35).
4. Lay them face down (Figure 11-36).

Figure 11-30 *Tightening the weatherproof covers onto the second connection.*

Figure 11-32 *The wooden frames holding the three modules together are being installed.*

Figure 11-33 *Try to remember to tie your shoelaces before getting up on the roof, and certainly before moving around.*

Figure 11-34 *Gather everything you'll need.*

Figure 11-35 *Carefully pass the panels up.*

Figure 11-36 *Lay out the panels so that the electrical connections are accessible.*

5. Finish any final wiring, such as wiring the two panels together (Figure 11-37).
6. Carefully turn the panels right side up, making sure the electrical connections are accessible (Figure 11-38).
7. Test the panels at this point (Figure 11-39) to make sure there are no loose connections as the electrical connections will be difficult to get at later.
8. Feed the cables from your panels into a weatherproof junction box (Figure 11-40).
9. Secure the junction box to the roof (Figure 11-41) and ground it.

Figure 11-37 *Connect the two modules together.*

Figure 11-38 *Easy for wires to get into inconvenient places, so make sure the important ones are accessible.*

Figure 11-39 *Make sure nothing came loose in the move.*

Figure 11-40 *Feed the wires from the panels into the junction box.*

Figure 11-41 *Securing the junction box.*

10. Splice the cable that will lead to the charge controller (Figure 11-42).
11. Feed the cable into the junction box (Figure 11-43) and tighten the weatherproof shield into place (Figure 11-44).
12. With the wiring basics in place, secure the panels to the roof (Figure 11-45).
13. Be careful, as your may be drilling holes very close to the panels (Figure 11-46).
14. Check to make sure your panels are secure (Figure 11-47); if not, add more support (Figure 11-48).

Figure 11-42 *Strip the end of the cable that will carry the electricity to the battery or charge controller.*

Figure 11-43 *Feed the thick cable into the junction box.*

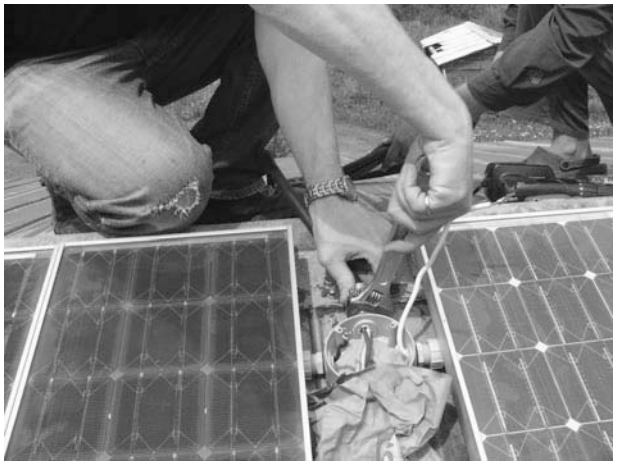

Figure 11-44 *Secure the connector so the water can't get in.*

Figure 11-45 *Time to make sure the panels don't move.*

Figure 11-46 *Drilling this close to the panel isn't really advisable, but is sometimes necessary. Be careful.*

Figure 11-47 *On flat roof installation, your panels are not going to have that many forces acting on them, but they shouldn't move around.*

Figure 11-48 *Fasten every corner into a solid part of the roof, so the wind doesn't pick them up.*

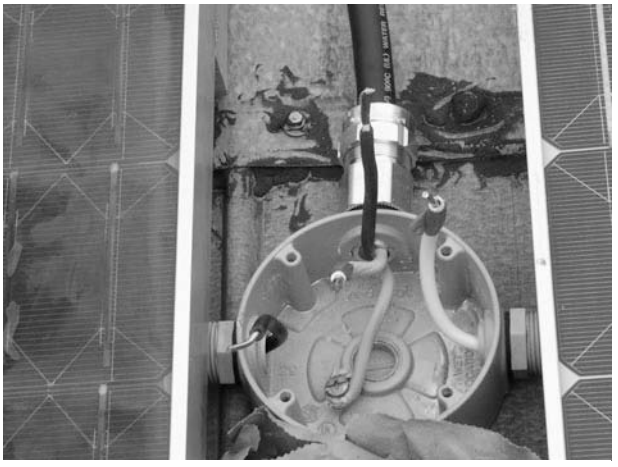

Figure 11-49 *The wires are live: make sure the ground wire (middle) is attached.*

Figure 11-51 *Rain is bad for electronics. Fasten the junction box cover tightly.*

15. Be careful working on the wiring at this point as the panels will be producing electricity if it is a sunny day. Make sure the ground wire is in place (Figure 11-49).
16. Connect and tighten the positive cable first (Figure 11-50), then the negative terminal.
17. Close and seal the junction box (Figure 11-51).
18. Run the cable to the charge controller (Figure 11-52).
19. We should be finished on the roof: come down carefully (Figure 11-53). Remember that doesn't

Figure 11-52 *The cable should be fed out of the way, but on the shortest path possible to avoid losses.*

Figure 11-50 *A secure connection will mean you do not have to get up on the roof again.*

Figure 11-53 *Climbing down after a job well done.*

quite finish the job. You still have to send the electricity somewhere useful. For this project it is connected into the charge controller from an earlier project.

20. Enjoy the view of the newly mounted panels (Figure 11-54).

Tie or no tie

As we discussed in an earlier chapter, deciding how and if to interact with the grid is a complicated decision that gets made for all sorts of reasons. From an environmental perspective, we want as much solar power feeding onto the grid as possible. Particularly because solar radiation tends to coincide with peak electricity demand, electricity companies are starting to offer various programs that enable individuals to feed their excess power back onto the grid. If this is an option to you in your current location with your current electricity provider, then this is by far the most environmentally friendly option available to you.

Figure 11-54 *The mounted PV modules, producing clean electricity!*

The incentives could work for you too. In Ontario, for example, doing this on a small scale would enable you to pay for the average (2008 prices) solar panel in approximately 25 years, which is a very short payback period for a renewable energy system. For comparison, a similar system in New Brunswick, where production is only counted against consumption, would increase the payback period to 100 years for the average consumer. Tying into the grid ensures that none of the valuable solar electricity you generated will be wasted. If you are not near the grid, or want to ensure some level of independence, or have another motivation, then you can choose to go with a battery system. You will then need to look into inverters if you plan to use AC current, and size your battery and your loads appropriately so that as little solar electricity goes to waste as possible.

Whether tied to the grid or not, there are often times when the sun is not shining. Thankfully, we have other forms of solar energy to put to use at those times.

Chapter 12

Wind Power

Wind power is a valuable and in some places consistent source of energy, which we have generations of experience using. The wind is really a form of solar energy: the sun heats up some patches of air, causing circulation currents in the air, which blow across our fields and valleys. The principles behind harnessing some of that energy can be fairly simple: a cloth hung on a mast catches the wind as a sail, and fabric on a rope does the same as a kite. Early windmills had pieces of cloth hung on wooden panels, tilted at a slight angle to harness that caught wind as a turning motion useful for a variety of tasks, such as grinding corn or pumping water.

Some of those "old" ways of using the wind are still around today and some are even getting a new life because of their environmental benefits (Figure 12-1). Large freight ships are reportedly testing large kites that deploy from the front of the ship and pull it along, for use on the open ocean to reduce fuel consumption. The kites fly high in the air, because winds are more constant at higher altitudes, and don't replace the ship's engines, just improve the overall efficiency. They are not exactly like the sailing ships of old, but they are a step in the right direction. Efficiency gains are important, as is remembering that the vast majority of our global trade once happened because of the wind. When we speak of an economy powered by renewable energy sources, it is something we hope for the future, as well as something we had in the past.

Figure 12-1 *This children's kite demonstrates an idea that people think has currency on a large scale. The turbine in the center of the kite spins in the wind, possibly generating electricity in a larger version.*

Depending on your needs and the available resource at your site, there are a number of important factors to consider when deciding if wind is the most appropriate energy source for your task. If it is, there are several options available to you, depending on what needs doing. In many cases installations will be close to electricity lines and, as we've discussed already, whether it is possible to feed electricity back onto the grid depends largely on your local utility, so is not always practical. But electricity isn't the only way to do useful work. If you decide to go down the biofuel route to fuelling your car, discussed later in the book, you might think about going so far as to produce your own oil from seeds. As in the past, grinding seeds is a fantastic job for the wind, so long as your design is appropriate. Like pumping water, grinding works well with a high-torque, low-speed sort of motion. Electricity tends to prefer a high-speed low-torque sort of motion, so the types of machines that do each job can look quite different.

Medium and large two- and three-spar wind turbines that produce electricity are beginning to dot the landscape and are becoming familiar to people everywhere (see Figure 12-2). These blades use the same effect as an airplane wing to produce lift from the passing wind and are very efficient at moderate to high winds. The shape of an airplane wing (Figure 12-3) causes a pressure to build up on one side and air to move faster around the long end of the wing, to create lift. The lift that enables airplanes to fly is directed in a circle on a turbine blade to cause it to spin.

Figure 12-2 *A twin-blade electricity-producing turbine.*

Figure 12-4 *A multiblade turbine.*

Windmills and water pumps tend to have many small blades, which can turn in smaller winds (see Figure 12-4), though this sort of turbine can also produce electricity. The blades on a multiblade turbine are not necessarily shaped like an airplane wing, and instead use a dragging force to spin. The blades can be fairly simple; traditionally they were cloth and wood, and are each angled slightly to catch the wind. These many multibladed machines turn at low speeds and tend to be robust enough not to get damaged by higher wind speeds. These are often hooked directly on to a pump or grinding wheel, and simply pump water to a convenient place (like an above ground store tank from a well) or grind a ready pile of seeds. It is also possible to use slower-turning turbines to generate electricity, but less common so you'd have to look into sizing your alternator properly, or some gearing. There are a number of good places to continue reading, some listed on Evilgeniusonline.com.

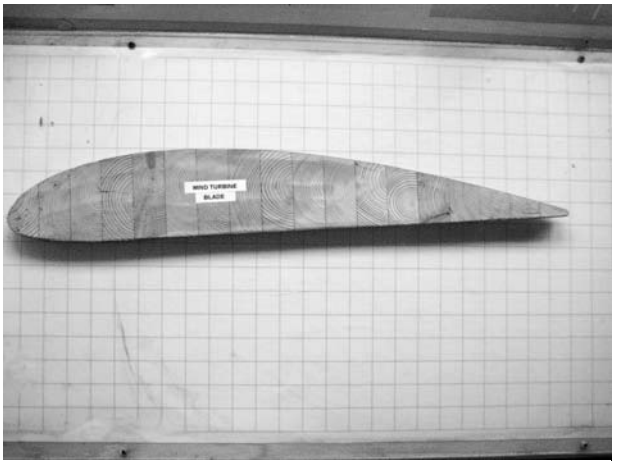

Figure 12-3 *The same principles contribute to both airplane wing and wind turbine designs.*

All of the wind machines we've talked about have blades around an axis that is horizontal to the ground, but there is also another possibility, which has probably been in use even longer. The vertical axis turbine spins, as you might guess, around a vertical axis. Recent versions use curved blades to generate lift using the same principles as flight, whereas older versions used a drag force to capture the wind. Some of the problems that people have encountered are that vertical axis turbines are best suited for use on the ground, where the wind is not exactly at its peak. But that could be different in urban areas, where vertical lines are more common and create wind gusts, which might unobtrusively power part of our future. (Think about skyscrapers and the long upward lines along their corners.) They are already widely used as anemometers that reliably report the wind speed.

Project 42: A Plastic Cup Vertical Axis Drag Turbine

This project demonstrates, in a simple, old and valuable way, how to capture the power of the wind. Drag is used rather than lift, to spin the machine around a vertical axis. Devices like this are used to measure wind speed today because they turn at a reliable speed in a variety of conditions.

You will need

- Four plastic cups.
- Two plastic straws or thin wooden dowels, like popsicle sticks.
- A small wooden dowel to serve as the mast with a base, or a cork in a wine bottle, or something similar to imitate a tower.
- A sewing pin or thumbtack.
- Some tape.
- A base, or a fifth cup and a surface to tape it to.

Steps

1. Poke holes two-thirds of the way up each cup.
2. Stick one end of the straw through the hole in one cup, and the other end in another cup.
3. Tape the straw securely in place. Do the same to the other straw and cups.
4. Align the cups so that the open end is facing the closed end of the cup in front of it (they will catch the wind).
5. Fix the two straws together at their center point with tape.
6. Push the pin through the center of the two straws, and into the top of your wooden dowel. Don't push all the way in; the cups and straws should be able to rotate.
7. Push the other end of the dowel into the bottom of the last cup (or fix it in a base).
8. That's it. Place it in the wind. The cups should catch the wind and spin it around.

Variations

- A sturdy version of this project could be used to determine wind speed in your location before deciding on a bigger project. You can also find pre-built models in your hardware store, often as demonstrations that you could use with a small electric generator attached to the center of the turbine to record how much electricity was produced.
- You can buy commercial anemometers, or for a slightly different version of a vertical axis turbine that will produce electricity, try www.re-energy.ca/t-i_windbuild-1.shtml

Sites and heights

Not all sites are equal where wind is concerned. Even a small change in location can have a significant effect on the overall amount of energy harnessed from the wind. The wind can be a highly variable resource. It is ideal if you are able to gather the actual wind speed data for a site for at least a year, before deciding to build a large wind-powered installation. That isn't always practical and, depending on the size of your proposed system, not always necessary. There are a number of important observations a person can make when visiting a prospective site, which can tell a great deal about the amount of wind and general direction. Generally, elevated locations will tend to have greater average wind speeds, so a mountain peak or ridge would be preferable to a valley. Alternatively, a larger tower could greatly improve average wind speeds at the turbine, but a large mast brings it's own complications.

Assessing a site

You can tell a few things about a prospective site, just by knowing what to look for. You may know of some local areas that are particularly windy, such as a windy field or a gusty corner. For the purposes of using the wind's power, it is important to know the constancy of the wind and whether it prevails from a certain direction.

Looking at foliage or natural growth in the area can be your best indicator. Stop and look at the trees. Do the branches on one side have fewer leaves? Is the tree leaning at all? If either is true, you may have a reasonable site with a strong prevalent wind. If there are trees that are visibly leaning to one side, there is a good chance that you have a good site. You could set up a small version of the vertical axis turbine we just built, and record the speed it turns by connecting it to a data logger and small electric engine or use short periodic video captures.

Towers

There are generally two types of mast for horizontal axis turbines: those with and those without guy lines (long cables that support the tower). The benefit of using guy lines is that they support the tower, which can be much, much lighter as a result. Consequently, they tend to be much cheaper to install with today's materials, especially for the small and medium-sized turbine. Another alternative is of course to try mounting a turbine on a building (see Figure 12-5), or incorporating it into the design from the outset. A number of innovative projects are currently underway worldwide trying to integrate wind systems into building designs. One of the biggest problems is noise and vibration, which can be an enormous and terrible nuisance to the building's occupants but may be surmountable through electronics or dampeners.

Figure 12-5 *A building-mounted wind turbine.*

Project 43: Raising a Guyed Tower

The typical guyed tower consists of a thin pole onto which the turbine is mounted, supported by four to eight guy wires (see Figure 12-6). The guy wires attach to four solid anchors buried into the ground, in four directions and equidistant from the central pole.

A common method of raising a guyed tower is to use a gin pole, which attaches at a right angle to the mast at one end and to a cable at the other, which is run to a pulley on the anchor. Figure 12-7 shows a guyed tower being lowered for maintenance. The tower and

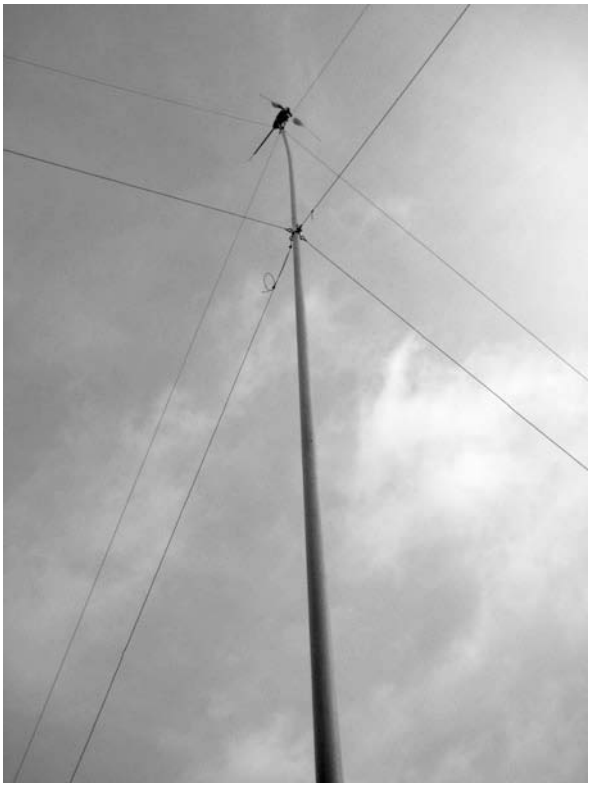

Figure 12-6 *A thin tower with eight guy wires visible.*

Figure 12-7 *Lowering a tower with a removable gin pole.*

gin pole form a right angle at the hinge line, the photograph is from the viewpoint of the person letting cable out through a pulley at the anchor, to the gin pole. The turbine will reach the ground on the sawhorse in the background, in front of the small shed. In some systems the guy wires are then attached and the gin pole removed, in others the gin pole is a permanent fixture.

You will need

- Your wits about you. We will be working with 45-foot towers, cables, and heavy electronics.
- Very likely, an experienced installer, or a very handy person around. The concepts aren't hard to understand, but the size of a tower can mean there are very real risks to those raising it.
- You'll want to have had your anchors installed beforehand. Figure 12-8 shows the rubble surrounding the anchor, the steel connection points, and turnbuckles. Depending on your site, you would probably need to dig a large hole, then install a solid anchor into a heavy mass. This is a very important step not to scrimp on, as a loose anchor could result in your valuable turbine crashing to the ground.

Figure 12-8 The rubble holding the anchor underground and the steel connection point with turnbuckles.

- Most commercial turbine kits come with most of the cables and accessories you'll need; a good commercial installer will bring these if not. It is often good to have extra hands around when erecting a turbine for the first time, especially ones that have an idea of what will be happening. That's what we are hoping to make of you, through this project—certainly not professional installers. We are working with a 45-foot land-based tower made by Southwest Windpower in the images accompanying the project.
- If you insist on trying to install your own tower without professional assistance, at least get the help of someone who is handy, take a class if available, read more, and talk to every knowledgeable person you can find, first. And read the instructions that came with your mast and turbine too.

Steps

We'll be starting from the point where anchors have been installed already. The main mast joins a second steel pole (the hinge line) running along the ground and is secured to the earth under U-shaped pieces of rebar. These are loose enough to enable the hinge line to rotate, so that the mast can be raised and lowered. You can see the U-shaped rebar holding the hinge line in place in Figure 12-9. There is space for electrical connections and four equidistant anchor points with inverted steel U attachment points.

We'll raise the tower first without the turbine mounted in order to make sure that there are no problems with our setup, before we mount our valuable turbine to the top of the tower.

1. Start by laying the tower out so that the end that will have the turbine on it is elevated from the ground. Attach the cables (Figure 12-10) to the mid and upper points (Figure 12-11) on the tower.
2. Next, attach the other end of the cable to the anchor (see Figure 12-12).
3. Attach a long piece of rope to one end of the gin pole. In Figure 12-13, the gin pole (far left) has the rope (next in) tied to one end. The tower is center in the picture; at its base you can see the hole where the gin pole will be inserted, right where the cable is coming out. You might find that the tools needed vary on your project; for this one, they included a mop handle,

Figure 12-9 *The hinge line (vertical tube) held in place by a U-shaped rebar. The mast (down) forms a T going off to the right. The gin pole lies, detached, horizontally across the photo, just below the second U-shaped bracket. The electrical connection wires are visible where the gin pole and tower meet in the center of the image.*

Figure 12-10 *With the tower laid out, start by attaching cables.*

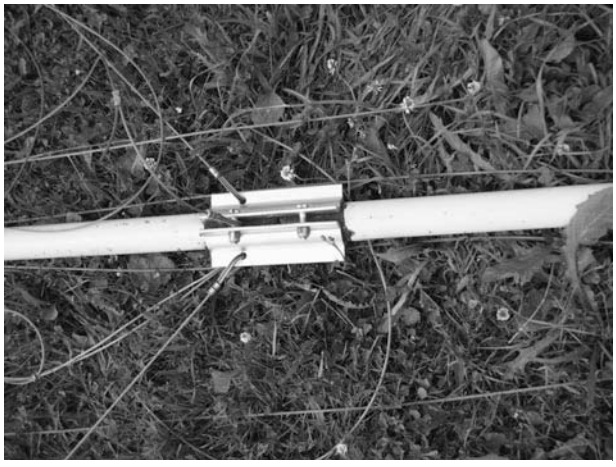

Figure 12-11 *The connection point on the tower shown in detail.*

which is used to push the wire up into the gin pole, so that it does not get pinched or broken.

4. With support ropes attached and a pulley on the lift anchor (see Figure 12-14), carefully lift the gin pole up (see Figures 12-15 and 12-16) and then gently slide it into the hole in the base (Figure 12-17), being sure not to clip the electric cable.
5. Once the gin pole is securely mounted (see Figure 12-18), we can prepare to raise the tower.

Figure 12-12 *Attach the other end of the cable to the anchor.*

Figure 12-13 *The gin pole (left), mast (center), and wire stuffing tool (right), with the hinge line and electrical connections visible at the bottom.*

6. Pulling the cord at the end of the gin pole will lift the tower (remember there is no turbine yet), as in Figure 12-19.
7. Once the tower is erect, the cables should be tight, as in Figure 12-20.
8. All went well, so we're ready to lower the mast and attach the turbine.
9. Slowly give the rope some slack to lower the mast to the ground. Have someone else guide it to a soft set down.

Figure 12-14 *The pulley attached to the lift anchor.*

Figure 12-15 *Raising the gin pole takes several people.*

Figure 12-16 *The gin pole is not actually that light, pull on the long ropes to help lift one end upright.*

Figure 12-17 *In this position, it is important to make sure the electrical cable is not pinched, which can require lifting the pole straight up.*

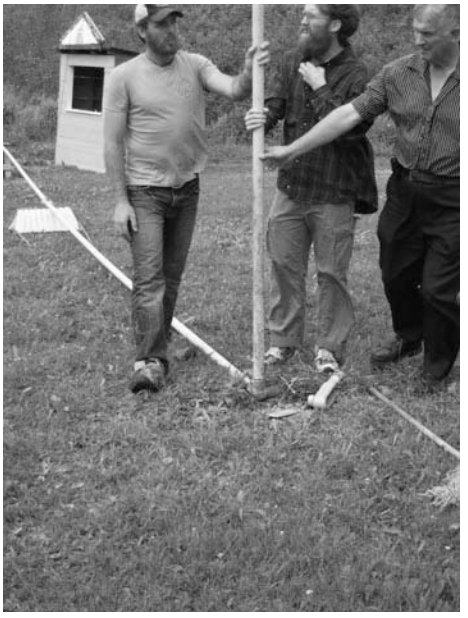

Figure 12-18 *The gin pole installed.*

Figure 12-19 *With the ropes attached, the gin pole is used to raise the tower.*

Figure 12-20 *Safely raised, we know it works. Now we'll lower it and start installing the turbine.*

Project 44: Installing the Turbine

Though it is not that sexy, having a mast that can be raised and lowered safely is a crucial step to having a functioning wind system. Don't be tempted to skip the last project because there was no turbine involved: without the mast this turbine is little good. The turbine pictured in this installation is commercially available, and a perfectly reasonable choice, but not necessarily endorsed more than any others by inclusion here. The turbine produces three-phase AC current, which is being used in combination with the solar module we install elsewhere, to charge a battery and power lights and fans in a workshop. The lights are DC based and the workshop is on a battery system, so the AC current from the turbine is fed into a converter, which turns it into DC current, which is fed into a battery charge controller.

You will need

- Common sense when working around electricity and heavy electronics up thin poles.
- Screwdrivers, electrician's tape, wire strippers, etc.
- The forethought to have fed the cable up the tower; otherwise, a very long pole and some patience.

Steps

1. Sometimes, even the best laid plans can go sour. Even if you are careful with cables, you may have to ensure, again, that they are out of the way. The mop handle works great (Figure 12-21) to push the cable up into the gin pole, and up the tower base.
2. Use tape to attach the cable to rope that you can use to pull it up through the tower (see Figure 12-22).
3. Our turbine is three-phase AC, so there are three wires coming out of the tower and three connectors, pictured in Figure 12-23.
4. Slide the wires in and tighten with a screwdriver (Figure 12-24).

Figure 12-21 *Using a special tool to gently push the electric wire up the tower.*

5. Once the wires are attached, slide the cover closed (Figure 12-25).
6. Lift and slide the turbine onto the tower and tighten the bolts around the connection (Figure 12-26).
7. Now we're ready to lift the turbine into the air! The process should be about the same as in the last project, but heavier to lift.
8. Once the turbine is up, the lift cable will need to be moved from the gin pole to the lift anchor (Figure 12-27).

Figure 12-22 *Attaching the wire to a guide rope.*

Figure 12-23 *The turbine electrical connection and wire coming from the tower.*

Figure 12-24 *Connecting the turbine to the wire feeding down the tower.*

Figure 12-25 *The turbine wired up, with the protective cover closed.*

Figure 12-26 *The turbine mounted on the tower.*

Figure 12-27 *Moving the cable from the gin pole to the lift anchor.*

The combination of wind and solar electricity is acknowledged by many people with years of first-hand experience to be a fair pairing: when the sun is not shining the wind tends to be blowing. Together, they can afford a degree of independence or of constant renewable energy production to the green landowner. As mature and market-ready technologies, they are available and have a growing network of qualified installers around the world. Especially when combined with systems that can store energy for periods of time until it is needed—as we saw with chemical, water, and air batteries and as will be possible in the future with other means such as fuel cells—wind is a smart choice.

Chapter 13

Alternatives to Your Car

Chapter 1 described how our current CO_2 emissions come from different sources, like heating our homes or creating electricity. Most estimates put our transportation pollution estimates somewhere around half, if not more, of our total CO_2 emissions. More detailed studies show that more than half of all individual car trips are for trips that are less than 10 miles long. For those short trips the car is very often not the most efficient choice; it is after all designed for safe travel at much higher speeds. In addition, internal combustion engines tend to have a dirtier burn when they are cold, so the combined emissions from short trips are disproportionately large.

In some countries where bicycles are more common than automobiles, people tend to use non-automotive means of getting around, particularly for short trips, and have far fewer greenhouse gas emissions as a result. The bicycle is among the most efficient vehicles we know of, and is ideal for short trips. In the Netherlands, Denmark, and parts of China and Africa (though with less infrastructural support), as well as hundreds of other places, bicycles are commonly used for both long and short trips. When North Americans are asked about why they don't use their bicycles more frequently, the most common answer frequently has to do with the weather.

Getting out of the rain

There have been a great many thoughts on weather protection for cyclists over the years. If the reader was brave enough to "try another way" in an earlier project, they may have had their own already. Lately, several industrious individuals have been commercially producing human-powered and human-electric vehicles that provide weather protection (see Figures 13-1 and 13-2). Budding hobbyists have also collected a plethora of ideas on how home-builders can construct their own weather-protected human-powered vehicle or velomobile. There are also, of course, purely electric vehicles that are available, but from the point of view of sustainability, including the social aspects alongside environmental and economic factors, adding human power to the mixture has some important consequences,

Figure 13-1 *The Sunrider velomobile made in the Netherlands.*

Figure 13-2 *The Leitra (right) and Quest (#1) made in Denmark.*

such as fitness and health. Just think of all the miles driving to the gym that could be avoided if all our electric-based vehicles had pedals in them!

Tip

There are a large number of models and designs of human-electric weather-protected vehicles available, even though they are not common on the roads. Spend some time researching before committing to building your own or purchasing one; there is something for every budget, desire, and ability.

The next few projects examine several different styles and models of velomobile—a name that is gaining popularity to describe weather-protected pedal-powered vehicles—which you can order prebuilt, build yourself, or assemble from the factory with plans and some parts. There are two general types of vehicle: those where the body provides strength to hold the vehicle together—a unibody—and those where the body is attached, either permanently or temporarily, to an underlying frame.

Recumbent tricycles are the most common vehicles to fit fairings onto, and there are a large variety of models to choose from if going down this route, as some commercial manufacturers did, as well as ways of making a tricycle that fits your needs perfectly. There are also an enormous variety of tricycles on the market, many of which can be fit with a fairing (Figure 13-3), and something to suit most tastes, including folding models, and inexpensive off-road models. *Velovision* is a popular magazine for those wanting more information. Greenspeed and ICE are just two of many popular recumbent trike makers. There are also four-wheeled vehicles, like the Rhoades Car or MicroCar by Lightfoot Cycles (Figure 13-4). Some models can fit up to four people, and lend themselves to car-like shapes when covered, as the geniuses at bicycleforest.com did (Figure 13-5).

A fairing fits around an existing vehicle, providing improved wind resistance and weather protection, but is not structurally integral to the vehicle and can often be removed. The Leitra—a commercial velomobile—uses a fiberglass fairing attached to a custom-built frame for

Figure 13-3 *The Leitra front fairing fit to an inexpensive recumbent tricycle, named "California Sunshine." Image courtesy of Leitra.dk.*

Figure 13-4 *The MicroCar, by Lightfoot Cycles, a four-wheeled vehicle that the company plans to produce a fairing for. Photo courtesy of Rod Miner.*

Figure 13-5 *A four-wheeled two-passenger Rhoades Car with a lightweight fairing designed to mimic a pickup truck. Image courtesy of bicycleforest.com.*

the complete vehicle, and more recently began fitting their fairing to other commercial trikes. Another design, the VeloKit is a fabric and aluminum rod fairing that attaches to any number of commercial tricycles.

Unibody constructions, from aluminum fiberglass and advanced composites like carbon–kevlar, have a stiff body and no frame, so the wheels and seat are all attached directly to the frame. These can be very light vehicles, as Fietser's carbon–kevlar WAW (Figure 13-6) shows (a mere 23 kg (50 lb) vehicle that sings at around 50 km per hour (2 miles per hour) without the rider breaking a sweat), as well as heavier sturdier vehicles, such as the Aerorider (Figure 13-7) which encases the driver (including their head) in a bullet-like shape for electric-assisted cruising. Many people looking at the cars of the future have thought about lightweight unibody construction techniques as the way forward. Vehicles to meet most of our transportation needs are already being produced and are available as commercial products from Alleweder in aluminum (Figure 13.8), Aerorider and others in fiberglass, and Fietser and others in advanced composites. There is also an open-source velomobile project that aims to provide drawings and a forum for those interested in building their own vehicle, and countless small projects happening in garages everywhere.

The range of vehicles

There are several different models and manufacturers of velomobiles in Europe and the variety of vehicles

Figure 13-6 *Fietser's WAW velomobile, made in Belgium. Photo courtesy of Fietser.be.*

Figure 13-7 *Aerorider's traditional commuter vehicle in the background (white) and the Sunrider in black.*

produced is very large. It ranges from the Twike, a $20,000 two-person highway-speed electric/pedal vehicle, to the $3,500 Alleweder self-assembly kit, right through to the free do-it-yourself book from the British Human Power Club (BHPC). Some estimate that thousands have been built by hobbyists, but the total number of production velomobiles around the world is in the hundreds.

The largest centers for velomobile use today are Germany and the Netherlands, so you're likely to be ordering parts from there or at least getting inspiration from some of the vehicles made there. There is at least one manufacturer in Germany (Cabbike) and there are

Figure 13-8 *The Alleweder velomobile, available to build yourself from a kit, or preassembled, from several sources. Photo courtesy of Dutch Speed Bicycles.*

several next door in the Netherlands (Aerorider, velomobiel.nl's Mango, Flevobike's Versatile). Nearby, Belgium's Fietser produces the WAW and the Leitra has been made in Denmark for the past 25 years. There are less than one thousand commercially produced velomobiles in the world and most of them are found in northern Europe, but a growing number are appearing in Australia, New Zealand, and North America. There are always new entrants to the market too, such as two new manufacturers in North America (Lightfoot cycles producing the Stormy Weather and Cambie Cycles producing Steve's velomobile in Vancouver) as well as a dealership in Canada (bluevelo.com) and Pedal Yourself Healthy manufacturing their improved Alleweder. Surely this list is already out of date and missing a few. The Online Resources will help you fill in my omissions.

Some commercial velomobile links

- www.fietser.be/en/index.htm
- www.lightfootcycles.com/velomobile.htm
- www.twike.com/
- www.velomobileusa.com/
- www.aerorider.com/
- leitra.dk/
- www.cab-bike.de/
- www.flevobike.nl/content/view/25/55/lang,en/

A number of people reportedly use velomobiles for their daily commute, but there are not a lot of good data about how much a weather-protected bike changes people's travel habits. Some manufacturers direct their product and advertising towards work journeys, which allows the introduction of electric assist and accessories, whereas others are directed at the many people who also use their velomobile for long-distance trips and racing. A velomobile is not going to be perfect for every journey, but it does provide an option for a large number of common car trips. Before you decide whether this is for you, think about how many short trips you make by car. Maybe look back at the list of trips you usually make (see Chapter 2) and think about how many of those trips are under 5 km. These are the most polluting trips in your car and the ones it is easiest to use a velomobile for.

Online Resources

- www.velomobiling.net—the North American resource includes links to all the major manufacturers around the world.
- www.bhpc.org.uk—the British Human Power Club will send you a free book *So You Want to Build an HPV* and links to the *Human Power* magazine archive, an amazing resource.
- www.recumbents.com—a large resource on a variety of human power construction projects, including velomobiles.

Though this range and availability should encourage anyone who feels the desire to be riding around in their own velomobile, there are curiously few on the road, considering it's an 80-year-old idea.

The easiest route for someone who just wants to start riding their eco-friendly vehicle around is to purchase a commercial vehicle, and there are plenty to choose from. Often the most difficult part of the decision is getting the chance to try the vehicle, at least once, before deciding to spend an average of $10,000 on it. Considering the fuel costs you will make up that price very quickly, but it is still quite a bit all at once. Many people choosing from North America will go to Europe and try several models out; the Netherlands is particularly good for trying out several vehicles in a short space of time, but that often still leaves the problem of bringing your new vehicle back to your neighborhood. Some manufacturers like Aerorider are looking into larger shipments to the United States to save on costs, once there are sufficient orders. In these cases you will have little to do but unwrap your new package and go for the first ride, at which time you'll probably feel pretty genius like and a little smug (especially if it is raining).

One of the oldest velomobile manufacturers came up with a unique solution to the issue of transportation, which was to have the velomobile fly back as luggage with its new owner. The true evil genius may of course be tempted to calculate how many short car trips made by the velomobile it might take to compensate for the flight. Consider, however, that calculating the value of new converts to weather-protected human-powered travel because of their first-hand exposure is a little more tricky.

Project 45: Traveling with a Leitra

The Leitra has been made by hand for the past 25 years from a small factory outside Copenhagen in Denmark. Upon arrival in Copenhagen, the budding green genius is likely to be greeted by the smiling and fit face of Carl Georg Rasmussen. Spending some time at the factory once your vehicle is ready is a good way to make sure that every part of this unique vehicle fits you. Small angles on the roll bar that supports the fairing while riding may be fitted while you are there, so that it fits tight to the rider but with sufficient room to move about and pedal. If you are the least bit handy, you may even be able to assist in making parts of your vehicle, with Carl Georg's expert advice and watchful eye (Figure 13-9). For the uninitiated, this is a priceless introduction to building with fiberglass.

As with most projects so far, this is only an example of the type of challenge you may face on your journey to green, clean transportation. Other manufacturers have come up with other ways to get around the quite difficult issue of shipping within a reasonable cost. Lightfoot cycles, in Montana, has worked with the designer of the Stormy Weather velomobile Reg Rodaro (Figure 13-10) on a fairing that fits within the dimensions required for a low-cost UPS shipment. Fietser's WAW disassembles into three small pieces, while the volekit arrives in a small box. These creative solutions aim to save the customer a trip and/or only add a small amount to the final cost. Normal air-shipping charges from Europe or even across the continent could otherwise add a third of the price of an individual velomobile, but even still you could recoup those costs quickly with gas savings if getting out of the rain encourages you to use human power for at least part of your journey.

Figure 13-9 *Carl Georg Rasmussen, builder of the Leitra velomobile, removing the fiberglass wheel cover from the mold at the factory in Denmark.*

Figure 13-10 *Reg Rodaro with the Stormy Weather velomobile he designed, now being produced by Lightfoot Cycles in Montana. Photo courtesy of Rod Miner.*

You will need

- The resources for a Leitra velomobile (and have decided this is the velomobile for you).
- Some large pieces of bubble wrap or other packing material (Figure 13-11).

Figure 13-11 *A well-used Leitra and the packing material (foreground) that will be used to protect it for shipping once disassembled.*

- Large pieces of cardboard or other rigid material (recommended).
- Two small wrenches.
- A plane ticket back home (this packing technique works equally well for train journeys across Canada and probably other places too).
- A few hours before your plane (or train) leaves.

Steps

1. First, lift the front fairing of the Leitra (Figure 13-12) upwards so that you can have a seat inside, but leave the fairing up.
2. Disassembly of the Leitra starts by removing the front fairing: first removing the lightweight swing-limiter (Figure 13-13); then placing a foot under the clip (Figure 13-14) and lifting the top off (Figure 13-15).
3. To be very cautious, it is possible to remove the roof and windshield from the fairing by unscrewing several small bolts around the outside. The roof and windshield can then be wrapped separately.
4. Wrap the outside of the fiberglass in protective wrap and place it open-side up on top of the cardboard pieces.
5. Remove the rear luggage box by unscrewing two bolts (Figure 13-16) and then the wing nut in the bottom of the box (Figure 13-17).

Figure 13-12 *Lift the front fairing up and let it swing all the way forward to begin.*

6. Lift the luggage box off (Figure 13-18) and detach the bottom carriers from the frame by first unhooking them at the rear (Figure 13-19), and then lifting one side at a time off (Figure 13-20).

Figure 13-13 *Detaching the lightweight device used to keep the front fairing from rotating too far forward.*

Figure 13-14 *Use your foot while seated to unclip the front fairing from its secure hooks.*

7. The disassembled pieces (Figure 13-21) should get wrapped in bubble wrap. To save space, place the bottom carriers, luggage box, and lid into the upturned fairing body.
8. Wrap the whole fairing in one last protective layer; then pull layers of cardboard around.
9. Lower the roll bar on the trike and secure it with some tape. Let some air out of the tires.

Figure 13-15 *Lift the front fairing off with two hands on the aluminum support bar, and carefully place it on the protective wrap.*

Figure 13-16 *Loosening the bolt holding the luggage carrier in place.*

Figure 13-17 *Remove the wing nut in the base of the luggage box.*

Figure 13-18 *Carefully carry the luggage box away to be wrapped.*

10. That's it. You should now be able to proceed carefully up to the check-in counter, where you may have to pay extra fees for a bicycle. The fairing will be a large package, but because it is not heavy, should not incur any further charges.

Figure 13-19 *Unhook the lower luggage carriers at the back first.*

Figure 13-20 *Then lift the hooked edge off of the frame.*

Figure 13-21 *The disassembled parts of the Leitra fairing with the bare trike in the background.*

Project 46: Frame and Fabric Tops

Probably the simplest form of some weather protection is to use a lightweight fabric and lightweight frame. Many people will be familiar with this sort of construction technique in the form of a tent for camping. Applying this idea to a vehicle is not that difficult, but does require some ingenuity. One of the most ingenious idea I have seen along these lines is the veloKit cover. Pictured in Figure 13-22, it provides lightweight weather protection and is designed to be attached to a variety of different commercial trikes. Builder and inventor Krash is keen to be able to fit the kit to a variety of trikes (see www.krash.us/velokit-trike-list.html for the list), and will offer a discount if you can supply your trike to be fitted, for those models where this hasn't already been done.

Figure 13-22 *The veloKit fairing system, made to suit a variety of vehicles. Photo courtesy of Krash.*

You will need

- A recumbent trike that you like and which is supported by veloKit already (or patience to send Krash your trike).
- To order the veloKit, which will arrive more or less as pictured in Figure 13-23.
- A wrench or two and an afternoon.

Steps

1. Onto the bottom bracket (where the pedals are) you will need to attach the supplied mounting bracket. It is generally a T shape, as shown in Figure 13-23, but will vary slightly depending on your trike. When entering and exiting the vehicle, the front windshield tilts forward to allow easy access (Figure 13-24) and this is the point it pivots about, so be sure it is secure.
2. Two lightweight vertical pieces will then need to be attached to the head tube mounts. These hold the walls and side windows in place, stretching forward from the rear frame, which provides you with an accessible trunk space (Figure 13-25).
3. The trunk section attaches above the rear wheel and is made of lightweight aluminum rods that are bent into the correct shape.
4. The fabric body, expertly presewn by Krash with flexible windows and a specially blown front bubble windshield for maximum visibility (Figure 13-26), can then be attached. The kit

Figure 13-23 *The veloKit, as it will arrive at your door.*

Figure 13-24 *How the veloKit opens to enable the driver to enter and exit.*

leaves the bottom free so you can still put your feet down and push when necessary, but still keeps you totally dry, even riding through puddles, as any splash hits the fabric wall and not the rider.

5. To enter and exit the vehicle, simply tilt the front section away and stand straight up. Groceries and other luggage is accessible through the rear.

Figure 13-25 *Details of where the veloKit will attach to the average tricycle.*

Figure 13-26 *The view from the inside, through the specially shaped windshield.*

Assembling an Alleweder

The Alleweder is one of the older models of commercial velomobiles which now has several derivatives of the original design in production. Since its inception in the 1970s, it has always been available as a kit or a completed vehicle, so you can choose how much you want to get your hands dirty. There are now several different derivatives made by different companies, which share fundamental technologies and have equally fundamental differences. Most kits are designed to take about 40 hours to complete and require very few specialized tools or skills, but lots of patience and some skilled workmanship (Figure 13-27).

Figure 13-27 *Internal parts of the Alleweder velomobile under construction. Photo courtesy of Dutch Speed Bicycles.*

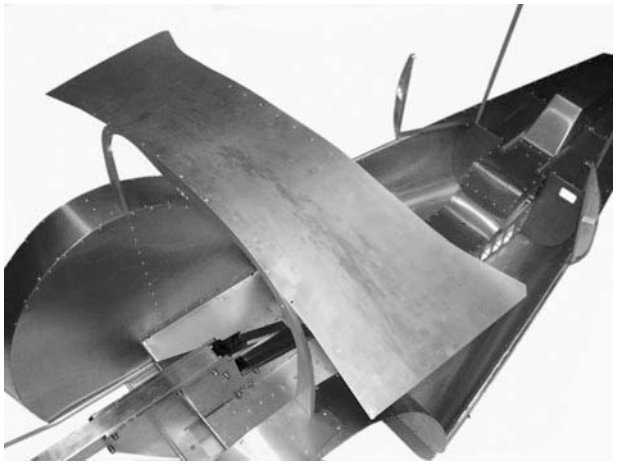

Figure 13-28 *Parts of the shell and dashboard of the Alleweder under assembly. Photo courtesy of Dutch Speed Bicycles.*

The Alleweder is formed by aluminum riveted together in a sort of bullet-type shape (Figure 13-28). There are several variations on the original design now available from manufacturers in Europe and the United States: check the Online Resources to locate some. Do some reading from people who already built them before deciding on one. Regardless of which version of the Alleweder you decide on, no welding is required in the assembly of the kit. The difficult pieces have all been precut and it is designed for someone with "only one left hand," but no other special skills.

Online Resources

- www.dutchbikes.nl—sells the original Alleweder kit from the Netherlands and ships worldwide.
- www.pedalyourselfhealthy.org—manufactures and sells Alleweder derivative kits in the USA.
- www.dutchbikes.nl/uploads/builders_manual_KV4_1.6%20h.PDF—complete instructions for assembly.

Project 47: A Zotefoam Fairing

For the home builder, the process of creating fiberglass molds for a single vehicle production may seem labor intensive, and in search of a solution one man has been successful in using Zotefoam—a closed-cell cross-linked polyethylene thermoplastic material—to easily create a stylish and practical fairing. Of course, there are countless other ways to do this; fiberboard (like old election signs) is another popular choice and the pieces are easily attached together using duct tape. Zotefoam can be a bit trickier than cardboard and duct tape, but the end result has many advantages and the process involves fewer molds than a fiberglass fairing.

Online Resources

- www.recumbents.com/mars/pages/proj/tetz/projtetzmain.html—John Tetz's building page with links to the *Zotefoam Manual* and a massive resource for homebuilders on the rest of the recumbents.com site. Many thanks to John Tetz for images and assistance preparing this project. The reader interested in this project is urged to visit complete directions at his site before proceeding on their own project.
- www.ihpva.org/—The international human-powered vehicle association has a useful builders corner and links to their mailing lists, an invaluable source of advice for those in the process of conceiving or building their own vehicle.

You will need

- A trike or other suitable vehicle you intend to attach a fairing to, and a creative idea for how to attach the two.
- A male mold or some rigid foam (that pink stuff—common 2 inch thick home insulation) and an idea of what your fairing should look like (the BHPC book is a good place to start).
- A heat source, preferably several—to heat-form the Zotefoam to the male mold—such as electric space heaters or a large air dryer.
- Bungee cords to attach the foam to the mold while it is heated and cooled.
- A small amount of fiberglass and resin to add strength to sensitive areas such as the nose cone and small pieces of metal to brace the fairing in shape.
- Contact cement to weld pieces of Zotefoam together.

Steps

1. Start by making a drawing and model of your trike and how the fairing will fit over it. Remember to consider things like the distance the wheels have to move when turning, and how you will get in and out.
2. A male mold has about the same shape as the outside of your fairing will have, and its surface should be relatively smooth. Many hours can go into tracing a smooth curve on layers of insulation, gluing them together, and sanding it all flat, but it need not be exhausting. Be sure to wear protective clothing and be in a well-ventilated area when sanding (see Figure 13-29).
3. Lay out the color pattern your final product will have, and order sufficient Zotefoam for the purpose and some extra. Use masking tape as a guide before trimming the foam; then use bungee cords to attach the Zotefoam to the mold. If you are going to place fiberglass in the nose cone, now is the time to do so (see Figure 13-30).
4. Arrange your workspace so that the heaters can be suspended about 18 inches above the foam; be adjustable and able to move along the mold

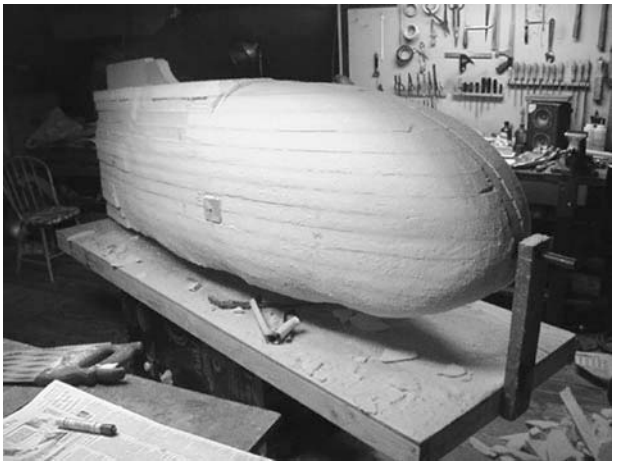

Figure 13-29 *The male mold ready for sanding.*

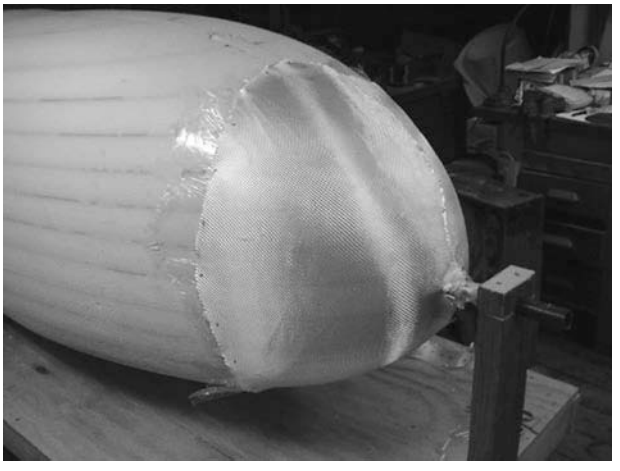

Figure 13-30 *Fiberglass in the nose cone for a little added rigidity.*

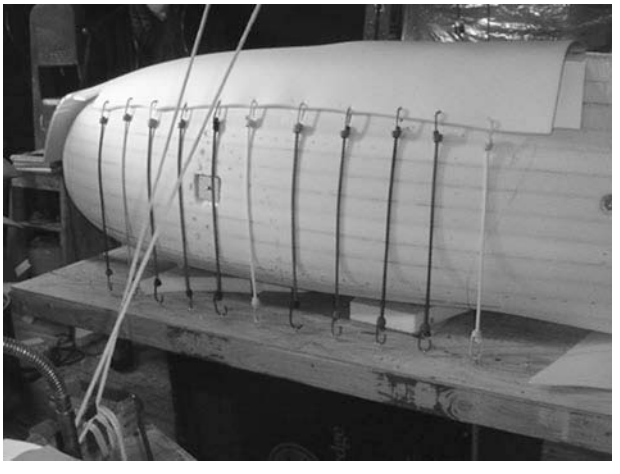

Figure 13-31 *The top color of Zotefoam laid out and fastened to the mold.*

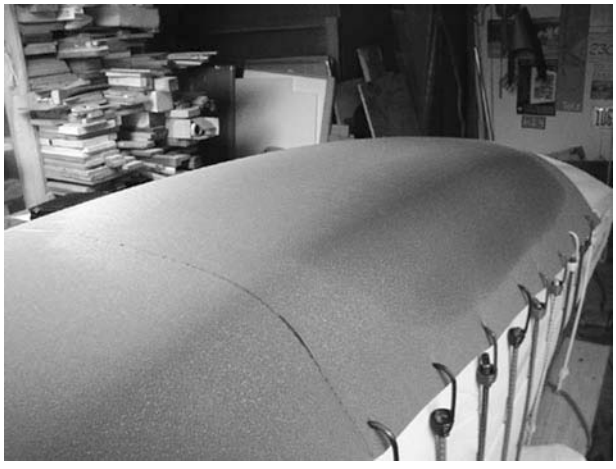

Figure 13-32 *The change in color is visible at the far end of the fairing.*

(or move the mold along the heaters), and leave your hands free (see Figure 13-31).

5. Once the colors are laid out, start by forming one color piece at a time. The heaters should be kept moving at all times while heat-forming the Zotefoam, with slow even movements. The foam will change color slightly as it is heated; noticing this can help you prevent overheating, which can spoil your material. Practice helps you notice how much heat is required to form but not burn the foam (see Figure 13-32).
6. Contact cement can be used to join two pieces of heat-molded Zotefoam together into a fairing. You'll notice that this light body is still floppy, and you will want to build some braces to help it maintain its shape (see Figures 13-33 and 13-34).
7. Depending on your model of trike, it can be tricky to mount the fairing. With some models, you have to remove the wheels from the trike to attach the fairing, but it is likely that each individual project is different (see Figures 13-35–13-37).

Figure 13-34 *The fairing, once removed from the mold and cooled.*

Figure 13-33 *The two colors joined after having been heat-formed separately.*

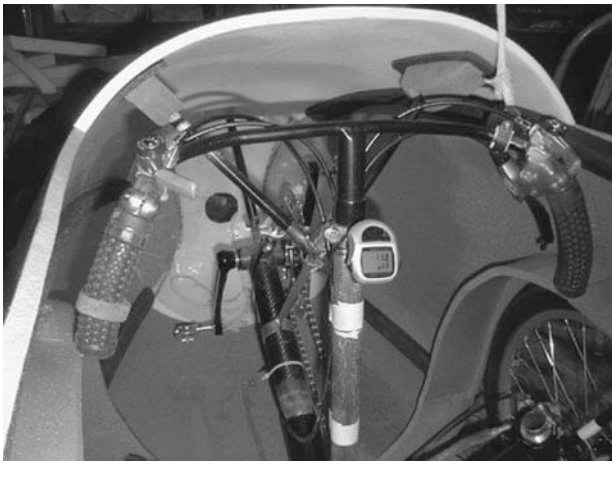

Figure 13-35 *The inside of the fairing, once it is mounted.*

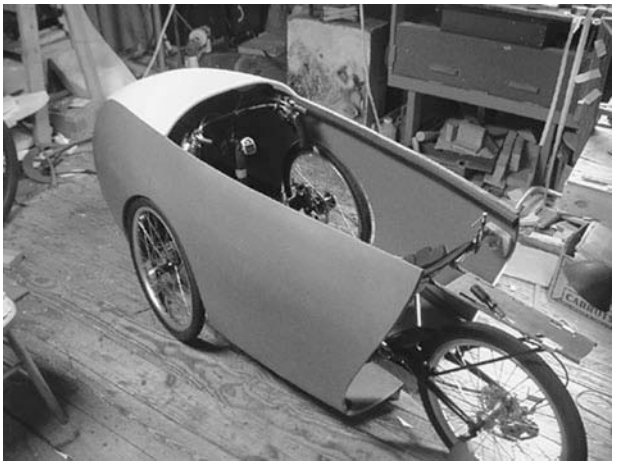

Figure 13-36 *The partly mounted Zotefoam fairing.*

Figure 13-38 *The relaxed sitting position of recumbent vehicles makes them more attractive to actually use.*

Even lighter

A plethora of ideas for smaller and lighter vehicles are available that can meet some of your transportation needs. For adventurous individuals looking at building their own vehicles, we've sort of glossed over frame building, because it can be very involved. Atomic Zombie's *Bicycle Builder's Bonanza* by Brad Graham and Kathy McGowan is a fantastic introduction to the subject with heaps of great ideas for innovative ideas for useful and fun vehicles, and can help you keep your car in the garage more often and through more seasons.

Part of the problem with using a car for so many of our trips is that cars really do weigh a lot. It is quite silly to be taking a heavy machine around, just to move a single lightweight person around most of the time. The velomobile starts to get at that problem by trying to provide some of the comforts of a car without the weight. But there are often times when you might not need a car or all of its features: e.g., when the weather is nice, and the sun is shining. Recumbent trikes, which have a relaxed comfortable ride help (Figure 13-38), while two-wheeled electric scooters (see Figure 13-39)

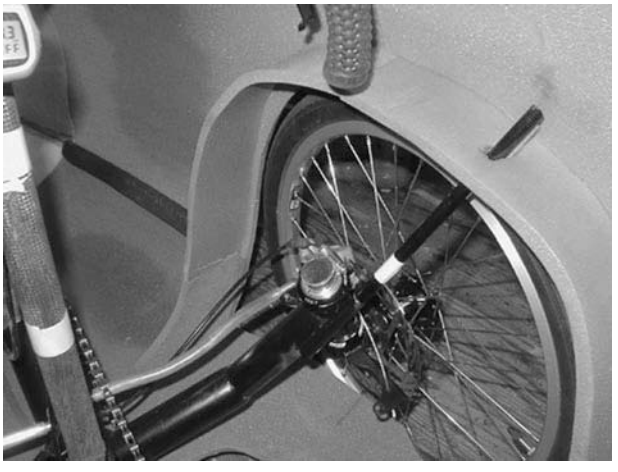

Figure 13-37 *The fairing near the wheels—notice the small clearance.*

Figure 13-39 *Narrow and light electric vehicles are especially appropriate for urban areas, but also face many regulatory hurdles to becoming street legal.*

Figure 13-40 *The BionX electric assist system is a popular choice for cyclists. It replaces the rear wheel in a very simple operation that can be performed on most bikes.*

are becoming popular for people who do not find the exercise of a bicycle something they need, as are electric assist systems for regular bicycles (see Figure 13-40). For those who want something a little larger, there are smaller automobiles such as the Smart Car on the market, but the real genius is urged to fully consider such a choice. One effective way that cities have found to reduce the number of automobiles circulating is to restrict parking, making people consider one more element of inconvenience before choosing their car for a short journey. The Smart Car removes that inconvenience, and may actually make using a car for short journeys more attractive and increase individual emissions.

This page intentionally left blank

Chapter 14

Alternative Fuels for Transport

Earlier in the book, we looked first at ways to reduce your car use by using the tools already available to you. In Chapter 1 these included carpooling, using your feet for short trips, and using public transport. We also looked at some simple techniques for maximizing the fuel economy of your existing car. In Chapter 13, we looked at alternative vehicles that might make you a little more comfortable for those trips where you leave your car at home, and some lighter alternatives for other trips.

In this chapter we focus on the fuel you put into your car and explore some alternatives you might look into. These are of course longer-term projects, which people newly inducted to the world of green might not immediately be willing to do. They are perhaps something to think about for the future, recognizing that making modifications to existing technologies is a good way to reuse, but is also a stopgap. Creating an engine that can use a variety of fuels easily, as we saw with external combustion engines, is not technically challenging. Today it is often other factors, such as our dependence on diesel and gasoline engines, that can hinder technical change to the engines we use, which have a long life. In this case fuels can be tailored to the engine. However, some of these "alternative" fuels have problems of their own, which everyone should take the time to consider before deciding whether it is a route they should put the effort into trying.

Biofuels: a question of balance

Ethanol is currently all the rage in North America. It has been promoted as an available renewable fuel that could help kick the oil habit, and increase the profitability of farms around the country in the meantime. Biodiesel has come a close second in the race to being perceived as a viable alternative fuel for our transportation needs—one that also has the potential to be used in many other locations where heavy oil is used, like in home heating. Ethanol can be made from a wide variety of biomass. In the United States it is largely made from corn, whereas in other parts of the world such as Brazil, sugarcane is used. Biodiesel can also be made from a variety of raw biomass sources, and different sorts of vegetable oils are often used.

Both of these sources of renewable fuel for our vehicles present some very serious problems, as currently produced. The reader is urged to exercise caution before deciding to go down this route. Both ethanol and biodiesel use a raw material that is frequently sold as a food product; the impact that the growth in popularity of these fuels could have on the world's food supplies is likely to be significant. This is so serious that a United Nations expert recently called biofuel use a crime against humanity (see www.monbiot.com/archives/2007/11/06/an-agricultural-crime-against-humanity/ for more information). Now, as we discussed, we need to cut our energy bills and the amount of carbon from sources deep under the earth's crust. The question is, do biofuels do this?

The biofuels energy balance is something that scientists and energy analysts are debating. Estimates try to take into account all of the inputs to growing crops, including making and applying fertilizers, as well as the energy that goes into fermenting and distilling the fuel. Many of the estimates seem to conclude that every barrel of ethanol uses a little more than a barrel of oil to make it; some claim that it is a little less. The energy balance with biodiesel can be slightly better, often because waste oil is used and because the oil does not need to be fermented. Ethanol does tend to burn slightly cleaner than gasoline and, as it is sold in the United States currently, as an additive to gasoline, it could help an engine's emission performance.

But can these new fuels help us reduce energy? Barely, if at all, as currently produced, and especially not if used in our current large and wasteful vehicles, with our current wasteful driving habits. Also, any energy reduction has also to be measured against the very real possibility that putting a food crop into our cars today may mean that others are going hungry. Rising corn prices in 2008 following an ethanol boom reflect the reality that there is only so much arable land on the planet, and if we use too much of it to grow fuel for our too-large trucks, some people could go hungry. This may even be true if one is using a waste product, such as used vegetable oil, because of how our economic system works. For example, some waste vegetable oils are currently collected from Canada and sent to parts of Asia, where they are used as a chicken feed. Now, the reader may question whether it is a wise use of resources to send used oil several thousand kilometers away, and whether we like to have our chickens eating used oil. That is fair and neither of those could be considered terribly wise. However, the result of increased use of waste oil in North America could mean that there is less cheap chicken feed in Asia. This is likely to result in increases to the price of chicken feed in Asia, with the consequence that fewer people are able to afford to eat chicken.

A deep-green environmentalist, who has recognized the link between animal consumption and energy use, might not mind fewer chickens consumed by people. Animals use more energy for each unit of energy they deliver as a food product, compared to vegetables. A low-energy diet therefore includes little or no meat in it, but it is sustainable and just that each person should be able to make that choice for her- or himself. A person having too little food to eat so that another may drive a large car with a clear conscience about the fuel they are using is not a fair solution. Indeed, it is hardly a solution.

Nonetheless, we'll show you how to make biodiesel and convert your car to straight vegetable oil (SVO). Why? Not necessarily because we need more vegetable oil cars on the road—we need fewer cars on the road more urgently—but because the process of getting close and dirty with the fuel you use is an incredible learning experience. There are also possibilities for advanced biodiesel and ethanol fuels, grown from algae or using crops that are inedible and grown on marginal land, that may make these biofuels a more socially responsible option in the not so distant future. There are also other fuels that could be used and this is just a small taste of the possibilities that I'm sure the true evil genius will explore further. During the depression in the 1930s, when fuel was difficult to afford, it is rumored that the waste product pictured in Figure 14-1 and the bulky solid fuel in Figure 14-2 were turned into methane-rich gases that were successfully fired in automotive internal combustion engines; more on these options in a future volume.

Creating one's own fuel from waste is among the most vivid educational tools I have encountered. It excels at making people aware of their energy consumption, though a similar experience may also be had cutting and collecting your own firewood. The sweat equity developed by the process, and the realization of the quantity of fuel that is typically required for the average lifestyle, are both valuable. It is far too easy to fill up the car with a hose coming from a pump, and never really realize that 20 liters (a little over 5 gallons) is too heavy for a person to carry, never-mind ponder where it came from or what it took to get it there. Going a step further and growing the crop and pressing the oil would bring an even deeper connection, but dealing with the sights and smells of waste can also be its own worthwhile experience.

Figure 14-1 *Human and animal manure, if processed correctly, can produce a gas suitable for use as a transportation fuel.*

Figure 14-2 *Wood can be processed into a methane-rich gas, which can then be used to power spark-ignition engines for transportation purposes.*

Vegetable oil and biodiesel

What is known today as biodiesel is the product of the transesterification of vegetable oils in order to reduce the viscosity of the oil. We need to do this because the modern-day diesel engine is not designed for vegetable oil, but for a thinner fuel we call diesel. We call it diesel because of Rudolph Diesel, an inventor who lived about 100 years ago and came up with the idea of an engine that ran on the basis of compression. The engine he demonstrated used a vegetable oil to run when he unveiled it to the world, and his idea is said to have been to enable farmers to grow and process fuel for their own needs. Not long after, a petroleum-based substitute was found and popularized, and we now call this fuel diesel, for some reason. Because this diesel fuel is thinner than your typical vegetable oil, modern engines have been optimized to use a thin fuel. It is not a difficult engineering challenge to create an engine that would run on straight vegetable oil, indeed older diesel engines already can. Until that vehicle is available though, the fuel can be thinned.

There are two well-known ways to make vegetable oil thinner, or decrease its viscosity: one is a chemical reaction that produces biodiesel; the other is by heating the oil before it reaches the engine. Through a process called transesterification vegetable oil reacts with methoxide, which we create by mixing methanol and lye, to produce biodiesel and glycerin. This reaction was first discovered by a chemical company looking for a way to produce glycerin, which is useful for making bombs and soaps, but for most biodiesel makers the glycerin is the waste product.

Online Resources

- Journey to Forever is one of the most valuable resources on the web for the intrepid renewable fuels explorer. Their biodiesel recipes at journeytoforever.org/biodiesel_make.html have been used by hundreds of people across the world.
- A video of the process of making biodiesel with common household products is available at www.videojug.com/film/how-to-make-pop-bottle-biodiesel.

Project 48: A Blender Batch of Biodiesel

The process of making biodiesel is not very difficult, but it does require some patience and careful attention to the instructions. It is in the intrepid evil genius' interests to do as much reading and hands-on learning on the subject as possible before attempting this alone: this is meant as a brief introduction. There are as many different ways of making biodiesel as there are colors in the rainbow, and lots of people have shared their experiences online.

You will need

- Some new or used vegetable oil (Figure 14-3). For the first batch, start with new vegetable oil to make life a bit easier. A good small batch to start with if you are using a blender for a processor is about 1 liter in size.
- A means of bringing the temperature of the oil to 50°C (122°F). In a larger system you will want to permanently install this either in a preheating tank (Figure 14-4) and/or in the main processor (Figure 14-5). For larger batches, it is also important to be able to maintain the heat of the oil for a longer period of time. For smaller batches, this is not so important and a small gas or electric element and pot will do the trick to warm up the vegetable oil.
- To track down methanol (Figure 14-6), you will need about 20% by volume as much as the vegetable oil you are planning to use, and 99% pure. You can sometimes find this at car racetracks, as it is a fuel for some racing vehicles. You might also find it in products that clear the fuel lines of gasoline engines, but read the ingredients carefully: 20 ml will do for a 1 liter sized test batch, but do some reading on the web before trying this at home.
- Lye catalyst. Only a small amount is needed: 5.3 grams of 97% pure potassium hydroxide (KOH) or 3.5 grams of 97% pure sodium hydroxide (NaOH). Lye absorbs water quickly, so do not leave it exposed to the air for long periods of time.

Figure 14-3 *Gathering and using waste oil can be an inconvenient as well as a dirty job.*

Figure 14-4 *The biodiesel processor at the Falls Brook Centre in New Brunswick. Two filters above the heated black barrels are fed by a pump near the floor, which circulates and filters the oil constantly as it is heated.*

Figure 14-5 *The main biodiesel reactor has a water jacket that maintains the required temperature during the reaction of methoxide and vegetable oil. The glycerin and then biodiesel is drained from a valve at the bottom, and the tank is fed via a pump through an inlet at the top.*

- A processor. On a large scale this needs to have a heating element capable of bringing the oil to 50°C (122°F); on a small scale it can be a kitchen style blender, but an old one as you will not want to use it for food products again. In a pinch you could use a 2 liter pop bottle and shake it with your arms rather than run the blender, as you will only need to do that for a few minutes anyways.

Figure 14-6 *A container of methanol with a custom delivery spout.*

- Methoxide mixing chamber: an HDPE (high density polyethylene also known as #2 Plastic is resistant to corrosion) bottle or other vessel (Figure 14-7) that will not corrode in contact with methoxide and will not be affected by the exothermic (produces heat) reaction. The vessel should, ideally, have a tight sealing lid and a method of mixing it (on a small scale, shaking will do) as well as a means of ensuring that the toxic vapors produced by the process are kept well away from the operator. Make sure you have appropriate safety equipment, including corrosion-resistant gloves, safety goggles, and a filtered-air mask.
- Scale, accurate to 0.1 gram.
- Funnels.
- Duct tape.
- Thermometer.
- Using used oil batch would require titration equipment, which would include (Figure 14-8):
  - a pipette
  - a beaker
  - an eye dropper
  - acid test strips or phenol red
  - Distilled water and some of the lye.
- Finally, a container to let the biodiesel settle out in, if you don't want to be scraping glycerin from the inside of your blender (a 2 liter bottle will do, the same one as before if you skipped the blender altogether).

Steps

1. There are several good recipes for biodiesel on the Internet: most vary to some degree, but still work. There are also many detailed books on the subject, and this is really just a brief introduction.
2. You will want to start by warming up the oil to about 50°C (122°F). While this is going on (Figure 14-9), move onto other things, but keep an eye on it.
3. The titration equipment is used to measure the acidity (free fatty acids) of the oil in order to determine the amount of reactant needed to make a successful batch of biodiesel:

Figure 14-7 *The methoxide mixing vessel (on the right), which is vented and feeds directly into the main reactor pictured in Figure 14-5.*

- Measure a small sample of vegetable oil into a beaker (Figure 14-10) and add phenol red.
- Slowly add droplets of lye/water (0.1% NaOH) mixture from the pipette (Figure 14-11) and keep the beaker moving in a circular motion to stir the liquid.
- Note the volume added at the moment when the reaction is visible (Figure 14-12) and has completed (Figure 14-13). Repeat it a few times, and use the average to calculate the extra amount of lye you will need in order to ensure a complete reaction, if you are using waste vegetable oil.

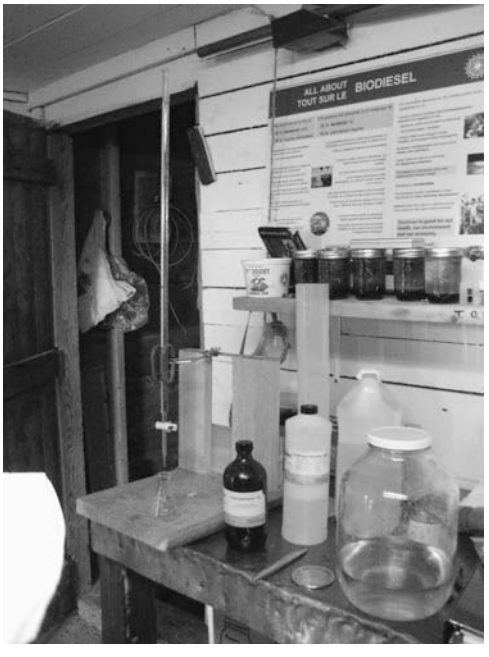

Figure 14-8 *A pipette, distilled water, and other materials required for a titration.*

Figure 14-9 *Warming the used oil in this large-scale system includes filtering it and continuous pumping to ensure a good mix of the oil.*

4. With the oil warmed up, measure and prepare the methanol and lye (Figure 14-14).

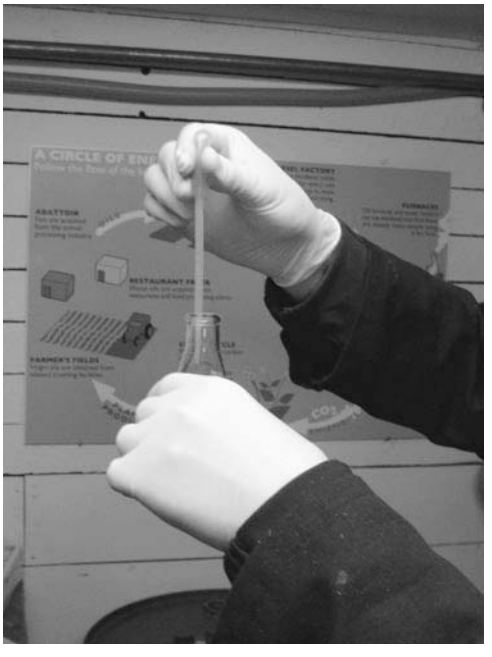

Figure 14-10 *Measuring oil into the beaker.*

Figure 14-11 *The beaker placed under the pipette with a measured volume of distilled water added slowly.*

5. Slowly add lye to the methanol, and mix the methoxide carefully for at least 10 minutes. You will feel the container start to get warm. Ensure you don't inhale any of the fumes from this reaction as they are hazardous to your health.

Figure 14-12 *Note the volume of reactant added when the reaction starts to take place.*

Figure 14-13 *Stop adding reactant when you can see the color of the liquid inside the beaker change.*

6. Once the methanol and lye have formed methoxide, slowly mix it in with the preheated oil.
7. Mix the whole solution for about a half an hour before letting it settle and cool (Figure 14-15).
8. Once it settles, if the reaction was successful, you will see a dark layer of glycerin at the bottom and a lighter layer of biodiesel above it (Figure 14-16).

Figure 14-14 *Wear protective equipment when handling lye, as it is caustic.*

Figure 14-15 *A small amount of completed vegetable oil and methoxide mixture, before it has settled out.*

Figure 14-16 *The process of glycerin settling out to the bottom of the jar, leaving biodiesel above, is clearly visible.*

9. Filter the biodiesel before putting it into the tank of a diesel car. Unlike the SVO conversion covered next, no conversion of your vehicle is required. Do be aware that using home-brewed biodiesel will void the warranty of any new vehicle, so use common sense. A failed reaction can easily destroy an engine too, so be careful testing your fuel before using it.

Straight vegetable oil in your car

To save you the trouble of brewing a batch of biodiesel for every tank or two, it is possible to modify an existing vehicle to run on straight vegetable oil. By incorporating a filtration system and pump into your vehicle, it is possible to pull up to waste oil bins, which are located at the back of nearly every restaurant, and fill up your tank. Keep in mind that doing so without permission of the restaurant owner is stealing, so always ask first. Also, remember to ask what was going to happen to that oil. It is not a bad question to ask the restaurant owner, after he has said you could take it, of course.

Online Resources

Commercial vegetable oil conversion kits include:

- www.goldenfuelsystems.com/
- www.greasecar.com/
- www.plantdrive.ca/html/vegtherm.html
- www.greaseworks.org/svo.

And other home-built examples and hints can be found at:

- www.dancingrabbit.org/energy/winter_svo.php
- www1.agric.gov.ab.ca/$department/deptdocs.nsf/all/eng4435.

Project 49: Tearing Up Your Fuel System and Feeding in Waste

For a fairly moderate cost of the conversion kit, which can be constructed or ordered as a retail item, it is possible to drastically reduce fuel bills. What sort of kit and how many modifications you will need to make will depend on the climate you are operating in. Warm climates simply need less heat added to their vegetable oil-based fuel to make it thin enough for a diesel engine. Vegetable oil can also be mixed, in small amounts, directly with diesel fuel, and there are a number of reports of people simply pouring fresh oil into their tanks in warm climates with not too many mishaps. In cold climates, vegetable oil has a tendency to get thick and sometimes congeal, especially if it has been used before, so properly heating the oil before it reaches your engine will keep you moving.

You will need

- Patience and probably another mode of transport to use for the time this small surgery on your vehicle is performed.
- There are a wide variety of techniques used in the commercial kits, and an even wider variety of ways to convert your own vehicle. The concept is generally to have a second tank (Figure 14-17), so one tank can contain diesel fuel that is used to start the engine and create some heat either through the cooling system or by powering an electric heater. For some extreme climates, it is often advisable to do both (as is the case pictured, from Edmonton, Alberta).
- The average kit will have a second, heated tank, or expect you to be creative in finding one. Try to have good seals around the tank (unlike the accompanying images), as you will be heating used vegetable oil in it, and the smells of its previous use can tend to be exacerbated by heating, and seep into all manner of fabrics in the vehicle and worn by its occupants.
- The tank can be heated by electricity or by tapping into the vehicle's cooling system or exhaust system.

Figure 14-17 *Two metal jerry cans repurposed as vegetable oil tanks in the trunk of a VW Jetta. The tank on the right provides extra storage capacity and holds a prefilter, which enables raw grease to be collected from restaurants. The tank on the left is heated by copper pipes filled with radiator fluid, and has a fuel line running through the radiator fluid up to the engine.*

  There are advantages and disadvantages to each method: an electric heater might be easy to install; a radiator fluid system can very simply be copper pipes in a salvaged jerrycan; while using the exhaust saves the trouble of running pipes of hot fluid down the length of a vehicle (as in Figure 14-18).
- Insulated hoses, or for cold-weather systems a hose-in-hose system that prewarms the fuel all the way from the tank using the radiator fluid as a liquid "jacket" surrounding the fuel line, run to the engine compartment (Figure 14-19). The fuel line will need to be cut into, and a solenoid (Figure 14-20) will be inserted to enable you to switch between the two tanks. A diesel engine does not consume all of the fuel that is fed to it, and typically returns some fuel to the tank. To save on costs, it is possible to "T" the return line on the vegetable oil side back into the engine, also reducing the amount of diesel fuel that gets mixed with your vegetable oil.

Figure 14-18 *The hoses filled with radiator fluid and, through the center in its own tube, heated vegetable oil, running through a hole inside the vehicle.*

- To try to plan out your system well before starting to cut hoses and drill into your vehicle to secure the tanks. Clamps, tools, a soldering iron, and blowtorch are common tools you'll need if you are going the route of building your own conversion. If you're not comfortable with these sorts of tools, you'll probably want to think instead about ordering a kit and having your local mechanic install it, with your input so you understand how the driver's behavior will need to change. For example, with an SVO system, it is necessary to run the engine for a short period of time on diesel fuel before shutting the engine off, in order to ensure that there is diesel in the fuel system when it comes time to start, and not congealed vegetable matter. This requires the driver to remember to switch back to the diesel tank a block or two away from the destination, especially if the vehicle will be parked for a long time or in a cold place, otherwise starting will be difficult. There are some new products that try to handle this process in their own way, so do some research if, for example, you think this might be a problem.

Figure 14-19 *The extra addition to the radiator system is about center in the photograph. Two T junctions tap into the existing system and feed hot fluid down to a second set of T junctions, through one of which runs a tube filled with heated vegetable oil.*

Figure 14-20 *The location where the fuel line has been cut into, and the six-port solenoid (a little left of center) in the photograph. An emergency return valve has also been fitted to this system to enable air bubbles to be cleared after a filter is changed.*

Steps

1. Read much more on the subject of what you intend to do and understand the very real risk that you could damage the engine of your vehicle beyond repair by converting it to run on a fuel for which it was not designed. Any manufacturer's warranty would of course be void, and your insurance status may technically change. In most countries any

vehicle on the road is required to pay a fuel tax, and, by using a substance which has not had taxes paid on it as a road fuel, it is likely that the upcoming conversion will put your vehicle in violation of tax laws, unless you take corrective actions. The UK has a tedious process in place that vegetable oil vehicle owners should use to calculate and pay their tax bill. In other countries where this is not in place the responsible genius might think of bringing the matter to the attention of his elected representative and using the opportunity to discuss the importance you place on good climate change policies with them.

2. It is often easiest to start by installing the tank, as this step does not necessarily disable the vehicle. An electrical system would have the relatively trivial task of running electric wires to a heating element in the tank, whereas the radiator fluid-based system pictured earlier has a more involved installation process that includes splicing into the vehicle's cooling system. It is advisable to ensure that the heating element in the tank and hoses leading to the engine compartment are completely free of leaks before attaching them to your vehicle's cooling system. A leak in the tank can bleed your vehicle's cooling system dry in a matter of minutes and easily damage your engine by overheating.
3. The fuel line leading from the tank should be protected from damage and, if in a cold climate, well insulated or fed through the center of the cooling fluid hose.
4. A fuel line heater (Figure 14-21) can serve as anything from a sufficient heat source for your whole system, if you live in a hot country, to a supplementary heater for already heated oil, as shown in the images using the Vegtherm electric fuel line heater. There are various types of fuel line heaters available on the market, including ones that use the radiator fluid to heat fuel in a compact device. It is a good idea to think about extra filters (Figure 14-22) on the vegetable oil-fed side of your fuel system, and many people have also come up with heated fuel filters to ensure that congealed oil does not clog the filters.
5. Once your fuel line is correctly attached to a three- or six-port solenoid, you will need to wire it up to a convenient switch, accessible from the driver's seat (Figure 14-23).

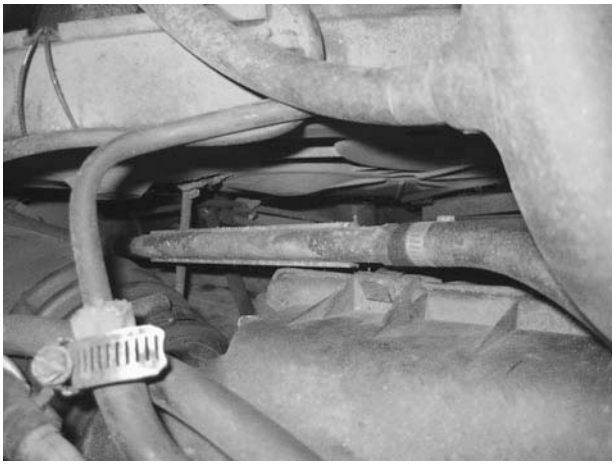

Figure 14-21 *The Vegtherm electric fuel line heater (above center—also visible in Figure 14-20) provides a secondary heat source on this cold-weather system, but could be sufficient on its own in a warmer climate.*

Figure 14-22 *Second and even third filters on the vegetable oil side of your fuel system help protect your engine from small pieces of food waste.*

Figure 14-23 *The electric switch that will connect to your solenoid and change the fuel source from diesel to straight vegetable oil. You will need to remember to turn it back to diesel a few minutes before arriving and turning the car off, or else starting again will be a problem.*

Figure 14-24 *Of course the decals are optional, and always remember to use alternatives—like the Leitra velomobile behind the car—when practical.*

6. In a very brief series of steps, that is the basic concept. The VW Jetta pictured (Figure 14-24) was expected to take a day for the conversion operation, once the homemade system was designed, but it took about 6 weeks in total to work out the problems that inevitably arose. *From the Fryer to the Fuel Tank* by Joshua Tickle is a priceless book for the aspiring vegetable oiler, and a must read before actually proceeding on a conversion. There are also many other valuable books on the market.

Chapter 15

Spaces and Structures

This book began talking about transportation, because its emissions are the biggest single part of our emissions. Concentrating on the easy fixes first, we then moved on to discuss some of the harder projects you might try to green your means of transport further; e.g., by building weather-protected human- and electric-powered vehicles. We've also discussed the ability to use our cars on alternative fuels, and the dangers that some of these fuels could pose, not just to the environment but to other people too. In addition to transportation technologies, the book has also touched on greener ways to produce electricity, e.g., through hydro or wind production, as well as greener ways to heat and cool buildings.

We have tended to focus on the individual actions and choices; however, too often, the choices we as individuals are able to make are limited by the world around us and choices that have been made by the planning of others. The reality of the transportation problem we face is that infrastructure increasingly locks us into our existing patterns of travel, which tend to be very high-energy consumers. The same goes for housing; increasingly, large suburban developments lock us into a high-energy-consuming lifestyle. There are options, but the farther we get down the path of building suburbs, freeways, and multiterminal airports, the harder it is to move towards less high-energy-consuming ways of life. In this chapter we will look briefly at what citizens can do to change the way the structures and cities in which they live are built.

Structures

If you are starting a new project, it's a good idea to think about energy early on. For a new construction project, choosing the site can have a large impact on the energy consumed in transporting materials to the site, on the renewable energy resources available onsite, and on availability of transportation links to surrounding services and communities. If you are constructing an office, for example, where people will travel to every day, it is a good idea to locate it close to an existing stock of housing or a major transportation route. Otherwise, the office could indirectly result in the construction of houses, roads, and possibly all the infrastructure that follows development, including power lines, sewage systems, highways, etc.

Before considering new buildings, it is always a good idea to consider reusing an existing structure because there are frequently environmental and social benefits to doing so. Unfortunately, the economics don't always reflect that, so like other environmental decisions, they have to be made for reasons other than money. Nonetheless, try to find a site with the best transport access and existing infrastructure for your needs, which infringes on natural areas as little as possible. Existing sites have already disturbed a natural area, and tend to have services close by—so they are a natural choice.

Onto your site is likely to come a foundation of some sort. Most times today that will involve concrete, in order to comply with building regulations (Figure 15-1). Concrete, although it has a great many uses, has a high amount of embedded energy, owing to the huge amounts of energy that goes into its production. Embedded energy is a concept that captures the energy which has gone into production of a resource, such as mining the gravel (Figure 15-2) and transporting it to the site. It is efficient, if we are using a high embedded energy material, to use it wisely. Try to minimize your use of concrete if possible, through judicious design and alternatives where appropriate, while still being aware of the benefits of such a heavyweight material: this not only refers to how much concrete weighs but also to its thermal performance. We talked about how water and stones can hold a lot of heat energy earlier; a building is the perfect place to put this to use. Try to think about the orientation of a building as if it were your solar

Figure 15-1 *A heavy concrete foundation beneath a lightweight wooden wall construction is a common building technique. If well-insulated, this method of construction can produce buildings that are efficient.*

cooker, with a glazed southern exposure to maximize the amount of the sun's heat that can be trapped if you are in a northern area. The sun's energy can then be usefully stored overnight and sometimes longer by using a heavyweight material in the part of the building being heated by the sun. If you are in a warmer climate, heavyweight materials can be used to mitigate fluctuations in temperature by being cooled with fresh air at night, and radiating their cool through the day.

Figure 15-2 *Gravel is a component of lots of things, including the concrete in most foundations, and is usually mined in large open pits like this. The concept of the embodied energy of the materials you use assesses a portion of the energy consumed by such an operation to the materials you use.*

Composite structures

A composite structure is one that is made of constituents that remain recognizable. Typically in the built environment, the structural properties of the different parts combine to work as a whole. Composite structures can be found in a large variety of applications, from reinforced concrete in skyscrapers, to glass-reinforced plastic in car and boat bodies (Figure 15-3).

"Sandbag" structures are just one type of composite structure, which can be called a contained composite structure, because one of the materials (the sand) is completely contained by the bag. The bag can be filled with nearly any material, in which case its name should change; however, in practice sandbag often refers to bag-type buildings filled with a variety of materials. "Earth bag" is another term gaining in popularity, which is a slightly more accurate description of a composite structure that is filled with earth, often gathered on the building site itself. They are a priceless introduction to the building process that can be pursued on a small or large scale, without enormous cost.

How sandbag structures are built

A sandbag structure is made by filling a sack, bag, or other container with sand, and then laying the filled bags on top of one another to form the desired shape.

Figure 15-3 *Composite structures are all around us, in the hull of the boats and reinforced concrete in skyscrapers.*

The procedure is more or less identical for earth bag construction, where the bags are filled with earth, often from the building site itself.

All contained composite structures utilize the combined properties of each constituent material to attain their structural strength. The inner material provides the mass of the structure and presses against the containing layer, expanding its shape to create structural strength. A friction element between layers of bags is sometimes used to decrease slippage and increase the structural strength of structures.

The resulting structure has properties that neither of the two materials could have on their own. Sandbag structures have commonly been used in the past as an emergency fortification or shelter because of the strength of the structure and the ease with which it can be built, from materials that are sometimes to be found on site. As a temporary structure, the sandbag method has many advantages, which are not lost when used to build a more permanent structure.

The main deterrent to using a contained composite structure for a permanent structure is the deterioration of the containing layer, which could destroy the integrity of the structure unless accommodated for by using an appropriate material for the outer layer. Sandbag structures in the past that have used natural fibers like burlap as the containing layer have encountered this problem, which is still encountered using more modern materials like polypropylene, especially if it is exposed to sunlight. For polypropylene sacks, a commonly used adaptation is to render the outside of the building with a protective layer that will halt the deterioration of the structural strength of the building.

Another common adaptation is to use a material on the inside of the sacks that will bind to itself and solidify once the bags have disintegrated and ceased to contribute to the structural strength of the building. This method, used in the adobe style of building, eventually ceases to have the characteristics of a composite structure once the bags disintegrate.

A particularly innovative method of sandbag buildings is called the super adobe system. It uses a single long bag instead of the typical series of smaller bags, along with both measures already discussed, to prevent the deterioration of the structural integrity of the building. Super adobe buildings are often designed as a dome, which is a shape that is particularly strong when built with most contained composite materials, not just super adobe, because of the way that the forces of the roof and walls are spread evenly throughout the structure, all the way to the ground.

Online Resources

- www.calearth.org—Nader Khalili is the founder of the California Earth Institute and pioneer super adobe designer and builder.
- greenhomebuilding.com—a skillful collection of resources, including details of how to build some beautiful insulated earthbag domes.

Thermal properties of contained composite

A contained composite structure will get its thermal characteristics largely from the thermal characteristics of the material that is used to fill the containers. Earth and sand will of course exhibit thermally heavy characteristics, while lava rock—which has many holes in it—might be more insulating because more air is trapped. Because an earthbag-type structure uses a large number of smaller pieces to form the structure of the whole building, and to protect the bags from deterioration, a final rendering layer can also contribute to the thermal qualities of the building.

Sandbags as heavyweight and lightweight materials

Sandbags are interesting as an introductory building material because they can perform as either a heavyweight or lightweight material. Heavyweight and lightweight structures can perform similar functions, but they do so in completely different ways, as we've already discussed. A heavyweight building moderates temperature differences by absorbing and releasing heat energy from either side, whereas a lightweight building

operates by maintaining a temperature difference on either side.

Sandbags can be used to build heavyweight or lightweight buildings by varying the containing material. This can be performed by completely replacing it with a material that has a higher insulative value, by mixing two materials to increase their insulative value, or by building a layered structure.

An earthbag structure will have many of the heavyweight characteristics of other styles of construction with earth. Heavyweight buildings work by retaining thermal energy and releasing it slowly, rather than maintaining a temperature difference as an insulative, or lightweight fabric, would. Optimally, a heavyweight building will have a temperature delay of approximately 12 hours, meaning that the building will release the heat from the previous 12 hours. This is optimal, because the times of day when the heating and cooling requirements of many buildings are highest are approximately 12 hours from the times when the daily temperature cycles are at their nadir.

Heavyweight materials can be very useful from the perspective of the thermal performance of your building, particularly if they are planned for at the outset of a design. A common criticism of thermally heavy materials is that they tend to be made of concrete and other materials that require a lot of energy to produce and use. That isn't always bad, because they are strong materials that will be used for many decades to come. Like cheap fuel though, having a plentiful source of an inexpensive material can tend to encourage people to forget the alternatives. And there are some alternative heavyweight materials, like sandbag and earthbag building techniques, to experiment with right under your nose.

Project 50: Building with Earth

Earth building has a lot of potential to be an educational experience, with several interesting building principles.

You will need

- Some dirt and clay (Figure 15-4).
- Large planks of wood to create a form (Figure 15-5), if you would like to experiment with a rammed earth wall, as the accompanying pictures do, and potentially an arch form for an exploration of structure.

Figure 15-4 *Mixing earth on a cardboard plank.*

Figure 15-5 *A simple wooden form can be used to create a thermally massive earth wall to store heat and cold and reduce energy costs.*

- Bags. Lots of bags. Burlap or plastic will do equally well, but there are other materials on the market, some specially designed to resist corrosion, for example. You will have to adjust your building to the bag or the inside material if you expect a structure to last, perhaps by mixing cement with the earth, or by protecting the bags from the elements. Thankfully, this is not an expensive material, so it is possible to do many experiments, even testing a structure through the seasons, if you have the space. You could experiment with structures that are not bags too; as shown in Figure 15-6, relatively weak materials, like aluminum cans, can have some structural strength in a composite structure—in this case, wrapped in chicken wire.
- For a larger structure you may consider using barbed wire in between layers of bags, mixing earth with hardening agents to prevent structural failure if the bags erode, or covering the walls with a render such as lime or clay, to prevent deterioration of the bags.

Figure 15-6 *Two arches made of composite materials—on the right is an earthbag arch and on the left an arch made from reused aluminum cans and some chicken wire—shows the potential strength in individually weak materials.*

Steps

1. To start with a small wall of sandbags, dig up some dirt (or rocks or other material), place it in the bags, and stack the bags in a shape you would like. You can easily make a square shape from a sandbag structure without a form. It is often used for flood defenses, because it has an enormous amount of strength as a composite material (both the bag and dirt contribute towards the final properties).
2. Rammed earth building compresses the earth into a form (see Figure 15-7) that can be very strong and support one or more stories. Earth can be compressed by hand or with ram tools (Figure 15-8), and then the form is removed.
3. There are many techniques for doors and windows. Making smaller rammed earth bricks with a brick maker (Figure 15-9) is one option.
4. You might also want to try building an arch. To begin, build your form from wood. It should resemble the arch you would like to build, only slightly smaller. When stacking around the arch, place your form, then stack bags evenly up both sides, with a locking bag at the very top (see Figure 15-10).

Figure 15-7 *A rammed earth wall built as an educational experience by students at the Centre for Alternative Technology, in Machynlleth, Wales.*

Figure 15-8 *Ramming earth into a wooden framework to create the earth wall shown in Figure 15-7.*

Figure 15-9 *An earth brick maker works by compressing a small amount of earth into a small brick, which can be used to create all manner of structures.*

5. Sandbag structures can be very strong, support a lot of weight (see Figure 15-11), and last a long time, particularly if covered or plastered to avoid corrosion of the bags. Another alternative is to mix cement in with the dirt so that the heavyweight structure has its own strength once the bags disintegrate. The Online Resources lists people who are using this technique and others who are experimenting with lighter-weight materials in an effort to raise the insulative properties of this material.

Figure 15-10 *A sandbag arch. Note how there is one central bag, directly in the middle, which forms an almost triangular shape. This is called the locking bag, because it locks the arch into a sturdy form.*

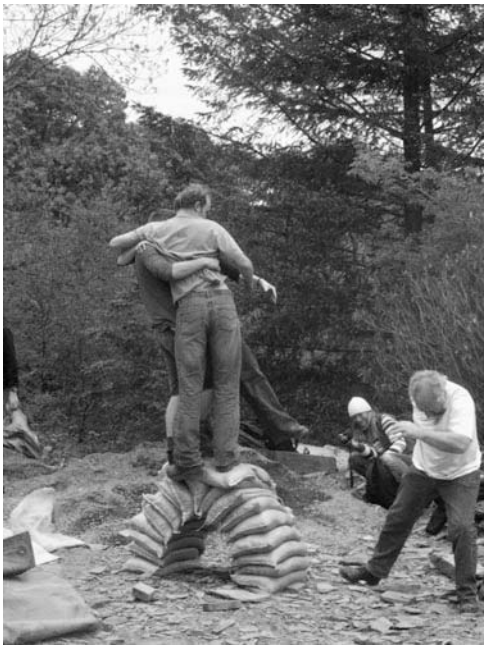

Figure 15-11 *A properly constructed arch, made of sandbags, can support a surprising weight. Strong, standing room structures can be built environmentally sensitively and inexpensively using this building style.*

Project 51: The $500 House

It is easy, especially when looking around at very expensive eco-homes, to think that everything green has to be expensive. That is simply not true. Some very inventive people are not only thinking about affordable eco-housing but also putting the plans up for free, for everyone to read and see.

The hexayurt (Figure 15-12) is a fantastic experiment that can be done on both a small scale and a large scale. The deliberately open-source and public domain plans include large to small houses, intended as easy-to-build structures relevant for refugee populations. The hexayurt has a number of interesting features, including scalability, a modular nature, packaging with a range of renewable energy technologies, and the use of common materials that are quick and easy to work with. The other low-impact materials we cover in this chapter do not tend to have the last feature listed (easy to work with), though that is the predominant factor in material choice by the building industry.

Depending on how long the unit is expected to last, several different materials can be chosen for the construction. The outer materials have been chosen to be easily available, durable, easy to work with, able to moderate the indoor climate, and be esthetically pleasing.

Online Resources

- hexayurt.com—the main source for information on this project.
- www.appropedia.org—the main wiki page for the project.

For a permanent shelter, a builder or potential manufacturer might consider the following materials:

- Permanent use: Thermax HD (Dow).
- Temporary use: laminated hexacomb cardboard (Pregis).
- On-site fabrication: Tuff R (Dow, widely used).

There are three shelter sizes; the middle size is shown in Figure 15-12. The houses are designed to be very affordable. For example, the size shown is expected to cost around $200 before any services. Full-sized units take a team of three people around 1 hour to assemble. They are assembled using a 6 inch wide, 600+ lb bidirectional filament tape, and anchored to the ground like tents. No heavy lifting, ladders, or scaffolding is required.

You will need

- The complete free plans are available to download from www.appropedia.org.
- Sheets of material that are used on a large scale are insulated and have a layer that reflects heat, which is useful in the hot areas where the structures are expected to be most useful.
  The hexayurt is a fairly simple but very useful observation on shapes, which is that 4 ft × 8 ft pieces of material—which is a common size for several industrial materials—can be cut in half and assembled easily to form a shelter form, with minimal material waste.

Figure 15-12 *The hexayurt—an open-source environmentally responsive building technology that costs little to build and can be constructed quickly.*

- It is relatively simple to follow the designs with sheets of cardboard that are twice as long as they are wide (4 ft × 8 ft).
- This material is held together with an advanced joining device, called sticky tape.
- When combined with low-impact technologies—like solar panels, battery chargers, efficient stoves, etc.—and aimed at migrant populations, such as refugees, it has the potential to provide high-volume, low-impact, and affordable serviced shelter—see appropedia.org for more details.

Steps

1. This is actually a remarkably simple idea to put into practice. A major trouble when working with large square sheets can be that a lot of material is wasted. The designer of this project thought about this and the form reflects conservation of materials.
2. Five or six pieces form the walls of the hexagonal house. Twelve triangular pieces form the roof, and tape holds them all together (see Figure 15-13 for a simple version). Standard 4 ft × 8 ft pieces are rearranged to form a habitable structure.
3. On a large scale, the industrial material is insulated already. All that remains is to wire and plumb it in. Already covered earlier, you should be experts by now.

How to Build a "Pup" Hexayurt

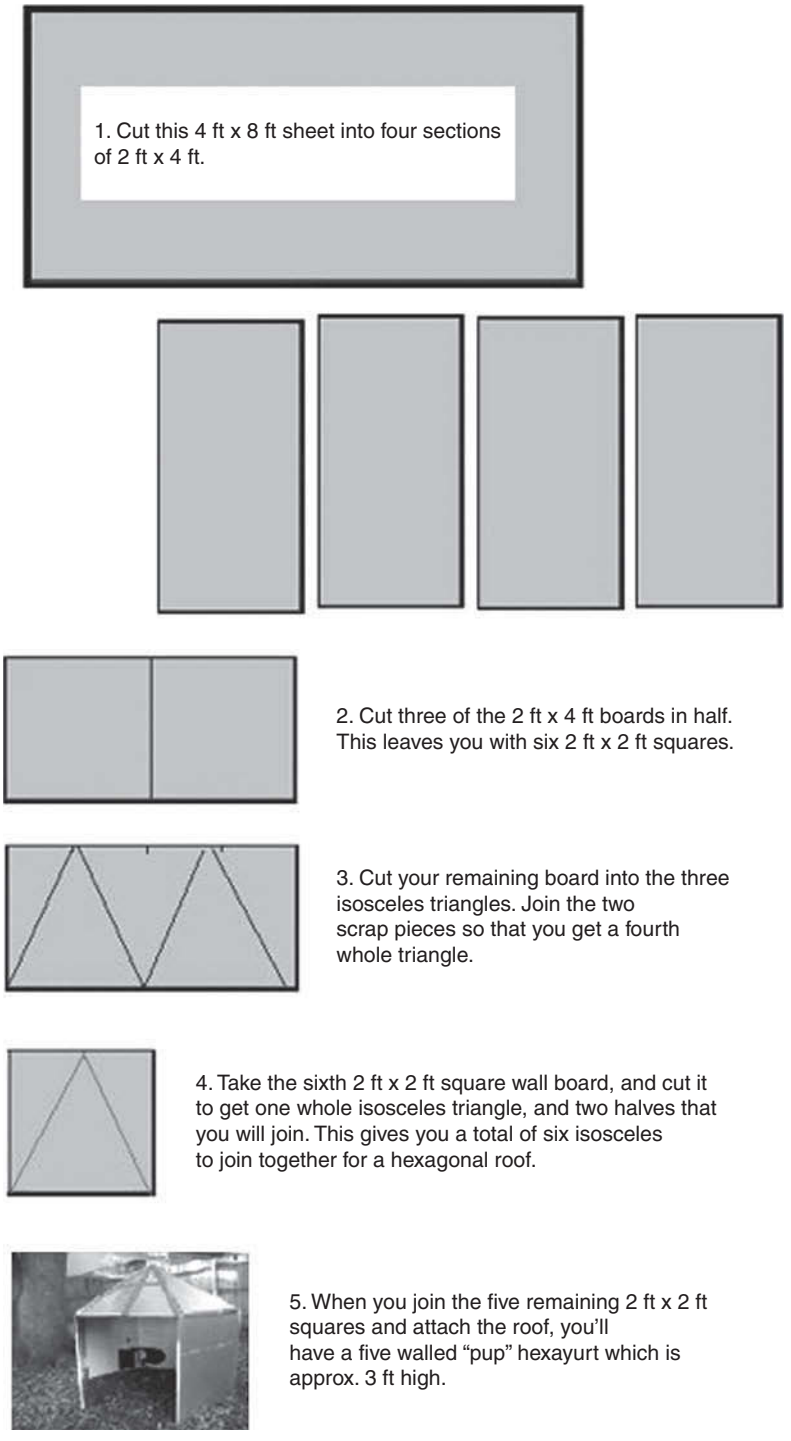

Figure 15-13 *How to build a "pup" hexayurt. Plans for a cardboard-based model-sized pentayurt that will help the reader to understand the building ideas presented. They can be downloaded for free from the Appropedia site.*

Building with straw

Straw comes up too often, I think, in a discussion of environmentally friendly building materials. We spoke of waste and value earlier, and in many ways straw fits the bill very well; it is a waste product that we can give renewed value to by using it for insulation. I have seen first hand how difficult it can be to use it correctly. One of the biggest problems is air leaking in and out. Straw doesn't particularly like to sit straight and, though compression by using it as a structural material can help to maintain tight barriers against the floor or foundation and roof, over time it can require regular maintenance to keep up its thermal performance. This tends not to get done. In addition, it can be a time-consuming material to build with, which makes it less than ideal for large-scale implementation. It also needs protection from the elements in the form of a good foundation and good roof, otherwise water can quickly destroy its integrity. The reader considering this route is urged to take hands-on lessons from experienced builders before embarking on a larger project. Leaky structures can have an enormous impact on resource consumption, and straw structures are no exception, despite their positive qualities as a low-impact building material.

Other options

There are a simply enormous number of new environmentally sensitive building materials on the market, with more arriving every day. Many are easy to work with and have a relatively low embodied energy content, like sheep's wool batting, whereas other more traditional alternatives, like expanded foams, might be more easily accessible and familiar to installers. Manufactured products, including insulation and paints, can release gases and pollutants that can often be harmful to the occupants of a building long after they are delivered and installed.

Volatile organic compounds (VOCs) are released by paints and fire-retardant sprays commonly applied to building materials and home furnishings, and can provoke allergic reactions in some people. Alternatives are sometimes available as a choice of paints and some other products, but often require some searching and research. For insulation, traditional foam materials, while they have drawbacks, save an enormous amount of energy once installed, and should not be overlooked while awaiting more convenient or lower embodied energy-based alternatives. This is especially true when retrofitting older dwellings or working with limited spaces, which, if the avid reader has taken considerations about travel seriously, is more likely to be the case.

Spaces

As true today as it was 20 years ago and—aside from a few exceptions—a pattern that the many cities around the world have followed for the last 50 years is to give priority to faster patterns of movement. Planners around the world have been bending over backwards for the automobile—narrowing sidewalks and removing bike lanes in some cases—to provide an unimpeded path for the venerable automobile. There have also been pushes for airport expansions all over the world, with more communities subjected to their noise and air pollution than ever before.

It wasn't always this way. Before planes and cars, and almost gone from memory, is a history of wide-reaching train networks that provided cheap and reliable transportation on the ground. Streetcars (Figure 15-14), as they were and are still known in Toronto, San Francisco, Istanbul, and around the world, move thousands of commuters daily and are a clean and

Figure 15-14 *Among the first streetcars in the world, this nearly 100-year-old streetcar is still operating today in the bustling city of Istanbul, in Turkey.*

efficient way to move people about. But as the automobile became ever more popular, streetcar lines, across all of North America and other parts of the world, were torn up and public transport services in cities were provided by buses instead.

Buses are not necessarily an inconvenient way to travel. There are very comfortable overnight buses that have beds running lengthwise down the coach, but these tend not to operate in the high-energy consuming continent of North America. In Canada, Europe, and many other parts of the world, it is possible to get a bed on a long-distance train, as well as a freshly prepared meal. While this is possible in Canada, at a comparatively steep price, to my knowledge the United States no longer has such a service. In circumstances like this, flying or driving can look like the only option for long-distance travel, and that this is the case cannot surprise many.

On a local level the tendency of developers to build sprawling suburban developments, creates an over-reliance on cars in cities that is difficult for individuals to combat on their own. Our governments can even sometimes work against very innovative projects spawned by individuals. For instance, in Ontario several years ago, a service similar to the French Allo-Stop ride-sharing service—which matched riders and drivers to share gas and driving for long-distance trips—was stopped from operating by government regulations. The regulations purported to safeguard public safety and the rights of licensed for-hire drivers in the province, which does little to explain why the neighboring province of Quebec and the country of France both operate successful services on the same principle, alongside thriving bus lines with excellent public safety records.

While the planning decisions of governments may seem to be out of the control of any one person, the truth is, governments exist to serve their people. If you don't like what your government is doing, make your voice heard.

Project 52: Attend a Public Consultation or Planning Meeting

A range of government bodies hold public consultations—your local planning department is no exception. Planning departments, as well as many other government decision-making bodies, are in many cases required by law to publicize changes and adjustments they intend to make or give permission for. Far too many of these meetings and consultations go unattended, or poorly attended.

You will need

- A spare evening, maybe two.
- Your local newspaper. A common location for planning applications and zoning regulation changes to be posted is in the local newspaper. If you can't find them there, you might have to go digging into your local government departments, to find out when and where notices are posted.
- To have educated yourself on issues you would like addressed. For example, you may like to ask about accommodation for bicycles and walkers in the form of sidewalks and covered and secure bicycle parking. It seems commonplace lately in new developments to leave these very useful structures out entirely, in the name of cost savings. If they are in place, ask about linkages and contributions to the larger cycle and walking network in your area, or about public transport links.
- If you are attending a planning consultation, you may also want to ask questions on related issues. For example, if you are interested in increased low-

impact transportation in an existing or built-up location, remember that densification of older areas is a significant way in which we can prevent far-flung development from encouraging automobile-dependent housing. You may also want to ask about renewable energy systems, efficiency measures, waste management, water conservation, and other topics.

- The idea is not to make redevelopment difficult for planners or developers, but to ensure they have considered the range of options.

Steps

1. Get aware of the planning process and the very real challenges of balancing competing interests that planners are trying to do. Remain aware that too often the people running these meetings have simply never considered that a bicycle rack belongs in the front of the building, closer than the cars and not further away, or that water conservation measures at an early stage of the design will save the city from upgrades years down the road.
2. Arrive hoping to make new friends, not with the intention to "tell someone off." Confrontation rarely gets anyone anywhere. For your first meeting try to find a subject that is not too close to your heart and treat it objectively. Make notes during the meeting. Raise concerns if you have them; otherwise, listen and learn. It may not be the most exciting thing in the world, but real change can come out of it.
3. Tell others about what happened, whether good or bad. Use clear language and publicize it as widely as possible. Planning issues can descend into "us-and-them" scenarios; try not to let it get there by being aware that the planners are people too, and are not necessarily anti-anything, even though it may seem otherwise.

Stepping out

Sometimes, though everyone realizes it's a good idea, and is needed, the things that we think should happen in the world take longer than we want, or just don't seem to happen at all. In these cases, some may find it necessary to step out, just a bit.

In Toronto a major cross-town route without bike lanes resulted in the death of two cyclists in one week in 2008. Articles were written in the local newspaper about how Bloor St needed a bicycle lane, and many people opined loudly that the days of on-street parking had to finally come to an end. The city seemed to have been studying the issue since the 1970s, and though they have a fantastic plan for a great expansion of bicycle routes, it didn't seem to be getting there quickly enough for some people.

Building your own bicycle path is not something I can encourage you to do. It could be dangerous, and is quite illegal. But some fearless geniuses have done exactly that, in Toronto and around the world. The process for making your own bike paths are available on the Internet if you are interested in pursuing this. Simply use spraypaint in a more or less straight line down the edge of the roadway; if you are going for accuracy, paint a bike sign. The painters in Toronto found that people in cars thought they were real right away and immediately stayed out of them. I met Italian bike lane painters who took pride in an article in their local paper that criticized the local council for painting crooked bike lanes, when in fact the group had painted the "bike lanes" themselves using a specially designed trailer to hold the paint and an automatic trigger to start making lines!

Note that your actions could cost your municipality, which is likely to decide to remove them using funds which could have gone towards putting in actual bike lanes. But there is a certain level of frustration if a person tries the advocacy route repeatedly without

success. Lines of paint are not expensive and our governments need to know that putting them in the right places is important to us.

Failing these types of direct action, smaller actions can be used to make others know that bikes have rights too. Bigger human-powered vehicles, like the ones we explored earlier, are a step in taking space for sustainable transportation. For narrower vehicles without separate direct paths to use, remember that it is your right as a user of the road to use a whole lane of traffic. Riding in the middle of the lane is a useful technique, which ensures a wide berth by motorists. Though you may not be popular with them, stand your ground. Awareness that sustainable modes of travel have a right to use a proportionate amount of space creates safer streets for all users.

This page intentionally left blank

Index

A

acid rain, 4–5
activism, 3
adobe style of building, 177
Aerorider, 149, 150
  see also velomobiles
air
  compressed, 86, 87
  as insulator, 26
  see also hot air
air conditioners, 103
air-powered cars, 87
airplanes
  emissions, 9
  wings, 137–138
airport expansions, 184
alkaline batteries, 114
Alleweder, 149, 150, 156–157
  assembling, 156–157
  see also velomobiles
Allo-Stop ride-sharing, 185
alpha Stirling engines, 98
alternating current (AC), 111
alternators, 112
ant rules, 39–40
Appropedia, 182
arches, 179, 180–181
atoms, 111
attic insulation, 30
auditing, energy consumption, 50–51, 119–120
automobiles
  dependence on, 7
  planning for, 184
  smaller, 161
  see also car travel

B

batch heater, 71
batteries, 114–115
  charging, 121
  coin, 115–116
  disposal, 37, 114
beta Stirling engines, 98, 99
Bicevskis, Rob, 90–93
bicycles, 147
  accommodation for, 185
  electric assist systems, 161
  flat tire repair, 12–18
  repairs, 12
  see also cycling
biodiesel, 163, 165
  making, 166–170
biofuels, 163–165
biogas systems, 33, 37
blower test for energy efficiency, 26
British Human Power Club (BHPC), 149, 150
Build It Solar, 86
buildings
  design, 21
  see also homes; structures
buses, 185
  emissions, 9

C

Cab-Bike, 149, 150
  see also velomobiles
calcium sulfate, 4
California Earth Institute, 177
car clubs, 10
car travel
  alternatives, 11–12, 147, 160–161 (*see also* bicycles; buses; carpools; cycling; electric scooters; streetcars; subways; trains; velomobiles)
  dependence on, 7
  emissions, 9
carbon dioxide, 1, 2, 5
carbon footprint calculator, 51
cardboard, recycling, 37
carpool lanes, 18
carpools, 20
catalytic converters, 5
Centre for Alternative Technology, 82, 84, 100, 108
CFCs, 103, 109
charge controllers, 117–118, 119, 130, 134–135
chicken feed, 164
chlorofluorocarbons (CFCs), 103, 109
CHP systems, 43–44, 96–98
climate change, 1
  feedback loop, 8
  impacts, 2
  see also global warming
coal-fired power plants, 4
coin batteries, 115–116
cold, creating, 107–108
combined heat and power (CHP) systems, 43–44, 96–98
combustion, cleaning up, 96
composite structures, 176–177
composting, 33–34
composting toilets, 64
compressed air, 86, 87
concrete, 175, 176
concrete flooring, 28
contained composite structures, 176–177
cooling, evaporative, 57–60
Co-op America, Responsible Shopper, 52

corn, 163, 164
corporations, pressuring, 4
cryogenic freezing, 109
cup of tea, energy of, 101
current, electric, 111
curtains for energy efficiency, 23–26
cycling
  routes, 11, 186–187
  weather protection, 147
  see also bicycles; velomobiles

D

dam systems, 83
desalination, 55
Diesel, Rudolph, 165
diesel fuel, 165
diesel engines, 87, 95, 96
dioxins, 44
direct action, 186–187
direct current (DC), 111
district heating systems, 43
domes, 177
double-pane windows, 26–27
draft proofing strips, 26
drafts and energy efficiency, 30
Drake Landing, 109
driving smart, 18, 20

E

earth, 65
earthbags, 176–177, 178
Eco-Power Stirling Engine Kit, 101–103
electric generators, 111–113
electric grid, 112, 116–119, 135–136
electric light, 44–45
  see also light bulbs
electric motors, 112, 113–114
electric scooters, 160–161
  see also car travel, alternatives
electricity
  basics, 111–113
  from solar energy *see* solar electricity
  production efficiency, 43
  wind-generated, 117, 138, 146
electricity meters, 119
electronic equipment, disposal, 37
electrons, 111
embedded energy, 175
energy assessors, 26
energy conservation, 119
energy consumption
  auditing, 50–51, 119–120
  pattern, 3
energy efficiency, 43–53
  heat pumps, 109
  water, 60
  see also energy consumption; heat sources; light bulbs; shopping, responsible; transportation
energy meters, 46–47
  auditing appliances with, 49
Environmental Protection Agency, 4
Ephemeral Tourist 2.0, 39, 52
ethanol, 163
evacuated tube collectors, 75–76
evaporative cooling, 57–60
exercise bikes, 47–48
external combustion engines, 95–96

F

fabric walls, 23–25
fairings for velomobiles, 148–149
  Zotefoam, 157–160
  see also velomobiles
Falls Brook Centre
  biodiesel processor, 166
  Energy Experience workshop, 130
  rainwater collection barrel, 62
  renewable energy systems, 118
  showerhead, 61
  solar electric modules, 121
  solar-powered noise-maker, 122
  solar thermal design competition, 71
  water heater, 70
fan, powering, 122
Faraday motor, 113–114
fiddleheads, 41
Fietser, 149–151
fire pistons, 90–93
Flevobike, 150
  see also velomobiles
flooring, concrete, 28
  see also geothermal heating systems
flue gas desulfurization (FGS) and acid rain, 4
fluorescent bulbs, 44–46, 52
  energy savings, 46–48
foam materials, 184
food miles, 51
fossil fuels, 1–2
fuel cells, 96, 114
fuel efficiency, 18, 20
fuel line heaters, 173
fuel tax, 173
furnaces, efficiency, 22, 44

G

gamma Stirling engines, 98
gasoline engines, 95, 96
geothermal heating systems, 109
ghost electric loads, 49–50
gin poles, 140–141, 142–144
  see also wind turbines
glass
  double-pane, 26–27
  as insulator, 26
  recycling, 38
glass jars, reusing, 37
global warming
  particulate matter and, 44
  see also climate change
glycerin for biodiesel, 165, 167, 169–170

gravel, 175, 176
gray water, 64
green cities, 7–8
greenhouse gases (GHGs), 1–3
greenhouses, 51
grid, electric, 112, 116–119, 135–136
grinding, 137
ground source heat systems, 109
guerilla gardening, 41
guy lines, 140
  see also wind turbines

H

H2G2, 58
halfbakery, 52
halocarbons, 1
hazardous waste, 37, 114
heat engines, 95–96, 97–98, 121
  see also air conditioners; heat pumps; internal combustion engines; steam engines; Stirling engines
heat pumps, 43, 44, 103
  efficiency, 109
heat sources, 43–44
heavyweight buildings, 177–178
Hexayurt, 181–183
hinge line, 142, 143
Hirata, Koichi, 100
homes
  temperature, 21–22
  zero energy, 22
homopolar motor, 113–114
hot air, 86–87, 98–99
  demonstrating power of, 100–101
hydroelectricity, 81
hydrogenerators, 82
hyper-milling, 20

I

iBuyRight program, 52
incandescent bulbs, 44–45, 52
inner tube, repairing, 14–17
insulation, 22
  attic, 30
  inside vs. outside, 30–32
  testing methods of, 29–30
Intergovernmental Panel on Climate Change, 5
Intermediate Technology Development Group, 36
internal combustion engines, 96
International Human Powered Vehicle Association, 157
inverters, 117–119, 136

J

junction box, 133, 134, 135

K

Khalili, Nader, 177
kilowatt-hour (kWh), 46
kites, 137
Krash, 155
Kyoto Protocol, 2–3

L

laminated hexacomb cardboard, 182
land, underused, 40–41
landfills, 33
LCA *see* life cycle assessment
lead-acid batteries, 114, 117
Leadership in Energy and Environmental Design (LEED) program, 21
leaks, household air, 26, 30
Leitra, 148–149, 150, 151
  traveling with, 151–154
  see also velomobiles
life cycle assessment (LCA), 52
light bulbs, 44–46, 52
  energy savings, 46–48
light sources, 44–45
Lightfoot Cycles, 148, 150, 151
  see also velomobiles
lightweight buildings, 177–178
locking bag for sandbag structures, 179, 180
lye and biodiesel, 165, 166, 168–169

M

manure, 33, 164
mercury, 45
methane, 1, 5, 33, 65
  from food scraps, 35–36
methanol and biodiesel, 165, 166, 167, 168–169
methoxide and biodiesel, 165, 167, 168, 169–170
MicroCar, 148
  see also velomobiles

N

natural gas, 5, 65
  see also methane
net metering, 117
neutrons, 111
nickel-metal hydride (NiMH) batteries, 114
nitrogen oxides, 1, 5
nuclear reactions, 65

O

off-grid room, 119–120
oil, 65
  waste, 163, 164, 166
  see also vegetable oil
online resources
  coin batteries, 115
  compressed air usage, 87
  contained composite structures, 177
  electricity, 113
  Environmental Protection Agency, 4
  fire pistons, 90
  hexayurt, 182
  hot air engines, 100

Practical Action, 36
renewable fuels, 165
responsible shopping, 52
solar Stirling engines, 105
vegetable oil conversion, 170
velomobiles, 150, 157
water pumping systems, 86, 88
overshot wheels and hydroelectric power, 81

P

packaging and waste, 37, 38
paints, 184
paper, recycling, 37
parking, restricting, 161
particulate matter (PM), 44
pasteurization of water, 55–57
peak oil, theory of, 65
pentayurt, 183
photovoltaic (PV) cells
assembling solar module from, 123–128
cutting, 123–125
wiring together, 125–126
photovoltaic (PV) panels, 121
installing on roof, 130–135
where to mount, 129
piston engines, 95
planning meetings, 185–186
plastic cup vertical axis drag turbine, 139
plastics, 37
polypropylene, 177
pot-in-pot for passive cooling, 58
see also Zeer fridge
power, 111
power bars, 50
Practical Action, 36
protons, 111
public consultations, 185–186

Q

Quasiturbine project, 87

R

radiative forcing, 9
radiator fluid, 171, 172
rainfall, measuring, 63–64
rainwater, collecting, 62–64
ram pumps, 83, 86
rammed earth building, 178, 179–180
Rasmussen, Carl Georg, 151
recycling, 37–38
refrigerators, 58, 103, 109
refundable containers, 37
reservoirs, 83
Rhoades Car, 148
river courses, 83
river wheel kit, 84–85
Rodaro, Reg, 151
run of the river systems, 83

S

sails, 137
sandbag structures, 176–178, 179–181
seed bombs, 41–42
shopping, responsible, 52–53
showerheads and water efficiency, 61
shutters, 25
sidewalks, 184, 185
single-use batteries, 114
Smart Car, 161
smog, 44
solar concentrators, 104
solar cooker, 67–69
solar electricity, 103–104, 121–136
assembling solar module from PV cells, 123–128
grid interaction, 117, 135–136
installations, 128–129
options, 103–104, 121–122
rates paid for production, 117
see also photovoltaic (PV) cells; photovoltaic (PV) panels
solar energy, 22, 44, 65–66
electricity from *see* solar electricity
maximizing, 66
storing, 109
solar pasteurization, 56
solar shading, 65
solar thermal collectors, 71–74
solar thermal heaters
circulating, 71–74
on roof of house, 76–80
simple, 69–70
solar thermal panels, 74–76
spaces, 184–185
spiral water pump, 87–89
standby function, 49
steam engines, 95, 96, 121
Stierhof, Hubert, 100
Stirling engines, 86, 96, 97–98, 101–103
solar, 104–107
Stormy Weather, 150, 151
see also velomobiles
stoves, 44
straight vegetable oil (SVO), 170, 172
straw, building with, 184
streetcars, 184–185
see also car travel, alternatives
structures, 175–176
composite, 176–177
see also buildings
subways, 185
see also car travel, alternatives
sulfur dioxide, 4
sun, 65
path through sky, 65–66
see also solar energy; solar thermal heaters
Sun Runner engine, 99, 104–106, 108
Sunmachine Stirling engine, 105
super adobe system, 177
see also structures, composite

sustainable development, 8
switches, 49

T

technology, and society, 5–6
Tetz, John, 157
thermal mass, using, 28–29
Thermax HD hexayurt, 182
thermocouples, 103
thermoelectronics and cooling, 96
thermosiphon effect, 72
  see also solar thermal heaters
Thinking Man's Stirling engine, 98, 104, 107–108
Three Gorges Dam, 83
tin can engine, 100–101
tire gauges, 19
tire irons, 12, 13
tire pressures, 18–19
toilet bags, 61–62
towers for wind power, 140
  raising guyed tower, 140–144
trains, 184, 185
  emissions, 9
  see also car travel, alternatives
transesterification and biodiesel, 165
transportation, 7–8, 51
  estimating existing emissions, 9–10
trash
  returning, 38
  see also waste
tricycles, 148–149, 155–160
  recumbent, 160
  see also velomobiles
Tuff R hexayurt, 182
turbine engines, 95
TV standby and energy efficiency, 49
Twike, 149, 150
  see also velomobiles

U

undershot wheels and hydroelectric power, 81
unibodies for velomobiles, 148, 149
uninterruptible power supplies (UPS), 87
urban centers, 7–8
UVA radiation, use in pasteurization, 56

V

value of waste, perceptions of, 39–40
vegetable oil, 165, 166, 171
  books on, 174
  converting vehicle to, 171–174
  straight (SVO), 170, 172
vehicle occupancy, 18
VeloKit, 149, 155–156
  see also velomobiles
velomobiles, 147–150
  commercial links, 150
  frame and fabric tops, 155–6
  online resources, 150, 157
  range of vehicles, 149–50
  see also Aerorider; Alleweder; Cab-Bike; car travel, alternatives; Flevobike; Leitra; Lightfoot cycles; MicroCar; Stormy Weather; tricycles; Twike; Velokit; WAW; Zotefoam fairing
VelomobileUSA, 150
Velovision, 148
volatile organic compounds (VOCs), 184
voltages, 111
  cable losses, 112, 129
  characteristics, 112

W

walking routes, 11
waste
  energy from, 33–37
  hazardous, 37, 114
  reducing, 37
water, 55
  collecting rainwater, 62–64
  cool, 57–58
  efficiency, 60
  gray, 64
  heating with sun *see* solar thermal heaters
  pasteurizing, 55–57
  quality, 55
  saving around house, 60–62
water batteries, 83
water meters, 62
water pasteurization indicator (WAPI), 56
water power, 81
water pumps, 138
  online resources, 86, 88
  spiral, 87–89
water vapor, 1
water wheels, 81–85
watt, 46
WAW, 149, 150, 151
  see also velomobile
weeds, edible, 41
  see also food miles
Whispergen, 97–98
wind-generated electricity, 117, 138, 146
wind power, 137–138
wind turbines, 112, 117–118, 137–138
  anchors, 140, 141, 142, 143
  installing, 145–146
  sites, 139–140
  vertical axis, 138–139
  see also towers
windmills, 137, 138
windows and heat efficiency, 26–28
  double-pane, 26–27
  fixing, 27–28
wood, 165
worm compost bins, 34

Z

Zeer fridge for passive cooling, 58
Zotefoam fairing, 157–160
  see also velomobiles

ELECTRONIC WARFARE FUNDAMENTALS

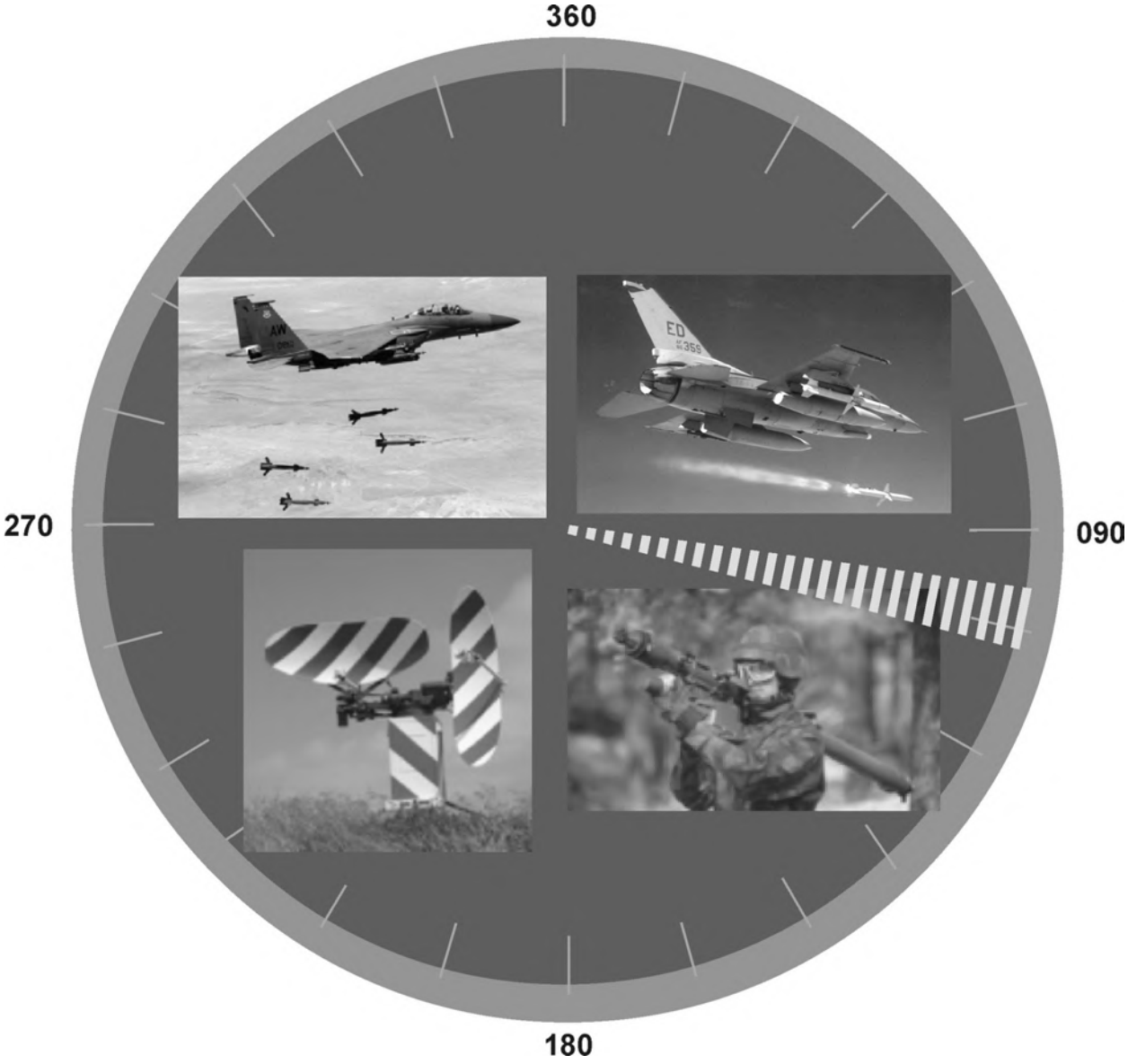

NOVEMBER 2000

PREFACE

Electronic Warfare Fundamentals **is a student supplementary text and reference book that provides the foundation for understanding the basic concepts underlying electronic warfare (EW). This text uses a practical building-block approach to facilitate student comprehension of the essential subject matter associated with the combat applications of EW.**

Since radar and infrared (IR) weapons systems present the greatest threat to air operations on today's battlefield, this text emphasizes radar and IR theory and countermeasures. Although command and control (C^2) systems play a vital role in modern warfare, these systems are not a direct threat to the aircrew and hence are not discussed in this book. This text does address the specific types of radar systems most likely to be associated with a modern integrated air defense system (IADS).

To introduce the reader to EW, ***Electronic Warfare Fundamentals*** **begins with a brief history of radar, an overview of radar capabilities, and a brief introduction to the threat systems associated with a typical IADS. The two subsequent chapters introduce the theory and characteristics of radio frequency (RF) energy as it relates to radar operations. These are followed by radar signal characteristics, radar system components, and radar target discrimination capabilities. The book continues with a discussion of antenna types and scans, target tracking, and missile guidance techniques.**

The next step in the building-block approach is a detailed description of countermeasures designed to defeat radar systems. The text presents the theory and employment considerations for both noise and deception jamming techniques and their impact on radar systems. This is followed by a chapter on decoys, both for defeating an IADS as well as for self-protection. Then, the next chapter discusses chaff characteristics, employment, and impact on specific radar systems.

The following two chapters are dedicated to the IR threat. The first covers IR theory, IR target detection and tracking, and advanced IR missile flare rejection techniques. The second chapter presents IR countermeasures to include flare employment, maneuvers, and missile warning equipment.

Electronic Warfare Fundamentals **then addresses an important aspect of EW, specifically electronic protection (EP). This section includes a description of the most common radar EP techniques designed to counter noise jamming, deception jamming, and chaff employment. The book concludes with an overview of the basic components and limitations of a typical radar warning receiver (RWR), current geolocation techniques, and it finally discusses the basic components of a self-protection jamming system.**

In addition to the textual material, the book also contains a detailed glossary of EW-related terms and acronyms for quick reference. A list of references is provided to acknowledge the source material used in the preparation of this text. These sources also provide the interested student with a supplementary reading list to learn more about a specific topic.

For information or comments on this document, please contact:

Det 8, ACC TRSS
4349 Duffer Drive, Ste 437
Nellis AFB NV 89191-7007

DSN: 682-4897
DSN FAX: 682-7391
Comm: (702) 652-4897
Comm FAX: (702) 652-7391

TABLE OF CONTENTS

CHAPTER 1. INTRODUCTION TO RADAR 1-1

1. INTRODUCTION 1-1
2. HISTORY 1-1
3. TARGET DISCRIMINANTS 1-2
4. INTRODUCTION TO INTEGRATED AIR DEFENSE SYSTEMS (IADS) 1-6
5. SUMMARY 1-10

CHAPTER 2. CHARACTERISTICS OF RF RADIATION 2-1

1. INTRODUCTION 2-1
2. FREQUENCY 2-1
3. WAVELENGTH 2-2
4. POLARIZATION 2-2
5. DOPPLER EFFECT 2-5
6. ELECTROMAGNETIC SPECTRUM 2-7
7. RF PROPAGATION 2-9
8. SUMMARY 2-14

CHAPTER 3. RADAR SIGNAL CHARACTERISTICS 3-1

1. INTRODUCTION 3-1
2. PULSE WIDTH (PW) 3-1
3. PULSE RECURRENCE TIME (PRT) 3-1
4. PULSE REPETITION FREQUENCY (PRF) 3-2
5. RADAR RECEIVER CHARACTERISTICS 3-3
6. DUTY CYCLE 3-4
7. PEAK POWER 3-4
8. AVERAGE POWER 3-5
9. MODULATION 3-6
10. SUMMARY 3-8

CHAPTER 4. RADAR SYSTEM COMPONENTS 4-1

1. INTRODUCTION 4-1
2. PULSE RADAR SYSTEM 4-1
3. CONTINUOUS WAVE (CW) RADAR 4-7
4. PULSE DOPPLER RADAR 4-9
5. MONOPULSE RADAR 4-10
6. SUMMARY 4-13

CHAPTER 5. RADAR PRINCIPLES 5-1
1. INTRODUCTION 5-1
2. RADAR RANGE 5-1
3. AZIMUTH DETERMINATION 5-7
4. ELEVATION DETERMINATION 5-11
5. RADAR RESOLUTION CELL 5-12
6. PULSE DOPPLER VELOCITY DETERMINATION 5-14
7. BASIC RADAR EQUATION 5-18
8. SUMMARY 5-21

CHAPTER 6. ANTENNA CHARACTERISTICS AND SCANS 6-1
1. INTRODUCTION 6-1
2. PARABOLIC ANTENNA 6-1
3. CASSEGRAIN ANTENNA 6-3
4. PHASED ARRAY ANTENNA 6-5
5. ANTENNA GAIN 6-9
6. POWER DENSITY 6-11
7. CIRCULAR SCAN 6-12
8. LINEAR SCAN 6-16
9. UNIDIRECTIONAL SCAN 6-16
10. BIDIRECTIONAL SCAN 6-17
11. CONICAL SCAN 6-18
12. TRACK-WHILE-SCAN 6-20
13. IMPACT OF TERRAIN ON RADAR SCANS 6-23
14. SUMMARY 6-26

CHAPTER 7. TARGET TRACKING 7-1
1. INTRODUCTION 7-1
2. RANGE TRACKING 7-2
3. CONICAL SCAN 7-4
4. TRACK-WHILE-SCAN (TWS) 7-6
5. LOBE-ON-RECEIVE-ONLY (LORO) 7-11
6. MONOPULSE RADAR 7-12
7. CONTINUOUS WAVE (CW) RADARS 7-16
8. PULSE DOPPLER RADAR 7-20
9. SUMMARY 7-24

CHAPTER 8. RADAR MISSILE GUIDANCE TECHNIQUES 8-1
1. INTRODUCTION 8-1
2. COMMAND GUIDANCE 8-3
3. SEMI-ACTIVE GUIDANCE 8-6
4. ACTIVE GUIDANCE 8-9
5. SEEKER-AIDED GROUND GUIDANCE/TRACK-VIA-MISSILE GUIDANCE ... 8-11

6. ANTIAIRCRAFT ARTILLERY (AAA) 8-12
7. SUMMARY 8-15

CHAPTER 9. INTRODUCTION TO RADAR JAMMING 9-1
1. INTRODUCTION 9-1
2. RADAR JAMMING TYPES 9-1
3. RADAR JAMMING EMPLOYMENT OPTIONS 9-3
4. FUNDAMENTALS OF RADAR JAMMING 9-7
5. SUMMARY 9-15

CHAPTER 10. RADAR NOISE JAMMING 10-1
1. INTRODUCTION 10-1
2. RADAR NOISE JAMMING EFFECTIVENESS 10-1
3. RADAR NOISE JAMMING GENERATION 10-4
4. BARRAGE JAMMING 10-5
5. SPOT JAMMING 10-6
6. SWEPT-SPOT JAMMING 10-7
7. COVER PULSE JAMMING 10-8
8. MODULATED NOISE JAMMING 10-10
9. SUMMARY 10-11

CHAPTER 11. DECEPTION JAMMING 11-1
1. INTRODUCTION 11-1
2. FALSE TARGET JAMMING 11-3
3. RANGE DECEPTION JAMMING 11-5
4. ANGLE DECEPTION JAMMING 11-8
5. VELOCITY DECEPTION JAMMING 11-11
6. MONOPULSE DECEPTION JAMMING 11-17
7. TERRAIN BOUNCE 11-23
8. SUMMARY 11-24

CHAPTER 12. DECOYS 12-1
1. INTRODUCTION 12-1
2. SATURATION DECOYS 12-1
3. TOWED DECOYS 12-3
4. EXPENDABLE ACTIVE DECOYS 12-6
5. SUMMARY 12-7

CHAPTER 13. CHAFF EMPLOYMENT 13-1
1. INTRODUCTION 13-1
2. CHAFF CHARACTERISTICS 13-2
3. CHAFF OPERATIONAL EMPLOYMENT 13-9
4. SUMMARY 13-16

CHAPTER 14. IR FUNDAMENTALS 14-1
1. INTRODUCTION 14-1
2. BASIC IR THEORY 14-1
3. IR SIGNATURE SOURCES 14-5
4. IR SEEKER CHARACTERISTICS 14-7
5. IR SEEKER TYPES 14-9
6. IR MISSILE FLARE REJECTION 14-12
7. SUMMARY 14-18

CHAPTER 15. IR COUNTERMEASURES 15-1
1. INTRODUCTION 15-1
2. FLARE CHARACTERISTICS 15-1
3. ADVANCED FLARES 15-3
4. FLARE EMPLOYMENT 15-4
5. IRCM TACTICS 15-5
6. MISSILE APPROACH WARNING SYSTEMS (MAWS) 15-6
7. SUMMARY 15-8

CHAPTER 16. RADAR ELECTRONIC PROTECTION (EP) TECHNIQUES 16-1
1. INTRODUCTION 16-1
2. RADAR RECEIVER PROTECTION 16-1
3. JAMMING SIGNAL AVOIDANCE 16-4
4. JAMMING SIGNAL EXPLOITATION 16-5
5. OVERPOWERING THE JAMMING SIGNAL 16-6
6. PULSE DURATION DISCRIMINATION 16-7
7. ANGLE DISCRIMINATION 16-7
8. BANDWIDTH DISCRIMINATION 16-8
9. DOPPLER DISCRIMINATION 16-9
10. TIME DISCRIMINATION 16-9
11. SUMMARY 16-10

CHAPTER 17. RADAR WARNING RECEIVER (RWR) BASIC OPERATIONS AND GEOLOCATION TECHNIQUES 17-1
1. INTRODUCTION 17-1
2. RWR ANTENNAS 17-1
3. RWR RECEIVER/AMPLIFIERS 17-3
4. SIGNAL PROCESSOR 17-6
5. EMITTER IDENTIFICATION (EID) TABLES 17-8
6. RWR SCOPE DISPLAY 17-8
7. RWR AUDIO 17-9
8. RWR INTERFACE CONTROL UNIT (ICU) 17-10
9. RWR LIMITATIONS 17-10
10. THREAT GEOLOCATION TECHNIQUES 17-15
11. SUMMARY 17-20

CHAPTER 18. SELF-PROTECTION JAMMING SYSTEM OPERATIONS 18-1
1. INTRODUCTION 18-1
2. RECEIVE ANTENNAS 18-2
3. RECEIVER SECTION 18-2
4. SYSTEM PROCESSOR 18-3
5. JAMMING TECHNIQUES GENERATOR 18-4
6. TRANSMIT ANTENNAS 18-4
7. C-9492 CONTROL INDICATOR UNIT 18-5
8. JAMMING POD CONSIDERATIONS 18-5
9. SUMMARY 18-7

ANNEX A. GLOSSARY A-1

ANNEX B. EC-RELATED ABBREVIATIONS AND ACRONYMS B-1

LIST OF REFERENCES

CHAPTER 1. INTRODUCTION TO RADAR

1. INTRODUCTION

The word "RADAR" is an acronym for RAdio Detection And Ranging. As it was originally conceived, radio waves were used to detect the presence of a target and to determine its distance or range (Figure 1-1).

Figure 1-1. Radar System

2. HISTORY

The reflection of radio waves by objects was first noted more than a century ago. In 1903, the reflection of radio waves was employed in Germany to demonstrate detection of ships at sea (Figure 1-2). In 1922, Marconi presented the same idea in Britain but received little official interest. These early experiments used continuous wave, or CW, transmissions and relied on the reflection of a transmitted wave from a target to indicate the presence of a target. CW transmissions can detect the presence of an object and, if the radio wave is formed into a narrow beam, can also provide azimuth information. CW transmissions cannot provide range.

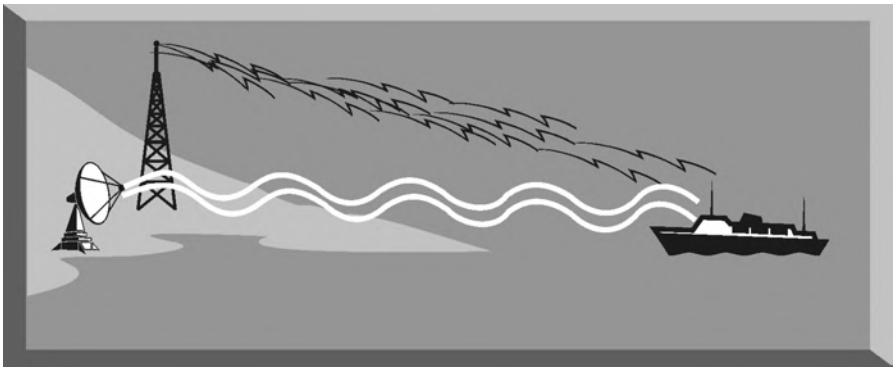

Figure 1-2. Early Continuous Wave Radar Experiments

a. The lack of range information was a serious limitation but was finally overcome by modulating the radio wave transmissions to send out a train of short pulses (Figure 1-3). The time between pulse transmission and an echo return to the receiver provides a direct measurement of range. Practical development of the pulse radar began in the 1930s, principally in the United States, Britain, and Germany. Due to deteriorating relations with Germany and the threat of invasion, the British intensified their efforts to develop a pulse radar in 1935. These efforts culminated in the development and deployment of multiple radar stations which formed the Chain Home System. These radar installations provided critical information to British pilots on the size and location of German bomber formations during the Battle of Britain.

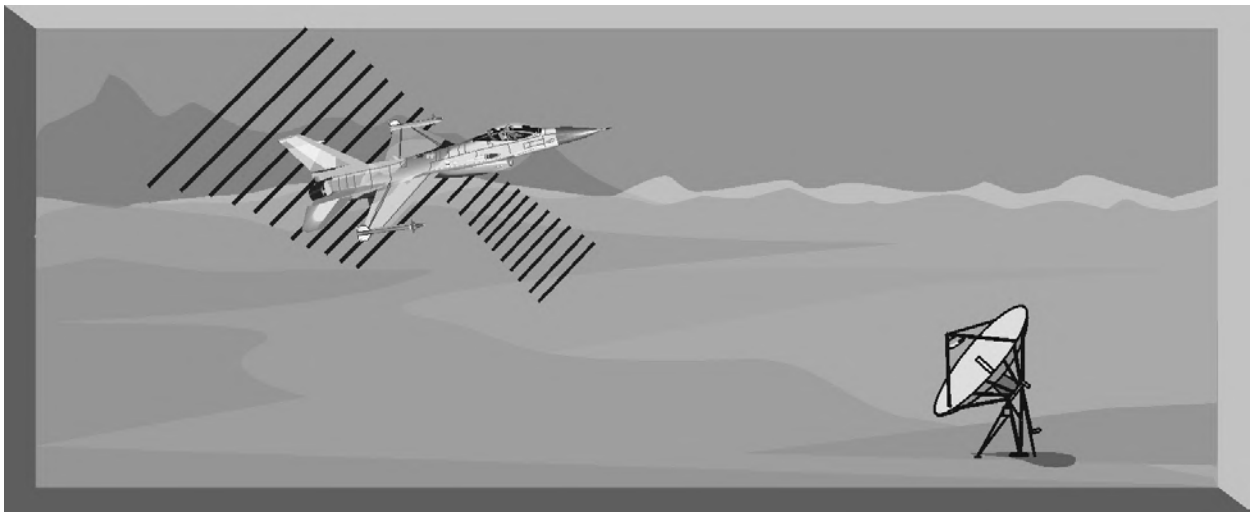

Figure 1-3. Pulse Radar Operation

b. The Chain Home System is considered the first integrated air defense system, or IADS. Radar development, with its obvious military and civilian applications, has continued unabated to the present day.

3. TARGET DISCRIMINANTS

The widespread military and civilian application of radar is based on its inherent advantages over the human eye (Figure 1-4). Radar can "see" farther than the human eye and more accurately assess the range or distance of an object. Radar works well in all-weather conditions and is relatively immune to smoke, haze, and clouds. What's more, radar works 24 hours a day because it can transmit its own energy and does not have to rely on sunshine or ambient radiation. There are some disadvantages of radar when compared to the human eye. First, radar does not have the resolution that the human eye has. While radar can detect the presence of an airplane, the human eye can discern, in great detail, the shape, size, color, and even markings. This can be a serious limitation if positive identification is required prior to engagement.

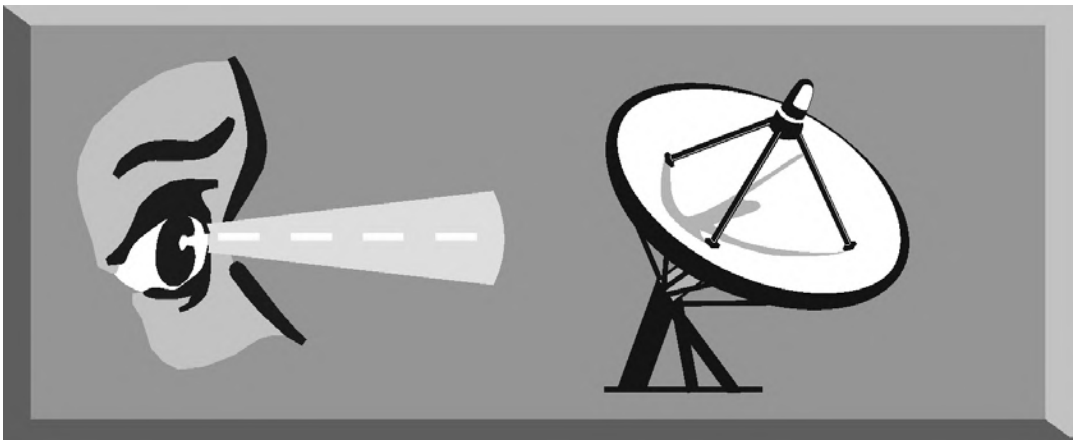

Figure 1-4. Radar Advantages and Disadvantages

Second, the human eye is not bothered by undesirable reflections, called clutter, the way radar sometimes is. Although metal is the best reflector of radio frequency (RF) energy, nearly any material will reflect some RF energy. Mountains, trees, buildings, rain, birds, and chaff all reflect RF energy. Radar systems must use target discriminants to isolate the desired target return from the clutter. These target discriminants include range, velocity, and angle (Figure 1-5).

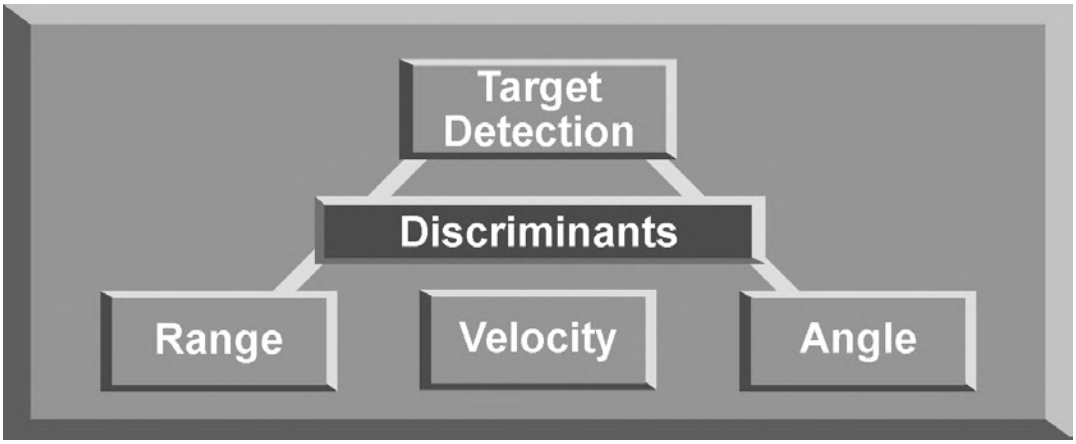

Figure 1-5. Radar Target Discriminants

a. The first target discriminant is range. The time an RF wave takes to go to, and return from, a target allows measurement of the range to that target. We know that RF energy travels at the speed of light, or "c" which is 3 x 10^8 meters per second. Target range can be determined by using the basic radar range equation (Equation 1-1), target range equals measured time, multiplied by the speed of light ("c"), divided by 2.

Radar Range Equation

Speed of Light (c) = $3x10^8$ meters/sec

Range = (Measured Time x c)÷2

Equation 1-1. Basic Radar Range Equation

b. Target angle discrimination is another critical capability of radar systems. In order for a radar system to detect a target, the antenna must be pointed at the target during the transmission and reception of RF energy. The ability of a radar system to accurately determine angle is a function of the horizontal beamwidth of the antenna. If the radar sweep is referenced to true North, the angle of a radar return can be measured relative to true North (Figure 1-6).

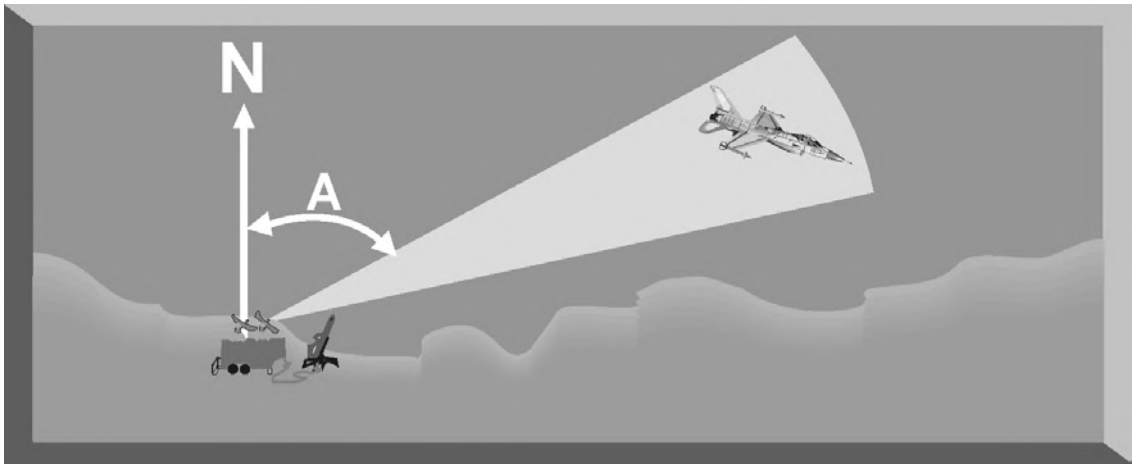

Figure 1-6. Angle Discrimination

c. Velocity discrimination is a specific capability of CW and pulse Doppler radar systems. The transmitters of CW radars send out continuous RF at a specific frequency (Figure 1-7). The reflected signal frequency is changed, or shifted, by a specific amount by a moving target. This frequency shift, called the Doppler effect, allows the measurement of the velocity of that target relative to the radar. The receiver measures this frequency difference which equates to a specific radial velocity. Pulse Doppler radars can measure the Doppler effect while still obtaining the range.

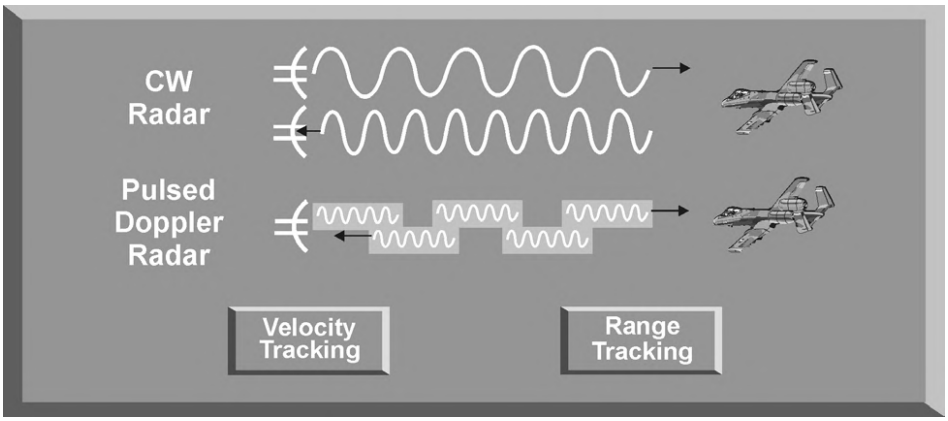

Figure 1-7. Velocity Discrimination

d. A basic pulse radar system consists of a transmitter, antenna, receiver, and a master timer (Figure 1-8). The transmitter sends electromagnetic energy (RF) to the antenna. This energy is radiated through the atmosphere. When this RF energy is interrupted by any object, such as a plane, ship, or the earth, a portion of the RF energy is reflected back to the antenna and processed by the receiver.

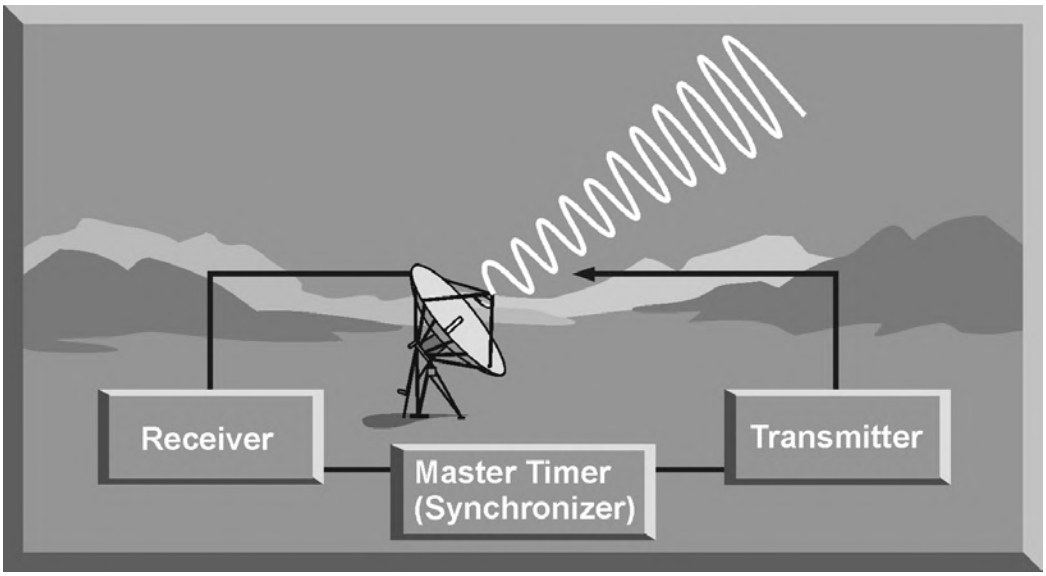

Figure 1-8. Basic Radar Operation

The reflection is called an echo, and the object interrupting the RF energy is called a target. The presence of an echo indicates target detection. If the target detected is the desired target, the echo is referred to as a target signal. If the echo is from undesired targets, such as the earth, the echo is referred to as clutter. This is especially true when the undesirable echoes make the detection of the desired target difficult. The capability of the antenna to focus the RF energy

affects the angular discrimination of the radar. The ability of the master timer to determine the time between RF transmission and target echo reception impacts the range determination capability of the radar. The ability of the receiver to analyze the Doppler frequency shift in the target echo determines the velocity discrimination capability of the radar and the ability of the radar to reject clutter.

4. INTRODUCTION TO INTEGRATED AIR DEFENSE SYSTEMS (IADS)

Radar systems have the inherent capability to determine accurate range, azimuth, and/or velocity information on airborne targets. Radar systems can provide this information in nearly all types of weather, day or night, and at distances that far exceed the capabilities of the human eye. Military commanders have taken advantage of these capabilities by employing radar systems to provide air defense for high-value targets. The primary missions of radar systems employed for air defense are attack warning and threat engagement.

a. Radar systems specifically designed to provide attack warning are called early warning (EW) radars (Figure 1-9). These radars are characterized by high power output, large antennas, and low frequencies. These same characteristics limit the accuracy of the target parameters available from early warning radars. The long-range detection of aircraft and the earliest possible attack warning capabilities of early warning radars provide the first line of defense for the air defense system.

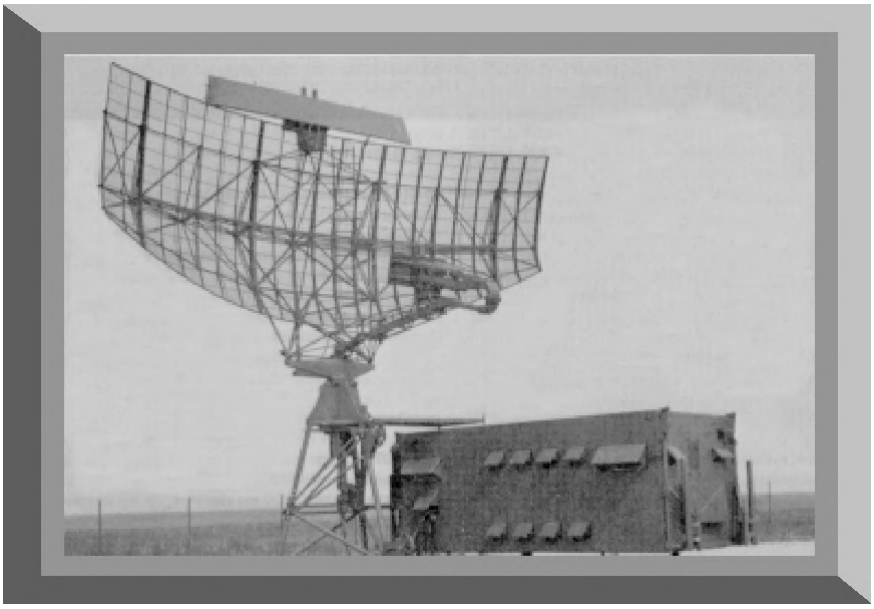

Figure 1-9. Early Warning Radar System

b. Radar systems designed to provide target engagement information include ground control intercept (GCI) radars, acquisition radars, target tracking radars (TTRs), and airborne interceptor (AI) radars.

(1) GCI radars are designed to provide sufficiently accurate target aircraft range, azimuth, and altitude information to vector AI assets to intercept and destroy attacking aircraft (Figure 1-10). To provide this data, early warning radars can be deployed along with specialized height finder radars. This combination of radar systems is commonly referred to as a GCI site. Newer GCI radar systems, employing phased array antennas and Doppler processing, can provide the required 3-dimensional target information. Any radar system, or combination of radar systems, that can determine 3-dimensional target data, and is equipped with the communication equipment to pass this information to AI assets, can act as a GCI site. GCI radar systems can be used to supplement early warning radar systems to provide critical attack warning.

Figure 1-10. GCI Radar

(2) Acquisition radar systems are designed to act as GCI radars for ground based TTRs. Acquisition radar systems generally have shorter range capability than early warning radars and operate at higher frequencies. These radar systems provide accurate target range and azimuth data to TTRs to facilitate target engagement. Acquisition radars can be a distinct radar system (Figure 1-11) or be incorporated as part of the TTR (Figure 1-12).

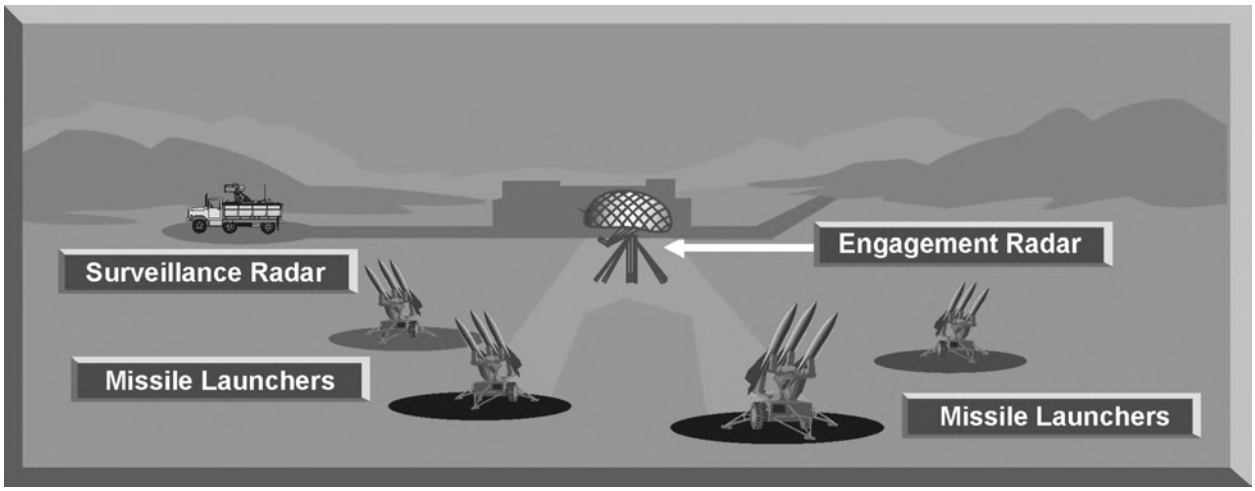

Figure 1-11. Acquisition Radar and TTR

Figure 1-12. TTR with Acquisition

(3) The primary role of TTRs, in support of an air defense system, is to provide continuous and accurate target parameters to a fire control computer. The fire control computer uses this data to guide missiles or aim antiaircraft artillery (AAA) to destroy attacking aircraft. TTRs employ various tracking techniques to continuously update target parameters. TTRs generally employ high frequencies, narrow beamwidths, and computer signal processing to enhance the accuracy of target parameters provided to the fire control computer.

(4) AI radar systems are TTRs employed by fighter aircraft to engage and destroy airborne targets (Figure 1-13). These radar systems are characterized by high frequency, sophisticated computer processing, and accurate target tracking capability. They are designed to allow the AI asset to employ air-to-air missiles and guns/cannons. TTRs and AI radars constitute the highest radar threat associated with an air defense system.

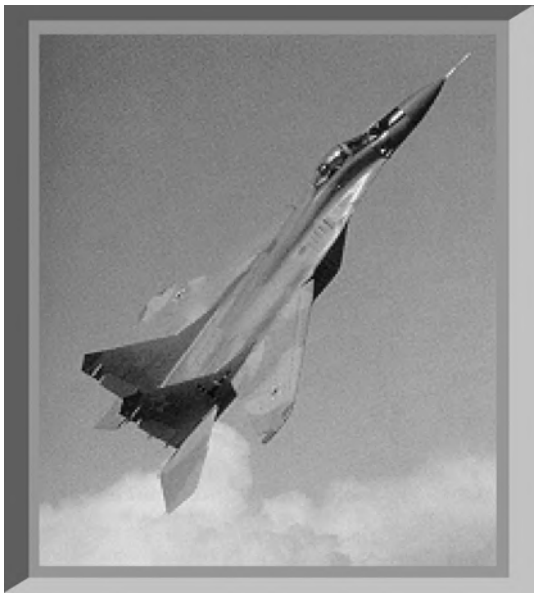

Figure 1-13. MiG-29

(5) Another growing lethal threat associated with an air defense system is infrared (IR) missiles. IR missile systems can be man-portable (Figure 1-14), mounted on vehicles, or employed by AI assets. These missile systems guide on the distinctive IR signature of aircraft. The recent proliferation and enhanced performance of IR systems has increased the contribution of these systems to air defense.

Figure 1-14. IR System

c. All these radar systems can be deployed to provide air defense for a particular country or geographical area. When the employment of these radar systems is integrated by a command and control (C^2) structure, this constitutes an IADS (Figure 1-15). The C^2 structure allows the military commander to take advantage of the threat warning provided by early warning radars. Based on this threat warning, the military commander can allocate specific assets (GCI and AI assets, or acquisition radars and TTRs) to engage airborne targets. This allocation decision is based on the capabilities of these systems and the tactical situation. This allocation process enables the military commander to maximize the capabilities of his forces to engage and destroy attacking aircraft.

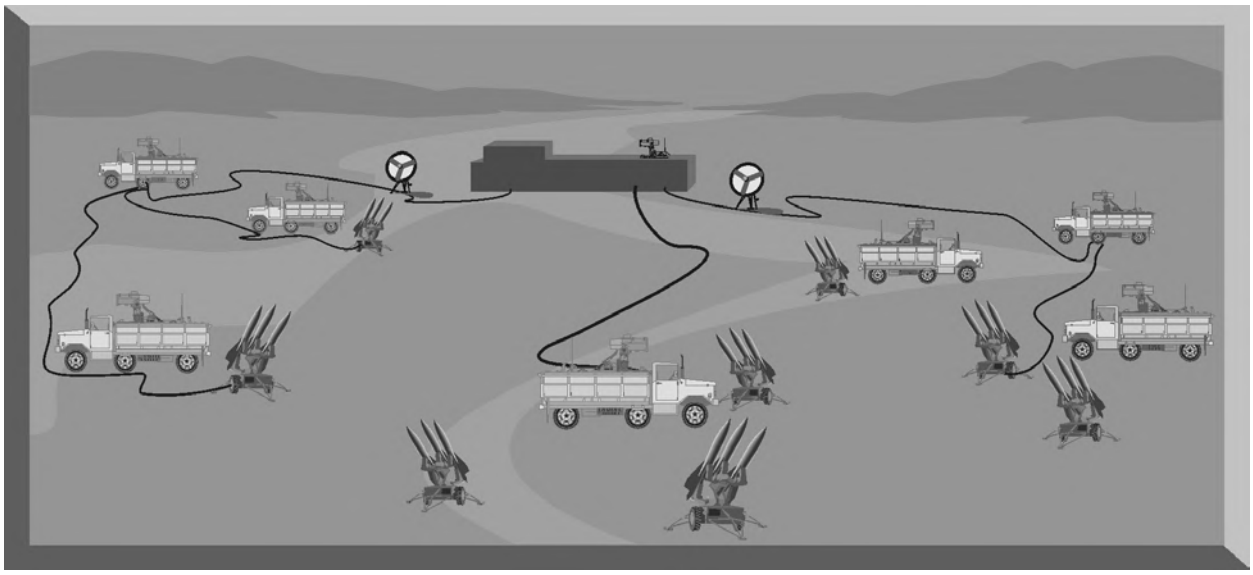

Figure 1-15. A Typical IADS

5. SUMMARY

Radar systems are the cornerstones of a modern IADS. Radar and IR threat systems operate at frequencies that span most of the electromagnetic spectrum. Each system has unique capabilities and operating characteristics that enable it to accomplish assigned tasks in support of the IADS. In order to effectively employ offensive air power on the modern battlefield, the systems that support the IADS must be negated. A basic knowledge of how radar and IR systems operate, their capabilities, limitations, and the available countermeasures is the key to defeating these systems. The purpose of this book is to provide this information.

CHAPTER 2. CHARACTERISTICS OF RF RADIATION

1. INTRODUCTION

In order for a radar system to determine range, azimuth, elevation, or velocity data, it must transmit and receive electromagnetic radiation. This electromagnetic radiation is referred to as radio frequency (RF) radiation. RF transmissions have specific characteristics that determine the capabilities and limitations of a radar system to provide these target discriminants, based on an analysis of the characteristics of the target return. The frequency of transmitted RF energy affects the ability of a radar system to analyze target return, based on time, to determine target range. RF frequency also affects the ability of the transmitting antenna to focus RF energy into a narrow beam to provide azimuth and elevation information. The wavelength and frequency of the transmitted RF energy impact the propagation of the radar signal through the atmosphere. The polarization of the RF signal affects the amount of clutter the radar must contend with. The ability of a radar system to use the Doppler effect in analyzing the radar return impacts the velocity discrimination capability of the radar. These characteristics of RF radiation will be discussed in this chapter.

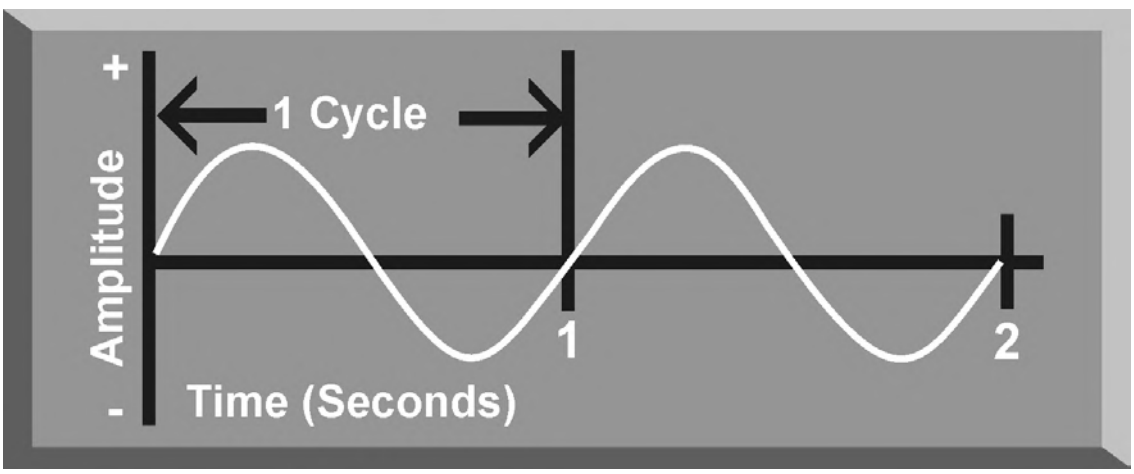

Figure 2-1. Radio Frequency

2. FREQUENCY

The output signal from a typical radio or radar system has several important characteristics that affect the capabilities and limitations of radio or radar systems. The first characteristic considered is usually RF. The frequency of the transmitted signal is the number of times per second the RF energy completes one cycle. The RF signal depicted in Figure 2-1 has a frequency of one cycle per second. The basic unit of measurement is the hertz (Hz). One hertz equals one cycle per second. Most radars have an RF in the millions of hertz, or megahertz (MHz).

3. WAVELENGTH

A characteristic of any RF signal is wavelength. Wavelength is a measure of the physical distance between peaks of a sine wave propagated in space (Figure 2-2).

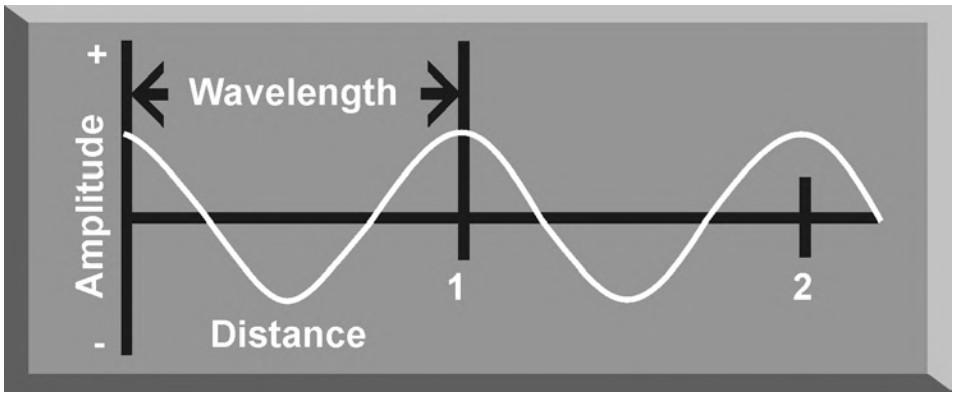

Figure 2-2. Radar Signal Wavelength

Though wavelength is measured in meters, most radar signals have wavelengths measured in centimeters or millimeters. The wavelength of a radar signal can be computed using the equation shown in Equation 2-1. The relationship between wavelength and frequency is inverse: the higher the frequency, the shorter the wavelength. In early radio and radar terminology, wavelength was used instead of frequency to describe operating characteristics of a system. Today, wavelength is used to describe systems operating at very high frequencies, such as millimeter wave, and for describing infrared (IR) systems.

$$\text{Wavelength } (\lambda) = \frac{c}{f} \quad \begin{matrix}\text{(Speed of Light)} \\ \text{(Radar Frequency)}\end{matrix}$$

Equation 2-1. Basic Wavelength Equation

4. POLARIZATION

Another characteristic of a radio frequency wave is polarization. Polarization is determined by the radar antenna and refers to the orientation of the RF wave as it travels through space. There are two types of polarization: linear and circular.

a. Traveling electromagnetic energy has two components: an electrostatic field and a magnetic field. These two fields are always perpendicular to each other and perpendicular to the direction of travel. The polarization of the wave is defined in terms of the orientation to the electrostatic field. Many radar antennas are linearly polarized, either vertically or horizontally. The signal depicted in Figure 2-3 is vertically polarized.

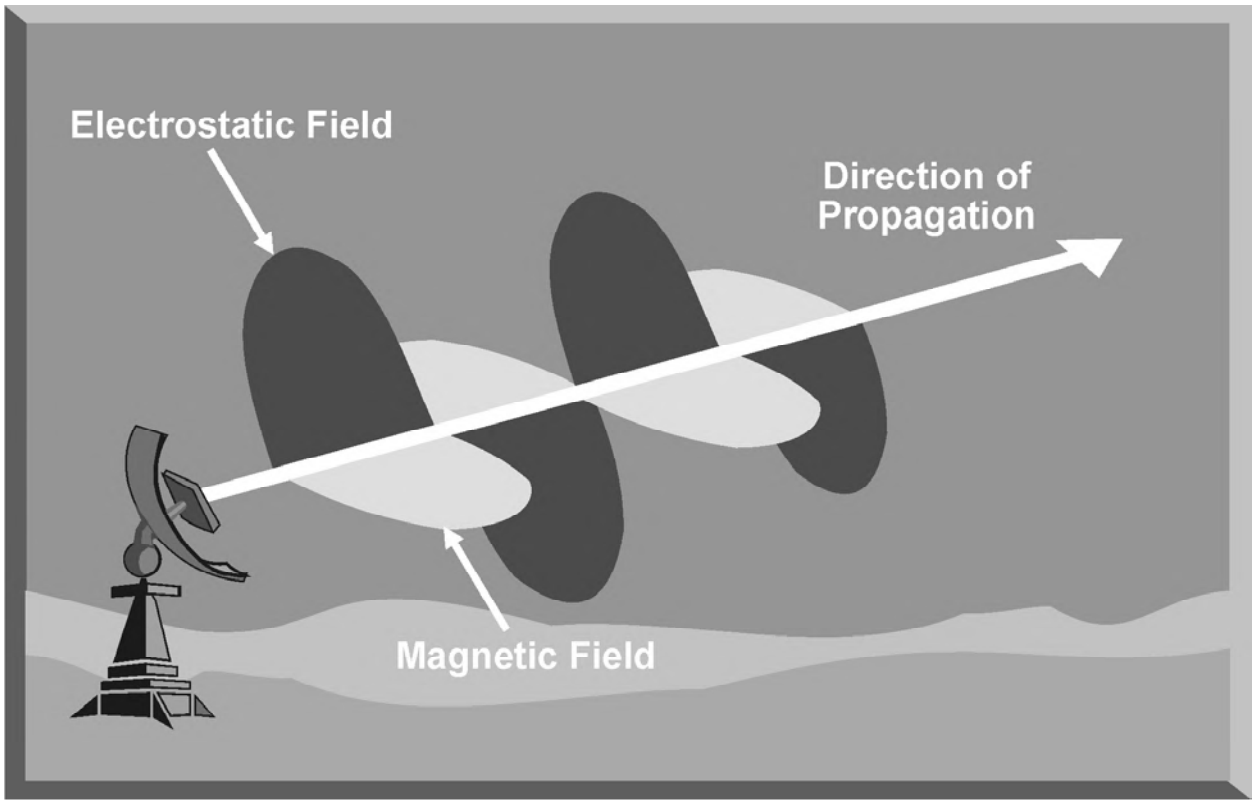

Figure 2-3. Radar Signal Vertical Polarization

b. Some radars use circular polarization to improve target detection in rain. Circular polarization can be right-hand, or left-hand orientation. For circular polarization, the direction of the electrostatic field varies with time and traces a circular locus about a fixed plane perpendicular to the direction of propagation. For a right-hand circular polarized signal, the electrostatic vector appears to rotate in a clockwise direction. For a left-hand circular polarized signal, the rotation is counterclockwise. Circular polarization can be visualized by pointing the thumb of either hand in the direction of propagation and curling the fingers in the direction of electrostatic field rotation (Figure 2-4).

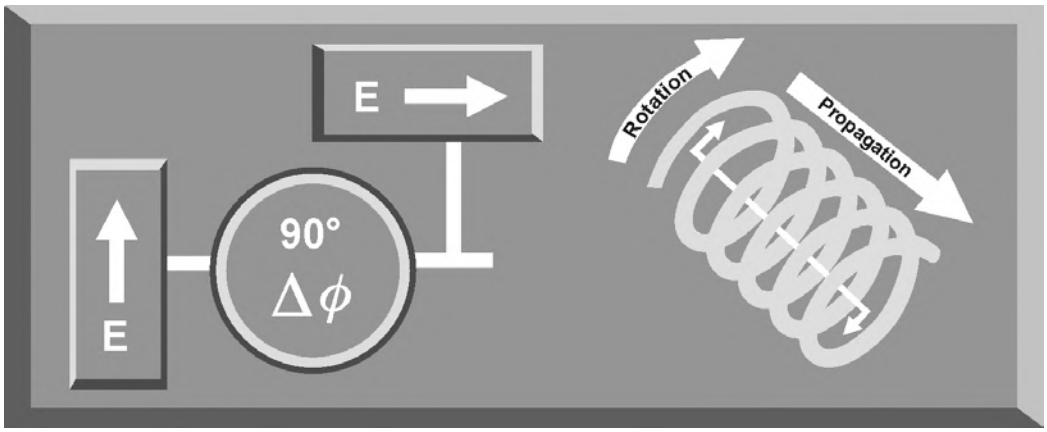

Figure 2-4. Circular Polarization

c. The impact of polarization on receivers and transmitters is fairly straightforward. If an antenna is designed to receive a particular polarization, it will have difficulty receiving a signal with an opposite polarization. This situation is defined as cross polarization (Figure 2-5).

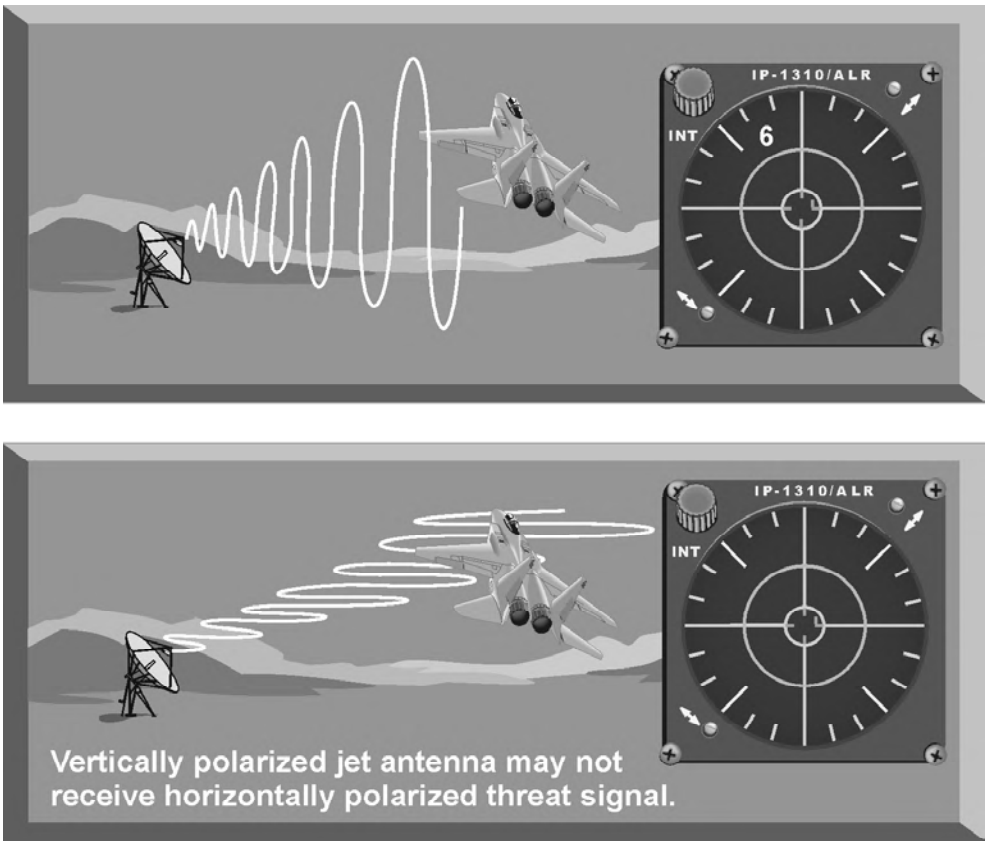

Figure 2-5. Impact of Polarization

The impact of cross polarization on electronic combat can be dramatic. If a radar warning receiver antenna is polarized to receive vertically polarized signals, a threat system employing a horizontally polarized radar signal may not be detected, or may be displayed on the scope well after the threat has acquired the aircraft. In addition, if the jamming antenna on an electronic attack (EA) system is also vertically polarized, it may not be able to jam this system. Fortunately, this potentially lethal situation rarely occurs, but future threat systems may take advantage of this situation. Table 2-1 details the impact of polarization on selected transmit and receive antenna combinations.

Table 2-1. Antenna Polarization Loss

Transmit Antenna Polarization	Receive Antenna Polarization	Percent Lost
Vertical	Vertical	0
Vertical	Slant (45° or 135°)	50
Vertical or Horizontal	Horizontal or Vertical	75
Vertical	Circular (right-hand or left-hand)	50
Horizontal	Horizontal	0
Horizontal	Slant (45° or 135°)	50
Horizontal	Circular (right-hand or left-hand)	50
Circular (right-hand)	Circular (right-hand)	0
Circular (right-hand)	Circular (left-hand)	94
Circular (right-hand or left-hand)	Slant (45° or 135°)	50

5. DOPPLER EFFECT

The "Doppler effect" takes advantage of the fact that the frequency of RF waves will be changed or shifted when reflected from a target moving relative to the radar. The shifted frequency of the returning RF wave depends on the movement of the aircraft in relation to the radar. In Figures 2-6, 2-7, and 2-8, f_o is the transmitted frequency of the radar, and f_t is the frequency of the reflected RF

wave from the target. For a stationary target, the frequency of the reflected signal will equal the frequency of the transmitted signal (Figure 2-6).

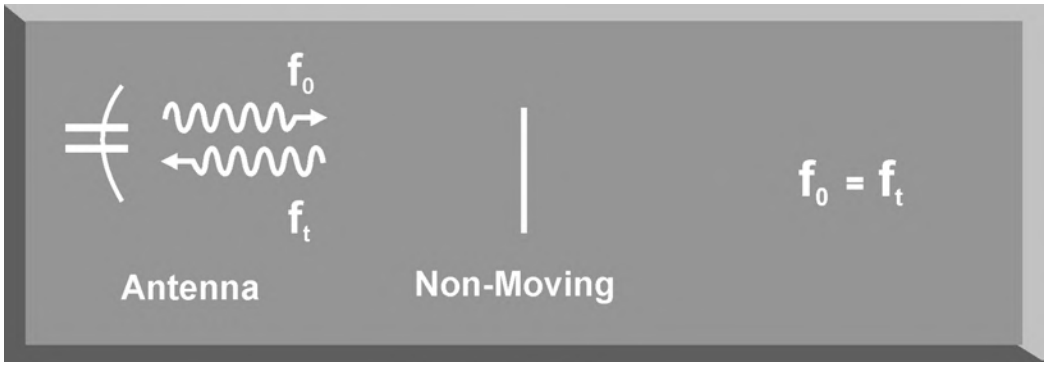

Figure 2-6. Zero Doppler Effect – Stationary Target

a. For a target moving toward the radar, the frequency of the reflected signal will be higher than the transmitted signal (Figure 2-7).

Figure 2-7. Doppler Effect – Closing Target

b. The reflected frequency for a target moving away from the radar will be lower than the transmitted frequency (Figure 2-8).

Figure 2-8. Doppler Effect – Opening Target

6. ELECTROMAGNETIC SPECTRUM

The portion of the electromagnetic spectrum (Figure 2-9) that today's electronic combat systems must deal with starts with radio waves and encompasses microwaves, infrared, and a small portion of the ultraviolet region. Communications systems generally operate in the HF, UHF, and VHF regions. Some satellite communications operate in the SHF region. Radars operate in the microwave region, normally from 0.2 – 200 gigahertz. Infrared systems operate in the region just below visible light.

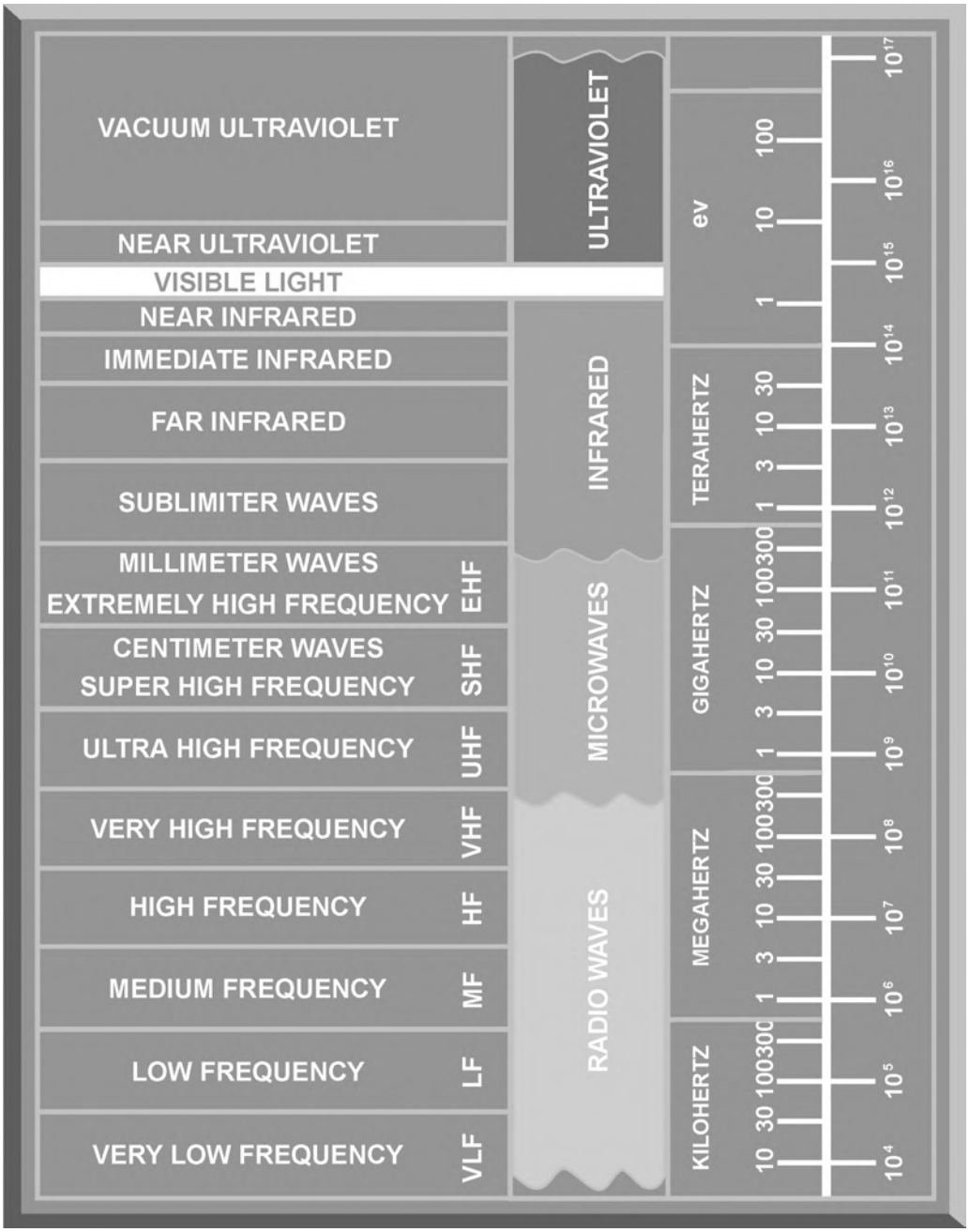

Figure 2-9. Electromagnetic Spectrum

a. Table 2-2 lists prefixes commonly used to indicate scientific notation and their abbreviations. These prefixes are often used when dealing with extremely high frequency radar signals or RF waves with extremely small wavelengths. For example, when dealing with extremely high frequency RF, it is simpler to use gigahertz, or GHz. One gigahertz is one thousand megahertz (MHz). For example, a radar operating at 3150 MHz is also operating at an RF of 3.150 GHz.

Table 2-2. Commonly Used Prefixes for Scientific Notation

Unit Designations			
Prefix	Symbol	Unit	Measure
Tetra	T	10^{12}	One Trillion
Giga	G	10^{9}	One Billion
Mega	M	10^{6}	One Million
Kilo	k	10^{3}	One Thousand
Cent	c	10^{-2}	One Hundred
Milli	m	10^{-3}	One Thousandth
Micro	u	10^{-6}	One Millionth

b. Frequency bands are often used when discussing radars and electronic combat systems. Radar designers use a frequency band designation system entirely different from the one used in electronic combat. Table 2-3 depicts both frequency band designation systems and the corresponding frequency ranges.

Table 2-3. Radar Frequency Band Designations

Frequency Range	EW Frequency Band	Radar Design Frequency Band
0-250 MHz	A	HF/VHF
250-500 MHz	B	UHF
500-1000 MHz	C	UHF
1-2 GHz	D	L
2-3 GHz	E	S
3-4 GHz	F	S
4-6 GHz	G	C
6-8 GHz	H	C
8-10 GHz	I	X (8-12.5 GHz)
10-20 GHz	J	Ku (12.5-18 GHz)
20-40 GHz	K	K (18-26.5 GHz)
40-60 GHz	L	Ka (26.5-40 GHz)
60-100 GHZ	M	40-100 Millimeter

7. RF PROPAGATION

Propagation characteristics of RF energy are profoundly affected by the earth's surface and atmospheric conditions. Any analysis of radar performance must take into account the propagation phenomena associated with RF radiation in a "real world" environment. The most important propagation phenomena include refraction, anomalous propagation (ducting), and attenuation.

a. In a vacuum, RF waves travel in a straight line. However, RF waves propagating within the earth's atmosphere do not travel in a straight line. The earth's atmosphere bends, or refracts, RF waves. One impact of the atmospheric refraction of RF waves is an increase in the line of sight (LOS) of the radar. This increase in radar LOS effectively extends the range of the radar system (Figure 2-10).

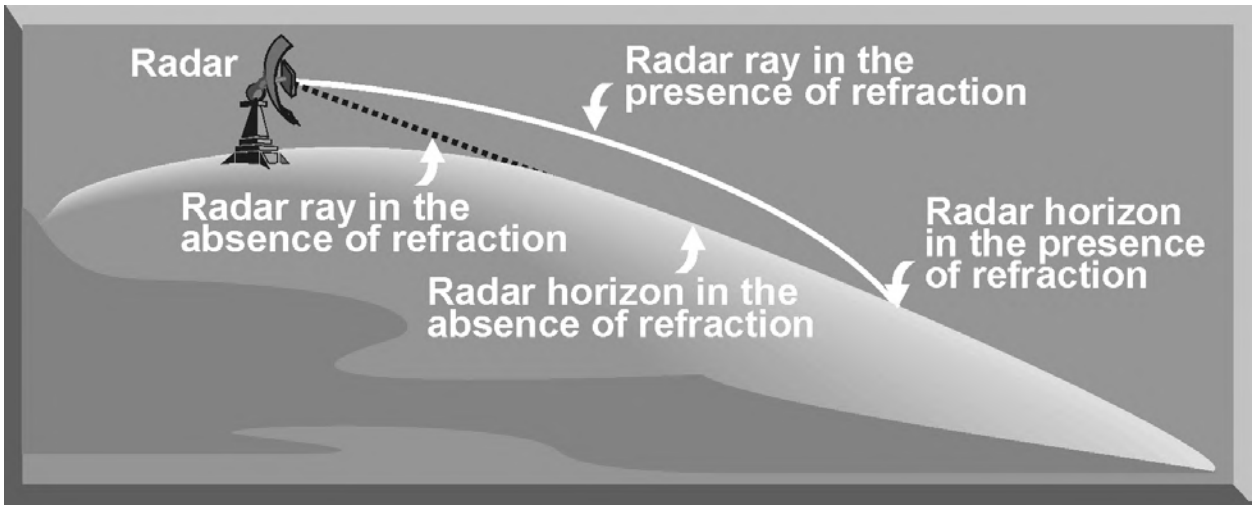

Figure 2-10. Impact of Refraction on RF Propagation

Atmospheric refraction of RF energy can also induce elevation measurement errors in radar systems (Figure 2-11).

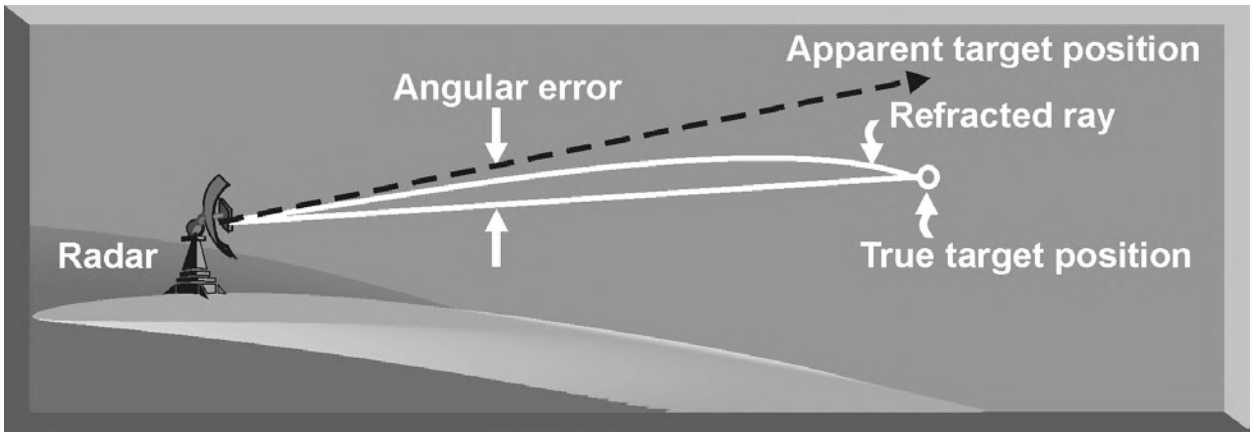

Figure 2-11. Impact of Refraction on Target Elevation Determination

(1) The refraction of RF waves in the atmosphere is caused by the variation in the velocity of propagation with altitude. The index of refraction (n) is used to describe this velocity variation and is defined by Equation 2-2.

$$\text{Index of Refraction (n)} = \frac{\text{Velocity of Propagation in a Vacuum}}{\text{Velocity of Propagation in the Atmosphere}}$$

Equation 2-2. Index of Refraction

(2) The term refractivity (N) is used for predicting the impact of refraction on RF wave propagation. Refractivity is a "scaled up" expression for the index of refraction and is used by radar designers to calculate the impact of refraction on actual radar systems. At normal radar operating frequencies, the refractivity for air containing water vapor can be computed using Equation 2-3.

$$\text{Refractivity (N)} = (n-1) \times 10^6 = \frac{77.6\,p}{T} + \frac{3.75 \times 10^5 e}{T^2}$$

n = index of refraction e = partial pressure of water vapor
p = barometric pressure T = absolute temperature (degrees K)

Equation 2-3. Refractivity of RF Waves (Normal Radar Frequencies)

(3) As altitude increases, the barometric pressure and water vapor content decrease rapidly. At the same time, the absolute temperature decreases slowly based on the standard lapse rate. Using Equation 2-3, it can be seen that the refractivity of the atmosphere decreases with increasing altitude. This decrease in refractivity means that the velocity of RF waves increases with altitude. The result is a downward bending, or refraction, of RF waves as depicted in Figure 2-10. RF wave refraction primarily affects ground-based radar systems at low antenna elevation angles, especially at or near the horizon. For most radar applications, refraction is not a factor at elevation angles above 5 degrees.

b. The term anomalous, or nonstandard, propagation is used to describe atmospheric conditions that extend the propagation of RF waves and increase radar range. The most common anomalous propagation phenomena is called superrefraction, or ducting.

(1) A superrefracting duct is formed when the refractivity of the atmosphere (Equation 2-2) rapidly decreases with altitude. Based on Equation 2-2, this occurs when the temperature increases with altitude and/or the water vapor content decreases with altitude. An increase in temperature with altitude is called a temperature inversion. To produce a duct, the temperature inversion must be very pronounced.

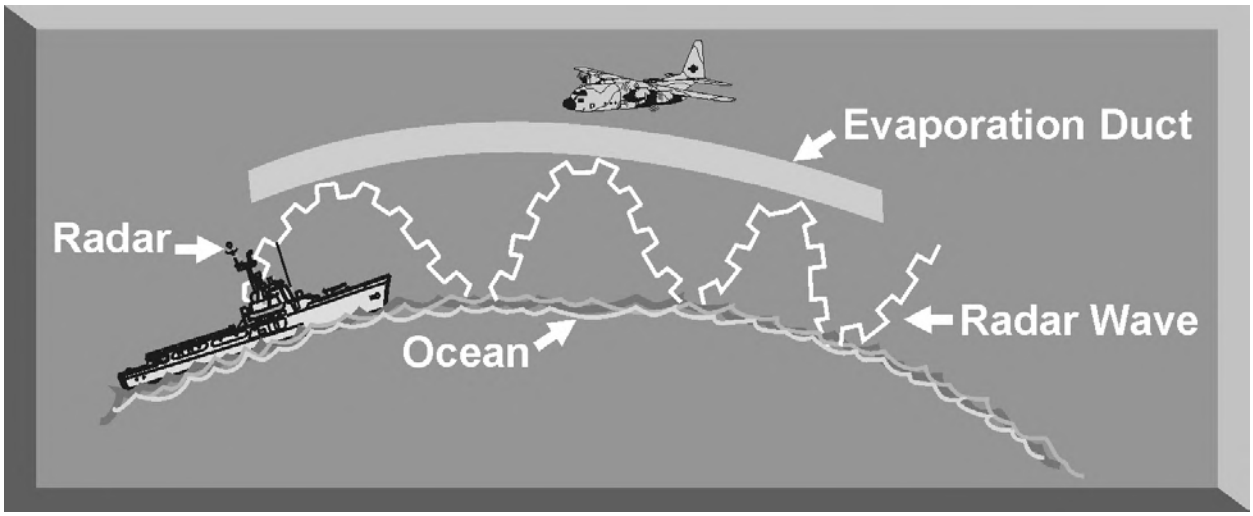

Figure 2-12. Superrefracting Surface Duct

(2) A superrefracting duct acts like a wave guide which traps the RF wave (Figure 2-12). This channels the radar signal and reduces attenuation. In order for an RF wave to propagate within a duct, the angle of the radar signal, in relation to the duct, should be less than one degree. The RF waves trapped by the duct take advantage of the decrease in refractivity and travel much further than normal. This can greatly extend the range of a radar system.

(3) The extension of radar range inside a duct can result in a reduction of radar coverage outside the duct. The area of reduced radar coverage because of ducting is called a radar hole. Due to radar holes, the extended radar range caused by ducting may result in a decrease in radar coverage along other paths of propagation. These holes can seriously degrade the effectiveness of early warning radar systems. For example, a radar system is taking advantage of a duct formed at the surface to extend low altitude radar range (Figure 2-12). Airborne targets flying just above the duct would normally be detected, but because of ducting, these targets may be missed.

(4) Water vapor content is a significant factor in producing ducts. Consequently, most ducts are formed over water and in warm climates. Any atmospheric phenomenon that results in a pronounced increase in temperature and/or a decrease in water vapor content as altitude increases can generate a superrefracting duct, of which there are three types. A superrefracting duct which is formed just above the surface of the earth is referred to as a surface duct. A surface duct formed just above the surface of the ocean is called an evaporation duct. A duct which is formed well above the surface of the earth is known as an elevated duct.

(a) Surface ducts formed over land are usually a result of the nighttime radiation of heat from the earth. Duct formation is especially prevalent during the

summer months when the ground is moist. As the earth loses heat, a temperature inversion is created at the surface coupled with a sharp decrease in the moisture content. These conditions are favorable to the formation of a surface duct. A superrefracting duct can also be produced by the diverging downdraft under a thunderstorm. The cool air that is dispersed creates a local temperature inversion while the water vapor content decreases due to rain. Surface ducts formed in conjunction with thunderstorms are difficult to predict and normally persist for a short period of time.

(b) A superrefracting surface duct that lies just above the surface of the ocean is a result of evaporated water, thus the term evaporation duct. The air in contact with the ocean is saturated with water vapor, while the air several feet above the ocean contains a much lower level. This rapid decrease in water vapor pressure with an increase in altitude creates an evaporation duct. An evaporation duct exists over the ocean almost all the time. The height of this duct varies from 20 to 100 feet based on the season, time of day, and wind speed. One positive aspect of an evaporation duct is the extended range available to a shipborne radar system with a properly aligned antenna. This extended range coverage against surface ships and low altitude aircraft is a definite advantage of ducted propagation.

(c) An elevated duct is generally formed by a temperature inversion in the upper atmosphere. To take maximum advantage of the increased radar range inside an elevated duct, both the radar and the target should be inside the elevated duct. In addition, radar systems operating below an elevated duct may also experience enhanced range performance.

(4) The presence of surface ducts and elevated ducts, especially over land, are extremely difficult to predict and may persist for very short periods of time. The atmospheric conditions favorable to duct formation are difficult to predict using conventional weather forecasting techniques.

c. The attenuation of RF energy in a clear atmosphere is due to the presence of oxygen and water vapor. Attenuation results when a portion of the RF energy strikes these molecules and is absorbed as heat. Figure 2-13 details the RF attenuation loss due to atmospheric gasses based on the frequency of the RF energy.

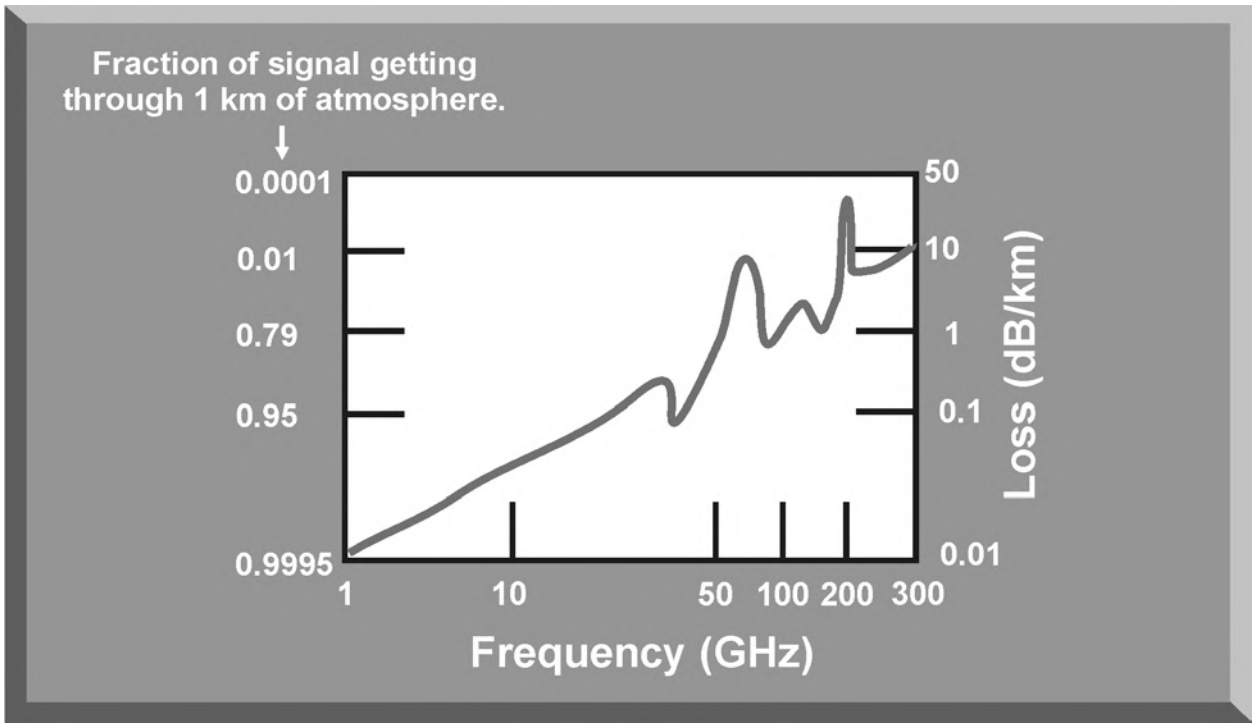

Figure 2-13. RF Atmospheric Attenuation

(1) At frequencies below 1 GHz, the effect of atmospheric attenuation is negligible. Above 10 GHz, atmospheric attenuation increases dramatically. This dramatic signal loss impacts the maximum detection range of radars operating in the millimeter wavelength band.

(2) RF energy attenuation decreases as altitude increases. The RF attenuation experienced by an air-to-air radar will depend on the altitude of the target as well as target range. For a ground-based radar, RF attenuation will decrease as antenna elevation increases.

8. SUMMARY

Since all radar operations depend on the transmission and reception of RF energy, a basic knowledge of RF frequency, wavelength, and polarization provides the basis for understanding the more complex radar characteristics. Since most modern radar systems employ some form of Doppler signal processing, the concept of the Doppler effect is fundamental to understanding modern radar operation. The concepts of refraction, anomalous propagation (ducting), and atmospheric attenuation are key to understanding how RF waves propagate in the atmosphere. The topics in this chapter provide a foundation for understanding radar and jamming system operation.

CHAPTER 3. RADAR SIGNAL CHARACTERISTICS

1. INTRODUCTION

Every radar produces a radio frequency (RF) signal with specific characteristics that differentiate it from all other signals and define its capabilities and limitations. Pulse width (pulse duration), pulse recurrence time (pulse repetition interval), pulse repetition frequency, and power are all radar signal characteristics determined by the radar transmitter. Listening time, rest time, and recovery time are radar receiver characteristics. An understanding of the terms used to describe these characteristics is critical to understanding radar operation.

2. PULSE WIDTH (PW)

Figure 3-1 depicts the output from a typical pulse radar. PW, sometimes called pulse duration (PD), is the time that the transmitter is sending out RF energy. PW is measured in microseconds. It has an impact on range resolution capability, that is, how accurately the radar can discriminate between two targets based on range.

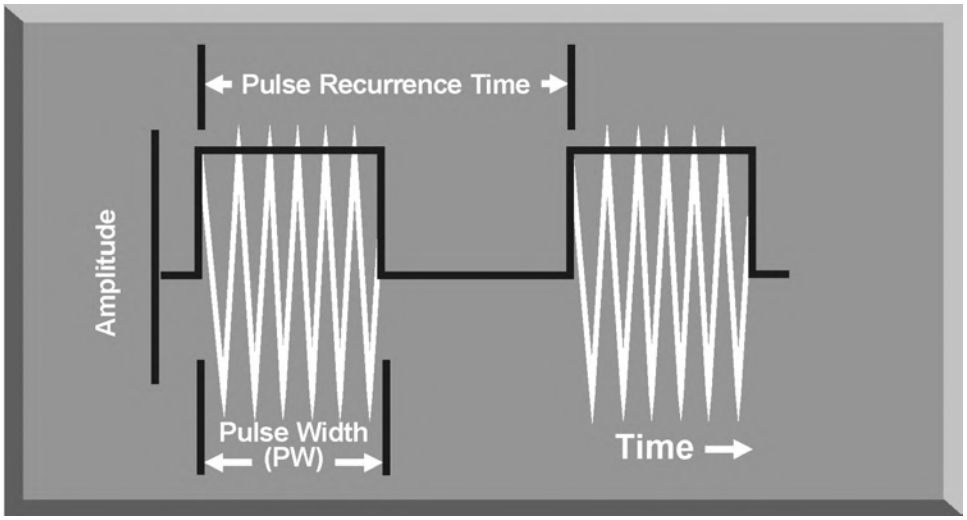

Figure 3-1. Typical Radar Pulse

3. PULSE RECURRENCE TIME (PRT)

Pulse recurrence time is also known as pulse repetition time. PRT is the time required for a complete transmission cycle. This is the time from the beginning of one pulse of RF energy to the beginning of the next. PRT is measured in microseconds. PRT is the same as pulse repetition interval (PRI), which is used in radar warning receivers and other electronic warfare support (ES) assets to discriminate between radar systems. It also affects maximum radar range.

4. PULSE REPETITION FREQUENCY (PRF)

One of the most important characteristics of a pulse radar signal is pulse repetition frequency. PRF is the rate at which pulses or pulse groups are transmitted. Generally, PRF is the number of pulses generated per second and is expressed in hertz (Hz). PRF and PRI are related in that PRI is the inverse of PRF. A word of caution—do not confuse the operating frequency of the radar, which is measured in Hz, with the pulse repetition frequency, which is also measured in Hz. They are entirely different characteristics of a pulsed radar signal.

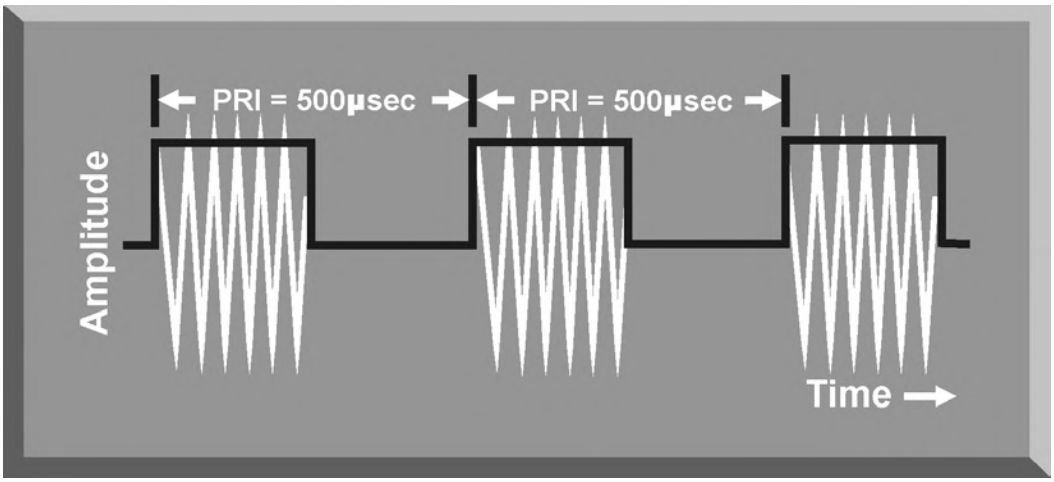

Figure 3-2. Constant PRF Radar Pulse

a. A pulse radar operating at an unvarying PRF is called a constant PRF radar (Figure 3-2). Pulse radar systems can employ PRF stagger or PRF jitter as an electronic protection (EP) technique against repeater or synchronous jammers. The time between each pulse is the PRI.

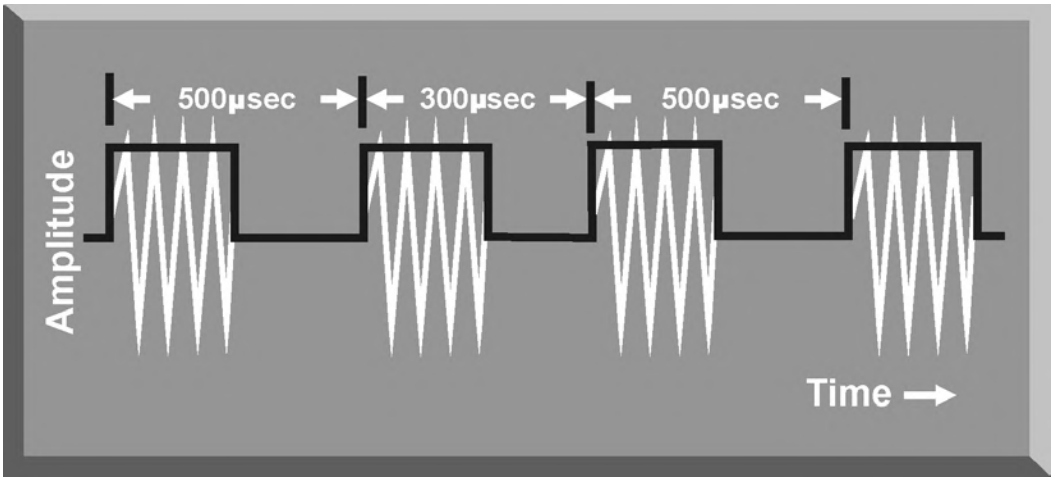

Figure 3-3. PRF Stagger

b. PRF stagger is accomplished by assuring that no adjacent PRIs are equal. The number of different PRIs generated is called the "position" of the stagger. Two-position stagger would have two PRI values, for example, 300 microseconds and 500 microseconds (Figure 3-3).

c. PRF jitter may be considered a random stagger. It is also an EP technique to counter synchronous jammers. PRF jitter has no repeating pattern of PRI values (Figure 3-4).

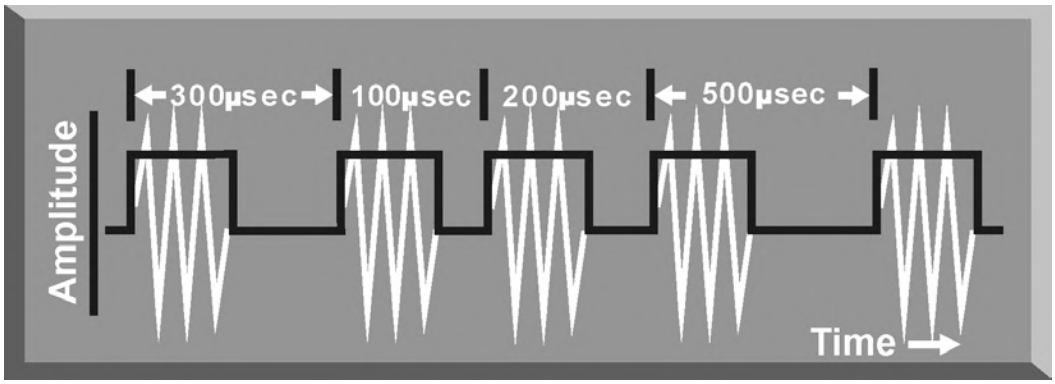

Figure 3-4. PRF Jitter

5. RADAR RECEIVER CHARACTERISTICS

Pulse repetition frequency, pulse recurrence time, and pulse width are determined by the transmitter. The pulse radar signal characteristics that relate to receiver operation are rest time, recovery time (RT), and listening time (LT) (Figure 3-5).

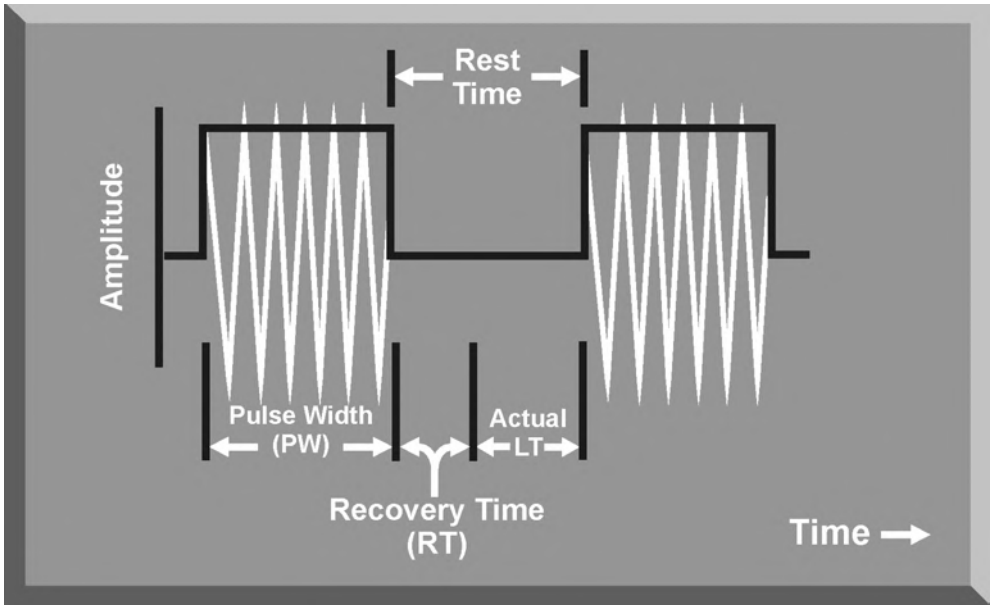

Figure 3-5. Basic Radar Pulse

a. Rest time is the time between the end of one transmitted pulse and the beginning of the next. It represents the total time that the radar is not transmitting. Rest time is measured in microseconds.

b. Recovery time (RT) is the time immediately following transmission time during which the receiver is unable to process returning radar energy. RT is determined by the amount of isolation between the transmitter and receiver and the efficiency of the duplexer. A part of the high power transmitter output spills over into the receiver and saturates this system. The time required for the receiver to recover from this condition is RT.

c. Listening time (LT) is the time the receiver can process target returns. Listening time is measured from the end of the recovery time to the beginning of the next pulse, or PRT minus (PW + RT). Listening time is measured in microseconds.

6. DUTY CYCLE

Duty cycle is the ratio of the time the transmitter operates to the time it could operate during a given transmission cycle. The duty cycle of a radar can be computed by dividing the PW by the PRT, or by multiplying the PW times the PRF. Duty cycle has no units (Equation 3-1). CW radars have a duty cycle of 100%, while early warning radars may have a duty cycle of around 1%.

$$\text{Duty Cycle} = \frac{PW}{PRT} \text{ or Duty Cycle} = PW \times PRF$$

Equation 3-1. Duty Cycle

7. PEAK POWER

The power output of a radar is normally expressed in terms of peak power or average power (Figure 3-6). Peak power is the amplitude, or power, of an individual radar pulse. It is simply the power, measured in watts or megawatts, that is radiated when the transmitter is on. The power a radar transmits is normally used to determine the maximum detection range of that radar. However, it is the energy in a radar pulse that determines maximum radar detection range. Since power is the rate of flow of energy, the energy in a radar pulse is equal to the peak power multiplied by the time the radar is transmitting, or pulse width (Equation 3-2).

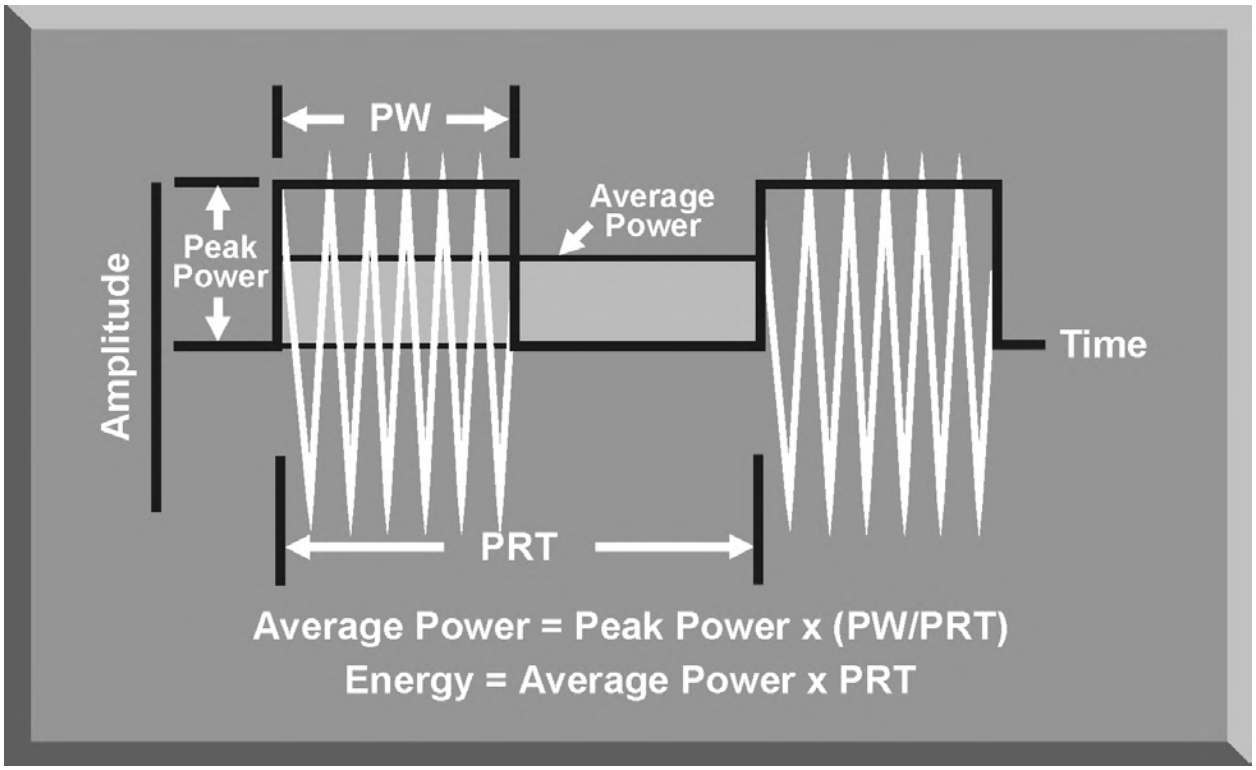

Figure 3-6. Peak Power and Average Power

$$\text{Energy Per Pulse} = \text{Peak Power} \times \text{Pulse Width}$$

Equation 3-2. Energy Per Pulse

8. AVERAGE POWER

Average power is the power distributed over the pulse recurrence time. It can be computed using the formula in Figure 3-6. The energy transmitted by average power can be computed by multiplying average power by PRT. Since the energy in a set of pulses determines detection range, average power or energy provides a better measure of the detection range of a radar than does peak power. Average power can be increased by increasing the PRF, by increasing the pulse width, or by increasing peak power (Figure 3-7).

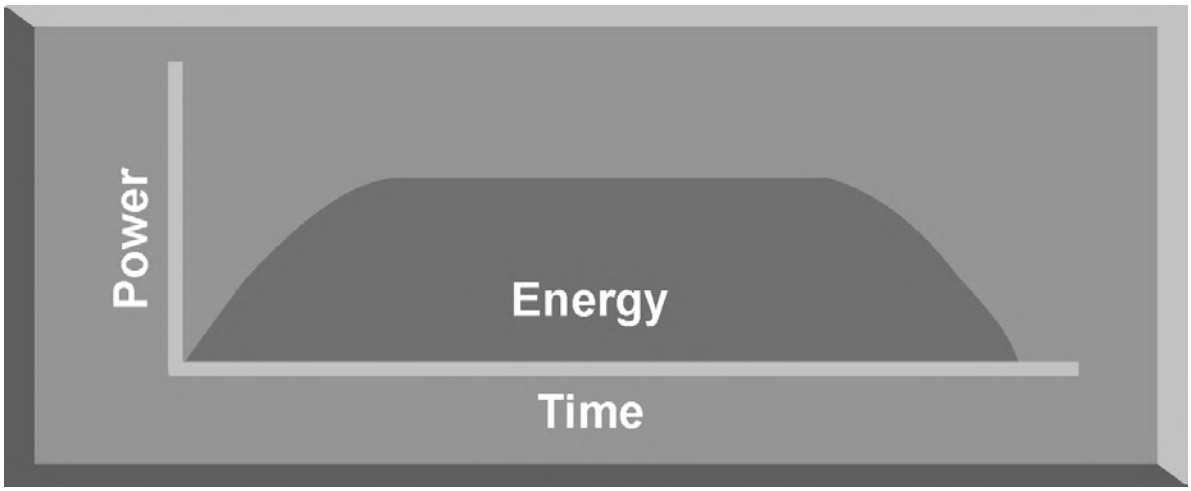

Figure 3-7. Radar Power and Energy

9. MODULATION

The characteristics of an RF signal must be changed in order to transmit information on the signal. This process is called modulation. Modulation is accomplished by combining a basic RF signal, called a carrier wave, with a modulating signal that contains the desired information. The resulting waveform is then used to transmit the desired information.

a. One basic modulation technique is amplitude modulation (AM). The carrier wave is combined with a modulating signal containing information of varying amplitude. Waveforms produced have the same frequency as the carrier wave but with a varying amplitude based on the information from the modulating signal. AM is used extensively in communications and broadcast radio transmissions (Figure 3-8).

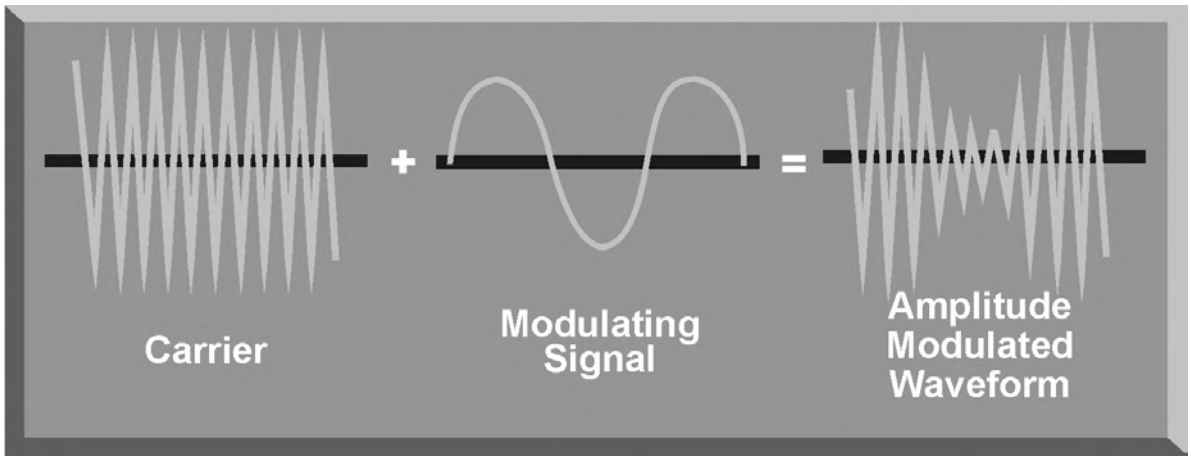

Figure 3-8. Amplitude Modulation

b. Frequency modulation (FM) is another means of impressing information on a carrier wave. Frequency modulation is accomplished by combining the carrier wave with a modulating signal containing information of varying frequency. The waveform produced has the same amplitude as the carrier wave, but the frequency varies based on the information from the modulating signal (Figure 3-9). FM is used extensively in communications and commercial radio. FM is also used with continuous wave (CW) radars to make them more resistant to jamming and to add range determination capability.

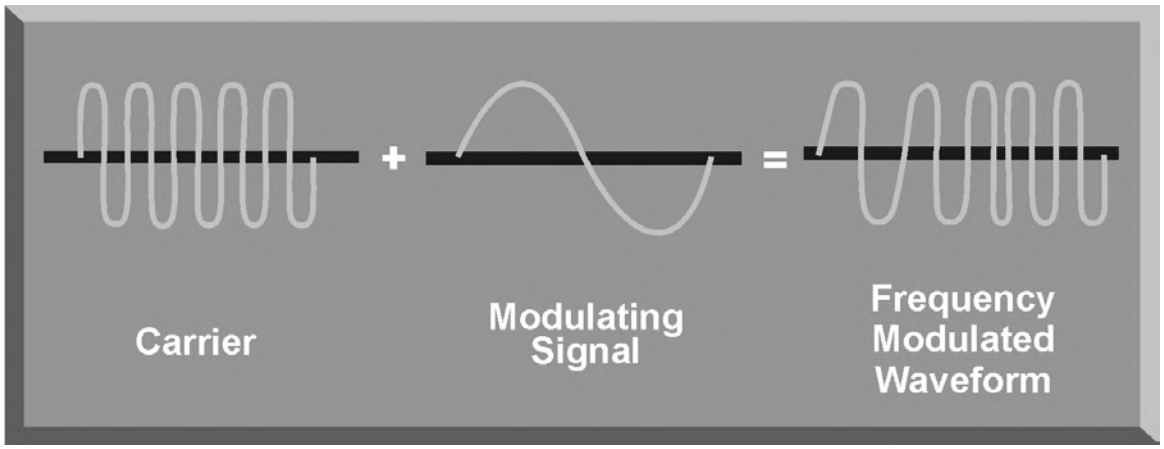

Figure 3-9. Frequency Modulation

c. A type of amplitude modulation known as pulse modulation (PM) is used in pulse radars to produce the short, powerful bursts of RF energy. PM combines the carrier wave with a rectangular pulse that acts like a switch. PM turns the transmitter on, leaves it on for a predetermined time, and then turns it off. The result is a waveform that produces radar pulses that can be used to measure range and angle to the target (Figure 3-10).

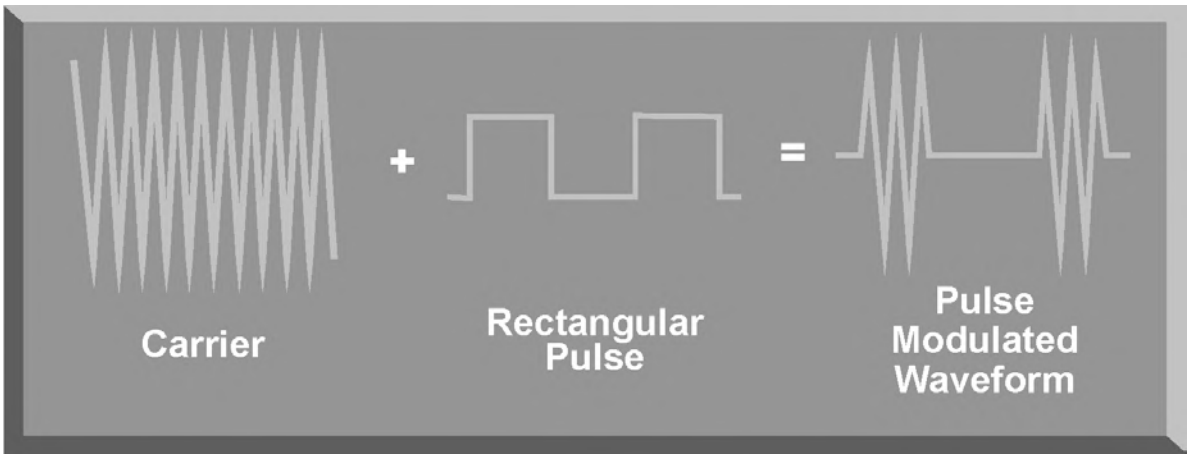

Figure 3-10. Pulse Modulation

10. SUMMARY

The radar signal characteristics of PW, PRI, PRF, and power determine the maximum range and the range resolution capability of a specific radar. When combined with the frequency of the carrier wave of the radar signal, these parameters provide a unique signature to identify a specific radar signal. Modulation is the method used to put information on an RF carrier wave. The primary modulation techniques used in radar signal generation include amplitude, frequency, and pulse modulation. The radar signal characteristics of PRF, PRI, power, and modulation are the keys to understanding radar operation and jamming techniques.

CHAPTER 4. RADAR SYSTEM COMPONENTS

1. INTRODUCTION

The individual components of a radar determine the capabilities and limitations of a particular radar system. The characteristics of these components also determine the countermeasures that will be effective against a specific radar system. This chapter will discuss the components of a basic pulse radar, a continuous wave (CW) radar, a pulse Doppler radar, and a monopulse radar.

2. PULSE RADAR SYSTEM

The most common type of radar design is the pulse radar system. The name describes a process of transmitting discrete bursts of RF energy at the frequency of the radar system. The time that pulses are transmitted determines the pulse repetition frequency (PRF) of the radar system. A pulse radar system can figure out range and azimuth. Range is determined by the time that it takes a pulse to go to a target and return. Target azimuth is determined by the relative position, or antenna orientation, when the pulse strikes the target. Figure 4-1 is a basic block diagram of a simple pulse radar system.

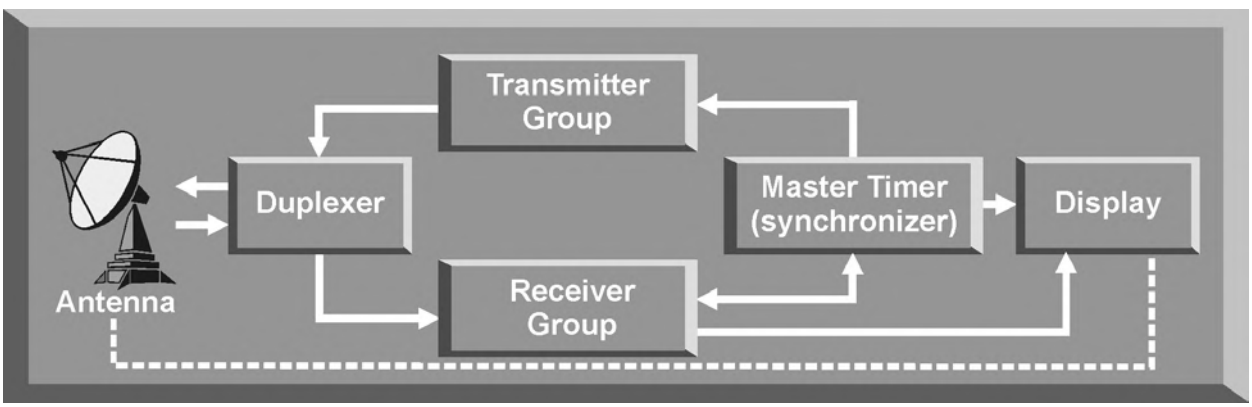

Figure 4-1. Pulse Radar Block Diagram

a. The purpose of the transmitter is to deliver a series of high-energy bursts of radio frequency (RF) energy to the antenna. The transmitter group of a modern pulse radar normally consists of a pulse generator or waveform generator, a modulator, and some kind of power amplifier (Figure 4-2).

(1) The purpose of the waveform generator is to generate the proper waveform or pulse, normally at a low power level, before delivery to the modulator. It is much easier to generate complex waveforms at a lower power level. These complex waveforms are required for coherent systems employing digital moving target indicator techniques and for pulse Doppler radar operations.

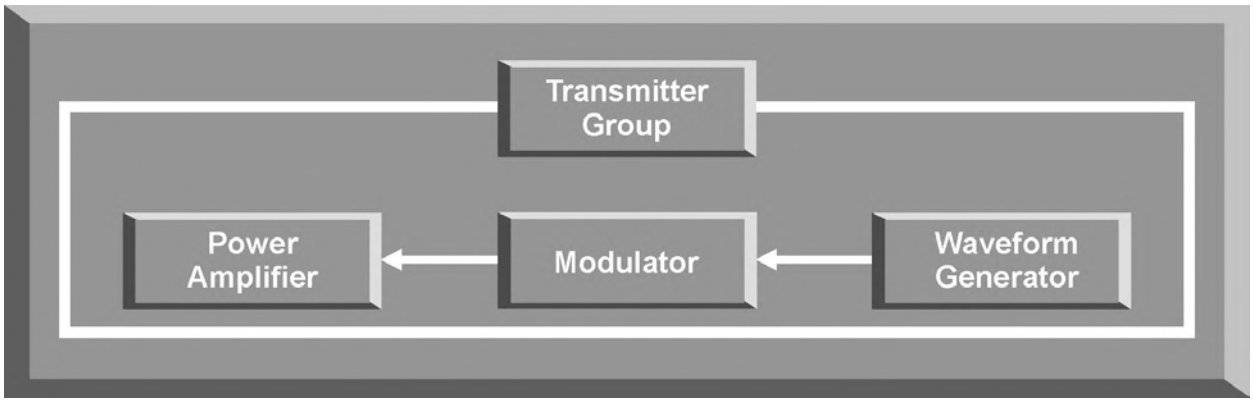

Figure 4-2. Transmitter Group

(2) The modulator is a major portion of the transmitter. The modulator provides an extremely powerful, very short pulse of direct current (DC) voltage to the power amplifier. This is similar to the ignition system of an automobile but with very stringent requirements. The modulator has an energy storage device and a switch. Between pulses, during the resting time of the transmitter, energy is accumulated and stored in the storage device. When keyed by the master timer, all this energy is switched to the power amplifier as a pulse. The waveform of this pulse is determined by the waveform generator.

(3) The power amplifier for a modern radar is normally a klystron, traveling wave tube, cross field amplifier, or solid state amplifier. Most common pulse radars use a klystron power amplifier. No matter what power amplifier is used, the purpose of the transmitter group is to produce a series of pulses at the correct amplitude, at the proper interval, with the exact waveform, and at the operating frequency of the radar.

b. A duplexer is required when both the transmitter and receiver use the same antenna. The duplexer acts as a rapid switch to protect the sensitive receiver from damage when the high-power transmitter is on. When the transmitter is off, the duplexer directs the weak target signals to the receiver. The duplexer's main purpose is to minimize power loss and maximize isolation. Power lost in the duplexer during transmission reduces the maximum detection range of the radar. Isolation refers to the amount of transmitter power that “bleeds through” the duplexer to the receiver during transmission. This “bleed through” must be extremely small to avoid receiver saturation or damage.

c. The capabilities of the receiver group are critical to radar performance (Figure 4-3). The ability of the radar receiver to detect the presence of the target return and extract the required information is limited primarily by noise. Noise can enter the receiver through the antenna along with the target return. This type of noise is called external noise. Noise generated within the receiver is called thermal noise. Radar noise can never be completely eliminated. Minimizing noise

is the most important consideration in the design of the sensitive receivers used with modern radars. In addition, relative immunity to noise makes a radar system more resistant to jamming.

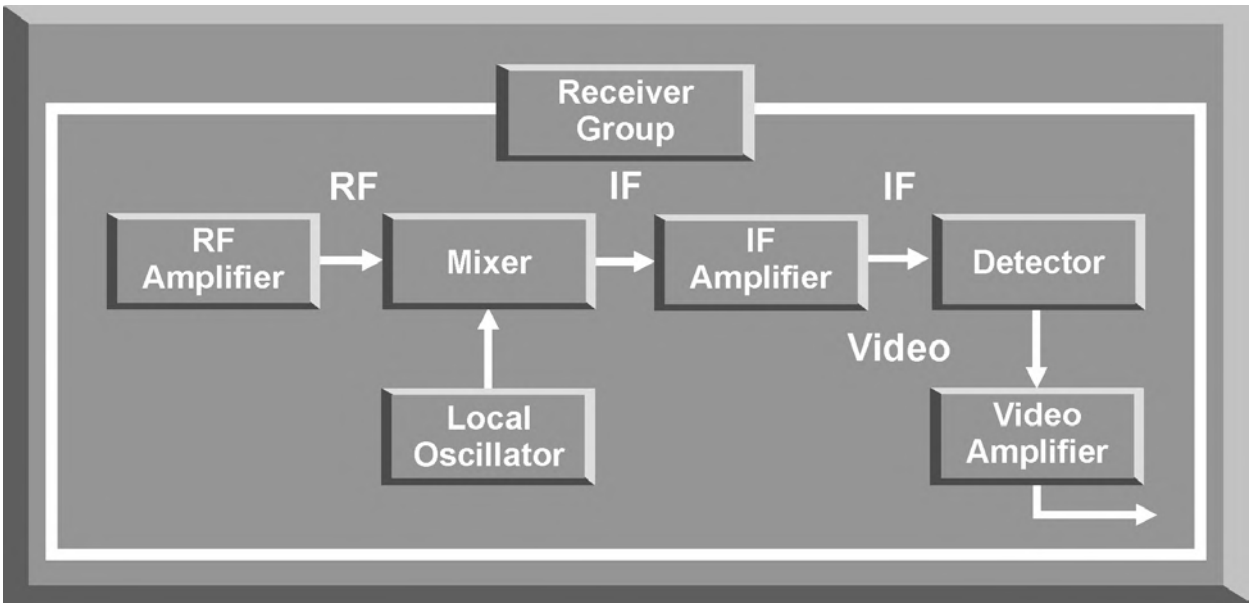

Figure 4-3. Receiver Group

(1) The most common pulse radar receiver is the superheterodyne receiver. A superheterodyne receiver consists of an RF amplifier, a mixer and local intermediate frequency (IF) amplifier, a detector, and a video amplifier.

(2) Radar target returns enter the receiver group via the antenna and duplexer. Since these signals are normally very low power, the RF amplifier boosts the signal gain and filters out as much external noise as possible. The capability of the RF amplifier to minimize noise determines the receiver sensitivity. The boosted RF signal is sent to the mixer where it is converted to a lower IF. This is accomplished by mixing the RF signal with the signal from the local oscillator to produce an IF that is easier to process. The IF amplifier increases the IF signal level and includes a matched filter. The matched filter maximizes the signal-to-noise ratio which enhances detection of the target return. The detector, which is usually a crystal diode, extracts the video modulation from the IF or converts the IF to a video signal.

d. The brain of a basic pulse radar is the master timer, or synchronizer, which coordinates the operation of the various parts of the radar (Figure 4-4). Exact timing within the radar is necessary to get accurate range. The master timer is an oscillator that triggers the transmitter to initiate transmission of a pulse. Simultaneously, the master timer sends a signal to initialize the display to ensure that range and azimuth information is accurately displayed.

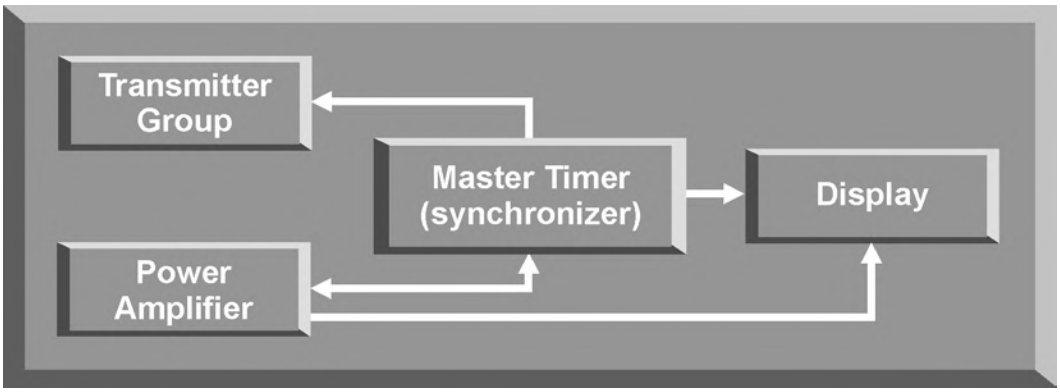

Figure 4-4. Master Timer/Synchronizer

e. The function of the antenna during transmission is to concentrate the radar energy from the transmitter into a shaped beam that points in the desired direction (Figure 4-5). During reception, or listening time, the function of the antenna is to collect the returning radar energy contained in the echo signals, and deliver these signals to the receiver. Radar antennas are characterized by directive beams that are usually scanned in a recognizable pattern.

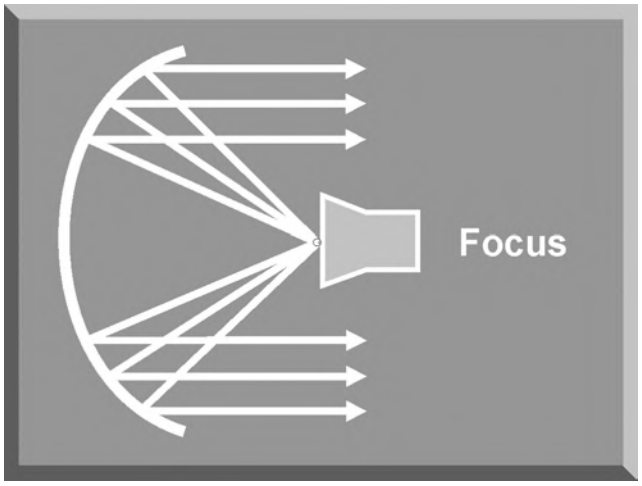

Figure 4-5. Parabolic Antenna

f. The purpose of the radar display is to take the information derived from a radar target in the receiver group and present it to the operator in a usable format. There are many different types of scope displays depending on the purpose of the radar and how the radar information is to be used. There are four basic types of radar displays: the A scope, B scope, range height indicator (RHI) scope, and plan position indicator (PPI) scope.

(1) The A scope is used to display target range or velocity (Figure 4-6). Threat systems using A scope displays include air interceptors (AIs) with range-only radar, surface-to-air missiles (SAMs), and radar-directed antiaircraft artillery (AAA) systems. SAM and AAA systems may use the A scope for range or velocity information, and other radar displays for azimuth and elevation data. The A scope displays range or velocity in relation to amplitude. The operator must distinguish the target return from other returns, including ground return and noise.

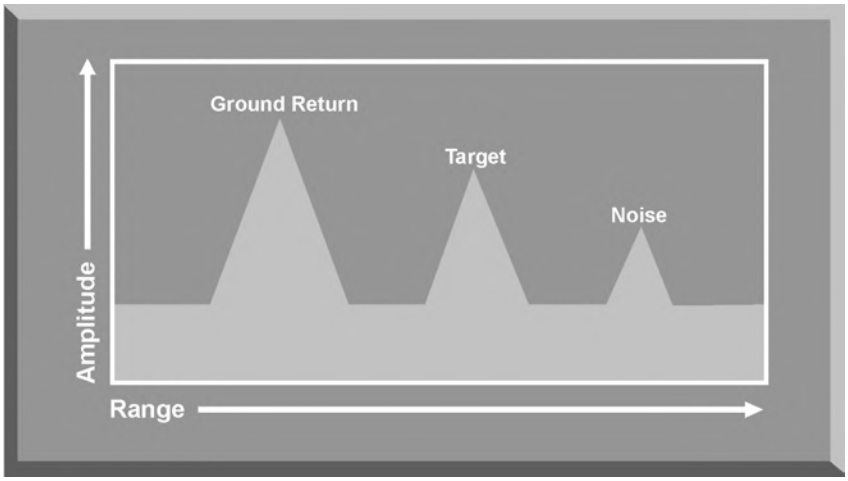

Figure 4-6. A Scope Display

(2) The B scope is used to display target range and azimuth (Figure 4-7). Threat systems using B scope displays include AI and SAM systems. The position of the target return to the right or left of the centerline of the screen shows the azimuth of the target. The position of the target return in relation to the bottom of the display, or zero range, shows target range.

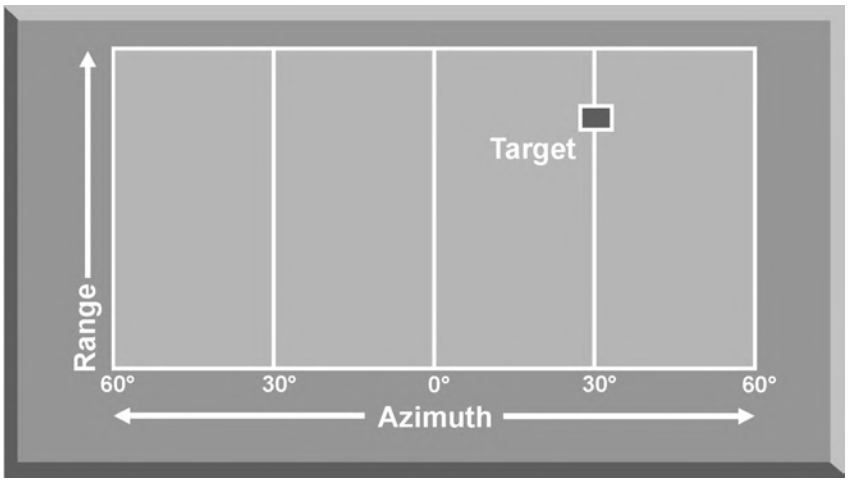

Figure 4-7. B Scope Display

(3) The RHI scope is used to display range and elevation (Figure 4-8). The RHI scope is used with height finder radars, and a modified RHI scope is used for ground-controlled approach (GCA) radars. The sweep trace of the display produces a fan-shaped display with the vertex at the lower left of the scope. The antenna sweeps up and down and is synchronized with the display.

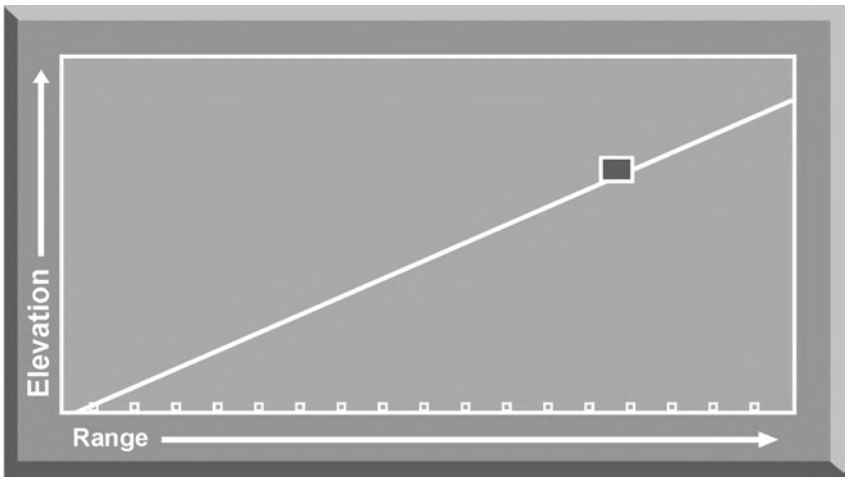

Figure 4-8. RHI Scope Display

(4) The PPI display is probably the best known radar display (Figure 4-9). The display represents a map picture of the area scanned by the radar beam, usually 360 degrees. The PPI display is used by early warning, acquisition, ground-controlled intercept (GCI), and SAM radar systems. The target return's angular position shows target azimuth, while distance from the center of the display shows range.

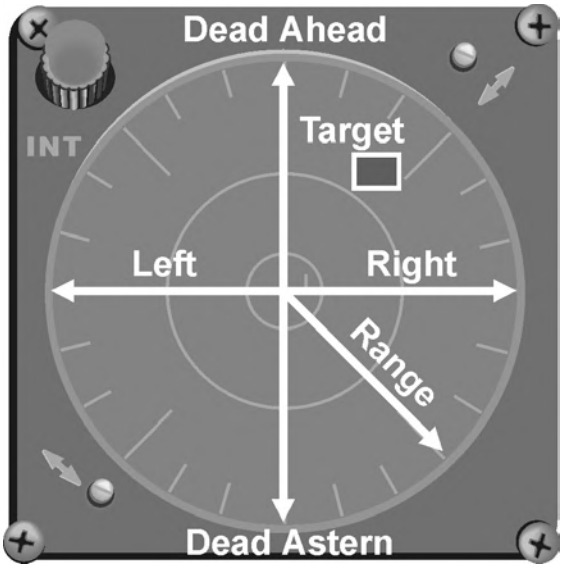

Figure 4-9. PPI Scope Display

3. CONTINUOUS WAVE (CW) RADAR

A continuous radar transmission from the antenna requires that classic CW radars have two antennas, one for transmission and one for reception (Figure 4-10). Since a continuous transmission results in a continuous echo signal, it is impossible to tell what part of the echo is associated with any particular part of the transmission. This makes conventional range determination (based on timing) impossible. However, the simple application of the Doppler principle provides a means for a CW radar to track a target. The Doppler principle deals with the fact that a radar return from a moving target will be shifted in frequency by an amount proportional to its radial velocity relative to the radar site. Using the difference in frequency from the transmitted signal to the received signal, a CW radar can separate the target return from clutter, based on a change in frequency. This type of radar is called a CW Doppler radar.

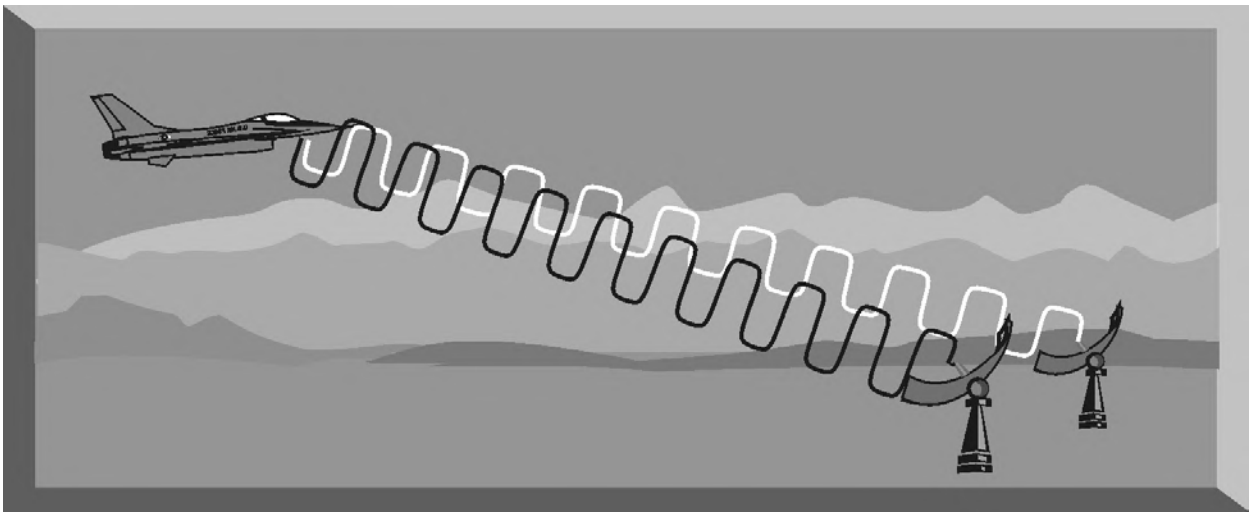

Figure 4-10. Continuous Wave Radar

a. Figure 4-11 depicts a basic CW Doppler radar. In a simple CW Doppler radar, the transmitter transmits a continuous signal at the radar's operating frequency. This signal is reflected by a moving target and travels back to the receiving antenna. The frequency of the reflected signal (f_d) is the frequency change due to the Doppler effect. This target frequency is passed to the detector. The transmitted frequency (f_o) is also fed to the detector as a reference. The detector notes the difference between the transmitted and received frequencies and passes this frequency to the Doppler filters. The Doppler filters only allow Doppler frequencies within a certain range to pass through. A filter is required for each Doppler frequency. The number of Doppler filters determines the number of targets that the radar can resolve in velocity.

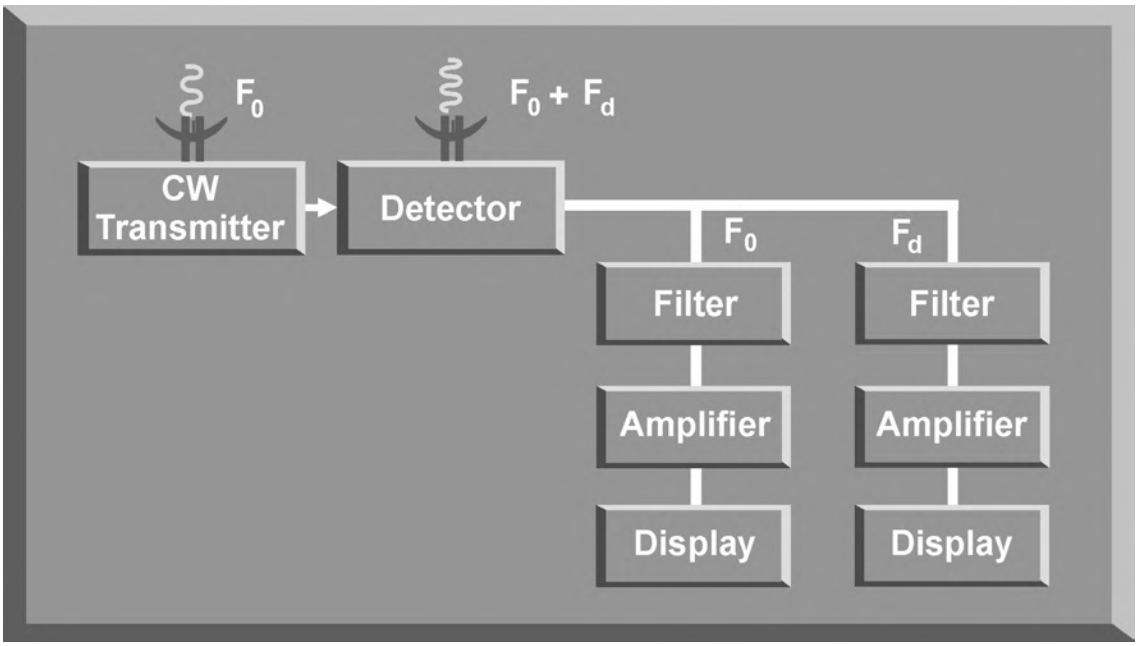

Figure 4-11. Basic CW Doppler Radar

b. The output of each Doppler filter is amplified and passed to its own display. The display is normally an A scope as shown in Figure 4-12.

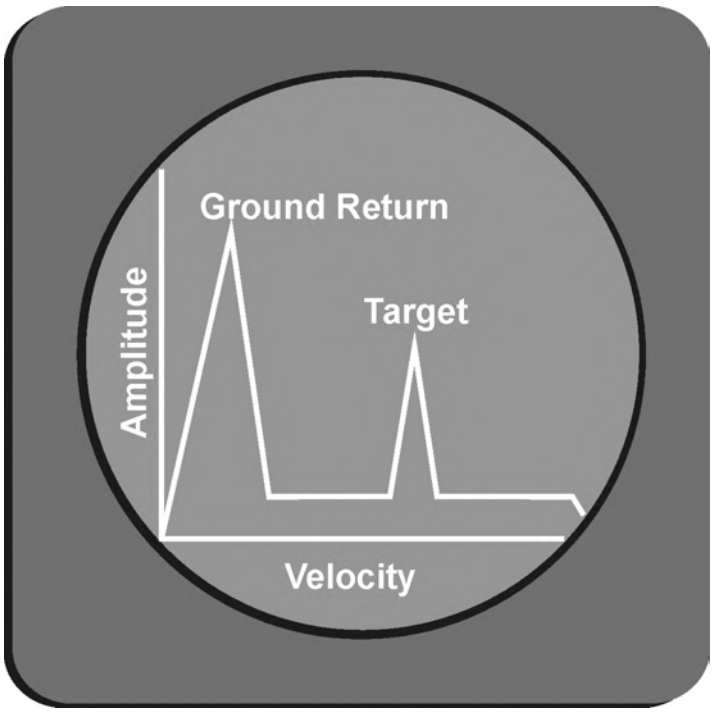

Figure 4-12. CW Doppler Radar Display

4. PULSE DOPPLER RADAR

Pulse Doppler radars combine the advantages of both pulse and Doppler radar systems (Figure 4-13). Because the signal is pulsed, the radar can determine range, azimuth, and elevation, similar to a conventional pulsed radar. A pulse Doppler radar can also compute overtake, or rate of closure, relative to the radar system on a pulse-to-pulse basis. Pulse Doppler radars also use multiple PRFs to eliminate target eclipsing and for range determination in medium PRF. The beauty of a pulse Doppler radar is that it eliminates ground clutter and provides range, azimuth, and velocity resolution.

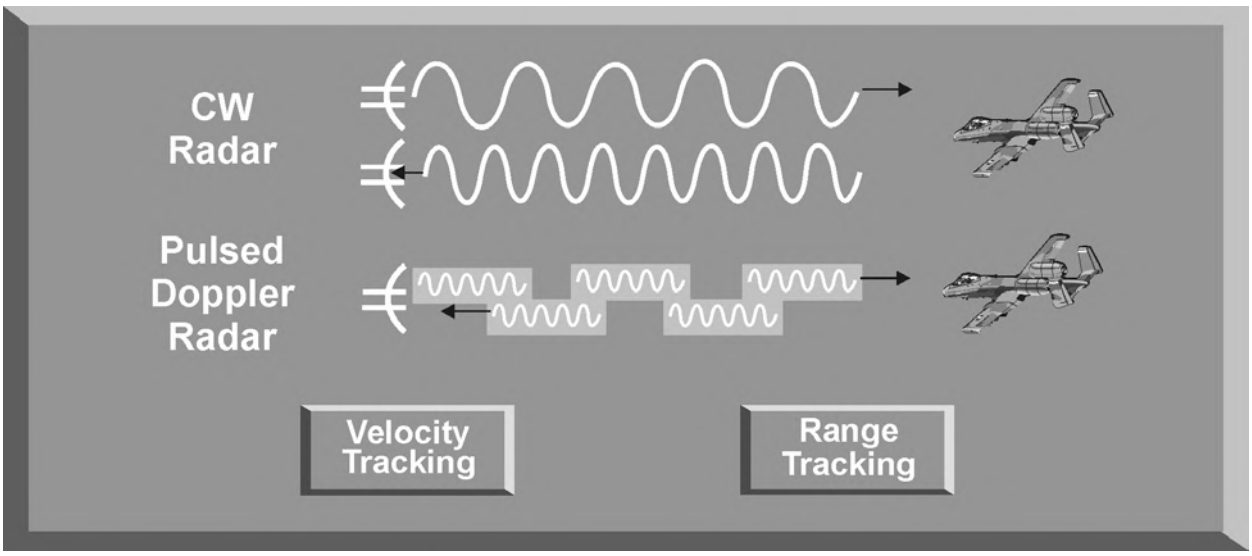

Figure 4-13. CW and Pulse Doppler Radar Comparison

a. A pulse Doppler radar transmits a box, or pulse, of coherent RF energy at the operating frequency of the radar. The frequency inside these boxes reacts the same way as the continuous waves of a CW radar. However, since the RF waves are pulsed, range determination can be accomplished by measuring the time it takes for the reflected pulse to return from the target. Velocity determination and tracking are accomplished by capturing and quantifying the Doppler shift of the frequencies in each box or pulse.

b. The basic block diagram of a coherent pulse Doppler radar (Figure 4-14) is similar to a pulse radar except for the addition of an exciter, a radar computer, and a digital signal processor. The exciter generates a continuous stable low power signal at the desired frequency and phase for the transmitter. It also sends this signal as a reference to the receiver. The digital signal processor performs the adding and subtracting functions required to find, track, and sort targets with respect to velocity and range. The radar computer performs all routine functions of the radar such as changing modes and accounting for aircraft flight parameters.

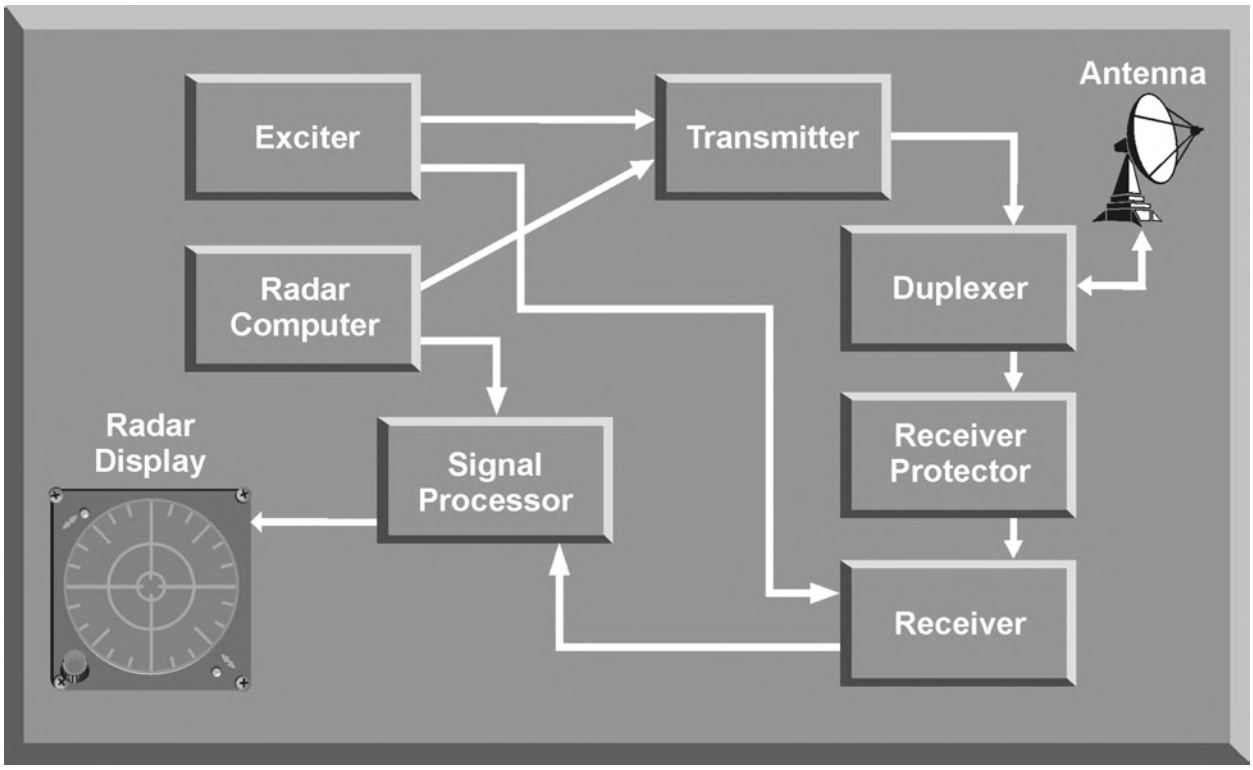

Figure 4-14. Basic Pulse Doppler Radar Diagram

5. MONOPULSE RADAR

The primary functions of monopulse radars include target tracking and weapon guidance. Monopulse radars were developed to overcome the limitations and jamming susceptibility of scanning radar systems. A monopulse radar typically receives returned radar energy in two, three, or four separate receivers, or channels, each looking at a different area. By comparing the returns from each receiver, track errors can be determined. For example, in Figure 4-15, this radar compares the amplitude, or signal strength, in each channel. Obviously, an aircraft in area "A" will produce a stronger return in receiver "A" since that receiver is focused in that direction. Since this type of system uses signal strength to determine position, typical noise jamming will only highlight an aircraft'' position. Other coherent radars can measure phase differences verses the amplitude differences used in the last example. If a signal is directly ahead of the antenna, each quadrant will receive the returned signal at exactly the same time and therefore the same exact phase. However, if a return is off-center, the returned signal will strike part of the antenna slightly ahead of the opposite side and each quadrant will measure a different phase. This phase difference is used to determine azimuth error.

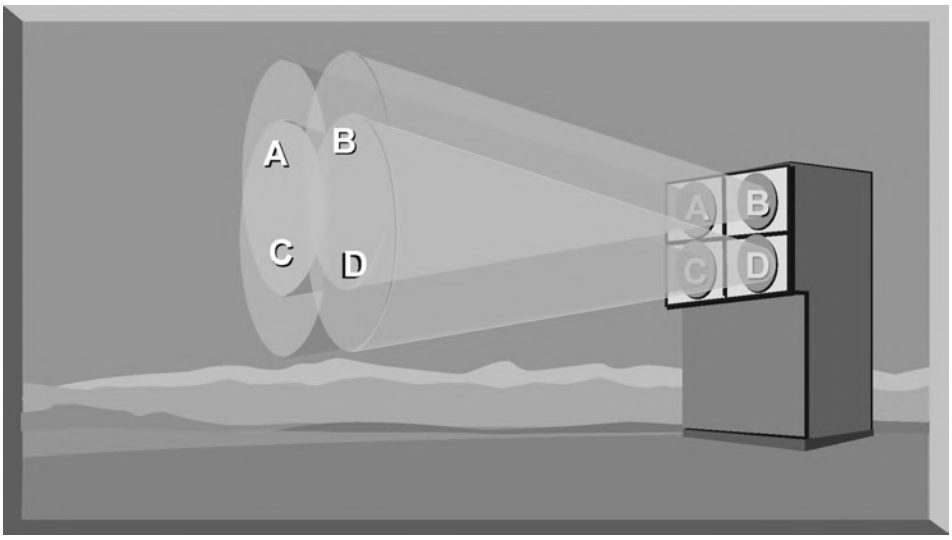

Figure 4-15. Monopulse Radar

a. Monopulse radars operate by comparing the amplitude or the phase of the received signal in each of the transmitted beams. A complex set of comparator circuits, called magic T's, do the addition and subtraction of the received signals based on the orientation of the magnetic field, or H-plane, and the electrostatic field, or E-plane (Figure 4-16). The received signal from antenna A enters the magic T in the H-plane arm while the signal from antenna B enters the magic T in the E-plane arm.

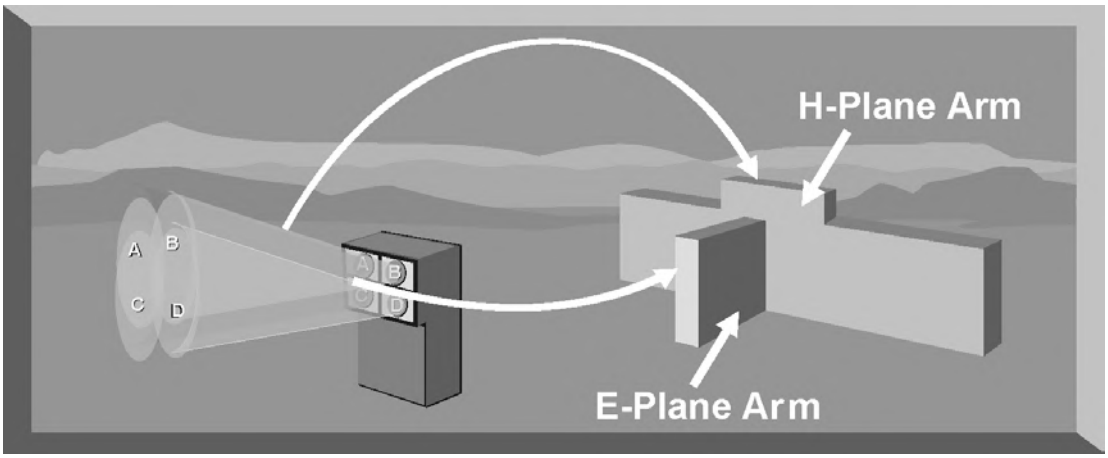

Figure 4-16. Monopulse Magic T's

b. Figure 4-17 depicts the output of a magic T. Output is the sum and difference of the two input signals. These sum and difference values, in amplitude or phase, are used to generate azimuth and elevation error signals and to compute range.

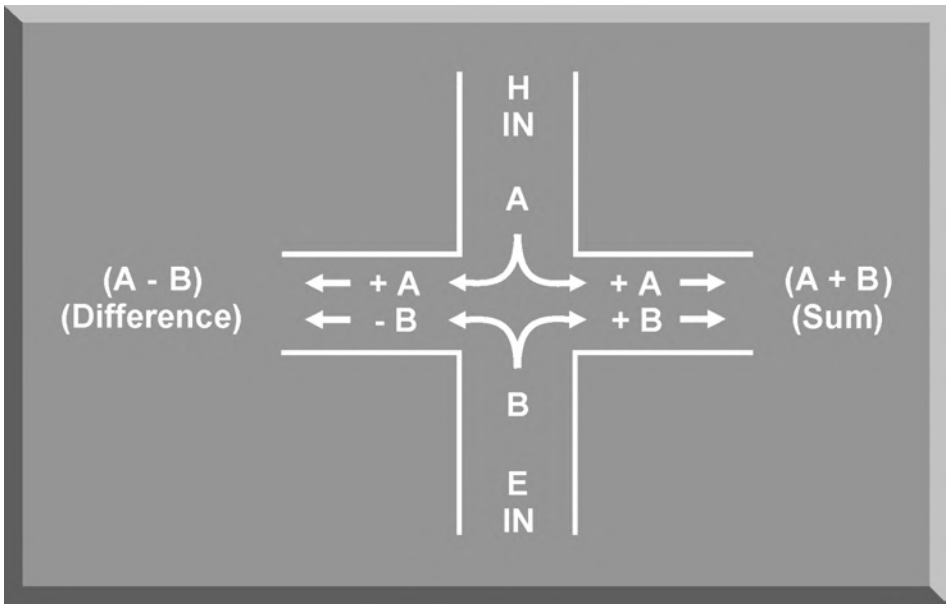

Figure 4-17. Magic T Output Signals

c. These sum and differences computed by the magic T's are sent as signals to the monopulse tracking servos to generate both azimuth and elevation corrections to keep the monopulse antenna centered on the target (Figure 4-18). Target range is computed by calculating the difference of signal transmission time with the reception time of the target echo. Range information is displayed to the operator for range tracking.

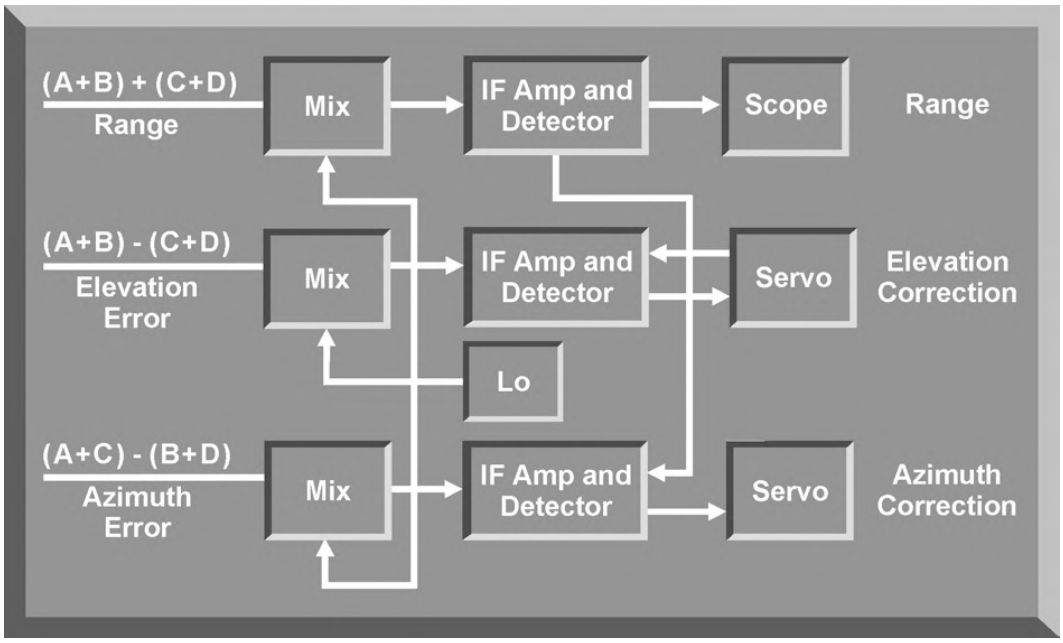

Figure 4-18. Monopulse Radar Track

d. If the signal in antenna A equals the signal in antenna B, equals the signal in antenna C, and equals the signal in antenna D, the target is in the center of the four radar beams (Figure 4-19). This is the condition the monopulse tracker attempts to maintain when tracking a target.

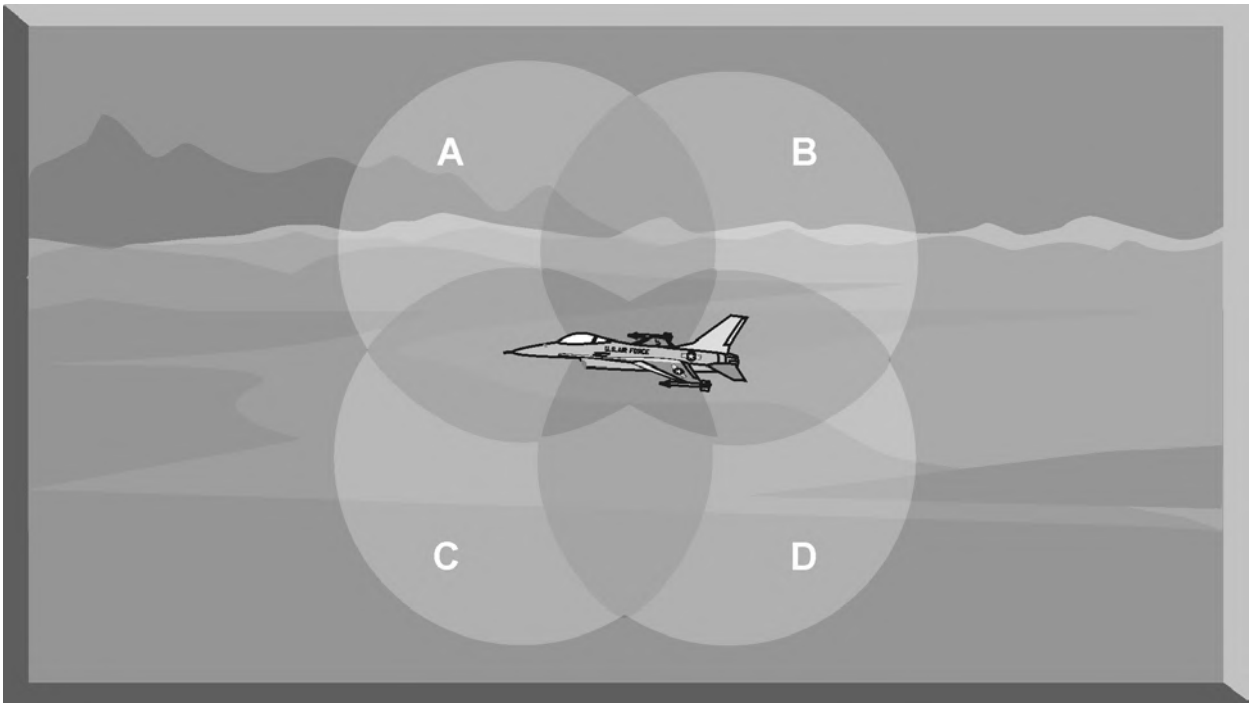

Figure 4-19. Monopulse Radar Track Logic

6. SUMMARY

This chapter has discussed the basic components of a simple pulse radar, a continuous wave radar, a pulse Doppler radar, and a monopulse radar. The characteristics of these components determine the capabilities and limitations of a particular radar system.

CHAPTER 5. RADAR PRINCIPLES

1. INTRODUCTION

The primary purpose of radar systems is to determine the range, azimuth, elevation, or velocity of a target. The ability of a radar system to determine and resolve these important target parameters depends on the characteristics of the transmitted radar signal. This chapter explains the relationship of radar frequency (RF), pulse repetition frequency (PRF), pulse width (PW), and beamwidth to target detection and resolution.

2. RADAR RANGE

A basic pulse radar system consists of four fundamental elements: the transmitter, the receiver, the antenna, and the synchronizer, or master timer.

a. The transmitter, through the antenna, sends out a pulse of RF energy at a designated frequency. The presence of a target is revealed when the RF energy bounces off the target, returns to the radar antenna, and goes into the receiver (Figure 5-1). The master timer measures the time between the transmission of a pulse and the arrival of a target echo.

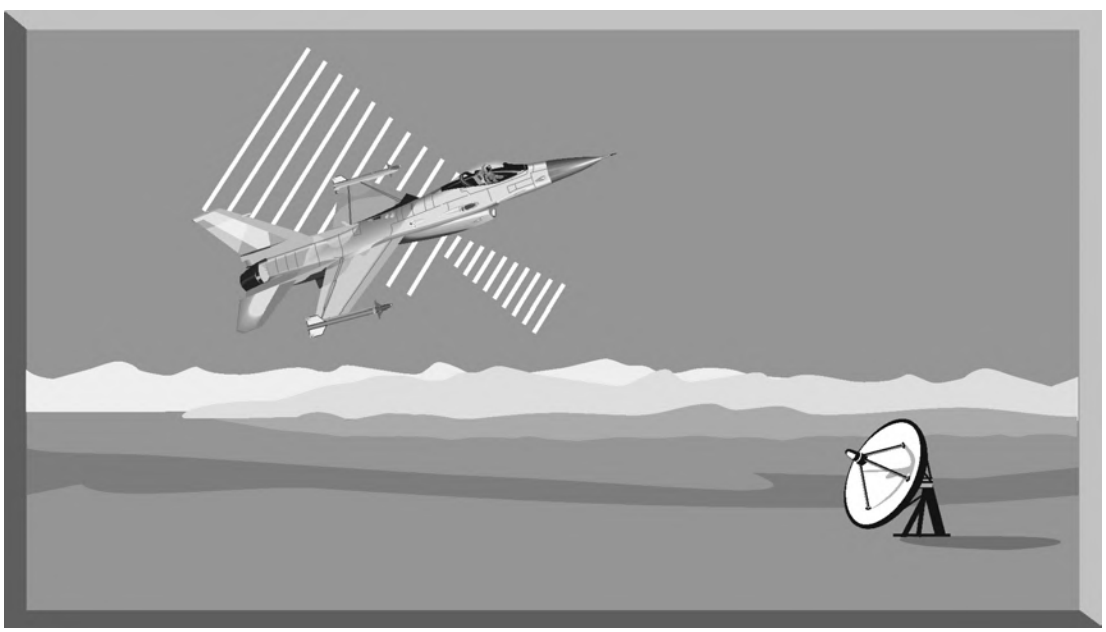

Figure 5-1. Basic Radar Pulse

(1) RF energy travels at the speed of light (c) which is 3 x 10^8 meters per second. Target range can be computed by using the basic radar range determination equation (Equation 5-1).

$$\text{Target Range} = \frac{\text{Measured Time x Speed of Light (c)}}{2}$$

Equation 5-1. Basic Radar Range Determination Equation

(2) Another useful measurement is the radar mile, which is the round trip time for an RF wave to travel to and from a target one nautical mile away (Figure 5-2). Solving the radar range equation for time results in Equation 5-2. Substituting the appropriate values into the equation and solving for time gives measured time of 12.4 microseconds for a one nautical mile (1853 meters) round trip.

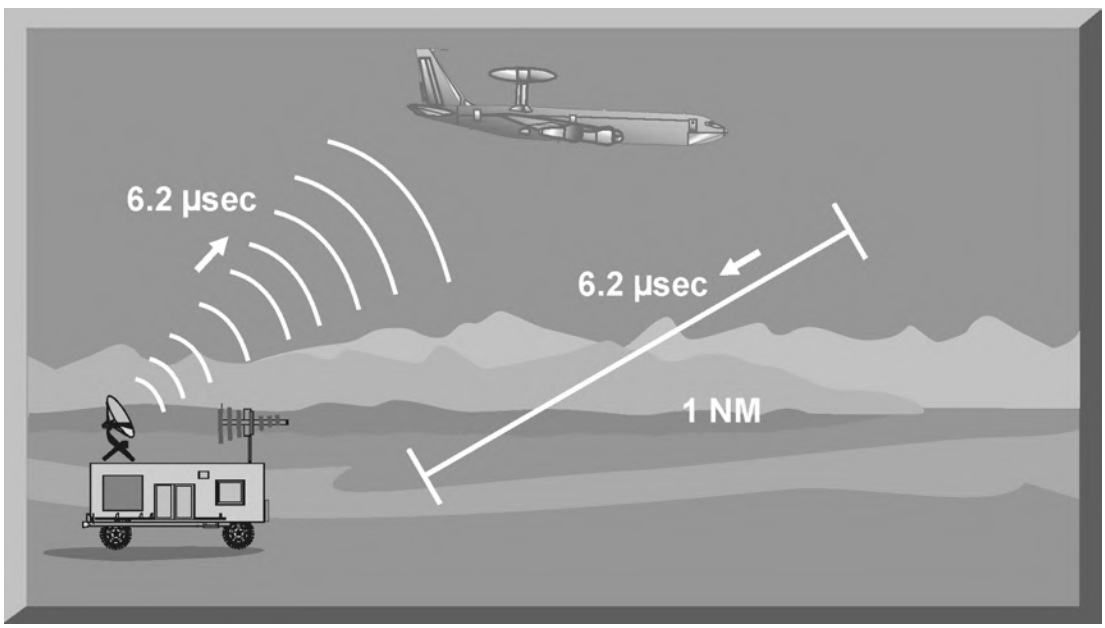

Figure 5-2. Radar Mile

$$\text{Measured Time} = \frac{\text{Target Range x 2}}{\text{Speed of Light (c)}} = \frac{\text{1853 meters x 2}}{3 \times 10^{8}\ \text{meters/second}} = 12.4\,\mu\text{sec}$$

Equation 5-2. Radar Mile

(3) A limitation on radar detection range is the concept of a second time around echo. A second time around echo occurs when a target echo associated with a particular radar pulse arrives at the antenna after another radar pulse has been transmitted. The radar master timer always assumes the target echo is associated with the last pulse transmitted. This makes the target echo ambiguous in range. Figure 5-3 depicts a radar signal with a pulse recurrence time (PRT) of 248 microseconds. Radar pulse A takes 372 microseconds to travel to the target and return. Using the range determination equation, actual target range is 30 nautical miles (nm). However, before the target echo returns to the antenna, radar pulse B is transmitted. The master timer associates the target echo of pulse A with radar pulse B, and calculates a target range of 10 nm. This ambiguous and false range is displayed to the operator.

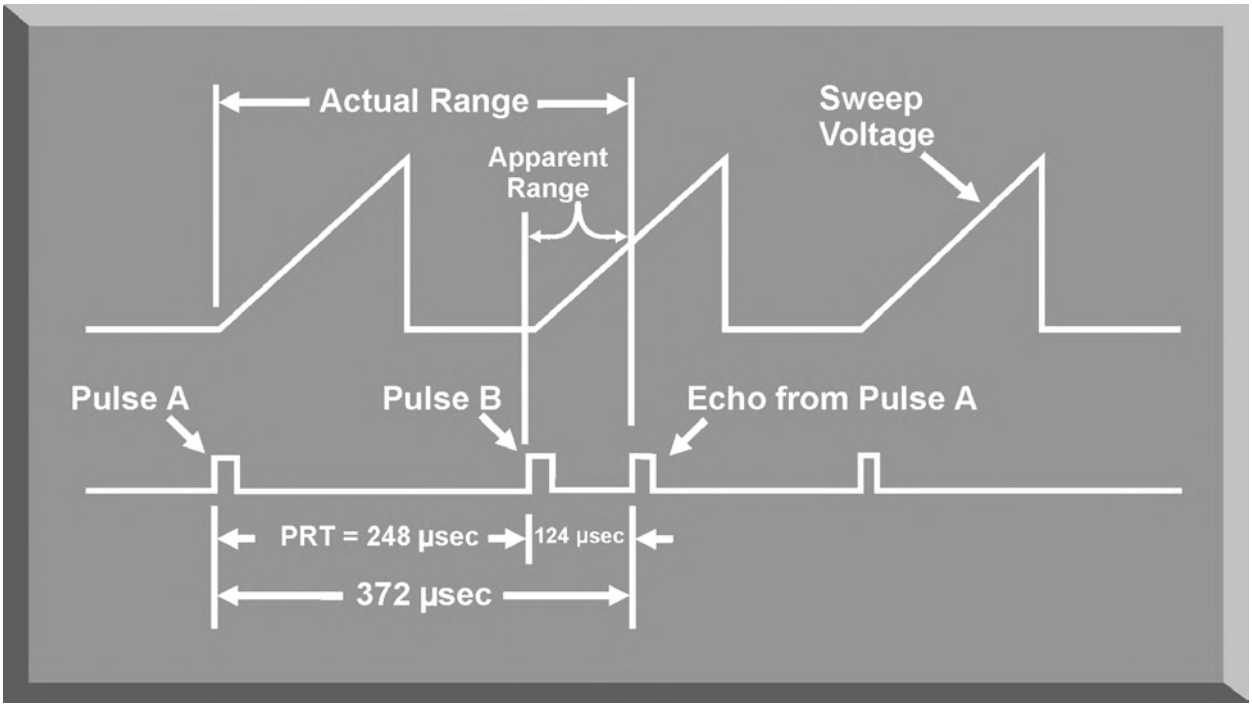

Figure 5-3. Second Time Around Echo

(4) Range ambiguities caused by second time around echoes limit the maximum unambiguous range of a radar system. This important capability can be calculated by using Equation 5-3. An analysis of this equation shows that a radar system designed for long-range detection should transmit a radar signal with a large PRT. In addition, as the PRF of a radar signal increases, the PRT decreases, and the maximum unambiguous range decreases.

$$\text{Maximum Unambiguous Range} = \frac{\text{PRT } (\mu\text{secs})}{12.4\ (\mu\text{secs/nm})}$$

Equation 5-3. Maximum Unambiguous Range

b. A critical aspect of range determination is range resolution. Range resolution is the ability of a radar to separate two targets that are close together in range and are at approximately the same azimuth (Figure 5-4). The range resolution capability is determined by pulse width. Pulse width is the time that the radar is transmitting RF energy. Pulse width is measured in microseconds.

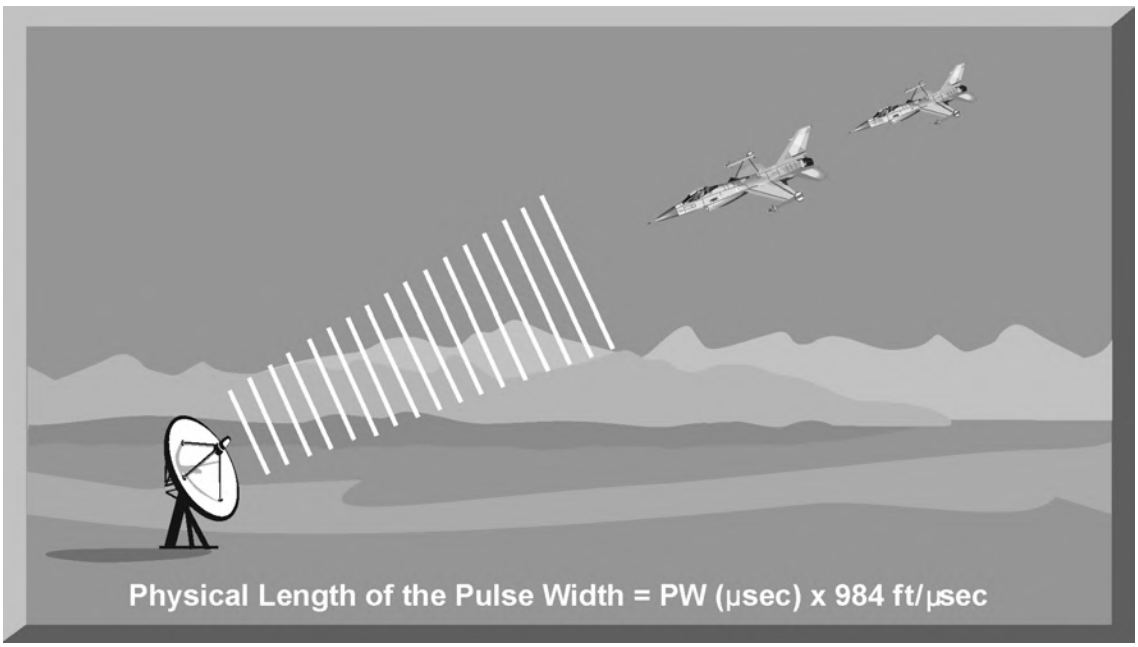

Figure 5-4. Radar Pulse

(1) A radar pulse in free space occupies a physical distance equal to the pulse width multiplied by the speed of light, which is about 984 feet per microsecond. If two targets are closer together than one-half of this physical distance, the radar cannot resolve the returns in range, and only one target will be displayed.

(2) To illustrate range resolution, consider Figure 5-5, in which two aircraft are separated by a distance of one-half the pulse width or less. At T1, the leading edge of the radar pulse hits the lead aircraft.

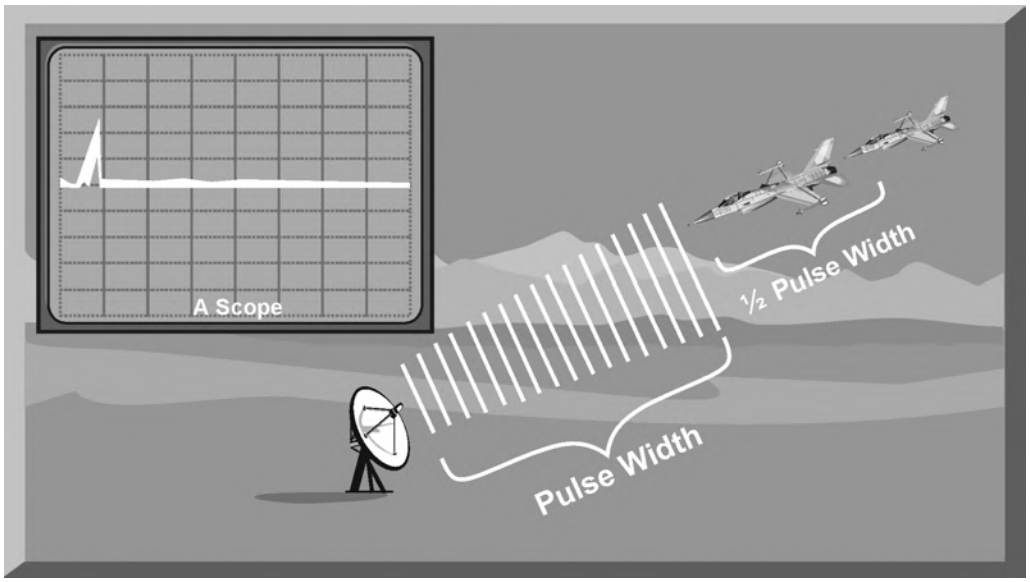

Figure 5-5. Radar Pulse at T1

(3) In Figure 5-6, at T2 the leading edge of this same pulse hits the trailing aircraft. Since the trailing aircraft is less than one-half the pulse width from the lead aircraft, the return echo from the lead aircraft is received by the antenna before the entire pulse has left the trailing aircraft.

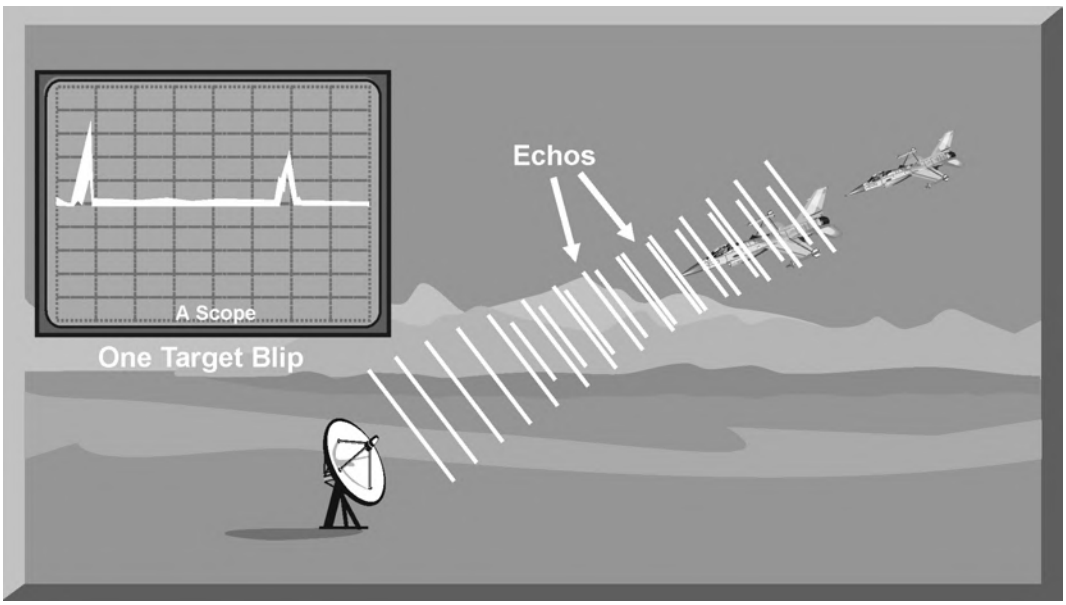

Figure 5-6. Radar Pulse at T2

(4) T3 depicts the merging target echoes at the radar (Figure 5-7). The radar would display only one target in this situation, such as the one shown on the radar scope in Figure 5-6.

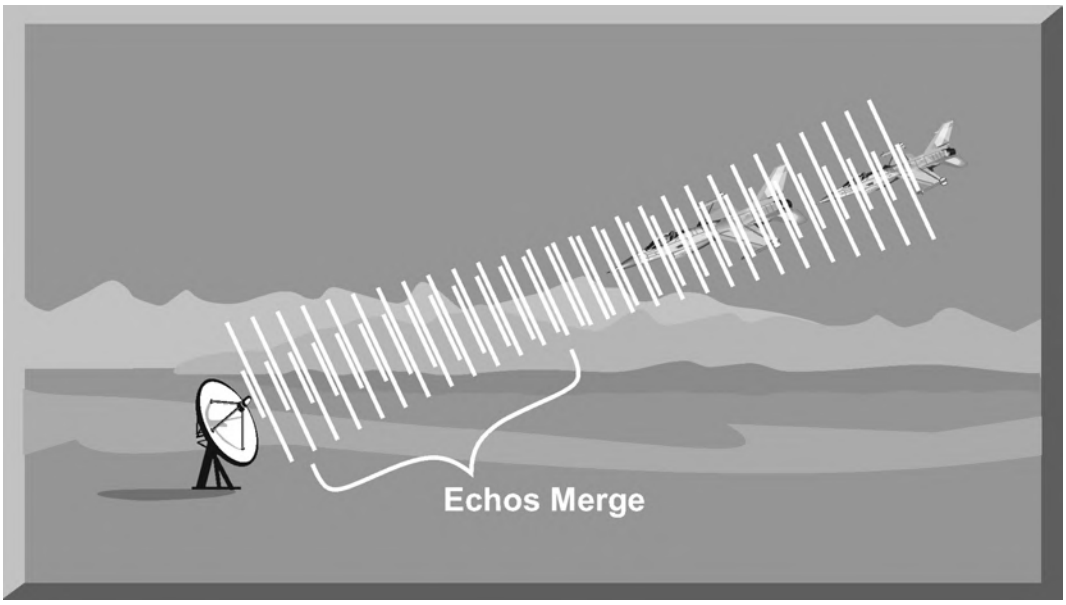

Figure 5-7. Radar Pulse at T3

(5) Two targets separated by more than one-half the pulse width, as in Figure 5-8, will be displayed as two targets. In this case, the transmitted pulse is completely past the lead aircraft before the return echo from the trailing aircraft reaches the antenna.

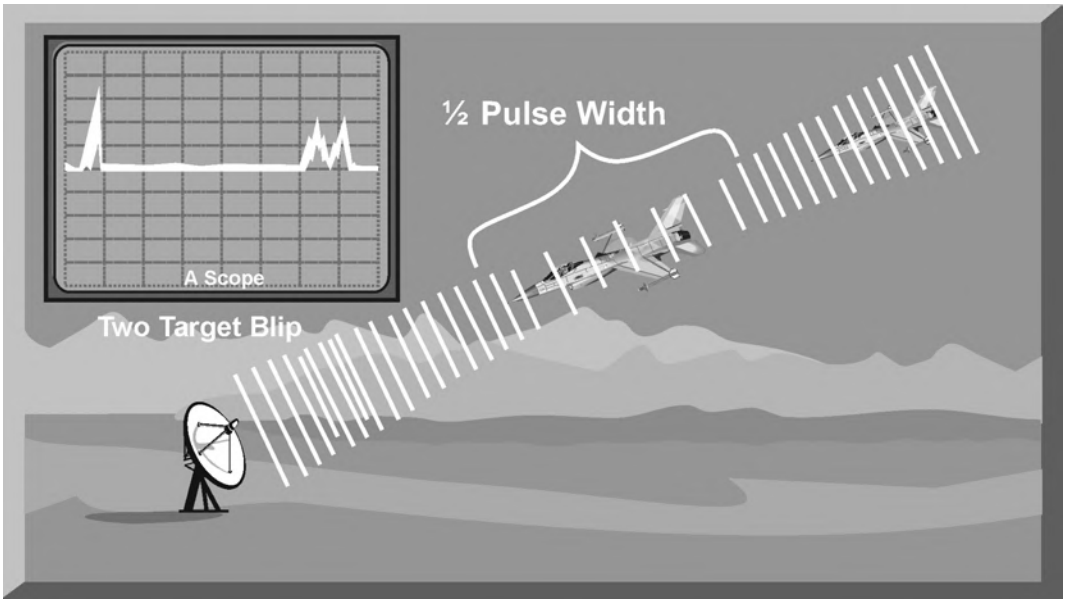

Figure 5-8. Radar Range Resolution

(6) The range resolution of the radar is usually expressed in feet and can be computed using Equation 5-4. It is the minimum separation required between two targets in order for the radar to display them separately on the radar scope.

$$\text{Range Resolution} = \frac{\text{Pulse Width x 984 feet}}{2}$$

Equation 5-4. Range Resolution

3. AZIMUTH DETERMINATION

The beamwidth of a radar system is the horizontal and vertical thickness of the radar beam (Figure 5-9). Beamwidth depends on antenna design and is normally measured in degrees from the center of the beam to the point at which the power drops off by half. This half-power point is -3 dB in power drop-off. Beamwidth governs the azimuth and elevation accuracy and resolution capability of a radar system in the same way that pulse width governs radar range accuracy and resolution.

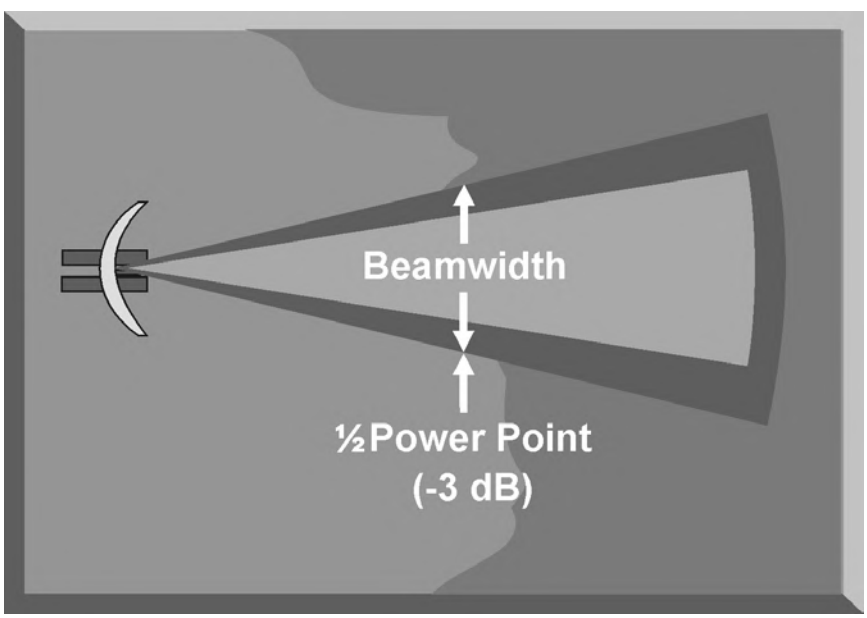

Figure 5-9. Radar Beamwidth

a. In order for a radar system to figure out target azimuth, the antenna must be aligned with a point of reference and pointed at the target during the transmission and reception of several pulses of radar energy. If the antenna is

referenced to true North, the azimuth of the target can be measured relative to true North (Figure 5-10). Azimuth determination is based on the position of the antenna when the target is being illuminated.

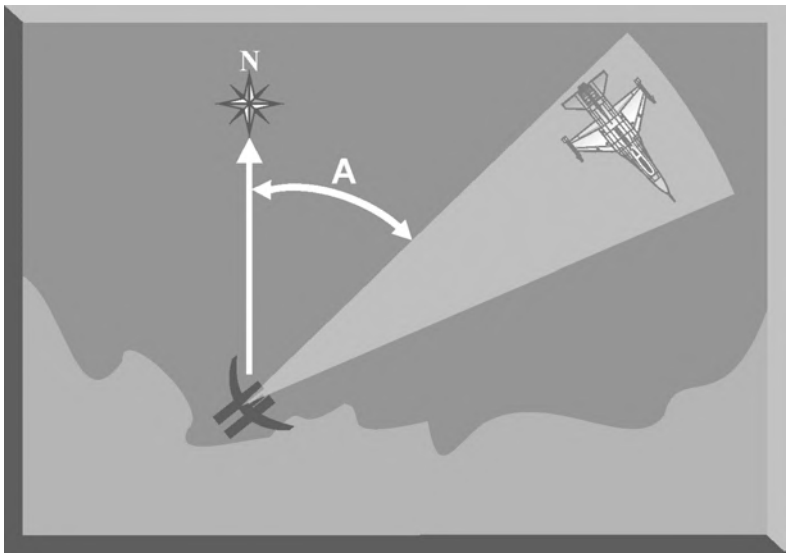

Figure 5-10. Azimuth Determination

(1) To provide accurate azimuth determination over a large area, many radars employ a narrow beam and scan the antenna in a predictable pattern. The most common scan pattern is a 360° circular scan at a constant rate (Figure 5-11). The plan position indicator (PPI) radar scope display is normally associated with this scan pattern. As the radar beam sweeps, a target is detected and displayed. The position of the antenna, when the target is displayed, shows the relative azimuth.

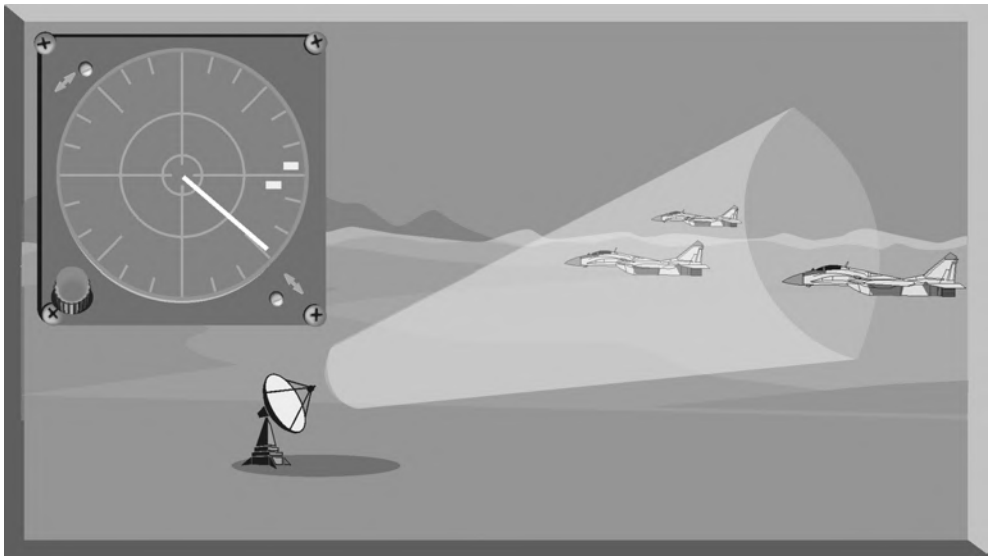

Figure 5-11. Antenna Scan

(2) The azimuth accuracy of a radar system is determined by the horizontal beamwidth (HBW). In Figure 5-12, radar system A has a horizontal beamwidth of 10°. As the beam sweeps, the target is illuminated for as long as it is in the beam. This means that the target covers 10° in azimuth on the PPI scope. Radar system B has a beamwidth of 1°. A target displayed on the PPI scope will cover 1° in azimuth. The narrower the horizontal beamwidth, the better the azimuth accuracy.

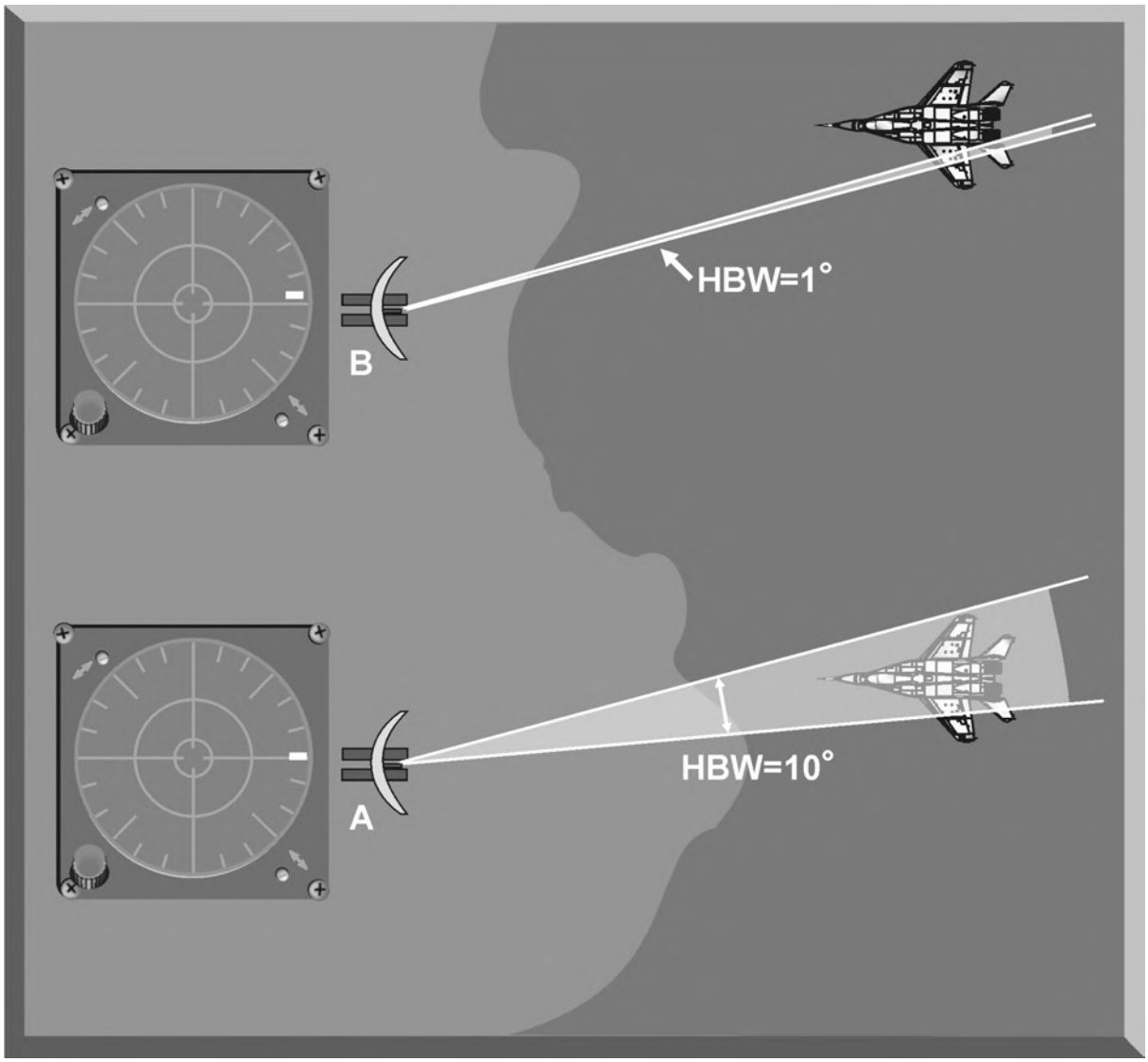

Figure 5-12. Horizontal Beamwidth Comparison

b. Azimuth resolution is the ability of a radar to display two targets flying at approximately the same range with little angular separation, such as two fighters flying line-abreast tactical formation. The azimuth resolution capability is usually expressed in nautical miles and corresponds to the minimum azimuth separation

required between two targets for separate display. Azimuth resolution depends on the horizontal beamwidth of the radar. The radar system in Figure 5-13 has a horizontal beamwidth of 10°. The two targets are so close in azimuth that the return echoes are blended into one return.

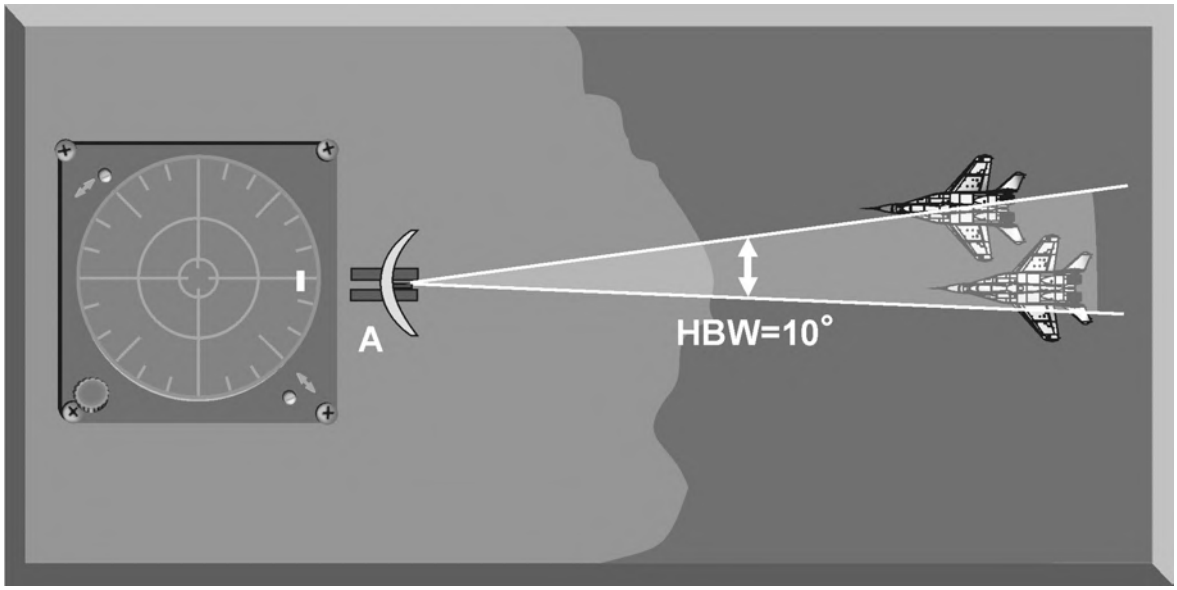

Figure 5-13. Horizontal Beamwidth and Azimuth Resolution

(1) The radar system in Figure 5-14 has a horizontal beamwidth of 1°. The radar beam not only hits the targets, but passes between them without causing a return. This allows the radars to display two distinct radar returns. A small horizontal beamwidth improves azimuth resolution.

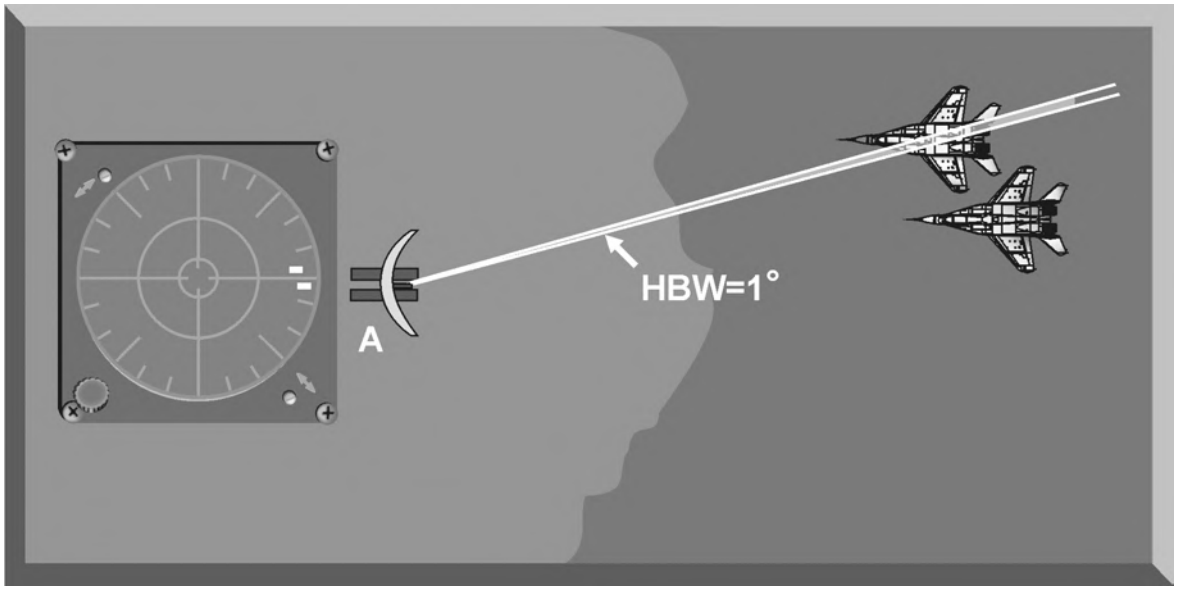

Figure 5-14. Azimuth Resolution

(2) Azimuth resolution, in nautical miles, can be computed using Equation 5-5. Notice that this equation is the "60 to 1 rule" used for navigation. A 1° beamwidth will yield a one-mile-wide cell at 60 nautical miles.

$$\text{Azimuth Resolution} = \frac{\text{Horizontal Beamwidth x Range}}{60}$$

Equation 5-5. Azimuth Resolution

4. ELEVATION DETERMINATION

Since a radar beam is three-dimensional, the vertical beamwidth is the primary factor in determining altitude resolution capability. Altitude resolution is the ability of a radar to display two targets flying at approximately the same range and azimuth with little altitude separation, such as two fighters flying a vertical stack formation. The altitude resolution capability is usually expressed in feet and corresponds to the minimum altitude separation required between two targets for separate display. The radar system in Figure 5-15 has a vertical beamwidth of 10°. The two targets are so close in altitude that the return echoes depicted on the range height indicator (RHI) are blended into one.

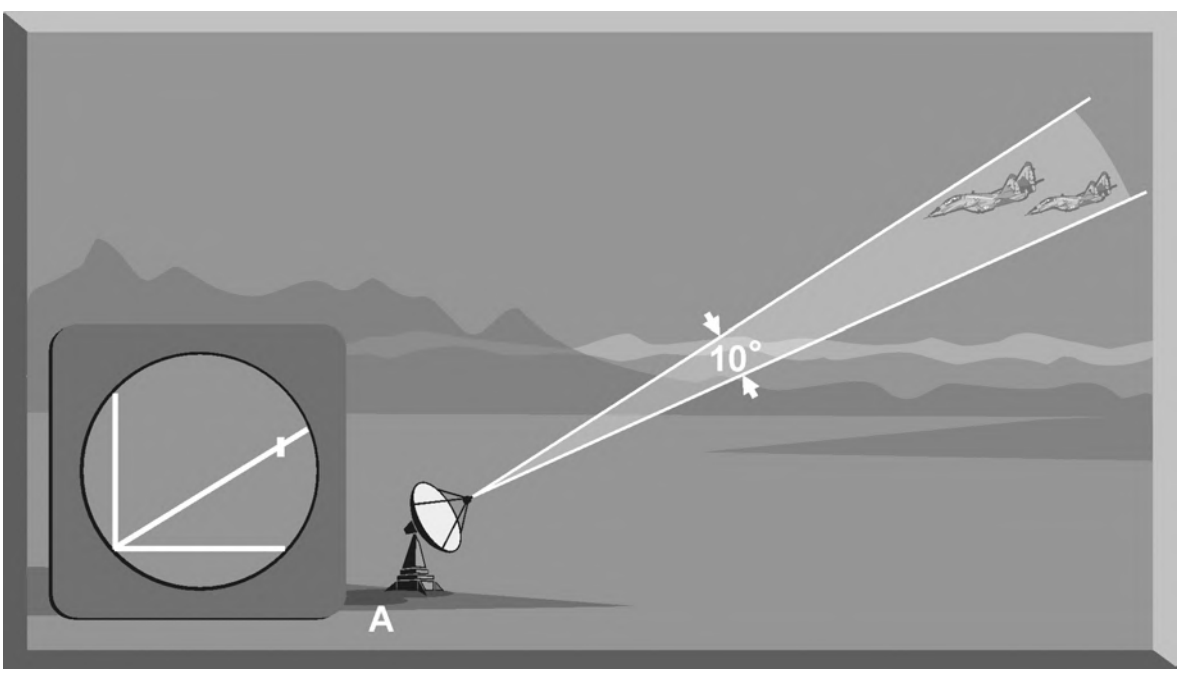

Figure 5-15. Vertical Beamwidth and Elevation Resolution

a. The radar system depicted in Figure 5-16 has a vertical beamwidth of 1°. This small beam not only hits the targets, but passes between them without causing a return. This allows the radar to display two distinct targets.

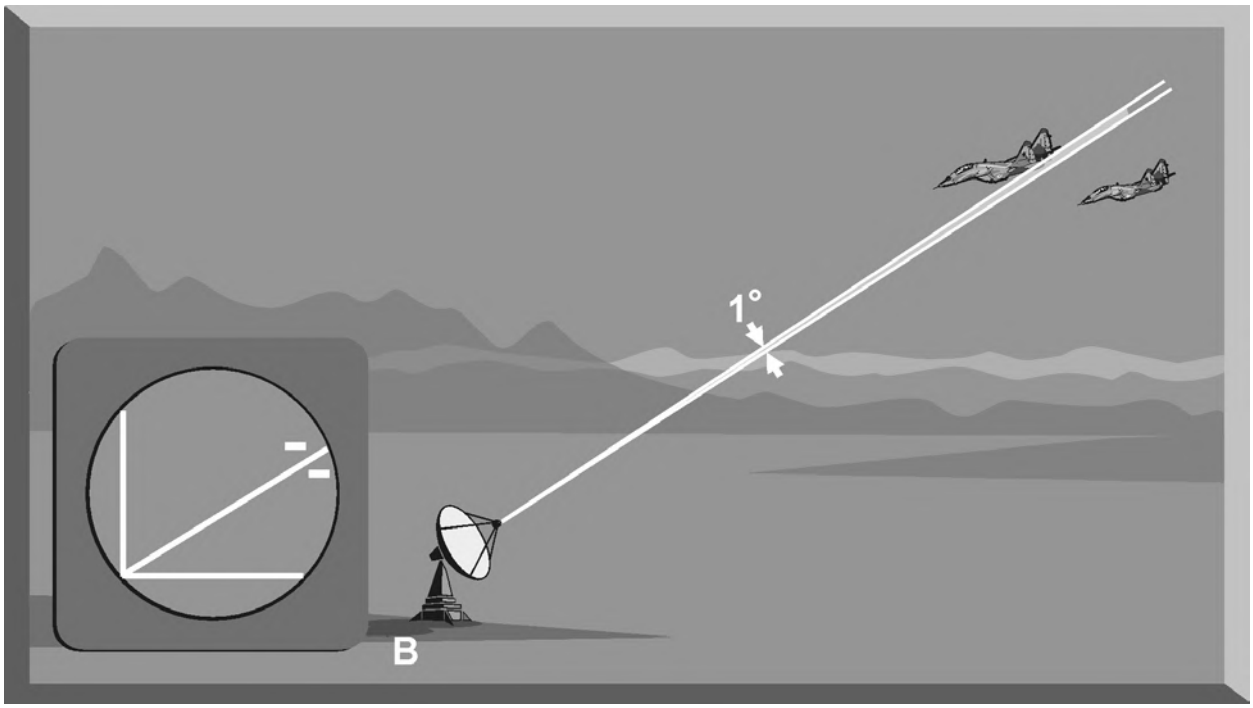

Figure 5-16. Elevation Resolution

b. Altitude/elevation resolution, in thousands of feet, can be computed using Equation 5-6.

$$\text{Altitude Resolution} = \frac{\text{Vertical Beamwidth x Range}}{60}$$

Equation 5-6. Altitude Resolution

5. RADAR RESOLUTION CELL

A radar's pulse width, horizontal beamwidth, and vertical beamwidth form a three-dimensional resolution cell (RC) (Figure 5-17). A resolution cell is the smallest volume of airspace in which a radar cannot determine the presence of more than one target. The resolution cell of a radar is a measure of how well the radar can resolve targets in range, azimuth, and altitude. The horizontal and vertical

dimensions of a resolution cell vary with range. The closer to the radar, the smaller the resolution cell.

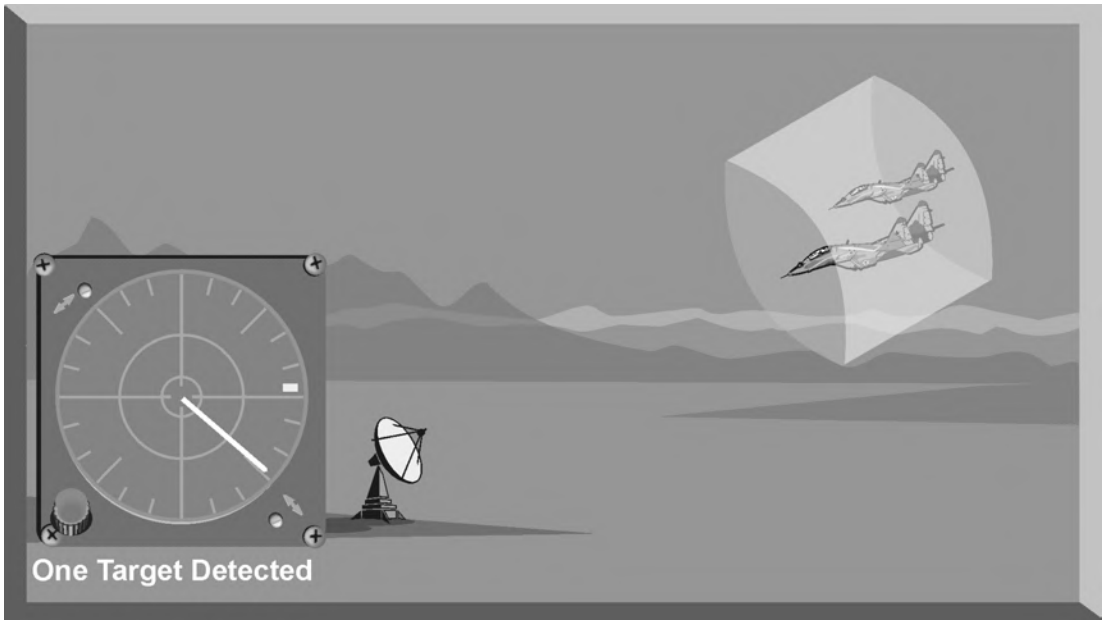

Figure 5-17. Radar Resolution Cell

a. The physical dimensions of a radar's resolution cell can be computed. For a radar with a pulse width of 1 microsecond, a horizontal beamwidth of 1°, and a vertical beamwidth of 10°, the formulas for range resolution, azimuth resolution, and altitude resolution can be used to compute the dimensions of the resolution cell. In the example in Figure 5-18, at a target range of 10 nm, the physical dimensions of the radar's resolution cell are 492 feet in range, by 1000 feet in azimuth, and 10,000 feet in altitude. These figures can be confirmed by using Equations 5-4, 5-5, and 5-6.

$$A = \text{Pulse Width} \times \frac{\text{Speed of Light}}{2}$$

$$A = 1 \text{ Microsecond} \times \frac{984 \text{ feet per microsecond}}{2}$$

$$A = 492 \text{ feet}$$

Figure 5-18. Radar Resolution Cell Dimensions

b. Based on these computations, two, or more, aircraft flying a trail formation closer than 492 feet would be displayed as a single target. Two, or more, aircraft flying line abreast closer than 1000 feet would be displayed as a single target. Two, or more, aircraft flying a vertical stack closer than 10,000 feet would be displayed as a single target. This also shows that the shorter the pulse width, the better the range resolution capability of a radar system. The narrower the horizontal beamwidth, the better the azimuth resolution capability. The narrower the vertical beamwidth, the better the altitude resolution capability.

c. Another type of resolution is velocity resolution. For a Doppler radar aircraft flying within the conventional resolution cell described above can be distinguished as separate targets if they have enough speed differential. Paragraph 6 below will describe how this is carried out.

6. PULSE DOPPLER VELOCITY DETERMINATION

To fully understand how a pulse Doppler radar determines target velocity, it is necessary to know more about the pulsed waveform. To generate a pulse modulated wave, a continuous carrier sine wave, like the output from a CW radar, is combined with a rectangular wave, like that of a pulse radar, to produce the pulse modulated waveform. Figure 5-19 depicts pulse modulation.

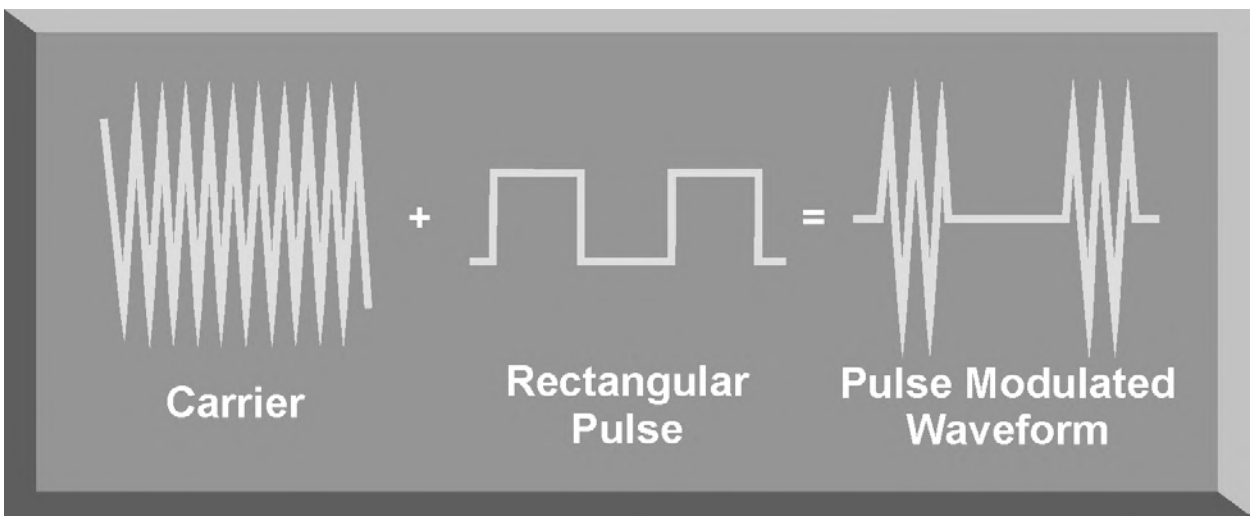

Figure 5-19. Pulse Modulation

a. Mathematically, any waveform other than a sine wave is composed of many different pure sine waves added in the proper amplitude and phase relationships (Figure 5-20). In a pulsed modulated waveform, the sine waves correspond to the fundamental frequency, which is the PRF, and the sum of all harmonics in the proper amplitude and phase. The frequency of the harmonic is the basic frequency plus or minus a multiple of the PRF.

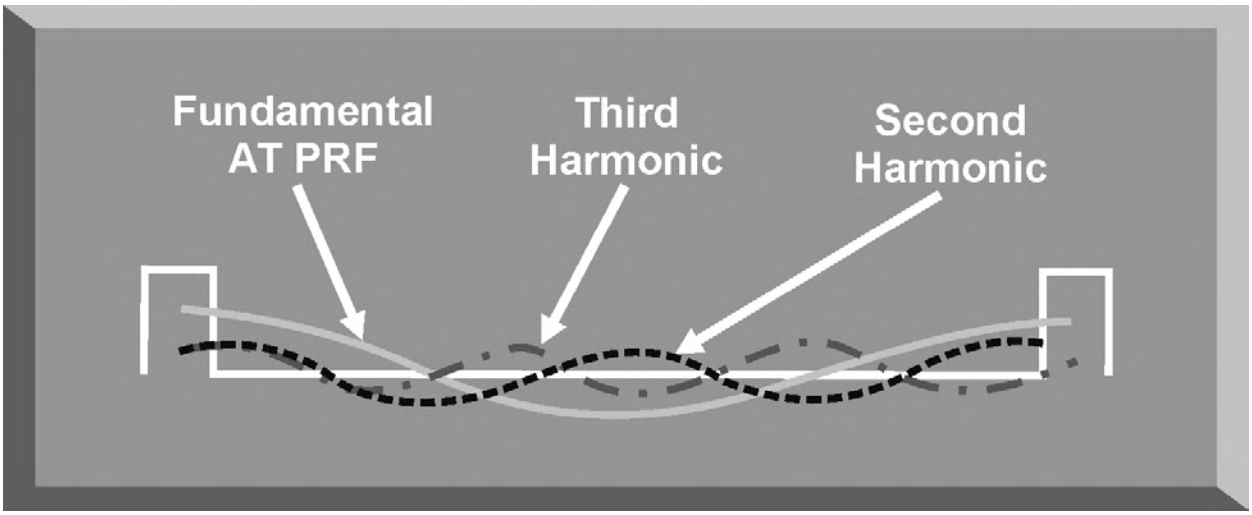

Figure 5-20. Harmonics of a Pulse Modulated Waveform

(1) Figure 5-21 is a plot of the harmonic content of a pulse modulated waveform operating at a carrier frequency of 2800 megahertz (MHz) with a PRF of 1 MHz. Note the loops of frequencies on either side of the carrier frequency. These are the additions and subtractions of all the frequencies in the rectangular pulse to the carrier frequency. The important thing to remember is that there are many frequencies present, and a pulse Doppler radar must deal with a crowded frequency spectrum. This becomes even more important when one considers the fact that every frequency present will experience a Doppler shift when it is reflected by a moving target. The individual frequencies shown are called spectral lines.

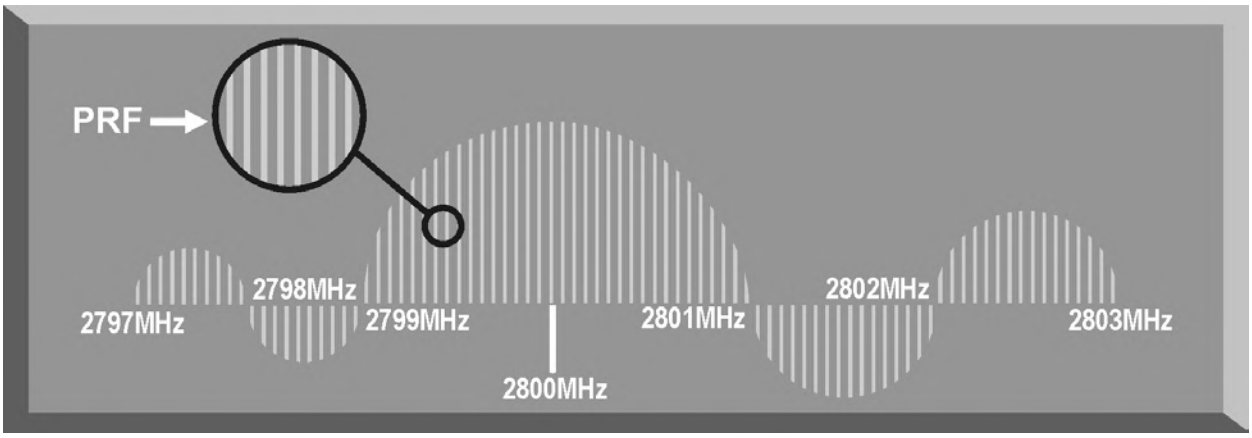

Figure 5-21. Harmonic Content

(2) For a pulse Doppler radar to accurately measure velocity, it must compare the frequency change, or Doppler shift, between the carrier frequency

and the frequency returning from the target. It is a difficult task for the radar to differentiate between the returning carrier and all the harmonic frequencies (Figure 5-22).

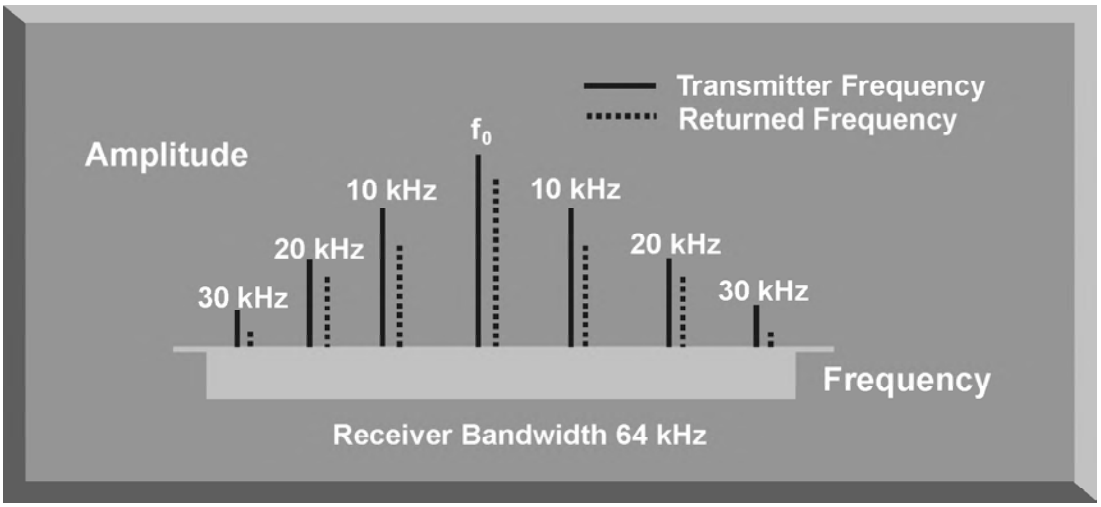

Figure 5-22. Spectral Line Frequencies

b. The radar differentiates between the returning carrier frequencies and all other harmonic frequencies by using clutter cancellers, or filters, at the known harmonic frequencies (Figure 5-23). The radar cannot process frequencies cancelled by these filters. The filters create "blind speeds" for the radar. The closer together the spectral lines, the more "blind speeds" the radar will have.

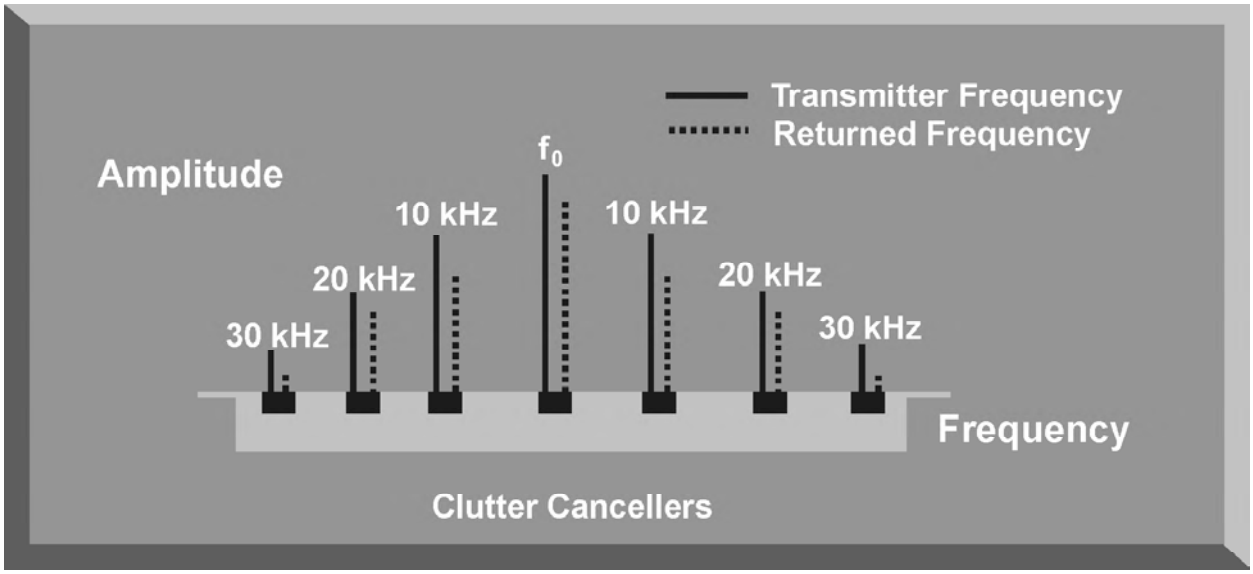

Figure 5-23. Selective Clutter Canceling

(1) Since the position of the harmonics in relation to the carrier frequency is based on PRF, the number of blind speeds can be reduced by changing the PRF of the radar. The higher the PRF, the wider the spacing of the spectral lines and the fewer blind speeds due to selective clutter canceling. However, a high PRF increases the problem of range ambiguities. Most modern pulse Doppler radars employ a medium and high PRF mode. Medium PRF equates to fewer range ambiguities but more blind speeds. High PRF has fewer blind speeds but more range ambiguities (Figure 5-24).

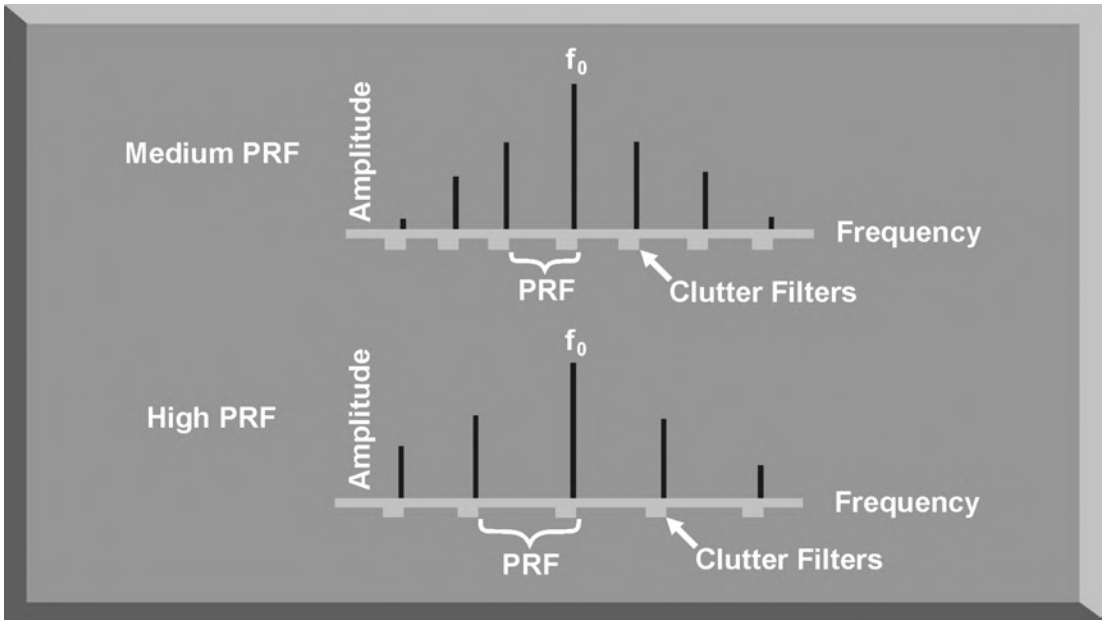

Figure 5-24. PRF and Spectral Lines

(2) To separate the returning target frequency shifts from all other frequencies in the returning waveform, the pulse Doppler radar employs filters to cancel the known harmonic frequency shifts. In addition, the radar cancels out all returns with no frequency shift, which equates to canceling all returns with no movement relative to the radar. However, if the radar has too many clutter filters, this creates multiple blind speeds, and targets will be missed. In Figure 5-25, the detection filters allow target frequencies to be processed, and clutter filters cancel unwanted frequency shifts. Target 1 will be detected, but Target 2 will be canceled.

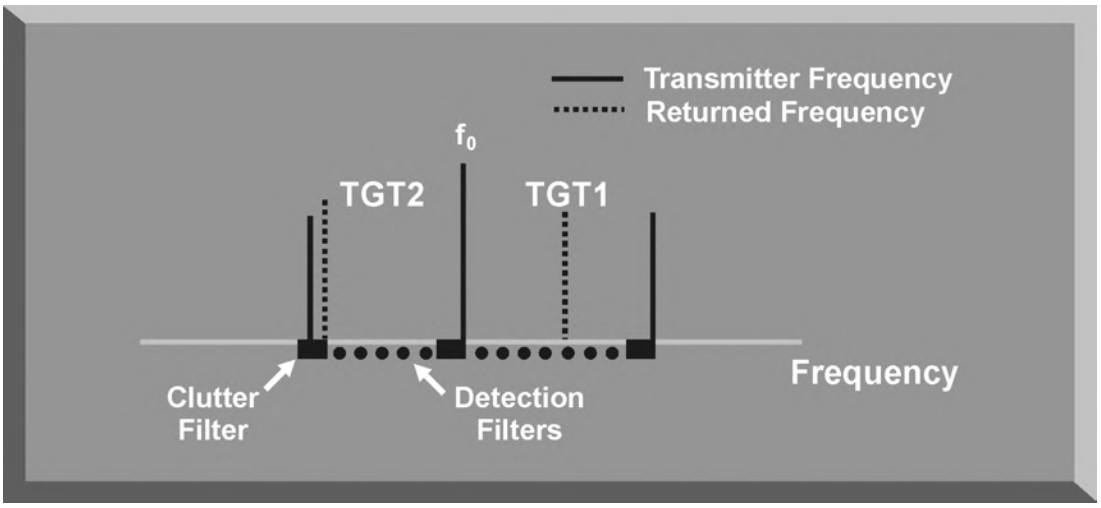

Figure 5-25. Pulse Doppler Filters

7. BASIC RADAR EQUATION

The basic radar equation relates the range of a radar system to the characteristics of the transmitter, receiver, antenna, and the target. The radar equation provides a means not only to figure out the maximum range of a particular radar system, but it can be used to understand the factors that affect radar operation. In this section, the simple forms of the radar equation are developed, starting with the power density of the transmitting antenna to the power received by the receiving antenna.

a. Power density is the power of a radio wave per unit of area normal to the direction of propagation. The power density generated by a practical antenna can be expressed in Equation 5-7.

$$\text{Power Density from Antenna} = \frac{P_T \times G}{4\pi r^2}$$

P_T = transmitted power
G = antenna gain
r = radius of the antenna

Equation 5-7. Power Density From an Antenna

b. As the radar beam propagates through space, it arrives at a target at some range (R) from the antenna. As the radar beam travels through space, the wavefront of the beam expands to a very large cross-sectional area, especially in relation to the target dimensions. The power density of the radar beam, across this wide area, at the target, is detailed in Equation 5-8.

$$\text{Power Density at Target} = \frac{P_T \times G}{4\pi R^2}$$

P_T = transmitted power
G = antenna gain
R = range to the target

Equation 5-8. Power Density at the Target

c. Since the cross-sectional area of the radar beam is so large, only a small portion of the total power in the beam can be reflected toward the antenna. The rest of the radar energy continues through space and is dissipated, absorbed, or reflected by other targets. The small portion of the radar beam that hits the target is reradiated in various directions. The measure of the amount of incident power intercepted by the target and reradiated back in the direction of the antenna depends on the radar cross section (RCS) of the target. Equation 5-9 details the power density of the target echo signal reflected back to the radar antenna.

$$\text{Power Density at Antenna} = \frac{P_T \times G}{4\pi R^2} \times \frac{\sigma}{4\pi R^2}$$

P_T = transmitted power
G = antenna gain
σ = RCS
R = range to the target

Equation 5-9. Power Density at the Antenna

d. As the target echo reaches the antenna, part of the echo is captured by the antenna based on the effective aperture (A_e). Equation 5-10 details the actual signal power received by the radar system. This is one form of the basic radar equation and is the signal strength of a radar return from a specific target at range (R) from the radar.

$$\text{Signal Power Density (S)} = \frac{P_T G \sigma A_e}{(4\pi)^2 R^4}$$

P_T = transmitted power

G = antenna gain

σ = RCS

R = range to the target

A_e = antenna aperture area

Equation 5-10. Signal Power Density

e. A detailed analysis of this equation is not required to draw some basic conclusions about the factors affecting the detection of an aircraft. If any factor in the numerator, such as transmitted power, is increased by a factor of three, the signal received by the radar will increase by only 30 percent. This clearly shows why radar system operation is characterized by the transmission of megawatts of power and the reception of microwatts of returning power. In addition, this equation shows that the most critical factor in determining radar detection is target range.

f. The maximum radar range (R_{MAX}) occurs when the signal power density received just equals the minimum detectable signal (S_{MIN}) for the receiver. Solving Equation 5-11 for range, and substituting S_{MIN}, yields the basic radar equation for R_{MAX} for a specific target. This is another form of the basic radar equation.

$$R_{MAX} = \frac{\left[P_T G \sigma A_e\right]^{1/4}}{\left[(4\pi)^2 S_{MIN}\right]}$$

P_T = transmitted power

G = antenna gain

σ = RCS

A_e = antenna aperture area

R = range to the target

Equation 5-11. Basic Radar Equation

g. It is important to note that the basic radar equations do not consider such factors as meteorological conditions, changes in aircraft RCS, the impact of clutter on gain, or operator abilities. The radar equation does explain why a radar system designed for long-range detection should transmit a very high power signal, concentrated into a narrow beam, collected by a large antenna, and processed by a very sensitive receiver.

8. SUMMARY

This chapter has discussed the methods employed by radar systems to determine target range, azimuth, elevation, and velocity. The relationship between pulse width and range resolution, beamwidth and azimuth/elevation resolution, and PRF and velocity resolution have been explained. In addition, an explanation of the complex radar equation has been presented. The capabilities and limitations of a specific radar system to determine these critical target parameters is the key to understanding the countermeasures designed to defeat this system.

CHAPTER 6. ANTENNA CHARACTERISTICS AND SCANS

1. INTRODUCTION

The function of the antenna during transmission is to concentrate the radar energy from the transmitter into a shaped beam that points in the desired direction. During reception, or listening time, the function of the antenna is to collect the returning radar energy, contained in the echo signals, and deliver these signals to the receiver. Radar antennas are characterized by directive beams that are usually scanned in a recognizable pattern. The primary antenna types in use today fall into three categories: parabolic, Cassegrain, or phased array antennas. Additionally, the method radar antennas employ to sample the environment is a critical design feature of the radar system. The scan type selected for a particular radar system often decides the employment of that radar in an integrated air defense system (IADS). The process the radar antenna uses to search airspace for targets is called scanning or sweeping. This chapter discusses circular, unidirectional, bidirectional, helical, raster, Palmer, and conical scans, and track-while-scan (TWS) radar systems.

2. PARABOLIC ANTENNA

One of the most widely used radar antennas is the parabolic reflector (Figure 6-1). The parabola-shaped antenna is illuminated by a source of radar energy, from the

Figure 6-1. Parabolic Antenna

transmitter, called the feed. The feed is placed at the focus of the parabola, and the radar energy is directed at the reflector surface. Because a point source of energy, located at the focus, is converted into a wavefront of uniform phase, the parabola is well suited for radar antenna applications. By changing the size and shape of the parabolic reflecting surface, a variety of radar beam shapes can be transmitted.

a. The antenna depicted in Figure 6-1 generates a nearly symmetrical pencil beam that can be used for target tracking.

b. Elongating the horizontal dimensions of the parabolic antenna creates a radar antenna called the parabolic cylinder antenna (Figure 6-2). The pattern of this antenna is a vertical fan-shaped beam. Combining this antenna pattern with a circular scan technique creates a radar system well suited for long-range search and target acquisition.

Figure 6-2. Parabolic Cylinder Antenna

c. Elongating the vertical dimensions of the parabola creates a radar antenna that generates a horizontal fan-shaped beam with a small vertical dimension (Figure 6-3). This type of antenna is generally used in height-finding radar systems.

Figure 6-3. Height-Finder Parabolic Antenna

d. Another variation of the basic parabolic antenna includes using an array of multiple feeds instead of a single feed (Figure 6-4). This type of parabolic antenna can produce multiple radar beams, either symmetrical or asymmetrical, depending on the angle and spacing of the individual feeds.

Figure 6-4. Multiple-Feed Parabolic Antenna

3. CASSEGRAIN ANTENNA

A Cassegrain antenna uses a two-reflector system to generate and focus a radar beam (Figure 6-5). The primary reflector uses a parabolic contour, and the secondary reflector, or subreflector, has a hyperbolic contour. The antenna feed

is located at one of the two foci of the hyperbola. Radar energy from the transmitter is reflected from the subreflector to the primary reflector to focus the radar beam. Radar energy returning from a target is collected by the primary reflector and reflected as a convergent beam to the subreflector. The radar energy is rereflected by the subreflector, converging at the position of the antenna feed. The larger the subreflector, the closer it can be to the primary reflector. This reduces the axial dimensions of the radar but increases aperture blockage due to the subreflector. A small subreflector reduces aperture blockage, but it must be positioned at a greater distance from the primary reflector.

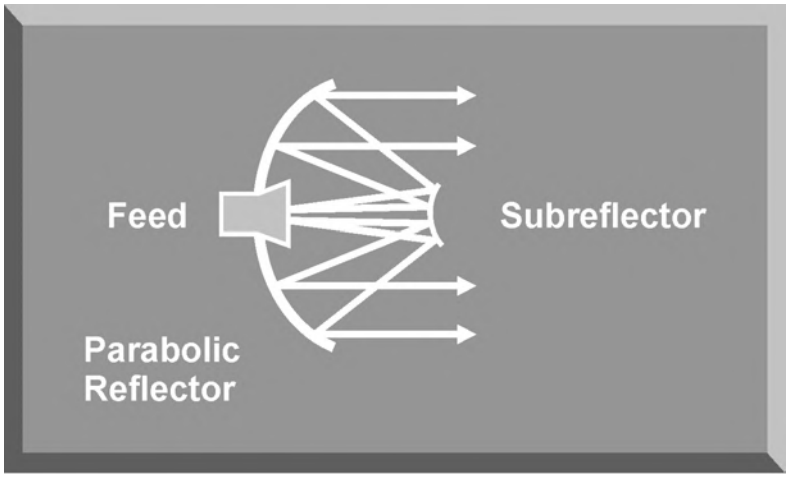

Figure 6-5. Cassegrain Antenna

a. To reduce the aperture blockage by the subreflector and to provide a method to rapidly scan the radar beam, the flat plate Cassegrain antenna was developed. This type of Cassegrain antenna is depicted in Figure 6-6.

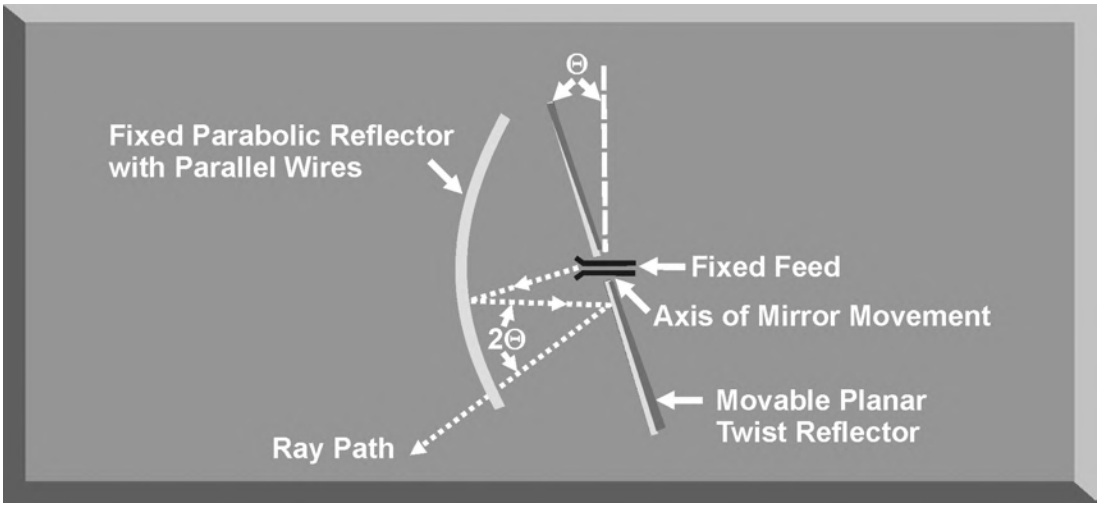

Figure 6-6. Flat Plate Cassegrain Antenna

The fixed parabolic reflector is made up of parallel wires spaced less than a half wavelength apart and supported by a low-loss dielectric material. This makes the fixed parabolic reflector polarization sensitive. It will completely reflect one type of linear polarization and be transparent to the orthogonal polarization. The fixed antenna feed, in the middle of the moveable mirror, transmits a radar signal polarized to be reflected by the parabolic reflector. The moveable mirror is constructed as a twist reflector that changes the polarization of the radar signal by 90°. The signal from the feed is reflected by the parabolic reflector to the mirror, which rotates the polarization 90°. This rotation makes the transmitted signal transparent to the parabolic reflector, and the signal passes through with minimal attenuation. The radar beam can be scanned over a wide area by rotating the moveable mirror. A deflection of the mirror by the angle θ results in the beam scanning through an angle of 2θ.

b. The geometry of the Cassegrain antenna is especially well suited for monopulse tracking radar applications. Unlike the parabolic antenna, the complex feed assembly required for a monopulse radar can be placed behind the reflector to avoid aperture blocking.

4. PHASED ARRAY ANTENNA

The phased array radar is a product of the application of computer and digital technologies to the field of radar design. A phased array antenna is a complex arrangement of many individual transmitting and receiving elements in a particular pattern. A phased array antenna can, in effect, radiate more than one beam from the antenna by using a computer to rapidly and independently control groups of these individual elements. Multiple beams and computer processing of radar returns give the phased array radar the ability to track-while-scanning and engage multiple targets simultaneously. Figure 6-7 is a view of the phased array radar antenna.

Figure 6-7. Phased Array Antenna

a. A phased array radar uses the principle of radar phase to control the individual transmitting and receiving elements. When two transmitted frequencies are in-phase, their amplitudes add together, and the radiated energy is doubled. When two transmitted frequencies are out-of-phase, they cancel each other. Phased array radars use this principle to control the shape of the transmitted radar beam (Figure 6-8).

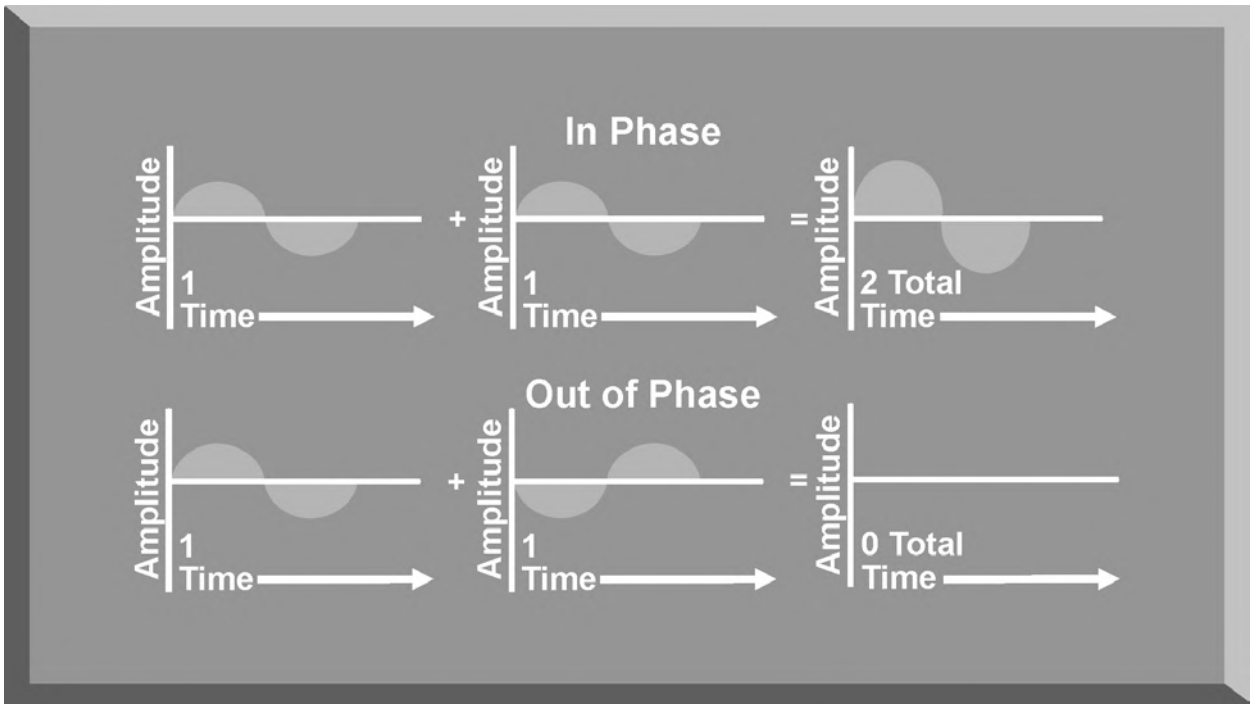

Figure 6-8. Phase Relationships

b. Phase relationships and antenna element spacing determine the orientation of the transmitted beam. In Figure 6-9, antenna elements A and B are separated by one-half wavelength and are radiating in-phase, that is, when one is at the positive peak, the other is also at a positive peak. Since the elements are one-half wavelength apart, when the positive peak radiated by A reaches B, B will be radiating a negative peak. As the peaks propagate along the X axis, they will cancel each other out. The total radiated power along that axis will be zero. Along the Y axis, however, the positive peaks from A will add to the positive peaks from B, causing the total radiation along this axis to be at its maximum value. This type of array is called a "broadside array" because most of the radiation is in the direction that is broadside to the line of the antenna array.

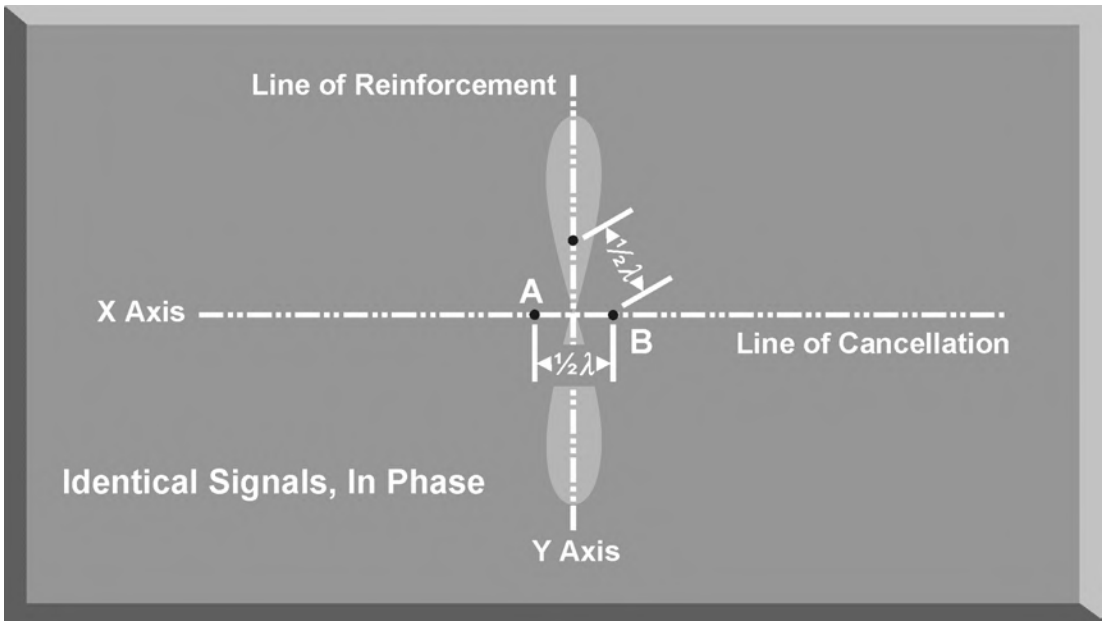

Figure 6-9. Broadside Array

c. If the same antenna elements are fed out-of-phase, the principal direction of radiation will be along the axis of the antenna elements. In Figure 6-10, when the positive peak from A arrives at B, B is now positive also. These energies interact to strengthen the energy being radiated from the ends of the array. Meanwhile, when the positive peak from A, radiating along the Y axis, meets the negative peak from B, they are canceled. This type of array is called an "end-fire array."

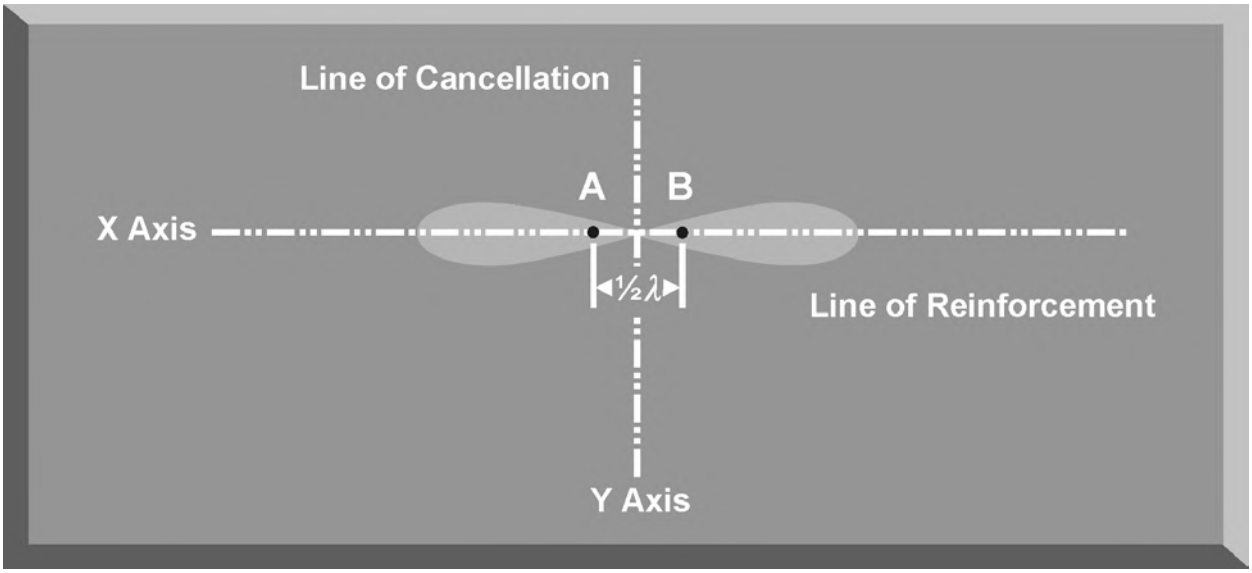

Figure 6-10. End-Fire Array

d. The computer controlling the phase of the signal delivered to each transmitting and receiving element of a phased array antenna controls the direction and shape of the radiated beam (Figure 6-11). By shifting the phase of the signals between 0° and 180°, the beam sweeps. This is the basic means of producing an antenna scan. In addition, the amplitude, or power, of the signal applied to each element can be varied to control the sidelobes. This alters the shape of the beam which affects the range capability and angular resolution of the radar.

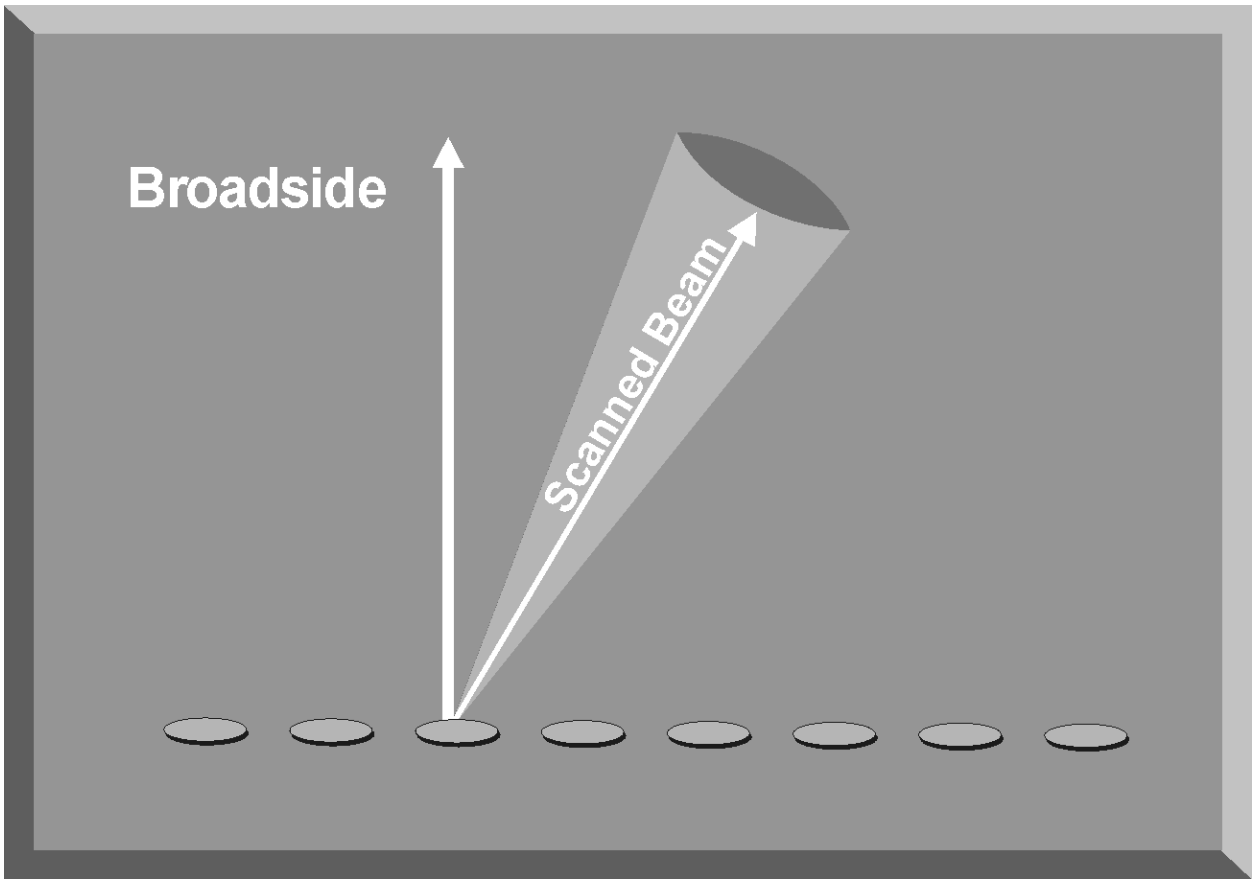

Figure 6-11. Phased Array Antenna Scan

e. Figure 6-12 depicts a variation of the phased array antenna, known as a planar array antenna. A planar array antenna uses transmit and receive elements in a linear array, but, unlike the phased array radar, the elements are smaller and are placed on a movable flat plate. The ability to simultaneously track several targets is one advantage of this type of radar.

Figure 6-12. Planar Array Antenna

5. ANTENNA GAIN

The most important characteristic of any type of antenna is antenna gain. Antenna gain is a measure of the ability of an antenna to concentrate energy in the desired direction. Antenna gain should not be confused with receiver gain, which is designed to control the sensitivity of the receiver section of a radar system. There are two types of antenna gain: directive and power.

a. The directive gain of a transmitting antenna is the measure of signal intensity radiated in a particular direction. Directive gain is dependent on the shape of the radiation pattern of a specific radar antenna. The directive gain does not take into account the dissipative losses of the antenna. Directive gain is computed using Equation 6-1.

$$G_D \text{ (Directive Gain)} = \frac{\text{Maximum Radiation Intensity (Desired Direction)}}{\text{Average Radiation Intensity}}$$

Equation 6-1. Directive Gain

b. The power gain does include the antenna dissipative losses and is computed using Equation 6-2.

$$G\ (\text{Power Gain}) = \frac{\text{Maximum Radiation Intensity (Practical Antenna)}}{\text{Radiation Intensity of an Isotropic Antenna}}$$

Equation 6-2. Power Gain

c. The term isotropic antenna describes a theoretical spherical antenna that radiates with equal intensity in all directions. This results in a spherical radiation pattern. The power density for any point on an isotropic antenna is the radiation intensity and can be calculated by dividing the total power transmitted (P_T) by the total surface area of the sphere, as shown in Equation 6-3.

$$\text{Power Density (Isotropic Antenna)} = \frac{P_T\ (\text{Watts})}{4\pi r^2\ (\text{Centimeters}^2)}$$

Equation 6-3. Power Density for an Isotropic Antenna

d. The radiation pattern of an isotropic, or spherical, antenna would provide neither azimuth or elevation resolution and would be unusable for radar applications. To provide azimuth and elevation resolution, a practical antenna must focus the radar energy. The power density of a practical antenna differs from the isotropic antenna only in terms of antenna gain (G). Solving Equation 6-3 for the power density of a practical antenna yields Equation 6-4.

$$\text{Power Density (Practical Antenna)} = \frac{P_T\ G}{4\pi r^2}$$

Equation 6-4. Power Density for a Practical Antenna

e. The actual power gain (G) of a practical antenna can be calculated by using Equation 6-5.

$$G = \frac{4\pi A_e}{\lambda}$$

A_e = effective area of aperture
λ = wavelength of the radar

NOTE: The effective area of aperture (A_e) is the effective antenna area presented to the returning radar echo.

Equation 6-5. Power Gain of a Practical Antenna

6. POWER DENSITY

The power density and gain of an antenna are a function of the antenna pattern of a radar system. Figures 6-13 and 6-14 illustrate the antenna pattern of a typical parabolic antenna. Most of the power density of the radar is concentrated in the main beam. However, since the radar is not a perfect reflector, some radar energy is transmitted in the sidelobes. In addition, there is spillover radiation due to the energy radiated by the feed that is not intercepted by the reflector. Finally, the radar has a back lobe caused by diffraction effects of the reflector and direct signal leakage. Sidelobes and backlobes are all undesirable radiations that adversely affect the maximum radar range and increases the vulnerability of the radar to certain jamming techniques.

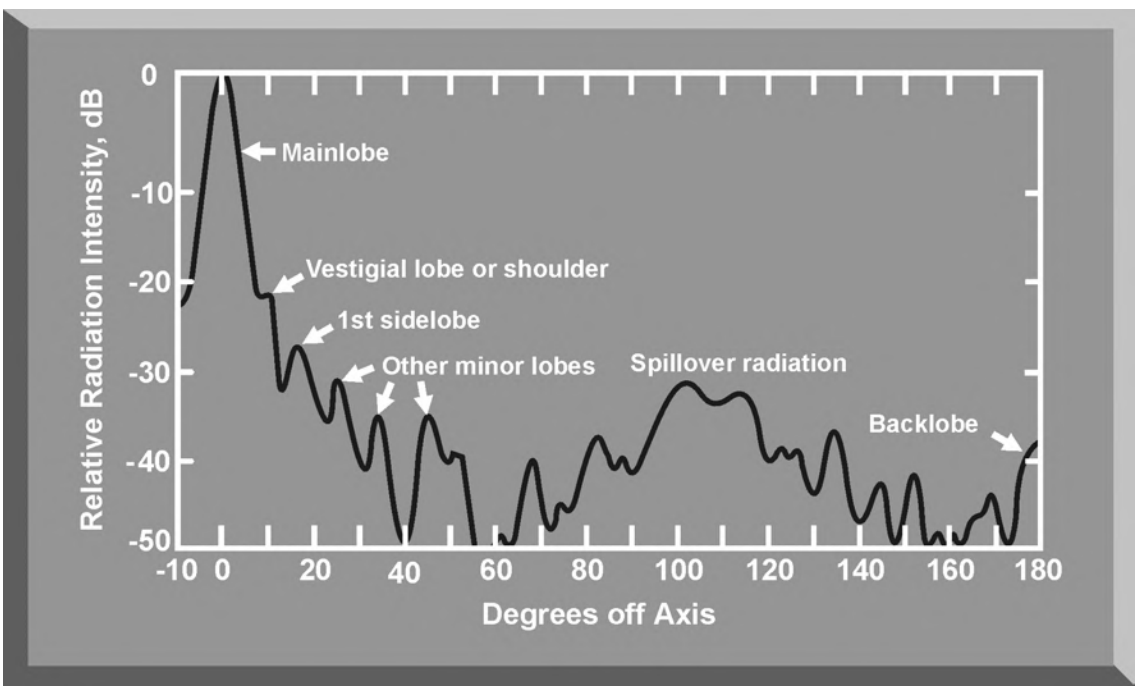

Figure 6-13. Radiation Pattern for a Parabolic Antenna

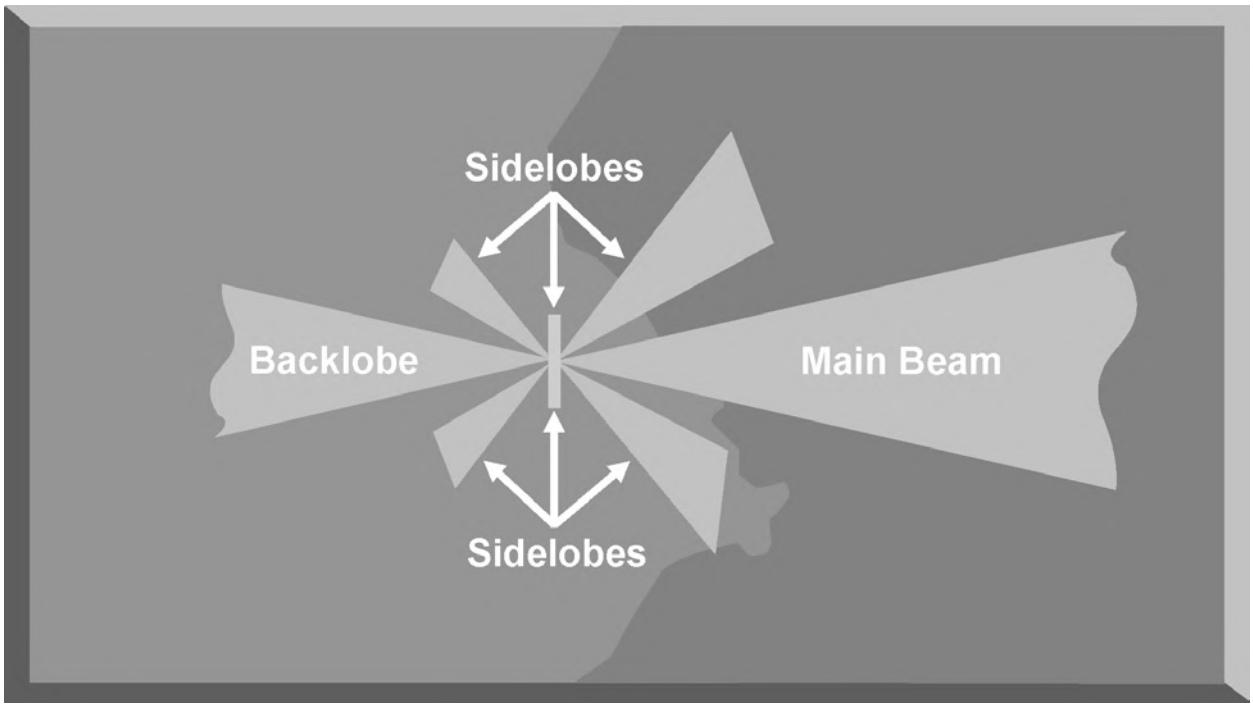

Figure 6-14. Radar Antenna Pattern

a. All radars have a primary main beam, which is where the radar has the most power and where target detection usually occurs. The dimensions of this main beam are highly dependent on the design of the antenna.

b. Besides the main beam, all radars have what is called a backlobe. This lobe is directly opposite to the location of the main beam. The sensitivity and signal strength associated with the backlobe is significantly less than that in the main beam.

c. Sidelobes add another dimension to the radar pattern. As with the backlobe, sidelobes do not have the signal strength or sensitivity associated with the main beam. Normally, the sensitivity associated with the sidelobes is 40-50 decibels (dBs) less than the main beam. The radar signal weakness in the backlobe and sidelobes of the main beam make these areas of the radar signal vulnerable to jamming. It is much easier to introduce jamming into these areas because of the reduced jamming-to-signal ratio needed to be effective. It is difficult for jamming to be effective in the main beam because the radar signal is very powerful in that region.

7. CIRCULAR SCAN

A circular scanning radar uses an antenna system that continuously scans 360° in azimuth (Figure 6-15). The time required for the antenna to sweep one complete 360° cycle is called the scan rate. Scan duration is the number of "hits per scan,"

or the number of pulses, reflected by a target as the radar beam crosses it during one full scan. Most pulse radars require 15 to 20 hits per scan to obtain sufficient information to display a target. The factors that determine the number of hits per scan the radar receives include pulse repetition frequency (PRF), antenna beamwidth, and scan duration.

Figure 6-15. Circular Scan Radar

a. Circular scan radars provide accurate target range and azimuth information. This makes these radars ideal for the roles of early warning and initial target acquisition. To accomplish these missions, the antenna generates a fan beam that has a large vertical beamwidth and a small horizontal beamwidth. Since elevation information will normally be provided by height finder radars, the size of the vertical beamwidth is not a limitation. This antenna scan allows the radar to scan large volumes of airspace for early target detection. Since early detection is the primary goal of early warning radars, accurate altitude and azimuth resolution are secondary considerations.

b. Circular scan radars designed for early warning transmit a radar signal with a low PRF. A low PRF allows sufficient time for the radar pulse to travel long distances, and return, before another pulse is transmitted. This gives the radar system a long, unambiguous range capability. Circular scan radars with low PRFs generally use long pulse widths in order to increase their average power and long-range detection capability. The scan durations of early warning radars are relatively long to provide the required "hits per scan" for long-range target

detection. The plan position indicator (PPI) scope display is normally used with a circular scan radar (Figure 6-16).

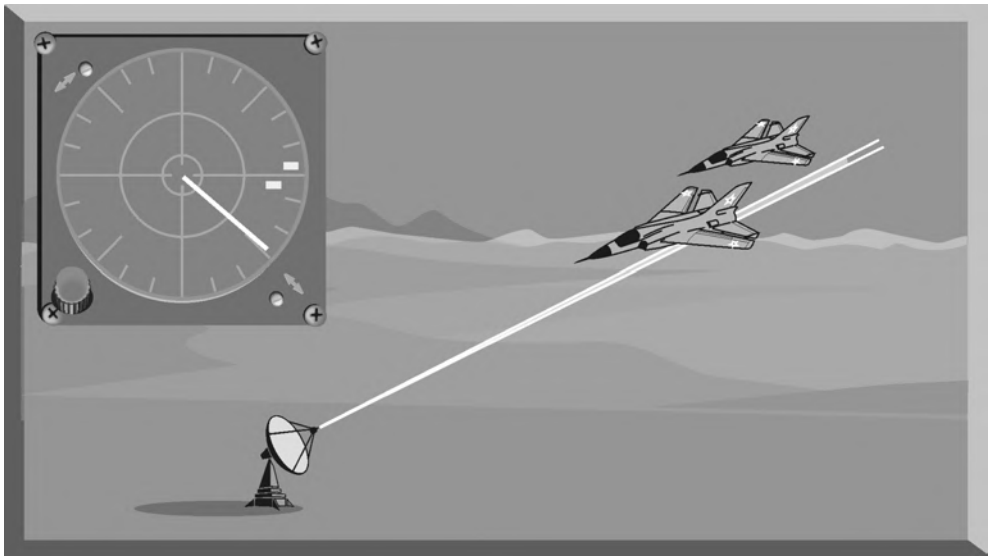

Figure 6-16. PPI Scope Display

c. In order to provide coverage for a large volume of airspace, the beamwidth associated with a circular scan radar is relatively wide. This wide beamwidth, coupled with the long pulse width and low PRF, gives the circular scan radar a large resolution cell, especially at long ranges (Figure 6-17). This limitation can be exploited to mask force size and composition. However, as range decreases, the dimensions of the resolution cell decrease, and a circular scan radar will begin to break out target formations.

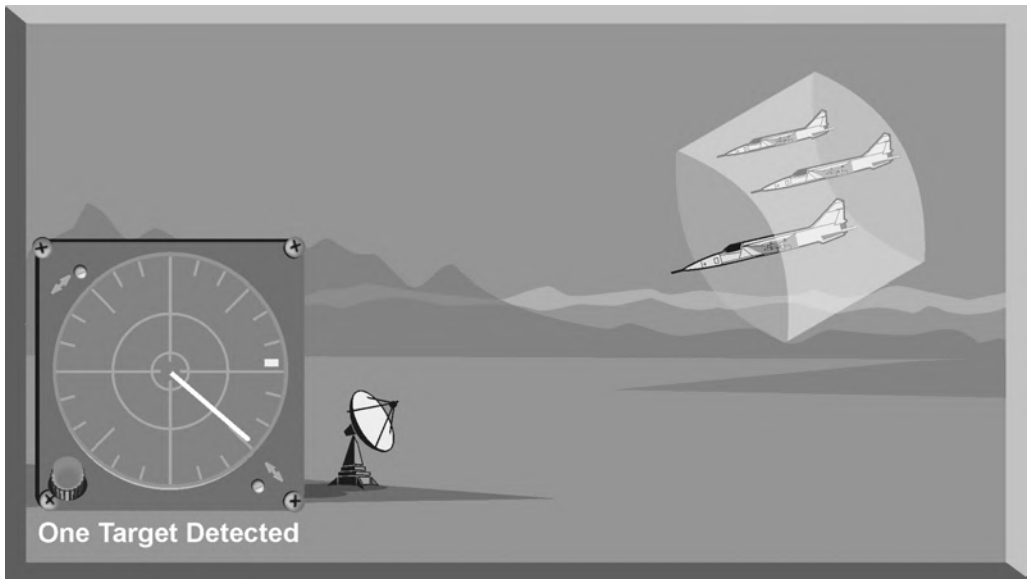

Figure 6-17. Resolution Cell

d. Circular scan radars provide range and azimuth information for both early warning and acquisition roles. Modified circular scan radars that can also provide elevation information may be used for ground control intercept (GCI) roles. Two modified circular scan radars that determine range, azimuth, and elevation are the V-beam and the stacked beam.

(1) The V-beam radar transmits two fan-shaped beams that are swept together (Figure 6-18). A vertical beam provides range and azimuth information. A second beam, rotated at some convenient angle, provides a measure of the altitude of the target.

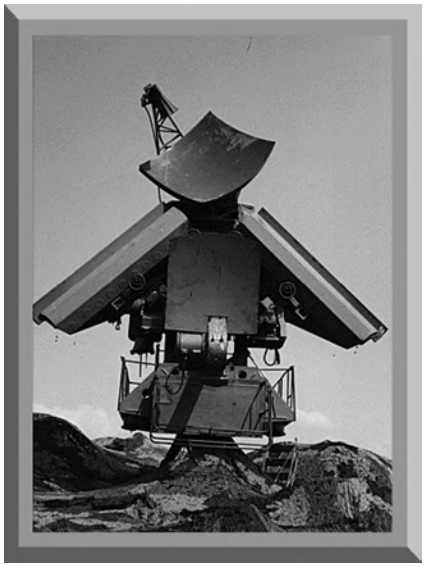

Figure 6-18. V-Beam Radar

(2) A stacked beam radar (Figure 6-19) employs a vertical stack of fixed elevation "pencil" beams which rotate 360°. Elevation information is obtained by noting which beam contains the target return. Range and azimuth information is determined in the same manner as in an early warning radar.

Figure 6-19. Stacked Beam Radar

8. LINEAR SCAN

Linear scan is a method used by some radar systems to sweep a narrow radar beam in a set pattern to cover a large volume of airspace. Linear scans can be oriented in a vertical direction for height finder radars or in a horizontal direction, or raster, for acquisition and target tracking radars. A unidirectional linear radar scans in a single direction then begins its sweep all over again (Figure 6-20). Generally, linear scans offer excellent single-axis coverage, and the narrow beam offers enhanced azimuth and elevation resolution.

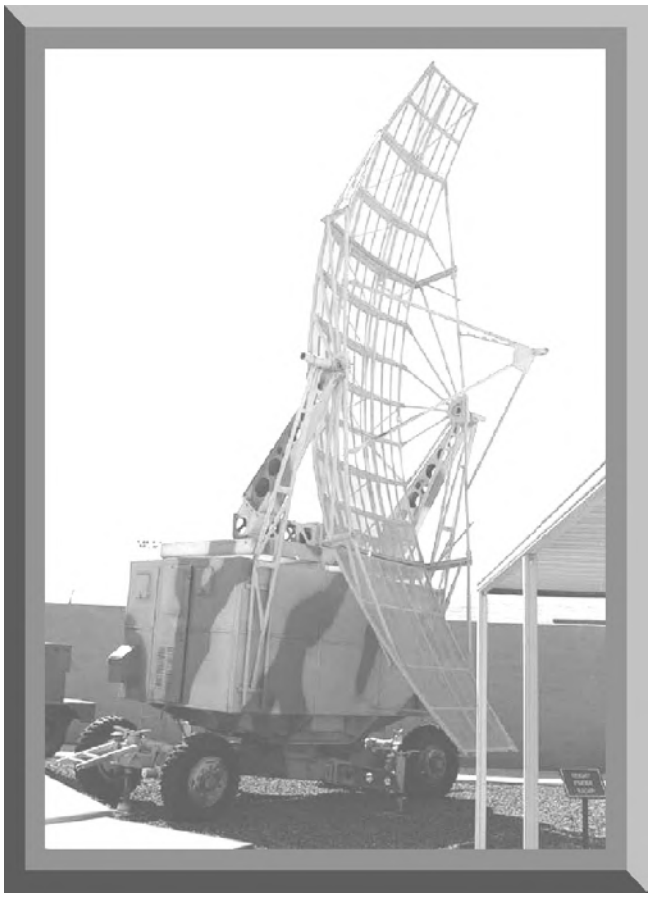

Figure 6-20. Unidirectional Linear Scan

9. UNIDIRECTIONAL SCAN

A helical scan is a unidirectional scan pattern that allows a "pencil" beam to search a 360° pattern. In Figure 6-21, the antenna sweeps a 360° sector in a clockwise direction. After each complete revolution, the antenna elevation is increased. This scan pattern is repeated for a specified number of revolutions, in this case, three, 360° sweeps. At the end of the scan pattern, the antenna elevation is reset to the initial elevation and the scan is repeated. A helical scan pattern is commonly used as a target acquisition mode for radar systems with narrow vertical and horizontal beamwidths.

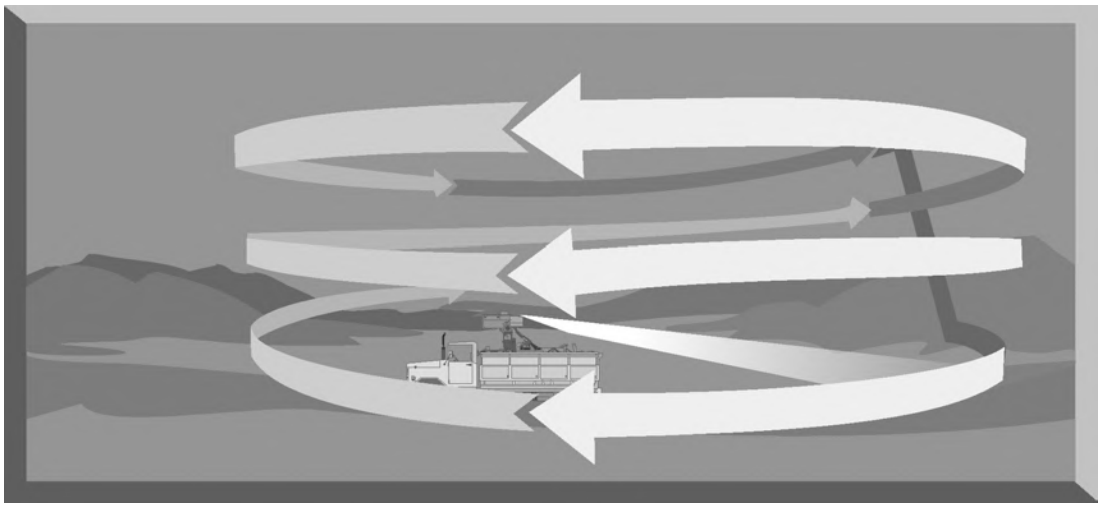

Figure 6-21. Helical Scan

10. BIDIRECTIONAL SCAN

A bidirectional linear scan, such as a raster scan, sweeps both horizontally and vertically (Figure 6-22). A raster scan uses a thin beam to cover a rectangular area by horizontally sweeping the area. The angle of elevation is incrementally stepped up or down with each horizontal sweep of the desired sector. After the sector has been covered, the angle of elevation is reset to the original value and the process is repeated. The number of raster bars is set by the number of horizontal sweeps in the basic raster pattern. Figure 6-22 shows a four-bar raster scan, which is normally associated with an airborne interceptor (AI) radar.

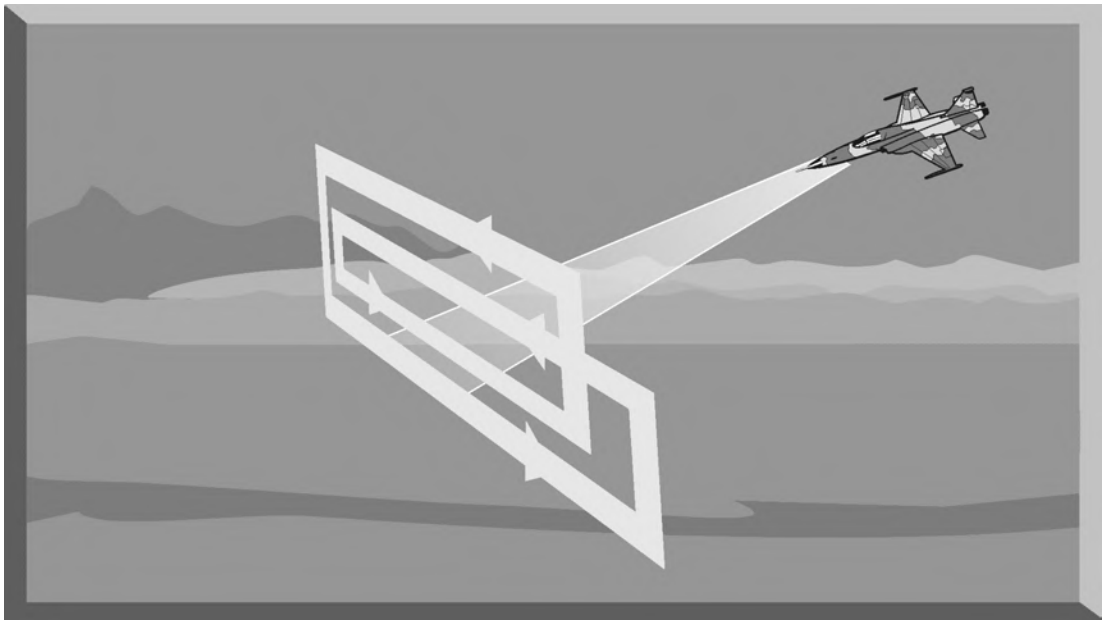

Figure 6-22. Raster Scan

11. CONICAL SCAN

A conical scan, or conscan, radar is generally used for precision target tracking. A conical scan radar (Figure 6-23) employs a pencil beam of radar energy that is continuously rotated around the target. This circular rotation of a pencil beam generates a cone-shaped scan pattern with the apex of the cone located at the antenna. Thus, the name conical scan.

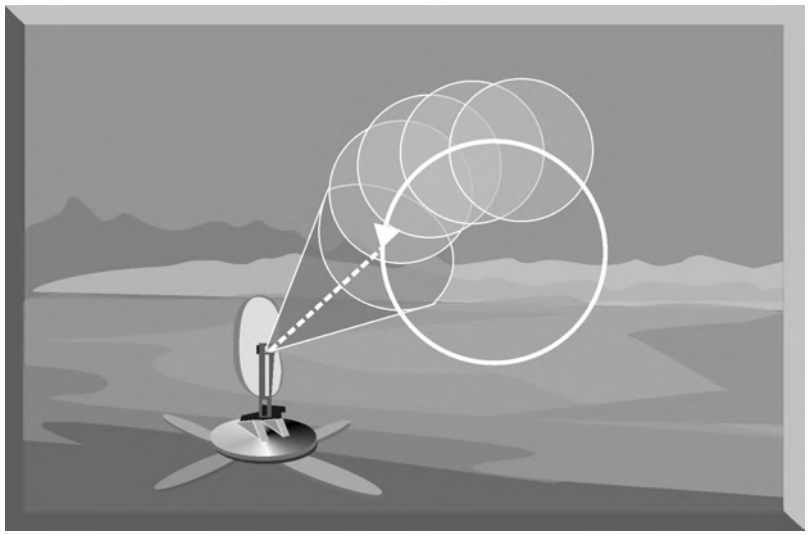

Figure 6-23. Conical Scan

a. As the pencil beam rotates, the circular scan patterns overlap in the center. This creates a central tracking area that has a much smaller effective beamwidth than the rotating pencil beam (Figure 6-24). This results in a very precise tracking solution.

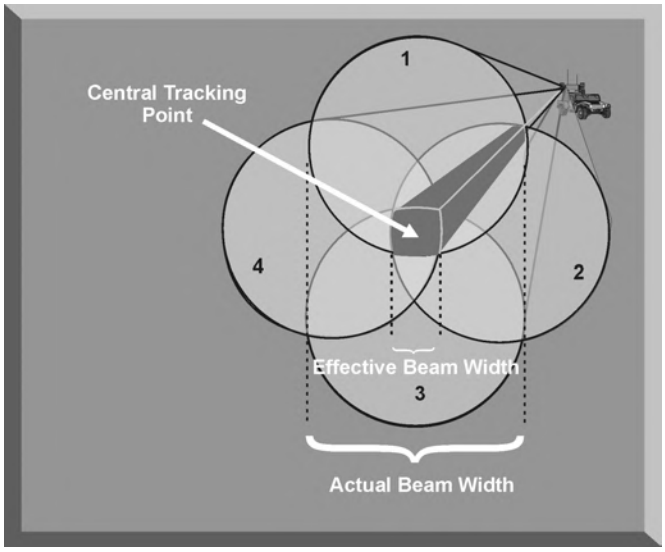

Figure 6-24. Conical Scan Tracking Area

b. Since conical scan radars are designed for precision target tracking, these radars normally operate at high frequencies, high PRF, narrow pulse widths, and narrow beamwidths. The rotation rate of the pencil beam can exceed 1,800 revolutions per minute. This means that both azimuth and elevation data can be updated about 30 times per second.

c. The combination of conical scan and raster scan is called a Palmer-raster scan (Figure 6-25). A Palmer-raster scan uses a thin beam, employing a conical scan searching pattern, for a specific sector of airspace. With each sweep of the sector, the angle of elevation is incrementally stepped up or down. After the vertical sector has been covered, the angle of elevation is set at the original elevation and the process is repeated. The number of bars is determined by the number of vertical search scans.

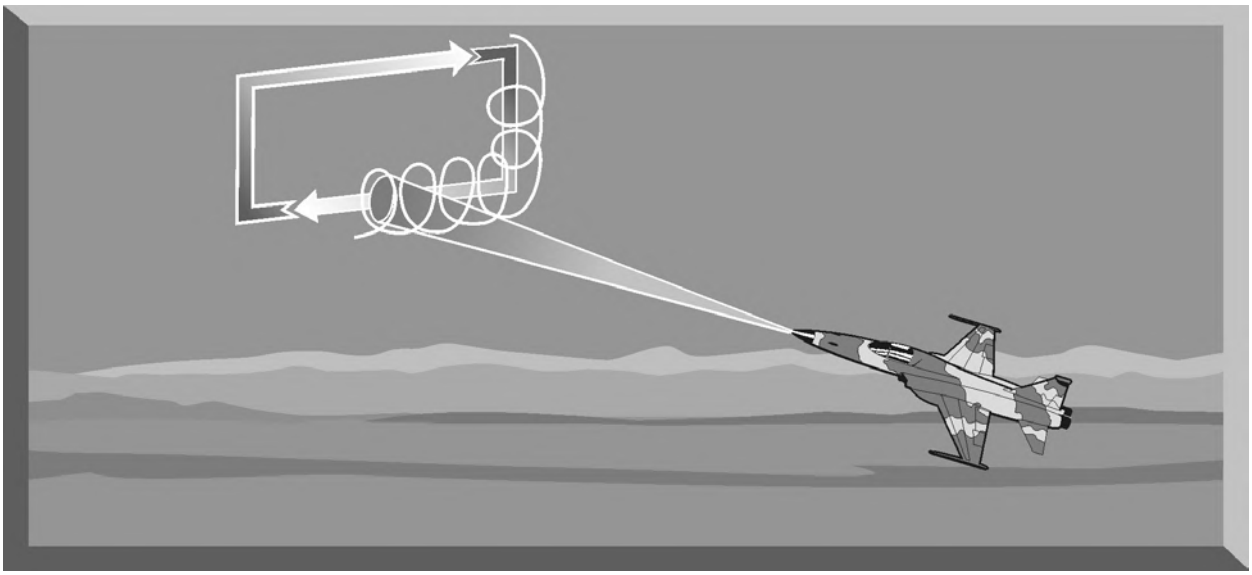

Figure 6-25. Palmer-Raster Scan

d. The combination of a conical scan and a circular scan is called a Palmer scan. Palmer scans incorporate a circular scanning antenna to search the entire horizon while simultaneously performing a conical scan. If the radar antenna is also performing a unidirectional altitude search in conjunction with this scan, it is employing a Palmer-helical scan (Figure 6-26).

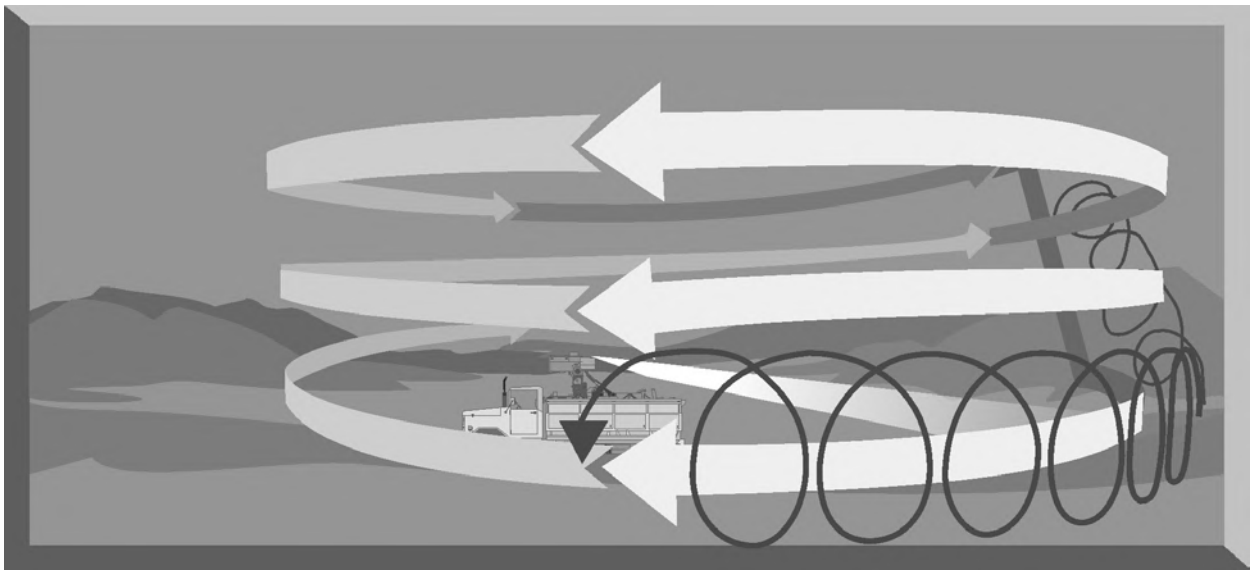

Figure 6-26. Palmer-Helical Scan

12. TRACK-WHILE-SCAN

A track-while-scan (TWS) system uses a technique that allows a radar to track one or more targets while scanning for others. Radar systems with a TWS capability must be able to generate two or more distinct radar beams.

a. A conventional TWS radar employs two antennas that work with each other to perform the scan function (Figure 6-27). Each antenna produces a separate unidirectional beam. Each beam is transmitted at a different frequency. The vertical antenna generates a beam employing a vertical sector scan similar to a height finder radar except the beamwidth is narrower and it scans at a higher rate. The horizontal antenna generates an identical beam employing a horizontal sector scan at a different frequency. The track function is accomplished in the area where the two beams pass through each other. A target that is within this center area is tracked, and positional information on range, elevation, and azimuth is updated each time the beams sweep through the area.

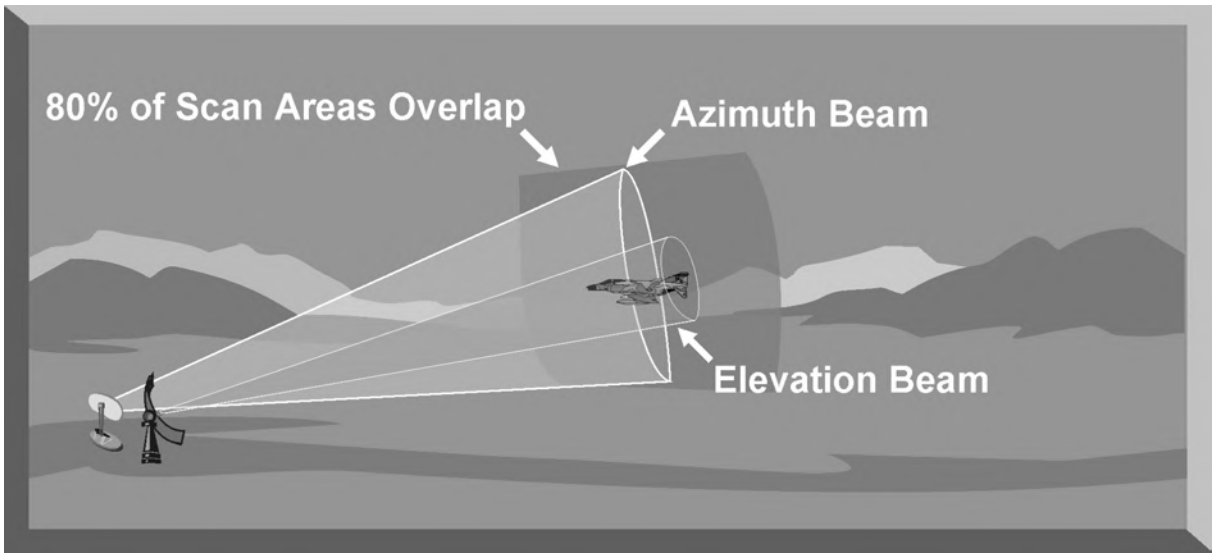

Figure 6-27. Conventional TWS Radar

b. The phased array radar is a product of the application of computer and digital technologies to the field of radar design. A phased array is a complex arrangement of many individual transmitting and receiving elements in a particular pattern (Figure 6-28). Common arrays include linear, planar, curved, and conformal, with linear being the most common. By using a computer to rapidly and independently control groups of these individual elements, a phased array antenna can, in effect, radiate more than one beam from the antenna. Multiple beams and computer processing of radar returns give the phased array radar the ability to perform the TWS function. The most common employment of the TWS capability of the phased array radar is in the air-to-air arena.

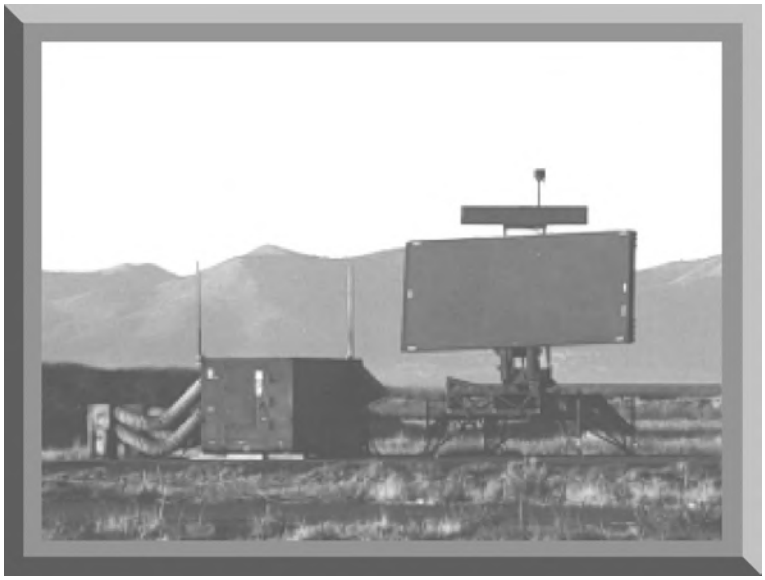

Figure 6-28. Phased Array Antenna

(1) The number of individual transmitting and receiving elements is limited by the size of the radar antenna. The number of targets a phased array radar can track is limited by the number of independent beams the antenna can generate. Many phased array radars, especially air-to-air radars, do not track and scan simultaneously, but rapidly switch between the two modes to overcome this limitation (Figure 6-29).

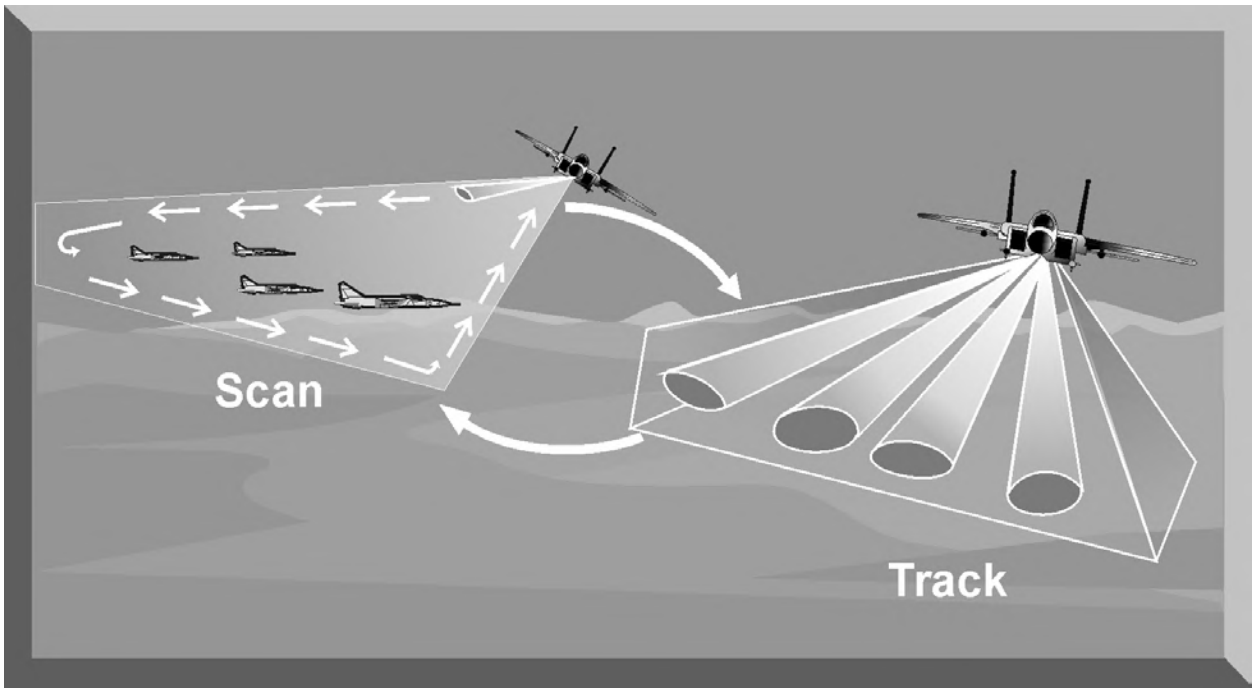

Figure 6-29. Phased Array TWS

(2) Modern TWS radars employ computer signal processing and complex computer algorithms to simplify the problem of target correlation (Figure 6-30). An air-to-air radar typically uses a raster scan to search a volume of airspace. In the search mode, the radar simply presents all targets detected in this airspace to the pilot on his radar display. In the TWS mode, the radar employs computer processing to figure out target correlation and update target information. This is done automatically, and the results are presented on the display.

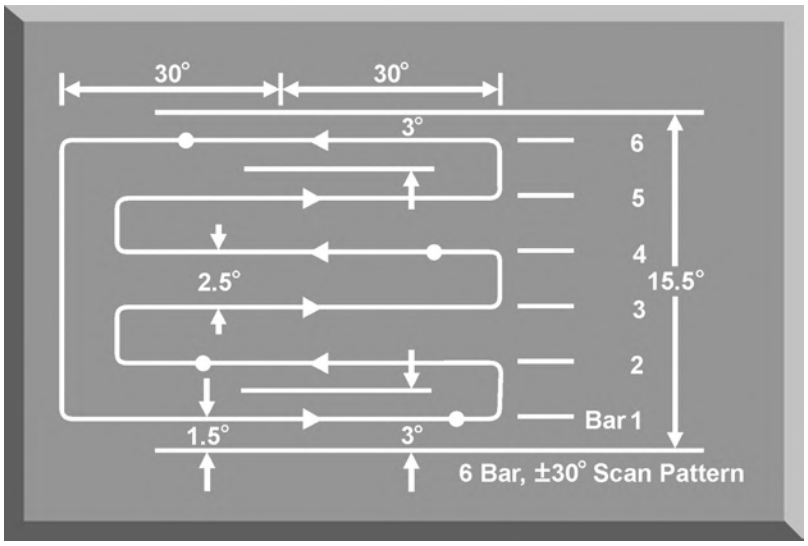

Figure 6-30. Phased Array TWS Radar Display

13. IMPACT OF TERRAIN ON RADAR SCANS

No matter what type of scan a radar system employs, terrain can limit radar line of sight (LOS) and target detection. The concepts of radar horizon, direct terrain masking, and indirect terrain masking are important factors in radar target detection and mission planning.

a. RF waves traveling in the atmosphere are bent, or refracted, and do not travel in a straight line. However, the degree of refraction depends on atmospheric conditions which vary significantly and are difficult to accurately quantify and predict. For these reasons, most radar computations are based on the assumption that RF waves travel in a straight line. The concept of the radar horizon is based on this assumption.

(1) The radar horizon shown in Figure 6-31 is the maximum range a radar system can detect a target due to the curvature of the earth. The distance (d) to the horizon for a radar antenna at a height (h) can be computed using Equation 6-6.

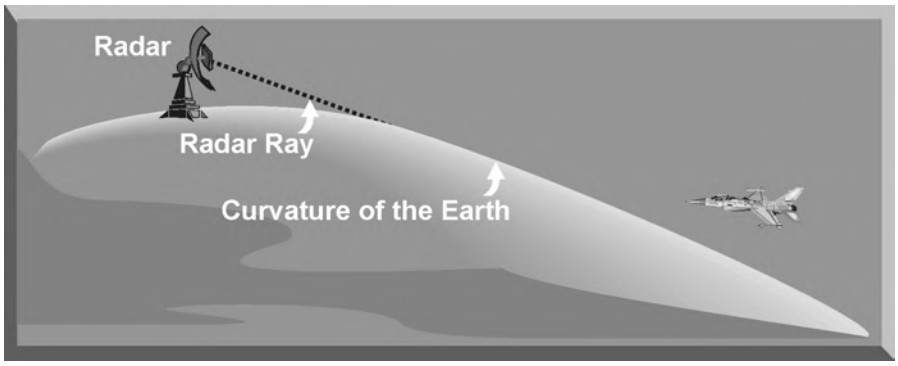

Figure 6-31. The Radar Horizon

$$\text{Distance to Horizon (d)} = \sqrt{2kah}$$

k = constant (4/3)
a = radius of earth
h = height of radar antenna

Equation 6-6. Basic Radar Horizon Equation

(2) In Equation 6-6, the constant, k, is commonly used to compensate for the assumption of straight line propagation of RF waves. Using the assumption that the height of the radar antenna is small compared to the radius of the earth, distance is measured in nautical miles (nm), and height is measured in feet, then Equation 6-6 reduces to Equation 6-7.

$$\text{Distance to Horizon (d)} = 1.06\sqrt{h}$$

Equation 6-7. Simplified Radar Horizon Equation

(3) Another application of Equation 6-7 is in calculating the range at which a radar antenna will achieve LOS with a low-altitude target. To compute this distance (D), Equation 6-8 can be used.

$$\text{Target Detection Distance (D)} = 1.06\left(\sqrt{h} + \sqrt{\text{target altitude}}\right)$$

Equation 6-8. Target LOS Distance

(4) To illustrate the use of Equations 6-7 and 6-8, consider the example of a radar antenna located at a height of 25 feet and a target aircraft flying at an altitude of 100 feet. From Equation 6-7, the radar horizon for this system would be 5.3 nm. From Equation 6-8, the radar antenna will have LOS with the target aircraft at 16 nm.

b. The previous discussions of the radar horizon assumes the radar is operating over water or level terrain. Radar operations over rough terrain can present other radar LOS limitations. As illustrated in Figure 6-32, prominent terrain features can limit radar detection. In this illustration, a mountain acts as a radar horizon and limits target LOS in one sector of the radar scan. This situation is called direct terrain masking. Placing prominent terrain features between the aircraft and threat radar systems effectively negates these systems and is an integral part of threat avoidance during combat mission planning.

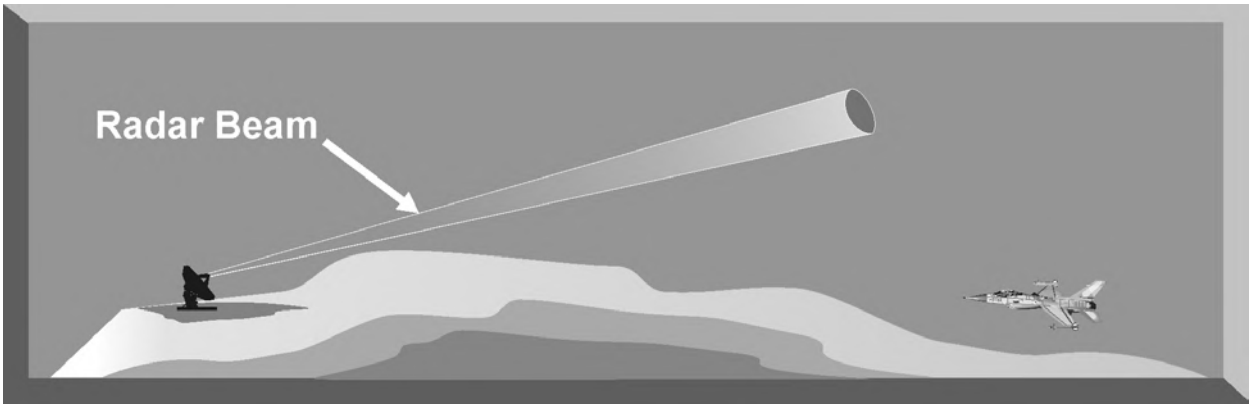

Figure 6-32. Direct Terrain Masking

c. Figure 6-33 depicts another impact of terrain on target detection/indirect terrain masking. When both the aircraft and a prominent terrain feature are illuminated by a radar beam, a pulse radar system may not be able to differentiate the target return from the return generated by the terrain. Indirect terrain masking is most effective when the aircraft is flying abeam the radar site. Pulse Doppler radars and radar systems employing moving target indicator (MTI) circuits may be able to negate the effectiveness of indirect terrain masking. However, indirect terrain masking is another important consideration for threat avoidance during combat mission planning.

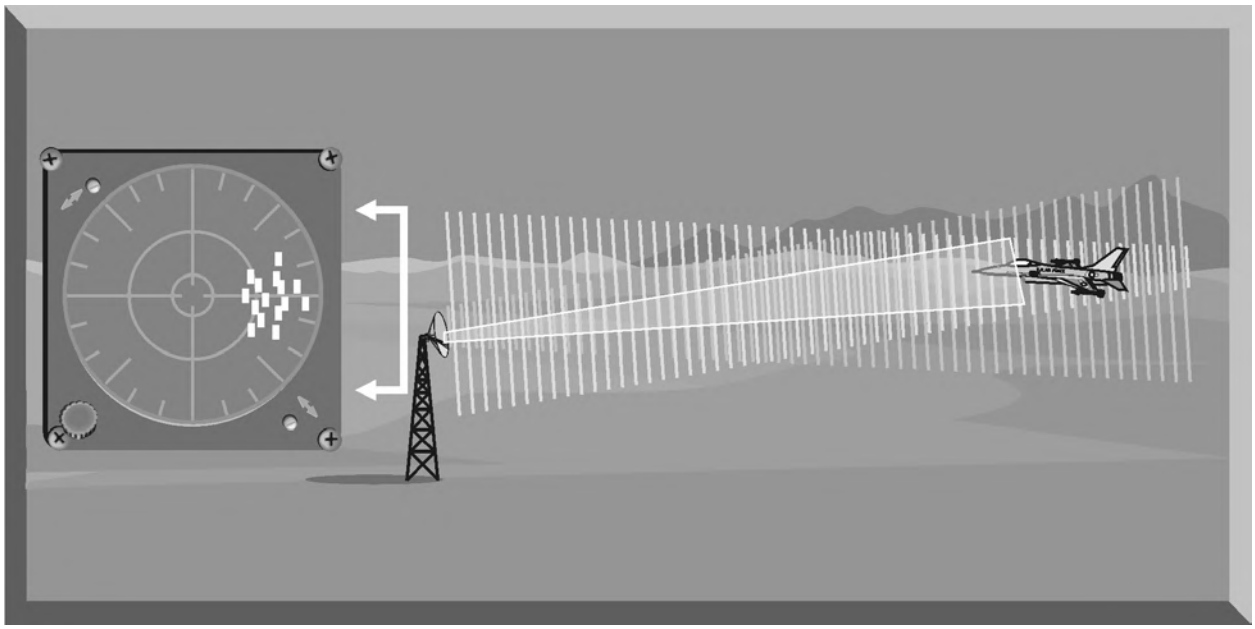

Figure 6-33. Indirect Terrain Masking

14. SUMMARY

This chapter has introduced basic antenna characteristics and how these characteristics influence their employment. The concepts of antenna gain and power density were also explained. The remainder of the chapter discussed the different types of radar scans. A radar's scan pattern is designed to enhance target detection and facilitate target tracking. The radar horizon, direct terrain masking, and indirect terrain masking are LOS limitations to all radar scans. The scan pattern chosen for a specific radar system determines the ability of that radar to provide accurate range, azimuth, elevation, or velocity of the detected target.

CHAPTER 7. TARGET TRACKING

1. INTRODUCTION

A target tracking radar (TTR) is designed to provide all the necessary information to guide a missile or aim a gun to destroy an aircraft. Once a target has been detected, either by a dedicated search radar or by using an acquisition mode, the TTR is designed to provide accurate target range, azimuth, elevation, or velocity information to a fire control computer.

a. A typical TTR has individual tracking loops to track a target in range, azimuth, elevation, or velocity. The antenna of the TTR is pointed at a single target, and the radar initiates acquisition and target track. TTRs normally employ automatic trackers to continuously measure target data. The range tracking loop employs an early gate/late gate range tracker to maintain automatic range tracking. The azimuth and elevation tracking loops generate error signals to position the antenna and maintain constant target illumination. The velocity tracking loop found on pulse Doppler and CW radars is used to reject clutter and generate accurate target radial velocity information. All this critical information is passed to a fire control computer for weapons employment.

b. The fire control computer is programmed with critical information on the capability of the weapon to be employed. For a missile, the fire control computer is programmed with the aerodynamic and range capabilities of the missile. For antiaircraft artillery (AAA), the fire control computer is programmed with the ballistics for the gun, rate of fire, and tracking rate. The fire control computer uses the precise target information from the TTR and the programmed weapon's parameters to compute a firing solution. Once a firing solution has been computed, the fire control computer either fires the weapon automatically or alerts the operator, who fires the weapon. For missile employment, the fire control computer may continue to provide missile guidance and fusing commands until missile impact or initiation of an active missile guidance mode. For AAA engagement, the fire control computer computes the required lead angle, aims the guns, and initiates firing.

c. To provide the required azimuth and elevation resolution, most TTRs use a high frequency to provide narrow antenna beamwidths for accurate target tracking. High frequency operation also allows the radar to transmit wide bandwidths. To provide the required range resolution, most TTRs employ narrow pulse widths and high pulse repetition frequencies (PRFs) to rapidly update target information. In this chapter, the target tracking techniques of conical scan, track-while-scan, lobe-on-receive-only, monopulse, Doppler radars, and pulse Doppler radars will be discussed.

2. RANGE TRACKING

In most TTR applications, the target is continuously tracked in range, azimuth, and elevation. Range tracking can be accomplished by an operator who watches an "A" scope presentation and manually positions a handwheel to maintain a marker over the desired target return. The setting of the handwheel is a measure of target range and is converted to a voltage used by the fire control computer. As target speeds and maneuvers increase, the operator may have extreme difficulty maintaining manual target range tracking. To avoid this situation, most TTRs employ an automatic range tracking loop. All pulse TTRs, which includes conical scan, track-while-scan, monopulse, and pulse Doppler radars, employ either a split gate or leading-edge automatic range tracking system. In a TTR, automatic range tracking serves two essential functions: (1) it provides the critical value of target range, and (2) it provides a target acceptance range gate that excludes clutter and interference from other returns. Since radar range is normally the first target discriminator used to initiate automatic target tracking, the second function is essential to the proper operation of the other tracking loops.

a. A range gate circuit is simply an electronic switch that is turned on for a period of time after a pulse has been transmitted. The time delay for switch activation corresponds to a specific range. Any target return that appears inside this range gate is automatically tracked. The most common type of automatic range tracking is accomplished by a split-gate tracker. Two range gates are generated as shown in Figure 7-1. The automatic range tracking loop attempts to keep the amount of energy from the target return in the early gate and late gate equal. The range tracking error is computed by subtracting the output of the late gate from the output of the early gate. The amount of the range tracking error signal is the difference between the center of the pulse and the center of the range gate. The sign of the error signal determines the direction in which the gates must be repositioned to continue to track the target.

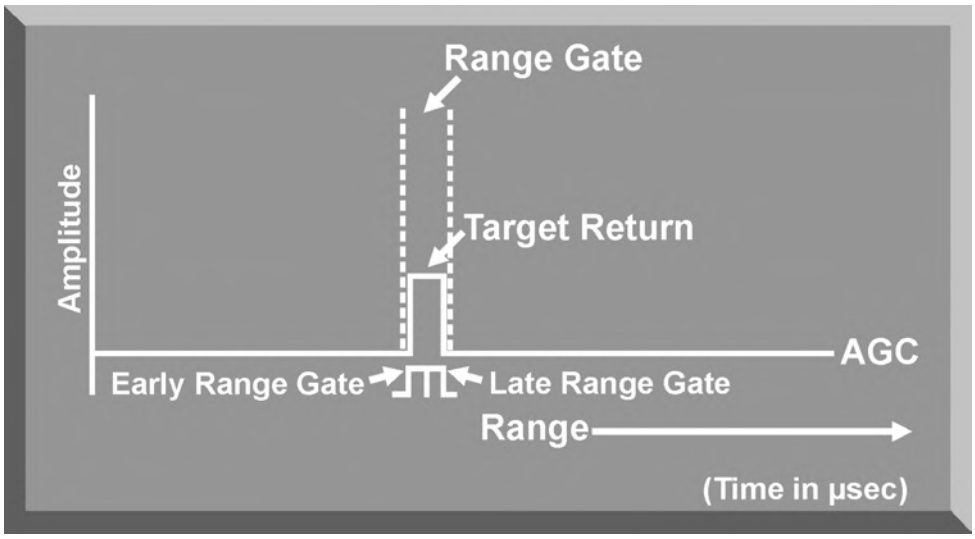

Figure 7-1. Split-Gate Range Tracker

b. Leading-edge range tracking is an electronic protection (EP) technique used to defeat range-gate-pull-off (RGPO) jamming. Figure 7-2 illustrates the application of leading-edge tracking. The leading-edge tracker obtains all range data from the leading edge of the target return. All RGPO cover pulse jamming tends to lag the target return by some increment of time (see (a) in Figure 7-2). By differentiating the entire return with respect to time, the target return can be separated from the jamming pulse (see (b) in Figure 7-2). Employing a split-gate tracker electronically positioned at the initial pan, or leading edge, of the returning pulse, the range tracking loop can track the target return and ignore any jamming signals. The range tracking loop then uses split-gate tracking logic to determine the magnitude and direction of range tracking errors and reposition the range gate.

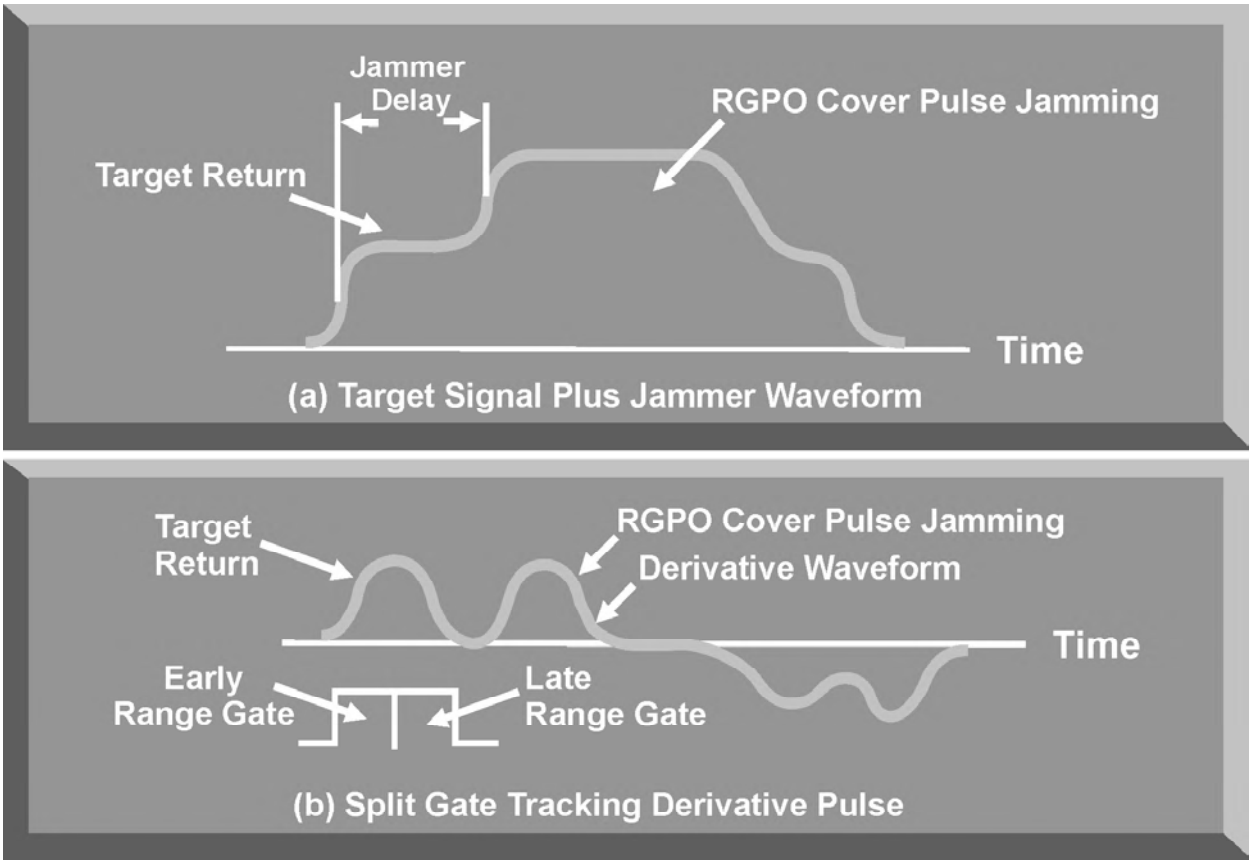

Figure 7-2. Leading-Edge Range Tracker

c. The width of the tracking gate is an important radar design consideration. The range gate should be sufficiently narrow to effectively isolate the target from other returns at different ranges. It should be wide enough to allow sufficient energy from the target echo to be displayed. The width of the range tracking gate is normally equal to the pulse width of the radar.

d. Nearly all range tracking gates employ some form of automatic gain control (AGC). AGC is designed to limit target clutter and glint. It is also designed to avoid excessive false alarms.

3. CONICAL SCAN

A conical scan tracking system is a special form of sequential lobing. Sequential lobing implies that the radar antenna beam is sequentially moved between beam positions around the target to develop angle-error data. For a conical scan radar to generate azimuth and elevation tracking data, the beam must be switched between at least four beam positions as shown in Figure 7-3.

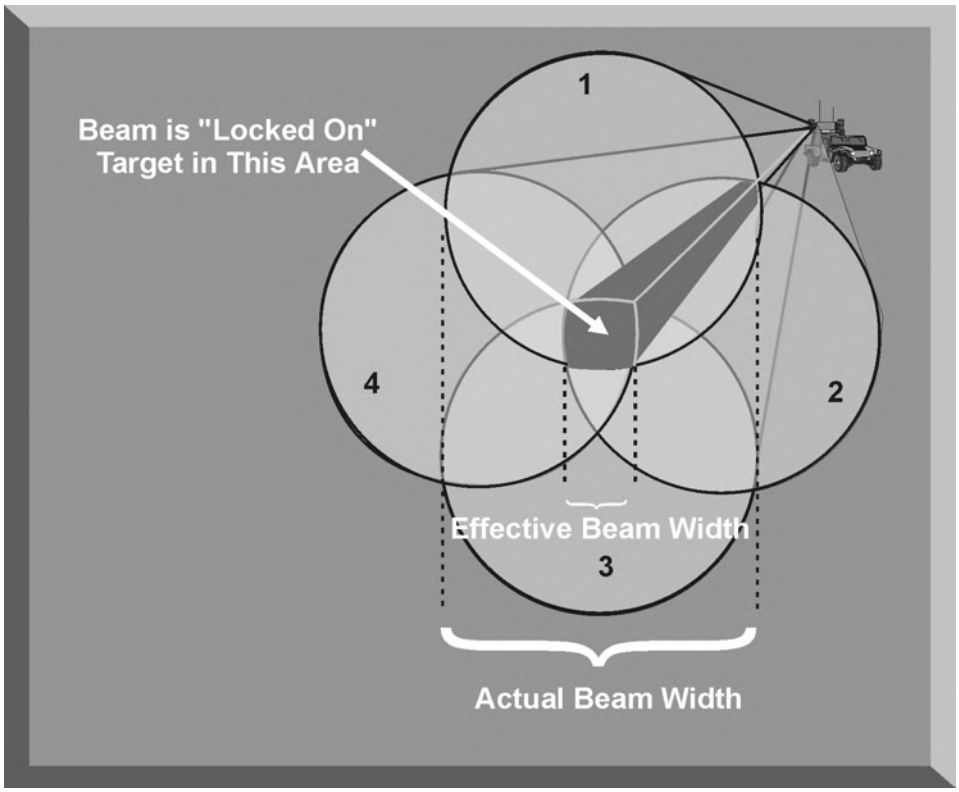

Figure 7-3. Conical Scan Positions

a. One of the simplest conical scan antennas is a parabola with an offset rear feed that rotates, or nutates, to maintain the plane of signal polarization. The radar beam is rotated at a fixed frequency around the target. The angle between the axis of rotation (normally the axis of the antenna) and the axis of the antenna beam is called the squint angle.

b. A conical scan radar first tracks the target aircraft in range. For azimuth and elevation tracking, the target return is modulated at a frequency equal to the rotation frequency of the radar beam. This results in a target signal output that resembles a sine wave (Figure 7-4). The azimuth and elevation tracking loops

drive servo motors to position the antenna to keep the energy level in each of the four positions equal. The amount of the modulated signal determines how far the target is off the antenna boresight while the phase of the modulation (positive or negative) determines the direction.

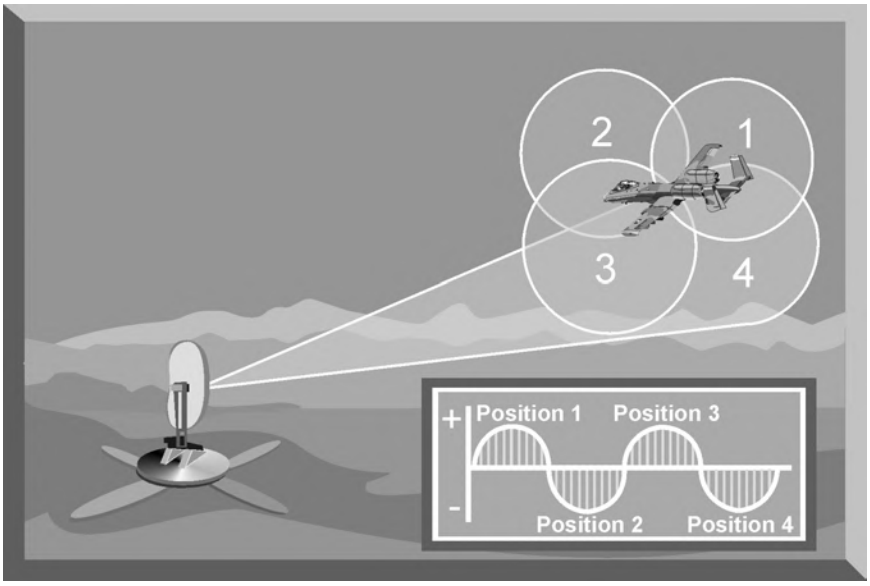

Figure 7-4. Conical Scan Modulation

c. In Figure 7-5, most of the target energy is in position 1, with a small amount of energy in position 4. The output from the elevation tracking loop is positive and drives the antenna servos upward. The output from the azimuth tracking loop moves the antenna to the right.

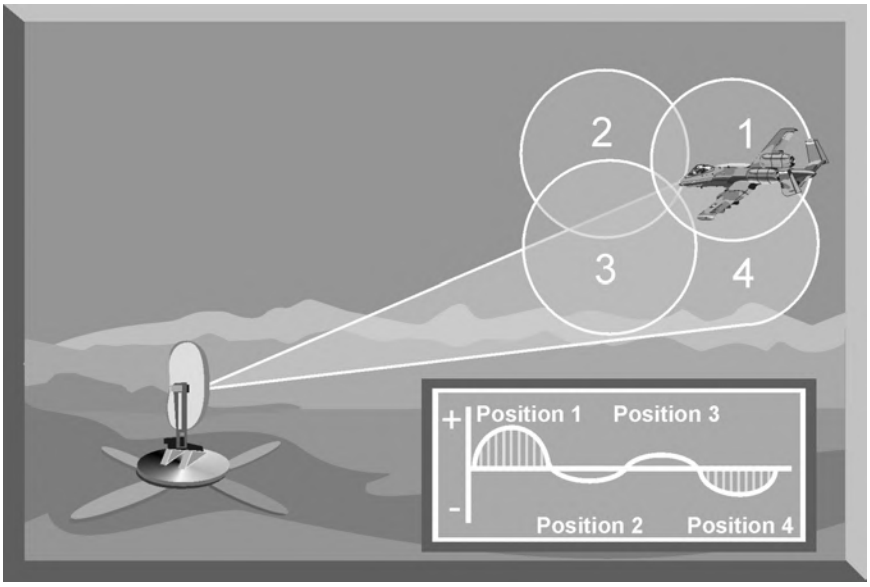

Figure 7-5. Conical Scan Tracking Errors

d. Once a balance of target energy in each scan position is achieved, the target is in the central tracking area (Figure 7-6). The azimuth and elevation tracking circuits continue to drive the antenna servos to maintain this energy balance which keeps the radar beam on the target.

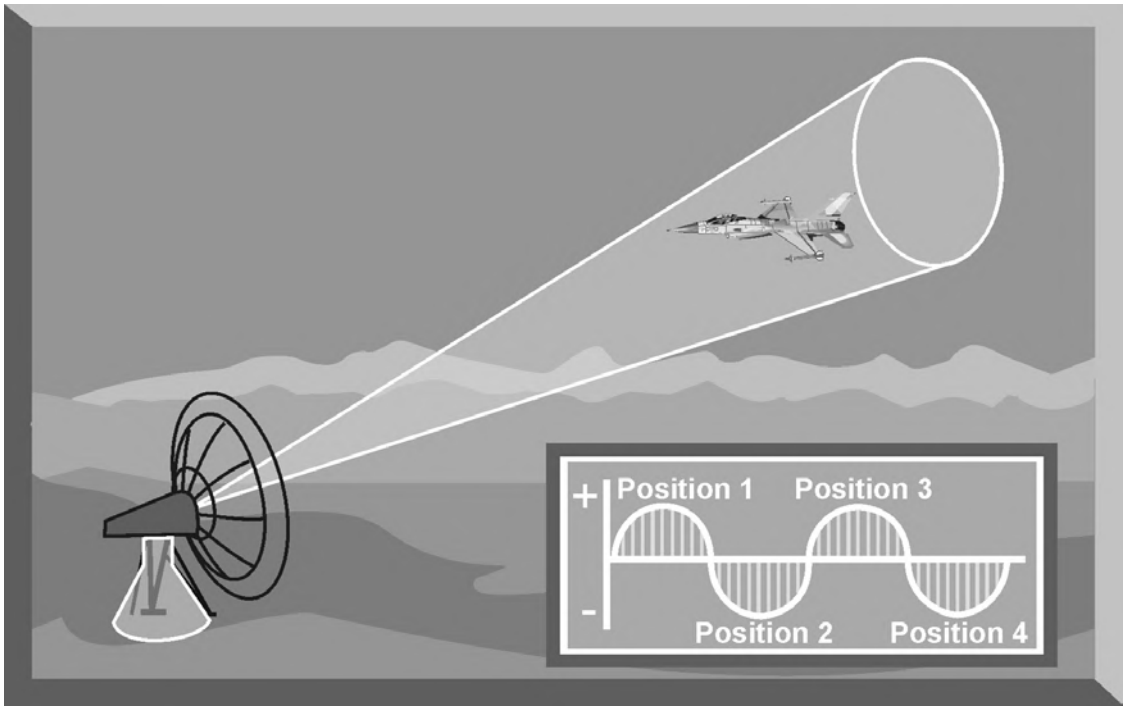

Figure 7-6. Conical Scan Tracking

e. The primary advantage of a conical scan radar is the small beamwidth which provides extremely accurate target tracking information. The primary disadvantages of conical scan include the following: (1) the narrow beamwidth makes target acquisition a problem. Even using a Palmer-helical scan, it may take considerable time to find and initiate track on a target; (2) conical scan radars are vulnerable to inverse gain modulation jamming based on the scanning frequency of the rotating beam; (3) a conical scan radar must analyze many radar return pulses to generate a tracking solution.

4. TRACK-WHILE-SCAN (TWS)

TWS is a combined search and tracking mode that sacrifices the continuous target observation capability of the dedicated tracker in return for the ability to monitor a finite sector of airspace. This is accomplished while maintaining tracks on multiple targets moving through the covered airspace. There are two types of radar systems capable of TWS operation: conventional and phased array.

a. Conventional track-while-scan threat radars use two separate antennas to generate two separate beams (Figure 7-7). These beams operate at two different

frequencies and are sectored so they overlap the same region of space. This overlap area provides a tracking area for a single target. One beam is sectored in the vertical plane to give range and elevation. The other beam is sectored in the horizontal plane to provide range and azimuth. Each beam scans its sector at a rate of 5 to 50 times per second. This provides a rapid update on target range, azimuth, and elevation.

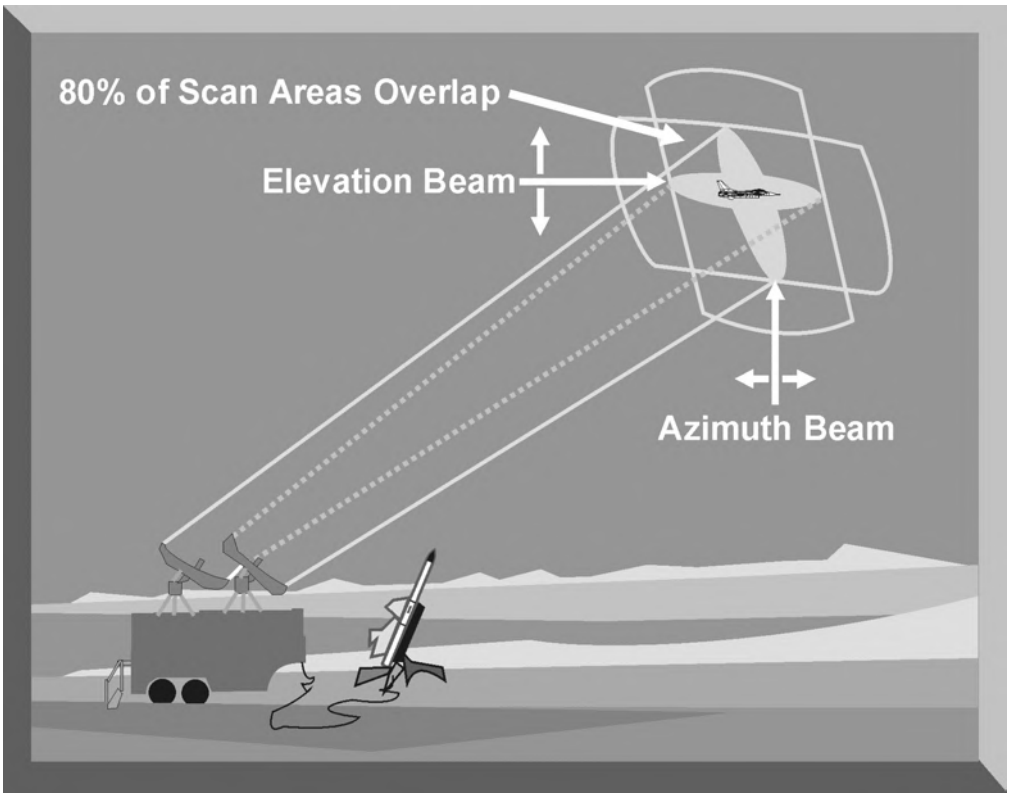

Figure 7-7. Conventional TWS Radar Beams

(1) The two TWS antennas generate their beams using an electro-mechanical principle. Each antenna provides inputs to its own display and provides angle and range information for all targets in the coverage of the radar. The display from the elevation beam is calibrated in range and elevation, while the display from the azimuth beam is calibrated in azimuth and range. Operators position a cursor over the returns on these displays using range as the primary parameter. Once a target has been designated for engagement, the radar automatically attempts to keep the tracking axis of the radar beams centered on the target.

(2) Once the target is designated by the operator, the range gate is enabled and tracks the target using a split-gate tracker. The azimuth and elevation tracking loops receive information only from targets inside the range gate. As the beams scan across the target, a burst of pulse returns is received that have an

amplitude envelope corresponding to the beam pattern. The azimuth beam pattern is shown in Figure 7-8.

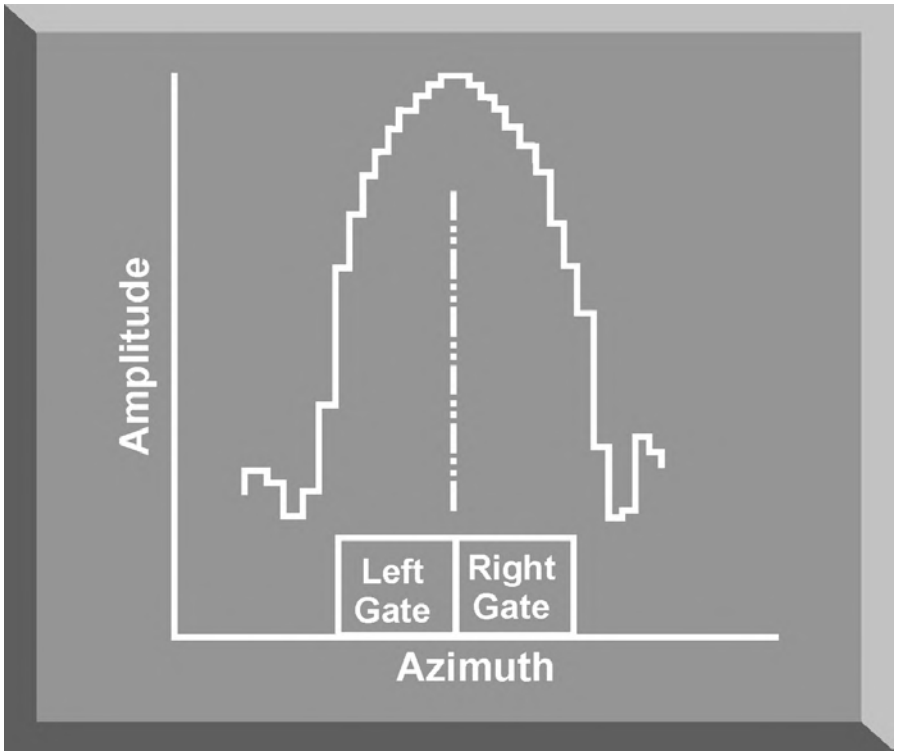

Figure 7-8. Conventional TWS Azimuth Tracking

(a) The azimuth tracker is typically a split-gate tracker, identical in concept to a split-gate range tracker. However, range delay time is replaced by azimuth scan time. The azimuth tracker uses a left gate and right gate. Each gate integrates its share of the target return to generate a voltage/time value. When the azimuth gate is centered on the target, the areas are equal and the error signal (right gate minus left gate) is zero. The azimuth tracking loop sends signals to the antenna servos to keep the target centered in the scan area.

(b) Elevation tracking is accomplished in the same manner by using an up gate and a down gate. The elevation tracking loop also sends signals to the antenna servos to keep the target centered in the scan area.

(3) Once the target is designated and the radar is automatically keeping the radar return centered in the tracking area, target range, azimuth, and elevation information is sent to a fire control computer. The radar continues to provide information on other targets in the scan area. The fire control computer indicates the firing solution has been achieved for the designated target, and a missile is launched. The radar tracks the target and the missile and provides in-flight corrections to the missile right up to the moment of missile impact. These corrections are based on both target and missile azimuth, range, and elevation

information. Information is passed to the missile from a dedicated antenna on the radar to special antennas on the missile. Commands from the radar to the missile are called uplink guidance commands. Information from the missile back to the radar and fire control computer is called downlink information.

(4) The advantages of a conventional TWS radar include the following: (1) TWS radars have the ability to maintain radar contact with all targets in the sector scan area while maintaining target track on a single target, and (2) the rapid sector scan rate provides a rapid update on target parameters. The primary disadvantages of a conventional TWS radar include: (1) a large resolution cell due to the wide azimuth and elevation beams, and (2) vulnerability to modulation jamming based on the scan rate of the independent beams.

b. Many modern radars employing a planar or phased array antenna system have a TWS mode. The radar does not really track and scan simultaneously, but rapidly switches between search and track (Figure 7-9).

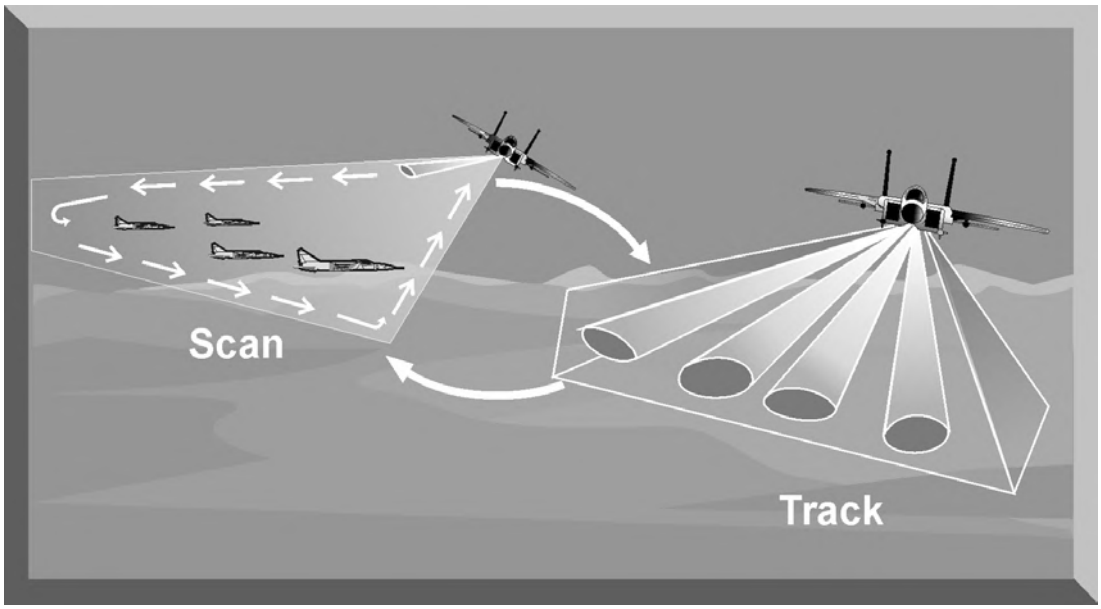

Figure 7-9. Phased Array TWS

(1) The most common air-to-air radar system uses a planar array antenna. In the scan mode, the radar antenna generates a pencil beam and uses a raster scan to detect targets in the search area. Targets detected are presented to the pilot on the aircraft's radar display (Figure 7-10).

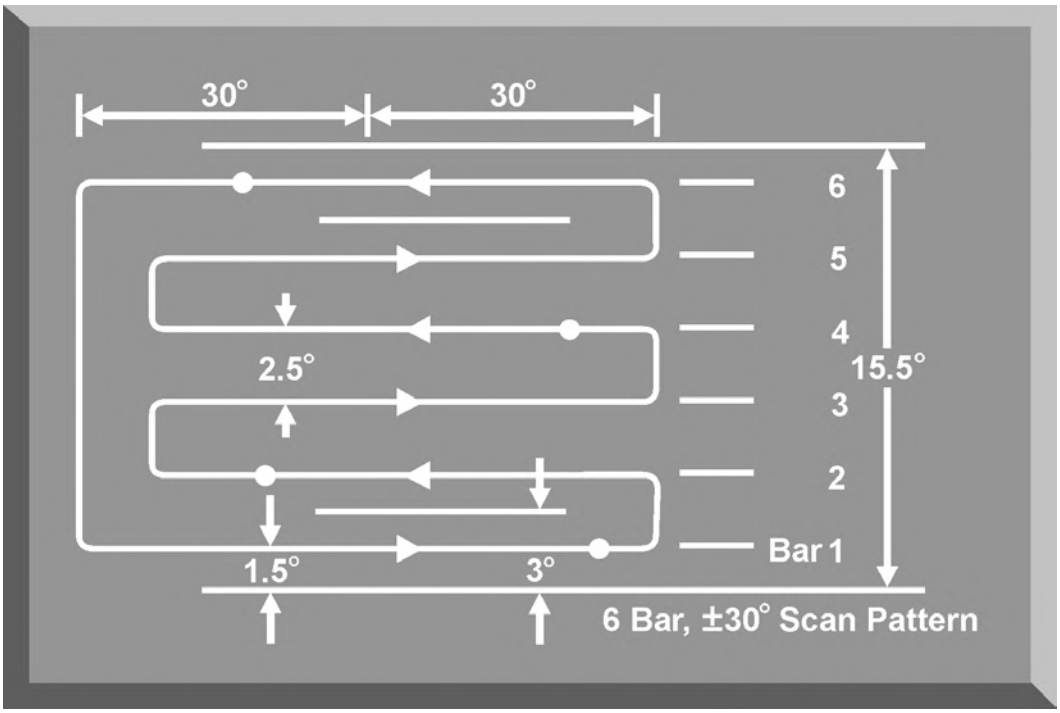

Figure 7-10. Air-to-Air TWS Display

(a) In the track mode, the antenna generates multiple beams to illuminate individual targets. The radar typically uses monopulse or pulse Doppler techniques to update target range, azimuth, elevation or velocity. These tracking techniques will be covered later in this chapter. The radar initiates a track file on each detected target that contains all current data on the target and an estimate of future target position.

(b) As the radar switches between track and scan modes, target parameters are updated in the tracking loop (Figure 7-11). The new target information is compared to the predicted information in the measurement data processing cell. If the two sets of data agree within certain limits, target position and information are updated. This process is called gating.

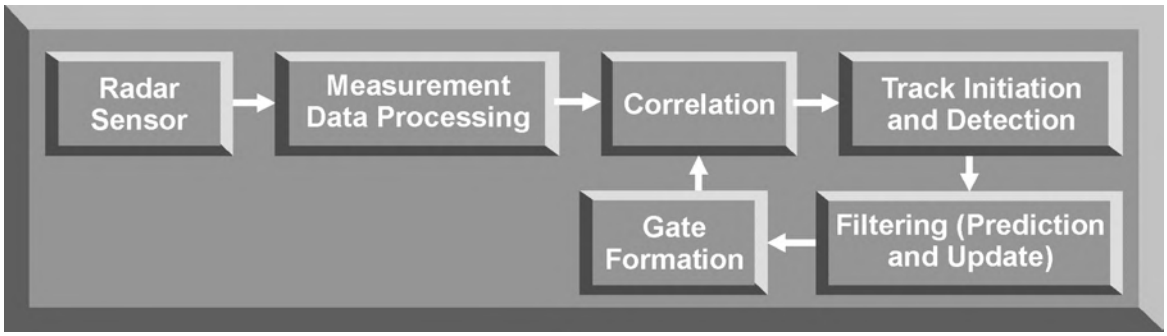

Figure 7-11. Planar/Phased Array TWS Tracking Loop

(c) If the updated target information does not correspond to the predicted values, the information is sent to the correlation processor. The correlation processor attempts to resolve the conflict based on further refinement of target data. If the correlation processor cannot assign the target parameters to an existing track file, a new track file is generated and displayed.

(2) The obvious advantage of a planar/phased array TWS radar is that it can search a large volume of airspace while tracking individual targets. The number of targets that can be tracked is limited by the number of beams the radar can generate. Planar/phased array radars have increased peak and average power when compared to pulse radar systems. Since the radar beam of a planar/phased array radar is electronically controlled and can rapidly change beams and scans, it is resistant to many jamming techniques. The primary disadvantages of a planar/phased array TWS radar include its complexity, cost, and reliance on computer processing.

5. LOBE-ON-RECEIVE-ONLY (LORO)

LORO is a mode of radar operation developed as an EP feature for a track-while-scan radar. LORO can be employed by any radar that has the capability to passively track a target. In a LORO mode, the radar transmits a continuous signal from a set of illuminating antennas. This continuous signal hits the target, and the return echo is received by a different set of receive antennas (Figure 7-12). The receive antennas are passive and generate azimuth and elevation tracking signals by electronically scanning the reflected signal. The tracking signals are sent to the antenna servos to keep the illuminating antennas pointed at the target and centered in the receive antenna tracking area. The range tracking circuit uses the time delay between the transmission and reception of the illuminating antenna signals. A split-gate tracker is used to provide range tracking.

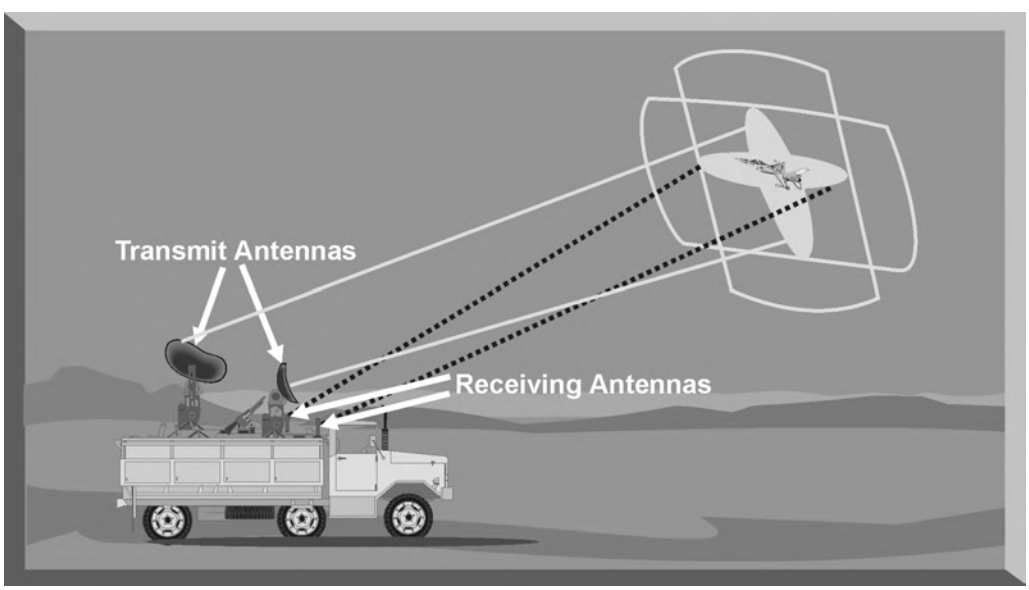

Figure 7-12. LORO Mode

a. The illuminating antennas used in the LORO mode have very narrow beamwidths and transmit at a high power level. This reduces the effectiveness of noise jamming techniques against a radar employing a LORO mode. In addition, the continuous signal from the illuminating antennas negate the effectiveness of most angle deception jamming techniques designed to defeat TWS radars. These specialized jamming techniques exploit the scan rate of TWS antennas. In the LORO mode, the illuminating antennas do not have a scan rate. The limited effectiveness of both noise and deception jamming techniques is the major advantage of the LORO mode.

b. The LORO mode also provides a track-on-jam (TOJ) capability to exploit noise jamming techniques. In a TOJ mode, the receive antennas passively track any detected noise jamming signals. The radar assumes that the most intense jamming signal is the target. The receive antennas process the strongest jamming signal as if it were a target echo from the transmit antenna signal. The receive antennas generate azimuth and elevation tracking signals to keep the jamming signal centered in the tracking area. The TOJ mode does not provide target range.

6. MONOPULSE RADAR

Monopulse radars are among the most complex radar systems. From a single pulse, a monopulse radar can derive all the data needed to update a target's position. It does this by comparing the relationship of two or more radar beams that are transmitted together from the same antenna but received separately. By comparing the phase or amplitude of the energy in these returned beams, target azimuth and elevation can be found. The speed that a monopulse radar updates the target's position, coupled with its azimuth/elevation accuracy and resistance to jamming, make this a popular choice amongst many newer TTRs.

a. The Magic T circuit allows monopulse radars to gather and process information from a single pulse that is transmitted and received using separate antennas. Figure 7-13 depicts a four-beam monopulse radar system. The Magic T is a sophisticated wave guide that can separate multiple signals by their phase relationships. This allows the radar tracking computer to compare the signal amplitude from the reflected pulses in several distinct ways. As the reflected energy enters the Magic T, it is separated by phase. The energy in the "H" arm will be in-phase and will exit from ports 1 and 2. The received energies entering the wave guide in the "E" arm exit at the number 1 port. This energy is exactly 180° out-of-phase with energy entering the H arm. This ensures there is no transfer of energy between the E and H plane arms. A typical monopulse radar would have eight Magic T's.

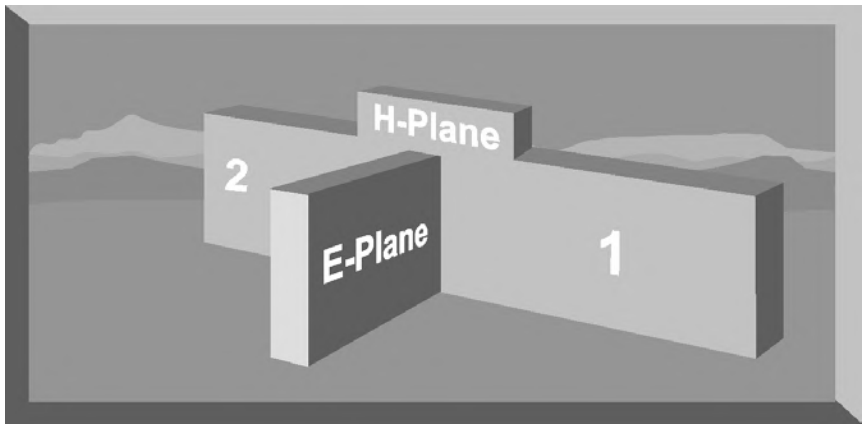

Figure 7-13. Monopulse Magic T

b. The output of a Magic T is the sum and difference of the two signals. These sum and difference values in amplitude or phase are used to generate azimuth and elevation error signals as well as to compute range. Monopulse radars may split the incoming signal as depicted in Figure 7-14. Upper antennas receive the A and B signals. Lower antennas receive the C and D signals. The various combinations of signals are processed and compared by simple addition and subtraction of the signal characteristics. From these steps, azimuth, range and elevation data are computed.

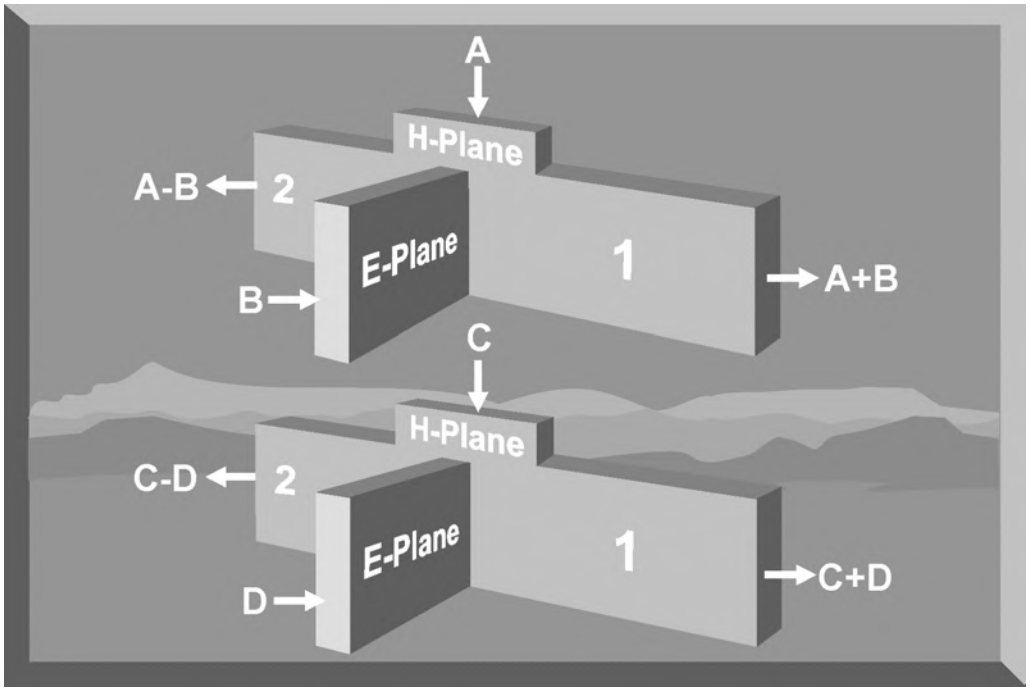

Figure 7-14. Magic T Output Signals

(1) The top equation in Figure 7-15 is used to compute target range. Target range is derived by adding the signal from the A scan to the signal from the B scan. This value is then added to the sum of the C and D scan signals. The output of these combinations is then passed to the range circuit which figures out the range of the target and displays it to the operator. Monopulse range tracking is accomplished by using either a leading-edge or split-gate tracking loop.

(2) Target elevation tracking error is derived using the middle equation from Figure 7-15. The signal from the A scan is added to the signal from the B scan. The signals from the C and D scans are also added. This time, however, the sum of A+B is subtracted from the sum of C+D. This value is then passed to the elevation circuit. Elevation signals are sent to the operator display and the servo mechanism, which corrects to the updated position of the target.

(3) The bottom equation from Figure 7-15 is used to compute the azimuth error. The signal from the A scan is added to the signal from the C scan. The B and D scans are also added together. The sums of these values are subtracted from each other. This difference equals the tracking error in azimuth. The radar system will then position the search beam to even the energy level between the two pairs of sums. When this occurs, the azimuth tracking error is zero.

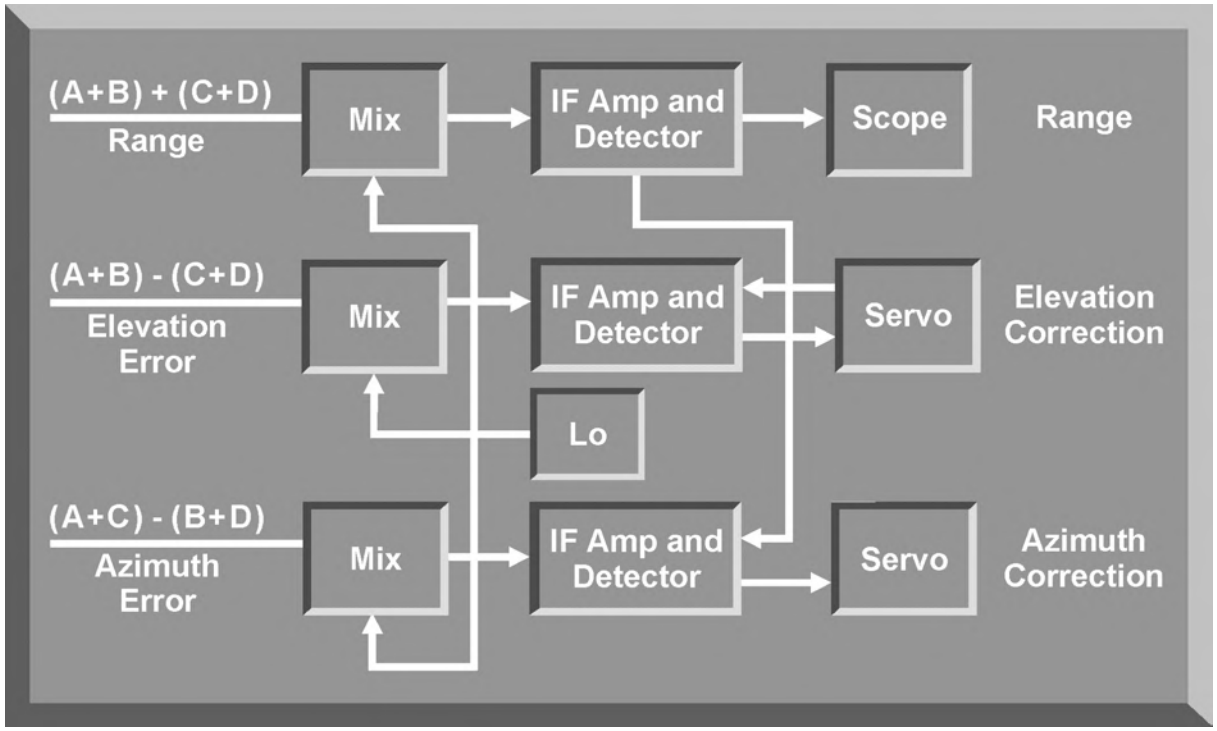

Figure 7-15. Monopulse Tracking Loops

c. A further illustration of the idea of signal combinations can be seen by referring to the F-16 in Figure 7-16. All the energy is received in the B scan area.

The A scan signal is added to the B scan signal. The signals from the C and D scans are also added. However, the sum of A+B is now subtracted from the sum of C+D. In this case, the values from the A scan and the C scan are zero. This total value of (A+B) - (C+D) is then passed to the elevation circuit.

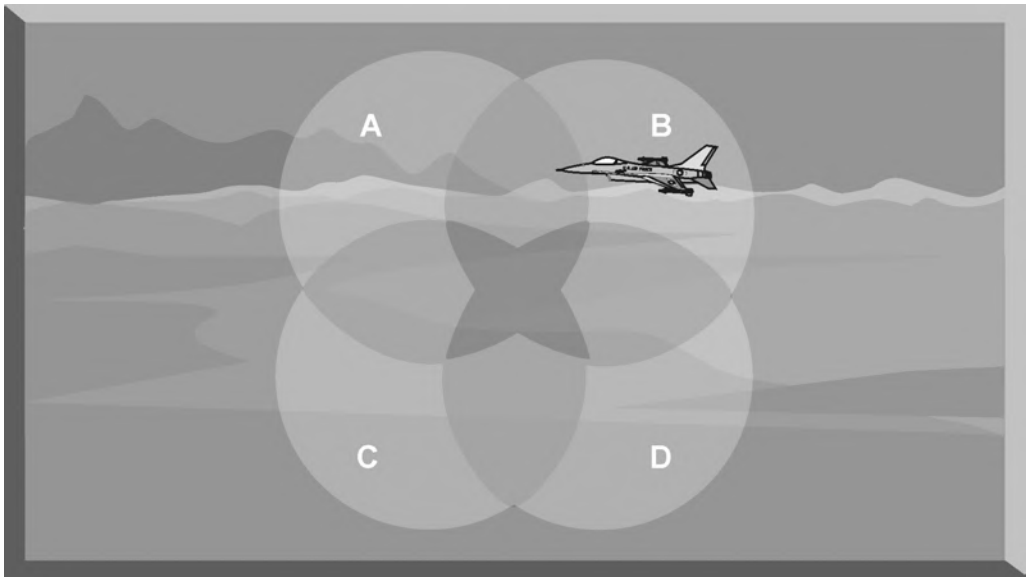

Figure 7-16. Monopulse Elevation Tracking Error

(1) The comparison in Figure 7-17 shows that all the energy is in the B scan. The radar will reposition the scan vertically to balance the energy between the B and D scans. When the energy level is balanced, the elevation error is zero.

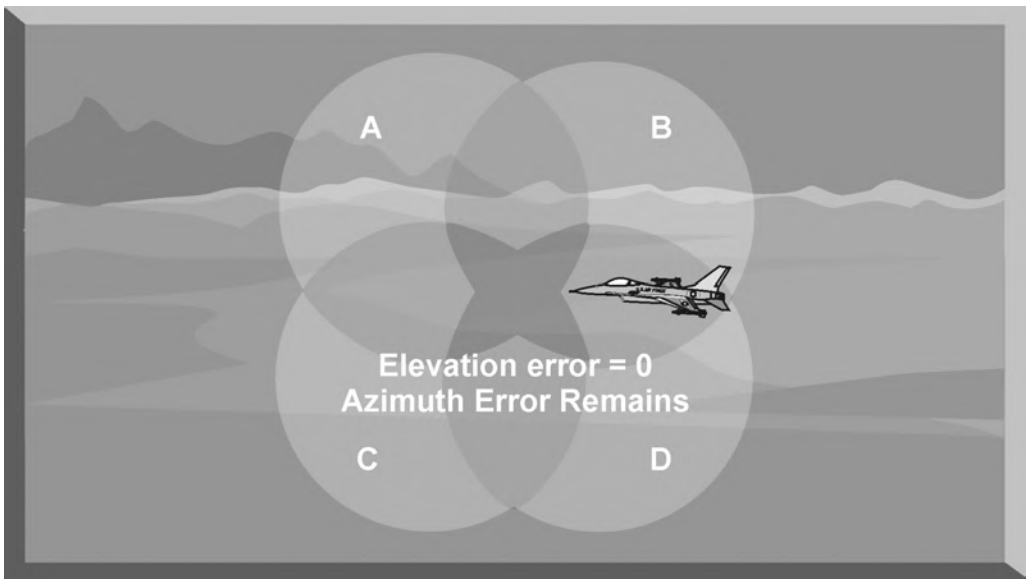

Figure 7-17. Monopulse Elevation Track

(2) Using the azimuth error equation from Figure 7-15, the azimuth tracking loop computes the azimuth error and repositions the antenna to equalize the received energy in all the beams. The monopulse radar has now established a tracking solution (Figure 7-18). All these computations are done instantaneously on a pulse-to-pulse basis.

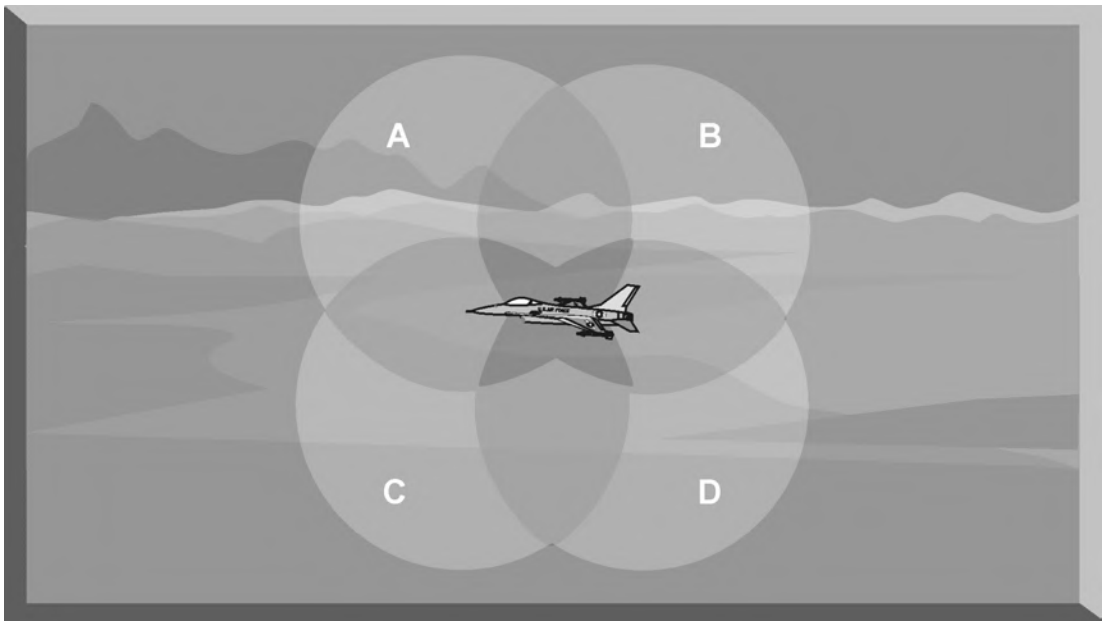

Figure 7-18. Monopulse Azimuth Track

7. CONTINUOUS WAVE (CW) RADARS

CW radar was one of the earliest forms of radar systems. Unlike pulse radar systems, CW radars emit a continuous beam of RF energy with no interruptions in the transmissions to detect returning echoes. A continuous radar transmission from the antenna requires that a classic CW radar have two antennas, one for transmission and one for reception (Figure 7-19).

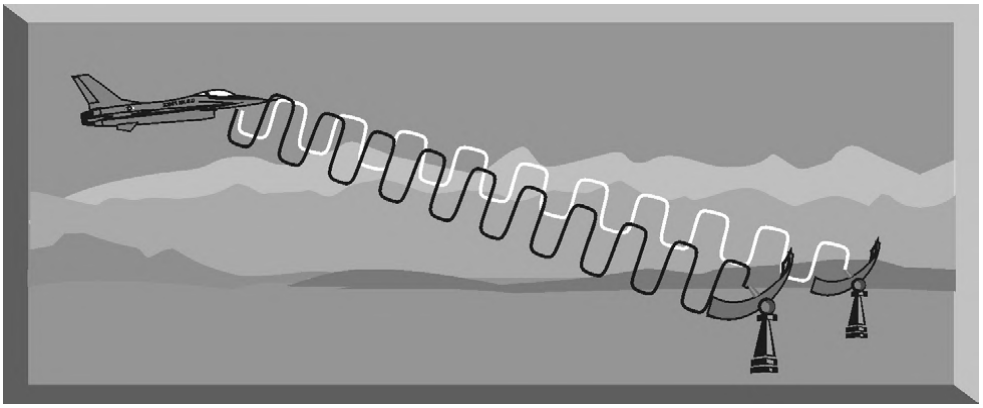

Figure 7-19. CW Radar

a. Since a continuous transmission results in a continuous echo signal, it is impossible to tell what part of the echo is associated with any particular part of the transmission. This makes range typical determination impossible. The azimuth and elevation tracking capability of a CW radar is based on the antenna position when the target is illuminated. The simple application of the Doppler principle provides a means for a CW radar to track a target in velocity and reject clutter. The Doppler principle deals with the fact that a radar return from a moving target will be shifted in frequency by an amount proportional to its radial velocity compared with the radar site. Using the difference in frequency from the transmitted signal to the received signal, a CW radar can separate the target return from clutter based on a change in frequency. This type of radar is called a CW Doppler radar.

b. The most serious disadvantage of a simple CW Doppler radar is that it does not provide any range information on the target. One method of obtaining range information from a CW radar uses frequency modulation (FM). The modulation can be sinusoidal, sawtooth, triangular, or any shape, as long as the rate of frequency change is known. The transmitter emits a continuous signal, but the frequency is changed in a known pattern. When the echo returns from the target, it is then compared to the frequency being transmitted. This frequency difference is directly proportional to the range of the target.

(1) Figure 7-20 shows how a FM CW radar measures range. Using a triangular wave for modulation, a plot of transmitted frequency over time would look like the solid line. It is important to note that this is not a depiction of the transmitted wave but a plot of how the frequency of the wave varies with time. For a target, without any relative motion, the frequency returning to the receiver is depicted by the dotted line. The target echo frequency lags the transmitted frequency by time (t). There is also a frequency difference between the transmitted and received signals. Range to the target may be computed by measuring this frequency difference and dividing by the rate of change of the transmitted frequency. The result is time. Dividing this time by 12.4 microseconds per radar mile yields range to the target. The frequency difference is constant for a target, without any relative motion, except for the brief intervals when the change in frequency goes from a positive to a negative slope. These “ditches” are negligible and can be disregarded when calculating range. The average amplitude is equal to target range.

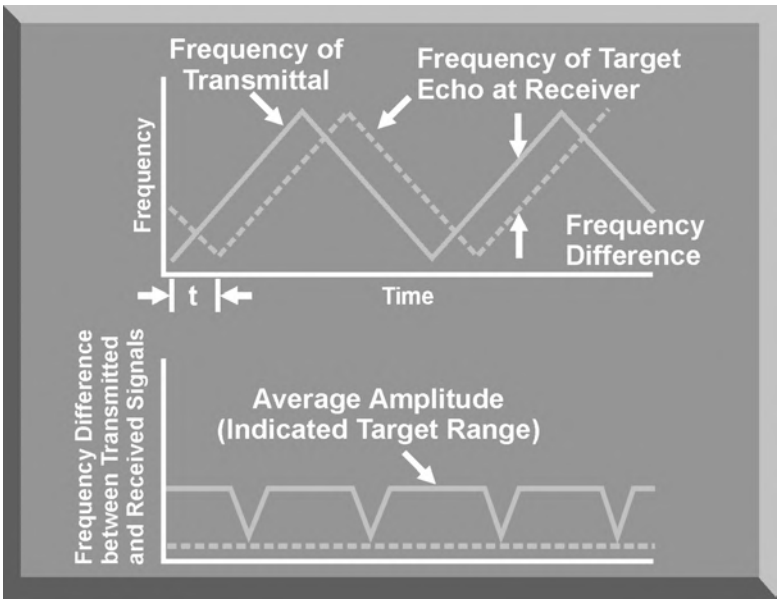

Figure 7-20. FM CW Radar Range Determination (No Relative Motion)

(2) For a target moving toward the radar, the FM CW radar measures both target range and velocity. In Figure 7-21, the frequency of the return signal will be increased as depicted by the dotted line. Remember, this is a graph of frequency versus time, not a depiction of the radar wave. For a moving target, this results in a varying frequency difference. A plot of the frequency difference over time provides target range by averaging the difference, while target velocity is found by comparing the two frequency differences.

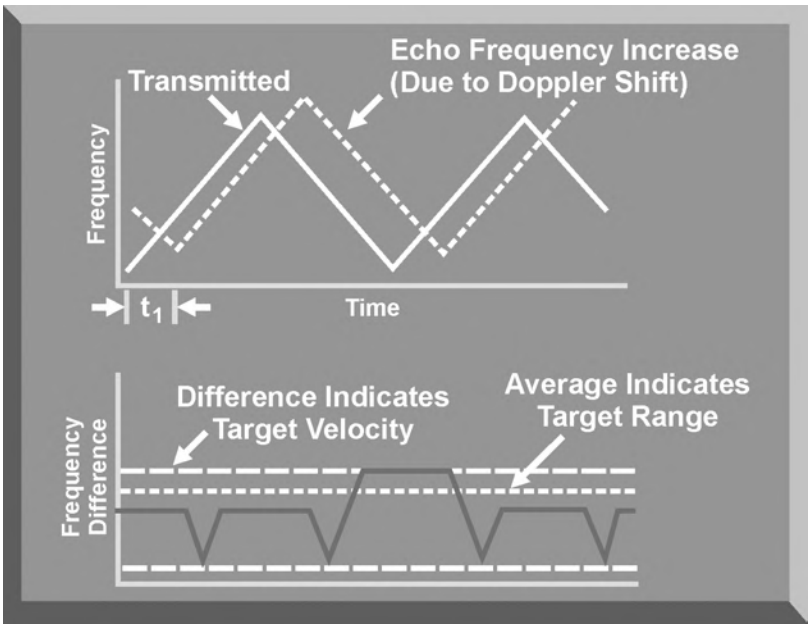

Figure 7-21. FM CW Radar Range Determination (Relative Motion)

c. The primary advantage of the FM CW Doppler radar is its ability to combine the clutter rejection features of a simple CW Doppler radar with the capability to detect range. The widest application of FM CW Doppler radars is in radar altimeters for aircraft. In addition, the HAWK missile system uses an FM CW Doppler acquisition radar and a CW target illuminator.

d. Another method used for clutter rejection in a pulse radar system is to employ special circuits, or Doppler processing, to identify and reject clutter. These special circuits are added to the receiver section of a pulse radar and are called moving target indicators (MTIs). There are two types of MTIs, non-coherent and coherent.

(1) The earliest form of MTI was called non-coherent MTI or "area" MTI. Non-coherent MTI radars do not process Doppler frequencies. The returns from one scan are subtracted from returns from the next scan. All targets that move at least one resolution cell in the time between scans are displayed. All stationary objects, including fixed clutter, are cancelled and not displayed. In this type of MTI, clutter cancellation is based on the size and movement of the return. Due to changes in the clutter cross section, instabilities in radar operations, variations such as rain or clouds, and noise from the transmitter, clutter cancellation is never complete. In another form of non-coherent MTI, the radar returns from moving targets are compared to the returns from fixed targets, and the fixed targets are cancelled. These non-coherent MTIs are simple, but they do not provide the clutter rejection available from coherent MTI radars.

(2) A coherent MTI uses the fact that Doppler shifts appear to a pulse radar as phase shifts on the received target pulse. Coherent MTI uses sophisticated circuitry, including stable local oscillators (STALOs) and coherent local oscillators (COHOs) to capture and process these phase shifts. Further processing of these phase shifts yields velocities for each return. Those velocities associated with stationary targets are rejected and only moving targets are displayed. Coherent MTIs have a major problem called "blind speeds." Blind speeds occur for all target Doppler frequencies that are the exact PRF, or any multiple of the PRF, of the radar signal. When a target is moving at a velocity that produces this Doppler frequency, its return is cancelled along with fixed returns.

(3) There are three techniques to limit "blind speeds." The first technique is to use a PRF stagger. By staggering the PRF, the blind speed associated with one PRF will be covered by the other PRF. The second method is called the delay line and canceler. This involves delaying each pulse so it can be compared to the next pulse before processing. This method enhances Doppler frequency comparison and rejects clutter more effectively. The third way is to use range gates and Doppler filters. A range gate is simply a switch that opens for a time corresponding to the time a radar return would arrive for a target at a specific range. For example, a range gate for all targets between 10 and 11 nautical miles would open 124 microseconds after the transmitted pulse (12.4 microseconds per mile) and close 12.4 microseconds later. A target return at this range would trip

this gate and be processed by Doppler filters to find velocity. Fixed targets would trip the range gate and be eliminated by the Doppler filters. This is a sophisticated technique that is also used by pulse Doppler radars.

8. PULSE DOPPLER RADAR

Pulse Doppler radars combine the advantages of both pulse and Doppler radar systems. Because the signal is pulsed, the radar can find range, azimuth, and elevation, similar to a conventional pulsed radar. A pulse Doppler radar can also compute overtake, or rate of closure, compared with the radar system on a pulse-to-pulse basis. A pulse Doppler radar operates much like an MTI, and the terms are sometimes used interchangeably. However, an MTI uses Doppler frequency shifts only to reject clutter while a pulse Doppler radar uses Doppler frequency shifts to reject clutter and to track targets in velocity. A pulse Doppler radar transmits a box or pulse of RF energy at the operating frequency of the radar (Figure 7-22). The frequency inside these boxes reacts the same way as the continuous waves of a CW radar, but since the RF waves are pulsed, range determination can be accomplished by measuring the time it takes for the reflected pulse to return from the target. Velocity determination and tracking are accomplished by capturing and quantifying the Doppler shift of the frequencies in each pulse.

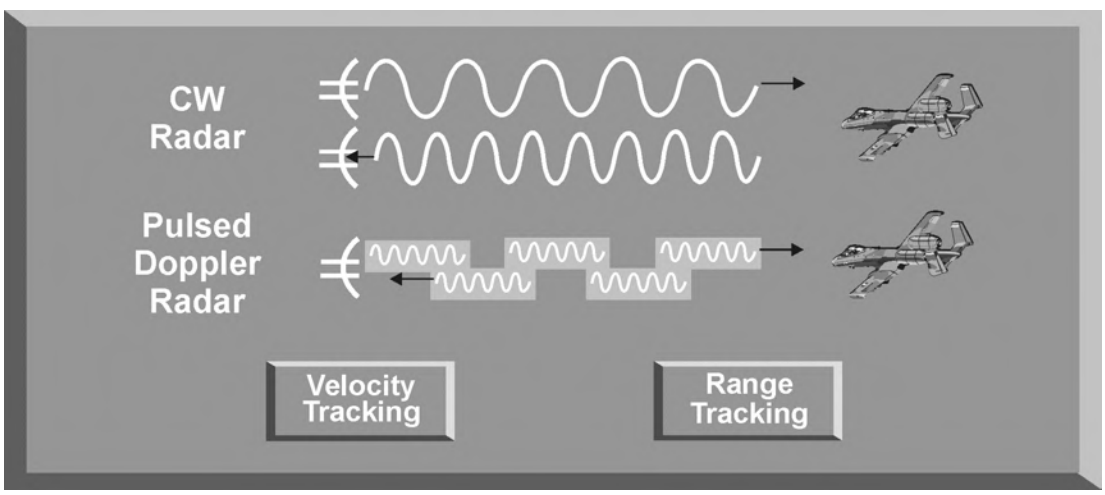

Figure 7-22. Comparison of CW Radar and Pulse Doppler Radar

a. A pulse Doppler radar tracks a single target in azimuth and elevation by employing either conical scan (sequential lobing) or monopulse tracking. Angle and elevation tracking employing these techniques is covered in Sections 3 and 6 of this chapter. The error signals generated by these techniques are sent to the antenna servos to keep the target return centered in the antenna beam.

b. Range tracking of a single target in a pulse Doppler radar is normally accomplished by a split-gate or leading-edge range tracking loop. Some pulse

Doppler radars employ an FM technique to provide range information during high PRF operations.

c. For velocity tracking, each range gate has a complete set of Doppler filter banks as depicted in Figure 7-23. Each pulse of RF energy is composed of many frequencies. To separate the returning target frequency from all other frequencies in the returning waveform, the pulse Doppler radar employs filters to cancel the unwanted frequencies. In addition, it cancels out all returns with no frequency shift, which equates to canceling all returns with no movement relative to the radar.

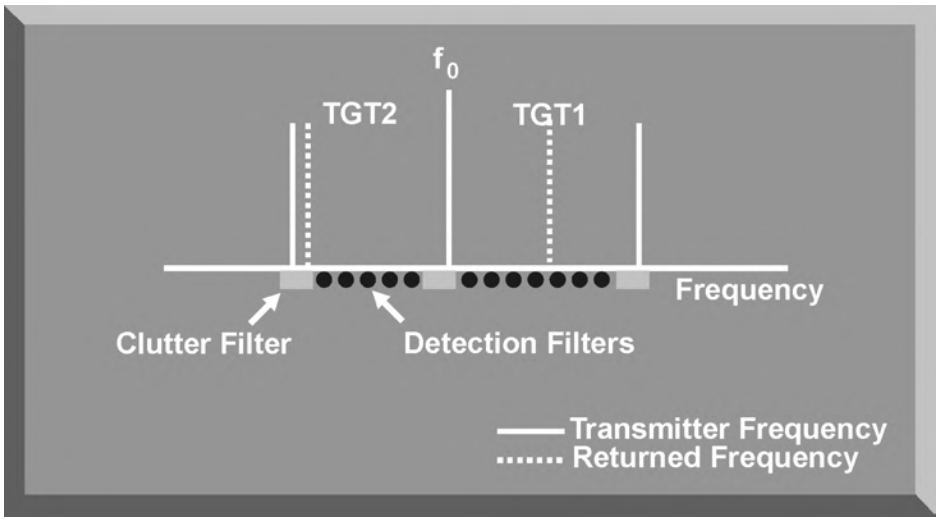

Figure 7-23. Range Ambiguity

d. The ability of a pulse Doppler radar to accomplish range, azimuth, and velocity tracking is dependent on the PRF of the radar. Table 7-1 summarizes these capabilities based on PRF. Low PRF tracking in velocity is extremely difficult due to the spacing of the spectral lines. Low PRF gives accurate range and azimuth as well as long, unambiguous range. Medium PRF tracking in range, azimuth, and velocity is easy for the radar to handle. High PRF provides excellent velocity resolution, but range ambiguities become a problem.

Table 7-1. Pulse Doppler Tracking Capabilities

Prefix	Velocity	Range	Azimuth
Low PRF	Poor	Good	Good
Med PRF	Good	Good	Good
High PRF	Excellent	Poor	Good

e. Weaknesses of pulse Doppler radars include velocity blind speeds, range ambiguity, and range eclipsing.

(1) The primary operator exploitable weakness of a pulse Doppler radar takes advantage of the pulse Doppler radar's biggest strength. The pulse Doppler is designed to eliminate ground returns so that the attacker is able to track an aircraft that used to be able to hide in ground clutter. To remove the ground clutter and avoid tracking unwanted targets like cars on a road, a filter is designed in the radar to eliminate all targets with a low velocity relative to the radar. The key to breaking track of a pulse Doppler radar is to place the aircraft in a speed less than the speed gate relative to the radar (Figure 7-24), commonly referred to as the Doppler notch.

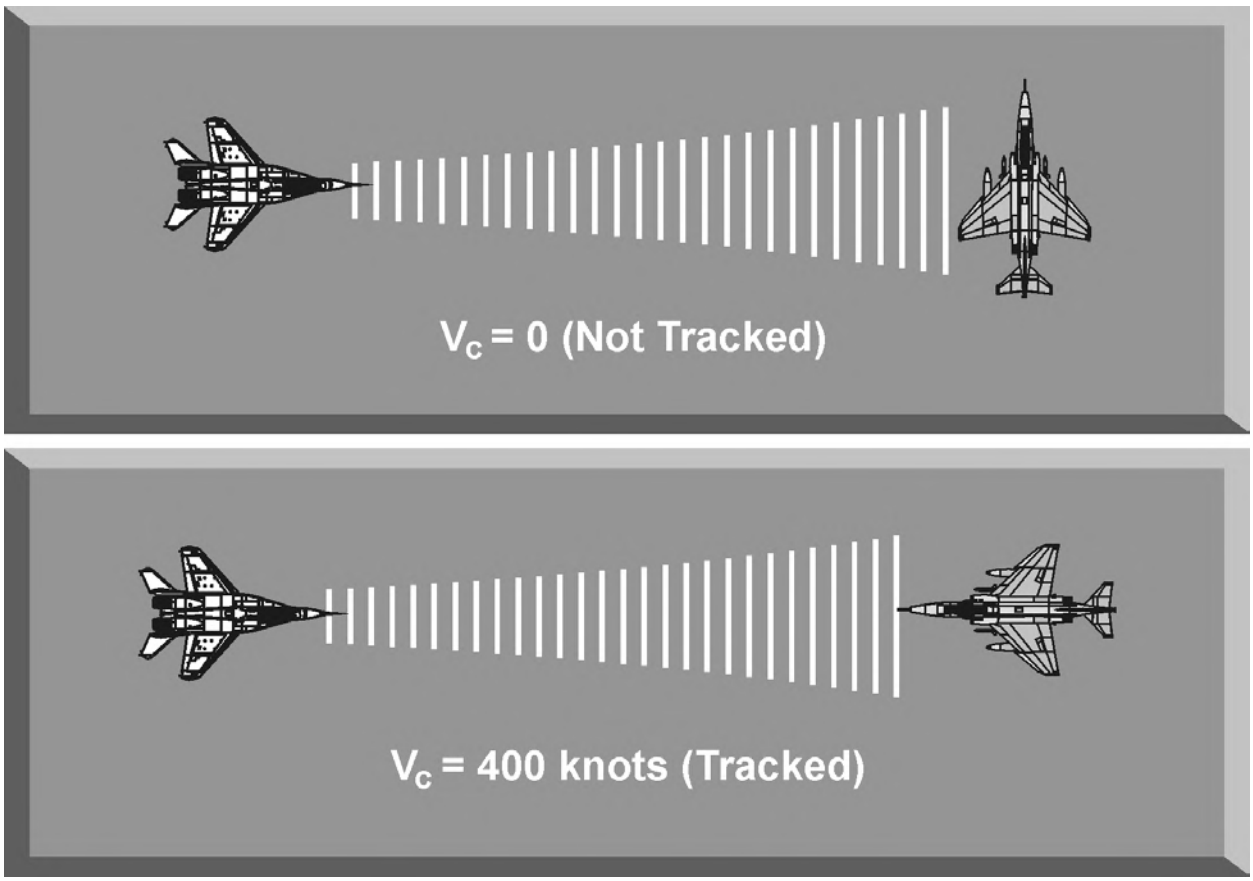

Figure 7-24. Pulse Doppler Speed Gate

(2) Range ambiguity occurs primarily with long-range targets when the return comes back to the radar after another pulse has already been transmitted (Figure 7-25). The radar will see this return and base its range calculations on the transmission time of the immediately preceding pulse, instead of the pulse that generated the return. The result will be an incorrect range calculation.

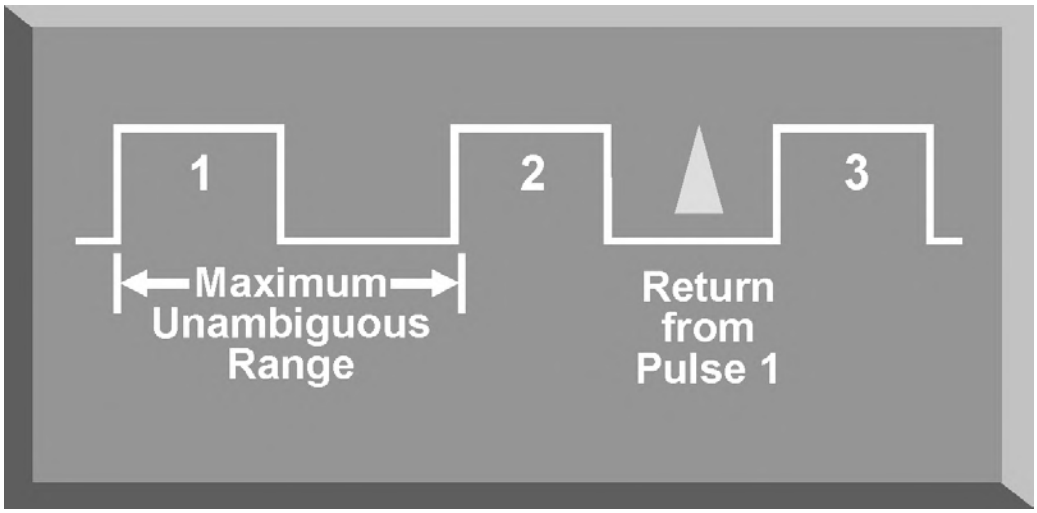

Figure 7-25. Range Ambiguity

(3) Range eclipsing occurs when a target return comes back to the radar antenna while a pulse is being transmitted (Figure 7-26). Since the radar cannot receive while transmitting, the return will not be displayed.

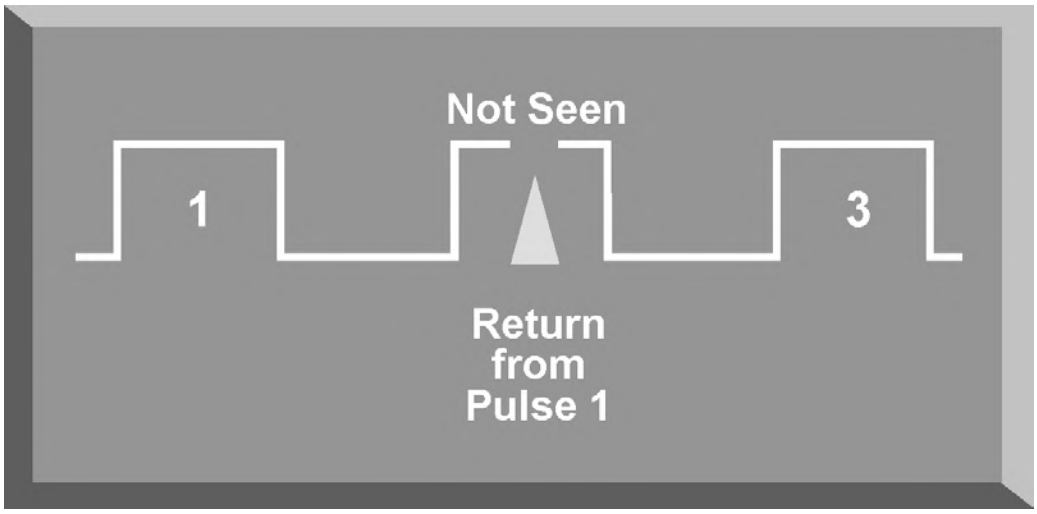

Figure 7-26. Range Eclipsing

(4) To solve the problems of range ambiguity and eclipsing, a pulse Doppler radar employs different PRFs and computer logic. In Figure 7-27, at PRF 1, the return from target 1 is eclipsed, and target 2 is ambiguous. By changing the PRF slightly, these range problems can be resolved. Notice that at PRF 2, neither target is eclipsed, and at PRF 3, target 2 is eclipsed. The computer logic needs to be extremely advanced to compensate for these problems. These simplistic examples show the complex problem of using multiple PRFs.

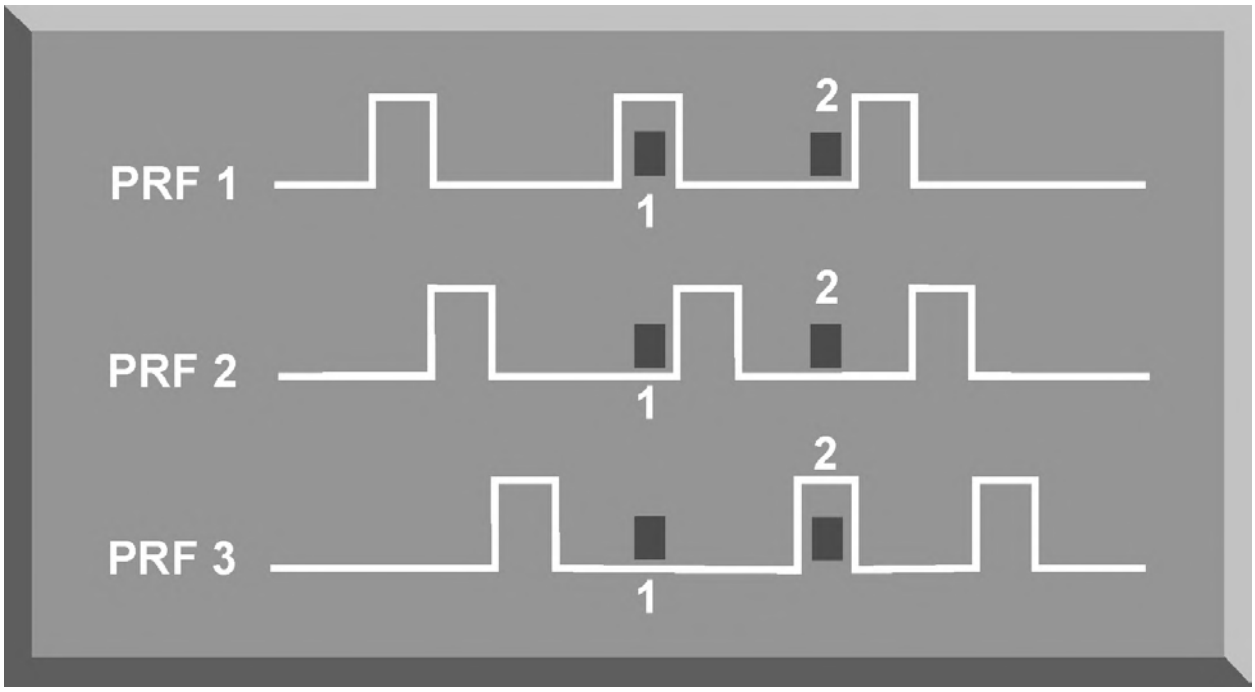

Figure 7-27. Resolving Range Ambiguity and Eclipsing

9. SUMMARY

This chapter has discussed the range, azimuth, elevation, and velocity tracking techniques employed by conical scan, TWS, LORO, monopulse, CW Doppler, and pulse Doppler radar systems. The method used by a specific radar system to track a target determines the type of jamming technique required to counter this system. A basic understanding of the target tracking techniques will enable you to understand the basic jamming techniques employed to defeat these threats.

CHAPTER 8. RADAR MISSILE GUIDANCE TECHNIQUES

1. INTRODUCTION

Once a target has been designated, acquired, and tracked by a radar system, the final stage in target engagement is to guide a missile or projectile to destroy the target. There are three basic requirements for successful missile guidance: (1) precise target tracking by a target tracking radar (TTR) to provide target parameters (range, azimuth, elevation, velocity, etc.), (2) a method to track the position of the missile compared with the target, and (3) a fire control computer to generate missile guidance commands based on target and missile position. The missile guidance techniques employed by modern air-to-air and surface-to-air missile (SAM) systems will be covered in this chapter. In addition, the target engagement techniques employed by antiaircraft artillery (AAA) systems will also be discussed. There are three distinct phases in any missile intercept: boost, mid-course, and terminal.

a. Nearly all missiles are unguided during the initial boost phase (Figure 8-1). During the boost phase, the missile electrical and hydraulic systems are activated and are coming up to operating parameters. The missile is gathering speed and normally will be in an unguided mode of flight.

Figure 8-1. Initial Boost Phase

b. During the mid-course phase, the missile is actively being guided to the target using some type of guidance signal (Figure 8-2). Guidance signals deflect

the control vanes of the missile to change its direction. These vanes change the roll, pitch, and yaw, in some combination, to control the missile flight path. Normally a gas grain generator powers a small hydraulic pump that deflects the control vanes in response to guidance signals. Each missile carries a limited supply of hydraulic fluid for maneuvering. The fluid is expended through vents with every control surface activation. The limited quantity of hydraulic fluid can be a significant factor during a long-range missile intercept.

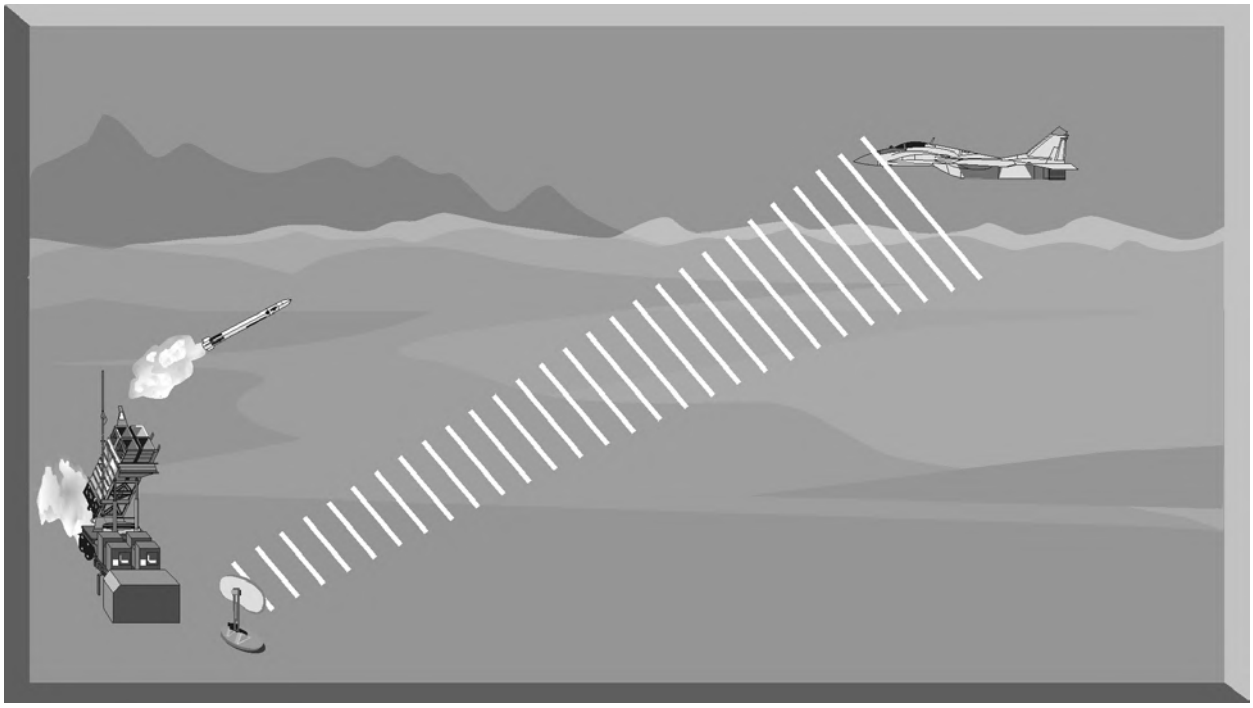

Figure 8-2. Mid-Course Guidance Phase

c. The final phase of an intercept is the terminal phase (Figure 8-3). During this phase, the missile attempts to pass close enough to the target to detonate the fuse while the target is within the lethal radius of the warhead. Modern missiles employ both a contact fuse and some type of proximity fuse. Proximity fuses range from command detonation for command-guided missiles, fractional Doppler gates for semi-active guided missiles, to active laser fuses for IR-guided missiles.

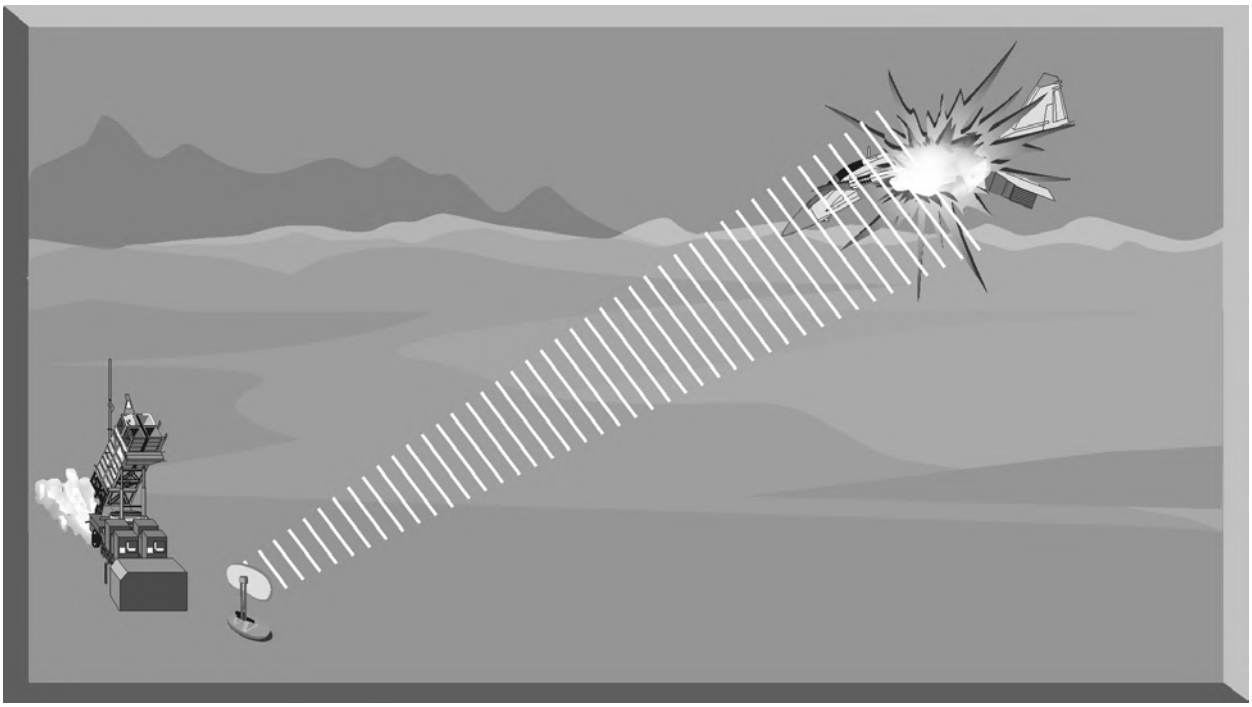

Figure 8-3. Terminal Guidance Phase

2. COMMAND GUIDANCE

Command guidance uses a fire control computer to constantly send course correction commands to the missile throughout its flight. These commands are a series of electrical missile guidance pulses called doublets or triplets. These pulses provide steering commands to the missile by varying the spacing between each guidance pulse. Each pulse, or pulse combination, relays some roll, pitch, and yaw command to the missile. These inputs are constantly corrected for the spatial relationship between the missile and the target's present position and rate of motion. Guidance commands are passed to the missile by specialized antennas on the TTR and an antenna installed on the missile, called a missile beacon. The beacon is a special radio receiver and transmitter that is attached to the rear of the missile. It acts like a transponder in that the TTR tracks and receives guidance commands. The guidance frequency may be widely separated from the target tracking radar frequency to minimize interference. This beacon is usually masked until missile booster separation. This results in the missile being launched unguided for the first 2-3 seconds. This type of delay is one of the reasons that all command-guided missile systems have a minimum launch range. Command guidance is used by the SA-2, SA-3, SA-4, and SA-8.

a. Command-guided missiles will generally fly a rectified (full or half) or three-point pursuit geometry during the mid-course portion of the intercept (Figure 8-4). However, a command-guided missile may transition to a pure pursuit geometry during the terminal phase of the intercept. Rectified geometry involves the prediction of where the target and the missile will be at some point in the future.

The target's direction and rate of movement is tracked and predicted. The missile is then launched, pulls lead on the target, and is guided to the point in the sky where the intercept is predicted to take place. This profile requires the constant update of both the target and missile positions.

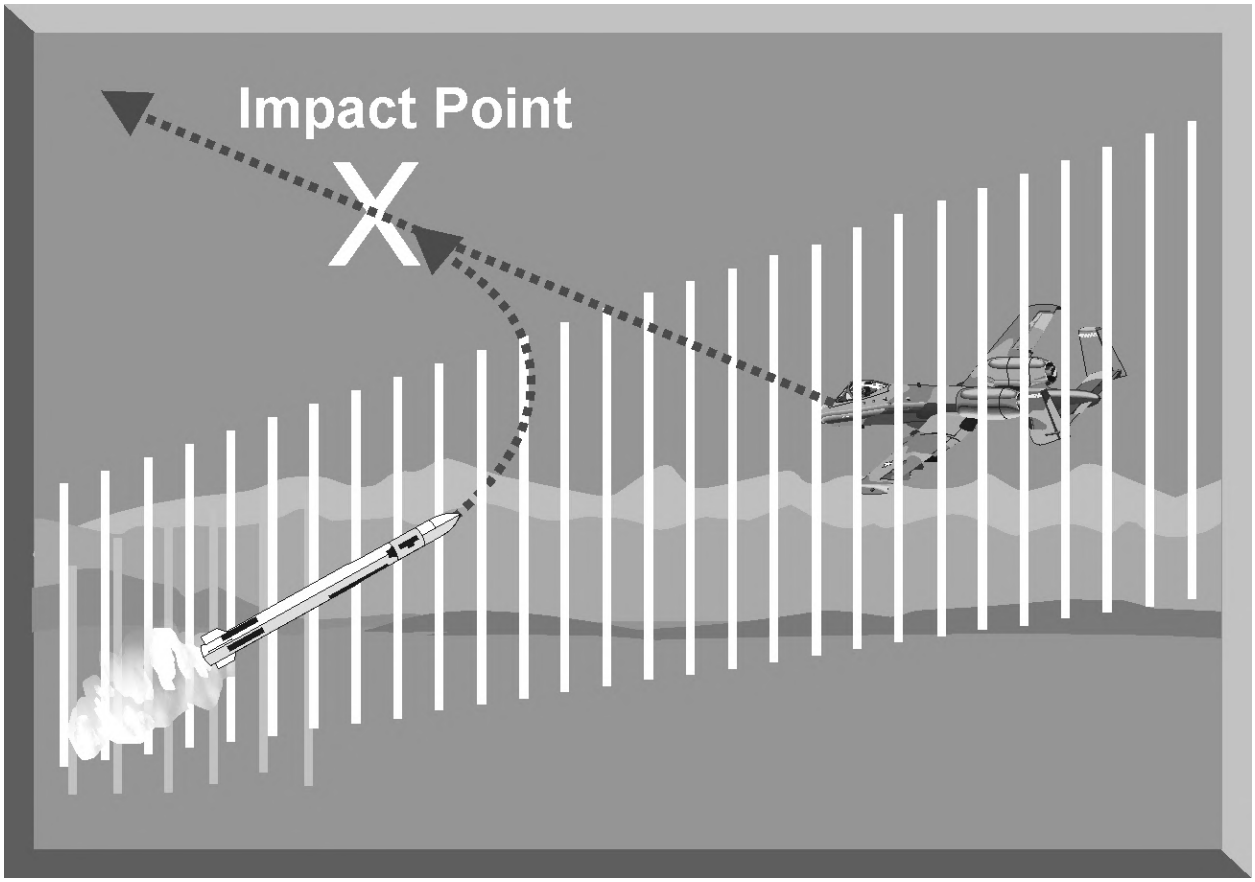

Figure 8-4. Rectified Flight Profile

b. Three-point pursuit geometry is often used when there is incomplete range tracking data on the target. In this case, it will be impossible to predict exactly where the target will be at some point in the future. In this profile, the target tracking radar constantly tracks the target. The missile location will be updated by the missile beacon. The fire control computer will direct the missile to fly directly down the tracking radar beam toward the target. In this geometry, the missile may start out on a direct intercept course and, depending on the target's direction and rate of movement, transition to a pure pursuit intercept. The three points in three-point missile geometry are depicted in Figure 8-5. Point one is the target tracking radar, point two is the missile itself, and point three is the target. By keeping all three points always in a line, the missile will intercept the target at some point, although the range of the target is unknown.

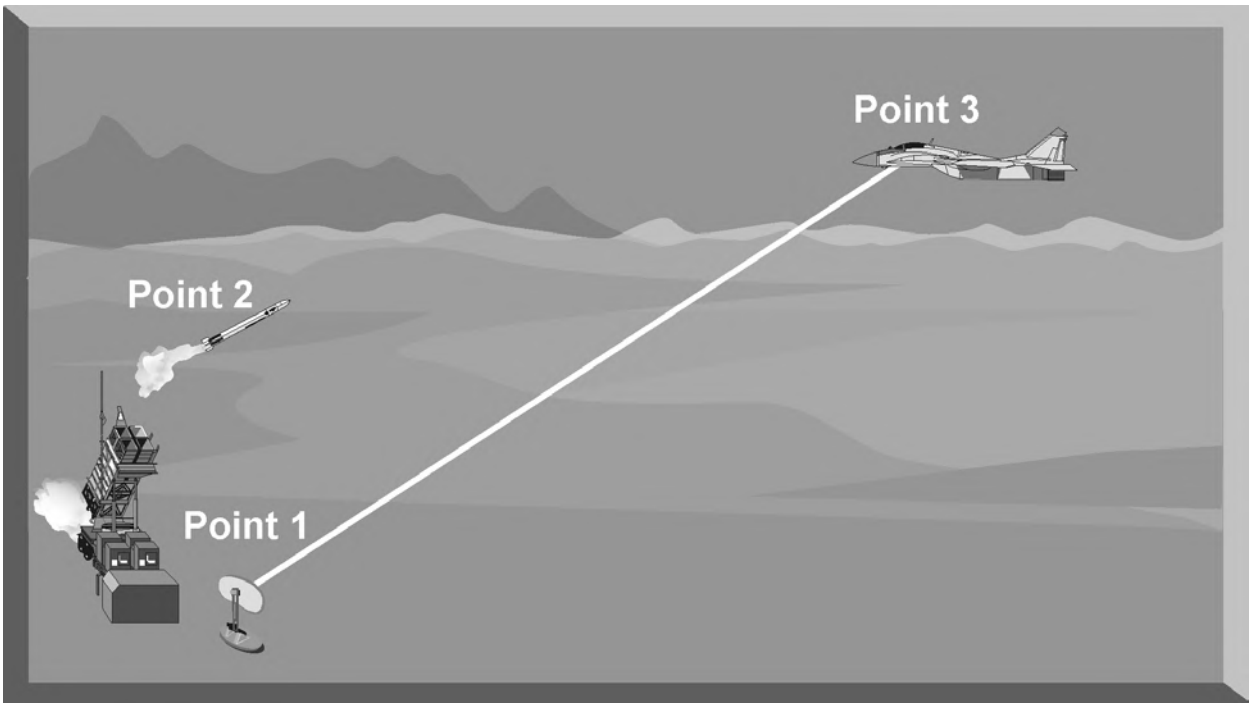

Figure 8-5. Command Guidance: Three-Point Pursuit

c. Command guidance techniques have many advantages. First, command-guided missiles can adjust their flight geometry throughout an intercept profile. Second, the missiles are uncomplicated since they do not carry onboard computers or target tracking equipment. The fire control computer associated with the TTR accomplishes all intercept calculations. Third, the primary intercept profile, a full- or half-rectified intercept, is the fastest and most fuel-efficient intercept. Fourth, command guidance is difficult to jam since the missile beacon antenna is at the rear of the missile and can be relatively high-powered. And finally, an intercept is possible even without accurate range information by using the three point intercept profile.

d. Command guidance has several disadvantages. First, the use of a missile beacon delays the capture of the missile by the tracking radar. This can cause a large dead zone which equates to a larger minimum engagement range. Second, the accuracy of the intercept geometry is only as good as the tracking information provided by the target tracking radar. Jamming, interference, or loss of signal will adversely affect the intercept accuracy. In addition, normal radar characteristics could produce sufficient errors to cause the missile to miss the target, especially at longer ranges. Third, with insufficient range information, the three-point intercept profile is very slow and could result in the missile running out of energy before it gets to the target. Fourth, command guidance is reactive. The fire control computer constantly updates the intercept geometry based on target maneuvering. This results in missile maneuvering lagging target maneuvers.

3. SEMI-ACTIVE GUIDANCE

Semi-active guidance is significantly different from command guidance, but only after launch. The first requirement is still for the target tracking radar to maintain a solid target track, with the tracking data being supplied to the fire control computer. The fire control computer then directs a target illumination antenna to point at the target and illuminates it with CW energy. The missile then passively homes on the reflected CW energy.

a. The missile used by a threat system that uses CW homing is vastly different from the missile being guided by a command guidance signal. The missile that homes on CW energy must be equipped with a seeker section composed of an antenna and an internal receiver. The seeker section processes and computes the necessary course corrections as it flies toward the target. It can do this by knowing the zero boresight line of the antenna within the missile (Figure 8-6). As the reflected CW energy is received by the seeker, there is normally some deviation from the zero reference position. The onboard computer then directs the control surfaces to change the flight path to reduce the reference errors in the antenna to zero, if possible. When the error between the antenna position and the boresight position is zero, the missile is pointed directly at the target.

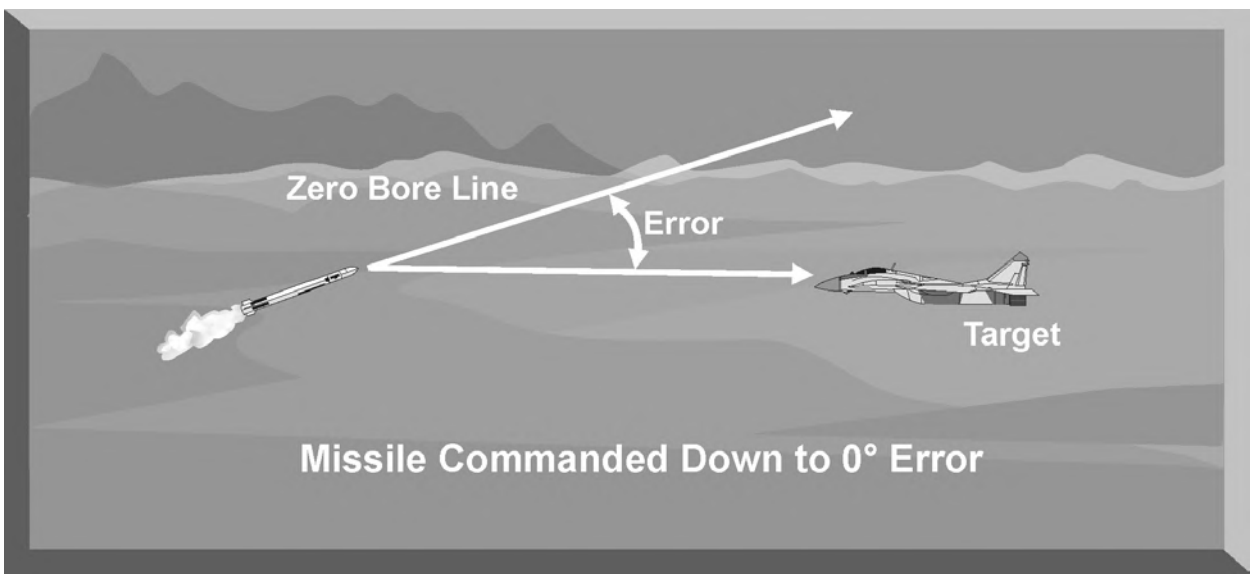

Figure 8-6. Semi-Active Guided Missile

b. Missile systems that use semi-active guidance normally use velocity as the primary target discriminator during the intercept. The missile seeker locks onto a reference Doppler signal provided by the fire control computer before launch. This Doppler signal establishes a tracking gate around the velocity of the target. After the missile is launched, it initially compares the reference Doppler to the target Doppler signal.

c. The mid-course phase for a semi-active missile is also different from that of a command-guided missile. A semi-active guided missile follows the reflected CW energy during the mid-course phase of the intercept and normally attempts to fly a lead pursuit profile to the target (Figure 8-7). If the target maneuvers, however, the missile may transition to a pure pursuit flight path. Unlike a command-guided missile, a semi-active guided missile does not use a missile beacon. The fire control computer does not need to know where the missile is to compute course corrections since all that is necessary is to illuminate the target with the CW illuminator. This also means that the missile can begin to track and guide when it is launched and locked on to the reference Doppler gate. Semi-active guidance is the primary mode of guidance for many surface-to-air missiles, and almost all radar-guided air-to-air missiles.

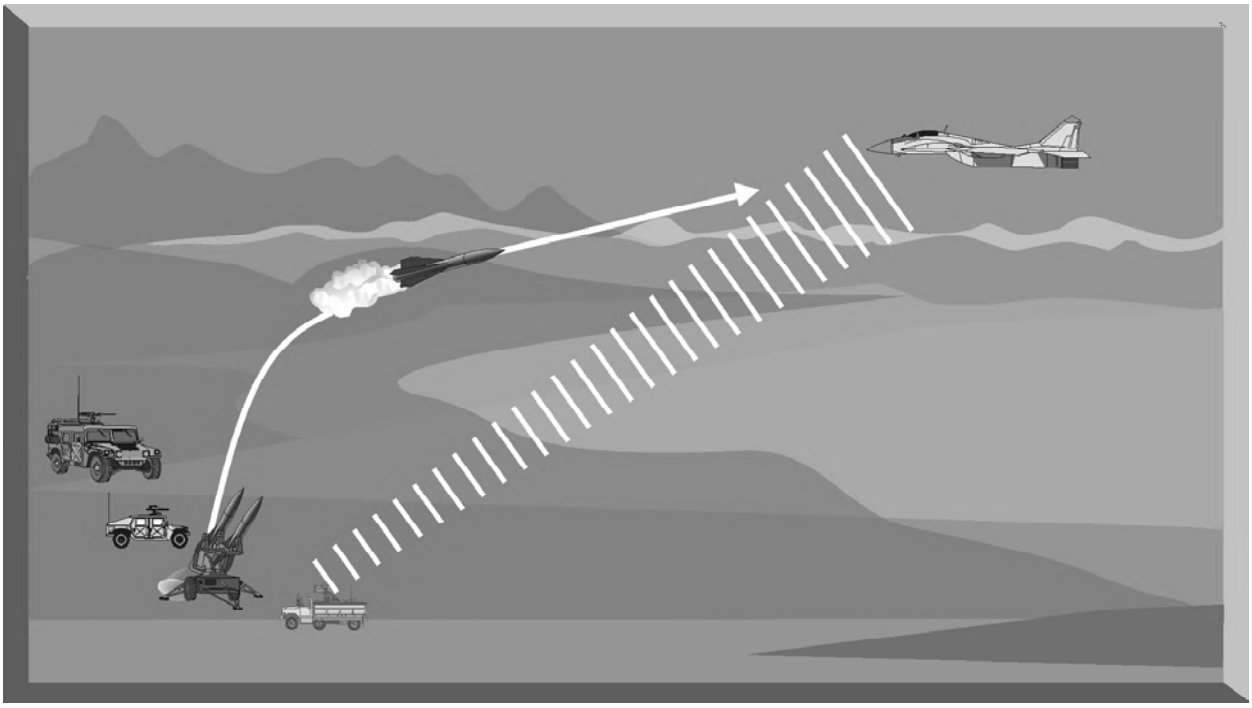

Figure 8-7. Semi-Active Guidance (Mid-Course)

d. As the missile enters the terminal phase of the intercept, there is no change in the guidance mode used by a CW homing missile. The missile may complete the terminal phase of the intercept geometry by going to a pure pursuit flight path, if necessary (Figure 8-8). The missile continues to home in on the reflected CW signal until it passes close enough for the fuse to function.

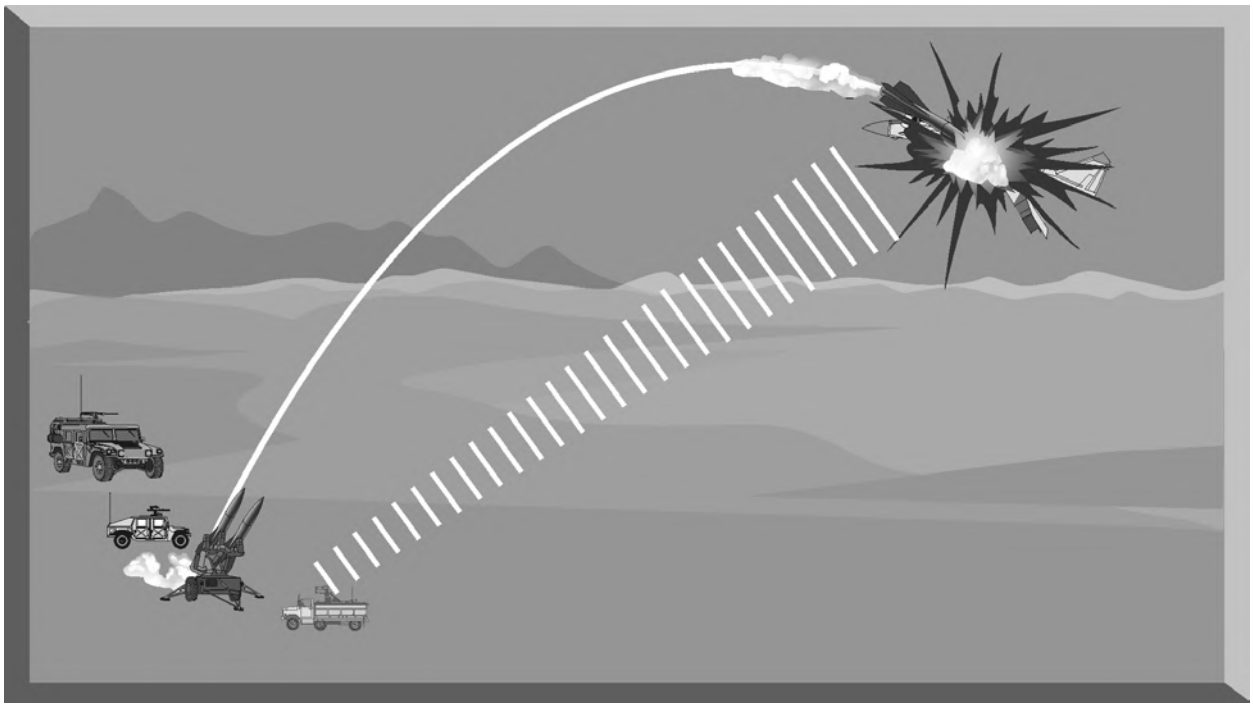

Figure 8-8. Semi-Active Guidance (Terminal Phase)

e. Semi-active missile guidance has many advantages. First, a semi-active guided missile is resistant to electronic jamming that may be used to deny range information. Second, a semi-active missile can be guided almost immediately after launch. This gives it a very small minimum range since it can maneuver almost as soon as it clears the launch rail. Third, it computes its own course corrections as necessary. This allows for a much quicker reaction to target maneuvers compared to a command-guided missile. Fourth, during a long-range intercept, a CW missile can be more accurate than a command-guided missile. This is accomplished by taking the inherent long-range radar tracking errors out of the equation. The target tracking radar only has to keep the target illuminated so that it can point the CW antenna at the target.

f. Although semi-active missile guidance is generally considered an excellent guidance technique, it does have some disadvantages. First, a semi-active guided missile normally requires reference Doppler values to be entered into the missile computer before launch. Without this reference, a semi-active missile cannot be launched (Figure 8-9). Second, a semi-active homing missile must maintain a lock onto the target Doppler. The use of chaff and beam maneuvers, which result in a near zero target Doppler, may cause a missile or radar to break lock. Third, if a break-lock occurs, a CW homing missile normally cannot regain target track and complete the intercept.

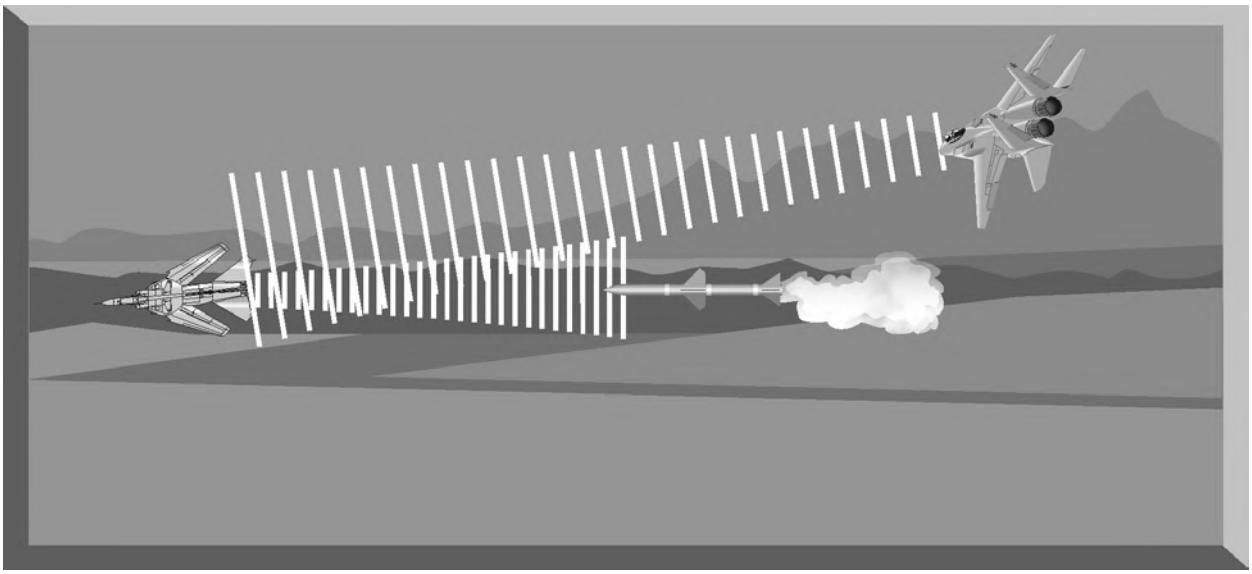

Figure 8-9. Semi-Active Guidance CW Reference Signal

4. ACTIVE GUIDANCE

Active guidance is an improvement that has been included in several new long-range missiles such as the AIM-54 Phoenix and the AIM-120 AMRAAM. This specialized guidance mode is only active during the terminal phase of flight. The mid-course phase usually employs semi-active or command guidance (Figure 8-10).

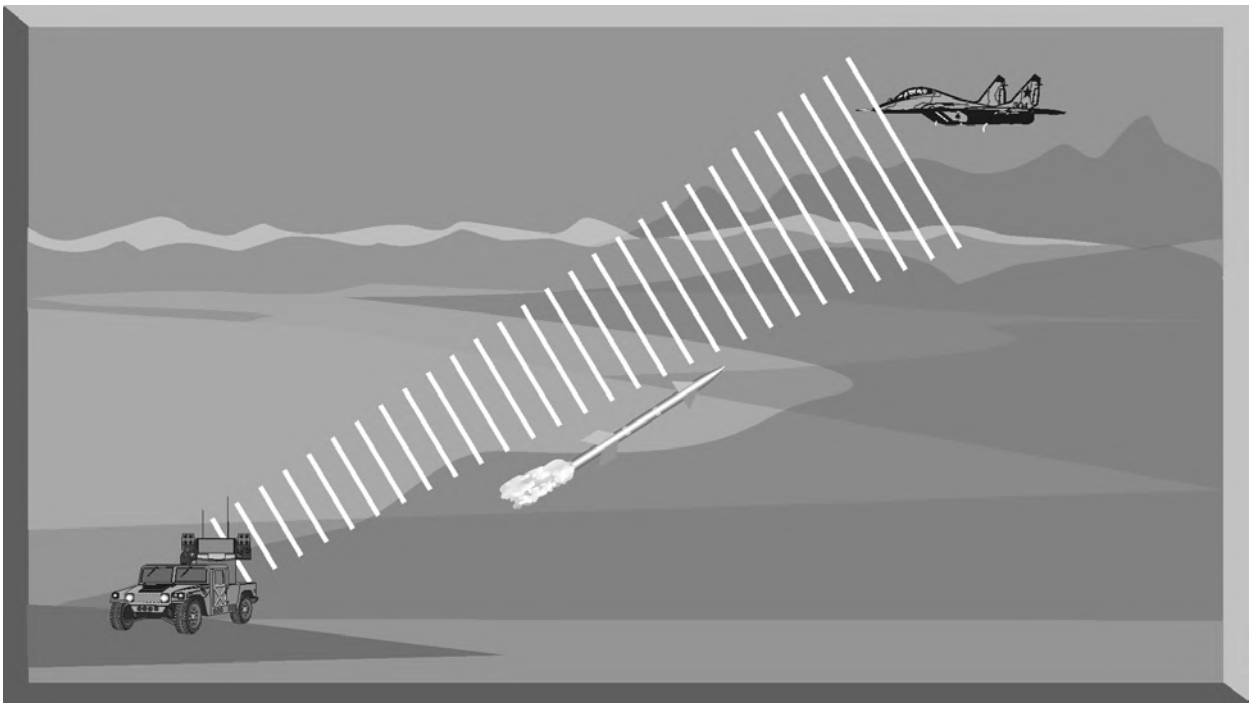

Figure 8-10. Active Guidance Mid-Course Intercept Phase

a. The range at which the missile goes "active" is dependent on the intercept geometry. High-aspect angle intercepts allow the activation of active guidance sooner than beam or tail-aspect intercepts. Missiles that employ active guidance carry a complete miniature radar system and fire control computer within the missile. As the missile nears the target, its internal radar system turns on and locks onto the target. The internal fire control computer directs control inputs to complete the intercept (Figure 8-11).

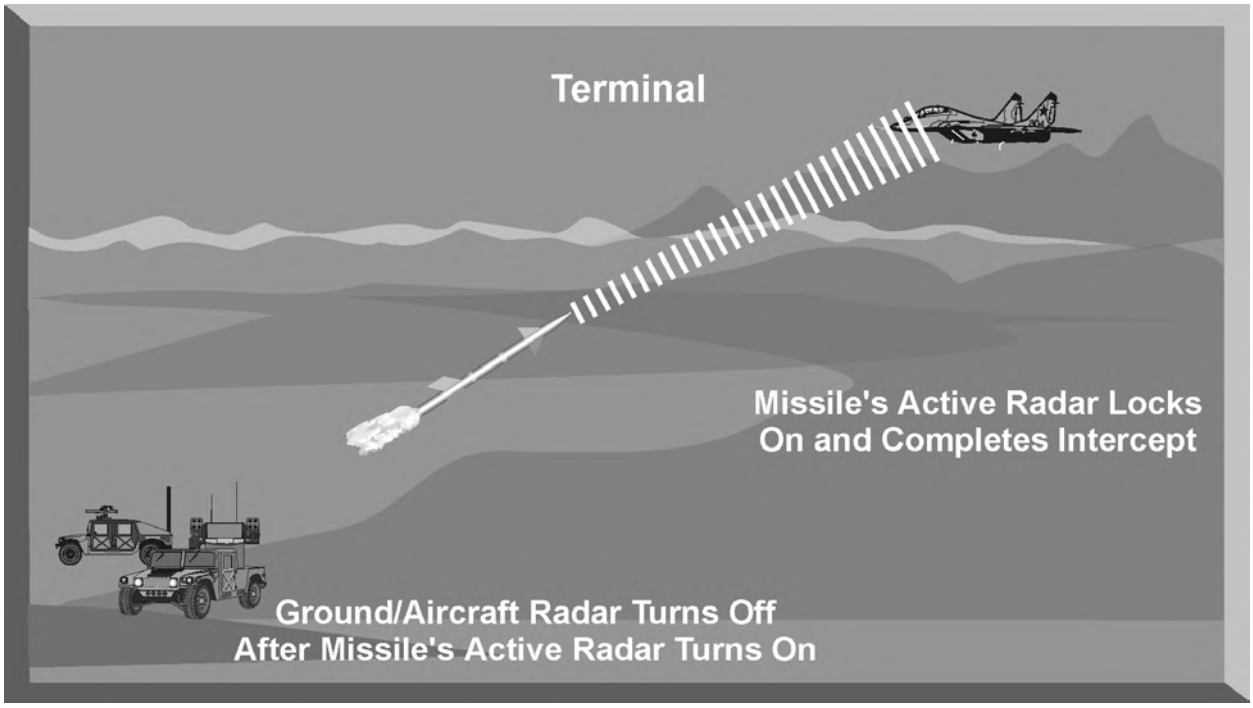

Figure 8-11. Active Guidance Phase

b. Active-guided missiles have many advantages. First, active-guided missiles are very accurate at long ranges. This is because they do not rely on the target tracking radar once their internal radar takes over the intercept. Second, an active missile is extremely difficult to jam. It uses a narrow beam and its relative power is constantly increasing as it nears the target. Third, an active-guided missile is a fire-and-forget weapon. Command or semi-active missile guidance requires the target tracking radar to maintain lock-on until the intercept is completed. In an air-to-air engagement, this means the interceptor is predictable until the missile hits the target, and vulnerable to an enemy missile attack. An interceptor with an active missile, however, may launch the missile and, once it goes "active," can then turn around or maneuver defensively.

c. Active-guided missiles have a few disadvantages as well. First, the active homing missile is a complex missile integrating both command and active guidance modes. Second, the missile may still be susceptible to electronic jamming during the mid-course phase of flight. Remember, during the mid-course

phase, the missile relies on command or semi-active guidance. Jamming the target tracking radar may affect the missile's ability to "see" the target near the terminal phase.

5. SEEKER-AIDED GROUND GUIDANCE/TRACK-VIA-MISSILE GUIDANCE

In seeker-aided ground guidance (SAGG) and track-via-missile (TVM) guidance, the target is illuminated by the ground-based radar and the missile receives reflected energy from the target. Unlike conventional semi-active homing, the missile does not generate its own guidance commands. Instead, the missile transmits raw engagement data to the ground-based fire control system (FCS) in order to generate uplink guidance commands. TVM is similar to SAGG; however, additional processing is done on-board the missile prior to transmitting the engagement data to the ground-based FCS.

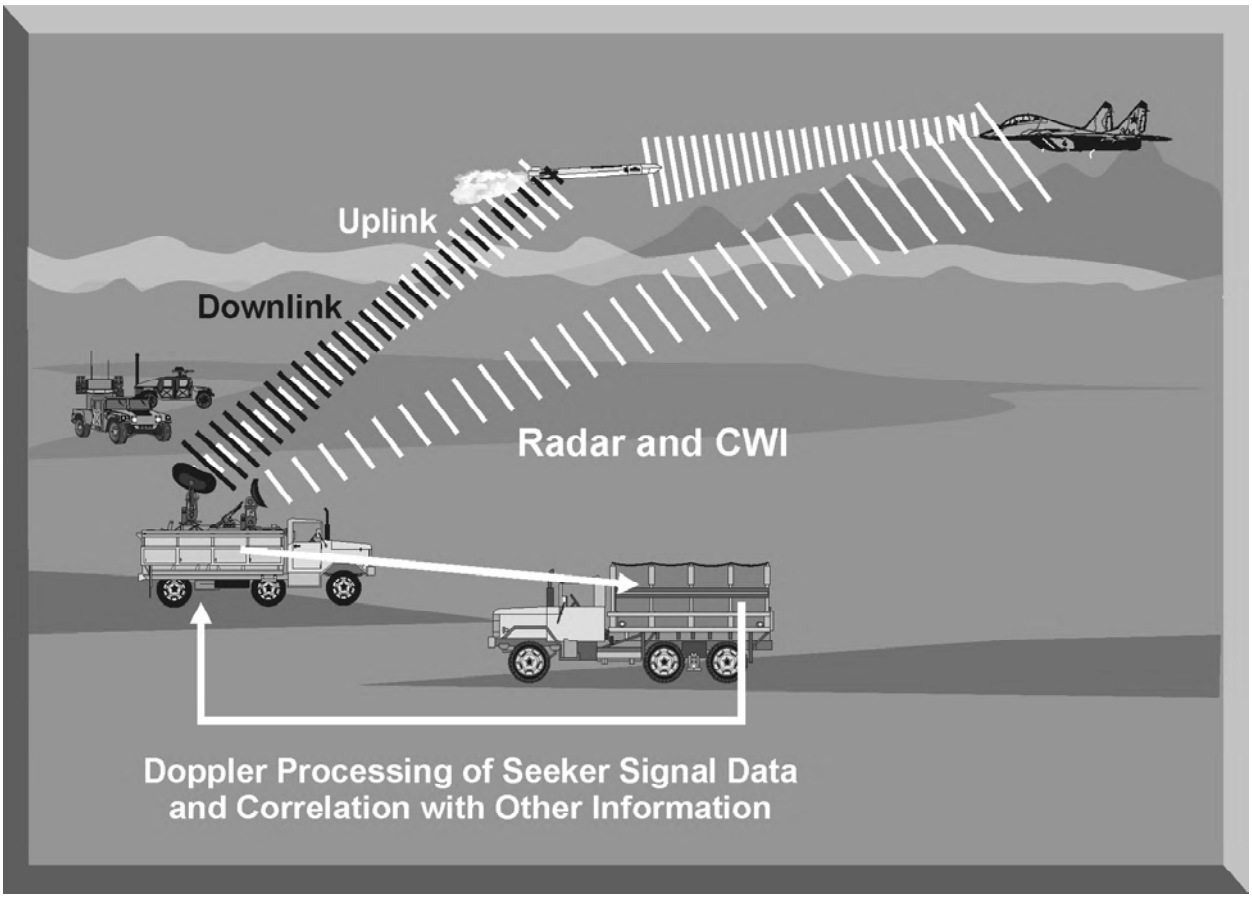

Figure 8-12. SAGG/Track-Via-Missile Guidance

a. Track-via-missile and seeker-aided ground guidance are two relatively new missile guidance techniques with similar advantages. First, they are extremely accurate at long ranges where the inherent radar tracking errors may be large

enough to cause a miss. Second, they can respond very quickly to any actions taken by the target since the missile seeker can track these changes and transmit the new position to the TTR fire control computer. Third, TVM and SAGG can be used with a large and capable fire control computer since most computations are accomplished by the TTR. Fourth, the integration of a phased array radar and the powerful TTR fire control computer allows the missile system to engage multiple targets. The Patriot missile battery, for example, can track and engage at least four targets simultaneously.

b. The major disadvantage of track-via-missile and seeker-aided ground guidance is that they are the most complex forms of missile guidance. They require the use of sophisticated computers to combine radar tracking data and data received from the missile. This required hardware is expensive and demands greater maintenance and logistical support. In addition, the missile itself needs to be large enough to store the appropriate hardware for computations and data transfer.

6. ANTIAIRCRAFT ARTILLERY (AAA)

The classic role of AAA is point defense. AAA systems provide close-in defense for high-value targets. AAA systems are deployed to defend cities, airfields, bridges, industrial centers, lines of communications, command and control centers, infantry/tank units, and SAM sites. There are two types of AAA systems: towed and mobile. Towed AAA is normally deployed in fixed sites around key targets. Mobile AAA systems are deployed to provide air defense for army units and to protect mobile SAM sites. The effectiveness of AAA systems, towed or mobile, depends on the ability of the system to predict an aircraft's future position to fire its unguided ballistic projectile to intercept the aircraft and destroy it. To accomplish this objective, AAA systems employ two primary tactics, aimed fire and sector/barrage fire.

a. Aimed AAA fire requires very accurate aircraft position information and an accurate prediction of future position. For aimed AAA fire, this information can be derived by using an optical sighting system on the gun or by employing a radar system coupled with a fire control computer. Smaller caliber AAA guns generally rely on optical target acquisition and firing (Figure 8-13). The high rate of fire, short range, and short projectile time of flight (TOF) simplifies the prediction and aiming problem for these systems. Smaller caliber AAA can also use tracer ammunition to help the gunner in correcting his optical firing solution. Larger caliber AAA systems, with slow rates of fire, long range, and long projectile TOF, generally use a TTR and a fire control computer to solve the problems associated with aimed fire (Figure 8-14).

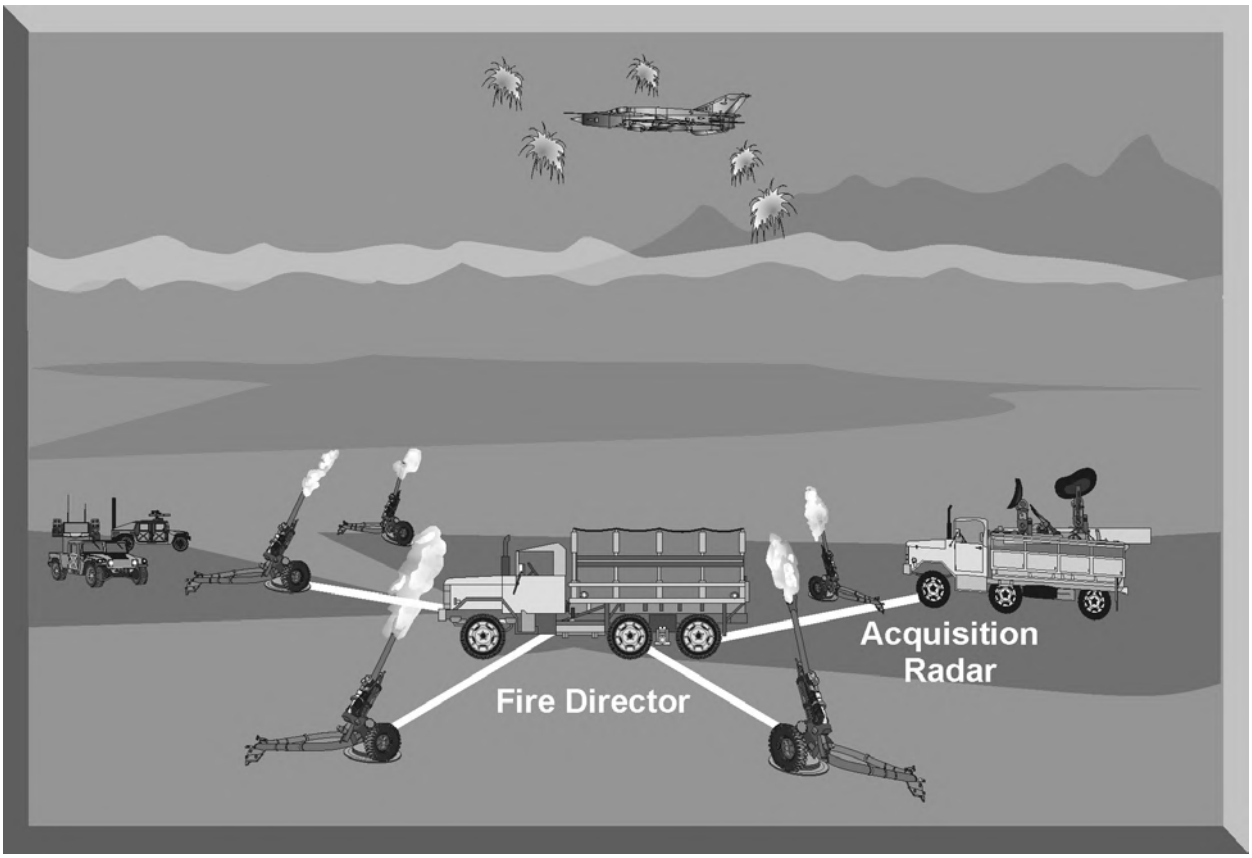

Figure 8-13. Optically Aimed AAA

(1) The typical engagement sequence for an aimed AAA engagement employing a TTR and fire control computer begins with initial target data from an acquisition radar. The guns and TTR are pointed toward the target. The TTR initiates search and lock-on to the target. The TTR associated with large caliber AAA is usually a conical scan radar to provide accurate target positioning information. Target information is fed into the fire control computer which calculates the aim point, points the guns, and initiates firing. The fire control computer uses the target kinematic data, gun ballistics, wind, air density, and projectile dispersion pattern to compute the required aim point. All these computations are based on the assumption that the target will continue on the same heading, at the same altitude, and at the same airspeed during the projectile TOF.

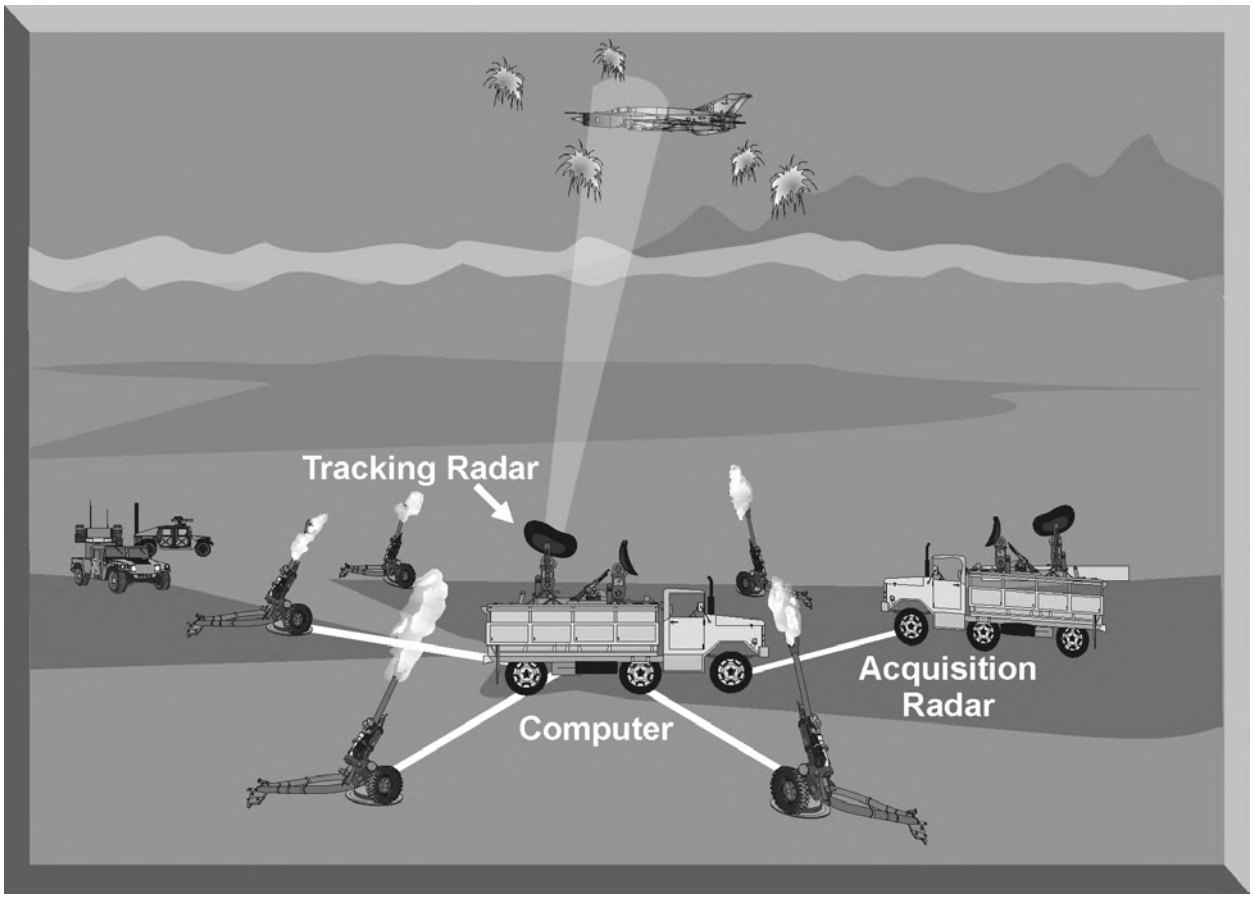

Figure 8-14. Radar-Directed AAA

(2) The typical engagement sequence for an aimed AAA engagement, employing optical target tracking begins with initial target information from an acquisition radar to the fire director. The fire director gives gross aiming commands to the individual guns. The gunners then visually search for the target and use the on-carriage gun sights to predict the required lead angle and initiate firing.

b. Sector or barrage fire tactics are employed when the aircraft cannot be accurately tracked (Figure 8-15). Acquisition information suggests an aircraft will traverse a volume of airspace or a specific sector. The fire director instructs the gunners to fire randomly into this sector in an effort to hit the aircraft with the barrage of AAA fire, or have the aircraft fly into a "curtain" of AAA fire. This tactic is especially effective for point defense for a fixed target. Attacking aircraft may have to fly a predictable flight path during weapons delivery. Sector/barrage fire can be directed to cover the expected attack directions and altitudes.

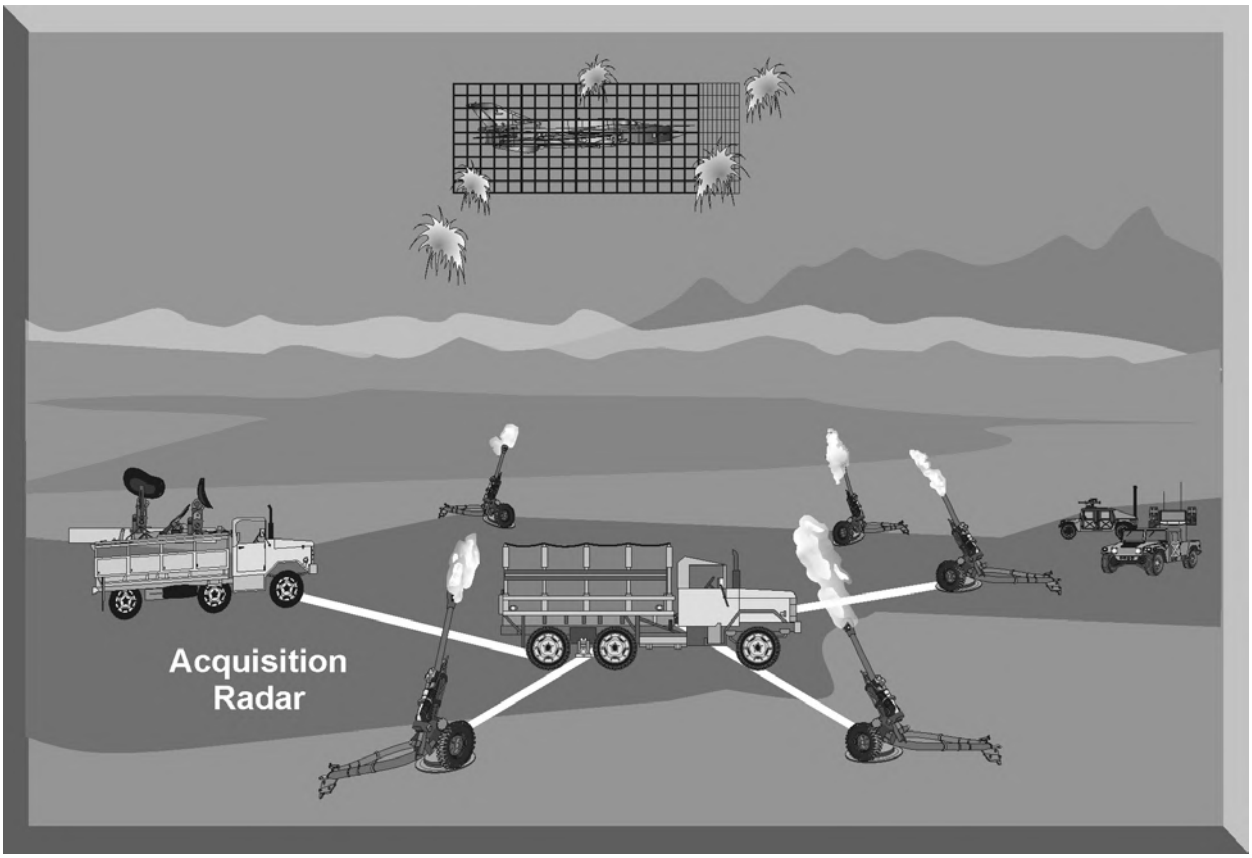

Figure 8-15. Sector/Barrage AAA

7. SUMMARY

This chapter has discussed the most common missile guidance techniques and AAA firing modes used by modern threat systems. A familiarity with the guidance technique employed by specific threat systems is the key to understanding the jamming techniques, chaff/flare employment settings, and tactical maneuvers designed to counter these systems.

CHAPTER 9. INTRODUCTION TO RADAR JAMMING

1. INTRODUCTION

Radar jamming is the intentional radiation or reradiation of radio frequency (RF) signals to interfere with the operation of a radar by saturating its receiver with false targets or false target information. Radar jamming is one principal component of electronic combat (EC). Specifically, it is the electronic attack (EA) component of electronic warfare (EW). Radar jamming is designed to counter the radar systems that play a vital role in support of an enemy integrated air defense system (IADS). The primary purpose of radar jamming is to create confusion and deny critical information to negate the effectiveness of enemy radar systems. This chapter will introduce the two types of radar jamming, the three radar jamming employment options, and discuss the fundamental principles that determine the effectiveness of radar jamming.

2. RADAR JAMMING TYPES

There are two types of radar jamming: noise and deception.

a. Noise jamming is produced by modulating a RF carrier wave with noise, or random amplitude changes, and transmitting that wave at the victim's radar frequency. It relies on high power levels to saturate the radar receiver and deny range and, occasionally, azimuth and elevation information to the victim radar (Figure 9-1). Noise jamming takes advantage of the extreme sensitivity of the radar receiver and the transmission pattern of the radar antenna to deny critical information to the victim radar.

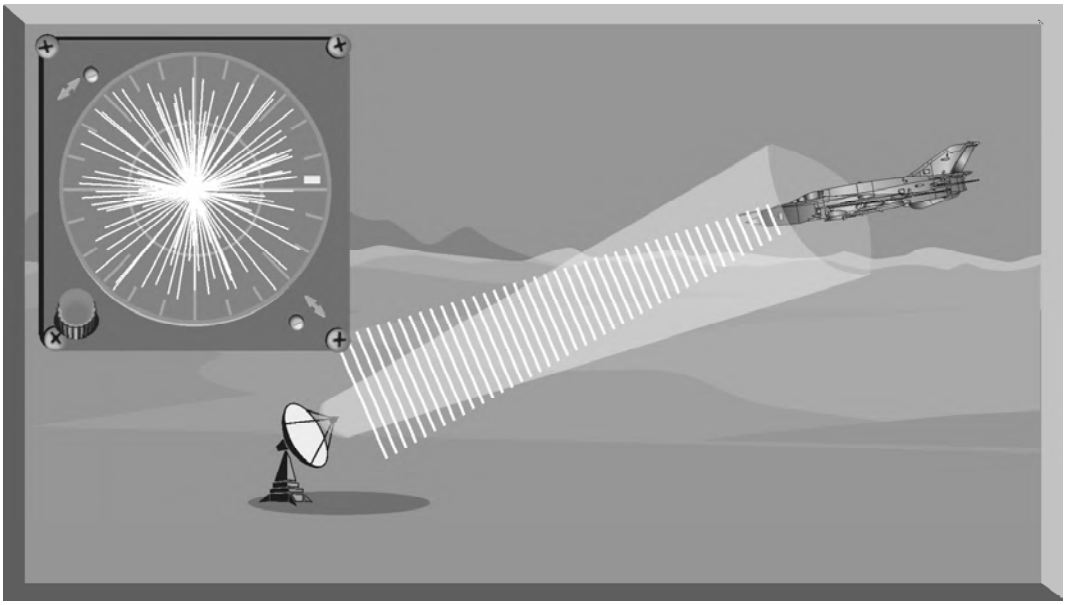

Figure 9-1. Noise Jamming

b. Deception jamming uses complex receiving and transmitting circuits to process and retransmit jamming pulses that appear as a real target to the victim radar. A deception jammer receives the signal from the victim radar and alters the signal to provide false range, azimuth, or velocity information. The altered signal is then retransmitted (Figure 9-2). The victim radar processes this signal, which disrupts the victim radar and confuses the radar operator. To be effective, deception jamming must match not only the victim radar's operating frequency, but all the other operating characteristics, including pulse repetition frequency (PRF), pulse repetition interval (PRI), pulse width, and scan rate.

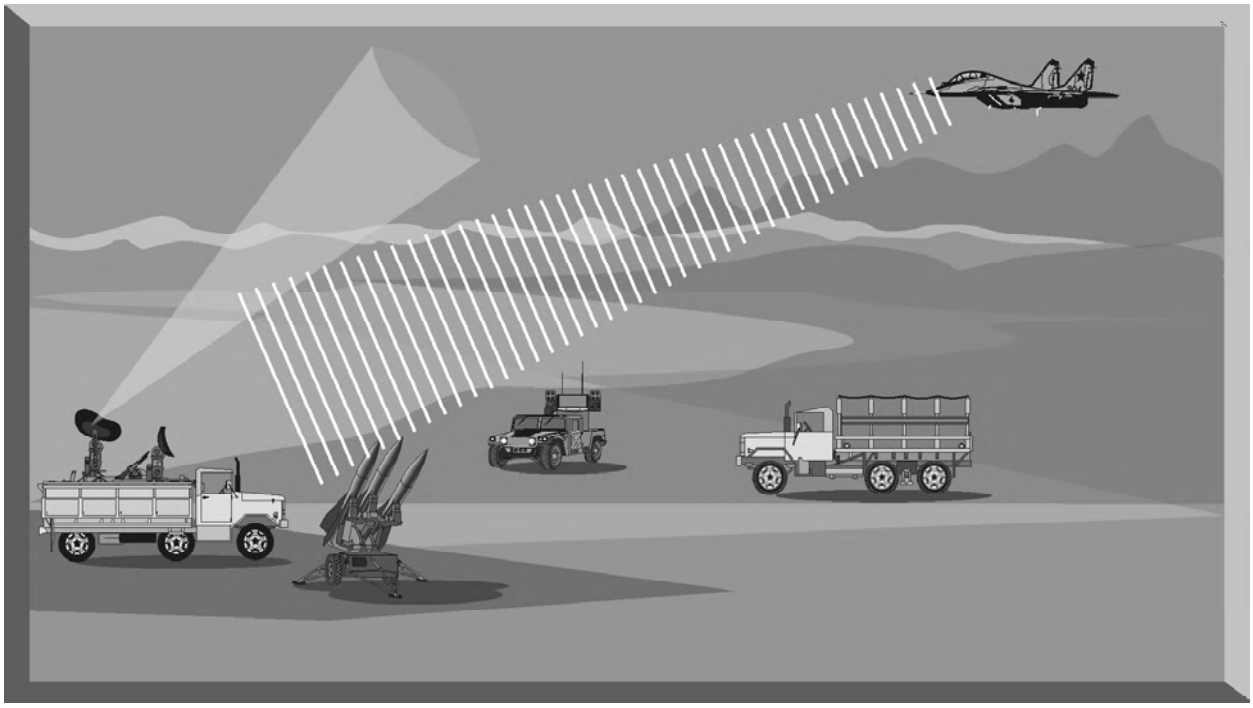

Figure 9-2. Deception Jamming

c. Both noise and deception jamming effectiveness are heavily dependent on another component of EW, specifically, electronic warfare support (ES). ES assets, either airborne or ground-based, provide the threat system specific radar parametric data and update this critical information based on observed threat system operations. This data provides the foundation for developing noise and deception jamming techniques. Intelligence and engineering assessment of this data are used to identify specific threat system weaknesses that can be exploited with the optimum noise, deception, or combination of jamming techniques. This information is then programmed into jamming systems to counter specific threats.

3. RADAR JAMMING EMPLOYMENT OPTIONS

There are currently two primary employment options for both noise and deception jamming techniques. These options are: (1) support jamming, and (2) self-protection jamming. Support jamming can be broken down further into stand-off jamming (SOJ), and escort jamming.

a. To counter early warning, ground control intercept (GCI), and acquisition radars associated with an enemy IADS, noise and deception jamming techniques are employed by specialized support jamming aircraft. The goal of support jamming is to create confusion and delays within the command and control structure of the IADS. Deny, delay or degrade the enemy's ability to engage friendly forces. Support jamming operations can be focused against a national level IADS through the use of a stand-off jamming (SOJ) profile (Figure 9-3) or against a target area threat array using an escort jamming profile.

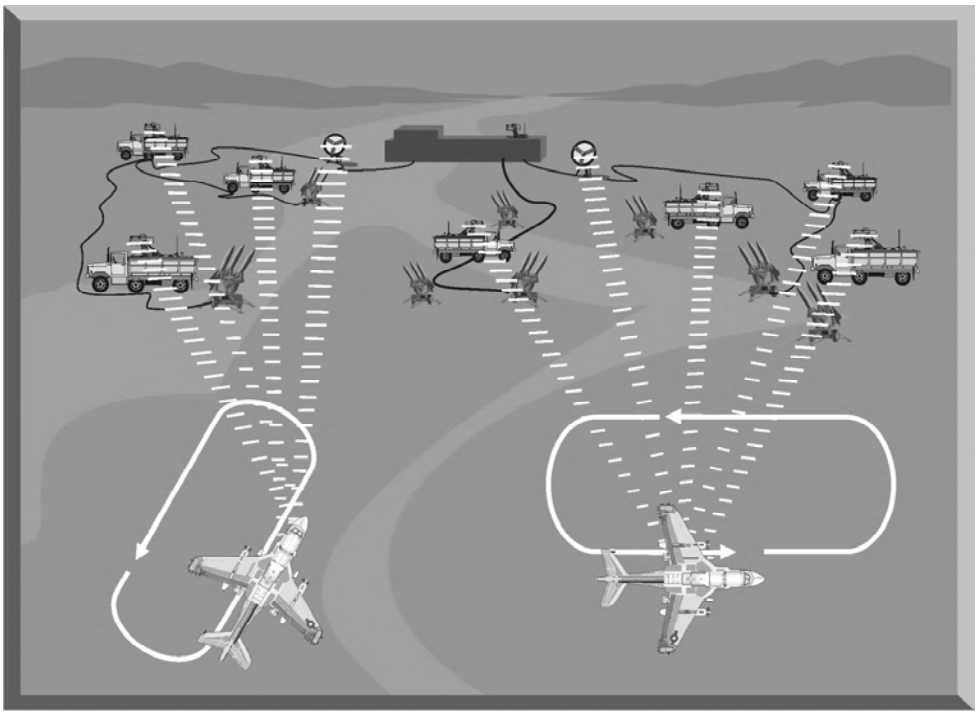

Figure 9-3. Stand-Off Jamming

(1) From an orbit area outside the surface-to-air missile (SAM) engagement zone, SOJ aircraft employ specialized jamming techniques to deny the enemy information about the attack package. SOJ aircraft employ specialized noise jamming techniques to generate jamming strobes on the victim radar display. This effectively denies range and azimuth information on aircraft ingressing and egressing the area covered by the noise jamming strobes. Intensity of the strobes is based on the power in the jamming. The area covered is based on the amount of jamming that can be injected into the main beam and sidelobes of the victim

radar. The effectiveness of SOJ noise jamming is determined by the power the jammer can generate relative to the power the victim radar can generate. This is called the jamming-to-signal (J/S) ratio.

(2) SOJ aircraft can also employ a deception technique to generate false targets to confuse the radar operator and mask the presence of real targets (Figure 9-4). In this specialized technique, the deception jammer must tune to the frequency, PRF, and scan rate of the victim radar. The jammer then transmits multiple jamming pulses that the victim radar receiver processes like real target returns. With enough power, the deception jammer can generate multiple false azimuth targets by injecting jamming pulses into the sidelobes of the victim radar. False moving targets and false range targets are generated by varying the time delay of the jamming pulses based on the PRF and scan rate of the victim radar.

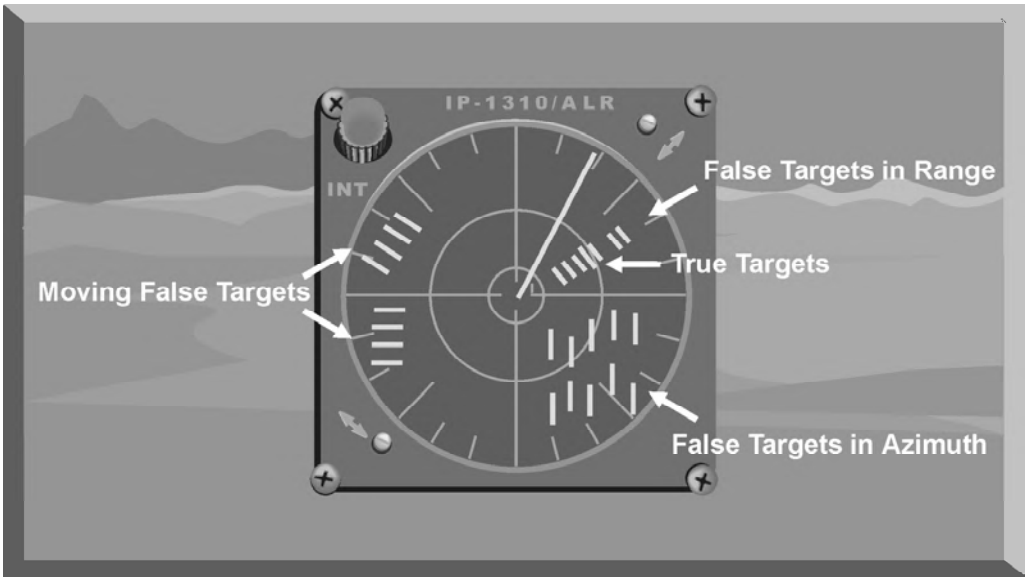

Figure 9-4. False Target Jamming

(3) Escort jamming is a specific tactic used by the EA-6B Prowler. The EA-6B is employed as an integral part of the attack package and is normally positioned behind and above the attack package (Figure 9-5).

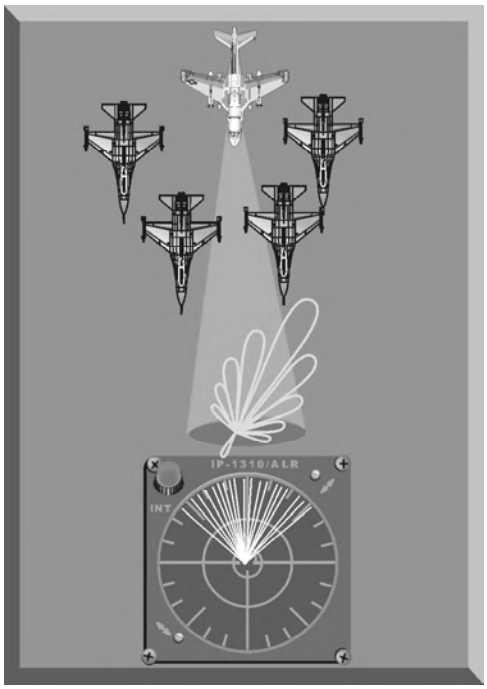

Figure 9-5. Escort Jamming

Using noise jamming, the EA-6B attempts to deny range and azimuth information to the victim radar by injecting high power signals into the main radar beam and sidelobes. To be effective, the EA-6B must be properly positioned in relation to the ingressing or egressing attack package (Figure 9-6).

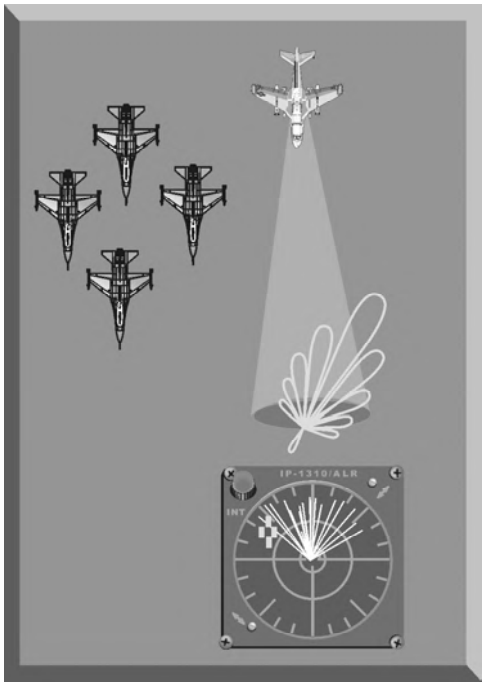

Figure 9-6. Escort Jamming Alignment

b. Self-protection radar jamming targets the radar systems that support jamming cannot negate. Self-protection jamming systems are part of a self-protection suite that includes a self-protection jamming pod, a chaff/flare dispenser, and on some aircraft, a towed decoy system. The overall purpose of these systems is individual aircraft survivability. These systems are designed to counter the individual SAM, AAA, and AI assets associated with the enemy IADS. They employ deception jamming techniques against the target tracking radars (TTRs) associated with these threats. They are designed to break the radar track or generate sufficient tracking errors to cause the missile or bullet to miss the aircraft.

(1) Self-protection radar jamming systems usually employ deception jamming techniques based on several factors. First, effective deception jamming techniques generally require less power than noise jamming techniques. Second, less power means less weight and space, which are very important considerations for modern tactical aircraft. Finally, deception jammers can be designed to jam multiple threats, which is a critical requirement for operations in a dense threat environment (Figure 9-7).

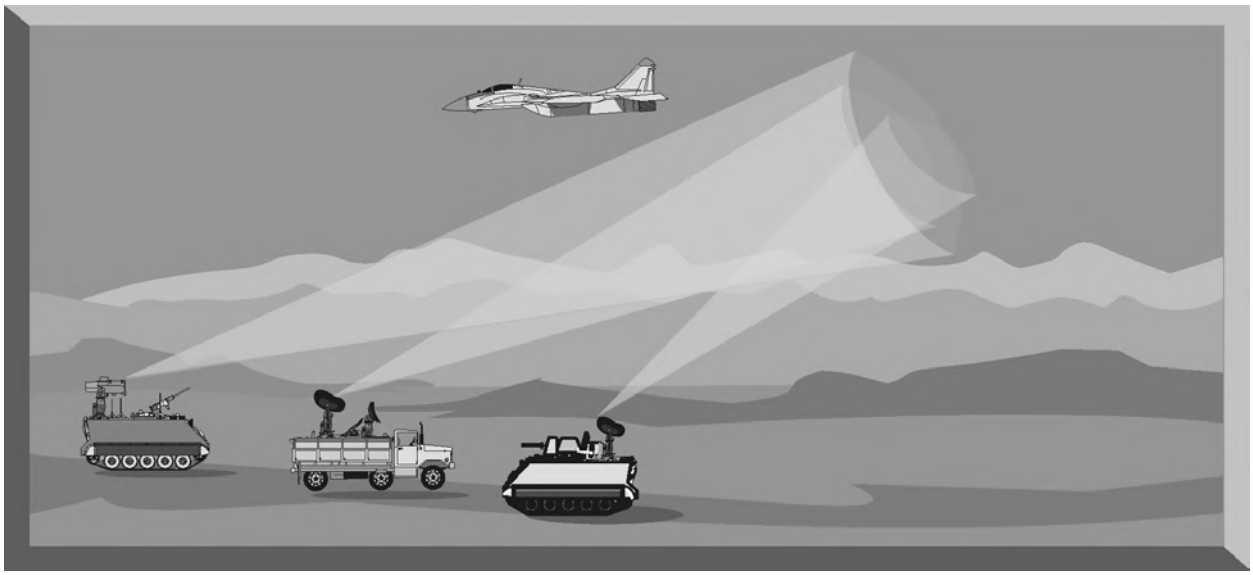

Figure 9-7. Self-Protection Jamming

(2) Despite the advantages of deception jamming techniques for self-protection jamming, there are some limitations that must be considered. First, deception jammers are complex electronic systems that must receive a victim radar's signal, memorize all its characteristics, modify the signal, and retransmit this modified signal at a high power level. Second, to be effective, deception jammers must be programmed with all the signal parameters (frequency, PRF, PRI, pulse width, scan rate, etc.) of the victim radar. Finally, because many deception techniques can be effective against specific threats, selecting optimum techniques to employ against these threats must be based on identified threat

system limitations. Identifying these specific threat systems limitations may be difficult.

4. FUNDAMENTALS OF RADAR JAMMING

There are some fundamental principles that apply to all types of jamming and to all jamming employment options. These principles are based on the characteristics of the jamming system and the characteristics of the victim radar. They include frequency matching, continuous interference, signal-to-noise ratio, jamming-to-signal ratio, and burnthrough range.

a. Based on the data provided by ES systems and intelligence evaluations, radar jamming systems must transmit signals at the frequency of the victim radar This applies to both noise and deception jamming. If a jamming signal does not match the transmitter frequency, the jamming signal is not received and displayed on the scope (Figure 9-8). When a jamming signal matches the transmitter frequency, the jamming signal is received and masks the target display (Figure 9-9).

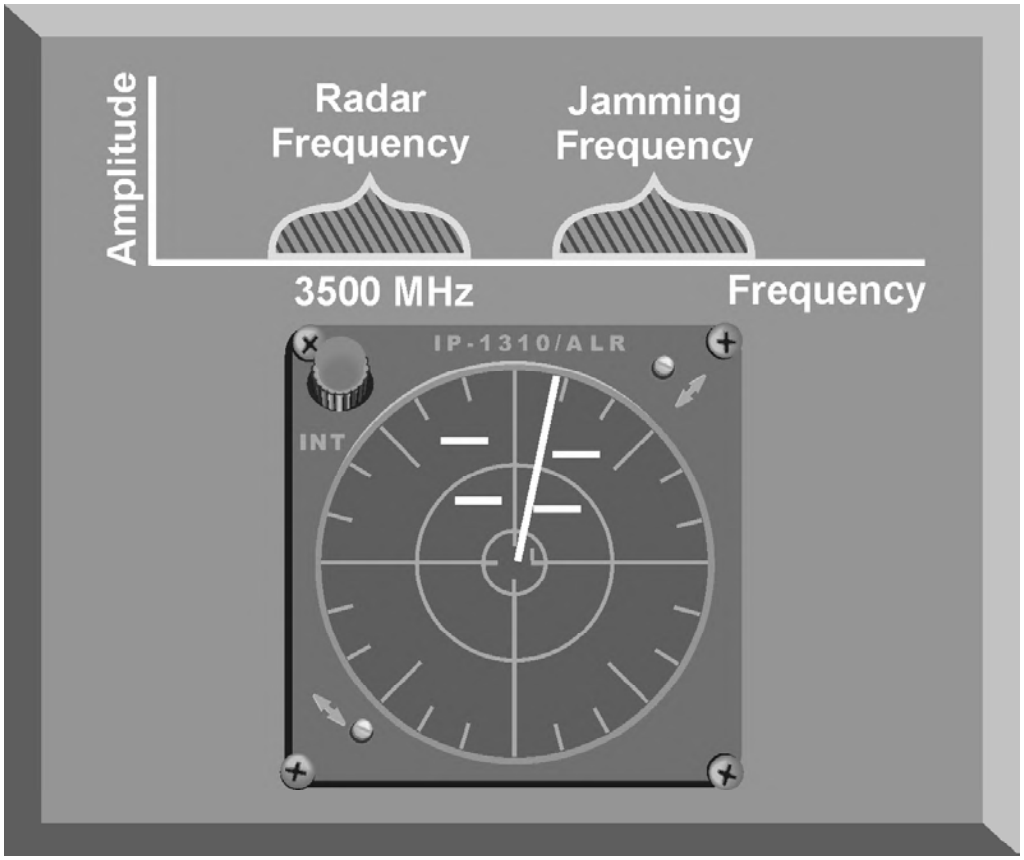

Figure 9-8. Jamming Frequency Error

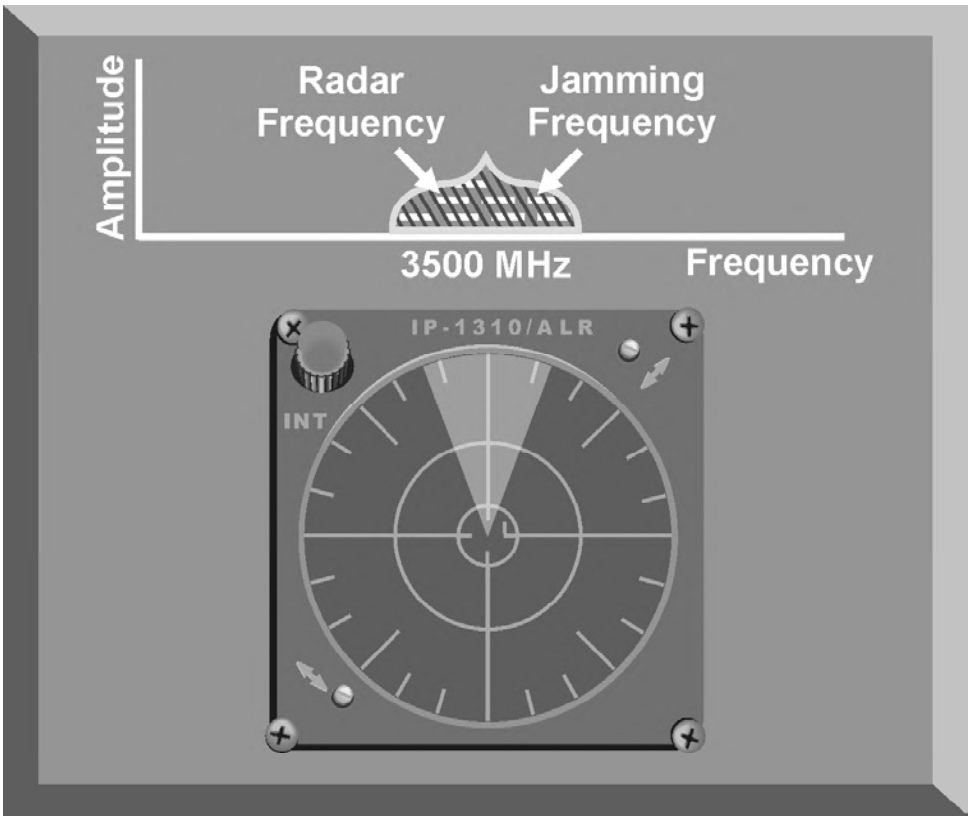

Figure 9-9. Correct Jamming Frequency Matching

b. For maximum effectiveness, a jamming transmitter should produce continuous interference. In much the same way intermittent static on a radio receiver does not completely block out a signal, intermittent jamming on a radar scope may not completely mask the target. An experienced radar operator or advanced automatic tracker can "read through" intermittent jamming and derive sufficient target information to negate jamming effectiveness. While true for noise jamming techniques, continuous interference also applies to deception techniques, especially when target reacquisition is considered.

c. The signal-to-noise (S/N) ratio is a measure of the ability of the victim radar to detect targets. It is also an indication of the vulnerability of the radar to certain jamming techniques, especially noise jamming.

(1) From the discussion of the basic radar equation in Chapter 5 (Equation 5-10), Equation 9-1 is the signal power density of a target return at the radar receiver. The signal power density of the target return is so weak that it requires very strong amplification before processing and display. Besides the signal power from the target, some level of thermal noise is also generated and amplified along with the target signal. For an "ideal" (no noise) amplifier, Equation 9-2 is used to compute the level of thermal noise generated by the amplifier.

$$\text{Signal Power Density} = \frac{P_T G \sigma A_e}{(4\pi)^2 R^4}$$

P_T = transmitted power
G = antenna gain
σ = target radar cross section (RCS)
A_e = antenna aperture area
R = range to the target

Equation 9-1. Signal Power Density

$$\text{Thermal Noise (N)} = KTBF$$

K = Boltzman's Constant
(1.38×10^{-23} watts/Hz degrees K)
T = standard temperature (290° K)
B = radar receiver equivalent bandwidth
F = radar receiver noise figure
(one for "ideal" receiver)

Equation 9-2. Thermal Noise

Note: The instantaneous bandwidth of a receiver is the frequency range over which the receiver can simultaneously amplify two or more signals to within a specified gain.

(2) The radar receiver amplifies both target signal and thermal noise. The output of the radar receiver will contain the target signal and the noise amplified across the bandwidth of the receiver. Separating the desired target signal from the undesired noise signal is one of the major problems confronting radar designers.

(3) Equation 9-3 is derived by dividing Equation 9-1 by Equation 9-2. Many factors in this equation fluctuate and must be estimated using statistical calculations. For example, target RCS fluctuates based on the changing angle of the antenna beam and corresponding changes in the reflected signal. Effective antenna aperture is also a statistical phenomenon based on the fluctuations in target RCS. The thermal noise generated by a receiver is also a fluctuating factor and must be treated statistically. This means that the S/N ratio is a statistical factor associated with a probability of target detection and a probability of a false alarm. A false alarm occurs when the radar operator or automatic tracking circuit designates a fluctuation in noise level as a target. The higher the S/N ratio, the

higher the probability of target detection with a corresponding reduction in the probability of a false alarm.

$$\text{Signal-to-Noise Ratio} = \frac{P_T G \sigma A_e \left(\frac{1}{(4\pi)^2 R^4} \right)}{KTBF}$$

P_T = transmitted power
G = antenna gain
σ = target radar cross section (RCS)
A_e = antenna aperture area
R = range to the target

K = Boltzman's Constant
(1.38×10^{-23} watts/Hz degrees K)
T = standard temperature (290° K)
B = radar receiver equivalent bandwidth
F = radar receiver noise figure
(one for "ideal" receiver)

Equation 9-3. Signal-to-Noise Ratio

(4) An analysis of Equation 9-3 suggests that any action that increases the power in the target signal (for example, increasing transmitted power, increasing antenna gain/aperture area, or decreasing target range) will improve the S/N ratio and improve the probability of target detection. It would also appear that decreasing the bandwidth of the radar receiver will increase the S/N ratio and enhance the probability of target detection. However, if the effective bandwidth of the receiver is reduced, this may eliminate a significant portion of the radar signal spectrum and decrease the probability of target detection.

(5) The S/N ratio is also an indication of the range at which a target will be detected. A plot of the receiver output of a typical radar is shown in Figure 9-10. The weak target signal at an extended range is just above the receiver noise level. The target at closer range is easily detected above the noise level. A radar operator or automatic target detector could mistake the very weak target return as a fluctuation in the receiver noise level. This could result in a missed detection. The lack of discrimination between noise and target returns because of a poor S/N ratio can also result in designating fluctuations in the noise level as actual target signals, known as false alarms.

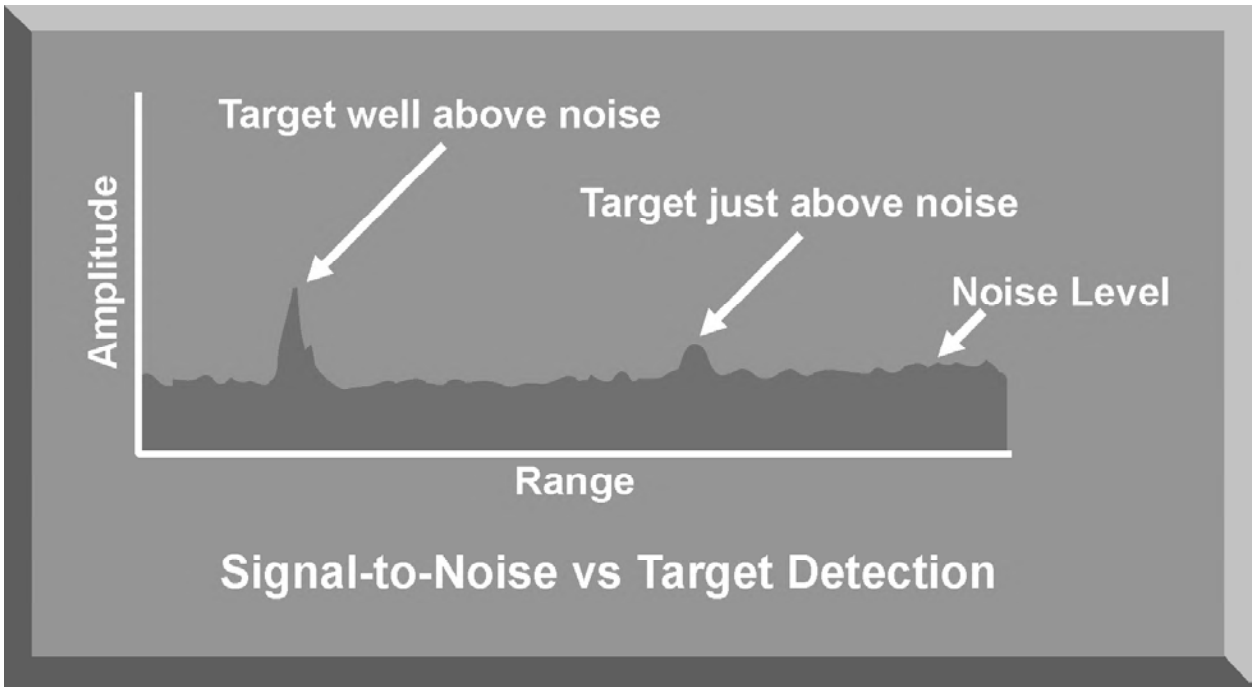

Figure 9-10. S/N Ratio and Target Detection

(6) To preclude, or minimize false alarms, the radar receiver may be equipped with electronic circuits to establish a false alarm threshold. If the signal strength of a radar return is below this threshold level, it will not be detected or displayed (Figure 9-11). This false alarm threshold also influences the probability of target detection. With the threshold set too high, many detected targets will not be displayed. Additionally, if the false alarm threshold is raised automatically in relation to the amplitude of the receiver noise, the radar receiver is more vulnerable to noise jamming.

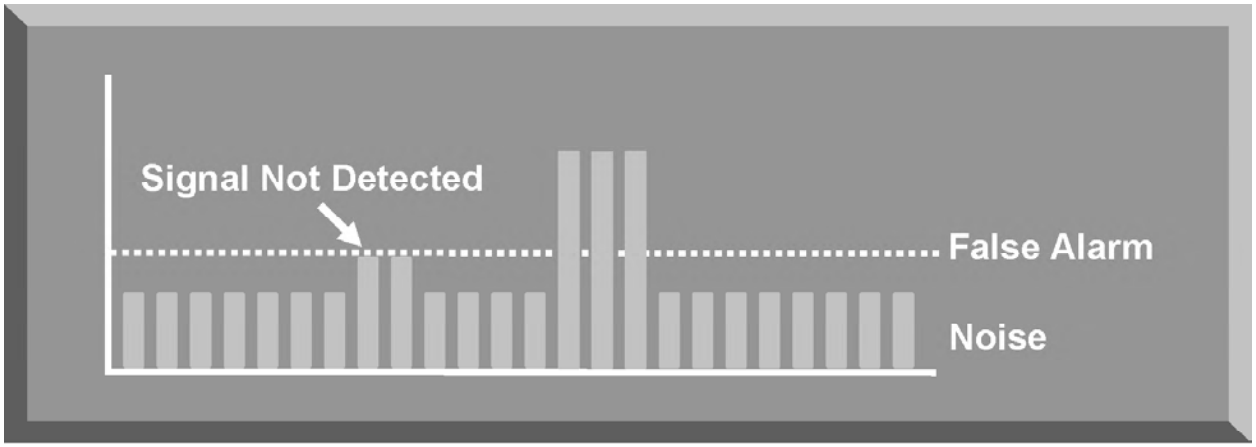

Figure 9-11. Receiver False Alarm Threshold

(7) For any target return to be detected by the radar, the S/N ratio must be greater than one. If the S/N ratio is less than one, the target will not be detected above the receiver noise level. The purpose of noise jamming is to raise the level of noise in the radar receiver to reduce the S/N ratio to less than one. This masks the presence of the true target return. If a false alarm threshold is used, noise jamming raises this threshold to further complicate target detection. Figure 9-12 depicts a S/N ratio greater than one. Figure 9-13 depicts a S/N ratio of less than one due to noise jamming.

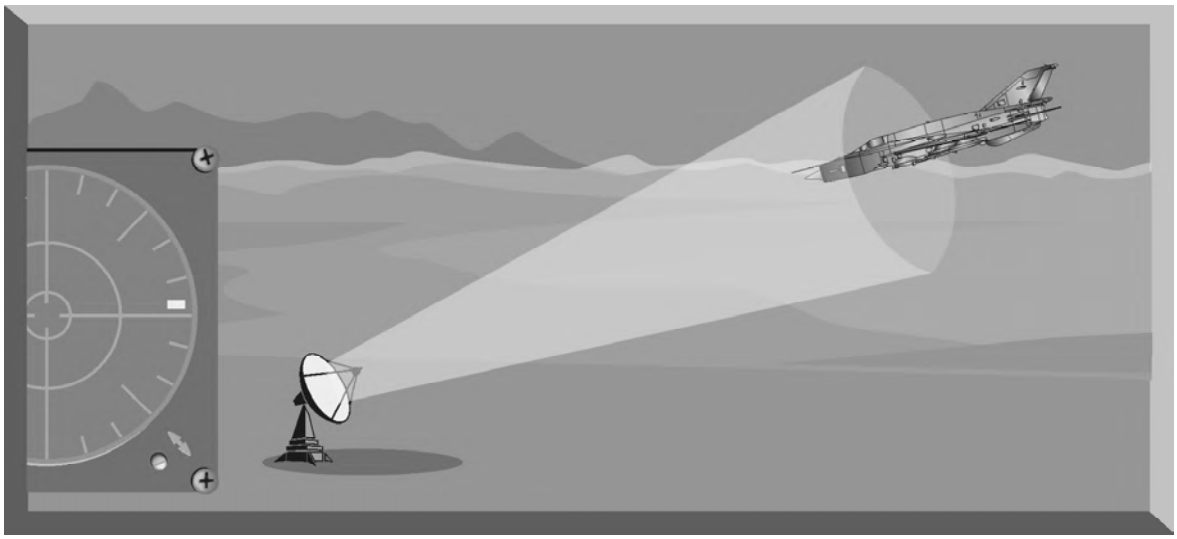

Figure 9-12. S/N Ratio Greater Than One

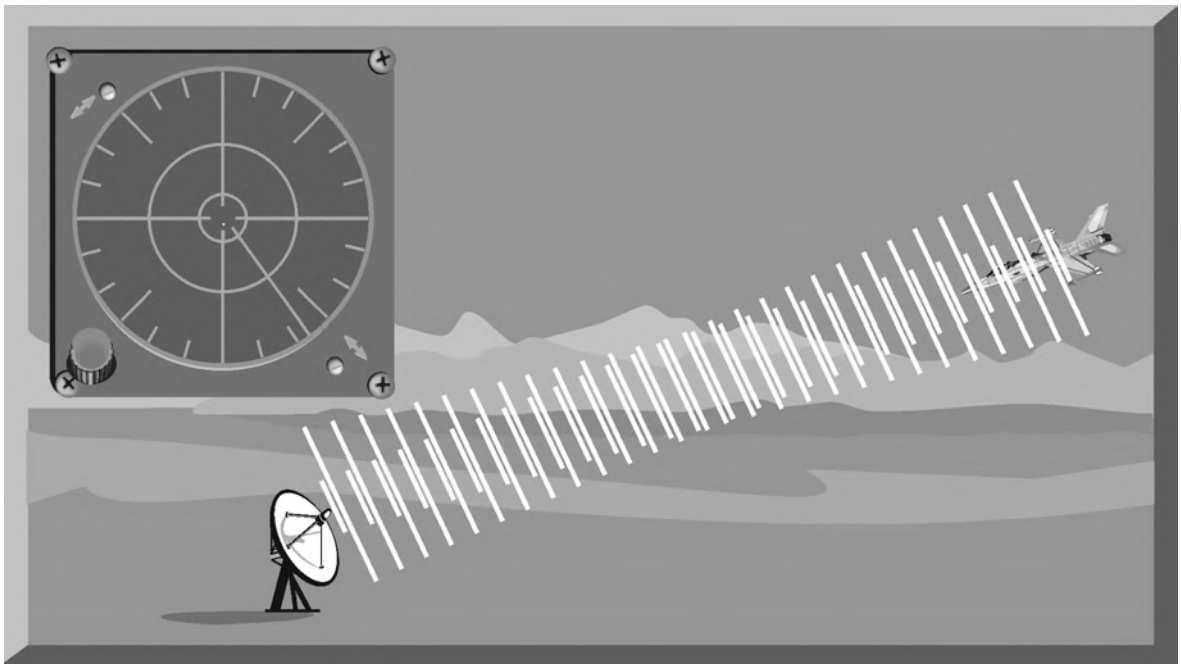

Figure 9-13. S/N Ratio Less Than One

d. The jamming-to-signal (J/S) ratio is a fundamental measure of jamming effectiveness. The J/S ratio compares the power in the jamming signal with the power in the radar return. Equation 9-4 is an expression of the J/S ratio. It is important to note that the J/S ratio should be measured at the output of the radar receiver. This will allow consideration of the receiver signal processing gain applied to the jamming signal.

$$\text{Jamming-to-Signal Ratio} = \frac{P_J G_J}{P_T G_T} \times \frac{4\pi R^2}{\sigma}$$

P_J = jamming power transmitted
G_J = jamming antenna gain
P_T = peak power transmitted by the radar
G_T = radar antenna gain
R = range from jammer to radar
σ = aircraft RCS

Equation 9-4. Jamming-to-Signal Ratio

(1) The most critical factor in both the S/N and the J/S ratios is range. The S/N ratio is calculated based on R to the fourth power. This equates to a signal traveling from the radar to the target, and back to the radar receiver. The J/S ratio is calculated using R to the second power. This factor reflects the "one way" transmission of the jamming pulse from the jammer to the victim radar's receiver.

(2) For a jamming signal to be effective, the J/S ratio must be greater than one. In general, threat radars, especially ground-based radars, transmit much more power than does an airborne jamming system. However, this power must travel twice as far as the airborne jamming signal. At long ranges, a low power jamming system can generate a J/S ratio much greater than one. In Figure 9-14, the jamming pulse completely masks the target return. As the jamming system approaches the target, the distance the radar pulse travels decreases with a corresponding increase of power in the radar return. This reduces the J/S ratio to a value less than one and the radar "sees" the target. This is called the burnthrough range (Figure 9-15).

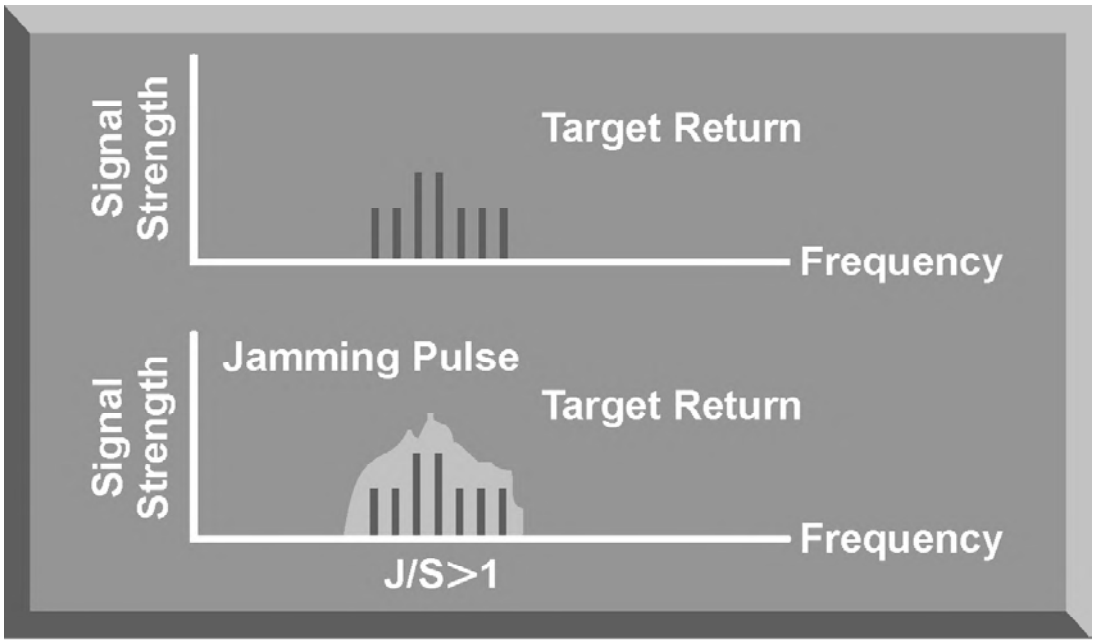

Figure 9-14. J/S Ratio Greater Than One

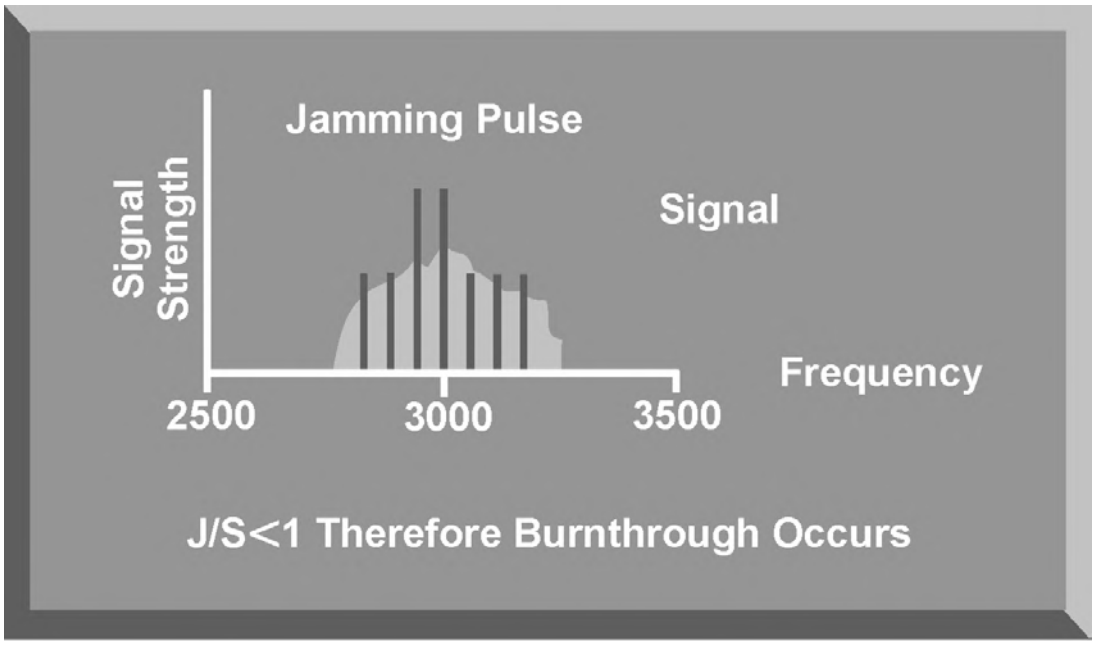

Figure 9-15. J/S Ratio Less Than One

e. Burnthrough occurs when the power in the reflected target signal exceeds the power in the jamming signal. Even when an optimum and continuous jamming technique is transmitting on the exact frequency of the victim radar, the jamming starts to lose effectiveness as it nears the radar. For a particular radar

jamming technique, burnthrough range depends on the detection capability of the victim radar, expressed as the S/N ratio, and the capability of the aircraft's jamming system, expressed as the J/S ratio. The idea of burnthrough range explains why a jamming technique, especially noise jamming, loses its effectiveness as the aircraft approaches the radar. When plotting the jamming and signal power versus range (Figure 9-16), these two values intersect at the point where the J/S ratio is one. At closer ranges, the jamming pulse is no longer masking the aircraft, and the aircraft can be detected. Burnthrough range is the point where the radar can see through the jamming.

Figure 9-16. Burnthrough Range

5. SUMMARY

The purpose of radar jamming is to confuse or deny critical data to the radar systems that play a vital role in supporting the mission of an integrated air defense system. Two types of radar jamming, noise and deception, can be employed in a support-jamming role, or in a self-protection role for individual aircraft. The effectiveness of a jamming technique depends on the ability of the jamming system to generate a jamming signal that replicates the parameters of the victim radar, especially its frequency. The signal-to-noise ratio of the victim radar determines the vulnerability of the radar receiver to jamming while the jamming-to-signal ratio is an indication of the ability of the jamming system to effectively jam the victim radar. These basic radar jamming concepts are fundamental to understanding the impact of specific jamming techniques on radar systems.

CHAPTER 10. RADAR NOISE JAMMING

1. INTRODUCTION

A radar noise jamming system is designed to generate a disturbance in a radar receiver to delay or deny target detection. Since thermal noise is always present in the radar receiver, noise jamming attempts to mask the presence of targets by substantially adding to this noise level. Radar noise jamming can be employed by support jamming assets or as a self-protection jamming technique. Radar noise jamming usually employs high-power jamming signals tuned to the frequency of the victim radar. This chapter will discuss the factors that determine the effectiveness of radar noise jamming, radar noise jamming generation, and the most common noise jamming techniques. These noise jamming techniques include barrage, spot, swept spot, cover pulse, and modulated noise jamming.

2. RADAR NOISE JAMMING EFFECTIVENESS

The effectiveness of radar noise jamming depends on numerous factors. These factors include the jamming-to-signal (J/S) ratio, power density, the quality of the noise signal, and the polarization of the transmitted jamming signal (Figure 10-1).

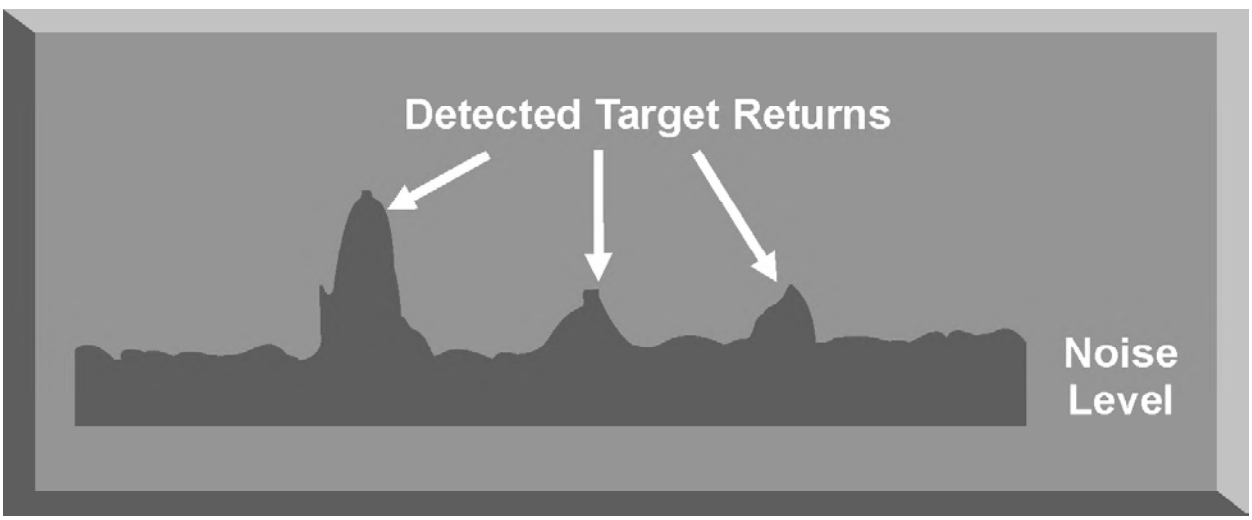

Figure 10-1. Noise Level in a Typical Radar Receiver Output

a. One of the most important factors that impacts the effectiveness of radar noise jamming is the J/S ratio (Figure 10-2). As discussed in Chapter 9, the power output of the noise jammer must be greater than the power in the target return, as measured at the output of the radar receiver. To achieve this level of jamming power, radar noise jammers usually generate high-power jamming signals. These high-power jamming signals can be introduced into the victim radar's main beam

to deny range information and into the victim radar's sidelobes to deny azimuth information.

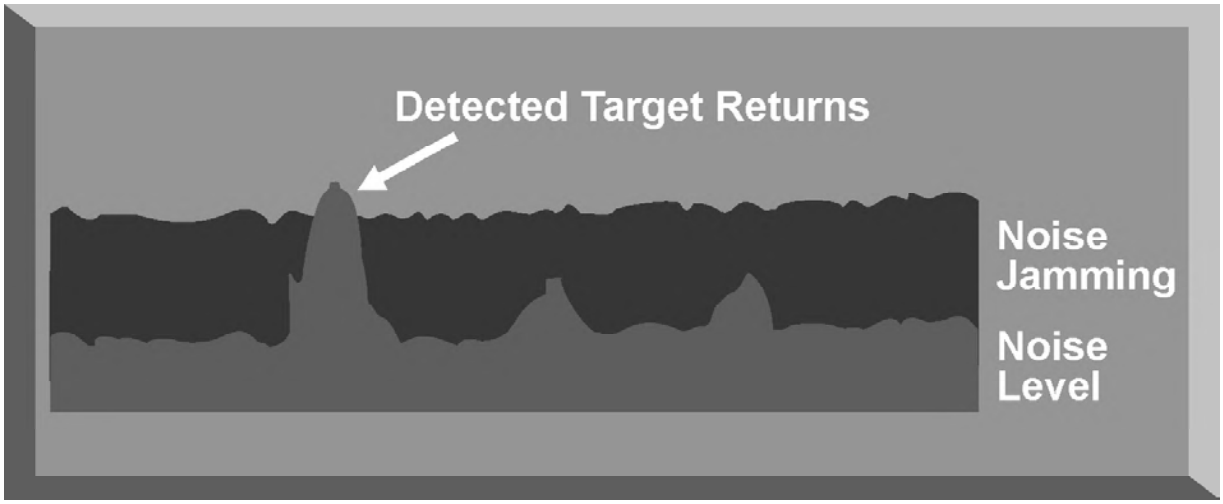

Figure 10-2. Impact of Noise Jamming

b. Another factor which impacts the effectiveness of radar noise jamming is the power density. The power density of the noise jamming signal has a direct relation to the J/S ratio.

(1) If the noise jamming signal is centered on the frequency and bandwidth of the victim radar, the jamming signal has a high power density. The ability of a noise jammer to concentrate the jamming signal depends on the ability of the jammer to identify the exact frequency and bandwidth of the victim radar (Figure 10-3).

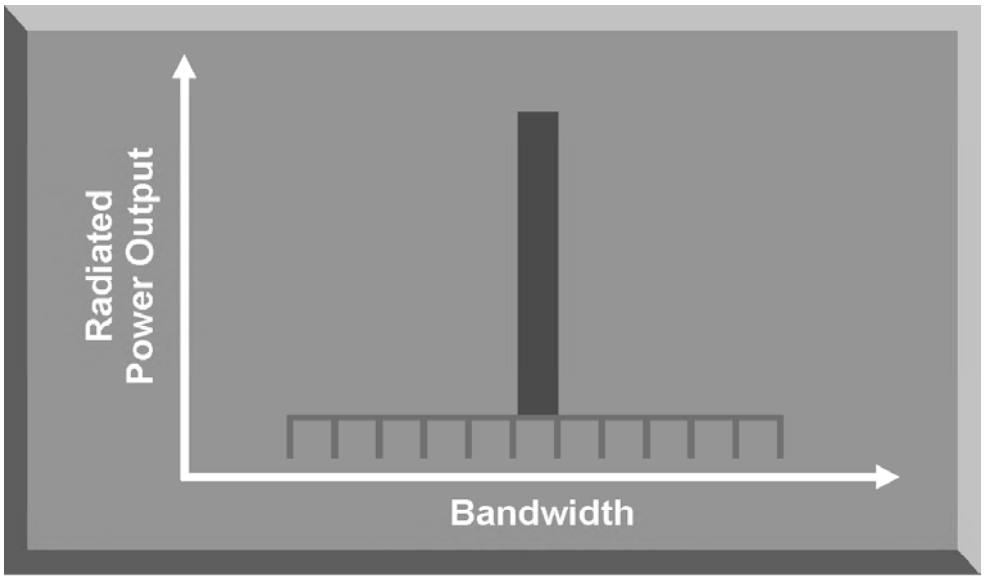

Figure 10-3. Power Density – Narrow Bandwidth

(2) If the generated noise jamming signal has to cover a wide bandwidth or frequency range, the power density at any one frequency is reduced (Figure 10-4). Radar systems that are frequency agile or that employ a wide bandwidth can reduce, or negate, the effectiveness of noise jamming by reducing the power density of the jamming signal.

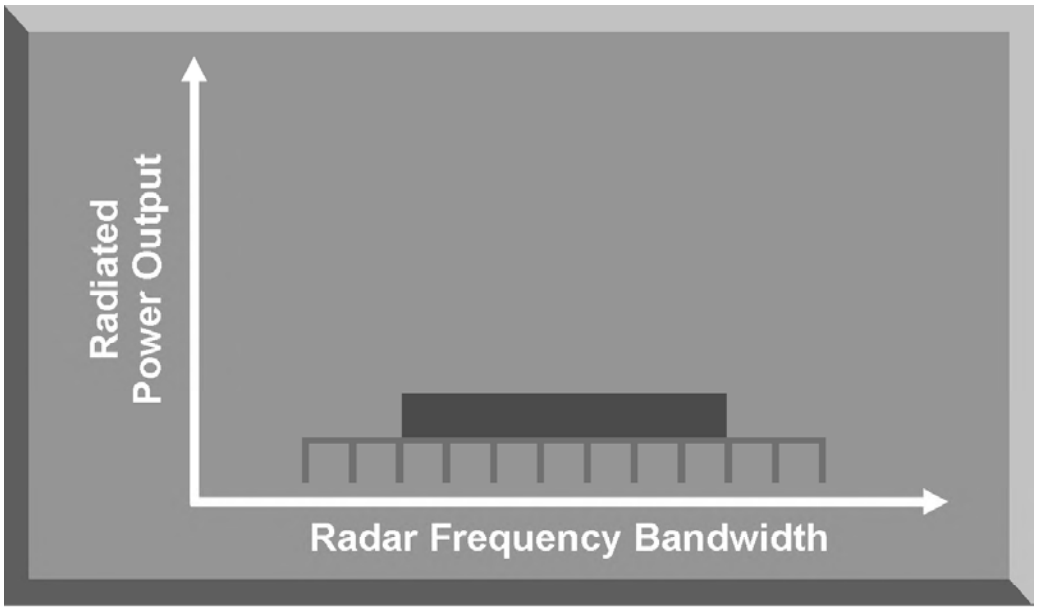

Figure 10-4. Power Density – Wide Bandwidth

c. The quality of the noise jamming also determines its effectiveness. To effectively jam a radar receiver with noise, the jamming signal must emulate the thermal noise generated by the receiver. This ensures that the radar operator or automatic detection circuit cannot distinguish between the noise jamming and normal thermal noise. Thermal noise is referred to as white noise and has a uniform spectrum. All of the frequencies in the bandwidth of the receiver have the same spectrum and an amplitude that varies based on Gaussian distribution. A Gaussian distribution is simply a bell-shaped distribution of amplitudes. In order to be effective, the jamming signal should exactly match the characteristics of the thermal noise signal of the victim radar receiver.

d. Polarization of the noise jamming signal is another significant factor that impacts its effectiveness. As discussed in Chapter 2, if the polarization of the jamming signal does not match the antenna polarization of the victim radar, there is a significant power loss in the jamming signal. Noise jamming systems designed to counter multiple threat radars, with various polarizations, generally use a transmitting antenna with a 45° slant or use circular polarization. Most threat systems are horizontally or vertically polarized. This results in a 50% reduction in effective radiated power (ERP) for most threat systems. A more serious power loss, nearly 100%, in ERP occurs when the jamming antenna is

orthogonally polarized with the victim antenna. The polarization of the noise jamming signal impacts the J/S ratio and the power density.

3. RADAR NOISE JAMMING GENERATION

Noise jamming is produced by modulating an RF carrier wave with random amplitude or frequency changes, called noise, and retransmitting that wave at the victim radar's frequency. Since noise from numerous sources is always present and displayed on a radar scope, noise jamming adds to the problem of target detection. Reflected radar pulses from target aircraft are extremely weak. To detect these pulses, a radar receiver must be very sensitive and be able to amplify the weak target returns. Noise jamming takes advantage of this radar characteristic to delay or deny target detection.

a. The simplest method of generating a high-power Gaussian noise jamming signal is to employ a highly amplified diode to generate a noise signal at the frequency of the victim radar. This signal is filtered and directly amplified to the maximum power that can be generated by the transmitter. This method is called direct noise amplification (DINA). The DINA method of noise generation has a serious limitation. The maximum power available from linear wideband power amplification is extremely limited. Employing any other form of power amplification would alter the Gaussian distribution of the jamming signal. This method of generating radar noise jamming was used extensively during WW II.

b. Modern noise jamming systems generate noise jamming signals by frequency modulating a carrier wave at the frequency of the victim radar. FM noise jammers employ a receiving antenna to intercept the victim's radar signal. The antenna passes the victim radar signal to the receiver for identification. The receiver also tunes the jamming signal generator to the correct frequency. The receiver uses an automatic frequency control (AFC) circuit to tune the voltage-controlled oscillator (VCO) to the frequency of the victim radar. A noise signal is generated by the jamming signal generator and added to the tuning voltage of the VCO to get an FM jamming signal. This signal is sent to a traveling wave tube (TWT) power transmitter. The TWT is normally operated in a saturated mode which produces a high-power jamming signal that covers a wider bandwidth than the victim radar. This reduces the power density of the signal, but the high power levels available from the TWT amplification of an FM signal compensate for this loss. The signal is sent to the transmitting antenna and directed toward the victim radar.

c. Figure 10-5 highlights an important feature of a modern radar noise jamming system: a look-through capability. A look-through mode allows the receiver to periodically sample the signal environment. The objective of the look-through mode is to allow the jammer to update victim radar parameters and change the jamming signal to respond to changes in the signal environment. This greatly enhances the effectiveness of noise jamming systems. One method used to provide a look-through capability is to isolate the transmit and receive

antennas to allow continuous operation of the receiver to update signal parameters. Another method is to switch off the jammer for a brief period to allow the receiver to sample the signal environment. Since this latter look-through method eliminates the jamming signal, the amount of time the jammer is switched off must be kept to a minimum.

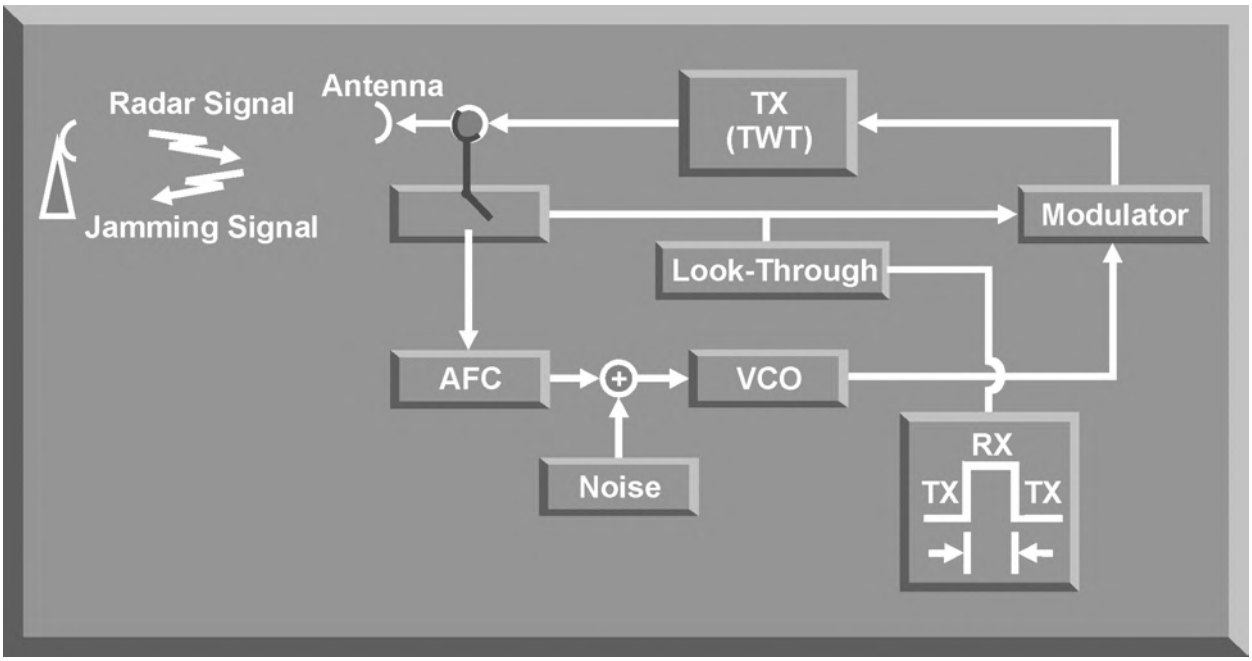

Figure 10-5. Frequency Modulated (FM) Noise Jamming System

4. BARRAGE JAMMING

An important aspect of jamming power is power density. Noise jamming depends on power density for its effectiveness. Power density is a function of the frequency range, or bandwidth, of the jamming signal. If a jammer covers a narrow frequency range, it can concentrate energy in a narrow band. If a jammer covers a wide frequency range, the energy is spread over that entire range. Since the jammer has fixed radiated power, this lowers the effective jamming power at a given frequency. Barrage jamming is a jamming technique where high power is sacrificed for the continuous coverage of several radar frequencies (Figure 10-6). The jamming signal is spread over a wide frequency range, which lowers the ERP at any one frequency. This type of jamming is useful against frequency-agile radars, against a radar system that uses multiple beams, or against multiple radar systems operating in a specific frequency range. By spreading the jamming over a wide frequency range, there is some level of jamming no matter what frequency the radar uses. Barrage jamming was used extensively during World War II. Advantages of barrage jamming are its simplicity and ability to cover a wide portion of the electromagnetic spectrum. The primary disadvantage is the low power density, especially when a high J/S ratio is needed against modern radars.

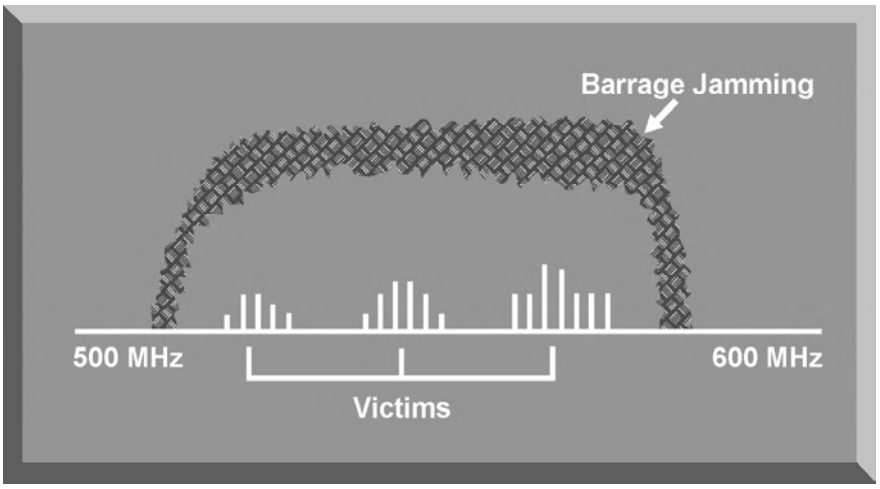

Figure 10-6. Barrage Jamming

5. SPOT JAMMING

One way to take advantage of the noise jammer's simplicity, but raise the jamming signal power, is to use a spot jammer. The earliest spot jammers were very narrow band jammers covering a bandwidth of 10 megahertz or less (Figure 10-7). This narrow band spot jammer was tuned to the anticipated frequency of the target radar. When it is necessary to jam a number of radars at different frequencies, more than one jammer is used. One problem that developed was of carrying the required number of spot jammers to counter a modern IADS. Also, radars that change their operating frequency, or are frequency-agile, defeat the spot jammer. Today, intercept panoramic receivers work with spot jammers to determine the frequency of the victim radar. A look-through capability is included in the system so that the target radar signal can be monitored to assess jamming effectiveness. The jamming signal can be adjusted for any changes in the operating frequency of the radar.

Figure 10-7. Spot Jamming

a. The primary advantage of spot jamming is its power density. Radar or communications receivers can be countered at longer ranges than when using a barrage jammer of equal output power (Figure 10-8).

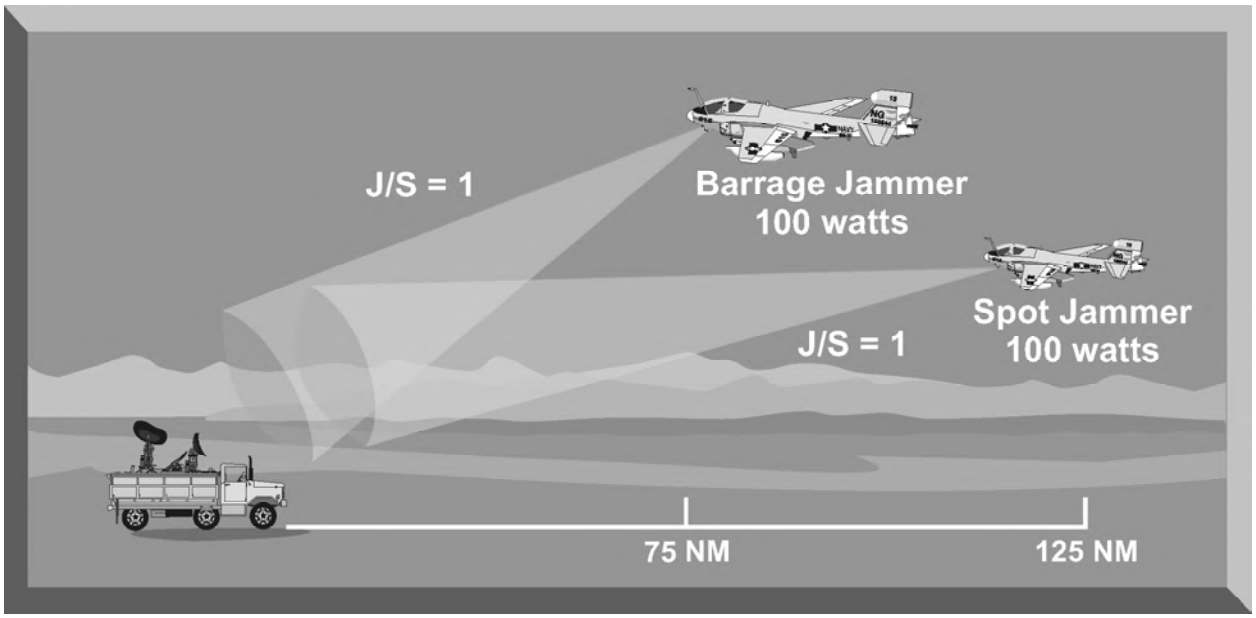

Figure 10-8. Spot Jamming Effectiveness

b. A disadvantage of the spot jammer is its coverage of a narrow band of the frequency spectrum. An operator or computer in the receiver must constantly monitor and tune the jamming signal to the target radar's frequency. The complexity of this process increases when jamming frequency-agile radars that can change frequencies with every pulse.

6. SWEPT-SPOT JAMMING

When high power density is required over a large bandwidth, one solution is to take spot jamming and sweep it across a wide frequency range (Figure 10-9). This preserves the high power density but allows the jamming to cover a large bandwidth. The jamming spot is swept across a broad frequency range at varying speeds. With this technique, a number of radar systems can be covered. Because of their high jamming power, swept-spot jammers are able to cover a number of radars operating in a broad frequency range. However, jamming is not continuous. Fast swept-spot jamming can approximate continuous jamming by causing a phenomenon known as "ringing." Fast sweeping spot noise is like a burst of energy which sets up vibrations within the receiver section. When these vibrations last until the next burst of energy is received, this is known as ringing. Three factors determine swept-spot jamming effectiveness. The first is the power in the spot. The next is the bandwidth, or frequency range, the spot covers. The last is the sweep rate.

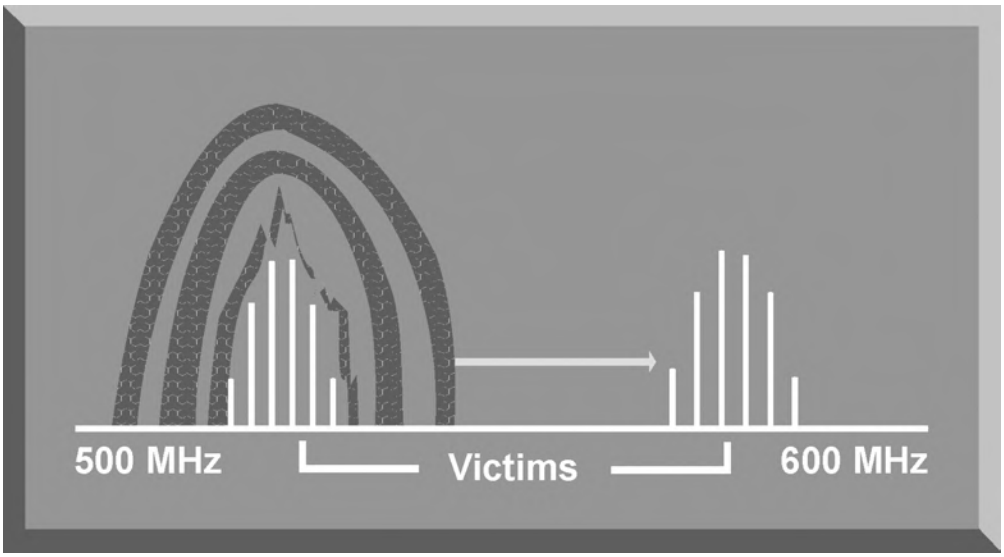

Figure 10-9. Swept-Spot Jamming

7. COVER PULSE JAMMING

Cover pulse jamming is a modification of swept-spot jamming. This is a "smart noise" technique that is responsive for a short period of time (Figure 10-10). A repeater jammer acts as a transponder. It receives several radar pulses and determines the PRF of the victim radar. It then uses this data to predict when the next radar pulse should arrive. Using an oscillator that is gated for a period of time based on predicted pulse arrival time, a noise-modulated signal is amplified and transmitted. This process works against a radar with a steady PRF, and allows a low-powered repeater to respond to a number of threats by time-sharing.

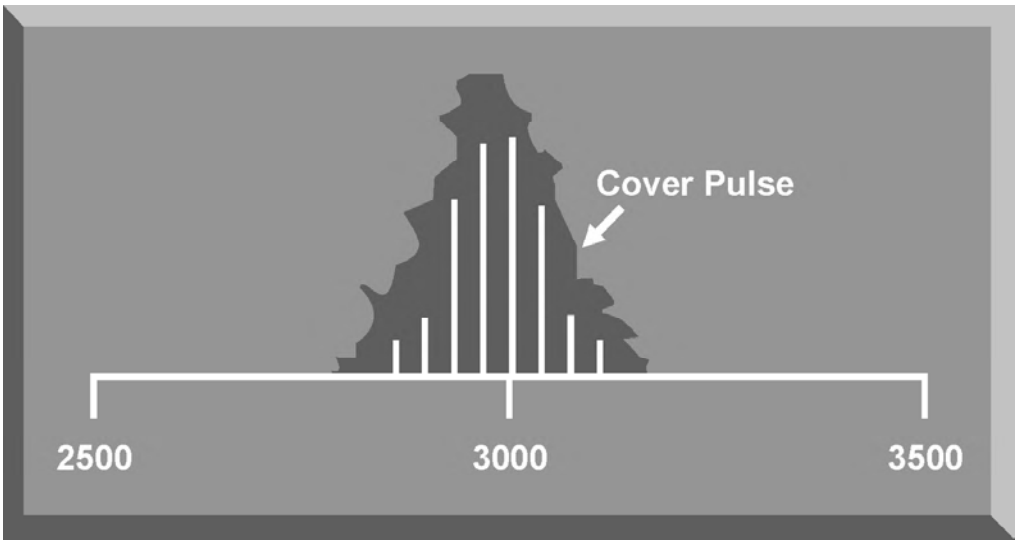

Figure 10-10. Cover Pulse Jamming

a. Cover pulse jamming is used to initiate a range gate pull-off (RGPO) deception jamming technique. The deception jammer transmits a noise jamming signal, or cover pulse, that is much stronger than the target return. The cover pulse raises the automatic gain inside the range gate, and the range tracking loop initiates tracking on the cover pulse. The deception jammer then increases the time delay in the jamming pulse and moves the range tracking gate away from the real target (Figure 10-11).

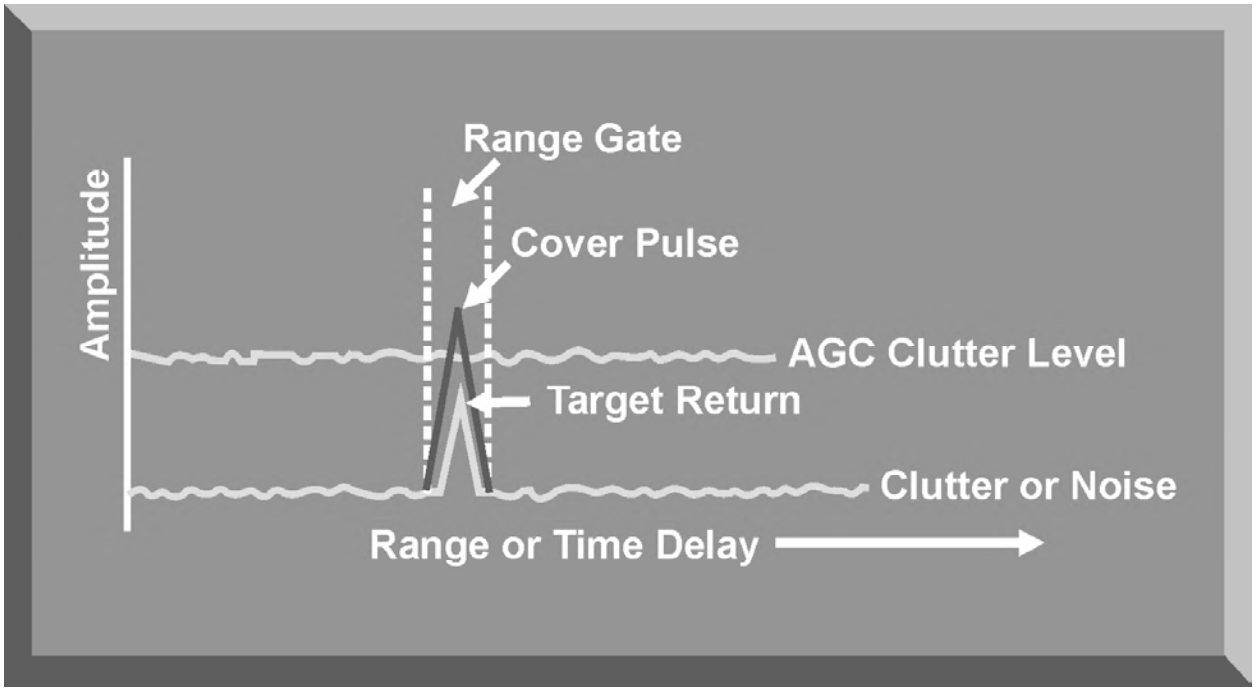

Figure 10-11. Range Gate Pull-Off Cover Pulse

b. A form of cover pulse jamming is also used to initiate a velocity gate pull-off (VGPO) technique against continuous wave and pulse Doppler radars. The cover pulse, in this case, is a strong jamming signal with the same frequency shift as the aircraft return. This cover pulse steals the velocity tracking gate and sets up the velocity tracking loop to steal the velocity tracking gate based on false target Doppler shifts (Figure 10-12).

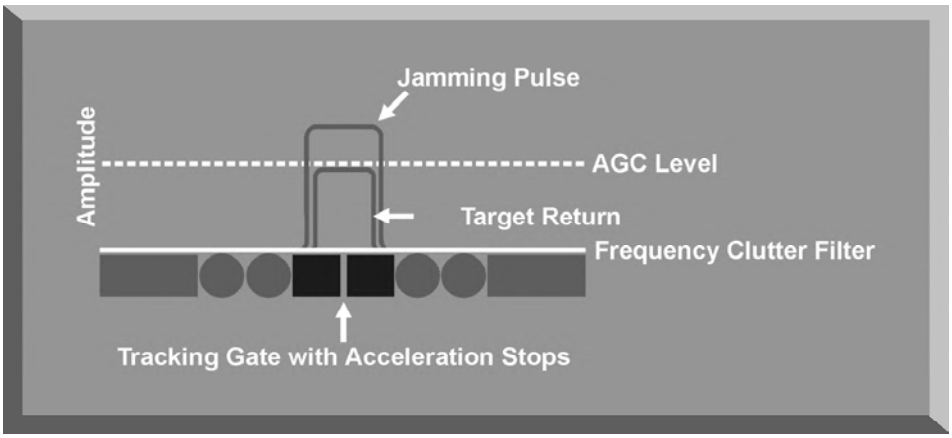

Figure 10-12. Velocity Gate Pull-Off Cover Pulse

8. MODULATED NOISE JAMMING

Modulated jammers are special hybrid jammers which employ noise jamming that is either amplitude or frequency modulated. The purpose of this modulated noise is to defeat target tracking radars (TTRs) rather than deny range information. Modulated noise jamming has proven effective against conical scan and track-while-scan (TWS) TTRs.

a. Modulated jamming alters the noise jamming signal at a frequency that is related to the scan rate of the target radar. If modulated jamming is used against a conical scan radar, a sine wave signal is used (Figure 10-13). The frequency of the sine wave is slightly higher than the scan rate of the victim radar. The amplitude difference results in a constantly varying phase between the radar and the jamming signal. This phase differential produces false targets with a strong signal amplitude everywhere the signals reinforce each other. This causes the conical scan radar to track the false returns and lose the real target return. For this technique to work, the scan rate of the intended victim radar must be known.

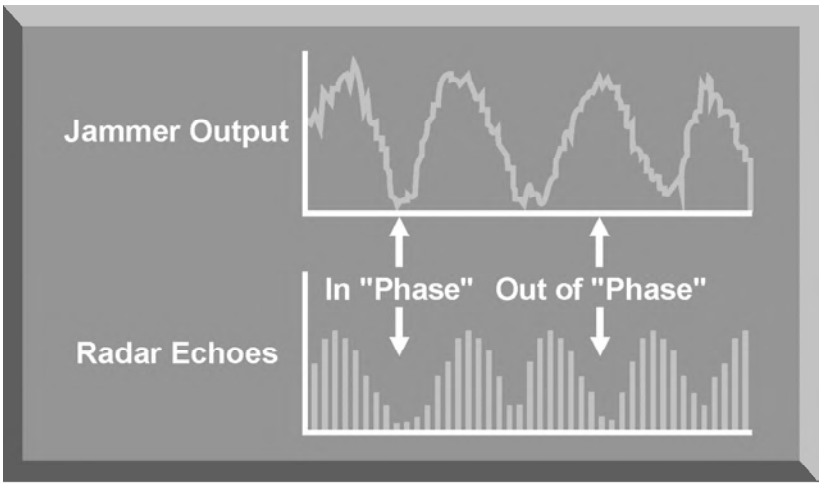

Figure 10-13. Conical Scan Modulated Jamming

b. Against a TWS radar, a rectangular waveform is used to modulate the noise signal. The PRF of the modulation is set at some harmonic of the TWS rate. This synchronization results in a number of jamming strobes on the radar scope. Each jamming strobe is at a different azimuth or elevation depending on which radar beam is being jammed. The number of jamming strobes depends directly on the harmonic used to modulate the signal. In Figure 10-14, a modulating signal frequency that is four times the scan rate of the radar will produce four jamming strobes on the scope. If the jamming is slightly out of tune with the scan rate, the jamming strobes will appear to roll across the radar scope.

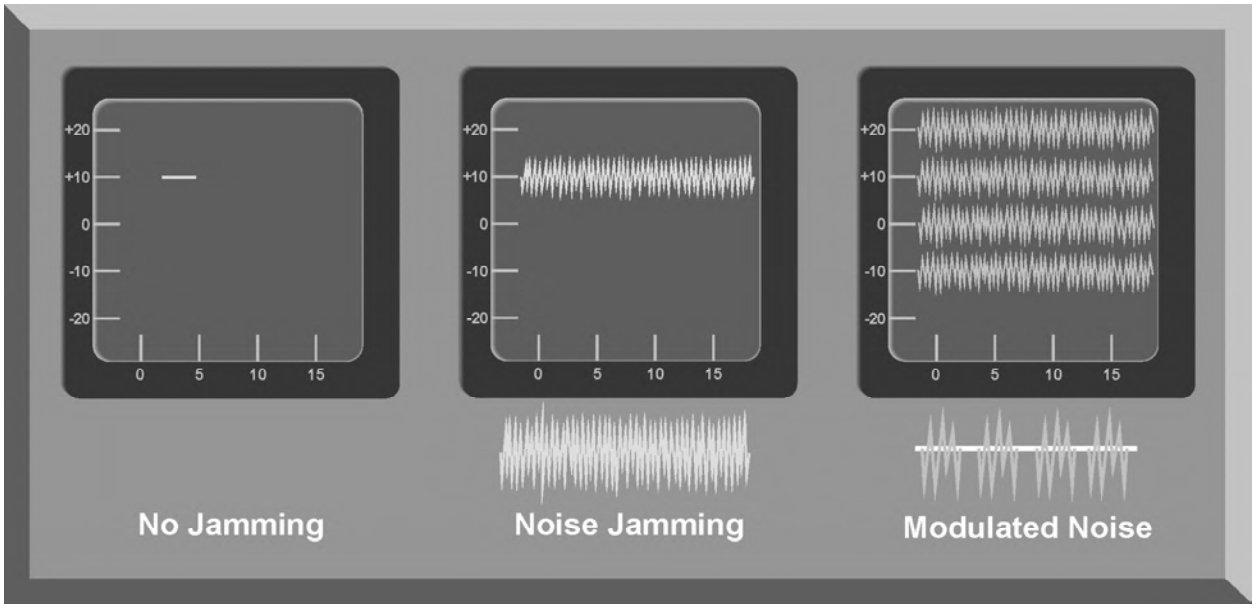

Figure 10-14. TWS Modulated Jamming

9. SUMMARY

Radar noise jamming is employed to deny target acquisition and target tracking data to a victim radar. This is accomplished by injecting amplitude or frequency modulated noise jamming signals into the victim radar's receiver. The radar noise jamming techniques discussed in this chapter included barrage, spot, swept-spot, cover pulse, and modulated jamming. The effectiveness of these noise jamming techniques depends on the power density of the jamming signal compared to the power in the radar return, or the J/S ratio. Radar noise jammers are generally simple, high-power systems which can be effectively employed in a support or self-protection role. Radar noise jamming can be employed in conjunction with deception jamming techniques to maximize the impact of jamming on victim radars.

CHAPTER 11. DECEPTION JAMMING

1. INTRODUCTION

Deception jamming systems are designed to inject false information into a victim radar to deny critical information on target azimuth, range, velocity, or a combination of these parameters. To be effective, a deception jammer receives the victim radar signal, modifies this signal, and retransmits this altered signal back to the victim radar. Because these systems retransmit, or repeat, a replica of the victim's radar signal, deception jammers are known as repeater jammers. The retransmitted signal must match all victim radar signal characteristics including frequency, pulse repetition frequency (PRF), pulse repetition interval (PRI), pulse width, and scan rate. However, the deception jammer does not have to replicate the power of the victim radar system.

a. A deception jammer requires significantly less power than a noise jamming system. The deception jammer gains this advantage by using a waveform that is identical to the waveform the radar's receiver is specifically designed to process. Therefore, the deception jammer can match its operating cycle to the operating cycle of the victim radar instead of using the 100% duty cycle required of a noise jammer. To be effective, a deception jammer's power requirements are dictated by the average power of a radar rather than the peak power required for a noise jammer. In addition, since the jammer waveform looks identical to the radar's waveform, it is processed like a real return. The jamming signal is amplified by the victim radar receiver, which increases its effectiveness. The reduced power required for effective deception jamming is particularly significant when designing and building self-protection jamming systems for tactical aircraft that penetrate a dense threat environment. Deception jamming systems can be smaller, lighter, and can jam more than one threat simultaneously. These characteristics give deception jammers a great advantage over noise jamming systems.

b. Although deception jammers require less power, they are much more complex than noise jammers (Figure 11-1). Memory is the most critical element of any deception jammer. The memory element must store the signal characteristics of the victim radar and pass these parameters to the control circuitry for processing. This must be done almost instantaneously for every signal that will be jammed. Any delay in the memory loop diminishes the effectiveness of the deception technique. Using digital RF memory (DRFM) reduces the time delay and enhances deception jammer effectiveness. Deception jamming employed in a self-protection role is designed to counter lethal radar systems. To be effective, deception jamming systems must be programmed with detailed and exact signal parameters for each lethal threat.

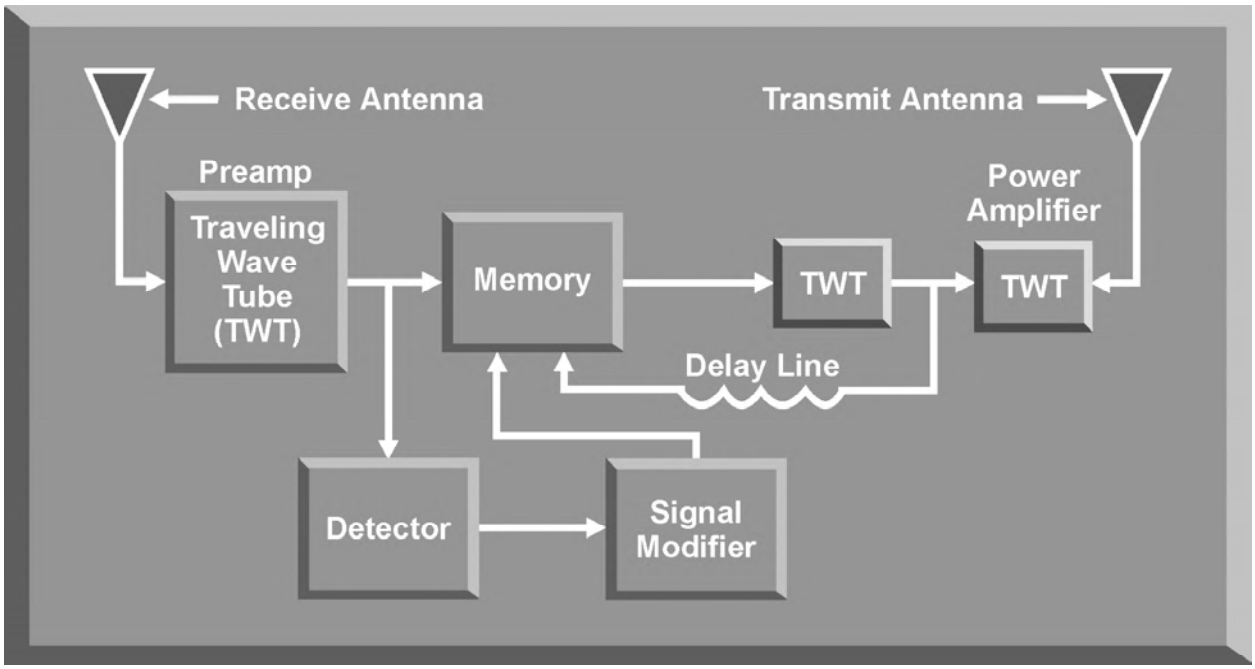

Figure 11-1. Deception Jamming System

c. The requirement for exact signal parameters increases the burden on electronic warfare support (ES) systems to provide and update threat information on operating frequency, PRF, PRI, power pulse width, scan rate, and other unique signal characteristics. An electronic intelligence (ELINT) architecture is required to collect, update, and provide changes to deception jamming systems. In addition, intelligence and engineering information on exactly how a specific threat system acquires, tracks and engages a target is essential in identifying system weaknesses. Once a weakness has been identified, an effective deception jamming technique can be developed and programmed into a deception jammer. For example, if a particular radar system relies primarily on Doppler tracking, a Doppler deception technique will greatly reduce its effectiveness. Threat system exploitation is the best source of detailed information on threat system capabilities and vulnerabilities. Effective deception jamming requires much more intelligence support than does noise jamming.

d. Most self-protection jamming techniques employ some form of deception against a target tracking radar (TTR). The purpose of a TTR is to continuously update target range, azimuth, and velocity. Target parameters are fed to a fire control computer that computes a future impact point for a weapon based on these parameters and the characteristics of the weapon being employed. The fire control computer is constantly updating this predicted impact point based on changes in target parameters. Deception jamming is designed to take advantage of any weaknesses in either target tracking or impact point calculation to maximize the miss distance of the weapon or to prevent automatic tracking. This chapter will discuss the most commonly employed deception jamming

techniques, including false target jamming, range deception jamming, angle deception jamming, velocity deception jamming, and monopulse jamming.

2. FALSE TARGET JAMMING

False target jamming is an effective jamming technique employed against acquisition, early warning, and ground control intercept (GCI) radars. The purpose of this type of jamming is to confuse the enemy radar operator by generating many false target returns on the victim radar scope. When false target deception jamming is successfully employed, the radar operator cannot distinguish between false targets and real targets (Figure 11-2).

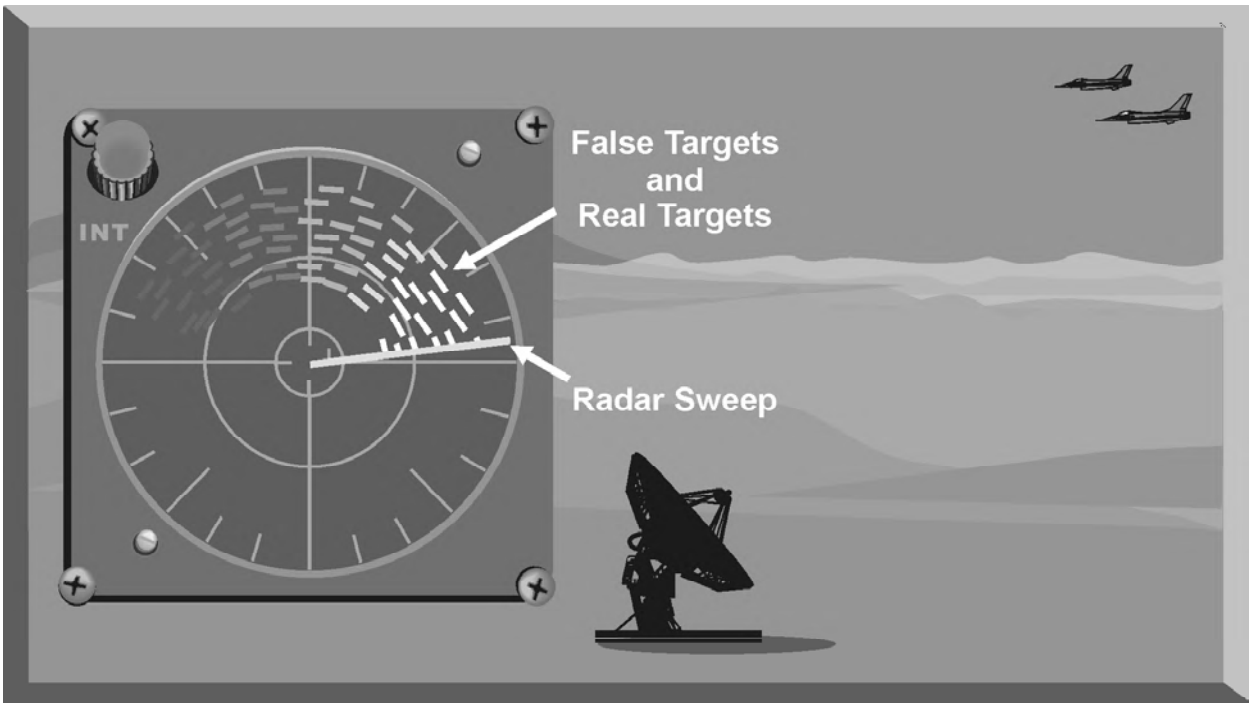

Figure 11-2. False Target Generation

a. To generate false targets, the deception jammer must tune to the frequency, PRF, and scan rate of the victim radar. The jamming pulse must appear on the radar scope exactly like a radar return from an aircraft. Multiple false targets greater in range than the jammer are generated by delaying the transmission of a jamming pulse until after the victim radar pulse has been received. False targets closer in range are generated by anticipating the arrival of a radar pulse and transmitting a jamming pulse before the victim radar pulse hits the aircraft. If the victim radar employs a jittered PRF, only targets greater in range can be generated.

b. To generate different azimuth false targets, the deception jammer synchronizes its transmitted pulse with the victim radar's sidelobes. Due to their

reduced power, when compared to the main beam, sidelobes are difficult to detect and analyze. The receiver in the deception jammer must be sensitive enough to detect these sidelobes and not be saturated by the power in the main radar beam. A false target deception jammer must inject a jamming pulse that looks like a target return into these sidelobes. To penetrate the radar sidelobes requires a lot of power. However, the power must be judiciously used. If a powerful jamming pulse is injected into the main beam, the false targets will be easy to detect. Most false target jammers vary the power in the jamming pulse inversely with the power in the received signal, on a pulse-by-pulse basis. This means the repeater jamming signal is at minimum power when the main beam of the victim radar is on the aircraft and at maximum power when the sidelobes are being jammed. To effectively generate false azimuth targets, the jammer must have a receiver with a wide dynamic range to detect both the main beam and the sidelobes. In addition, the jamming system must be able to generate high power that can be effectively controlled by the receiver.

c. To generate moving false targets, the deception jammer must synchronize with the main beam and the sidelobes in frequency, pulse width and PRF. Amplitude modulated jamming signals, with variable time delays, are transmitted into the sidelobes of the victim radar. The variable time delay provides a false target that changes range, either toward or away from the radar, depending on the time delay. The amplitude modulation provides false azimuth targets that appear to be moving.

d. The effectiveness of false target generation is based on the credibility of the generated false radar returns. If the victim radar can easily distinguish between false returns and target returns, the technique is a failure. The false returns must look identical to an aircraft return. The radar return on the victim radar scope should have the same intensity, depth, and width as a target return.

(1) Power determines the false target intensity when it is displayed on the victim radar scope. Varying jammer output power inversely with received power ensures that each false target has nearly the same intensity as a true target return. The depth, or thickness, of the false target depends on the pulse width of the victim radar. By matching the pulse width of the jamming pulse with the pulse width of the victim radar, the jammer can generate false targets with the same depth as a real target return.

(2) The width of the false target depends on the antenna pattern of the victim radar. This can pose a problem for false-target deception jammers. Because the jamming pulse is transmitted the entire time the radar beam is on the jammer, the width of a false target will tend to be greater than a real target return. Aircraft radar return varies with main beam cross-section. To correct this problem, most false target deception jammers use random modulation in the power of the transmitted pulses. This will vary the width of the false targets and make them look more like the variable returns of actual targets.

3. RANGE DECEPTION JAMMING

Although a specific TTR can track multiple targets and direct multiple weapons, the tracking circuit must select a single target return and track it while ignoring all other returns. Target selection is done by using gate bins. The range gate is used as the primary gate for target selection. A range gate is an electronic switch that is turned on for a period of microseconds based on a certain range or time delay after a pulse is transmitted (Figure 11-3).

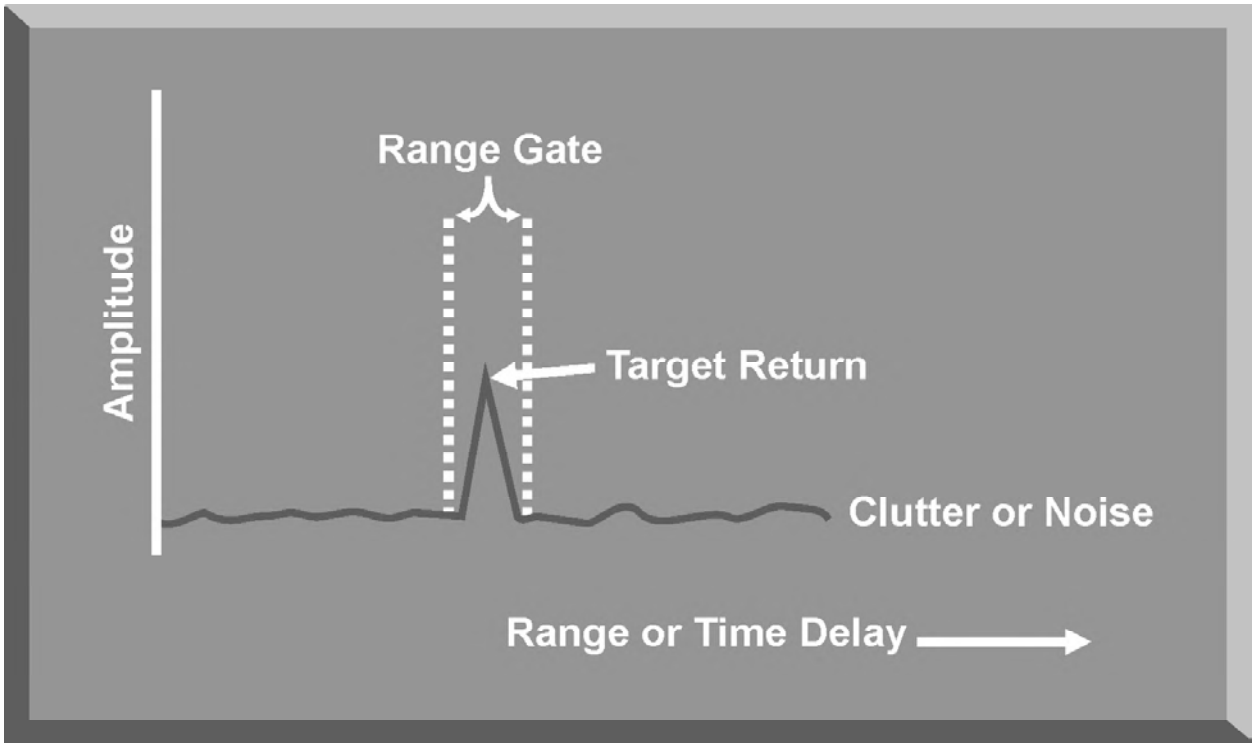

Figure 11-3. Range Gate Tracking

a. Range deception jamming exploits any inherent weakness in a TTR's automatic range gate tracking circuits. When a TTR's range gate locks on to an aircraft, the range deception jammer detects the radar signal. The range deception jammer then amplifies and retransmits a signal much stronger than the radar return. This retransmitted signal, called a cover pulse, is displayed in the range gate with the target signal (Figure 11-4).

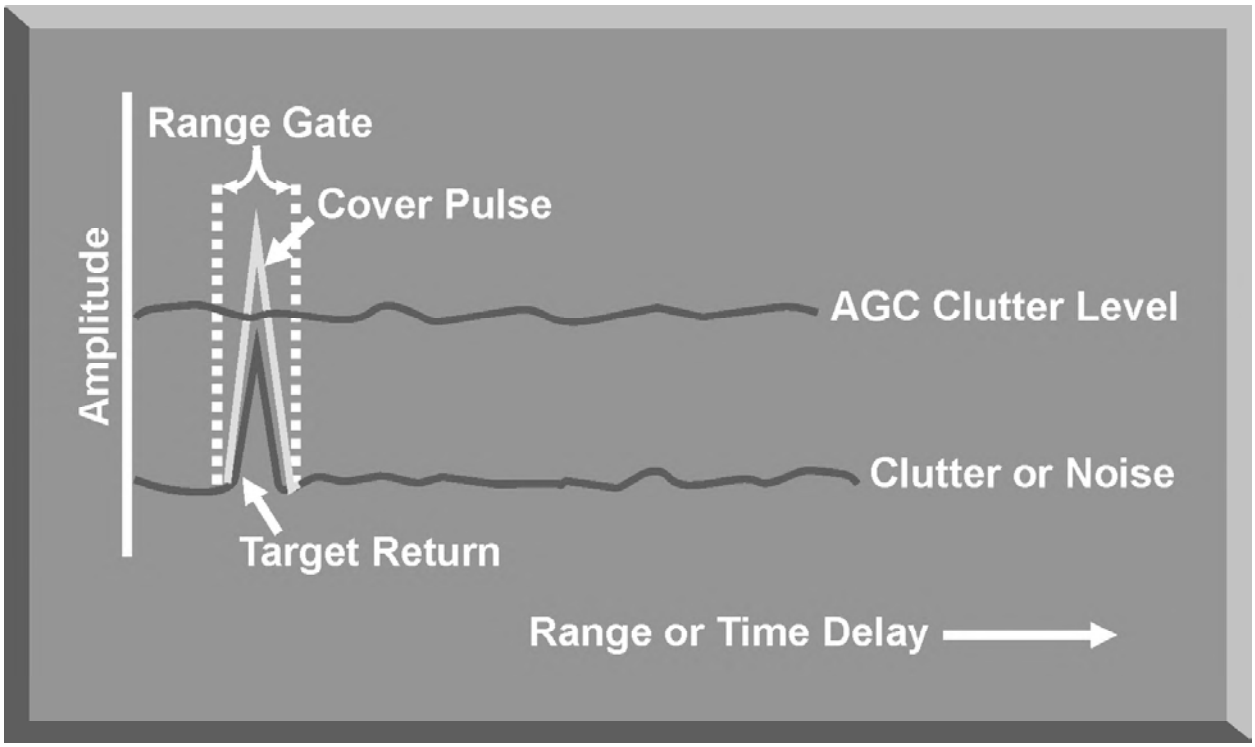

Figure 11-4. Range Gate Jamming Cover Pulse

b. The automatic gain control (AGC) circuit lowers the gain in the range tracking gate to control the amplitude of the cover pulse in the range gate. Reduced gain causes the real target return to be lost, and the range gate only tracks the jamming signal. This is known as range gate capture.

c. Once the range gate is captured by the cover pulse, a technique called range gate pull-off (RGPO) is employed (Figure 11-5). The deception jammer memorizes the radar signal and introduces a series of time delays before retransmitting. By increasing these time delays, the range gate will detect an increase in range and automatically move off to a false range. Once the range gate has moved well away from the real target, the range deception jammer shuts down, and the radar range gate is left with no target to track. The range gate breaks lock and the TTR must again go through the process of search, acquisition, and lock-on to re-engage the target.

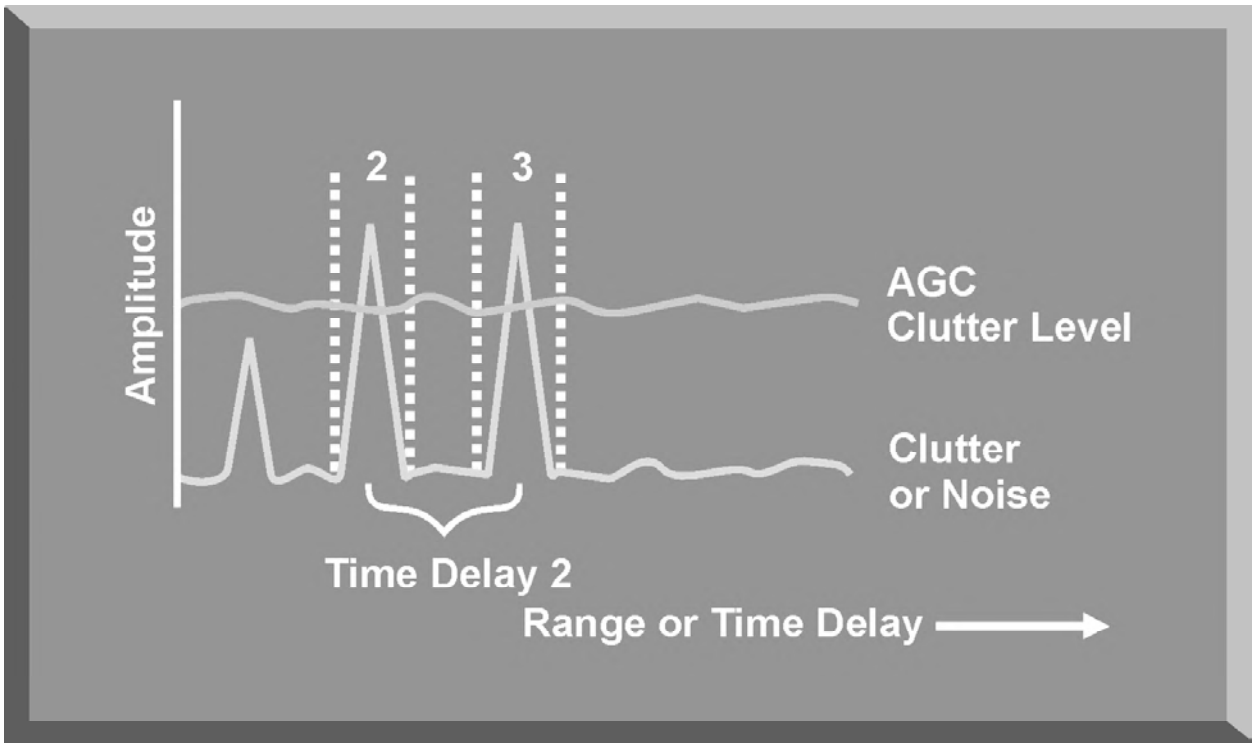

Figure 11-5. Range Gate Pull-Off

d. There are several advantages of range deception jamming, especially when used as a self-protection technique. It can generate sufficient errors to deny range information and is effective against most automatic range tracking systems. This technique does not require a large amount of power, just enough to cover the radar return of the aircraft. If the time delays are not exaggerated, an operator may not detect the loss of range lock-on until after a missile has been fired. The insidious nature of range deception jamming may generate enough miss distance to save the aircraft and pilot.

e. There are disadvantages to using range deception jamming. First, it can be defeated by a trained radar operator. If the operator detects a problem with the automatic range tracking circuit, the system can be switched to manual range tracking mode to defeat RGPO. Also, if the threat system is still able to track the aircraft's azimuth and elevation, range information may not be required to complete target engagement. To maximize range deception jamming effectiveness, it should be employed in conjunction with azimuth and elevation jamming. Finally, this type of range deception jamming is not effective against a leading-edge range tracking system. A leading-edge tracker will not see the delayed cover pulse. As the cover pulse moves off the target, AGC circuits reset the gain to continue tracking the real target. The only way to defeat a leading-edge range tracker is with a deceptive jammer that anticipates the next radar pulse and sends a jamming cover pulse before it reaches the aircraft. This jamming technique can also be defeated by randomly varying the radar PRF.

4. ANGLE DECEPTION JAMMING

Angle deception jamming is designed to exploit weaknesses in the angle tracking loop of the victim radar. The specific technique depends on the tracking method used to derive azimuth and elevation information. Inverse amplitude modulation jamming is the main angle deception technique used against TWS radars. For conical scan radars, scan rate modulation and inverse gain jamming are used. Swept square wave (SSW) jamming is used against LORO tracking radars. Monopulse angle deception jamming will be covered separately.

a. The azimuth and elevation tracking loop for a TWS radar is based on target signal amplitude modulation. The inverse amplitude modulation jammer generates a signal with modulation exactly opposite the expected return. To accomplish this, the angle deception jammer must receive the radar signals from the tracking beams. The jammer responds with a signal of the same frequency, PRF, and scan rate synchronized to the inverse of the radar antenna pattern (Figure 11-6). This induces an error in the angle tracking gate that, over a series of scans, causes the radar to lose target angle tracking.

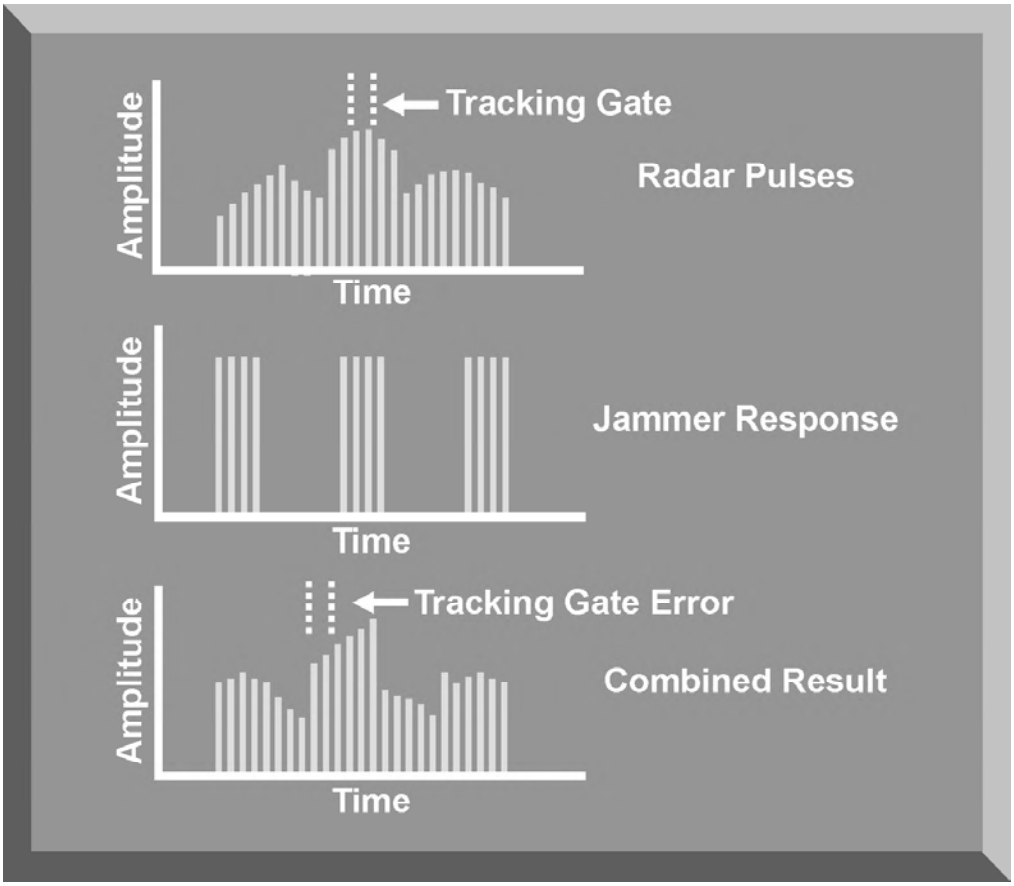

Figure 11-6. Inverse Amplitude Modulation Jamming

b. Inverse gain jamming is also effective against conical scan radars. Since conical scan radars use the phase of the target returns to generate error signals, an inverse gain deception jammer attempts to alter the phase by inducing fake signals into the antennas. In addition, by altering the amplitude of the signal, the jammer induces large errors into the tracking loop. To accomplish this, the jammer must determine the frequency, PRF, and scan rate of the victim radar. It then transmits signals that change the phase and amplitude of the target signal, resulting in a signal 180 degrees out of phase with the actual target (Figure 11-7). This 180-degree error rapidly drives the antenna off the target and causes break-lock.

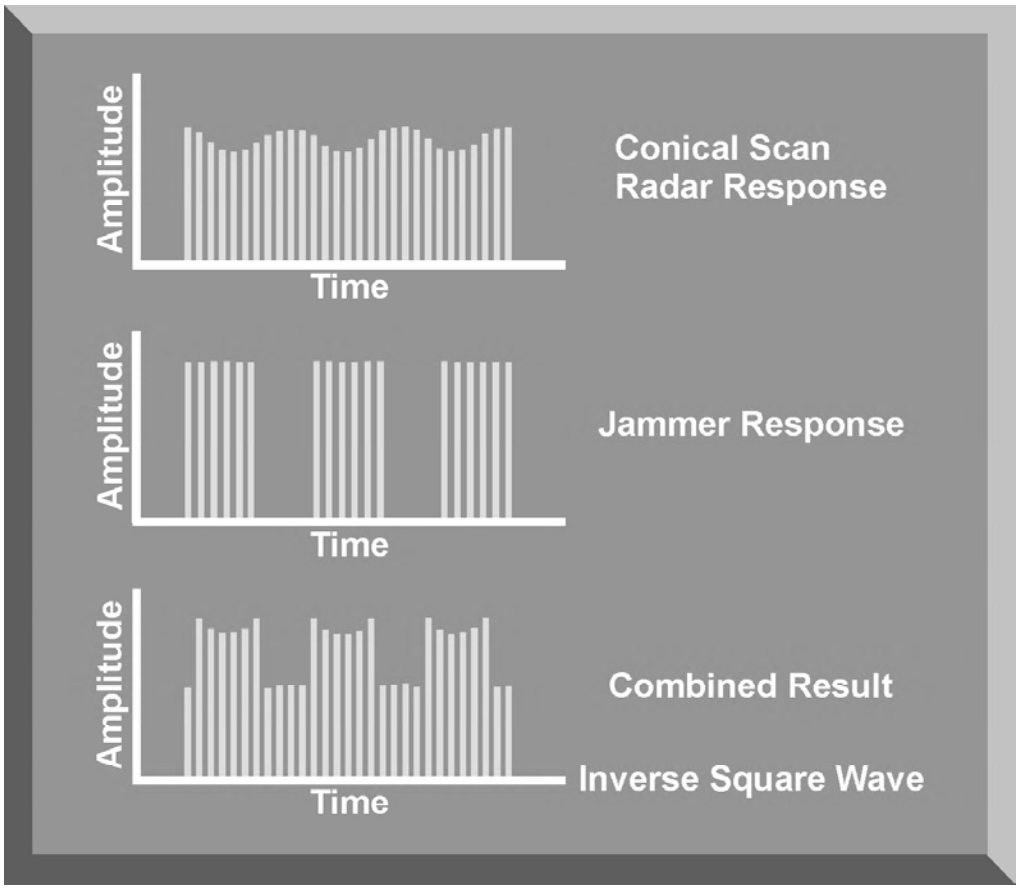

Figure 11-7. Inverse Gain Jamming

c. Scan rate modulation is also used against conical scan radars. This angle deception technique modulates the jamming pulse at or near the victim radar nutation frequency. As the modulation approaches the radar's nutation frequency, large error signals appear in the radar servo tracking loops, producing random gyrations in the antenna system, causing break-lock. This technique is most effective if the modulation jamming is slowly swept in frequency until it matches the nutation rate.

d. Both inverse scan and scan rate modulation jamming require very little power and have proven extremely effective against TWS and conical scan radars. To be effective, however, the angle deception jammer must find the precise scan rate of the victim radar. The jammer must concentrate on one signal at a time, limiting the number of threat systems that can be jammed simultaneously. In a dense threat environment, this can be a severe limitation.

e. The effectiveness of inverse gain and scan rate modulation jamming led radar designers to employ antennas that scan only during the receiving function of the radar system. Generally, this is accomplished by using two antennas. The transmitting antenna illuminates the target. Receiving antennas scan to produce the amplitude modulation of the reflected signal for effective angle tracking. This technique is called Lobe-On-Receive-Only (LORO). Since the transmitting antenna does not nutate, or scan, angle deception jammers cannot detect the modulation required to generate effective inverse gain modulation. Swept square wave (SSW) jamming is the angle deception technique developed to counter LORO angle tracking.

f. SSW jamming continuously varies the frequency of amplitude modulation on the jamming pulse over an expected range of nutation or scanning frequencies. This range is established by either electronic intelligence (ELINT) data on a particular system, or by exploitation. The dotted line in Figure 11-8 shows a threat's nutation or scan frequency. As the frequency of the modulated jamming pulse approaches the threat scan frequency, it induces errors in the angle tracking loop of the victim radar. The longer the SSW jamming stays near the scan frequency, the greater the induced errors. It is important that the sweep rate of the modulating jamming be slow enough to maximize its impact on the victim radar.

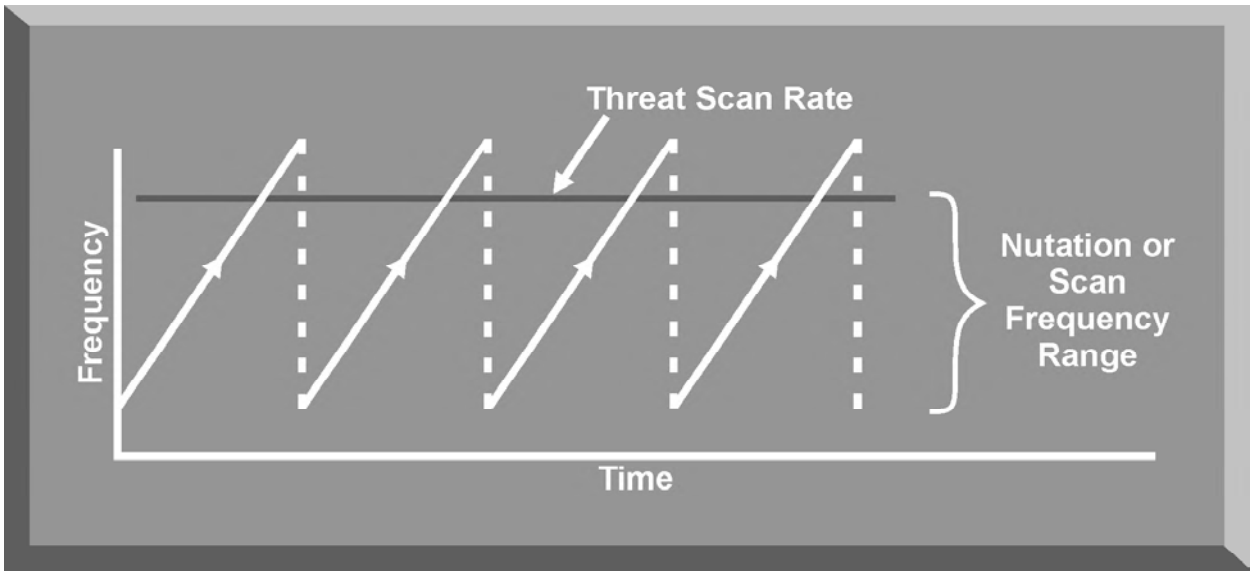

Figure 11-8. Swept Square Wave Jamming

5. VELOCITY DECEPTION JAMMING

Pulse Doppler and continuous wave (CW) radars track targets based on velocity or Doppler-shifted frequency (Figure 11-9). The objective of velocity deception jamming is to deny velocity tracking information and generate false velocity targets. The primary techniques include velocity gate pull-off (VGPO), Doppler noise, narrowband Doppler noise, and Doppler false targets.

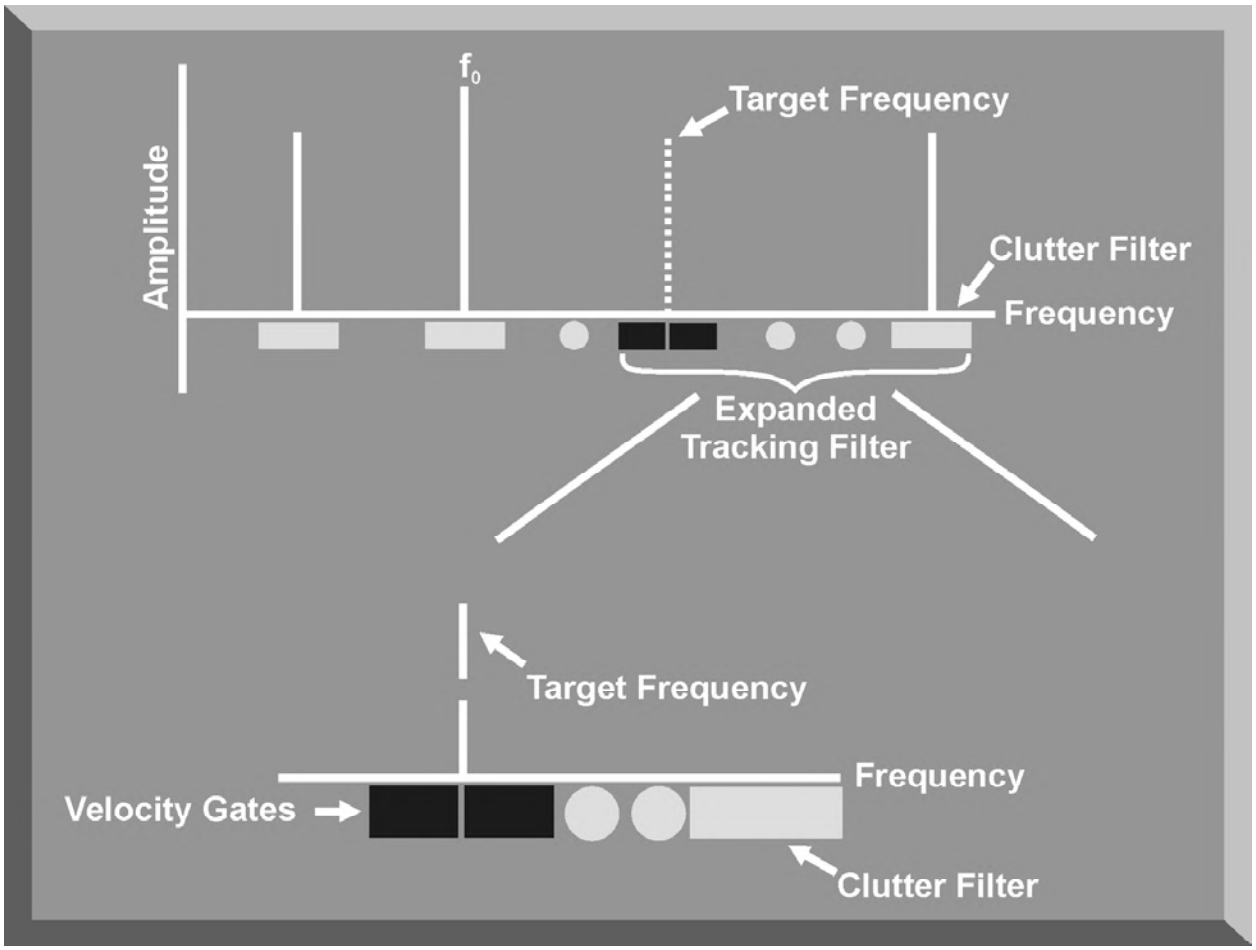

Figure 11-9. Velocity Tracking Gate

a. Velocity gate pull-off counters pulse Doppler or CW radars by stealing the velocity gate of their automatic tracking loop. The objective of VGPO is to capture the Doppler velocity tracking gate by transmitting an intense false Doppler signal. Then the frequency of the false signal is changed to move the tracking gate away from the true target Doppler. This is analogous to the RGPO technique used against the range gate tracking loop.

(1) To accomplish an effective VGPO technique, the jammer receives the CW or pulse Doppler signal. It then retransmits a CW or pulse Doppler signal that is higher in power than the return from the aircraft, but at approximately the same

Doppler frequency (Figure 11-10). It is important that the frequency of this initial jamming pulse appears within the same velocity tracking filters as the target return or the victim radar will disregard it. The frequency band of the Doppler tracking filters is an important piece of intelligence information. The velocity tracking gates are quite narrow, roughly 50 to 250 MHz. Once the jamming pulse appears in the tracking gate, the automatic gain control circuit gains out the target return, and the jamming pulse has captured the velocity gate.

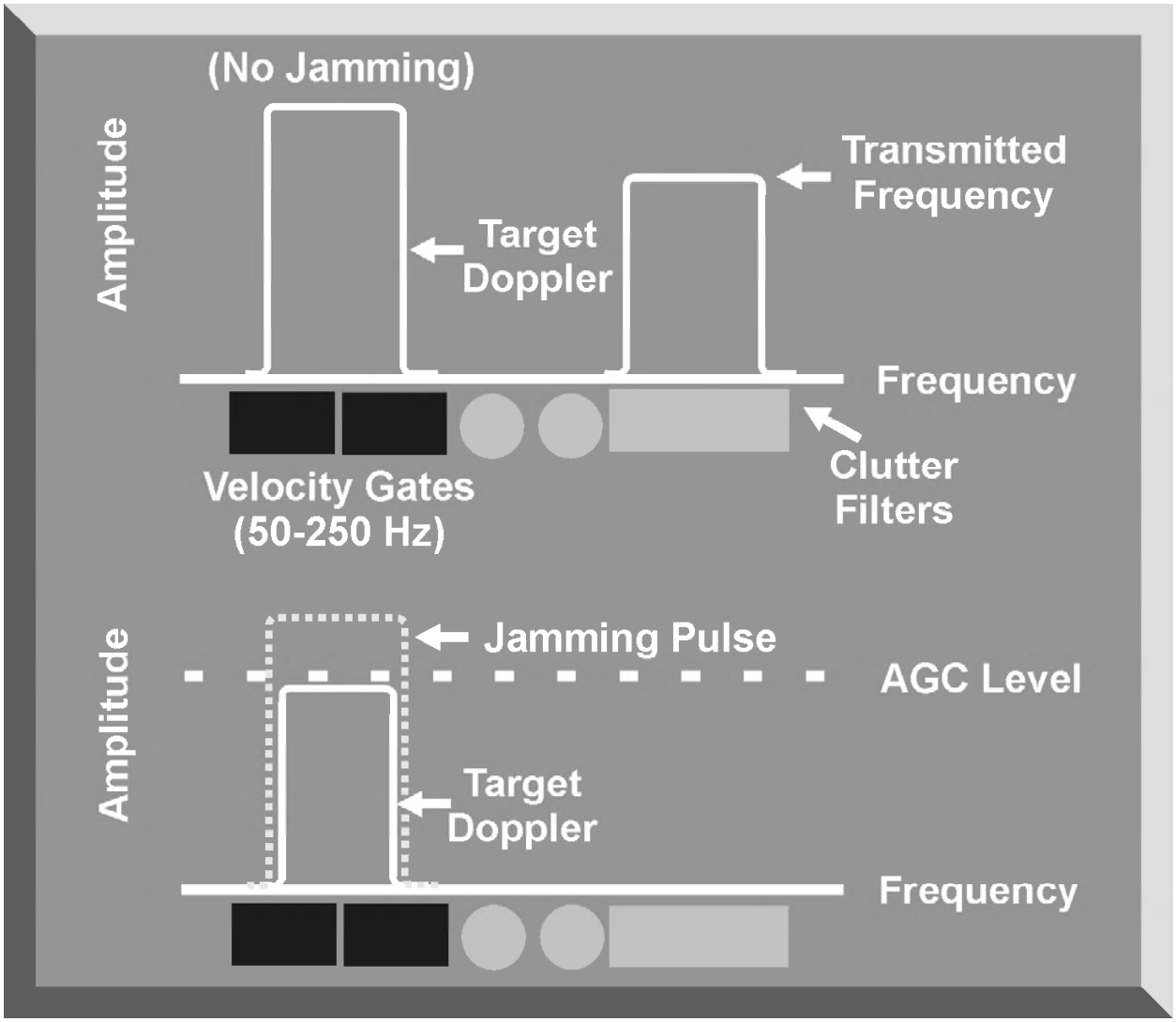

Figure 11-10. Velocity Gate Capture

(2) Once the jamming pulse has captured the tracking gate, the deception jammer slowly changes the Doppler frequency (Figure 11-11). This frequency shift is accomplished by several methods. The most common method uses frequency modulation (FM) within the jammer's traveling wave tube (TWT). By varying the TWT voltage, the Doppler frequency of the jamming pulse is changed

linearly, and the radar tracking gates follow the jamming pulse. By using FM, the jamming pulse can be moved in either a positive or negative direction, depending on the slope of the voltage. By slowly changing the frequency of the modulation, the jamming pulse pulls the tracking gates off the target. When the maximum offset has been achieved, nominally 5 to 50 kHz, the FM is "snapped back" to a minimum value, and the process is repeated to preclude target reacquisition.

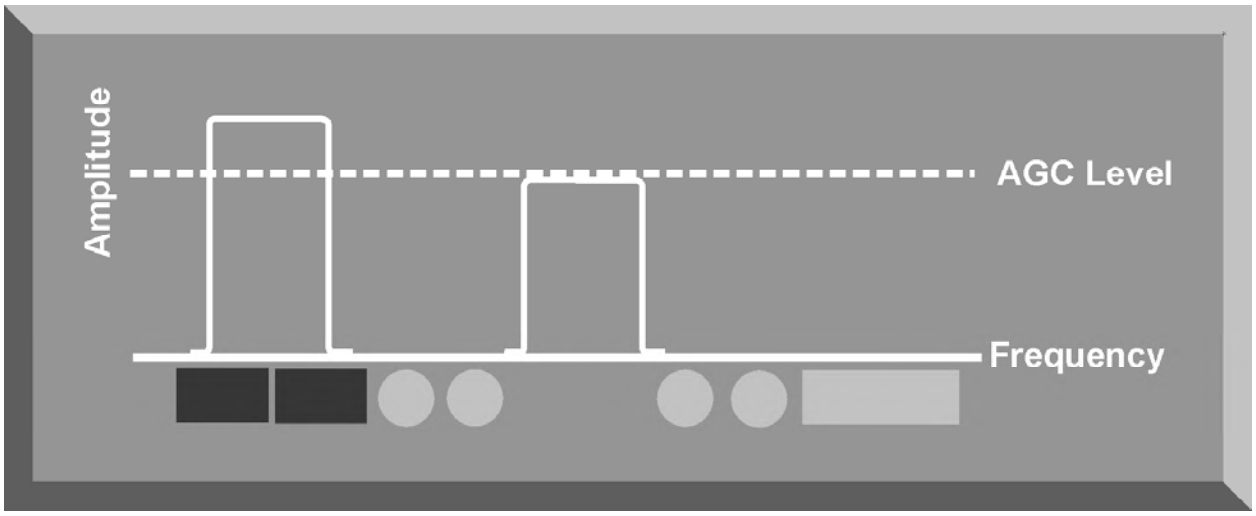

Figure 11-11. Velocity Gate Pull-Off

(3) The rate of change of frequency offset in a VGPO pulse is an extremely critical parameter. Many CW and pulse Doppler radars employ acceleration stops as part of the tracking gates. By differentiating the velocity outputs of the velocity tracking gates with respect to time, the velocity tracker computes target acceleration. Acceleration stops detect and reject unusually large changes in target acceleration. If the VGPO technique changes the frequency of the jamming pulse too rapidly, the tracking loop, with acceleration stops, will reject the jamming pulse and stay on the target. This means that an effective VGPO technique may take from one to ten seconds.

b. Doppler noise differs from most noise techniques in that it is a repeater technique. The jamming system must receive the pulse Doppler radar signal in order to generate an appropriate jamming pulse. Also, noise jamming output is done on a pulse-by-pulse basis and only lasts as long as the pulse duration, or pulse width, of the victim radar signal (Figure 11-12). The Doppler noise jammer receives each pulse and applies a random frequency shift, either positive or negative, to each pulse.

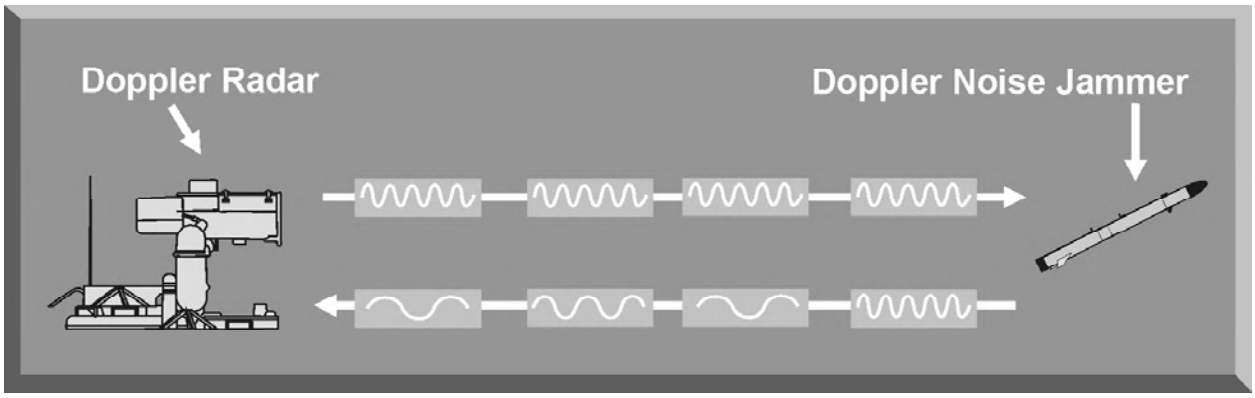

Figure 11-12. Doppler Noise Jamming

(1) When Doppler noise jamming pulses are processed by the signal processor, and the Doppler frequencies are sent to the velocity tracking gate, there are so many different velocities that the tracking gate cannot distinguish the target from the jamming. The random distribution of target velocities effectively masks the true target Doppler velocity. If the velocity tracking loop is not saturated, multiple false targets traveling at different speeds will be displayed.

(2) When a technique called Doppler noise blinking is employed, it interferes with the angle and velocity tracking within most semi-active radar missiles. Doppler noise blinking is accomplished by rapidly transmitting bursts of Doppler noise jamming (Figure 11-13).

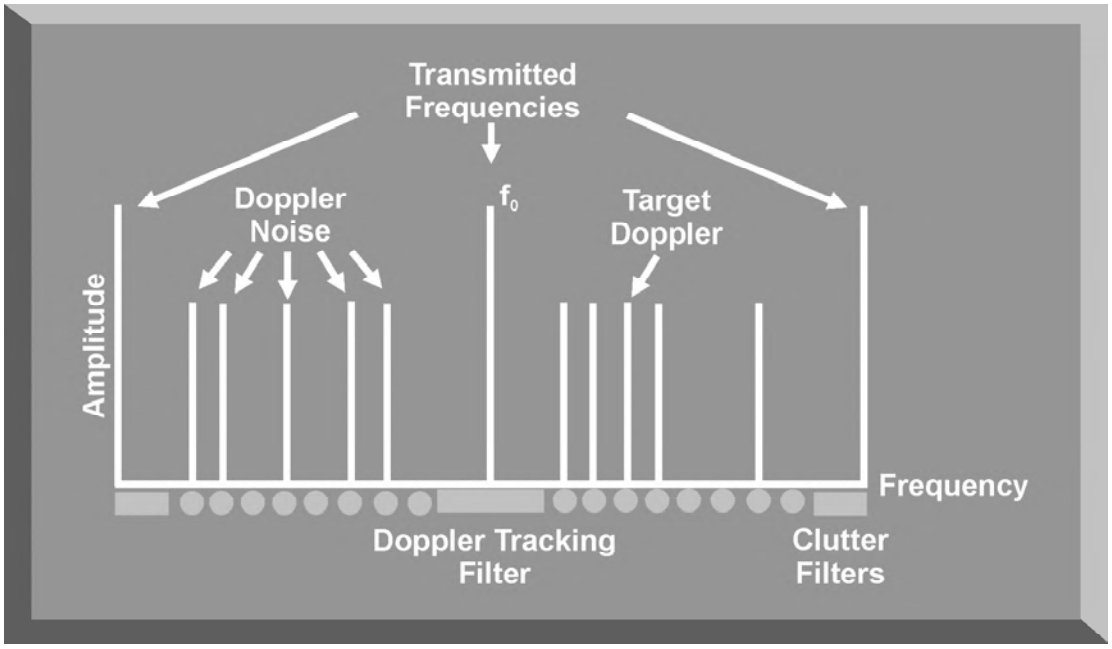

Figure 11-13. Impact of Doppler Noise Jamming

(3) Doppler noise jamming is effective against most pulse Doppler radars and the semi-active missiles employed with these radars. One disadvantage, however, is that it is only effective against the velocity tracking loop. If range tracking is still available to the radar, Doppler noise may highlight the jamming aircraft. Another disadvantage is that Doppler noise requires a sophisticated jammer able to receive the victim radar pulse, generate random positive and negative frequency modulations on this pulse, and retransmit the jamming pulses at the PRF and pulse width of the victim radar. This requires an extremely fast signal processing capability and detailed intelligence information on the victim radar.

c. Narrowband Doppler noise is also a repeater technique. The jamming system receives the pulse Doppler radar signal and generates a noise jamming signal on a pulse-by-pulse basis (Figure 11-14). Narrowband Doppler noise requires detailed information on the frequency coverage of an individual velocity tracking filter, or velocity bin, employed by the victim radar. Once this frequency range is known, the jammer receives each pulse from the victim radar and transmits jamming pulses with a higher and lower frequency shift based on the real target Doppler. These frequency shifts are always within the frequency range of the velocity bin.

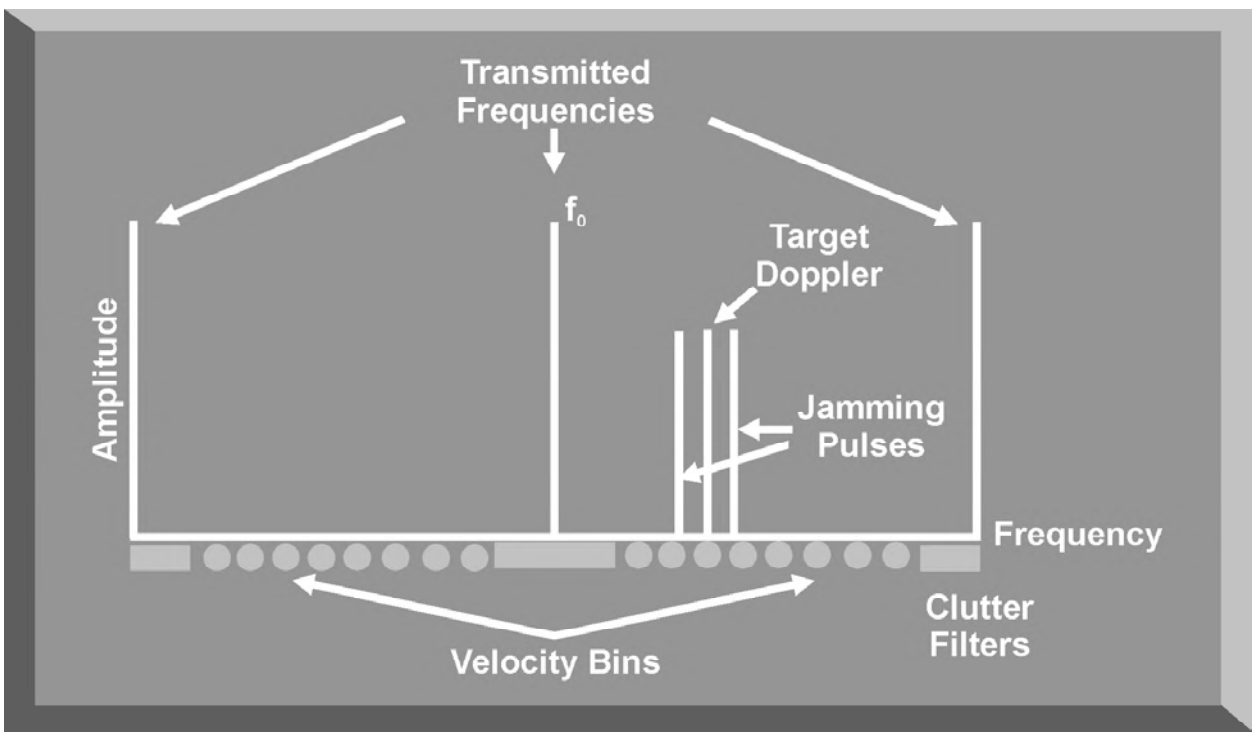

Figure 11-14. Narrowband Doppler Noise

(1) When these pulses are processed by the signal processor and the Doppler signals are sent to the velocity tracking gates, the particular bin that

contains the target Doppler also contains several other targets generated by the jammer. The victim radar signal processor attempts to distinguish the target Doppler from the jamming pulses. It raises the gain in the velocity tracking bins, thinking that the signal with the highest amplitude is the target. But, as the signal gain is increased, the target is "gained out" with the jamming signals and no target is displayed. This is called velocity bin masking and can completely deny target information to a pulse Doppler radar (Figure 11-15).

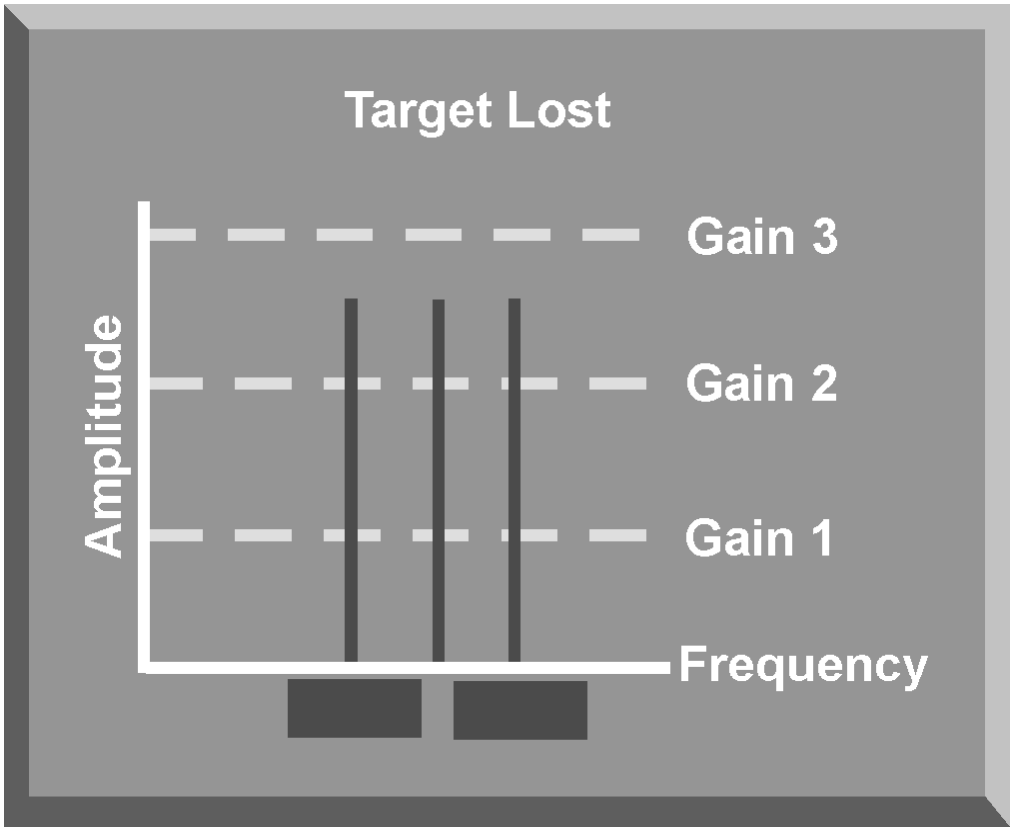

Figure 11-15. Velocity Bin Masking

(2) The advantage of narrowband Doppler noise is that it completely masks an aircraft's velocity from a pulse Doppler radar. The disadvantages include the following: When the victim radar can range-track an aircraft, narrowband Doppler noise highlights the aircraft's presence. To be effective, narrowband Doppler noise requires knowledge of the frequency range of the victim radar's velocity tracking bins, or filters. This detailed information may be available only through threat system exploitation. Finally, sophisticated signal processing and jamming systems are required to receive and transmit in the very narrow frequency band of the velocity bin.

d. Doppler false target jamming is normally used with narrowband Doppler noise or other deception techniques. Its purpose is to initially confuse the radar signal processor with multiple targets and then force the radar signal processor

to raise its gain levels in the velocity tracking loop. The Doppler false target jammer receives each pulse of the victim radar and applies a random frequency shift to a selected number of these pulses (Figure 11-16).

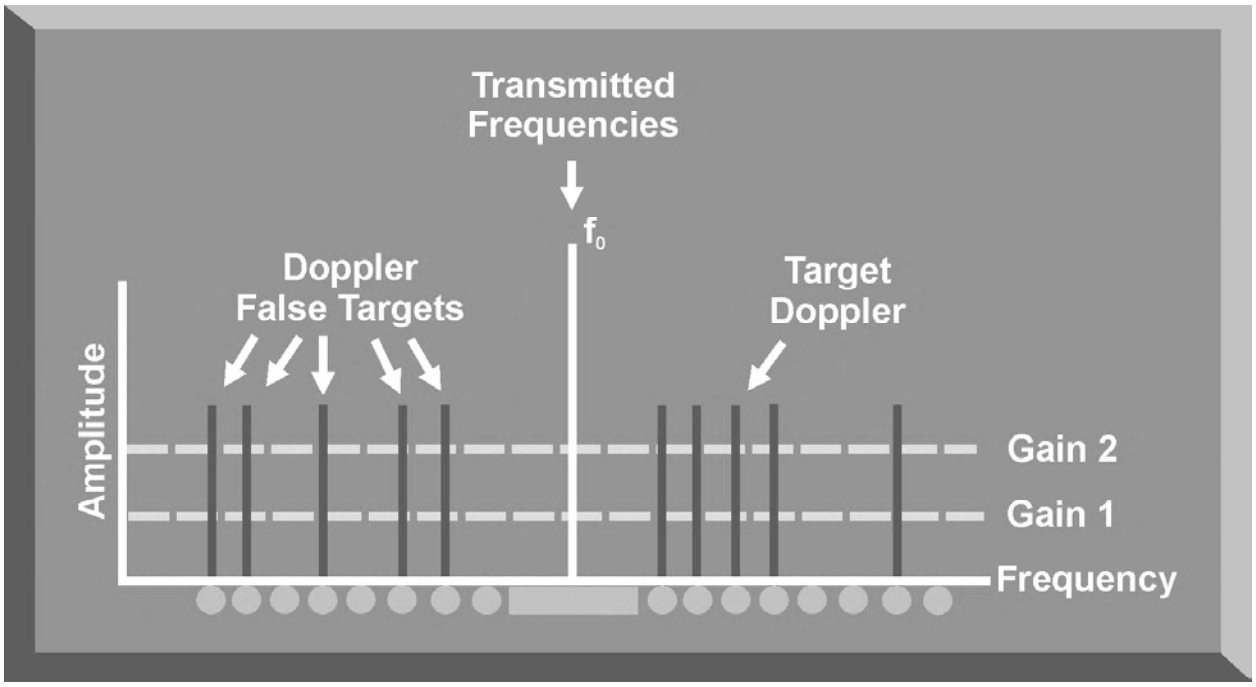

Figure 11-16. Impact of Doppler False Target Jamming

(1) The selected pulses are processed by the signal processor, and multiple Doppler frequencies are sent to the velocity tracking gate. In an attempt to distinguish the target from the jamming pulses, the signal processor increases the gain in each tracking filter, assuming the target Doppler has a higher amplitude than the jamming pulses. This increase in gain sets up the velocity tracking loop for a narrowband Doppler noise technique that will cause the real target to be lost among the generated false targets.

(2) The advantage of Doppler false target jamming is that it can initially confuse the radar signal processor and the radar operator as to the velocity of the real target. It also sets up the radar for narrowband Doppler noise technique and increases its effectiveness. The disadvantage is that the signal processor or the radar operator will eventually be able to distinguish the real target from the false targets based on its velocity. This jamming technique is much more effective when used in conjunction with other Doppler jamming techniques.

6. MONOPULSE DECEPTION JAMMING

The ability of monopulse tracking radars to obtain azimuth, range, and elevation information on a pulse-by-pulse basis make them extremely difficult to jam

(Figure 11-17). Amplitude modulation jamming used against conical scan or TWS radars, such as inverse scan and swept square wave, highlights a target, making monopulse tracking easier. Frequency modulation techniques, such as RGPO and VGPO, are equally ineffective. They serve as a beacon that aids the monopulse radar's target tracking ability. The monopulse radar may be able to track the jammer with more accuracy than tracking actual radar returns because target glint effects are absent from the jamming pulse. Monopulse angle jamming techniques can be divided into two main categories, system-specific and universal. Examples of system-specific jamming techniques include skirt frequency jamming, image jamming, and cross-polarization jamming. These techniques attempt to exploit weaknesses in the design and operation of specific monopulse radars. Cross-eye jamming, a universal technique, attempts to exploit all monopulse radar systems.

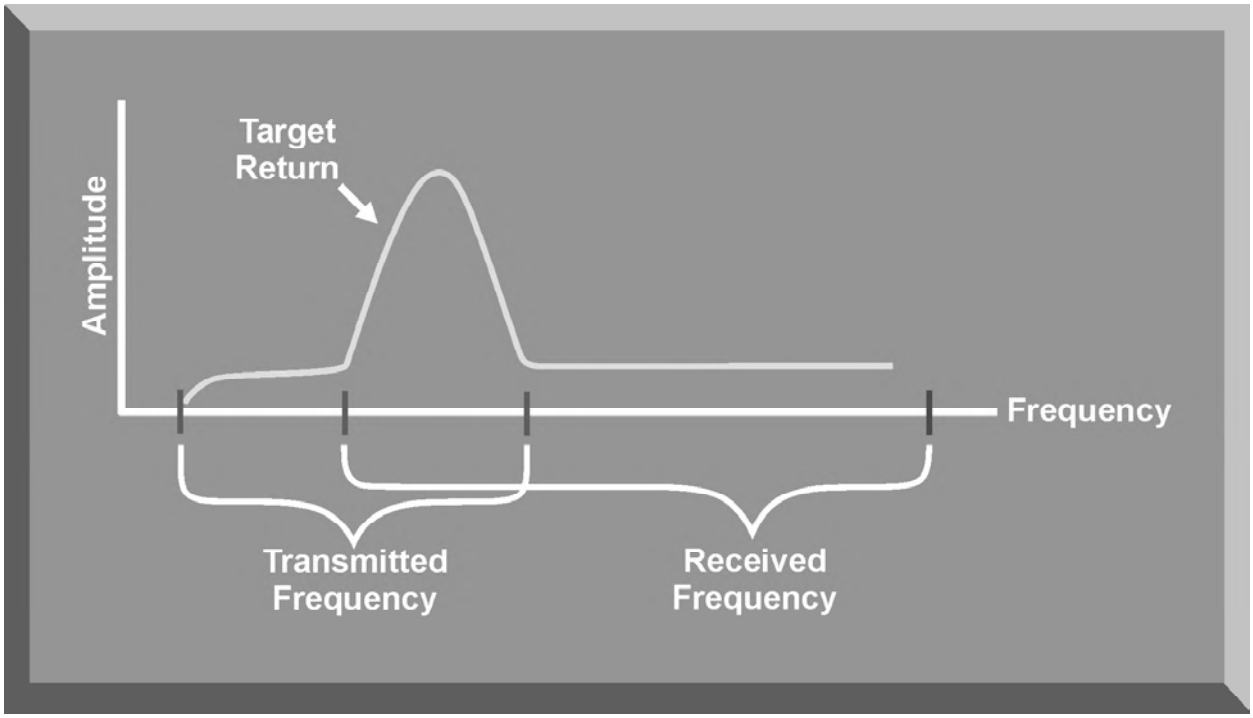

Figure 11-17. Monopulse Radar Receiver

a. Skirt frequency jamming, or filter skirt jamming, is designed to counter the monopulse receiver. Skirt frequency jamming is based on the fact that the intermediate frequency (IF) filter of the monopulse receiver must be correctly tuned to the transmitting frequency of the monopulse radar. It these two components are not exactly tuned, the target signal may be presented on the edge, or skirt, of the receiver IF filter. This offers an opportunity to inject a jamming signal into this skirt (Figure 11-18).

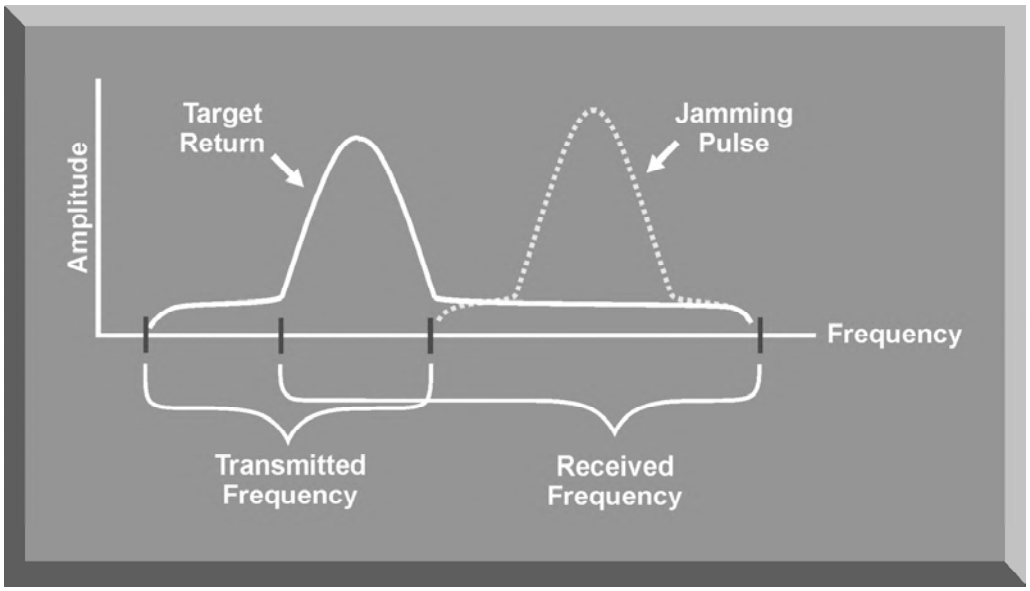

Figure 11-18. Filter Skirt Jamming Pulse

(1) Filter skirt jamming attempts to take advantage of this frequency imbalance by transmitting a jamming pulse tuned slightly off the radar transmitted frequency and in the middle of the receiver IF filter. This jamming pulse will generate a false error signal and drive the antenna away from the true target return.

(2) A well designed and maintained monopulse system does not have a frequency imbalance. The transmitter and IF filter frequencies will be identical. Jamming signals that are even slightly out of this narrow frequency range will not affect the monopulse tracking capability of the radar (Figure 11-19).

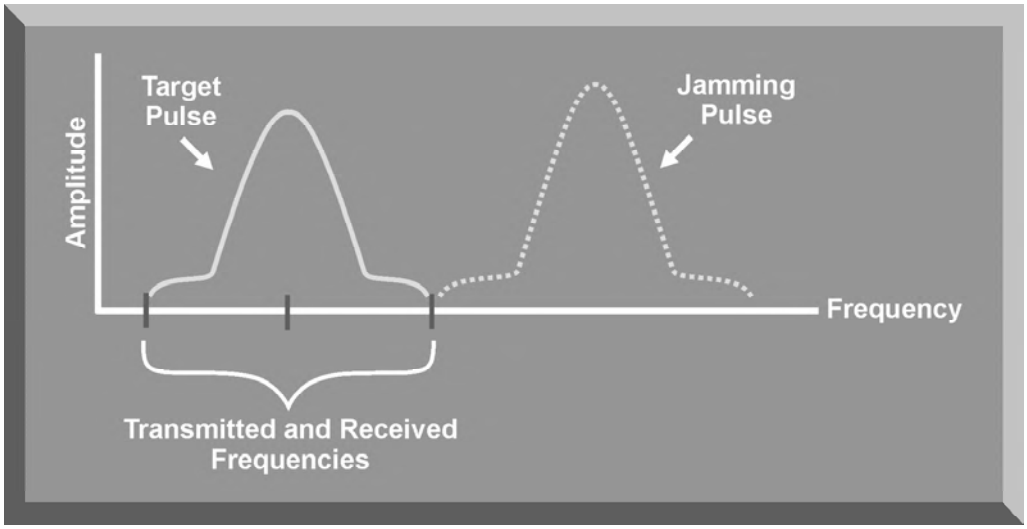

Figure 11-19. Ineffective Filter Skirt Jamming

(3) Effective filter skirt jamming requires extensive knowledge of the internal operation of the IF filter. This information can normally be obtained only by system exploitation. Variances from radar to radar and frequency imbalance exists from one radar IF filter to another. This creates a high degree of uncertainty in the effectiveness of this technique.

b. Image jamming exploits another potential weakness in the monopulse receiver (Figure 11-20). Some monopulse receivers have a wide-open front end with no preselection before the mixer. If the jammer transmits a pulse at the intermediate, or image, frequency, but out of phase with this frequency, the phase of the target tracking signal will be reversed and the antenna will be driven away from the target (Figure 11-21). Effective image jamming requires detailed information on the operation of the monopulse receiver. Of particular importance is the image, or intermediate, frequency and whether the local oscillation frequency is above or below the transmitted frequency. This may require exploitation of the monopulse threat system. In addition, a well-designed monopulse system has preselection in the front end and will reject signals that are out of phase with the transmitted frequencies. This capability renders image jamming ineffective.

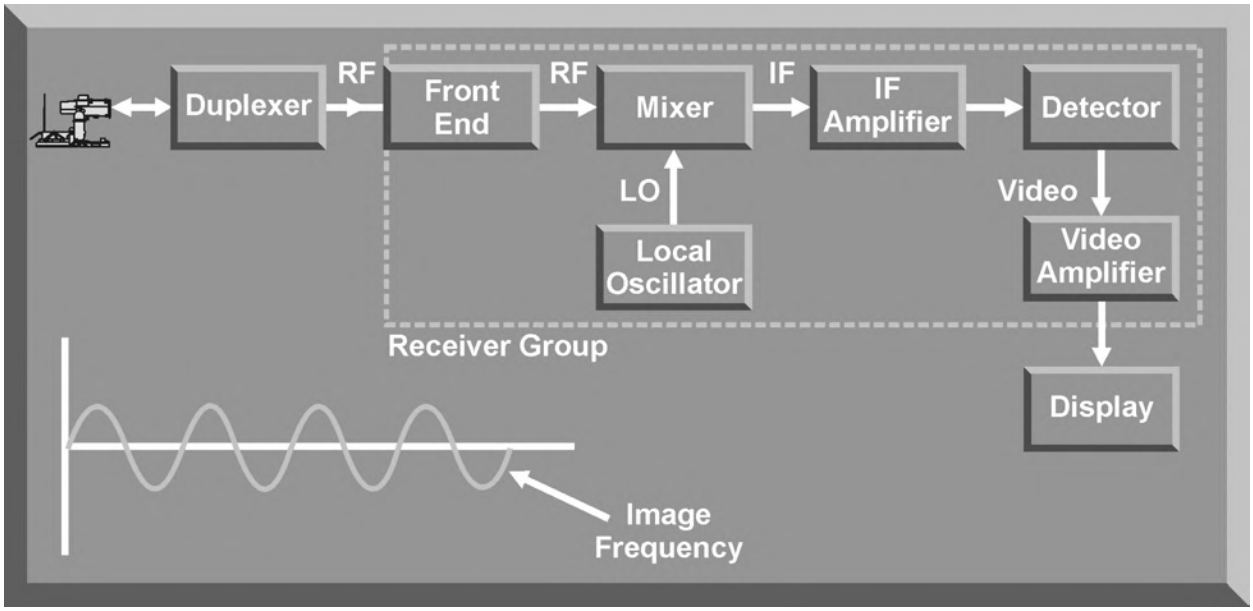

Figure 11-20. Monopulse Image Frequency

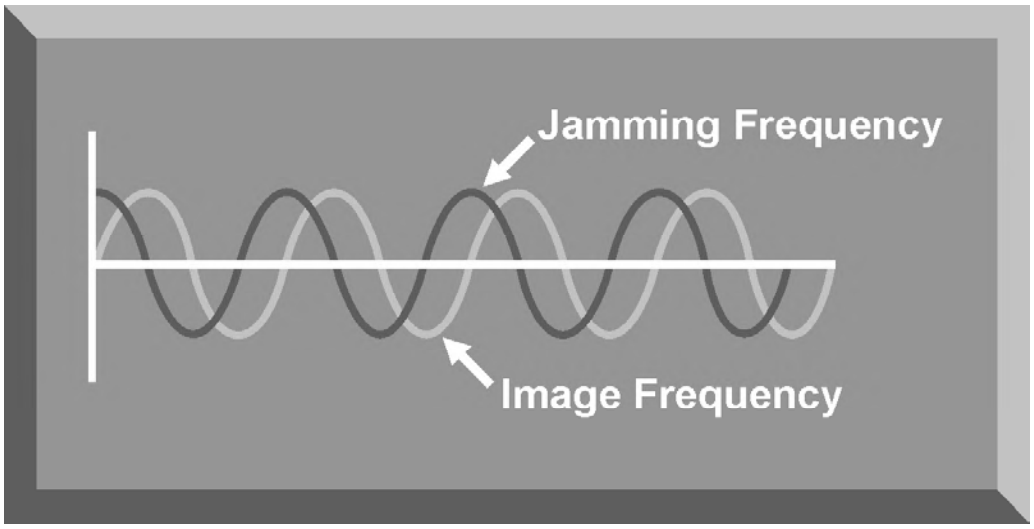

Figure 11-21. Monopulse Image Jamming

c. Cross-polarization jamming exploits the difference in the monopulse antenna pattern for a jamming pulse that is polarized orthogonal to the design polarization. The antenna pattern for a two-channel monopulse radar using sigma and delta beams shows the tracking point to be between the two beams (Figure 11-22). This is true if the radar is using its design polarization. However, the radar antenna also has a receiving pattern for a signal that is cross-polarized with the design frequency. For a cross-polarized signal, the tracking point is shifted one beamwidth to the right. This shift in the tracking point results in a target tracking signal that is 180° out of phase with the real signal. To be effective, a jamming signal polarized orthogonally to the design frequency of the radar would have to be 25 to 30 decibels, or about 1000 times, stronger than the radar signal.

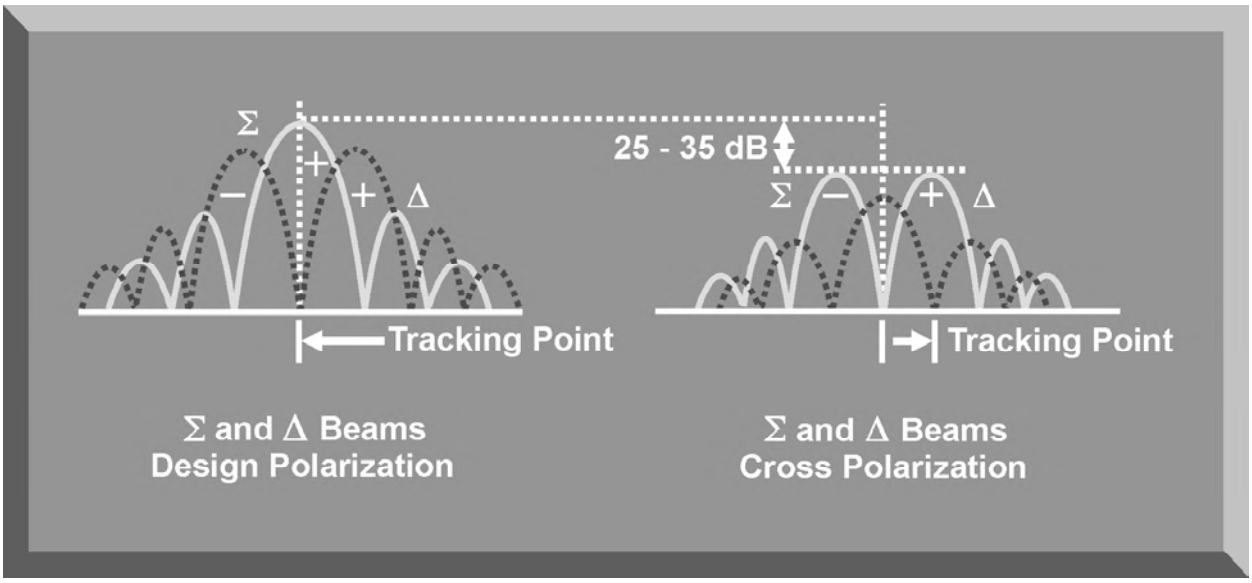

Figure 11-22. Cross-Polarization Antenna Pattern

(1) A cross-polarized jammer must receive and measure the polarization of the victim monopulse radar. The jammer then transmits a very high power jamming signal at the same frequency, but orthogonally polarized, to the victim radar. As a rule, the jamming signal must be 25 to 30 dBs stronger than the target return to exploit the tracking errors in the cross-polarized antenna pattern. Additionally, it must be as purely orthogonal to the design polarization as possible. Any jamming signal component that is not purely orthogonal will highlight the target and require more jamming power to cover the target return.

(2) A cross-polarized jammer must be able to generate a powerful jamming pulse that is polarized orthogonal to the victim radar. A cross-polarized jammer that generates the power and purity of polarization required to defeat monopulse angle tracking poses extreme technological challenges.

d. Cross-eye jamming is a complex technique that attempts to distort the wavefront of the beams in a monopulse radar and induce angle tracking errors. It exploits two basic assumptions of monopulse tracking logic in comparing target returns on a pulse-by-pulse basis. The first assumption is that a target return will always be a normal radar pulse echo. The second assumption is that any shift in amplitude or phase in a target return is due to the tracking antenna not pointing directly at a target. This condition generates an error signal and the antenna tries to null, but the amplitude or phase shifts.

(1) Cross-eye jamming attacks the two assumptions through a process of receiving and transmitting jamming pulses from different antennas separated as far apart as possible. In Figure 11-23, the phase front of a monopulse signal is received by the number 1 receive antenna, amplified by the repeater, and transmitted by the number 2 transmit antenna. The same phase front then hits receive antenna number 2, is shifted 180°, amplified by the repeater, and transmitted by the number 1 transmit antenna. These two out-of-phase signals must be matched in amplitude and must exceed the amplitude of the target return.

(2) When these jamming signals arrive at the victim radar, the tracking loop attempts to null out the amplitude and phase differences. With two widely spaced jamming sources at different phases, the antenna never achieves a null position or tracking solution. The distance between antenna pairs is an important parameter that determines the effectiveness of cross-eye jamming. The wider the spacing between antenna pairs, the more distortion in the victim's wave front near the true radar return. Most fighter aircraft do not provide sufficient spacing between the antennas to maximize effectiveness. Effectiveness is also lost when the aircraft is abeam or going away from the radar. To further complicate matters, when the radar is directly in front of the aircraft, the jamming pulses must have a power at least 20 dBs above the target return. Cross-eye jamming can also be defeated with a leading-edge tracker that rejects jamming signals arriving at the antenna behind the target return.

(3) Countering monopulse angle tracking is the greatest challenge for self-protection jamming systems. Skirt jamming and image jamming have had limited success. Cross-polarization and cross-eye jamming techniques require complex and sophisticated circuitry and much power.

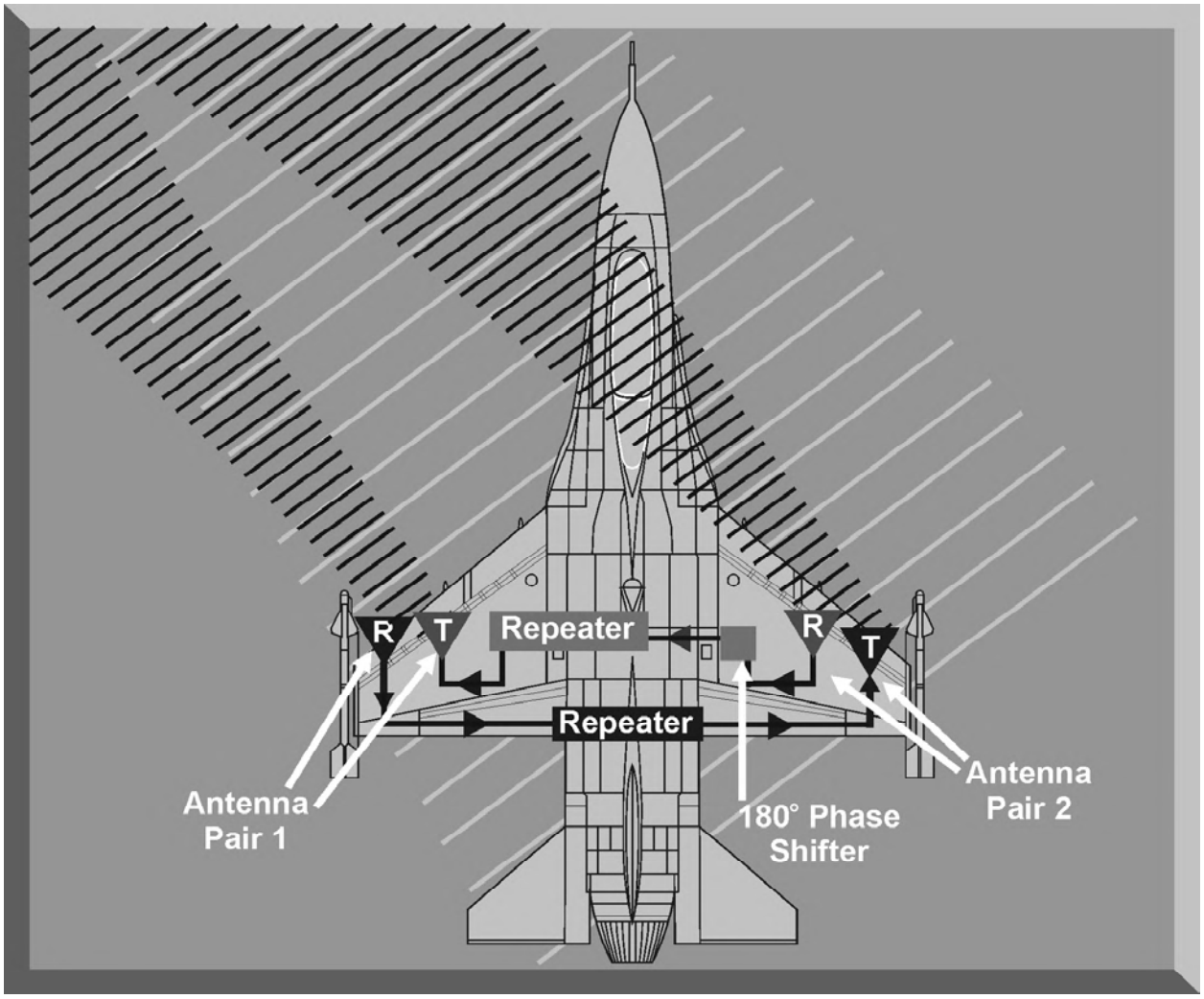

Figure 11-23. Cross-Eye Jamming

7. TERRAIN BOUNCE

Terrain bounce is a jamming technique used primarily at low altitude. It is used to counter semi-active, air-to-air missiles and monopulse tracking radars. The technique involves a repeater jammer that receives the radar or missile guidance signal. The jammer amplifies and directs this signal to illuminate the terrain directly in front of the aircraft. The missile or radar tracks the reflected energy from the spot on the ground instead of the aircraft (Figure 11-24).

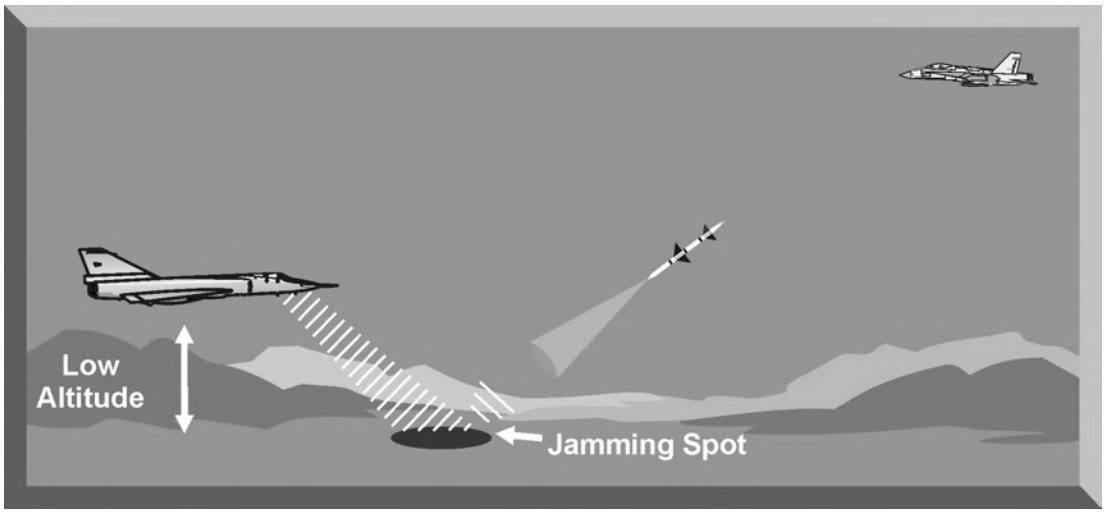

Figure 11-24. Terrain Bounce

a. To be effective, the terrain bounce jamming antennas should have a narrow elevation beamwidth and a broad azimuth beamwidth. This transmission pattern maximizes the energy directed toward the ground and minimizes the energy transmitted toward the missile or radar. To overcome signal losses associated with uncertain terrain propagation, the jamming system should also generate high jamming power. This ensures the energy reflected from the terrain is higher than the energy in the aircraft return. The terrain bounce jamming antennas should have very low sidelobes to preclude activation of any home-on-jam (HOJ) missile capability. For an air-to-air missile, the terrain bounce technique should be activated at long range. This will initially put the aircraft and the jamming spot in the same resolution cell. As the range decreases, the missile will be decoyed by the higher power in the jamming spot.

b. Some problems associated with terrain bounce jamming include the uncertainty of the signal scattering parameters of the various terrain features and the possible changes in signal polarization caused by terrain propagation. In addition, terrain bounce jamming can place maneuvering restrictions and maximum altitude limitations on the aircraft.

8. SUMMARY

There are several deception jamming techniques that can be employed to counter threat radar systems. The effectiveness of these techniques can be enhanced when they are employed in combination. For example, the effectiveness of an RGPO technique is enhanced when an angle deception technique is also employed. Determining the most effective deception technique, or combination of techniques, can present a challenge to intelligence and engineering analysts. However, when employed with maneuvers and chaff, deception techniques can mean the difference between success and failure on the modern battlefield.

CHAPTER 12. DECOYS

1. INTRODUCTION

A decoy is a device designed to look to an enemy radar more like an aircraft than the actual aircraft itself. Decoys do three primary missions: they saturate the enemy's integrated air defense system (IADS), coerce the enemy into exposing his forces prematurely, and defeat tracking by enemy radar. This chapter will discuss saturation decoys, towed decoys, and expendable active decoys. Chaff and flare systems will be discussed in separate chapters.

2. SATURATION DECOYS

A saturation decoy is usually an expendable vehicle designed to emulate a penetrating aircraft. Its mission is to deceive and saturate an enemy's IADS. Employing multiple saturation decoys can force an IADS to devote critical resources to engage these false targets. This depletes enemy assets available to engage penetrating aircraft. In addition, ground or air launched saturation decoys can be used to stimulate the IADS, to collect intelligence data, or to initiate attacks by suppression of enemy air defense (SEAD) assets. The three main characteristics of saturation decoys are their electronic signature, their flight program, and their mission type.

a. Saturation decoys must present an electronic signature, or radar return, that is indistinguishable from the aircraft they are protecting. Decoys can do this by either passive or active measures, or use a combination of both. A passive decoy is essentially a flying radar reflector. The size, shape, and materials used in the decoy are optimized to ensure that the proper amount of radar energy is returned to the enemy radars. Active decoys employ radar repeater systems to receive the enemy radar signal, amplify it and send back a radar return of the proper size to confuse the enemy. Reflecting or transmitting the proper size radar return is critical for both passive and active decoys. A return that is too large or too small will allow the enemy radar operator to differentiate between decoys and aircraft, causing the decoys to be ignored.

b. To continue deceiving an enemy IADS, a decoy must do more than provide the proper-sized radar return. Possessing flight characteristics similar to the aircraft it is protecting increases the probability that the decoy will effectively deceive an IADS for a sustained period of time. Modern decoys can either be powered with rockets, miniature engines, or simply glide for very long distances based upon the altitude and airspeed of the jet that releases them. Additionally, their flight paths can be pre-programmed into an onboard autopilot, allowing the decoy to fly an independent ground track, thus increasing their appearance as attack aircraft worth tracking.

c. Saturation decoys carry out two of the three decoy missions. Launched in significant numbers, they can saturate or overburden an IADS. Meanwhile, their realistic electronic image and preprogrammed flight paths entice the enemy to turn on radars and show his forces.

(1) Saturation decoys launched in coordination with an attacking strike package force the enemy to take time to process meaningless tracks and tie up critical assets. In this role, decoys primarily work against the early warning network of the enemy IADS by presenting the IADS with numerous targets to sort and track. Resources committed to tracking decoys may not be available to track actual aircraft. Additionally, if an enemy knows that decoys are present, he may not commit any resources against targets for fear they are just decoys.

(2) Time of radiation or "emission control" is a critical factor for acquisition and target tracking radars. To be effective and survive on the battlefield, ground threat radars radiate as little as possible; too much time radiating allows ELINT collectors to find their location and either direct aircraft to avoid them or call in an attack upon them. Therefore, when a decoy can get a radar to emit, the radar is now essentially compromised and can be avoided or attacked. Getting the enemy's radars to emit is called "stimulating the IADS," which is generally a precursor to any threat suppression mission.

(3) An extremely successful example of using decoys to stimulate the IADS was carried out in the Bekaa Valley in 1982. The Israelis opened the conflict by launching saturation decoys to successfully simulate an attack. While the Syrians reloaded, Israeli fighters attacked, destroying 17 of 19 Syrian SA-6s in the beginning of the battle. With the ground threat neutralized, the Israeli Air Force went on to destroy 85 Syrian fighters in the pure air-to-air conflict that resulted.

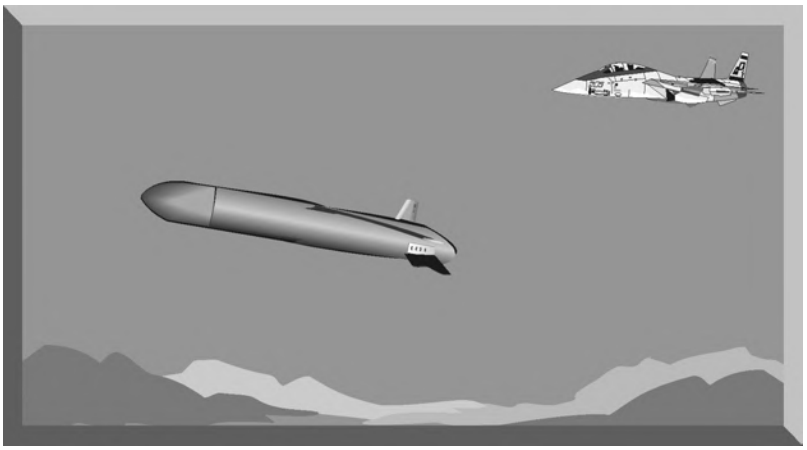

Figure 12-1. Tactical Air Launched Decoy

d. Two examples of saturation decoys are the Navy's Tactical Air Launched Decoy (TALD) in Figure 12-1 and the Air Force's proposed Miniature Air Launched

Decoy (MALD) in Figure 12-2. Both of these decoys can work actively or passively and both have pre-programmable flight paths. The TALD is an unpowered decoy normally launched from an F-14 Tomcat. The Air Force's MALD is a smaller jet-powered decoy also designed to be used by fighter aircraft. The MALD is 90 inches long, 6 inches in diameter, and has 25-inch wings that are foldable–essentially it is the size of an air-to-air missile. Because of its small size, the MALD can be carried into the target area before it is launched. Once launched it uses its speed, independent flight path, and electronically manipulated radar signature to make acquisition radars and target tracking radars mistake it for one of the attacking aircraft.

Figure 12-2. Miniature Air Launched Decoy (MALD)

3. TOWED DECOYS

A towed decoy is a small jammer that is physically attached to the aircraft (Figure 12-3). Unlike the saturation decoys that work against the IADS, the towed decoys are for individual aircraft survival. Towed decoys are designed to defeat enemy missiles in the final stages of an engagement; therefore, towed decoys, as well as other expendables, are known as endgame countermeasures. While towed decoys are primarily designed to provide sufficient miss distance between an attacking semi-active radar missile and the protected aircraft, they may also be effective against pulse Doppler radars and monopulse radars.

a. To be effective, the towed decoy must turn on within the threat radar's resolution cell after the radar is tracking the protected target. To successfully decoy the missile, the towed decoy must return radar signals with sufficient power to simulate a radar cross section (RCS) significantly larger than that of the

protected target. There are currently two generations of towed decoys on the market. Their primary difference lies in the connection each has with the aircraft towing it.

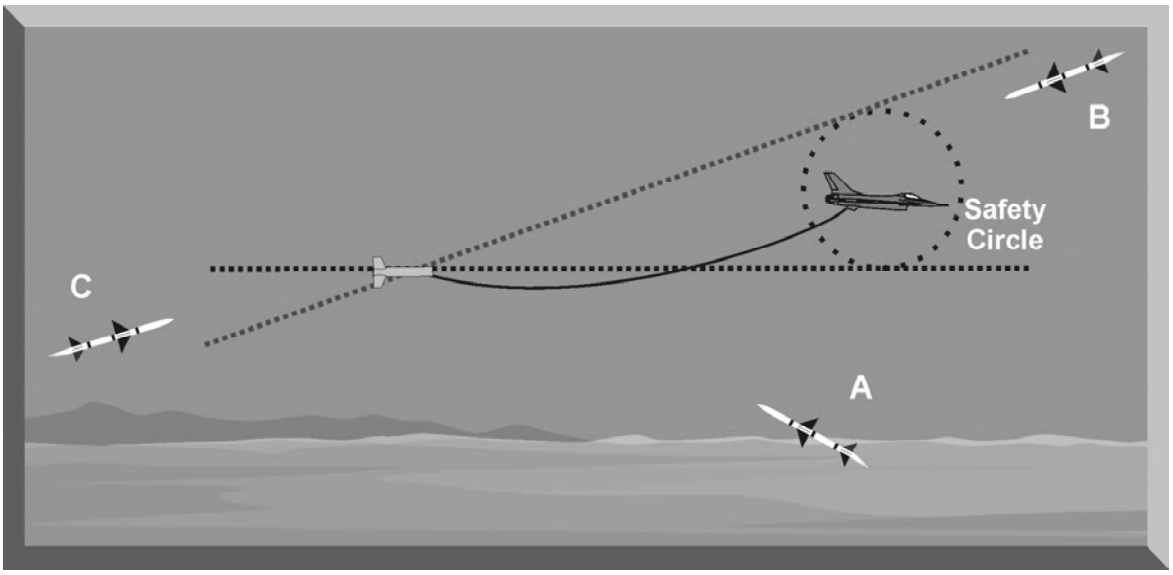

Figure 12-3. Towed Decoy

(1) The first generation of towed decoys contains a simple repeater jammer that enhances any signal it receives in the proper frequency range. The enhanced signal is stronger than the aircraft signal so the missile is lured towards the decoy. These decoys are stand-alone units that contain all the electronics, processors, receivers and transmitters within them. The only tie to the aircraft is for power and status. One of the big advantages of these simple repeater devices is that they do not require the exact frequency of the enemy radar systems to be effective, they will enhance any signal coming at them. An area of concern with the use of towed decoys is possible conflict between the onboard jamming system and the towed decoy. The onboard system could overpower the decoy, causing the attacking missile to ignore the decoy and track the aircraft.

(2) The second generation of decoys is tethered to the aircraft via fiber optic cable. Through this cable travels the different jamming modulations to be used by the decoy. These fiber optic towed decoys (FOTD) only contain the transmitters; the remaining items are in the jet or the pod. This system allows for more complex jamming through the decoy, including cooperative jamming between the aircraft and the decoy.

b. The separation required between the decoy and the aircraft is a primary consideration in developing a towed decoy system. The towed decoy should be positioned far enough behind the aircraft to preclude warhead fragments from missiles guiding on the decoy from also impacting the aircraft. Missile A in Figure

12-3 depicts a situation where the missile will detonate well outside of the aircraft's safety circle. From a pilot perspective, any restrictions on aircraft maneuvering imposed by a towed decoy are very important. The number of decoys that can be carried and the time required for decoy deployment are also important employment considerations.

c. Achieving 360° coverage is a primary limitation of a towed decoy system. When an aircraft equipped with a towed decoy is abeam a threat radar, the radar may be able to discriminate between the aircraft and the decoy. This is a function of the resolution cell of the radar. In addition, missiles approaching from a high-aspect angle, and above the aircraft (Figure 12-3 - Missile B), may fuse on the aircraft while guiding to the decoy. Missiles approaching from a low-aspect angle (Figure 12-3 - Missile C) may not fuse on the decoy and subsequently acquire and fuse on the aircraft. Finally, if the decoy is destroyed or lost, the time required to deploy a replacement decoy is critical, especially if the aircraft is engaged by multiple missiles.

d. An example of a fielded towed decoy system is the AN/ALE-50 (Figure 12-4). This first generation towed decoy system is found on Air Force F-16 and B-1 aircraft, and there is a version that is integrated into the ALQ-184 pod.

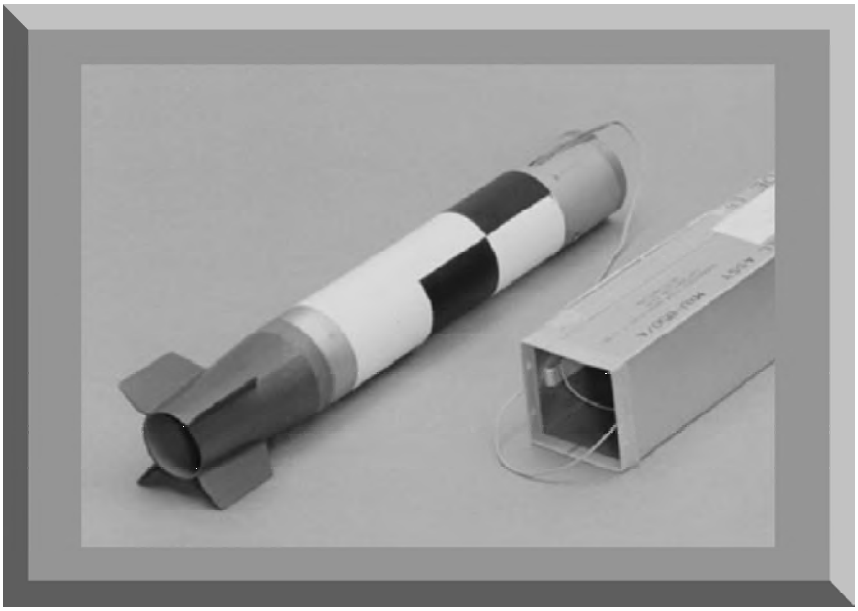

Figure 12-4. AN/ALE-50 System

(1) The system consists of a launch controller subsystem and towed decoys. The launch controller houses the decoy before it is launched, provides power to the decoy, and provides for the monitoring of the electronics. The decoy body is a factory sealed, self-contained unit with everything except for power. Power comes through the tether from the host aircraft; the decoy sends its operating status back through the tether to the aircraft.

(2) ALE-50 decoy use is cleared throughout the flight regime of the F-16 and B-1. Decoys can be deployed without being turned on, but once a decoy has been deployed, it cannot be reeled back in and must be severed before landing. Procedures are in place to reduce the chance that the onboard jamming system will negate the decoy.

(3) The ALE-50 towed decoy is a wideband RF repeater that provides self-protection EA by receiving, electronically amplifying, and retransmitting enemy radar RF signals. Upon receiving a threat radar signal, this simple repeater amplifies the signal and retransmits it. This provides the radar with two signals, one reflected from the aircraft and a stronger one from the decoy. With the signal from the decoy being the more attractive, the radar or missile guides towards the decoy. During combat operations over Kosovo, ALE-50 decoys were credited with saves for both F-16s and B-1s.

4. EXPENDABLE ACTIVE DECOYS

Expendable active decoys are designed to lure the tracking gates of an enemy's radar away from the aircraft. They are endgame countermeasures like towed decoys, but they differ in that expendable decoys free-fall or glide to the ground as opposed to being towed behind the aircraft.

a. Expendable decoys are small, active jamming systems designed to be expended by existing aircraft chaff and flare dispensers, such as the AN/ALE-40 or the AN/ALE-47. Expendable decoys can employ noise or deception jamming with noise jamming being the most common. Deception jamming techniques can be employed to enhance effectiveness against pulse Doppler radars. There are two challenges associated with expendable jammers: the amount of the time the jammer is effective and the packaging (Figure 12-5).

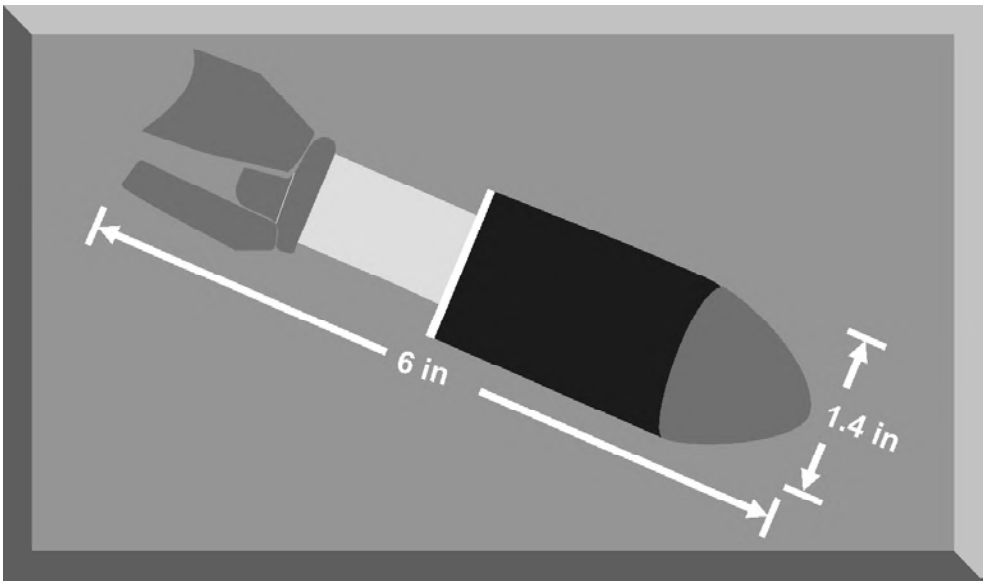

Figure 12-5. Generic Expendable

b. Expendable decoys are designed to provide protection for the dispensing aircraft for a specific period. The dispensing altitude and rate of fall determine this period of effective coverage. Expendable decoys can employ small parachutes of aerodynamic design to slow the rate of fall and increase the time of effective coverage. If the period of coverage is too short, multiple expendable decoys must be employed. This places a premium on timely employment and expendables management.

c. The primary components of an expendable decoy are the transmit and receive antennas, techniques generator, amplifier, and power supply. The transmit and receive antennas should be isolated and capable of high gain, wide bandwidth, and should use compatible polarization with the victim radar. The techniques generator must recognize the victim radar signal and generate the appropriate jamming response. The amplifier must be capable of generating a high power jamming signal over a wide frequency range. To meet these requirements, sophisticated computer and miniaturization techniques are used, and the components packaged to all fit in the aircraft dispenser. These factors impact the cost of expendable decoys and may limit the availability of these assets.

d. The Generic Expendable, RTE-1489, commonly called the GEN-X decoy is a fielded expendable active decoy. The decoy is sized to fit into a 1.4 x 1.4 x 5.8 inch cartridge and take advantage of new microwave/millimeter-wave integrated circuit (MMIC) technology. The GEN-X is programmable and features a broadband antenna and wide frequency coverage. After ejection, the decoy extends three small fins for stability. Its battery ignites to provide power, the receiver locks on to the threat radar signal, and a deception signal is generated and transmitted.

5. SUMMARY

Decoys simply provide the enemy with more targets to process. In the case of saturation decoys, this forces the enemy to commit resources against false targets, or show his defenses. For towed decoys and expendable active decoys, it makes the missile or tracking radar separate a real target from more electronically attractive decoys.

CHAPTER 13. CHAFF EMPLOYMENT

1. INTRODUCTION

Chaff was first used during World War II when the Royal Air Force, under the code name "WINDOW," dropped bales of metallic foil during a night bombing raid in July 1943 (Figure 13-1). The bales of foil were thrown from each bomber as it approached the target. The disruption of German AAA fire control and ground control intercept (GCI) radars rendered these systems almost totally ineffective. Based on this early success, chaff employment became a standard bomber tactic for the rest of the war.

Figure 13-1. "WINDOW" – The First Operational Employment of Chaff

a. Chaff is one of the most widely used and effective expendable electronic attack (EA) devices. It is a form of volumetric radar clutter consisting of multiple metalized radar reflectors designed to interfere with and confuse radar operation. It is dispensed into the atmosphere to deny radar acquisition, generate false targets, and to deny or disrupt radar tracking. Chaff is designed to be dispensed from an aircraft and function for a limited period.

b. Even with the development and deployment of advanced radar threat systems, chaff continues to be an extremely effective EA device. Experience gained during the Vietnam conflict, the 1973 Yom Kippur War, and DESERT STORM clearly shows that chaff effectiveness against radar threats is still a factor with which the enemy must contend. This is especially true when chaff is employed with self-protection jamming and aircraft maneuvers.

c. Chaff screening and self-protection are the two basic chaff employment tactics. Chaff screening tactics, including area saturation and chaff corridor employment, are designed to confuse and deny acquisition information to the early warning, GCI, and acquisition radars supporting surface-to-air missile (SAM) systems. Self-protection tactics are designed to counter acquisition and target tracking radars (TTRs). When used with jamming and maneuvers, chaff can cause TTRs to break lock or generate survivable miss distances if a SAM is fired at the aircraft.

2. CHAFF CHARACTERISTICS

To understand how chaff affects radar systems, it is important to understand its characteristics. The most important chaff characteristics are radar cross section (RCS), frequency coverage, bloom rate, Doppler content, polarization, and persistence.

a. RCS is a measure of the net reradiated energy from a target to the illuminating radar. The RCS of an aircraft varies based on the size, shape, type of skin surface, configuration, and aspect to the illuminating radar. Figure 13-2 shows the effect of aspect on aircraft RCS. The RCS is greatest when the aircraft aspect is 90°, or abeam the radar. The lowest RCS occurs near the 30-70° and 110-150° of aspect. Since the aircraft RCS also varies based on frequency, the victim radar's frequency is a key factor. To be effective, chaff must be dispensed in large enough quantities to create an RCS greater than the aircraft RCS.

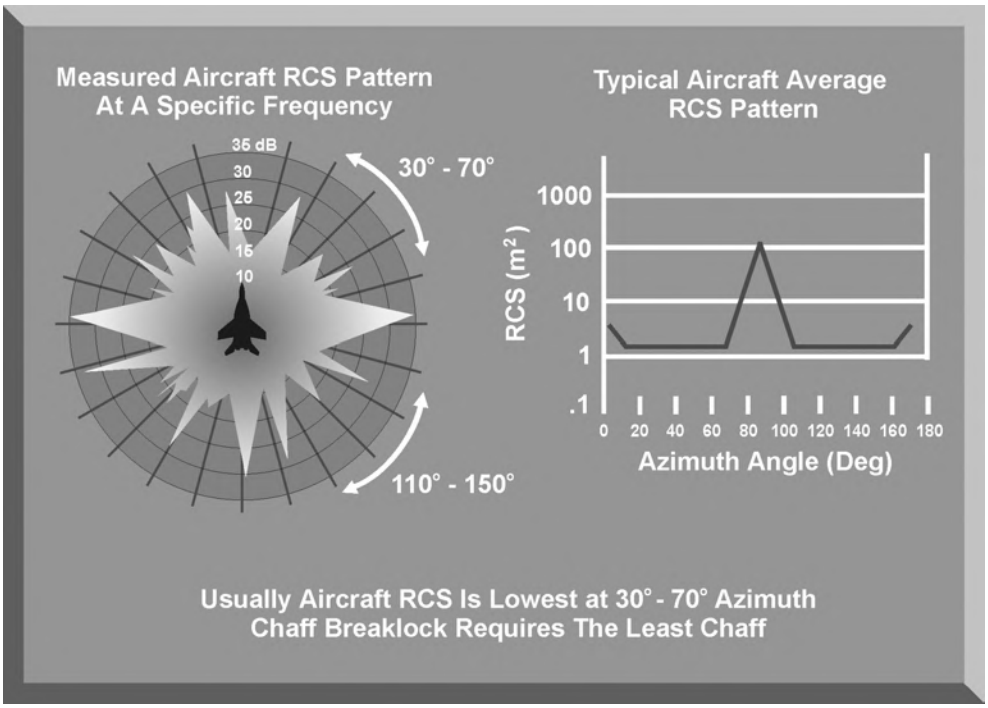

Figure 13-2. Aircraft Radar Cross Section (RCS)

(1) The RCS of a chaff bundle depends on the frequency of the victim radar and the dispensing aircraft's relative position, or aspect. Figure 13-3 shows the RCS of a single RR-170 chaff cartridge based on frequency. It shows that the largest RCS occurs at about 3 GHz. However, for the spectrum between 2-18 GHz, which includes most SAM TTRs, the RCS of the RR-170 cartridge is over 50 square meters. Since the typical fighter aircraft RCS varies between 1 and 10 square meters, depending upon frequency and aspect, the RR-170 chaff cartridge should provide a sufficient RCS to mask the aircraft RCS.

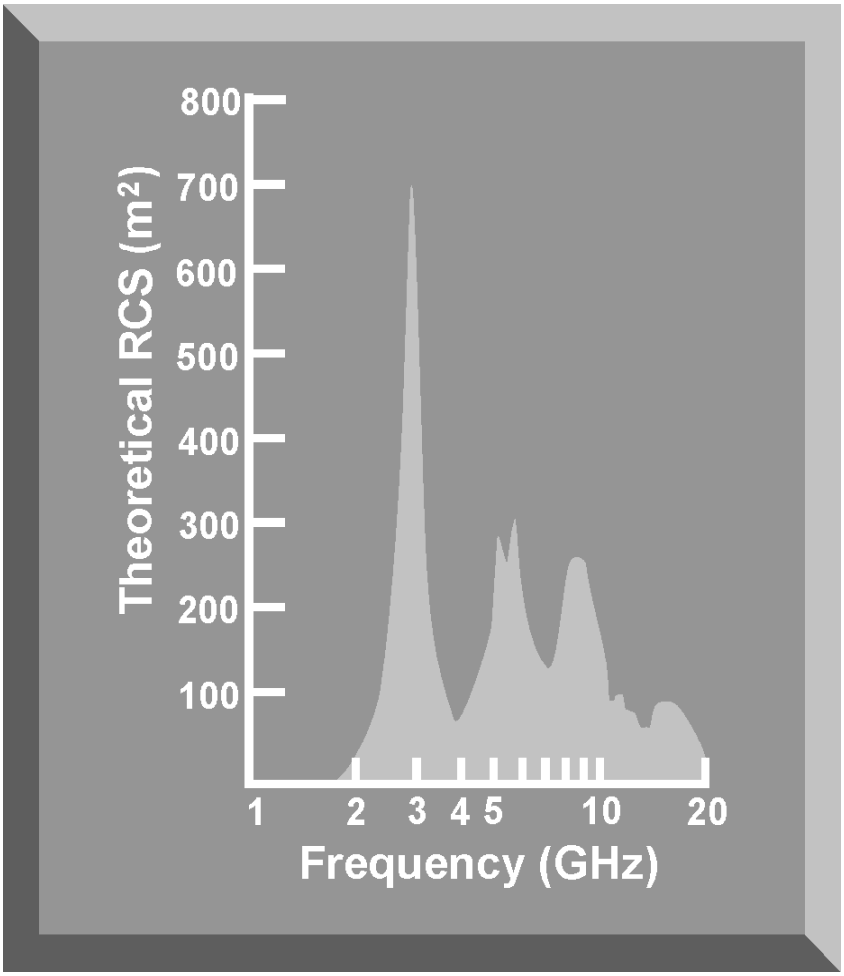

Figure 13-3. RR-170 Chaff Cartridge RCS

(2) The angular relationship, or aspect, between the aircraft and chaff bundle affects the chaff RCS presented to the victim radar. Chaff RCS is greatest when the chaff bundle and the aircraft are abeam the threat radar. It is smallest when the threat radar is off the nose or tail of the aircraft. Aspect is important when developing self-protection maneuvering and chaff dispensing tactics against threat radars (Figure 13-4).

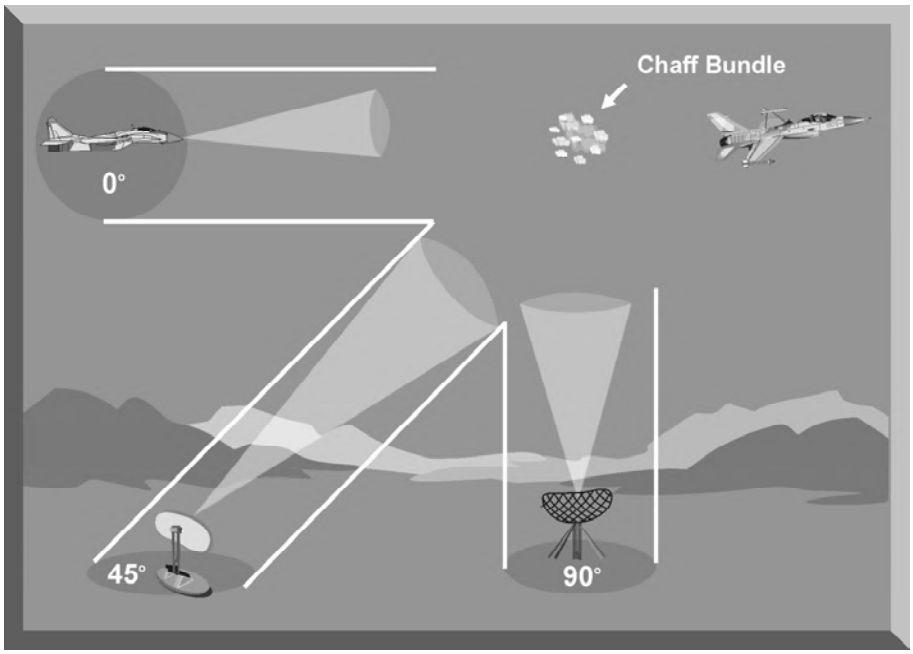

Figure 13-4. Threat Radar Aspect and Chaff RCS

(3) Dispensing multiple chaff bundles simultaneously does not necessarily increase chaff RCS. Multiple bundles increase the density of the chaff but do not directly enhance self-protection capabilities (Figure 13-5). This is an important consideration when developing chaff dispenser rates to counter threats.

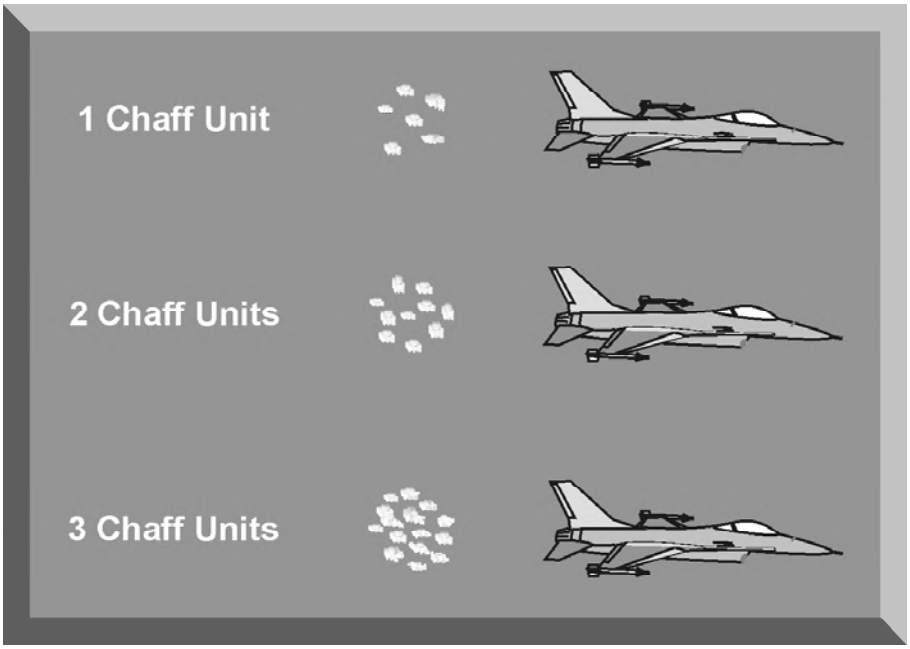

Figure 13-5. Impact of Multiple Chaff Cartridge Employment on Chaff RCS

b. Each strip of chaff is a dipole reflector that reradiates the electromagnetic energy received from an emitting radar and creates a radar echo. The optimum size is cut to about one-half the wavelength of the victim radar's RF. Since a single cut length is restricted in effectiveness to a narrow range of frequencies, different lengths are normally packaged together to provide coverage over a wide range of frequencies (Figure 13-6).

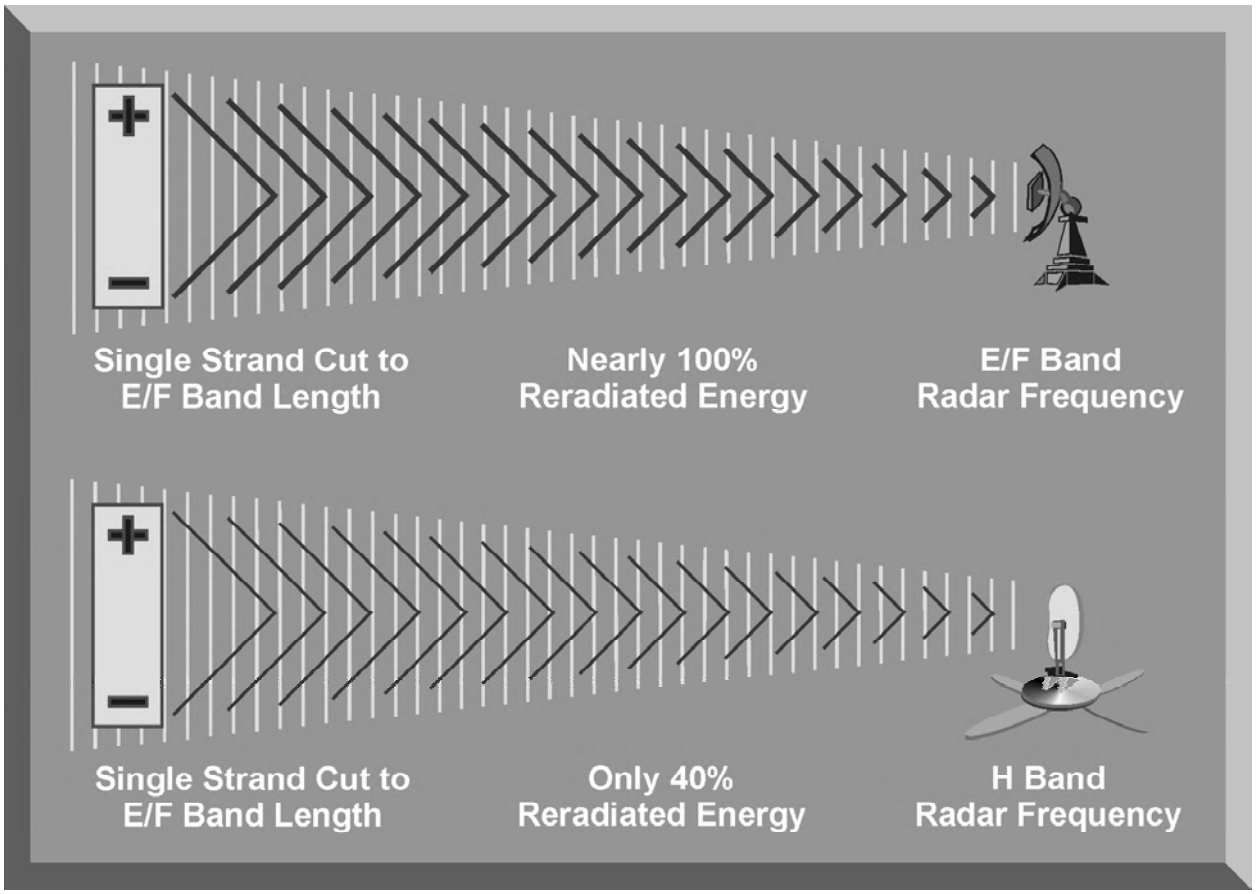

Figure 13-6. Chaff Length and Frequency Coverage

(1) Considerable research and development has reduced the size and increased the effectiveness of self-protection chaff. There are various chaff sizes, shapes, and materials. Most chaff carried on fighter aircraft are made of small aluminum strips, coated strips of nylon, or fiberglass. These strips are cut to various lengths and compressed into bundles that are small and light enough to allow the aircraft to carry and dispense multiple chaff bundles. These cuts of chaff are packaged into chaff cartridges and inserted into a dispenser on the aircraft. An explosive squib assembly ejects the cartridges from the dispenser and disperses the chaff (Figure 13-7).

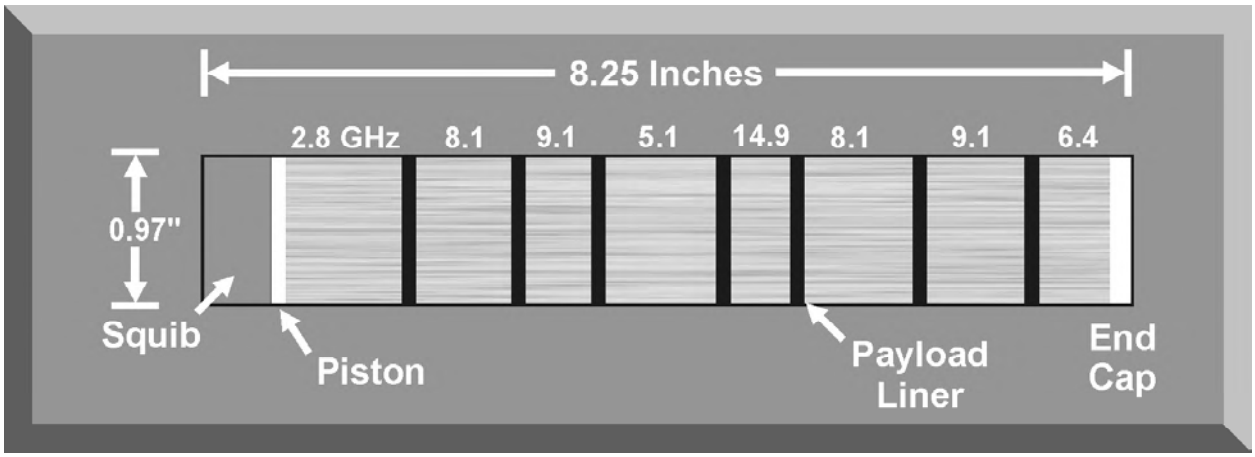

Figure 13-7. RR-170 Chaff Cartridge

(2) To provide as many dipoles as possible and present the maximum radar cross section, each chaff bundle has numerous chaff cuts to match a predetermined range of frequencies. Each chaff cartridge contains almost 3 million dipoles packaged in an eight inch by one-inch cartridge. The dipole frequencies cover the frequency range where most SAM TTRs and air-to-air radars operate (2 - 18 GHZ).

c. Bloom rate, the rate at which chaff will scatter, is also a very important characteristic of self-protection chaff. Self-protection chaff effectiveness is based on the relationship of bloom rate, chaff RCS, aircraft RCS, and the resolution cell of the threat radar system. The ability of chaff to effectively defeat a target tracking radar is directly related to the chaff dispense rate, which determines the chaff RCS, which should be larger than the aircraft's RCS. The chaff bundles must also bloom within the resolution cell of the radar.

(1) Chaff bloom rate is dependent on aerodynamic factors associated with the chaff type, the location of the dispenser on the aircraft, and the aircraft wake or turbulence. Heavy or dense chaff falls faster and blooms slower than lighter and less dense chaff. The location of the chaff dispenser on the aircraft affects the airflow in which the chaff will be dispensed. The ideal position for the dispenser is in the area where there is the most turbulence from the aircraft. Turbulence behind the aircraft is probably the most important factor affecting bloom rate. The more turbulent the airflow, the greater the bloom rate (Figure 13-8). Maneuvering the aircraft while dispensing chaff also enhances the chaff bloom rate.

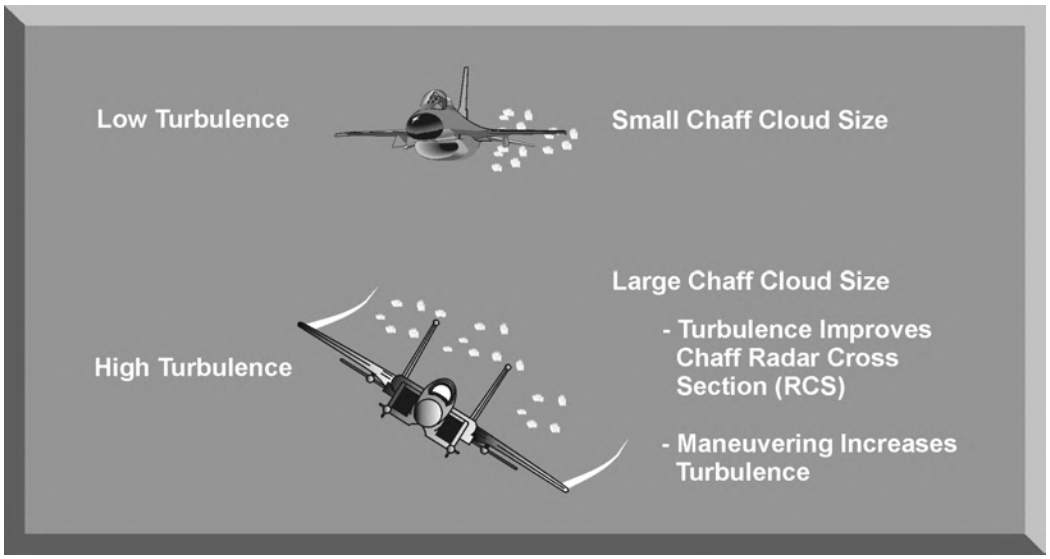

Figure 13-8. Impact of Turbulence and Chaff Bloom Rate

(2) To ensure that the victim radar is decoyed or that it transfers automatic tracking to the chaff, the chaff must bloom within the radar resolution cell. This resolution cell is a three-dimensional spheroid with dimensions based on the pulse width, horizontal beamwidth, vertical beamwidth, and the range of the aircraft (Figure 13-9). There are some rules of thumb that can be used when considering the bloom rate of chaff and the resolution cell of a particular radar. The shorter the pulse width of a radar, the faster the chaff has to bloom to be effective. The narrower the horizontal and vertical beamwidths, the faster the chaff has to bloom to be effective.

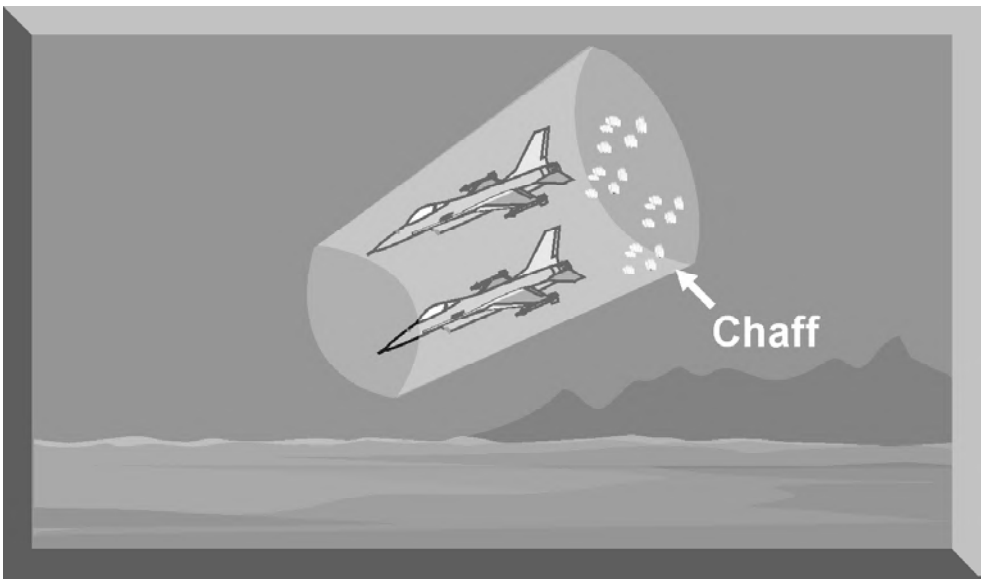

Figure 13-9. Chaff Bloom Rate and Radar Resolution Cell

d. Against Doppler radars, self-protection chaff is most effective when dispensed at or near the beam, relative to the threat radar. When chaff is dispensed in the airstream, the drag on an individual dipole is so great compared to its mass that it slows to the velocity of the surrounding air mass almost instantly. Since the relative velocity of the chaff, in relation to the radar, is zero, radar systems employing Doppler processing and tracking will not display the chaff. Doppler processing radars will continue to track the aircraft unless it also has a relative velocity of zero. This occurs when the aircraft is abeam the radar. Chaff corridor and area saturation tactics against Doppler tracking radars will have limited effectiveness.

e. Chaff persistence and polarization are two additional characteristics that are important employment considerations for area saturation or chaff corridor operations. These individual chaff element characteristics are directly related to the combined effects of aerodynamic, atmospheric, and gravitational influences.

(1) Chaff persistence is the length of time the chaff is at an effective altitude to screen ingressing aircraft during area saturation or chaff corridor operations. The time span depends on the fall rate of the chaff and varies according to the density of the dipoles. The prevailing atmospheric conditions, such as wind and temperature also affect chaff persistence. Generally, the longer cuts used for lower frequency radars fall faster than the shorter cuts used for higher frequency radars. Each type has its own rate of fall based on these conditions. The rate of fall is a critical mission planning consideration for determining the amount of time between chaff corridor or area saturation initiation and the arrival of the aircraft being screened. If the chaff is employed too early, it may not be at the correct altitude or may have dispersed to the point that it is not effective to screen ingressing aircraft.

(2) Each chaff strand is a polarized dipole with positive and negative ends. The orientation of these strands determine their polarity (Figure 13-10). Chaff cuts with the positive and negative ends oriented vertically are vertically polarized. Chaff cuts with the positive and negative ends oriented horizontally are horizontally polarized. Since chaff strands are initially buffeted by turbulence and airstream vortices, the dipole orientation and polarization, changes rapidly and randomly. Eventually, the strands separate into two groups; one descending horizontally, and one descending vertically. Since the vertically oriented strands tend to fall faster, the lower part of the chaff cloud tends to become more vertically polarized, while the upper portion is horizontally polarized. A threat radar that uses vertical polarization will receive minimal affects from the upper (horizontally polarized) portion of the chaff cloud. If the aircraft being screened are flying within this portion of the chaff cloud, they may be detected and engaged. This is another mission planning consideration for chaff area saturation or chaff corridor operations.

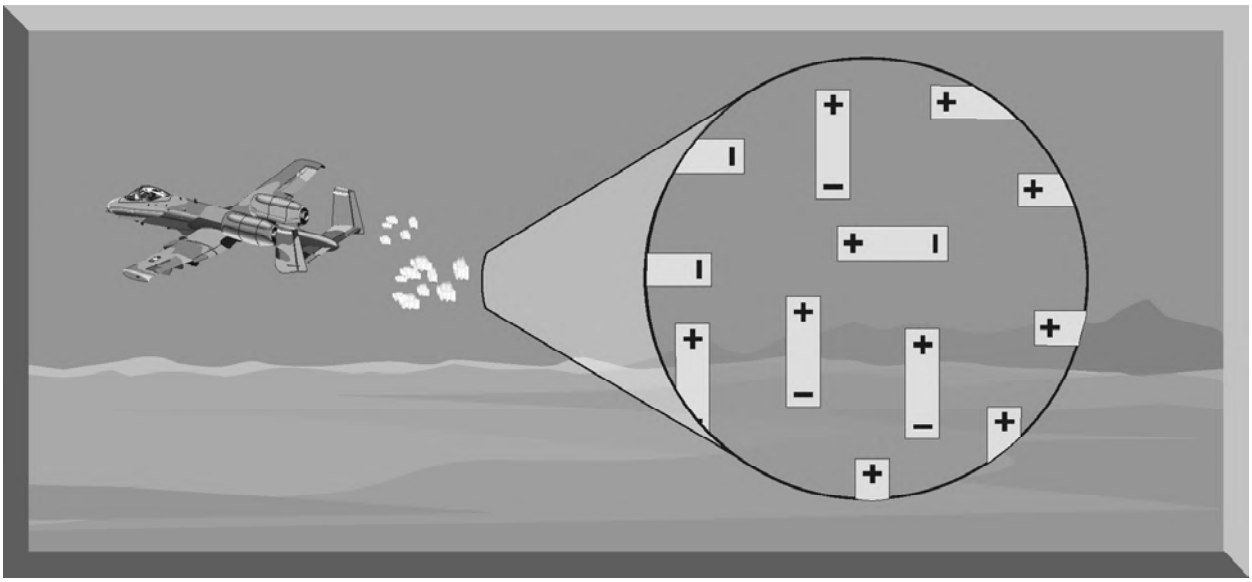

Figure 13-10. Impact of Chaff Polarization

3. CHAFF OPERATIONAL EMPLOYMENT

The two primary chaff employment tactics are force screening and self-protection. Force screening tactics include area saturation and corridor operations. Self-protection tactics include the reactive employment of chaff to negate a potentially lethal engagement. Different chaff dispensing techniques are used for each employment tactic and are important planning considerations for all chaff employment tactics. This section will discuss area saturation, corridor operations, and self-protection chaff employment.

a. The objective of area saturation operations is to present multiple false targets in a specific area in order to saturate radar systems and confuse the enemy integrated air defense system (IADS). Area saturation can be accomplished by fighter aircraft or drones equipped with chaff pods employing random chaff dispensing techniques. The chaff dispenser is set to release random bursts of chaff along the ingress and egress route of the attack package. Chaff pods may be supplemented with chaff bombs containing special fuses that provide false targets at varying altitudes. Attack aircraft can also contribute to area saturation by randomly dispensing self-protection chaff as they ingress and egress. However, this tactic can deplete the number of chaff bundles an attack aircraft may need to defeat a potentially lethal radar system encountered at a later time in the mission.

(1) The chaff cuts must provide frequency coverage for the threat radar systems. Also the RCS of each chaff burst should be large enough to present a realistic target to the victim radars. Multiple false targets created by chaff area saturation may confuse threat system operators and encourage them to expend missiles on false chaff targets.

(2) Saturation also masks the number of attacking aircraft (Figure 13-11). When used with false target deception jamming, area saturation can greatly enhance mission success. However, the technique is resource-intensive since aircraft employing chaff pods and chaff bombs cannot attack targets. These aircraft are vulnerable to attack and should be supported by standoff jamming. Area saturation tactics may have limited success against Doppler processing radars.

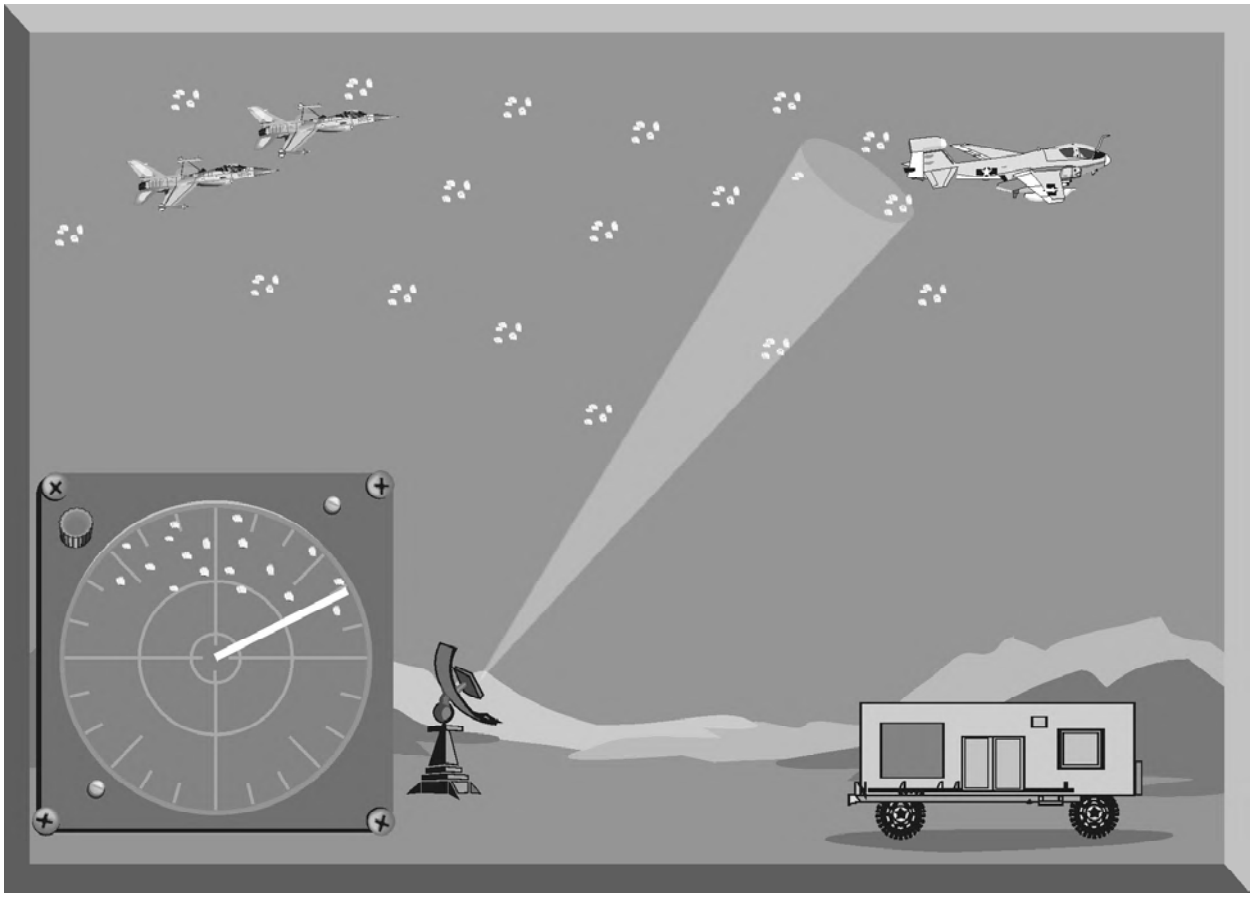

Figure 13-11. Area Saturation Tactics

b. The objective of chaff corridor operations is to screen the ingress and egress of an attack package by dispensing large quantities of chaff in a continuous "ribbon." Fighter aircraft, or drones equipped with chaff pods such as the ALE-38, employ a stream chaff dispensing technique to "lay" the chaff corridor. The pods are set to provide a continuous line of chaff dense enough to hide ingressing and egressing aircraft. The chaff cuts should provide frequency coverage for the radar systems that must be countered. Timing for the chaff aircraft in relation to the attack package must consider the fall rate and persistency of the chaff to ensure that the chaff corridor covers the required altitude for a time sufficient to allow the attack package to ingress and egress. An effective chaff corridor completely denies a radar's ability to distinguish between

the chaff and the attack aircraft. To do this, the radar cross section, or RCS, of the chaff within the resolution cell of the radar must exceed the RCS of the aircraft. This condition must be met throughout the length of the chaff corridor. When this condition is met, the chaff corridor will appear as a continuous return on the victim radar scope, and the attack package cannot be detected (Figure 13-12).

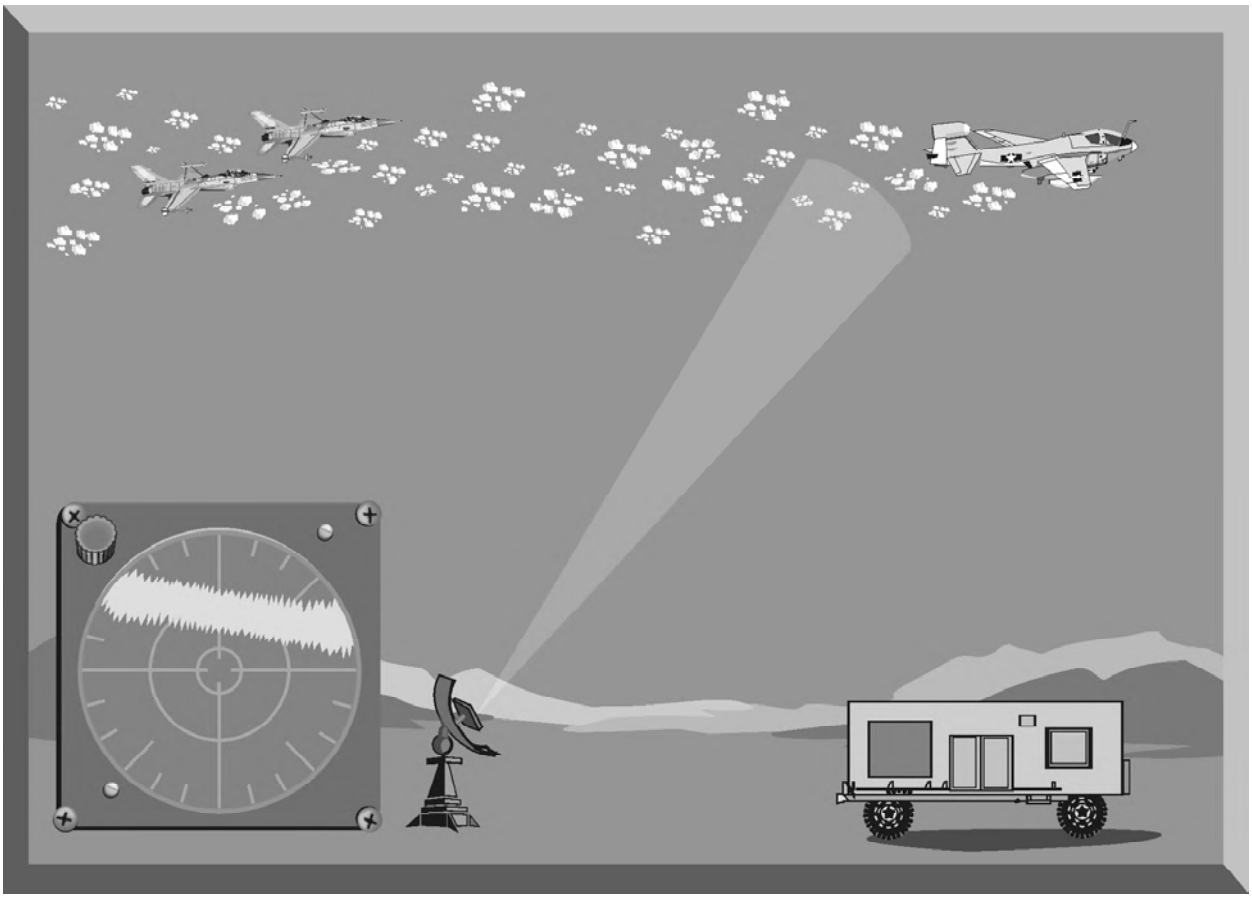

Figure 13-12. Chaff Corridor Tactics

(1) One advantage of a chaff corridor is that it can screen ingressing and egressing aircraft from pulse radar systems. However, chaff corridors are resource-intensive. Aircraft "laying" the corridor cannot strike critical targets. The chaff aircraft are also vulnerable to attack. Therefore, standoff jamming and self-protection jamming systems should be employed to provide some screening and protection for the chaff dispensing aircraft. Finally, chaff corridors may not be effective against radars with Doppler processing.

(2) To be effective, chaff corridor operations require detailed planning. Electronic combat (EC) planners must first determine that a chaff corridor is the most effective way to screen the attack force. This decision is based on the vulnerability of the attack aircraft to the anticipated threat radar systems and the availability of chaff assets. Once the decision is made to employ a chaff corridor,

planners must select the location, determine the length of the chaff corridor, select the ingress and egress altitudes, and establish the timing for the chaff aircraft and the attack package. Once the location of the chaff corridor is determined, planners must assess the threat radar systems that must be countered. The specific operating frequencies of the threat radars will determine the cuts of chaff that must be dispensed. The resolution cells of the threat radars will determine the density of chaff required. The length of the chaff corridor and the chaff density will determine the number of chaff aircraft required to seed the chaff corridor. The chaff fall rate and the atmospheric conditions impact the timing between the chaff aircraft and the attack package, and the altitude that the chaff dispensing aircraft must fly.

c. Self-protection chaff tactics are based on the use of chaff dispensers that use burst chaff dispensing techniques to defeat a TTR. Burst chaff dispensing, employed during the final phase of an engagement by air-to-air or surface-to-air weapons, can generate tracking errors or a radar break-lock. Burst chaff effectiveness is greatly enhanced when accompanied by jamming and evasive maneuvers (Figure 13-13).

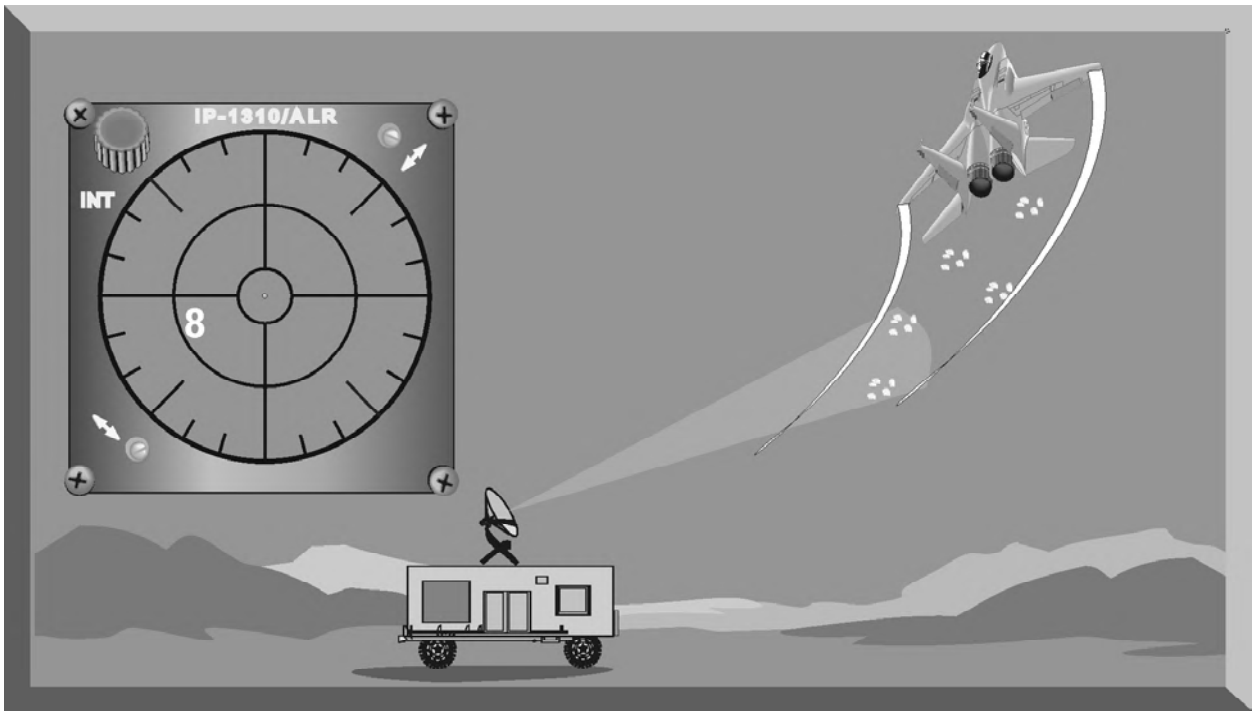

Figure 13-13. Self-Protection Chaff Tactics

(1) Self-protection chaff has proven effective against all pulse radar threat systems when employed with maneuvers and jamming. This is especially true for TTRs operating in an automatic tracking mode.

(a) Chaff employed against a track-while-scan (TWS) radar is designed to put multiple targets, with an RCS greater than the aircraft, in the resolution cell of the horizontal and vertical radar beams (Figure 13-14). Since the tracking loop tracks the largest return, the TWS radar will automatically switch to the chaff. After dispensing chaff, the pilot can maneuver vertically or horizontally to move the aircraft out of the resolution cell.

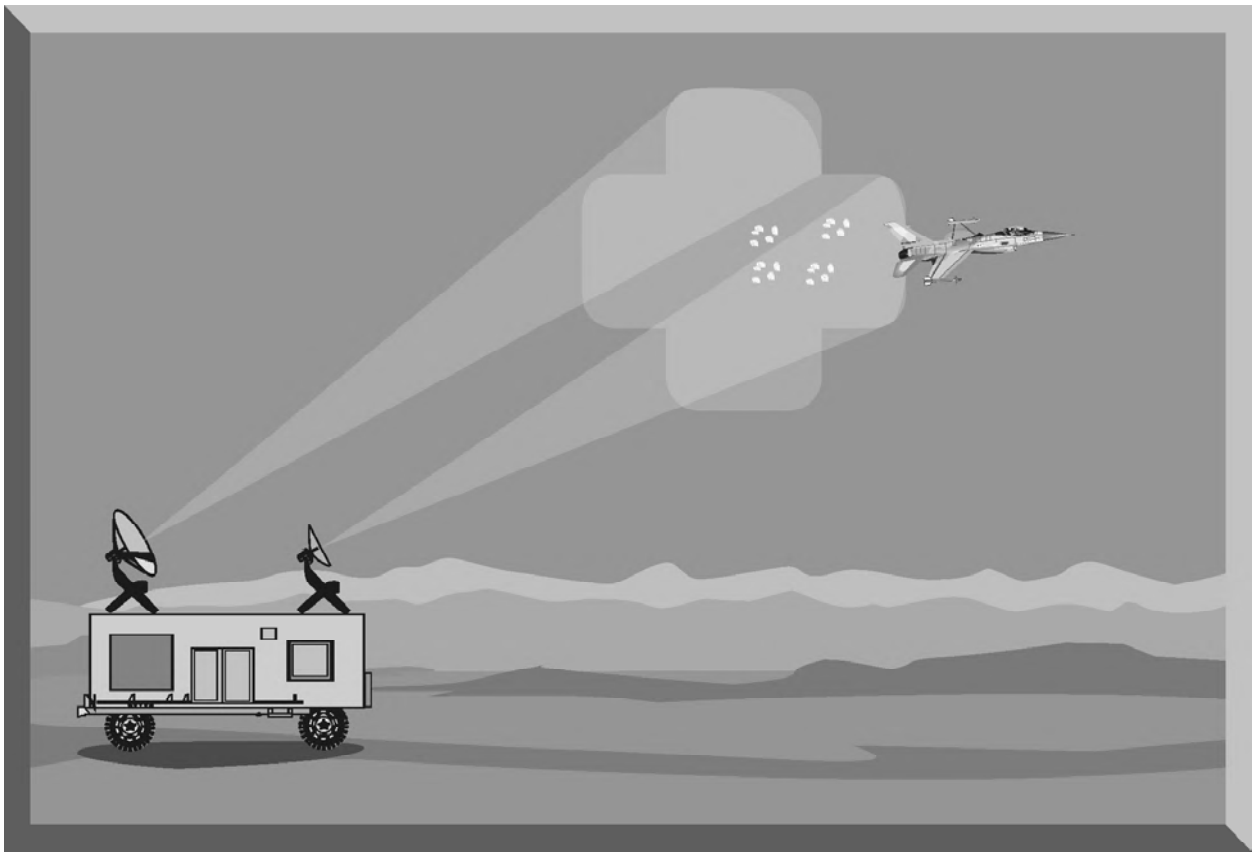

Figure 13-14. Self-Protection Chaff Effect on a TWS Radar

(b) Against a conical scan radar, chaff puts multiple, large RCS targets within the separate scans of the radar (Figure 13-15). These multiple targets generate error signals in the tracking loop and drive the separate scans off the aircraft return. As the conical scan radar tracking loop attempts to resolve these error signals, it will eventually lock on to the chaff. Maneuvering outside the overlapping scan area enhances chaff effectiveness and facilitates the transfer of radar lock-on to the chaff.

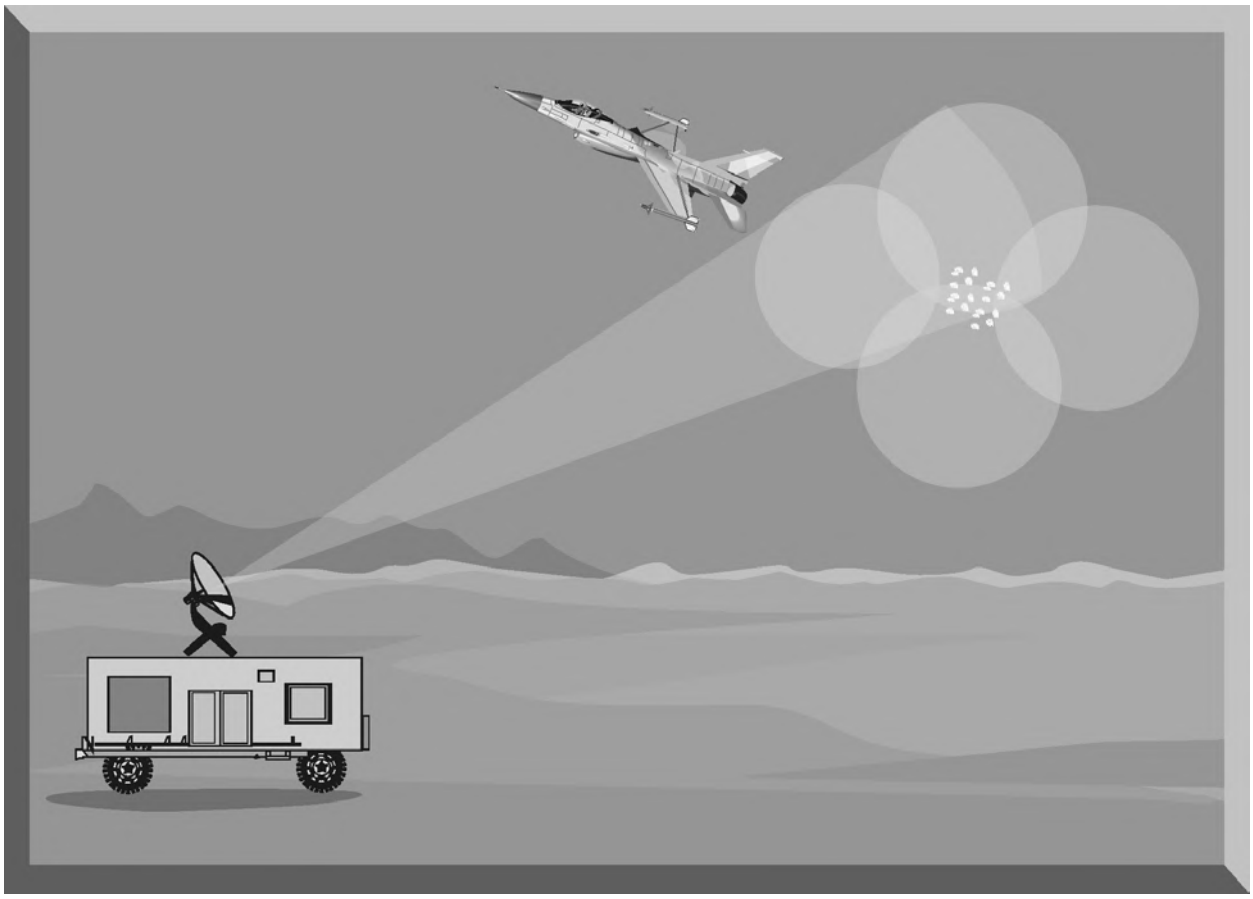

Figure 13-15. Self-Protection Chaff Impact on a Conical Scan Radar

(c) Chaff employed against a monopulse radar is designed to put multiple targets in at least two of the tracking beams (Figure 13-16). This generates errors in the azimuth, elevation, and range tracking circuits. Multiple chaff targets continue to generate azimuth and elevation errors that can eventually generate a break-lock condition, as the radar transfers lock-on to the chaff. Chaff is most effective against monopulse radars when employed on the beam in order to create the maximum angular tracking error.

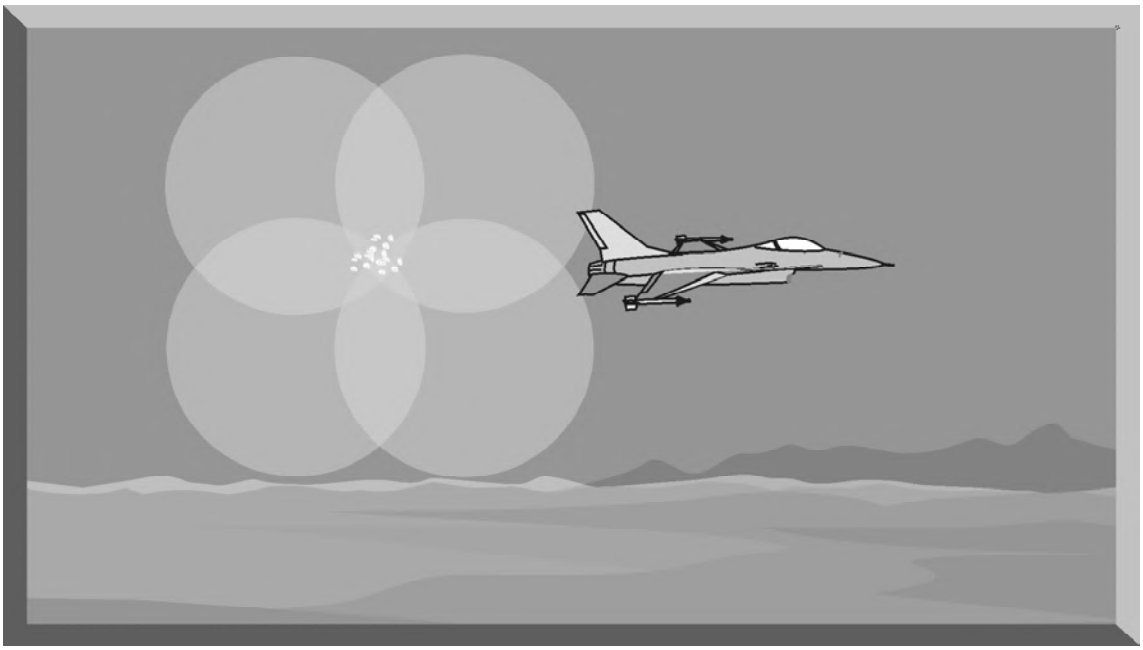

Figure 13-16. Self-Protection Chaff Impact on a Monopulse Radar

(d) Modern radars may employ some form of Doppler filtering to negate the effectiveness of chaff and other sources of clutter. Pulse Doppler and continuous wave radar systems track targets based on target velocity relative to the radar. Radars employing a moving target indicator (MTI) use relative target velocity to distinguish between targets and clutter. Chaff slows to near zero relative velocity almost immediately after dispensing. For self-protection chaff to be effective, the aircraft velocity relative to the radar site must also be near zero This occurs when the aircraft's aspect to the radar is 90°, or on the beam. By maneuvering to a beam aspect against a Doppler radar, the pilot is exploiting the "notch" where radar cannot discriminate targets based on Doppler frequency shift (Figure 13-17).

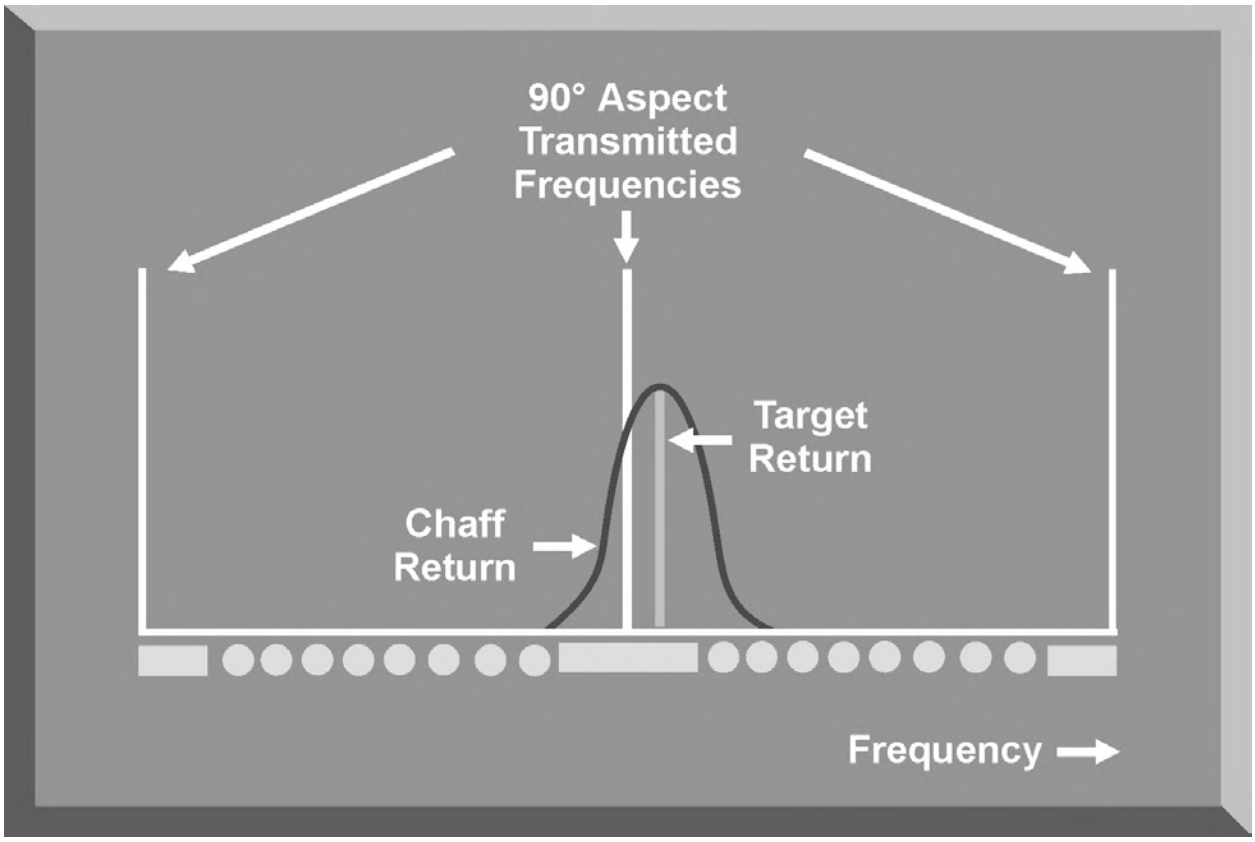

Figure 13-17. Self-Protection Chaff Impact on a Doppler Radar

4. SUMMARY

Chaff is one of the oldest and most effective pulse radar countermeasures. The fundamental characteristics of chaff (RCS, frequency coverage, bloom rate, Doppler content, polarization, and persistence) determine the effectiveness of chaff employment. The primary chaff employment tactics of force screening and self-protection are designed to maximize the impact of chaff on threat radar systems. Self-protection chaff, together with jamming and maneuvers, is often the "last line of defense" against lethal radar threat systems.

CHAPTER 14. IR FUNDAMENTALS

1. INTRODUCTION

Since their introduction in the 1950s, infrared (IR) missiles have been an increasing threat from both ground-based and airborne systems. The range, reliability, and effectiveness of IR missiles have been continuously improved by advanced detector materials and computer technology. Since IR missiles are passive, they are relatively simple and inexpensive to produce. These characteristics have contributed to the proliferation of IR missiles in the combat arena. Nearly every aircraft flying in either the air-to-air or air-to-surface role now carries an all-aspect IR missile. Additionally, every infantry unit down to the platoon level is equipped with shoulder-fired IR missiles (Figure 14-1). This chapter will cover basic IR theory, IR missile detection, IR seekers, and conclude with a section on IR flare rejection.

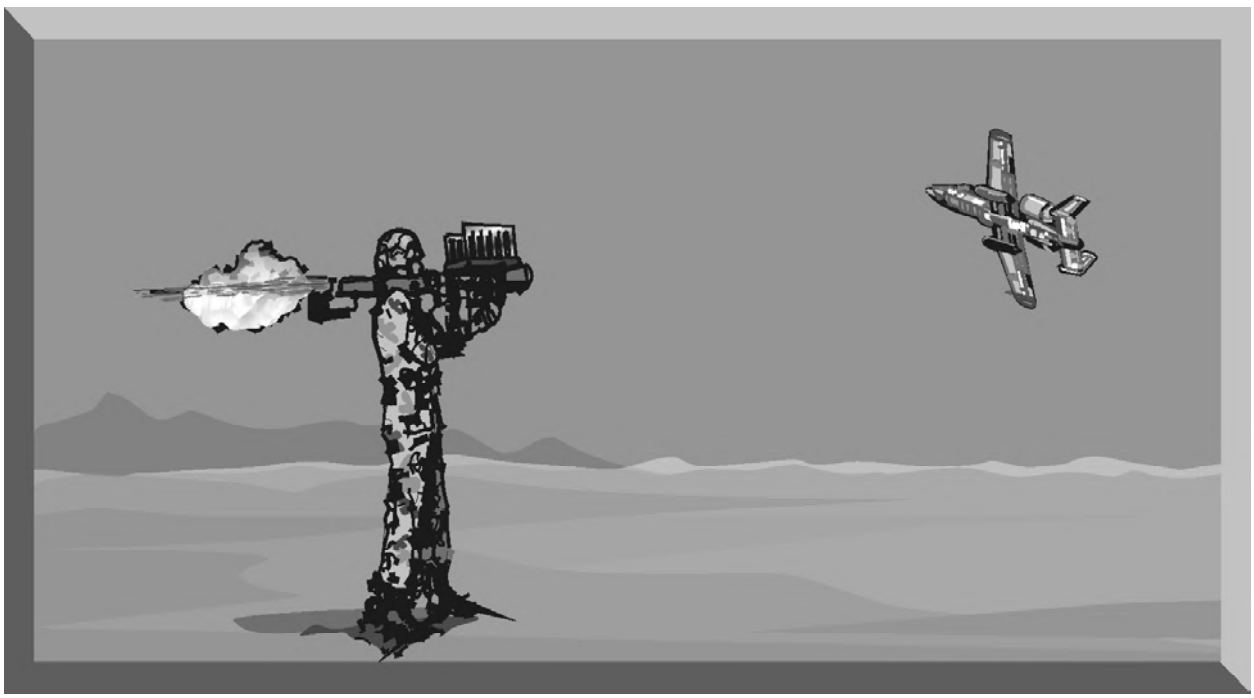

Figure 14-1. The IR Threat

2. BASIC IR THEORY

Because of its location in the frequency spectrum, IR radiation exhibits some of the characteristics and limitations of microwaves and visible light.

a. All warm objects emit IR energy. The object's temperature dictates the characteristics of this radiation. As the temperature of the material increases, the radiant intensity increases and shifts to shorter and shorter wavelengths or

higher and higher frequencies. The frequency band of IR radiation falls between the upper limit of microwaves and the lower limit of visible light. When discussing IR radiation, it is more convenient to refer to wavelength instead of frequency (Figure 14-2). The wavelength of the highest frequency IR is 0.72 x 10^{-6} meters. A unit of measure called the micron (μ), is one millionth, or 10^{-6}, of a meter and is used to designate IR wavelengths. IR energy falls in the electromagnetic spectrum between the wavelengths of 1000 and 0.72 microns, while visible light occupies the spectrum from 0.72 to 0.39 microns.

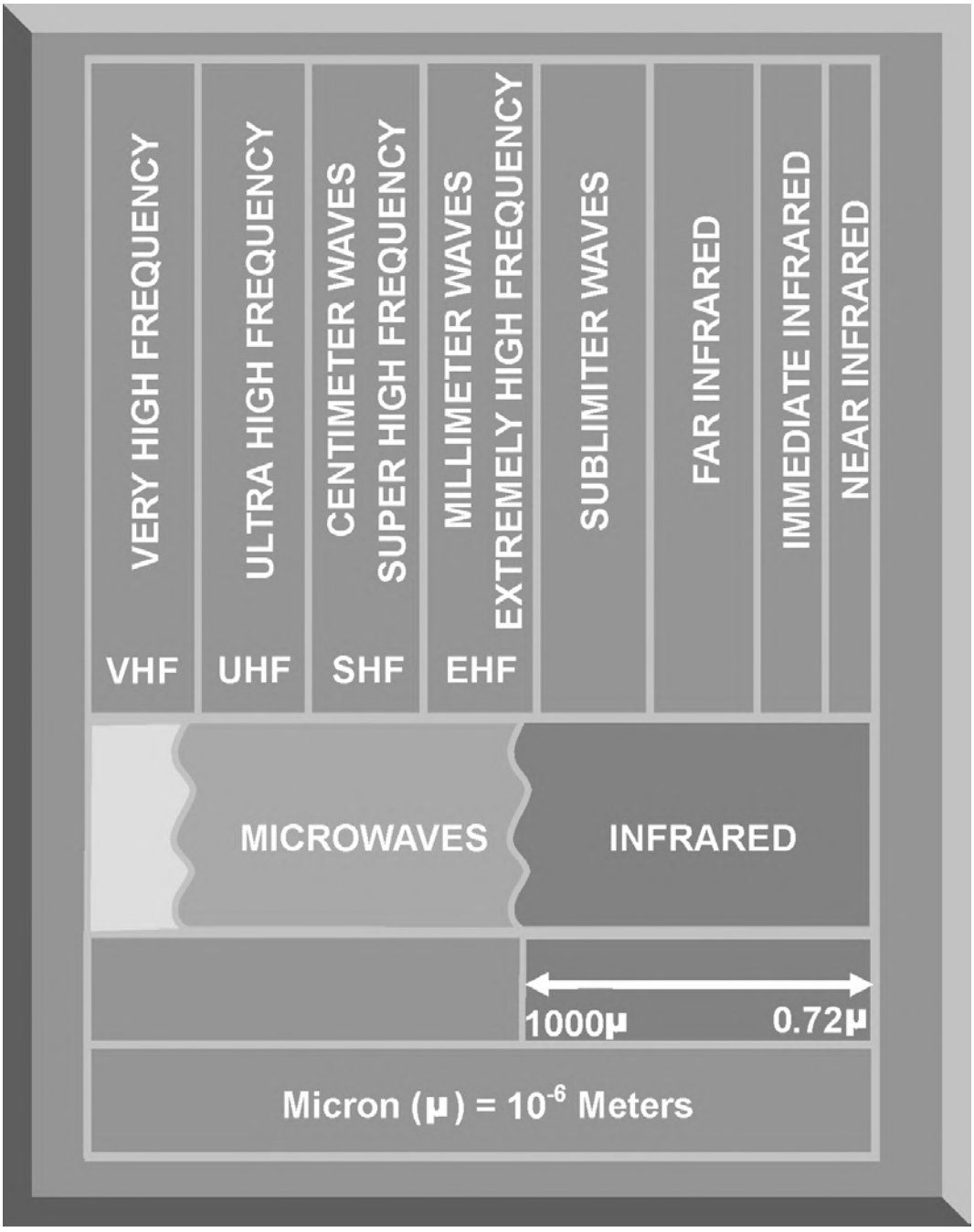

Figure 14-2. IR Frequency Band

b. As the IR energy travels through the atmosphere, certain wavelengths are absorbed or attenuated. The greatest IR attenuator is atmospheric water vapor, which varies as the weather conditions vary, with negligible absorption at altitudes above 30,000 feet. Another significant attenuator is carbon dioxide. The percentage of carbon dioxide in the atmosphere is practically constant up to a height of 30 miles. Carbon dioxide absorption is predictable and occurs only in the IR region. Scattering is another form of atmospheric attenuation and is caused by dust particles and water droplets. Scattering is also largely dependent on weather conditions and cannot be predicted. Most of the scattering occurs at lower altitudes and at the shorter wavelengths. Other atmospheric elements cause little or no attenuation of IR energy. Figure 14-3 shows atmospheric IR transmission at sea level. There is a relatively large window of IR transmission in the region from one to five microns. This is the region where the aircraft engine heat signature is at its maximum intensity and where most IR missiles are designed to operate.

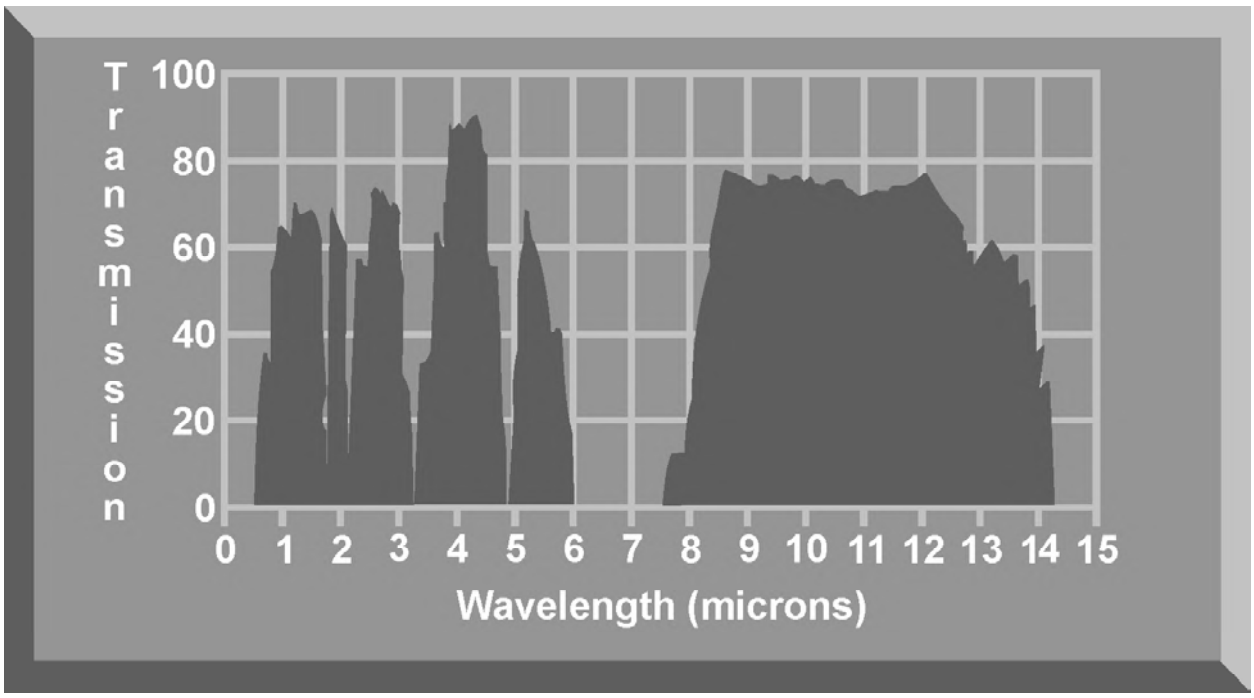

Figure 14-3. Atmospheric IR Transmission

c. IR energy exhibits some of the transmission characteristics of both RF energy and visible light. As with visible light, it can be optically focused by lenses and mirrors. This characteristic is used in the IR missile detector elements (Figure 14-4). As with RF energy, the intensity of IR radiation diminishes inversely with the square of the distance between the source and the receiver.

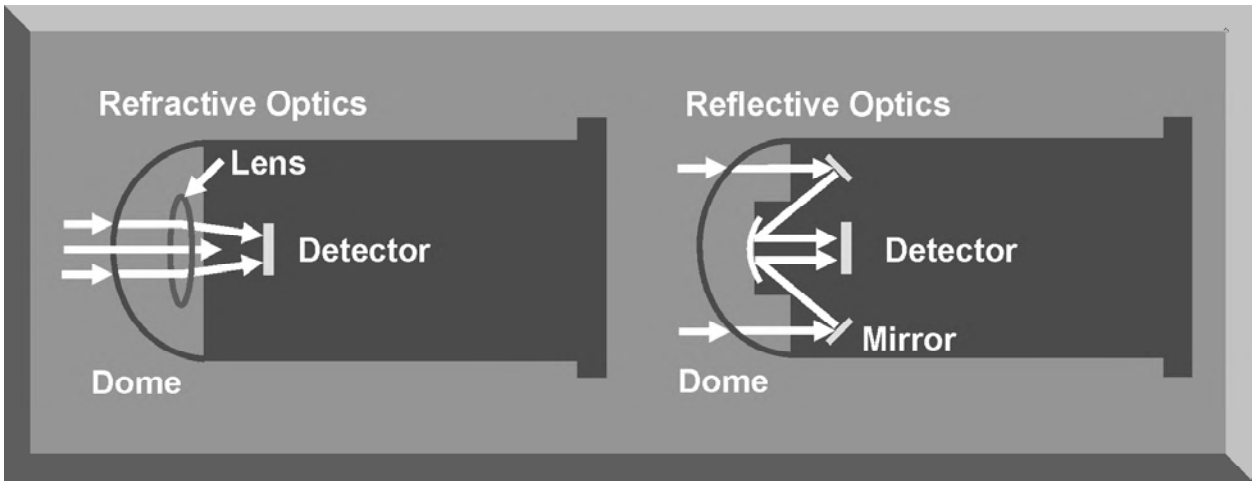

Figure 14-4. IR Missile Seeker

d. If the intensity of the aircraft's IR signature, while in the military power setting, is plotted in relation to wavelength, it reaches a peak at approximately 3 microns (Figure 14-5). In afterburner, the aircraft's IR intensity reaches a peak at approximately 1.5 microns. Since IR missiles are designed to detect and track the aircraft's IR signature, most IR missiles operate in the region of 1 to 5 microns. To be effective, the IR intensity of a flare must also fall within this micron region.

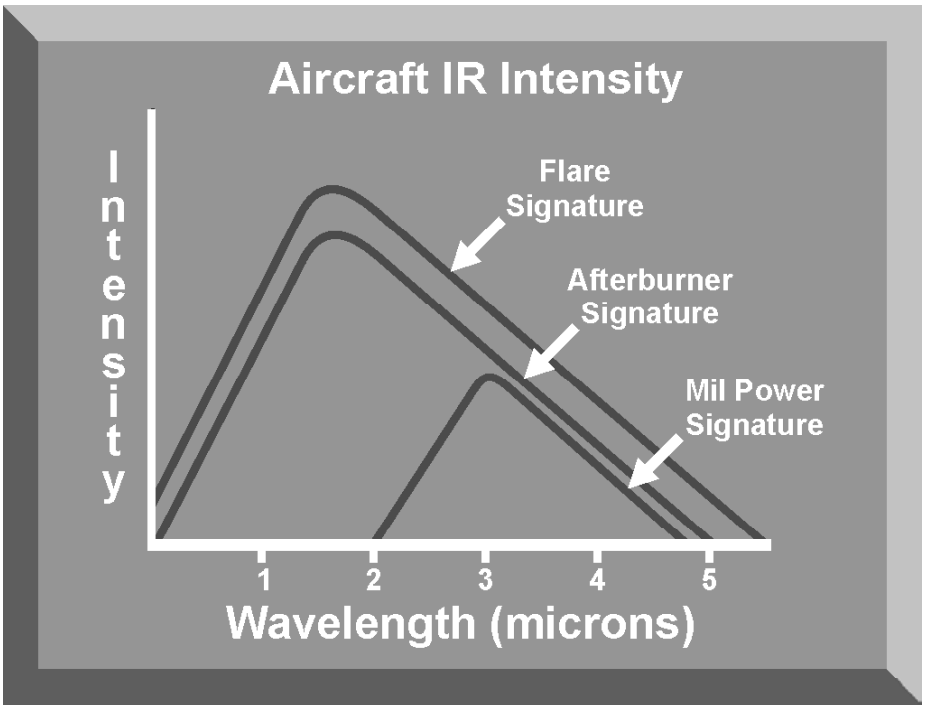

Figure 14-5. Aircraft IR Intensity

e. An aircraft's relative IR signature is based on aspect angle, airspeed, altitude, and afterburner status. The minimum relative IR intensity is at the nose and maximum at the tail. As airspeed increases, the relative IR intensity increases due to the heat generated by friction and increased engine temperatures. As altitude increases, the relative IR signature increases at all aspect angles, due to the reduction in atmospheric attenuation (Figure 14-6).

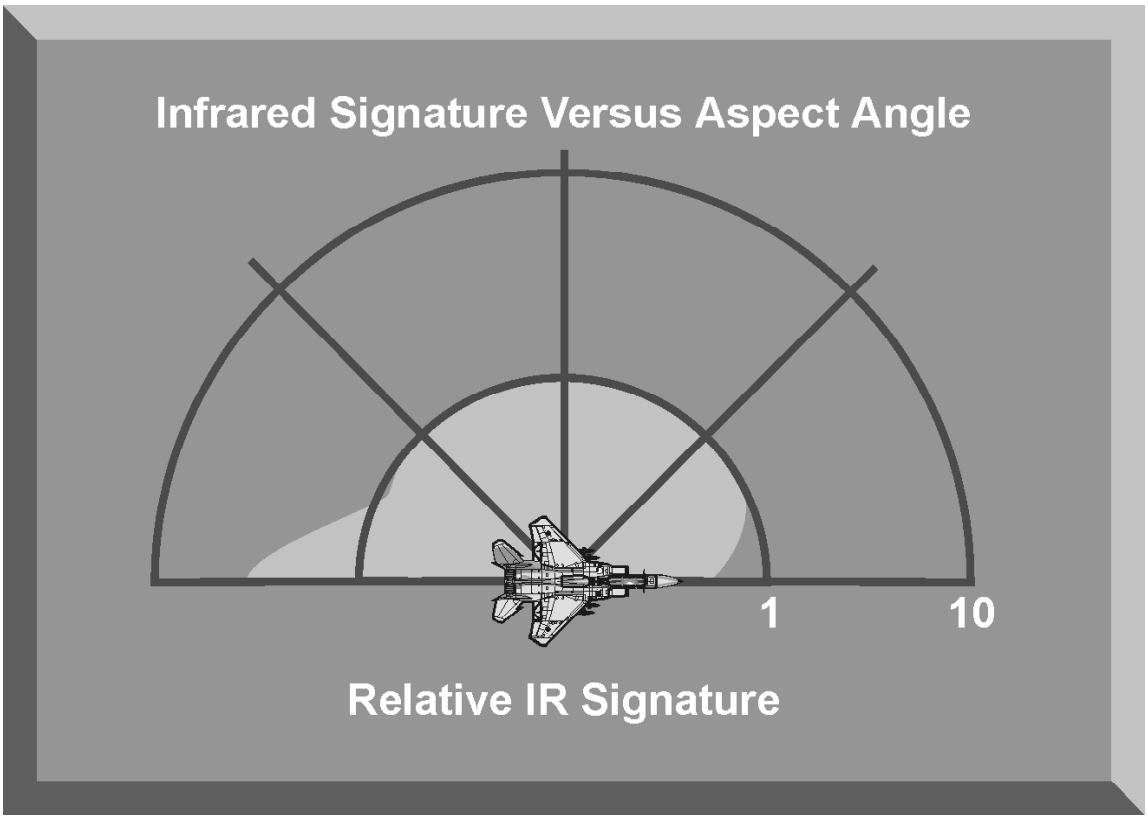

Figure 14-6. IR Signature Versus Aspect Angle

3. IR SIGNATURE SOURCES

IR guidance is based on the fact that every object with a temperature above zero degrees Kelvin emits IR radiation. The temperature of the object dictates the characteristics of this radiation. As the temperature of the object increases, the radiant intensity increases and shifts to higher and higher frequencies and correspondingly shorter and shorter wavelengths. The F-16 at Figure 14-7 demonstrates the different wavelengths found at different areas of the aircraft. Emissivity in Figure 14-7 is a relative measure of the IR energy emitted when a surface is directly viewed.

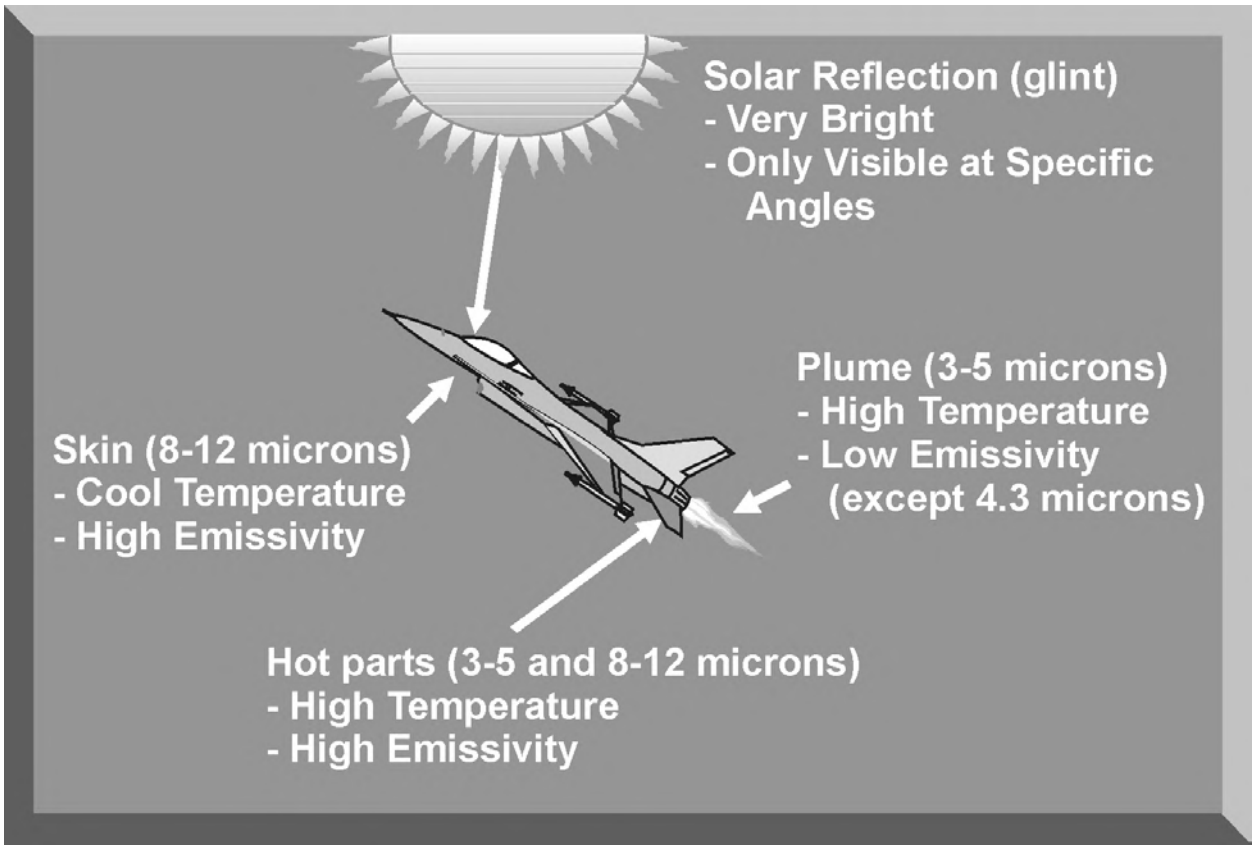

Figure 14-7. Target Signature Sources

a. The main aircraft signature sources are the plume, the engine hot parts, and the skin. The skin is large in area, but usually fairly cool. Thus the best detection of the aircraft skin is usually in the long wave IR band (8-12 microns).

b. The engine hot parts offer excellent detection when one is looking at the right angle. They have high temperatures and high emissivity. However, depending on the viewing angle, they may have a low perceived area.

c. The plume has high temperatures and a high perceived area. This large perceived area allows near all-aspect detection. Unfortunately, it has a relatively low emissivity except near 4.2 microns. It is the strategy of the new breed of all-aspect missiles to detect the plume in the mid-wave IR, around 4.2 microns.

d. Figure 14-8 shows some of the common IR detector materials. Note that the cooled detectors are sensitive to longer wavelength (lower energy) photons, as discussed earlier.

Material	Wave-Band
Lead Sulfide (PbS) - Uncooled	1.5 - 2.5 micrometers
Lead Sulfide (PbS) - Cooled	2.0 - 4.0 micrometers
Lead Selenide (PbSe) - Uncooled	2.0 - 4.2 micrometers
Lead Selenide (PbSe) - Cooled	3.0 - 5.0 micrometers
Indium Antimonide (InSb) - Cooled	2.0 - 5.0 micrometers
Mercury-Cadium-Telluride ($Hg_{(1-x)}Cd_{(x)}Te$) - Cooled	8.0 - 13.0 micrometers

Figure 14-8. IR Detection Materials

4. IR SEEKER CHARACTERISTICS

Guidance units are designed to detect and home in on the IR radiation of the aircraft. The job of the seeker is to view the scene and output the estimated target position. Figure 14-9 shows the hardware that makes up the seeker of a generic IR missile system.

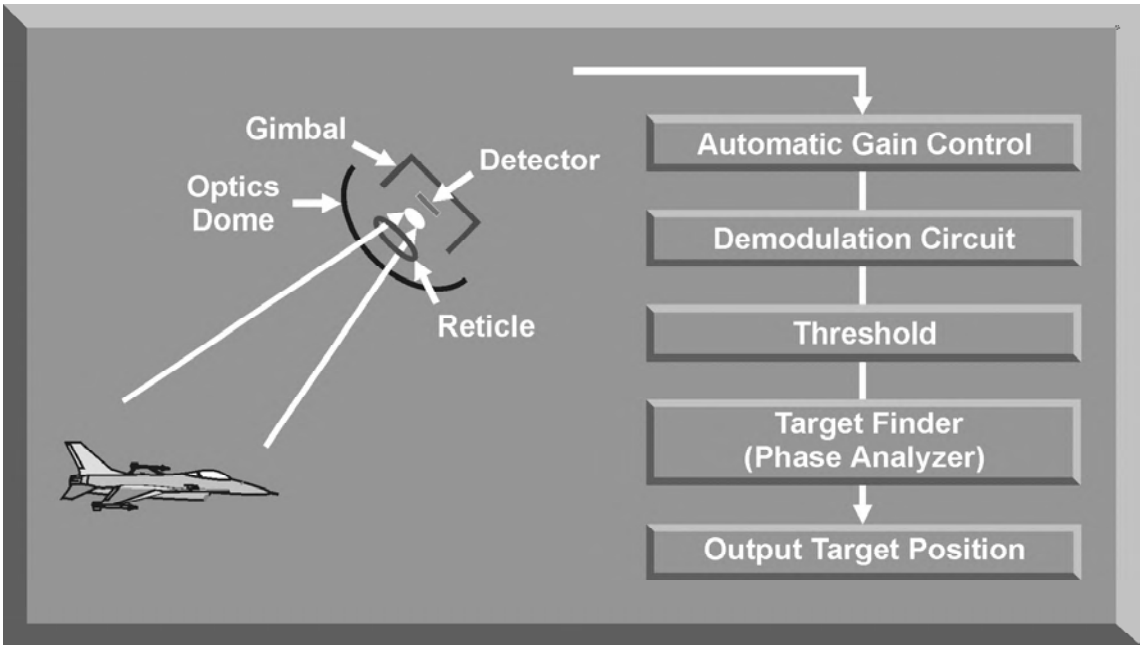

Figure 14-9. IR Missile Seeker

a. The dome acts as an IR transparent protective cover. Most IR missiles use the hemispherical dome because that shape does not alter the path of the incoming light rays. The optics focus the scene through the reticle onto the detector. The reticle pattern enables the detector output to "code" the position of the target.

b. The internal workings of the missile are similar to those found in a radar tracking system. There is an automatic gain control (AGC) to adjust the levels of the detector output so that it is not too large or too small. The demodulation circuit "decodes" the detector signal. The threshold circuit cancels signals that are below the specified threshold value, similar to the clutter rejection function found in radar systems. Finally, the phase analyzer reads the target position from the signal and sends the result to the autopilot. The autopilot then adjusts the missile's flight path to track the target.

c. IR systems employ filters and detectors to filter out unwanted IR radiation from the sun, sunlit clouds, smoke, the earth, and other background radiation sources (Figure 14-10). The detection unit is coupled with a guidance system to generate commands to the missile control vanes to keep the target centered in the field of view.

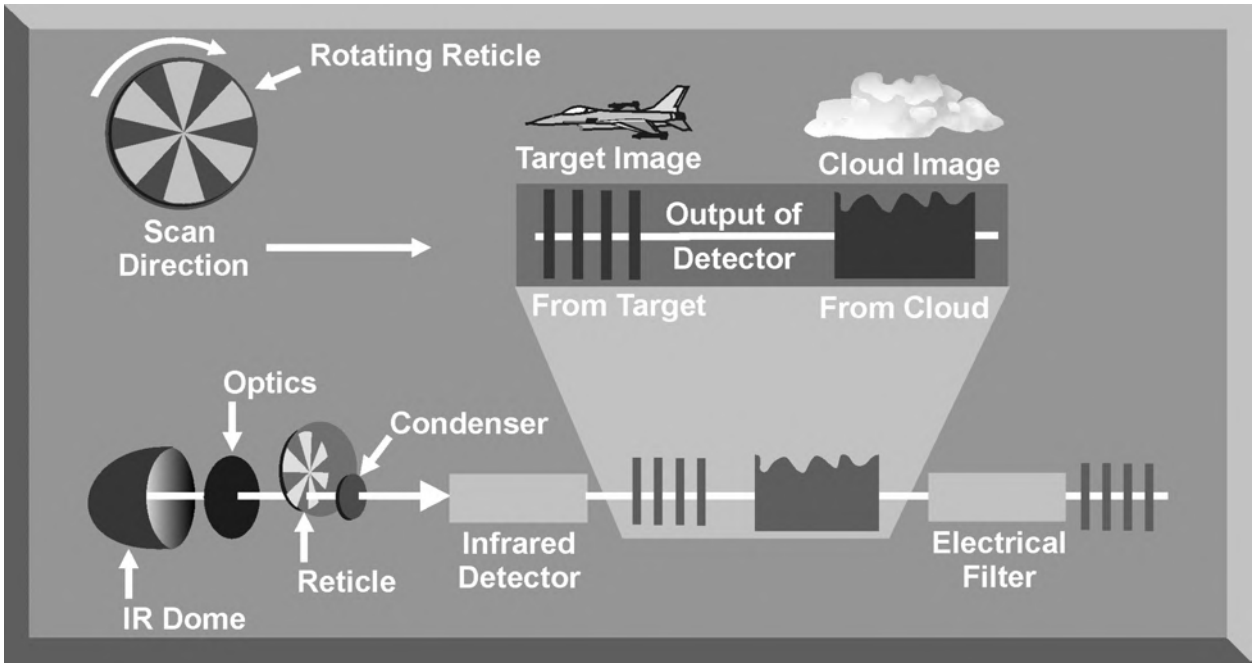

Figure 14-10. Spin Scan Reticle

d. A defining characteristic of an IR missile is its field of view (FOV) and field of regard (FOR) (Figure 14-11). The angular size of the image in degrees is called the field of view. To provide the greatest possibility of collecting IR radiation from the target, the receiver must have the greatest possible FOV. This in turn may

create problems. A large FOV increases the possibility that the receiver may not be able to distinguish the target from other sources of IR radiation. To avoid this problem, a relatively small FOV is scanned through a wider area. This wider area is referred to as the FOR. The gimbal enables the FOV to be scanned, so that an entire FOR can be searched.

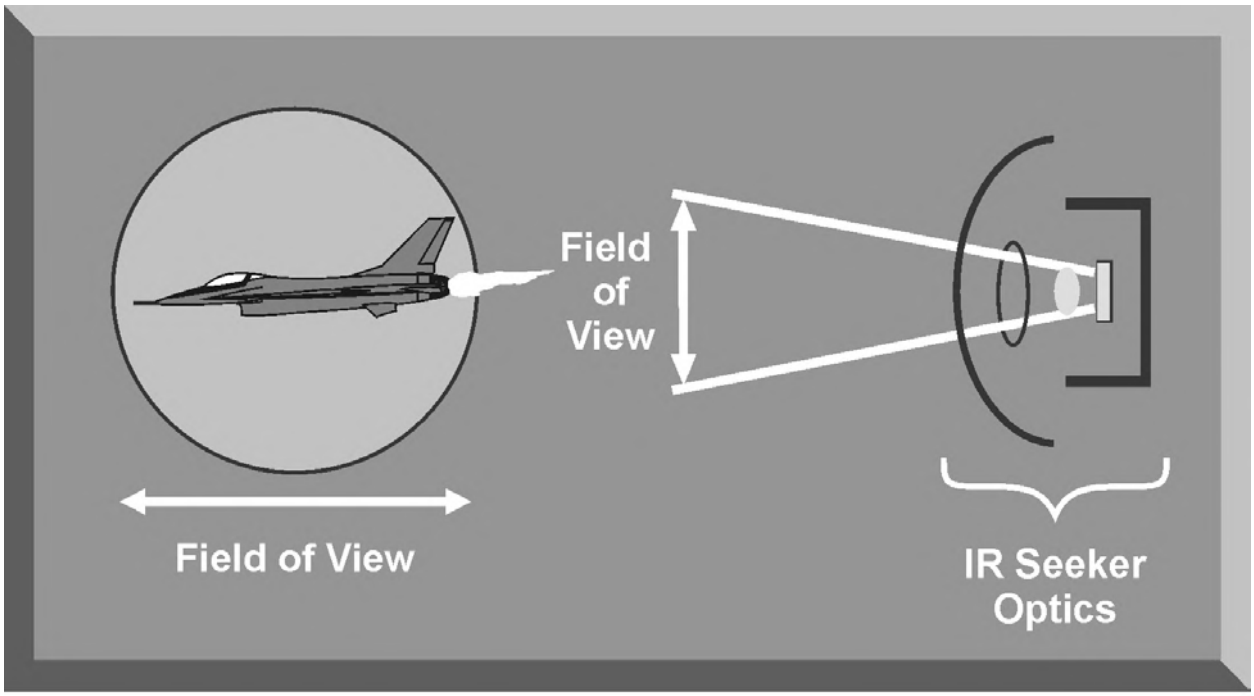

Figure 14-11. Missile Field of View

5. IR SEEKER TYPES

Through the years advances in seeker technology have resulted in significant changes to IR missile engagement tactics. This section will discuss spinning reticle, conical scan, cooled, and imaging IR seekers.

a. First generation IR missiles, like the SA-7, use a spinning reticle as the means to track the target. Due to their relatively low cost and ease of use, IR missiles of the first generation can still be encountered. The spinning reticle is inserted in the seeker just before the IR radiation reaches the detector. The reticle is a thin plate of optical material which has a transparent and opaque pattern on it. As the reticle is rotated, the IR energy is chopped at a rate determined by the reticle pattern. This system produces error signals when the target is not exactly centered in the field of view. Figure 14-12 is an example of a reticle pattern that can provide both azimuth and elevation information. If the target is located in the upper half of the pattern, the IR intensity on the detector is constant as the reticle rotates. As the pie-shaped half of the disc rotates over the target, the IR energy is pulsed and the amplitude of the pulses is an indication of relative elevation angle.

When the target moves to the right or left, the pulsing starts and stops at different times, indicating target azimuth. Center spun spin-scan seekers, also called center null reticles, are relatively insensitive when the target is in the center of the seeker scan where there is no tracking error. This is because the point target tends to bleed energy into all the spokes at once, eliminating the pulsed signal output of the detector. Once the target falls off the center of the reticle, the seeker generates an error signal that initiates guidance commands to recenter the target. This is the reason early IR missiles flew an undulating path toward the target.

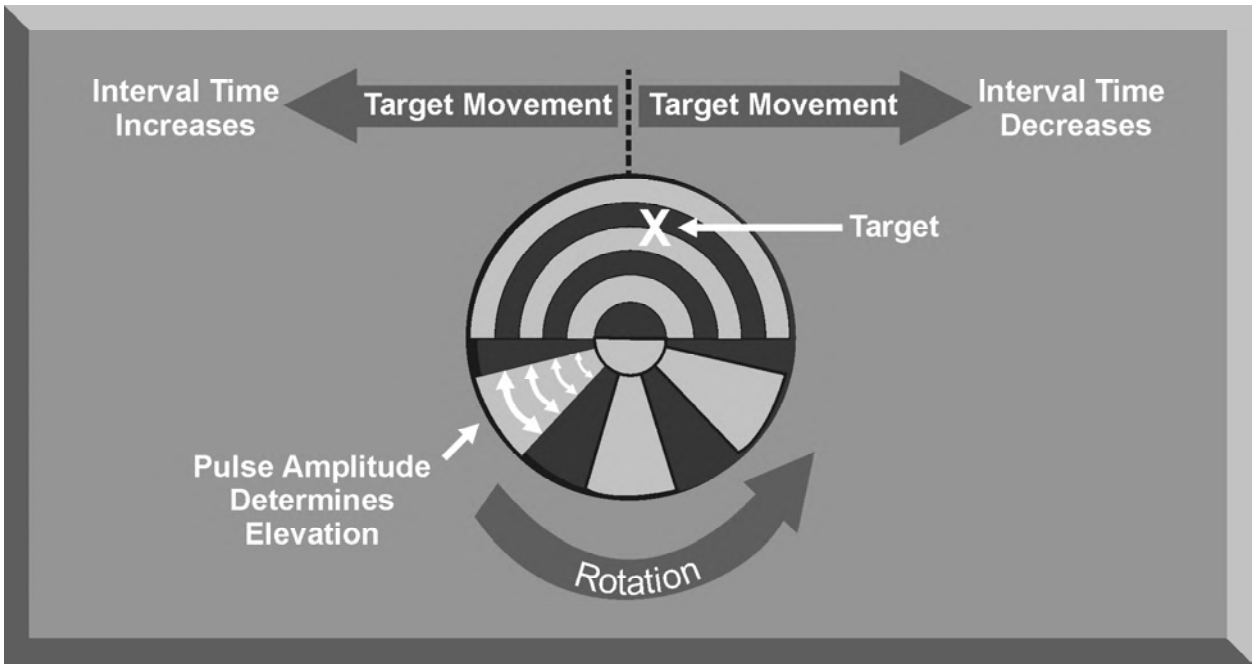

Figure 14-12. IR Missile Reticle

b. IR conical-scan (con-scan) seekers were developed to solve some of the problems with spin-scan seekers; notably the lack of error response when the target is near the center of the seeker field of view (FOV) (Figure 14-13). In a typical con-scan seeker, the reticle is fixed and does not spin. Instead, a secondary mirror is tilted and spun. This causes the target image to be scanned in a circular path around the outer edge of the reticle. When the target is centered in the seeker scan, the detector generates a pulsed output similar to that of the spin-scan seeker. However, as the target leaves the center, the output of the detector is a frequency modulated (FM) sine wave. The frequency of the modulation is directly proportional to the amount of target displacement from the center of the seeker scan. Con-scan optics are usually designed to spin the target very close to the edge of the reticle. This generates the greatest amount of FM modulation for a given target tracking error and gives the con-scan IR missile a more sensitive and tighter tracking loop. The center of the reticle is only used for acquisition.

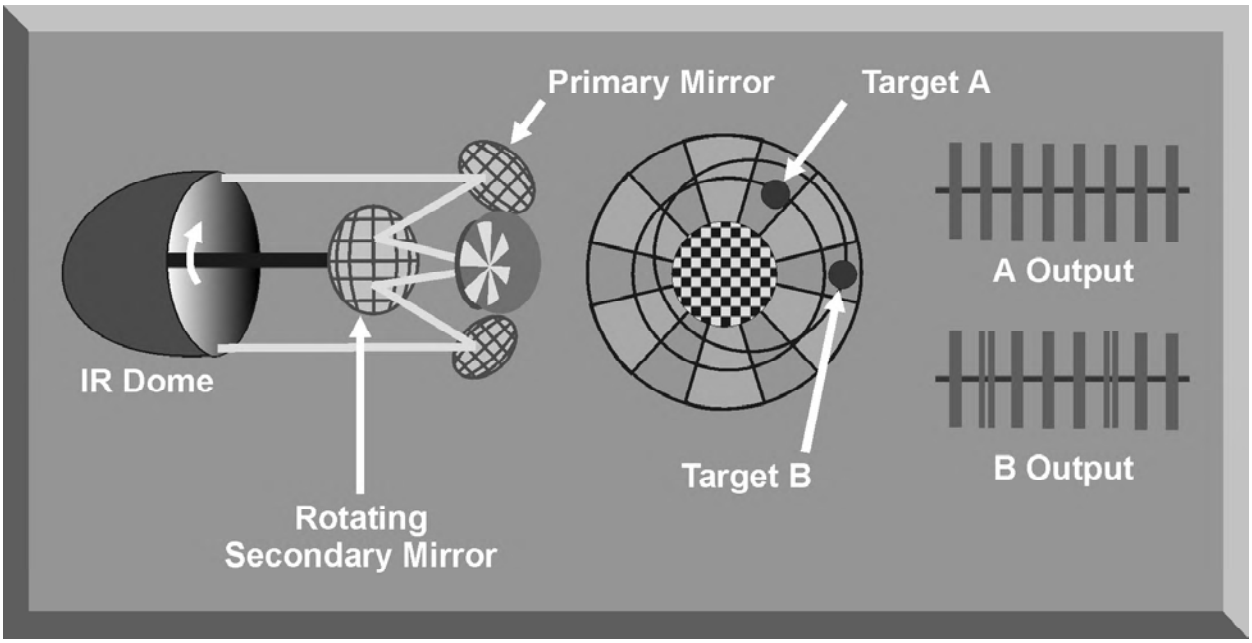

Figure 14-13. Conical Scan IR Seeker

c. A significant improvement to IR seekers resulted from the cooling of the detector with an inert gas such as argon. Older IR missiles, using uncooled lead-sulfide detectors, have a peak sensitivity in the 2 micron region. This limits these missiles, the SA-7 for example, to stern attacks because the missiles can only discriminate the IR signature of the engine turbine from background IR energy. By cooling the detector with an inert gas, like argon, the detectors of newer IR missiles can track longer wavelength IR radiation associated with airframe friction. Using newer detector materials like indium antimonide (InSb), require cooling to have increased target detection range and all-aspect tracking capability.

d. Imaging IR is the most recent advancement in IR seeker technology. The technology for these seekers is similar to that found in the AGM-65 Maverick missile. Imaging IR seekers are harder to decoy with flares than older seekers, and they are resistant to pulsed light jamming. Imaging detection involves creating an IR picture of the scene in one of two ways, scanning or staring. A scanning system uses one detector (or a mix of detectors and mirrors) which moves relative to the scene until the entire scene is scanned. This is an easy system to fabricate, but it can be noisy because the detector can't stay very long at each position, and it does not have a lot of time to measure the signal. A staring system uses many detectors, each of which detects a small portion of the scene. Each detector can "dwell" on its part of the scene for the entire frame time. However, such systems, also called focal plane arrays, are difficult to fabricate in a way such that each detector has the same sensitivity. One of the prime advantages with using imaging IR seekers is that they can be programmed

to track a particular IR shape or scene, significantly reducing the effectiveness of decoy flares.

6. IR MISSILE FLARE REJECTION

Flares are the primary countermeasure used to defeat the IR missile. Advanced IR missiles use different techniques to overcome the use of self-protection flares. There are two important characteristics of infrared (IR) missiles that influence the effectiveness of self-protection flares. The first is the ability of the IR missile seeker to discriminate between the IR signature of the aircraft and the IR signature of background interference, especially clouds. The second is the flare rejection capability built into the missile seeker and the missile guidance section.

a. The major source of IR background interference is sunlit clouds. Space filtering using a spinning reticle as described in the previous section is the method most widely used to suppress background interference and improve discrimination. IR energy from the target is gathered by the optical system and focused on the spinning reticle. The reticle chops the signal into a series of pulses that are focused onto the IR detector element. The signal output of a point source of IR energy, such as a target aircraft, will be a series of pulses. The signal output of a cloud, which covers several segments of the reticle, will be a single large pulse. An electrical filter eliminates the single large cloud pulse, and passes the multiple pulses generated by the target to the missile guidance section.

(1) IR missiles using spin-scan seekers have very little ability to reject flares. Flares provide the missile seeker with a hotter target than that of the aircraft, causing the spin-scan seeker to track the flare. The typical flare burns with a peak energy emission in the 2 micron range. Since the flare energy emission is greater than that of the target aircraft, the missile seeker transfers lock to the flare.

(2) Due to the scan pattern, con-scan seekers have some inherent resistance to flares. As described in the previous section, the reticle in a con-scan seeker is fixed and does not spin. Instead, a secondary mirror is tilted and spun. This causes the target image to be scanned in a circular path around the outer edge of the reticle. Because flares tend to drop away from the aircraft, they will drop off the con-scan reticle much faster than for a spin-scan reticle; therefore, flare resistance is built-in.

(3) Reducing the missile FOV is another method to help an IR missile discriminate the target IR signature from background IR (Figure 14-14). Limiting the FOV of the missile also makes the missile more resistant to flares. To decoy an IR missile seeker, the flare must create a heat source hotter than the aircraft and within the missile FOV. To decoy an IR missile with a narrow FOV, the flare must reach peak intensity almost immediately after ejection (Figure 14-15).

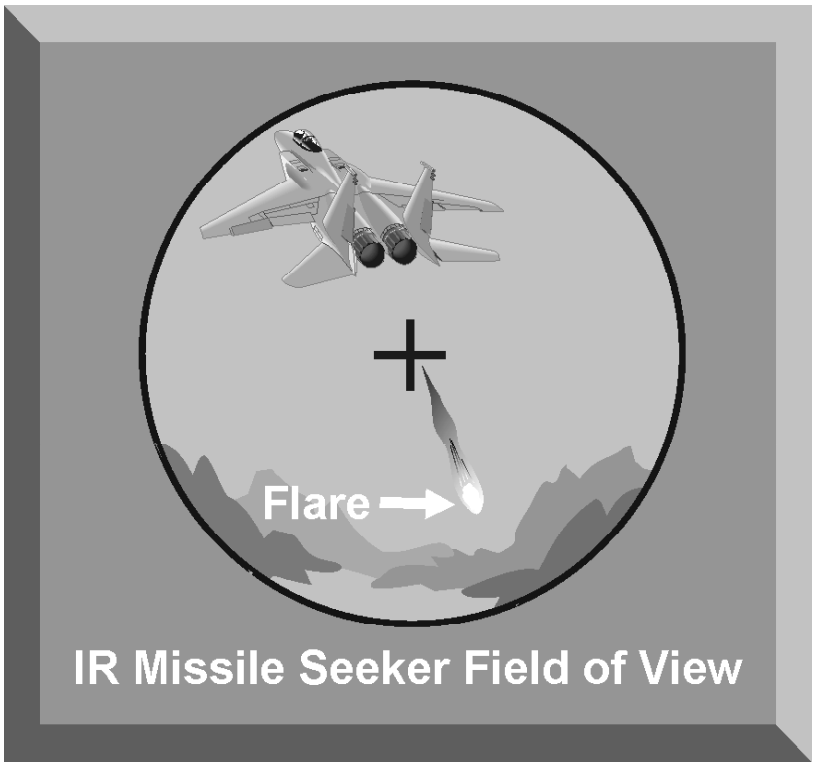

Figure 14-14. Impact of IR Missile Field of View

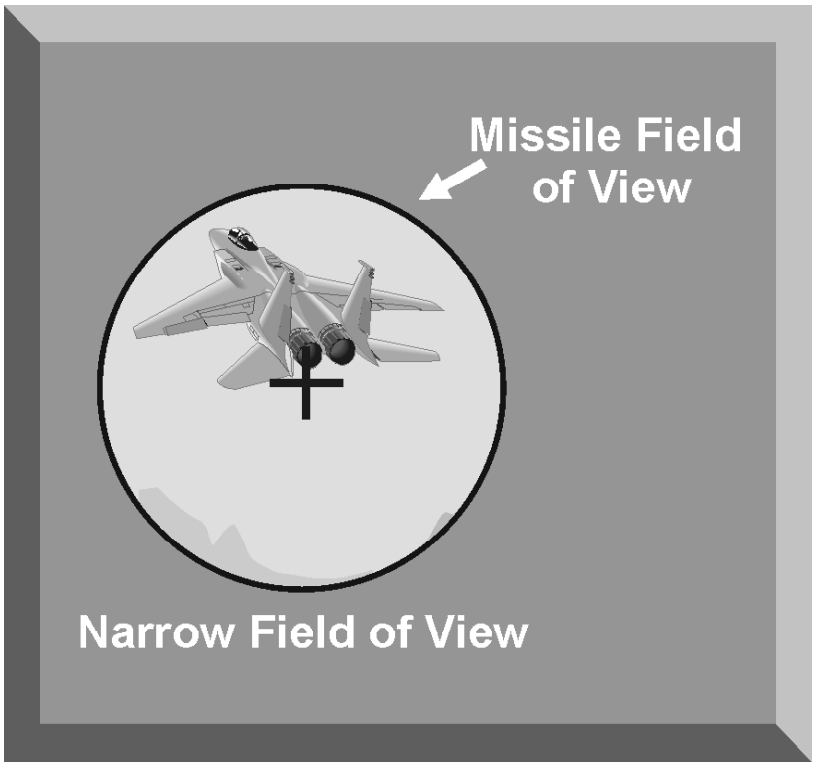

Figure 14-15. IR Missile – Narrow Field of View

(4) The detector also influences the ability of an IR missile to discriminate target IR from background IR. Newer IR seekers can track longer wavelength IR radiation. The seeker's ability to track through a wider frequency range forces flares to decoy that wider frequency range to be successful. Additionally, the cooled seeker's ability to track from all angles could cause geometry problems, the missile may never see a flare ejected from the bottom rear of an aircraft.

b. IR missile designers have combined computer signal processing and modern IR missile seekers to detect the presence of flares and reject them as targets. This flare rejection capability, or IR counter-countermeasure (IRCCM), allows newer IR missiles to track the aircraft IR signature while rejecting multiple flares. Flare rejection is based on two computer functions. The first is called the "trigger," which detects the flare in the seeker field of view. The "trigger" function activates the "response" computer processing, the action the seeker takes to reject the flare. Both the "trigger" and "response" must operate to successfully reject flares. Each advanced IR missile employs different computer techniques for both the "trigger" and "response." A flare technique developed to counter one IR missile may not work against another IR missile that uses different flare rejection computer techniques.

(1) There are several "trigger" techniques that can be used by IR missiles to detect flares. Advanced IR missiles may employ one or more of these techniques to detect the presence of a flare in the seeker FOV. These "trigger" techniques include rise time, two-color, kinematic, and spatial.

(a) An IR missile using a rise time "trigger" monitors the IR energy level of the target. A sharp rise in the received IR energy within a specified time limit indicates a flare in the IR seeker FOV. When the missile detects this rapid rise in IR energy, the rise-time "trigger" triggers a flare "response." The "response" is switched off when the received IR energy drops to its original level. The thresholds for the rise in IR energy and the response time are set to preclude activating the rise time "trigger" when the aircraft selects afterburner. An IR missile using the rise time "trigger" can be decoyed by multiple flares with slow rise times.

(b) IR missiles using a two-color "trigger" to detect flares sample the energy level in two different wavelength bands. In Figure 14-16, a non-afterburning target would have more IR intensity in band B than in band A. The typical flare produces more IR intensity in band A than band B. A sudden increase in band A intensity compared to band B intensity indicates a flare in the seeker FOV. The two-color "trigger" would then trigger a flare "response." Advanced IR missiles using a two-color "trigger" can employ different detectors composed of different materials to monitor the intensity in two bands. A lead sulfide detector could be used for band A and indium antimonide for band B. IR missiles using a single detector can employ a reticle with different bandpass filters to monitor IR intensity in both bands. To track the target, IR missiles employing a two-color "trigger" may use either band, or use data from both

bands of a dual-channel tracker. An IR missile using the two-color "trigger" can be decoyed by multiple flares that provide equal IR intensity in each band.

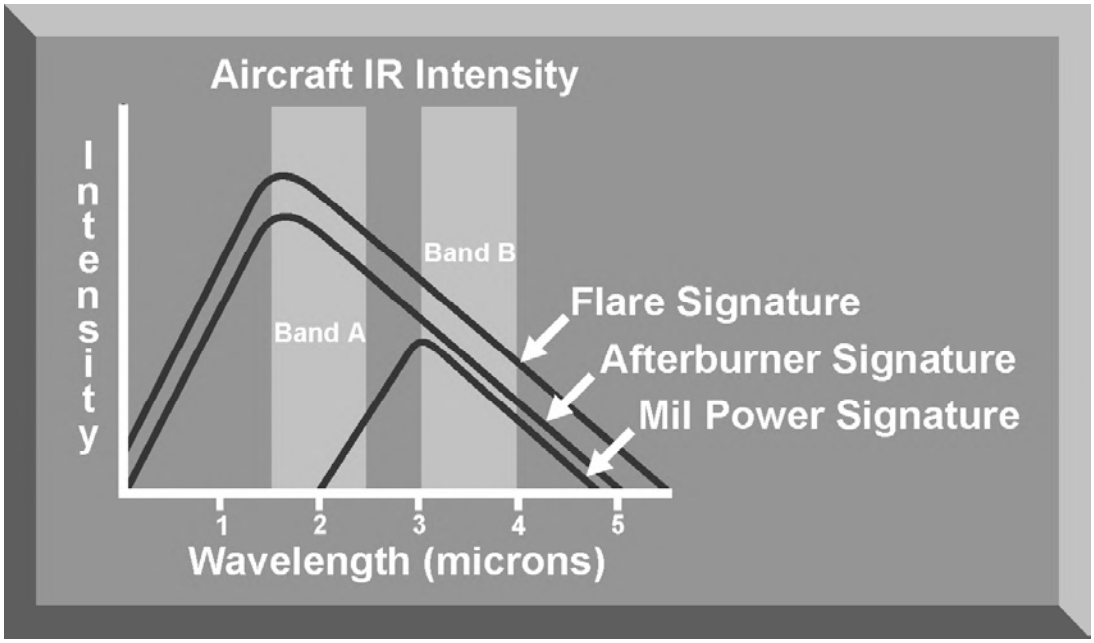

Figure 14-16. Two-Color IR "Trigger"

(c) A kinematic "trigger" takes advantage of the fact that flares separate very quickly from the dispensing aircraft due to aerodynamic drag. In a beam aspect engagement, an IR seeker that transfers track from the target to the flare will have a dramatic change in the line-of-sight rate due to the rapid separation of the flare from the aircraft. An IR missile employing a kinematic "trigger" detects this change and initiates the "response." IR missiles employing a kinematic "trigger" may have difficulty in flare detection in a head-on or stern engagement due to the small line-of-sight change between target and flare. Multiple flares dispensed at very short intervals will probably decoy an IR missile employing a kinematic "trigger".

(d) The spatial "trigger" operates like the kinematic "trigger" in that it uses the rapid separation of the flare from the aircraft to trigger the "response." An IR missile employing a spatial "trigger" uses the seeker to detect a flare. When the flare separates to the rear of the aircraft, the seeker will see the target on the edge of the FOV corresponding to the direction of target movement. The flare will be on the opposite side of the FOV. Once two hot objects on opposite sides of the FOV are distinguishable, the spatial "trigger" triggers the flare "response." IR missiles employing a spatial "trigger" can be decoyed by dispensing multiple flares at very short intervals.

(2) The seeker's "response" to the "trigger" is to reject the flare or limit its effect on target track. As long as the flare remains in the seeker FOV, the missile

is tracking the target in a degraded mode. Most IR seekers have a FOV of less than 2.5°. At long ranges, the flare will remain in the FOV for a relatively long period of time. At close range, the flare will be in the missile FOV for a relatively short period of time. Several different "response" techniques may be used, either alone or in combinations, to defeat a flare. These "response" techniques include simple memory, seeker push-ahead, seeker push-pull, and sector attenuation.

(a) When the simple memory "response" is initiated, the missile continues the maneuver it was performing just before the "trigger." This "response" assumes the flare will separate to the rear of the target. The missile rejects the seeker track data and maintains its motion relative to the target, waiting for the flare to leave the seeker FOV. The missile will continue to reject track data until the flare leaves the FOV or until the "trigger" times out. When the "trigger" times out, the "response" is discarded and the seeker operates in the normal track mode. If the "trigger" times out while a flare remains in the FOV, the seeker will usually transfer lock to the flare.

(b) The seeker push-ahead "response" causes the seeker gimbals to drive the seeker forward in the direction the target is moving (Figure 14-17). Pushing the seeker forward causes the flare to depart the FOV faster than with simple memory, minimizing the amount of time the missile is not tracking the target. The greater the amount of forward movement (called "bias"), the faster the flare will depart the FOV. If the amount of forward bias applied is too great, the seeker may be pushed forward of the target. This could cause both the target and the flare to depart the FOV and the missile would have to reacquire the target.

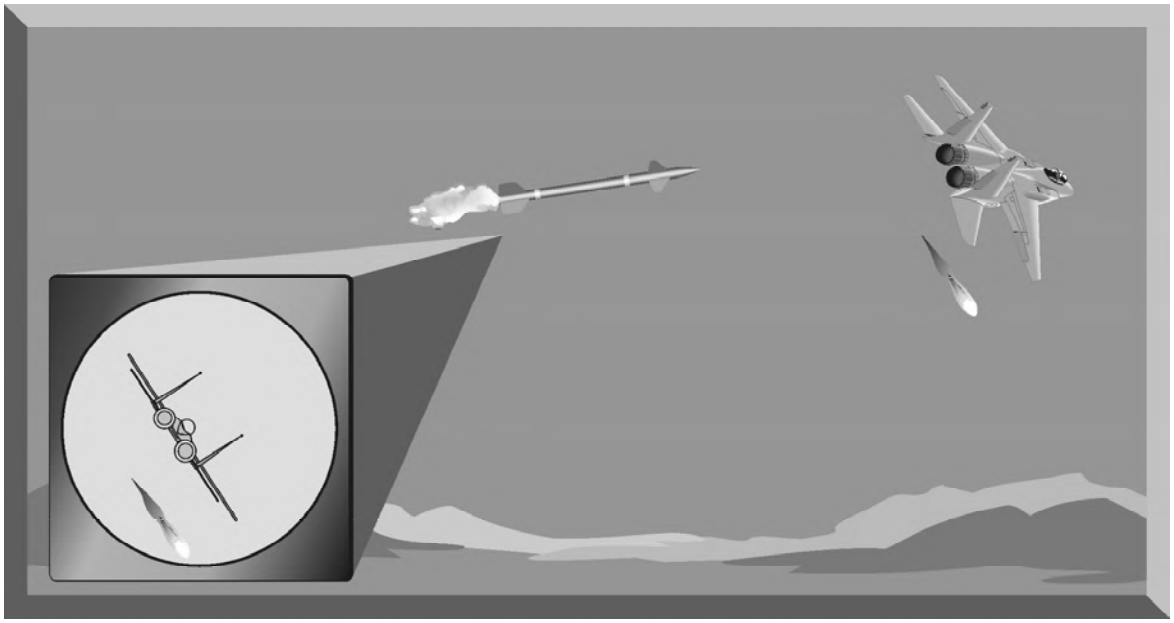

Figure 14-17. Seeker Push-Ahead "Response" Technique

(c) The seeker push-pull "response" assumes flares will have a higher intensity IR signature than the target. The "response" is initiated when the target and flare are on opposite sides of the seeker FOV (Figure 14-18). This corresponds to a spatial "trigger" condition. The received energy will rise and fall as the energy of the target and flare is scanned across the detector. When the flare energy is at a peak, the seeker gimbals drive the seeker away from the flare. When the lesser energy from the target is detected, the seeker's gimbals pull the seeker in the direction of the target. As a result, the seeker is moved away from the flare and toward the coolest IR source in the FOV, the target aircraft.

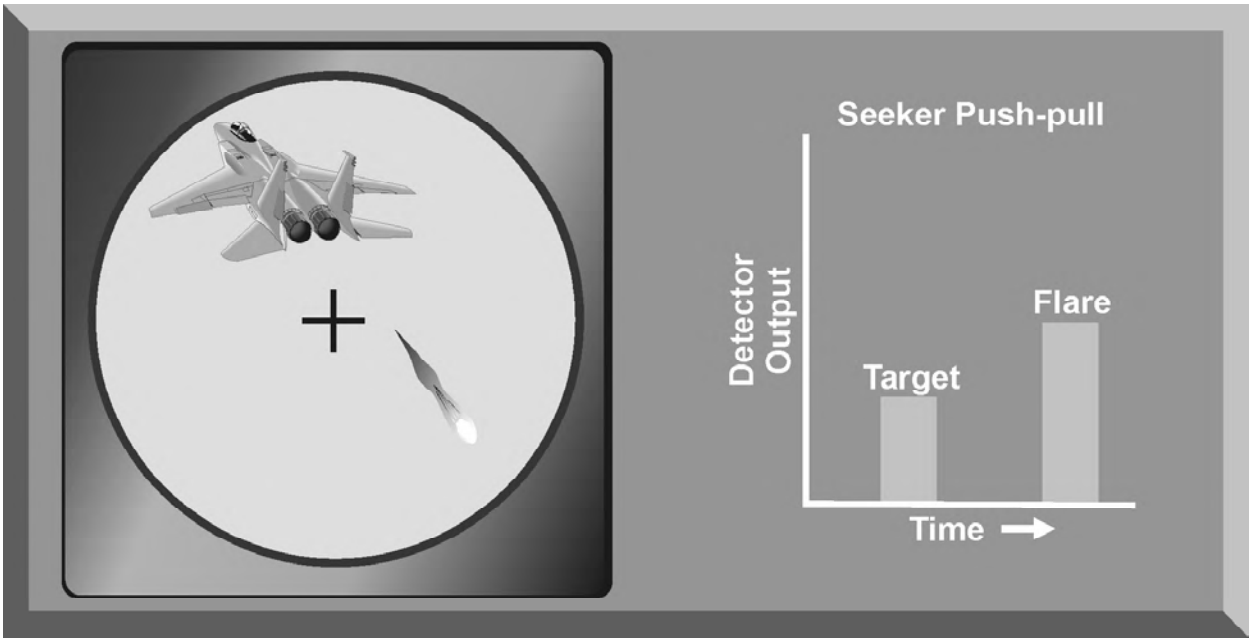

Figure 14-18. Seeker Push-Pull "Response" Technique

(d) The sector attenuation "response" is initiated by placing an attenuation filter across part of the seeker FOV (Figure 14-19). This filter reduces the seeker sensitivity in that part of the FOV. If the target being tracked is in the center of the FOV, then placing an attenuator in the quadrant below and to the rear of the target should reduce any energy received from a flare. If the attenuated flare energy is below that of the target energy, the seeker will continue to track the target.

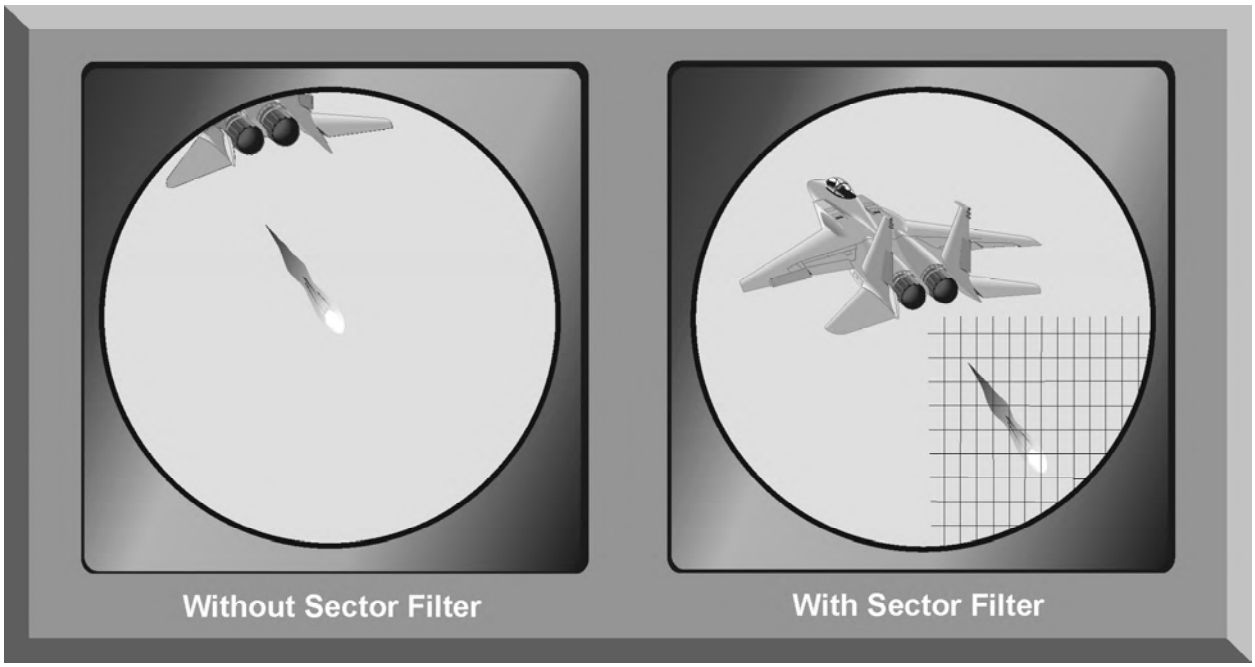

Figure 14-19. Sector Attenuation "Response" Technique

7. SUMMARY

This chapter provided some background on IR theory and IR detection, then went into some of the basics about the different types of IR missile seekers. Finally factors that impact the ability of an IR missile to reduce the effectiveness of self-protection flares were discussed. This ability depends on the discrimination capabilities of the missile seeker, the type of detector, the missile FOV, and the missile flare rejection capabilities. Modern IR missiles that employ sophisticated flare rejection techniques and advanced missile seeker technologies present a growing, and potentially lethal, threat.

CHAPTER 15. IR COUNTERMEASURES

1. INTRODUCTION

Defeating IR missiles used to be an afterthought placed well behind surviving the radar missile threat. Now with the proliferation of advanced IR missiles, defeating the IR threat is becoming more important and more difficult. The primary countermeasure used to defeat IR missiles is the self-protection flare. This chapter will discuss flare characteristics and employment considerations. One of the main difficulties in defeating an IR missile is knowing that one has been launched. This chapter will also discuss some of the methods currently available to detect an IR missile attack.

2. FLARE CHARACTERISTICS

Self-protection flares were developed to counter threat systems operating in the IR spectrum. Self-protection chaff and flare dispensers, such as the ALE-40, ALE-45, or the ALE-47, are designed to allow the pilot to dispense flare cartridges when engaged by an IR threat. These flare cartridges are pyrotechnic and pyrophoric devices designed to produce an IR source that is more attractive than the IR signature of the aircraft. To decoy an IR missile seeker, the flare must create a heat source more attractive than the aircraft, within the missile field of view. The most important flare characteristics that determine the ability of a flare to decoy an IR missile are IR wavelength matching, flare rise time, and flare burn time. The MJU-7 flare cartridge will be used as an example of a typical flare cartridge.

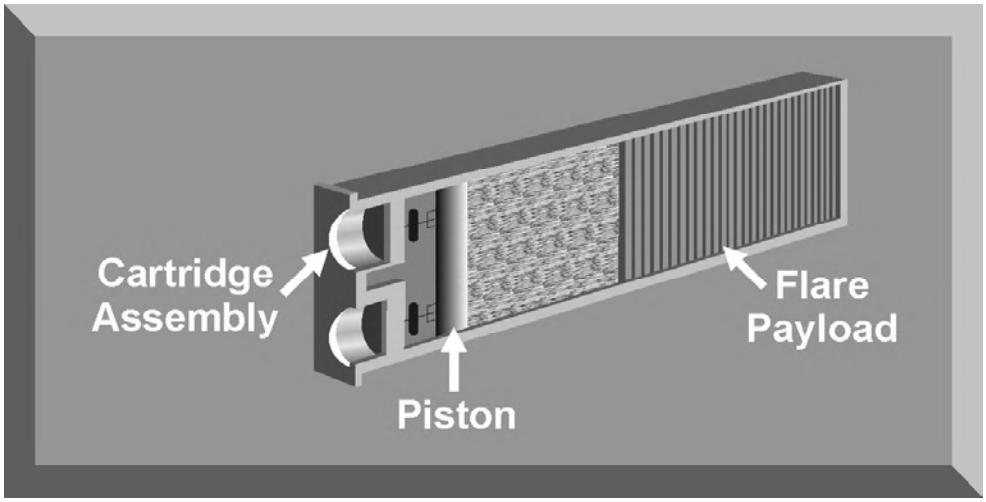

Figure 15-1. The MJU-7 Flare

a. The MJU-7 flare cartridge (Figure 15-1) is an example of a flare cartridge used in both the ALE-40 and the ALE-47 dispensers. The flare grain is composed of magnesium and tetraflouroethylene, or C_2F_4, which burns at 2000 to 2200°K. As the flare burns, it emits IR energy of different wavelengths from the luminous zone that emulates the aircraft IR signature. The burning flare also produces a large quantity of white smoke, which may highlight the position of the dispensing aircraft.

b. A flare must reach peak intensity shortly after ejection or it will not be effective in decoying the IR missile seeker. Flare rise time is the time required for the flare to reach peak intensity.

(1) To counter a short-range IR missile with a narrow field of view, a flare must reach peak intensity quickly. On the other hand, some advanced IR missiles now look for a rapid rise in IR energy as a trigger to know when a flare is trying to decoy it (Figure 15-2).

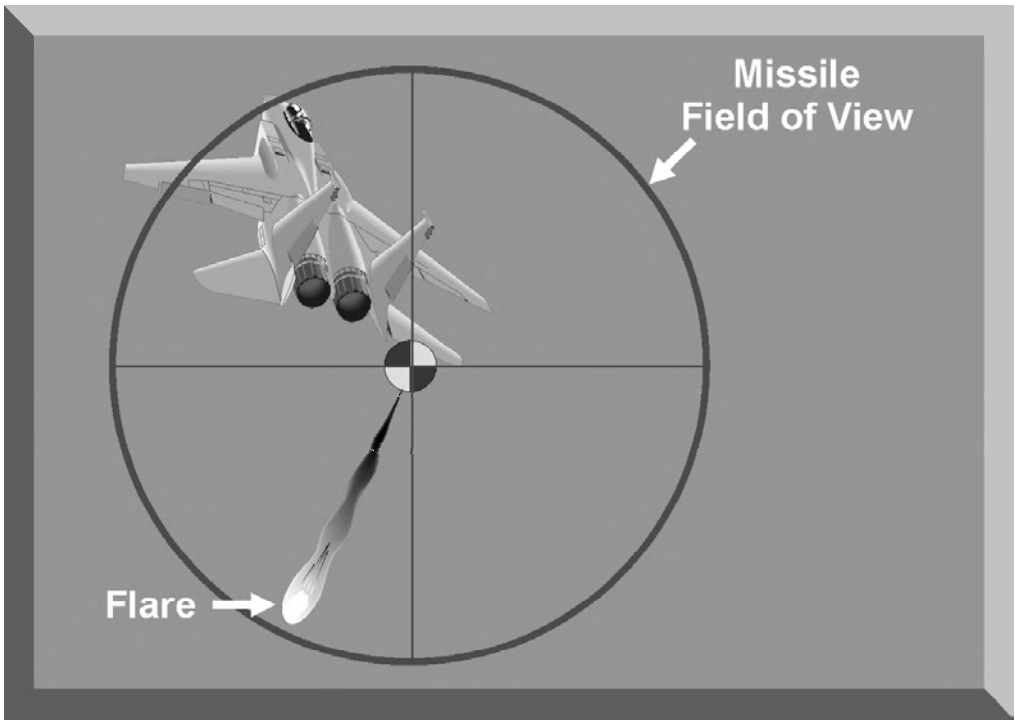

Figure 15-2. Impact of Flare Rise Time

(2) Flare rise time varies dramatically with altitude. The flare burns longer at high altitude, but it takes much longer to reach peak intensity. This increase in flare rise time at high altitude can impact the effectiveness of flares to decoy and defeat IR missiles particularly in the air-to-air combat environment.

c. Flare burn time is the time span that the flare burns and determines how far the IR seeker will be pulled off the target. The longer the burn time, the longer the

IR seeker is pulled off the target aircraft. The flare should burn long enough to ensure that the aircraft is no longer in the missile field of view. Flare burn time, like flare rise time, varies with altitude. A flare will burn longer, but at lower intensity, at higher altitudes. A longer flare burn time increases the probability the IR missile will be decoyed by a single flare.

3. ADVANCED FLARES

To counter the advances in IR missile seeker technology the Air Force and Navy formed the Advanced Strategic and Tactical Expendables program to develop and field advanced IR decoys. Two products to come out of this program are the kinematic flare, MJU-47, and the covert flare, MJU-50/51.

a. Kinematic Flares. A significant characteristic of conventional flares is that upon ejection they rapidly slow down and separate from the aircraft. As described in Chapter 14, modern IR missiles exploit this rapid separation between the aircraft and the flare. The rapid separation triggers a flare rejection response in the missile seeker causing it to ignore the flare and continue tracking the aircraft. The kinematic, or thrusted, flare delays the missile response by propelling itself in the direction of the aircraft and negating or delaying the missile's flare rejection trigger. The MJU-47 is the same size as the currently fielded MJU-10 flares. The flare's decoying pyrotechnics are vectored out the end of the flare to provide a means of propulsion (Figure 15-3).

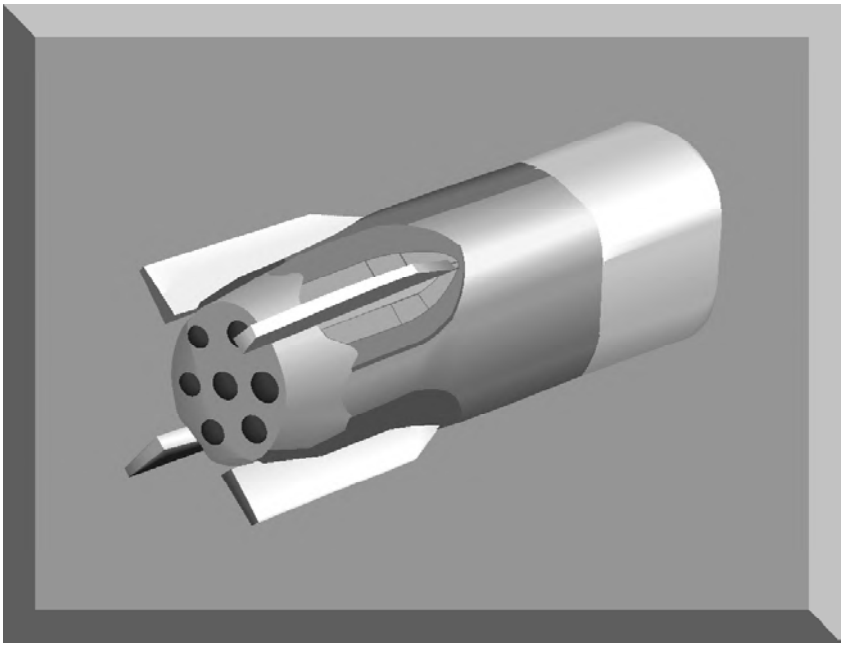

Figure 15-3. Kinematic Flare

b. Covert Flares. Though an effective tactic at defeating MANPADS, pre-emptively dropping flares in a target area carries a significant risk. The risk is that enemy air defense systems that may not have known the aircraft's location will surely see the flares, day or night, and any chance for surprise is lost. Figure 15-4 shows the visual signature of conventional flares. The danger of highlighting oneself becomes even more likely as aircraft become fitted with chaff and flare systems that automatically dispense expendables based upon inputs from the RWR or a missile attack warning system (MAWS). Automatic systems tend to error on the side of caution which means expendables will be dropped if there is any ambiguity. Visually covert flares, named the MJU-50 and MJU-51, remove this problem by not leaving a visual signature such as smoke or flame. These covert flares are made of material that oxidizes, pyrophoric instead of pyrotechnic, when released in the air. The MJU-50 is the size of the small M-206 flare while the MJU-51 is the size of the MJU-7 flare.

Figure 15-4. Flare Visual Signature

4. FLARE EMPLOYMENT

The purpose of employing a self-protection flare cartridge is to decoy the seeker head of an IR missile. This is accomplished by presenting the IR missile with a second heat source with an IR signature that exceeds the aircraft signature. The flare or IR source must appear in the field of view of the IR missile at the same time as the aircraft. As the flare separates from the aircraft, the IR missile seeker tracks the most intense IR signature, which ideally is the flare, and is decoyed away from the aircraft.

a. It is important to perform maneuvers along with flare employment to effectively defeat IR missiles. Maneuvers compound the IR missile's tracking problems and increase the distance between the aircraft and flare. Maneuvers that put the aircraft outside the IR missile field of view increase the ability of the flare to decoy the missile. When engaged by an IR threat, one tactic is to immediately dispense a flare and maneuver to put the missile on the beam. This increases the line-of-sight rate the missile guidance system must process and gives maximum separation between the aircraft and the flare (Figure 15-5).

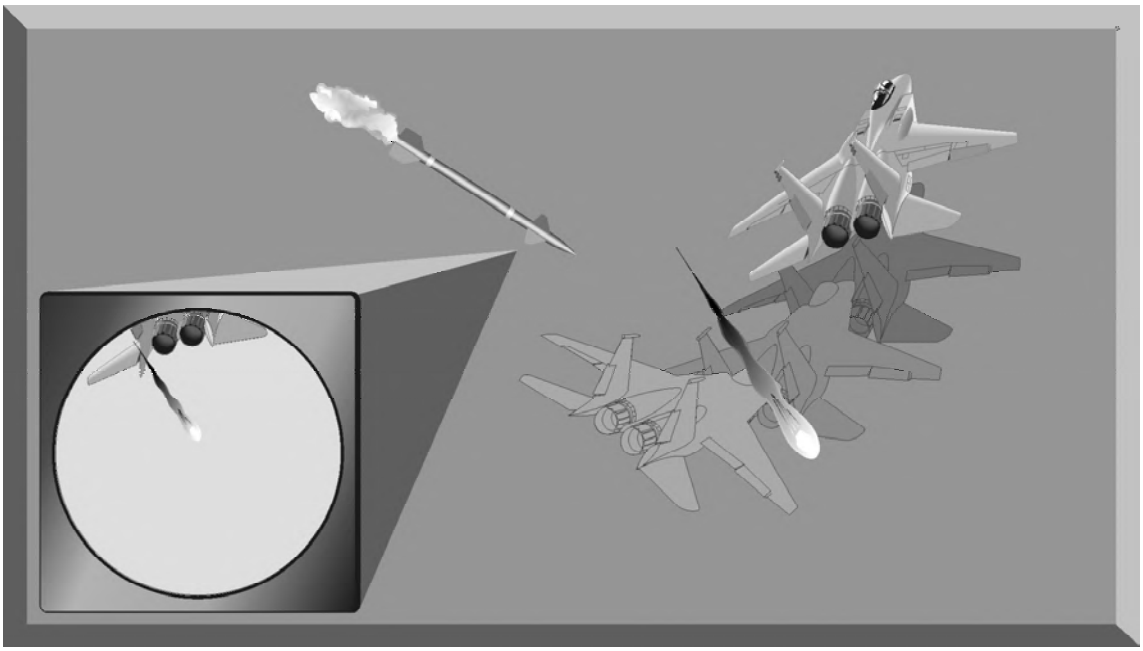

Figure 15-5. Initial Maneuver and Flare Employment

b. With the IR threat on the beam, the pilot has the best chance for achieving a "tally-ho" on the missile to determine range and keep the missile on the beam. Visually acquiring the missile increases the chances of surviving the encounter. Modern chaff and flare dispensers, such as the ALE-47 and ALQ-213, can be programmed to dispense flares in a sequence optimized to defeat specific IR missiles. Programs are selected by the pilot based upon the most likely threat. Classified tactics manuals provide aircraft specific maneuvers and flare dispensing programs to defeat the IR threat.

5. IRCM TACTICS

Besides maneuvers and flare employment, there are other IR countermeasures that can reduce the effectiveness of IR threat systems. The first is to reduce the intensity of the heat signature of the aircraft by reducing the power setting. The engines produce the largest IR signature and are the only source of IR radiation that the pilot can influence. By reducing the power setting, the IR signature is

reduced and the required flare intensity is thereby reduced. Use of afterburner should be minimized for exactly the same reason; the required flare intensity necessary to cover an aircraft in afterburner is difficult to obtain. The pilot should not reduce the power setting below the minimum required to maintain sufficient maneuvering airspeed.

a. Another effective IRCM is to use the sun. Maneuvering into the sun masks the aircraft's IR signature from most IR threat systems. When attacking a target defended by IR systems, an attack axis that places the sun behind the attacker may limit the effectiveness of these systems.

b. Clouds or smoke can also confuse IR threat systems (Figure 15-6). The water vapor making up clouds diffuses the IR energy making it difficult for an IR system to get a point to track, similar to how sun's light is diffused on a cloudy day. The particles found in smoke can have a similar effect on IR energy. The final IRCM is to reduce the IR signature of the aircraft by careful design of the engines and exhaust system. For example, the F-117 was specifically designed to provide the lowest possible IR signature.

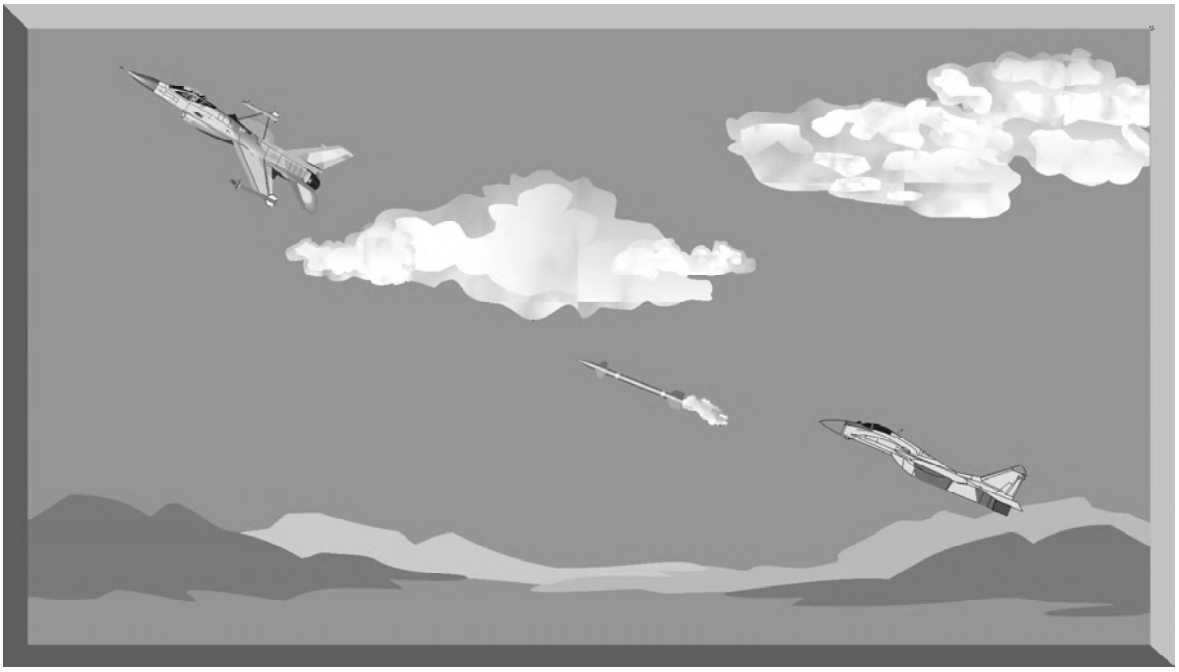

Figure 15-6. IRCM

6. MISSILE APPROACH WARNING SYSTEMS (MAWS)

One of the most important factors in defeating an IR missile attack is knowing that an attack is in progress. Since IR threat systems are generally passive, the radar warning receiver (RWR) will provide no attack warning unless the threat uses some detectable radar energy for acquisition prior to launching an IR

missile. MAWS are designed to provide the crew some warning of an ongoing missile attack. These systems have been widely deployed on larger aircraft. Advances in technology allowing them to be smaller and promising lower false alarm rates have increased the possibility that fighter size aircraft may be outfitted with this equipment.

a. The two primary requirements for MAWS are timeliness and reliability. An IR missile engagement is an extremely short event providing very little time for the targeted aircraft to respond with maneuvers and flares. Secondly, there must be a very low false alarm rate. In earlier systems the sun, flares, or the wingman's aircraft have been known to cause false alarms. Aside from being annoying, a false alarm can become a tactical problem if the MAWS is tied directly into the countermeasures dispenser set allowing for automatic dispensing of chaff and flares when the MAWS senses an attack. False alarms in this type of scenario would only serve to highlight a previously untargeted aircraft.

b. MAWS detect incoming missiles either actively or passively. The active MAWS use a pulse Doppler radar to detect and track the in-flight approach of an attacking missile. Pulse Doppler radar is used for this purpose because of its ability to use relative velocity to pull targets out of clutter. An incoming missile will have a high velocity relative to the surrounding background. Range and time to impact are computed automatically, updated continuously, and provided to the crew to assist in defensive maneuvers (Figure 15-7). The down side to active MAWS is the requirement to continuously radiate for long periods of time to ensure protection. This contradicts the common tactic of keeping radar transmissions to a minimum to avoid being tracked via passive detection measures. This situation has led to the latest generation of MAWS being mostly of the passive type.

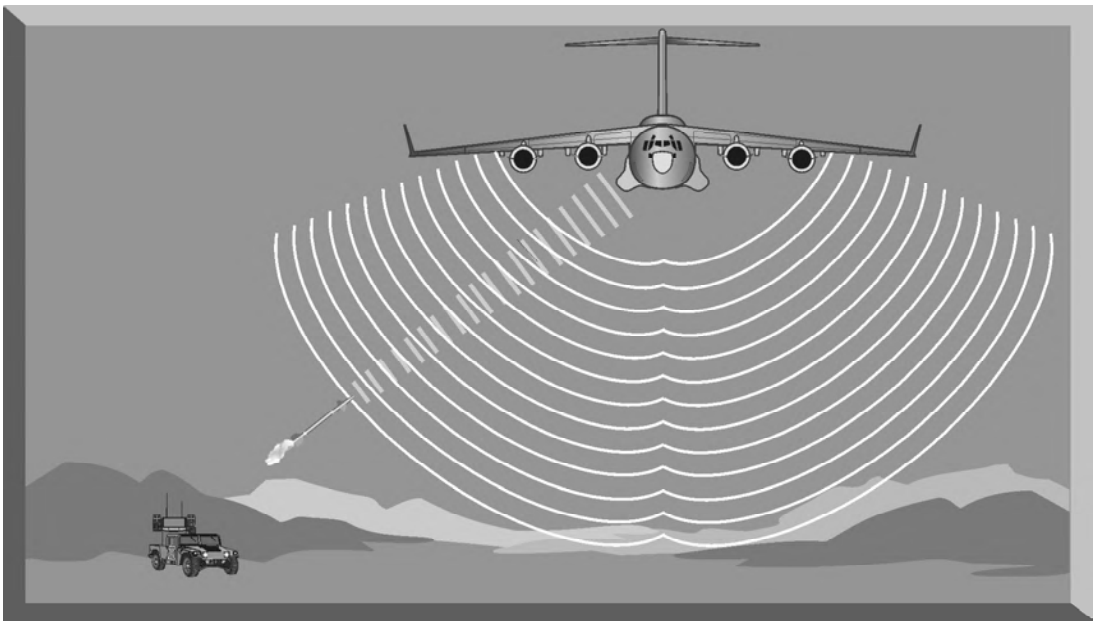

Figure 15-7. Missile Alert Warning System (MAWS)

c. The passive MAWS operate in either the ultraviolet, or the infrared frequency spectrum. These systems are tuned to look for the IR signature of a missile's rocket motor, then pass a warning and the position of the inbound threat to the pilot. To obtain all-aspect missile warning, multiple MAWS sensors must be positioned on the aircraft in a similar fashion to RWR antennas. All-aspect MAWS face the same challenges that RWR systems face: false multiple targets due to maneuvers and accurate threat position reporting, to name a few.

7. SUMMARY

The proliferation of IR threat systems has elevated the importance of IRCM to survival on the modern battlefield. The most effective IRCM is still the employment of flares in conjunction with maneuvers. The specific flare characteristics of IR spectrum coverage, rise time, and burn time are critical factors in determining flare effectiveness. Other IRCM tactics are designed to enhance the effectiveness of flares and take advantage of IR missile limitations. The effectiveness of all IRCM tactics depends on some type of attack warning. The new generation of MAWS should provide some measure of warning to the crews and in some cases automatically defeat the IR missile.

CHAPTER 16. RADAR ELECTRONIC PROTECTION (EP) TECHNIQUES

1. INTRODUCTION

Electronic warfare (EW) is defined as military action involving the use of electromagnetic and directed energy to control the electromagnetic spectrum or to attack the enemy. Nearly every military action, from command and control of an entire integrated air defense system (IADS) to precision guidance of an individual weapon, depends on effective use of the electromagnetic spectrum. Radar systems have become a vital element of nearly every military operation. Since these systems operate across the entire electromagnetic spectrum, much of the EW effort is concerned with countering radar systems. All of the jamming techniques discussed in Chapters 10 and 11 and the chaff employment options discussed in Chapter 13 are specifically designed to counter radar systems. These actions are classified as electronic attack (EA), which is a part of EW.

a. EW is somewhat like a chess game—a series of moves and countermoves within the electromagnetic spectrum. As we develop jamming techniques to counter radar systems, our adversaries develop counter-countermeasures to negate the effectiveness of these techniques. In response, we develop newer techniques and our adversaries respond with new modifications to their radar systems. This series of moves and countermoves can continue for decades. The development and application of radar counter-countermeasures are classified as electronic protection (EP), also a part of EW.

b. The continuing battle to control the electromagnetic spectrum for unrestricted radar employment has resulted in over 150 radar EP techniques. These techniques are designed to negate the effectiveness of electronic jamming and chaff on radar systems. These radar EP techniques can be incorporated into the design of a radar system or added to an existing radar system in response to a jamming technique. It is beyond the scope of this text to discuss all the radar EP techniques in use today. This chapter will discuss the most common EP techniques. They have been organized by function of the technique within the radar. These functions include radar receiver protection, jamming avoidance, jamming signal exploitation, overpowering the jamming signal, pulse duration discrimination, angle discrimination, bandwidth discrimination, Doppler discrimination, and time discrimination.

2. RADAR RECEIVER PROTECTION

The following are some of the most common radar counter-countermeasures designed to prevent receiver overload or saturation.

a. Sensitivity time control (STC) is used to counter close-in chaff or close-in clutter. Receiver gain is set at normal for long ranges and reduced for close-in ranges. One problem with using STC is that close-in targets may be missed if STC is improperly adjusted.

b. Automatic gain control (AGC) is used to counter chaff, clutter, and most types of transmitted jamming. AGC senses the signal level of a receiver's output and develops a back-bias, producing a constant output level. This technique has a slow response time compared to fast AGC and instantaneous AGC, both of which are employed instead of AGC. Also, it cannot maintain correct IF output levels for different intensity signals that are close in range because the bias voltage has a long buildup and decay time.

c. Fast automatic gain control (FAGC) is also employed against chaff, clutter, and most types of transmitted jamming. FAGC works by sensing the signal level of receiver output and develops a back-bias, tending to hold output constant. Response time is within milliseconds, permitting fast response and recovery as the antenna traverses the jammer's bearing. There are several precautions to note when using FAGC. First, targets may be suppressed and lost without the operator knowing that jamming is present. Second, a strong pulse or echo may cause ensuing weak targets to be lost. Lastly, FAGC has difficulty getting an accurate bearing on the jamming source.

d. Instantaneous automatic gain control (IAGC) is another technique to counter chaff, clutter, and most types of transmitted jamming. IAGC senses the signal level of each echo or jamming pulse and develops a back-bias that holds the stage output constant. Gain control response time is within milliseconds and extends the dynamic range of the receiver. There are several precautions to note when using IAGC. First, it is not effective against signals whose "in band" time is less than the IAGC response time. Also, with continuous duty cycle jammers, targets may be lost without the operator knowing that jamming is present. Finally, it is difficult to get an accurate bearing on the jamming source.

e. Automatic noise leveling (ANL) counters noise jamming and modulated or unmodulated constant wave jamming. ANL samples receiver noise content at the end of each PRF and sets the gain accordingly for the next pulse interval. Continuous jamming reduces gain to keep output the same as the original noise level. ANL also follows the scanning rate of the antenna so that receiver noise output is constant as the antenna rotates. When using ANL, targets may be suppressed and lost without the operator knowing that jamming is present. Also, receiver gain is unstable when pulses or swept jamming enter the sampling gate intermittently.

f. The logarithmic receiver (LOG) counters most types of transmitted jamming by amplifying and demodulating large dynamic-range signals in logarithmic amplifiers. This produces "amplitude compression" of the strong

signals. However, when using LOG, output is nearly constant so the operator cannot easily tell when jamming is present.

g. The logarithmic receiver with fast time constant (LOG-FTC) counters narrowband jamming, chaff, and clutter. This technique amplifies and demodulates large dynamic-range signals in logarithmic amplifiers, producing "amplitude compression" of the strong signals. Video is coupled through FTC circuits to eliminate rectified carrier and low frequency sideband products. There are problems with using LOG-FTC. First, the receiver output is nearly constant, so the operator cannot always tell when jamming is present. Second, LOG-FTC is not effective against wideband, or fast-swept, short pulse jamming. Lastly, LOG-FTC causes a broadening of displayed jam sector. as well as degrading bearing accuracy on the jam source.

h. Dicke-fix (DF) counters wideband and fast-swept jamming and is similar in employment to wideband limiting (WBL). DF amplifies without ringing, clips down all pulses to a common level, then amplifies the narrowband echo signal more than the wideband jamming. Noise level is held constant, independent of jamming intensity. There are precautions to note when using DF. Jamming that enters the wideband limiter can capture limiters, causing poor receiver sensitivity. Targets may be suppressed without the operator knowing that jamming is present. Also, resolution and target detection range are reduced, even in a non-jamming environment. Finally, DF is ineffective against extremely fast-swept spot jamming.

i. WBL is used to counter wideband jamming and fast-swept jamming. WBL amplifies without ringing, clips down all pulses to a common level, then amplifies the narrowband echo signal more than the wideband jamming. Noise level is held constant, independent of jamming intensity. However, jamming that enters the wideband limiter can capture limiters and cause poor receiver sensitivity. Resolution and target detection range is reduced, even in a clear environment. Targets may be suppressed without the operator knowing that jamming is present. Finally, WBL is ineffective against fast-swept spot jamming.

j. Adaptive video processing (AVP) counters chaff corridors, weather, sea clutter, and most types of transmitted jamming. AVP combines the adaptive threshold, beam-to-beam correlation, and wide-pulse blanking in frequency-scanning three-dimensional radars to avoid collapsing undesired returns on the PPI display. However, when using AVP, there is a decreased probability of detection in some multiple target situations. Also, targets may be suppressed without the operator knowing that jamming is present. Finally, AVP passes all point targets.

3. JAMMING SIGNAL AVOIDANCE

The following are some EP techniques used to avoid jamming signals.

a. Frequency agility (FA) counters narrowband jamming and some types of repeater and deception jamming. FA enables the radar to make rapid changes of transmitter and receiver operating frequency, sometimes on a pulse-to-pulse basis. Manual frequency changes may cause mutual interference with other radars and services.

b. Frequency diversity works against narrowband jamming and some types of repeaters and transponders. It is a multiple-radar coordination procedure in which radars are assigned operating frequencies that are separated to reduce mutual interference and their susceptibility to a single jammer. It is important to note that other radars may be operating at the same allocated operating frequency.

c. Polarization diversity is used to counter chaff, weather, and transmitted jamming. Polarization diversity attenuates jamming input to a radar receiver by using antenna polarization different from jammer polarization, and usually involves separate radars of different polarization. There are two precautions when using polarization diversity: (1) ground clutter worsens on vertical polarization, and (2) close coordination is necessary if separate radars are used; for example, one horizontally polarized search radar and one vertically polarized search radar.

d. Circular polarization (CP) works against chaff, weather, and transmitted jamming. CP attenuates jamming input to a radar receiver by using antenna polarization different from jammer polarization, and usually involves separate radars of different polarization. CP also improves target detection in rain clutter.

e. Conical-scan-on-receive-only (COSRO) is employed against inverse conical scan jamming to deny a jammer the ability to sense and upset scan angle tracking information. A constantly transmitted illumination beam is received and scanned to derive target angle information. However, the jammer can still degrade angle tracking if it can approximate the received signal scan rate.

f. Speedgate tracking is used against all types of transmitted jamming. The technique provides a very narrow bandpass having a center frequency related to Doppler shift. Only jamming within the restricted band is effective. It has the advantages of accurate target Doppler discrimination and good target tracking at low target levels. However, the speedgate can be stolen by gate stealers and some types of swept jamming.

g. Leading-edge track (LET) is used to counter an incoming target dropping chaff by allowing target tracking on the leading edge of the target. Trailing edge track (TET) is used to counter a receding target dropping chaff.

h. Track coast is used to counter chaff, clutter, multiple targets, range gate stealers, jam fades, and blinking jamming by placing tracking radar in a rate-aided coast condition. The system "estimates" target position to avoid interrupting the fire control solution. A lock-on or return to acquisition mode terminates the track coast condition. Track coast requires adequate storage of rate-aided information, and no true tracking information will be developed while track coast is operating.

i. Guard gates work against chaff, clutter, multiple targets, range gate stealers, jam fades, and blinking jamming. Guard gates provide automatic detection of a foreign signal and "estimates" target position to avoid interrupting fire control solutions. Like track coast, guard gates require an adequate store of rate-aided information with no true tracking information developed.

4. JAMMING SIGNAL EXPLOITATION

The following are some EP techniques that use the jamming signal for target acquisition and engagement.

a. Passive angle tracking (PAT) counters most types of transmitted jamming by allowing the radar to acquire and angle-track the source of jamming signals. There are some problems with this technique. Blinking jamming can cause severe instability, and the range of the jammer is unavailable until the target reaches burnthrough range.

b. Home-on-jamming (HOJ) counters most types of transmitted jamming by allowing the missile or radar to use the jamming signals, locate the source, and home on it. However, blinking jamming can cause severe instability, and the range of the jammer is unavailable until burnthrough.

c. Jamming signals produce recognizable sounds that help in their detection and identification. Aural recognition allows an operator to listen to the Doppler frequency associated with a moving target. It is used to counter most types of jamming.

d. The local oscillator off technique counters continuously transmitted jamming. No receiver output occurs unless a target echo signal and a jamming signal are present. Limitations of this technique include: targets only display in an area where jamming is present; and, if the antenna rotates away from the jammer, or if jamming is turned off, no targets are displayed on the radar scope.

e. The jamming strobe indicator counters any transmitted jamming with high-duty-cycle modulation. The indicator is a variable marker strobe on the radar display that moves in range proportional to jamming strength. The indicator traces an antenna lobe pattern on the display, showing the azimuth of the jamming source. There are some problems with the jamming strobe indicator. First, it interrupts normal video in some radars. Second, inverse or sidelobe

jamming can cause erroneous strobes. Finally, the jam strobe does not react to unmodulated CW or low-duty-cycle jamming for some radar systems.

f. The jamming indicator lamp, located on the operator console, is used on radars with automatic noise leveling (ANL) to counter continuous transmitted jamming. The lamp alerts the operator to the presence of jamming, and the ANL is manually shut off. This action allows the operator to determine jammer bearing.

g. Clean strobe generation (CSG) counters any transmitted jamming by using the sidelobe blanking circuits of a radar. An azimuth strobe appears when the jamming level in the main antenna exceeds the jamming level in the sidelobe auxiliary antennas. The operator is alerted to the presence and bearing of a jamming source, even with a constant false alarm radar (CFAR) receiver.

h. Jamming attenuation (JAM ATTEN) counters both clutter and any type of jamming. Receiver gain is reduced to avoid receiver saturation by inserting an attenuator pad that enables the operator to recognize presence, type, and bearing of a jamming source. When using JAM ATTEN, however, the reduced gain may cause loss of targets, even in non-jammed sectors. Also, any improvement in signal-to-jam ratio is not possible.

i. Receiver manual IF gain (MAN GAIN or IF GAIN) also counters clutter and jamming. Receiver gain is reduced to avoid jamming saturation by manually reducing stage gain, allowing the operator to identify jammer presence, type, and bearing. When using IF GAIN, the reduced gain may cause a loss of targets, even in non-jammed sectors. Also, any improvement in signal-to-jam ratio is not possible.

5. OVERPOWERING THE JAMMING SIGNAL

Following are some EP techniques a radar system can employ to overpower jamming and reduce the jamming-to-signal (J/S) ratio to less than one.

a. Burnthrough counters most types of transmitted jamming. Energy in the target pulse is raised by increasing the peak power, that is, the PRF or pulse width, or by increasing the time the radar illuminates the target by reducing the scan rate or scan angle. Some radars have modes in which the radar concentrates its power in narrow azimuth and elevation sectors about the suspected target position. However, burnthrough can degrade general radar performance by overloading the receiver if a large radar cross section target is detected. High power may impact radar operation in clutter or dense chaff environments.

b. Narrowband long pulse (NBLP or NLP) counters most types of transmitted jamming by using a high-energy long pulse. The signal uses a narrowband receiver for reception, and increases detection range for targets in jamming and

in the clear. Simultaneously, it reduces resolution, which causes poor radar performance in chaff and clutter.

6. PULSE DURATION DISCRIMINATION

The following are some radar counter-countermeasures that use pulse duration to discriminate between radar and jamming signals.

a. The fast time constant (FTC) is used to counter chaff, clutter, and narrowband jamming. A video circuit provides low frequency attenuation to reject carrier and low frequency modulation jamming. FTC passes normal radar pulse lengths with little attenuation, but causes some loss of receiver sensitivity.

b. Pulse width discrimination (PWD), clutter eliminate (CE), and wide pulse blanking (WPB) are designed to counter chaff, most types of jamming, EMI, and some types of deception jammers. A video coincidence gate, involving a delay line matched to the expected signal duration, senses if a return is the proper pulse width. PWD, CE, and WPB provide an enabling path for qualified signals. However, weak signals may be lost in the signal processing.

c. Pulse expansion-compression (PC) is used to counter most types of noise jamming and some types of deception jamming. An expanded pulse is coded for transmission. This expanded pulse is transmitted and decoded on return. Echo responses are then compressed in a decoding process. This expansion/compression is equivalent to NLP, which provides longer detection ranges, and wideband short pulse, which provides increased resolution. Using PC is not without problems. Unwanted residues may cause loss of weak targets. Additionally, range error proportional to the Doppler shift, or radial velocity, affects the accuracy of the PC.

7. ANGLE DISCRIMINATION

The following techniques use angle discrimination to distinguish between radar returns and jamming signals.

a. Sidelobe blanking (SLB) and sidelobe cancellation (SLC) are types of sidelobe suppression (SLS) used to counter sidelobe response to chaff, clutter, transmitted jamming, sidelobe jamming, and deception jamming. An auxiliary antenna approximates the pattern and gain of sidelobes of the main antenna and produces a signal for comparison with the signal received in the main antenna. If the signal in the auxiliary antenna is greater, the signal in the main antenna channel is blanked. This permits bearings to be obtained on a jamming source and rejects sidelobe jamming. SLB is useful only for determining the bearing to the jamming source.

b. Antenna manual positioning, antenna traverse and elevation angle offset, antenna jog, and antenna slow scan are EP techniques used to counter main

beam and sidelobe jamming and deception. These techniques are designed to increase the antenna scans across the jammed sector to increase the blip-scan ratio. These techniques increase the number of pulses integrated, as well as the operators' sorting capability.

8. BANDWIDTH DISCRIMINATION

The following are EP techniques that use bandwidth to distinguish between radar jamming and target returns.

a. Dicke-fix (DF) counters wideband and fast-swept jamming. A wideband limiter amplifies without ringing and clips all pulses down to a common level. Then an amplifier increases narrowband target echo signals more than the wideband jamming. There are some problems associated with DF. Any jamming entering the wideband limiter can "capture" the limiters and cause poor receiver sensitivity. Targets may be suppressed without the operator knowing that jamming is present. Resolution and target range is reduced, even in a clear environment. Finally, DF is ineffective, even harmful, when the jamming bandwidth is near the bandwidth of the desired echo signal.

b. Transmitter pulse lengthening (TPL) counters wideband and fast-swept jamming. TPL concentrates power into a narrow band about the carrier frequency by lengthening the transmitting pulse. While this allows use of a narrowband receiver, it impairs resolution, causing poor chaff and clutter performance.

c. Transmitter pulse shaping (TPS) counters wideband and fast-swept jamming. The sideband range is limited by shaping the transmitted pulse. This allows use of a narrowband receiver, but impairs resolution, causing poor performance in chaff and clutter.

d. Narrowband pulse limiting (NBLP or NLP) is a form of transmitter pulse lengthening that counters wideband jamming and fast-swept jamming. NBLP concentrates power into a narrow band in the carrier frequency by lengthening the transmitting pulse. This allows use of a narrowband receiver, but impairs resolution, causing poor chaff and clutter performance.

e. The fast time constant (FTC) is used to counter chaff, clutter, and narrowband jamming. A video circuit provides low frequency attenuation to reject carrier and low frequency modulation of jamming. FTC passes normal radar pulse lengths with little attenuation, but causes some loss of receiver sensitivity.

f. High video pass (HVP) is used to counter chaff, clutter, and narrowband jamming. It is similar to FTC. A video circuit provides low frequency attenuation to reject carrier and low frequency modulation jamming. HVP passes only the leading edge of the received pulses. HVP can cause some loss of receiver sensitivity.

g. The wideband short pulse (WSP) counters chaff, clutter, and narrowband jamming by transmitting a short pulse and using a wideband receiver for reception. Echo resolution and accuracy are improved, and performance against narrowband jamming is enhanced. However, the maximum detection range is decreased and system vulnerability to wideband jamming is increased.

h. Narrowband limiting (NBL) counters chaff, clutter and narrowband jamming. A narrowband filter positioned in the front of the amplifier section allows only the target signal bandwidth to enter the limiter, reducing wideband and off-frequency jamming. The limiter clips all signals and noise to a common level. This technique is useful only when followed by pulse compression or other "decode" techniques. NBL is not effective against wideband jammers capable of causing "ringing" of the NBL bandpass filters. Targets may be suppressed and lost without the operator knowing that jamming is present. Finally, target detection and resolution are poor.

9. DOPPLER DISCRIMINATION

EP techniques that use Doppler frequency discrimination between radar and jamming signals to negate jamming effectiveness include the following:

a. Moving target indication (MTI) is used to counter chaff and clutter. The phase of returned target echoes is compared on a pulse-to-pulse basis. Those with no phase change (no change in radial velocity) are cancelled using a delay-line canceler. Sensitivity using MTI is poor for weak targets, even in the clear. Also, it is blind to targets that have a Doppler frequency that is equal to a multiple of the radar PRF, unless PRF stagger is used. Finally, limited dynamic range does not allow full cancellation of strong clutter echoes.

b. Compensated coherent MTI, also known as compensated COHO MTI, counters chaff and clutter by comparing the phase of returned target echoes on a pulse-to-pulse basis. Those pulses with no phase change, that is, no change in radial velocity, are cancelled. Corrections to the coherent oscillator are applied to compensate for motion of the platform and radar antenna. Sensitivity is poor for weak targets, even in the clear, and it is blind to targets that have a Doppler frequency equal to, or a multiple of, the radar PRF, unless PRF stagger is used.

10. TIME DISCRIMINATION

The following EP techniques use time discrimination between radar and jamming signals to negate jamming effectiveness.

a. Video integration (VINT) and integrate-multiply (INT-MULT) counter any form of transmitted jamming not synchronous with radar PRF. The video continuously circulates through a delay line, delaying signals exactly one pulse recurrence time (PRT), then combines them with signals from the next PRT. Synchronous target signals add together to increase video output, but noise and

random pulses are suppressed. Unless MTI and FTC are employed, VINT and INT-MULT will enhance chaff, clutter, and jamming along with target returns. Also, feedback control, or loop gain, must be carefully adjusted for optimum results.

b. PRF stagger and jitter are EP techniques designed to counter quasi-synchronous jamming, EMI, MTI blind-speeds, "second trip" echoes, and repeater jammers simulating "closer-than-real" targets. The transmitter pulse interval is varied to break up synchronous patterns. Received signals must be "de-staggered" for use with MTI or integration. When using any of these techniques, video de-stagger balance must be accurate or "double video" occurs. These techniques are not effective against exact synchronous deception jamming.

c. Pulse-to-pulse correlation (PPC) is used to counter slow-swept blinking or pulsed jamming not synchronized with radar PRF, and some types of deception jammers. To be displayed, target video must exceed a threshold voltage for two successive pulses. The technique avoids displaying non-synchronous jamming and EMI, but is not effective against synchronous jamming, and may cause weak targets to be missed.

d. Beam-to-beam correlation (BBC) is used to counter slow-swept blinking or pulse jamming not synchronous with radar PRF and some types of repeaters and transponders. It is used in three-dimensional frequency scanning or frequency agile radars. To be displayed, the target return echo signal must exceed a threshold value in two adjacent antenna beams. BBC is not effective against synchronous jamming. It may also cause weak targets to be missed.

e. Single beam blanking (SBB) is used to counter slow-swept, blinking, pulsed jamming, and narrowband jamming. It is used in three-dimensional frequency scanning or frequency agile radars to avoid displaying vertical beams containing jamming. A blanking pulse is generated for vertical beams containing jamming so that they are not displayed. The technique is not used on RHI video. Also, it can cause a loss of targets at the jammed elevation angle on the PPI display.

11. SUMMARY

This chapter has discussed some of the most widely employed EP techniques designed to counter radar jamming. The capabilities of the individual radar operator were not discussed. However, the radar operator is as important as the EP techniques designed for the radar system. Many of the most effective EP techniques are designed to ease operator interpretation of the radar display. In the chess game of EW, the capabilities of individual radar operators can be as important as the sophisticated EP techniques in determining the final outcome.

CHAPTER 17. RADAR WARNING RECEIVER (RWR) BASIC OPERATIONS AND GEOLOCATION TECHNIQUES

1. INTRODUCTION

Radar surveillance and radar-directed weapons represent the biggest threat to aircraft survival on the modern battlefield. The first step in countering these threat systems is to provide the pilot or crew with timely information on the signal environment. The radar warning receiver (RWR) is designed to provide this vital information to the pilot. The RWR system is an example of an electronic warfare support (ES) system. The primary purpose of an RWR system is to provide a depiction of the electronic order of battle (EOB) that can have an immediate impact on aircraft survival. Though the RWR system is complex, the basic operations of the various components are straightforward. A step above RWR systems is threat geolocation. While an RWR provides the EOB for a single aircraft, threat geolocation systems can provide accurate threat location data for numerous aircraft over an entire region. Threat location data is used for aircraft threat avoidance and, more common today, the preemptive attacking of enemy radar sites. This chapter will discuss the functions of the various components of a RWR system including the antennas, receiver/amplifiers, signal processor, emitter identification (EID) tables, RWR scope, RWR audio, and limitations to RWR systems. This chapter will then go on to discuss three of the methods used to geolocate radar threat systems.

2. RWR ANTENNAS

Antennas are designed to receive radar pulses from threat radar systems. Factors that impact the operation of the RWR antennas include location, pattern, sensitivity, and polarization.

a. The physical location of the RWR antennas on the aircraft can affect its ability to detect a radar signal. Antennas are arranged to cover a predetermined area of horizontal and vertical space around the aircraft (Figure 17-1).

b. The antennas and their patterns play an essential part in displaying the spatial relationship of a threat radar to the aircraft. The antenna patterns are the areas, or "footprints," that the antennas are specifically designed to cover. These footprints are directly affected by the relative position of the antennas to the threat systems. This is because the signal processor measures and compares signal strength from all the aircraft antennas to compute threat signal location relative to the aircraft. This relative location is then presented on the RWR scope display. Aircraft movement and maneuvering shifts these relative positions during flight and can distort the true threat position on the RWR scope. Precise position determination is not possible with most RWRs.

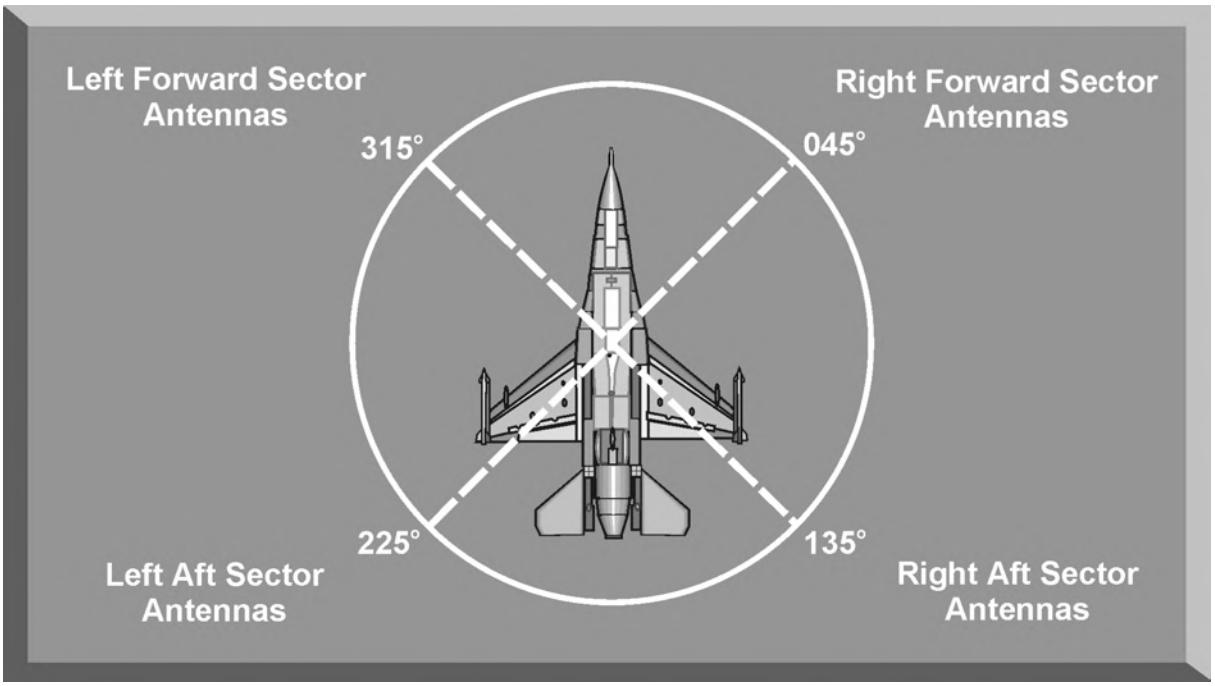

Figure 17-1. Radar Warning Receiver (RWR) Antennas

c. The sensitivity of an RWR antenna directly affects its ability to detect a radar signal. The more sensitive the antenna, the further it can detect a signal. The sensitivity of a system and its ability to intercept a radar signal is usually expressed in decibels relative to milliwatts or dBm units. A 10 dBm change in sensitivity can result in a 25 nm range difference in target detection. In general, sensitivity levels of -50 to -60 dBms are required to detect signals at long ranges (Figure 17-2).

Figure 17-2. RWR Antenna Sensitivity

d. Another factor affecting antenna detection range is the polarization of the antennas. If the polarization of the RWR antenna and the threat system antenna are mismatched, or cross-polarized, initial detection of a threat signal could be delayed until the aircraft is within the lethal range of a threat system. In this situation, the aircraft could be engaged with minimal warning (Figure 17-3).

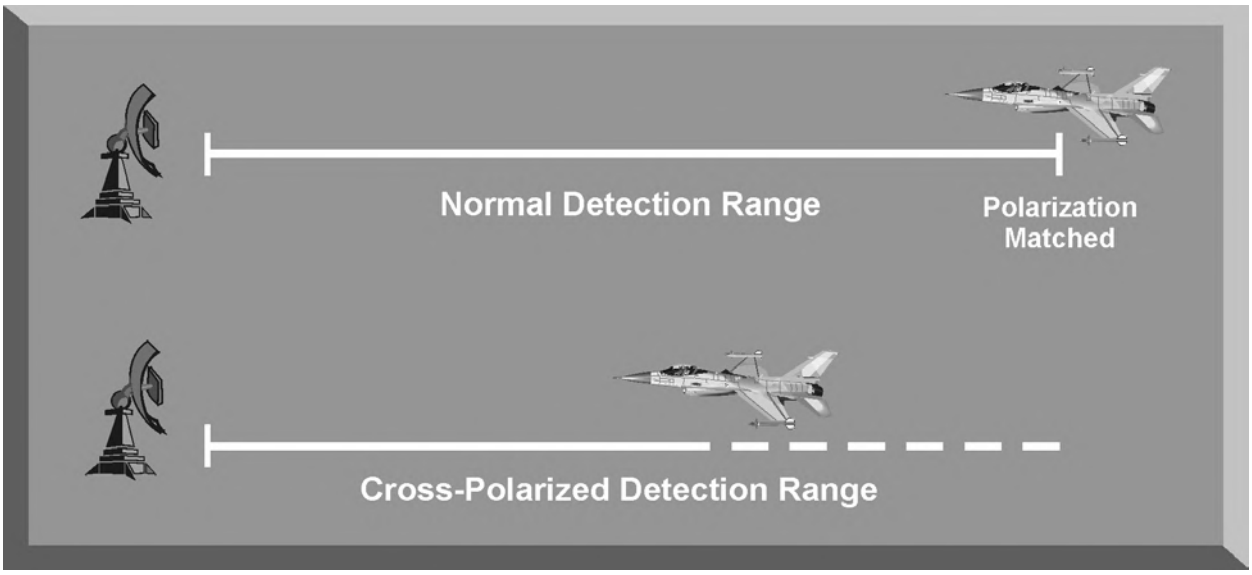

Figure 17-3. RWR Antenna Polarization

3. RWR RECEIVER/AMPLIFIERS

The RWR receiver/amplifier section processes the radar signals from the antennas. Most RWR systems use frequency bands to differentiate signals. Nominal band designations are summarized in Table 17-1. There are two types of receivers currently used in RWR systems: the crystal video receiver and the superheterodyne receiver.

Table 17-1. RWR Frequency Band Designators

RWR Frequency Band	EW Frequency Band
Band 0	Charlie-Delta Bands
Band 1	Echo-Foxtrot Bands
Band 2	Golf-Hotel Bands
Band 3	India-Juliet Bands

a. A crystal video receiver (CVR) is the simplest type of microwave receiver. It is used primarily for detection of pulse radar signals in the 2 to 18 GHz band. A CVR used in a radar warning receiver incorporates crystal detectors for each designated frequency band. A pulse radar signal is detected by the antenna and passed to the multiplexer. The multiplexer divides the received radar signals by frequency band and sends the signals to the appropriate band channel. The RF amplifier boosts the radar signal and passes it to the crystal detector (Figure 17-4).

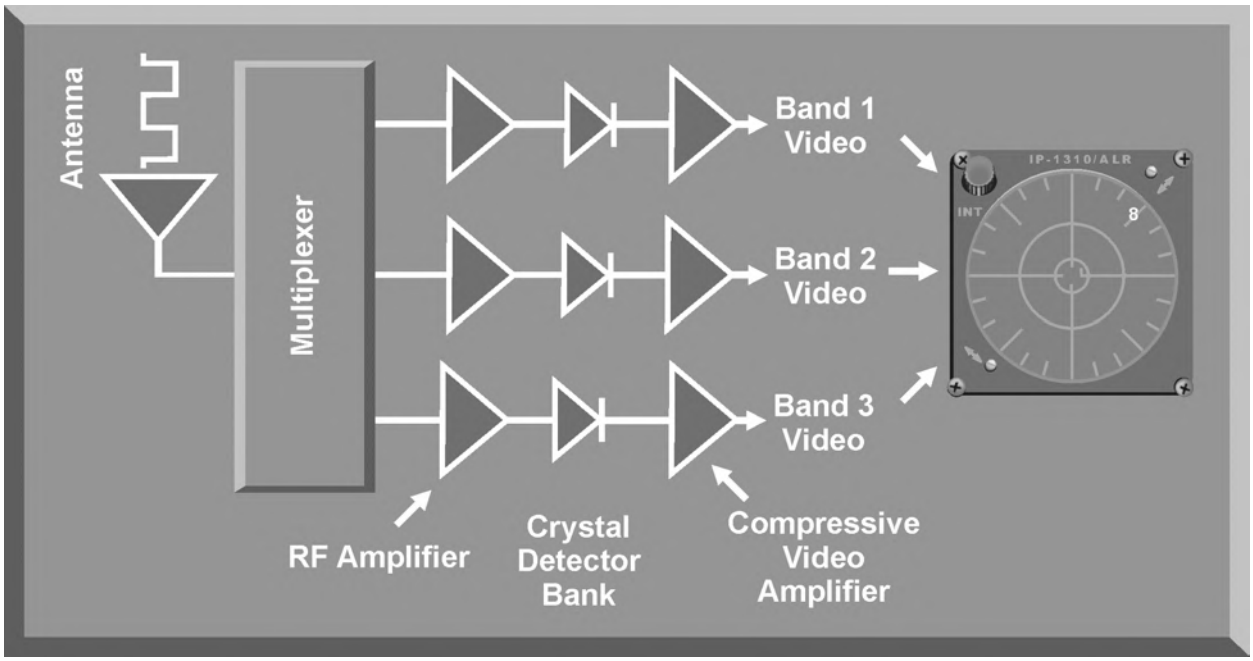

Figure 17-4. Crystal Video RWR Receiver

(1) The crystal detector is an RF diode, which converts the RF signal into a video signal. The voltage level of the output video signal is dependent only on the amplitude of the input signal and not on the frequency or phase. The sensitivity of a CVR is limited by the sensitivity of these crystal detectors. The sensitivity of crystal detectors currently available is generally adequate to detect main beam radiation from most threat radars. The video output of the crystal detectors is amplified by a high-grain compressive video amplifier and sent to the RWR scope for display.

(2) A CVR is extremely fast, sensitive, and covers a wide frequency range. These characteristics coupled with low cost and small size make CVRs ideal for use in radar warning receivers. The primary disadvantage of a CVR is that it is indiscriminate in reception and can be saturated in a dense signal environment. Multiple signals in the same band can cause amplitude distortion which can mask key threat signals.

b. A superheterodyne RWR receiver uses a pre-selector filter, mixer, and a local oscillator to translate the received signal to a lower intermediate frequency (IF). This lower IF allows the receiver to amplify and filter the received signal to provide greater sensitivity and frequency selectivity than a CVR (Figure 17-5).

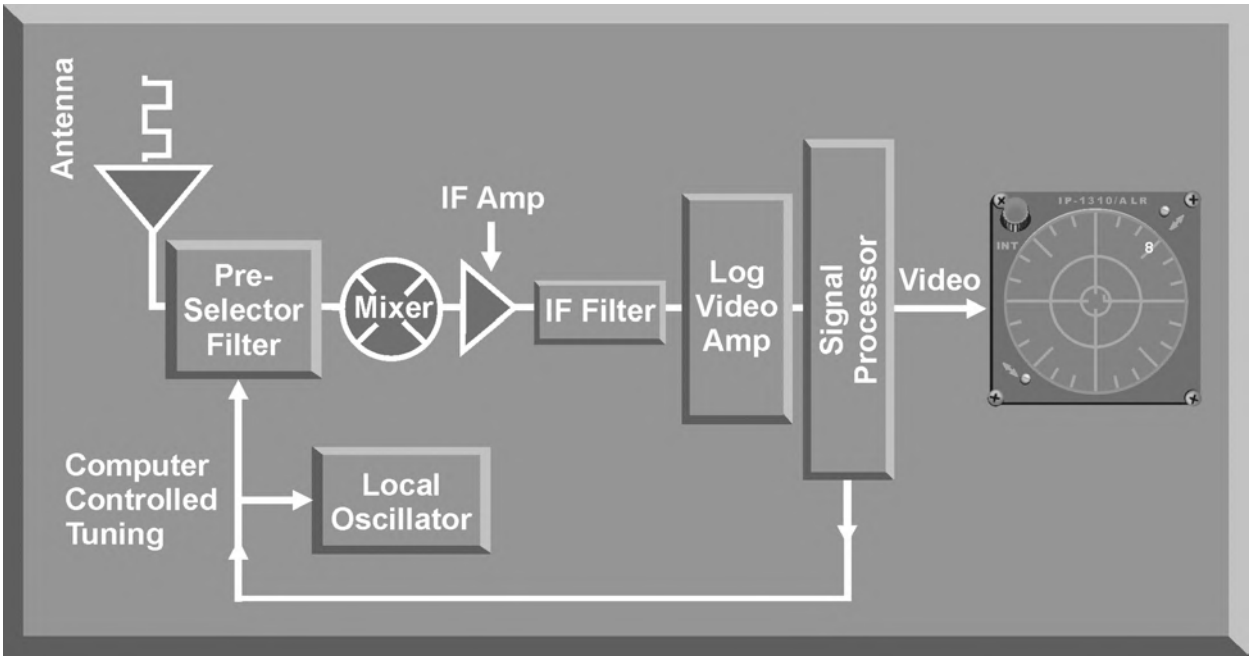

Figure 17-5. Superheterodyne RWR Receiver

(1) Superheterodyne RWR receivers use special scanning techniques controlled by the signal processor to tune the pre-selector filter and the local oscillator to rapidly scan selected threat system frequency bands. If the receiver detects activity in any of these bands, the scan stops to allow the processor to analyze the detected signals. The signal is combined with the local oscillator signal to lower the frequency to the IF. This signal is amplified, filtered, and amplified again before it reaches the signal processor. The signal processor classifies the threat and displays the proper threat symbol to the pilot. This entire process is accomplished in a matter of microseconds.

(2) The scanning superheterodyne receiver has important features that make it effective for RWR system application. It has excellent sensitivity and selectivity. It also has good frequency resolution. These features give the superheterodyne receiver a very low false alarm rate. The major disadvantage of the scanning superheterodyne receiver is its limited capability to receive signals from threat systems employing scanning antenna patterns. This limitation can be overcome with specific computer-controlled tuning to look for these threat signals.

4. SIGNAL PROCESSOR

The signal processor is the heart of the radar warning receiver. The signal processor is also known as the digital processor or analysis processor in different RWR systems. Its primary functions are to process numerous complex radar signals and identify, among the thousands of similar signals, those generated by lethal threat systems. The signal processor accomplishes this task continuously over the duration of the mission and displays the identified threat system to the aircrew almost instantly.

a. Signal processing begins when RF energy strikes the receive antennas on the aircraft. The received signals are then boosted in strength by intermediate amplifiers or antenna receivers. These amplified signals are then sent to the signal processor, or digital processor, where they are assigned a track file for reference to other signal characteristics. Data in these files is compared to those in the emitter identification (EID) table to process the signal for identification. Once identification is complete, a video and, if necessary, an audio signal, is sent to the cockpit display. The audio and video signals alert the aircrew to the electronic environment around the aircraft. This whole process takes less than a microsecond (Figure 17-6).

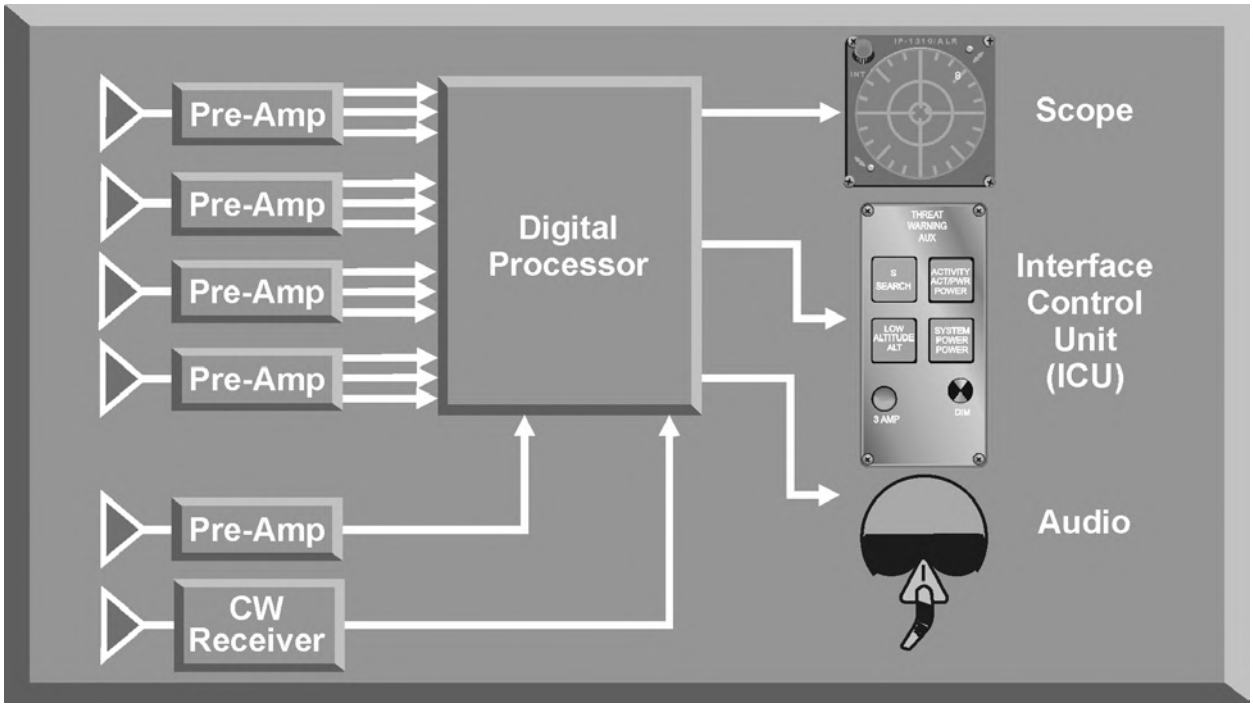

Figure 17-6. RWR System

b. Since many signals may be present, the amplifier detectors boost the signal strength, and also tag each signal by certain characteristics such as its time of arrival, direction of arrival, and/or frequency. These signals, along with their respective tags, are sent to the signal processor for further processing and

identification. The signal processor then makes a track file for each signal it receives from the amplifier detector.

c. The signal processor classifies each received signal and corresponding track file by its unique radar signal characteristics. Identifying characteristics used by a signal processor can include radio frequency, pulse width, pulse repetition frequency, EP techniques, and more. Characteristics of one signal may be identical to characteristics from different signals, while certain other characteristics can be as unique as a human fingerprint. The signal processor uses these primary characteristics to identify specific signals. When the primary characteristics of two or more signals are similar, the signal processor uses additional signal characteristics to resolve any confusion between two or more signals.

d. The signal processor ranks the track files based on priorities determined from tests it conducts on the signal characteristics and the threat priorities contained in the EID tables. It then quickly processes signals belonging to lethal threats before it processes signals belonging to non-lethal threats. For example, three signals enter the processor together and separate track files are established for each signal (Figure 17-7). A test on the first characteristic discriminant, frequency, will delay the further processing of Signal 3, since no lethal threat systems operate at a frequency less than 2000 megahertz. A further test on the remaining prioritized signals may eliminate Signal 2 as a threat system signal, leaving more processor time for the identification of the threat system which generated Signal 1. These tests do not stop the processor from attempting to identify all received signals. The signal processor merely delays the identifying sequence until all high priority signals have been processed.

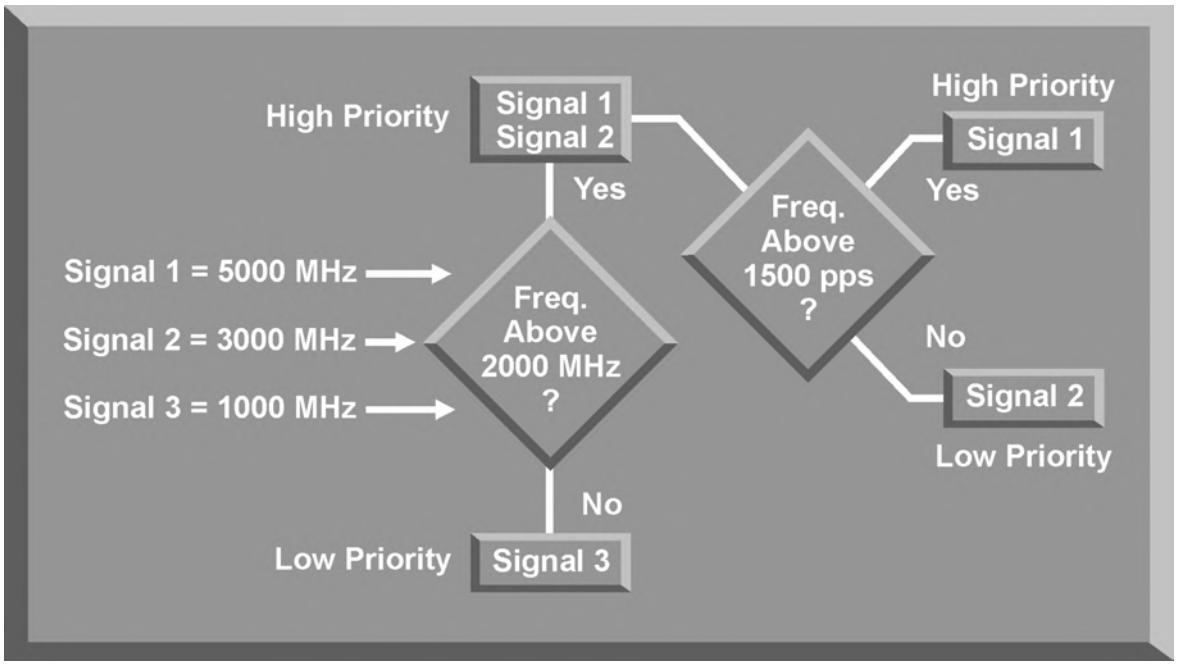

Figure 17-7. Signal Processor Signal Priority

5. EMITTER IDENTIFICATION (EID) TABLES

The signal characteristics in each track file are filled with processed data, and are constantly updated based on the time of arrival and location of the received signals. In addition, the track files are constantly compared to the EID table installed in the signal processor's computer memory. The EID table is a predefined table of radar characteristics associated with known radar systems (Figure 17-8). It is created from information gathered from electronic warfare support (ES) assets and intelligence sources. This table can be changed and updated as necessary to reflect the most current radar characteristics available for the anticipated threats in the planned theater of conflict. Each RWR system has unique procedures to reprogram the signal processor and update the EID tables. Emergency reprogramming actions, such as would be taken if a new threat appears that is not part of the current EID, are called a Pacer Ware.

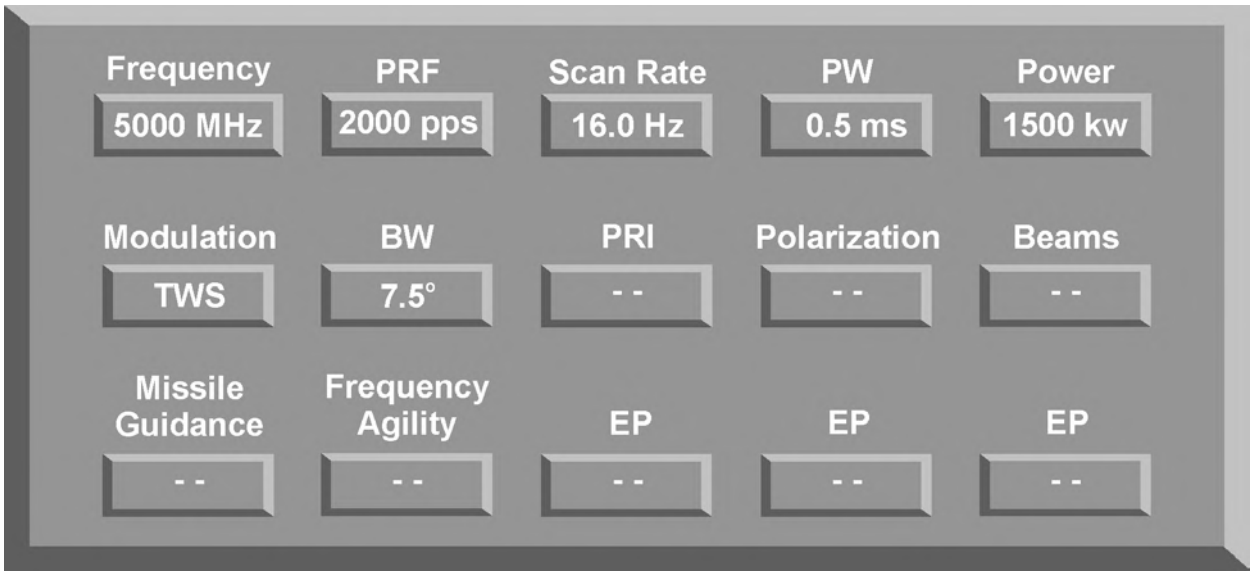

Figure 17-8. Sample EID Table

6. RWR SCOPE DISPLAY

The signal processor continually compares signal characteristics in the track files with the data in the EID tables. Once the signal processor has determined that enough of the signal characteristics match the information in the EID tables, it generates and positions a video symbol on the RWR scope. The video symbol represents a specific threat, and each threat system has its own unique symbol. In addition, an audio tone is generated to alert the pilot. The signal processor also generates symbols and audio associated with specific threat system actions, including search, track, and missile launch. The position of the threat symbol on the RWR scope always represents the relative position of the threat in relation to the aircraft which is the center of the RWR scope. The signal processor compares the received signal strength in the different antennas to determine the proper location of the threat symbol. Figure 17-9 depicts a situation where the two

forward antennas receive equal signal strength therefore the signal processor places the symbol at the 12 o'clock position.

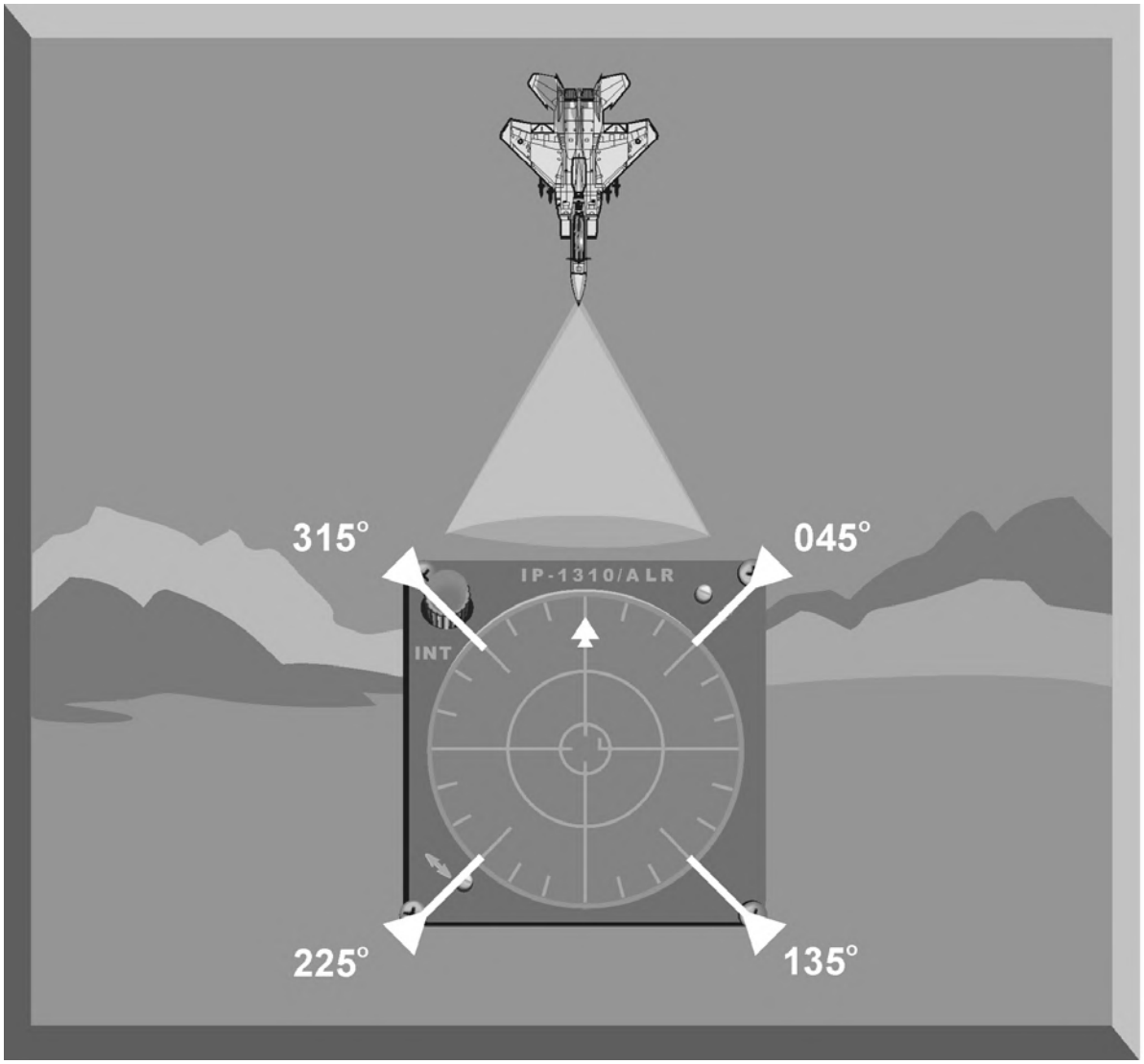

Figure 17-9. RWR Scope Azimuth Positioning

7. RWR AUDIO

In addition to generating threat symbols for each identified threat, the signal processor also generates threat audio. Threat audio first alerts the aircrew to the detection of a threat system. This RWR audio is generally referred to as "new guy" alert audio. The signal processor can also present constant audio from a selected threat. The aircrew controls this function through the interface control unit. The constant audio provided by an RWR system can be either "real" or synthetic. "Real" audio is normally based on the actual pulse repetition frequency (PRF) of the threat system radar whether the signal processor has identified it or not. Synthetic audio is based on the classification of the threat (SAM, AI, etc.) as

determined by the signal processor. The signal processor also generates a launch warning audio when the signal characteristics of the threat indicate a missile launch condition exists.

8. RWR INTERFACE CONTROL UNIT (ICU)

Every RWR system has some type of an ICU which provides the aircrew interface with the signal processor (Figure 17-10). The buttons on the ICU control specific functions of the signal processor. The ICU allows the aircrew to optimize the RWR system based on mission tactics. This optimization includes selecting appropriate priority lists based on ingress and egress tactics, controlling threat audio presentation, and determining the number and types of threats displayed. In addition, the ICU provides an additional visual indication of missile launch. All system test functions are controlled by the ICU to allow the aircrew to monitor the status of the RWR system.

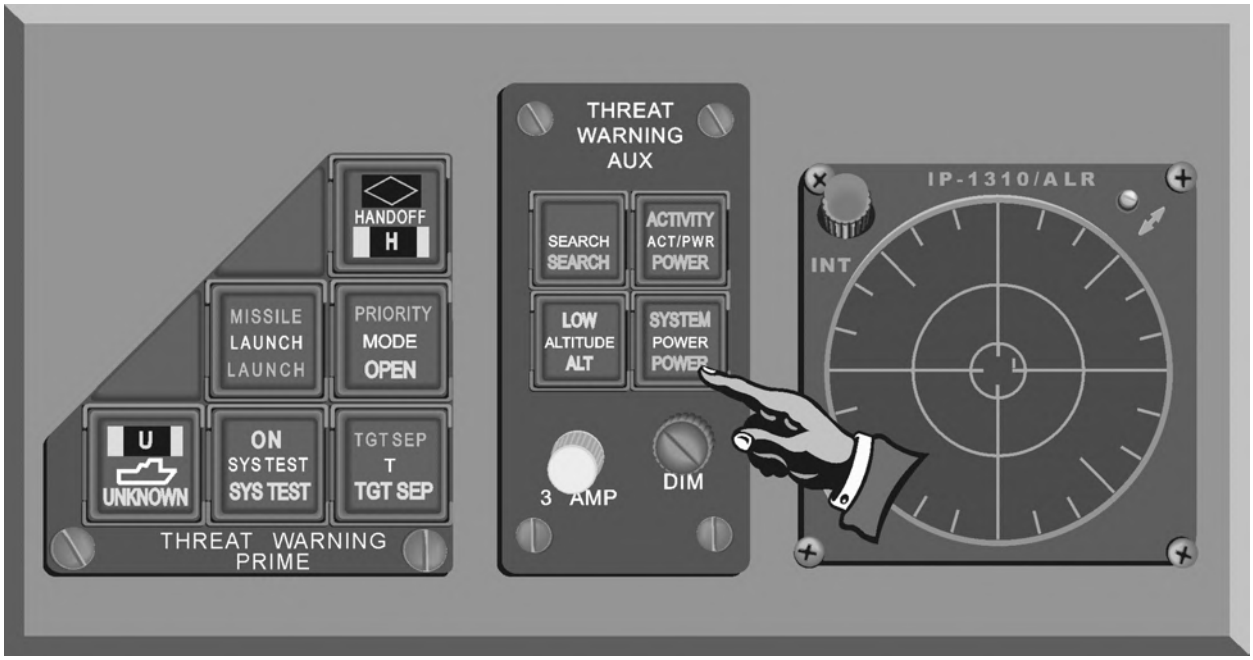

Figure 17-10. RWR Interface Control Unit

9. RWR LIMITATIONS

There are several limitations associated with all RWR systems. The most important limitations include ambiguities, impact of maneuvering, and electromagnetic interference (EMI).

a. The sheer number and diversity of radar systems associated with an enemy IADS greatly compound the problem of threat identification and warning for RWRs. Adding to this problem is the fact that many different threat systems use operating modes that are parametrically similar. When an RWR processes a

radar signal that has the same characteristics of a signal from a different system, an ambiguity may occur. An RWR ambiguity is defined as the display of more than one symbol for a specific threat signal. RWR ambiguities may occur from both enemy and friendly radar systems.

(1) Figure 17-11 depicts a number of friendly and threat signals that operate between 8000 and 10,000 megahertz. On any given combat mission, it is quite possible that the RWR will receive signals from one or more of these threat systems at the same time. If frequency is the only signal characteristic available for processing, the RWR will not be able to determine which system the signal represents. Since threat systems operating in this frequency range are potentially lethal systems, the signal processor will attempt to match the frequency with a threat system from the EID table.

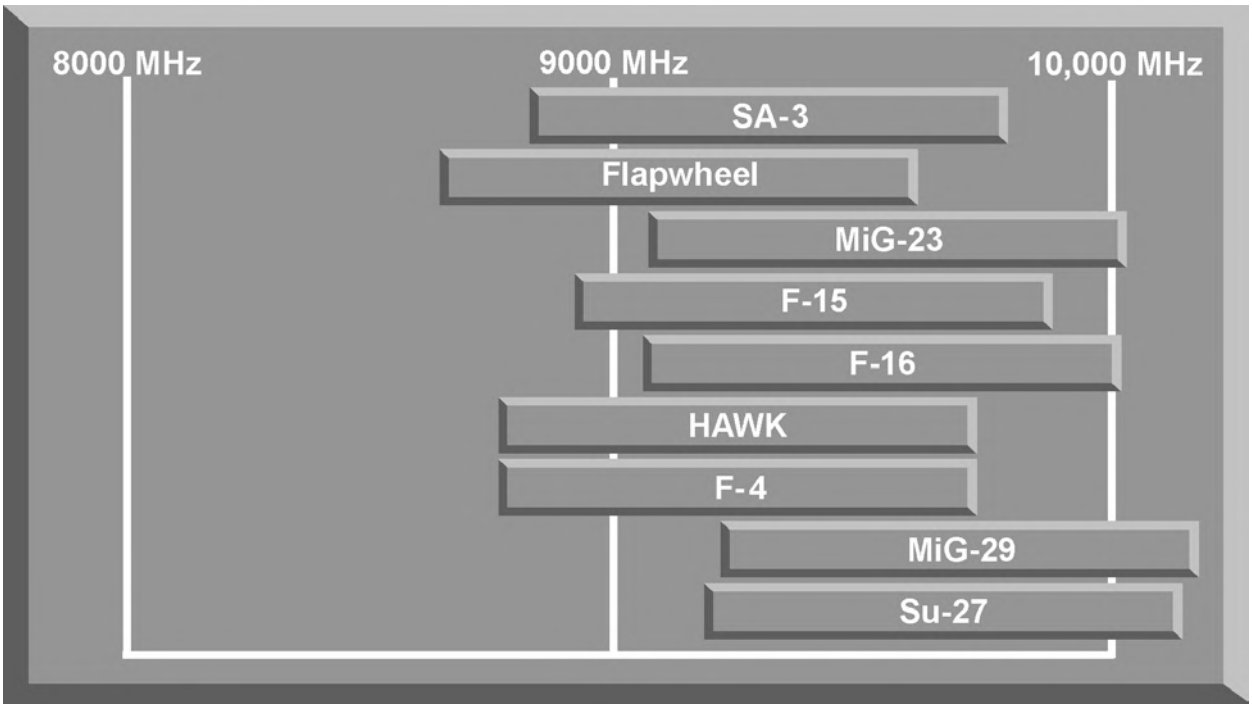

Figure 17-11. Signal Frequency Spectrum

(2) Matching partially processed signals to threat systems in the EID table may result in the wrong threat symbol being displayed, or numerous symbols being displayed on top of each other, making it difficult for the pilot to distinguish the exact threat. Incorrect threat symbology, or numerous combined symbols, are called RWR ambiguities.

b. RWRs are designed to provide accurate threat positioning information when the aircraft is flying straight and level. Most RWRs will also provide accurate threat positioning information when the aircraft is maneuvering up to certain limits of bank angle and turn rate. If aircraft maneuvering exceeds these

limits, RWR threat positioning data becomes unreliable. The two RWR limitations associated with aggressive maneuvering are inaccurate threat azimuth and multiple threat symbols.

(1) In Figure 17-12, the right forward and right aft RWR antennas detect a threat signal from a TTR. The left forward and left aft antennas are shielded by the aircraft and do not detect the signal. The signal processor determines the threat position, using the azimuth positioning algorithm, and displays the threat symbol at the 2 o'clock position.

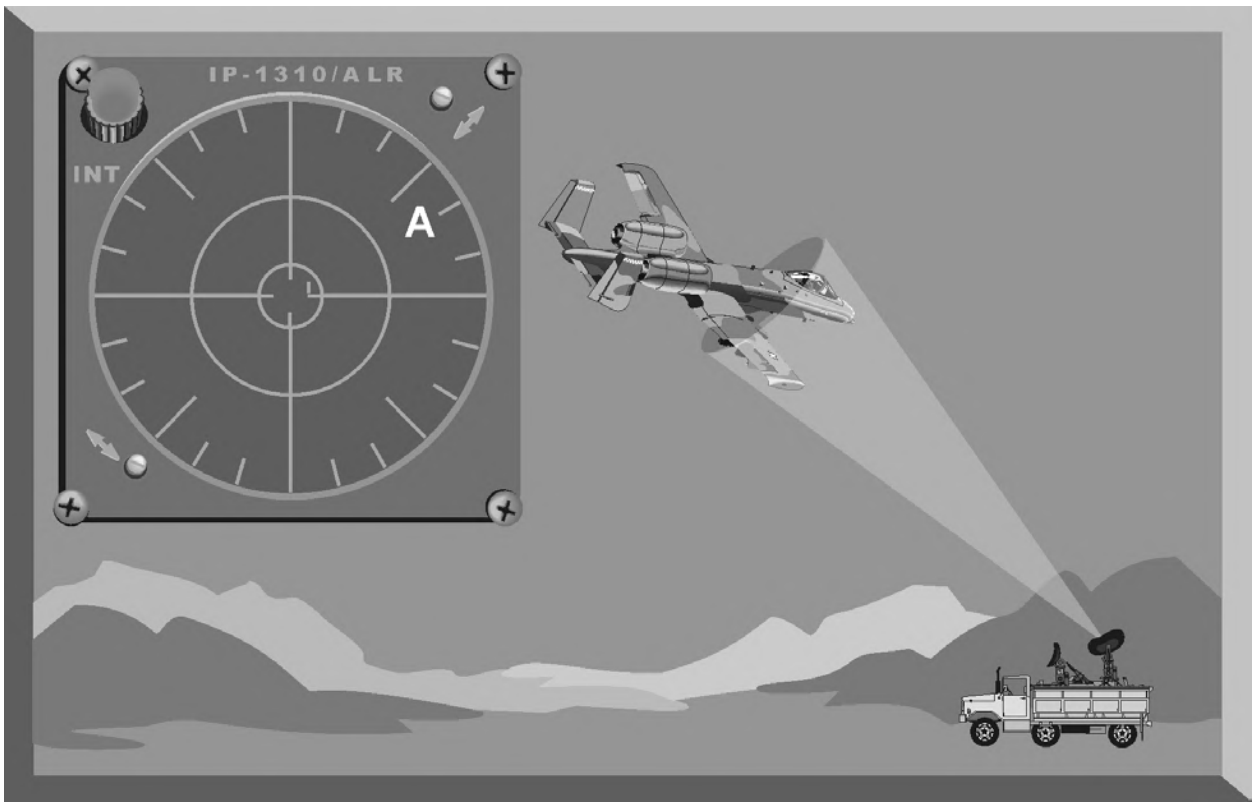

Figure 17-12. RWR Threat Azimuth Position Determination

(2) When the pilot maneuvers aggressively to put the threat symbol on the beam, he exceeds the RWR maneuvering limitations (Figure 17-13). Now all four RWR antennas detect the TTR signal. The signal strength in the right and left forward antennas is nearly equal. Based on this information, the signal processor displays the RWR symbol at the one o'clock position while the threat is actually at the three o'clock position.

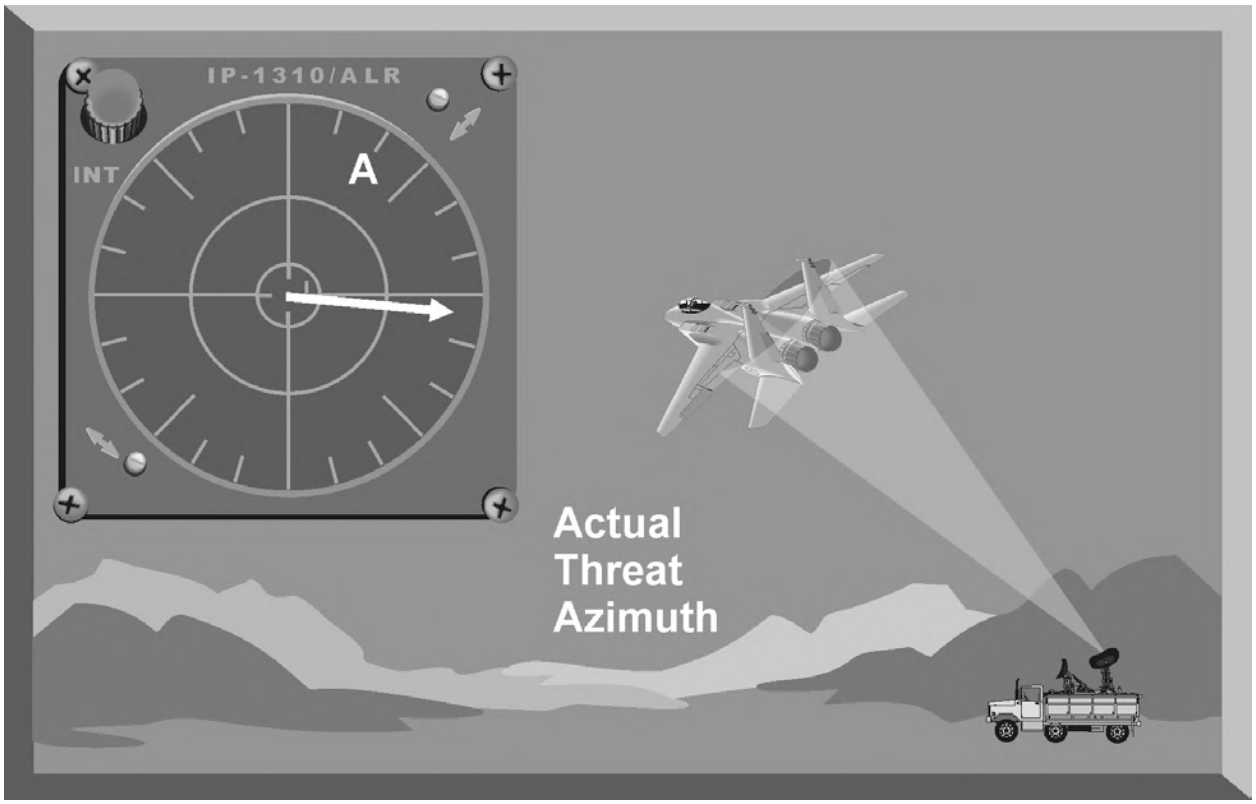

Figure 17-13. RWR Azimuth Error

(3) During aggressive maneuvering, the RWR signal processor may generate multiple symbols for a single threat emitter. In Figure 17-14, as the aircraft maneuvers, the relative azimuth of the threat position changes rapidly causing signal strength detected by each antenna to also change rapidly. The signal processor interprets these changing signals as new and different threat systems with the same signal characteristics. The number of "false" threat symbols displayed for a single threat is determined by the processing speed of the signal processor and a parameter called the symbol "age-out" time. Symbol age-out is the time, normally in seconds, that the RWR will continue to display a threat symbol after the signal processor has determined that the threat is no longer transmitting. The symbol age-out time is set for each threat in the EID tables.

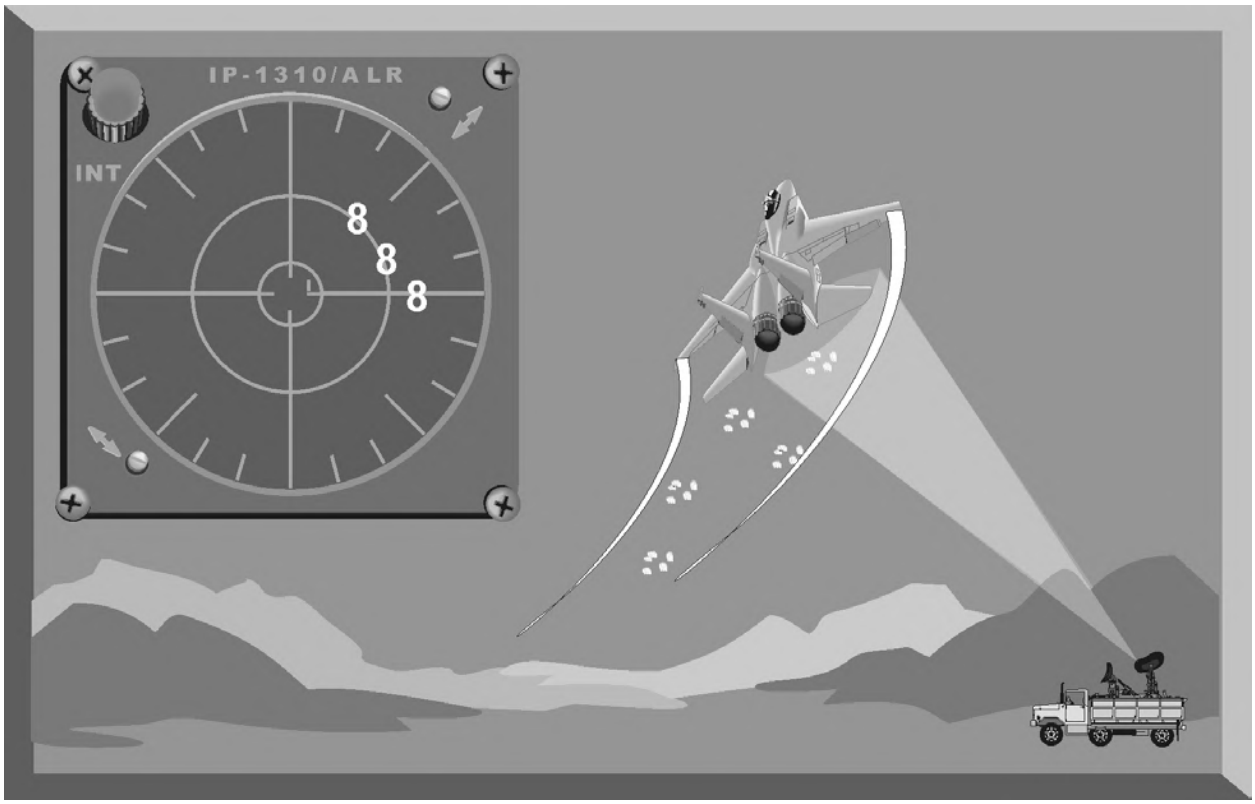

Figure 17-14. RWR Multiple Threat Symbols

c. Electromagnetic interference (EMI) is defined as any electromagnetic disturbance that interrupts, obstructs, or otherwise degrades or limits the effective performance of electronic systems. EMI can be induced intentionally, by way of jamming, or unintentionally as a result of spurious emissions and modulations. Certain RWR characteristics make them susceptible to EMI. Modern RWR systems are designed to receive and process signals in a wide frequency range, nominally 0.5 to 18 GHz, where most threats operate. This broad frequency coverage combined with the sensitive antennas make RWR systems susceptible to EMI. The primary source of EMI that impacts RWR operation is noise and deception jamming designed to counter enemy threat systems.

(1) High power noise jamming, such as that provided by a stand-off jamming aircraft, causes the RWR to raise the receiver threshold in the frequency band of the jamming. This effectively reduces the sensitivity of the RWR receiver and could delay the display of threat signals in that band. The reduction in sensitivity depends on the power that the jammer is transmitting, the beamwidth of the jamming beam, and the distance from the jammer to the aircraft. High power jamming may also generate multiple threat symbols on the RWR scope at the approximate azimuth to the jammer's position relative to the aircraft. Additionally, jamming from a wingman's self-protection system can generate multiple threat symbols and reduced sensitivity.

(2) A limitation of all RWR systems, related to EMI, is the problem of inaccurately identifying threat radar systems as friendly radar systems. This occurs when the parameters of a friendly radar are similar to the parameters of a threat radar system. The RWR will either display a threat radar symbol or an ambiguity associated with a threat radar. These RWR misidentifications are especially prevalent for AI radar systems.

(3) The impact of EMI on the operation of an RWR system depends on the signal environment. The pilot has little control over the number and diversity of friendly and enemy signals the RWR system must process. EMI is an unfortunate consequence of the reliance of modern military forces on operations in the electromagnetic spectrum. Aircrews should be keenly aware that EMI will impact RWR operation and be must be familiar with common RWR displays of EMI.

10. THREAT GEOLOCATION TECHNIQUES

The purpose of threat geolocation is to put a defined position, normally coordinates, on a threat radar. This information can be used to simply warn other aircraft about the threat or, if the coordinates are accurate enough, to allow for targeting and attack of the threat. Until recently, threat geolocation could only be performed by strategic assets and specialized tactical aircraft, specifically the F-4G Wild Weasel. Due to inherent time delays, data provided through strategic channels often did not apply to mobile threat systems. The mobile systems would relocate making the data obsolete. This section will discuss three techniques used to geolocate, also known as direction finding (DF), emitting radars that can be used by tactical assets to rapidly locate radar threat systems. The three are triangulation, interferometry, and time of arrival. All three techniques are heavily dependent upon the receiving aircraft's ability to accurately determine its present position, and the advent of GPS receivers has made this significantly easier.

a. Triangulation is the most basic form of DF available. It involves taking direction measurements from more than one source. The intersection of the azimuth measurements, called “lines of bearing”, is the likely location of the emitter (Figure 17-15). To be effective, the participating aircraft must have accurate data of their current positions when getting the lines of bearing.

(1) Triangulation can be carried out by multiple aircraft equipped with receiver equipment or by one aircraft over a period of time. The advantage of having multiple aircraft providing azimuth measurements is the increased angle-off and the speed of interception. In triangulation the best azimuth cuts are those that approach 90° angles. The speed of interception comes into play because threat emitters, knowing that DF operations are underway, attempt to transmit for as little time as possible. The disadvantage of multiple platforms is the communication required to ensure that all the platforms are measuring the same radar. In a dense radar environment this can be a difficult task.

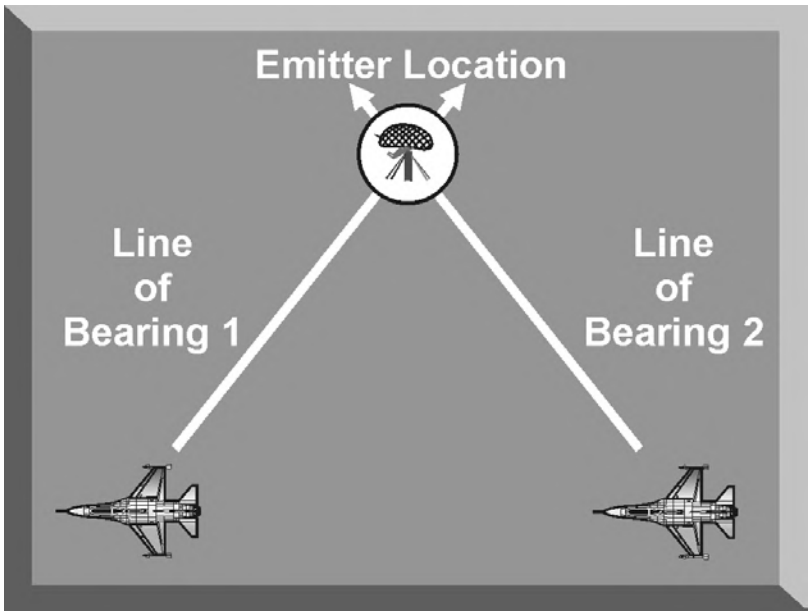

Figure 17-15. Triangulation

(2) Single aircraft triangulation eliminates the problem of signal coordination with other aircraft, but it also requires that the aircraft transit some distance to get multiple azimuth measurements. The accuracy of single ship DF operations is a function of the quality of the receiver equipment, distance away from the targeted radar, speed of the aircraft, and the amount of time that the targeted radar radiates.

b. The second technique is called interferometry. This technique is also known as phase interferometry, or phase difference of arrival. These systems operate by comparing the phase of a radar wave as it impacts two or more DF antennas; this phase difference is then used to compute an angle of arrival (AOA). For aircraft, the desire is to have these DF antennas on different parts of the same aircraft. Multiple AOA measurements are then used to provide the range and position of the threat.

(1) The key elements in an interferometer system are two antennas in fixed locations with matched receivers, a phase comparator, and a processor (Figure 17-16). An intermediate frequency output from each receiver is passed to a phase comparator, which measures the relative phase of the two signals. This relative phase position is passed to a processor, which calculates the AOA relative to the orientation of the two antennas (called the baseline). In most systems, the processor also accepts information about the orientation of the baseline (relative to true North or local horizontal) to determine the true azimuth or elevation angle to the emitter.

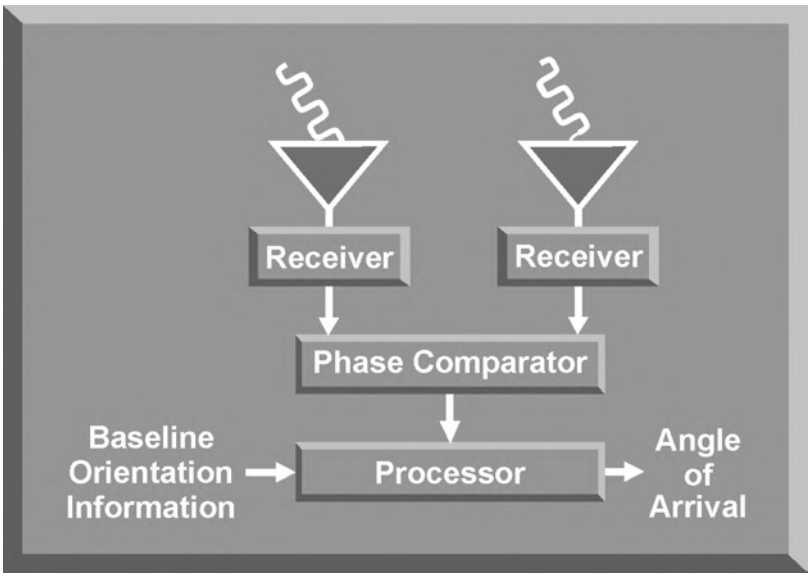

Figure 17-16. Interferometer Components

(2) To obtain rapid emitter locations some interferometer systems use multiple receive antennas in an array setup. This allows for simultaneous azimuth and elevation measurements to rapidly locate the emitter. An array allows for the mixing of long and short baselines in different patterns by selecting different pairs of antennas (Figure 17-17). The terms long baseline and short baseline are often used to designate the distance between the antenna elements in an interferometer system. Long baselines have the advantage of providing a quick and accurate location of the emitter, but they can suffer from ambiguities resulting from different wavefronts hitting the different antenna elements. In addition to the array depicted in Figure 17-17, a long baseline system could be created by using the existing RWR antennas on an aircraft, and supplementing these with a small short baseline system to compensate for the ambiguities.

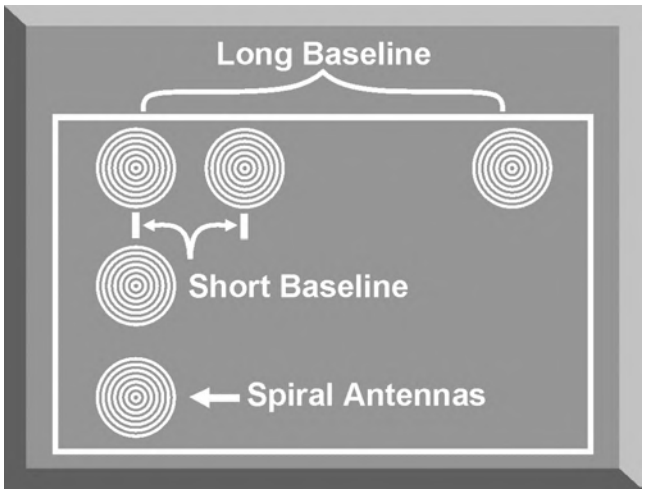

Figure 17-17. Interferometer Array

c. Time of arrival (TOA) and time difference of arrival (TDOA) techniques are the final type of location techniques to be covered in this section. Both techniques are based around the fact that radar signals travel at approximately the speed of light. Both techniques, using the speed of light as a constant, solve for the distance that the emitter is away from the receiver using the equation distance equals rate multiplied by time. Because there is not any directional information, the equation represents the radius of a circle around the receiving antenna; multiple distance measurements taken from multiple receivers are then overlayed. The intersection of the circles is the position of the emitter. If only two receivers are used, a simple DF technique can solve the ambiguity of which intersection represents the emitter (Figure 17-18).

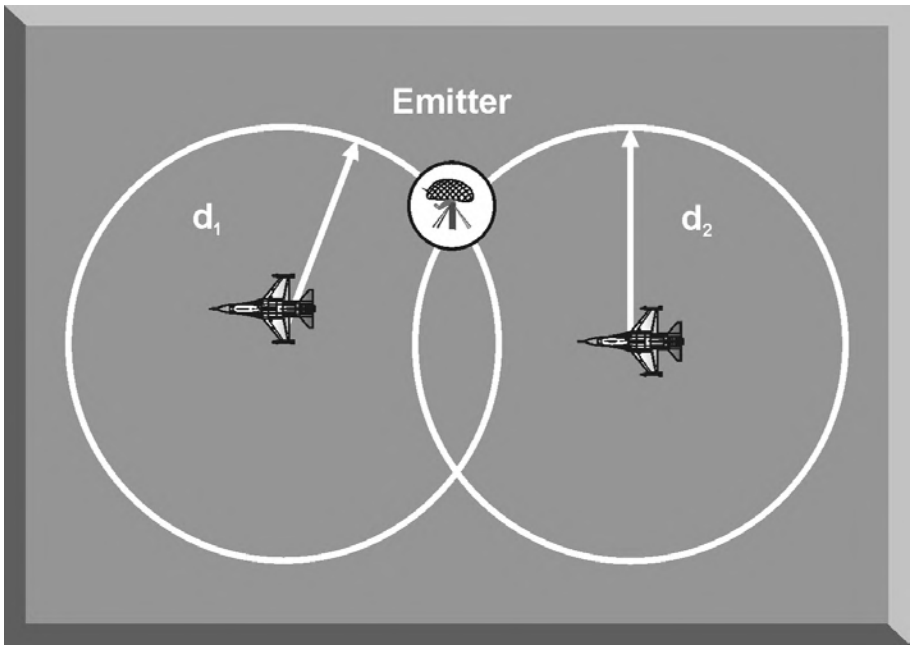

Figure 17-18. Time of Arrival Measurements

(1) TOA positioning is calculated by taking the time that a signal leaves a radar, measuring its arrival time at the receiver and mathematically solving for distance using the techniques described above. One of the primary challenges involved with TOA positioning is determining when the measured signal was transmitted, this requires either a very cooperative enemy or a radar signal with some type of exploitable time reference. Another challenge involves insuring that multiple receivers are timing the same signal. This is especially difficult in a threat intensive environment.

(2) TDOA is used when it is not possible to determine when a signal was transmitted. TDOA uses most of the same principles as TOA except that it must compensate for not knowing the time the signal was transmitted. It does this by using an extra receiver a known distance from the first receiver to generate a distance curve. The arrival of the signal is precisely measured at the two

receivers, the theory is that a signal that arrives at the two receivers at times t1 and t2 had to originate from a point on a curve defined by that difference in arrival time. For example, if the signal arrives at the two points at exactly the same time, then the transmitter must be equal distance from the two receivers. In this case the curve is actually a line of possible locations equal distance from the receivers and can easily be drawn. For situations where the signal arrives at different times at the receivers, a hyperbolic curve instead of a straight line denotes all the possible locations of the transmitter. Figure 17-19 shows an example of when the signal arrives at a different time, the constant value is the time difference multiplied by the speed of light yielding a distance. To solve for the emitter's location using TDOA another antenna receiver is required that is not in line with the first two receivers to generate an independent curve that will cross the first curve at the transmitter location.

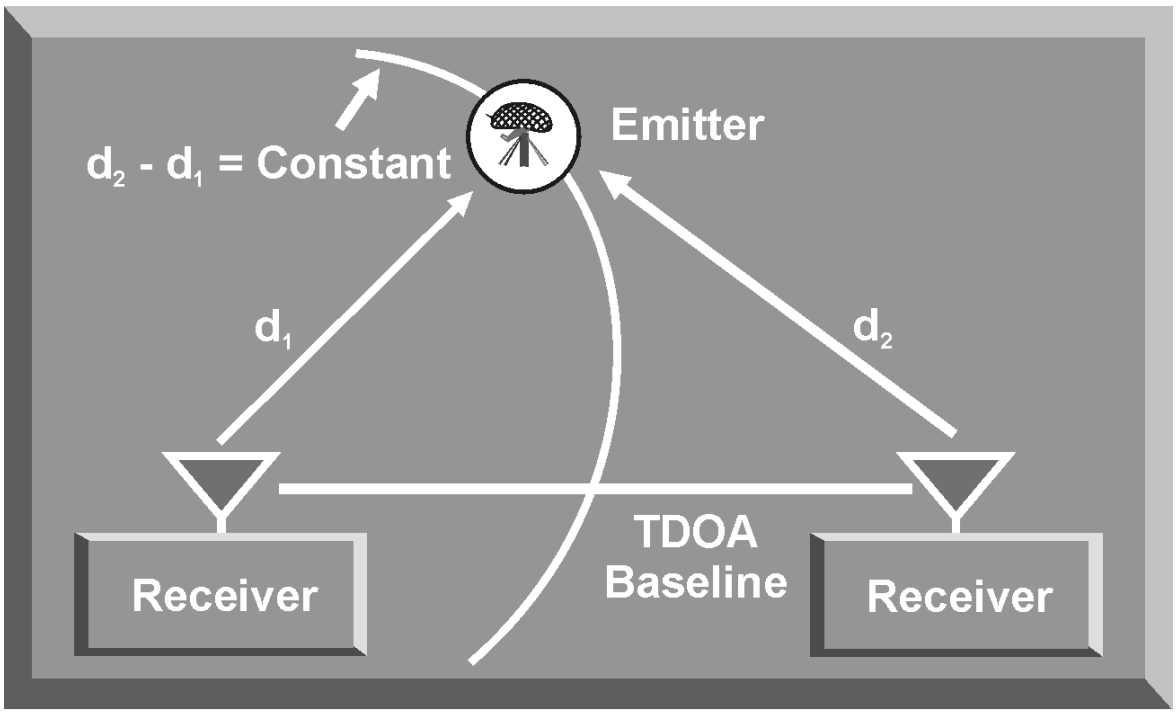

Figure 17-19. Time Difference of Arrival Measurements

(3) Timing techniques require very good timing accuracy in the receiving systems. If the receivers are far apart, such as different aircraft, then a separate time measurement is required at the source before sending to a processor. As with triangulation, one of the major challenges of multiple aircraft measurements is the coordination to ensure that the same signal is being looked at by all aircraft involved.

(4) Timing techniques are affected by the type of radar that they are trying to locate. Pure CW radars are not practical for a timing technique because there

is not a pulse to time. Pulsed signals, on the other hand, are much more susceptible to this type of location technique.

11. SUMMARY

An RWR system is designed to provide a picture of the electronic order of battle (EOB) operating in the vicinity of an aircraft. The signal processor is the heart of the RWR system and controls the function of all other system components. The signal processor, using inputs from the antennas and the receiver/amplifiers, compares the signal parameters with the parameters in the EID tables. The identified signals are displayed on the RWR scope with the appropriate audio. The ICU provides the aircrew interface with the signal processor to allow the aircrew to customize RWR operation for each combat mission. Modern RWR systems have some limitations that can effect aircrew survival. These limitations include ambiguous threat displays, maneuvering limitations, and EMI. Despite these limitations, an operational RWR system is one of the keys to survival on today's electronic battlefield. A product of advances on the electronic battlefield is rapid threat geolocation. New threat geolocation techniques are designed to provide advanced threat information to allow pilots to avoid, suppress, or destroy the mobile threat. The three most common techniques are basic triangulation using lines of bearing, interferometry using phase difference of arrival, and time difference of arrival using time differences to determine distance curves.

CHAPTER 18. SELF-PROTECTION JAMMING SYSTEM OPERATIONS

1. INTRODUCTION

Self-protection jamming systems are designed to counter surface-to-air missile (SAM), airborne interceptor (AI), and antiaircraft artillery (AAA) acquisition and target tracking radars. Self-protection jamming systems generate noise and deception jamming techniques to either deny threat system automatic tracking capability or generate sufficient tracking errors to prevent a successful engagement.

a. To counter the diverse array of threats and their associated frequencies in an integrated air defense system (IADS), a self-protection jamming system must be able to simultaneously jam multiple signals operating in a wide frequency range. The system must also be able to generate sufficient power to mask the radar return of the aircraft. Since many modern self-protection jamming systems are carried internally or externally on aircraft, their size, shape, and weight must be carefully controlled to minimize adverse effects on aircraft performance and handling. These design requirements may require a trade-off between additional power or capability and aircraft compatibility.

b. A self-protection jamming system must have receive antennas to receive radar signals, a system processor to identify received signals, a jamming techniques generator to produce an optimum jamming technique for the identified threat, and transmit antennas to transmit the required jamming techniques. These system components will be discussed in this chapter.

c. There are numerous internal and externally mounted self-protection jamming systems in use today. To simplify the discussion, the ALQ-184 pod will be used as an example of a modern, self-protection jamming system (Figure 18-1). The functions and operations of the ALQ-184 components are representative of currently deployed self-protection systems.

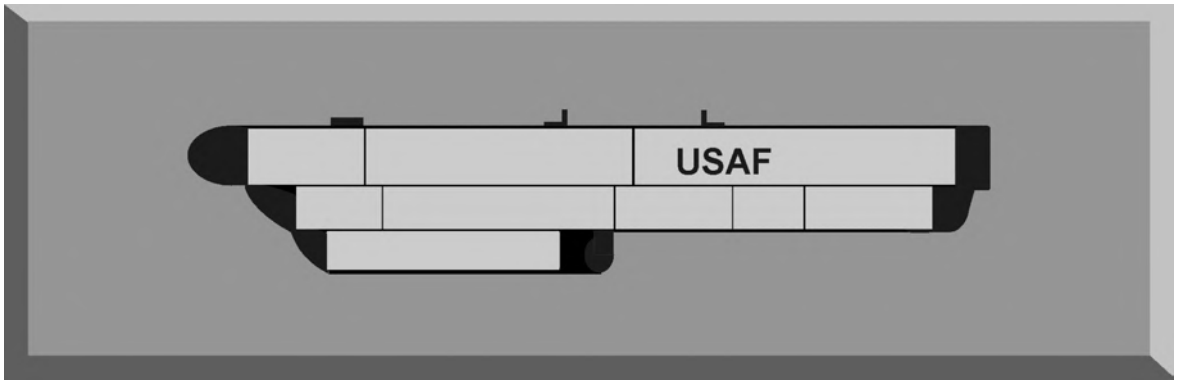

Figure 18-1. ALQ-184 Pod

2. RECEIVE ANTENNAS

The ALQ-184 pod has two sets of receive antenna assemblies located on the front and rear of the lower pod "gondola" (Figure 18-2). Each receive antenna assembly set consists of a low-band antenna and a mid/high-band antenna. The low-band antenna's signals are combined to form the input for the low-band receiver. The mid/high-band antennas provide signals to the separate mid/high-band portion of the pod.

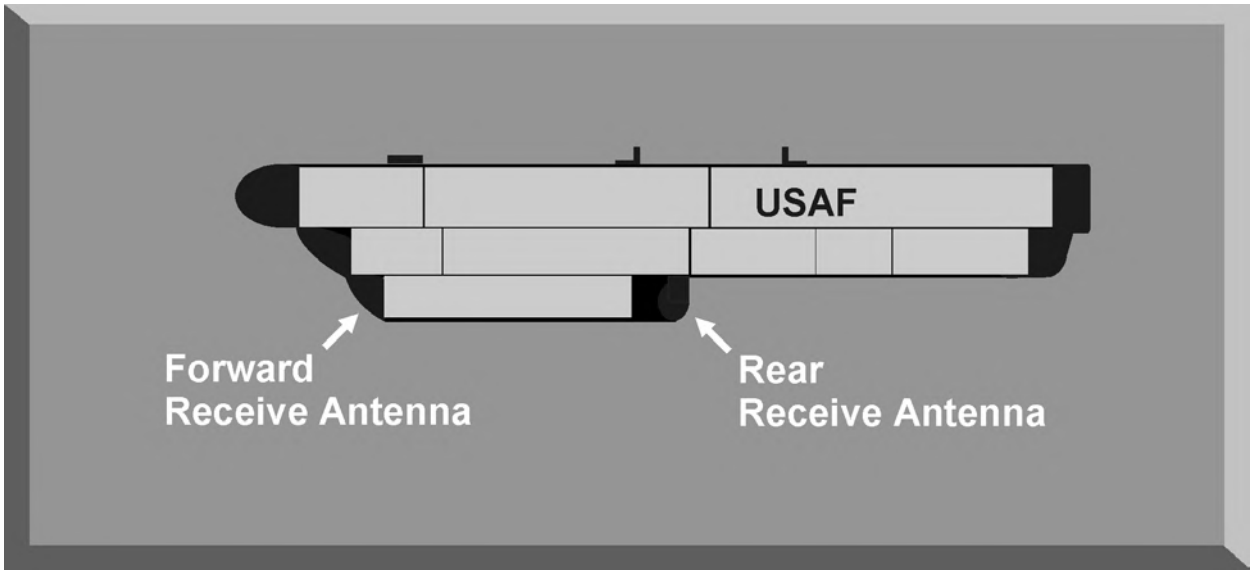

Figure 18-2. ALQ-184 Receive Antenna Location

a. The low-band receive antennas are circularly polarized spiral arrays. The mid/high-band receive antenna covers eight sub-bands via an eight element array that corresponds to the eight element transmit array. The mid/high-band antenna is also circularly polarized.

b. Each signal received via the receive antenna generates a corresponding transmit signal through a crystal video receiver. The angle of arrival (AOA) of each signal is determined by comparing the output of the crystal video receiver for each antenna.

3. RECEIVER SECTION

The forward and aft receive antennas detect radar signals and send them to the receiver section. The receiver section contains an AOA receiver and a multiplexer that separates frequencies. The AOA receiver determines the AOA of a signal based on the output signal level of each antenna element. The AOA data is passed to the system processor to control the angle of transmission of the jamming signal. The multiplexer separates all received threat signals into eight frequency sub-bands consisting of five mid-band and three high-band frequency

ranges. The multiplexer categorizes the received radar signals by sub-band and azimuth and then sends them to the system processor and the exciter.

4. SYSTEM PROCESSOR

The system processor is the "brain" of the ALQ-184 pod. It receives the threat signals from the receiver section that have already been categorized by sub-band and distinguished by AOA. Each received signal and its corresponding AOA is counted. When the signal count exceeds a pre-set threshold, the system processor validates the signal and identifies it using the emitter identification (EID) tables. Based on this threat identification, the system processor directs the techniques generator to initiate a jamming program through the exciter. At the same time, the system processor, through a signal switch control, directs the transmitter section to use either the forward or aft transmit antenna array, and specifies the transmit angle for the jamming program based on AOA.

a. The system processor also controls the low-band portion of the pod (Figure 18-3). The forward or aft low-band antenna receives and combines the threat signal and sends it to the multiplexer. The multiplexer channelizes this signal into one of two low sub-bands. The signal then passes to the modulator where the voltage controlled oscillators (VCOs) generate a jamming technique as directed by the system processor techniques generator. This ensures the jamming technique is at the proper frequency and modulation to provide maximum effect against the threat system. The generated jamming signal passes to a second multiplexer and then to a solid state amplifier for amplification. The amplified jamming signal is then sent to the two low-band traveling wave tubes (TWTs) and transmitted from the forward and aft low-band transmit antennas.

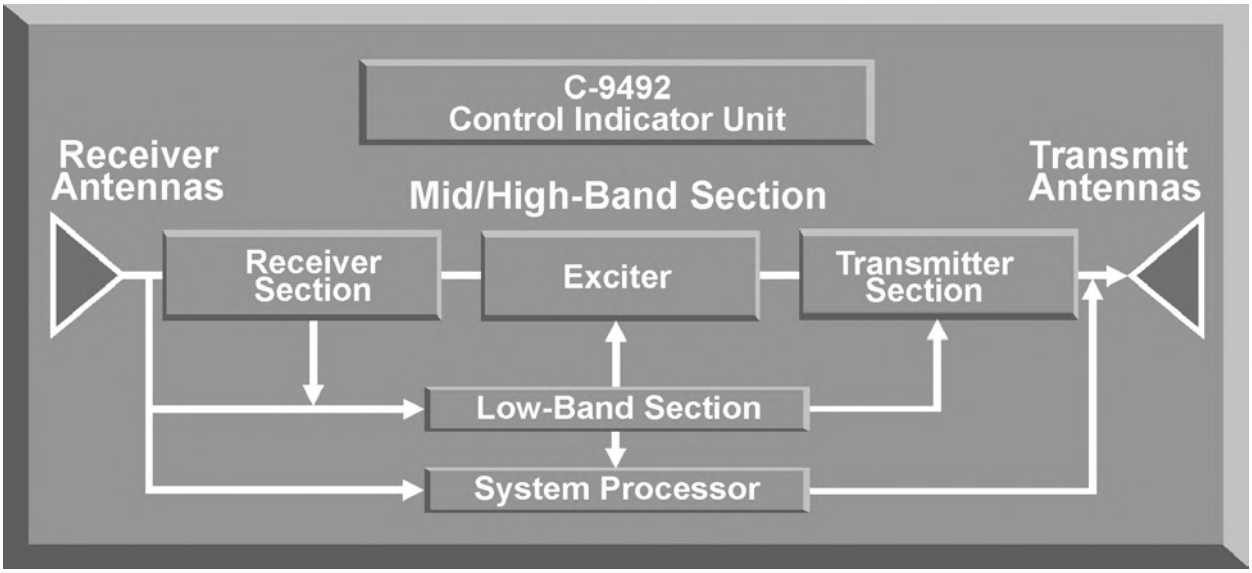

Figure 18-3. ALQ-184 Simplified Block Diagram

b. The system processor periodically performs a background built-in-test (B-BIT), to check the status and calibration of the ALQ-184. The system processor software is updated or reprogrammed as required from a memory loader verifier (MLV). The system processor uses two major software programs. The operational flight program (OFP) manages the receiver and transmitter functions, signal processing, and techniques generation. The mission data generator (MDG) contains the threat EID tables and the jamming techniques matrix for these threats.

5. JAMMING TECHNIQUES GENERATOR

The exciter section contains the VCOs and the keyed oscillators, which generate the jamming waveforms that are directed by the system processor. The exciter takes the threat signal from the receiver and modifies it with deception modulation or generates a noise program based on the techniques generator in the system processor. The selected jamming technique is then sent to the transmitter section.

6. TRANSMIT ANTENNAS

The transmitter section contains antenna switching circuits, a signal forming network, and TWTs. The antenna switching circuits are controlled by the system processor to ensure the transmitted jamming pulse is radiated at the proper azimuth. The signal-forming network controls the phase of each jamming signal. There are sixteen TWTs in the transmitter section, one for each front and aft antenna. The TWTs amplify the jamming signal for transmission from the appropriate transmit antenna.

a. The ALQ-184 has two sets of transmit antenna assemblies. One set is located on the front and one on the rear of the main pod assembly (Figure 18-4).

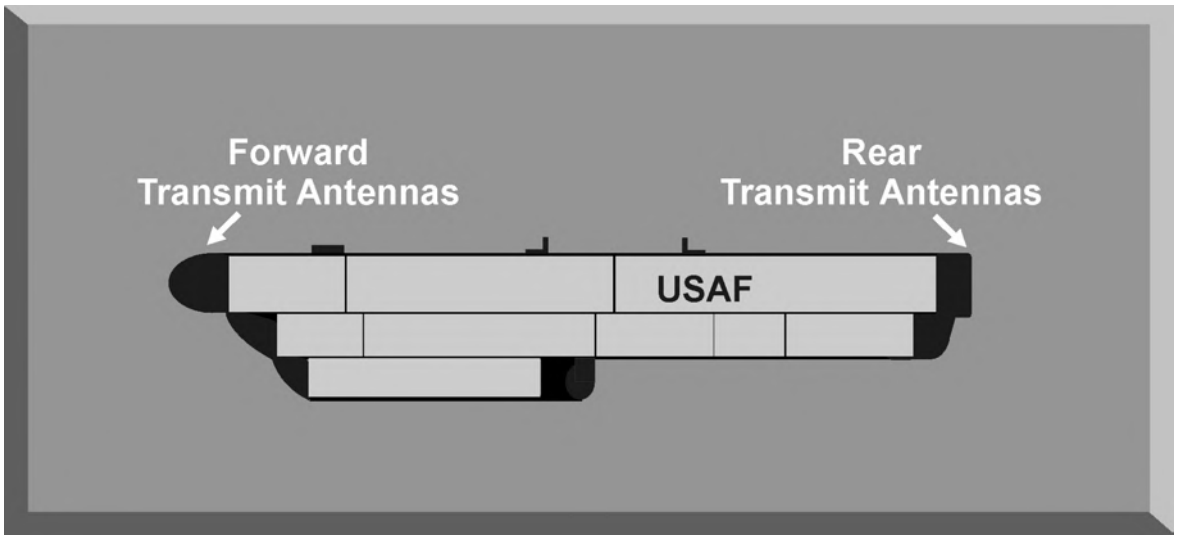

Figure 18-4. ALQ-184 Transmit Antenna Location

Each set has a low-band and mid/high-band antenna. The transmit antennas have opposite polarization from the receive antennas. This enables the pod to transmit and receive at the same time while preventing pod "ringing." Ringing occurs when the pod receives its own jamming signal and generates a jamming program to counter its own signal. This condition can highlight the aircraft to enemy radar and seriously degrade pod effectiveness.

b. The low-band transmit horn antennas are circularly polarized. The mid/high-band transmit antennas have the same eight-element array as the receive antennas. The transmit antennas generate a directional jamming signal for pulsed radar signals based on the AOA determined by the receive antennas. Detailed information on the antenna jamming pattern is contained in the ALQ-184 ECM Handbook.

7. C-9492 CONTROL INDICATOR UNIT

The C-9492 Control Indicator Unit (CIU) provides control of all functions of the ALQ-184. It allows the aircrew to control system power, select jamming techniques, and monitor system status (Figure 18-5).

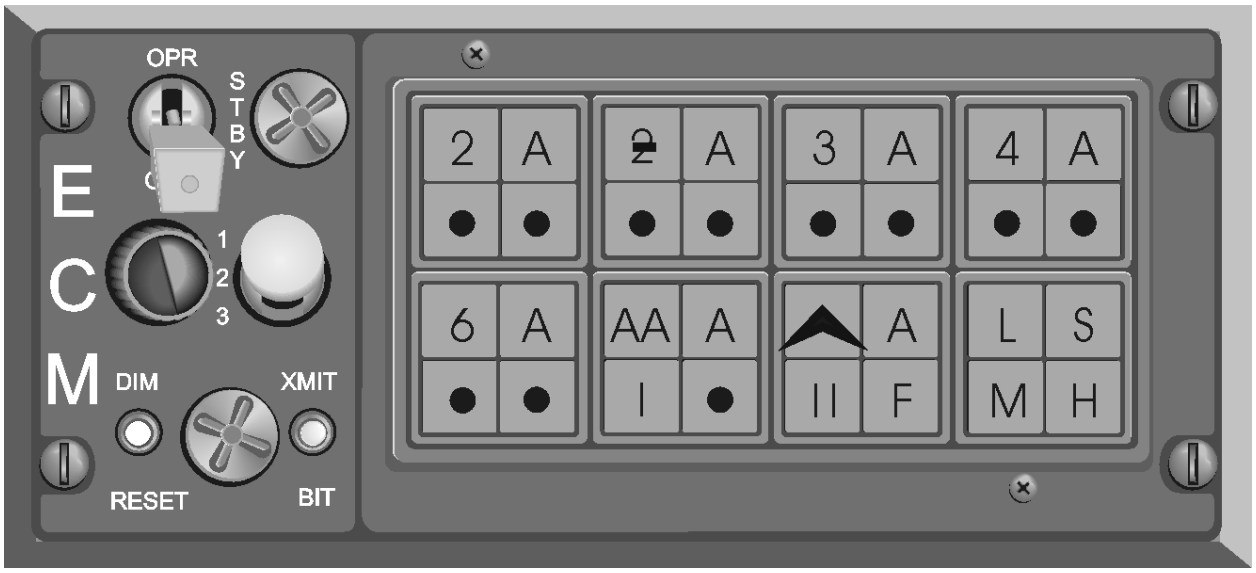

Figure 18-5. C-9492 Control Indicator Unit

8. JAMMING POD CONSIDERATIONS

Unfortunately, jamming pods do not make the aircraft completely invisible from enemy threat systems. When used in conjunction with the RWR, expendables, and threat countertactics they do drastically increase the probability of surviving a threat engagement. This section contains some items of consideration to ensure that your self-protection jamming is being properly utilized. These considerations include highlighting, burnthrough, and reprogramming.

a. If used improperly a self-protection pod can actually highlight the aircraft. This happens when a pod transmits a jamming program constantly or when another type of radar, not targeted for jamming but in the same frequency range, sees the jamming. Highlighting is normally associated with noise programs that transmit constantly. Most pods today avoid this by transmitting only when a threat requires it. Additionally, some aircraft have pod inhibit switches that allow the pod to remain in a standby condition until the pilot switches the pod to operate. What makes this system effective is that the switch is either on the stick or throttle allowing the pilot to rapidly go to operate without looking inside the cockpit (Figure 18-6).

Figure 18-6. F-16 ECM CMS

b. Burnthrough is described as the range that the aircraft's radar return is stronger than its jamming signal. Basically, the jet has gotten so close to the threat radar that the threat radar is overpowering the jamming pod. The range that this occurs varies for different radars, but it should be planned for particularly when there are threats in the target area. Burnthrough is also a consideration for support jamming systems; there is a range at which the support jammer's signal will be overpowered and the protected aircraft can be seen.

c. Many self-protection jamming systems are what is called software-reprogrammable. This means that jamming programs can be rapidly changed to adjust for changes in enemy radar systems. These updates can be made to

systems while they are still on the jet, and can take as little as 15 minutes using an MLV. The process of changing electronic warfare systems is known as a Pacer Ware change. An exercise to check the ability to make changes is known as a Serene Byte exercise. The pilot of the aircraft carrying the self-protection system has one responsibility in this process: to ensure that his jamming system is carrying the most current software program, usually referred to as a software version. While Pacer Ware changes are not common during peacetime operations, they do happen quickly during combat operations often to fine tune the jamming systems for the particular theater of combat.

9. SUMMARY

The effective employment of self-protection jamming is one of the factors that can mean the difference between success and failure on the modern battlefield. When employed in concert with chaff and maneuvers, self-protection jamming can be extremely effective in negating potentially lethal attacks. Despite their limitations, self-protection jamming systems are an important part of the "bag of tricks" aircrews can employ to put bombs on target.

ANNEX A
GLOSSARY

Absorption - Dissipation of energy of electromagnetic waves, sound, and light waves into other forms of energy because of interaction with matter. Absorption characteristics of specific materials are used as blankets, coatings, or structural and surface materials for aircraft to reduce effective radar cross-sections.

Acoustic jamming - The deliberate radiation of mechanical or electro-acoustic signals with the objectives of obliterating or obscuring signals which the enemy is attempting to receive, and of deterring enemy weapon systems.

Acquire –

1. When applied to acquisition radars: the process of detecting the presence and location of a target in sufficient detail to permit identification.

2. When applied to tracking radars: the process of positioning a radar beam so that a target is in that beam to permit the effective employment of weapons.

Acquisition radar - A radar set that detects an approaching target and feeds approximate position data to a fire control or missile guidance radar that then takes over the function of tracking the target.

Active array radar - A phased array radar in which each radiating element contains a transmitter and receiver front end, as opposed to a single transmitter/receiver serving all phased array elements. Advantages attributed to active array radars include efficient use of prime power, no waveguide losses, very wide bandwidth, and extreme reliability due to the lack of single point of failure.

Active homing guidance - A system of homing guidance in which both the source for illuminating the target, and the receiver for detecting the energy reflected from the target as the result of illumination, are carried within the missile.

Aerosols - Solid particles dispersed in the atmosphere that have resonant size particles with a high index of refraction. The particles both scatter and absorb visual and laser-directed energy so as to lessen the effect of weapon systems directed by these techniques.

Airborne early warning and control - Air surveillance and control provided by airborne early warning vehicles that are equipped with search and height finding radar and communications equipment for controlling weapons.

Airborne interceptor (AI) - A manned aircraft used for identification and/or engagement of airborne objects. (An AI may or may not be equipped with radar to assist in the interception.)

Airborne Warning and Control System (AWACS) - An aircraft suitably equipped to provide control, surveillance, and communications capability for strategic defense and/or tactical air operations.

Air defense - All defensive measures designed to destroy attacking enemy aircraft or missiles in the earth's envelope of atmosphere, or to nullify or reduce the effectiveness of such attack.

Air surveillance radar (ASR) - A radar displaying range and azimuth that is normally employed in a terminal area as an aid to approach and departure control.

Air-to-air missile (AAM) - A missile launched from an airborne carrier at a target above the surface.

Air-to-surface missile (ASM) - A missile launched from an airborne carrier to impact on a surface target.

Alternating current (AC) - An electric current that reverses its direction at regularly recurring intervals, the frequency being determined by the frequency of the alternator supplying the current.

AM-CW jamming - Jamming in which a carrier wave is modulated at a constant recurring rate. The recurrence rate of amplitude modulation is variable, and reflects a noticeable change in the radar scope. Because of the spiraling or chaining effect produced, AM-CW jamming is easily identified.

Amplifier - An electronic circuit usually used to obtain amplification of voltage, current, or power.

Amplitude shift keying - A method of impressing a digital signal upon a carrier signal by causing the carrier amplitude to take different values corresponding to the different values of the digital signal.

Amplitude modulation (AM) - **A method of impressing a message upon a carrier signal by causing the carrier amplitude to vary proportionally to the message waveform.**

Angle jamming - **A deception jamming technique used to deny azimuth and elevation information to a TTR by transmitting a jamming pulse similar to the radar pulse, but with modulation information out of phase with the returning target azimuth modulation information.**

Angle tracking - **Accomplished through the use of pulses to determine angular definition of a target.**

Antenna - **A device used for transmitting or receiving RF energy. The function of the antenna during transmission is to concentrate the radar energy from the transmitter into a shaped beam that points in the desired direction. During reception, or listening time, the function of the antenna is to collect the returning radar energy, contained in the echo signals, and deliver these signals to the receiver. Radar antennas are characterized by directive beams that are usually scanned in a recognizable pattern. The primary radar antenna types in use today fall into three categories: parabolic, Cassegrain, and phased array antennas.**

Antenna cross talk - **A measure of undesired power transfer through space from one antenna to another. Ratio of power received by one antenna to power transmitted by the other usually expressed in decibels.**

Antenna gain - **See Gain**

Antenna polarization - **See Polarization**

Antenna sidelobes - **See Sidelobes**

Antiaircraft artillery (AAA) - **Guns used to shoot unguided projectiles at airborne aircraft. Usually used in the air defense system.**

Anti-clutter circuits (in radar) - **Circuits that attenuate undesired reflections to permit detection of targets otherwise obscured by such reflections.**

Antiradiation missile (ARM) - **A missile that homes passively on a radiation source.**

Area defense - **The concept of locating defense units to intercept enemy attacks, remote from, and without reference to, individual vital installations, industrial complexes, or population centers.**

Asynchronous pulsed jamming - An effective form of pulsed jamming where the jammer nearly matches the PRF of the radar then transmits multiples of the PRF. It is more effective if the jammer pulse width is greater than that of the radar. Asynchronous pulsed jamming is similar to synchronous jamming except that the target lines tend to curve inward or outward and appear fuzzy in the jammed sector of the radar scope.

Attenuation - The decrease in amplitude of a signal during its transmission from one point to another. Attenuation increases as distance increases. The higher the frequency of the propagating signal, the higher the rate of attenuation.

Automatic frequency control (AFC) - Circuits in a receiver that automatically correct the local oscillator frequency to prevent receiver drift in tuned frequency.

Automatic gain control (AGC) –

1. A feature involving special circuitry designed to maintain the output of a radio, radar, or television receiver essentially constant, or to prevent its exceeding certain limits, despite variations in the strength of the incoming signal. In a radio receiver, in particular, though something of a misnomer, also known as automatic volume control.

2. A self-acting compensating device that maintains the output of a transmission system constant with narrow limits, even in the face of wide variations in the attenuation of the system.

3. A radar circuit that prevents saturation of the radar receiver by long blocks of receiver signals, or by a carrier modulated at low frequency.

Automatic search jamming - An intercept receiver and jamming transmitting system that automatically searches for and jams enemy signals of specific radiation characteristics.

Automatic tracking - Tracking in which a system employs some mechanism, e.g., servo or computer, to automatically follow some characteristics of the signal.

Azimuth resolution - The ability of a radar to distinguish two targets in close azimuth proximity and distance.

Backlobe - The portion of the radiation pattern of an antenna that is oriented 180° in relation to the main beam. The antenna backlobe is a result of diffraction effects of the reflector and direct leakage through the reflector surface.

Backward wave oscillator (BWO) - **A special traveling wave tube in which oscillatory currents are produced by using an oscillatory electromagnetic field to bunch the electrons as they flow from cathode to anode.**

Ballistic missile - **Any missile that does not rely upon aerodynamic surfaces to produce lift and consequently follows a ballistic trajectory when thrust is terminated.**

Bandpass filter - **A filter that allows a select range of frequencies to pass while attenuating all frequencies outside the range.**

Bandwidth - **The range of frequencies within which performance, with respect to some characteristics, falls with specific limits (i.e., the width of frequency of a barrage noise package).**

Barrage noise jamming - **Noise jamming spread in frequency to deny the use of multiple radar frequencies to effectively deny range information. Although this is attractive because it enables one jammer to simultaneously jam several radars of different frequencies, it does have the inherent problem that the wider the jamming spread, the less jamming power available per radar.**

Beam rider - **A missile guided by an electronic beam.**

Beam-to-beam correlation (BBC) - **Used by frequency scan radars to reject pulse jamming and jamming at swept frequencies. Correlation is made from two adjacent beams (pulses). The receiver rejects those targets (signals) that do not occur at the same place in two adjacent beams.**

Beamwidth - **The width of a radar beam measured between lines of half-power points on the polar pattern of the antenna. This width is measured at the 3 dB points.**

Beat frequency oscillator (BFO) - **Any oscillator whose output is intended to be mixed with another signal to produce a sum or difference beat frequency. Used particularly in reception of CW transmissions.**

Bistatic radar - **A radar where the transmitting and receiving antennas are separated by a considerable distance. Bistatic operation provides several advantages for its user. The covert positioning of the receivers poses problems for a potential attacking force since ELINT techniques locate the transmitter not the receiver. The proper placement of jamming assets is difficult, since the receiving sites are unknown. In addition, if a stand-off jammer is directed at the transmitter, its effectiveness in the direction of the covert receiver is diminished.**

Jammers not in the same beam as the wanted targets will be attenuated by the receiver's sidelobe protection and these targets will be more readily detected.

Blanking –

1. The cutting off of the electronic beam in a cathode-ray tube when the picture is not being formed. The beam is blanked while the spot is returning to the starting position (normally right to left).

2. Process of making a channel or device noneffective for a desired interval.

Blinking - A jamming technique employed by two aircraft separated by a short distance and within the same azimuth resolution to appear as one target to a tracking radar. The two aircraft alternately spot jam, causing the radar system to oscillate from one plane to another, making an accurate solution of fire control problem impossible. However, keep in mind that too high a blinking frequency can cause the tracker to average the data while too low a frequency will cause a missile to home-in on one of the jammers.

Broad pulse jamming - Transmission of broad pulses for control system jamming when little is known about the command pulse group. For example, a broad pulse might cover a whole group of command pulses, thus jamming that command.

Burnthrough range - The ability of a radar to see through jamming. Usually described as the point when the radar's target return is stronger than the jamming signal.

Burst chaff - The formation of a reflective volume of chaff from an individual bundle.

Buzzer - Code name for airborne jamming.

Capture - Where the jammer takes control over the guidance signal by active jamming.

Capture effect - The tendency of a receiver to suppress the weaker of two signals within its bandpass.

Capture of AGC - Domination of the radar's automatic gain control (AGC) level by a strong transmitted jamming signal.

Carrier frequency - Frequency of an unmodulated radio wave emanated from a radio, radar, or other type of transmitter.

Carrier wave - Electromagnetic radiation used to "carry" information from one point to another.

Centroid homing - When applied to antiradiation missiles, the effect on a missile that has two or more radiation sources in its field of view causing it to home on the centroid of the power from the radiating sources.

Chaff - Ribbon-like pieces of metallic materials or metalized plastic that are dispensed by aircraft to mask or screen other aircraft or to cause a tracking radar to break lock. The foil materials are generally cut into small pieces for which the size is dependent upon the radar interrogation frequency (approximately 1/2 wavelength of the victim radar frequency). Being 1/2 wavelength long, chaff acts as a resonant dipole and reflects much of the energy back to the radar.

Chaff corridor - Operational technique of dropping large quantities of chaff for a continuous period of time. This results in a "ribbon" or "stream" of returns many miles long on radar scopes. The penetrating strike force can then use the resulting chaff corridor to mask its penetration.

Chirp - A pulse compression technique characterized by linear frequency modulation on pulse (LFMOP).

Chirp radar - Radar in which a swept-frequency signal is transmitted, received from a target, and then compressed in time to give a final narrow pulse called the chirp signal. It has high immunity to jamming and an inherent rejection of random noise signals.

Circularly polarized jamming - The techniques of radiating jamming energy in both planes of polarization. With this method, there is a 3-dB loss of effective power in either plane, but the enemy cannot cross-polarize his antenna to escape jamming.

Circular scan - The pattern generated by an antenna that is continuously rotating in one direction.

Clipped noise modulation - A clipping action is performed to increase the. bandwidth of the jamming signal. Results in more energy in the sidebands, correspondingly less energy in the carrier, and an increase in the ratio of average power to peak power.

Clutter - Unwanted signals, echoes, or images on the face of a scope that interferes with the observation of desired signals. Also called noise. This tends to mask the true target from detection or cause a tracking radar to break lock.

Clutter elimination - The clutter eliminator circuit discriminates against any target echo that exceeds three times the transmitted pulse width, and will not display it on the indicator. It is normally employed on the lower beams of a high frequency radar. This will allow targets above a preset signal strength to be presented, while the clutter (land) will be eliminated.

Clutter gating - A technique that provides switching between MTI and normal videos. It results in the normal video being displayed in regions with no clutter and the MTI video being switched in only for the clutter areas. Clutter gating is achieved automatically by the PW discrimination or the use of storage tubes. It also can be achieved by a manually operated range azimuth gate. The clutter gate vastly increases the effectiveness of noncoherent MTI against chaff.

Coherent MTI (in radar MTI) - A system in which the target echo is selected based on its Doppler frequency when compared to a local reference frequency maintained by a coherent oscillator.

Coherent noise jamming - Noise-like jamming signal that is repetitive and in synch with the PRI of the radar.

Coherent repeater jammer - A jammer that uses the phase information of the receiver radar signal in creating false targets thus transmitting a signal that is acceptable to the receiver processor of a victim coherent radar.

Command and control warfare (C2W) - The integrated use of operations security (OPSEC), military deception, psychological operations (PSYOP), electronic warfare (EW), and physical destruction, mutually supported by intelligence to deny information, influence, degrade, or destroy adversary C^2 capabilities while protecting friendly C^2 capabilities.

Command, control, communications, and computer systems (C4) - The process of, and means for, the exercise of authority and direction by a properly designated commander over assigned forces in the accomplishment of the commander's mission.

Command guidance - A guidance system in which intelligence transmitted to the missile from an offboard source causes the missile to traverse a directed flight path.

Communications intelligence (COMINT) - Intelligence derived from the interception of enemy communications signals.

Communications security (COMSEC) - The protection resulting from all measures designed to deny unauthorized persons information of value that might be

derived from the possession and study of telecommunications, or to mislead unauthorized persons in their interpretation of the results of such possession and study. COMSEC includes: 1. Cryptosecurity; 2. transmission security; 3. emission security; and 4. physical security of communications security material and information.

1. Cryptosecurity - The component of communications security that results from the provision of technically sound cryptosystems and their proper use.

2. Transmission security - The component of communications security from which all measures designed to protect transmissions from interception and exploitation by means other than cryptoanalysis.

3. Emission security - The component of communications security that results from all measures taken to deny unauthorized persons information of value that might be derived from intercept and analysis of compromising emanations from crypto equipment and telecommunications systems.

4. Physical security - The component of communications security that results from all physical measures necessary to safeguard classified equipment, material, and documents from access thereto or observation thereof by being within a friendly power.

Complex pulse - A pulse train in which there is more than one pulse width and/or more than one pulse repetition interval.

Conformal antenna - An antenna which conforms to a surface whose shape is determined by considerations other than electromagnetic, for example, an antenna shaped to aerodynamically fit the side of an aircraft.

Conical scan (CONSCAN) - A type of scanning in which the axis of the RF beam is tilted away from the axis of the reflector and rotated about it, thus generating a cone.

Constant false alarm rate (CFAR) receiver - A radar receiver with automatic detection circuits designed to produce a constant number of erroneous target detections independent of noise level at the receiver input. CFAR techniques are intended to prevent receiver saturation and overload, to present clear video information to the display, and a constant noise level to an automatic detector. A device that accomplishes these objectives may respond to the signal-to-noise ratio, for example, rather than the absolute signal level above a fixed threshold. CFAR does not usually permit the detection of a target if the target is weaker than the jamming, but it does attempt to remove the confusing jamming effects.

Continuous wave (CW) - A constant, single-frequency, unmodulated carrier wave that is transmitted and then reflected. A good system for determining velocity.

Correlation detection (modulation systems) - Detection based on the averaged product of the received signal and locally generated function possessing some known characteristics of the transmitted wave. Note the following caveats:

1. The averaged product can be formed, for example, by multiplying and integrating, or by using a matched filter whose impulse response, when reversed in time, is the locally generated function.

2. Strictly, the above definition applies to detection based on cross-correlation. The term correlation detection may also apply to detection involving autocorrelation, in which case the locally generated function is merely a delayed form of the received signal.

Countdown - A technique for forcing the radar AGC to continuously change value and oscillate. The jammer rapidly changes the duty cycle of the deception pulses.

Countdown blink - Self-screening AGC deception using a gated repeater or noise source; the period of which is short compared to the victim's AGC time constant.

Cover pulse - A jammer covers the radar return with an AM pulse usually much wider than the radar pulse. Since tracking circuits are looking for largest return, they will transfer to the cover pulse, thereby denying range information.

Cross-eye - A jamming technique used to produce angular errors in monopulse and other passive lobing radars. Jammer is a two-source interferometer that causes the phase front of the signal reaching the radar to be highly distorted. With such a technique, it is difficult for the radar to determine the points from which the transmissions are originating. Requires a high jam-to-signal ratio or the skin echo will show up in the pattern nulls.

Cross-gated CFAR - A CFAR technique employed to achieve the fast switching required for an optimum combination of normal and MTI modes. Here, the MTI video signals are used to "gate" on the normal video when the MTI indicates a target in clutter. CFAR action is achieved by the wideband as in the zero-crossing and Dicke fix CFARs.

Cross polarization - or "Cross Pole," is a monopulse jamming technique where a cross-polarized signal is transmitted to give erroneous angle data to the radar. The component of the jamming signal with the same polarization as the radar must be very small.

Cross polarization jamming - A technique whereby the received signal is retransmitted cross-polarized and at a much higher power than the skin return-effective against some monopulse radars by generating erroneous angle information.

CW jamming - The transmission of constant-amplitude, constant-frequency, unmodulated jamming signals to change the signal-to-noise ratio of a radar receiver.

Data link - A communications link which permits automatic transmission of information in digital form.

Deception - Those measures designed to mislead the enemy by manipulation, distortion, or falsification of evidence to induce him to react in a manner prejudicial to his interests. (See Electronic Deception, or Manipulative Deception.)

Deception jamming - Any means of jamming consisting of false signals that have similar characteristics to the victim radar thereby deceiving the operator into erroneous conclusions.

Decibel (dB) - A dimensionless unit for expressing the ratio of two values, the number of decibels being 10 times the logarithm to the base 10 of a power ratio, or 20 times the logarithm to the base 10 of a voltage of current ratio. A power increase by 3 dB indicates a doubling of the original power.

(dBm) - Same as dBw except the reference level is one milliwatt instead of one watt.

(dBw) - Unit used to describe the ratio of the power at any point in a transmission system to a referenced level of one watt. The ratio expresses decibels above and below the reference level of one watt.

Defense suppression - A term applied to weapons systems that are intended to eliminate or degrade enemy detection, acquisition, or tracking equipment.

Delayed opening chaff - Chaff that blooms at a specific elapsed time after it is dispensed.

Detector balanced bias - Controlling circuit used in radar systems for anti-clutter purposes.

Dicke fix - A technique specifically designed to protect the receiver from ringing caused by noise, fast-sweep, or narrow-pulse jamming. The basic configuration

consists of a broadband limiting IF amplifier, followed by an IF amplifier of optimum bandwidth. The limit level is preset at approximately the peak amplitude of receiver noise. The bandwidth may vary from 10 to 20 MHz, depending on the jamming environment. The device provides excellent discrimination against fast-sweep jamming (10 - 500 MHz), usually something about 20 to 40 dB, without appreciable loss in sensitivity. However, strong CW jamming will seriously degrade the performance of the Dicke fix because the CW signal captures the radar signal in the limiter.

Dicke fix CFAR - Constant False Alarm Rate.

Dicke fix MT CFAR - An MTI CFAR technique similar to Dicke fix CFAR. Limiting and narrowbanding follow wideband amplification, phase detection, and cancellation so as not to impair the MTI performance.

Digital radio frequency memory (DRFM) - A computer-controlled digital device used in radar jamming systems. DRFM provides an extremely fast and accurate storage capability for victim radar signal parameters. Jamming systems employing DRFM can rapidly and accurately generate coherent jamming based on the memorized victim radar signal.

DINA - See Direct Amplified Noise.

Diode - An electron device having two electrodes, a cathode, and an anode.

Diplex - Two transmitters operating alternately on approximately the same RF and using a common antenna. The normal procedure is to pulse each transmitter at ½ the desired PRF, 180° out-of-phase. The advantage is that higher peak power per transmitter is possible because each transmitter is operating at ½ the normal duty cycle.

Dipole antenna - A straight, center-fed, ½ wavelength antenna. Horizontally polarized, it produces a figure-eight radiation pattern with maximum radiation at right angles to the plane of the antenna.

Direction finding (DF) - A procedure for obtaining bearings of radio frequency emitters with the use of a highly directional antenna and a display unit on an intercept receiver or ancillary equipment.

Direct amplified noise (DINA) - DINA without a carrier frequency is used for increasing (saturating) the radar receiver's noise level. This is called video stealing. The biggest danger from this type of jamming is that the radar operator may not realize he is being jammed when automatic gain control (AGC) or automatic noise leveling (ANL) are employed. This is a barrage type of jamming

with a bandwidth normally more than 50 MHz. DINA appears as a bright, high intensity wedge when the manual gain is employed. Thus, all useful radar scope information is lost.

Doppler (effect) - Continuous wave (CW) Doppler radar modules are sensors that measure the shift in frequency created when an object moves. A transmitter emits energy at a specific frequency which, when reflected, can indicate both speed and direction of the target. When objects move closer to the Doppler source, they increase in shift (positive value), and when they move further away, they decrease in shift (negative value).

Doppler radar - A radar system that measures the velocity of a moving object by the apparent shift in carrier frequency of the returned signal as it approaches or recedes.

Downlink - The signal from a transponder beacon located on a surface-to-air missile (SAM) used to provide a traceable radar return for missile guidance.

Downlink jamming (DLJ) - Some command guidance missiles carry a beacon (downlink) which is used by the parent radar to track the missile. If this beacon reply can be hidden from the parent tracking radar, the missile guidance solution can be defeated. Hence, downlink (beacon) jamming is intended to screen the missile beacon signal from the parent radar's view.

Ducting - The bending of radar rays due to atmospheric conditions. Ducting can either extend radar coverage beyond normal line of sight or it can deny the radar picture above a duct. Ducting is also called Anomalous Propagation.

Dummy antenna - A device that has the necessary impedance characteristics of an antenna and the necessary power-handling capabilities, but does not radiate or receive radio waves. Note: In receiver practice, that portion of the impedance not included in the signal generator is often called a dummy antenna.

Dummy load (radio transmission) - A dissipative but essentially nonradiating substitute device having impedance characteristics simulating those of the substituted device. This allows power to be applied to the radar unit without radiating into free space.

Duplex - In radar, a condition of operation when two identical and interchangeable equipments are provided—one in an active state, and the other immediately available for operation.

Duplexer - A switching device used in radar to permit alternate use of the same antenna for both transmitting and receiving.

Duty cycle - The ratio of the time the transmitter is actually on versus the time it could be on in a given transmission cycle. Mathematically, it can be expressed as:

$$\text{Duty Cycle} = \frac{PD}{PRT} \quad \text{or} \quad \text{Duty Cycle} = PD \times PRF$$

Dynamic range –

1. The difference, in decibels, between the overload level and the minimum acceptable signal level in a system or transducer. Note: The minimum acceptable signal level of a system or transducer is ordinarily fixed by one or more of the following: noise level, low-level distortion, interference, or resolution level.

2. Ratio of the specified maximum signal level capability of a system or component to its noise or resolution level, usually expressed in decibels.

Early warning radar - A radar set or system used near the periphery of a defended area to provide early notification of hostile aircraft approaching the area.

EA pod - A jamming system that is designed to be carried externally on an aircraft.

Effective radiated power (ERP) - Input power to antenna time multiplied by the gain of the antenna, expressed in watts.

Electromagnetic interference (EMI) - Any electromagnetic disturbance that interrupts, obstructs, or otherwise degrades or limits the effective performance of electronic systems. EMI can be induced intentionally, by way of jamming, or unintentionally because of spurious emissions and modulations.

Electromagnetic pulse (EMP) - The generation and radiation in a transmission medium of a very narrow and very high-amplitude pulse of electromagnetic noise. The term is associated with the high-level pulse because of a nuclear detonation and with an intentionally generated narrow, high-amplitude pulse for EA applications. In nuclear detonations, the EMP signal consists of a continuous spectrum with most of its energy distributed throughout the low frequency band of 3 to 30 kHz.

Electromagnetic radiation - Radiation made up of oscillating electric and magnetic fields and propagated with the speed of light. Includes gamma radiation, x-rays, ultraviolet, visible and infrared radiation, plus radar and radio waves.

Electromagnetic spectrum - The total range of frequencies (or wavelengths) over which any form of electromagnetic radiation occurs.

Electromagnetic test environment (EMTE) - A range complex of radars, such as those located at Eglin AFB, FL, operating in different frequency bands and modes to provide a very flexible test facility for evaluating aircraft antenna patterns, reflectivity measurements, infrared, reconnaissance, airborne interceptors, and electronic warfare devices and techniques.

Electronic attack (EA) - The use of electromagnetic energy, directed energy, or antiradiation weapons to attack personnel, facilities, or equipment with the intent of degrading, neutralizing, or destroying enemy combat capability. Action taken to reduce the enemy's effective use of the electromagnetic spectrum. EA is a division of electronic warfare (EW).

Electronic combat (EC) - Action taken in support of military operations against the enemy's electromagnetic capabilities. EC is task-oriented and includes electronic warfare (EW), command and control warfare (C2W), and suppression of enemy air defenses (SEAD).

Electronic protection (EP) - Active and passive means taken to protect personnel, facilities, and equipment from any effects of friendly or enemy employment of electronic warfare that degrade, neutralize or destroy friendly combat capability. EP is a division of electronic warfare (EW).

Electromagnetic deception - The deliberate radiation, reradiation, alteration, absorption, or reflection of electromagnetic radiations in a manner intended to mislead an enemy in the interpretation of, or use of, information received by his electronic systems. There are two categories of electronic deception:

1. **Manipulative deception - The alteration or simulation of friendly electromagnetic radiation to accomplish deception.**

2. **Imitative deception - The introduction of radiations into enemy channels that imitate his own emissions.**

Electronic intelligence (ELINT) - The intelligence information product of activities engaged in the collection and processing for subsequent intelligence purposes of foreign, noncommunications, electromagnetic radiations emanating from other than nuclear detonations or radioactive sources.

Electronic intelligence parameter limit list (EPL) - A compilation of identified signals with assigned ELINT notations.

Electronic jammers –

1. **Expendable - A transmitter designed for special use such as being dropped behind enemy lines.**

2. **Repeater - A receiver-transmitter device that, when triggered by enemy radar impulses, returns synchronized false signals to the enemy equipment. The returned impulses are spaced and timed to produce false echoes or bearing errors in the enemy equipment. See Expendable and Repeater Jammers.**

Electronic jamming - The deliberate radiation, reradiation, or reflection of electromagnetic energy with the object of impairing the use of electronic devices, equipment, or systems.

Electronic order of battle - A listing of all the electronic radiating equipment of a military force giving location, type function, and other pertinent data.

Electronic reconnaissance - Specific reconnaissance directed toward the collection of electromagnetic radiations. Examples:

COMINT	**Communications Intelligence**
ELINT	**Electronic Intelligence**
OPINT	**Optical Intelligence**
RINT	**Radiated Intelligence**
SIGINT	**Signal Intelligence**

Electronic warfare (EW) - Military action involving the use of electromagnetic energy and directed energy to control the electromagnetic spectrum. EW has three divisions: electronic attack (EA), electronic protection (EP), and electronic warfare support (ES).

Electronic warfare support (ES) - Actions taken to search for, intercept, identify, and locate sources of intentional radiated electromagnetic energy for the purpose of immediate threat recognition. Surveillance of the electromagnetic spectrum that directly supports an operational commander's electromagnetic information needs. ES is a division of EW.

Electro-optics (EO) - The interaction between optics and electronics leading to the transformation of electrical energy into light, or vice versa, with the use of an optical device.

Electro-optic counter-countermeasures (EOCCM) - Actions taken to ensure the effective friendly use of the electro-optic spectrum despite the enemy's use of countermeasures in that spectrum.

Emission control (EMCON) –

1. The management of electromagnetic radiations to counter an enemy's capability to detect, identify, or locate friendly emitters for exploitation by hostile action.

2. Controlling the radiation of an active system to minimize detection by enemy sensors.

Endgame - The period of military engagement 3-5 seconds before missile impact.

Endgame countermeasures (EGCM) - Actions taken to defeat a tracking missile. This includes expendables, decoys, and maneuvers.

Essential elements of information (EEI) - The critical items of information regarding the enemy and his environment needed by the commander by a particular time to relate with other available information and intelligence to be able to reach a logical decision.

Expendable jammer - A nonrecoverable jammer. Early expendables were limited to chaff and flare deployments; however, various radiating jamming systems exist that use noise or repeater techniques. These are dispensed by aircraft or other delivery systems and are designed to disrupt or deceive a victim radar for a short period of time.

Extremely high frequency (EHF) - Frequencies in the range of 30 to 300 GHz.

False target - Radiated bundle of electromagnetic energy that is displaced in time from the echo that creates a response in the receiver where no reflecting surface exists.

False target generator - Device for generating electromagnetic energy of the correct frequency of the receiver that is displaced in time from the reflected energy of the target.

Fast automatic gain control (FAGC) - An AGC scheme characterized by a response time that is long with respect to a PW and short with respect to the target. An ultra fast FAGC will reduce the CW capture effect on the Dicke fix.

Fast time constant circuit (in radar) –

1. A circuit with short time constant used to emphasize signals of short duration to produce discrimination against extended clutter, long-pulse jamming, or noise.

2. A resistance-capacitance differentiating network with a time constant about equal to the transmitted pulse width and employed in the video portion of the receiver to provide the discrimination against jamming with low modulating frequencies. FTC is effective against CW, long jamming pulses, swept jamming, and clutter. It is also fairly effective against chaff corridors. Based on time, the radar receiver will allow only pulses equal to its own pulse width to pass and be presented on the indicators as targets. Because of this, only the leading edges of long pulses will be displayed.

Fence –

1. Line or network of early warning radars.

2. Concentric steel fence erected around a ground radar transmitting antenna to serve as an artificial horizon and suppress ground clutter that would otherwise drown out weak signals returning at a low angle from the target.

Ferret - An aircraft, ship, or vehicle especially equipped for the detection, location, recording, and analyzing of electromagnetic radiations.

Field of view (FOV) - The maximum solid angle visible by an optical or electro-optic system.

Fire control radar - Specialized radar systems used to locate and track airborne and surface targets, compute an optimum weapons firing point, and control the firing and sometimes guidance of its weapons.

FM-by-noise modulation - A method of frequency modulating with effective jamming method against AM and fix-tuned FM receivers. Not very effective against continuously tunable PFM receivers; careful tuning can defeat a great portion of the jamming signal. For this reason, FM-by-noise is not considered optimum as a type of modulation for jamming FM receivers.

FM jamming - Technique consisting of a constant amplitude RF signal that is varied in frequency around a center frequency to produce a signal over a band of frequencies.

Forward edge of the battle area (FEBA) - **The foremost limits of a series of areas in which ground combat units are deployed, excluding the areas in which the covering or screening forces are operating, designated to coordinate fire support, the positioning of forces, or the maneuver of units.**

Frequency agility - **A radar's ability to change frequency within its operating band, usually on a pulse-to-pulse basis. This is an EP technique employed to avoid spot jamming and to force the jammer to go into a less effective barrage mode.**

Frequency band designations –

1. As decided upon by the Atlantic City Radio Convention of 1947, and later modified by Comite Consultatif International Radio (CCIR) Recommendation No. 142 in 1953:

Band	RF Range	Band	RF Range
VLF	0-30 kHz	VHF	30-300 MHz
LF	30-300 kHz	UHF	300-3000 MHz
MF	300-3000 kHz	SHF	3-30 GHz
HF	3-30 MHz	EHF	30-300 GHz

2. Electronic warfare uses the following designations:

A	0-250 MHz	H	6-8 GHz
B	250-500 MHz	I	8-10 GHz
C	500-1000 MHz	J	10-20 GHz
D	1000-2000 MHz	K	20-40 GHz
E	2-3 GHz	L	40-60 GHz
F	3-4 GHz	M	60-100 GHz
G	4-6 GHz		

Frequency bandpass - **The number of hertz where maximum output is obtained between two limits usually defined and bounded by lower and upper half power (3 dB) points.**

Frequency hopping - **An anti-jamming technique used by a radar system. The carrier frequency of the pulsed transmissions are periodically or continuously shifted within limits on each successive pulse.**

Frequency diversity - **Method of transmission and/or reception using several frequencies simultaneously to minimize the effects of selective fading, deliberate jamming, or interference.**

Frequency modulated CW (FM-CW) jamming - FM of a CW signal to produce a wide band of signals when the exact operating frequency of the victim is not known within the CW limits.

Frequency modulation (FM) - A method of impressing a message upon a carrier signal by causing the carrier frequency to vary proportionally to the message waveform.

Frequency shift keying (FSK) - A form of FM where the carrier is mined code. In multiple FSK, the carrier is shifted to more than two frequencies. FSK is used principally with teletype communications.

Frequency spectrum - The entire range of frequencies of electromagnetic radiation.

G - Acceleration due to gravity (32.2 ft/sec^2).

Gain (manual) - The receiver gain control allows the operator to vary the receiver sensitivity. It is not designed as an AJ feature; however, when properly employed it may greatly reduce the effects of jamming. The radar detection capability is also reduced by an equal amount.

Gain (transmission gain) - The increase in signal power in transmission from one point to another under static conditions. Note: Power gain is usually expressed in decibels.

Glint (in radar) –

1. The random component of target location error caused by variations in the phase front of the target signal (as contrasted with scintillation error). GLINT may affect angle, range of Doppler measurements, and may have peak values corresponding to locations beyond the true target extent in the measured coordinate.

2. Electronic countermeasures that use the scintillating, or flashing, effect of shuttered or rotating reflectors to degrade tracking or seeking functions of an enemy weapons system.

Ground controlled intercept (GCI) - Vectoring an interceptor aircraft to an airborne target by means of information relayed from a ground-based radar site that observes both the interceptor and target.

Guidance system (missile) - A system that evaluates flight information, correlates it with target data, determines the desired flight path of the missile, and communicates the necessary commands to the missile flight control system.

Guided missile - An unmanned vehicle moving above the surface of the earth, whose trajectory of flight path is capable of being altered by an external or internal mechanism.

Height finder - A radar used to detect the angular elevation, slant range and height of objects in the vertical sight plane. An air defense ground radar used specifically to accurately determine aircraft altitude for tracking and ground controlled intercepts.

Hertz (Hz) - The unit of frequency, equal to one cycle of variation per second. It supersedes the unit cycle per second (cps).

High frequency (HF) - Frequencies from 3000 - 30,000 kHz.

Home-on-jam (HOJ) - A missile mode of operation in which a jamming signal is used to develop steering information for the missile to home in on the jamming source.

Homing guidance - A system by which a missile steers itself toward a target by means of a self-contained mechanism which is activated by some distinguishing characteristics of the target.

Identification, friend or foe (IFF) - A system using radar transmission to which equipment carried by friendly forces automatically responds, for example, by emitting pulses, thereby distinguishing themselves from enemy forces. It is the primary method or determining the friendly or unfriendly character of aircraft and ships by other aircraft and ships, and by ground forces employing radar detection equipment and associated identification, friend or foe units.

Image frequency - An undesired input frequency capable of producing the selected frequency by the same process. NOTE: An image frequency is a frequency which differs from, but has a certain symmetrical relationship to, that which a superheterodyne receiver is tuned. Consequently, the image frequency can be mistakenly accepted and processed as a true frequency by the receiver.

Image jamming - Jamming at the image frequency of the radar receiver. Barrage jamming is made most effective by generating energy at both the normal operating and imaging frequency of the radar. Image jamming inverts the phase of the response and is thereby useful as an eagle deception technique. Not effective if the radar uses image rejection.

Imitative deception - The introduction of radiations into enemy channels which imitates their own emissions.

Imitative jamming - The jamming technique of transmitting a signal identical to the original guidance signal.

Infrared (IR) - That portion of the frequency spectrum lying between the upper end of the millimeter wave region and the lower (red) end of the visible spectrum. In wavelength, the IR lies between 0.78 and 300 microns; in frequency, it lies between one and 400 terahertz (THz).

Infrared counter-countermeasures (IRCCM) - Actions taken to effectively employ our own infrared radiation equipment and systems in spite of the enemy's actions to counter their use.

Infrared countermeasures (IRCM) –

1. Countermeasures used specifically against enemy threats operating in the infrared spectrum.

2. Actions taken to prevent or reduce the effectiveness of enemy equipment and tactics employing infrared radiation.

Instantaneous automatic gain control (IAGC) –

1. That portion of a system that automatically adjusts the gain of an amplifier with varying input pulse amplitudes. The adjustment is sufficiently fast to operate while a pulse is passing through the amplifier.

2. In radar, a quick-acting automatic gain control that responds to variations of mean clutter level, or jamming over different range or angular regions, avoiding receiver saturation (also known as back-bias). IAGC automatically adjusts the gain of the radar receiver so that strong signals do not block adjoining weak signals. IGAC is not quick enough to block short pulse jamming, extended clutter, or chaff.

Instantaneous frequency CFAR (IFCFAR) - A technique similar to the IF DICKE FIX CFAR, except for having a phase detector instead of a frequency discriminator. The primary use of this technique, combined with rapid random frequency changes, is to make chaff signals appear noise-like so they can be handled conventionally.

Instantaneous inverse gain - Pulse-by-pulse amplification, modulation, and reradiation of the victim's radar pulse to obscure angle data.

Intercept point - A computed point in space toward which an interceptor is vectored to complete an interception.

Interference (electronic) - An electrical or electromagnetic disturbance that causes undesirable responses on electronic equipment. Electrical interference refers specifically to interference caused by the operation of electrical apparatus that is not designed to radiate electromagnetic energy.

Interferometer - As pertains to radar, a receiving system which determines the angle of arrival of a wave by phase comparison of the signals received at separate antennas or separate points on the same antenna.

Interleaved jamming - Time sharing of a jammer's output around many threats usually to cover pulse jamming.

Intermediate frequency (IF) –

1. A fixed frequency to which all carrier waves are converted in a superheterodyne receiver.

2. A frequency to which a signaling wave is shifted locally as an intermediate step during transmission or reception.

3. A frequency resulting from the combination of the received signal and that of the local oscillator in a superheterodyne receiver.

Intermediate frequency jamming - Form of CW jamming that is accomplished by transmitting two CW signals separated by a frequency equal to the center frequency of the radar receiver IF amplifier.

Interrogator - A device used to transmit pulse-coded challenges to an IFF transponder and then evaluates the pulse-coded reply for identification purposes.

Intrapulse modulation repeater - A classified deception jamming technique.

Intrusion –

1. **The entry of a nonfriendly aircraft or system into friendly air space.**

2. **The intentional interference in a communication system by which the intruder attempts to confuse, delay, or cause error by the selective introduction of additional data.**

Inverse conscan - One method of confusing a radar operator or fire control radar system is to provide erroneous target bearings. This is accomplished by first sensing the radar antenna scan rate and then modulating repeater amplifier gain so that the weapons systems will fire at some bearing other than the true target bearing. The angle deception technique is used to break lock on CONSCAN radars.

Inverse gain - Amplification, inverse modulation, and reradiation of a radar's pulse train at the rotation rate of the radar scan. Deceives a conical scanning radar in angle.

Inverse-gain repeater jammer - A form of repeater in which the jammer creates false targets by varying the output power inverse with the strength of the received radar signal.

Jaff - Expression for the combination of electronic and chaff jamming. An ECM tactic involving the use of jammers to illuminate chaff corridors or chaff bursts to produce false targets.

Jam attenuator control - Used to prevent receiver saturation from any strong signals, including electronic jamming, chaff, or clutter. It also permits the determination of the bearing and elevation of jammers that would cause wide sectors of the scope to be obscured. The control reduces all signals equally, jamming as well as targets. This control should be used in the jammed sector only and not for an entire antenna revolution. Targets in the jammed sector would only be seen if they were stronger than the jamming. However, the jammed sector may be reduced enough in size to allow the operator to determine either bearing or elevation.

Jammer - A device used to deprive, limit, or degrade the use of communications or radar systems. Radio frequency jammers include noise, discrete frequency repeater, and deceptive equipment.

Jamming-to-signal (J/S) ratio - The relative power ratio of jamming to the radar return signal at the radar antenna. The inverse of the signal-to-jamming ratio.

Jam strobe - Also called JAVA (jamming amplitude versus azimuth). A circuit that generates a marker on the PPI to indicate signal strength as a function of bearing. It does this by sampling the jamming intensity once each repetition period. Besides showing the direction of the jammer, it also indicates the severity of main beam and sidelobe jamming.

Jet engine modulation (JEM) - Modulation present in the radar returns received from a jet aircraft, caused by the rotation of the fan or turbine blades of the aircraft's engines.

Jittered pulse repetition frequency (jittered PRF) - The PRF is rapidly varied at a random rate so that false targets appear to jitter or appear fuzzy on the scope. An alternative to jittered PRF is to change the PRF momentarily. This causes the false targets to change their position on the scope. It provides a discrimination against repeater-type jammers.

Klystron - A very stable microwave amplifier that provides high gain at good efficiency. This is accomplished by velocity modulating (accelerating a beam of electronics flowing from its cathode to its anode.

Laser target designation - The use of a laser to direct a light beam onto the target so that appropriate sensors can track or home on the reflected energy.

Leading-edge tracker - A tracking radar that obtains its data from the leading edge of the echo pulse from the target.

Light amplification by stimulated emission of radiation (LASER) - A process of generating coherent light. The process uses a natural molecular (and atomic) phenomenon whereby molecules absorb incident electromagnetic energy at specific frequencies. It then stores this energy for short but usable periods, then releases the stored energy as light at particular frequencies, and in an extremely narrow frequency band.

Lobe - One of the three-dimensional sections of the radiation pattern of a directional antenna bounded by 1-2 cones of nulls.

Lobe-on-receive-only (LORO) - Mode of operation consisting of transmitting on one antenna system and receiving the reflected energy on another system (TWS, conical, or monopulse).

Local oscillator off - A simple expedient of shutting off the local oscillator during barrage jamming. The barrage jammer will not be seen unless there is a beating signal such as a target; therefore, targets will appear. Since targets will not

appear in directions where no jamming arises, either an automatic azimuth switch or an additional receiver display is required.

Logarithmic fast time constant log (LOG-FTCL) - A device consisting of a logarithmic IF amplifier followed by an FTC circuit. The LOG-FTC combination is very effective in removing variations in the video output noise level caused by spot noise, wideband noise, and slow sweep noise modulated AM jamming.

Logarithmic receiver - A receiver whose response approximates the logarithm of the strength of the incoming signal. A special type of receiver having a large dynamic range of automatic gain control that gives considerable protection against receiver saturation by strong jamming on interference signals. Useful against weather, clutter, chaff, and spot jamming.

Look-down, shoot-down - Refers to an air interceptor (AI) equipped with a pulse Doppler radar, or a radar that has a moving target indicator (MTI) feature, that can detect and lock-on to a target within ground return clutter enabling the AI to track and shoot the target.

Look-through –

1. When jamming, a technique by which the jamming emission is interrupted irregularly for extremely short periods to allow monitoring of the victim signal during jamming operations.

2. When being jammed, the technique of observing or monitoring a desired signal during interruptions in the jamming signals.

Low frequency (LF) - Frequencies from 30 - 300 kHz.

Low power spread spectrum radar - A low power, high duty cycle radar whose spectrum is spread 100 MHz or more. Since this radar has a broad output spectrum and a high duty cycle, neither time nor frequency can be effectively used to resolve these signals. This leaves direction as the prime method of resolution. The spectrum of these radars is spread over the bandwidth by any of the pseudo random noise modulating techniques commonly used in communications. Techniques such as bi-phase modulation, quaternary phase modulation, chirp, random frequency jumping, etc., may be used to spread either a CW signal or a very high duty cycle signal. Such signals have a very good range resolution—approximately equal to the reciprocal of the bandwidth.

Magnetron - A radar microwave device whose operation is based on the motion of electrons (AC) under the influence of combined electric and magnetic fields.

Mainlobe - The lobe of a transmitting or receiving antenna centered on the directivity axis of the antenna.

Manipulative deception - The alteration or simulation of friendly electromagnetic radiations to accomplish the deception.

Meaconing, interference, jamming, and intrusion (MIJI) - An acronym of four component parts to determine the intent and technique of electromagnetic radiation.

Meaconing - a system of receiving radio beacon signals and rebroadcasting them on the same frequency to confuse navigation. Interference - unintentional electromagnetic radiation that may cause interference with electronic equipment.

Jamming - the deliberate radiation, reradiation, or reflection of electromagnetic energy with the intent of impairing the use of electronic devices, equipment, or systems being used by the enemy.

Intrusion - the intentional insertion of electromagnetic energy into transmission paths in any manner with the objective of deceiving operators or causing confusion.

Medium frequency (MF) - Frequencies from 300 to 3,000 kHz.

Micron - A unit of length equal to a micrometer (10^{-6} meters).

Microwave amplification by stimulated emission or radiation (MASER) - A low-noise, radio-frequency amplifier. The emission of energy stored in a molecular or atomic system by a microwave power supply is stimulated by the input signal.

Microwave communications - Line-of-sight communications, the frequency of which is higher than 300 MHz.

Millimeter waves - Frequencies (30 GHz to 300 GHz) in the millimeter portion of the electromagnetic spectrum.

Miss distance - The distance measured between the closest paths of a target and interceptor (i.e., aircraft and missile). One objective of self-protection jamming systems is to increase the miss distance to avoid destruction if missile launch cannot be prevented.

Missile approach warning system (MAWS) - A system used to detect and provide warning of approaching missiles. MAWS may be partitioned into active MAWS and passive MAWS.

1. Active missile approach warning system (AMAWS) - Generally employs pulse Doppler radar as its sensor. This radar is able to discern a moving target in stationary or slow-moving background clutter.

2. Passive missile approach warning system (PMAWS) - An ultraviolet (UV) or infrared-based detector system with the ability to detect and distinguish threat missiles from surrounding clutter and non-lethal missiles.

Modulated barrage jamming - A technique that varies the amplitude of the output power of a barrage jammer with sinusoidal or complex modulation.

Modulated CW jamming - A CW carrier waveform that has been modulated with another signal (such as noise, low, medium, or high frequencies), and is transmitted for the purpose of deception. May be AM, FM, pulse modulated (PM), etc.

Modulated PRF (MPRF) - The deliberate modulation of the interpulse spacing in a pulse train. See PRF Jitter and PRF Stagger.

Modulation - The variation of amplitude, frequency, or phase of an electromagnetic wave by impressing another wave on it.

Modulator - A device (such as an electron tube) for modulating a carrier wave or signal for the transmission of intelligence of some sort.

Monopinch - Anti-jam application of the monopulse technique where the error signal is used to provide discrimination against jamming signals.

Monopulse - A method of pulse generation that allows the simultaneous determining of azimuth, elevation and range, and/or speed from a single pulse.

Monopulse radar - A radar using a receiving antenna system having two or more partially overlapping lobes in the radiation patterns. Sum and difference channels in the receiver compare the amplitudes or the phases of the antenna outputs to determine the angle of arrival of the received signal relative to the antenna boresight. A well-designed monopulse tracking system will achieve a more accurate track under conventional jamming techniques than on the skin return. Certain monopulse trackers are susceptible to angular jamming techniques such as skirt and image jamming. Techniques such as "CROSS EYE" are designed to

attack all monopulse tracking systems. Monopulse deception is a major area of advanced R&D with no clear "best technique" yet in sight.

Moving target indicator (MTI) - A radar presentation that shows only targets that are in motion. Signals from stationary targets are subtracted out of the return signal by the output of a suitable memory circuit.

MTI CFAR - A technique that provides CFAR capability in an MTI receiver. The cancellation of ground clutter is not impaired during radar jamming.

Multiband radar - Radar that simultaneously operates on more than one frequency band through a common antenna. This technique allows for many sophisticated forms of video processing and requires that a jammer must jam all channels simultaneously.

Multiplex - Simultaneous transmission of two or more signals on a common carrier wave. The three types of multiplex are called time division, frequency division, and phase division.

Multitarget generator jamming - A technique where a generator takes the radar's PRF, scan rate, and antenna lobe pattern and computes when to transmit false targets at the radar's frequency. The targets appear as true targets, but normally only about 20 percent of the targets are programmed to give a logical course and speed. The many targets saturate the tracking operator's capability by the sudden appearance of multiple targets, and/or many targets either stationary or on illogical courses and speeds, or maneuvers such as 90 degree turns at high speeds but with no displacement. Also, targets may appear in back and sidelobe positions.

Music - In air intercept, a term meaning electronic jamming.

Narrowband (NB-1) - Narrows the receiver frequency making it more selective. It limits the target signals and the jamming signal to a set level of amplitude and reduces the level of a jamming signal if the jammer is not tuned to the radar's exact frequency.

Narrow pulse jamming - Jamming where the jammer pulse width is less than the radar's pulse width. Technique may be required by interleaved jamming.

Noise –

1. Any unwanted disturbance within a dynamic electrical or mechanical system, such as undesired electromagnetic radiation, and any transmission channel or device.

2. Uncontrolled random disturbances that arise in a guided missile system because of various physical phenomena.

Noise jamming - Direct (straight) AM or FM noise on a carrier frequency that has a highly variable bandwidth for the purpose of increasing (saturating) the radar receiver's noise level.

Nuclear effects - The electromagnetic phenomena resulting from a nuclear explosion. The phenomena are listed as follows:

1. Argus phenomena (trapped electrons). The trapping in the earth's magnetic field of electrons produced by a nuclear burst.

2. Blackout (radio frequency interference). An effect that is the result of ionization produced by a nuclear explosion in or above the atmosphere. This ionization can cause interference (blackout) by attenuating, reflecting, cluttering, and scattering radar electromagnetic pulses in a high-intensity burst of electromagnetic radiation, predominantly in the radio frequency range of the spectrum.

3. Optical phenomena. Intense radiations covering all parts of the optical spectrum are produced by the interactions between the atmosphere and the nuclear radiation and fission products resulting from a nuclear detonation. The resulting auroras and airglows are created as an optical background that can affect reconnaissance, tracking, warning and homing systems, and personnel.

4. Transient radiation effects on electronics. Nuclear radiation impinging on electronic systems or components can substantially alter the operation and output of these systems. The word transient refers to the type of environment and not to the duration of the effect since the effect may be either transient or permanent.

Nulls - Points of no radiation in an antenna radiation pattern.

Obscuration - Effects produced by masking-type jammers. Denial of either range or angle is achieved by submerging data interference caused by noise or noise-like signals.

Off-frequency spot jamming - A type of spot jamming in which the jammer frequency is off the radar operating frequency but still within the radar receiver bandpass.

Optical countermeasures - Applications of electronic countermeasures in the visible light portion of the electromagnetic spectrum. Actions taken to prevent or reduce an enemy's effective use of the visible spectrum.

Oscillator - Electronic circuit or device capable of converting direct current (DC) into alternating current (AC) at a frequency determined by the inductive and the capacitive constants of the oscillator.

Over-the-horizon radar - A radar system that makes use of the ionosphere to extend its range of detection beyond line-of-sight. Over-the-horizon radars may be either forward scatter or backscatter systems.

Palmer scan - Conical scan superimposed on another type of scan pattern-usually a spiral pattern.

Passive angle tracking (PAT) - A target may be tracked "passively" if that target emits electromagnetic radiation; i.e., jamming radio, radar signal of sufficient duration that a DF bearing may be obtained. The emission from the target is DF-ed in azimuth and/or elevation. No range information will be available unless cross DF techniques are used by two or more passively tracking sites.

Passive detection and tracking - By combining azimuth data on jamming strobes from several stations, intersections are obtained which indicate the position of the jammers. The number of ghosts can be reduced by increasing the number of friendly stations and obtaining elevation angles of strobes when available.

Passive electronic countermeasures - Electronic countermeasures based on the reflection, absorption or modification of the enemy's electromagnetic energy. This distinction between active and passive countermeasures is not currently used, but is based on the presence or absence of an electronic transmitter.

Passive homing guidance - A system of homing guidance in which the receiver in the missile uses radiations only from the target.

Peak power - Maximum power output during transmission time. Expressed in watts or megawatts.

Penetration aids - Techniques and/or devices employed by aerospace systems to increase the probability of weapon system penetration of any enemy defense.

Examples are: Low altitude profiles, trajectory adjustments, reduced radar cross-sections of attack vehicles, improved vehicle hardness to effects of defense engagements, terrain avoidance radar, bomber defense missiles, decoys, chaff, electronic countermeasures, etc. Penetration aids are used by an offensive system to penetrate enemy defenses more effectively. Also called PENAIDS.

Phase modulation - A method of impressing a message upon a carrier signal by causing the carrier phase to vary proportionally to the waveform.

Phase shift keying - A method of impressing a digital signal upon a carrier signal by causing the carrier phase to take different values corresponding to the different values of the digital signal.

Phased array radar - Radar using many antenna elements that are fed out-of-phase to each other. The direction of the beam can be changed as rapidly as the phase relationships (usually less than 20 μsec). Thus, the antenna remains stationary while the beam is moved electronically. The use of many antenna elements allows for very rapid and high directivity of the beam(s) with a large peak and/or average power.

Point defense - The defense of specified geographical areas, cities, and vital installations. One distinguishing feature of point defense missiles is that their guidance information is received from radars located near the launching sites.

Polarization - The direction of an electrical field is considered the direction of polarization. When a half-wave dipole antenna is horizontally oriented, the emitted wave is horizontally polarized. A vertical polarized wave is emitted when the antenna is erected vertically.

Polarization diversity - The variation of polarization (such as horizontal, vertical, circular, or elliptical for radar use) either simultaneously or singularly.

Power management - Generally classified methods to optimize all related EW activities and facilities-usually in reference to a coordinate, optimized EW suite.

PPI scope - A radar display yielding range and azimuth information via an intensity modulated display and a circular sweep of a radial line. The radar is located at the center of the display.

PRF jitter - PRF rapidly varied at a random rate so that false targets appear to jitter, or appear fuzzy, on the scope. An alternative to jittered PRF is to momentarily change the PRF. This causes the false targets to change their position on the scope.

PRF stagger - The technique of switching PRF or PRI to different values on a pulse-to-pulse basis such that the various intervals follow a regular pattern. This is useful in compensating for "blind speeds" in pulsed MTI radars. Interpulse intervals differ but follow a regular pattern.

Pseudo noise - A modulation technique resulting in low signal selectability and decreased vulnerability to jamming.

Pulse compression - A scheme whereby a specifically modulated, medium power long pulse is stretched and transmitted. The returned pulse is compressed in the receiver demodulation process to obtain the advantage of narrow pulse operation. Long pulses provide the advantage of long range detection and short (compressed) pulses provide the advantage of better resolution and accuracy. This technique uses matched filter techniques for discriminating against signals that do not correspond to the transmitted code. It permits an increase in average transmitted power (without an increase in peak power) with no loss in range resolution. Pulse compression is a special form of pulse coding and correlation.

Pulse deception jamming - Any of the many false target techniques used to deceive a pulse radar, as opposed to obscurative noise techniques.

Pulse discriminator - Device that responds only to a pulse that has a particular characteristic, such as duration or period.

Pulse Doppler radar - A highly complex radar system that employs a very high pulse repetition frequency (usually 10,000 PPS or higher) to reduce "blind speeds" and measure the Doppler frequency shift to resolve target velocity. Pulse Doppler is applied principally to radar systems requiring the detection of moving targets in a ground clutter environment. It uses pulse modulation to achieve higher peak power, greater range, less susceptibility to unfriendly detection, and enhanced range resolution.

Pulse duration - The time in microseconds that the radar set is transmitting RF energy. Generally, the greater the pulse duration, the higher the average power, but the poorer the range resolution. Also known as pulse width. More technically, it is the time interval, measured at the half-amplitude points, from the leading edge to the trailing edge of a pulse.

Pulse group - In complex pulse trains, two or more pulses that are recognizably distinct from the others.

Pulse interference suppression and blanking (PISAB) - An EP automatic interference blanking device that will blank all video signals not synchronous

with the radar PRF. PISAB does not require any trigger and operates on both normal and MTI modes. It is effective against random pulse signals.

Pulse jitter - Random variation of interpulse interval.

Pulse modulation (PM) - A special case of amplitude modulation in which the carrier wave is varied at a pulsed rate. This series of pulses is generally for transmitting data. The result is a short, powerful burst of electromagnetic radiation that can be used for measuring the distance from a radar set to a target.

Pulse modulated jamming - Use of jamming pulses of various widths and repetition rates.

Pulse position modulation - Modulation by variation of the interval that elapses between the pulse to be modulated in a group of pulses and a synchronizing pulse, usually the first pulse of the group.

Pulse repetition frequency (PRF) - The rate at which pulses or pulse groups are transmitted from a radar set. Generally, PRF is the number of pulses generated per second and is expressed in hertz (Hz).

Pulse repetition interval (PRI) - The interval of time between two transmitted radar pulses, usually expressed in microseconds. PRI is the inverse of PRF.

Pulse recurrence time (PRT) - Time elapsing between the start of one transmitted pulse and the start of the next. It is the reciprocal of PRF.

Pulse recurrence time (PRT) agility - Ability of the radar set to vary the number of pulses per set.

Pulse width (PW) - See Pulse Duration.

Pulse width discrimination (PWD) - An EP technique used to discriminate against received pulses that do not have the same duration as the radar transmitted pulse. PWD is used in eliminating the effects of pulse type interference when the interference pulses are not the same length as the real radar pulse. Since this circuit generates a blanking gate that shuts off the receiver whenever a pulse of improper length is sensed, loss of valid target data can result. PWD offers good discrimination against long-pulse jamming and jamming signals employing low frequency noise modulation. It affords little or no discrimination against short pulses and HF noise modulations.

Pulse width discriminator - A device that measures the pulse length of video signals and passes only those pulses whose time duration tails into some predetermined design tolerances. A pulse width discriminator will generally provide some gain against barrage jamming, similar to that of a matched filter in the video.

"Rabbits" - Interference from another radar on or near the frequency of the receiving radar. Shows on the indicators as interference at the rate of the relative PRF of the interfering radar.

Radar - From Radio Detection And Ranging. A device used to detect a distant target and determine and display its relative direction (azimuth) and its relative distance (range).

Radar absorbent material (RAM) - Material used as a radar camouflage device to reduce the echo area of an object.

Radar beacon - A receiver-transmitter combination that sends out a coded signal when triggered by the proper type of pulse enabling determination of range and bearing information by the interrogating station or aircraft.

Radar cross section - The equivalent area intercepted by a radiated signal and, if scattered uniformly in all directions, produces an echo at the radar receiver equal to that of the target. Typical radar cross sections of aircraft vary from one to over 1,000 square meters. The RCS of ships may exceed 10,000 square meters.

Radar definition - The accuracy with which a radar obtains target information such as range, azimuth, or elevation.

Radar homing - Homing on the source of a radar beam.

Radar homing and warning (RHAW) - Typically consists of an airborne, wideband video receiver designed to intercept, identify, and display the direction to pulse-type emitters.

Radar resolution - A measure of a radar's ability to separate targets that are close together in some aspect of range, azimuth, or elevation into individual returns.

Radar warning receiver (RWR) - A receiver onboard an aircraft that analyzes the hostile radar environment and determines radar threat by type, frequency, relative bearing, and relative distance. The threat is displayed to the aircrew by means of display lights, video symbols, and aural tones.

Radio frequency (RF) - Electromagnetic energy radiated at some frequency.

Radio frequency interference - An unintentional interfering signal capable of being propagated into electronic equipment, usually derived from sources outside the system.

Railing –

1. Pertains to radar pulse jamming at high recurrence rates (50 to 150 kHz). It results in an image on a radar indicator resembling fence railing.

2. The name given to that pattern produced on an "A" scope by CW modulated with a high frequency signal. Railings appear as a series of vertical lines resembling target echoes along the baseline.

Random modulation CW jamming - The use of a nonperiodic function to an AM, FM, or AM/FM CW carrier. The effects produced on a radar are similar to those produced by DINA.

Random noise - Electromagnetic energy having no particular modulation or pattern. May be generated by either natural atmospheric phenomena or by electromagnetic radiation devices.

Random pulse jamming - The technique by which a pulse transmission system is pulsed irregularly by random noise signals.

Range - The distance from one object to another.

Range gate - A gate voltage used to select radar echoes from a very short range interval.

Range gate capture - A jamming technique using a spoofer radar transmitter to produce a false target echo that can make a target tracking radar move off the real target and follow the false one.

Range gate pull-in (RGPI) - Same as range gate pull-off (see next text entry) except that the deceptive pulse is transmitted before the radar pulse is received. This is accomplished by digital storage of the pulse repetition period which must be extremely stable.

Range gate pull-off (RGPO) - A deception technique used against pulse tracking radars using range gates. The jammer initially repeats the skin echo with minimum time delay at a high power to capture the AGC circuitry. The delay is

progressively increased, forcing the tracking gates to be pulled away ("walked off") from the target echo. Frequency memory loops (FML) or transponders provide the variable delay.

Range gate tracker - A radar system that tracks targets in range by measuring the elapsed time from the transmitted pulse to the echo return.

Range tracking - Pulse radars measure the time difference between radar pulse transmission and echo reception. The range gate is positioned at a range where the target is expected. The receiver is blanked off except during the period where the range gate is positioned. Range tracking may occur at the leading edge of the return pulse or between ON and OFF gates.

Recovery time (RT) - The time that a radar requires to "get ready" to receive after a pulse is sent out. Time is required to get ready because the high-powered pulse tends to fill the sensitive radar receiver with RF energy, which prevents target returns from being seen. A short "damping out" period occurs after the pulse width during which time the RF energy dissipates, allowing weak target echoes to once again be detected.

Rectifier - A device (such as a vacuum tube) for converting alternating current (AC) into direct current (DC).

Repeater - A receiver-transmitter combination that amplifies the received signal and retransmits it.

Repeater jammer - Equipment used to confuse or deceive the enemy by causing his equipment to present false information. This is done by a system that intercepts and reradiates a signal on the frequency of the enemy equipment. The reradiated signal is modified to present erroneous data on azimuth, range, number of targets, etc.

Repeater jamming - Interception and reradiation of a signal with the reradiation of a signal being modified to give erroneous azimuth, range, velocity, acceleration, or number of targets.

Resolution - The ability of a system to distinguish between two adjacent objects and to display them separately.

Resolution cell - The minimum volume in space in which a radar can discriminate between targets. It is determined numerically-for a conventional radar-by the width of the beam in angle, the pulse width in range, and the velocity gate width in speed.

Response noise jammer - A repeater jammer that transmits spot noise over the received radar frequency even in the case of radar frequency agility.

Ringing - The undesired oscillation or triggering of an electrical device by its own transmitter.

Rope - An element of chaff consisting of a long roll of metallic foil or wire that is designed for broad low frequency response. (See Chaff.)

Rope chaff - Chaff that contains one or more rope elements. (See Chaff.)

Rotating polarization - The result of a rotating feed. This should not be confused with circular polarization where the electric field rotates about the axis of propagation at the radar frequency.

SAM - Surface-to-air missile.

Saturating signal - In radar, a signal of an amplitude greater than the dynamic range of the receiving system.

Sawtooth modulated jamming - Electronic countermeasure technique when a high-level jamming signal is transmitted, thus causing large AGC voltages to be developed at the radar receiver that, in turn, causes the target return and receiver noise to completely disappear.

Scan - The process of directing a beam of RF energy successively over a given region, or the corresponding process in reception.

Scan interval - The time interval from the peak of one mainlobe in a scan pattern to the peak of the next mainlobe.

Scan period - The time period of basic scan types (except conical and lobe switching) or the period of the lowest repetitive cycle of complex scan combinations. The basic unit of measurement is degrees/mils per second or seconds per cycle.

Scan rate modulation - Modulation of the deception jamming signal with one or more frequencies that are related to the scan rate of the radar.

Scan type - The path made in space by a point on the radar beam, for example, circular, helical, conical, spiral, or sector.

Search –

1. **A term applied to that phase of radar operation when the lobe, or beam of radiated energy, is directed in such a way to search for targets in the area.**

2. **A systematic examination of space to locate and identify targets of interest.**

Sector scan - A scan in which the antenna sweeps back and forth through a selected angle.

Selective identification feature (SIF) - A capability which, when added to the basic IFF system, provides the means to transmit, receive, and display selected coded replies.

Self-protection jamming - Jamming to protect the vehicle upon which the jammer is deployed.

Semiactive radar homing - Semiactive homing guidance combines principles from both the beam rider and the active radar homing missile. Track on the target is established by the AI's radar; the missile is launched when the target comes within its effective range. During missile flight, the AI maintains track on the target. Radar returns from the target are received by the missile. Guidance commands are generated within the missile from the radar returns.

Sensitivity time control (STC) - Programmed variation of the gain (sensitivity) of a radar receiver as a function of time within each pulse repetition interval or observation time. STC prevents overloading of the receiver by strong echoes from targets or clutter at close ranges. STC reduces the gain of the radar receiver for detection of close-in targets. It is particularly effective in removing close-in clutter and strong nearby signals. STC also refers to a circuit that reduces the gain of the radar receiver immediately following the transmission of the radar pulse so that the receiver is not saturated by strong radar returns from nearby objects.

Serrodyne - A method of "pulling off" the velocity gate of a Doppler radar by using a voltage-controlled phase shifter, usually a traveling wave tube (TWT). This introduces a frequency shift from zero to some maximum value, pulling the Doppler tracking gate away from the skin echo. The phase shift is usually accomplished by modulating the TWT's helix voltages.

Sidelobe - Part of the beam from an antenna, other than the mainlobe. Sidelobe gain is usually less than mainlobe gain. Given that the mainlobe radiates most of the power at zero degrees azimuth, sidelobes inherently radiate significant power in the direction of +20°, 90°, and 150° relative to the mainlobe.

Sidelobe blanking (SLB) - A device that employs an auxiliary wide angle antenna and receiver to sense whether a received pulse originates in the sidelobe region of the main antenna and to gate it from the output signal if it does. This technique uses an omnidirectional antenna and compares relative signal strength between the omni and the radar antenna. The omnichannel (plus receiver) has slightly more gain than the sidelobes of the normal channel, but less gain than the main beam. Any signal that is greater in the omnichannel must have been received from a sidelobe and is blanked. This technique is effective in removing spoofed signals with a duty cycle up to 50%.

Sidelobe canceller (SLC) - A device that employs one or more auxiliary antennas and receivers to allow linear subtraction of interfering signals from the desired output if they are sensed to originate in the sidelobe of the main antenna. This technique employs the same antenna and receiver configurations of the SLB, except that a gain matching and canceling process takes place. Extraneous signals entering the sidelobes of the main antenna are canceled while the targets remain. This type of system exhibits cancellation roughly 20 dB against a single noise jammer. With multiple jammers at various azimuths, the performance of this device rapidly deteriorates.

Sidelobe jamming - Jamming through a sidelobe of the receiving antenna in an attempt to obliterate the desired signal received through the mainlobe of the receiving antenna at fixed points.

Sidelobe suppression - The suppression of that portion of the beam from a radar antenna other than the mainlobe.

Sidewinder - A solid-propellant, air-to-air missile with nonnuclear warhead and an infrared guidance system. Designated as the AIM-9 missile.

Signal intelligence (SIGINT) - Intelligence derived from the interception of enemy communications and noncommunication signals. A generic term that includes both COMINT and ELINT.

Signal-to-jamming ratio (S/J) - The ratio of the signal power to the jamming power or intentional interference at some point in the system. This ratio is often expressed in decibels.

Signal-to-noise ratio (S/N) - Ratio of the power of the signal to the power of the noise.

Signature - The set of parameters that describes the characteristics of a radar target or an RF emitter and distinguishes one emitter from another. Signature

parameters include the RF of the carrier, the modulation characteristics (typically the pulse modulation code), and the scan pattern.

Sine-wave modulated jamming - Jamming signal produced by modulating a CW signal with one or more sine waves.

Single beam blanking (SBB) - Used by phased array radars as an alternative method of Beam to Beam Correlation (BBC). It is effective, to some degree, against many multiple target generators and swept frequency jammers. Because of overlapping beamwidths, a target signal will appear in more than one beam as the beams are scanned past a true target. When jamming signals are transmitted along one beam, that beam is blanked by the radar receiver.

Skirt jamming - Jamming that places the signal somewhat off the radar center frequency but within the IF skirts. The technique will degrade the tracking accuracy of some monopulse radars; however, good radar design makes the technique ineffective.

Smart jamming - Selective jamming of threat radars with an optimized modulation signal at a correct time. Power management techniques are used to control smart jamming systems.

Smith modulation - Deceptive technique that operates on the servo loop of the victim's radar. Two RF carriers are transmitted with a few cycles difference.

Spiral scan - A pencil beam scan which moves around a central axis describing the surface of a cone in an ever-increasing cone size.

Spot jamming - Narrow frequency band jamming concentrated against radar at a particular frequency. The jamming bandwidth is comparable to the radar bandpass. Used to deny range and sometimes angle information.

Spread spectrum - Use of broader frequency bandwidths than normally required to transmit information, in order to gain advantages in interference rejection (anti-jam), message privacy/security, low probability of intercept (LPI), deny frequency resolution, multiplexing of more than one message in the same bandwidth, or high resolution range measurement.

Spurious radiation - Emissions from a radio transmitter at frequencies outside its assigned or intended emission frequency. Spurious emission includes harmonic emission, parasitic emission, and intermodulation products, but excludes emissions in the immediate vicinity of the necessary band that are a result of the modulation process for the transmission of information.

Spurious response –

1. Any response, other than the desired response, of an electric transducer or device.

2. A term used in electronic warfare to describe the undesirable signal images in the intercept receiver resulting from the mixing of the intercepted signal with harmonics of the local oscillators in the receiver.

Staggered PRF - A technique of using more than one PRF to reduce the blind speeds associated with MTI radars. PRF switching occurs on a pulse-to-pulse basis.

Stand-off jammer (SOJ) - A powerful jammer that remains at a safe range while providing jamming coverage (masking) for the attacking elements. The Navy EA-6B is an example of a SOJ aircraft.

Stand-off jamming (SOJ) - A jamming aircraft that orbits outside the maximum range of the SAM threat. As the attack package penetrates, the jamming aircraft directs jamming against all significant radars in the area.

Stream - Dispensing of chaff (solid/random interval/bursts).

Stream chaff - Operational technique of dropping large quantities of chaff for a continuous period of time. This results in a "ribbon" or "stream" of returns many miles in length on victim radar scopes. The penetrating attack package can then use the resulting chaff corridor to mask their penetration.

Super high frequency (SHF) - Frequencies from 3 to 30 GHz.

Support jamming - A tactic by which aircraft carrying electronic jamming equipment orbit at a safe distance from the enemy threat defenses or fly escort with the strike force for the primary purpose of screening them from the threat radars.

Suppression of enemy air defenses (SEAD) - That activity which neutralizes, destroys, or temporarily degrades enemy air defense systems in a specific area by using physical attack, deception, and/or electronic warfare.

Surface-to-air missile (SAM) - A missile launched from a surface launcher at a target above the surface.

Sweep jammer - Electronic jammer that sweeps a narrow band of electronic energy over a broad bandwidth.

Sweep lock-on jammer - A transmitter in which a narrowband jamming signal can be tuned over a broad frequency band and the signal locked on a particular frequency.

Swept audio - Jamming technique usually employed against conical scan-on-receive-only (COSRO) radars. The received pulses are amplified and retransmitted by the target and amplitude modulated at a frequency close to the suspected receiver antenna scan frequency.

Swept jamming - An EA technique of barrage jamming in which a CW carrier or noise source is swept over a selected bandwidth.

Swept-spot jamming - A jamming technique in which an oscillator is swept over a specific range of frequencies in the band of interest in order to be assured of exciting a receiver tuned to any frequency in that band.

Synchronized-pulse jamming - The technique of attempting to insert jamming pulses into a receiver each time the receiver gate opens.

Synchronous-pulsed jamming - A jamming technique that matches exactly the PRF of the victim's radar; then transmits multiples of the PRF. It is most effective if the jammer also matches the PW of the radar. Synchronous-pulsed jamming is easily recognized since the spacing between successive target lines is equal and each target line is the same in depth from the center outward. The width of the jammed sector is dependent upon the range of the jammer from the radar.

Synthetic aperture radar (SAR) - A high-resolution ground mapping technique in which advantage is taken of the forward motion of a coherent pulsed radar to synthesize the equivalent of a very long sidelooking array antenna from the radar returns received over a period of up to several seconds or more.

Target acquisition - The detection, identification, and location of a target in sufficient detail to permit the effective employment of weapons.

Terminal guidance –

1. The guidance applied to a guided missile between mid-course and arrival in the vicinity of the target.

2. Electronic, mechanical, visual, or other assistance given to aircraft pilots to facilitate arrival at, operation within or over, landing upon or departure from an air landing or air drop facility.

Terminal threat - The weapon systems, generally near a target, used to directly engage an aircraft in order to destroy it.

Terrain-avoidance radar - An airborne radar that provides a display of terrain ahead of low-flying aircraft to permit horizontal avoidance of obstacles.

Terrain-following radar (TFR) - An airborne radar that provides a display of terrain ahead of low-flying aircraft to permit manual control, or signals for automatic control to maintain constant altitude above the ground.

Thermal crossover - The natural phenomenon which normally occurs twice daily when temperature conditions are such that there is a loss of contrast between two adjacent objects on infrared imagery.

Threshold - The minimum value of a signal that can be detected by a system or sensor under consideration.

Time-of-arrival (TOA) - A method of locating a distant pulse emitter by measuring the difference in the time-of-arrival of its pulses at three separate locations. This method is also called Inverse LORAN.

Track –

1. **A series of related contacts displayed on a plotting board.**

2. **To display or record the successive positions of a moving object.**

3. **To lock onto a point of radiation and obtain guidance from it.**

4. To keep a gun properly aimed, or to continuously point a target-locating instrument at a moving target.

5. The actual path of an aircraft above, or a ship on, the surface of the earth. The course is the path that is planned; the track is the path that is taken.

Tracking - The continuous monitoring of range, velocity, or position of a target in space from a reference position. This is accomplished via radar and/or optical means.

Tracking radar - A radar that measures the range, azimuth, elevation, and/or velocity of the target and provides data that may be used by the fire control computer to determine the target path and predict its future position.

Track-on-jam - A method of passive target tracking using the jamming signal emitted by the target.

Track-while-scan (TWS) radar - Although it is not really a tracking radar in the true sense of the word, it does provide complete and accurate position information for missile guidance by using two separate beams produced by two separate antennas on two different frequencies. The system uses electronic computer techniques whereby raw data are used to track an assigned target, compute target velocity, and predict its future position while maintaining normal sector scan.

Transceiver - A combined radio transmitter and receiver in which some circuits other than those of the power supply are common to both transmitter and receiver, and not providing for simultaneous transmission and reception.

Transponder - A transmitter-receiver capable of accepting the electronic challenge of an interrogator and automatically transmitting an appropriate reply.

Traveling wave tube (TWT) - An electron tube in which a beam of electrons interacts continuously with a guided electromagnetic wave to produce amplification at microwave frequencies. A TWT capable of providing high amplification (60 dB) in frequencies over several octaves without adjustment. TWTs are classified by:

1. Power Output:

Low (less than one watt)
High (more than 10 watts)
Intermediate (one to 10 watts)

2. **Noise Characteristics:**

   Low (less than 20 dB)

3. **Operating Mode:**

   Pulse
   CW
   Dual Mode (pulse or CW)

4. **Method of Focusing:**

   PPM (periodic permanent magnet)
   Solenoid (single electromagnet)
   Coupled Cavity

5. **Terms associated with TWT operation:**

   a. **Gain Compression: Change in amplification a device provides as it operates near saturation.**

   b. **Overdrive: TWT is operating beyond the point of saturation.**

   c. **Saturation Gain: Ratio of output power to input power when the device is being driven at maximum output.**

   d. **Serrodyne: Linear translation of the phase of a signal on the helix of a TWT by a linear sawtooth waveform that enables the TWT to operate as a single sideband frequency translator.**

   e. **Small Signal Gain: Ratio of output power to input power when the TWT is operating linearly.**

Two-signal jamming (also called straddle jamming) - Jamming whereby two signals are transmitted on two RF frequencies slightly separated. Effective against certain types of radar where receiver bandwidth is narrow enough to defeat noise jamming.

Ultra high frequency (UHF) - Frequencies from 300 to 3,000 MHz.

Unit prefixes - Prefixes used to indicate scientific units:

Multiple	Prefix	Symbol
10^{12}	tera	T
10^{9}	giga	G
10^{6}	mega	M
10^{3}	kilo	k
10^{2}	hecto	h
10^{1}	deka	da
10^{-1}	deci	d
10^{-2}	centi	c
10^{-3}	milli	m
10^{-6}	micro	µ
10^{-9}	nano	n
10^{-12}	pico	p
10^{-15}	femto	f
10^{-18}	atto	a

Unmodulated CW jamming - The transmission of a high power carrier frequency that causes an overload effect to occur in the radar receiver. Used against bandpass radars that have a limited tuning capability. Unmodulated CW jamming can be identified by a blackening of the scope background (no video present) in a wedge-shaped sector, or by a solid brightening of a wedge or sector, normally exceeding one bandwidth.

Uplink - The missile guidance signal that passes command guidance intelligence from the site to the missile.

Velocity gate pull-off (VGPO) - Method of capturing the velocity gate of a Doppler radar and moving it away from the skin echo. Similar to the RGPO, but used against Doppler radar systems. The target Doppler frequency, which is amplified and retransmitted, is shifted in frequency to provide an apparent rate change or Doppler shift.

Very high frequency (VHF) - Frequencies from 30 to 300 MHz.

Very low frequency (VLF) - Frequencies from 3 to 30 kHz.

Video frequency –

1. A band of frequencies extending from approximately 100 Hz to several MHz.

2. The frequency of the voltage resulting from television scanning. Range from zero to 4 MHz or more.

Warning receiver - A receiver with the primary function of warning the user that his unit is being illuminated by an electromagnetic signal of interest.

Wideband constant false alarm rate receiver (WB-1) - Used against individual or combinations of rapidly swept FM-CW, noise, or CW jamming. This mode has nonlinear limiting and gives poor resolution of overlapping targets.

Window –

1. Strips of frequency-cut metal foil, wire, or bars that may be dropped from aircraft or missiles, or expelled from shells or rockets as a radar countermeasure. A confusion reflector.

2. A passive radar deception or confusion device; usually consisting of some metallic structure, designed in size and shape to effectively reflect impinging signals, to simulate a true target.

3. British name for chaff.

Wobbulation - A periodic and usually slow variation of a parameter (such as frequency, amplitude, or period) about a central value. A low frequency modulation of a jamming carrier that appears on a radar display as a "wobbling" target. This effect is an undesired result of an angle deception or time-varying barrage technique.

Wooden round - An ordnance round (shell, missile, etc.) requiring no maintenance or preparation time prior to loading for firing.

OLEG D. JEFIMENKO
West Virginia University

Electrostatic Motors

Their History, Types, and
Principles of Operation —

With many illustrations, of which 57 are
by
David K. Walker
of
Waynesburg College

Electret Scientific Company
Star City

UNIVERSITY OF COLORADO
DENVER CAMPUS LIBRARY

Copyright © 1973 by
Electret Scientific Company
P.O. Box No. 4132
Star City, West Virginia 26505

All rights reserved

Printed in the United States of America

This book is dedicated to an accomplished
farmer, craftsman, musician,
educator, and lawyer
MY FATHER

PREFACE

The fascinating science of electrostatics was developed mainly in the 18th century at a time when the technology and industry were too primitive to put this science to practical uses. As a result, serious research in electrostatics soon lost its momentum and, except for a few isolated efforts, was practically nonexistent during the entire 19th century. Only very recently practical aspects of electrostatics began to make their impact on the industry and economy, and the once glamorous but long forgotten science has again appeared at the focal point of serious scientific investigations.

A peculiar obstacle stands, however, in the way of many such investigations: because of the one and one half century of neglect of electrostatic explorations there is a singular lack of easily available quantitative and qualitative information on even the most basic electrostatic phenomena, techniques, and devices. Whereas experimental and theoretical data pertaining to most modern sciences are well documented and are easily retrievable from numerous reference sources, many data in the field of electrostatics

must be extracted through thorough and laborious firsthand studies of old books and magazines, the very existence of which is not generally known, and which are not readily available in any of the present-day libraries or repositories.

It is precisely this kind of obstacle that the author encountered, when several years ago he started his research on electrostatic motors. Luckily, however, the obstacle soon transformed itself into a highly rewarding experience of studying various "ancient" books and periodicals and searching through electrostatic inventories of various European and American science museums. In the course of these studies he found numerous forgotten publications on electrostatic motors and found that several old electrostatic motors can actually be seen in some of the museums. (It is interesting to note that the latter motors are usually not on public display, apparently because of a lack of adequate information about their purpose and mode of operation available to museum personnel. It is also interesting to note that certain types of electrostatic motors were frequently employed in various animated toys during the second half of the 18th century, and that, although some of these toys are shown in museums, they are usually shown without an explanation of what made them move or how they were supposed to function.)

The purpose of this book is to describe the various types of electrostatic motors reported in

the scientific literature between 1700 and the present, and to discuss in general terms their various design features and principles of operation. The book is written for a wide circle of readers, and care has been taken to avoid technical details that would be useful only to a small group of specialists. The readers interested in additional scientific and technical data on the various motors are referred to appropriate original publications cited in this book.

The material is presented in several chapters, each chapter describing a particular class of motors. The sequence of the chapters corresponds to the chronological order in which the earliest motor belonging to each particular chapter was invented. The sequence of material in each chapter is normally arranged also in a chronological order. The last chapter describes some of the most recent research results on electrostatic motors and extrapolates these results into the immediate future.

The author is grateful to his wife Valentina for typing the manuscript and for otherwise helping him to make the book ready for publication. He is also grateful to Dr. David K. Walker for reading the manuscript and for drawing the illustrations for the book.

Oleg D. Jefimenko

CONTENTS

Preface vii

1. What are Electrostatic Motors? 1

Electromagnetic and Electrostatic Motors. Some Unique Properties of Electrostatic Motors. Classification of Electrostatic Motors.

2. Electric Pendulum Motors; Contact Motors. 6

Gordon Electric Bells. Electric Swing. Electric Seesaw. Electric Perpetuum Mobile. Dailey Reciprocating Motor. Electric Racing Ball.

3. Electric Wind Motors. 22

Gordon Electric Fly. Hamilton Electrometer. Langenbucher Electrometer. Electric Orrery. Kinnersley Electric Horse-Race. Bichat Electric Tourniquet. Corona-Kraft Levitation. Electric Wind Wheels and Turbines. King Electric Rabbit Hunt.

4. Franklin's Spark Motors and Their Descendants. 39

Franklin First Motor. Franklin Second Motor. Moore Motors. Bell Jar Motors. Another Electric Perpetuum Mobile. Dressel Nuclear Battery Motor.

5. Corona Motors and Motors Similar to Them. 56

Holtz Rotation Phenomenon. Poggendorff Motor. Christiansen Motors. Gruel Electric Tourbillion. Ruhmkorff Motor. Johnson Motors. McVay Motors.

6. Capacitor Motors. 73

Zipernowsky Motor. Van Huffel Motor. Synchronous and Asynchronous Motors. Bollée Capacitor Motors. Moore Interdigital Motor.

7. Induction Motors. 84

Arno Motor. Weiler Induction Motors. Bollée Induction Motors. Choi and Dunn Motor.

8. Liquid-Immersed Motors. 91

Weiler Liquid-Immersed Motor. Secker Motors. Quincke Motor.

9. Electret Motors. 97

Gubkin Motor. Slot-Effect Motors. Synchronous Electret Motor.

10. What to Expect from Electrostatic Motors. 106

Motors for Miniaturized Systems. New Corona Motors. Sources of Power for Electrostatic Motors. Operation of Electrostatic Motors from Atmospheric Electricity.

11. Index 120

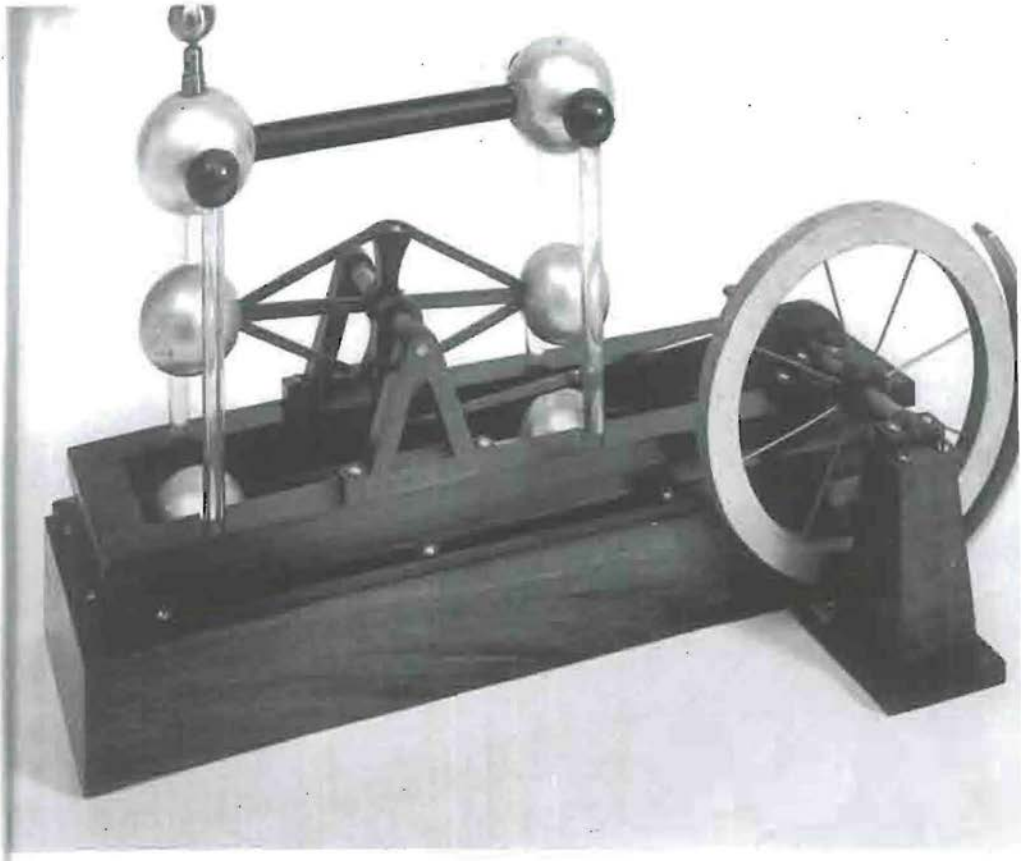

PLATE 1

Here is what H. B. Dailey wrote about this electrostatic motor which he and his father built in 1880: "Whether or not there is about the instrument and its history that which would ever give it a claim to any measure or serious interest, it is at least an electric motor most unique. A motor without magnetism, wiring, or any iron in its make up. A motor that runs by the action of the direct push and pull of the pure unconverted electricity itself".

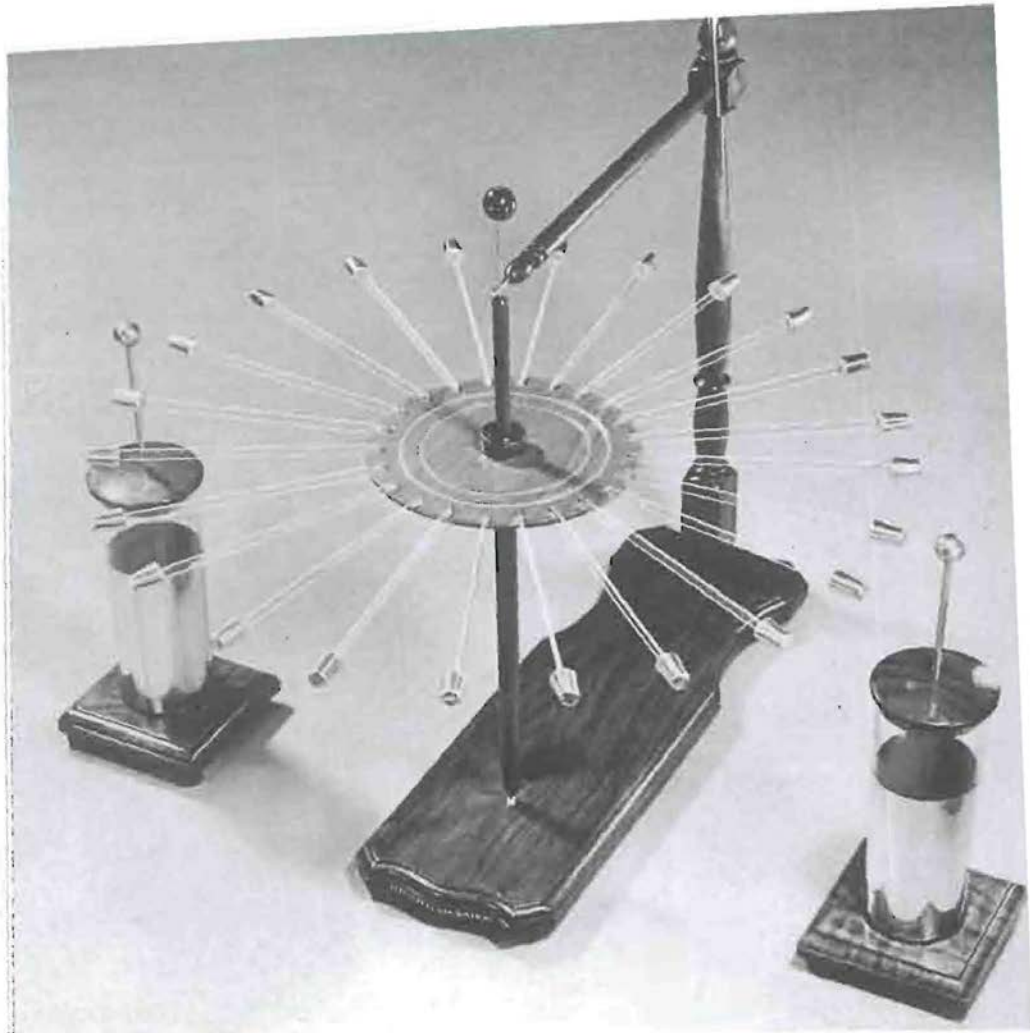

PLATE 2

It was Benjamin Franklin who in 1748 constructed the first electrostatic motors. No original drawings or models of his motors are known to exist, but his first motor must have looked very similar to this replica designed by the author for the Electret Scientific Company.

PLATE 3

Franklin's second motor probably looked very much like this replica also designed by the author for the Electret Scientific Company. Whereas the first motor operated from the electricity stored in Leyden jars, this motor operated from the electricity stored in the motor itself.

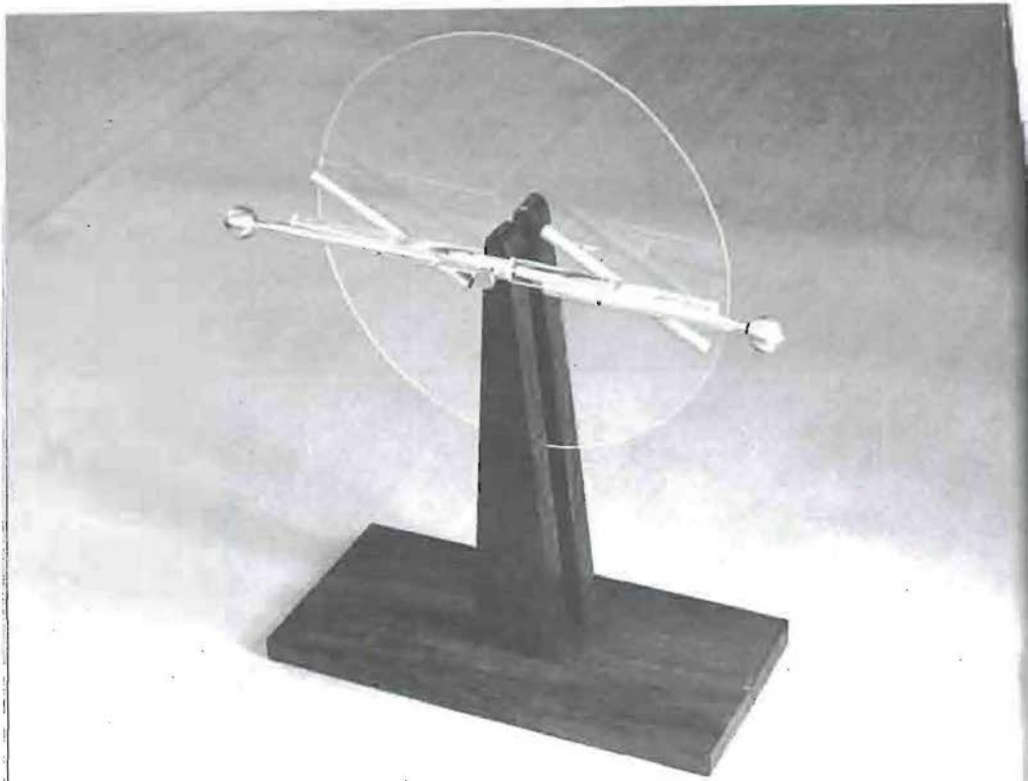

PLATE 4

The first corona motor was designed around 1869 by the German physicist Poggendorff. Poggendorff made a thorough study of the motor, but failed to appreciate its possibilities in the mistaken belief that no sources of electricity could supply enough power to any electric motor to make it do useful work. This simplified version of Poggendorff's motor was built by the author.

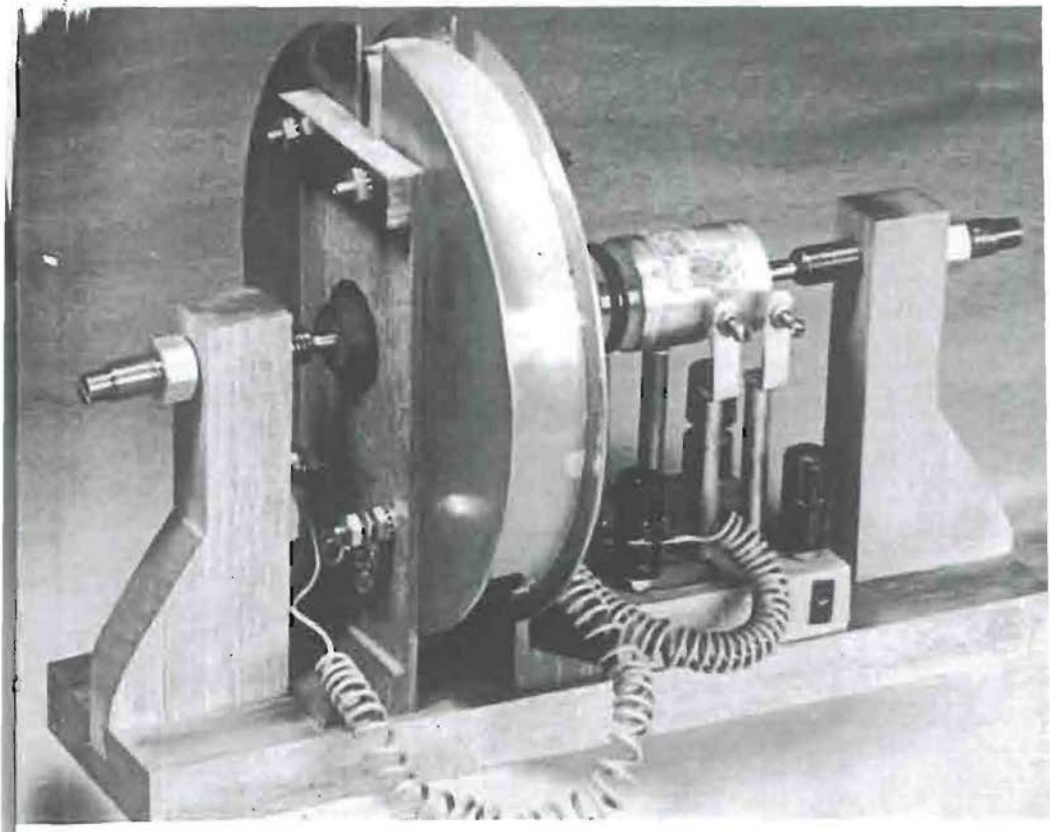

PLATE 5

The electret—a permanently electrized dielectric—is essentially a product of the 20th century. When an electret is placed between slotted electrodes to which a voltage is applied, the electret experiences a force. This motor designed by the author utilizes the slot effect. The rotor of the motor is a carnauba wax electret made of two oppositely polarized half-disks. The motor was built in 1966.

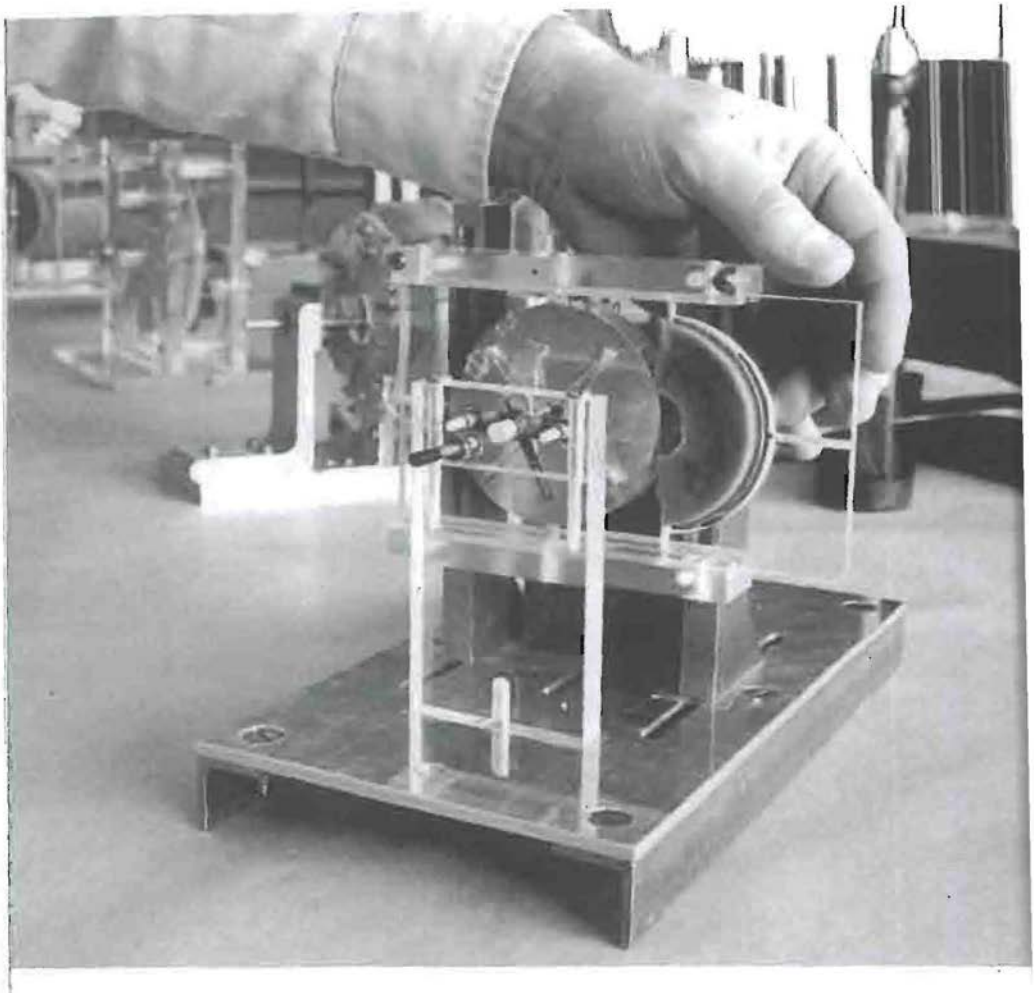

PLATE 6

A more practical design of an electret motor incorporates stationary electrets and rotating electrodes. The electrets can be easily withdrawn from the motor for servicing or replacement. The motor operates from approximately 60 volts dc. This particular motor was the first ever operated from atmospheric electricity.

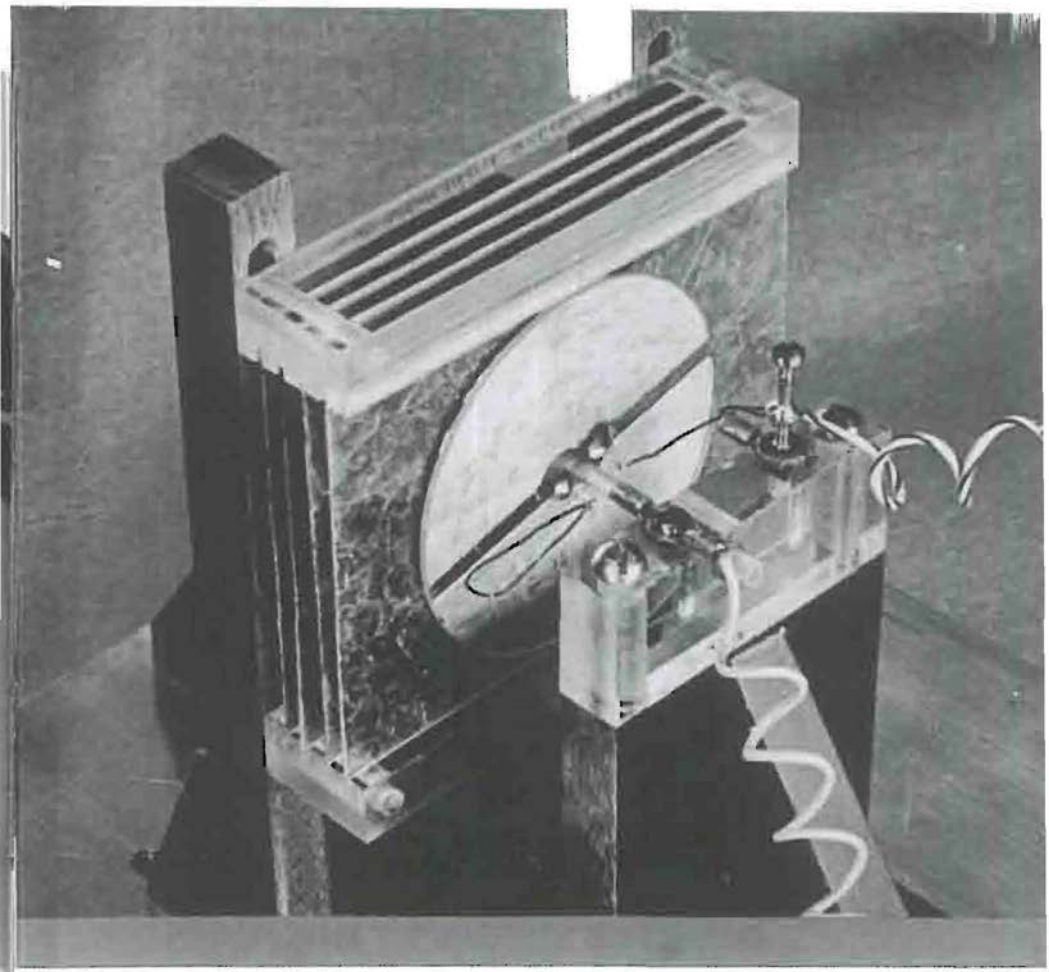

PLATE 7

In this electret motor developed in the author's laboratory (as were all the electret motors reproduced in these photographs) several thin mica electrets are used as active elements. This arrangement of electrets makes good use of the available space and allows one to construct relatively powerful electret motors.

PLATE 8

This "hoop" electret motor built in 1967 by D. K. Walker has a stationary cylindrical electret. The rotor is made of four pairs of bent aluminum plates enclosing the electret. The motor requires no commutator. The motor has been operated for several years without any servicing.

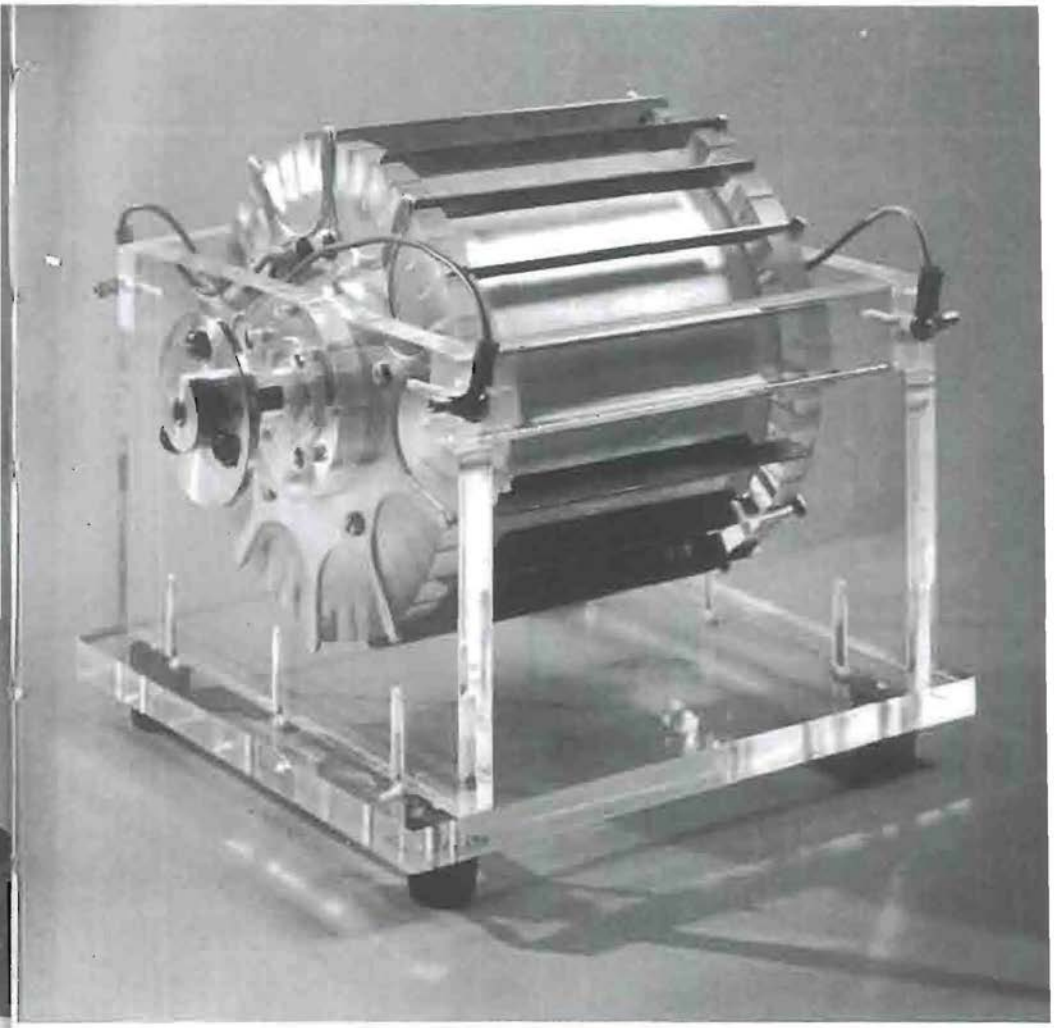

PLATE 9

Corona motors are probably the most promising electrostatic motors. This 0.1-hp modern version of the Poggendorff motor has a cylindrical rotor instead of a disk. The motor operates from a 6000-volt power supply as well as from an earth field antenna.

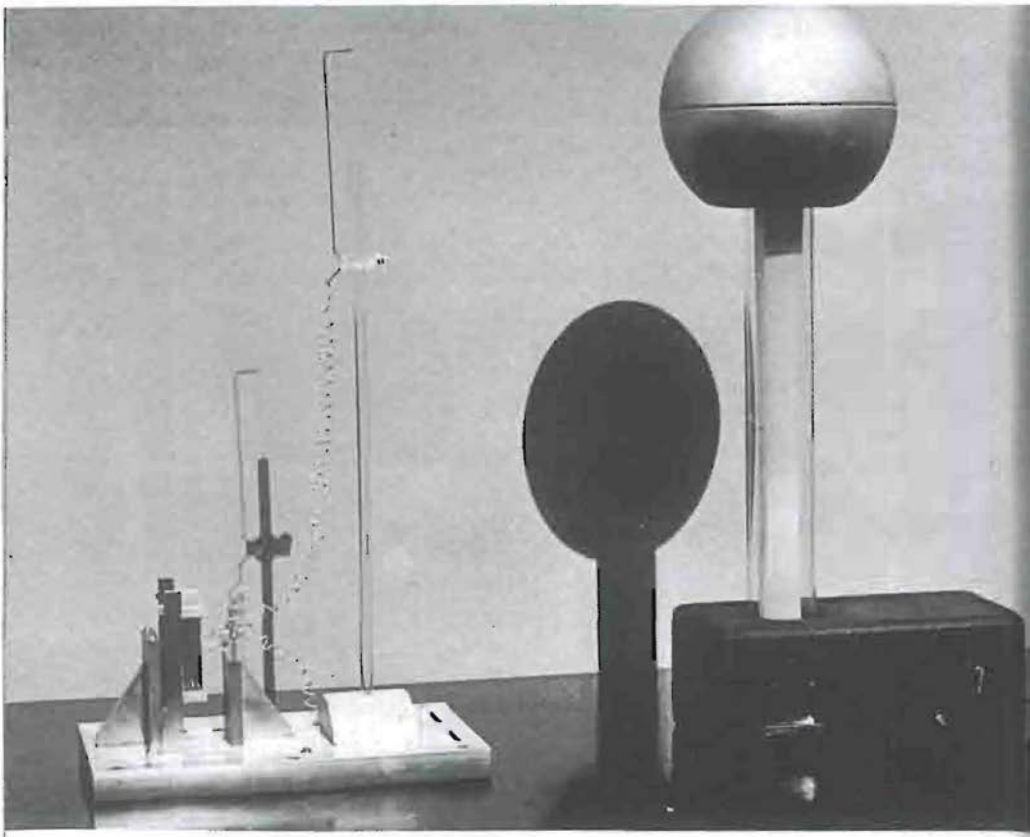

PLATE 10

The operation of electrostatic motors from antennas can be demonstrated with this lecture-room apparatus. The Van de Graaff generator produces electric charges in the air. The sharp-point antenna collects the charges from the air and delivers them to one terminal of an electrostatic motor whose other terminal is grounded.

PLATE 11

The author and D. K. Walker attempt to operate an electret motor from a 20-foot pole antenna in front of the Physics Building of the West Virginia University. The tall building screened the atmospheric field, and the motor did not run, although it operated very well from the same antenna in the nearby unobstructed parking lot.

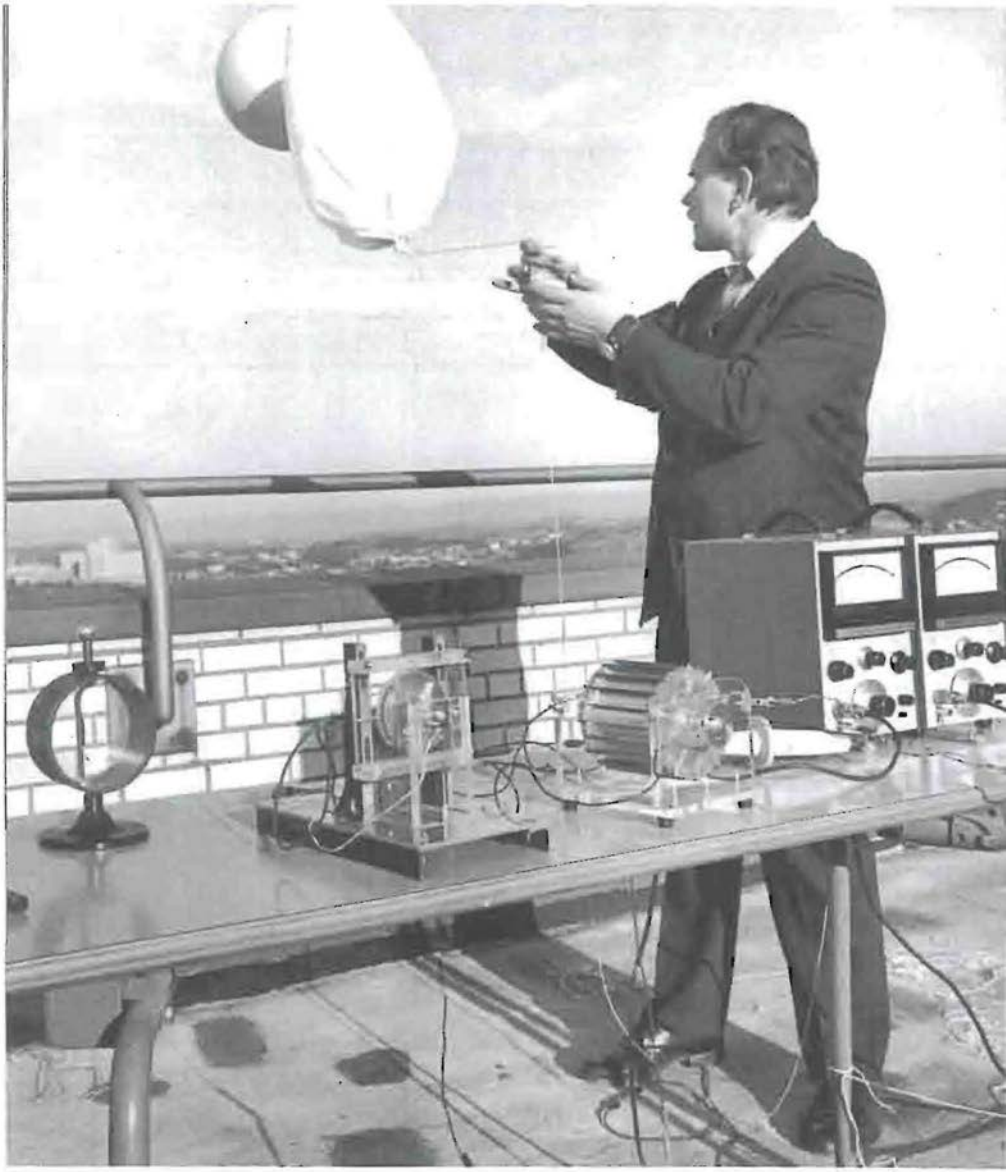

PLATE 12

The author operates electrostatic motors by means of an airborne antenna.

1

WHAT ARE ELECTROSTATIC MOTORS?

Conventional electric motors create mechanical motion as a result of magnetic forces acting upon electric currents. These motors are properly called *electromagnetic motors*. There is, however, another type of electric motor, in which the motion is created as a result of electric, or "electrostatic", forces acting between electric charges. Motors of this type are called *electrostatic motors*.

It is interesting to note that in nature the electrostatic forces are much stronger than the magnetic ones. There are many ways in which this can be demonstrated. For example, although a considerable effort may be needed to separate a magnet from an object attracted by it, a much greater effort is needed to break the magnet; this is because the magnet and the object are held together by magnetic forces, while the mol-

ecules of matter in the magnet (as well as in any other body) are held together by electrostatic forces.

Why, then, do we not use the electrostatic forces in our electric devices, and in motors in particular, at least on as wide a scale as we use the "inferior" magnetic forces? There are two main reasons for that. First, it is difficult to establish appreciable concentrations of electric charges without causing an electric breakdown in the medium surrounding or supporting the charges (although with modern insulating materials and techniques this difficulty becomes progressively less serious). Second, powerful electrostatic devices require voltages of many kilovolts for their operation, and until recently such voltages could not be produced conveniently and economically.

Motors of great power, however, are not the only ones needed. Equally important are low-power motors capable of performing various special tasks. In this respect electrostatic motors may compete successfully with their electromagnetic cousins even now.

Although electrostatic motors are not yet widely known or used, they already hold at least five very impressive records as compared with the electromagnetic motors:

1. The first electric motor ever invented was an electrostatic one. It was built about 100 years before the first electromagnetic motor was conceived.

2. The electric motor that operated without interruption longer than any other electric motor was an electrostatic one. This was a pendulum-type motor, known as the "electric perpetuum mobile", installed at the University of Insbruck, Austria, in 1823. Since then it operated continuously at least until 1909, powered by a Zamboni pile (an early high-voltage battery).
3. Electrostatic motors have been operated from voltages in excess of 10^5 volts, which is much higher than the voltages suitable for operating electromagnetic motors.
4. Electrostatic motors have been operated by using currents smaller than 10^{-9}amp, which is much less than the currents needed to operate electromagnetic motors.
5. The first electric motor that operated directly from the atmospheric electricity was an electrostatic motor. None of the presently available electromagnetic motors can operate directly from this source.

Even this short list reflecting some of the more obvious peculiarities of electrostatic motors shows quite clearly that electrostatic motors possess a number of unique properties. These properties undoubtedly will make electrostatic motors increasingly more important for the science, engineering, and technology of the future.

Many different types and designs of electrostatic motors are possible. It is customary to classify electrostatic motors in accordance with

some prominent feature of their mode of operation or some prominent feature of their design. Thus, in reference to the techniques used for delivering electric charges to the active part of a motor one speaks of *contact motors*, *spark motors*, *corona motors*, *induction motors*, and *electret motors*. In reference to the medium in which the active part of a motor is located one speaks of *liquid-* or *gas-immersed motors*. In reference to the material and design of the active part of a motor one speaks of *dielectric motors* (the active part is made mainly of dielectric material) and *conducting-plate*, or *capacitor*, *motors* (the active part is made mainly of metal and resembles a variable capacitor). Finally, in reference to the rate of rotation of a motor relative to the period of the applied voltage (for ac operated motors) one speaks of *synchronous motors* and *asynchronous motors*.

This classification of electrostatic motors does not make it possible, however, to specify uniquely each individual motor. Also, two or more different operation modes are usually possible for most electrostatic motors (for example, certain motors can be operated at will as contact, spark, or corona motors). Therefore an assignment of a particular motor to one or another of the above types or categories is frequently more or less arbitrary. This applies, of course, also to the present book, where certain motors described in the chapters that follow could be equally well discussed under different chapter headings, and

where the inclusion of certain motors in a particular chapter was occasionally dictated by the fact that such an inclusion resulted in a more coherent development of the subject matter.

2

ELECTRIC PENDULUM MOTORS; CONTACT MOTORS

If "electric motor" is understood to be a device converting electric energy into a continuous mechanical motion, then the first two electric motors were invented in the early 1740's by Andrew Gordon, a Scottish Benedictine monk and professor of philosophy at Erfurt, Germany.[1] Gordon's first motor was a device known as the "electric bells" (his second motor will be described in the next chapter). The device and its operation were as follows. A metallic clapper (pendulum) was suspended by a silk thread between two oppositely charged bells (Fig. 1). From an initial contact with one of the bells the clapper acquired a charge of the same polarity as that of the bell. Due to repulsion of like charges and attraction of opposite charges the clapper was then repelled by this bell and attracted by the second bell. As the clapper

struck the second bell, it gave off its initial charge and acquired a charge of the same polarity as that of the second bell. Then the clapper was repelled by the latter and attracted by the first bell, which it struck again, and so on.

Numerous variations of Gordon's bells have been described by later authors, mostly as devices for lecture-room demonstrations of electrostatic forces. Such devices are widely used for this purpose even now.

An ingenious application of Gordon's bells was made by Benjamin Franklin in 1752. He connected the bells to an insulated lightning rod as a warning device "to give notice when the rod should be electrified".[2] (It appears that at that time neither Franklin nor any other scientist suspected how dangerous this "warning" device could be. The extreme danger of experiments with insulated lightning rods became clear a year later, when in 1753 the Russian physicist George Wilhelm Richmann was killed by lightning that entered his laboratory through such a rod, as he approached it in order to measure its electrification with a specially constructed electrometer.)

In a later modification of Gordon's invention one of the two bells was mounted on a Leyden jar (Fig. 2); the bells would then ring for as long as there was enough electric energy stored in the jar to move the clapper. (Franklin described the operation of an electric pendulum powered by a Leyden jar in 1747; see Ref. 2, p. 189.)

Sometimes Gordon's bells were made as a set

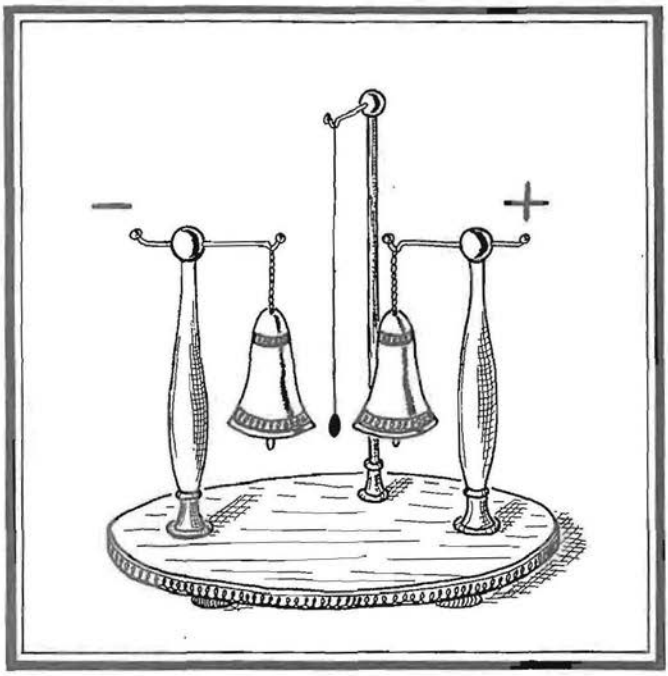

FIGURE 1

The so-called "electric bells" constituted the first device that converted electrical energy into a continuous mechanical motion. They were invented in about 1742 by Andrew Gordon, a professor of philosophy at Erfurt, Germany.

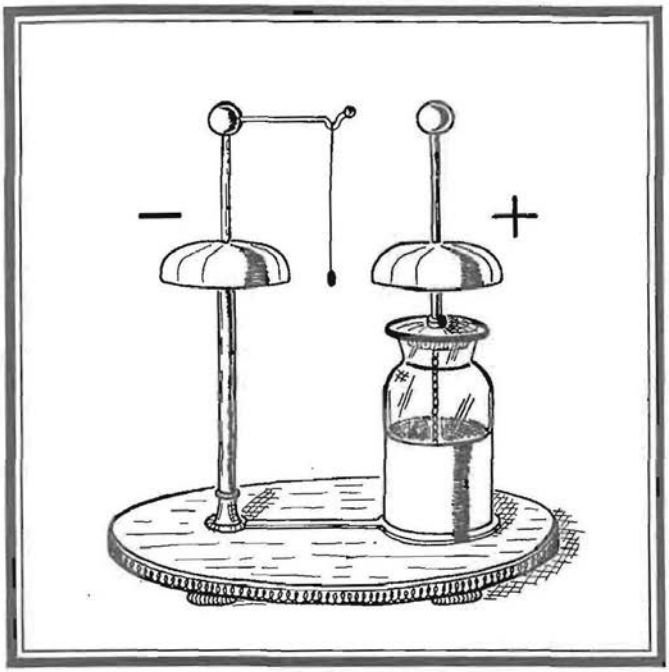

FIGURE 2

In a later modification of Gordon's invention one of the two bells was mounted on a Leyden jar. The bells would then ring for as long as there was enough electrical energy stored in the jar to move the clapper.

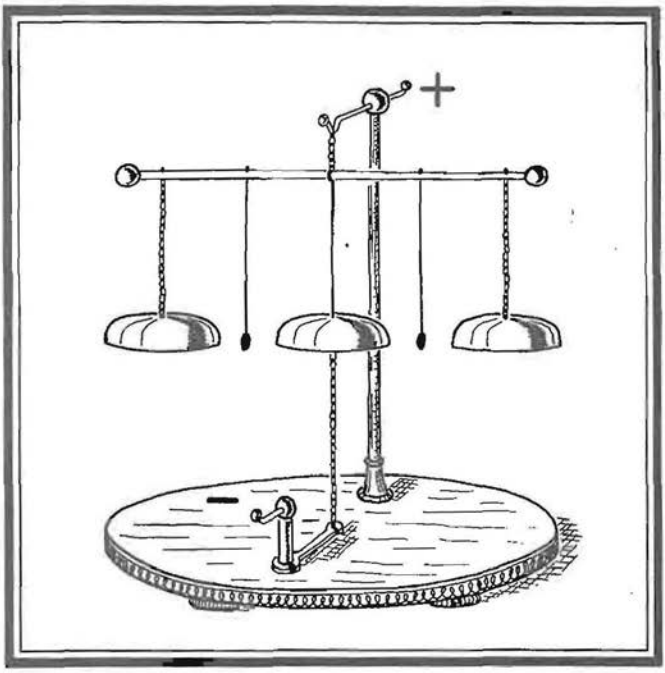

FIGURE 3

Sometimes Gordon's bells were made as a set of three bells and two clappers, all suspended from a horizontal bar, the central bell being insulated from the bar and grounded by means of a light chain.

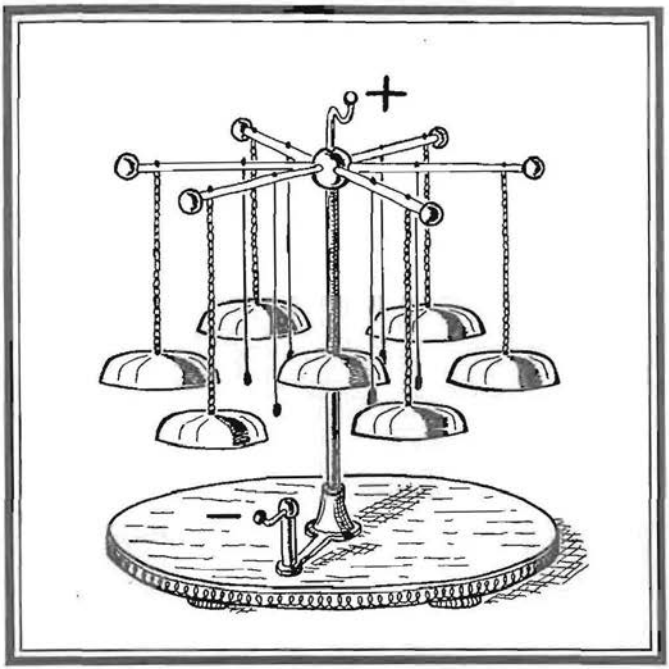

FIGURE 4

Another modification of Gordon's bells was a set of bell chimes arranged on a wooden base in a circular formation around the central bell. A separate clapper was then present for each of the outside bells.

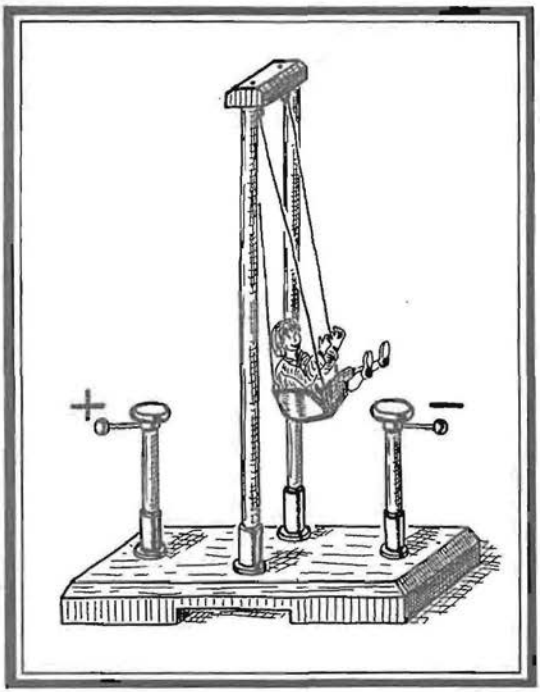

FIGURE 5

The electrical and mechanical principle of Gordon's invention could be used not only for ringing bells but for creating a mechanical motion in general. In this "electric swing" this principle was used to operate an animated toy.

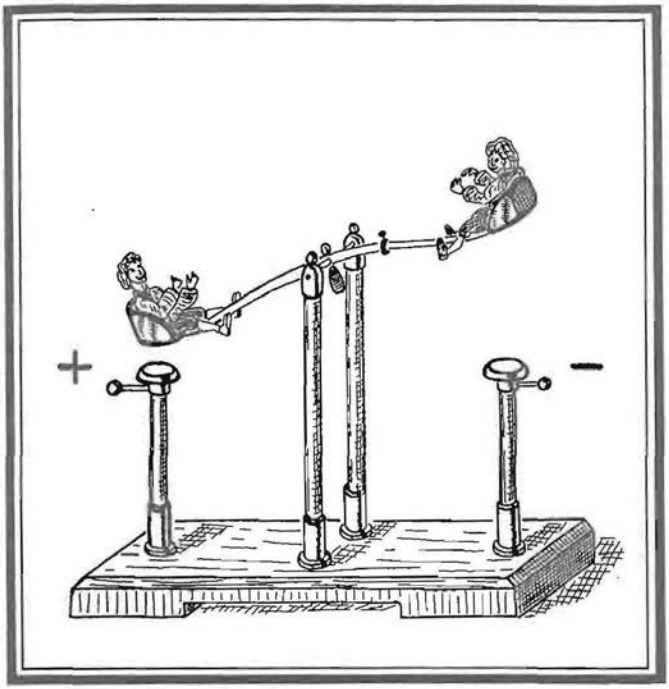

FIGURE 6

Various electrostatically operated toys were invented in the 18th and 19th centuries. This "electric seesaw" was basically a conducting bar oscillating about a horizontal axis on the same principle as the clapper of Gordon's bells.

of three bells and two clappers, all suspended from a horizontal bar, the central bell being insulated from the bar and grounded by means of a light chain (Fig. 3). Another modification of Gordon's bells was a set of bell chimes arranged in a circular formation around the central bell (Fig. 4); a separate clapper was then present for each of the outside bells, each clapper moving between one of the latter and the central bell (the central bell was usually grounded, the outside bells were connected to an electrostatic generator).

The electrical and mechanical principle of Gordon's invention could be used, of course, not only for ringing bells but also for a variety of other purposes. In particular, this principle was later used in two electrically operated toys: the "electric swing" and the "electric seesaw", which utilized, respectively, an insulated pendulum made as a swing (Fig. 5) and an insulated conducting swing bar capable of oscillating about a horizontal axis (Fig. 6).[3,4]

Except for Franklin's bells, all of the above devices were designed for operation from an electrostatic generator or from Leyden jars charged by such a generator. However, in 1806 a high-voltage chemical battery ("dry pile", later known as the "Zamboni pile") was invented by Georg Behrens, and in 1810 this pile was adapted by Giuseppe Zamboni to operate primitive electrostatic motors.[5] Inasmuch as a Zamboni pile could remain active for many years, the

little motors that operated from it were known as the "electric perpetuum mobile". An example of such a perpetuum mobile is shown in Fig. 7 (see Chapter 4 for another design). The apparatus consisted of a light rigid insulated pendulum, pivoted just above the center of gravity, with a light conducting ring at the top. The ring was located between the two knobs of a Zamboni pile. When the ring contacted one of the knobs, it acquired a charge from the knob and was repelled from this knob and attracted to the second knob, and so on, just like the clapper in Gordon's bells. One such perpetuum mobile is reported to have operated without interruption for at least 86 years.[6]

The most sophisticated device derivable from Gordon's electric bells was probably the reciprocating electrostatic motor (Fig. 8 and Plate 1) built in 1880 by Howard B. Dailey and Elijah M. Dailey.[7] The motor, which is now at the Museum of History and Technology of the Smithsonian Institution, was described by one of its builders as follows:

"This machine operates by the direct action of static electric attractions and repulsions. It is constructed entirely of fine wood, glass and hard rubber, there being no magnetic materials used. The flywheel is of laminated, soft wood and runs in journal bearings of very small diameter. The moving balls, mounted on the walking beam of vulcanite, are made of wood, hollowed out so that the walls are about 2 millimeters thick.

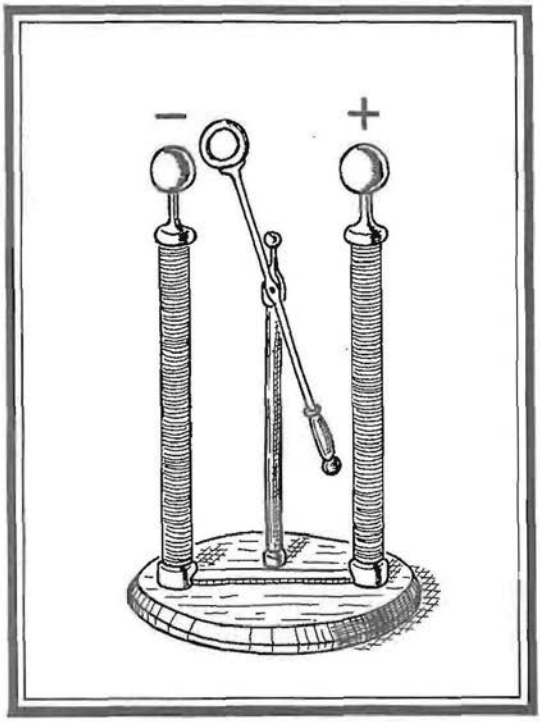

FIGURE 7

This electric pendulum operated from a Zamboni pile, an early high-voltage battery. Since the pile remained active for years, the pendulum was known as an "electric perpetuum mobile".

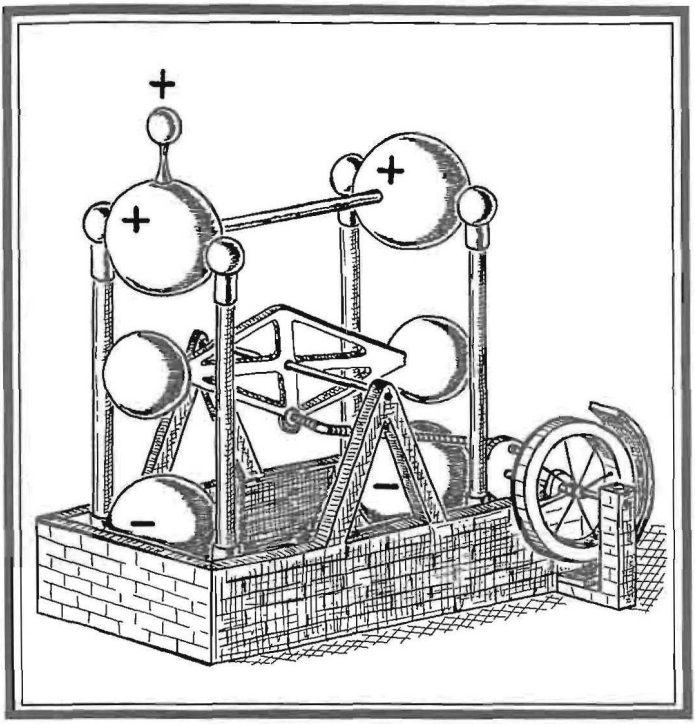

FIGURE 8

The most sophisticated device derivable from Gordon's bells was probably this reciprocating electrostatic motor built in 1880 by H. B. Dailey and E. M. Dailey.

They are covered with aluminum foil for static conductivity. The stationary balls are of solid wood.

"To operate the engine the stationary balls are charged with electricity from a static electric generator, such as a Holtz machine, the upper balls being connected through the brass ball to one pole of the machine while the lower stationary balls are connected through the binding post on the bed frame to the opposite pole of the machine. Under proper conditions, when charged, the engine will make about 375 revolutions per minute.

"The walnut base upon which the engine is mounted is 14" long, 4" wide and 1¾" thick. The movable balls are about 1½" in diameter; the upper stationary balls are 1¾" in diameter; and the lower stationary balls, 1½". The four glass rods, mounted vertically, are about 6" high and spaced 6" apart along the bed. The diameter of the flywheel is 5¾". It is gilded and has small wire spokes. The connecting rod is 7" in length."*

The electric principle of Gordon's bells could be used also for producing a continuous unidirectional motion. A fascinating device of this type was the "electric racing ball", or the "electric planetarium", an excellent description of

*The author is grateful to Mr. Elliot N. Sivowitch, Smithsonian Institution Museum Specialist, for kindly providing this description and the photograph of Dailey's motor.

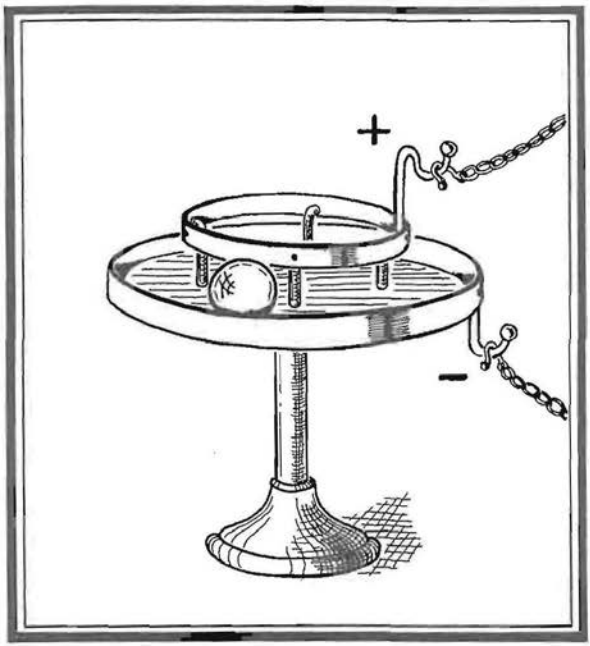

FIGURE 9

The electric principle of Gordon's bells could be used also for producing a continuous unidirectional motion. This "electric racing ball" was propelled along a conducting hoop by the same mechanism that moved the clapper in Gordon's bells.

which has been provided by M. Guyot.[8] The apparatus consisted of an insulated horizontal conducting hoop positioned above a conducting disk having a vertical rim concentric with the hoop (Fig. 9). The arrangement constituted a track for a light sphere of glass placed on the disk between the hoop and the rim. When the hoop and the disk were connected to an electrostatic generator, the sphere ran along this track due to attraction and repulsion exerted by the hoop and the disk upon the points of the sphere that acquired charges from contact with the disk and the hoop (the rolling of the sphere usually had to be initiated with a light push by hand, but once the sphere had started to run, it continued running for as long as the electrostatic generator was in operation).

Since the moving elements in the above described motors were charged by contact, the motors may be classified as "contact motors". This method of charging, however, is neither the only possible nor the most expedient one. Therefore contact motors will probably always be subordinate to most of the motors described in the following chapters. In this connection it may be useful to note that, upon a closer examination of the operation of Gordon's bells and other similar devices, one recognizes that the charging of the moving elements in these devices usually occurs by means of a spark that jumps from a stationary electrode (bell) to a moving element (clapper) as soon as the latter comes close

enough to the former. Thus the actual physical contact between the moving and stationary components in these devices is not at all necessary for their operation. In fact, such a contact is harmful insofar as it results in energy losses from impact and friction.

REFERENCES

1. P. Benjamin, *A History of Electricity*, John Wiley and Sons, New York, 1898, pp. 506, 507.
2. J. Sparks, Ed., *The Works of Benjamin Franklin*, Whittemore, Niles, and Hall, Boston, 1856, Vol. 5, p. 301.
3. F. M. Avery, *Modern Electricity and Magnetism*, Sheldon and Company, New York, 1885, p. 241.
4. A. Neuburger, *Ergötzliches Experimentierbuch*, Ullstein & Co., Berlin, 1920, pp. 434-436.
5. Gilbert, *Annalen der Physik*, Ser. 1, Vol. 49, pp. 35-46, (1815).
6. Müller-Pouillet, *Lehrbuch der Physik und Meteorologie*, Friedrich Vieweg und Sohn, Braunschweig, 1909, 10th edn., Vol. 4, p. 338.
7. H. B. Dailey, *Modern Electrics*, Vol. 5, pp. 916-917 (1912).
8. M. Guyot, *Nouvelles Recreations Physiques et Mathematiques*, Gueffier, Paris, 1786, Vol. 1, pp. 272-274 and Plate 27.

3

ELECTRIC WIND MOTORS

As already mentioned in the preceding chapter, Andrew Gordon invented two electric motors. His second motor was the "electric fly",[1,2] also known as the "electric whirl", "electric pinwheel", or "electric reaction wheel" (Fig. 10). The electric fly consisted of one or more light metal arms with sharp-point ends bent at right angles to each arm and in the same circumferential direction. The fly was pivoted at its center on an insulated needle. When the needle was connected to an electrostatic generator, a corona discharge* took place from the sharp points of the fly. The air near these points became charged with charges of the same polar-

*Corona discharge is a spontaneous electric conduction in a gas (air) originating from sharp conducting bodies whose electrostatic potential relative to the ground is 3000 volts or higher.

ity as that of the fly and was then repelled from the points due to repulsion of like charges (the resulting motion of the air is known as the "electric wind"). Similarly, the points themselves were repelled from the charges in the air, and the fly rotated therefore in the opposite sense to that in which the points were directed.

Also the electric fly was used for ringing bells or chimes. This was accomplished by suspending from the fly a clapper, which, as the fly rotated, struck in turn several bells positioned in a circular formation underneath the fly (Fig. 11).[3]

In 1760, Hamilton, professor of philosophy at Dublin, suggested to use a similar device as an electrometer.[4] In this electrometer small weights were suspended from the fly. As the fly turned, the weights were deflected from the vertical direction by centrifugal forces. This deflection was a measure of the fly's speed and, hence, of the strength of the source to which the fly was connected. A more sophisticated electrometer utilizing the electric fly was described by Jakob Langenbucher,[5] a silversmith at Augsburg, Germany, who spent a large part of his time and fortune on improving electrostatic generators and studying electrostatic phenomena. In this electrometer the fly was mounted on a thin vertical cylinder. A fine string was fastened to the cylinder. The string passed over a small pulley and had a light pan attached to its free end. A small weight was placed on the pan. As the fly turned, the string

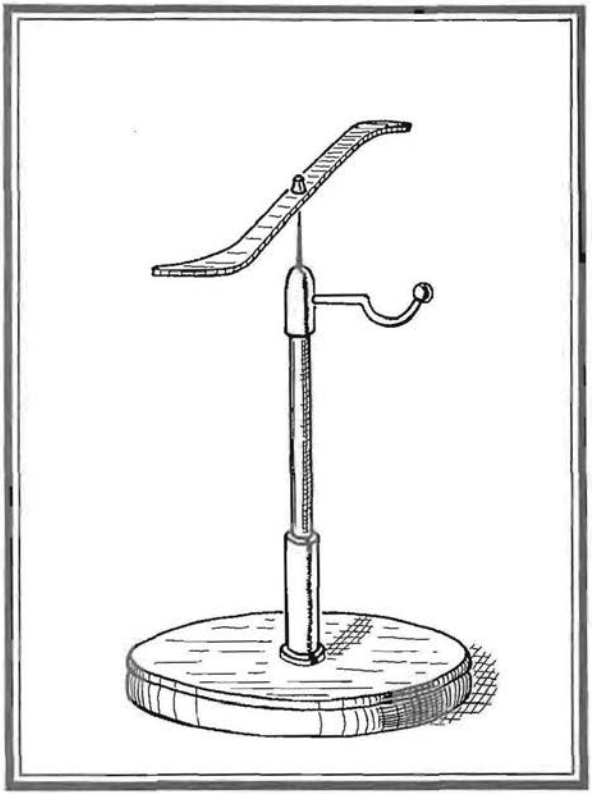

FIGURE 10

Andrew Gordon invented two electric motors. His second motor was the so-called "electric fly".

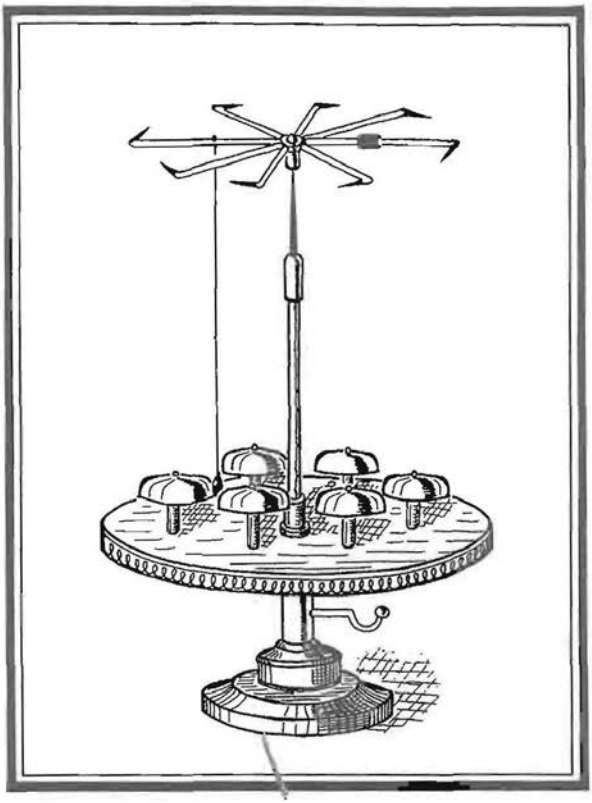

FIGURE 11

Also the electric fly was used for ringing bells with the aid of a clapper suspended from it.

wound itself on the cylinder lifting the pan and the weight. The maximum weight that could be lifted by this electrometer was a measure of the strength of the source from which the fly was operated.

The principle of the electric fly was later used to operate an orrery depicting the orbital motions of the Sun, the Moon, and the Earth (Fig. 12).[6] In such an orrery, also known as the "electrical tellurium", the longer bent arm carried a large sphere at one end, while at the other end it carried a similar but smaller bent arm, each end of which also carried a small sphere. The three spheres represented the Sun, the Moon, and the Earth. The arms were pivoted on sharp points, and each arm had a perpendicular sharp point in the horizontal plane. When the instrument was connected to an electrostatic generator, the two systems rotated about their points of support, the smaller system, being lighter, rotated more rapidly than the larger one. The relative masses of the spheres were adjusted to make the Earth-Moon system rotate twelve times for every single rotation of the Sun.

An interesting variation of the electric fly was constructed in 1761 by Ebenezer Kinnersley, a Philadelphia school teacher and close friend of Benjamin Franklin. Kinnersley called his device the "electrical horse-race".[7] This was a cross formed by two pieces of wood of equal length (probably about 18 inches long) supported horizontally on a central pin. A light figure of horse

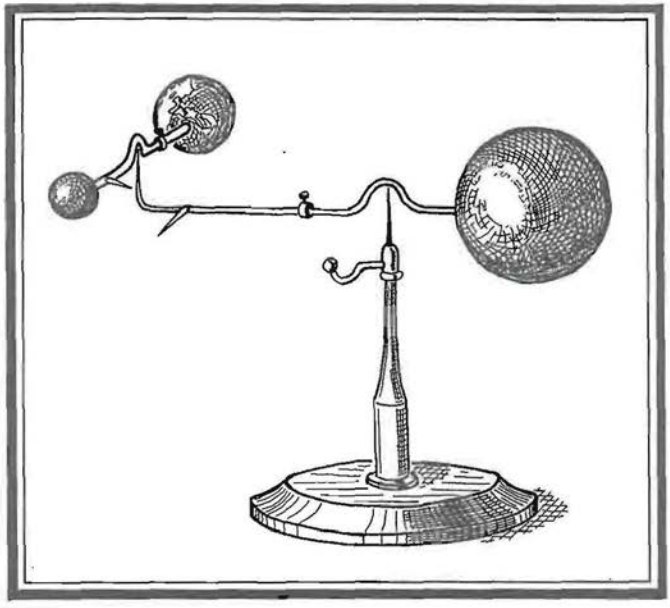

FIGURE 12

The principle of the electric fly was later used to operate an orrery depicting the orbital motions of the Sun, the Moon, and the Earth. The masses of the spheres were adjusted to make the Earth-Moon system rotate twelve times for every single rotation of the Sun.

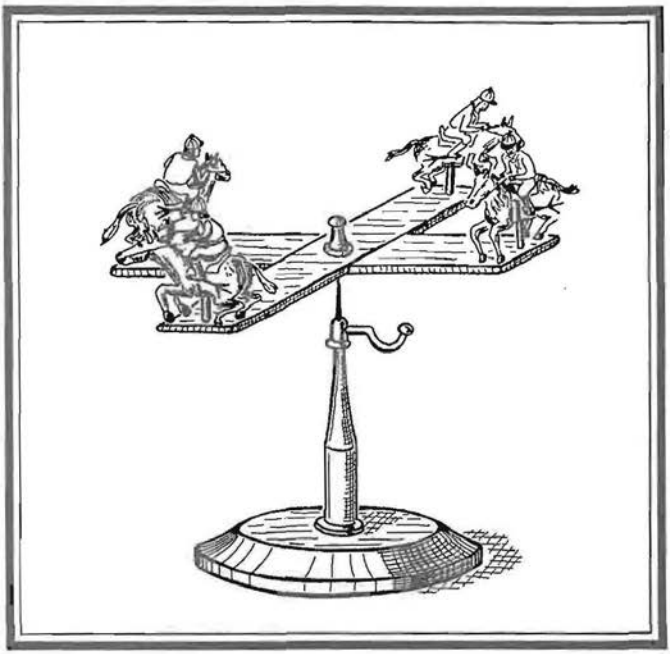

FIGURE 13

An interesting variation of the electric fly was constructed in 1761 by Ebenezer Kinnersley, a friend of Benjamin Franklin. Kinnersley called his device the "electrical horse-race". The electrical horse-race was a popular toy in the latter part of the 18th century.

with his rider was placed upon each extremity of the cross. The motion was produced by corona discharge from the spurs of the riders (Fig. 13). The electrical horse-race was a popular toy in the latter part of the 18th century. Interesting descriptions of this toy have been provided by Langenbucher (Ref. 5, p. 206 and Plate 8), and by Guyot.[8]

To show more convincingly that the electric fly converted electrical energy into mechanical energy, electric flies were placed on horizontal axes and were arranged to lift small weights (Fig. 14) or to climb inclined rails (Fig. 15).[9]

Operation of the electric fly in liquids was investigated by Aimé.[10] A historical account of electric fly studies was presented by Tomlinson.[11] The mechanism of the fly was discussed at some length by Mascart.[12] A quantitative study of the forces acting upon the electric fly was performed by Kämpfer.[13]

A more efficient modification of the electric fly was proposed in 1887 by Bichat.[14] Bichat's electric "tourniquet" consisted of a light vertical frame capable of turning about a vertical axis and supporting two thin vertical wires producing a corona discharge along their entire length. The vertical sides of the frame acted as "spoilers" preventing a corona discharge from the "back side" of the wires. A simple motor based on Bichat's device is shown in Fig. 16.

In recent years the principle of the electric fly (reaction force experienced by a sharp point as a

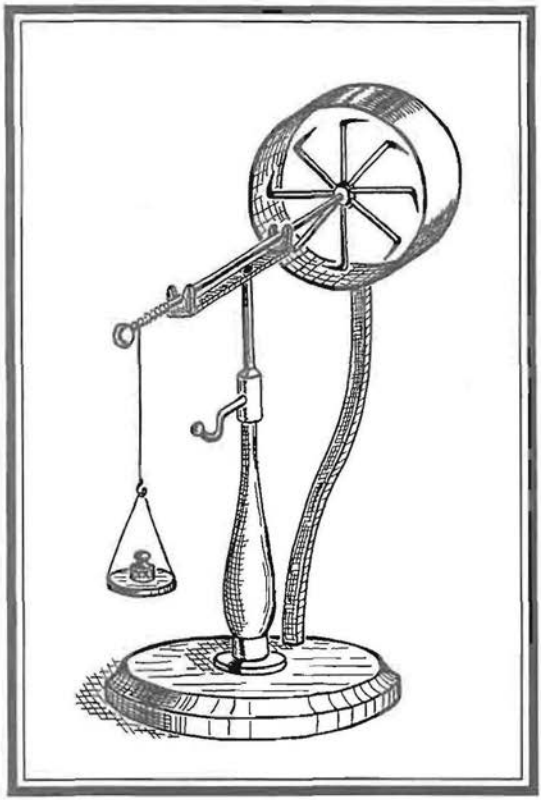

FIGURE 14

Electric fly converted electrical energy into mechanical energy and could lift small weights.

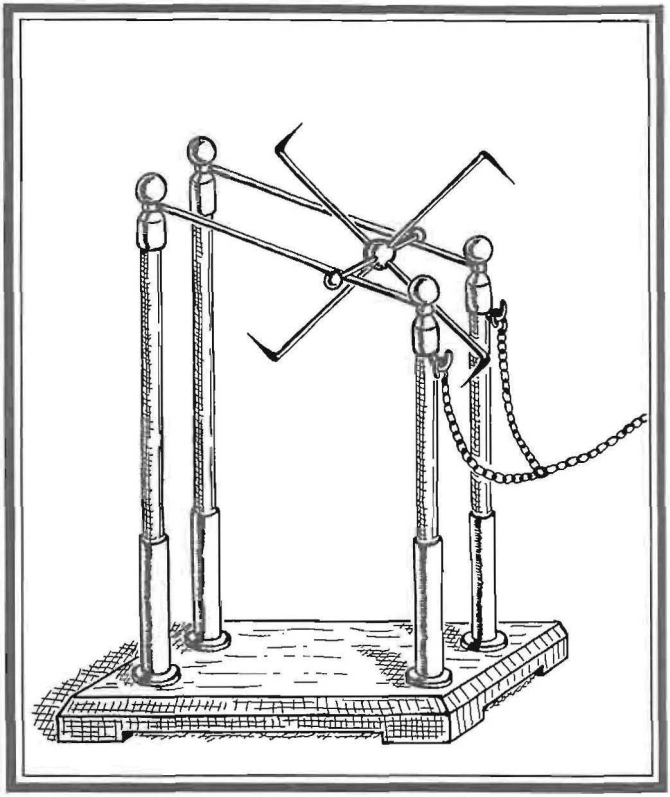

FIGURE 15

Electric fly developed enough mechanical energy for climbing inclined rails.

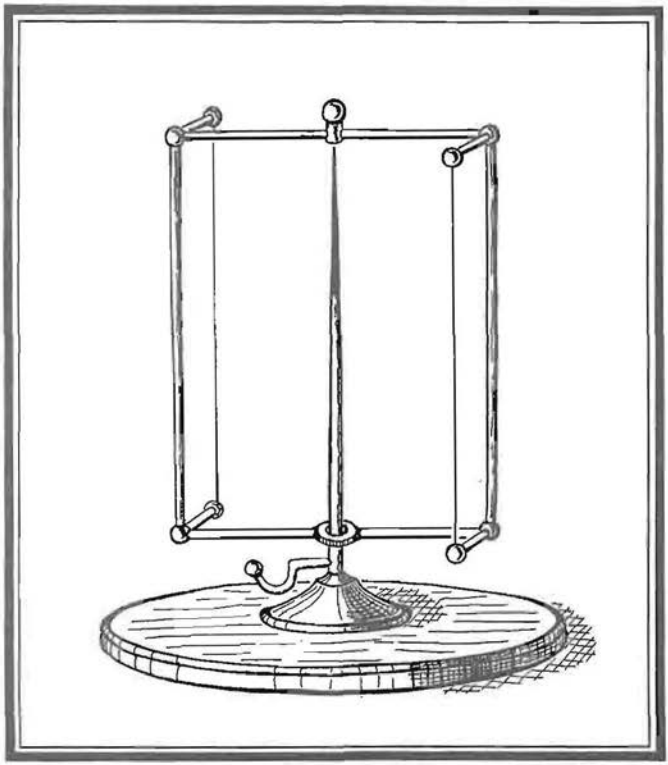

FIGURE 16

A more efficient modification of the electric fly was proposed in 1887 by Bichat, who called his device the "electric tourniquet".

result of a corona discharge from it) has been suggested for a flying machine ("corona-kraft levitation").[15] The lift realizable from such a machine does not, however, appear to be of practical significance.[16]

Closely related to the electric fly were the "electric wind wheels" and the "electric wind turbines". Like the electric fly, they were invented in the 1740's and utilized a corona discharge from sharp points for their operation. Benjamin Franklin studied these devices in 1747 (he first learned of them from his friend Philip Syng). According to Franklin (Ref. 7, p. 184) they were "light windmill-wheels made of stiff paper vanes; also...little wheels, of the same matter, but formed like water-wheels". Their probable appearance was as shown in Figs. 17 and 18. Later versions of these devices have been described by Guyot (Ref. 8, pp. 274, 275 and Plate 27), by Langenbucher (Ref. 5, pp. 75, 76 and Plate 3), by Gale,[17] and by Neuburger.[18]

A delightful electric toy using the electric wind for its propulsion was made by W. R. King, an associate of James Wimshurst (the designer of the electrostatic machine carrying his name). This toy, which may be called an "electrical rabbit hunt", now at the Science Museum in London, is shown in a simplified form in Fig. 19. It consists of a small electric wind turbine mounted on a vertical shaft carrying five light metal arms on its upper end; the arms support

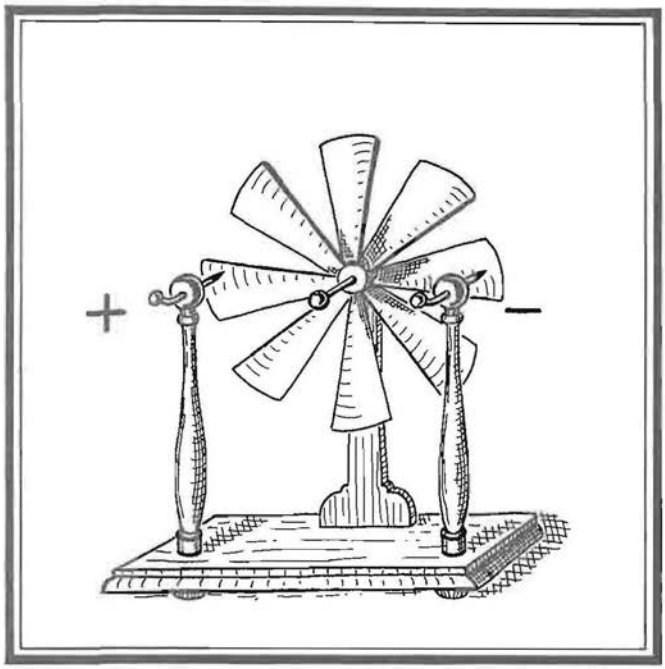

FIGURE 17

Closely related to Gordon's electric fly was the "electric wind wheel". Like the electric fly, it was invented in the 1740's and utilized a corona discharge from two sharp points for its operation.

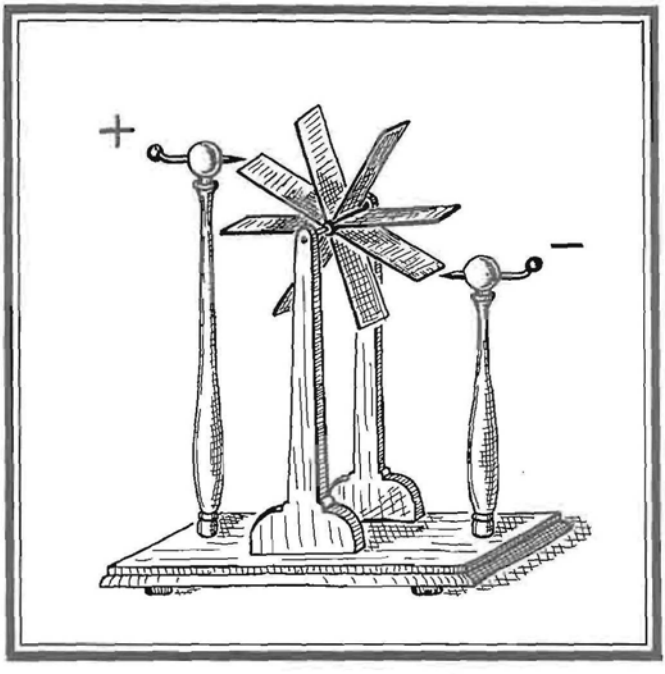

FIGURE 18

Benjamin Franklin studied this "electric wind turbine" in 1747. He concluded that its action depended not as much on the electric wind as on the forces between the charges present on its moving and stationary parts.

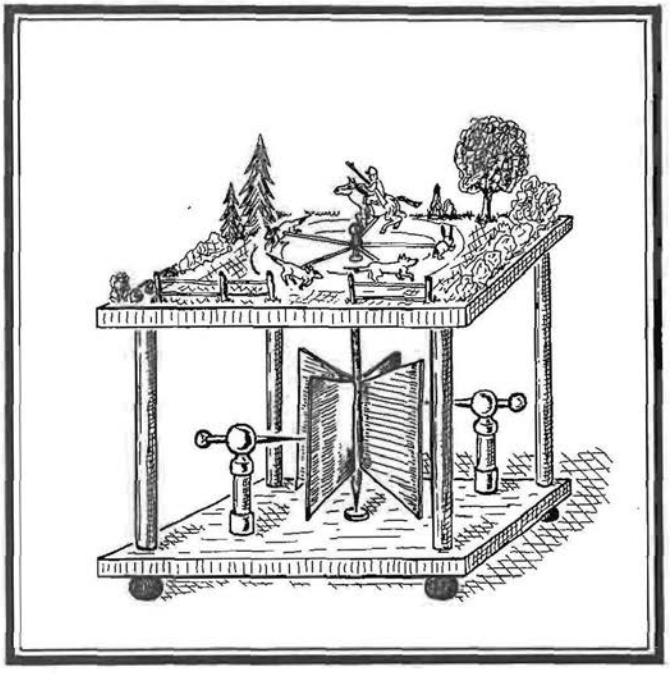

FIGURE 19

A delightful electric toy utilizing the electric wind for its propulsion was made by E. R. King, an associate of James Wimshurst. This toy, which may be called an "electrical rabbit hunt", is now at the Science Museum in London.

figurines of a rabbit, three dogs, and a horseman, who chase each other in a beautiful little garden, as the arms turn powered by the turbine below.

In studying the electric wind motors, Benjamin Franklin concluded that their action depended not as much on the electric wind as such, but on the repulsion and attraction of electric charges present on the moving and stationary parts of the motors (Ref. 7, p. 184). It is very probable that this conclusion led him to the invention of his big electric motors, the famous "electrical wheels", which are described in the next chapter.

REFERENCES

1. P. Benjamin, *A History of Electricity*, John Wiley and Sons, New York, 1898, pp. 506, 507.
2. J. C. Poggendorff, *Geschichte der Physik*, Johann A. Barth, Leipzig, 1879, p. 846.
3. V. K. Chew, *Physics for Princes*, Her Majesty's Stationery Office, London, 1968, p. 13.
4. B. Wilson, *Philosophical Transactions*, Vol. 51, p. 896 (1760).
5. J. Langenbucher, *Beschreibung einer beträchtlich verbesserten Elektrisiermaschine*, Mathäus Reigers, Augsburg, 1780, pp. 54-56 and Plate 3.
6. G. Adams, *An Essay on Electricity*, London, 1799, 5th edn., pp. 580-581 and Plate 4.

7. J. Sparks, Ed., *The Works of Benjamin Franklin*, Whittemore, Niles, and Hall, Boston, 1856, Vol. 5, p. 371.
8. M. Guyot, *Nouvelles Recreations Physiques et Mathematiques*, Gueffier, Paris, 1786, Vol. 1, pp. 249, 250 and Plate 25.
9. H. J. Oosting, *Zeitschrift für den Physikalischen und Chemischen Unterricht*, Vol. 9, pp. 84-85 (1896).
10. R. Aimé, *Annales de Chimie et de Physique*, Ser. 2, Vol. 62, p. 421 (1833).
11. C. Tomlinson, *Philosophical Magazine*, Ser. 4, Vol. 27, p. 202 (1864).
12. M. E. Mascart, *Traité d'Electricité Statique*, G. Masson, Paris, 1876, Vol. 1, pp. 175-179.
13. D. Kämpfer, *Annalen der Physik*, Ser. 3, Vol. 20, pp. 601-614 (1887)
14. E. Bichat, *Annales de Chimie et de Physique*, Vol. 12, pp. 64-79 (1887).
15. A. Christenson and S. Moller, *AIIA Journal*, Vol. 5, pp. 1768-1733, (1967).
16. L. B. Loeb, *Electrical Coronas*, University of California Press, Berkley, 1965, pp. 402-406.
17. L. D. Gale, *Elements of Natural Philosophy*, Mark H. Newman, New York, 1846, p. 164.
18. A. Neuburger, *Ergötzliches Experimentierbuch*, Ullstein & Co., Berlin, 1920, pp. 432, 433.

4

FRANKLIN'S SPARK MOTORS AND THEIR DESCENDANTS

If one defines the "electric motor" as a machine capable of converting substantial amounts of electrical energy into mechanical energy, then it was Benjamin Franklin who invented the electric motor, for he was the first person to design and to construct a machine capable of accomplishing such a conversion.

Franklin built two electric motors, which he called "electrical wheels". He described them in a letter to Peter Collinson, Fellow of the Royal Society of London, written in Philadelphia in 1748.[1]

His first motor was a big machine, about 40 inches in diameter. The main part of this motor was a wooden disk mounted horizontally on a vertical wooden axle and carrying 30 glass spokes with brass thimbles on their ends (Fig. 20 and Plate 2). The axle turned on a sharp point of

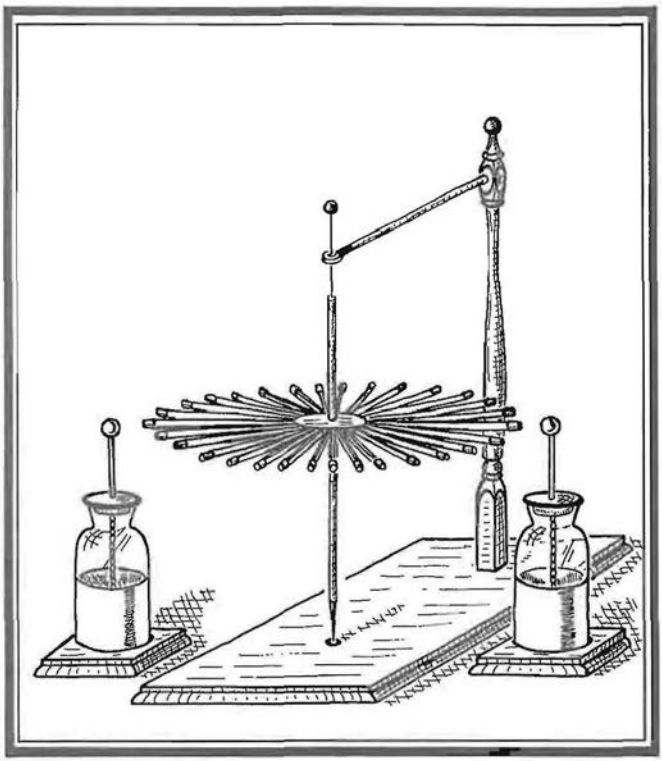

FIGURE 20

Franklin's first "electrical wheel" was the earliest device converting substantial amounts of electrical energy into mechanical energy.

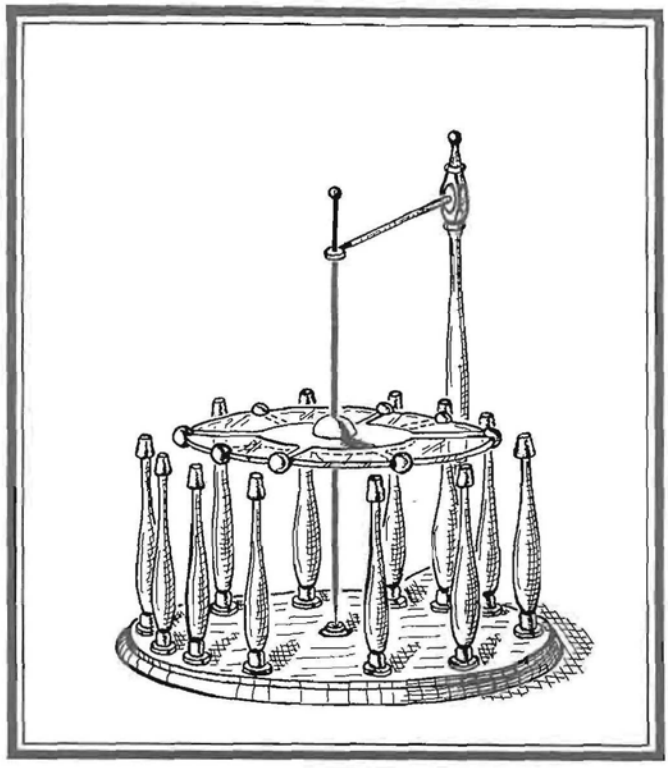

FIGURE 21

Franklin's second "electrical wheel" was more efficient than the first. It was powered by the electric charge stored in its capacitor-rotor.

iron fixed in its lower end and was kept in the vertical position by a strong wire mounted in its upper end and passing through a small hole in a thin stationary brass plate. Two oppositely charged Leyden jars (bottles) were placed in close proximity to the thimbles on the spokes, so that when the wheel turned, the thimbles barely missed the knobs of the jars.

As the thimbles moved past the Leyden jars, a spark jumped between a jar knob and the passing thimble, charging the latter with a charge of the same polarity as that of the knob. Therefore each knob attracted the oncoming thimbles ("opposite charges attract") and repelled the departing thimbles ("like charges repel"), causing the motor to turn. The motor, being perfectly symmetric, could turn in either direction, and usually required a starting push by hand to initiate the charging of the thimbles.

Here is how Franklin himself described the operation of his motor:[1]

"If now the wire of a bottle, electrified in the common way, be brought near the circumference of this wheel, it will attract the nearest thimble, and so put the wheel in motion; that thimble, in passing by, receives a spark, and thereby being electrified, is repelled, and so driven forwards; while a second being attracted, approaches the wire, receives a spark, and is driven after the first, and so on till the wheel has gone once round, when the thimbles before electrified approaching the wire, instead of

being attracted as they were at first, are repelled, and the motion presently ceases. But if another bottle, which had been charged through the coating (e.i. charged oppositely to the first, O. J.), be placed near the same wheel, its wire will attract the thimble repelled by the first, and thereby double the force that carries the wheel round; and, not only taking out the fire (electric charge, O. J.) that had been communicated to the thimbles by the first bottle, but even robbing them of their natural quantity, instead of being repelled when they come again towards the first bottle, they are more strongly attracted, so that the wheel mends its pace, till it goes with a great rapidity, twelve or fifteen rounds in a minute, and with such strength, as that the weight of one hundred Spanish dollars, with which we once loaded it, did not seem in the least to retard its motion".

Franklin was not quite pleased with this motor, however, because it required "a foreign force, to wit, that of the bottles" for its operation. He constructed therefore a second, "self-moving", motor, which itself contained the electrical energy to be converted into the mechanical motion.

The second motor was made as follows (Fig. 21 and Plate 3). A disk of window glass, 17 inches in diameter, was gilded on each side, except for narrow areas next to the edge. Several lead spheres (bullets) were fixed to the edge of the disk and were connected in alternation to

the two gold layers. The disk was mounted on a vertical axle consisting of two pieces of strong wire, each about 9 inches long; the upper wire being in contact with the top layer of gold, the lower wire being in contact with the bottom layer. The lower wire terminated in a sharp point resting on a piece of brass cemented within a glass salt-cellar. The upper wire passed through a hole in a thin brass plate cemented on a long strong piece of glass. This wire carried a small ball on its upper end for preventing a corona discharge from it. Several glass pillars with thimbles on their tops were positioned in a circle around the disk, so that the spheres on the edge of the disk barely missed the thimbles when the disk was in motion. The motor was powered by electricity stored in the disk itself, which, due to the two layers of gold, constituted a capacitor capable of storing an appreciable quantity of charge (to charge the rotor, the two layers of gold were temporarily connected to an electrostatic friction generator).

The motor operated on the same principle as Franklin's first motor, except that now the thimbles were stationary and received positive or negative charges from the passing spheres, rather than the other way around. As in the first motor, the rotation persisted as long as there was enough charge stored in the capacitor (rotor) to produce sparks between the spheres and the thimbles.

Franklin reported that his second motor

(which was more powerful than the first one) could make 50 turns in a minute and could run for up to 30 minutes on a single charging of the rotor.[1] Experiments with replicas of Franklin's motors performed by the author indicate that the original motors developed a power of the order of 0.1 watt,[2,3] which was a very impressive achievement for that very early period in the history of electric science.

Several authors have described simplified versions of Franklin's motors.[4,5] Miniature Franklin-type motors have been constructed and described by A. D. Moore[6] (Fig. 22). One such motor consists of a Plexiglas disk about 4 inches in diameter with small conducting balls embedded in the rim. The disk turns on a horizontal axis supported by a base behind the disk. The motor runs when placed between two conductors connected to an electrostatic generator. To make the motor self-starting and one-way running, the conductors may be provided with short auxiliary rods tangential to the disk; since the rods dispatch sparks predominantly in the direction of their free ends, the disk also turns in this direction. Another little motor of the same type designed by Moore is shown in Fig. 23.

An obvious improvement of Franklin's motors would be to use a cylindrical rotor with electrodes in the shape of long strips. Such electrodes would accept more charge than thimbles or spheres, and the power of the motor would be increased considerably. Motors of this type

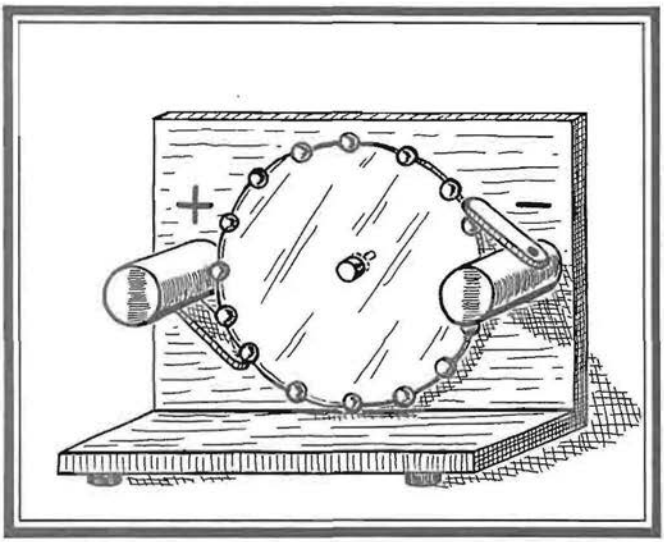

FIGURE 22

Several authors have described simplified versions of Franklin's motors. One such motor consists of a Plexiglas disk about 4 inches in diameter with small conducting balls embedded in the rim. The disk turns on a horizontal axis supported by a base behind the disk.

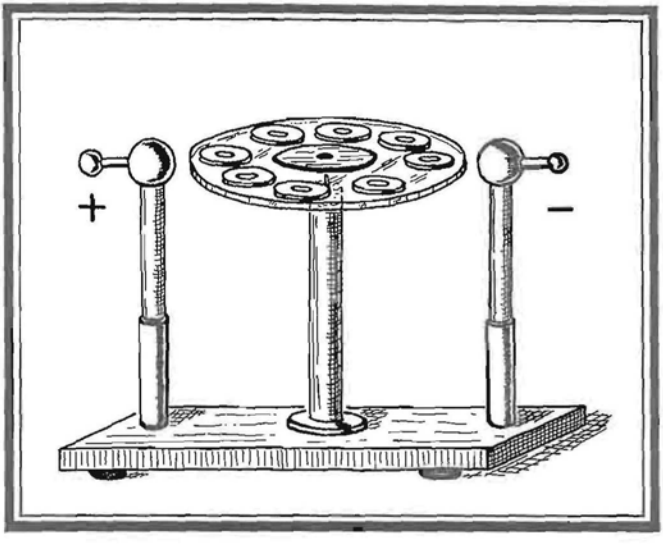

FIGURE 23

This inexpensive miniature Franklin-type motor of recent design can be used for lecture-room demonstrations of electrostatic forces. The rotor disk can be made from cardboard, wood, or plastic. For the rotor electrodes one can use thumbtacks or small aluminum foil disks.

have indeed been constructed. Here is a description of a "bell jar" motor taken from a book published in 1847 (Fig. 24):

"On a pivot, *a*, suspend a bell jar having four pieces of tinfoil pasted on its sides, *b*, *c*, *d*; connect the jar, by means of the insulated wire, *y*, with the prime conductor (high-voltage terminal of an electrostatic friction generator, O. J.) so that the pieces of tinfoil may receive sparks. On the opposite side arrange a conductor, *x*, in connection with the ground by a chain. On putting the machine into activity, the jar will commence rotating on its pivot."[7]

Small motors closely related to both Franklin's first motor and to pendulum motors were used in the rotary-type "perpetuum mobile" (see Chapter 2) operated from a Zamboni pile.[8] The main part of these motors (Fig. 25) was a light insulated arm pivoted on a sharp point and carrying a piece of tinsel on each end. The tinsels could just touch the knobs of the pile when the arm was moving on its pivot. The device functioned in the same manner as Franklin's first motor, the two tinsels corresponding to the thimbles of the latter.

An analogous design has recently been described as a "millifleapower motor" operating from a nuclear battery.[9] In this motor a light aluminum vane with pointed ends (Fig. 26) bent so as to form an inverted V is mounted at its midpoint on the tip of a sharp needle protruding from the positive terminal of the battery. As the

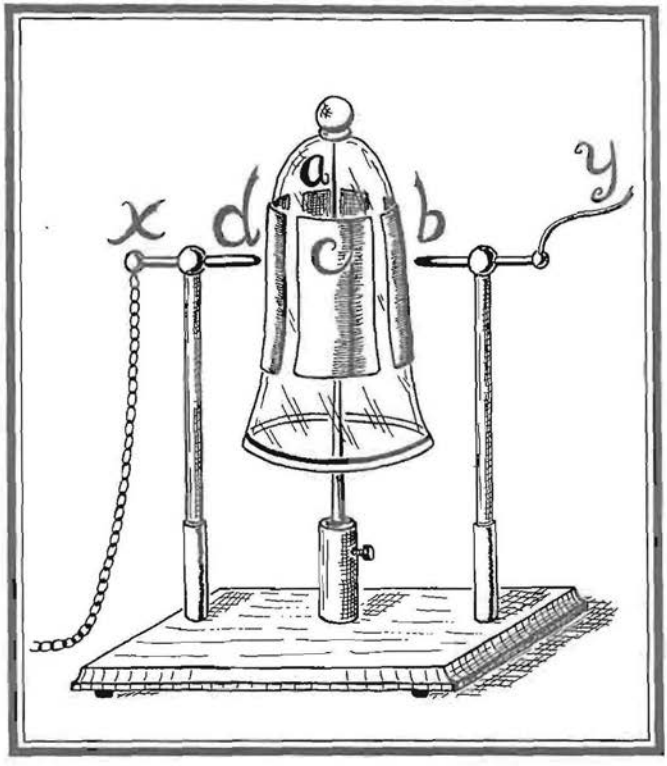

FIGURE 24

This "bell jar" Franklin-type motor had a cylindrical rotor with tinfoil electrodes in the shape of long strips.

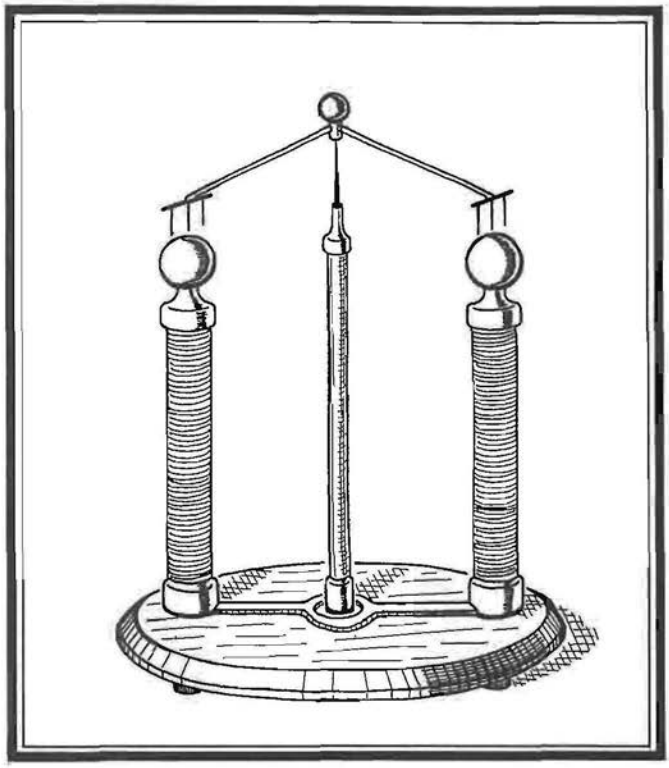

FIGURE 25

This small motor was used as a rotary-type "perpetuum mobile" operating from a Zamboni pile. Such motors turned for years without stopping.

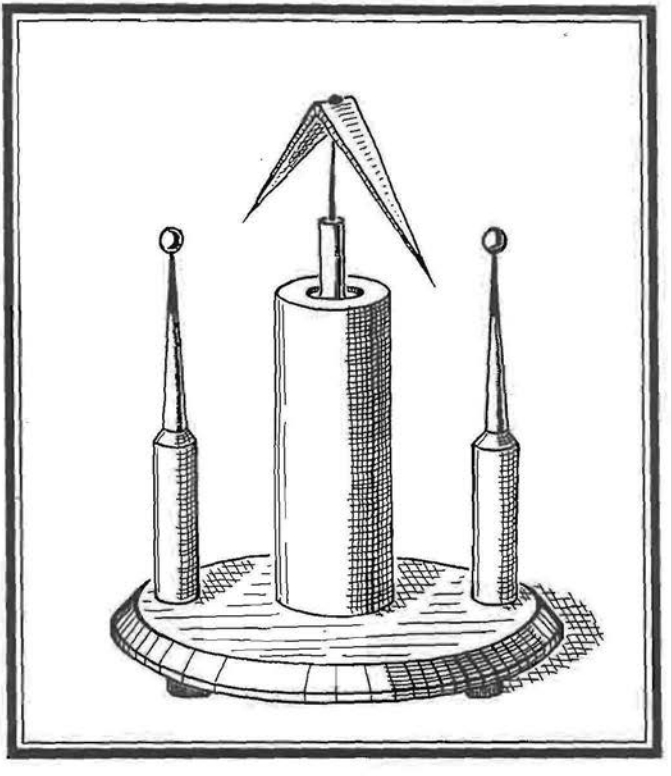

FIGURE 26

An analogous design has recently been described as a "millifleapower motor" operating from a nuclear battery.

vane turns, its ends come close to two spheres connected with the ground through a high resistance and become attracted by them. A discharge from the ends of the vane charges the two spheres, and the spheres then repel the ends of the vane. During the time it takes the vane to complete one half of its revolution, the charges of the spheres leak off to the ground, so that the spheres can again attract the ends of the vane, accept new charges from them, and then again repel them. The motor is expected to run for many years.

An interesting motor derivable from Franklin's first motor and from pendulum motors was suggested for operation from an electrophorus.[10] The main part of this motor (Fig. 27) was a light conducting ring supported in a vertical plane on an insulated needle. In front of the ring there were two insulated spheres, which were so positioned that the ring just missed them as it turned on its needle. The spheres were either charged oppositely by the electrophorus, or only one sphere was charged, in which case the second sphere was grounded. The device operated on the same principle as Franklin's first motor.

Of all the motors discussed above, Franklin's original motors and the bell jar motor were the most powerful ones. One can make such motors even more powerful by increasing the number of moving and stationary electrodes. But this can be done only up to a limit, because if the electrodes are too close to one another, sparks will

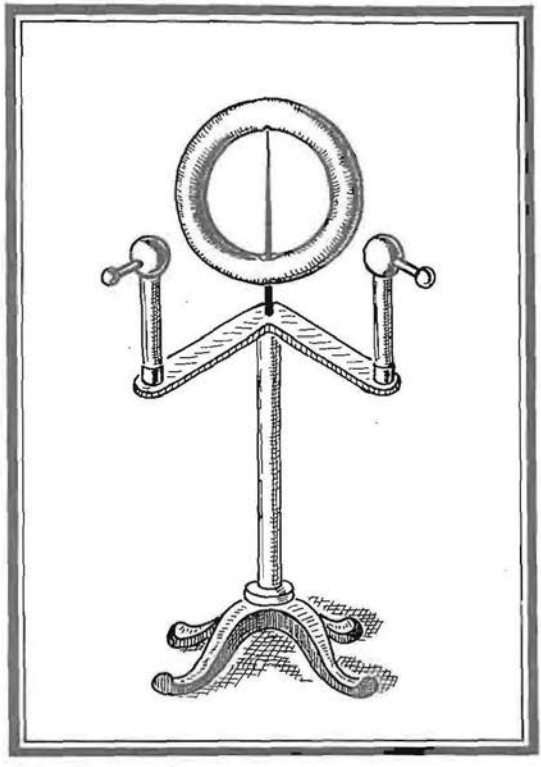

FIGURE 27

This motor derivable from Franklin's first motor and from pendulum motors was suggested for operation from an electrophorus.

jump all around from one electrode to the next, thus short-circuiting the motor. The motor will then not work at all, unless the operating voltage is lowered. But by lowering the voltage one also lowers the power, so that the gain obtained by increasing the number of electrodes becomes offset by the decrease in the operating voltage. Franklin type motors have therefore an inherent limitation in their power characteristics, and the fact that they depend for their operation on the presence of many metallic electrodes is one of their disadvantages.

Since in Franklin's motors and in other motors described in this chapter the rotor is charged by means of electric sparks, these motors may be classified as "spark motors". Toward the end of the 19th century a way was found to construct electrostatic motors based on the same mechanism of attraction and repulsion between electric charges as in Franklin's motors, but with rotors (or stators) charged more efficiently than it is possible to do by means of the sparks. These motors are described in the next chapter.

REFERENCES

1. J. Sparks, Ed., *The Works of Benjamin Franklin*, Whittemore, Niles, and Hall, Boston, 1856, Vol. 5, pp. 204-207.
2. O. Jefimenko and D. K. Walker, *The Physics Teacher*, Vol. 9, pp. 121-129 (1971).
3. O. Jefimenko, *American Journal of Physics*, Vol. 39, pp. 1139-1140 (1971).

4. M. Guyot, *Nouvelles Recreations Physiques et Mathematiques*, Gueffier, Paris, 1786, Vol. 1, pp. 272-274 and Plate 27.
5. Dayton C. Miller, *Sparks, Lightning, Cosmic Rays*, MacMillan, New York, 1939, pp. 63, 64.
6. A. D. Moore, *Electrostatics*, Doubleday and Company, Inc., New York, 1968, pp. 104-108.
7. J. W. Draper, *Text-Book on Chemistry*, Harper and Brothers, New York, 1847, p. 105.
8. M. J. Jamin, *Cours de Physique*, Gauthier-Villars, Paris, 1869, 2nd edn., Vol. 3, p. 39.
9. R. H. Dressel, *High School Science Bulletin of the New Mexico State University*, Vol. 6, pp. 3-4 (April 1, 1964).
10. H. Wommelsdorf, *Annalen der Physik*, Ser. 4, Vol. 70, pp. 135-138 (1923).

5

CORONA MOTORS AND MOTORS SIMILAR TO THEM

In 1867, W. Holtz, the inventor of the electrostatic "influence" machine (generator) carrying his name, discovered that this machine could function as a motor when powered by another similar machine.[1] In order to study this effect in some detail, the famous German physicist J. C. Poggendorff ordered the construction of a special device, analogous to Holtz's machine, but designed to operate only as a motor and provided with numerous adjustable components so as to operate under a wide range of conditions.[2]

The basic part of this motor was a vertical glass-disk rotor placed between two ebonite crosses carrying metallic sharp-needle "combs" (Fig. 28 and Plate 4). The sharp points of the combs almost touched the surface of the disk, so that the disk could be charged by means of a corona discharge from the combs when they were

connected in alternation to an electrostatic generator. Each comb could be oriented so as to make an arbitrary angle with respect to a radial direction.

Just like the sparks in Franklin's motors, the corona discharge from a comb deposited on the rotor a charge of the same polarity as that of the comb. Each comb repelled therefore the segment of the rotor carrying charges which it sprayed onto the rotor and attracted the segment carrying charges sprayed onto the rotor by the preceding comb. Because of a continuous discharge between the combs and the rotor, almost the entire surface of the rotor was sprayed with electric charges. The repulsion and attraction between the combs and the rotor, were therefore not only much stronger than in Franklin's motors, (where only the electrodes were charged) but were also much steadier, since the distances between the combs and the charges on the rotor were always the same. As a result, the torque and power obtainable with this motor were far greater than those obtainable with Franklin's motors of similar dimensions.

Poggendorff made a thorough study of his motor, varying all its important parameters (his article comprises 32 pages). He used several rotors of different thickness and surface characteristics, whose weight ranged from 2.5 to 4.5 pounds (all rotors were 15 inches in diameter). He varied the number, the orientation, and the polarity of the combs.

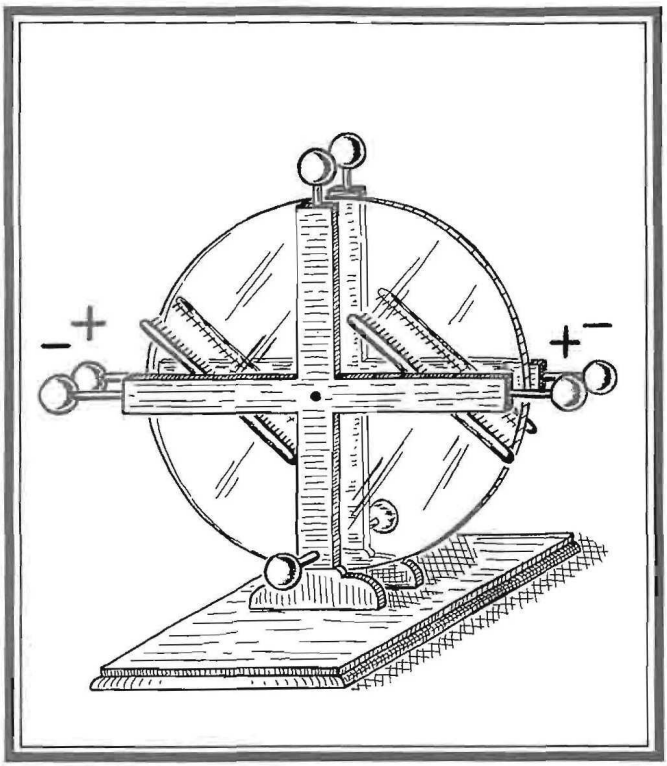

FIGURE 28

Poggendorff's corona motor had a glass-disk rotor placed between two ebonite crosses carrying metallic sharp-needle "combs".

He found that a motor with combs arranged along the radii of the rotor could rotate equally well in either direction but was not self-starting, since such combs sprayed charges onto the rotor in a perfectly symmetric fashion. However, if the combs were slanted relative to the radii, the motor became self-starting and unidirectional, because such combs sprayed charges predominantly in one direction. He also fould that the performance of the motor could be improved by placing pieces of glass, cardboard, or metal close to the surface of the rotor (this is the principle of the modern "backing plate" or "lining"; see Chapter 10). When properly adjusted, the motor could run at better than 300 rpm.

Poggendorff had fully appreciated the superiority of his motor in comparison fo Franklin's motors, and had stated so at the end of his article. In fact, he had indicated that his motor used from 1200 to 1800 times as much current as Franklin's motors, in which case, assuming that the operating voltage of his motor was the same as that of Franklin's motors (approximately 100 kilovolts), the power of his motor must have been close to 100 watts.

At the time when Poggendorff's article was written, however, it was considered unscientific to expect that electricity (*any* electricity) could ever become a significant source of motive power. This may be the reason why Poggendorff, speaking of the rotation phenomenon that he investigated, declared at the end of

his article: "...it would be a sanguine hope if one wanted to believe that any useful mechanical effect could be achieved with it. That this is not possible, follows already from the consideration of how small is the quantity of electricity that is here put into play in comparison to that developed by a voltaic battery, with which one nevertheless, even with the help of the magnetismus produced by it, has so far achieved nothing substantial ("Erkleckliches")". The argument was obviously weak, but taking into account Poggendorff's reputation as an eminent scientist, it was probably sufficient to discourage further serious investigations of the corona-induced rotation for many years to come.

Since Poggendorff's motor depended on a corona discharge for its operation, the motor may be classified as a "corona motor".

Holtz's rotation phenomenon was also studied by the Danish physicist C. Christiansen (whose interest in the phenomenon had been aroused by a preliminary report of Poggendorff's investigations published in 1867).[3] Christiansen described two motors based on Holtz's discovery. His first motor consisted of a horizontal disk rotor and two stationary corona-producing combs. His second motor was similar to the first except that in it the glass disk was stationary and the combs constituted the rotor. The rotor combs in this second motor were located below the glass disk and were charged by means of two foil strips hanging from them and sliding along

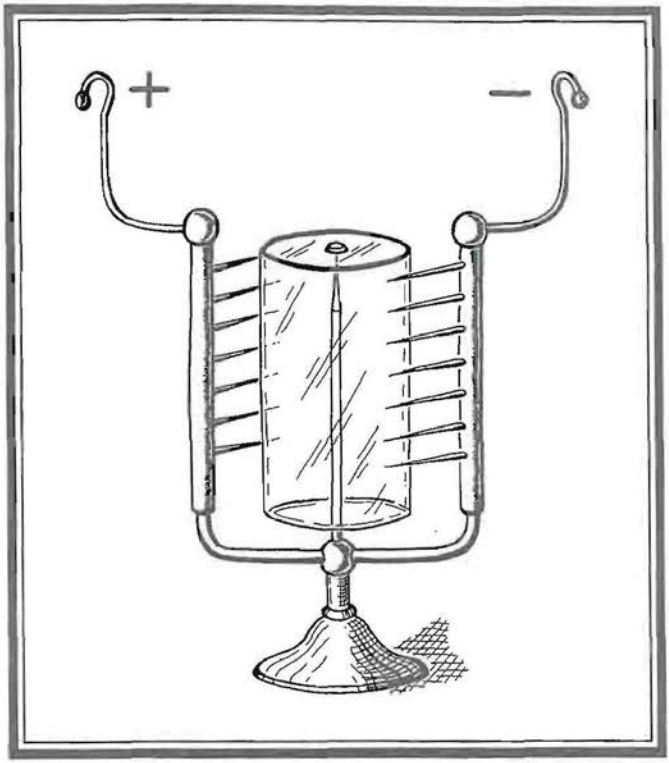

FIGURE 29

This self-starting corona motor with a cylindrical rotor was described in 1871 under the name of "electric tourbillion".

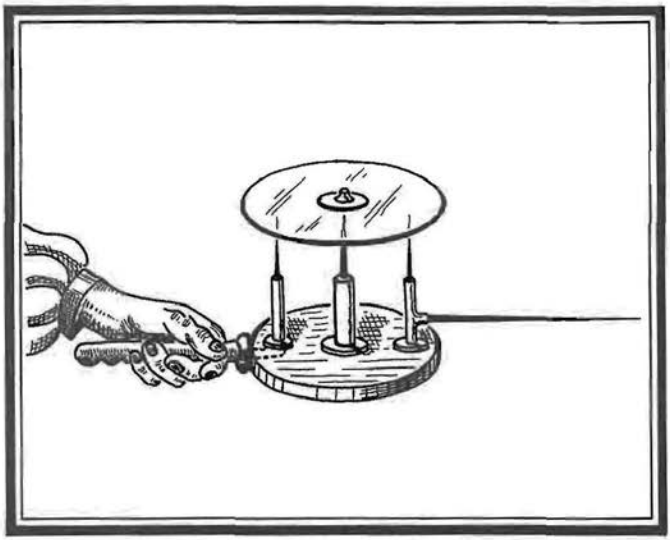

FIGURE 30

In this hand-held corona motor (attributed to Ruhmkorff) the horizontal wire, by a corona discharge, extracted charges from the power source, and the vertical needle connected to this wire, also by a corona discharge, sprayed these charges onto the rotor.

two horizontal concentric contact rings mounted on the base of the motor.

Cylindrical and spherical motors operating on the same principle as Poggendorff's motor were described in 1871 by W. Gruel (Fig. 29), who called them the "electric tourbillions".[4] Gruel pointed out that these motors could be made self-starting and unidirectional by inclining the combs in the same rotational direction with respect to the surface of the rotor. He also suggested that by providing the rotors with a series of holes, the motors could be used as sirens.

A disk motor not noticeably different from Poggendorff's motor was patented in the U.S.A. in 1891 by J. W. Davis and J. B. Farrington.[5]

An interesting hand-held corona motor (attributed to Ruhmkorff) was described in 1876 by M. E. Mascart.[6] The motor had a horizontal mica disk rotor (Fig. 30) supported on a vertical needle by a jewel bearing, such as are used for supporting compass needles. Below the disk there were two vertical corona-producing needles mounted on a hard rubber base. One of the latter needles was connected to a metal handle, the other was connected to a long, stiff, horizontal wire terminating in a sharp point. To set the motor in motion, the operator held the motor so that the sharp point of the horizontal wire was in the proximity of a charged conductor. By a corona discharge, the horizontal wire then extracted charges from the conductor, and the ver-

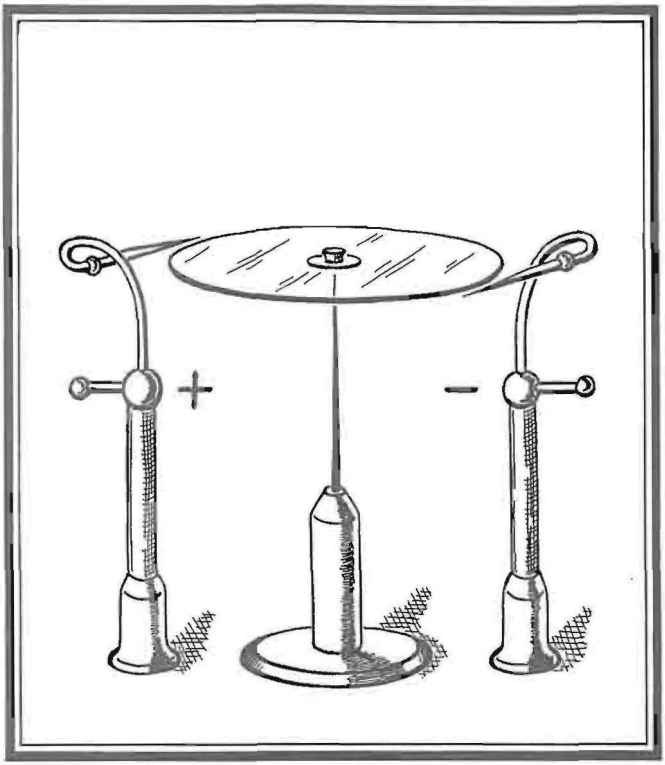

FIGURE 31

This motor had two insulated corona-producing points tangential to the rotor disk and oriented in the same rotational direction.

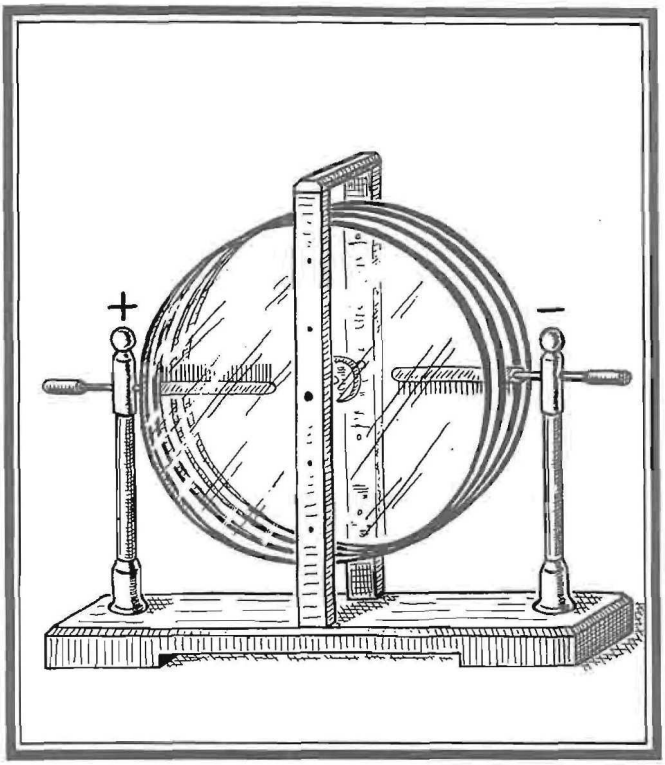

FIGURE 32

This corona motor with a compound glass rotor could run at about 2000 rpm and had a power of about 90 watts.

tical needle connected to this wire, also by a corona discharge, sprayed these charges onto the rotor. The second vertical needle discharged the rotor and conducted its charges to the ground through the hand and body of the operator.

A number of experiments with Poggendorff type corona motors were reported in 1921 by V. E. Johnson.[7] One of his motors was similar to Ruhmkorff's motor (Fig. 31). This was a horizontal mica disk, about 6 inches in diameter, supported on a vertical needle point. At the edge of the disk there were two insulated corona-producing points tangential to the disk and oriented in the same rotational direction. Another of Johnson's motors was a big machine consisting of two stationary glass disks and a three-piece glass rotor that could rotate on ball bearings between the stationary disks. The rotor was made of two large glass disks separated by a smaller disk so as to have a deep slot along its edge. Two flat sharp-point combs were inserted diametrically opposite to one another into the slot of the rotor (Fig. 32). Johnson estimated that his motor could run at about 2000 rpm and had a power of about 90 watts.

Just as Poggendorff's motor was derived from Holtz's electrostatic machine, a series of electrostatic motors were similarly derived from Wimshurst's electrostatic machine.

In 1891 five such motors were constructed by William McVay of New York City.[8] McVay's first motor (Fig. 33) consisted of two horizontal

glass disks, about 12 inches in diameter, one stationary and the other rotating on the vertical axis just above the first. The lower disk had two quadrants of tinfoil, and the upper disk had 16 tinfoil sectors, as shown in the figure. The power (from a Wimshurst machine) was delivered to the motor by means of two insulated arms, each of which terminated in two brushes, one touching continually one of the lower quadrants, the other charging a sector on the upper disk just clear of the edge of the quadrant. Charges of the same polarity were thus deposited on the quadrant and on the sector, causing them to repel each other. An "equalizer" reduced the charge of the sectors before they passed over the further edge of an oppositely charged quadrant, thus reducing the back torque on the rotating disk. An important new feature of this motor was the simultaneous charging of the stationary quadrants and of the moving sectors, which assured a relatively strong starting torque and, together with the neutralizing system, assured a reliable unidirectional operation. McVay also constructed motors of cylindrical geometry, one of which is shown in Fig. 34. In this motor the quadrants were located on the inner cylinder, while the charging and neutralizing brushes were on the neck of the outside cylinder.

McVay's first motor was later modified for charging by combs, rather than by brushes (Fig. 35). The motor then operated essentially as

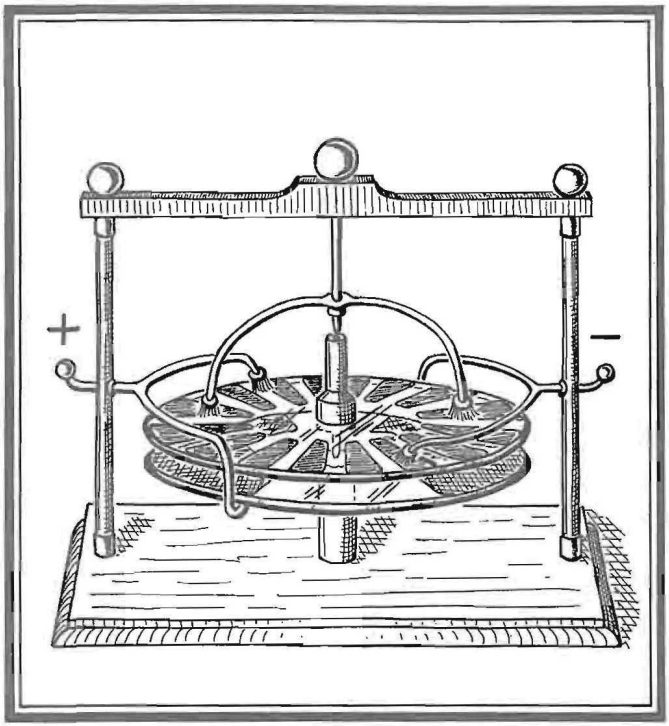

FIGURE 33

McVay's first motor consisted of two horizontal glass disks, about 12 inches in diameter, one stationary and the other rotating on the vertical axis just above the first.

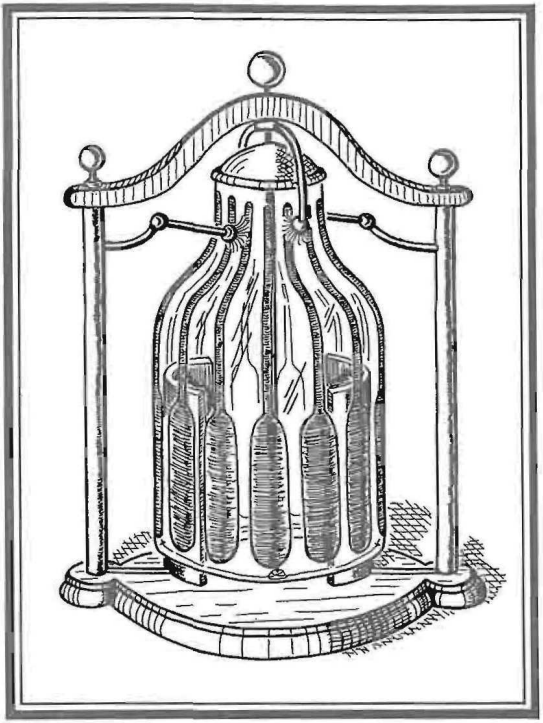

FIGURE 34

In this McVay's motor the quadrants were located on the inner cylinder (shown as two segments), while the charging and neutralizing brushes were on the neck of the outside cylinder.

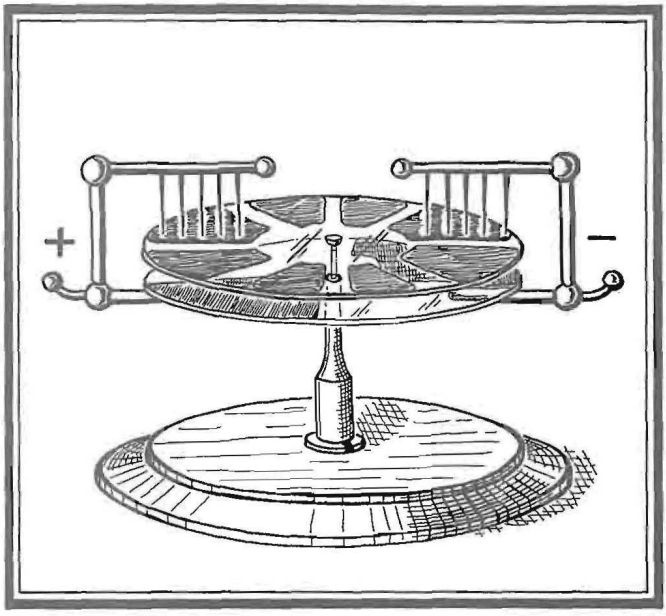

FIGURE 35

McVay's first motor was later modified for charging by combs, rather than by brushes. The motor then operated essentially as Poggendorff's corona motor, retaining, however, its self-starting and unidirectional qualities.

Poggendorff's corona motor, retaining, however, its self-starting and unidirectional qualities.

Instructions for building a Poggendorff motor may be found in the May 1971 issue of Popular Science.[9] Instructions for building a simple McVay motor may be found in the January 1914 issue of Electrical Experimenter[10] (the author is grateful to Mr. Thorn L. Mayes for this information).

Since a corona discharge in air at atmospheric pressure requires a minimum voltage of about 3000 volts, ordinary corona motors can operate only from sources capable of supplying a voltage of this magnitude. Such voltages are, of course, easily attainable at the present time, and since the corona motors are very simple and efficient devices, they have been further developed and studied in recent years. We shall return to them in the last chapter of this book.

REFERENCES

1. W. Holtz, *Annalen der Physik*, Ser. 2, Vol. 130, pp. 168-171 (1867).
2. J. C. Poggendorff, *Annalen der Physik*, Ser. 2, Vol. 139, pp. 513-546 (1870).
3. C. Christiansen, *Annalen der Physik*, Ser. 2 Vol. 137, p. 490 (1869).
4. "Elektrischer Tourbillion", *Annalen der Physik*, Ser. 2 Vol. 144, p. 644 (1871).
5. U. S. Patent No. 459678.

6. M. E. Mascart, *Traité d'Electricité Statique*, G. Masson, Paris, 1876, Vol. 1 pp. 179, 180.
7. V. E. Johnson, *Modern High Speed Influence Machines*, E. and F. N. Spon, London, 1921, pp. 175-205.
8. "A Group of Static Motors", *Electrical World*, Vol. 18, p. 418 (1891).
9. C. P. Gilmore and W. J. Hawkins, *Popular Science Monthly*, Vol. 198, pp. 95-97 and 114 (May 1971).
10. "A Static Electric Motor", *Electrical Experimenter*, January 1914, p. 137.

6

CAPACITOR MOTORS

In 1889, Karl Zipernowsky, a Hungarian engineer (co-inventor of practical electrical transformers), constructed a new type of electrostatic motor,[1] which was derived from Thomson's quadrant electrometer.[2] The rotor of this motor (Fig. 36) consisted of two pairs of aluminum sectors insulated from each other and from the rest of the apparatus. The stator consisted of four double (hollow) sectors of brass enclosing the rotor. The rotor was fitted with a commutator in four parts, by means of which the sectors of the rotor were charged oppositely to those sectors of the stator into which they were entering and identically to those sectors of the stator which they were leaving. An interesting property of this motor was that it could operate from high-voltage dc as well as from high-voltage ac sources.

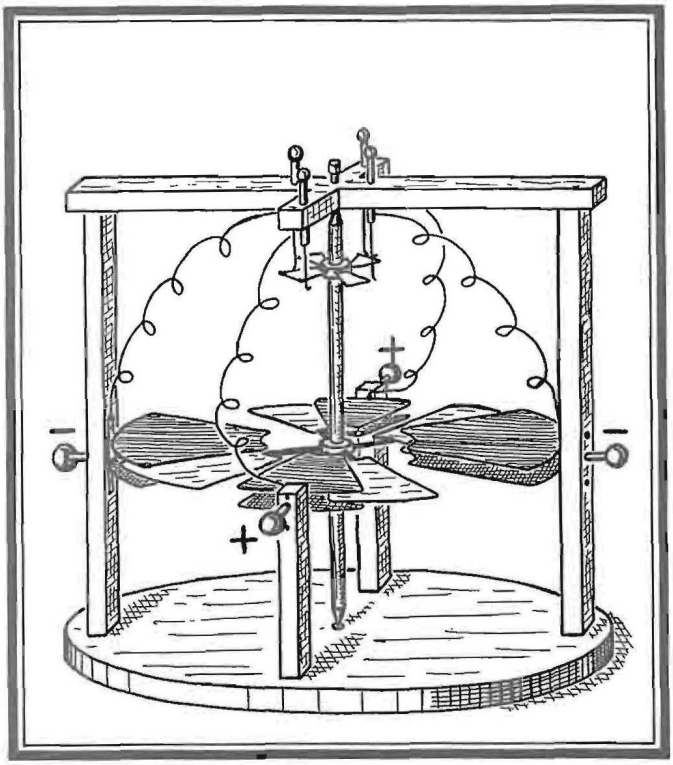

FIGURE 36

This motor was built in 1889 by Karl Zipernowsky, a Hungarian engineer. It operated from dc as well as from ac sources.

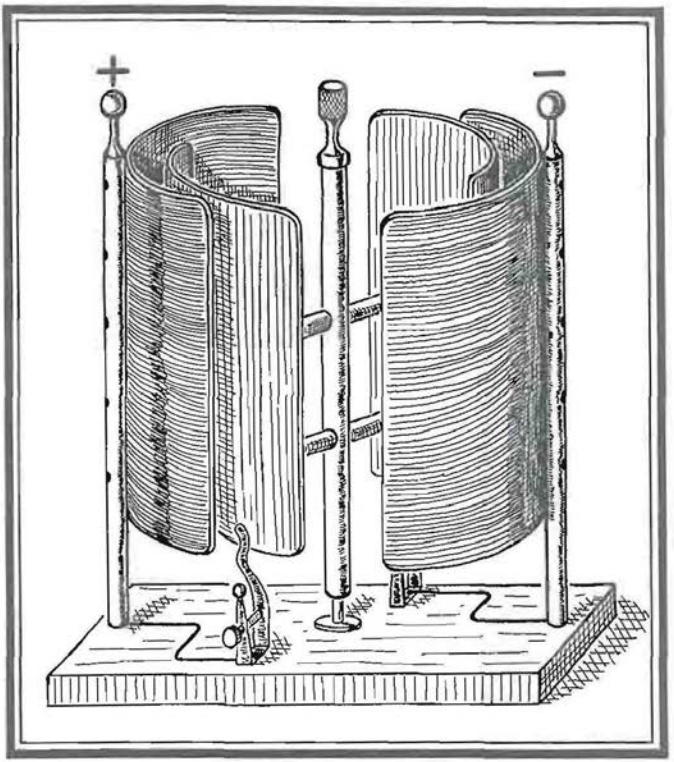

FIGURE 37

This capacitor motor was described in 1904 by van Huffel. Its rotor could be charged by contact or by sparks.

Inasmuch as Zipernowsky's motor operated as a result of the electric forces exerted by one charged conducting plate upon a second charged conducting plate (which are the same forces that act upon the two plates of a capacitor) it constituted what is now called an electrostatic "capacitor motor".

A simpler version of a capacitor motor was described in 1904 by van Huffel.[3] This motor was based on the so-called Thomson's replenisher.[4] The motor had an essentially cylindrical geometry (Fig. 37) and consisted of a rotor with two insulated bent brass plates mounted on a vertical axle and located between two similar, but slightly larger, plates of the stator. The rotor plates (which were not quite coaxial) were charged by means of two metallic tongues connected to the stator plates; the tongues touched the rotor plates just as the latter began to clear the stator plates. The charging of the rotor plates could occur by a direct contact as well as through a spark, depending on the adjustment of the tongues.

Since capacitor motors do not require sparks or a corona discharge for their operation, they can operate, at least in principle, from as low a voltage as one desires to use. This is one of their important advantages and is one of the reasons that such motors have been given considerable attention in recent years. Furthermore, as already indicated, capacitor motors can operate not only from dc sources, but also from ac

sources. Finally, when powered by an ac source, they can operate both as synchronous and asynchronous motors (Zipernowsky's original motor operated from ac as an asynchronous motor).

A synchronous capacitor-type electrostatic motor is merely a multi-electrode capacitor motor without a commutator, the proper charging of the rotor being accomplished by continuously supplying an ac voltage of proper frequency between the stator and the rotor (Fig. 38). It is easy to see that if the rotor moves by one electrode in one period of the supply voltage, then the ac voltage accomplishes the same effect as that accomplished by a dc voltage with a commutator. The synchronous velocity is therefore $2\pi f/N$, where f is the frequency of the supply voltage and N is the number of the electrodes.

Several precision-made synchronous motors were described in 1969 by B. Bollée.[5] One of these motors ran on sapphire bearings and had a cylindrical aluminum rotor 1 centimeter long and 0.45 centimeters in diameter; the rotor and the stator had 60 electrodes each, with a 0.001 centimeter gap between stator and rotor electrodes. The maximum power of this motor was about 100 microwatts at 220 volts and 50 hertz. Another motor (for an electric clock) had a dielectric disk rotor, with four rows of 100 electrodes on each side, located between two bearing covers, each with five rows of 100 elec-

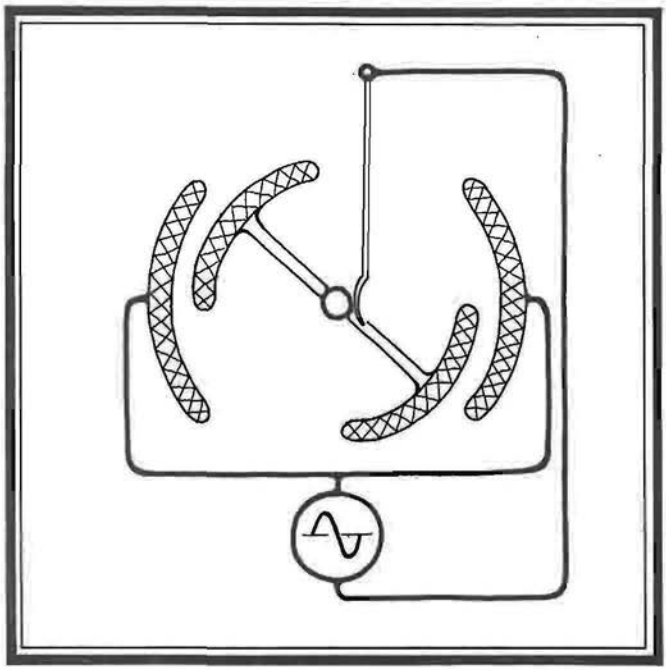

FIGURE 38

In a synchronous capacitor-type electrostatic motor the proper charging of the rotor is accomplished by continuously supplying an ac voltage of proper frequency between the stator and the rotor.

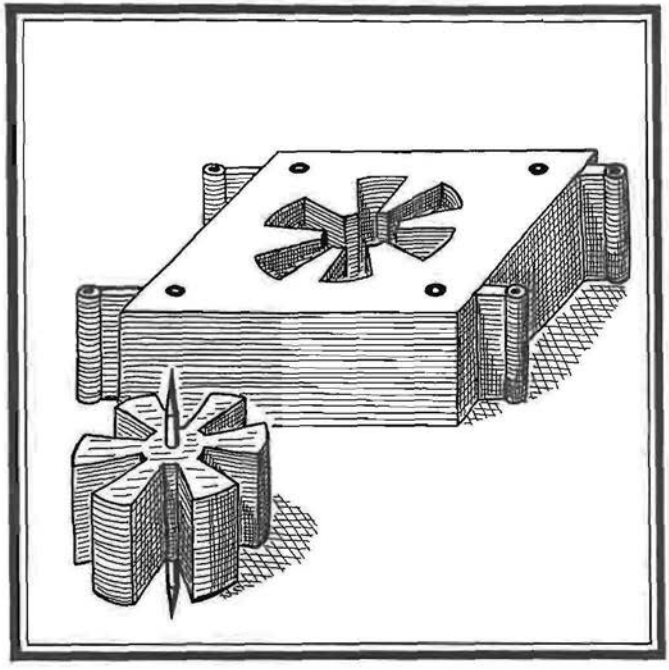

FIGURE 39

This synchronous electrostatic motor is essentially a variable capacitor with a rotatable shaft. The design of this motor is similar to the design of an electrostatic variable-capacitance generator.

trodes; the gap width in the axial direction was 0.01 centimeter. At 200 volts this motor had a maximum output of 600 microwatts. An interesting feature of this motor was that it had no slip ring on the rotor shaft, and that the rotor was therefore not connected to the power source. Instead, the stator was divided into two mutually insulated halves. This arrangement reduced the friction of the rotor and improved the performance of the motor. Still another motor was essentially a variable capacitor with a rotatable shaft. It had 15 plates in the stator and 14 in the rotor, each 0.03 centimeters thick; the gaps between stator and rotor plates were 0.015 centimeters (Fig. 39). The design of this motor is similar to the design of the electrostatic variable-capacitance generator described by N. J. Felici.[6]

According to Bollée, the maximum average torque on the rotor in a capacitor-type electrostatic motor is $T_{max} = kNV^2$, where k is a geometrical constant, and V is the peak voltage applied. A motor with many electrodes is therefore slow but produces greater torque. The power of the motor is proportional to the square of the applied voltage and to the frequency but does not depend on the number of electrodes.

An important parameter in capacitor-type electrostatic motors is the capacitance difference $C_{max} - C_{min}$, where C_{max} is the greatest capacitance between the rotor and the stator and C_{min} is the smallest capacitance as they oc-

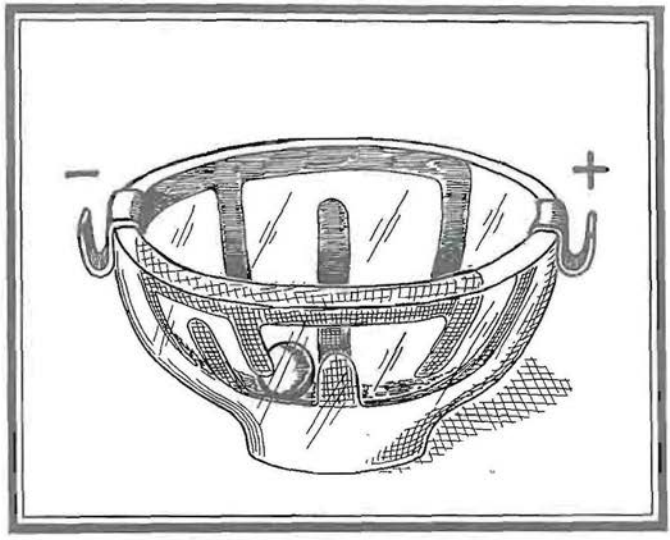

FIGURE 40

This interesting motor has been described by Moore, who calls it the "Interdigital Motor". The stator consists of a glass bowl with strips of aluminum foil glued to it. The rotor is a single conducting ball inside the bowl.

cur when the rotor turns. The larger this parameter is, the better are both the torque and the power. The main objective in the design of such motors is therefore to obtain the greatest possible variation of the capacitance.

An interesting motor which can be classified either as a modified Franklin's second motor or as a modified capacitor-type motor has been described by Moore,[7] who calls it the Interdigital Motor. The stator consists of a glass bowl with strips of aluminum foil glued to it (Fig. 40). The rotor is a single conducting ball inside the bowl; the ball runs along the sloping side when the strips are connected to an electrostatic generator (positive and negative strips are connected in alternation). Several balls can be placed into the bowl at the same time, and all of them will then run.

REFERENCES

1. "Zipernowsky Electrostatic Motor", *Electrical World*, Vol. 14, p. 260 (1889).
2. W. Thomson, *British Association Report*, 1855 (2), p. 22.
3. N. G. van Huffel, *Zeitschrift für den Physikalischen und Chemischen Unterricht*, Vol. 17, pp. 316-317 (1904).
4. W. Thomson, *British Association Report*, 1867, pp. 489-513.
5. B. Bollée, *Philips Technical Review*, Vol. 30, pp. 178-194 (1969).

6. N. J. Felici, *Electronics and Power*, Vol. 11, pp. 169-171 (1965).
7. A. D. Moore, *Electrostatics*, Doubleday and Company, Inc., New York, 1968, p. 109.

7

INDUCTION MOTORS

In 1892-1893, electrostatic motors of a fundametally new kind were described by Riccardo Arno[1,2] and by W. Weiler.[3] Their motors operated on the principle that the polarization of a dielectric in a variable electric field lags behind the field inducing the polarization. Therefore if a dielectric body is placed into a rotating electric field, the polarization charges* induced on the body will experience a force causing the body to follow the rotation of the field.

Arno's motor (Fig. 41) had a cylindrical stator formed by four insulated copper segments enclosing the space in which the rotating field was to be produced. The rotor was a hollow closed ebonite cylinder supported on two steel

*See, for example, O. Jefimenko "Electricity and Magnetism", Appleton-Century-Crofts, Inc. (1966), pp. 245-249.

points turning in holes in glass; the cylinder weighed 40.33 grams, was 18 centimeters long and 8 centimeters in diameter. The rotating field was produced by means of a high-voltage transformer (3800 volts output), an RC-circuit, and a mercury commutator. The rotor attained a speed of about 250 rpm and developed a torque of 176 centimeter^2 × gram × second^{-2}.

Weiler used a hand-operated double commutator for his motors. The commutator delivered high voltage from an electrostatic generator in sequence to the four segments of a stator, thus producing the needed rotating electric field. Weiler described four different motors utilizing rotating fields. One of his motors was similar to Arno's motor. The operation of this motor (and that of Arno's motor) can be explained with the aid of Fig. 42, representing the top view of the motor. When segment A of the stator is positive, and segment B is negative, the electric field of the stator induces in the dielectric rotor (assumed to be at rest) polarization charges as shown in the figure. After the commutator has completed ¼ revolution, segment C is positive and segment D is negative. Thus the field has rotated by 90°, and now it polarizes the rotor in a new direction (at 90° with respect to the first). However, since it takes a certain time for the polarization charges to relax to zero, some of the initial polarization charges are still on the rotor, so that the distribution of the polarization charges on the rotor is not symmetrical relative

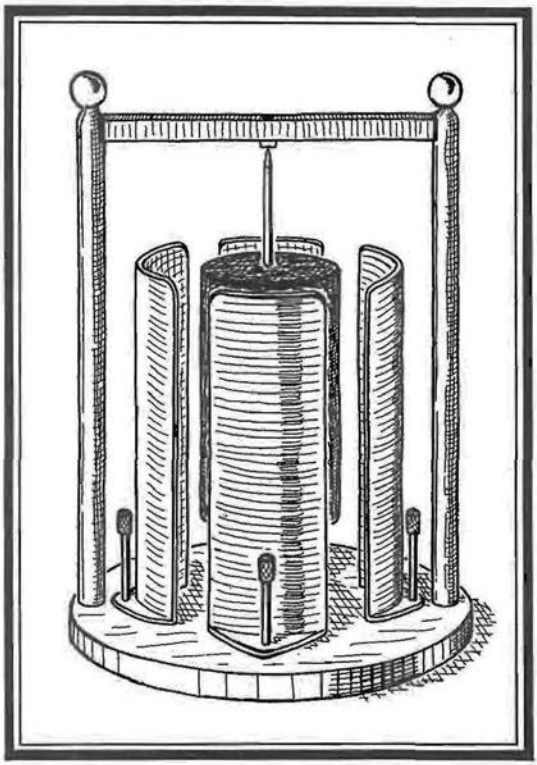

FIGURE 41

Arno's induction motor operated on the principle that the polarization of a dielectric in a variable electric field lags behind the field.

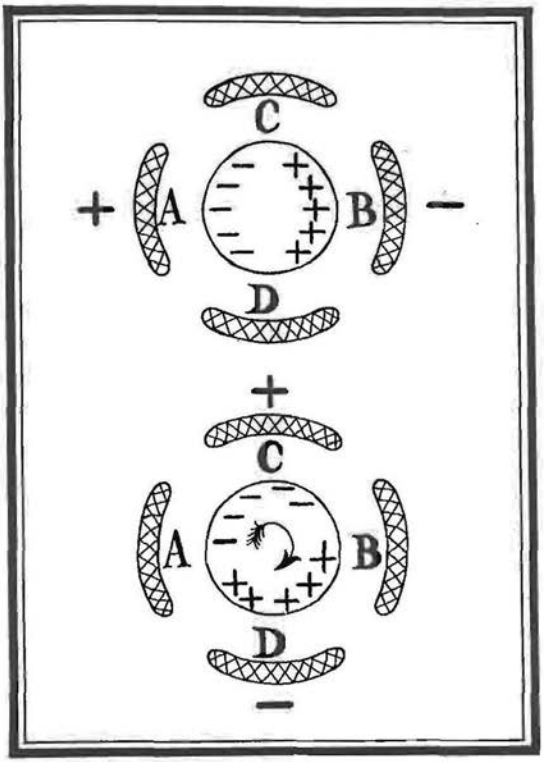

FIGURE 42

The operation of Arno's and Weiler's induction motors can be explained with the aid of this diagram.

to the charges on the stator. The rotor experiences therefore a torque due to attraction and repulsion between the rotor charges and stator charges, and the rotor turns.

Weiler also experimented with motors having noncylindrical rotors. One such motor is shown in Fig. 43. Rotating field electrostatic motors with disk-shaped rotors were built and studied between 1894 and 1901 in Japan by Hiderato Ho.[4]

Since Arno's and Weilers motors depend for their operation on induced polarization charges, they may be called "induction motors".

Induction motors, too, have a number of appealing features which attracted considerable interest to such motors in recent years: the motors can operate from both dc and ac; the motors can operate from low-voltage sources; since the motors require no brushes or slip rings, friction losses in these motors are very small.

Several carefully designed induction motors (both cylindrical and flat) were described in 1969 by Bollée.[5] One such motor of cylindrical geometry operated from a three-phase power supply at 220 volts and 50 hertz. The stator had 12 electrodes, which surrounded a rotor 15 centimeters in diameter. A disk-type induction motor operating from a three-phase power supply had a rotor consisting of 10 glass disks, each 6 centimeters in diameter, coated with a thin layer of slightly conductive material and mounted on a common axle. The rotor turned inside a ring

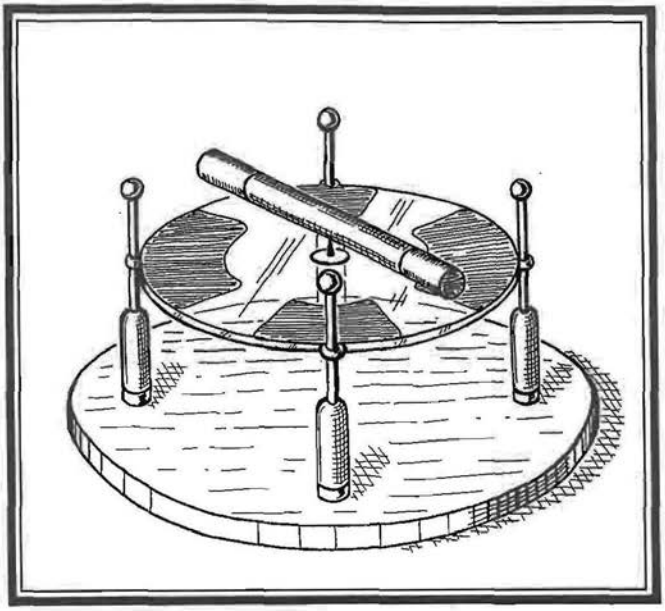

FIGURE 43

In 1892-1893, Weiler also experimented with induction motors having noncylindrical rotors, such as the motor shown in this drawing. Induction motors have a number of appealing features which attracted considerable interest to such motors in recent years.

formed by 60 comb-shaped stator electrodes. The maximum torque was 2000 centimeter^2 × gram × second $^{-2}$ at 220 volts and 50 hertz.

Another interesting motor described by Bollée was a linear induction motor, which "may be regarded as a segment of rotating-field motor bent straight".[5]

An extensive mathematical analysis of the induction motors was published in 1970 by Soon Dal Choi and D. A. Dunn.[6] They tested their theoretical results on a cylindrical motor with 72 electrodes. The motor was 14 inches wide, 14 inches high, and 19¼ inches long. It had a Plexiglas rotor that turned at a maximum rate of about 1000 rpm when powered by a 10-kilovolt source.

REFERENCES

1. R. Arno, *Rediconti della Atti Reale Accademia dei Lincei*, Vol. 1 (2), p. 284 (1892).
2. R. Arno, *The Electrician*, Vol. 29, pp. 516-518 (1892).
3. W. Weiler, *Zeitschrift für den Physikalischen und Chemischen Unterricht*, Vol. 7, pp. 1-4 (1893).
4. "A Rotary Field Electrostatic Induction Motor", *Electrical World*, Vol. 37, pp. 1012-1014 (1901).
5. B. Bollée, *Philips Technical Review*, Vol. 30, pp. 178-194 (1969).
6. S. D. Choi and D. A. Dunn, *Proceedings of the IDEE*, Vol. 59, pp. 737-738 (1971).

8

LIQUID-IMMERSED MOTORS

In 1893, W. Weiler discovered that a glass cylinder placed in a poorly conducting liquid between two spherical electrodes began to rotate when the electrodes were connected to an electrostatic generator.[1] He then constructed a small motor based on this discovery (Fig. 44). The principle of the operation of this motor was essentially the same as that of a cylindrical corona motor, except that the charges were now deposited on the rotor not by a corona discharge, but by the conduction current in the liquid.

In 1896, G. Quincke reported the same phenomenon and published a very comprehensive experimental study of it.[2] His device is shown in a simplified form in Fig. 45. It is interesting to note that Quincke, rather than Weiler, has been credited by subsequent investigators with the discovery of the rotation of dielectric bodies in

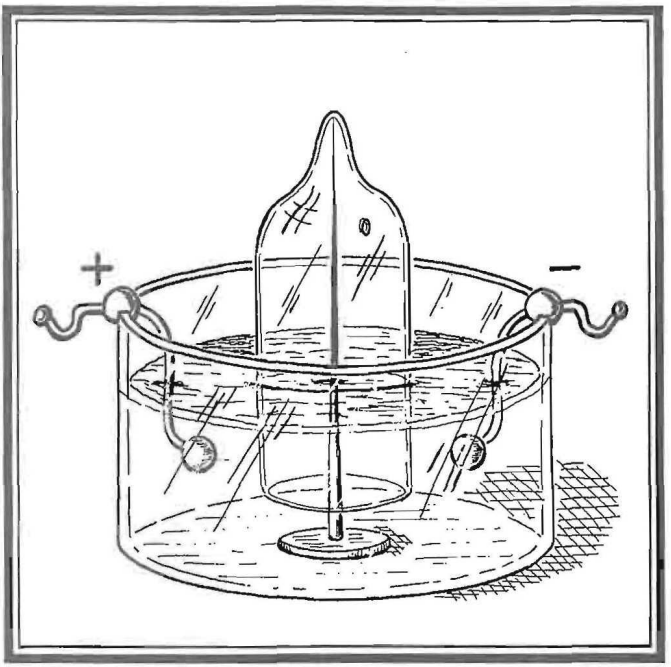

FIGURE 44

In 1893, W. Weiler discovered that a glass cylinder placed in poorly conducting liquid between two spherical electrodes began to rotate when the electrodes were connected to an electrostatic generator.

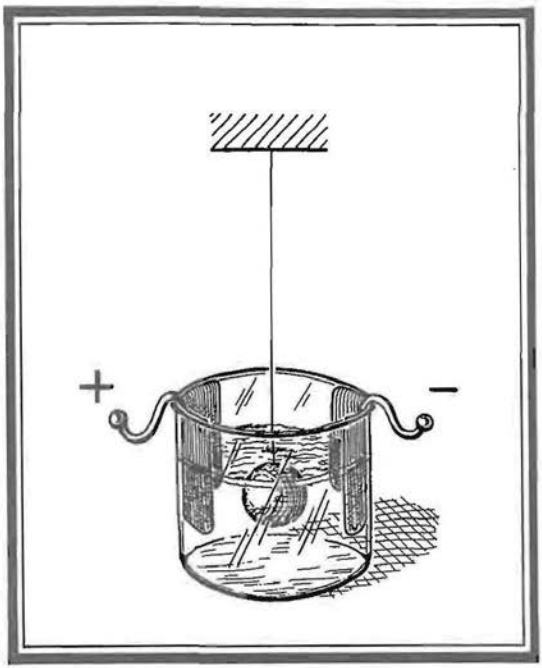

FIGURE 45

In 1896, G. Quincke reported the same phenomenon of rotation and published a very comprehensive experimental study of it. His liquid-immersed motor is shown in a simplified form in the above drawing.

poorly conducting liquids.

Weiler-type liquid-immersed dielectric motors were recently studied in considerable detail by P. E. Secker and his co-workers.[3,4] Their motors operated in various semi-insulating liquids such as hexane, hexane doped with amyl alcohol or ethyl alcohol, and isoamyl alcohol.

In one of their motors the electrodes were stainless steel squares 1.8 centimeters on a side. Their separation was varied from 1 to 2.5 centimeters. The rotor, of ebonite or Perspex, was 0.95 centimeters in diameter and 2.2 centimeters long. The operating voltage was from 3 to 30 kilovolts. The speed of the motor was found to be a linear function of the applied voltage, with the maximum recorded speed of about 2500 rpm.

In another motor, a stator with six electrodes was used (Fig. 46). The rotor was made of Perspex and was 7/8 inches in diameter and 2 inches long; it had a layer of high-permittivity material on its surface (titanium ceramic in polystyrene). Powered by a 30-kilovolt source, the motor turned at 1700 rpm, and the total power input amounted to 5.4 watts, of which 2.7 watts appeared at the rotor shaft.

A discussion of electrohydrodynamic effects that may take place during an operation of liquid-immersed motors has been presented by J. R. Melcher and G. I. Taylor.[5]

Because of considerable hydrodynamical losses, the motors of this type will apparently always have a relatively low output torque.

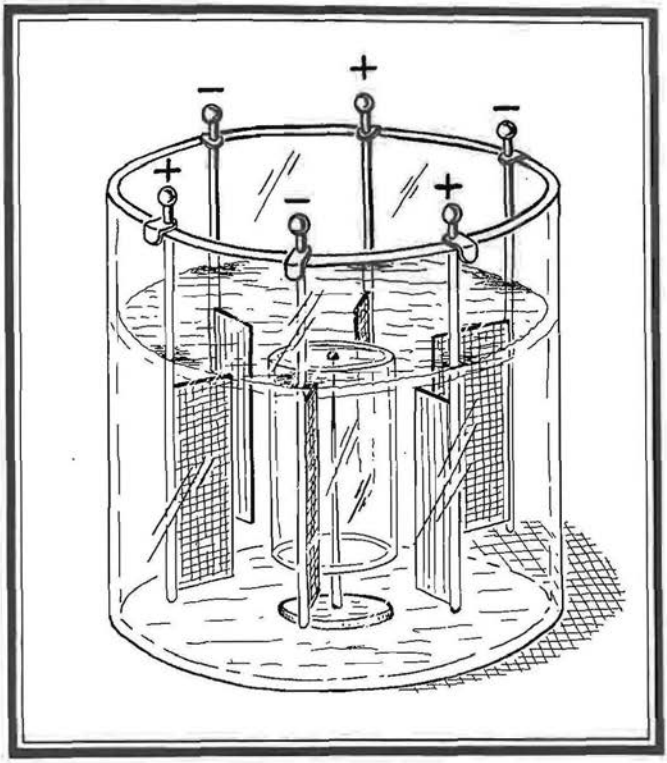

FIGURE 46

This liquid-immersed dielectric motor was recently studied in considerable detail by P. E. Secker and his co-workers.

REFERENCES

1. W. Weiler, *Zeitschrift für den Physikalischen und Chemischen Unterricht*, Vol. 6, pp. 194-195 (1893).
2. G. Quincke, *Annalen der Physik*, Ser. 3, Vol. 59, pp. 417-486 (1896).
3. P. E. Secker and I. N. Scialom, *Journal of Applied Physics*, Vol. 39, pp. 2957-2961 (1968).
4. P. E. Secker and M. R. Belmont, *Journal of Physics D: Applied Physics*, Vol. 3, pp. 216-220 (1970).
5. J. R. Melcher and G. I. Taylor, *Annual Review of Fluid Mechanics*, Vol. 1, pp. 111-146 (1969).

9

ELECTRET MOTORS

In general, an electret is a permanently charged dielectric body. In a more restricted sense of the word, an electret is a permanently polarized dielectric body and may be considered to constitute the electrical counterpart of a permanent magnet. It is this latter type of electret that has been used for constructing electrostatic motors.

In 1961, the Russian physicist A. N. Gubkin described an electret motor[1] shown schematically in Fig. 47. The motor consisted of a stator formed by two horizontal, axially symmetric, parallel-plate capacitors and a rotor formed by two flat, axially symmetric, oppositely polarized electrets mounted on a vertical axle and capable of passing between the plates of the capacitors. The motor operated as follows. When a voltage was applied to the two capacitors, so that

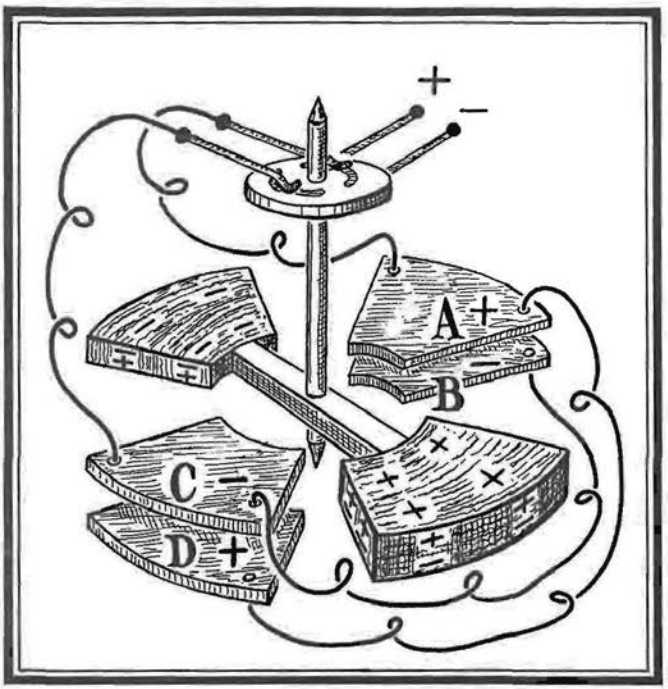

FIGURE 47

In 1961, the Russian physicist A. N. Gubkin described this motor with two electrets in the rotor and two parallel-plate capacitors in the stator. A commutator was used to change the polarity of the capacitors.

plates A and D were positive and plates B and C were negative, the capacitors attracted the electrets as soon as the latter came close to the plates, and the electrets were pulled into the capacitors. A commutator changed the polarity of the plates just as the electrets were coming out from the capacitors, and the electrets were then repelled from them, and so on. Thus the rotor was set in a continuous rotation.

A well-known property of electrets is that they lose their polarization in the absence of adequate shielding. Electret motors with almost perfect shielding were described by this author and by D. K. Walker in 1970.[2] These motors were based on the so-called "electret slot effect".[3] The slot effect works as follows (Fig. 48). An electret is placed between two pairs of electrodes, each pair forming a slot. If a voltage is applied to one or both electrode pairs, the electret (or the electrodes) experiences a force in a direction perpendicular to the slot and parallel to the plates. This arrangement insures both a nearly perfect shielding and a relatively large force.

A simple electret motor utilizing the slot effect is shown in Fig. 49 and Plate 5.* It uses a disk-shaped carnauba wax electret rotor consisting of two oppositely polarized half-disks. The stator has two pairs of electrodes connected to a

*The motor was designed by the author and built by one of his students, Charles Lynn Walls, in 1966.

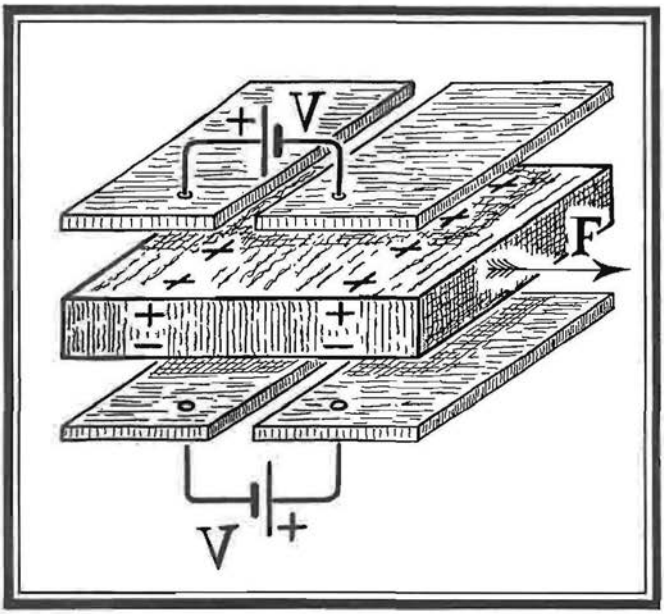

FIGURE 48

The slot effect works as follows. An electret is placed between two pairs of electrodes, each pair forming a slot. If a voltage is applied to one or both electrode pairs, the electret experiences a force in a direction perpendicular to the slot and parallel to the plates.

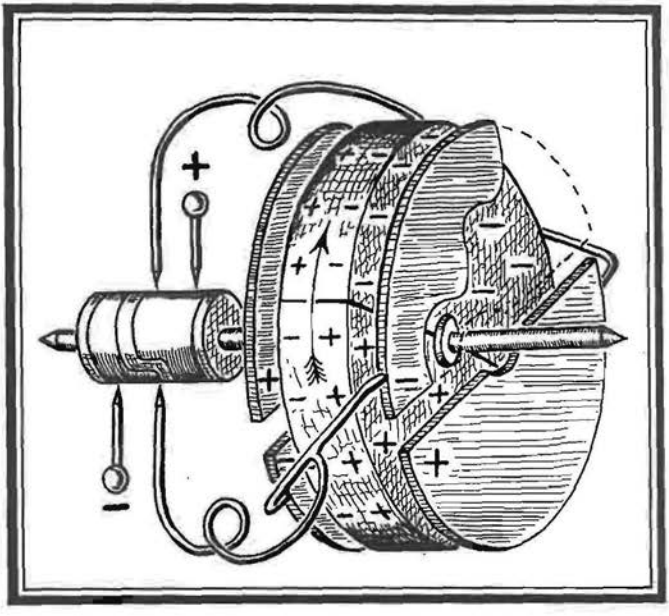

FIGURE 49

This simple electret motor utilizes the slot effect. The rotor is made of a disk-shaped electret consisting of two oppositely polarized half-disks. The stator has two pairs of slotted electrodes connected to a cylindrical commutator, which is charged by contact or by sparks.

cylindrical commutator. The thickness of the rotor is ½ inch, the diameter is 5 inches. The motor operates from an 8-kilovolt power supply and rotates at 1500 rpm.

Similar motors with stationary electrets and rotating electrodes are shown in Plates 6 and 7.

A more sophisticated slot-effect motor[2] uses a cylindrical electret (Fig. 50 and Plate 8). The electret is stationary; it is shaped as a hollow cylinder and has four sections of opposite radial polarization. The rotor is made of four internal and four external aluminum electrodes forming two cylinders with four slots in each. The inner electrodes are cross-connected with the outer ones, and all electrodes are supported by a Plexiglas disk mounted on a steel axle. This motor uses no commutator. The power is delivered to two adjacent external electrodes by means of two sharp points which charge the rotor through a corona discharge. The overall diameter of this motor is 3 inches, the operating voltage is 6 kilovolts, the speed is up to 5000 rpm, the power is about 20 milliwatts.

Synchronous electret motors for electric clocks have been recently announced by the General Time Corporation. The motors are about 1¼ inches in diameter and ¼ inch thick. In these motors (Fig. 51) a thin plastic electret disk with 15 active sectors and 15 equally large cut-outs is the rotor. The rotor is placed between two stator plates fabricated as printed circuit boards. Each stator plate has 30 elec-

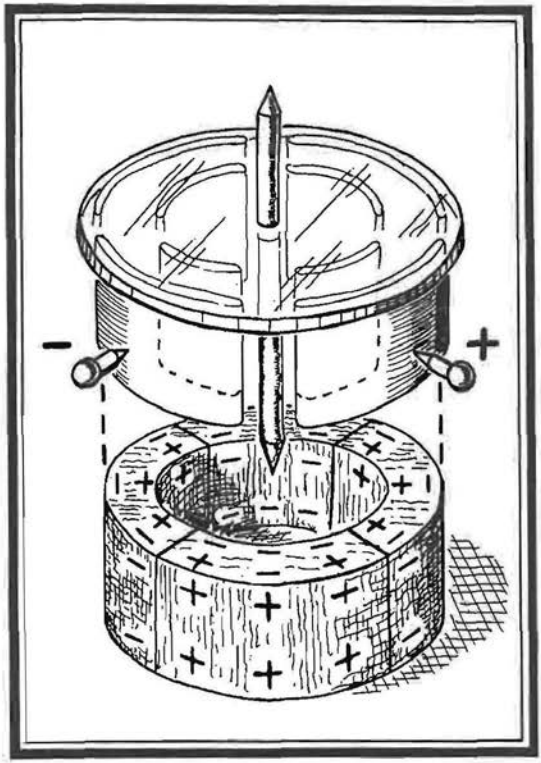

FIGURE 50

This more advanced slot-effect motor uses a stationary cylindrical electret and works without a commutator. The rotor has 8 slots.

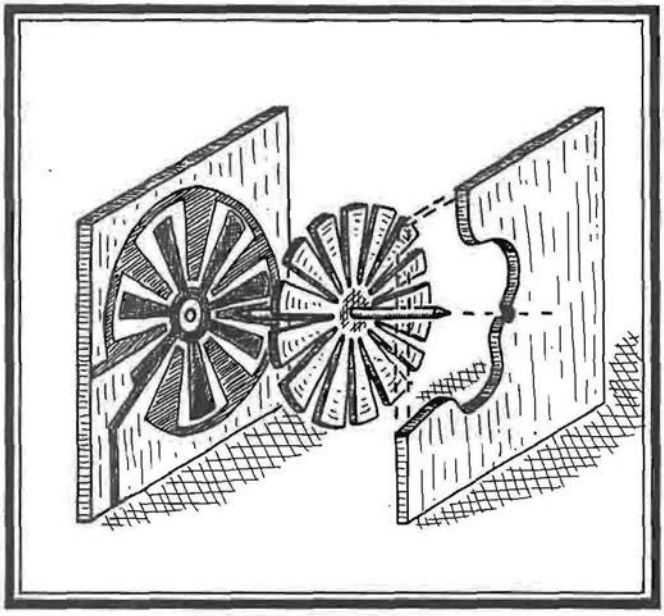

FIGURE 51

In this simplified version of a synchronous electret motor for electric clocks a thin plastic electret disk with several active sectors and several cut-outs is used as the rotor.

trodes connected in alternation to the two input terminals. The operation of this motor is similar to that of the first slot-effect motor described above (Fig. 49) except that the reversal of polarity of the electrodes is accomplished directly by the applied ac voltage rather than by a commutator.

Of all presently known types of electrostatic motors, electret motors are the newest and (together with corona motors) the most highly promising ones. We shall return to them once again in the next chapter.

REFERENCES

1. A. N. Gubkin, *Electrets*, Academy of Sciences, Moscow, 1961, pp. 130-133 (in Russian).
2. O. Jefimenko and D. K. Walker, *Conference on Dielectric Materials, Measurements and Applications*, The Institution of Electrical Engineers, London, 1970, pp. 146-149.
3. O. Jefimenko, *Proceedings of the West Virginia Academy of Sciences*, Vol. 40, pp. 345-348 (1968).

10

WHAT TO EXPECT FROM ELECTROSTATIC MOTORS

Having described the various types of electrostatic motors we shall now present a brief discussion of the current aims in the electrostatic motor research and a brief discussion of the most probable future uses and applications of these motors.

It has been pointed out by Bollée[1] that electromagnetic motors rapidly lose their efficiency in scaled-down versions (which is due to the relative increase in energy dissipation in the magnet coils) and that very small capacitor-type and induction-type electrostatic motors may be a better choice for miniaturized systems. Therefore one may expect that miniature electrostatic motors of these types will find applications in various sensor and control devices where only very small torques and power are needed.

Experiments with electret motors conducted

in the author's laboratory[2] indicate that these motors may be very useful in systems where powers of up to 1 watt are needed.

The most promising electrostatic motors appear to be, however, the corona motors. These motors possess a number of highly desirable features. Here are some of them: the motors are extremely simple in design; they require no expensive materials; their maintenance is very simple; having only few metal parts they possess a very good power-to-weight ratio; they are fully capable of developing appreciable amounts of power; and they can attain very high speeds.

Our present-day awareness of the many attractive properties of corona motors is to a great extent due to the work of the Russian engineers Yu. Karpov, V. Krasnoperov, and Yu. Okunev published in 1958 and 1960.[3,4] They described a 6-watt cylindrical corona motor of improved design (Fig. 52) operating from a 7-kilovolt power supply and turning at a rate of 6000 rpm. This motor had a hollow Plexiglas rotor 10.5 centimeters in diameter and 17 centimeters long with a conducting lining on its inner surface. The stator supported 16 knife-like electrodes inclined relative to the surface of the rotor in the direction of the desired rotation. The lining of the rotor served to increase the electric field in the gap between the electrodes and the surface of the rotor and thus to enhance the corona discharge from the electrodes.

A high-speed corona motor with a disk rotor

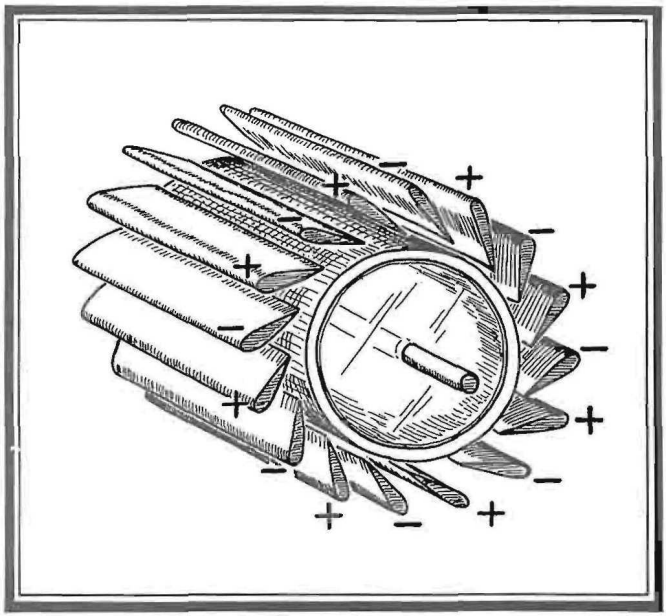

FIGURE 52

In 1958, the Russian engineers Yu. Karpov, V. Krasnoperov, and Yu. Okunev described a 6-watt cylindrical corona motor of an improved design operating from a 7-kilovolt power supply and turning at a rate of 6000 rpm. This motor had a Plexiglas rotor.

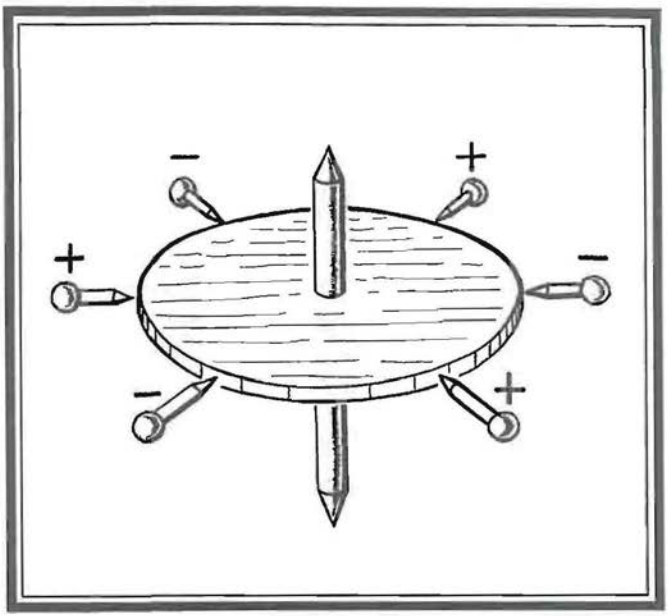

FIGURE 53

This corona motor with a disk rotor and circumferential electrodes was described by J. D. N. Van Wyck and G. J. Kühn of South Africa in 1961. It had a rotor 1.5 inches in diameter turning in jewel bearings. Operating from 13 kilovolts, the motor ran at 12000 rpm.

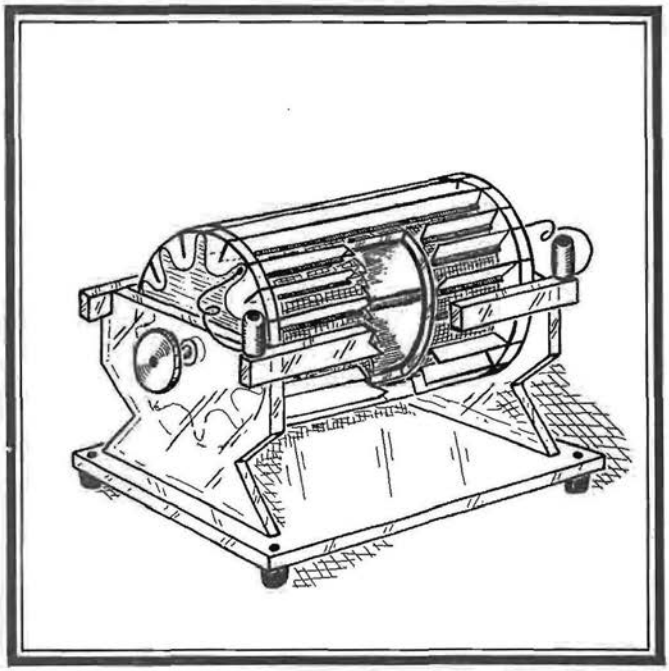

FIGURE 54

The performance of a corona motor depends on the shape and arrangement of electrodes and the structure of the rotor. The curved electrodes of this motor produce an especially large torque. The lining of the rotor increases the power.

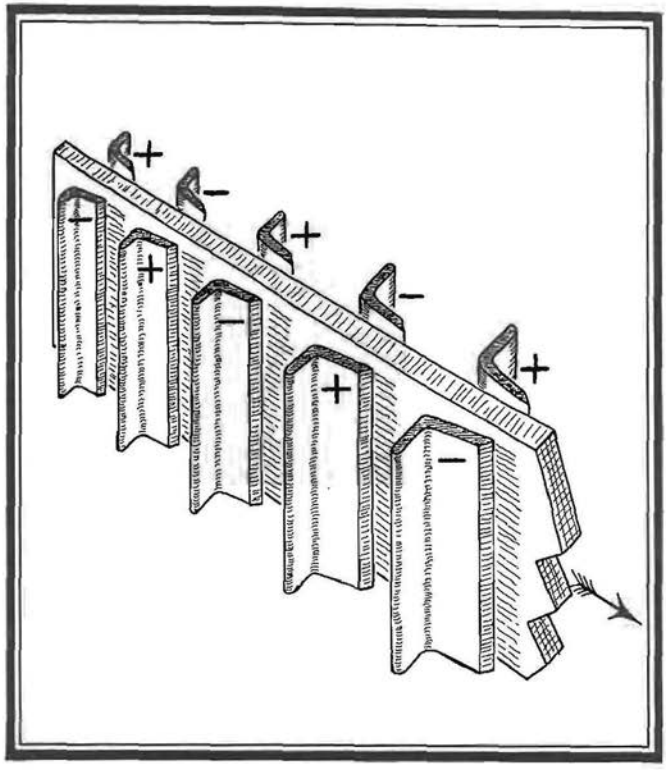

FIGURE 55

The mechanism of electric interaction producing rotational motion in corona motors can be used to achieve a translational motion as well. This drawing shows the principle of a linear corona motor with multiple electrodes.

and circumferential electrodes was described by J. D. N. Van Wyck and G. J. Kühn of South Africa in 1961.[5] The motor (Fig. 53) had a rotor 1.5 inches in diameter turning in jewel bearings. The stator supported 6 sharp-point electrodes. Operating from 8-13 kilovolts, the motor developed speeds of up to 12000 rpm.

A similar motor was studied in Poland by B. Sujak and W. Heffner in 1963.[6]

A number of advanced corona motors were studied in the author's laboratory;[7] an example of these motors is given in Fig. 54 and Plate 9. A diagram of a linear corona motor designed by the author is shown in Fig. 55. Instructions for building the corona motors of the author's design may be found in the May 1971 issue of Popular Science.[8]

It appears that corona motors with input power of 100 to 1000 watts and efficiency of at least 60% can be constructed without any difficulty. There seems to be no reason why even more powerful corona motors could not be built. It is likely that the motors can be further improved by using rotors immersed in a gas other than the air at atmospheric pressure.

Performance characteristics of corona motors strongly depend on the design and geometrical configuration of the electrodes spraying charges onto the rotor. Several typical electrode types and electrode configurations for corona motors are shown in Fig. 56. Especially interesting is the electrode arrangement shown in Fig. 56c.

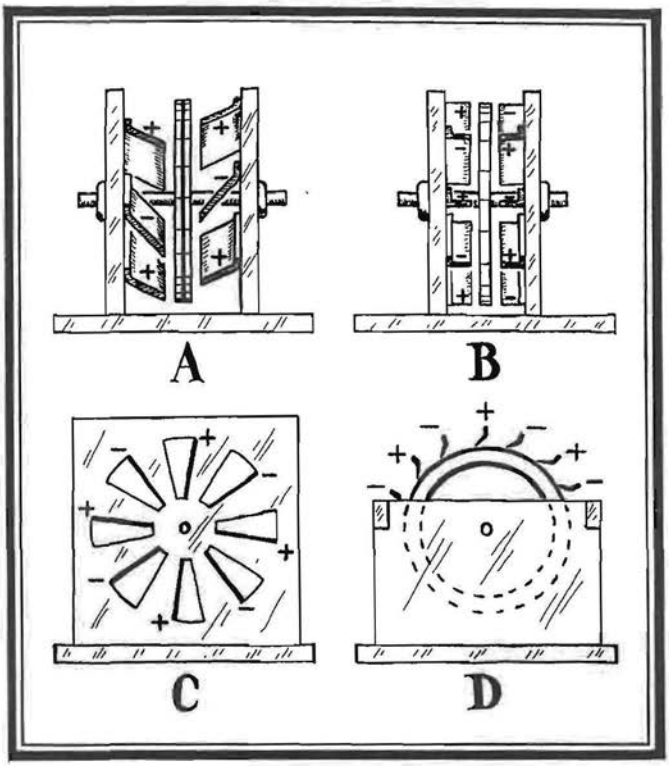

FIGURE 56

(a) Slanted electrodes and disk rotor with a conducting lining in the middle; (b) Straight electrodes; (c) Foil electrodes shielded on one side; (d) Curved electrodes and cylindrical rotor with a conducting lining.

This arrangement is used in conjunction with thin disk-shaped rotors "sandwiched" between two insulating stator plates. An even number of windows is cut in each stator plate, and metal foil electrodes are glued to the walls of the holes, as shown by heavy lines in Fig. 56c. In this arrangement there is a dielectric medium on one side of each electrode, and there is air on the other side. Therefore the electrodes spray charges predominantly in the direction of the side facing the air. Thus a motor with electrodes of this type is unidirectional and self-starting. Furthermore, the entire "sandwich" comprising the rotor and the two stator plates may be very thin. Therefore many such "sandwiches" can be placed on a single axle thus forming a compound motor in which good use is made of the entire volume occupied by the motor. There are indications that compound motors of this type can develop up to 1000 horsepower for each cubic meter of their volume.

An important property of electrostatic motors is that they can operate from a much greater variety of sources than the electromagnetic motors. It is, of course, obvious that any sources used for operating conventional electromagnetic motors can be used to operate the electrostatic motors. However, the electrostatic motors can operate also from sources from which no other motors can operate. The reason for this is that the electrostatic motors are extra-high impedence devices and thus require extremely

small currents for their operation.

One very interesting source of electricity for electrostatic motors is the ordinary capacitor. It is true that capacitors, as we know them now, do not store appreciable amounts of electric energy. However, if high-permittivity low-loss dielectric materials were developed, then the capacitor would become a very useful device for storage of electric energy, and possibly could be used in place of the chemical batteries for operating electrostatic motors.

Another possible source of power for electrostatic motors are high-impedance high-voltage batteries of the type of Zamboni pile.

A potentially very important source of electricity for powering electrostatic motors are electrostatic generators. Considerable advances in the development of such generators have been made in recent years[9,10] and it is conceivable that electrostatic motor-generators will be used to convert the high-voltage dc produced by such generators into the conventional low-voltage dc or ac.

Finally, a very interesting source for powering electrostatic motors is the atmospheric electric field. In fact, it appears possible to extract the energy contained in this field by means of electrostatic motors. Experiments on such an energy extraction have been conducted by the author.[11,12] In these experiments an electret motor and a corona motor were powered by simple earth-field antennas (Fig. 57; Plates 10 to

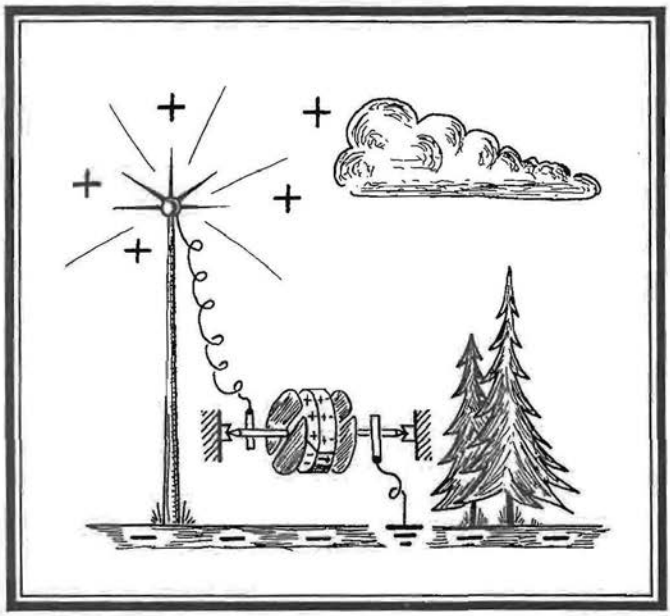

FIGURE 57

Small electrostatic motors can be powered from atmospheric electricity by means of simple earth-field antennas. Whether or not it will be possible to operate large motors in this manner will depend on how successful we are in designing antennas capable of extracting appreciable power from the earth electric field.

12). The corona motor was the one shown in Plate 9. The electret motor was similar to that shown in Fig. 49, but with the electret stationary and the electrodes rotating (Plate 6). These experiments indicate that it is entirely possible to operate small electrostatic motors from atmospheric electricity. Whether or not it will be possible to operate large motors in this manner will depend on how successful we will be in designing and building earth-field antennas capable of extracting appreciable power from the earth electric field.

In conclusion it may be useful to mention that a quantitative electrostatic motor research is now only in its very rudimentary stage. Almost all papers on electrostatic motors published thus far deal with the qualitative aspects of the performance of the various types of motors. Only very few papers deal with the optimization of design and with the quantitative aspects of the operation of the motors, likewise only very few papers present a theoretical analysis of the electrostatic motors. It is clear therefore that the electrostatic motors still constitute an essentially unexplored area of physics and engineering, and that the electrostatic motor research is presently one of the potentially most rewarding research fields in modern electrostatics.

REFERENCES

1. B. Bollée, *Philips Technical Review*, Vol. 30, pp. 178-194 (1969).

2. O. Jefimenko and D. K. Walker, *Conference on Dielectric Materials, Measurements and Applications*, the Institution of Electrical Engineers, London, 1970, pp. 146-149.
3. Yu. Karpov, V. Krasnoperov, and Yu. Okunev, *Tekhnika Molodezhi*, Vol. 26, pp. 36-37 (Sept. 1958) (in Russian).
4. Yu. Karpov, V. Krasnoperov, Yu. T. Okunev, and V. V. Pasynkov, "On the Motion of Dielectrics in an Electric Field", in *Dielectric Physics*, Academy of Sciences, Moscow, 1960, pp. 124-131 (in Russian).
5. J. D. N. Van Wyck and G. J. Kühn, *Nature*, Vol. 192, pp. 640-650 (1961).
6. B. Sujak and W. Heffner, *Acta Physica Polonica*, Vol. 23, pp. 715-726 (1963).
7. O. Jefimenko and H. Fischbach-Nazario, *Proceedings of the West Virginia Academy of Sciences*, Vol. 42, pp. 216-221 (1971).
8. C. P. Gilmore and W. J. Hawkins, *Popular Science Monthly*, Vol. 198, pp. 95-97, 114 (May 1971).
9. N. J. Felici, *Elektrostatische Hochspannungs Generatoren*, G. Braun, Karlsruhe, 1957.
10. J. Hughes and P. Secker, *New Scientist and Science Journal*, Vol. 49, pp. 468-470 (1971).
11. O. Jefimenko, *American Journal of Physics*, Vol. 39, pp. 776-778 (1971).
12. W. Aston, *West Virginia University Magazine*, Vol. 3, Number 4, Spring 1971, pp. 6-11.

INDEX

INDEX

Adams, G., 37
Aimé, R., 29,38
Arno, Q., 84,90
Arno Motor, 84,85,87
Aston, W., 118
Asynchronous motors, 4, 77
Atmospheric electricity, 3, 115-117
Avery, F. M., 21

Backing plate, 59, 107
Behrens, G., 14
Bell jar motor, 48, 49, 52
Belmont, M. R., 96
Benjamin, P., 21
Bichat, E., 29, 32, 38
Bollée, B., 77, 80, 82, 90, 106, 117
Bollée capacitor motors, 77, 79, 80
Bollée induction motors, 88, 90

Capacitor motors, 4, 73-77, 80, 82, 106
Chew, V. K., 37
Choi, S. D., 90
Christenson, A., 38
Christiansen, C., 60, 71
Christiansen motor, 60
Classification of electrostatic motors, 4
Collinson, P., 39
Contact motors, 4, 6, 20
Corona discharge, 22, 56, 71
Corona-kraft levitation, 33
Corona motors, 4, 56, 58, 60-66, 68-71, 107-112, 115, 116

Dailey, H. B. and E. M., 15, 21
Dailey motor, 15-18
Davis, J. W., 63
Draper, J. W., 55
Dressel, R. H., 51, 55
Dunn, D. A., 90

Earth-field antennas, 115, 116, 117
Electret, 97, 99
Electret motors, 4, 97-104, 106, 114, 115
Electret slot effect, 99, 100
Electric bells, 6, 8-11, 23, 25
Electric chimes, 11, 14, 23, 25
Electric fly, 22-26, 29-31
Electric horse-race, 26, 28, 29

Electric motor, 1, 6, 39
Electric orrery, 26, 27
Electric pendulum, 6
Electric pendulum motors, 6, 15, 16
Electric perpetuum mobile, 3, 15, 16, 48, 50
Electric pinwheel, 22
Electric planetarium, 18, 19
Electric rabbit hunt, 33, 36
Electric racing ball, 18, 19
Electric reaction wheel, 22
Electric seesaw, 13, 14
Electric swing, 12, 14
Electric tellurium, 26, 27
Electric tourbillion, 61, 63, 71
Electric tourniquet, 29, 32
Electric toys, 12, 13, 14, 28, 29, 33, 36
Electric wheels, 37, 39
Electric whirl, 22
Electric wind, 23
Electric wind motors, 22 ff, 33-35
Electric wind turbines, 33, 35
Electric wind wheels, 33, 34
Electromagnetic motors, 1-3, 106, 114
Electrophorus, 52
Electrostatic forces, 1
Electrostatic generators, 80, 115
Electrostatic motors, 1-4, 106, 107, 114-117

Farrington, J. B., 63
Felici, N. J., 80, 83, 118
Franklin, Benjamin, 7, 33, 37, 39, 42, 43
Franklin bells, 7, 14
Franklin first motor, 39-45, 48, 52
Franklin motors, 39-45, 54, 57, 59
Franklin second motor, 41, 43-45, 82

Gale, L. D., 33, 38
Gilmore, C. P., 72, 118
Gordon, A., 6, 22
Gordon bells, 6, 8, 15, 18, 20
Gruel, W., 63
Gruel motor, 61, 63
Gubkin, A. N., 97, 105
Gubkin motor, 97-99
Guyot, M., 20, 21, 29, 33, 38, 55

Hamilton, 23
Hamilton electrometer, 23
Hawkins, W. J., 72, 118
Heffner, W., 112, 118
Ho, H., 88
Holtz, W., 56, 71
Holtz rotation phenomenon, 56, 59, 60
Van Huffel, N. G., 76, 82
Van Huffel motor, 75, 76
Hughes, J., 118

Induction motors, 4, 84-90, 106
Interdigital motor, 81, 82

Jamin, M. J., 55
Jefimenko, O., 54, 84, 105, 117, 118
Johnson, R., 66
Johnson motors, 64, 65, 66

Kämpfer, D., 29, 38
Karpov, Yu., 107, 108, 118
King, W. R., 33
Kinnersley, E., 26
Krasnoperov, V., 107, 108, 118
Kühn, G. J. 110, 118

Langenbucher, J., 23, 29, 33, 37
Langenbucher electrometer, 23, 24
Levitation, electrostatic, 33
Leyden jar, 6, 42, 43
Linear corona motor, 111, 112
Linear induction motor, 90
Liquid-immersed motors, 4, 91-95
Loeb, L. B., 38

McVay, W., 66
McVay motors, 66-71
Magnetic forces, 1
Mascart, M. E., 29, 38, 63, 72
Mayes, T. L., 71
Melcher, J. R., 94, 96
Miller, D. C., 55
Millifleapower motor, 48, 51
Moller, S., 38
Moore, A. D., 45-47, 55, 81-83
Müller-Pouillet, 21

Neuburger, A., 21, 33, 38

Okunev, Yu., 107, 108, 118
Oosting, H. J., 38

Pendulum motors, 3, 6, 15, 16
Perpetuum mobile, electric, 3, 15, 16, 48, 50
Poggendorff, J. C., 37, 56, 59, 60, 71
Poggendorff motor, 56-60, 66, 71

Quincke, G., 91, 93, 96

Reciprocating motor, 15, 17, 18
Richmann, G. W., 7
Rotating field motors, 84-90
Ruhmkorff, 63
Ruhmkorff motor, 62, 63

Scialom, I. N., 96
Secker, P. E., 94, 96, 118
Secker motor, 94, 95
Sivowitch, E. N., 18
Slot effect, 99, 100
Slot-effect motors, 99-103
Spark motors, 4, 39-41, 46, 47, 49, 50, 53, 54
Sparks, J., 21, 38, 54
Sujak, B., 110, 118
Synchronous motors, 4, 77, 102
Syng, P., 33

Taylor, G. I., 94, 96
Thomson, W., 82
Thomson electrometer, 73
Thomson replenisher, 76
Tomlinson, C., 29, 38

Walker, D. K., 54, 99, 105
Weiler, W., 84, 90, 91, 96
Weiler induction motors, 87-89
Weiler liquid-immersed motor, 91, 92
Wilson, B., 37
Wimshurst, J., 33
Wommelsdorf, H., 55
Van Wyck, J. D. N., 110, 118

Zamboni, G., 14
Zamboni pile, 3, 14, 15, 48, 115
Zipernowsky, K., 73, 77
Zipernowsky motor, 73, 74, 82

This book was set in Century Textbook.
The format was designed by the author.
The drawings were done by
Dr. D. K. Walker from the author's sketches.
The printer and binder was
Morgantown Printing & Binding Company.

Picture Credits

Plate 1: courtesy Smithsonian Institution, Washington, D.C.
Plates 2 and 3: courtesy Electret Scientific Company, Star City, W. Va.
Plates 6, 9, 11, and 12: courtesy West Virginia University, Morgantown, W. Va.
Plates 4, 5, 7, 8, and 10: author's photographs.

ACTIVITY 1

Opposites Attract

(Static electricity)

Table of contents

Page 2: **Dancing Fleas:** Watch as objects dance underneath a charged plate (level 1).

Page 4: **Electrophorus:** Make a static electricity generator out of household items (level 2).

Page 6: **Leyden Jar:** Use this jar to have fun with the charge from your electrophorus (level 2).

Page 8: **Franklin Bells:** Construct a simple device for detecting static electricity (level 2 demonstration).

Safety

Please note that while following the precautions in this guide can help teachers foster inquiry in a safe way, no manual could ever predict all of the problems that might occur. Good supervision and common sense are always needed.

Warning: These activities work best in low humidity. If humidity in your classroom is high, consider relocating to an air conditioned room or rescheduling these activities for another day.

PhysicsQuest 2006: **Ben Franklin's Secret Message.** Copyright © 2006 by the American Physical Society. All rights reserved. **www.physicscentral.com/physicsquest**

Dancing Fleas

Use static electricity to make objects dance.

Safety

The edges of the plexiglass sheet may be sharp, especially if it was cut down to size for you, so be careful.

Materials

- Plexiglass sheet
- A piece of wool
- A piece of white paper

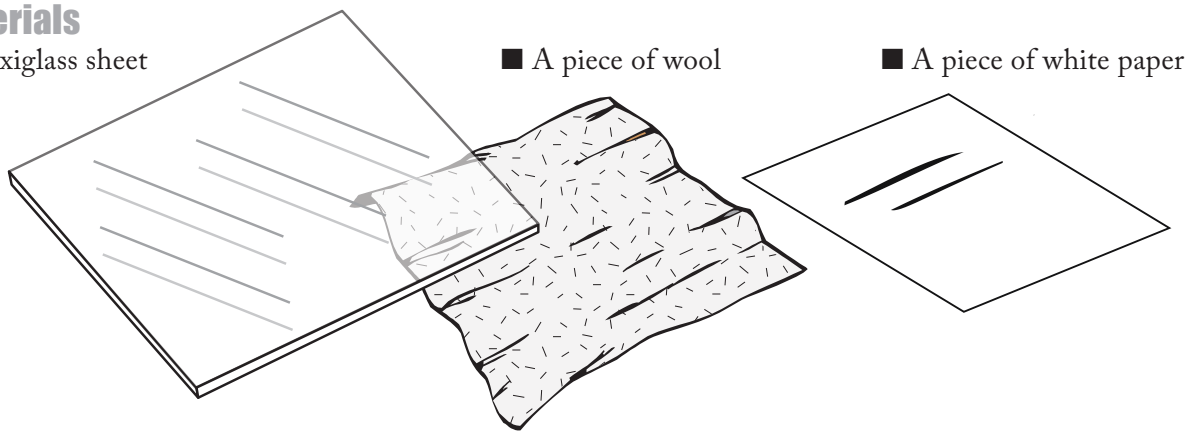

- 2 textbooks, each about 2.5-cm thick

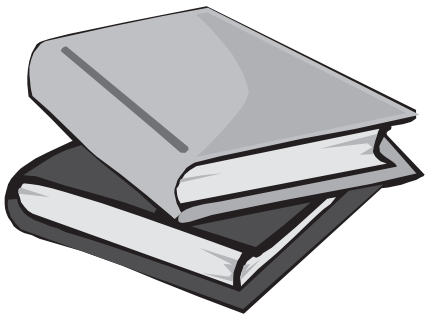

An assortment of tiny objects, for example:

- Paper squares (colored paper is easier to see)
- Aluminum foil squares
- Puffed rice cereal
- Grains of rice

Instructions

1. Tape the piece of paper down on a desk and sprinkle some of the "tiny objects" over the paper.

2. Use the textbooks to suspend the plexiglass sheet directly over the paper, as shown below.

3. Rub the top of the plexiglass sheet with the wool and record what happens.

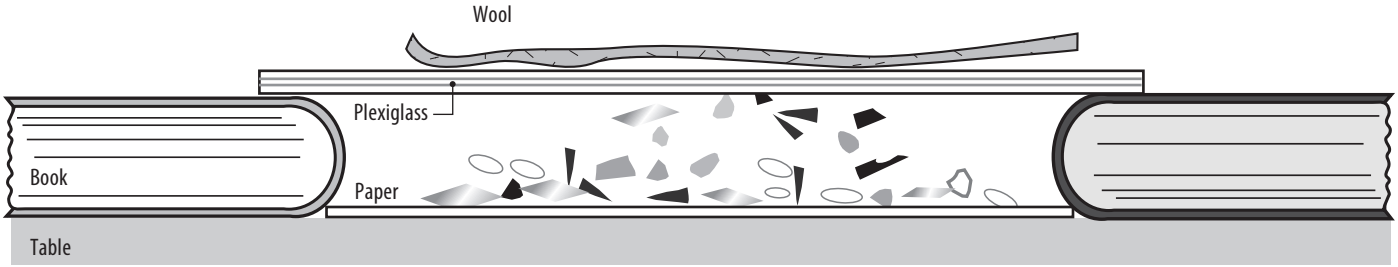

Graphics by Kerry G. Johnson

Discussion questions

- How can we use static electricity to make objects move?
- What kinds of materials are affected by electric charges?
- How strong is the force of an electric charge compared to the force of gravity?
- How could you test this?

PhysicsQuest 2006: **Ben Franklin's Secret Message**. Copyright © 2006 by the American Physical Society. All rights reserved. **www.physicscentral.com/physicsquest**

FOR THE TEACHER

(Level 1)

Dancing Fleas

Materials

■ 12-inch x 12-inch or larger sheet of 1/8-inch thick plexiglass (acrylic)
Available at hardware stores. Often you order the sheet at the check-out counter and they cut it to size for you. Approximately $5.

■ A piece of wool, approximately 10-cm x 10-cm or larger*
You can purchase wool felt by the yard at most fabric stores. You can also purchase wool cloths from science supply stores, such as Science Kit & Boreal Labs, www.sciencekit.com, part number WW2742300. $6.60 / 12-inch x 24-inch cloth.

■ 2 textbooks, each about 2.5-cm thick

■ 1 piece of white paper

An assortment of tiny objects, for example:
■ Paper squares (colored paper is easier to see)
■ Aluminum foil squares
■ Puffed rice cereal
■ Grains of rice

Discussion

Materials are attracted to the plexiglass after it is rubbed. This is because the wool deposits extra electrons on the sheet, giving it an overall negative charge. The electrons in the tiny objects are then repelled by the sheet and move to the bottom of the pieces, leaving the positively charged protons near the sheet. The objects move up toward the plexiglass (as long as they are not too heavy) because the protons are attracted to the negatively charged plexiglass.

Students may notice that some of the bits of paper stick completely to the plexiglass sheet while others hang by an edge. The bits that hang by an edge have a high concentration of electrons in part of the paper farthest from the sheet; if you remove the electrons by touching the paper, it will then stick completely to the plexiglass.

Another notable result is that the aluminum foil bits often bounce back and forth rapidly between the paper taped to the desk and the plexiglass, while other materials move much slower or stick completely to the plexiglass the first time they hit it. This is because the conducting foil quickly picks up electrons from the plexiglass. This causes the foil bits to be repelled from the sheet, so they fly back to the paper They deposit the electrons on the paper, and then are attracted to the plexiglass again. To magnify this effect, place a large piece of aluminum foil under the plexiglass instead of the paper.

Suggested resources

Bell, Trudy E. *"Crackling Planets"* Science@Nasa, 2005.
http://science.nasa.gov/headlines/y2005/10aug_crackling.htm?list78675
Article about charging by rubbing as a concern for exploration of the Moon and Mars.

"Static Electricity: What causes static shocks?" Science Made Simple, Inc., 2005.
http://www.sciencemadesimple.com/static.html
Static electricity basics with background information on atoms and charge.

Bibliography

"Electrical Fleas: Start your own electric flea circus." Exploratorium Snacks.
http://www.exploratorium.edu/snacks/electrical_fleas.html

PhysicsQuest 2006: **Ben Franklin's Secret Message**. Copyright © 2006 by the American Physical Society. All rights reserved. **www.physicscentral.com/physicsquest**

The Electrophorous

Create your own electrophorus – a device developed over 200 years ago for creating static charge.

Safety

You will be building up small amounts of static charge in this activity and could receive shocks.

Materials

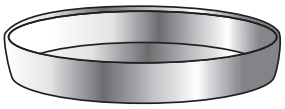

■ An aluminum pie pan

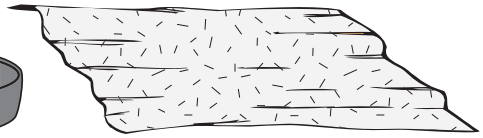

■ A piece of wool

■ A Styrofoam plate

■ A Styrofoam cup

■ Adhesive tape

■ Aluminum foil

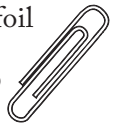

■ A paper clip

Making the electrophorus

1. Tape the plate upside down to the center of a desk.

2. Tape the cup to the middle of the top of the aluminum pie pan, top down, to make a handle.

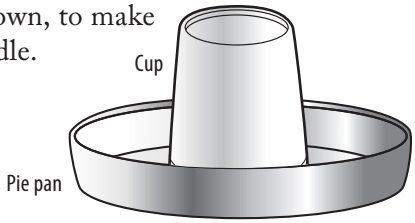

3. Bend the paper clip so that one end is a base and the other makes a horizontal arm.

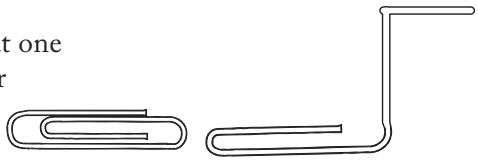

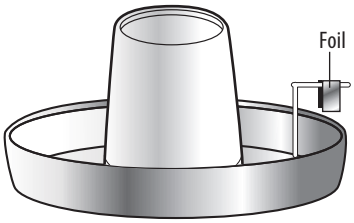

4. Tape the base of the paper clip to the top of the pie pan next to the cup, and hang a small strip of aluminum foil (about 0.5-cm x 4-cm) over the horizontal arm.

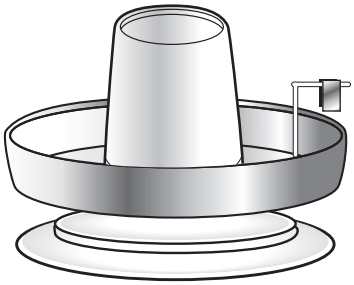

5. Place the pie pan on top of the plate. Your electrophorus should look like the picture above.

Using the electrophorus

A. Set aside the top (pie pan / Styrofoam cup) and rub the surface of the Styrofoam plate with wool for a full minute.

B. Touching only the Styrofoam cup handle, set the pie pan back on top of the plate.

C. Touch the pie pan (you should feel a slight shock).

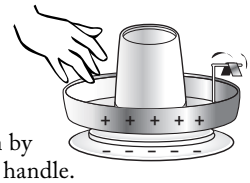

D. Lift up the pie pan by the Styrofoam cup handle. The foil should flip away from the pan.

E. Touch the pie pan again. You should feel a shock and see the foil flip back down.

The pie pan can be charged multiple times without recharging the Styrofoam plate by rubbing, but the Styrofoam plate will loose charge slowly to the air and surroundings, especially in humid weather.

Discussion questions

- Why doesn't the Styrofoam plate loose all its charge to the pie pan?
- Do you think there is a limit to the amount of charge you can build up on the plate?
- What is the role of the foil strip?
- How can you turn this static electricity into useful energy?

Graphics by Kerry G. Johnson

PhysicsQuest 2006: **Ben Franklin's Secret Message**. Copyright © 2006 by the American Physical Society. All rights reserved. **www.physicscentral.com/physicsquest**

(Level 2)

FOR THE TEACHER

The Electrophorous

Materials

- An aluminum pie pan. *Available in the baking section of the grocery store for a few dollars.*
- Piece of wool, approximately 10-cm x 10-cm or larger. *You can purchase wool felt by the yard at most fabric stores. You can also purchase wool cloths from science supply stores, such as Science Kit & Boreal Labs, www.sciencekit.com,part number WW2742300. $6.60 / 12"x24" cloth.*
- Styrofoam plate
- Styrofoam cup
- Aluminum foil
- Adhesive tape
- A paper clip

Discussion

Rubbing the Styrofoam plate with wool transfers electrons to the plate, where they stay because the plate is an insulator (A). When the intially neutral conducting pie pan is set on top of the insulating plate, its extra electrons move to the top surface because they are repelled by the plate's negatively charged extra electrons (B). This leaves the bottom of the pan positively charged.

When you touch the plate (C) the negative charges on the pie pan are drawn off. This happens because you act as a ground. Even though the body is electrically neutral, its positive charges attract the free electrons in the pie tin. Because you are connected to the ground, the negative charges (electrons) flow through you to the earth without building up a charge on the body. This process leaves the pan with an overall positive charge.

When the pan is lifted, the positive charges redistribute evenly on its surface and the aluminum foil strip (D). This causes the aluminum foil strip to flip up, since it is repelled from the similarly charged pan.

If you (or any other conductor) now touch the pie pan, electrons will flow back to the pan, creating another spark and leaving the pan neutral once again. When the pan discharges, the foil flips back down because it and the pan are now neutral and no longer repel one anther.

Note that the Styrofoam plate does not lose any charge in this process; only the charges in the pie pan move around. This is called charging by induction, and explains why the pan can be recharged without rubbing the plate again.

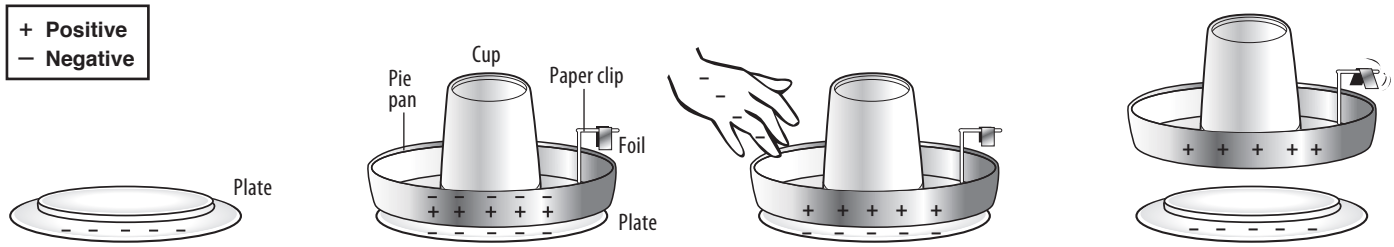

A. The Styrofoam plate is negatively charged by the wool. The electrophorus is initially electrically neutral.

B. Electrons on the electrophorus are repelled by the negatively charged plate and move toward the top surface. This leaves the bottom surface positively charged.

C. Electrons near the top surface of the pan are drawn off by the ground.

D. The electrophorus is left with an an overall positive charge that redistributes when the plate is lifted.

Suggested resources

"Charge and Carry: Store up an electric charge, then make sparks." Exploratorium Snacks. http://www.exploratorium.org/snacks/charge_carry.html
Another form of the electrophorus and Leyden jar activities with a good explanation.

"Static Electricity." The Physics Classroom, 2004.
http://www.physicsclassroom.com/mmedia/estatics/estaticTOC.html
Use the menu on the left to find out more about various forms of electrostatic induction, including the electrophorus.

Bibliography

"Charge and Carry: Store up an electric charge, then make sparks." Exploratorium Snacks. http://www.exploratorium.org/snacks/charge_carry.html

Graf, Rudolph F. *Safe and Simple Electrical Experiments.* New York: Dover Publications, Inc. 1973. Pages 16-18.

Henderson, Tom. *"Charging an Electrophorus by Induction Using a Negatively-Charged Object."* Multimedia Physics Studios, 1998.
http://www.glenbrook.k12.il.us/gbssci/phys/mmedia/estatics/epn.html

Jones, Thomas B. *"Electrophorus and Accessories."* 2005. http://www.ece.rochester.edu/~jones/demos/electrophorus.html

PhysicsQuest 2006: **Ben Franklin's Secret Message**. Copyright © 2006 by the American Physical Society. All rights reserved. **www.physicscentral.com/physicsquest**

The Leyden Jar

Make your own Leyden jar for storing charge.

Safety

You will be building up small amounts of static charge in this activity and could receive shocks. In addition, be very careful when working with the nails.

Materials

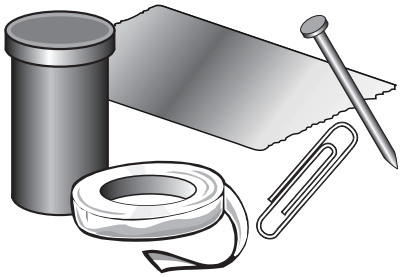

- 35mm film canister
- A 2-inch nail or a paper clip with one leg straightened
- Aluminum foil
- Adhesive tape
- Tap water
- Electrophorus or other static electricity source

Making the Leyden Jar

1. Cut a 4-cm x 12-cm piece of aluminum foil and smooth it out with your fingers.

2. Neatly wrap the bottom two thirds of the film canister in the foil and tape it in place securely.

3. Push the nail (or paper clip) through the top of the canister, so that the tip of the nail points toward the inside of the canister. The head of the nail should stick out a few centimeters.

4. Fill up the canister most of the way with tap water and snap the lid in place. The point of the nail should be immersed in water.

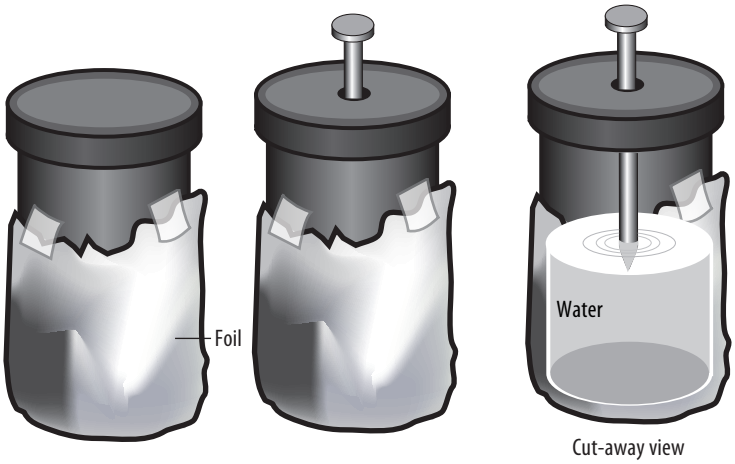

Cut-away view

Using the Leyden Jar

A. Charge the electrophorus as in Extension 1, but do not discharge it.

B. Lift the pie pan off the Styrofoam plate. Hold the Leyden jar by the foil and drag the top of the the nail along the edge of the pie pan. Note that the aluminum foil charge tester on the electrophorus flips down as the pie pan touches the nail.

C. Charge the pan again and repeat step 2. Do this several times.

D. Discharge the Leyden jar by touching the nail and the foil on the jar at the same time (you will get a shock, but it is not large enough to be dangerous).

Discussion questions

- Is there a maximum charge that your jar can hold? How might you test this?
- Can you discharge the Leyden jar into other objects? Try discharging it into a fluorescent tube or light emitting diode (LEDs) in a dark room. Do this by touching one lead to the nail and one lead to the foil.
- Can you discharge the Leyden jar without touching it? Sparks should be able to jump between your fingers and the charged object if you hold your fingers close enough. How far you can make the sparks jump?

Graphics by Kerry G. Johnson

PhysicsQuest 2006: **Ben Franklin's Secret Message**. Copyright © 2006 by the American Physical Society. All rights reserved. **www.physicscentral.com/physicsquest**

FOR THE TEACHER

(Level 2)

The Leyden Jar

Materials

- 35mm film canister
  Usually a camera store will give you empty film canisters
- A 2-inch nail or a paper clip with one leg straightened
- Aluminum foil
- Adhesive tape
- Tap water
  Not purified or distilled
- Electrophorus or other static electricity source such as a PVC pipe rubbed with wool

Discussion

The pan has a positive charge on it when it leaves the Styrofoam plate. When you drag the nail along the pan, electrons in the neutral nail are attracted to the positively charged pie pan. These electrons go from the nail to the pan, neutralizing the pan and leaving the inside of the Leyden jar positively charged. Repeating the process increases the charge inside the jar.

As the inside of the jar becomes positively charged, the charges in foil on the outside of the jar are also affected. The electrons in the foil move to the inside-facing side of the foil because they are attracted to the positively charged interior of the jar. This leaves the outside-facing side of the foil positively charged. Since you are holding the can by the foil, negative charges in your hand are attracted to the positively charged foil, and they flow into the foil. This leaves the foil with an overall negative charge.

When you touch the aluminum foil and the nail at the same time, electrons flow through your hand from the foil to the water, neutralizing the charge inside the jar and giving you a shock.

If you are working with a more advanced class, you may wish to challenge your students to write an explanation of how the charges are moving throughout the process of charging and discharging the Leyden jar. This exercise will be most effective when groups discuss their explanations and use pictures to visualize how the charges flow.

Suggested resources

"Charge and Carry: Store up an electric charge, then make sparks." Exploratorium Snacks.
http://www.exploratorium.org/snacks/charge_carry.html
Another form of the electrophorus and Leyden jar activities with a good explanation.

Katz, Eugenii. *"Leyden Jars."* http://chem.ch.huji.ac.il/~eugeniik/instruments/archaic/leyden_jars.htm
History of the Leyden jar and pictures of various types of jars.

Bibliography

"Charge and Carry: Store up an electric charge, then make sparks." Exploratorium Snacks.
http://www.exploratorium.org/snacks/charge_carry.html

PhysicsQuest 2006: **Ben Franklin's Secret Message**. Copyright © 2006 by the American Physical Society. All rights reserved. **www.physicscentral.com/physicsquest**

FOR THE TEACHER

(Level 2)

Franklin's Bells

This is a simple device for detecting static electricity that works with a television or CRT (non-flatscreen) computer monitor. Franklin used a similar device in his house to let him know when static electricity was in the air, like during a thunderstorm.

It is recommended that Franklin's Bells be done as a demonstration because there are safety concerns about having students work with the static charges on TV / computer screens. Construction is simple enough that inspecting the finished product enables students to understand how the bells are made.

Safety

An uncomfortable and possibly dangerous shock can result from discharging the electric charge of a TV screen or computer monitor through your body. Be sure to connect the second can to a ground (such as the metal on the back of a computer or the metal leg of a table or chair). Only touch the bells and screen when the screen is turned off and the bells have stopped ringing.

Materials

- Two empty soda cans, at least one with a pull tab

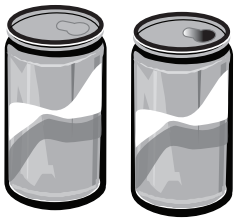

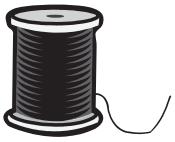

- Sewing thread or thin string

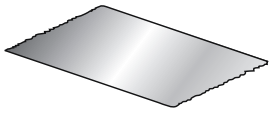

- Aluminum foil

- Plastic pen

- Adhesive tape

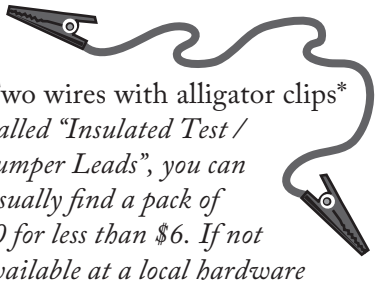

- Two wires with alligator clips*
  Called "Insulated Test / Jumper Leads", you can usually find a pack of 10 for less than $6. If not available at a local hardware store or RadioShack, you can purchase them from RadioShack.com, model 278-1156.

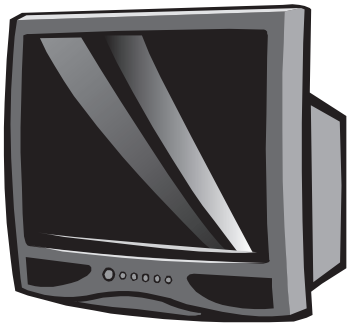

- TV or CRT computer monitor (some newer screens are "non-static" – these won't work. If you are having trouble making the bells ring, try another screen)

Making Franklin's Bells

1. Break the tab off of one can and tie it to one end of the thread.
2. Tie or tape the other end of the thread around the center of the pen so that when hanging from can level, the tab does not touch the table.
3. Place the cans about thee centimeters apart, and lay the pen on top of them so that the tab is suspended between the cans. Make sure the tab is not touching either can.

Graphics by Kerry G. Johnson

PhysicsQuest 2006: **Ben Franklin's Secret Message**. Copyright © 2006 by the American Physical Society. All rights reserved. **www.physicscentral.com/physicsquest**

Graphics by Kerry G. Johnson

4. Connect one can to a ground, such as the metal part of a computer frame, using one of the alligator clip wires.

5. Use the other wire to connect the other can to a sheet of aluminum foil about the size of the TV or computer screen.

6. Turn the screen off, and tape the foil directly to the screen.

7. Turn the screen on – the tab should swing back and forth hitting the cans and creating a bell-like sound until the charge on the screen is dissipated. You can make the tab continue moving by turning the screen on and off repeatedly.
Note that the screen becomes charged when it is switched off as well.

If you have access to a source of constant static electricity, such as a Van de Graaff Generator or Wimshurst Machine, try connecting the bells to it after using the TV. The bells should ring constantly as long as the machine is turned on.

Discussion questions

- What causes the bells to ring?
- What would happen if you used a metal pen instead of a plastic one?
- What do you need to connect the second can to ground?
- How else could you detect static electricity?

Discussion

The tab moves because it is made of conducting metal and therefore attracted to charged objects. When the screen is turned on, a static charge accumulates on it (students may have noticed that they can get small shocks from TV screens). The aluminum foil / wire set-up transfers most of this charge to the first soda can. The hanging tab is uncharged, and therefore attracted to the charged can by induction.

When the tab strikes the can, some of the can's charge is transferred to the tab, and the tab is then repelled from the first can. The charged tab is then attracted to the neutral second can by induction. When it strikes this can, it transfers its charge to the second can and into the ground through the second wire. After the tab touches the second can, both the tab and second can are neutral, as at the start of the experiment, and the tab is attracted to the first can once again. This cycle repeats until all of the charge from the screen has been moved to the ground by the tab.

Suggested resources

"Franklin Bells." The Bakken Library and Museum, 2004
http://www.thebakken.org/artifacts/Franklin-Bells.htm
History of Franklin bells and explanation of their use detecting thunderstorms.

Bibliography

Field, Simon Quellen. *"Electromagnetism: A High Voltage Motor in 5 Minutes."*
Science toys you can make with your kids.
http://www.scitoys.com/scitoys/scitoys/electro/electro4.html

PhysicsQuest 2006: **Ben Franklin's Secret Message**. Copyright © 2006 by the American Physical Society. All rights reserved. **www.physicscentral.com/physicsquest**

Operation of Electric Motors from the Atmospheric Electric Field

OLEG JEFIMENKO
Department of Physics
West Virginia University
Morgantown, West Virginia 26506
(Received 18 December 1970; revised 16 February 1971)

An electret-type electric motor and a corona-type electric motor have been constructed for operation from the earth electric field. The power is delivered to the motors by means of simple earth-field antennas with radioactive or sharp-point collectors. Initial results on the operation of the motors are reported.

I. INTRODUCTION

It is a common knowledge that at the surface of the earth there exists an atmospheric electric field, or the earth electric field, as it is usually called. The average intensity of this field is about 120 V/m during fair-weather periods and can be much higher during electric storms. By using an appropriate earth-field antenna a few meters high one can obtain therefore a voltage of about 1000 V or more between the tip of the antenna and the ground. It is quite tempting to use this voltage for operating an electric device, an electric motor for example. However, since the electric conductivity of air is very small, the current that can be produced by means of an earth-field antenna is also very small. Thus only a motor requiring for its operation a fairly high voltage but an extremely small current, or an "extra high impedance" motor, can be powered in this fashion.

The currents obtainable with the earth-field antennas used for studying the earth electric field range from fractions of a microampere (antennas with α-source collectors during fair-weather periods) to perhaps a few milliamperes (antennas with sharp-point collectors during electric storms).[1] The voltages normally obtainable with these antennas range from several hundred to several thousand volts. Thus, if a motor is to be powered by means of such antennas, the motor should have an impedance of at least $10^5\ \Omega$.

An impedance of this magnitude is not practical with the usual electromagnetic motors, whose very nature demands the use of relatively high currents. But even a much higher impedance is attainable with electrostatic motors.[2] The impedance of the recently discussed "slot-effect electret motors," for example, is $10^9\ \Omega$ and higher.[3,4] Electrostatic motors with electrets and other similar motors should therefore be adaptable for operating from the earth electric field by means of the above-mentioned antennas.

II. EXPERIMENT

On the basis of the considerations just presented a slot-effect electret motor has been constructed requiring for its operation 100 V at 5×10^{-8} A and thus suitable for being powered by a conventional earth-field antenna. The active element of the motor is a stationary disk electret consisting of two oppositely polarized

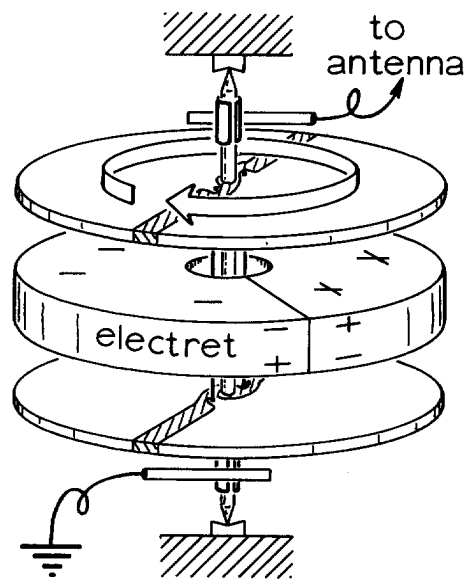

FIG. 1. Electret motor capable of operating from the atmospheric electric field.

half-disks (Fig.
tween two slott
made of alumin
disks. The roto
Plexiglas axle ha
commutators pa
ink. The comm
rotor electrodes
lines drawn alon
consisting of th
weighs 4 g. The b
foil strips 0.5 n
electret and roto
ness of the electr
of a mixture of c
beeswax (45%,
The pulverized
for 1.5 h at 12
allowed to solid
7900 V/cm.[5] The
of the electret is
Since the motor is
the axle is suppo
As expected,
when connected
antenna. The me
in Fig. 2. The
antenna consistin
ing an α source
Placed at the st
tall buildings an
on an average, a
of 10^{-7} A. With
rate of about 60

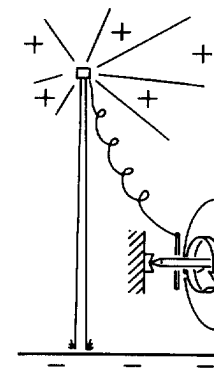

FIG. 2. Operation of
pheric electric field b
active collector.

half-disks (Fig. 1). The electret is positioned between two slotted disk-shaped rotor electrodes made of aluminum foil glued on two thin mica disks. The rotor electrodes are mounted on a Plexiglas axle having near its ends two "printed" commutators painted onto the axle with India ink. The commutators are connected with the rotor electrodes by means of narrow India ink lines drawn along the axle. The rotor assembly consisting of the two electrodes and the axle weighs 4 g. The brushes are made of two aluminum foil strips 0.5 mm wide. The diameter of the electret and rotor electrodes is 7.5 cm. The thickness of the electret is 1.3 cm. The electret is made of a mixture of carnauba wax, colophonium, and beeswax (45%, 45%, and 10%, respectively). The pulverized mixture was melted and heated for 1.5 h at 120°–125°C. The melt was then allowed to solidify while in a forming field of 7900 V/cm.[5] The effective surface charge density of the electret is approximately 2×10^{-6} Asec/m^2. Since the motor is designed for a very small power, the axle is supported by jewel bearings.

As expected, the motor operates very well when connected to an appropriate earth-field antenna. The method of operation is illustrated in Fig. 2. The motor was first tested with an antenna consisting of a 7-m wooden pole carrying an α source in a brass capsule at its top. Placed at the street level sufficiently far from tall buildings and trees this antenna produced, on an average, a voltage of 500 V and a current of 10^{-7} A. With this antenna the motor ran at a rate of about 60 rpm. Subsequently the motor

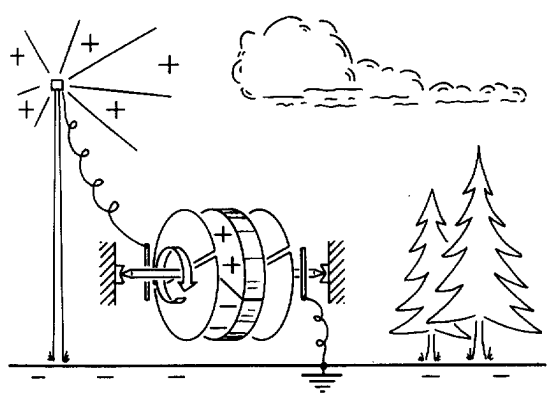

FIG. 2. Operation of the electret motor from the atmospheric electric field by means of an antenna with a radioactive collector.

has been powered by the same antenna placed on the roof of an isolated 11-story building (West Virginia University Engineering Building). On the roof the antenna normally produces a voltage of several thousand volts and a current of about one microampere, causing the motor to run at a rate of several hundred rpm. The motor operates equally well from a 7-m sharp-point antenna erected on the roof or from an airborne sharp-pointed antenna.

Although various applications of low-power motors operating from the earth electric field are possible, it is interesting to explore whether the earth electric field can be used to operate motors of appreciable power. The maximum energy density in the earth electric field occurs during electric storms and may be assumed to be as large as 0.5 J/m^3 (corresponding to a field of $\approx3\times10^5$ V/m).[6] Assuming furthermore that by means of appropriate antennas the energy contained in 1 m^3 of the earth field could be extracted from the field in 0.1 sec and that the field would replenish itself at the same rate, one would be able to deliver to a motor a maximum power of 5 W from each cubic meter of the field for as long as the assumed conditions would exist. It appears, therefore, that appreciable rates of energy extraction from the earth electric field should be possible, if only occasionally.

As far as the motors are concerned, of all presently known electrostatic motors the corona-type motors appear to be the most powerful ones.[2] It is therefore likely that motors of this type would be especially suitable for accepting significant amounts of power from the earth electric field.

In accordance with these considerations a fairly large corona motor has been constructed for investigating the possibility of operating this motor by means of antennas. The motor consists of a cylindrical Plexiglas rotor 10 cm in diameter and 10 cm long surrounded by 20 stationary knifelike brass electrodes, each two adjacent electrodes being of opposite polarity. The rotor is hollow and has an internal aluminum foil lining for enhancing the corona discharge from the electrodes onto the rotor. The rotor is mounted on a steel axle supported by ball bearings. The weight of the rotor with the axle is approximately 300 g. The motor is represented

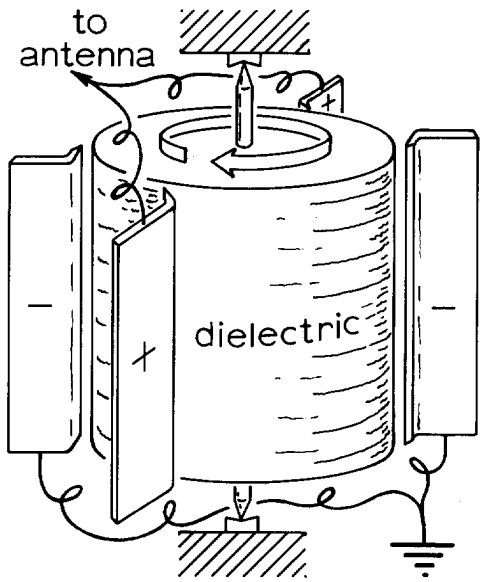

FIG. 3. Corona motor capable of operating from the atmospheric electric field.

schematically in Fig. 3, where only four electrodes are shown, for simplicity. This motor requires for its operation a minimum of 4000 V at 10^{-7} A and is capable of developing a maximum power of 70 W at about 10 000 rpm. In laboratory tests this motor has been found to perform very well from a small sharp-point antenna placed in the vicinity of a Van de Graaff generator. Connected to the roof-top sharp-point antenna the motor also operates but makes no more than 100 rpm (the slow rate is a result of the fact that the antenna normally produces just about the minimum voltage and current required for the operation of this motor).

III. DISCUSSION

The above experiments demonstrate that it is entirely possible to operate electric motors from the earth electric field. Low-power motors may be operated from the conventional earth-field antennas (those commonly used for the earth-field studies). In principle, motors of appreciable power can also be operated from the earth field. However, the conventional antennas are not well suited for this purpose since the currents which they produce are much too small. One will have to design therefore new types of antennas before motors developing a power of at least several watts can be conveniently operated from the earth electric field. For producing relatively large currents these antennas should have either multiple collectors or single collectors of large dimensions.

In conclusion it may be mentioned that the principles involved in the operation of electric motors from the earth electric field can be easily demonstrated in a classroom by means of the following very spectacular experiment. A small sharp-point antenna or, preferably, a candle-flame[1] antenna is placed in the vicinity of a Van de Graaff generator. The antenna is connected to a small electrostatic motor or, if such a motor is not available, to an "electric whirl" (electric reaction wheel). As soon as the generator is turned on, the motor (or the whirl) begins to turn although there is no direct connection between the motor and the generator. The power is delivered to the motor by the antenna located in the electric field of the generator. The antenna receives this power from the generator through the intervening air.

ACKNOWLEDGMENT

I thank Mr. David K. Walker for assistance in carrying out the experiments reported in this paper.

[1] For a discussion of various collectors see J. A. Chalmers, *Atmospheric Electricity* (Pergamon, Oxford, Eng., 1967), pp. 122–134 and papers quoted therein.

[2] For a review of the various types of electrostatic motors and principles of their operation see O. Jefimenko and D. K. Walker, Phys. Teacher **9**, 121 (1971).

[3] O. Jefimenko, Proc. W. Va. Acad. Sci. **40**, 345 (1968).

[4] O. Jefimenko and D. K. Walker, in *Conference on Dielectric Materials, Measurements and Applications* (The Institution of Electrical Engineers, London, 1970), pp. 146–149.

[5] For details on fabrication of carnauba-wax electrets such as the one used here see O. Jefimenko and D. K. Walker, Appl. Phys. Letters **18**, 52 (1971) and papers quoted therein.

[6] Although the breakdown field as measured in a laboratory is $\approx 3\times10^6$ V/m, the maximum field occurring in the atmosphere appears to be no greater than $\approx 3\times10^5$ V/m (see Ref. 1, p. 330).

On Presenti

JOHN I. SHONLE
University of Colorad
Denver, Colorado 802
(Received 7 October

In this paper we
tions to the standar
the hydrogen atom.
principle avoids thes
hypotheses which ca
of quantum mecha
and the limitations
discussed.

INTRODUCTION

The treatments
that are found in
criticized on sev
criticism is that a
tary model is sh
spectral wave len
model is not corre
students, even se
erroneous picture
that the usual wa
mixes classical m
with no clear dis
may be used and
used. The angula
this way are not c
[either $L=n\hbar$ (R
ad hoc and are
methods do not
arguments.[3]

A proper treatm
the use of the c
method) avoids t
teachers may use
their courses, its
reasons may be t
the use of the co
A straightforwar

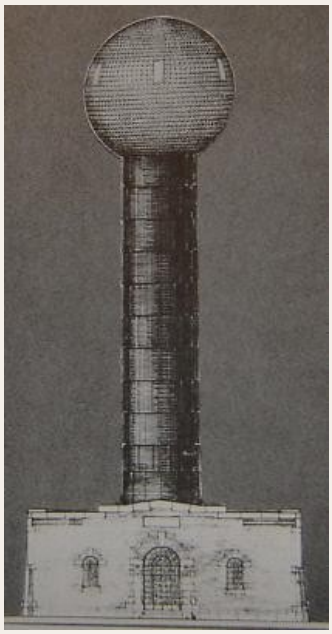

Architectural drawing by Titus deBobula shows Tesla's high potential terminal and powerhouse. This illustration was included with his death ray weapon proposal.

Tesla explained in many articles about experiments or inventions that could produce effects at considerable distances. He described different phenomena which seems to have different nature between eachother. Despite his statements about this concepts have never been demonstrated today there exist the concept of "directed energy weapons" which is applyed in different weapons for the military defence "to produce effects at distance".

Tesla's Latest Results – He Now Produces Radiographs at a Distance of More Than Forty Feet - Electrical Review - March 18th, 1896:

> *"I am producing strong shadows at distances of 40 feet. I repeat, 40 feet and even more. Nor is this all. So strong are the actions on the film that provisions must be made to guard the plates in my photographic department, located on the floor above, a distance of fully 60 feet, from being spoiled by long exposure to the stray rays. Though during my investigations I have performed many experiments which seemed extraordinary, I am deeply astonished observing these unexpected manifestations, and still more so, as even now I see before me the possibility, not to say certitude, of augmenting the effects with my apparatus at least tenfold!"*
>
> *"These effects upon the sensitive plate at so great a distance I attribute to the employment of a bulb with a single terminal, which permits the use of practically any desired potential and the attainment of extraordinary speeds of the projected particles. With such a bulb it is also evident that the action upon a fluorescent screen is proportionately greater than when the usual kind of tube is employed, and I have already observed enough to feel sure that great developments are to be looked for in this direction".*

Today we know that X-rays are a form of invisible, high frequency electromagnetic radiation withwavelenght between 10 and 0.01 nanometres, corresponding to a frequencyof 30 PHz to 3 E Hz. They are produced by accelerating electrons at a metal target. In medical application, this is Tungstran (95%), Rhenium (5%), orMolibden. X rays are used in various medical application.

concentrated non-dispersive energy through natural media - Briefly Exposed by Nikola Tesla - Circa May 16, 1935

- **News on directed energy weapons**
- **Nazi developed Particle Beam Weapon & electric gun/cannon**
- **Videos/documentaries on secret weapons & the death ray & directed energy weapons**

In 1907, when commenting on the destruction of the French ship Iena, Tesla noted in a letter to the New York Times that he has built and tested remotely controlled torpedoes, but that electrical waves would be more destructive:

> *"As to projecting wave energy to any particular region of the globe, this can be done by my devices," he wrote. Further, he claimed that "the spot at which the desired effect is to be produced can be calculated very closely, assuming the accepted terrestrial measurements to be correct."*

In 1908 Tesla repeated the idea of destruction by electrical waves to the newspaper on April 21st His letter to the editor stated:

> *"When I spoke of future warfare I meant that it should be conducted by direct application of electrical waves without the use of aerial engines or other implements of destruction." He added: "This is not a dream. Even now wireless power plants could be constructed by which any region of the globe might be rendered uninhabitable without subjecting the population of other parts to serious danger or inconvenience."*

Again in 1915, in another letter to the editor, Tesla stated:

> *"It is perfectly practical to transmit electrical energy without wires and produce destructive effects at a distance. I have already constructed a wireless transmitter which makes this possible. When unavoidable, the [transmitter] may be used to destroy property and life."*

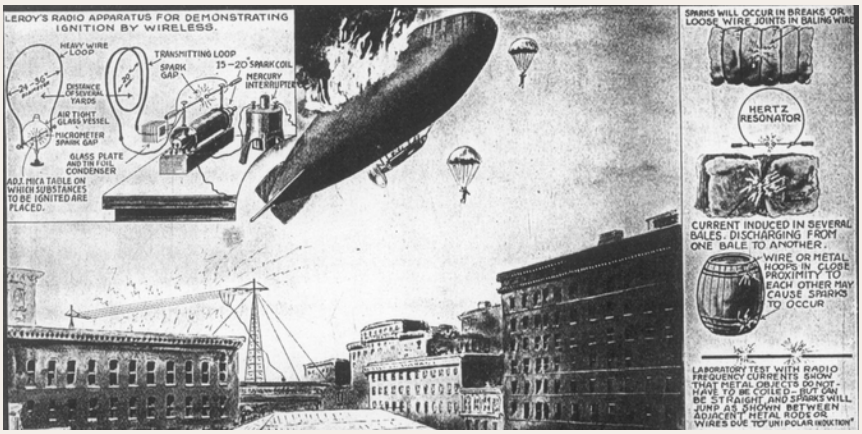

Can Radio Ignite Balloons? - Electrical Experimenter - October 1, 1919

Courtesy of Tesla Collection - http://teslacollection.com/

TESLA'S NEW DEVICE LIKE BOLTS OF THOR

He Seeks to Patent Wireless Engine for Destroying Navies by Pulling a Lever.

TO SHATTER ARMIES ALSO

A New York Times headline from December 8th, 1915

Tesla's Views on Electricity and the War - The Electrical Experimenter - August, 1917:

> "At the time of those tests I succeeded in producing the most powerful X-rays ever seen. I could stand at a distance of 100 feet from the X-ray apparatus and see the bones of the hand clearly with the aid of a fluoroscope screen; and I could have easily seen them at a distance several times this by utilizing suitable power. In fact, I could not then procure X-ray generators to handle even a small fraction of the power I had available. But I now have apparatus designed whereby this tremendous energy of hundreds of kilowatts can be successfully transformed into X-rays."

By the same month Tesla outlined a concept for primitive radar-like units. He stated:

> *"...by their [electromagnetic waves] use we may produce at will, from a sending station, an electrical effect in any particular region of the globe; [with which] we may determine the relative position or course of a moving object, such as a vessel at sea, the distance traversed by the same, or its speed".*

Tesla's 1917 proposal for Directed Energy submarine warfare (Tesla's Views on Electricity and the War - The Electrical Experimenter - August, 1917 and New Yankee Tricks to Circumvent the U-Boat - The Fort Wayne Journal-Gazette, Fort Wayne, Indiana - August 19, 1917):

> *"I believe the magnetic method of locating or indicating the presence of an iron or steel mass might prove very practical in locating a hidden submarine. And it is of course of paramount importance that we do find a means of accurately locating the sub-sea fighters when they are submerged, so that we can, with this information, be ready to close in on them when they attempt to come to the surface. Especially is this important when several vessels are traveling in fleet formation; the location and presence of the enemy submarine can be radiographed to the other vessels by the one doing the magnetic surveying and, by means of nets in some cases, or gun-fire and the use of hydro-aeroplanes sent aloft from the ships, the enemy under water stands a mighty good chance of being either 'bombed,' shelled or netted.*
>
> *"However, a means would soon be found of nullifying this magnetic detector of the submerged undersea war-craft. They might make the 'U-boat' hulls of some non-magnetic metal, such as copper, brass, or aluminum. It is a good rule to always*

keep in mind that for practically every good invention of such a kind as this, there has always been invented an opposite, and equally efficient counteracting invention."

"Now suppose that we erect on a vessel a large rectangular helice or inductance coil of insulated wire. Actual experiments in my laboratory at Houston Street (New York City) have proven that the presence of a local iron mass such as the ship's hull would not interfere with the action of this device. To this coil of wire, measuring perhaps 400 feet in length by 70 feet in width (the breadth of the ship), we connect a source of extremely high frequency and very powerful oscillating current. By this means there are radiated powerful oscillating electro-static currents, which as I have found by actual experiment in my Colorado tests some years ago, will first affect a metallic body (such as a submarine hull, even though made of brass or any other metal), and in turn cause that mass to react inductively on the exciting coil on the ship. To locate an iron mass, it is not necessary to excite the coil with a high frequency current; the critical balance of the coil will be affected simply by the presence of the magnetic body. To be able to accurately determine the direction and range of the enemy submarine, four exciting inductances should be used. With a single inductance, however, it would be possible to determine the location of a submarine by running the ship first in one direction and then in another, and noting whether the reactance effect caused by the presence of the submarine hull increased or decreased. The radiating inductance must be very sharply attuned to the measuring apparatus installed on the ship, when no trouble will be found in detecting the presence of such a large metallic mass as a submarine, even at a distance of 5 to 6 miles; of this I feel confident from my past experiments in the realm of ultra-high frequency currents and potentials."

Tesla was incorrect in his assumption that high frequency radio waves would penetrate water but Émile Girardeau, who helped develop France's first radar system in the 1930s, noted in 1953 that Tesla's general speculation that a very strong high frequency signal would be needed was correct stating:

"(Tesla) was prophesying or dreaming, since he had at his disposal no means of carrying them out, but one must add that if he was dreaming, at least he was dreaming correctly."

On July 11, 1934 the inventor described a new weapon for first time in the New York Sun and The New York Times as being able to be used against ground-based infantry or for anti-aircraft purposes. The press called it a "peace ray" or death ray.

Tesla announced to the world two astonishing new inventions. The first was a particle-beam projector that Tesla intended to be used as an instrument of national defense. He called his system "teleforce." With this machine he declared that a nation could bring wholesale destruction upon invading armies and shoot down fleets of incoming aircraft at a distance of 200 miles (400 km) away. While the basic beam weapon concept was first revealed in 1934, on Tesla's 78th birthday, specific details about the actual device have been difficult to obtain.

One year later, during his annual birthday press conference on July 10, 1935, Tesla claimed a method to transmit mechanical energy with minimal loss over any terrestrial distance, allowing for a new means of communication and a technique for the location of subterranean mineral deposits. Tesla's mechanical power transmission system, he dubbed it the "art of telegeodynamics," was based primarily upon his reciprocating engine invention, patented in 1894. While the fundamental operating principles of Tesla's mechanical oscillator are well understood, little has been said about how the machine would have been used for underground prospecting.

In Leland Anderson's newest book "Nikola Tesla's Teleforce & Telegeodynamics Proposals" these two important papers, hidden for more than 60 years, are presented for the first time. The principles behind teleforce the particle-beam weapon, and telegeodynamics the mechanical earth-resonance concept for seismic exploration, are fully addressed. In addition to copies of the original documents, typed on Tesla's official stationery, this work also includes two Reader's Aid sections that guide the reader through the more technical aspects of each paper. The papers are followed by Commentary sections which provide historical background and functional explanations of the two devices. Significant newspaper articles and headline accounts are provided to document the first mention of these proposals. A large Appendix provides a wealth of related material and background information, followed by a Bibliography section and Index.

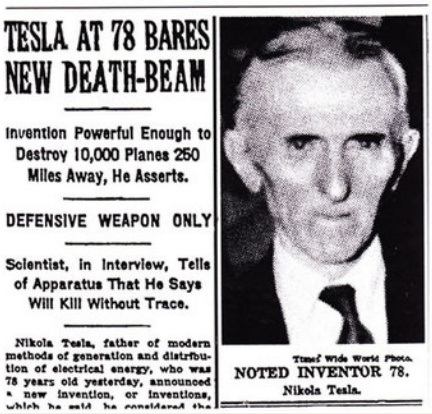

TESLA AT 78 BARES NEW DEATH-BEAM

Invention Powerful Enough to Destroy 10,000 Planes 250 Miles Away, He Asserts.

DEFENSIVE WEAPON ONLY

Scientist, in Interview, Tells of Apparatus That He Says Will Kill Without Trace.

Nikola Tesla, father of modern methods of generation and distribution of electrical energy, who was 78 years old yesterday, announced a new invention, or inventions,

Times' Wide World Photo.
NOTED INVENTOR 78.
Nikola Tesla.

Postcard illustration of the Hotel New Yorker, New York City. (Collection of The New-York Historical Society)

Tesla announced his new beam weapon in numerous newspaper interviews on his seventy-eighth birthday

In 1934 Tesla moved to his final residence, room 3327 (still divisible by three) of the recently completed Hotel New Yorker. There he lived alone with his ideas and his pigeons for the next decade. He posted a typewritten note on the door: "Please Do Not Disturb The Occupant Of This Room."

In Tesla's mind, it was time to reveal his greatest invention: a perfect and impossible idea, a weapon to prevent World War II.

On July 11, 1934, the headline on the front page of The New York Times anounced: "Tesla at 78 bares new death beam"

> *"Will send concentrated beams of particles through the free air, of such tremendous energy that they will bring down a fleet of 10,000 enemy airplanes at a distance of 250 miles* (400 km) *from a defending nation's border and will cause armies of millions to drop dead in their tracks.*
>
> *When put in operation, Dr. Tesla said, this latest invention of his would make war impossible. This death-beam, he asserted would surround each country like an invisible Chinese wall, only a million times more impenetrable. It would make every nation impregnable against attack by airplanes or by large invading armies".*

Joseph Butler, a U.S. Air Force expert on beam weapons, has said of Tesla's idea, "Definitely, he had the concept of a charged particle beam weapon back in the 1930s. The concept was right on the mark ... particles projected out long distances to do

damage to some enemy airplanes, in his particular case." But Butler added, "I haven't a clue how he meant to actually do it" (interview with the authors, 1998).

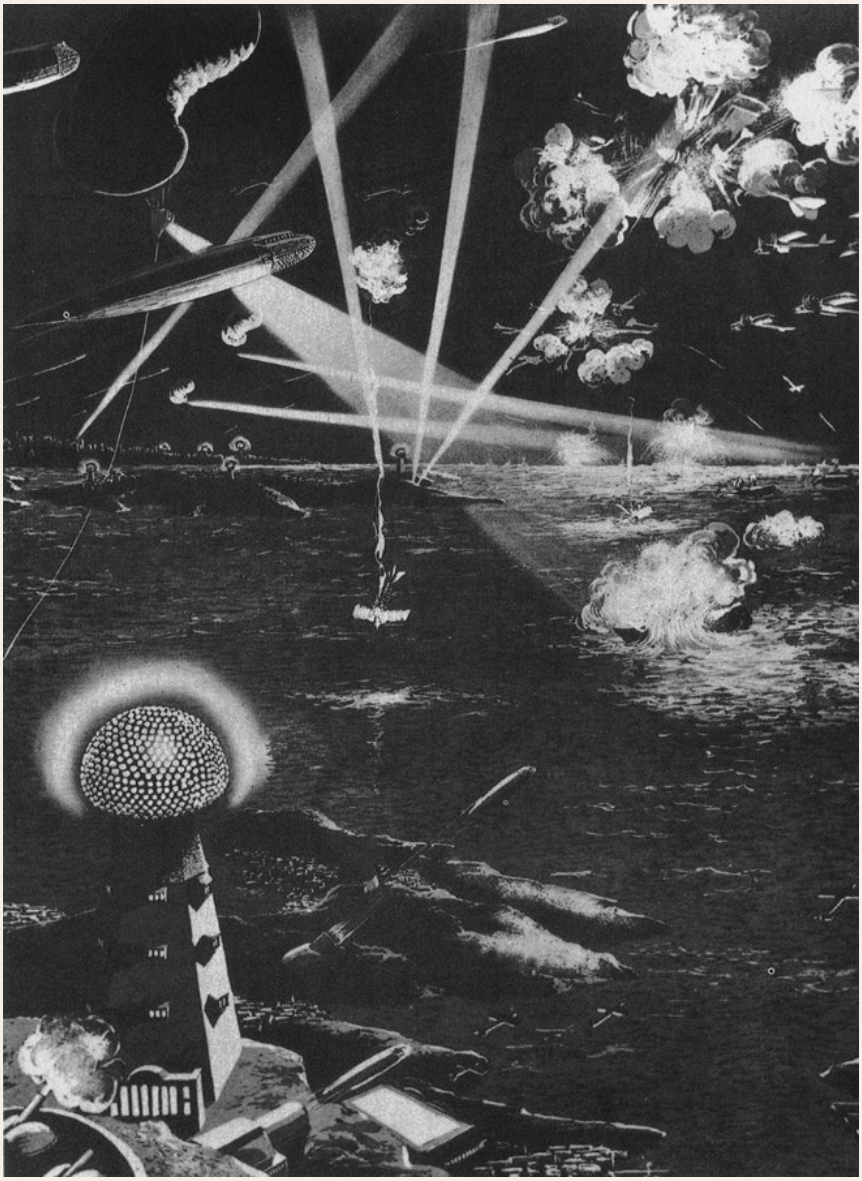

Tesla's concept of future warfare: Tesla tower in action supplying and directing war machines from distances of hundreds or even thousands of miles away.

The inventor envisioned war in the future as a "mere contest" between machines. This concept was illustrated by Paul Frank and appeared in Science and Invention, February 1922.

Sensing a business opportunity, Tesla commissions architect Titus deBobula in 1934 to draw plans of what the new particle beam weapon towers might look like and contacts several governments around the world to try to sell his plans.

Principles and concepts of Tesla's "death ray"

Beam to Kill Army at 200 Miles, Tesla's Claim on 78th Birthday - New York Herald Tribune - July 11, 1934:

> *"First and most important is a **mechanism for producing rays and other energy manifestations in free air**. Hitherto vacuum tubes have always been necessary. Second is an **apparatus for producing unheard-of quantities of electrical current and for controlling it when produced**. The current is necessary as power for the first mechanism. Without this, no rays of sufficient strength could be produced. The third is **a method of intensifying and amplifying the second process**, and the fourth is **a method of producing "tremendous electrical repellent force"**.*

On July 23, 1934 Time Magazine wrote an article about Tesla's Ray:

"*Last week Dr. Tesla announced a combination of four inventions which would make war unthinkable.*

Nucleus of the idea is a death ray – a concentrated beam of sub-microscopic particles flying at velocities approaching that of light. The beam, according to Tesla, would drop an army in its tracks, bring down squadrons of airplanes 250 miles away. Inventor Tesla would discharge the ray by means of

1. *a device to nullify the impeding effect of the atmosphere on the particles,*
2. *a method for setting up high potential,*
3. *a process for amplifying that potential to 50.000.000 volts,*
4. *creation of "a tremendous electrical repelling force."*

http://www.tfcbooks.com/teslafaq/q&a_011.htm

According to Tesla production of the particle beam is dependent upon the following four inventions (For more details see also: "The new art of projecting concentrated non-dispersive energy through natural media"):

1-.A method and apparatus for producing rays and other manifestations of energy in free air, eliminating the high vacuum necessary at present for the production of such rays and beams. This is accomplished with a novel form of high vacuum tube, one end of which is open to the atmosphere. The projectiles are accelerated in a vacuum and then conducted into the atmosphere through a valvular conduit.

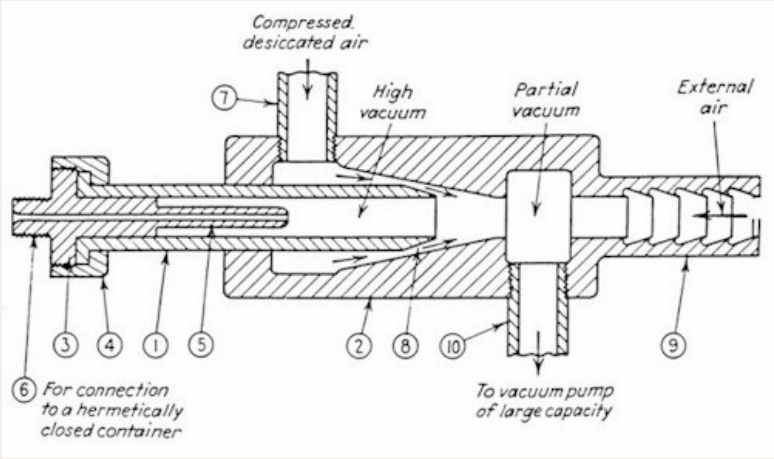

Modified open vacuum tube

- GB179,043 - Improved process and apparatus for production of high vacua - March 24, 1921

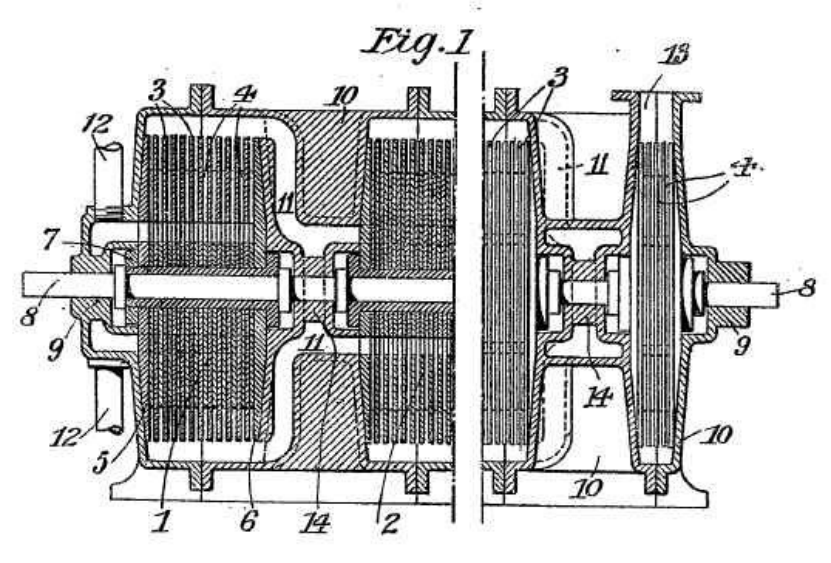

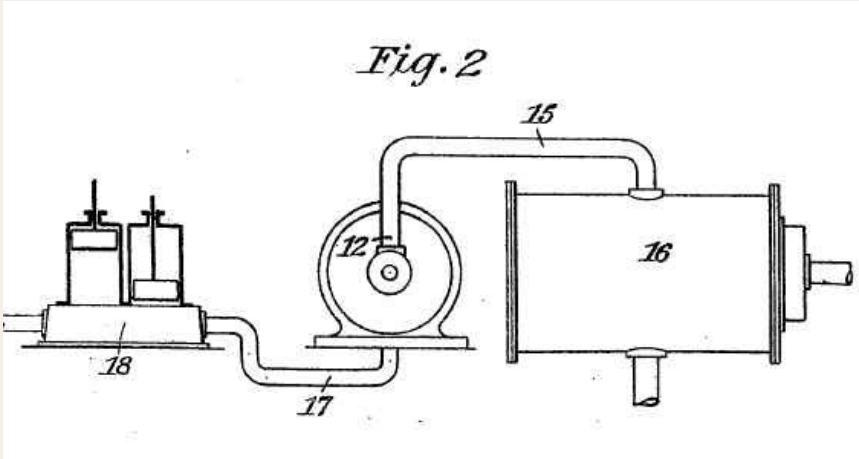

- 1,329,559 Valvular Conduit, February 3, 1920

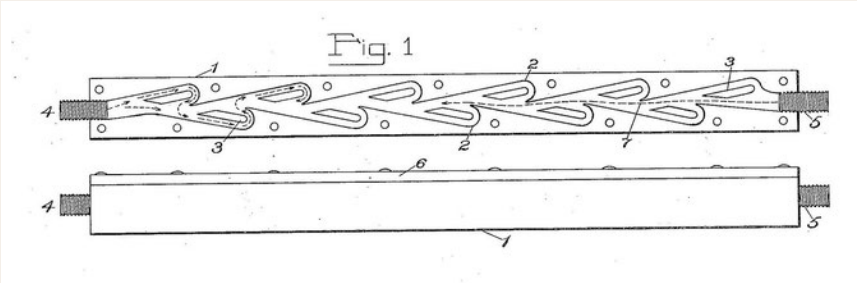

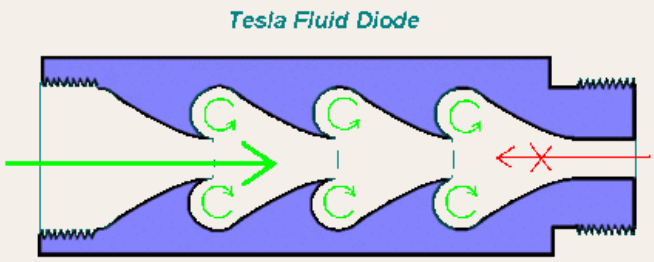

2-.A method and process for producing very great electrical force in the range of 60,000,000 volts to propel the particles to their objective. Tesla specified that this could be done with a large electrostatic generator on a new principle and of very great power, in many respects similar to a Van de Graaff generator. In place of a charge-carrying belt it employs a circulating stream of desiccated air that is propelled through a hermetically sealed ductwork by a Tesla disc blower. A Wardenclyffe type apparatus could also be used for this purpose.

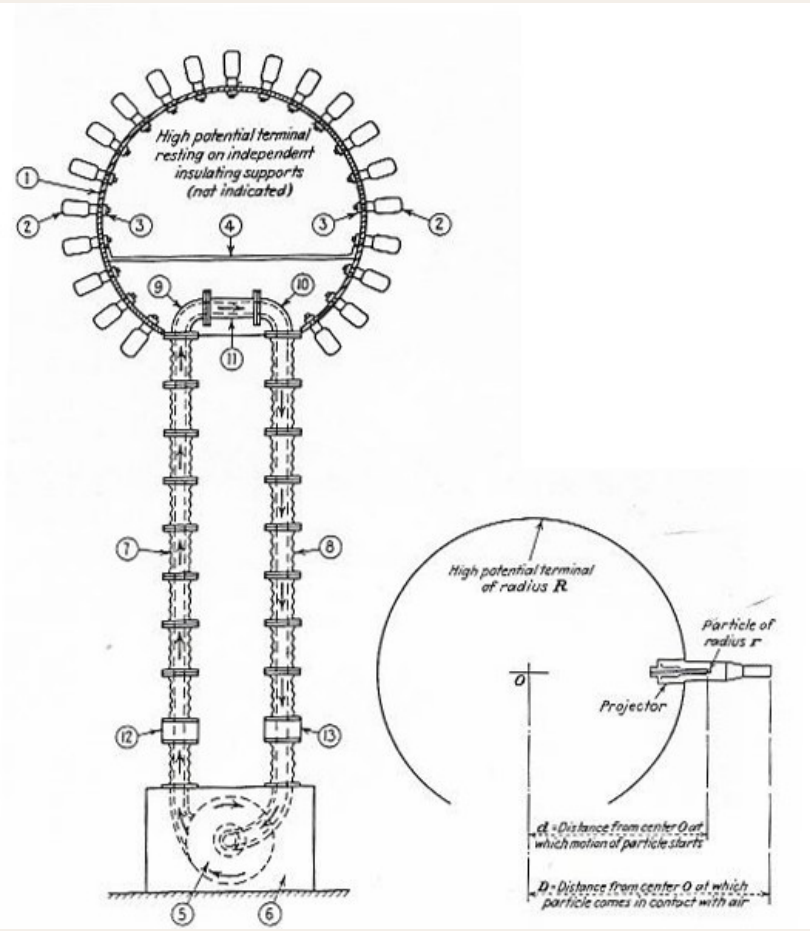

SCHEMATIC ILLUSTRATION OF NEW HIGH POTENTIAL GENERATOR & SPHERICAL TERMINAL AND AN OPEN VACUUM TUBE

- US1,061,142 - Fluid Propulsion - April 29, 1913

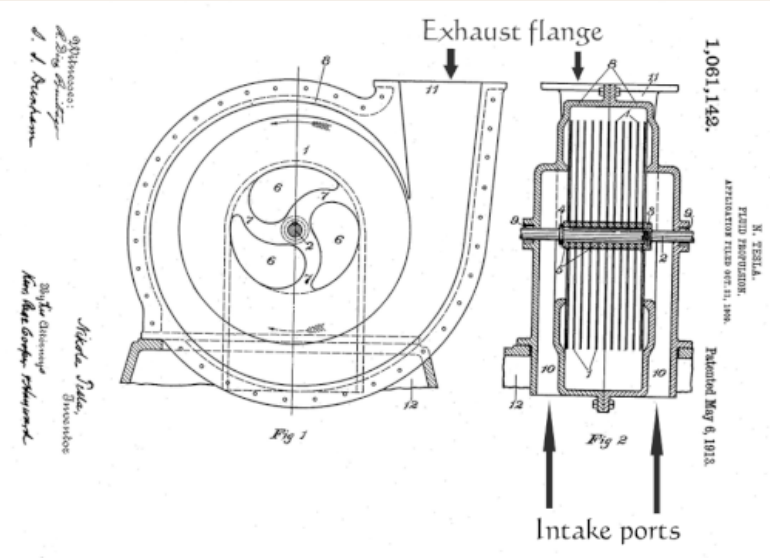

3-.A method for amplifying this process in the second invention. The exterior of the high potential terminal is equipped with numerous bulbs of some insulating material each containing, —an electrode of thin metal sheet suitably rounded— and — exhausted to the highest vacuum obtainable.—

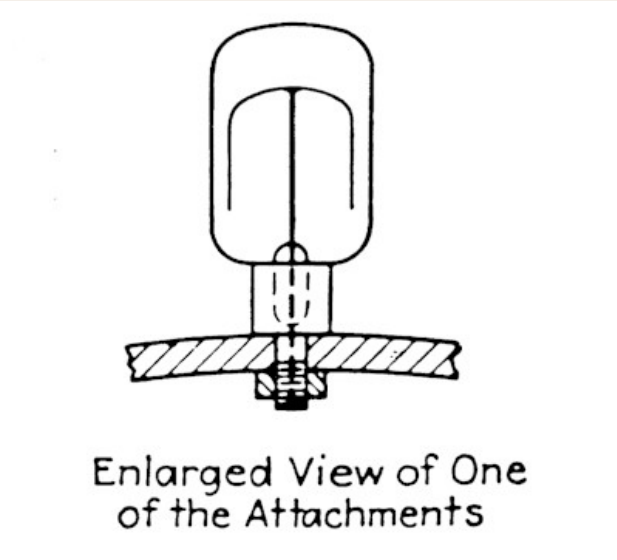

NEW TERMINAL FOR EXCEEDINGLY HIGH POTENTIALS
CONSISTING OF SPHERICAL FRAME ATTACHMENTS

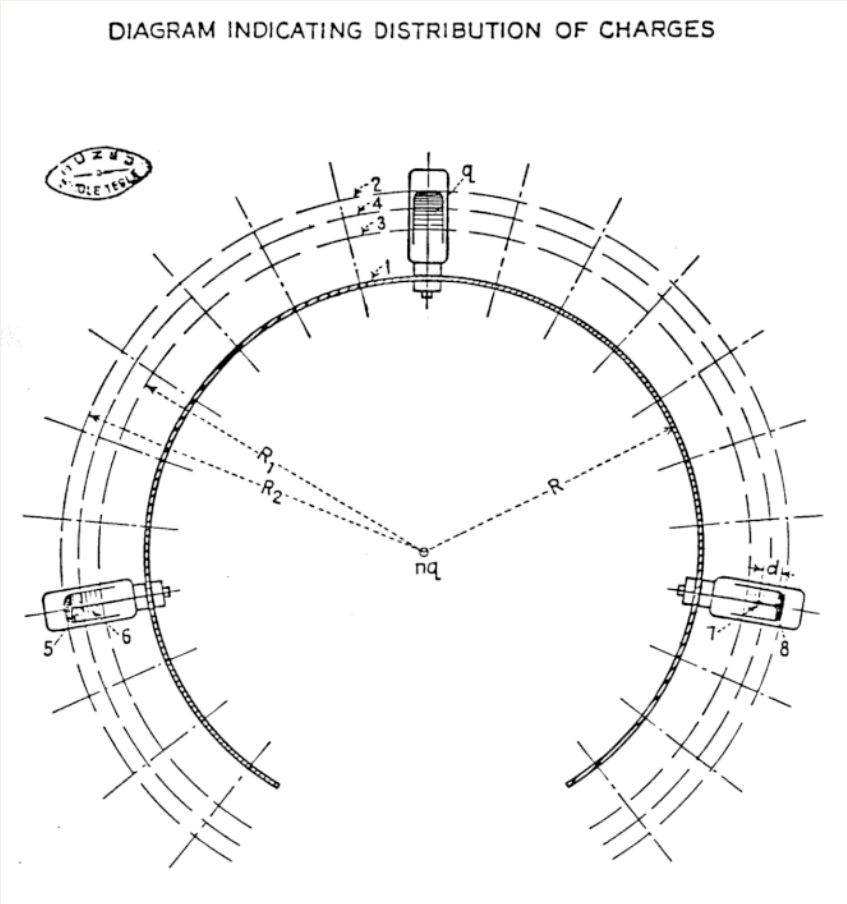

4-.A new method for producing a tremendous electrical repelling force in the form of —provisions for imparting to a minute particle an extremely high charge.— It appears this refers to the internal conducting component (the socket and central extension) at the base of the projector or gun element of the system While the specific details about this aspect of the design are not readily apparent, it seems that strict attention to the fulfillment of requirements 1, 2 and 3 is critical to success. In Tesla's words, *"by the application of my discoveries it is possible to increase the force of repulsion more than a million times and what was heretofore impossible is rendered easy of accomplishment"*.—[1, 2]

His idea was probably to use a gigantic electrostatic generator run by one of his turbines to accelerate tiny particles of mercury until they became a stream of super high-powered bullets of several million volts. Since they were accelerated in a vacuum, Tesla needed a way to spit them out of the accelerator sphere without letting air in. He proposed to do this with the special nozzle which blew high-pressure air around an open tube leading to the evacuated sphere and acted like a constantly renewing plug to preserve the vacuum. What happens to the mercury stream after it left the nozzle and had to travel through the atmosphere was another matter that was never quite figured out.

In the death ray prpoposal, Tesla used the term "particles" but in this case he did not mean atomic particles like protons, neutron... etc but he meant microscopic droplets accelerated in a electron tube and by the action of the repulsion of the electrostatic force.

The Inventions, Researches and Writings of Nikola Tesla - by Thomas Commerford Martin, Editor - 1894:

The electrostatic attractions and repulsions between bodies of measurable dimensions are, of all the manifestations of this force, the first so-called electrical phenomena noted. But though they have been known to us for many centuries, the precise nature of the mechanism concerned in these actions is still unknown to us, and has not been even quite satisfactorily explained. What kind of mechanism must that be? We cannot help wondering when we observe two magnets attracting and repelling each other with a force of hundreds of pounds with apparently nothing between them. We have in our commercial dynamos magnets capable of sustaining in mid-air tons of weight. But what are even these

[Pg 326]

forces acting between magnets when compared with the tremendous attractions and repulsions produced by electrostatic force, to which there is apparently no limit as to intensity. In lightning discharges bodies are often charged to so high a potential that they are thrown away with inconceivable force and torn asunder or shattered into fragments. Still even such effects cannot compare with the attractions and repulsions which exist between charged molecules or atoms, and which are sufficient to project them with speeds of many kilometres a second, so that under their violent impact bodies are rendered highly incandescent and are volatilized. It is of special interest for the thinker who inquires into the nature of these forces to note that whereas the actions between individual molecules or atoms occur seemingly under any conditions, the attractions and repulsions of bodies of measurable dimensions imply a medium possessing insulating properties. So, if air, either by being rarefied or heated, is rendered more or less conducting, these actions between two electrified bodies practically cease, while the actions between the individual atoms continue to manifest themselves.

An experiment may serve as an illustration and as a means of bringing out other features of interest. Some time ago I showed that a lamp filament or wire mounted in a bulb and connected to one of the terminals of a high tension secondary coil is set spinning, the top of the filament generally describing a circle. This vibration was very energetic when the air in the bulb was at ordinary pressure and became less energetic when the air in the bulb was strongly compressed. It ceased altogether when the air was exhausted so as to become comparatively good conducting. I found at that time that no vibration took place when the bulb was very highly exhausted. But I conjectured that the vibration which I ascribed to the electrostatic action between the walls of the bulb and the filament should take place also in a highly exhausted bulb. To test this under conditions which were more favorable, a bulb like the one in Fig. 174, was constructed. It comprised a globe b, in the neck of which was sealed a platinum wire w carrying a thin lamp filament f. In the lower part of the globe a tube t was sealed so as to surround the filament. The exhaustion was carried as far as it was practicable with the apparatus employed.

This bulb verified my expectation, for the filament was set spinning when the current was turned on, and became incandes

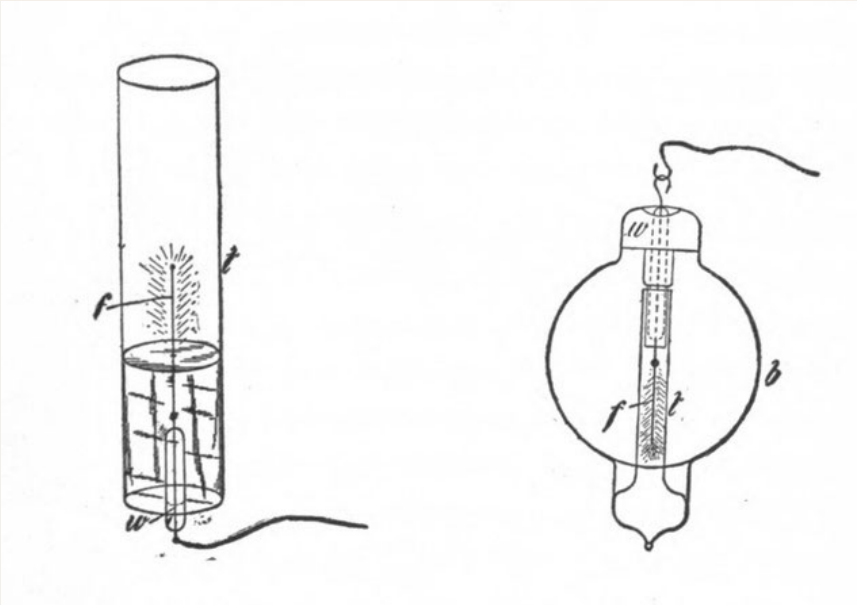

Fig. 173. & Fig. 174.

[Pg 327]

cent. It also showed another interesting feature, bearing upon the preceding remarks, namely, when the filament had been kept incandescent some time, the narrow tube and the space inside were brought to an elevated temperature, and as the gas in the tube then became conducting, the electrostatic attraction between the glass and the filament became very weak or ceased, and the filament came to rest. When it came to rest it would glow far more intensely. This was probably due to its assuming the position in the centre of the tube where the molecular bombardment was most intense, and also partly to the fact that the individual impacts were more violent and that no part of the supplied energy was converted into mechanical movement. Since, in accordance with accepted views, in this experiment the incandescence must be attributed to the impacts of the particles, molecules or atoms in the heated space, these particles must therefore, in order to explain such action, be assumed to behave as independent carriers of electric charges immersed in an insulating medium; yet there is no attractive force between the glass tube and the filament because the space in the tube is, as a whole, conducting.

It is of some interest to observe in this connection that whereas the attraction between two electrified bodies may cease owing to the impairing of the insulating power of the medium in which they are immersed, the repulsion between the bodies may still be observed. This may be explained in a plausible way. When the bodies are placed at some distance in a poorly conducting medium, such as slightly warmed or rarefied air, and are suddenly electrified, opposite electric charges being imparted to them, these charges equalize more or less by leakage through the air. But if the bodies are similarly electrified, there is less opportunity afforded for such dissipation, hence the repulsion observed in such case is greater than the attraction. Repulsive actions in a gaseous medium are however, as Prof. Crookes has shown, enhanced by molecular bombardment.

In some moment of his life, Tesla believed in the possibility of the atomic energy as a source of energy, but after some years he stated just the oposite as a result of his unsuccessfull experiments of "accelerating and crushing atomic particles". For this reason it is supposed that some kind of particle accelerator would be necessary to develop such experiments, however the details are uknown. The utilization of electron

tubes (or cathode tubes) is described in some articles and interviews about Tesla's "death ray".

Harnessing Nature - Can The Free Energy Of Space Be Utilized? - Scientific American - April 5, 1913

> *"Experiments conducted by Mr. Nikola Tesla with electromotlve forces of 2.000.000 volts have* ***convinced him that if 100.000.000 volts could be produced it might be possible to break down the atomic structure of any element and thus liberate a certain amount of energy.*** *"But," he told the wrlter of this artlcle, "even lf the feat could be accomplished and suficient energy set free, there still remains the enormously dificult problem of devising a means of utillzing the energy ln a practical way."*

Tesla, 75, Predicts New Power Source - New York Times - July 5th, 1931

> *"When and where do you expect to make the official announcement of your new discoveries?" the inventor was asked.*
>
> *"These discoveries," he replied, "did not come to me over night, but as the result of intense study and experimentation for nearly thirty-six years. I am naturally anxious to give the facts to the world as soon as possible, but I also wish to present them in a finished form. That may take a few months or a few years."*
>
> *"The idea of atomic energy is illusionary but it has taken so powerful a hold on the minds, that although I have preached against it for twenty-five years, there are still some who believe it to be realizable."*
>
> *"I have disintegrated atoms in my experiments with a* ***high potential vacuum tube I brought out in 1896****, which I consider one of my best inventions.* ***I have operated it with pressures ranging from 4,000,000 to 18,000,000 volts. More recently I have designed an apparatus for 50,000,000 volts which should produce many results of great scientific importance.***
>
> *"But as to atomic energy,* ***my experimental observations have shown that the process of disintegration is not accompanied by a liberation of such energy*** *as might be expected from the present theories."*

Aerial defense "death beam" offered to U.S by Tesla - The Baltimor Sun - July 12, 1940.

> ***The voltages for propelling the deth beam to its objective, he stated, will attain a potential of 50.000.000****.*
>
> ***With this enourmous voltage, he said, microscopic particles of matter will be catapulted on their mission of defensive destruction.***

Beam to Kill Army at 200 Miles, Tesla's Claim on 78th Birthday - New York Herald Tribune - July 11, 1934:

> ***"It Is an Electric Gun***
>
> *The beam of force itself, as Dr. Tesla described it, is a concentrated current - it need be no thicker than a pencil - of microscopic particles moving at several*

hundred times the speed of artillery projectiles. The machine into which Dr. Tesla combines his four devices is, in reality, a sort of electrical gun.

He illustrated the sort of thing that the particles will be by recalling an incident that occurred often enough when he was experimenting with a ***cathode tube****. Then, sometimes, a particle larger than an electron, but still very tiny, would break off from the cathode, pass out of the tube and hit him. He said he could feel a sharp, stinging pain where it entered his body, and again at the place where it passed out.* ***The particles in the beam of force, ammunition which the operators of the generating machine will have to supply, will travel far faster than such particles as broke off from the cathode****, and they will travel in concentrations, he said.*

As Dr. Tesla explained it, ***the tremendous speed of the particles will give them their destruction-dealing qualities****. All but the thickest armored surfaces confronting them would be melted through in an instant by the heat generated in the concussion".*
"I should also say, and this is perhaps as important as anything else about it, that in this apparatus all limitations as to electric force and the quantity of electricity transmitted have been removed."

Prepared Statement of Tesla (For interview with press on 81st birthday observance):

There is one more discovery which I want to announce at this time, consisting of a new method and apparatus for the obtainment of vacua exceeding many times the highest heretofore realized. I think that as much as one-billionth of a micron can be attained. What may be accomplished by means of such vacua is a matter of conjecture, but it is obvious that they will make possible the production of much more intense effects in ***electron tubes****. My ideas regarding the electron are at variance with those generally entertained.* ***I hold that it is a relatively large body carrying a surface charge and not an elementary unit. When such an electron leaves an electrode of extremely high potential and in very high vacuum, it carries an electrostatic charge many times greater than the normal.*** *This may astonish some of those who think that the particle has the same charge in the tube and outside of it in the air. A beautiful and instructive experiment has been contrived by me showing that such is not the case, for* ***as soon as the particle gets out into the atmosphere it becomes a blazing star owing to the escape of the excess charge****.* ***The great quantity of electricity stored on the particle is responsible for the difficulties encountered in the operation of certain tubes and the rapid deterioration of the same.***

Proposing the "death ray" for defense - Philadelphia Inquirer - October 20, 1940:

"It is based on an entirely new principle of physics that nobody ever has dreamed of. **It is different from the principle embodied in my inventions relating to the transmission of electrical power from a distance**, for which I hold a number of basic patents."

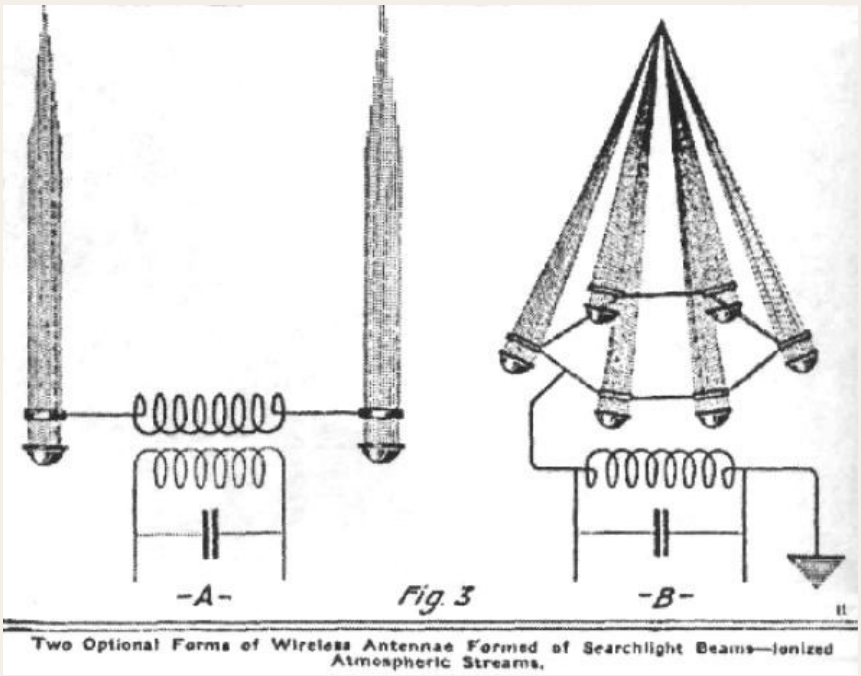

Illustrations from an article in the March, 1920 issue of Electrical Experimenter entitled "Wireless Transmission of Power Now Possible". The illustrations show his prototype devices for "directed ionized beam transmissions," a "deathray—searchlight" device. But according to Tesla, the results of tests did not justify the hope of important practical applications in large distance.

> *"After preliminary laboratory experiments,* ***I made tests on a large scale with the transmitter referred to and a beam of ultra-violet rays of great energy in an attempt to conduct the current to the high rarefied strata of the air and thus create an auroral display*** *such as might be utilized for illumination, especially of oceans at night.* ***I found that there was some virtue in the principal but the results did not justify the hope of important practical applications*** *although, some years later, several inventors claimed to have produced a "death ray" in this manner. While the published reports to this effect were entirely unfounded, I believe that with the new transmitter to be built, many wonders will be achieved".*

A Machine to End War - Liberty - February 1937:

> *My discovery ends the menace of airplanes or submarines, but it insures the supremacy of the battleship, because battleships may be provided with some of the required equipment. There might still be war at sea, but no warship could successfully attack the shore line, as the coast equipment will be superior to the armament of any battleship.*
>
> ***I want to state explicitly that this invention of mine does not contemplate the use of any so-called "death rays." Rays are not applicable because they cannot be produced in requisite quantities and diminish rapidly in intensity with distance.*** *All the energy of New York City (approximately two million horsepower) transformed into rays and projected twenty miles, could not kill a human being, because, according to a well known law of physics, it would disperse to such an extent as to be ineffectual.*
>
> ***My apparatus projects particles which may be relatively large or of microscopic dimensions****, enabling us to convey to a small area at a great*

distance trillions of times more energy than is possible with rays of any kind. Many thousands of horsepower can thus be transmitted by a stream thinner than a hair, so that nothing can resist. This wonderful feature will make it possible, among other things, to achieve undreamed-of results in television, for there will be almost no limit to the intensity of illumination, the size of the picture, or distance of projection.

I do not say that there may not be several destructive wars before the world accepts my gift. I may not live to see its acceptance. But I am convinced that a century from now every nation will render itself immune from attack by my device or by a device based upon a similar principle.

At the age of 81, at a luncheon in his honor, concerning the Death Ray, Tesla stated:

"But it is not an experiment…. I have built, demonstrated and used it. Only a little time will pass before I can give it to the world."

History of particle accelerators

There are two basic classes of accelerators: electrostatic and oscillating field accelerators. Electrostatic accelerators use static electric fields to accelerate particles. A small-scale example of this class is the cathode ray tube in an ordinary old television set. Other examples are the Cockcroft–Walton generator and the Van de Graaff generator. The achievable kinetic energy for particles in these devices is limited by electrical breakdown. Oscillating field accelerators, on the other hand, use radio frequency electromagnetic fields to accelerate particles, and circumvent the breakdown problem. This class, which was first developed in the 1920s, is the basis for all modern accelerator concepts and large-scale facilities.

To be able to go deeper into the secrets of the structure of matter, the phycisists found that they had to "crush", "hit" or "disturb" the atomic particles with the maximum energy as possible. In 1911 Rutherford achieved to elaborate an atomic model by the help of a projectile of certain energy: the α particles (alpha particles). During a long period of time such particles were the unique method to disturb the microcosmos in a controled way; but for the only way to produce them, it was necesary some kind of material which would be already radiactive in nature. This limitation became more remarkable in 1919 when Rutherford opened the new field of nuclear transformations when he studied the reaction N14 + α (alpha) => O17 + p (a nucleus of Nitrogen absorbs an α particle, emiting a proton and transforming it into a Oxigen nucleus). The radiactive sources available were too weak to continue penetrating into the mistery of atomic nucleus. One gram of radium produced 37.000 milion of α particles per second (apart from other products of the disintegration) of which 1 from 100.000 brought a transformation; too few to be able to separate chemically the generated substances to examine the products. Furthermore, the energy of those α particles were just enough to be able to surpass the electric repulsion of the nucleus to which they were directed. It was urgent to find machines which would be able to increase the number and velocity (energy) of the particles. And because they were charged, one way was to put them inside great potential differences.

Before the WW1 no technical means existed to progress so much in that direction. From the 1920's already begun to appear some apparatus. In Cambridge, John Cockcroft and Ernest Walton used a voltaic multiplier which provided to them 125 Kv (1Kv=1000V) to be the first to observe in 1932 the artificial disintegration of atoms of lithium in two α particles. In the department of Terrestrial Magnetism of the Carnegie Institute of

Washington, Merle Tuve in 1928 used a transformer invented by Nikola Tesla with which he reached 3 million Volts. With the colaboration of Gregory Breit, Tuve used this method to accelerate protons and electrons. After working during a short time in an electric power plant in Alabama, Robert J. Van de Graaf designed his electrostatic generator. After spending one year in Oxford with a studentship, he conceived a device to build up a high voltage using simple principles of electrostatics. A belt of insulating material carries electricity from a point source to a large insulated spherical conductor. Another belt likewise delivers electricity of the opposite charge to another sphere. The spheres build up a potential until the electric field breaks down the air and a huge spark "arcs" across. While a postdoctoral fellow at Princeton, he adapted it (where he arrived in 1928) for the acceleration of particles. In a short time his prototype provided the 80 Kv and in 1931 was already possible to provide 750 Kv and using two spheres it was possible to achieve a potential difference of 1,5 Mv (1Mv=1000Kv). In 1937 already existed Van de Graaf generators of 5 meters high which were able to provide 5Mv. By increasing the radius of the spheres, Van de Graaff could reach higher voltages without arcing. The maximum voltage in theory, in megavolts, roughly equalled the radius of the sphere in feet. He was soon planning a pair of spheres 15 feet across. In 1933 Tuve and his team used a Van de Graaf generator of 1 Mv together with the discharge tube which they improved and they observed the disintegration of lithium and boron.

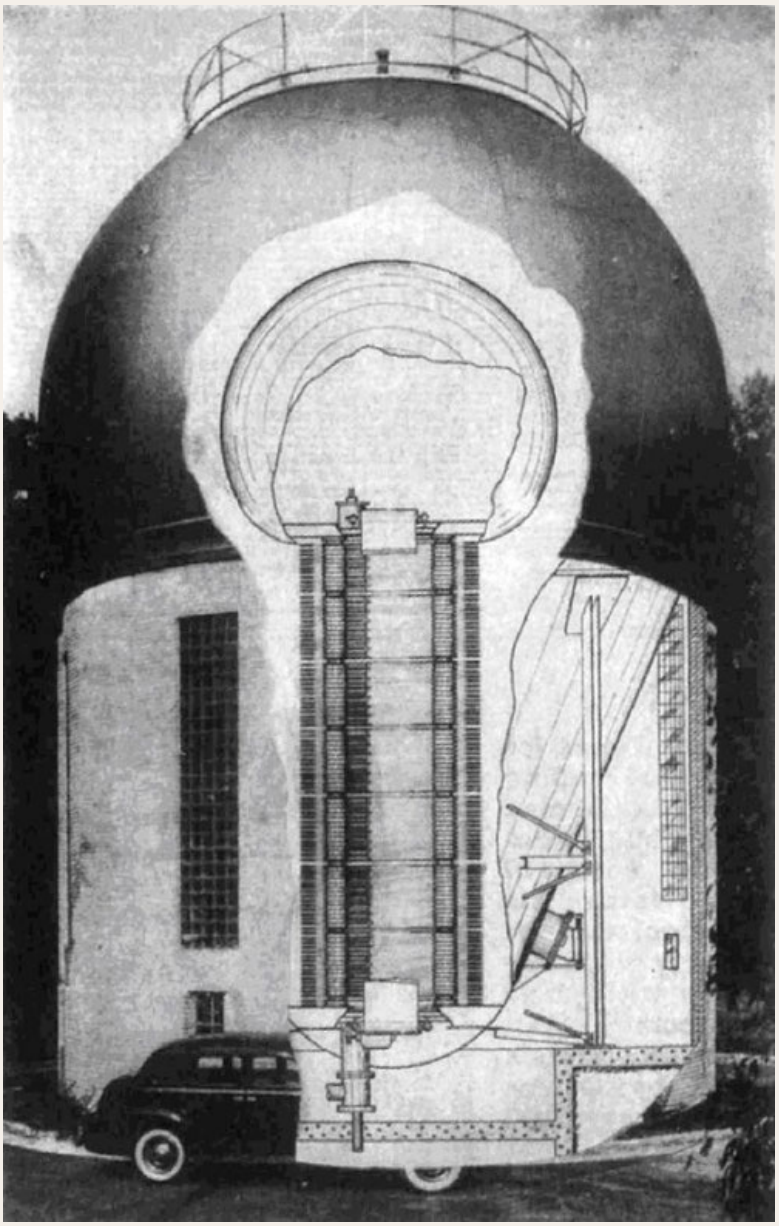

This electrostatic generator (Van de Graaf generator) atom-smasher was built at the Carnegie Institution in Washington D.C., and used between 1920 and 1940. The cross-section shows a spherical conductor, its insulating supports, and tube in which particles are accelerated. The charging belt is shown cut-off near the top and bottom. This structure was also the talk of "death-rays".

The most important initiative which ended up developing more and marking an era of physics was that associated to American phycisist Ernest Orlando Lawrence. The difficulties of maintaining high voltages led several physicists to propose accelerating particles by using a lower voltage more than once. After graduating in Yale Lawrence was hired as a professor associated to physics for Berkley in 1928. Lawrence learned of one such scheme in the spring of 1929, while browsing through an issue of *Archiv für Elektrotechnik*, a German journal for electrical engineers. Lawrence read German only with great difficulty, but he was rewarded for his diligence: he found an article by a Norwegian engineer, Rolf Wideröe, the title of which he could translate as *"On a new principle for the production of higher voltages."* The diagrams explained the principle and Lawrence skipped the text. This article inspired his idea of a particle accelerator, the first cyclotron.

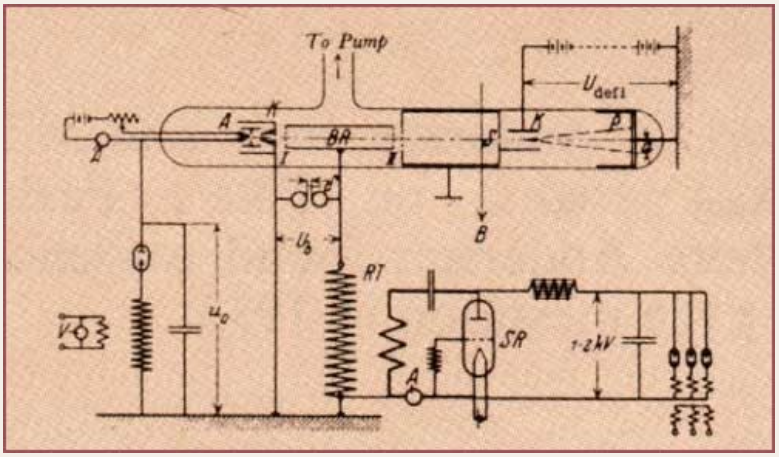

The first radio frequency linac for acceleration of heavy ions was designed by Rolf Widerøe in 1928. 1 MHz, 25KV rf source to accelerate potassium ions up to 50 KeV. Optimum gap distance d=βλ/2=βc/2f

Rolf Widerøe, Gustav Ising, Leó Szilárd, Donald Kerst, and Ernest Lawrence are considered pioneers of the particle accelerators, conceiving and building the first operational linear particle accelerator, the betatron, and the cyclotron.

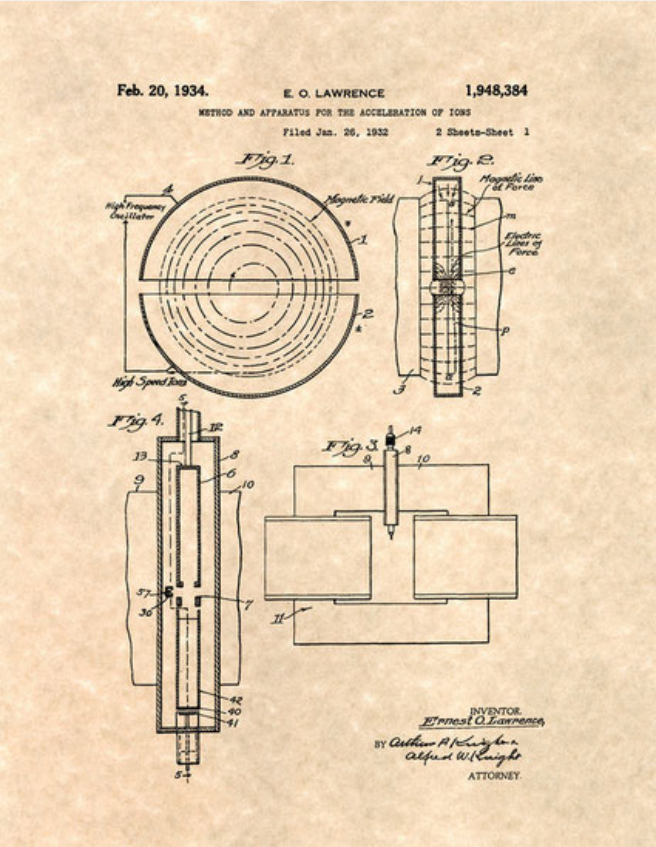
Feb. 20, 1934.
E. O. LAWRENCE
1,948,384
METHOD AND APPARATUS FOR THE ACCELERATION OF IONS
Filed Jan. 26, 1932
2 Sheets-Sheet 1
Fig. 1.
Fig. 2.
Magnetic Field
High Frequency Oscillator
High Speed Ions
Magnetic Lines of Force
Electric Lines of Force
Fig. 4.
Fig. 3.
INVENTOR.
Ernest O. Lawrence,
BY Arthur H. Knight
Alfred W. Knight
ATTORNEY.

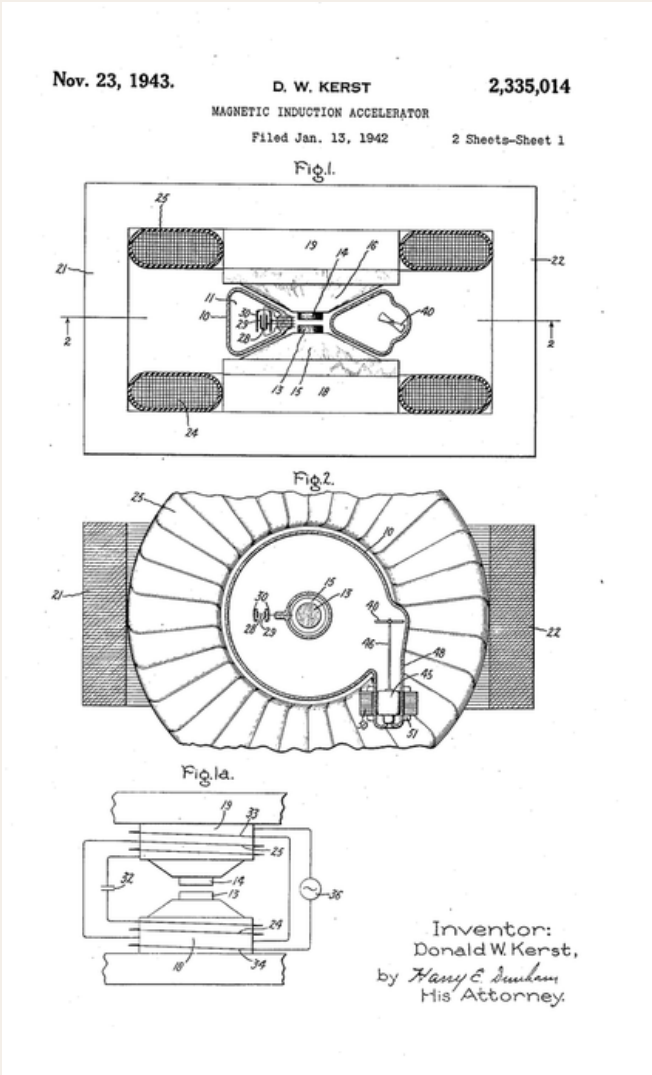
Nov. 23, 1943.
D. W. KERST
2,335,014
MAGNETIC INDUCTION ACCELERATOR
Filed Jan. 13, 1942
2 Sheets-Sheet 1
Fig. 1.
Fig. 2.
Fig. 1a.
Inventor:
Donald W. Kerst,
by Harry E. Dunham
His Attorney.

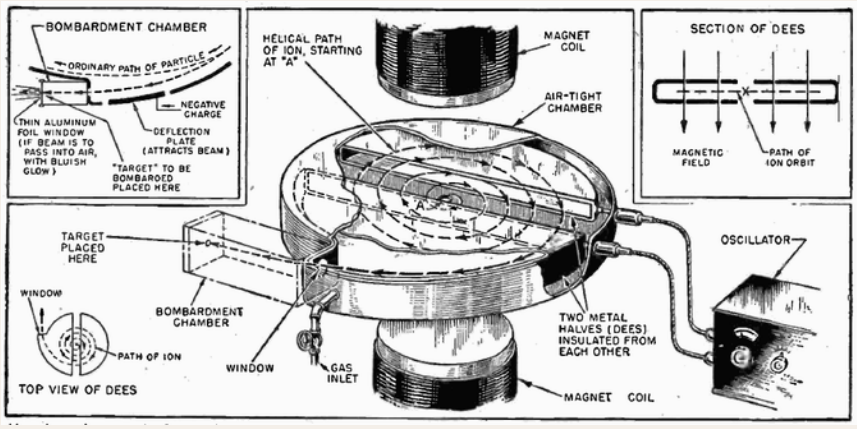

Diagram of a cyclotron, a particle accelerator invented by Earnest O. Lawrence in 1932 and widely used from the 1930s to the 1950s. It consists of a pair of "D" shaped sheet metal electrodes called "Dees" placed face to face inside a vacuum chamber, between the poles of an electromagnet. An oscillating radio frequency voltage of several thousand volts is applied to the dees. Atomic particles to be accelerated, such as protons are released in the center. The magnetic field causes them to travel in a spiral path from the center to the rim of the dees, being accelerated each time they pass from one electrode to the other. When the particles reach the rim they pass out of the dees through a small gap and strike a target. In this diagram the electromagnet pole pieces are not shown full size; they must be at least as big as the dees to create a uniform field. Caption: How the cyclotron works. Size of the magnets has been kept down to show the path of the electron

The New Art of Projecting Concentrated Non-Dispersive Energy Through Natural Media

Whether Tesla's idea was ever taken seriously is still a mater of conjecture. Most experts today consider his idea infeasible. Though, his death beam bears an uncanny resemblance to the charged-particle beam weapon developed by both the United States (Beam Experiments Aboard Rocket) and the Soviet Union during the cold war.

At the end of 1930s many conflicts were giving enough evidence that the dark future of war would soon break out in Europe. Nikola Tesla tryed to convince the military to generate interest to get the fundings for his "peace beam", but it seems that he didn't recieve the attention that he was hoping. After some attempts, he decided to not give up and he sent an elaborate technical paper, including diagrams, to a number of Allied nations including the United States, Canada, England, France, the Soviet Union, and Yugoslavia.

A paper surfaces in 1983 which is the first to show an actual plan for a weapon. An analysis of the paper by the Tesla museum in Belgrade determines them to be authentic. The paper, which is entitled "New Art of Projecting Concentrated Non-Dispersive Energy Through Natural Media" is the only known paper Telsa ever wrote about particle beam weaponry.

The most interested country of all which recieved Tesla's proposal, the greatest interest came from the Soviet Union. In 1937 (agreement dated in April 20, 1935) Tesla presented a plan to the Amtorg Trading Corporation, an alleged Soviet arms front in New York City. Two years later, in 1939, one stage of the plan was tested in the USSR and Tesla received a check for $25,000. It is highlighted from the released unclassified FBI archives (Part 1 page 185). Contained within the extract Tesla agreed to supply

plans, specification, and complete information on a method and apparatus for producing very small particles in a tube open to air, for increasing the charge of the particles to the full voltage of the high potential terminal, and for projecting the particles to a distances of a hundred miles or more. The maximum speed of the particles was specified as not less than 350 miles per second. The receipt of $25,000 fee for this disclosure was acknowledged by Nikola Tesla and by A. Bartanian of the Amtorg Trading Corporation.

During World War II, Amtorg handled the flow of military supplies to the Soviet Union, including armaments, raw materials, food, and uniforms under the Lend-Lease program.

During the Cold War years, the scope of Amtorg's enterprise was more limited, but it continued to conduct its business at 49 West 37th Street, in New York City, maintaining a skeleton staff. As an arm of the Soviet state, Amtorg, at that time located at 355 Lexington Avenue in New York City, was targeted in two bombing attempts, in 1971 and 1976, by members of the Jewish Armed Resistance, an extremist group affiliated with the Jewish Defense League.

Surrounded by continuing controversy, Amtorg survived the Cold War but did not survive the collapse of the Soviet Union, quietly disappearing in 1998.

In a letter that was written to J. P. Morgan, Jr. on November 29, 1934, Tesla described the weapon:

> *"I have made recent discoveries of inestimable value... The flying machine has completely demoralized the world, so much that in some cities, as London and Paris, people are in mortal fear from aerial bombing. The new means I have perfected afford absolute protection against this and other forms of attack. ... These new discoveries, which I have carried out experimentally on a limited scale, have created a profound impression. One of the most pressing problems seems to be the protection of London and I am writing to some influential friends in England hoping that my plan will be adopted without delay. The Russians are very anxious to render their borders safe against Japanese invasion and I have made them a proposal which is being seriously considered".*

During the period in which the negotiations were being carried on, Tesla claimed that efforts had been made to steal the invention. His room had been entered and his papers had been scrutinized, but the thieves, or spies, left empty-handed. He said that there was no danger that his invention could be stolen for he had at no time committed any part of it to paper. The blueprint for the Teleforce weapon was all in his mind.

In 1940 Tesla estimated that each station would cost no more than $2,000,000 and could have been constructed in a few months.

CNN Special Report 1985 Electromagnetic Frequency

Tesla Weapons

Other controversial death ray proposals and possible frauds

Death ray proposal by Harry Grindell Matthews

Death ray proposal by Harry Grindell Matthews

"Tesla's Views on Electricity and the War" - The Electrical Experimenter - August, 1917

> "The 'Ulivi ray' really was transplanted from this country to Italy," asserted Dr. Tesla. "It was simply an adaptation of my ultra-powerful high-frequency phenomena as carried out in Colorado and cited previously. With a powerful oscillator developing thousands of horsepower it would become readily possible to detonate powder and munition magazines by means of the high frequency currents induced in every bit of metal, even when located five to six miles away and more. Even a powder can would have a potential of 6,000 to 7,000 volts induced in it at that distance.
>
> "At the time of those tests I succeeded in producing the most powerful X-rays ever seen. I could stand at a distance of 100 feet from the X-ray apparatus and see the bones of the hand clearly with the aid of a fluoroscope screen; and I could have easily seen them at a distance several times this by utilizing suitable power. In fact, I could not then procure X-ray generators to handle even a small fraction of the power I had available. But I now have apparatus designed whereby this tremendous energy of hundreds of kilowatts can be successfully transformed into X-rays."

Tesla was probablly wrong in this case when he stated that Giacomo Ulivi copyed his idea knowing that Ulivi's death rays were finally considered a fraud after many attempts in different places to avoid his excuses to demonstrate his invention to the public without conditions but also because he had the bad habbit to disapear in the righ moments (See also: http://trove.nla.gov.au/ndp/del/article/6426458?searchTerm=Giulio%20Ulivi&searchLimits=).

The death ray proposal by Harry Grindell Matthews had almost the same reputation as the false italian inventor Giacomo Ulivi because he never had been able to demonstrate to the military of the UK or to any other witness, but it seems that there has always been some doubt as to whether Matthews ever actually invented a 'Death Ray' knowing that some documents held in the French patent office show a patent registered for the 'Projection à distance Phénomenès invisibles de haute fréquency électrique' - or the 'remote projection of invisible high frequency electricity' (seeking source) in other words, the 'Death Ray' - filed in October 1924 under the name Eugene Royer, Matthews' close associate.

Nazi developed "death ray" Weapon

More information: " Nazi developed "death ray" Weapon."

The following is a set of data related to the Nazi project.

Death-Rays as Life-Savers in the Third Reich by Pedro Waloschek (the description which appear in the book about Tesla's "death ray" is wrong as it was not supposed to use electromagnetic waves or wireless energy and in this case Tesla never stated that particles should travel faster than light):

> Today we know that the 'death rays' made famous through science fiction literature and cinema were never actually deployed, and certainly not during World War II. The extensive literature on secret weapons provides us with very few mentions of 'death rays', and most of these refer to desperate publicity stunts by the German leadership towards the end of the war. However, several proposals were made, which led to the establishment of real research and development projects that aimed (or hoped) to achieve the development of 'death rays', or at least to gather

some of the knowledge considered indispensable for the realisation of such weaponry. This does not belong to the world of conjecture; there is real evidence of activity, which can be reconstructed thanks to archive documents and witness statements.

Towards the end of the war, scientists in Germany tried to make use of what funds were still available for research work. Some of these projects were sensible, others less so. They also used such projects as pretexts to save their employees from war services (see Schiebold) or from deportation in concentration camps (see Schmellenmeier). Most of them were already thinking in terms of post-war scientific or commercial applications. So they were supported and encouraged by industrial firms like Brown Boveri (BBC), Philips and Siemens, which expected a future market for X-ray-producing machines for hospitals. And they were in strong competition with US-firms like General Electric.

However, in order to obtain the materials, financial support and services required for a project, several scientists found it expedient to declare that their work was of vital importance to the war effort. Their chances of success fared even better if they could assert that their developments were indispensable for producing a specific weapon, which could prove decisive for a conclusive (and somewhat miraculous) victory. Sometimes these proposals were explicit, and 6 unambiguous (albeit secret) reports were submitted to the authorities in writing. But in other cases suggestions were raised only orally, and the paperwork that was presented merely served to hide the military purpose of these projects behind a smokescreen of civilian intent. To some extent the scientists were able to play this game thanks to the Nazi leadership's lack of technical and scientific understanding. Furthermore, it was unlikely that experts with opposing viewpoints would raise any objections to a project considered essential to the war effort since this would have been considered in general as rank defeatism.

Nevertheless the world was afraid of Hitler's miracle weapons and particularly his death rays. What was the truth behind these death rays? And how had the German Luftwaffe and other authorities been convinced of the case for making substantial research and development efforts to produce such death rays? This is the area under discussion. The subject began to fascinate me in my youth.

My aim is to present the collection of data I have accumulated over many years, and make it accessible to others in a way that I hope will be interesting and easy to understand. I have been particularly interested in the lives and problems of the people involved in the 'death ray' projects, and I hope that the information I present will contribute to the elimination of some of the myths and prejudices that arose after the war, mainly as a result of the (sometime justified) silence of the participants.

German "death ray" weapon wrecked - The argus, Melbourne - 8 sept, 1944

This concrete structure in France was intended to house a Nazi secret weapon, French civilians believe. Five thousand workmen were engaged on it day and night, but after 35 attacks by the RAF the project was abandoned. Construction men hinted that a death ray machine capable of stopping aircraft engines in flight and burning London to the ground was being installed. (Canadian WIB Radio photo received by Beam Wireless.)

http://www.arcforums.com/forums/air/index.php?showtopic=215575

From "Restricted Films of WWII":

> *"An incomplete German Block House near Vatan, France. (About 240Km south of Paris) According to civilians, the nazis hoped to house electrical apparatus to send out beams that would stop aircraft in flight. The structure is 300' long, 200' wide, and some four stories high. Steel doors meant to operate on rollers are 8' thick and 24'-25' high. Allied aircraft pounded the block hous and it's environs with 1000lb bombs."*

Aerial view of the heavily bombed bunker - Blockhaus d'Éperlecques - Open to the public since 1973 and listed "Ancient Memorials" in 1985.

http://www.456fis.org/NAZI_SECRET_WEAPONS_OF_1944.htm

Mechanix Illustrated
April 1944

The British government was spooked back in 1935. Not because of Hitler's air force or his infantry. Because of his death ray.

Newspapers screamed that the Nazis might have a super-weapon that could incinerate living tissue or detonate a bomb at long distance. Flooded by letters begging for a response, the British Air Ministry asked prominent physicist Robert Watson-Watt to see if a radio-wave-based death ray was feasible.

Within ten days Watson-Watt reported that such a weapon was unlikely. But using radio waves to locate an approaching bomber was a real possibility. And that's how radar was born.

Robert Watson-Watt is given the credit for inventing the radar. In fact, this credit should go to the German engineer Christian Hulsmeyer who in 1904, using patented an early warning system for shipping. He, in turn, used a discovery by Heinrich Hertz who had discovered in 1888 that radio waves could be bounced off objects.

In 1935, Robert Watson-Watt - a Scottish physicist - was asked by the Air Ministry to investigate the possibility of creating a "death-ray" weapon using radio waves. Watson-Watt was working at the National Physical Laboratory in Slough.

Watson-Watt did not create a "death-ray" weapon but he did find that his radio transmitters could create an echo from an aeroplane that was over 200 miles away. This information would give the Royal Air Force an early warning of an attack by enemy fighters. By the time an enemy force was nearing the coastline, fighters would be airborne and ready to fight. The enemy would have lost the element of surprise. This invention by Watson-Watt was vital to the RAF during the Battle of Britain in 1940.

In 1940, aided by John Randall and Henry Boot from Birmingham University, Robert Watson-Watt invented the cavity magnetron. This produced a compact source of short-wave radio waves and allowed Fighter Command of the RAF to detect incoming enemy planes from a much greater distance thus giving the pilots more time to organize themselves.

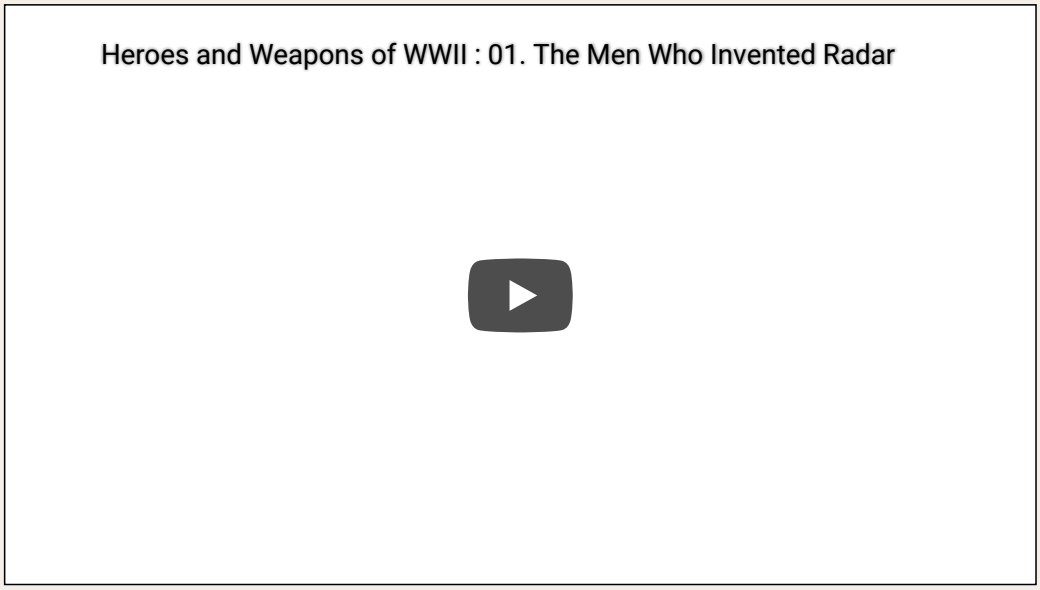

The Quantum Exodus: Jewish Fugitives, the Atomic Bomb, and the Holocaust - by Gordon Fraser - 2012 - Pg 133-134:

> A network of scientific supporters sprung into action to convince the authorities that Gans, an expert in magnetism, would be more profitably employed in Schmellenmeier's laboratory. A letter from no less than SS Reichsfürer Heinrich

Himmler appeared to settle the matter. The enfeebled Gans was assigned a new objective. More than a decade before, an obscure idea in a German research journal had led the US scientis Ernest Lawrence to invent cyclotrons. Machines to whirl protons and other subatomic fragments and accelerate them to high energies. Schmellenmeier's idea was to investigate wether this new machines could be made into weapons. The effectiveness of conventional German antiaircraft guns had been reduced by Allied bombers flying high, out of range ofthe guns, and wreaking increasing havoc on German cities. Perhaps Schmellenmeier's new weapon could hit such targets in the stratosphere. The idea was to whirl electrons round in a ring to create intense microwave radiation. This would them be beamed at enemy aeroplanes and interfere with engine ignition or blind the crew. The device was called the "Rheotron". On a paper, it sounded very impressive, a new superweapon to complement the V1 and the V2 "Vergeltungswaffen" (retaliation weapons) then beeing readied. However the idea of such "death ray" was not new. In 1935, Britain had set up a comitee to study the new methods of air defence. Soon it appeared that the beam power needed was unattainable, but the technology was soon refocused into what became to known as "radar".

Gans had been rescued once from fate in a concentration camp, but was still not safe. His luck finally seemed to have run out in the summer of 1944, when he was arrested and taken to the Grosse Hamburger Strasse, Berlin's assembly point for jews en route to concentration camps. Again, a rescue mission swung into action in the last minute. By now, with the fate of the Nazis becoming clear, some high-level SS members were eager to fabricate some protection for themselves by helping Jews instead of killing them. The Rheotron was an elaborate bluff in several levels. First it was a paper deterrent, but it also had a secondary role as a cover for Jewish scientists, notably Gans, who suspected that the idea would not work. Later that year Schmellenmeier's equipment was evacuated with the instruction that "in case of military defeat, the Jew Gans is to be liquidated. However the American forces arrived first.

Ernst Schiebold (1894-1963) was a German mineralogist who has rendered outstanding services to the material examination using X-rays. Von Schiebold sold Milch of the Air Force the idea that it was possible to build an X-ray searchlight which would cause burns on the crews of Allied bombers at altitudes up to 30.000 feet. the source of the X-rays was to be a betatron.

http://www.abovetopsecret.com/forum/thread817832/pg1
http://www.forbiddenknowledgetv.com/videos/911--false-flags/911-proof-of-laser-weapons-part-3.html

During WW2 the German electronics firm Siemens developed a particle beam weapon for the Luftwaffe. It was invented by Prof Max Steenbeck in 1935. Heinz Schmellenmeier, Richard Gans and Fritz Houtermans were leading figures in the project.

How the machine worked was that it interrupted the magnetos of engines in Allied bombers and brought aircraft down to lower altitudes into the reach of FLAK batteries.

Norwegian born Dr Rolf Wideroe wrote in his autobiography that he worked on a particle accelerator X-Ray transformer for this project at Hamburg in 1943. The Philips subsidiary Valvo also participated and much of the engineering was performed by CHF Muller & Co. Wideroe later rescued the device from the rubble of Dresden and delivered it to General Patton's 3rd Army at Burggrub on 14 April 1945.

A second rival device, Ernst Schiebolds 'Röntgenkanone was developed at Großostheim south of Frankfurt. This employed a particle accelerator cupped from beneath by a Beryllium parabolic mirror with a bundle of nine beryllium rods as an anode at it's core. the entire device was steerable at Allied bomber formations. The Company Richert Seifert & Co was largely responsible for it's manufacture.

These were not lasers. They directed hard radiation at aircraft and were the forerunners of Star wars weapons today.

http://www.answers.com/topic/directed-energy-weapons
http://en.wikipedia.org/wiki/Wunderwaffe

In the later phases of World War II, Nazi Germany increasingly put its hopes on research into technologically revolutionary secret weapons, the Wunderwaffen.

Among the directed-energy weapons the Nazis investigated were X-Ray Beam Weapons developed under Heinz Schmellenmeier, Richard Gans and Fritz Houtermans. They built an electron accelerator called Rheotron (invented by Max Steenbeck at Siemens-Schuckert in the 1930s, these were later called Betatrons by the Americans) to generate hard X ray synchrotron beams for the Reichsluftfahrtministerium (RLM). The intent was to pre-ionize ignition in Aircraft engines and hence serve as anti-aircraft DEW and bring planes down into the reach of the FLAK. The Rheotron was captured by the Americans in Burggrub on April 14, 1945.

Another approach was Ernst Schiebolds 'Röntgenkanone' developed from 1943 in Großostheim near Aschaffenburg. The Company Richert Seifert & Co from Hamburg delivered parts.

The Third Reich further developed sonic weaponry, using parabolic reflectors to project sound waves of destructive force. Microwave Weapons were investigated together with the Japanese (see also: Japanese radar and related weapons of world war 2).

http://www.cdvandt.org/CIOS-XXVIII-31.pdf
http://www.quora.com/Sy-Gunson

Rolf Wideroe said in his autobiography:

"It appears that Dr. Schiebold hawked his ideas about. He spoke to physicists who must have thought him a hopeless case, but he also tackled some influential people in official capacities who were not in a position to make informed judgements. Most people probably dismissed him as a harmless lunatic, but some must have been convinced because the Air Force, i.e. the German Aviation Ministry (RLM) and Command of the Luftwaffe, provided a certain amount of support for his `death ray'.

In order to conduct some test experiments for this `death ray', a still unused and unpacked X-ray apparatus with a high voltage supply of a little over one million volts (made by means of a sort of cascade circuit), was taken from a hospital in Hamburg to a small military airport called Groß-Ostheim (today `Großostheim') in the region of Hanau. If I remember rightly, Richard Seifert organized this tests and Hollnack was their administrator. However, both engineers and technicians quickly understood that the danger to themselves operating the machine on the ground was far greater than to the pilots and bombs in the enemy aircraft.

Still, a ray-transformer or betatron could produce X-rays of many million volts and in doing so one could, in principle (purely on the grounds of the laws of physics), improve the `bundling' of the beam with an increase of energy. To a certain extent, the effective range could be increased. This seemed to be the reason for the German Air Force's interest in the betatron. I wasn't really supposed to know anything about it, and we only ever talked about the betatron in terms of its importance to medicine. As it turned out this was actually correct.

By November 1943 I had developed a three-phase plan which provided first for the construction of a 15 MeV betatron in Hamburg, then a 200 MeV betatron and finally an experimental station in Groß-Ostheim for even larger installations... [Wideroe comments that only the Hamburg machine came to fruition however Allied intelligence refers to a working machine at Groß-Ostheim disrupting Allied bombers therefore Wideroe may have been out of the loop on subsequent developments]

Our work in Hamburg soon confirmed that the step from Kerst's 2.3 MeV machine (USA) to our planned 15 MeV ray-transformer was the right one. Of course, all we wanted in principle was to achieve as much energy as possible, but at 15 MeV we did not expect any imminent problems with the iron yoke (which was very similar to that of an ordinary transformer). However, these problems did appear when we built the first 31MeV machine for Brown Boveri in Baden, as I shall explain later."

Dr. Schiebold's 'Röntgenkanone' was captured by Patton's Army at Burggrub near Beyreuth about 14 April 1945. It disappeared into US black projects in New Mexico brought back to USA by Project LUSTY.

http://jansrose.blogspot.com.es/2012/03/death-rays-and-ball-lightning.html

From Wideroe's online autobiography, The Infancy of Particle Accelerators:

I eventually found out why the German Air Force was so interested in the betatron. Physicist Dr. Schiebold from Leipzig, a specialist on non-destructive testing of materials using X-rays among other methods (after the War he became professor in Magdeburg) had had the idea that it would be possible to build an X-ray tube....[that] would cause the X-rays to be emitted in a narrow bundle. With sufficiently high voltage it would then be possible to achieve high radiation intensities at long distances. Thus it may even be possible to kill the pilots.

> *In order to conduct some test experiments for this 'death ray', a still unused and unpacked X-ray apparatus with a high voltage supply of a little over one million volts (made by means of a sort of cascade circuit), was taken from a hospital in Hamburg to a small military airport called Groß-Ostheim (today 'Großostheim') in the region of Hanau.*

Gunson states that "ball lightning" was an artifact of the ray when it was used to disable aircraft in flight. I have heard this claim before, though I can't remember where. However, mention of ball lightning always rings a resounding "ding! ding! we have a winna!" in my head.

http://en.wikipedia.org/wiki/Betatron

A betatron is a cyclic particle accelerator developed by Donald Kerst at the University of Illinois in 1940 to accelerate electrons, but the concepts ultimately originate from Rolf Widerøe, whose development of an induction accelerator failed due to the lack of transverse focusing. Previous development in Germany also occurred through Max Steenbeck in the 40s.

The betatron is essentially a transformer with a torus-shaped vacuum tube as its secondary coil. An alternating current in the primary coils accelerates electrons in the vacuum around a circular path. The betatron was the first important machine for producing high energy electrons.

Betatrons were historically employed in particle physics experiments to provide high energy beams of electrons—up to about 300 MeV. If the electron beam is directed at a metal plate, the betatron can be used as a source of energetic x-rays or gamma rays; these x-rays may be used in industrial and medical applications (historically in radiation oncology). A small version of a Betatron was also used to provide electrons converted into hard X-rays by a target to provide prompt initiation of some experimental nuclear weapons by means of photon-induced fission and photon->neutron reactions in the bomb core.

The Radiation Center, the first private medical center to treat cancer patients with a betatron, was opened by Dr. O. Arthur Stiennon in a suburb of Madison, Wisconsin in the late 1950s.

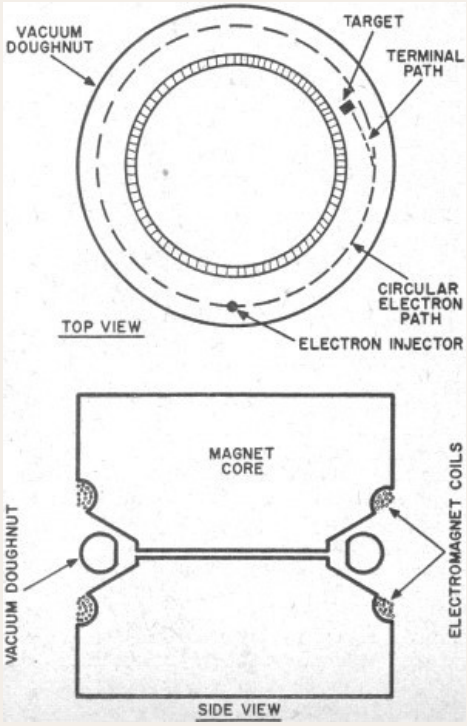

Fig. ? The betatron. Note how the pole pieces go into the center of a vacuum "doughnut."

American Atomic Bomb testing!! (a Betatron bomb)

The George device used a Mk-5 bomb assembly and was intended to gather additional data on the initiation time vs yield curve. A device used of an external initiator as opposed to an internal one activated by the implosion shockwave. This device known as a betatron used electrons to generate high energy X-rays inducing photo-fission in the core to initiate the chain reaction. The betatron allowed very accurate control of initiation time. The test device had a diameter of 100cm and weighed 1224kg, the cloud reached 11,000m. The shot was postponed due to unfavorable weather conditions, and was also moved to a different area of the Nevada Test Site due to residual radiation from the previous shots Easy and Fox.

http://nuclearweaponarchive.org/Usa/Tests/Tumblers.html

Operation Tumbler-Snapper
George
1 June 1952

US 20170117714A1

(19) United States

(12) Patent Application Publication

(10) Pub. No.: US 2017/0117714 A1

(43) Pub. Date: Apr. 27, 2017

Dinwiddie et al.

(54) POWER RECEIVER FOR EXTRACTING POWER FROM ELECTRIC FIELD ENERGY IN THE EARTH

(71) Applicant: **Earth Energies, Inc.**, Johns Creek, GA (US)

(72) Inventors: **John Dinwiddie**, Cary, NC (US); **Terry L. Wright**, Suwanee, GA (US); **David R. Ames**, Johns Creek, GA (US)

(21) Appl. No.: **15/397,281**

(22) Filed: **Jan. 3, 2017**

Related U.S. Application Data

(63) Continuation-in-part of application No. 14/509,772, filed on Oct. 8, 2014, now Pat. No. 9,564,268.

(60) Provisional application No. 61/889,894, filed on Oct. 11, 2013.

Publication Classification

(51) **Int. Cl.**

H02J 4/00	(2006.01)
H02J 7/35	(2006.01)
H02J 3/38	(2006.01)

(52) **U.S. Cl.**

CPC ***H02J 4/00*** (2013.01); ***H02J 3/385*** (2013.01); ***H02J 7/35*** (2013.01)

(57) **ABSTRACT**

A resonant transformer connected between a ground terminal and elevated terminal draws current from the earth's electric field through a primary winding of the transformer. An impulse generator applies a high voltage impulse to the primary winding of the resonant transformer to cause current to flow from the ground terminal through the primary winding. The flow of current through the primary winding of the resonant transformer induces a current in the secondary winding, which may be converted and filtered to a usable form, e.g. 60 Hz AC or DC.

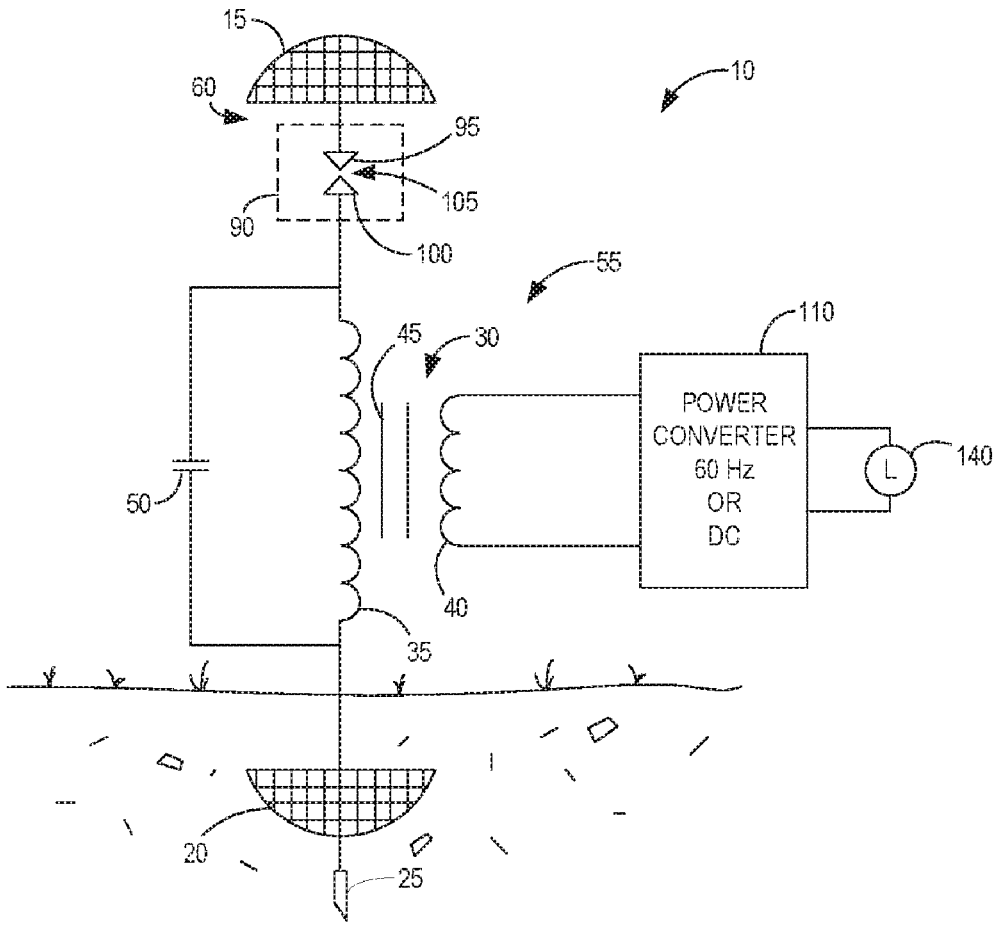

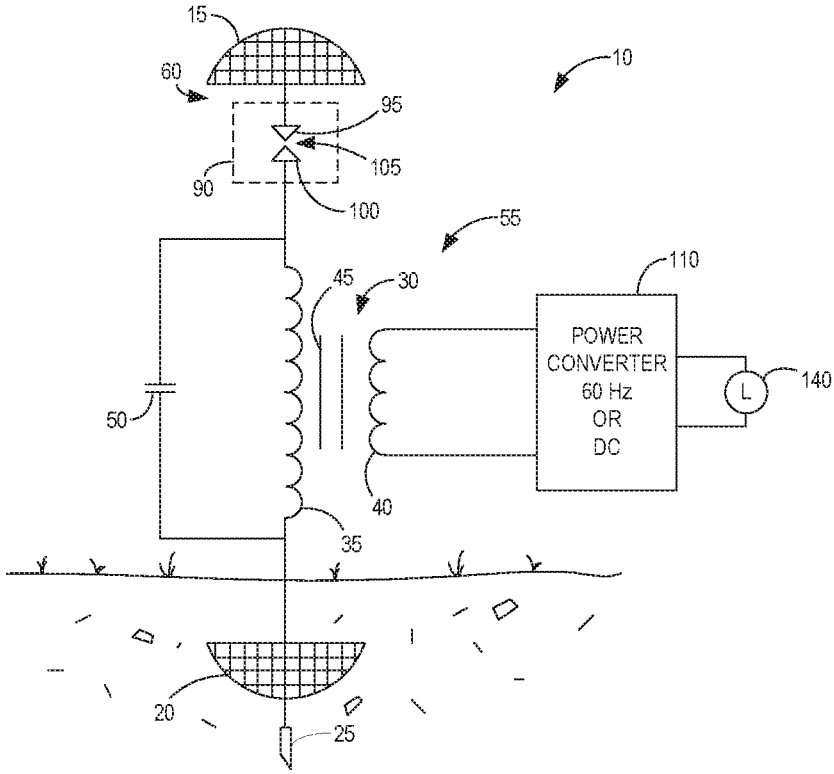
15
60
10
95
105
90
100
55
110
45
30
POWER
CONVERTER
60 Hz
OR
DC
140
L
50
40
35
20
25

FIG 1

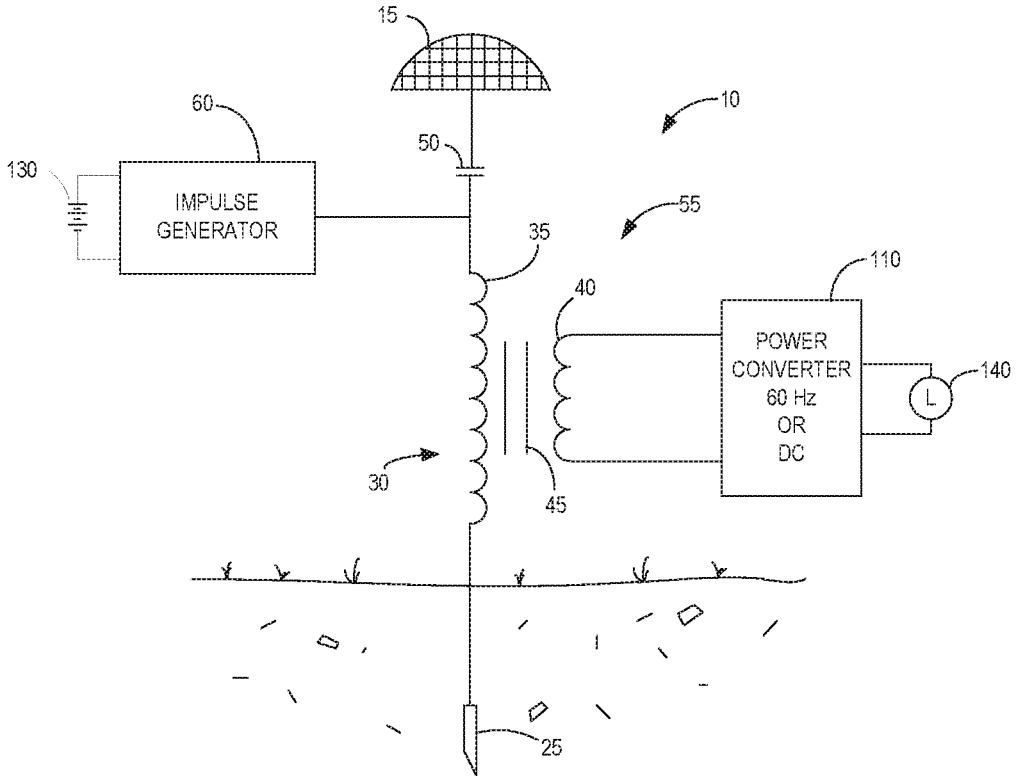
15
10
60
50
130
IMPULSE
GENERATOR
55
35
110
40
POWER
CONVERTER
60 Hz
OR
DC
140
L
30
45
25

FIG 2

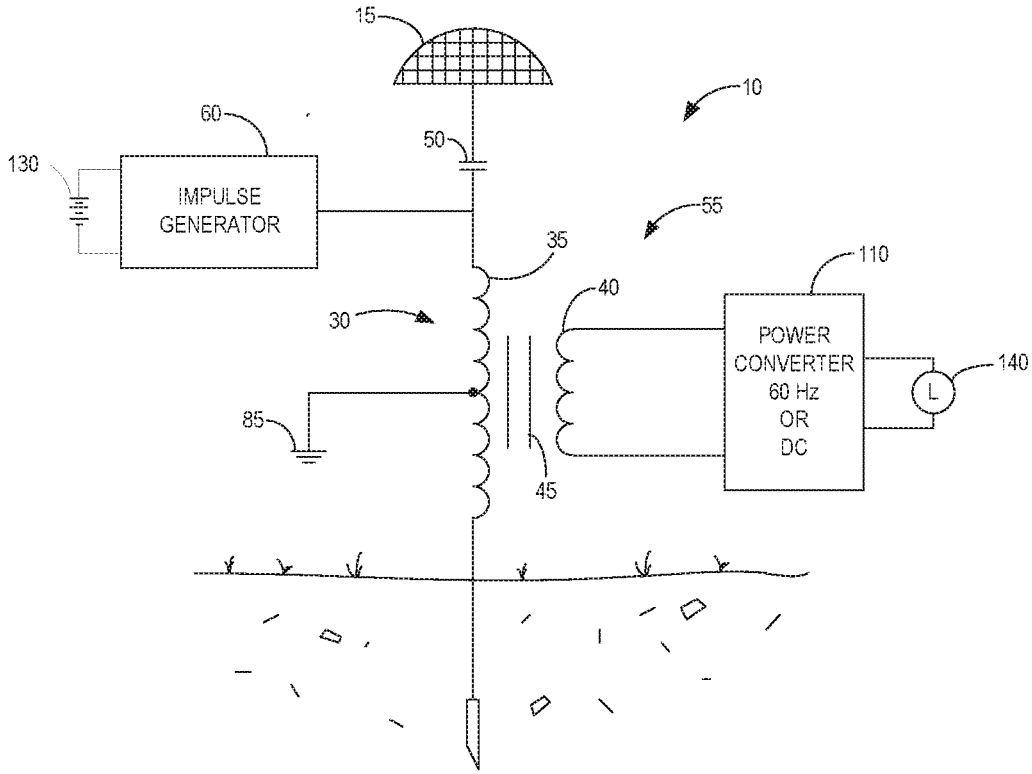
15
10
60
50
130
IMPULSE
GENERATOR
55
35
110
40
30
POWER
CONVERTER
60 Hz
OR
DC
140
L
85
45

FIG 3

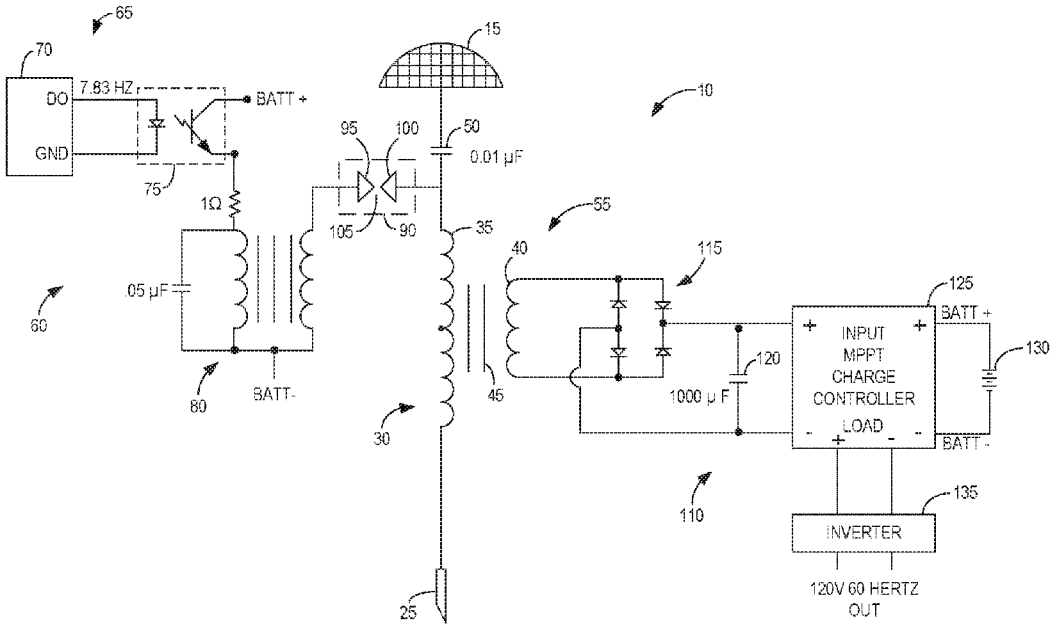
65
70
DO
GND
7.83 HZ
BATT +
75
1Ω
.05 μF
60
80
BATT-
95
100
105
90
15
50
0.01 μF
10
35
30
25
55
40
45
115
120
1000 μ F
125
BATT +
INPUT
MPPT
CHARGE
CONTROLLER
LOAD
BATT -
130
110
135
INVERTER
120V 60 HERTZ
OUT

FIG 4

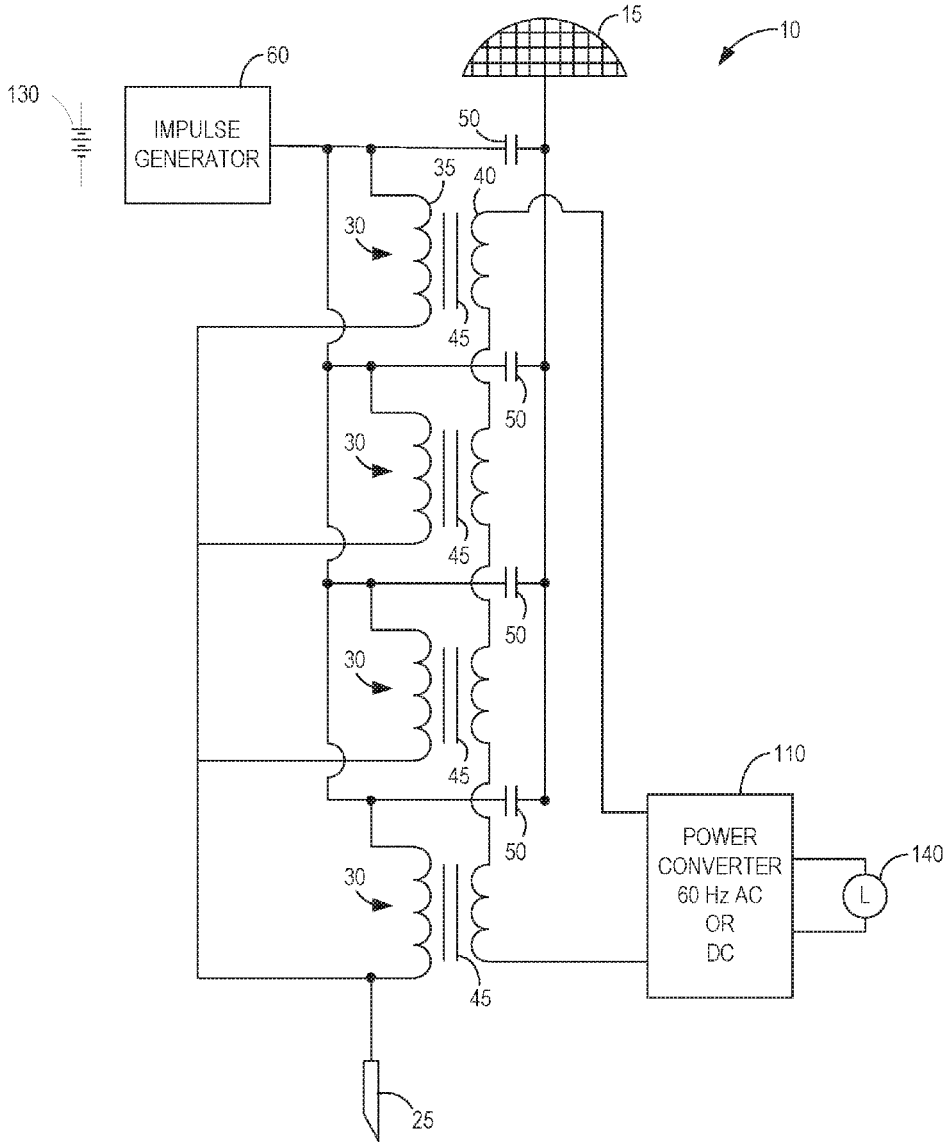
15
10
60
130
IMPULSE
GENERATOR
50
35
40
30
45
50
30
45
50
30
45
110
POWER
CONVERTER
60 Hz AC
OR
DC
140
L
50
30
45
25

FIG 5

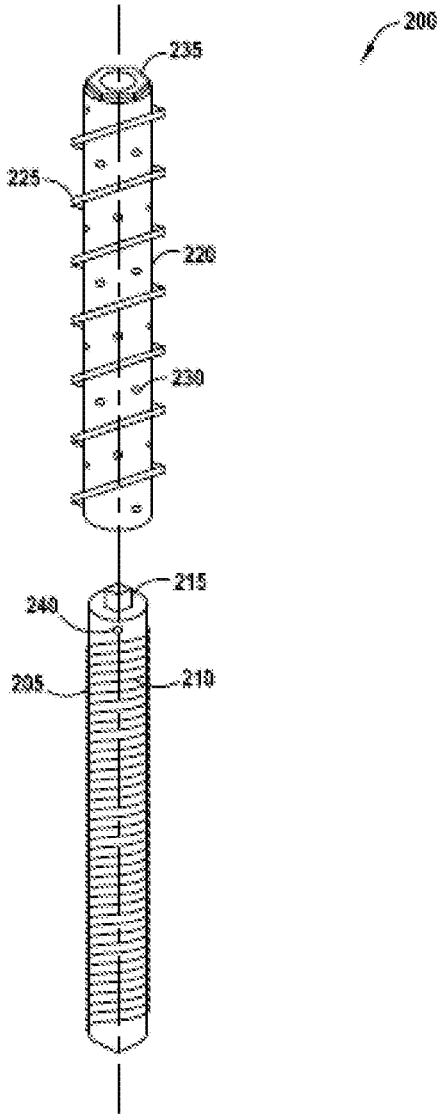

FIG 6A

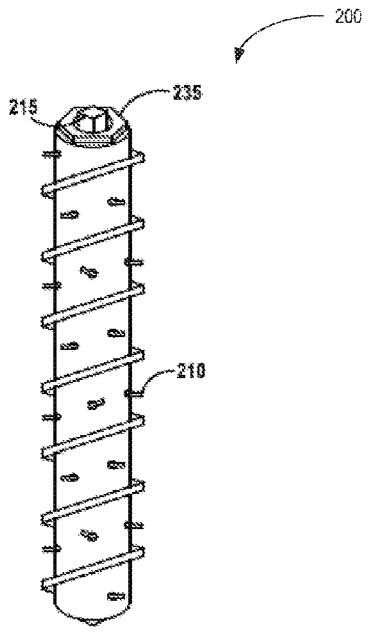

FIG 6B

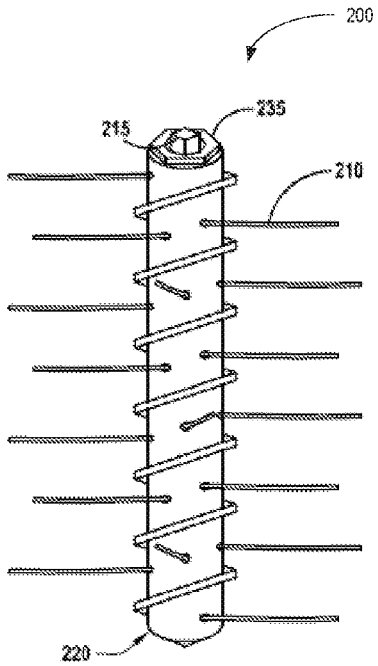

FIG 6C

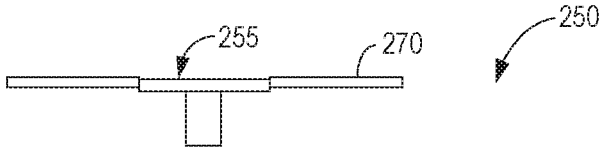

FIG 7A

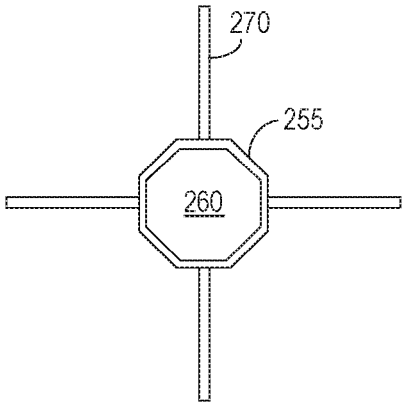

FIG 7B

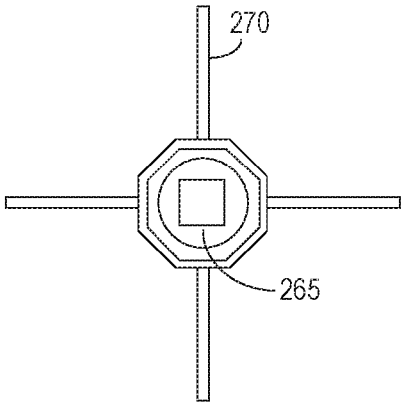

FIG 7C

POWER RECEIVER FOR EXTRACTING POWER FROM ELECTRIC FIELD ENERGY IN THE EARTH

[0001] This application is a continuation-in-part of prior U.S. application Ser. No. 14/509772 filed 8 Oct. 2014 which claims the benefit of U.S. Provisional Application No. 61/889894 filed 11 Oct. 2013, the disclosures of all of which are incorporated by reference herein in their entirety.

TECHNICAL FIELD

[0002] The present invention relates generally to renewable energy, and more particularly to methods and apparatus for extracting energy from subsurface electrical fields beneath the earth's surface.

BACKGROUND

[0003] The earth and the ionosphere cavity may be viewed as a global electric circuit. Electrical currents are constantly flowing within the earth and its atmosphere. Within the earth, the majority of the earth's energy is carried by extremely low frequency (ELF) and ultralow frequency (ULF) waves in the 0-200 Hz frequency range. The earth's rotating magnetic field and positive lightning are two energy sources that sustain the ELF/ULF waves within the earth and the atmosphere.

[0004] A great deal of research has been devoted to studying the electric field present in the earth's ionosphere cavity. Joseph M. Crawley, the "Fair Weather Atmosphere as a Power Source", Proceedings ESA Annual Meeting on Electrostatics 2011; O. Jefimenko, "Operation of Electric Motors from Atmospheric Electric Field," American Journal of Physics, Vol. 39, Pgs. 776-779, 1971; M. L. Breuer, "Usability of Tapping Atmospheric Charge as a Power Source," Renewable Energy, Vol. 28, Pgs. 1121-1127, 2003. Numerous attempts have been made in the past to extract electrical energy from the earth's atmosphere. For example, U.S. Pat. No. 1,540,998 to Plauson describes a system for converting atmospheric electrical energy into usable power. These past attempts have been successful in producing only small amounts of power from the electrical field in the earth's ionosphere cavity. The modest success of these experiments compared to results from other renewable energy sources, such as solar and wind, has tempered further research and prevented widespread use of the electric field in the ionosphere cavity as an energy source.

SUMMARY

[0005] The present invention relates to a power receiver for extracting power from electric fields beneath the earth's surface. In embodiments of the present disclosure, a resonant transformer connected to a ground terminal draws current from the earth's electric field through the primary winding of the transformer. Current flow through the resonant transformer is induced by applying a high voltage impulse to the primary winding. The flow of current through the primary winding of the resonant transformer induces a current in the secondary winding, which may be converted and filtered to a usable form, e.g. 60 Hz AC or DC.

[0006] In some embodiments of the power receiver, the resonant frequency of the resonant transformers is below 200 Hz.

[0007] In some embodiments of the power receiver, the resonant transformer comprises a ferro-resonant transformer.

[0008] In some embodiments, the power receiver further comprises an elevated terminal.

[0009] In some embodiments of the power receiver, the primary winding of the resonant transformer is connected between the ground terminal and elevated terminal.

[0010] In some embodiments of the power receiver, the elevated terminal comprises an upper capacitive plate coupled to the earth's ionosphere cavity.

[0011] In some embodiments of the power receiver, the impulse generator comprises the upper capacitive plate and a spark gap connected between the upper capacitive plate and the primary winding of the resonant transformer. The spark gap comprises a pair of electrodes separated by a gap and configured to generate a spark when a voltage difference between the electrodes reaches a predetermined level.

[0012] In some embodiments of the power receiver, the impulse generator comprises a pulse generator for generating low voltage pulses, a step-up transformer for converting the low voltage pulses provided by the pulse generator to high voltage impulses, and a spark gap connected between the step-up transformer and the primary winding of the resonant transformer to generate a spark responsive to the high voltage impulses from the step-up transformer.

[0013] In some embodiments of the power receiver, the impulse generator comprises a pulse generator for generating low voltage pulses, and a step-up transformer connected to the primary winding of the resonant transformer for converting the low voltage pulses provided by the pulse generator to high voltage impulses.

[0014] In some embodiments of the power receiver, the impulse generator comprises a solid state spark generator.

[0015] In some embodiments of the power receiver, the resonant transformer includes a capacitor connected in parallel with the primary winding.

[0016] In some embodiments of the power receiver, the resonant transformer includes a capacitor connected in series with the primary winding between the impulse generator and the elevated terminal.

[0017] In some embodiments, the power receiver comprises multiple resonant transformers having primary windings connected in parallel between the ground terminal and the elevated terminal.

[0018] In some embodiments of the power receiver, the resonant transformers have different resonant frequencies.

[0019] In some embodiments of the power receiver, the resonant frequencies of the resonant transformers are all below 200 Hz.

[0020] In some embodiments of the power receiver, the resonant frequencies of the resonant transformers are matched to respective Schumann resonances.

[0021] Another embodiment of the power receiver comprises a resonant circuit connected to a ground terminal disposed below the surface of the earth, an impulse generator for generating and applying a high voltage electrical impulse to the resonant circuit to induce current flow from the ground terminal through the resonant circuit, and a power conversion circuit connected to the resonant circuit to convert electrical current flowing through the resonant circuit to a desired form. The resonant circuit has a resonant frequency below 200 Hertz.

[0022] In some embodiments of the power receiver, the resonant circuit comprises a resonant transformer having a primary winding, a secondary winding, and resonant capacitor connected in series with the primary winding.

[0023] In some embodiments of the power receiver, the resonant circuit comprises multiple resonant transformers having primary windings connected in parallel to the ground terminal.

[0024] In some embodiments of the power receiver, the resonant transformers have different resonant frequencies.

[0025] In some embodiments of the power receiver, the resonant frequencies of the resonant transformers are all below 200 Hz.

[0026] In some embodiments of the power receiver, the resonant frequencies of the resonant transformers are matched to respective Schumann resonances.

[0027] Other embodiments of the disclosure comprise a ground terminal for a power receiver. In one embodiment, the ground terminal comprises a ground shaft configured for insertion beneath the surface of the earth, a hollow cylinder surrounding the ground shaft and having a plurality of openings, and a plurality of ground wires connected at one end to the ground shaft. The ground wires are wound around the ground shaft and have free ends protruding through respective openings in the hollow shaft so that rotation of the ground shaft relative to the hollow cylinder causes the ground wires to extend radially into the earth.

[0028] Other embodiments of the disclosure comprise methods of extracting power from the earth. In one embodiment, the method comprises applying a high voltage impulse to resonant circuit coupled to a ground terminal disposed beneath the surface of the earth to initiate resonance in the resonant circuit and induce the flow of current from the ground terminal to the resonant circuit, and converting the current flowing from the ground terminal into the resonant circuit into a useful form.

[0029] In some embodiments of the method, the resonant circuit comprises a resonant transformer including a primary winding coupled to the ground terminal and a second winding coupled to a power converter, and applying a high voltage impulse to resonant circuit comprises applying a high voltage impulse to the primary winding of the resonant transformer.

[0030] In some embodiments of the method, applying a high voltage impulse to the primary winding of the resonant transformer comprises applying an impulse in the range to 10,000 to 40,000 volts to primary winding of the transformer.

BRIEF DESCRIPTION OF THE DRAWINGS

[0031] FIG. **1** illustrates a first exemplary embodiment of a power receiver.

[0032] FIG. **2** illustrates a second exemplary embodiment of a power receiver.

[0033] FIG. **3** illustrates a third exemplary embodiment of a power receiver.

[0034] FIG. **4** illustrates a fourth exemplary embodiment of a power receiver.

[0035] FIG. **5** illustrates a fifth exemplary embodiment of a power receiver.

[0036] FIG. **6**A is an exploded perspective view of an exemplary ground antenna array for the power receiver.

[0037] FIG. **6**B is a perspective view of an assembled ground antenna array before being deployed.

[0038] FIG. **6**C is a perspective view of an assembled ground antenna array after being deployed.

[0039] FIG. **7**A is a side view of an insertion tool for installing the ground antenna array.

[0040] FIG. **7**B is a top view of the insertion tool for installing the ground antenna array.

[0041] FIG. **7**C is a bottom view of the insertion tool for installing the ground antenna array.

DETAILED DESCRIPTION

[0042] Referring now to the drawings, a power receiver for extracting energy from the earth's electric field are illustrated and indicated generally by the numeral **10**. Various embodiments of the power receiver **10** are described and similar reference numbers are used throughout the description to indicate similar components.

[0043] The power receiver **10** converts energy in the ELF/ULF waves to useful form, e.g. 60 Hz AC or DC. The power receiver **10** is essentially a resonance circuit that resonates at the natural resonance frequencies in the earth's electric field. These resonance frequencies, known as Schumann resonance frequencies, occur at 7.83 Hz, 14.3 Hz, 20.8 Hz, 27.3 Hz, and 33.8 Hz. A high voltage impulse initiates resonance within the power receiver **10**. In the resonant mode, the impedance of the power receiver **10** is reduced to near zero thus inducing ground currents to flow into the power receiver **10** where the ground currents are converted to useful form.

[0044] FIG. **1** illustrates a first embodiment of the power receiver **10**. The power receiver **10** comprises a resonant transformer **30** connected between an elevated terminal **15** and ground terminal **25**. In this embodiment, the elevated terminal **15** is capacitively coupled to electric fields within the earth's ionosphere cavity and functions as an upper capacitive plate. A lower capacitive plate **20** is connected to the ground terminal **25** beneath the surface of the earth.

[0045] The resonant transformer **30** comprises a primary winding **35**, secondary winding **40**, ferromagnetic core **45**, and capacitor **50**. One end of the primary winding **35** is connected to the lower capacitive plate **20** and ground terminal **25**. The opposite end of the primary winding **35** is connected via a spark gap **90** to the elevated terminal **15**. The capacitor **50** is connected in parallel with the primary winding **35** of the resonant transformer **30** to form an LC circuit **55** with a resonance frequency range of between about 0.1 and 200 Hz. In a preferred embodiment, the resonant transformer has a Q of about 10 or greater and resonance frequency in the range of about 0.1-200 Hertz. For example, the resonant transformer **30** may have a resonance frequency of about 7.83 Hz, the fundamental Schumann resonance frequency. The secondary winding **40** of the resonant transformer **30** is connected to a power converter **110** as will be hereinafter described in greater detail. The power converter **110** converts the energy extracted from the earth's electric field by the power receiver **10** into a usable form for driving a load **140**.

[0046] The elevated terminal/upper capacitive plate **15** comprises an insulated, dish-shaped plate with a large radius of curvature. The capacitance and resistance of the elevated terminal is chosen for receiving broadband electric field frequencies in the 0-200 Hz range. The upper capacitive plate **15** is sized to maximize to the extent practical coupling with the electric field in the earth's ionosphere cavity.

[0047] The lower capacitive plate **20** is also a dish-shaped plate with a large radius of curvature. One function of the lower capacitive plate **20** is to collect charge from the earth's ground currents and provide an instantaneous source of current as hereinafter described. The capacitance and resistance of the lower capacitive plate **20** is selected to promote the flow of current from the ground with minimal losses.

[0048] The spark gap **90** connected between the elevated terminal **15** and resonant transformer **30** comprises a pair of electrodes **95**, **100** separated by an evacuated air gap **105**. Electrode **95** is connected to the upper capacitive plate **15**. Electrode **100** is connected to the resonant transformer **30**. The spark gap **105** prevents electrical discharge from the upper capacitive plate **15** to the earth's ionosphere cavity. The spark gap **90** in combination with the elevated terminal **15** function as an impulse generator that applies a high voltage impulse of about 10,000-40,000 volts to the primary winding **35** to initiate resonance in the transformer **30**.

[0049] In operation, the capacitive coupling of the upper capacitive plate **15** induces a high voltage operating current in the upper capacitive plate **15**. The upper capacitive plate is connected to a first electrode **95** to the spark gap **90**. When the voltage difference between the electrodes **95** and **100** reaches a threshold, a spark forms across the electrodes **95**, **100** and a high voltage impulse is applied to the primary winding **35** of the resonant transformer **30**. This high voltage impulse initiates resonance within the transformer **30**.

[0050] In resonant mode, the impedance of the resonance transformer is reduced to nearly zero allowing current to flow from the capacitive plate **20** and ground terminal **25** through the primary winding **35** of the transformer **30**, which in turn induces current in the secondary winding **40**. Power converter **110** converts the current flowing through the secondary winding **40** into a usable form for driving a load **140**. The transformer **30** will continue to resonate for a short period of time. By providing high voltage impulses to the primary winding **35** of the resonant transformer **30** at periodic intervals, it is possible to maintain a continuous flow of current from the earth into the resonant transformer **30**, thus producing a continuous supply of power.

[0051] FIG. **2** discloses a second embodiment of the primary receiver **10**. This embodiment includes a resonant transformer **30** connected between an elevated terminal **15** and ground terminal **25**. The resonant transformer **30** comprises a primary winding **35**, secondary winding **40**, ferromagnetic core **45** and a high voltage capacitor **50**. One end of the primary winding **35** is connected to the ground terminal **25**. The opposite end of the primary winding **35** is connected to the elevated terminal **15**. The capacitor **50** has a capacitance of about 0.01 micro-farads. In contrast to the previous embodiment, capacitor **50** is connected in series with the primary winding **35** and elevated terminal **15** and forms a LC circuit **55** with a Q of about 10 or greater and a resonance frequency in the range of about 0.1 to 200 Hz. In a preferred embodiment, the resonance frequency of the transformer **30** is 7.83 Hz, the fundamental Schumann resonance frequency. An impulse generator **60** is connected between the primary winding **35** of the resonant transformer **30** and the series capacitor **50** and applies a high voltage impulse to the primary winding **35** of the resonant transformer **30**. A battery **130** or other external power source supplies power to the impulse generator **60**. As previously described, the high voltage impulse applied by the impulse generator **60** initiates resonance within the resonant transformer **30** inducing current flow from the ground terminal **25** into the primary winding **35** of the resonant transformer **30**. The flow of current from the ground terminal **25** through the primary winding **35** induces current in the secondary winding **40**. Power converter **110** converts the electrical energy in the current flowing through the primary winding **40** into a usable form.

[0052] In contrast to the first embodiment, it is not required to capacitively couple the elevated terminal **15** in the second embodiment to the earth's ionosphere cavity. Rather, the elevated terminal **15** in this embodiment provides lightning protection and dissipates some of the energy flowing into the power receiver **10** to the earth's ionosphere cavity. Also, in contrast to the first embodiment, the capacitor **50** is connected in series between the primary winding **35** of the transformer **30** and the elevated terminal **15**. Those skilled in the art will appreciate that the capacitor **50** could also be connected in parallel rather than series with the primary winding **35** as shown in FIG. **1**. Another difference is that the impulse generator **60** has an external power source. The amount of energy generated by the power receiver **10**, however, is far greater than the energy needed to generate high voltage impulses. The first embodiment does not require an external power source to generate high voltage impulses.

[0053] FIG. **3** illustrates a third embodiment of the power receiver **10**. This embodiment is essentially the same as the embodiment shown in FIG. **2**. The main difference is that a center tap of the primary winding **35** in the resonant transformer **30** is connected to an electrical ground **85**. It should be appreciated that the electrical ground **85** may be different than the earth ground. When the center tap of the resonant transformer **30** is grounded at a distance away from the ground terminal **25** (e.g. 50 ft to 100 ft), the power receiver **10** becomes a transmitter via the ground loop formed.

[0054] FIG. **4** illustrates the power receiver **10** of FIG. **2** in greater detail. The power receiver includes a resonant transformer **30** connected between a ground terminal **25** and an elevated terminal **15**. The ground terminal **25** may comprise a ⅝-inch×8-foot copper ground rod, such as the ERICO 615880UPC. The elevated terminal **15** may comprise a 90% copper mesh formed into a hemisphere with a radius of about 9 inches. The elevated terminal **15** may be elevated at a height of approximately 6 feet above the ground.

[0055] The resonant transformer **30** includes a primary winding **35**, secondary winding **40**, ferromagnetic core **45** and series capacitor **50** configured as previously described. The resonant transformer **30** may have a Q of about 10 and a resonance frequency in the range of about 0.1 to 200 Hz. The resonant transformer **30** may be made using an Allanson transformer (part #1530BP120R) connected in series with a 0.01 micro-farad capacitor, such as the Condensor Products high voltage capacitor (part #TC 103-17-125). The resonant transformer **30** is used in a step-down configuration. The center tap of the resonant transformer **30** may optionally be connected to a ground.

[0056] An impulse generator **60** is connected between the primary winding **35** of the resonant transformer **30** and the series capacitor **50** and applies a high voltage impulse in the range of about 10,000 to 40,000 volts to the primary winding of the transformer **30**. A battery **130** or other external power source supplies power to the impulse generator **60**. The power converter **110** connects to the secondary winding **40**

of the resonant transformer **30** for converting current in the secondary winding of the transformer to a useful form.

[0057] The impulse generator **60** comprises a pulse generator **65** for generating low voltage pulses, a step-up transformer **80** for converting the low voltage pulses from the pulse generator **65** to high voltage pulses, and a spark gap **90** for generating sparks responsive to the high voltage pulses from the step-up transformer **80**.

[0058] The pulse generator **65** comprises a square wave generator **70**, such as a Sinometer VC2002 function signal generator, and solid state relay **75**. The square wave generator **70** generates a digital pulse stream. In one embodiment, the digital pulse stream generates a square waveform with a frequency of about 7.83 Hz. The frequency of the digital pulse stream is selected to match the resonance frequency of the transformer **30**, though such is not necessarily required. The pulse stream output from the square wave generator **70** is applied to the solid state relay **75**. The solid state relay **75** is connected between a battery or other power source and a first winding of the step-up transformer **80**. The battery may comprise a 12 V, 7.0 A/H sealed lead acid battery, such as the ELB 1270A by Lithonia Lighting. The solid state relay **75** functions as a switch that is activated responsive to the waveform from the square wave generator **70** to provide a continuous stream of low voltage pulses from the battery to the first winding of the step-up transformer **80**. A 1 ohm resistor is connected between the solid state relay **75** and step-up transformer **80**.

[0059] The step-up transformer **80** may comprise a Transco 15 kV, 30 mA neon sign transformer (part #S15612). The step-up transformer **80** converts the low voltage pulses from the pulse generator **65** to high voltage pulses that are applied to the spark gap **90**. The step-up transformer has a 0.5 micro-farad capacitor connected in parallel with the primary winding of the step-up transformer **80**. The step-up transformer produces pulses at the output of about 30,000 to 40,000 volts.

[0060] The spark gap **90** comprises a pair of electrodes **95**, **100** separated by an air gap **105**. A suitable spark gap electrode pair is the Information Unlimited SPARK05 ¼-inch×1-inch tungsten electrodes. As previously described, when the voltage potential between the electrodes **95**, **100** reaches a threshold, a spark forms between the electrodes **95**, **100** and supplies a nearly instantaneous, high voltage impulse to the primary winding **35** of the resonant transformer **30**. This high voltage impulse initiates resonance in the resonant transformer **30** inducing current flow from the ground terminal **25** through the primary winding **35** of the resonant transformer **30**.

[0061] The power converter **110** comprises a bridge rectifier **115**, filter capacitor **120**, charge controller **125**, and inverter **135**. A suitable rectifier is the Micro Commercial Components 10 amp, 1000 volt bridge rectifier (Part #GBJL 1010). The bridge rectifier **115** converts the AC current flowing through the secondary winding **40** of the resonant transformer to a DC current. A filter capacitor **120** removes unwanted frequencies from the DC current. A suitable capacitor **120** is Cornell Dubilier 1000uF 450VDC capacitor (part #383LX102M450N082). The filter capacitor **120** has a capacitance of about 1000 micro-farads. The DC current is input to the charge controller **125**. The charge controller **125** may, for example, comprise a maximum power point tracking (MPPT) charge controller, such as a Tracer 4215 BN MPPT Solar Charge Controller, which is commonly used in solar power generating systems. The charge controller **125** applies a small amount of energy to a battery **30** to charge the battery **130**. As previously noted, the battery **130** serves as a power source for the impulse generator **60**. The remaining current is supplied to an inverter **135**, which converts the DC current to an AC current with a desired voltage and frequency, e.g., 120 volts/60 Hz AC. A suitable inverter **135** is the 1500 W Pure Sine power inverter (AIMS) (part #PWRI1500125).The power converter **110** as shown in FIG. **4** may be utilized in the embodiment shown in FIGS. **1**, **2** and **3**.

[0062] FIG. **5** illustrates a power receiver **10** according to another embodiment. The power receiver **10** comprises a plurality of resonant transformers **30** connected between a ground terminal **25** and elevated terminal **15**. Each of the resonant transformers **30** comprises a primary winding **35**, secondary winding **40**, ferromagnetic core **45** and series capacitor **50**. The primary windings **35** of the resonant transformers **30** are connected in parallel. The secondary windings **40** are connected in series with the power converter **110**. An impulse generator **60** applies a high voltage impulse to the primary windings **35** of the resonant transformers **30**. A battery **130** or other external power source supplies power to the impulse generator **60**. The power converter **110** converts the current in the power converter circuit to a usable form for driving a load **140**.

[0063] In one embodiment, each of the resonant transformers **30** shown in FIG. **5** is configured to have a different resonant frequency. In one embodiment, the resonant transformers **30** are configured to resonate at frequencies of 7.83 Hz, 14.8 Hz, 20.3 Hz and 26.8 Hz respectively. Additional resonant transformers **30** could be added to operate at other resonance frequencies.

[0064] FIGS. **6**A-**6**C illustrate a high quality ground antenna array **200** which may be used as a ground terminal **25**. The ground antenna array **200** comprises a generally cylindrical ground shaft **205** disposed with a hollow cylinder **220** and a plurality of reinforced, heavy gauge ground wires **210** attached at one end to the ground shaft **205**. The ground shaft **205** and ground wires **210** should be highly conductive and have low resistance to supply current from the ground to the power receiver **10**. In one embodiment, the ground wires **210** may be copper or other highly-conductive metal. The end of the ground shaft may be pointed to facilitate insertion into the earth. A connection port on the ground shaft **220** is provided to electrically connect the ground antenna array **220** to the resonant transformer **30**.

[0065] The hollow cylinder **220** has external threads **25** to facilitate insertion into the ground. A rotator nut **235** is fixedly secured to the top end of the hollow shaft **220**. A square shaft **215** protrudes from the top end of the ground shaft **205** into the opening in the rotator nut **235**. FIG. **6**B. A tool **250**, shown in FIG. **7**, engages with the rotator nut **235** and square shaft **215** during insertion of the ground antennas array **200** into the ground as will be hereinafter described.

[0066] The insertion tool **250** is shown in FIG. **7**. The insertion tool **250** includes a tool body **255** having a first socket **260** on one side to fit the rotator nut **235** on the hollow cylinder **220** and a second socket **265** on the other side to fit the square shaft **215** on the ground shaft **205**. Arms **270** extend from the outer periphery of the tool body **255** for manually or mechanically turning the insertion tool **250**.

[0067] Before the antenna array **200** is deployed, the ground wires **210** are wound around the ground shaft **205** with the free ends protruding slightly from respective openings **230** in the hollow cylinder **220** to a distance not to exceed one half (½) the depth of the external threads **225** on the hollow cylinder **220**. FIG. **6**B illustrates the ground antenna array **200** before deployment. FIG. **6**C illustrates the ground antenna array in a deployed configuration.

[0068] Installation of the ground antenna array **200** is performed in two stages. In the first stage, a hole slightly smaller in diameter than the threads **235** of the hollow cylinder **220** is drilled into the Earth to a depth matching the length of the hollow cylinder **220** or slightly longer. The hole is filled with water and the water is allowed to soak into the soil. After the ground is softened, the hollow cylinder **220** is rotated using the insertion tool **250** to insert the ground antenna array **200** into the ground. The first socket **260** of the insertion tool **250** is engaged with the rotator nut **230** and the insertion tool **250** is turned by hand or a mechanized rotating shaft fitted and attached to the tool arms **270** to thread the ground assembly into the hole. During the initial insertion of the ground antenna array **200**, the ground shaft **205** is fixed to the hollow shaft **220** and rotates with the hollow shaft. The hollow cylinder **220** is rotated until it reaches the full depth of the hole.

[0069] Once the ground antenna array **200** has been fully inserted into the earth, the insertion tool **250** is flipped over and the second socket **265** of the insertion tool **250** is engaged with the square shaft **215**. The insertion tool **250** is turned by hand or a mechanized rotating shaft fitted and attached to the tool arms **270** to rotate the ground shaft **205**. During the second phase, the ground shaft **205** rotates freely inside the hollow cylinder **220**. Rotation of the ground shaft **205** causes the reinforced ground wires **210** to extend radially into the earth. The ground shaft **220** is rotated until the ground wires are fully extended. The ends of the ground wires may be sharpened to aid in the extension of the ground wires during the second phase.

[0070] After the ground antenna array **200** is deployed, a connection cable **280** is attached to a connection port **240** on the ground shaft **220** to electrically connect the ground antenna array **220** to the resonant transformer **30** in the power receiver **10**.

What is claimed is:

1. A power receiver for extracting electrical energy from the earth's electric field, said power receiver comprising:

a resonant transformer connected to a ground terminal disposed below the surface of the earth;

an impulse generator for generating and applying a high voltage electrical impulse to a primary winding of the resonant transformer to induce current flow from the ground terminal through the primary winding of the transformer; and

a power conversion circuit connected to a secondary winding of the resonant transformer to convert electrical current flowing through the secondary winding to a desired form.

2. The power receiver of claim **1** wherein a resonant frequency of the resonant transformers is below 200 Hz.

3. The power receiver of claim **1** wherein the resonant transformer comprises a ferro-resonant transformer.

4. The power receiver of claim **1** further comprising an elevated terminal, and wherein the primary winding of the resonant transformer is connected between the ground terminal and elevated terminal.

5. The power receiver of claim **1** wherein the impulse generator comprises:

a pulse generator for generating low voltage pulses;

a step-up transformer for converting the low voltage pulses provided by the pulse generator to high voltage impulses;

a spark gap connected between the step-up transformer and the primary winding of the resonant transformer to generate a spark responsive to the high voltage impulses from the step-up transformer.

6. The power receiver of claim **1** wherein the impulse generator comprises a solid state spark generator.

7. The power receiver of claim **1** wherein said resonant transformer includes a capacitor connected in parallel with the primary winding.

8. The power receiver of claim **1** wherein said resonant transformer includes a capacitor connected in series with the primary winding between the impulse generator and the elevated terminal.

9. The power receiver of claim **1** comprising multiple resonant transformers having primary windings connected in parallel between the ground terminal and the elevated terminal.

10. The power receiver of claim **9** wherein the resonant transformers have different resonant frequencies.

11. The power receiver of claim **10** wherein the resonant frequencies of the resonant transformers are matched to respective Schumann resonances.

12. A power receiver for extracting electrical energy from the earth's electric field, said power receiver comprising:

a resonant circuit connected to a ground terminal disposed below the surface of the earth, said resonant circuit having a resonant frequency below 200 Hertz

an impulse generator for generating and applying a high voltage electrical impulse to the resonant circuit to induce current flow from the ground terminal through the resonant circuit; and

a power conversion circuit connected to the resonant circuit to convert electrical current flowing through the resonant circuit to a desired form.

13. The power receiver of claim **12** wherein the impulse generator comprises:

a pulse generator for generating low voltage pulses;

a step-up transformer for converting the low voltage pulses provided by the pulse generator to high voltage impulses;

a spark gap connected between the step-up transformer and resonant circuit to generate a spark responsive to the high voltage impulses from the step-up transformer.

14. The power receiver of claim **12** wherein the resonant circuit comprises a resonant transformer having a primary winding, a secondary winding, and resonant capacitor connected in parallel with the primary winding.

15. The power receiver of claim **12** wherein the resonant circuit comprises a resonant transformer having a primary winding, a secondary winding, and resonant capacitor connected in series with the primary winding.

16. The power receiver of claim **12** wherein the resonant circuit comprises multiple resonant transformers having primary windings connected in parallel to the ground terminal.

17. The power receiver of claim **16** wherein the resonant transformers have different resonant frequencies.

18. The power receiver of claim **17** wherein the resonant frequencies of the resonant transformers are matched to respective Schumann resonances.

* * * * *

Creative SCIENCE & Research

459

Information Big Brother & the Oil Companies do not want you to know!

Copyright 2002 - 2004 Creative Science & Research

PO BOX 557 New Albany, IN. 47151 USA

Free Energy *From The* EARTH

Nikola Tesla

Scale up the enclosed methods and you could have

Unlimited Amperage!

By Unlimited we mean you can keep adding more earth cells to your earth power station as you can afford it year by year adding more and more amp power.

Aluminum

Copper

There are many ways to pick up on the free energy in the earth, Just a few are described in these plans. These devices if made right will pick up earth energy that many call ether or static currents as well as acting as high efficient earth battery's. Ether travels through plastic wood etc... Study and research these plans closely there is more to these plans than what you may think. You can learn to get enough power to run your home!

Copyright 2002 - 2004 Creative Science & Research

Learning The basic's of our invention

Experiment #1 How to assemble a 12 vdc system

1. You will have 12- 4" 3/4" copper piping, or If you did not purchase the kit then cut your copper to this size. KIT: take each piece of copper and tape the tops with 1" masking tape.

2. Now using RED LACQUER spray paint (Which you can buy at any hardware store), Paint the outside of the copper all around. (DO NOT PAINT THE INSIDE.) let air dry for 24 hrs. Now remove 1" masking tape.

3. Take the copper pipe outside to the area that you are going to use. use a hammer and hammer each one Into the ground up to the 1" copper exposed top. do not let the exposed copper touch the earth in the final placement. Dirt should be moist. Not real dry.

4. Now remove each pipe and place a thick piece of plastic on bottom of copper pipe to cap it. LET IT BE LOSE, DO NOT TAPE IT. YOU WANT RAIN WATER TO BE ABLE TO ESCAPE FROM EACH PIPE, Do not let exposed outside copper touch the earth.

5. Now hammer each pipe back Into the same holes. place each 2" piece of zinc rod (or a long bolt, most bolts are zinc plated) into the center of each pipe. The zinc Is the NEGATIVE and the copper is the + POSITIVE.

6. Now connect them in series to get 12 volts, use clip wire or solder them. If you are going to leave It outside for a long time then make sure connections are soldered and then painted to protect them from the weather. The rain will replenish your earth batteries. Top get more amaperage with this type simply add more copper and zinc rod cells USE 3' PIECES OF COPPER PIPE INSTEAD OF 4" PIPE. THEN CONNECT EVERY ROW OF 12 PIPES IN PARALLEL.. ADD AS MANY ROWS AS YOU NEED UNTIL YOU GET THE DESIRED AMPERAGE YOU WANT. **(THINK BIG!)** This can be a very powerful free energy system for your home or other. Not only will you get an earth battery effect, but you will also be collecting earth currents from ether /static and under ground radio waves as well.

7. The deeper you go with the copper pipe, the more amperage and voltage you can get.

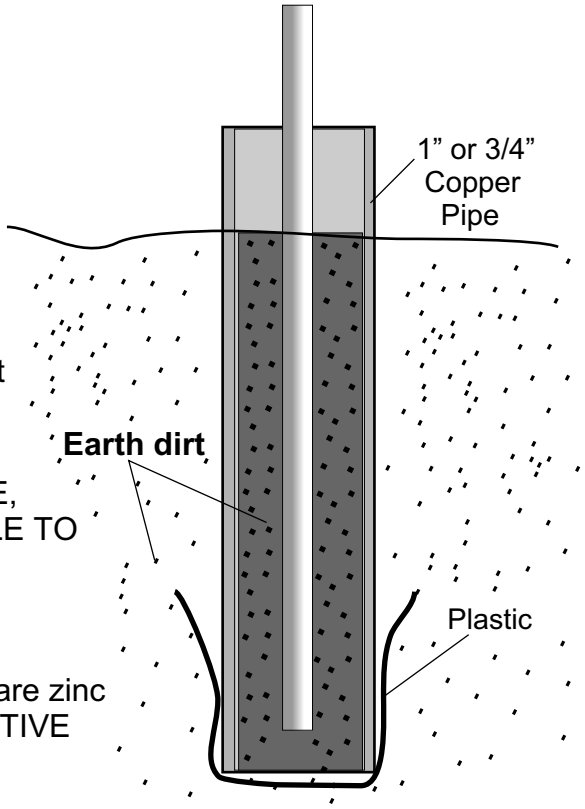

1" Copper = +
Positive 1.5 vdc
each cell you make

This represents one cell. A qty of 12 to 14 will give you 12 - 14 volts dc when connected in series.

Cut 12 - 4" L x 3/4" copper pipe

Copyright 2002 - 2004 Creative Science & Research

Learning The basic's of our invention

Experiment #2 How to assemble a 12 vdc system

This is just an example to go by and is not the best way but is low in efficiency! See our capacitor earth cells, coil type or flat sheet type. They produce far more amperage and voltages than this type.

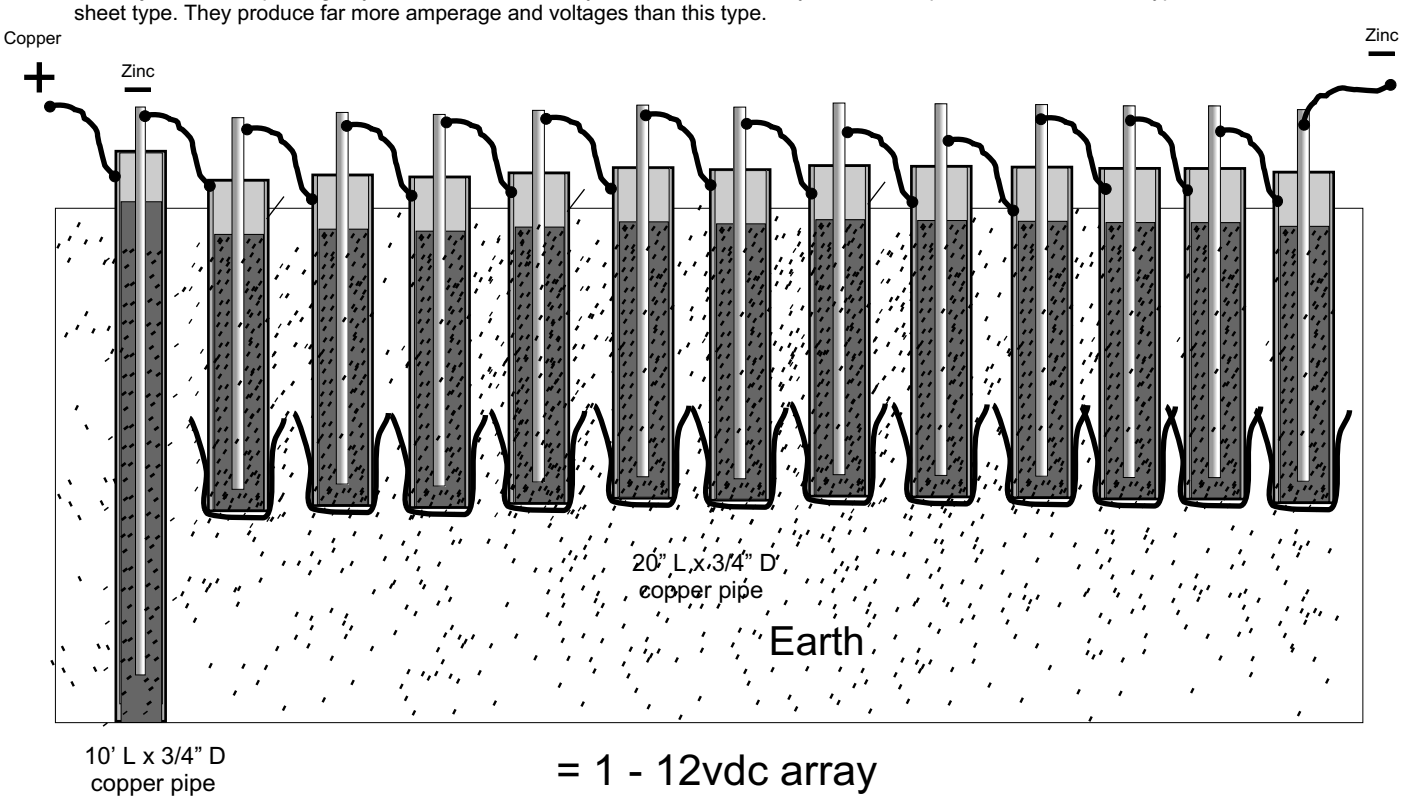

= 1 - 12vdc array

NOTICE: Do not paint the 10 foot copper cell. Keep all copper exposed to the earth. The more exposed copper the better. For higher amperage output, use a zinc or aluminum rod 10/16" Diameter which will leave a space of more than 1/16" to the copper.

Advantages of earth powered batteries

1. Free Energy
2. Long Life
3. The collection of aether energy.
4. Cells are also replenished by outside weather. Rain as well as lightning charges.

Copyright 2002 - 2004 Creative Science & Research

Learning The basic's of our invention

You can purchase Zinc rods or zinc plated bolts at any hardware store, most all nuts and bolts they sell are zinc coated and will work just fine. They also carry aluminum sheeting. Most hardware stores can order you copper sheeting as well.

Experiment #3 How to assemble a 12 vdc system

This is a simple way to produce more amperage but is not practical, we are only showing you this to educate you. The closer the zinc rod is to the copper the more amperage you will get as well as going deeper into the earth. If you do decide to build this basic set up. It is suggested that you solder all leads very well and dig deep enough into the earth to hide the tops of each cell. By covering the tops with dirt the cells can short out so what you want to do is to paint the exposed tops with lacquer or enamel paint then cover with plastic, cover with dirt and allow both the negative and the positive leads to stick out of the ground. But like I said this is not practical, what your goal should be is to make a very strong uf earth capacitor / battery, This will allow you to pick up and collect earth radiant waves of energy as well as lighting energy during storms, the energy you can collect in a strong lighting storm will amaze you! You must use an antenna on the zinc rod or copper rod. **WARNING! Be careful when collecting lighting it can kill you, be sure the positive and negative wires are not coming into your home. During a storm it is advised to have the lead wires going into a large uf cap bank via a one way diode on the positive lead to the positive of the cap or battery. The earth battery's can be dangerous at times and must be completely buried in the earth so a child, adult or animal can not touch or get to. Our earth capacitor batteries can store and hold thousands of volts. So be careful. Use rubber gloves and clothing to protect yourself. We are not responsible for anything in these plans you build at your own risk.**

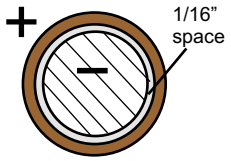

Example of a perfect Zinc rod copper pipe cell

Top view of a 12 volt dc array high amp system

Connect the series arrays in parallel to each other as shown. Or for a high voltage system connect all in series! Pulse the dc into a 10x step up transformer, 15,000 v Neon transf.

Zinc rod can be replaced by using rolled up aluminum sheeting or Zinc sheeting, Use 100% cotton cloth wrapped around the rolled sheeting or rod to give a small space in between the aluminum sheet and copper.

Copyright 2002 - 2004 Creative Science & Research

Learning The basic's of our invention

Experiment #4 The 6 foot spacing method (old way)

There are many US Patents that were Issued back in the 1800's, one of them was issued to a Mr. Deckman. Deckman found that if you take several small pieces of Zinc and Carbon rod and stick them into the ground next to each other and connect them in series (much like a battery) you get very liittle gain at all.

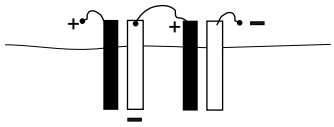

But if you put them 6 feet apart you will get a gain In voltage and they will not cancel one another out. so by doing this you can put them In series to increase your voltage and your volt amps. The theory is that there Is some sort of natural energy VORTEX that takes up about that much space for each unit or cell.

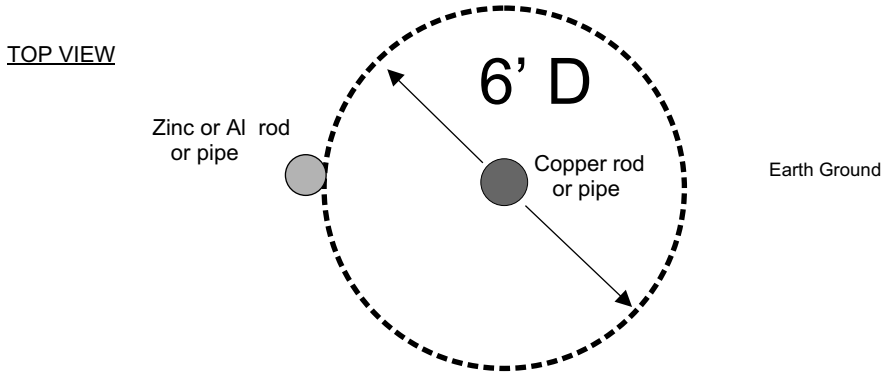

By using this method it will take a lot of ground space, ground space that many people just do not have with the exception of farmers. If you do have the space then think BIG! dig deep and have as many cells as you can get up to 2 to 4 acres. There are much better ways - vs - the old method as you will see. but by using Deckmans old way or our new methods, you can get as much free energy as you want with voltages or amperages as high as you want or desire. The higher the desired amperage the more costly it can get. We are always working to better our inventions to keep the cost down.

Copyright 2002 - 2004 Creative Science & Research

Learning The basic's of our invention

By using our new system you can get as much voltage or amperage as you want. Just size It to meet your needs or your budget.

How to get AC current for house hold use.

You can convert the incoming dc current to ac by using a home made inverter (which we sell the plans to, **5 kw inverter plans $40 order #579**) or you can purchase a 12 v to 115 vac inverter from a store or solar panel supply house.. If you are planing to make a 115 VAC system this Is the only way you can do it. You can not get AC current from the ground. You must use our system to charge a deep cycle 12 v marine battery, and then connect our 5,000 watt 120 vdc to ac inverter to the battery to run your home. (we do not sell kits or inverters assembled, we only sell the plans at this time.)

More on the basic pipe method

Please note: the dirt level inside each pipe should be up to 1/4" from the top. each pipe should be tightly fliied with dirt. Which will automatically happen when you hammer the pipe into the ground the first time.

Each copper pipe (or cell) should be spaced 1 Inch to 1 1/2 inch apart. Doing this will give you more amperage and voltage.

How to dig a simple deep hole for 8' pipe: There are many ways in which you can do this. you can rent a ground drill bit and rig it up with a electric 2 hp motor or you can use 1" copper pipe.

First: prepare the ground with water to make it moist but not muddy, 2nd: hammer a 1" x 5' copper pipe into the moist ground about 5 inches deep/ then remove it from the ground and take a stick or a water hose to remove the dirt from inside the pipe. Then just repeat the process over and over until you get the desired depth that you want. you can get about 10 feet or more using this method.

WARNING! BE CAREFUL OF ELECTIC POWER LINES WHEN YOU PLACE OR PULL THE COPPER PIPE FROM THE GROUND, IT WILL KILL YOU IF YOU TOUCH A POWER LINE WITH THE END OF THE COPPER PIPE.

We are dealing with a new type of energy as well as conventional energy < Ether energy can go through rubber/ plastic. Iron, etc....

Copyright 2002 - 2004 Creative Science & Research

What is ether or Radiant energy?

The understanding comes from a very deep study of etheric or static forces, this energy that we are getting out of the ground is what some call LIGHT ETHER, when you separate the light ether from the warm ether you can get these superconductive events. It appears like electricity but it has no heat events related to It.

The point is that the best polarity's of things to get a differential in the light ether is to have a silvered coloured metal and then something that is totally absorbitive/ Like black Carbon.

So now you have something that's the perfect reflector and something that is the perfect absorber, and once you understand what your pulling out of the ground (and that it Is not classic electricity as we get out of a normal type of chemical battery), then your going to be farther down the road to understanding how to get much more power out of this stuff.....

There are researchers now that are getting 1 /2 volt to 2 volts dc on a "Quote" volt meter, but it will shock you through an inch of rubber shoes this is not normal electricity!

Q: Is this energy coming from the sun and being absorbed In the earth or from the center of the earth?

A: Yes, but the primary source of light ether is the sun light, yes the earth does have an economy of light ether which does follow the sun around. BUT IT IS ALSO IN THE GROUND! AND ITS IN THE AIR!

Q: Did NokolaTesla know about this in the 1900's?

A: Yes, if you read into his writings he was always saying things like, there is more energy moving than just the electricity in this stuff.

Example: If you take a large Tesla coil and fire it up, and you drive it with a van de graph generator and you put the output of that into a Tesla coil. you can throw sparks across the room! What these electrostatic machines are gathering is light ether.

Copyright 2002 - 2004 Creative Science & Research

A Very Strange and New Discovery!

While working outside on another experiment I discovered a very strange generator effect, much to my surprise, I found that by using 2 aluminum 8” disks connected to my DC volt meter and by placing both disks in a vertical position while touching the bare earth dirt, and moving one of the disks and allowing the other to be stationary I get a dc voltage positive output! This effect works with any size or shape of aluminum, we used 8” diameter disk x 1/8” thick, we found that size to work best. Also by stacking them like a capacitor you will find that the current output is far greater, For Example: see figure 1, Disk A would have 4 more disks connected in parallel of the same size separated by paper die electrics. The same goes for Disk B .

First find a spot any where on the ground where there is no grass (best when wet). Please note, it's not just creating an acid battery effect, you are also getting a good contact with the ground as a conductor to pick up ether energy.

Now place the disks side by side, attach your DC voltmeter probes onto the disks, one negative and one positive. DC meter should be on the lowest setting, now place both disks on the ground very softly and move **disk B** and **do not move disk A** (positive.) You will notice you are getting a small amount of voltage and amperage. Now Move **disk A** and do not move **disk B.** **THE POLARITY CHANGES**.

The rule here is; The disk that moves is always positive. since we can get a polarity change just by moving the disks at opposite times. You can make a very simple mechanical device to get AC current from on top of the earth. Again, this is not just a chemical reaction we have done many test to prove this. You can also get a small voltage reading in dry dirt. The reason for the smaller voltage in using dry dirt is because a low conductance resistance is taking place here, keeping the system from being in contact with the earth and collecting the earth **ether energy.**

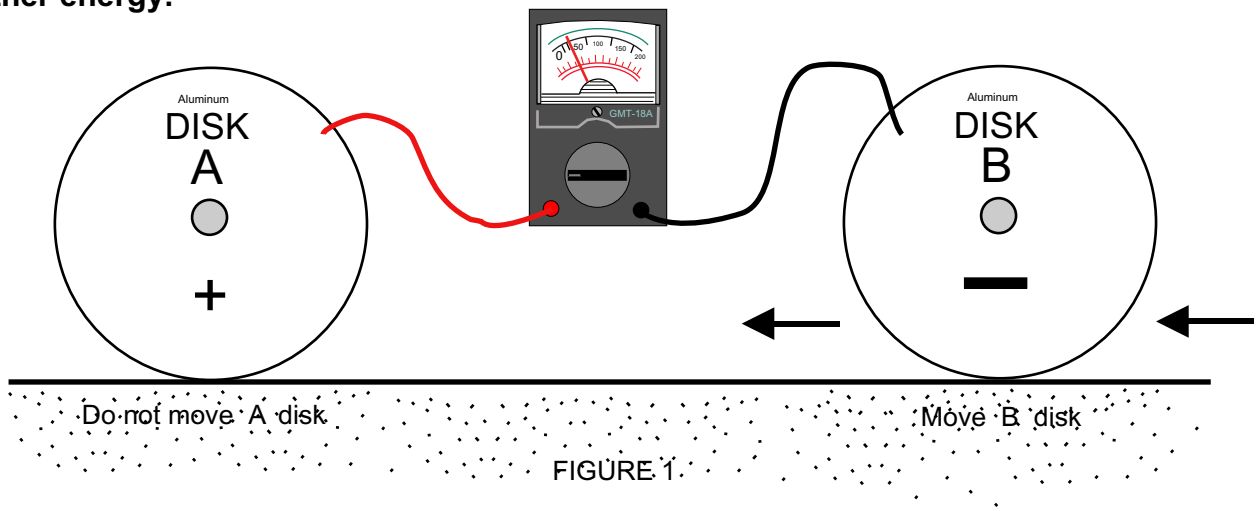

FIGURE 1

Copyright 2002 - 2004 Creative Science & Research

Capacitor Sheet Method

This method is far better than using pipes or rods. By using copper and zinc or aluminum foil sheets you will get much more amperage out of your system!

The amperage you will be collecting will be coming from 3 different sources,

1. **The acid in the ground and water**
2. **Energy that is being transmitted from the earth itself**
3. **Energy that is being transmitted from the sky and space.**

This may all seem unbelievable but it's true and is a fact! The more plates that you add the more power you will get! The copper sheet(s) is the positive, it must be facing down toward the earth. The aluminum or zinc sheet(s) is the negative and must be facing toward the sky! Between each sheet place 1- cotton or course screen printing mesh or other plastic course mesh cloth material. you can use a hole puncher to punch exact holes in each sheet, use 2 holes per sheet copper and aluminum. Use a 8 1/2" x 11" paper puncher one that is adjustable. next use a 3/4 wood base and drill hole for wood dowel rods to fit to the holes you punched in the sheets, you will have a total of 4 wood dowel rods, 2 on the right for the copper sheets and 2 on the left for the aluminum sheets to fit over, cloth die electric can be done the same. You then need to assemble dry and use another 3/4" wood board for top holding plate, which will fit over the wood dowel rods on top, sandwhich and press the assembly together and tape in place with duct tape, drill 2 long bolt holding holes on bottom wood base and top wood base then attach long bolts and nuts and tighten down. Remove tape. and attach wires, water the entire capacitor assembly and bury in the ground.

Copper sheet

Top View

Aluminum sheet

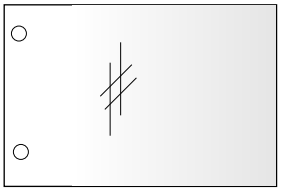

Top View

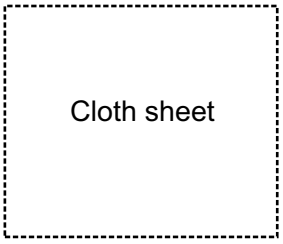

Top View

Place Aluminum sheet on top of copper sheet

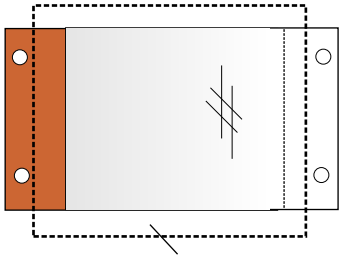

Dotted lines indicate where cloth goes

Top View

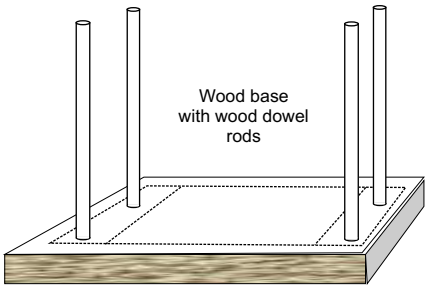

Side View

Copyright 2002 - 2004 Creative Science & Research

Capacitor Sheet Method

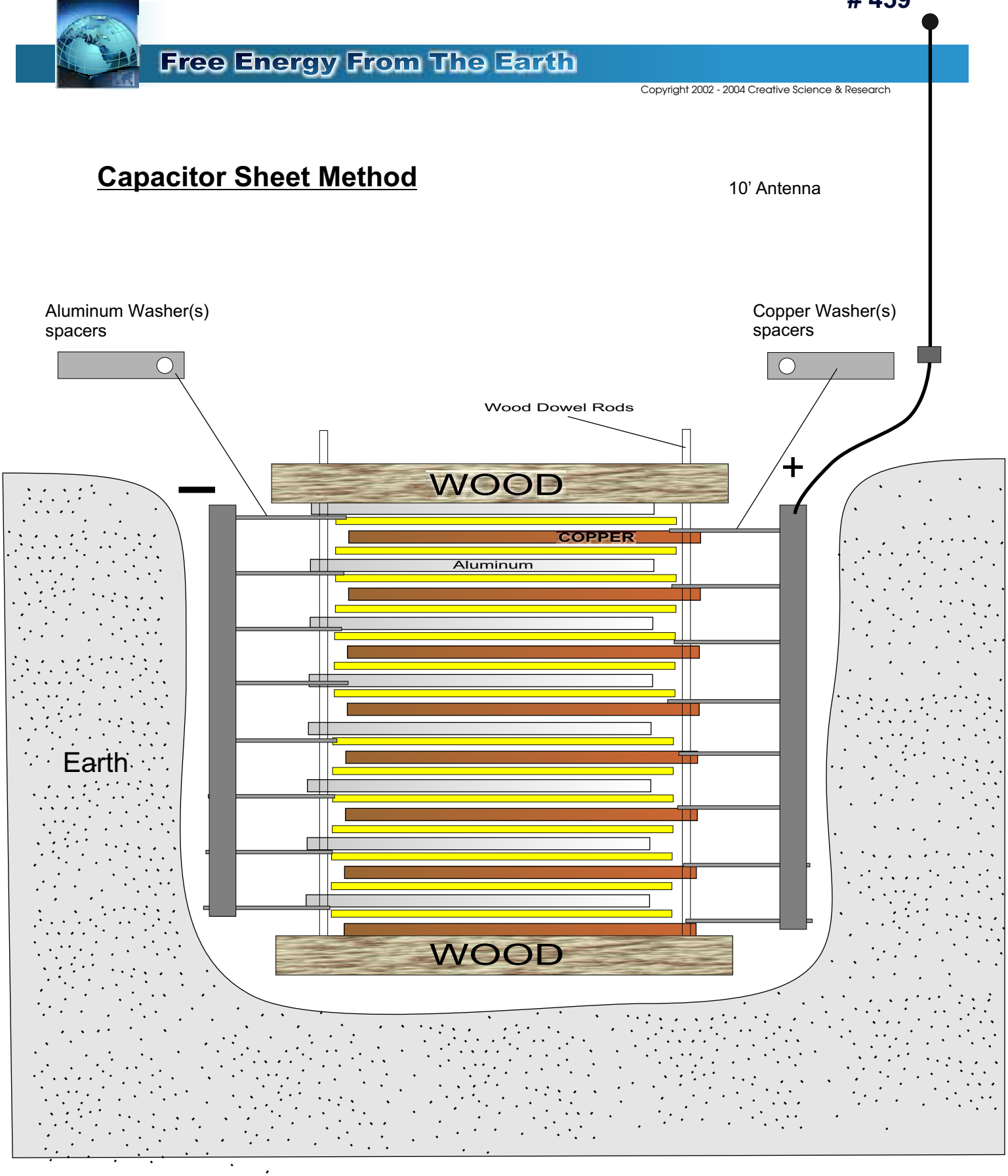

Copyright 2002 - 2004 Creative Science & Research

Capacitor Sheet Method

Again, the more plate sheets of metal you add (or cells) the more power you will get! Remember it's all about capacitance. You are collecting more than just simple battery type power. The copper plate sheet is the Positive + and the Aluminum sheet is the negative. There are many ways in which one can build this type of earth energy collector, below is simply an example of another shape and form. In this type we use water holes. water holes must all be in exact spots.

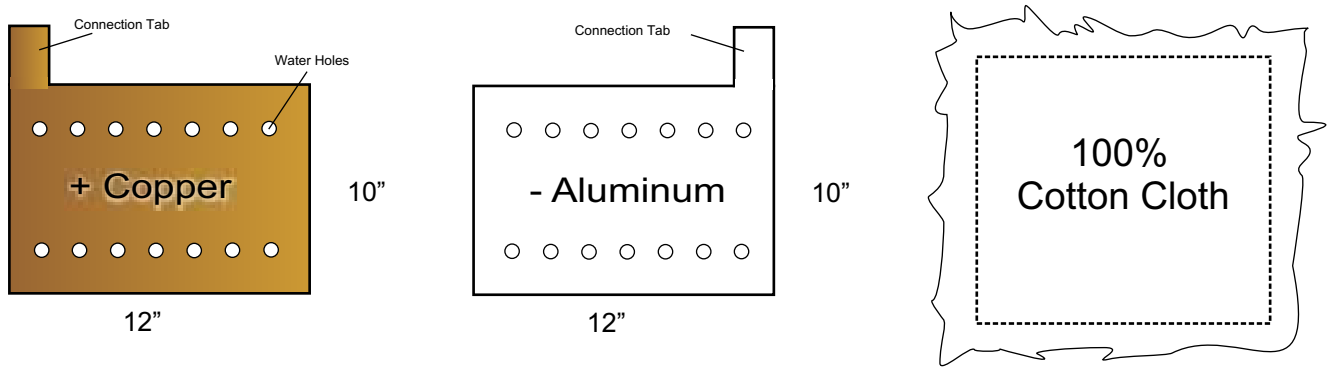

Figure #1 Top View of separate pieces

Figure #1 Side View

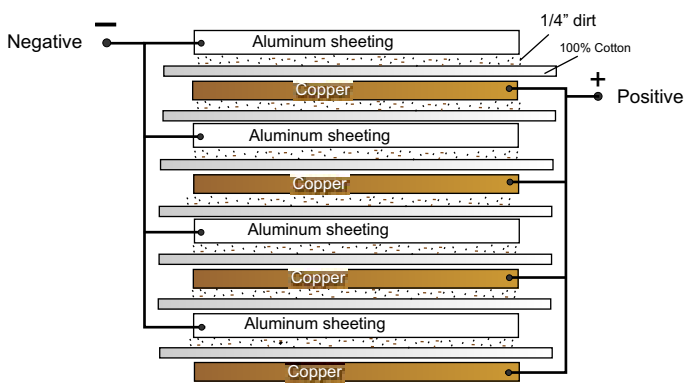

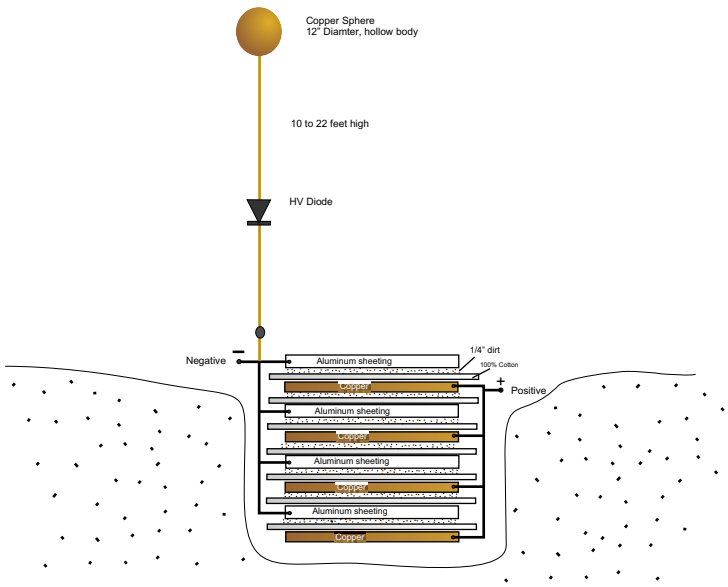

Copyright 2002 - 2004 Creative Science & Research

OUR MORE ADVANCED EARTH CAPACITOR!

(EECC) Earth Energy Coil Capacitor!

To collect more ether earth energy atoms, build the following **Earth Energy Coil Capacitor**, **Designed & Created by Creative Science & Research.** This is far better than anything we have found yet! Much more power and is easier to build.

Start with our EECC Model #1, Take a 5/16" zinc rod or aluminum rod, cut to 7.5" long. Now use #27 bare copper wire, secure it in a drill press (which you will then turn by hand). Cover zinc rod with paper one layer, use very tiny bits of tape to secure. Now apply the copper wire over the paper, remember to use copper that is not coated! Tape one end of the copper wire to the end of the zinc or aluminum rod and begin to slowly wind. Each wind must be perfectly fitted side by side, paper should be 5.5" long, total length of winds should be 4" long centered on paper. Once you are done with the first layer, apply another piece of paper to the top layer of the first copper layer, do not use to much tape to secure paper in place! Now begin your 2nd layer, repeat this same process until you have about 10 layers, (the more layers the better!) Copper must not touch the zinc or aluminum. When done hot glue or epoxy a small end piece of the copper wire so it will not come unwound. This is one complete cell, keep in mind this is a small test version, to get more power you have to THINK BIG! Build larger cells, using larger size copper. Then place them in salt water to test, 2 cells can be connected in series, after that you must connect them by use of capacitors, diodes and electronic or hand wound spring switches. If you build 20 of these and try to connect them all in series without a cap/ diode switching method, the cells will cancel each other out. Keep in mind you want water to get to each layer as well as the zinc or aluminum. You can also use Aluminum or zinc pipe.

Now concerning the paper Die Electric, Paper will not last very long, test and find a water absorbing plastic die electric,(mesh type). We suggest that you use Plastic screen mesh that you can buy at any hardware store, if all you are interested in is collecting small voltages then use one layer in between each layer of copper, if you are interested in collecting higher voltages such as lightning charges then you must use more layers of plastic screen mesh to thicken the die electric so the higher voltages will not short out your system. Paper may not last longer than 1 year, Plastic screen mesh or polyester screen printing mesh will last for many years.

EECC Model #2 Same as #1, but different. In this design we use #27 copper COATED wire, instead of bare wire. since the copper wire is coated and not bare, each layer must be sanded, that is, the top portion of the copper coated layer must be sanded off so it will be exposed to the water and acid, a die electric should still be used in this case. This type makes for a very high efficient earth cap!

EECC Model #3 Same as #1 but reversed! You will use aluminum wire and a copper rod or pipe. Use a 3/4" copper pipe and wind the die electric paper or plastic mesh and Aluminum bare wire around the copper pipe as explained in Model #1

Copyright 2002 - 2004 Creative Science & Research

OUR MORE ADVANCED EARTH CAPACITOR!

(EECC) Earth Energy Coil Capacitor!

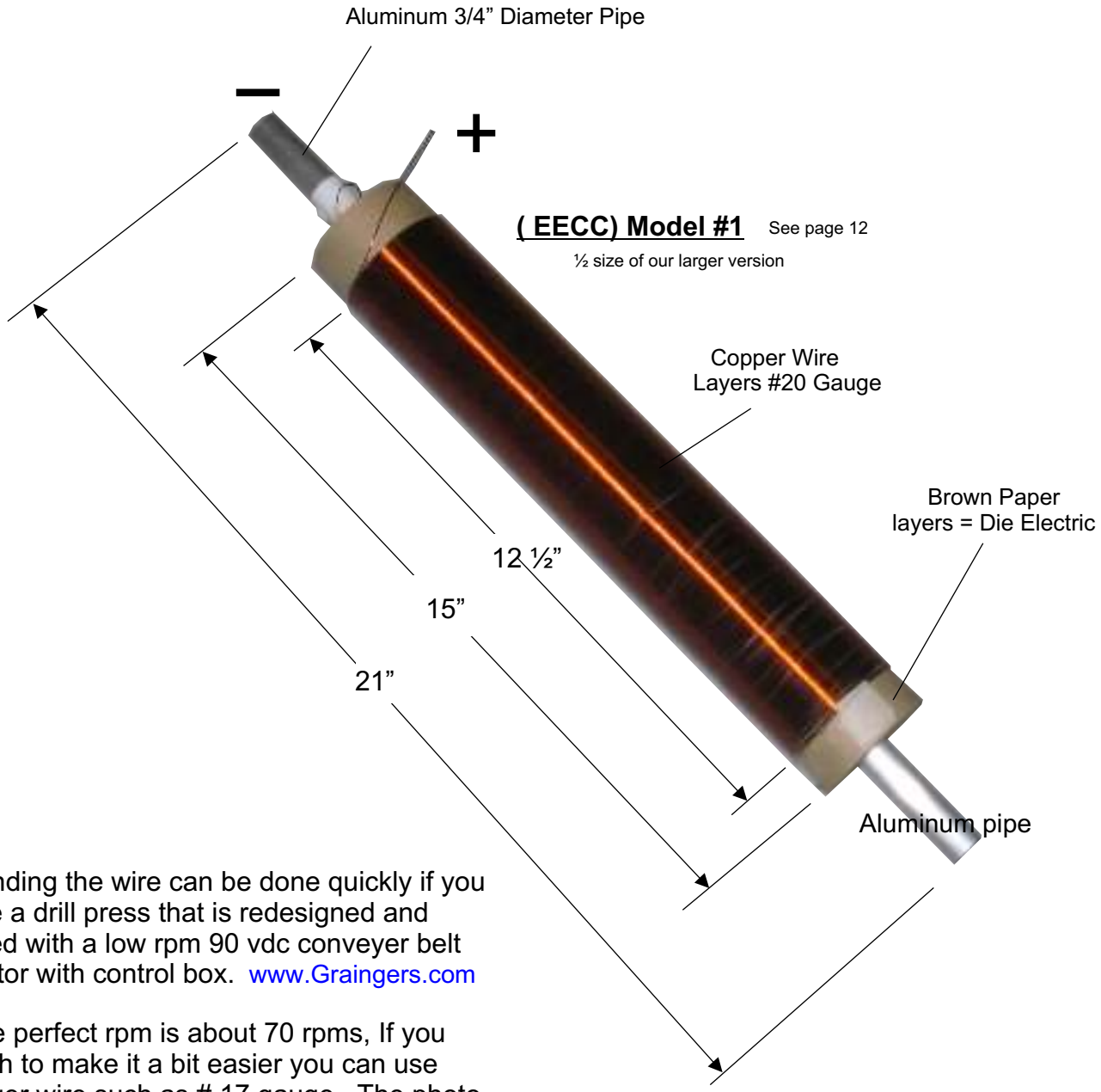

Winding the wire can be done quickly if you use a drill press that is redesigned and fitted with a low rpm 90 vdc conveyer belt motor with control box. www.Graingers.com

The perfect rpm is about 70 rpms, If you wish to make it a bit easier you can use larger wire such as # 17 gauge. The photo is an example of a mid size cell and can be very powerful! This is ½ size of a large cell.

Copyright 2002 - 2004 Creative Science & Research

OUR MORE ADVANCED EARTH CAPACITOR!

(EECC) Earth Energy Coil Capacitor!

Our small test model #1, we used #22 bare copper wire wrapped around a zinc rod, each layer had a paper die electric, tested in tap water. 5 layers.
Output = 89 vdc x 3.5 ma, this is low.
more layers will = more capacitance which ='s more amperage and voltage.

Small Drill press turned into a Coil Winder

The more layers, the more free earth energy you can collect!

Small Drill press turned into a Coil Winder. We turned this by hand.
Larger coils is best to use low rpm motor at about 70 rpms, In this picture you see that we wound each wind side by side, this makes for a more high efficient earth cap.
You can wild wind if you like if you use smaller wire like #31 to #34.

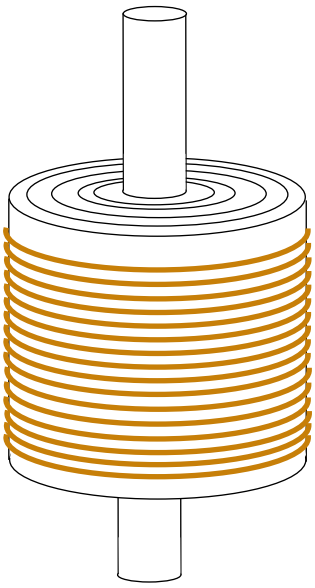

Side View
Ideal size for experimenting

Copyright 2002 - 2004 Creative Science & Research

(EECC) Earth Energy Coil Capacitor!

Rolled Earth Capacitor

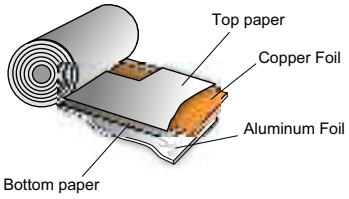

MODEL #4 Rolled Earth Capacitor

Copper foil is placed between 2 pieces of paper strips and Aluminum is placed on bottom. Use 400 foot strips 2" wide. This method is very hard to do. But is very high eff.

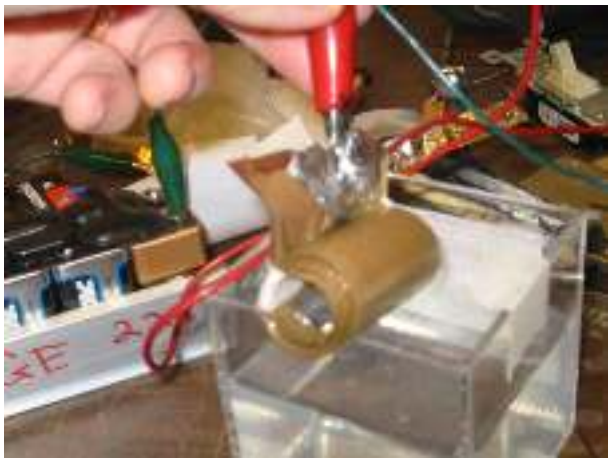

We used salt water to test rolled caps before placing them in the ground.

Copyright 2002 - 2004 Creative Science & Research

(EECC) Earth Energy Coil Capacitor!

MODEL #4 Rolled Earth Capacitor

Rolled Earth Capacitor

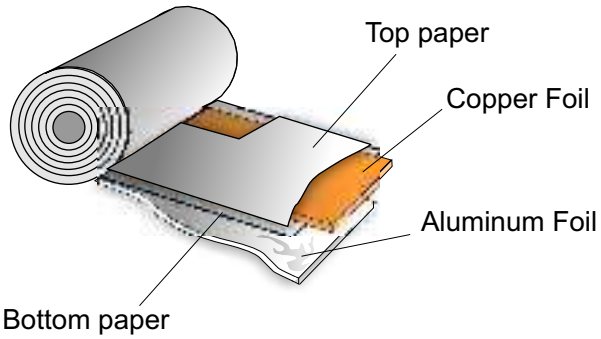

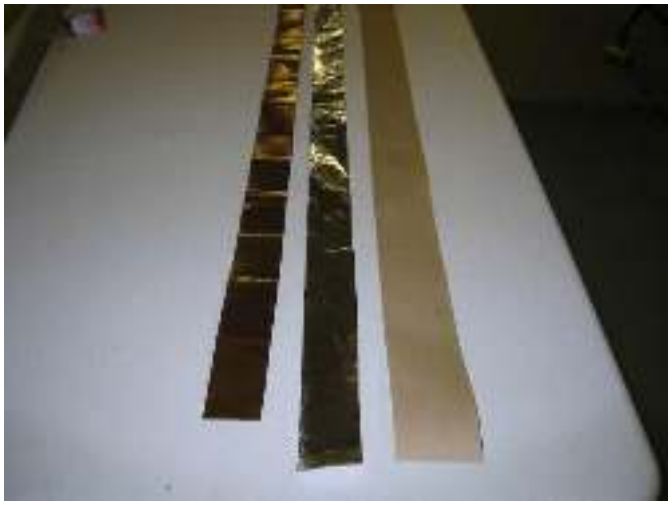

Again rolling this type of earth capacitor is very hard, Everything must be kept straight and inline with one another, Manufacturers of rolled electrolytic capacitors use computers and machinery. I am sure a simple home made roller with pin registration could be designed very easily. This type of earth battery is very high efficient. Paper is not a good die electric for high voltages! If you are wanting to collect earth and storm HV Currents you must use a thicker die electric. Metals must be spaced properly for storing high voltage.

Copyright 2002 - 2004 Creative Science & Research

(EECC) Earth Energy Coil Capacitor!

Rolling a capacitor is the best way but not the easiest,
Which makes this pipe coil model much more desirable to build

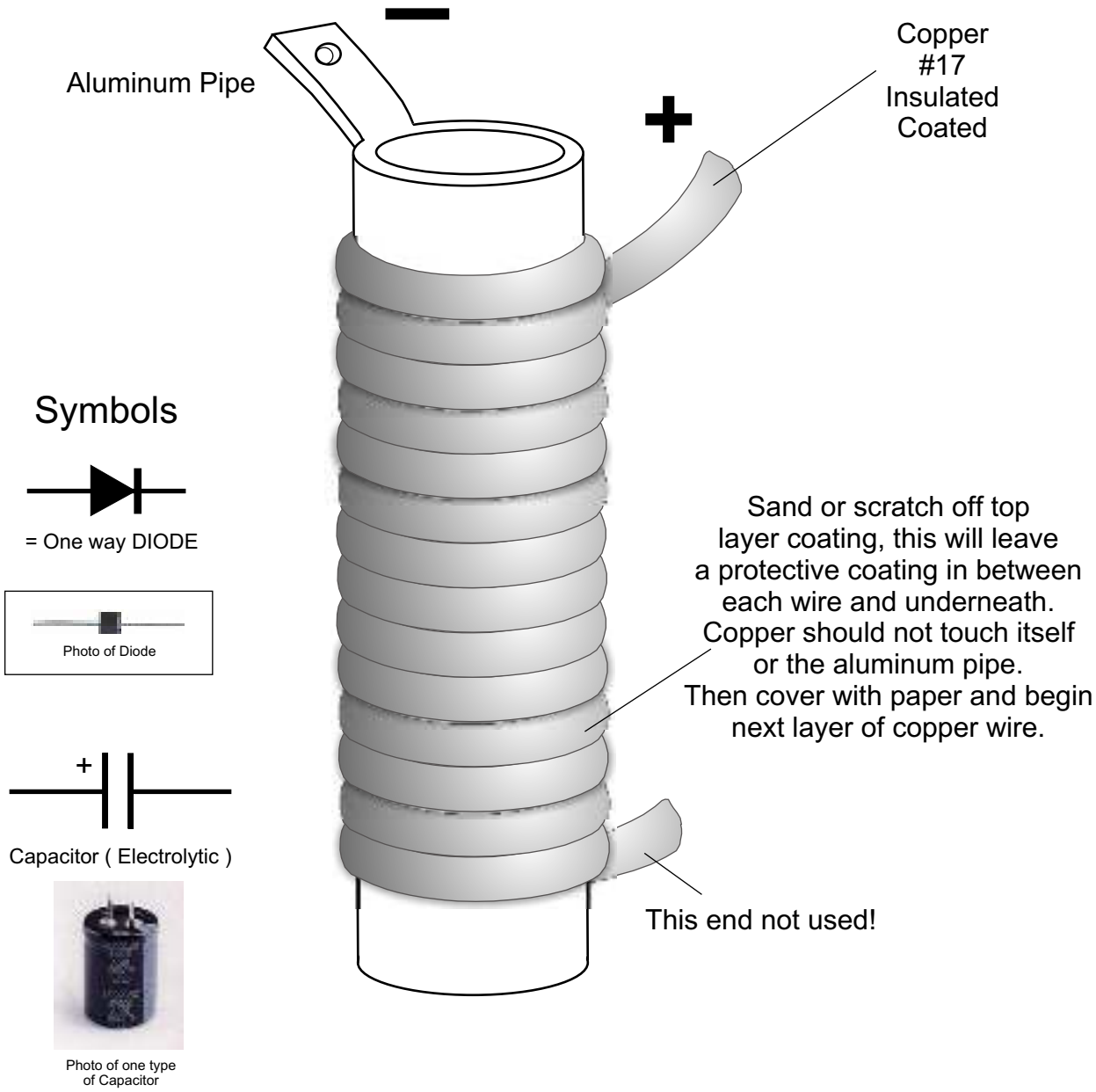

Copyright 2002 - 2004 Creative Science & Research

CONNECTING THE CELLS IN SERIES

How to connect the cells in series to increase the output voltage without allowing the cells to cancel each other out. Figure **A** The Copper pipe and zinc rod method without the use of plastic on bottom of pipe. **Figure B** is the coil earth cap method.

Figure A

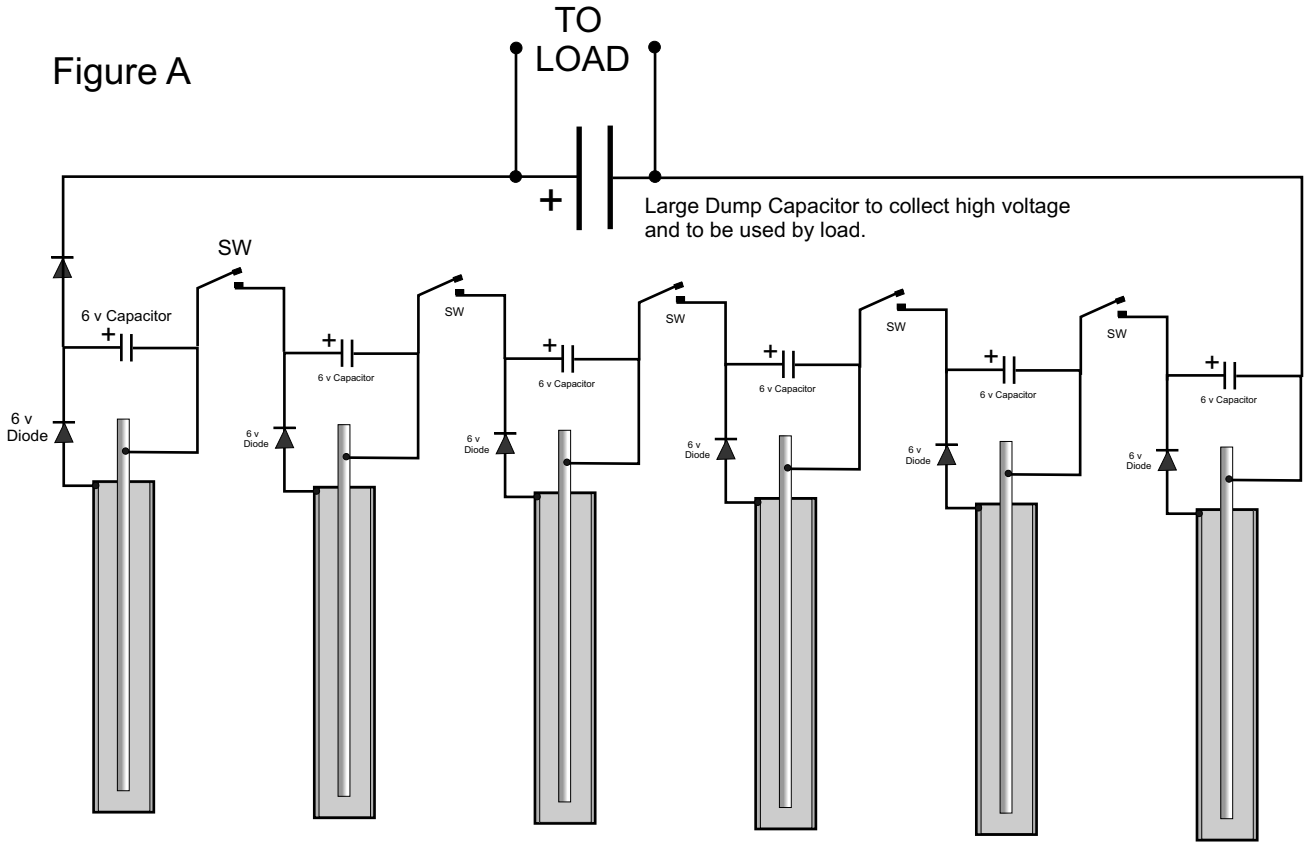

Use electrolytic capacitors to store the charge coming from each cell, then connect them in series using Commutator Sw's connected to a small rotor shaft, connected to a milliamp solar cell hobby motor or build a small fuelless engine electric motor to run on and off switch's. You can also build a very low milliamp electronic switching circuit and use the earth energy to power it. Or another more simple way would be to use a hand spring type device (timer type) glue small magnets on a long rotating rotor arm connected to the inner spring. Then place small reed relay magnetic switches, on each timing magnet ON position. should have multi reed sw's, as the unit turns if gives time for the caps to charge and then comes around and connects caps all in series which in turn discharges into main cap dump.

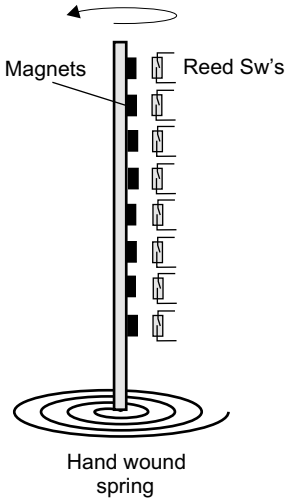

Copyright 2002 - 2004 Creative Science & Research

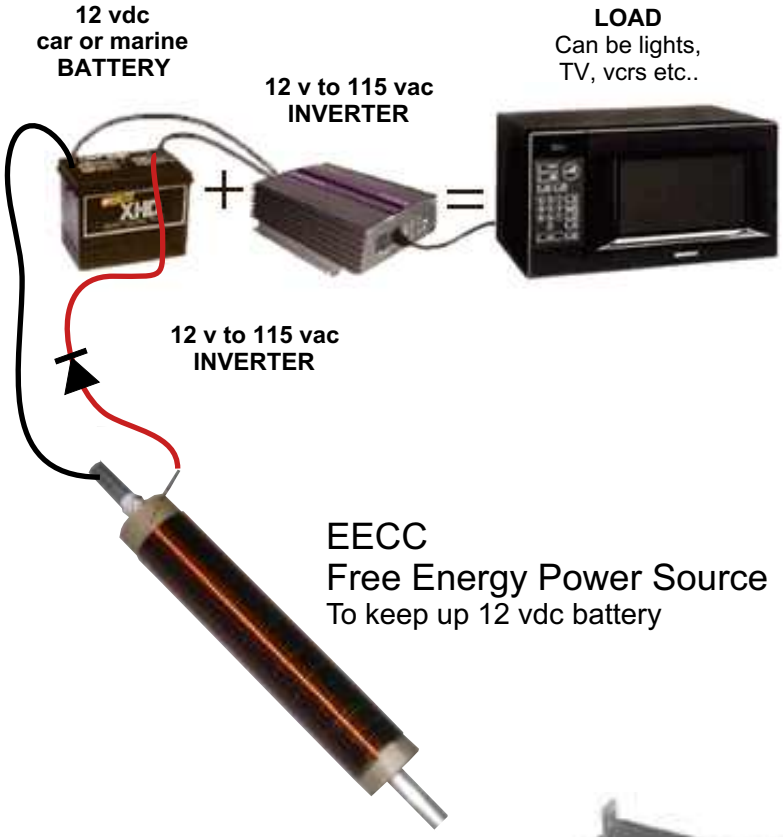

Copper

Symbols

= One way DIODE

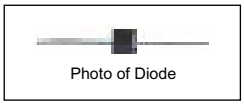

Photo of Diode

Capacitor (Electrolytic)

Photo of one type
of Capacitor

Copyright 2002 - 2004 Creative Science & Research

Suppliers List

Free News

Google

Copper Foil | Search

See www.google.com

1. Http://www.delphiglass.com/

   Use there search engine to find copper foil tape

2. http://www.glassmart.com/foil_menu.htm
3. http://www.globalsources.com

Search Google.com for:

1. Copper flashing
2. Inverters
3. Batteries
4. Copper coated wire
5. Copper wire
6. Electronic parts and supplies
7. Diodes
8. Capacitors
9. Free energy from the earth
10. Zinc rods

Copyright 2002 - 2004 Creative Science & Research

EECC update

Step One

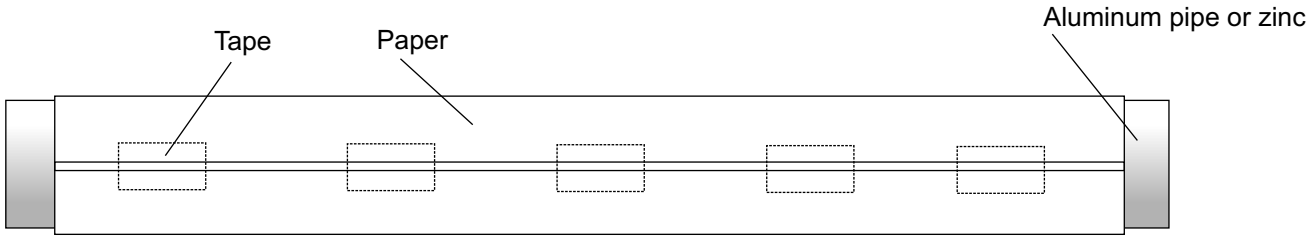

Step two

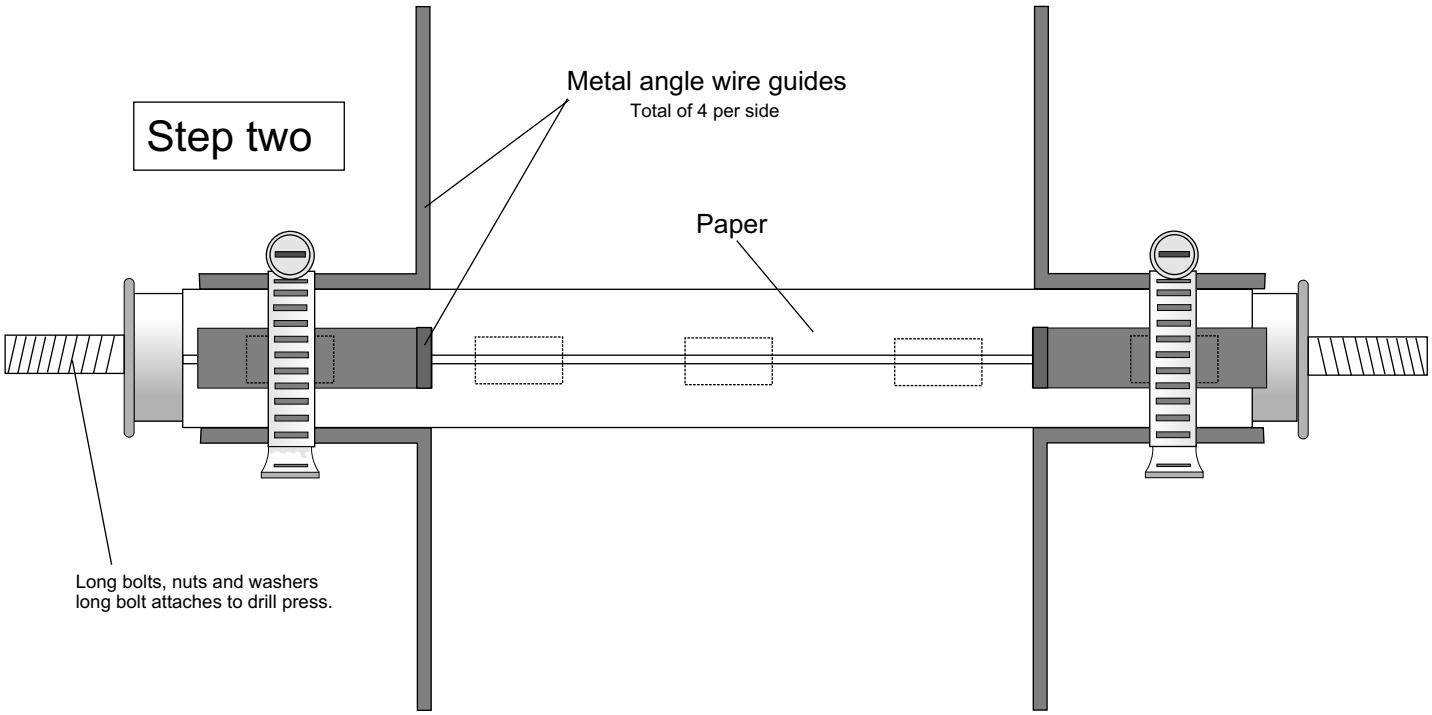

Apply first layer of wire, remove, metal wire guides, apply more paper, then repeat over and over again until you have about a 5 to 6 inch diameter roll of wire and paper. Makes a very powerful earth capacitor!

Copyright 2002 - 2004 Creative Science & Research

EECC update

These are just a few extra idea's that we threw together. I hope they are helpful to you. Let us know how you like these plans. Send us photo's of what you have done we love to hear from our customers. If you got any new free energy idea's let us know we can research them for you. Many customers do not have the extra research time that we have.

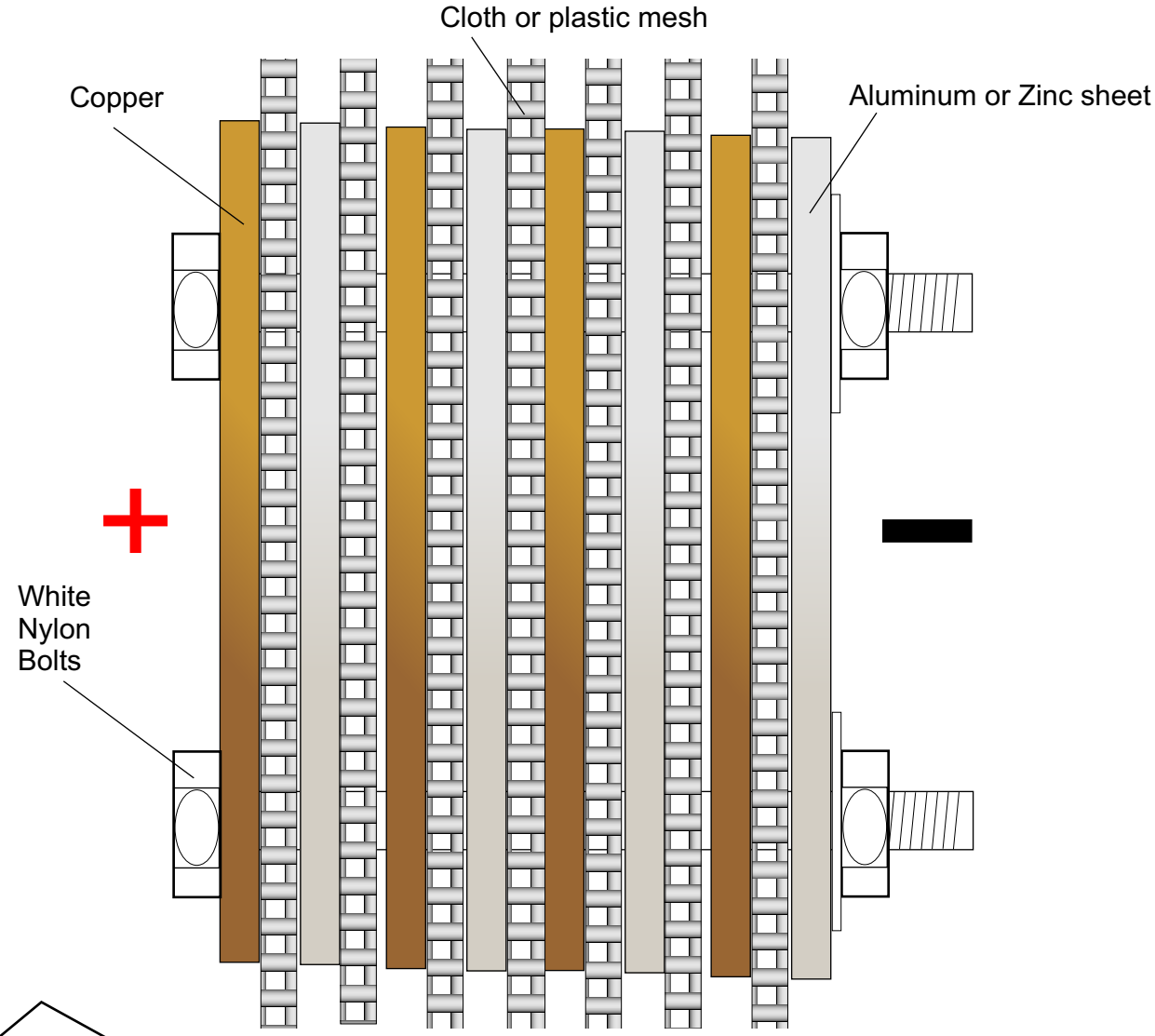

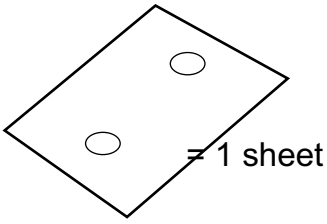

Metal sheet type earth battery

United States Patent [19]

Ryeczek

[11] **Patent Number: 4,457,988**

[45] **Date of Patent: Jul. 3, 1984**

[54] **EARTH BATTERY**

[76] Inventor: **John J. Ryeczek**, R.D. #1, Box 190C, Point Marion, Pa. 15474

[21] Appl. No.: **384,781**

[22] Filed: **Jun. 4, 1982**

[51] **Int. Cl.**[3] **H01M 14/00**

[52] **U.S. Cl.** ..... **429/47**; 204/105 R; 175/64

[58] **Field of Search** 429/10, 47, 13

[56] **References Cited**

U.S. PATENT DOCUMENTS

155,209	9/1874	Snow	429/47
182,802	10/1896	Cerpaux	429/47
329,724	11/1885	Dieckmann	429/47
495,582	4/1893	Emme	429/47
728,381	5/1903	Emme	429/47
3,288,648	11/1966	Jones	429/13

Primary Examiner—Donald L. Walton

Attorney, Agent, or Firm—Webb, Burden, Robinson & Webb

[57] **ABSTRACT**

An earth battery which includes a first electrode which is a veined material located in the earth, a second electrode electrically connected to the surface of the earth and disposed in a hole which extends from the surface of the earth into the first electrode, an electrolyte disposed in the hole and in contact with the first and second electrodes, and means for electrically connecting the first electrode to the surface of the earth. A seam of coal is preferred as the first electrode. A method of mining metals located in the earth using the earth battery and a method of drilling holes in the earth are also disclosed.

21 Claims, 6 Drawing Figures

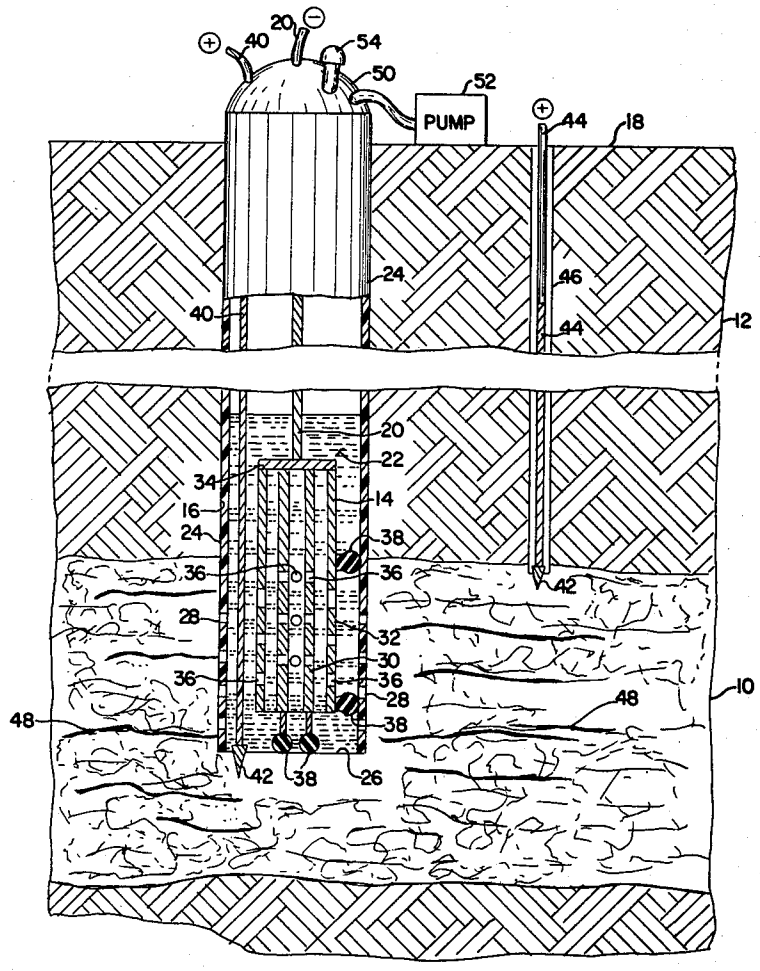

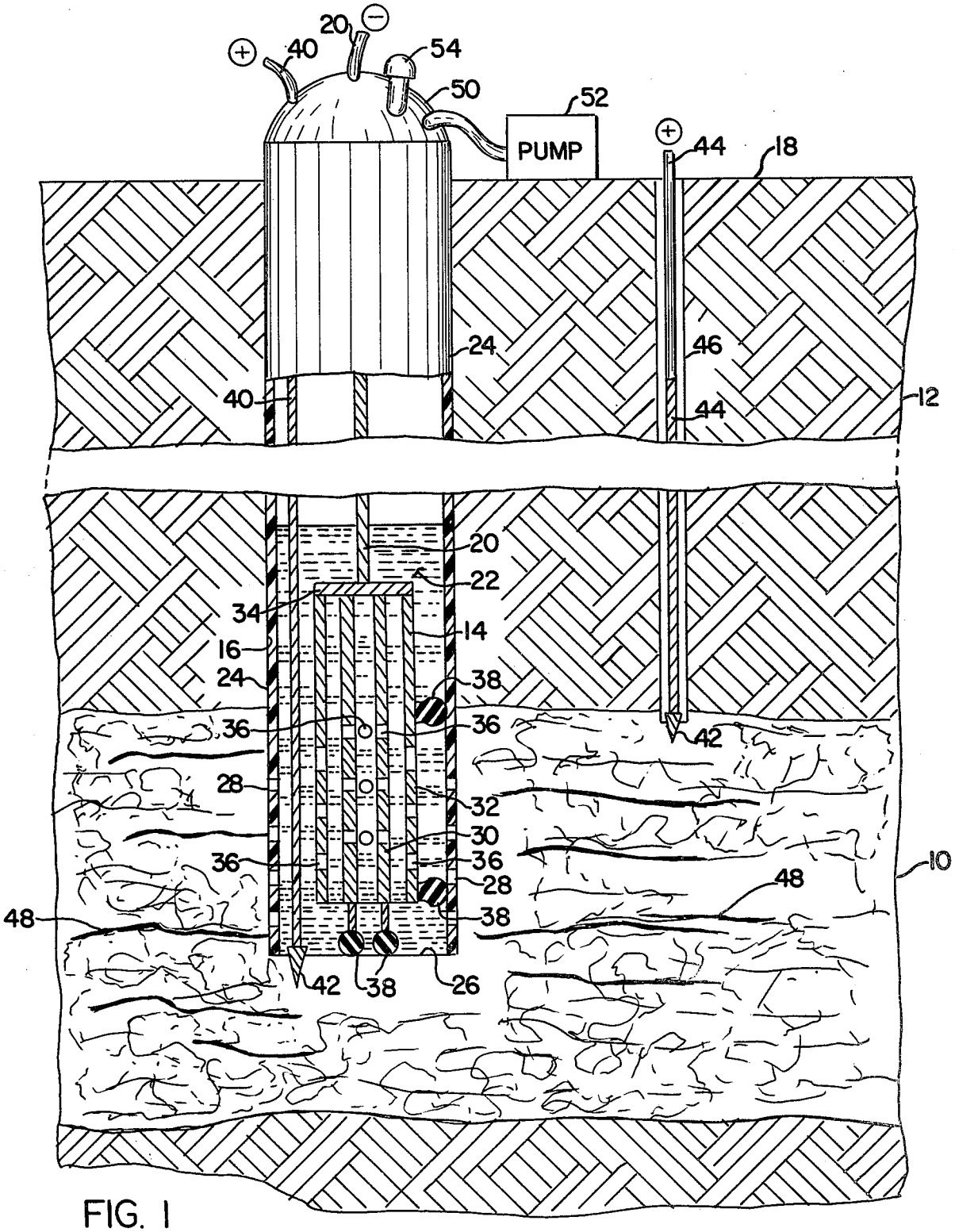
20
40
54
50
52
PUMP
44
18
24
46
40
44
12
20
22
34
14
16
24
38
36
36
42
28
32
30
36
36
28
48
10
48
38
42
38
26

FIG. 1

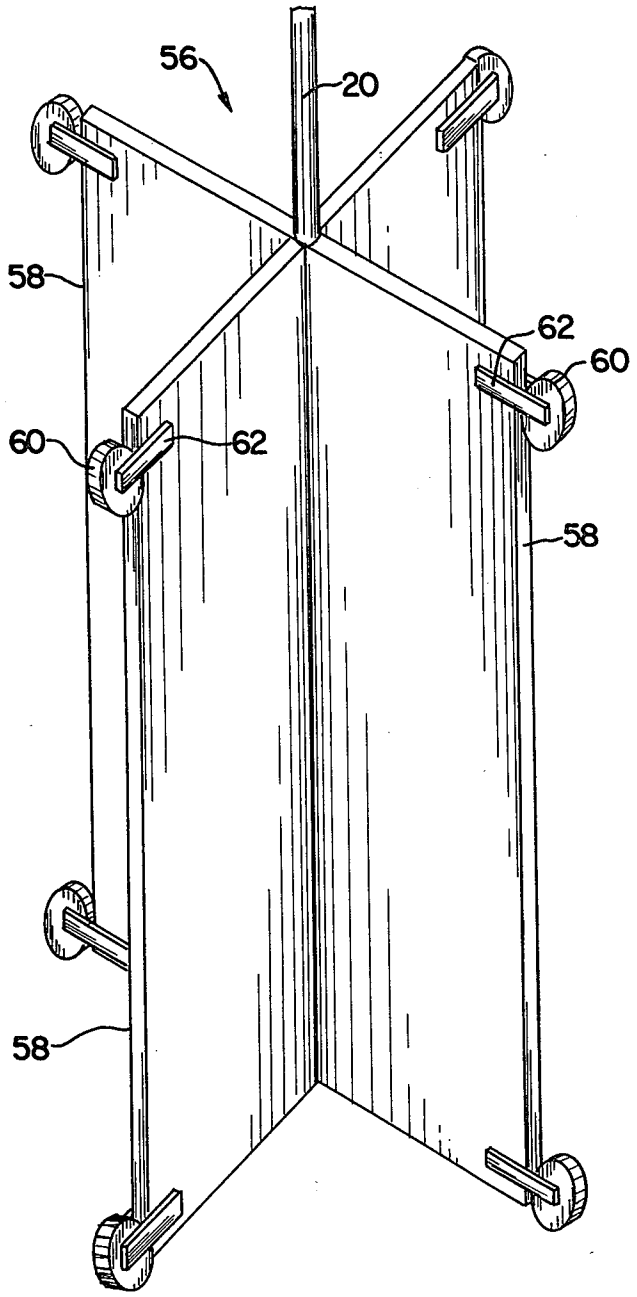

FIG. 2

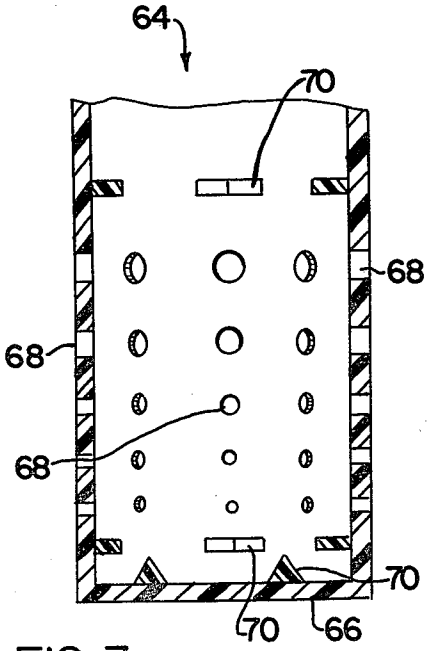

FIG. 3

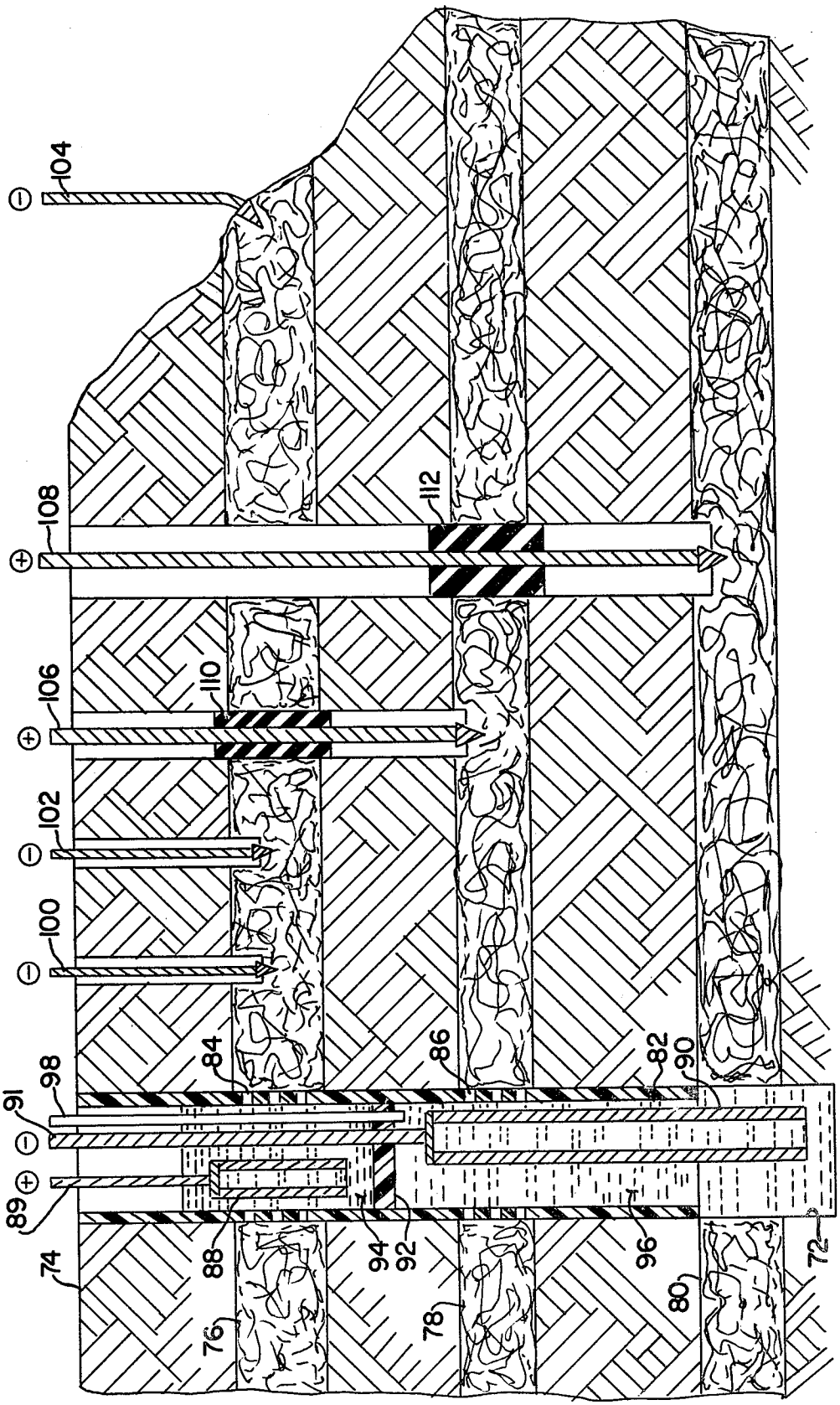
104
108
112
106
110
102
100
98
91
84
86
82
90
89
88
94
92
96
72
74
76
78
80

FIG. 4

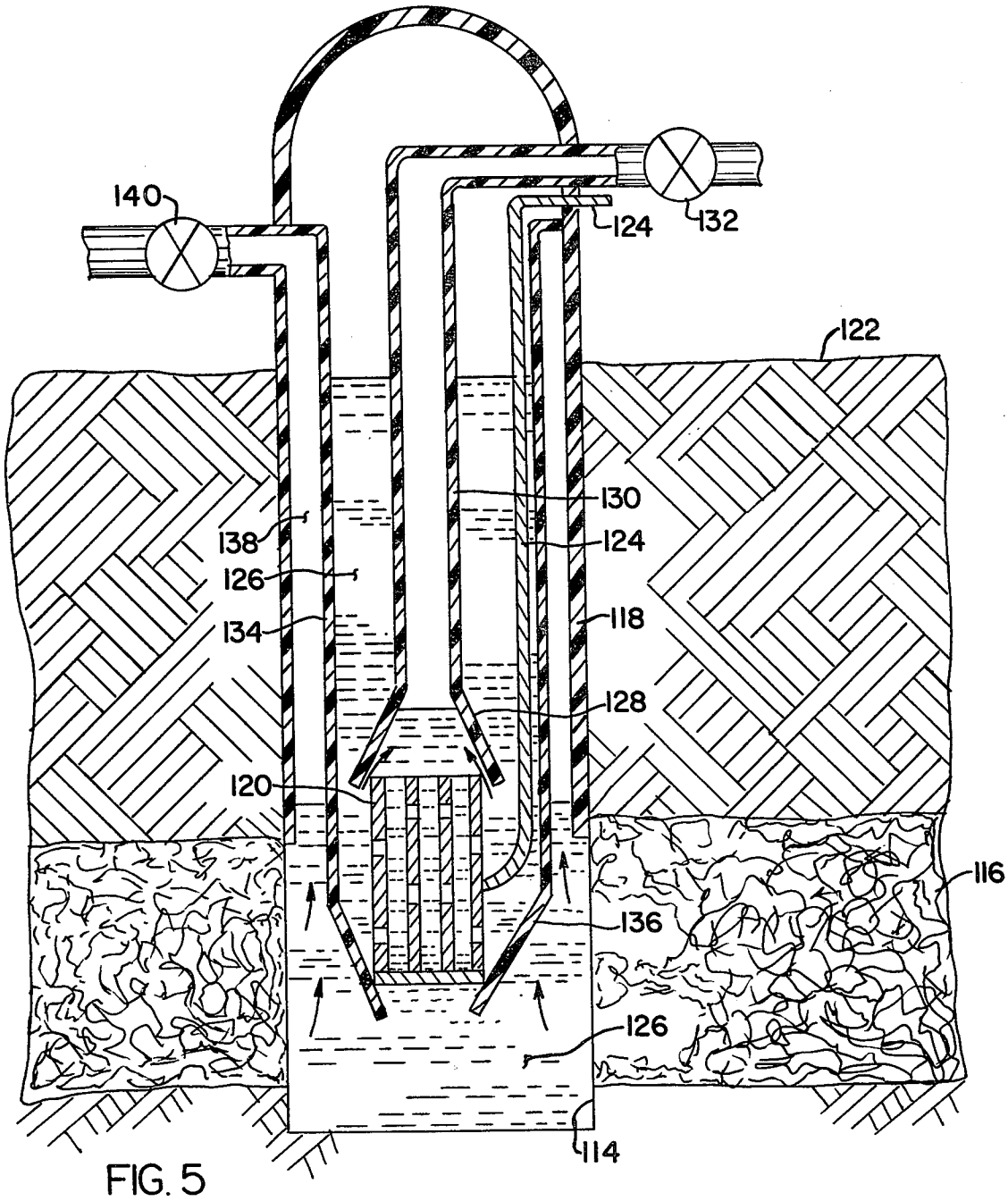

FIG. 5

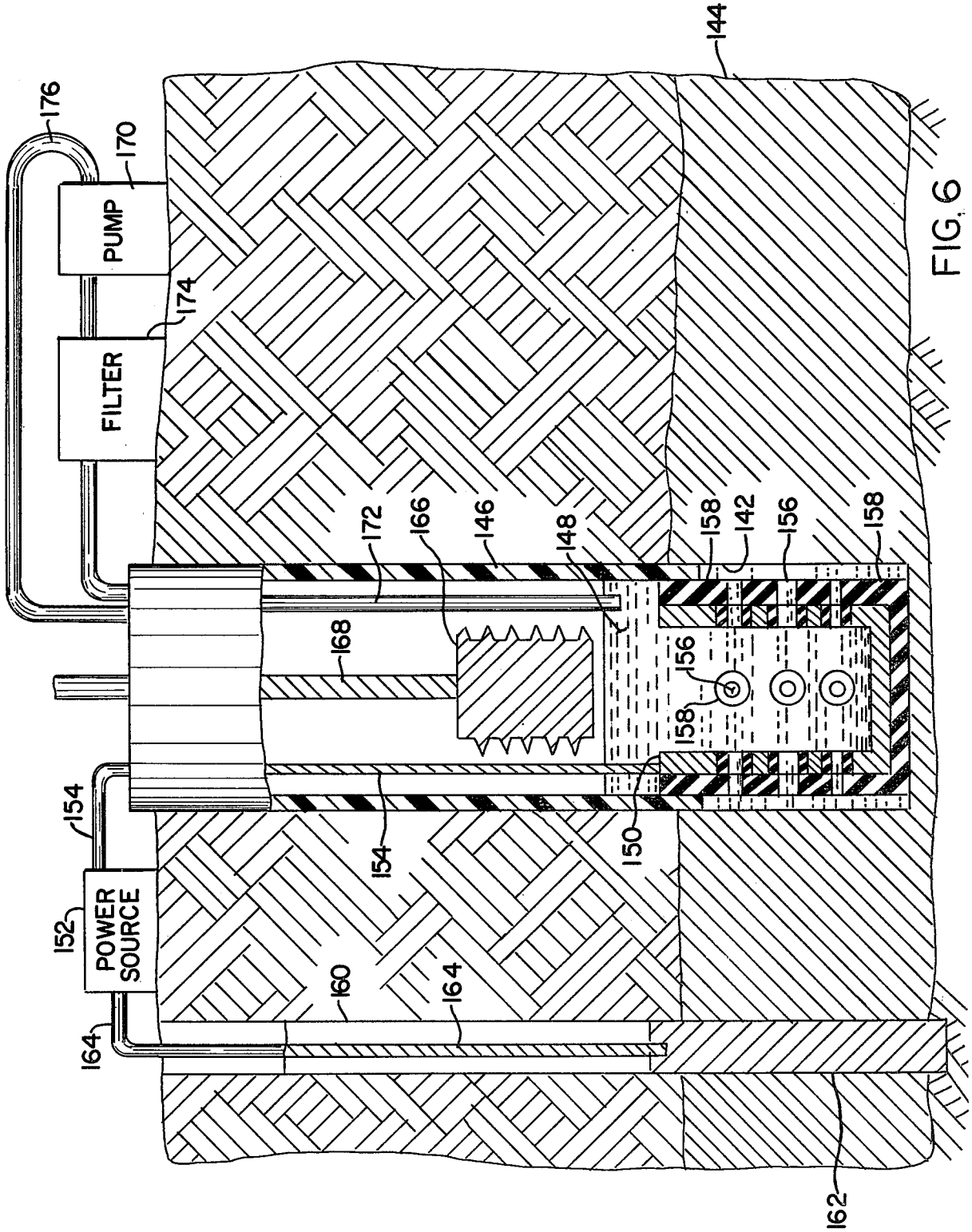
PUMP
FILTER
POWER SOURCE
176
170
174
144
172
166
146
148
158
142
156
158
168
156
158
154
154
150
152
160
164
164
162

FIG. 6

EARTH BATTERY

DESCRIPTION

1. Field of the Invention

This invention pertains to earth batteries or electric wells and, more particularly, to a battery in which one electrode is a veined material located in the earth.

2. Background Art

Batteries which convert the chemical energy contained in their active materials directly into electrical energy by means of an oxidation-reduction electrochemical reaction are well-known in the art. Such batteries, in their most basic sense, include a pair of spaced apart electrodes and an electrolyte in the space between the electrodes. During the electrochemical reaction electrons are transferred from one electrode to the other and produce an electrical current when an external circuit is connected between the electrodes.

The electrode which gives up electrons during the reaction, and is oxidized in the process, is referred to as the anode. The other electrode, which is capable of accepting electrons and is an oxidizing material for the overall process, is referred to as the cathode. The electrolyte, generally an aqueous solution, provides the necessary internal ionic conductivity for the flow of electrons released at the anode. The electrolyte may also be a solid material.

The anode, cathode and the electrolyte may be made of a variety of materials, as is well known in the art. The only requirement for the anode and cathode is that one material must give up electrons at a faster rate than the other material, and thereby acquire a positive charge with respect to the other material. In one common battery arrangement, one electrode is made of carbon or copper, the other electrode is made of zinc and the electrolyte is sulphuric acid (H_2SO_4).

Various arrangements of these batteries, and the various combinations of materials which may be used for the electrodes and the electrolyte is discussed in Fink, *Standard Handbook for Electrical Engineers,* Eleventh Ed. 1978, pages 11–92 to 11–141, and is incorporated herein by reference.

It is also known in the art to use the earth as an electrolyte in a battery. Typically, two spaced electrodes are buried in the ground, and the ground, by itself or moistened with a chemical, functions as the electrolyte. See U.S. Pat. Nos. 155,209; 160,152; 182,802; 211,322; 329,724; 495,582; and 728,381. In the process disclosed in U.S. Pat. No. 3,278,335, an oil bearing formation forms a portion of an electrolyte and electrical energy is produced through the growth of bacteria in the formation. However, in each of these prior art patents, the electrodes are the typical zinc, carbon or copper plates or rods which are inserted into the earth, and the earth is used solely as an electrolyte.

It is an object of the present invention to provide a battery in which a portion of the earth is one electrode thereof.

It is a further object of the present invention to provide a battery in which one electrode is a veined material in the earth.

Another object of the present invention is to provide such a battery which is capable of generating electricity as well as capable of storing electrical energy.

It is yet a further object of the present invention to utilize such a battery in the mining of veined materials located in the earth.

SUMMARY OF THE INVENTION

Therefore, I have invented an electric battery which includes a first and second spaced electrode and an electrolyte in the space between the electrodes and in contact therewith, in which the first of the electrodes is a veined material located in the earth. In one embodiment, the second electrode is disposed in a hole which extends from the surface of the earth into the first electrode and is electrically connected to the surface of the earth, an electrolyte is disposed in the hole and in contact with the electrodes, and the first electrode is electrically connected to the surface of the earth. The battery may also include a casing disposed within the hole and surrounding the second electrode, such that the casing contains the electrolyte and permits contact of the electrolyte only with the first electrode but not with the surrounding earth. The first electrode is electrically connected to the earth's surface by way of one or more cables anchored thereto and located either within the hole or outside of the hole. The gases generated during the battery operation may be recovered and used as desired.

The first electrode is preferably a veined material located in the earth and may be a seam or vein of coal, graphite, magnetite, nickeline, sphalerite, arsenic, siderite, gold, silver, or copper.

I have also invented a method of mining metals located in the earth using the earth battery of the present invention. The method includes the steps of drilling a hole from the earth's surface into the metal to be mined, placing an electrolyte in the hole and in contact with the metal, positioning a recovery electrode within the hole and at least partially immersed in the electrolyte, making electrical contact with the metal, passing an electric current through the metal, electrolyte and recovery electrode such that the metal will be deposited on the recovery electrode, and removing the deposited metal from the recovery electrode.

I have also invented a method of drilling holes in the earth using the present invention. The method includes the steps of predrilling a small hole into the earth for a desired distance, placing a quantity of acid into the small hole such that the acid will seep into and soften the area around the small hole, and then drilling a hole through the area softened by the acid. The acid may be neutralized prior to the final drilling step.

BRIEF DESCRIPTION OF THE DRAWINGS

FIG. **1** is a partial cross section taken through the earth and through one embodiment of an earth battery in accordance with the present invention;

FIG. **2** is a perspective view of one embodiment of the second electrode;

FIG. **3** is a cross section of the bottom portion of one embodiment of the casing;

FIG. **4** is a cross section taken through the earth showing several alternative arrangements of the earth battery;

FIG. **5** is a cross section taken through the earth showing one embodiment of a gas recovery mechanism for the earth battery; and

FIG. **6** is a partial cross section taken through the earth showing one embodiment of a metal recovery apparatus in accordance with the present invention.

DETAILED DESCRIPTION OF THE PREFERRED EMBODIMENTS

An earth battery in accordance with the present invention is shown, partially in cross section, in FIG. 1. The earth battery includes a first electrode **10** which is a veined material located within the earth **12**. A second electrode **14** is disposed within a hole **16** which extends from the surface **18** of the earth **12** and into the first electrode **10**. The second electrode **14** is electrically connected to the surface **18** of the earth **12** via cable **20**. An electrolyte **22** is disposed in the hole **16**, is in contact with the first electrode **10** and the second electrode **14**, and fills the space in the hole **16** therebetween. The electrolyte **22** is shown in FIG. **1** as a fluid, but it is to be understood that a solid electrolyte may also be utilized.

The earth battery shown in FIG. **1** also includes a casing **24** disposed within the hole **16**, adjacent the earth **12** and the first electrode **10** and surrounding the second electrode **14**. The casing **24** is preferably a hollow tube made of plastic or other insulating material and is adapted to prevent the electrolyte **22** from seeping out into the surrounding earth **12**. As shown in FIG. **1**, the casing extends from the earth's surface **18** to the bottom **26** of the hole **16**, but does not cover said bottom **26**. The casing **24** includes a plurality of openings **28** in the area where the casing is adjacent the first electrode **10**. These openings **28** permit the electrolyte **22** to contact and flow into the first electrode **10** but not into the surrounding earth **12**. The hole **16** and the casing **24** are preferably of circular cross section.

The second electrode **14** may be constructed in a variety of shapes. As shown in FIG. **1**, the second electrode **14** includes inner and outer cylindrical sleeves **30**, **32** mounted to a top plate **34**. A plurality of openings **36** through the sleeves **30**, **32** permit the electrolyte **22** to flow completely around all the surfaces of the second electrode **14**. In order to prevent the second electrode from touching the first electrode **10** or the casing **24**, and thereby shorting out the entire battery, insulating spacers **38** may be mounted on the sides or on the bottom of the second electrode **14**.

The first electrode **10** is electrically connected to the surface **18** of the earth **12** by means of a cable which extends into the earth and is physically anchored to the first electrode. As shown in FIG. **1**, cable **40** may be located within hole **16** and anchored to the bottom **26** of the hole by a spike **42** or the like. Alternatively, cable **44** may be located outside of hole **16** in a smaller hole **46** which passes into the first electrode **10**. Cable **44** is similarly anchored with spike **42**. A plurality of cables, spaced around or within the hole **16**, may also be used.

The electrolyte **22** will seep into and cause stress fractures **48** in the first electrode **10**. Cable **44** located outside of hole **16** is preferably anchored within the extent of the electrolyte **22** seepage. Over a period of time, the area of electrolyte seepage, and hence the effective size of the first electrode **10** in the battery, will slowly increase. It can be appreciated that the earth battery of the present invention can be permitted to grow as large as desired by allowing the electrolyte **22** to continue to seep into the first electrode **10**. The casing **24** is preferably sealed at the top by a lid **50** or the like. The rate of seepage of the electrolyte **22** into the first electrode may be regulated by a vacuum pump **52** connected to the inside of the casing **24**.

Various gases will be generated by the earth battery, both from the electrochemical reaction involved in the battery itself and the gases released from the first electrode **10** as the stress fractures **48** are formed. For example, if the first electrode **10** is a seam of coal, methane will be released, and if the second electrode is made of zinc and the electrolyte is sulphuric acid, oxygen and hydrogen will be generated during the electrochemical reaction of the battery. The casing lid **50** may include a pressure relief valve **54** to release these generated gases built up in the casing **24** when the pressure exceeds a predetermined value.

The earth battery described above operates in the exact same manner as a conventional battery and generates electrical energy from the electrochemical reaction of the electrodes and the electrolyte. The first electrode **10** is selected to be a veined material located in the earth and may include seams or layers of such materials as coal, graphite, magnetite, nickeline, sphalerite, arsenic, siderite, gold, silver and copper. The second electrode is selected from a material suitable for use with the particular veined material used as is well known in the art. A suitable electrolyte is selected to function with the electrodes chosen as is well known in the art.

In a preferred embodiment, a seam of coal is used as the first electrode, the second electrode is made of zinc, and sulphuric acid is used as the electrolyte. As an alternative, pickling acid, which is usually a waste by-product of a metal manufacturing plant, can be utilized as the electrolyte. Furthermore, a solid electrolyte, such as ammonium chloride (NH_4Cl) or zinc chloride ($ZnCl$) may be used. The use of an acidic electrolyte should not cause any environmental problems if the seam of coal, or other veined material, is located beneath the surrounding water table level. If pollution of the water table is of concern, an alkaline electrolyte, such as potassium hydroxide, may be used.

The earth battery described above may be used as a source of electrical energy at a variety of locations which have underground veins of suitable electrode material. The earth battery has the advantages that it is located primarily underground and out of the way, the functioning portions remain at a constant temperature, and the battery has the potential of growing to a rather large size. The battery of the present invention may be used as an electrical energy source, but may also be used to store electrical energy from a variety of sources such as solar cells, windmills, lightning, or the excess capacity from electrical utility plants.

An alternate embodiment of a second electrode **56** is shown in FIG. **2** and includes four rectangular plates **58** joined together along one edge to form an X-shaped structure. While only four plates **58** are shown in FIG. **2**, more or fewer plates may be utilized as desired. Second electrode **56** also includes a plurality of glass wheels **60**, each of which are mounted to the plates **58** by a bracket **62**. The glass wheels **60** are insulating and function to support and space second electrode **56** from the casing and the first electrode in a similar manner to the spacers **38** discussed above in connection with FIG. **1**.

An alternate arrangement for the casing is shown in FIG. **3**. Casing **64** shown in FIG. **3** is similar to casing **24** discussed above but further includes a bottom casing plate **66** which seals casing **64** and prevents the electrolyte from flowing downwardly. Openings **68** in casing **64** vary in size inversely with distance of each opening from the surface of the earth. The smallest opening is

located nearest the bottom plate **66** and openings **68** gradually increase in size as the distance from the bottom plate increases. Since the pressure of the electrolyte fluid increases toward the bottom plate **66** from the weight of the fluid above, the rate of flow of the electrolyte through openings **68** and into the first electrode will remain constant.

A plurality of sharp protrusions **70** are located along the inner surface of casing **64** near openings **68** and on the bottom plate **66**. When the earth battery of the present invention is no longer in use, it may be desirable to neutralize the acidic electrolyte liquid used. Baking soda, or any other acid neutralizing substance, may be placed into a glass or other breakable container and dropped into the casing. The breakable container will strike the sharp protrusions **70**, break apart, and release the acid neutralizing substance into the electrolyte.

The earth battery of the present invention may utilize more than one veined material in the earth as electrodes and the materials may be the same or may be different from each other. In the configuration shown in FIG. **4**, hole **72** passes from the earth's surface **74** through three veins of material, referred to as first electrode **76**, first electrode **78** and first electrode **80**. Casing **82** is disposed within hole **72** and extends to the top of first electrode **80**. Openings **84** extend through casing **82** into first electrode **78** and openings **86** extend through casing **82** into first electrode **78**. Second electrode **88** is disposed within casing **82** adjacent first electrode **76** and is connected to the earth's surface **74** via cable **89**. Second electrode **90** is disposed within casing **82** adjacent both first electrode **78** and first electrode **80** and is connected to the earth's surface **74** via cable **91**. As shown in FIG. **4**, second electrode **90** is a single electrode which reacts electrochemically with both first electrode **78** and first electrode **80**.

In the arrangement shown in FIG. **4**, first electrode **76** is a negative material with respect to both first electrode **78** and first electrode **80**. To prevent a shorting out of the earth battery, the interior of casing **82** is divided by a plug **92**. In this manner, one earth battery is formed by first electrode **76**, second electrode **88**, and electrolyte **94**, and a second, separate earth battery is formed by first electrode **78**, first electrode **80**, second electrode **90**, and electrolyte **96**. To replenish the supply of electrolyte **96**, a pipe **98** extends from the earth's surface **74** through the plug **92**.

Since hole **72** passes completely through first electrode **76** and first electrode **78**, electrical connection between these electrodes and the earth's surface **74** cannot be made within hole **72**. Cables **100** and **102** extend down and are attached to first electrode **76**. While only two cables **100** and **102** are shown, it is to be understood that fewer or more cables may be attached to one such electrode. As shown in FIG. **4**, first electrode **76** is exposed to the earth's surface, such as on a hill, and may be electrically contacted directly by cable **104** without the necessity of passing through the earth. First electrode **78** is electrically connected to the earth's surface by cable **106** and first electrode **80** is electrically connected to the earth's surface by cable **108**. To avoid short circuits, the cables should not electrically contact the other veins of material through which they pass. Cable **106** is shown surrounded by heavy insulation **110** in the vicinity of first electrode **76**. Cable **108** is shown physically spaced from first electrode **76** and surrounded by heavy insulation **112** in the vicinity of first electrode **78**. Ideally, the entire length of each cable would be encased in an insulating material, except where electrical contact is made at the ends.

The relative electrical potential of each electrode shown in FIG. **4** is shown as being either positive or negative. The various electrodes could be operated as separate batteries, or could be connected in parallel or in series as is desired.

As an example of the arrangement shown in FIG. **4**, first electrodes **78** and **80** could each be a seam of coal, which is considered to be a relatively positive material. Second electrode **90** may be made of zinc, a negative material when compared with coal. First electrode **76** may be a seam of magnetite (Fe_3S_4), nickeline (NiAs), or sphalerite (ZnS), each considered to be a negative material. Second electrode **88** may be made of carbon, a positive material when compared with the magnetite, nickeline or sphalerite. The particular arrangement used will be dictated solely by the various veined materials actually encountered within the earth.

An arrangement of an earth battery of the present invention which includes apparatus for collecting the gases generated during battery operation is shown in FIG. **5**. The earth battery includes hole **114**, passing through first electrode **116**, and casing **118** which extends adjacent hole **114** as described above. Second electrode **120** is identical to the second electrode **14** shown in FIG. **1**, except that it is turned upside down, and is electrically connected to the earth's surface **122** by cable **124**. Electrolyte **126** is located in hole **114** between first electrode **116** and second electrode **120**.

A funnel-shaped trap **128** is disposed above second electrode **120** to collect the gases generated therein. The trap **128** is connected to pipe **130** which carries the gas through valve **132** and then out of casing **118**. Sleeve **134** is disposed within and spaced from casing **118** and terminates near the bottom of hole **114** in an inwardly directed, cone-shaped deflector **136**. Deflector **136** is open to allow electrolyte **126** to flow between the interior and exterior of sleeve **134**. Gases which are either generated by or are released from first electrode **116** are directed by deflector **136** into the space **138** between sleeve **134** and casing **118**, and then out of casing **118** through valve **140**.

If valves **132** and **140** were open, the gases generated would continuously escape. If valves **132** and **140** were closed, the pressure of the generated gases would increase, and eventually force electrolyte **126** up into the area between pipe **130** and sleeve **134**, as is shown in FIG. **5**. When the valves are opened, electrolyte **126** will drop back down to its original level and aid in expelling the generated gases.

The particular gases generated will depend on the exact materials involved. If the first electrode were coal, the second electrode zinc, and the electrolyte sulphuric acid, then oxygen would be generated at the second electrode, hydrogen would be generated at the first electrode, and methane would be released from the first electrode due to the fracturing of the coal from the electrolyte. The recovered gases could be used as is or could be burned to generate electric energy.

The earth battery of this invention can also be easily used to recover metals located in the earth. If a metal, such as gold, copper, or silver, is used as the first electrode, and a direct current is passed through the battery, the metal will be removed from the first electrode and plated onto the second electrode. By withdrawing the second electrode from the battery and removing the plated metal, the mining operation is completed.

Any of the earth battery arrangements discussed above could be utilized in the mining of such a metal. FIG. **6** shows an arrangement particularly adapted for mining a vein of metal. Hole **142** extends into the vein of metal **144** to be mined, casing **146** extends down to the top of the vein of metal, and electrolyte **148** is deposited in hole **142**. A recovery electrode **150** is placed into hole **142** and is at least partially immersed in electrolyte **148**. The recovery electrode **150** is connected to a direct current power source **152** by cable **154**.

The recovery electrode **150** shown in FIG. **6** is cup-shaped, open at the top, and includes a plurality of openings **156** passing therethrough. The outside of the recovery electrode **150** and the surface of openings **156** are covered with insulation **158**. Only the inner surface of the recovery electrode **150** is in contact with electrolyte **148**, and will be plated with the metal **144**.

To make electrical connection between the power source **152** and the vein of metal **144**, hole **160** is passed through the vein of metal, a liquid, electrically conductive material **162** is poured into hole **160**, and cable **164** is connected between the power source **152** and material **162**, preferably before liquid material **162** has solidified. By passing a direct current through the vein of metal **144**, electrolyte **148** and recovery electrode **150**, the metal will be plated on the recovery electrode as is known in the art.

The plated metal may be recovered by withdrawing the recovery electrode **150** from hole **142** and thereafter removing the metal. Alternatively, the metal could be removed with the recovery electrode **150** in place within hole **142**. Shown in FIG. **6** is a threaded auger **166** which is as wide as the inner width of the recovery electrode. The auger **166** may be rotated via shaft **168** and lowered into the recovery electrode **150** to thereby scrape off any metal plated thereon. The metal will then be floating in electrolyte **148** in small pieces. By removing electrolyte **148** via pump **170** through an outlet pipe **172**, the metal may be recovered by passing electrolyte **148** through a filter **174**. The filtered electrolyte may then be returned to the battery via an inlet pipe **176**.

This method can be used to recover natural veined metals located in the earth or metals buried in the earth such as gold bars, coins, or the like, which are otherwise inaccessible to conventional mining techniques. This method is particularly useful for mining paper thin seams of gold which cannot be economically mined using conventional mining techniques.

When the earth battery is no longer in use and the casing, second electrode, and other materials are removed from the hole, the ground surrounding the hole will be relatively soft due to the action of the acidic electrolyte. If a larger hole were desired, such as to reach oil deposits beneath the vein of material previously used in the earth battery, such drilling could be accomplished relatively early because the ground is already softened. This method of drilling may be useful in passing a large hole through a particularly hard rock formation. By merely drilling a small hole through the rock formation, pouring in a quantity of an acid solution, and letting the rock be softened by the acid, a larger hole may be easily drilled through the formation. It may be desirable to neutralize the acid remaining in the rock before the final drilling step. This may be done by pouring in an acid neutralizing solution, such as a baking soda solution.

Having described presently the preferred embodiments of this invention, it is to be understood that it may be otherwise embodied within the scope of the appended claims.

I claim:

1. In an electric battery including a pair of spaced electrodes and an electrolyte in the space between the electrodes and in contact therewith, the improvement comprising: one of said electrodes being a solid veined material located in the earth.

2. The battery of claim **1** wherein the veined material is selected from the group consisting of coal, graphite, magnetite, nickeline, sphalerite, arsenic, siderite, gold, silver, or copper.

3. The battery of claim **1** wherein the veined material is a seam of coal.

4. An earth battery comprising:

(a) a first electrode which is a solid veined material located in the earth;

(b) a second electrode electrically connected to the surface of the earth and disposed in a hole which extends from the surface of the earth into the first electrode;

(c) an electrolyte disposed in said hole and in contact with said first and second electrodes, and

(d) means for electrically connecting said first electrode to the surface of the earth.

5. The earth battery of claim **4** further including a casing disposed within the hole and surrounding the second electrode, wherein said casing contains the electrolyte and permits contact of the electrolyte with the first electrode but not with the surrounding earth.

6. The earth battery of claim **5** wherein the casing is a plastic tube which includes a plurality of openings in the area where the tube is adjacent the first electrode.

7. The earth battery of claim **6** wherein the electrolyte is fluid and wherein the openings vary in size inversely with their distance from the surface of the earth, such that the flow of electrolyte into the first electrode is at a uniform rate.

8. The earth battery of claim **4** wherein the means for electrically connecting the first electrode to the surface of the earth is a cable anchored to the first electrode.

9. The earth battery of claim **8** wherein the cable is anchored to the first electrode inside of said hole.

10. The earth battery of claim **8** wherein the cable is anchored to the first electrode outside of said hole.

11. The earth battery of claim **4** wherein the means for electrically connecting the first electrode to the surface of the earth is a plurality of cables anchored to the first electrode.

12. The earth battery of claim **11** wherein said plurality of cables are located outside of said hole.

13. The earth battery of claim **4** wherein the first electrode further includes one or more additional and separate veins of material located in the earth.

14. The earth battery of claim **4** further including means for recovering the gases generated during use of the battery.

15. The earth battery of claim **14** wherein the means for recovering gases includes a funnel-shaped trap located above the second electrode to collect the gases generated by the second electrode and wherein the means for recovering gases further includes a sleeve disposed within but narrower than the hole and adapted to direct the gases released by the first electrode into the space between the hole and the sleeve.

16. The earth battery of claim **4** further including a regulating means for controlling the flow of electrolyte into the first electrode.

17. The earth battery of claim 16 wherein the regulating means is a vacuum pump.

18. The earth battery of claim 4 wherein the first electrode is a vein of material selected from the group consisting of coal, graphite magnetite, nickeline, sphalerite, arsenic, siderite, gold, silver, or copper.

19. The earth battery of claim 18 wherein the first electrode is a seam of coal.

20. An earth battery comprising:

(a) a vein of coal located in the earth;

(b) an electrode disposed in a hole which extends through the vein of coal;

(c) a liquid electrolyte located in the space between the coal and the electrode;

(d) a casing disposed within the hole and surrounding the electrode, said casing directing the liquid electrolyte into the coal; and

(e) an electric cable anchored to the coal and extending to the earth's surface.

21. The earth battery of claim 20 wherein the electrode disposed in the hole is made of zinc and the electrolyte is an acid solution.

* * * * *

US008253639B2

(12) **United States Patent**
Cohen

(10) **Patent No.: US 8,253,639 B2**
(45) **Date of Patent: Aug. 28, 2012**

(54) **WIDEBAND ELECTROMAGNETIC CLOAKING SYSTEMS**

(76) Inventor: **Nathan Cohen**, Belmont, MA (US)

(*) Notice: Subject to any disclaimer, the term of this patent is extended or adjusted under 35 U.S.C. 154(b) by 498 days.

(21) Appl. No.: **12/547,104**

(22) Filed: **Aug. 25, 2009**

(65) **Prior Publication Data**

US 2010/0156556 A1 Jun. 24, 2010

Related U.S. Application Data

(60) Provisional application No. 61/189,966, filed on Aug. 25, 2008.

(51) **Int. Cl.**
H01Q 15/02 (2006.01)
H01Q 19/06 (2006.01)

(52) **U.S. Cl.** **343/753**; 343/909

(58) **Field of Classification Search** 343/753, 343/909, 910; 333/135
See application file for complete search history.

(56) **References Cited**

U.S. PATENT DOCUMENTS

5,471,224 A * 11/1995 Barkeshli 343/909
5,714,961 A * 2/1998 Kot et al. 343/769
6,473,048 B1 * 10/2002 Diaz 343/753

* cited by examiner

Primary Examiner — Michael C Wimer
(74) *Attorney, Agent, or Firm* — McDermott Will & Emery LLP

(57) **ABSTRACT**

Arrangement of resonators in an aperiodic configurations are described, which can be used for electromagnetic cloaking of objects. The overall assembly of resonators, as structures, do not all repeat periodically and at least some of the resonators are spaced such that their phase centers are separated by more than a wavelength. The arrangements can include resonators of several different sizes and/or geometries arranged so that each size or geometry corresponds to a moderate or high "Q" response that resonates within a specific frequency range, and that arrangement within that specific grouping of akin elements is periodic in the overall structure. The relative spacing and arrangement of groupings can be defined by self similarity and origin symmetry.

14 Claims, 4 Drawing Sheets

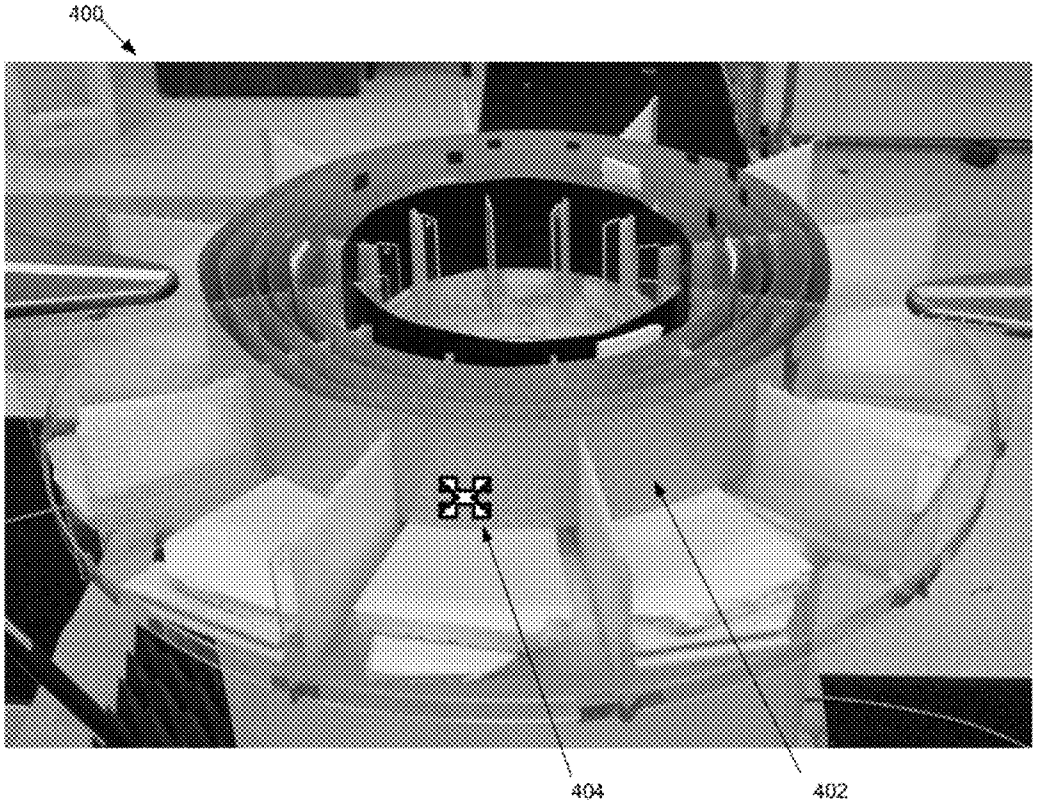

FIG. 1

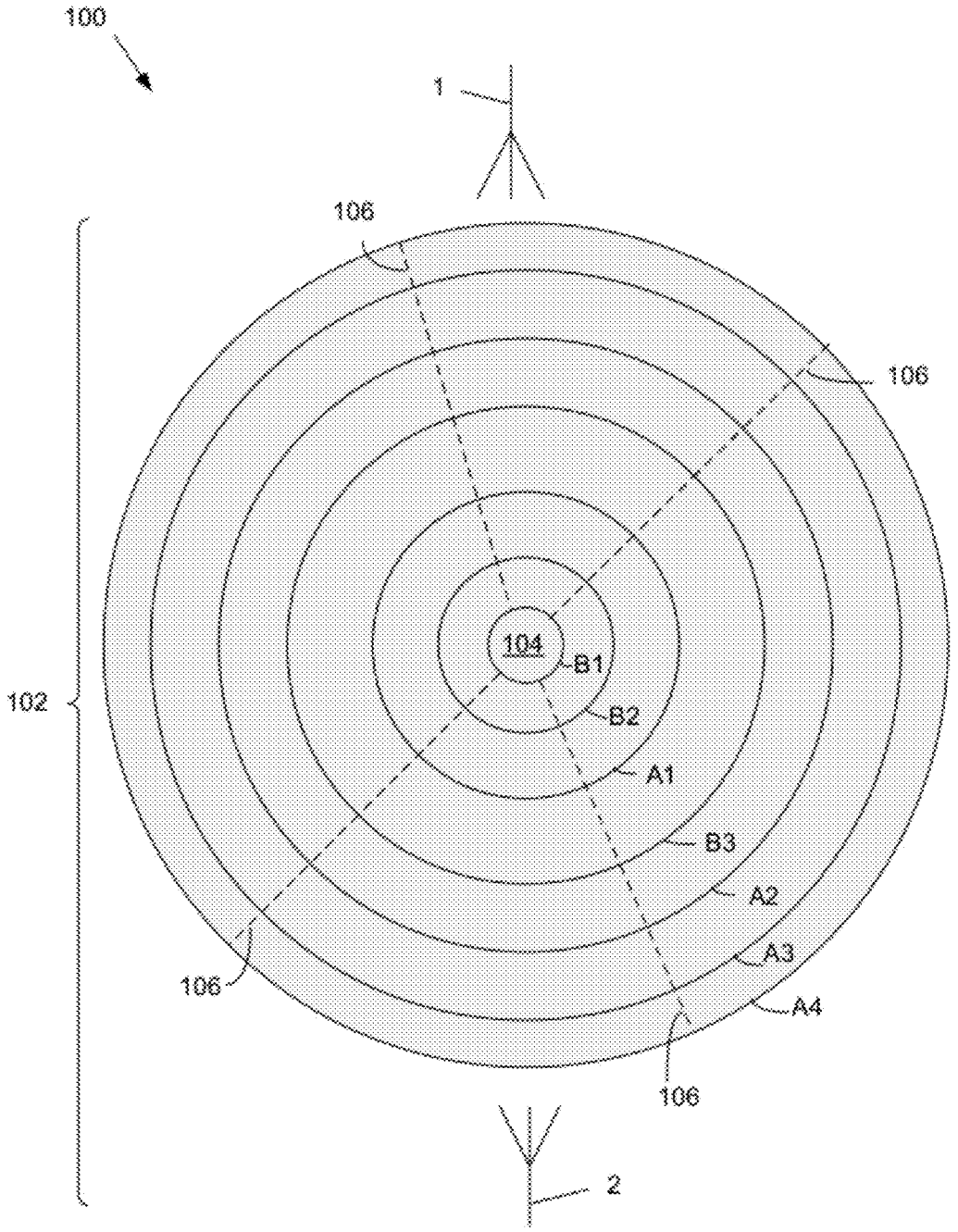

FIG. 2

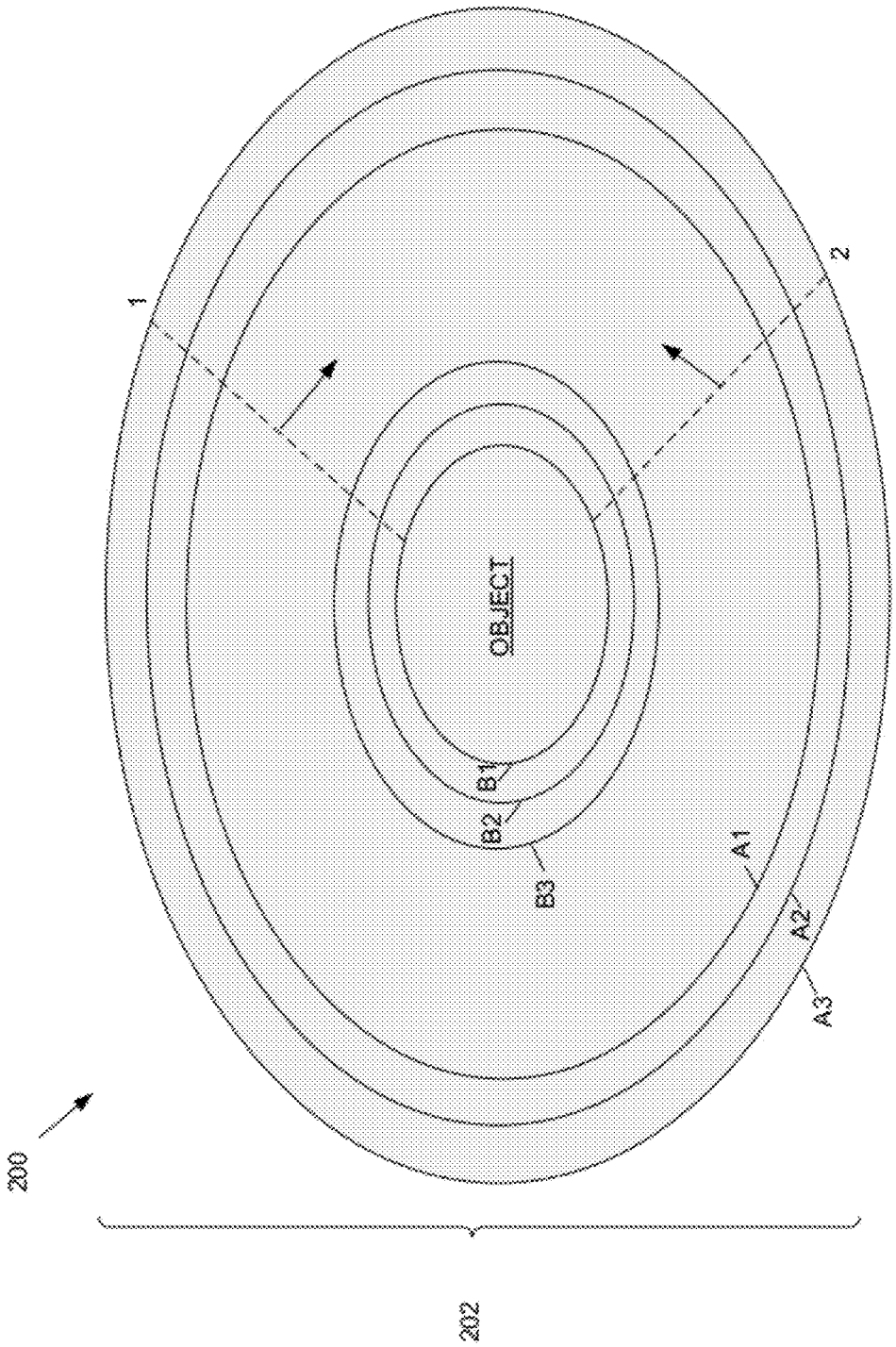

FIG. 3

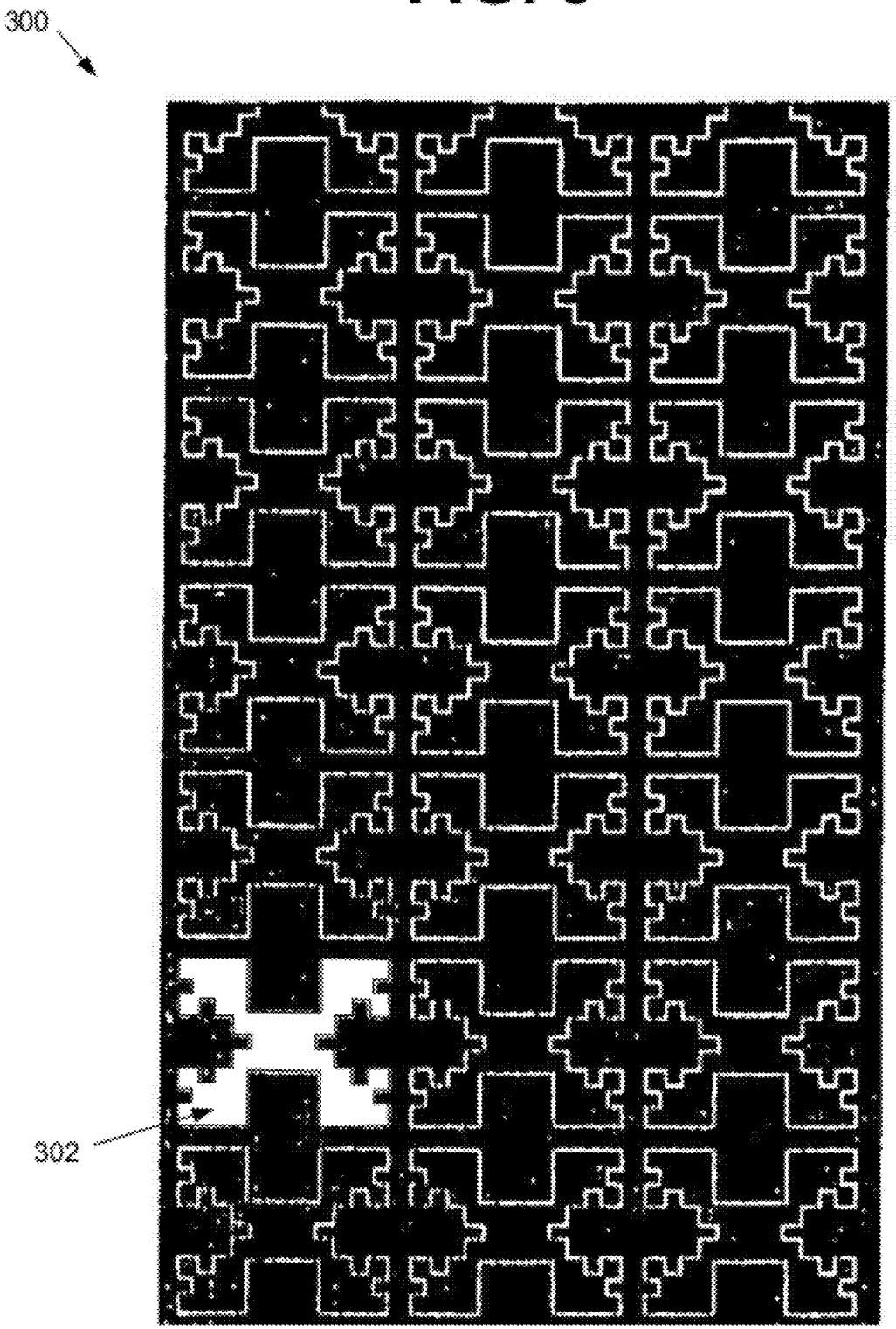

FIG. 4

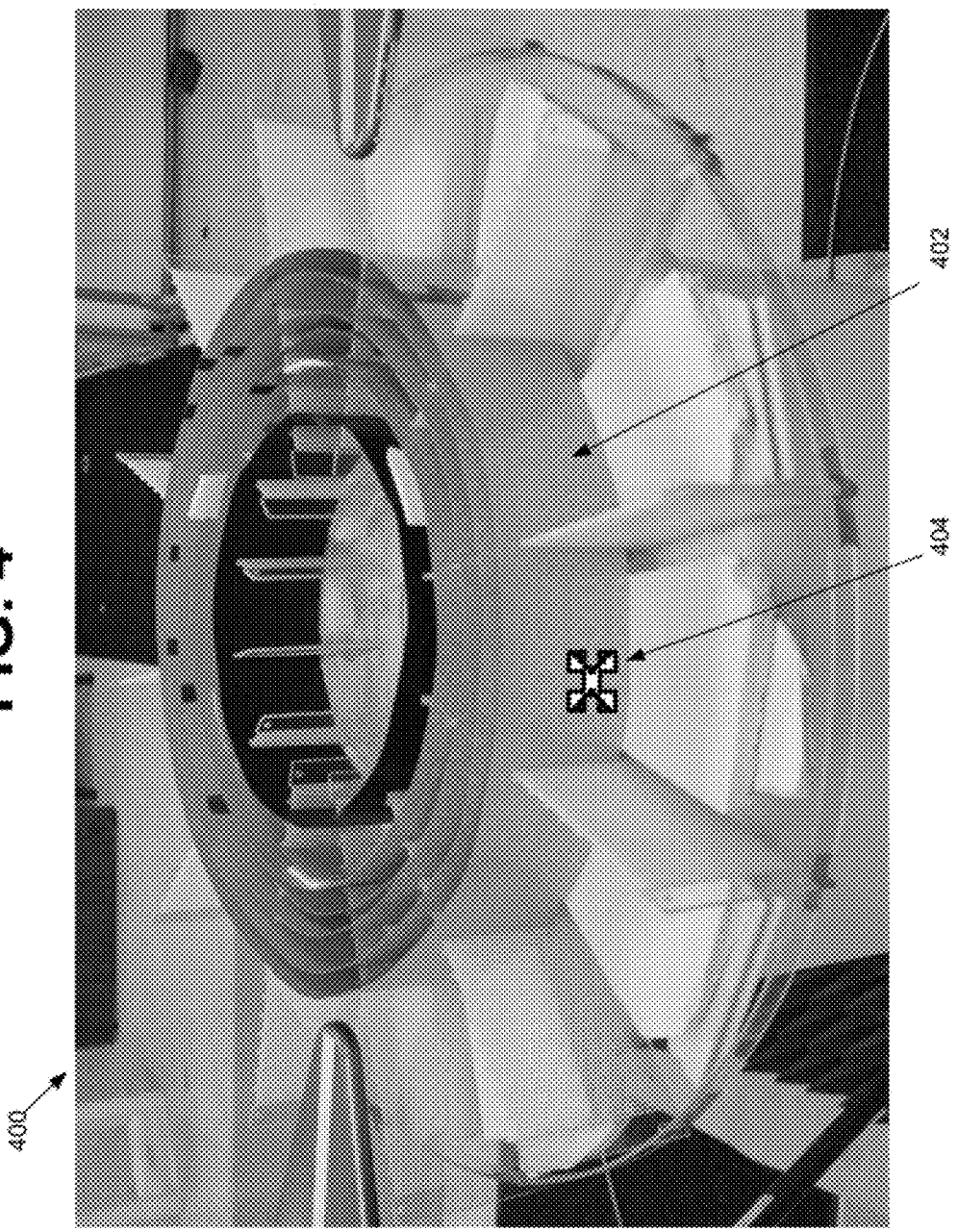

WIDEBAND ELECTROMAGNETIC CLOAKING SYSTEMS

RELATED APPLICATION

This application claims priority to U.S. Provisional Patent Application No. 61/189,966, filed 25 Aug. 2008 and entitled "Method and Apparatus for Wideband Electromagnetic Cloaking, Negative Refractive Index Lensing and Metamaterial Applications," the entire contents of which are incorporated herein by reference.

BACKGROUND

Much time and effort has been devoted to the quest for so-called invisibility machines. Beyond science fiction, however, there has been little if any real progress toward this goal.

Materials with negative permittivity and permeability leading to negative index of refraction were theorized by Russian noted physicist Victor Veselago in his seminal paper in *Soviet Physics* USPEKHI, 10, 509 (1968). Since that time, metamaterials have been developed that produce negative index of refraction, subject to various constraints. Such materials are artificially engineered micro/nanostructures that, at given frequencies, show negative permeability and permittivity. Metamaterials have been shown to produce narrow band, e.g., typically less than 5%, response such as bent-back lensing. Such metamaterials produce such a negative-index effect by utilizing a closely-spaced periodic lattice of resonators, such as split-ring resonators, that all resonate. Previous metamaterials provide a negative index of refraction when a sub-wavelength spacing is used for the resonators.

In the microwave regime, certain techniques have been developed to utilize radiation-absorbing materials or coatings to reduce the radar cross section of airborne missiles and vehicles. While such absorbing materials can provide an effective reduction in radar cross section, these results are largely limited to small ranges of electromagnetic radiation.

SUMMARY

Embodiments of the present disclosure can provide techniques, including systems and/or methods, for cloaking objects at certain wavelengths/frequencies or over certain wavelength/frequency ranges (bands). Such techniques can provide an effective electromagnetic lens and/or lensing effect for certain wavelengths/frequencies or over certain wavelength/frequency ranges (bands).

The effects produced by such techniques can include cloaking or so-called invisibility of the object(s) at the noted wavelengths or bands. Representative frequencies of operation can include, but are not limited to, those over a range of 500 MHz to 1.3 GHz, though others may of course be realized. Operation at other frequencies, including for example those of visible light, infrared, ultraviolet, and as well as microwave EM radiation, e.g., K, Ka, X-bands, etc. may be realized, e.g., by appropriate scaling of dimensions and selection of shape of the resonator elements.

Exemplary embodiments of the present disclosure can include a novel arrangement of resonators in an aperiodic configuration or lattice. The overall assembly of resonators, as structures, do not all repeat periodically and at least some of the resonators are spaced such that their phase centers are separated by more than a wavelength. The arrangements can include resonators of several different sizes and/or geometries arranged so that each size or geometry ("grouping") corresponds to a moderate or high "Q" (that is moderate or low bandwidth) response that resonates within a specific frequency range, and that arrangement within that specific grouping of akin elements is periodic in the overall structure—even though the structure as a whole is not an entirely periodic arrangement of resonators. The relative spacing and arrangement of groupings (at least one for each specific frequency range) can be defined by self similarity and origin symmetry, where the "origin" arises at the center of a structure (or part of the structure) individually designed to have the wideband metamaterial property.

For exemplary embodiments, fractal resonators can be used for the resonators in such structures because of their control of passbands, and smaller sizes compared to non-fractal based resonators. Their benefit arises from a size standpoint because they can be used to shrink the resonator (s), while control of passbands can reduce or eliminates issues of harmonic passbands that would resonate at frequencies not desired.

It should be understood that other embodiments of wideband electromagnetic resonator or cloaking systems and methods according to the present disclosure will become readily apparent to those skilled in the art from the following detailed description, wherein exemplary embodiments are shown and described by way of illustration. The systems and methods of the present disclosure are capable of other and different embodiments, and details of such are capable of modification in various other respects. Accordingly, the drawings and detailed description are to be regarded as illustrative in nature and not as restrictive.

BRIEF DESCRIPTION OF THE DRAWINGS

Aspects of the disclosure may be more fully understood from the following description when read together with the accompanying drawings, which are to be regarded as illustrative in nature, and not as limiting. The drawings are not necessarily to scale, emphasis instead being placed on the principles of the disclosure. In the drawings:

FIG. **1** depicts a diagrammatic plan view of a resonator cloaking system utilizing a number of cylindrical shells, in accordance with exemplary embodiments of the present disclosure;

FIG. **2** depicts a diagrammatic plan view of a resonator cloaking system utilizing a number of shells having an elliptical cross-section, in accordance with an alternate embodiment of the present disclosure;

FIG. **3** depicts an exemplary embodiment of a portion of shell that includes repeated conductive traces that are configured in a fractal-like shape; and

FIG. **4** depicts a perspective view (photograph) of an exemplary embodiment of the present disclosure.

While certain embodiments depicted in the drawings, one skilled in the art will appreciate that the embodiments depicted are illustrative and that variations of those shown, as well as other embodiments described herein, may be envisioned and practiced within the scope of the present disclosure.

DETAILED DESCRIPTION

The present disclosure is directed to novel arrangements of resonators useful for obscuring or hiding objects at given bands of electromagnetic radiation. Embodiments of the present disclosure can provide techniques, including systems and/or methods, for hiding or obscuring objects at certain wavelengths/frequencies or over certain wavelength/frequency ranges or bands. Such techniques can provide an

effective electromagnetic lens and/or lensing effect for certain wavelengths/frequencies or over certain wavelength/frequency ranges or bands. The effects produced by such techniques can include cloaking or so-called invisibility of the object(s) at the noted wavelengths or bands.

Representative frequencies of operation can include, but are not limited to, those over a range of about 500 MHz to about 1.3 GHz, though others may of course be realized. Operation at other frequencies, including for example those of visible light, infrared, ultraviolet, and as well as microwave EM radiation, e.g., K, Ka, X-bands, etc. may be realized, e.g., by appropriate scaling of dimensions and selection of shape of the resonator elements.

Embodiments of the present disclosure include arrangement of resonators or resonant structures in aperiodic configurations or lattices. The overall assembly of resonator structures can include nested or concentric shells, that each include repeated patterns of resonant structures. The resonant structures can be configured as a close-packed arrangement of electrically conductive material. The resonant structures can be located on the surface of a circuit board.

The overall assemblies, as structures, do not all repeat periodically and at least some of the resonators are spaced such that their phase centers are separated by more than a wavelength. The arrangements can include resonators of several different sizes and/or geometries arranged so that each size or geometry ("grouping") corresponds to a moderate or high quality-factor "Q" response (that is, one allowing for a moderate or low bandwidth) that resonates within a specific frequency range, and that arrangement within that specific grouping of like elements is periodic in the overall structure—even though the structure as a whole is not an entirely periodic arrangement of resonators. The relative spacing and arrangement of groupings (at least one for each specific frequency range) can be defined by self similarity and origin symmetry, where the "origin" arises at the center of a structure (or part of the structure) individually designed to have the wideband metamaterial property.

For exemplary embodiments, fractal resonators can be used for the resonators because of their control of passbands, and smaller sizes. A main benefit of such resonators arises from a size standpoint because they can be used to shrink the resonator(s), while control of passbands can reduce/mitigate or eliminate issues of harmonic passbands that would resonate at frequencies not desired.

Exemplary embodiments of a resonator system for use at microwave (or nearby) frequencies can be built from belts of circuit boards festooned with resonators. These belts can function to slip the microwaves around an object located within the belts, so the object is effectively invisible and "see thru" at the microwave frequencies. Belts, or shells, having similar closed-packed arrangements for operation at a first passband can be positioned within a wavelength of one another, e.g., $1/10\lambda$, $1/8\lambda$, $1/4\lambda$, $1/2\lambda$, etc.

An observer can observe an original image or signal, without it being blocked by the cloaked object. Using no power, the fractal cloak can replicates the original signal (that is, the signal before blocking) with great fidelity. Exemplary embodiments can function over a bandwidth from about 500 MHz to approximately 1500 MHz (1.5 GHz), providing 3:1 bandwidth; operation within or near such can frequencies can provide other bandwidths as well, such as 1:1 up to 2:1 and up to about 3:1.

FIG. **1** depicts a diagrammatic plan view of a cloaking system **100** and RF testing set up in accordance with exemplary embodiments of the present disclosure. As shown in FIG. **1**, a number of concentric shells (or bands) **102** are placed on a platform (parallel to the plane of the drawing). The shells include a flexible substrate (e.g., polyimide with or without composite reinforcement) with conductive traces (e.g., copper, silver, etc.) in fractal shapes or outlines. The shells **102** surround an object to be cloaked (shown as **104** in FIG. **1**). A transmitting antenna **1** and a receiving antenna **2** are configured at different sides of the system **100**, for verifying efficacy of the cloaking system **100** and recording results. The shells **102** can be held in place by radial supports **106** (while only four are shown, **12** were used in the exemplary embodiment indicated).

The shells indicated in FIG. **1** are of two types, one set (A**1**-A**4**) configured for optimal operation over a first wavelength/frequency range, and another set (B**1**-B**3**) configured for optimal operation over a second wavelength/frequency range. (The numbering of the shells is of course arbitrary and can be reordered, e.g., reversed.)

For an exemplary embodiment of system **100**, the outer set of shells (A**1**-A**4**, with A**1** being the innermost and A**4** the outmost) had a height of about 3 to 4 inches (e.g., 3.5 inches) and the inner set of shells had a height of about 1 inch less (e.g., about 2.5 to 3 inches). The spacing between the shells with a larger fractal shape (A**1**-A**4**) was about 2.4 cm while the spacing between shells of smaller fractal generator shapes (B**1**-B**3**) was about 2.15 cm (along a radial direction). In a preferred embodiment, shell A**4** was placed between shell B**2** and B**3** as shown. The resonators formed on each shell by the fractal shapes can be configured so as to be closely coupled (e.g., by capacitive coupling) and can serve to propagate a plasmonic wave.

It will be appreciated that while, two types of shells and a given number of shells per set are indicated in FIG. **1**, the number of shell types and number of shells for each set can be selected as desired, and may be optimized for different applications, e.g., wavelength/frequency bands.

FIG. **2** depicts a diagrammatic plan view of a cloaking system (or electrical resonator system) according to an alternate embodiment in which the individual shells have an elliptical cross section. As shown in FIG. **2**, a system **200** for cloaking can include a number of concentric shells (or bands) **202**. These shells can be held in place with respect to one another by suitable fixing means, e.g., they can be placed on a platform (parallel to the plane of the drawing) and/or held with a frame. The shells **202** can include a flexible substrate (e.g., polyimide with or without composite reinforcement) with a close-packed arrangement of electrically conductive material formed on the first surface. As stated previously for FIG. **1**, the closed-packed arrangement can include a number of self-similar electrical resonator shapes. The resonator shapes can be made from conductive traces (e.g., copper, silver, gold, silver-based ink, etc.) having a desired shape, e.g., fractal shape, split-ring shape, and the like. The shells **202** can surround an object to be cloaked, as indicated in FIG. **2**.

As indicated in FIG. **2** (by dashed lines **1** and **2** and arrows), the various shells themselves do not have to form closed surfaces. Rather, one or more shells can form open surfaces. This can allow for preferential cloaking of the object in one direction or over a given angle (solid angle). Moreover, while dashed lines **1** and **2** are shown intersecting shells B**1**-B**3** and A**1**-A**3** of system **200**, one or more shells of each group of shells (B**1**-B**3** and A**1**-A**3**) can be closed while others are open.

With further regard to FIGS. **1**-**2**, it should be appreciated that the cross-sections shown for each shell can represent closed geometric shapes, e.g., spherical and ellipsoidal shells.

As indicated previously, each shell of a cloaking system can include multiple resonators. The resonators can be repeated patterns of conductive traces. These conductive traces can be closed geometric shapes, e.g., rings, loops, closed fractals, etc. The resonator(s) can being self similar to at least second iteration. The resonators can include split-ring shapes, for some embodiments. The resonant structures are not required to be closed shapes, however, and open shapes can be used for such.

In exemplary embodiments, the closed loops can be configured as a fractals or fractal-based shapes, e.g., as depicted by **302** in FIG. **3** for an exemplary embodiment of a shell **300**, or **402** in FIG. **4**. The dimensions and type of fractal shape can be the same for each shell type but can vary between shell types. This variation (e.g., scaling of the same fractal shape) can afford increased bandwidth for the cloaking characteristics of the system (e.g., system **100** of FIG. **1**) This can lead to periodicity of the fractal shapes of common shell types but aperiodicity between the fractal shapes of different shell types.

Examples of suitable fractal shapes (for use for shells and/or a scatting object) can include, but are not limited to, fractal shapes described in one or more of the following patents, owned by the assignee of the present disclosure, the entire contents of all of which are incorporated herein by reference: U.S. Pat. Nos. 6,452,553; 6,104,349; 6,140,975; 7,145,513; 7,256,751; 6,127,977; 6,476,766; 7,019,695; 7,215,290; 6,445,352; 7,126,537; 7,190,318; 6,985,122; 7,345,642; and, U.S. Pat. No. 7,456,799.

Other suitable fractal shape for the resonant structures can include any of the following: a Koch fractal, a Minkowski fractal, a Cantor fractal, a torn square fractal, a Mandelbrot, a Caley tree fractal, a monkey's swing fractal, a Sierpinski gasket, and a Julia fractal, a contour set fractal, a Sierpinski triangle fractal, a Menger sponge fractal, a dragon curve fractal, a space-filling curve fractal, a Koch curve fractal, an Iypanov fractal, and a Kleinian group fractal.

FIG. **3** depicts an exemplary embodiment of a shell **300** (only a portion is shown) that includes repeated conductive traces that are configured in a fractal shape **302** (the individual closed traces). For the exemplary embodiment shown, each resonator shape **302** is about 1 cm on a side. Such resonator could, e.g., be used for the fractal shapes of shells B**1**-B**3** of FIG. **1**, in which case similar fractal shapes of larger size (e.g., about 1.5 cm on a side) could be used for shells A**1**-A**4**. The conductive trace is preferably made of copper. While exemplary fractal shapes are shown in FIG. **3**, the present disclosure is not limited to such and any other suitable fractal shapes (including generator motifs) may be used in accordance with the present disclosure.

It will be appreciated that the resonant structures of the shells may be formed or made by any suitable techniques and with any suitable materials. For example, semiconductors with desired doping levels and dopants may be used as conductive materials. Suitable metals or metal containing compounds may be used. Suitable techniques may be used to place conductors on/in a shell, including, but no limited to, printing techniques, photolithography techniques, etching techniques, and the like.

It will also be appreciated that the shells may be made of any suitable material(s). Printed circuit board materials may be used. Flexible circuit board materials are preferred. Other material may, however, be used for the shells and the shells themselves can be made of non-continuous elements, e.g., a frame or framework. For example, various plastics may be used.

FIG. **4** depicts a perspective view (photograph) of an exemplary embodiment of a cloak system **400** according to the present disclosure. As shown, the system includes a number of resonator shells **402** each having a close-packed arrangement of electrically conductive material (self-similar resonators **404**) formed on one surface. Two different shell configurations are shown, four larger shells and two smaller shells. The smaller shells included close-packed arrangements of resonator structures in which each resonator shape (as shown by **302** in FIG. **3**) was about 1 cm on a side. Similar fractal shapes of larger size (e.g., about 1.5 cm on a side) were used for the larger shells.

In FIG. **4**, a transmitting (source) antenna and a receiving antenna are shown as triangular shapes on the left and right, respectively (though functionally of each could of course be interchanged for the other). Twelve radially arrayed spacers are shown in FIG. **4**. The system **400** is shown supported on a Nalgene tank and Delrin platform and Delrin supports (radial supports) RF absorbers were placed in the immediate vicinity of the set up; further RF tripods (e.g., available from ETS) were used; all such materials were substantially transparent at the RF frequencies investigated/used. The cloak system **400** consists of six belts of fractal metamaterial (i.e., fractal-resonant structures shown in FIG. **3**) on flexible Taconic EF35 (low loss) circuit board. The belts are shown surround a scattering ring (object). The arrangement is supported by RF transparent plastics in a comb support. The entire system **400** was shown to be easily built up and broken down within a minute or two. The scale in FIG. **4** is about 0.7 meters across. The height of each shell can of course be selected as desired depending on the situation/application.

While embodiments are shown and described herein as having shells in the shape of concentric rings (circular cylinders), shells can take other shapes in other embodiments. For example, one or more shells could have a generally spherical shape (with minor deviations for structural support). In an exemplary embodiment, the shells could form a nested arrangement of such spherical shapes, around an object to be shielded (at the targeted/selected frequencies/wavelengths). Shell cross-sections of angular shapes, e.g., triangular, hexagonal, while not preferred, may be used.

One skilled in the art will appreciate that embodiments and/or portions of embodiments of the present disclosure can be implemented in/with computer-readable storage media (e.g., hardware, software, firmware, or any combinations of such), and can be distributed and/or practiced over one or more networks. Steps or operations (or portions of such) as described herein, including processing functions to derive, learn, or calculate formula and/or mathematical models utilized and/or produced by the embodiments of the present disclosure, can be processed by one or more suitable processors, e.g., central processing units ("CPUs") implementing suitable code/instructions in any suitable language (machine dependent on machine independent).

While certain embodiments and/or aspects have been described herein, it will be understood by one skilled in the art that the methods, systems, and apparatus of the present disclosure may be embodied in other specific forms without departing from the spirit thereof.

For example, while certain wavelengths/frequencies of operation have been described, these are merely representative and other wavelength/frequencies may be utilized or achieved within the scope of the present disclosure.

Furthermore, while certain preferred fractal generator shapes have been described others may be used within the scope of the present disclosure. Accordingly, the embodi-

ments described herein are to be considered in all respects as illustrative of the present disclosure and not restrictive.

What is claimed is:

1. An electrical resonator system, comprising:

a plurality of concentric electrical resonator shells, each shell including a substrate having first and second surfaces and a close-packed arrangement of electrically conductive material formed on the first surface, wherein the closed-packed arrangement comprises a plurality of self-similar electrical resonator shapes and is configured to operate at a desired passband of electromagnetic radiation;

wherein the close-packed arrangements of at least two of the electrical resonator shells are different in size and/or shape; and

wherein a resonator in the close-packed arrangement comprises a second order or higher fractal.

2. The system of claim **1**, wherein said passband is about 2:1.

3. The system of claim **2**, wherein said passband is about 3:1.

4. The system of claim **1**, wherein the electrical system is configured and arranged so that radiation incident on the system from a given direction has an intensity on a point-by-point basis such at each respective antipodal point, relative to an object placed at the center of the system, the radiation has the same or similar intensity.

5. The system of claim **1**, wherein the system is configured and arranged so that radiation incident on the system from a direction in cylindrical coordinates has the same or similar intensity at the antipodal point after having traversed the system.

6. The system of claim **1**, wherein the plurality of shells comprises a first pair of shells having similar closed-packed arrangements for operation at a first passband, wherein the two shells are positioned within $\frac{1}{8}\lambda$ of one another.

7. The system of claim **6**, wherein the plurality of shells comprises a second pair of shells having similar closed-packed arrangements for operation at a second frequency band, wherein the two shells are positioned within $\frac{1}{8}\lambda$ of one another.

8. The system of claim **1**, wherein the plurality of shells are hemispherical.

9. The system of claim **1**, wherein the plurality of shells are cylindrical.

10. The system of claim **1**, wherein the plurality of shells are spherical.

11. The system of claim **1**, wherein said fractal is selected from the group consisting of a Koch fractal, a Minkowski fractal, a Cantor fractal, a torn square fractal, a Mandelbrot, a Caley tree fractal, a monkey's swing fractal, a Sierpinski gasket, and a Julia fractal.

12. The system of claim **1**, wherein the fractal is selected from the group consisting of a contour set fractal, a Sierpinski triangle fractal, a Menger sponge fractal, a dragon curve fractal, a space-filling curve fractal, a Koch curve fractal, a Lypanov fractal, and a Kleinian group fractal.

13. The system of claim **1**, wherein the plurality of concentric electrical resonator shells are configured and arranged for operation at K band, Ka band, or X-band.

14. The system of claim **1**, wherein the system is operational over a bandwidth from about 500 MHz to about 1500 MHz.

* * * * *

US006859114B2

(12) **United States Patent**
Eleftheriades et al.

(10) **Patent No.: US 6,859,114 B2**
(45) **Date of Patent: Feb. 22, 2005**

(54) **METAMATERIALS FOR CONTROLLING AND GUIDING ELECTROMAGNETIC RADIATION AND APPLICATIONS THEREFOR**

(76) Inventors: **George V. Eleftheriades**, 59 Dorset Road, Scarborough, Ontario (CA), M1M 2S8; **Keith G. Balmain**, 44 Jackes Avenue, Apartment #1904, Toronto, Ontario (CA), M4T 1E5

(*) Notice: Subject to any disclaimer, the term of this patent is extended or adjusted under 35 U.S.C. 154(b) by 4 days.

(21) Appl. No.: **10/453,907**

(22) Filed: **Jun. 2, 2003**

(65) **Prior Publication Data**

US 2004/0066251 A1 Apr. 8, 2004

Related U.S. Application Data

(60) Provisional application No. 60/384,080, filed on May 31, 2002.

(51) **Int. Cl.**[7] **H01P 1/18**

(52) **U.S. Cl.** **333/156**; 333/116

(58) **Field of Search** 333/156, 116, 333/204; 343/700

(56) **References Cited**

U.S. PATENT DOCUMENTS

6,731,244 B2 * 5/2004 Killen et al. ..... 343/700 MS

* cited by examiner

Primary Examiner—Brian Young
Assistant Examiner—Joseph Lauture
(74) *Attorney, Agent, or Firm*—Beyer Weaver & Thomas, LLP

(57) **ABSTRACT**

A linear metamaterial comprises a transmission line, having a linear dimension, and is loaded with capacitors, and shunted with an inductor such that for an electromagnetic wave, having a wavelength greater than the linear dimension and traveling along the axis of the transmission line, the effective permeability and permittivity of the metamaterial are simultaneously negative. Applications for the metameterial are also disclosed.

18 Claims, 28 Drawing Sheets

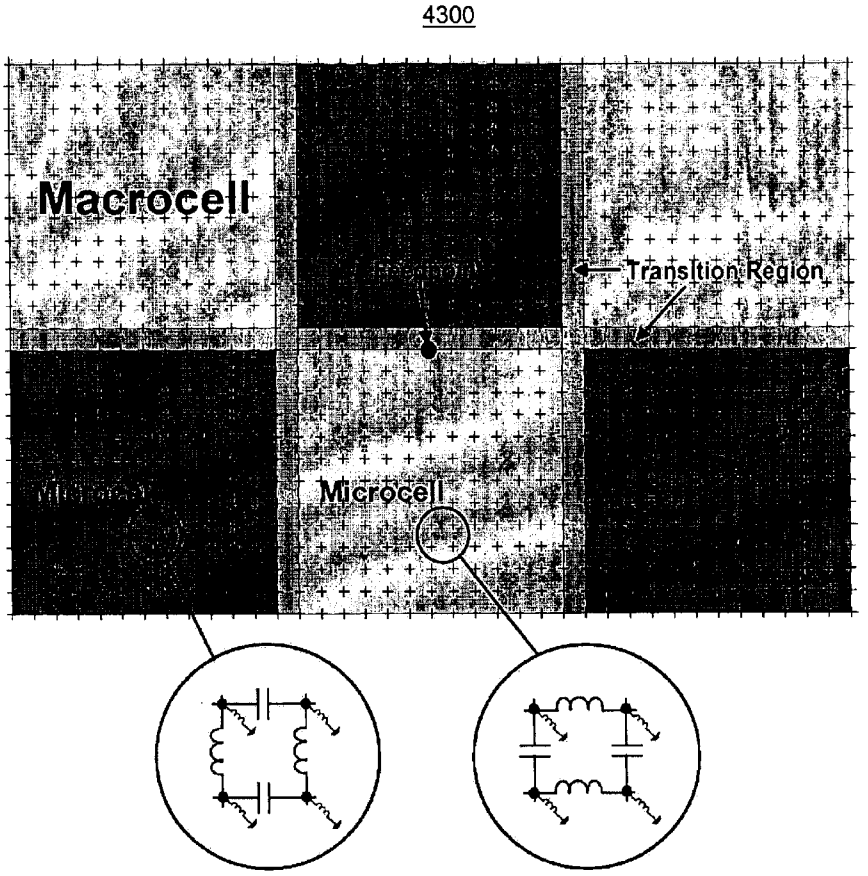

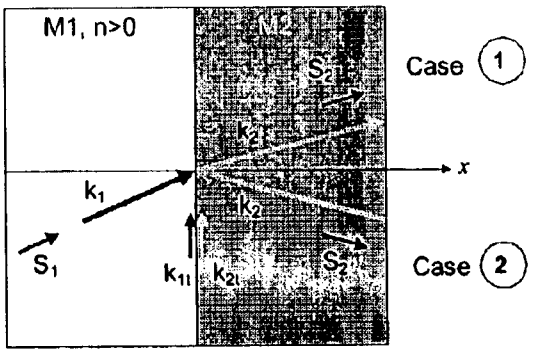

Figure 1

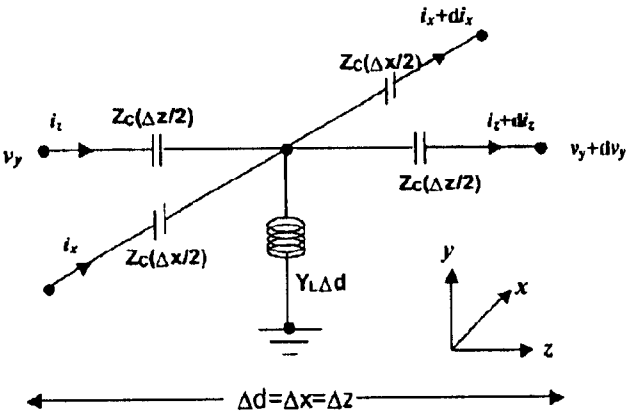

Figure 2

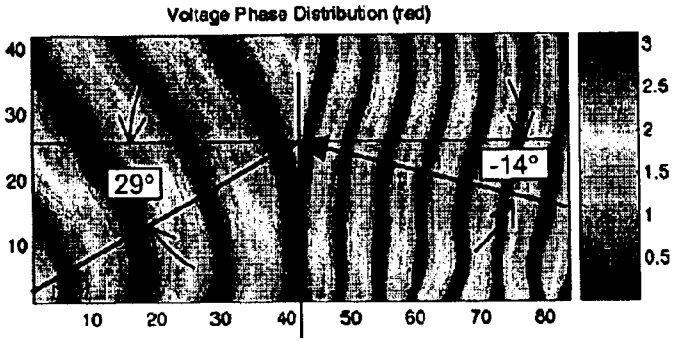

Figure 3

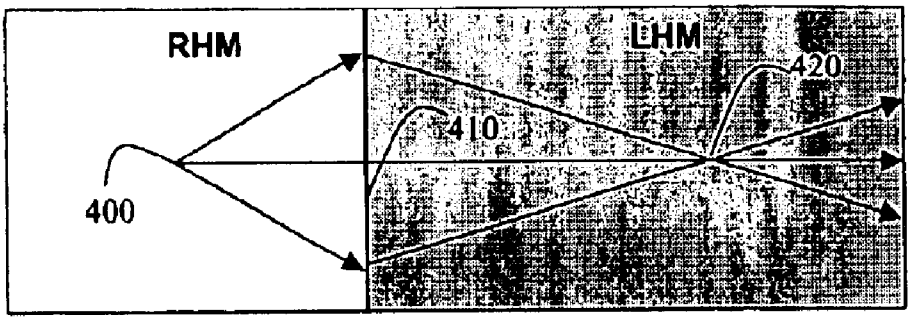

Figure 4

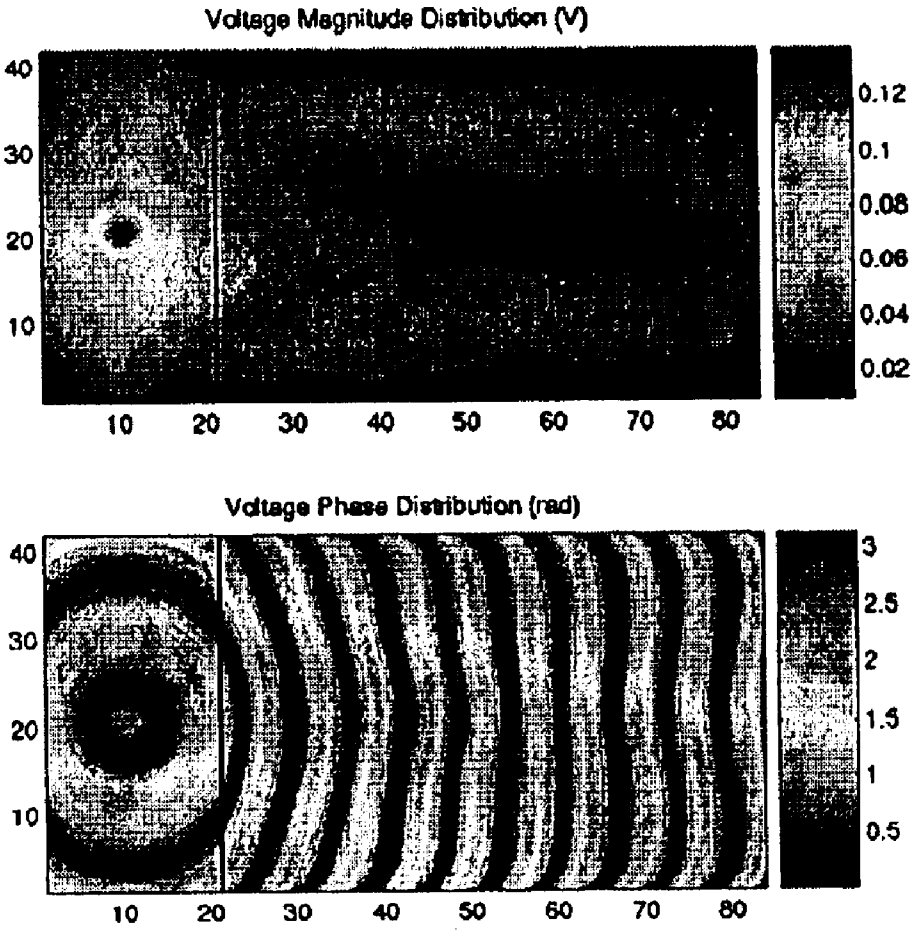

Figure 5

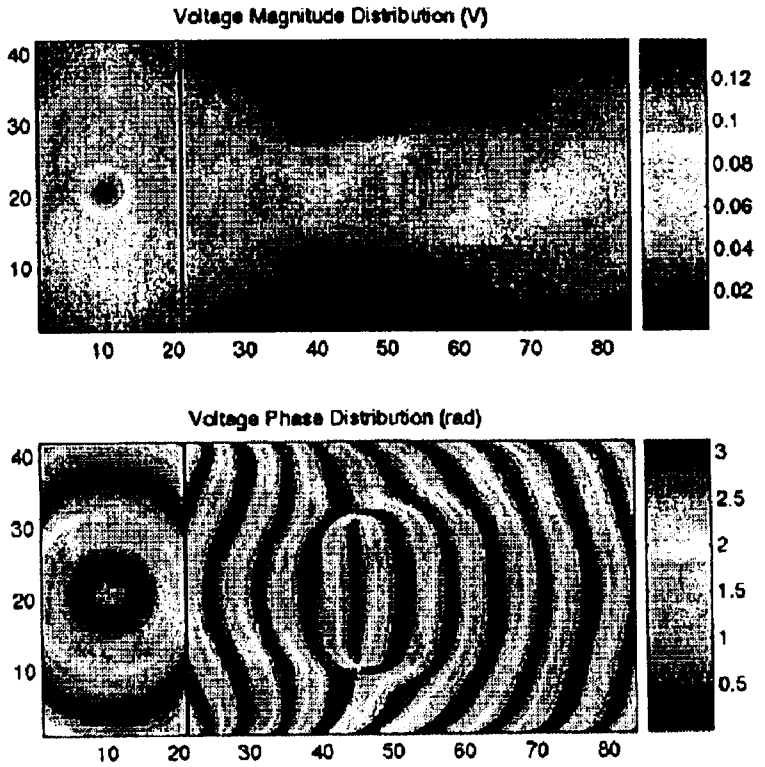

Figure 6

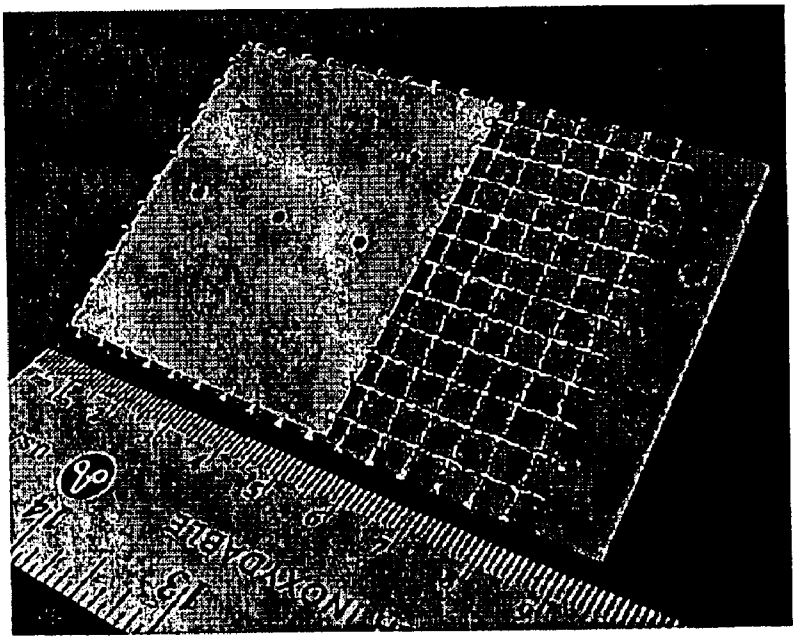

Figure 7

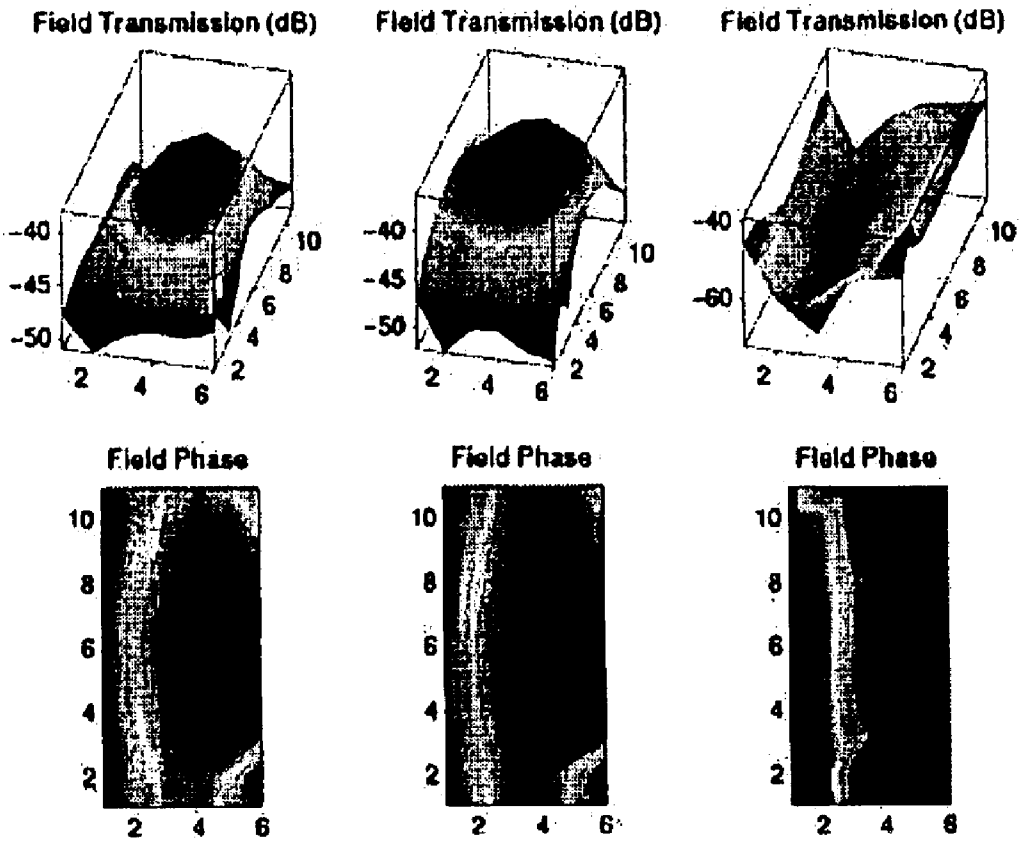
Field Transmission (dB)
-40
-45
-50
2
4
6
10
8
6
4
2
Field Transmission (dB)
-40
-45
-50
2
4
6
10
8
6
4
2
Field Transmission (dB)
-40
-60
2
4
6
10
8
6
4
2
Field Phase
10
8
6
4
2
2
4
6
Field Phase
10
8
6
4
2
2
4
6
Field Phase
10
8
6
4
2
2
4
6

Figure 8

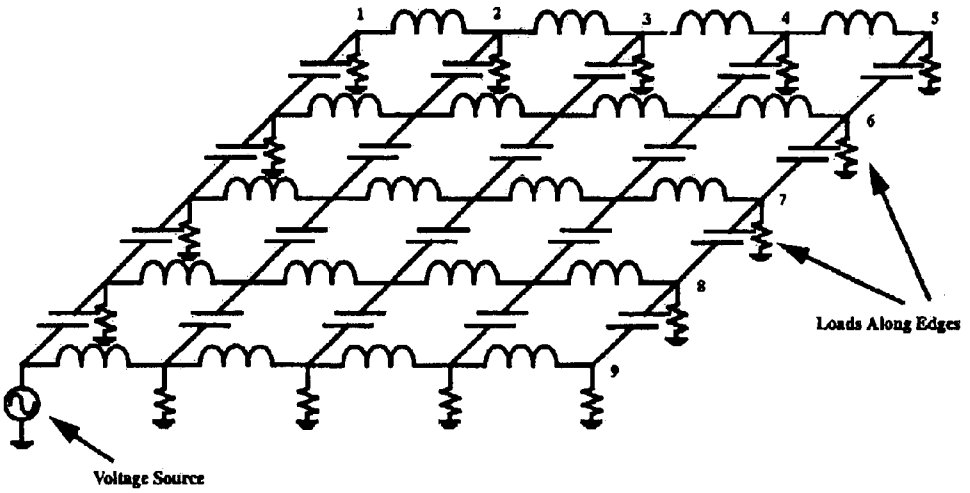

Capacitance: 1 pF (at each end of each segment)
Inductance: 25.33 nH (at each end of each segment)
Load Resistances: 300 Ohms
Source Voltage: 1 V
Grid Spacing: 1 mm
Height above ground: 1 mm

Figure 9

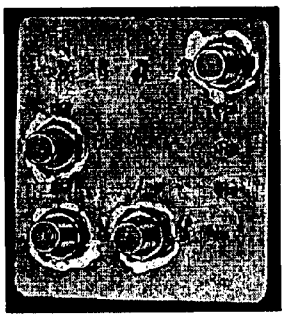

Figure 10

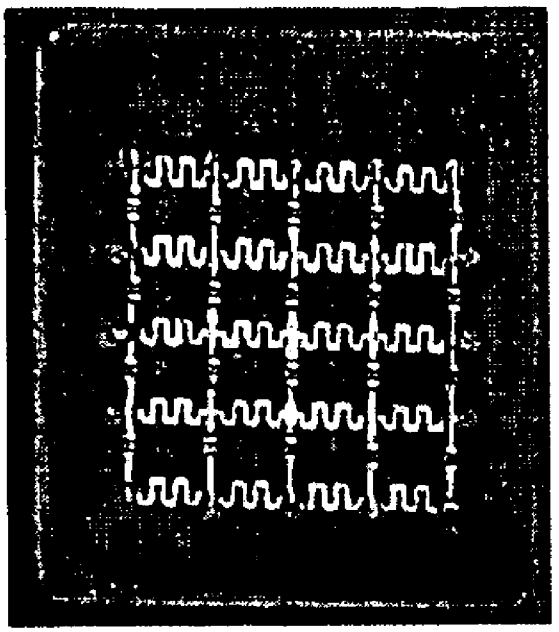

Figure 11

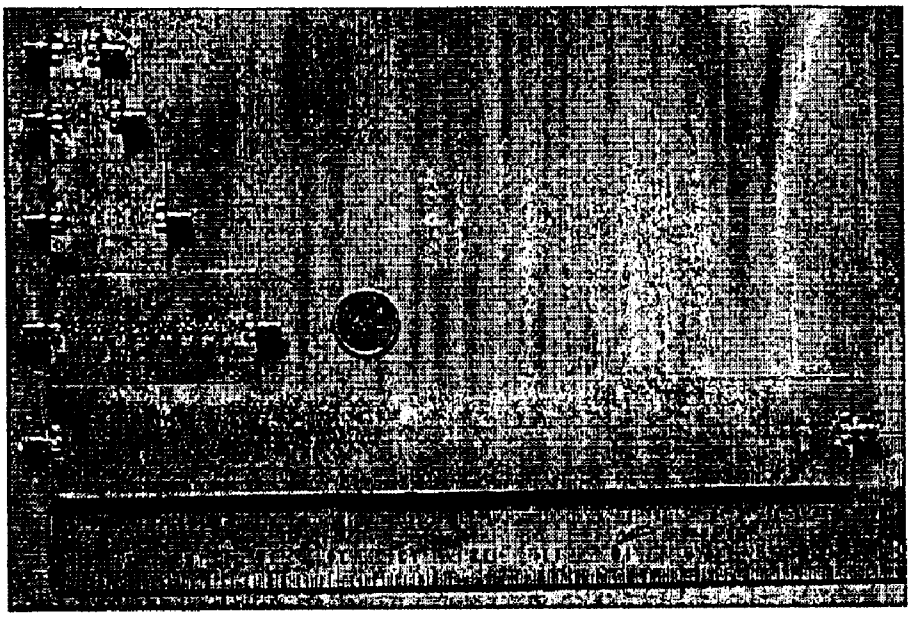

Figure 12

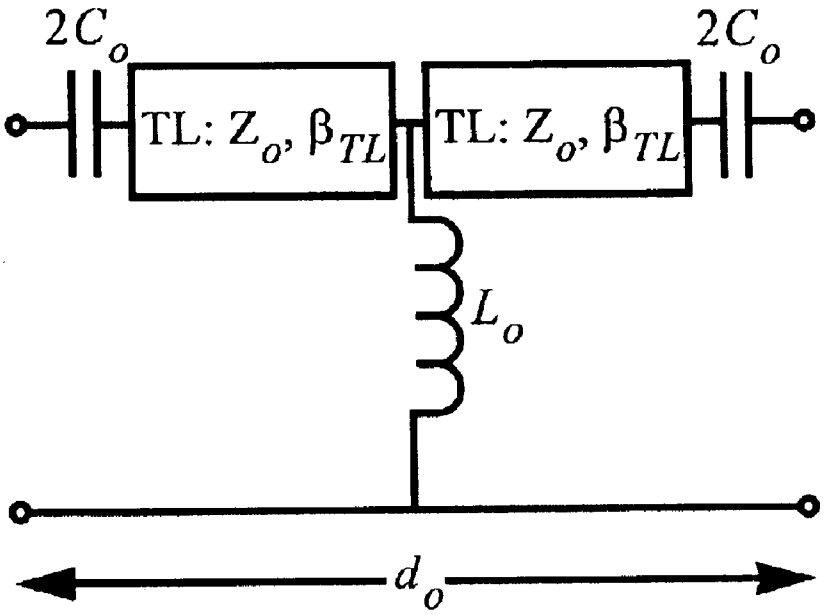

Figure 13

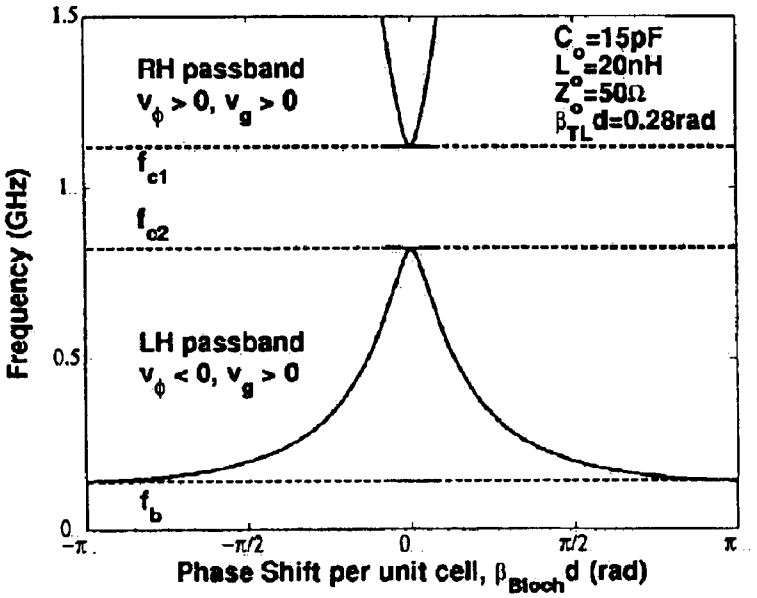

Figure 14

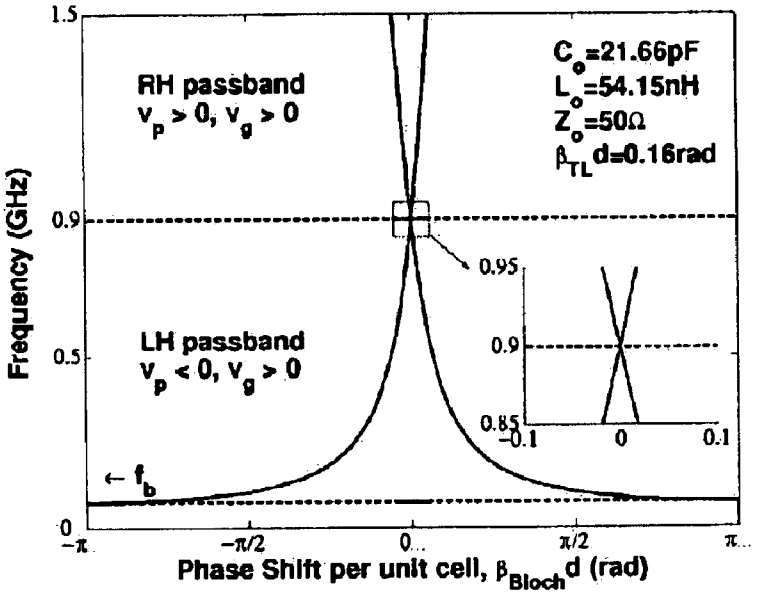

Figure 15

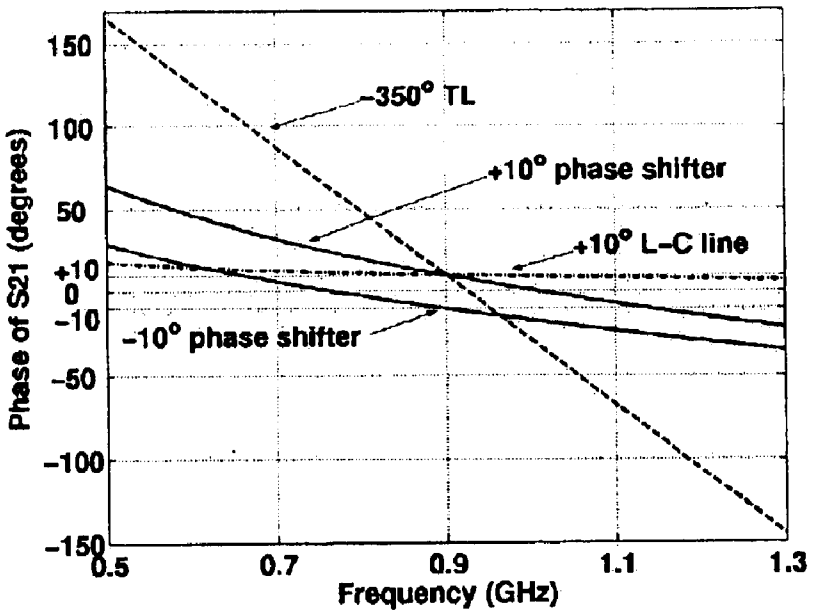

Figure 16

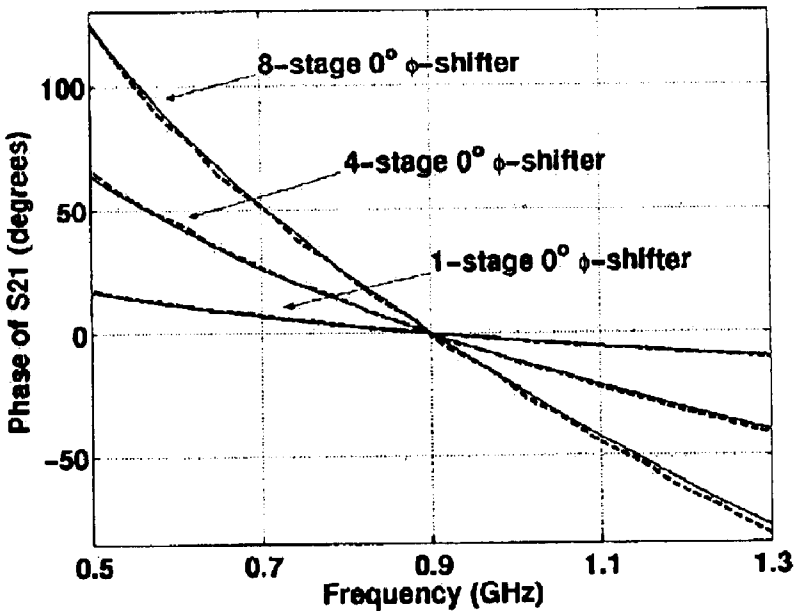

Figure 17

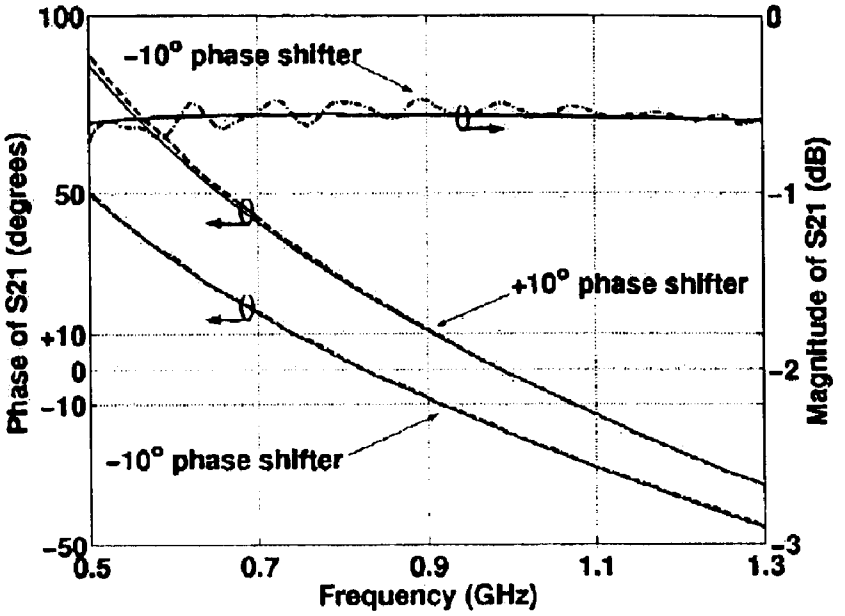

Figure 18

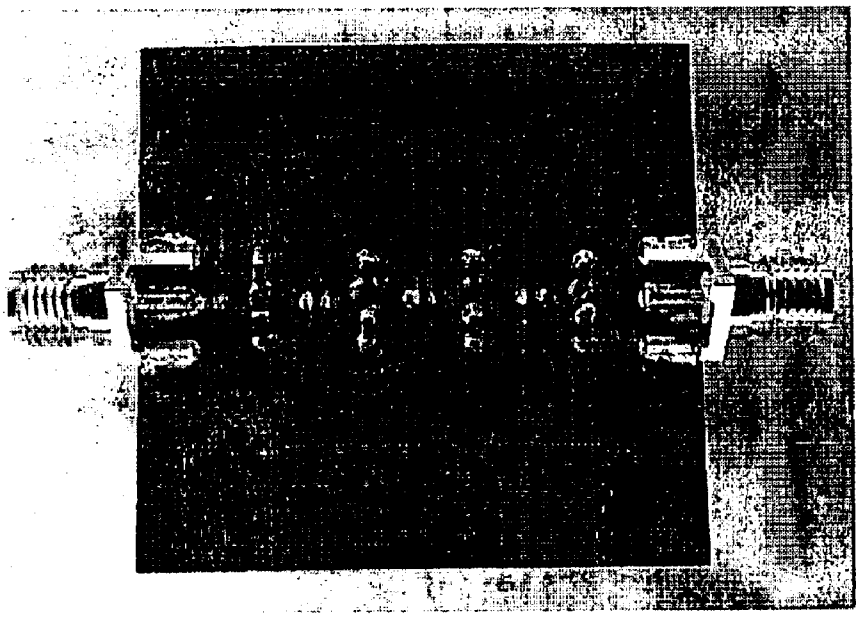

Figure 19

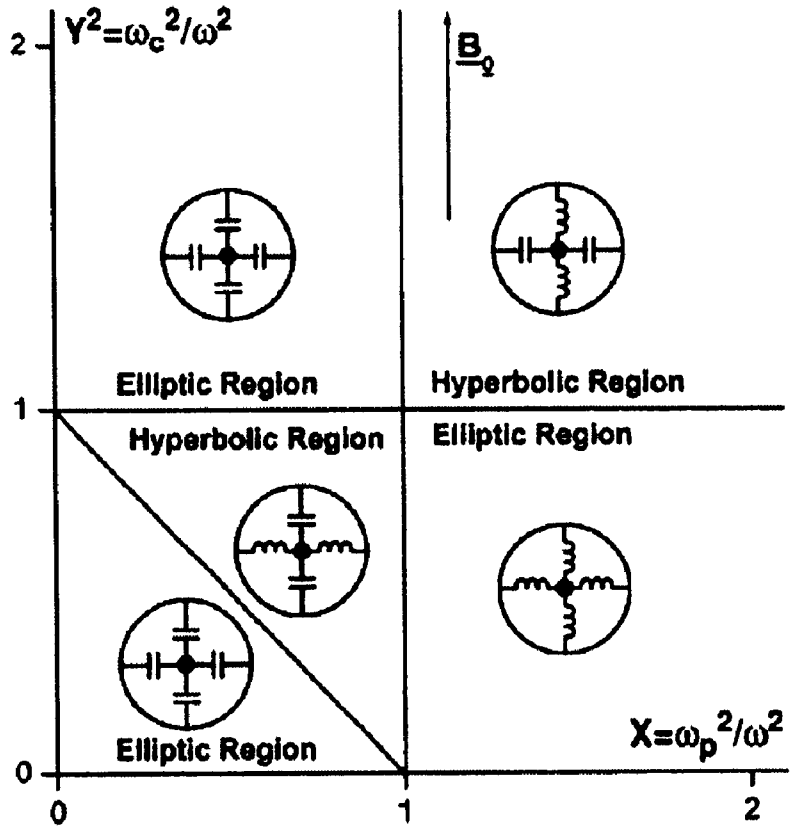

Figure 20

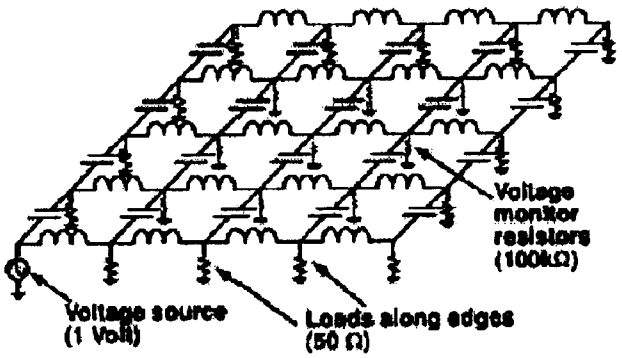

Figure 21

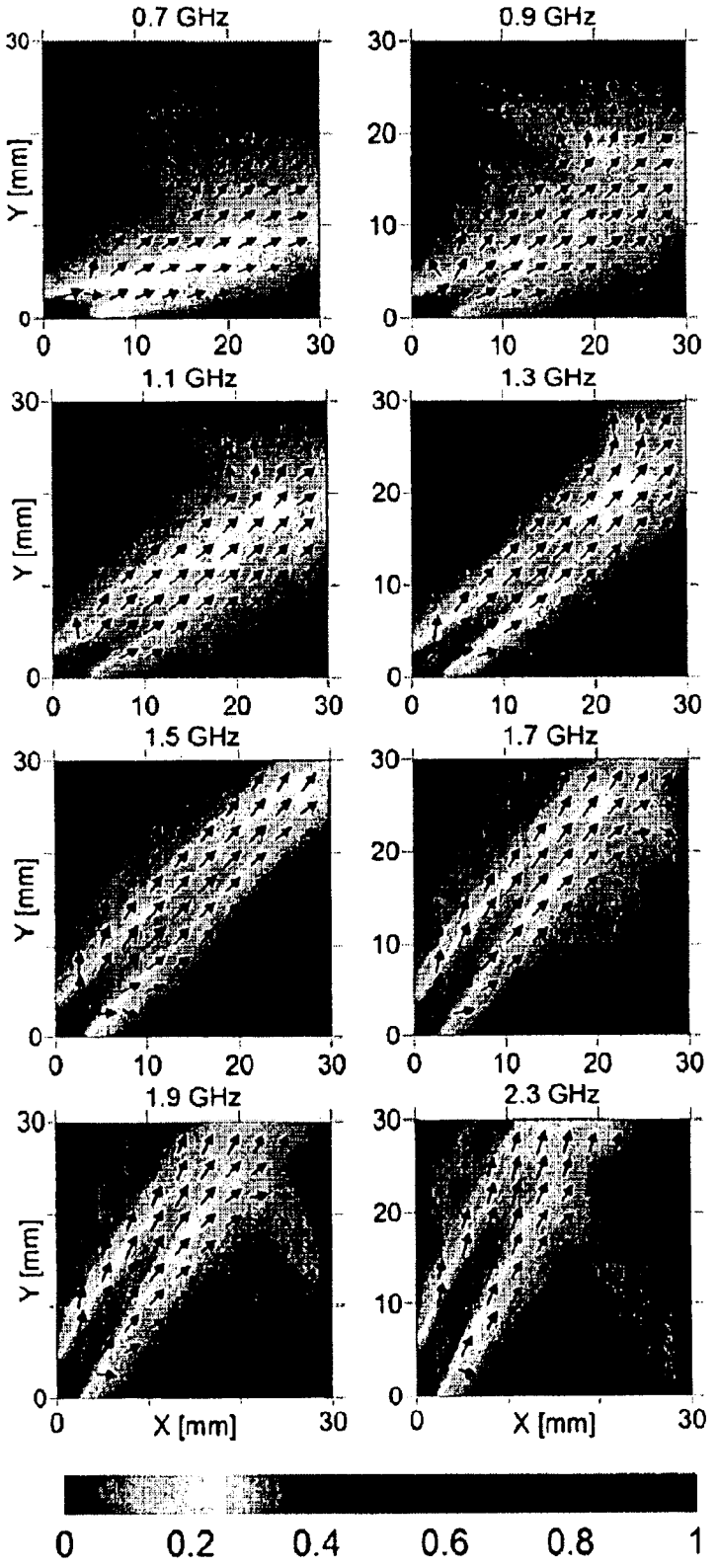
0.7 GHz
0.9 GHz
1.1 GHz
1.3 GHz
1.5 GHz
1.7 GHz
1.9 GHz
2.3 GHz
Y [mm]
X [mm]
0
10
20
30
0
0.2
0.4
0.6
0.8
1

Figure 22

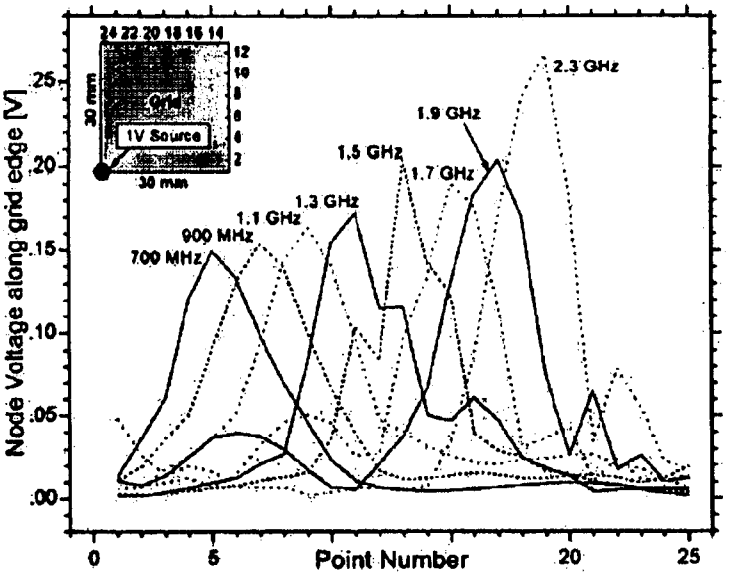

Figure 23

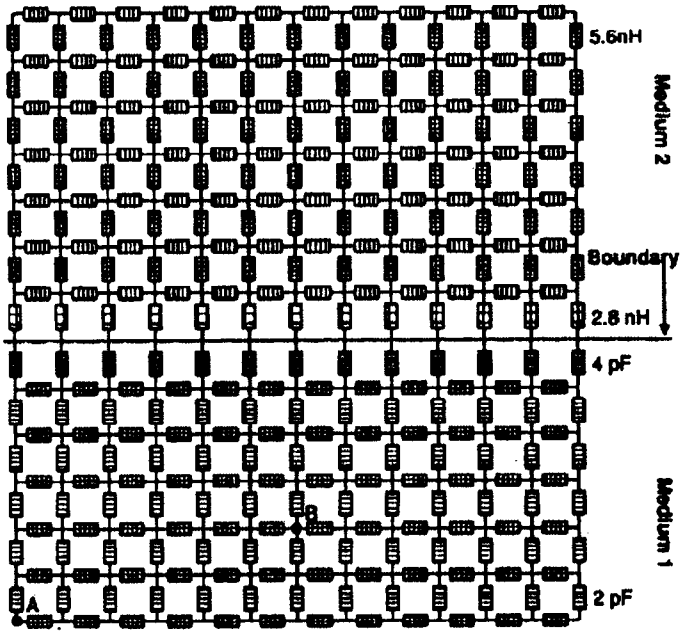

Figure 24

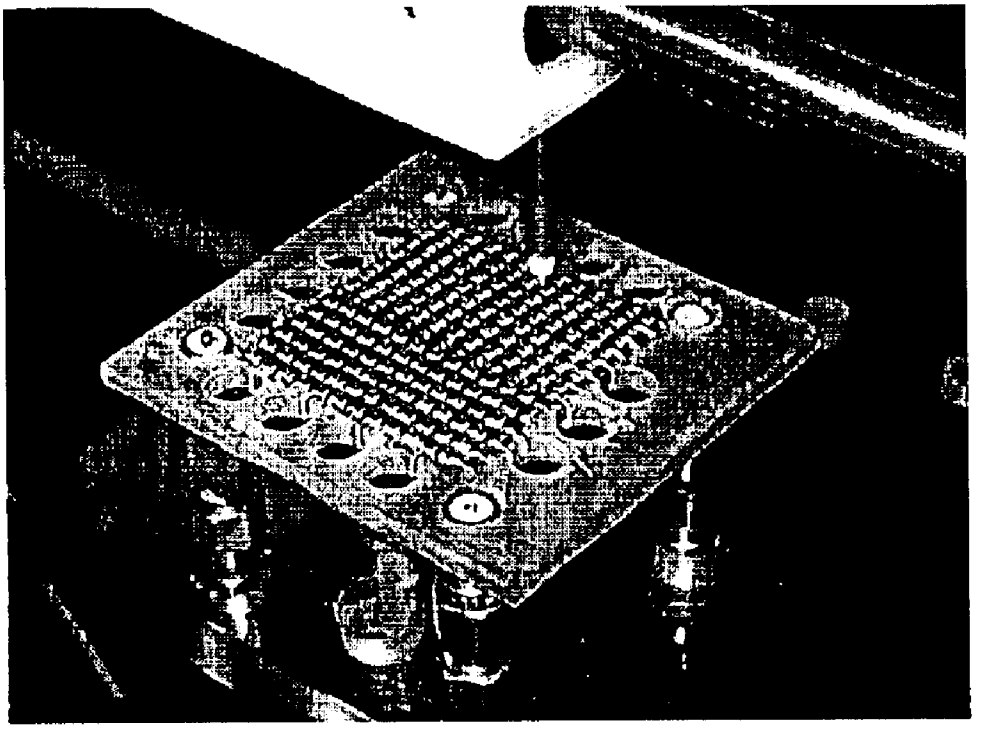

Figure 25

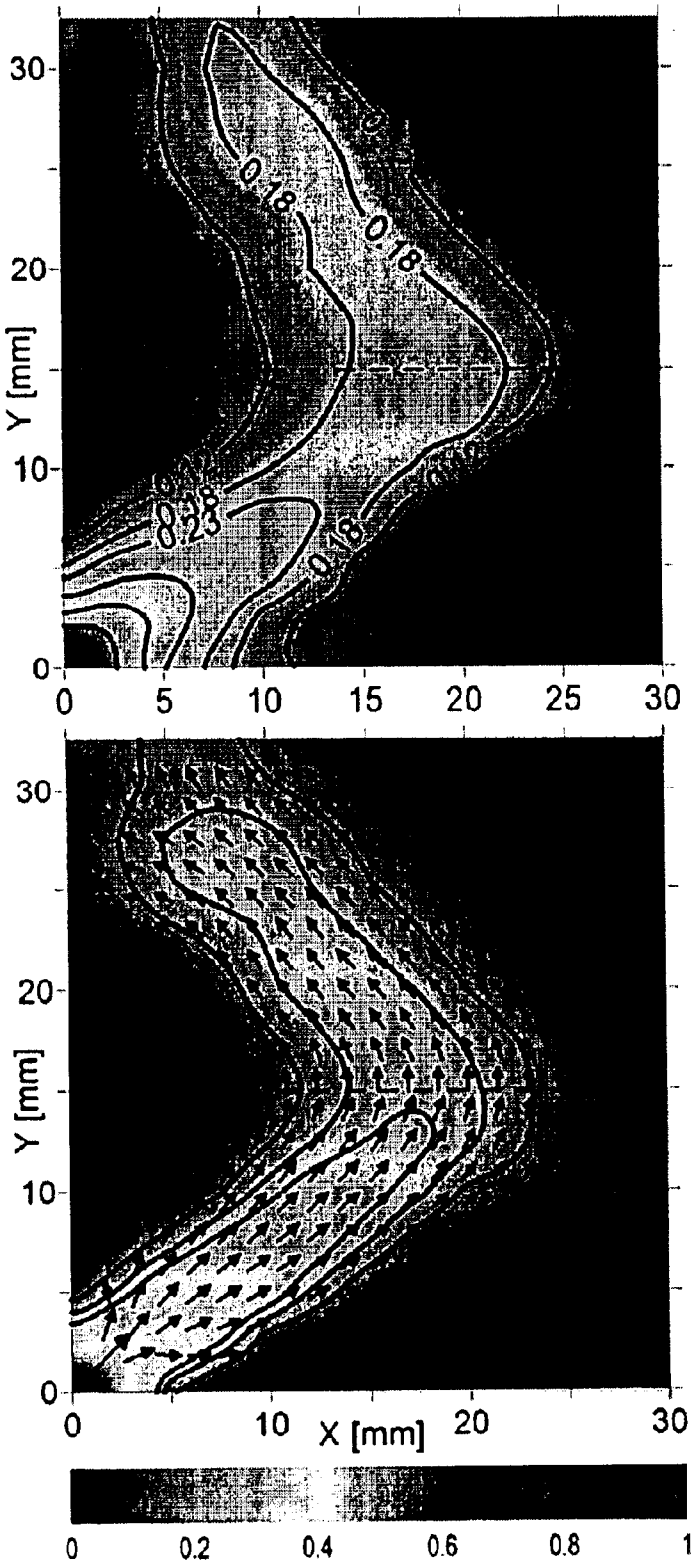

Figure 26

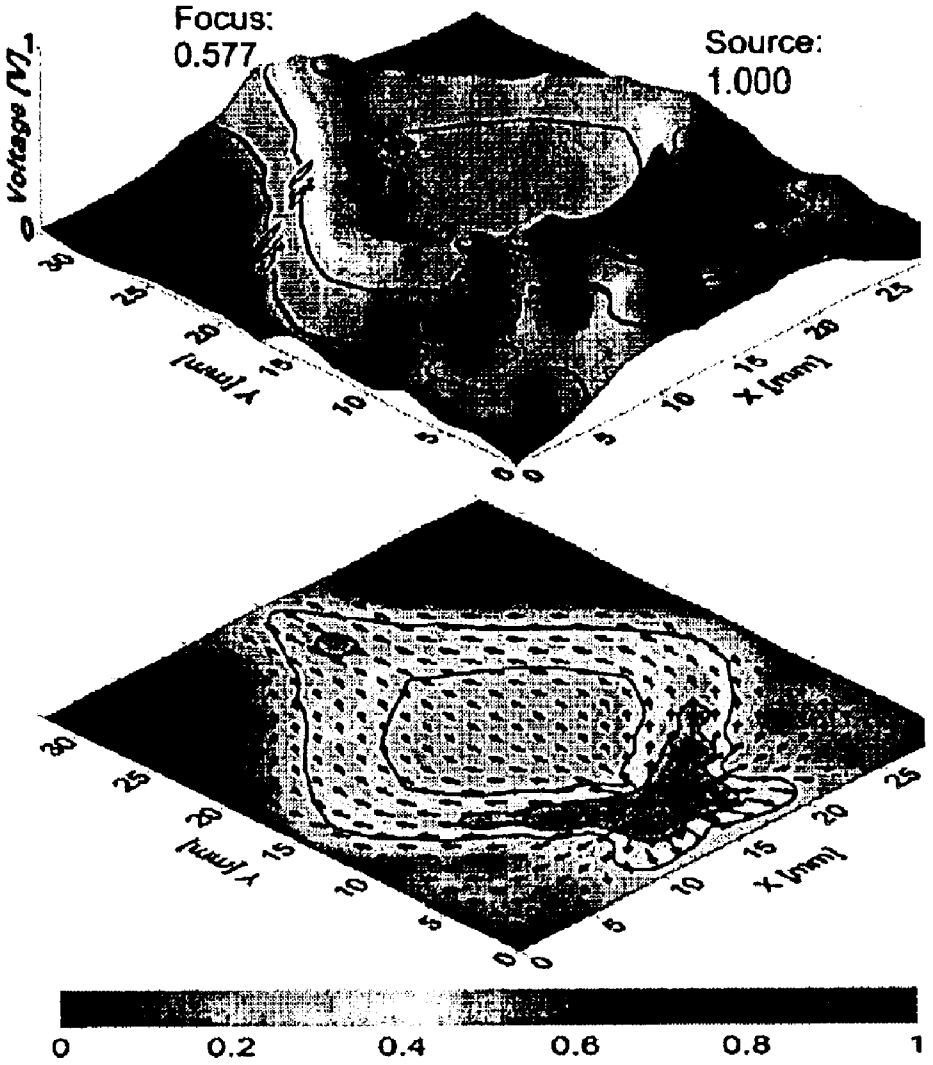

Figure 27

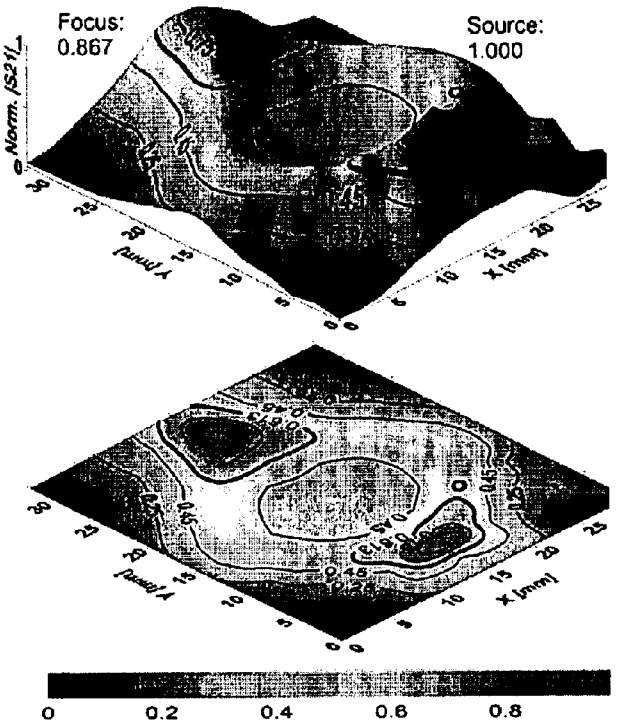

Figure 28

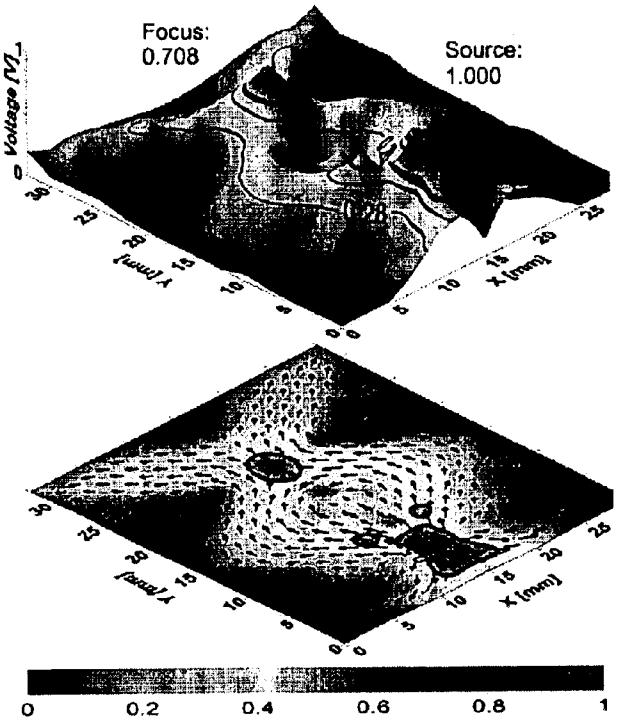

Figure 29

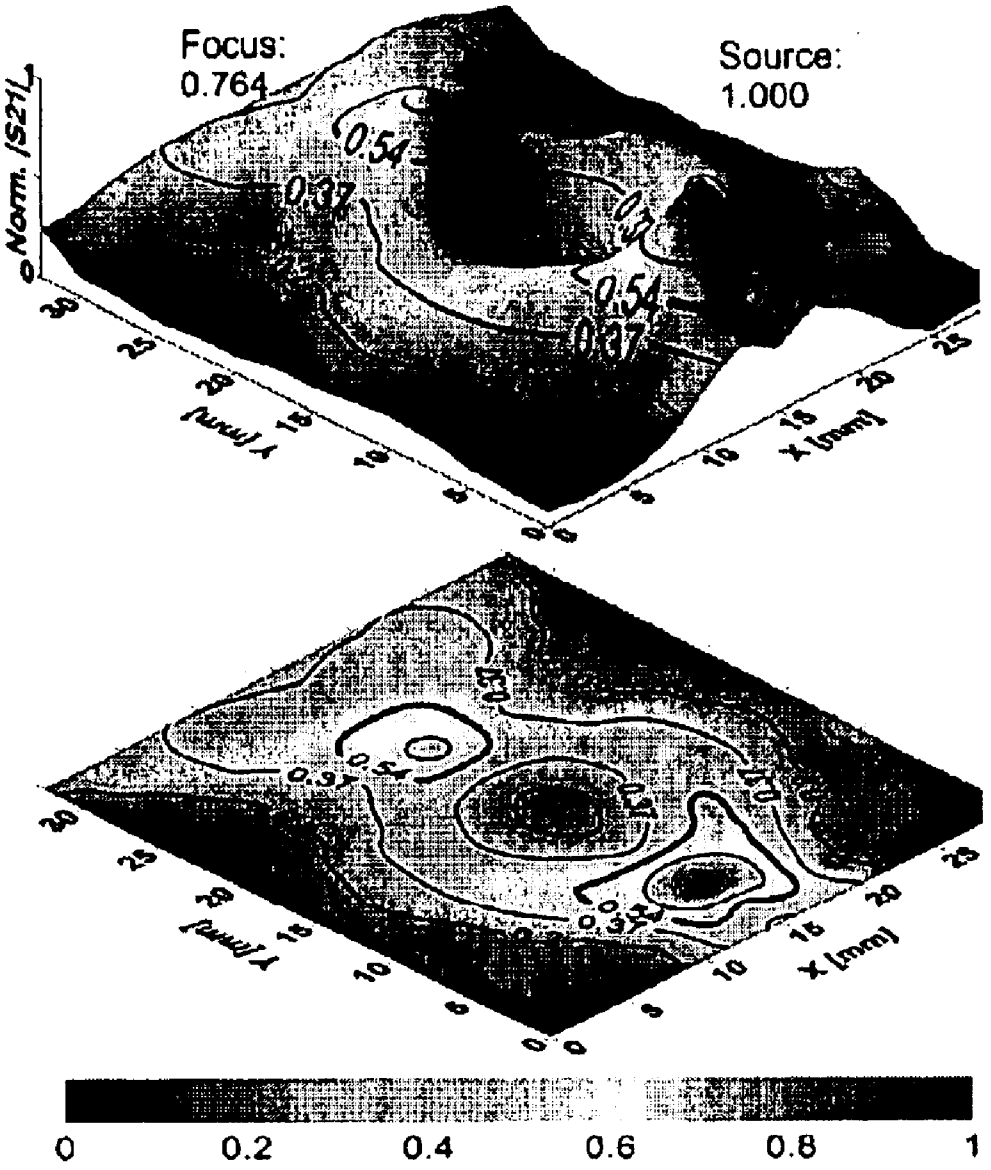

Figure 30

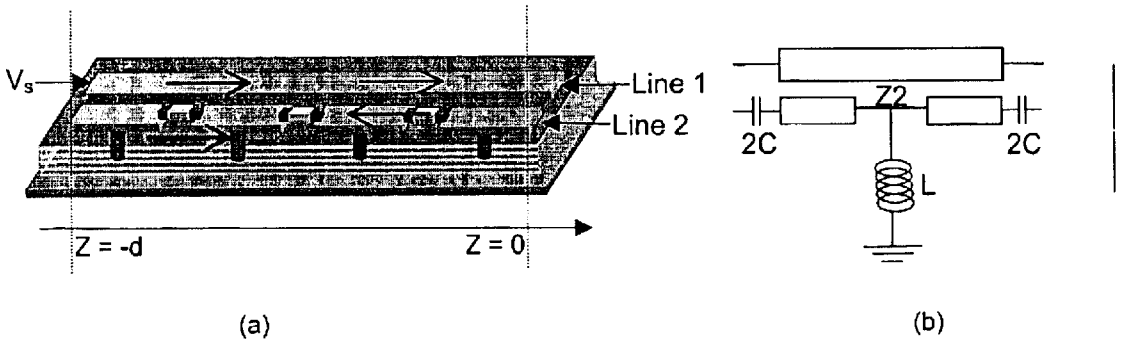

Figure 31

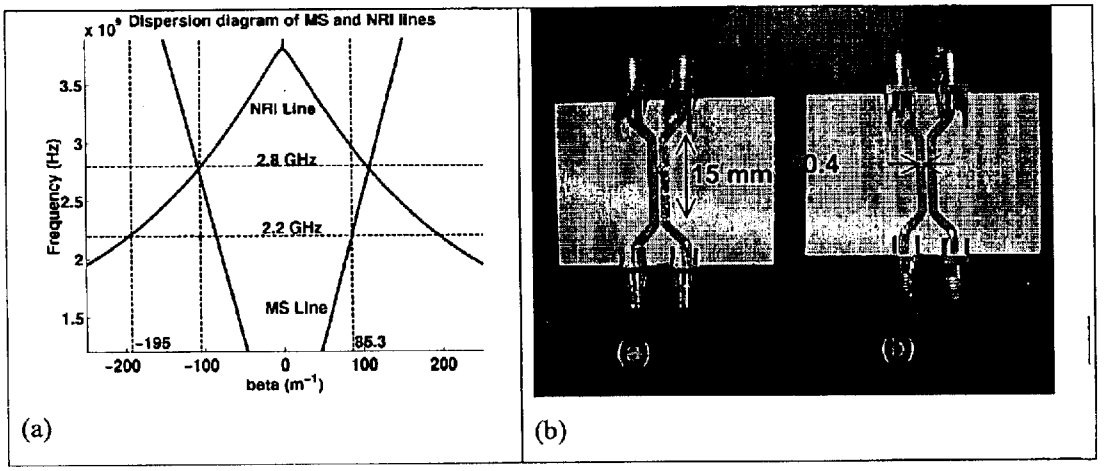

Figure 32

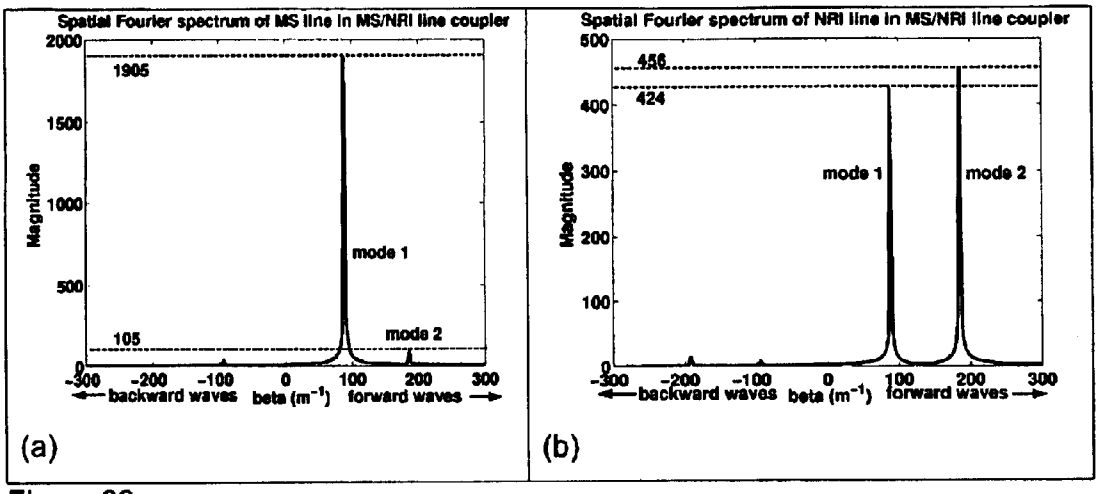

Figure 33

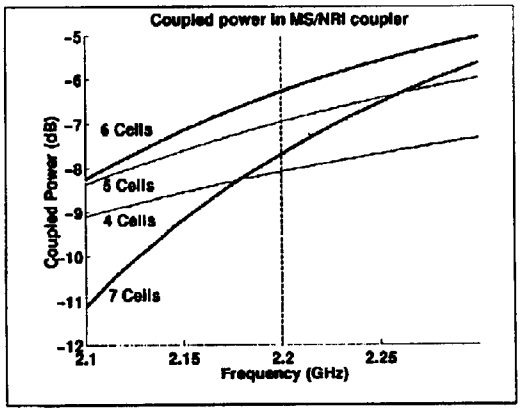

Figure 34

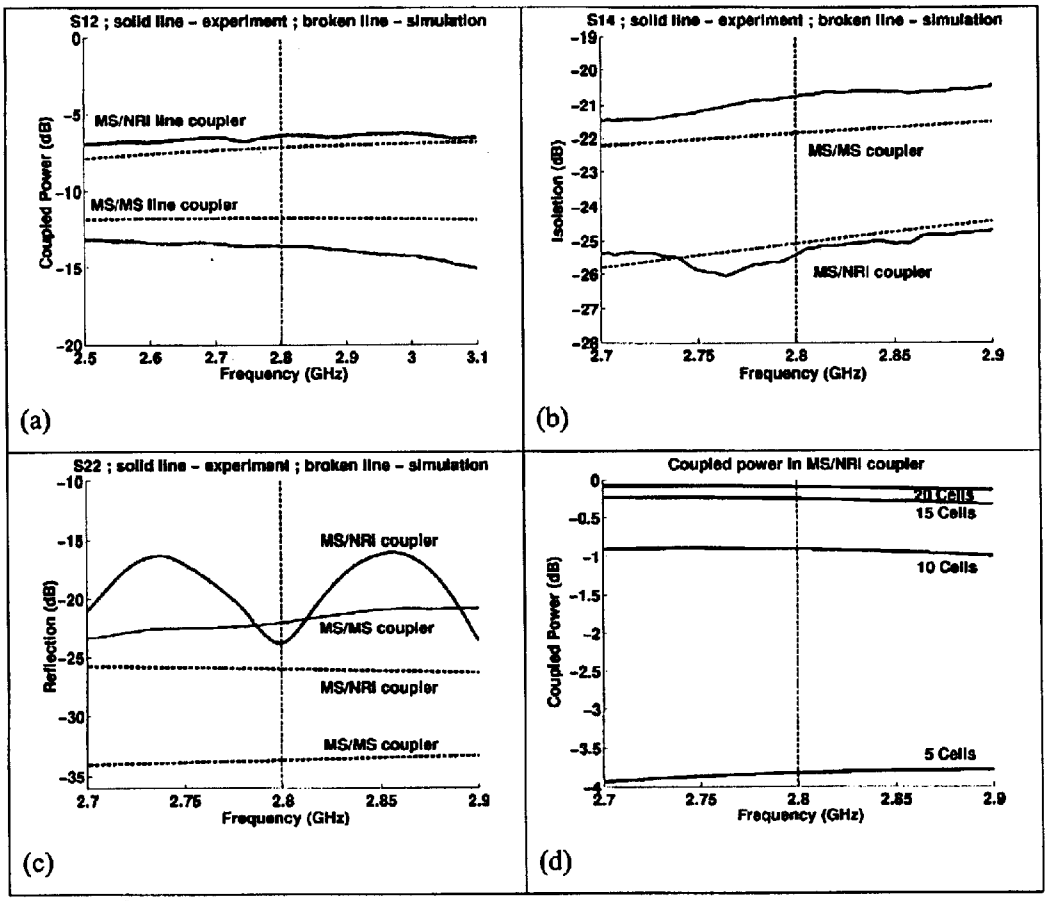

Figure 35

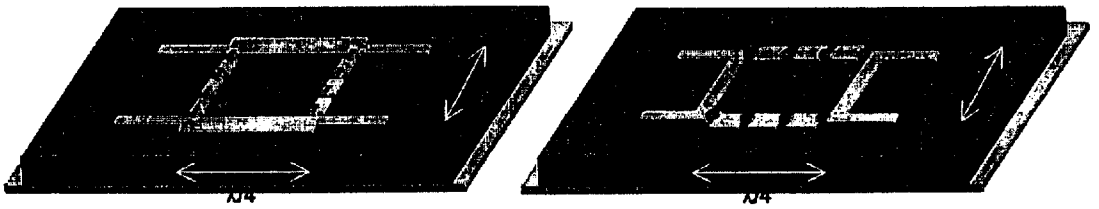

(a) (b)

Figure 36

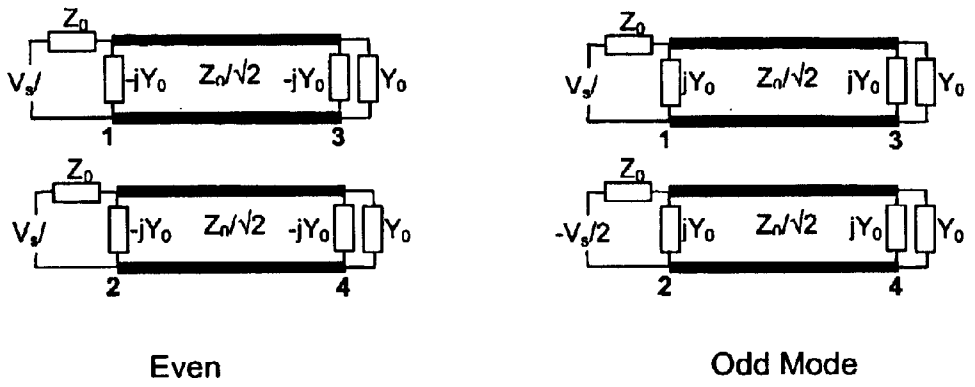

Even

Odd Mode

Figure 37

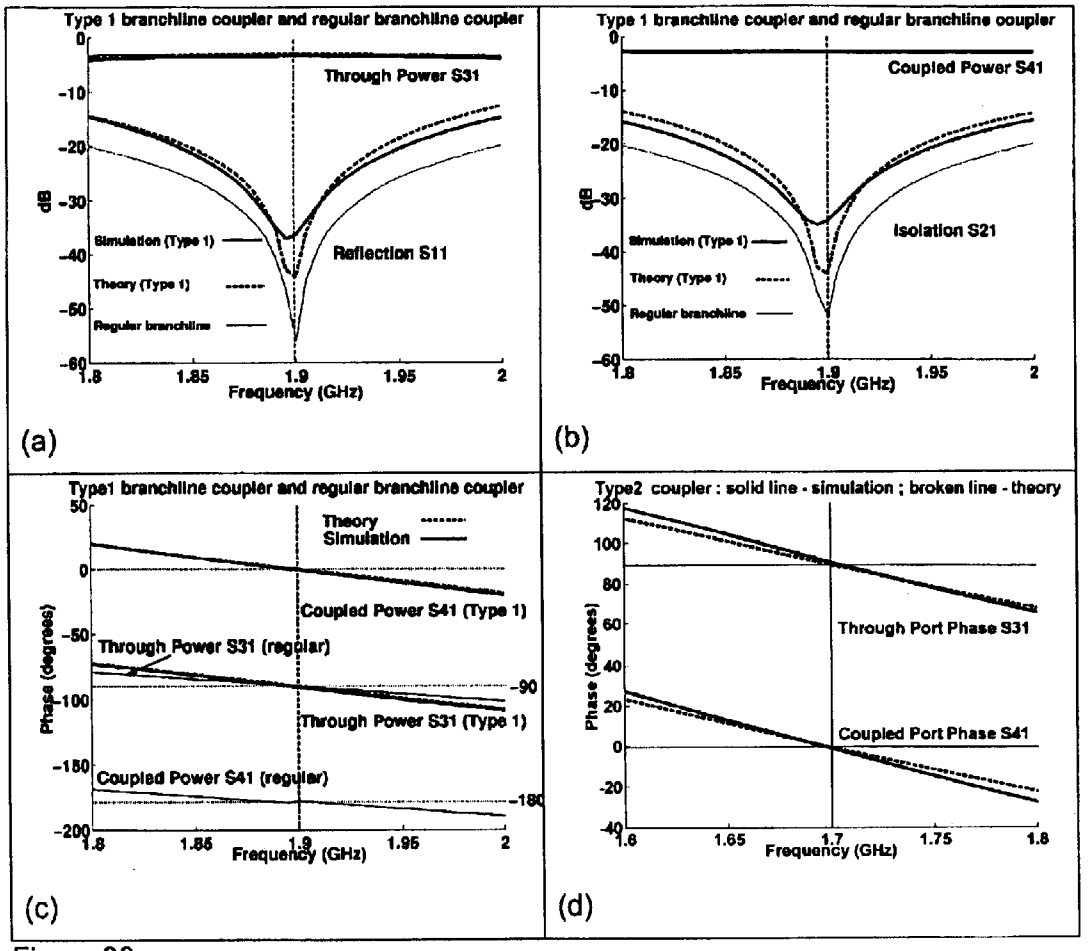
Type 1 branchline coupler and regular branchline coupler
Through Power S31
Reflection S11
Simulation (Type 1)
Theory (Type 1)
Regular branchline
dB
Frequency (GHz)
(a)
Type 1 branchline coupler and regular branchline coupler
Coupled Power S41
Isolation S21
Simulation (Type 1)
Theory (Type 1)
Regular branchline
dB
Frequency (GHz)
(b)
Type1 branchline coupler and regular branchline coupler
Theory
Simulation
Coupled Power S41 (Type 1)
Through Power S31 (regular)
Through Power S31 (Type 1)
Coupled Power S41 (regular)
Phase (degrees)
Frequency (GHz)
(c)
Type2 coupler : solid line - simulation ; broken line - theory
Through Port Phase S31
Coupled Port Phase S41
Phase (degrees)
Frequency (GHz)
(d)

Figure 38

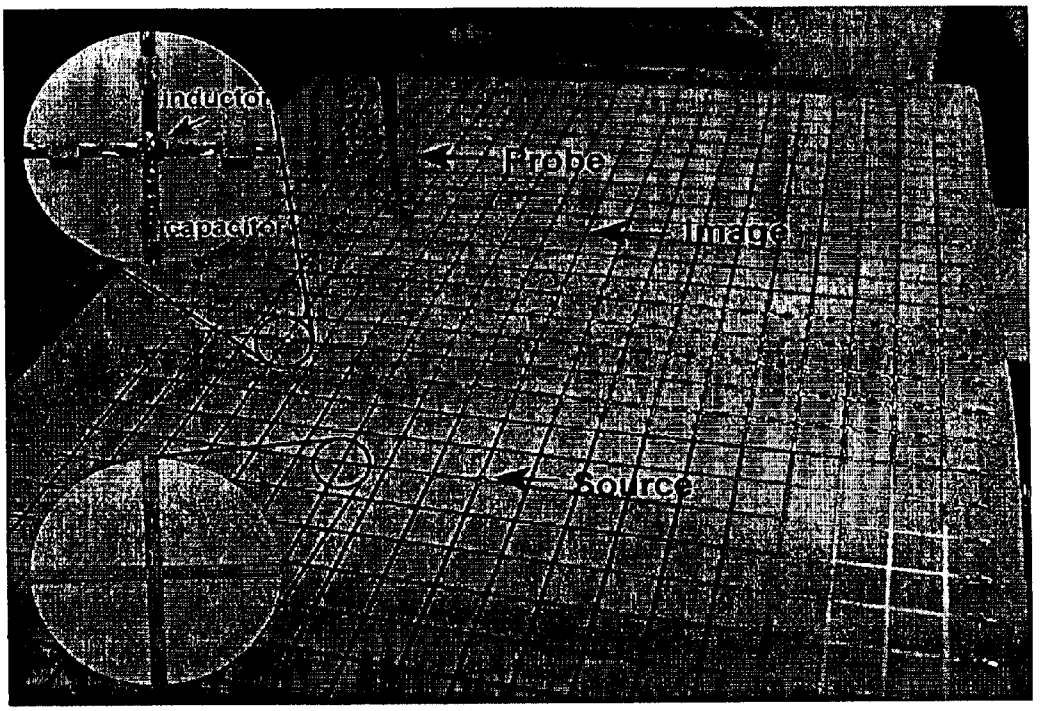

Figure 39

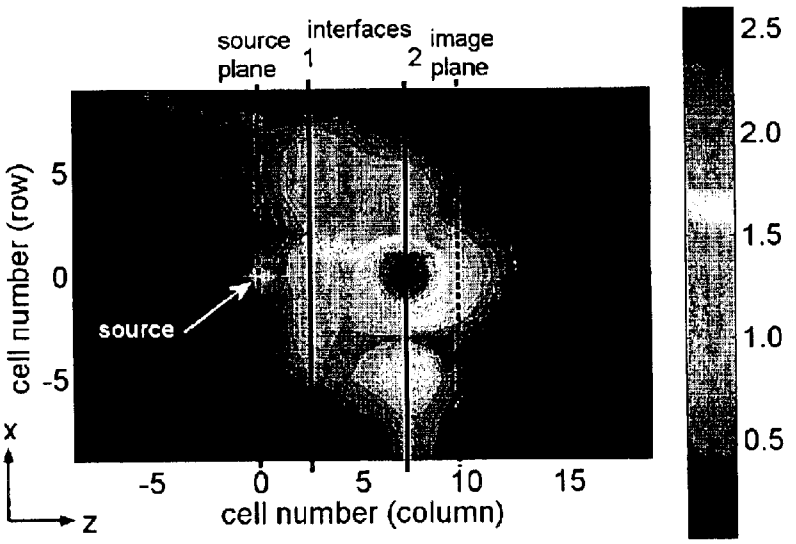

Figure 40

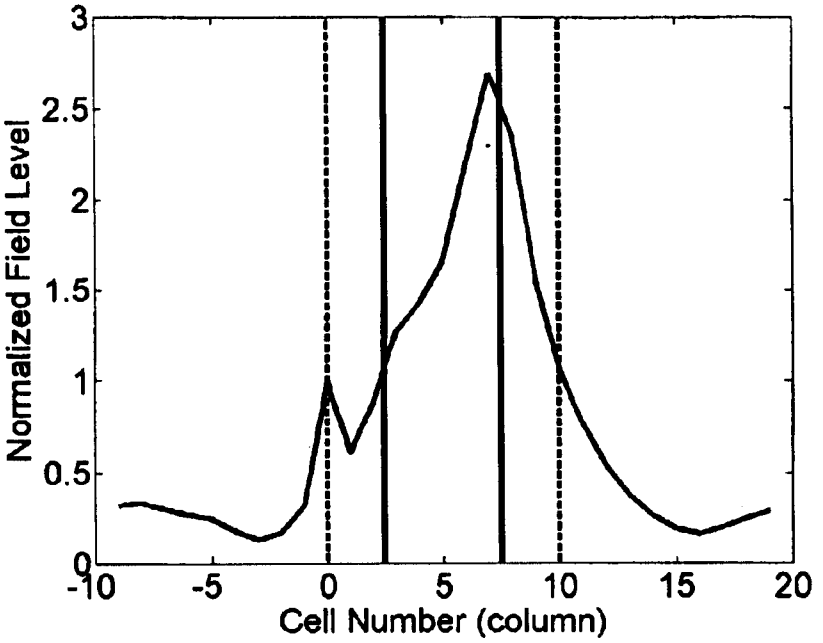

Figure 41

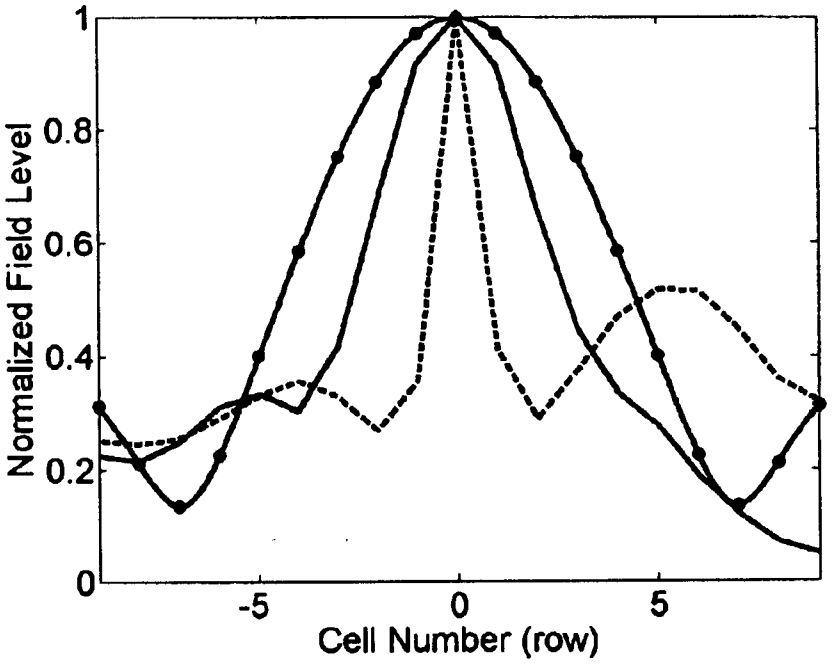

Figure 42

4300

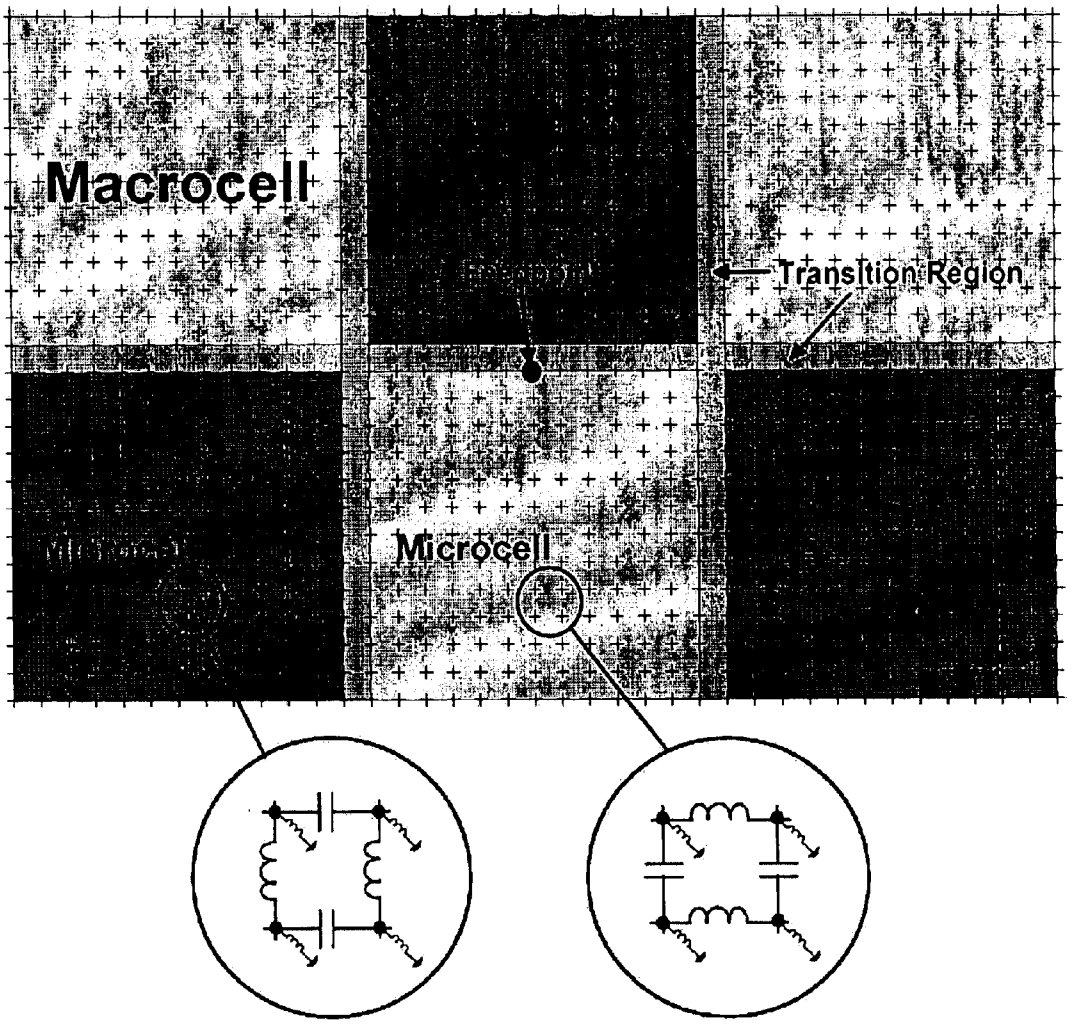

Figure 43

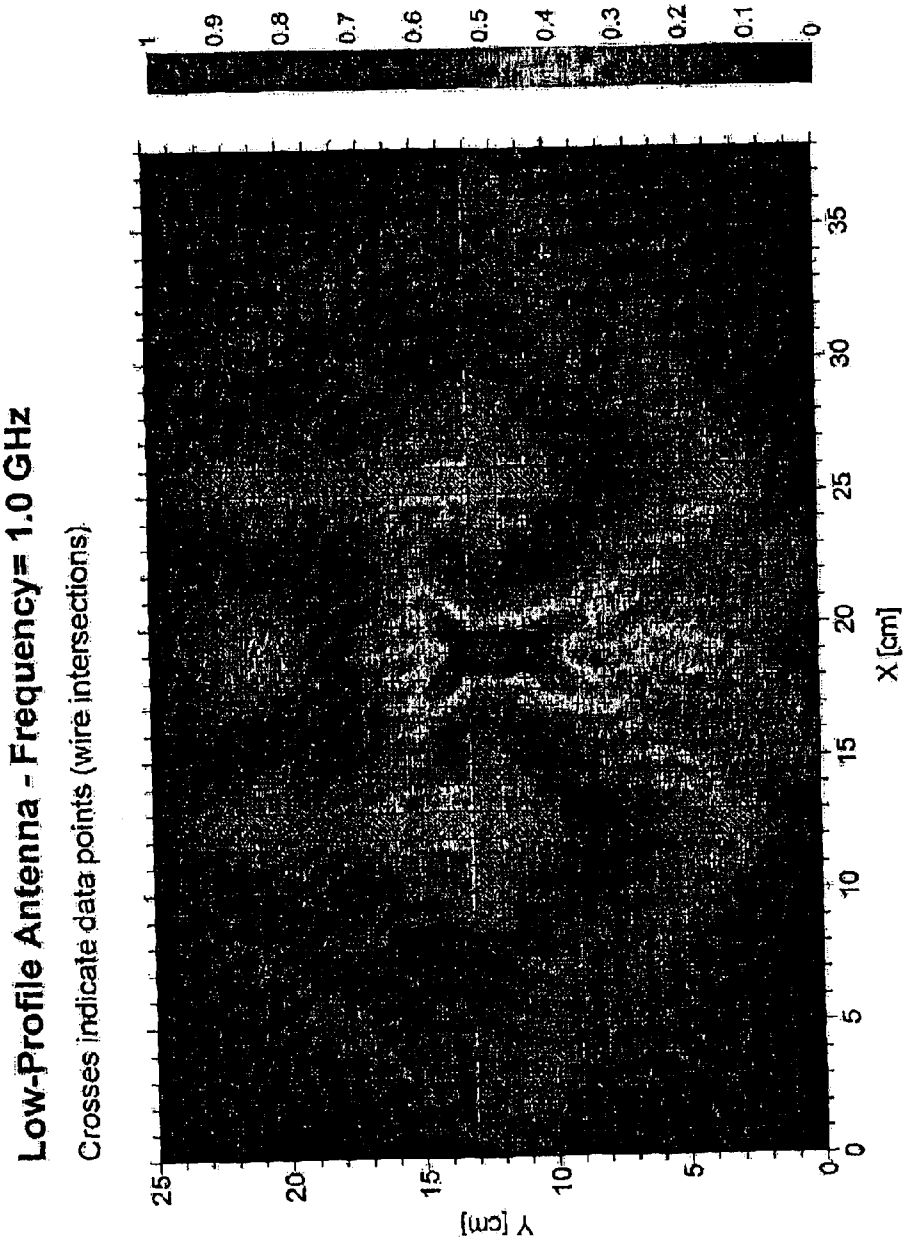
Low-Profile Antenna - Frequency= 1.0 GHz
Crosses indicate data points (wire intersections)
Y [cm]
X [cm]
0
5
10
15
20
25
30
35
1
0.9
0.8
0.7
0.6
0.5
0.4
0.3
0.2
0.1
0

Figure 44

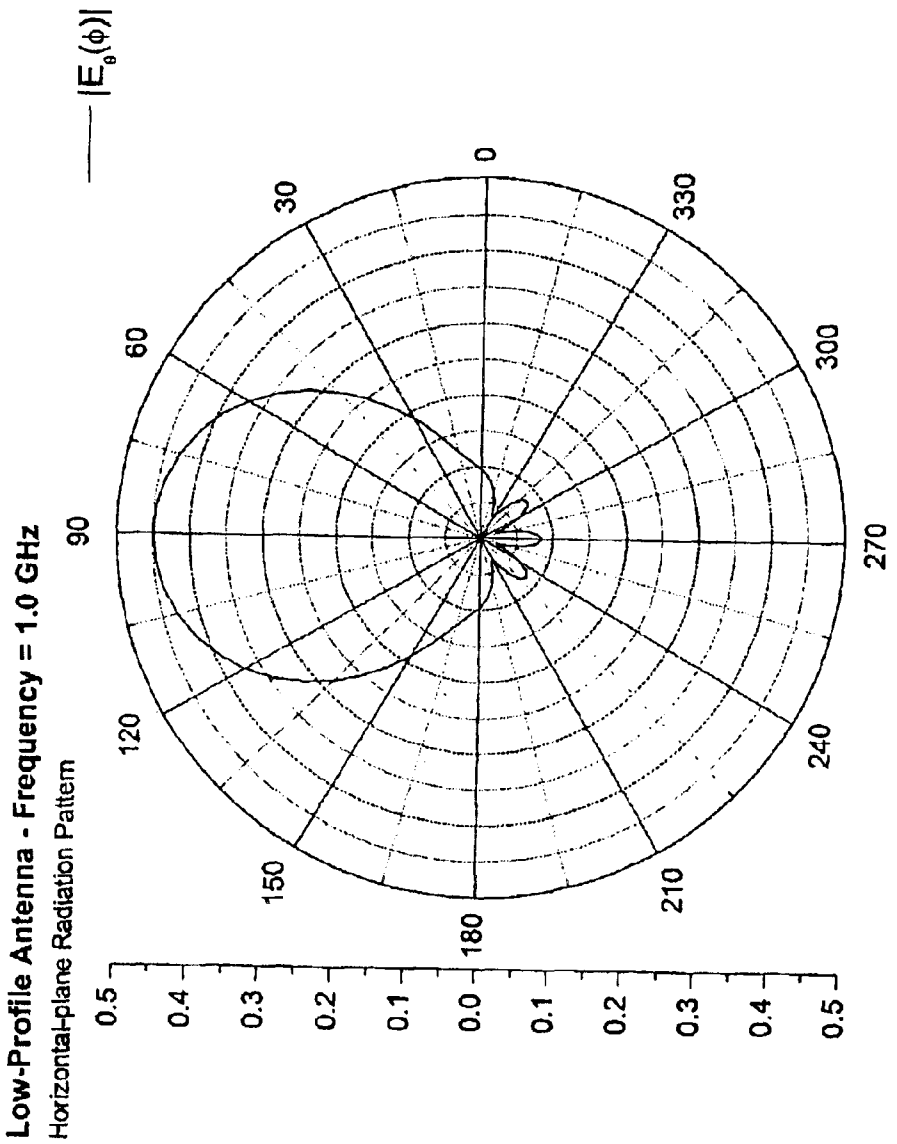
Low-Profile Antenna - Frequency = 1.0 GHz
Horizontal-plane Radiation Pattern
|E_θ(φ)|
0
30
60
90
120
150
180
210
240
270
300
330
0.5
0.4
0.3
0.2
0.1
0.0
0.1
0.2
0.3
0.4
0.5

Figure 45

METAMATERIALS FOR CONTROLLING AND GUIDING ELECTROMAGNETIC RADIATION AND APPLICATIONS THEREFOR

CROSS-REFERENCE TO RELATED APPLICATIONS

The present application claims the benefit of U.S. Provisional Patent Application No. 60/384,080 filed on May 31, 2002, which is hereby incorporated by reference herein.

FIELD OF THE INVENTION

The present invention relates generally to the control and guidance of electromagnetic radiation and in particular to a left-handed metamaterial for controlling and guiding electromagnetic radiation and to applications therefor.

BACKGROUND OF THE INVENTION

The concept of a negative index of refraction, originally proposed by Veselago in the 1960s, suggested the possibility of materials in which the permittivity and permeability could be made simultaneously negative. Veselago termed these left-handed media (LHM), because the vectors E, H, and k would form a left-handed triplet instead of a right-handed triplet, as is the case in conventional, right-handed media (RHM). In such a material the phase velocity and Poynting vector are antiparallel. Recently, novel 3-dimensional (3-D) electromagnetic materials have successfully demonstrated negative refraction by synthesizing a negative refractive index. These artificial dielectrics (metamaterials) consist of loosely coupled unit cells composed of thin wire strips and split-ring resonators to synthesize negative permittivity and permeability, respectively. In these metamaterials, the choice of operating frequency is restricted to the region of the resonance, which results in a highly dispersive, narrow and behaviour with strong associated absorption losses.

Other structures with magnetic properties to refract electromagnetic radiation at negative angles have also been considered. For example, International PCT Application No. WO 00/41270 discloses a structure that exhibits magnetic properties when it receives incident electromagnetic radiation. The structure is formed from an array of capacitive elements, each of which is smaller, and preferably much smaller, than the wavelength of the incident electromagnetic radiation. Each capacitive element has a low-resistance conducting path associated with it and is such that a magnetic component of the incident electromagnetic radiation induces an electrical current to flow around a path and through the associated capacitive element. The creation of the internal magnetic fields generated by the flow of the induced electrical current gives rise to the structure's magnetic properties.

International PCT Application No. WO 02/03500 discloses a microstructured magnetic material having a magnetic permeability of negative value but unity magnitude over a particular radio frequency range.

Although the above references disclose structures with magnetic properties to refract electromagnetic radiation at negative angles, improved materials exhibiting negative refractive indices are desired.

It is therefore an object of the present invention to provide a novel left-handed metamaterial for controlling and guiding electromagnetic radiation and novel applications therefor.

SUMMARY OF THE INVENTION

According to one aspect of the present invention there is provided a planar metamaterial comprising:

two substantially orthogonal, coplanar sets of transmission lines, said transmission lines being spaced with a periodicity, loaded with capacitors with said periodicity, and shunted with inductors with said periodicity such that for an electromagnetic wave, having a wavelength greater than said periodicity and traveling along the plane of said transmission lines, the effective permeability and permittivity of said metamaterial are simultaneously negative.

According to another aspect of the present invention there is provided a linear metamaterial comprising:

a transmission line, having a linear dimension, and being loaded with capacitors, and shunted with an inductor such that for an electromagnetic wave, having a wavelength greater than said linear dimension and traveling along the axis of said transmission line, the effective permeability and permittivity of said metamaterial are simultaneously negative.

According to yet another aspect of the present invention there is provided a planar resonance cone metamaterial comprising:

a first set of transmission lines, spaced with a periodicity, and loaded with capacitors with said periodicity;

a second set of transmission lines, substantially orthogonal and coplanar with said first set of transmission lines, said second set of transmission lines being spaced with said periodicity, and loaded with inductors with said periodicity, said first and second sets of transmission lines exhibiting characteristics such that for an electromagnetic wave, having a wavelength greater than said periodicity by an order of magnitude, and traveling along the linear axis of said first set of transmission lines, the effective permittivity of said metamaterial is positive such that for an electromagnetic wave, having a wavelength greater than said periodicity by an order of magnitude and traveling along the linear axis of said second set of transmission lines, the effective permittivity of said metamaterial is negative.

According to yet another aspect of the present invention there is provided a planar resonance cone metamaterial comprising:

a first set of transmission lines, spaced with a first periodicity, and loaded with capacitors with a second periodicity;

a second set of transmission lines, substantially orthogonal and coplanar with said first set of transmission lines, said second set of transmission lines being spaced with said second periodicity, and being loaded with inductors with said first periodicity whereby for an electromagnetic wave, having a wavelength greater than said first and second periodicities by an order of magnitude and traveling along the longitudinal axis of said first set of transmission lines, the effective permittivity of said metamaterial is positive and for an electromagnetic wave having a wavelength greater than said first and second priodocities and traveling along the longitudinal axis of said second set of transmission lines, the effective permittivity of said metamaterial is negative.

According to yet another aspect of the present invention there is provided a near field focusing device comprising:

a first set of transmission lines, said first set of transmission lines being spaced with a first periodicity and loaded with capacitors with a second periodicity;

a second set of transmission lines, substantially orthogonal to, and coplanar with said first set of transmission lines, said second set of transmission lines being spaced with said second periodicity, loaded with capacitors with said first periodicity, and shunted with inductors, said first set of

transmission lines intersecting said second set of transmission lines such that for an electromagnetic wave, having a wavelength greater than said first or second periodicity by an order of magnitude, and traveling along the plane of said transmission lines, the effective permeability and permittivity of said metamaterial are simultaneously negative; and

a planar waveguide, having a flat extent, coupled to said transmission lines, such that said flat extent is parallel to one set of transmission lines.

According to yet another aspect of the present invention there is provided a phase-shifting device comprising:

a transmission line, having a linear dimension and characteristic impedance;

capacitors loaded on said transmission line; and

an inductor shunting said transmission line, said transmission line exhibiting characteristics such that for an electromagnetic wave, having a wavelength greater than said linear dimension by an order of magnitude and traveling along the axis of said transmission line, the effective permeability and permittivity of transmission are simultaneously negative and such that said transmission line provides a continuous passband for said electromagnetic wave along said transmission line.

According to yet another aspect of the present invention there is provided a near field focussing device comprising:

a parallel-plate waveguide; and

a negative refractive index metamaterial in line with said waveguide and forming an interface therewith.

According to yet another aspect of the present invention there is provided a coupled-line coupler comprising:

a microstrip line; and

a left-handed material coupled to an edge of said microstrip line.

The present invention provides advantages in that the metamaterial is capable of internal positive and negative wave refraction, and guided wave beam formation, steering, and focusing over regions that are smaller than the wavelength of incident electromagnetic radiation. Moreover, the beam steering capability can be extended beyond the physical boundaries of the metamaterial into the surrounding space to produce a controllable radiation pattern.

BRIEF DESCRIPTION OF THE DRAWINGS

Embodiments of the present invention will now be described more fully with reference to the accompanying drawings in which:

FIG. **1** shows phase matching at an interface between a right-handed material (RHM) and a generic material i.e. a right-handed material or a left-handed material;

FIG. **2** is a two-dimensional (2-D) loaded left-handed transmission line unit cell;

FIG. **3** shows a plane wave illuminating a RHM/LHM interface at 2 GHz;

FIG. **4** illustrates the focusing effect at an interface between right-handed and left-handed media;

FIG. **5** shows a point source illuminating a RHM/RHM interface at 2 GHz;

FIG. **6** shows a point source illuminating a RHM/LHM interface at 2 GHz;

FIG. **7** shows a focusing device including a negative refractive index metamaterial interfaced with a parallel-plate waveguide at 1.5 GHz;

FIG. **8** shows experimental data demonstrating focal regions observed in the focusing device of FIG. **7** at 1.55 GHz and 1.65 GHz and the lack thereof at 2.55 GHz when operating beyond the left-handed frequency band;

FIG. **9** shows a planar resonance cone metamaterial including a square-celled transmission-line network containing inductors and capacitors oriented orthogonally and positioned over a ground plane;

FIG. **10** shows one side of the square-celled transmission-line network of FIG. **9** illustrating attached coaxial connectors;

FIG. **11** shows an opposite side of the square-celled transmission-line network of FIG. **9**, with chip capacitors and meander-line inductors in place.

FIG. **12** shows single-stage, 2-stage, 4-stage and 8-stage 0° phase-shifting circuits;

FIG. **13** is a schematic diagram of a 1-D phase-shifting unit cell;

FIG. **14** shows an unmatched dispersion relation for the phase-shifting unit cell of FIG. **13**;

FIG. **15** shows a matched dispersion relation for the phase-shifting unit cell of FIG. **13**;

FIG. **16** shows phase responses of a +10° phase-shifting device, a −350° transmission line, a −10° phase-shifting device and +10° L-C line;

FIG. **17** shows phase responses of one-stage, 4-stage and 8-stage 0° phase-shifting devices;

FIG. **18** shows phase and magnitude responses of +10° and −10° 4-stage phase-shifting devices;

FIG. **19** shows a 4-stage +10° phase-shifting device;

FIG. **20** is a plasma parameter diagram showing elliptic and hyperbolic regions;

FIG. **21** is a schematic diagram of a focusing device in the form of a uniform anisotropic planar L-C grid over ground, with corner feed and resistive edge-loading;

FIG. **22** shows a uniform-grid moment-method simulation displaying corner-fed resonance cones at eight frequencies;

FIG. **23** shows node voltage across 50Ω terminating resistors at numbered points around the edge of the grid of FIG. **21**, derived from the simulation data displayed in FIG. **22**;

FIG. **24** shows a focusing device in the form of a non-uniform L-C grid, wherein the inductors and capacitors have been transposed in the upper part of the grid and wherein the transition region includes a row of elongated cells;

FIG. **25** shows the physical layout of the grid of FIG. **24**;

FIG. **26** shows resonance cone refraction at 1.2 GHz;

FIG. **27** shows a focusing simulation at 1.3 GHz showing the grid-to-ground voltage magnitude;

FIG. **28** shows focusing measurements at 1.3 GHz showing the normalized S**21** magnitude;

FIG. **29** shows a focusing simulation at 1.7 GHz showing the grid-to-ground voltage magnitude;

FIG. **30** shows focusing measurements at 1.7 GHz showing the normalized S**21** magnitude;

FIG. **31** shows a MS/LHM coupled-line coupler and schematic of a coupler unit cell;

FIG. **32** shows a dispersion diagram for MS and LHM lines used in the coupler of FIG. **31** and photograph of a MS/LHM coupler and a conventional MS/MS coupler of the same length, line spacing and propagation constant;

FIG. **33** shows a spatial Fourier transform of line voltages on the MS line and LHM line of the MS/LHM coupled-line coupler of FIG. **31**;

FIG. **34** shows the coherence length of the MS/LHM coupled-line coupler of FIG. **31**;

FIG. **35** shows a comparison of a MS/MS coupler with a MS/LHM coupler of the same length, line spacing and propagation constant for coupled power, isolation, reflection, and arbitrary coupling;

FIG. **36** shows MS/LHM branch-line couplers;

FIG. **37** shows even/odd mode equivalent circuits of a type **1** MS/LHM branch-line coupler;

FIGS. **38***a* to **38***d* show scattering parameters of type **1** MS/LHM branch-line couplers compared to a regular branch-line coupler and scattering parameters of a type **2** MS/LHM branch-line coupler;

FIG. **39** shows a planar transmission-line left-handed lens;

FIG. **40** shows the measured vertical electric field detected 0.8 mm above the surface of the lens of FIG. **39** at 1.057 GHz;

FIG. **41** shows the measured vertical electric field above row 0 of the lens of FIG. **39** at 1.057 GHz;

FIG. **42** shows the measured vertical electric field at the source (dashed curve) and image (solid curve) planes along with the diffraction-limited image (solid curve with circles);

FIG. **43** shows an antenna formed of 6 macrocells of resonance cone metamaterial; and

FIGS. **44** and **45** show the grid-to-ground voltage of a six cell antenna operating at 1 GH_z and the resulting radiation pattern.

DETAILED DESCRIPTION OF THE PREFERRED EMBODIMENT

The present invention relates generally to a metamaterial that supports propagating backward waves and thus exhibits left-handedness. Such metamaterials inherently support 2-D wave propagation, which is desirable for antennas, antenna beam formers, planar spectrum analyzers, compact RF/microwave lenses and antennas, phase compensators, antenna-integrated multiplexers and other microwave circuit applications.

To illustrate the concept of negative refraction, consider a phase-matching argument at the interface between a right-handed medium **M1** and another generic medium **M2**, as shown in FIG. **1**. The sign of the index of refraction of medium **M2** is not a concern. Consider an incident plane wave in medium **M1** with a wave vector k_1 (i.e. such that the x-component of k_1 is positive). A refracted wave with a wave vector k_2 is then established in medium **M2** such that the tangential wave vector components k_{1t} and k_{2t} are equal across the interface. This is the basis for Snell's Law, and it permits two scenarios for the orientation of k_2, represented as Case **1** and Case **2** in FIG. **1**. The conservation of energy also insists that the normal components of the Poynting vectors S_1 and S_2 remain in the positive-x direction through both media. If the medium **M2** is a conventional RHM, then refraction occurs as illustrated by Case **1**. However, if medium **M2** is a medium supporting propagating backward waves (i.e. a LHM), it is implied that power is propagated along the direction of phase advance, which requires in FIG. **1** that k_2 and S_2 be antiparallel. Consequently, the direction of k_2 is specified uniquely for backward-wave structures as illustrated by Case **2**. Under such conditions, power is refracted through an effectively negative angle, which implies a negative index of refraction.

Metamaterials exhibiting negative indices of refractions and applications therefor that enable electromagnetic radiation to be controlled and guided will now be described.

Planar Metamaterials

Turning now to FIG. **2**, a shunt-centered unit cell for a metamaterial or left-handed medium (LHM) that synthesizes a negative refractive index is shown. In this particular example, the metamaterial is in the form of a two-dimensional (2-D), L-C loaded substantially orthogonal, coplanar transmission line network. In the unit cell, $Z_C=(j\omega C)^{-1}$ and $Y_L=(j\omega L)^{-1}$ represent the per-unit-length capacitor impedance and inductor admittance, respectively.

The unit cell dimensionality represented by Δd is provided by the host transmission line medium. At the continuous medium limit, $\Delta d \ll \lambda$, the 2-D telegrapher's equations representing the structure of the unit cell can be expressed as:

$$\frac{\partial v_y}{\partial z} = -i_z\left(\frac{1}{j\omega C\Delta d}\right),\ \frac{\partial v_y}{\partial x} = -i_x\left(\frac{1}{j\omega C\Delta d}\right) \tag{1}$$

and

$$\frac{\partial i_z}{\partial z} + \frac{\partial i_x}{\partial z} = -v_y\left(\frac{1}{j\omega L\Delta d}\right). \tag{2}$$

Combining equations (1) and (2) yields:

$$\frac{\partial^2 v_y}{\partial x^2} + \frac{\partial^2 v_y}{\partial z^2} + \beta^2 v_y = 0,\quad \beta = -\frac{1}{\omega\sqrt{LC}\,\Delta d} \tag{3}$$

where β is the propagation constant. The phase and group velocities are antiparallel and are given by:

$$v_\phi = \frac{\omega}{\beta} = -\omega^2\sqrt{LC}\,\Delta d,\ v_g = \left(\frac{\partial\beta}{\partial\omega}\right)^{-1} = +\omega^2\sqrt{LC}\,\Delta d. \tag{4}$$

Subsequently, a negative refractive index can be defined as:

$$n = \frac{c}{v_\phi} = -\frac{1}{\omega^2\sqrt{LC}\sqrt{\mu_0\varepsilon_0}\,\Delta d}. \tag{5}$$

It is interesting to note that it is possible to achieve the same result for the phase velocity and index of refraction if an equivalent negative permittivity and permeability are defined as:

$$\mu_{eq} = -\frac{1}{\omega^2 C\Delta d},\ \varepsilon_{eq} = -\frac{1}{\omega^2 L\Delta d}, \tag{6}$$

so that the total stored time-averaged energy, expressed by:

$$W = \frac{\partial(\mu_{eq}\omega)}{\partial\omega}|E|^2 + \frac{\partial(\varepsilon_{eq}\omega)}{\partial\omega}|H|^2, \tag{7}$$

remains positive.

In order to model the 2-D wave equation represented by equation (3), metamaterial including an array of unit cells, each as depicted in FIG. **2**, was implemented in a microwave-circuit simulator simulator. To simulate the incidence of waves on this LHM in a circuit environment, a right-handed medium (RHM) was also designed. The topology of the unit cells in the RHM were identical to those of FIG. **2**, except that the roles of C and L were interchanged, giving rise to the well-known LC low-pass network representation of free-space propagation.

The specification of the unit cell parameters in both media provides information about the permissible operating

frequencies, the relative refractive indices, and also the required inductance and capacitance values. In both media, the wave impedance is given by:

$$Z_M = \sqrt{\frac{L}{C}}. \tag{8}$$

It is therefore reasonable to begin with the simple constraint that the two media be matched, and moreover, matched to free space (Z_M=377Ω).

In the limit $\Delta d \ll \lambda$ in equation (5), it is not possible to specify directly indices of refraction in the individual media, but it is possible to specify a relative index of refraction through the ratio of their respective phase shifts per unit cell $\beta_{LHM}\Delta d/\beta_{RHM}\Delta d$. The LHM was designed to be denser than the RHM, arbitrarily by a factor of 2. Specifically, phase shifts per unit cell of $|\beta_{RHM}\Delta d|=0.25$ and $|\beta_{LHM}\Delta d|=0.5$ were chosen in the right-handed and left-handed media, respectively. Choosing an operating frequency of 2 GHz, the LHM and RHM unit cell capacitive and inductive elements were specified as (C_{LHM}=422.5 fF, L_{LHM}=60.0 nH) and (C_{RHM}=52.8 fF, L_{RHM}=7.5 nH), respectively. The corresponding cut-off frequencies are given by:

$$f_{c,LHM} = \frac{1}{4\pi\sqrt{L_{LHM}C_{LHM}}},\ f_{c,RHM} = \frac{1}{\pi\sqrt{L_{RHM}C_{RHM}}}, \tag{9}$$

which were found to be 500 MHz and 16 GHz, respectively. Finally, the designed LHM and RHM arrays were appropriately terminated with matching resistors on all edges and simulated with a microwave-circuit simulator.

To verify the ray picture presented in the phase-matching argument of FIG. **1**, a RHM/LHM interface was constructed using 42×42 RHM and LHM unit cell arrays with $\beta_{RHM}\Delta d=+0.25$ and $\beta_{LHM}\Delta d=-0.5$, yielding a relative refractive index of −2. The RHM unit cell array was excited with a plane wave, which was simulated using sequentially phase-shifted voltage sources along the left boundary of the unit cell array. FIG. **3** illustrates the plane wave illuminating the RHM/LHM interface at 2 GH_z for an incident angle of $\theta_{RHM}=29°$ with the axes being labelled according to unit cell number and the right vertical scale designating radians. The steepest phase descent in the LHM is observed along the direction of propagation, which is $\theta_{LHM}=-14°$ from the normal, in exact correspondence with Snell's Law for the given design parameters.

Turning now to FIG. **4**, it can be seen that a RHM/LHM planar interface **410** can also be used to focus electromagnetic waves from a point source located inside the RHM, within the LHM. These conditions can be modelled by exciting a single node **400** inside the RHM and observing the magnitude and phase of the voltages to ground at all points in the LHM. The focusing effect manifests itself as a "spot" distribution of voltage **420** at a predictable location in the LHM.

An alternative embodiment of an RHM/LHM interface used to generate the results of FIG. **3** will now be examined. In this embodiment finite length transmission line sections (k, Z_O, finite Δd) are inserted in each LC unit cell. In order that the host transmission-line medium does not significantly alter the propagation constant predicted by equation (5), it is necessary to modify the loading elements C_{LHM} and L_{LHM} to compensate for the presence of the distributed transmission line parameters. In the final design, the lines in each unit cell are designed to be air-filled, with Δd=5 mm. From equation (5), and using the appropriately compensated loading element values, the corresponding equivalent, absolute index of refraction of the LHM is approximately equal to −2.4. To maintain the relative refractive index of −2, the absolute index of refraction of the RHM is made to be +1.2.

In the interest of completeness, cases of both positive and negative refraction are examined, with the host transmission line medium in place. In the first case, a 42×21 RHM unit cell array is interfaced with another 42×63 RHM unit cell array with a relative refractive index of +2. The plane wave source is placed 11 unit cells into the first RHM. Here, focusing is not expected since Snell's Law for positive-index media predicts a continued divergence into the second RHM. FIG. **5** shows a point source illuminating the RHM/LHM interface at 2 GH_Z as well as the corresponding magnitude and phase plots of these results with the axes labelled according to cell number. As can be seen, the results confirm that the cylindrical wave excitation diverges into the second medium.

In the second case, a RHM unit cell array is interfaced with a LHM unit cell array with a relative refractive index of −2. The unit cell array dimensions and source location are as specified above. This arrangement is expected to show focusing inside the LHM, in accordance with FIG. **4**. The paraxial limit dictates a focus in the LHM at twice the distance of the source from the interface, or near unit cell **44** of the array. FIG. **6** shows the point source illuminating the RHM/LHM interface at 2 GH_Z, as well as the corresponding magnitude and phase results with the axes labelled according to cell number. As can be seen, the results show focusing in the LHM, manifested in increased voltage amplitudes (nearly 65% of the source amplitude), and also in the reversal of the concavity of the wavefronts at both the RHM/LHM boundary and the expected focal point.

For applications in which waves are propagated only in a single dimension e.g. phase-shifting lines as will be described, the metamaterial above may be simplified to a 1-D array using a single transmission line i.e. a linear LHM metamaterial is a simplified case of the planar metamaterial.

Since the metamaterial exhibits left-handedness and allows electromagnetic radiation to be guided and controlled, the metamaterial is useful in a number of applications. Examples of applications for the present metamaterial will now be described.

Near-Field Focusing Device

Turning now to FIG. **7**, a focusing device is shown that includes a 55 mm×50 mm parallel-plate waveguide serving as a RHM interfaced with a negative refractive index metamaterial including an 11×6 unit cell array around 1.5 GHz. Each unit cell has a dimension of 5 mm. The fabricated 11×6 unit cell areas includes 400 μm wide microstrip lines on a 60 mil Rexolite® dielectric (ϵ_r=2.53) substrate. Shunt chip inductors are embedded into 1 mm holes drilled into the substrate at the appropriate unit cell sites. Chip capacitors are surface-mounted between gaps etched into the grid lines, and additional capacitors are placed at the array edges to maintain unit cell uniformity throughout. The two media meet along a flat border, defining their respective extents. The LHM extent is parallel to and displaced from the nearest microstrip line. The parallel-plate waveguide is excited with a shorted vertical probe connected to a SMA connector. Matching chip resistors of 100Ω are used to terminate the unit cells at the LHM and parallel-plate waveguide boundaries. The focusing device as shown measures approximately 60 mm×95 mm×1.5 mm.

FIG. **8** shows a sample of measured vertical E-field distributions over the 11×6 LHM unit cell array at 1.55 GHz, 1.65 GHz, and 2.55 GHz. The first two frequencies lie in the

LH passband, whereas the last frequency occurs in a second (RH) passband. In accordance with theory, the field distributions at 1.55 GHz and 1.65 GHz exhibit focusing, manifested by a localized region of increased transmission through the focusing device. The maximum focal amplitude obtained was observed at a frequency of 1.65 GHz (the central plot of FIG. **8**), where the distinction between the peak and the two edges of the spot was noted to be approximately 15 dB. Furthermore, the concavities of the wavefronts of FIG. **8** also indicate the convergent progression of phase associated with focusing. As expected, neither phenomenon is evident at 2.55 GHz, since the second passband does not possess left-handed properties. As will be appreciated, the results demonstrate focusing of an incident cylindrical wave over an electrically short area, i.e. near-field focusing.

Planar Resonance Cone Metamaterial

Turning now to FIGS. **9** to **11**, a planar resonance cone metamaterial is illustrated. In this embodiment, the metamaterial includes a substantially orthogonal, coplanar, periodic square-celled transmission line network that is analogous to a sheet of uniaxial plasma with permittivities of opposite signs in two orthogonal, in-plane directions. As can be seen, the transmission line network is disposed over a ground plate and parallel to it. Electromagnetic radiation is fed to the transmission line network at one corner with respect to the ground plate. The transmission line network is connected to instruments through coaxial connectors as shown in FIG. **10** and includes chip capacitors and meander-line inductors as shown in FIG. **11**. Resonance cone angle scans with frequency and with peak frequencies detected at the mid-points of the transmission line network sides, yielded an end-to-end frequency ratio of 2:1 with a transmission line network of only 4 cells by 4 cells. A center frequency of 1.4 GHz was used. The commercial chip capacitive and inductive elements used to construct the transmission line network yielded a compact array. A larger transmission line network having 24 cells by 24 cells was also modelled computationally. This transmission line network displayed resonance cones that showed little or no near-field beam spreading with increasing distance from the source. When a cone beam encountered an edge of the transmission line network with insufficient resistive absorption, specular reflection of the cone beam was observed.

Changing the reactive loads creates a different transmission line network. For example, a "transpose" transmission line network can be created by interchanging the inductive and capacitive elements.

Phase-Shifting Line Using a Linear Metamaterial

The metamaterial in accordance with the present invention is also suitable for use in a compact 1-D phase-shifting device that can be used to synthesize arbitrary transmission phases. Such as shifting device includes sections of LHM metamaterial lines cascaded with sections of conventional RHM transmission lines. Several embodiments of such a phase-shifting device, having a 1, 2, 4, and 8 stages can be seen in FIG. **12**. The phase-shifting device offers significant advantages when compared to standard delay transmission lines. The phase-shifting device is more compact in size and can achieve a positive, a zero, or a negative phase shift while occupying the same or shorter physical length. The phase-shifting device also exhibits a linear, flatter phase response with frequency, leading to shorter group delays.

In a LHM, the phase leads in the direction of group velocity, therefore incurring a positive phase shift with propagation away from the source. In addition, it is well known that in conventional RHM transmission lines, the phase lags in the direction of positive group velocity, thus incurring a negative phase shift with propagation away from the source. It therefore follows that phase compensation can be achieved at a given frequency by cascading a section of a LHM with a section of a RHM to form a unit cell with a given phase shift.

The unit cell of the phase-shifting device is shown in FIG. **13** and has total dimension d_o. The unit cell includes a host transmission line medium TL periodically loaded with discrete lumped element components, L_o and C_o.

The dispersion characteristics of the unit cell can be determined by the following equations:

$$\cos(\beta_{Bloch}d) = \cos(\beta_{TL}d)\left(1-\frac{1}{4\omega^2 L_o C_o}\right)+\sin(\beta_{TL}d)\left(\frac{1}{\omega C_o Z_o}+\frac{Z_o}{\omega L_o}\right)-\frac{1}{4\omega^2 L_o C_o} \tag{10}$$

where:

β_{Bloch} is the Bloch propagation constant; and

$\beta_{TL}=\omega\sqrt{LC}$ is the propagation constant of the host transmission line.

In order to consider a series of cascaded unit cells as an effective periodic medium, the physical length of the unit cell must be much smaller than a wavelength, therefore restricting the phase shift per unit cell and the length of the transmission lines to small values (βBlochd<<1 and βTLd<<1). Thus, an effective propagation constant, βeff, can be defined for the medium by the following equation:

$$\beta_{eff} = \pm\sqrt{\left(L-\frac{1}{\omega^2 C_o d}\right)\left(C-\frac{1}{\omega^2 L_o d}\right)} \tag{11}$$

FIG. **14** shows the dispersion relation for a unit cell with typical parameters C_o=15 pF, L_o=20 nH, Z_o=50Ω and β_{TL}d=0.28 rad. It can be observed that the corresponding dispersion diagram exhibits a band structure with two distinct passbands and stopbands. Expressions for the pertinent cut-off frequencies as indicated in FIG. **14** are as follows:

$$f_b = \frac{1}{4\pi\sqrt{L_o C_o}},\ f_{c1} = \frac{1}{2\pi\sqrt{LC_o}},\ f_{c2} = \frac{1}{2\pi\sqrt{L_o C}} \tag{12}$$

Equating f_{c1} and f_{c2} causes the stopband between these two cut-off frequencies to close and the band becomes continuous. This corresponds to the following matching condition for the LHM and RHM sections:

$$Z_o=\sqrt{L_o/C_o}=\sqrt{L/C} \tag{13}$$

Under this condition, it can be shown that the effective propagation constant of equation (11) simplifies to the expression:

$$\beta_{eff} \approx \omega\sqrt{LC} + \frac{-1}{\omega\sqrt{L_o C_o}} \tag{14}$$

Expression (14) can be interpreted as the sum of the propagation constants of the host transmission line and a uniform LHM line. For a transmission line medium with periodicity d and phase shift $\phi_{TL}=\beta_{TL}$d, the total phase shift per unit cell, $|\phi_o|$, given that the matching condition of equation (13) is satisfied, can be written as:

$$|\phi_o| = \beta_{eff} d = \phi_{TL} + \frac{-1}{\omega\sqrt{L_o C_o}} \quad (15)$$

Thus equations (13) and (15) can be used to determine unique values for L_o and C_o for any phase shift, ϕ_o, given a transmission line section with intrinsic phase shift β_{TL} and characteristic impedance Z_o.

The unit cell of FIG. **13** was implemented in coplanar-waveguide (CPW) technology at a design frequency of f_o=0.9 GHz using microwave-circuit simulator. The lumped element components and the transmission lines were assumed to be ideal. The transmission lines were designed with Z_o=50Ω, $\in_r$=2.2, dielectric height, h=20 mils and length d=7.4 mm. The dispersion relation for the unit cell with ϕ_o=0° is shown in FIG. **15**. The impedance matching condition of equation (13) has been satisfied and therefore, the stopband has been closed. It can also be observed that at f_o=0.9 GHz, the phase shift is 0°.

Based on the above parameters a +10-degree phase-shifting device was designed including 4 unit cells of total physical length 0.11λCPW=32 mm, with loading element values of C_o=21.66 pF and L_o=54.15 nH. The resulting phase characteristic of the phase-shifting device is shown in FIG. **16**. It can be observed that the phase shift is +10 degrees at fo=0.9 GHz with a phase slope of −95.7-degrees/GHz. In addition, the phase response around fo is linear with respect to frequency, implying a constant group delay for the phase-shifting device. Also shown in FIG. **16** is the phase characteristic of a conventional 50Ω transmission line of length 35/36 λCPW=275.7 mm for comparison. The transmission line exhibits as expected a −350-degree phase shift at fo, which is equivalent to +10 degrees, with a phase slope of −389-degrees/GHz. In addition, its physical length is approximately 9 times longer than the 4 unit cell phase-shifting line.

Referring back to FIG. **12**, an impression of the relative sizes of the two structures can be obtained. The proposed +10-degree phase-shifting device offers two main advantages over its equivalent transmission line implementation, namely a +10-degree phase shift while occupying significantly less physical space than a conventional transmission line, and a shorter group delay which is desirable for applications that require broadband operation.

Also shown in FIG. **16** is the phase characteristic of a 4-stage −10° phase-shifting device with loading element values of C_o=29.46 pF and L_o=73.65 nH. It can be observed that the −10° phase characteristic is similar to the +10° phase characteristic, with a phase slope of −72.9°/GHz. The −10° phase-shifting device occupies the same physical length as the +10° phase-shifting device and has loading element values that are at a ratio of approximately 1.4:1 compared to the ones used for the +10° phase shifting device. This implies that a reasonable variation of the loading element values using tuneable components can produce either a positive or a negative phase shift.

FIG. **16** also shows the phase characteristic of a 4-stage +10° uniform backward wave L-C line with loading element values of C_o=81.06 pF and L_o=202.64 nH. This corresponds to the unit cell of FIG. **13** with the transmission line sections removed. Setting therefore ϕTL to zero in equation (15), implies that ϕ_o will always remain negative, corresponding to a phase advance for a positively traveling plane wave of the form exp(−jβeffd). The absence of transmission lines implies that any combination of C_o and L_o values will produce a phase shift that will always be greater than 0 degrees for the unit cell. This is verified by the phase characteristic of the L-C line in FIG. **16** that stays well above 0 degrees at all times. Therefore, although the backward wave L-C line and the proposed unit cell of FIG. **13** can both provide positive phase shifts, the latter has the additional advantage of being able to provide a negative phase shift by simply varying the loading element values. More importantly, short, broadband 0-degree phase shift lines can be realized which can be used in numerous applications.

The 1-D phase-shifting structures were constructed using CPW technology on a Rogers™ RT5880 substrate with ∈r=2.2, and a dielectric height, h=20 mils. Standard size 0402 Panasonic ECJ-0EC capacitors were used for C_o with dimensions L=1 mm, W=0.5 mm, and H=0.5 mm, and standard size 0603 Panasonic ELJ-RE/FJ inductors were used for L_o with dimensions L=1.6 mm, W=0.8 mm, and H=0.8 mm. The 50Ω transmission lines were designed to have a length of d=7.4 mm, and a gap of s=0.6 mm was created to accommodate the series capacitors, resulting in a unit cell of total length d_o=8 mm. At 0.9 GHz the transmission lines were designed with a center conductor width of w=4 mm and a gap between the center conductor and the ground plane of g=0.106 mm. In addition, two 5 mm transmission lines were added to each end of the phase-shifting devices in order to accommodate SMA connectors. A Thru-Reflect-Line (TRL) calibration was carried out in order to remove the effects of the connectors and establish the reference planes at the input and output ports of the phase-shifting devices. All measurements were carried out on a HP8753C series vector network analyzer. The simulated results were obtained by replacing the ideal models for the capacitors and inductors with their corresponding S-parameter files provided by the vendors. Since the S-parameter files were extracted directly from device measurements, they therefore contain all the parasitic values associated with each component.

FIG. **17** shows the simulated (- - -) and measured (-) phase responses of 1-stage, 4-stage and 8-stage 0° phase-shifting devices with loading element values of C_o=12 pF and L_o=100 nH. It can be observed that the experimental results match very closely the simulated results, with phase slopes of −30.2°/GHz, −122.1°/GHz and −237.5°/GHz for the phase-shifting devices respectively. The measured insertion losses are 0.1 dB, 0.7 dB and 1.6 dB respectively at f_o=0.9 GHz. It is therefore evident that any number of stages can be used in order to produce the desired phase shift, however as the number of stages increases, so does the slope of the phase characteristic. For broadband applications therefore, it is desirable to keep the number of stages to a minimum.

FIG. **18** shows the simulated (- - -) and measured (-) phase responses of a 4-stage +10° phase-shifting device with loading element values of C_o=12 pF and L_o=68 nH and a 4-stage −10° phase-shifting device with loading element values of C_o=15 pF and L_o=120 nH. It can be observed that the experimental results correspond very closely to the simulated results with phase slopes of −136.6°/GHz and −108.4°/GHz for the +10° and −10° phase-shifting devices respectively. Also shown in FIG. **18** is the magnitude response of the −10° 4-stage phase-shifting device. The simulated (- - -) and measured (-) results correspond closely, however as the number of stages is increased the phase-shifting device begins to radiate, and resembles a leaky-wave structure. Therefore the phase-shifting devices should be kept short in length to avoid unnecessary energy leakage. The measured insertion losses at f_o=0.9 GHz are 0.4 dB and 0.5 dB respectively for the +10° and −10° phase-shifting devices.

The phase-shifting devices described above use cascaded sections of LHM lines and conventional transmission lines and offer significant advantages over conventional delay lines and uniform backward-wave L-C lines. The phase-shifting devices are compact in size, can be easily fabricated using standard etching techniques and exhibit a linear phase response around the design frequency. The phase-shifting devices can incur a negative or a positive phase, as well as a 0° phase depending on the values of the loading elements, while maintaining a short physical length. In addition, the phase incurred is independent of the length of the phase-shifting devices. Due to the compact, planar design, the phase-shifting devices are easily integrated with other microwave components and devices making them ideal for broadband applications requiring small, versatile, linear phase shifters.

Spectrum Analyser Using a Resonance Cone Metamaterial

The resonance cone metamaterial is useful in spectrum analysis. To illustrate this, a spectrum analyser incorporating resonance cone metamaterial was simulated. For the representation of metamaterial, analyser simulations employed a full-electromagnetic, thin-wire moment-method program, permitting the insertion of lumped circuit elements in finite-length wire segments. The basic network simulated is shown in FIG. **21**, and includes a 12×12 unit cell array, each unit cell being a 2.5 mm square, yielding a total grid size of 30 mm×30 mm. The grid is disposed above the ground plane a distance of 2.5 mm. The capacitance was 2 pF per segment and the inductance was 5.6 nH per segment. The chosen capacitance and inductance values were selected for availability as well as to achieve the desired resonance cone effects using existing X-Y scanning and network analysis equipment. The inductors used in the experiment had a manufacturer nominal quality factor Q of around 27. This was achieved in the simulation by adding a 1.6Ω resistor in series with each inductor. A resistor of the same value was added in series with each capacitor as well. Also shown in FIG. **21** is a 100 kΩ resistor from each grid intersection to ground to enable deduction of the grid-to-ground voltage from the computed resistor current. Along the edges, 50Ω resistors were connected to ground in place of the 100 kΩ resistors. For this value of edge resistance, resonance cone specular reflection from the edges is not significant.

Contour plots of grid-to-ground voltage magnitude and the Poynting vector real parts evaluated from the electric and magnetic fields on the ground-plane level at the center of each unit cell for a corner feed of 1 volt are shown in FIG. **22**. The simulated resonance cones and the way the cone orientation scans with frequency over the eight frequencies employed are illustrated. The arrows depict the Poynting vector real parts calculated on the ground plane. From the Poynting vector plot it can be seen that power flow is directed along the resonance cones. Apparent specular reflection from the grid edges is sometimes visible (for example at 0.7, 0.9, 1.9 and 2.3 GHz) but generally it is weak. As well, very weak parasitic resonance cones can be seen in FIG. **22** (for example at 0.9 and 2.3 GHz), probably caused by scattering from the inhomogeneities inherent in the grid structure. FIG. **23** shows the frequency response for the voltages across the 50Ω resistors to ground at all points along two edges of the grid.

Focusing Device Using Two Resonance Cone Metamaterials

Another focusing device making use of resonance cone metamaterial was created using a two media plane including metamaterial similar to that shown in FIG. **11**. By interchanging (transposing) the inductors and capacitors in the grid in part of the media, an interface is formed, separating two media. If the plasma negative and positive permittivities are interpreted by representing the media in terms of arrays of inductors and capacitors respectively, then interchanging the inductors and capacitors corresponds to moving the operating point from one hyperbolic region to the other in the parameter space as shown in FIG. **20**. The hyperbolic regions characterize the relevant partial differential equation. The vertical axis involves the electron cyclotron frequency ω_c and is proportional to the square of the ambient magnetic field, while the horizontal axis involves the plasma frequency ω_p and is proportional to the ambient electron density. The capacitor and inductor symbols characterize the impedance properties of the plasma medium as they effect the input of impedance of a small, spherical RF probe immersed in the plasma medium. These two hyperbolic regions suggest two quite different periodic physical media that, when interfaced, display unusual refraction phenomena. If the inductors and capacitors are regarded as physical entities and not just as aids to interpretation, a physical inductor-capacitor (L-C) network becomes a metamaterial that exhibits a resonance cone phenomena. This enables a two-medium configuration with a linear interface between the original medium and the transpose medium.

The component layout of a focusing device including multi-resonance cone materials is shown in FIG. **24**, and its physical grid realization is shown in FIG. **25** in which the grid elements are chip-type surface-mount inductors and capacitors soldered together. The grid has 12 by 12 unit cells. Medium **1** is constituted by the lower 5 rows of the grid and includes inductors on the horizontal segments and capacitors on the vertical segments. Medium **2** is constituted by the upper 6 rows of the grid and includes capacitors on the horizontal segments and inductors on the vertical segments. The sixth row of cells is the transition region, or interface, where the lower edges of the unit cell carry inductive loads, the upper edges carry capacitive loads, and the vertical segments carry a capacitor on the lower half and an inductor on the upper half. Therefore the boundary between the two media lies in the middle of the transition region.

To accommodate the physical size of the chip-type inductors and capacitors, the unit cells in the transition region are elongated i.e. the vertical dimension is doubled compared to unit cells elsewhere in the grid. The overall size of the grid is 30 mm×32.5 mm and the boundary is a horizontal line 15 mm from the bottom of the grid. The grid is aligned so that individual vertical transmission lines run directly through both media and the interface. In the refraction experiments, the vertical E-field is picked up by an open-ended coaxial probe positioned sequentially just above each conductor intersection, and the probe signal is fed to a network analyzer with output **S21** which, when plotted on a linear scale, is approximately proportional to the grid-to-ground voltage.

The two-medium result for corner feed with the feed point being below point A in FIG. **24**, is shown in FIG. **26**, which displays clearly the negative refraction of the resonance cone as it traverses the transposition interface. Experimental results at the top exhibit contours of normalized /**S21**/, and the simulation at the bottom exhibits contours of grid-to-ground voltage magnitude with the arrows depicting the Poynting vector real parts on the ground plane. The counter lines in the bottom plot are at the same levels as the three lowest contour lines in the top plot. Notice that specular reflection from the interface is negligible and there is no visible transmission into the second medium in the same direction as the incident cone. This can also be seen from the

Poynting vectors in the bottom plot of FIG. **26**, which displays the simulation results, where the power flow associated with specular reflection from the interface is negligible and no power along the original resonance cone is transmitted into the second medium. In order to extend the refraction results to include focusing, the physical set-up of FIG. **25** was used with coaxial feed from beneath the ground plane to point B on the grid in FIG. **24**, near the middle of one of the two planar metamaterials.

Simulation and experimental results are shown in FIGS. **27** and **28** at 1.3 GH_Z. The arrows display the Poynting vector real ports calculated on the ground plane. Heavy contour is at 0.707 of focal maximum of 0.867 units of normalized /**S21**/. Simulation and experimental results are also shown in FIGS. **29** and **30** at 1.7 GH_Z. In FIG. **29** heavy contour is at 0.707 of focal maximum of 0.708 and in FIG. **30** heavy contour is at 0.707 of focal maximum of 0.764. In all cases, one can see the cones emanating from the feed point (the "source"), the backward refraction at the y=15 mm interface, and the cones merging at the "focus". Note that in FIGS. **27** and **29** the power flow closely follows the directions of the resonance cones. Furthermore, FIG. **29** shows the power flow emanating from the source and following the resonance cones to converge at the focus, from where it diverges again into a new set of resonance cones. In FIGS. **29** and **30**, the focal region is taken to be bounded by the contour that is at 0.707 of the focal region maximum, so this contour may be termed the "half-power" contour. It is worth noting, that at 1.7 GHz, the experimental focal region boundary lies within a square measuring ½5th free-space wavelength on a side, so the phenomenon properly may be termed "sub-wavelength focusing". In contrast, at 1.3 GHz the focal point is too close to the upper edge of the material to exhibit an equally well localized focal region, and thus this represents a useful low-frequency limiting case for the particular overall grid size in use. As well, with increasing frequency, it should be noted that the focal region moves gradually toward the boundary between the two media.

Couplers Using Linear Metamaterials

The present metamaterial is also useful in couplers by combining the metamaterial with conventional microchip (MS) transmission lines. In particular, it has been found that the metamaterial is useful in both a coupled-line coupler and a branch-line coupler. The MS/LHM coupled-line coupler is realized by means of one regular microstrip line that is edge-coupled to a LHM line. Such a coupler excites modes on the two lines whose propagation constants are co-directional but whose corresponding Poynting vectors are contra-directional, leading to backward power coupling. Moreover, by comparison to a conventional coupled-line microstrip coupler of the same length and line spacing, the present MS/LHM coupled-line coupler offers better performance in terms of coupled power, return loss and isolation without any bandwidth degradation. The MS/LHM coupled-line coupler can also be designed for arbitrary backward coupling.

The branch-line coupler uses LHM lines to split power equally between the output ports with interesting phase compensation characteristics. In conventional branch-line couplers, the through and coupled ports are −90° and −180° out of phase respectively with reference to the input port. The present branch-line coupler using an LHM line, results in the power emerging from the coupled port to be in phase with the input port and permits a choice of either positive or negative phase-quadrature (±90°) at the through port.

For ease of understanding, the theory behind the coupled-line coupler will be described. A MS/LHM coupled-line coupler can be realized by means of one regular microstrip line that is edge-coupled to a LHM line as shown in FIG. **31**. The LHM is synthesized by periodically loading a host microstrip transmission-line (TL) medium with series capacitors and shunt inductors. In such a backward-wave transmission line, the phase velocity and power flow are anti-parallel.

Coupled-line couplers rely on proximity interaction of fields between transmission lines to transfer power between them. In co-directional coupled-line couplers, the direction of the propagation vectors on the two lines is the same. When such couplers are constructed using either two regular or two LHM lines, the underlying propagation phenomenon is fundamentally similar to that on a corresponding isolated line of the same type. Indeed in such co-directional couplers including two lines of the same type, the power also couples co-directionally and appears at the far end of the coupler (i.e. away from the source). Peculiar features arise when two different types of lines are used. Herein it is shown that a MS/LHM coupler excites co-directional forward traveling waves but delivers power backwards as a result of the power flow being contra-directional.

The analysis presented herein assumes that port **1** in FIG. **31**(*a*) is the excited port. The operation of coupled line couplers can be understood in terms of constructive and destructive interference of the two modes that are allowed to propagate. Using a coupled-mode differential-equation formulation, it is possible to show that the general expressions for voltages and currents on the two lines take the form:

$$V_1=(V_c^+e^{-j\beta_c z}+V_c^-e^{j\beta_c z})+(V_\pi^+e^{-j\beta_\pi z}+V_\pi^-e^{j\beta_\pi z}) \tag{16}$$

$$V_2=R_c(V_c^+e^{-j\beta_c z}+V_c^-e^{j\beta_c z})+R_\pi(V_\pi^+e^{-j\beta_\pi z}+V_\pi^-e^{j\beta_\pi z}) \tag{17}$$

$$I_1=\frac{1}{Z_{c1}}(V_c^+e^{-j\beta_c z}-V_c^-e^{j\beta_c z})+\frac{1}{Z_{\pi 1}}(V_\pi^+e^{-j\beta_\pi z}-V_\pi^-e^{j\beta_\pi z}) \tag{18}$$

$$I_2=\frac{R_c}{Z_{c2}}(V_c^+e^{-j\beta_c z}-V_c^-e^{j\beta_c z})+\frac{R_\pi}{Z_{\pi 2}}(V_\pi^+e^{-j\beta_\pi z}-V_\pi^-e^{j\beta_\pi z}) \tag{19}$$

Subscripts **1** and **2** refer to line **1** (microstrip) and line **2** (LHM) of the coupler respectively; c and π are the two possible modes and the coefficients R_c and R_π are the ratios of the voltages on line **2** to line **1** for each mode.

To analyze the MS/LHM coupler of FIG. **31**, some simplifying assumptions are made. First, the lines of the coupler are assumed to the far removed from each other so that the coupled-mode propagation constants β_c and β_π correspond to the isolated propagation constants β_1 and β_2 respectively of each line. This implies that β_2 (LHM line) has a negative value. Hence all occurrences of β_c and β_π in equations (16) to (19) can be replaced by β_1 and β_2 respectively. Furthermore line **1** is assumed to be the excited line and therefore, it is anticipated that mode **1** will be the dominant mode for determining the voltage on line **1**. Second, to minimize reflections, only the case of properly terminated lines is considered. Thus each mode travels in one direction only. Mode **1**, being dominant on line **1**, has a forward phase velocity and carries power away from the source. The dilemma lies in the choice of the direction of the phase velocity for mode **2**. To resolve this issue, one can consider the limiting case when the magnitudes of the isolated propagation constants of the modes are close to each other. As mode **1** travels forward, due to phase matching constraints, it is expected that the coupled mode (mode **2** in this case) should also travel forward. The present situation is the reciprocal case and therefore, power from the excited

regular MS line will couple backwards into port **2** of the LHM line (see FIG. **31**(*a*)). In the general case when the two mode propagation constants are not close to each other, maximum power can be coupled backwards into port **2** (see FIG. **32**(*a*)) only when the excited modes are co-directional. Hence in the following discussion, only the case of co-directional (phase-wise) coupled modes will be considered.

Lastly, it is assumed that the magnitudes of the impedances for each mode on line **1** are the same and are denoted by Z_1; similarly for line **2** they are denoted by Z_2. Caution must be exercised in choosing the signs of the impedances in the current equations 3 and 4. The impedance term in front of V_c^+ and V_c^- (equation 3) will be positive as usual. Since V_π^+ and V_π^- (equation 3) actually correspond to backward and forward traveling waves respectively on line **1** (due to the negative sign of β_2), and to ensure that the power carried by a forward traveling wave in a regular medium is also forward, $Z_{\pi 1}$ should be negative. Similar arguments applied to line **2** (LHM line) require that the sign of Z_{c2} be negative and that of $Z_{\pi 2}$ be positive to ensure that power flow and phase flow occur in opposite directions.

With these assumptions, equations (16) to (19) can be simplified to:

$$V_1=V_c^+e^{-j\beta_1 z}+V_\pi^-e^{j\beta_2 z} \tag{20}$$

$$V_2=R_cV_c^+e^{-j\beta_1 z}+R_\pi V_\pi^-e^{j\beta_2 z} \tag{21}$$

$$I_1=\frac{V_c^+}{Z_1}e^{-j\beta_1 z}+\frac{V_\pi^-}{Z_1}e^{j\beta_2 z} \tag{22}$$

$$I_2=-\frac{R_c}{Z_2}V_c^+e^{-j\beta_1 z}-\frac{R_\pi}{Z_2}V_\pi^-e^{j\beta_2 z} \tag{23}$$

Applying boundary conditions at port **1** (presence of source V_s and matching source impedance Z_1) and port **4** (termination to Z_2) respectively yields:

$$V_c^+e^{j\beta_1 d}+V_\pi^-e^{-j\beta_2 d}=\frac{V_s}{2} \tag{24}$$

$$R_cV_c^++R_\pi V_\pi^-=0 \tag{25}$$

Solving for V_c^+ and V_π^-, and plugging back into equations (20) and (21), the following expressions for the line voltages along the coupler can be obtained:

$$V_1(z)=\frac{V_s}{2}\frac{R_\pi e^{-j\beta_1 z}-R_c e^{j\beta_2 z}}{R_\pi e^{j\beta_1 d}-R_c e^{-j\beta_2 d}} \tag{26}$$

$$V_2(z)=\frac{V_s}{2}\frac{R_\pi R_c(e^{-j\beta_1 z}-e^{j\beta_2 z})}{R_\pi e^{j\beta_1 d}-R_c e^{-j\beta_2 d}} \tag{27}$$

Equations (26) and (27) confirm that port **4** (z=0) is the isolated port and port **2** (z=−d) is the coupled port. Expressions for power delivered to the through port (port **3**) and coupled port (port **2**) can be derived from equations (26) and (27):

$$P_2=\frac{1}{Z_2}\left(\frac{V_s}{2}\right)^2\frac{(R_CR_\pi)^2(1-\cos((\beta_1+\beta_2)d))}{(R_c^2+R_\pi^2-2R_cR_\pi\cos((\beta_1+\beta_2)d))} \tag{28}$$

-continued

$$P_3=\frac{1}{2Z_1}\left(\frac{V_s}{2}\right)^2\frac{(R_C-R_\pi)^2}{(R_c^2+R_\pi^2-2R_cR_\pi\cos((\beta_1+\beta_2)d))} \tag{29}$$

From equation (29) it can be seen that the power delivered to the through port (port **3**) is minimized (i.e. the power to the coupled port is maximized) when the argument of the cosine function in the denominator takes values which are odd integer multiples of π. This allows the definition of the coherence length of the coupler, which is the optimal length for maximum coupling, as:

$$d_{coherence}=\pi/|\beta_1+\beta_2| \tag{30}$$

Note that in the above equation (30), β_2 is negative. An interesting feature of such a coupler is that it is possible to achieve arbitrary backward coupling by making the magnitudes of the propagation constants of the two modes close to each other.

Two coupled-line couplers were constructed, namely a short MS/LHM coupled-line coupler and a long MS/LHM coupled-line coupler with arbitrary coupling. The substrate used to construct the couplers was a low-loss Rogers™ TMM4® having a relative dielectric constant $\in_r$=4.6 and 50 mils thickness (loss tangent=0.002). The regular MS lines were designed using a microwave-circuit simulator, whereas Matlab® simulations of the dispersion relation of the periodic LHM line were performed to estimate the corresponding propagation constant at the design frequency. Moreover, microwave circuit simulations of the couplers were performed using a microwave-circuit simulator.

The short MS/LHM coupled-line coupler was designed with a finite coherence length to demonstrate the validity of the theory. The long MS/LHM coupled-line coupler has magnitudes of the two modal propagation-constants close to each other. By taking a finite number of cells (the optimal length infinite as defined by equation 15), a comparison with a conventional (MS/MS) coupled-line microstrip coupler of the same length, line spacing, and propagation constant is permitted.

Using a microwave circuit simulator the widths of the lines of the short MS/LHM coupled-line coupler are designed so that both the MS and LHM lines have an impedance of 50Ω when placed 0.4 mm apart. The width of the MS and LHM lines used was 2.383 mm. Using a unit cell size of 5 mm for the LHM line, the choice of the loading elements are 2.7 nH shunt inductors and 0.9 pF series capacitors. Again, the microwave circuit simulator is used to determine the effective dielectric constant for the line segments. This is used in Matlab simulations of the periodically loaded transmission-line based LHM line to extract its dispersion characteristics (see FIG. **32**(*a*)). A design frequency of 2.2 GHz is selected for this configuration so that the magnitude of the isolated propagation constants differ enough (see FIG. **32**(*a*)) to give a short coherence length (see equation 15).

A spatial Fourier transform of the line voltages, extracted by exciting port **1** in ADS simulations, is shown for both lines of the coupled-line coupler at 2.2 GHz using 400 sample points (see FIGS. **33**(*a*) and (*b*)). These plots demonstrate the validity of the assumption that the propagation constants of the coupled modes ($|\beta_1|$=85.3 m^{-1} and $|\beta_2|$=195 m^{-1}) are indeed close to the isolated propagation constants of the individual lines (compare to FIG. **32**(*a*)). Moreover the Fourier spectrum demonstrates that both modes propagate forward (co-directional) and that β_1 is dominant on line **1** (MS). Furthermore, the assumption of minimal reflections

is evident from the small peaks in the negative region of the spectrum in FIGS. **33**(*a*) and **33**(*b*). In addition, using equation (30), the coherence length is calculated to be 28.6 mm and can be approximated by 6 unit cells of the MS/LHM coupled-line coupler. By comparing the coupled power as a function of frequency for various coupler sizes, this is verified to be true as shown in FIG. **34**. Moreover, the input power at port **1** is $V_s^2/8Z_0$ and the output power at the coupled port is given by equation (28). The implicated voltage ratios R_c and R_π can be estimated from FIGS. **33**(*a*) and **33**(*b*) and the corresponding theoretical value for the coupled power (S_{21}) amounts to −7.46 dB at the coherence length, which is close to the simulation results for a 6 unit cell long coupler (see FIG. **34**).

Fair comparison between a conventional coupled-line backward coupler (MS/MS) and a metamaterial long MS/LHM coupled-line coupler (see FIG. **32**(*b*)) can be made if their propagation constants and line impedances are similar. This is because, it is always possible to slow down the coupled waves and improve coupling in conventional couplers by loading them. For this purpose, a design frequency of 2.8 GHz (FIG. **32**(*a*)) is selected. The widths of the MS and LHM strips of the MS/LHM coupled-line coupler are taken to be 2.45 mm and 2.0 mm respectively so that at a line separation of 0.4 mm at the design frequency, the impedances of each line are close to 50Ω. The loading elements are the same as above with reference to the short MS/LHM coupled-line coupler.

A regular MS/MS backward coupler was also designed at the same frequency with a propagation constant of 108.2 m^{-1} and impedance close to 50Ω. The widths of the strips were taken to be 2.122 mm in this case and the length of the coupler was optimized to 14.5 mm (λ/4).

From MATLAB® simulations of the periodic LHM lines (see FIG. **32**(*a*)) it is found that at 2.8 GHz, the propagation constants for both lines of the MS/LHM coupled-line coupler are similar to those of the MS/MS coupler lines (MS and LHM propagation constants are 108.9 m^{-1} and 105 m^{-1} respectively). This makes the coherence length for the MS/LHM coupled-line coupler very long (equation 15). For comparison with the designed conventional MS/MS coupler, the former is constructed out of 3 unit cells corresponding to a total length of 15 mm (see FIG. **32**(*b*)).

From theory (equation (15)) it is anticipated that this MS/LHM coupled-line coupler will have a long coherence length if the propagation constants of its two modes are close to each other. This is true at 2.8 GHz as shown in the dispersion diagram for the LHM-line (see FIG. **31**(*a*)).

For comparison with a conventional MS/MS backward coupler, simulation and experimental results are presented in FIGS. **35**(*a*) to **35**(*c*), involving a λ/4 MS/MS coupler and a 3 unit cell long MS/LHM coupled-line coupler, both of approximately equal lengths, equal spacing and propagation constants (see FIG. **32**(*b*)). The return loss (S_{11}), isolation (S_{41}) and coupled power (S_{21}) for each coupler were measured using a HP8753D network analyzer and values obtained were compared to microwave-circuit simulation results. As shown in FIG. **35**(*a*), the coupled power of the MS/LHM coupled-line coupler is better than that of the MS/MS coupler. Furthermore, from FIG. **35**(*b*), it is seen that the amount of power leaking into the isolated port of the MS/LHM coupled-line coupler is lower than that of the corresponding MS/MS coupler. In addition, at the design frequency, the return loss of the MS/LHM coupled-line coupler is lower than its conventional counterpart (see FIG. **35**(*c*)). Hence, the metamaterial MS/LHM coupled-line coupler exhibits superior performance in terms of the coupled power, isolation and return loss when compared to a conventional MS/MS coupler of the same length, line separation and propagation constant.

As expected from the dispersion analysis and the theory presented earlier, the MS/LHM coupled-line coupler has a very large coherence length. Under such conditions, arbitrary coupling can be achieved as demonstrated in FIG. **35**(*d*). As the number of unit cells is increased, the coupled power improves and it is possible to achieve close to 0 dB coupled power.

Overall, there is good agreement between theory, simulation and experiment. The predictions of the coherence length as well as the level of the coupled power agree well with the experimentally observed results. The coupled-line coupler demonstrates better performance in terms of coupling, isolation and reflection when compared to a conventional microstrip coupler of the same length, line spacing and propagation constant.

Small discrepancies between simulation and experimental results can be attributed to a number of factors. The absence of accurate models for the inductors used and their self-resonance characteristics affect the design. Moreover chip components with finite dimensions add to the overall electrical length of the MS/LHM coupler which needs to be properly accounted for.

In conventional microstrip branch-line couplers, power splits equally between the through and coupled ports and the ports are −90° and −180° out of phase respectively with reference to the input port. Interesting phase compensation effects can be achieved when some of the branches of the branch-line couplers are replaced by LHM lines.

Two different branch-line coupler designs are presented below denoted as type **1** and type **2**. The type **1** branch-line coupler uses regular microstrip lines for the low-impedance branches and LHM lines for the high-impedance branches (see FIG. **36**(*a*)). The type **2** branch-line coupler is the dual of the type **1** branch-line coupler and utilizes LHM lines for the low-impedance branches and microstrip lines for the high-impedance branches (see FIG. **36**(*b*)). For both branch-line couplers, power splits equally between the two output ports with a 0°-phase shift with respect to the input at the coupled port. Furthermore, the type **1** branch-line coupler offers a negative phase quadrature (−90°) while the type **2** branch-line coupler provides a positive phase quadrature (+90°) at the through port with respect to the input port.

FIG. **36**(*a*) shows the structure of the type **1** branch-line coupler made of alternating MS and LHM lines. The scattering parameters of the coupler can be determined using even-odd mode analysis. It can be easily shown that the impedance looking into a segment of LHM transmission line of length d is given by:

$$Z_{in} = Z_0 \frac{Z_L + jZ_0 \tan\beta d}{Z_0 + jZ_L \tan\beta d} \tag{31}$$

where:

Z_L is the load impedance at the end of the line;

Z_0 is its characteristic impedance; and

β is a negative number corresponding to the propagation constant.

For the purpose of analysis, port **1** is excited by a source V_s of internal impedance Z_0 and all other ports are terminated at Z_0. In the even mode analysis, both port **1** and port **2** are excited by $V_s/2$ sources. In the odd mode, the source at port **1** is $V_s/2$ and the source at port **2** is $-V_s/2$ (see FIG. **37**).

In the even mode, looking down the LHM lines at port **1** and port **3** (see FIG. **36**(*a*)), one sees open λ/8 lines and

hence βd is $-\pi/4$. From equation (31), this corresponds to shunt loading of the λ/4 MS line at its ends by a susceptance $-jY_0$ (see FIG. **37**). In the odd mode, one can observe shorted λ/8 segments of LHM lines instead, corresponding to shunt loading of the MS line by a susceptance jY_0.

By analyzing the equivalent circuits in FIG. **37**, it is seen that the impedance looking into each port is Z_0. Since the ports are always matched, S_{11}, S_{22}, S_{33} and S_{44} are zero. As the waves in each port travel in only one direction, by superposition of the even and odd modes, S_{21} is zero. In the even mode, the signal at port **1** can be related to the signal at port **3** by the following transfer matrices:

$$\begin{bmatrix} V_s/4 \\ I_1 \end{bmatrix} = \begin{bmatrix} 1 & 0 \\ -jY_0 & 1 \end{bmatrix} \begin{bmatrix} 0 & j\frac{Z_0}{\sqrt{2}} \\ jY_0\sqrt{2} & 0 \end{bmatrix} \begin{bmatrix} 1 & 0 \\ -jY_0 & 1 \end{bmatrix} \begin{bmatrix} V_3 \\ V_3Y_0 \end{bmatrix} \tag{32}$$

$$\Longleftrightarrow V_3^{even} = \frac{1}{\sqrt{2}}\frac{V_s}{4}(1-j) = V_4^{even} \tag{33}$$

In the even mode, the voltage at port **3** and port **4** are identical (see FIG. **37**). In the odd mode, the transfer matrices are:

$$\begin{bmatrix} V_s/4 \\ I_1 \end{bmatrix} = \begin{bmatrix} 1 & 0 \\ jY_0 & 1 \end{bmatrix} \begin{bmatrix} 0 & j\frac{Z_0}{\sqrt{2}} \\ jY_0\sqrt{2} & 0 \end{bmatrix} \begin{bmatrix} 1 & 0 \\ jY_0 & 1 \end{bmatrix} \begin{bmatrix} V_3 \\ V_3Y_0 \end{bmatrix} \tag{34}$$

$$\begin{bmatrix} -V_s/4 \\ I_2 \end{bmatrix} = \begin{bmatrix} 1 & 0 \\ jY_0 & 1 \end{bmatrix} \begin{bmatrix} 0 & j\frac{Z_0}{\sqrt{2}} \\ jY_0\sqrt{2} & 0 \end{bmatrix} \begin{bmatrix} 1 & 0 \\ jY_0 & 1 \end{bmatrix} \begin{bmatrix} V_4 \\ V_4Y_0 \end{bmatrix} \tag{35}$$

$$\Leftrightarrow V_3^{odd} = -\frac{1}{\sqrt{2}}\frac{V_s}{4}(1+j);\ V_4^{odd} = \frac{1}{\sqrt{2}}\frac{V_s}{4}(1+j) \tag{36}$$

where equation (34) is the transfer matrix from port **1** to port **3** and equation (35) is the transfer matrix from port **2** to port **4** (see FIG. **37**). The amplitude of the total incident voltage (odd and even) at port **1** is $V_s/2$. Hence from superposition of the modes, S_{31} and S_{41} are equal to $-j/\sqrt{2}$ and $1/\sqrt{2}$ respectively. The scattering matrix for the MS/LHM branch-line coupler is:

$$\begin{bmatrix} V_1^- \\ V_2^- \\ V_3^- \\ V_4^- \end{bmatrix} = \frac{1}{\sqrt{2}} \begin{bmatrix} 0 & 0 & -j & 1 \\ 0 & 0 & 1 & -j \\ -j & 1 & 0 & 0 \\ 1 & -j & 0 & 0 \end{bmatrix} \begin{bmatrix} V_1^+ \\ V_2^+ \\ V_3^+ \\ V_4^+ \end{bmatrix} \tag{37}$$

From equation (37), it is seen that in the MS/LHM branch-line coupler, the power divides equally between the through port (port **3**) and coupled port (port **4**) and they are 90° and 0° out of phase respectively with reference to the input (port **1**).

To construct the type **1** branch-line coupler a substrate similar to that of the coupled-line couplers was used. In the type **1** branch-line coupler, the MS strips have an impedance of 50/√2Ω whereas LHM strips have an impedance of 50Ω (using a microwave-circuit simulator). The design frequency is chosen to be 1.9 GHz so that each side of the coupler is λ/4 long (from Matlab® simulations of the dispersion characteristics of the line). The MS line used is 4.018 mm wide and 20.603 mm long. The LHM-line strip comprises 3 unit cells of width 2.343 mm and length 5.2 mm each. The latter is loaded with 3.3 nH shunt inductors and 1.6 pF series capacitors. The end capacitors of each LHM line segment are 2.4 pF. The terminating capacitors are chosen to be almost twice the value of the interior ones to preserve the symmetry of the unit cells making up the LHM lines (see FIG. **31**(*b*)).

During simulation, port **1** of the branch-line coupler shown in FIG. **36**(*a*) is excited in a microwave-circuit simulation and all other ports are terminated with 50Ω loads. The reflected power (S_{11}), isolation (S_{21}), through power (S_{31}) and coupled power (S_{41}) are recorded and compared to theoretical estimates from even-odd mode analysis. To apply the previously presented even-odd mode analysis, Matlab® simulations are performed for both lines to determine their dispersion characteristic. Subsequently, the corresponding phase shifts are used in the even-odd mode analysis. These theoretical results are compared with a microwave-circuit simulation and are presented in FIGS. **38**(*a*) to **38**(*c*).

In this branch-line coupler, the input power splits in half between the through port (port**3**) and coupled port (port **4**) as expected (see equation (22)). This is demonstrated in FIGS. **38**(*a*) and **38**(*b*). FIGS. **38***a* and **38***b* also show that at the design frequency, the through and coupled ports are matched (see S_{11} in FIG. **38**(*a*)) and port **2** is isolated (see FIG. **38**(*b*)). In FIGS. **38**(*a*) and **38**(*b*) the response of a commensurate, conventional, branch-line coupler is also included for comparison purposes. As shown, there is no degradation of the useful bandwidth between the conventional and the type **1** branch-line coupler. However, from theory the through port (port **3**) undergoes a phase shift of −90° and the coupled port (port **4**) undergoes a phase shift of 0° with respect to the input. This is clearly demonstrated from the simulation results in FIG. **38**(*c*).

The schematic for the type **2** MS/LHM branch-line coupler is shown in FIG. **36**(*b*). The scattering parameters for this branch-line coupler can be determined in the same way followed for the type **1** case. Since in this branch-line coupler, the MS and LHM lines are switched, every occurrence of j in equations (32) to (37) is replaced by −j. Hence the scattering matrix for the type **2** MS/LHM branch-line coupler is:

$$\begin{bmatrix} V_1^- \\ V_2^- \\ V_3^- \\ V_4^- \end{bmatrix} = \frac{1}{\sqrt{2}} \begin{bmatrix} 0 & 0 & j & 1 \\ 0 & 0 & 1 & j \\ j & 1 & 0 & 0 \\ 1 & j & 0 & 0 \end{bmatrix} \begin{bmatrix} V_1^+ \\ V_2^+ \\ V_3^+ \\ V_4^+ \end{bmatrix} \tag{38}$$

From equation (38), it is seen that in the type **2** MS/LHM branch-line coupler, the power divides equally between the through port (port **3**) and coupled port (port **4**) and the parts are +90° and 0° out of phase respectively with reference to the input (port **1**).

For the type **2** branch-line coupler, the LHM strips are designed with 50/√2Ω impedance and the MS strips with 50Ω impedance. The design frequency is chosen at 1.7 GHz so that again all sides are λ/4 long. In this case, the MS lines used are 2.342 mm wide and 23.645 mm long. The LHM-line strip comprises 3 unit cells of width 4.017 mm and length 5 mm each. The latter is loaded with 2.7 nH shunt inductors and 2.4 pF series capacitors, with terminating 4 pF capacitors for the LHM lines.

The type **2** branch-line coupler splits the input power equally between the two forward ports (through and coupled) and the backward port is isolated. As will be appreciated, the magnitude response is very similar to that of the type **1** branch-line coupler. From theory (equation (23)) and verified from the simulation results in FIG. **38**(*d*), the through port (port **3**) undergoes a phase shift of 90° and the

coupled port (port **4**) undergoes a phase shift of 0° with respect to the input.

A conventional branch-line coupler allows for equal power split between the output ports but with −90° and −180° phase shifts with respect to the input (see FIGS. **38**(*a*) to **38**(*c*)). As will be appreciated, the present branch-line couplers offer more options in the design of circuits involving branch-line couplers. than available with conventional branch-line couplers. Specifically either a positive or a negative phase quadrature at the through port can be achieved, associated with a phase compensation at the coupled port.

The present coupled-line coupler demonstrates superior performance in terms of coupling, isolation and return loss when compared to a conventional microstrip coupled-line coupler of the same length, line spacing and propagation constant. Moreover, it is possible to realize such MS/LHM coupled-line couplers to achieve an arbitrary coupling coefficient. Furthermore, MS/LHM branch-line couplers possess similar functionality to their conventional counterparts when considering the magnitude of the power transfer between the ports. However, new functionality is added by the ability to obtain phase compensation at the coupled port (0° phase shift with respect to the input) along with a choice of either a positive or a negative phase quadrature (±90° phase shift) at the through port. On the other hand, the corresponding bandwidth remains comparable to that of conventional, commensurate, microstrip branch-line couplers.

Backward Leaky-Wave Antenna Using Metamaterial

Charged particles traveling at speeds greater than the phase velocity of light in a medium emit coherent radiation better known as Cherenkov radiation. The angle of the radiated conical wave front is given by the velocity of the particle (V) with respect to the phase velocity of EM waves (v) within the medium in the following manner:

$$\mathrm{Cos}(\theta) = v/V = \frac{c/n_0}{V} \tag{39}$$

where:

n_0 is the refractive index of the surrounding medium;

c is the speed of light in a vacuum; and

θ is the angle between the particle velocity and the radiated EM wave front.

This expression suggests that in a medium with negative no, the angle θ becomes obtuse. This implies that radiation is directed backward rather than forward, as is the case in a RHM.

Similarly, if a periodic guiding structure supports Bloch currents (moving charge) or equivalently EM waves with phase velocities greater than the speed of light, the angle of the radiated wave front is derived from equation (39) by letting V be the phase velocity of the EM wave along the guiding interface. This is due to the phase matching condition along the interface of the guide and surrounding medium. If the guiding structure is a medium with an effective refractive index n_1, and the surrounding medium has a refractive index n_0, then the angle of the radiated wave front is given by the following expression:

$$\mathrm{Cos}(\theta) = \frac{c/n_0}{c/n_1} = \frac{n_1}{n_0} \tag{40}$$

The above equation indicates that if the refractive index of the guiding medium (n_1) is negative, the radiation emitted into a RHM will be directed backward. It is in fact the phase advancement (backward-wave propagation) that causes backward radiation into the surrounding medium.

In order to excite backward-wave radiation from a dual transmission line LHM into free space, the L, C parameters need to be chosen such that the effective refractive index of the LHM, (n_1), is negative and smaller in magnitude than one, as indicated by equation (40). Equivalently, the magnitude of the propagation constant along the guiding LHM needs to be designed to be smaller in magnitude than the propagation constant in free-space k_0.

A radiating LHM antenna at 15 GHz based on dual transmission lines of the type shown in FIG. **13** was created. The LHM antenna includes 16 unit cells, with each unit cell having a dimension of 4.268 mm, approximately a factor of 5 smaller than the free-space wavelength of 2 cm at 15 GHz. Thus, the antenna can be treated as an effective medium. Commercial method of moments software was used to design the layout of the antenna. The LHM was fabricated by a mask/photo-etching technique on a 20-mil thick Rogers™ RO3203 circuit board with a relative permittivity of 3. The interconnecting transmission line sections were implemented in coplanar waveguide (CPW) technology. The transmission lines include a planar center conductor with two adjacent ground planes on either side. In the coplanar waveguide configuration, both ground planes and the center conductor lie in the same plane, which allows the simple integration of shunt inductors and series capacitors. The gaps in the CPW center conductor serve as the series capacitors and the narrow lines connecting the center conductor to the coplanar ground planes act as the shunt inductors. It is in fact these capacitive gaps that radiate in the structure and cause a backward emerging transverse magnetic wavefront. On the contrary, the inductive lines are non-radiating due to the antiparallel currents flowing on each pair of inductive lines. This odd symmetry causes cancellation in the far field and leads to low cross-polarization levels.

Although there are various radiating structures that exhibit phase and group velocities of opposite sign, the proposed structure, unlike conventional structures operates in the long wavelength regime and demonstrates backward-wave radiation in its lowest passband of operation. The proposed structure supports a backward-wave fundamental spatial harmonic that radiates. Early examples of backward-wave radiating structures include the helix antenna, corrugated dielectric, or metallic surfaces, and periodic arrays of radiating elements fed by slow wave transmission line sections of large periodic spacing (d>λ/2). These structures, however, radiate in higher-order passbands (exhibit higher-order radiating spatial harmonics) and therefore, effective material constants such as a refractive index cannot in general be defined. On the other hand, log-periodic dipole arrays and related uniform dipole arrays with a transposed feed have shown to produce backward waves even for small longitudinal periodic spacings. Nevertheless, the dipoles are resonant so element dimensions still remain electrically large (~λ/2) and therefore effective material parameters, e and m cannot be defined.

Super-Lens Formed From Metamaterials and RHM

The present metamaterial is also suitable for use in a focusing device that overcomes diffraction limits, hereinafter referred to as a "super-lens". The super-lens includes two-field focusing devices of the type previously discussed and is formed by sandwiching the LHM between the two RHM at two parallel interfaces. The LHM is a planar slab having a grid of printed metallic strips over a ground plane, loaded with series capacitors C and shunt inductors L. The

two RHMs are two unloaded printed grids which act as homogeneous and isotropic media with positive indices of refraction.

FIG. **39** illustrates the planar transmission line left-handed super-lens. The unit cell of the left-handed grid is shown in the top insert while the unit cell of the positive refractive index grid is shown in the bottom insert. The super-lens is fabricated on a grounded microwave substrate (Rogers™ RO3003) of thickness 60 mil (1.52 mm) and dielectric constant $\in_r$=3.00. The left-handed slab has a 5×19 grid of printed metallic strips (microstrip lines) loaded with series chip capacitors C and shunt chip inductors L to the ground. Each unit cell has dimensions 8.40 mm×8.40 mm and therefore is much smaller than the nominal operating wavelength of 15.59 cm at 1 GHz. Hence, the loaded periodic grid acts as an effective medium exhibiting a negative index of refraction. The left-handed planar slab is sandwiched between two commensurate unloaded printed grids that act as effective homogenous media with positive indices of refraction. The unloaded grid and ground plane behave like a dielectrically loaded parallel-plate waveguide, but in addition allow simple measurement of the guided fields through proximity coupling. The left-handed grid is designed so that it is impedance matched and exhibits a refractive index of −1 relative to the unloaded grids at the design frequency of 1.00 GHz.

The first unloaded grid is excited at a point which is imaged by the left-handed slab to the second unloaded grid, with a vertical monopole fed by a coaxial cable through the ground plane. The monopole attaches the center conductor of the coaxial cable to a point on the unloaded grid, while the outer conductor of the coaxial cable attaches to the ground plane. The vertical monopole lies along the center row (row **0**), located 2.5 unit cells away from the first interface of the left-handed slab. According to geometrical optics, the source and image should be symmetrically positioned with respect to the left-handed slab. This is due to the fact that the distance from the source to the first interface (2.5 unit cells) is half the left-handed slab thickness (5 cells). The set-up shown in FIG. **39** is a practical implementation for imaging a point source from one homogeneous dielectric to another using a left-handed slab.

The vertical electric field over the entire structure is measured using a detecting probe. The field is detected 0.8 mm above the entire surface of the structure, using a short vertical probe connected to a Hewlett-Packard Vector Network Analyzer model 8753D. Port **1** of the network analyzer is connected to the coaxial cable that feeds the exciting monopole. Port **2** is connected by a separate coaxial cable to the detecting probe that is scanned above the surface of the structure using a computer-controlled stepper motor. The measured transmission coefficient is proportional to the voltage of the grid nodes with respect to the ground plane. The best focusing results were observed at 1.057 GHz, a frequency slightly higher than the design frequency of 1.00 GHz. This is primarily due to the variation of chip inductors and capacitors from their nominal values, as well as fabrication tolerances in printing the grid lines. The measured vertical electric field above each unit cell for the entire structure is shown in FIG. **40**, at a frequency of 1.057 GHz. The plot is normalized with respect to the source amplitude. The source is located at (column, row)=**(0,0)** and the image at **(10,0)**, whereas the first and second interfaces are located between columns **2** & **3** and **7** & **8**, respectively. As shown, the enhancement of evanescent waves is quite evident at the second interface of the left-handed slab near the center row (row **0**) and the results agree well with microwave-circuit simulations. FIG. **41** explicitly shows the measured electric field along row **0** to emphasize the growing evanescent fields within the left-handed lens. The vertical dashed lines identify the source at column **0** and the image at column **10** while the vertical solid lines identify the interfaces of the left-handed slab.

Geometrical optics establish that the source and its image should be separated by twice the thickness of the slab (2×5=10 unit cells). Thus, the measured vertical electric field along the image column (column **10**) is shown in FIG. **42**. Plotted in the same Figure are the measured transverse patterns at the source column (column **0**), as well as the theoretical diffraction-limited pattern. All patterns in FIG. **42** are normalized to unity for comparison purposes. Nevertheless, the measured source and image peaks lie within 7% of each other. In addition, it is important to explain how the theoretical diffraction-limited pattern was computed. Due to the close proximity (0.54 effective wavelengths) of the source and its image, evanescent waves that reach the image should be accounted for. For this reason, the diffraction-limited pattern assumes that the propagating components are focused whereas the evanescent components are not neglected, but rather assumed to exponentially decay from the source to the image, with attenuation factors corresponding to a refractive index of n=+1. Expressions for the voltage (V) at the image plane (column **10**) are given by the integral in equation 41 below:

$$V(x) = C\int_{-\infty}^{\infty} \frac{e^{ik_{z1}D}e^{ik_{z2}D}e^{ik_x x}}{k_{z1}} dk_x \tag{41}$$

$$k_{z1}=-k_{z2}=\sqrt{k_o^2-k_x^2} \text{ for } k_x<k_o \text{ (propagating waves)}$$

$$k_{z1}=k_{z2}=i\sqrt{k_x^2-k_o^2} \text{ for } k_x>k_o \text{ (evanescent waves)}$$

where:

C is a constant that normalizes V(0)=1;

D is the width of the lens; and

k_o is the intrinsic wavenumber in all grid media.

The half-power beamwidth of the diffraction-limited image shown in FIG. **42** is 129 degrees. It was found that the diffraction-limited image including attenuating evanescent waves and the image neglecting them altogether are almost identical.

With this clarification in mind, a comparison of the images shown in FIG. **42** can be made. Clearly, the measured image pattern is narrower than the theoretical diffraction-limited one. The measured half-power beamwidth is 75 degrees. This is significantly narrower than the 129 degrees for the diffraction-limited image. This establishes that it is possible to overcome the diffraction limit when imaging from one homogeneous dielectric to another through a left-handed isotropic lens. This narrowing of the beamwidth beyond the diffraction limit can be ascribed to the enhancement of the evanescent waves evident in FIGS. **39** and **40**. Nevertheless, the image is still imperfect since the source beamwidth is narrower than that of the image. This is not surprising considering that slight material losses and mismatches at the lens interfaces lead to departures from the n=−1 condition and thus, degrade the ability of a left-handed lens to achieve perfect imaging.

Resonance Cone Antenna

Resonance cone metamaterial may also be used in an antenna, by shunting the metamaterial with inductors, at the transmission line intersections. FIG. **43** shows a resonance cone antenna **4300** constructed using metamaterial. The

antenna includes a 2×3 array of macrocells. Each macrocell includes a plurality of microcells of orthogonal pairs of transmission line segments joined in a substantially rectangular fashion. The segments are loaded periodically with lumped capacitors in one direction and lumped inductors in a perpendicular direction. The microcells of the macrocells have a shared orientation that is different from the orientation of microcells in adjacent macrocells by 90 degrees. Macrocells are joined by transition regions similar to those described previously with reference to the focusing device. The transmission line segments of the transition regions include both lumped capacitors and inductors arranged in a manner consistent with FIG. **24**. The device input, or feed point, is located at the transition region adjacent the center of the macrocell array.

This arrangement of metamaterials, and input location allows input waves of compatible wavelength, to form a resonance cone patern of two squares that are multi-refracted within the macrocell array. This gives radiation patterns that can be close to the ground plane or elevated, but do not suffer from unwanted edge interactions as shown in FIGS. **44** and **45**. Moreover, as the frequency departs from the design value, the resonance cone squares turn into expanding or contracting square spirals that become weak before reaching the grid edges due to radiation or ohmic losses. This phenomenon is inherently non-resonant which leads to broadened operating bandwidths as compares to patch antennas over ground.

As will be appreciated it has been shown that negative refraction and focusing of electromagnetic waves can be achieved in metamaterials that support backward waves without employing resonances or directly synthesizing the permittivity and permeability. Schemes for fabricating such media by appropriately loading a host transmission line medium have also been described. The resulting planar topology permits LHM structures to be readily integrated with conventional planar microwave circuits and devices and used in a variety of applications to guide and control electromagnetic radiation.

Although preferred embodiments of the present invention have been described, those of skill in the art will appreciate that variations and modifications may be made without departing from the spirit and scope thereof as defined by the appended claims.

What is claimed is:

1. A planar metamaterial comprising:

two substantially orthogonal, coplanar sets of transmission lines, said transmission lines being spaced with a periodicity, loaded with capacitors with said periodicity, and shunted with inductors with said periodicity such that for an electromagnetic wave having a wavelength greater than said periodicity and traveling along the plane of said transmission lines, an effective permeability and permittivity of said metamaterial are simultaneously negative.

2. A planar metamaterial according to claim **1** wherein the wavelength of said electromagnetic wave is greater than said periodicity by an order of magnitude.

3. A linear metamaterial comprising:

a transmission line, having a linear dimension, and being loaded with capacitors, and shunted with an inductor such that for an electromagnetic wave having a wavelength greater than said linear dimension and traveling along the axis of said transmission line, an effective permeability and permittivity of said metamaterial are simultaneously negative.

4. A planar metamaterial according to claim **3** wherein the wavelength of said electromagnetic wave is greater than said periodicity by an order of magnitude.

5. A metamaterial according to claim **4** wherein the values of said capacitors and inductor are proportioned to provide a continuous passband for said electromagnetic wave.

6. A metamaterial according to claim **4** wherein said transmission line includes two substantially identical capacitors on either side of said inductor.

7. A metamaterial according to claim **4** further comprising a plurality of substantially identical transmission lines arranged in series.

8. A metamaterial according to claim **7** wherein each transmission line includes two substantially identical capacitors on either side of said inductor.

9. A metamaterial according to claim **8** wherein the values of said capacitors and inductor are proportioned to provide a continuous passband for said electromagnetic wave.

10. A planar resonance cone metamaterial comprising:

a first set of transmission lines, spaced with a periodicity, and loaded with capacitors with said periodicity;

a second set of transmission lines, substantially orthogonal and coplanar with said first set of transmission lines, said second set of transmission lines being spaced with said periodicity, and loaded with inductors with said periodicity, said first and second sets of transmission lines exhibiting characteristics such that for an electromagnetic wave having a wavelength greater than said periodicity by an order of magnitude, and traveling along the linear axis of said first set of transmission lines, an effective permittivity of said metamaterial is positive such that for an electromagnetic wave having a wavelength greater than said periodicity by an order of magnitude and traveling along the linear axis of said second set of transmission lines, the effective permittivity of said metamaterial is negative.

11. A metamaterial according to claim **10** further comprising an input on the perimeter of said metamaterial coincident with an intersection of one transmission line of said first set and one transmission line of said second set and a plurality of outputs on the perimeter of said metamaterial coincident with intersections of transmission lines of said first and second sets.

12. A planar resonance cone metamaterial comprising:

a first set of transmission lines, spaced with a first periodicity, and loaded with capacitors with a second periodicity;

a second set of transmission lines, substantially orthogonal and coplanar with said first set of transmission lines, said second set of transmission lines being spaced with said second periodicity, and being loaded with inductors with said first periodicity whereby for an electromagnetic wave having a wavelength greater than said first and second periodicities by an order of magnitude and traveling along the longitudinal axis of said first set of transmission lines, an effective permittivity of said metamaterial is positive and for an electromagnetic wave having a wavelength greater than said first and second priodocities and traveling along the longitudinal axis of said second set of transmission lines, the effective permittivity of said metamaterial is negative.

13. A near field focusing device comprising:

a first set of transmission lines, said first set of transmission lines being spaced with a first periodicity and loaded with capacitors with a second periodicity;

a second set of transmission lines, substantially orthogonal to, and coplanar with said first set of transmission lines, said second set of transmission lines being spaced with said second periodicity, loaded with capacitors

with said first periodicity, and shunted with inductors, said first set of transmission lines intersecting said second set of transmission lines such that for an electromagnetic wave having a wavelength greater than said first or second periodicity by an order of magnitude, and traveling along the plane of said transmission lines, an effective permeability and permittivity of said metamaterial are simultaneously negative; and

a planar waveguide having a flat extent, coupled to said transmission lines, such that said flat extent is parallel to one set of transmission lines.

14. A phase-shifting device comprising:

a transmission line, having a linear dimension and characteristic impedance;

capacitors loaded on said transmission line; and

an inductor shunting said transmission line, said transmission line exhibiting characteristics such that for an electromagnetic wave having a wavelength greater than said linear dimension by an order of magnitude and traveling along the axis of said transmission line, an effective permeability and permittivity of transmission are simultaneously negative and such that said transmission line provides a continuous passband for said electromagnetic wave along said transmission line.

15. A phase-shifting device according to claim **14** further comprising a plurality of transmission lines coupled in series.

16. A phase-shifting-device according to claim **15** wherein each transmission line includes a pair of identical capacitors on either side of said inductor.

17. A near field focussing device comprising:

a parallel-plate waveguide; and

a negative refractive index metamaterial in line with said waveguide and forming an interface therewith.

18. A focussing device according to claim **17** wherein said waveguide serves as a right-handed medium, electromagnetic radiation passing through said interface from said waveguide being focussed in said metamaterial.

* * * * *

US005307162A

United States Patent [19]

Schowengerdt

[11] Patent Number: 5,307,162

[45] Date of Patent: Apr. 26, 1994

[54] CLOAKING SYSTEM USING OPTOELECTRONICALLY CONTROLLED CAMOUFLAGE

[76] Inventor: Richard N. Schowengerdt, 3145 Kerry La., Costa Mesa, Calif. 92626

[21] Appl. No.: 977,192

[22] Filed: Nov. 16, 1992

Related U.S. Application Data

[63] Continuation-in-part of Ser. No. 682,945, Apr. 10, 1991, abandoned.

[51] Int. Cl.[5] H04N 7/18

[52] U.S. Cl. 348/122; 472/61; 348/586

[58] Field of Search 358/93, 108, 225, 230, 358/87; 472/57, 61, 65, 71, 75, 77, 81; H04N 7/18

[56] References Cited

U.S. PATENT DOCUMENTS

2,591,068 4/1952 Hilchey 272/17

2,797,612 7/1957 Holmes 272/10

3,352,965 11/1967 Driver et al. ..... 358/93 X

4,962,420 10/1990 Judenich ..... 272/11 X

Primary Examiner—Victor R. Kostak

[57] ABSTRACT

The Cloaking System is designed to operate in the visible light spectrum, utilizes optoelectronics and/or photonic components to conceal an object within it, and employs analog or digital control feedback resulting in camouflage adaptable to a changing background. The system effectively conceals either a still or moving object from view by the interposing of a shield between an observer and the object and recreating a full color synthetic image of the background on the shield for viewing by observer, thus creating the illusion of transparency of both the object and the Cloaking System. This system consists of four major elements: a sensor; a signal processor; a shield; and a means of interconnecting, supporting, and safely enclosing the aforementioned elements along with the concealed object.

10 Claims, 3 Drawing Sheets

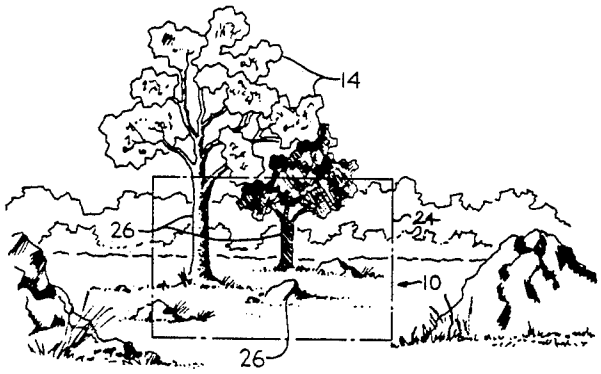

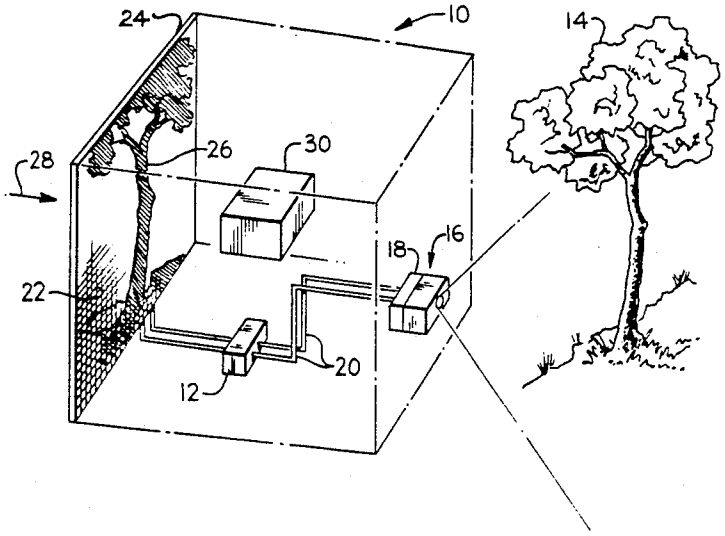

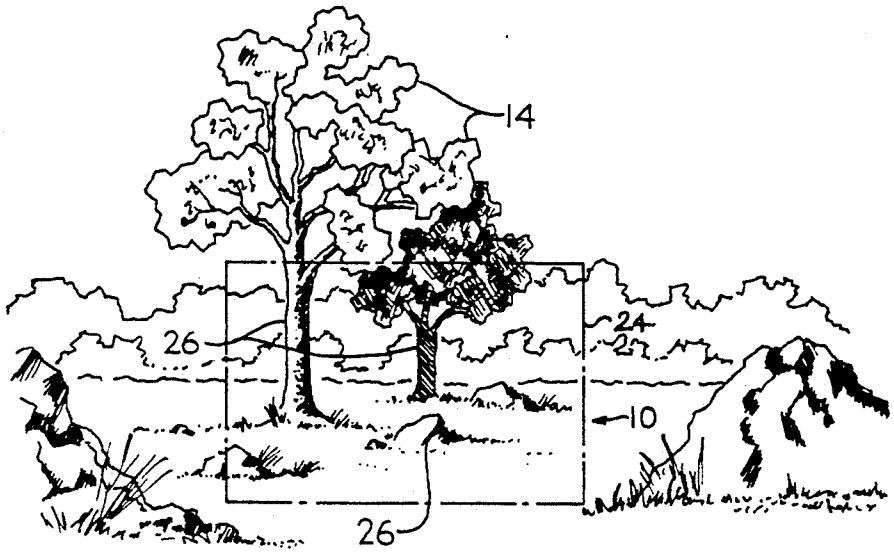

FIG. 1

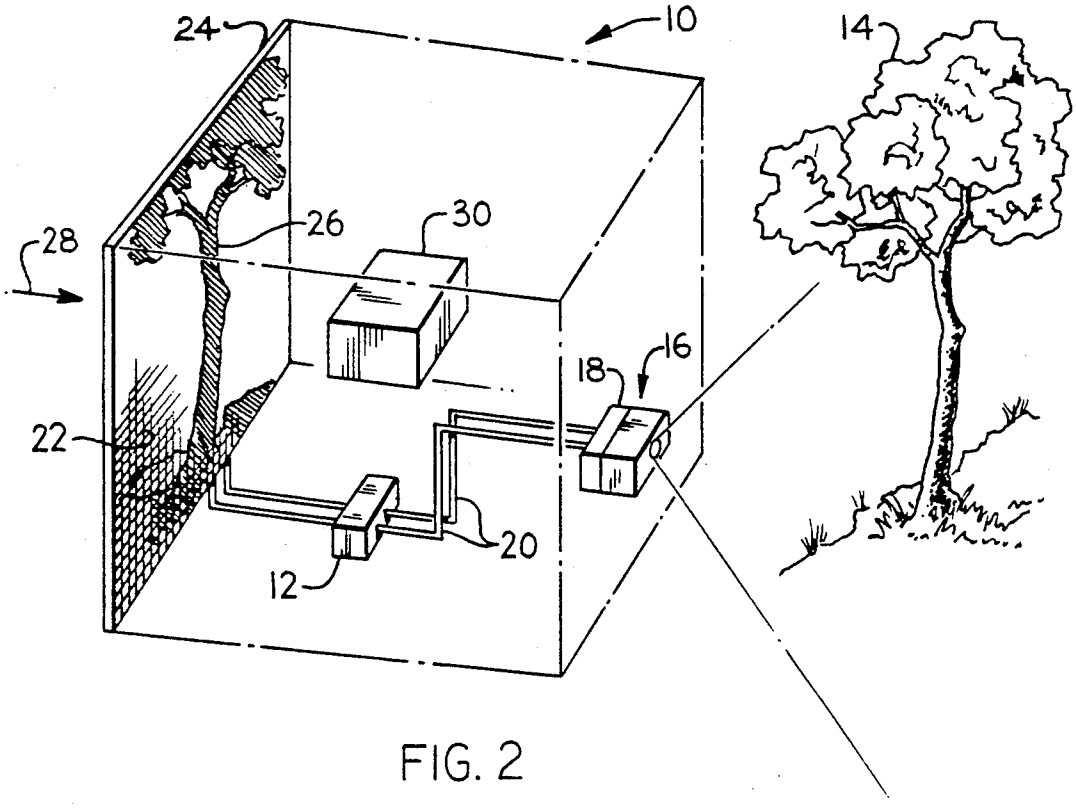

FIG. 2

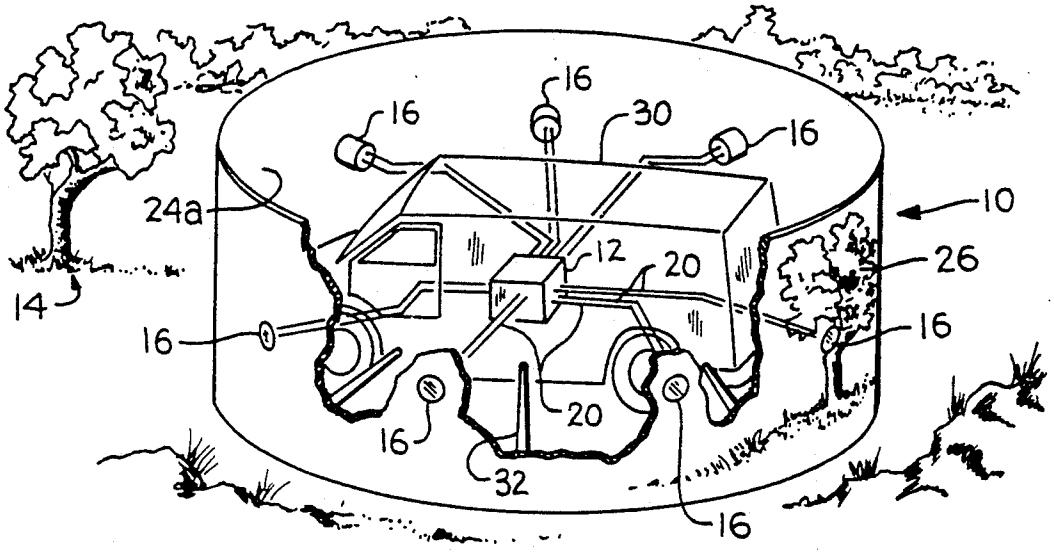
16
16
30
16
24a
10
12
20
26
14
16
16
20
16
32
16

FIG. 3

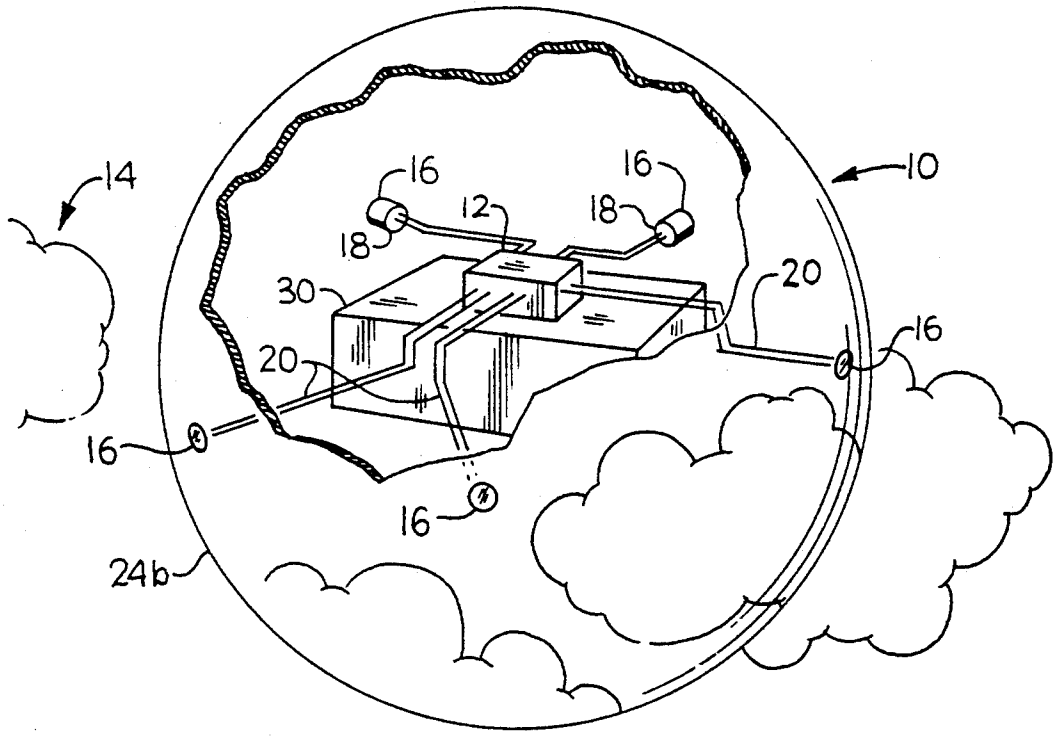
14
16
16
10
12
18
18
30
20
20
16
16
16
24b

FIG. 4

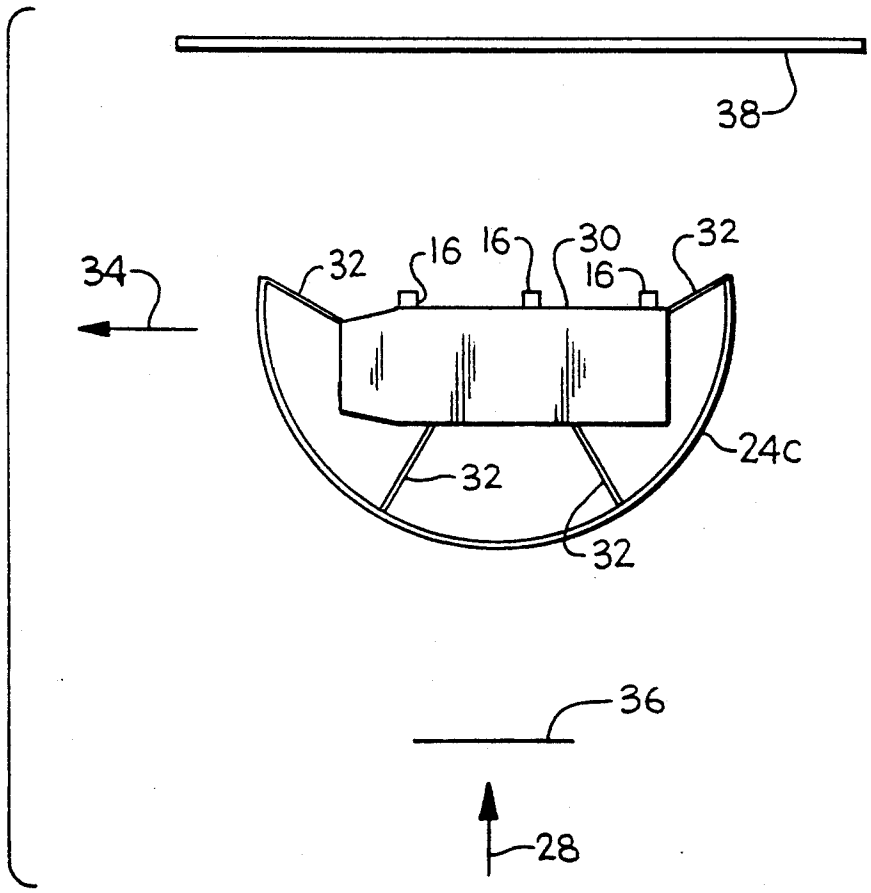

FIG. 5

CLOAKING SYSTEM USING OPTOELECTRONICALLY CONTROLLED CAMOUFLAGE

This is a continuation in part of application Ser. No. 07/682,945, filed Apr. 10, 1991, **now abandoned.**

REFERENCES CITED

1. U.S. Pat. No. 2,591,068.
2. U.S. Pat. No. 2,797,612.
3. U.S. Pat. No. 3,352,965.
4. U.S. Pat. No. 4,962,420.

BACKGROUND OF THE INVENTION

1. Field of the Invention

The need for this invention arises out of the present state of the art of military camouflage in the visible light spectrum. This invention is designed for the purpose of concealing both stationary and moving objects from view. The term "cloaking" as used in the title of this invention and elsewhere herein refers to concealing such objects.

2. Prior Art

The techniques in use today largely involve painting, coloring, and/or contour shaping to allow an object to better blend in with the background. Such techniques are rather primitive and do little to conceal a moving object as it is not possible with present fixed state camouflage techniques to cause an object to continually blend in with a changing background. In order to effectively camouflage a moving object, its appearance must be constantly controlled from the viewpoint of the observer to blend in with the changing background from the observer's perspective. Little has been done to utilize modern advancements in optoelectornics, computers, or microminiature components to camouflage an object. The proposed system was conceived with the view in mind of effectively concealing a stationary or moving object such as a man, vehicle, or aircraft from view by utilization of this technology. This invention will find practical application in military and law enforcement where field commanders find it useful to conceal such an object from view.

SUMMARY OF THE INVENTION

This system is designed to interrupt energy in the visible light electromagnetic spectrum to effectively conceal an object from view by an observer. This is accomplished by insertion of a shield between an observer and the object being concealed and recreating a full color synthetic real-time image of the background on the shield for view by an observer, thus creating the illusion of transparency of the object. The basic concept for the application consists of four basic building blocks: a sensor, a signal processor, and a shield which are interconnected through an analog, digital, of fiber optic data bus, and a supporting structure for all system elements, the object being concealed being interposed between the background and the shield.

The signal processor formats the image of the background as viewed by the sensor and presents a synthetic image of the background on the shield for view by an observer. The object is placed behind or within the shield which is of opaque construction, and having a nonspecular display surface thus concealing the object from view by the observer and yet creating an illusion of transparency of the complete Cloaking System and

the enclosed object. In its nonactivated state, the shield would have minimum light reflectivity. Although either an analog signal processor or digital signal processor may be used, the latter is described herein as one specific embodiment. The digital signal processor constantly compares the synthetic image in the shield with the reference image within the sensor and makes corrections to the synthetic image to correspond with the actual image being sensed. Data on the data bus blows in both directions. Special software or embedded firmware will also be utilized in the signal processor to make changes in the image presented on the shield to correct for distance and angle of the observer with respect to the object being concealed; the source of intelligence information pertaining to an observer is beyond the scope of this invention but is mentioned here only for clarification.

BRIEF DESCRIPTION OF THE DRAWINGS

FIG. **1** is a pictorial representation of the invention and is intended to illustrate the basic concept of the invention;

FIG. **2** is a pictorial isometric view of the system block diagram implementing the basic concept;

FIG. **3** is a pictorial perspective view of the invention and illustrates how an object can be concealed within a 360° shield;

FIG. **4** is a perspective view of the invention and illustrates how an object can be concealed within a sphere; and

FIG. **5** is an orthographic view that illustrates a simple concept demonstration model.

DESCRIPTION OF ONE EMBODIMENT OF THE INVENTION

The basic concept of the Cloaking System **10** is illustrated in FIG. **1** wherein the background **14** is displayed on the shield **24** as a synthetic image **26** on its nonspecular display surface, when viewed from the front. FIG. **2** illustrates how the basic concept is implemented. The digital signal processor **12** is the brain and controls all operations, digitally formats the image of the background **14** as viewed by the sensor **16**, establishes a reference image matrix **18** within the sensor **16**, and transmits the background image signal via the data bus **20** to a synthetic image matrix **22** within the shield **24**, thus causing a synthetic image **26** to be displayed on the surface of the shield **24** as seen from the direction of observation **28**. The object **30** to be concealed is placed behind the shield **24** to prevent its being observed. The digital signal processor **12** constantly compares the synthetic image matrix **22** with the reference image matrix **18** and makes corrections to the synthetic image matrix **22** which in turn corrects the synthetic image **26** to correspond with the actual background image **14** being sensed, thus minimizing distortion and maintaining realism of the synthetic image **26**. Data on the data bus **20** flows in both directions. The primary purpose of the system is to present on the shield **24** a near identical image of the background behind said object **30** so as to create the illusion of transparency of both said object **30** and the Cloaking System **10**; a secondary purpose of the system is to alter the synthetic image **26** to create an illusion of a background that does not exist; while such a deceptive method goes beyond the scope of simply creating an illusion of transparency of the object it would be very useful for special missions or difficult scenario conditions where it would be more effective to

depict an artificial background than to display a representation of the actual background. Any such alterations in the synthetic image **26** would be accomplished by software or embedded firmware and is considered part of the tactical strategy to be employed, thus emphasizing the flexibility of the invention and its potential interaction with the operating environment.

The basic concept or cell unit depicted in the preceding FIG. **2** may be expanded to combine as many cells as desired to provide 360° coverage. Referring to FIG. **3**, a cylindrical shield **24***a* is illustrated with a cutaway view showing object **30** along with the digital signal processor **12**, data bus **20**, and sensors **16**, all supported by a suitable attachment means **32**. The digital signal processor **12** organizes and presents a different synthetic image **26** on the appropriate sector of the shield **24***a* utilizing signals from appropriate sensors **16**, together with tactical data concerning potential points of observation. The appropriate size and number of sectors would be determined by the optimal design for a given operational mission. Although shown here as separate components for clarity, the present state-of-the-art would allow incorporation of the an embedded circuitry digital signal processor **12** and sensors **16** into the shield **24***a* to provide a cylindrical smart skin to wrap around the object. The shield may also incorporate backplanes for mounting embedded sensors, processors and bus circuitry.

Carrying the basic concept a step further, the shield **24***b* may be formed into a spherical shape as illustrated in FIG. **4**. A cutaway view is again presented showing object **30**, sensors **16**, digital signal processor **12**, data bus **20**, and a spherically shaped shield **24***b*. As with the cylindrical shape, the digital signal processor **12** organizes and presents a different synthetic image **26** on the appropriate sector of the shield **24***b* utilizing both tactical data and signals from appropriate sensors **16**. In this configuration there would be considerably more sectors, as compared with the cylindrical shape, and the programming would be more complex to provide a high degree of realism in the image.

Irregular shapes for the shield may also be employed utilizing conformal smart skins which would be thin digital signal processor circuits embedded within the shield display surface. However, in order to reduce distortion of the image, either a circular, cyclindrical, or spherical shape would allow uniform algorithms to be employed in the embedded processor programs in the digital signal processor **12** to correct for circular or spherical aberration. Some distortion may appear as ripples or waves in the image, depending upon the shape of the shield, relative position and motion of the observer, and complexity of background images. However, in the algorithms could be developed, such as those required for irregular or conformal shields for military vehicles, to minimize such distortion.

ALTERNATE TECHNOLOGIES AND EMBODIMENTS

Several alternate technologies and methods of implementing this invention may be utilized.

One alternate technology employs the simplest method of implementing the Cloaking System concept which would utilize a conventional analog signal processor, a specially designed liquid crystal display to present the background image on the shield, and a conventional video camera for the sensor. Since this method utilizes conventional analog technology, this method is limited to flat plane or semicircular displays and would not lend itself to image correction as could be achieved by the digital options. However, this method would allow the construction of a prototype model within a year or two to demonstrate the basic cloaking concept.

Another alternate technology employs a digital option; the main differences between this method and the first-described analog method consists of the conversion of all analog video signals to digital signals, the usage of a digital signal processor to direct all operations, and higher technology used in constructing the shield and the sensor. Because of the high flexibility of the digital method, a great variety of shapes could be used for the shield and various compensation software or embedded firmware schemes could be employed to minimize distortion in the image; hence the digital method was selected and described in the preceeding section in considerable detail as one embodiment of the invention.

In still another method, photonic materials could be used for constructing the shield and sensor which would be capable of directly manipulating light signals and transmitting these signals on a higher speed fiber optic data bus. These light signals could be then digitized and further manipulated by a digital signal processor to perform necessary system functions but without the encumbrance of the slower speed of a digital data bus. The selection of either optoelectronic or photonic building blocks for the shield, sensor, and data bus would depend upon such factors as size and shape of the object to be shielded, speed of the object relative to the background, and environment. Usage of either optoelectronic or photonic materials in extremes such as that encountered in combat would require extensive testing and development. However, for more benign applications, a state-of-the-art system could be developed within three to five years utilizing currently available materials and components.

Any one of several available commercial or military digital process and bus architectures could be used depending upon the application and program requirements. IBM-PC integrated circuits and bus standards such as RS-232 (Serial), RS-422 (Parallel), or IEEE 488 (Parallel could be used for lower cost and benign environments. In more rigorous combat environments Very High Speed Integrated Circuit (VHSIC) architecture and Military standards such as MIL-STD-1553, MIL-STD-1750, or MIL-STD-1760 could be used for complex interfaces between men and machines. Sophisticated and advanced models using fiber optic technology and a high speed data bus would have advantages in terms of small size and conformal shape adaption of the shield.

CONCEPT DEMONSTRATION MODEL

A simple Concept Demonstration Model could be constructed utilizing any of the above-described technologies and methods. This model is shown in FIG. **5**; the object **30**, such as a vehicle, is shown in a top view with a semicircular shield **24***c* secured by an attachment means **32**, such as supporting struts. Sensors **16** view the wall **38** and the analog signals are subsequently displayed on the shield **24***c* facing the point of observation **28** behind line **36** which is fifty feet from the vehicle **30**. The vehicle **30** is moving to the left as shown by the arrow **34**. When the system is operating properly, the vehicle **30** would never be observed; only the wall **38** behind said vehicle **30** would be seen. For simplicity

and to establish a reference, the wall **38** would probably be initially monochromatic and color patterns added later to present more difficult scenarios and to measure system limitations.

LIST OF REFERENCES CITED

1. U.S. Pat. No. 2,591,068, Hilchey, Eugene L., *Studio Background,* Apr. 1, 1952.
2. U.S. Pat. No. 2,797,612, Holmes, Oscar J., *Intermittent Motion Picture Film Feed Apparatus,* Jul. 2, 1957.
3. U.S. Pat. No. 3,352,965, Driver, Paul C., and Fowler, Robert E., *Method And Means For Enhancing Camouflaged Target Detection Utilizing Light Polarization Techniques,* Nov. 14, 1967.
4. U.S. Pat. No. 4,962,420, Judenich, Gennady I., *Entertainment Video Information System Having A Multiplane Screen,* Oct. 9, 1990.

I claim:

1. A system for concealing an object from view by an observer through use of a background scene and comprising:

means for sensing a background scene and for generating a video image signal therefrom;

means for creating a processed image of said background video image signal for display purposes; and

means for displaying an image represented by said processed image signal, the generated image being part of the sensed field of view, the object located between the means for sensing and the means for displaying, the object thereby being substantially camouflaged by the image displayed.

2. A concealing system according to claim **1** wherein said background scene sensing means comprises means for converting background light images electrical analog image signals for processing by an analog signal processor.

3. A concealing system according to claim **1** wherein said background scene sensing means for converting background light images to electrical digital image signals for processing by a digital signal processor comprises;

means for responding to digital commands from a digital signal processor;

means for storing digital image signals in a reference background image matrix array within the sensor upon command by the digital signal processor; and

means for providing digital information from said array upon said command from said digital signal processor.

4. A concealing system according to claim **1** wherein said sensing means for sensing a background scene produces fiberoptic image signals for said processed image.

5. A concealing system according to claim **1** wherein a processing subsystem, including said background sensing means, has the means for processing digital image signals for the purpose of presentation to a shield subsystem comprising:

means for formatting digital image signals from said sensing means;

means for receiving and commanding said sensing means to store digital image signals in a reference background image matrix therein;

means to receive and transmit digital image signals from the reference background image matrix to a synthetic image matrix within a shield subsystem;

means to compare the digital information stored in the reference background image matrix in the sensor with that stored in the synthetic image matrix;

means coupled to said means to compare digital information for correcting or altering the image displayed on the shield subsystem by providing commands to the shield subsystem;

means for converting analog video signals from said correcting means to digital image signals;

means for converting created optical image signals to digital image signals;

means for formatting digital image signals from said optical image creating means into a form suitable for presentation to the shield subsystem; and means for receiving and commanding the display at information stored in the synthetic image matrix.

6. A shield for concealing an object from view of an observer comprising:

means for providing a light absorbing opaque and nonspecular display surface which, in its nonactivated state, has minimum light reflectivity;

means for receiving and commanding the display of information from an analog signal processor;

means for providing in said display's activated state the display of a near-identical full color image of the background or other scene for view on the shield surface facing an observer as directed by said analog signal processor, said shield including means to obstruct visual sight of an adjacent concealed object;

means associated with said object for support thereof; and

means to support said analog processor, at least one sensor, and circuitry therefor.

7. A shield for concealing an object from view comprising:

means for providing a light absorbing opaque and nonspecular display surface that, in its nonactivated state, has minimum light reflectivity;

means for obstructing visual sight of an object in said shield, concealed adjacent thereto from view;

means for receiving and commanding the display of information from a digital signal processor;

means for providing in its activated state the display of a near-identical full-color image of a screen for view on the shield surface being viewed as directed by said digital signal processor;

means for storing digital image signals in an array within a synthetic image matrix;

means for display of said digital image signals in the form a full-color image of the background as stored in said synthetic image matrix, said full-color image to be presented on said surface being viewed;

means associated with said object for support thereof; and

means to support said digital signal processor and at least one sensor in association with said shield including backplanes for mounting embedded components, embedded sensors, and embedded data busses.

8. A shield according to claim **7** wherein said shield is constructed from fiberoptic materials and has means for responding to commands from said digital signal processor.

9. A shield according to claim **7** including an integral support structure for said shield, said signal processor, and an object to be concealed, said shield including backplanes for mounting embedded components, embedded sensors, and embedded data buses.

10. A shield according to claim **8** including an integral support structure for said sensor, said signal processor, and an object to be concealed, said shield including backplanes for mounting embedded components, embedded sensors, and embedded data buses.

* * * * *

US 20100277381A1

(19) United States

(12) Patent Application Publication

(10) Pub. No.: US 2010/0277381 A1

(43) Pub. Date: Nov. 4, 2010

Smolyaninov et al.

(54) METAMATERIAL CLOAKED ANTENNA

(75) Inventors: **Igor I. Smolyaninov**, Columbia, MD (US); **Nikolay K. Yushin**, Herndon, VA (US); **Louise C. Sengupta**, Ellicott City, MD (US)

Correspondence Address:
BAE SYSTEMS
PO BOX 868
NASHUA, NH 03061-0868 (US)

(73) Assignee: **BAE Systems Information and Electronic Systems Integration Inc.**, Nashua, NH (US)

(21) Appl. No.: **12/773,562**

(22) Filed: **May 4, 2010**

Related U.S. Application Data

(60) Provisional application No. 61/175,221, filed on May 4, 2009.

Publication Classification

(51) **Int. Cl.**
H01Q 19/06 (2006.01)
H01Q 1/32 (2006.01)

(52) **U.S. Cl.** **343/713**; 343/753

(57) **ABSTRACT**

In the method for operating a plurality antenna having near-field (NF) zone mounted on a vehicle, wherein the improvement comprises the step of cloaking in the near-field (NF) zone of each of said plurality of antennas.

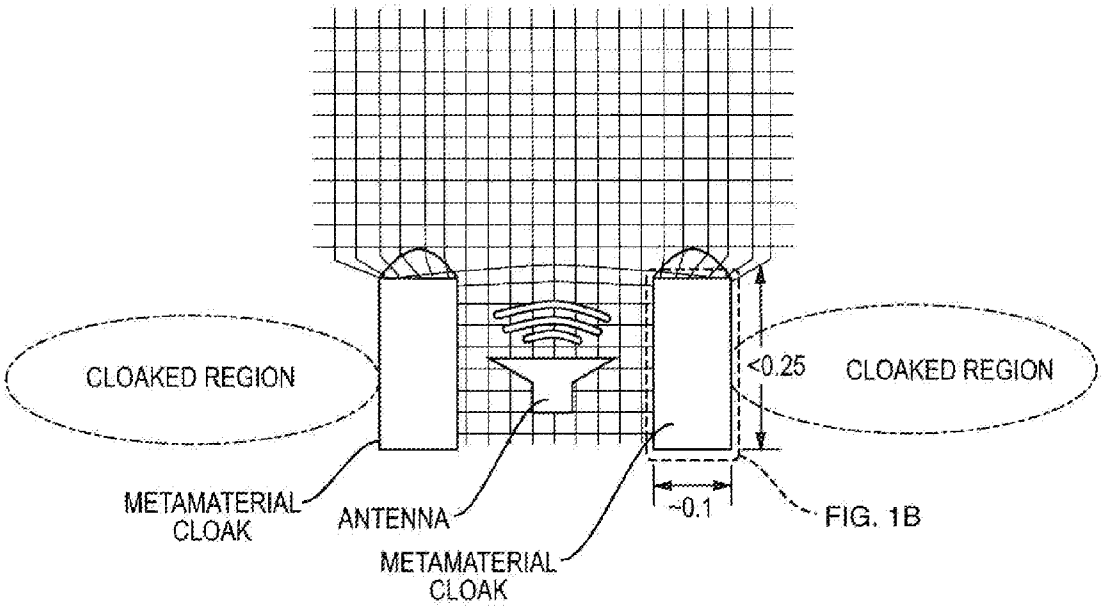

FIG. 1B

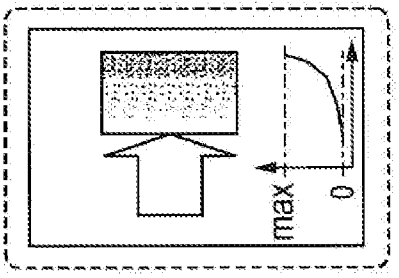
max
0

FIG. 1B

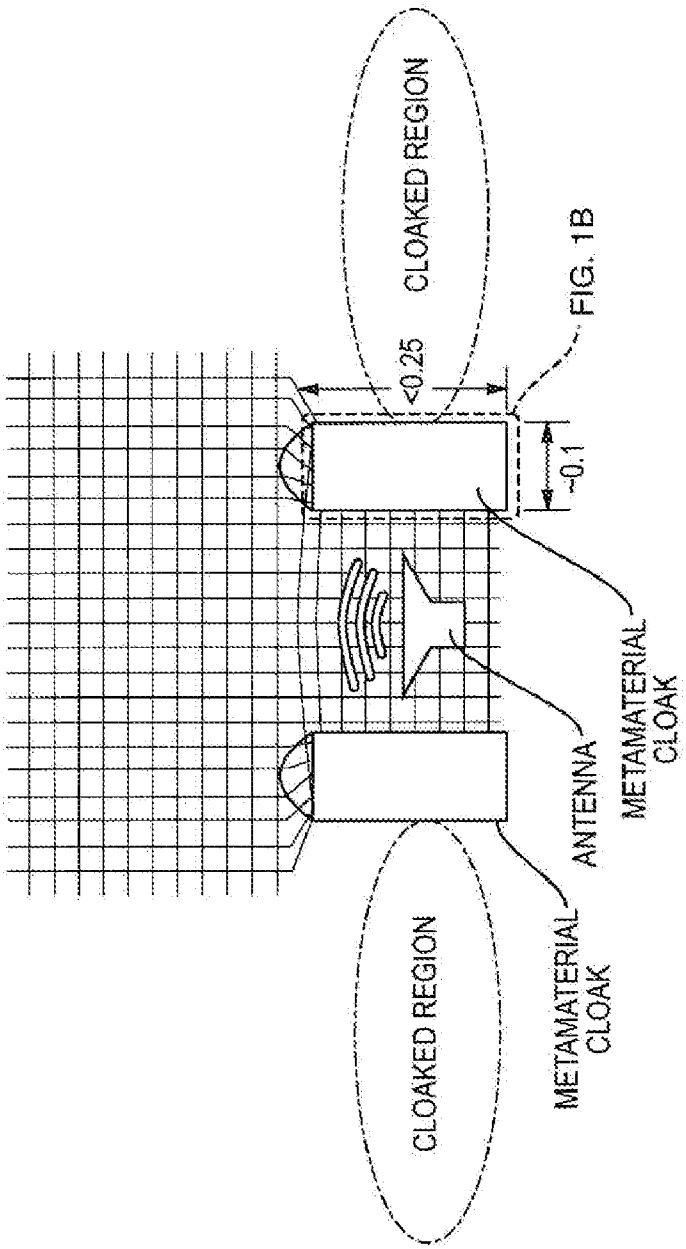
CLOAKED REGION
<0.25
FIG. 1B
~0.1
METAMATERIAL CLOAK
ANTENNA
METAMATERIAL CLOAK
CLOAKED REGION

FIG. 1A

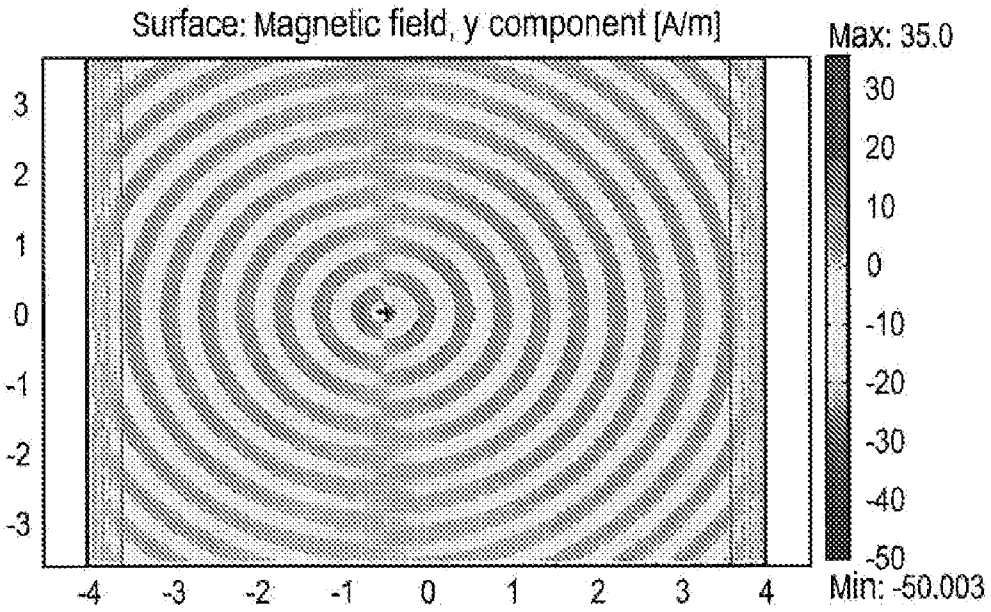
Surface: Magnetic field, y component [A/m]
Max: 35.0
30
20
10
0
-10
-20
-30
-40
-50
Min: -50.003
3
2
1
0
-1
-2
-3
-4
-3
-2
-1
0
1
2
3
4

FIG. 2A

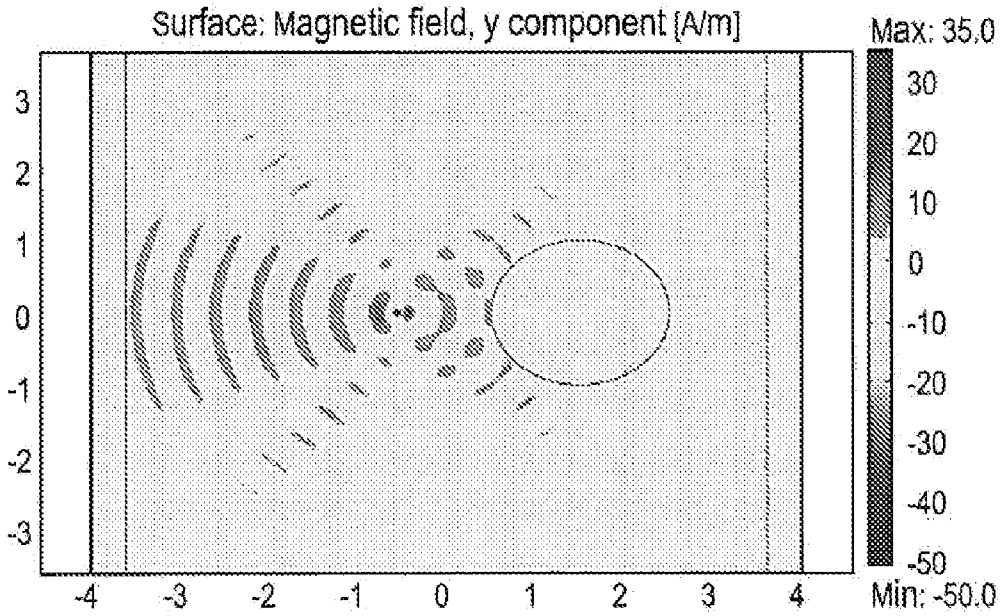
Surface: Magnetic field, y component [A/m]
Max: 35.0
30
20
10
0
-10
-20
-30
-40
-50
Min: -50.0
3
2
1
0
-1
-2
-3
-4
-3
-2
-1
0
1
2
3
4

FIG. 2B

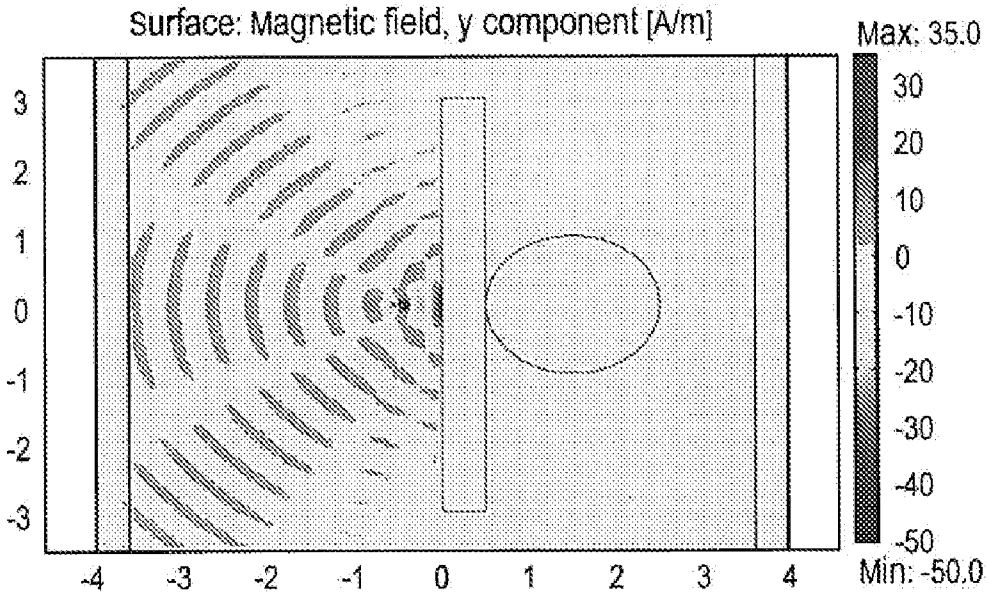
Surface: Magnetic field, y component [A/m]
Max: 35.0
30
20
10
0
-10
-20
-30
-40
-50
Min: -50.0
3
2
1
0
-1
-2
-3
-4
-3
-2
-1
0
1
2
3
4

FIG. 2C

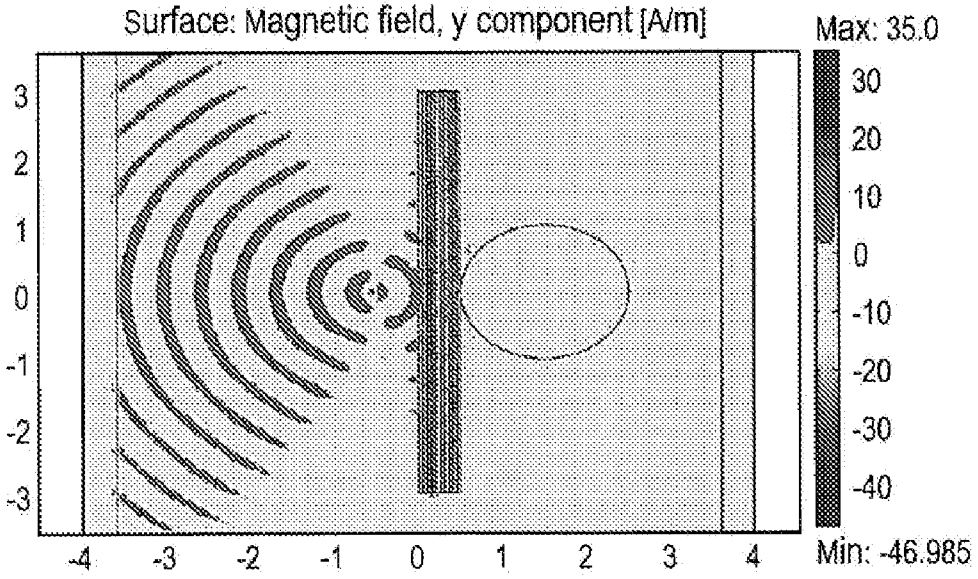
Surface: Magnetic field, y component [A/m]
Max: 35.0
30
20
10
0
-10
-20
-30
-40
Min: -46.985
3
2
1
0
-1
-2
-3
-4
-3
-2
-1
0
1
2
3
4

FIG. 2D

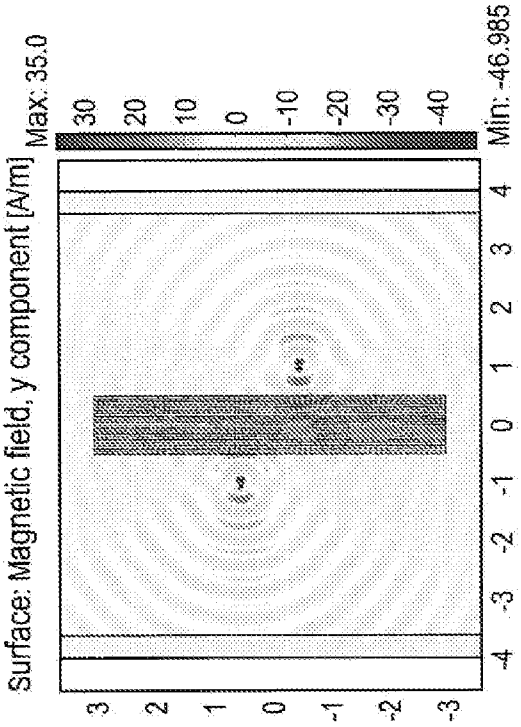
Surface: Magnetic field, y component [A/m]
Max: 35.0
Min: -46.985
30
20
10
0
-10
-20
-30
-40
3
2
1
0
-1
-2
-3
-4
-3
-2
-1
0
1
2
3
4

FIG. 3B

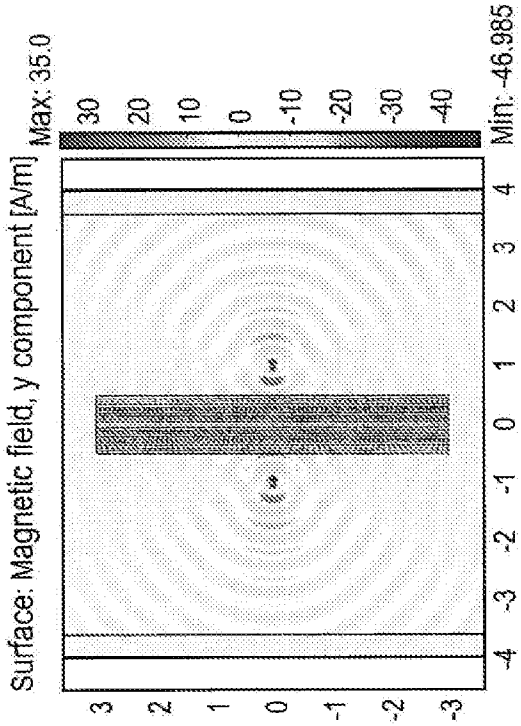
Surface: Magnetic field, y component [A/m]
Max: 35.0
Min: -46.985
30
20
10
0
-10
-20
-30
-40
3
2
1
0
-1
-2
-3
-4
-3
-2
-1
0
1
2
3
4

FIG. 3A

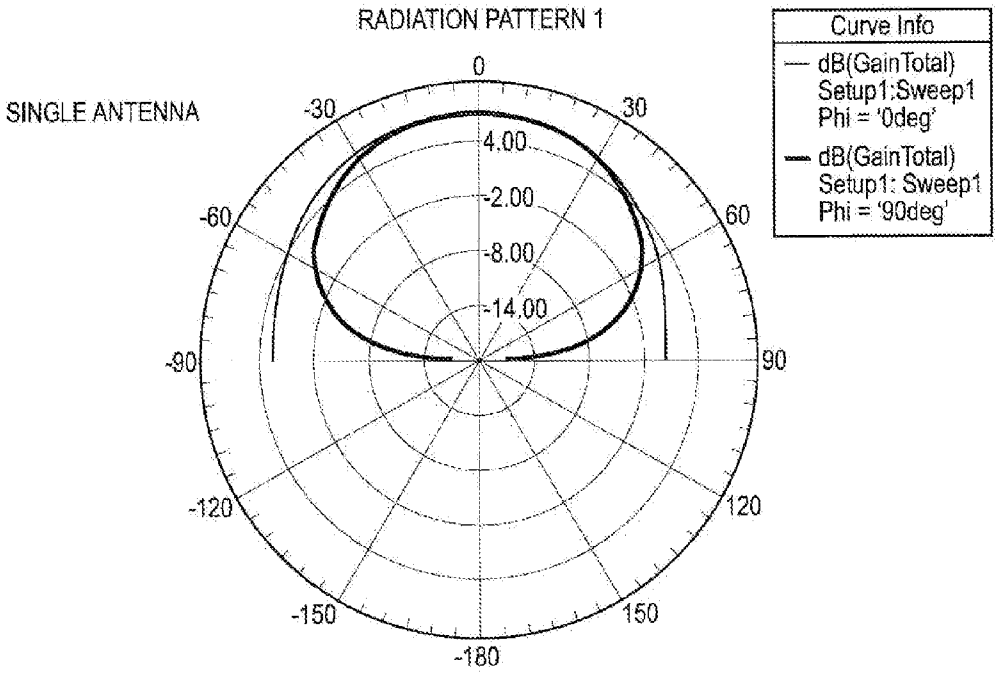
RADIATION PATTERN 1
SINGLE ANTENNA
Curve Info
dB(GainTotal)
Setup1:Sweep1
Phi = '0deg'
dB(GainTotal)
Setup1: Sweep1
Phi = '90deg'
0
30
60
90
120
150
-180
-150
-120
-90
-60
-30
4.00
-2.00
-8.00
-14.00

FIG. 4A

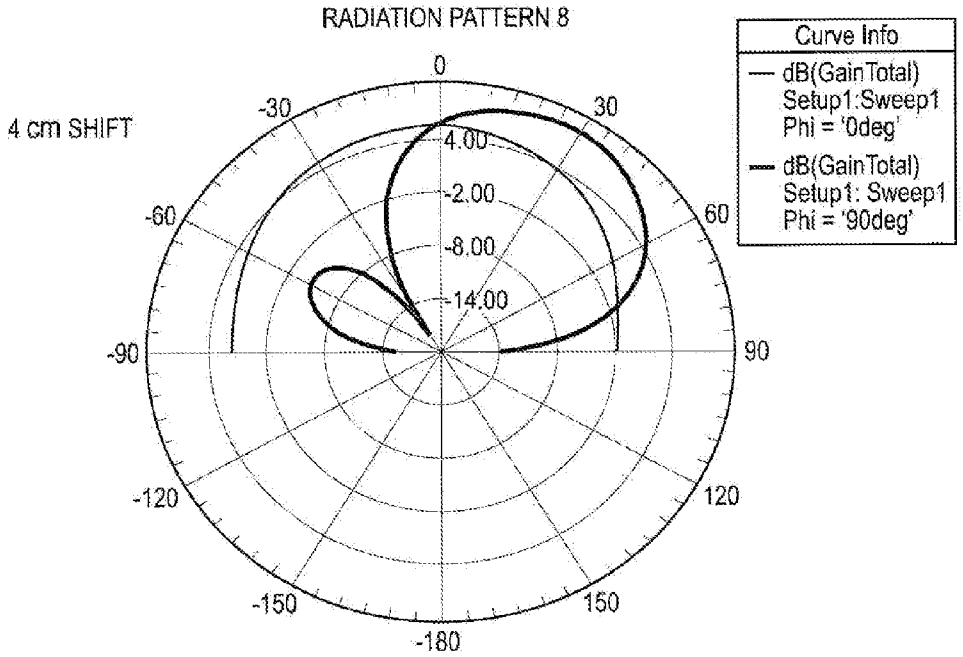
RADIATION PATTERN 8
4 cm SHIFT
Curve Info
dB(GainTotal)
Setup1:Sweep1
Phi = '0deg'
dB(GainTotal)
Setup1: Sweep1
Phi = '90deg'
0
30
60
90
120
150
-180
-150
-120
-90
-60
-30
4.00
-2.00
-8.00
-14.00

FIG. 4B

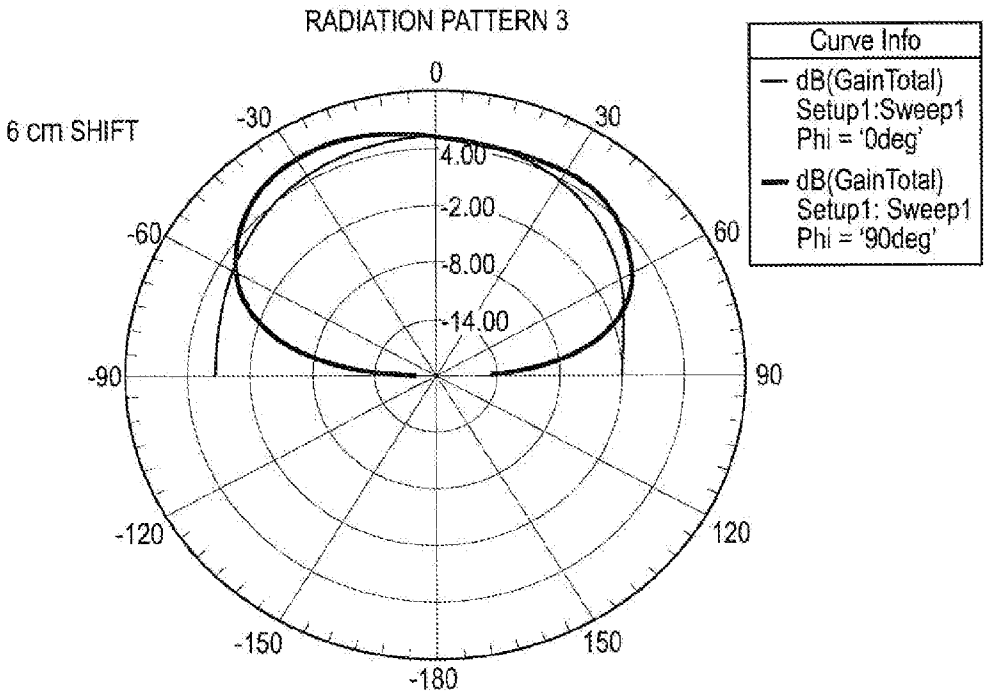
RADIATION PATTERN 3
6 cm SHIFT
Curve Info
dB(GainTotal)
Setup1:Sweep1
Phi = '0deg'
dB(GainTotal)
Setup1: Sweep1
Phi = '90deg'
0
30
60
90
120
150
-180
-150
-120
-90
-60
-30
4.00
-2.00
-8.00
-14.00

FIG. 4C

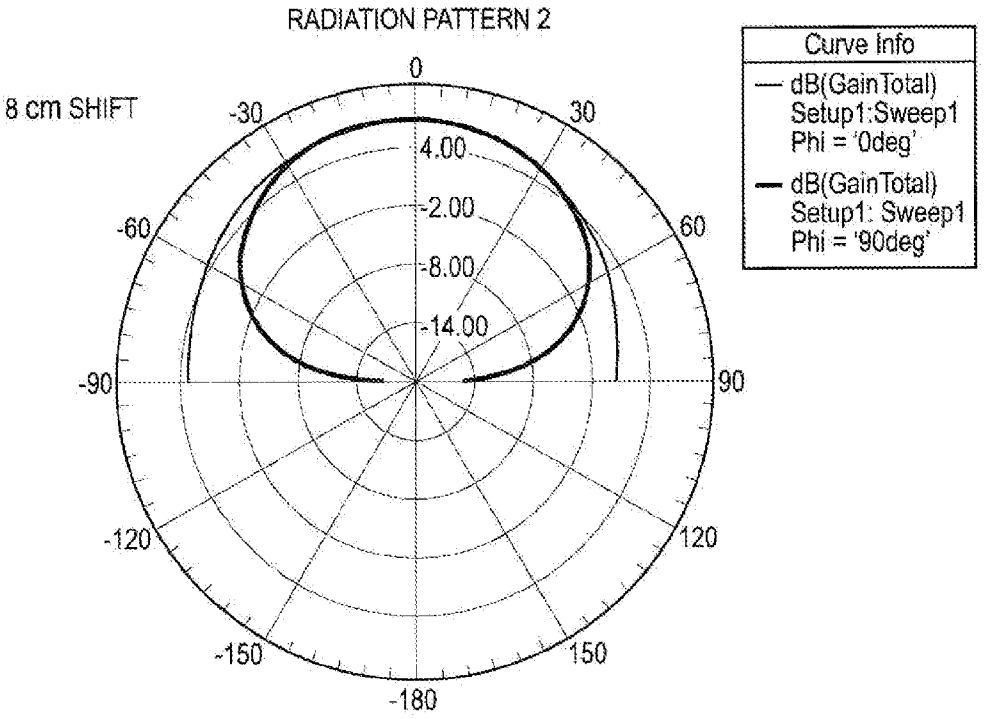
RADIATION PATTERN 2
8 cm SHIFT
Curve Info
dB(GainTotal)
Setup1:Sweep1
Phi = '0deg'
dB(GainTotal)
Setup1: Sweep1
Phi = '90deg'
0
30
60
90
120
150
-180
-150
-120
-90
-60
-30
4.00
-2.00
-8.00
-14.00

FIG. 4D

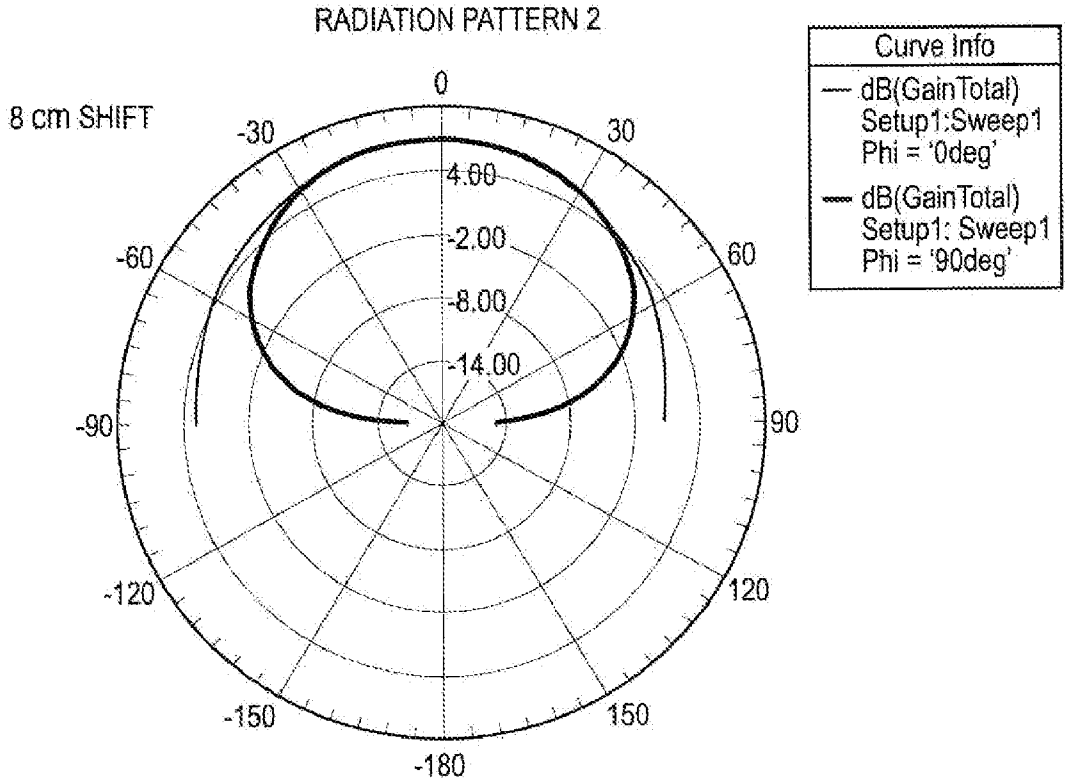
RADIATION PATTERN 2
8 cm SHIFT
Curve Info
dB(GainTotal)
Setup1:Sweep1
Phi = '0deg'
dB(GainTotal)
Setup1: Sweep1
Phi = '90deg'
0
30
60
90
120
150
-180
-150
-120
-90
-60
-30
4.00
-2.00
-8.00
-14.00

FIG. 4E

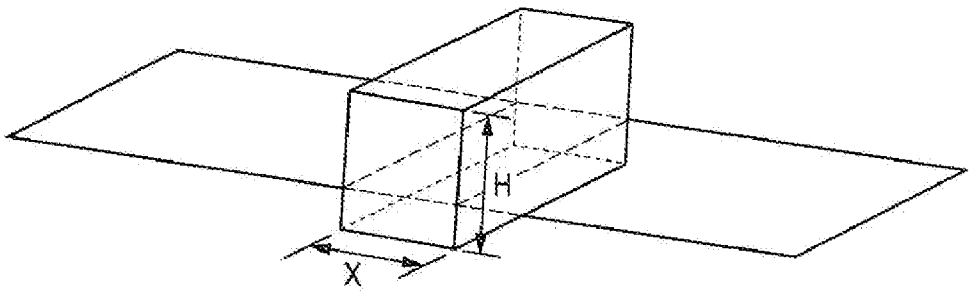
H
X

FIG. 4F

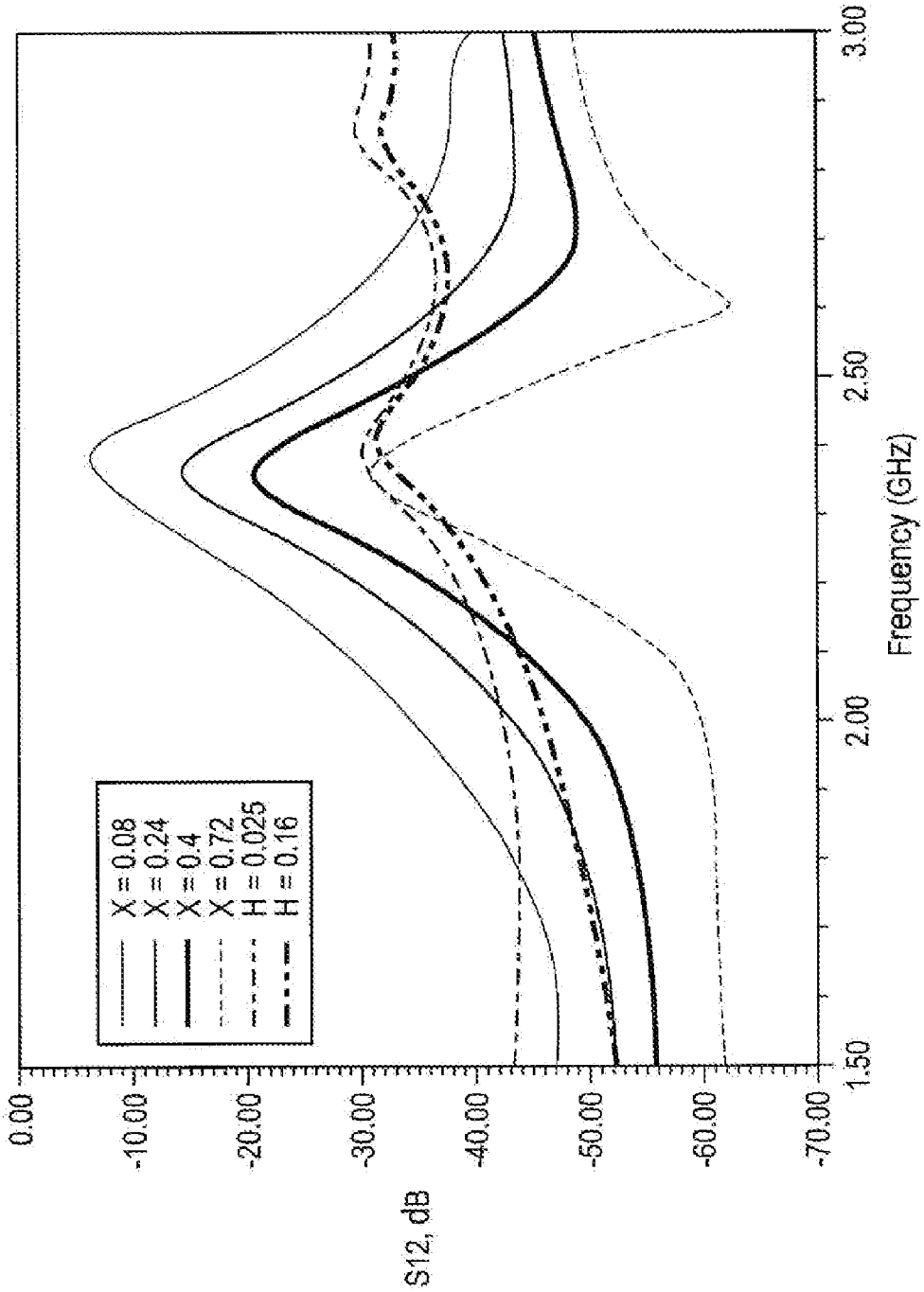
0.00
-10.00
-20.00
-30.00
-40.00
-50.00
-60.00
-70.00
S12, dB
1.50
2.00
2.50
3.00
Frequency (GHz)
X = 0.08
X = 0.24
X = 0.4
X = 0.72
H = 0.025
H = 0.16

FIG. 5

METAMATERIAL CLOAKED ANTENNA

CROSS-REFERENCE TO RELATED APPLICATIONS

[0001] This application claims rights under 35 U.S.C. §119 (e) from U.S. Application Ser. No. 61/175,221, filed. May 4, 2009, the contents of which are incorporated herein by reference.

BACKGROUND OF THE INVENTION

[0002] 1. Field of the Invention

[0003] The present invention relates to electromagnetic cloaking and more particularly to metamaterial cloaked antennas.

[0004] 2. Brief Description of Prior Developments

[0005] Prior art metamaterial-based cloaking techniques are described in the following publications, the contents of which are incorporated herein by reference:

[0006] 1. J. B. Pendry, D. Schurig, D. R. Smith, *Science* 312, 1780 (2006).

[0007] 2. U. Leonhardt, *Science* 312, 1777 (2006).

[0008] 3. D. Schurig, J. J. Mock, B. J. Justice, S. A. Cummer, J. B. Pendry, A. F. Starr, D. R. Smith, *Science* 314, 977 (2006).

[0009] 4. W. Cai, U. K. Chettiar, A. V. Kildishev, V. M. Shalaev, *Nature Photonics* 1, 224 (2007).

[0010] The performance of modern and future aircraft and satellites strongly depends on various antennas. Typically, a very large number of different types of antennas are mounted on board aircraft, satellites or other vehicles in order to cover as wide a radio-frequency range and bandwidth as is possible. Because space is at a premium on board, the airborne antennas are usually located in close proximity to each other. This arrangement may cause so-called estate issues with respect to antenna installation.

[0011] A need, therefore, exists for a way of reducing the detrimental effect of co-site interference between multiple antennas densely mounted on aircraft, satellites, ships or other vehicles.

SUMMARY OF INVENTION

[0012] According to the present invention, engineered metamaterial (MM) layers are applied to antenna surfaces to prevent the reflected/scattered radiation return on the active antenna surface. The cloaking effect is based on the ability of specially designed MM devices to prevent reflection of the electromagnetic radiation rays in such manner that the electromagnetic waves go around the object and make the object essentially "invisible". A transformational optics approach is used for the cloaked antenna design. An important feature of method of the present invention is cloaking in the near-field (NF) zone of an antenna. The radiation field distribution in the NF region of an antenna is much more complex than in the far-field (FF) zone. Therefore, the MM structure has to be designed in a different way than has been demonstrated in early cloaks for the FF zone.

[0013] This invention also encompasses the method of improving the performance of multiple antennas mounted on board of the aircraft, satellite, ship, or any vehicle by separating the near field (NF) radiation by the metamaterial cloaks positioned between the neighbor antennas (see FIGS. **1** and **2**). As a result the far field (FF) radiation patterns are significantly improved.

[0014] This invention also encompasses a cloaked antenna which directs the antenna radiation in such manner that it does not reach the neighbor objects and/or other antennas (see FIG. **2**). We would like to emphasize that the metamaterial cloak developed for the purposes of this project has a different configuration than to the conventional cloaks described by the Pendry et al. and Schurig et al. references cited above.

BRIEF DESCRIPTION OF THE DRAWINGS

[0015] The invention will be more closely understood hereinafter by reference to the drawings in which:

[0016] FIGS. **1**A and **1**B show drawings of an antenna cloaking by the coordinate transformation method. By selecting conformal coordinate transformation to curvilinear coordinate system schematically indicated by the black mesh, the donut-shaped region of space on the sides of the antenna is "eliminated": from the point of view of the radiating antenna, the other antennas and/or passive sections of the aircraft located in the donut-shaped cloaked region are located at infinity. As a result, the radiation pattern of the cloaked antenna is insensitive to its ambient. The inset shows gradual change of the metamaterial parameters inside the cloak wall.

[0017] FIGS. **2**A, **2**B, **2**C and **2**D show a COMSOL simulation of the dipole near-field distribution for a single dipole (a), the dipole and metallic cylinder (b), the metallic plate positioned between the dipole and the cylinder (c), and the metamaterial flat cloak located between the dipole and the cylinder (d). In real applications the edges of the cloak will be tapered in order to reduce scattering.

[0018] FIGS. **3**A and **3**B show a COMSOL simulation of the NF H-field of the two dipole antennas separated by the metamaterial cloak.

[0019] FIGS. **4**A, **4**B, **4**C, **4**D and **4**F show the FF radiation pattern calculated for a single patch antenna (a), the active antenna with a neighbor passive antenna at $X=0.08\lambda$ (b), $X=0.24\lambda$ (c), and $X=0.72\lambda$ (d). The FF radiation pattern of the two antennas at $X=0.08\lambda$ with the metamaterial cloak between them (e). The MM clock (with the width X and the height H) shown green is positioned between the two patch antennas shown pink (f).

[0020] FIG. **5** shows the transmission coefficient S_{12} of the two patch antennas separated by the distance $X=0.08\lambda$ (a), $X=0.24\lambda$ (b), $X=0.4\lambda$ (c), and $X=0.72\lambda$ (d), as well as with the metamaterial cloak of the height H between the antennas at $X=0.08\lambda$ and $H=0.025\lambda$ (e), $X=0.08\lambda$ and $H=0.16\lambda$ (f).

DETAILED DESCRIPTION OF THE PREFERRED EMBODIMENT

[0021] Based on the transformational optics approach we have developed a novel concept of the cloaked antenna, which is illustrated in FIG. **1**. The transformational optics approach is based on the conformal coordinate transformations to a specially chosen system of curvilinear coordinates (x_1,y_1,z_1,t_1), which distort the length elements but keep the angles intact. The Maxwell equations in such a curvilinear coordinate system may be written in the usual form by introducing effective anisotropic dielectric permittivity $\epsilon(x_1,y_1,z_1)$ and magnetic permeability $\mu(x_1,y_1,z_1)$ tensors of free space. On the other hand, if the so obtained ϵ and μ distributions will be engineered artificially using specially designed metamaterial medium, electromagnetic fields in such a medium will propagate as if in normal Minkowski space described by the (x_1,y_1,z_1,t_1) coordinates. Thus, transformational optics approach to antenna cloaking is applicable to both near and far fields of a cloaked antenna.

[0022] The schematic drawing in FIG. **1** represents our conceptual approach. In real-life applications the exact configuration of the cloak needs to be tailored in order to avoid undesirable blind spots. The approximate dimensions in FIG.

1 indicate that not much of the antenna field of view will be obscured. Those skilled in the art will appreciate that if any particular application would require an omnidirectional field of view, a combination of our approach with the approach disclosed in the Pendry et al. reference (cited above) may be used, so that antenna may see behind the obscuration.

[0023] The distinctive feature of the metamaterial for cloaking applications is that its properties (dielectric permittivity c and magnetic permeability μ) are gradually changed inside the cloak, while their ratio does not. It is matched to the impedance of free space. FIG. **1** illustrates our MM cloak that is essentially multilayered dielectric structure (with some metallic particles inclusions) each layer ϵ (and μ) being extrapolated by the step function close to desirable ϵ and μ distribution. Our simulations show that significant field distortion is observed when the radiation from the dipole hits metallic objects (e.g. metal cylinder or metal plate), while in the case of the metamaterial cloak positioned between the dipole and the metal object there is no such field distortion (compare FIGS. **2***b*, **2***c* and FIG. **2***d*). Thus, screening the objects by metallic plate or cylinder does not prevent the radiation pattern distortion. On the other hand, two antennas may work independently without interference with each other when each antenna is cloaked, even though they are situated next to each other (FIG. **3**).

[0024] The general algorithm for designing the MM cloak is the following:

Using the desired conformal coordinate transformation tensor we calculate the spatial variations of components of the permittivity ϵ(r) tensor and the permeability μ(r) tensor. From the so obtained ϵ(r) and μ(r) spatial distribution, the structure and composition of the metamaterial is determined. To simplify the cloak fabrication we will use the multilayered structure (as in the inset in FIG. **1**) where the ϵ(r) and μ(r) function are replaced by the step-like approximation.

[0025] An underlying feature of the proposed approach is the use of the metamaterial cloaks to prevent the electromagnetic radiation from the neighbor objects (active and/or passive ones) from hitting the emitting surface of the antenna(s). This returning radiation creates the phase distortion on the surface and deteriorates the FF radiation pattern of the antenna. In the conventional approach to antenna separation one has to position the antennas in such a way that the lateral distance between them is greater than the NF zone as is described in Handbook of Antennas in Wireless Communications, Ch. 5, Antenna Parameters, Various Generic Antennas and Feed Systems, and Available Softwares, CRC, 2002, the contents of which are incorporated herein by reference, size d_{NF} (d_{NF}>>D, d_{NF}>>λ, and d_{NF}>>$2D^2/\lambda$, here D is the antenna size and λ is its wavelength). Therefore, there is a room for $(D+d_{NF})^{-2}$ antennas per unit area. With the proposed metamaterial cloaks the distance d_{MM} between the antenna edges could be 0.08λ or less. Then we may put $(D+d_{MM})^2$ antennas per unit area. For d_{MM}<<D the metamaterial clock permits the position of much more antennas than a conventional spatial separation.

[0026] To evaluate significance of our approach the antenna FF radiation pattern distortion and its correction with the metamaterial cloak have been simulated by HFSS software for a set of two antennas—one is an active patch antenna and second is a passive patch antenna located on a distance X from the edge of the active antenna.

[0027] The results presented in FIG. **4** show the radiation pattern of the active antenna is drastically deteriorated at low X, but the pattern coincides with a single antenna pattern when the distance X becomes larger. Meanwhile the metamaterial clock positioned between the antennas makes the pattern looks as a single antenna one even at X=0.08λ (Compare FIGS. **4***a, d*, and *e*). Using HFSS we have also calculated the S-parameters of the set of the two identical patch antennas located at the distance X. One may see from the results presented in FIG. **5** that the closer antennas the higher the transmission S_{12}-parameter. Meanwhile the metamaterial cloak positioned between the antennas significantly decreases the S_{12} magnitude even at the distance as small as 0.08λ with a low value of the scattering S_{11}-parameter.

[0028] Thus, our HFSS simulations demonstrate that the proposed metamaterial cloak of the thickness of only 0.08λ works as the separation of the antennas by the distance of 0.72λ.

[0029] Those skilled in the art will appreciate that any combination of metal, dielectric, ferroelectric and/or ferromagnetic materials may be used in the antenna cloak design, as long as the resulting metamaterial parameters would satisfy the desired spatial distribution of ϵ and μ tensors, as described in FIG. **1**.

[0030] While the present invention has been described in connection with the preferred embodiments of the various figures, it is to be understood that other similar embodiments may be used or modifications or additions may be made to the described embodiment for performing the same function of the present invention without deviating therefrom. Therefore, the present invention should not be limited to any single embodiment, but rather construed in breadth and scope in accordance with the recitation of the appended claims.

What is claimed is:

1. In the method for operating a plurality antenna having near-field (NF) zone mounted on a vehicle, wherein the improvement comprises the step of cloaking in the near-field (NF) zone of each of said plurality of antennas.

2. The method of claim **1** wherein near-field (NF) radiation of neighboring radiation is separated by a plurality of metamaterial cloaks so that the far field (FF) radiator patterns are improved.

3. The method of claim **1** wherein a cloaked antenna is provided which directs radiation in such a way that said radiation is impeded from reaching neighboring antennas.

4. The method of claim **1** wherein a metamaterial cloak is used.

5. The method of claim **4** wherein using a desired conformal coordinate transformation tensor the spatial variations of components of the permittivity ϵ(r) tensor and the permeability μ(r) tensor is calculated.

6. The method of claim **5** wherein from ϵ(r) and μ(r) spatial distribution, the structure and composition of the metamaterial is determined.

7. The method of claim **6** wherein a multilayered cloak structure is used wherein ϵ(r) and μ(r) function are approximated by a step-like approximation.

8. The method of claim **4** wherein the metamaterial cloaks of the antennas prevent electromagnetic radiation from hitting emitting surfaces of the antenna.

* * * * *

US009971162B2

(12) **United States Patent**
Banerjee et al.

(10) **Patent No.: US 9,971,162 B2**
(45) **Date of Patent: May 15, 2018**

(54) **APPARATUSES AND METHODS FOR MAKING AN OBJECT APPEAR TRANSPARENT**

(71) Applicant: **Toyota Motor Engineering & Manufacturing North America, Inc.**, Erlanger, KY (US)

(72) Inventors: **Debasish Banerjee**, Ann Arbor, MI (US); **Hideo Iizuka**, Nissin (JP)

(73) Assignee: **Toyota Motor Engineering & Manufacturing North America, Inc.**, Plano, TX (US)

(*) Notice: Subject to any disclaimer, the term of this patent is extended or adjusted under 35 U.S.C. 154(b) by 74 days.

(21) Appl. No.: **15/185,988**

(22) Filed: **Jun. 17, 2016**

(65) **Prior Publication Data**

US 2017/0227781 A1 Aug. 10, 2017

Related U.S. Application Data

(60) Provisional application No. 62/291,920, filed on Feb. 5, 2016.

(51) **Int. Cl.**
G02B 27/14 (2006.01)
G02B 27/10 (2006.01)
(Continued)

(52) **U.S. Cl.**
CPC ***G02B 27/14*** (2013.01); ***B60R 13/025*** (2013.01); ***G02B 5/3083*** (2013.01);
(Continued)

(58) **Field of Classification Search**
CPC G02B 5/30; G02B 5/3025; G02B 5/3083; G02B 21/14; G02B 27/024;
(Continued)

(56) **References Cited**

U.S. PATENT DOCUMENTS

4,684,255 A * 8/1987 Ford G01J 3/453 356/455
5,941,596 A 8/1999 See
(Continued)

OTHER PUBLICATIONS

Hongsheng Chen et al., "Broadband polygonal invisibility cloak for visible light", Scientific Reports, Feb. 9, 2012, pp. 1-14.
(Continued)

Primary Examiner — Loha Ben
(74) *Attorney, Agent, or Firm* — Dinsmore & Shohl LLP

(57) **ABSTRACT**

A cloaking device includes cloaking region boundary planes oriented non-planar to each other, each of the cloaking region boundary planes having an outward facing mirror surface and an inward facing opaque surface. The cloaking device includes a cloaking region bounded at least partially by the inward facing opaque surfaces of the cloaking region boundary planes. Half mirrors are spaced apart from and generally parallel to the outward facing mirror surfaces such that a half mirror is spaced apart from and generally parallel to each outward facing mirror surface. Light from an object on an object-side of the cloaking device is directed around an article within the cloaking region and forms an image on an image-side of the cloaking device such the article appears transparent to an observer looking towards the object.

20 Claims, 9 Drawing Sheets

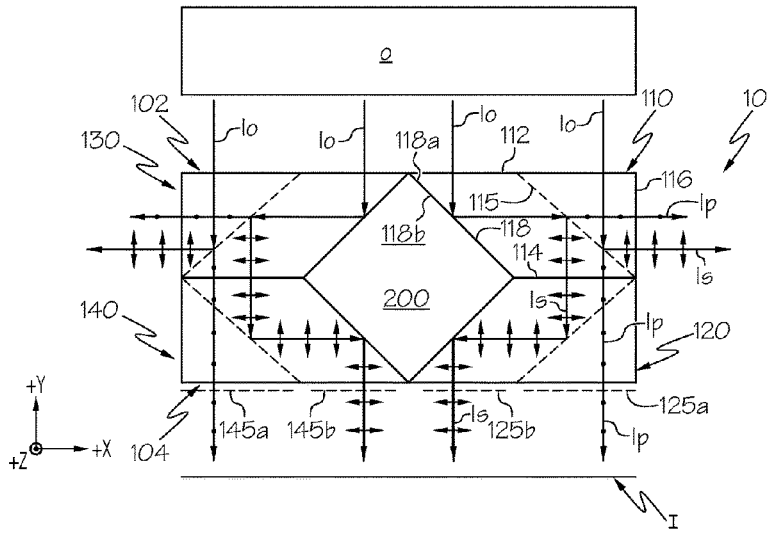

(51) **Int. Cl.**

G02B 27/28	(2006.01)
G02B 5/30	(2006.01)
B60R 13/02	(2006.01)
B60R 1/08	(2006.01)

(52) **U.S. Cl.**

CPC ***G02B 27/1086*** (2013.01); ***G02B 27/283*** (2013.01); *B60R 1/082* (2013.01); *B60R 2013/0287* (2013.01); *G02B 5/30* (2013.01); *G02B 5/3025* (2013.01); *G02B 27/144* (2013.01)

(58) **Field of Classification Search**

CPC .. G02B 27/1086; G02B 27/14; G02B 27/141; G02B 27/143; G02B 27/144; B60R 1/08; B60R 1/082; B60R 13/02; B60R 13/025; B60R 2013/0287; G03B 21/2066; G03B 21/2073

USPC 359/299–304, 493, 618, 629, 634; 396/331, 386, 544; 353/12, 14, 20, 28, 353/66

See application file for complete search history.

(56) **References Cited**

U.S. PATENT DOCUMENTS

5,982,343	A *	11/1999	Iba	G02B 27/0172 345/8
6,130,784	A *	10/2000	Takahashi	H04N 5/7491 348/E5.145
2015/0248013	A1	9/2015	Chen et al.	

OTHER PUBLICATIONS

John C. Howell et al., "Simple, broadband, optical spatial cloaking of very large objects", Department of Physics and Astronomy, University of Rochester, www.physics.optics, arXiv:1306.0863 </abs/1306.0863> [physics.optics], Jun. 2013.

Yihao Yang et al., "Towards omnidirectional, large scale, full polarization, and broadband practical invisibility cloaks: challenges and progress", EPJ Appl. Metamat. 2014, 1, 7.

"Physics demonstrations: cloaking device?", Apr. 25, 2013; URL: https://skullsinthestars.com/2013/04/25/physics-demonstrations-cloaking-device.

* cited by examiner

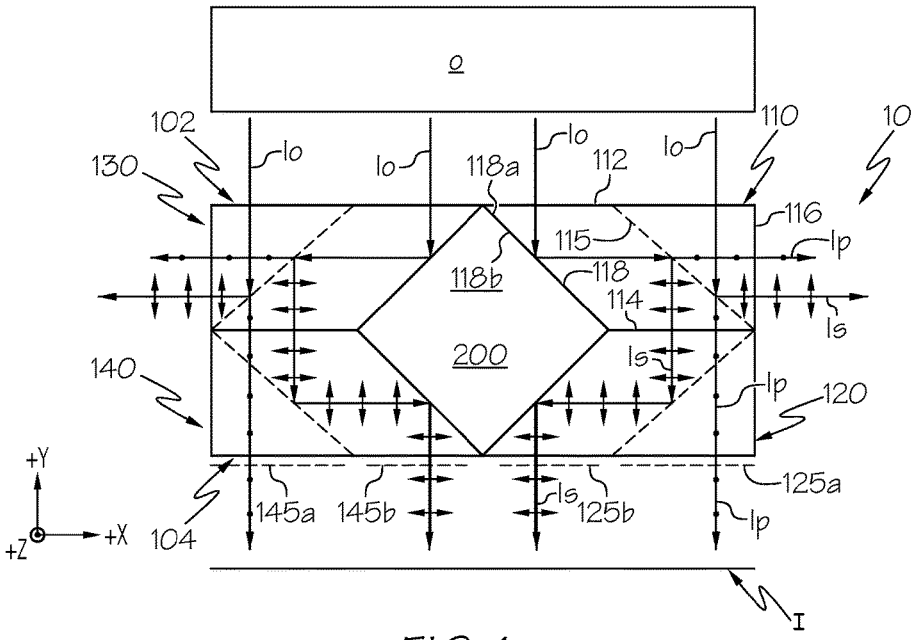
o
102
130
Io
Io
118a
Io
112
Io
110
10
116
115
Ip
118b
118
114
Is
200
Is
140
Ip
120
+Y
+X
+Z
104
145a
145b
Is
125b
125a
Ip
I

FIG. 1

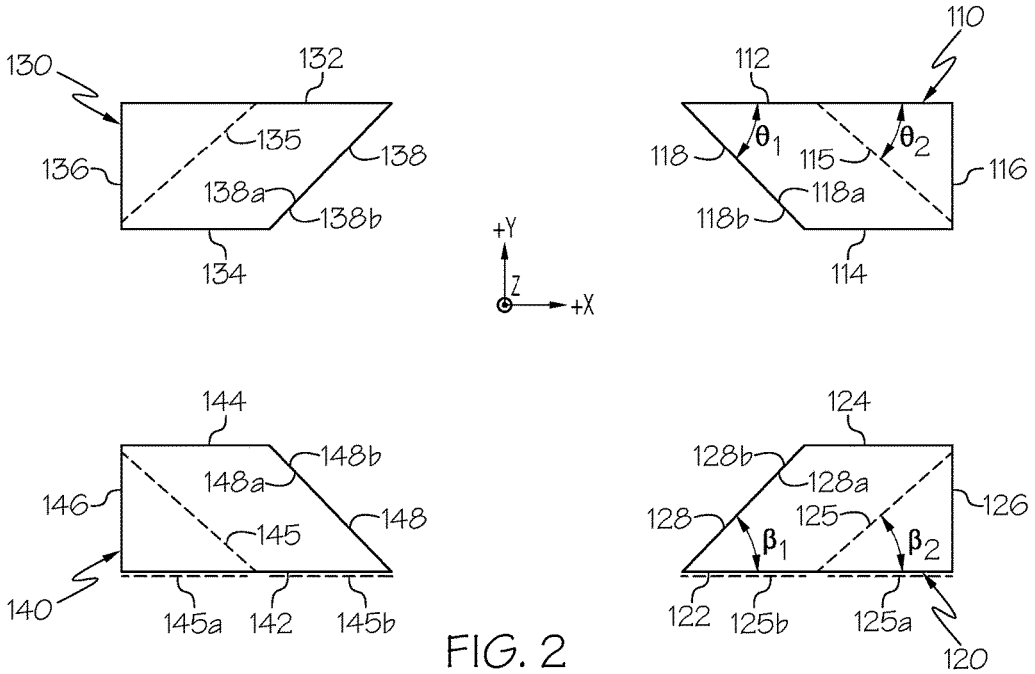
130
132
135
136
138
138a
138b
134
+Y
Z
+X
110
112
θ1
θ2
118
115
116
118a
118b
114
144
148b
148a
146
148
145
140
145a
142
145b
124
128b
128a
128
125
126
β1
β2
122
125b
125a
120

FIG. 2

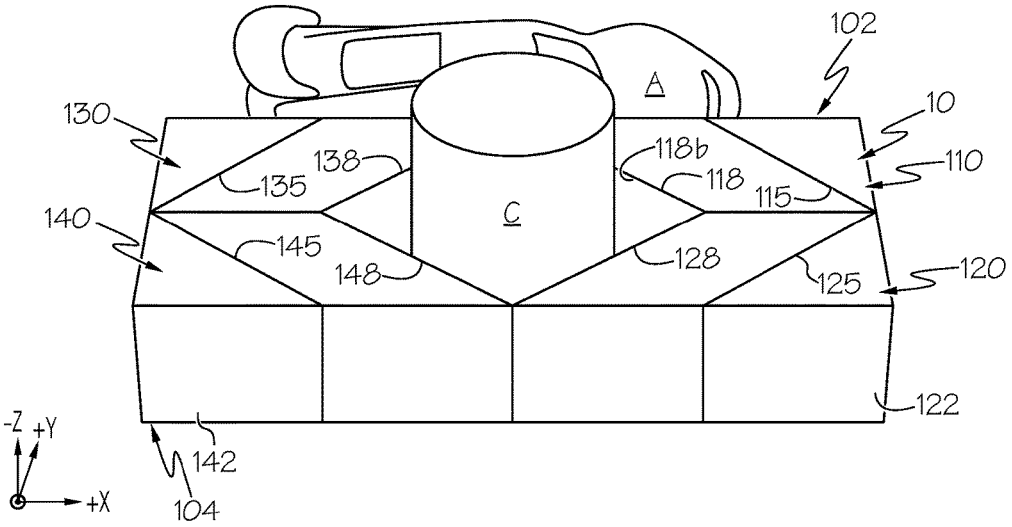
102
A
10
130
138
118b
110
135
118
115
140
C
145
128
120
148
125
122
-Z
+Y
142
+X
104

FIG. 3

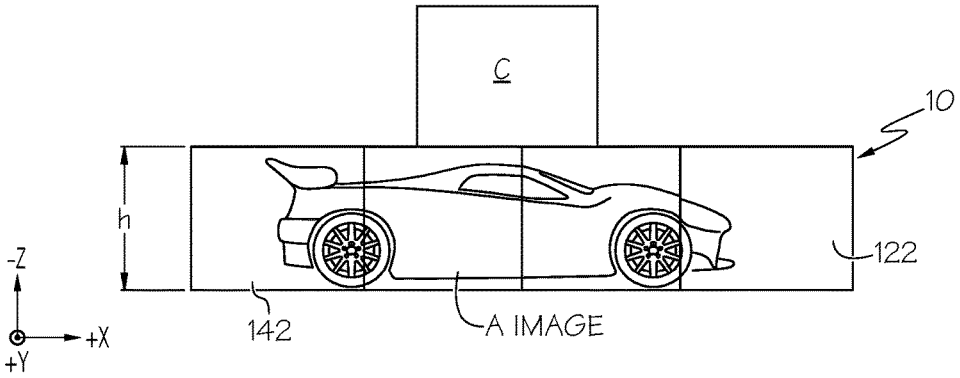
C
10
h
122
-Z
+X
+Y
142
A IMAGE

FIG. 4

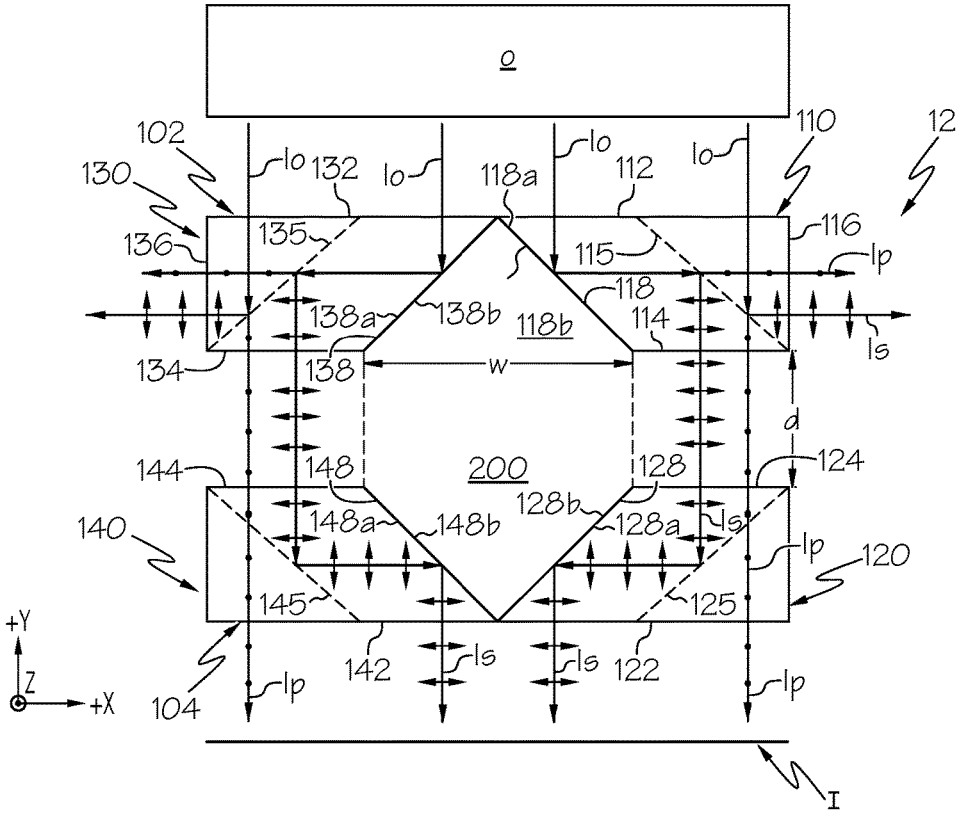
o
102
130
136
134
132
135
Io
118a
112
110
12
116
115
Ip
118
138a
138b
118b
114
Is
138
w
d
144
148
200
128
124
140
148a
148b
128b
128a
120
145
125
142
122
+Y
Z
+X
104
I

FIG. 5

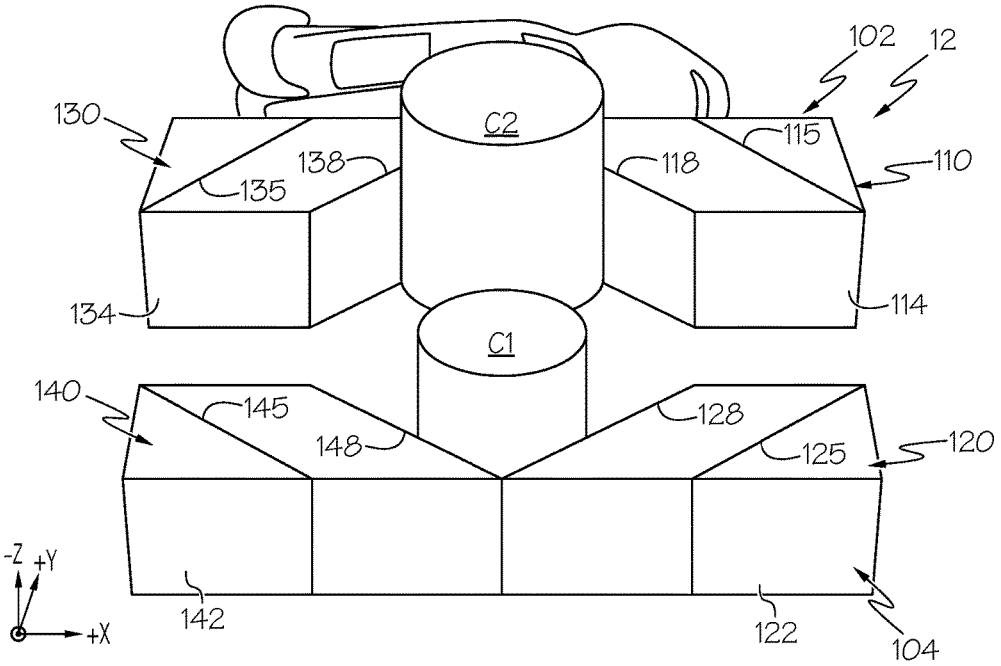
102
12
130
C2
115
138
118
110
135
134
114
C1
140
145
128
148
125
120
-Z
+Y
+X
142
122
104

FIG. 6

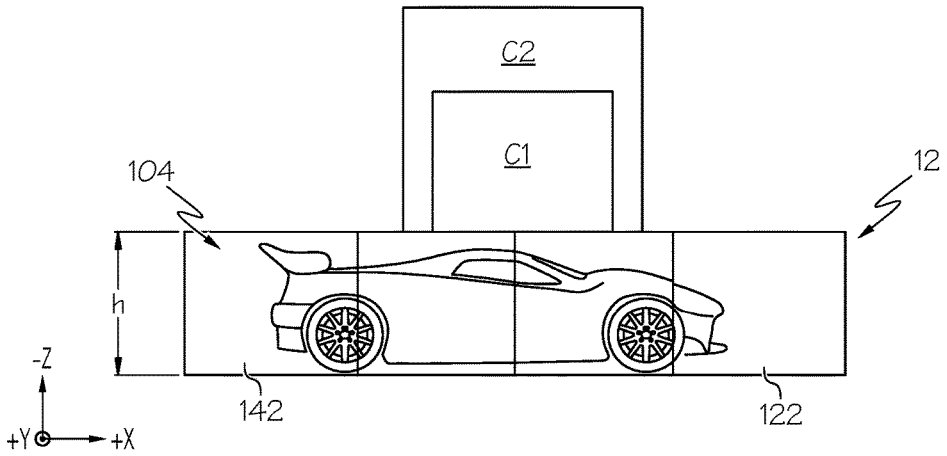
C2
C1
104
12
h
-Z
+Y
+X
142
122

FIG. 7

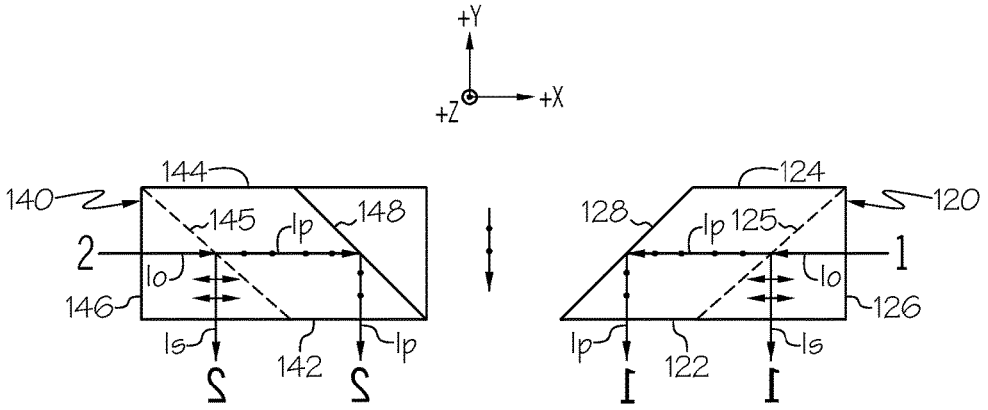

FIG. 8

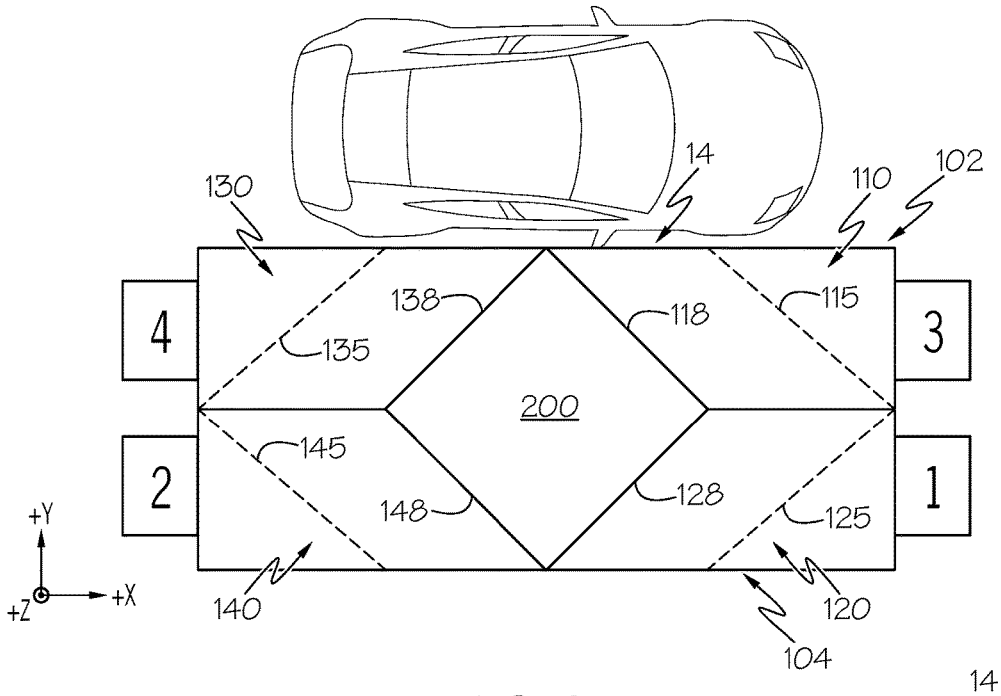

FIG. 9

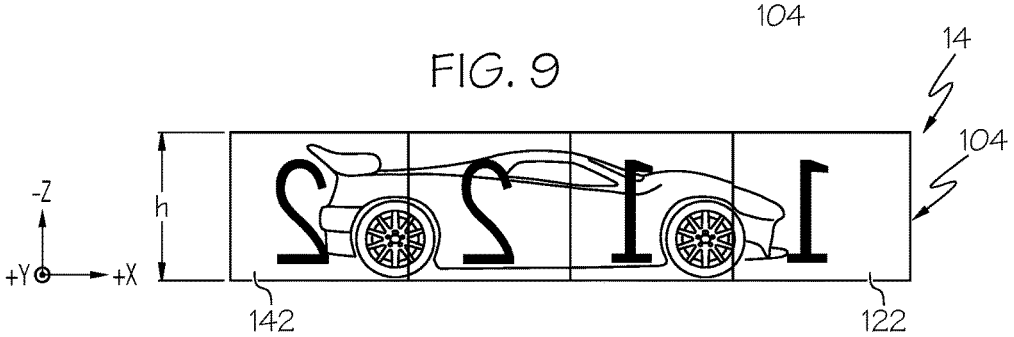

FIG. 10

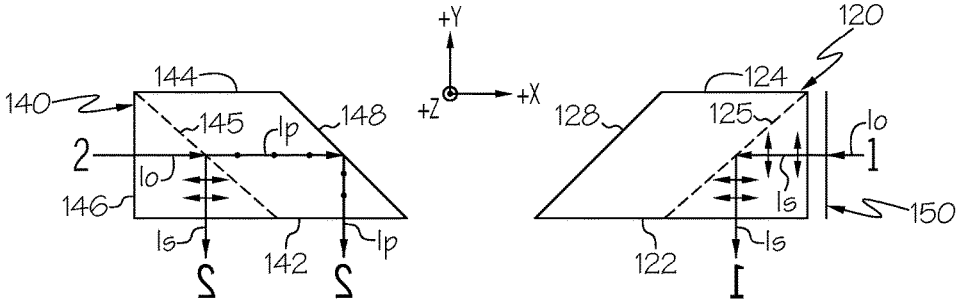

FIG. 11

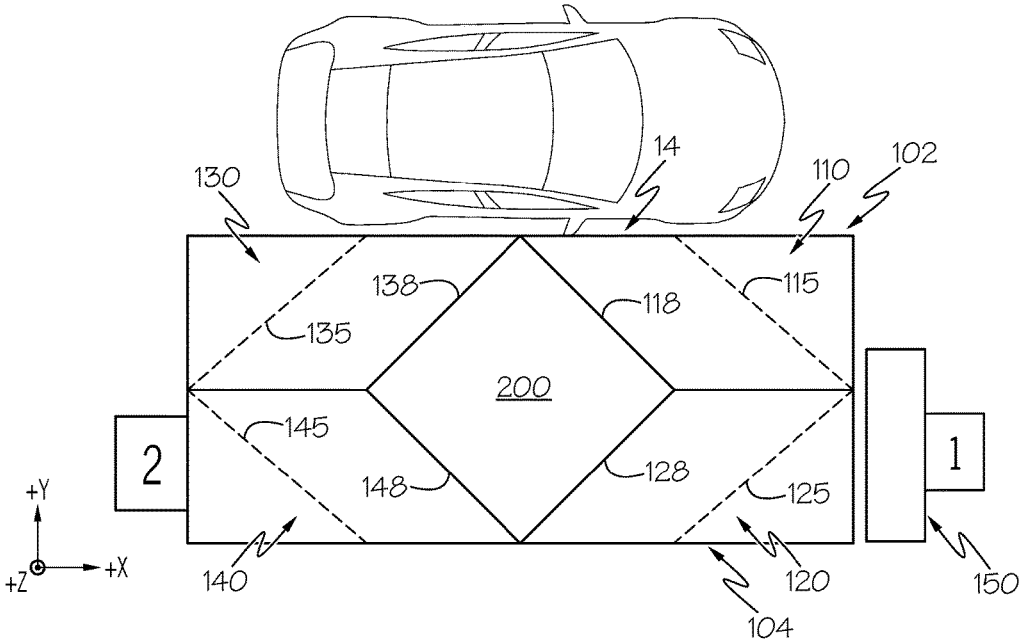

FIG. 12

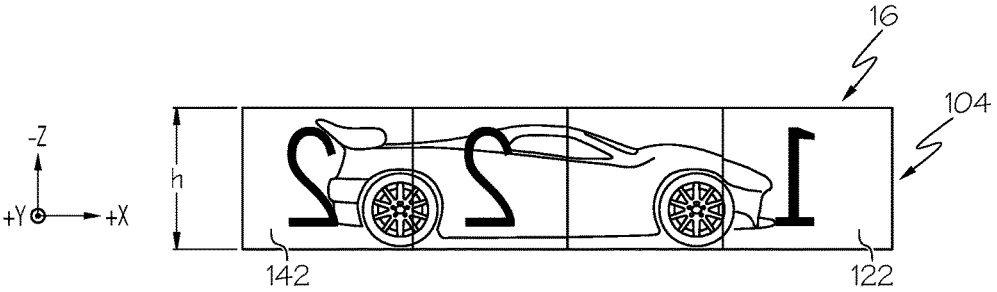

FIG. 13

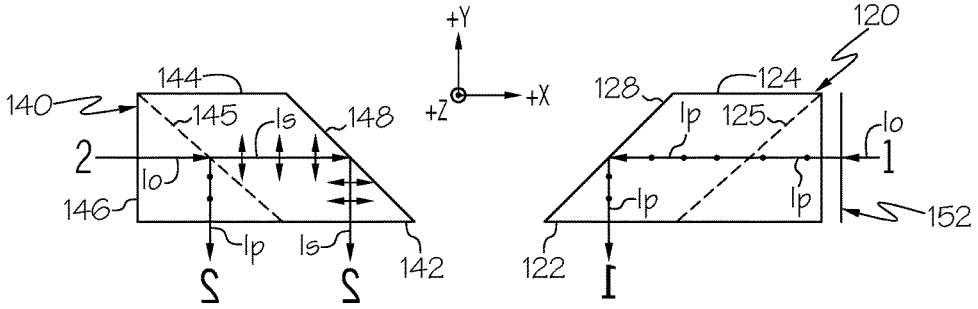

FIG. 14

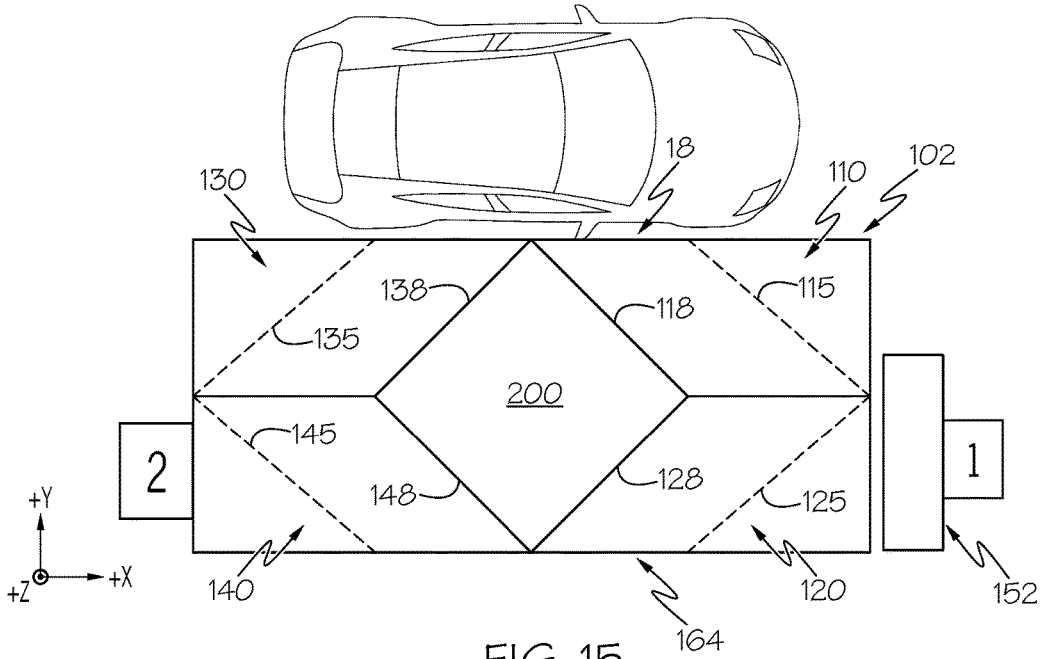

FIG. 15

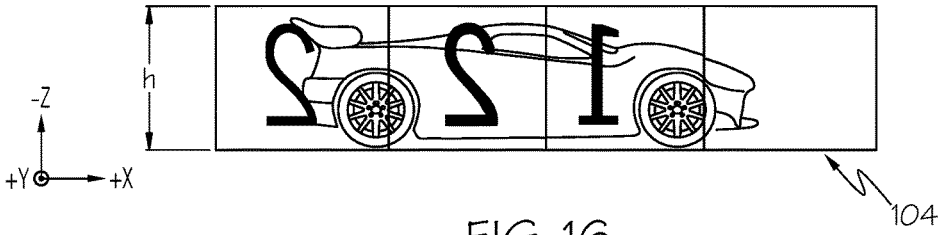

FIG. 16

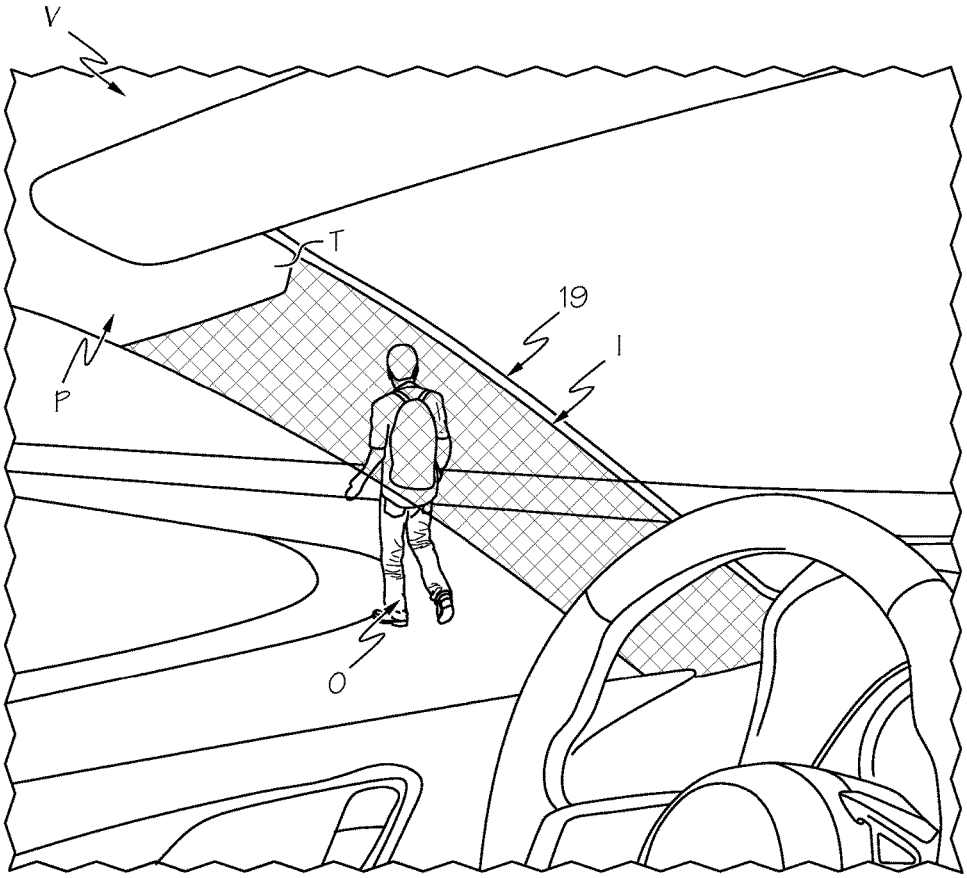

FIG. 17

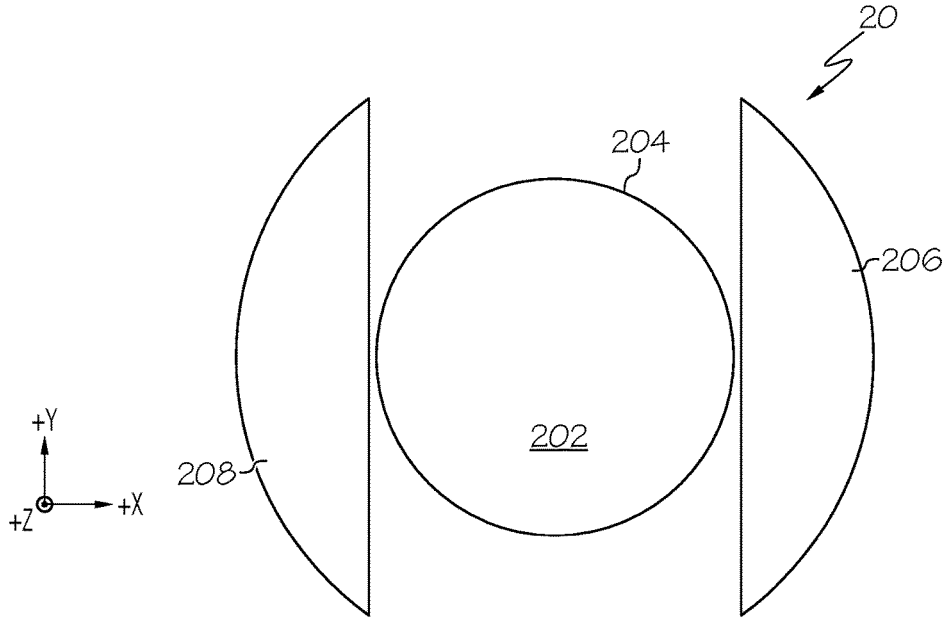

FIG. 18

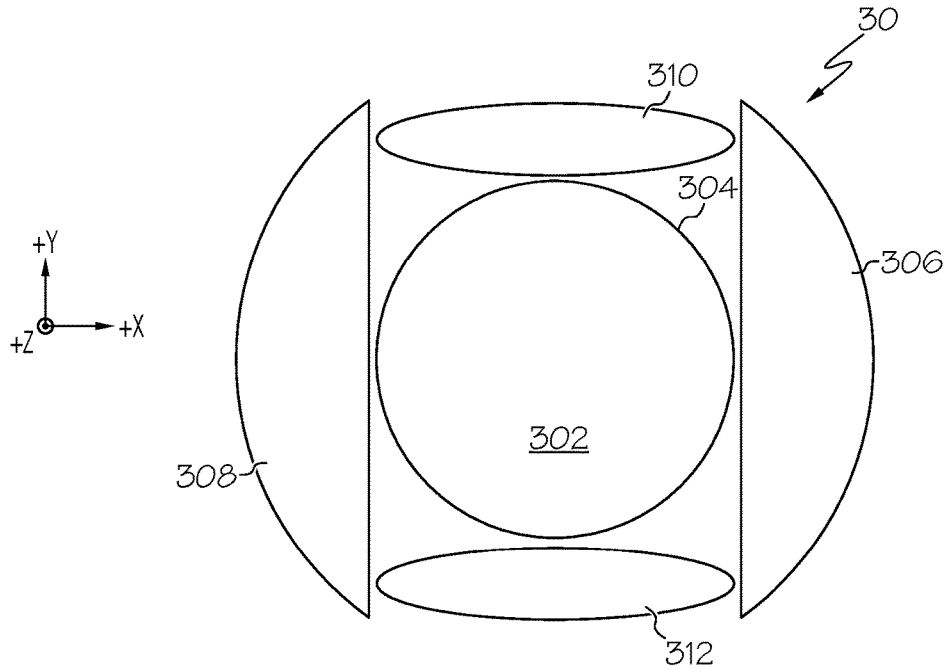

FIG. 19

APPARATUSES AND METHODS FOR MAKING AN OBJECT APPEAR TRANSPARENT

RELATED APPLICATION

This application claims the benefit of U.S. Provisional Patent Application Ser. No. 62/291,920 filed Feb. 5, 2016, the entirety of which is incorporated herein by reference.

TECHNICAL FIELD

The present specification generally relates to apparatuses and methods for making an object appear transparent and, more specifically, to cloaking devices for pillars of vehicles and methods for making pillars of vehicles appear transparent.

BACKGROUND

Studies on cloaking devices that appear to make a pillar of a vehicle transparent have been published. Such studies disclose the use of metamaterials or the use of video cameras in combination with a display screen to allow an occupant of a vehicle to ostensibly "see" though the vehicle pillar, thereby reducing blind spots in the vehicle. However, metamaterials and video technology use complicated material designs and equipment.

Accordingly, a need exists for alternative devices that appear to make a pillar of a vehicle transparent.

SUMMARY

In one embodiment, a cloaking device includes cloaking region (CR) boundary planes oriented non-planar to each other and each of the CR boundary planes has an outward facing mirror surface and an inward facing opaque surface. The cloaking device includes a CR at least partially bounded by the inward facing opaque surfaces of the CR boundary planes. The cloaking device includes half mirrors spaced apart from and generally parallel to the outward facing mirror surfaces such that a half mirror is spaced apart from and generally parallel to each outward facing mirror surface. An article positioned within the CR is not visible outside of the CR and light reflected from an object on one side of the cloaking device is redirected around the CR and the article positioned within the CR, and forms an image of the object on another side of the cloaking device.

According to another embodiment, a cloaking device for cloaking an article of a vehicle includes a cloaking assembly with an object-side, an image-side and at least two CR boundary planes positioned at least partially between the object-side and the image-side. The at least two CR boundary planes are positioned non-planar to each other and each of the at least two CR boundary planes have an outward facing mirror surface and an inward facing opaque surface. A CR is bounded by the inward facing opaque surfaces of the at least two CR boundary planes and a vehicle article positioned within the CR is not visible from outside the CR. The cloaking assembly has at least two half mirrors positioned at least partially between the object-side and the image-side. Each of the at least two half mirrors is spaced apart from and generally parallel to one of the outward facing mirror surfaces such that a half mirror is spaced apart from and generally parallel to each outward facing mirror surface. Light from an object located on the object-side of the cloaking assembly, and obscured by the vehicle article positioned within the CR is redirected around the CR, and forms an image of the object on the image-side of the cloaking assembly such that the vehicle article appears transparent to an observer looking in a direction towards the object.

In embodiments, the cloaking assembly has four CR boundary planes and four half mirrors. The four CR boundary planes are oriented generally orthogonal to each other, the CR is bounded by the four CR boundary planes, and each of the half mirrors are spaced apart and generally parallel to one of the outward facing mirror surfaces such that a half mirror is spaced apart and generally parallel to each outward facing mirror surface. Each of the half mirrors may be selected from a p-polarization half mirror or an s-polarization half mirror. Light reflected from the object located on the object-side of the cloaking assembly passes through the cloaking assembly by reflecting off of a first outward facing mirror surface, a first half mirror oriented generally parallel to the first outward facing mirror surface, a second half mirror oriented generally orthogonal to the first half mirror and a second outward facing mirror surface oriented generally parallel to the second half mirror. Light that passes through the cloaking assembly forms an image of the object on the image-side of the cloaking assembly.

In embodiments, the cloaking device with the cloaking assembly has an end surface oriented non-planar to a half mirror. Light from an item located adjacent to the end surface passes through the cloaking assembly and forms an image of the item on the image side of the cloaking assembly.

These and additional features provided by the embodiments described herein will be more fully understood in view of the following detailed description in conjunction with the drawings.

BRIEF DESCRIPTION OF THE DRAWINGS

The embodiments set forth in the drawings are illustrative and exemplary in nature and not intended to limit the subject matter defined by the claims. The following detailed description of the illustrative embodiments can be understood when read in conjunction with the following drawings, where like structure is indicated with like reference numerals and in which:

FIG. **1** schematically depicts a top view of a cloaking device according to one or more embodiments described and illustrated herein;

FIG. **2** schematically depicts top isolated views of four cloaking device components of the cloaking device of FIG. **1** according to one or more embodiments described and illustrated herein;

FIG. **3** schematically depicts a top perspective view of the cloaking device of FIG. **1** with a first object on one side of the cloaking device and a second object within a cloaking region (CR) of the cloaking device;

FIG. **4** schematically depicts a side view of the cloaking device of FIG. **3** with the first object on one side of the cloaking device and the second object within the CR of the cloaking device;

FIG. **5** schematically depicts a top view of a cloaking device according to one or more embodiments described and illustrated herein;

FIG. **6** schematically depicts a top perspective view of the cloaking device of FIG. **5** with a first object on one side of the cloaking device and a second object and a third object within a CR of the cloaking device;

FIG. **7** schematically depicts a side view of the cloaking device of FIG. **6** with the first object on one side of the cloaking device and the second object and the third object within the CR of the cloaking device;

FIG. **8** schematically depicts a top isolated view of two cloaking device components according to one or more embodiments described and illustrated herein;

FIG. **9** schematically depicts a top view of a cloaking device with four cloaking device components according to one or more embodiments described and illustrated herein;

FIG. **10** schematically depicts a side view of the cloaking device shown in FIG. **9**;

FIG. **11** schematically depicts a top isolated view of two cloaking device components according to one or more embodiments described and illustrated herein;

FIG. **12** schematically depicts a top view of a cloaking device with four cloaking device components according to one or more embodiments described and illustrated herein;

FIG. **13** schematically depicts a side view of the cloaking device of FIG. **12**;

FIG. **14** schematically depicts a top isolated view of two cloaking device components according to one or more embodiments described and illustrated herein;

FIG. **15** schematically depicts a top view of four cloaking device components according to one or more embodiments described and illustrated herein;

FIG. **16** schematically depicts a side view of the cloaking device of FIG. **15**;

FIG. **17** schematically depicts a side view of a cloaking device cloaking an A-pillar of a vehicle according to one or more embodiments described and illustrated herein;

FIG. **18** schematically depicts a top view of a cloaking device according to one or more embodiments described and illustrated herein; and

FIG. **19** schematically depicts a top view of a cloaking device with four cloaking device components according to one or more embodiments described and illustrated herein.

DETAILED DESCRIPTION

A cloaking device is provided. The cloaking device may have an object-side, an image-side and a cloaking region (CR) boundary plane having an outward facing mirror surface and an inward facing opaque surface. A CR is at least partially bounded by the inward facing opaque surface of the CR boundary plane and a half mirror is spaced apart from and generally parallel to the outward facing mirror surface. The half mirror may be a p-polarization half mirror or an s-polarization half mirror. In embodiments, an article, e.g. an A-pillar of a vehicle, a B-pillar of a vehicle or a C-pillar of a vehicle, is positioned within the CR and light from an object located on the object-side of the cloaking device and obscured by the CR is redirected around the CR and the article and forms the image of the object on the image-side of the cloaking device such that the article appears transparent. Various embodiments of cloaking devices and methods for using the same will be described in further detail herein with specific reference to the appended drawings.

FIG. **1** generally depicts one embodiment of a cloaking device. The cloaking device includes a cloaking region (CR) that is at least partially bounded by at least two CR boundary planes that are non-planar to each other. Each of the two CR boundary planes has an outward facing mirror surface and an inward facing opaque surface. Spaced apart from and oriented generally parallel to each of the CR boundary planes is a half mirror (e.g., a polarizing half mirror) that allows p-polarized light to pass through and s-polarized light to be reflected or, alternatively, allows s-polarized light to pass through and p-polarized light to be reflected. Referring to the coordinate system in the figure, portions of a target object are located directly behind the CR in the +Y direction (obscured portions of the object which are otherwise not visible through the CR) and portions of the target object are located outside or beyond the CR in the +Y direction (visible portions of the object). Light rays (light) from the obscured portions of the target object travel in the −Y direction and are incident on a first outward facing mirror surface. The first outward facing mirror surface reflects the incident light from the obscured portions of the target object in the +X direction to a first half mirror that is spaced apart from and oriented generally parallel to the first outward facing mirror surface. One mode of polarized light (e.g., p-polarized light) from the light reflected from the first outward facing mirror surface passes through the first half mirror (continues traveling in the +X direction), while another mode of polarized light (e.g. s-polarized light) is reflected by the first half mirror in the −Y direction. The polarized light reflected in the −Y direction by the first half mirror is reflected into the −X direction by a second half mirror. The polarized light reflected into the −X direction by the second half mirror is reflected in the −Y direction by a second outward facing mirror surface that is spaced apart from and oriented generally parallel to the second half mirror. An observer looking at the cloaking device in the +Y direction will see the reflection of the polarized light by the second outward facing mirror surface, i.e. polarized light originating from light from obscured portions of the target object will be visible to a human eye located on an opposite side of the CR from the obscured portions of the target object. Also, light reflected from an article positioned within the CR (i.e., the cloaked article) is not transmitted through the inward facing opaque surfaces and is not seen by the observer looking at the cloaking device in the +Y direction. That is, the cloaking device effectively redirects light from the obscured portions of the target object around the CR such that the light from the target object appears to pass through the cloaked article giving the visual impression that the cloaked article is not present. Light from the visible portions of the target object travels in the −Y direction and is incident on the first half mirror. One mode of the incident light (e.g., s-polarized light) is reflected in the +X direction by the first half mirror and another mode of the incident light (e.g. p-polarized light) is transmitted through the first half mirror and continues traveling in the −Y direction. The transmitted polarized light traveling in the −Y direction reaches the second half mirror and is transmitted through the second half mirror. An observer looking at the cloaking device in the +Y direction will see the transmitted polarized light traveling in the −Y direction, i.e. polarized light originating from light from visible portions of the target object will be visible to a human eye located on an opposite side of the cloaking device from the visible portions of the target object. Accordingly, an individual will see the entire target object, both obscured portions and visible portions, that is located on the opposite side of the CR (and thus on the opposite side of a cloaked article) giving the visual impression that the cloaked article is transparent.

Referring now to FIGS. **1-2**, embodiments of a cloaking device include a cloaking assembly **10** with four CR boundary planes **118**, **128**, **138**, **148**. The CR boundary planes **118**, **128**, **138**, **148** located adjacent to each other are non-planar to each other. In embodiments, opposing CR boundary planes **118**, **148** and **128**, **138** may be oriented parallel to each other and adjacent CR boundary planes **118**, **128**, **138**,

148 may be oriented orthogonal to adjacent CR boundary planes, e.g. CR boundary plane 118 is oriented orthogonal to adjacent CR boundary planes 138, 128, CR boundary plane 128 is oriented orthogonal to adjacent CR boundary planes 118, 148, etc. Each of the four CR boundary planes has an outward facing mirror surface 118*a*, 128*a*, 138*a*, 148*a*, respectively, and an inward facing opaque surface 118*b*, 128*b*, 138*b*, 148*b*, respectively. The outward facing mirror surfaces 118*a*, 128*a*, 138*a*, 148*a*, can be made from omni-directional photonic crystals or mirrors such that approximately 100% (+/−10%) of light incident on the outward facing mirror surfaces is reflected from the outward facing mirror surfaces. Accordingly, the term "mirror surface" used herein refers to a surface that reflects approximately 100% (+/−10%) of all modes of light (e.g. s-polarized light and p-polarized light) incident on the mirror surface. In embodiments, the CR boundary planes 118, 128, 138, 148 form a CR 200 bound at least partly by the inward facing opaque surfaces 118*b*, 128*b*, 138*b*, 148*b*. The four CR boundary planes 118, 128, 138 148, have a height 'h' (FIG. 4) in the Z direction of the coordinate axes in the figures and light reflected or transmitted within the CR 200 does not pass through the inward facing opaque surfaces 118*b*, 128*b*, 138*b*, 148*b*. Accordingly, an article (e.g., a cloaked article) located within the CR 200 is not visible to an observer viewing the cloaking assembly 10 in the +Y direction.

Still referring to FIGS. 1 and 2, spaced apart from and oriented generally parallel (within +/−2°) to the four CR boundary planes 118, 128, 138 148, are half mirrors 115, 125, 135, 145, respectively. The half-mirrors 115, 125, 135, 145 reflect a specific mode of visible light Specifically, each of the half mirrors 115, 125, 135, 145 can be an s-polarizer half mirror or a p-polarizer half mirror. The half mirrors 115, 125, 135, 145 can be in the form of a diffraction grating or thin film polarizer that reflects the s-mode of visible light and allows the p-mode of visible light to pass through (a p-polarization diffraction grating or thin film), or in the alternative, reflects the p-mode of visible light and allows the s-mode of the visible light to pass through (an s-polarization diffraction grating or thin film). It should be appreciated that the half mirrors 115, 125 are both s-polarizer half mirrors or p-polarizer half mirrors and the half mirrors 135, 145 are both s-polarizer half mirrors or p-polarizer half mirrors, i.e. the half mirrors 115, 125 may be s-polarizer mirrors and the half mirrors 135, 145 may be p-polarizer half mirrors; the half mirrors 115, 125 may be p-polarizer mirrors and the half mirrors 135, 145 may be s-polarizer half mirrors; or all of the half mirrors 115, 125, 135, 145 may be s-polarizer half mirrors or p-polarizer half mirrors.

The four CR boundary planes 118, 128. 138 148, and the corresponding half mirrors 115, 125, 135, 145, may be part of four cloaking assembly components 110, 120, 130, 140, respectively. Each of cloaking assembly components 110, 120, 130, 140 has an outward facing surface 112, 122, 132, 142, respectively, an inward facing surface 114, 124, 134, 144, respectively, an outer end surface 116, 126, 136, 146, respectively, and an inner side surface defined by the inward facing opaque surface 118*b*, 128*b*, 138*b*, 148*b*, respectively. The outward facing surfaces 112, 132 form an object-side 102 of the cloaking device and the outward facing surfaces 122, 142 form an image-side 104 of the cloaking device. One or more optical filters 125*a*, 125*b* may be positioned on or adjacent to the outward facing surface 122 and one or more optical filters 145*a*, 145*b* may be positioned on or adjacent to the outward facing surface 142. The optical filter 125*a* is positioned to the right (+X direction) of the half-mirror 125, the optical filter 125*b* is positioned to the left (−X direction) of the half-mirror 125, the optical filter 145*a* is positioned to the left (−X direction) of the half-mirror 145, and the optical filter 145*b* is positioned to the right (+X direction) of the half-mirror 145. The one or more optical filters 125*a*, 125*b*, 145*a*, 145*b* may be quarter-wave plates that convert linearly polarized light into circularly polarized light, or in the alternative, the one or more optical filters 125*a*, 125*b*, 145*a*, 145*b* may be a quarter-wave plate and a linear polarizer that convert linearly polarized light of one mode, e.g., s-mode or p-mode, into circularly polarized light, and then convert the circularly polarized light into a different linearly polarized mode, e.g., p-mode or s-mode, respectively.

The CR boundary planes 118, 138 are oriented at an angle θ_1 relative to the outward facing surfaces 112, 132, respectively, and the CR boundary planes 128, 148 are oriented at an angle β_1 relative to the outward facing surfaces 122, 142, respectively. In embodiments, the angle θ_1 is equal to the angle β_1. In other embodiments, the angle θ_1 is not equal to the angle β_1. The half mirrors 115, 135 are oriented at an angle θ_2 relative to the outward facing surfaces 112, 132, respectively, and the half mirrors 125, 145 are oriented at an angle β_2 relative to the outward facing surfaces 122, 142, respectively. In embodiments, the angle θ_2 is equal to the angle β_2. In other embodiments, the angle θ_2 is not equal to the angle β_2. In embodiments, the angle θ_1 is equal to the angle θ_2 and the angle β_1 is equal to the angle β_2. For example, θ_1 and θ_2 can be generally equal to 45° (+/−1°), and β_1 and β_2 can be generally equal to 45° (+/−10).

The four cloaking assembly components 110, 120, 130, 140 are transparent to incident light (both polarized and unpolarized) except for the half mirrors 115, 125, 135, 145, the outward facing mirror surfaces 118*a*, 128*a*, 138*a*, 148*a*, the inward facing opaque surfaces 118*b*, 128*b*, 138*b*, 148*b*, and optionally the outer end surfaces 116, 126, 136, 146. The four cloaking assembly components 110, 120, 130, 140 can be made from any suitable transparent material, for example a transparent glass or a transparent plastic. In the alternative, the four cloaking assembly components 110, 120, 130, 140 can be a structure, e.g. a frame, that holds the four CR boundary planes 118, 128, 138, 148, and the four half mirrors 115, 125, 135, 145 in a desired orientation relative to each other with air or another gas present between the four CR boundary planes 118, 128, 138, 148, and the four half mirrors 115, 125, 135, 145. The frame may be a plurality of transparent glass or transparent plastic panes that hold the four CR boundary planes 118, 128, 138, 148, and the four half mirrors 115, 125, 135, 145 in a desired orientation relative to each other with air or another gas present between the four CR boundary planes 118, 128, 138, 148, and the four half mirrors 115, 125, 135, 145. In embodiments, transparent glass or transparent plastic panes form the outward facing surfaces 112, 122, 132, 142, inward facing surfaces 114, 124, 134, 144, and outer end surfaces 116, 126, 136, 146, and hold the four CR boundary planes 118, 128, 138, 148, and the four half mirrors 115, 125, 135, 145 in a desired orientation relative to each other with air or another gas present between the four CR boundary planes 118, 128, 138, 148, and the four half mirrors 115, 125, 135, 145.

The outer end surfaces 116, 126, 136, 146 may be transparent, have an absorber layer disposed thereon or be a half-mirror. In embodiments, the outer end surfaces 116, 126, 136, 146 are transparent. In other embodiments, the outer end surfaces 116, 126, 136, 146 have an absorber layer disposed thereon that absorbs incident light from within the four cloaking assembly components 110, 120, 130, 140, and/or from outside the four cloaking assembly components

110, **120**, **130**, **140**. The absorber layer may be made from any suitable material that absorbs approximately 90% (+/−10%) of incident light, illustratively including dark colored surfaces made of glass, polymers, metals, ceramics, composites, etc. In other embodiments, the outer end surfaces **116**, **126**, **136**, **146** are half-mirrors such that one mode of incident light is reflected (e.g., s-polarized light or p-polarized light) and another mode of incident light is transmitted through the half mirror (e.g., p-polarized light or s-polarized light, respectively). In other embodiments, one or more of the outer end surfaces **116**, **126**, **136**, **146** is transparent and one or more of the outer end surfaces **116**, **126**, **136**, **146** has an absorber layer disposed thereon. In other embodiments, one or more outer end surfaces **116**, **126**, **136**, **146** is transparent and one or more of the outer end surfaces **116**, **126**, **136**, **146** is a half mirror. In other embodiments, one or more of the outer end surfaces **116**, **126**, **136**, **146** has an absorber layer disposed thereon and one or more of the outer end surfaces **116**, **126**, **136**, **146** is a half mirror. In other embodiments, one or more of the outer end surfaces **116**, **126**, **136**, **146** is transparent, one or more of the outer end surfaces **116**, **126**, **136**, **146** has an absorber layer disposed thereon, and one or more of the outer end surfaces **116**, **126**, **136**, **146** is a half mirror.

While FIGS. **1-2** illustrate four cloaking assembly components **110**, **120**, **130**, **140**, it should be appreciated that the four CR boundary planes **118**, **128**, **138**, **148**, and the four half mirrors **115**, **125**, **135**, **145** can be contained within any number of cloaking assembly components. For example, in embodiments, the cloaking assembly components **110** and **120** may be a single cloaking assembly component with no inward facing surface **114**, **124**, between the outward facing surfaces **112**, **122**, and the cloaking assembly components **130** and **140** may be a single cloaking assembly component with no inward facing surface **134**, **144**, between the outward facing surfaces **132**, **142**. In other embodiments, the cloaking assembly components **110** and **130** may be a single cloaking assembly component and the two cloaking assembly components **120** and **140** can be a single cloaking assembly component. In other embodiments, three of the four cloaking assembly components **110**, **120**, **130**, **140** may be a single cloaking assembly component assembled with a remaining one of the cloaking assembly components **110**, **120**, **130**, **140**. For example, the three cloaking assembly components **110**, **120**, **130** may be a single cloaking assembly component assembled with the remaining cloaking assembly component **140**. In other embodiments, the four cloaking assembly components **110**, **120**, **130**, **140** may be a single cloaking assembly component.

Still referring to FIGS. **1-2**, light 'lo' is reflected from an object 'O' (e.g., a target object) located on the object-side **102** of the cloaking device, travels in the −Y direction, and is incident on and transmitted through the outward facing surfaces **112**, **132**. The light lo reflected from the obscured portions of the object 'O' located directly behind the CR in the +Y direction is reflected by the outward facing mirror surfaces **118***a*, **138***a* in the +X and −X directions, respectively. The light lo reflected in the +X and −X directions is incident on the half mirrors **115**, **135** respectively. As illustrated in FIG. **1**, the half mirrors **115**, **135** are p-polarization half mirrors that reflect the s-mode (ls) of the light lo and allow the p-mode (lp) of the light lo to pass through. The s-polarized light ls reflected from the half mirrors **115**, **135** in the −Y direction is incident on the half mirrors **125**, **145**, respectively. The half mirrors **125**, **145** are also p-polarization mirrors that reflect the s-polarized light ls traveling in the −Y direction into the −X and +X directions, respectively. The s-polarized light ls reflected in the −X and +X directions is incident on the outward facing mirror surfaces **128***a*, **148***a*, respectively, and the outward facing mirror surfaces **128***a*, **148***a* reflect the incident s-polarized light ls into the −Y direction. The s-polarized light reflected into the −Y direction by the outward facing mirror surfaces **128***a*, **148***a*, forms an image of the obscured portion of the target object located directly above the CR **200** in the +Y direction that is visible to an observer viewing the image-side **104** of the cloaking assembly **10**. In embodiments, the optical filter **125***b*, the optical filter **145***b*, or both optical filters **125***b*, **145***b* may be positioned on or adjacent to the outward facing surfaces **122**, **142**, respectively, as described above, and may convert the s-polarized light reflected into the −Y direction by the outward facing mirror surfaces **128***a*, **148***a*, into circularly polarized light or p-polarized light. For example, the optical filter **125***b* the optical filter **145***b*, or both optical filters **125***b*, **145***b* may be quarter wave plates that convert the s-polarized light reflected into the −Y direction by the outward facing mirror surfaces **128***a*, **148***a* into circularly polarized light (not shown) before forming the image of the obscured portion of the target object 'O' located directly above the CR **200** in the +Y direction. In the alternative, the optical filter **125***b*, the optical filter **145***b*, or both optical filters **125***b*, **145***b* may be a quarter-wave plate and a linear polarizer that converts the s-polarized light reflected into the −Y direction by the outward facing mirror surfaces **128***a*, **148***a* into circularly polarized light (not shown) and then converts the circularly polarized light into p-polarized light before forming the image of the obscured portion of the target object 'O' located directly above the CR **200** in the +Y direction.

Light lo reflected from the visible portions of the target object 'O' not located directly behind the CR in the +Y direction is incident on and transmitted through the outward facing surfaces **112**, **132**. The transmitted light lo is incident on the p-polarization half mirrors **115**, **135**. The half mirrors **115**, **135** reflect the s-mode is of the incident light lo in the +X and −X directions, respectively, and transmit the p-mode lp of the incident light lo in the −Y direction. The p-polarized light lp transmitted through the half mirrors **115**, **135** will be incident on and be transmitted through the p-polarization half mirrors **125**, **145**, respectively, in the −Y direction. The p-polarized light lp transmitted in the −Y direction by the half mirrors **125**, **145** forms an image of the visible portions of the target object O not located directly behind the CR **200** in the +Y direction that is visible to an observer viewing the cloaking assembly in the +Y direction. In embodiments, the optical filter **125***a*, the optical filter **145***a*, or both optical filters **125***a*, **145***a* may be positioned on or adjacent to the outward facing surfaces **122**, **142**, respectively, as described above, in order to convert the p-polarized light into circularly polarized light of s-polarized light. For example, the optical filter **125***a*, the optical filter **145***a* or both optical filters **125***a*, **145***a* may be quarter wave plates that convert the p-polarized light transmitted into the −Y direction by the half mirrors **125**, **145** into circularly polarized light (not shown) before forming the image of the visible portions of the target object 'O' not located behind above the CR **200** in the +Y direction. In the alternative, the optical filter **125***a*, the optical filter **145***a*, or both optical filters **125***a*, **145***a* may be a quarter-wave plate and a linear polarizer that convert the p-polarized light reflected into the −Y direction by the outward facing mirror surfaces **128***a*, **148***a* into circularly polarized light (not shown) and then convert the circularly polarized light into s-polarized light before forming the image of the visible portions of the target object 'O' not

located directly above the CR **200** in the +Y direction. Accordingly, an image 'I' of the entire target object 'O' (both the obscured portion and the visible portions) is visible to the observer viewing the image-side **104** of the cloaking assembly **10**. While half mirrors **115**, **125**, **135**, **145** are described herein as p-polarization half mirrors, it should be appreciated that half mirrors **115**, **125**, **135**, **145** can be s-polarization half mirrors and the reflected and transmitted portions of the reflected light lo discussed above will be reversed. However, the human eye cannot distinguish between s-polarized light, p-polarized light or circularly polarized light and the image 'I' of the entire object 'O' will be visible to the human eye when an observer is viewing the image-side **104** of the cloaking assembly **10**. Also, it should be appreciated that the one or more of optical filters **125***a*, **125***b*, **145***a*, **145***b* may be positioned on or adjacent to outward facing surfaces **122**, **142** as described above such that only p-polarized light forms the image 'I', only s-polarized light forms the image 'I', only circularly polarized light forms the image 'I', only p-polarized light and circularly polarized light form the image 'I' or only s-polarized light and circularly polarized light form the image 'I'. Such manipulation of the polarized light reflected into the −Y direction by the outward facing mirror surfaces **128***a*, **128***a* and the polarized light transmitted in the −Y direction by the half mirrors **125**, **145** may assist an observer wearing polarized sunglasses in viewing the image-side **104** of the cloaking assembly **10**. Particularly, the one or more optical filters **125***a*, **125***b*, **145***a*, **145***b* ensure that polarized sunglasses that block p-polarized light or s-polarized light do not prevent an observer wearing such polarized sunglasses from seeing the entire target object 'O' when viewing the image-side **104** of the cloaking assembly **10**.

Referring now to FIGS. **1-4**, a top perspective view and a side view of a cloaking device according to embodiments (as discussed with respect to FIGS. **1-2**) are shown in FIGS. **3-4**, respectively. Specifically, FIG. **3** is a top perspective view of an article in the form of a column 'C' within the CR **200** of the cloaking assembly **10** and an automobile 'A' located behind the column C on the object-side **102** of the cloaking assembly **10** in the +Y direction. The column C has a height dimension in the Z direction (increasing height in the −Z direction) greater than the height h of the cloaking device. FIG. **4** is a side view from the +Y direction of the cloaking assembly **10** shown in FIG. **3** and shows the portion of the column C that is within the CR **200** is not visible and the automobile A located behind the column C in the +Y direction is visible to an observer viewing the cloaking assembly **10** in the +Y direction. Accordingly, the column C positioned within the CR **200** is not visible to an observer viewing the image-side **104** of the cloaking assembly **10** and an image of the entire automobile A (both the obscured portion and the visible portions) is visible to the observer viewing the image-side **104**. Although column C in FIGS. **3-4** is separate from the CR boundary planes **118**, **128**, **138**, **148**, i.e., column C is a separate object from the cloaking device **10**, it should be appreciated that column C may be structurally part of the cloaking device **10** and have an outer surface that provides or is equivalent to the CR boundary planes **118**, **128**, **138**, **148** with outward facing mirror surfaces **118***a*, **128***a*, **138***a*, **148***a*, respectively.

Referring now to FIGS. **1-5**, FIG. **5** shows embodiments of a cloaking assembly **12** with an enlarged CR **200**. Particularly, the cloaking assembly components **110**, **120**, **130**, **140** are arranged such that the cloaking assembly components **110**, **130** are spaced apart in the Y direction from the cloaking assembly components **120**, **140**, and a distance 'd' is between the inward facing surfaces **114**, **124**, and between the inward facing surfaces **134**, **144**. The area of the CR **200** in the X-Y plane is increased by the width 'w' times the distance d (w×d). The volume of the CR **200** is increased by the width w times the distance d times the height h (FIG. **4**) of the CR **200** (w×d×h). While FIG. **5** illustrates four cloaking assembly components **110**, **120**, **130**, **140**, it should be appreciated that the four CR boundary planes **118**, **128**, **138**, **148**, and the four half mirrors **115**, **125**, **135**, **145** can be contained within any number of cloaking assembly components. For example, in embodiments, the cloaking assembly components **110** and **130** may be a single cloaking assembly component and the two cloaking assembly components **120** and **140** can be a single cloaking assembly component.

As shown in the FIG. **5**, light lo is reflected from the target object O, travels in the −Y direction and is incident on and transmitted through the outward facing surfaces **112**, **132**. Light lo reflected from the obscured portions of the object located directly behind the CR in the +Y direction is reflected by the outward facing mirror surfaces **118***a*, **138***a* in the +X and −X direction, respectively. The reflected light lo in the +X and −X directions is incident on the half mirrors **115**, **135** respectively. The half mirrors **115**, **135** are p-polarization half mirrors and reflect the s-mode is of the light lo and transmit the p-mode lp of the light lo. The s-polarized light ls reflected by the half mirrors **115**, **135** in the −Y direction is incident on the half mirrors **125**, **145**, respectively. The half mirrors **125**, **145** are also p-polarization mirrors that reflect the s-polarized light ls traveling in the −Y direction into the −X and +X directions, respectively. The s-polarized light ls traveling in the −X and +X directions is incident on the outward facing mirror surfaces **128***a*, **148***a*, respectively, and the outward facing mirror surfaces **128***a*, **148***a* reflect the incident s-polarized light ls in the −Y direction. The s-polarized light reflected in the −Y direction by the outward facing mirror surfaces **128***a*, **148***a*, forms an image of the obscured portion of the object located behind the CR **200** in the +Y direction that is visible to an observer viewing the image-side **104** of the cloaking assembly **12**. Light lo reflected from the visible portions of the target object O not located behind the CR **200** in the +Y direction is incident on and transmitted through the outward facing surfaces **112**, **132**. The transmitted light lo is incident on the p-polarization half mirrors **115**, **135**, and the half mirrors **115**, **135** reflect the s-mode is of the incident light lo in the +X and −X directions, respectively, and transmit the p-mode lp of the incident light lo in the −Y direction. The p-polarized light lp transmitted through the half mirrors **115**, **135** in the −Y direction is incident on and transmitted through the p-polarization half mirrors **125**, **145**, respectively, in the −Y direction. The p-polarized light lp transmitted in the −Y direction through the half mirrors **125**, **145**, forms an image of the visible portions of the target object O not located behind the CR **200** in the +Y direction that is visible to an observer viewing the image side **104** of the cloaking assembly **12**. Accordingly, an image I of the entire target object O (both the obscured portion and the visible portions) is visible to an observer viewing the image-side **104** of the cloaking assembly **12**. It should be appreciated that half mirrors **115**, **125**, **135**, **145**, can be s-polarization half mirrors and the reflected and transmitted portions of the reflected light lo discussed above will be reversed. Also, it should be appreciated that the one or more of optical filters **125***a*, **125***b*, **145***a*, **145***b* may be included. However, the human eye cannot distinguish between s-polarized light, p-polarized light or circularly polarized light and the image I of the

entire object O will be visible to an observer viewing the image-side **104** of the cloaking assembly **12**.

Referring now to FIGS. **1-7**, a top perspective view and a side view of a cloaking device according to embodiments (as discussed with respect to FIG. **5**) are shown in FIGS. **6-7**, respectively. Specifically, FIG. **6** is a top perspective view of a first article in the form of a column 'C**1**' and a second article in the form of a column 'C**2**' within the CR **200** of the cloaking assembly **12** and the automobile 'A' located behind the columns C**1**, C**2** on the object-side **102** of the cloaking assembly **12** in the +Y direction. The column C**1** has a first height dimension in the Z direction and the column C**2** has a second height dimension that is greater (in the −Z direction) than the first height dimension of column C**1**. The first height dimension of column C**1** and the second height dimension of column C**2** are both greater than the height h of the cloaking assembly **12**. FIG. **7** is a side view from the +Y direction of the cloaking assembly **12** shown in FIG. **6** and shows the image-side **104**. Portions of column C**1** and column C**2** within the CR **200** are not visible and automobile A located behind column C**1** and column C**2** in the +Y direction is visible to an observer viewing the image-side **104** of the cloaking assembly **12**. Although columns C**1**, C**2** in FIGS. **6-7** are separate from the CR boundary planes **118**, **128**, **138**, **148**, i.e., columns C**1**, C**2** are separate objects from the cloaking device **12**, it should be appreciated that columns C**1**, C**2** may be structurally part of the cloaking device **12** and have an outer surface that provides or is equivalent to the CR boundary planes **118**, **128**, **138**, **148** with outward facing mirror surfaces **118***a*, **128***a*, **138***a*, **148***a*, respectively.

Referring to FIG. **8**, embodiments of a cloaking device that can display additional images in conjunction with the images depicted in FIGS. **1**, **4**, **5** and **7** are shown. Particularly, FIG. **8** shows an item in the form of the number '1' (item 1) and an item in the form of the number '2' (item 2) located adjacent to the outer end surfaces **126**, **146**, respectively, in the +X, −X directions, respectively. Light lo reflected from item 1 and item 2 is incident on and transmitted through the outer end surfaces **126**, **146** in the −X, +X directions, respectively. The light lo transmitted through the outer end surfaces **126**, **146** is incident on the half mirrors **125**, **145**, respectively. The half mirrors **125**, **145** (p-polarization half mirrors) transmit the p-mode lp of the light lo in the −X, +X directions, respectively, and reflect the s-mode is of the light lo into the −Y direction. The transmitted p-polarized light lp in the −X, +X directions is incident on the outward facing mirror surfaces **128***a*, **148***a*, respectively. The outward facing mirror surfaces **128***a*, **148***a*, reflect the incident p-polarized light lp into the −Y direction. The s-polarized light ls reflected by the half mirror **125** in the −Y direction forms a reversed '1' image on the right hand side of the outward facing surface **122** and the s-polarized light ls reflected by the half mirror **145** in the −Y direction forms a reversed '2' image on the left hand side of the outer facing surface **142**. The p-polarized light lp reflected by the outward facing mirror surface **128***a* into the −Y direction forms a reversed '1' image on the left hand side of the outward facing surface **122** and the p-polarized light lp reflected by the outward facing mirror surface **148***a* into the −Y direction forms a reversed '2' image on the right hand side of the outer facing surface **142**. It should be appreciated that the display of additional images as depicted in FIG. **8** in conjunction with images as depicted in FIGS. **1**, **4**, **5** and **7** can be used as part of a heads-up display, a warning system (signal) that an object is located on the object side of the cloaking device, etc.

Referring to FIGS. **1-10**, embodiments of a cloaking device with a cloaking assembly **14** having items in the form of '1', '2', '3', '4' adjacent to the outer end surfaces **126**, **146**, **116**, **136**, respectively are shown in FIG. **9**. FIG. **10** is a side view of the cloaking assembly **14** illustrated in FIG. **9** with reversed images of item 1 and item 2, in conjunction with the image of the automobile A, visible on the image-side **104** of the cloaking assembly **14**. It should be appreciated that items 1, 2, 3, 4 depicted in FIGS. **9-10** are shown for illustrative purposes only, i.e. the items 1, 2 in FIG. **9** could be oriented in the Y-Z plane in order to provide reversed images of items 1, 2 on the image side **104** (X-Z plane) in FIG. **10**. It should also be appreciated that reversed images of item 3 and item 4 can be formed or provided on the object-side **102** of the cloaking assembly **14** in a similar manner as the reversed images of item 1 and item 2 are formed on the image-side **104**.

Referring to FIGS. **1-8** and **11**, embodiments of a cloaking device that can selectively display images in conjunction with the images depicted in FIGS. **1**, **4**, **5** and **7** are shown. Particularly, FIG. **11** shows an item in the form of the number '1' and an item in the form of the number '2' located adjacent to the outer end surfaces **126**, **146**, respectively, in the +X, −X directions, respectively. Light lo from item 1 is incident on an s-polarizer **150**. The s-polarizer **150** allows the s-mode is of the incident light lo to pass through in the −X direction. The s-polarized light ls is incident on and reflected by the p-polarization half mirror **125** into the Y direction and no light is transmitted through or beyond the p-polarization half mirror **125** in the −X direction. Accordingly, a reversed image of item 1 is formed only on the right hand side of the outward facing surface **122**. The light lo from item 2 is transmitted through the outer end surface **146** in the +X direction and is incident on the p-polarization half mirror **145**. The p-polarization half mirror **145** transmits the p-mode lp of the incident light lo in the +X direction and reflects the s-mode is of the incident light lo in the −Y direction. The p-polarized light lp in the +X direction is incident on the outward facing mirror surface **148***a*. The outer facing mirror surface **148***a* reflects the incident p-polarized light lp in the −Y direction. The s-polarized light ls reflected by the half mirror **145** in the −Y direction forms a reversed item 2 image on the left hand side of the outer facing surface **142**. The p-polarized light lp reflected by the outer facing mirror surface **148***a* into the −Y direction provides a reversed item 2 image on the right hand side of the outer facing surface **142**.

Referring to FIGS. **1-8** and **11-13**, embodiments of a cloaking device with a cloaking assembly **16** having items in the form of '1' and '2' adjacent to the outer end surfaces **126**, **146**, respectively, and the s-polarizer **150** adjacent the outer end surface **126**, are shown in FIG. **12**. FIG. **13** is a side view of the cloaking assembly **16** illustrated in FIG. **12** with the reversed image of item 1 visible on the right hand side of the outer facing surface **122** of the cloaking assembly component **120** and the reversed image of item 2 visible on the left hand side and right hand side of the outward facing surface **142** of the cloaking assembly components **140** shown in conjunction with the image of the automobile A. It should be appreciated that items 1, 2 depicted in FIG. **12** are shown for illustrative purposes only, i.e. the items 1, 2 in FIG. **12** could be oriented in the Y-Z plane in order to provide the reversed images of items 1, 2 on the image-side (**104**) (X-Z plane) shown in FIG. **13**.

Referring to FIGS. **1-8** and **14**, another embodiment of a cloaking device that can selectively display additional images in conjunction with the images depicted in FIGS. **1**,

4, 5 and 7 is shown. Particularly, FIG. 14 shows an item in the form of the number '1' and an item in the form of the number '2' located adjacent to the outer end surfaces 126, 146, respectively, in the +X, −X directions, respectively. Light lo reflected from the item 1 is incident on a p-polarizer 152 which allows p-polarized light lp to pass through in the −X direction. The p-polarized light lp is incident on the p-polarization half mirror 125. The incident p-polarized light lp in the −X direction is transmitted through the p-polarization half mirror 125 in the −X direction and there is no s-polarized light is to be reflected by the p-polarization half mirror 125 in the −Y direction. The p-polarized light lp transmitted through the p-polarization half mirror 125 is incident on the outward facing mirror surface 128*a* and the outward facing mirror 128*a* reflects the p-polarized light lp into the −Y direction. Accordingly, a reversed image of item 1 is formed only on the left hand side of the outward facing surface 122. The light lo reflected from item 2 is transmitted through the outer end surface 146 in the +X direction and is incident on the p-polarization half mirror 145. The p-polarization half mirror 145 transmits the p-mode lp of the incident light lo in the +X directions and reflects the s-mode ls of the incident light lo into the −Y direction. The p-polarized light lp in the +X is incident on the outer facing mirror surface 148*a*. The outer facing mirror surface 148*a* reflects the incident p-polarized light lp into the −Y direction. The s-polarized light ls reflected by the half mirror 145 in the −Y direction forms a reversed 2 on the left hand side of the outer facing surface 142 and the p-polarized light lp reflected by the outer facing mirror surface 148*a* in the −Y direction forms a reversed 2 image on the right hand side of the outer facing surface 142.

Referring to FIGS. 1-8 and 14-16, embodiments of a cloaking device with a cloaking assembly 18 having items 1 and items 2 adjacent to the outer end surfaces 126, 146, respectively, and the p-polarizer 152 adjacent to the outer end surface 126, are shown in FIG. 15. FIG. 16 is a side view of the cloaking assembly 18 illustrated in FIG. 15 with the single reversed image of item 1 visible on the left hand side of the outer facing surface 122 of the cloaking assembly component 120 and the reversed image of item 2 visible on the left hand side and right hand side of the outward facing surface 142 of the cloaking assembly components 140 in conjunction with the image of the automobile A. It should be appreciated that items 1, 2 depicted in FIG. 15 are shown for illustrative purposes only, i.e. the items 1, 2 in FIG. 15 could be oriented in the Y-Z plane in order to provide the reverse images of items 1, 2 on the image-side 104 (X-Z plane) shown in FIG. 16.

Referring to FIGS. 1, 2, 5, 8-17, embodiments of an A-pillar of a vehicle being cloaked by a cloaking device are shown. Particularly, FIG. 17 shows a cloaking device 19 cloaking a portion of an A-pillar P of a vehicle V. A portion of the A-pillar P is positioned within a CR 200 (not shown) of the cloaking device 19 and a portion of the A-pillar P extends beyond the cloaking device and is covered with trim T. Illustrated outside of the vehicle V is a target object O in the form of pedestrian. A portion of the pedestrian O is visible through a side window of the vehicle V and a portion of the pedestrian is visible "through" the A-pillar P cloaked by the cloaking device 19. The cloaking device 19 redirects light reflected from the pedestrian O around the A-pillar P positioned within the CR 200 of the cloaking device 19 and forms an image I of the pedestrian O on an image-side 104 of the cloaking device 19 that is visible to an occupant of the vehicle V looking towards the pedestrian O. Accordingly, light from the pedestrian O appears to pass through the A-pillar P and a blind spot typically created by the A-pillar P is not present. In embodiments, the A-pillar P itself serves as the CR 200, i.e. the A-pillar P has an outer surface with one or more outer facing mirror surfaces that assist in redirecting light from the pedestrian) around the A-pillar P. It should be appreciated that cloaking of the A-pillar P with the cloaking device 19 and removing the blind spot produced by the A-pillar P is performed without the use of metamaterials, video images, cameras, sophisticated electronics, etc.

Referring to FIGS. 18-19, alternative embodiments of cloaking devices are shown. Specifically, FIG. 18 shows a cloaking device 20 with a circular CR 202 having an outer mirror surface 204 with half mirrors 206, 208 around the outer mirror surface 204 having a circular shape. In embodiments, the CR 202 is provided by an object to be cloaked itself, e.g., an A-pillar, that has an outer mirror surface 204. The cloaking device shown in FIG. 18 can increase the field of view for an observer viewing the cloaking device 20 in the +Y direction. FIG. 19 shows a cloaking device 30 with a circular CR 302 having an outer mirror surface 304 with half mirrors 306, 308 and optical components 310, 312 such as lenses. In embodiments, the CR 302 is provided by an object to be cloaked itself, e.g., an A-pillar, that has an outer mirror surface 304. The cloaking device shown in FIG. 19 allows for an external view from an object located behind the CR 302 (+Y direction) to be manipulated to increase a field of view or to normalize a distorted image.

The cloaking devices described herein may be used to cloak vehicle articles such as a vehicle A-pillar, and remove a "blind spot" caused by the vehicle article. It will be understood that the term "blind spot" as used herein refers to an area around the vehicle that cannot be directly observed by a driver while operating the vehicle. The terms "object," "article," and "item" may interchangeably refer to a visual object or image (2D or 3D) that reflects light or transmits light and the team "light from" may refer to "light reflected from" or "light transmitted from." The terms "generally," "approximately," and "about" may be utilized herein to represent the inherent degree of uncertainty that may be attributed to any quantitative comparison, value, measurement, or other representation. These terms are also utilized herein to represent the degree by which a quantitative representation may vary from a stated reference without resulting in a change in the basic function of the subject matter at issue.

While particular embodiments have been illustrated and described herein, it should be understood that various other changes and modifications may be made without departing from the spirit and scope of the claimed subject matter. Moreover, although various aspects of the claimed subject matter have been described herein, such aspects need not be utilized in combination. It is therefore intended that the appended claims cover all such changes and modifications that are within the scope of the claimed subject matter.

What is claimed is:

1. A cloaking device comprising:

an object-side and an image-side;

a cloaking region (CR) boundary plane having an outward facing mirror surface and an inward facing opaque surface;

a CR at least partially bounded by the inward facing opaque surface of the CR boundary plane;

a half mirror spaced apart from and generally parallel to the outward facing mirror surface;

wherein light from an object located on the object-side of the cloaking device and obscured by the CR is redi-

rected around the CR to form an image of the object on the image-side of the cloaking device such that the light from the object appears to pass through the CR.

2. The cloaking device of claim **1**, wherein the half mirror is selected from a p-polarization half mirror and an s-polarization half mirror.

3. The cloaking device of claim **1**, further comprising an article positioned within the CR, wherein the light from the object located on the object-side of the cloaking device and obscured by the CR is redirected around the CR and the article to form the image of the object on the image-side of the cloaking device such that the article appears transparent.

4. The cloaking device of claim **3**, wherein the article is a vehicle A-pillar.

5. The cloaking device of claim **1**, further comprising:

at least two CR boundary planes positioned non-planar to each other, each of the at least two CR boundary planes having an outward facing mirror surface and an inward facing opaque surface, the CR at least partially bounded by the inward facing opaque surfaces of the at least two CR boundary planes;

at least one quarter-wave plate positioned on or adjacent to the image side; and

at least two half mirrors spaced apart from and generally parallel to the outward facing mirror surfaces, respectively; such that a half mirror of the at least two half mirrors is spaced apart from and generally parallel to each of the outward facing mirror surfaces;

wherein the light from the object located on the object-side of the cloaking device and obscured by the CR is redirected around the CR by the at least two outward facing mirror surfaces and the at least two half mirrors, and the image of the object is formed on the image-side of the cloaking device such that the light from the object located on the object-side of the cloaking device appears to pass through the CR.

6. The cloaking device of claim **5**, wherein the at least two CR boundary planes are positioned orthogonal to each other.

7. The cloaking device of claim **6**, wherein the light from the object on the object-side of the cloaking device is reflected by a first outward facing mirror surface, a first half mirror positioned parallel to the first outward facing mirror surface, a second half mirror positioned orthogonal to the first half mirror, a second outward facing mirror surface positioned parallel to the second half mirror, and transmitted through the at least one quarter-wave plate before forming the image of the object on the image-side of the cloaking device.

8. The cloaking device of claim **7**, further comprising a vehicle article positioned within the CR, wherein the light from the object located on the object-side of the cloaking device and obscured by the CR is redirected around the CR and the vehicle article to form the image of the object on the image-side of the cloaking device and the vehicle article appears transparent.

9. The cloaking device of claim **5**, further comprising an end side, wherein light from an item positioned adjacent to the end side forms an image of the item on the image-side of the cloaking device.

10. A cloaking device for cloaking an article of a vehicle comprising:

a cloaking assembly comprising:

an object-side and an image-side;

at least two cloaking region (CR) boundary planes located at least partially between the object-side and the image-side, the at least two CR boundary planes positioned non-planar to each other and each of the at least two CR boundary planes having an outward facing mirror surface and an inward facing opaque surface;

a CR bounded by the inward facing opaque surfaces of the at least two CR boundary planes;

at least two half mirrors located at least partially between the object-side and the image-side, each of the at least two half mirrors spaced apart from and generally parallel to one of the outward facing mirror surfaces;

at least one quarter-wave plate positioned on or adjacent to the image side;

and

a vehicle article positioned within the CR;

wherein light from an object located on the object-side of the cloaking assembly and obscured by the CR is redirected around the CR and forms an image of the object on the image-side of the cloaking assembly such that the vehicle article appears to be transparent.

11. The cloaking device of claim **10**, wherein the vehicle article is a vehicle A-pillar.

12. The cloaking device of claim **10**, wherein the light from the object is reflected by a first outward facing mirror surface, a first half mirror oriented generally parallel to the first outward facing mirror surface, a second half mirror oriented generally orthogonal to the first half mirror and a second outward facing mirror surface oriented generally parallel to the second half mirror and transmitted through the at least one quarter-wave plate before forming the image on the image-side of the cloaking assembly.

13. The cloaking device of claim **12**, further comprising an end surface, wherein light from an item located adjacent to the end surface passes through the cloaking assembly and forms an image of the item on the image-side of the cloaking assembly.

14. The cloaking device of claim **13**, wherein a p-mode or an s-mode of the light from the item is reflected from the second half mirror before forming the image of the item on the image-side of the cloaking assembly.

15. The cloaking device of claim **13**, wherein a p-mode or an s-mode of the light from the item is transmitted through the second half mirror and reflected by the second outward facing mirror surface before forming the image of the item on the image-side of the cloaking assembly.

16. A cloaking device comprising:

four cloaking region (CR) boundary planes positioned non-planar to each other, each of the four CR boundary planes having an outward facing mirror surface and an inward facing opaque surface;

a CR bounded by the inward facing opaque surfaces of the four CR boundary planes;

an article located at least partially within the CR;

four half mirrors spaced apart from and generally parallel to the outward facing mirror surfaces, respectively, such that a half mirror of the four half mirrors is spaced apart from and generally parallel to each of the outward facing mirror surfaces;

wherein light from an object on an object-side of the cloaking device is redirected around the CR and appears as an image on an image-side of the cloaking device and is visible to an observer viewing the image-side of the cloaking device, and wherein the article within the CR is not visible to the observer viewing the image-side of the cloaking device such that the article within the CR appears transparent to the observer viewing the image-side of the cloaking device.

17. The cloaking device of claim **16**, wherein the light from the object is reflected by a first of the outward facing mirror surfaces, a first of the outward facing mirror surfaces, a first of the four half mirrors oriented generally parallel to the first outward facing mirror surface, a second half mirror oriented generally orthogonal to the first half mirror and a second outward facing mirror surface oriented generally parallel to the second half mirror before forming the image on the image-side of the cloaking device.

18. The cloaking device of claim **17**, wherein the article is a vehicle A-pillar.

19. The cloaking device of claim **18**, further comprising an end side, wherein light from an item located adjacent to the end side is reflected by at least one of the second half mirror and the second outward facing mirror surface and forms an image of the item on the image-side of the cloaking device.

20. The cloaking device of claim **19**, wherein the image of the item is selectively formed on the image-side of the cloaking device.

* * * * *

US 20170227781A1

(19) United States

(12) Patent Application Publication

(10) Pub. No.: US 2017/0227781 A1

(43) Pub. Date: Aug. 10, 2017

Banerjee et al.

(54) APPARATUSES AND METHODS FOR MAKING AN OBJECT APPEAR TRANSPARENT

(71) Applicant: **Toyota Motor Engineering & Manufacturing North America, Inc.**, Erlanger, KY (US)

(72) Inventors: **Debasish Banerjee**, Ann Arbor, MI (US); **Hideo Iizuka**, Nissin-shi (JP)

(21) Appl. No.: **15/185,988**

(22) Filed: **Jun. 17, 2016**

Related U.S. Application Data

(60) Provisional application No. 62/291,920, filed on Feb. 5, 2016.

Publication Classification

(51) **Int. Cl.**

G02B 27/14	(2006.01)
B60R 13/02	(2006.01)
G02B 5/30	(2006.01)
G02B 27/28	(2006.01)
G02B 27/10	(2006.01)

(52) **U.S. Cl.**

CPC ***G02B 27/14*** (2013.01); ***G02B 27/283*** (2013.01); ***G02B 27/1086*** (2013.01); ***G02B 5/3083*** (2013.01); ***B60R 13/025*** (2013.01); *B60R 2013/0287* (2013.01)

(57) **ABSTRACT**

A cloaking device includes cloaking region boundary planes oriented non-planar to each other, each of the cloaking region boundary planes having an outward facing mirror surface and an inward facing opaque surface. The cloaking device includes a cloaking region bounded at least partially by the inward facing opaque surfaces of the cloaking region boundary planes. Half mirrors are spaced apart and generally parallel to the outward facing mirror surfaces such that a half mirror is spaced apart and generally parallel to each outward facing mirror surface. Light from an object on an object-side of the cloaking device is directed around an article within the cloaking region and forms an image on an image-side of the cloaking device such the article appears transparent to an observer looking towards the object.

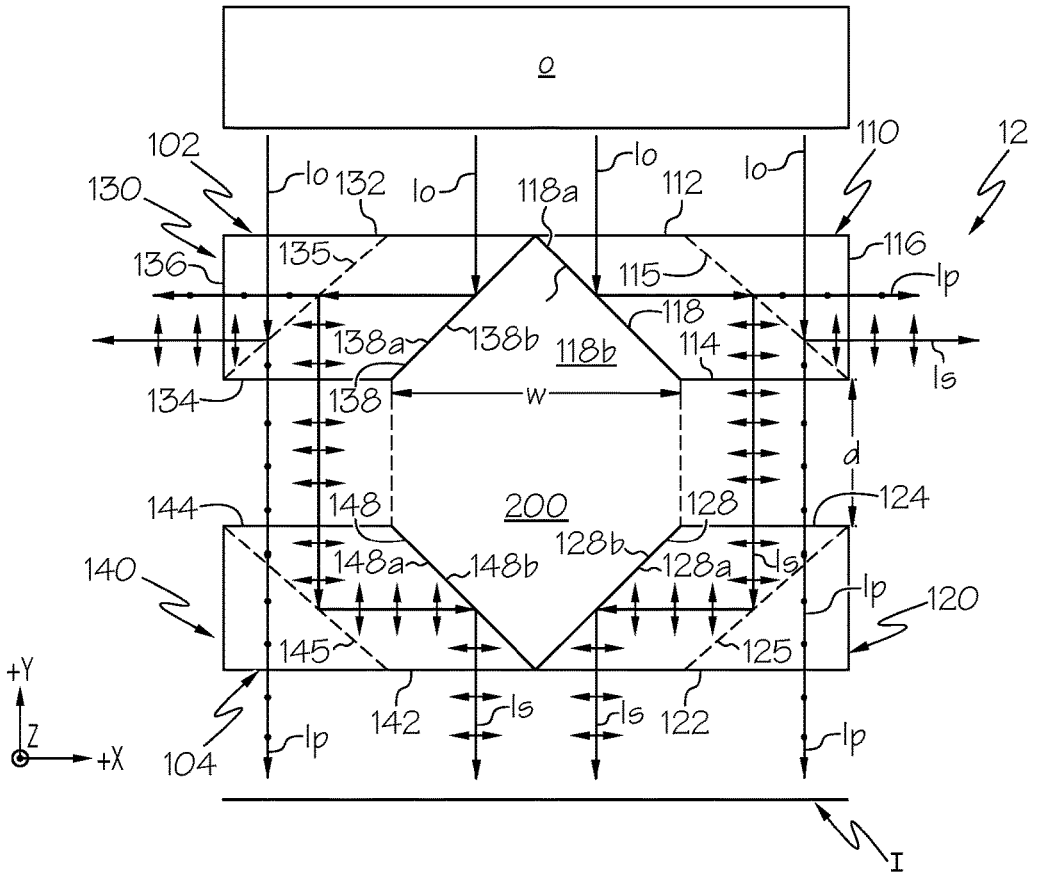

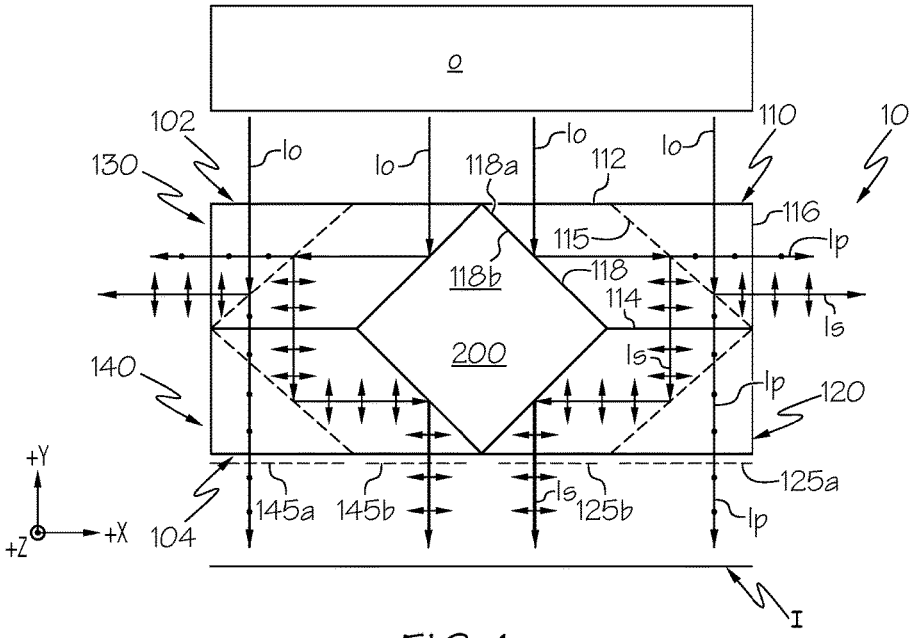
o
102
130
Io
Io
118a
Io
112
Io
110
10
116
115
Ip
118b
118
114
Is
200
Is
140
Ip
120
+Y
+Z
+X
104
145a
145b
Is
125b
125a
Ip
I

FIG. 1

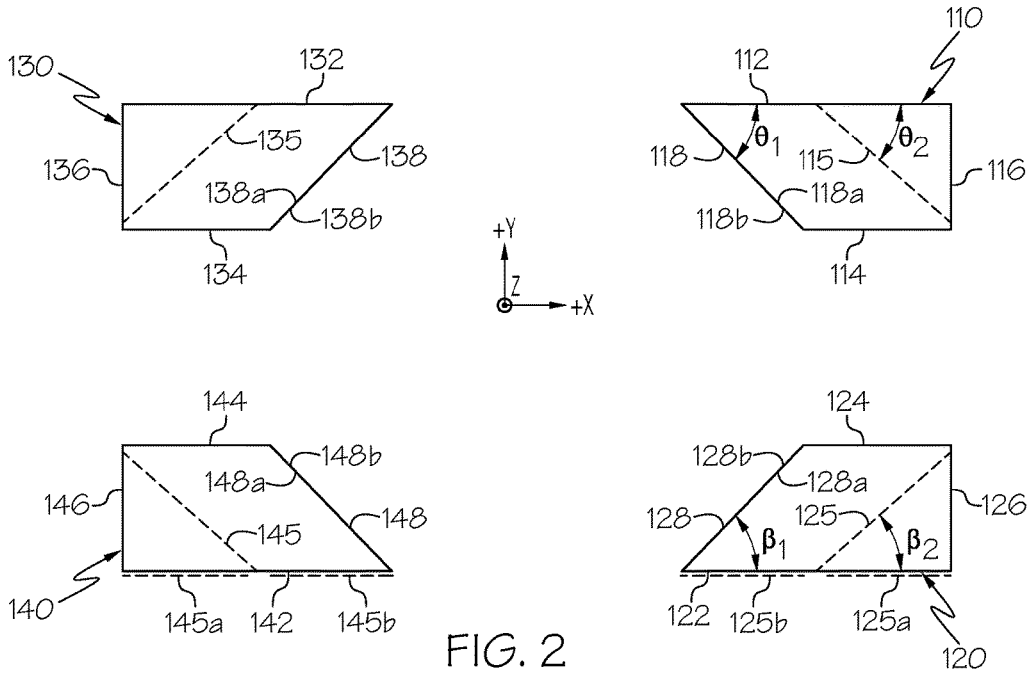
130
132
135
136
138
138a
138b
134
110
112
θ1
θ2
118
115
116
118a
118b
114
+Y
Z
+X
144
148b
148a
146
148
145
140
145a
142
145b
124
128b
128a
126
128
125
β1
β2
122
125b
125a
120

FIG. 2

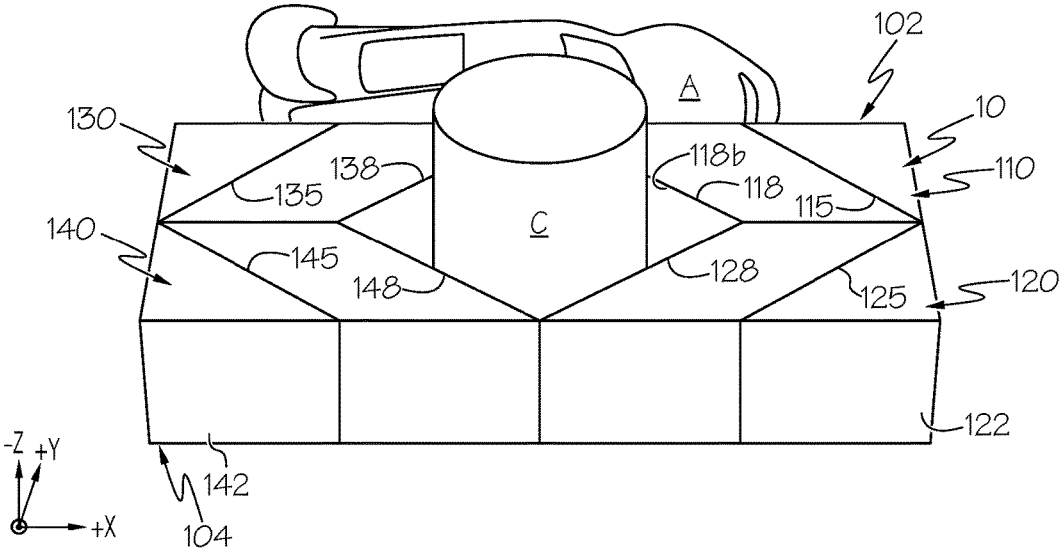
102
A
10
130
138
118b
110
135
118
115
C
140
145
128
148
125
120
122
-Z
+Y
142
+X
104

FIG. 3

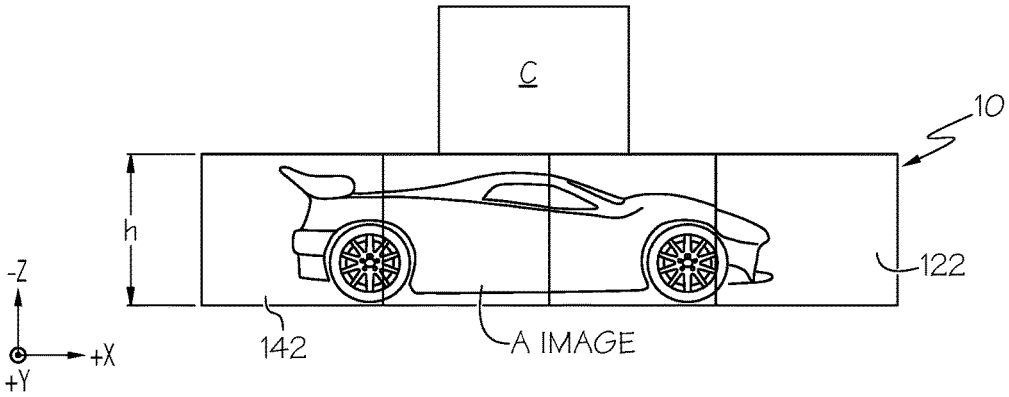
C
10
h
122
-Z
+X
+Y
142
A IMAGE

FIG. 4

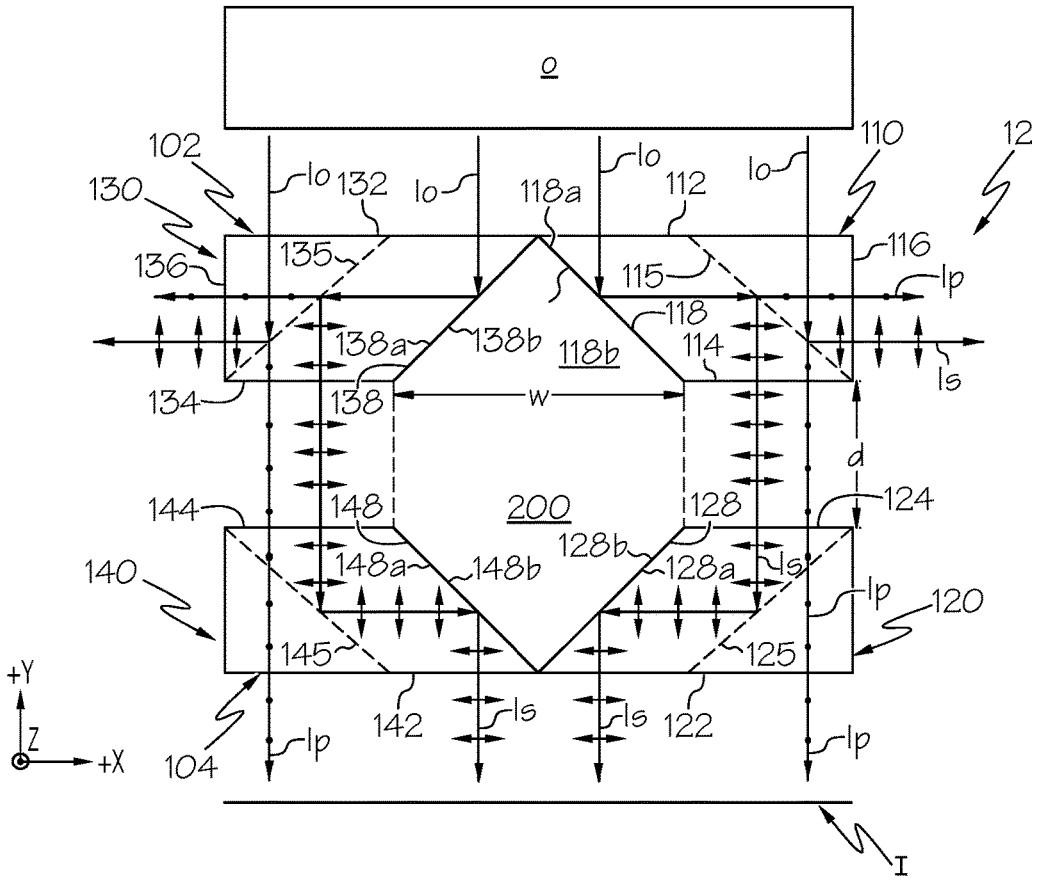
o
102
130
136
134
132
135
Io
118a
112
110
12
116
115
Ip
118
138a
138b
118b
114
Is
138
w
d
144
148
200
128
124
140
148a
148b
128b
128a
120
145
125
+Y
Z
+X
104
142
122
I

FIG. 5

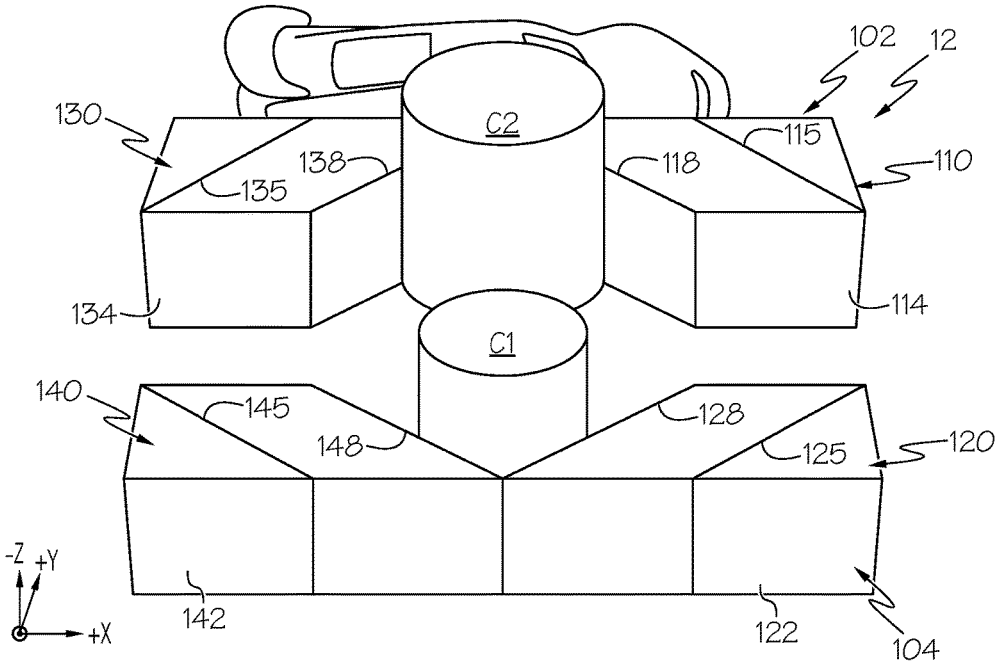
102
12
130
C2
115
138
118
110
135
134
114
C1
140
145
128
148
125
120
-Z
+Y
+X
142
122
104

FIG. 6

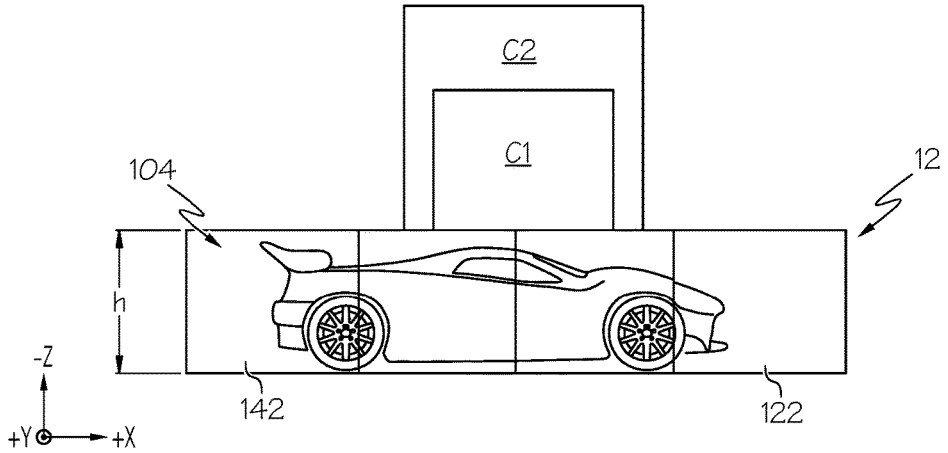
C2
C1
104
12
h
-Z
+Y
+X
142
122

FIG. 7

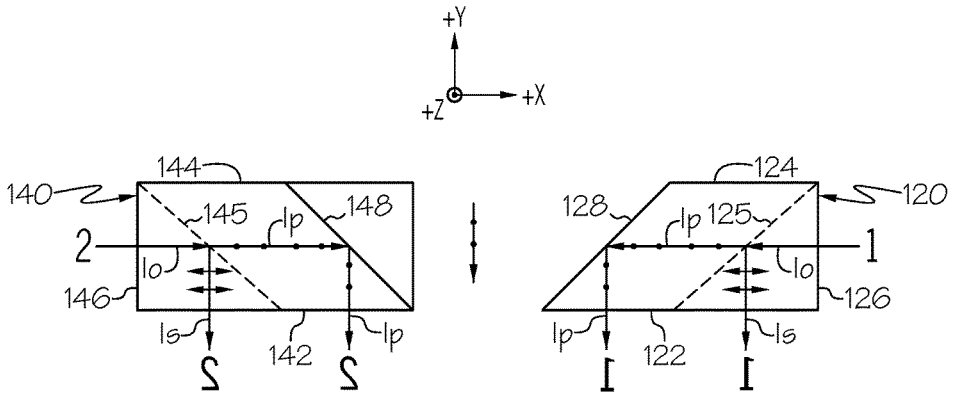

FIG. 8

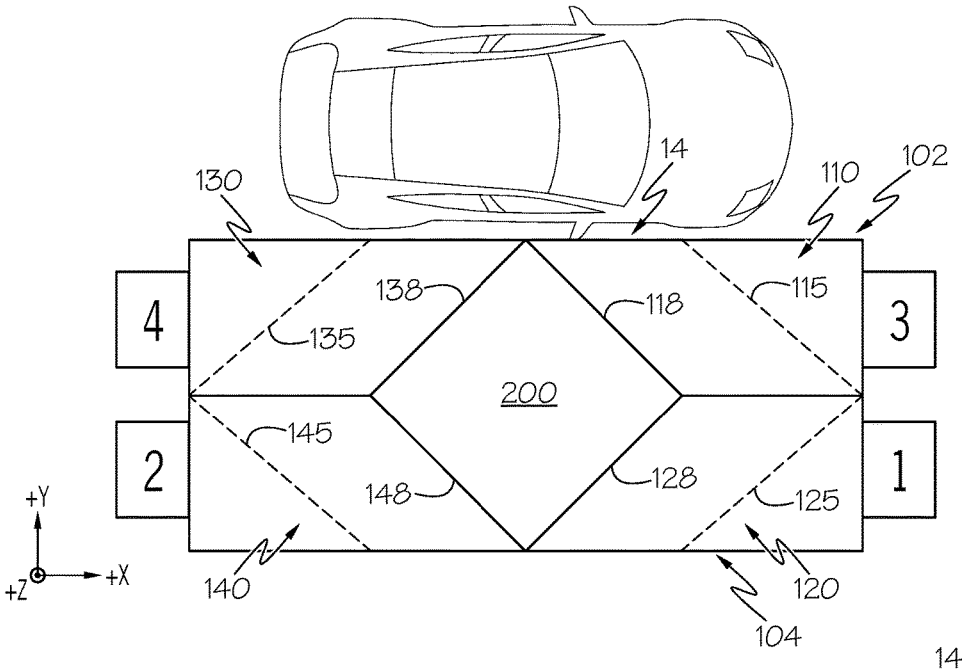

FIG. 9

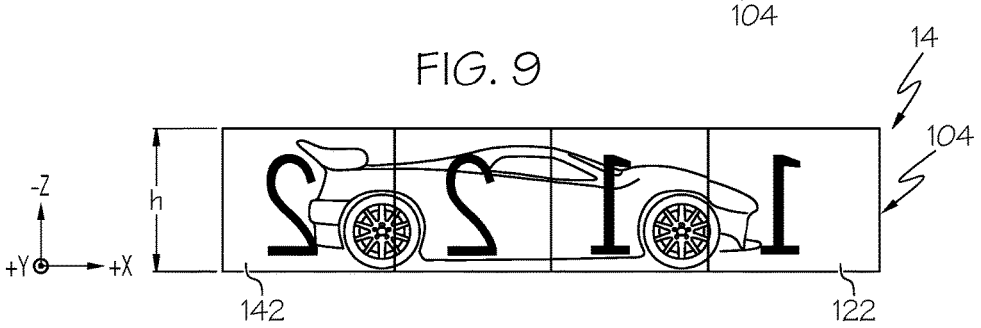

FIG. 10

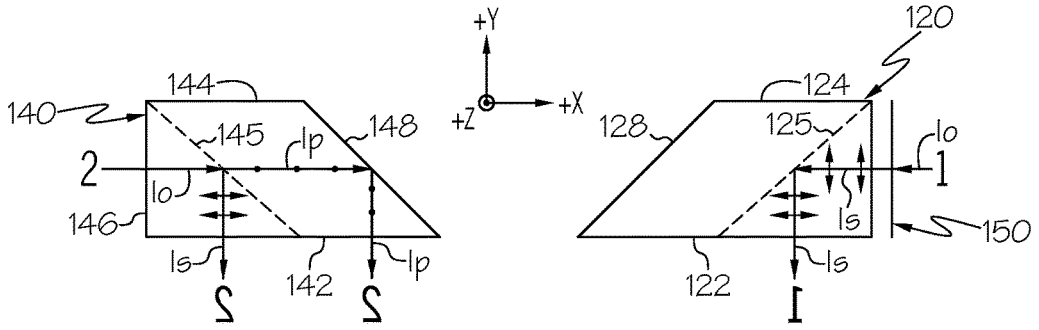

FIG. 11

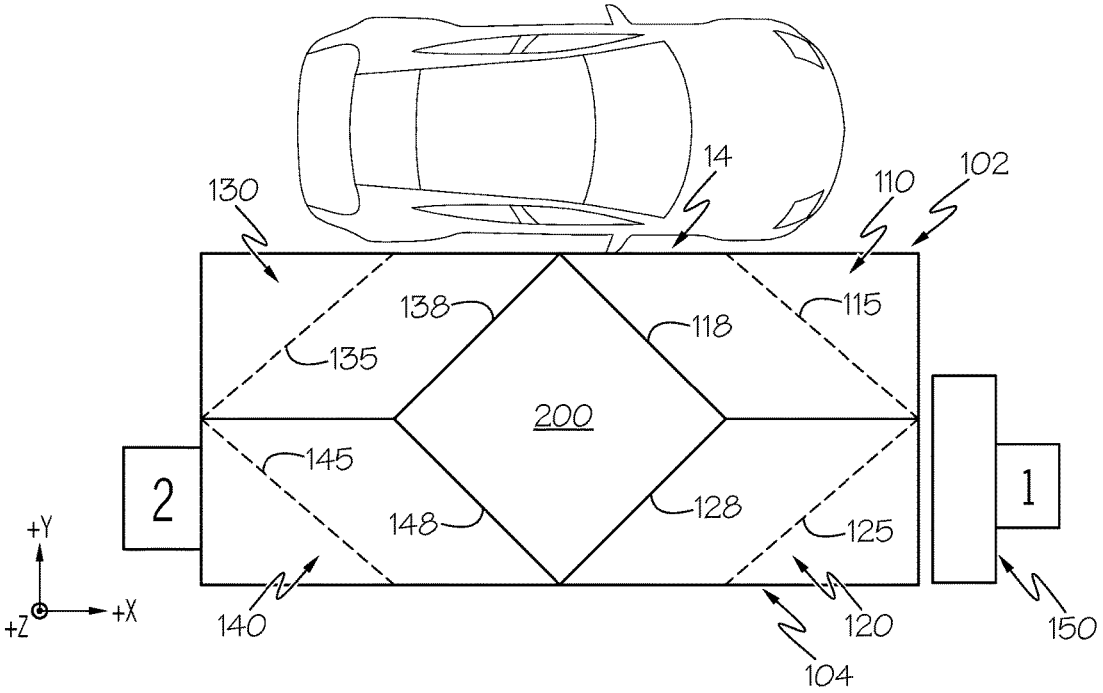

FIG. 12

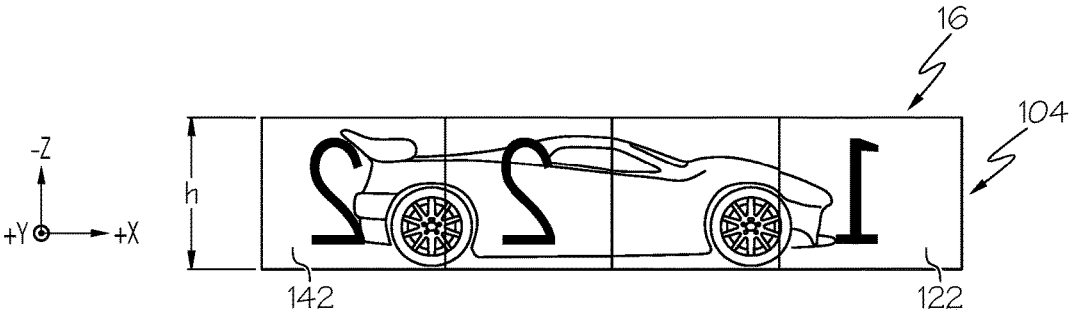

FIG. 13

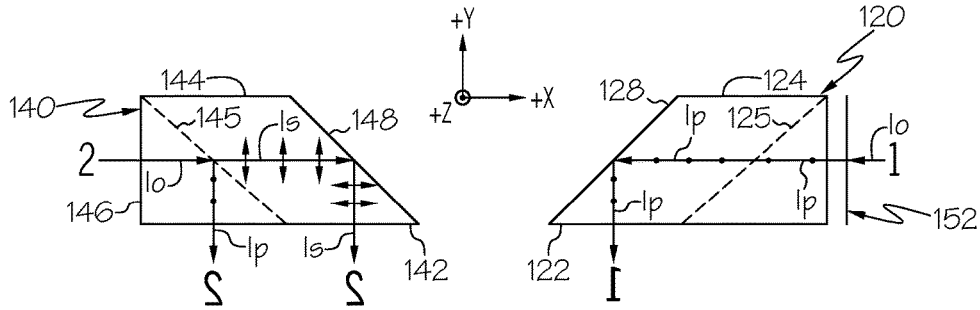

FIG. 14

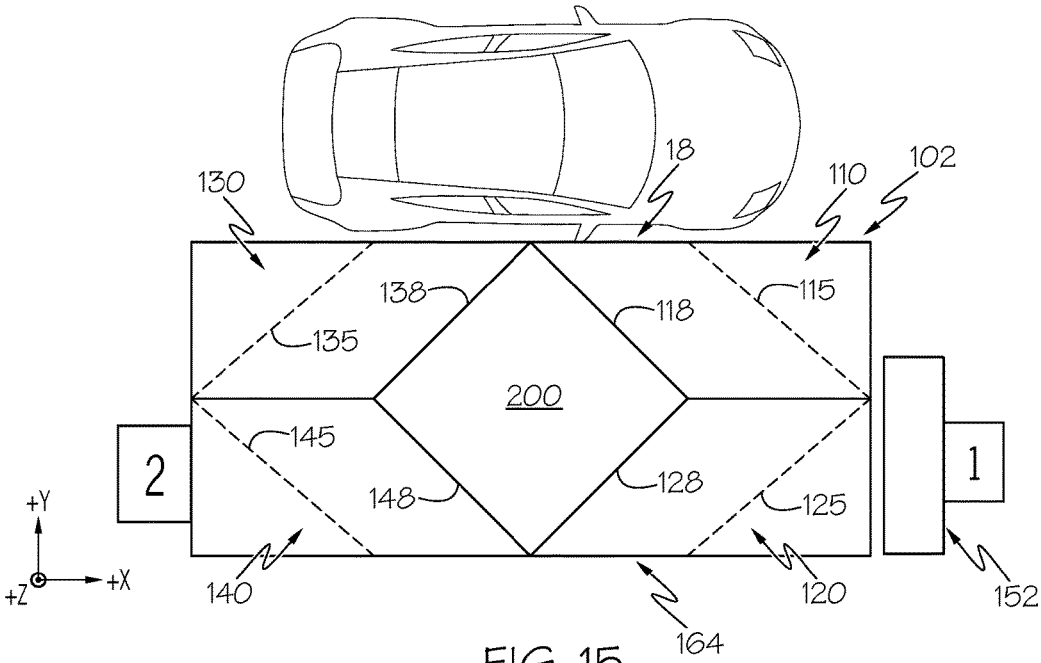

FIG. 15

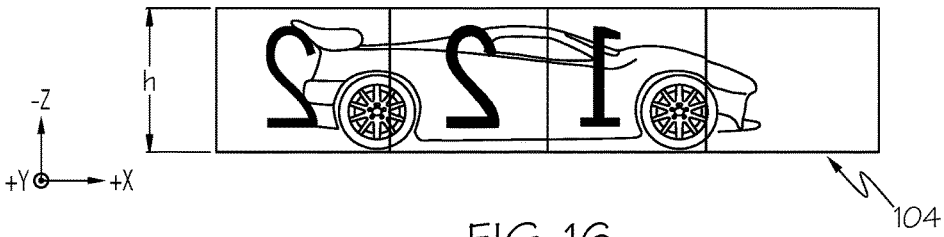

FIG. 16

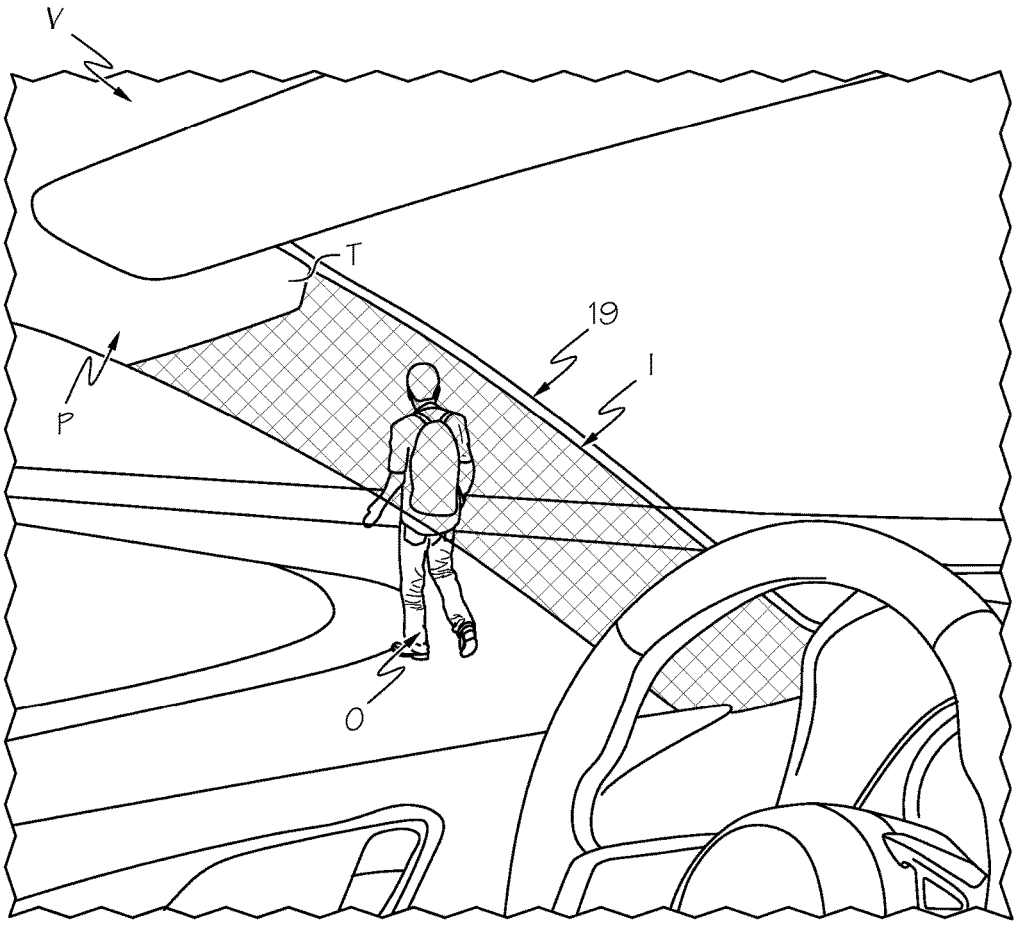

FIG. 17

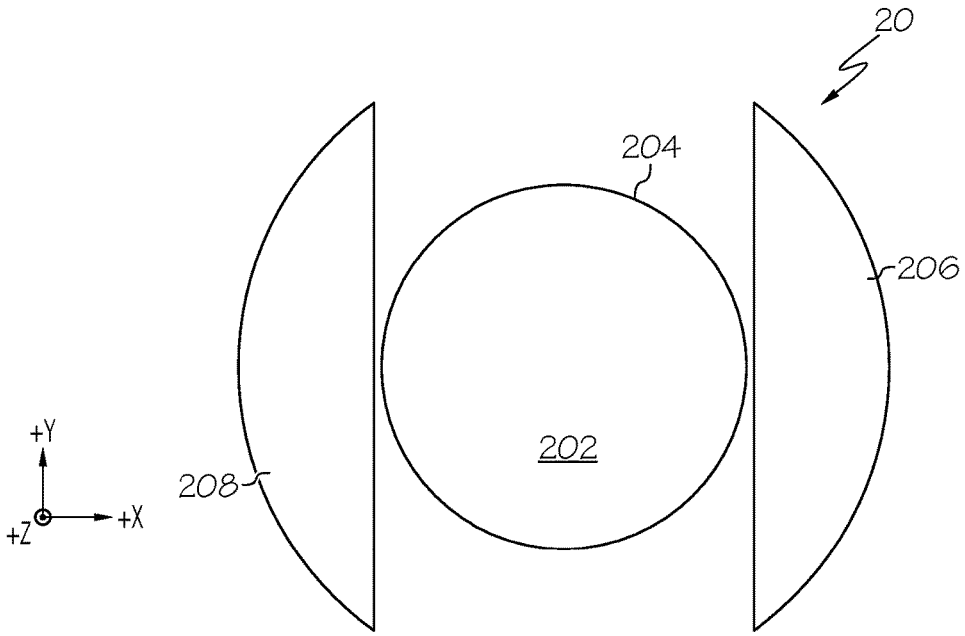

FIG. 18

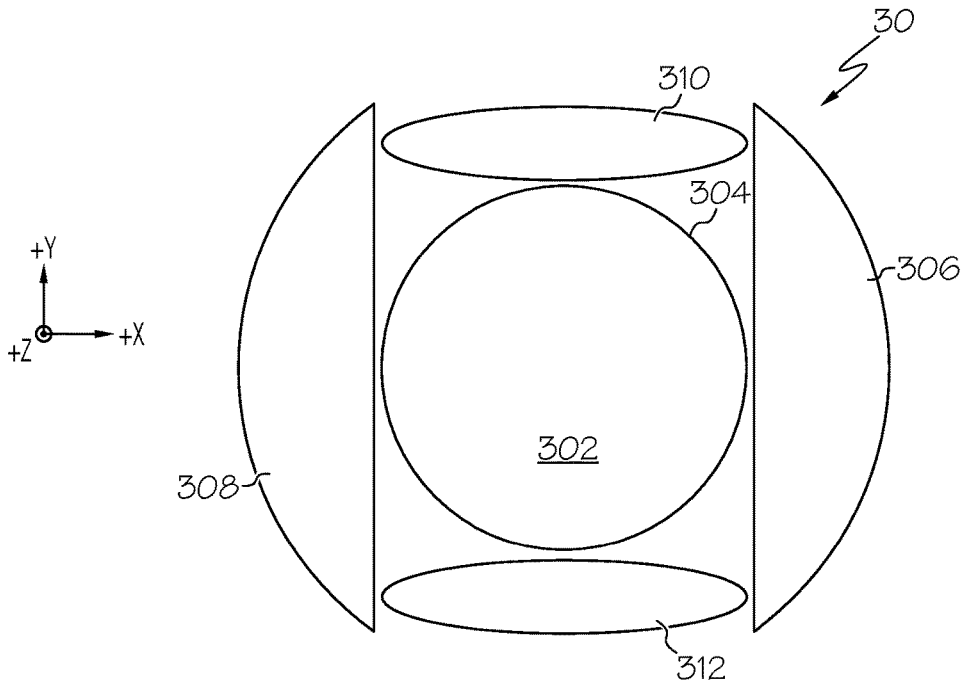

FIG. 19

APPARATUSES AND METHODS FOR MAKING AN OBJECT APPEAR TRANSPARENT

RELATED APPLICATION

[0001] This application claims the benefit of U.S. Provisional Patent Application Ser. No. 62/291,920 filed Feb. 5, 2016, the entirety of which is incorporated herein by reference.

TECHNICAL FIELD

[0002] The present specification generally relates to apparatuses and methods for making an object appear transparent and, more specifically, to cloaking devices for pillars of vehicles and methods for making pillars of vehicles appear transparent.

BACKGROUND

[0003] Studies on cloaking devices that appear to make a pillar of a vehicle transparent have been published. Such studies disclose the use of metamaterials or the use of video cameras in combination with a display screen to allow an occupant of a vehicle to ostensibly "see" though the vehicle pillar, thereby reducing blind spots in the vehicle. However, metamaterials and video technology use complicated material designs and equipment.

[0004] Accordingly, a need exists for alternative devices that appear to make a pillar of a vehicle transparent.

SUMMARY

[0005] In one embodiment, a cloaking device includes cloaking region (CR) boundary planes oriented non-planar to each other and each of the CR boundary planes has an outward facing mirror surface and an inward facing opaque surface. The cloaking device includes a CR at least partially bounded by the inward facing opaque surfaces of the CR boundary planes. The cloaking device includes half mirrors spaced apart and generally parallel to the outward facing mirror surfaces such that a half mirror is spaced apart and generally parallel to each outward facing mirror surface. An article positioned within the CR is not visible outside of the CR and light reflected from an object on one side of the cloaking device is redirected around the CR and the article positioned within the CR, and forms an image of the object on another side of the cloaking device.

[0006] According to another embodiment, a cloaking device for cloaking an article of a vehicle includes a cloaking assembly with an object-side, an image-side and at least two CR boundary planes positioned at least partially between the object-side and the image-side. The at least two CR boundary planes are positioned non-planar to each other and each of the at least two CR boundary planes have an outward facing mirror surface and an inward facing opaque surface. A CR is bounded by the inward facing opaque surfaces of the at least two CR boundary planes and a vehicle article positioned within the CR is not visible from outside the CR. The cloaking assembly has at least two half mirrors positioned at least partially between the object-side and the image-side. Each of the at least two half mirrors are spaced apart and generally parallel to one of the outward facing mirror surfaces such that a half mirror is spaced apart and generally parallel to each outward facing mirror surface. Light from an object located on the object-side of the cloaking assembly, and obscured by the vehicle article positioned within the CR is redirected around the CR, and forms an image of the object on the image-side of the cloaking assembly such that the vehicle article appears transparent to an observer looking in a direction towards the object.

[0007] In embodiments, the cloaking assembly has four CR boundary planes and four half mirrors. The four CR boundary planes are oriented generally orthogonal to each other, the CR is bounded by the four CR boundary planes, and each of the half mirrors are spaced apart and generally parallel to one of the outward facing mirror surfaces such that a half mirror is spaced apart and generally parallel to each outward facing mirror surface. Each of the half mirrors may be selected from a p-polarization half mirror or an s-polarization half mirror. Light reflected from the object located on the object-side of the cloaking assembly passes through the cloaking assembly by reflecting off of a first outward facing mirror surface, a first half mirror oriented generally parallel to the first outward facing mirror surface, a second half mirror oriented generally orthogonal to the first half mirror and a second outward facing mirror surface oriented generally parallel to the second half mirror. Light that passes through the cloaking assembly forms an image of the object on the image-side of the cloaking assembly.

[0008] In embodiments, the cloaking device with the cloaking assembly has an end surface oriented non-planar to a half mirror. Light from an item located adjacent to the end surface passes through the cloaking assembly and forms an image of the item on the image side of the cloaking assembly.

[0009] These and additional features provided by the embodiments described herein will be more fully understood in view of the following detailed description in conjunction with the drawings.

BRIEF DESCRIPTION OF THE DRAWINGS

[0010] The embodiments set forth in the drawings are illustrative and exemplary in nature and not intended to limit the subject matter defined by the claims. The following detailed description of the illustrative embodiments can be understood when read in conjunction with the following drawings, where like structure is indicated with like reference numerals and in which:

[0011] FIG. **1** schematically depicts a top view of a cloaking device according to one or more embodiments described and illustrated herein;

[0012] FIG. **2** schematically depicts top isolated views of four cloaking device components of the cloaking device of FIG. **1** according to one or more embodiments described and illustrated herein;

[0013] FIG. **3** schematically depicts a top perspective view of the cloaking device of FIG. **1** with a first object on one side of the cloaking device and a second object within a cloaking region (CR) of the cloaking device;

[0014] FIG. **4** schematically depicts a side view of the cloaking device of FIG. **3** with the first object on one side of the cloaking device and the second object within the CR of the cloaking device;

[0015] FIG. **5** schematically depicts a top view of a cloaking device according to one or more embodiments described and illustrated herein;

[0016] FIG. **6** schematically depicts a top perspective view of the cloaking device of FIG. **5** with a first object on one

side of the cloaking device and a second object and a third object within a CR of the cloaking device;

[0017] FIG. **7** schematically depicts a side view of the cloaking device of FIG. **6** with the first object on one side of the cloaking device and the second object and the third object within the CR of the cloaking device;

[0018] FIG. **8** schematically depicts a top isolated view of two cloaking device components according to one or more embodiments described and illustrated herein;

[0019] FIG. **9** schematically depicts a top view of a cloaking device with four cloaking device components according to one or more embodiments described and illustrated herein;

[0020] FIG. **10** schematically depicts a side view of the cloaking device shown in FIG. **9**;

[0021] FIG. **11** schematically depicts a top isolated view of two cloaking device components according to one or more embodiments described and illustrated herein;

[0022] FIG. **12** schematically depicts a top view of a cloaking device with four cloaking device components according to one or more embodiments described and illustrated herein;

[0023] FIG. **13** schematically depicts a side view of the cloaking device of FIG. **12**;

[0024] FIG. **14** schematically depicts a top isolated view of two cloaking device components according to one or more embodiments described and illustrated herein;

[0025] FIG. **15** schematically depicts a top view of four cloaking device components according to one or more embodiments described and illustrated herein;

[0026] FIG. **16** schematically depicts a side view of the cloaking device of FIG. **15**;

[0027] FIG. **17** schematically depicts a side view of a cloaking device cloaking an A-pillar of a vehicle according to one or more embodiments described and illustrated herein;

[0028] FIG. **18** schematically depicts a top view of a cloaking device according to one or more embodiments described and illustrated herein; and

[0029] FIG. **19** schematically depicts a top view of a cloaking device with four cloaking device components according to one or more embodiments described and illustrated herein.

DETAILED DESCRIPTION

[0030] A cloaking device is provided. The cloaking device may have an object-side, an image-side and a cloaking region (CR) boundary plane having an outward facing mirror surface and an inward facing opaque surface. A CR is at least partially bounded by the inward facing opaque surface of the CR boundary plane and a half mirror is spaced apart and generally parallel to the outward facing mirror surface. The half mirror may be a p-polarization half mirror or an s-polarization half mirror. In embodiments, an article, e.g. an A-pillar of a vehicle, a B-pillar of a vehicle or a C-pillar of a vehicle, is positioned within the CR and light from an object located on the object-side of the cloaking device and obscured by the CR is redirected around the CR and the article and forms the image of the object on the image-side of the cloaking device such that the article appears transparent. Various embodiments of cloaking devices and methods for using the same will be described in further detail herein with specific reference to the appended drawings.

[0031] FIG. **1** generally depicts one embodiment of a cloaking device. The cloaking device includes a cloaking region (CR) that is at least partially bounded by at least two CR boundary planes that are non-planar to each other. Each of the two CR boundary planes has an outward facing mirror surface and an inward facing opaque surface. Spaced apart and oriented generally parallel to each of the CR boundary planes is a half mirror (e.g., a polarizing half mirror) that allows p-polarized light to pass through and s-polarized light to be reflected or, alternatively, allows s-polarized light to pass through and p-polarized light to be reflected. Referring to the coordinate system in the figure, portions of a target object are located directly behind the CR in the +Y direction (obscured portions of the object which are otherwise not visible through the CR) and portions of the target object are located outside or beyond the CR in the +Y direction (visible portions of the object). Light rays (light) from the obscured portions of the target object travel in the −Y direction and are incident on a first outward facing mirror surface. The first outward facing mirror surface reflects the incident light from the obscured portions of the target object in the +X direction to a first half mirror that is spaced apart and oriented generally parallel to the first outward facing mirror surface. One mode of polarized light (e.g., p-polarized light) from the light reflected from the first outward facing mirror surface passes through the first half mirror (continues traveling in the +X direction), while another mode of polarized light (e.g. s-polarized light) is reflected by the first half mirror in the −Y direction. The polarized light reflected in the −Y direction by the first half mirror is reflected into the −X direction by a second half mirror. The polarized light reflected into the −X direction by the second half mirror is reflected in the −Y direction by a second outward facing mirror surface that is spaced apart and oriented generally parallel to the second half mirror. An observer looking at the cloaking device in the +Y direction will see the reflection of the polarized light by the second outward facing mirror surface, i.e. polarized light originating from light from obscured portions of the target object will be visible to a human eye located on an opposite side of the CR from the obscured portions of the target object. Also, light reflected from an article positioned within the CR (i.e., the cloaked article) is not transmitted through the inward facing opaque surfaces and is not seen by the observer looking at the cloaking device in the +Y direction. That is, the cloaking device effectively redirects light from the obscured portions of the target object around the CR such that the light from the target object appears to pass through the cloaked article giving the visual impression that the cloaked article is not present. Light from the visible portions of the target object travel in the −Y direction and are incident on the first half mirror. One mode of the incident light (e.g., s-polarized light) is reflected in the +X direction by the first half mirror and another mode of the incident light (e.g. p-polarized light) is transmitted through the first half mirror and continues traveling in the −Y direction. The transmitted polarized light traveling in the −Y direction reaches the second half mirror and is transmitted through the second half mirror. An observer looking at the cloaking device in the +Y direction will see the transmitted polarized light traveling in the −Y direction, i.e. polarized light originating from light from visible portions of the target object will be visible to a human eye located on an opposite side of the cloaking device from the visible portions of the target object. Accord-

ingly, an individual will see the entire target object, both obscured portions and visible portions, that is located on the opposite side of the CR (and thus on the opposite side of a cloaked article) giving the visual impression that the cloaked article is transparent.

[0032] Referring now to FIGS. **1-2**, embodiments of a cloaking device include a cloaking assembly **10** with four CR boundary planes **118**, **128**, **138**, **148**. The CR boundary planes **118**, **128**, **138**, **148** located adjacent to each other are non-planar to each other. In embodiments, opposing CR boundary planes **118**, **148** and **128**, **138** may be oriented parallel to each other and adjacent CR boundary planes **118**, **128**, **138**, **148** may be oriented orthogonal to adjacent CR boundary planes, e.g. CR boundary plane **118** is oriented orthogonal to adjacent CR boundary planes **138**, **128**, CR boundary plane **128** is oriented orthogonal to adjacent CR boundary planes **118**, **148**, etc. Each of the four CR boundary planes have an outward facing mirror surface **118***a*, **128***a*, **138***a*, **148***a*, respectively, and an inward facing opaque surface **118***b*, **128***b*, **138***b*, **148***b*, respectively. The outward facing mirror surfaces **118***a*, **128***a*, **138***a*, **148***a*, can be made from omnidirectional photonic crystals or mirrors such that approximately 100% (+/−10%) of light incident on the outward facing mirror surfaces is reflected from the outward facing mirror surfaces. Accordingly, the term "mirror surface" used herein refers to a surface that reflects approximately 100% (+/−10%) of all modes of light (e.g. s-polarized light and p-polarized light) incident on the mirror surface. In embodiments, the CR boundary planes **118**, **128**, **138**, **148** form a CR **200** bound at least partly by the inward facing opaque surfaces **118***b*, **128***b*, **138***b*, **148***b*. The four CR boundary planes **118**, **128**, **138** **148**, have a height 'h' (FIG. **4**) in the Z direction of the coordinate axes in the figures and light reflected or transmitted within the CR **200** does not pass through the inward facing opaque surfaces **118***b*, **128***b*, **138***b*, **148***b*. Accordingly, an article (e.g., a cloaked article) located within the CR **200** is not visible to an observer viewing the cloaking assembly **10** in the +Y direction.

[0033] Still referring to FIGS. **1** and **2**, spaced apart and oriented generally parallel (within +/−2°) to each of the four CR boundary planes **118**, **128**, **138** **148**, are half mirrors **115**, **125**, **135**, **145**, respectively. The half-mirrors **115**, **125**, **135**, **145** reflect a specific mode of visible light. Specifically, each of the half mirrors **115**, **125**, **135**, **145**, can be an s-polarizer half mirror or a p-polarizer half mirror. The half mirrors **115**, **125**, **135**, **145**, can be in the form of a diffraction grating or thin film polarizer that reflects the s-mode of visible light and allows the p-mode of visible light to pass through (a p-polarization diffraction grating or thin film), or in the alternative, reflects the p-mode of visible light and allows the s-mode of the visible light to pass through (an s-polarization diffraction grating or thin film). It should be appreciated that the half mirrors **115**, **125** are both s-polarizer half mirrors or p-polarizer half mirrors and the half mirrors **135**, **145** are both s-polarizer half mirrors or p-polarizer half mirrors, i.e. the half mirrors **115**, **125** may be s-polarizer mirrors and the half mirrors **135**, **145** may be p-polarizer half mirrors; the half mirrors **115**, **125** may be p-polarizer mirrors and the half mirrors **135**, **145** may be s-polarizer half mirrors; or all of the half mirrors **115**, **125**, **135**, **145** may be s-polarizer half mirrors or p-polarizer half mirrors.

[0034] The four CR boundary planes **118**, **128**, **138** **148**, and the corresponding half mirrors **115**, **125**, **135**, **145**, may be part of four cloaking assembly components **110**, **120**, **130**, **140**, respectively. Each cloaking assembly component **110**, **120**, **130**, **140**, has an outward facing surface **112**, **122**, **132**, **142**, respectively, an inward facing surface **114**, **124**, **134**, **144**, respectively, an outer end surface **116**, **126**, **136**, **146**, respectively, and an inner side surface defined by the inward facing opaque surface **118***b*, **128***b*, **138***b*, **148***b*, respectively. The outward facing surfaces **112**, **132** form an object-side **102** of the cloaking device and the outward facing surfaces **122**, **142** form an image-side **104** of the cloaking device. One or more optical filters **125***a*, **125***b* may be positioned on or adjacent to the outward facing surface **122** and one or more optical filters **145***a*, **145***b* may be positioned on or adjacent to the outward facing surface **142**. The optical filter **125***a* is positioned to the right (+X direction) of the half-mirror **125**, the optical filter **125***b* is positioned to the left (−X direction) of the half-mirror **125**, the optical filter **145***a* is positioned to the left (−X direction) of the half-mirror **145**, and the optical filter **145***b* is positioned to the right (+X direction) of the half-mirror **145**. The one or more optical filters **125***a*, **125***b*, **145***a*, **145***b*, may be quarter-wave plates that convert linearly polarized light into circularly polarized light, or in the alternative, the one or more optical filters **125***a*, **125***b*, **145***a*, **145***b*, may be a quarter-wave plate and a linear polarizer that convert linearly polarized light of one mode, e.g., s-mode or p-mode, into circularly polarized light, and then convert the circularly polarized light into a different linearly polarized mode, e.g., p-mode or s-mode, respectively.

[0035] The CR boundary planes **118**, **138**, are oriented at an angle θ_1 relative to the outward facing surfaces **112**, **132**, respectively, and the CR boundary planes **128**, **148** are oriented at an angle β_1 relative to the outward facing surfaces **122**, **142**, respectively. In embodiments, the angle θ_1 is equal to the angle β_1. In other embodiments, the angle θ_1 is not equal to the angle β_1. The half mirrors **115**, **135**, are oriented at an angle θ_2 relative to the outward facing surfaces **112**, **132**, respectively, and the half mirrors **125**, **145** are oriented at an angle θ_2 relative to the outward facing surfaces **122**, **142**, respectively. In embodiments, the angle θ_2 is equal to the angle β_2. In other embodiments, the angle θ_2 is not equal to the angle β_2. In embodiments, the angle θ_1 is equal to the angle θ_2 and the angle β_1 is equal to the angle β_2. For example, θ_1 and θ_2 can be generally equal to 45° (+/−1°), and β_1 and β_2 can be generally equal to 45° (+/−1°).

[0036] The four cloaking assembly components **110**, **120**, **130**, **140**, are transparent to incident light (both polarized and unpolarized) except for the half mirrors **115**, **125**, **135**, **145**, the outward facing mirror surfaces **118***a*, **128***a*, **138***a*, **148***a*, the inward facing opaque surfaces **118***b*, **128***b*, **138***b*, **148***b*, and optionally the outer end surfaces **116**, **126**, **136**, **146**. The four cloaking assembly components **110**, **120**, **130**, **140**, can be made from any suitable transparent material, for example a transparent glass or a transparent plastic. In the alternative, the four cloaking assembly components **110**, **120**, **130**, **140**, can be a structure, e.g. a frame, that holds the four CR boundary planes **118**, **128**, **138**, **148**, and the four half mirrors **115**, **125**, **135**, **145** in a desired orientation relative to each other with air or another gas present between the four CR boundary planes **118**, **128**, **138**, **148**, and the four half mirrors **115**, **125**, **135**, **145**. The frame may be a plurality of transparent glass or transparent plastic panes that hold the four CR boundary planes **118**, **128**, **138**, **148**, and the four half mirrors **115**, **125**, **135**, **145** in a desired orientation relative to each other with air or another gas

present between the four CR boundary planes **118**, **128**, **138**, **148**, and the four half mirrors **115**, **125**, **135**, **145**. In embodiments, transparent glass or transparent plastic panes form the outward facing surfaces **112**, **122**, **132**, **142**, inward facing surfaces **114**, **124**, **134**, **144**, and outer end surfaces **116**, **126**, **136**, **146**, and hold the four CR boundary planes **118**, **128**, **138**, **148**, and the four half mirrors **115**, **125**, **135**, **145** in a desired orientation relative to each other with air or another gas present between the four CR boundary planes **118**, **128**, **138**, **148**, and the four half mirrors **115**, **125**, **135**, **145**.

[0037] The outer end surfaces **116**, **126**, **136**, **146**, may be transparent, have an absorber layer disposed thereon or be a half-mirror. In embodiments, the outer end surfaces **116**, **126**, **136**, **146**, are transparent. In other embodiments, the outer end surfaces **116**, **126**, **136**, **146**, have an absorber layer disposed thereon that absorbs incident light from within the four cloaking assembly components **110**, **120**, **130**, **140**, and/or from outside the four cloaking assembly components **110**, **120**, **130**, **140**. The absorber layer may be made from any suitable material that absorbs approximately 90% (+/−10%) of incident light, illustratively including dark colored surfaces made of glass, polymers, metals, ceramics, composites, etc. In other embodiments, the outer end surfaces **116**, **126**, **136**, **146**, are half-mirrors such that one mode of incident light is reflected (e.g., s-polarized light or p-polarized light) and another mode of incident light is transmitted through the half mirror (e.g., p-polarized light or s-polarized light, respectively). In other embodiments, one or more of the outer end surfaces **116**, **126**, **136**, **146**, is transparent and one or more of the outer end surfaces **116**, **126**, **136**, **146**, has an absorber layer disposed thereon. In other embodiments, one or more outer end surfaces **116**, **126**, **136**, **146**, is transparent and one or more of the outer end surfaces **116**, **126**, **136**, **146**, is a half mirror. In other embodiments, one or more of the outer end surfaces **116**, **126**, **136**, **146**, has an absorber layer disposed thereon and one or more of the outer end surfaces **116**, **126**, **136**, **146**, is a half mirror. In other embodiments, one or more of the outer end surfaces **116**, **126**, **136**, **146**, is transparent, one or more of the outer end surfaces **116**, **126**, **136**, **146**, has an absorber layer disposed thereon, and one or more of the outer end surfaces **116**, **126**, **136**, **146**, is a half mirror.

[0038] While FIGS. **1-2** illustrate four cloaking assembly components **110**, **120**, **130**, **140**, it should be appreciated that the four CR boundary planes **118**, **128**, **138**, **148**, and the four half mirrors **115**, **125**, **135**, **145** can be contained within any number of cloaking assembly components. For example, in embodiments, the cloaking assembly components **110** and **120** may be a single cloaking assembly component with no inward facing surface **114**, **124**, between the outward facing surfaces **112**, **122**, and the cloaking assembly components **130** and **140** may be a single cloaking assembly component with no inward facing surface **134**, **144**, between the outward facing surfaces **132**, **142**. In other embodiments, the cloaking assembly components **110** and **130** may be a single cloaking assembly component and the two cloaking assembly components **120** and **140** can be a single cloaking assembly component. In other embodiments, three of the four cloaking assembly components **110**, **120**, **130**, **140** may be a single cloaking assembly component assembled with a remaining one of the cloaking assembly components **110**, **120**, **130**, **140**. For example, the three cloaking assembly components **110**, **120**, **130** may be a single cloaking assembly component assembled with the remaining cloaking assembly component **140**. In other embodiments, the four cloaking assembly components **110**, **120**, **130**, **140** may be a single cloaking assembly component.

[0039] Still referring to FIGS. **1-2**, light 'lo' is reflected from an object 'O' (e.g., a target object) located on the object-side **102** of the cloaking device, travels in the −Y direction, and is incident on and transmitted through the outward facing surfaces **112**, **132**. The light lo reflected from the obscured portions of the object 'O' located directly behind the CR in the +Y direction is reflected by the outward facing mirror surfaces **118***a*, **138***a* in the +X and −X directions, respectively. The light lo reflected in the +X and −X directions is incident on the half mirrors **115**, **135** respectively. As illustrated in FIG. **1**, the half mirrors **115**, **135** are p-polarization half mirrors that reflect the s-mode (ls) of the light lo and allow the p-mode (lp) of the light lo to pass through. The s-polarized light ls reflected from the half mirrors **115**, **135** in the −Y direction is incident on the half mirrors **125**, **145**, respectively. The half mirrors **125**, **145** are also p-polarization mirrors that reflect the s-polarized light ls traveling in the −Y direction into the −X and +X directions, respectively. The s-polarized light ls reflected in in the −X and +X directions is incident on the outward facing mirror surfaces **128***a*, **148***a*, respectively, and the outward facing mirror surfaces **128***a*, **148***a* reflect the incident s-polarized light ls into the −Y direction. The s-polarized light reflected into the −Y direction by the outward facing mirror surfaces **128***a*, **148***a*, forms an image of the obscured portion of the target object located directly above the CR **200** in the +Y direction that is visible to an observer viewing the image-side **104** of the cloaking assembly **10**. In embodiments, the optical filter **125***b*, the optical filter **145***b*, or both optical filters **125***b*, **145***b* may be positioned on or adjacent to the outward facing surfaces **122**, **142**, respectively, as described above, and may convert the s-polarized light reflected into the −Y direction by the outward facing mirror surfaces **128***a*, **148***a*, into circularly polarized light or p-polarized light. For example, the optical filter **125***b* the optical filter **145***b*, or both optical filters **125***b*, **145***b* may be quarter wave plates that convert the s-polarized light reflected into the −Y direction by the outward facing mirror surfaces **128***a*, **148***a* into circularly polarized light (not shown) before forming the image of the obscured portion of the target object 'O' located directly above the CR **200** in the +Y direction. In the alternative, the optical filter **125***b*, the optical filter **145***b*, or both optical filters **125***b*, **145***b* may be a quarter-wave plate and a linear polarizer that converts the s-polarized light reflected into the −Y direction by the outward facing mirror surfaces **128***a*, **148***a* into circularly polarized light (not shown) and then converts the circularly polarized light into p-polarized light before forming the image of the obscured portion of the target object 'O' located directly above the CR **200** in the +Y direction.

[0040] Light lo reflected from the visible portions of the target object 'O' not located directly behind the CR in the +Y direction is incident on and transmitted through the outward facing surfaces **112**, **132**. The transmitted light lo is incident on the p-polarization half mirrors **115**, **135**. The half mirrors **115**, **135** reflect the s-mode is of the incident light lo in the +X and −X directions, respectively, and transmit the p-mode lp of the incident light lo in the −Y direction. The p-polarized light lp transmitted through the half mirrors **115**, **135** will be incident on and be transmitted through the p-polarization

half mirrors **125**, **145**, respectively, in the −Y direction. The p-polarized light lp transmitted in the −Y direction by the half mirrors **125**, **145** forms an image of the visible portions of the target object O not located directly behind the CR **200** in the +Y direction that is visible to an observer viewing the cloaking assembly in the +Y direction. In embodiments, the optical filter **125***a*, the optical filter **145***a*, or both optical filters **125***a*, **145***a* may be positioned on or adjacent to the outward facing surfaces **122**, **142**, respectively, as described above, in order to convert the p-polarized light into circularly polarized light of s-polarized light. For example, the optical filter **125***a*, the optical filter **145***a* or both optical filters **125***a*, **145***a* may be quarter wave plates that convert the p-polarized light transmitted into the −Y direction by the half mirrors **125**, **145** into circularly polarized light (not shown) before forming the image of the visible portions of the target object 'O' not located behind above the CR **200** in the +Y direction. In the alternative, the optical filter **125***a*, the optical filter **145***a*, or both optical filters **125***a*, **145***a* may be a quarter-wave plate and a linear polarizer that convert the p-polarized light reflected into the −Y direction by the outward facing mirror surfaces **128***a*, **148***a* into circularly polarized light (not shown) and then convert the circularly polarized light into s-polarized light before forming the image of the visible portions of the target object 'O' not located directly above the CR **200** in the +Y direction. Accordingly, an image 'I' of the entire target object 'O' (both the obscured portion and the visible portions) is visible to the observer viewing the image-side **104** of the cloaking assembly **10**. While half mirrors **115**, **125**, **135**, **145** are described herein as p-polarization half mirrors, it should be appreciated that half mirrors **115**, **125**, **135**, **145** can be s-polarization half mirrors and the reflected and transmitted portions of the reflected light lo discussed above will be reversed. However, the human eye cannot distinguish between s-polarized light, p-polarized light or circularly polarized light and the image 'I' of the entire object 'O' will be visible to the human eye when an observer is viewing the image-side **104** of the cloaking assembly **10**. Also, it should be appreciated that the one or more of optical filters **125***a*, **125***b*, **145***a*, **145***b* may be positioned on or adjacent to outward facing surfaces **122**, **142** as described above such that only p-polarized light forms the image 'I', only s-polarized light forms the image 'I', only circularly polarized light forms the image 'I', only p-polarized light and circularly polarized light form the image 'I' or only s-polarized light and circularly polarized light form the image 'I'. Such manipulation of the polarized light reflected into the −Y direction by the outward facing mirror surfaces **128***a*, **128***a* and the polarized light transmitted in the −Y direction by the half mirrors **125**, **145** may assist an observer wearing polarized sunglasses in viewing the image-side **104** of the cloaking assembly **10**. Particularly, the one or more optical filters **125***a*, **125***b*, **145***a*, **145***b* ensure that polarized sunglasses that block p-polarized light or s-polarized light do not prevent an observer wearing such polarized sunglasses from seeing the entire target object 'O' when viewing the image-side **104** of the cloaking assembly **10**.

[0041] Referring now to FIGS. **1-4**, a top perspective view and a side view of a cloaking device according to embodiments (as discussed with respect to FIGS. **1-2**) are shown in FIGS. **3-4**, respectively. Specifically, FIG. **3** is a top perspective view of an article in the form of a column 'C' within the CR **200** of the cloaking assembly **10** and an automobile 'A' located behind the column C on the object-side **102** of the cloaking assembly **10** in the +Y direction. The column C has a height dimension in the Z direction (increasing height in the −Z direction) greater than the height h of the cloaking device. FIG. **4** is a side view from the +Y direction of the cloaking assembly **10** shown in FIG. **3** and shows the portion of the column C that is within the CR **200** is not visible and the automobile A located behind the column C in the +Y direction is visible to an observer viewing the cloaking assembly **10** in the +Y direction. Accordingly, the column C positioned within the CR **200** is not visible to an observer viewing the image-side **104** of the cloaking assembly **10** and an image of the entire automobile A (both the obscured portion and the visible portions) is visible to the observer viewing the image-side **104**. Although column C in FIGS. **3-4** is separate from the CR boundary planes **118**, **128**, **138**, **148**, i.e., column C is a separate object from the cloaking device **10**, it should be appreciated that column C may be structurally part of the cloaking device **10** and have an outer surface that provides or is equivalent to the CR boundary planes **118**, **128**, **138**, **148** with outward facing mirror surfaces **118***a*, **128***a*, **138***a*, **148***a*, respectively.

[0042] Referring now to FIGS. **1-5**, FIG. **5** shows embodiments of a cloaking assembly **12** with an enlarged CR **200**. Particularly, the cloaking assembly components **110**, **120**, **130**, **140** are arranged such that the cloaking assembly components **110**, **130** are spaced apart in the Y direction from the cloaking assembly components **120**, **140**, and a distance 'd' is between the inward facing surfaces **114**, **124**, and between the inward facing surfaces **134**, **144**. The area of the CR **200** in the X-Y plane is increased by the width 'w' times the distance d (w x d). The volume of the CR **200** is increased by the width w times the distance d times the height h (FIG. **4**) of the CR **200** (w x d x h). While FIG. **5** illustrates four cloaking assembly components **110**, **120**, **130**, **140**, it should be appreciated that the four CR boundary planes **118**, **128**, **138**, **148**, and the four half mirrors **115**, **125**, **135**, **145** can be contained within any number of cloaking assembly components. For example, in embodiments, the cloaking assembly components **110** and **130** may be a single cloaking assembly component and the two cloaking assembly components **120** and **140** can be a single cloaking assembly component.

[0043] As shown in the FIG. **5**, light lo is reflected from the target object O, travels in the −Y direction and is incident on and transmitted through the outward facing surfaces **112**, **132**. Light lo reflected from the obscured portions of the object located directly behind the CR in the +Y direction is reflected by the outward facing mirror surfaces **118***a*, **138***a* in the +X and −X direction, respectively. The reflected light lo in the +X and −X directions is incident on the half mirrors **115**, **135** respectively. The half mirrors **115**, **135** are p-polarization half mirrors and reflect the s-mode is of the light lo and transmit the p-mode lp of the light lo. The s-polarized light ls reflected by the half mirrors **115**, **135** in the −Y direction is incident on the half mirrors **125**, **145**, respectively. The half mirrors **125**, **145** are also p-polarization mirrors that reflect the s-polarized light ls traveling in the −Y direction into the −X and +X directions, respectively. The s-polarized light ls traveling in the −X and +X directions is incident on the outward facing mirror surfaces **128***a*, **148***a*, respectively, and the outward facing mirror surfaces **128***a*, **148***a* reflect the incident s-polarized light ls in the −Y direction. The s-polarized light reflected in the −Y direction

by the outward facing mirror surfaces **128***a*, **148***a*, forms an image of the obscured portion of the object located behind the CR **200** in the +Y direction that is visible to an observer viewing the image-side **104** of the cloaking assembly **12**. Light lo reflected from the visible portions of the target object O not located behind the CR **200** in the +Y direction is incident on and transmitted through the outward facing surfaces **112**, **132**. The transmitted light lo is incident on the p-polarization half mirrors **115**, **135**, and the half mirrors **115**, **135** reflect the s-mode is of the incident light lo in the +X and −X directions, respectively, and transmit the p-mode lp of the incident light lo in the −Y direction. The p-polarized light lp transmitted through the half mirrors **115**, **135** in the −Y direction is incident on and transmitted through the p-polarization half mirrors **125**, **145**, respectively, in the −Y direction. The p-polarized light lp transmitted in the −Y direction through the half mirrors **125**, **145**, forms an image of the visible portions of the target object O not located behind the CR **200** in the +Y direction that is visible to an observer viewing the image side **104** of the cloaking assembly **12**. Accordingly, an image I of the entire target object O (both the obscured portion and the visible portions) is visible to an observer viewing the image-side **104** of the cloaking assembly **12**. It should be appreciated that half mirrors **115**, **125**, **135**, **145**, can be s-polarization half mirrors and the reflected and transmitted portions of the reflected light lo discussed above will be reversed. Also, it should be appreciated that the one or more of optical filters **125***a*, **125***b*, **145***a*, **145***b* may be included. However, the human eye cannot distinguish between s-polarized light, p-polarized light or circularly polarized light and the image I of the entire object O will be visible to an observer viewing the image-side **104** of the cloaking assembly **12**.

[0044] Referring now to FIGS. **1-7**, a top perspective view and a side view of a cloaking device according to embodiments (as discussed with respect to FIG. **5**) are shown in FIGS. **6-7**, respectively. Specifically, FIG. **6** is a top perspective view of a first article in the form of a column 'C**1**' and a second article in the form of a column 'C**2**' within the CR **200** of the cloaking assembly **12** and the automobile 'A' located behind the columns C**1**, C**2** on the object-side **102** of the cloaking assembly **12** in the +Y direction. The column C**1** has a first height dimension in the Z direction and the column C**2** has a second height dimension that is greater (in the −Z direction) than the first height dimension of column C**1**. The first height dimension of column C**1** and the second height dimension of column C**2** are both greater than the height h of the cloaking assembly **12**. FIG. **7** is a side view from the +Y direction of the cloaking assembly **12** shown in FIG. **6** and shows the image-side **104**. Portions of column C**1** and column C**2** within the CR **200** are not visible and automobile A located behind column C**1** and column C**2** in the +Y direction is visible to an observer viewing the image-side **104** of the cloaking assembly **12**. Although columns C**1**, C**2** in FIGS. **6-7** are separate from the CR boundary planes **118**, **128**, **138**, **148**, i.e., columns C**1**, C**2** are separate objects from the cloaking device **12**, it should be appreciated that columns C**1**, C**2** may be structurally part of the cloaking device **12** and have an outer surface that provides or is equivalent to the CR boundary planes **118**, **128**, **138**, **148** with outward facing mirror surfaces **118***a*, **128***a*, **138***a*, **148***a*, respectively.

[0045] Referring to FIG. **8**, embodiments of a cloaking device that can display additional images in conjunction with the images depicted in FIGS. **1**, **4**, **5** and **7** are shown. Particularly, FIG. **8** shows an item in the form of the number '1' (item 1) and an item in the form of the number '2' (item 2) located adjacent to the outer end surfaces **126**, **146**, respectively, in the +X, −X directions, respectively. Light lo reflected from item 1 and item 2 is incident on and transmitted through the outer end surfaces **126**, **146** in the −X, +X directions, respectively. The light lo transmitted through the outer end surfaces **126**, **146** is incident on the half mirrors **125**, **145**, respectively. The half mirrors **125**, **145** (p-polarization half mirrors) transmit the p-mode lp of the light lo in the −X, +X directions, respectively, and reflect the s-mode is of the light lo into the −Y direction. The transmitted p-polarized light lp in the −X, +X directions is incident on the outward facing mirror surfaces **128***a*, **148***a*, respectively. The outward facing mirror surfaces **128***a*, **148***a*, reflect the incident p-polarized light lp into the −Y direction. The s-polarized light ls reflected by the half mirror **125** in the −Y direction forms a reversed '1' image on the right hand side of the outward facing surface **122** and the s-polarized light ls reflected by the half mirror **145** in the −Y direction forms a reversed '2' image on the left hand side of the outer facing surface **142**. The p-polarized light lp reflected by the outward facing mirror surface **128***a* into the −Y direction forms a reversed '1' image on the left hand side of the outward facing surface **122** and the p-polarized light lp reflected by the outward facing mirror surface **148***a* into the −Y direction forms a reversed '2' image on the right hand side of the outer facing surface **142**. It should be appreciated that the display of additional images as depicted in FIG. **8** in conjunction with images as depicted in FIGS. **1**, **4**, **5** and **7** can be used as part of a heads-up display, a warning system (signal) that an object is located on the object side of the cloaking device, etc.

[0046] Referring to FIGS. **1-10**, embodiments of a cloaking device with a cloaking assembly **14** having items in the form of '1', '2', '3', '4' adjacent to the outer end surfaces **126**, **146**, **116**, **136**, respectively are shown in FIG. **9**. FIG. **10** is a side view of the cloaking assembly **14** illustrated in FIG. **9** with reversed images of item 1 and item 2, in conjunction with the image of the automobile A, visible on the image-side **104** of the cloaking assembly **14**. It should be appreciated that items 1, 2, 3, 4 depicted in FIGS. **9-10** are shown for illustrative purposes only, i.e. the items 1, 2 in FIG. **9** could be oriented in the Y-Z plane in order to provide reverse images of items 1, 2 on the image side **104** (X-Z plane) in FIG. **10**. It should also be appreciated that reverse images of item 3 and item 4 can be formed or provided on the object-side **102** of the cloaking assembly **14** in a similar manner as the reversed images of item 1 and item 2 are formed on the image-side **104**.

[0047] Referring to FIGS. **1-8** and **11**, embodiments of a cloaking device that can selectively display images in conjunction with the images depicted in FIGS. **1**, **4**, **5** and **7** are shown. Particularly, FIG. **11** shows an item in the form of the number '1' and an item in the form of the number '2' located adjacent to the outer end surfaces **126**, **146**, respectively, in the +X, −X directions, respectively. Light lo from item 1 is incident on an s-polarizer **150**. The s-polarizer **150** allows the s-mode is of the incident light lo to pass through in the −X direction. The s-polarized light ls is incident on and reflected by the p-polarization half mirror **125** into the Y direction and no light is transmitted through or beyond the p-polarization half mirror **125** in the −X direction. Accord-

ingly, a reversed image of item 1 is formed only on the right hand side of the outward facing surface **122**. The light lo from item 2 is transmitted through the outer end surface **146** in the +X direction and is incident on the p-polarization half mirror **145**. The p-polarization half mirror **145** transmits the p-mode lp of the incident light lo in the +X direction and reflects the s-mode is of the incident light lo in the −Y direction. The p-polarized light lp in the +X direction is incident on the outward facing mirror surface **148***a*. The outer facing mirror surface **148***a* reflects the incident p-polarized light lp in the −Y direction. The s-polarized light ls reflected by the half mirror **145** in the −Y direction forms a reversed item 2 image on the left hand side of the outer facing surface **142**. The p-polarized light lp reflected by the outer facing mirror surface **148***a* into the −Y direction provides a reversed item 2 image on the right hand side of the outer facing surface **142**.

[0048] Referring to FIGS. **1-8** and **11-13**, embodiments of a cloaking device with a cloaking assembly **16** having items in the form of '1' and '2' adjacent to the outer end surfaces **126**, **146**, respectively, and the s-polarizer **150** adjacent the outer end surface **126**, are shown in FIG. **12**. FIG. **13** is a side view of the cloaking assembly **16** illustrated in FIG. **12** with the reversed image of item 1 visible on the right hand side of the outer facing surface **122** of the cloaking assembly component **120** and the reversed image of item 2 visible on the left hand side and right hand side of the outward facing surface **142** of the cloaking assembly components **140** shown in conjunction with the image of the automobile A. It should be appreciated that items 1, 2 depicted in FIG. **12** are shown for illustrative purposes only, i.e. the items 1, 2 in FIG. **12** could be oriented in the Y-Z plane in order to provide the reverse images of items 1, 2 on the image-side (**104**) (X-Z plane) shown in FIG. **13**.

[0049] Referring to FIGS. **1-8** and **14**, another embodiment of a cloaking device that can selectively display additional images in conjunction with the images depicted in FIGS. **1**, **4**, **5** and **7** is shown. Particularly, FIG. **14** shows an item in the form of the number '1' and an item in the form of the number '2' located adjacent to the outer end surfaces **126**, **146**, respectively, in the +X, −X directions, respectively. Light lo reflected from the item 1 is incident on a p-polarizer **152** which allows p-polarized light lp to pass through in the −X direction. The p-polarized light lp is incident on the p-polarization half mirror **125**. The incident p-polarized light lp in the −X direction is transmitted through the p-polarization half mirror **125** in the −X direction and there is no s-polarized light is to be reflected by the p-polarization half mirror **125** in the −Y direction. The p-polarized light lp transmitted through the p-polarization half mirror **125** is incident on the outward facing mirror surface **128***a* and the outward facing mirror **128***a* reflects the p-polarized light lp into the −Y direction. Accordingly, a reversed image of item 1 is formed only on the left hand side of the outward facing surface **122**. The light lo reflected from item 2 is transmitted through the outer end surface **146** in the +X direction and is incident on the p-polarization half mirror **145**. The p-polarization half mirror **145** transmits the p-mode lp of the incident light lo in the +X directions and reflects the s-mode ls of the incident light lo into the −Y direction. The p-polarized light lp in the +X is incident on the outer facing mirror surface **148***a*. The outer facing mirror surface **148***a* reflects the incident p-polarized light lp into the −Y direction. The s-polarized light ls reflected by the half mirror **145** in the −Y direction forms a reversed 2 on the left hand side of the outer facing surface **142** and the p-polarized light lp reflected by the outer facing mirror surface **148***a* in the −Y direction forms a reversed 2 image on the right hand side of the outer facing surface **142**.

[0050] Referring to FIGS. **1-8** and **14-16**, embodiments of a cloaking device with a cloaking assembly **18** having items 1 and items 2 adjacent to the outer end surfaces **126**, **146**, respectively, and the p-polarizer **152** adjacent to the outer end surface **126**, are shown in FIG. **15**. FIG. **16** is a side view of the cloaking assembly **18** illustrated in FIG. **15** with the single reversed image of item 1 visible on the left hand side of the outer facing surface **122** of the cloaking assembly component **120** and the reversed image of item 2 visible on the left hand side and right hand side of the outward facing surface **142** of the cloaking assembly components **140** in conjunction with the image of the automobile A. It should be appreciated that items 1, 2 depicted in FIG. **15** are shown for illustrative purposes only, i.e. the items 1, 2 in FIG. **15** could be oriented in the Y-Z plane in order to provide the reverse images of items 1, 2 on the image-side **104** (X-Z plane) shown in FIG. **16**.

[0051] Referring to FIGS. **1**, **2**, **5**, **8-17**, embodiments of an A-pillar of a vehicle being cloaked by a cloaking device are shown. Particularly, FIG. **17** shows a cloaking device **19** cloaking a portion of an A-pillar P of a vehicle V. A portion of the A-pillar P is positioned within a CR **200** (not shown) of the cloaking device **19** and a portion of the A-pillar P extends beyond the cloaking device and is covered with trim T. Illustrated outside of the vehicle V is a target object O in the form of pedestrian. A portion of the pedestrian O is visible through a side window of the vehicle V and a portion of the pedestrian is visible "through" the A-pillar P cloaked by the cloaking device **19**. The cloaking device **19** redirects light reflected from the pedestrian O around the A-pillar P positioned within the CR **200** of the cloaking device **19** and forms an image I of the pedestrian O on an image-side **104** of the cloaking device **19** that is visible to an occupant of the vehicle V looking towards the pedestrian O. Accordingly, light from the pedestrian O appears to pass through the A-pillar P and a blind spot typically created by the A-pillar P is not present. In embodiments, the A-pillar P itself serves as the CR **200**, i.e. the A-pillar P has an outer surface with one or more outer facing mirror surfaces that assist in redirecting light from the pedestrian) around the A-pillar P. It should be appreciated that cloaking of the A-pillar P with the cloaking device **19** and removing the blind spot produced by the A-pillar P is performed without the use of metamaterials, video images, cameras, sophisticated electronics, etc.

[0052] Referring to FIGS. **18-19**, alternative embodiments of cloaking devices are shown. Specifically, FIG. **18** shows a cloaking device **20** with a circular CR **202** having an outer mirror surface **204** with half mirrors **206**, **208** around the outer mirror surface **204** having a circular shape. In embodiments, the CR **202** is provided by an object to be cloaked itself, e.g., an A-pillar, B-pillar, C-pillar, D-pillar, etc., that has an out outer mirror surface **204**. The cloaking device shown in FIG. **18** can increase the field of view for an observer viewing the cloaking device **20** in the +Y direction. FIG. **19** shows a cloaking device **30** with a circular CR **302** having an outer mirror surface **304** with half mirrors **306**, **308** and optical components **310**, **312** such as lenses. In embodiments, the CR **302** is provided by an object to be

cloaked itself, e.g., an A-pillar, B-pillar, C-pillar, D-pillar, etc., that has an out outer mirror surface **304**. The cloaking device shown in FIG. **19** allows for an external view from an object located behind the CR **302** (+Y direction) to be manipulated to increase a field of view or to normalize a distorted image.

[0053] The cloaking devices described herein may be used to cloak vehicle articles such as a vehicle A-pillar, B-pillar, C-pillar, D-pillar, etc., and remove a "blind spot" caused by the vehicle article. It will be understood that the term "blind spot" as used herein refers to an area around the vehicle that cannot be directly observed by a driver while operating the vehicle. The terms "object," "article," and "item" may interchangeably refer to a visual object or image (2D or 3D) that reflects light or transmits light and the team "light from" may refer to "light reflected from" or "light transmitted from." The terms "generally," "approximately," and "about" may be utilized herein to represent the inherent degree of uncertainty that may be attributed to any quantitative comparison, value, measurement, or other representation. These terms are also utilized herein to represent the degree by which a quantitative representation may vary from a stated reference without resulting in a change in the basic function of the subject matter at issue.

[0054] While particular embodiments have been illustrated and described herein, it should be understood that various other changes and modifications may be made without departing from the spirit and scope of the claimed subject matter. Moreover, although various aspects of the claimed subject matter have been described herein, such aspects need not be utilized in combination. It is therefore intended that the appended claims cover all such changes and modifications that are within the scope of the claimed subject matter.

What is claimed is:

1. A cloaking device comprising:

an object-side and an image-side;

a cloaking region (CR) boundary plane having an outward facing mirror surface and an inward facing opaque surface;

a CR at least partially bounded by the inward facing opaque surface of the CR boundary plane;

a half mirror spaced apart and generally parallel to the outward facing mirror surface;

wherein light from an object located on the object-side of the cloaking device and obscured by the CR is redirected around the CR to form an image of the object on the image-side of the cloaking device such that the light from the object appears to pass through the CR.

2. The cloaking device of claim **1**, wherein the half mirror is selected from a p-polarization half mirror and an s-polarization half mirror.

3. The cloaking device of claim **1**, further comprising an article positioned within the CR, wherein the light from the object located on the object-side of the cloaking device and obscured by the CR is redirected around the CR and the article to form the image of the object on the image-side of the cloaking device such that the article appears transparent.

4. The cloaking device of claim **3**, wherein the article is selected from the group consisting of a vehicle A-pillar, a vehicle B-pillar and a vehicle C-pillar.

5. The cloaking device of claim **1**, further comprising:

at least two CR boundary planes positioned non-planar to each other, each of the at least two CR boundary planes having an outward facing mirror surface and an inward facing opaque surface, the CR at least partially bounded by the inward facing opaque surfaces of the at least two CR boundary planes;

at least one quarter-wave plate positioned on or adjacent to the image side; and

at least two half mirrors spaced apart and generally parallel to the outward facing mirror surfaces such that a half mirror is spaced apart and generally parallel to each outward facing mirror surface;

wherein the light from the object located on the object-side of the cloaking device and obscured by the CR is redirected around the CR by the at least two outward facing mirror surfaces and the at least two half mirrors, and the image of the object is formed on the image-side of the cloaking device such that the light from the object located on the object-side of the cloaking device appears to pass through the CR.

6. The cloaking device of claim **5**, wherein the at least two CR boundary planes are positioned orthogonal to each other.

7. The cloaking device of claim **6**, wherein the light from the object on the object-side of the cloaking device is reflected by a first outward facing mirror surface, a first half mirror positioned parallel to the first outward facing mirror surface, a second half mirror positioned orthogonal to the first half mirror, a second outward facing mirror surface positioned parallel to the second half mirror, and transmitted through the at least one quarter-wave plate before forming the image of the object on the image-side of the cloaking device.

8. The cloaking device of claim **7**, further comprising a vehicle article positioned within the CR, wherein the light from the object located on the object-side of the cloaking device and obscured by the CR is redirected around the CR and the vehicle article to form the image of the object on the image-side of the cloaking device and the vehicle article appears transparent.

9. The cloaking device of claim **5**, further comprising an end side, wherein light from an item positioned adjacent to the end side forms an image of the item on the image-side of the cloaking device.

10. A cloaking device for cloaking an article of a vehicle comprising:

a cloaking assembly comprising:

an object-side and an image-side;

at least two CR boundary planes located at least partially between the object-side and the image-side, the at least two CR boundary planes positioned non-planar to each other and each of the at least two CR boundary planes having an outward facing mirror surface and an inward facing opaque surface;

a CR bounded by the inward facing opaque surfaces of the at least two CR boundary planes;

at least two half mirrors located at least partially between the object-side and the image-side, each of the at least two half mirrors spaced apart and generally parallel to one of the outward facing mirror surfaces such that a half mirror is spaced apart and generally parallel to each outward facing mirror surface;

at least one quarter-wave plate positioned on or adjacent to the image side;

and

a vehicle article positioned within the CR;

wherein light from an object located on the object-side of the cloaking assembly and obscured by the CR is redirected around the CR and forms an image of the object on the image-side of the cloaking assembly such that the vehicle article appears to be transparent.

11. The cloaking device of claim **10**, wherein the vehicle article is selected from the group consisting of a vehicle A-pillar, a vehicle B-pillar and a vehicle C-pillar.

12. The cloaking device of claim **10**, wherein the light from the object is reflected by a first outward facing mirror surface, a first half mirror oriented generally parallel to the first outward facing mirror surface, a second half mirror oriented generally orthogonal to the first half mirror and a second outward facing mirror surface oriented generally parallel to the second half mirror and transmitted through the at least one quarter-wave plate before forming the image on the image-side of the cloaking assembly.

13. The cloaking device of claim **12**, further comprising an end surface, wherein light from an item located adjacent to the end surface passes through the cloaking assembly and forms an image of the item on the image-side of the cloaking assembly.

14. The cloaking device of claim **13**, wherein a p-mode or an s-mode of the light from the item is reflected from the second half mirror before forming the image of the item on the image-side of the cloaking assembly.

15. The cloaking device of claim **13**, wherein a p-mode or an s-mode of the light from the item is transmitted through the second half mirror and reflected by the second outward facing mirror surface before forming the image of the item on the image-side of the cloaking assembly.

16. A cloaking device comprising:

four CR boundary planes positioned non-planar to each other, each of the four CR boundary planes having an outward facing mirror surface and an inward facing opaque surface;

a CR bounded by the inward facing opaque surfaces of the four CR boundary planes;

an article located at least partially within the CR;

four half mirrors spaced apart and generally parallel to the outward facing mirror surfaces such that a half mirror is spaced apart and generally parallel to each outward facing mirror surface;

wherein light from an object on an object-side of the cloaking device is redirected around the CR and appears as an image on an image-side of the cloaking device and is visible to an observer viewing the image-side of the cloaking device and the article within the CR is not visible to the observer viewing the image-side of the cloaking device such that the article within the CR appears transparent to the observer viewing the image-side of the cloaking device.

17. The cloaking device of claim **16**, wherein the light from the object is reflected by a first outward facing mirror surface, a first half mirror oriented generally parallel to the first outward facing mirror surface, a second half mirror oriented generally orthogonal to the first half mirror and a second outward facing mirror surface oriented generally parallel to the second half mirror before forming the image on the image-side of the cloaking device.

18. The cloaking device of claim **17**, wherein the article is selected from at least one of a vehicle A-pillar, a vehicle B-pillar and a vehicle C-pillar.

19. The cloaking device of claim **18**, further comprising an end side, wherein light from an item located adjacent to the end side is reflected by at least one of the second half mirror and the second outward facing mirror surface and forms an image of the item on the image-side of the cloaking device.

20. The cloaking device of claim **19**, wherein the image of the item is selectively formed on the image-side of the cloaking device.

* * * * *

US009847583B1

(12) **United States Patent**
Cohen

(10) **Patent No.: US 9,847,583 B1**
(45) **Date of Patent: *Dec. 19, 2017**

(54) **DEFLECTIVE ELECTROMAGNETIC SHIELDING**

(71) Applicant: **Fractal Antenna Systems, Inc.**, Bedford, MA (US)

(72) Inventor: **Nathan Cohen**, Belmont, MA (US)

(73) Assignee: **Nathan Cohen**, Belmont, MA (US)

(*) Notice: Subject to any disclaimer, the term of this patent is extended or adjusted under 35 U.S.C. 154(b) by 167 days.

This patent is subject to a terminal disclaimer.

(21) Appl. No.: **14/853,298**

(22) Filed: **Sep. 14, 2015**

Related U.S. Application Data

(63) Continuation of application No. 14/071,235, filed on Nov. 4, 2013, now Pat. No. 9,134,465, which is a continuation-in-part of application No. 14/043,178, filed on Oct. 1, 2013.

(60) Provisional application No. 61/744,651, filed on Oct. 1, 2012, provisional application No. 61/796,119, filed on Nov. 3, 2012.

(51) **Int. Cl.**
H01Q 15/00 (2006.01)
H01Q 17/00 (2006.01)

(52) **U.S. Cl.**
CPC ***H01Q 15/0086*** (2013.01)

(58) **Field of Classification Search**
CPC G02B 5/008; H01Q 15/0086; H01Q 15/0093; H01Q 17/00; H01Q 17/002; H01Q 15/00; H01Q 21/06; H01Q 21/20; H01Q 21/205
See application file for complete search history.

(56) **References Cited**

U.S. PATENT DOCUMENTS

1,434,167	A	10/1922	Thorner
5,250,950	A	10/1993	Scherrer et al.
6,642,881	B1	11/2003	Lawrence et al.
6,876,320	B2	4/2005	Puente Ballarda
7,102,814	B1	9/2006	Hughes
7,256,751	B2	8/2007	Cohen
7,301,493	B1	11/2007	Canales et al.

(Continued)

FOREIGN PATENT DOCUMENTS

KR	10-2010-0072382		7/2010
WO	WO2011/138670	A2	11/2011
WO	WO2014/05573	A1	4/2014

OTHER PUBLICATIONS

Korean International Searching Authority (ISA/KIPO). 2014. International Search Report and Written Opinion, dated Jan. 23, 2014, from PCT Application PCT/US2013/062940 (published as WO 2014/05573 A1).

Primary Examiner — Bernarr E Gregory
(74) *Attorney, Agent, or Firm* — McDermott Will & Emery LLP

(57) **ABSTRACT**

Systems according to the present disclosure provide one or more surfaces that function as power transferring surfaces for which at least a portion of the surface includes or is composed of "fractal cells" placed sufficiently closed close together to one another so that a surface (plasmonic) wave causes near replication of current present in one fractal cell in an adjacent fractal cell. A fractal of such a fractal cell can be of any suitable fractal shape and may have two or more iterations. The fractal cells may lie on a flat or curved sheet or layer and be composed in layers for wide bandwidth or multibandwidth transmission.

34 Claims, 7 Drawing Sheets

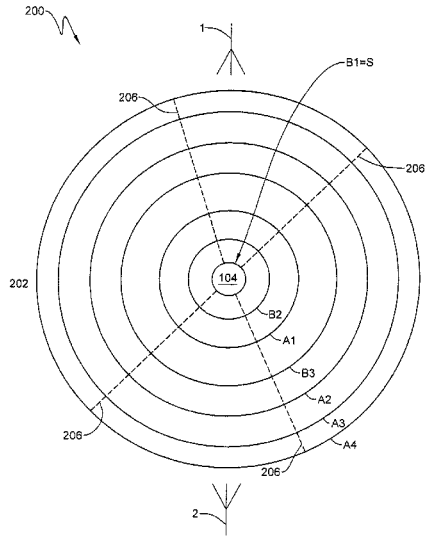

(56) **References Cited**

U.S. PATENT DOCUMENTS

7,994,962	B1	8/2011	Ben-Shmuel	
8,253,639	B2	8/2012	Cohen	
8,378,877	B2	2/2013	Tishin et al.	
8,610,617	B1	12/2013	Avouris et al.	
8,878,741	B2	11/2014	Mosallaei	
8,937,579	B2	1/2015	Cohen	
9,134,465	B1 *	9/2015	Cohen	G02B 5/008
2007/0236406	A1 *	10/2007	Wen	H01Q 15/0093 343/909
2008/0024792	A1 *	1/2008	Pendry	H01Q 15/00 356/602
2009/0135042	A1	5/2009	Umishita et al.	
2009/0207087	A1	8/2009	Fang et al.	
2010/0126566	A1 *	5/2010	Ji	G02B 5/008 136/252
2010/0288116	A1	11/2010	Cincotti et al.	
2011/0050360	A1 *	3/2011	Cohen	H01Q 21/205 333/135
2011/0063189	A1	3/2011	Cohen et al.	

* cited by examiner

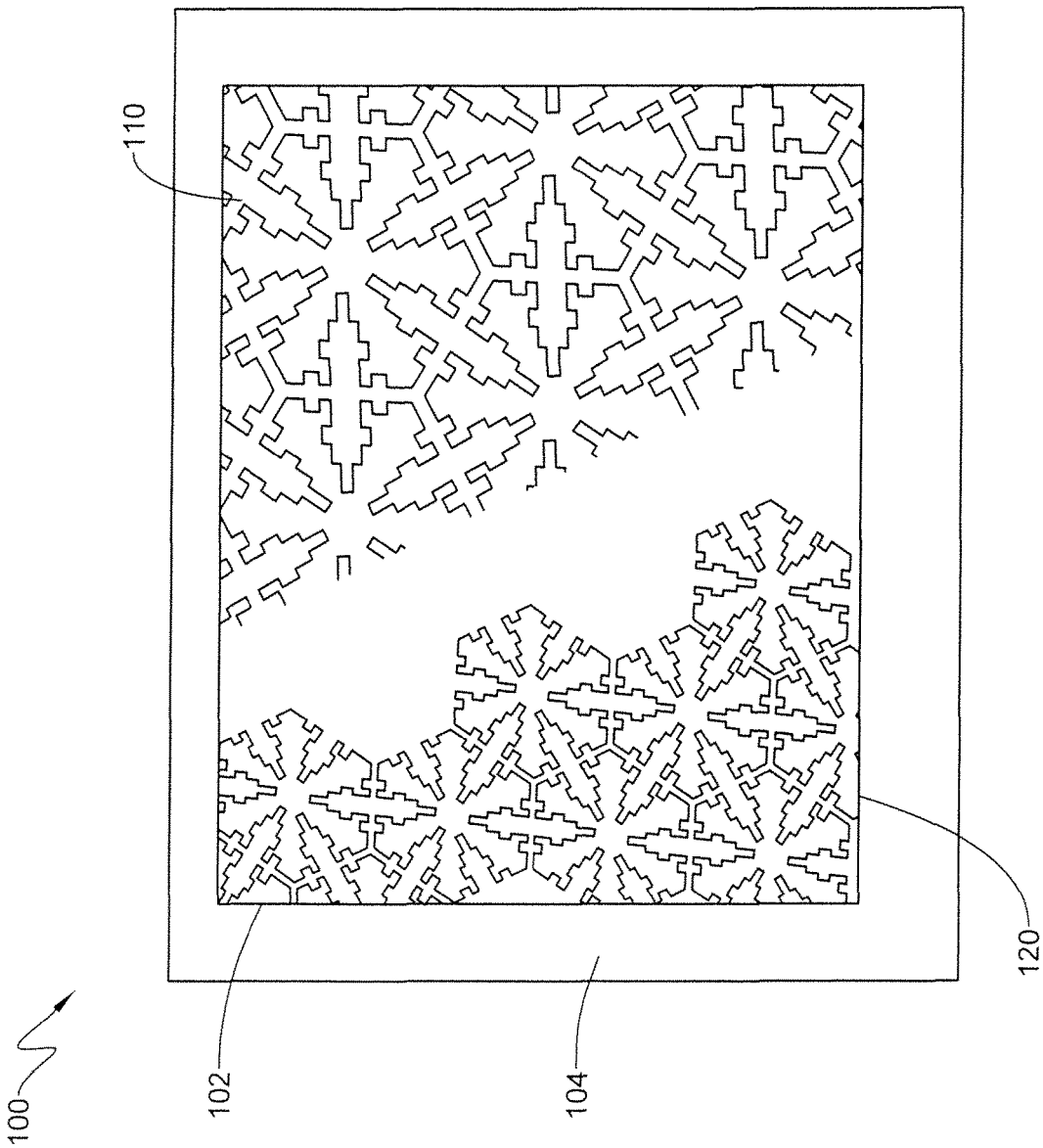

FIG. 1

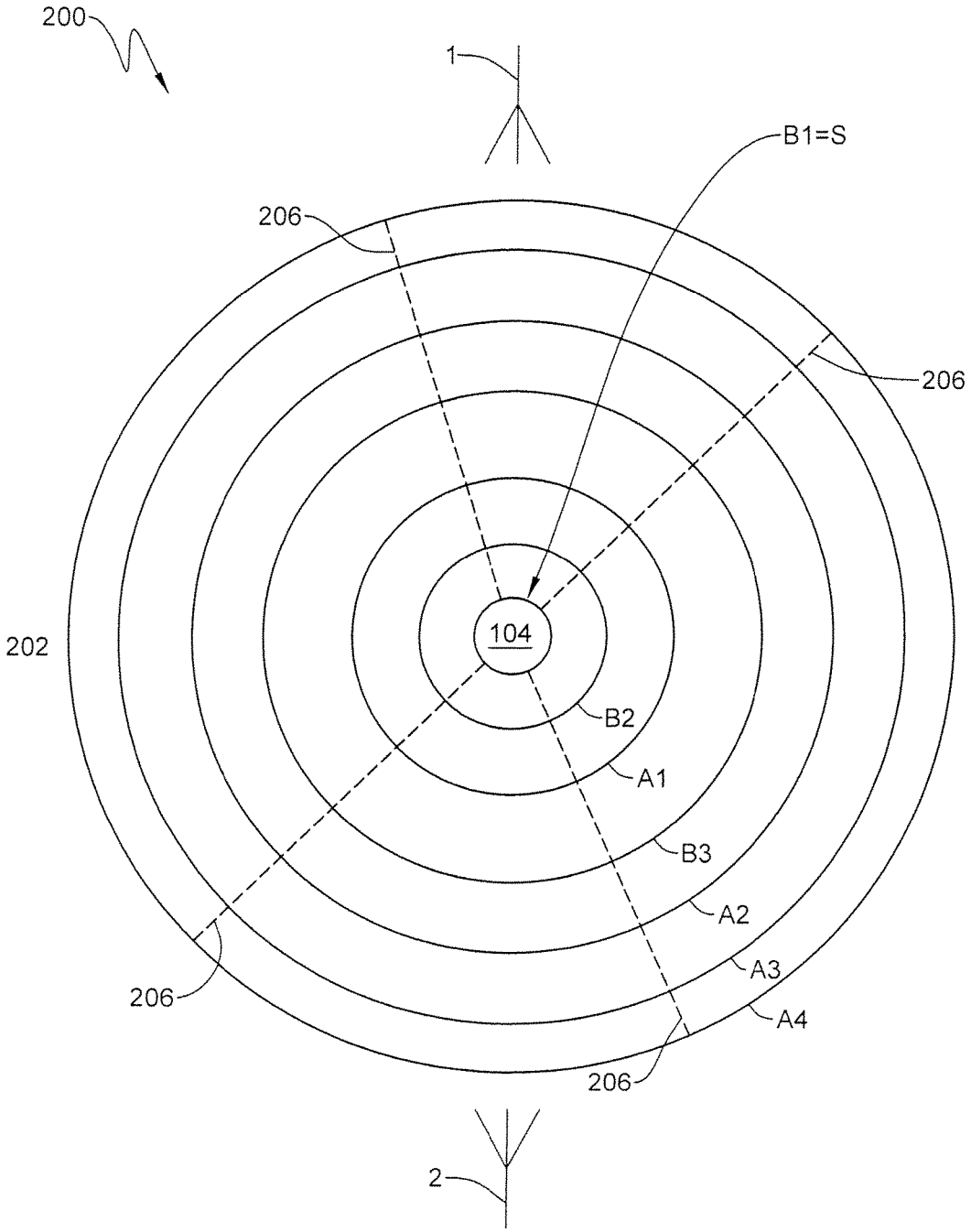

FIG. 2

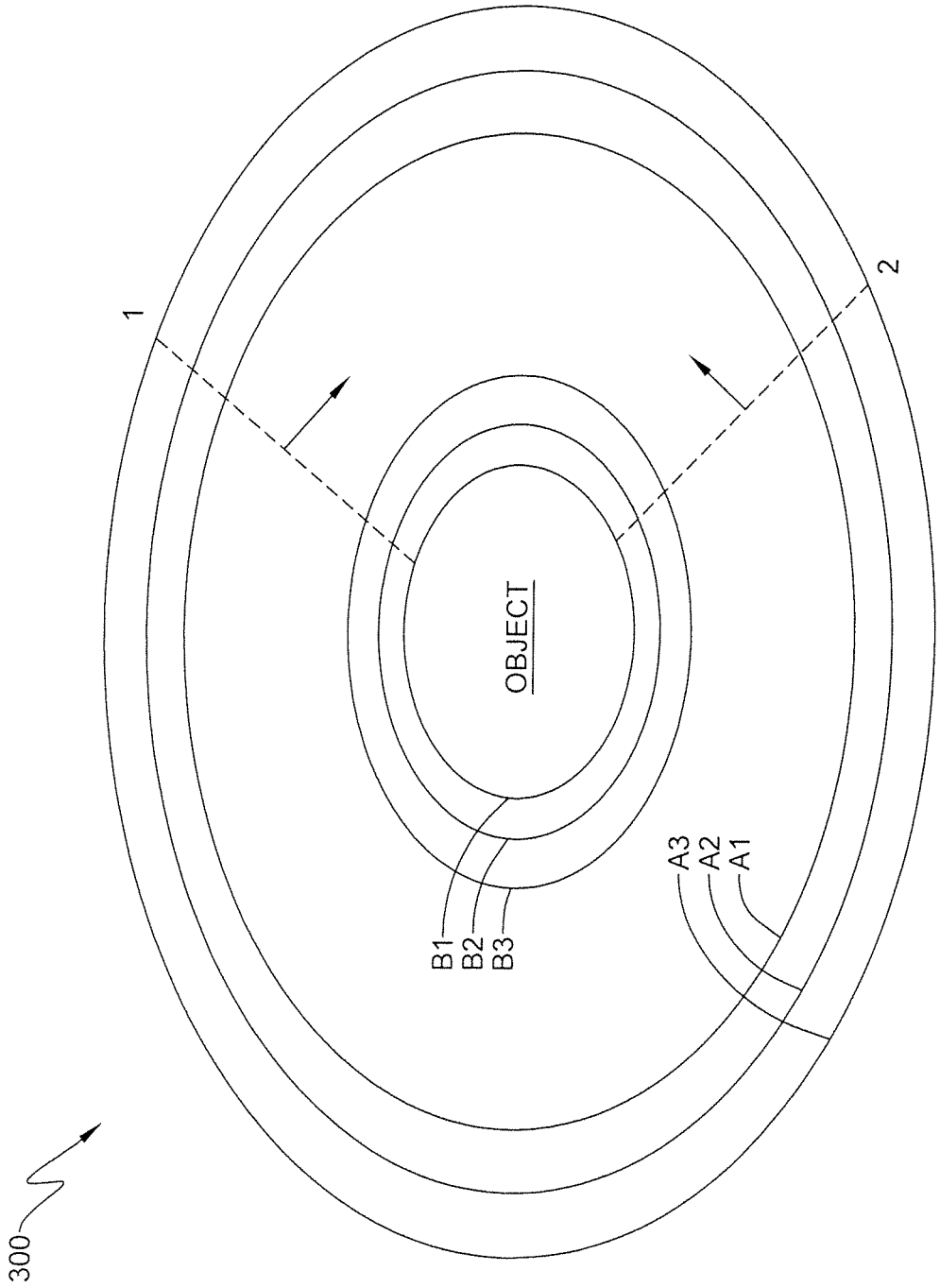

FIG. 3

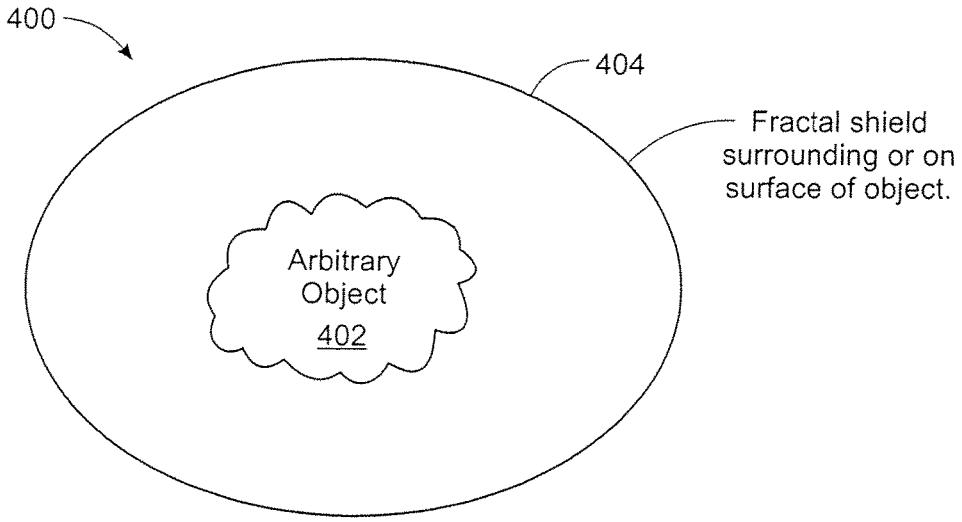
400
404
Fractal shield surrounding or on surface of object.
Arbitrary Object
402

FIG. 4A

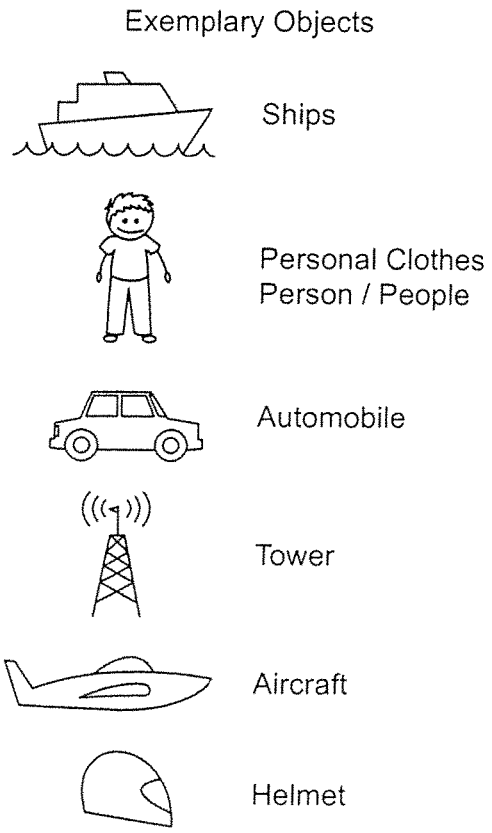
Exemplary Objects
Ships
Personal Clothes Person / People
Automobile
Tower
Aircraft
Helmet

FIG. 4B

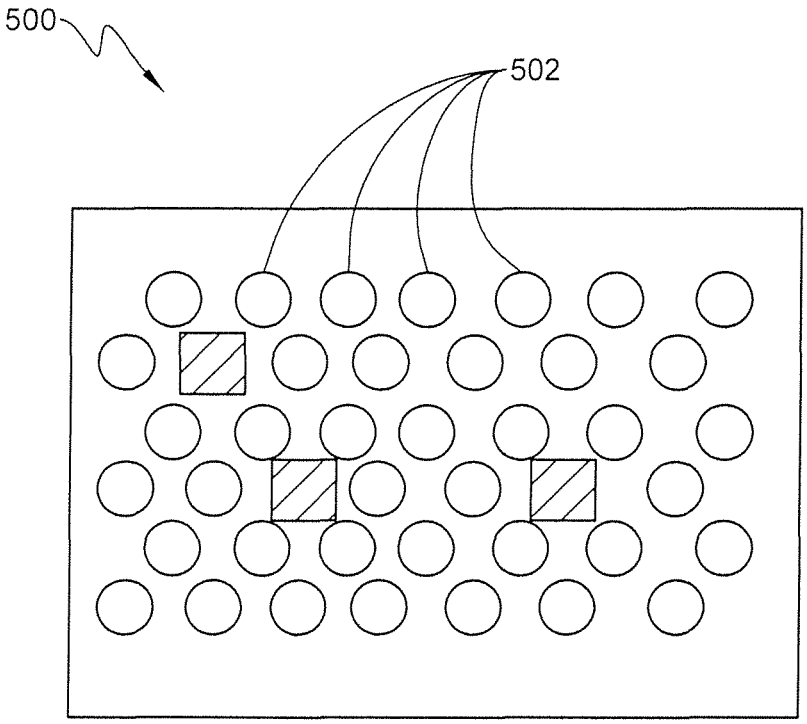

FIG. 5

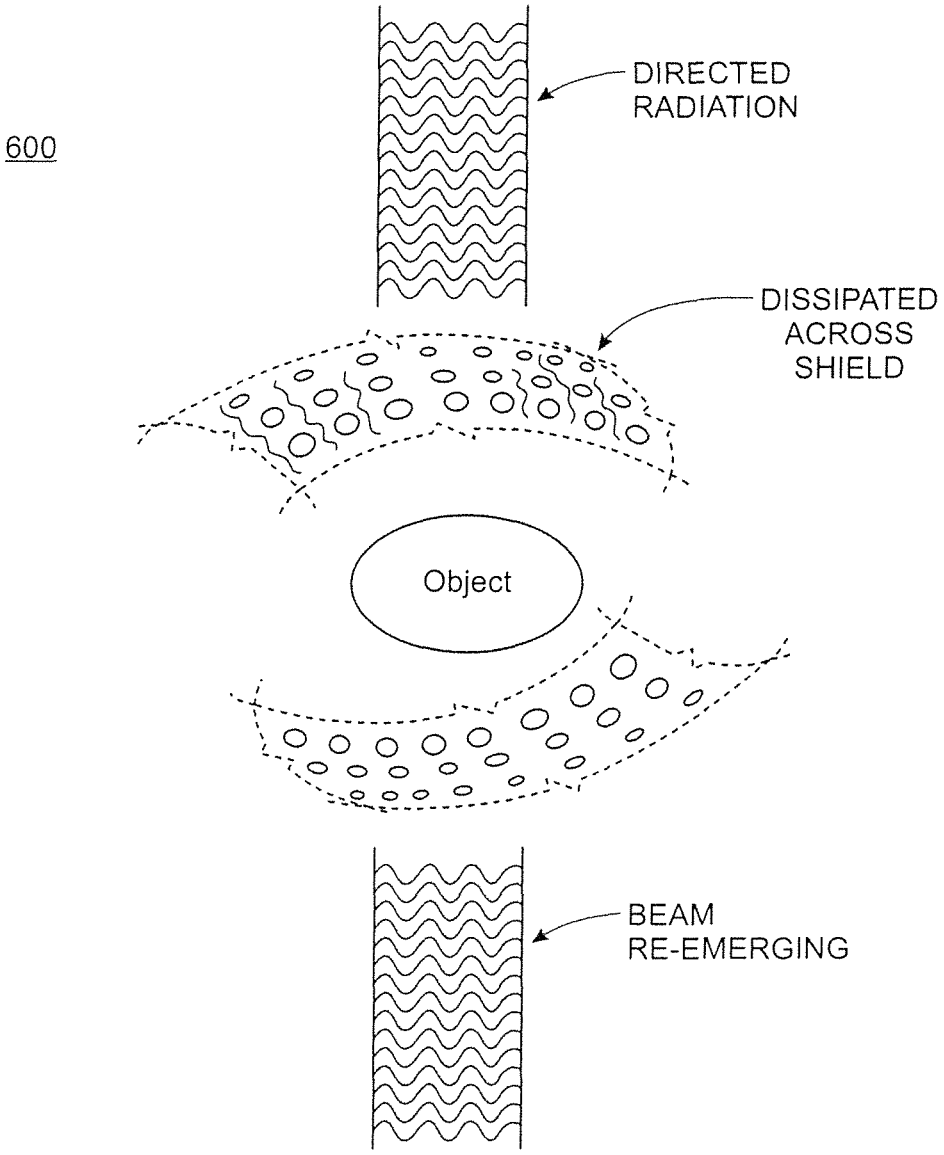
600
DIRECTED RADIATION
DISSIPATED ACROSS SHIELD
Object
BEAM RE-EMERGING

FIG. 6A

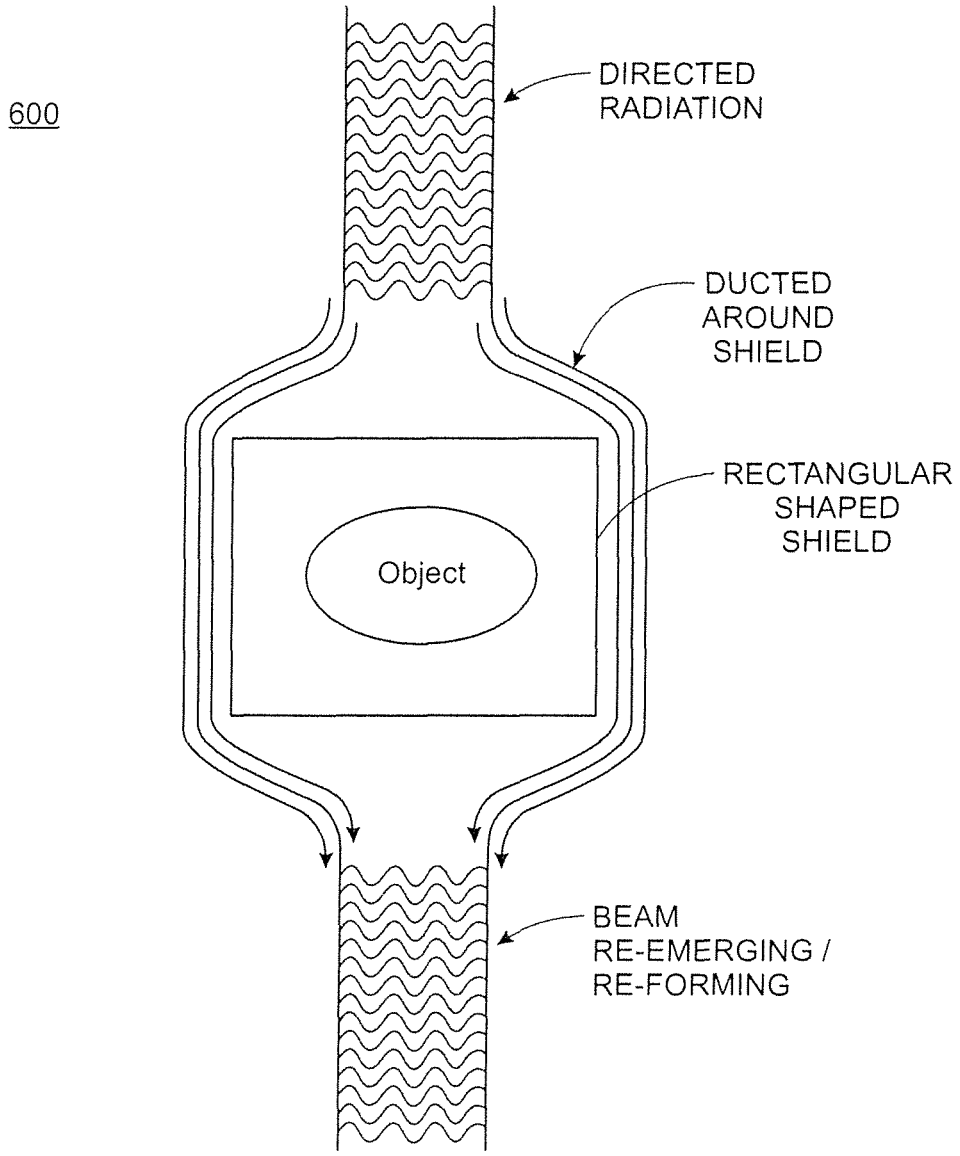
600
DIRECTED RADIATION
DUCTED AROUND SHIELD
RECTANGULAR SHAPED SHIELD
Object
BEAM RE-EMERGING / RE-FORMING

FIG. 6B

DEFLECTIVE ELECTROMAGNETIC SHIELDING

RELATED APPLICATION

This application is a continuation of application Ser. No. 14/071,235 filed 4 Nov. 2013, now U.S. Pat. No. 9,134,465, and entitled "Deflective Electromagnetic Shielding," which (i) claims priority to U.S. Provisional Patent Application No. 61/796,119, filed 3 Nov. 2012 and entitled "Deflective Shielding Via Electromagnetic Cloaking," and (ii) is also a continuation-in-part of U.S. patent application Ser. No. 14/043,781 filed 1 Oct. 2013, now abandoned, and entitled "Radiative Transfer and Power Control with Fractal Metamaterial and Plasmonics," which claims priority to U.S. Provisional Patent Application No. 61/744,651, filed 1 Oct. 2012 and entitled "Radiative Transfer and Power Control with Fractal Metamaterial and Plasmonics"; the entire contents of all of which previously-noted applications are incorporated herein by reference.

BACKGROUND

Much time and effort has been devoted to the quest for so-called invisibility machines. Beyond science fiction, however, there has been little if any real progress toward this goal.

Materials with negative permittivity and permeability leading to negative index of refraction were theorized by Russian noted physicist Victor Veselago in his seminal paper in *Soviet Physics* USPEKHI, 10, 509 (1968). Since that time, metamaterials have been developed that produce negative index of refraction, subject to various constraints. Such materials are artificially engineered micro/nanostructures that, at given frequencies, show negative permeability and permittivity. Metamaterials have been shown to produce narrow band, e.g., typically less than 5%, response such as bent-back lensing. Such metamaterials produce such a negative-index effect by utilizing a closely-spaced periodic lattice of resonators, such as split-ring resonators, that all resonate. Previous metamaterials provide a negative index of refraction when a sub-wavelength spacing is used for the resonators.

In the microwave regime, certain techniques have been developed to utilize radiation-absorbing materials or coatings to reduce the radar cross section of airborne missiles and vehicles. While such absorbing materials can provide an effective reduction in radar cross section, these results are largely limited to small ranges of electromagnetic radiation.

SUMMARY

The present disclosure is directed to systems and techniques that provide for desired transfer of radiation by using close packed arrangements of resonators having fractal shapes, i.e., "fractal cells." Systems and techniques according to the present disclosure provide one or more surfaces that act or function as power transfer surfaces or structures for which at least a portion of the surface or structure includes or is composed of "fractal cells" (fractal shapes) (as antennas or resonators) placed sufficiently closed close together to one another (e.g., less than 1/20 wavelength) to produce substantial replication of current present in one fractal cell in an adjacent fractal cell. The size of the fractal cells can be adjusted based on or tailored to a desired wavelength or wavelength range of operation.

A fractal of such a fractal cell can be of any suitable fractal shape and may have two or more iterations. The fractal cells may lie on a flat or curved sheet or layer and be composed in layers for wide bandwidth or multibandwidth transmission. The area of a surface (e.g., sheet) and its number of fractals determines the gain relative to a single fractal cell. As each cell is fed indirectly (e.g., plasmonicly) rather than directly, 'dead' or covered or out of resonance cells do not alter the ability of the other cells to work. The boundary edges of the surface may be terminated resistively so as to not degrade the cell performance at the edges. These surfaces may be referred to as fractal plasmonic surfaces (FPS's) and can provide benefits such as shielding for/against electromagnetic radiation.

Such a fractal plasmonic surface (FPS) may be used to transfer radiation, e.g., via evanescent wave transfer. In doing so such surfaces can be used to remove radiative power from one location to another, or divert it to another location. Such surfaces may be used to essentially diffuse power delivered to a part of the FPS and dissipate and or distribute it to other specific parts or globally. For example, a power "hotspot" supplied or hit with localized power may have the power spread out or diverted to other desired locations, e.g., different areas of a related machine or structure. In some embodiments, a FPS on a closed or curved surface may act as a cloaking device to divert power (in a wavelength or frequency of interest) from one side of the device to the other.

Exemplary embodiments of the present disclosure can provide techniques, including systems and/or methods, for cloaking objects at certain wavelengths/frequencies or over certain wavelength/frequency ranges (bands). Such techniques can provide an effective electromagnetic lens and/or lensing effect for certain wavelengths/frequencies or over certain wavelength/frequency ranges (bands).

In some embodiments, the effects produced by such techniques can include cloaking or so-called invisibility of the object(s) at the noted wavelengths or bands. Representative frequencies of operation can include, but are not limited to, those over a range of 500 MHz to 1.3 GHz, though others may of course be realized. Operation at other frequencies, including for example those of visible light, infrared, ultraviolet, and as well as microwave EM radiation, e.g., K, Ka, X-bands, etc. may be realized, e.g., by appropriate scaling of dimensions and selection of shape of the resonator elements.

Exemplary embodiments of the present disclosure can include a novel arrangement of resonators in a lattice-like configuration. The arrangements can include resonators of several different sizes and/or geometries arranged so that each size or geometry ("grouping") corresponds to a moderate or high quality factor, "Q," (that is moderate or low bandwidth) response that resonates within a specific frequency range.

For exemplary embodiments, fractal resonators can be used for the resonators in such structures because of their control of passbands, and smaller sizes compared to non-fractal based resonators. Their benefit arises from a size standpoint because they can be used to shrink the resonator(s), while control of passbands can reduce or eliminates issues of harmonic passbands that would resonate at frequencies not desired.

Further embodiments of the present disclosure are directed to scatterer or scattering structures. Additional embodiments of the present disclosure are directed to structures/techniques for activating and/or deactivating cloaking

structures. Further embodiments of the present disclosure are directed to wideband absorbers.

It should be understood that other embodiments of FPS systems and methods according to the present disclosure will become readily apparent to those skilled in the art from the following detailed description, wherein exemplary embodiments are shown and described by way of illustration. The systems and methods of the present disclosure are capable of other and different embodiments, and details of such are capable of modification in various other respects. Accordingly, the drawings and detailed description are to be regarded as illustrative in nature and not as restrictive.

BRIEF DESCRIPTION OF THE DRAWINGS

Aspects of the disclosure may be more fully understood from the following description when read together with the accompanying drawings, which are to be regarded as illustrative in nature, and not as limiting. The drawings are not necessarily to scale, emphasis instead being placed on the principles of the disclosure. In the drawings:

FIG. **1** depicts a diagrammatic plan view of a fractal plasmonic surface (FPS), in accordance with exemplary embodiments of the present disclosure;

FIG. **2** depicts a diagrammatic plan view of a resonator cloaking system utilizing a number of cylindrical shells, in accordance with exemplary embodiments of the present disclosure; and

FIG. **3** depicts a diagrammatic plan view of a resonator cloaking system utilizing a number of shells having an elliptical cross-section, in accordance with an alternate embodiment of the present disclosure;

FIG. **4**A depicts an example of a fractal shield surrounding or on an arbitrary object; FIG. **4**B depicts exemplary objects for use with a fractal shield;

FIG. **5** illustrates the robustness or anti-fragility presented by a FPS under conditions where some fractal cells are damaged or otherwise inoperative; and

FIG. **6**A depicts an example of a fractal shield dissipating/transferring incident radiation; FIG. **6**B shows another example in which directed radiation is incident on a rectangular shield.

While certain embodiments depicted in the drawings, one skilled in the art will appreciate that the embodiments depicted are illustrative and that variations of those shown, as well as other embodiments described herein, may be envisioned and practiced within the scope of the present disclosure.

DETAILED DESCRIPTION

Systems and techniques according to the present disclosure provide for desired transfer of electromagnetic radiation by using close packed arrangements of resonators having fractal shapes, i.e., "fractal cells." Systems and techniques according to the present disclosure provide one or more surfaces that act or function as shielding and/or cloaking surfaces for which at least a portion of the surface includes or is composed of "fractal cells" (small fractal shapes, functioning as antennas or resonators) placed sufficiently close to one another so that current present in one fractal cell is replicated or reproduced to an extent in an adjacent fractal cell. Without being limited by any theoretical explanation, surface plasmonic waves are believed to cause such replication in conjunction with evanescent waves.

A fractal of such a fractal cell can be of any suitable fractal shape and may have two or more iterations. The fractal cells may lie on a flat or curved sheet or layer and be composed in layers for wide bandwidth or multibandwidth transmission. As each cell is fed plasmonicly rather than directly, "dead" or covered or out of resonance cells do not alter the ability of the other cells to work. The boundary edges of the surface may be terminated resistively so as to not degrade the cell performance at the edges. These surfaces may be referred to as fractal plasmonic surfaces (FPS's) and they can function to shield structures and/or objects by conveying or ducting EM radiation.

Such a fractal plasmonic surface (FPS) may be used to transfer radiation, e.g., via evanescent wave transfer. In doing so such surfaces can be used to remove or transfer radiative power and/or heat from one location (such as a location receiving incident radiation) to another location. Such surfaces may be used to essentially diffuse power delivered to a part of the FPS and dissipate and or distribute it to other specific parts or globally. For example, a power "hotspot" supplied or hit with localized electromagnetic power may have the power spread out or diverted to other desired locations, e.g., different areas of a related machine or structure. Thus, the structure may act as shielding for another structure or the structure itself. In some embodiments, a FPS on a closed or curved surface may act as a cloaking device to divert power (in a wavelength or frequency of interest) from one side of the device to the other. In other embodiments, a refrigeration or cooling effect may be induced by transferring heat away from a FPS.

In some embodiments, power control may also be achieved through wideband absorption by placing a resistive sheet at the edge of the fractal cells, creating a layer adjacent to the cells. Impinging electromagnetic radiation will be absorbed and not reflected or scattered. A FPS may be used to wirelessly couple a device for power transmission by placing the power as electromagnetic radiation on the FPS and then physically placing the (to be) powered device closely to the FPS. A FPS may also work even if some of the cells are damaged or missing as a variety of paths exist to convey the plasmonic transmission.

Exemplary embodiments of the present disclosure can provide techniques, including systems and/or methods, for cloaking objects at certain wavelengths/frequencies or over certain wavelength/frequency ranges (bands). Such techniques can provide an effective electromagnetic lens and/or lensing effect for certain wavelengths/frequencies or over certain wavelength/frequency ranges (bands). In some embodiments, the effects produced by such techniques can include cloaking or so-called invisibility of the object(s) at the noted wavelengths or bands. Representative frequencies of operation can include, but are not limited to, those over a range of 500 MHz to 1.3 GHz, though others may of course be realized. Operation at other frequencies, including for example those of visible light, infrared, ultraviolet, and as well as microwave EM radiation, e.g., K, Ka, X-bands, etc. may be realized, e.g., by appropriate scaling of dimensions and selection of shape of the resonator elements.

The fractal cells of a FPS can be designed or configured (e.g., sized) based on the wavelength or wavelength range of radiation that the FPS is anticipated as working with. In exemplary embodiments, a fractal cell may be sized such that its spatial extent in a given direction (e.g., a minor diameter, a major diameter, a major axis, a minor axis, etc.) is less than a wavelength of the radiation it is intended to work with. For example, a fractal cell may be constructed that has a spatial extent (in a particular direction) that is ⅛, or less, of the wavelength (lambda, λ) of radiation that the cell is intended to work with. For example, considering a

roughly hexagonal shaped fractal cell (e.g., as shown in FIG. **1**), the "flat-to-flat" distance of the hexagonal cell may be ⅛ λ or less of the longest wavelength of radiation foreseen for use with the fractal cell. The spacing between the cell and each of the other adjacent cells (e.g., in this case, six other cells) is preferably 1/16 λ to 1/20 λ. When a wavelength range is anticipated for the cell or FPS having the cell, the wavelength used for design purposes can be the greatest wavelength of operation (corresponding to the lowest frequency of operation). Exemplary embodiments can be designed and built to operate to transfer radiation in the near-IR (NIR) wavelength range. Examples of such wavelengths include but are not limited to the edge of the visible red spectrum (~700 nm) through 1 mm. Other embodiments can operate at medium and/or long-wave infrared wavelengths. As stated above, the spacing between fractal cells in preferably sub-wavelength, e.g., 1/20 of a wavelength. For example, for a desired wavelength of operation of 1 mm (corresponding to 300 GHz), the spacing between adjacent fractal cells could be 50 microns (i.e., 1/20 λ).

Exemplary embodiments of the present disclosure can include an arrangement of resonators in a lattice-like configuration. The arrangements can include resonators of several different sizes and/or geometries arranged so that each size or geometry ("grouping") corresponds to a moderate or high quality factor, "Q," (that is moderate or low bandwidth) response that resonates within a specific frequency range.

For exemplary embodiments, fractal resonators can be used for the resonators in such structures because of their control of passbands, and smaller sizes compared to non-fractal based resonators. Their benefit arises from a size standpoint because they can be used to shrink the resonator(s), while control of passbands can reduce or eliminates issues of harmonic passbands that would resonate at frequencies not desired.

Further embodiments of the present disclosure are directed to scatterer or scattering structures. Additional embodiments of the present disclosure are directed to structures/techniques for activating and/or deactivating cloaking structures.

Related fractal technology is described in the following: (i) U.S. patent application Ser. No. 12/732,059 filed 25 Mar. 2010 and entitled "Wideband Electromagnetic Cloaking Systems," which is a continuation-in-part of (ii) U.S. patent application Ser. No. 12/547,104 filed 25 Aug. 2009, now U.S. Pat. No. 8,253,639, which claims benefit of (iii) U.S. Provisional Patent Application No. 61/189,966 filed 25 Aug. 2008 and (iv) U.S. Provisional Patent Application No. 61/163,824 filed 26 Mar. 2009 and entitled "Cloaking Techniques"; (v) U.S. Provisional Patent Application No. 61/163,837, filed 26 Mar. 2009 and entitled "Scatterer"; (vi) U.S. Provisional Patent Application No. 61/163,913, filed 27 Mar. 2009 and entitled "Cloaking Techniques"; and, (vii) U.S. Provisional Patent Application No. 61/237,360, filed 27 Aug. 2009 and entitled "Switching System for Cloak On Command"; the entire contents of all of which applications are incorporated herein by reference.

For exemplary embodiments, fractal resonators can be used for the resonators because of their control of passbands, and smaller sizes. A main benefit of such resonators arises from a size standpoint because they can be used to shrink the resonator(s), while control of passbands can reduce/mitigate or eliminate issues of harmonic passbands that would resonate at frequencies not desired.

Exemplary embodiments of a resonator system for use at infrared (or nearby) frequencies can be built from belts or loops having fractal cells on one or both sides. These belts or loops can function to slip or duct the infrared (heat) energy around an object located within the belts, so the object is effectively invisible and "see thru" at the infrared frequencies. Belts, or shells, having similar closed-packed arrangements for operation at a first passband can be positioned within a wavelength of one another, e.g., 1/10λ, ⅛λ, ¼λ, ½λ, etc.

In exemplary embodiments, as described in further detail below, an observer can observe an original image or signal, without it being blocked by the cloaked object. Using no power, the fractal cloak having FPS can replicate the original signal (that is, the signal before blocking) with great fidelity. Exemplary embodiments can function in the infrared region (e.g., ~700 nm to ~1 mm, corresponding to ~430 THz to ~300 GHz), providing 3:1 bandwidth; operation within or near such can frequencies can provide other bandwidths as well, such as 1:1 up to 2:1 and up to about 3:1.

FIG. **1** depicts a deflective shield system **100** having a fractal plasmonic surface (FPS) **102**, in accordance with the present disclosure. The FPS **102** includes a close packed arrangements of resonators having fractal shapes (e.g., "fractal cells") as denoted by **110** and **120**. The FPS **102** may be part of a larger surface or area **104**. The individual fractal cells are separated from the adjacent fractal cells but are sufficiently close to one another (e.g., preferably less than 1/20 wavelength) so that a surface (plasmonic) wave causes near replication of current present in one fractal cell in an adjacent fractal cell. While preferred fractal shapes are shown in FIG. **1** as being hexagonal or snowflake-like, any suitable fractal shape (e.g., deterministic) may be used and such a fractal may have two or more iterations. The fractal cells may lie on a flat or curved sheet or layer and be composed in layers for wide bandwidth or multibandwidth transmission; the fractal cells can also lie on more complex three-dimensional surfaces and structures of virtually any shape. For embodiments having layers, each layer holding a FPS can utilize fractal cells of different size and shape that those of another layer.

Examples of suitable fractal shapes (for use for shells and/or a scatting object) can include, but are not limited to, fractal shapes described in one or more of the following patents, owned by the assignee of the present disclosure, the entire contents of all of which are incorporated herein by reference: U.S. Pat. No. 6,452,553; U.S. Pat. No. 6,104,349; U.S. Pat. No. 6,140,975; U.S. Pat. No. 7,145,513; U.S. Pat. No. 7,256,751; U.S. Pat. No. 6,127,977; U.S. Pat. No. 6,476,766; U.S. Pat. No. 7,019,695; U.S. Pat. No. 7,215,290; U.S. Pat. No. 6,445,352; U.S. Pat. No. 7,126,537; U.S. Pat. No. 7,190,318; U.S. Pat. No. 6,985,122; U.S. Pat. No. 7,345,642; and, U.S. Pat. No. 7,456,799.

Other suitable fractal shape for the resonant structures can include any of the following: a Koch fractal, a Minkowski fractal, a Cantor fractal, a torn square fractal, a Mandelbrot, a Caley tree fractal, a monkey's swing fractal, a Sierpinski gasket, and a Julia fractal, a contour set fractal, a Sierpinski triangle fractal, a Menger sponge fractal, a dragon curve fractal, a space-filling curve fractal, a Koch curve fractal, an Lypanov fractal, and a Kleinian group fractal. While exemplary fractal shapes are shown in FIG. **1**, the present disclosure is not limited to such and any other suitable fractal shapes (including generator motifs) may be used in accordance with the present disclosure.

With continued reference to FIG. **1**, the fractal cells **110** and **120** can be formed on the FPS **102** by any suitable techniques. Of course, while a space devoid of cells is shown between cell groups **110** and **120**, such is not necessary (and is included in FIG. **1** merely to show the distinction between

the individual cells of the two groups). Such techniques can include additive and/or subtractive techniques. Suitable lithography techniques may be used for some embodiments. In exemplary embodiments, the fractal shapes of the fractal cells **110** and **120** can be conductive traces that are deposited on the underlying surface, e.g., a suitable substrate. Any suitable deposition techniques can be utilized. In other embodiments, the fractal cells **110** and **120** can be etched or engraved onto a surface. Any suitable micromachining or nanomachining techniques may be used.

Exemplary embodiments of system **100** can utilize a material for a substrate that has low-loss characteristics in the infrared region to facilitate heat transfer by fractal cells disposed on, disposed in, or supported by the substrate, e.g., on a supporting surface provided by the substrate. Examples of suitable materials for such substrates can include, but are not limited to, the following: chalcogenide-glasses in general; high-purity As—S, As—Se, Ge—As—Se glasses; and, $Ge_{30}As_{10}Se_{30}Te_{30}$ glass, and the like.

FIG. **2** depicts a diagrammatic plan view of a cloaking system **200** and RF testing set up in accordance with exemplary embodiments of the present disclosure. As shown in FIG. **2**, a number of concentric shells (or bands) **202** are placed on a platform (parallel to the plane of the drawing). The shells include a flexible substrate (e.g., polyimide with or without composite reinforcement) with conductive traces (e.g., copper, silver, etc.) in fractal shapes or outlines, each separate shape representing a fractal cell (e.g., similar to cells **110** and **120** of FIG. **1**). The shells **202** surround an object to be cloaked (shown as **204** in FIG. **1**). A transmitting antenna **1** and a receiving antenna **2** are shown at different sides of the system **200**, for the purposes of illustration. The shells **202** can be held in place by suitable radial supports **206**.

The shells indicated in FIG. **2** are of two types, one set (A**1**-A**4**) configured for optimal operation over a first wavelength/frequency range, and another set (B**1**-B**3**) configured for optimal operation over a second wavelength/frequency range. (The numbering of the shells is of course arbitrary and can be reordered, e.g., reversed.)

For an exemplary embodiment of system **200**, the outer set of shells (A**1**-A**4**, with A**1** being the innermost and A**4** the outmost) had a height of about 3 to 4 inches (e.g., 3.5 inches) and the inner set of shells had a height of about 1 inch less (e.g., about 2.5 to 3 inches). The spacing between the shells with a larger fractal shape (A**1**-A**4**) was about 2.4 cm while the spacing between shells of smaller fractal generator shapes (B**1**-B**3**) was about 2.15 cm (along a radial direction). In a preferred embodiment, shell A**4** was placed between shell B**2** and B**3** as shown. The resonators formed on each shell by the fractal shapes can be configured so as to be closely coupled (e.g., by capacitive and/or evanescent-wave coupling) and function to propagate energy by a plasmonic wave.

It will be appreciated that while, two types of shells and a given number of shells per set are indicated in FIG. **2**, the number of shell types and number of shells for each set can be selected as desired, and may be optimized for different applications, e.g., wavelength/frequency bands, including the optical bands, i.e., infrared, visible, and ultraviolet, as well as x-ray.

FIG. **3** depicts a diagrammatic plan view of a cloaking system (or electrical resonator system) according to an alternate embodiment in which the individual shells have an elliptical cross section. As shown in FIG. **3**, a system **300** for cloaking can include a number of concentric shells (or bands) **302**. These shells can be held in place with respect to one another by suitable fixing means, e.g., they can be placed on a platform (parallel to the plane of the drawing) and/or held with a frame. The shells **302** can include a flexible substrate (e.g., polyimide with or without composite reinforcement) with a close-packed arrangement of electrically conductive material formed on the first surface. As stated previously for FIG. **2**, the closed-packed arrangement can include a number of self-similar electrical resonator shapes. The resonator shapes can be made from conductive traces (e.g., copper, silver, gold, silver-based ink, etc.) having a desired shape, e.g., fractal shape, split-ring shape, and the like. The shells **302** can surround an object to be cloaked, as indicated in FIG. **3**.

As indicated in FIG. **3** (by dashed lines **1** and **2** and arrows), the various shells themselves do not have to form closed surfaces. Rather, one or more shells can form open surfaces. This can allow for preferential cloaking of the object in one direction or over a given angle (solid angle). Moreover, while dashed lines **1** and **2** are shown intersecting shells B**1**-B**3** and A**1**-A**3** of system **300**, one or more shells of each group of shells (B**1**-B**3** and A**1**-A**3**) can be closed while others are open. Additionally, it should be appreciated that the cross-sections shown for each shell can represent closed geometric shapes, e.g., spherical and ellipsoidal shells.

As indicated previously, each shell of a cloaking system (e.g., system **300**) include multiple resonators in one or multiple close-packed configurations. The resonators can be repeated patterns of conductive traces. These conductive traces can be closed geometric shapes, e.g., rings, loops, closed fractals, etc. The resonator(s) can being self similar to at least second iteration. The resonators can include split-ring shapes, for some embodiments. The resonant structures are not required to be closed shapes, however, and open shapes can be used for such.

In exemplary embodiments of shell **300**, the closed loops can be configured as a fractals or fractal-based shapes, e.g., as depicted by fractal cells **110** and **120** in FIG. **1**. The dimensions and type of a fractal shape for a fractal cell can be the same for each shell type but can vary between shell types. This variation (e.g., scaling of the same fractal shape) can afford increased bandwidth for the cloaking characteristics of the system. This can lead to periodicity of the fractal shapes of common shell types but aperiodicity between the fractal shapes of different shell types.

It will be appreciated that the resonant structures of the shells may be formed or made by any suitable techniques and with any suitable materials. For example, semiconductors with desired doping levels and dopants may be used as conductive materials. Suitable metals or metal containing compounds may be used. Suitable techniques may be used to place conductors on/in a shell, including, but no limited to, printing techniques, photolithography techniques, etching techniques, and the like.

It will also be appreciated that the shells may be made of any suitable material(s). Printed circuit board materials may be used. Flexible circuit board materials are preferred. Other material may, however, be used for the shells and the shells themselves can be made of non-continuous elements, e.g., a frame or framework. For example, various plastics may be used. In exemplary embodiments, the underlying surface or substrate on which a FPS is formed can have low loss with respect to the type of radiation that the FPS is designed for, so as to facilitate the intended heat and/or power transfer or dissipation.

Exemplary embodiments of the present disclosure can provide techniques, including systems and/or methods, for

providing a radar cross section of different sizes than as would otherwise be dictated by the physical geometry of an object. Such techniques (objects/methods) can be useful for implementations such as radar decoys where a given object (decoy) is made to appear in radar cross section as like another object (e.g., missile). Representative frequencies of operation can include those over a range of 500 MHz to 1.3 GHz, though others may of course be realized. Other frequencies, include those of visible light may be realized, e.g., by appropriate scaling of dimensions and selection of shape of fractal elements.

FIG. **4**A depicts an example of a system **400** including an arbitrary object **402** surrounded by a fractal shield **404**. FIG. **4**B depicts exemplary objects **402** that may be shielded by or with a fractal shield **404**. Of course, such objects are merely representative and virtually any object or portion thereof may be shielded by EM radiation by a fractal shield designed (e.g., sized) for such radiation.

FIG. **5** illustrates the robustness or anti-fragility presented by a FPS **500** under conditions where some fractal cells are damaged or otherwise inoperative. As shown, FPS **500** has a close-packed arrangement of fractal cells, indicated by circles **502**. The close-packed arrangement provides many paths by which energy may be transferred from one area of the FPS to another, even in the presence of damaged or otherwise inoperative fractal cells (represented by the black squares shown).

FIG. **6**A depicts an example **600** of a FPS-based shield **602** used to dissipate incident radiation, which may be directed radiation of high intensity or fluence. As shown, radiation that is incident on a localized area of the shield **602** can be transferred from an area of incidence, around the object **604**, and dissipated and/or retransmitted via plasmonic coupling and radiative transfer between the fractal cells of the FPS-based shield **602**.

FIG. **6**B shows another example in which directed radiation is incident on a rectangular shield (exemplifying that a shield need not be circular/elliptical or have circular or elliptical symmetry). As shown, the incident radiation is ducted (indicated by flow lines) over the surface of the shield and around the object within the shield.

Accordingly the subject technology in accordance with the present disclosure can provide protection for a desired object (e.g., a person or thing) from incident radiation such as high energy density electromagnetic waves and/or impulses that would otherwise tend to damage or destroy the object(s). Such deflective shields, or deflectors, can be used on or for three-dimensional surfaces in addition to two-dimensional surfaces. Such a deflector allows the electromagnetic waves or impulses to emerge or re-form on the far side of the object, not passing through the object, wand with minimum (or reduced) absorption and reflection of the waves or impulses; moreover, the momentum of the incident radiation is not conveyed to the objected (or such conveyance is reduced compared to the case where no shield is used).

While embodiments are shown and described herein as having fractal-based EM shields in the shape of concentric rings (circular cylinders), EM shields in accordance with the present disclosure can take other shapes in other embodiments. For example, one or more shells could have a generally spherical shape (with minor deviations for structural support). In an exemplary embodiment, the shells could form a nested arrangement of such spherical shapes, around an object to be shielded (at the targeted/selected frequencies/wavelengths). Shell cross-sections of angular shapes, e.g., triangular, hexagonal, while not preferred, may be used. Further, shields may be placed on or integrated with one or more surfaces of a particular object to be shielded. Such shields and shield structures may be implemented in or configured as conformable surfaces which adapt or conform to any underlying surface or structure.

One skilled in the art will appreciate that embodiments and/or portions of embodiments of the present disclosure can be implemented in/with computer-readable storage media (e.g., hardware, software, firmware, or any combinations of such), and can be distributed and/or practiced over one or more networks. Steps or operations (or portions of such) as described herein, including processing functions to derive, learn, or calculate formula and/or mathematical models and geometric shapes utilized and/or produced by the embodiments of the present disclosure, can be processed by one or more suitable processors, e.g., central processing units ("CPU's") implementing suitable code/instructions in any suitable language (machine dependent on machine independent).

While certain embodiments and/or aspects have been described herein, it will be understood by one skilled in the art that the methods, systems, and apparatus of the present disclosure may be embodied in other specific forms without departing from the spirit thereof.

For example, while certain wavelengths/frequencies of operation have been described, these are merely representative and other wavelength/frequencies may be utilized or achieved within the scope of the present disclosure.

Furthermore, while certain preferred fractal generator shapes have been described others may be used within the scope of the present disclosure. Accordingly, the embodiments described herein are to be considered in all respects as illustrative of the present disclosure and not restrictive.

What is claimed is:

1. A fractal-cell deflective shield system comprising:

a plurality of close-packed fractal cells disposed on a supporting surface, wherein each fractal cell includes a fractal shape defining an electrical resonator, wherein each fractal cell has a spatial extent in a given direction of less than ⅛ of an operational wavelength of incident radiation, and wherein the plurality of fractal cells are positioned sufficiently close to one another to support plasmonic transfer of energy between the fractal cells;

wherein the supporting surface has a configuration adapted to surround an object.

2. The system of claim **1**, wherein the object, corresponding to the configuration of the supporting surface, is a vehicle.

3. The system of claim **1**, wherein the object, corresponding to the configuration of the supporting surface, is a satellite.

4. The system of claim **1**, wherein the object, corresponding to the configuration of the supporting surface, is an automobile.

5. The system of claim **1**, wherein the object, corresponding to the configuration of the supporting surface, is a tower.

6. The system of claim **1**, wherein the object, corresponding to the configuration of the supporting surface, is a person.

7. The system of claim **1**, wherein the object, corresponding to the configuration of the supporting surface, is a vessel.

8. The system of claim **1**, wherein the object, corresponding to the configuration of the supporting surface, is an antenna.

9. The system of claim **1**, wherein the object, corresponding to the configuration of the supporting surface, is a weapon.

10. The system of claim **1**, wherein the object, corresponding to the configuration of the supporting surface, is a ship.

11. The system of claim **1**, wherein the object, corresponding to the configuration of the supporting surface, is a rocket.

12. The system of claim **1**, wherein the object, corresponding to the configuration of the supporting surface, is a spacecraft.

13. The system of claim **1**, wherein the object, corresponding to the configuration of the supporting surface, is an aircraft.

14. The system of claim **1**, wherein the object, corresponding to the configuration of the supporting surface, is a piece of artillery.

15. The system of claim **1**, wherein the object, corresponding to the configuration of the supporting surface, is a radome.

16. The system of claim **1**, wherein the object, corresponding to the configuration of the supporting surface, is a body covering.

17. A fractal-cell shield system comprising:

a first plurality of concentric first shells, each first shell including a substrate having first and second surfaces and a plurality of close-packed fractal cells disposed on a supporting surface disposed on the first surface, wherein each fractal cell includes a fractal shape defining an electrical resonator, and wherein the plurality of fractal cells are positioned sufficiently close to one another to support plasmonic transfer of energy between the fractal cells;

wherein the first plurality of concentric first shells have a configuration adapted to surround an object.

18. The system of claim **17**, further comprising:

a second plurality of concentric second shells, each second shell including a substrate having first and second surfaces and a plurality of close-packed fractal cells disposed on a supporting surface disposed on the first surface, wherein each fractal cell includes a fractal shape defining an electrical resonator, and wherein the plurality of fractal cells are positioned sufficiently close to one another to suppoli plasmonic transfer of energy between the fractal cells;

wherein at least one of the second plurality of second shells is configured at a greater distance from the object than at least one of the first plurality of first shells.

19. The system of claim **18**, wherein each of the second shells are configured at a respective greater distance from the object than the first plurality of first shells.

20. The system of claim **17**, wherein the object, corresponding to the configuration of the first plurality of concentric first shells, is a vehicle.

21. The system of claim **17**, wherein the object, corresponding to the configuration of the first plurality of concentric first shells, is a satellite.

22. The system of claim **17**, wherein the object, corresponding to the configuration of the first plurality of concentric first shells, is an automobile.

23. The system of claim **17**, wherein the object, corresponding to the configuration of the first plurality of concentric first shells, is a tower.

24. The system of claim **17**, wherein the object, corresponding to the configuration of the first plurality of concentric first shells, is a person.

25. The system of claim **17**, wherein the object, corresponding to the configuration of the first plurality of concentric first shells, is a vessel.

26. The system of claim **17**, wherein the object, corresponding to the configuration of the first plurality of concentric first shells, is an antenna.

27. The system of claim **17**, wherein the object, corresponding to the configuration of the first plurality of concentric first shells, is a weapon.

28. The system of claim **17**, wherein the object, corresponding to the configuration of the first plurality of concentric first shells, is a ship.

29. The system of claim **17**, wherein the object, corresponding to the configuration of the first plurality of concentric first shells, is a rocket.

30. The system of claim **17**, wherein the object, corresponding to the configuration of the first plurality of concentric first shells, is a spacecraft.

31. The system of claim **17**, wherein the object, corresponding to the configuration of the first plurality of concentric first shells, is an aircraft.

32. The system of claim **17**, wherein the object, corresponding to the configuration of the first plurality of concentric first shells, is a piece of artillery.

33. The system of claim **17**, wherein the object, corresponding to the configuration of the first plurality of concentric first shells, is a radome.

34. The system of claim **17**, wherein the object, corresponding to the configuration of the first plurality of concentric first shells, is a body covering.

* * * * *

US 20080024792A1

(19) United States

(12) Patent Application Publication

(10) Pub. No.: US 2008/0024792 A1

(43) Pub. Date: Jan. 31, 2008

Pendry et al.

(54) ELECTROMAGNETIC CLOAKING METHOD

(76) Inventors: **John Pendry**, London (GB); **David Smith**, Durham, NC (US); **David Schurig**, Durham, NC (US)

Correspondence Address:
HAMILTON, BROOK, SMITH & REYNOLDS, P.C.
530 VIRGINIA ROAD, P.O. BOX 9133
CONCORD, MA 01742-9133

(21) Appl. No.: 11/459,728

(22) Filed: Jul. 25, 2006

Publication Classification

(51) Int. Cl.
G01B 11/24 (2006.01)

(52) U.S. Cl. 356/602

(57) ABSTRACT

A method of constructing a concealing volume comprises constructing a plurality of concealing volume elements around a concealable volume. Each concealing volume element has a material parameter arranged to direct a propagating wave around the concealable volume.

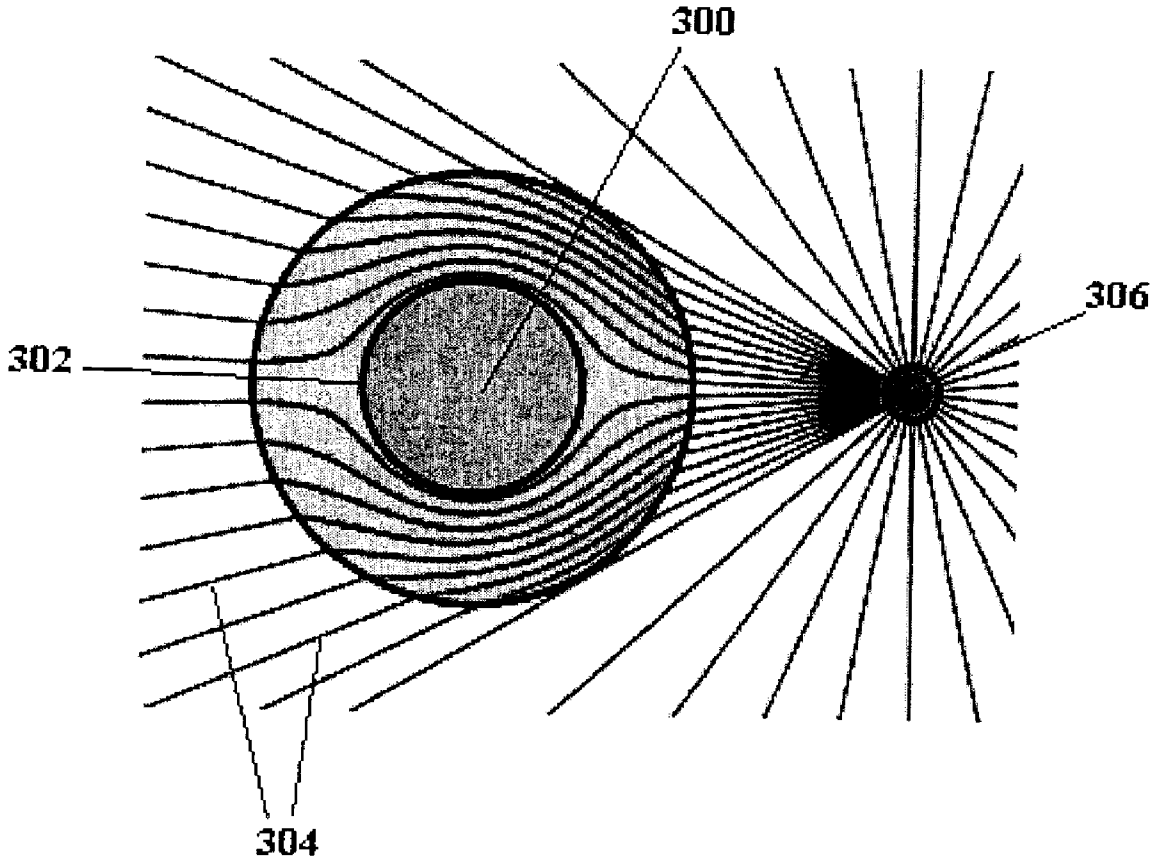

Fig 1

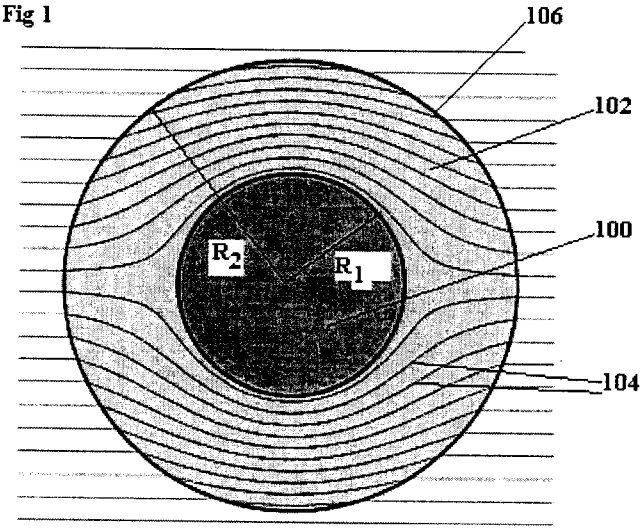

Fig 2a

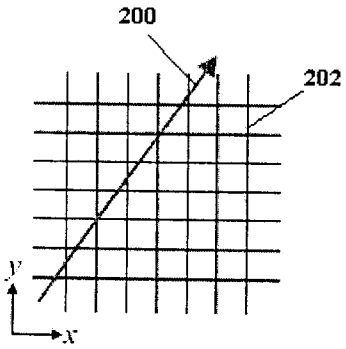

Fig 2b

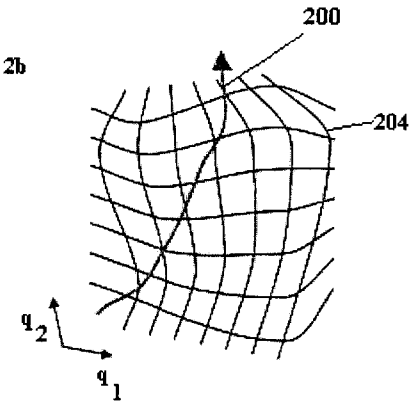

Fig 3

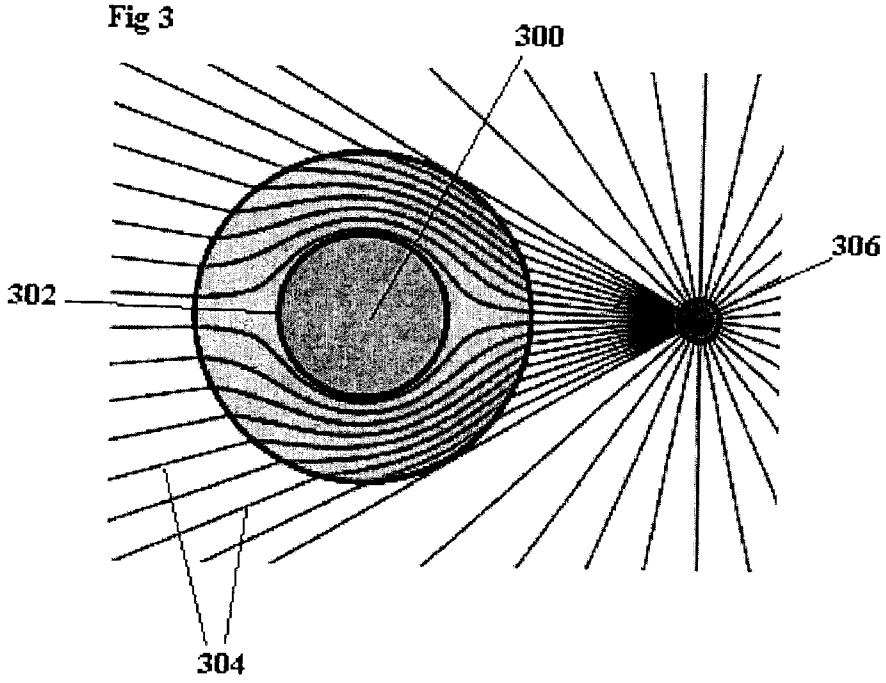

Fig 4a

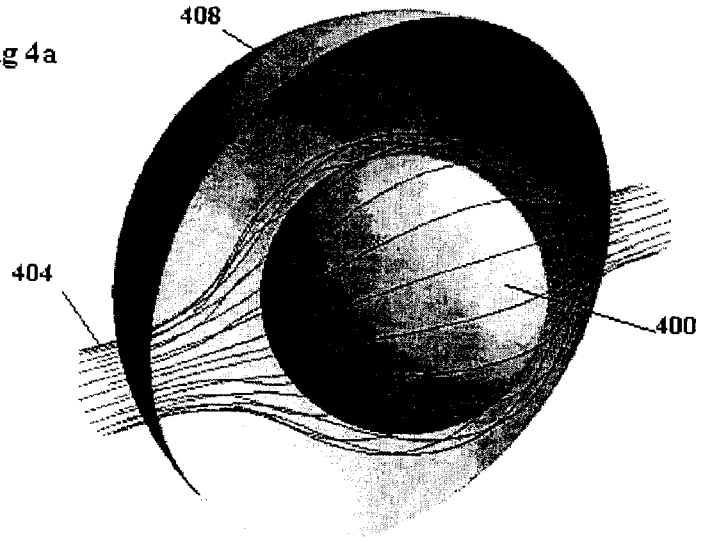

Fig 4b

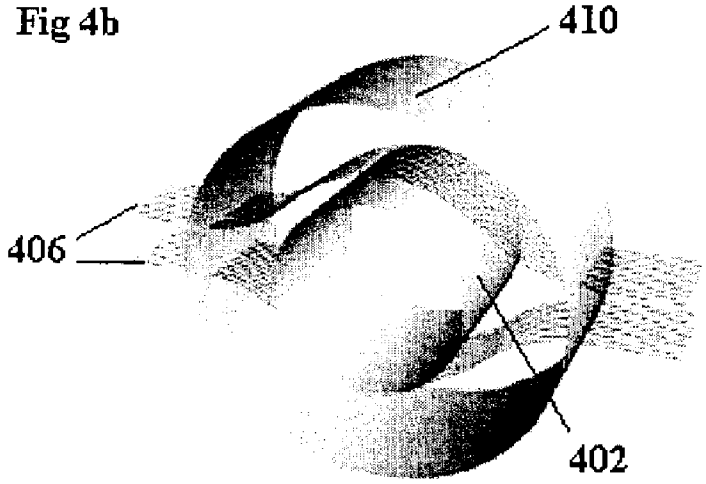

Fig 5

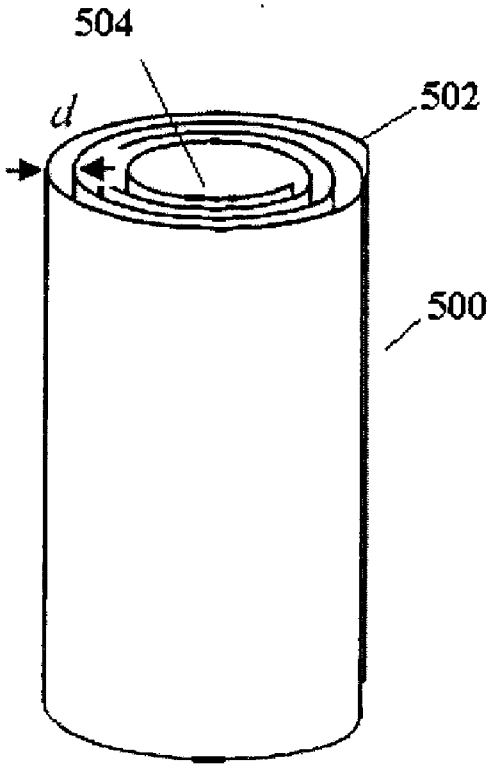

FIg 6

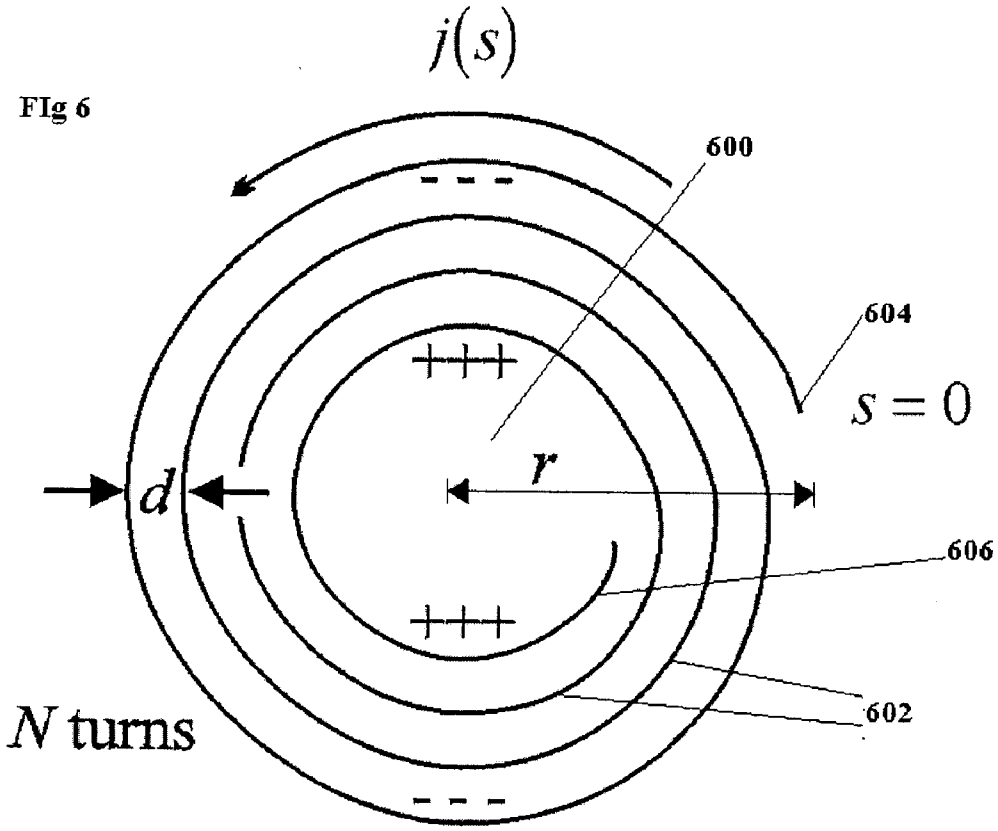

Fig 7

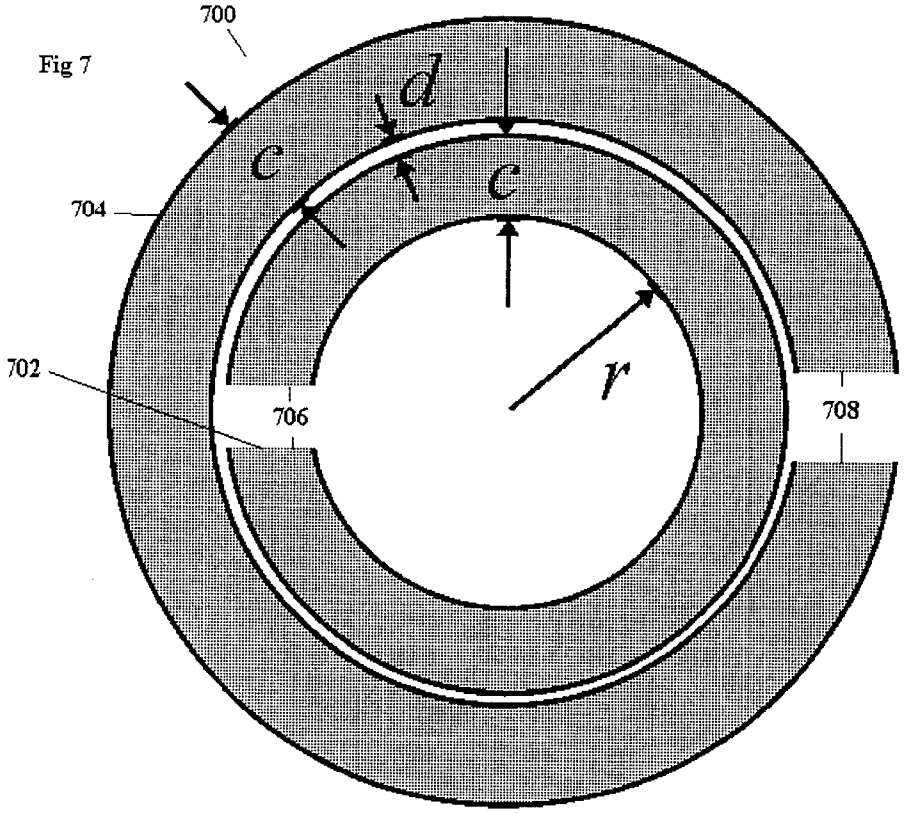

Fig 8

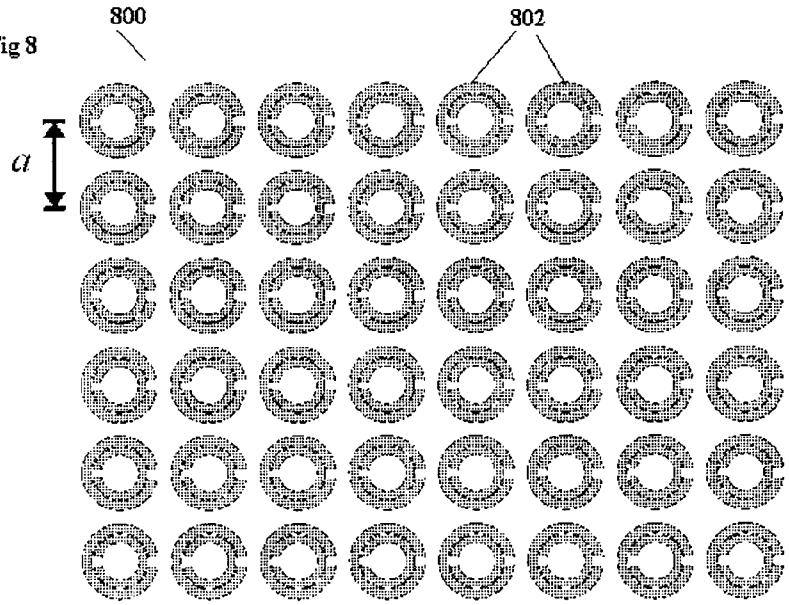

Fig 9

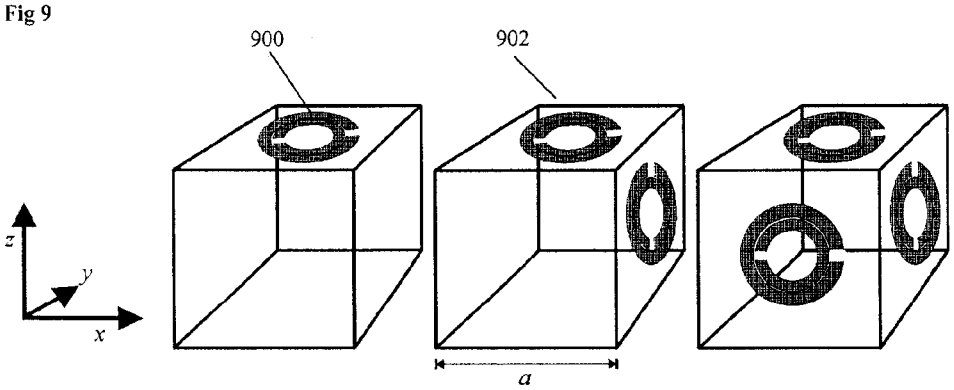

Fig 10

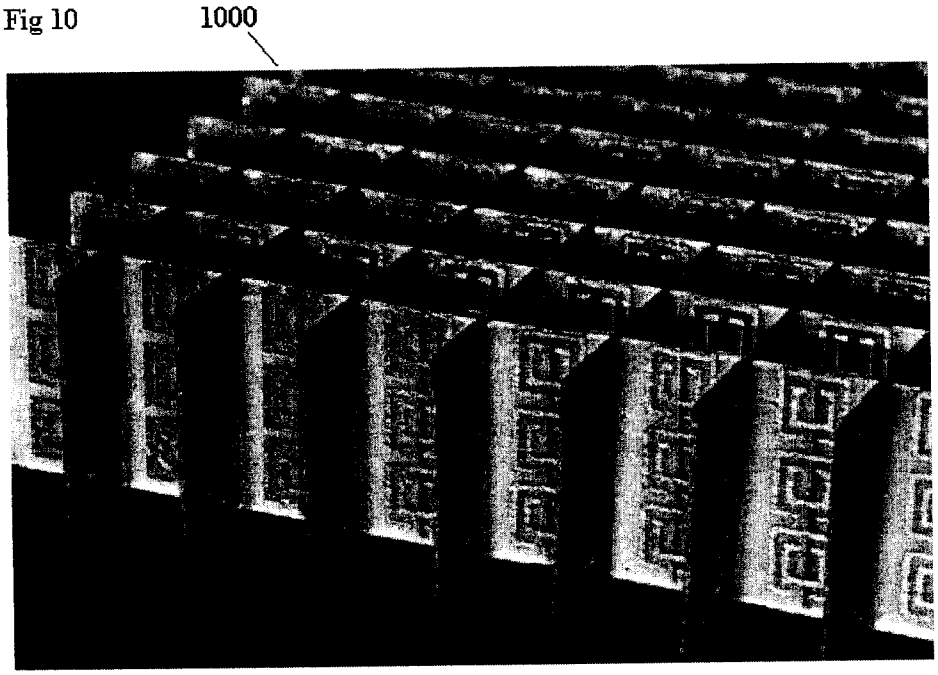

Fig 11

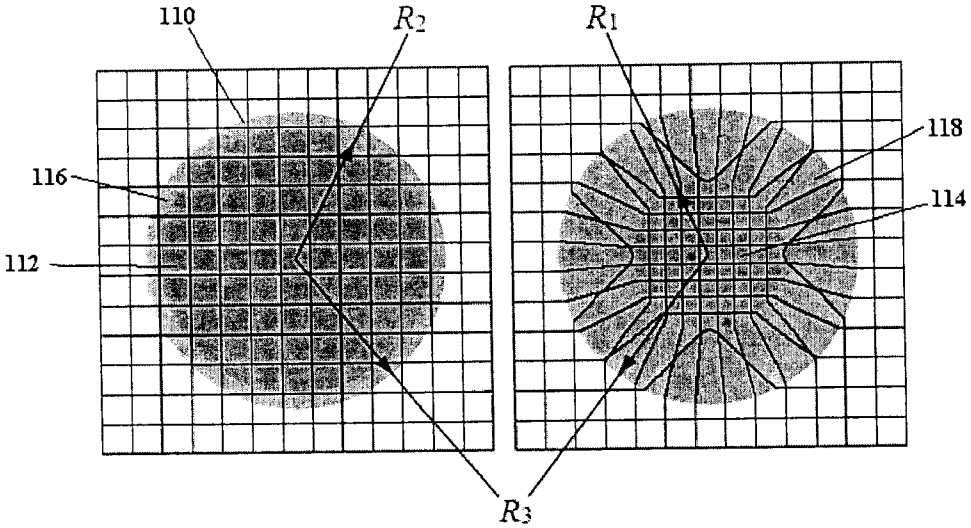

Fig 12

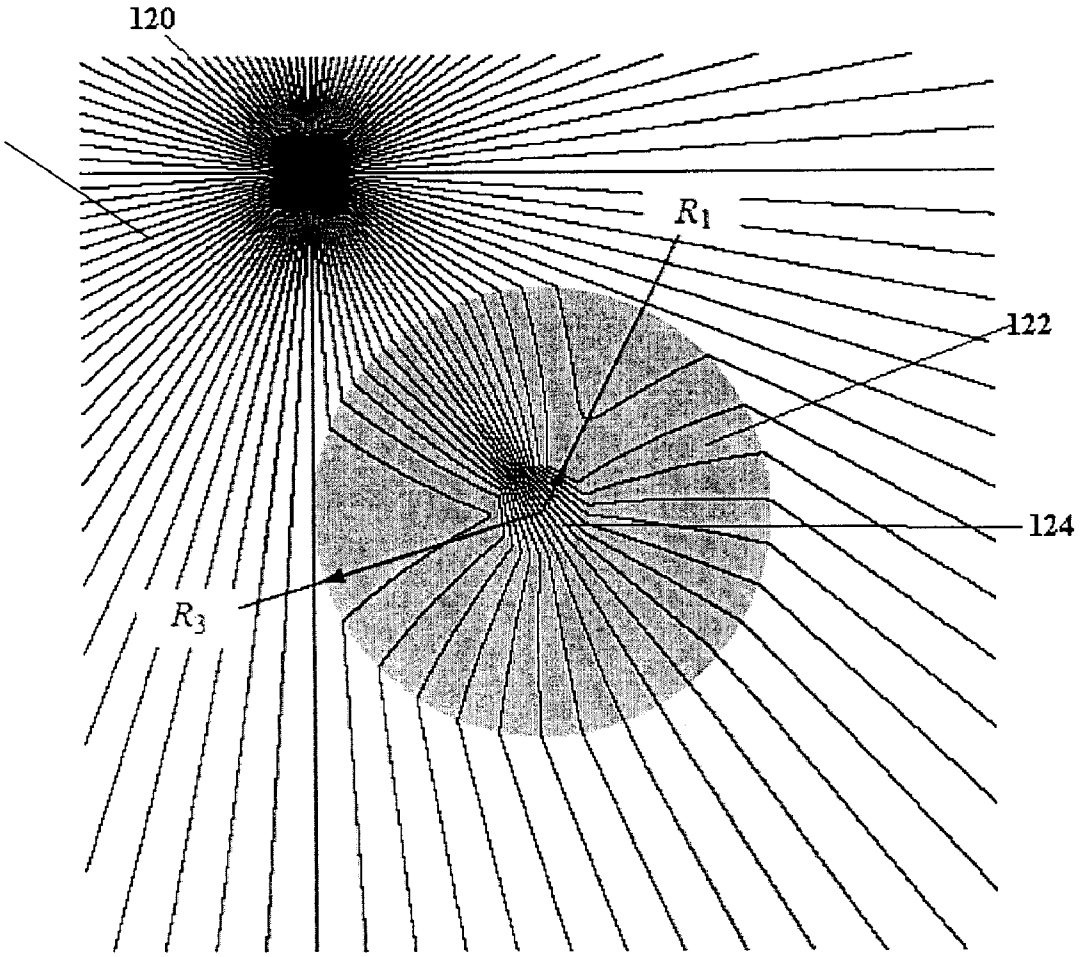

ELECTROMAGNETIC CLOAKING METHOD

BACKGROUND

[0001] In order to exploit electromagnetism, materials are commonly used to control and direct the electromagnetic fields. For example, a glass lens in a camera directs the rays of light to form an image, metal cages are used to screen sensitive equipment from electromagnetic radiation, and various forms of 'black bodies' are utilised to prevent unwanted reflections. One aspect of electromagnetism which is of particular interest, is the use of materials in the manipulation of electromagnetic waves such as to conceal or cloak objects or volumes of space from detection by an outside observer.

[0002] Several known methods exist which attempt to achieve electromagnetic concealment of objects. For example, it is possible to use a series of cameras to project an image to an observer of what he would see if an object in question were not blocking his view path. As a result, the observer does not realise that the object is present. This method, however, relies on the use of active components, and depends heavily on the relative positioning of the object, cameras and observer at all times.

[0003] Further known concealment methods include traditional "stealth technology" and the use of low radar cross section structures. These are designed to minimize back reflection of radar or other electromagnetic waves. Whilst these structures can provide a reduced or altered electromagnetic signature, because they involve either the scattering of incident waves away from the target or absorbing incident waves, the objects which they hide are still detectable in transmission.

[0004] In their paper, Physics Rev. E95, 016623 (2005), A Alu and N Engheta suggest a scheme for the concealment of spherical and cylindrical objects through the use of plasmonic and metamaterial 'cloaks' or covers. Whilst this paper provides a method of reducing the total scattering cross section of such objects, it relies on a specific knowledge of the shape and material properties of the object being hidden. In particular, the electromagnetic cloak and the concealed object form a composite, whose scattering properties can be reduced in the lowest order approximation. Therefore, if the shape of the object changes, the shape of the cloak must change accordingly. Furthermore, this method relies on a resonance effect, such that if the frequency drifts away from its resonant peak, the method is less effective. It is therefore a narrowband method, which cannot be implemented for broadband applications.

[0005] A further aspect of electromagnetism which is of interest is the use of materials in electromagnetic sensing and energy harvesting applications. Several known devices exist in this area, such as satellite dishes and solar energy panels. Whilst such prior art devices are operable to collect or detect electromagnetic radiation incident upon them from a number of different directions, and can be moveable to capture radiation incident from any desired direction, they do not have the capability to capture electromagnetic radiation incident from all directions at any given time. Problems therefore arise in applications when the direction of the electromagnetic source is initially unknown or constantly changing, such as in solar energy collection and microwave energy beaming on mobile platforms.

SUMMARY

[0006] The invention is set out in the claims. According to a first embodiment, because a method is provided in which those rays which would have passed through a particular volume of space are deflected around the volume and returned to their original trajectory, an observer would conclude that the rays had passed directly through that volume of space. This will be the case regardless of the relative positioning of the observer and the concealed volume. Furthermore, because no radiation can get into the concealed volume nor any radiation gets out, an object of any shape or material placed in the concealed volume will be invisible to the observer.

[0007] In one aspect, the invention utilises a co-ordinate transformation approach which is independent of the sizes of the concealed and concealing volume and does not suffer from any of the fundamental scaling issues which affect known concealment schemes. It is also possible to use the transformation method for any shape of concealed or concealing volume. The wavelength of the electromagnetic radiation does not appear in the solution, such that the invention can be applied for any size structure and for any wavelength, and for near and far fields.

[0008] In a further embodiment of the invention, all electromagnetic fields which are incident on an outer surface of a particular volume of space are concentrated into a inner core region, regardless of their direction of incidence on the outer surface. This enables a detector or collector to be placed at the inner core into which the electromagnetic fields have been concentrated, allowing it to interact with the intensified fields from all directions at that location. Because a method is described in which those rays which pass through the particular volume of space are returned to their original trajectory outwards of its outer surface, an observer would conclude that the rays had passed directly through that volume of space, regardless of the relative positioning of the observer and the volume in question. In addition, the present invention enables a detector placed within the inner core region to have its material properties matched to the surrounding layer such that it will also be invisible to an observer viewing the set up from any direction.

BRIEF DESCRIPTION OF THE DRAWINGS

[0009] FIG. **1** is a cross-sectional ray trajectory diagram for a sphere of radius $r<R_1$ cloaked within an annulus of radius $R_1<r<R_2$, assuming that $R_2>>\lambda$;

[0010] FIG. **2***a* shows a field line in free space plotted on a Cartesian mesh;

[0011] FIG. **2***b* shows the field line and background coordinates of FIG. **2***a* both distorted by the same transformation;

[0012] FIG. **3** is a cross-sectional view of the electrostatic displacement field lines for a sphere of radius $r<R_1$ cloaked within an annulus of radius $R_1<r<R_2$, located close to a point charge, assuming that $R_2<<\lambda$;

[0013] FIG. **4***a* is a three-dimensional depiction of the diversion of electromagnetic rays around a cloaked volume, according to the present invention;

[0014] FIG. **4***b* is a three-dimensional depiction of the diversion of electromagnetic rays around a cloaked surface, according to the present invention;

[0015] FIG. **5** shows a front perspective view of a 'Swiss-roll' metamaterial;

[0016] FIG. **6** shows a top view of the 'Swiss-roll' metamaterial of FIG. **5**;

[0017] FIG. **7** shows a single split ring metamaterial;

[0018] FIG. **8** shows a plan view of a split ring structure in a square array, lattice spacing a;

[0019] FIG. **9** depicts the building of three-dimensional split ring resonator (SRR) at unit cell level;

[0020] FIG. **10** is a prior-art negative index metamaterial comprising SRR's and wires;

[0021] FIG. **11** is a cross-sectional ray trajectory diagram of a concentration device of radius R_3 in which a spherical volume of space radius R_2 is compressed to a smaller volume of space radius R_1; and

[0022] FIG. **12** is a cross-sectional ray trajectory diagram in which rays from a point source incident on a sphere radius R_3 are concentrated into an inner sphere radius R_1.

DETAILED DESCRIPTION

[0023] In overview, according to a first embodiment the invention provides a method of concealing an object or volume of space by means of redirecting the electromagnetic field lines around it. Any field lines which normally would flow through the concealed volume are redirected through a surrounding concealing volume. Outside of the cloaking structure, the field lines remain unperturbed. The cloaking structure is formed from a metamaterial, that is a material designed to exhibit the specific material parameters required for cloaking the object or volume in question. In particular, the electric permittivity ϵ and magnetic permeability μ and hence the refractive index n of the cloaking metamaterial can be varied effectively continuously spatially in order to manipulate the electromagnetic field lines and hence effectively conceal the enclosed volume. As a result of the invention, the concealed volume is undetectable to an outside observer, and any electromagnetic radiation produced by an object within the concealed volume cannot escape from it.

[0024] In a further embodiment the invention provides a method of concentrating the electromagnetic fields incident upon the outer surface of a concentrator device into an inner core region. The concentrator structure comprises a concentrating volume and a collecting volume. Any field lines which would normally flow through the concentrating volume are redirected into an inner collecting volume. Outside of the concentrator annulus surrounding the concentrating volume, the field lines remain unperturbed. The concentrator structure is formed from a metamaterial in a similar manner to that described above for the cloaking structure above.

[0025] Whilst, as is outlined in more detail below, the transformation method described herein can be applied to conceal any desired volume using any desired cloaking structure, for simplicity it will first be described in relation to the simple spherical case as shown in FIG. **1**. According to FIG. **1**, the volume to be hidden is a sphere **100** of radius R_1 and the cloaking material is contained within the annulus **102** of radius $R_1<r<R_2$. In order to create a secure, radiation-free volume within the sphere **100** of radius R_1, all those electromagnetic field lines **104** which normally would flow through the sphere **106** of radius $r<R_2$ must therefore be compressed into the cloaking annulus **102** $R_1<r<R_2$. That is, in order to remove the sphere **100** of radius R_1 from view, the volume within that sphere **100** plus the volume within the annulus **102** must all be mapped onto the annulus **102** of radius $R_1<r<R_2$. In the medium outside of the sphere **106** $r<R_2$, the electromagnetic field lines **104** must remain unperturbed.

[0026] The theory of propagation of electromagnetic waves is well known and so only the relevant aspects are summarised here in the context of the invention. In free space, the magnetic field strength H is related to the magnetic field intensity B and the magnetic permeability of free space, μ_0, via the equation $B=\mu_0 H$. The electric field E in free space is related to the electric displacement field D and electric permittivity of free space ϵ_0 via the equation $D=\epsilon_0 E$. In a dielectric the value of ϵ and μ are modified by the relative permittivity and permeability value ϵ_r, μ_r and the refractive index of the invention is given by

$$n_r = \pm\sqrt{\varepsilon\mu}\,.$$

As will be well known to the skilled person in the art, the three vectors E, H, and S are mutually orthogonal, with the Poynting vector S being calculable via the vector cross product $S=E\times H$. The Poynting vector S gives the direction and magnitude of energy flow per unit area per unit time of an electromagnetic wave, and in a ray trajectory diagram such as that shown in FIG. **1**, the direction of the rays of light correspond to the electromagnetic field lines and follow the direction of the Poynting vector. In order to implement this invention therefore, it is necessary to focus or redirect any of the electric displacement field D, the magnetic field intensity B, and the Poynting vector S so that they avoid the sphere **100** of radius R_1, and return undisturbed to their original trajectories.

[0027] As described in more detail below the approach further requires solution of Maxwell's equations in relation to the redirected fields. For ease of depiction, redirection of the Poynting vector in particular will be addressed in the following description.

[0028] In order to calculate the electromagnetic properties which a cloaking structure must possess in order to effectively implement the desired cloaking effects, the first step is to calculate the distortion which must be applied to the Poynting vector S so that the rays do not pass through the sphere **100** of radius R_1. As shown in FIGS. **2***a* and **2***b*, this is achieved by recording the initial configuration of each ray, which would occur in the absence of a cloaked volume and cloaking material, on a known geometric mesh, such as a spherical or Cartesian mesh. For example in FIG. **2***a*, a single ray **200** is plotted on a Cartesian mesh **202**: Once the appropriate rays **200** have been plotted on it, the Cartesian mesh **202** is stretched or distorted in such a manner that the rays plotted thereon become distorted to follow their new desired path, avoiding the cloaked volume. The distortions which are imposed on the Cartesian mesh **202** in order to achieve this can then be recorded as a coordinate transformation between the original Cartesian mesh **202** and a second transformed mesh **204**, wherein the second mesh is defined by:

$$q_1(x,y,z),\ q_2(x,y,z),\ q_3(x,y,z) \qquad (1)$$

[0029] In this second mesh **204**, lines of constant q_2, q_3 define the generalized q_1 axis, and so on. It will be seen that conversely if the second mesh **204** comprised a set of points defined by equal increments along the q_1, q_2, q_3 axes, it would appear distorted in the x, y, z Cartesian frame, as a comparison of FIGS. **2***a* and **2***b* clearly demonstrates.

[0030] The benefit of performing this transformation is that, as described below, it can be shown that it is possible to solve Maxwell's equations in the same form in the transformed geometry as in the original geometry, with only a corresponding transform of the spatially distributed values of ϵ and μ being required. This can be understood intuitively from the recognition that variation of the permittivity ϵ and permeability μ values, and hence the refractive index n in a space, is equivalent to distorting the geometry of the space as seen by a light ray. It will be noted that the approach specifically addresses modification of the value of ϵ and μ individually rather than of the refractive index $n=\pm\sqrt{\epsilon\mu}$. In particular this allows reflection between interfaces of different media to be removed by ensuring impedance (Z) matching where

$$Z = \sqrt{\frac{\mu}{\varepsilon}}.$$

[0031] As will be known to the skilled person, Maxwell's equations in a system of Cartesian coordinates take the form:

$$\nabla\times E=-\mu\mu_0\partial H/\partial t$$

$$\nabla\times H=+\epsilon\epsilon_0\partial E/\partial t \tag{2}$$

where both electric permittivity ϵ and magnetic permeability μ depend on position. As described in Annex 1, when a coordinate transformation is applied to these equations, in the new co-ordinate system they take the form:

$$\nabla_q\times\hat{E}=-\mu_0\hat{\mu}\partial\hat{H}/\partial t,$$

$$\nabla_q\times\hat{H}=+\epsilon_0\hat{\epsilon}\partial\hat{E}/\partial t \tag{3}$$

where ϵ and μ are in general tensors, and $\hat{E}$, $\hat{H}$ are renormalized electric and magnetic fields. All four quantities are simply related to originals. In other words the form of Maxwell's equation is preserved by a co-ordinate transformation: the co-ordinate transformation does not change the fact that we are still solving Maxwell's equations, it simply changes the definition of ϵ, μ.

[0032] In particular, as is shown in detail in Annex 1, the effect of the transformation on μ and ϵ is to scale them both by a common factor. A generalized solution to this is shown in Annex 1, however in the case of an orthogonal geometry (Cartesian, spherical or cylindrical) but the renormalized values of the permittivity and permeability are:

$$\varepsilon'_u = \varepsilon_u \frac{Q_u Q_v Q_w}{Q_u^2}, \tag{4}$$

$$\mu'_u = \mu_u \frac{Q_u Q_v Q_w}{Q_u^2}, \text{ etc.}$$

$$E'_u = Q_u E_u,\ H'_u = Q_u H_u, \text{ etc.} \tag{5}$$

where,

-continued

$$Q_u^2 = \left(\frac{\partial x}{\partial u}\right)^2 + \left(\frac{\partial y}{\partial u}\right)^2 + \left(\frac{\partial z}{\partial u}\right)^2 \tag{6}$$

$$Q_v^2 = \left(\frac{\partial x}{\partial v}\right)^2 + \left(\frac{\partial y}{\partial v}\right)^2 + \left(\frac{\partial z}{\partial v}\right)^2$$

$$Q_w^2 = \left(\frac{\partial x}{\partial w}\right)^2 + \left(\frac{\partial y}{\partial w}\right)^2 + \left(\frac{\partial z}{\partial w}\right)^2$$

And:

$$B'\mu_0\mu' H' \text{ and } D' = \varepsilon_0\varepsilon E' \tag{7}$$

[0033] Referring back to the spherical case as shown in FIG. **1**, the natural choice of mesh on which to plot the original ray configuration is a spherical one, which uses the co-ordinates r, θ and ϕ. The co-ordinate transformation operates by taking all the fields in the sphere **106** of radius $r<R_2$ and compressing them into the annulus **102** of radius $R_1<r<R_2$. This is achieved by any transformation of the form:

$$r' = R_1 + \frac{f(r) - f(0)}{f(R_2) - f(0)}(R_2 - R_1), \tag{8}$$

$$\theta' = \theta,$$

$$\phi' = \phi$$

where f (r) is a monotonically increasing function of r, this will map the entire interior of a sphere **106** of radius R_2 into an annulus bounded by two spheres **100**, **106** radii R_1 and R_2 respectively. There is symmetry for ϕ and θ because the field lines are being compressed radially only, so their angular positioning is not distorted.

[0034] The simplest solution to equation (8) arises when f(r)=r, which simplifies to give:

$$r'=R_1+r(R_2-R_1)/R_2,$$

$$\theta'=\theta,$$

$$\phi'=\phi \tag{9}$$

[0035] In order to ascertain the electromagnetic properties which will be required of the cloaking annulus **102** material so that it achieves the desired result of cloaking any object in the sphere **100** R_1 the transformation which has been imposed on r, ϕ and θ must be applied in an analogous manner to ϵ and μ, as shown for the general case in Annex 1. At each point (x, y, z) in space, ϵ and μ will have component (ϵ_x, ϵ_y, ϵ_z), (μ_x, μ_y, μ_z) which must be transformed to spherical coordinate valve (ϵ'_r, ϵ'_Θ, $\epsilon'\varnothing$), (μ_r, , $\mu\Theta$., $\mu'\varnothing$) in the transformed geometry.

[0036] We do this in two steps:

First transform to spherical coordinates without any compression,

[0037]

$$x=r\cos\phi\sin\theta,\ y=r\sin\phi\sin\theta,\ Z=r\cos\theta \tag{A1}$$

so that, as shown in equation (4) above, in the new frame,

$$\tilde{\varepsilon}_i = \varepsilon_i \frac{Q_1 Q_2 Q_3}{Q_i^2}, \quad \tilde{\mu}_i = \mu_i \frac{Q_1 Q_2 Q_3}{Q_i^2} \tag{A2}$$

We calculate,

[0038]

$$Q_r^2 = \left(\frac{\partial x}{\partial r} = \cos\phi\sin\theta\right)^2 + \left(\frac{\partial y}{\partial r} = \sin\phi\sin\theta\right)^2 + \left(\frac{\partial z}{\partial r} = \cos\theta\right)^2 = 1 \tag{A3}$$

$$Q_\theta^2 = \left(\frac{\partial x}{\partial \theta} = r\cos\phi\cos\theta\right)^2 + \left(\frac{\partial y}{\partial \theta} r\sin\phi\cos\theta\right)^2 + \left(\frac{\partial z}{\partial \theta} = -r\sin\theta\right)^2 = r^2$$

$$Q_\phi^2 = \left(\frac{\partial x}{\partial \phi} = -r\sin\phi\sin\theta\right)^2 + \left(\frac{\partial y}{\partial Z} = +r\cos\phi\sin\theta\right)^2 + \left(\frac{\partial z}{\partial Z} = 0\right)^2 = r^2\sin^2\theta$$

and hence,

$$\begin{aligned}\tilde{\varepsilon}_r &= \tilde{\mu}_r \\ &= \frac{Q_r Q_\theta Q_\phi}{Q_r^2}\varepsilon_r \\ &= \frac{r^2\sin\theta}{1}\varepsilon_r \\ &= r^2\sin\theta\varepsilon_r\end{aligned} \tag{A4}$$

$$\begin{aligned}\tilde{\varepsilon}_\theta &= \tilde{\mu}_\theta \\ &= \frac{Q_r Q_\theta Q_\phi}{Q_\theta^2}\varepsilon_\theta \\ &= \frac{r^2\sin\theta}{r^2}\varepsilon_\theta \\ &= \sin\theta\varepsilon_\phi\end{aligned}$$

$$\begin{aligned}\tilde{\varepsilon}_\phi &= \tilde{\mu}_\phi \\ &= \frac{Q_r Q_\theta Q_\phi}{Q_\phi^2}\varepsilon_\phi \\ &= \frac{r^2\sin\theta}{r^2\sin^2\theta}\varepsilon_\phi \\ &= \frac{1}{\sin\theta}\varepsilon_\phi\end{aligned}$$

where ϵ_r, ϵ_θ, ϵ_ϕ, the three components of the permittivity tensor in the original Cartesian frame, and we assume that the permittivity and permeability are equal. Note that we can easily extract the Cartesian view of ϵ_r, ϵ_θ, ϵ_ϕ from (A4) by removing the appropriate factors of r.

[0039] In order to create a protected space inside the sphere radius R_1 we make a further transformation to a new cylindrical system in which the radius is compressed taking any ray trajectories with it. It is noted that computer programs work in Cartesian coordinates and therefore that it is possible to re-express the compressed radial coordinate system in terms of a compressed Cartesian system, x' y' z', by removing factors of r'.

Consider the transformation from equation (9),

[0040]

$$r' = R_1 + r(R_2 - R_1)/R_2,\ \theta' = \theta,\ \phi' = \phi \tag{A5}$$

which can be re-expressed as,

$$r = \frac{(r' - R_1)R_2}{R_2 - R_1},\ \theta' = \theta,\ \phi' = \phi \tag{A6}$$

We calculate,

[0041]

$$Q_{r'}^2 = \left(\frac{\partial r}{\partial r'} = \frac{R_2}{R_2 - R_1}\right)^2 + \left(\frac{\partial \theta}{\partial r'} = 0\right)^2 + \left(\frac{\partial \phi}{\partial r'} = 0\right)^2 = \left[\frac{R_2}{R_2 - R_1}\right] \tag{A7}$$

$$Q_{\theta'}^2 = \left(\frac{\partial r}{\partial \theta'} = 0\right)^2 + \left(\frac{\partial \theta}{\partial \theta'} = 1\right)^2 + \left(\frac{\partial \phi}{\partial \theta'} = 0\right)^2 = 1$$

$$Q_{\phi'}^2 = \left(\frac{\partial r}{\partial \phi'} = 0\right)^2 + \left(\frac{\partial \theta}{\partial \phi'} = 0\right)^2 + \left(\frac{\partial \phi}{\partial \phi'} = 1\right)^2 = 1$$

so that in the new frame,
for $R_1 < r' < R_2$

$$\begin{aligned}\tilde{\varepsilon}_{r'} &= \tilde{\mu}_{r'} \\ &= \tilde{\varepsilon}_r \frac{Q_{r'} Q_{\theta'} Q_{\phi'}}{Q_{r'}^2} \\ &= \frac{(R_2 - R_1)}{R_2} r^2\sin\theta\varepsilon_r \\ &= \frac{(R_2 - R_1)}{R_2}\left[\frac{(r' - R_1)R_2}{R_2 - R_1}\right]^2 \sin\theta\varepsilon_r \\ &= \frac{R_2(r' - R_1)^2}{R_2 - R_1}\sin\theta\varepsilon_r\end{aligned} \tag{A8a}$$

$$\begin{aligned}\tilde{\varepsilon}_{\theta'} &= \tilde{\mu}_{\theta'} \\ &= \tilde{\varepsilon}_\theta \frac{Q_{r'} Q_{\theta'} Q_{\phi'}}{Q_{\theta'}^2} \\ &= \frac{R_2}{R_2 - R_1}\sin\theta\varepsilon_\theta\end{aligned}$$

$$\begin{aligned}\tilde{\varepsilon}_{\phi'} &= \tilde{\mu}_{\phi'} \\ &= \tilde{\varepsilon}_\phi \frac{Q_{r'} Q_{\theta'} Q_{\phi'}}{Q_{\phi'}^2} \\ &= \frac{R_2}{R_2 - R_1}\frac{1}{\sin\theta}\varepsilon_\phi\end{aligned}$$

[0042] Alternatively we can reinterpret these values in a Cartesian coordinate frame, x'y'z', which is easily done by comparison with (A4),

$$\begin{aligned}\varepsilon_{r'} &= \mu_{r'} \\ &= \frac{R_2}{R_2 - R_1}\frac{(r' - R_1)^2}{r'^2}\varepsilon_r\end{aligned} \tag{10}$$

-continued

$$\varepsilon_{\theta'} = \mu_{\theta'} = \frac{R_2}{R_2 - R_1}\varepsilon_\theta$$

$$\tilde{\varepsilon}_{\phi'} = \tilde{\mu}_{\phi'} = \frac{R_2}{R_2 - R_1}\varepsilon_\phi$$

where we have assumed that the starting material is vacuum. for $R_2<r'$

$$\tilde{\varepsilon}_{r'} = \tilde{\mu}_{r'} = r'^2\sin\theta'\varepsilon_{r'} \quad \text{(A7b)}$$

$$\tilde{\varepsilon}_{\theta'} = \tilde{\mu}_{\theta'} = \sin\theta'\varepsilon_{\theta'}$$

$$\tilde{\varepsilon}_{Z'} = \tilde{\mu}_{Z'} = \frac{1}{\sin\theta'}\varepsilon_{\phi'}$$

$$\text{In free space, } \epsilon_r'=\mu_r'=\epsilon_\theta'=\mu_\theta'\epsilon_\phi'=\mu_\phi'=1 \quad (11)$$

for $r'<R_1$ we may choose any value we please for the dielectric functions since radiation never penetrates into this region. In this region ϵ', μ' are free to take any value without restriction whilst still remaining invisible, and not contributing to electromagnetic scattering. This will be the case for all cloaked volumes, regardless of their shape or size.

[0043] If a suitable cloaking material can be implemented for the annulus **102** of radius $R_1<r<R_2$, this will exclude all fields from entering the central region **100** of radius R_1 and, conversely, will prevent all fields from escaping from this region. The cloaking structure itself and any object placed in the concealed sphere **100** R_1 will therefore be undetectable in either reflection or transmission. It will be noted that at all points in the medium the impedance

$$z = \sqrt{\frac{\mu}{\varepsilon}} = 1$$

such that no unwanted reflection in the medium, caused by impedance mismatch, takes place.

[0044] It is noted that if the impendance $z=\sqrt{\mu/\epsilon}=1$ is achieved at all points in the metamaterial, the cloaking structure and concealed volume will appear to contain only free space, and so will be invisible if embedded in free space. If the cloaking structure is embedded in another medium the effect will differ, for example if embedded in water it would have the appearance of a bubble. In order to make the cloaking structure invisible in another medium it is necessary to match the ratio of μ and ϵ in the metamaterial to that of the surrounding medium at the interface between the two. As the skilled person will appreciate, whilst this changes the numerical values of ϵ and μ in the cloaking structure metamaterial, the general transformation theory outlined in Annex 1 remains the same. That is, because the present invention enables ϵ and μ to be controlled in a metamaterial independently of one another, it is possible to achieve any desired value of z, to match the impedance of the metamaterial to that of its surroundings.

[0045] Whilst in FIG. **1** the cloaking annulus **102** is depicted as being relatively thick, this does not have to be the case. The solution is not dependent on shell thickness or any other length scales, such that it does not suffer from any scaling issues. Additionally, the solution provided holds in both in the near and far fields, because the solution does not depend on the wavelength λ. This is demonstrated in FIGS. **1** and **3**. For purposes of illustration, suppose that $R_2>>\lambda$ where λ is the wavelength so that we can use the ray approximation to plot the Poynting vector. If our system is then exposed to a source of radiation at infinity we can perform the ray tracing exercise shown in FIG. **1**. Rays **104** in this figure result from numerical integration of a set of Hamilton's equations obtained by taking the geometric limit of Maxwell's equations with anisotropic, inhomogeneous media. This integration provides an independent confirmation that the configuration specified by (9) and (10) excludes rays from the interior region **100**. Alternatively if $R_2<<\lambda$ and we locate a point charge **306** nearby, the electrostatic (or magnetostatic) approximation applies. A plot of the local electrostatic displacement field which results is shown in FIG. **3**.

[0046] The theoretical solution outlined above can be demonstrated using a ray-tracing program to calculate the ray trajectories. According to such a program, a specified material is assumed to exist around a central volume that is to be 'cloaked', or rendered invisible to the user. Using the specified parameters as input, the ray-tracing code confirms the theoretical prediction. Ray tracing programs of this type will be well known to those skilled in the art, although some existing programs will not be able to deal with the complexity of the problem for this invention. In FIGS. **4***a* and **4***b*, a ray tracing program has been used which was developed from a custom ray tracing code based on a Hamiltonian formulation to solve Maxwell's equations in the geometric limit (ie zero wavelength limit). The results are shown for a spherical structure **400** and a cylindrical structure **402** respectively, wherein the transformed parameters ϵ and μ in the cylindrical case are calculated in a similar manner to those for the sphere, as shown below:

[0047] First transform to cylindrical coordinates without any compression,

$$x=r\cos\theta,\ y=r\sin\theta,\ Z=z \quad \text{(A8)}$$

so that in the new frame,

$$\tilde{\varepsilon}_i = \varepsilon_i\frac{Q_1Q_2Q_3}{Q_i^2}, \qquad \tilde{\mu}_i = \mu_i\frac{Q_1Q_2Q_3}{Q_i^2} \quad \text{(A9)}$$

We calculate,

[0048]

$$Q_r^2 = \left(\frac{\partial x}{\partial r} = \cos\theta\right)^2 + \left(\frac{\partial y}{\partial r} = \sin\theta\right)^2 + \left(\frac{\partial z}{\partial r} = 0\right)^2 = 1 \quad \text{(A10)}$$

$$Q_\theta^2 = \left(\frac{\partial x}{\partial \theta} = -r\sin\theta\right)^2 + \left(\frac{\partial y}{\partial \theta} = +r\cos\theta\right)^2 + \left(\frac{\partial z}{\partial \theta} = 0\right)^2 = r^2$$

$$Q_Z^2 = \left(\frac{\partial x}{\partial Z} = 0\right)^2 + \left(\frac{\partial y}{\partial Z} = 0\right)^2 + \left(\frac{\partial z}{\partial Z} = 1\right)^2 = 1$$

and hence,

$$\tilde{\varepsilon}_r = \tilde{\mu}_r = \frac{Q_r Q_\theta Q_Z}{Q_r^2}\varepsilon_r = r\varepsilon_r \tag{A11}$$

$$\tilde{\varepsilon}_\theta = \tilde{\mu}_\theta = \frac{Q_r Q_\theta Q_Z}{Q_\theta^2}\varepsilon_\theta = r^{-1}\varepsilon_\theta$$

$$\tilde{\varepsilon}_Z = \tilde{\mu}_Z = \frac{Q_r Q_\theta Q_Z}{Q_Z^2}\varepsilon_Z = r\varepsilon_Z$$

where $\epsilon_r, \epsilon_\theta, \epsilon_Z$ the three components of the permittivity tensor in the original Cartesian frame, and we assume that the permittivity and permeability are equal. Note that we can easily extract the Cartesian view of $\epsilon_r, \epsilon_\theta, \epsilon_Z$ from (A13) by removing the appropriate factors of r.

[0049] In order to create a protected space inside a cylinder radius R_1, we make a further transformation to a new cylindrical system in which the radius is compressed taking any ray trajectories with it. It is noted that computer programs work in Cartesian coordinates and therefore that it is possible to re-express the compressed radial coordinate system in terms of a compressed Cartesian system, x'y'z', by removing factors of r'.

Consider the transformation,

[0050]

$$r' = R_1 + r(R_2 - R_1)/R_2,\ \theta' = \theta,\ Z' = Z \tag{A12}$$

or,

$$r = \frac{(r' - R_1)R_2}{R_2 - R_1},\ \theta' = \theta,\ Z' = Z \tag{A13}$$

We calculate,

[0051]

$$Q_{r'}^2 = \left(\frac{\partial r}{\partial r'} = \frac{R_2}{R_2 - R_1}\right)^2 + \left(\frac{\partial \theta}{\partial r'} = 0\right)^2 + \left(\frac{\partial Z}{\partial r'} = 0\right)^2 + \left[\frac{R_2}{R_2 - R_1}\right]^2 \tag{A14}$$

$$Q_{\theta'}^2 = \left(\frac{\partial r}{\partial \theta'} = 0\right)^2 + \left(\frac{\partial \theta}{\partial \theta'} = 1\right)^2 + \left(\frac{\partial Z}{\partial \theta'} = 0\right)^2 = 1$$

$$Q_{Z'}^2 = \left(\frac{\partial r}{\partial Z'} = 0\right)^2 + \left(\frac{\partial \theta}{\partial Z'} = 0\right)^2 + \left(\frac{\partial Z}{\partial Z'} = 1\right)^2 = 1$$

so that in the new frame,

for $R_1 < r' < R_2$

$$\begin{aligned}\tilde{\varepsilon}_{r'} &= \tilde{\mu}_{r'} \\ &= \tilde{\varepsilon}_r \frac{Q_{r'} Q_{\theta'} Q_{Z'}}{Q_{r'}^2} \\ &= \frac{(R_2 - R_1)}{R_2} r\varepsilon_r \\ &= \frac{(R_2 - R_1)}{R_2}\frac{(r' - R_1)R_2}{R_2 - R_1}\varepsilon_r \\ &= (r' - R_1)\varepsilon_r\end{aligned} \tag{A15a}$$

-continued

$$\begin{aligned}\tilde{\varepsilon}_{\theta'} &= \tilde{\mu}_{\theta'} \\ &= \tilde{\varepsilon}_\theta \frac{Q_{r'} Q_{\theta'} Q_{Z'}}{Q_{\theta'}^2} \\ &= \frac{R_2}{R_2 - R_1} r^{-1}\varepsilon_\theta \\ &= \frac{R_2}{R_2 - R_1}\frac{R_2 - R_1}{(r' - R_1)R_2}\varepsilon_\theta \\ &= \frac{1}{(r' - R_1)}\varepsilon_\theta\end{aligned}$$

$$\begin{aligned}\tilde{\varepsilon}_{Z'} &= \tilde{\mu}_{Z'} \\ &= \tilde{\varepsilon}_Z \frac{Q_{r'} Q_{\theta'} Q_{Z'}}{Q_{Z'}^2} \\ &= \frac{R_2}{R_2 - R_1} r\varepsilon_Z \\ &= \frac{R_2}{R_2 - R_1}\frac{(r' - R_1)R_2}{R_2 - R_1}\varepsilon_Z \\ &= \left[\frac{R_2}{R_2 - R_1}\right]^2 (r' - R_1)\varepsilon_Z\end{aligned}$$

for $R_2 < r'$

$$\tilde{\epsilon}_{r'} = \tilde{\mu}_{r'} = r'\epsilon_{r'}$$

$$\tilde{\epsilon}_{\theta'} = \tilde{\Xi}_{\theta'} = r'^{-1}\epsilon_{\theta'}$$

$$\tilde{\epsilon}_{Z'} = \tilde{\mu}_{Z'} = r'\epsilon_{Z'} \tag{A15b}$$

for $r' < R_1$ we may choose any value we please for the dielectric functions since radiation never penetrates into this region.

Alternatively we can reinterpret these values in a Cartesian coordinate frame, x'y'z', which is easily done by comparison with (A4),

[0052]

$$\begin{aligned}\varepsilon_{r'} &= \mu_{r'} \\ &= \frac{r' - R_1}{r'}\end{aligned} \tag{A16}$$

$$\begin{aligned}\varepsilon_{\theta'} &= \mu_{\theta'} \\ &= \frac{r'}{(r' - R_1)}\end{aligned}$$

$$\begin{aligned}\varepsilon_{Z'} &= \mu_{Z'} \\ &= \left[\frac{R_2}{R_2 - R_1}\right]^2 \frac{r' - R_1}{r'}\end{aligned}$$

where we have assumed that the starting material is vacuum.

[0053] FIGS. **4***a* and **4***b* show that the incident rays **404**, **406** are diverted around a central region **400**, **402** and emerge from the cloaking region **408**, **410** apparently unperturbed, as predicted by the theoretical solution.

[0054] Whilst the theoretical solution has been confirmed by ray-tracing methods, in order to put the invention into effect a suitable material to form the cloaking structure has been developed.

[0055] The material parameters of the cloaking structure require that the components of ϵ' equal those of μ', that ϵ' and μ' vary throughout space, and that the tensor components of $\epsilon'$and μ' vary independently. The anticipated material is thus inhomogeneous and anisotropic. Moreover, the material parameters ϵ' and μ' must assume values less than unity and approach zero at the interface between the concealed region and the cloaking shell. Furthermore, it is noted that equation (6) is singular at $r'=R_1$. This is unavoidable as can be seen by considering a ray headed directly towards the centre of the sphere **100** (FIG. **1**). This ray does not know whether to be deviated up or down, left or right. Neighbouring rays **104** are bent around tighter and tighter arcs closer to the critical ray they are. This in turn implies very steep gradients in ϵ' and μ'. Parameters ϵ' and μ' are necessarily anisotropic in the cloaking material because space has been compressed anisotopically. This set of constraints is not attainable by conventional materials for example because finding matching values for ϵ and μ in the same waveband does not occur. However, given the rapid progress that has occurred over the past several years in artificial materials, a metamaterial can be practically designed that satisfies the specifications.

[0056] Metamaterials are artificially constructed 'materials' which can exhibit electromagnetic characteristics that are difficult or impossible to achieve with conventional materials. From an electromagnetic point of view, the wavelength, λ, of a wave passing through a material determines whether a collection of atoms or other objects can be considered a material and properties at the atomic level determine ϵ and μ. However, the electromagnetic parameters ϵ and μ need not arise strictly from the response of atoms or molecules: Any collection of objects whose size and spacing are much smaller than λ can be described by an ϵ and μ. In that case, the values of ϵ and μ are determined by the scattering properties of the structured objects. Although such an inhomogeneous collection may not satisfy an intuitive definition of a material, an electromagnetic wave passing through the structure cannot tell the difference, and, from the electromagnetic point of view, we have created an artificial material, or metamaterial. This properties of metamaterials are explained further in "Metamaterials and Refractive Index", D R Smith, J B Pendry, MCK. Wiltshire, VOL 305, SCIENCE 061081 (2004).which is incorporated herein by reference.

[0057] One useful property exhibited by certain metamaterials is that of artificial magnetism. It has been found that structures consisting of non-magnetic arrays of wire loops in which an external field can induce a current consequently produce an effective magnetic response. One such design is the so-called 'Swiss-roll' structure, as shown in FIG. **5**. The roll **500** is manufactured by rolling an insulated metallic sheet around a cylinder **504**. A design with about 11 turns on a 1-cm-diameter cylinder gives a resonant response at 21 MHz. The metamaterial is formed by stacking together many of these cylinders. In this structure, the coiled copper sheets have a self-capacitance and self-inductance that create a resonance. The currents that flow when this resonance is activated couple strongly to an applied magnetic field, yielding an effective permeability that can reach quite high values. No current can flow around the coil except by self capacitance. As is shown in FIG. **6**, when a magnetic field parallel to the cylinder **600** is switched on it induces currents (j) in the coiled sheets **602**, which are spaced a distance d apart from one another. Capacitance between the first **604** and last **606** turns of the coil enables current to flow. This is described further in "Magnetism from Conductors and Enhanced Non-Linear Phenomena", J B Pendry, A J Holden, D J Robbins and W J Stewart IEEE Trans. Micr. Theory and Techniques, 47, 2075 (1999), which is incorporated herein by reference.

[0058] One problem with the Swiss-roll structures is that the continuous electrical path provided by metal cylinders can cause the metamaterial to respond like an effective metal when the electric field applied is not parallel to the cylinders, hence restricting its usefulness in certain applications. An adaptation described in the same paper which avoids this undesirable effect is the split ring resonator (SRR). The SRR is built up from a series of split rings, as shown in FIG. **7**. Each split ring **700** comprises at least two concentric thin metal rings **702**, **704** of width c, spaced apart by a distance d, each one with a gap, **706**, **708**. By eliminating the continuous conducting path which the cylinders provide, an SRR eliminates most of the electrical activity along this direction.

[0059] As shown in FIG. **8**, it is possible to form a planar split ring structure **800** from a series of split rings **802**, spaced a distance a apart. The two dimensional square array **800** shown in FIG. **8** can be made by printing with metallic inks. If each printed sheet is then fixed to a solid block of inert material, thickness a, the blocks can be stacked to give columns of rings. This would establish magnetic activity along the direction of stacking, z-axis.

[0060] The unit cell **900** of the stacked SRR structure is shown in FIG. **9** on the left. It is possible to form a symmetrical three dimensional structure starting from such a structure comprising successive layers of rings stacked along the z-axis. This is achievable by cutting up the structure into a series of slabs thickness a, making incisions in the y-z plane and being careful to avoid slicing through any of the rings. Each of the new slabs contains a layer of rings but now each ring is perpendicular to the plane of the slab and is embedded within. The next stage is to print onto the surface of each slab another layer of rings and stack the slabs back together again. The unit cell **902** of this second structure is shown in the middle of FIG. **9**. In the final step, a third set of slabs is produced by cutting in the x-z plane, printing on the surface of the slabs, and reassembling. This results in a structure with cubic symmetry whose unit cell **904** is shown on the right of FIG. **9**.

[0061] Similarly ϵ can be governed by an array of thin wires as described in "Extremely Low Frequency Plasmas in Metallic Mesostructures", J B Pendry, A J Holden, W J Stewart, I Youngs, Phys Rev Lett, 76, 4773 (1996) which is incorporated herein by reference.

[0062] Hence known techniques can be applied to construct the metamaterial required to put the current invention as described above into practice. The materials comprise many unit cells, each of which is designed to have a predetermined value for ϵ' and μ', such that they correspond to the values determined by equation (4) above (or for the non-orthogonal case, equation (23) of Annex 1). As will be apparent to the skilled reader, this may involve each unit cell having slightly different values of ϵ' and μ' to those of its radially neighbouring cells. Each unit cell in the metamaterial acts as a concealing volume element. The concealing volume elements are assembled in the correct respective spatial positions to form the cloaking structure, as calculated by the methods outlined above. The cloaking structure will,

as a result, possess the spatially distributed material parameter values required for electromagnetic concealment of the enclosed volume.

[0063] For practical implementation of the theory outlined above, a three dimensional cloaking structure will be necessary in most cases. A solid composite metamaterial structure can be formed using fabrication techniques similar to those used to manufacture a gradient index lens. One such known structure **1000** is shown in FIG. **10**, in which SRR's and wires are deposited on opposite sides lithographically on a standard circuit board to provide a desired material response. This is described in more detail in "Reversing Light with Negative Refraction", J B Pendry, D R Smith, Physics Today, June 2004, which is incorporated herein by reference.

The unit cell structure of the metamaterial used ensures that anisotropy and continuous variation of the parameters, as required by the theoretical solution, can be achieved. Unrelated to cloaking, another application of the transformation theory described above is a device for concentrating fields. FIG. **11** shows a concentrator that concentrates electromagnetic fields incident upon its outer surface (**110**) onto an inner core region (**114**). The transformation that characterizes the concentrator, for the spherical geometry, is shown in FIG. **11**. The outer radius of the device (**110**) is R_3. A concentrating volume of space (**112**) with radius $R_2<R_3$ is compressed to a collecting volume (**114**) of radius R_1. The shell volume (**116**) that lies between R_2 and R_3 is expanded to fill the region (**118**) between R_1 and R_3, as FIG. **11** depicts. A simple example of this transformation that compresses the core (**112**) uniformly and stretches the shell region (**116**) with a linear radial function is given by

$$r = \begin{cases} \frac{R_2}{R_1} r' & 0 < r' < R_1 \\ \frac{R_2 - R_1}{R_3 - R_1} R_3 + \frac{R_3 - R_2}{R_3 - R_1} r' & R_1 < r' < R_3 \\ r' & R_3 < r' \end{cases} \tag{12}$$

$$\theta = \theta'$$

$$\phi = \phi' \tag{13}$$

The resulting material properties of permitting and permeability in the concentration device are then

[0064]

$$[\varepsilon'_{r'}, \varepsilon'_{\theta'}, \varepsilon'_{\phi'}] = [\mu'_{r'}, \mu'_{\theta'}, \mu'_{\phi'}] \tag{15}$$

$$= \begin{cases} \frac{R_2}{R_1}[1, 1, 1] & 0 < r' < R_1 \\ \frac{R_3 - R_2}{R_3 - R_1}\left[\left(1 + \frac{R_2 - R_1}{R_3 - R_2}\frac{R_3}{r'}\right)^2, 1, 1\right] & R_1 < r' < R_3 \\ [1, 1, 1] & R_3 < r' \end{cases}$$

where the material properties are given relative to the external environment. As with the cloaking structure, the external environment may be free space or any other medium.

[0065] In order to concentrate fields into an arbitrarily small volume, we let $R_1 \rightarrow 0$ and obtain

$$[\varepsilon'_{r'}, \varepsilon'_{\theta'}, \varepsilon'_{\phi'}] = [\mu'_{r'}, \mu'_{\theta'}, \mu'_{\phi'}] \tag{16}$$

$$= \begin{cases} \frac{R_3 - R_2}{R_3}\left[\left(1 + \frac{R_3}{R_3 - R_2}\frac{R_2}{r'}\right)^2, 1, 1\right] & 0 < r' < R_3 \\ [1, 1, 1] & R_3 < r' \end{cases}$$

[0066] If we wish the concentration cross section of the sphere to equal it's outer radius, then we let $R_2 \rightarrow R_3$.

$$\lim_{R_3 \rightarrow R_3} [\varepsilon'_{r'}, \varepsilon'_{\theta'}, \varepsilon'_{\phi'}] = \lim_{R_3 \rightarrow R_3} [\mu'_{r'}, \mu'_{\theta'}, \mu'_{\phi'}] \tag{17}$$

$$= \begin{cases} [+\infty, 0, 0] & 0 < r' < R_3 \\ [1, 1, 1] & R_3 < r' \end{cases}$$

[0067] This is the perfect field concentrator. The material parameters which are required in the concentrator can be achieved through the use of metamaterials as described in relation to the cloaking structure. The permittivity ϵ and permeability μ can be controlled independently of one another in each of three dimensions within each unit cell of the metamaterial.

[0068] The concentrator device is unique, and different from focusing lenses and mirrors, in that it operates on fields incident from any direction. For electromagnetic sensing or energy harvesting applications, a detector or collector would be placed at the core (**114**) to interact with the intensified fields at that location. Part of the utility of this device is concentration of fields when the direction of their source is initially unknown or constantly changing e.g. solar energy collection or microwave energy beaming on mobile platforms.

[0069] A detector placed at the concentrator's core (**114**) could easily be configured to provide accurate directional information as well as collect the energy. This could be accomplished by, for example, using a spherical shaped detector patterned into eight quadrants. By comparing the energy collected from each quadrant, accurate directional information will be obtained. The detector need not be spherical. A transformation could be used that results in a core region that is a thin circular disk. This would make the concentrator compatible with common planar detectors.

[0070] The device can also provide impedance matching to the detector. This is achieved by applying the inverse transformation to the desired detector, expanding it from the core radius, R_1, to the radius R_2. It is then possible to design an impedance matching layer, (between R_1 and R_3), to match the transformed detector to its environment. This impedance matching layer is then transformed with the forward transformation expanding it to fill the region (**118**) between R_1 and R_3. The resulting shell layer between R_1 and R_3, provides both concentration and impedance matching functions.

[0071] Like the cloak structures the concentrator (**110**) can be perfectly matched to its environment, so that if the fields are not disturbed in the core (**114**) by a detector, the device (**110**) is undetectable by external electromagnetic probing. This device (**110**) can operate in both near and far field regimes and at any size scale and wavelength. The basic

formalism of this transformation can be applied to other basic geometries, (e.g. cylindrical) or applied conformally to an arbitrarily shaped object.

FIG. 12 demonstrates the concentration of rays or field lines from a point source (**120**) incident upon a sphere (**122**) radius R_3, into an inner core region (**124**) radius R_1.

[0072] The co-ordinate transfer mapping theory outlined above has been described with respect to diverting the propagation of electromagnetic waves. However it is noted that there is a significant analogy between electromagnetic and other propagating waves such as acoustic waves. In particular, this theory may be applied to obtain specifications for the mechanical properties of a material such as density and stiffness that yield acoustic cloaking. Such a cloak may be used for example to conceal bodies from sonar detection.

[0073] Whilst the description of the cloaking theory above is directed mainly to concealing objects, it will be appreciated that the diversion of electromagnetic disturbances from the cloaked volume into a cloaking shell creates an electromagnetic quiet zone inside. Equation (9) dictates that any electromagnetic radiation produced by an object inside the quiet zone will not be able to emerge from it. This may be put to use in electromagnetic interference shielding applications, for example inside MRI machines. Analogously, acoustic quiet zones may also be achieved.

[0074] The application of the present invention is not limited to the cloaking and concentrator structures as shown in the Figures. As demonstrated clearly in Annex 1, the mathematical solution provided herein applies to cloak a structure of any shape. Furthermore, if a volume is cloaked, an object of any shape or material placed therein will not be detectable by an outside observer, either in reflection mode or transmission mode.

[0075] The methods described herein can be used to apply any appropriate coordinate transformation between any appropriate co-ordinate systems and using any appropriate function of the co-ordinates in the original frame. The cloaking structure used to conceal the material within it can be of any shape or thickness. In particular, the cloaking structure does not have to follow the same shape as the object within that is to be concealed. It will be apparent to the skilled reader that the methods described herein can be used to transform all frequencies of electromagnetic radiation, and for a given application can be applied to radiation in any specific frequency range of the electromagnetic spectrum, including infrared, radio, visible light, x-rays, microwaves and radar.

[0076] In the examples shown impedance matching has been achieved by the ratio

$$\frac{\mu}{\varepsilon} = 1.$$

As will be apparent to the skilled reader, impedance matching of the sort described herein can be achieved for

[0077]

$$\frac{\mu}{\varepsilon} = m$$

where m is any real constant value. In particular, the desired ratio of μ/ϵ will depend on the medium in which the cloaking structure is to be embedded.

[0078] While this invention has been particularly shown and described with references to preferred embodiments thereof, it will be understood by those skilled in the art that various changes in form and details may be made therein without departing from the scope of the invention encompassed by the appended claims.

What is claimed is:

1. A method of constructing a concealing volume comprising constructing a plurality of concealing volume elements around a concealable volume, each concealing volume element having a material parameter arranged to direct a propagating wave around a concealable volume.

2. A method as claimed in claim **1** in which the material parameter comprises one of refractive index, electrical permittivity, magnetic permeability.

3. A method as claimed in claim **2** in which the propagating wave comprises an electromagnetic wave.

4. A method as claimed in claim **1** in which the material parameter comprises each of electrical permittivity and magnetic permeability.

5. A method as claimed in claim **2** in which the concealing volume is a metamaterial.

6. A method as claimed in claim **5** in which each element comprises at least one of a split ring and a conductive wire providing a respective permeability and permittivity value.

7. A method as claimed in claim **1** in which the concealing volume is designed to divert incoming propagating waves such that outgoing propagating waves appear to be unperturbed to an observer.

8. A method of designing a concealing volume for provision around a concealable volume comprising identifying a co-ordinate transform mapping a concealable volume space onto a concealing volume space and applying a corresponding transform to spatially distributed material parameter values in the concealable volume space.

9. A method as claimed in claim **8** in which the material parameter comprises at least one of the refractive index, electrical permittivity, magnetic permeability.

10. A method of constructing a concealing volume comprising designing a concealing volume as claimed in claim **8**, constructing a plurality of elements having said transformed material parameter values and assembling said elements at the respective transformed spatial positions.

11. A method as claimed in claim **10** in which the assembled elements form a metamaterial.

12. A concealing volume for concealing a concealable volume comprising a plurality of concealing volume elements each having a material parameter arranged to divert a propagating wave around a concealable volume.

13. A concealing volume as claimed in claim **12** in which the material parameter is at least one of refractive index, electrical permittivity and magnetic permeability.

14. A concealing volume as claimed in claim **12** in which the concealing volume elements form a metamaterial.

15. A concealing volume as claimed in claim **12** in which each concealing volume element comprises at least one of a split ring and an electrically conductive wire providing a respective magnetic permeability or electrical permittivity value.

16. A concealing volume as claimed in claim **12** further comprising a concealed volume within said concealing volume.

17. A concealing volume as claimed in claim **12** further comprising a plurality of bandwidth enhancing elements.

18. A computer readable medium comprising a set of instructions for implementing a method as claimed in claim **1**.

19. A computer configured to operate under the instructions of a computer readable medium as claimed in claim **18**.

20. A computer readable medium storing concealing volume element material parameter data derived according to the method of claim **8**.

21. A concealing volume as claimed in claim **12** configured for cloaking in at least one of the following electromagnetic spectrum bands: visible, infrared, ultraviolet, x-ray, radio, radar, microwave.

22. A computer readable medium as claimed in claim **18** in which the propagating wave is an acoustic wave and the material parameter comprises at least one of density and stiffness.

23. A method of constructing a concentrator comprising constructing a plurality of concentrator elements to form a concentrating volume and a collecting volume, each concentrator element having a material parameter arranged to direct a propagating wave from the concentrating volume to the collecting volume.

24. A method as claimed in claim **23** in which the material parameter comprises one of refractive index, electrical permittivity, magnetic permeability.

25. A method as claimed in claim **24** in which the propagating wave comprises an electromagnetic wave.

26. A method as claimed in claim **23** in which the material parameter comprises each of electrical permittivity and magnetic permeability.

27. A method as claimed in claim **24** in which the concentrator is a metamaterial.

28. A method as claimed in claim **27** in which each element comprises at least one of a split ring and a conductive wire providing a respective permeability and permittivity value.

29. A method as claimed in claim **23** in which the concentrator is designed to divert incoming propagating waves such that outgoing propagating waves appear to be unperturbed to an observer.

30. A method of designing a concentrator for provision around a concentrating volume comprising identifying a co-ordinate transform mapping the concentrating volume space onto a collecting volume space and applying a corresponding transform to spatially distributed material parameter values in the concentrator space.

31. A method as claimed in claim **30** in which the material parameter comprises at least one of the refractive index, electrical permittivity, magnetic permeability.

32. A method of constructing a concentrator comprising designing a concentrator as claimed in claim **36**, constructing a plurality of elements having said transformed material parameter values and assembling said elements at the respective transformed spatial positions.

33. A method as claimed in claim **32** in which the assembled elements form a metamaterial.

34. A concentrator for concentrating a concentrating volume comprising a plurality of concentrator elements each having a material parameter arranged to divert a propagating wave from the concentrating volume to a collecting volume.

35. A concentrator as claimed in claim **34** in which the material parameter is at least one of refractive index, electrical permittivity and magnetic permeability.

36. A concentrator as claimed in claim **34** in which the concentrator elements form a metamaterial.

37. A concentrator as claimed in claim **34** in which each concentrator element comprises at least one of a split ring and an electrically conductive wire providing a respective magnetic permeability or electrical permittivity value.

38. A concentrator as claimed in claim **34** further comprising a collecting volume within said concentrating volume.

39. A concentrator as claimed in claim **34** further comprising a plurality of bandwidth enhancing elements.

40. A computer readable medium comprising a set of instructions for implementing a method as claimed in claim **23**.

41. A computer configured to operate under the instructions of a computer readable medium as claimed in claim **40**.

42. A computer readable medium storing concentrator element material parameter data derived according to the method of claim **30**.

43. A concentrator as claimed in claim **34** configured for concentrating in at least one of the following electromagnetic spectrum bands: visible, infrared, ultraviolet, x-ray, radio, radar, microwave.

44. A method for controlling a propagating wave within a material comprising controlling the values of electrical permittivity and magnetic permeability exhibited by the material independently of one another.

45. A method as claimed in claim **44** in which the material is a metamaterial.

46. A method as claimed in claim **44** in which the propagating wave is an electromagnetic wave.

47. A method as claimed in claim **44** wherein the propagating wave is controlled to circumvent a concealable volume.

48. A method as claimed in claim **44** wherein the propagating wave is directed from a concentrating volume to a collecting volume.

49. A method of defining a spatial distribution of material parameter values of an object comprising performing a spatial coordinate transformation in relation to a volume having a pre-transformation material parameter value spatial distribution, and constructing an object from a metamaterial having a post-transformation material parameter value spatial distribution.

50. A method of defining a spatial distribution of material parameter values of an object comprising performing a spatial coordinate transformation in relation to a volume having a pre-transformation material parameter value spatial

distribution having an effect on a volume surrounding the object, in which the spatial transformation is selected so that the post-transformation material parameter value spatial distribution achieves the same effect on the volume surrounding the object.

51. A method as claimed in claim **50** in which the effect on the surrounding volume is non-perturbation of electromagnetic radiation by virtue of presence of the object.

* * * * *

US 20080165442A1

(19) United States

(12) Patent Application Publication

Cai et al.

(10) Pub. No.: US 2008/0165442 A1

(43) Pub. Date: Jul. 10, 2008

(54) SYSTEM, METHOD AND APPARATUS FOR CLOAKING

(76) Inventors: **Wenshan Cai**, West Lafayette, IN (US); **Vladimir M. Shalaev**, West Lafayette, IN (US); **Uday K. Chettiar**, West Lafayette, IN (US); **Alexander V. Kildishev**, West Lafayette, IN (US)

Correspondence Address:
BRINKS HOFER GILSON & LIONE
P.O. BOX 10395
CHICAGO, IL 60610

(21) Appl. No.: **11/983,228**

(22) Filed: **Nov. 7, 2007**

Related U.S. Application Data

(60) Provisional application No. 60/857,526, filed on Nov. 8, 2006.

Publication Classification

(51) **Int. Cl.**
G02B 27/00 (2006.01)

(52) **U.S. Cl.** **359/896**

(57) **ABSTRACT**

An apparatus and method of cloaking is described. An object to be cloaked is disposed such that the cloaking apparatus is between the object and an observer. The appearance of the object is altered and, in the limit, the object cannot be observed, and the background appears unobstructed. The cloak is formed of a metamaterial where the properties of the metamaterial are varied as a function of distance from the cloak interfaces, and the permittivity is less than unity. The metamaterial may be fabricated as a composite material having a dielectric component and inclusions of particles of sub-wavelength size, so as to have a permeability substantially equal to unity.

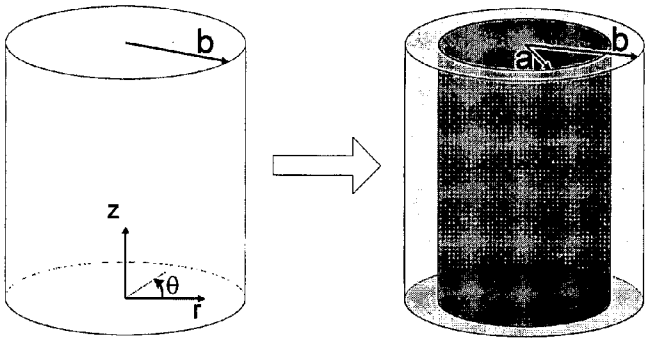

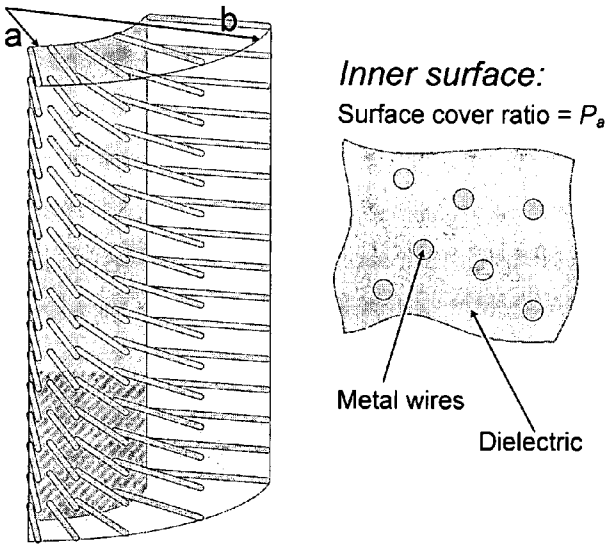

(a)

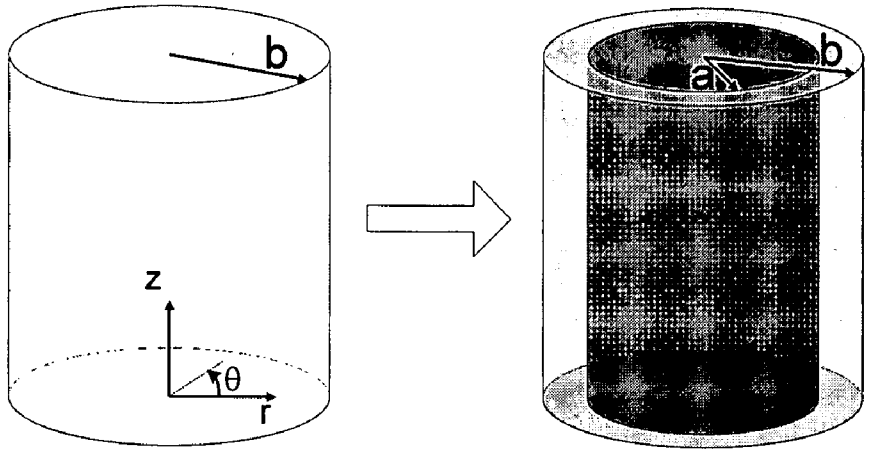
b
z
θ
r
a
b

(b)

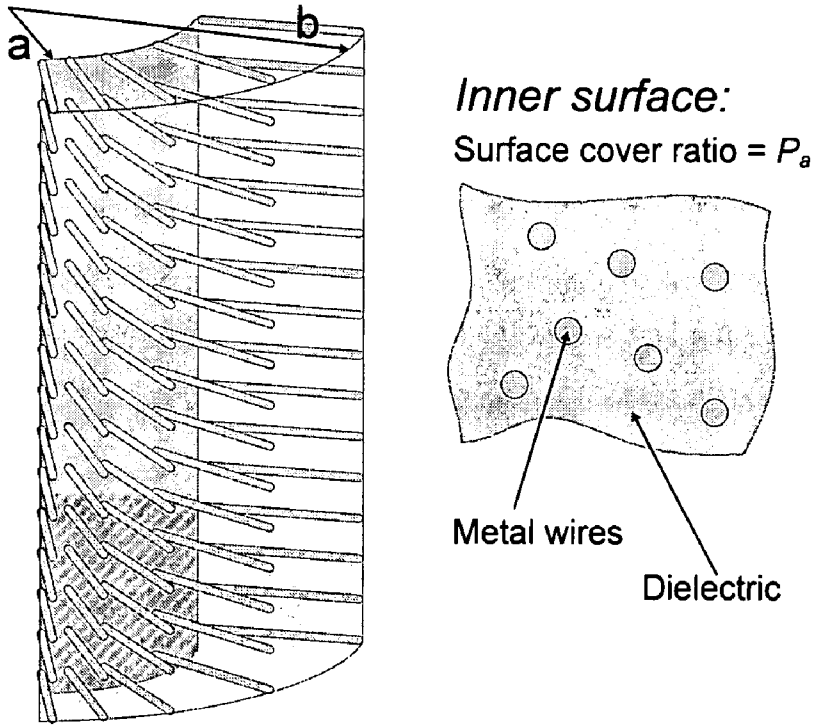
a
b
Inner surface:
Surface cover ratio = P_a
Metal wires
Dielectric

FIG. 1

FIG. 2

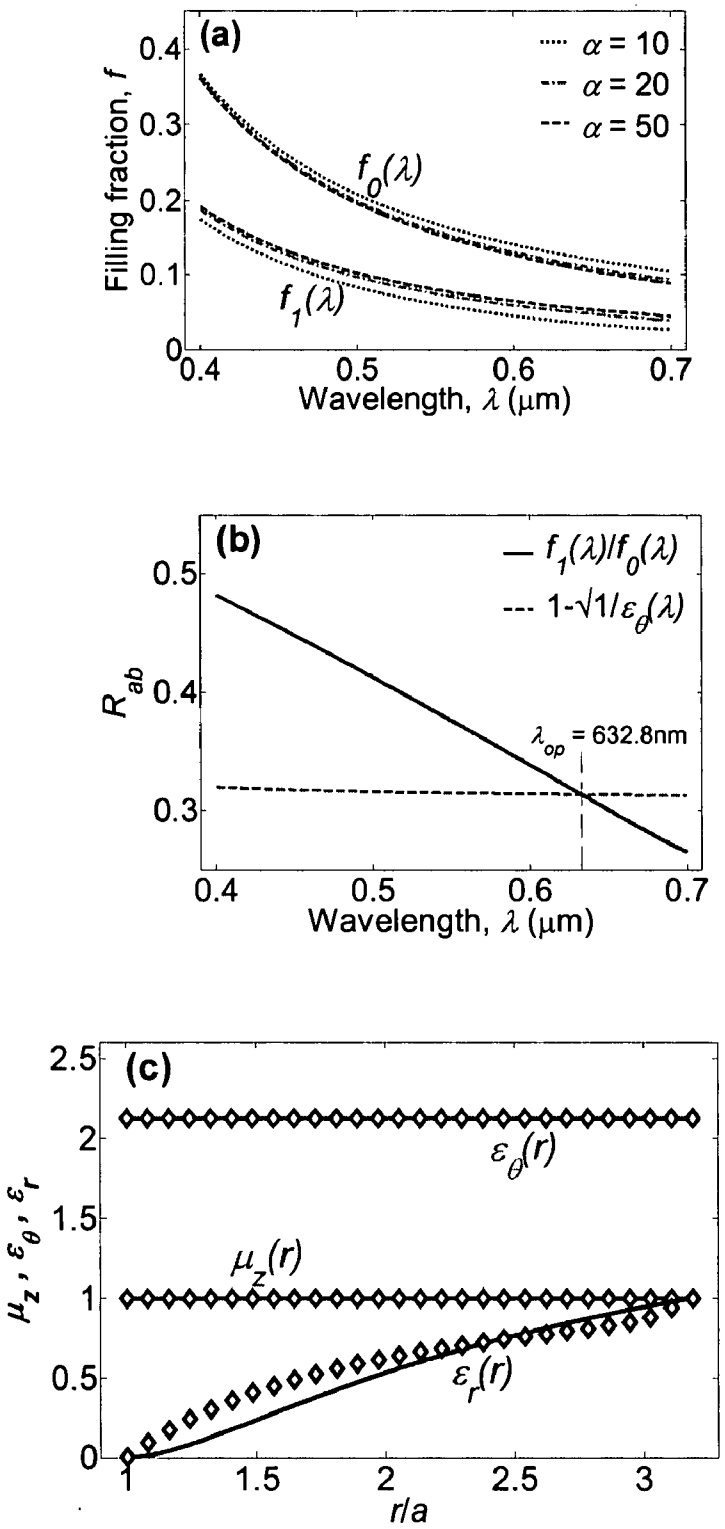
(a)
α = 10
α = 20
α = 50
Filling fraction, f
f0(λ)
f1(λ)
Wavelength, λ (μm)
(b)
f1(λ)/f0(λ)
1-√1/εθ(λ)
Rab
λop = 632.8nm
Wavelength, λ (μm)
(c)
εθ(r)
μz(r)
εr(r)
μz, εθ, εr
r/a

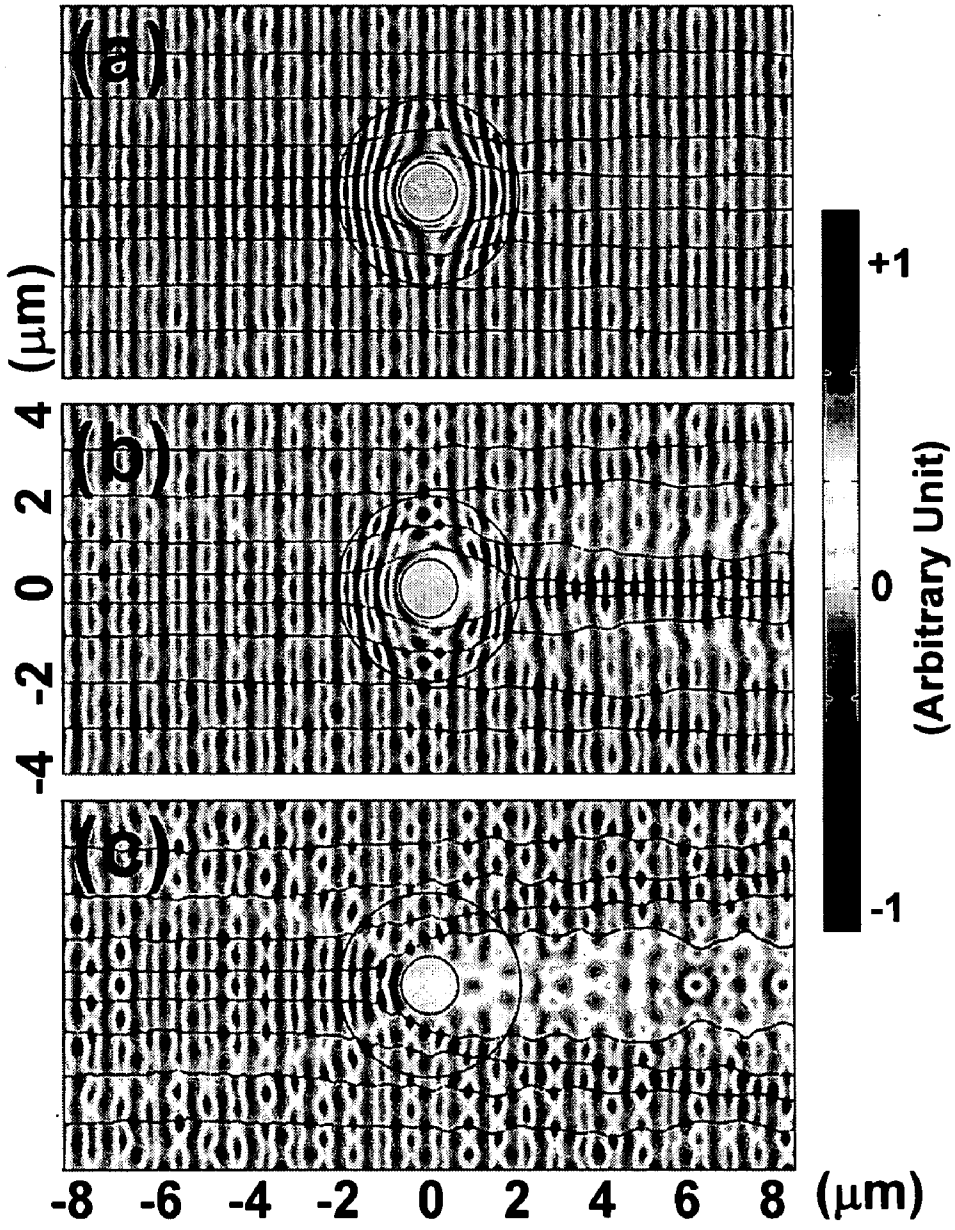

FIG. 3

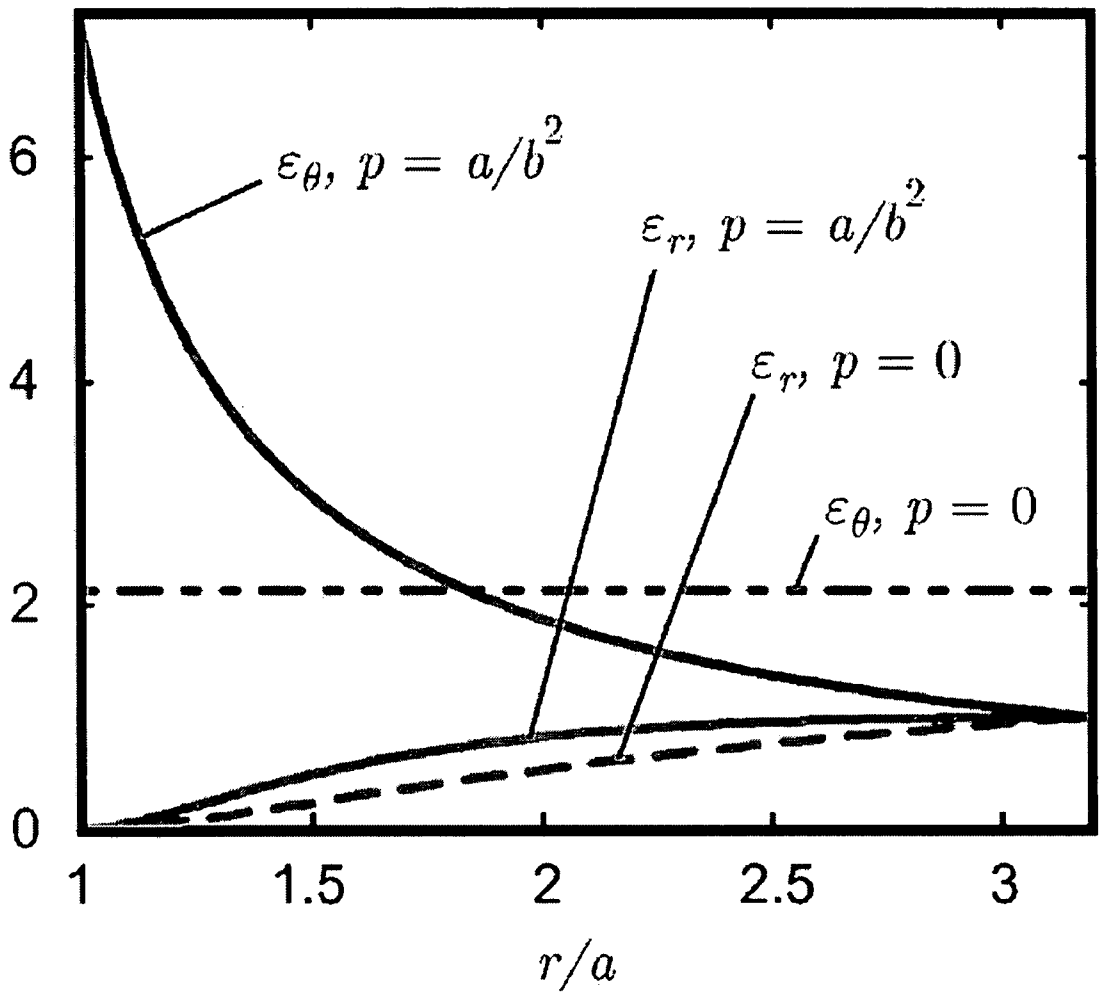
6
4
2
0
1
1.5
2
2.5
3
r/a
$\varepsilon_\theta,\ p = a/b^2$
$\varepsilon_r,\ p = a/b^2$
$\varepsilon_r,\ p = 0$
$\varepsilon_\theta,\ p = 0$

FIG. 4

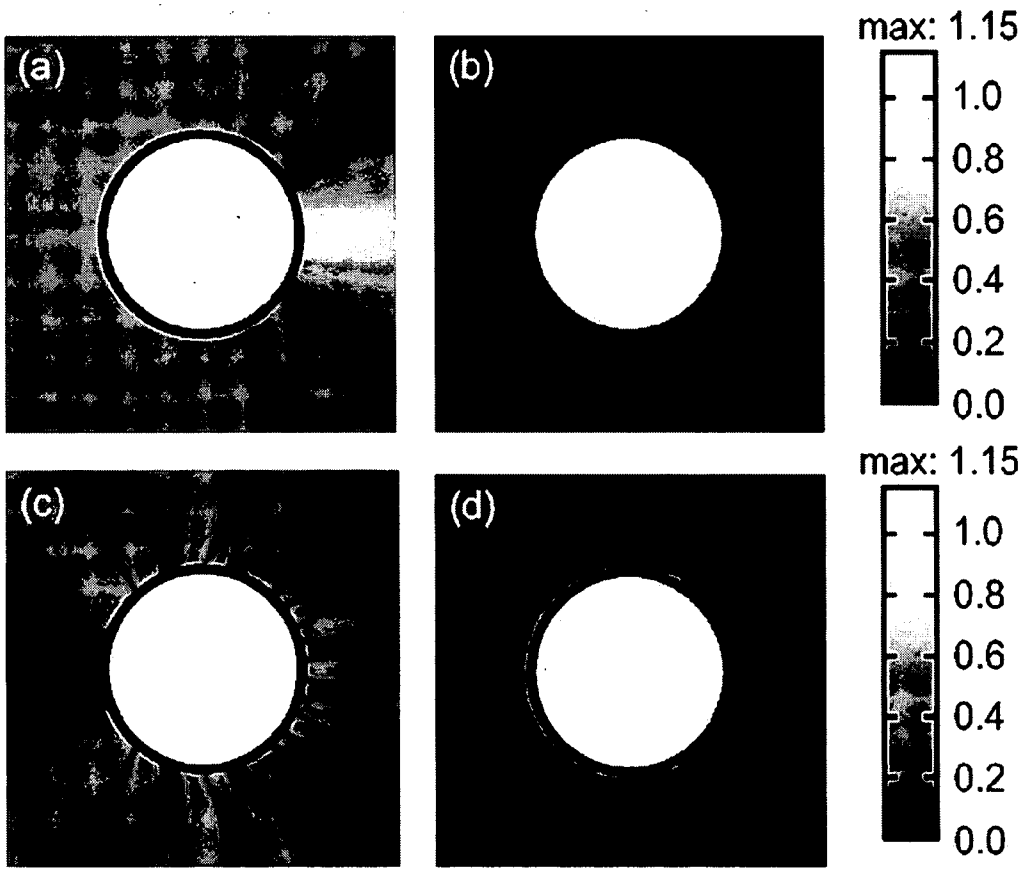

FIG. 5

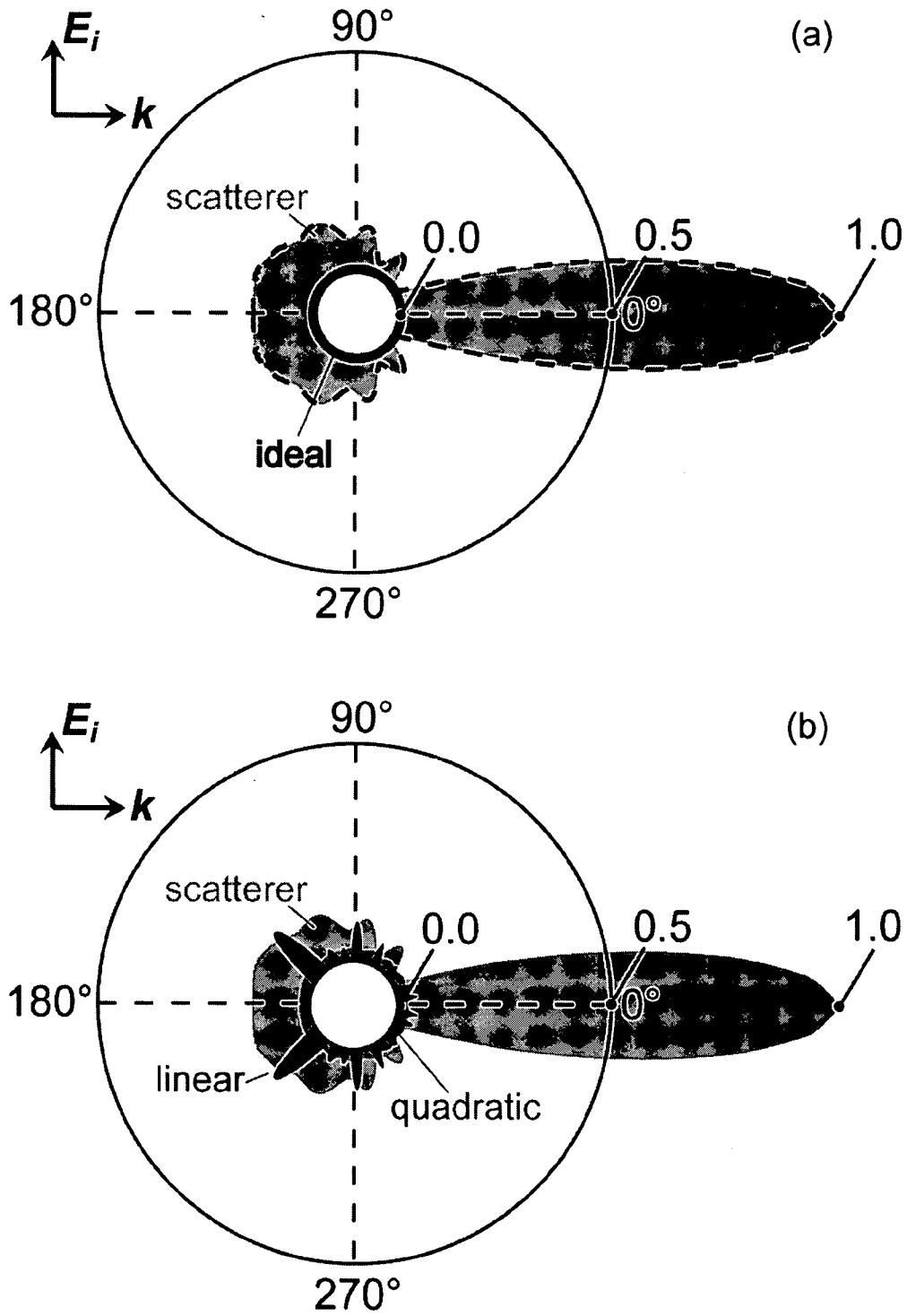
E_i
k
90°
(a)
scatterer
0.0
0.5
1.0
180°
0°
ideal
270°
E_i
k
90°
(b)
scatterer
0.0
0.5
1.0
180°
0°
linear
quadratic
270°

FIG. 6

SYSTEM, METHOD AND APPARATUS FOR CLOAKING

[0001] This application claims the benefit of U.S. provisional application Ser. No. 60/857,526, filed on Nov. 8, 2006, which is incorporated herein by reference.

STATEMENT OF GOVERNMENT SUPPORT

[0002] This application is based on research sponsored by the U.S. Army Research Office under 50342-PH-MUR.

TECHNICAL FIELD

[0003] This application relates to a system, method and apparatus for the modification of the scattering properties of an object. In particular, the effect may be achieved using non-magnetic materials.

BACKGROUND

[0004] An object may be sought to be made invisible at least over some frequency range. This has been termed a "cloak of invisibility"; the invisibility sought may be partial at a specific frequency, or over a band of frequencies, so the term "cloak of invisibility" or "cloak" may take on a variety of meanings. The cloak may be designed to decrease scattering (particularly "backscattering") from an object contained within, while at the same time reducing the shadow ("forward scattering"), so that the combination of the cloak and the object contained therein have a resemblance to free space. When the phrase "cloaking", "cloak of invisibility" or the like, is used herein, the effect is generally acknowledged to be imperfect, and the object may appear in a distorted or attenuated form, or the background obscured by the object may be distorted or partially obscured.

[0005] In an aspect the cloak has a similarity to "stealth" technology where the objective is to make the object as invisible as possible in the reflection or backscattering direction. One means of doing this is to match the impedance of the stealth material to that of the electromagnetic wave at the boundary, but where the material is strongly attenuating to the electromagnetic waves, so that the energy backscattered from the object within the stealth material is strongly attenuated on reflection, and there is minimal electromagnetic reflection at the boundary within the design frequency range. This is typically used in evading radar in military applications. Shadowing may not be a consideration in stealth technology.

[0006] The materials used for the cloak may have properties where, generally the permeability and permittivity tensors are anisotropic and where the magnitudes of the permeability and permittivity are less than one, so that the phase velocity of the electromagnetic energy being bent around the cloaking region is greater than that of the group velocity.

[0007] Materials having such properties have not been discovered as natural substances, but may be produced as artificial, man-made materials, where the permittivity and permeability are less than unity, and may be negative. Metamaterials, an extension of the concept of artificial dielectrics, were first designed in the 1940s for microwave frequencies. They typically consist of periodic geometric structures of a guest material embedded in a host material. Analogous to the circumstance where homogeneous dielectrics owe their properties to the nanometer-scale structure of atoms, metamaterials derive their properties from the sub-wavelength structure of its component materials. At wavelengths much longer than the unit-cell size, the structure can be assigned parameters that may be used describe homogeneous dielectrics, such as electric permittivity and refractive index.

[0008] A first experimental demonstration of a cloak operating over a narrow band of microwave frequencies was recently reported. Cloaking was achieved by varying the dimensions of a series of split ring resonators (SRRs) to yield a desired gradient of permeability in the radial direction. However, there appear to be limits to size scaling of SRRs so as to exhibit magnetic responses in the optical range. Replacing the SRRs with other optical magnetic structures like paired nano-rods or nano-strips may be difficult, primarily due to fabrication issues. Moreover, optical magnetism based on, for example, resonant plasmonic structures is usually associated with a high loss factor, which may be detrimental to the performance of cloaking devices.

SUMMARY

[0009] An apparatus is disclosed, the apparatus being a structure formed of a material having a permittivity less than unity and a permeability approximately equal to unity. The structural material may be a metamaterial: for example, a material having a permittivity greater than or equal to unity, partially filled with a material having a negative permittivity at a design wavelength. The permittivity of the material may be anisotropic.

[0010] In an aspect, the apparatus is sized and dimensioned such that the structure is disposable between an object and an observer.

[0011] A method of cloaking an object is described, the method including providing a structure formed of a metamaterial, and disposing the object to be cloaked such that the structure is positioned between the object and an observer. The metamaterial has a permittivity less than unity and a permittivity approximately equal to unity. The metamaterial may be fabricated from a dielectric with sub-wavelength inclusions of a material having a permittivity less than zero.

[0012] In another aspect, method of designing a cloaking structure includes, selecting a dielectric material; selecting a filler material having a permittivity less than zero; and, adjusting at least one of a distribution, a quantity or a dimension of the filler material within the dielectric material such that, at a design wavelength, a permittivity of a composite material comprised of the dielectric material and the filler material varies with a distance such that a visibility of an object disposed within the cloaking structure is reduced, and the region behind the object is visible.

[0013] In yet another aspect, a cloaked object, includes an object having a electromagnetic scattering property and a structure disposable between the object and an observer. The structure may be fabricated from a material having a permeability approximately equal to unity and a permittivity between approximately unity and approximately zero. The properties of the material may be selected so that a visibility of the object is reduced and a visibility of region behind the cloaked object may be substantially unaffected.

BRIEF DESCRIPTION OF THE DRAWINGS

[0014] FIG. **1**A illustrates the coordinate transformation that compresses a cylindrical region $r<b$ into a concentric

cylindrical shell a<r<b; and, **1**B the structure of a non-magnetic optical cloak, together with a portion of the inner surface thereof;

[0015] FIG. **2**A is a graph of the functions f_0 and f_1 as defined by (8) for a silver-silica composite with aspect ratios of 10:1, 20:1 and 50:1, respectively; **2**B, the operational point determined by (11) for a cloak consisting of silver wires of α=10.7 in silica; and, **2**C, the material parameters $\in_r$, $\in_\theta$ and μ_z of the cloak operating at λ=632.8 nm, where the solid line (—) represents the exact set of reduced parameters by Eq. 2, and the diamond (◇): parameters of the metal wire composite cloak; and

[0016] FIG. **3** is a cross-sectional view of finite-element simulations of the magnetic field mapping around the cloaked object with TM illumination at λ=632.8 nm when the object is surrounded by: A, a cloak with the exact set of reduced parameters; B, the metal wire composite cloak; and C, a vacuum (no cloak).

[0017] FIG. **4** shows a comparison of the anisotropic material properties for of the anisotropic material properties for the optimal quadratic design ($p=a/b^2$), solid lines and the linear transformation (p=0), dashed lines. The shape factor a/b is 0.31 and the diameter **2***b* is 4 microns.

[0018] FIG. **5** shows the results of full-wave field-mapping simulations of the magnitudes of the normalized scattered field for a metal cylinder with: A, no cloak; B, an ideal cloak; C, a linear transformation non-magnetic cloak; and D, an optimal quadratic transformation nonmagnetic cloak; and

[0019] FIG. **6** shows scattering patterns from the four cases shown in FIG. **5**; where A shows the metal cylinder scatterer with no cloak and the cylinder with the ideal cloak; and B shows the cylinder with a linear nonmagnetic cloak and the cylinder with an optimal quadratic nonmagnetic cloak.

DETAILED DESCRIPTION

[0020] Exemplary embodiments may be better understood with reference to the drawings, but these embodiments are not intended to be of a limiting nature.

[0021] When the phrase "cloaking", "cloak of invisibility" or the like is used herein, the effect is generally acknowledged to be imperfect in practice, and the object may appear in a distorted or attenuated form, or the background obscured by the object may be distorted or partially obscured. Therefore, "cloak" should not be interpreted so as to require that the object within the cloak be "invisible" even at a design wavelength.

[0022] Reference may be made in this application to systems, apparatus, components, or techniques that are known, so as to enable a person of ordinary skill in the art to be able to comprehend the examples disclosed in the specification. The examples are intended to enable a person of ordinary skill in the art to practice the inventive concepts as claimed herein, using systems, apparatus, components, or techniques that may be known, disclosed herein, or hereafter developed, or combinations thereof. Where a comparison of performance is made between the examples disclosed herein and any known system, apparatus, component, or technique, such comparison is made solely to permit a person of skill in the art to more conveniently understand the present novel system, apparatus, component, or technique, and it should be understood that, in complex systems, various configurations may exist where the comparisons made may be better, worse, or substantially the same, without implying that such results are invariably obtained or constitute a limitation on the performance which may be obtained.

[0023] A non-magnetic cloak structure of cylindrical geometry which may be operable at visible wavelengths is described. The cloak may be designed to be effective at other wavelengths, and in other geometries.

[0024] In a first example, a cylindrical geometry is selected. A coordinate transformation may be used where a cylindrical region r<b is compressed into a concentric cylindrical shell a<r<b as shown in FIG. **1**A. There is no variation of permittivity or permeability along the z direction in the model geometry of this example.

[0025] Using a linear coordinate transformation results in the following properties for the anisotropic permittivity and permeability in a cloaking shell or structure:

$$\varepsilon_r = \mu_r = \frac{r-a}{r}, \quad \varepsilon_\theta = \mu_\theta = \frac{r}{r-a}, \quad \varepsilon_z = \mu_z = \left(\frac{b}{b-a}\right)^2 \frac{r-a}{r} \tag{1}$$

[0026] Mathematically, there are a variety of coordinate transformations that may be used, and while a linear transformation is used in this example, the optimization of a quadratic coordinate transformation is described in a second example. Such mathematical examples are convenient for discussion, but more complex transformations may be used and, in conjunction with electromagnetic finite-element analysis, to design more complex structures having differing properties, and include the effects of lossy materials.

[0027] For transverse electromagnetic (TE) illumination of the cylindrical system with the incident electrical field polarized along the z axis, only ϵ_z, μ_r and μ_θ in (1) enter into Maxwell's equations. The dispersion properties and wave trajectory in the cloaking shell remain the same as long as the values of the products $\epsilon_i\mu_j$ are maintained constant, where i and j represent any of the two distinct subscripts among r, θ and z.

[0028] For transverse magnetic (TM) illumination of the cylindrical system with the incident magnetic field polarized along the z axis is considered, only μ_z, ϵ_r and ϵ_θ may need to satisfy the requirements in (1), and the dispersion relations inside the cloak may remain unaffected as long as the product of $\mu_z\epsilon_r$ and $\mu_z\epsilon_\theta$ are maintained the same as the values determined by (1). Unlike the TE case, under TM illumination only one component of μ is of interest in the model. By multiplying ϵ_r and ϵ_θ by the value of μ_z, a reduced set of cloaking shell parameters is obtained:

$$\mu_z = 1 \tag{2a}$$

$$\varepsilon_\theta = \left(\frac{b}{b-a}\right)^2 \tag{2b}$$

$$\varepsilon_r = \left(\frac{b}{b-a}\right)^2 \left(\frac{r-a}{r}\right)^2 \tag{2c}$$

[0029] By the process of normalizing the parameters to the permeability such that μ_z=1, a material that does not exhibit magnetic properties within the effective frequency regime of the cloak may be used. The reduced set of parameters of (2)

results in the same electromagnetic wave trajectories as for materials meeting the requirements of (1).

[0030] The ideal parameters in (1) result in a perfectly-matched impedance of $Z=\sqrt{\mu_z/\epsilon_\theta}=1$ at r=b, while the reduced set in (2) produces an impedance at the outer boundary of $Z=1-R_{ab}$, where $R_{ab}=a/b$ denotes the ratio between the inner and outer radii. R_{ab} may be termed the "shape factor" of the cylindrical structure. The level of power reflection or back-scattering due to using reduced parameters in the design with a linear transformation can be estimated as $|(1-Z)/(1+Z)|^2=[R_{ab}/(2-R_{ab})]^2$.

[0031] The azimuthal permittivity ϵ_θ is a constant with a value larger than 1, which can be achieved with the usual dielectric materials, although specially designed materials are not intended to be excluded. The cylindrical shell may be constructed with a desired radial distribution of ϵ_r which may vary from 0 at the inner boundary (r=a) of the cloak to 1 at the outer surface (r=b).

[0032] The effect of using a material meeting the electromagnetic and spatial requirements of (2) is to guide incident electromagnetic waves such that they are excluded from the region interior to r=a, and which exit the cloaking region with minimal disturbance to the originally incident ray paths. As such, the background behind the object may appear to be substantially undisturbed by the presence of the object being cloaked.

[0033] Artificial dielectrics, such as metamaterials, with a positive permittivity ϵ_r less than unity are known. In this example, the characteristics of ϵ_r may be realized, for example, by using metal wires of sub-wavelength size disposed in a radial direction and embedded in a dielectric material, as shown FIG. **1**B. The wires may be disposed perpendicular to the cylinder inner and outer surfaces. The spatial positions may not be periodic and may be random. For large cloaks, the wires may be broken into smaller pieces. The aspect ratio of the metal wires, defined by the ratio of the length to the radius of the wire, is denoted by α. The whole structure of the cloaking system may conceptually resemble a round hair brush (except that the "bristles" of such a "hair brush" may consist of disconnected smaller pieces, with either random or periodic distribution within the cylinder).

[0034] The metal material may be chosen so as to have a negative permittivity in the wavelength regime chose for the design. Metals from the noble metals such as gold, silver, tantalum, platinum, palladium or rhodium may be used. Other materials are known to exhibit negative permittivity, such as silicon carbide. These materials may be combined with dielectric materials having a permittivity greater than unity, so as to result in a metamaterial with an effective permittivity between about zero and unity.

[0035] The shape-dependent electromagnetic response of a sub-wavelength particle can be characterized by the Lorentz depolarization factor q. For an ellipsoid of semiaxes a_i, a_j and a_k with electric field polarized along a_i, the depolarization factor may be expressed by:

$$q_i = \int_0^\infty \frac{a_i a_j a_k ds}{2(s+a_i^2)^{3/2}(s+a_j^2)^{1/2}(s+a_k^2)^{1/2}} \tag{3}$$

Another commonly used parameter, the screening factor κ of a particle, is related to q by $\kappa=(1-q)/q$. A long wire with large aspect ratio α results in a small depolarization factor and a large screening factor, which generally indicates strong interactions between the electromagnetic fields and the wire.

[0036] For a composite cloak with metal wires as inclusions in a dielectric, the electromagnetic properties may be described by "shape-dependent" effective-medium theory (EMT) that describes composites with particles of different shapes and thus different κ-factors. The effective permittivity ϵ_{eff} for a composite material comprising metal particles with permittivity ϵ_m a volume filling factor f and screening factor κ, along with a dielectric component with permittivity ϵ_d and a filling factor $1-f$ is given by:

$$f\frac{\varepsilon_m-\varepsilon_{eff}}{\varepsilon_m+\kappa\varepsilon_{eff}}+(1-f)\frac{\varepsilon_d-\varepsilon_{eff}}{\varepsilon_d+\kappa\varepsilon_{eff}}=0 \tag{4}$$

For spherical particles with q=⅓ and $\kappa=2$, (4) reduces to the common EMT expression which is a quadratic equation with the following solutions:

$$\varepsilon_{eff}=\frac{1}{2\kappa}\left\{\bar{\varepsilon}\pm\sqrt{\bar{\varepsilon}^2+4\kappa\varepsilon_m\varepsilon_d}\right\} \tag{5}$$

where $\bar{\epsilon}=[(\kappa+1)f-1]\epsilon_m+[\kappa-(\kappa+1)f]\epsilon_d$. The sign in (5) may be chosen such that $\epsilon_{eff}>0$.

[0037] When using metal wires in a composite cloak, the radial permittivity ϵ_r determined by (5) may exhibit a positive value less than 1 with a minimal imaginary part. Metamaterials having a metallic component may exhibit a permittivity that differs from unity, while having a permeability close to unity, and such material may be termed substantially non-magnetic so as to suggest that the permittivity characteristics are more important in achieving the cloaking.

[0038] For the structure in FIG. **1**B, the volume filling fraction is inversely proportional to r. The filling fraction in the EMT formula for calculating ϵ_r using (5) may be $f(r)=P_a\cdot(a/r)$, with P_a being the surface cover ratio of metal at the inner surface of the cloak (r=a). The filling fractions f at the inner and outer surface of the cloak are P_a and $P_a\cdot(a/b)$ respectively, and the overall metal filling fraction in the whole cloak layer is $P_a\cdot 2a/(a+b)$. The azimuthal permittivity ϵ_θ inside the cloak is substantially the same as that of the dielectric material because a response of wires to the angular electrical field E_θ oriented normally to the wires is small and, at low metal filling factors, it may generally be neglected.

[0039] The reduced set of cloak parameters in (2) is consistent with a smooth variation of the radial permittivity from 0 to 1 as r varies from a to b. That is,

$$\begin{cases}\varepsilon_{eff,r}(P_a)=0\\ \varepsilon_{eff,r}(P_a\cdot a/b)=1\end{cases} \tag{6}$$

[0040] The gradient in $\epsilon_{eff,r}$ may follow the function described in (2c) such that

$$\varepsilon_{eff,r}(P_a\cdot a/r)=\left(\frac{b}{b-a}\right)^2\left(\frac{r-a}{r}\right)^2 \tag{7}$$

[0041] In an actual design, $\epsilon_{eff,r}$ may have some deviation from the value given by (2c) inside the cloak. For example, in the reported microwave cloak with a layered structure, the desired permeability was fulfilled at only a few discrete posi-

tions along the radial direction, while in the majority of the cloak the material was air. At the inner and outer surfaces of the cloak, the conditions of (6) should be satisfied as closely as practical, although the conditions at the inner surface may be relaxed where there is a lossy component to the material. This may result in impedance index matching at r=b and minimal leaking energy at r=a.

[0042] To determine all the parameters of the design shown in FIG. **1**B, the general properties of a metal-dielectric composite with thin metal wires in the radial direction as the inclusion are modeled. Two filling fraction functions $f_0(\lambda)$ and $f_1(\lambda)$ are such that for given constituent composite materials and for a fixed aspect ratio α of the wires, the effective radial permittivity is.

$$\epsilon_{eff,r}(\lambda, f_0(\lambda))=0 \tag{8a}$$

and

$$\epsilon_{eff,r}(\lambda, f_1(\lambda))=1 \tag{8b}$$

The values of $f_0(\lambda)$ and $f_1(\lambda)$ calculated from (5) and (8) for a silver-silica composite with α=10, 20 and 50 at visible wavelengths are plotted in FIG. **2**A. In the calculation the metal permittivity is approximated by the Drude model, and the permittivity of the dielectric is calculated using Sellmeier equation.

[0043] Combining (6) and (8), at the design wavelength λ,

$$\begin{cases} f_0(\lambda) = P_a \\ f_1(\lambda) = P_a \cdot a/b \end{cases} \tag{9}$$

[0044] From the above equations R_{ab} may be expressed as:

$$R_{ab}=f_1(\lambda)/f_0(\lambda) \tag{10}$$

[0045] Using (10) with (2b), the operating condition of the cloak is obtained as:

$$f_1(\lambda)/f_0(\lambda)=1-\sqrt{1/\epsilon_\theta(\lambda)}, \tag{11}$$

where $\epsilon_\theta(\lambda)$ is the permittivity of the dielectric material surrounding the metal wires in the cloak. Thus, the geometrical factors of the cloak including R_{ab}, P_a and α are determined. The same design may work for similar cylindrical cloaks with the same shape factor R_{ab}. In FIG. **2**B we show the operational point obtained by (11) is shown for a cloak consisting of silver wires with α=10.7 in silica.

[0046] A cloaking device or structure may be designed for operating at an operational wavelength λ_{op}. A method of designing a cloaking device may include the steps of: choosing materials that are available for the metal wires and the surrounding dielectric, or other metamaterials; and, calculating the values of f_0 and f_1 as functions of the aspect ratio α at λ_{op} using, for example, the EMT model in (5). Other models may also be used. The desired aspect ratio for λ_{op} corresponds to the fulfillment of (12).

$$\varepsilon_\theta(\lambda_{op}) = \left(\frac{f_0(\lambda_{op}, \alpha)}{f_0(\lambda_{op}, \alpha) - f_1(\lambda_{op}, \alpha)}\right)^2 \tag{12}$$

Then, the structure of the cloak can be determined from (9) and (10).

[0047] The "round brush" design for a non-magnetic cloak may permit constructing an appropriate device operating at desired wavelength, which may be an optical wavelength, by choosing the proper materials and structures. As an example, the design of an optical cloak operating at the frequently-used wavelength of 632.8 nm (He—Ne laser), and consisting of silver and silica is described.

[0048] Expressions (5), (8), and (12) yield the aspect ratio α=10.7, and the volume filling fractions at the two boundaries are f_0=0.125 and f_1=0.039, respectively. From (9) and (10) the shape factor of the cylindrical cloak is Rab=0.314 while the surface cover ratio at the inner boundary is P_a=12.5%. The effective parameters of μ_z, ϵ_r and ϵ_θ from for this design and the set of reduced parameters from (2) are shown in FIG. **2**C. As seen in FIG. **2**C, μ_z and ϵ_θ match the theoretical requirements throughout the cylindrical cloak. In this example, the radial permittivity ϵ_r fits the values required by (2) exactly at the two boundaries of the cloak, and follows the overall tendency relatively well inside the cloak. The imaginary part of ϵr is almost zero at r=b where $\epsilon_r'(\lambda_{op}, b)=1$ and reaches around 0.6 at the inner surface where $\epsilon_r'(\lambda_{op}, a)=0$. These quantities are similar to reported low-index metamaterials with periodic-metal-wire arrays.

[0049] The effects of loss can be addressed in several ways. As an example, if the aspect ratio of the wires is varied along the radial direction, the imaginary part of ϵ_r may be smaller than 0.1 throughout the cloak. It may possible to compensate the loss by using a gain medium.

[0050] To illustrate the performance of the non-magnetic optical cloak with a design corresponding to FIG. **2**C, a finite element method simulation using the commercial finite element package COMSOL Multiphysics (available from COMSOL, Inc. Burlington, Mass.) was performed. An ideal metallic cylinder with radius r=a is disposed within the cloaked region. The simulated results of magnetic field distribution around the cloaked object together with the power flow lines are illustrated in FIG. **3** for three cases. As shown in FIG. **3**A, the cloak with the reduced set of material parameters represented by the solid curves in FIG. **2**C leads to a small perturbation of the external fields, which is limited by imperfect impedance matching. FIG. **3**B corresponds to a cloak with parameters given by the diamond shaped markers in FIG. **2**C. Comparing the field maps in FIGS. **3**A and **3**B, the simulations for the designed cloak are in good agreement with the exact case. Without the cloak (FIG. **3**C), the waves around the object are severely distorted and a clear shadow is cast behind the cylinder. These simulations show the capability of the structure described in reducing the scattering from the object inside the cloaked region.

[0051] The achievable invisibility with the example designed cloak is not perfect due to impedance mismatch associated with the reduced material specifications and the energy loss in a metal-dielectric structure.

[0052] In another aspect, a cloaking device can be based on vertical metal strips (instead of rods) placed in the radial directions within the cloaking structure. These strips can also be randomly or periodically disposed and may also consist of disconnected smaller strips. Chains of metal particles of various shapes may also be used.

[0053] In a second example, the coordinate transformation applied to (1) may be a high-order transformation such as a quadratic instead of the linear transformation. This example is one of a number of different analytic coordinate transformations which may be employed and illustrates a particular situation where the impedance is matched at the boundary between the cloaking cylinder and the assumed free space propagation medium of the incident electromagnetic wave.

[0054] By constraining the impedance of the outer boundary to be equal to that of the external propagation medium, an optimal quadratic coordinate transformation may be obtained as:

$$r=[(a/b((r'/b-2)+1]r'+a \quad (13)$$

[0055] The shape factor a/b should be less than 0.5 in order to have a monotonic transformation. When evaluating the material properties at the outer boundary, r=b, the material parameters ϵ_r, ϵ_θ, μ_r, are each equal to unity. As such, the impedance mismatch at the boundary has been obviated for the case of reduced parameters.

[0056] FIG. **4** compares the material properties of the nonmagnetic cloak structures of the first and the second examples, where the shape factor a/b is 0.31, and the diameter (**2***b*) is 4 micrometers and the wavelength λ=632.8 nanometers. The object disposed inside of the cloaks is an ideal metal cylinder with a radius that is the same as the inner surface; that is r=a. This may be a worst-case condition, and an arbitrarily shaped object of any configuration may be disposed inside of the inner surface with the same, similar, or better results.

[0057] The results were computed using the same finite-element software package as used for the first example, and the normalized magnitudes of the scattered fields are shown in FIG. **5**.

[0058] The scattered field from the cloaked metallic cylinder is itself is shown in FIG. **5**A. The strong forward scattering observed at the right-hand side of the diagram corresponds to a shadow cast behind the object. An idealized cloak is shown in FIG. **5**B, where the scattered field would be essentially zero in magnitude in all directions in the plane. These examples may be compared with the results obtained for the linear transformation (FIG. **5**C) and the quadratic case (FIG. **5**D). The linear case exhibits a scattering pattern from the outer boundary of the system, primarily due to the impedance mismatch. On the other hand, the quadratic transformation function results in substantially less scattering from the cloaking system. A figure of merit for cloaking, which may be defined as the ratio of the scattering cross sections with and without the cloak, is about 10 for quadratic cloak of the dimensions modeled, and it increases as the size of the cloaking system increases.

[0059] FIGS. **6** A and B. show the scattering radiation patterns corresponding to the four cases of FIG. **5**. The curves in FIG. **6** show the energy flow in the radial direction normalized by the maximum value in the noncloaked case at a boundary outside the outer surface of the cloak structures. In the ideal cloaking system, the scattering energy flow is zero, which is indicated by the solid inner circle in FIG. **6**A.

[0060] FIG. **6**B shows that the linear cloak structure with reduced parameters exhibits a noticeable although smaller scattering, and has and strongly directional scattering pattern. However, for the nonmagnetic quadratic cloak, the overall scattering is much less significant. The peak value of the radial Poynting vector in the quadratic cloak is more than six times smaller than that of the linear example. Moreover, the directivity in the scattering pattern is substantially suppressed.

[0061] In another aspect, a cloaking device or structure may be a spherical or other shaped cloaking structure. The specific geometrical shape, the size and other design parameters of the structure, such as the spatial variation of permittivity, may be chosen using the general approach described herein so as to be adaptable to the wavelength, the degree of cloaking, and the properties of the object to be cloaked. Loss and gain may be introduced in various portions of the structure.

[0062] The examples shown herein have used analytic profiles for the material properties so as to illustrate certain of the principles which may influence design of cloaking structures. However, since electromagnetic simulations using finite element methods are commonly used in design of complex shapes, and have been shown herein to yield plausible results, the use of such simulations are envisaged as useful in design.

[0063] Certain aspects, advantages, and novel features of the claimed invention have been described herein. It would be understood by a person of skill in the art that not all advantages may be achieved in practicing a specific embodiment. The claimed invention may be embodied or carried out in a manner that achieves or optimizes one advantage or group of advantages as taught herein without necessarily achieving other advantages as may have been taught or suggested.

[0064] It is therefore intended that the foregoing detailed description be regarded as illustrative rather than limiting, and that it be understood that it is the following claims, including all equivalents, that are intended to define the spirit and scope of this invention.

What is claimed is:

1. A cloaking apparatus, comprising:

a structure formed of a material having a permittivity less than unity and a permeability approximately equal to unity,

wherein the material is a metamaterial.

2. The apparatus of claim **1**, wherein the structure is disposable between an object and an observer.

3. The apparatus of claim **1**, wherein the structure has a first surface and a second surface such that an object is disposable so that the second surface lies between the object and the first surface.

4. The apparatus of claim **3**, wherein the permittivity of the metamaterial varies between approximately zero at an interface with the void and approximately unity at an outer radius of the cylinder.

5. The apparatus of claim **3**, wherein the properties of the metamaterial are selected so that the power flow crossing the second surface in the direction of an object to be cloaked is minimized.

6. The apparatus of claim **3**, wherein the properties of the metamaterial are selected so that the backscattering coefficient and the forward scattering coefficient of a combination of the structure and an object disposed such that the first and second surfaces are disposed between the object and a source of electromagnetic radiation are reduced.

7. The apparatus of claim **3**, wherein the properties of the metamaterial include a variation of permittivity with distance between the first and the second surface.

8. The apparatus of claim **3**, wherein the metamaterial has permittivity that is a function of the distance between the first surface and the second surface, and the variation of the permittivity is selected so that the impedance of the metamaterial at the first surface is the substantially the same as the impedance of a region outside of the structure and abutting the first surface.

9. The apparatus of claim **1**, wherein the structure has at least one axis of symmetry.

10. The apparatus of claim **1**, wherein the structure has a cylindrical symmetry, and an inner void.

11. The apparatus of claim **10**, wherein an object is disposable in the inner void.

12. The apparatus of claim **10**, wherein the permittivity of the metamaterial varies in a radial direction.

13. The apparatus of claim **1**, wherein the permittivity is anisotropic.

14. The apparatus of claim **1**, wherein the metamaterial comprises a dielectric material having a permittivity greater than or equal to unity partially filled with a material having a negative permittivity at a design wavelength.

15. The apparatus of claim **14**, wherein the filler material is a plurality of sub-wavelength sized structures.

16. The apparatus of claim **14**, wherein the material having a negative permittivity is a metal.

17. The apparatus of claim **16**, wherein the metal is selected from a noble metal group.

18. The apparatus of claim **1**, wherein the properties of the metamaterial are selected so that an impedance discontinuity between the metamaterial and an external environment is minimized.

19. The apparatus of claim **18**, wherein a refractive index of the external environment is unity.

20. The apparatus of claim **1**, wherein the properties of the metamaterial are selected so that the backscattering coefficient and the forward scattering coefficient of the structure are reduced.

21. The apparatus of claim **1**, wherein the rate of change of an outer geometrical shape of the structure is slow when compared with a value of a design wavelength.

22. The apparatus of claim **1**, wherein the metamaterial is lossless.

23. The apparatus of claim **1**, wherein the metamaterial has a permeability of unity.

24. The apparatus of claim **1**, wherein the properties of the metamaterial are selected so that a cloaking effect is a maximum at a visible wavelength of light.

25. The apparatus of claim **1**, wherein the metamaterial includes a gain medium material.

26. A method of cloaking an object, the method comprising:

providing a structure formed of a metamaterial; and

disposing the object to be cloaked such that the structure is positioned between the object and an observer,

wherein the metamaterial has a permittivity less than unity and a permittivity approximately equal to unity.

27. The method of claim **16**, wherein the metamaterial is a dielectric with sub-wavelength inclusions of a material having a permittivity less than zero.

28. The method of claim **26**, wherein the object is surrounded by the structure.

29. A method of designing a cloaking structure, the method comprising:

selecting a dielectric material;

selecting a filler material having a permittivity less than zero; and

adjusting at least one of a distribution, a quantity or a dimension of the filler material within the dielectric material such that, at a design wavelength, a permittivity of a composite material comprised of the dielectric material and the filler material varies with a distance such that a visibility of an object disposed within the cloaking structure is reduced, and the region behind the object is visible.

30. The method of claim **29**, where the energy reflected from a surface of the cloaking structure is substantially less than the energy that reflectable by the object without the cloaking structure.

31. The method of claim **29**, wherein an outer geometrical shape of the cloaking structure is slowly varying with respect to the design wavelength.

32. The method of claim **29**, wherein the composite material further includes a gain medium.

33. A cloaked object, the object comprising:

an object having a electromagnetic scattering property; and

a structure disposable between the object and an observer, wherein the structure further comprises:

a material having a permeability approximately equal to unity and a permittivity between approximately unity and approximately zero.

34. The cloaked object of claim **33**, wherein the properties of the material are selected so that a visibility of the object is reduced and a visibility of region behind the cloaked object is substantially unaffected.

35. The cloaked object of claim **33**, wherein the properties of the metamaterial include the variation of permittivity as a function of a location within the structure.

36. The cloaked object of claim **33**, wherein a design wavelength is within a visible light spectrum.

37. The cloaked object of claim **33**, wherein the material further includes a gain medium.

38. The cloaked object of claim **33**, where an outer geometrical shape of the structure varies slowly compared with a value of a design wavelength.

* * * * *

US 20100110559A1

(19) United States

(12) Patent Application Publication

Cai et al.

(10) Pub. No.: US 2010/0110559 A1

(43) Pub. Date: May 6, 2010

(54) SYSTEM, METHOD AND APPARATUS FOR CLOAKING

(76) Inventors: **Wenshan Cai**, Sunnyvale, CA (US); **Vladimir M. Shalaev**, West Lafayette, IN (US); **Uday K. Chettiar**, Philadelphia, PA (US); **Alexander V. Kildishev**, West Lafayette, IN (US)

Correspondence Address:
BRINKS HOFER GILSON & LIONE
P.O. BOX 10395
CHICAGO, IL 60610 (US)

(21) Appl. No.: **12/573,610**

(22) Filed: **Oct. 5, 2009**

Related U.S. Application Data

(60) Provisional application No. 61/103,025, filed on Oct. 6, 2008.

Publication Classification

(51) **Int. Cl.**
G02B 3/00 (2006.01)
G06F 17/50 (2006.01)

(52) **U.S. Cl.** **359/642**; 703/1

(57) **ABSTRACT**

An apparatus and method of cloaking is described. An object to be cloaked is disposed such that the cloaking apparatus is between the object and an observer. The appearance of the object is altered and, in the limit, the object cannot be observed, and the background appears unobstructed. The cloak is formed of a metamaterial where the properties of the metamaterial are varied as a function of distance from the cloak interfaces. The metamaterial may be fabricated as a composite material having a dielectric component and inclusions of particles of sub-wavelength size, and may also include a gain medium.

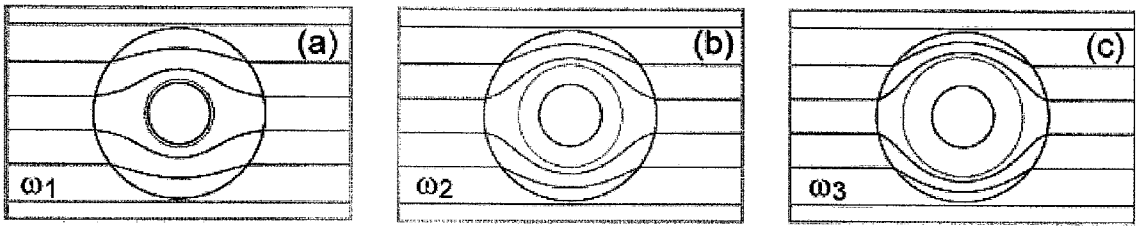

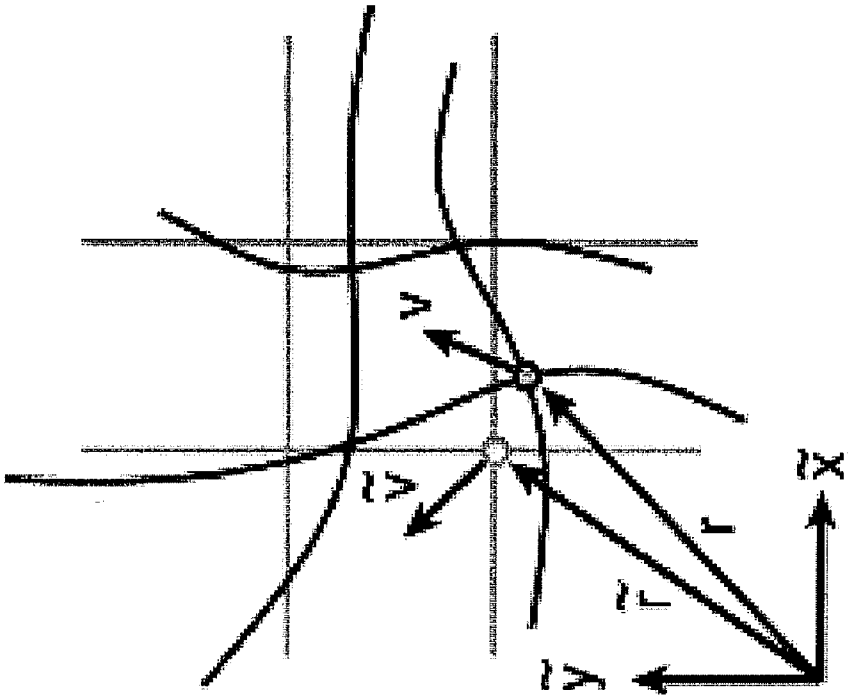

FIG. 1

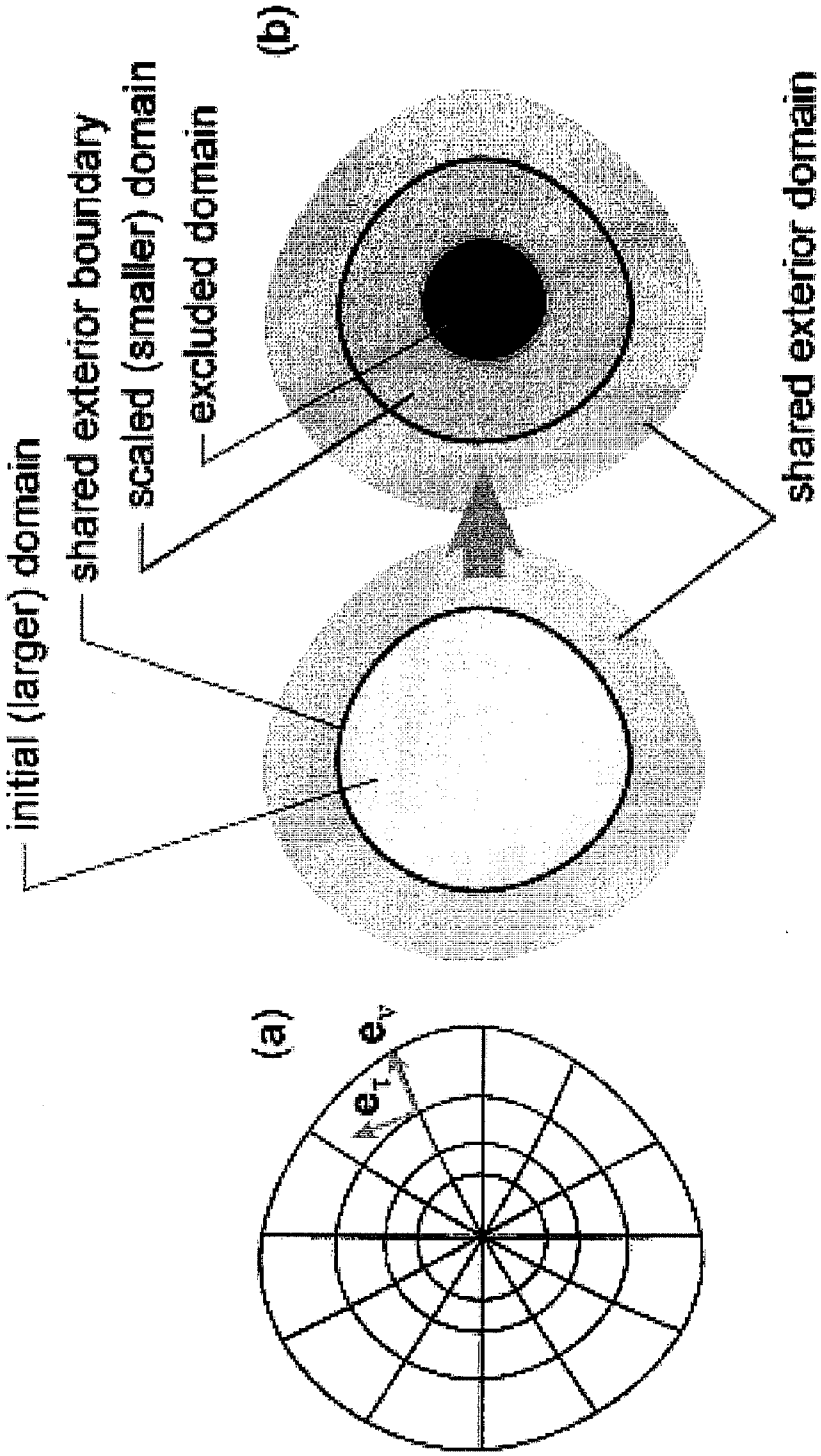
initial (larger) domain
shared exterior boundary
scaled (smaller) domain
excluded domain
(b)
shared exterior domain
(a)
e_r
e_v

FIG. 2

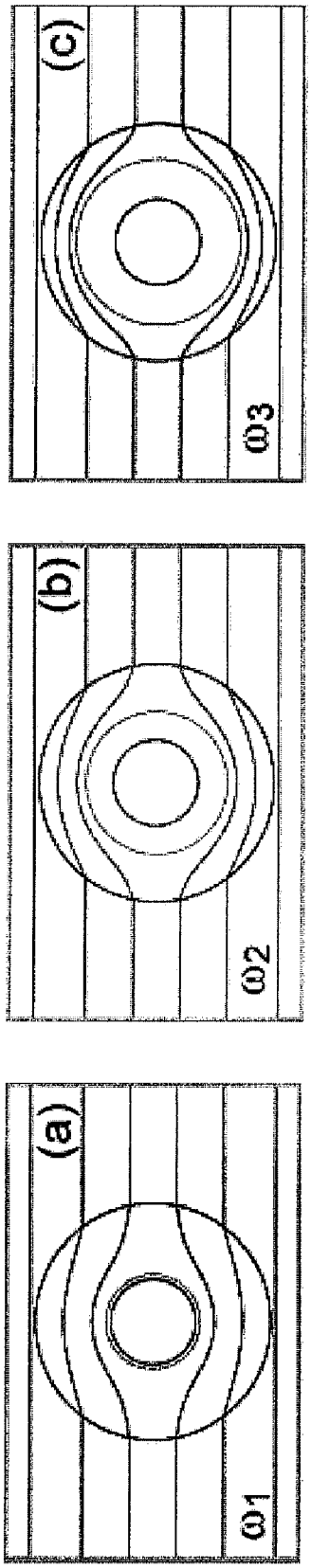

FIG. 3

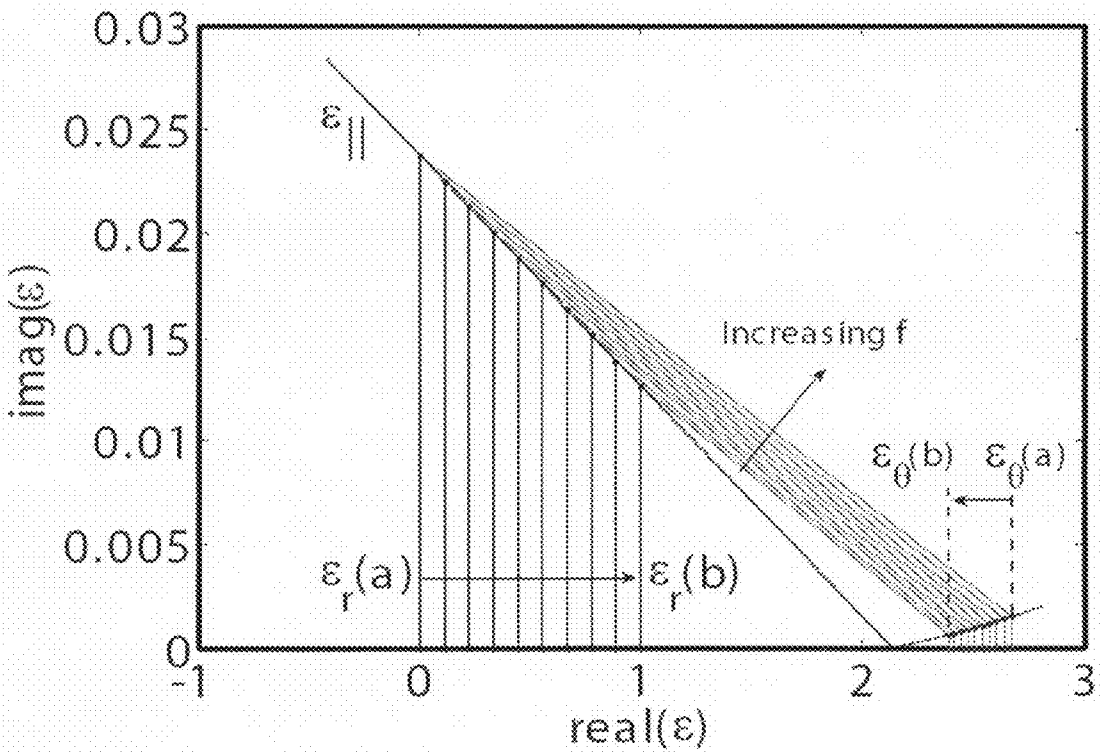
0.03
0.025
0.02
0.015
0.01
0.005
0
imag(ε)
-1
0
1
2
3
real(ε)
ε||
Increasing f
ε0(b)
ε0(a)
εr(a)
εr(b)

FIG. 4

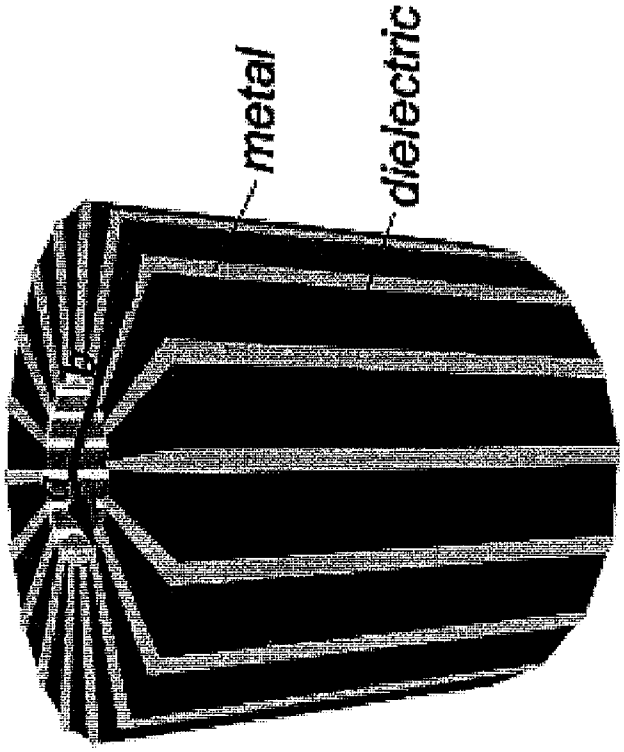

FIG. 5

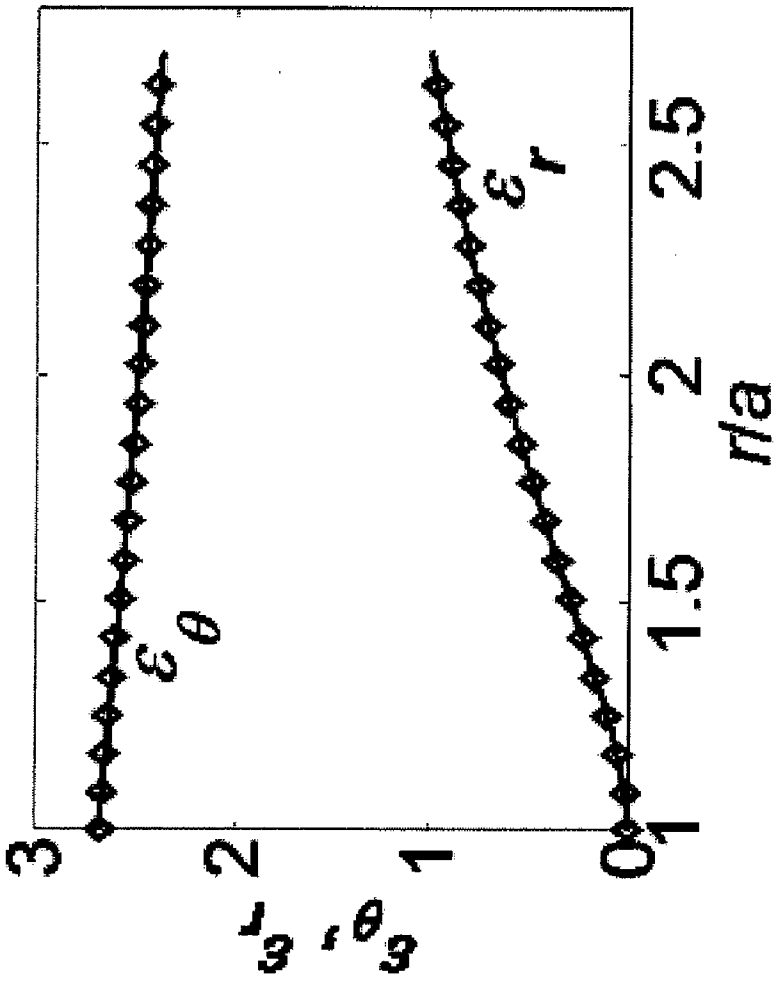
3
2
1
0
1
1.5
2
2.5
ε_θ
ε_r
$\varepsilon_r, \varepsilon_\theta$
r/a

FIG. 6

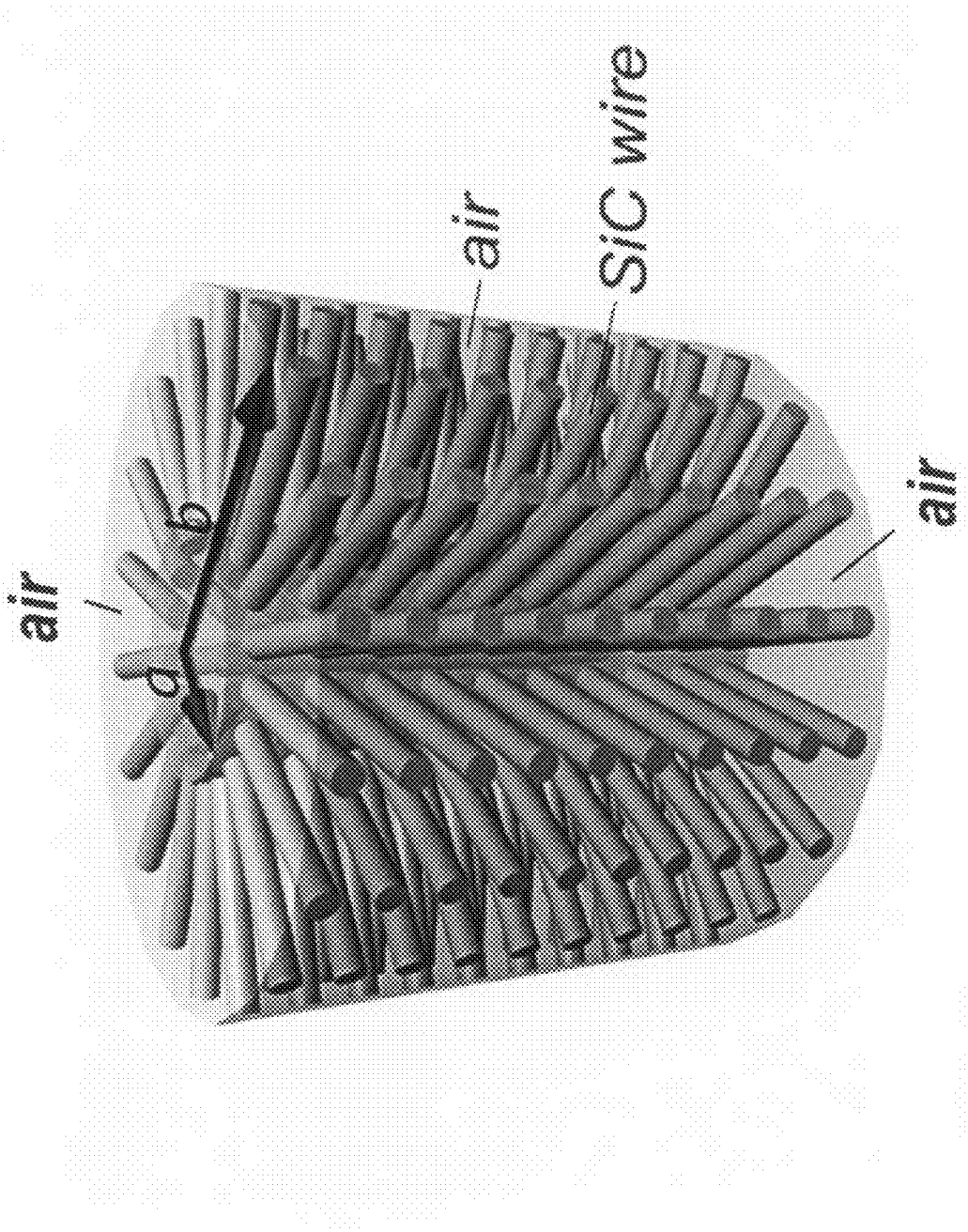

FIG. 7

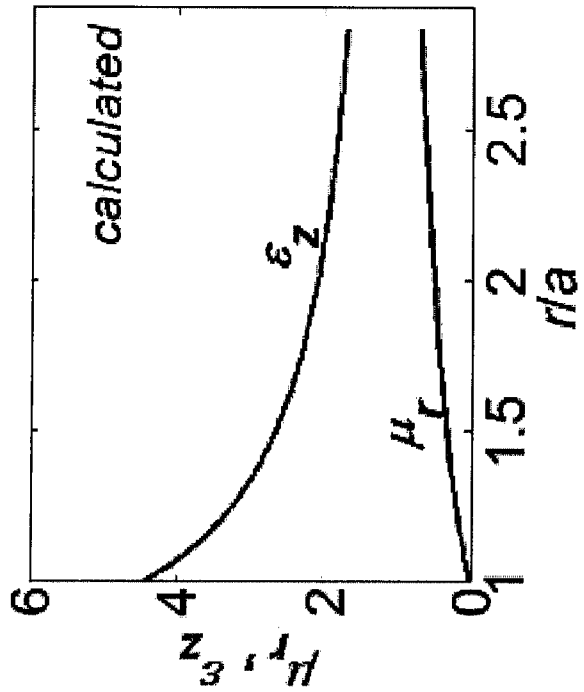
calculated
ε_z
μ_r
μ_r, ε_z
6
4
2
0
1
1.5
2
2.5
r/a

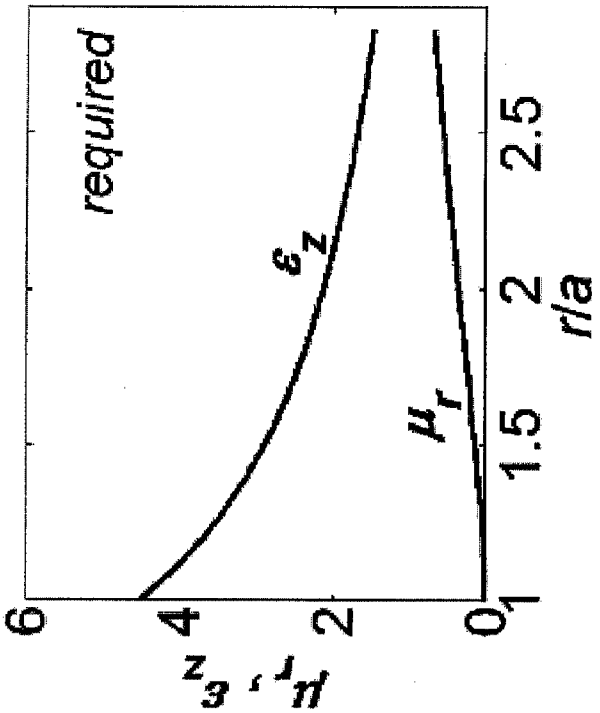
required
ε_z
μ_r
μ_r, ε_z
6
4
2
0
1
1.5
2
2.5
r/a

FIG. 8

SYSTEM, METHOD AND APPARATUS FOR CLOAKING

[0001] This application claims the benefit priority to U.S. provisional application Ser. No. 61/103,025, filed on Oct. 6, 2008, which is incorporated herein by reference.

STATEMENT OF GOVERNMENT SUPPORT

[0002] This work was supported in part Army Research Office grant W911NF-04-1-0350 and by ARO-MURI award 50342-PH-MUR.

TECHNICAL FIELD

[0003] This application relates to a system, method and apparatus for the modification of the observability properties of an object by a structure.

BACKGROUND

[0004] An object may be made effectively invisible at least over some frequency range. This has been termed a "cloak of invisibility"; the invisibility sought may be partial at a specific frequency, or over a band of frequencies, so the term "cloak of invisibility" or "cloak" may take on a variety of meanings. The cloak may be designed to decrease scattering (particularly "backscattering") from an object contained within, while at the same time reducing the shadow cast by the object, so that the combination of the cloak and the object contained therein have a resemblance to free space. When the phrase "cloaking," "cloak of invisibility," or the like, is used herein, the effect is generally acknowledged to be imperfect, and the object may appear in a distorted or attenuated form, or the background behind the object by the object may be distorted or partially obscured.

[0005] As will be understood by a person of skill in the art a "frequency" and a "wavelength" are inversely related by the speed of light in vacuo, and either term would be understood when describing an electromagnetic signal.

[0006] In some aspects, the cloak has a superficial similarity to "stealth" technology where the objective is to make the object as invisible as possible in the reflection or backscattering direction. One means of doing this is to match the impedance of the stealth material to that of the electromagnetic wave at the boundary, but where the material is strongly attenuating to the electromagnetic waves, so that the energy backscattered from the object within the stealth material is strongly attenuated on reflection, and there is minimal electromagnetic reflection at the boundary within the design frequency range. This is typically used in evading radar detection in military applications. Shadowing may not be a consideration in stealth technology. Shadowing may be understood as the effect of the object in blocking the observation of anything behind the object, for example the background, where the object is disposed between the observer and the background. A perfect cloak would result in no shadowing.

[0007] The materials used for the cloak may have properties where, generally, the permeability and permittivity tensors are anisotropic and where the magnitudes of the permeability and permittivity are less than one, so that the phase velocity of the electromagnetic energy being bent around the cloaking region is greater than that of the group velocity.

[0008] Materials having such properties have not been discovered as natural substances, but have been produced as artificial, man-made composite materials, where the permittivity and permeability of the bulk material are less than unity, and may be negative. They are often called "metamaterials" an extension of the concept of artificial dielectrics, that were first designed in the 1940s for microwave frequencies. Such materials typically consist of periodic geometric structures of a guest material embedded in a host material.

[0009] Analogous to the circumstance where homogeneous dielectrics owe their properties to the nanometer-scale structure of atoms, metamaterials may derive their properties from the sub-wavelength structure of its component materials. At wavelengths much longer than the unit-cell size of the material, the structure can be represented by effective electromagnetic parameters that are also used describe homogeneous dielectrics, such as an electric permittivity and a refractive index.

[0010] Cloaking has been experimentally demonstrated over a narrow band of microwave frequencies by achieved by varying the dimensions of a series of split ring resonators (SRRs) to yield a desired gradient of permeability in the radial direction.

SUMMARY

[0011] A apparatus for modifying the visibility properties of an object is disclosed, including a structure formed of a metamaterial. The metamaterial properties are selected so that an electromagnetic wave incident on the apparatus is guided around the object at plurality of wavelengths.

[0012] In an aspect, a method of designing a structure for use as a cloak effective at a plurality of wavelengths, includes the steps of: selecting a design wavelength; selecting a metamaterial having the property of having a low loss at the design wavelength and at least a permeability or a permittivity of less than unity; and determining, for a selected shape and size of structure, the variation of metamaterial properties as a function of position in the structure so as to guide electromagnetic waves of the design wavelength and polarization around a object disposed within the structure. A second design wavelength is selected and the design process is repeated for the second design wavelength.

[0013] In another aspect, a method of modifying the observability of an object, includes the steps of: providing a structure fabricated from a plurality of metamaterials, the metamaterials selected so as to guide electromagnetic waves around an object at a plurality of wavelengths; and disposing the structure between an observer and the object.

BRIEF DESCRIPTION OF THE DRAWINGS

[0014] FIG. **1** is a representation of a transformation of a vector field;

[0015] FIG. **2** is (a) an example of a general orthogonal cylindrical coordinate system; and, (b) a domain transformation for a cylindrical cloaking device where the larger initial domain in the left panel is mapped onto a scaled smaller annular domain shown in the right panel, leaving the central domain inaccessible to light; the initial and scaled domains share the same exterior boundary and the common space beyond;

[0016] FIG. **3** is a schematic representation of a cloaking system for multiple wavelengths or a finite bandwidth, with $w_1>w_2>w_3$, shown in (a), (b), and (c) respectively; the outer

and inner circles represent the physical boundaries the cloaking device, and the circle between the two refers to an inner material boundary for each design wavelength;

[0017] FIG. **4** shows design constraints for constructing a non-magnetic cloak in the TM mode with high-order transformations; the thick solid and dashed lines represent the two Wiener bounds $\in_{\parallel}(f)$ and $\in_{\perp}(f)$, respectively: the basic material properties for this calculation are: $\in_1=\in_{Ag}=-10.6+0.14i$ and $\in_2=\in_{SiO2}=2.13$ at $\lambda=532$ nm;

[0018] FIG. **5** is a perspective view of a cylindrical non-magnetic cloak using the high-order transformations for TM polarization;

[0019] FIG. **6** is a graph of the anisotropic material parameters $\in_r$ and $\in_\theta$ of a non-magnetic cloak made of silver-silica alternating slices corresponding to the third row ($\lambda=532$ nm) in Table 1; the solid lines represent the exact parameters determined by equation 35, and the diamond markers show the parameters on the Wiener's bounds given by equation (37);

[0020] FIG. **7** is a perspective view of a cylindrical non-magnetic cloak with high-order transformations for TE polarization; and

[0021] FIG. **8** shows a comparison of the theoretical and the calculated values of effective parameters μ_r and $\in_z$ for a cylindrical TE cloak with SiC wire arrays at a design wavelength of $\lambda=13.5$ μm.

DETAILED DESCRIPTION

[0022] Exemplary embodiments of the apparatus and method may be better understood with reference to the drawings, but these embodiments are not intended to be of a limiting nature.

[0023] When the phrase "cloaking," "cloaking structure," "cloak of invisibility" or the like is used herein, the effect may be imperfect in practice, and the object may appear in a distorted or attenuated form, or the background obscured by the object may be distorted or partially obscured or attenuated, or the perceived color of the background may be modified. Therefore, "cloak" should not be interpreted so as to require that the object within the cloak be "invisible" even at a design wavelength, nor that the background be free of shadowing or distortion. Of course, a design objective may be to approach the ideal cloak at a wavelength or a range of wavelengths. A plurality of non-contiguous wavelength ranges may also be considered in a design for a structure.

[0024] The examples disclosed herein are intended to enable a person of ordinary skill in the art to practice the inventive concepts as claimed herein, using systems, apparatus, components, or techniques that may be known, disclosed herein, or hereafter developed, or combinations thereof. Where a comparison of performance is made between the examples disclosed herein and any known system, apparatus, component, or technique, such comparison is made solely to permit a person of skill in the art to more conveniently understand the present novel system, apparatus, component, or technique, and it should be understood that, in complex systems, various configurations may exist where the comparisons made may be better, worse, or substantially the same, without implying that such results are invariably obtained or constitute a limitation on the performance which may be obtained.

[0025] Broadband cloaking of electromagnetic waves can be understood by a person of skill in the art using a simplified example of a scaling transformation of a general cylindrical coordinate system. A generalized form of the transformation equations is presented so as to permit the application of this approach to other related designs.

[0026] The apparatus design may use metamaterials with specifically engineered dispersion. Constraints on the signs of gradients in the dispersion dependencies of dielectric permittivity and magnetic permeability for different operation wavelengths may result. Some constraints may be obviated by gain-assisted compensation for losses or electromagnetically induced transparency (EIT) are included in the design of cloaking system. So, when a structure, or a portion thereof, is described as "transparent," the transparency may be at a wavelength or a range of wavelengths, and should be understood to be achievable either by low loss materials, or materials with loss that has be compensated by a gain medium.

[0027] Electromagnetically induced transparency (EIT) is a coherent nonlinear process that may occur in some highly dispersive optical systems. EIT creates a narrow transparency window within an absorption peak. The anomalous dispersion along with a low optical loss available in an EIT system may be used for broadband optical cloaking. Similarly, in a gain medium the imaginary part of the refractive index has a negative value, and the dispersion curve exhibits an anti-Lorentz line shape. This property may result in anomalous dispersion with a low loss. Examples of EIT systems are three-state lead vapors. Examples of gain media include electrically or optically pumped semiconductors, dye modules, and quantum structures.

[0028] Examples of electromagnetic wave propagation in an isotropic bi-layer or for multilayer sub-wavelength inclusions of ellipsoidal (spheroidal or spherical) shapes in a dielectric host media are presented. Other geometrical shapes may be used. Such shapes may be known geometrical shapes, portions thereof, or shapes that are composites of geometrical shapes, including shapes that are arbitrary, but slowly varying with respect to the design wavelength.

[0029] In addition to numerical and theoretical studies of composite materials described herein, broadband transparency achieved by using multiphase spherical inclusions with appropriate layered geometries and materials is described. These examples are useful for estimating local electromagnetic fields and effective optical properties of heterogeneous media with binary or multi-phase inclusions, and as the starting point for more complex designs in accordance with the concepts described herein.

[0030] The basics of transformation optics (TO) approach to designing cloaking structures described herein may follow from the fundamental theoretical results of Dolin (Dolin. L. S., Izzv. Vyssh. Uchebn. Zaved., Radiofiz. 4, 694-7, 1961) which showed that Maxwell's equations can be considered to be form-invariant under a space-deforming transformation.

[0031] The underlying theoretical basis for the transformational optics (TO) approach is presented so as to enable a person of skill in the art to generalize the examples which follow. The transformation may be used at any wavelength, but the selection of materials and geometries may depend on the specific application of the design. As such, the terms "light," "optics," and the like, are understood to be interchangeable with "electromagnetic wave" at an appropriate frequency, and not to be limited to light visible to the human eye, infrared light, or the like. Specific examples are provided at visible (to the human eye) wavelengths, and in the mid infrared, so as to illustrate the concepts presented herein.

[0032] Consider an initial material space defined by its radius-vector $\tilde{r}(\tilde{x}, \tilde{y}, \tilde{z})$ and an inhomogeneous distribution of an anisotropic material property (e.g., either anisotropic permittivity, $\in$, or anisotropic permeability, μ), given by a tensor, $\tilde{m}=\tilde{m}(r)$ Suppose that the initial distribution of coupled vector fields, $\tilde{v}=\tilde{v}(\tilde{r})$ and $\tilde{u}=\tilde{u}(\tilde{r})$ is modified using a tensor j. The transformation may be formally achieved by mapping the initial space, using a coordinate transformation ($r=r(\tilde{r})$, i.e. $x=x(\tilde{x}, \tilde{y}, \tilde{z})$, $y=y(\tilde{x}, \tilde{y}, \tilde{z})$, $z=z(\tilde{x}, \tilde{y}, \tilde{z})$) with a non-singular Jacobian matrix j, ($|j|\neq 0$), so that it is a one-to-one transformation in a neighborhood of each point. The Jacobian matrix j is arranged from the columns of base vectors,

$$j=(r^{(x)}r^{(y)}r^{(z)}), \tag{1}$$

or its transposition can be arranged from the columns of gradients

$$j^T=(\tilde{\nabla}x\tilde{\nabla}y\tilde{\nabla}z). \tag{2}$$

In equation (1) and equation (2), $f^{(.)}$ and $\tilde{\nabla}f=f^{(x)}\hat{x}+f^{(y)}\hat{y}+f^{(z)}\hat{z}$ denote a partial derivative and a gradient, respectively. The Jacobian determinant $|j|$ is equal to the triple vector product, $r^{(x)}r^{(y)}r^{(z)}$. Vectors $\tilde{v}$ and $\tilde{v}$ are have scalar components, as $\tilde{v}=\tilde{v}_x\hat{x}+\tilde{v}_y\hat{y}+\tilde{v}_z\hat{z}$ and $v=v_x\hat{x}+v_y\hat{y}+v_z\hat{z}$, respectively.

[0033] Thus, a general invertible field-deforming transformation,

$$\tilde{v}=j^Tv,\ \tilde{u}=j^Tu, \tag{3}$$

links the vectors of the initial vector-space $\tilde{v}=\tilde{v}(\tilde{r})$ and $\tilde{u}=\tilde{u}(\tilde{r})$ with the new vectors of a deformed vector-space $v=v(r)$ and $\tilde{u}=\tilde{u}(\tilde{r})$ obtained at the corresponding points of the new material domain.

[0034] A solution may be sought so as to achieve a given transformation of the fields in equation (3). The initial material properties, $\tilde{m}=\tilde{m}(r)$, are modified in order to obtain the required transformation of the vector fields as determined by equation (3). A formal connection between the expressions for gradients before and after the change of variables may be expressed as:

$$x=x(\tilde{x},\tilde{y},\tilde{z}),\ y=y(\tilde{x},\tilde{y},\tilde{z}),\ z=z(\tilde{x},\tilde{y},\tilde{z})$$

where

$\tilde{\nabla}f(x, y, z)=f^{(x)}\tilde{\nabla}x+f^{(y)}\tilde{\nabla}y+f^{(x)}\tilde{\nabla}z$, which yields a general result that is analogous to equation (3)

$$\tilde{\nabla}=j^T\nabla. \tag{4}$$

[0035] The transformation identity for the curl can be derived first for pseudo-vectors $p=u\times v$ and $\tilde{p}=\tilde{u}\times\tilde{v}$. The standard vector algebra gives

$$\tilde{u}\times\tilde{v}=(j^Tu)\times(j^Tv)=|j|j^{-1}(u\times v), \tag{5}$$

connecting pseudo-vectors p and $\tilde{p}$ through

$$p=|j|^{-1}j\tilde{p}. \tag{6}$$

[0036] To obtain a formalism that is closer to Maxwell's curl equations, another product of the material tensor m and a vector u can be defined as $(mu)^{(t)}=\nabla\times v$, such that for time-independent material properties, $(mu)^{(t)}=mu^{(t)}$. This yields:

$$mu^{(t)}=\nabla\times v. \tag{7}$$

[0037] The right hand side of equation (7) is identical to $p=u\times v$, provided that vector u is replaced with ∇, following the result shown in equation (4). The use of the same sets of vector components, i.e. $\tilde{\nabla}\times\tilde{v}=(j^Tu)\times(j^Tv)=|j|j^{-1}(\nabla\times v)$ gives $mu^{(t)}=\nabla\times v$. Finally, using $\tilde{m}=|j|j^{-1}m(j^T)^{-1}$, equation (7) can be rewritten as,

$$\tilde{m}\tilde{u}^{(t)}=\tilde{\nabla}\times\tilde{v}. \tag{8}$$

[0038] Then, the required transform for tensors $\tilde{m}$ and m is given by

$$m=|j|^{-1}j\tilde{m}j^T. \tag{9}$$

[0039] As shown in FIG. **1**, the spatial transformation of the vector fields performed by tensor j through equation (3) can be considered as a spatial transformation $r=r(\tilde{x}, \tilde{y}, \tilde{z})$, with j being its Jacobian matrix, $j=(r^{(x)}\ r^{(y)}\ r^{(z)})$.

[0040] For the divergence relationships in Maxwell's equations, the derivation uses a scalar product of vector v and pseudo-vector p, which gives a scalar q (i.e., $v\cdot p=q$). Then, using equation (6) the scalar products yields $\tilde{v}\cdot\tilde{p}=(j^Tv)\cdot(|j|j^{-1}p)=|j|v\cdot p)=|j|v\cdot p$, and an equivalent divergence equation is obtained through substitution of v and $\tilde{v}$ with ∇ and $\tilde{\nabla}$, resulting in:

$$\tilde{\nabla}\cdot\tilde{p}=|j|\nabla\cdot p. \tag{10}$$

[0041] Equation (8) has cast the Maxwell curl equations $\nabla\times E=-\mu H^{(t)}$ and $\nabla\times H=\in E^{(t)}$ into a new set of similar equations, $\tilde{\nabla}\times\tilde{E}=-\tilde{\mu}\tilde{H}^{(t)}$ and $\tilde{\nabla}\times\tilde{H}=\tilde{\in}\tilde{E}^{(t)}$, where

$$H=(j^T)^{-1}\tilde{H},\ E=(j^T)^{-1}\tilde{E}, \tag{11}$$

and

$$\in=|j|^{-1}j\tilde{\in}j^T,\ \mu=|j|^{-1}j\tilde{\mu}j^T. \tag{12}$$

$(j^T)^{-1}$ in (11) is a matrix of the columns of reciprocal vectors $(j^T)^{-1}=(r^{(y)}\times r^{(z)}\ r^{(z)}\times r^{(x)}\ r^{(x)}\times r^{(y)})|j|^{-1}$.

[0042] Thus, provided that the electromagnetic properties of the new material space follow equation (12), the Poynting vector in the new space,

$$S=\frac{1}{2}(E\times H^*),$$

will obey equation (6), satisfying the following transformation of the initial Poynting vector

$$\tilde{S}=\frac{1}{2}(\tilde{E}\times\tilde{H}^*)$$

$$S=|j|^{-1}j\tilde{S}. \tag{13}$$

[0043] An analogous result would also be valid for other pseudo-vectors, e.g., the time derivatives of magnetic flux densities $B^{(t)}$ and $\tilde{B}^{(t)}$, and displacement currents, $D^{(t)}$ and $\tilde{D}^{(t)}$.

[0044] In a similar way, the divergence equations $\tilde{\nabla}\cdot\tilde{D}=\tilde{q}$ and $\nabla\cdot D=q$ would link the charge densities through equation (10) as

$$q=|j|^{-1}\tilde{q}. \tag{14}$$

[0045] The above conversions provide a method of designing a continuous material space for a required spatial transformation of electromagnetic vectors and, therefore, achieving a desired functionality. That is, for the physical Poynting vector, S, to match the required transformation of the Poynt-

ing vector, $S=|j|^{-1}j\mathbf{S}$, the material properties in the new space, $r=r(\tilde{r})$, should satisfy $\in=|j|^{-1}j\in j^T$ and $\mu=|j|^{-1}j\mu j^T$.

[0046] The result of Dolin is repeated here as equation (15), as the original work is in Russian and not readily available. The radially anisotropic permeability and permittivity of a spherical material inhomogeneity may be expressed as:

$$\|\varepsilon_{ik}\| = \|\mu_{ik}\| = \begin{vmatrix} \frac{R^2}{r^2(R)}\frac{dr(R)}{d(R)} & 0 & 0 \\ 0 & \frac{1}{\frac{dr(R)}{dR}} & 0 \\ 0 & 0 & \frac{1}{\frac{dr(R)}{dR}} \end{vmatrix} \tag{15}$$

corresponding to a spatial transformation from the spherical coordinates r, Q, j to the coordinates R (r), Q, j . A plane wave incident from infinity on an inhomogeneity with parameters in accordance with equation (15) would pass through the inhomogeneity without apparent distortion to the external observer.

[0047] A method is described herein for the design of broadband cloaking apparatus and systems comprising binary or multiphase metamaterials, where different optical paths are arranged for different wavelengths inside the macroscopic cloaking structures. The cloaking design requirements may be satisfied through appropriate dispersion engineering of metamaterials.

[0048] The concept of an electromagnetic cloak is to create a structure, whose permittivity and permeability distributions allow the incident waves to be directed around the inner region and be (at least ideally) emitted on the far side of the structure without distortion arising from propagating through the structure. From among simple geometries, including spherical, square and elliptical varieties, cloaking in a cylindrical system is may be the most straightforward to describe mathematically, and is used for the examples herein. However, solutions in other than cylindrical coordinate systems arise from the general transformational optics theory presented herein. A person of skill in the art would understand that such structures may not need to be solved analytically, as numerical analysis methods may be effectively used. Such numerical analysis techniques may also be used for more complex structures. For some scale sizes, ray tracing in an inhomogeneous anisotropic medium may be used. For numerical analysis of cloaking devices, there are a variety of numerical electromagnetic approaches that can be used, such as the finite-element methods (FEM), the finite-difference time-domain (FDTD) methods, the finite integration technique (FIT), and the method of moments (MoM). A number of commercial packages are widely, including COMSOL MULTIPHYSICS, CST MICROWAVE STUDIO, RSoft FULLWAVE, and others may be used to perform the numerical analysis and design.

[0049] A class of a general orthogonal cylindrical coordinate system (OCCS) can be arranged by translating an x-y-plane map ($x=x(\nu, \tau)$, $y=y(\nu, \tau)$) perpendicular to itself; the resulting physical coordinate system forms families of concentric cylindrical surfaces. Since the unit vectors are orthogonal, $\hat{e}_\nu\times\hat{e}_\tau=\hat{e}_z$, $\hat{e}_\tau\times\hat{e}_z=\hat{e}_\nu$, and $\hat{e}_z\times\hat{e}_\nu=\hat{e}_\tau$, the complexity of TO problems in TE or TM formulations can be significantly reduced.

[0050] Consider the initial OCCS, where a 2D radius-vector is defined by a parametric vector function $\tilde{r}(\nu, \tau)$, and a 2D vector μ is defined as $\tilde{u}=\nu_\mu\hat{e}_\nu+\nu_\tau\hat{e}_\tau$. The Jacobian matrix is the diagonal matrix, $s\%=\mathrm{diag}(s_{1\%}s_{1\%})$, with the metric coefficients $\tilde{s}=\mathrm{diag}(s_\nu,s_\tau)$ and $s_\nu=\sqrt{\tilde{r}^{(\nu)}\cdot\tilde{r}^{(\nu)}}$. Then, the following scalar wave equation may be obtained from the Maxwell curl equations in an orthogonal cylindrical basis for a general anisotropic media. Thus, from

$$\tilde{u}_\nu=\omega^{-1}\tilde{m}_\nu^{-1}\tilde{s}_\tau^{-1}\nu^{(\tau)},\ \tilde{u}_\tau=-\omega^{-1}\tilde{m}_\tau^{-1}\tilde{s}_\nu^{-1}\nu^{(\nu)},\ -\omega\tilde{m}_z\nu=|\tilde{s}|^{-1}[(\tilde{s}_\tau\tilde{u}_\tau)^{(\nu)}-(\tilde{s}_\nu\tilde{u}_\nu)^{(\tau)}], \tag{16}$$

we arrive at

$$(\tilde{s}_\tau\tilde{m}_\tau^{-1}\tilde{s}_\nu^{-1}\nu^{(\nu)(\nu)}+(\tilde{s}_\nu\tilde{m}_\nu^{-1}\tilde{s}_\tau^{-1}\nu^{(\tau)})^{(\tau)}-\omega^2\tilde{m}_z|s|\nu=0, \tag{17}$$

where $\tilde{m}_\nu$ and $\tilde{m}_\tau$ are the only components of a diagonal material property tensor, i.e., anisotropic permeability or anisotropic permittivity (for TM or TE polarization respectively); the scalar ν is the only component of the , transverse field: i.e., the magnetic field, $H=\hat{e}_xH_z$ (TM), or the electric field, $E=\hat{e}_zE_z$ (TE).

[0051] Similar to equation (17), another wave equation in a new physical OCCS, (ν, τ, z), can be written as

$$(s_\tau m_\tau^{-1}s_\nu^{-1}\nu^{(\nu)})^{(\nu)}+(s_\nu m_\nu^{-1}s_\tau^{-1}\nu^{(\tau)})^{(\tau)}-\omega^2m_z|s|\nu=0 \tag{18}$$

To mimic the behaviour of light waves obeying equation (16), a scaling transformation $\nu=\nu(\nu)$ (with $\tau=\tau$, $z=\tilde{z}$, and $\nu^1=\nu^{(\nu)}$) is introduced. Thus, to get closer to equations (16), equations (18) are expressed as

$$\left(\left[\frac{1}{\nu'}\frac{s_T\tilde{m}_T\tilde{s}_{\tilde{\nu}}}{\tilde{s}_{\tilde{T}}m_Ts_\nu}\right]\frac{\tilde{s}_{\tilde{T}}}{\tilde{m}_{\tilde{T}}\tilde{s}_{\tilde{\nu}}}\nu^{(\tilde{\nu})}\right)^{(\tilde{\nu})}+\left(\left[\nu'\frac{s_\nu\tilde{m}_{\tilde{\nu}}\tilde{s}_T}{\tilde{s}_\nu m_\nu s_T}\right]\frac{\tilde{s}_\nu}{\tilde{m}_\nu\tilde{s}_T}\nu^{(\tilde{T})}\right)^{(\tilde{T})}-w^2\left(\nu'\frac{m_z|s|}{\tilde{m}_z|\tilde{s}|}\right)\tilde{m}_z|\tilde{s}|\nu=0.. \tag{19}$$

It follows that equation (19) is may be made to be the same as equation (16), provided that the ratios in the square brackets can be eliminated. Thus, the TO identities

$$\frac{1}{\nu'}\frac{s_T\tilde{m}_{\tilde{T}}\tilde{s}_{\tilde{\nu}}}{\tilde{s}_Tm_Ts_\nu}=1,\ \nu'\frac{s_\nu\tilde{m}_{\tilde{\nu}}\tilde{s}_T}{\tilde{s}_\nu m_\nu s_T}=1,\ \nu'=\frac{m_z|s|}{\tilde{m}_z|\tilde{s}|}=1, \tag{20}$$

should be valid in a new material space (m_ν, m_τ, and m_z) in order to mimic the behaviour of light in the initial material space ($\tilde{m}_\nu$, $\tilde{m}_\tau$, and $\tilde{m}_z$). The above identities define the material transformation requirements which may be used for cloaking design and other applications.

[0052] Equations (20) are a solution to the problem of designing an anisotropic continuous material space supporting a required electromagnetic wave behavior, which is equivalent to the behavior of the electromagnetic waves mapped back onto the initial space. Scaling transformations that expand the initially small domain onto a larger physical domain are pertinent to imaging or light concentration while a typical cloaking application uses scaling transforms that shrink the initially larger space to produce voids excluded from the initial domain. Such voids are therefore inaccessible to electromagnetic waves at least the design frequency. The initial virtual space shares a common exterior boundary with the rest of the transformed physical world. An example is shown in FIG. **2**.

[0053] In the circular cylindrical coordinates ($\nu=\rho$, $\tau=\phi$), and $s_\rho=1$, $s_\phi=\rho$, equations (20) give

$$m_\phi = \frac{\rho}{\rho'\tilde{\rho}}\tilde{m}_\phi,\ m_\rho = \frac{\rho'\tilde{\rho}}{\rho}\tilde{m}_\rho,\ m_z = \frac{\tilde{\rho}}{\rho\rho'}\tilde{m}_z, \tag{21}$$

which are the material space parameters for an exact cloak, which is analogous to a cylindrical free-space domain, and is defined by the following inhomogeneous and anisotropic material properties:

$$\in_\rho=\mu_\rho=\tilde{\rho}\rho^1/\rho;\ \in_\phi=\mu_\phi=\in_\rho^{-1};\ \in_z=\mu_z=\tilde{\rho}/(\rho^1\rho). \tag{22}$$

[0054] The constraints on the material properties may be relaxed in some circumstances. For example, for TM polarization with the magnetic field polarized along the z-axis, multiply $\in^\tau$ and $\in_\phi$ by μ_z in equation (22) to obtain the following reduced set of non-magnetic cloak parameters:

$$\in_\rho=(\tilde{\rho}/\rho)^2;\ \in_\phi=(\rho^1)^{-2};\ \mu_z=1. \tag{23}$$

[0055] Similarly, for the TE polarization, the required parameters for a general transformation are:

$$\mu_\rho=(\tilde{\rho}/\rho)^2(\rho^1)^2,\ \mu_\phi=1,\ \in_z=(\rho^1)^{-2}. \tag{24}$$

In equations (22)-(24), $\tilde{\rho}$ could be replaced by $\tilde{\rho}=\tilde{\rho}(\rho)$ to obtain closed-form expressions. Such closed form expressions are useful to verify numerical analysis results for a corresponding geometrical configuration. The numerical analysis may then be extended to situations where the geometry of the apparatus or the complexity of the material spatial variations may make a closed-form solution impractical as a design tool. A person of skill in the art would use the numerical analysis methods so as to extend the scope of the types of apparatus, materials and wavelength regimes which may be used in designs based on the theoretical analysis presented herein.

[0056] Consider the bandwidth of a cloaking structure when a design for a single specific central wavelength is used. A broadband cloak may be designed to function in a wavelength multiplexing manner. Since the anisotropic constituent materials of a cloak for one wavelength may not be transparent at other frequencies, cloaks for the wavelengths being considered should share the same outer boundary, may be is the physical outer boundary of the device. The inner boundary and the transformation for each operating wavelength is dependent on the wavelength. Thus, a number of different inner boundaries and different transformations may be used to provide a broadband cloaking capability.

[0057] In practice, the registration of the outer boundaries of the different material layers may have some variation without appreciable degeneration of the overall effectiveness of the broadband guidance. This follows from simulations which have suggested that variations from the ideal material parameter profile may be tolerated.

[0058] Moreover, as the theoretical results here and elsewhere in the description herein are obtained from analytic models, some adjustment of the results may be needed in practice to, for example, take account of the refraction of a signal of a wavelength that differs from the design wavelength, or which passes through a shell of another design wavelength prior to being refracted by a shell designed for the signal. In another aspect, while gain media may be needed in some cases for an exact cloaking result, some loss may be tolerated in the structure, depending on the application, and the sensitivity of the viewer or viewing device to changes in the strength of the background signal, the transmitted signal or the like.

[0059] FIG. **3** is a schematic representation of a cloaking system for multiple wavelengths or a finite bandwidth, with $w_1>w_2>w_3$, shown in (a), (b), and (c) respectively; the outer and inner circles represent the physical boundaries the cloaking device, and the circle between the two refers to an inner material boundary for each design wavelength;.

[0060] Since the wave components at different frequencies go through the system following different physical paths, the proposed system may permit the cloaking parameters to be appropriately realized over a finite bandwidth without violating basic physical laws or giving rise to a superluminal group velocity. As a result, a 'colorful' (multi-frequency) image would appear transparently through the cloaking device. At the central wavelength of each of the various designs, an image of the background region behind the cloaking structure in the design wavelength ("color") would be seen. This would be the situation for each of the design wavelengths of the structure.

[0061] The device may be constructed using multiple shells of material, where the material properties of each shell is appropriate for the wavelengths propagating therein. Further, it would be understood that each shell may also be comprised of a number of conformal shells with material properties that vary with a geometric dimension such as the radius. Such a construction may facilitate the manufacturing process. Further, although not shown, some shells may be a gain material, or dielectric materials or various types of materials may be fabricated as a composite material.

[0062] In order to better understand the limitations on cloaking over a contiguous band of frequencies, consider the TE propagation mode with material properties given in equation (24), which allows for flexible parameters at the outer boundary of $\rho=b$. Assume that at frequency ω_0, the material properties required by a TE cloak are exactly satisfied based on the transformation $\rho=\rho(\tilde{\rho})$ within the range, $\alpha\leqq\rho\leqq b$;

$$\mu_\rho(\omega_0,\rho)=(\tilde{\rho}/\rho)^2(\rho^1)^2,\ \mu_\phi(\omega_0,\rho)=1,\ \in_z(\omega_0,\rho)=(\rho^1)^{-2}. \tag{25}$$

[0063] Dispersion needs to be considered for broadband performance of a cloaking system. Assuming that the cloaking materials exhibit a linear dispersion around the initial frequency ω_0 the dispersion function may be expressed in a Taylor series expansion:

$$\mu_\rho(\omega,\rho)=\mu_\rho(\omega_0,\rho)+\mu_\rho^{(\omega)}(\omega_0,\rho)(\omega-\omega_0), \tag{26}$$

and

$$\in_z(\omega,\rho)=\in_z(\omega_0,\rho)+\in_z^{(\omega)}(\omega_0,\rho)(\omega-\omega_0), \tag{27}$$

[0064] In equations (26) and (27) the two frequency derivatives $\mu_\rho^{(\omega)}$ and $\in_z^{(\omega)}$ are continuous functions of ρ. Since there is no magnetic response along the ϕ direction at ω_0, it may be reasonable to choose that $\mu_\phi(\omega,\tau)=\mu_\phi(\omega_0,\tau)=1$.

[0065] The initial formulation of the analysis is to determine, at a frequency $\omega_1=\omega_0+\delta\omega$, a combination of the transformation $\rho_1=\rho_1(\tilde{\rho})$ along with yet another inner radius a_1 such that the function $\rho_1(\tilde{\rho})$ maps [0, b] onto [a_1, b] with $a<a_1<b$, while satisfying the boundary conditions

$$\rho_1(0)=a_1\rho_1(b)=b \tag{28}$$

along with the monotonicity condition:

$$\rho_1^{\ 1}>0 \tag{29}$$

and, the material transforms of the reduced TE cloak:

$$\mu_\rho(\omega_1,\rho_1)=(\wp/\rho_1)^2(\rho_1^{\,1})^2,\ \in_z(\omega_1,\rho_1)=(\rho_1^{\,1})^{-2} \tag{30}$$

where $\wp=g_1^{-1}(\rho)$, $a_1\leqq\rho\leqq b$.

[0066] The transformation $\rho_1(\wp)$ for $\omega_1=\omega_0+\delta\omega$ is related to the original transformation at ω_0 and the dispersion functions by:

$$(\wp(\rho_1)/\rho_1)^2(\rho_1^{\,1})^2=(\wp(\rho)/\rho)^2(\rho^1)^2+\mu_\rho^{(\omega)}(\omega_0,\rho)(\omega-\omega_0), \tag{31}$$

and

$$(\rho_1^{\,1})^{-2}=(\rho^1)^{-2}+\in_z^{(\omega)}(\omega_0,\rho)(\omega-\omega_0), \tag{32}$$

within the range of $a_1\leqq\rho_1\leqq b$ with the boundary conditions mentioned above. It would appear that equations (31) and (32) may not be fulfilled exactly for arbitrary gradients of dispersion functions $\mu_\rho^{(\omega)}(\omega_0,\rho)$ and $\in_z^{(\omega)}(\omega_0,\rho)$.

[0067] Therefore, achieving complete cloaking over a bandwidth involves computational methods and materials for dispersion management. This requirement may be expressed as: What physically-possible functions $\mu_\rho^{(\omega)}(\omega_0,\rho)$ and $\mu_\rho^{(\omega)}(\omega_0,\rho)$ should be engineered to make the cloaking effect possible at a given frequency $\omega_1=\omega_0+\delta\omega$ in addition to cloaking at ω_0?

[0068] After some algebra, it may be seen that equations (28) to (32) can be satisfied by

$$\mu_\rho^{(\omega)}(\omega_0,\rho)\in_z^{(\omega)}(\omega_0,\rho)<0. \tag{33}$$

That is, equation (33) indicates that the dispersion of the radial permeability $\mu_\rho(\omega,\rho)$ and the axial permittivity $\in_z(\omega,\rho)$ should have opposite slopes as functions of the frequency.

[0069] The effective bandwidth of a transformation-based cloaking device is determined by the frequency range over which the material properties in equations (22)-(24) are substantially satisfied. The curved trajectory of the electromagnetic waves within the cloak implies a refractive index n of less than 1 in order to satisfy the minimal optical path requirement of the Fermat principle. However, a metamaterial with n<1 should be dispersive to fulfill causality.

[0070] In practice, the bandwidth of the apparatus may largely be determined by the performance tolerances. That is, how close to the performance of an ideal cloak over a bandwidth is achieved. The needed performance may be dependent on the application for which the structure is intended. So, while mathematically there may be a single wavelength value where the cloaking conditions are exactly fulfilled, the undesired scattering and distortion arising from the cloak structure may remain at a low level over a finite bandwidth. As such, cloaks share the property of many engineering solutions in that compromises in performance may be accepted as a trade-off with respect to cost, complexity, and the like.

[0071] Specifically engineered strong anomalous dispersion may be needed as equation (33) is not satisfied with normal dispersion, where $\partial\in(\omega)/\partial\omega>0$ and $\partial\mu(\omega)/\partial\omega>0$. However, anomalous dispersion characteristics are normally associated with substantial loss. In such designs, a broadband cloaking solution may need additional loss-compensation by incorporating gain media in the structure.

[0072] Passive materials exhibit normal dispersion away from the resonance band. Because anomalous dispersion usually occurs only around the absorption bands, a wavelength multiplexing cloak with broadband capability may be achievable when gain materials or electromagnetically induced transparency or chirality are introduced to make low-loss anomalous dispersion possible. For example, in an active medium, where the optical gain is represented by a negative imaginary part of permittivity over a finite bandwidth, the real part of permittivity around the active band will exhibit an anti-Lorentz line shape, as governed by the Kramers-Kronig relations. As a result, anomalous dispersion with relatively low loss can occur in the wings of the gain spectrum. Incorporating gain materials into plasmonics and metamaterials has been proposed and demonstrated in related applications such as, a near-field superlens, tunneling transmittance, enhanced surface plasmons, and lossless negative-index materials.

[0073] We present two structures for optical cloaking based on high-order transformations for TM and TE polarizations respectively. These designs are realizable for at least visible and infrared light wavelengths.

[0074] The constitutive dimensional and electromagnetic parameters of the cloak are determined by the specific form of the spatial transformation used. The parameters are usually anisotropic with gradient requirements that may be achieved using artificially engineered structures

[0075] Two design examples of optical cloaks based on high-order transformations are described. Specifically: i) a non-magnetic cylindrical cloaking system for TM incidence (magnetic field polarized along the cylindrical axis) which consists of a layered metal-dielectric without any variation in either material or structure along the vertical direction; and, ii) a magnetic cylindrical cloak for TE incidence (electric field polarized parallel to axis) utilizing Mie resonance in periodic rod-shaped high-permittivity materials.

[0076] For a cloak in the cylindrical geometry, a coordinate transformation function $r=g(r^1)$ from (r^1, θ^1, z^1) to (r, θ, z) is used to compress the region $r^1\leqq b$ into a concentric shell of $a\leqq r\leqq b$, and the permittivity and permeability tensors required for an exact cloak can be determined as:

$$\in_r=\mu_r=(r^1/r)\partial g(r^1)\partial r^1;\ \in_\theta=\mu_\theta=1/\in_r;\ \in_z=\mu_z=(r^1/r)[\partial g(r^1)/\partial r^1]^{-1} \tag{34}$$

For the standard states of incident polarization, the requirement of equation (34) can be relaxed such that only three of the six components are relevant. For example, for TE (TM) polarization, only μ_z, μ_r and μ_θ(μ_z, $\in_\tau$ and $\in_\theta$) enter into Maxwell's equations. As would be understood, the TM and the text in parenthesis are read in lieu of the TE and corresponding parameters so as to provide a compact presentation of the discussion

[0077] The parameters can be further simplified to form reduced parameters which are more realistic for practical applications. Since the trajectory of the waves is determined by the cross product components of the $\in$ and μ tensors instead of the two tensors individually, the cloaking performance is sustained as long as $n_\theta=\sqrt{\in_z\mu_r}$ and $n_r=\sqrt{\in_s\mu_\theta}$ ($n_0=\sqrt{\mu_z\in_r}$ and $n_r=\sqrt{\mu_z\in_\theta}$) meet equation (34). This technique results in a specific set of reduced parameters which allow for a permeability gradient along only the radial direction for the TE mode:

$$\mu_r=(r^1/r)^2[\partial g(r^1)/\partial r^1]^2;\ \mu_\theta=1;\ \in_z=[\partial g(r^1)/\partial r^1]^{-2} \tag{35}$$

and can be purely non-magnetic for the TM mode:

$$\in_r=(r^1/r)^2;\ \in_\theta=[\partial g(r^1)/\partial r^1]^{-2};\ \mu_z=1 \tag{36}$$

[0078] The designs of the example electromagnetic cloaks herein use known structures and materials to achieve the set of parameters corresponding to any of equations (34)-(36). Recently a demonstration of a microwave cloak satisfying equation (35) was reported and the previously described non-

magnetic optical cloak in U.S. patent application Ser. No. 11/983,228, filed on Nov. 7, 2007, and is incorporated herein by reference, corresponds to the case described by equation (36). One common aspect in the previous work is that the designs were based on a standard linear transformation $r=g(r^1)=(1-a/b)r^1+a$.

[0079] Designs based on more general high-order transformations are described. In particular, for the TM polarization, a non-magnetic cloak design which may compatible with mature fabrication techniques such as direct deposition and direct etching is described; for TE incidence, a structure that allows for a radial gradient in the magnetic permeability while avoiding the use of plasmonic metallic inclusions in the optical range is described.

[0080] Consider a non-magnetic cloak for the TM mode with parameters given in equation (36). In this case, the cloak material is designed to produce the required gradients in $\in_r$ and $\in_\theta$ using readily available materials. In an aspect, the design may employ the flexibility in realizing the effective permittivity of a general two-phase composite medium.

[0081] When an external field interacts with a composite material comprising two elements with permittivity of $\in_1$ and $\in_2$ respectively, minimal screening occurs when all internal boundaries between the two constituents are parallel to the electric field, and maximal screening occurs when all boundaries are aligned perpendicular to the field. These two extremes of orientation can be achieved by using an alternating layered structure, provided that the thickness of each layer is much less than the wavelength of the incident electromagnetic radiation. The two extreme values of the effective permittivity can be approximated as:

$$\in_{\|}=f\in_1+(1-f)\in_2;\ \in_{\perp}=\in_1\in_2/(f\in_2+(1-f)\in_1) \quad (37a, b)$$

where f and $1-f$ denote the volume fractions of components **1** and **2**, and the subscripts $\|$ and $\perp$ indicate the cases with electric field polarized parallel and perpendicular to the interfaces of the layers, respectively. Such layered structures have been studied extensively in recent years for various purposes, especially in sub-diffraction imaging for both the near field and the far zone.

[0082] The alternating layers may be a plurality of layers, each layer having a bulk material property appropriate to a particular wavelength and the shape of the cloaking structure being designed, and some of these layers may be, for example gain media so as to compensate for the loss in passive layers.

[0083] The two extrema in equation (4) are termed the Wiener bounds on the permittivity, which set the bounds on the effective permittivity of a two-phase composite material. Other limits, for example those from the spectral representation developed by Bergman and Milton (see Bergman, D. J., Phys. Rev. Lett. 44, 1285-1287, 1980; Milton, G. W., Appl. Phys. Lett. 37 , 300-302, 1980) may also apply in addition to the Wiener bounds, but equation (37) nonetheless provides a straightforward way to evaluate the accessible permittivity range in a composite with specified constituent materials. The Wiener bounds can be illustrated on a complex $\in$-plane with the real and imaginary parts of $\in$ being the x and y axis, respectively. In this plane, the low-screening bound in equation (37a) corresponds to a straight line between $\in_1$ and $\in_2$, and the high-screening bound in equation (4b) defines an arc which is part of the circle determined by the three points: $\in_1$, $\in_2$ and the origin.

[0084] The material properties for the cloak design corresponding to equation (36) are such that, for a non-magnetic cylindrical cloak with any transformation function, $\in_r$ varies from 0 at the inner boundary of the cloak (r=a) to 1 at the outer surface (r=b), while $\in_\theta$ is a function of r with varying positive value, except for the linear transformation case where $\partial g(r^1)/\partial r^1$ is a constant.

[0085] Fulfilling the parameters in equation (36) may use, for example, alternating metal-dielectric slices whose properties may be estimated by equation (37). Phase **1** is a metal ($\in_1=\in_m<0$) and phase **2** is a dielectric ($\in_2=\in_d>0$), and the desired material properties of the cloak are achieved when the slices are within the r-z plane of the cylindrical coordinates. $\in_r$ and $\in_\theta$ correspond to $\in_{\|}$ and $\in_{\perp}$ in equation (37), respectively.

[0086] This situation is illustrated in FIG. **4**. The thick solid and dashed lines represent the two Wiener bounds $\in_{\|}(f)$ and $\in_{\perp}(f)$, respectively. The constituent materials used for the calculation presented in FIG. **4** are silver and silica at a "green" light wavelength of 532 nm. The pair of points on the bounds with the same filling fraction are connected with a straight line for clarity. When $\in_r$ varies between 0 and 1, the value of $\in_\theta$ varies accordingly as shown by the arrow between the two thin dashed lines. Therefore, the construction of a non-magnetic cloak establishes the relationship between the two quantities $\in_{\|}$ and $\in_{\perp}$ (as functions of f) within the range shown in FIG. **4** that fits the material properties given in equation 36 for a particular transformation function: $r=g(r^1)$.

[0087] The example design has a low loss factor. As shown in FIG. **4**, the loss factor described by the imaginary part of the effective permittivity is on the order of 0.01. This is considerably smaller than that of a pure metal or any resonant metal-dielectric structures. A schematic representation of the structure having interlaced metal and dielectric slices is illustrated in FIG. **5**.

[0088] For a selected design wavelength, a transformation together with the cylindrical shape factor a/b that fulfills the following equation may be suitable.

$$\varepsilon_m\varepsilon_d\left(\frac{\partial g(r')}{\partial r'}\right)^2+\left(\frac{r'}{g(r')}\right)^2-\varepsilon_m+\varepsilon_d=0 \quad (38)$$

and

$$g(0)=a;\ g(b)=b;\ \partial g(r^1)/\partial r^1>0 \quad (39)$$

[0089] An approximate solution to the equations may be found using a polynomial function such as:

$$r=g(r^1)=[1-a/b+p(r^1-b)]r^1+a \quad (40)$$

with $|p|<(b-a)/b^2$

[0090] Such a quadratic transformation satisfies the boundary and monotonicity requirements in equation (39), and it is possible to fulfill equation (38) with minimal deviation from a theoretical profile when an appropriate shape factor is chosen. Table 1 sets forth transformations, materials and geometries for non-magnetic cloaks designed for several important central wavelengths across the visible wavelength regime including 488 nm (Ar-ion laser), 532 nm (Nd:YAG laser), 589.3 run (sodium D-line), and 632.8 nm (He—Ne laser). In the calculations, the permittivity of silver is taken from well accepted experimental data (see Johnson, P. B., and R. W. Christy, Phys. Rev. B **6 4370-4379 ,1972**), and the dielectric constant of silica is from tabulated data (see Palik, E. D., Handbook of Optical Constants of Solids, Academic Press, New York, 1997. The same design and transformation work

for similar cylindrical cloaks with the same shape factor a/b. When the approximate quadratic function is fixed for a given design wavelength, the filling fraction function $f(r)$ is determined by:

$$f(r) = \frac{Re(\varepsilon_d) - (g^{-1}(r)/r)^2}{Re(\varepsilon_d - \varepsilon_m)} \tag{41}$$

TABLE 1

Approximate quadratic transformations and materials for constructing a cloak with alternating slices

λ	ϵ_1	ϵ_2	p × (b^2/a)	a/b
488 nm	$\epsilon_{Ag} = -8.15 + 0.11i$	$\epsilon_{SiO2} = 2.14$	0.0662	0.389
532 nm	$\epsilon_{Ag} = -10.6 + 0.14i$	$\epsilon_{SiO2} = 2.13$	0.0517	0.370
589.3 nm	$\epsilon_{Ag} = -14.2 + 0.19i$	$\epsilon_{SiO2} = 2.13$	0.0397	0.354
632.8 nm	$\epsilon_{Ag} = -17.1 + 0.24i$	$\epsilon_{SiO2} = 2.12$	0.0333	0.347
11.3 nm	$\epsilon_{SiC} = -7.1 + 0.40i$	$\epsilon_{BaF2} = 1.93$	0.0869	0.356

[0091] FIG. **6** shows the calculated anisotropic material properties of a non-magnetic cloak corresponding to the λ=532 nm case. With the approximate quadratic transformation, the effective parameters $\in_r$ and $\in_\theta$ obtained with the Wiener bounds in equation (37) fit with the exact parameters required for this transformation by equation (35) quite well, with the average deviation of less than 0.5%.

[0092] Fabrication of the design is practical, as such vertical wall-like structures are compatible with mature fabrication techniques such as direct deposition and direct etching.

[0093] In another example, a cylindrical cloak for TE mode cloaking operable within the mid-infrared frequency range is described, with a gradient in the magnetic permeability, in accordance with equation (35). This frequency range is of interest as it corresponds to the thermal radiation band from human bodies.

[0094] Several different approaches involving silicon carbide as component of the metamaterial are described. SiC is a polaritonic material with a phonon resonance band falling into the spectral range centered at around 12.5 μm (800 cm^{-1}) This resonance band introduces a sharp Lorentz behavior in the electric permittivity. The dielectric function of SiC at mid-infrared may be described with the following model:

$$\in_{SiC} = \in_\infty [\omega^2 - \omega_L^2 + i\gamma\omega]/[\omega^2 - \omega_T^2 + i\gamma\omega] \tag{42}$$

where $\in_\infty$=6.5, ω_L=972 cm^{-1}, ω_T=796 cm^{-1} and γ=5 cm^{-1}. On the high-frequency side of the resonance frequency, the dielectric function is strongly negative, which makes the optical response similar to that of metals, and the material has been already been utilized in applications such as a mid-infrared superlens. At frequencies lower than the resonance frequency, the permittivity can be strongly positive, which makes SiC a candidate for producing high-permittivity Mie resonators at the mid-infrared wavelength range.

[0095] SiC structures may be used to build mid-infrared cloaking devices in a variety of physical configurations. For example, the needle-based structure may be used for the TM mode, where needles are made of a low-loss negative-∈ polaritonic material such as, for example, SiC or TiO_2, and are embedded in an infra-red-transparent dielectric such as, for example, ZnS.

[0096] In another aspect, a non-magnetic cloak using alternating slices of structure as previously described herein may be used. With SiC as the negative-s material and BaF_2 as the positive-∈ slices, the appropriate transformation function and shape factor that fulfills the material property requirements at a preset wavelength may be determined. The result for λ=11.3 μm (CO_2 laser range) is shown in the last row of Table 1.

[0097] In yet another example, a cylindrical cloak for the TE mode with the required material properties given in equation (35) is described, having a gradient in the magnetic permeability along the radial direction. μ_r may vary from 0 at the inner boundary (r=a) to $[\partial g(r^1)/\partial r^1]^2$: at the outer surface (r=b), while the $\in_z$ changes according to $[\partial g(r^1)/\partial r^1]^{-2}$. The magnetic requirement may be accomplished using metal elements like split-ring resonators, coupled nanostrips or nanowires. However, such plasmonic structures exhibit a high loss. A SiC based structure provides an all-dielectric design to a magnetic cloak for the TE mode due to the Mie resonance in subwavelength SiC inclusions.

[0098] Meta-magnetic responses and a negative index of refraction in structures made from high-permittivity materials have been studied extensively in recently years. Magnetic resonance in a rod-shaped high-permittivity particle can be excited by different polarizations of the external field with respect to the rod axis. When a strong magnetic resonance and an effective permeability substantially distinct from 1 are desired, the rod should be aligned parallel to the electric field to assure the maximum possible interaction between the rod and the external field. In the present example the radial permeability has values of less than (but close to) 1, and resonance behavior in the effective permittivity $\in_z$ should be avoided for a minimal loss. Therefore, with the electrical field polarized along the z axis of the cylindrical system, the SiC rods may be arranged along the r axis and form an array in the θ-z plane. The structure is depicted in FIG. **7**, where arrays of SiC wires along the radial direction are placed between the two surfaces of the cylindrical cloak.

[0099] The effective permeability of the system may be estimated as follows using the approach of O'Brien and Pendry (see O'Brien, S., and J. B. Pendry, J. Phys. Condens. Matter. 14, 4035-4044, 2002)

$$\mu_r = \frac{2}{kL_1^2} \frac{L_1 J_1(kL_1) - tJ_1(kt) + a_0 t H_1^{(1)}(kt) - a_0 L_1 H_1^{(1)}(kL_1) + c_0 t J_1(nkt)/n}{J_0(kL_2/2 - a_0 H_0^{(1)}(kL_2/2)} \tag{43}$$

where h and ϕ represent the periodicities along the z and θ directions respectively, t denotes the radius of each wire, $n=\sqrt{e_{SiC}}$ is the refractive index, $k=2\pi/\lambda_0$ denotes the wave vector, $L_1=\sqrt{hr\phi/\pi}$ and $L_2=(h+r\phi)/2$ represent the two effective unit sizes based on area and perimeter estimations respectively. $a_0=[nJ_0(nkt)J_1(kt)-J_0(kt)J_1(nkt)]/[nJ_0(nkt)H_1^{(1)}(kt)-H_0^{(1)}(kt)J_1(nkt)]$ and $c_0=[J_0(kt)-a_0H_0^{(1)}(kt)]/J_0(nkt)$ are the scattering coefficients, and the Bessel functions in the equation follow the standard notations. The permittivity along the z direction may be approximated using Maxwell-Garnett method. In the design disclosed herein we choose the appropriate transformation geometry and operational wavelength such that the calculated effective parameters μ_r and $\in_z$ follow equation (35) with tolerable deviations. FIG. **8** shows the theoretically required and the calculated μ_r and $\in_z$ for a TE cloak at λ=13.5 μm. The parameters used for this calculation

are a=15 μm, a/b=0.35, t=1.2 μm, h=2.8 μm, ϕ=10.6°, and the p coefficient in the quadratic transformation is $0.5a/b^2$. Good agreement between the required values and the calculated ones based on analytical formulae, and the imaginary part in the effective permeability is less than 0.06. This computation verifies the feasibility of the proposed cloaking system based on SiC wire arrays for the TE polarization. In FIG. **8** the magnetic parameter μ_r is calculated using equation (43), and the electric parameter $\in_z$ is obtained based on Maxwell-Garnett method.

[0100] In another aspect, a cloaking device structure may be a spherical or other shaped cloaking structure. The specific geometrical shape, the size and other design parameters of the structure, such as the spatial variation of material properties, may be chosen using the general approach described herein so as to be adaptable to the wavelength, the degree of cloaking, and the properties of the object to be cloaked. Loss and gain may be introduced in various portions of the structure.

[0101] The examples shown herein have used analytic profiles for the material properties so as to illustrate certain of the principles which may influence design of cloaking structures. However, since electromagnetic simulations using finite element methods, for example, are commonly used in design of complex shapes, and have been shown to yield plausible results, the use of such simulations are envisaged as useful in apparatus design. Ray tracing programs may be effectively used in situations where the spatial component of the material properties, and of the geometry, are slowly varying with respect to a wavelength at the operating frequencies. In optics, this is termed an adiabatic approximation.

[0102] Certain aspects, advantages, and novel features of the claimed invention have been described herein. It would be understood by a person of skill in the art that not all advantages may be achieved in practicing a specific embodiment. The claimed invention may be embodied or carried out in a manner that achieves or optimizes one advantage or group of advantages as taught herein without necessarily achieving other advantages as may have been taught or suggested.

[0103] It is therefore intended that the foregoing detailed description be regarded as illustrative rather than limiting, and that it be understood that it is the following claims, including all equivalents, that are intended to define the spirit and scope of this invention.

What is claimed is:

1. A apparatus for modifying the visibility properties of an object, comprising:

a structure formed of a metamaterial,

wherein the metamaterial properties are selected so that an electromagnetic wave incident on the apparatus is guided around the object at plurality of wavelengths.

2. The apparatus of claim **1**, wherein the structure is disposable between an object and an observer.

3. The apparatus of claim **1**, wherein the structure is comprised of a plurality of metamaterial layers, the layers having electromagnetic properties determined by one or more of the plurality of wavelengths.

4. The apparatus of claim **1**, wherein the structure includes a gain medium.

5. The apparatus of claim **4**, wherein the gain medium is a semiconductor capable of spontaneous emission at least one wavelength of the plurality of wavelengths.

6. The apparatus of claim **3**, where the material properties of each layer are selected so that the outermost boundary of a metamaterial layer of the plurality of metamaterial layers for each design wavelength is substantially coincident with the outer boundary of the structure.

7. The apparatus of claim **3**, where each layer is formed from a plurality of conformal layers.

8. The apparatus of claim **3**, wherein the location of an innermost boundary of a metamaterial layer of the structure is dependent on the design wavelength.

9. The apparatus of claim **3**, wherein a least a portion of the structure is formed of metamaterial layers wherein proximal layers have a effective refractive index of less than unity for an orthogonal polarization of an incident wave.

10. The apparatus of claim **3**, wherein the metamaterial properties of the layers at a first design wavelength are selected such that electromagnetic waves of a second design wavelength may penetrate into the structure so as to be guided by layers having metamaterial properties suitable for guiding the second design wavelength.

11. The apparatus of claim **10**, wherein gain medium layers are included in the layers of the first design wavelength so as to compensate for loss of the metamaterial at the second design wavelength.

12. The apparatus of claim **1**, wherein the structure is a sphere with an interior void containing an object to be cloaked.

13. The apparatus of claim **1**, wherein the structure is a cylinder of finite length having a symmetrical cylindrical void therein.

14. The apparatus of claim **1**, wherein the metamaterial comprises a dielectric having inclusions of a polaritonic material.

15. The apparatus of claim **14**, wherein the polaritonic material is silicon carbide (SiC).

16. The apparatus of claim **14**, wherein the polaritonic material is rod shaped, with the rods oriented in a radial direction.

17. The apparatus of claim **1**, wherein the metamaterial comprises a dielectric having inclusions of a metal.

18. The apparatus of claim **17**, wherein the metal and the dielectric are disposed in wedge shapes oriented in a radial direction.

19. A method of designing a structure for use as a cloak, comprising:

(a) selecting a design wavelength;

(b) selecting a metamaterial having the property of having a low loss at the design wavelength and at least a permeability or a permittivity of less than unity;

(c) determining, for a selected shape and size of structure, the variation of metamaterial properties as a function of position in the structure so as to guide electromagnetic waves of the design wavelength and polarization around a object disposed within the structure;

(d) selecting a second design wavelength and performing steps (a)-(c) for the second design wavelength.

20. The method of claim **19**, wherein the metamaterial includes a gain medium.

21. The method of claim **19**, wherein at least a portion of the metamaterial comprises a metamaterial effective at the first design wavelength, interspersed with a metamaterial effective at the second design wavelength.

22. The method of claim **19**, wherein the metamaterials for the first design wavelength and the second design wavelength are conformal alternating layers at least when proximal to an outer surface of the structure.

23. The method of claim **22**, wherein the step of determining, for a selected shape and size of structure, the variation of metamaterial properties as a function of position in the structure so as to guide electromagnetic waves of the design wavelength and polarization around a object disposed within the structure is performed iteratively to adjust the properties of the metamaterials at each design wavelength to account for the effect of the metamaterial selected for the other design wavelength.

24. The method of claim **22**, wherein the thickness of the metamaterial layers is small compared with either design wavelength.

25. A method of modifying the observability of an object, comprising:

providing a structure fabricated from a plurality of metamaterials, the metamaterials selected so as to guide electromagnetic waves around an object at a plurality of wavelengths; and

disposing the structure between an observer and the object.

* * * * *

AUTODESK Make anything. (http://www.autodesk.com)
advertisement

Diet post-TAVR
Healthgrades

LIMITED-TIME OFFER
EARN
60,000
AADVANTAGE®
BONUS MILES AFTER
QUALIFYING PURCHASES
CITI® / AADVANTAGE®
PLATINUM SELECT® CARD
LEARN MORE >
This little-known trick can save you money on Amazon

About This Instructable

21,231 views
77 favorites
License: (cc) BY-NC-SA

slimjed (/member/slimjed/)
Follow 10
(/member/slimjed/)

More by slimjed:

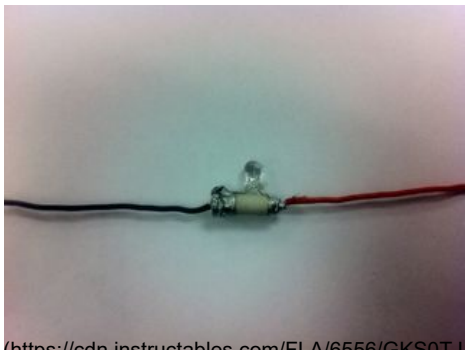

This simple circuit is able to detect signal from your cellphone antenna and converts it to electricity to power an LED (the best thing about this is that its completely passive and doesn't require batteries) this circuit requires: RF diode (search ebay for: RF diode or microwave diode) LED Peace of wire Solder I have Noticed that it only detects phones working on (EDGE), ocasionally works on 3G I have a low knowledge about RF but I think it has to de with the shape and/or length of antennas. So if you can contribute to make it work better please do so. (this is based on a video i saw a long time ago on you tube) the video had no instructions. here is the link http://www.youtube.com/watch?v=CNJVhzOjWgU&playnext=1&list=PL8ACFDE47FA548451 (RF energy, LED, tesla, passive, electricity)

Step 1: LED+RF Diode

(/id/Free-Energy-Cellphone-detector-

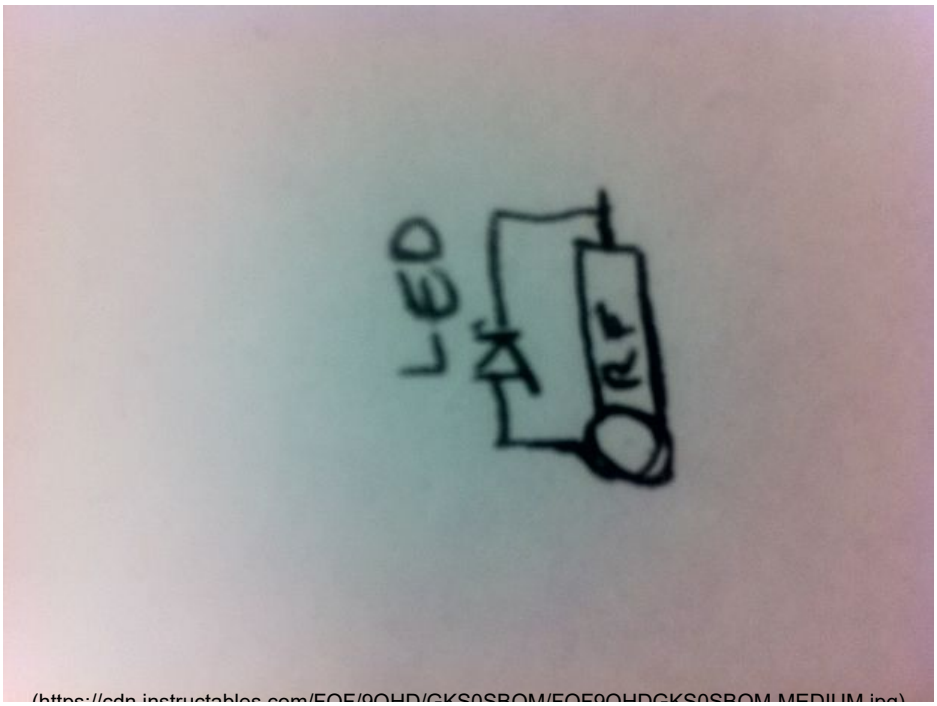

First Solder the led parallel to the Rf diode

Step 2: RF Diode+ LED+ Wires

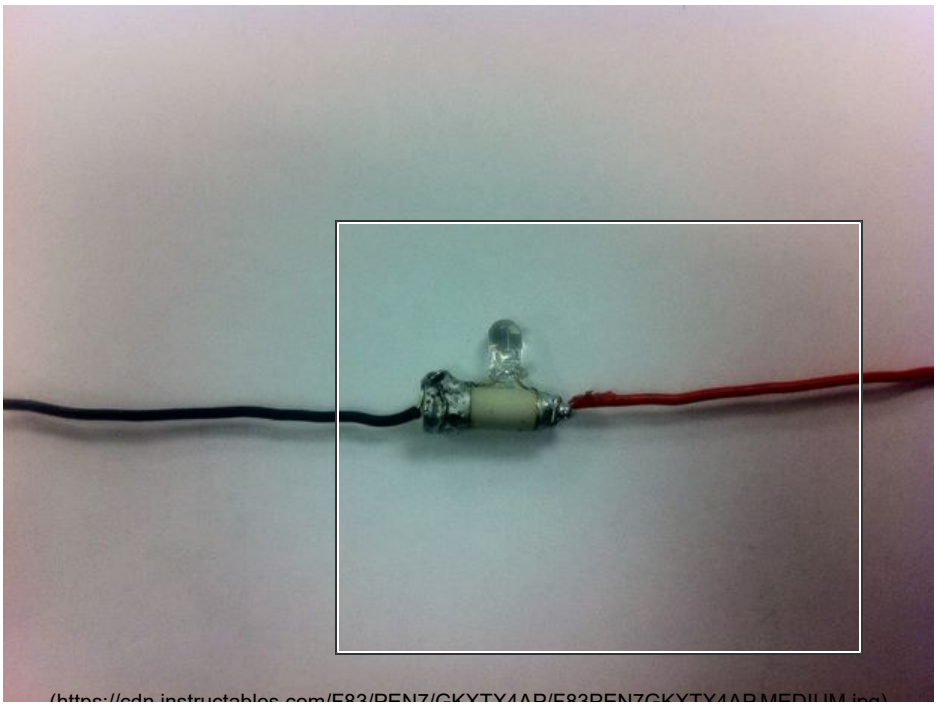

Solder One peace of wire to each end of the RF diode which will work as antenna

Step 3: Make a Call and Put the Circuit Next to Phone

An idle telephone line tempts designers to use its 48V potential as a power source. However, Part 68 of the US Federal Communications Commission's telecommunications regulations states that any device that connects to the phone line and is not actively communicating must present a resistance of at least 5 MΩ (**Reference 1**). To meet this requirement, a device's continuous-current drain must not exceed 10 μA. Fortunately, many devices that connect to the phone line do not require continuous power and can remain off for long intervals, awakening only for a short time before relapsing into power-off mode. Providing power for these applications from the phone line presents obvious advantages by eliminating the need for a battery or another power source and the cost of battery maintenance.

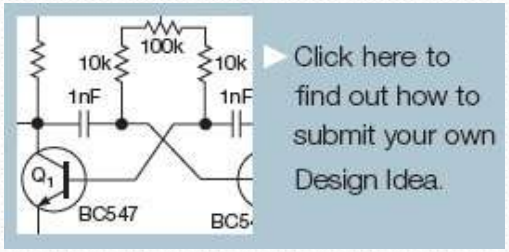

The circuit in **Figure 1** charges a 1.5F supercapacitor, C_1, from the phone line through a diode bridge and a 5.6-MΩ resistor. A **Maxim MAX917** nanopower comparator, IC_1, consumes only 0.75 μA from its power supply. Resistors R_2 and R_3 halve the voltage across C_1 and apply it to IC_1's positive input voltage at Pin 3 for comparison with its built-in 1.245V reference. For voltages across C_1 that do not exceed 2.49V, IC_1's output at Pin 6 remains low. When C_1's voltage reaches 2.5V, Pin 3's voltage exceeds the reference voltage, and IC_1's output goes high, turning on Q_1 and Q_2.

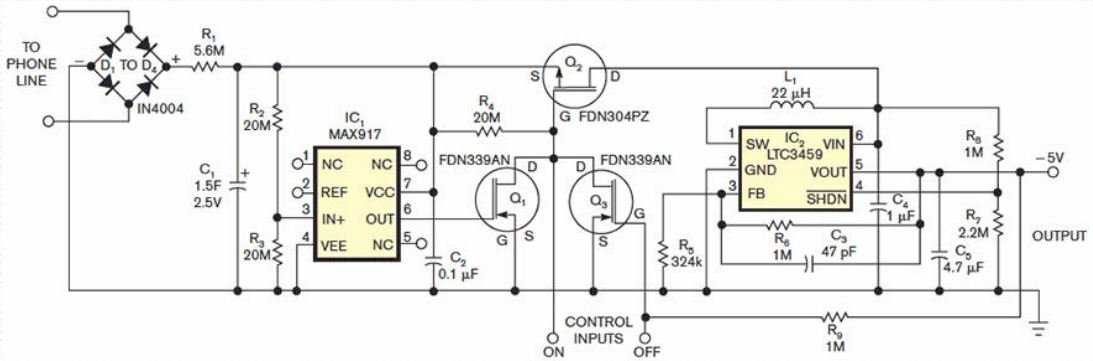

Figure 1 This power-conversion circuit delivers intermittent bursts of regulated voltage from a supercapacitor charged by a trickle of current from a telephone line.

Several days must elapse before C_1 becomes fully charged, given its huge capacitance and a charging current of less than 10 μA. The voltage on C_1 can never exceed 2.5V because, once it reaches 2.49V, Q_1 and Q_2 turn on, connecting C_1 to a switched-mode-power-supply circuit. Because the power-supply current exceeds the charging current, the voltage across C_1 starts to decrease when Q_2 turns on. Transistor Q_3 holds Q_2 on when C_1's decreasing voltage causes Q_1 to turn off.

The switched-mode-power-supply circuit comprises a **Linear Technology LTC3459** micropower boost converter, IC_2, and its associated components, which deliver 5V at 10 mA. A fully charged C_1 can supply power to a 10-mA load for approximately 40 sec. With no load, the circuit can sustain its 5V output for more than 10 hours. For greater output current and shorter operating time, select another boost converter that can operate at a low input voltage.

Mechanical switches, open-drain MOSFETs, open-collector transistors, or a microcontroller's open-drain output pins can drive two external control inputs to force the circuit on and off. Pulling the On input low forces Q_2 to turn on and deliver power from C_1 to the power converter, and pulling the Off input low turns off Q_2 and removes power from the converter. Note that the power converter's output-return line connects to the telephone line and thus should not connect to an earth ground or to grounded equipment.

READ MORE designideas

Reference

1. "**Part 68**," Federal Communications Commission.

Share G+ Tweet Like 0

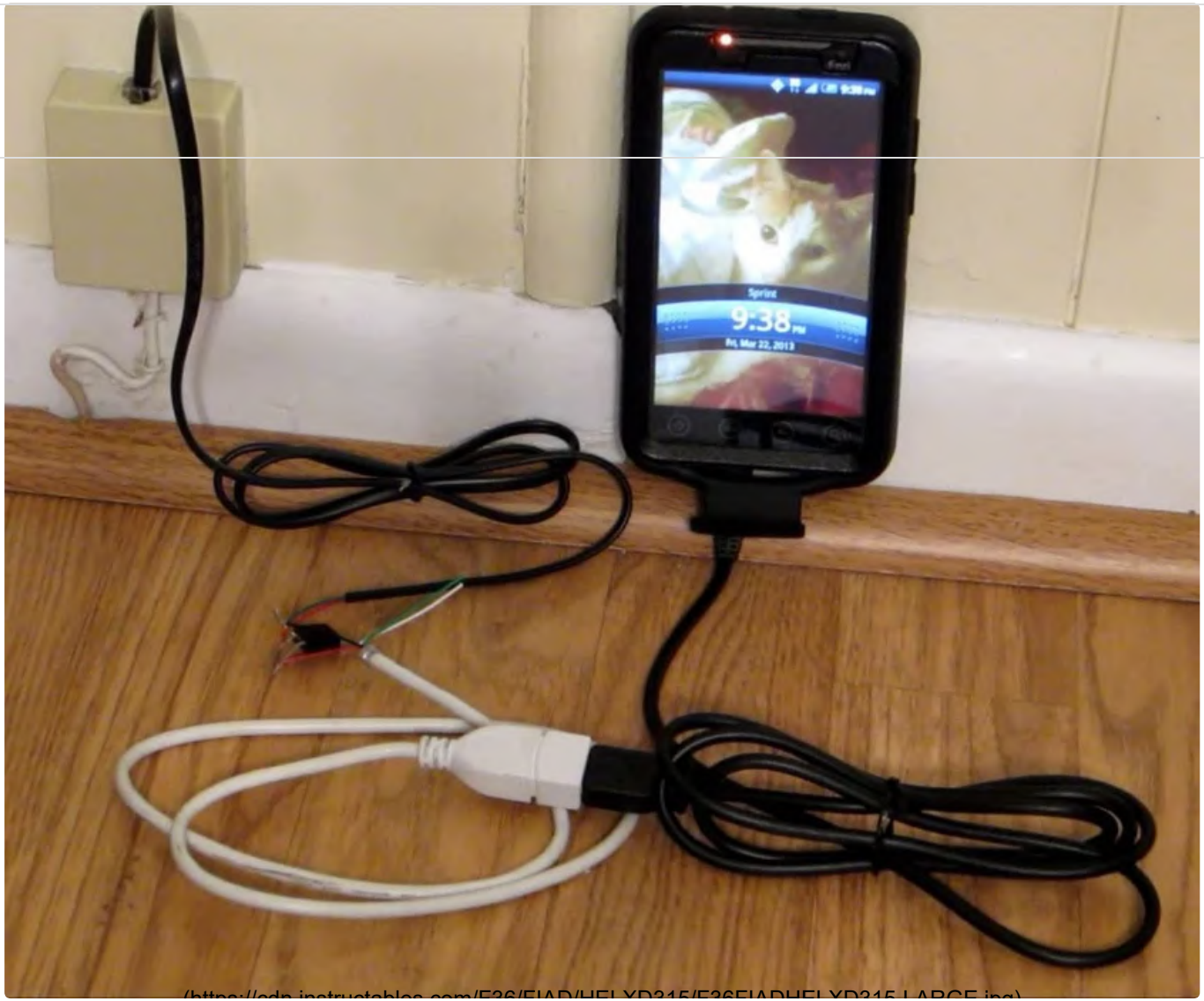

(https://cdn.instructables.com/F36/FIAD/HFLXD315/F36FIADHFLXD315.LARGE.jpg)

Download Favorite

vimeo

Tons and tons of video storage.

Get up to 7TB

advertisement

(/member/DIY%20Hacks%20and%20How%20Tos/)
By **DIY Hacks and How Tos (/member/DIY%20Hacks%20and%20How%20Tos/)**
DIY Hacks & How Tos on YouTube (http://www.youtube.com/user/DIYHacksandHowTos)

Follow

More by the author:

not in use, this is a constant DC signal (about 50-60 volts). When the phone rings, the signal is a 20 hertz AC signal (about 90 volts). When in use it is a modulated DC signal (between 6 and 12 volts).

Download Favorite

The phones lines even have power during a blackout in most cases. This is because the phone company maintains their own backup power system. Your phone lines may be powered even if you don't have a land line service set up.

Add Tip Ask Question Comment Download

Step 2: Check the Phone Line With a Multimeter

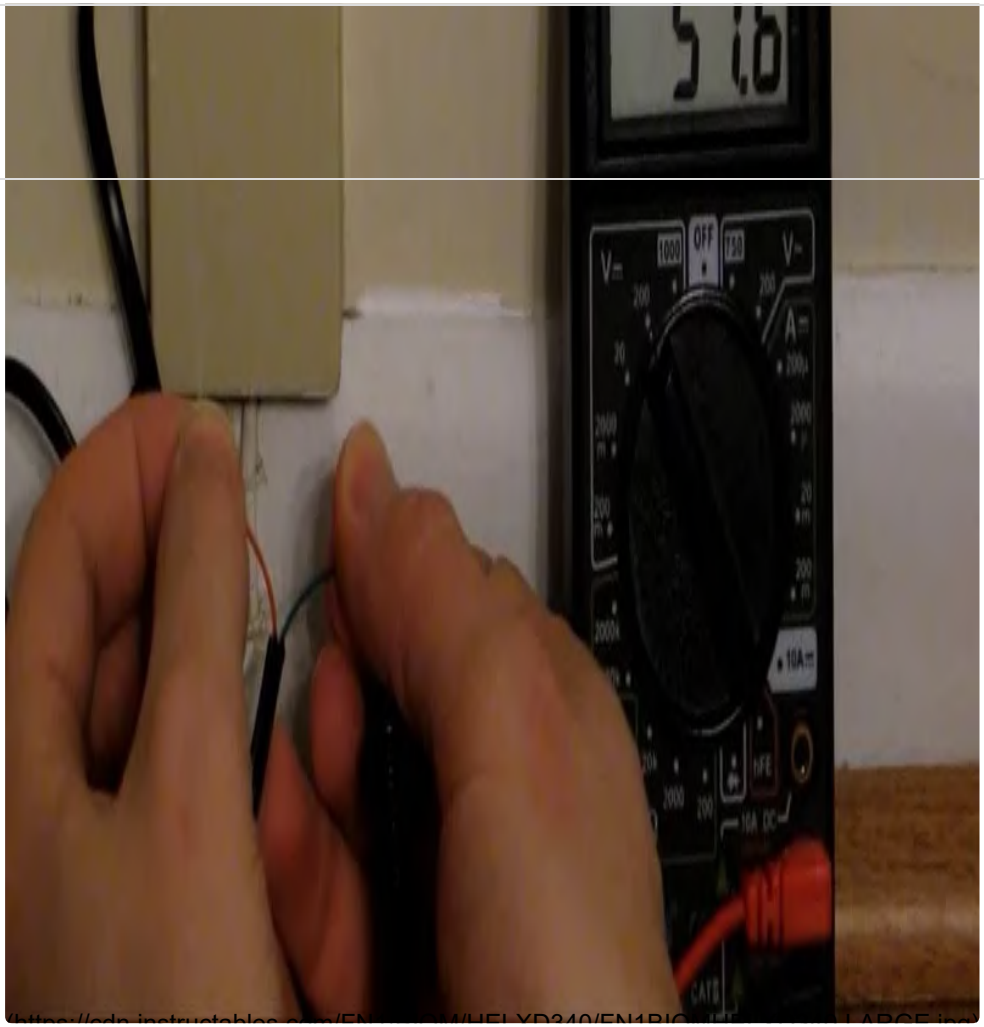

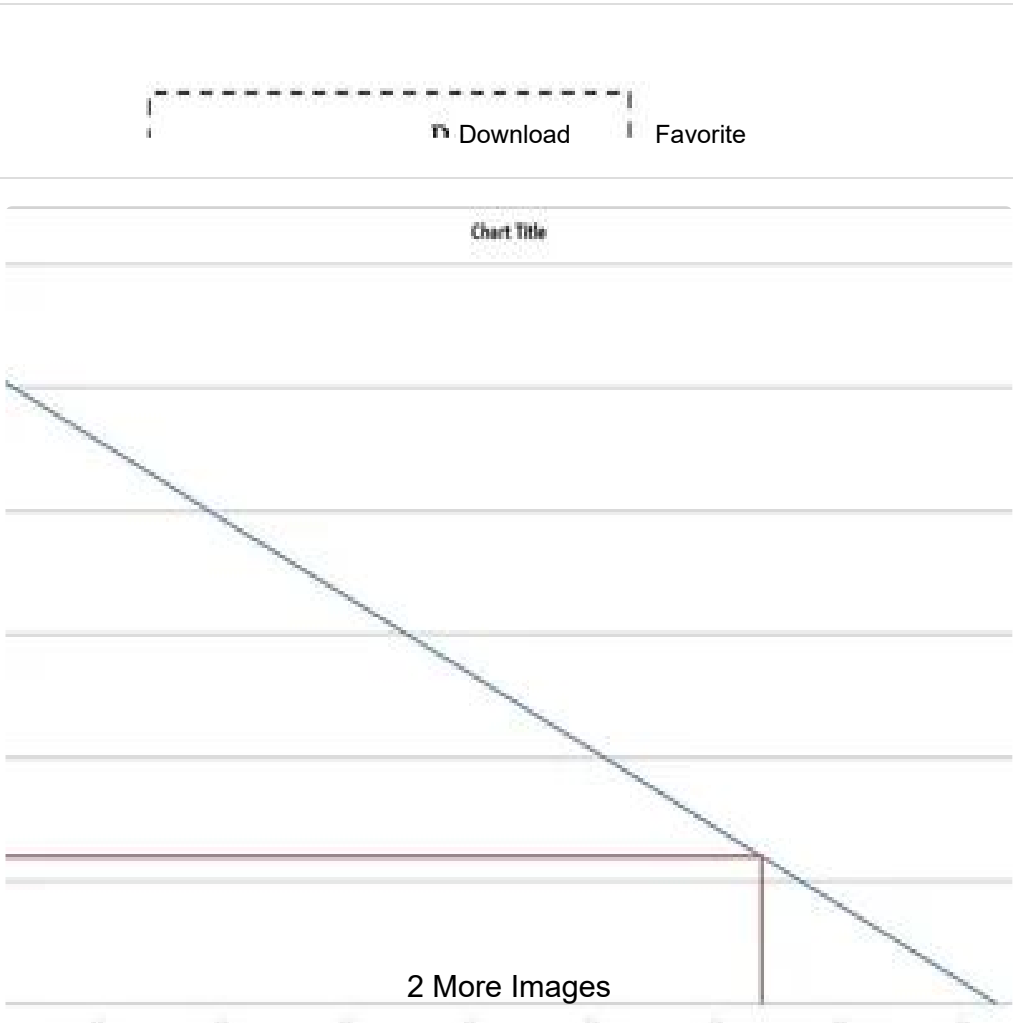

Before you try to tap into the electricity in the phone line, you should check it with a multimeter to see what you are working with.

Start by cutting open a phone cord and separating the internal wires. In most cases you will have one red wire and one green wire. Strip the insulation off the ends. Then plug the cord into a phone jack and use a multimeter to measure the output voltage. At my house, I measured an open-circuit (no load) voltage (http://en.wikipedia.org/wiki/Open-circuit_voltage) of 52 volts DC.

Then I hooked up various resistors to see what the output would be with different loads. I determined that the supply voltage isn't regulated. This means that the voltage changes depending on the resistance of the circuit that it is powering. After some calculating, I worked out that the base signal coming out of my phone jack pretty closely resembles a 52 Volt DC source (http://en.wikipedia.org/wiki/Voltage_source) with a 628 ohm internal resistance (http://en.wikipedia.org/wiki/Internal_resistance).

Download Favorite

Basically this means that I can run a 12V circuit at 64mA, a 9V circuit at 68mA, or a 5V circuit at 75mA. This isn't a lot. But it is enough to charge a cell phone.

Add Tip Ask Question Comment Download

Step 3: Construct a Simple Voltage Regulator Circuit

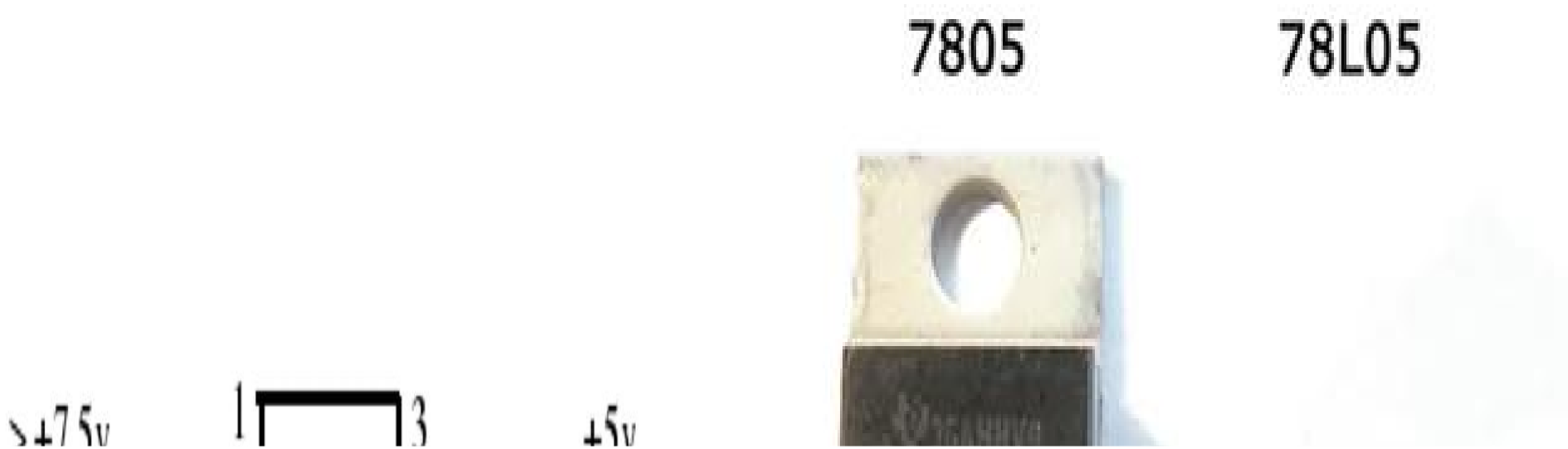

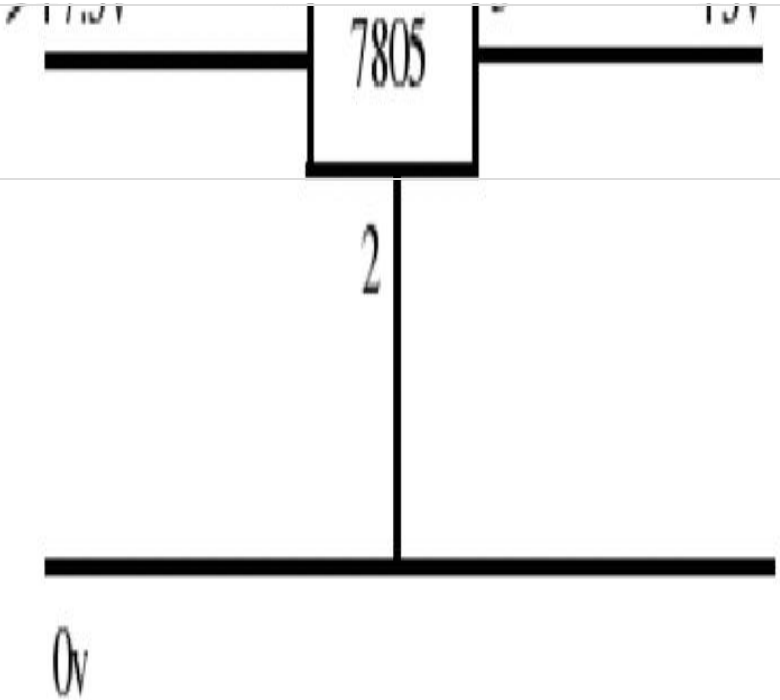

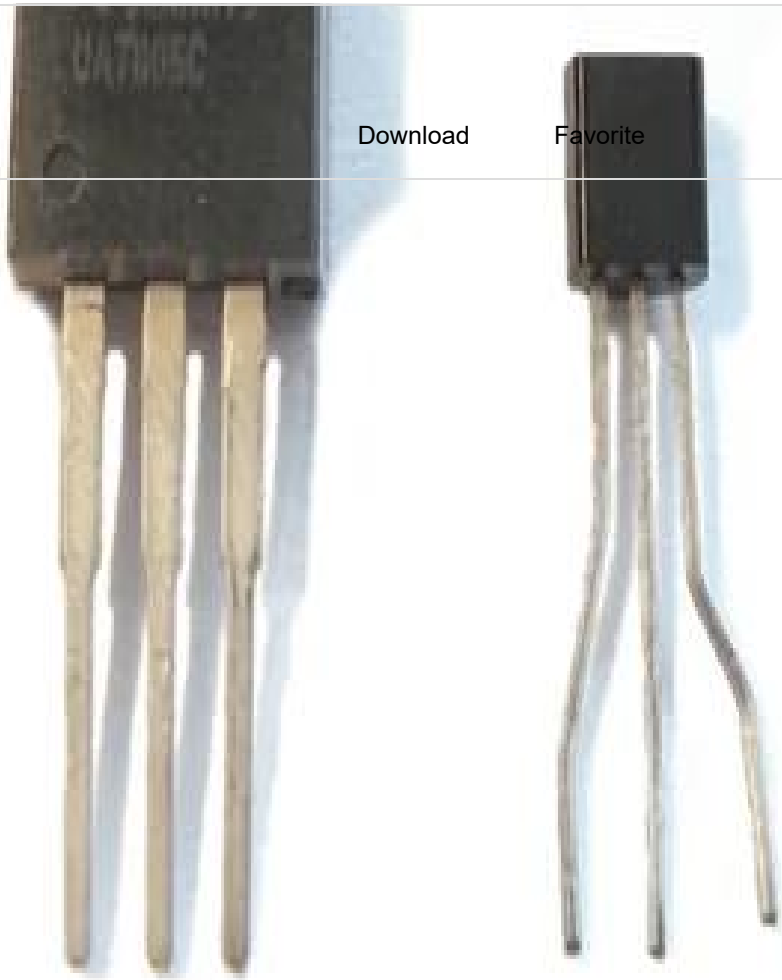

Download Favorite

(https://cdn.instructables.com/FXB/5YW1/HFI4FJX4/FXB5YW1HFI4FJX4.LARGE.jpg)

(https://cdn.instructables.com/FFV/H9M3/HFLXD34J/FFVH9M3HFLXD34J.LARGE.gif)

We know that the phone needs 5 volts in order to charge. But much current it draws or it's equivalent load resistance (http://en.wikipedia.org/wiki/Electrical_load). So we can't charg from the phone line. We need to use a voltage regulator (http://en.wikipedia.org/wiki/Voltage_regulator) to bring the out

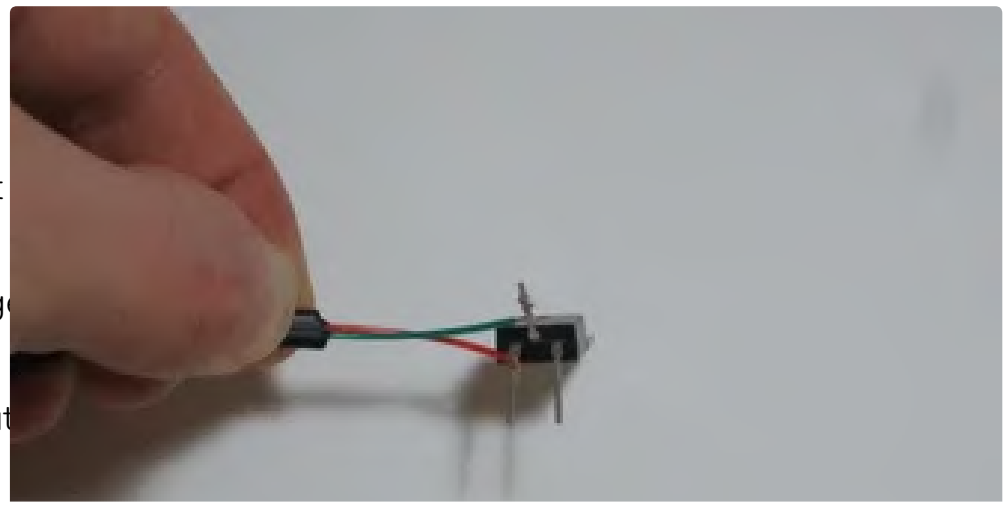

down to 5 volts and keep it there. A LM7805 5 volt regulator s

3 More Images Download Favorite

To make this simple phone line adapter you will need the phon
been working with, the 5V voltage regulator and a USB connector cable with a female end. Just connect the red wire from the phone line to the first lead on the regulator and connect the green wire from the phone line to the second lead. Then connect the black wire from the USB cable to the second lead on the regulator and connect the red wire from the USB cable to the third lead on the regulator. If you can't solder the wires together (because the power is out), you can just wrap the wires around each lead. If you do this, you should bend the leads of the regulator away from each other. This will help you avoid accidentally crossing the wires.

This simple regulator circuit is able to safely convert the base phone signal into something that can be used to charge your phone. However, many voltage regulators are not able to handle the AC signal that they would receive if the phone rang. So if you are worried that you might receive a call while your regulator is hooked up to the phone line , then you may wish to add a diode between the red wire from the phone line and the first pin on the voltage regulator. This will protect your circuit from problems that may be caused by reverse polarity.

Add Tip Ask Question Comment Download

Step 4: Use Other Regulators for Other Output Voltages

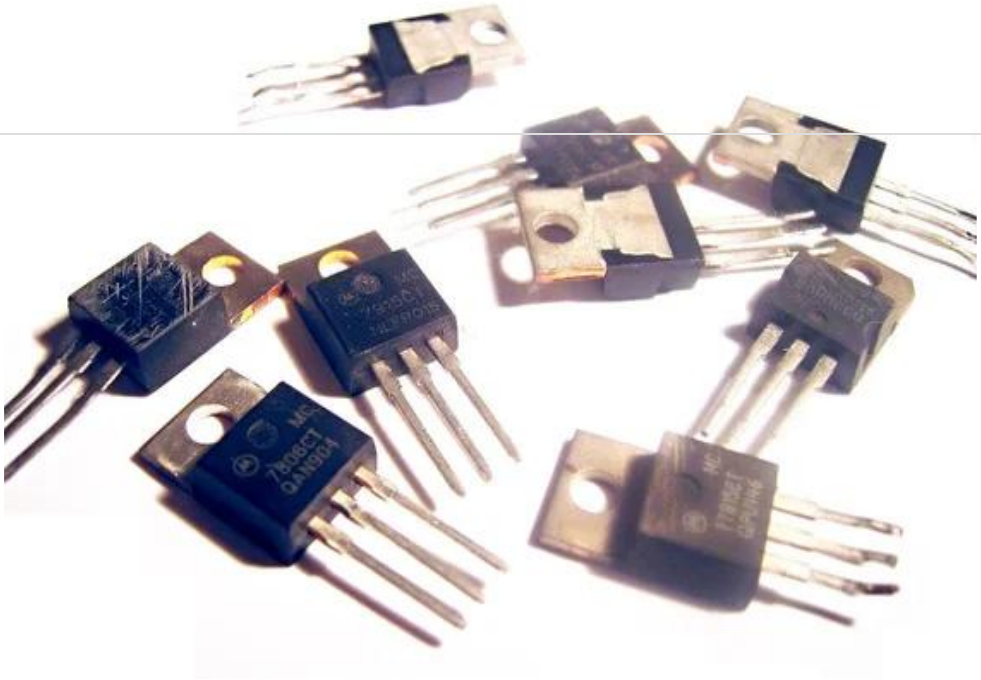

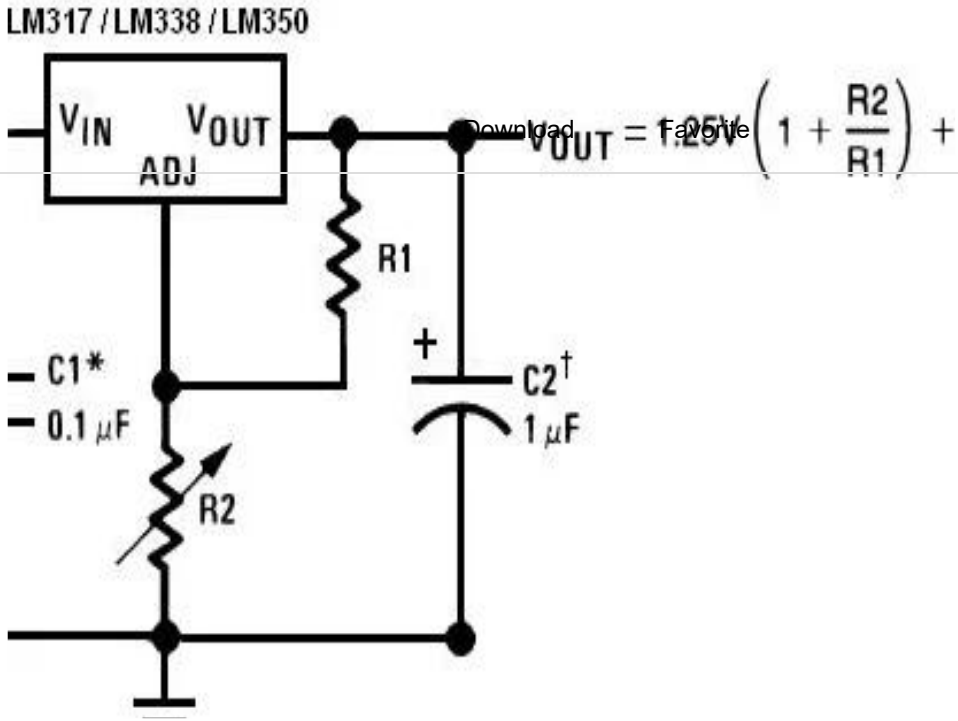

Download Favorite

A 7805 regulator will work if you need an output of 5 volts but other kinds of voltage of voltage regulators are also available. Other voltages in the 78xx series include 6V, 8V, 9V, 10V, 12V, 15V, 18V, and 24V. In addition to these fixed value regulators, there are also variable regulators that let you set the voltage level with the use of a few external components. One such variable voltage regulator is the LM317 (http://www.ti.com/lit/ds/symlink/lm117.pdf). These are what you would use if you needed a different output voltage.

Add Tip Ask Question Comment Download

Step 5: Finished Phone Line Adapter Tool

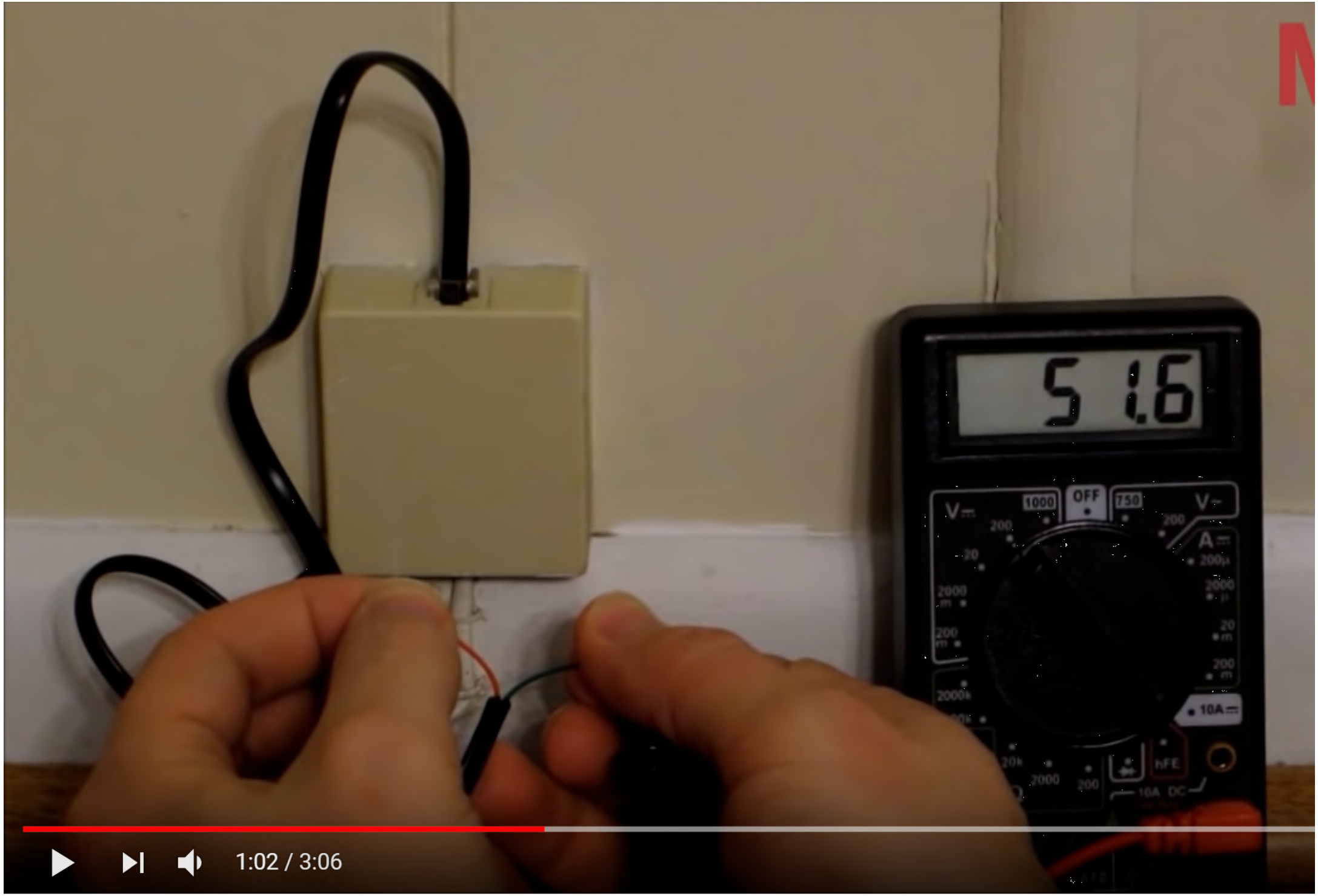
5 1.6
OFF
1000
750
V
A
10A
hFE
1:02 / 3:06

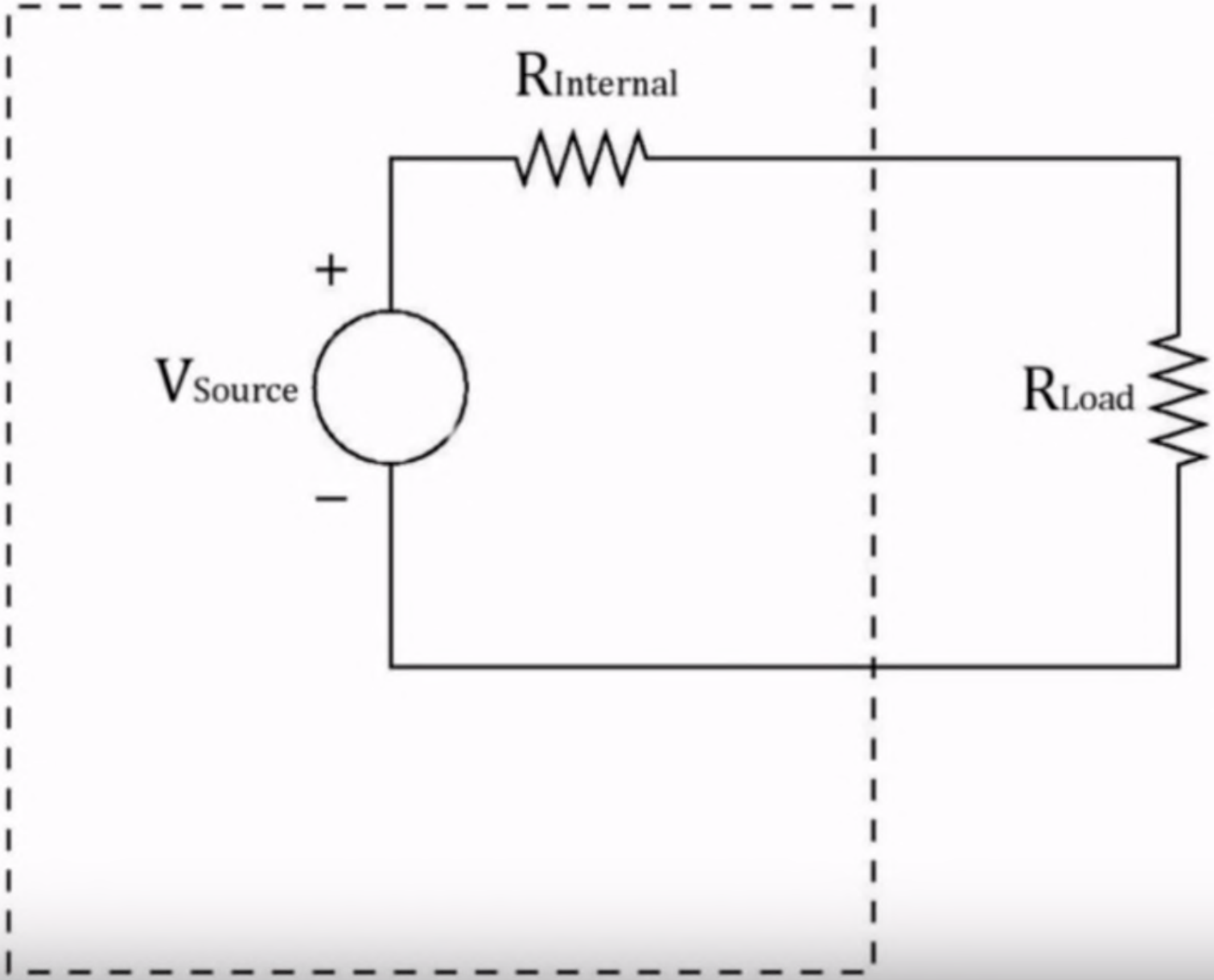

1:14 / 3:06

$$V_{Load} = V_{Source} \times R_{Load} / (R_{Load} + R_{Internal})$$

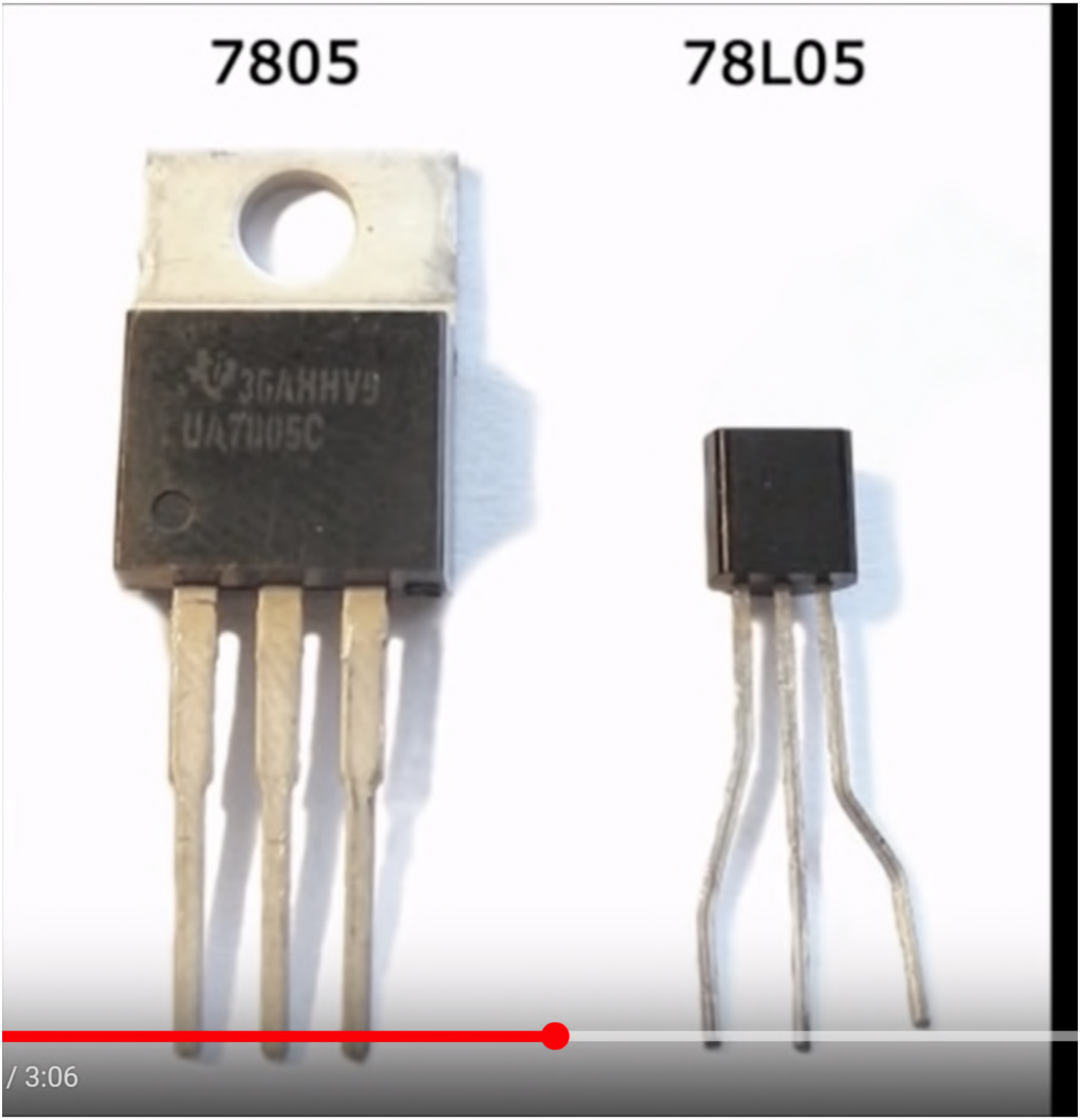
7805
78L05
3GAHHV9
UA7805C
/ 3:06

1:50 / 3:06

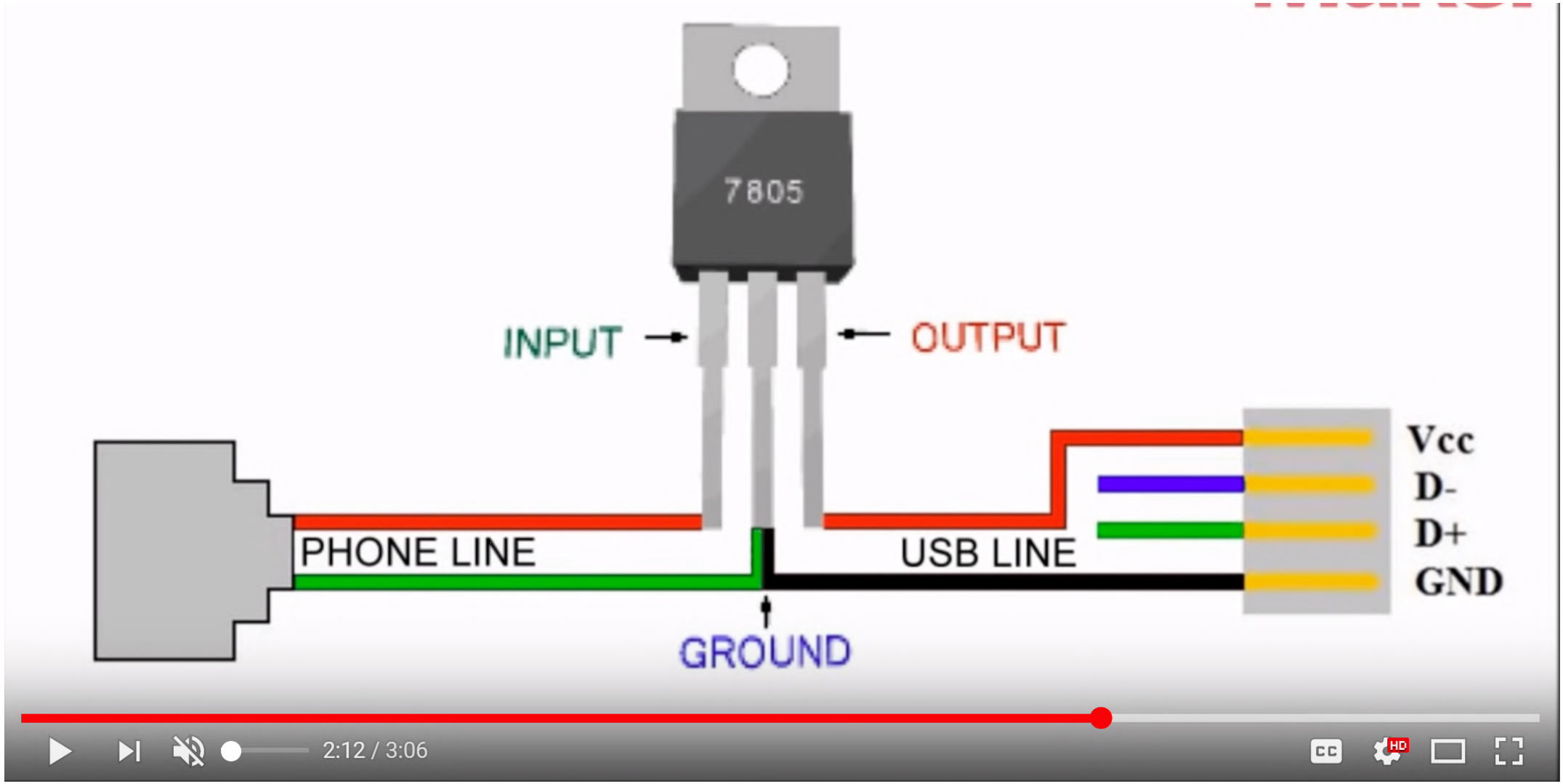
7805
INPUT
OUTPUT
PHONE LINE
USB LINE
GROUND
Vcc
D-
D+
GND
2:12 / 3:06

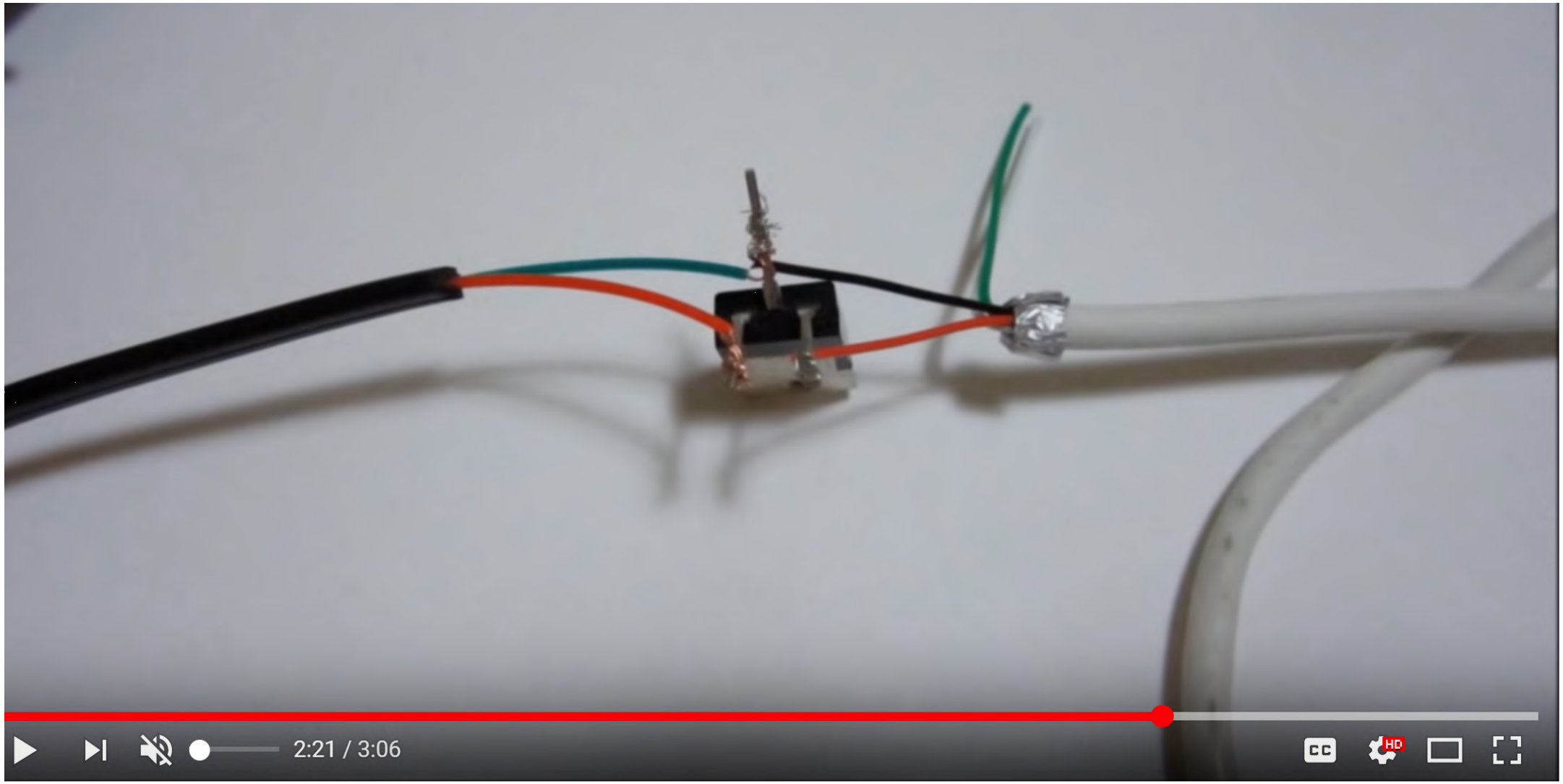
2:21 / 3:06

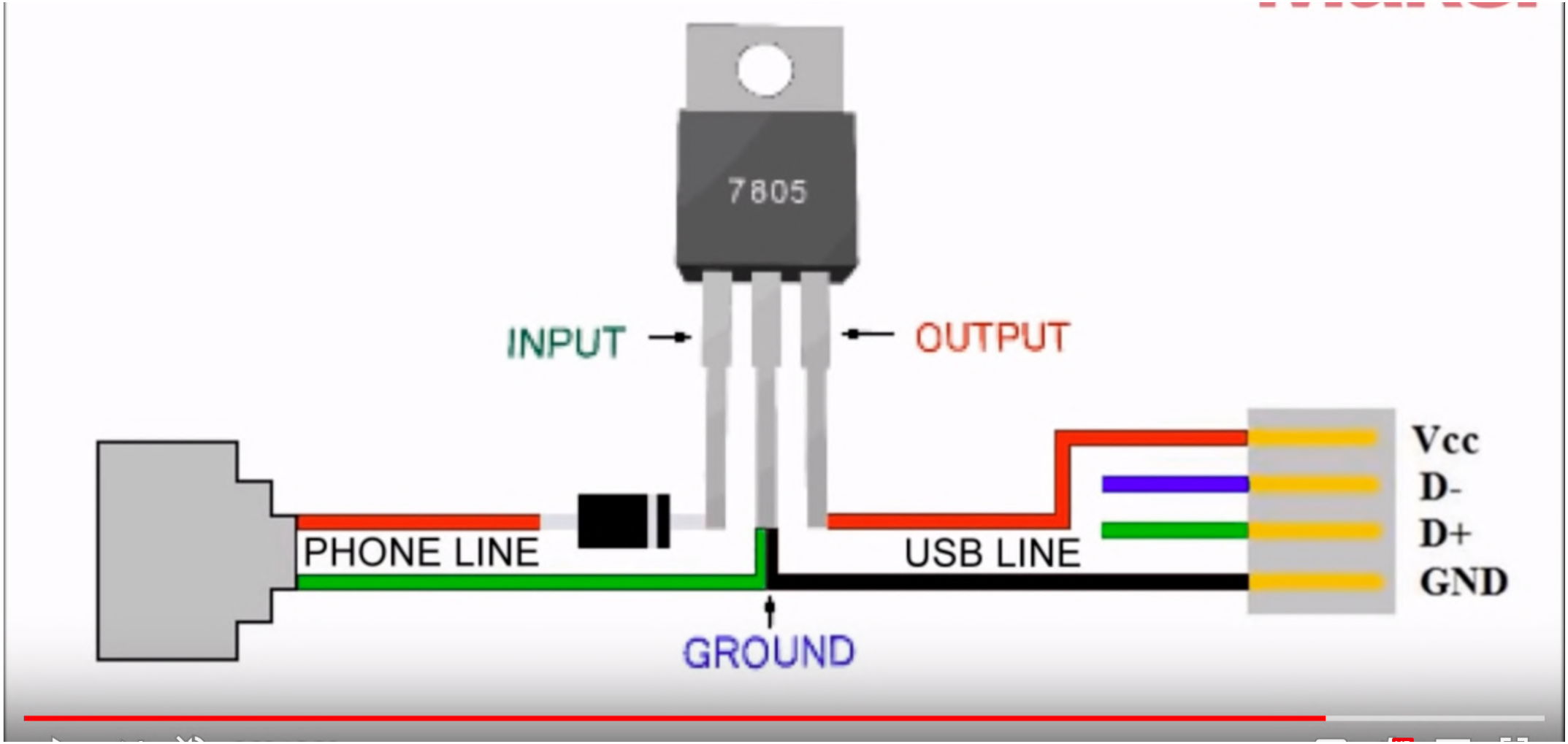
7805
INPUT
OUTPUT
PHONE LINE
USB LINE
GROUND
Vcc
D-
D+
GND

Ma
MC
78T05CT
QZA807
2:33 / 3:06

MORGAN

THE BOYS' SECOND BOOK OF RADIO AND ELECTRONICS

THE BOYS' SECOND BOOK of RADIO and ELECTRONICS

Alfred Morgan

THE BOYS' SECOND BOOK OF RADIO AND ELECTRONICS

OTHER BOOKS BY ALFRED MORGAN

THE BOYS' FIRST BOOK OF RADIO AND ELECTRONICS

FIRST CHEMISTRY BOOK FOR BOYS AND GIRLS

A PET BOOK FOR BOYS AND GIRLS

THE BOYS' BOOK OF ENGINES, MOTORS AND TURBINES

THINGS A BOY CAN DO WITH ELECTRICITY

AN AQUARIUM BOOK FOR BOYS AND GIRLS

A FIRST ELECTRICAL BOOK FOR BOYS

THE BOYS' SECOND BOOK OF

Radio

AND

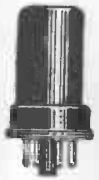

Electronics

by ALFRED MORGAN

WITH DIAGRAMS BY THE AUTHOR

CHARLES SCRIBNER'S SONS NEW YORK

COPYRIGHT © 1957 BY ALFRED MORGAN

H-12.63[H]

All rights reserved. No part of this book may be reproduced in any form without the permission of Charles Scribner's Sons.

First printing	May 1957
Second printing	January 1958
Third printing	September 1958
Fourth printing	November 1959
Fifth printing	December 1960
Sixth printing	June 1960
Seventh printing	May 1963
Eighth printing	December 1963

PRINTED IN THE UNITED STATES OF AMERICA

LIBRARY OF CONGRESS CATALOG CARD NUMBER 57-6078

Science Beckons to Youth

Brig. General David Sarnoff

Chairman of the Board

RADIO CORPORATION OF AMERICA

In the guided missiles program and in all fields affecting our national security, research and engineering are of surpassing importance. There is no substitute for brains, or for practical training in a technical age.

Our safety and our industrial strength rest upon our success in expanding the Nation's reservoir of physicists and scientists, trained engineers and technicians. Our economy and national security alike will suffer seriously unless we solve this problem promptly and vigorously.

Science and technology are the very hallmarks of American civilization.

In the not too distant past, science was associated with men of age and experience. Science was moving slowly

at that time and its discoveries developed leisurely. The pressure of time was not a vital factor in the birth or use of an invention. Even when a great discovery was made, a skeptical public was slow to accept it because public interest in science was limited and faith in its possibilities was not what it is today.

In contrast with that past, youth today is largely in the forefront of science. Young men and women hold strategic places in its advancement. Young experimenters now enjoy the vast facilities of university and industrial laboratories and a free exchange of knowledge with others.

These young people have noted professors and their libraries from which to draw knowledge from other men's experience. As a result, they may easily learn what has been done before and need not waste their time and energy going over ground already covered by other scientific experimenters.

Science is much like a football game; teamwork is the key to success, but some player trained to take advantage of opportunity will pick up the ball and score a touchdown. That has happened time and time again in science and industry. Science seems to have an affinity for youth. Genius knows no age.

Contents

FOREWORD vii

1 An Adventure in Science 3

2 Building Your First Radio Receiver 15
GERMANIUM SEMI-CONDUCTORS

3 How to Build a More Selective Crystal Receiver 26

4 Taking the Mystery out of Tuning 36

5 A Simple Outdoor Receiving Antenna 48
STATIC AND STRAYS

6 Components of Electronic Circuits 52
CAPACITORS AND CAPACITANCE
RESISTORS AND CONTROLS

7 Transducers—Components of an Electronic Circuit 70
EARPHONES, LOUDSPEAKERS, MICROPHONES AND PICKUPS

8 Transistors—Versatile Midgets Which Can Do the Work of Vacuum Tubes 89

9 Transistor Apparatus Which You Can Build 99
A ONE-STAGE AUDIO AMPLIFIER
A COMBINATION CRYSTAL DIODE AND TRANSISTOR RADIO RECEIVER
A TRANSISTOR TIMER SWITCH
A TRANSISTOR CODE PRACTICE OSCILLATOR
LEARNING TO TELEGRAPH

10 About Radio Tubes 125

11 Introduction to Amplifiers 135

12 The Photocells and Phototubes Which Are Popularly Called Electric Eyes 143
HOW TO BUILD A PHOTOTUBE RELAY

13 Prospecting for Uranium 171
RADIOACTIVITY
GEIGERSCOPES
GEIGER COUNTERS
SCINTILLOMETERS
HOW TO MAKE A GEIGER COUNTER

14 How to Build a Two-stage Audio Amplifier 199

15 How Phonograph Records Are Made 214
BUILD YOUR OWN RECORD PLAYER
YOU CAN PLAY RECORDS WITH THE AMPLIFIER IN A RADIO RECEIVER
HOW TO BUILD THE HUSH-A-TUNE
REPAIRS AND ADJUSTMENTS TO LOUDSPEAKERS

16 Electron Tubes as Oscillators and Some of Their Uses 239
CAPACITY RELAYS
YOU CAN BUILD A CAPACITY RELAY
FUN WITH A CAPACITY RELAY

17 How to Build and Operate a Miniature Home Broadcasting Station 254

Where to Obtain Materials 269

Index 271

THE BOYS' SECOND BOOK OF RADIO AND ELECTRONICS

CHAPTER ONE

An Adventure in Science

We live in a complex technological world. Progress in science and engineering is not only desirable but has become an essential part of our civilization. We must look to this progress for the maintenance of our high standard of living. In it is much of our hope for peace and survival. More and more we are dependent on people who are well trained in scientific and technical skills.

Are you looking for an interesting hobby—a hobby which may lead to a more intelligent understanding of the world in which we live and which may also lead to a scientific career? Are you undecided about your future? Do you still have to make a decision whether you should study law, medicine, engineering, or go into business? You may find an answer in this book. It deals with an intriguing, constantly growing and probably unlimited branch of science and engineering.

America needs twice as many scientists and engineers

as we are turning out. By 1960, the U.S.A. will be short at least 100,000 scientists and engineers. Opportunities for employment and advancement in engineering and in the sciences have never been so great or numerous. The best way to discover whether or not you have natural ability for one of these professions is to adopt some branch of engineering or science as a hobby. Electronics is recommened as an enjoyable, engrossing and instructive scientific spare time activity.

An interest in electronics will bring adventures in a scientific wonderland. Radiotelegraphy and radiotelephony, television, hi-fi phonographs, sound motion pictures, radar, telephoto transmission of pictures, guided missiles, "electric eyes" and "snooperscopes" for seeing in the dark are only a few of the marvelous things found in the realm of electronics. Apparatus with which you can communicate with other "amateurs" in far away Hawaii or on the other side of the world in Europe is not difficult to construct. Furthermore, a sustained interest in electronics as a hobby will provide the foundation for a professional career as an engineer or scientist. The principles of electronics are basically electrical principles but physics and chemistry are also involved. When this nation's industries are listed according to their size, electronics is No. 9 on the list.

Electronics is a science and an art. A science, you may know, is systematized knowledge obtained by study and practice. What is an art? Well, an art is the practical application of knowledge and skill.

Electronics includes so much of the science of physics and of electrical engineering that it is difficult to state a

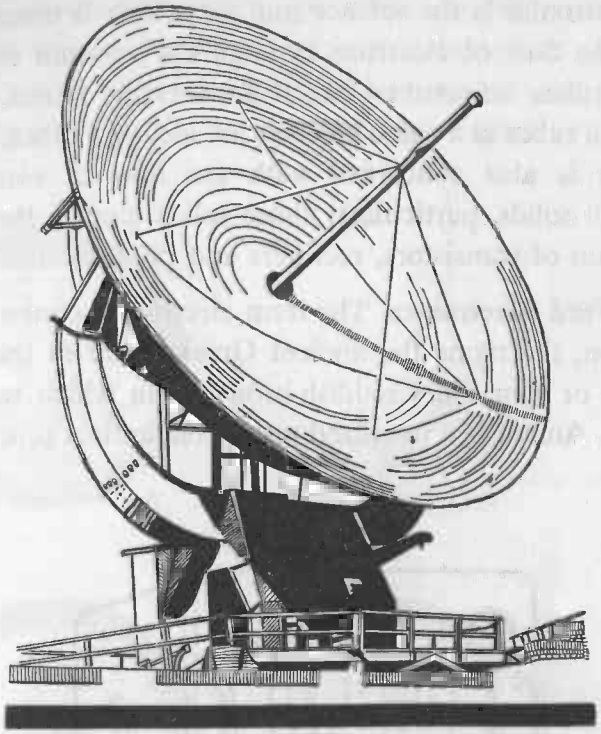

RADIO WAVES FROM THE STARS

This is the 50-foot radio mirror and 21 centimeter antenna at the Naval Research Laboratory in Washington, D. C. where it is used as a *radio telescope.* Radio radiation reaching the earth from outer space is adding to our knowledge of the physical universe of stars and galaxies. Very large antennas and sensitive electronic recording apparatus are required in the operation of a radio telescope.

Until 1931 all our knowledge of the physical universe of stars and galaxies came from studies made with optical telescopes. Atmospheric absorption limits research with optical telescopes to about 5 octaves of the electromagnetic spectrum. On the other hand, radio telescopes can record radiation for the entire range of wave lengths between 1 centimeter and 30 meters. This is roughly 12 octaves of the electromagnetic spectrum.

brief yet comprehensive definition of what is included in the term ELECTRONICS. A short definition, ample for the purpose of this book, is:

Electronics is the science and art which is concerned with the flow of electrons through the vacuum or gas-filled tubes sometimes called ELECTRON TUBES. The vacuum tubes in a radio receiver are electron tubes. Electronics is also concerned with the flow of electrons through solids, particularly those solids used in the construction of transistors, rectifiers and photoelectric cells.

The Word Electronics. The term electronics comes from *electron,* the name the ancient Greeks gave to the pale yellow or sometimes reddish-brown resin which we call amber. Amber is a fossilized resin from extinct pine trees

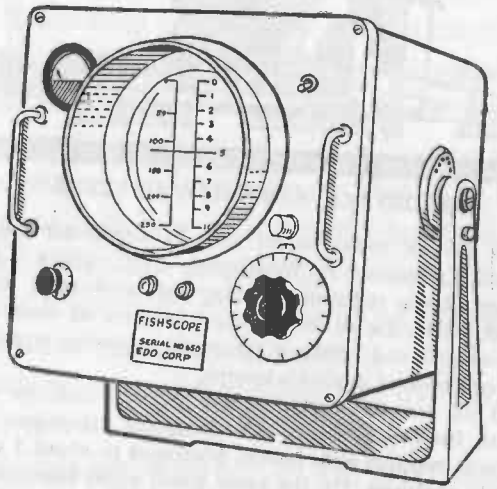

THE EDO FISHSCOPE,
AN ELECTRONIC APPARATUS WHICH FINDS FISH WITH SONAR

The Edo Fishscope employs the principles used in under-water sonar detection gear for the Navy. It gives a clear, accurate picture on an easily readable cathode-ray tube of schooled or even individual fish swimming just below the surface to as deep as 250 fathoms. The Fishscope also serves as a very accurate depth sounder.

which existed many ages ago. Pieces of the resin were worn by ancient people as jewels and decorations. Amber beads which were buried in prehistoric times have been dug up from tombs at Mycenae and Etruria. Amber's

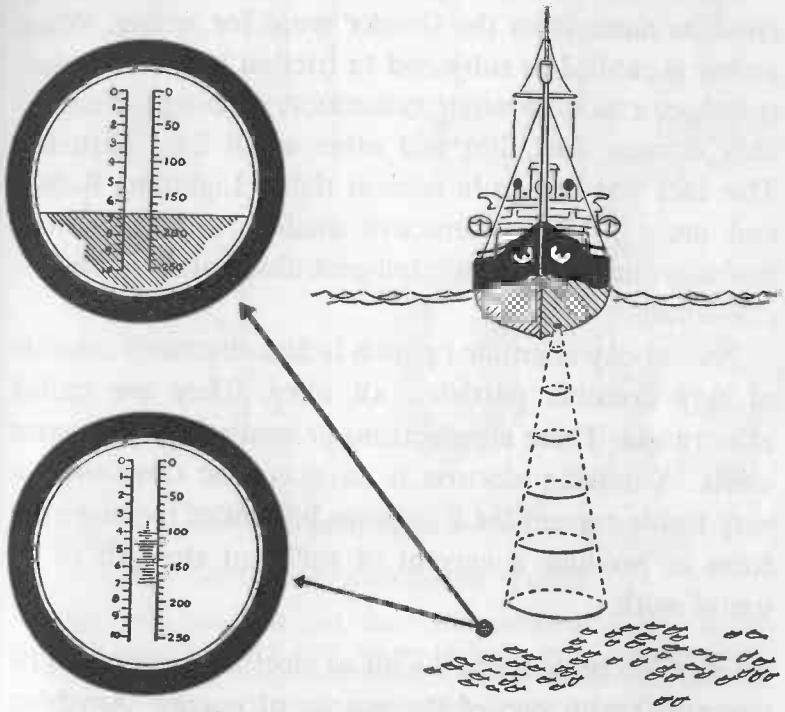

HOW THE EDO FISHSCOPE OPERATES

Sonar signals are sent forth from a transducer located in the bottom of the ship. If the signals strike fish nearby, the signals are reflected back to the transducer and produce "pips" on the screen of a large cathode ray tube in the Fishscope. The right-hand sketch shows how signals from the transducer spread out as they travel toward "bottom." The solid curved lines are the outgoing sonar signals. The dotted curved lines are the sonar signals reflected from the fish. The upper left-hand sketch shows how a school of fish appears on the 0- to 250-fathom scale on the tube. By flipping a switch to the 10-fathom scale, the view is magnified 25 times. The exact depth of the fish is determined by centering the enlarged view on the scope and reading the depth indicated on the scale (*see lower left*).

yellow luster must have reminded the Greeks of native gold, for they applied the same name to amber and gold. Amber and gold were both *electron* or "children of the sun" to the Greeks.

There is a reason why the science of electronics derived its name from the Greeks' word for amber. When amber is rubbed or subjected to friction it becomes electrified, or CHARGED WITH ELECTRICITY, so that it noticeably attracts dust, lint and other small light particles. This fact was known in ancient times. Lightning flashes and amber's magic attractive quality, therefore, were probably mankind's first intelligent observation of electrical action.

Present-day scientific opinion is that electricity consists of tiny invisible particles, all alike. They are called ELECTRONS. There are electrons present wherever matter exists. A moving electron is an ELECTRIC CURRENT—a very feeble current for it requires billions of moving electrons to produce a current of sufficient strength to do useful work.

Energy. To be concerned with an electric current is to be concerned with one of the FORMS of energy. Anything which can be converted into work and which can arise from work is ENERGY. Energy can also be the CAPACITY for doing work. Energy takes different forms. The forms of energy of greatest interest in electronics are electricity, heat, light, mechanical energy, electromagnetic energy, radiant energy and sometimes chemical energy.

All of these different forms of energy can be converted into any of the other forms. All electronic equipment con-

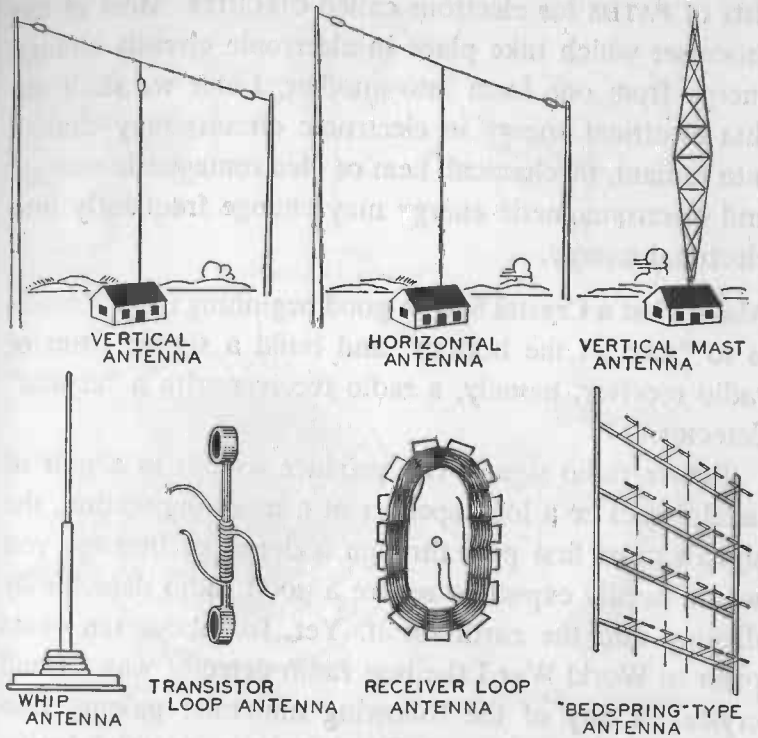

ANTENNAS AND RADIO WAVES

Radar, loran, television and radio communications employ electromagnetic waves to carry their signals through space. Electromagnetic waves are commonly called RADIO WAVES. A wire or conductor, or a system of wires or conductors, known as an ANTENNA, is necessary to radiate radio waves into space and to receive them from space.

Antennas are made in many forms and sizes. Portable broadcast receivers are usually equipped with a flat coil of wire called a LOOP ANTENNA. Many home broadcast receivers are provided with a loop antenna inside the cabinet. When not equipped with a built-in antenna, an external wire strung to a mast or tree is used. Automobile radio receivers and transmitters are connected to a WHIP ANTENNA. This is a metal tube about 6 feet long.

Television waves are of much higher frequency than the waves used for broadcasting. For that reason television transmitters and receivers use antennas which are different from those used for broadcasting waves. Radar antennas are of different shapes still. The illustrations show seven types of antennas. The BEDSPRING type is one form of radar antenna.

sists of PATHS for electrons called CIRCUITS. Most of the processes which take place in electronic circuits change energy from one form into another. Later we shall see that electrical energy in electronic circuits may change into radiant, mechanical, heat or electromagnetic energy, and electromagnetic energy may change frequently into electrical energy.

Make First a Crystal Set. A good beginning in electronics is to "start at the bottom" and build a simple form of radio receiver, namely, a radio receiver with a "crystal" detector.

Before radio signals can produce sounds in a pair of headphones or a loud speaker at a receiving station, the signals must first pass through a detector. Perhaps you would hardly expect to secure a good radio detector by digging into the earth for it. Yet, for about ten years prior to World War I the best radio detector was a small crystal of any of the following minerals: galena, iron pyrites, chalcopyrites, zincite, bornite and molybdenite.

For more than a generation uncounted thousands of interested youngsters and adults have constructed radio receivers with mineral or "crystal" detectors. The fascination of this device does not seem to wane.

Some amateur experimenters may prefer to put together pieces of equipment without knowing the "whys" of what they are doing. On the other hand, young experimenters with greater curiosity and more analytical minds wish to know the "whys" as well as the "hows" of radio. Here is an explanation of some of the fundamental processes that take place in a radio receiver.

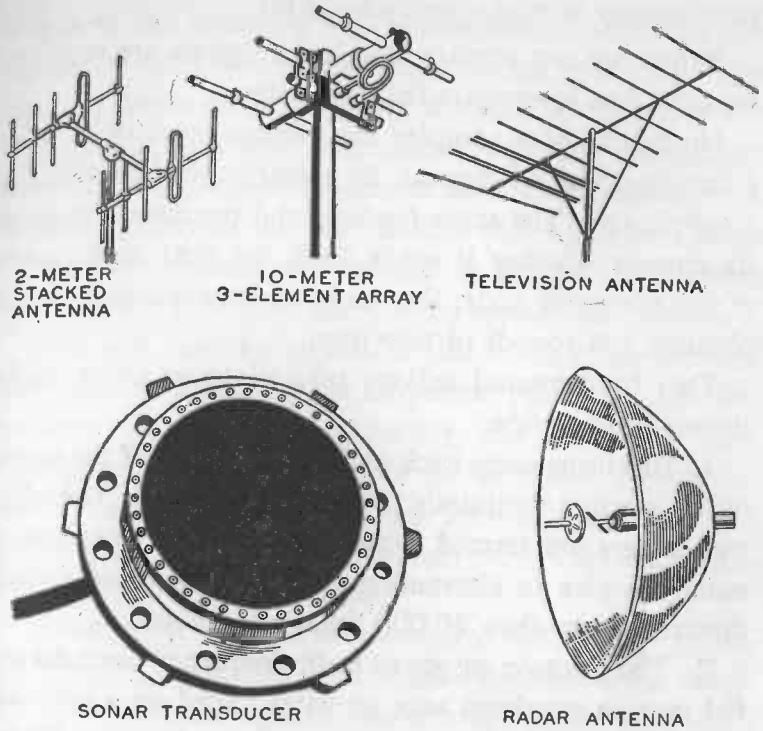

A SUITABLE ANTENNA IS IMPORTANT

Best results are obtained only when radio apparatus is connected to a suitable antenna. An antenna that is efficient at one frequency may be entirely unsatisfactory at another frequency. The antenna most suitable for receiving waves of a certain frequency is not always the best antenna for transmitting waves of the same frequency. The higher the frequency, the shorter or smaller the antenna required. At very low frequencies the physical dimensions of the antenna become so great that it is not always practical to employ the vertical type. These are some of the reasons that antennas are of many forms.

The 2-meter and 10-meter antennas illustrated above are types used frequently by amateur or "ham" operators. The television antenna is one of the many kinds for television receivers. The sonar transducer is a form of antenna for propagating and receiving sonar waves in water. The radar antenna at the lower right is the reflector, or mirror, type.

HOW RADIO SIGNALS ARE RECEIVED

Before we can explain how radio signals are received we must first investigate the transmitter.

No matter how complex the various parts of a radio transmitter make it appear, its performance is essentially a simple one. The same fundamental processes occur in its circuits whether it sends forth the dots and dashes of the telegraph code, the music of broadcasting or the pictures and sounds of television.

Two fundamental actions take place at every radio transmitting station.

1. Electrons surge back and forth in some of the transmitter circuits thousands of times per second. The electron surges are termed RADIO-FREQUENCY CURRENTS, a name we give to alternating currents that change their direction more than 20,000 times per second.

2. The electron surges or radio-frequency currents are fed into an overhead wire or wires called an ANTENNA. The surges send radio waves out through space. These radio waves are the CARRIERS of the radio signals.

When a transmitter is in operation there are several changes of energy from one form into another. The principal changes are: electrical energy into magnetic energy, magnetic energy into electrical energy and electrical energy into electromagnetic energy, the latter being a form of radiant energy related to light, heat and x-rays.

When the waves produced at the transmitting station reach an antenna connected to a receiver they set up electron surges in that antenna. The surges in the receiving antenna are of the same frequency as the electron

surges in the transmitting antenna which produced the waves. In other words, they occur at the same rate. The electron surges in the receiving antenna, like those in the transmitting antenna, are radio-frequency alternating currents. An alternating current reverses its direction at regular intervals. At one instant the electrons surge through the antenna wire toward the ground. At the next instant, they flow from the ground toward the antenna.

You will hear no signals if you connect an antenna and ground directly to an earphone. Antenna currents, because of their high frequency, are unable to flow through the electromagnets in an earphone. Moreover, when radio frequencies produce sounds, the sounds are ultrasonic—that is, their vibrations are so rapid they cannot be heard by human ears.

However, if you connect a crystal detector to an antenna and ground and connect an earphone to the detector, you will hear signals. The crystal detector makes the signals audible. The crystal does this because it functions as a one-way valve or RECTIFIER. Electron surges in the antenna can pass through it more easily in one direction than in the other. Thus the crystal detector can change or rectify an alternating current into a direct current. A single radio-frequency electron surge does not last long enough to have a useful effect on an earphone. But the surges which produce signals come in groups at an AUDIO frequency, which is to say at less than 20,000 per second, and therefore audible to human ears. Due to the rectifying action of the crystal, the portions of the surges in each group which pass through the crystal ALL FLOW IN

THE SAME DIRECTION. They are pulsating direct currents (currents flowing in one direction only) and can PRODUCE SOUNDS IN AN EARPHONE.

Detection or Demodulation. This process of sorting out the audio-frequency groups of pulses generated in an antenna by radio-frequency carrier waves is called DETECTION OR DEMODULATION. There could be no practical radio communication without detection or demodulation.

First Detectors. In the pioneering days of wireless telegraphy many types of detectors were devised and used but they all lacked dependability and great sensitivity. The use of crystal detectors began in 1906 when General H. H. Dunwoody of the U.S. Army discovered that a small piece of Carborundum would act as a sensitive detector. Carborundum is a crystalline abrasive used in the manufacture of grinding wheels. It is made by heating coke, sand, sawdust and salt in an electric furnace. Its chemical name is silicon carbide. A year later (1907) Greenleaf W. Pickard, an American engineer, developed the first crystal detector of the type which is still in use today.

Dr. Lee DeForest discovered the most practical detector in 1906 when he added a wire grid to the Fleming two-element vacuum tube valve. DeForest thus created not only a stable sensitive detector but also an amplifier which would increase the strength of signals.

CHAPTER TWO

Building Your First Radio Receiver

GERMANIUM SEMI-CONDUCTORS

Instructions for assembling a simple radio receiver with a crystal detector, using the circuit diagram shown on page 16, have been printed frequently in pamphlets and magazines. The design of the receiver is based on the use of a crystal diode and the standard antenna coil which is manufactured for superheterodyne broadcast receivers. All parts are factory made except the small wood base. The receiver can be assembled and made ready in an hour or two.

The following parts and materials are required for building the Simple Crystal Receiver:

1 Shellacked wood base
1 1N34 germanium crystal diode
1 Antenna coil with frequency range of 540-1750 kilocycles when used with a 365 mmfd. variable capacitor

1 365 mmfd. midget variable capacitor
1 0.001 mfd. mica capacitor
1 2,000-ohm radio headset
6 No. 2 Fahnestock connector clips
6 ½-in. No. 5 round head wood screws

The 1N34 crystal diode in the list above is used as a detector. A germanium diode of the right type is the modern form of crystal detector. It is sensitive, and unlike the "cat-whisker" detector which was its predecessor in the early days of radio, a germanium diode needs no adjustment and does not get out of order unless mistreated.

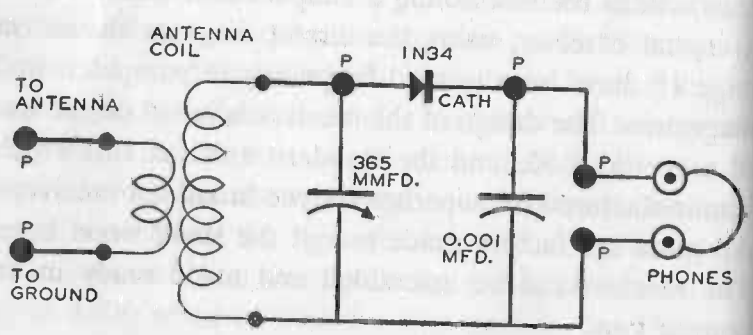

DIAGRAM OF CIRCUIT OF SIMPLE CRYSTAL RECEIVER

This receiver is assembled from standard parts. Nothing is homemade except a 5½ in. x 3¼ in. x ¾ in. wood base. The drawing is a SCHEMATIC diagram. Conventional symbols indicate the various parts or components of the circuit. The symbols used in the circuit diagrams in this book are shown on another page. Memorize them so that you can read any of the schematic diagrams. Schematic diagrams are not as easy at first for the beginner to understand as pictorial diagrams. A pictorial diagram of the same circuit follows this one. Schematic diagrams are more accurate and convey more information than pictorial diagrams. Both kinds appear in this book.

Germanium is of great importance in modern electronics. Since it will be mentioned again in later chapters let's find out what germanium is and what diodes are.

Germanium. Germanium is one of the rare and least known metals of the earth. This grayish-white crystalline substance of great hardness and brittleness was first discovered in 1886 by Clemens Winkler, Professor of Chemistry at the Freiberg School of Mines. He named his discovery germanium in honor of his fatherland. Germanium remained an insignificant metal, merely a laboratory curiosity, for more than half a century. But during the last decade it has become one of the most valuable metallic substances in existence. In 1942 the National Defense Research Council sought metal with certain special properties for use in the field of electronics. Germanium was found to have those properties. Its utility in electronics soon caused it to become five times

PICTORIAL DIAGRAM OF CIRCUIT OF SIMPLE CRYSTAL RECEIVER

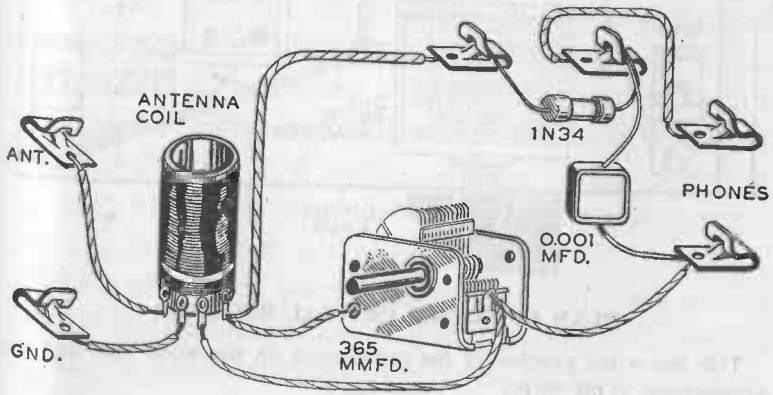

as valuable as gold. But as more sources of germanium were found and better methods of refining it were developed, the cost was reduced. Pure germanium is worth about $300.00 per pound today. Gold is worth $510.40 a pound.

The useful electrical properties which give germanium its importance in electronics are due to its behavior as a SEMI-CONDUCTOR.

Semi-conductors. The materials through which electrical currents flow easily are called CONDUCTORS. Most of the metals are fairly good conductors, copper and silver being the best. Materials through which electric currents do not

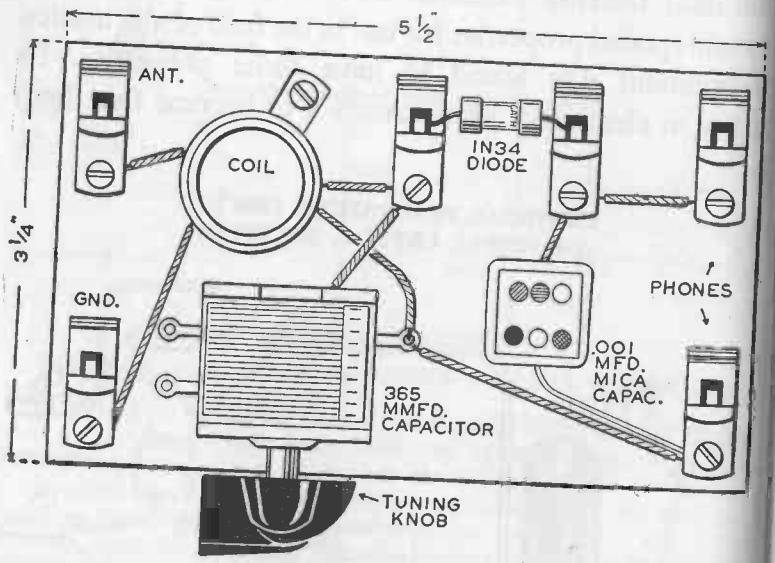

PLAN OF SIMPLE CRYSTAL RECEIVER

This shows the position of the components on the wood base and the arrangement of the wiring.

flow are called NON-CONDUCTORS. Materials such as glass, porcelain, rubber, Bakelite, etc., used to insulate current-carrying wires are non-conductors.

In addition to conductors and non-conductors there are materials called SEMI-CONDUCTORS. A semi-conductor is neither a good conductor like silver or copper, nor a good non-conductor like glass. But under certain conditions germanium acts like copper, and a current will flow through it. Under other conditions it acts like glass and is practically a non-conductor.

One of the useful properties of a semi-conductor is its ability to permit the flow of electricity in one direction and to resist its flow in the other direction. It acts as a sort of automatic electrical valve, opening to electrons passing in one direction and closing to those which try to move the opposite way. Germanium, selenium and silicon, when combined with certain impurities, are the most useful semi-conductors. There are other materials which possess similar properties but they are not used as extensively as the three mentioned.

The first use for semi-conductors in electronics was as RECTIFIERS—devices which change alternating current into direct current. The galena or silicon crystals with an adjustable "cat's whisker," employed as detectors in the early days of radio, represent one of the earliest uses of a semi-conductor as a rectifier *in electronics*. Selenium has long been used as a semi-conductor in power rectifiers and in "self-generating" photocells.

The first use for germanium was in the construction of tiny electronic rectifiers called DIODES, and used to replace the diode vacuum tubes used as detectors in radar,

radio and television receivers. A variety of germanium crystal diodes and also silicon crystal diodes are produced by several manufacturers. They range from 65 cents to $11.00 in retail price. They are small objects, averaging about ½ inch long and ¼ inch in diameter. The construction of all varieties is quite similar and in general consists of a tiny crystal of germanium or silicon to which is welded a small platinum "cat-whisker" wire. The crystal and whisker are enclosed in a small ceramic tube or hermetically sealed in moisture-proof glass cartridges. The germanium or silicon crystal is the cathode and the contact point wire is the anode of the device. A germanium diode is not only much smaller than a vacuum tube diode, which performs the same service, but there are no parts which wear or burn out soon in normal use. A germanium diode has a life about ten times as long as the average life of a vacuum tube diode. A further advantage of the germanium diode is that, unlike a vacuum tube diode, it requires no filament or heater current for its operation.

No. 1N34 Diode. The Sylvania No. 1N34 general purpose germanium diode is an excellent detector. It retails for about 80 cents and can be used for several purposes in electronic circuits.

Although germanium is a costly metal, the amount used in each diode is so small that it does not greatly increase the cost of a diode. The small speck of mirror surfaced germanium which is used in each diode is only 0.02 of an inch thick and is not worth more than two cents.

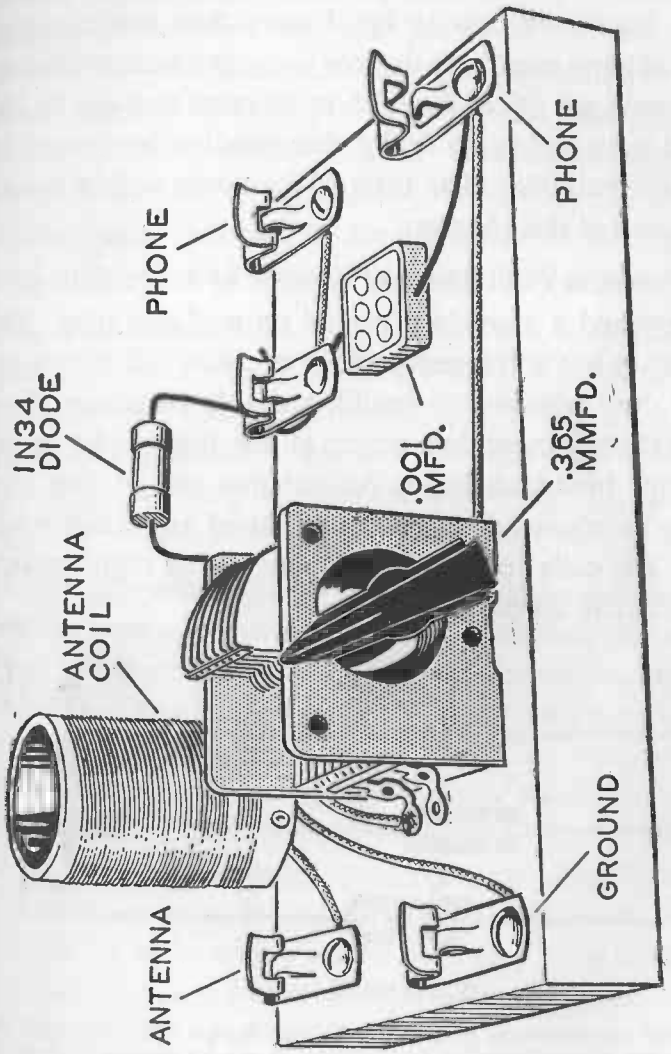

PERSPECTIVE SKETCH OF THE COMPLETED CRYSTAL RECEIVER

Several small paper-covered books have been published by engineers who helped develop the germanium diode. These books tell how to build more than one hundred electrical and electronic devices using germanium diodes. The books are priced from 25 to 50 cents and can be obtained from any radio dealer that handles the diodes, or from the publisher. The titles of the books will be found at the end of this chapter.

The Antenna Coil. The coil consists of two windings, a primary and a secondary wound on a plastic tube. The secondary has a frequency range of 540-1750 kilocycles when used with a 365 mmfd. variable capacitor. This range slightly more than covers all the frequencies in the standard broadcast band. An antenna coil of this type can be purchased at small cost at almost any radio repair shop. The coils are kept in stock for use as replacements for defective coils.

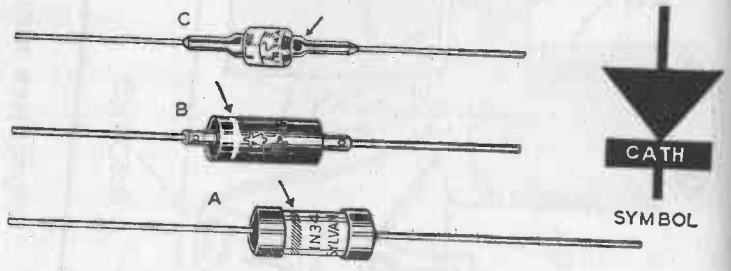

GERMANIUM DIODES

Several manufacturers produce germanium diodes. The 1N34 (A) and 1N34A (C) illustrated above are products of the Electronics Division of Sylvania Electric Products, Inc. The arrows in the illustration point to the markings which indicate the cathode end of the diode. On each Sylvania germanium diode the cathode terminal is indicated by a green band and the letters CATH.

Radio Headset. A radio headset consists of two earphones, or telephone receivers, mounted on a headband. The telephone receivers made for radio use are more sensitive to very small currents than the common telephone receiver. Two types of telephone receivers are used in radio. Do not use "crystal" type headphones with a crystal detector. The headset connected to the Simple Crystal Receiver should be the electromagnetic type and have a resistance rating of at least 2000 ohms.

Mica Capacitor. This component of the circuit is not always required. Some headsets have enough of the quality called "distributed capacitance" to make the mica capacitor unnecessary. In some instances the use of the mica capacitor may not improve the strength of the signals heard in the headset but will improve their tone.

Variable Capacitor. The common 365 single gang mmfd. variable capacitors usually have a ¼ inch diameter shaft. When purchasing the capacitor, obtain also a molded knob which can be attached to the shaft with a setscrew. Some variable capacitors are so made that they can be mounted on a base or against a panel. A capacitor for base mounting has threaded holes in the bottom of the frame. The threaded holes are in the front of the frame in capacitors for panel mounting. If the capacitor which you use is of the latter type it will be necessary to mount it on the back of a small ¼-inch plywood panel attached to the front of the wood base.

ASSEMBLING THE SIMPLE CRYSTAL RECEIVER

The base should be a piece of well seasoned wood

which has been shellacked or varnished on all surfaces. Mount the components as shown in the plan and perspective sketch. There are four terminals on the antenna coil and connection is made to them by soldering. Use rosin-core solder NOT acid-core solder. The short coil is the primary. The long coil is the secondary.

Use both the schematic and pictorial circuit diagrams when wiring the receiver, and check each connection carefully to make sure it is correct.

Operating the Receiver. Connect a high-resistance (1000 ohms or more) earphone or a radio headset to the PHONE terminals. Connect an antenna to the ANTENNA terminal and a ground to the GROUND terminal. The antenna should be a wire 50 to 100 feet long and be insulated from its supports. Antennas and grounds are described in more detail in the chapter called "Taking the Mystery Out of Tuning."

Under ordinary conditions the range of the receiver will not be over 25 to 30 miles when listening to a broadcast station. The range of the receiver and the strength of its signals will depend to a great extent upon the height and length of the antenna. If the receiver is located in a metropolitan area where several broadcasting stations are nearby, it may "pick up" more than one program at a time. If two stations are heard at the same time, adjusting the variable capacitor will increase the strength of the signals which you prefer to listen to and weaken those which are causing interference.

All in all, the "simple crystal receiver" is not an entirely satisfactory design. There is no provision for adjusting

or tuning the antenna circuit. It has been described here because of its simplicity and because there are no home-made parts required except the wood base.

If you are willing to wind your own coils, build the receiver described in the next chapter. It is much more sensitive and selective. With it, you can perform experiments which will demonstrate the principles of tuning radio circuits.

Books about Transistors

Electronic Shortcuts for Hobbyists, Sylvania Electric Products, Inc., 1740 Broadway, New York 19, N. Y. 25 cents.

Forty Uses for Germanium Diodes, Sylvania Electric Products, Inc., 1740 Broadway, New York 19, N. Y. 25 cents.

Transistor Manual, General Electric Co., Electronics Park, Syracuse, N. Y. 50 cents.

Transistor Applications, Raytheon Mfg. Co., Newton 58, Mass. 50 cents.

Popular Electronics, Ziff-Davis Publishing Co., 366 Madison Avenue, New York 17, N. Y. 35 cents. A magazine published monthly for electronic experimenters.

How to Build A More Selective Crystal Receiver

The crystal receiver described in the last chapter is popular because all the parts can be purchased ready-made. It is used in many high schools to demonstrate elementary principles of a radio receiver.

Unfortunately, the advantage of being able to assemble quickly a working receiver sacrifices sensitivity and selectivity. You can build a much better receiver if you wind a special coil to be used in place of a standard antenna coil which, after all, was not originally designed for use in a crystal receiver.

The following parts and materials are required:

1 Shellacked wood base, 10 in. x 4 in. x ¾ in. (1)

1 Shellacked pine coil form 10 in. x 1½ in. x ¾ in. (2)

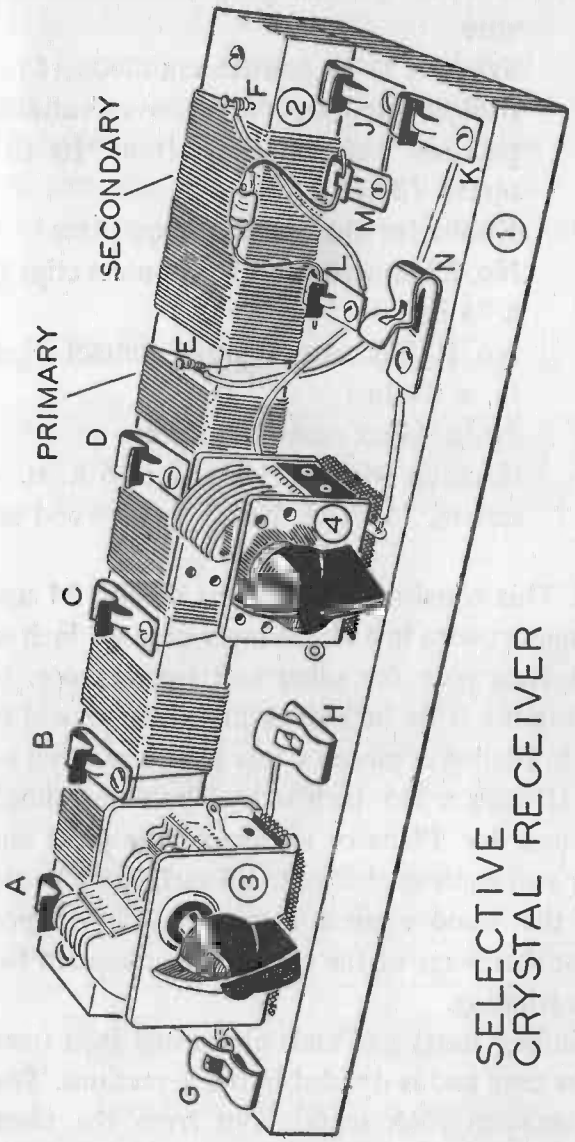

A MORE SELECTIVE CRYSTAL RECEIVER

100 feet No. 24 B.S. gauge enamelled magnet wire
1 Sylvania 1N34 germanium diode (**5**)
2 Midget one-gang TRF receiver variable capacitors with capacity from 10 to 365 mmfd. (**3** and **4**)
2 Knobs for the variable capacitors
9 No. 2 Fahnestock spring contact clips (1 in. x ⅜ in.)
2 No. 10 Fahnestock spring contact clips (¾ in. x 5/16 in.)
2 ¾ in. brass escutcheon pins
Hook-up wire, 2-1¼-in. No. 6 R. H. wood screws, 11-½-in. No. 5 R. H. wood screws

The Coil. This consists of 245 turns of No. 24 B.S. enamelled magnet wire in a single layer on a 10 inch x 1½ inch x ¾ inch pine (or other soft wood) core. Much common lumber is ¾ inch thick and there should be no difficulty in finding a piece of this thickness from which to saw a 10 inch x 1½ inch strip. The wood should be seasoned and dry. Plane or sandpaper the piece smooth and apply two coats of shellac to all surfaces. The shellac will seal the wood against moisture, help to prevent swelling or shrinkage of the core and consequent loosening of the winding.

The winding starts and ends about one inch from the ends of the core and is divided into five sections. There is a space between each section but from the electrical standpoint the winding is continuous. There is no break in the wire between sections. The spaces between the

sections and at the ends of the core provide the room for "taps." Four of the taps are No. 2 Fahnestock connector clips so that a wire can be easily and quickly connected to any one of them and disconnected with equal facility. Two of the taps are brass escutcheon pins. Escutcheon pins are round headed brass nails obtainable at a hardware store and used for fastening small name

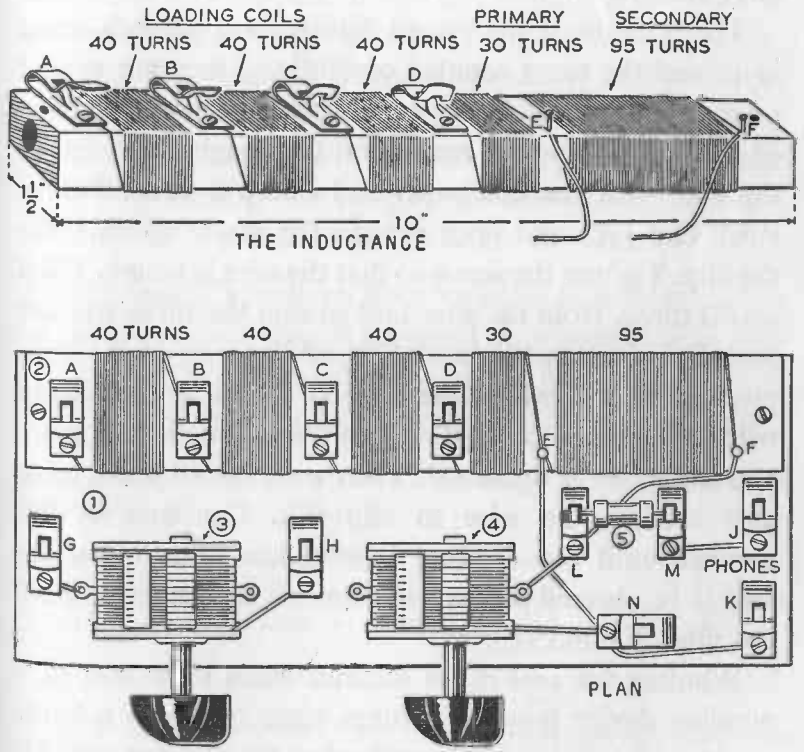

PLAN OF THE CRYSTAL RECEIVER AND DETAILS OF THE TUNING INDUCTANCE

Note the letters identifying each contact clip and the two pins. These letters also appear in the circuit diagram.

plates. The connections made to the brass pins are permanently soldered. The Fahnestock clips are fastened to the wood core with ½-inch No. 5 round head wood screws. The escutcheon pins are driven into the core.

The first three sections of the winding each contain 40 turns of wire and comprise the ANTENNA LOADING COIL. The fourth section consists of 30 turns and is the PRIMARY. The last section contains 95 turns and is the SECONDARY.

The wire must be wound tightly in a smooth, even layer and the turns counted carefully as they are wound on so that there will be the correct number in each section of the coil. Scrape the enamel off the "beginning" end of the wire with fine sandpaper and clamp it under Fahnestock clip (**A**) and once around the screw which holds the clip. Tighten the screw so that the wire is secure. Wind on 40 turns. Hold the wire taut so that the turns will not loosen, and clean the insulation off the wire at the right place so that it will make a good electrical connection with Fahnestock clip (**B**) when placed under the latter and the screw is tightened. Then wind on 40 more turns and connect the wire to clip (**C**). Continue in this manner until the winding is complete. The insulation should be cleaned off the wire where it is wrapped around the pins (**E**) and (**F**).

Winding the coil is not difficult when some sort of a winding device is used. Perhaps some one with a lathe-equipped home workshop will wind the coil for you. Or perhaps you can do this yourself on a lathe in the shop at your school. If a metal-turning lathe is used, one end of the wood core is placed in a four-jaw chuck on the

headstock of the lathe. The other end is supported on the center in the tailstock. The lathe should be turned slowly by hand by pulling on the belt. If a wood-turning lathe is used, the wood core is mounted between the head and tail centers as if it were a piece of wood to be turned. Turn the lathe by hand by pulling on the belt. Do not use power. Those who are not fortunate enough to have a lathe available should build the winding machine described at the end of this chapter. It will not require much time to make and the machine will make winding the coil easy.

When the winder is in use it should be held firmly to the top of work bench or table with a C clamp. Coil forms of various lengths can be wound with this same winder by moving the uprights so that the distance between them is $\frac{1}{16}$ inch longer than the coil form.

The Variable Capacitors. Both variable capacitors should be the type which can be mounted on a base and be provided with two threaded holes in the bottom of the capacitor frame for that purpose. If the threaded holes are

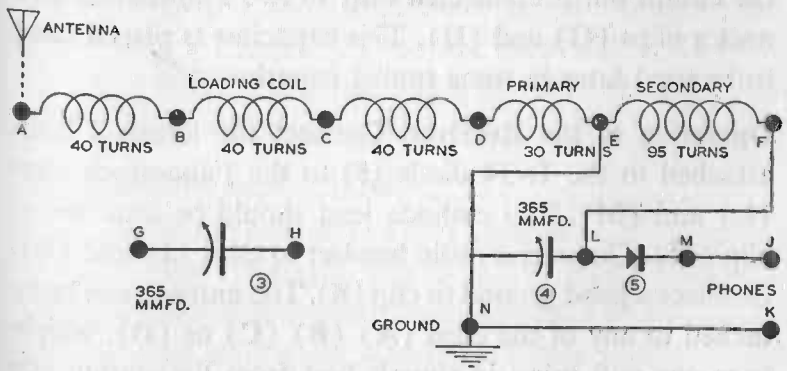

CIRCUIT DIAGRAM OF THE CRYSTAL RECEIVER

in the front of the frame, the capacitor is designed for panel mounting. In that case it will be necessary to attach a small plywood panel (6 in. x 3 in. x ¼ in.) to the front edge of the wood base and mount the capacitors on the back of the panel.

Fixed Capacitor. You may notice that an 0.001 mfd. fixed capacitor to be connected across the headset is not included in the list of parts. Such a capacitor is usually shown in circuit diagrams of crystal receivers. If a standard radio headset is connected to the receiver the 0.001 mfd. capacitor is not necessary. The purpose of the capacitor is to provide a path for radio-frequency currents around the headset. There is sufficient capacitance in the windings and connecting cord of a standard radio headset to provide such a path.

Assembling. Assemble the parts on the base according to the plan in one of the illustrations. To connect the parts, consult the wiring diagram. Notice that the variable capacitor (3) to the left on the base is not included in the circuit but is connected only to two Fahnestock connector clips (G) and (H). This capacitor is placed there to be used later in some tuning experiments.

Operation of the Receiver. Connect the terminal leads attached to the 1N34 diode (5) to the Fahnestock clips (L) and (M). The cathode lead should be attached to clip (M). Connect a radio headset to clips (J) and (K). Connect a good ground to clip (K). The antenna can be attached to any of the clips (A) (B) (C) or (D), whichever one will bring in signals best from the station you wish to listen to. For instructions regarding the antenna

and ground connection consult the chapter devoted to those subjects. Adjusting the variable capacitor (4) will tune the secondary winding and enable you to tune out unwanted signals.

With this receiver you should be able to hear more stations and get louder signals without interference than is possible with the simple receiver described in the previous chapter. The primary of the antenna coil used with that receiver does not contain enough turns to tune in signals efficiently over the entire broadcast band when used with a crystal detector. The coils (A) (B) (C) and (D) provided in the more selective receiver are loading coils. They enable you to tune or adjust the antenna circuit to suit the length of the waves which produce the signals you wish to listen to.

Perhaps you will understand how the loading coil improves the receiver after you have read the next chapter.

HOW TO BUILD A WINDING MACHINE FOR WINDING THE TUNING INDUCTANCE

The materials required are several pieces of wood, screws, ½-inch dowel rod, a piece of wire from a coat hanger and a clamp. A handsaw, screwdriver, ½-inch auger bit, brace, hand drill and a No. 28 twist drill will be needed for making the parts.

Parts Required for the Winder

1 Wood base 8 in. x 3¾ in. x ¾ in.
2 Wood uprights 4½ in. x 2¼ in. x ¾ in.
2 Wood battens 3½ in. x 1¼ in. x ¾ in.
1 Piece of steel wire from a coat hanger
8 No. 6 wood screws 1¼ in. long

Cut the wooden parts to the dimensions shown in the illustration. Give them one or two coats of shellac or varnish. Bore a ½-inch diameter hole through both uprights on their center line and 3½ inches from the lower end.

Bore two holes in each upright with a No. 28 twist drill. The holes should be ⅜ inch from the end, and at the end opposite the ½-inch hole. Slip a No. 6 wood screw through each of the small holes in the uprights and fasten each upright to a batten. Fasten each batten to the base, using two screws. The battens should be located so that the distance between the uprights is $\frac{1}{16}$ inch longer than the wood core of the inductance. The ½-inch holes in the uprights are bearings and must be in line so that a piece of ½-inch diameter dowel will pass through both

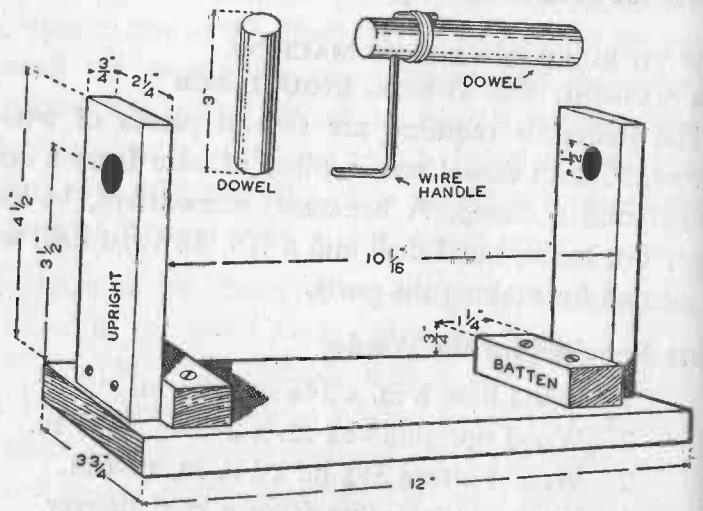

PARTS FOR THE COIL WINDER

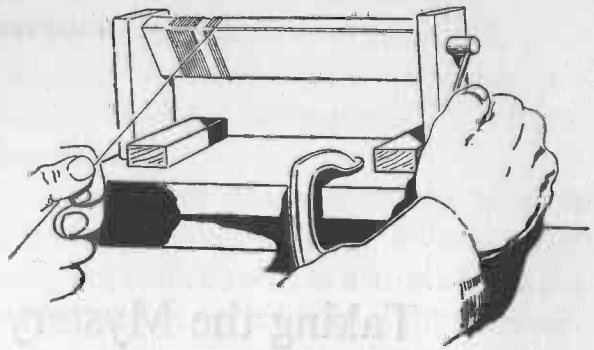

WINDING THE TUNING INDUCTANCE

holes and turn without binding. To align the holes, first fasten one upright and batten to the base. Then slip a long piece of ½-inch dowel through the bearing holes in both uprights, and fasten the second batten and upright to the base at the proper distance. Assembling the winder with a long dowel in the bearing holes should bring the holes in alignment.

Two pieces of ½-inch dowel 3 inches long are used as a shaft for the wood core which is to be wound. Bore a ½-inch diameter hole in each end of the core along its axis. Make the holes 1½ inches deep. A piece of steel wire (from a coat hanger) is slipped through a hole near the end of one of the 3-inch dowels and bent to form a crank. This wire handle is used to turn the core when winding it. The two pieces of dowel used as a shaft should fit tightly into the holes in the end of the core. It may be necessary to wrap them with a layer or two of paper to make a snug fit. The dowel shafts must turn freely in the bearing holes in the uprights. If they are too tight in the bearing holes, free them by sandpapering the dowels to make them slightly smaller.

CHAPTER FOUR

Taking the Mystery Out of Tuning

Hundreds of radio stations are transmitting at the same time. Many of them are in the same neighborhood. They transmit at many different frequencies. For example, broadcasting stations transmit over a "band" ranging from 550 kilocycles to 1700 kilocycles. This means that the alternating currents produced at broadcast transmitters and fed into the antenna alternate from 550,000 to 1,700,000 times per second. Each transmitting station sends at a frequency which has been assigned to it by the Federal Communications Commission. Each transmitter is equipped with automatic controlling apparatus which holds it within narrow limits to the frequency assigned to it.

Every receiving antenna is constantly intercepting waves of many different frequencies, but with a selective receiver signals from only one transmitter can be heard at a time. A process called TUNING makes this possible.

Tuning a receiver adjusts it so that it selects signals of one frequency only and rejects the signals of all other frequencies. Tuning is accomplished by adjustable coils and capacitors.

A radio engineer thinks of tuning in mathematical terms. By using analogies instead of technical terms and by comparing radio circuits to a rope clothes-line, tuning can be freed of some of its mystery for the novice.

EXPERIMENTS IN "TUNING" A ROPE

Try these experiments. Hang a light rope or clothes-line between two supports 30 to 40 feet apart. The rope

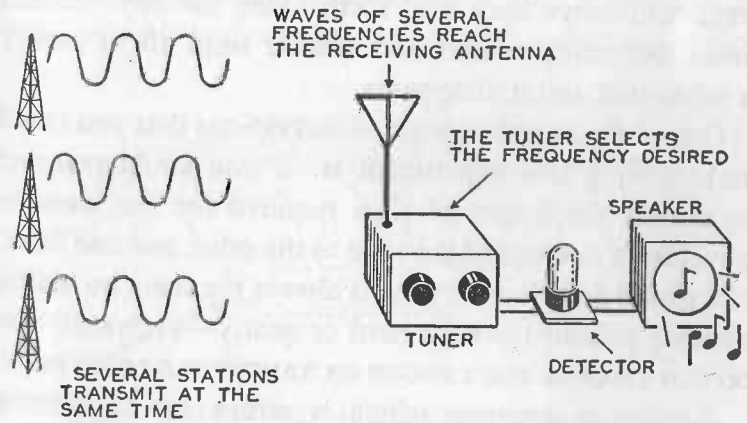

TUNING

An agreement among the nations of the world requires all radio transmitters to be licensed. Under this agreement, each transmitter is licensed for operation only on the frequency (or frequencies) assigned to it. Consequently it is necessary to adjust or TUNE a transmitter so that it will produce waves only of the frequency or frequencies assigned. Tuning a receiver strengthens the desired signals and bars out signals from other stations which are unwanted at the time.

should not be stretched taut or allowed to hang very slack.

The rope can be made to behave in a mechanical manner somewhat as a radio circuit behaves in an electrical manner, and thereby illustrate some of the principles of tuning.

With your forefinger or a stick, strike the rope a sharp, quick blow near one end. If the rope is properly hung and you use the right amount of force, a visible wave in the rope will move along its length. Some of the energy in your arm has been transferred to the rope. The energy travels along the rope to the opposite end in the form of a wave. When it reaches the end of the rope the wave reverses its motion and travels back toward you. The wave will move back and forth along the rope several times, becoming weaker and weaker until all its energy is exhausted and it disappears.

One of the most important observations that you could make during this experiment is: if you could measure accurately the length of time required for the wave to travel from one end of the rope to the other end and back, you would find that the time is always the same no matter whether you hit the rope hard or gently—PROVIDED YOU DO NOT CHANGE THE LENGTH OR TAUTNESS OF THE ROPE.

A wire or antenna which is struck by an electromagnetic (radio) wave from a transmitter can be likened to the rope struck by your hand. Energy runs along the wire or antenna, not in a visible wave which can be seen, but as a moving group of invisible electrons called a pulse of electric current. The electrons travel along the wire or antenna to one end and then reverse their direction.

They travel back and forth until the energy that moves them is exhausted. Since the electrons reverse their motion they are an ALTERNATING electric current.

Now try another experiment. Tighten the rope slightly so that there is less slack. Tap it again once near one end. A wave will travel from one end of the rope to the other and back as it did before but this time it will travel MORE RAPIDLY. Shortening the rope will produce the same effect as tightening it. The wave will move from one end to the other and back in less time. Lengthening or loosening the rope will INCREASE the time required for the wave to travel back and forth. By this experiment you have demonstrated a method of "tuning" a rope.

A wire or an antenna can be ELECTRICALLY shortened, lengthened, tightened or loosened just as a rope can be MECHANICALLY shortened, lengthened, tightened or loos-

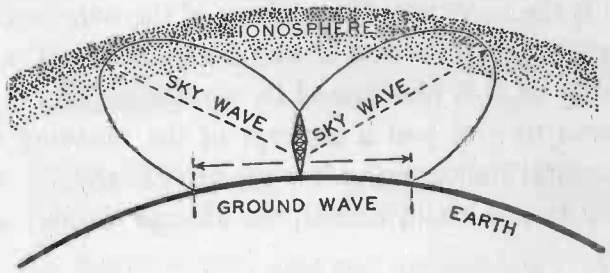

RADIO WAVES—GROUND WAVES AND SKY WAVES

Normally a vertical antenna is more efficient for transmitting radio waves than a horizontal antenna. When a radio wave leaves a vertical antenna, if it were visible, its pattern would resemble a huge doughnut lying on the ground with the antenna in the hole at the center. Part of the wave moves away from the antenna but remains in contact with the earth and is called the GROUND WAVE. The rest of the wave moves upward and outward to form the SKY WAVE. It is the surface part of the ground wave that reaches most receivers tuned to daytime broadcast programs.

ened. In other words, it can be TUNED. If a wire or circuit is either shortened or electrically "tightened," alternating electric currents will travel back and forth in it in less time than before. From a radio or electrical standpoint, the currents will alternate at HIGHER FREQUENCY. Lengthening or electrically "loosening" a wire or circuit will produce the opposite effect. This will increase the time required for an alternating current to travel back and forth therein. The currents will alternate at a LOWER FREQUENCY.

NATURAL FREQUENCY

The number of little waves that run back and forth along a rope in a second are called the NATURAL FREQUENCY of the rope. The number of times that an alternating electric current will surge back and forth along a wire or through a circuit NATURALLY, that is, without being forced is the NATURAL FREQUENCY of the wire or circuit. This explanation is not a literal definition of natural frequency as it is understood by a radio engineer, but it will serve to give you a concept of the meaning of the term natural frequency as it is used in electronics. Whenever we tune a radio circuit, we change its natural frequency.

Changing the physical length of a wire or circuit, that is its length in feet and inches, changes its natural frequency. There are other ways of changing the natural frequency of a wire or circuit besides changing its physical length. It may be ELECTRICALLY tightened or shortened, or lengthened or loosened by changing its INDUCTANCE and CAPACITANCE. A wire wound in the form of a coil

has a different "tension" and a different "electrical length" from the same piece of wire when it is stretched out straight.

ANOTHER EXPERIMENT WITH THE ROPE

Let us consider the rope again. Suppose, for the moment, that your finger is an electromagnetic wave carrying energy from a transmitting station and that the rope is an antenna connected to a radio receiver. You are the transmitter. Your frequency is three. You tap the rope three times per second. At the first tap the energy induced in the rope surges outward toward the far end. It reaches

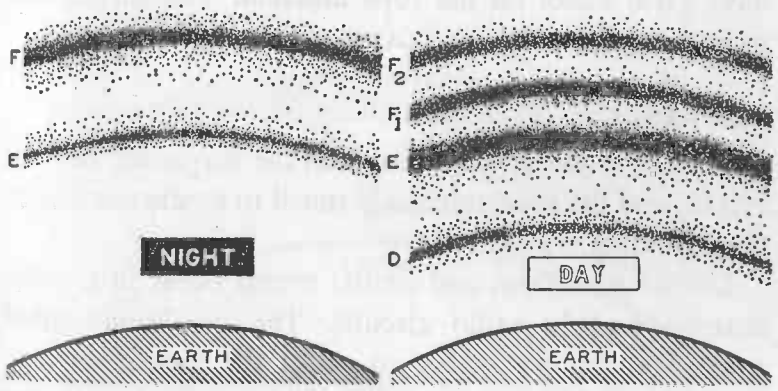

RADIO WAVES AND THE IONOSPHERE

The rarefied atmosphere approximately 40 to 350 miles above the earth contains many more positive and negative ions than the lower atmosphere. This ionized layer is called the IONOSPHERE. It has a marked effect upon the transmission and reception of radio signals. The ions in the ionosphere are produced by ultra violet and particle radiation from the sun. The ionosphere is thicker and closer to the earth in the daytime than at night. Consequently sunshine limits radio transmission. Radio transmission and reception are better at night than in daytime. Much long distance radio transmission is accomplished by receiving sky waves reflected from the ionosphere. The reflected waves come back to earth closer to the transmitter in daytime than at night (*See next illustration*).

the far end and is returning when it meets the second outward traveling surge induced by the second tap of your finger. One surge cancels another when they meet coming from opposite directions. Your waves (taps) do not have much effect on the rope antenna after the first surge because the antenna is NOT IN TUNE with the frequency of the surges.

But wait a moment. Suppose that you lengthen, shorten, loosen or tighten the rope. In other words, tune the rope so that each new outgoing surge set up by the three taps per second of your finger falls in step with the one already travelling back and forth on the rope. Your waves will have great effect on the rope antenna. The surges will move to and fro, or OSCILLATE, without interference.

RESONANCE

A radio engineer would say that the surges are now IN PHASE, and the rope antenna is tuned to RESONANCE with the incoming waves.

Similar conditions and similar events occur in a radio antenna and in radio circuits. The condition called resonance enables tuning to select the signals of one station from the others which are transmitting at the same time. In order for incoming waves to have the most effect in producing alternating currents in a receiving antenna or in radio circuits, the antenna and circuits must be tuned until they are in resonance wih the incoming waves. They must be tuned to suit the frequency of the waves coming from the station to which it is desired to listen.

Every receiving antenna includes a small coil which

couples it to the detector and other receiver parts. A coil is also used to couple transmitting apparatus to its antenna. These antenna coupling coils increase the electrical length of the antenna. A capacitor placed in series with the coil shortens the electrical length of the antenna. These two devices, a coil and a capacitor, are a simple means of increasing or decreasing the ELECTRICAL LENGTH of an antenna or radio circuit or bringing it into resonance with the frequency of the alternating currents which surge in it. In actual practice that is the way most tuning is done. A coil and a capacitor connected to a tuning knob tune the antenna and other circuits.

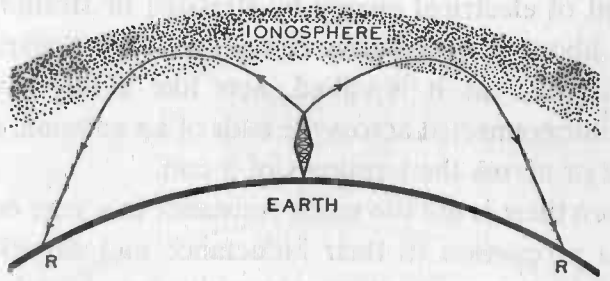

RADIO WAVES—REFLECTION OF THE SKY WAVES BY THE IONOSPHERE

The ionosphere acts as a conductor and absorbs part of the energy in the sky waves radiated from an antenna. It also acts as a radio mirror and bends the sky wave back to the earth as illustrated above. Receivers located at or near either of the points **R** in the illustration will receive signals transmitted from the antenna at point **T**. This explains why low-powered amateur stations can sometimes be heard at night halfway around the world. Their sky waves are bent by the ionosphere and returned to earth in a distant land. It also partly explains the fading of signals. The ionosphere is constantly shifting and changing. Occasionally sudden disturbances in the ionosphere cause absorption of all sky-wave radiations. At other times the reflected sky waves alternately strike and skip over areas.

EXPLANATION OF INDUCTANCE AND CAPACITANCE

One of the first things to be learned about electricity is that in order for a direct current to flow in a circuit, the circuit must be complete—that is, the wire must form a loop so as to provide a return path. How then can an alternating current flow back and forth in a straight wire without a return path, as it does in an antenna?

Here is the explanation. A single wire stretched out straight or in the form of an open coil has two remarkable properties. One of these is its INDUCTANCE. The inductance of a wire or a coil is the property that allows it to store up energy in the form of an electromagnetic field. The other is its CAPACITY or ability to store up a certain amount of electrical energy by stressing or straining the space about it or substances nearby. This "distributed capacitance," as it is called, acts like a tiny invisible capacitor connected across the ends of an antenna, across a wire or across the terminals of a coil.

When there is not too much resistance in a wire or open coil in proportion to their inductance and capacitance, radio-frequency currents can surge back and forth in the wire or coil because of the distributed capacitance present. Low-frequency or direct currents can flow in an open circuit for the merest infinitesimal fraction of a second only while the open coil or wire is storing up energy in electromagnetic or electrostatic form.

The antenna is not the only part of a radio transmitter or receiver that must be tuned. Other circuits in both transmitters and receivers must be adjusted until they are in resonance. The transmitter circuits are tuned to be in

resonance with the frequency at which IT IS DESIRED TO TRANSMIT. The receiving circuits are tuned to resonance with the frequency of the transmitter whose signals IT IS DESIRED TO RECEIVE.

When an antenna or radio circuit is tuned to resonance with any certain frequency, for example 550 kilocycles, the maximum amount of 550 kilocycle current will flow in the circuit. Very little, if any, current of other frequencies will flow.

Tuning therefore, is ADJUSTING CIRCUITS TO RESONANCE at a desired frequency so that the circuits give the maximum response to currents of that frequency.

Tuning can be done by varying the inductance of a

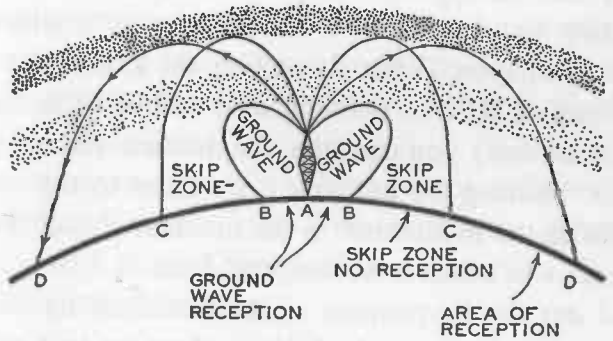

RADIO WAVES—SKIP ZONES

Signals from a transmitter can always be heard over the considerable area (**A** to **B**) surrounding the transmitter where the ground waves reach. Surrounding this area is a SKIP ZONE where there are no ground waves and where the transmitter's signals cannot be heard. Beyond the skip zone there are distant points where the signals can be heard. The illustration helps to explain this. The skip zone is the area beyond the limits of the ground waves. The area beyond the skip zone where signals can be heard again is the area where the sky waves reflected from the ionosphere return to earth (**D**).

coil. Usually it is easier to do it with a capacitor and most tuning is done with a variable capacitor.

The majority of modern receivers employ the superheterodyne circuit invented by E. H. Armstrong. In this circuit, there are tuned radio-frequency amplifiers. They consist of electron tubes, coils and variable capacitors. There is more than one tuned circuit in a superheterodyne receiver. For convenience in tuning, so that there is only one knob to turn, the rotors of two or more identical variable capacitors are mounted on one shaft. Such capacitors are called ganged capacitors.

EXPERIMENTS IN TUNING A CRYSTAL RECEIVER

Now that tuning has been explained it will be more interesting to experiment with the crystal receiver described in Chapter Three. By moving the antenna connection to clip **A**, **B**, **C** or **D** (whichever will bring in the station the loudest) you can tune the antenna circuit of the receiver. Shifting the antenna connection to the various clips varies the inductance in the antenna circuit and the frequencies to which it will respond best.

Find out the frequencies of the broadcasting stations which you can tune in, by looking them up in a printed radio program. Listen to each station until its name is announced. Then jot down its call letters and frequency. You will find that by tuning the antenna circuit you can bring in more frequencies than is possible with the simple receiver with an untuned antenna circuit described in Chapter Two.

The variable capacitor marked (**3**) to the left in the

plan was purposely not made a permanent part of the receiver circuit so that it could be used for experiment. The terminals of capacitor (**3**) are connected to the Fahnestock clips **G** and **H**.

Let us suppose that you have tuned in a station which you wish to listen to and get the best signal when the antenna is connected to clip **B**. Perhaps you will get an even better signal if you connect capacitor (**3**) across the primary and that portion of the loading coil which is in the antenna circuit. To do this connect clip **B** to clip **C** with a short piece of wire and connect clip **H** to escutcheon pin **E** with another piece of wire. Adjusting capacitor (**3**) may improve the signals. Perhaps you will get even better signals if you connect the antenna to clip **C** and disconnect clip **G** from clip **B** and connect **G** to **C**.

If the antenna you are using is a very long one, it may be necessary to connect the antenna to clip **G** and connect clip **H** to clip **A** in order to receive the higher frequencies in the broadcast band.

Remember that in order to tune you do not merely shift the capacitor connections. You must also adjust both capacitors by turning the knobs to the position that produces the loudest signals.

A Simple Outdoor Receiving Antenna . . . STATIC AND STRAYS

The simplest outdoor antenna for receiving signals from the broadcasting stations which are in the standard frequency range is a single horizontal wire having a lead-in wire connected to one end. A wire 50 to 100 feet long, properly insulated and as high and clear of surrounding objects as possible, with a height of 30 to 50 feet is desirable. It is important to provide rigid supports for both ends of the antenna. Tree branches are not desirable supports because they sway in a wind. When a tree trunk must be used as an antenna support, the antenna wire should hang slack so that the tree can move without straining the wire.

It is important to keep an antenna wire as far away as possible from chimneys, metal roofs, gutters, drain pipes, telephone and power wires, other antennas and tree branches.

The antenna and lead-in should be one continuous piece of wire. If they are not, all splices should be soldered. Use stranded copper antenna wire, obtainable at any radio store. Use a 3-inch glass insulator at each end of the antenna.

The lead-in wire should not approach the side of a building closer than six inches except at the point where it enters. An antenna lead-in strip will insulate the lead-in and bring it into a building without permitting much leakage of energy. The lead-in strip is a thin copper strip covered with waterproof lacquered webbing. It is thin enough so that it may be laid on the sill and the window sash will close upon it.

An antenna on an apartment building or on a city house brings problems not encountered if you live in a detached house in the country or suburbs. Telephone wires over the rooftops, other antennas close by, steel framework in buildings, and man-made static are some of the difficulties to be met in the city. Preferably the antenna

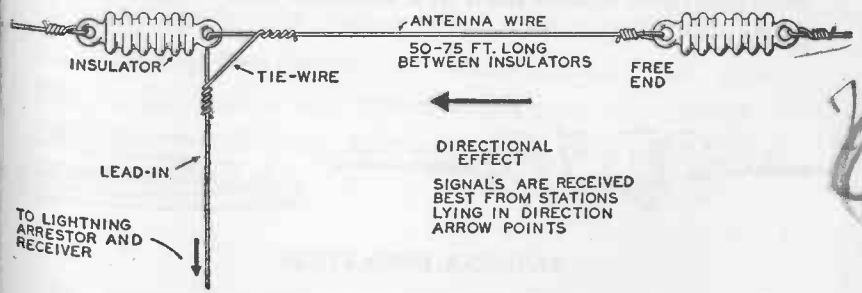

AN ANTENNA FOR YOUR HOMEMADE RECEIVER

A single hard drawn No. 14 B.S. copper wire or stranded copper wire 50 to 75 feet long insulated at both ends from its supports.

wire erected on an apartment house or city dwelling should be supported from two wood poles at least ten feet above the roof. The wire, if possible, should be erected at right angles to neighboring wires or antennas.

A horizontal antenna wire whose length is greater than its height above ground will receive signals slightly better in one direction than in others. It will receive best from stations lying in the direction OPPOSITE to which the free end points. The free end is the one opposite to that the lead-in is attached to.

If you can arrange your antenna to point in any desired direction, erect it so that its position will be an advantage in bringing in signals from the station you prefer to listen to.

The single, horizontal wire antenna which has just been discussed is recommended only as the SIMPLEST form of antenna for use with a broadcast band receiver used solely for the reception of comparatively local programs. Receiving antennas of this type were in wide use in the early days of broadcasting. Today they are not considered desirable unless used in a location free of man-made static.

ANTENNA INSULATORS

At the left is a corrugated glass insulator suitable for supporting a 50- to 75-foot receiving antenna. The right-hand sketch shows an insulated lead-in window strip which makes it easy to lead in the antenna over a window sill and under the sash without interfering with the opening or closing of the window.

Static. There are two kinds of objectionable noises called STATIC produced in radio receivers. One is due to nature's electrical disturbances in the atmosphere and the other is "man-made."

Lightning discharges are the cause of the loud crashes and rattling sounds sometimes heard coming from a loudspeaker or headset. Snowflakes often carry minute electrical charges and produce noises in a receiver when they strike the antenna.

Another name for atmospheric electricity which disturbs a radio receiver is STRAYS. Natural static does not affect a frequency-modulated or FM receiver but it cannot be tuned out of an AM receiver. All of the receivers described in this book are the AM type. An FM receiver cannot be assembled by the young novice at radio building.

Man-made static is usually due to induction and sparking by various electrical devices such as elevators, vacuum cleaners, oil burners, sewing machines, electric refrigerators, etc. Apartment houses are fairly alive with these radio disturbers. When a receiver is disturbed the source of the trouble is usually not far away. Nowadays many electrical appliances are equipped with interference prevention devices at the factory. When not equipped, a line filter connected to the power wires near the source of interference will often eliminate man-made static from electrical appliances.

CHAPTER SIX

Components of Electronic Circuits . . . CAPACITORS AND CAPACITANCE • RESISTORS AND CONTROLS

It would be difficult to find an electronic circuit in which there is not at least one capacitor. It is important for the experimenter with electronics to know about capacitors and their quality of CAPACITANCE.

Capacitors were formerly called condensers. But thousands of young men who were trained to handle radio and electronics equipment by the U. S. Navy in World War II learned to use the better and now correct term CAPACITOR. In engineering, the term "condenser" now refers only to certain hydraulic, chemical and engineering devices.

What is a Capacitor? A capacitor is not a complicated device. There are few useful contrivances as simple as a capacitor. It is not much more elaborate than a resistor.

A capacitor consists of two conducting metal plates separated by a layer of insulating material. The conduct-

ing plates are called the PLATES and the insulating separator is called the DIELECTRIC. If the plates are separated by air, air is the dielectric. If they are separated by oil, oil is the dielectric. The plates are usually made of sheet aluminum or aluminum foil. The common dielectrics used in capacitors are air, mica, paper, oil and a thin layer of non-conducting aluminum oxide.

The behavior of capacitors when connected to a source of electric current makes them a necessary part of almost every electronic circuit. For example, capacitors will store energy. In addition, when included in a circuit, an efficient capacitor will IN EFFECT allow an alternating current to pass but block a steady direct current. See further explanation on page 69.

How a Capacitor Performs. Let's see what happens when a capacitor is connected to a direct current voltage source, as, for example, to the terminals of a battery. Since the dielectric between the plates is a non-conductor, a capacitor might be expected to behave as a break in the circuit. When connected to a source of steady direct current, it does act as an open circuit except for a very short time

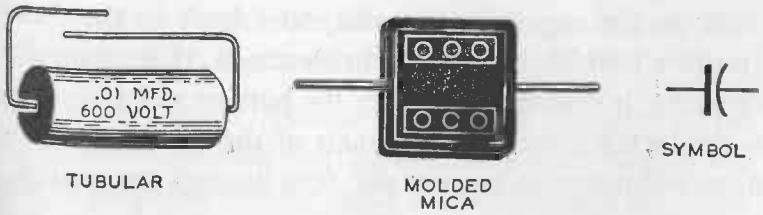

SMALL FIXED CAPACITORS AND THEIR SYMBOLS

The capacitor at the left is a paper by-pass capacitor. That at the right is a molded mica capacitor.

while it is CHARGING. But it does other things as well.

As soon as a capacitor is connected to a source of direct current voltage, electrons start to flow from the plate connected to the positive terminal of the battery. The electrons move through the battery and up to the plate connected to the negative terminal. They collect there. When the capacitor is first connected to the battery, the electrons rush along quickly. Then they slow down. When the charging continues to the point where the voltage across the capacitor terminals equals the voltage across the battery terminals, the electrons no longer move. At this stage the capacitor is fully charged insofar as the voltage of that particular battery is able to charge it. When in this condition, one plate has a positive charge, which is to say it is deficient in electrons. The other plate is negatively charged, that is, has a surplus of electrons. While the electrons were in motion during the charging process, there was a current flow. When the electrons are not moving, there is no current flow.

If the charged capacitor is disconnected from the battery it will remain charged unless the electrons leak across the dielectric or are released by an outside conducting path. Given the opportunity, the excess of electrons on the negative plate will move back to the plate (positive) which is deficient in electrons. If the charged capacitor is disconnected from the battery and a resistor is connected across the terminals of the capacitor, electrons will move—a current will flow through the resistor.

The Meaning of Capacitance. The CAPACITANCE of a capacitor refers to the amount of charge—that is, the

number of electrons required to build up a certain potential difference. Increasing the area of the plates, or decreasing the distance between the plates increases the capacitance. The unit of measurement for capacitance is the FARAD (a shortened form of Faraday in honor of Michael Faraday).

The plates of a capacitor with a capacitance of one farad would be raised to a potential difference of one volt if charged for one second with electrons flowing at the rate of one ampere. When current flows at a rate of one ampere 6 quintillion, 281 quadrillion electrons flow past a given point in the circuit in one second. That is a lot of electrons and you can see what a staggering quantity is involved if you write 6,281 and place fifteen zeros after it like this: 6,281,000,000,000,000,000. A capacitor having a capacitance of ONE FARAD is extremely large and there is little use for so much capacitance in a single unit. The capacitors which are most widely used are much smaller. A more practical unit than the farad for measuring capacitance is the MICROFARAD, this being one millionth of a farad or .000001 farad. The abbreviation for microfarad is mfd. In electronic circuits some of the capacitors are so small that their capacitance is measured in micro-microfarads or millionths of a microfarad. The abbreviation for micro-microfarad is mmfd.

The Effects of the Dielectric. Different dielectrics in a capacitor create different capacitances even though the area of the plates and the space between them is the same. If a capacitor with air as the dielectric has a certain capacity, for example, .001 mfd., the same plates, spaced

the same distance apart but with mica as the dielectric will have from 2½ to nearly 7 times the capacitance. In other words, the capacitance will be from .0025 to .0065 mfd. depending upon the variety of mica. Paper substituted for air will increase capacitance from 2 to about 2½ times. The capacitance of .001 mfd. is increased to .002 to .0026 mfd. by paper.

Some dielectrics are stronger than others in respect to the amount of voltage they will withstand without breaking down or puncturing. A mica dielectric .005 inch thick will withstand several times the voltage that would puncture holes in a paper dielectric. Oil substituted for air between the capacitor plates will not only increase the capacitance from 2.2 to 4.7 times but will withstand a much higher voltage before breaking down.

When an electric current flows into a capacitor, a certain amount of energy is lost in the dielectric. Some dielectrics produce greater losses than others.

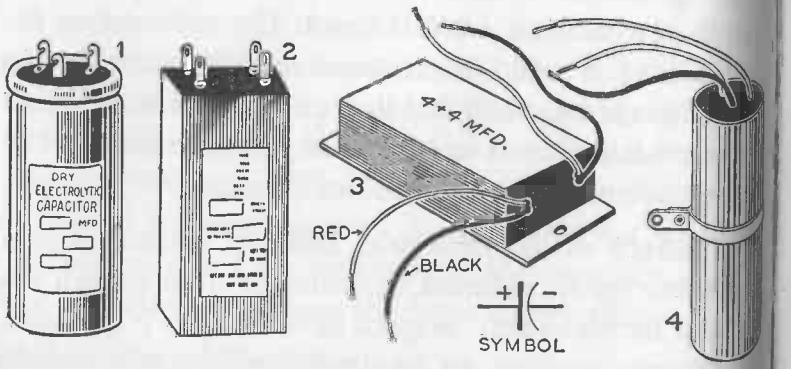

ELECTROLYTIC CAPACITORS

These are fixed capacitors of large capacitance.

For all of these reasons and also because of the requirements of limits in size, weight and cost, capacitors are manufactured in great variety. Those which we will utilize later in carrying out the plans in this book are described here in detail.

Capacitors are an essential part of most electronic circuits. They are also used in automobile ignition equipment, telephone, telegraph and railway signaling apparatus and other electrical devices.

There are two general classes of capacitors used in radio and electronics. They are called FIXED and VARIABLE, accordingly, as the capacity may be varied or not.

FIXED CAPACITORS

Of fixed capacitors there is no end of varieties and sizes. The catalogs of supply houses dealing in electronic components list hundreds of fixed capacitors. Some have mica dielectrics, some have paper, some have oil. They may be enclosed in molded Bakelite, waxed cardboard tubes or sealed in metal cans.

Fixed capacitors may be used to block a direct current from flowing in a circuit and let an alternating current pass. Their purpose in a circuit gives them various names such as BLOCKING CAPACITOR, BY-PASS CAPACITOR, etc.

Capacitors of small capacitance will pass radio-frequency alternating currents but block audio-frequency currents. Capacitors of greater capacitance pass radio-frequency and audio-frequency alternating currents and stop only direct current. By controlling the capacitance of a capacitor, it is possible to permit radio-frequency

currents to pass and stop audio-frequency currents that try to flow through the same path. Capacitors used for such purposes are termed BY-PASS capacitors. They are used to by-pass radio-frequency currents in the detector circuits of radio receivers and in amplifiers for radio-frequencies; also to by-pass audio-frequency currents in both detector circuits and audio amplifiers.

Generally speaking, the capacitances used for by-passing radio-frequencies in broadcast receivers usually range from 0.1 to .006 mfd. (depending upon frequency to be passed). Those for by-passing audio frequencies generally range from 0.25 to 1 mfd.

Mica Fixed Condensers. The size and form of small mica fixed condensers varies but the principle of two conducting surfaces separated by a thin layer of mica never changes. Mica fixed condensers are usually enclosed in moulded Bakelite. Two tinned wire terminals are provided. Mica fixed condensers withstand higher voltages and have less energy loss in their operation than paper condensers. They are usually of smaller capacitance than paper condensers. The capacitance may be indicated by color code markings, or numerals showing the actual value may be stamped on the capacitor. If the numerals are a decimal, for example, .002, the capacitance is indicated in microfarads. If it is a whole number, for example, 2000, the figure represents micro-microfarads.

Tubular Paper By-Pass Capacitors. These are cylindrical shaped paper dielectric capacitors with two tinned wire terminals. They are plainly marked to show the capacitance and safe working voltage.

Ceramic Capacitors. The dielectric in this type is a ceramic, that is, special baked clay. The plates are a film of metallic silver baked on the surface of the ceramic. Ceramic capacitors are often used for the same purposes as mica capacitors. They are made only in small capacitances.

Electrolytic Capacitors. This form of capacitor is commonly used in the power supply of electronic circuits where large capacitance is required. An electrolytic capacitor can provide large capacitance in small space. It can also be manufactured at much lower cost than a paper capacitor of equal capacitance.

Electrolytic capacitors may be either wet or "dry." Both types are actually wet inside but the so-called dry type contains no free liquid, whereas the wet type does. The wet capacitor consists of sheets of aluminum foil immersed in a solution of borax in water. The borax solution is an electrolyte. All electrolytes are conductors of electricity. The borax solution serves as one of the conducting surfaces in the capacitor. Chemical action forms a thin film of aluminum oxide on the surface of the aluminum foil immersed in the borax solution. Aluminum oxide is an insulator and the film serves as the dielectric between the aluminum foil and the solution. Wet type electrolytic capacitors are usually enclosed in an aluminum can.

The dry type of electrolytic capacitor also consists of aluminum foil and a solution of borax. However, the electrolyte is contained in wet gauze or paper or in a thick jelly so that there is no free liquid. There is nothing in the dry type to spill.

Electrolytic capacitors are manufactured in many sizes, ranging in capacitance from 1 to 1000 microfarads. The capacitance, polarity and working voltage is usually indicated. The terminals are always marked with a plus and minus sign or the polarity is indicated by red and green or by red and black terminal wires. Red indicates positive; so does a plus sign. The electrolytic capacitors shown in circuit diagrams are always marked to show the location of the positive and negative terminals. The circuit will not function unless the capacitors are connected as indicated. If an electrolytic capacitor is accidentally reversed in a circuit it forms a short circuit and the capacitor usually is ruined. Electrolytic capacitors are manufactured in single, double and triple units—that is, one, two or three capacitors within one case. Double and triple units usually have a common negative terminal.

The working voltage marked on an electrolytic capacitor is important. A capacitor marked 25-v D.C. should be used only in a circuit where the voltage is never above 25 volts. It is well to allow more margin of safety than this. A capacitor which is to be used on 117-v A.C. circuit should be one marked for 150 or 250 working volts.

Although electrolytic capacitors furnish large capacity in small space and at low cost they are inefficient and have a high power loss compared to paper, mica, air and oil dielectric capacitors. The electrolytic film between the aluminum foil and the electrolyte deteriorates with age. Consequently a breakdown in the electrolytic capacitors in commercial radio receivers is one of the most frequent causes of receiver failure. Because of deterioration with

age or while in storage, electrolytic capacitors seldom are used in army and navy equipment.

VARIABLE CAPACITORS

Variable capacitors are used for tuning. They are sometimes called tuning capacitors. The knob on your radio receiver which you turn to tune in different broadcasts is attached to a variable capacitor. The most common type is constructed so that the capacitance may be gradually and continuously increased or decreased by turning a

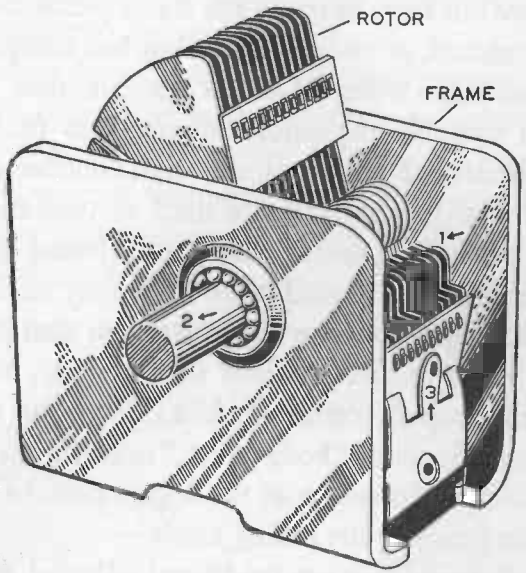

VARIABLE TUNING CAPACITOR

This is the 365 mmfd. variable tuning capacitor used in building the receivers described in this book. It is designed for mounting on a base and has two threaded holes for 6-32 machine screws on the under side. Connection to the frame and rotor is made by a wire placed under the head of one of the mounting screws. The numerals identify: **1**, the stator, **2**, the shaft and **3**, the stator terminal.

knob. It consists of a number of movable, semi-circular aluminum plates which rotate between another group of nonmoving plates so as to interleave. The group of movable plates is called the ROTOR. The group of nonmoving plates is called the STATOR.

The air between the plates is the dielectric. When the movable plates (rotor) are turned so as to mesh with the nonmoving plates (stator) the capacitance increases. The capacitance is greatest when the plates are completely meshed. When the rotor is turned so that the movable plates move out from between the stator plates the capacitance is reduced. A variable capacitor has comparatively small capacitance when the plates are separated.

Several variable capacitors mounted so that all the movable plates are on a common shaft is called a "gang" capacitor. Gang capacitors are used to tune more than one circuit simultaneously. They will be found in modern superheterodyne and tuned radio-frequency receivers.

Variable capacitors are constructed so that the metal frame is electrically connected to the rotor. When the capacitor is properly connected in a circuit, this construction helps to eliminate "body effect," or disturbance of the circuit due to the presence of the fingers close to the rotor shaft while grasping the tuning knob.

Variable capacitors are made and adjusted by experts at the factory. Bending the plates may throw them out of alignment or cause them to short circuit. When handling or working with a variable capacitor in the construction of a project, keep the capacitor closed—that is, plates fully meshed.

Trimmer and Padder Capacitors. The most common variety of this type of capacitor consists of two small metal plates mounted on a ceramic base. A thin sheet of mica between the plates acts as the dielectric. The capacitance can be changed by using a screwdriver to turn a screw which moves the two plates closer together or farther apart. Trimmers and padders are "adjustable" capacitors rather than variable condensers.

Trimmers are usually mounted on the side of variable capacitors for "trimming" or adjusting the capacitors. Padders are commonly used in the oscillator circuit of superheterodyne receivers.

Modern radio receivers employ from two up to ten or even more circuits in order to obtain selectivity. These circuits are useless unless all of them are working at their proper frequencies simultaneously. In order to tune several circuits simultaneously, tuning capacitors with several individual capacitor sections on one shaft are employed.

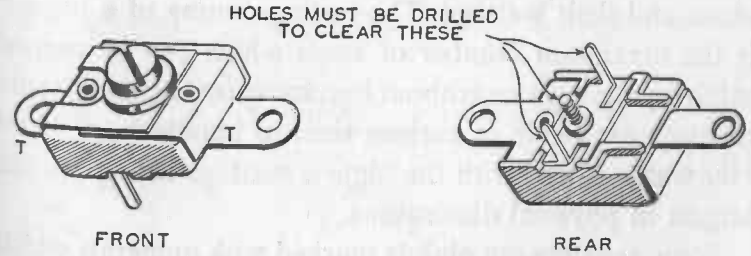

A TRIMMER CAPACITOR

The terminals are marked **T** in the illustration. When the capacitor is mounted on a base or panel, holes must be drilled to provide clearance for the lugs and adjusting screw.

Trimmer capacitors mounted on the variable capacitor and also, in some instances, on the transformers and other coils make it possible to "align" the coils and capacitors so that several circuits can be tuned simultaneously by turning a single tuning control knob.

RESISTORS

Radio men commonly use the term RESISTOR to indicate the small cartridge-shaped fixed resistances which are included in the circuits of radio receivers and amplifiers. A resistor is a device intentionally placed in an electric circuit to provide resistance in the circuit. The term resistor applies also to the various forms of voltage dividers, rheostats, potentiometers, volume controls and ballasts used in electronic circuits. Resistors are utilized in electronic circuits to:

1. Reduce or control the amount of current flowing.
2. Cause differences of potential at certain points.
3. Reduce the voltage applied to a device.

Resistors are rated according to their resistance in ohms and their wattage. The wattage rating of a resistor is the maximum number of watts which can be carried safely by the resistor without becoming overheated. Radio resistors are made in various sizes to handle from ¼ to 100 watts. Those with the highest wattage rating are the largest in physical dimensions.

Some resistors are plainly marked with numerals which show their resistance measured in ohms. Those which are not so marked employ a color code to indicate their resistance. The most common method is to use colored bands.

When the resistor is turned so that the bands are at the left hand end, the first two bands (reading from left to right) indicate the first two figures. The third band is the multiplier, used to multiply the first two figures. If there is no fourth band, the resistance may vary plus or minus one-fifth (20%). A gold fourth stripe indicates a variation of plus or minus one-twentieth (5%) and a silver fourth stripe indicates a variation of plus or minus one-tenth (10%).

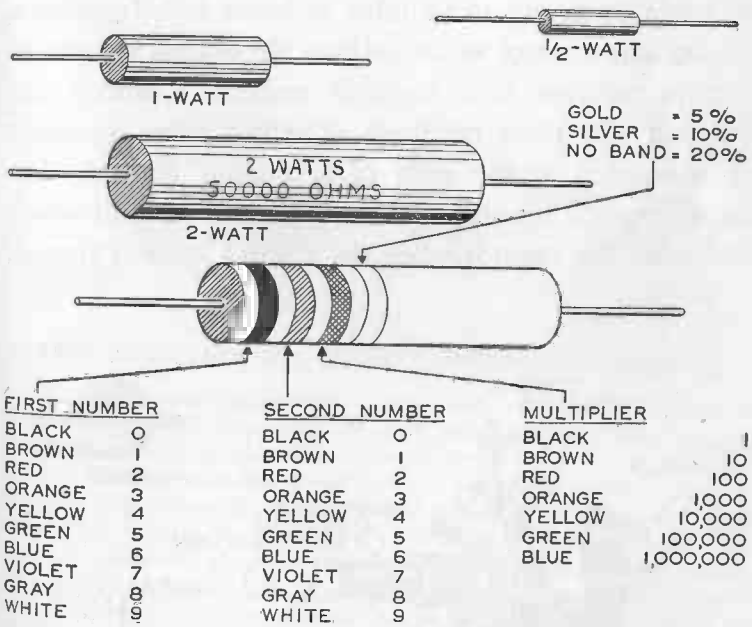

RESISTOR COLOR CODE

To interpret the color bands hold the resistor so that the end bearing the bands is at your left. Each band is code for a numeral. Follow the instructions in the text to determine the resistance. You can identify the capacity of a resistor by its size. The resistors illustrated above are full size.

For example, if a resistor has a blue first band, a gray second band, an orange third band and a silver fourth band, the first number is 6, the second is 8, the multiplier is 1000 and the variation may be plus or minus 10%. Therefore the resistor is a 68,000 ohm unit whose actual resistance in ohms may be somewhere between 61,200 and 74,800 ohms.

CONTROLS

Many of the adjustments required in electronic circuits are made by means of variable resistors called controls. The volume control which adjusts the sound volume of a radio receiver is a variable resistor. Controls are equipped with three terminals. The two outer terminals are connected to the ends of a circular resistor. The center terminal is connected to a movable contact which slides over the resistor when the control knob is turned.

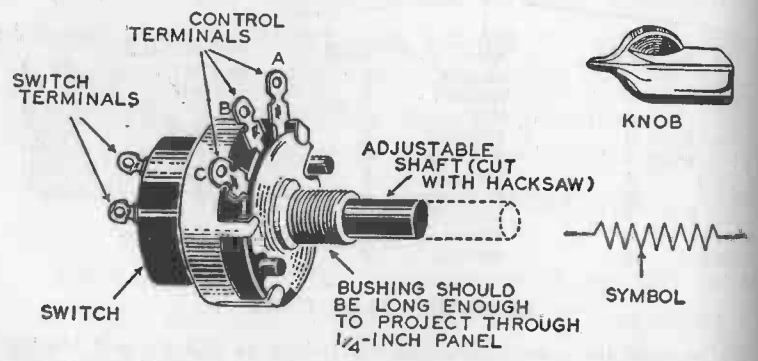

CONTROLS

Controls are resistors whose resistance can be varied by turning a knob. Controls are used in some of the apparatus described in this book.

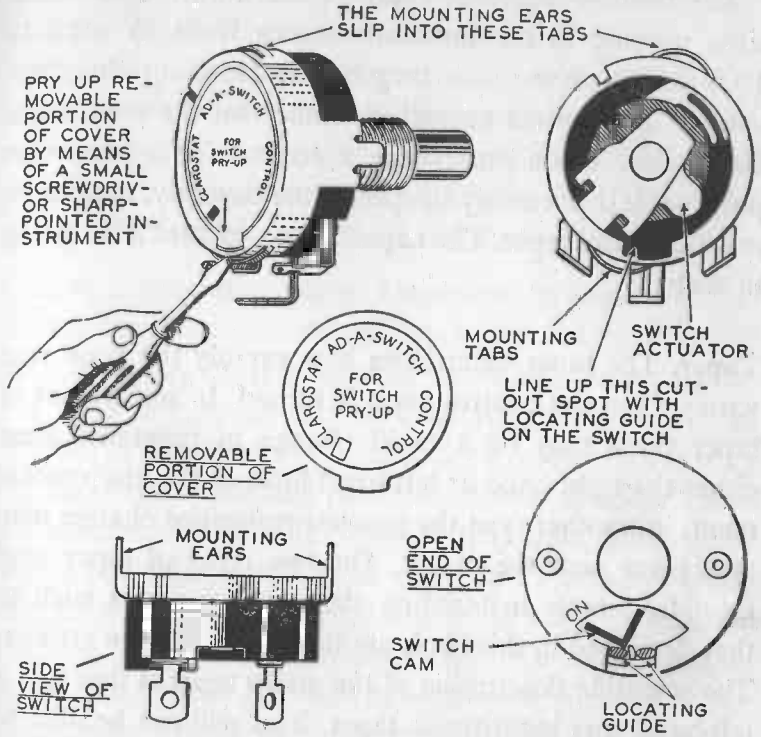

HOW TO ATTACH AN "ON-OFF" SWITCH TO A CONTROL

Pry off the removable portion of the cover on the control. Hold the control in your left hand with the shaft pointing toward you. Use your right hand to turn the shaft in a clockwise direction as far as it will go.

There are two projecting metal tabs or "ears" on the metal rim of the switch—there is also an opening in the switch cover. Inside the switch and visible through the opening is a "V"-shaped cam. Moving the cam operates the switch. Move the cam until it is in the center of the opening. Line up the projecting ears on the switch housing with the metal guides in the control case. Then press the switch firmly against the control and while holding it in that position bend the ears so that the switch cannot slip away from the control.

The shaft on the control will probably prove to be longer than necessary and it should be cut off. If the shaft is the notched type, it can be shortened by holding it in a pair of pliers and breaking it at the notch which will reduce it to the correct length. If the shaft is not notched, cut off the surplus length with a fine tooth hacksaw.

Electronic-equipment catalogs list controls of many sizes ranging in maximum resistance from ½ ohm to 10,000,000 ohms (ten megohms). Hook-up diagrams usually indicate the correct resistance for the controls in the circuit. When purchasing a control for a particular purpose, it is necessary to specify the capacity, maximum resistance and taper. The capacity of a control is its rating in watts.

Taper. The taper determines how rapidly the resistance varies when the control knob is turned. In some types of taper there may be a rapid change in resistance near either the right hand or left hand limit of the knob movement; in another type the greatest resistance change may take place near the center. The two types of taper used most frequently in building electronic appartus such as that described in this book are the AUDIO and the LINEAR. The scientific description of the audio taper is that it is a left-hand true logarithmic taper. You will not be able to understand that definition unless you are an engineer or a mathematician.

The linear taper is not really a tapered control even though it is commonly referred to as such. It has a uniform resistance change from either end. A "linear taper" is used wherever a control should be such that the change in resistance is proportional to the degree of rotation over the entire range of adjustment.

A control can be connected in a circuit so as to regulate either current flow or voltage. When used to regulate current it is a RHEOSTAT and only two terminals are used. When used to regulate voltage the control is a

POTENTIOMETER and all three terminals are utilized. Potentiometers usually have a linear taper.

It is sometimes desirable to attach an on-off switch to a control so that the same knob operates both the control and the switch. SPST, SPDT and DPST switches for this purpose are manufactured. One of the illustrations and its caption explains how to attach a switch to a control.

Further Explanation about Capacitor Action. It is customary for electronic technicians to use the word "pass" as if alternating current actually passed THROUGH a capacitor. The word pass may mislead students who are interested in the physics of a capacitor's action. Alternating current does not actually pass THROUGH a capacitor unless the capacitor "leaks." A capacitor may leak because of a defect, low resistance dielectric or other reasons and permit an alternating current to pass through. Without a long explanation of capacitor action, it is more accurate to say briefly that an efficient condenser, in good condition, blocks a steady direct current but permits an alternating current to surge back and forth in a circuit without in reality passing THROUGH the capacitor.

Transducers—Components of an Electronic Circuit: EARPHONES, LOUDSPEAKERS, MICROPHONES AND PICKUPS

There is a word in our language which once belonged only to physicists and the dictionary but now is coming into more common usage. It is the term TRANSDUCER and it means CONVERTER OF ENERGY. You hold two transducers in your hand when you make a telephone call. The microphone into which you direct your voice converts sound energy into electrical energy. The receiver into which you listen converts electrical energy back into sound energy.

There are many kinds of transducers. Some of them, such as the bolometer, glass electrodes and electrical strain gages, are used only in laboratories. A bolometer is an electrical instrument for measuring minute quantities of radiant heat by changes in the resistance of a blackened platinum strip exposed to the radiation. The development of transducers in recent years and their

combination with the electronic amplifier and recording instruments brought a revolution into the broad field of scientific measurements. Practically any physical or chemical property of matter can be made to give an electrical signal by means of transducers. They are invaluable in industrial research and development laboratories.

All of us have at least a nodding acquaintance with a few transducers. Two of these, the telephone receiver and telephone transmitter, have been mentioned. Others in this class are the loudspeaker, microphone, phonograph pickup and photocell. This chapter describes some of them.

TELEPHONE RECEIVERS AND HEADSETS FOR RADIO AND ELECTRONIC CIRCUITS

In the early days of radio, there were no loudspeakers. Loudspeakers had not been developed because they required more energy than a radio receiver could furnish without amplification and there were no amplifiers. A telephone receiver requires very little energy in order to produce sounds in comparison to the energy required for a loudspeaker. Telephone receivers made the signals audible. They were the transducer used to convert small amounts of electrical energy into audible sounds.

Telephone receivers still are used in aircraft, military and communications service, by experimenters and by "ham" (amateur) radio operators. The hams call a telephone receiver a "can."

A telephone receiver is one of the most sensitive of electrical instruments. A few millionth parts of the energy

required to light a small flashlight lamp will produce sounds in a telephone receiver. A good radio headset is so sensitive that it will produce audible sounds in response to changes in the almost infinitesimal amount of current generated when the cord tips are touched to the moist tongue and one tip is tapped against the other.

The telephone receivers or ear-phones used in radio and electronics are the small light-weight variety known as "watch case" or headphones. A complete headset consists of a pair of receivers, a connecting cord and a head band which holds the receivers snugly against the ears.

Electromagnetic Telephone Receivers. The most common type of earphone used in headsets is an electromagnetic device which consists of a case and cap enclosing a permanent magnet, a sheet-iron diaphragm and two small electromagnets wound with very fine wire. The parts are assembled so that the space between diaphragm and the iron cores in the electromagnets is small—usually about .002 inch.

It has been explained that there is always a magnetic force or flux at the poles of an electromagnet and that there is also a magnetic force or flux through the core of an electromagnet when an electric current flows through the winding. It has also been shown that a magnetic flux exerts an attractive or pulling force upon iron.

The magnetic flux from the poles of the permanent magnet in a telephone receiver passes through the cores of the electromagnets and exerts a pull upon the iron diaphragm. The pull of the permanent magnet places the

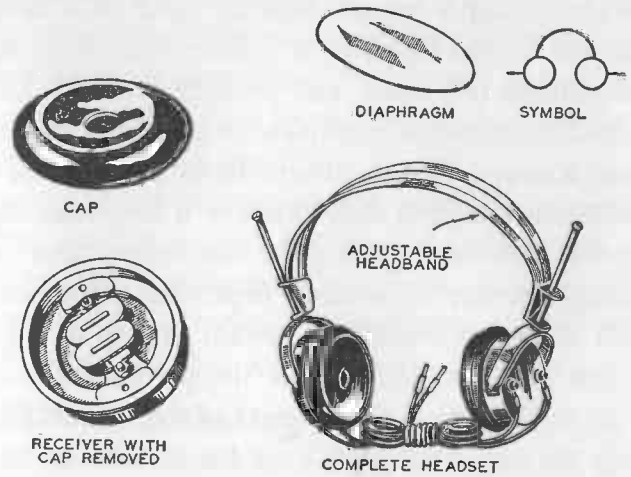

ELECTROMAGNETIC TELEPHONE HEADSET FOR RADIO USE

Telephone receivers make radio signals audible by changing the energy of the rectified high-frequency currents delivered by the detector into sound waves. For radio, it is desirable to have the telephone receivers held firmly to the listener's ears and leave both hands free. A complete radio headset consists of two receivers equipped with a headband so that a receiver is firmly held to each ear. When used for radio work, telephone receivers are wound with much finer wire than is used in the Bell telephone receiver. This makes it possible to wind a large number of turns in small space so that the receiver is more sensitive to weak currents. Incidentally, it also increases the resistance. The Bell telephone receiver has a resistance of approximately 75 ohms but the resistance of a radio headset is 2,000 to 3,000 ohms.

A telephone receiver is one of the most sensitive of electrical instruments. An amazingly small amount of energy flowing through a sensitive telephone receiver will produce sounds audible to human ears. There are two kinds of telephone receivers used in radio, the crystal and the electromagnetic types. Electromagnetic receivers are the "best all around" for amateur experimenters. An electromagnetic telephone receiver consists of a pair of small electromagnets, a permanent magnet and a thin sheet-iron diaphragm. The electromagnets are mounted close to the diaphragm but do not touch it. The permanent magnet exerts a constant pull on the diaphragm. The diaphragm acts like the head of a drum. Only a very small disturbance is required to make it respond. When current flows through electromagnets, the magnetic pull on the diaphragm varies. It becomes stronger or weaker, depending upon whether the current in the windings is aiding or is bucking the pull of the permanent magnet. Each quick change in the pull produces a sound wave.

diaphragm under a tension like the head of a drum. If the tension on the diaphragm is increased or decreased the diaphragm will move and produce a sound. Only a very small disturbance is required to make the diaphragm produce a sound. When current flows through the coils on the electromagnets they produce a magnetic flux of their own. The force pulling the diaphragm then varies, becoming stronger or weaker, depending upon whether the pull of the flux created by current passing through the coils aids or bucks the pull of the permanent magnet. Very small changes in the strength of the current flowing through the electromagnets alter the tension of the diaphragm and cause it to move. Its motions force sound waves out through the hole in the cap.

The strength of the magnetic flux produced when a weak current flows through the electromagnets is greater if the coils consist of many turns of wire than when the same weak current flows through electromagnets having few turns of wire.

The electromagnets in an earphone are wound with hundreds of turns of wire in order to make the phone sensitive to weak currents. The wire must be very small in diameter in order to wind a large number of turns on a small electromagnet. Fine wire has much greater resistance than larger wire. Earphones used in radio headsets usually have a resistance of 1000 to 1500 ohms each. Although radio headsets are rated according to their resistance in ohms, resistance itself is not always the quality which is most desired and it is specified only to give an indication of the turns on the electromagnets. The number of turns of wire wound on the bobbins is more

important than the resistance except in special instances. Headsets having a resistance of 8,000 to 10,000 ohms are manufactured for use in circuits where the high resistance is a desirable quality.

A radio headset requires care to preserve its sensitive condition. Do not drop it and do not unscrew the caps and lift up the diaphragms to see inside. A diaphragm is easily bent and the receiver thereby thrown out of adjustment. Keep the caps screwed tightly in place.

Crystal Telephone Receivers. The fact that certain crystals will be distorted mechanically if a voltage is impressed upon them is used in the construction of "crystal phones." No coils or magnets are used. The crystal is mounted between two electrodes. One electrode is connected to a circular diaphragm. When the electrodes are connected to a source of varying potential the crystal vibrates and transmits its motion to the diaphragm and sounds are produced. Crystal phones respond to a wide range of frequencies (60 to 10,000 cycles) and produce sounds of greater fidelity than electromagnetic receivers.

LOUDSPEAKERS

More energy is required to operate a loudspeaker than is required to produce audible sounds in a sensitive telephone receiver. A pair of headphones connected directly to the detector of a radio receiver will produce sounds which are plainly audible to the person wearing the headset. A loudspeaker connected to the detector under the same conditions would not produce audible sounds. The currents from a detector must be amplified before they will operate a speaker satisfactorily. A loudspeaker

connected to the right amplifier will produce sounds which can be heard by a group of people. When used to reproduce voice and music, the sounds from the speaker are a more faithful reproduction of the original than the sounds from a telephone receiver.

The type of speaker used most widely is the dynamic moving-coil PM speaker. PM is an abbreviation for permanent magnet. The mechanism of a PM dynamic speaker is a small coil of wire called the voice coil, a cone-shaped paper diaphragm and a permanent magnet assembled on a metal frame.

The voice coil is a single layer of fine wire wound on a small paper tube and attached to the small end of the paper diaphragm. The diaphragm is mounted on the

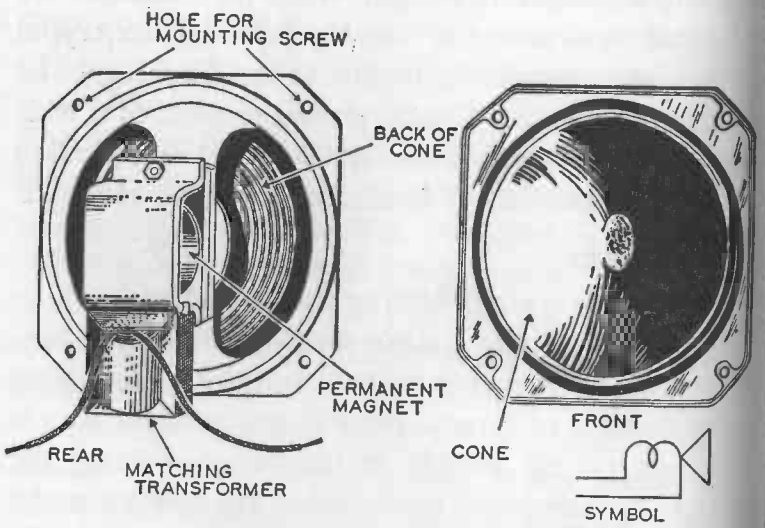

FRONT AND BACK OF A SMALL PM LOUDSPEAKER WITH TRANSFORMER

All speakers do not come equipped with a matching transformer.

speaker frame so that the coil attached to its apex "floats" in the narrow space between the poles of the permanent magnet. The coil is close to the magnet poles but does not touch them. The coil is supported so that it is free to move back and forth along its axis but not sideways or up and down. Its movements are like the to and fro motion of a piston in an engine cylinder.

When an electric current is passed through the voice coil it produces a magnetic field. The reaction of the coil's magnetic field produces forces which move the coil. A current flowing through the coil in one direction will cause the coil to be pulled farther into the field of the permanent magnet. A current in the opposite direction

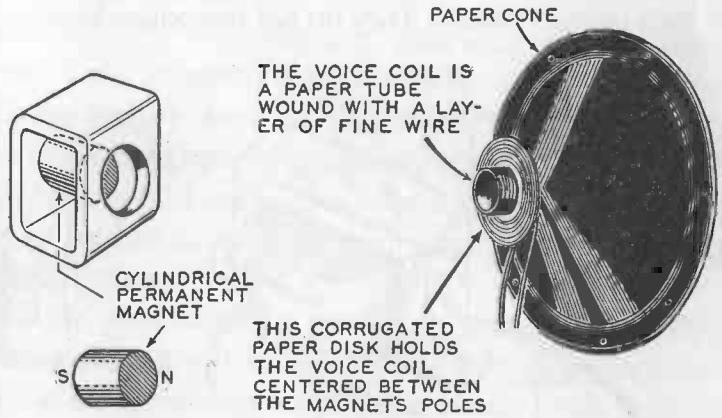

THE MECHANISM OF A PM SPEAKER

The permanent magnet in a PM speaker is usually a small cylinder of Alnico or similar alloy steel. It is mounted in an iron frame with a circular opening in the front. The magnetic path is arranged so that one end of the cylinder is one pole and the edge of the opening in the frame is the other pole. The voice coil moves back and forth in the magnetic field between the poles.

will cause the coil to be pushed away from the permanent magnet. A fluctuating direct current or an alternating current causes the coil to move to and fro. Since the coil is attached to the diaphragm, the diaphragm moves when the coil moves. Movements of the diaphragm push the air and produce sound waves. If the fluctuations in the direct current or alternations of the alternating current occur between approximately 40 to 10,000 per second, the movements of the ordinary PM speaker is able to follow them and produce sounds of corresponding frequencies.

A speaker is rated in size according to the diameter of its cone-shaped diaphragm. A 6-inch speaker has a 6-inch diaphragm; a 12-inch speaker has a 12-inch diaphragm, etc. Speakers smaller than 8 inches are noticeably partial to high-pitched sounds. They do not reproduce base tones

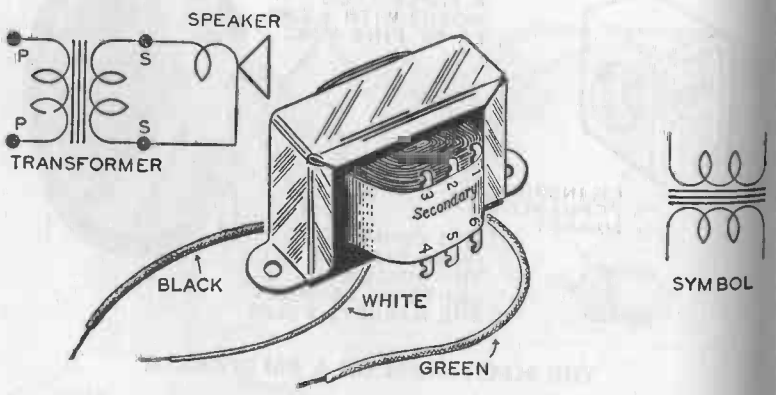

OUTPUT TRANSFORMER AND CIRCUIT CONNECTING A SPEAKER TO AN AMPLIFIER

The black, white and green wires are primary or input terminals.

as well as higher tones. No speaker is equally efficient over the full range of pitch audible to human ears. A 12-inch speaker gives more faithful reproduction than the smaller sizes, but it too favors some tones more than others and does not reproduce faithfully some of the higher pitched sounds. When high fidelity is desirable, three speakers of different size are often used in order to cover the audio-frequency sound range more efficiently.

Speakers are rated in capacity according to the number of watts they will carry. The 12-inch speakers built for home hi-fidelity phonograph installations have a rating of 10 to 25 watts. Some of the 12-inch speakers designed for public address systems have a rating of 35 to 50 watts.

The impedance of the voice coil in a speaker must be taken into consideration before it is connected to an amplifier. The impedance of standard speakers ranges from 3 to 50 ohms. Those used in ordinary radio receivers usually have an impedance of 3 to 4 ohms. Speakers designed for public address systems have an impedance of 6 to 8 ohms. The impedance of speakers manufactured for intercom systems is the highest, usually 45 to 50 ohms.

If the voice coil of a speaker is connected directly to an amplifier, it will not operate satisfactorily. The reason is that the impedance of the plate circuit in the amplifier output tube is much greater than the impedance of the voice coil in a PM speaker, and for efficient operation the impedance of the speaker should match the impedance of the tube. The problem is solved by the use of a small closed core transformer called a "matching" transformer.

The primary of a matching transformer is wound so that its impedance nearly matches the impedance of the plate circuit in the amplifier. It may have an impedance of 14,000 ohms. The secondary of the transformer is wound so that it has about the same impedance as the speaker voice coil. When the primary of the transformer is connected to the output of the amplifier and the secondary is connected to the voice coil, the speaker is "matched" to the amplifier.

Some matching transformers are built with taps on both the primary and secondary so that different impedance values are available. Matching transformers are made in several sizes having a capacity of 3.5 to 35 watts. The proper procedure is to select a transformer which will match most nearly the impedance of the signal source. A difference of 10% is usually of no great importance. If a close match cannot be secured, it is best to select an impedance value which will present a higher rather than a lower impedance to the output tube.

Cabinets for Loudspeakers. The common loudspeaker with a paper "cone" or diaphragm radiates sound waves directly into the air. Normally sound waves will be radiated from both sides of the cone. Those from the back of the cone combine with those from the front of the cone. Under these conditions the waves of low-pitched sounds tend to combine so as to mutually cancel each other. Therefore a loudspeaker is usually placed in an enclosure open to the front of the cone but closed at the back so that no sound waves can be radiated from the back of the diaphragm.

MICROPHONES

A microphone is a device which picks up sound vibrations and produces fluctuating currents or potentials. The ordinary telephone transmitter is a microphone. Usually there is a diaphragm in a microphone and the diaphragm vibrates when struck by sound waves. The vibrations occur in step with those of the sound waves. The movements of the diaphragms actuate an electrical device which may be a carbon button, a small metal ribbon or a piezo-electric crystal.

The Carbon Microphone. A single-button carbon microphone consists of a metal diaphragm which, when it vibrates, exerts mechanical pressure against a group of loosely packed carbon granules contained in a small cup (called the button). The carbon granules lie between two electrodes. One electrode is rigidly fixed but the other is attached to the diaphragm and moves when the diaphragm moves. The electrodes make electrical contact with the granules but there is a certain amount of resistance to the flow of current from one electrode and through the granules to the other electrode. This resistance changes if the granules are disturbed. Vibrations of the diaphragm disturb the granules. If a carbon microphone is made part of an electrical circuit, the resistance of that circuit will fluctuate when sounds strike the microphone.

Single-button carbon microphones are more sensitive than two-button microphones but their tone quality is not as high.

A carbon microphone itself does not generate any cur-

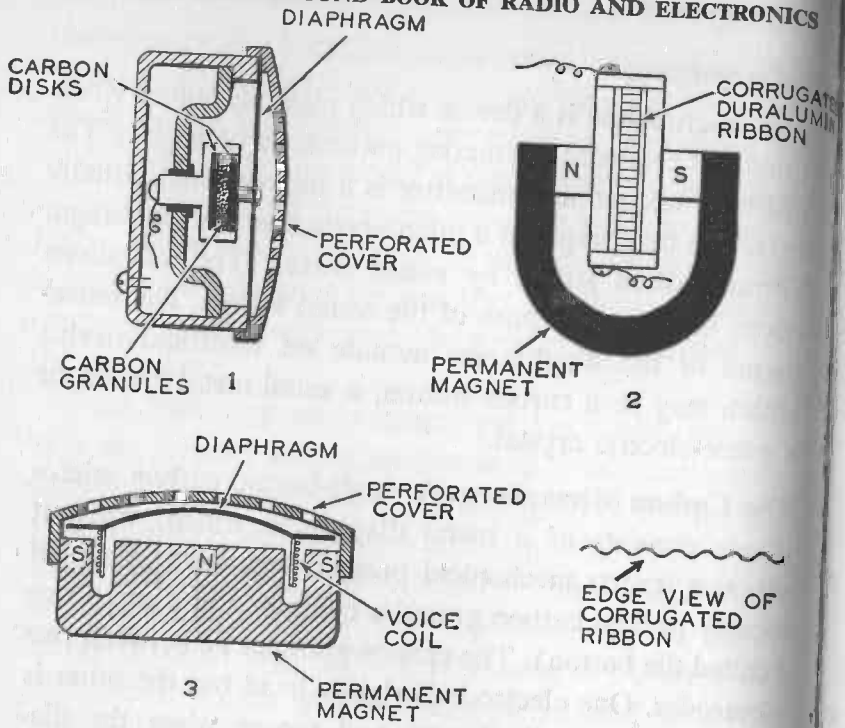

MICROPHONES

Several types of microphones are used in radio broadcasting. Here are three. (1) A single-button carbon microphone is shown in cross section at the upper left. The parts marked carbon disks are the electrodes. (2) A velocity or ribbon microphone consists of a thin corrugated Duralumin ribbon suspended between the poles of a permanent magnet. When the ribbon vibrates under the impact of sound waves, it is moving in a magnetic field and an alternating voltage is induced in the ribbon. The ribbon is connected to a small transformer and a high-gain pre-amplifier. The velocity microphone acquired its name from the fact that the ribbon vibrates in response to the velocity of the air particles moving in a sound wave rather than to the sound pressure. (3) The electrodynamic microphone reverses the principle of the speaker. A small coil of wire attached to a diaphragm is suspended in a magnetic field. When the diaphragm vibrates under the impact of sound waves an alternating current is generated in the moving coil. This current is fed into a small transformer, the secondary of which is connected to the input of an amplifier.

rent or voltage. If placed in a circuit with suitable direct current supply it will cause the current to fluctuate in step with the variations in its own resistance.

Crystal Microphones. No separate source of current or voltage is necessary for a crystal microphone. It generates its own voltage. A crystal microphone is practically a crystal earphone in reverse. The diaphragm of a crystal microphone is mechanically connected to a piezo-electric crystal. Sound waves which strike the diaphragm cause it to vibrate. The vibrations twist the crystal. Since it is a piezo-electric crystal, its disturbance generates a small alternating current voltage.

Electrodynamic Microphone. The electrodynamic or moving microphone reverses the principle of the loudspeaker. A small coil of fine wire attached to a diaphragm is suspended between the poles of a magnet. When the diaphragm vibrates under the impact of sound waves the

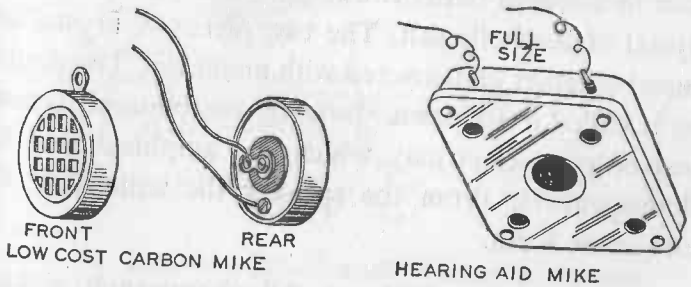

SMALL CARBON MICROPHONES USEFUL TO THE YOUNG AMATEUR EXPERIMENTER

Microphones such as these can often be purchased at small cost from mail order firms which advertise in radio magazines.

movements of the coil in the magnetic field generates an alternating voltage. An alternating current results if the microphone is connected in a closed circuit.

A PM loudspeaker can be used as an electrodynamic microphone. In fact PM loudspeakers function in intercom sets both as microphones and speakers.

Crystal Pickups. When certain crystalline materials are pressed or twisted, they generate electricity. The electromotive force produced in this manner is called PIEZO-electricity. The word *piezo* was derived from Greek and means *press* or *squeeze*. Crystals which will produce piezo-electricity are called piezo-electric crystals. Piezo-electric crystals have another remarkable and useful property. If placed between two metal plates, the crystals will change in width, in length or in thickness if a voltage is applied to the plates. Piezo-electric crystals of Rochelle salt and of quartz are in common use in electronics. The crystal pickups used to play phonograph records produce piezo-electricity. Movement of the needle as it follows the groove in a record twists two rectangular plates cut from a crystal of Rochelle salt. The two pieces of crystal are clamped together and covered with metal foil. The double layer is called a BIMORPH. Twisting the bimorph creates pulses of piezo-electricity which are amplified and fed to loudspeakers. From the speaker the sounds of the record come forth.

Variable Reluctance Pickups. All phonograph pickups do not utilize piezo-electricity. Some of the best reproduction from high-fidelity phonographs is furnished by variable reluctance pickups. These are magnetic devices.

Movement of the phonograph needle varies the amount of magnetism which passes through two small coils in the pickup. The variations in the magnetism generates a feeble alternating voltage which is greatly amplified before entering the loudspeaker. The voltage generated by a variable reluctance pickup is so small that it requires amplification by a pre-amplifier before it passes on to the ordinary phonograph amplifier.

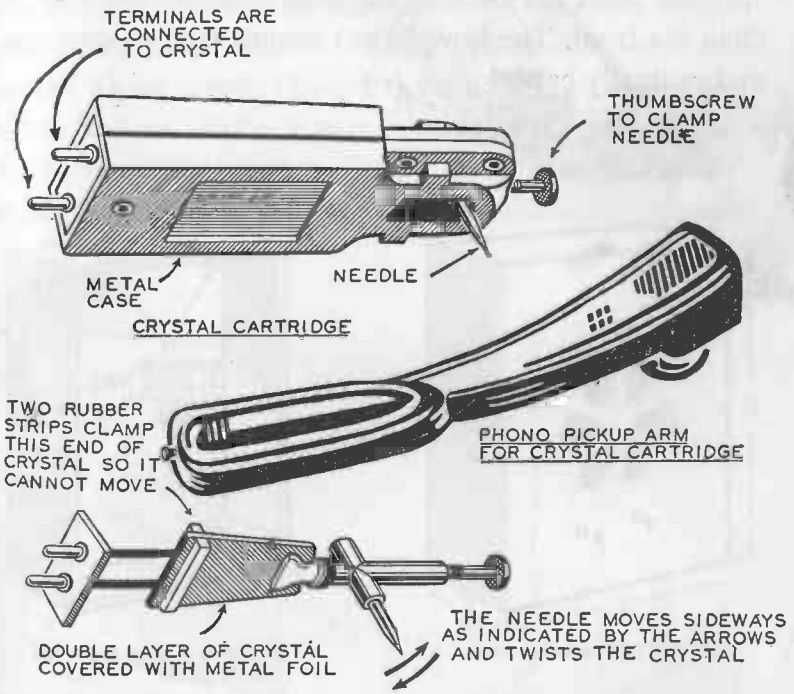

THE TRANSDUCER ON A RECORD PLAYER

Crystal pickups are in common use on record players. Movement of the needle or stylus as it follows the groove in a record twists two plates cut from a crystal of Rochelle salt. The twisting creates voltage pulses which are amplified and then led to a loudspeaker. The two plates of crystal are clamped together. The double layer is called a BIMORPH.

Baffles and Enclosures for Loudspeakers. Loud speakers should be mounted in a baffle or enclosure for two reasons:

1. To protect from dust and mechanical injury.
2. To improve the sound.

Sound waves are radiated from both the back and front of the cone-shaped paper diaphragm. When a speaker is not in a baffle or enclosure of some type, the sound waves radiated from the back of the cone combine with those from the front. The low-pitched sounds tend to combine and mutually cancel.

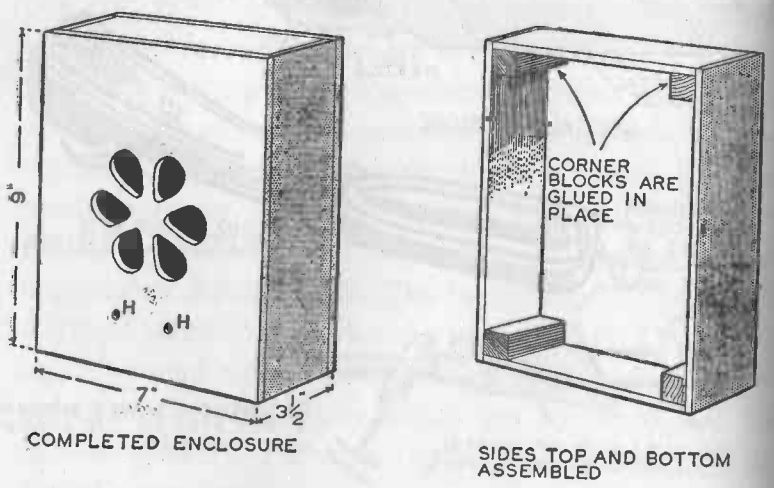

ENCLOSURE FOR SMALL SPEAKER

The enclosure illustrated above is suitable for a 3-, 4- or 5-inch speaker. The six petal-shaped openings in the front can be cut by hand with a fretsaw or with a power jigsaw. The speaker should be mounted on the back of the front panel. The location of the mounting holes depends upon the size of the speaker. The two holes marked HH in the illustration are for binding posts.

The simplest form of baffle is a large sheet of Celotex. A hole of the same diameter as the diameter of cone on the speaker is cut in the center of the sheet. The speaker is mounted on the back directly over the hole.

Two of the illustrations show a small cabinet suitable for a 3-, 4- or 5-inch speaker. This type of enclosure will not produce "hi-fi" tone quality but will protect the speaker and is easily constructed.

Base Reflex Cabinet. This is a common type of enclosure designed to secure the best tonal quality from a loudspeaker. Good results depend upon a cabinet of correct volume and an auxiliary port opening of correct area to suit the size of the speaker. One of the illustrations shows the correct dimensions for a 6-inch speaker. The cabinet

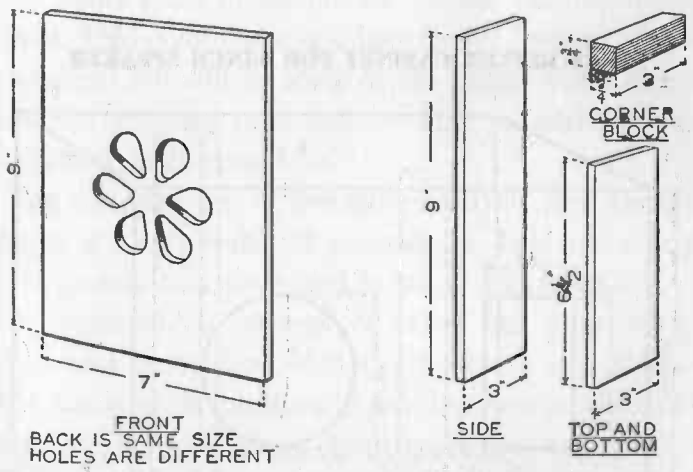

PARTS FOR THE SPEAKER CABINET

The parts for the cabinet, with the exception of the four corner blocks, are cut from ¼- to ⅜-inch plywood.

should be built of ½-inch plywood. The dimensions can be changed slightly to suit particular needs provided the area of the port in square inches and the enclosed volume of the cabinet measured in cubic inches are not changed. The inside surface of both sides and the inside surface of the back should be covered with Tufflex sound insulating material ⅝ inch thick. The Tufflex should be attached to the wood with rubber cement. The cement used for setting rubber floor tiles is satisfactory for this purpose. The speaker should be mounted on the back of the front panel directly over a circular opening of the same diameter as the speaker cone. A base reflex cabinet can be incorporated into a larger cabinet enclosing other portions of a "hi-fi" sound system.

BASE REFLEX CABINET FOR 6-INCH SPEAKER

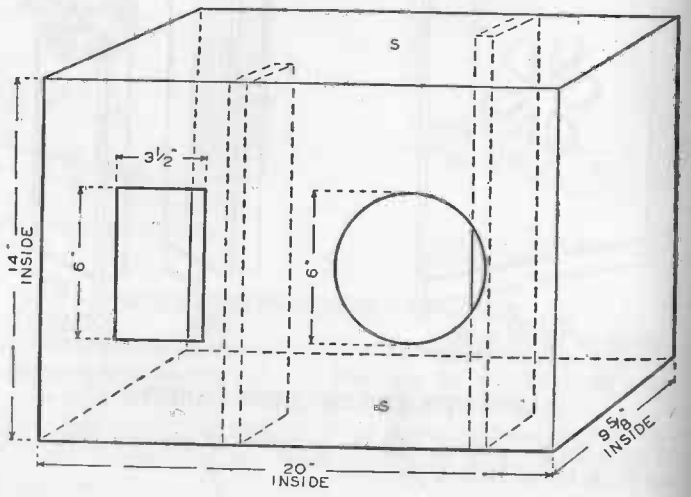

Transistors—Versatile Midgets Which Can Do the Work of Vacuum Tubes

After many years of unique service the vacuum tube has a rival. This competitor is a tiny device, without vacuum or filament but will do some of the things which the conventional vacuum tube can do and, in addition, some things that tubes cannot do.

The essential part of this comparatively new electronic wonder is a tiny wafer of germanium. It is a first cousin of the germanium diode and is called a TRANSISTOR.

A considerable amount of effort has gone into the design and production of this new device and it has become the most revolutionary development in the field of electronics in many years. Transistors are semi-conductor devices capable of doing most of the things that vacuum tubes can do, and as previously stated, they perform some jobs which heretofore have been difficult if not im-

possible for vacuum tubes alone to handle. Transistors may be used as detectors, amplifiers, oscillators, mixers, modulators, attenuators and relays.

The Advantages of Transistors. Transistors are much smaller, lighter, longer-lived, more rugged and more efficient than vacuum tubes. They require no heater current or "warm up" time. They are ready for instant operation and consume only infinitesimal power. Two coins, one of copper and one of silver, moistened on the tongue will provide enough current to operate a transistor.

Transistors were invented by Dr. John Bardeen and

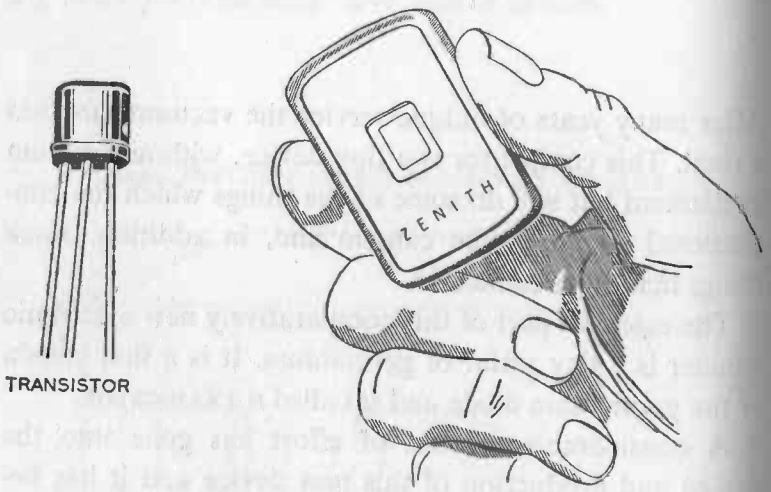

TRANSISTORS REDUCE THE SIZE OF ELECTRONIC EQUIPMENT

Transistors have made possible miniature electronic apparatus operated by tiny, low-voltage batteries. The Zenith "50-X" Hearing Aid, smaller than a package of cigarettes, is an example of such miniaturization. Four transistors supplied with current from a small low-cost battery do the work formerly performed by much larger vacuum tubes requiring expensive batteries.

Dr. Walter Brattan, members of a research group in the Bell Telephone Laboratories directed by Dr. William Shockley.

The small size and low power requirement of transistors are changing the design of much electronic equipment by reducing its size. The first large use for transistors was in hearing aids where they replace the vacuum tubes used as amplifier tubes. Battery replacement is the major cost of operating a hearing aid equipped with amplifier tubes. Transistor-equipped hearing aids are not only much smaller in size but have slashed operating costs from $50 to $75 a year to $5 a year or less.

Transistors have made it possible to build small superheterodyne radio receivers the size of a cigarette package.

Transistor Types. Transistors will probably undergo changes as they are further developed. In their present form, they are triodes. They have three electrodes known as the EMITTER, the COLLECTOR and the BASE. Two types are manufactured.

One, called the POINT-CONTACT transistor, is of little use to the average amateur electronics experimenter. It consists of a very small piece of semiconductor material such as germanium with two properly spaced, pointed, small diameter wires (electrodes) making contact with the surface of the germanium. In appearance the point-contact transistor resembles a crystal diode with an additional electrode. Its mode of operation is entirely different. Point-contact transistors have wide use in switching circuits and in oscillator circuits at frequencies which are normally not possible with the type of transistor known as a JUNCTION transistor.

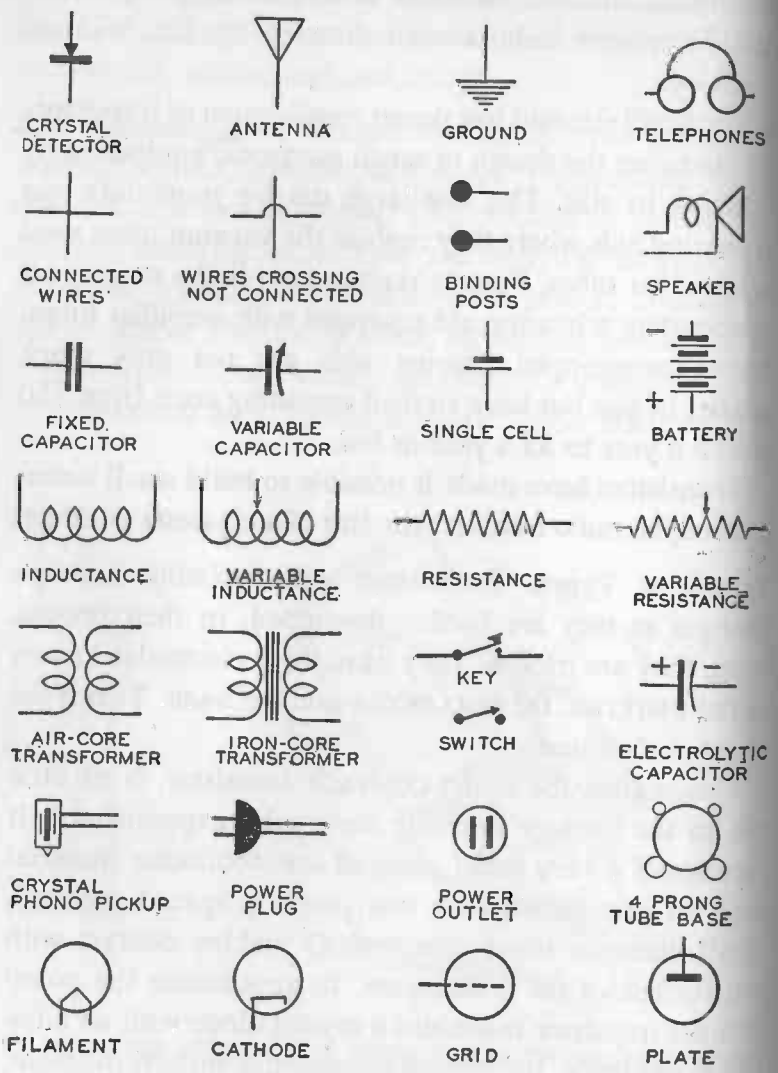

THE SYMBOLS USED IN DIAGRAMS OF RADIO CIRCUITS

Symbols are a sort of radio shorthand used to illustrate schematic circuit diagrams in radio books and magazines.

The junction transistor costs less than the point-contact type. It is of greater interest to the amateur experimenter in electronics and is the type used in building the transistor equipment described in this book.

There are several varieties of junction type transistors. The CK722 transistor manufactured by Raytheon Manufacturing Company of Waltham, Massachusetts, is the "p-n-p" type. It consists of a tiny wafer of germanium protected with about three layers of plastic so that it is hermetically sealed in its plastic jacket. The three wire leads which emerge from the bottom of the jacket are connected to the EMITTER, BASE and COLLECTOR. Current enters the transistor through the emitter lead and

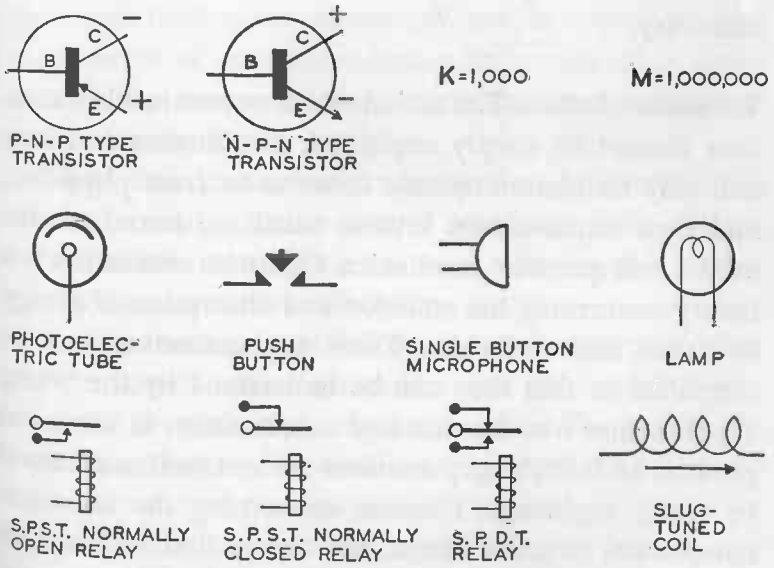

THE SYMBOLS USED IN DIAGRAMS OF RADIO CIRCUITS, CONTINUED

leaves through the collector lead. The emitter is a speck of indium on one side of the germanium wafer. The collector is also a tiny piece of indium but it is located on the opposite side of the wafer from the emitter. The wafer itself is the base. The wire lead on the side marked with the red dot is connected to the collector. The center wire lead is connected to the base. The remaining wire is connected to the emitter. In case you do not know what indium is, it may be interesting to know that indium is one of the metallic elements. It is white and somewhat soft like tin. It leaves a mark when drawn across paper. Indium was first discovered in 1863 by Ferdinand Reich, a professor of physics at the famous School of Mines at Freiberg, where germanium was also discovered. Reich's assistant, Hieronymus Theodor Richter, shared in the discovery.

Transistor Action. The action which occurs inside a transistor cannot be simply explained. Explanations of how and why transistors operate come to us from physicists, and their explanations involve much advanced mathematics and quantum mechanics. Quantum mechanics is a theory concerning the emission and absorption of energy by atoms and molecules. These explanations cannot be simplified so that they can be understood by the young experimenter who has not had an education in advanced physics. In fact the explanations are not well understood by many engineers. Theories concerning the transistor complicate, to some extent, the theory that we have all been taught that an electric current is a flow of electrons. It is not necessary to know anything about transistor

action in order to build the transistor-equipped apparatus described in the following pages. For these many reasons, no attempt will be made here to explain transistor action except by making a slight comparison between it and the familiar vacuum tube.

Transistor Characteristics. The emitter, base and collector of a transistor compare somewhat to the vacuum tube's cathode, grid and plate. The fundamental differences between transistor and vacuum tube action are:

1. In the vacuum tube electrons are liberated into an evacuated space or VACUUM by a heated cathode. The movement of the electrons toward a positively charged plate is an electric current.

2. In a transistor, electrons or holes (spaces where there are inadequate electrons) are injected into the SOLID BODY of a semiconductor by means of a small battery. The movement of the electrons through the SOLID material is an electric current.

When these statements are summed up in fewer words, the fact most evident is that in a vacuum tube electric current FLOWS THROUGH A VACUUM, whereas in a transistor the current FLOWS THROUGH A SOLID.

Another fundamental difference between vacuum tubes and transistors is in their mechanism of control. Mechanism of control is an engineer's term. To explain the term "mechanism of control" we might call the PRESSURE ON THE TRIGGER the "mechanism of control" in a rifle. Signal VOLTAGE and a minute grid charging current controls the cathode to anode electron flow in a radio receiving or amplifier tube and is the mechanism of control.

Signal ENERGY or CURRENT controls the electron flow in a transistor and is the mechanism of control. The signal source employed to operate a tube need deliver VOLTAGE only, but the signal source employed to operate a transistor must deliver CURRENT.

When a circuit is to be designed to couple a tube or a transistor to microphones, telephone receivers, speakers, etc., the radio engineer bases his plans and calculations on:

1. A vacuum tube is a voltage-actuated high-impedance device.
2. A transistor is a current-operated low-impedance device.

The Care Required in Handling Transistors. Although transistors are fairly rugged they can be damaged if improperly handled. The following precautions should be observed.

1. Do not drop or subject a transistor to severe mechanical shock.
2. Do not operate a transistor at higher voltages or greater current values than those designated for it.
3. When connecting a transistor, observe and comply with the polarity designation. Passing a current through a transistor in the wrong direction may damage it.
4. Do not connect a transistor in a circuit until all other connections have been made.
5. Whenever possible, avoid cutting transistor leads short.

Transistors are easily damaged by too much heat and special precautions must be taken when transistor leads

are soldered. Use rosin-core solder only, never acid-core. Use high quailty solder (60% tin and 40% lead). This quality is available in Ersin, Kester, Alpha and some other brands of solder. Scrape the connections before soldering so that they can be soldered quickly and without much heat. Use a small or miniature soldering iron. Grasp each transistor lead in turn as close to the free end as possible with a pair of long nose pliers. The pliers will conduct much of the heat away from the lead and prevent it from reaching the transistor.

There is no attempt at miniaturization in the design of the transistor-operated apparatus in this book. It is important to become familiar with the design, use and limitations of transistors before attempting to build MINIATURE receivers, amplifiers, etc.

Transistor Kits. If you wish to build miniaturized apparatus, you can buy complete kits of parts for building transistor-operated pocket radio receivers, amplifiers, etc. Miniature and sub-miniature controls, transformers, switches and coils are also available.

Transistor Batteries. Small 1½-volt flashlight cells called "penlite" cells give satisfactory service in many transistor circuits. They can be purchased at any "dime store" or hardware store. There are two sizes. Several manufacturers make them but the list numbers of all the different brands would be out of place here. The Burgess No. 7, called a "slim penlite" cell, or its equivalent of other brands is 1¾ inches long and 13/32 inches in diameter. The Eveready No. 915, called a "penlite" cell, or its equivalent of other brands is 1 31/32 inches long and 35/64

inches in diameter. An Eveready cell of the same size, known as No. 1015, is made for hearing aids. The hearing aid cells cost approximately the same price as the penlite cells but will last about six times as long as the No. 915 in transistor service.

Special tubular-shaped transistor batteries are also obtainable. Each tube contains fifteen 1.4 volt alkaline dry cells. Power requirement from 1.4 to 21 volts can be met simply by slicing off the necessary number of cells.

CHAPTER NINE

Transistor Apparatus Which You Can Build . . . A ONE-STAGE AUDIO AMPLIFIER • A COMBINATION CRYSTAL DIODE AND TRANSISTOR RADIO RECEIVER • A TRANSISTOR TIMER SWITCH • HOW TO BUILD A TRANSISTOR CODE PRACTICE OSCILLATOR • LEARNING TO TELEGRAPH.

Although transistors have been in use less than a decade, they have found so many applications they are being manufactured at the rate of 10,000,000 per year. In a few years transistor production is expected to total 30,000,000 per year. They truly are the basis for the electronics of the future. A transistor is free of many of the vacuum tube's limitations such as bulkiness, short life, fragility and high power consumption. A transistor saves space, weight, heat, power lasts 150 times as long as a vacuum tube and uses 1/1000 of the electric current.

Building radio and electronic apparatus which uses a transistor in place of a radio tube is easy for the amateur experimenter. An important advantage from the stand-

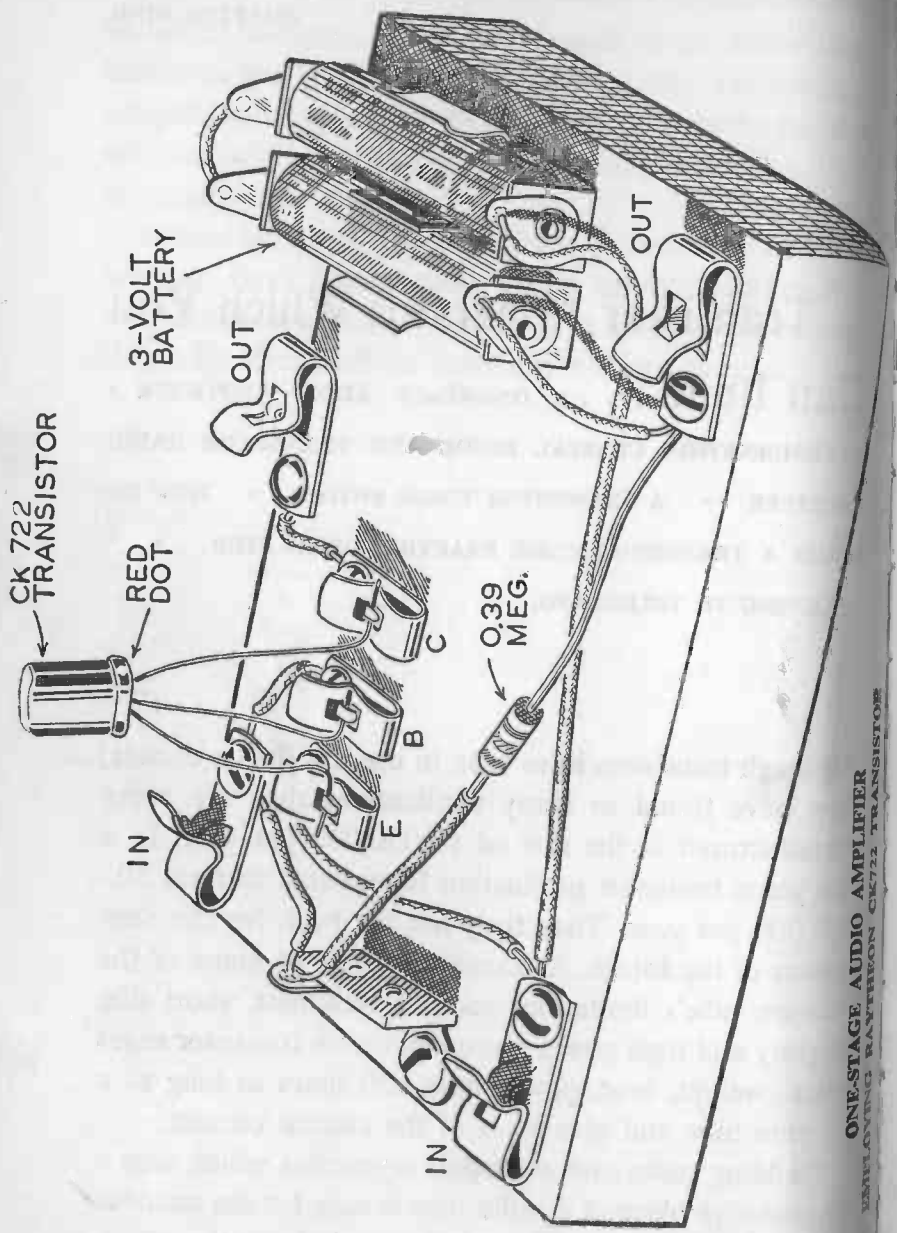

ONE-STAGE AUDIO AMPLIFIER
EMPLOYING RAYTHEON CK722 TRANSISTOR

point of the young experimenter is: transistor circuits are not connected to the 120-volt power line. No one in your household can object to your hobby on those grounds. Transistor circuits are operated by batteries. The batteries cost only a few pennies and last a long time.

There is no attempt at miniaturization in the design of the instruments described in this chapter. To make or assemble miniature and sub-miniature apparatus requires more mechanical skill than to make or assemble apparatus of larger size. There are many first-class kits of parts on the market for building miniature amplifiers, radio

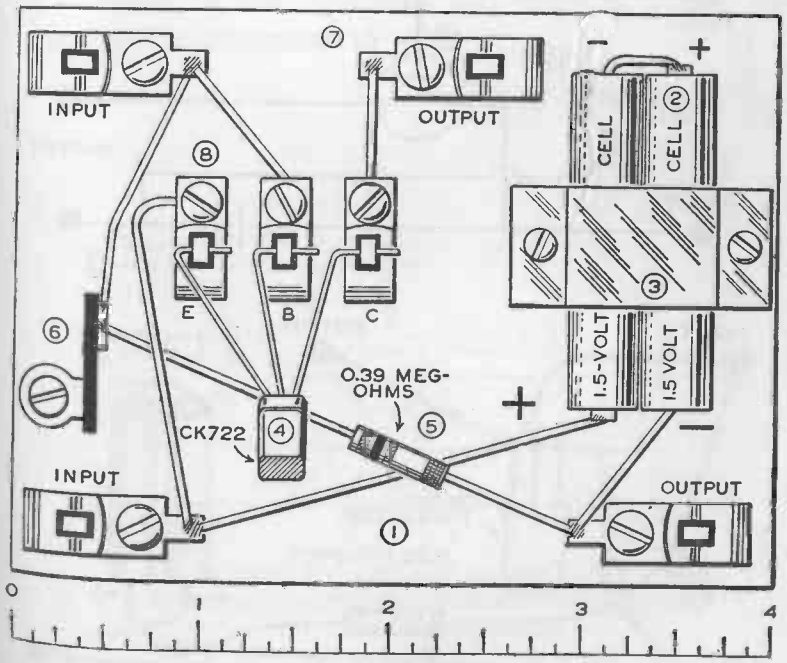

PLAN OF THE ONE-STAGE TRANSISTOR AUDIO AMPLIFIER

receivers, oscillators, timers, etc. If you wish to build miniature equipment, it is advisable to buy the kits and follow the instructions which accompany them.

ONE-STAGE TRANSISTOR AUDIO AMPLIFIER

One of the simplest transistor circuits is the one-stage audio amplifier shown on the following page. In addition to simplicity this amplifier has the advantage of low cost.

SCHEMATIC AND PICTORIAL DIAGRAMS OF ONE-STAGE AUDIO AMPLIFIER EMPLOYING RAYTHEON CK722 TRANSISTOR

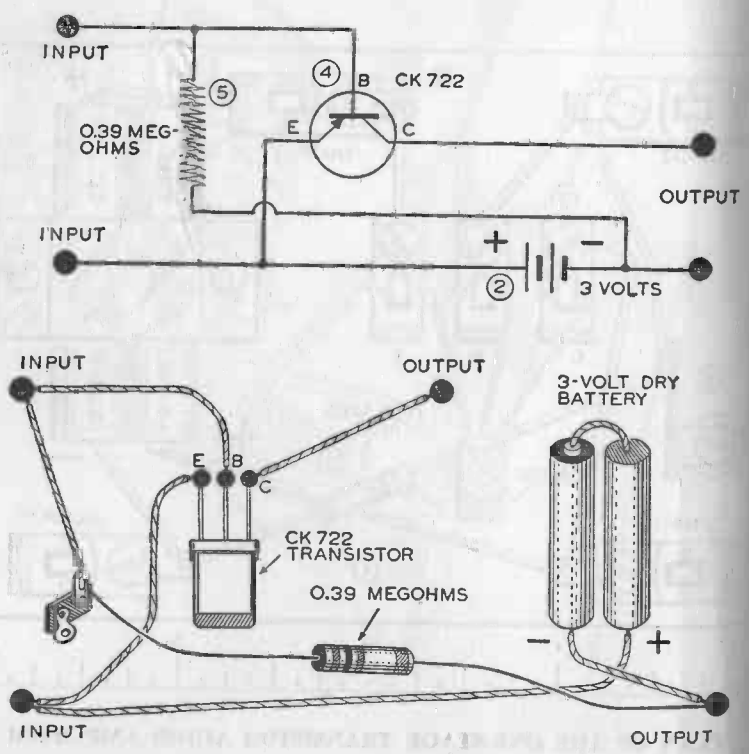

The components can be purchased for $1.75 or less. When connected to either of the crystal detector receivers described in Chapter Three, this amplifier will greatly increase the strength of the signals.

The amplifier is so designed that the transistor is held in three Fahnestock clips. This eliminates soldering and possible damage to the transistor by the heat of the soldering iron. The transistor can be removed quickly from the clips for use in another piece of equipment if you wish. The first circuit diagram of the amplifier specifies a a Raytheon CK722 transistor. A General Electric type 2N107 transistor will serve equally well. A circuit diagram for the G.E. 2N107 is also illustrated. Notice that the values of the capacitors and resistors in the two circuits are different.

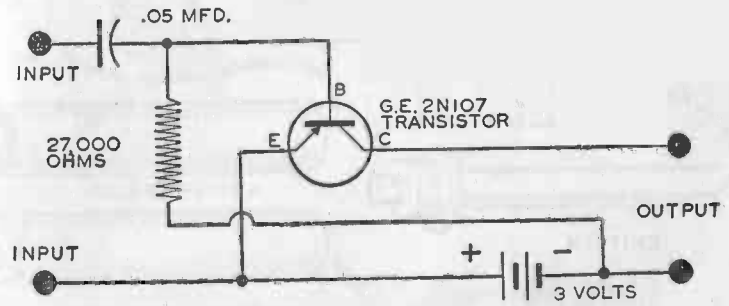

SCHEMATIC CIRCUIT DIAGRAM OF ONE-STAGE AUDIO AMPLIFIER EMPLOYING G. E. 2N107 TRANSISTOR

The diagram shows an .05 mfd. ceramic capacitor which does not appear in the previous circuit diagram.

Here is a list of the parts and materials needed to construct the amplifier:

1 Wood base 4 in. x 3 in. x ¾ in. (**1**)
1 Raytheon CK722 P-N-P transistor (**4**)
4 No. 2 Fahnestock Spring Contact Clips (**7**)
3 No. 10 Fahnestock Spring Contact Clips (**8**)
2 Burgess 1½-volt No. 7 dry cells (**2**)
1 Transistor battery holder for two Burgess No. 7 dry cells or 1 strip of thin metal sheet 2 7/16 in. x 1 in. if battery holder is to be home-made (**3**)
1 ½-watt 390,000-ohm resistor (**5**)
7 ⅜-in. No. 6 round head wood screws
3 ⅜-in. No. 4 round head wood screws
1 Single contact tie-point (**6**)
Hook-up wire

Two size AA flashlight cells can be used instead of Burgess No. 7 cells. If a factory-made transistor battery

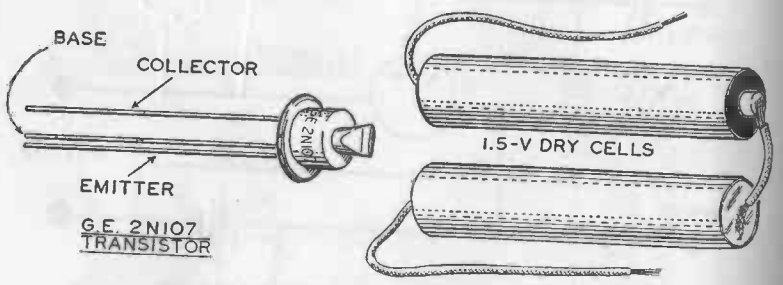

G. E. 2N107 TRANSISTOR

This is a PNP type transistor for experimental and amateur use. The right-hand sketch shows how two penlite cells are connected in series by soldering. If a G.E. 2N107 transistor cannot be obtained easily, a G.E. 2N191 or a G.E. 2N323 should give the same results.

holder is used, worn out cells can be removed without disturbing any soldered connections. If you wish to make a battery holder, clamp the cells to the wood base with a strip of thin sheet metal as shown in one of the illustrations. The Burgess cells are designed especially for transistors and will last longer than flashlight cells.

Assembling. Give all surfaces of the wood base a coat of white shellac. When the shellac is dry assemble the parts on the base as shown in the plan.

Although the plan drawing shows wires attached to the spring clips by soldering, it is easy to wire the amplifier without any soldered connections except those to the battery or battery holder. Remove the insulation from both

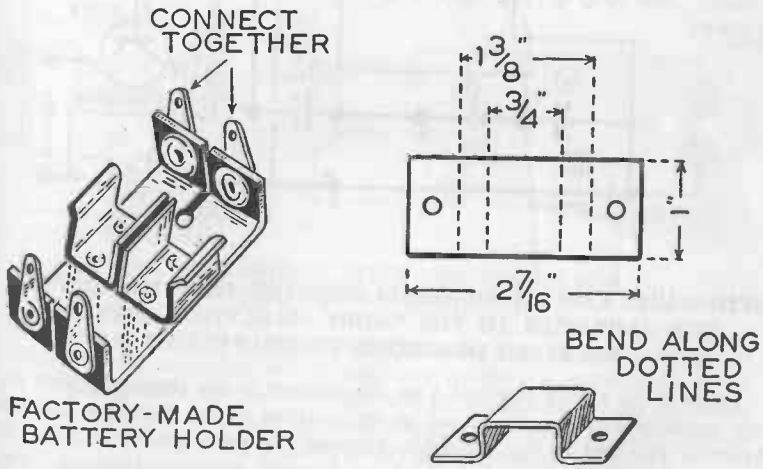

BATTERY HOLDERS FOR TWO 1½-v No. 7 CELLS

The right-hand sketch shows how to make a battery holder for clamping a two-cell battery to a wooden base. The holder is bent from a strip of sheet metal.

ends of each wire, and clamp the bare ends between the wood base and the spring clips. The single-contact tie-point can be omitted. Instead of soldering one terminal of the resistor and two wires to the tie-point, clamp them under a washer held firmly against the wood base by a round head screw which passes through the hole in the washer and into the base. When a factory-made battery holder is used, the cells should be placed in the holder so that they are in series and the terminal voltage of the battery is 3 volts. The positive end of the left-hand cell should be at the front of the holder and the positive end of the

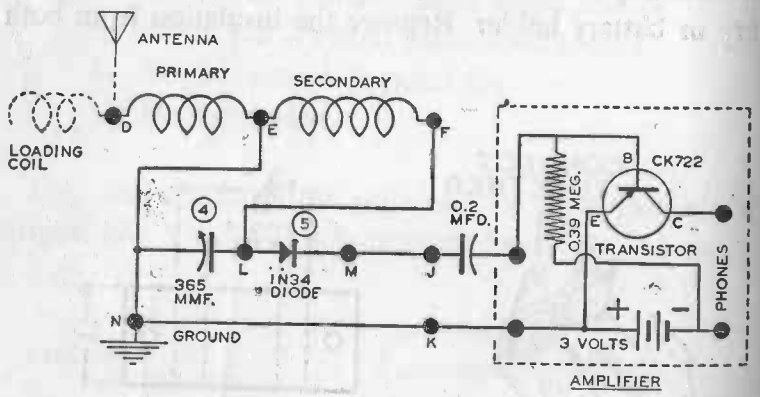

SCHEMATIC CIRCUIT DIAGRAM SHOWING HOW TO CONNECT THE AMPLIFIER TO THE "MORE SELECTIVE" CRYSTAL RECEIVER DESCRIBED IN CHAPTER III

Connect the PHONE terminal J on the receiver to the INPUT terminal on the amplifier which is connected to the EMITTER of the transistor and the POSITIVE terminal of the amplifier. Connect the other PHONE terminal J on the receiver to one terminal of an .02 mfd. ceramic capacitor. Connect the other terminal of the capacitor to the INPUT terminal on the amplifier which connects with the resistor and the base of the transistor. If a ceramic capacitor is not easily obtainable, a paper by-pass capacitor of the same capacitance can be used. The ceramic capacitor is preferable. Connect headphones to the PHONES or OUTPUT terminals of the amplifier.

right-hand cell should be at the back of the holder. Observe the indicated polarity carefully or possible damage to the transistor may occur.

Consult the plan and both circuit diagrams when wiring the amplifier. The center wire on a Raytheon CK722 transistor is the BASE terminal. The wire nearest the red dot on one side of the transistor is the COLLECTOR terminal. The remaining wire is the EMITTER terminal. The transistor terminals must be connected to the Fahnestock clips as shown in the diagrams. The letters **E**, **B** and **C** in the illustrations are abreviations for EMITTER, BASE and COLLECTOR *respectively*. Observe the transistor connections carefully. Possible damage to the resistor may result if it is not connected in the circuit properly.

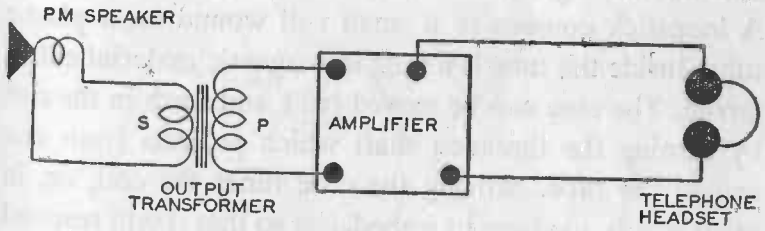

AN EXPERIMENT WITH THE ONE-STAGE TRANSISTOR AMPLIFIER

The gain or amplifying power of the amplifier may be demonstrated by hooking up the amplifier with a small PM speaker, a transformer and a pair of headphones. Connect the voice coil of the speaker to the secondary of a small output or matching transformer. Connect the primary of the transformer to the input terminals of the amplifier. Connect a 2,000-ohm headset to the output terminals of the amplifier. The speaker will act as a self-powered microphone. The wires connecting the headphones to the speaker should be long enough so that the speaker and amplifier are in one room and the phones can be carried to an adjoining room. Words spoken within a few feet of the speaker can be heard in the earphones in the adjoining room.

YOU CAN BUILD THIS COMBINATION CRYSTAL DIODE AND TRANSISTOR RADIO RECEIVER

This receiver is capable of providing good signals from broadcast stations within a radius of 50 miles using a 50-foot antenna and a first-class ground connection. In some locations, signals from stations 500 miles away can be picked up.

The antenna circuit includes a loopstick which can be used to select the station and a miniaturized 365 mmfd. variable capacitor to tune the station selected to a peak. A 1N34 diode is used as the detector.

There are several loopsticks on the market. They are intended as replacements for loop antennas in superheterodyne and other receivers provided with radio-frequency amplification. When used with a crystal detector and antenna a ground must be connected to the loopstick. A loopstick consists of a small coil wound on a plastic tube. Inside the tube is a plug of magnetic material called ferrite. The core can be moved back and forth in the coil by turning the threaded shaft which projects from one end of the tube. Moving the core tunes the coil, or, in other words, changes its impedance so that it will respond to different frequencies. A loopstick called a "tenna-loop" was used to build the receiver which is illustrated here. There are several other brands of equally good loopsticks, such as the "ferri-loopstick," "vari-loop" and Miller No. 6300 which can be used instead. Each loopstick comes equipped with a metal bracket. At one end of each loopstick is a metal ferrule. The loopstick is fastened to the bracket by pushing the ferrule into the large hole in the bracket. The bracket provided with a loopstick is usually

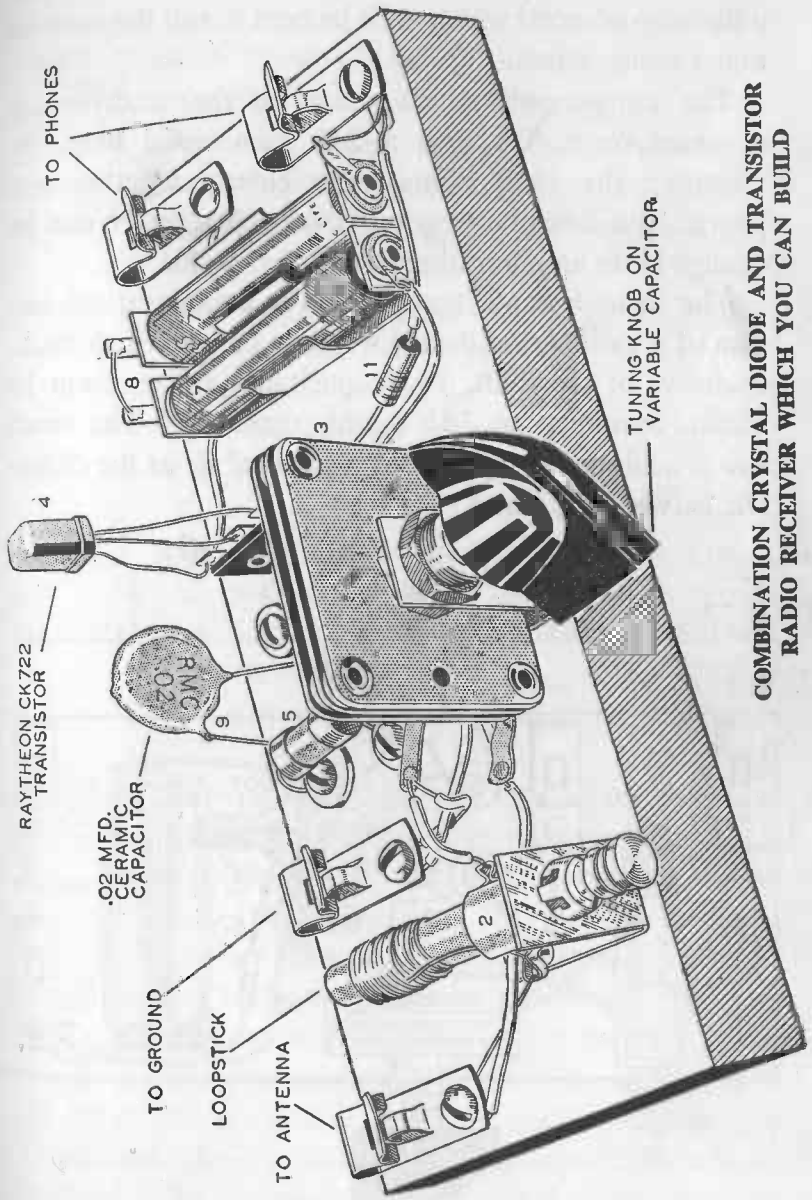

COMBINATION CRYSTAL DIODE AND TRANSISTOR RADIO RECEIVER WHICH YOU CAN BUILD

a flat strip of metal which must be bent to suit the receiver under construction.

The components which comprise the receiver are mounted on a 6⅜ inch x 2¾ inch wood base. By crowding the components more closely together and providing a box-like wooden cover the receiver can be changed into an interesting pocket size radio.

The variable capacitor specified is a miniaturized version of a variable condenser which is only 3/16 inch thick, exclusive of the shaft. The capacitance ranges from 10 mmfd. minimum to 365 mmfd. maximum. The small size is achieved by using mica instead of air as the dielectric between the plates.

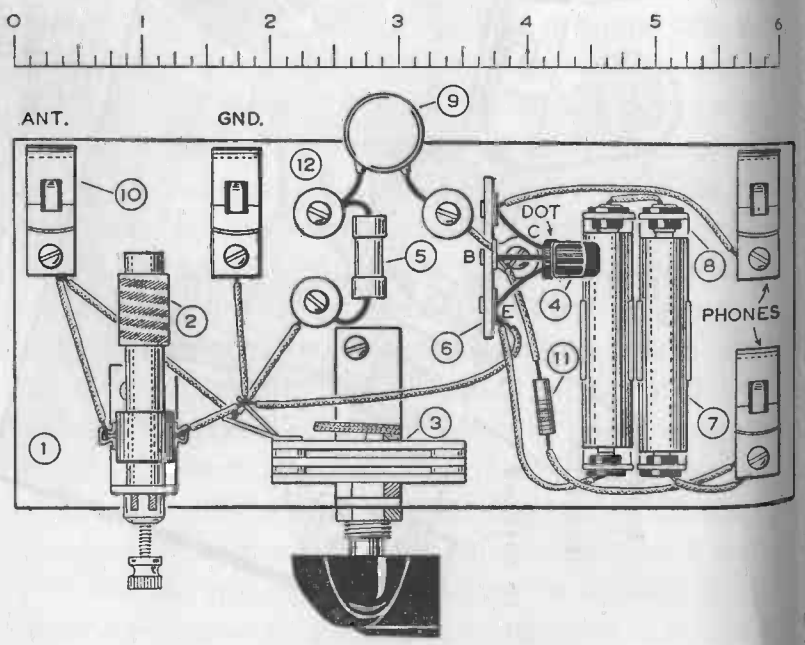

PLAN OF THE RECEIVER

PARTS NEEDED TO BUILD THE RECEIVER

1 Wood base 6⅜ in. x 2¾ in. x ¾ in. **(1)**
1 Loopstick antenna and bracket with small knob to fit threaded shaft on loopstick **(2)**
1 Miniaturized 365 mmfd. variable capacitor knob and bracket **(3)**
1 Raytheon CK722 transistor **(4)**
1 Sylvania IN34 diode crystal **(5)**
1 3-contact tie-point **(6)**
2 No. 7 Burgess dry cells **(7)**
1 Battery holder for cells **(8)**
1 .02 mfd. ceramic capacitor **(9)**
4 No. 2 Fahnestock spring contact clips **(10)**
1 ½-watt, 390,000-ohm resistor **(11)**
3 No. 4, ⅜ in., round head wood screws with washers to fit **(12)**
9 No. 6, ⅜ in. round head wood screws

Assembling and Wiring. Mount the parts on the wood base as shown in the plan. The loopstick comes with a short length of bare or enamelled wire attached to one of its terminals. Discard the wire. The terminal to which the wire is attached should be considered the ANT terminal and connected to the stator of the variable capacitor and the ANTENNA Fahnestock clip. The other terminal of the loopstick is the GND terminal and should be connected to the rotor of the variable capacitor and to the GROUND Fahnestock clip. Connections to the loopstick should be soldered. The terminals of the crystal diode and the ceramic capacitor are clamped under brass washers held

firmly against the base by a No. 4 round head brass screw through each washer and into the base.

Note that the terminals of the transistor are soldered to a 3-contact tie-point. If you use this method of construction, grasp each transistor terminal in the jaws of a pair of long nose pliers while soldering. Use a very small

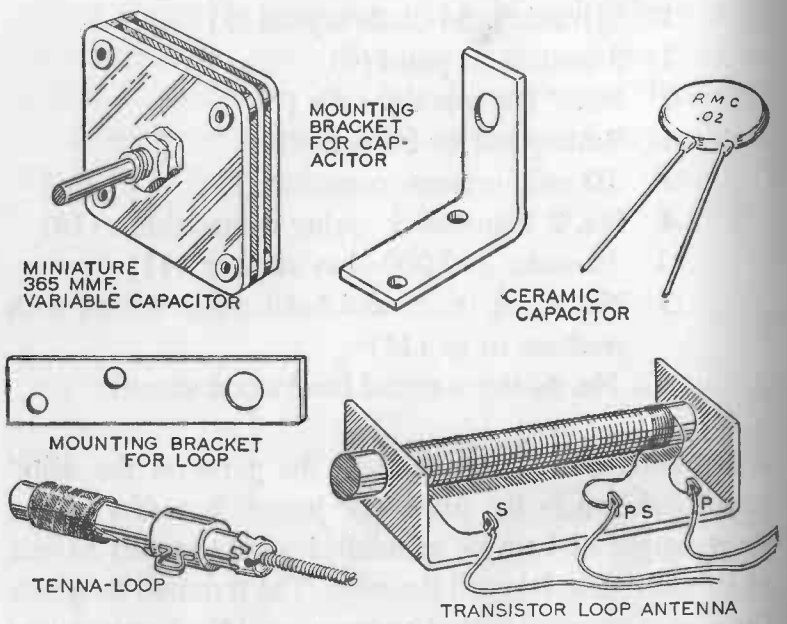

PARTS FOR TRANSISTOR CIRCUITS

The miniature variable capacitor uses thin sheets of plastic as the dielectric between plates. It is not as efficient as an air dielectric capacitor. Ceramic capacitors are much smaller than paper capacitors of equal capacitance. The transistor loop antenna at the lower right has a non-adjustable ferrite core. It is provided with two windings. **S** is one of the secondary terminals. **P** is a primary terminal. **PS** is a common primary and secondary terminal. The loopstick or tenna-loop at the lower left has an adjustable ferrite core. The winding is tuned by turning the projecting screw.

soldering iron. Transistors are easily damaged by heat and the purpose of the pliers is to draw the heat from the wire terminal and absorb it so that it cannot reach the transistor. If you do not wish to take the risk involved in soldering the transistor terminals you can clamp them under brass washers held to the base by round head screws.

Operation. Connect the ANT clip to a 50-foot antenna and connect the GND clip to a good ground. Connect a 2000-3000-ohm radio headset to the PHONE clips. Place the two dry cells in their holder. Observe the indicated polarity, or damage to the transistor may occur.

Tune the loopstick by turning the threaded shaft which moves the ferrite plug until the desired station is heard. Then tune the variable capacitor until the signal is as loud as it is possible to make it.

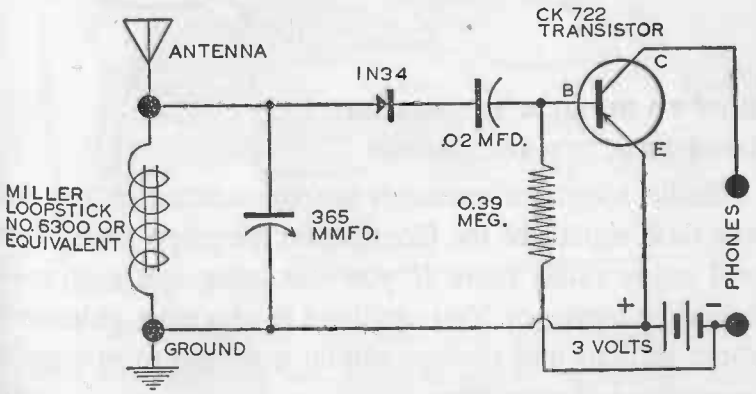

SCHEMATIC CIRCUIT DIAGRAM OF THE COMBINATION CRYSTAL DIODE AND TRANSISTOR RADIO RECEIVER

Trouble Shooting. If no signal is heard check the wiring and connections carefully, the polarity of the transistor and the polarity of the dry cells.

PICTORIAL CIRCUIT DIAGRAM OF THE COMBINATION CRYSTAL DIODE AND TRANSISTOR RADIO RECEIVER

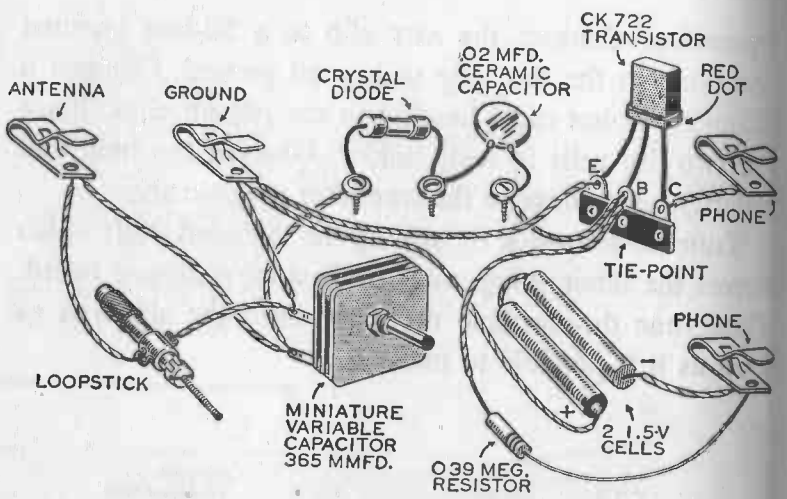

HOW TO BUILD A TRANSISTOR CODE PRACTICE OSCILLATOR

Radio telegraph messages are transmitted in the dot and dash signals of the Continental telegraph code. You will enjoy radio more if you can telegraph and read telegraph messages. You can listen to amateurs, ships and shore stations and perhaps obtain a license to operate a transmitter of your own.

Anyone who wishes to obtain an amateur license must pass an examination in reading the telegraph code. No fee

is required for the license. It is necessary only to pass a simple examination in elementary radio theory, in the Federal Radio Regulations and in sending and receiving the Continental telegraph code.

When you can send and receive 65 letters, numerals and puctuation marks per minute accurately you can pass the government code test for an amateur license. During the examination, the code test is given first. If the applicant passes this, he may proceed with the examination covering the radio laws and simple technical problems.

The first step in learning to telegraph is to memorize

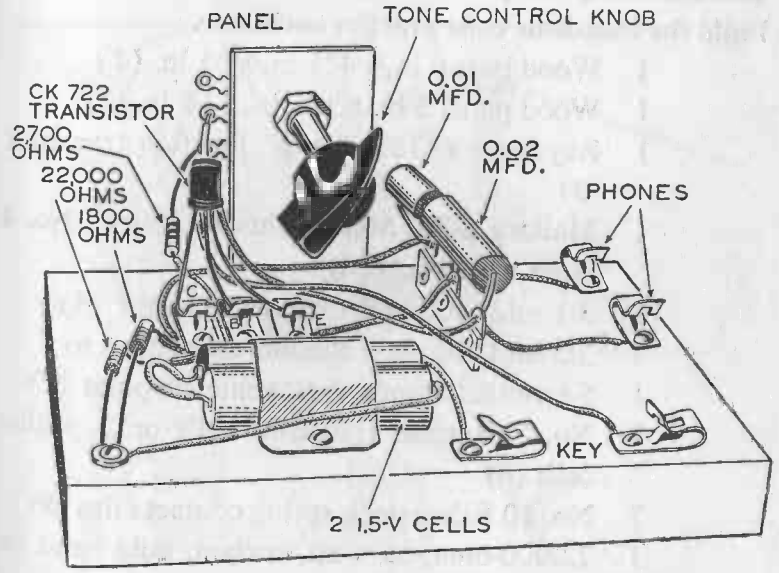

A TRANSISTOR CODE-PRACTICE OSCILLATOR

When the 50,000-ohm tone control is properly adjusted the circuit oscillates at an audio-frequency and sounds are produced by the headphones connected to the circuit. Adjusting the control varies the frequency and an exact imitation of the sound of radiotelegraph signals can be obtained.

the code. The second is to practice sending with a telegraph key. The simplest way to do this is to connect a telegraph key in series with a small high-pitched buzzer and a battery so that you can make DIT and DAH sounds on the buzzer by pressing the key. A code practice oscillator with a key and headphones is better than a key and buzzer. The DIT and DAH sounds are exactly like those heard in a radio receiver.

A compact, low-cost oscillator can be built with a transistor and a few other components.

The following components and materials are required to build the transistor code practice oscillator.

1 Wood base 6 in. x 4¾ in. x ¾ in. (**1**)
1 Wood panel 3 in. x 1½ in. x ⅛ in. (**2**)
1 Raytheon CK722 "p-n-p" junction transistor (**3**)
1 **Mallory U-35, 50,000-ohm midgetrol, No. 4 taper with knob (4)**
1 .01 mfd. 400 volt tubular capacitor (**5**)
1 .02 mfd. 400 volt tubular capacitor (**6**)
1 5-terminal standard Bakelite tie-point (**7**)
2 No. 7 Burgess transistor cells or 2 penlite cells (**8**)
7 No. 10 Fahnestock spring contact clips (**9**)
1 22,000-ohm, ½ watt, carbon, gold band resistor (**10**)
1 2,700-ohm, ½ watt, carbon, gold band resistor (**11**)
1 1,800, ½ watt, carbon, gold band resistor (**12**)

11 No. 4, ⅜-in. round head wood screws
1 Strip sheet metal 3 in. x 1 in. or a battery holder for 2 No. 7 cells

Assembling. Shellac or varnish the wood base and the small panel upon which the volume control is to be mounted. Fasten the Bakelite tie-points and the Fahnestock contact clips to the base in the locations indicated in the plan. Place a solder lug under the head of each

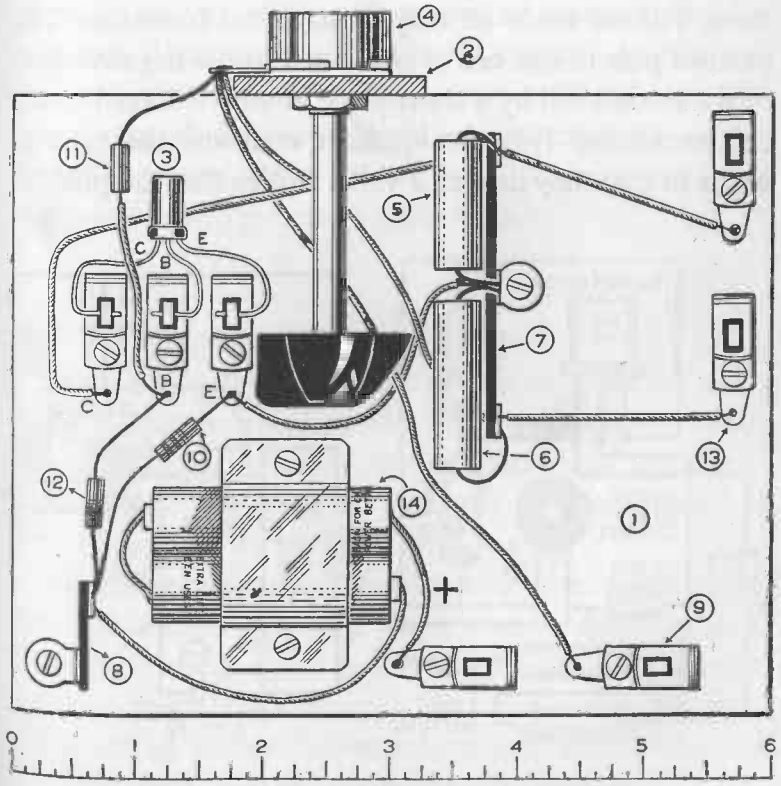

PLAN OF THE CODE PRACTICE OSCILLATOR

screw used to fasten a contact clip. The lugs make it easy to solder a connection to the clips.

Cut the strip of sheet metal 3 inches long and 1 inch wide from a tin can and use the strip to make a battery clamp as shown in one of the illustrations.

Wiring. Use pushback wiring for the connections and solder all wire terminals with rosin-core solder except the terminals of the transistor. Consult the schematic wiring diagram and also the wiring in the plan. Install the dry cells and observe the polarities indicated in the illustrations. Failure to do so may damage the transistor. The positive pole of one cell is connected to the negative pole of the second cell by a short piece of wire soldered to the cell terminals. This arrangement connects the cells in series so that they deliver 3 volts. Notice that the positive

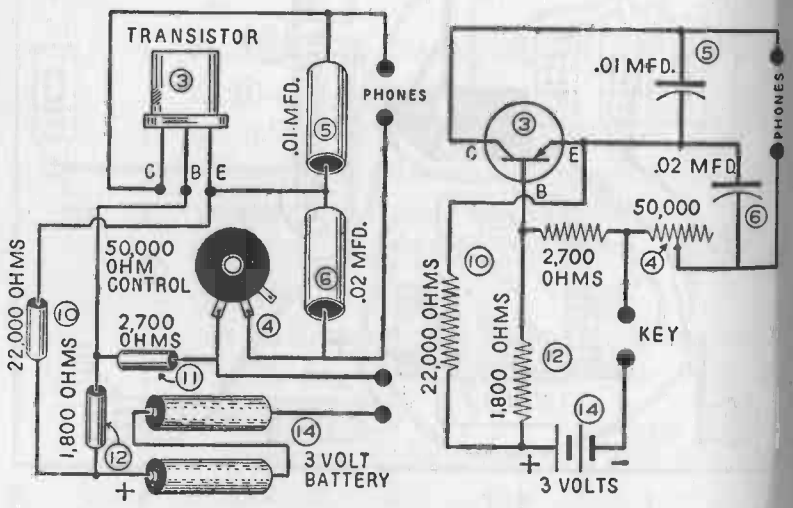

PICTORIAL AND SCHEMATIC CIRCUITS OF THE CODE PRACTICE OSCILLATOR

pole of the 3-volt battery is connected to the EMITTER of the transistor through the 22,000-ohm resistor. The COLLECTOR terminal on the transistor is marked by a RED dot. The wire terminal in the center is the BASE terminal. The wire terminal on the side of the transistor opposite to that marked by the red dot is the EMITTER terminal. The transistor is connected in the circuit by fastening the ends of the terminal wires in the three Fahnestock clips marked **E**, **B** and **C** in the diagrams. One terminal wire on the 2,700-ohm resistor which is connected to Fahnestock clip (**B**) and a terminal of the volume control is close to Fahnestock clip **C** but must not be allowed to touch the clip and form a short circuit. If you pull a piece of insulation 1¼ inches long off a piece of pushback wire and slip it over the wire terminal of the resistor, it will form an insulating sleeve which will prevent a short circuit.

LEARNING TO TELEGRAPH

When memorizing the code do not think of the characters as dots and dashes but rather as sounds in which the sound DIT represents a dot and the sound DAH represents a dash. For example, the letter A is memorized as DIT DAH and not as "dot dash."

The DIT sound is made in the headphones connected to the code practice oscillator by pressing the key down and letting it come up again just as soon as possible. The DAH sound is made by pressing the key down and holding it down for an instant before releasing it so that the DAH sound is three times as long as the DIT sound.

Proper adjustment of the telegraph key is important.

The key contacts should be adjusted for the beginner so that the space between is about 0.01 inch. If the key lever has more up and down movement than is provided by a space of 0.01 inch between the contacts, the signals sent with it will be "choppy."

The key should be mounted on a table far enough back from the edge so that there is room for the elbow to rest on the table. Learn in the beginning to handle the key properly. Let the fingers rest lightly against the key knob. The thumb should be against the left side of the knob (unless you are a southpaw). The first finger should be

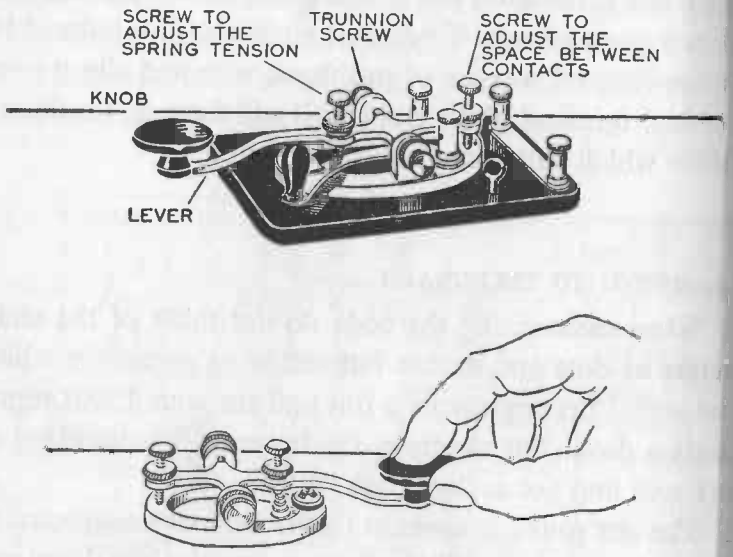

TELEGRAPH KEYS

Telegraph keys similar to those illustrated above are available from dealers in "ham" radio supplies. The drawing at the bottom shows a method of holding the key knob used by many professional telegraph operators. The forefinger rests on top of the key knob. The thumb and second finger grasp the edges of the knob and help the spring to raise the level. The thumb and both fingers are used to press the knob down.

THE CONTINENTAL CODE

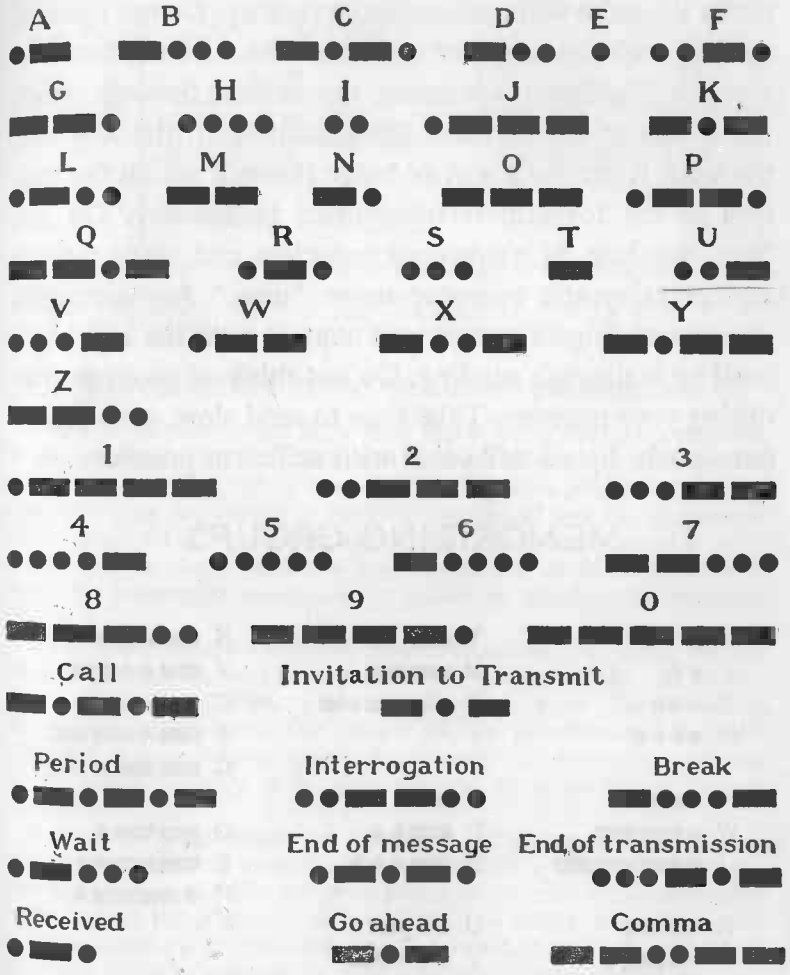

THE CONTINENTAL TELEGRAPH ALPHABET USED IN RADIOTELEGRAPHY

partly on top and against the edge of the knob. The second finger should be against the right edge of the knob. Allow the third and fourth fingers to curve naturally under the palm without tension or rigidity. Do not operate the key with the finger or wrist muscles. Use the forearm muscles. The fingers are merely the medium through which the stroke of the forearm is transmitted to the key and the wrist is merely a sort of hinge through which the motion of the forearm is transmitted to the key. Do not "tap" the key, as newspaper reporters and story writers say. A telegraph operator never "taps." An operator's thumb and fingers do not quit contact with the key knob until he is through sending. Do not think of speed at first during your practice. Take time to send slow, even clean-cut signals. Speed will come with sufficient practice.

MEMORIZING GROUPS

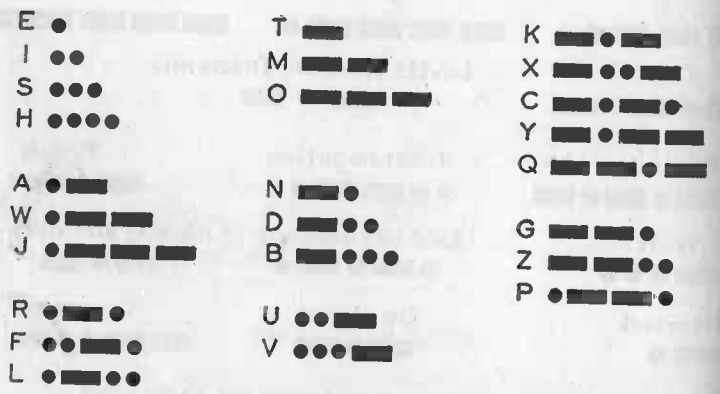

There are two systems of memorizing the telegraph alphabet. One is to study the first four or five letters, then the next four or five, and so on. The other is to study the characters after they have been arranged in easily identifiable "memory groups" as above.

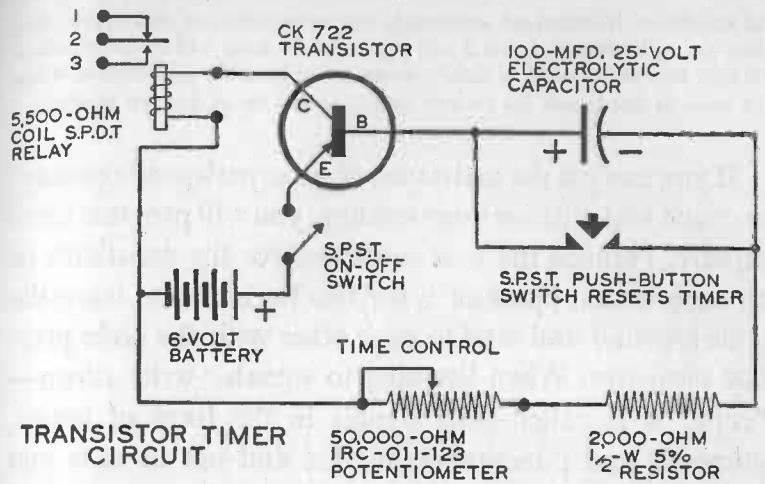

TRANSISTOR TIMER CIRCUIT

AN OPPORTUNITY TO DO YOUR OWN ENGINEERING

This is a schematic circuit for a timer switch which employs a transistor in its operation. The timer will open or close a switch after a definite period of time has elapsed. It can be used to turn off a photo-printing lamp after the lamp has burned a required number of seconds. A pictorial circuit, plan, list of components and detailed instructions have been omitted so that the young electronics experimenter can make his own layout from the information which can be gained by studying the schematic circuit.

With proper adjustment of the potentiometer and the spring on the relay armature, the relay can be made to operate at the end of any time period ranging from 2 to 40 seconds. A paper dial should be mounted under the knob and pointer on the potentiometer shaft and marked to indicate the time periods. Use a watch with a sweep second hand to test different settings of the potentiometer. Mark the dial to indicate seconds.

If the relay is connected to a lamp used for photo-printing, the lamp will remain lighted for periods of 2 to 40 seconds in accordance with the time indicated on the scale by the pointer. Use the relay terminals marked 1 and 2 in the circuit diagram as part of the lamp circuit. When the ON-OFF switch is closed and the push-button reset is pressed, the 100-mfd. electrolytic condenser is discharged and the relay armature is drawn toward the relay coil. This movement of the armature closes contacts 1 and 2 and lights the photo-printing lamp. As soon as the condenser is discharged by pressing the push button, the 6-volt battery begins to recharge it again. The time required to recharge the condenser depends upon the amount of resistance in the circuit, in other words, the adjustment of the potentiometer. When

the condenser is recharged sufficiently the relay armature will move away from the coil, contacts 1 and 2 will open and the lamp will be extinguished. To light the lamp again it is merely necessary to press the push-button. When the timer is not in use the ON-OFF switch should be in the OFF position.

If you can get the assistance of an experienced operator to coach and criticize your sending, you will progress more rapidly. Perhaps the best substitute for the assistance of an experienced operator is for two beginners to learn the code together and send to each other with the code practice oscillator. When listening to signals, write down—"copy" it is called—the signals in the form of letters, numerals and punctuation marks, and not as dots and dashes.

There is not enough space in this book to give more than brief instruction for learning to send and receive radiotelegraph signals.

A copy of the 126-page manual called *The Radio Operator* used in training operators in the army will be found helpful and interesting to any one who wishes to learn to telegraph. Write to the Superintendent of Documents, U. S. Government Printing Office, Washington, D. C. and ask if the book is in print and its price. Ask for TM-454 *The Radio Operator*. The book is not always available. The price is usually nominal (25 cents).

The American Radio Relay League, Hartford, Connecticut, publishes an excellent instruction manual called *Learning the Radio Telegraph Code*. The price is 25 cents.

CHAPTER TEN

About Radio Tubes

The operation of all the apparatus described in the following chapters centers around some type of ELECTRON TUBE, popularly known as a radio tube. An electron tube consists of two or more metal electrodes sealed within a totally or partially evacuated metal or glass envelope. Since radio tubes are the "heart" of most electronic apparatus, it is useful to have some knowledge of how they work and of the circuits which employ them.

Classification of Tubes. There are more than one thousand different types of vacuum tubes regularly manufactured in the United States. This wide variety may be classified in a number of ways. A simple method is to group them according to their use—that is, whether they were designed to be DETECTORS, AMPLIFIERS, OSCILLATORS or RECTIFIERS. Another method is to divide them into groups having such family names as DIODE, TRIODE, TETRODE

and PENTODE according to the number of electrodes they employ, DI, TRI, TETR and PENT are from Greek words meaning respectively *two, three, four* and *five*. A DIODE has two electrodes, a TRIODE has three electrodes and so on, the name of the tube thus revealing how many electrodes are enclosed in its glass or metal envelope.

Electron Emission. Interesting things happen inside a radio tube when it operates. These cannot be seen but they can be visualized by the mind when we know certain facts about electrons. A radio tube is essentially a device for moving electrons and utilizing their movement. The operation of all, except a few specialized forms of electron tubes, depends upon the phenomenon of ELECTRON EMISSION from a heated electrode.

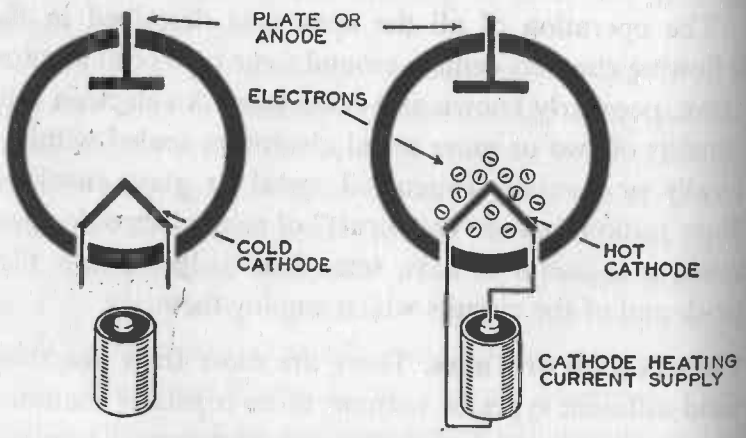

RADIO TUBES ARE ABLE TO FUNCTION BECAUSE OF ELECTRON EMISSION FROM A HEATED FILAMENT

A source of free electrons is essential for the operation of every radio vacuum tube. The electrons are supplied by using heat to drive them out of a filament or a sleeve surrounding a filament. The filament, or sleeve, which supplies the electrons is called the CATHODE. The cathode is heated by an electric current. When the cathode is cold no electrons are emitted.

To get a mental picture of electron emission, consider for a moment the tungsten filament of an incandescent lamp. You probably know that the tungsten is made up of atoms of tungsten clustered together in molecules and that scattered about in the spaces between the molecules are many "free" electrons. The free electrons are those which are not part of any of the atoms. At a temperature of absolute zero there is no motion of the atoms, molecules and free electrons. At higher temperatures there is random motion of these elementary particles. As the temperature increases, the velocity or speed of the motion increases. When an electric current is sent through a tungsten filament the filament is heated. At a dull red heat some of the electrons move with sufficient speed to break through the surface of the hot filament. The filament of an incandescent electric light, when heated to incandescence by the passage of an electric current, emits not only light but also electrons. Ordinarily the electrons do not travel far away from the filament. If undisturbed, they usually curve around and re-enter the filament.

All radio tubes contain a filament or heater similar to the filament of an incandescent lamp. When an electric current passes through the filament and sufficient heat is developed, electron emission occurs.

The Cathode. In some electron tubes, the electrons may be emitted directly from the filament, in which case it forms the CATHODE of the tube. In others, the filament may merely supply heat to a chemically treated sleeve which emits the electrons. In that case, the filament is called the HEATER and the sleeve is the CATHODE.

The Diode. The first radio tubes were diodes. They were called Fleming valves. John A. Fleming, a British scientist, found the first practical application for the diode. He patented its use as a detector of wireless telegraph signals and it was thus employed for several years by the Marconi Company.

A diode contains two electrodes, a cathode in the form of a filament and an anode in the form of a metal cylinder or plate. The anode of a radio tube is commonly called the PLATE in radio language, The cathode is an EMITTER of electrons and the plate is a COLLECTOR of electrons. A diode is an electrical valve in which electrons can flow only from the cathode to the anode. This action is explained by the illustration on page 129 and its caption.

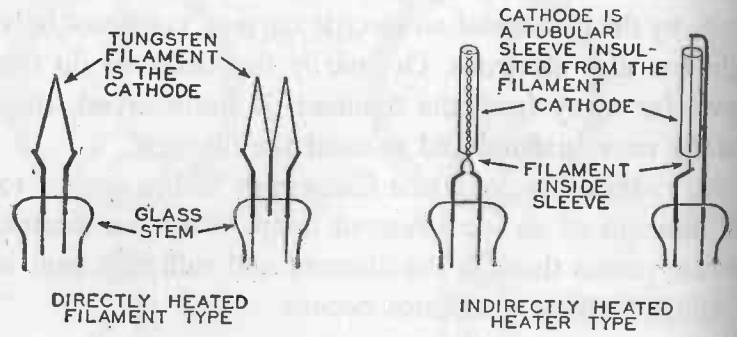

TWO KINDS OF RADIO-TUBE CATHODES

In the directly heated type (usually employed in battery-operated receivers) the cathode is a tungsten filament. The electrons are emitted directly from the hot tungsten, which is heated by an electric current passing through it.

In the indirectly heated type, the tungsten filament is enclosed in a chemically treated sleeve. The sleeve emits electrons when heated by the filament. The directly heated cathode requires direct current. An indirectly heated cathode may be operated on alternating current.

Since electrons can flow in only one direction through a diode, its basic use is as a rectifier. A rectifier changes alternating current into direct current.

The unidirectional flow of current through a diode is used in principle when a diode is employed as a DETECTOR. Diodes in which the filament is replaced by a combination of filament and cathode and which have been evacuated until only a few molecules of gas remain in the envelope, are used as detectors in some modern radios. Frequency modulation receivers use a diode detector.

Other diodes containing a small amount of mercury vapor to increase their current carrying capacity are used as rectifier tubes to change alternating current into direct

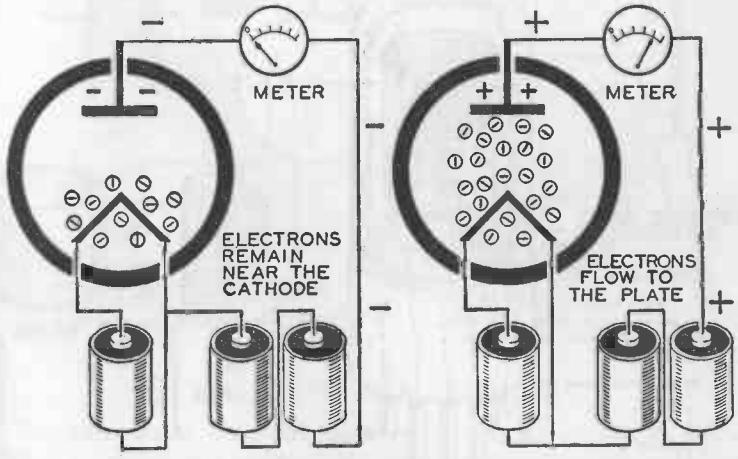

THE FUNDAMENTAL ACTION WHICH OCCURS IN A RADIO TUBE

If the plate is neutral or negative in respect to the cathode, the electrons emitted from the cathode remain close to the cathode. Some electrons reenter it. None reaches the plate and no current flows in plate circuit. (See meter in illustration.) If the plate is positive, electrons are drawn to it and pass across the vacuum space between the cathode and plate. Under this condition a current flows in the plate circuit. (See meter.)

current. Direct current is required in the plate circuits of all radio receivers and amplifiers, and in AC-operated receivers is secured by rectifying the AC.

The Triode. The greatest advance in the development of radio tubes was made in 1906 when Lee DeForest added a third electrode to the diode and it became a triode. The triode is similar in construction to the diode, except that a grid of fine wire or screen with openings through which electrons may pass is added between the cathode and plate. The addition of the grid gives to the tube its most

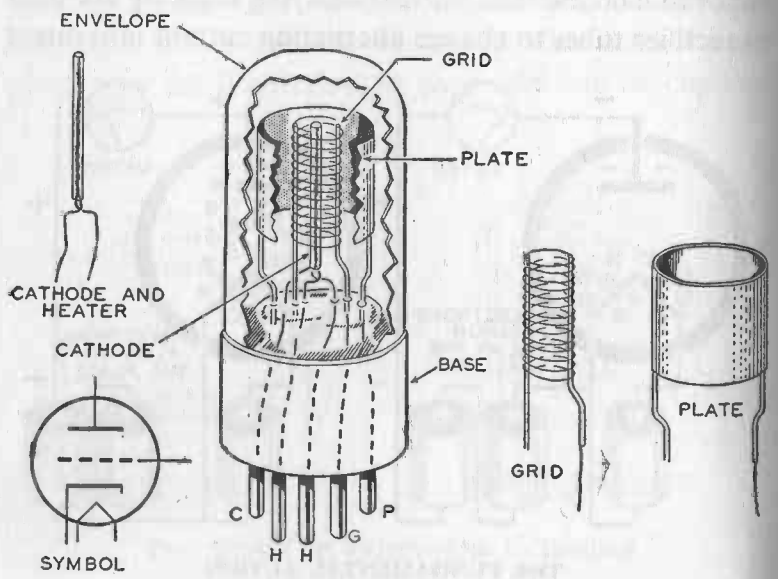

THE CONSTRUCTION OF A TYPICAL TRIODE

Part of the glass envelope and part of the plate are shown cut away in this illustration to reveal the arrangement of the electrodes. Electrical connections to the filament, cathode, grid and plate are made through wires which connect to the base pins. The cathode sleeve is insulated from the filament. Notice that the grid is much closer to the cathode than to the plate.

useful functions—the ability to amplify. The grid is called the CONTROL GRID. It makes it possible to control relatively large electron current across the space between the cathode and anode by very small variations in voltage applied to the grid. This can be accomplished without the expenditure of appreciable power in the control circuit. A triode may be used as a sensitive detector, a relay, an amplifier or an oscillator.

When a triode is placed in operation, the plate is con-

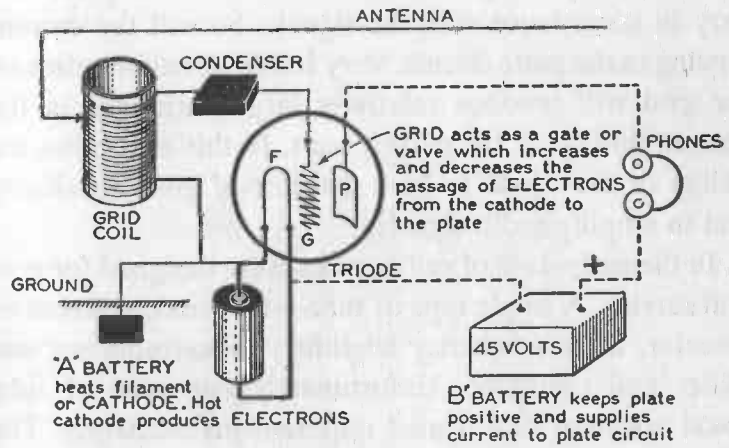

THE TRIODE AS A DETECTOR

The three circuits which are necessary in order for a triode to play its part as a detector in a radio receiver are illustrated. The tube represented is the filament cathode type. The grid circuit is indicated by light lines, the filament circuit is indicated by heavy lines and the plate circuit is indicated by broken lines. The high-frequency currents generated in a receiving antenna by incoming signals are alternating currents and as a result the charge upon the grid is alternately positive and negative and varies in degree in accordance with the signals. The number of electrons passing through the grid from the cathode to the plate and likewise the volume of current flowing in the plate circuit varies in accordance with the charge on the grid.

nected to a high positive voltage, usually designated by the abbreviation B+. The grid is connected so that it is negative in respect to the cathode. Since electrons are negative, they tend to be repelled by the negative grid and few of them get through the grid to the plate.

If the triode is used as a detector or an amplifier, the signals which reach the grid are alternately positive and negative. If the grid becomes less negative, more electrons will get through to the plate. If it becomes more negative, fewer electrons will get through to the plate. The number of electrons passing from the cathode to the plate will vary in accordance with the signals. So will the current flowing in the plate circuit. Very feeble signal impulses on the grid will produce relatively large variations in the current flowing in the plate circuit. In this action lies the ability of the triode to be a detector of great sensitivity and to amplify radio signals.

In the early days of radio, tubes were designed for general service. A single type of tube—the triode—served as detector, audio-frequency amplifier, radio-frequency amplifier and oscillator. Unfortunately one type of tube could not meet such varied requirements efficiently. The splendid performance of modern radio apparatus is largely due to the fact that hundreds of different tubes are available and that each one has been developed so as to be most efficient for a certain purpose.

Tetrodes and Pentodes. There is capacitance between the cathode, grid and plate of a triode just as there is between the plates of a small capacitor. For many years when triodes were the only tubes available, the capacitance between the plate and the grid prevented the development of satisfactory radio-frequency amplifiers. The problem was finally solved by adding a SCREEN GRID or fourth electrode between the grid and plate, thus changing the triode into a TETRODE. This reduced the capacitance between the control grid and the plate to a very low value.

With tetrode tubes as radio-frequency amplifiers it became possible to obtain much more amplification than with triodes. But before long it was discovered that a tetrode was not the final answer to the problem of radio-frequency amplification.

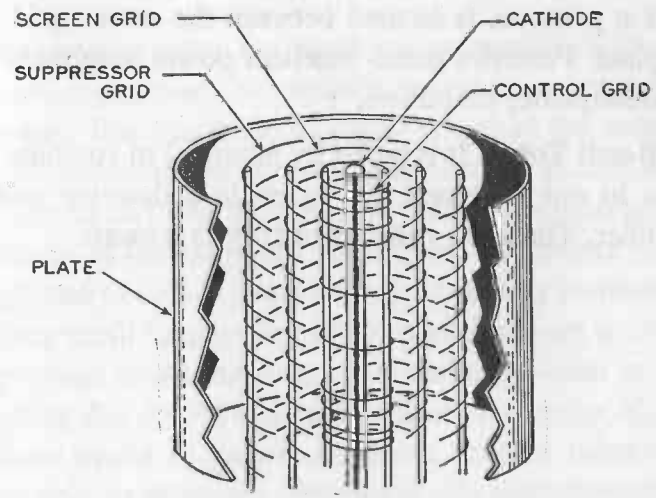

CONSTRUCTION OF A PENTODE

This is an example of the advance in tube knowledge and design since the first triode was created.

Part of the plate is shown cut away to reveal the three grids and cathode of a pentode designed to reduce distortion in radio-frequency amplifiers. Known both as a super-control amplifier tube and as a variable-mu tube, it also reduces "cross modulation." Cross modulation is the effect produced in a radio receiver by an interfering station "riding through" on the carrier wave of the station to which the receiver is tuned.

In all radio tubes the electrons emitted from the cathode and attracted to the plate may, if they strike the plate with sufficient velocity, dislodge other electrons from the plate. These dislodged electrons are called secondary electrons and their release is called secondary emission.

In a tetrode the screen grid offers an attraction to the secondary electrons and some of them are drawn to it with the effect that the plate current is lowered. It was soon found that the troublesome effect of secondary emission in lowering the plate current may be eliminated by adding a fifth electrode known as a SUPPRESSOR GRID. The suppressor grid, which added to a tetrode makes the latter a pentode, is located between the screen grid and the plate. Pentodes make excellent power amplifiers and radio-frequency amplifiers.

Multi-unit Tubes. It is perfectly practical to combine two tubes in one envelope, for example a detector and an amplifier. These are called MULTI-UNIT TUBES.

Introduction to Amplifiers

More vacuum tubes are employed as amplifiers than for any other purpose. To amplify means to enlarge or to increase. The electronic amplifier is one of the most important inventions of the twentieth century. It is an essential part of all radio, television and radar transmitters and receivers, of the telephone system,* of the modern phonograph and of almost unnumbered laboratory instruments.

Very small changes in voltage or current—so small that they would be useless without an amplifier—can be magnified by this device and made useful. The range of radio stations would be greatly limited if vacuum tubes could serve only as detectors. We would still wear headphones when listening to radio programs. Television, radar, long-distance telephony and talking motion pictures would be dreams and not realities.

Broadcasting and television transmitters put many thousands of watts of power into their signals but the

* The amplifier tubes used in telephone circuits are called REPEATERS.

energy picked up from them by your receiver is very small. It is usually only a few millionths of a watt and too weak to do more than produce faint sound in a sensitive telephone receiver. It is too feeble to operate a loud speaker or produce a television picture unless it is fed first into an amplifier. The common electronic amplifier employs vacuum tubes or transistors so arranged that a very small power in one part of the circuit will control a much larger power in an adjoining circuit. Many electronic devices require more than one tube or transistor to secure sufficient amplification. When the output of one tube or transistor is fed to another tube or transistor the arrangement is called a CASCADE AMPLIFIER. When one amplifier tube or transistor is used to do the job, it is called a single-stage amplifier. When two tubes or two transistors are used it is a two-stage amplifier. One, two and three-stage amplifiers are common. Some amplifiers consist of five or six stages.

A vacuum tube in itself is not an amplifier, nor is a transistor alone an amplifier. A single-stage amplifier utilizing a vacuum tube consists of the tube, a power source and three adjoining circuits. The three circuits may include resistors, transformers, capacitors, etc. (A single-stage transistor amplifier is illustrated on page 100.)

Amplifiers can be classified according to the frequency ranges over which they operate. There is no "universal" amplifier which will amplify all frequencies efficiently. The three general types are called:

1. Audio amplifiers
2. Video amplifiers
3. Radio-frequency amplifiers

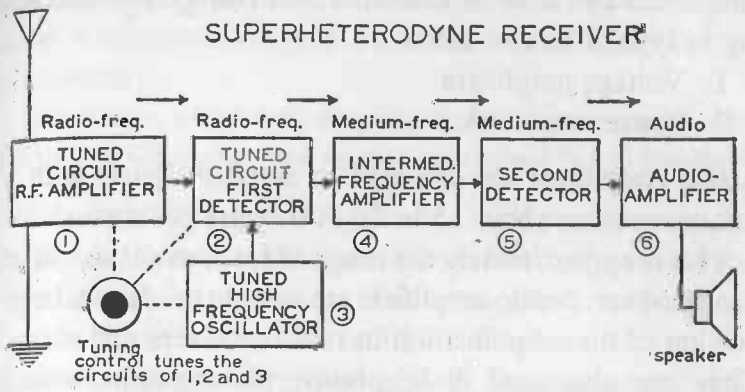

WHAT IS A SUPERHETERODYNE RECEIVER?

One of the problems in designing a sensitive broadcast receiver is that it must include a radio-frequency amplifier which will operate over a wide range of frequencies. Such an amplifier cannot be as efficient as one designed for a single frequency. The higher radio-frequencies cannot be amplified as efficiently as the lower frequencies. Most home broadcast receivers overcome this difficulty by employing the circuit invented by Prof. E. H. Armstrong which he named the SUPERHETERODYNE.

The illustration above is a block diagram of a simple superheterodyne receiver. A schematic circuit diagram of a superheterodyne would be very confusing to one who is not familiar with radio circuits. Radio engineers often use block diagrams to represent intricate apparatus. A block diagram is somewhat like an architect's plan for a building. The architect's plan does not show all the individual beams, boards, pipes, bricks and other details. A radio engineer's block diagram does not show all the details of a circuit.

In the superheterodyne circuit, the frequency of an incoming signal is changed to a lower frequency which can be amplified efficiently. The radio frequency signal from the antenna is mixed in the first detector (2) with radio-frequency currents generated by a tuned high-frequency oscillator (3). The combining of the two radio-frequencies results in an entirely new signal called the I.F. signal. The tuning and mixing is done in such a manner that the I.F. signal always has a carrier-frequency of exactly 456 Kc.

After the carrier-frequency of the desired incoming signal has been changed to 456 Kc by the mixer, first detector and oscillator, it is fed into the intermediate frequency (I.F.) amplifier (4). Since the I.F. amplifier works at only one frequency (456 Kc) it is many times more efficient than an amplifier which works at many different frequencies. The greatly amplified I.F. signal then passes through an ordinary detector (5) and audio amplifier (6). The modern superheterodyne receiver is simple to tune and so sensitive that it will pick up extremely faint signals.

Amplifiers can also be classified into two groups according to type of service as:

1. Voltage amplifiers
2. Power amplifiers.

Audio Amplifiers are designed to amplify signals with a frequency from about 15 to 20,000 cycles per second.

This is approximately the range of frequencies AUDIBLE to a good ear. Audio amplifiers are used to produce a large portion of the amplification in radio receivers and sonar. They are also used in telephony, phonographs, sound motion pictures and intercom equipment. The audio amplifiers in the common radio set do not usually have a

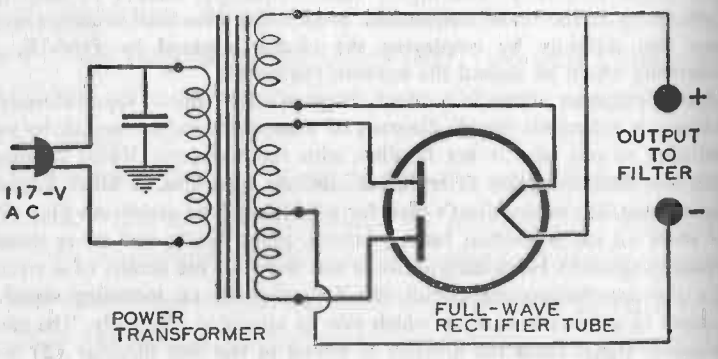

ELECTRON TUBES AS RECTIFIERS

Electron tubes are used for rectifying or changing 117-volt alternating current into direct current. The direct current used as the plate supply in radio receivers, amplifiers, transmitters, etc., is generally secured in this manner. A half-wave rectifier rectifies only one-half of each alternating-current cycle and consequently produces a pulsating direct current. A full-wave tube, connected to a "center-tapped" transformer, rectifies both halves of each alternating cycle. This produces a pulsating direct current also but the current does not have such prominent ripples as the current from a half-wave rectifier and so is easier to smooth out with a filter. (The circuit of a full-wave rectifier is illustrated.)

frequency range of 15 to 20,000 cycles. They commonly cover a narrower frequency band (30 to 11,000 cycles per second).

Amplifiers which will amplify uniformly frequencies of 15 to 20,000 cycles per second are rated "high-fidelity."

Video Amplifiers are designed to amplify uniformly the audio range and, in addition, a wide band of frequencies inaudible to human ears. Video amplifiers amplify all frequencies from about 30 to 6,000,000 cycles per second.

Radio-frequency Amplifiers. Well designed audio-frequency amplifiers amplify all the frequencies in the audio range as equally as possible. Unlike the audio and video

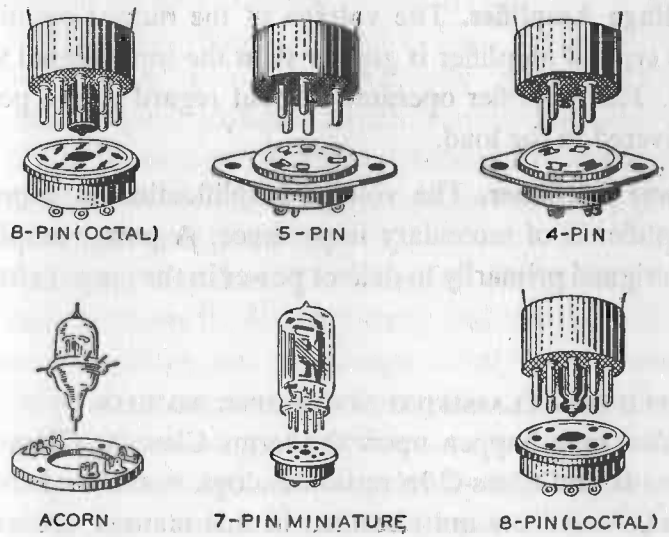

THE BASES OF RECEIVING TUBES AND THEIR CORRESPONDING SOCKETS

The electrodes in a tube are connected to terminal pins which project from the base of the tube. There are six different types of bases commonly used for receiving tubes.

amplifiers, radio-frequency amplifiers need amplify only a very narrow band of radio frequencies. This narrow band may be any part of the wide range of frequencies from 30,000 to several billion cycles per second. Radio-frequency amplifiers use resonant, or tuned, circuits whereas audio-frequency amplifiers use untuned circuits.

AMPLIFIERS CLASSIFIED ACCORDING TO USE

When amplifiers are classified according to use, they can be divided into two groups known respectively as POWER amplifiers and VOLTAGE amplifiers. You will see these two types mentioned from time to time in radio literature.

Voltage Amplifier. The voltage of the output circuit of this type of amplifier is greater than the input signal voltage. The amplifier operates without regard to the power delivered to the load.

Power Amplifier. The voltage amplification in a power amplifier is of secondary importance. A power amplifier is designed primarily to deliver power in the output circuit.

AMPLIFIERS CLASSIFIED ACCORDING TO BIAS

You may happen upon the terms Class-A, Class-AB, Class-B and Class-C in radio catalogs, books and magazines. Amplifiers are classified in this manner according to the "bias voltage applied to their grids." An explanation of grid bias and its effects involves the use of mathematical curves and diagrams which are clear only to those who have studied sufficient mathematics. If you are interested in the meaning and effects of grid bias upon the action of an amplifier tube you may be able to find an explanation in a radio book at the nearest public library.

Class-A amplifiers are used in the output stages of radio receivers and low-power audio systems. They are also used as radio-frequency amplifiers in radio receivers. Class-A amplifiers produce little distortion (an especially desirable quality in an audio amplifier). They are also characterized by low power output and low efficiency.

Class-B amplifiers are used where it is desired to develop a relatively large output in the load circuit. The grid of a class-B amplifier is biased so that plate current flows only during half of the AC signal voltage that is applied to the grid. Class-B amplifiers are used in audio amplifiers. Distortion-free amplification is desired in an audio amplifier. To obtain this quality, two class-B tubes are arranged in a push-pull circuit. Some of the tubes used for this purpose consist of two triodes in the same glass or metal envelope. Then only one socket and what appears to be a single tube is necessary.

Class-AB Amplifiers. Sometimes it is desirable to compromise between the low efficiency and low distortion of class-A amplifiers and the comparatively high distortion and high efficiency of a class-B amplifier. This can be accomplished by biasing an amplifier so that its operation is halfway between that of a class-A amplifier and a class-B amplifier. Such an amplifier is called a class-AB amplifier.

Class-C amplifiers are by far the most efficient of the four classes for radio-frequency amplification.

THE MEANING OF COUPLING

Joining one circuit to another so that energy can be transferred from one circuit to the other is called COUPLING. There are several methods of coupling.

There are two common methods of coupling a circuit to either the INPUT or OUTPUT circuit of an amplifier. One method employs a transformer and the other method uses a resistor and a capacitor. They are called respectively:

1. Transformer coupling
2. Resistance-capacitance coupling

There are two types of transformers used for transformer coupling. They are:

1. Radio-frequency transformers
2. Audio-frequency transformers

Radio-frequency transformers are usually wound on a tube and may have either an air-core or a core made of a powdered iron compound called FERRITE. The ferrite is pressed into a short, straight rod and forms the type of core known as an OPEN-CORE.

Audio-frequency transformers have closed cores made of thin sheets of transformer steel. For further description of audio-frequency transformers refer to the paragraphs on transformers in the chapter on Components.

CHAPTER TWELVE

The Photocells and Phototubes Which Are Popularly Called Electric Eyes . . . HOW TO BUILD A PHOTOTUBE RELAY

There are several varieties of transducers which generate a voltage when light shines on them. They change the energy of light into electrical energy. These devices have several names. They are called "light-sensitive cells," "photocells," "photronic cells," and "electric eyes." Photocell and photoelectric cell are the terms we will use.

Uses for Photocells. Photoelectric cells are far more sensitive than the human eye to small changes in light intensity and color. They have important uses. Here are a few:

1. to measure illumination
2. as light meters to indicate proper exposure in photography
3. to measure the intensity of photographic negatives for automatic photo-printing machines
4. to count vehicles or people passing a given point

5. to open a door when a person approaches it
6. to signal the presence of an intruder
7. to count packages or manufactured articles passing on a conveyor belt
8. to determine the amount of ingredients in a solution
9. to keep color-printing presses in "register" or adjustment
10. to send photos, graphs, drawings, etc. by wire or radio
11. as an essential part of sound motion pictures
12. to level elevators at a floor
13. to turn street lights on when darkness comes and off when the sun comes up
14. to measure high temperatures
15. to signal the boiler room when smoke issues from the chimney of a power plant

Selenium. The first photocell was made with selenium. Selenium is an element that lies between an insulator and a conductor. Many years ago small rods of selenium were used occasionally as resistors in electrical circuits. For a long time it was not known that selenium has a unique quality. Then a discovery was made on a far away Pacific island. There was an ocean cable station on the island and the resistors used at the station were selenium. One of the cable operators noticed that when the sun came up in the morning he had to readjust his apparatus. He discovered that the adjustment was necessary because a change in resistance occured when the sun shone on the selenium resistors. Thus it was found that selenium has the unique

quality of changing its resistance to electric current when exposed to light.

Selenium belongs to the same family of chemical elements as sulfur. It was discovered in 1817 by the great Swedish chemist, Jons Jakob Berzelius. Several chemical elements exist in more than one form. Selenium is one of these. It can be a brown shapeless mass or take the form of gray crystals. It is the gray crystalline selenium which has the property of being a conductor of electricity when exposed to light and almost an insulator in darkness.

First Photocell. A selenium photocell consists of two electrodes, separated by a thin layer of selenium. Alexander Graham Bell, the ingenious inventor of the telephone,

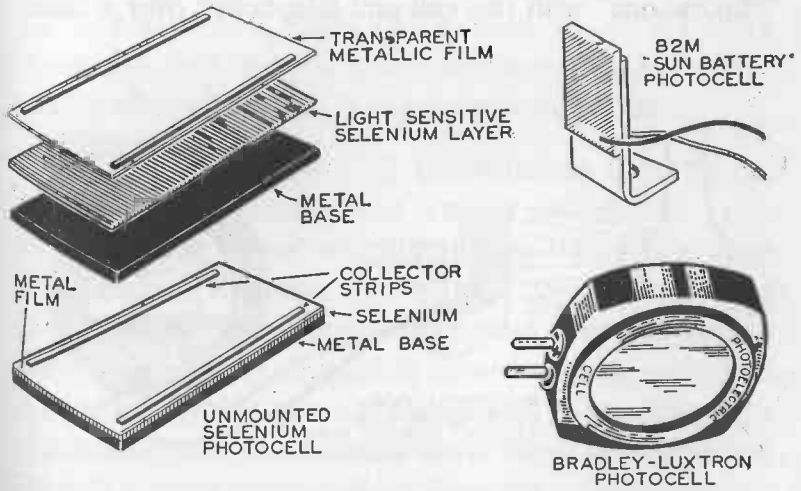

SELENIUM PHOTOELECTRIC CELL CONSTRUCTION

A selenium photoelectric cell is built in layers as shown at the left. The B2M "Sun Battery" is a low-priced photoelectric cell suitable for amateur experimenters.

was the first to make a USEFUL photocell. After much study of the remarkable behavior of selenium and much laborious research, Bell made a photocell in 1877. He used it to TELEPHONE OVER A BEAM OF LIGHT. The first successful selenium cells made by Bell for this purpose consisted of two copper or brass plates separated by a thin insulating layer of mica. A large number of holes were bored through both plates and mica. Conical brass studs were fixed in the holes in one plate and spaced so that they entered the holes in the other plate but did not touch the plate itself. The annular spaces surrounding the studs were filled with melted brown selenium and heated over a gas flame until the selenium again melted and turned into the slate-colored crystalline form.

Bell and an assistant named Taintner constructed a "photophone" with this cell and telephoned over a beam

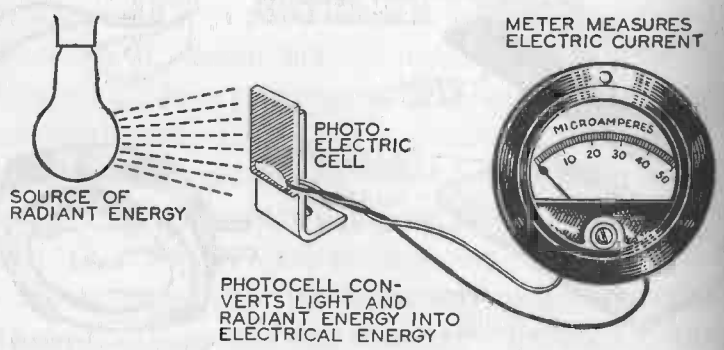

LIGHT METERS

Light meters, used in photography for measuring the intensity of light, consist of a selenium photoelectric cell connected to a microammeter (measures millionths of an ampere). The meter is calibrated to indicate the correct exposure under existing light conditions.

of light. In their first experiments, the rays of the sun furnished the source of light. The light was reflected from a mirror attached to the small end of a megaphone. Words spoken into the megaphone caused the mirror to vibrate and vary the light beam reflected from the mirror. When one of the Bell's selenium cells was connected to a battery and a telephone receiver and placed where it would intercept the light beam, the variations in light were reconverted into sound waves which repeated the words spoken into the megaphone.

The Direct Conversion of Sunlight to Electricity. For many decades the selenium cell was apparently only a current-conducting device whose resistance changed when exposed to light. It was not known that a selenium cell could also be a photoelectric cell and in addition to changing its resistance it could also generate a voltage when exposed to light. It is the photoelectric voltage-generating quality of selenium that is now most widely used.

Selenium Photoelectric Cell Construction. The typical selenium photocell consists of a metal plate or disk (usually iron), one side of which is covered with a thin layer of selenium. A very thin film of gold or silver is spattered on the selenium. A current-conducting electrode or collector strips rest on the gold or silver film. The metal film is so extremely thin that it is transparent and permits light to pass and reach the selenium layer. When light shines on the cell a small current flows from the selenium to the metal base. Under proper conditions the flow of current varies almost directly as the amount of light which reaches the cell. Needless to say, the action of a selenium cell is

electronic. Several theories explaining how light thus produces a flow of electrons have been proposed.

All photoelectric transducers are not constructed like a selenium cell. One different and widely used type is called a PHOTOTUBE.

Description of a Phototube. At first glance a phototube may have the general appearance of a radio tube intended for use in a radio receiver. It consists principally of two electrodes sealed in a glass envelope and has a black plastic base like the base of a radio tube.* The electrode in the

* This description does not fit some phototubes, namely, those of the cartridge and end types.

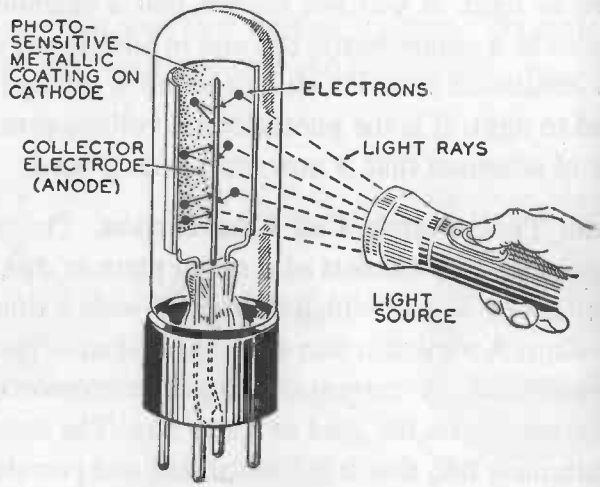

A PHOTOTUBE HAS A SMALL ANODE AND A LARGE LIGHT-SENSITIVE CATHODE

When light strikes the photosensitive metallic coating on the cathode of the tube, electrons are thrown off from the metal. The electrons (represented by black dots in the sketch) move toward the anode and current flows in the tube circuit. This current can be amplified and made to operate a relay.

shape of a half cylinder, easily visible through the glass envelope, is the cathode. The anode is a short straight rod or wire. When the phototube is in operation the anode is connected to the positive terminal of a voltage source. The cathode emits electrons when its sensitized surface is exposed to light or other radiant energy.

The cathode is the only part of the phototube which is sensitive to light. It is the PRODUCER of electrons. The anode is a COLLECTOR of electrons. The cathode is a strip of thin, silver-plated, sheet copper bent into semicylindrical form. When the phototube is one which is sensitized with cesium, the silver on the concave surface of the cathode is covered with a thin layer of cesium oxide and

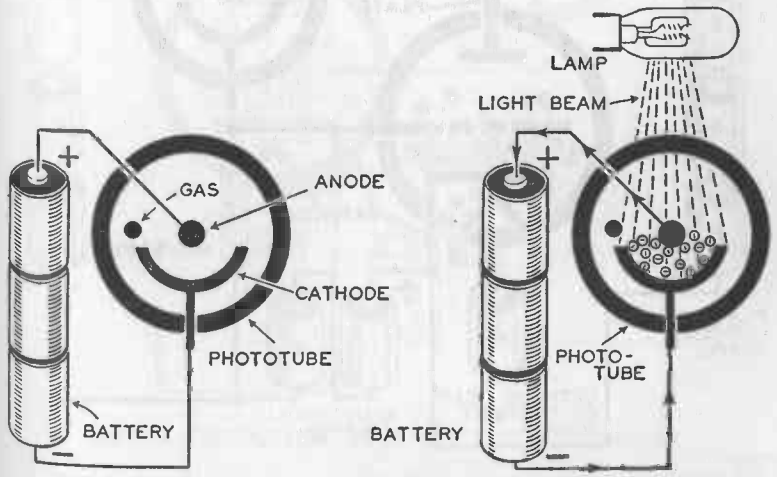

NO ELECTRONS ARE PRODUCED AT THE CATHODE UNLESS LIGHT STRIKES ITS SENSITIVE SURFACE

The large black dot is the conventional symbol for gas in a tube. The small circles enclosing a negative sign in the right-hand sketch represent electrons. When a photoelectric tube is placed in operation the anode is kept at a positive potential so that it will attract electrons.

the oxide is coated with a thin layer of metallic cesium. Cesium is a costly, rare, soft, silvery metal discovered nearly one hundred years ago by Professord Gustav R. Kirchoff and Professor Robert W. Bunsen.* Cesium oxidizes easily in air and decomposes water when immersed in the latter. It must be stored in a vacuum or in a chemically non-active gas.

* Both of these scientists made many important discoveries. Look for their names in the encyclopedia and read about them in "Discovery of the Elements" by Mary Elvira Weeks or in other reference books at the library.

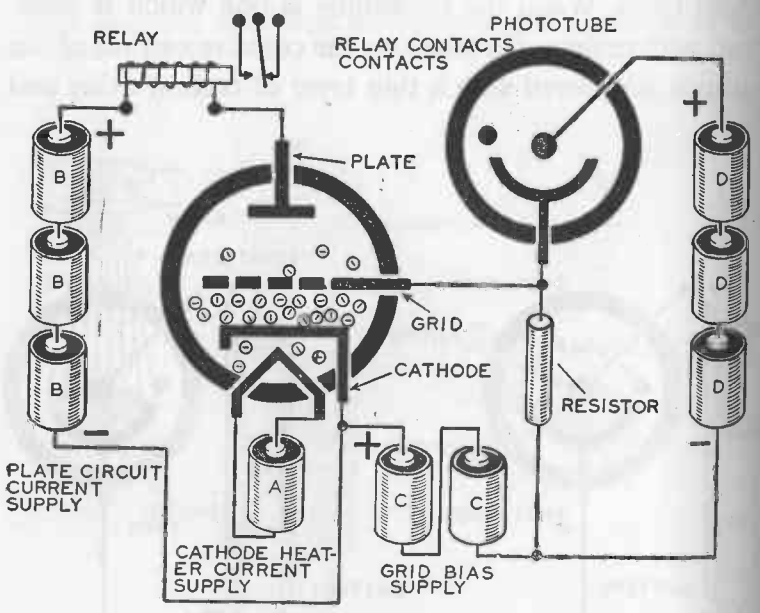

HOW A PHOTOTUBE RELAY OPERATES

When a phototube is put into operation the cathode is connected to a battery (DDD) or other source of positive potential. The circuit also includes an amplifier tube and a sensitive relay. The electric current produced in a phototube is too weak to operate any but the most sensitive relays. Therefore it is fed into an amplifier tube. The amplified current will operate a less sensitive but more rugged type of relay.

Little practical use has been found for cesium except in phototubes. However, cesium is not the only metal used for sensitizing the cathode in phototubes. Calcium, barium, strontium, etc., and their oxides, are also used for this purpose. Metals such as tantalum, thorium and

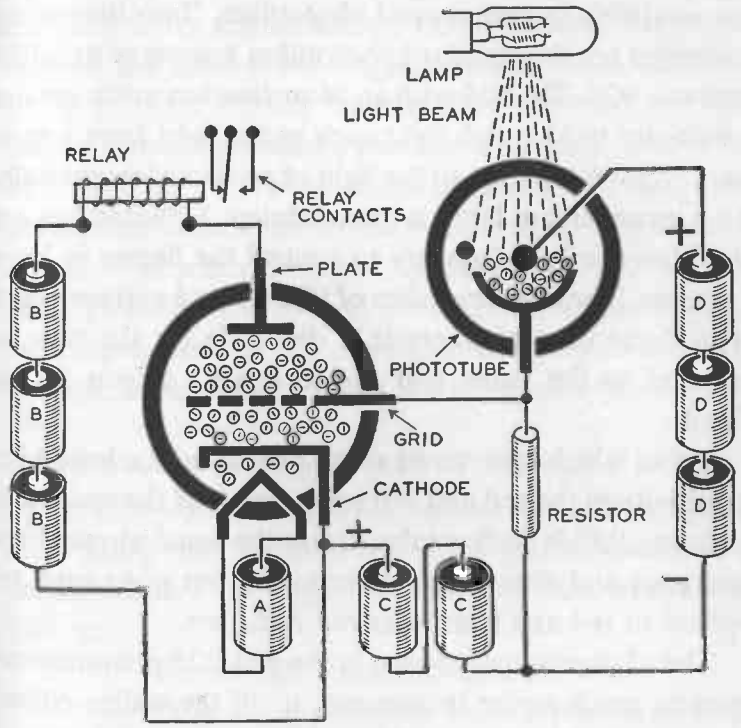

HOW A PHOTOTUBE RELAY OPERATES, continued

Compare this illustration carefully with the preceding one where no light strikes the phototube and consequently few electrons from the amplifier tube's cathode are able to get through the grid and reach the plate. In the illustration above, light is shown striking the cathode of the phototube. Electrons are released. The current flow in the phototube makes the grid of the amplifier tube more positive and electrons from the amplifier cathode reach the plate. Current flows in the plate circuit (B, B, B are the plate supply) and the relay armature is drawn toward the coil.

titanium are used on the cathodes of special purpose phototubes which respond to ultra violet light but are not sensitive to light visible to the human eye.

Different metals used as the sensitive surface of the cathode give phototubes different characteristics. Four types of surfaces known respectively as s1, s2, s3 and s4 are available in commercial phototubes. Two interesting examples are the standard phototubes known as RCA 929 and RCA 926. The 929 with an s4 surface has much greater sensitivity to blue rich light such as the light from a mercury vapor lamp than to the light of an incandescent bulb. (An incandescent lamp is blue deficient.) Phototubes are used frequently in industry to control the flames in large furnaces. The characteristics of 929 with s4 surface adapt it to flame control where it is desirable for the tube to respond to the flame and not to heated objects in the flame.

Tubes which have an s1 or s2 photo-surface have high sensitivity in the red and infra-red region of the spectrum. The RCA 930 is such a tube. It has the same physical appearance and dimensions as RCA 929 but gives high response to red and near infra-red radiation.

The s3 photo-surface used in the RCA 926 phototube responds, much as the human eye, to all the visible colors. Hence 926 s3 is often used in color measurement.

What happens? When a phototube is put into operation the anode is connected to the positive terminal of a battery or other source of positive potential. Then if light or other radiant energy strikes the photo-surface of the cathode, electrons are knocked out of the surface, and since electrons are negative they are drawn to the positive

anode. They fly across the space between the cathode and the anode and continue to do so as long as radiant energy strikes the cathode and the anode remains positive. This movement of electrons is an electric current. The number of electrons emitted by the cathode depends upon the wave length of the radiant energy and the amount of light that falls on the cesium surface of the cathode. An intense light of the same wave length produces more electrons and a stronger electric current than a weak light. The electric current produced, even by an intense light is too weak (it is only a few millionths of an ampere) to operate any but the most sensitive relay—a type of relay too delicate to be practical for most applications of the "electric eye." Therefore the current produced in a phototube by light rays is fed into an amplifier. The amplified current will operate less sensitive but more rugged types of relay.

HOW TO BUILD AND USE A PHOTOTUBE RELAY

The components and parts required to build the Phototube Relay are listed below. The letters enclosed in parenthesis are the key to identity the parts in the illustrations.

1 Wood base 7 in. x 4¾ in. x ¾ in.
1 Piece of plywood 2⅝ in. x 1⅛ in. x ¼ in. or a metal bracket to support volume control
1 2500-ohm SPDT sensitive plate circuit relay (**E**)
1 2-watt, 10,000 or 20,000-ohm wire wound linear taper volume control (**B**)
1 SPST switch which can be attached to the volume control (**A**)
1 Knob for volume control (**C**)

1 CE23C gas Cetron phototube
1 117L7/M7-GT radio tube
1 Octal wafer socket for 117L7 tube (**K**)
1 Steatite 4-prong wafer socket for phototube (**L**)
1 16 mfd. 150 DCWV electrolytic capacitor (**J**)
1 10 megohm, ½-watt resistor
1 25,000-ohm, ½-watt resistor
2 single-terminal Bakelite tie-points (**H**)
1 2-terminal Bakelite tie-point (**H**)
1 6-ft. lamp cord and attachment plug (**G**)
1 Screw eye with ¼ in. eye
3 Binding posts or 3 Fahnestock connectors (**D**)
6 ½-in. No. 5 round head wood screws
4 1¼-in. No. 5 round head wood screws
4 ¾-in. spacers with hole to pass No. 5 wood screw
shellac, hook-up wire, rosin-core solder

The Phototube. Several types of phototubes were tested for this book and it was found that the CE23C gas-filled Cetron and RCA 868 gave excellent results in a fairly simple circuit. The CE23C proved to be more sensitive than the RCA868. Both are 4-prong tubes which will fit into the same socket and either one may be substituted for the other without changing the circuit.

The Plate Relay. A relay is an electrically operated device for the opening and closing of a circuit, or, in other words, an electrically operated switch. A variety of relays are used in electronic circuits and several types will be found listed in the catalogs of firms dealing in radio, television and industrial electronic supplies. Each type is in-

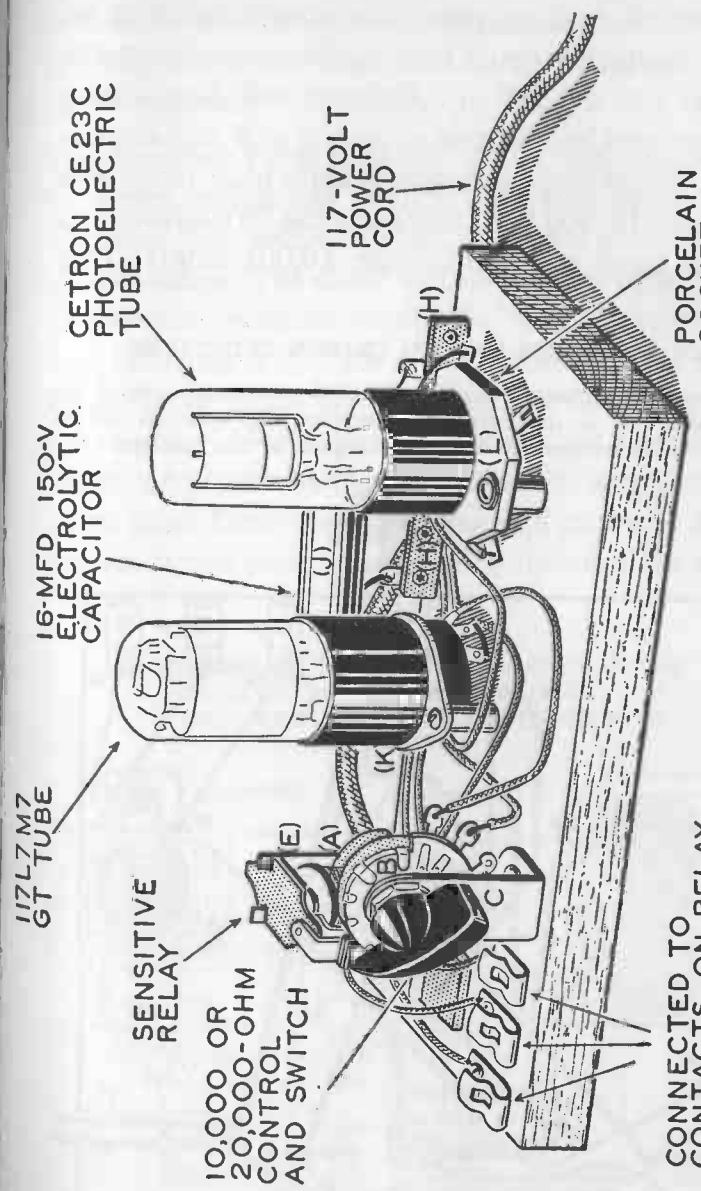

PHOTO-RELAY WITH CETRON CE23C TUBE

The letters enclosed in parentheses are the keys for identifying the parts with those in the plan.

tended for a special purpose. The relay selected to use with the phototube should be a medium-cost PLATE CIRCUIT relay with a 2,500 or 5,000-ohm coil. Such a relay can be operated by a current of only 8 or 9 milliamperes (0.008 to 0.009 amps.). Super-sensitive plate relays with a resistance of 5,000 to 10,000 ohms can be operated by a current as small as 1 milliampere (0.001 amp.). They

PLAN OF THE RELAY WITH CETRON CE23C TUBE

The letters in parentheses will aid in identifying the same parts in the circuit diagram and in the preceding illustration. The terminals can be identified with the terminals in the circuit diagram by the numerals.

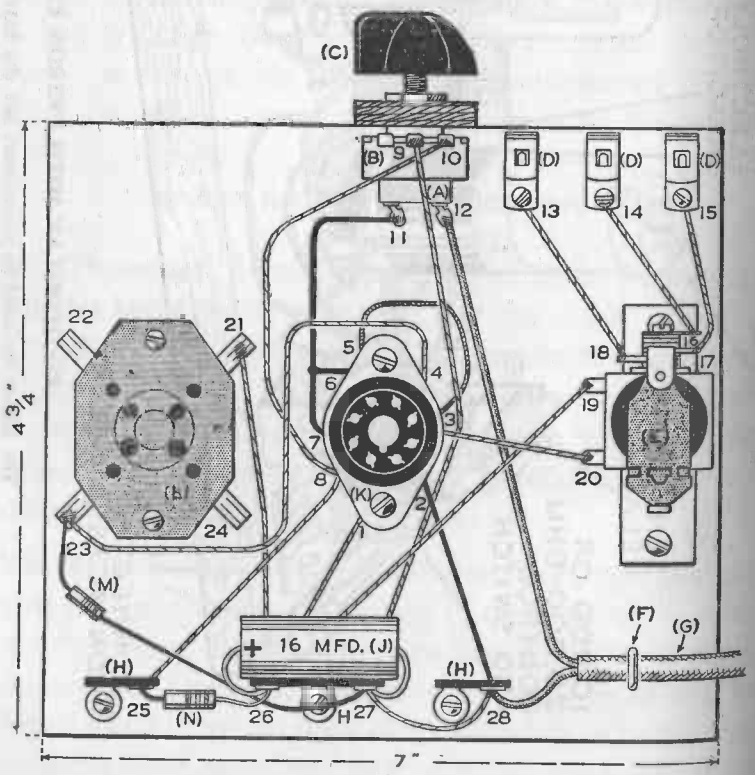

cost more than the type of relay recommended in the list of components and their great sensitivity is not required for this project.

The Amplifier Tube. A 117L7/M7-GT tube is a combined half-wave rectifier and amplifier. A glance at the diagram will show it to be a diode and a pentode within the same glass envelope. The diode section together with a 16 mfd. electrolytic condenser rectify the 117-v alternating current, changing it into the direct current voltage required for the anode of the phototube and for the plate circuit of the amplifier. When electrons are emitted from the cathode of the phototube they are fed to the amplifier section of the tube. Their effect upon the grid produces a flow of current in the plate circuit which operates the relay. A

SCHEMATIC CIRCUIT DIAGRAM OF RELAY WITH CETRON CE23C PHOTOTUBE AND 117L7 AMPLIFIER AND RECTIFIER TUBE

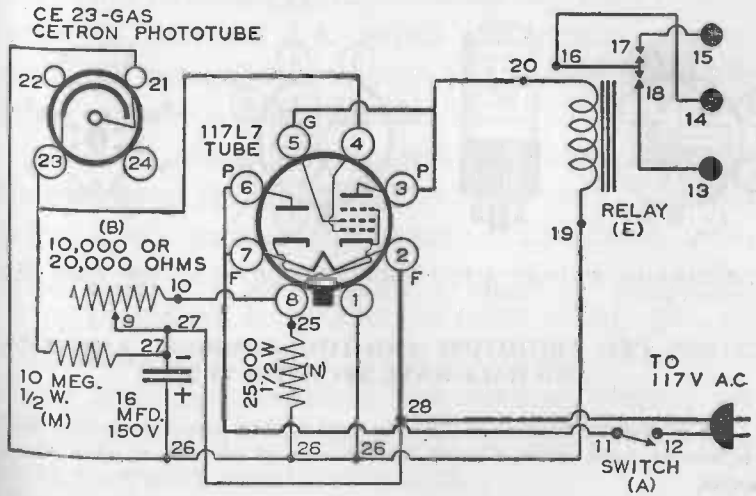

117L7 tube operates directly from the 117-v AC power supply without any form of resistor in series.

Socket. It is not necessary to use a steatite socket for the phototube. Steatite is a low-loss porcelain-like insulating material used in the manufacture of sockets for transmitting tubes. A steatite socket is recommended because it is preferable to a Bakelite or other plastic socket but a Bakelite or plastic socket will be satisfactory for a "home-made electric eye."

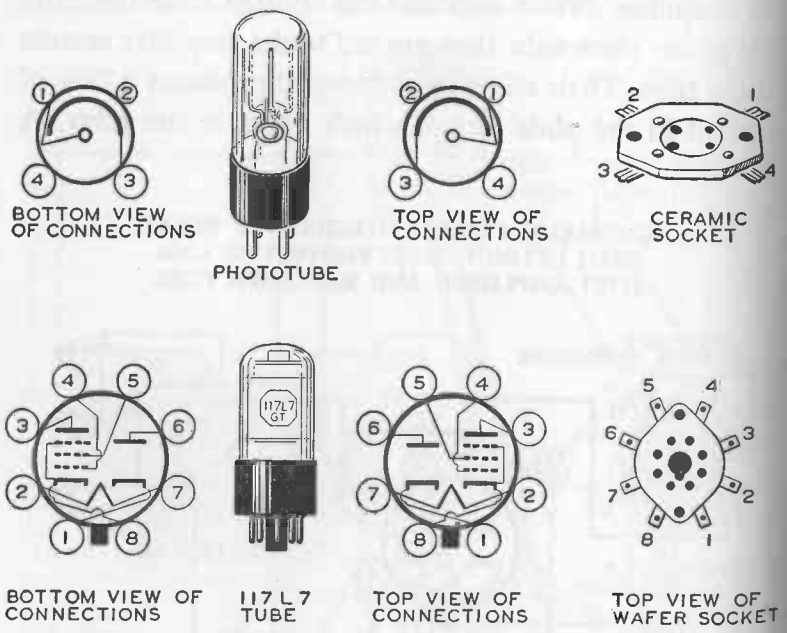

CETRON CE23 PHOTOTUBE AND 117L7 COMBINED AMPLIFIER AND HALF-WAVE RECTIFIER TUBE

The phototube requires a four-pin socket. The amplifier-rectifier tube requires an octal socket. Consult the top view of connections when wiring socket.

Control. The 10,000- to 20,000-ohm, 2-watt, linear taper, wire-wound control specified in the list of components is a type of potentiometer carried in stock by television repairmen for replacement of defective television controls and should not be difficult to find.

Assembling. Smooth the wood base by sandpapering and shellacking all its surfaces. When the shellac has dried mount the sockets, relay, Bakelite tie-points and connectors in the locations shown on the plan. Each socket is raised above the base by two ¾-inch spacers so that the socket terminals do not touch the wood.

The control and switch is mounted on a metal bracket or on a 2⅝ in. x 1⅛ in. plywood strip attached to the front edge of the base at its center.

Begin wiring by tying the 117-v power cord (**G**) to the screw eye **F**. Connect one power wire to a Bakelite tie-point (**H**) 28 near the capacitor. Connect the other power wire to one terminal (**12**) of the switch (**A**). Next connect socket (**K**) terminal 7 to switch (**A**) terminal 11 and socket (**K**) terminal 2 to tie-point (**H**) 28. The heater circuit of the tube is now complete.

Solder all connections with rosin-core solder. Observe the polarity of the electrolytic condenser and connect it as indicated. Consult both the plan and the schematic circuit diagram each time that you put a wire in place. The wiring should not be difficult. In order to help you, all components are marked in the illustrations with an identifying letter in parenthesis. The numerals identify the terminals. After the assembly and wiring is completed, check your work with the diagrams.

Adjustment and Operation. Set the control knob at about the halfway point between its limits of movement. Place the 117L7 tube in its socket but leave the phototube out of its socket temporarily. Allow about one-half minute for warm-up, then place the phototube in its socket. Darken the room or cover the phototube with a small cardboard tube or box. Make a hole about one inch in diameter in the box or tube and position it so that the hole is opposite the center of the concave side of the phototube cathode. Move the control knob back and forth very slowly until you find a point where the relay armature is drawn toward the coil but moves away from the coil if the knob is moved slightly in the opposite direction. Let the control rest at the point where the armature moves away from the coil.

When the phototube relay is used for some practical purpose such as for an annunciator, it should be enclosed in a small cabinet. It can be adjusted to greater sensitivity when all non-essential light is excluded. One of the illustrations shows the details of a 7 inch x 4¾ inch x 4¼ inch

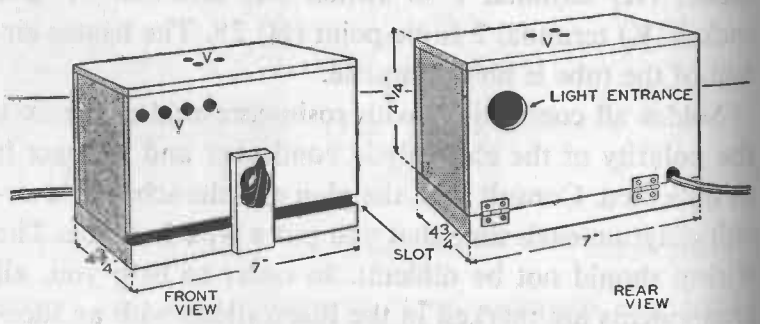

ENCLOSURE FOR PHOTOTUBE RELAY

The 5/16 in. diameter holes in the top and front of the enclosure (marked V) are for ventilation. The long slot along the lower edge of the front side of the enclosure is also for ventilation.

cabinet which can be fastened to the relay base with two small hinges. The light beam enters the cabinet through a 1 inch diameter round hole located exactly opposite the center of the concave side of the cathode. Three 5/16 in. holes are bored in the top of the cabinet directly over the 117 L7/M7-GT tube to let some of the warm air from the tube escape.

The Light Source. A match or a flashlight will test and demonstrate the action of the photo-relay. But if the relay is put into practical use, a source of steady light is required. Commercial light sources for photo-relays are fairly expensive. You can build your own at relatively low cost.

Two plans for light sources are illustrated and described. The one with cabinet is a more permanent arrangement than the other.

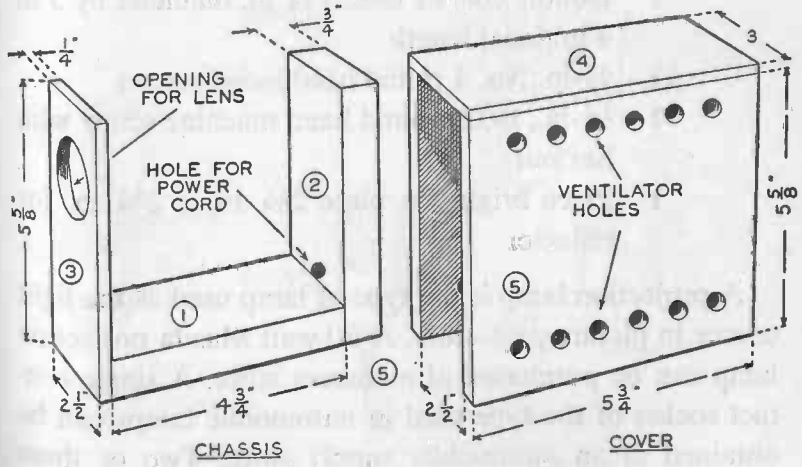

ENCLOSURE FOR LIGHT SOURCE

Materials and Parts Required for Building Light Source

1 Piece of pine 4¾ in. x 2½ in. x ¾ in. (1)
1 Piece of pine 5⅝ in. x 2½ in. x ¾ in. (2)
1 Piece of plywood 5⅝ in. x 2½ in. x ¼ in. (3)
1 Piece of plywood 5¾ in. x 3 in. x ¼ in. (4)
2 Pieces of plywood 5¾ in. x 5⅝ in. x ¼ in. (5)
1 Piece plywood 2⅜ in. x 2⅜ in. x ¼ in. with 1½ in. dia. hole in center (6)
1 115-125-volt, 50-watt, G. E. projection lamp with single contact bayonet candelabra base
1 100-ohm, 20-watt fixed wire wound power resistor with mounting brackets
1 Single-contact, candelabra-base lamp socket
1 Strip sheet metal 4¾ in. x ½ in. x approximately 1/32 in.
1 6 ft. length of lamp cord with attachment plug
1 Double convex lens, 1¾ in. diameter by 3 to 4 in. focal length
18 ¾-in. No. 4 round head wood screws
1 ½-in., 6-32, round head machine screw with hex nut
1 Piece bright tin plate 2¼ in. x 2¾ in. for reflector

A projection lamp is the type of lamp used as the light source in picture projectors. A 50-watt Mazda projection lamp can be purchased at a camera store. A single contact socket of the type used in automobile lamps can be obtained at an automobile supply store. Two or three dealers in surplus and chipped-edge lens advertise in the

mechanical and handicraft magazines. They will supply a chipped-edge lens, approximately 1¾ inches in diameter and with 3 to 4-inch focal length at small cost. A 4-inch

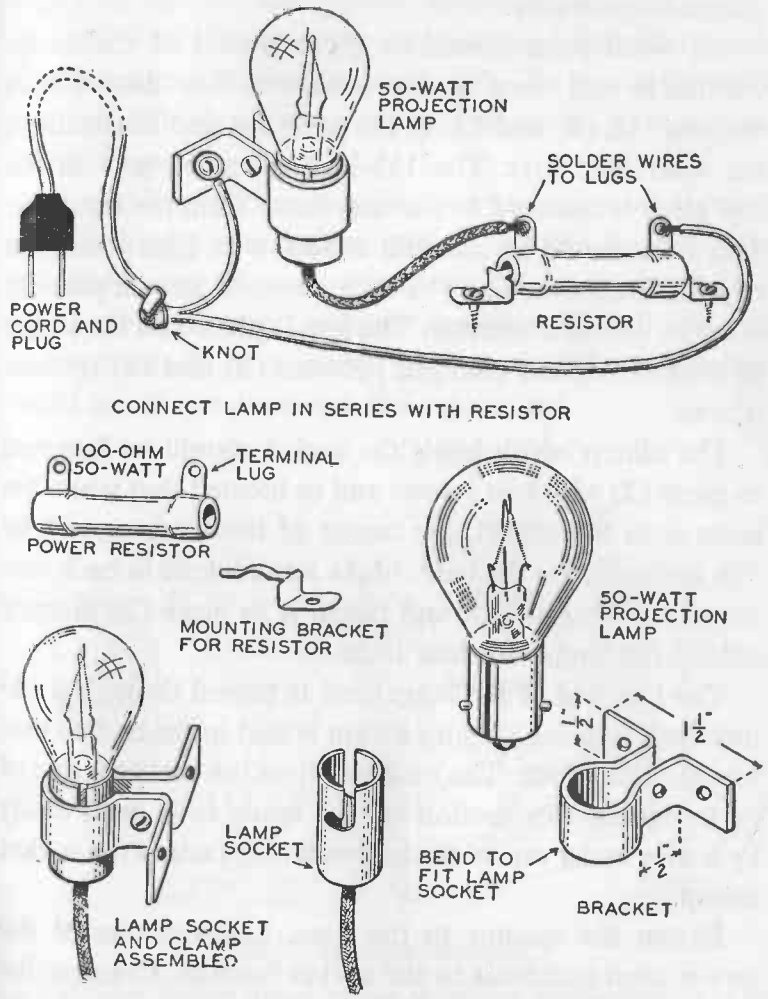

PROJECTION LAMP, SOCKET, RESISTOR AND HOMEMADE BRACKET FOR LIGHT SOURCE

focal length is preferable. The bracket for holding the light socket to one end of the cabinet is home-made from the metal strip specified in the parts list. Aluminum is good material for this part. It can be bent into the required shape easily.

All wood parts should be given a coat of shellac or varnish to seal them against moisture. The three pieces marked (**1**), (**2**) and (**3**) in the parts list and illustrations are assembled first. The 1½-inch diameter hole in the end piece is centered 1½ inches down from the top edge. This hole should be cut with a fretsaw or jigsaw and the edge filed smooth. The 1½-inch diameter hole in part (**6**) is cut in the same manner. The lens is placed on the inside of the cabinet and clamped between (**3**) and (**6**) by four screws.

The clamp which holds the socket should be fastened to piece (**2**) with two screws and so located that when the lamp is in the socket, the center of the filament will be 3⅜ inches above the base. Make a small hole in each corner of the tin reflector and fasten it to piece (**2**) directly behind the lamp with four tacks.

The free end of the lamp cord is passed through a ¼-inch hole in piece (**2**) and a knot is tied in the end so that it cannot slip back. The metal shell on the socket is one of its terminals. Connection can be made to it most easily by a wire under one of the screws which fastens the socket clamp.

Fasten the resistor to the base. Connect one of the power cord terminals to the socket bracket. Connect the other power cord terminal to one of the resistor terminals.

Connect the wire which comes out of the bottom of the socket to the other terminal of the resistor. This will connect the lamp and resistor in series.

The rows of ¼ inch holes near the top and bottom edges of the two side pieces (**5**) are necessary for ventilation. The 50-watt lamp and resistor generate considerable heat which must be dispersed. The top of the cabinet should be fastened to the two sides with glue and six or eight small brads.

One of the light sources illustrated in this book consists of a flashlight, transformer and power cord fastened to a wooden frame. The arrangement can be enclosed in a small cabinet if appearance is important. But if you wish to get a steady light source ready as quickly as possible, build it without a cabinet and save time.

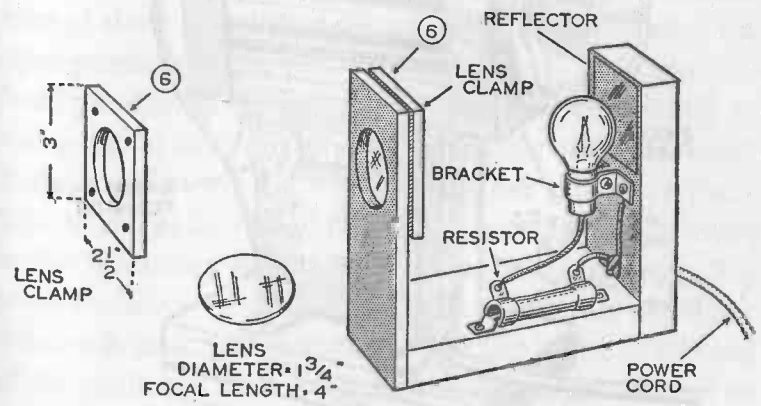

LIGHT SOURCE ASSEMBLY

This shows the light sources without its cover so that the assembly of the lens, socket and resistor can be seen.

The following parts and materials are required:

1 6 in. x 3 in. x ¾ in. wood base (**1**)
1 4¾ in. x 1½ in. x ¾ in. wood block (**2**)
2 Pieces ½ in. dowel rod 4½ in. long (**3**)
1 Piece of pine 1 in. x 1 in. x 4⅜ in. (**4**)
1 2-cell flashlight (**5**)
1 Small filament transformer with 6.3-volt secondary (**6**)
1 6.2 volt miniature lamp with base to fit socket in flashlight (**7**)
1 6 ft. power cord and plug (**8**)
1 Piece of thin brass or copper 2 in. x ¾ in. (**9**)
1 Small screweye (**10**)

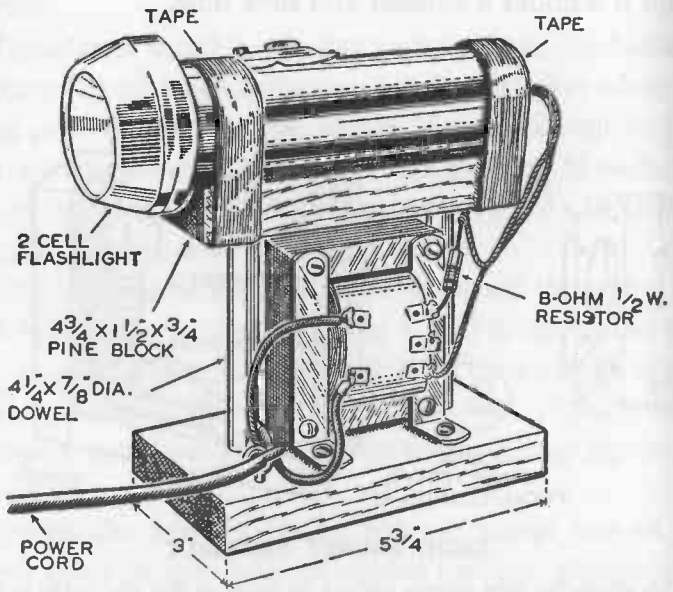

LIGHT SOURCE MADE FROM A FLASHLIGHT FOR OPERATION ON 117-V A.C.

1 2 ft. length of connecting wire
1 3 ft. length of friction tape
1 ¾-in. No. 6 round head brass wood screw

The flashlight should be a 2-cell spotlight or focussed type which throws a narrow concentrated beam. Flashlight batteries do not last long enough to use continuously so they are removed and the 117-V AC takes their place as a power source. The voltage is stepped down by a filament transformer. A filament transformer is used in many radio receivers and amplifiers to reduce 117-V AC to the proper value for the tube heaters. A small filament transformer which will deliver 6.3 volts and about 1 ampere is a standard size and carried in stock by most dealers in radio and electronic parts.

When a round head brass screw is inserted in one end of the 4⅜ inch x 1 inch x 1 inch pine block (**4**) and the strip of sheet metal (**9**) fastened to the opposite end, the arrangement will be just the right size to slide into the flashlight case in place of the batteries. A wire should be connected to the brass screw and another wire connected to the metal strip. The wires are led out through a small hole drilled in the end of the flashlight case and connected to the secondary of a 6.3-volt filament transformer. Remove the lamp supplied with the flashlight and substitute a 6.2-volt lamp with a similar base. The screw in the end of the block will make contact with the contact button on the bottom of the lamp base and the metal strip at the opposite end will make contact with the spiral spring in the end of the flashlight case. When the primary of the transformer is connected to the 117-V AC power supply,

the switch on the flashlight case will still function and will turn the lamp on and off.

The flashlight is fastened to the framework of the light source by two bands of friction tape and can be removed at any time and restored to normal use by unwinding the tape and installing batteries and suitable lamp. The transformer is mounted on the wood base below the flashlight. The power cord connected to the primary of the transformer is tied to a small screweye in the base so that there will not be a strain on the connections if the cord is pulled.

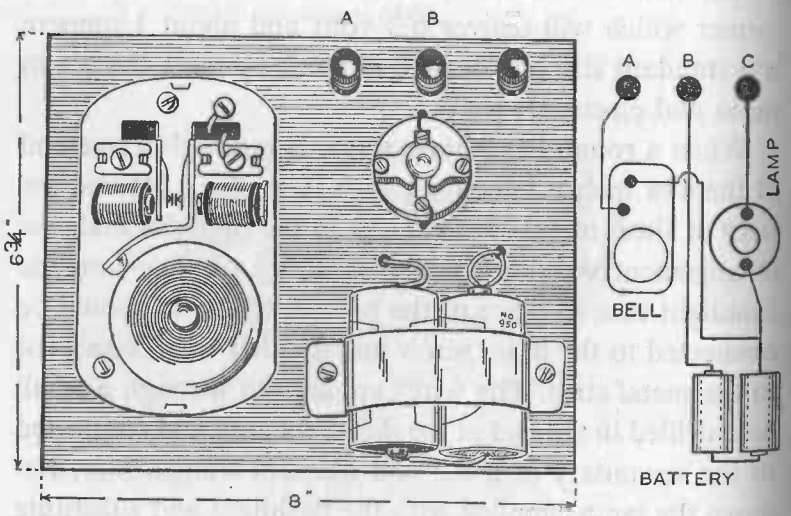

LAMP AND BELL FOR DEMONSTRATING THE PHOTO-RELAY

A bell, flashlight lamp and two size D flashlight cells mounted on an 8 in. x 6¾ in. wood base. The dry cells are connected in series and secured to the base by a clamp made from a sheet metal strip 5¼ in. x 1 in. The 2.5-V flashlight lamp screws into a miniature flat base porcelain receptacle. If binding post terminals **B** and **C** are connected to the relay, the lamp will light when the relay operates. If binding post terminals **A** and **B** are connected to the relay, the bell will ring when the relay operates.

The Phototube Relay which has just been described can be used as an annunciator. An annunciator is an electrically controlled signal or indicator which "makes an announcement." The small lights which flash on a telephone switchboard are annunciators. When one of the lamps is lighted, it is an announcement that someone is calling.

No one needs to touch a phototube annunciator to set it into operation. A light source and a phototube relay are

ELECTRONIC "BLABBER STOPPER"

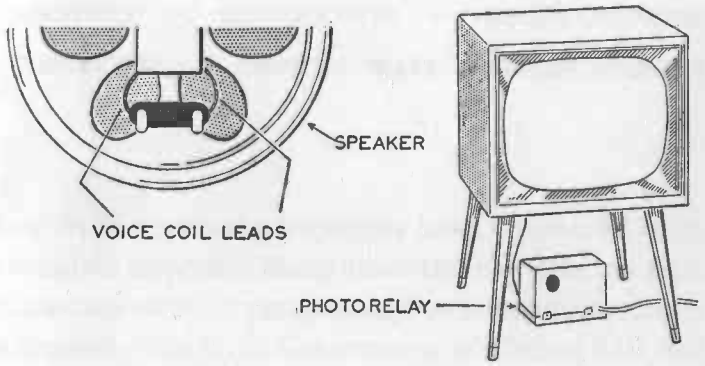

You do not have to leave the comfort of your favorite chair to turn down the volume when you are tired of hearing too much blabber about toothpaste, razor blades, beer, shaving cream, etc. Connect a photoelectric relay so that it will open one of the voice-coil leads on the receiver speaker. Short-circuiting the voice coil may work equally well. To short the voice-coil connect terminal **(13)** on the photo-relay to one of the voice-coil terminals and terminal **(14)** to the other voice-coil terminal. To open the voice coil circuit cut one of the voice-coil leads near its terminal and connect the ends of the lead to terminals **(14)** and **(15)** on the photo-relay. The voice-coil leads and terminals are located on the back of the speaker as illustrated above.

Adjust the photo-relay so that it will close when you direct the beam of a flashlight at it or turn on a table lamp alongside your chair. When the light is extinguished the program will resume.

placed near a doorway and arranged to announce when anyone passes through the doorway. Anyone who enters or leaves will interrupt the light beam and operate the relay. The relay can be connected to a bell, buzzer, chimes or lamp.

CHAPTER THIRTEEN

Prospecting for Uranium

RADIOACTIVITY • GEIGERSCOPES • GEIGER COUNTERS

SCINTILLOMETERS • HOW TO MAKE A GEIGER COUNTER

Thousands of amateur prospectors have discovered valuable uranium deposits. Many have thereby become rich. Part time and vacation prospecting has sometimes brought large rewards. The U. S. Government is offering $10,000 plus up to $35,000 more in cash bonuses for the discovery of new rich uranium deposits. In the two years just prior to the time when this was written, the U. S. Government paid about four million dollars in bonuses for uranium discoveries. This sum does not include payment for the ore or for land leases. Strikes have been reported throughout the United States from Oregon to Maine and California to Florida.

Prospecting for uranium does not require a great deal of technical "know-how." Uranium reveals itself by its

radioactivity. It is not a particularly rare element. It is more abundant than gold and silver. It is found in virtually every kind of rock and natural water but concentrated deposits of uranium are rare.

The search for uranium is not solely to obtain raw material for the manufacture of atomic weapons. There are other uses for this metal. It is a source of energy—a replacement for coal and oil. There are more than 1,000 industrial uses of uranium products. Of perhaps greatest importance are the medical applications of the radioactive uranium products called ISOTOPES. Their healing power may already have saved more lives than were destroyed by the atom bombs at Hiroshima and Nagasaki.

Radioactivity. Some elements continuously undergo a process of atomic disintegration in which energy is liberated. This process is called RADIOACTIVITY and while it is taking place one or more radiations known as particles and rays are spontaneously emitted. The three principal radiations have been named after the first three letters of the Greek alphabet: alpha-particles, beta-particles and gamma-rays. Radium, uranium and thorium and their products are radioactive substances. Their radioactivity cannot be seen, heard or felt directly but there are ways in which it can be revealed. There are several laboratory instruments for detecting radioactivity. Only three are practical to use for prospecting in the field. These are:

1. The Geigerscope
2. The Geiger-Muller Counter
3. The Scintillometer

The Geigerscope (also called a Scintilloscope) is an optical device. The Geiger counter and the scintillometer

are electronic instruments. A description of the Geigerscope and the manner in which it operates makes it easier to understand an explanation of the scintillometer.

What is the Geigerscope? At first glance, a Geigerscope resembles the magnifying glass which a watchmaker uses, called a loupe. The body of the Geigerscope is made of black plastic and is funnel-shaped. At the small end is a magnifying lens and a PHOSPHOR screen.

The word *phosphor* comes from a Greek word meaning *light-carrier*. The name of the element phophorus is from

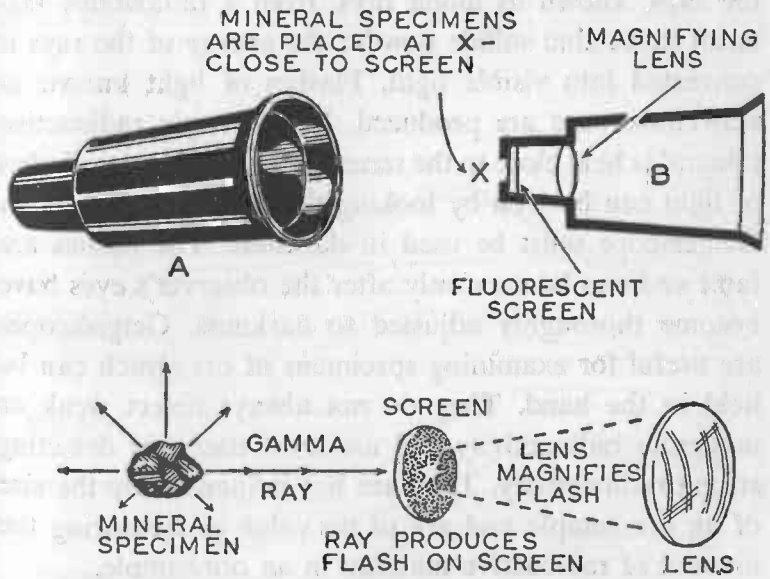

THE GEIGERSCOPE

The screen of a Geigerscope is coated with zinc sulfide. When alpha rays from a radioactive material strike the screen, flashes of light known as scintillations are produced. The scintillations can be seen by looking through the eyepiece. (B is a section of the Geigerscope shown at A.)

the same word. Phophorus emits light when exposed to natural weathering. Many photoluminescent phosphors are employed in television tubes, radar tubes, in paints and inks, in fluorescent lighting and in instruments for detecting various radiations. Photoluminescent phosphors produce light at low temperatures. They absorb energy and then re-emit this energy in the form of visible light. The hands and numerals on a "radium" watch dial which glow in the dark are coated with a photoluminescent phosphor.

The screen of a Geigerscope also is coated with a photoluminescent phosphor, namely zinc sulfide powder. When the rays, known as alpha rays, from a radioactive material strike zinc sulfide powder the energy of the rays is converted into visible light. Flashes of light known as SCINTILLATIONS are produced. If a strongly radioactive mineral is held close to the screen of a Geigerscope, flashes of light can be seen by looking through the eyepiece. A Geigerscope must be used in darkness. The flashes are faint and can be seen only after the observer's eyes have become thoroughly adjusted to darkness. Geigerscopes are useful for examining specimens of ore which can be held in the hand. They do not always detect weak or moderate radioactivity and are most useful in detecting strong radioactivity. They are not influenced by the size of an ore sample and are of no value in measuring the amount of radioactive material in an ore sample.

The Geiger Counter. The Geiger-Muller counter, popularly called Geiger counter, was first devised in 1928 as a laboratory instrument for measurements of radioactivity. When the wide search for uranium ores began

during World War II, the laboratory counter was developed into a rugged portable device which could be used by prospectors.

A portable Geiger counter resembles a small battery-operated radio in general appearance. It consists essentially of a Geiger-Muller tube (often spoken of as a G-M tube), a source of high voltage (700-1200 volts), an electronic amplifier and one or more transducers. The transducer provided with inexpensive counters is a telephone receiver or a set of earphones. The more expensive counters are provided with a meter and a neon tube in addition to the earphones. The equipment varies with model and price.

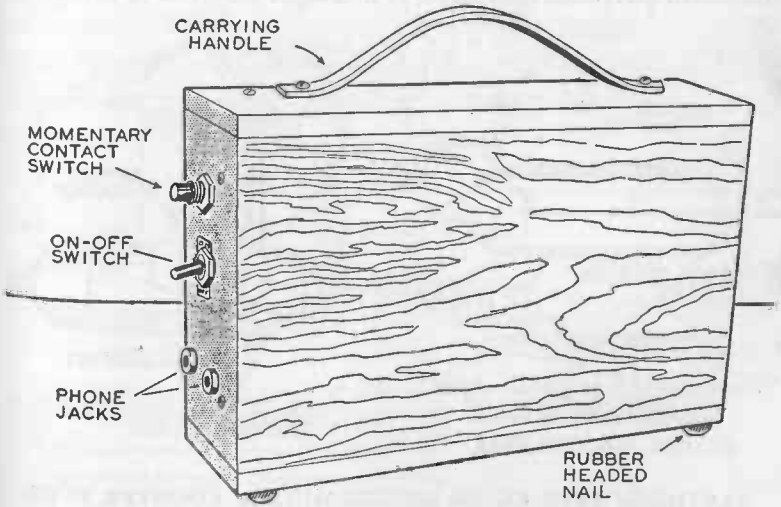

"GAMMA SNIFFER" OR HOMEMADE GEIGER COUNTER FOR DETECTING URANIUM ORES

The Geiger Counter Tube. The "heart" of a Geiger counter is the G-M tube. This may be a few inches long or several feet in length and be made of either glass or metal. In some counters the G-M tube is enclosed within the counter case. In others it is apart from the case but connected thereto by a cable. But all G-M counter tubes, regardless of size or form, operate in the same manner. They all consist of a metal or glass envelope and two electrodes, a cathode and an anode. The envelope is filled with one or more gases. Helium, argon, chlorine and Krypton are some of the gases used in G-M tubes.

When a G-M tube is in operation a high voltage positive charge (500 to 1000 volts depending upon the tube) is applied to the anode. When thus charged, the tube is sensitive to radioactivity. Ores containing such radioactive elements as uranium and radium are radioactive and emit particles and rays. If a Geiger counter is brought

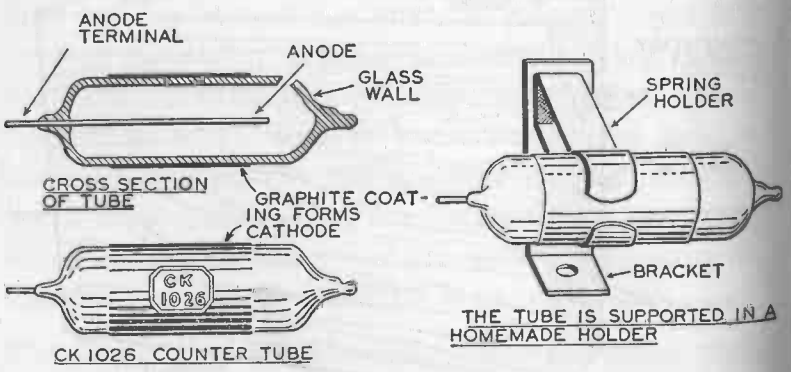

RAYTHEON TYPE CK1026 GEIGER-MULLER COUNTER TUBE

This is the sensitive, low-priced G-M tube used in the "Gamma Sniffer." The illustration shows also the homemade holder used to support the tube.

close to a radioactive ore a few rays (gamma rays) pass through the wall of the G-M tube and collide with molecules of the gas enclosed in the tube. The collisions knock electrons out of the molecules. The negative electrons are attracted to the positively charged anode and produce a negative electrical pulse each time that an electron collects on the anode. The anode is connected to the grid of an amplifier tube and each time an electron reaches the anode it is indicated by the transducer connected to the amplifier. If the transducer is an earphone it clicks each time an electron reaches the anode. If the transducer is a meter or a neon light it gives a visual signal. The number of clicks in the earphones or flashes in the neon tube which occur in a minute is called the "count" and is a measure of the radioactivity to which the tube is exposed.

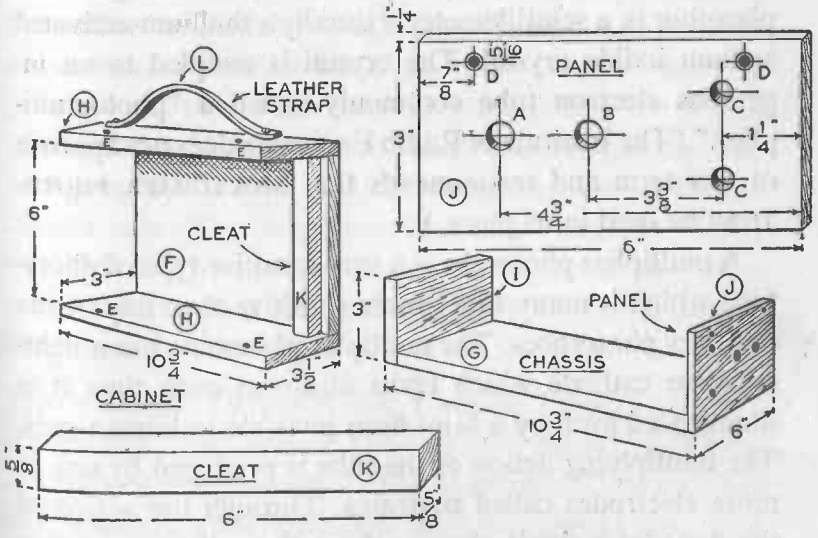

DETAILS OF THE WOOD CABINET FOR THE GEIGER COUNTER

When the transducer is a properly calibrated meter the position of the pointer indicates the count.

The Scintillometer. This instrument, (also called a scintillation detector and a scintillation counter) like the Geiger counter was used originally only in laboratories. Portable models for uranium and thorium prospecting are now manufactured. A scintillometer is more than 200 times as sensitive to gamma rays as the most sensitive Geiger counter. It can be used for uranium prospecting from an airplane or a moving vehicle and for the detection of radioactive minerals located from a few feet to hundreds of feet from the instrument.

A scintillometer can be described as an "electrified Geigerscope." As in a Geigerscope the rays from a radioactive material strike a phosphor and produce light. The phosphor in a scintillometer is usually a thallium-activated sodium iodide crystal. The crystal is coupled to an ingenious electron tube commonly called a "photomultiplier." (The Institute of Radio Engineers does not approve of this term and recommends that MULTIPLIER PHOTOTUBE be used in its place.)

A multiplier phototube is a very sensitive type of phototube which is many times more sensitive than any of the ordinary phototubes. The multipler phototube has a light-sensitive cathode which emits electrons each time it is illuminated even by a faint flash invisible to human eyes. The multiplying action of the tube is produced by one or more electrodes called DYNODES. Through the action of the dynodes a single electron from the cathode can start an avalanche of electrons flowing and produce a con-

siderable amount of plate current. Amplification of the order of 100,000 times is possible with this mechanism. A meter properly calibrated and connected to the scintillometer will indicate the percentage of uranium in samples of uranium ore.

HOW TO BUILD THE "GAMMA SNIFFER," OR GEIGER COUNTER

The components of an efficient scintillometer cost more than two hundred dollars at retail and consequently are not within the means of the average amateur experimenter. On the other hand, the components of a simple Geiger counter cost less than fifteen dollars. The Geiger counter, nicknamed "The Gamma Sniffer," and described on the following pages, can be built for slightly less than fifteen dollars by anyone who can make a simple cabinet and solder the circuit wiring. The "Gamma Sniffer" is a simple form of counter but is extremely sensitive and is a practical instrument for uranium prospecting. The model which was built in order to make illustrations for this book employs a type CK1026 Raytheon Geiger-Muller counter tube. This is a low-priced tube (listed by Allied at $3.35) but proved sensitive enough to detect the radioactive fallout which reached New York City from atomic bomb tests in Utah.

Type CK1026 Geiger-Muller Counter Tube. There are several types and sizes of G-M counter tubes. Each type has its own characteristics. The Raytheon Type CK1026 is a low-cost glass envelope tube for use in detecting gamma radiation. It is commonly used in inexpensive prospector's units and demonstration units. The envelope

is a sealed glass tube about 2 inches long and ¾ of an inch in diameter. The cathode is a band of colloidal graphite about one inch wide applied to the outside surface of the tube. Connection is made to the graphite band by a spring clamp. The anode is a straight wire which runs through the center of the tube and terminates at one end in a contact pin. A small Fahnestock spring contact clip is the best means of making connection to the pin which forms the anode terminal.

If not broken or mistreated, a CK1026 has a relatively unlimited life. It is not sensitive to light and therefore does not have to be enclosed in a light-tight box or shield.

The Chassis and Cabinet. Commercial Geiger counters

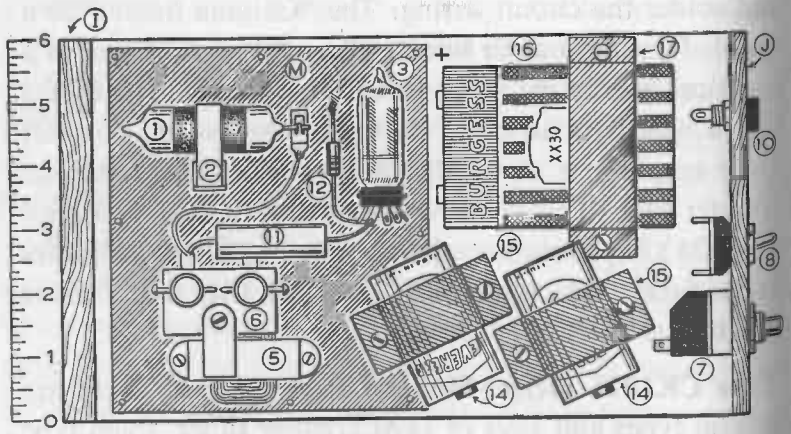

PLAN OF THE GAMMA SNIFFER

This illustration shows the arrangement of the parts on the chassis. The scale at the left can be used to locate their exact position. The letters and numerals correspond to those in the list of parts and can be used for identification.

are enclosed in a steel or aluminum case. A metal cabinet can be factory-produced in quantities at less cost than a well-finished wood cabinet. Another reason why metal cabinets are used is that a metal enclosure of sufficient thickness will shield the G-M tube from alpha particles and to a great extent from beta particles. The counter is thus made sensitive mainly to gamma rays.

Some readers of this book may not have the skill or tools required to make a metal cabinet but a wood cabinet is not difficult to make. Wood will permit the G-M tube to respond to all three forms of radioactivity. There is no objection to this.

Some commercial Geiger counters are very compact and the manufacturer features their small size. In designing the Geiger counter for this book, no attempt was made to reduce it to the smallest possible size. It is easier to assemble and wire than it would be if smaller.

The components of the counter are assembled on a wood chassis. When the cabinet is attached to the chassis all components are completely enclosed except those mounted on the panel. Plywood is used to make the

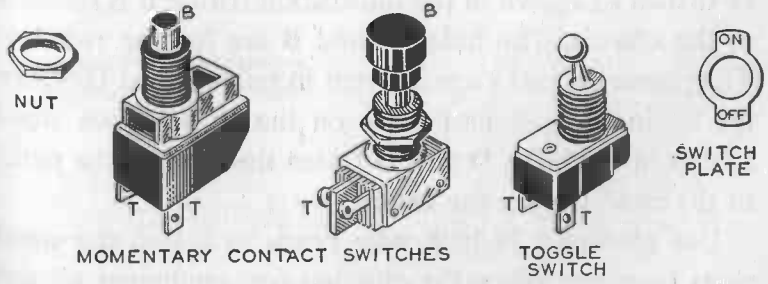

SWITCHES OF THE TYPES USED IN BUILDING THE SNIFFER

chassis and cabinet. Six pieces of plywood and one piece of pine cut to the following dimensions are required:

MATERIALS REQUIRED FOR BUILDING THE WOODEN CABINET AND CHASSIS

1 Piece of plywood 10¾ in. x 6 in. x ½ in (**F**)
1 Piece of plywood 10 in. x 6 in. x ½ in. (**G**)
2 Pieces of plywood 10¾ in. x 3½ in. x ½ in. (**H**)
1 Piece of plywood 6 in. x 3 in. x ½ in. (**I**)
1 Piece of plywood 6 in. x 3 in. x ¼ in. (**J**)
1 Piece of pine 6 in. x ⅝ in. x ⅝ in. (**K**)
4 Rubber head tacks
1 Piece leather strap 9 in. x ½ in. (**L**)
4 1-inch No. 6 flat head wood screws
2 ⅜-inch No. 5 round head wood screws
1 Piece sheet metal 5 in. x 5¾ in. (**M**)
⅞-in. brads and glue

The pieces marked **I, G** and **J** are assembled to make the chassis. The other four pieces form the cabinet. The 6 inch x 3 inch x ¼ inch piece (**J**), used as a panel, should be drilled as shown in the illustration before it is fastened to the chassis. The holes **A** and **B** are for the switches. The phone tip jacks are inserted in holes **C** and **C**. When the cabinet is put into place on the chassis, two wood screws in the holes **D** and **D** fasten the edge of the panel to the cleat (**K**) on the cabinet.

Use glue and ⅞-inch wire brads to fasten the wood parts together. When the glue has set, sandpaper all surfaces smooth and finish with two coats of shellac. Some

sort of carrying handle should be attached to the top of the cabinet (**H**). A piece of leather strap (**L**) makes a good handle. The holes **E, E, E, E** are for the screws which hold the cabinet to the chassis.

Cut a 5 inch x 5¾ inch rectangle from a piece of thin tinned or galvanized sheet iron. Use the point of an 8 d nail to punch a small hole through the plate at each corner and midway along each edge. Use ⅜-inch wire nails to fasten the plate to the chassis at the end opposite from the panel. (*See plan*). When the chassis has been assembled and the shellac or varnish finish is dry attach a rubber head tack at each corner on the underside.

COMPONENTS OF THE GEIGER-MULLER COUNTER CIRCUIT

All of these components, with the exception of the spark gap and tube holder are standard parts listed in many radio supply catalogs.

1 Type CK1026 Raytheon Geiger-Muller Counter Tube (**1**)
1 Homemade clamp for counter tube (**2**)

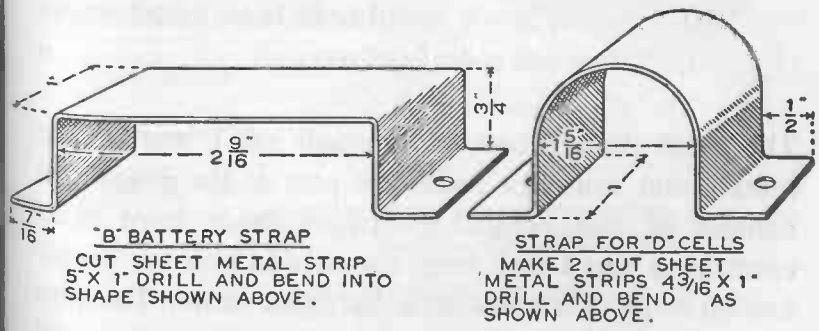

HOMEMADE CLAMPS FOR SECURING THE BATTERIES TO THE CHASSIS

1 Type 3s4 power pentode miniature radio tube (3)
1 Miniature bottom-mounting Bakelite tube socket for 3s4 tube (4)
1 Output transformer of the type used with 50L6 tubes in small radio receivers (5)
1 Homemade spark gap (6)
1 Momentary contact switch (7)
1 SPST toggle switch (8)
1 ON-OFF switch plate (9)
2 Phone tip jacks (10)
1 .05 mfd. 600 VDC by-pass capacitor (11)
1 10-megohm, ½ watt resistor (12)
1 Small Fahnestock Spring contact clip (13)
2 Size D 1.5 volt flashlight cells (14)
2 Homemade clamps for cells (15)
1 Type xx30 45-volt Burgess B battery with Snapon terminals (16)
The equivalent Eveready battery is No. 455 and the equivalent RCA battery is No. vs055
1 Homemade clamp for battery (17)
10 ⅜-inch No. 4 round head brass wood screws
1 2000-ohm radio headset

The Spark Gap. There is no small spark gap on the market and you must make this part of the counter. It consists of two pointed electrodes made from brass escutcheon pins 1 inch long. Escutcheon pins are round-headed nails obtainable at a hardware store. The pins are pointed at one end but the point is too blunt. It should be filed until it is as sharp as a needle. Each electrode is

supported in an Eby binding post. Both binding posts are mounted on a hard rubber, Micarta, polystyrene or Bakelite base. Any thin plastic which will insulate high voltage

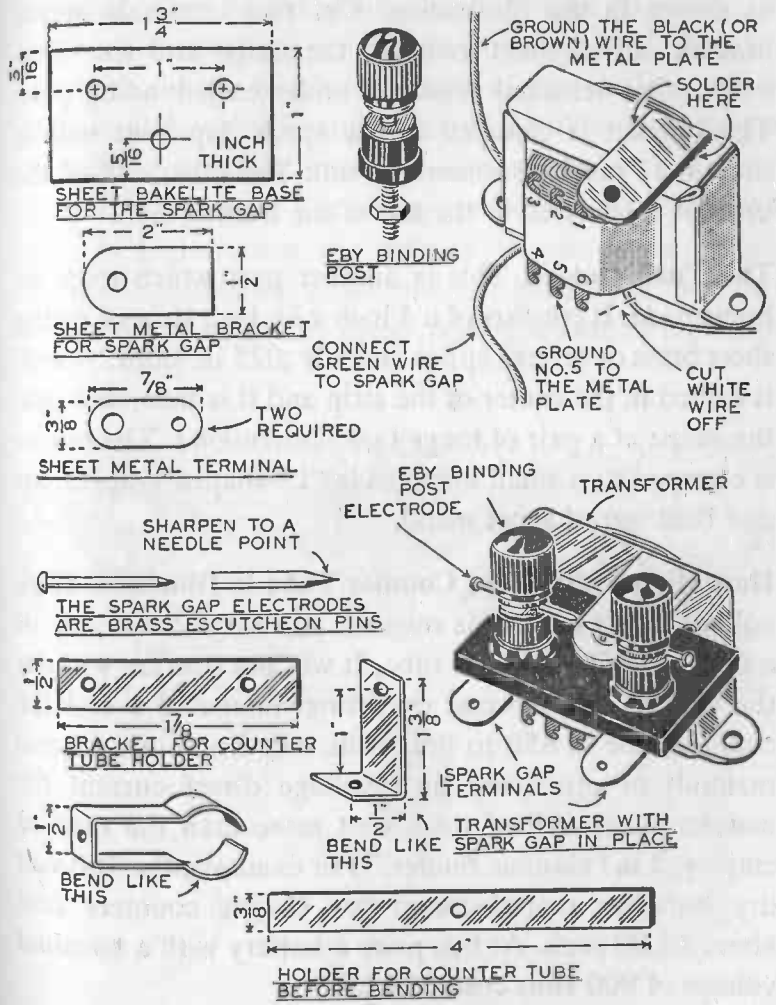

DETAILS OF THE SPARK GAP, BRACKET AND HOLDER FOR G-M TUBE

can be used. Bakelite and other plastics can be cut with a fine-tooth hacksaw. A piece 1 inch x 1¾ is required. It does not need to be more than 1/16 inch thick. Drill three holes in the plastic with a No. 28 drill. Locate the holes as shown in the illustration. Cut two terminals and a bracket out of sheet metal of the shape and size illustrated. One terminal is placed under each binding post. The bracket is clamped to the spark gap base with a short 6-32 machine screw and nut. The other end of the bracket is soldered to the top of the transformer.

The Tube Holder. This is another part which must be homemade. It consists of a 4 inch x ⅜ inch strip of spring sheet brass or bronze approximately .025 in. thick. A hole is drilled in the center of the strip and it is then bent into the shape of a pair of tongs (*see illustration*). The holder is clamped to a small homemade "L"-shaped bracket cut and bent out of sheet metal.

How High-Voltage for Counter Tube is Obtained. High voltage direct current is required to charge the anode of a Geiger-Muller counter tube. It will not operate without the charge. The normal operating-voltage of a CK1026 counter tube is 850 to 950 volts D.C. There are several methods of producing high voltage direct current for counter tubes. All of them cost more than the method employed in "Gamma Sniffer." For example, the 300-volt dry batteries manufactured for Geiger counters cost about $8.00 each. At this price a battery with a terminal voltage of 900 volts costs $24.00.

The "Gamma Sniffer" employs a small transformer, a spark gap, two size "D" Flashlight cells and a momentary

contact switch. This same method is used in low-priced factory-built Geiger counters. Here is how it operates:

The small transformer is an OUTPUT transformer ordinarily used to couple the plate circuit of an audio amplifier tube to the voice coil of a loud speaker. The primary winding on an output transformer of this type contains a large number of turns of wire and the secondary contains comparatively few turns. When it is used to couple an amplifier tube to a loudspeaker it is a STEP-DOWN transformer. The voltage across the primary terminals is higher than the voltage across the secondary terminals. However, if the primary winding is used as a secondary winding and the secondary is used as a primary

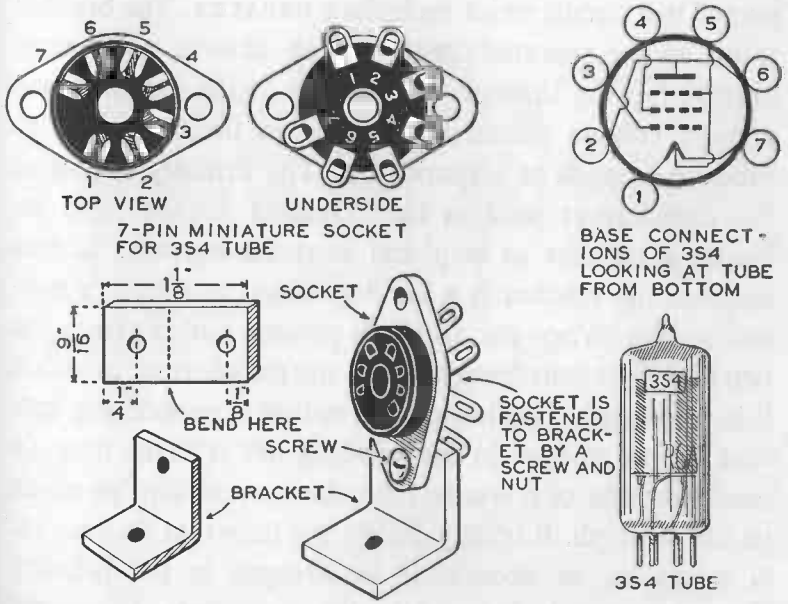

THE 3S4 AMPLIFIER TUBE, ITS SOCKET AND BRACKET FOR MOUNTING THE SOCKET ON CHASSIS

the transformer becomes a STEP-UP transformer and INCREASES voltage. It will raise the voltage of two flashlight cells (3 volts) to several hundred volts. An output transformer was not designed to produce high voltage for a Geiger counter tube but it serves this purpose quite well and is used because there are no small step-up transformers readily obtainable.

The transformer operates in the same manner as the ignition coil or spark coil in an automobile. When a direct current flows steadily through the primary winding there is no voltage induced in the secondary. It is only while a current BEGINS to flow and CEASES to flow through the primary that a voltage is induced in the secondary. The primary winding of an automobile ignition coil is connected in a circuit which includes a BREAKER. The breaker is an engine-operated switch which STARTS and STOPS current flowing through the primary at the instant when enough voltage should be induced in the secondary to produce a spark at a spark plug. The primary circuit of the transformer used in the "Gamma Sniffer" also includes a breaker to stop and start the current. In this instance the breaker is a hand-operated momentary contact switch. When the switch is pressed current from the two flashlight cells flows through the transformer to which it is connected. The instant the switch is pressed the current begins to flow in the winding but it takes time (a small fraction of a second) for the current flow to reach its full strength. It is only during the time that the current is increasing or decreasing in strength in the primary that a voltage is induced in the secondary. When the current reaches its full strength the voltage in the secondary disappears until the switch is released and the current in the primary winding is cut off. The current is not cut off instantly. It dies away gradually (in a very small fraction of a second) and while it is ceasing to flow a voltage is again induced in the secondary.

Electromagnetism is the agent which causes the current flow to increase gradually when the circuit is closed and to cease gradually when the circuit is opened. It is also electromagnetism which induces a voltage in the secondary. When current flows through the primary winding it builds up a magnetic field in the iron core of the transformer. In other words, current flowing through the primary winding magnetizes the iron core of the trans-

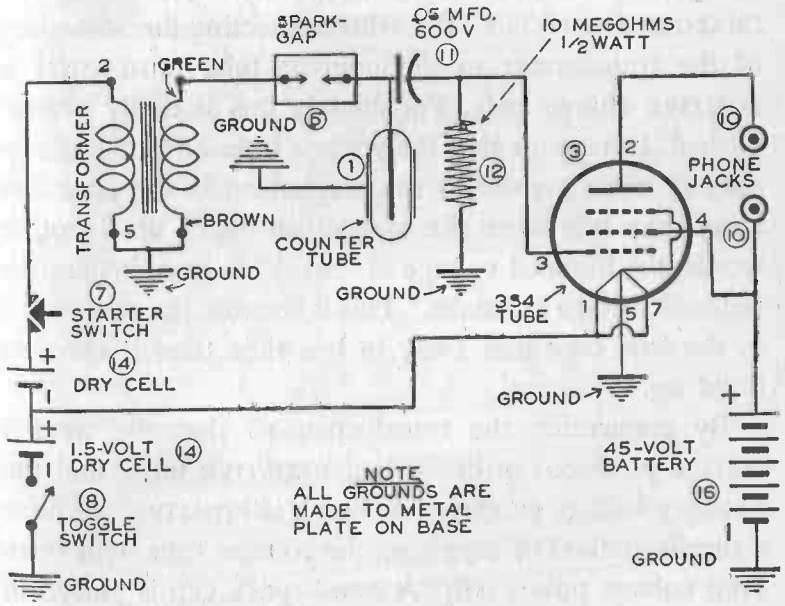

SCHEMATIC CIRCUIT DIAGRAM OF THE "GAMMA SNIFFER"

former. The secondary winding is also wound around the iron core. When current begins to flow through the primary, a short space of time (fraction of a second) is required for the magnetism to reach its full strength. When current ceases to flow through the primary a fraction of a second is required for the magnetism to die away and disappear. It is during the short periods when the magnetism is either building up or dying away, in other words fluctuating, that a voltage is induced in the secondary.

When the magnetism is building up it produces a voltage in the secondary which is of opposite polarity to that produced when the magnetism is dying away. This imposes a small problem when the transformer is used to charge the anode of a counter tube. The anode MUST BE CHARGED POSITIVELY. The wire connecting the secondary of the transformer to the counter tube must carry a POSITIVE charge only. Fortunately this is easily accomplished. It happens that the voltage induced in the secondary is much greater as the magnetism in the core dies away than it is when the magnetism builds up. In other words, the induced voltage at "break" is greater than the induced voltage at "make." This is because the magnetism in the iron core dies away in less time than it takes to build up.

By connecting the transformer so that the weaker voltage produced at break is a NEGATIVE pulse and the stronger voltage produced at break is POSITIVE, we have a simple method of supplying the counter tube with POSITIVE voltage pulses only. A small spark gap is placed in the wire which connects the anode of the counter tube to

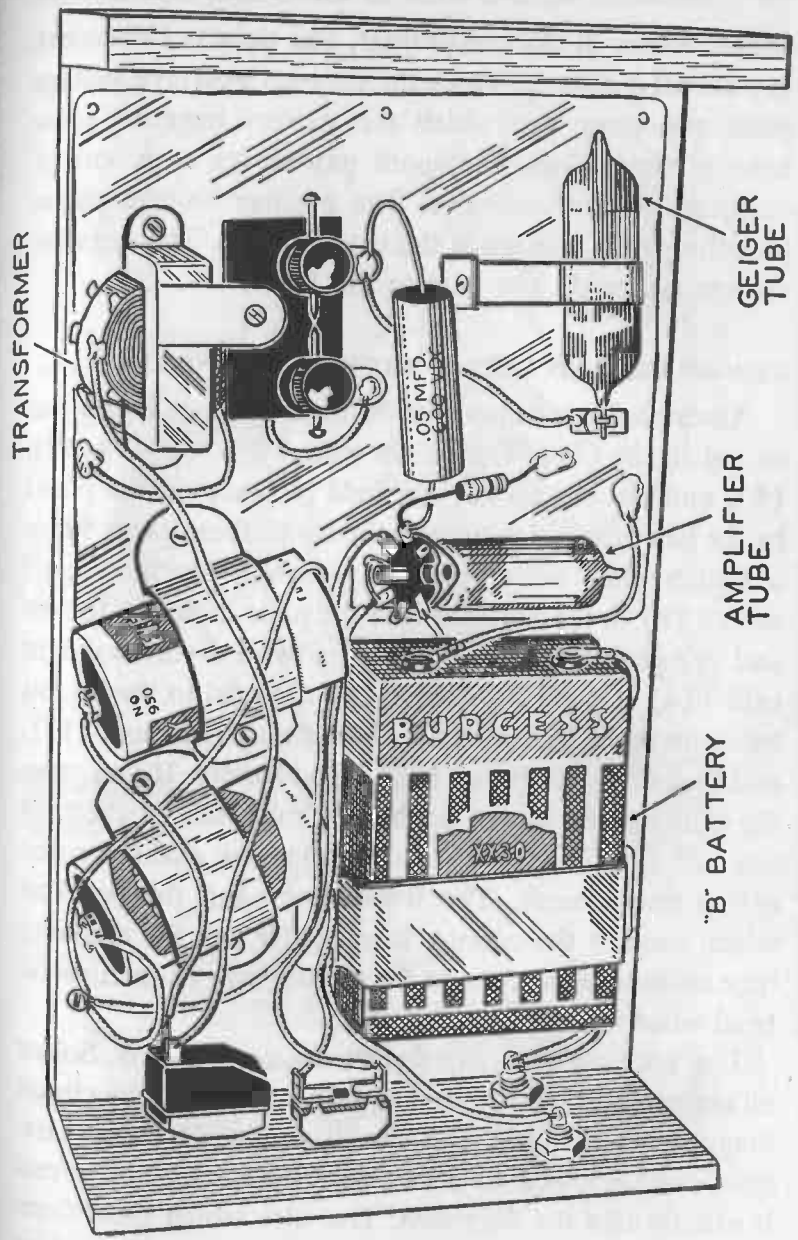

THE ASSEMBLED AND WIRED CHASSIS OF THE GEIGER COUNTER

the secondary of the transformer. The points of the spark gap are set a distance which the stronger POSITIVE voltage pulse can jump but which the weaker negative pulse cannot jump. Thus, the spark gap serves as a sort of electrical selector or valve. The positive voltage pulses pass through it and reach the counter tube. The negative voltage pulses do not pass to the tube.

ASSEMBLING AND WIRING THE "GAMMA-SNIFFER"

Assemble the components on the chassis and panel as shown in the plan. The starter switch (**7**), toggle switch (**8**), and pin jacks (**10**) are held in place on the panel by the hex nuts which are supplied with these parts. Place a switch plate under the nut which holds the toggle switch (**8**) to the panel so that the plate indicates the ON and OFF position of the switch. The two 1.5-volt flashlight cells (**14**) and the B battery (**16**) are held to the chassis by straps made from strips of sheet metal, (**15**) and (**17**), and fastened with round head wood screws. If you trace the 6-inch scale shown at the left hand side of the plan you can use the tracing to determine the exact position of the components. The transformer and the brackets which support the counter tube holder and the amplifier tube socket are fastened to the chassis with ⅜-inch round head wood screws.

Use hook-up wire to connect the components. Solder all connections with rosin-core solder. Refer to the circuit diagrams each time that a wire is put in place and carefully double check to insure that the completed circuit is exactly like the diagrams. The wire which leads from one side of the spark gap to the counter tube should be

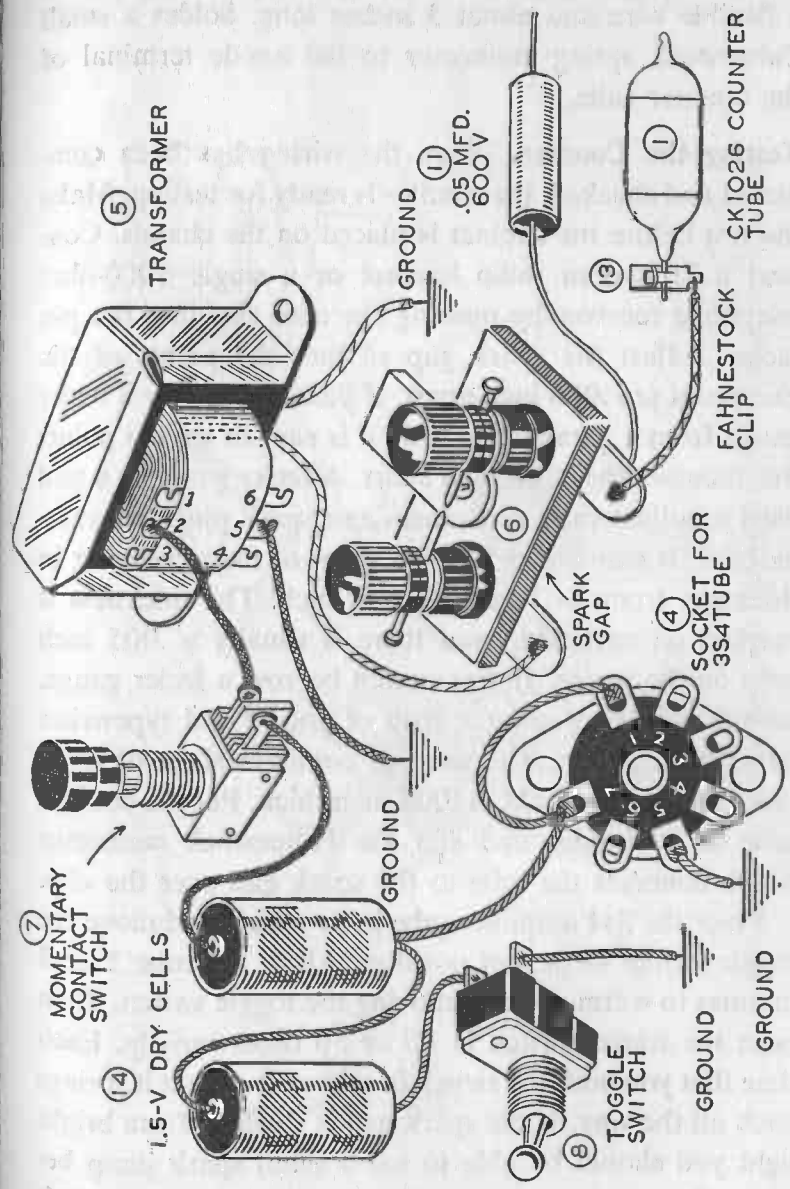

PICTORIAL DIAGRAM OF PART OF THE GEIGER COUNTER CIRCUIT

a flexible wire and about 3 inches long. Solder a small Fahnestock spring connector to the anode terminal of the counter tube.

Testing the Counter. When the wiring has been completed and checked, the counter is ready for testing. Make the test before the cabinet is placed on the chassis. Connect a 2000-ohm radio headset or a single 1000-ohm telephone receiver by pushing the cord tips into the pin jacks. Adjust the spark gap so that the points of the electrodes are .005 inch apart. If you can borrow a feeler gauge from a garage mechanic it is easy to set the points five-thousandths of an inch apart. A feeler gauge is a tool used to adjust valve clearances and spark plugs on automobiles. It consists of 8 or 10 strips of metal ranging in thickness from .003 inch to .040 inch. The thickness is marked on each strip and there is usually a .005 inch strip on the gauge. If you cannot borrow a feeler gauge, set the points by using a strip of good bond typewriter paper as a gauge. The average common sheet of bond typewriter paper is about .005 inch thick. Put the counter tube in its holder and slip the Fahnestock connector which connects the tube to the spark gap over the clip.

Place the 3s4 amplifier tube in its socket and move the toggle switch to the ON position. Allow the tube 2 or 3 minutes to warm up after moving the toggle switch. Then push the starter switch in 40 or 50 times rapidly. Each time that you push the switch in release it so that it springs back all the way. If the spark gap is shielded from bright light you should be able to see a small spark jump between the points each time that the button on the switch is released. Bring a sample of radioactive mineral or the radium dial of a watch close to the counter tube and listen

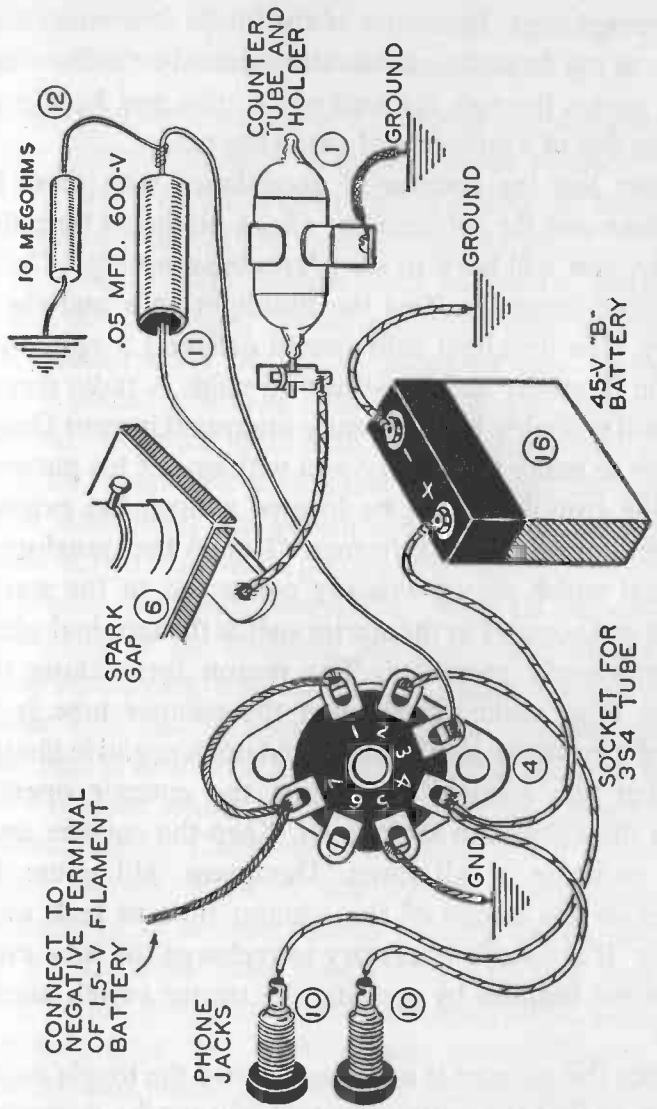

PICTORIAL DIAGRAM OF PART OF THE GEIGER COUNTER CIRCUIT

in the headphones. You should hear a loud rapid clicking in the earphones. Each one of the clicks is produced by a gamma ray from the radioactive mineral or radium dial which passes through the wall of the tube and knocks an electron out of a molecule of gas in the tube.

If you test the counter in accordance with these instructions and do not hear the clicks produced by radioactivity, you will have to start "trouble-shooting." Check the wiring carefully. Test the flashlight cells and the B battery. The flashlight cells should deliver 1.5 volts each and the B battery should deliver 45 volts. A radio service man will probably be sufficiently interested in your Geiger counter to make the test for you with one of his meters.

If the trouble cannot be located reverse the primary connections on the transformer. Ground the transformer terminal which was previously connected to the starter switch and connect to the starter switch the terminal which was previously grounded. The reason for making this change is to make certain that the counter tube is receiving a POSITIVE small charge and not a negative charge.

When you succeed in making the counter operate, fasten the cabinet to the chassis. Keep the counter away from moisture at all times. Dampness will cause the charge on the anode of the counter tube to leak away rapidly. It is usually necessary to recharge the tube every five or ten minutes by pressing the starter switch several times.

When the counter is not in use, move the toggle switch to OFF so that the battery current will not be wasted. In order for the counter to operate it is necessary for the 1.5-volt cells to be fresh.

The clicks which occur a few seconds apart when there

is apparently no radioactive material nearby is the "background" count and is due to cosmic rays and general radioactivity in the earth and atmosphere.

Prospecting for Uranium will probably be most successful if the mineral is sought in general areas where

(1) the geologic conditions are similar to those existing where uranium has been found before;

(2) where other metals such as cobalt, zinc, lead, nickel, silver, copper, vanadium and bismuth exist.

Uranium never occurs in nature in pure form. It is always found combined with other substances to form a mineral. There are more than 100 minerals which contain uranium combined with other substances. In some of these uranium is the principal constituent. In others it forms only a very small percentage. Anyone who intends to search for uranium-bearing minerals should have knowledge of the common uranium minerals and their chief identifying characteristics. This information, together with descriptions of the most common thorium minerals, is contained in a small book called *Prospecting for Uranium* which is published by the United States Atomic Energy Commission and the United States Geological Survey. It is for sale by the Superintendent of Documents, U. S. Government Printing Office, Washington 25, D.C. and costs only 45 cents. If you send for a copy do not send postage stamps. Send coins, a check or a money order. The United States Atomic Energy Commission also publishes a booklet called *Prospecting with a Counter*. This also is for sale by the Superintendent of Documents. The price is 30 cents. Both books are worth having if you are interested in radioactivity, uranium or counters.

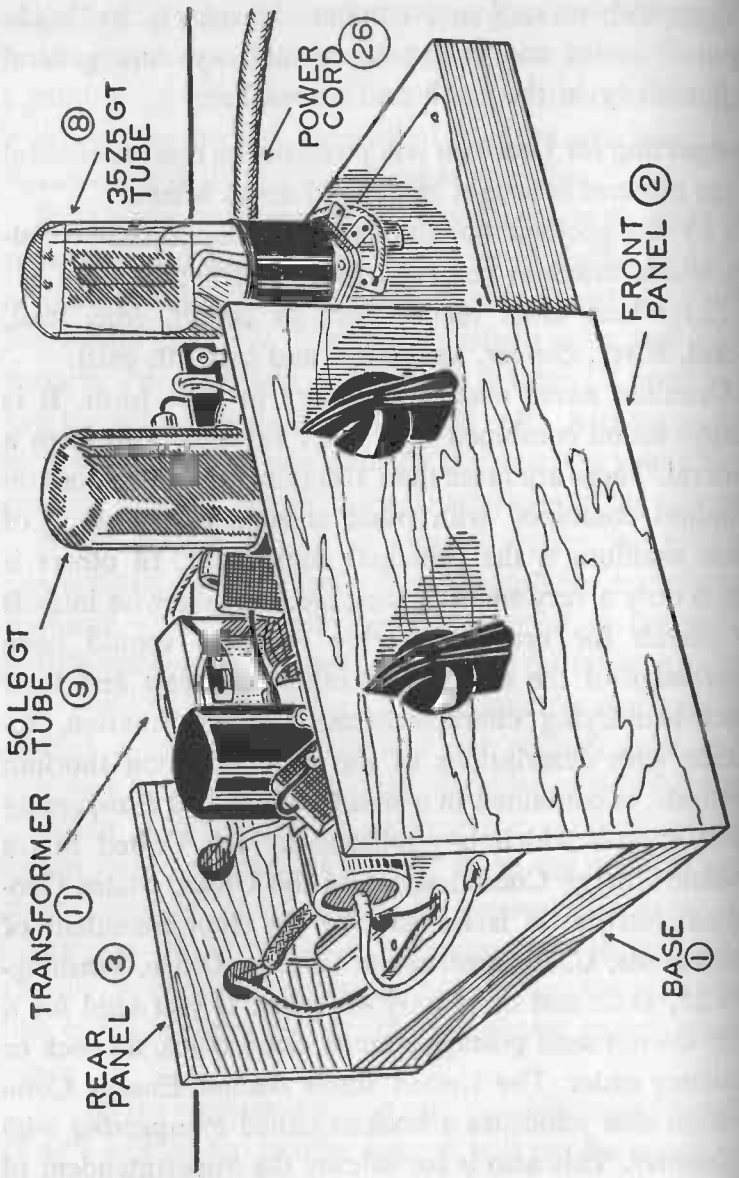

FRONT VIEW OF TWO-STAGE AUDIO-AMPLIFIER

How to Build a Two-stage Audio Amplifier

This simple, low cost amplifier is not "hi-fi." Nevertheless it will provide good musical reproduction when connected to a record player with a crystal pickup. An amplifier which could be rated "hi-fi" costs more and is not so easy to build.

Resistance coupling is used between the amplifier stages and the pickup. An "on-off" switch and tone and volume controls are provided. The amplifier tubes are a 12SQ7 and a 50L6. Plate current is supplied by a 35Z5 half-wave rectifier. All three tubes fit standard octal sockets. 12SQ7 is a metal-envelope, multi-unit tube which contains two diodes and a triode. The triode portion only is used in this amplifier. The triode in a 12SQ7 has characteristics which adapt it for use in resistance coupled amplifiers. The 50L6 is a beam power pentode. In other

words, it is a five-element screen grid tube designed for use in the output stage of low-powered amplifiers. 50L6 is frequently used in the output stage of broadcast receivers.

The amplifier is assembled on a wood base or chassis and can be of the open type or enclosed in a cabinet. The wood parts for the open and for the cabinet type are listed separately.

The components and materials required to build the two-stage audio amplifier are:

3 Octal wafer sockets (**6**)
6 Metal spacers ¾ in. long for supporting sockets (**7**)
1 35Z5 radio tube (**8**)
1 50L6 radio tube (**9**)
1 12SQ7 radio tube (**10**)
1 50L6 output transformer with tapped secondary (**11**)
1 1-megohm volume control with SPST switch and knob (**12**)
1 ½-megohm volume control and knob (**13**)
1 Dual section 50-30 mfd., 150-volt electrolytic capacitor with common negative terminal (**14**)
1 .02 mfd., 600-volt tubular capacitor (**15**)
1 .004 mfd., 600-volt tubular capacitor (**16**)
2 .01 mfd., mica capacitors (**17**)
1 150-ohm, 10-watt wire wound resistor (**18**)
1 22,000-ohm, 1-watt carbon resistor (**19**)
2 0.47-megohm, ½-watt carbon resistors (**20**)
1 .5-megohm, ½-watt carbon resistor (**22**)

2 3-terminal Bakelite tie-points (**23**)
2 Phono pin plugs and jacks (**24**)
1 117-volt plug-in receptacle (**25**). This part is optional.
1 6-ft. length of lamp cord with attachment plug (**26**)

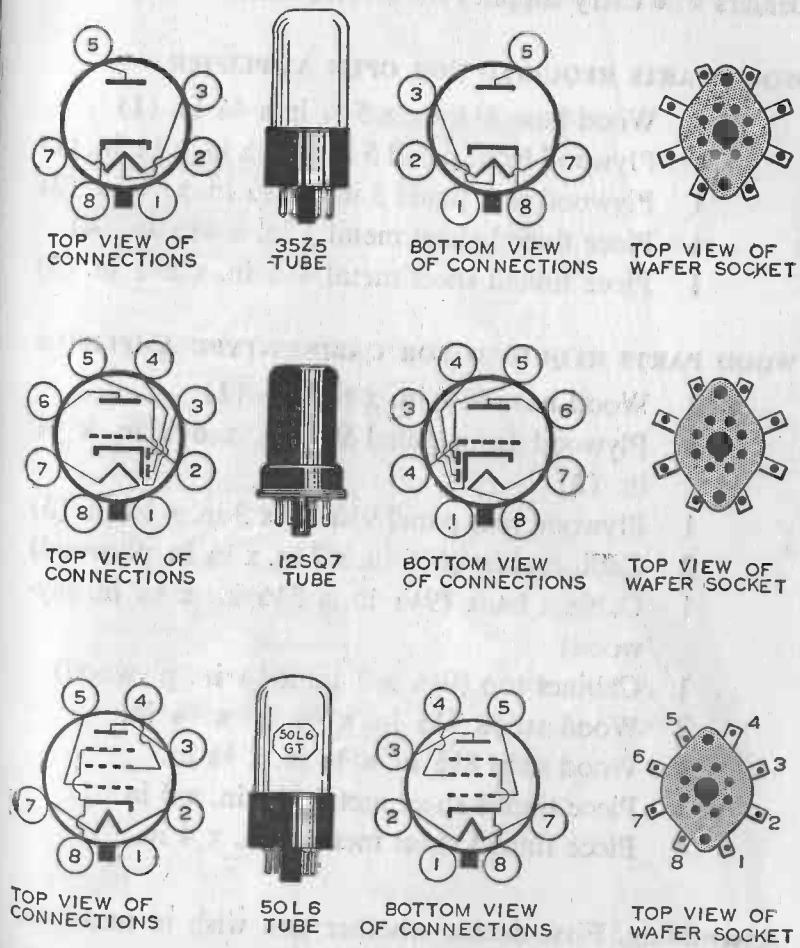

THE TUBES FOR THE AMPLIFIER

Sandpaper, shellac, varnish, push-back wire, shielded phono wire, rosin-core solder, miscellaneous screws and wire brads.

All of the components in the above list are standard electronic parts which can be purchased from radio dealers who carry supplies for service men and amateurs.

WOOD PARTS REQUIRED FOR OPEN AMPLIFIER

1 Wood base 8⅛ in. x 5¾ in x ¾ in. (**1**)
1 Plywood front panel 5 in. x 3½ in. x ¼ in. (**2**)
1 Plywood rear panel 3 in. x 2½ in. x ¼ in. (**3**)
1 Piece tinned sheet metal 7 in. x 4½ in. (**4**)
1 Piece tinned sheet metal 4½ in. x 2½ in. (**5**)

WOOD PARTS REQUIRED FOR CABINET-TYPE AMPLIFIER

1 Wood base 9¼ in. x 6½ in. (**1**)
1 Plywood front panel 9¼ in. x 6½ in. x ¼ in. (**2**)
1 Plywood rear panel 9¼ in. x 3 in. x ¼ in. (**3**)
2 Cabinet sides (6½ in. x 7 in. x ¼ in. plywood)
1 Cabinet back (9¼ in. x 3½ in. x ¼ in. plywood)
1 Cabinet top (9¼ x 7 in. x ¼ in. plywood)
2 Wood strips 5½ in. x ¾ in. x ⅜ in.
1 Wood strip 8½ in. x ¾ in. x ⅜ in.
1 Piece tinned sheet metal 8½ in. x 5 in.
1 Piece tinned sheet metal 5 in. x 4 in.

Assembling. First decide whether you wish to make an amplifier which is enclosed in its own cabinet or an am-

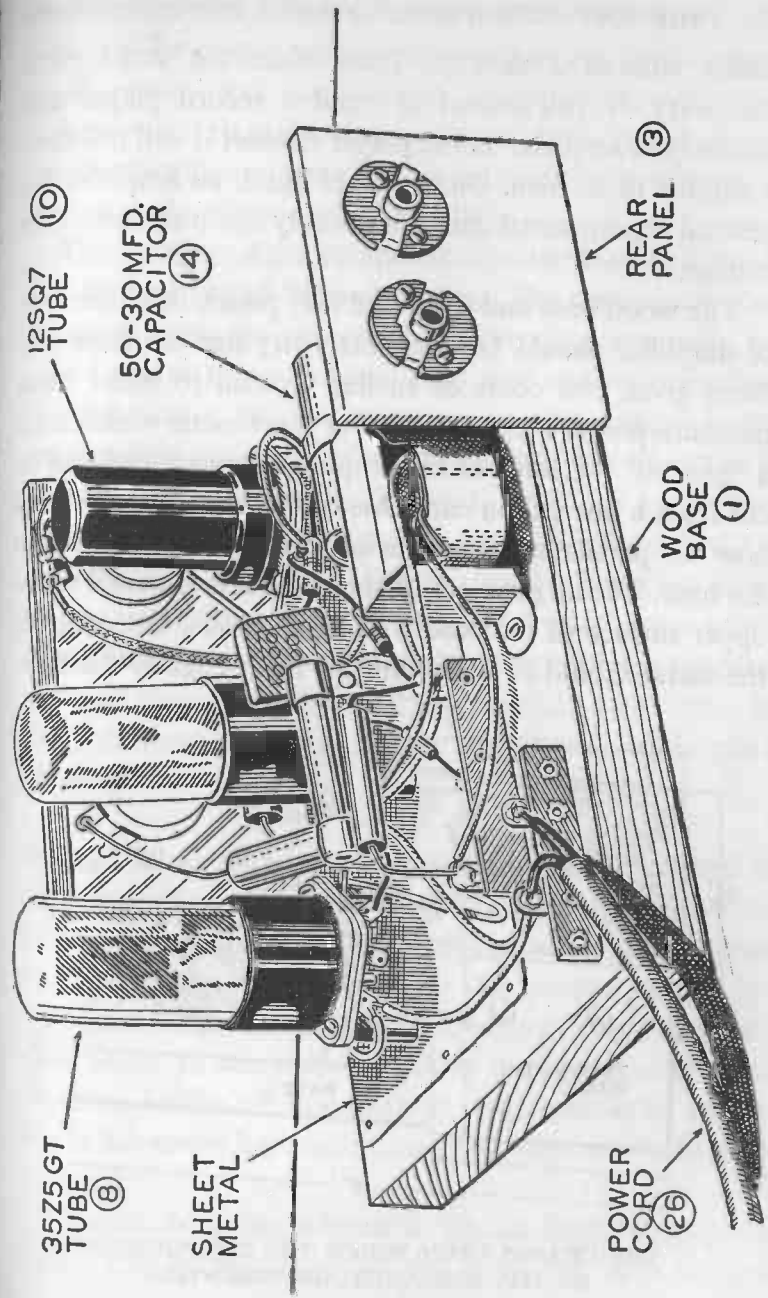

REAR VIEW OF THE AMPLIFIER

plifier without a cabinet. Then make the wood parts necessary. If you intend to build a record player and enclose the amplifier in the player cabinet it will not need a cabinet of its own. On the other hand, an amplifier for general experimental use is preferably enclosed in its own cabinet.

The wood base and front and rear panels of either type of amplifier should be completely dry and all their surfaces given two coats of shellac varnish to make them moisture-proof. The two pieces of sheet metal which form a "ground" for some of the amplifier components can be cut from a one-gallon can. One of the illustrations shows how the panels and sheet metal pieces are assembled on the base. The larger piece of sheet metal is fastened to the upper surface of the base with small brads. One edge of the metal should be flush with the front edge of the base.

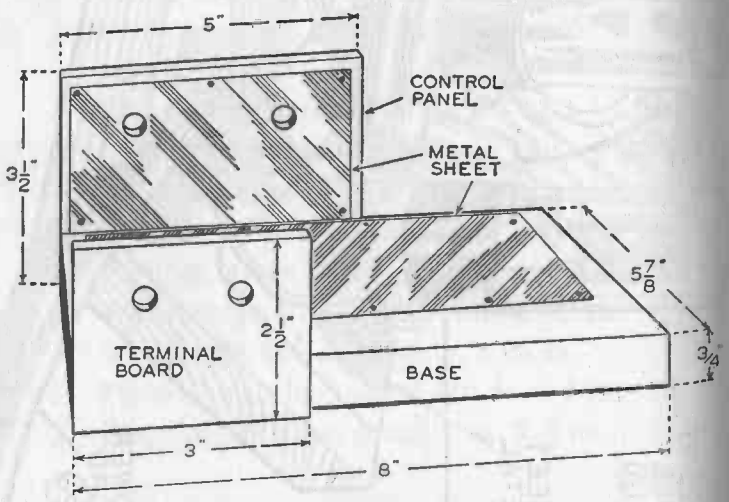

THE CHASSIS UPON WHICH THE COMPONENTS OF THE AMPLIFIER ARE MOUNTED

The smaller metal piece is fastened to the back of the front panel (the panel which supports the tone and volume controls). The two pieces of sheet metal should be electrically connected to each other by soldering at several spots where the edges adjoin.

The location of the components on the base and panels can be determined from the plans. The sockets (**6**) are mounted with spacers so that the socket terminals are raised above the metal plate (**4**) and cannot come into contact with it. If the sockets are located exactly in the positions shown in the plans, the wiring will be easier to follow. The two Bakelite tie-points (**23**) are anchorages for the terminals of the power cord and several of the resistors and capacitors. The electrolytic capacitor (**14**) is fastened to the base by a round head wood screw which passes through the metal mounting strap which is supplied with the capacitor. The SPST switch (**12**) is mounted on the volume control (**12**) before the latter is put in place on the panel.

Wiring. When all the components which are fastened to the base and panel are in place, the amplifier is ready for wiring. Use push-back wire for making the connections, except the wire which connects the phono jack to the volume control. This should be a piece of shielded phono wire. Make all connecting wires as direct and as short as possible. Solder all connections with rosin-core solder. When the solder has cooled, test each connection by pulling on it.

Consult both the schematic circuit diagram and the plans. The wiring shown in the plans has been divided

between two illustrations to make it clearer. One illustration, in which the wires are heavy black lines, shows the power wiring—in other words, the power supply to the heaters and the 35Z5 rectifier. The second plan shows the audio wiring.

Each resistor and each capacitor must be identified before it can be connected in the circuit. The capacity or resistance of some of these components may be printed on them. Others must be identified from the colors of their dots or bands. Make certain to connect the 50 mfd. section and the 30 mfd. section on the electrolytic capacitor exactly as shown in the illustrations.

The 50L6 output transformer (**11**) has six metal terminals connected to the secondary winding. They are numbered from 1 to 6. The No. 1 terminal should be connected to one of the terminals on the OUTPUT phono jack (**24**).

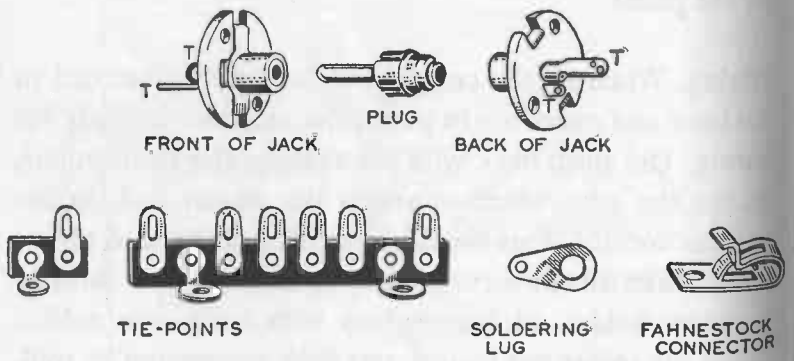

PHONOGRAPH JACK AND PLUG, TIE-POINTS, ETC., USED IN BUILDING THE AMPLIFIER

One of the tie-points illustrated above has six terminals. Only three are necessary on the tie-points used for the amplifier.

The other OUTPUT phono jack terminal should be connected to one of the other secondary terminals on the output transformer. The proper terminal is selected by testing when the amplifier is connected to a speaker and in operation. The terminal which gives the best tone is a "match" for the speaker and is the one which should be used.

There are three terminal wires connected to the primary winding of the 50L6 output transformer. Only two are used in this amplifier. Usually one wire is dark brown, one is green and one is white. The white wire is a center

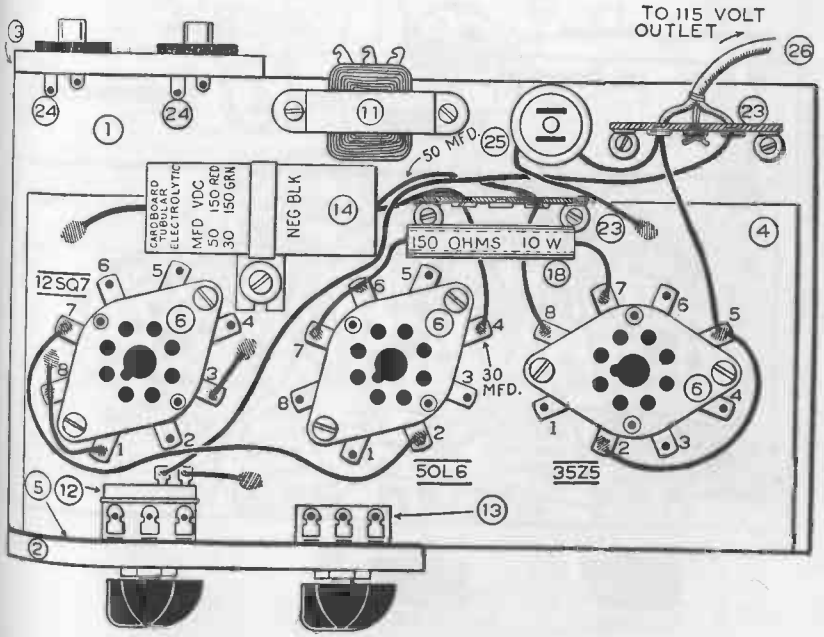

PLAN OF THE AMPLIFIER SHOWING THE POWER WIRING TO THE TUBE HEATERS AND PLATES

tap, that is, connected to the center of the primary winding. Use only the brown and green terminal wires. Connect one to the No. 3 terminal on the 50L6 tube socket. Connect the other to one of the terminals on the nearest Bakelite tie-point.

The outside terminal on the INPUT phono jack (24) is "grounded" by a short wire which connects it to the metal ground plate on the base. Remember to use a piece of shielded phono cable to connect the inner terminal of the INPUT phono jack to one of the outer terminals on the volume control. Use the wire conductor inside the cable

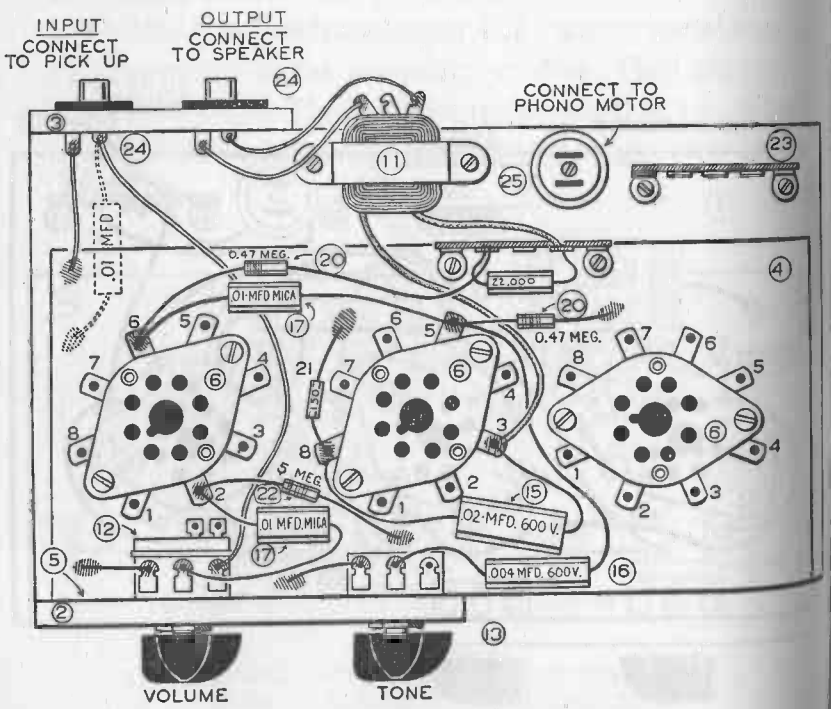

PLAN OF THE AMPLIFIER SHOWING THE WIRING OF THE AUDIO CIRCUIT

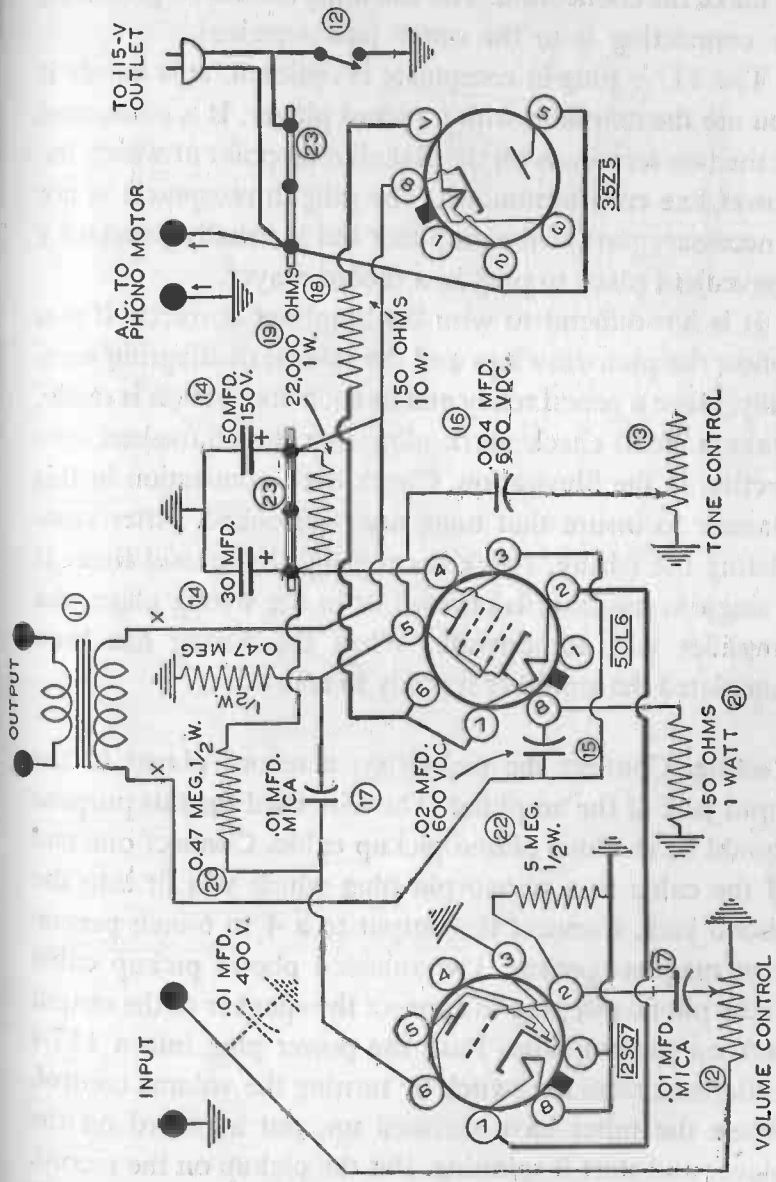

SCHEMATIC CIRCUIT DIAGRAM OF TWO-STAGE AUDIO AMPLIFIER

If the amplifier is to be connected to a speaker equipped with a matching transformer, omit transformer (11) and connect the two wires marked **X** directly to the output jack.

to make the connection. The shielding should be grounded by connecting it to the outer jack terminal.

The 117-v plug-in receptacle is optional. It is handy if you use the amplifier with a record player. It is connected to the two terminals on the Bakelite tie-point at which the power line cord terminates. The plug-in receptacle is not a necessary part of the amplifier but it usually provides a convenient place to plug-in a record player.

It is not difficult to wire the amplifier correctly if you follow the plan drawings and the schematic diagram carefully. Have a pencil ready and as each connection is made, make a small check mark alongside the equivalent connection in the illustration. Check each connection in this manner to insure that none are overlooked. After completing the wiring, check it carefully the second time. If a single connection is omitted or in the wrong place, the amplifier will not operate. When the wiring has been completed the amplifier is ready to test.

Testing. Connect the pickup on a record player to the input jack of the amplifier. The wire used for this purpose should be shielded phono pickup cable. Connect one end of the cable to a phono pin plug which will fit into the phono jack. Connect the output to a 4 to 6-inch permanent magnet speaker. Use shielded phono pickup cable and a phono pin plug to connect the speaker to the output jack on the amplifier. Push the power plug into a 117-v outlet and close the switch by turning the volume control. When the tubes have warmed up, put a record on the player and start it spinning. Put the pickup on the record. If all the connections have been made correctly you will

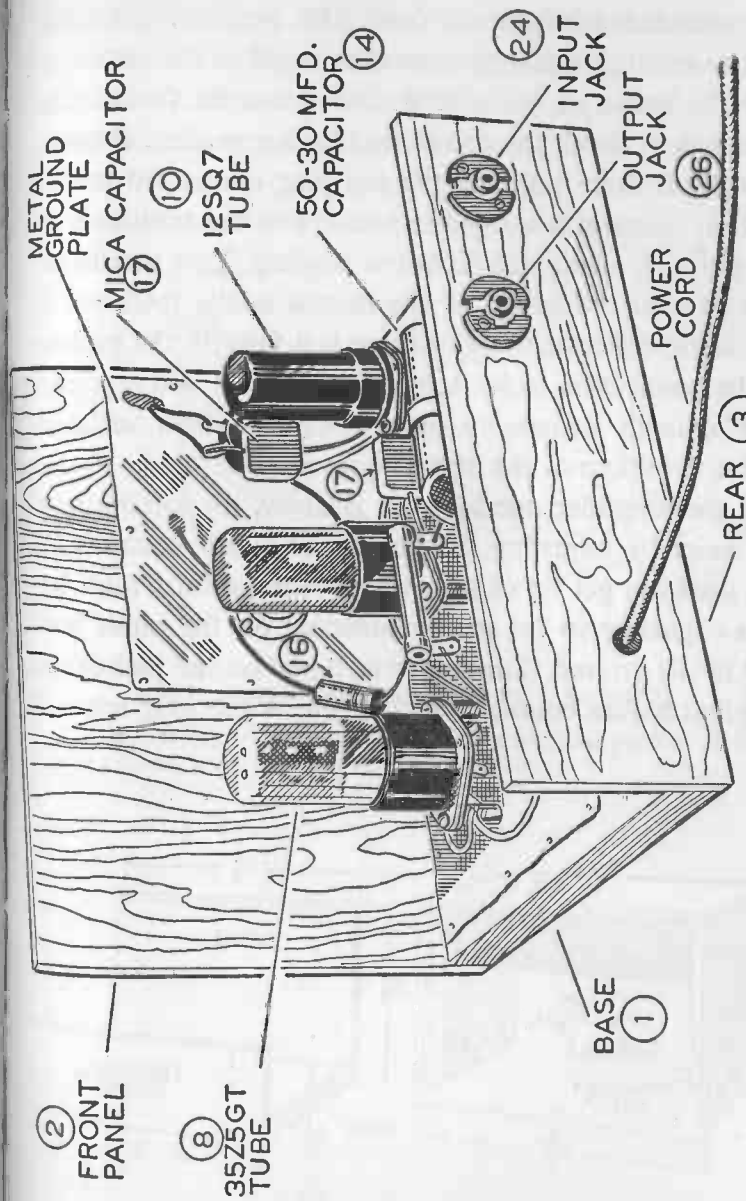

THE AMPLIFIER ON A CHASSIS WHICH CAN BE COMPLETELY ENCLOSED

Note that no matching transformer is shown. The transformer (11) is omitted when the speaker used is equipped with a transformer.

be rewarded with music from the speaker. Use the volume control and tone control to regulate the sound.

If the music of the record does not come forth from the speaker, check the connection to the speaker. If there is no fault there pull out the pin plug connected to the pickup. Connect a telephone receiver to the terminals of the pin plug while the record is playing. You should be able to hear the sound of the record in the receiver. If you cannot hear the record there is a fault in the pickup or the connection to it. A magnetic pickup will not produce enough volume to operate the amplifier satisfactorily. A pickup of the crystal type must be used.

If the amplifier operates but is noisy, try to eliminate the noise by adjusting the volume and tone controls. If this does not get rid of the noise connect a 0.01 mfd. bypass capacitor to the center terminal on the input jack and to the ground. The center terminal on the jack is the one that makes contact with the pin on the plug when it

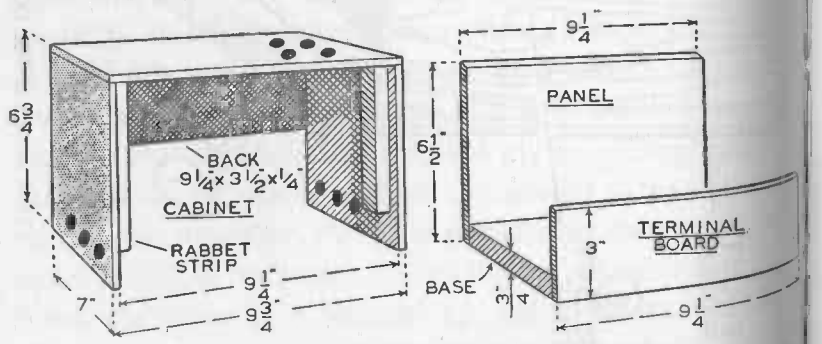

CABINET AND CHASSIS FOR AN ENCLOSED MODEL OF THE AMPLIFIER

is shoved in place. This capacitor and its connection are shown by dotted lines in two of the drawings. Remember that noise can also be caused by a worn record, a worn stylus or a damaged pickup.

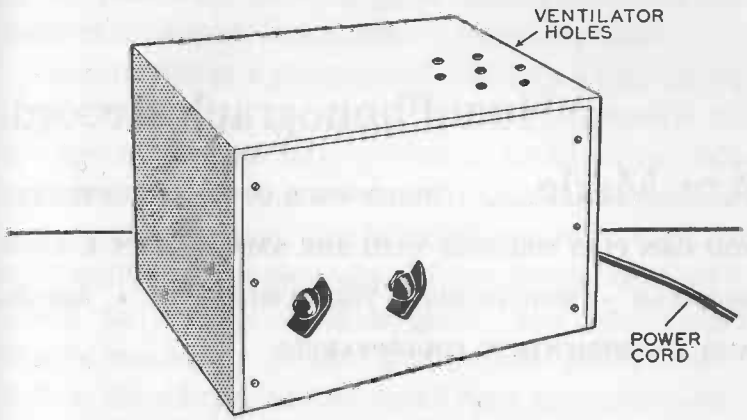

THE AMPLIFIER ENCLOSED IN A CABINET

The volume and tone control knobs are on the front panel so that they can be adjusted without opening the cabinet.

CHAPTER FIFTEEN

How Phonograph Records Are Made . . . BUILD YOUR OWN RECORD PLAYER. YOU CAN PLAY RECORDS WITH THE AMPLIFIER IN A RADIO RECEIVER • HOW TO BUILD THE HUSH-A-TUNE • REPAIRS AND ADJUSTMENTS TO LOUDSPEAKERS

When Thomas A. Edison invented "a machine that could talk" it brought a new form of entertainment into the world. It provided so much pleasure and happiness that for several decades little attention was paid to its principal defect, namely, the quality of its sounds. The early phonographs were purely mechanical devices and were "squawk boxes" in comparison to the realistic sounding phonographs of today. For a long time there was only one way to engrave the original wax recording from which other records were to be made. It was a purely mechanical method in which the energy used to engrave the wax was the energy of sound. Therein lay the difficulty. Some sounds do not possess enough energy to cut a faithful

recording in wax. No better method of making a recording was available until the electronic amplifier was invented.

Modern phonographs are electronic. The energy of electrons is added to the energy of sound in making an original recording. The energy of moving electrons also produces the sounds heard when a record is played.

The cartridge in a phonograph pickup is a tiny electrical generator. When the point of the stylus clamped in the cartridge follows the wavy groove in a record, the sideways motion of the stylus causes the cartridge to produce an electromotive force. This is fed into an audio amplifier which multiplies the electrons and gets enough of them in motion to operate a loudspeaker. The loudspeaker changes the energy of the electrons into sound waves. Modern records are first recorded on a magnetic tape.

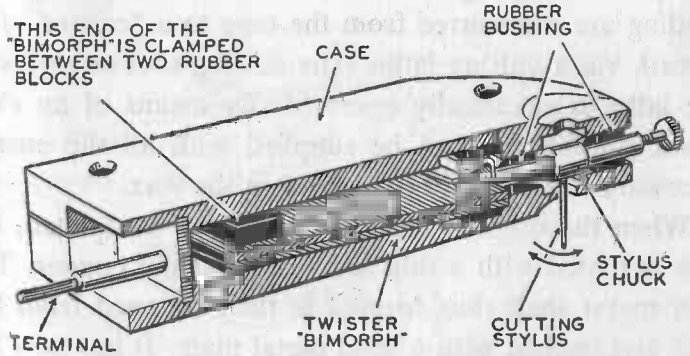

THE CARTRIDGE IN A PHONOGRAPH PICKUP IS A TINY ELECTRICAL GENERATOR

This shows a pickup cartridge of the crystal type. Part of the case is shown cut away to reveal the crystal (called a "twister bimorph"). Any sideways movement of the stylus twists the crystal and produces an electromotive force. The case of the pickup is one terminal. The other is a brass pin insulated from the case.

The first magnetic tape recorder was developed in Denmark about 1900 by Valdemar Poulsen. Incidentally, Poulsen made a great many important inventions in the field of wireless telegraphy and telephony. Poulsen's recorder, known as the Telegraphone, was sold and used for commercial purposes (dictation, etc.) in the ensuing years. The Telegraphone made its recordings on a small steel wire. When the Allies occupied Germany they found recorders which substituted a special tape for Poulsen's steel wire. The use of plastic tape, coated with a thin layer of fine particles of magnetic iron oxide, produced recordings far superior to those obtained with wire.

A tape recording can be played back without any loss of quality and artists can listen to the music immediately after it has been recorded. If no "bloopers" have occurred and the "master" tape is approved it is sent to the mold or stamper-making department. The sounds on the tape recording are transferred from the tape to a "master" disk record, via a cutting lathe. The cutting tool or stylus in the lathe is electrically operated. By means of an electronic amplifier it can be supplied with all the energy necessary to cut a faithful record in the wax.

When the original recording has been completed, the wax is plated with a thin layer of gold and copper. The thin metal shell thus formed is then stripped from the wax and backed with a solid metal plate. It has now become a "master record" used to produce a "mother." The "stompers" or molds for pressing a plastic into the records which are shipped to the music stores are made from the mother.

Assembling and installing record players, amplifiers,

speakers, etc., to produce highly faithful facsimiles of the sounds which made an original recording is a widespread hobby. There are catalogs which list a great variety of components required for high fidelity sound systems. Most young experimenters must look at these with longing and realize that cost places them out of their reach.

There are also catalogs which list a great variety of popularly priced phonograph components. You do not have to win the Irish Sweepstakes before you can afford to build your own record player or phonograph. There are good phono motors priced at less than four dollars. You can buy a standard pickup and cartridge for less than the cost of a motor.

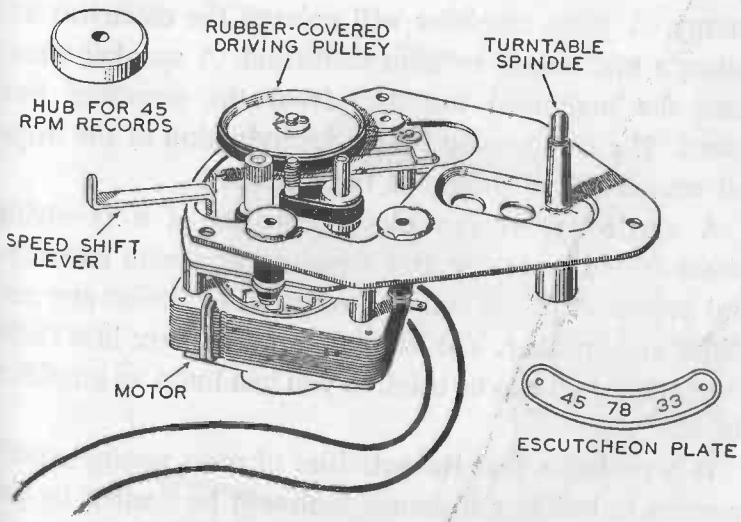

THREE-SPEED PHONOGRAPH MOTOR

The escutcheon plate is fastened to the mounting board under the speed shift lever to indicate the position of the lever which will produce the desired speed of the turntable.

BUILD YOUR OWN RECORD PLAYER

The modern phonograph consists of a revolving motor-driven turntable, a pickup arm with cartridge and needle, an audioamplifier and a loudspeaker. The needle or stylus, whichever you prefer to call it, is mechanically connected to the cartridge. As the needle follows the wavy groove in the record (the groove on one side of an LP record is ½ mile long)it vibrates from side to side. At times it vibrates 10,000 times per second, which is 50 times faster than the beating of a humming bird's wings. The vibrations of the needle create small electrical impulses in the pickup cartridge. The electrical impulses are an exact electrical replica of the sound vibrations which made the original recording. The electrical impulses are fed into an amplifier. Here they are given additional energy. A good amplifier will enlarge the electrical impulses a millionfold without distortion. A speaker translates the magnified impulses from the amplifier into sound. The result—you hear a reproduction of the original sounds which produced the recording.

A single-play record player consists of a revolving motor-driven turntable and a pickup arm with cartridge and needle. A player can be connected to almost any amplifier and speaker. The amplifier and speaker in a radio or television set can be used, or you can build an amplifier for it.

It is probable that the activities of most young experimenters in building a phonograph will be limited by the cost of the components. Why not start by building a single-play record player? It can be transformed into a complete phonograph later if you desire. When you have

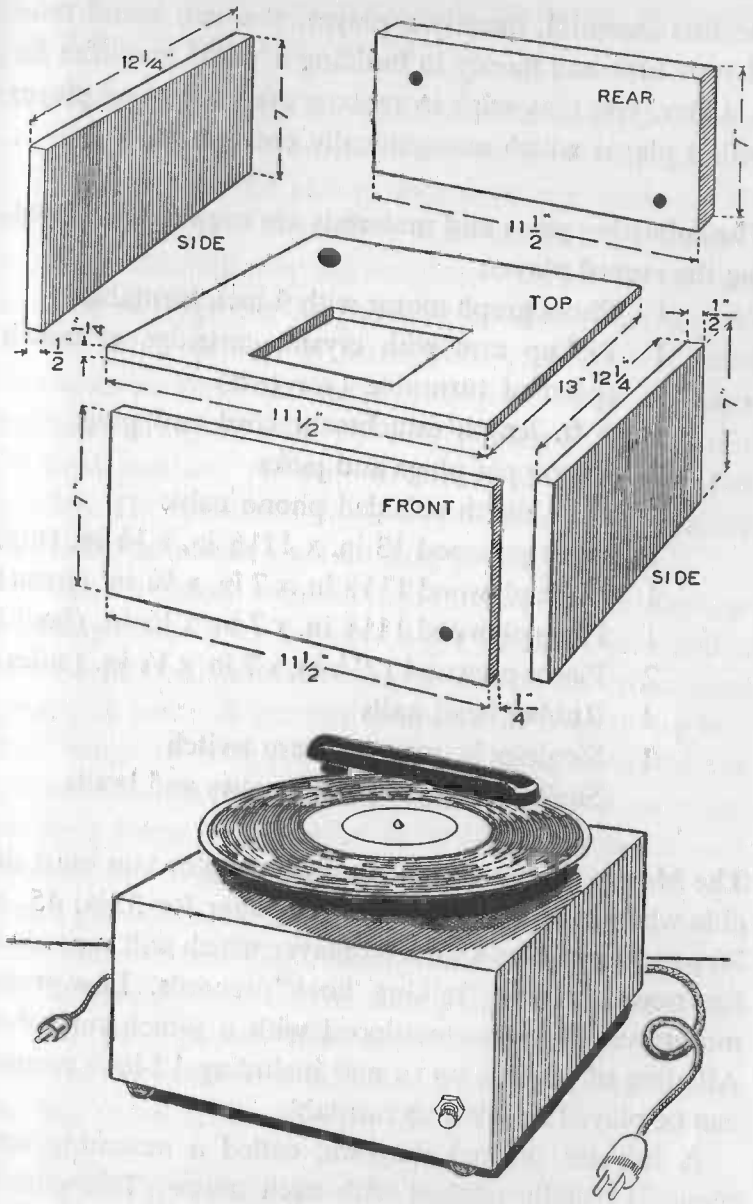

THE HOMEMADE RECORD PLAYER AND DETAILS OF THE CABINET

the first essential, namely a player, you can spend most of your time and money in building a "hi-fi" amplifier for it. Later, you may wish to replace the single-play player with a player which automatically changes records.

The following parts and materials are required for building the record player:

1 Phonograph motor with 9-inch turntable
1 Pickup arm with crystal cartridge to match speed of turntable (*see text*)
1 6 ft. length attachment cord and plug
2 Phono pin plugs and jacks
1 3 ft. length shielded phono cable
1 Piece plywood 13 in. x 11½ in. x ¼ in. (top)
1 Piece plywood 11½ in. x 7 in. x ¼ in. (front)
1 Piece plywood 11½ in. x 7 in. x ½ in. (back)
2 Pieces plywood 12¼ in. x 7 in. x ½ in. (sides)
4 Rubber head nails
1 Single-pole rotary fixture switch
Shellac, stain, varnish, screws and brads

The Motor. Before you buy a phono motor you must decide whether you wish to build a player for 33⅓, 45, or 78 RPM records or a 4-speed player which will reproduce the new 16 RPM "talking book" records. Low-priced motors usually come equipped with a 9-inch turntable. All sizes of records up to and including 12-inch records can be played on a 9-inch turntable.

A full-size printed diagram, called a mounting template, is usually packed with each motor. This pattern shows the size and shape of the holes which must be cut

in the motor board to accommodate the motor. When you buy a motor, get a template for it.

The Pickup. The pickup which you use in building your record player should match the motor. If you decide upon a 78 RPM motor the pickup should be one made for 78 RPM records. If you have a three-speed motor, buy a pickup which will play the standard 78 RPM records and also the microgroove long-playing records (33⅓ and 45 RPM). Some models of three-speed pickups are called "turnover pickups" and are provided with a knob for turning the cartridge to either the long-playing or the standard 78 RPM position. A turnover pickup is fitted with two needles. The needle for 78 RPM records is larger in diameter than the needle used for long-playing records.

Choose a pickup with a crystal cartridge, not a magnetic cartridge. The latter requires a pre-amplifier in addition to the regular amplifier. Pickup arms and cartridges vary greatly in price. A cartridge capable of responding to a wide range of sound frequencies is most desirable but frequency range largely determines the price. A cartridge having a frequency range of 40 to 10,0000 cps will pick up recorded sounds ranging in pitch from 40 to 10,000 cycles per second. The player which you are building in this instance is not a high fidelity instrument. The speaker and amplifier do not have a frequency range of 40 to 10,000 cps. A pickup with a cartridge having a frequency range of 50-4,000 costs less than one with a wider range and will prove satisfactory for this player.

The Cabinet. This part of the player is not difficult to make. It is merely a box and a box is considered to be

one of the simplest woodworking projects. The only skill necessary is that required to saw straight and accurately. It is for you to decide how carefully you wish to make the cabinet and how well you wish to finish it. The player will operate as well if the cabinet is unfinished lumber as it will if the cabinet is polished mahogany.

The cabinet for the model which was built for this book was made entirely of plywood. It was smoothed with fine sandpaper, then given a coat of light maple stain, a coat of white shellac and a coat of varnish. The shellac coat was rubbed with fine steel wool before the varnish was applied. It has been much admired.

It is not necessary to use plywood but it is difficult to find thin lumber which can be substituted for plywood. It is advisable to make the front of the cabinet and the motorboard of plywood. The motorboard is the flat top that supports the motor and pickup. These parts are only ¼-inch thick and solid lumber of that thickness would not be strong and rigid enough. The sides and back can be ½ to ¾-inch pine or any other wood.

If you do not have woodworking tools, perhaps you can make the cabinet in your school workshop. The secret of making a neat cabinet is to cut the parts accurately and smoothly. Sawing plywood often leaves a rough edge but it can be cut smoothly. It can be cut by hand satisfactorily by using a sharp fine-toothed saw. Lay the plywood on a piece of thin scrap lumber and cut through both pieces. This will prevent splintering the underside of the plywood. If a power circular saw is used, the saw blade should be one made for cutting plywood.

The location, size and shape of the holes in the motor-

board depend upon the motor and pickup which is used. Use the templates which come with the motor and pickup to locate the holes. Cut the large motor hole with a power jig saw or a hand fret saw.

Use a piece of paper the same size as the top of the cabinet to make a pattern. Lay the templates for the pick-up and motor on the pattern and move them into position so that:

1. When the pickup arm is swung from side to side, a needle in the pickup would move in an arc which passes through the center of the turntable.

2. The distance from the left hand edge of the cabinet top to the center of the turntable equals the distance from the right hand edge.

3. The center of the turntable will be 6 inches from the front edge.

Make all the holes in the top, front and back before assembling the cabinet. Use both glue and small brads to fasten it together. Drive the brad heads below the surface with a small nail set and fill with plastic wood. When the glue has dried smooth the outside of the cabinet with fine sandpaper. Then stain it. When the stain has dried apply a coat of white shellac. When the shellac has dried rub it smooth with No. 0 steel wool. Finish with a coat of varnish.

If you prefer, the cabinet can be painted. Apply first a coat of shellac to fill the wood. Use the variety of paint made for furniture and interior woodwork.

Drive the rubber head nails into the under edge of the front and back near the corners so that the cabinet is raised above any flat surface upon which it is placed.

This is necessary so air can move in and out of the cabinet freely and cool the motor.

Home-made rubber washers act as shock absorbers and prevent vibrations of the motor from being transmitted to the motorboard and so reaching the pickup. The washers can be cut from a piece of inner tube from an automobile tire. Six pieces ¾ inch x ¾ inch are required. Drill a hole through each with a ⅛ inch drill. The motor is fastened on top of the motorboard by three ¾ inch 8-32 R.H. machine screws. Place a rubber washer on each screw between the motor and motorboard and also between the underside of the motorboard and the washer which is slipped over the screw before placing the nut.

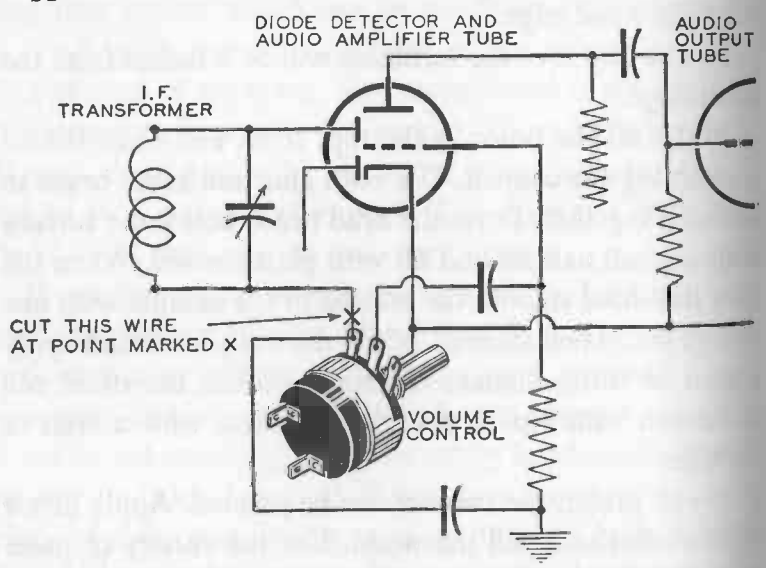

HOW TO USE THE AMPLIFIER IN A RADIO RECEIVER TO PLAY PHONOGRAPH RECORDS

If the receiver is not equipped with a phono-jack, cut the wire leading from the I.F. transformer to the volume control at the point marked X in the illustration. (*See also next illustration.*)

The power cord passes through a ⅜-inch hole in the back of the cabinet. One of the power wires is connected to the motor. The other is connected to the fixture switch mounted near the front of the cabinet. Run a wire from the other terminal wire on the switch to the motor. When the plug on the power cord is pushed into an outlet the motor can be started or stopped by turning the switch.

YOU CAN PLAY PHONOGRAPH RECORDS WITH YOUR TABLE MODEL RADIO

If you have a record player but no amplifier and loudspeaker for it you can use the audio-amplifier and speaker in a broadcast receiver. Many broadcast receivers are equipped with a phono jack and switch at the factory. Push a phono pin plug connected to a record player into the phono jack, move the switch to the correct position and you have a phonograph.

If your broadcast receiver is not equipped with a phono jack you can install one at a cost of about $1.00. **You will need the following parts:**

1 Shielded phono pin-plug jack
1 Single-pole, double-throw (SPDT) toggle switch
1 12-inch length shielded phono wire
2 ½ inch No. 8 self-tapping screws
1 .05 mfd., 600 DC working volts tubular bypass capacitor
1 12-inch length of spaghetti which will slip over the shielded phono wire
1 Piece of ¼-inch plywood approximately 3 in. x 3½ in.
Rosin-core solder

Spaghetti is the trade name for varnished cambric tubing used for insulation in radio and electronic circuits.

Mount the phono jack and the STDP switch on the plywood panel and fasten the panel to the rear of the receiver chassis. Drill two holes with a No. 28 drill through the panel and through the rear edge of the steel chassis. Use the No. 8 self-tapping screws to clamp the panel against the chassis.

The jack is to be connected to the input circuit of the audio amplifier. Most broadcast receivers employ a superheterodyne circuit and the input to the audio amplifier in that type of receiver should not be difficult to locate. Suppose that we operate on a 5-tube, table model AC-DC superheterodyne. Here is the procedure:

First, remove the control knobs so that you can take the chassis out of its cabinet after the four screws which hold it in place have been extracted. Turn the exposed chassis upside down and locate the volume control.

There is an ON-OFF switch on the back of the control. There are two terminal lugs on the switch. We are not interested in the switch except that it may be helpful to the novice to identify it and not confuse it with the control. The control has THREE terminal lugs in a row. We are not concerned with the center terminal.

Trace the wires connected to the two OUTSIDE terminals. You will find that one of the outside terminals is connected to a tube and the other is connected to a coil called an IF transformer.

Now you can start "operating." Cut this wire at the point where it is attached to the volume control and solder it to one of the contacts on the SPDT switch. If the wire is not long enough to reach the switch add a piece to it.

Connect the terminal on the volume control from which the wire to the IF transformer was removed to the center terminal on the SPDT switch.

Connect the other switch contact to the phono jack using a piece of shielded phono wire for the purpose. Connect the center wire to the center terminal of the jack. Connect the shield to the outer terminal of the jack.

The shielding on the wire must not touch any of the other terminals or components in the receiver or it will cause a short circuit. To prevent this, slip a piece of insulating spaghetti over the shield.

Connect one terminal of a .05 mfd., 600-volt by-pass capacitor to the shielding on the phono wire. Connect the other terminal of the capacitor to the steel chassis of the radio receiver.

The purpose of the by-pass capacitor is to "ground" the shield to the chassis. The shield could be grounded by a wire which connected it directly to the chassis but a direct ground is undesirable. A radio receiver of the AC-DC variety is likely to have a "hot chassis," that is a chassis that is connected to one side of the power line. If, by chance, the shielded phono wire from the record player should also be "hot" there might be a short circuit and "fireworks." The indirect ground provided by the capacitor eliminates this possibility.

All connections should be soldered with rosin-core solder. When the hookup is complete, restore the receiver to its cabinet, fasten it in and replace the control knobs.

If the SPDT switch which has been added at the back of the set is thrown so that the IF transformer is connected to the volume control, the receiver can be used to pick up broadcast programs in the usual manner. If connections

have been made properly the addition of the jack, switch and capacitor will not interfere in any way with the reception of broadcast programs.

To play records through the receiver is no trouble. Push the pin plug connected to the record player into the phono jack. Throw the SPDT switch so that the volume control is connected to the phono jack, turn on the ON-OFF switch on the volume control, put a record on the player and you are "in business." The volume control will regulate the sound of records in the same way that it controls the sound

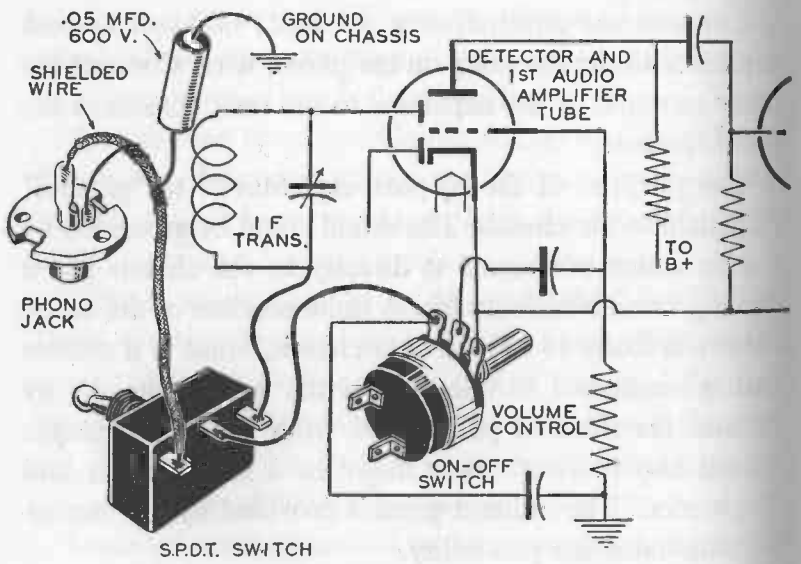

HOW TO USE THE AMPLIFIER IN A RADIO RECEIVER TO PLAY PHONOGRAPH RECORDS

When the wire from the I.F. transformer to the volume control has been cut, install a SPST switch, phono-jack and capacitor as shown above. To play a record, push the phono-plug connected to the record player into the phono-jack. One position of the switch connects the phono-jack to the amplifier. The other position eliminates the jack so that the receiver can be used for radio again.

of a radio program. Connect a shielded phone wire to the other switch contact. Connect the other end of this shielded wire to the phono jack. Connect the center wire to the center terminal of the jack and the shield to the outer terminal.

It is best to avoid a direct ground. Connect one terminal of a .05 mfd., 600 volt by-pass capacitor to the shielding on the phono wire and the other terminal to the chassis of the radio receiver. This cap is used to avoid making a direct ground between the chassis and the shield.

The shielding on the wire must not touch any of the other terminals or components, or it will cause a short circuit. To prevent this, slip a piece of "spaghetti" over the shield.

BUILD YOUR OWN PORTABLE PHONOGRAPH

This is a complete phonograph unit. It does not have to be connected to anything but the 117-v A.C. power supply. Push the plug into an outlet, put a record on the turntable and it is ready to play. The quality of its reproduction is good—equal to that of many factory-built phonographs which cost five or six times the price you pay for parts to build this unit.

With the exception of a few additional holes, a cabinet of the same size and form is used as that described for the record player in preceding pages. The cabinet encloses a phono motor, 3-tube amplifier and 6-inch loudspeaker. There are complete 3-tube AC-DC phono amplifiers on the market, priced at less than ten dollars. These give good reproduction and you can use one of them or use the equally good 3-tube phono amplifier described in Chapter

Fourteen. The instructions which follow are based upon the use of the homemade amplifier. It does not require a great deal of ingenuity to substitute a ready-made amplifier.

The following parts and materials are required:

1 Phonograph motor with 9-inch turntable
1 Pickup arm with crystal cartridge and stylus
1 6 ft. attachment cord and plug
1 Single pole 125-v rotary fixture switch
1 6-inch permanent magnet speaker
2 1 phone pin plugs
1 2 ft. length shielded phono cable
1 Piece rubber inner tube 2 in. x 2 in.
1 8 in. x 8 in. piece of grille cloth
1 3-tube phono amplifier
1 Piece plywood 13 in. x 11½ in. x ¼ in. (top)
1 Piece plywood 11½ in. x 7 in. x ¼ in. (front)
1 Piece plywood 11½ in. x 7 in. x ½ in. (back)
2 Pieces plywood 12¼ in. x 7 in. x ½ in. (sides)
4 Rubber head nails
1 2-terminal Bakelite tie-point
Shellac, stain, varnish, rosin-core solder, glue, rubber cement, screws and brads.

The information covering the choice of a phono motor and pickup for the record player should be used in their selection for the phonograph.

To make the cabinet, follow the instructions for making the record player cabinet. Make all holes in the top, front, sides and back before assembling the cabinet. The location, size and shape of the holes in the motorboard depend upon the motor and pickup which is used. Use the tem-

plate which comes with the motor and pickup to locate the holes. Cut the large hole for the motor with a power jig saw or a hand fret saw. (*See instructions for building record player cabinet.*)

The 5⅝-inch diameter circular hole in the front of the cabinet for the loudspeaker can be cut with a power jig saw or by hand with a fret saw. After cutting, smooth the edges of the hole with sandpaper.

Grille cloth to stretch across the hole in the front of the cabinet can be purchased from almost any radio repair shop. The cloth should not be put in place until the cabinet has been stained and varnished.

Cut a paper circle the same size as the hole for the loudspeaker and place it in the center of an 8 inch x 8 inch piece of grille cloth to act as a shield when spreading the cement. Spread rubber cement on that portion of the cloth which is not covered by the template. Also spread rubber cement on the back side of the cabinet front around the edge of the hole over an area (including the hole) equal in size to the piece of grille cloth. When the cement on both the grille cloth and the cabinet has dried for about 10 minutes, put the cloth in place on the back of the cabinet front. There will be a small surplus of cloth at the lower edge of the cabinet front. Trim this off with a safety razor blade.

Another method of putting the grille cloth in place is to cement it to an 8 inch x 7 inch piece of cardboard which has a 5¾-inch hole in the center.

Drill four holes in the cabinet front which will line up with the four holes in the loudspeaker when the latter is centered over the hole. Fasten the speaker to the back of

the cabinet front with four ¾-inch 8-32 machine screws. Push the screws through the holes from the front of the cabinet. Place an 8-32 hex nut on the end of each screw and tighten.

Use homemade shock-absorbing washers in mounting the motor.

The power cord passes through a hole in the back of the cabinet and terminates on a two terminal Bakelite tie-point strip fastened to the inside of the cabinet back. One of the motor terminal wires is connected to one of the tie-point terminals. A wire from the other tie-point terminal goes to the fixture switch on the cabinet front. The other switch terminal is connected to the remaining motor terminal. The fixture switch serves as an on-off switch to stop and start the motor but does not interrupt the power supply to the amplifier.

The amplifier is fastened inside the cabinet at the lower edge of the right hand side. First fasten a strip of plywood 3 inch x ¾ inch x ¼ inch to the front edge of the amplifier base so as to make it flush with the plywood panel which supports the volume and tone controls.

Drill three ⅛-inch holes ½ inch up from the bottom edge of the right hand side of the cabinet as indicated in one of the illustrations. The amplifier is held in place inside the cabinet by three 1¼-inch No. 6 round head wood screws which pass through the holes from the outside and into the edge of the amplifier base. Drill two 5/16 inch diameter holes in the right hand side of the cabinet for the shafts of the volume and tone controls.

Connect a phono pin plug to the end of the shielded phono wire which is connected to the crystal cartridge in

the pickup arm. Push the plug into the INPUT jack on the amplifier. Use shielded phono wire to connect the loudspeaker to the amplifier. Connect a phono pin plug to one end of the wire and push the plug into the OUTPUT jack on the amplifier. Connect the other end of the wire to the speaker.

One of the wires connected to the output jack should be permanently connected to the No. 1 terminal on the secondary winding of the 50L6 matching transformer. Determine which of the secondary terminals the other wire should be connected to by test and experiment. Connect it permanently to the terminal which produces the best tones from the speaker when a record is played.

Run a wire from each of the terminals on the tie-point, to which the power cord is connected, to the terminals on the tie-point marked **(23)** on the plan of the amplifier.

The phonograph is now ready to use.

THE HUSH-A-TUNE

Do you ever wish to play a phonograph record but must restrain yourself because the sound would annoy someone who is studying or sleeping or someone who does not approve of your taste in music?

Here is the answer to your problem. Equip your phonograph with a "Hush-a-tune." Then you can play the phonograph and you alone can hear it.

A double-pole, double-throw toggle switch and a phone jack are needed. You can use two binding posts in place of a phone jack. The jack is more convenient.

Drill three holes in the side of the phonograph cabinet so that you can fasten the switch and phone jack there.

An illustration on page 237 shows the connections. One position of the switch will connect the amplifier to the speaker voice coil so the phonograph can be played in the usual manner.

When the switch is thrown to the opposite side, the amplifier is connected to the phone jack. Push the tips on a radio headset, slip the phones on and you are equipped to listen to the phonograph music. The volume control on the amplifier will adjust the sounds in the headphones to suit you. Too much volume will produce distorted sounds.

LOUDSPEAKER REPAIRS AND ADJUSTMENTS

Loudspeakers do not require frequent repairs but they are sometimes damaged and occasionally get out of adjustment. The simplest way to remedy a defective loudspeaker is to replace it with another of the same model. The most economical method, if you have the time, is to repair it yourself.

Off-center Voice Coil. The most common defect is "off-center voice coil." This may be caused by rough handling or a bent frame but more frequently it is due to humidity changes which cause the paper cone to warp. If the voice coil is off center, it will rub against one of the magnet poles and the sound from the speaker will be distorted and "fuzzy." Radio repairmen are familiar with this sound and recognize it immediately.

Old style speakers are equipped with a "centering screw," located either behind the magnet or in the middle of the paper "spider" at the center of the cone. A centering screw makes readjustment simple. You will need a few centering shims. These are narrow strips of thin fiber or

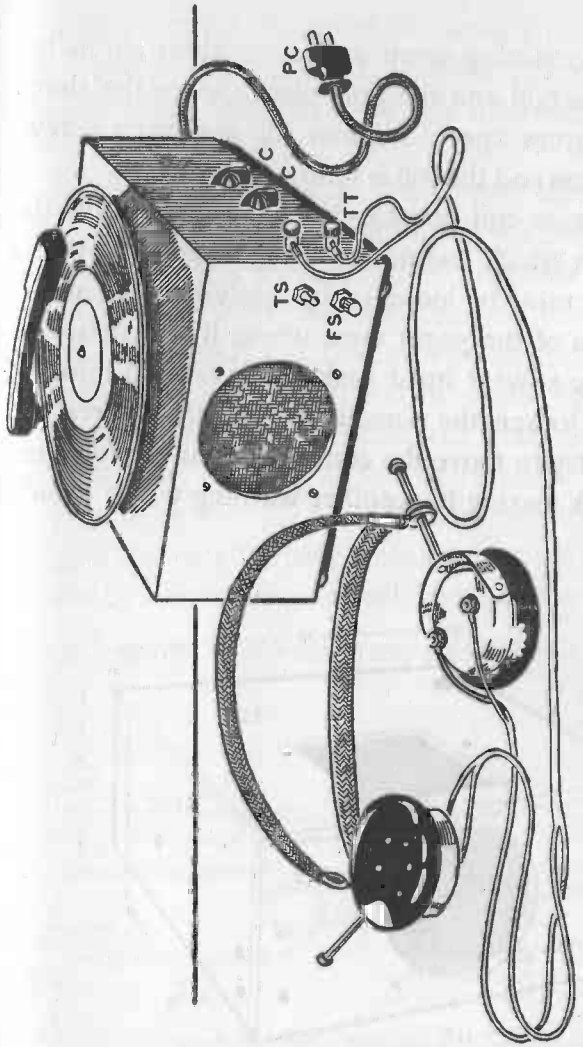

A HOMEMADE PHONOGRAPH ARRANGED SO THAT WHEN DESIRABLE ONLY ONE PERSON CAN HEAR ITS SOUND

FS is the fixture switch for starting the motor. **TT** are terminals for a pair of headphones. **TS** is a toggle switch for disconnecting the speaker and connecting the headphones. **CC** are the tone and volume controls. **PC** is the plug on the power cord.

metal of varying thickness. They are available from radio supply dealers and are priced at about forty cents for a set of twenty.

Loosen the centering screw and insert three shims between the voice coil and the pole piece. Space the shims about 120 degrees apart. Tighten the centering screw, remove the shims and the job is finished.

When the voice coil becomes off center on one of the newer speakers which has no centering screw, the whole cone assembly must be loosened by applying cement solvent to the rim of the paper cone where it is fastened to the frame. The solvent must soak in for several minutes before it will loosen the cement sufficiently to free the cone. Do not try to move the cone until it is entirely free or you will risk tearing it. Another warning which should

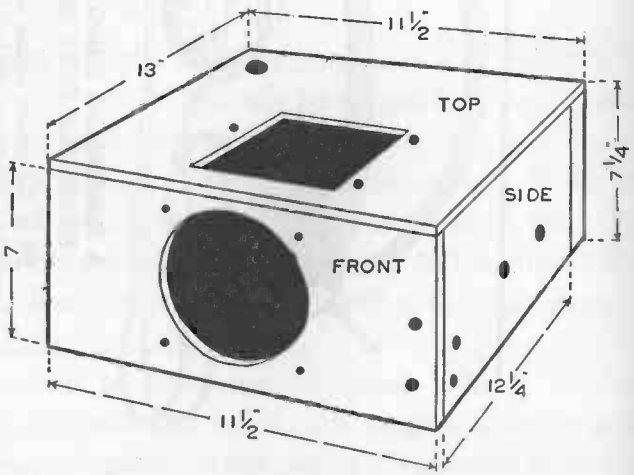

CABINET FOR THE PHONOGRAPH WITH "HUSH-A-TUNE" ATTACHMENT

be heeded is: Do not try to lift the cone from the frame or you will break the connection to the voice coil.

Apply cement solvent to the small circular dust felt in the center of the cone and remove the felt when the cement has softened. When the felt has been removed the pole piece will be exposed.

When the cone is loose, center the voice coil by inserting three shims of the proper thickness between the voice coil and the pole pieces. Space the shims about 120 degrees apart. With the shims in position recement the cone. When the cement has thoroughly set, remove the shims. Cement and cement solvent in small bottles for loudspeaker repair can be purchased from dealers in radio supplies. The dust cap should be replaced after the shims have been removed. The dust felt prevents dirt, etc., from lodging between the pole piece and the voice coil. Foreign matter in this small space will cause distortion.

Cone Repairs. Some cones are molded and have no seam.

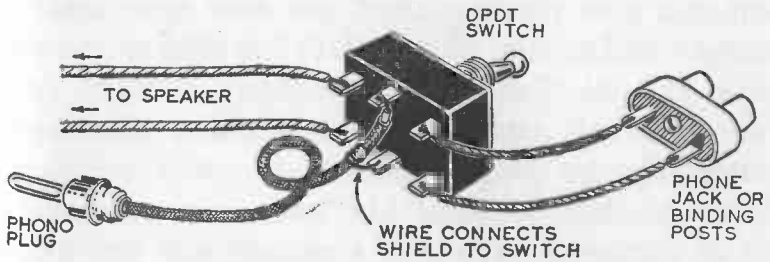

THE "HUSH-A-TUNE" ATTACHMENT

This consists of a phono-plug, double-pole, double-throw switch and a phone jack or pair of binding posts. One position of the switch connects the output of the amplifier to the speaker. The other position connects the amplifier to a radio headset.

Others, of the formed type, have an overlapping seam which is cemented. The cement sometimes dries out and the seam opens. This causes a rattling sound when the speaker is in operation. Put fresh cement along the seam and press the edges together. Use speaker cement or household Duco. Give the cement time to set thoroughly before using the speaker.

Torn cones can often be mended by pushing the torn edges together and applying cement along the tear on both the front and back of the cone.

If the tear or hole is a large one, it is advisable to have a radio repairman install a new cone in the speaker.

Broken Voice Coil Lead. This can be repaired by soldering with rosin-core solder. This defect will cause a "dead" receiver or phonograph. An "open" voice coil where the break is in the coil and not in a lead calls for a new cone and voice coil assembly.

CHAPTER SIXTEEN

Electron Tubes as Oscillators and Some of Their Uses . . .

CAPACITY RELAYS • YOU CAN BUILD A CAPACITY RELAY • FUN WITH A CAPACITY RELAY

What Is an Oscillator? To oscillate means to swing backward and forward. In an oscillating circuit, current and voltage surge back and forth, generally at a high frequency. In radio and electronics the term oscillator means any device for producing electric oscillations, or more specifically, a radio-frequency generator. Edwin H. Armstrong was first to reveal that a properly arranged circuit containing an electron tube could be made to OSCILLATE and thus become a means for converting direct current and voltage into high-frequency alternating current and voltage.

Electron-tube oscillators which generate radio-frequencies are indispensable in radio, industry and warfare

and are part of the equipment of scientific, educational and commercial laboratories.

The radio-frequency currents and voltages generated by electronic oscillators are used in transmitters to produce the radio waves which carry radio-telegraph, radio-telephone, broadcast, television and radar signals. There is a small radio-frequency oscillator in every superheterodyne radio receiver.

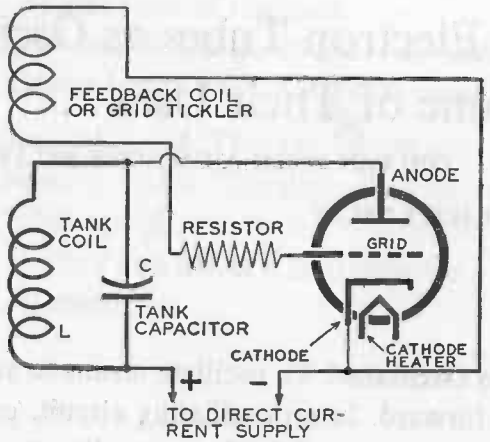

THE SIMPLEST FORM OF ELECTRONIC OSCILLATOR

"There are several types of electron tube oscillators. All provide some means in their circuit to feed part of the power passing through the plate circuit back to the grid. Most oscillators are named for the inventor who first demonstrated the particular type of feedback which is used in the oscillator. The illustration shows the circuit of the simplest type." It is called the magnetic or inductive feedback oscillator. A "tickler coil" which is part of the plate circuit feeds energy from the plate circuit to a "tank coil" which is part of the grid circuit. The energy fed from the plate circuit to the grid circuit appears again in the plate circuit in amplified form. This swinging to and fro of energy is sustained oscillation and will continue as long as power is supplied to the plate circuit. The frequency of the oscillations depends upon the amount of inductance and capacitance in the circuit. An electron tube can be made to oscillate as rapidly as 500,000,000 times per second under proper conditions.

Radio-frequency currents originated by electron-tube oscillators generate the healing heat employed in diathermy treatments. Heat produced in the same manner is used in industrial processes for curing plastics, drying lumber, gluing plywood, surface-hardening steels, to obtain a uniform thin coating of tin on the sheet iron used for cans and in many other ways.

Oscillators are no longer limited to the original type invented by Armstrong. There are several different fundamental types of oscillator circuits and many modifications of each fundamental type.

CAPACITY-OPERATED RELAYS

An electronic oscillator can be arranged and adjusted so that its oscillations cease when a metal plate is brought between its coils. If the circuit includes a relay, the relay

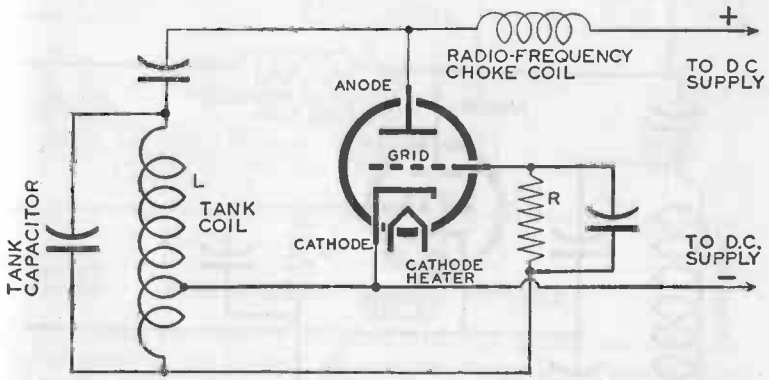

BASIC HARTLEY OSCILLATOR CIRCUIT

This is one of the circuits usually found in high-frequency heating units. A Hartley oscillator utilizes inductive coupling to feed back energy from the plate to the grid circuit. The tank coil is divided so that part of it is in the grid circuit and part is in the plate circuit. The magnetic coupling between the two sections of the tank coil furnishes the feedback which causes oscillations.

will remain open while oscillations occur and will close when the oscillations cease. This arrangement is called a capacity-operated relay. It has several practical industrial applications. It can operate a burglar alarm; it will stop and start machines and perform other useful services WITHOUT BEING TOUCHED. The next time that you ride in an elevator car it may be one which is stopped automatically by CAPACITY RELAYS.

Elevators are often controlled automatically by capacity relays. When the car approaches a floor where a stop is to be made, the elevator's slow-down relays are the first to be actuated. Then the stopping relay stops the car and levels it at the floor. Several capacity-operated relays assembled in a unit and mounted on the top of the car are required to accomplish this. Metal plates are mounted on the hoistway wall or elevator guide rails to actuate the

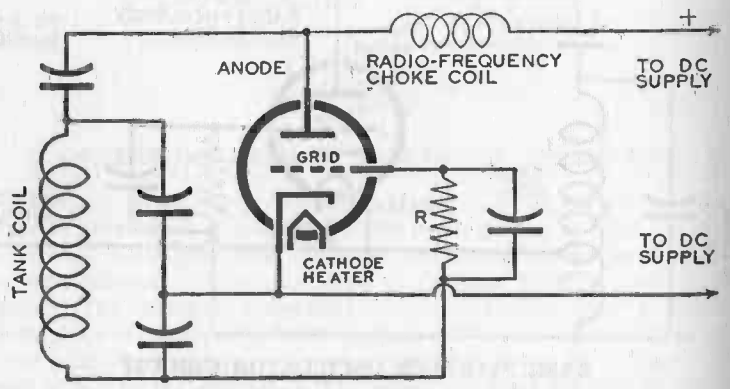

COLPITTS OSCILLATOR

The Colpitts oscillator circuit is also widely used for electronic heating units. By coupling the tank coil to an antenna, the Colpitts oscillator becomes a radio-telegraph transmitter. The Colpitts circuit usually has less frequency drift (change in frequency) with changes in load than some other oscillators.

relays. The metal plates are located so that as the elevator car approaches a floor the plates pass between but do not touch several pairs of coils. Each set of coils is part of a capacity relay circuit. When a plate passes between two coils a relay closes.

The operation of a capacity relay depends upon the action called BODY EFFECT. The effect which the presence of the hand or body near electronic apparatus has upon the circuit is called body effect.

Explanation of Body Effect. A metal plate which is insulated from the ground and from other surrounding ob-

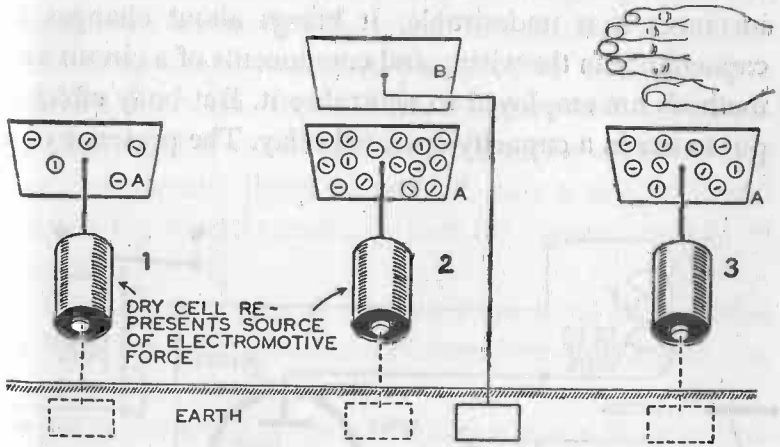

EXPLANATION OF BODY EFFECT

1. If a metal plate (A) is insulated from the ground and other surrounding objects it can be given an electrical charge. If a source of direct electromotive force is connected to the plate a few electrons will flow into the plate. In the illustration above, the source of direct current is represented by a dry cell. The circles with a negative sign represent electrons.
2. If a grounded plate (B) is brought near plate (A), a greatly increased number of electrons will flow into plate (A).
3. The presence of the human hand or body near plate (A) has much the same effect as plate (B) and increases the number of electrons which flow to plate (A).

jects can be given an electrical charge. If a source of direct electromotive force is connected to the plate a FEW electrons will flow either to the plate or away from it.

If a second plate insulated from the first plate but connected to ground is brought close to the first plate there will be a great INCREASE in the number of electrons that flow into the first plate.

If, instead of the second plate, the hand or body is brought close to the first plate, it will have much the same effect as the second plate. There will be a great increase in the number of electrons that flow into the first plate. This effect of the hand or body is BODY EFFECT. In most instances it is undesirable. It brings about changes in capacitance in the wiring and components of a circuit and methods are employed to neutralize it. But body effect is put to use in a capacity-operated relay. The presence of a

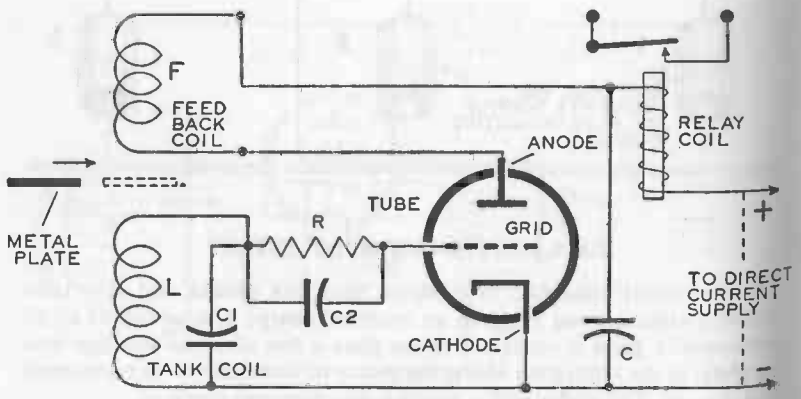

CIRCUIT OF CAPACITY RELAY USED TO STOP AND LEVEL ELEVATORS

When the metal plate is interposed between the feed-back coil and the tank coil, the relay closes.

person's hand or body close to a metal plate actuates the relay. It is not necessary to touch the plate. A hand held close to the plate will trigger the relay.

YOU CAN BUILD A CAPACITY RELAY AND USE IT FOR INTERESTING EXPERIMENTS

You can build a capacity-operated relay with some common electronic components and an oscillator coil. You can perform some interesting and amusing demonstrations with it.

Fun with a Capacity Relay. The plate (called the capacity plate) attached to the relay may be a disk of metal foil about 6 inches in diameter glued to the inside of a show window or display case. A passer-by or customer who places a hand near the disk can set into operation an advertising display. Without actually touching anything they can turn electric lights on and off, ring a bell, stop and start a toy electric train, in fact do a great variety of things.

If the capacity plate is concealed in a book or magazine no one can pick up coins or other objects lying on the book without ringing a bell.

For a variation of the same idea place a piece of foil about 12x12 (connected to the oscillator as a capacity plate) on a dinner table underneath the tablecloth. Lay a silver spoon or a knife and fork on the tablecloth above the capacity plate. Connect an electric bell and a battery to the relay and hide them beneath the table. When the oscillator is adjusted, no one can touch the silver or pick it up without setting off the alarm bell. During dry weather the relay can be connected to a window screen so that

anyone who gets close to the screen or touches it will set off an alarm such as a red light or a bell.

If the capacity plate is placed under a rug, the relay will be actuated when anyone steps on the rug over the plate. If the relay is connected to a bell, it will serve as an alarm. For amusement, the relay can be connected to a table lamp or a floor lamp and the light will flash on momentarily when a hand or foot is placed on the rug over the capacity plate. Or, the capacity plate can be placed under a slipcover on an upholstered chair located near a table lamp. If the relay is connected to the lamp, the latter will light when anyone sits in the chair and continue to burn as long as he remains.

A capacity plate larger than 6 inches x 6 inches can be used. The maximum size which is practical will have to be determined by experiment. If too large, the relay will not be sensitive.

COMPONENTS AND MATERIALS USED IN BUILDING THE CAPACITY-OPERATED RELAY

1 Shellacked wood base 6½ in. x 5 in. x ½ in. **(A)**
1 Piece plywood (shellacked) 2½ in. x 1⅜ in. x ¼ in. **(B)**
1 Piece plywood (shellacked) 2 in. x 1¼ in. x ¼ in.
For mounting relay **(D)**
1 Piece thin sheet metal 4 in. x 3 in. **(C)**
1 25A6 radio tube **(E)**
1 290-ohm line cord resistor **(F)**
1 Octal wafer socket **(G)**

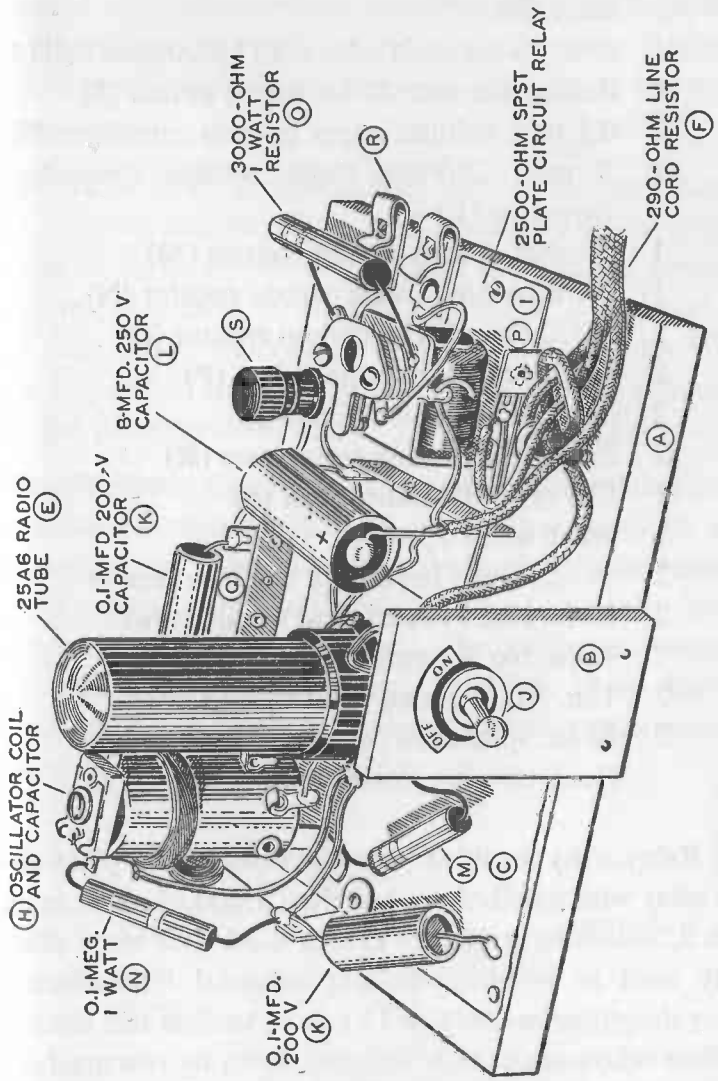

AN EXPERIMENTAL CAPACITY RELAY

1 Miller Cat. No. 695 oscillator coil for capacity relay (**H**)
1 SPDT plate circuit relay with 2,500-ohm coil (**I**)
1 Ball handle SPST-125-v toggle switch (**J**)
2 0.1 mfd. tubular paper by-pass capacitors (**K**)
1 8 mfd. 250-volt single section electrolytic capacitor (**L**)
1 50-ohm, 1 watt carbon resistor (**M**)
1 0.1 megohm, 1 watt carbon resistor (**N**)
1 3,000-ohm, I watt carbon resistor (**O**)
2 Single-lug Bakelite tie points (**P**)
2 5-lug Bakelite tie-points (**Q**)
2 Fahnestock spring connectors (**R**)
1 Eby type 30 binding post (**S**)
1 Small screw eye (**T**)
2 ⅜-in. round head 6-32 machine screws
2 ½-in. No. 4 round head wood screws
7 ⅜-in. No. 4 round head wood screws
2 1-in. No. 6 round head wood screws
2 ¾-in. spacers to raise socket above base
Hook-up wire, rosin-core solder

The Relay. Any sensitive SPST electromagnetic plate circuit relay with a coil of not less than 1,000 ohms or more than 2,500 ohms resistance can be used. The same plate relay used in building the experimental Photoelectric Relay described in Chapter 12 can be used in this circuit.

Plate relays are usually fastened down by two machine screws which fit into threaded holes at the bottom. When the relay is mounted directly on the wood base it is necessary to drill two holes through the base and counterbore

them from the underside so that the screw heads will not project below the surface. A more convenient method is to mount the relay on a small metal sheet or plywood sub-base of its own and fasten the sub-base to the larger base.

The Tube. 25A6 is an amplifier tube of the class known as a power pentode. It is used frequently in the output stage of AC-DC receivers. The tube has a metal envelope and requires an octal socket. The heater is designed for 25 volts and at that voltage consumes 0.3 amperes. When used alone and operated on 117 volts it must be connected to the power source with a 290-ohm line cord resistor.

The Oscillator Coil. This is an inexpensive factory-made coil wound on a plastic tube and comes complete with capacitor and radio-frequency choke coil. An instruction sheet comes with the coil showing how to use it in both a single-tube and two-tube circuit. The coil is manufactured by the J. W. Miller Company, 5917 S. Main St., Los Angeles, California. If your dealer cannot supply the coil, write direct to the manufacturer.

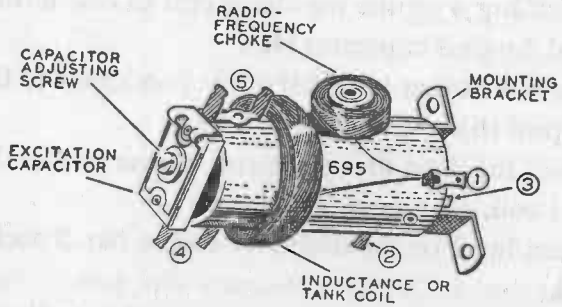

MILLER NO. 695 OSCILLATOR COIL

The Capacity Plate. This may be a square piece of WIRE screen or metal sheet about 6 inches x 6 inches or a disk of the same materials about 6 inches in diameter. Copper, brass, aluminum, iron, in fact any metal can be used as the capacity plate. A suitable plate can be made by covering a piece of cardboard with aluminum foil. Solder a flexible insulated wire to the plate. If foil is used, the wire cannot be attached by soldering, it must be clamped to the foil.

The plan of the oscillator is the best guide for assembling the components on the base.

The line cord resistor is tied to a screw eye in the forward right hand corner so that there will be no strain on the soldered connections. The Eby binding post near the back edge is the terminal to which the wire leading to the capacity plate is attached.

Use push-back wire for the connections. The ends of all wires except those which are clamped under the Fahnestock connectors and the binding post should be soldered. Use rosin-core solder. Make all wires as short and as direct as possible.

Make connections to the oscillator coil as follows:

Connect lug 4 on the oscillator coil to one terminal of a 0.1 mfd. by-pass capacitor (**K**).

Connect the other terminal of the condenser to the Eby binding post (**S**).

Connect lug 3 on the choke coil to one terminal of the relay (**H**) coil.

Connect lug 2 on the oscillator coil to No. 3 socket (**G**) terminal.

Connect lug 5 to the capacitor on the oscillator coil to No. 5 socket (**G**) terminal.

Operation. When the wiring has been completed check it carefully and if correct, the instrument is ready for a test. Connect a dry cell and an electric bell or a 1.5-v flashlight lamp to the Fahnestock connectors and push the armature of the plate relay so as to close the contacts. If the contacts are clean and touch each other the bell should ring or the lamp should light, as the case may be.

Place a 25A6 tube in the socket, push the plug on the resistor cord into a power outlet and turn the on-off switch to the ON position. Give the tube 3 or 4 minutes to warm up before making any adjustments. Connect the wire attached to the capacity plate to the binding post provided for it at the back of the base. Lay a newspaper or magazine

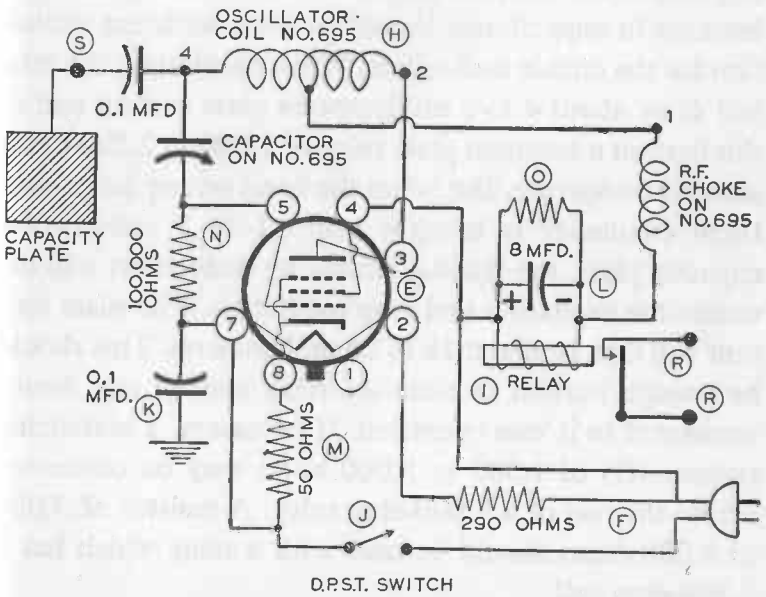

CIRCUIT FOR THE EXPERIMENTAL CAPACITY RELAY

The 290-ohm resistor is one of the conductors in the line cord resistor.

on the table and place the plate on this. The paper will insulate the plate from the table. Turn the adjustment screw on the excitation capacitor counterclockwise two or three revolutions. Use a screwdriver with a plastic handle and do not let your fingers touch the metal blade. The best screwdriver to use for this purpose is a nonmetallic screwdriver made of fiber and called an aligning tool. This tool is used by professionals for adjusting electronic equipment. Loosening the capacitor adjustment screw reduces the capacitance to a point where the circuit cannot oscillate and the bell should ring or the lamp light. If this occurs, turn the adjusting screw very slowly in a clockwise direction until the bell stops or the lamp is extinguished. Do not turn the screw beyond this point. The increase in capacitance should provide sufficient excitation for the circuit to oscillate. When oscillating, the tube will draw about 4 to 5 milliamperes plate current and at this current a common plate relay of 1,000 to 2,500 ohms should not operate. But when the hand or any large electrical conductor is brought near (1 to 3 inches) the capacity plate, the loading caused by body effect will decrease the excitation and stop oscillation. The plate current will then be about 18 to 25 milliamperes. This should be enough current to close the relay and set any device connected to it into operation. If necessary, a stabilizing resistor (**O**) of 1,500 to 5,000 ohms may be connected across the coil of a 1,000-ohm relay. A resistor of 3,000 to 5,000 ohms should be used with a relay which has a 2,500-ohm coil.

The relay and the excitation capacitor (on top of the coil) should not be adjusted until after the capacity plate

has been installed in position and connected. If the relay has a tendency to remain closed when it should open, it may be that the armature touches the end of the iron core in the relay coil. This can be remedied by slipping a piece of tissue paper between the core and the armature.

How to Build and Operate a Miniature Home Broadcasting Station

Radio signals of all sorts, telegraph code, speech, music and television, are sent out into space by radio waves appropriately called CARRIER waves. The carrier waves are produced by sending alternating currents into an antenna. The currents used for this purpose alternate at high frequency, hundreds of thousands, even millions of times per second, and are known as HIGH-FREQUENCY or RADIO-FREQUENCY CURRENTS. They are generated by an electron tube.

A radio tube which will amplify can also be made to oscillate or generate sustained radio-frequency currents. It is merely necessary to connect the tube in a proper circuit and supply the filament and plate circuits with suffi-

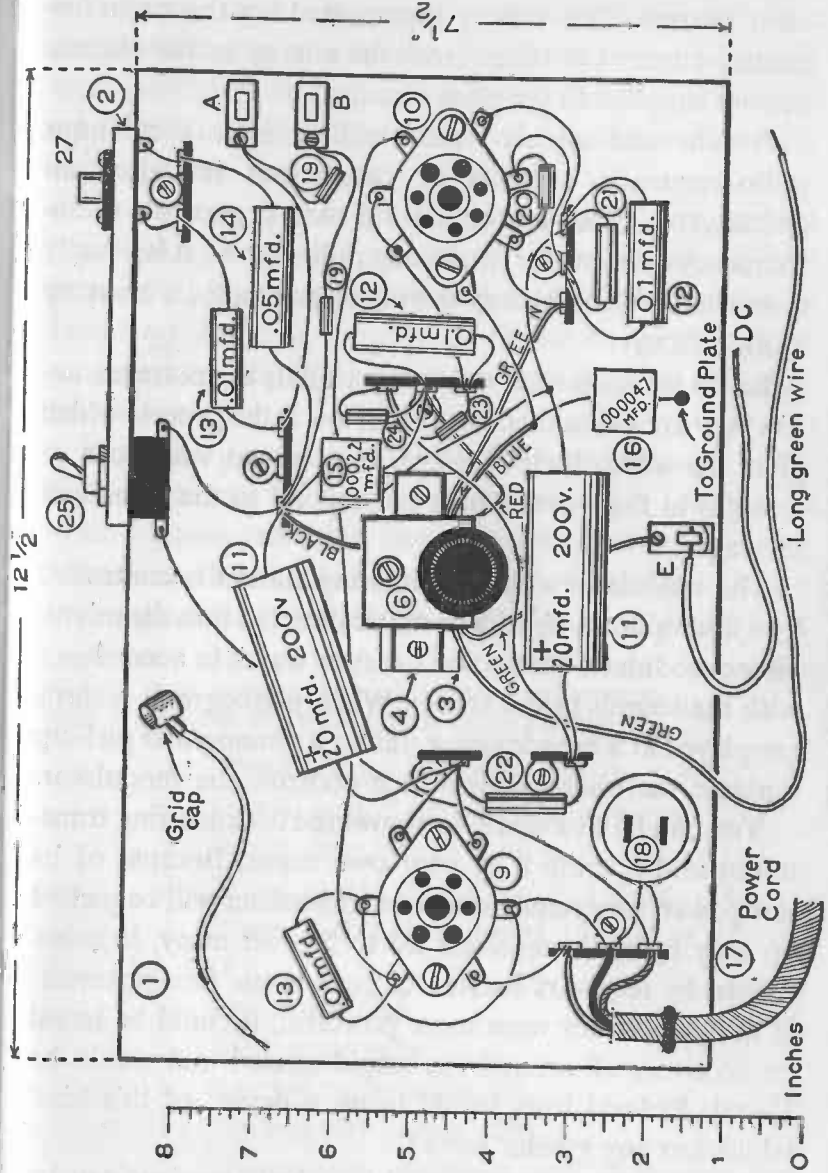

PLAN OF THE PHONO-OSCILLATOR

cient current. The energy represented by the radio-frequency currents is taken from the energy in the electric current supplied to the plate circuit.

A tube and circuit which will generate continuous radio-frequency currents or oscillations is called an OSCILLATOR. When an oscillator is used to generate radio-frequency currents for producing radio waves, it is usually associated with an energy-storing circuit called a TANK or TANK CIRCUIT.

Radio waves do not carry any signals or messages unless they are modulated. MODULATION is the process which gives the waves their message. It produces variations or changes in the waves which correspond to the signals or messages.

The modulator at a broadcasting station is controlled by a microphone. Speech or music directed into the microphone modulates the station's carrier waves in accordance with the sounds in the studio. When phonograph records are played at a broadcasting station a phonograph pick-up replaces the microphone which controls the modulator.

You can build a small, low-powered broadcasting transmitter and operate it in your own home. Because of its low power, programs from your transmitter will be picked up only by radio receivers 20 to 50 feet away, in other words, by receivers located in your house or apartment. If the transmitter were more powerful, it could be heard on receivers all around the neighborhood and would be illegal. Federal laws forbid using a device of this kind which has any greater power.

Any first-class, factory-built broadcast receiver can be used to receive your programs. Records can be played in a room adjoining that where the receiver is located or in

a room on another floor in the same building and their music will come out of the radio receiver. You can make announcements and your voice will be heard via the radio receiver. This will amaze those who do not know how it is accomplished.

The miniature broadcasting station is a device termed "wireless phonograph oscillator." It is actually a low-powered radio transmitter which sends out signals in the broadcast frequency band. The signals are picked up by a receiver nearby when the receiver is tuned to the oscillator's signals.

You can purchase a factory-built phonograph oscillator. You can build one yourself at much lower cost. With a phono oscillator, any broadcast receiver will perform as an electric phonograph without connecting it to a record player and without altering the receiver in any way.

PARTS AND MATERIALS REQUIRED TO BUILD THE WIRELESS PHONOGRAPH OSCILLATOR

1 Wood base, 12½ in. x 7½ in. x ¾ in. (**1**)
1 Wood strip, 5 in. x 2½ in. x ¼ in. (**2**)
1 Wood strip 2½ in. x ¾ in. x ¼ in. (**4**)
2 Wood blocks 1 in. x ¾ in. x ½ in. (**3**)
1 Piece of thin sheet metal 11½ in. x 6½ in. (**5**)
1 6F7 radio tube
1 25Z5 radio tube
1 6-prong tube socket (**9**)
1 7-prong tube socket (**10**)
1 Phonograph oscillator coil (Meissner No. 17-9373) (**6**)
2 20 Mfg. 200-volt electrolytic capacitors (**11**)

1 Female plug receptacle for 120 volts (**18**)
2 0.1 mfd., 200-volt tubular by-pass capacitors (**12**)
2 0.1 mfd., 400-volt tubular by-pass capacitors (**13**)
1 .05 mfd., 400-volt tubular by-pass capacitor (**14**)
1 .00022 mfd., mica capacitor (**15**)
1 .000047 mfd., mica capacitor (**16**)
1 290-ohm line cord resistor (**17**)
2 470,000-ohm, ½-watt resistors (**19**)
1 390,000-ohm, ½-watt resistor (**24**)
1 68,000-ohm, ½-watt resistor (**20**)
1 2,400-ohm, ½-watt resistor (**21**)
1 39,000-ohm, ½-watt resistor (**23**)
1 10,000-ohm, 1-watt resistor (**22**)
3 Binding posts or Fahnestock connectors
5 Solder-lug mounting strips with four lugs
1 Small single-pole, single-throw switch (**25**)
1 Phonograph jack (**27**)
4 Rubber head tacks
4 ½-inch, No. 5 round head wood screws
13 ⅜-inch, No. 5 round head wood screws
1 1½-inch, No. 6 round head wood screw
2 ¼-inch, No. 2 round head wood screws
Shellac, varnish, push-back wire and rosin-core solder

The Oscillator Coil. The "heart" of the oscillator is a No. 17-9373 Phono Oscillator Coil.* The coil can be ordered from the factory or from any dealer who sells

* Manufactured by Thordarson-Meissner, Mt. Carmel, Illinois

amateur and experimental radio equipment. The coil is actually three small coils and two small capacitors enclosed in a metal case or shield. One of the capacitors is a double trimmer capacitor which can be adjusted by means of a knob and a small screwdriver. Adjusting the trimmer capacitors tunes the oscillator. In other words, the adjustment changes the frequency and wavelength of the signals the oscillator sends forth.

Six wire terminal leads emerge from the bottom of the metal shield enclosing the coil. These are the terminals of the coils and colored so that they can be identified. There are four short solid wires, colored respectively black, blue, red, and green. The two other wires are both colored green, are stranded and are longer than the four short wires. One of the stranded green wires is about two feet long.

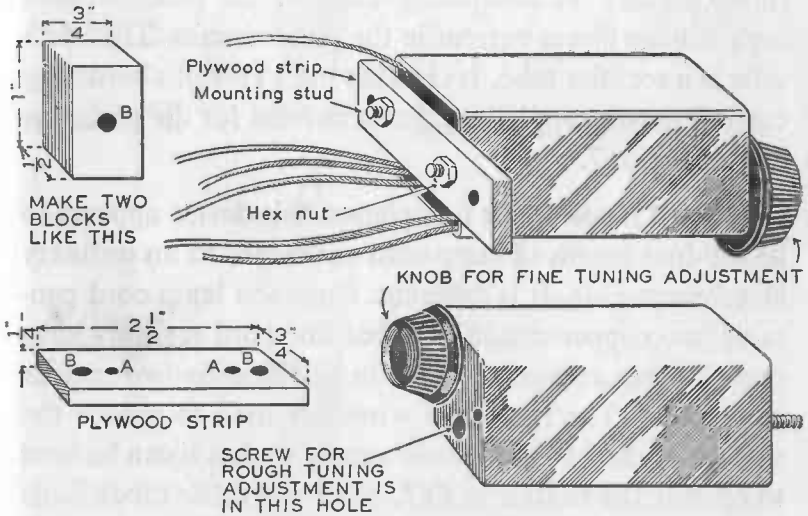

MEISSNER NO. 17-9373 PHONO-OSCILLATOR COIL

The screw which adjusts the capacitor is visible through a small hole in the top of the shield and can be turned with a small screwdriver. Turning the screw gives a rough or coarse adjustment of the frequency and wavelength. A tuning knob projects through the top of the shield. Turning the knob gives a fine adjustment of the frequency and wavelength.

The Tubes. The phono oscillator employs two tubes: a 6F7 and a 25Z5. Both are the heater type and consequently can be operated on alternating current (the heater circuits only). A 6F7 tube is actually two tubes in one, a triode and a pentode enclosed in the same glass envelope. The 6F7 is the oscillator tube and generates the radio-frequency currents which produce the waves that carry the phonograph music through space from the phono oscillator to the radio receiver. Although the heater of the 6F7 tube operates on alternating current, the tube requires high voltage direct current in the plate circuits. The 25Z5 tube is a rectifier tube. It changes the 117-volt alternating current power supply into direct current for the plate circuit of the 6F7.

Line Cord Resistor. At first glance, this device appears to be a 6-foot length of lamp cord connected to an ordinary attachment plug. It is different. Common lamp cord contains two copper conductors but line cord resistors have one or more resistance wires in addition to two copper conductors. The resistance wires are used to reduce the voltage of the 117-volt power supply so that it can be used to operate the heaters in 6F7, 35Z5 and other tubes. Line cord resistors complete with attachment plug are available

in several resistances ranging from 135 ohms to 960 ohms. The line cord resistor purchased for the phono oscillator should have a resistance of 290 ohms.

The Base. The first step in building the phono oscillator is to make a smooth wooden base 12 in. x 7 in. x ¾ in. and give all its surfaces a coat of white shellac varnish. When the shellac has dried, fasten a piece of thin sheet metal (11½ in. x 6½ in.) to the underside of the base. Use thin galvanized or tinned sheet iron. You can cut a suitable piece of tinned sheet iron out of the sides of a one-gallon can. Fasten the metal to the underside of the base with small brads. Do not try to drive the brads

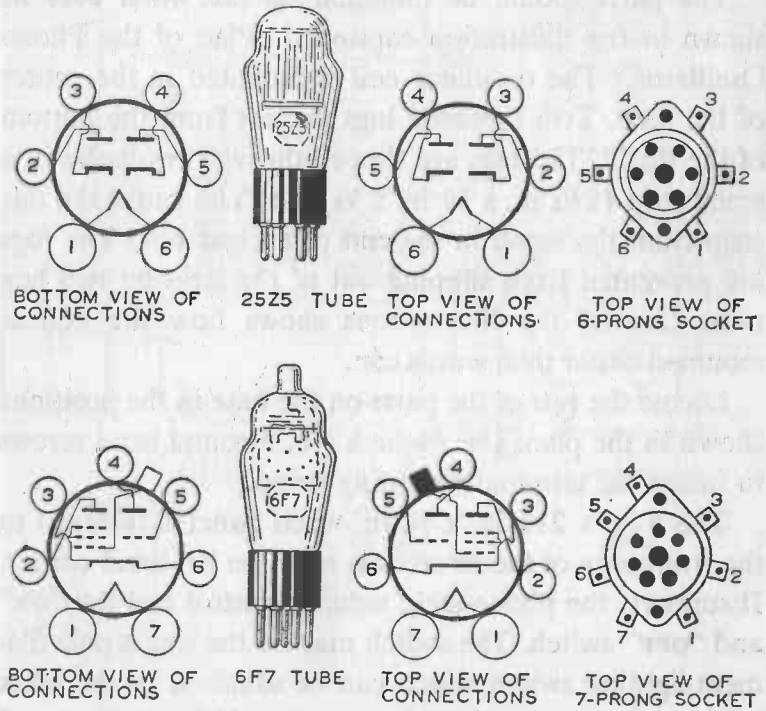

THE TUBES USED IN THE PHONO-OSCILLATOR

through the metal. Punch a small hole in the metal wherever you wish to place a brad. Make the holes with a nail. Hold the point of the nail against the metal, hit the nail head with a hammer and the hole is made. Use care not to drive the nail so hard that it makes holes larger than the heads of the brads you are using.

After fastening the metal sheet, drive a rubber headed tack into the underside of the base at each corner. They will insulate the metal sheet from any object upon which the phono oscillator rests. The metal plate must not be grounded because it is part of the antenna system from which the waves radiate.

The parts should be mounted on the wood base as shown in the illustration captioned "Plan of the Phono Oscillator." The oscillator coil is mounted in the center of the base. Two threaded lugs project from the bottom of the shield. The lugs are slipped through two holes in a wood strip (2½ in. x ¾ in. x ⅛ in.). You can make this strip from the wood in the end of a cigar box. The lugs are prevented from slipping out of the strip by two hex nuts. One of the illustrations shows how the coil is mounted better than words can.

Locate the rest of the parts on the base in the positions shown in the plan. Use ⅜-inch No. 5 round head screws to fasten the terminal mounting strips.

The 5 in. x 2½ in. x ¼ in. wood panel is fastened to the front edge of the wood base near the left hand corner. It supports the phono-jack, volume control and the "ON" and "OFF" switch. The switch may be the single-pole filament-lighting switch which can be attached to the back of the volume control or the common 120-volt "canopy" switch used on lamps and wall brackets.

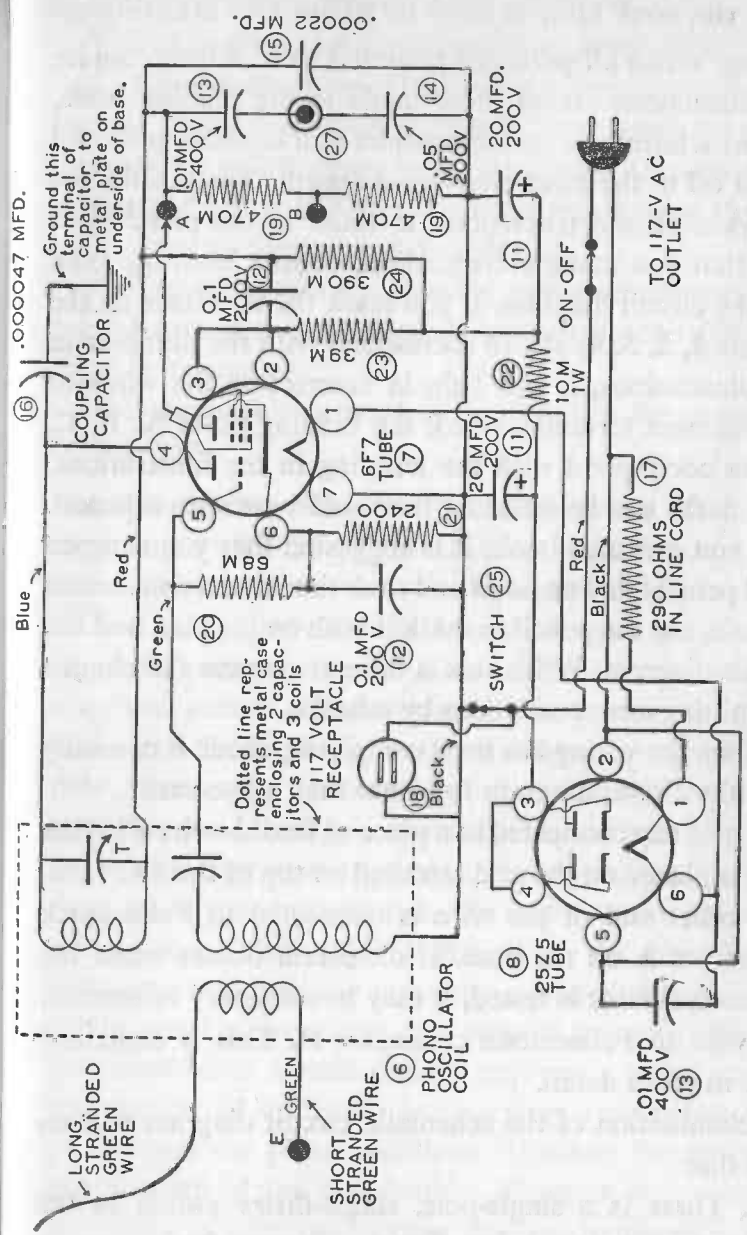

SCHEMATIC CIRCUIT DIAGRAM OF THE PHONO-OSCILLATOR

Wiring. When all parts are mounted, start wiring. Solder all connections except those made to the binding posts. The wire terminals on the resistors and capacitors should be cut off to the most convenient length. The position of the wires should correspond to those in the plan. Each time that you make a connection, consult both the plan and the circuit diagram. If you mark the terminals on the sockets **1, 2, 3, 4,** etc. to correspond with the numbers in the illustrations, it will help in connecting the wires to their correct terminal. Mark the binding posts **A, B, C,** etc. to correspond with the lettering in the illustrations. The marks can be made on the wood base with a pencil.

If you own this book, it is suggested that you sharpen a red pencil to a fine point and each time that a connection is made, use the pencil to mark it both on the plan and the circuit diagram. When this is done it reduces the chance of omitting any connections by mistake.

When the wiring has been completed, check it carefully with the circuit diagram to insure that it is correct.

A grid cap connected to a piece of flexible wire 6 inches long is placed on the grid terminal on top of the 6F7 tube. The other end of the wire is connected to Fahnestock connector **A** on the base. If distortion occurs when the phono oscillator is tested, it may be necessary to connect the wire to Fahnestock connector **B.** This is explained later in more detail.

Examination of the schematic circuit diagram will reveal that:

1. There is a single-pole, single-throw switch in the heater circuit of the tubes. The switch turns the heaters on and off.

2. The heaters of the two tubes are connected in series.

3. Current from the 117-volt A.C. circuit reaches the heaters (when the switch is closed) after passing through a resistance of 290 ohms in the line cord. This resistance prevents the full 117-volt current from flowing through the heaters and burning them out.

4. Two 470,000-ohm resistors provide a voltage dividing network to accommodate to some extent the difference there is in pickups.

The use of this network is discussed in the paragraph DISTORTION.

The Record Player for the Phono Oscillator. The record player used with the phono oscillator should be equipped with a high-impedance crystal pickup. The player described in Chapter 15 may be used. Crystal pickups and magnetic pickups may both have high impedance but a magnetic pickup will not usually give good results when connected to the phono oscillator unless a preamplifier is used. The energy produced by a magnetic pickup is less than that produced by a crystal pickup and the preamplifier is necessary to strengthen the feeble energy. The magnetic pickup is connected to the input terminals of the preamplifier. The output terminals of the amplifier are connected to the pickup terminals on the phono oscillator.

A crystal pickup does not require a preamplifier. A low impedance crystal pickup requires a small step up transformer of the audio or interstage type between the pickup and the phono oscillator. Connect the pickup to the primary of the transformer. Connect the secondary terminals of the transformer to the terminals on the phono oscillator marked "pickup."

A high impedance crystal pickup does not require a

preamplifier or a transformer. The terminals of the pickup are connected to a phono-plug which is pushed into the phono-jack.

To Operate the Phono Oscillator. If a checkup of the wiring on the phono oscillator shows it to be correct, the oscillator is ready for a test. When making the first test, place the phono oscillator close to a radio receiver or close to the antenna lead-in connected to the receiver provided the lead-in is not shielded wire. The base of the phono oscillator should rest where the metal plate will not be grounded. Sometimes the phono oscillator will not operate unless it rests on a piece of window glass (7½ in. x 12½ in.).

Push the 6F7 and 25Z5 tubes into their sockets on the phono oscillator. Connect the flexible grid connection to the terminal on the top of the 6F7 tube and to the Fahnestock connector marked **A** on the base of the phono oscillator. Connect the pickup plug of a record player to the pickup jack. Push the line cord plug of the phono oscillator into a 117-volt outlet. Push the plug connected to the line cord on the record player into the 117-volt outlet on the oscillator. Turn the ON and OFF switch on the phono-oscillator to the ON position so that the tubes start to warm up. When the tubes have been warm for about one minute, start a record playing. If the record player is equipped with a volume control, turn the volume control to maximum.

Turn the volume control on the radio receiver to the approximate position used when receiving local broadcasting stations. Tune the receiver by moving the tuning control slowly through its entire range as if looking for a

distant broadcasting station. At some point on the dial, the phonograph record will be heard.

It is possible that a broadcasting station may be heard simultaneously with the record. If such interference occurs it is a simple matter to change the frequency of the oscillator so that it will be heard at a position on the dial of the radio receiver where no broadcasting is heard.

Turning the screw which can be seen through the hole in the top of the coil shield, and turning the tuning knob which projects from the shield will change the frequency of the oscillator. Turning the screw makes a much greater change in frequency than turning the knob. The knob is the fine adjustment.

Distortion. The phono oscillator can be overmodulated by a microphone or phonograph pickup which generates too great an output voltage. Overmodulation produces raspy distortion. If the reproduction of loud tones is of poor quality and sounds raspy, release the flexible grid connection on the 6F7 tube from Fahnestock connector **A** and connect it to **B.**

Trouble Shooting. Some radio receivers lack sufficient sensitivity to reproduce good signals from a phono oscillator. Weak reproduction will occur if a receiver is shielded from the oscillator by metal laths, pipes, etc., in walls and partitions. Either of these conditions may reduce the useful range of the phono oscillator to less than 20 to 50 feet.

The noise from static due to thunder storms, vacuum cleaners, motors, etc., can be greatly reduced and some-

times entirely eliminated by disconnecting the antenna from the radio receiver and connecting the long green stranded wire on the oscillator coil to the antenna post on the receiver in place of the antenna.

The terminal "E" to which a green wire from the oscillator coil is connected, is used to connect the phono-oscillator directly to a radio receiver. Disconnect the antenna from the "A" or "Ant" terminal on the receiver. Connect a wire from terminal "E" directly to the "A" or "Ant" terminal on the receiver. When the oscillator is used connected directly to the receiver, it is recommended that the .00005 mfd. coupling capacitor (16) be short-circuited by connecting a wire across its terminals. Shorting this condenser will reduce the likelihood of interference with your neighbor's radio receiver.

NOTE: Radio repair shops and service men rarely have a 6F7 or 25Z5 tube in stock. Both tubes are listed in the catalogs of Allied Radio and Lafayette Radio (*see page 269*) and may be ordered by mail from those firms.

Where to Obtain Materials

The average radio and television service shop can furnish any of the tubes, fixed capacitors, resistors, volume controls and batteries required to build the apparatus described in this book. Other components such as transistors, coils, relays, phototubes, transformers, phonomotors, etc., can be obtained from the large distributors of electronic equipment. Six reliable firms which issue mail order catalogs are listed below. They will send you a catalog if you write and request it. Neither the author nor the publisher has any interest in these business firms and does not assume any responsibilty in your dealings or transactions with them.

Write for catalog to:

Allied Radio, 100 N. Western Avenue, Chicago 80, Illinois.

Lafayette Radio, 165 Liberty Avenue, Jamaica 33, New York.

Burstein Applebee Co., 1012 McGee Street, Kansas City, Missouri.

Radio Shack Corporation, 167 Washington Street, Boston 8, Massachusetts.

Concord Radio Corporation, 45 Warren Street, New York 7, New York.

Newark Radio, 223 W. Madison Street, Chicago 6, Illinois and 4736 W. Century Blvd., Inglewood, California.

Lens for Phototube Relay

Various lenses are listed in the catalog of the Edmund Scientific Co., Barrington, New Jersey. If interested, write for catalog.

Index

Amber, 6
Amplifier, 14, 135, 203
audio, 138
cabinet for, 212
cascade, 136
chassis for, 204
circuits, 207-209
classification of, 140
class A, 140
class AB, 140
class B, 140
class C, 140
experiment, 107
how to connect, 106
introduction to, 135
one-stage transistor, 102
power, 140
radio-frequency, 139
transistor, 100
tubes, 157, 201
two-stage audio, 199, 211
video, 139
voltage, 140
Annunciator, 169
Antenna, 9
bedspring, 9
insulators, 50
loading coil, 30
loop, 108, 112
receiving, 48, 49
television, 11
vertical, 9
Array, antenna, 11
Armstrong, E. H., 46, 239, 241
Audio amplifier, 138
circuit, 102, 103
one-stage, 102
two-stage, 198, 199

Baffles for loudspeaker, 86
Bardeen, Dr. John, 90
Base reflex cabinet, 87
Batteries, transistor, 97
Bedspring type antenna, 9
Bell, Alexander Graham, 145-147
Blabber stopper, 169
Body effect, 243
Bratten, Dr. Walter, 91
Bunsen, Robert W., 150
By-pass capacitors, 57, 58

Cabinet: amplifier, 212
base reflex, 87
geiger counter, 177
loudspeaker, 80
phonograph, 236
Capacitance, 40, 44, 52
defined, 54
Capacitors: by-pass, 57, 58
ceramic, 58
effect of, 43
electrolytic, 56, 59
fixed, 53, 57

Capacitors—*Continued*
mica, 23, 58
padder, 63
trimmer, 63
variable, 22, 31, 61
Capacity operated relay, 243-247
circuit, 244, 251
experiments with, 245
Capacity plate, 250
Carbon microphone, 81
Carriers, 12
Cascade amplifier, 136
Cathode, 127
Ceramic capacitors, 58
Cesium, 150
Cetron phototube, 154
Chassis for amplifier, 204
Circuits, 8
amplifier, 102, 103, 106, 209
receiver, 16, 17, 31
tank, 256
Code, continental, 115, 121
Code practice oscillator circuit, 118
Coils: antenna, 22
loading, 30
oscillator, 249, 258
phono-oscillator, 259
tuning, 28
voice, 76
winding, 31, 33
Colpitts oscillator, 242
Components, 52
Condenser, 52
Cone repairs, 237
Continental telegraph code, 115, 121
Controls, 52, 66, 159
Counter tube, 179
Coupling, 142
Crystal detector, 10-14
circuits, 16, 17
Crystal diode, 15
and transistor receiver, 108, 113, 114
Crystal microphones, 83
Crystal pickups, 84, 85
Crystal receiver, 10, 18, 21, 24-35
Crystal telephone receivers, 75
Crystals, piezo-electric, 84

De Forest, Dr. Lee, 14, 130
Demodulation, 14
Detection, 14
Detector: crystal, 10-17,
triode, 131
Dielectrics, 52
effects of, 55
Diodes, 19
Fleming, 128
Germanium, 22
Diode and transistor receiver, 109, 110
Distortion, 267
Dunwoody, Gen. H. H., 14

Edo fishscope, 6, 7
Electric eyes, 143
Electrodynamic microphone, 83
Electrolytic capacitors, 56, 59
Electromagnetic telephone receivers, 72
Electromagnetism, 189
Electrons, 8, 126, 152
Electron emission, 126
Electron tubes, 5
as oscillators, 239
as rectifiers, 138
Electronics, definition of, 4
Elevator control, 242

Emission, electron, 126
Enclosures: loudspeaker, 86
phototube relay, 160
Energy conversions, 12
Energy, definition of, 8
Experiment with amplifier, 107

Farad, 54
Fishscope, 6, 7
Fixed capacitors, 32, 53
Fleming valve, 14, 128
Flux, magnetic, 72

Gamma snuffer, 175, 179, 180
circuit, 189
Geiger counter, 171, 175, 191
circuit, 193, 195
how to build, 179
testing, 194
Geiger-Muller counter tube, 174, 176, 179
Geigerscopes, 171, 173
Germanium, 17, 22
diodes, 22
semi-conductors, 15-22
Grid, 130
suppressor, 134
Ground waves, 39

Half-wave rectifier tube, 158
Hartley oscillator, 241
Headset, 23
Heaters, 127
High-voltage for counter tubes, 186
Horizontal antenna, 9
Hush-a-tune, 233
attachment, 237

Inductance, 29, 40, 44
tuning, 33
Insulators, antenna, 50
Ionosphere, 41, 43

Keys, telegraph, 120
Kirchoff, Gustav R., 150

Lamp and bell for photo-relay, 168
Learning: radio telegraph code, 123
to telegraph, 119
Light meters, 146
Lightning, 51
Light source, 161, 166
Line cord resistor, 260
Loading coil, 30
Loudspeakers, 75
baffles for, 86
cabinets for, 80, 86-88
mechanism of, 77
repairs and adjustments, 234

Magnetic flux, 72
Magnetic tape recorder, 216
Materials, where to obtain, 269
Memorizing groups, 122
Mica capacitor, 23, 58
Microfarad, 55
Micro-microfarad, 55
Microphones, 81-83
carbon, 81
crystal, 83
electrodynamic, 83
modulation, 256
Motor, phonograph, 217, 220
Multiplier phototube, 178
Multi-unit tubes, 134

National Research Council, 17
Natural frequency, 40

Operation of crystal receiver, 24
Oscillator, 239, 256
code-practice, 115, 117
coil, 249, 258

Oscillator—*Continued*
Colpitts, 242
Hartley, 241
phonograph, 256
simple, 240
Overmodulation, 267

Padder, capacitor, 63
Pentodes, 132
construction of, 133
Phonograph: cabinet, 236
cartridge, 215
homemade, 235
homemade portable, 229
jack and plug, 206
motor, 217, 220
oscillator, 256
Phonograph Records, how made, 214
played with table model radio, 225
Phono-motor, 220
Phono-oscillator, 255, 256
coil, 259
circuit, 263
Phosphor, 173
Photocells, 143
first, 145
selenium, 144
Photoelectric cell, selenium, 145
Photophone, 146
Photo-relay, 150, 151, 155-157
circuit, 157
Phototube, 143, 148, 158
Phototube relay, 150-153
cabinet, 160
Pickard, Greenleaf W., 14
Pickups, 84, 221, 265
crystal, 84
variable reluctance, 84
Piezo-electric crystals, 84
Plate, 128
capacity, 250
relay, 154
Portable phonograph, 229
Poulsen, Valdemar, 216
Power amplifier, 140
Preamplifier, 265
Projection lamp, 163
Prospecting, 197

Radar antenna, 11
Radioactivity, 171
Radio-frequency: amplifiers, 139
currents, 12
Radio operator, the, 123
Radio receiver, building your first, 15
(see Receiver)
Radio tubes, 125
classification of, 125
fundamental action, 129
multi-unit, 134
rectifier, 129
Radio waves, 9, 12, 39, 41, 43, 45
from stars, 5
skip zone, 45
Receiver: antenna for, 49
building your first, 15
diode and transistor, 108-110
loop antenna, 9
operation of, 32
superheterodyne, 137
telephone, 71
tuning, 46
Receiving: antenna, 48
tube bases and sockets, 139
Record player, 220
how to build, 214

Rectifiers, 19
tubes for, 158
Reflex speaker cabinet, 88
Relays: capacity-operated, 241
phototube, 150-154
plate, 154
Repairs to loudspeakers, 234
Repeaters, 135
Resistors, 52, 64
color code, 65
line cord, 260
Resonance, 42, 45
Rheostat, 68
Rotor, 62

Scintillations, 174
Scintillometers, 171, 178
Selenium, 144
photocell, 145, 147
Semi-conductors, 18-22
Shockley, Dr. William, 91
Signal voltage, 95
Skip zone, 45
Sky waves, 39
Sonar, 6, 7
transducer, 11
Spark gap, 184
Stacked antenna, 11
Static, 48, 51
Stator, 62
Strays, 51
Sunlight into electricity, 147
Superheterodyne: circuit, 46
receiver, 137
Suppressor grid, 134
Switch, 69, 181
attached to control, 67
tuner, 123
Symbols, 92, 93

Tank circuit, 256
Taper, 66
Telescope, radio, 5
Telegraph: keys, 120
learning to, 119
Telegraphone, 216
Telephone, receivers, 71
crystal, 75
electromagnetic, 72
headset, 73
Television antenna, 11
Tenna-loop, 108
Tetrodes, 132
Timer switch, 123
Transducers, 70
on record player, 85
sonar, 11
Transformer, 76, 78, 187
matching, 79
output, 78
Transistors, 89-102
action of, 94
amplifier, 100-102
batteries for, 97
books about, 25
characteristics of, 94
circuits for, 102, 103, 106, 113, 114
junction, 91
kits, 97
loop antenna for, 108, 112
point contact, 91
types of, 91
Transistor oscillator, 114-117
Transistor receiver, 108
Transmitter, 12
Trimmer capacitor, 63
Triode, 130
as detector, 131
Tubes: amplifier, 157, 201
detector, 131
Geiger-Muller, 176, 179
Tuned radio-frequency amplifiers, 46

Tuning, 25, 42, 45
coil, 31
experiments in, 46
inductance, 33
taking mystery out of, 36
Two-stage amplifier, 198

Uranium prospecting, 171, 197

Variable capacitor, 23, 31, 61
Variable reluctance pickup, 84
Vertical antenna, 9
Vertical mast antenna, 9
Video amplifiers, 139
Voice coil, 76, 234
Voltage amplifier, 140

Waves: ground, 39
radio, 39, 41, 45
sky, 39
Whip antenna, 9
Winding coils, 31, 33
Winding machine, 33
Winkler, Clemens, 17

The "Porthole" Concept with technical background

Amplifying the cellular regenerative (healing) system of the body for treatment and healing of mass casualties

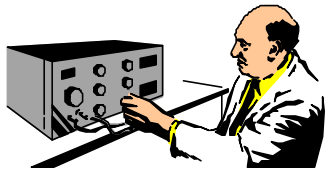

Outline of the presentation

- Mechanism for deep EM exchange of a body with its active EM environment
- Becker's epochal work and its ramifications
- Kaznacheyev's startling results and ramifications
- Weaponization of Kaznacheyev's findings
- Importance of time-energy and the time-domain
- Mechanisms for medical treatment and healing

Outline of the presentation (2)

- Prioré's revolutionary results and their ramifications.
- Proposed new mechanism for cancer promotion.
- Porthole concept: The 2-minute shortcut.
- Terrorist biological warfare capabilities.
- Summary and conclusion.
- Budgetary and Program package.

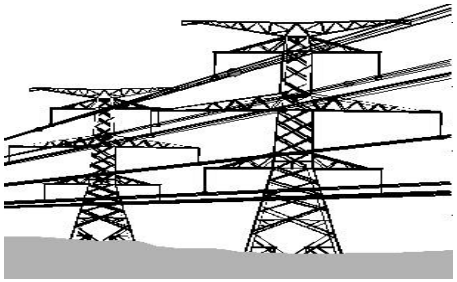

Mechanism for the body's deep EM exchange with its active EM environment

And some ramifications

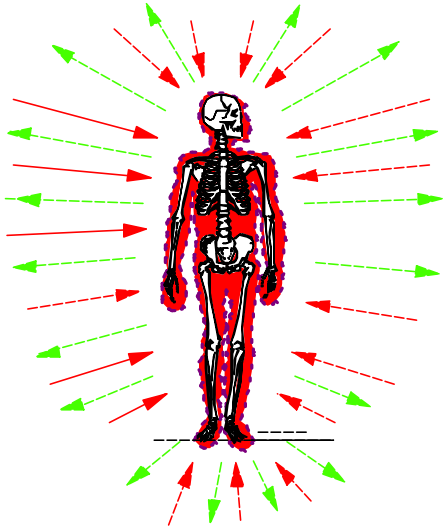

The body continually receives and retransmits EM energy

- The body may be considered as a dielectric.
- Every part of the dielectric participates in the absorption and emission of each photon to and from any point on the surface.*
- Mechanical force effects are also electrical in nature and exchange similarly.

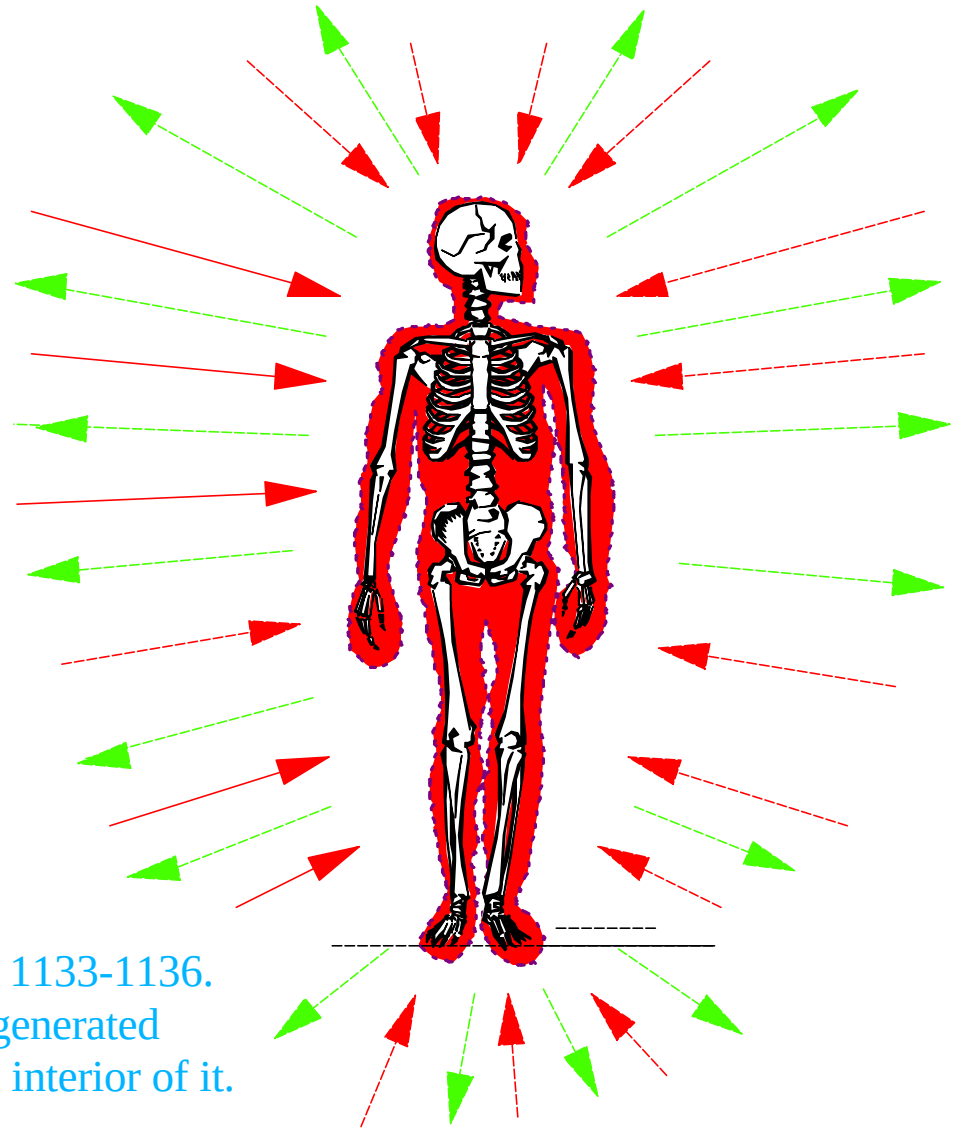

* Reali, G. C., "Reflection from dielectric materials," American Journal of Physics, 50(12), Dec. 1982, p. 1133-1136. The reflected field from a dielectric material is not generated just at its surface but comes from everywhere in the interior of it.

Ramifications:

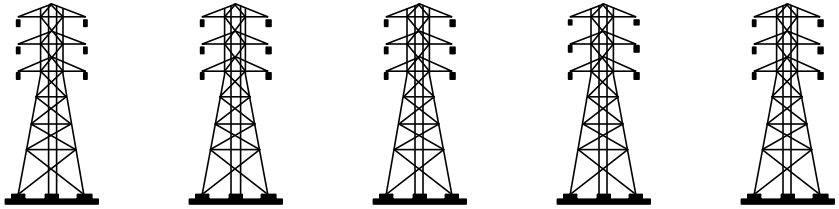

- There is an EM "dielectric transmission path" connecting every part of every cell to every part of the surface of the body.
- All electrical processes in the body, including deep within the cell and its nucleus, participate in the absorption and emission of every photon to and from the body's outer surface (and every mechanical force* experience).
- The EM emission energy of the body is a conglomerate mix of fractions of all processes and functions ongoing in the body or affecting it, including in every cell.
- This includes all electromagnetic, mechanical, chemical, and environmental effects upon and in the body and every tiniest part of it, and provides an extended definition of "stress".

* At base, all normal mechanical forces are generated by electromagnetic forces.

Ramifications (2)

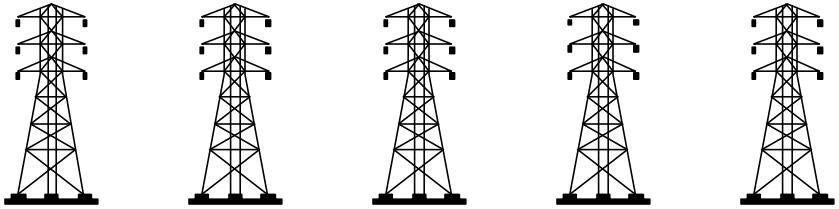

- The reaction of each photon absorbed on any point of the outer surface of the body, connects through the dielectric transmission path to every part of the body, including to every part of every cell*.
- Every emission from the body is participated in by every part of the body, including every part of every cell.
- The body's emission "changes" its environment, adding EM radiation. Some of the internal induced changes (excited states) in the body decay by this external emission. Some do not, but must be otherwise dealt with internally by the body systems.
- The body's EM absorption allows the environment to change or affect every function, operation, and part of the body, by adding EM radiation. All are continually being affected and deviated, both helpfully and harmfully, by these deeply induced EM interactions.
- The body's reaction (healing) must continually readjust and correct deviations from normalcy, in every part of every cell.

* In quantum physics, part of the photon is localized and part is nonlocalized, reaching even across the universe.

Ramifications (3)

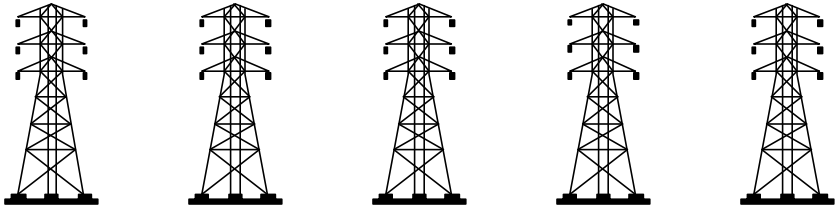

- The sum total of all the impinging external EM radiation upon the body, plus mechanical "special EM" radiation, thus affects and changes the body and all its processes, participating in them.
- That impinging EM radiation can be manipulated to either harm or heal the body and any or all of its cells.
- The body must continually overcome these externally-induced EM changes in its cells and processes, to maintain normalcy. Some EM changes are restored by the subsequent dielectric emission process, relieving the previously-induced deviant EM excitations in its internal processes. Some are not.
- The poorly studied *cellular regenerative system* performs the remainder of the restorative function, which is the fundamental "healing" function of the body.*

*The cellular regenerative system was mostly studied by Becker and a few others. See R. O.Becker, and David G. Murray, "The electrical control system regulating fracture healing in amphibians," Clinical Orthopaedics and Related Research, No. 73, Nov.-Dec. 1970, p. 169-198.

Becker's epochal work

And its ramifications

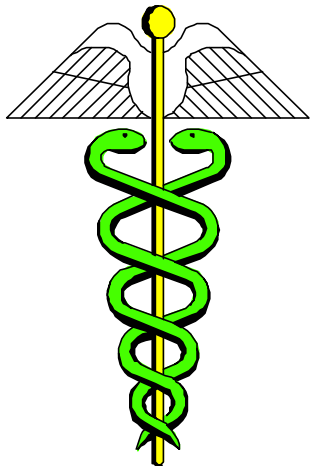

Becker's bone fracture healing

- Tiny DC currents (picoamperes)
- Pulsed DC current can be utilized
- Pulsed magnetic fields may be utilized

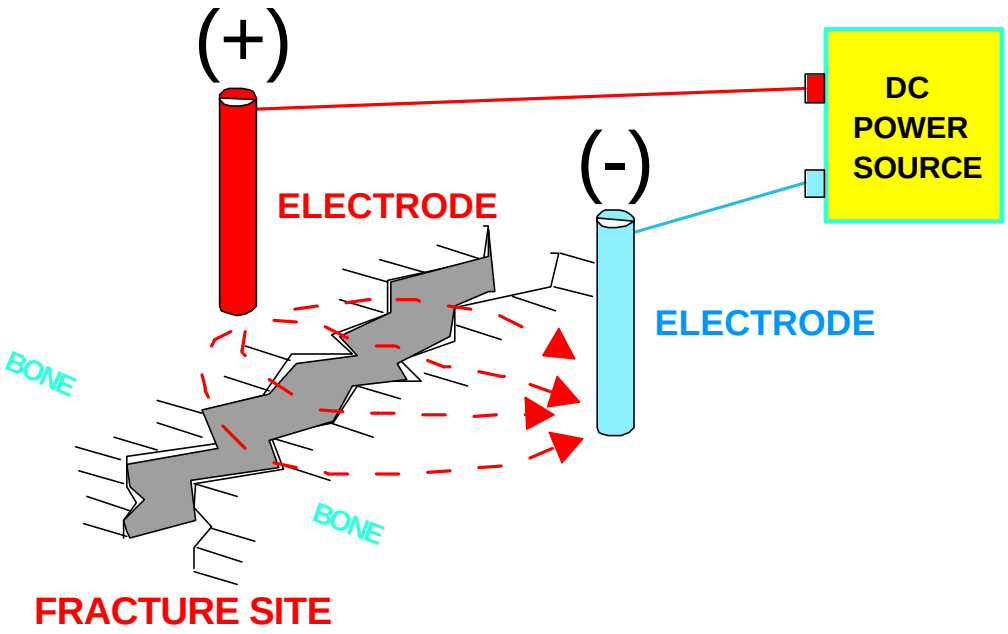

RED BLOOD CELL DEDIFFERENTIATES

Shucks hemoglobin coat
Grows nucleus

NEW CELL REDIFFERENTIATES

Turns into type of cell that makes cartilage

NEW CELL REDIFFERENTIATES

Turns into type of cell that makes bone
Deposits in fracture site, healing the fracture

Becker's theoretical DC control system involved with response to injury

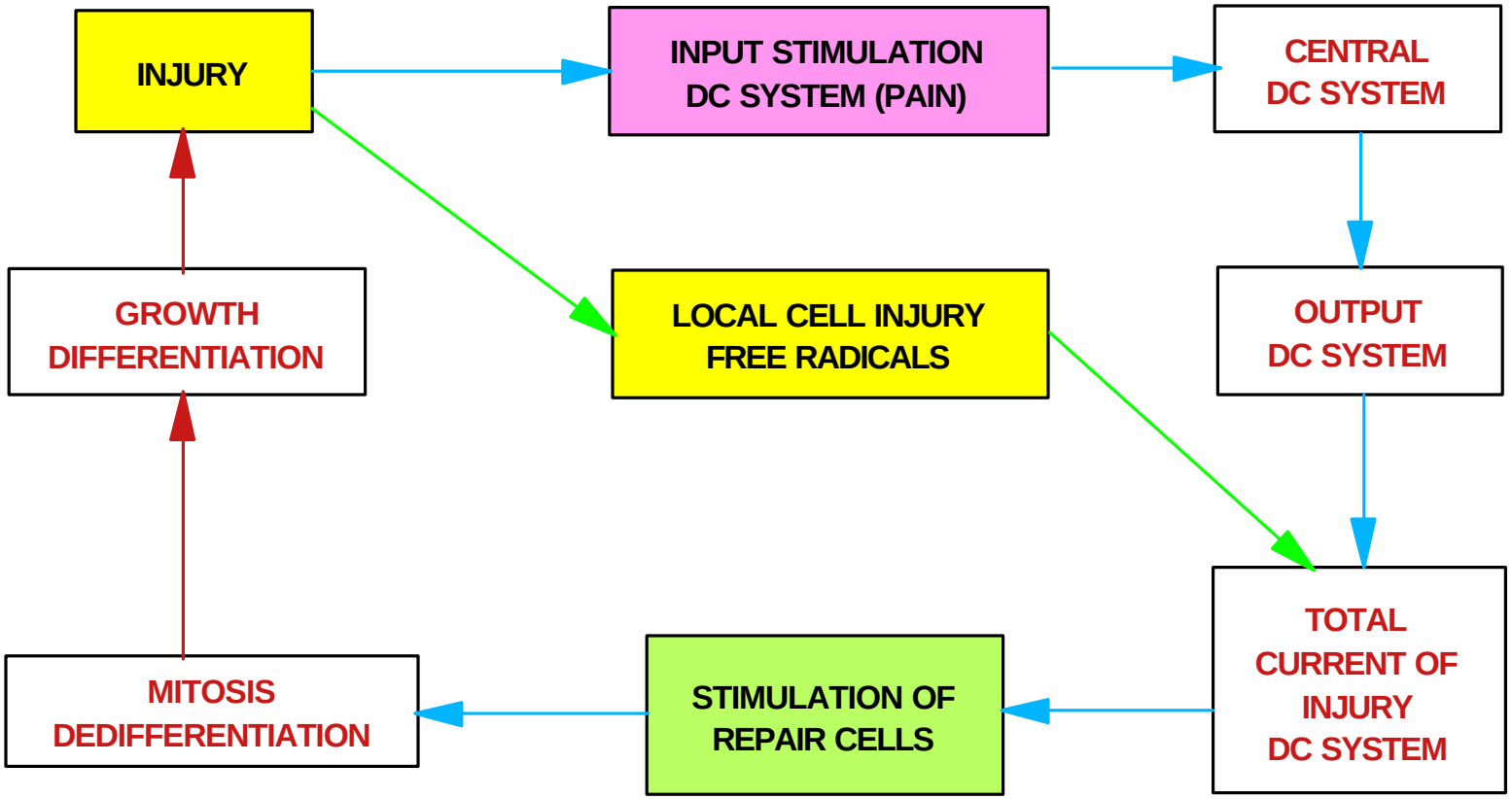

*Robert O. Becker, "The significance of bioelectrical potentials," Bioelectrochemistry and Bioenergetics, Vol. 1, 1974, p. 191.

Becker's proposed control system governing regeneration*

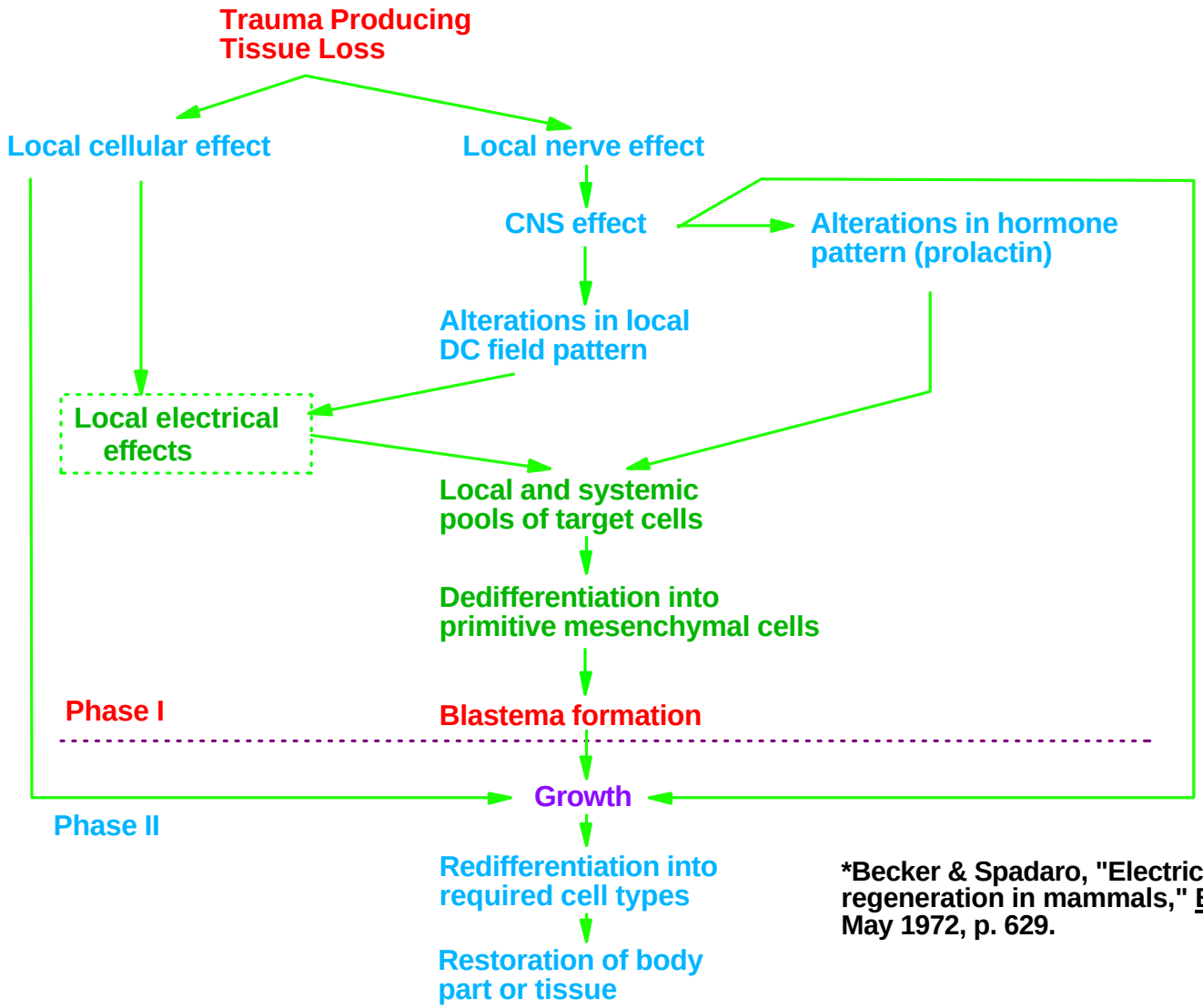

*Becker & Spadaro, "Electrical stimulation of partial limb regeneration in mammals," Bull. N. Y. Acad. Med., 48(4), May 1972, p. 629.

Extending Becker's work

- Becker had only the archaic classical electrodynamics available to him. That EM is grossly inadequate.
  - Insufficient group symmetry to model the process.
  - Already eliminates the "infolded" longitudinal wave EM that structurally and dynamically comprises all "normal" EM potentials, fields, and waves.
  - It is this internal LW EM that is manipulated and used by the cellular regenerative system.
- Nonlinear phase conjugate optics was not yet developed when Becker did his seminal work.
- Successful higher symmetry electrodynamics models -- such as O(3) -- have been developed and are available.

A sad commentary

- Becker was nominated for the Nobel Prize, but he was hounded, his funds were withdrawn, and he was forced to retire early.
- His main "sin" was having the courage to testify against the harmful effects of unrestricted powerline radiation and electronic smog.
- Powerful interests then crushed him, set up their own well-funded institutes, and hired scientists who then predictably found that powerline radiation was no problem.
- Such research is so tainted that recently several important journals have now required the authors of submitted papers to state what their affiliated companies do, and what "company massaging" of their research occurred.
- From a higher symmetry EM view, it is obvious that the dielectric pathway and quantum electrodynamics already show a significant problem due to such radiation, particularly with respect to long-term effects.
- This is particularly significant since "noise" -- the mere presence of more "hash" -- appreciably amplifies the dielectric transmission effect. So the major factor becomes EM smog *signals density*, not signal power.

Kaznacheyev's startling results

And its ramifications

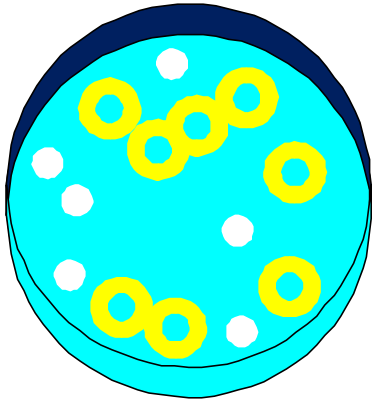

Proof that the cellular condition is radiated from groups of cells

- It follows that a diseased, damaged, or infected cell culture will and does emit its exact internal EM condition, hence the disease or damage "generatrix form" itself (in the internal structuring of the EM radiations).
- Further, these "state" emissions can couple into other targeted cells to produce disease and disorder in them.
- This was clearly proven in some 15,000 Russian experiments by Kaznacheyev.
- Kaznacheyev demonstrated induction of cellular disease and disorder between EM-coupled but otherwise environmentally shielded cell cultures
- Similar experiments have been replicated in the West by Reid *et al*., and by Popp *et al*.

Kaznacheyev's induction of cellular disease and disorder

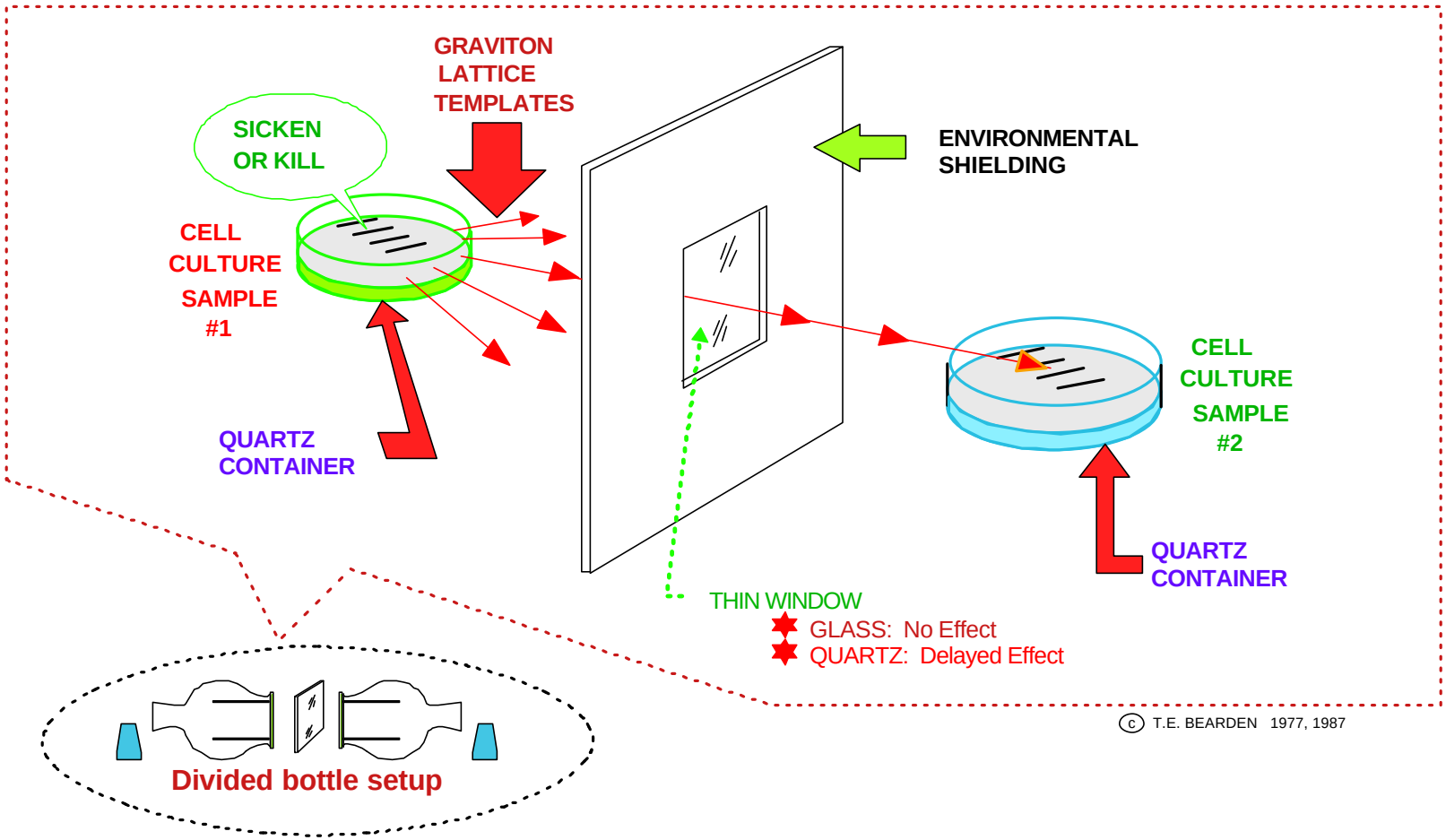

© T.E. BEARDEN 1977, 1987

Note: Minimum lattice is one harmonic interval: IR to UV is such a minimum G-lattice. Consider particularly the dielectric pathway in the emitting diseased cells and in the receiving targeted healthy cells.

Another surprising feature of Kaznacheyev's experiments

- The experiments do not work if the targeted cells are in normal light, such as sunlight*.
- The reason is that the normal light bandwidth occupies a single harmonic interval between ultraviolet and infrared.
- Hence its difference frequencies also fill such an interval. For a set of n frequencies, the number *d* of difference frequencies is $d >> n$.
- Thus the visible light spectrum represents "jamming" of specific internal EM signal inputs through the dielectric pathway into the body, turning much of the environmental signals into harmless warmth.

* It has also been shown that if bacteria are killed in the "dark" by UV, then 24 hours later placed in sunlight, a substantial fraction of the "dead" bacteria will revive.

Ramifications of Kaznacheyev's experimental results

- At least one harmonic interval is necessary for the effect to be evidenced in the target cells.
- Interestingly, if we assume the body dielectric to be isotropically nonlinear (to first order):
  - Velocities of the actual transmitted frequencies depend upon the particular point on the wave amplitude.
  - The transmitted frequencies overshoot, interfere, breakup, etc. The difference frequency does not.
  - The "difference frequency" is transmitted through the nonlinear dielectric medium as if it were a sine wave passing through a linear medium*.
- To our knowledge, this direct and deep communication of electronic "hash" difference frequencies in dielectric human bodies has not been investigated in the West.

* Owen Flynn, "Parametric arrays: A new concept for sonar," Electronic Warfare Magazine, June 1977, p. 107-112.

Ramifications of Kaznacheyev's experimental results (2)

- A heterodyne signal -- at the difference frequency between an input signal and a reference signal -- can be enhanced by adding noise*.
- Thus the signal of the disorder in the cellular pattern emitted from diseased cells, received by normal cells, can be amplified electronically and rather easily.
- Powerline radiation (electronic smog) thus carries its own amplification mechanism. Eventually the amplification overcomes any squelching by sunlight, etc.
- The Russians promptly (as early as the late 1950s) weaponized and tested these and similar effects.

* Dykman, M. I. et al., "Noise-enhanced heterodyning in bistable systems," Physical Review E, 49(3), Mar. 1994, p. 1935-1942

Weaponization of Kaznacheyev's findings

And its ramifications

"Microwave" radiation of the U.S. Embassy in Moscow.

Former U.S. Embassy in Moscow.

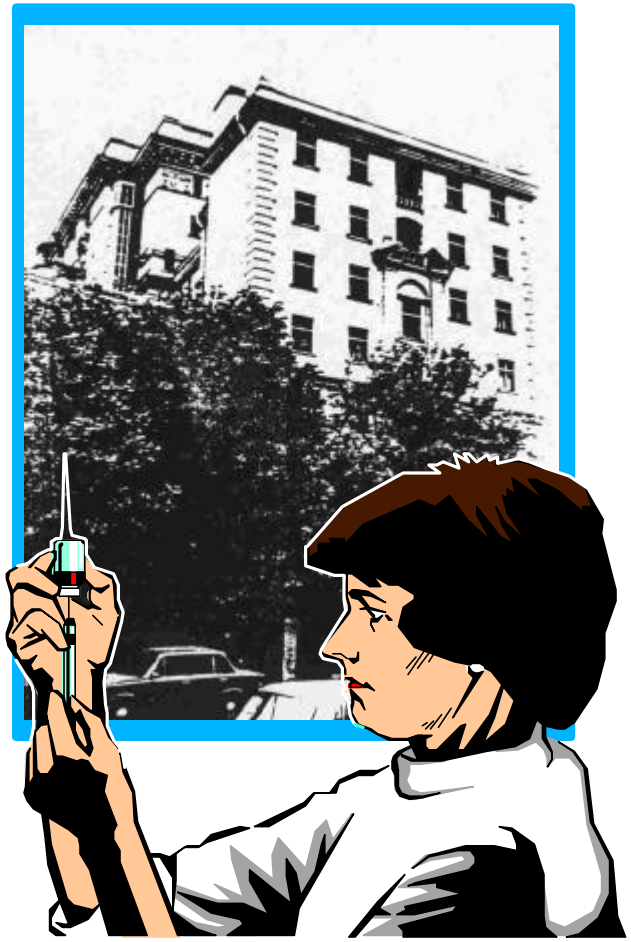

BACKGROUND

- Began in latter 1950s
- Discovered on VP Nixon's trip
- Initially thought to be *nuclear* radiation (Discovered w/Geiger counter)
- High level target -- U.S. Ambassador
- Guarantees personal attention of:
  - U.S. Ambassador to USSR
  - U.S. President
  - NSA, CIA, DIA, NSC, etc.
  - Top consulting scientists
  - Leading U.S. scientific institutions
- Two U.S. Ambassadors died, another sickened
- Anomalous health changes in personnel, only in zero-field (zero pot'l gradient) areas!
- Four U.S. Presidents requested Soviets cease
  - Cut from 18 watts/sq cm to 2
  - Then again increased
- No one could understand what was going on
- Aluminum screens were placed over windows
- Moscow was declared a hazardous duty zone

Ramifications of the microwave radiation of the U.S. Embassy

- The cellular disorder pattern in the EM radiation is carried by the field-free scalar potential.
- Since the disorder pattern is a "conglomerate", it must be carried by an internal EM structure existing inside the scalar potential itself.
- Whittaker decomposed the scalar potential into the appropriate internal longitudinal EM biwave structure in 1903*.

* E. T. Whittaker, "On the Partial Differential Equations of Mathematical Physics," Mathematische Annalen, Vol. 57, 1903, p. 333-355

The importance of time as energy, and the time-domain

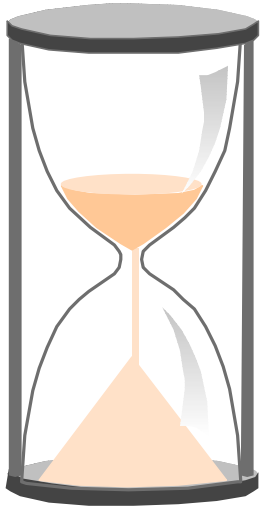

Time as energy

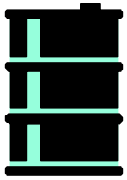
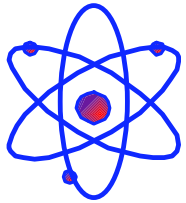

- In physics, the fundamental units one uses in his model are arbitrary.
  - A valid model can be made using only one unit.
  - It is already done in one branch of physics, using length as the single fundamental unit.
- Make a model with a single unit, the joule.
  - All other entities become functions of the joule.
  - We are familiar with mass as highly compressed EM energy, by the factor c^2.
  - It turns out that time is also highly compressed EM energy, by the factor c^2.
  - 1 sec. $\approx 9 \times 10^{16}$ joules.

How to see that "time is compressed spatial energy"

- Take some spatial EM energy and compress it by c^2
- Place it in 3-space, and it is *mass*.
- Place it on the time axis, and it is *time*.

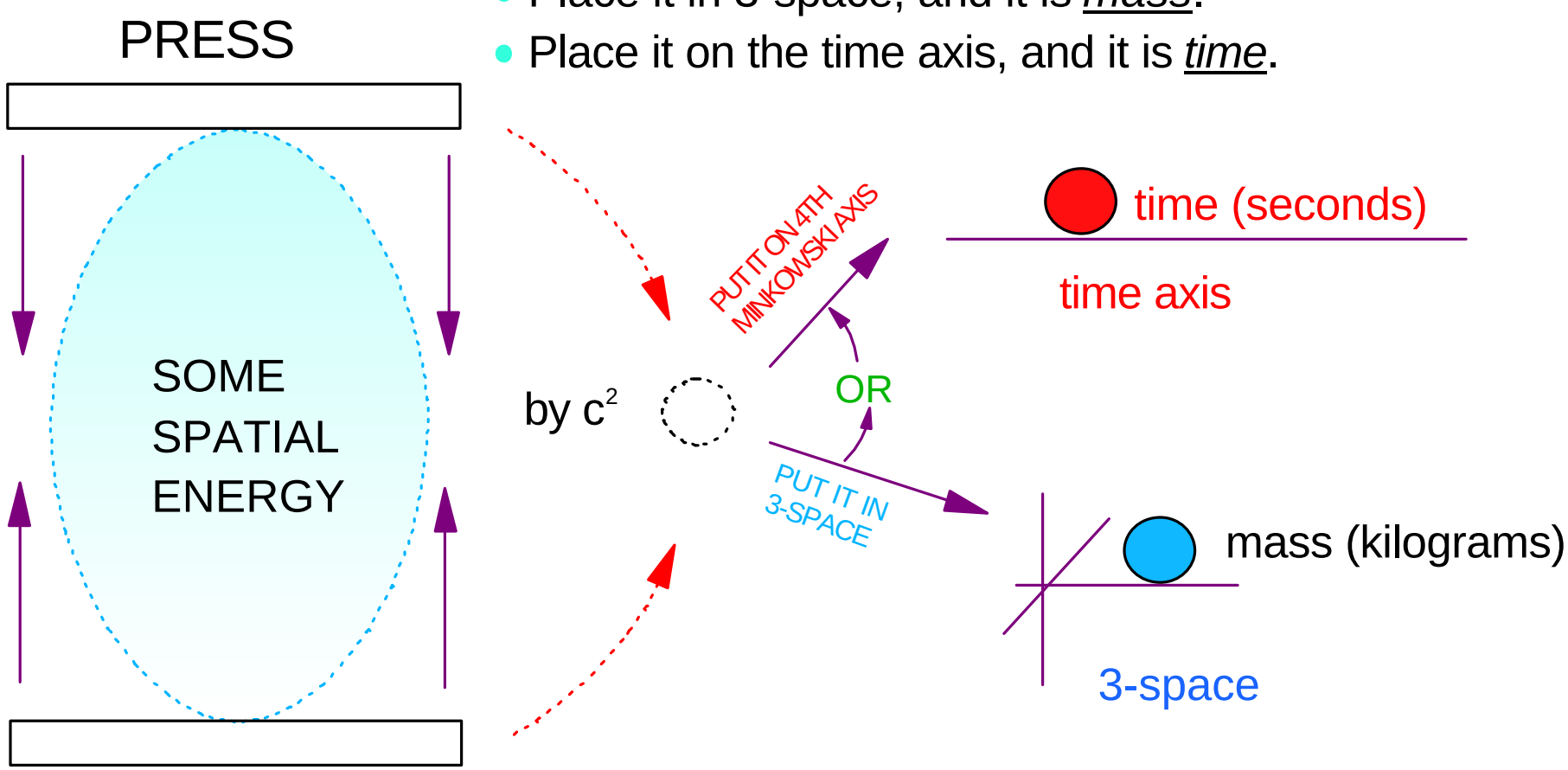

- When time-energy is converted into mass-energy, time is "decompressed" (expanded) into 3-space EM energy and 1 sec. $\approx 9 \times 10^{16}$ joules.

Time as EM energy in the time domain, with a density the same as mass-energy

- Bearden* reinterpreted (corrected) the 1903 Whittaker decomposition of the potential in 2000.
- The reinterpretation is consistent with broken symmetry in particle physics, for which Lee and Yang received the Nobel Prize in 1957.
- It is also powerfully supported by quantum field theory, notably by Mandl and Shaw in 1984**.
- Whittaker's pair is a combined time-polarized (scalar) EM wave and a 3-space longitudinal EM wave.

* T. E. "Giant Negentropy from the Common Dipole," Journal of New Energy, 5(1), Summer 2000, p. 11-23.

** F. Mandl and G. Shaw, Quantum Field Theory, Wiley, 1984, Chapter 5.

All EM energy in 3-space freely comes from the time domain

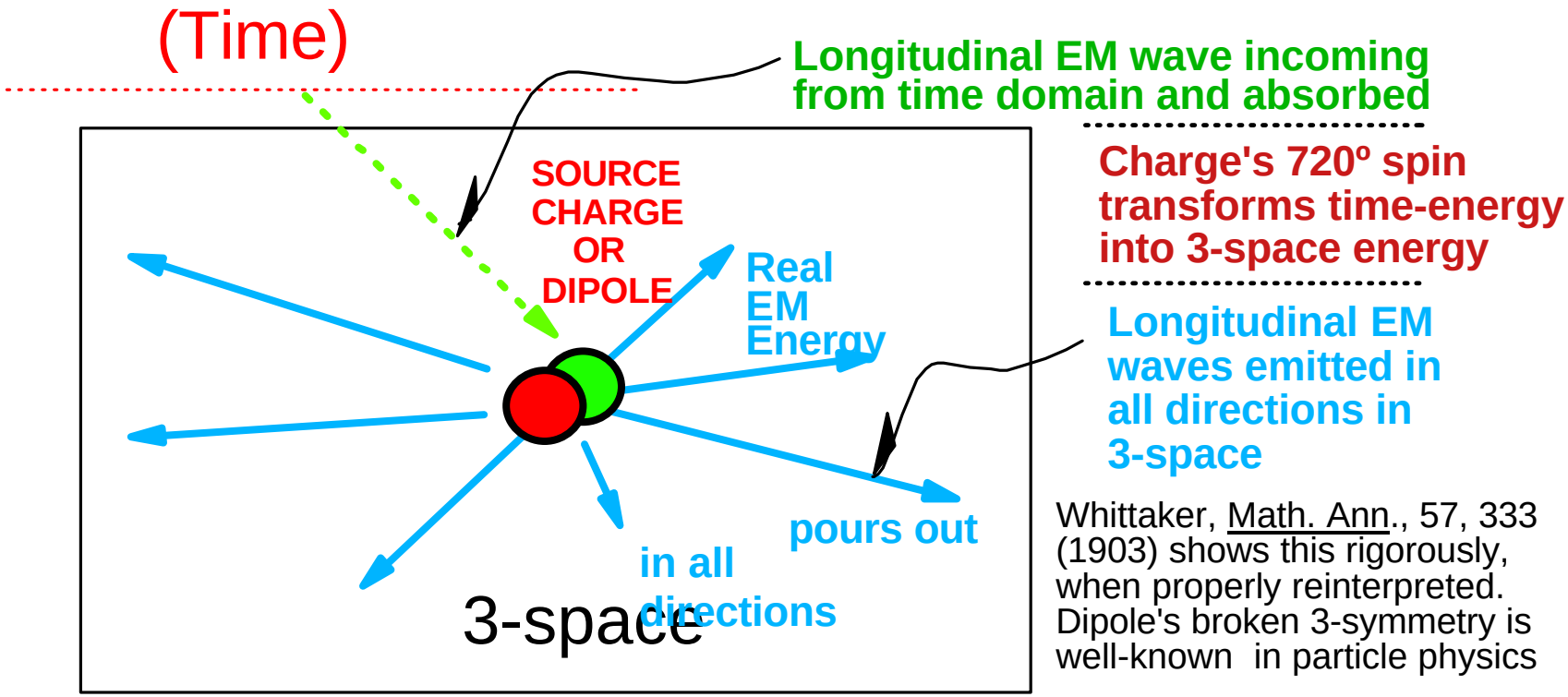

Whittaker, Math. Ann., 57, 333 (1903) shows this rigorously, when properly reinterpreted. Dipole's broken 3-symmetry is well-known in particle physics

Note: Whittaker (and others) interpreted the phase conjugate half set of LWs after interaction with the charges of the dipole, and as a 3-space *effect* rather than the time-domain *cause*. This fundamental non sequitur was just repeated since then, until corrected by Bearden to be consistent with broken symmetry and quantum field theory.

Strong support from quantum field theory

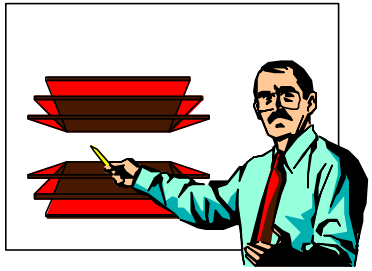

- Quantum field theory recognizes four photon polarizations:
  - Energy along x-, y-, z-, or t- axis.
  - Polarized along x- and/or y-axis, the photon is a *transverse* photon.
  - Polarized along z-axis (along its line of motion in 3-space), the photon is a *longitudinal* photon.
  - Polarized along the time-axis, the photon is a *time-polarized* or *scalar* photon.
- The individual longitudinal or scalar photon is not observable*.
- The combination of a longitudinal photon and a scalar photon is observable as the instantaneous scalar potential*.

* F. Mandl and G. Shaw, Quantum Field Theory, Wiley, 1984, Chapter 5.

Mechanism generating the flow of a mass through time

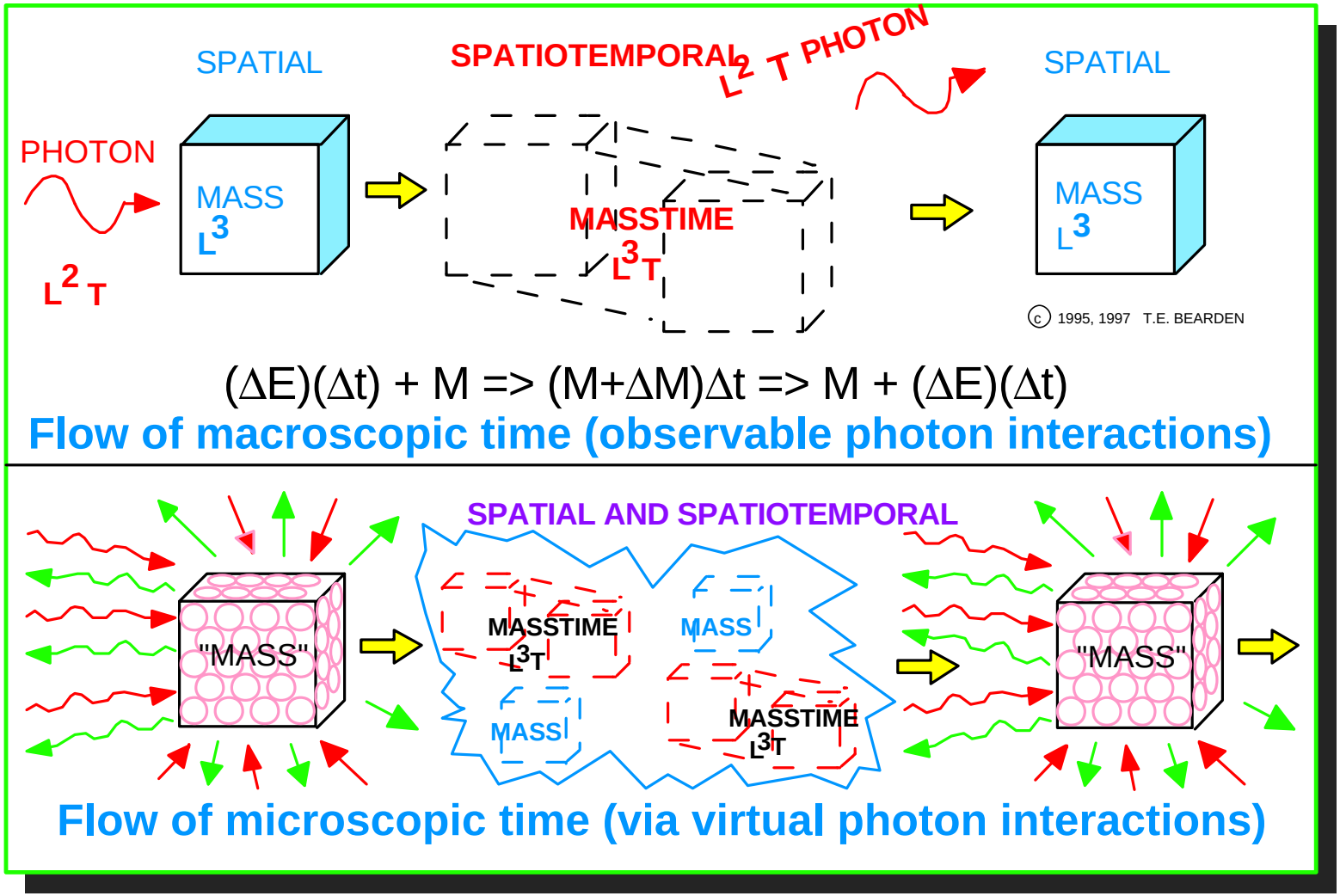

Mechanism is engineerable

Pumping a mass in the time-domain will time-reverse it back to an earlier state

- The reinterpreted biwave EM structure of the scalar potential means that time-reversal (phase conjugation by pumping in the time-domain) can be utilized to time-reverse a targeted cell (its mass-energy) in its entirety, including its genetics.
- Becker's bone fracture experiments showed it:
  - Weak scalar potential across the fracture site.
  - LWs in 3-space and time-energy waves in time
  - Red blood cells entered, dedifferentiated by shucking their hemoglobin and growing a nucleus, which is dedifferentiation (time-reversal of the cell and its mass-energy back to a previous physical state).

Principle for time-reversing a time-pumped mass

- Becker's cells then redifferentiated and changed -- first to primitive cartilage cells, then to primitive bone cells which were deposited in the fracture, healing it with new bone growth.
- This shows "time-forwarding" (redifferentiation) of the cell also.
- Becker actually showed that the *time-domain pumping* of the cells (by the time-polarized EM waves of Whittaker's reinterpreted wavepairs comprising the scalar potential), and the time-pumping of their mass-energy, operated to continuously and steadily *remove the delta between that cell's present condition and its former "normal" cellular physical condition in that area*.
- This is the long-sought secret of stem-cell research.
- Phase conjugate optics had not been born at the time. Without realizing its full nature, Becker demonstrated the body's own internal mechanism for healing, and the fundamental mechanism for time-reversing a physical mass, whether living or inert.

Mechanisms for use in medical treatment and healing

And ramifications

Successive deep penetration reactions of the cellular dielectric

- Change after change affects the cell and all of its parts, including from the external environment.
- Each successive change affects primarily the internal "LW EM structures and dynamics" comprising the ordinary potentials, fields, and waves.
- Thus in positive time the internal EM structurings produce successive "overlaid layers of change" -- so to speak -- in the internal EM structuring and dynamics of a cell in the body. These layers contain the "delta" from normal state.

Successive deep penetration reactions of the cellular dielectric (2)

- During time reversal, highest layer deltas are successively "peeled away" by the interaction of the mass-energy with the time-domain pumping.
- The result is to return the cell directly back to successive physical states, in the case of a single disease or disorder.
  - A cancer cell is returned to a normal cell prior to its "promotion".
  - An HIV-infected cell would be returned to its normal unaffected condition, free of HIV-induced genetic change.
  - For injuries and damage, the existing "delta" in each successive state-layer is steadily reduced to zero.
- This process thus can involve both cellular differentiation and dedifferentiation, as shown by Becker and by Prioré.

Engines (vacuum engines, spacetime curvature engines)

- Following Whittaker* as reinterpreted**, all normal EM fields, potentials, and waves decompose into sets of longitudinal EM waves (LWs) and their dynamics.
- Since these LWs and their dynamics are dynamics in the local energy density of spacetime (ST), they constitute *ST curvatures*.
- Hence they are general relativity infolded inside electrodynamics.
- By manipulating and changing these LWs, one manipulates and changes spacetime curvatures and their dynamics.
- The result is a unified field model where one directly controls and engineers a set of ST curvatures by use of higher group symmetry electrodynamics.
- Controlled patterns of local curvatures of ST are called "vacuum engines" or "spacetime curvature engines" -- or just "engines".

* E.T. Whittaker, Math. Ann., 57, 333-355 (1903); Proc. Lond. Math. Soc., Series 2, 1, 1367-372 (1904).
** T. E. Bearden, J. New Energy, 5(1), 11-23 (2000).

Pumping with EM time-polarized waves forms *amplified* antiengines

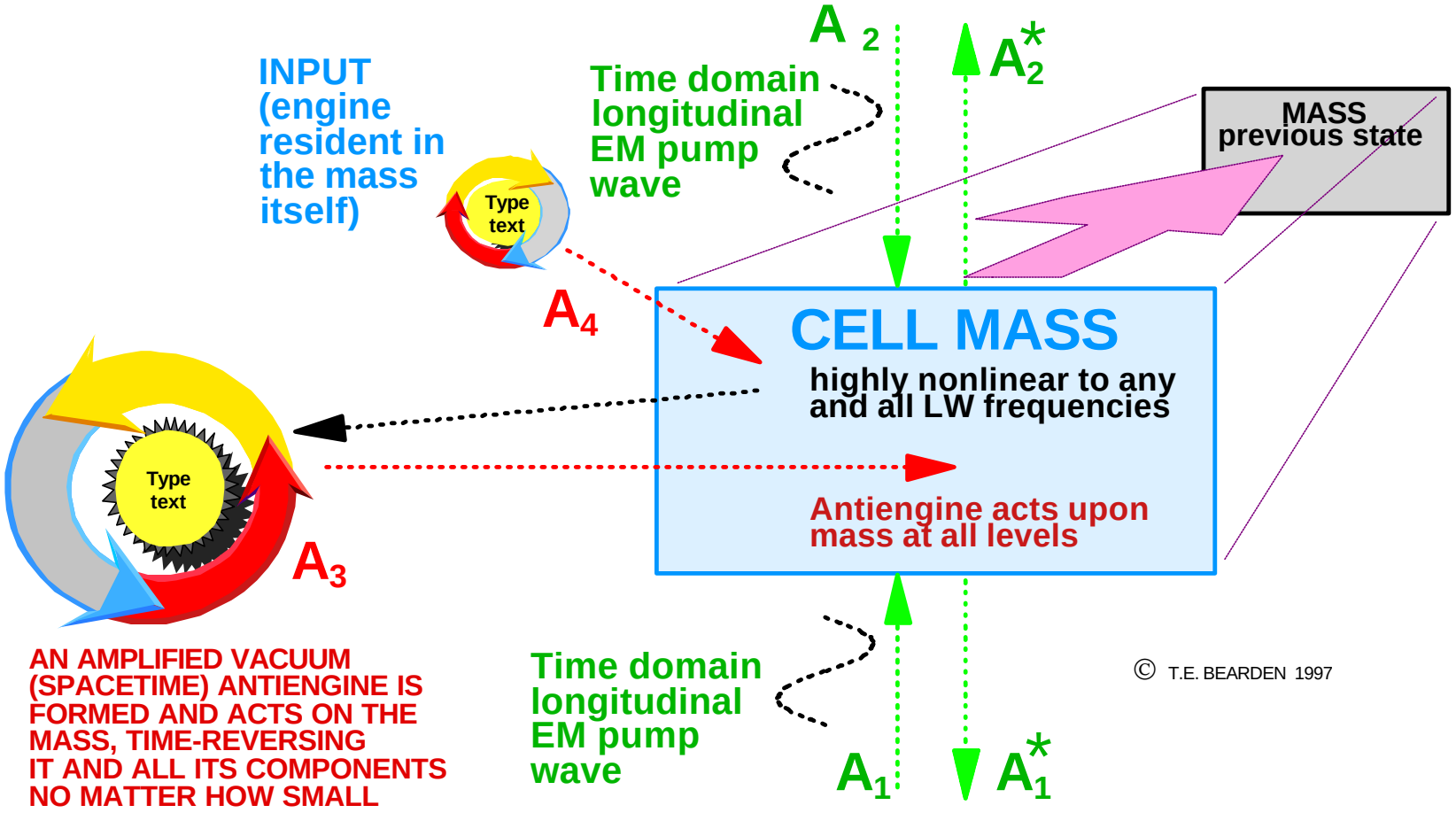

AN AMPLIFIED VACUUM (SPACETIME) ANTIENGINE IS FORMED AND ACTS ON THE MASS, TIME-REVERSING IT AND ALL ITS COMPONENTS NO MATTER HOW SMALL

© T.E. BEARDEN 1997

A DRAMATIC EXTENSION TO NONLINEAR OPTICAL PUMPING

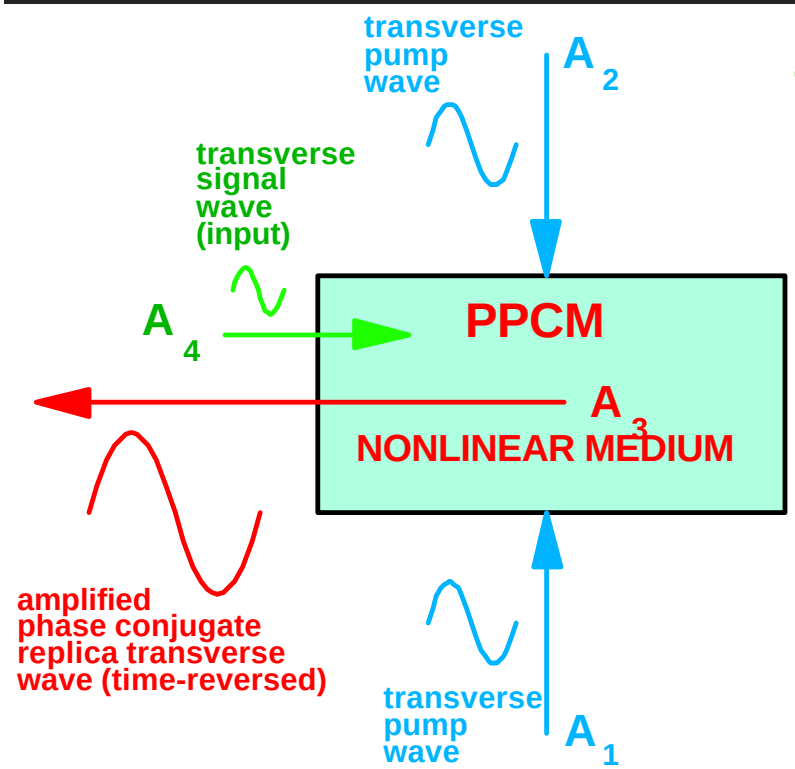

a. Pumping with transverse EM waves produces a time-reversed *wave*.

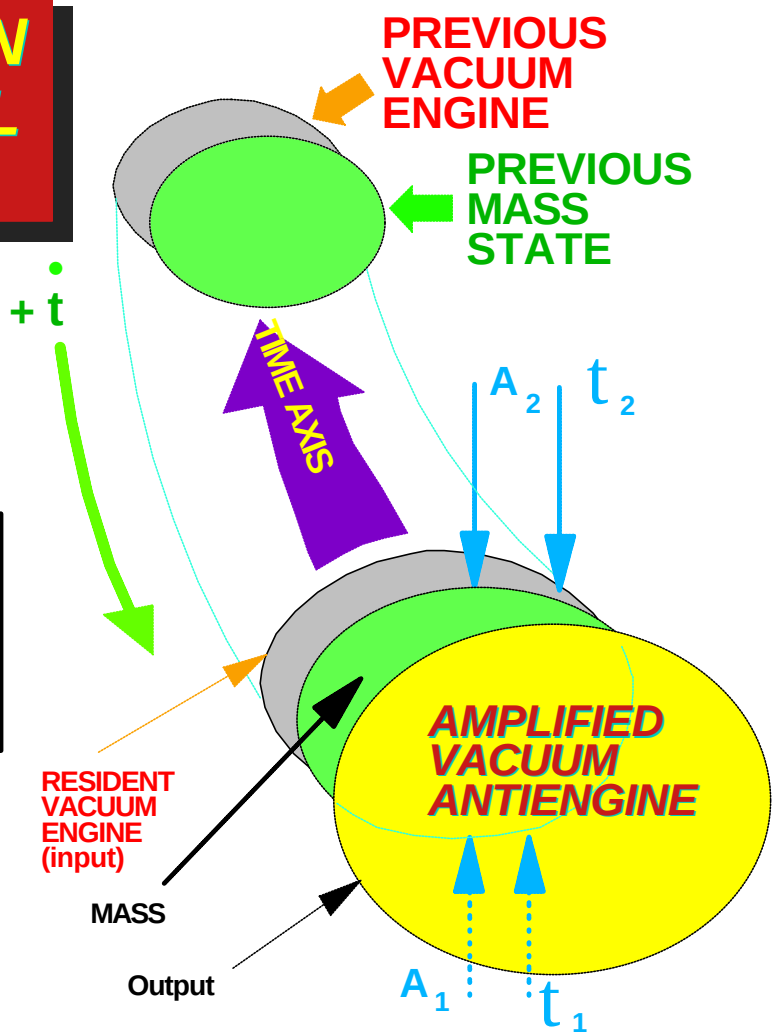

b. Pumping with longitudinal EM waves A_1 and A_2 time-reverses *the mass itself*.

Time-reversal of a mass to a new physical state not in its past

- Original engine A'
- New engine B' added
- Time-pumping moves to new "past" that is determined by (A'+B')

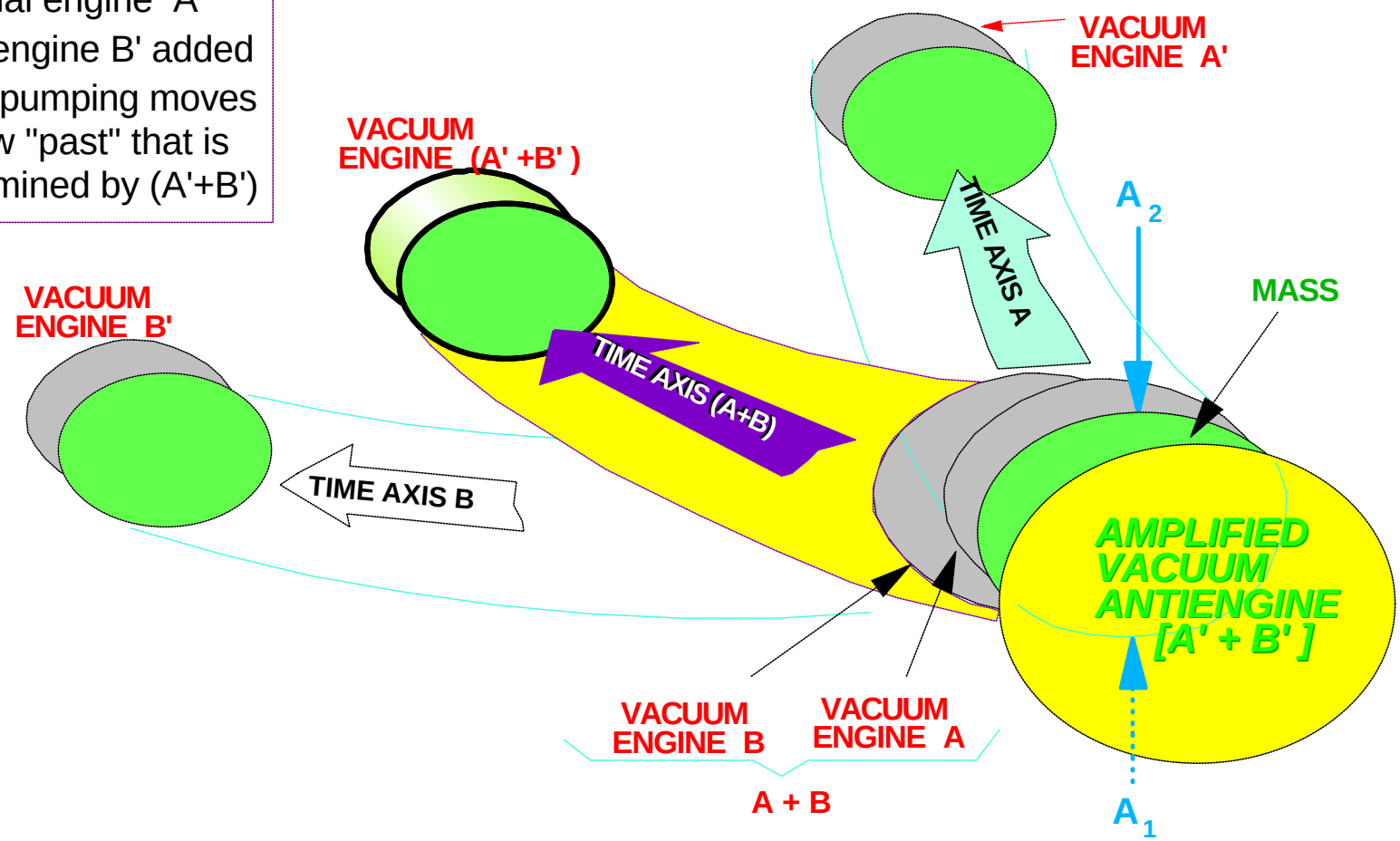

Extended general relativity principle

- All levels of energy structures and all levels of time structures mold spacetime geometry.
- The "pattern" is called a *template* for a vacuum engine (spacetime curvature engine).
- Spatial and temporal structurings of the engine act upon any exposed mass at all levels.
- This produces a template of forces, for precise translations and stresses within the mass at all levels. The forces exist in both time and 3-space.

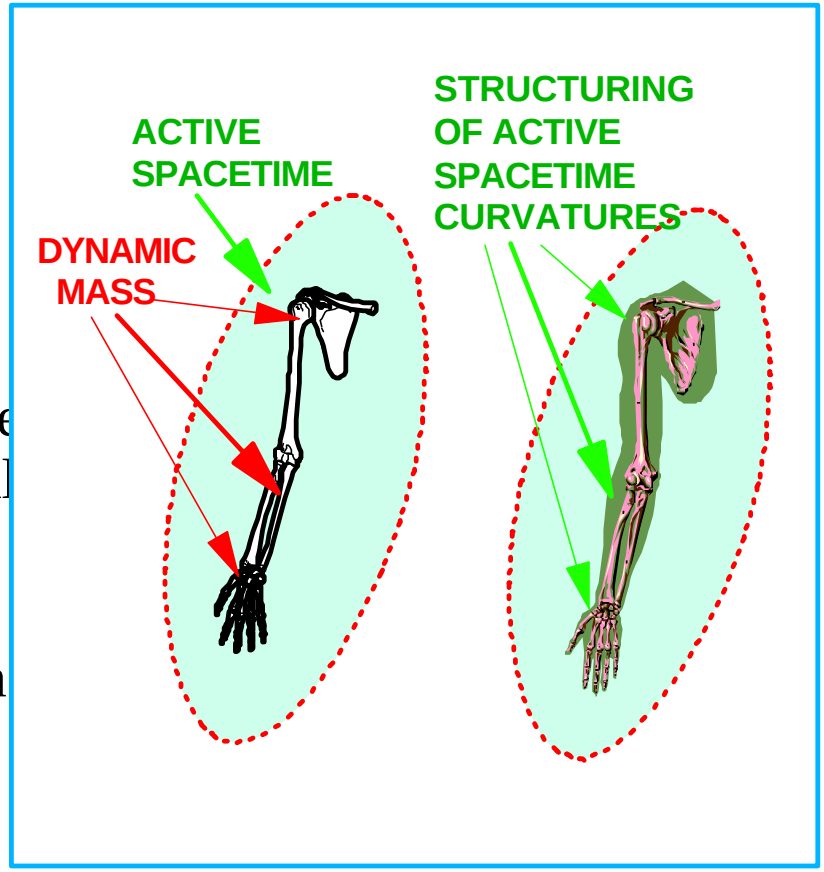

Engines: Working spacetime demons

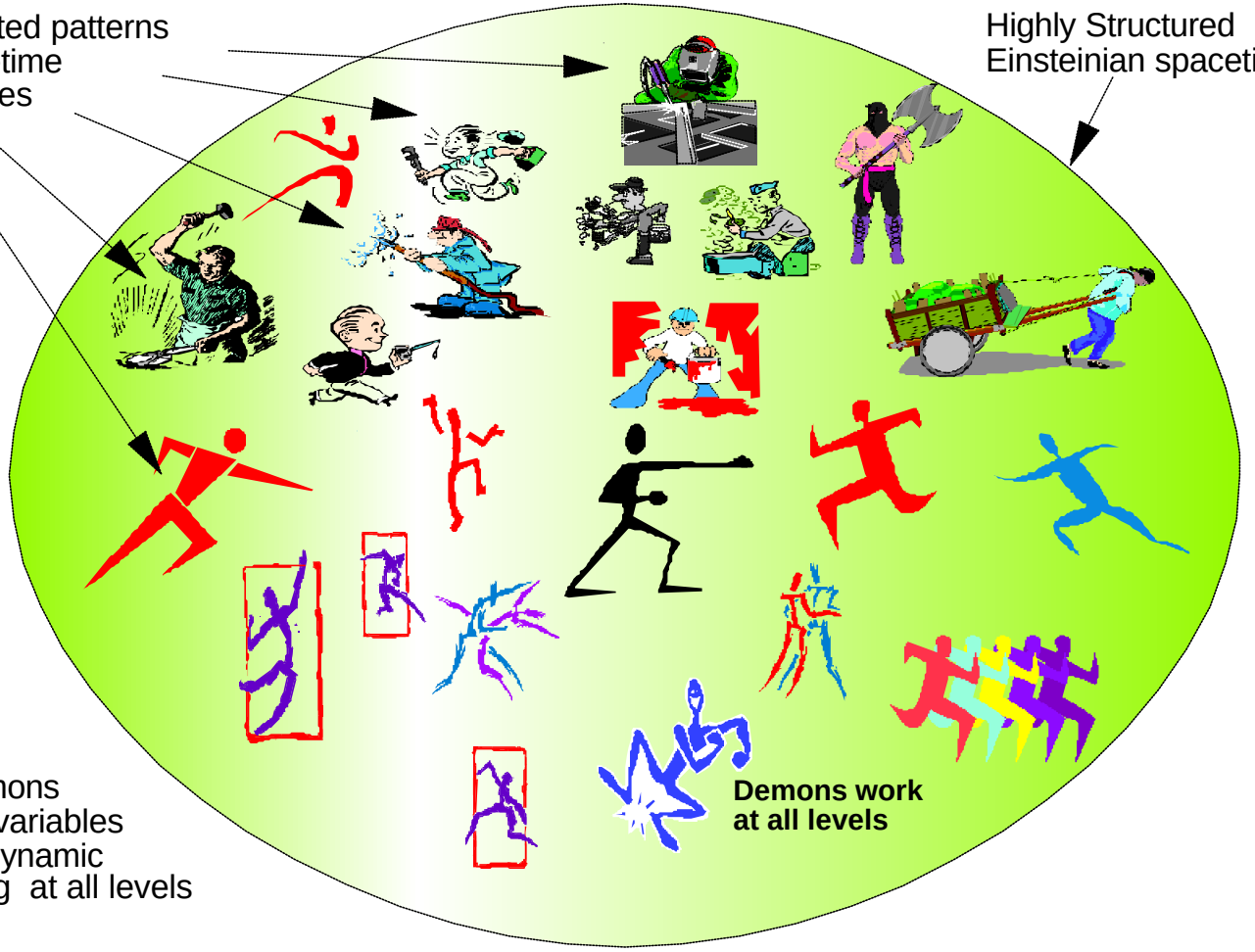

Maxwellian Demons
are EM hidden variables
organized into dynamic
structures acting at all levels

Signal vs. vacuum engine

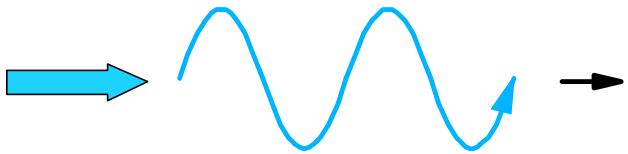

SIGNAL (INFO)

- ★ Information received
- ★ Any overt physical action must be taken by cell itself
- ★ Cell must furnish the energy for any action it takes
- ★ Passes from outside to in

A. ***Cell must do the action itself; vacuum energy exchange is passive. Energy or fuel for doing the action must be added to cell externally.***

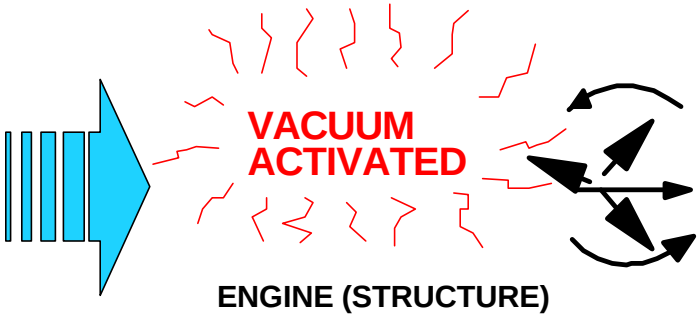

ENGINE (STRUCTURE)
TEMPLATE (FORM)

- ★ Information itself acts
- ★ Local spacetime curved, with internal subcurvatures
- ★ Produces template of forces in local spacetime (ST)
- ★ Arises from within local ST
- ★ Acts on and changes all parts of cell, including its genetics

B. ***Cell is acted upon; vacuum energy exchange does the specific action. No energy or fuel for doing the action need be added to cell externally.***

Unified field theory requires modeling and use of supersystem

Three components interact with each other:

- System and its dynamics
- Local active vacuum and its dynamics
- Local curvatures of spacetime and their dynamics.

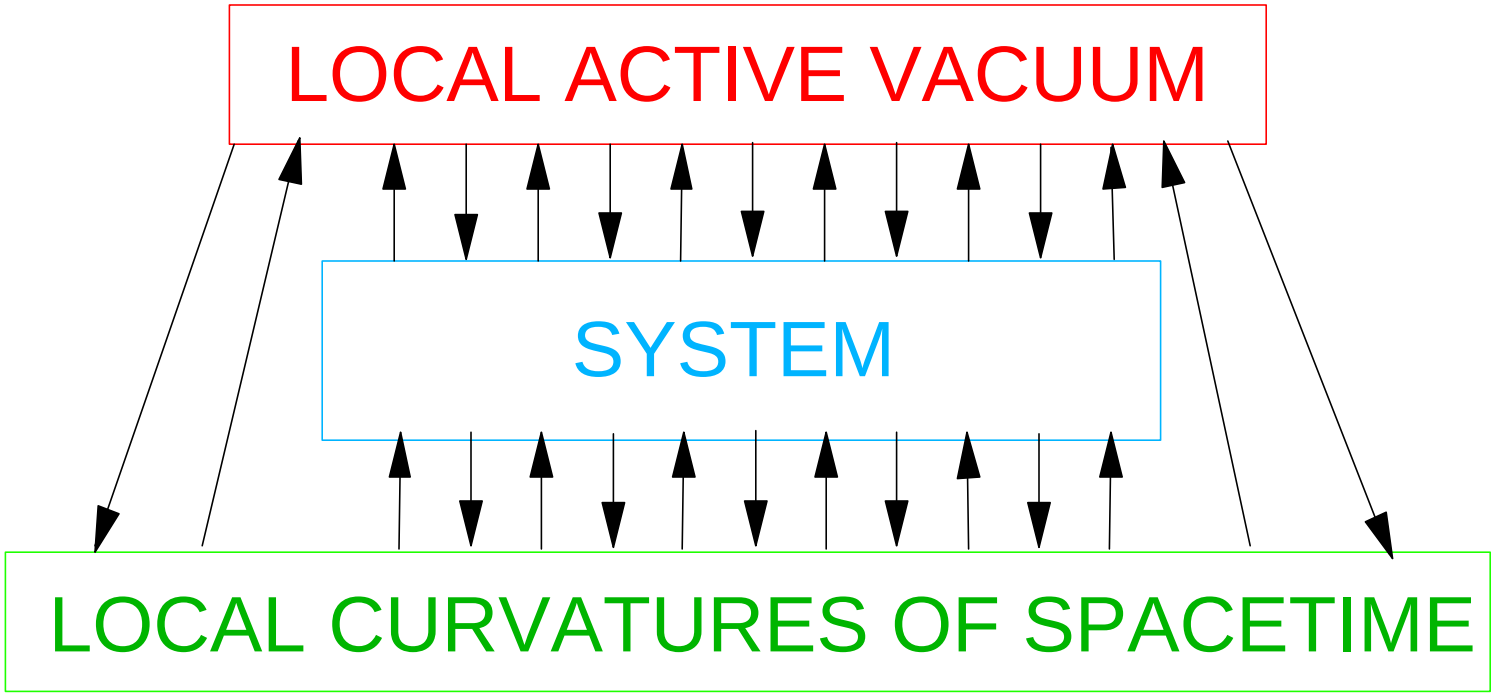

Classical EM kills the supersystem, prevents supersystem engineering

- Assumes flat local spacetime
- Assumes inert vacuum

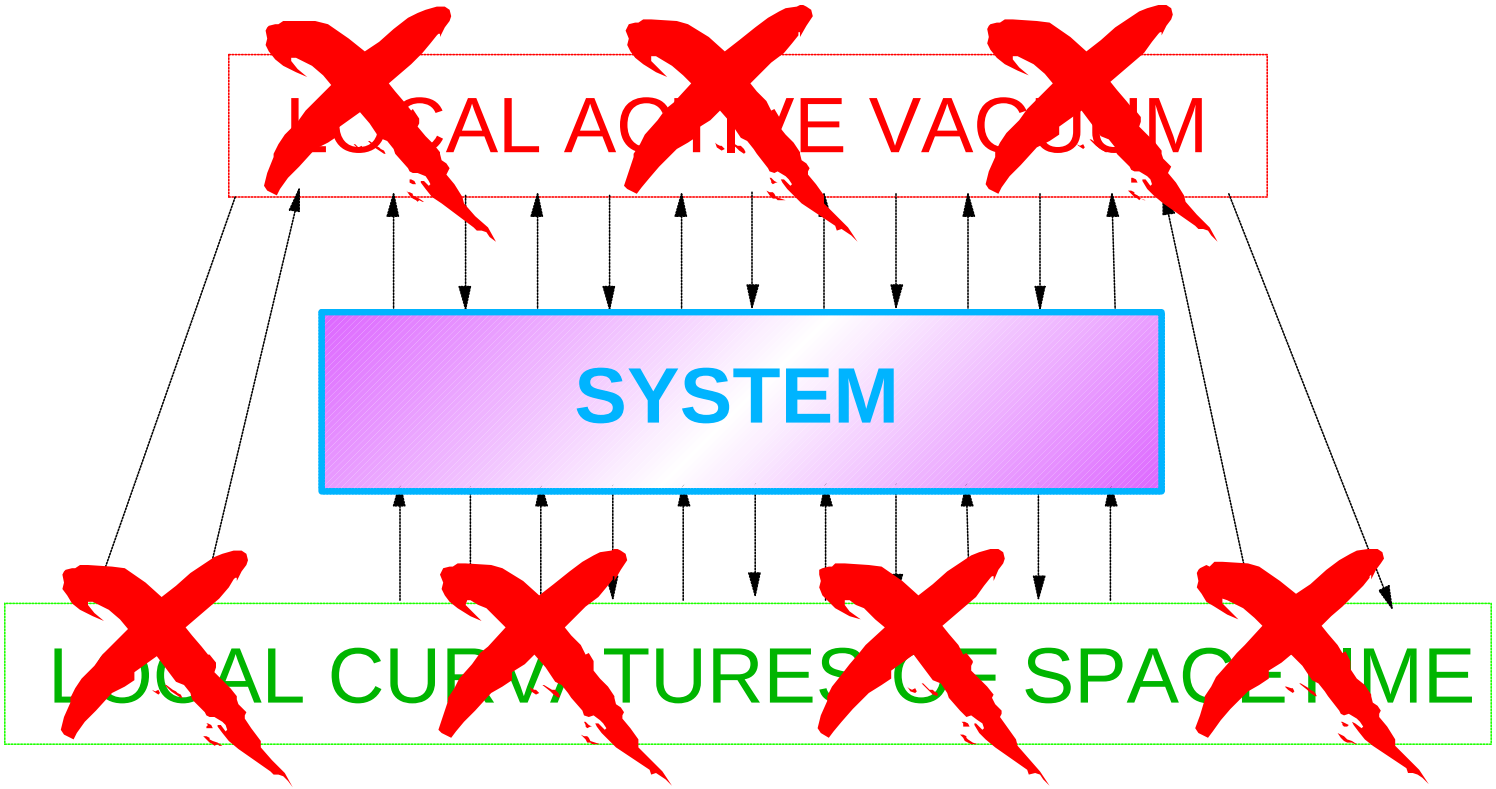

Malignant teratoma exhibits both time-reversal and fast-forwarding

- A teratoma cell is a tumor cell that has reverted to stem cells, then proceeds to differentiate toward new kinds of normal cells.
- May produce hair, skin, muscle, heart, bone, and other type cells.
- Sometimes present at birth.
- Demonstrates both "time-reversal" and "time-forwarding".
- The missing key is the engine function(s).

Miller-Fox-Urey biogenesis experiments

- Engines of and from all life forms ever on earth or in the universe exist in the ambient vacuum potential.
- The Miller-Fox-Urey experiments were not in a "sterile" environment.
- Heat (IR) and UV constitute (1) a harmonic interval with a difference frequency, and (2) amplifying by the process previously shown.
- These experiments "kindled" previously living forms from the available gases etc. by amplifying the ancient living engines from their virtual state to the observable state, so that the masses were molded into the physical states of their templates.

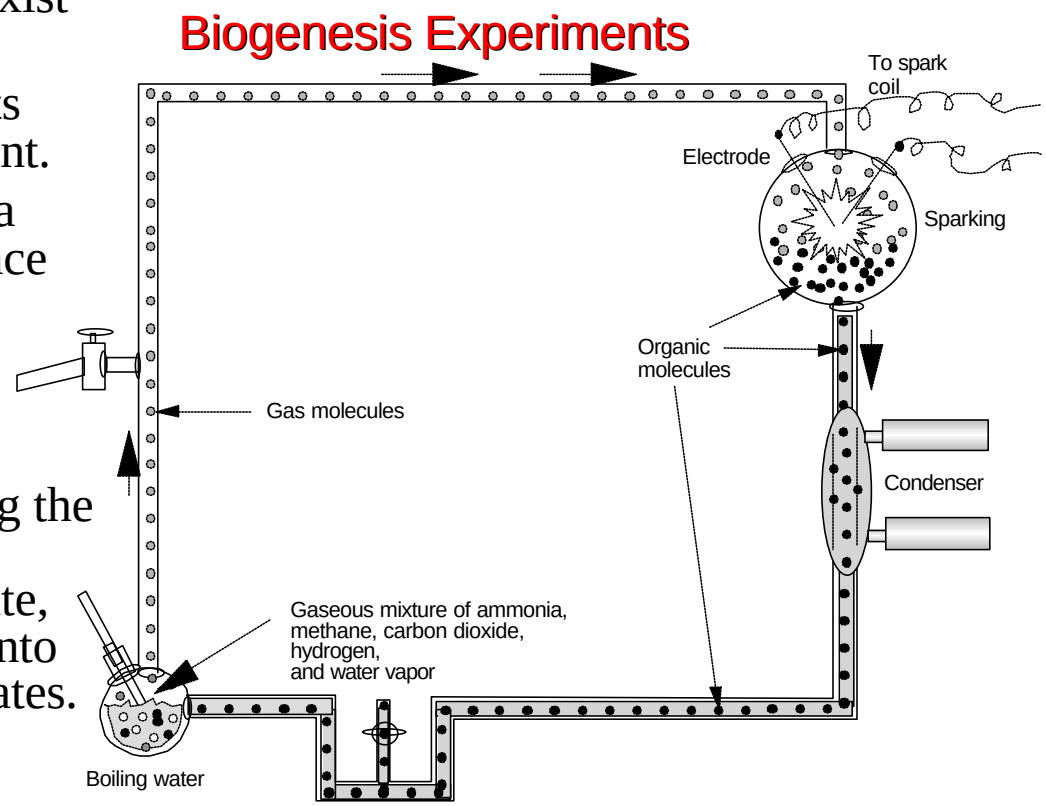

Cloning to produce stem cells

- Human DNA can be inserted in an animal cell, and the cell chemically tricked into proceeding as if fertilized.
- Formation, increase, and growth of stem cells begins and continues.

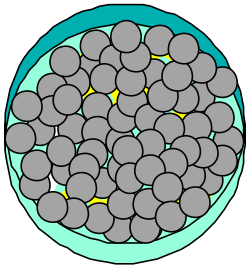

- The "engine" carried by the human DNA is changing the matter available into human cells.
- readily demonstrated experimentally.

Regeneration in a strain of rat with part of its immune system missing

- In mammals, the immune system plays a role in reducing the regeneration capability, compared to that of more primitive systems.
- In a strain of rat where that "suppressive" part of the immune system is missing, the regenerative capability is dramatically increased.
  - Can regrow cut away sections of tail.
  - Regrows plug cut out of ear.
  - Reconnects severed optic nerve.
  - Partially restores severed spinal cord.

- The suppressive "delta" engine of the immune system, operating simultaneously with the underlying primitive regenerative engine, sums to the modern much-reduced regenerative engine in the mammal.

An observation for the future

- When the science of engines is developed, physicians will be able to tailor these engine combinations to restore severed human spines, regrow severed limbs, etc.
- They will also be able to direct the body's "normal growth" to reduce and direct birth defects, genetic defects, etc.

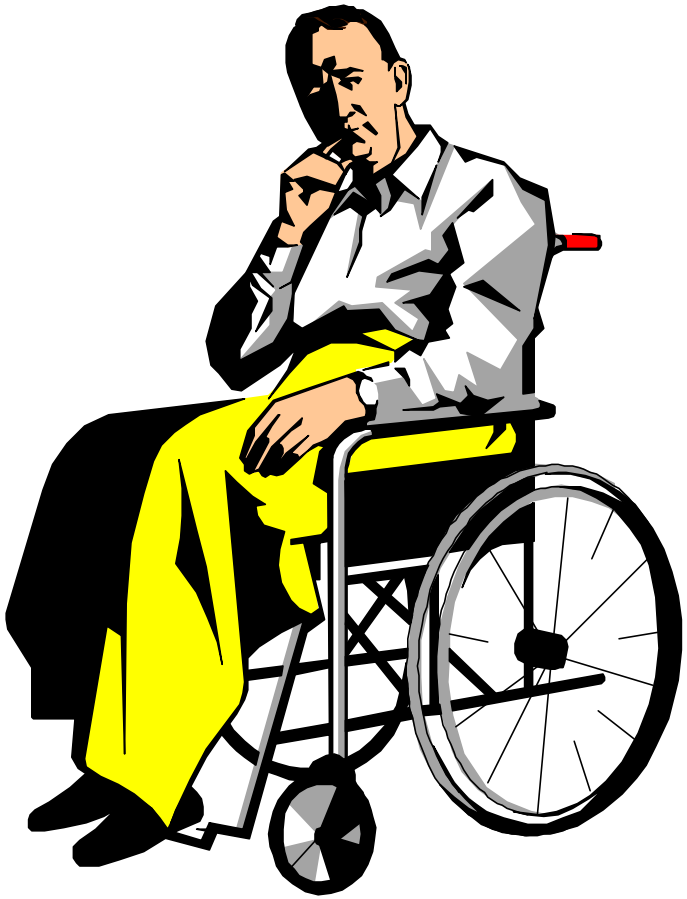

Biochemistry and EM models

- Medical scientists analyze such things as teratomas in terms of biochemistry and the biochemical model.
- An assembly of charges and charge distributions, with their associated fields and potentials, drives all chemistry at base level.
- The charge assembly and its dynamics involves a corresponding assembly of spacetime curvatures and their dynamics. These are *the cause that is driving the charge assembly and its dynamics, and therefore the chemistry*..
  - In unified field theory (such as that of Sachs) and O(3) electrodynamics.
  - Not in classical U(1) EM theory or quantum electrodynamics.
- Conventionally a causative EM field in space is "defined" as the *diversion from* that spatial field by and after its interaction with charge).
  The "definition" substitutes the effect for the cause, a non sequitur.
- This is a known major flaw, pointed out in one fashion or another by many physicists such as Wheeler and Nobelist Feynman.
- Classical EM theory is a 137-year-old model, seriously flawed. These flaws emerge in biochemistry and medical science.

Necessary EM corrections*

- Many of the corrections necessary in electrodynamics modeling either have been done or are underway.
- Higher symmetry, non-Abelian electrodynamics models have long been developed in particle physics.
- The new approach extends these models to also incorporate general relativity, thus producing a unified field theory*.
- In the new approach, spacetime curvature engines are perfectly natural and understandable, and can be directly modeled and engineered by advanced theorists.
- In short, the theory is sufficiently advanced and robust that technology and engineering can now advance.
- This will be a great leap forward for biochemistry and medical science, particularly in therapeutic methods.

* Sachs's unified field theory implemented by O(3) electrodynamics presently is the most suitable to use. Numerical methods are required.

Prioré's revolutionary results in lab animals

And its ramifications

Prioré (right) makes a point to Chaban-Delmas, Mayor of Bordeaux

- Many of the Prioré team's experiments were done in Bordeaux.
- Antoine Prioré patents:
  - "Apparatus for producing radiations penetrating living cells," U.S. Patent No. 3,368,155, Feb. 6, 1968.
  - "Method of producing radiations for penetrating living cells," U.S. Patent No. 3,280,816, Oct. 25, 1966.
  - "Procede et dispositif de production de rayonnements utilisables notamment pour le traitement de cellules vivantes," [Procedure and Assemblage for Production of Radiation Especially Serviceable for the Treatment of Living Cells], Republique Francais Brevet d'Invention P.V. No. 899.414, No. 1,342,772, Oct. 7, 1963.

Block diagram of Prioré's method

Time-reversing the cells back to normal state

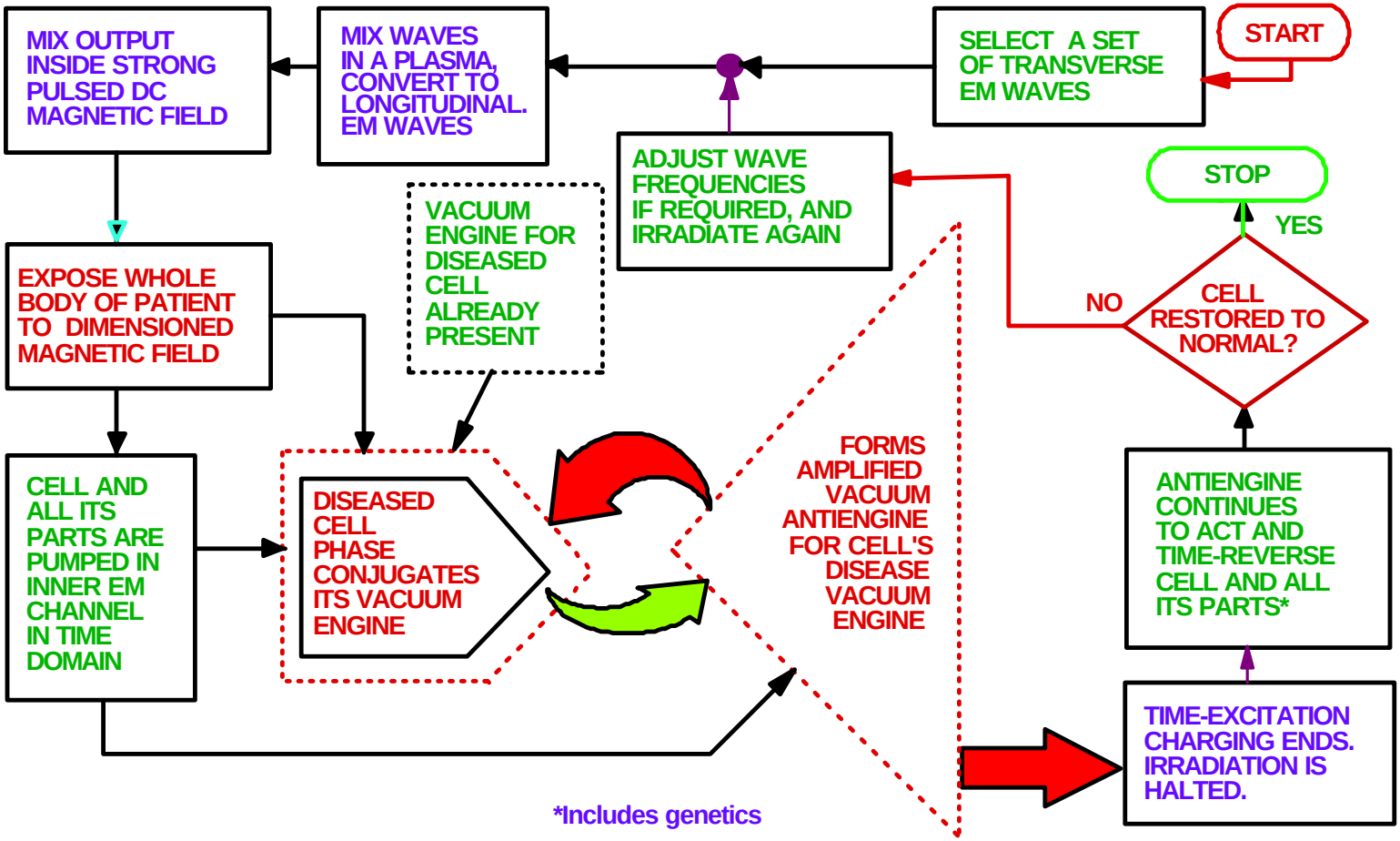

*Includes genetics

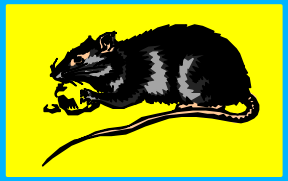

In Laboratory Animals:

Prioré Team Cured

- **Terminal malignant tumors**
- **Clogged arteries (atheriosclerosis)**
- **Suppressed Immune Systems**
- **Infectious trypanosomas**
- ***Results were presented to French Academy of Science by Robert Courrier, Director of the Biology Section of the Academy***
- ***<u>No one understood the mechanism!</u>***

© 1999 T. E. BEARDEN

Some peculiar results by the Prioré team

- Once a rat is cured of a particular disease:
  - A single drop of blood from the cured rat, injected into another rat stricken with same disorder, would result in the injected rat getting well slowly.
  - This ability to transfer immunity and healing in the extracted drop of blood gradually decayed over a period of a few weeks.
- Showed that even the fields and potentials in the blood had been altered internally, in the treated animal.
- Showed that the injected animal's cellular regenerative system possessed the ability to also time-domain pump over the entire body, everywhere reducing the delta between that injected drop of blood now the rat's own, and the rest of the blood in its body.

Proof of cellular time-reversal

- Pautrizel compared identical treatment of immature rats with immature immune systems, and mature rats with mature immune systems.
- Treatment restored the damaged mature system back to full mature functioning, and it promptly recognized and dispatched the pathogens.
- Treatment restored the damaged immature system back to full immature functioning, unable to cope, and the pathogens promptly reinfected and killed the immature rat.
- The lesson: The body is indeed returned to a previous physical state. The pathogens themselves are not killed by the treatment, but by restoring the ability of the immune system to recognize and destroy them.
- Only the *previous ability* of the immune system is restored by the process.

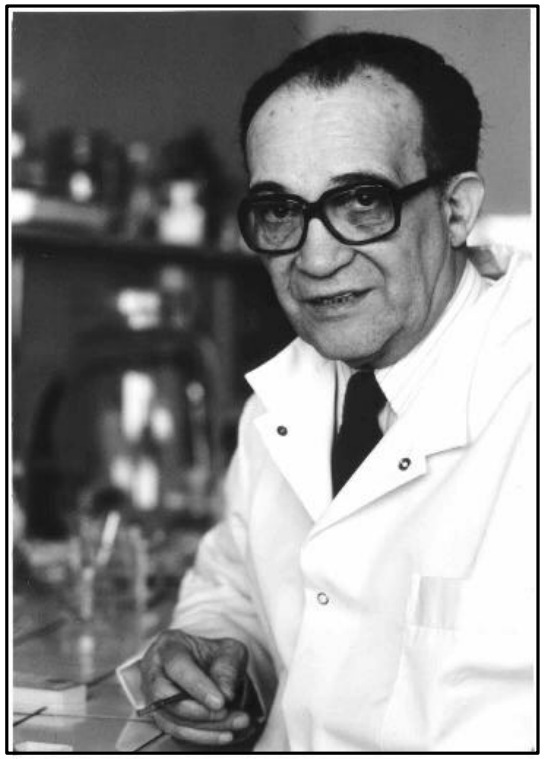

PROF. RAYMOND PAUTRIZEL
(Renowned Parasitologist)

Disadvantages of Prioré method

- Large plasma tube and facility required.
  - 3-stories high building bay if to treat humans.
  - Long irradiation time (2-3 hours).
  - Slow, numerous experimental adjustments.
- Fundamental mechanism was unknown.
  - Phase conjugate optics not yet born in West.
  - No higher symmetry EM modeling used.
  - Prioré thought it was a result of ionization.
  - Importance of difference frequency unknown.
  - Body dielectric transmission path unknown.

3-Story high Prioré device for treating humans

- At the end of the project, Prioré had developed a large unit to treat humans.
- A few were treated.
- Cures replicated what had been done in lab animals
- The massive size of the unit and long treatment time (hours) made the process bulky and very inconvenient -- and also expensive

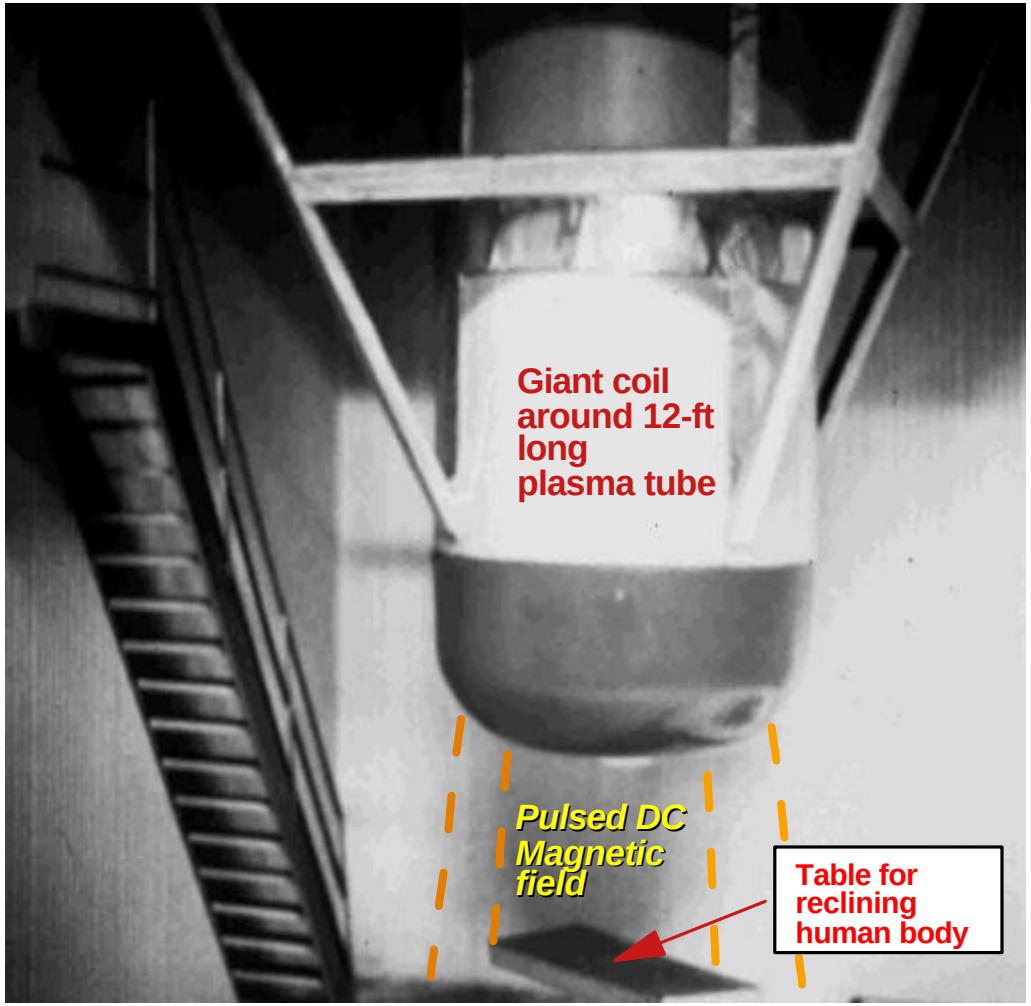

17-foot Prioré plasma tube

Used in large machine (3-stories high) to treat a limited number of human patients

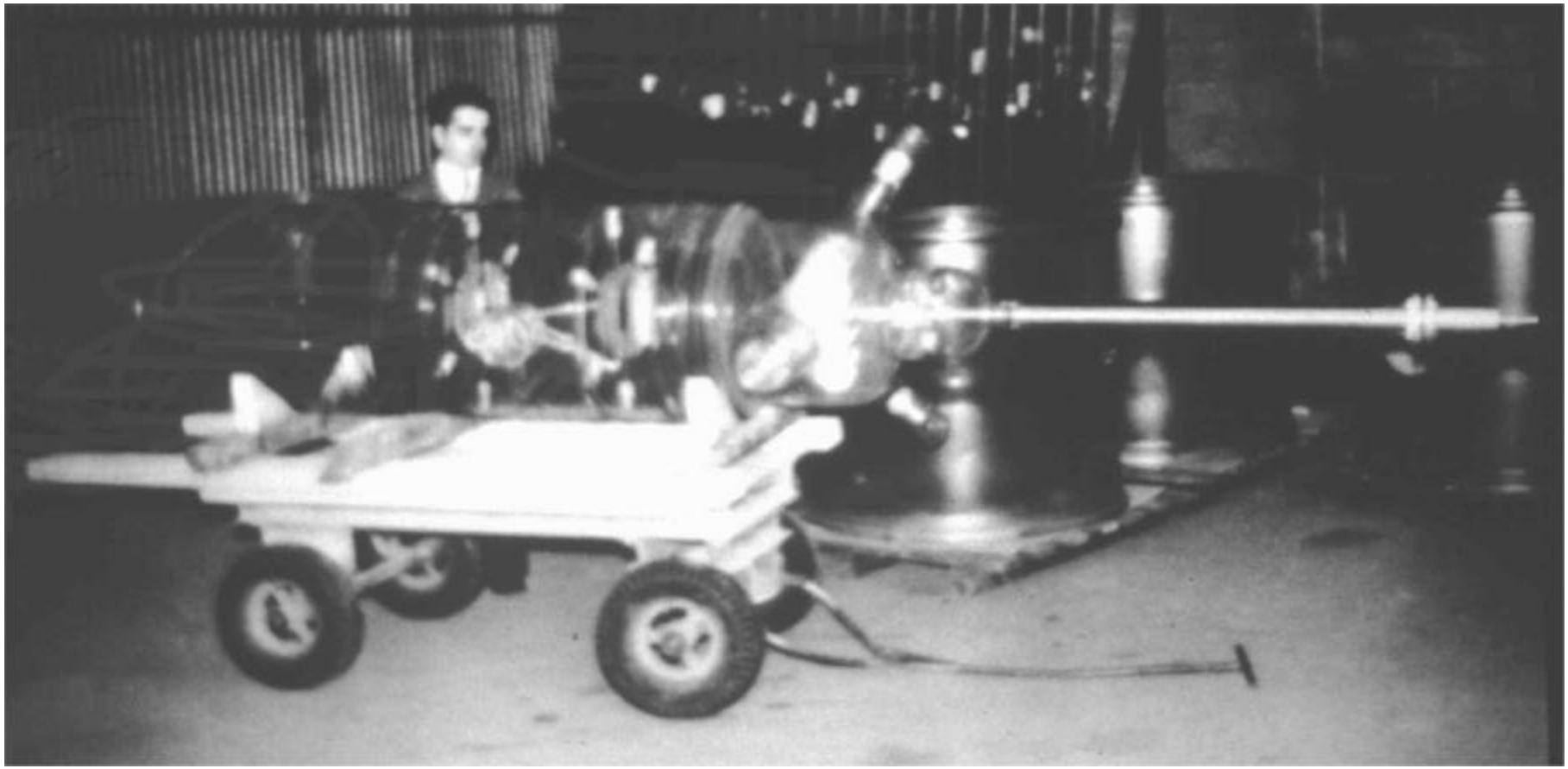

A proposed new mechanism for cancer promotion

And its ramifications

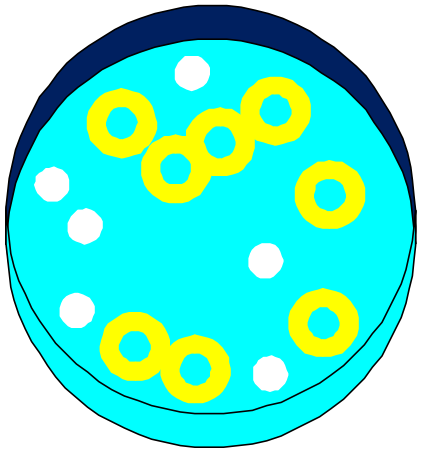

Remarks on cancer from a new perspective

- Two stages: cellular damage and promotion of the damaged cell to a tumorous cell. Promotion presently is poorly understood if at all.
- A master cellular control system (MCS) (studied by Popp et al.) controls both the immune system and the cellular regenerative system, as well as normal functions of the cells.
- The "past history" of ancestral development of aerobic cells and higher multicell aerobic bodies on planet Earth, resides in the "internested engine layers" in every tiniest part of the entire body dielectric, and in all cells.

Remarks on cancer from a new perspective (2)

- Faced with cell damage (such as sustained hypoxia) it cannot handle, the MCS continues to "peel the layers" in taking actions related to ever more distant pasts.
- Faced with continuing hypoxia, e.g., the MCS eventually reaches ancestral layers -- with an engine -- it forces the damaged cells to start moving back toward the original primeval anaerobic form.
- The first step backward is *separation from central growth control*, freeing the cell to multiply independently. At the same time, genetic changes in the cell are forced and produced, starting it back toward becoming an anaerobe.
- These actions comprise the *promotion process*.

The promotion process via engines

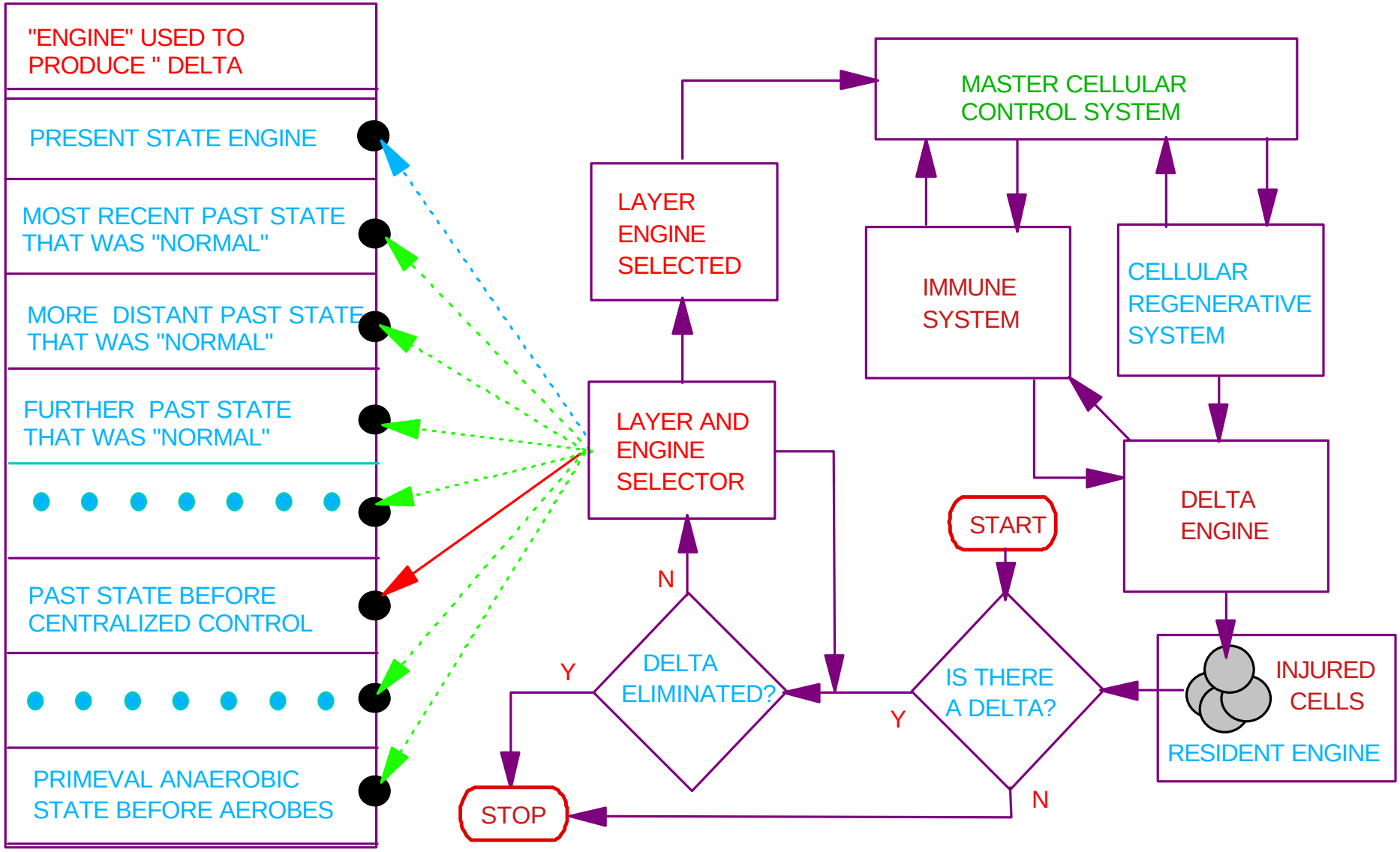

Evolution of aerobic systems

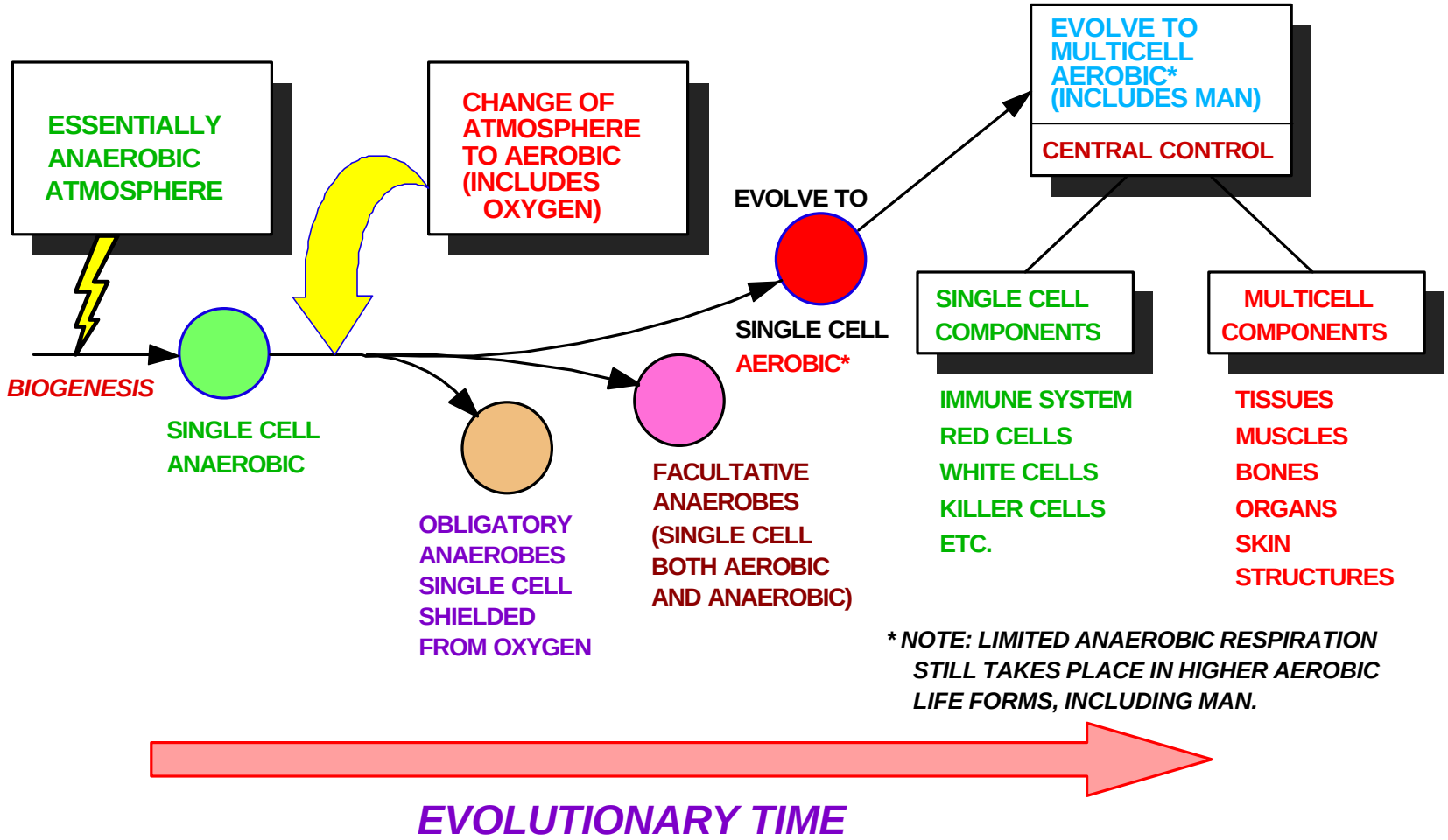

First step in self-promotion of cancer due to hypoxia

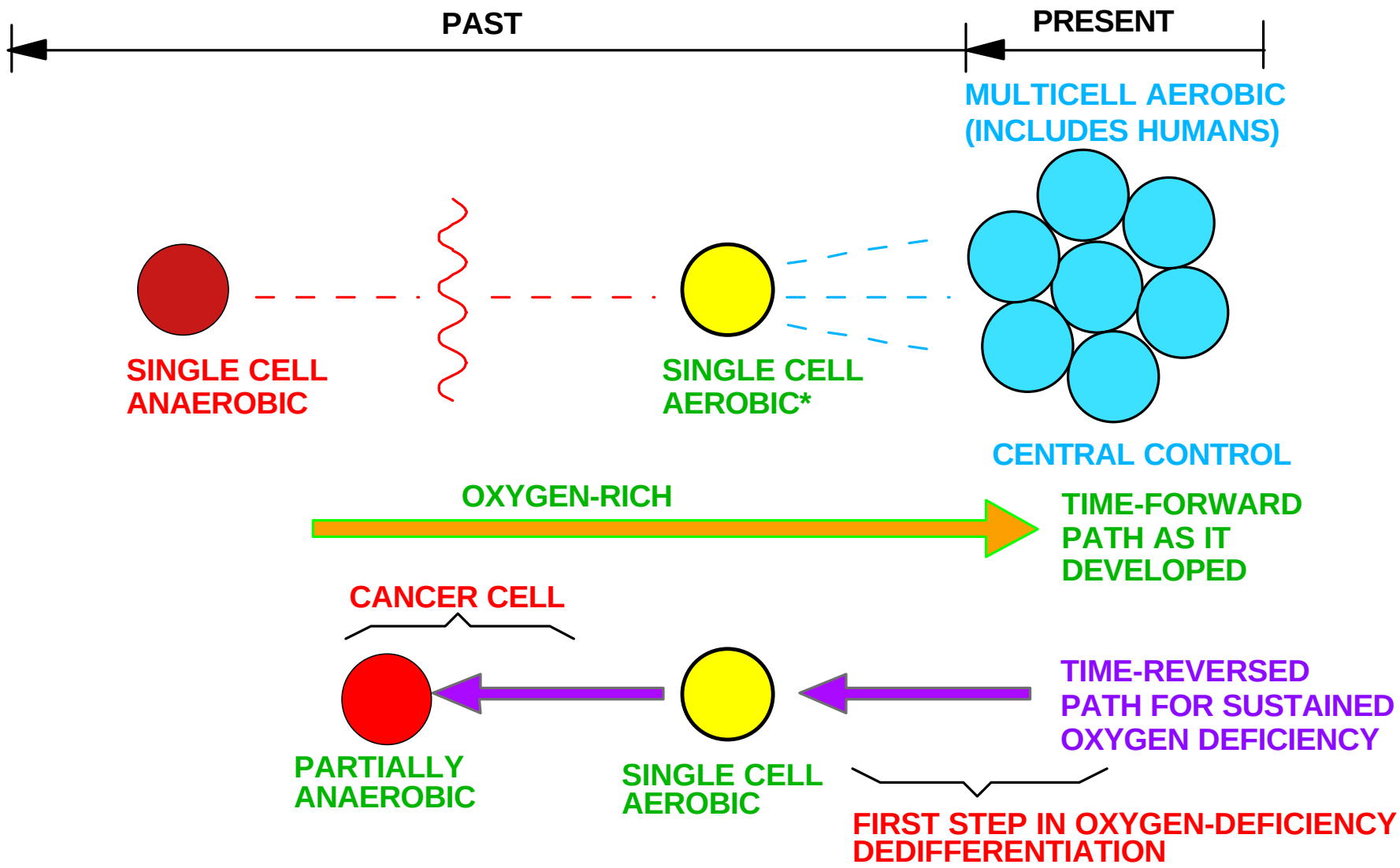

Block diagram of the cellular regenerative system

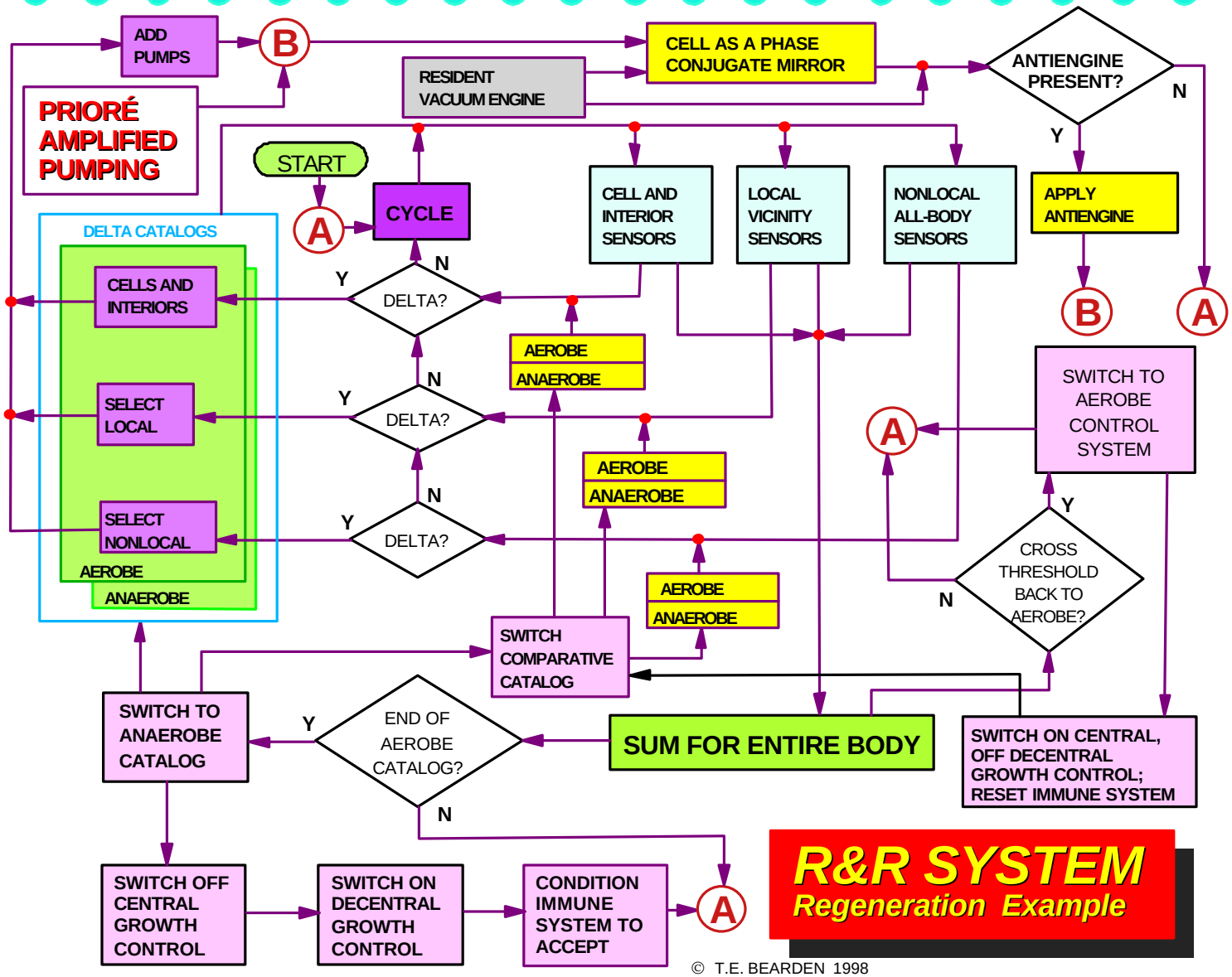

© T.E. BEARDEN 1998

Bombshell: Amplified EM healing

- A unified field theory approach and use of supersystem analysis has broken the basic mechanism for healing itself.
  - The Sachs unified field theory applies and has been partially fitted.
  - Evans-Vigier O(3) electrodynamics can properly model it, including both the internal and external electrodynamics and effects of engines.
  - Direct engineering development is now possible.
- Experimental proof of the results obtainable already exists in the literature.
- A medical revolution is in the offing.

Potential Medical Applications

- **Non-traumatic cancer treatment**
  - *Cure cancers and leukemias of all types*
  - *Remove pre-cancerous state*
  - *Restore system*
- **Treat and cure Infectious diseases**
- **Cure AIDS and restore immune systems**
- **Defense against biological warfare**
  - *Virulent diseases from unknown agents*
  - *Treat, cure prior to symptoms developing*
  - *Both civil populace and armed forces*
- ***Dramatically lower health costs***
- ***Rejuvenate the aged***

© 1999 T. E. BEARDEN

To treat and save mass casualties: What is urgently needed now:

- A small, portable, relatively inexpensive treatment unit, not requiring plasmas etc.
- Treatment in 2 to 5 minutes rather than 2-hours.
- Simple treatment application, almost anywhere.
- Effective in advanced stages as well as prior to emergence of symptoms.

- Effectiveness against a wide array of illnesses.
- Use is easy, high school student can be trained in 30 minutes.
- Crash program to develop, flood down through emergency systems in great quantities.

The Solution:

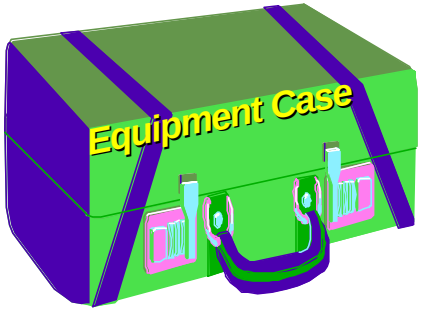

- Two blankets have antennas in them.
- Uses the "porthole" concept (discussed shortly)
- Eliminates plasma tube mixing etc.
- Computer-controlled complex signal structure.

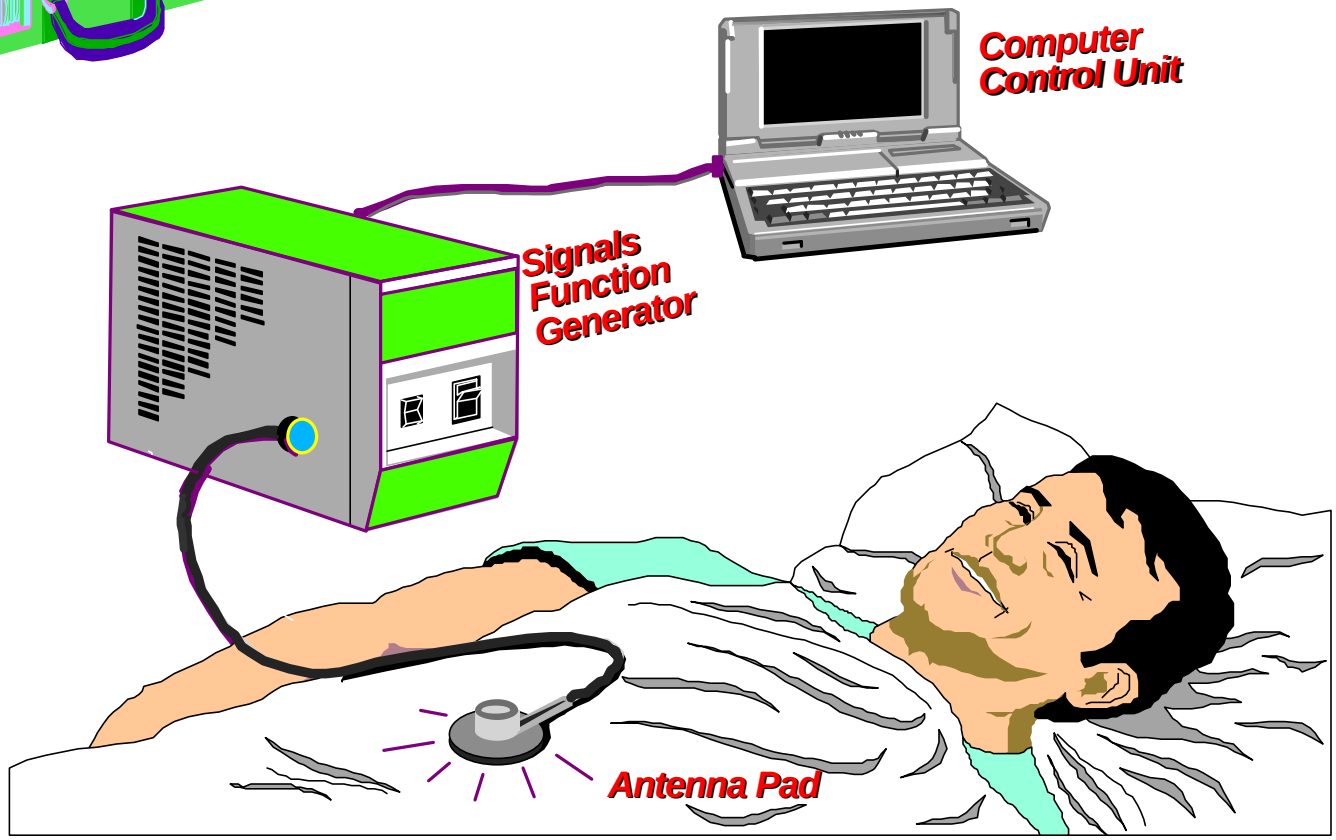

The Porthole concept:

The two-minute treatment shortcut

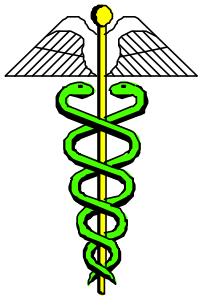

How the porthole concept works

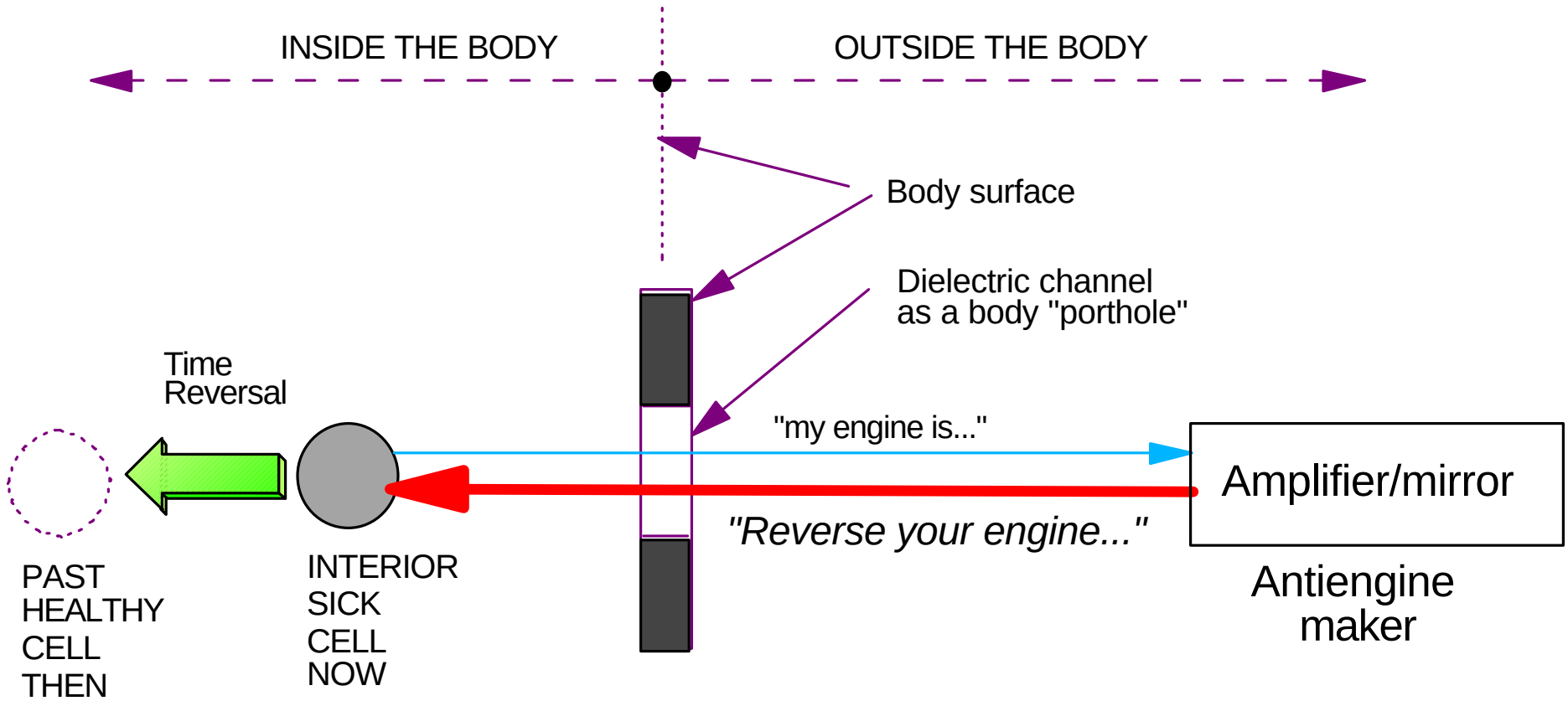

Porthole concept: An analogy of the dielectric path and inner-outer functional connections

- Imagine perfectly reversible dynamic light processes inside a large "cruise ship", that are also perfect phase conjugate mirrors
- Each process receives, absorbs, and emits light continuously
- Light escaping through the portholes is a composite from all the dynamic processes ongoing inside
- If we record and amplify the escaping light, then force it back through the portholes, it reverses all the internal processes
- The processes revert back, slowly, to a previous ongoing process state
- We cease radiation, and the processes reverse and move forward again

Porthole concept: The discovery

- The processes themselves, *in their own "frame"*, are never actually "reversed". Instead, the frame's motion through time is reversed.
  - Each to itself moves normally -- just receiving, absorbing, and radiating light, regardless of "whatever light" is interacting
  - This is due to a peculiarity of the photon and photon interaction
- Photon interaction creates observed physical reality, including the "frame" and the seeming "passage of a mass through time"
  - The photon is its own antiparticle, which is just a photon traveling in the opposite direction
  - So in this case we can use "light" to precisely time reverse (to the observer) the frame and the apparent operations (to the observer)
- When we cease irradiation, after a decay period to remove the reversed excitation, all functions are now seen to be moving forward normally in observer forward time, but from a previous physical state or condition

Using the porthole concept: Research

- The body's own emitted dense, broadband signals are recorded across a broad bandwidth
  - These signals are amplified, then rebroadcast precisely back into the body
  - This returns an amplified "reversed" signal set back through the dielectric path, invoking and applying the porthole concept in all processes
- The returning photons produce time-charging but in reversed frame direction
  - Tremendous potential energy is absorbed in highly compressed "time-energy" form in seconds
  - This "time-potential" slowly drains off as the body processes and cells reverse back to a previous state

Research using the porthole concept

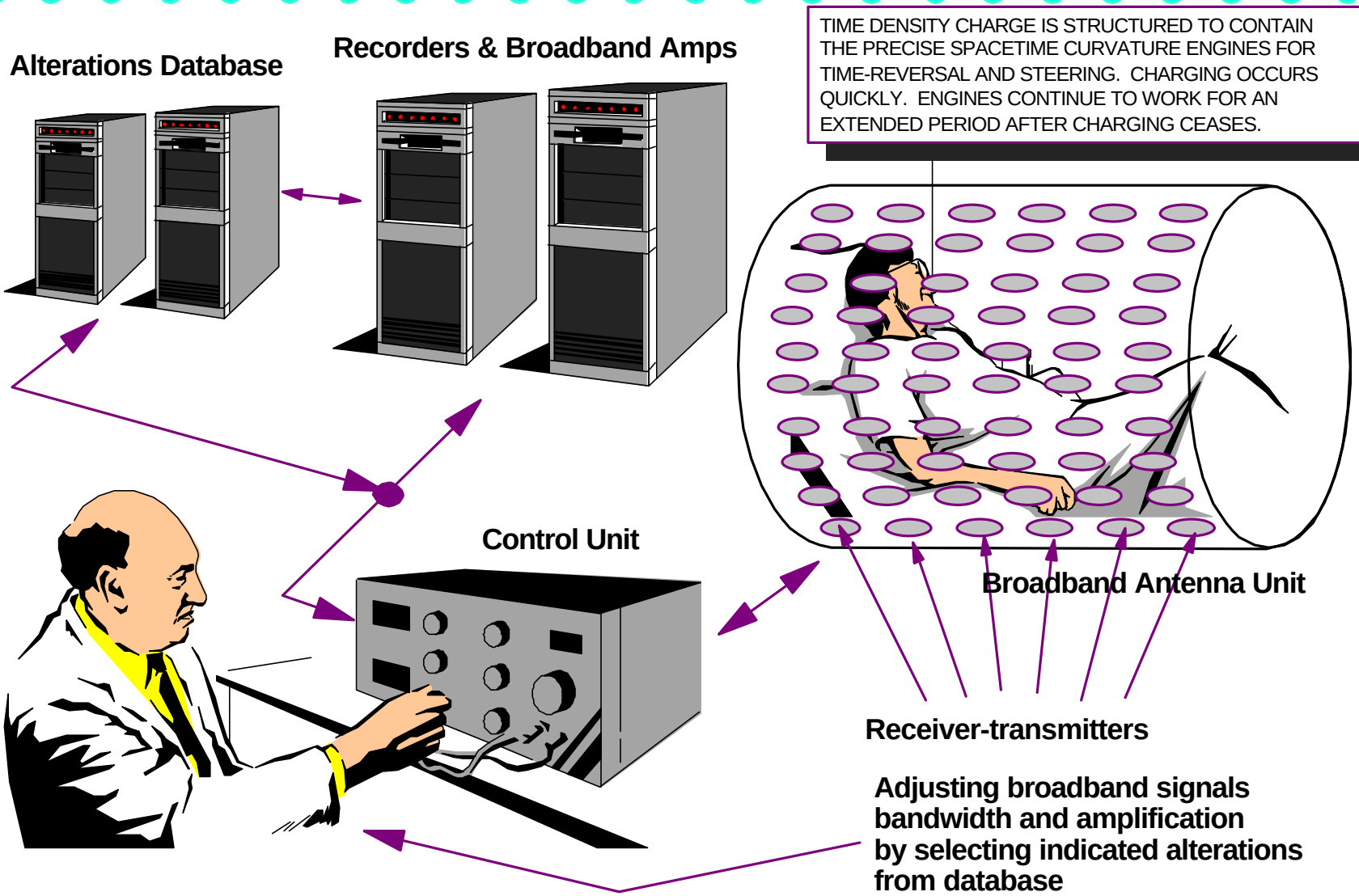

© T.E. BEARDEN 1998

Portable unit then developed for rapid treatment of mass BW casualties

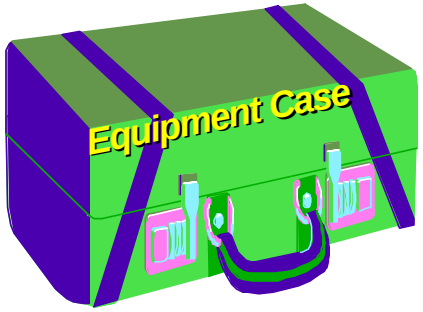

- Two blankets have antennas in them.
- Uses the "porthole" concept (discussed shortly)
- Eliminates plasma tube mixing etc.
- Computer-controlled complex signal structure.
- Irradiation for 2 minutes.

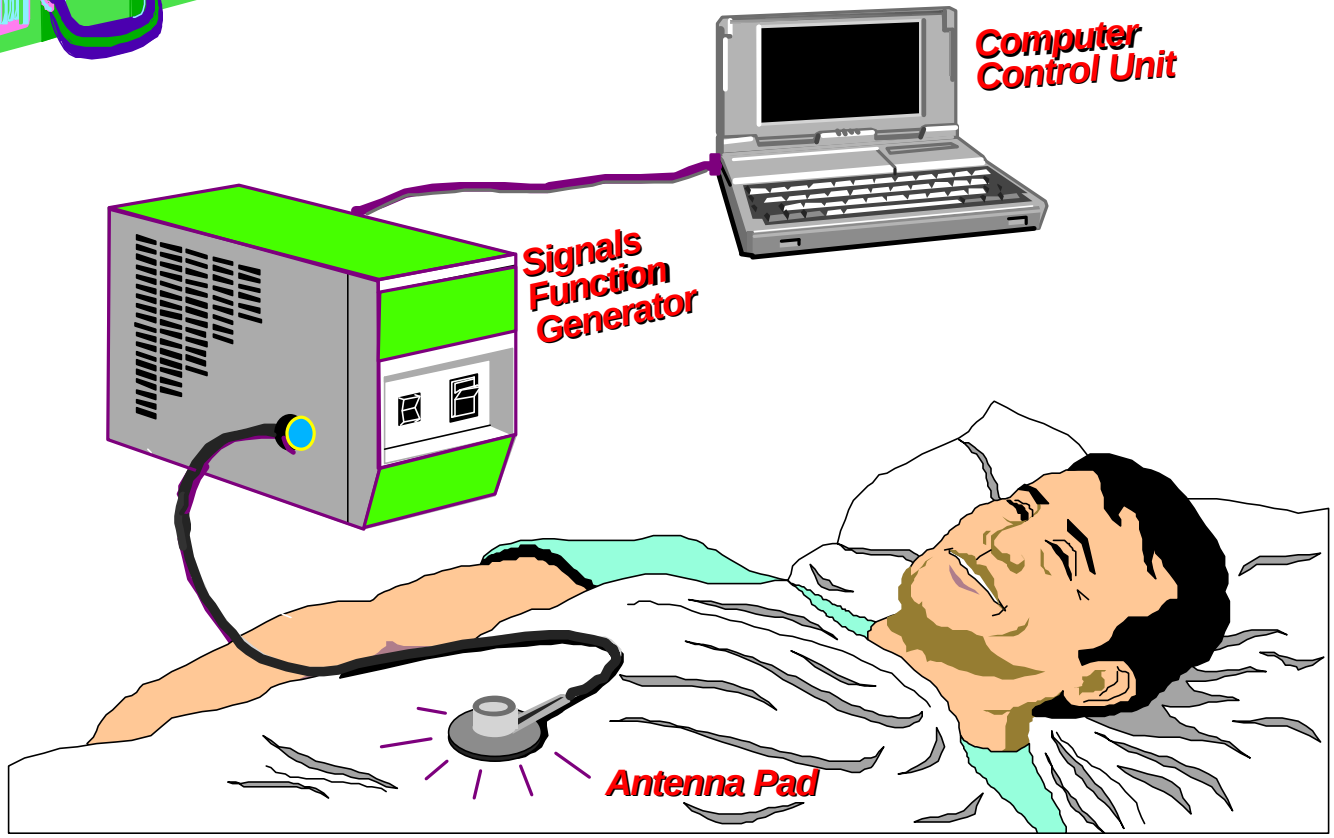

Training to use the unit

- High school student level, 30 minutes.
- Patient lies on one blanket, other covers him.
- Set the prescribed standard signal sets from listing.
- Computer-controlled generator produces the signal.
- Irradiation for 2 minutes, uncover patient, bring in another.
- Unit can be self-powering from vacuum energy (MEG*).

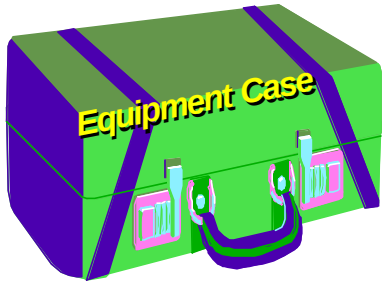

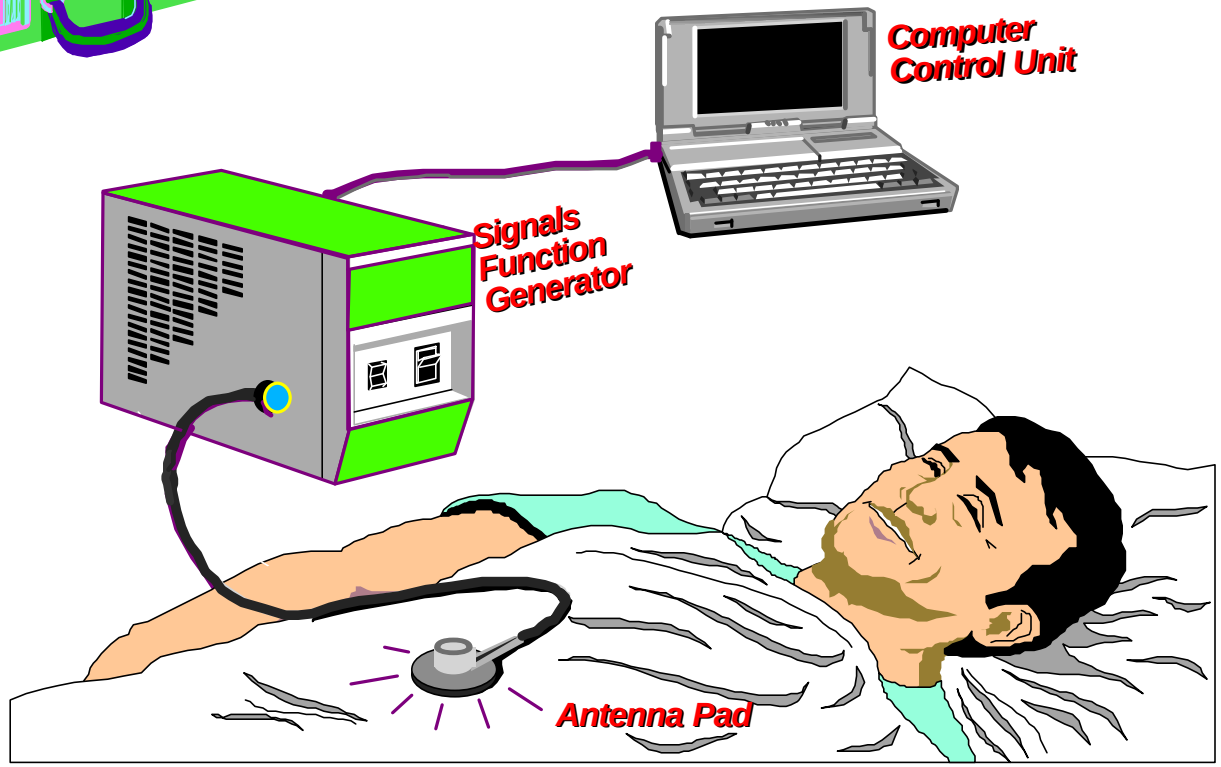

Additional advantages

- Can be developed in a crash program in 2-3 years.
- After sunk costs, projected cost per unit in mass production is less than $100,000
- Can be produced by the thousands
- Then flooded down through
  - Fire stations and police stations
  - Red cross units, hospitals, clinics
  - Emergency action teams and armed forces
- Large numbers of operators easily produced
- Emergency training could be watching a 15 minute film, then performing one graded practice run
- First generation equipment can save some 70% of the coming mass casualties from anthrax etc.

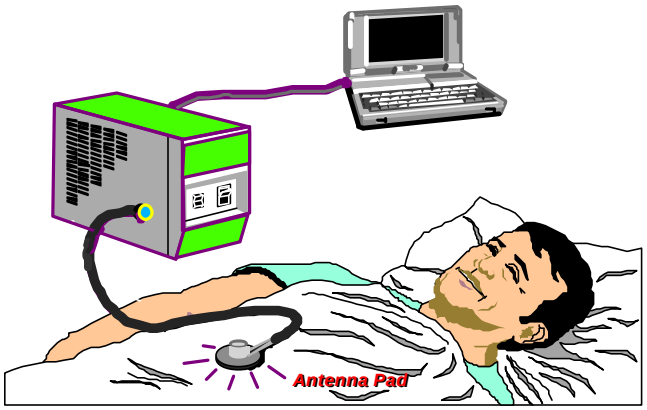

Terrorist BW warfare capabilities against the United States

The growing threat

Mass Casualty Problem: Aerial Anthrax Spray on Washington, D.C.

- **One terrorist, one light aircraft with spray tank**
- **100 kilograms of anthrax**
- **Flies over greater metropolitan Washington, D.C.**
- **Calm night**
- ***1-3 million casualties result****
- ***Most of those stricken will die***
- **Presently little can be done to save the stricken civilians**
- ***Attacks on several population centers might produce some 10 million or more casualties***

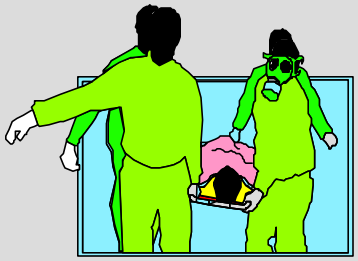

***Per OTA Report to Congress, 1993**

For decades, infiltration of terrorist teams into the U.S.

- From several foreign nations, not just Bin Laden in Afghanistan
- Several thousand Cuban guerillas, from training camps in Southern Mexico
- Russian Spetznaz teams
- Nuclear warheads (up to 80 KT)
- Biological warfare agents
- Yakuza in oriental populations in our cities
  - Yakuza manufactures Russian energetics weapons in their own facilities in Japan
  - Possesses the new EM weapons referred to by Secretary of Defense Cohen in 1997
- We are now in a very long, hard war and will suffer millions of casualties in our cities. It may last for decades.

Defense Secretary Cohen*

(Involvement of secret superweapons)

"Others [terrorists] are engaging even in an eco-type of terrorism whereby they can alter the climate, set off earthquakes, volcanoes remotely through the use of electromagnetic waves… So there are plenty of ingenious minds out there that are at work finding ways in which they can wreak terror upon other nations…It's real, and that's the reason why we have to intensify our [counterterrorism] efforts."

* Secretary of Defense William Cohen at an April 1997 counterterrorism conference sponsored by former Senator Sam Nunn. Quoted from DoD News Briefing, Secretary of Defense William S. Cohen, Q&A at the Conference on Terrorism, Weapons of Mass Destruction, and U.S. Strategy, University of Georgia, Athens, Apr. 28, 1997.

Some typical BW agents

- Smallpox, including different strain developed by Russia (some sold to terrorists)
- Anthrax
  - Over 400 known locations around the Earth have cultures
  - Difficult to decontaminate
- Bubonic Plague
- Botulism toxin
- Tularemia (rabbit fever)
- Hemorrhagic fevers, such as Ebola

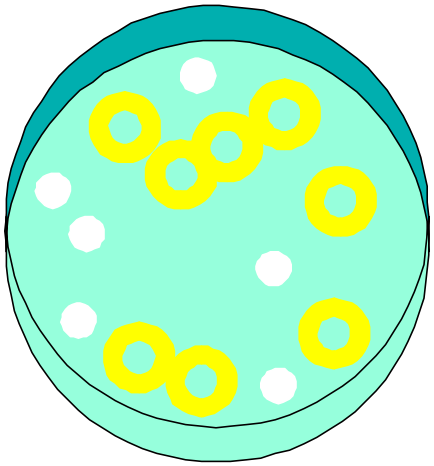

Anthrax

- OTA study: Some 200 pounds released in a spray, on calm night over Washington, D.C. could result in up to 3 million casualties
- Symptoms usually in 2-10 days
  - Sometimes as long as 7 weeks
  - Flu-like symptoms

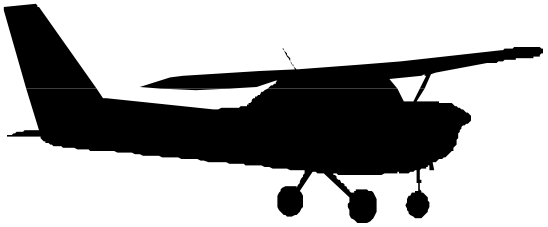

- Then 1-3 days later, shock and breathing problems cause death in up to 100%
- Antibiotics given early (before symptoms) can prevent infected persons from becoming ill
- Limited vaccine, reserved for military

Smallpox

- More than 500 million people killed in the 20th century before "eradicated" in 1977. Vaccination ceased in 1980.
- Russians kept it, developed new strains, sold to terrorists
- Symptoms in about 12 days: fever, headache, nausea. Rash similar to chickenpox then appears.
- Rash turns into hard blisters. *Highly contagious*, kills one-third of its victims.
- No cure. About 12 million doses of vaccine left.
- If smallpox is unleashed in any major city on earth, it will eventually kill 2 billion, or about 1/3 of the human species -- unless a radical new cure is found and utilized.

Bubonic Plague: Historically the most feared (Black Death)

- From 1980-1994, 18,739 cases in 20 countries.
- Symptoms occur in 1-6 days after inhaling the pneumonic form.

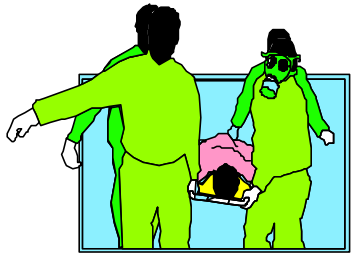

- High fever, cough, labored breathing lead to respiratory failure and death.
- It is contagious.
- Rapid use of antibiotics can be effective.
- Vaccine not currently produced in the U.S.

Botulism toxin (a nerve toxin)

- Single most poisonous BW substance known.
  - Typically borne in food, contacted by eating.
  - Could be developed as aerosol weapon.
- Symptoms in 24-36 hours; blurred vision and difficulty swallowing, speaking.
- Paralyzes muscles, leading to respiratory failure and death.
- Centers for Disease Control and Prevention maintain a botulism antitoxin supply.

Tularemia

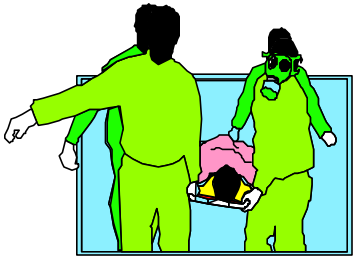

- U.S. studied its weapon potential in 1950s and 1960s.
- Symptoms appear in 3-5 days, including fever, chills, headache, and weakness
- Inflammation and hemorrhaging of the airways can lead to death.
- Without antibiotics, one-third die. Can be 90% if breathed in, in aerosol form.
- Vaccine developed and under review by FDA.

Hemorrhagic fevers, such as Ebola

- E.g., origin of Ebola is unknown. Probably transmitted to humans by animals, to begin a breakout.
- Symptoms in 3-5 days, include fever, aching muscles, diarrhea.
- Hemorrhaging of fluids out of tissues and orifices.
- From 30 to 90 percent die, depending on specific fever type.
- Some of these fevers respond to antiviral drugs.
- The drugs are in short supply.
- Presently *containment* is the primary goal.

A factor the U.S. does not know

(Secret involvement of clandestine superweapons)

- Three nations (not the U.S.) developed quantum potential weapons using Bohm's hidden variable theory of quantum mechanics.
- Can induce disease engines in matter or bodies at a distance.
- Have developed "spreading" of immune systems in a targeted populace (cleverly tested in Gulf War against U.S. troops).
  - Cocktail mix of disease engines for 2 dozen different diseases
  - Targeted area's human immune systems react to these engines when they are still in virtual state, just below quantum threshold.
  - Spread immune system's resources thus "thinned" across response to two dozen shadow diseases at once.
- Hit with a terrorist BW attack, the spread immune systems are overwhelmed much more easily and quickly.
  - Yield (casualties) of the attack is increased by factor of 3-5.
  - Spreading of U.S. immune systems has been accomplished and is still being maintained.

Summary and conclusion

The new war

A new Pearl Harbor: Strike on the World Trade Center in NYC

- The North Tower has already been struck and is burning.
- A second jetliner is about to strike the South Tower.

Fireball From Impact on South Tower

- The two buildings held some 50,000 occupants
- Evacuation was underway after the first strike
- More than 6,000 persons were killed
- This is more than were killed in the Dec. 7, 1941 strike on Pearl Harbor

Collapse of the South Tower

- The first tower to collapse was the South Tower
- It is still uncertain just how many people were caught inside and killed
- This is a half million tons of debris, falling from the New York skyview.

Collapse of the North Tower begins

- The North Tower then collapsed
- This was another half-million tons of debris falling from the NYC skyview

Collapse of North Tower finishes

- Collapse of the North Tower killed many rescue workers, fire-men, and policemen
- At this writing, the total casualties are still unknown

Next began the recovery efforts

- Recovery operations will require months
- At this writing, the total casualties are still unknown
- The damage was done by two civilian jetliner "bombs"

The Pentagon was hit on the same day

- Hundreds were killed the same day when another jetliner struck the Pentagon.
- Yet another jetliner, possibly headed for the White House, crashed enroute when the passengers attacked the suicide terrorist hijackers.

A sobering thought

- Nuclear weapons are already smuggled into the U.S., as are BW agents such as anthrax, smallpox, etc.
- Had a 40-80kT weapon been exploded in New York and one in Washington, millions would have perished and both cities would have been devastated
- There would have been no recovery of those cities for many decades

Present Status of the WMD Threat to the United States

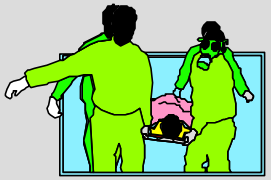

- **Many foreign nations are hostile to the U.S. and sponsor terrorists**
- **Some 25 nations have WMD or are acquiring them**
  - **BW agents and weapons**
  - **Chemical agents and weapons**
  - **Nuclear materials and weapons**
- **Thousands of students and émigrés**
- **Infiltrated teams, BW, other WMD already**
- **Castro guerrillas infiltrated over the years**
- **<u>Can do unacceptable damage to U.S. now</u>**
- ***<u>May reach knockout capability</u>***

© 1998 T.E. BEARDEN

***Per OTA Report to Congress, 1993**

The U.S. is terribly unprepared

- Limited medical supplies, antibiotics, vaccines
- Insufficient facilities, emergency teams
- No civilian shelters (much less BW-filtered)
- Not enough doctors, nurses, masks, etc.
- Present treatment methods woefully inadequate
- Triage will apply
  - First treat those most likely to recover
  - Others (showing symptoms, or advanced) are just set aside to die
- Other attacks are a matter of *when*, not *if*.

Conclusion

- As several cities are struck, millions of U.S. civilian casualties will result. Devastation will be enormous.
- We shall eventually lose more American lives than in all the rest of our wars to date.
- Present medical therapeutic science is totally inadequate to do the job. It cannot save us.

- At some point, when we are sufficiently damaged, the Spetznaz or other terrorists may detonate nuclear weapons in our cities, with appalling carnage.
- A combined superweapon technology and terrorist groups will then destroy the remaining populace.
- On its present course, the inadequacy of Western medicine may doom us.

A difficult truth to consider

- In any strategic strike, the first phase is to get the strategic weapons (weapons of mass destruction) delivered to their distant targets.
- That has already been done.
- Eerily, the first phase of World War III has already been accomplished.
- It was already accomplished before the Sept. 11, 2001 strike on New York and Washington. That was the new "Pearl Harbor", and only the opening round. It already killed more Americans than died at Pearl Harbor on Dec. 7, 1941.
- Unless we improve our medical therapy quickly and dramatically, we will lose -- particularly when the hidden energetics weapons and outside terrorist sponsorship by hostile nations are factored in.

A personal perspective

- There now exists an overwhelming, immediate moral imperative to get this development program done at the utmost speed humanly possible.
- The sheer survival of the United States and Western civilization depends upon it.
- Officialdom is aware that the KGB/Russians have long planned to finish the U.S., after initial nuclear exchanges, by fierce and massive BW strikes.
- It appears that the plan has changed to let the terrorists do the main work, while augmenting U.S. casualty levels by energetics weapons.

China is also involved

- China has declared South China Sea the territorial waters of China
- China will eventually take Taiwan
  - Has massed missile artillery trained on Taiwan
  - Recently held invasion practice on an island near Taiwan
- Recently deployed fearsome EMP weapons utilizing negative energy rather than positive energy (Dirac sea theory)
  - Extinguishes all electron currents
  - Duds electrical and electron systems instantly
  - Instant death to struck bodies
  - Instant kill of missiles, aircraft, electronics in nuclear warheads
  - Ultimate "death ray"; can be made small or large
- Recent 2-carrier U.S. task force maneuvered in South China Sea to caution China
  - The new Chinese EMP weapon was trained on that task force
  - Could have destroyed it within minutes

Final thoughts

???

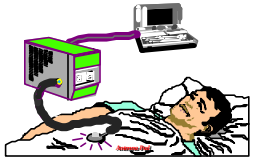

- This is one of the great turning points in history.
- The development program is eminently doable. That it works has been experimentally demonstrated. The long-vexing puzzle of the active mechanism has been solved.
- Our scientific community bitterly opposes any use of electromagnetics -- even an advanced, higher symmetry electrodynamics -- for medical treatment.
- A consortium of the scientific community, the large pharmaceuticals, FDA, and the AMA will oppose this project even while the U.S. is being destroyed wholesale.
- It can only be done in the private sector, and there will likely be no funding unless by philanthropists.

Continuation

Business plan, development program, budget breakdown, proposed schedule etc. go here.

The Tom Bearden Website

Energy, Observations and Comments

---

1. A Conservative Field Requires a Single-Valued Potential
2. Earth-Electrosphere and Earth-Ionosphere Capacitors
3. Earth's Poynting Energy Flow
4. The Hidden Energy Flow around us
5. Electrostatic Fields of the Earth's Electrosphere Capacitor in Fair Weather and Thunderstorms
6. Flow of Current and Energy Into, Through, and Along a Conductor
7. Energy "collected" on a charge
8. Fiber Fuse Effect
9. Impact of Vacuum Engineering
10. Lawandy's Experiment
11. Field may be nonconservative for a multivalued potential
12. The Ostrich Problem - Part 1
13. The Ostrich Problem - Part 2
14. Russia had Overunity Devices in 1930s
15. Energy output of human body
16. A "static" Poynting S-flow free-energy generator
17. Topology and Energy Conservation
18. Block Diagram: Sweet's Vacuum Triode

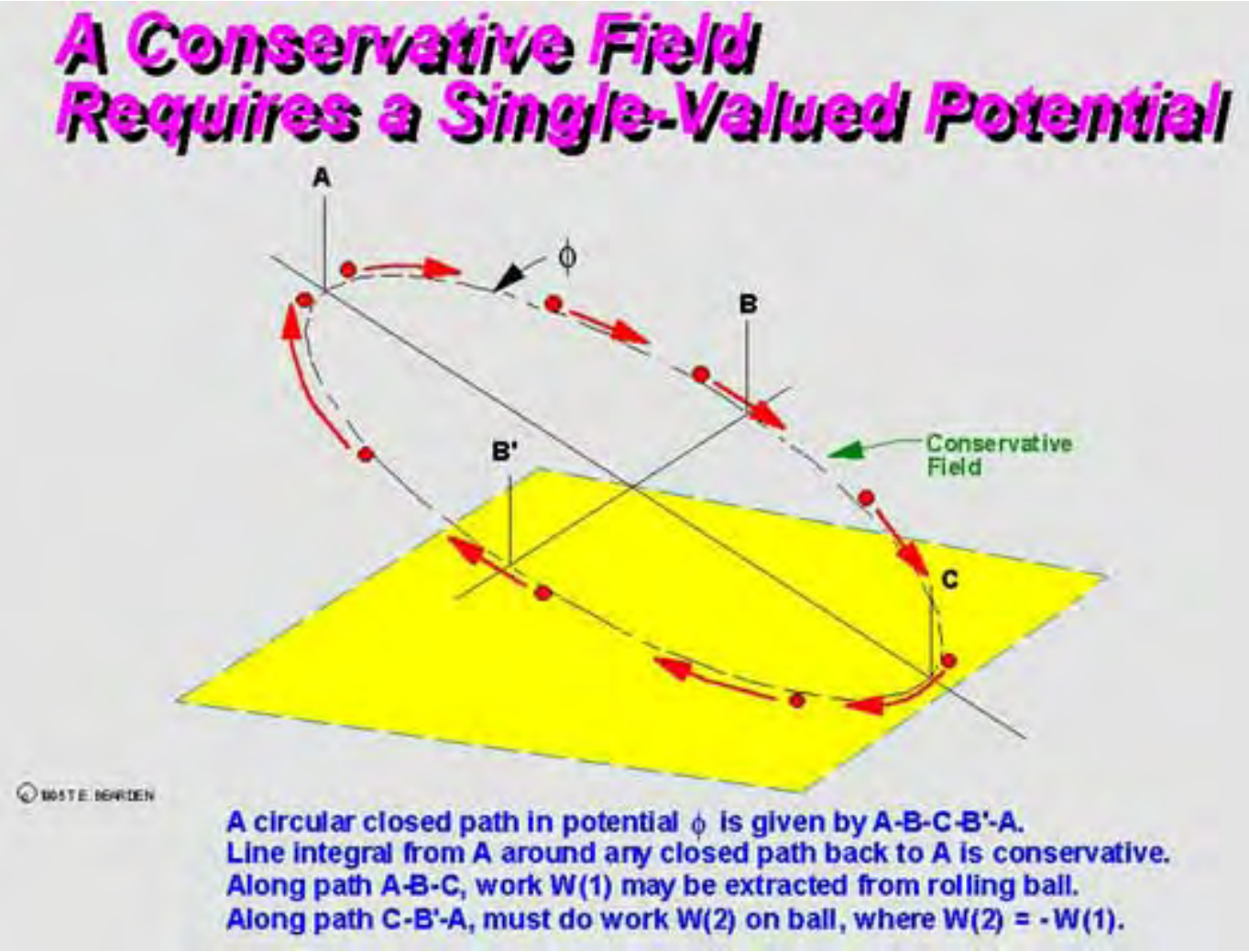

Return to Slide Index

Next Slide

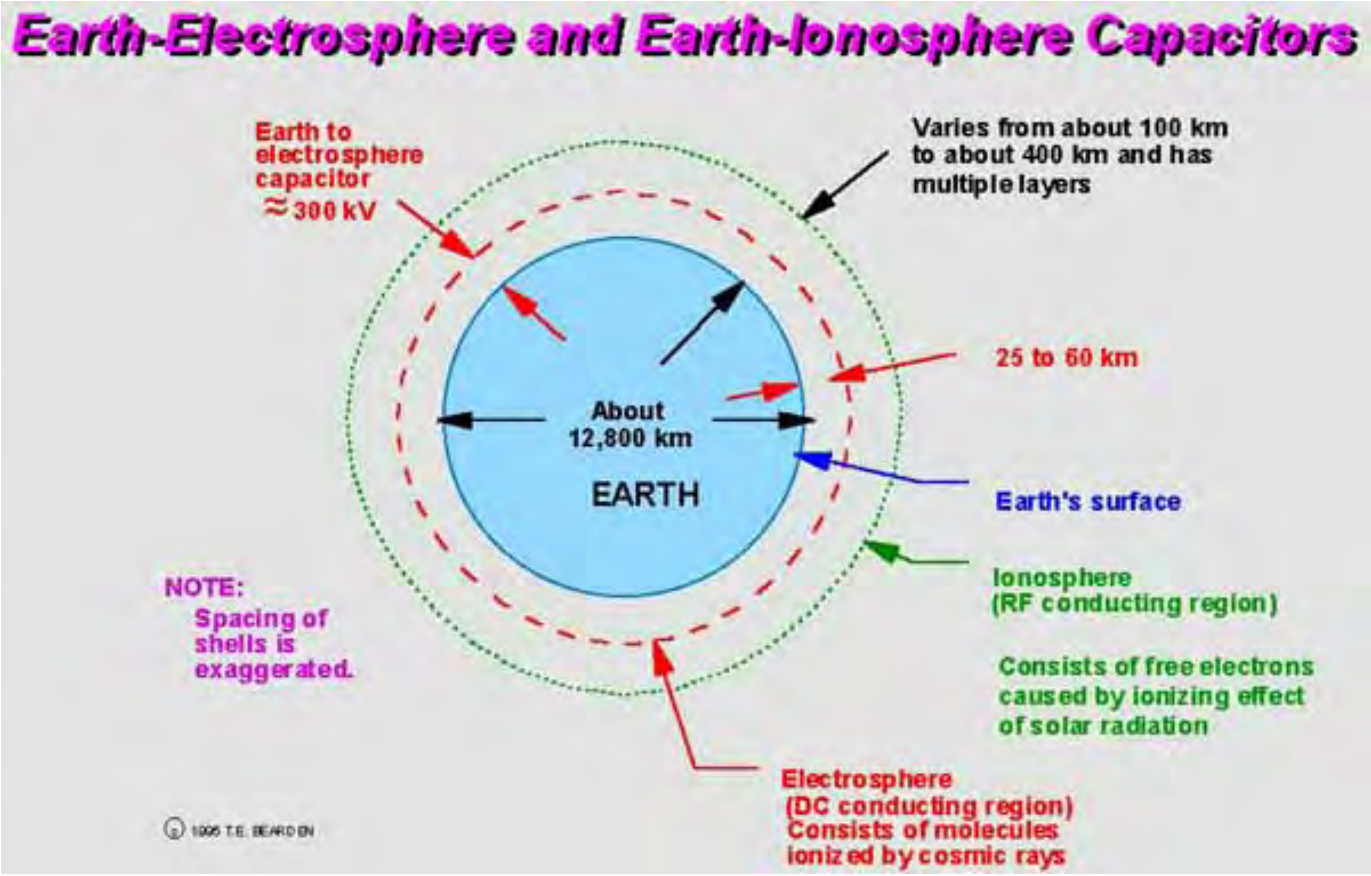

Return to Slide Index

Next Slide

Previous Slide

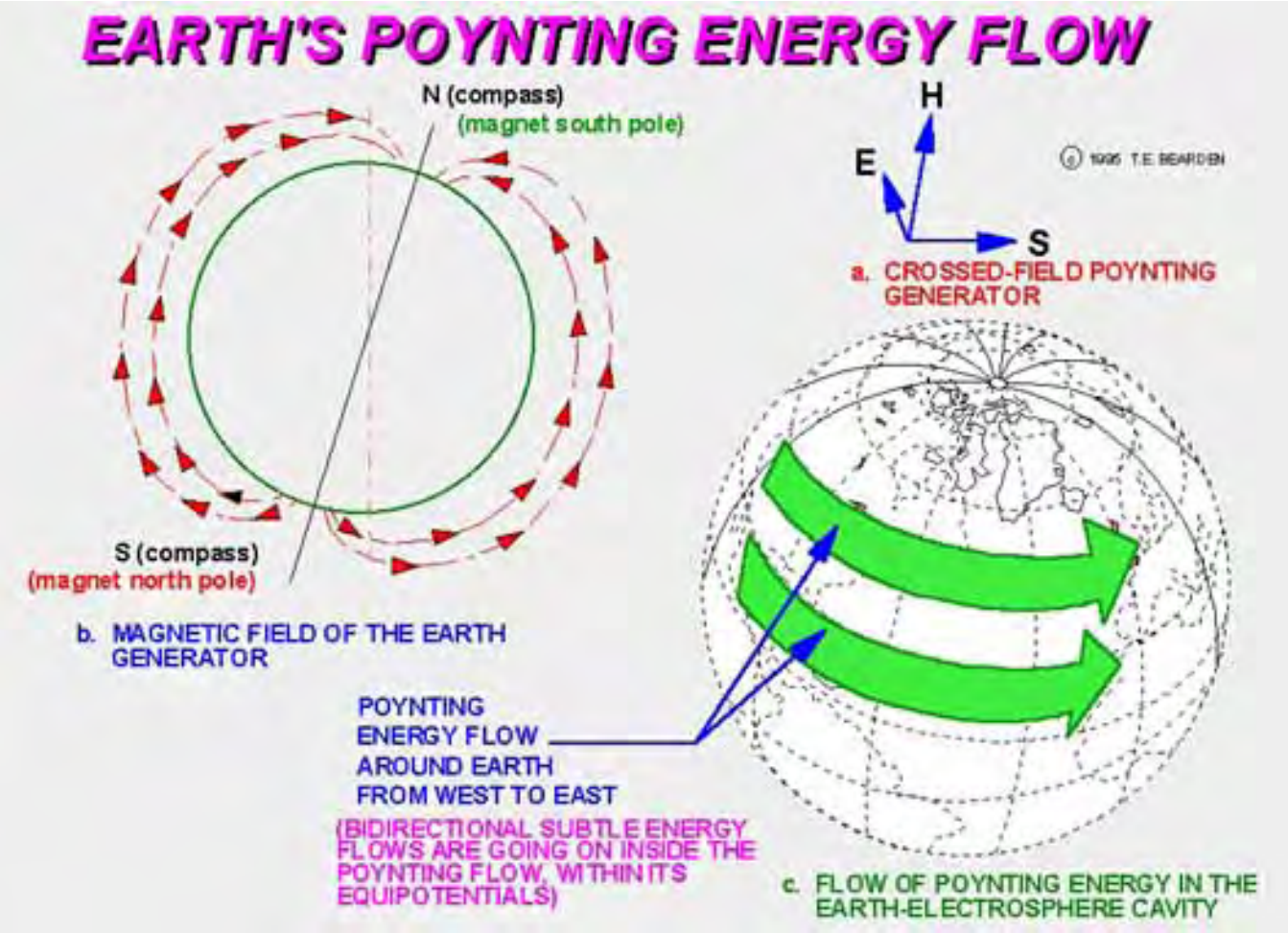

[Return to Slide Index](#)

[Next Slide](#)

[Previous Slide](#)

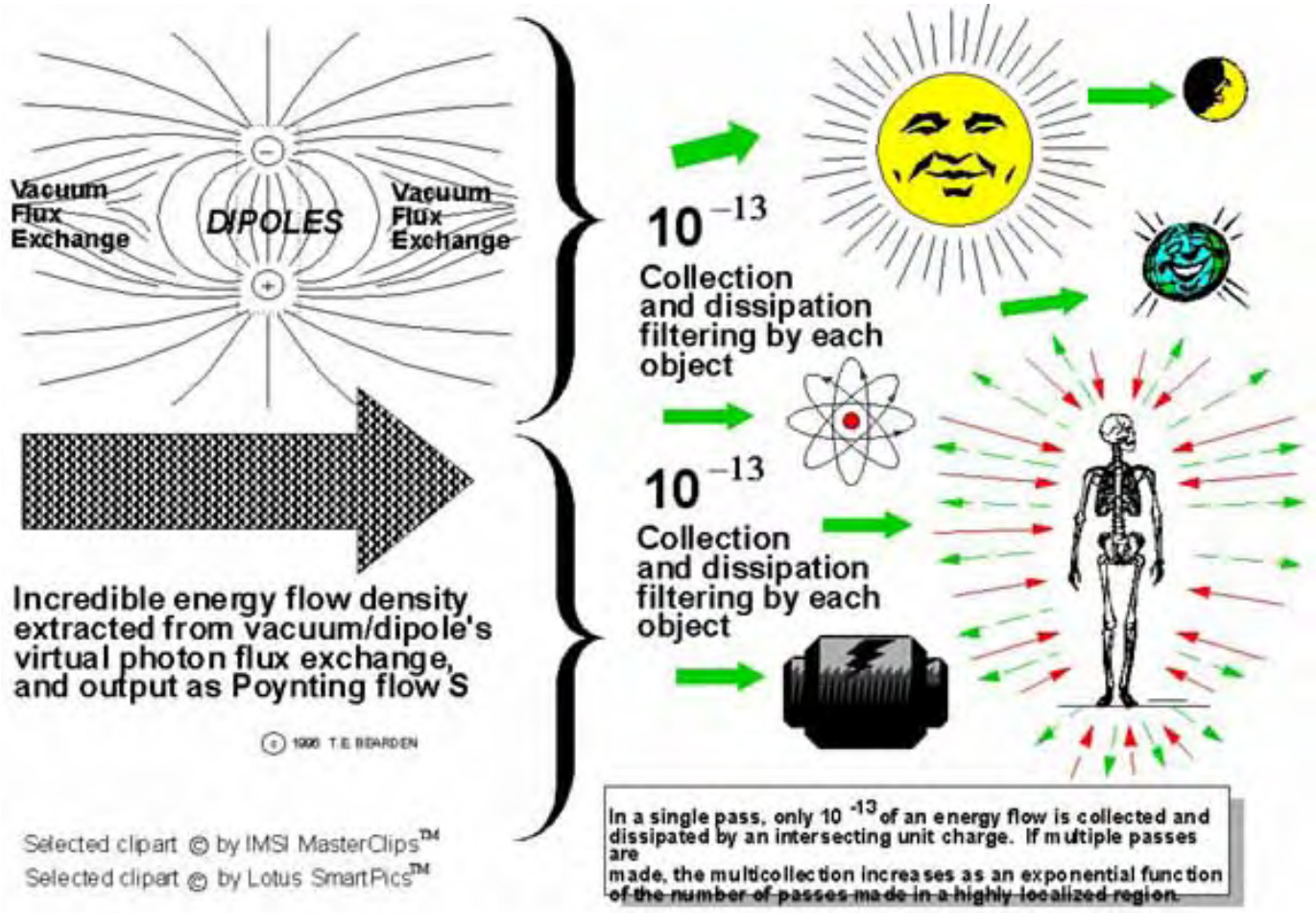

Figure 19. The world of physical matter exists behind a dramatic 10^{-13} filter in a fiery cauldron of fierce and primeval EM energy flow.

Return to Slide Index

Next Slide

Previous Slide

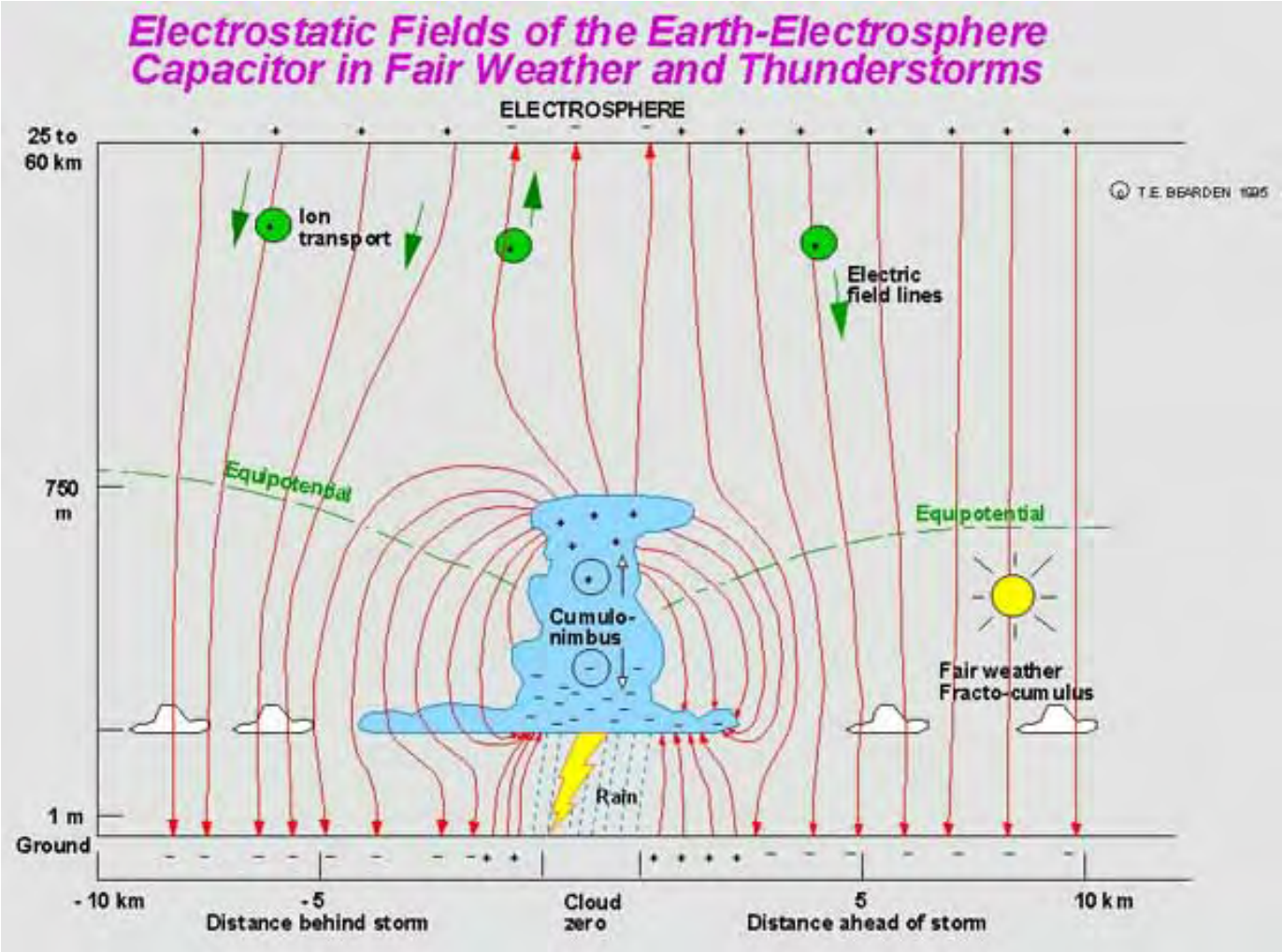

Return to Slide Index

Next Slide

Previous Slide

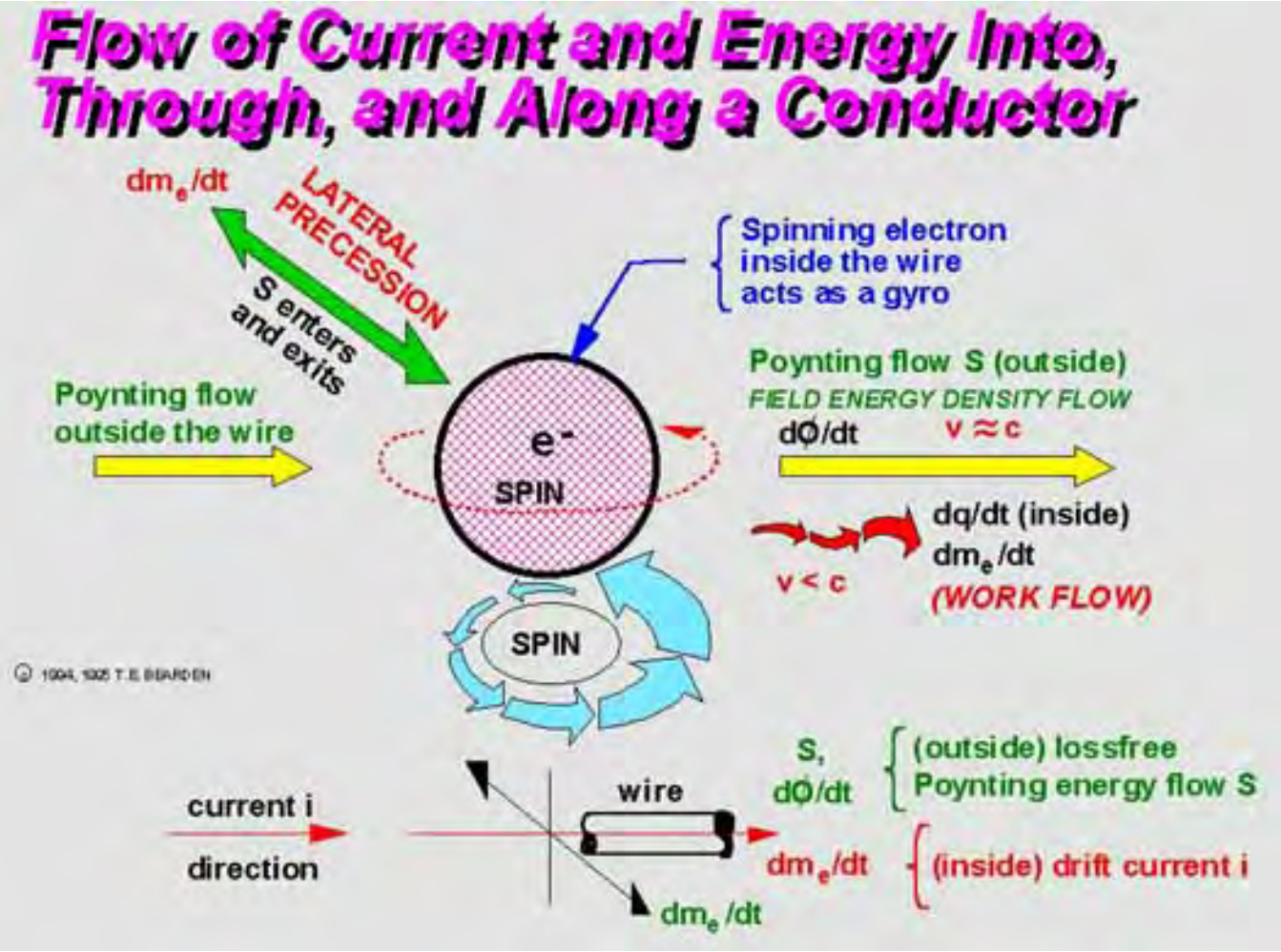

Return to Slide Index

Next Slide

Previous Slide

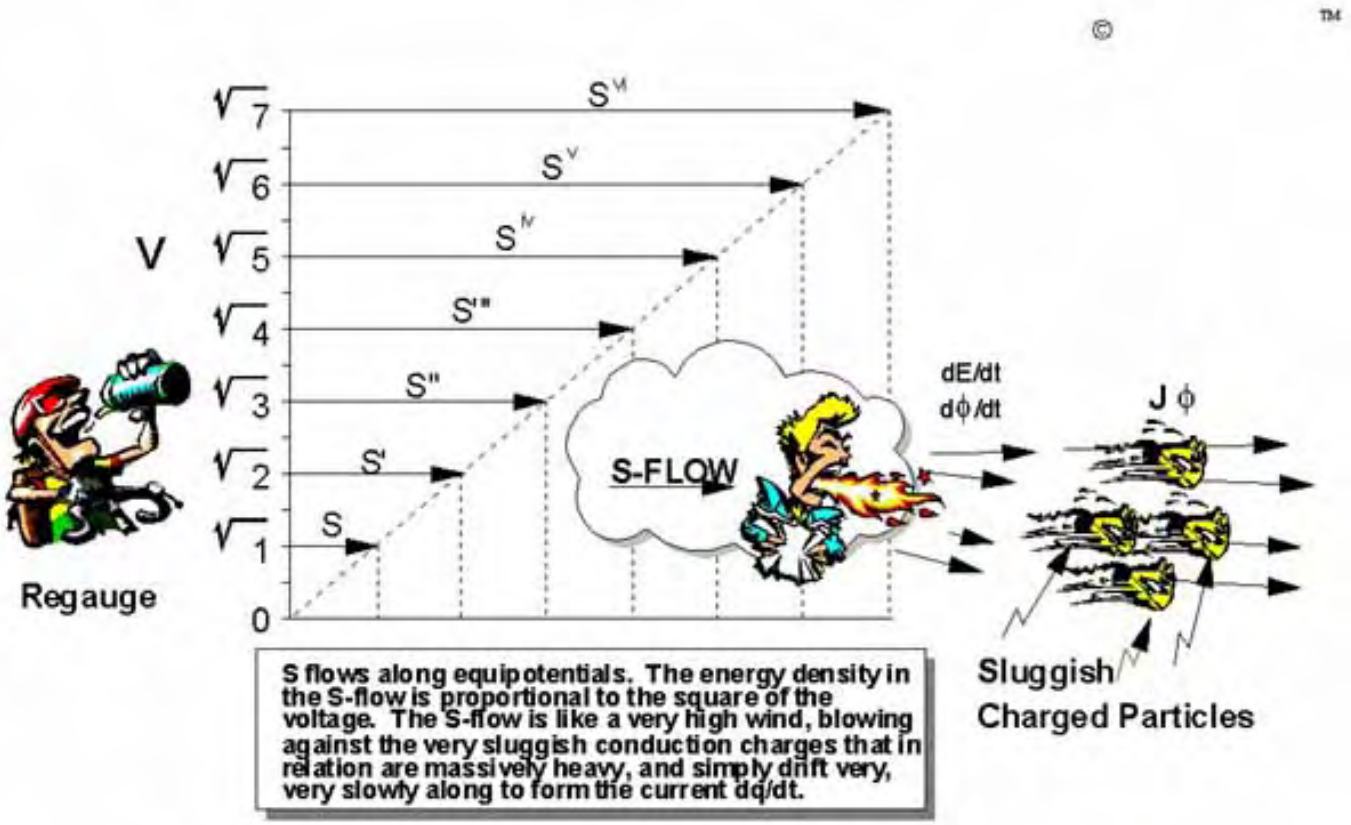

Figure 17. Energy "collected" on a charge depends upon the charge being in a continuous Poynting S-flow. When S ceases, there is no excess energy "collected" on the charge. Energy collection never occurs in chunks, but is always a dynamic, ongoing process.

Return to Slide Index

Next Slide

Previous Slide

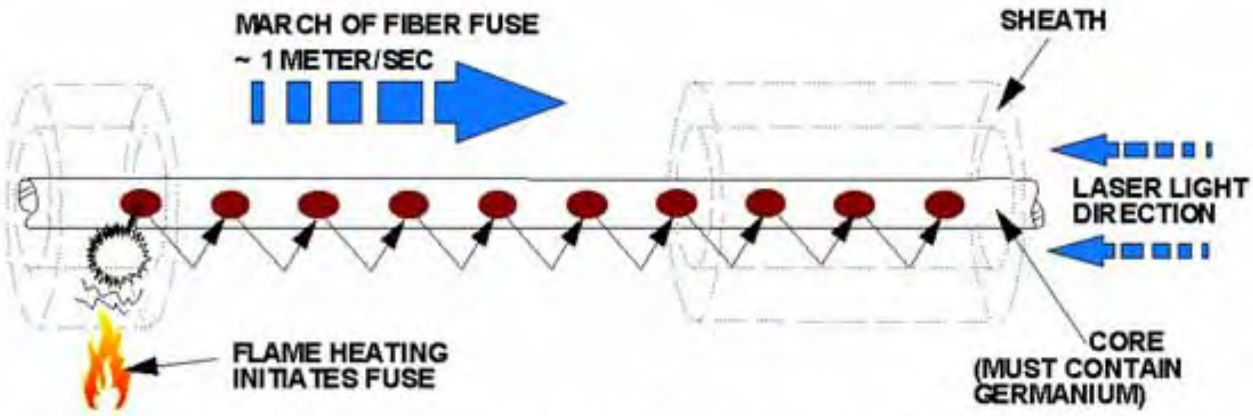

31A. Fiber fuse destroys core of fiber optics cable of indefinite length, pitting core with holes.

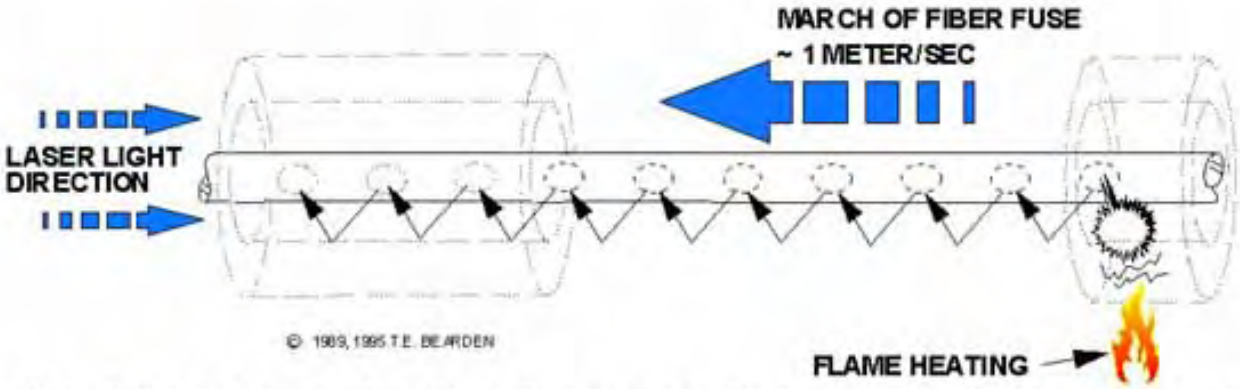

31B. Reversed second fiber fuse often *restores* pitted core in cable, filling holes back up.

Figure 31. Fiber fuse effect and its strange anomalies.

Return to Slide Index

Next Slide

Previous Slide

Impact of Vacuum Engineering

- "If they [quantum fluctuations of vacuum] can be [tapped], the impact upon our civilization will be incalculable. Oil, coal, nuclear, hydropower, would become obsolete – and so would many of our worries about environmental pollution."
- "Don't sell your oil shares yet – but don't be surprised if the world again witnesses the four stages of response to any new and revolutionary development:
  - 1. It's crazy!
  - 2. It may be possible -- so what?
  - 3. I said it was a good idea all along.
  - 4. I thought of it first."

Arthur C. Clarke
"Space Drive: A Fantasy That Could Become Reality"
Nov./Dec. 1994

- *Comment:*
  - *Every dipole's broken symmetry in its energetic exchange with the vacuum already freely extracts vacuum energy.*
  - *In power sources, the dipole gates the extracted energy out as S = EXH, which flows almost entirely outside the conductors.*
  - The circuit interacts with, and uses, only about 10^{-13} of S. The electrodynamicists calculate only this small S-component.

© 1996 T. E. BEARDEN

Return to Slide Index

Next Slide

Previous Slide

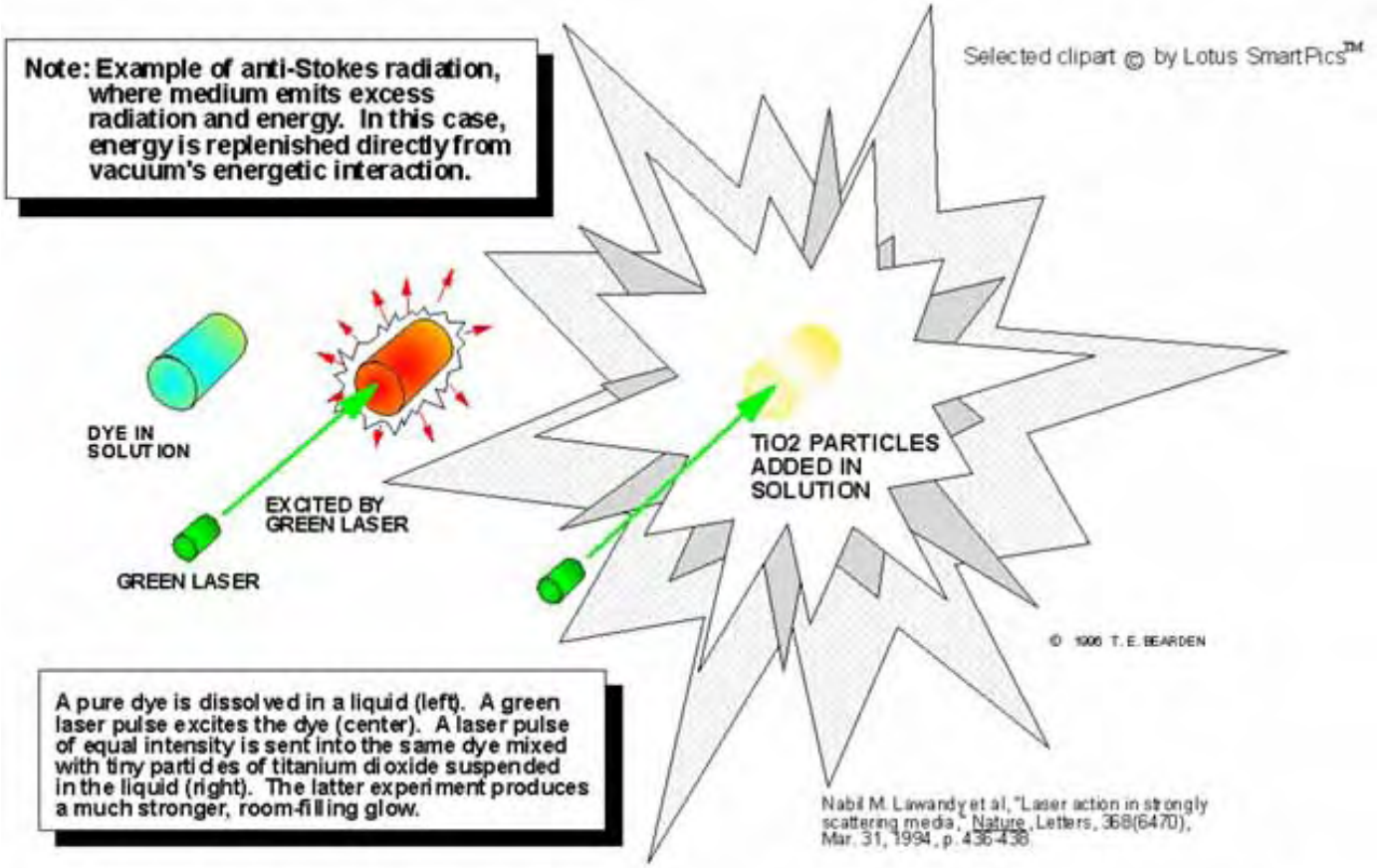

Figure 28. Lawandy's experiment (Letokhov-Lawandy effect) with multipass, multicollection of energy. Formation of a quantum potential can also become involved. Retroreflection and self-targeting are key.

Return to Slide Index

Next Slide

Previous Slide

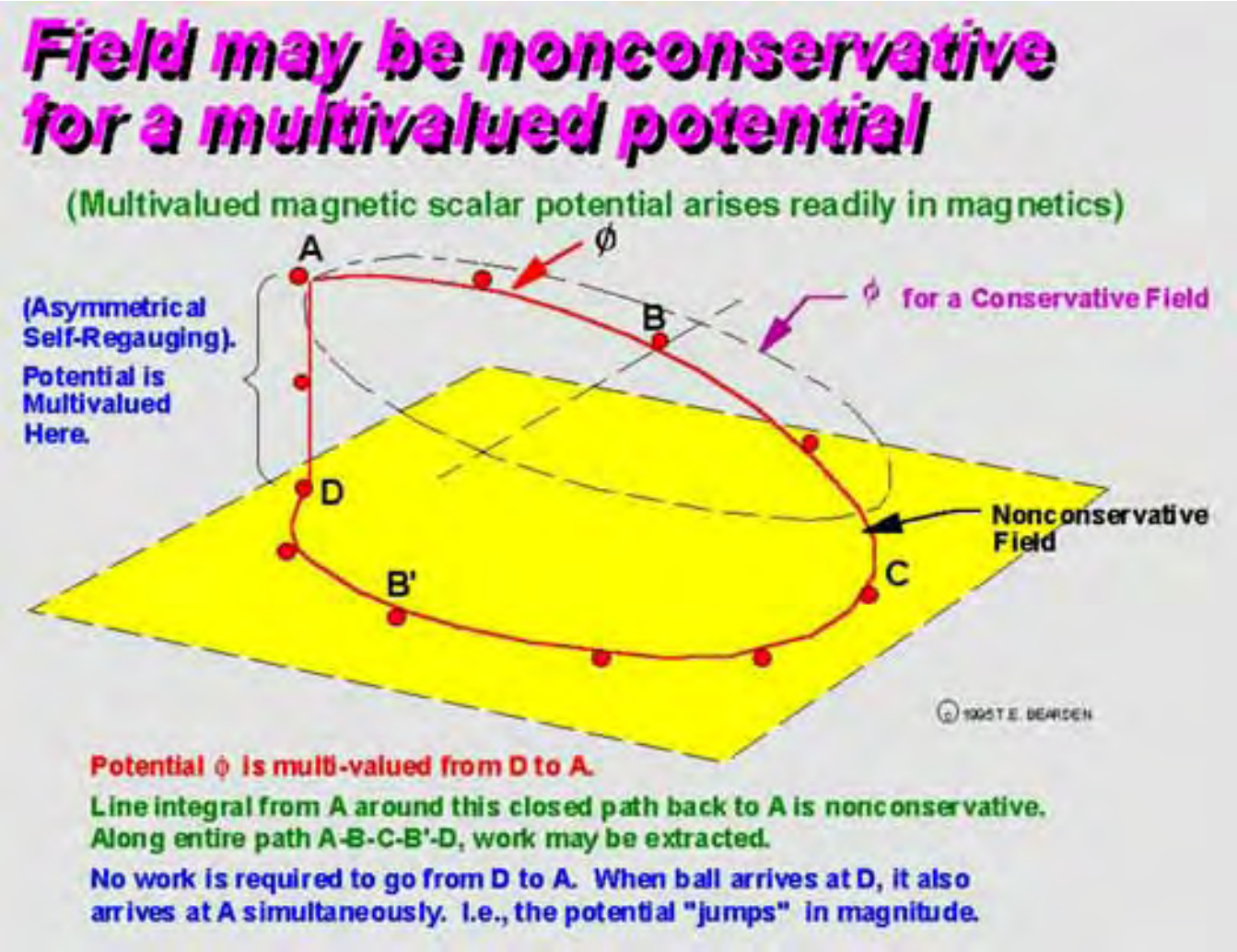

Return to Slide Index

Next Slide

Previous Slide

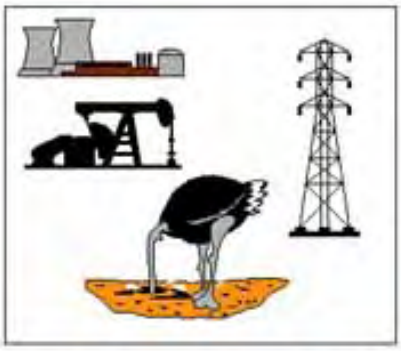

We're running out of energy! We must redouble our efforts!

We have to keep polluting the Earth, if we are to have energy!

Actually, a *few* of our electrical systems already produce all the energy we could ever need! *Learn to collect it and use it!*

Selected clipart © by IMSI MasterClips™
Selected clipart © by Lotus SmartPics™

All our antibiotics are failing! Millions will die from the new age of pandemics and from terrorists' BW attacks!!

We have to relegate EM effects on biological systems to the trash heap. We can only try to find more drugs and antibiotics.

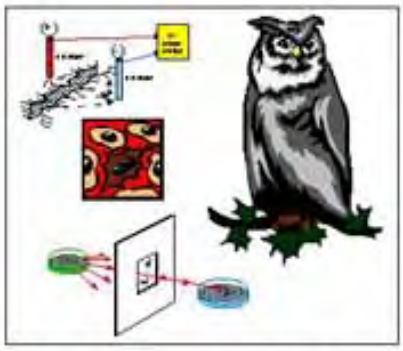

Actually, Priore already showed how to cure most dread diseases, by making and directing vacuum engines. Becker showed you it worked. *Develop it and use it!*

Figure 33. The only problem is the ostrich problem.

© T.E. BEARDEN 1996

Return to Slide Index

Next Slide

Previous Slide

We're running out of energy!
We must redouble our efforts!

We have to keep polluting the Earth, if we are to have lots of electrical energy!

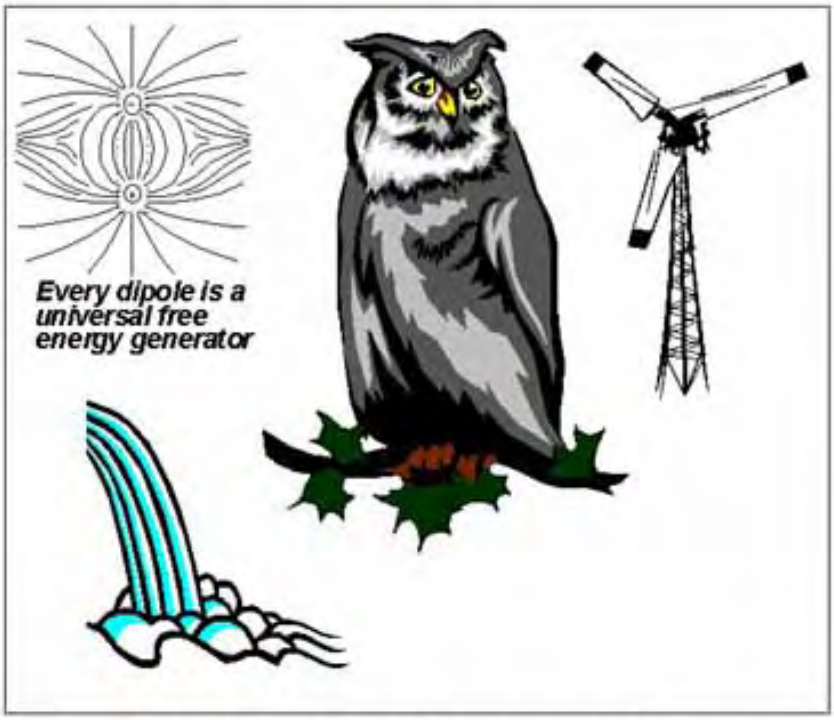

Actually, a single one of our large electrical power systems already produces all the free Poynting energy the world could ever need! *We just have to learn how to collect more of it and use it without continually destroying the source dipole!*

Figure . The only energy resource problem is the theoretical ostrich problem. We must become theoretical owls, rather than ostriches.

[Return to Slide Index](#)

[Next Slide](#)

[Previous Slide](#)

RUSSIAN "SWITCHED PARAMETERS" DEVICES: SELF-OSCILLATING ROTARY GENERATORS*

- Excites oscillations without explicit sources of magnetic or electric forces (i.e., regauges)
  - Periodic variation in system's parameters
  - Experimental and theoretical proof
  - Multiple successful systems made, tested
  - Papers published in Russian, French journals
- As theory predicts, power continually increases unless load is adjusted to stabilize system
- Several large systems tested to self-destruction
- Several large stable systems built, tested

* "On the parametric excitation of electric oscillations," L.I. Mandel'shtam and N.D. Papaleksi, Zh. Tek. Fiz. 4(1), 1934, p. 5-29.

© 1994 T.E. BEARDEN

Return to Slide Index

Next Slide

Previous Slide

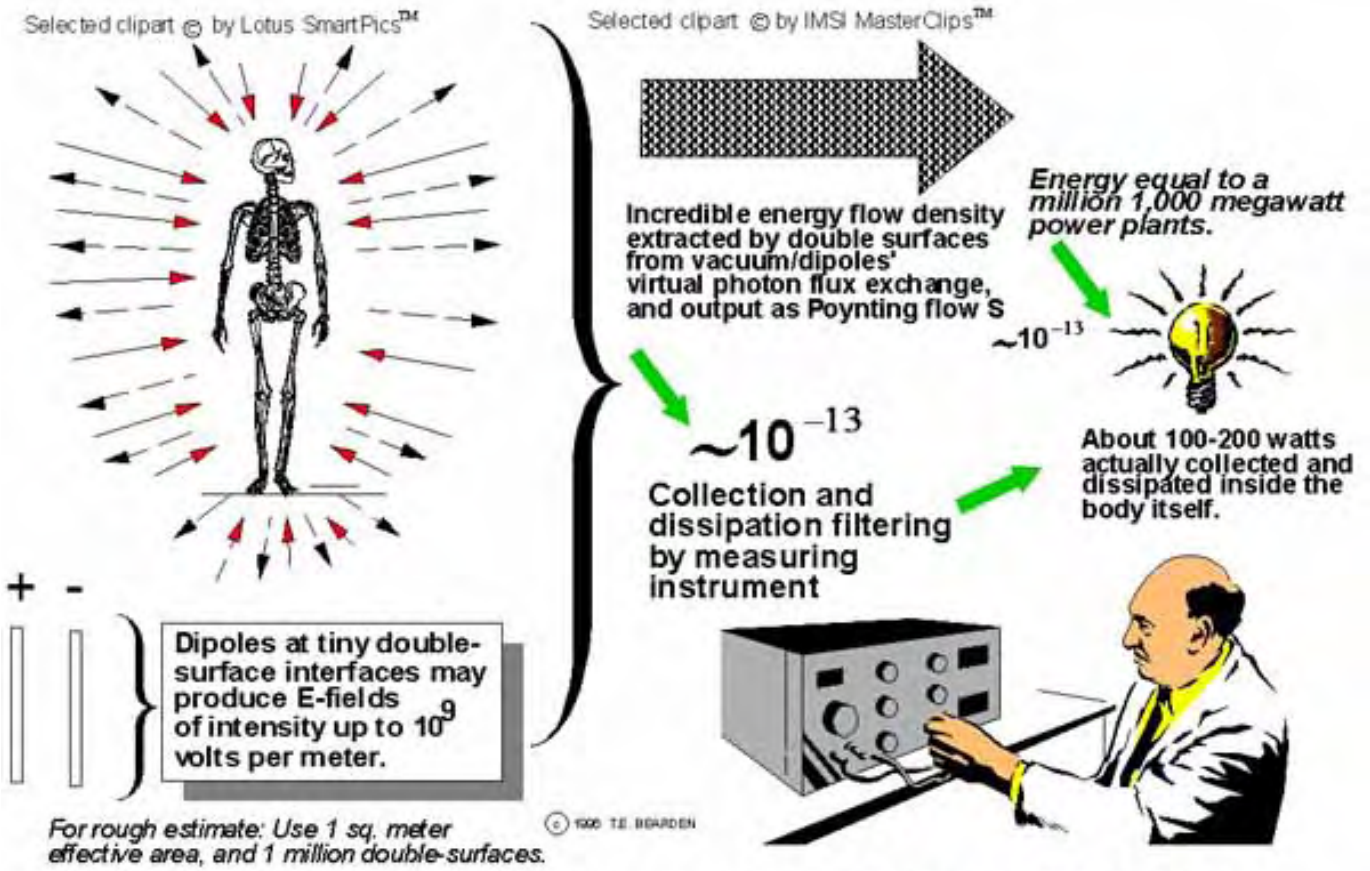

Figure 20. One human body produces more energy flow than all the electrical power loads on earth dissipate. However, only 100-200 watts of its own energy output is collected and dissipated by the body.

Return to Slide Index

Next Slide

Previous Slide

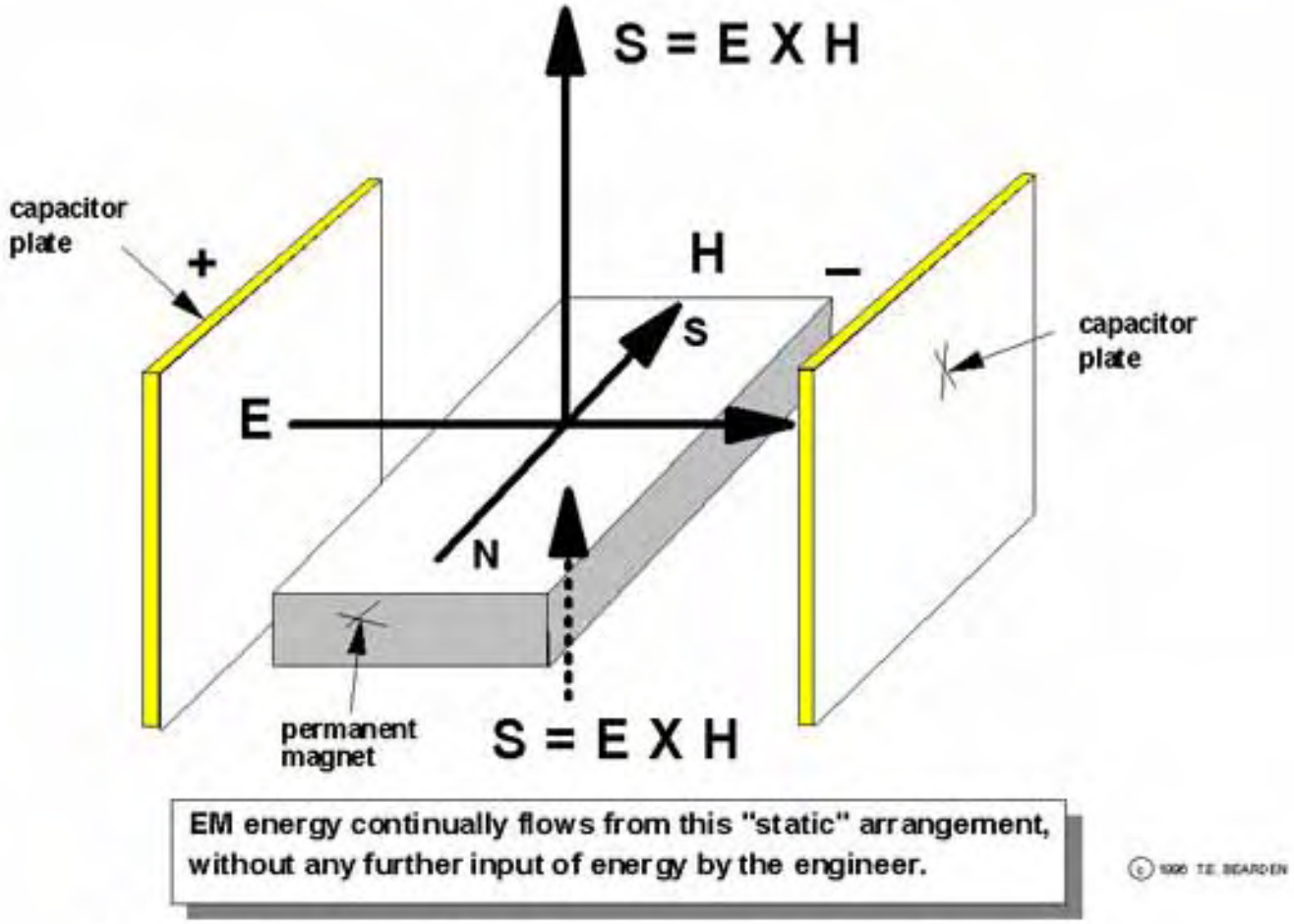

Figure 18. A "static" Poynting S-flow free-energy generator.

Return to Slide Index

Next Slide

Previous Slide

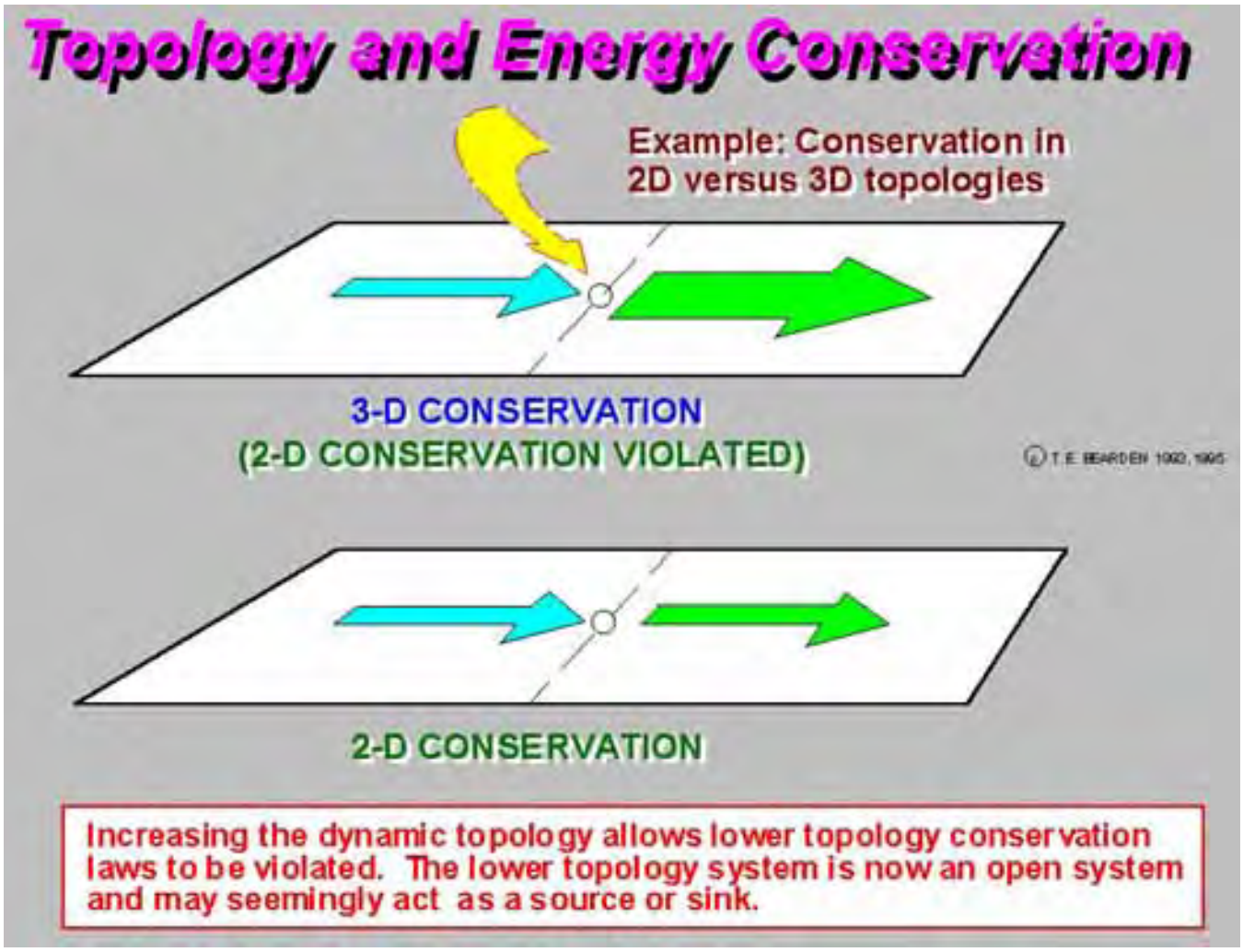

Return to Slide Index

Next Slide

Previous Slide

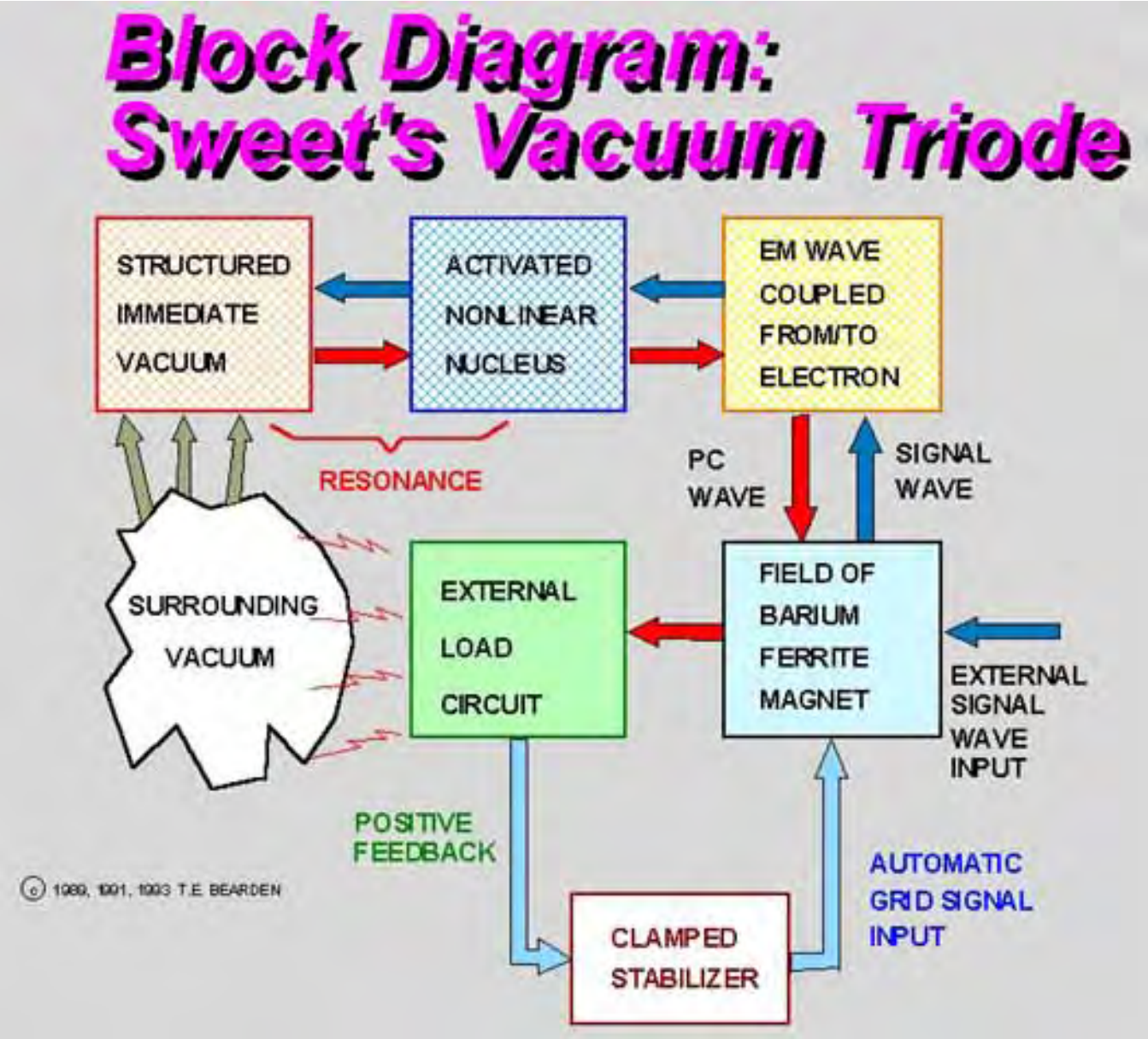

[Return to Slide Index](#)

[Previous Slide](#)

The Missing Infolded Electro-dynamics

Contents

1. The Missing Infolded Electrodynamics
2. Major Points
3. Major Points (cont.)
4. MTW's General Relativity Principle
5. Extended General Relavity Principle
6. Active Spacetime and Specific Vacuum Engine
7. Electrodynamicists React to Removal of Material Ether
8. Reaction to Loss of Material Ether
9. Massless Spacetime Perturbations Not Addressed
10. Bunge on Status of Electrodynamics
11. Bunge (continued)
12. Poynting Energy Flow Along Two Parallel Conductors
13. Fields and potentials defined only in/on charged matter
14. Wave in String (Transverse)
15. Launching EM Wave from Wire Antenna
16. Phase Conjugate Wavepairs Produce New Waves
17. Time-Polarized (Scalar) EM Wave
18. Mechanism for flow of time
19. Present systems coefficient of performance (COP)<1.0
20. Bridging for Overunity
21. Free Energy Generator
22. Demonstration of Overunity Concept
23. Altered Spacetime Curvatures
24. Interaction of Mass and Spacetime Curvature
25. Composition of Scalar Potential
26. Lorenz Closed Surface Integration
27. How can they use that old physically insignificant wind?!!
28. Vacuum Engines: Spacetime Demons
29. Undistorted Progressive Waves (1)
30. Undistorted Progressive Waves (2)
31. Other Superluminal Waves
32. Becker's Experiments: Healing Bone Fractures
33. Producing a Specific Spacetime Curvature Engine
34. Pumping A Phase Conjugate with Transverse EM

35. Differentiation and Dedifferentiation
36. First Step to Cancer: Hypoxia
37. Longitudinal Photon Interaction with Charge
38. General Relativity in Particle Physics
39. Pepper* on time-reversing mass
40. Pepper* on time-reversing mass (2)
41. Pepper* on time-reversing mass (3)
42. Chung's Negative Resistor
43. China Lake Anomalies
44. Time Reversal (TR) Zone
45. Electronuclear Reactions in TR-Zones (1)
46. Electronuclear Reactions in TR-Zones (2)
47. Electronuclear Reactions in TR-Zones (3)
48. Nuclear Reactions in Time-Reversal Zones
49. Nuclear reactions are biased
50. Dynamics may be reversed
51. Significant only after time-density charging
52. Curved Spacetime as source or sink
53. Anomalous China Lake Phenomena (1)
54. Anomalous China Lake 2
55. Anomalous China Lake 3
56. Anomalous China Lake 4
57. Consistent Anomalies 1
58. Consistent Anomalies 2
59. LW Emission in Electrolysis
60. New Energy Conservation Law
61. Carcinogens & EM Radiation
62. Carcinogens & EM Radiation 1
63. Chronic Disease Puzzle
64. Cancer characteristics
65. Solving Cancer Enigma
66. Cancer Characteristics
67. Portable Prioré Unit
68. Lisitsyn: Brain Code Broken
69. Anti-engine reverses cell
70. Prioré Methodology
71. Prioré Methodology (2)
72. Pumping cell with LW
73. Extension to Nonlinear Optics
74. Time Reversal of Mass to a Form Not in Its Past
75. Cellular R&R System

76. Portable Prioré Treatment System
77. Portable System Block Diagram
78. Absorption and Emission
79. Absorption and Emission (2)
80. EM Waves in Spacetime
81. Cellular Evolution
82. Becker's Regeneration System
83. Becker's Control System Responds to Injury
84. Casualties Surviving Conventional Treatment
85. "Time as fuel" is the future

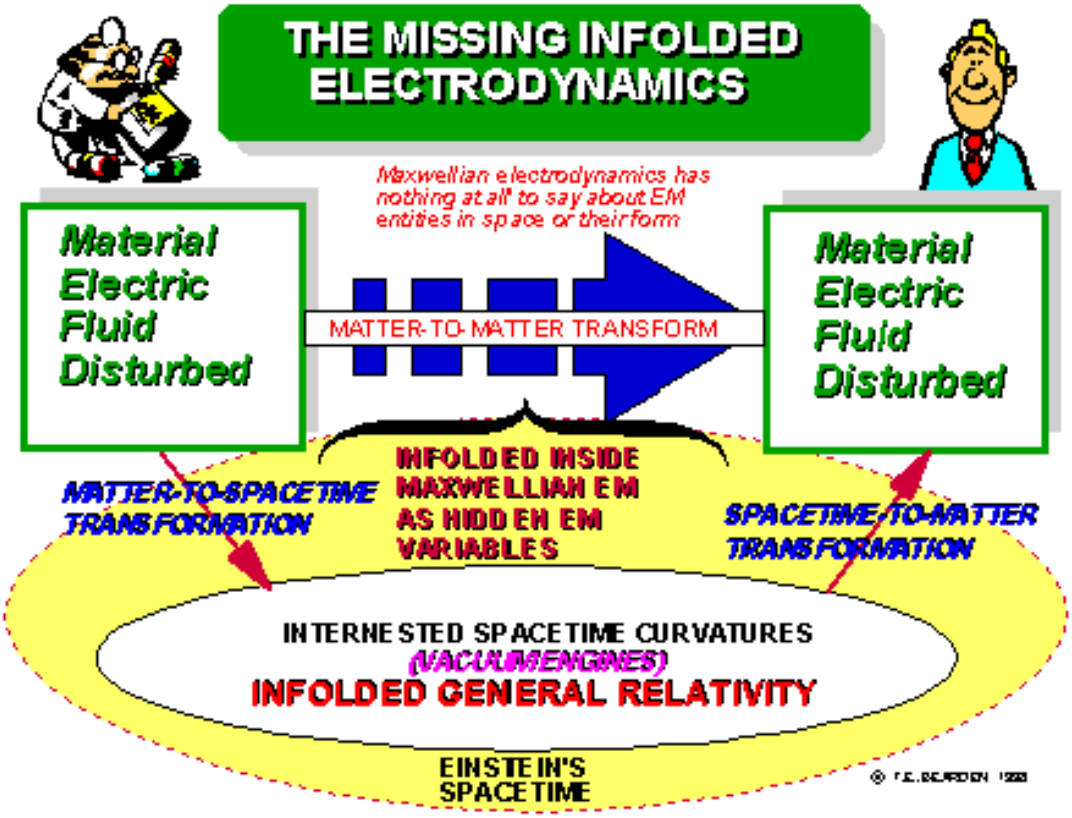

Published by Lotus® Freelance Graphics®

Major Points of Presentation

- Electrodynamic is seriously flawed
  - Some major flaws
  - Corrections indicated
- Why past corrective attempts failed
  - Force field concept is material
  - Missing two infolded transforms (M->ST; ST->M)
- Missing Infolded general relativity inside electrodynamics
- Several Kinds of EM Waves in Space
  - How to make
  - Transduction
- A French medical example as a deep experimental demonstration
  - Spectacular regenerative cures funded by French Govt
  - Not comprehended, therefore suppressed
- Cold Fusion examples of time-density wave effects
  - China Lake instrumental anomalies in electrolysis
  - Explanation of anomalous behavior of instruments
  - Explanation of new nuclear reactions
  - Wave energy transduction provides excess heat
- Urge theorists to consider dramatically new reactions

Published by Lotus® Freelance Graphics®

Major Points of Presentation

- Electrodynamic is seriously flawed
- Why past corrective attempts failed
- Missing Infolded general relativity inside electrodynamics
- Several Kinds of EM Waves in Space
- French medical example as a deep experimental demonstration
- Cold Fusion time-density wave effects
- Urge theorists to consider new reactions

Published by Lotus® Freelance Graphics®

MTW's General Relativity Principle

- "Space acts on matter, telling it how to move.
- In turn, matter reacts back on space, telling it how to curve."

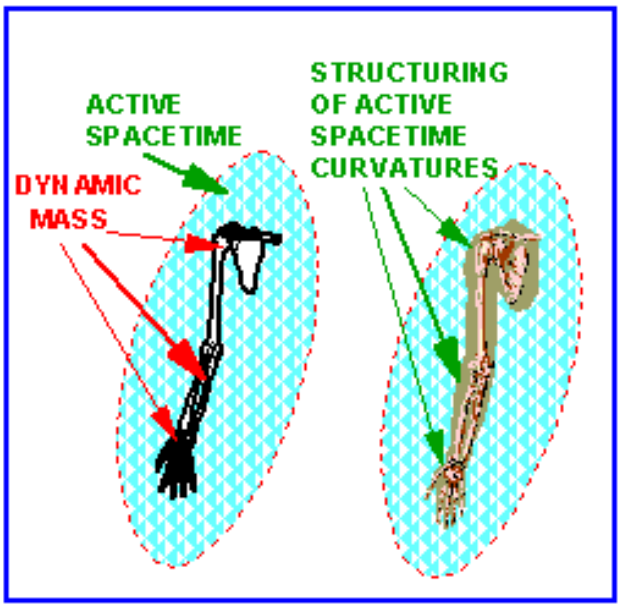

© T.E. BEARDEN 1993

Published by Lotus® Freelance Graphics®

Extended General Relativity Principle

- "All levels of energy structures and all levels of time structures mold spacetime geometry.
- This is called a *vacuum engine* (spacetime engine).
- Spatial and temporal structuring act upon mass at all levels.
- This produces *templates* of forces, for translations and stresses."

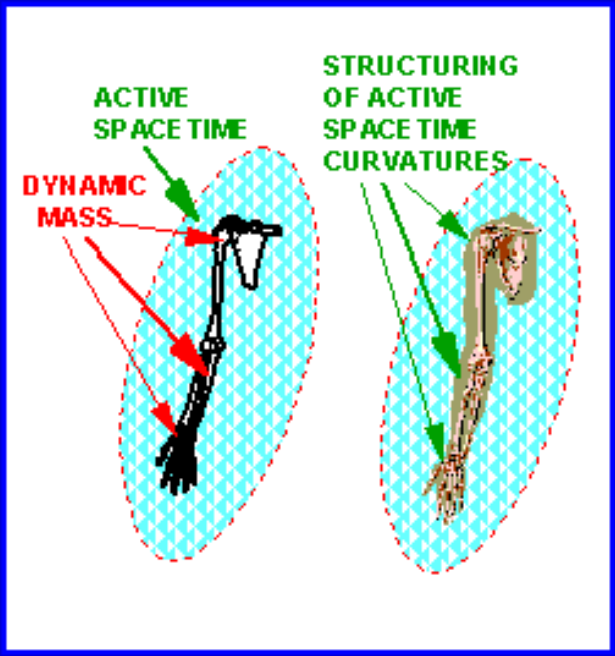

Published by Lotus® Freelance Graphics®

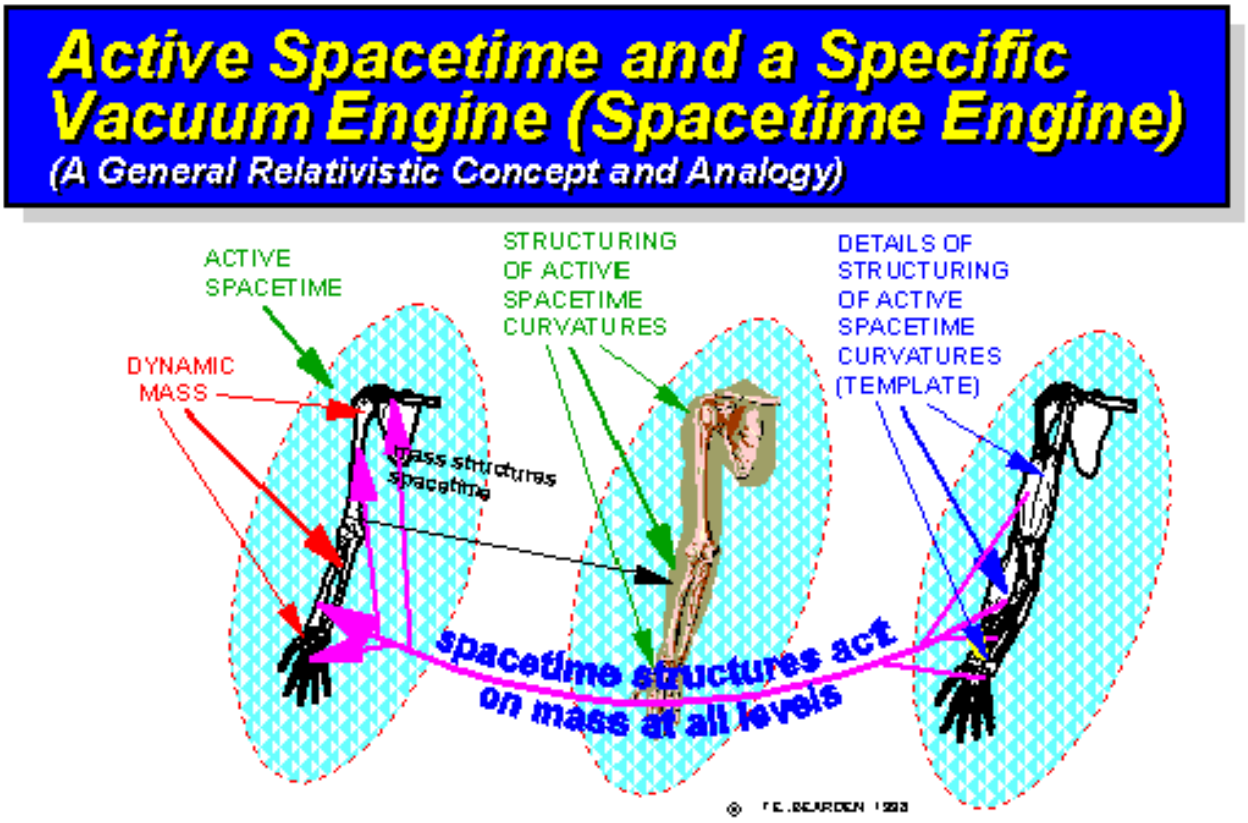

Published by Lotus® Freelance Graphics®

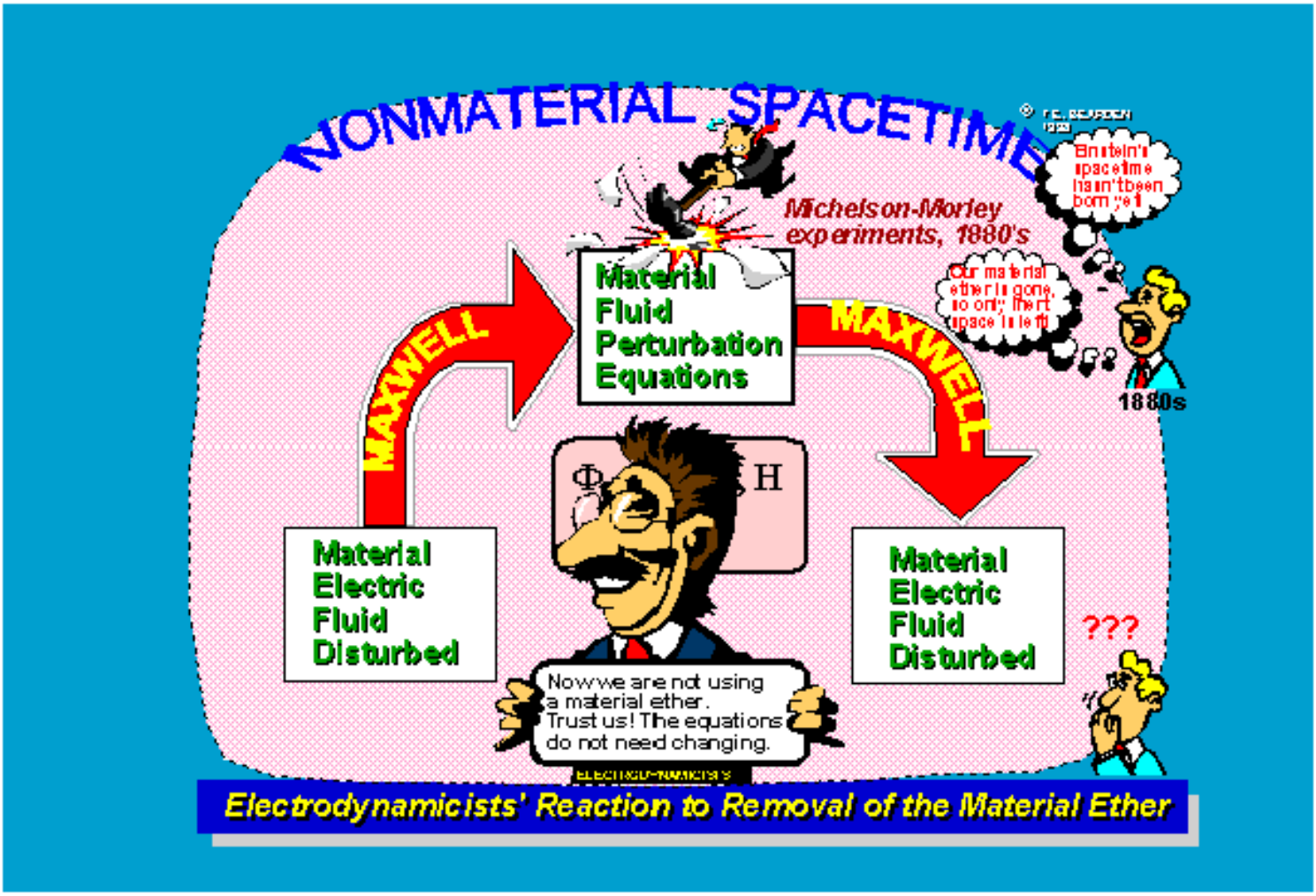

Published by Lotus® Freelance Graphics®

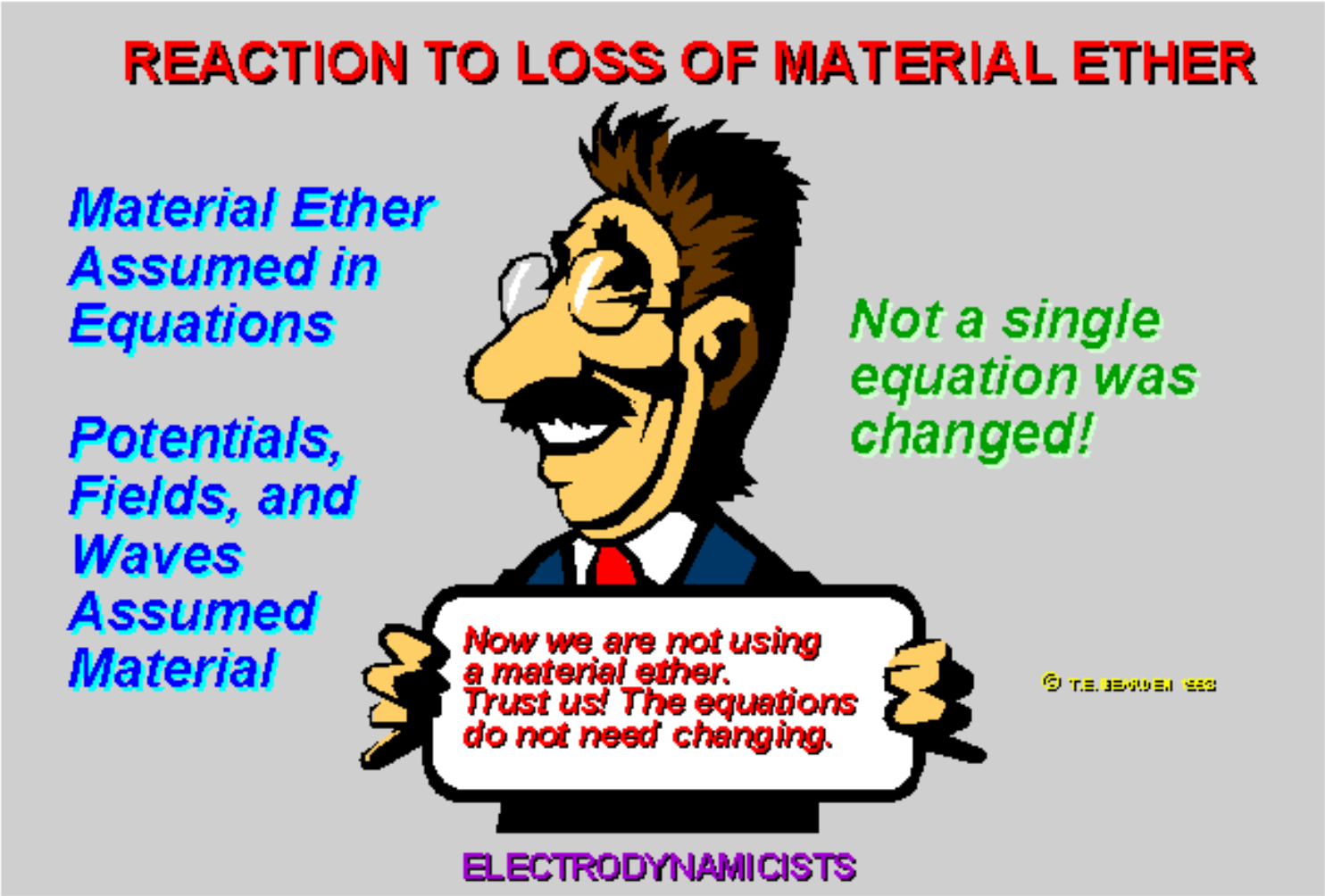

Published by Lotus® Freelance Graphics®

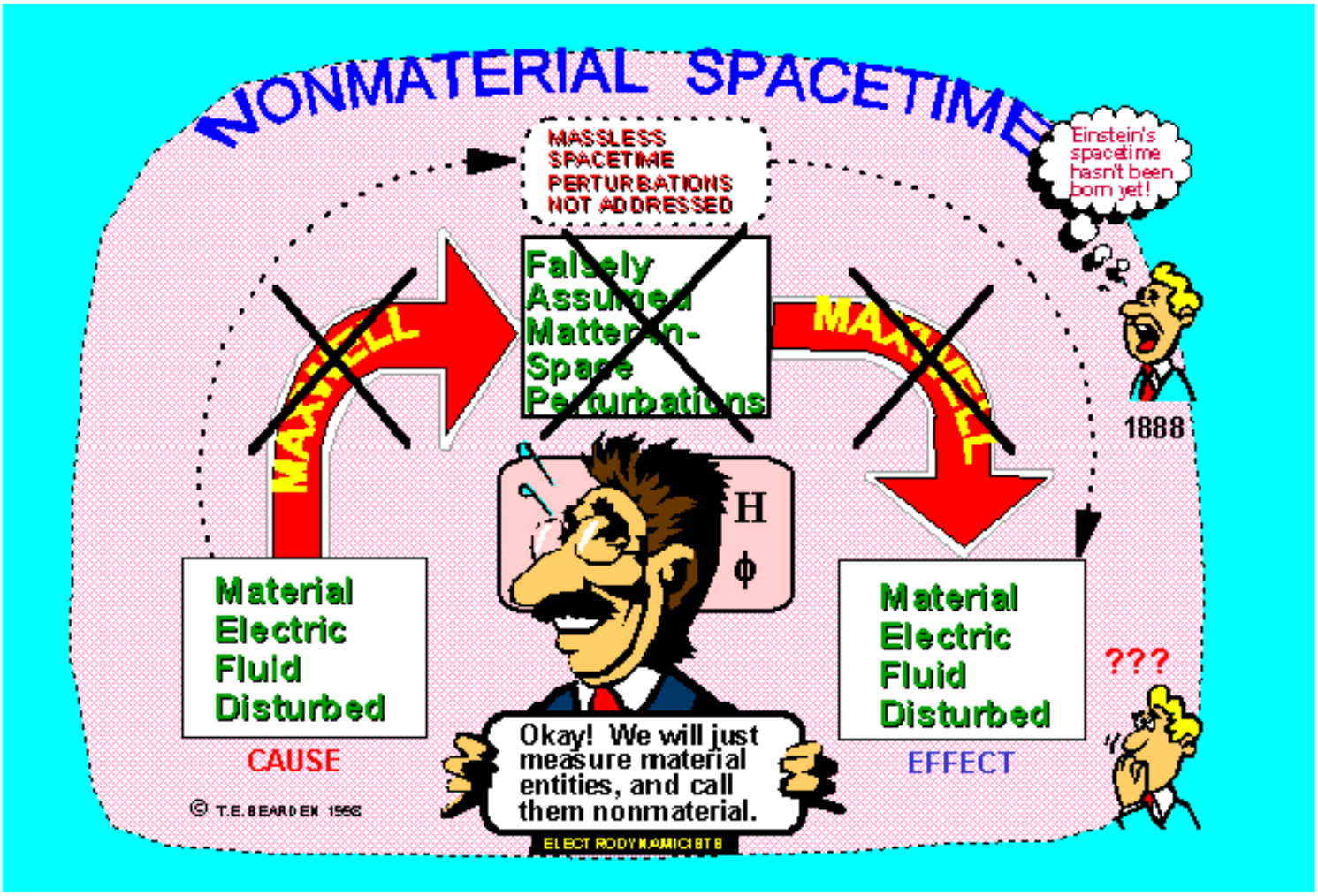

Published by Lotus® Freelance Graphics®

Bunge on the Status of Electrodynamics

"... it is not usually acknowledged that electro-dynamics, both classical and quantal, are in a sad state..."

"... the best modern physicist is the one who acknowledges that neither classical nor quantum physics are cut and dried, both being full of holes and in need of a vigorous overhauling..."

*Mario Bunge, Foundations of Physics, Springer-Verlag, New York, NY, 1967, p. 176..

© 1998 F.E. BEARDEN

Published by Lotus® Freelance Graphics®

Bunge on the Status of Electrodynamics and Physics

"... it is not usually acknowledged that electro-dynamics, both classical and quantal, are in a sad state...

"... neither classical nor quantum physics are cut and dried, both being full of holes and in need of a vigorous overhauling..."

© 1998 T.E. BEARDEN

*Mario Bunge, Foundations of Physics, Springer-Verlag, New York, NY, 1967, p. 176..

Published by Lotus® Freelance Graphics®

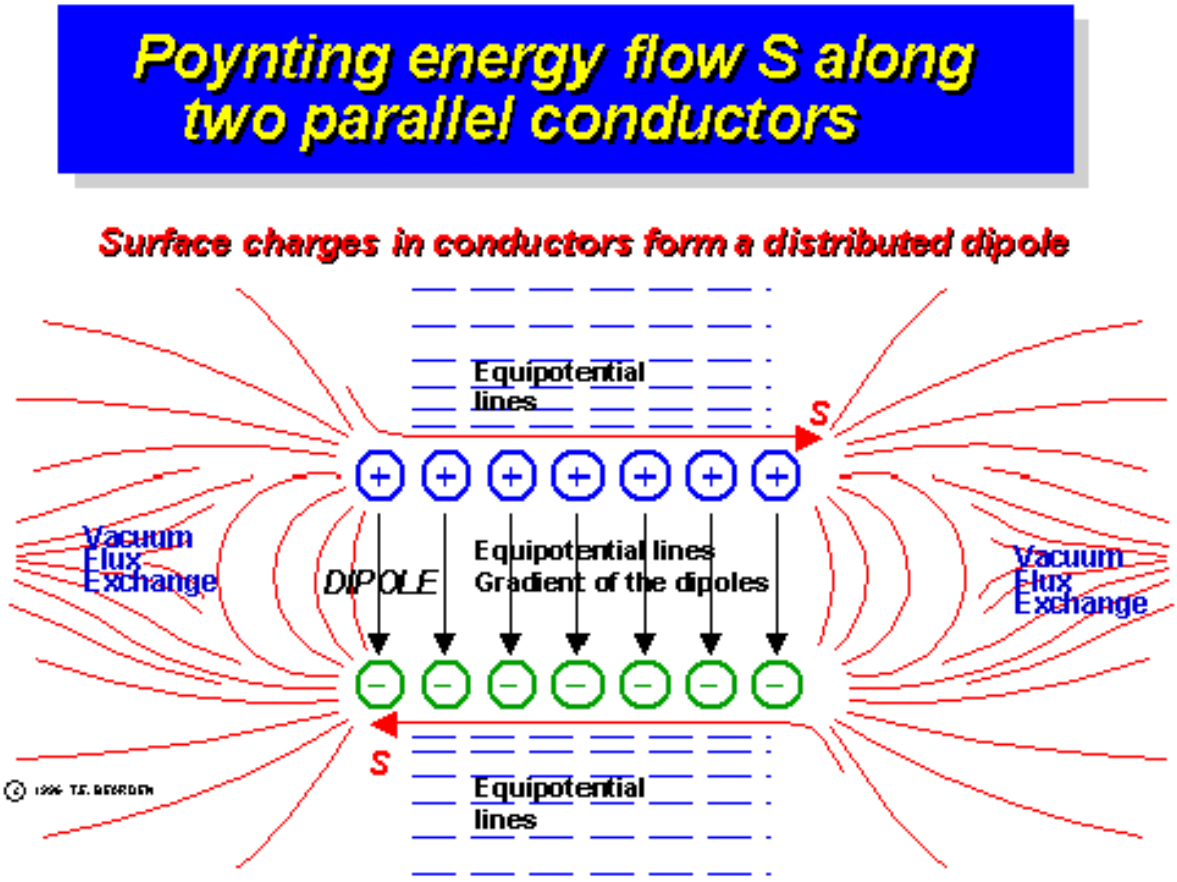

Published by Lotus® Freelance Graphics®

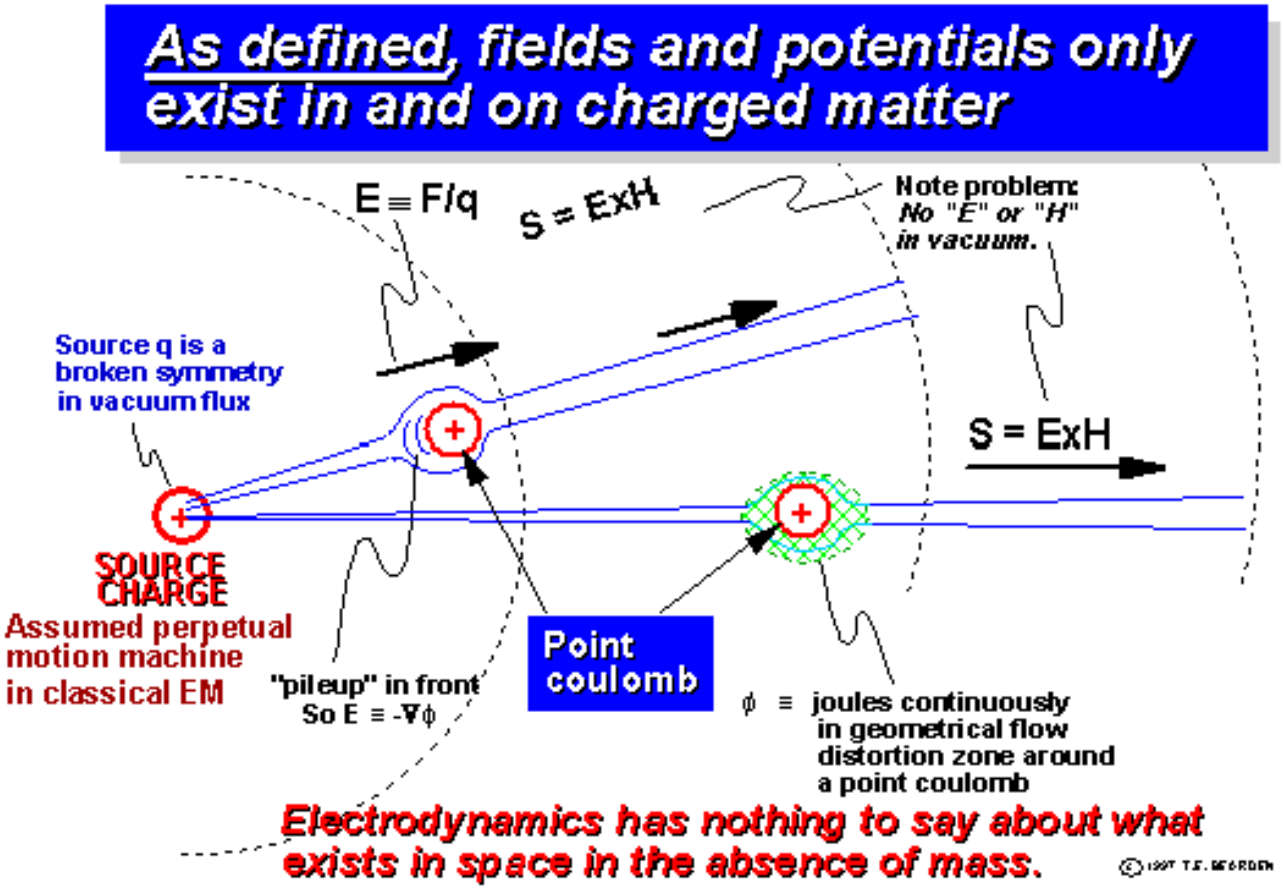

Published by Lotus® Freelance Graphics®

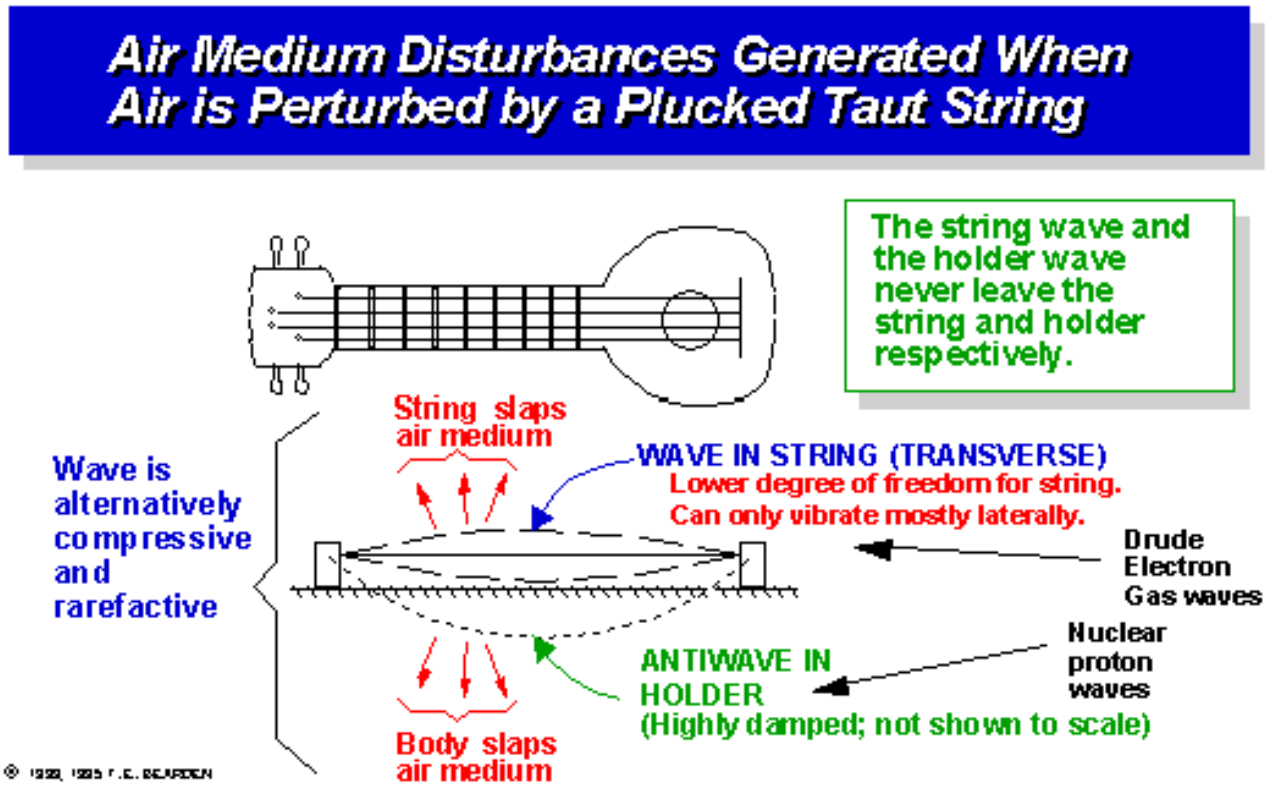

Published by Lotus® Freelance Graphics®

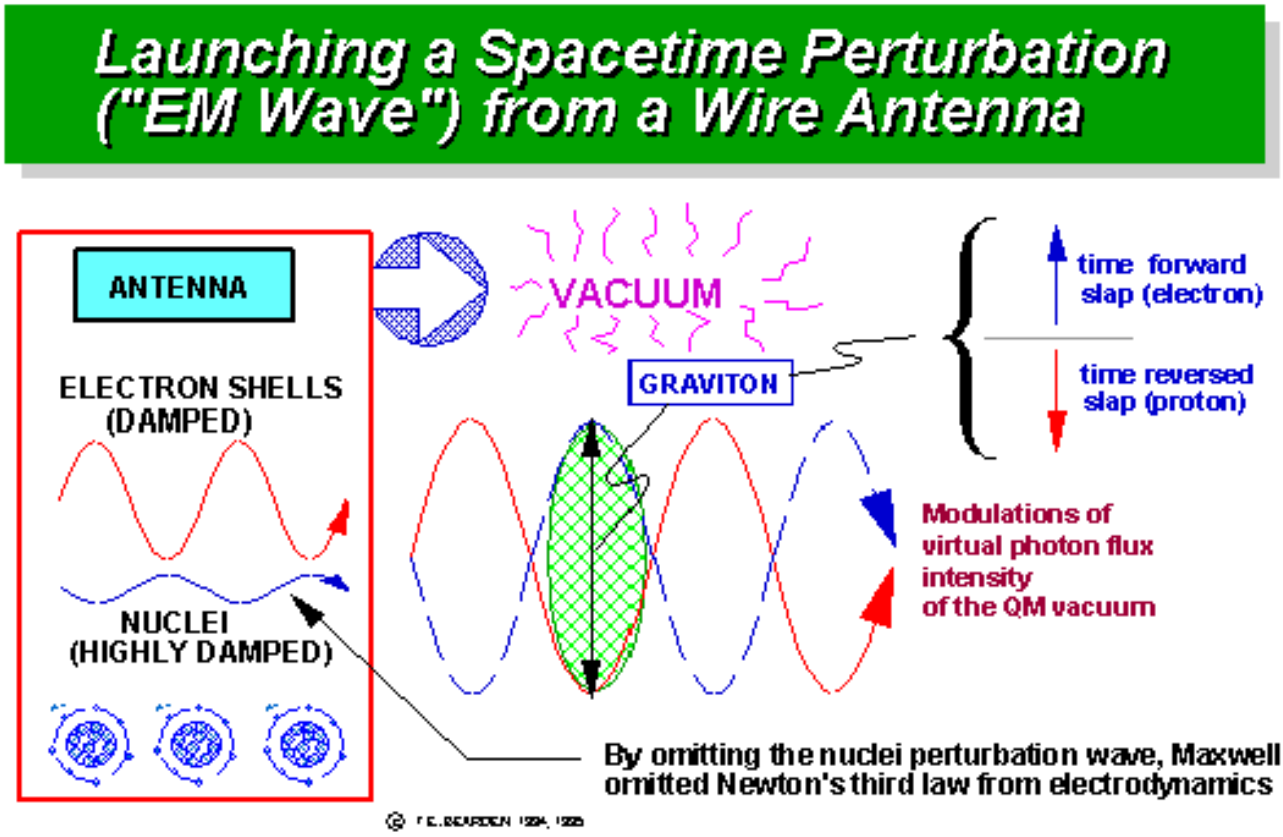

Published by Lotus® Freelance Graphics®

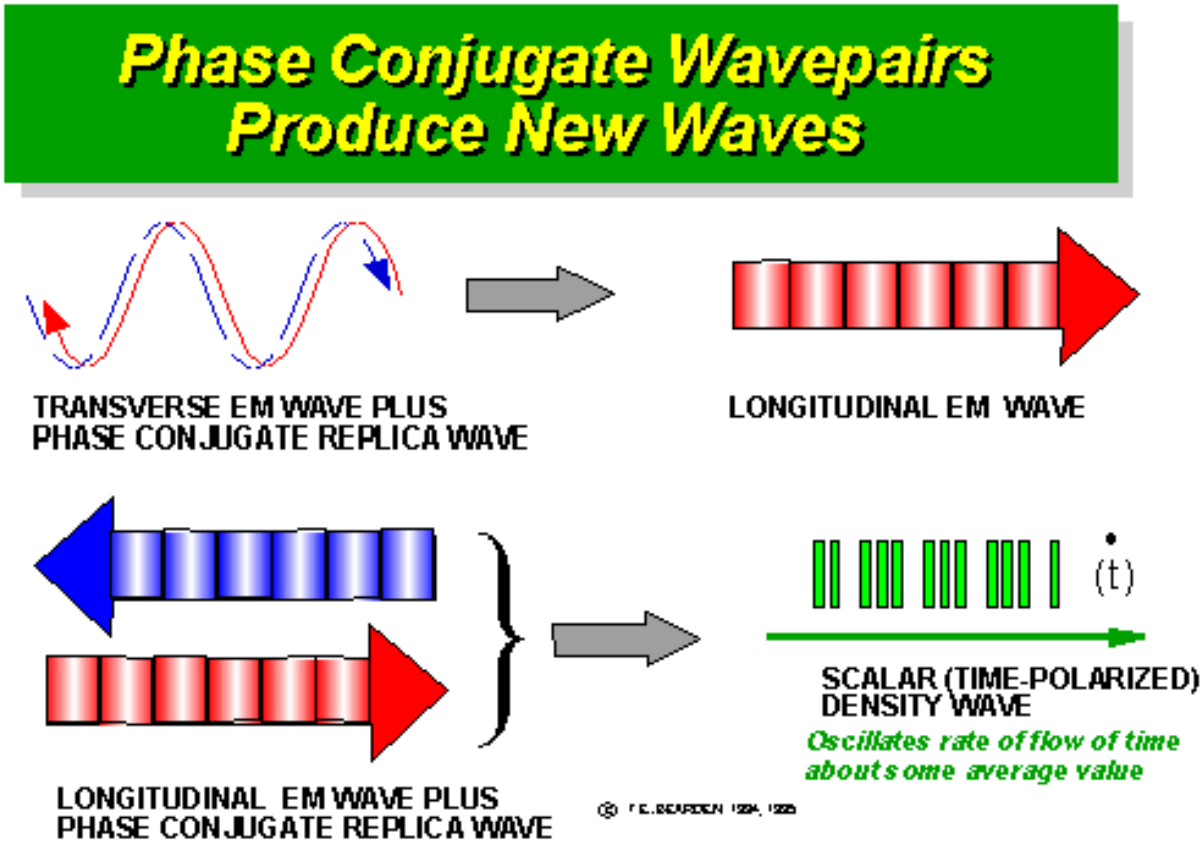

Published by Lotus® Freelance Graphics®

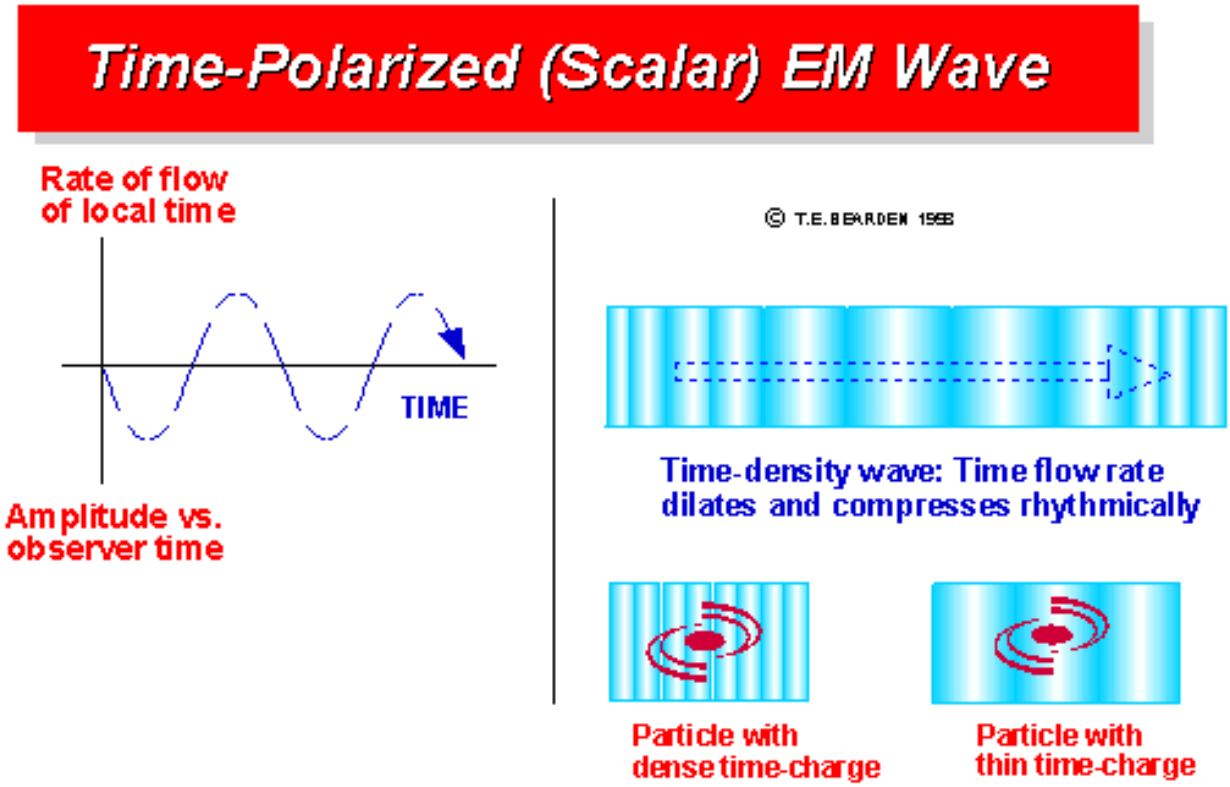

Published by Lotus® Freelance Graphics®

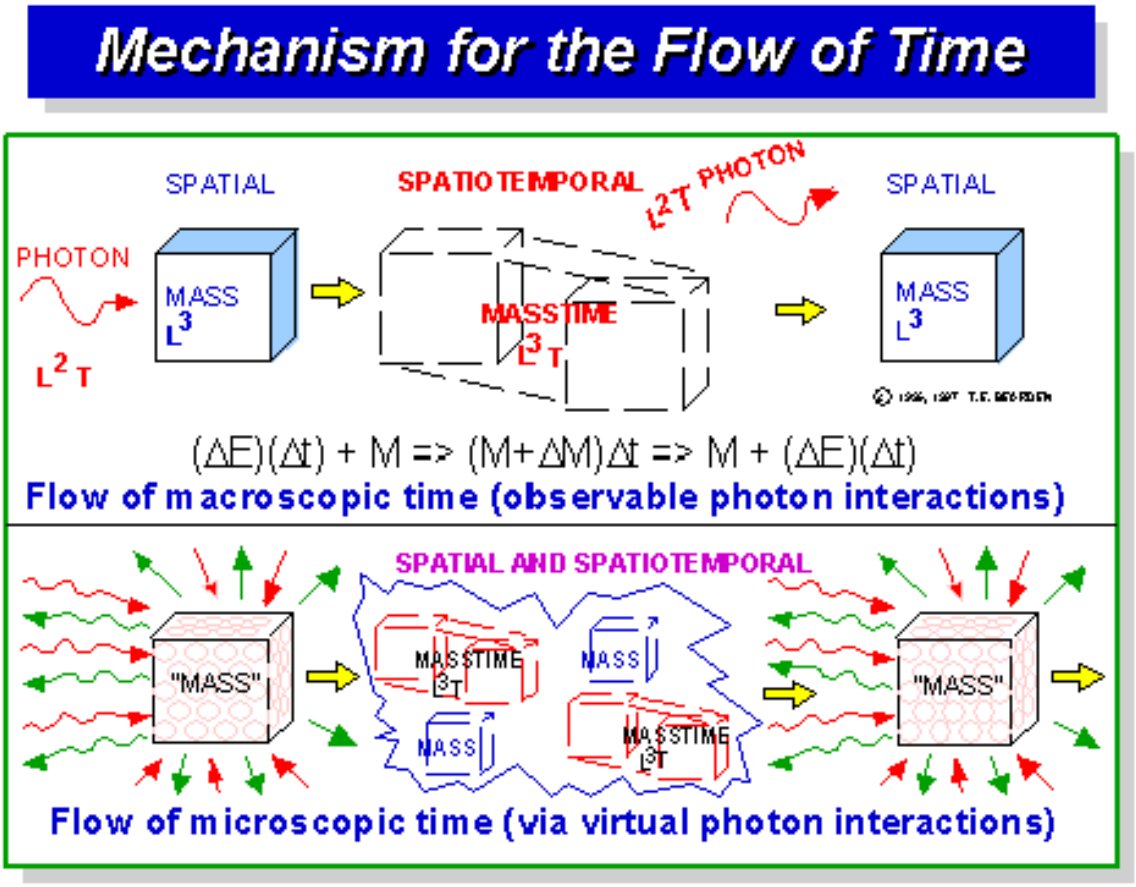

Published by Lotus® Freelance Graphics®

WHY PRESENT SYSTEMS HAVE COP < 1.0

Dissipative power inside source = VI_T and $VI_T > FI_L$

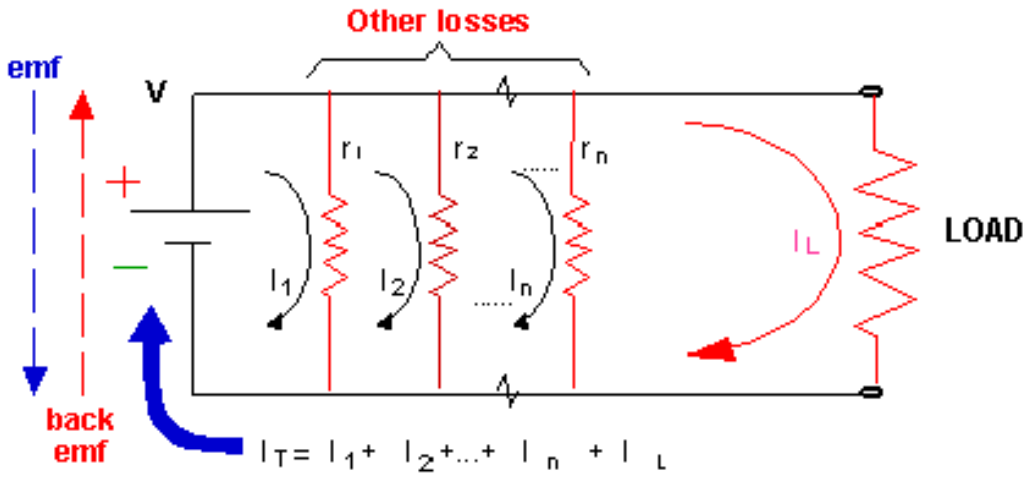

$$I_T = I_1 + I_2 + \ldots + I_n + I_L$$

$$\text{Eff} = \frac{P_L}{P_T} = \frac{V \times I_L}{V \times I_T} = \frac{I_L}{I_T}$$

$I_T > I_L$; so Eff < 1.0

© 1991, 1995 T.E. BEDFORD

Published by Lotus® Freelance Graphics®

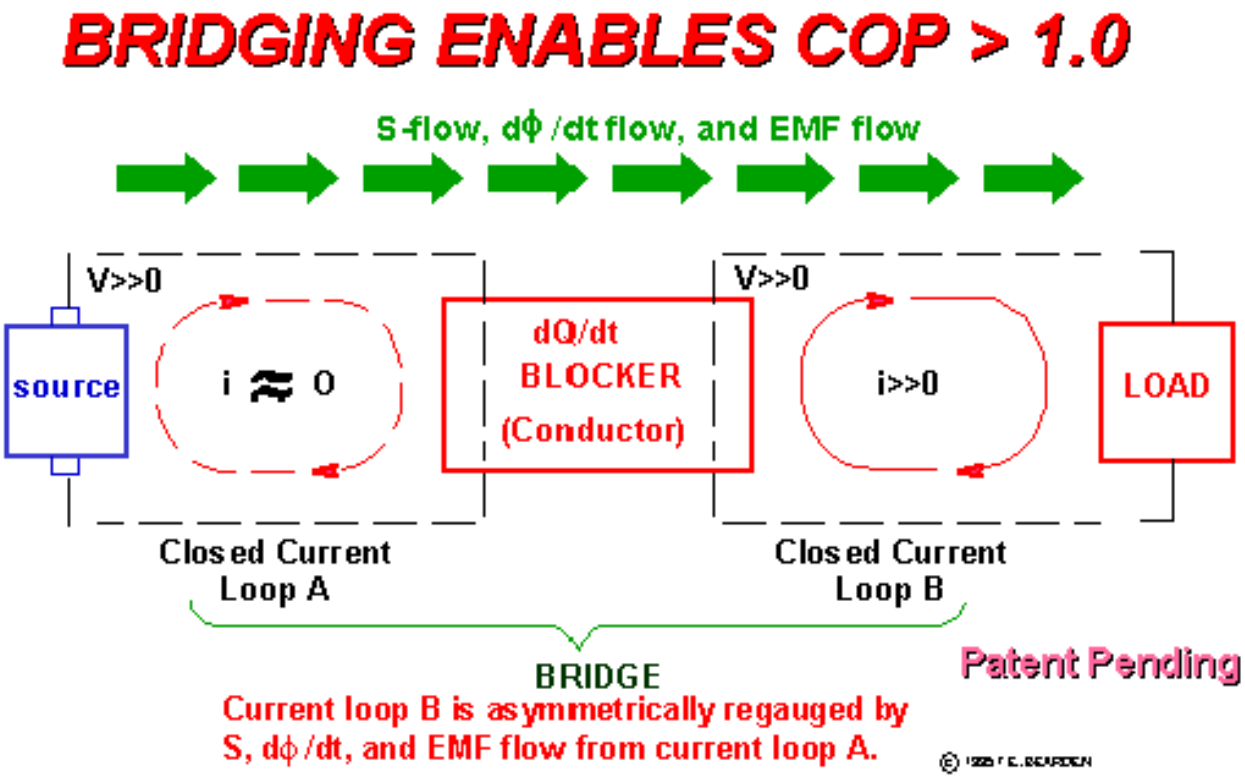

Published by Lotus® Freelance Graphics®

"Static" Poynting free-energy generator

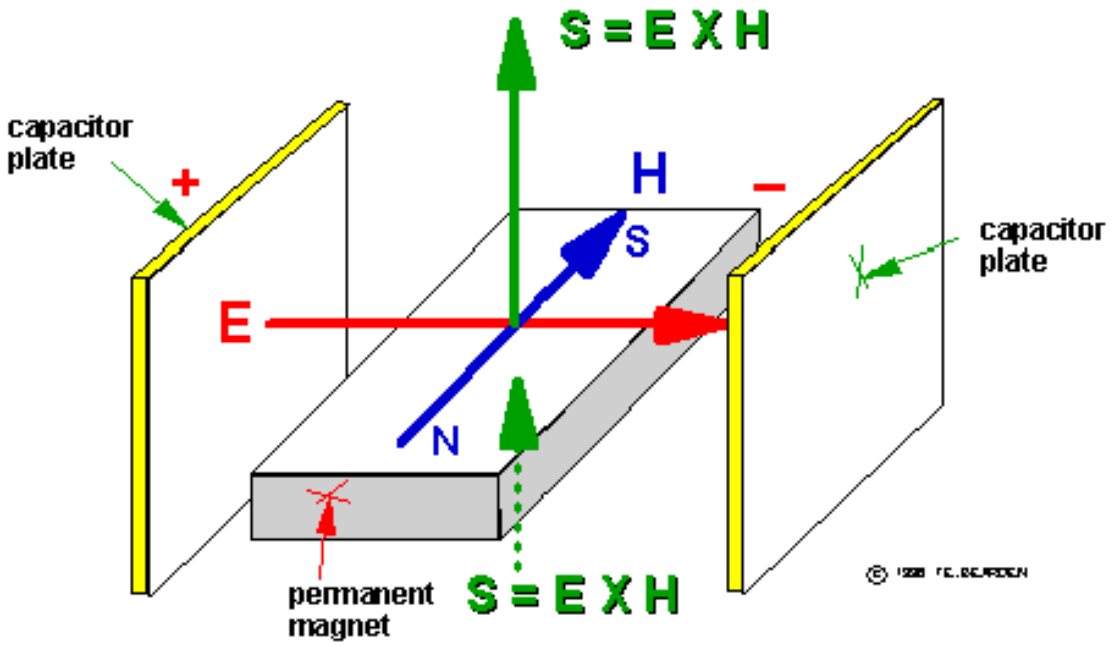

Published by Lotus® Freelance Graphics®

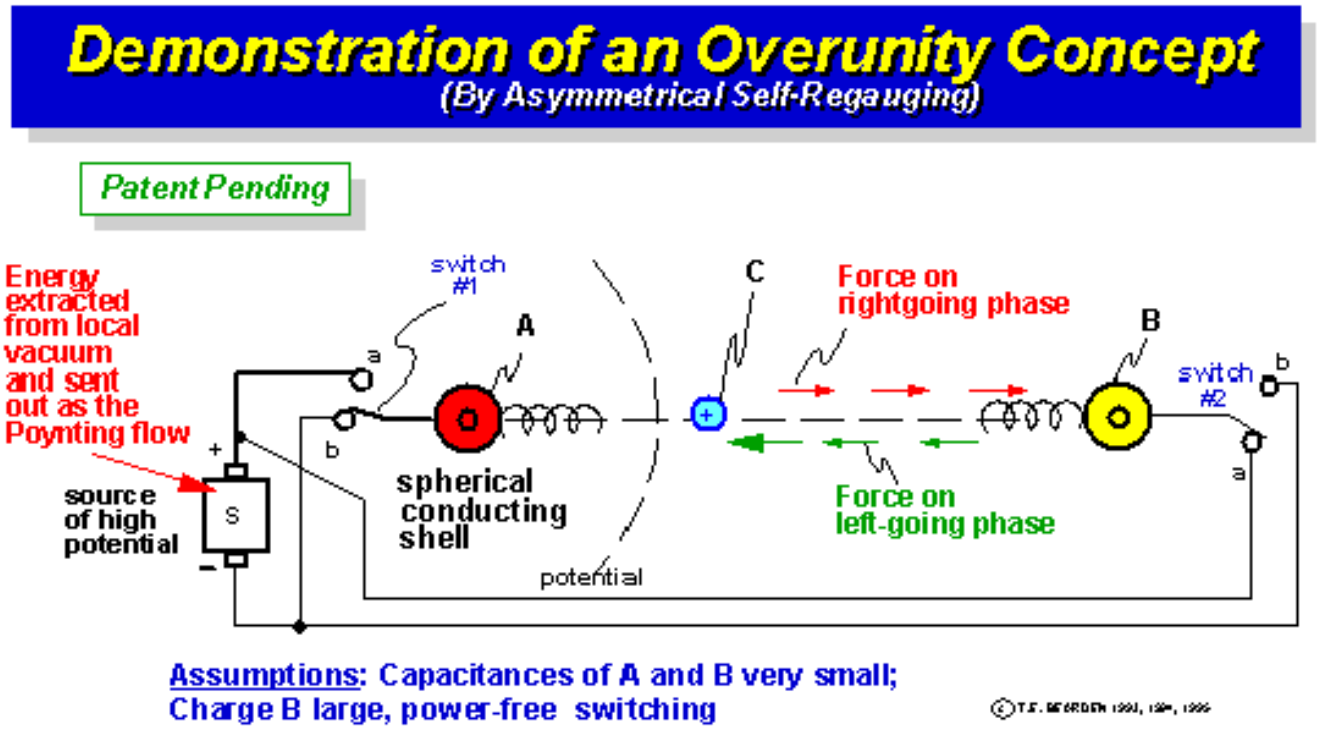

Published by Lotus® Freelance Graphics®

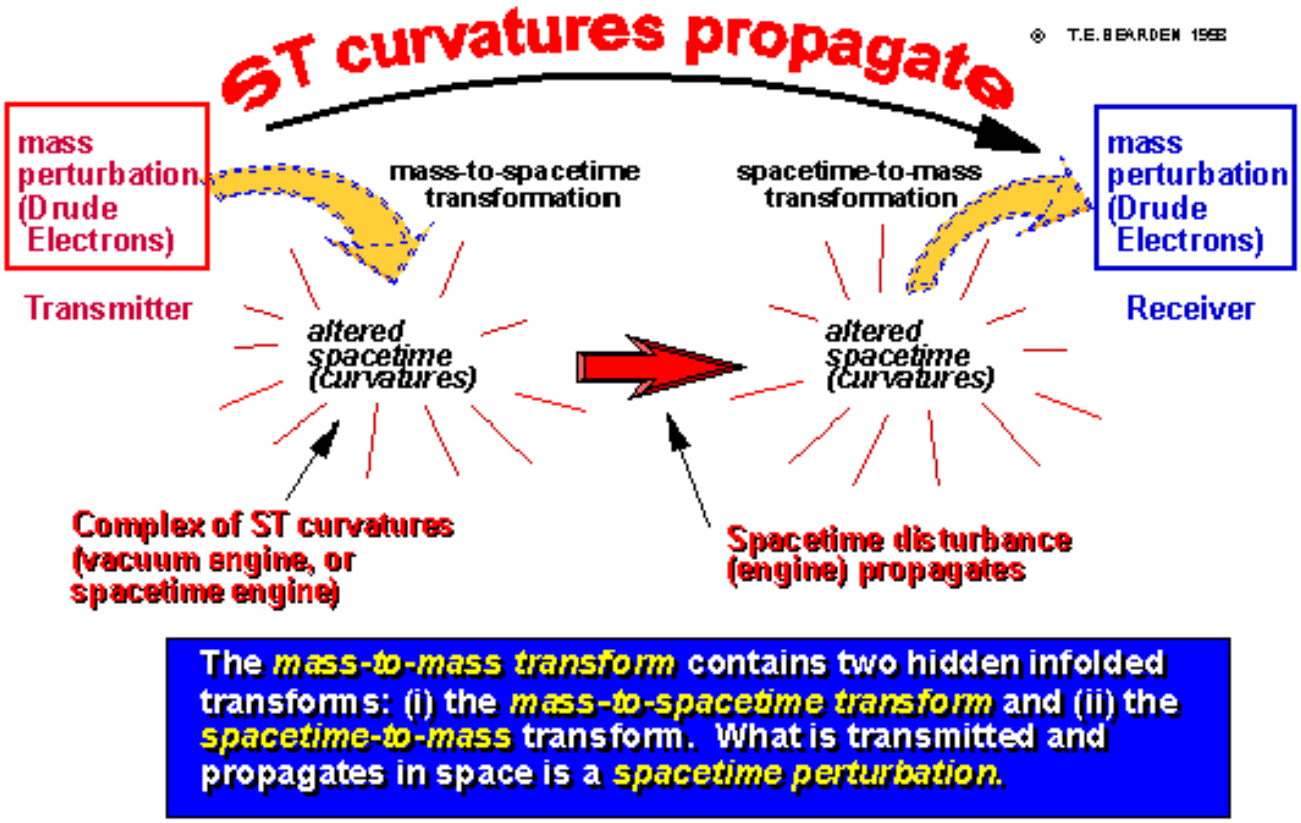

Published by Lotus® Freelance Graphics®

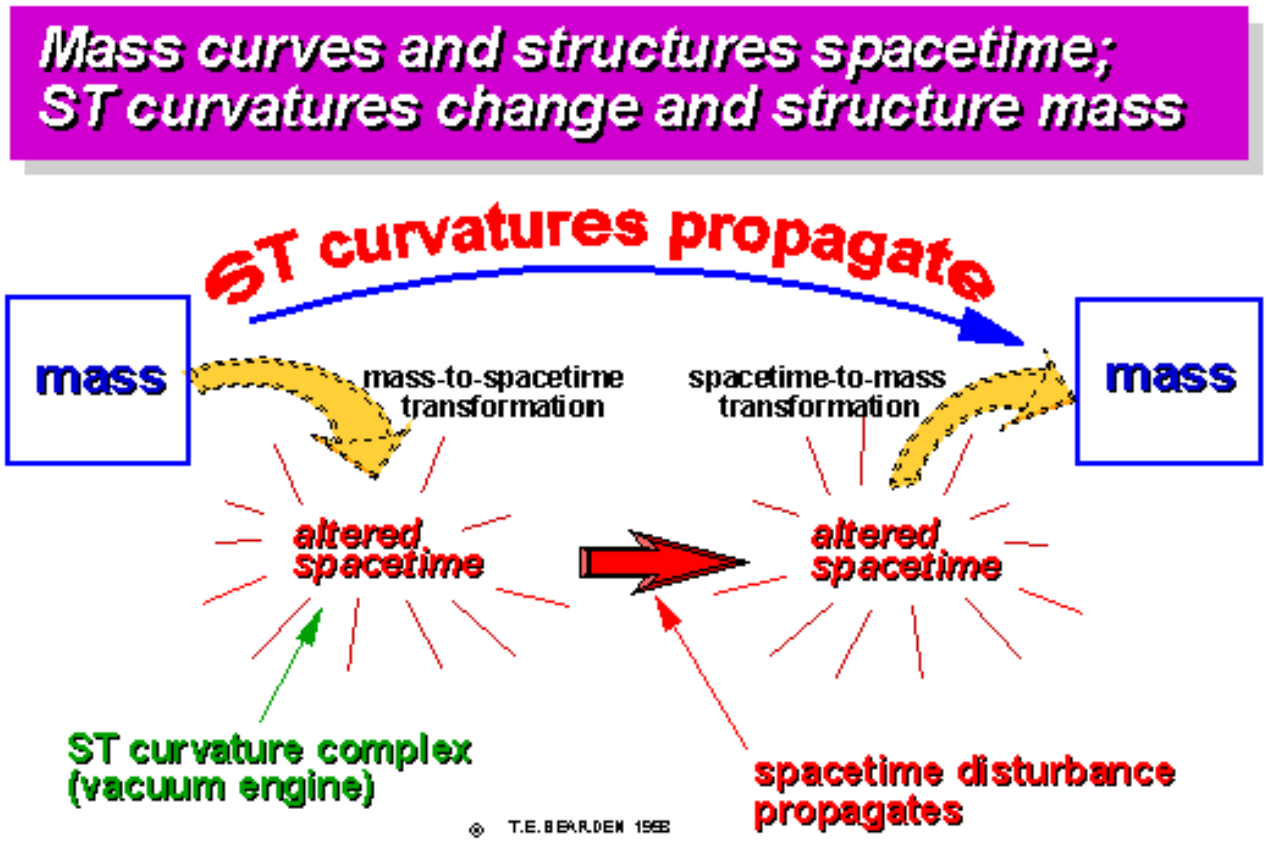

Published by Lotus® Freelance Graphics®

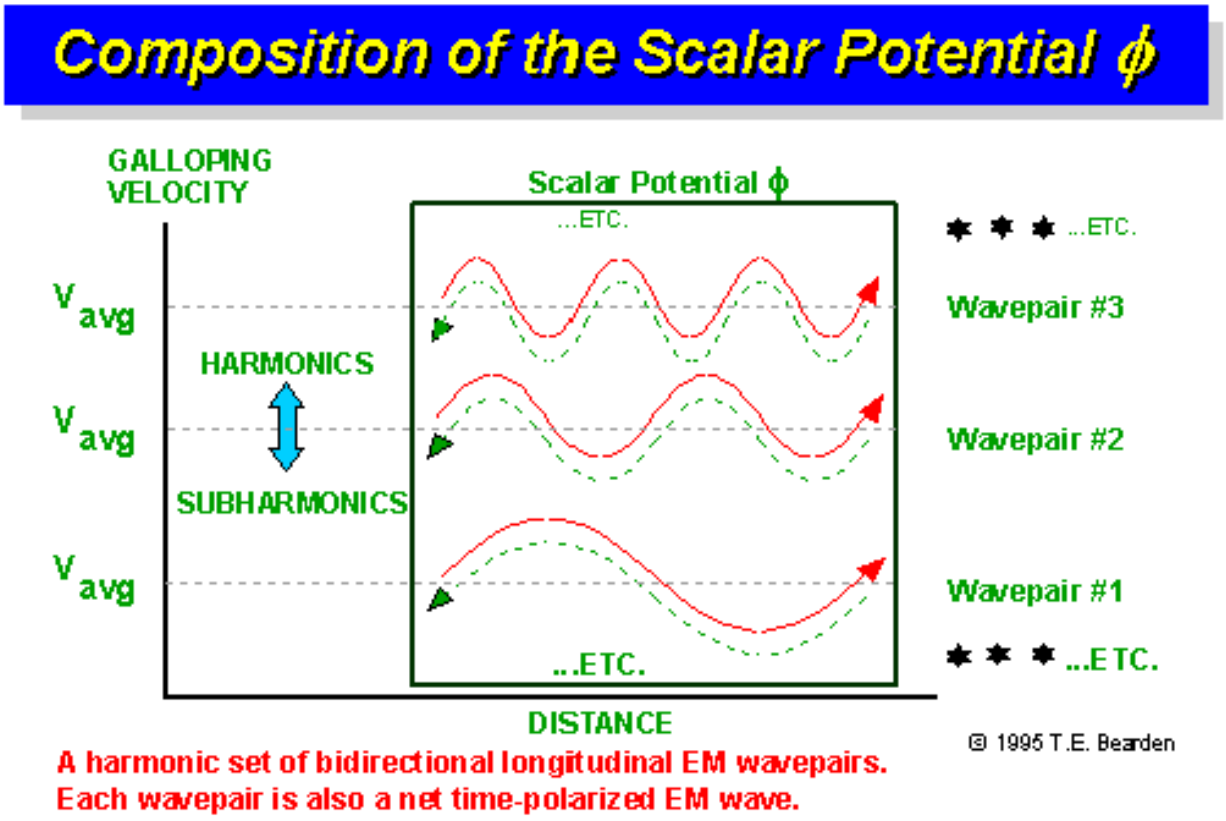

Published by Lotus® Freelance Graphics®

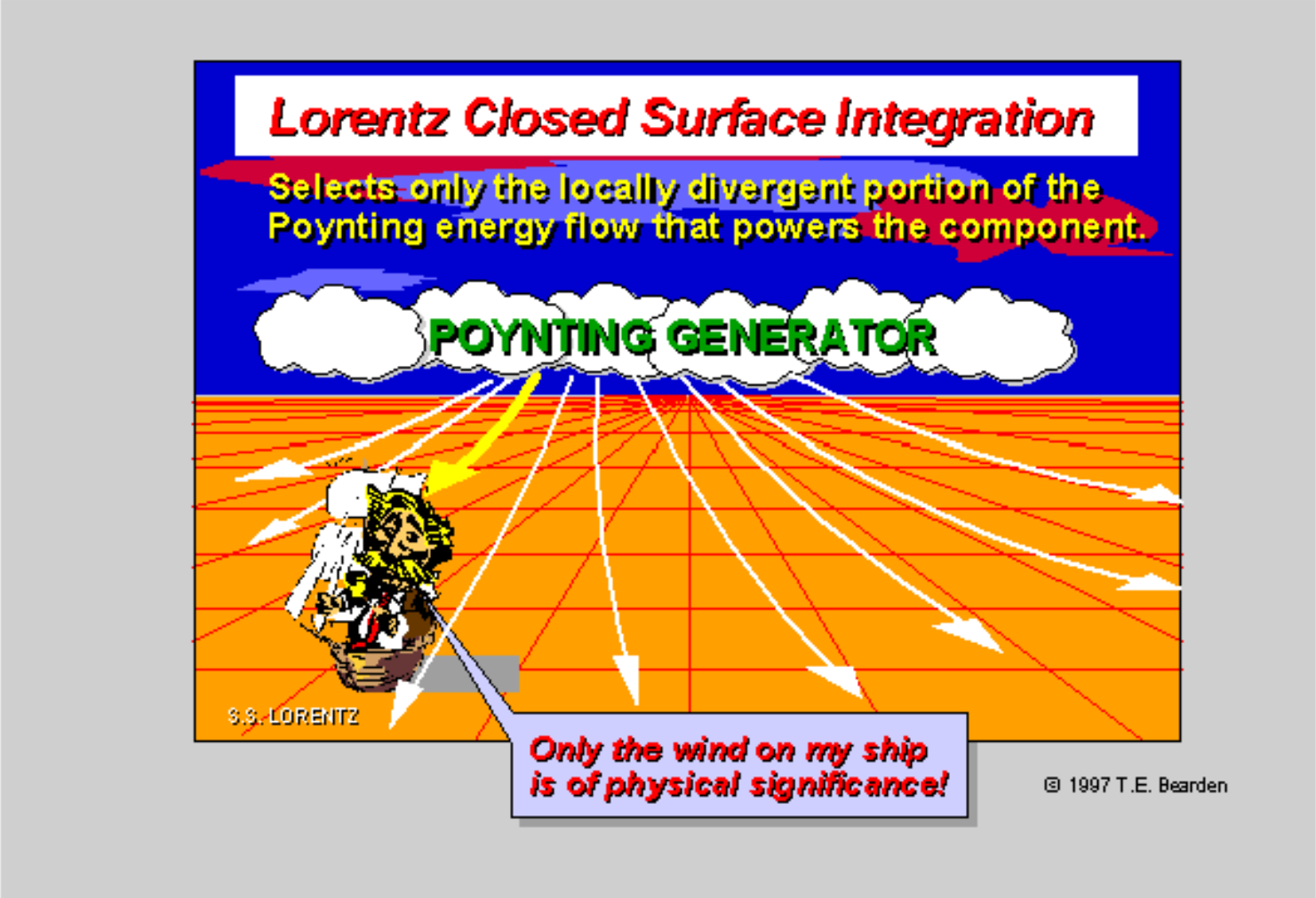

Published by Lotus® Freelance Graphics®

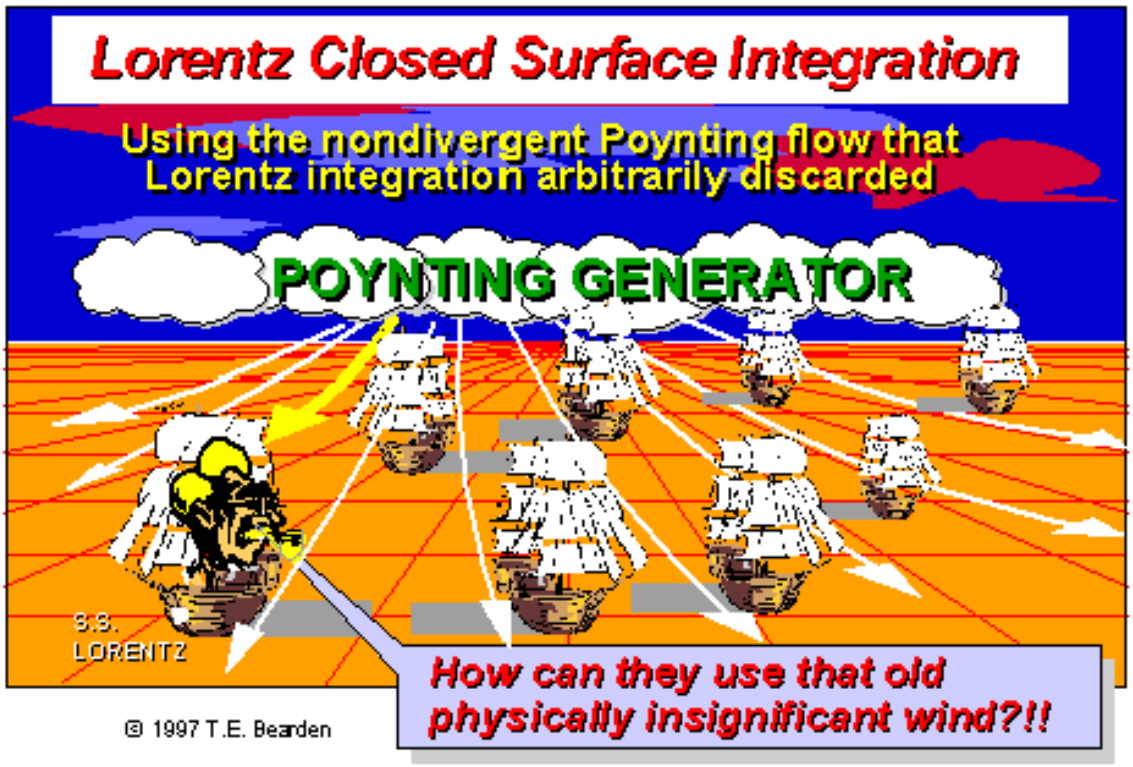

Published by Lotus® Freelance Graphics®

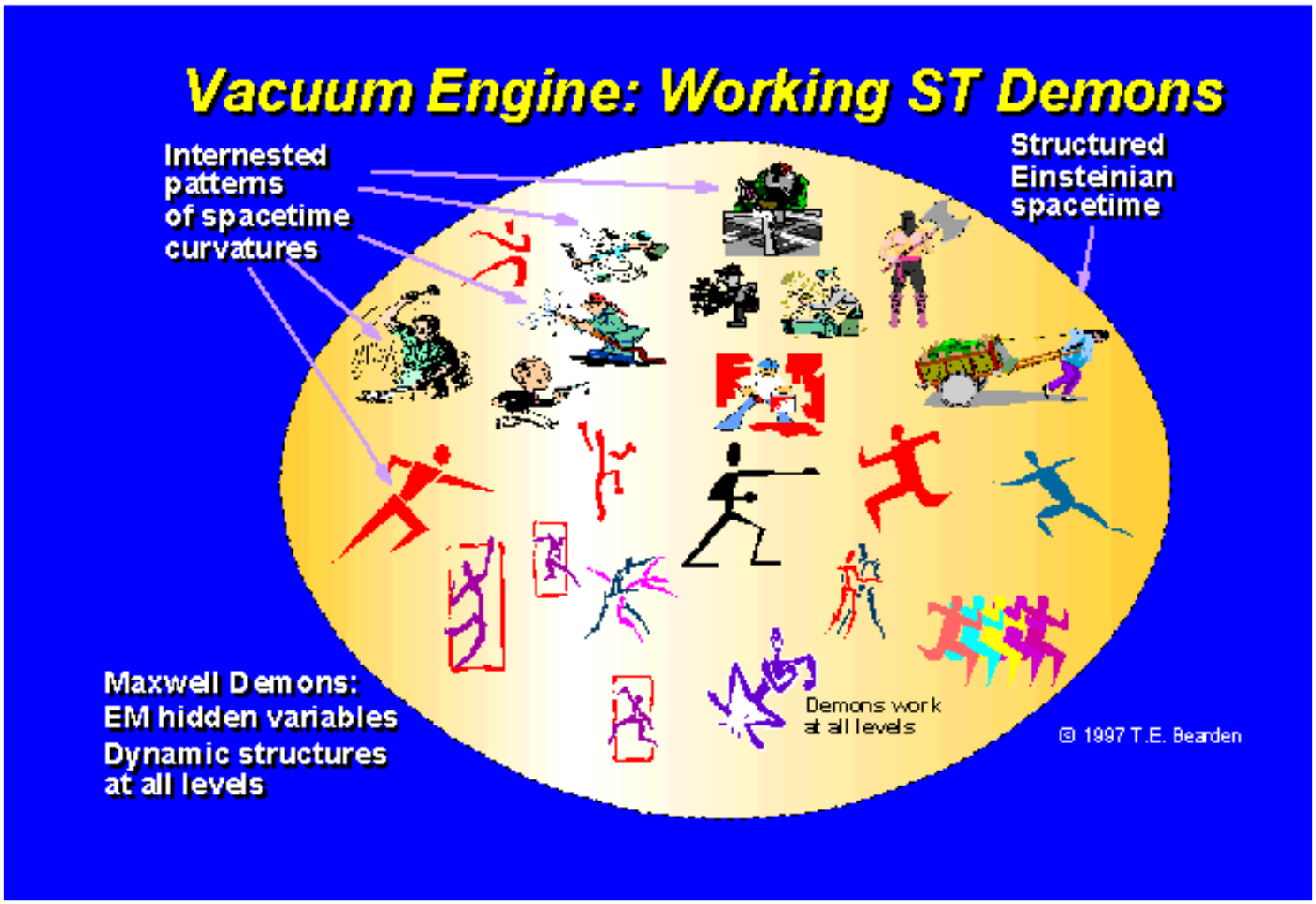

Published by Lotus® Freelance Graphics®

Undistorted Progressive Waves (UPWs)

Waves with velocity v, where ≤ v < ∞

- UPWs:
  - Translationally invariant
  - Do not spread, or reconstruct after a period
  - Have infinite energy
- Quasi UPWs:
  - Can have finite energy
  - In theory, can be launched into space
  - Can move subluminally
  - Can move superluminally

*Rodrigues and Lu, *Found. Phys.* 27(3), 1997, p. 435-508.

© 1997 T.E. BEARDEN

Published by Lotus® Freelance Graphics®

Undistorted Progressive Waves (UPWs)

Waves with velocity v, where ≤ v < ∞

- Major equations having UPW solutions:
  - *Homogeneous wave equation*
  - *Maxwell equations*
  - *Dirac, Weyl, and Klein-Gordon Equations*
- Maxwell solutions:
  - *Subluminal solutions are EM particles*
  - *Superluminal solutions are X-waves*
- Experiment indicates such waves will will be produced soon

© 1997 T.E. BEARDEN

*Rodrigues and Lu, *Found. Phys.* 27(3), 1997, p. 435-508.

Published by Lotus® Freelance Graphics®

Other Superluminal Waves

- Waves can move superluminally in quantum tunneling
- Nimtz *et al.* have translated Mozart's 40th symphony at v = 4.7 c
  - *Through a barrier in a waveguide*
  - *Other researchers have also transmitted EM waves superluminally through quantum tunneling*

© 1997 T.E. BEARDEN

Published by Lotus® Freelance Graphics®

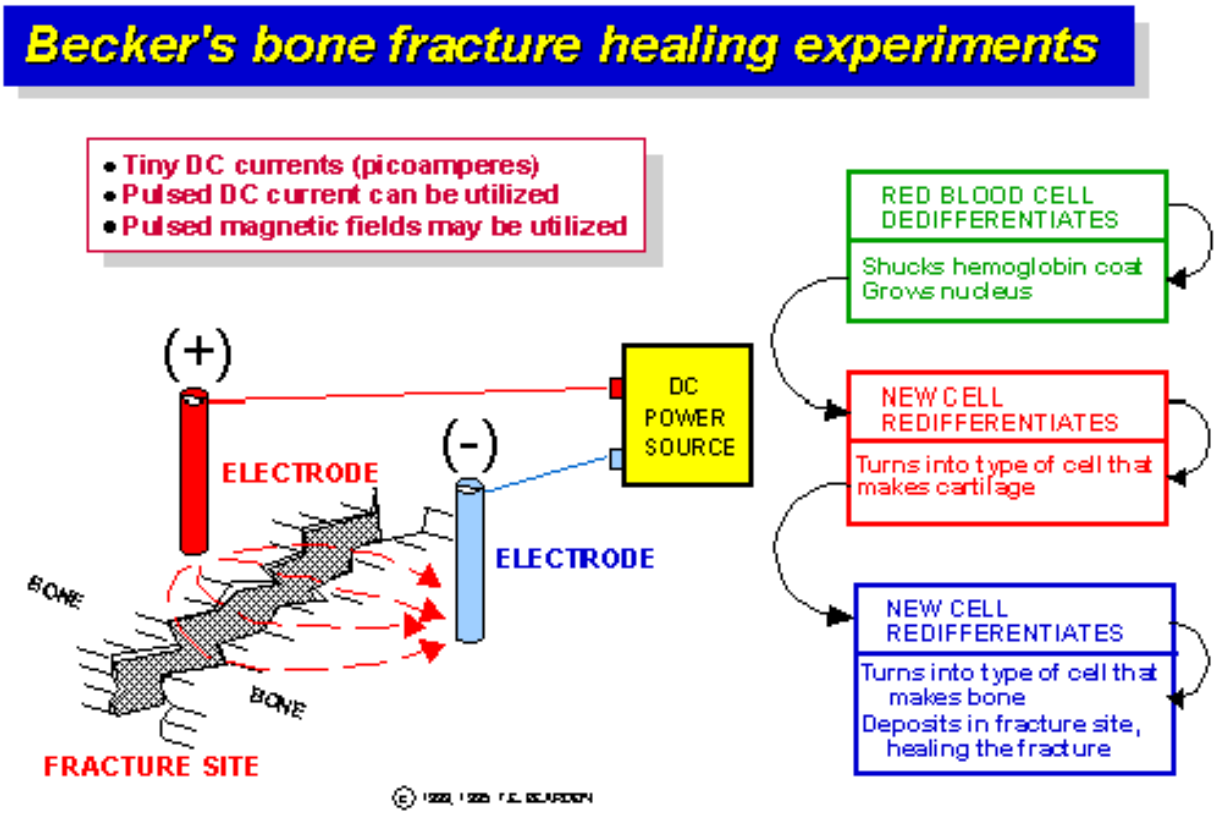

Published by Lotus® Freelance Graphics®

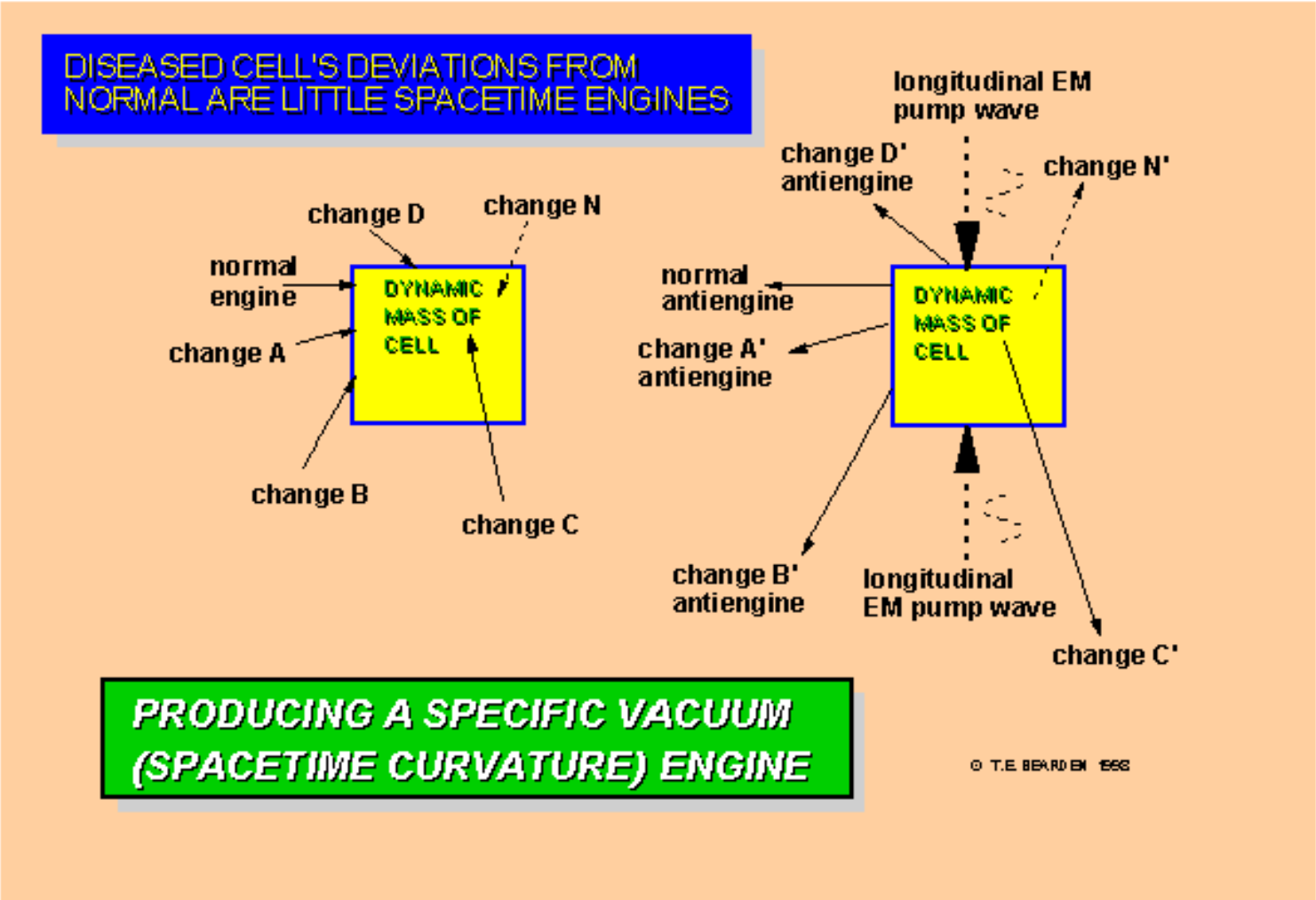

Published by Lotus® Freelance Graphics®

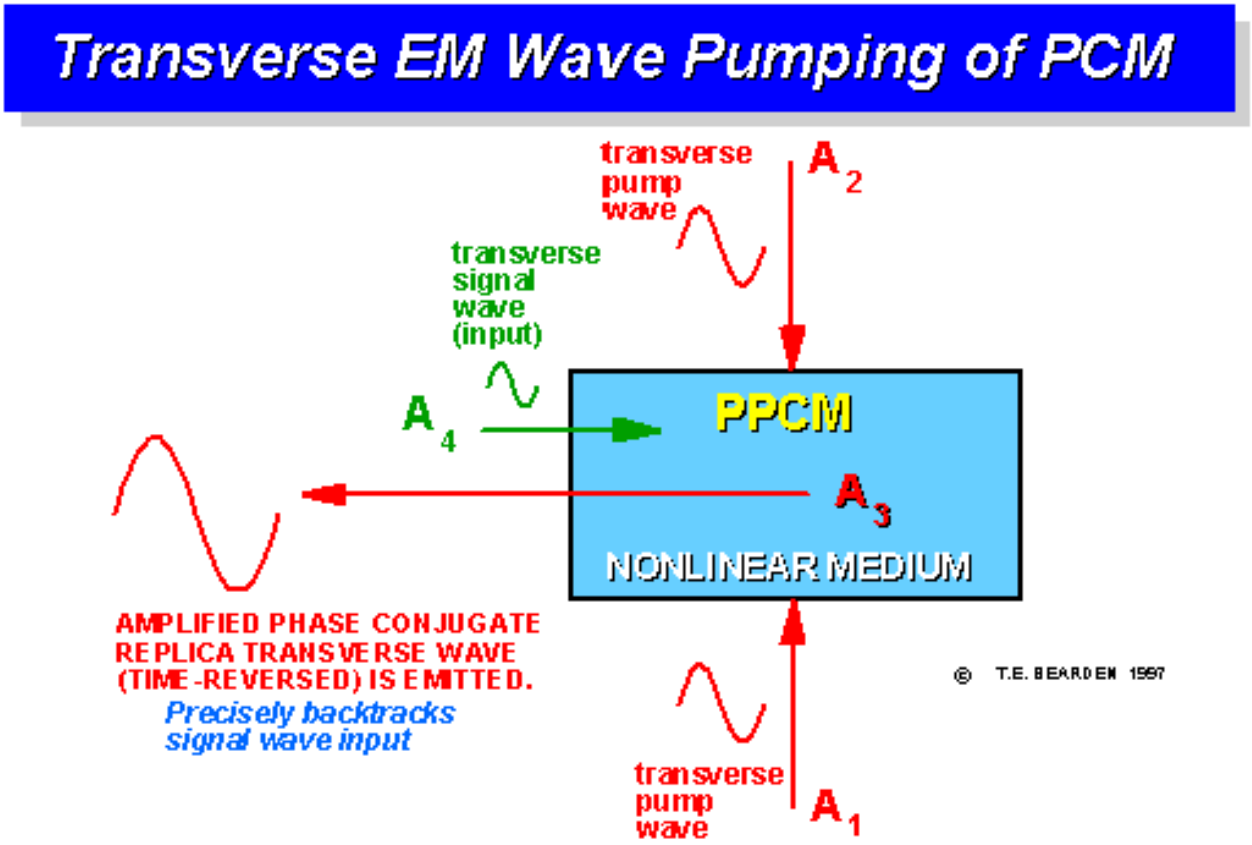

Published by Lotus® Freelance Graphics®

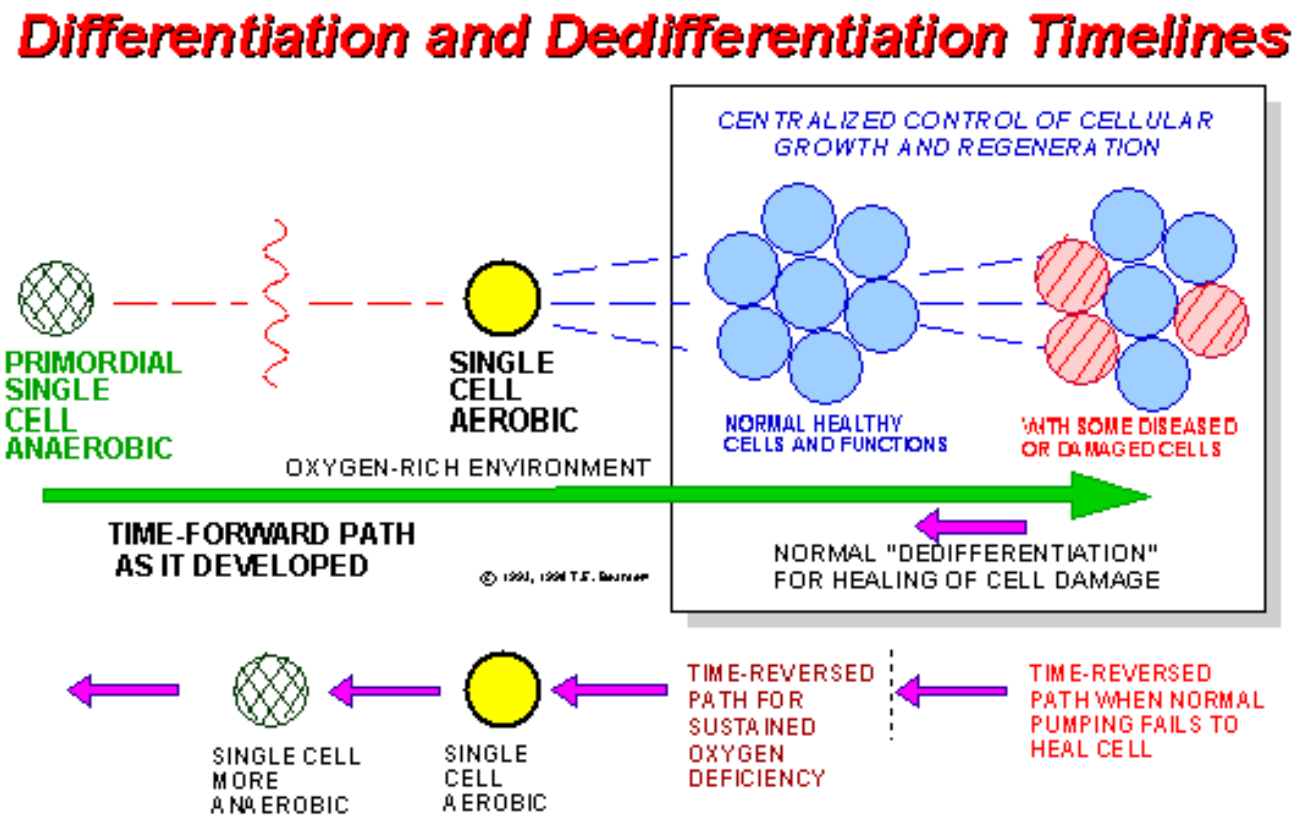

Published by Lotus® Freelance Graphics®

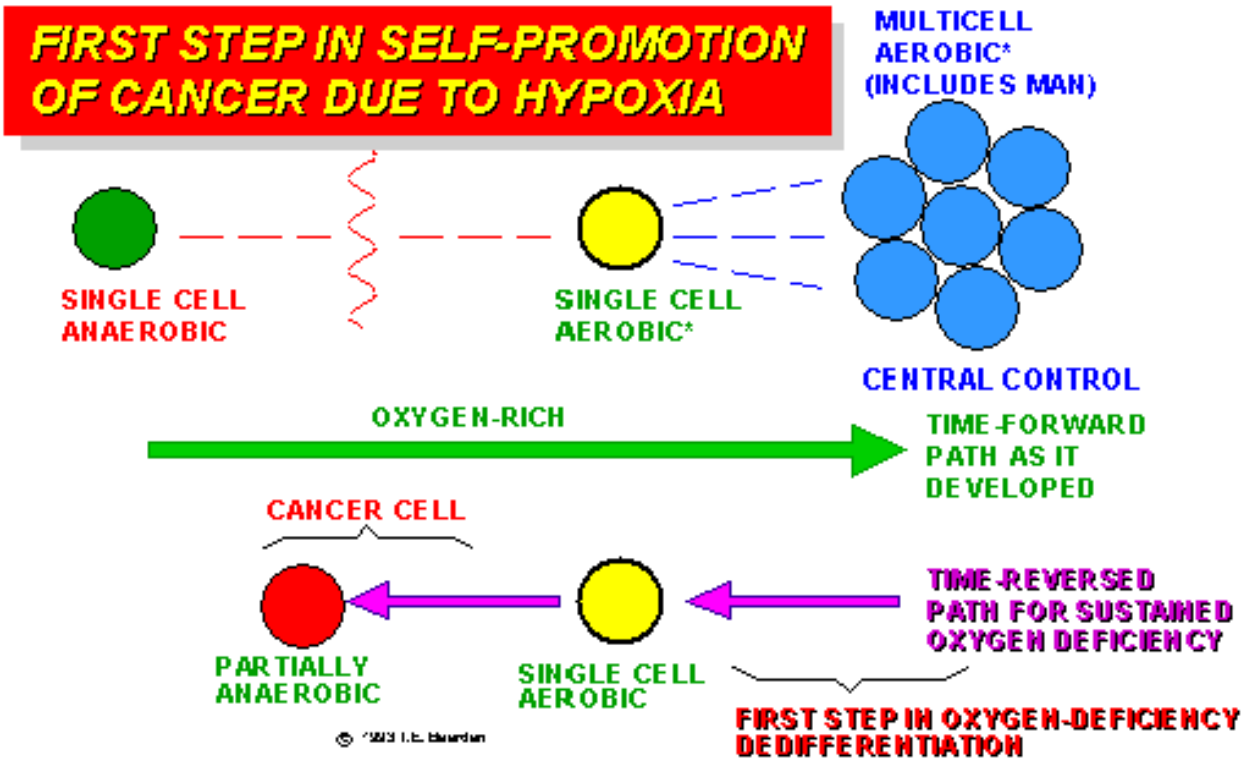

Published by Lotus® Freelance Graphics®

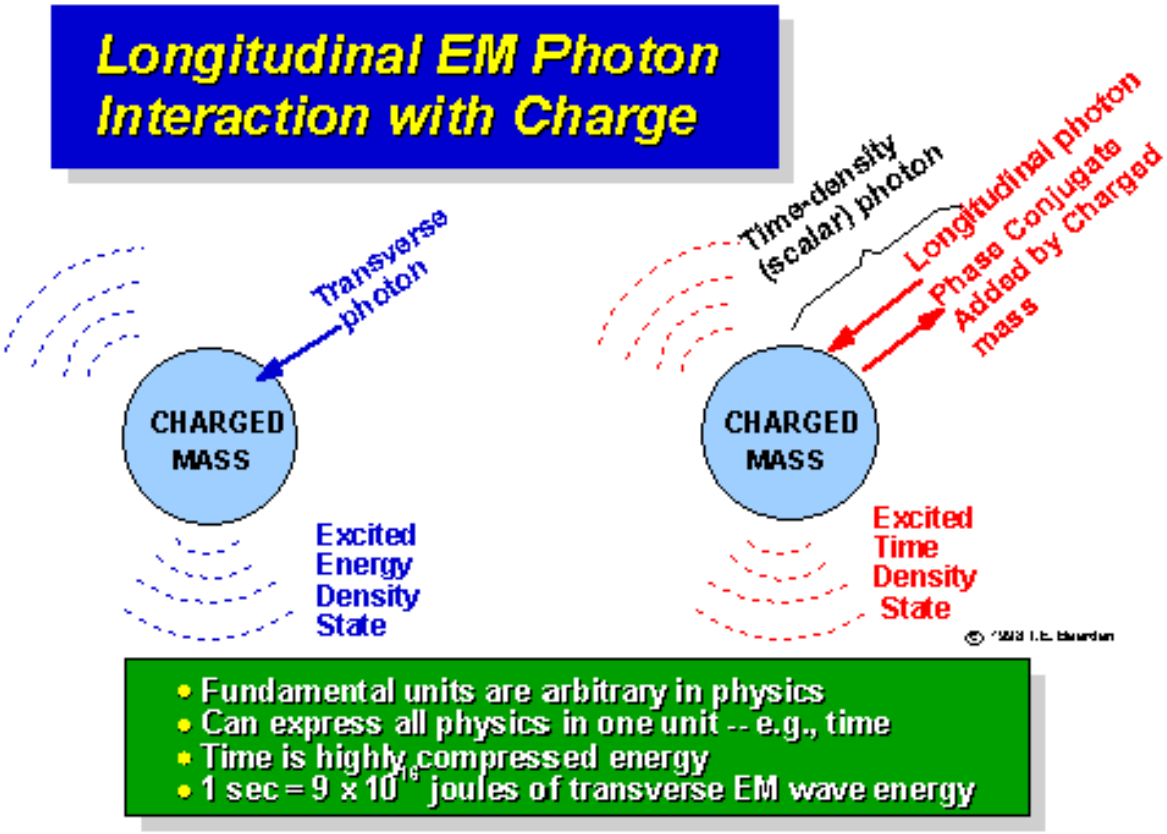

Published by Lotus® Freelance Graphics®

Use of General Relativity (GR) in Particle Physics

- GR seldom used in particle physics
- In cold fusion, Matsumoto* has applied general relativity
- Consistent with important cold fusion results
- Used spacetime (ST) curvature by energy density
- Matsumoto did not utilize:
  - Longitudinal EM waves
  - Time density (time-polarized EM) waves
  - Time density curvatures of ST (gain = 9×10^{16})

* T. Matsumoto, "Mechanisms of Electro-Nuclear Collapse," Proc. ICCF-7, Vancouver, BC, Canada, Apr. 1998, p. 98.

Published by Lotus® Freelance Graphics®

Pepper* on Time Reversing Mass

- Conventional NLO interactions restricted to bosons (spin 1 particles) by Pauli exclusion principle
- Concludes electrons, protons, neutrons, etc. (fermions, or spin 1/2 particles) cannot take part in such interactions
- Perhaps time reversal possible for bosons that are multiple fermions (two protons, Helium 4, pi and K mesons, etc.)

- Time-reversal of mass demonstrated by Priore, Pautrizel, et. al. without recognizing it.** Questions exclusion for:
  - Multi-fermion reaction with EM longitudinal waves
  - Multi-fermion reaction with time-density EM waves
- Prior to the laser, NLO - though known in theory - was a gedanken experiment regarded as experimentally unviable

© [illegible]

* David M. Pepper, "Nonlinear Optical Phase Conjugation," Optical Engineering, 21(12), Mar./Apr. 1982, p. 156-183.

** Before the development of NLO in the mid-to-latter 1970s.

Published by Lotus® Freelance Graphics®

Pepper* on time-reversing mass

- Conventional NLO interactions
  - *Restricted to bosons (spin 1 particles)*
  - *By Pauli exclusion principle*
- Fermions cannot take part in such interactions
  - *Electrons*
  - *Protons*
  - *Neutrons*
- Perhaps time reversal possible for multiple fermions (quasi-bosons)
  - *Two protons*
  - *Helium 4*
  - *pi and k mesons*

© 2003 E. Bindler

* David M. Pepper, "Nonlinear Optical Phase Conjugation," Optical Engineering, 21(12), Mar./Apr. 1982, p. 156-183.

Published by Lotus® Freelance Graphics®

Pepper* on time-reversing mass (2)

- Time-reversal of mass demonstrated by
  - *Priore, Pautrizel, other Priore team scientists*
  - *Without recognizing it*
- Apparently n-tuple fermions, where n is even, can be time-reversed
  - *Impact of longitudinal EM waves*
  - *Impact of scalar (time-density) EM waves*
  - *Major part played by time-reversal regions*
- Prior to the laser, NLO - though known in theory - was a gedanken experiment and regarded as experimentally unviable

© 1998 T.E. Bearden

* David M. Pepper, "Nonlinear Optical Phase Conjugation," Optical Engineering, 21(12), Mar./Apr. 1982, p. 156-183.

Published by Lotus® Freelance Graphics®

Chung's Carbon Filament Negative Resistor

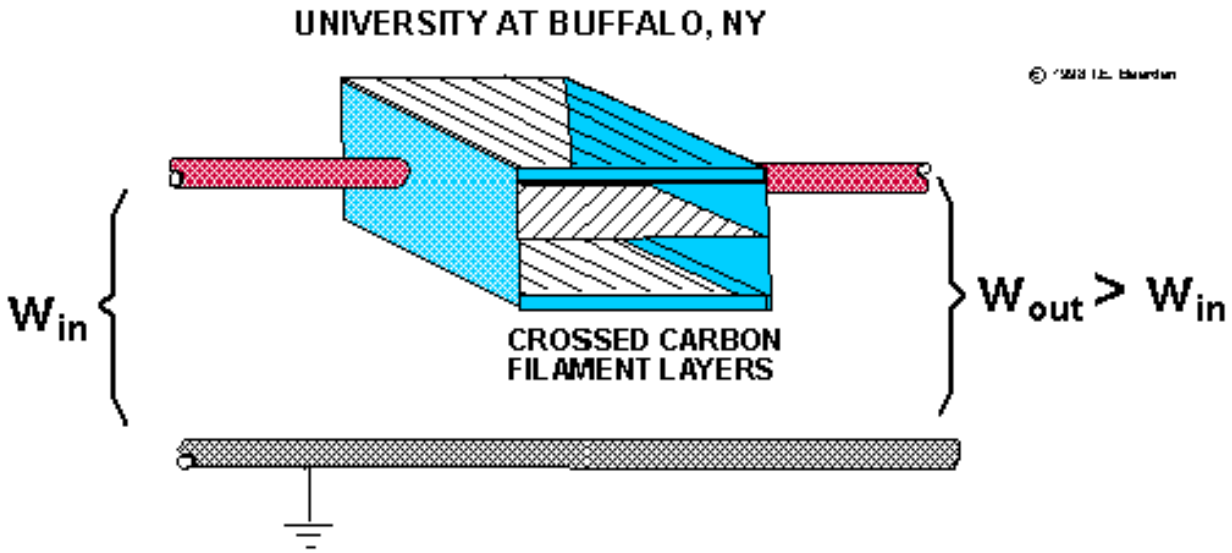

Published by Lotus® Freelance Graphics®

Consistency of China Lake Anomalies

- Variation in LW-TW transduction from experiment to experiment
- Majority produced insufficient transduction to cause ionization discharge of the GM tube gas (to cause detection)
- Correlation between appearance of anomalous radiation and the expected time periods to load palladium with deuterium
  - Within few hours in co-deposit experiments where palladium is loaded with deuterium as it deposits from solution
  - Required days of electrolysis for rods that load much slower
- The faster the deuterium loaded, the greater the interaction of deuterium in phase conjugating and self-targeting in lattice
- Variation in GM detector readings
  - One would read anomalous radiation, another would be blind to it
  - A few experiments gave simultaneous readings from two detectors
- Experiments perfectly consistent with LW-TW transduction, time-density charging, variation in GM time histories, and new conservation of energy law

© [illegible]

Published by Lotus® Freelance Graphics®

Time-Reversal Zones in Nuclear and Chemical Reactions

- TIME REVERSAL ZONE: A volume or area in a reaction environment where phase conjugate waves predominate over time-forward waves
  - In a given reaction, time-reversal may apply
  - If so, like charges attract and unlike charges repel
  - Charges move against potential gradient, to external observer
  - Time density and longitudinal EM waves become significant
  - Coulomb barrier turns into Coulomb assistant
- Examples (assuming a time-reversed zone):

© 1998 L.E. Eberden

$$^{1}H^{+} + {}^{1}H^{+} \text{-->} {}^{2}H^{++} \text{-->} {}^{1}n + {}^{1}H^{+} \text{-->} {}^{2}H^{+} = \text{deuterium}$$

$$2({}^{1}H^{+} + {}^{1}H^{+}) \text{-->} 2\,({}^{2}H)^{++} \text{-->} 2({}^{1}n + {}^{1}H^{+})$$

$$\text{-->} 2({}^{1}n) + 2({}^{1}H)^{++}$$

$$\text{-->} {}^{4}He^{++} = \text{helium}$$

Quark flipping and energy balancing with curved spacetime assumed)

Published by Lotus® Freelance Graphics®

The Electronuclear Reaction: Nuclear Reactions in TR-Zones (1)

- Nucleon interchange
  - Changes neutron into proton and vice versa
  - At high rate (flat spacetime assumed)
- Statistics become skewed due to curved ST
- Can bias statistics toward either neutron or proton end
  - Biases toward transmutation of elements along isomer chains
  - Concept of "isomer" is vastly expanded

Published by Lotus® Freelance Graphics®

The Electronuclear Reaction: Nuclear Reactions in TR-Zones (2)

- Normal dynamics (impulses) may reverse
  - Like charges attract, unlike charges repel
  - Positive charges cluster (are drawn together)
  - H+ ions (protons) may form quasi-nuclei
  - Nucleus coulomb barrier becomes assistant
- Many "impossible" reactions now possible
  - Quark access and quark flipping by EM
  - Ion clustering
  - Positive charges as phase conjugate mirrors
  - Time-density waves and time-energy charging

© 2000 T.E. Bearden

Published by Lotus® Freelance Graphics®

The Electronuclear Reaction: Nuclear Reactions in TR-Zones (3)

- Not observed until time-energy charging has become substantial
  - *Time delay (hours, days)*
  - *Transduction of LW --> TW involved*
  - *Specific time-charging history of detectors is involved in twhether they detect or not*
  - *Longitudinal EM waves become significant*
- Curved spacetime can act as source or sink
  - *May emit excess radiation*
  - *May absorb excess radiation*

© 1998 T.E. Bearden

Published by Lotus® Freelance Graphics®

On Nuclear Reactions in TR-Zones

- **Nuclear interactions now are biased:**
  - Normal nucleon interchange changes neutron into proton and vice versa, at a high rate (flat spacetime assumed)
  - Statistics now become skewed due to curved spacetime
  - Can bias statistics toward either the neutron end or proton end
  - Thus biases toward transmutation of elements along isomer chains
  - Concept of "isomer" vastly expanded
- **Normal dynamics (impulses) may be reversed**
  - Coulomb barrier becomes coulomb assistant
  - Reactions "impossible" from energy density standpoint become possible, even easy, from time-density standpoint
- **Does not become significant until sufficient time-density charges**
  - Time-delay (hours, days) before TR reactions become significant
  - Transduction of LW-->TW involved
  - Specific time-history of detectors is significant
  - longitudinal EM waves become significant
- **Curved spacetime acts as source or sink**
  - Energy balance in curved spacetime may emit excess radiation
  - Energy balance in curved spacetime may absorb excess radiation

Published by Lotus® Freelance Graphics®

In Time-Reversed Zone:
Nuclear reactions are biased

- In normal flat ST, n ⇔ p at high rate
- Curved ST skews statistics
- Biases to either n or p
- Biases to transmutation along isomer chain
- "Isomer" concept greatly expanded

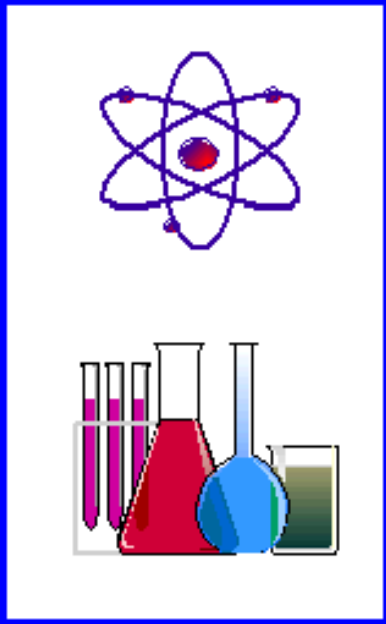

© 1998 T. E. BEARDEN

Published by Lotus® Freelance Graphics®

In Time-Reversed Zone:
Dynamics may be reversed

- Like charges may attract and unlike charges repel
- Coulomb barrier becomes Coulomb assistant
- Clusters like charges and forms artificial nuclei
- "Impossible" nuclear reactions at low energy
- Time-density interactions

© 1998 T.E. BEARDEN

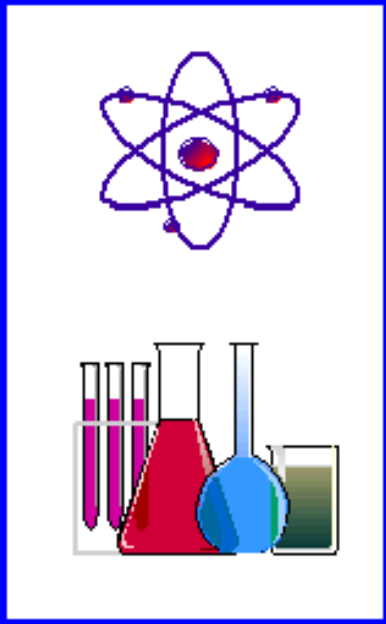

Published by Lotus® Freelance Graphics®

Time-Reversed Zone:
Significant only after time-density charging

- Hours, for "fast" onset
- Days, for "slower" onset
- Transduction involved for TW ⇔ LW ⇔ TDW
- Time-history of each detector is significant
- Longitudinal EM waves become significant

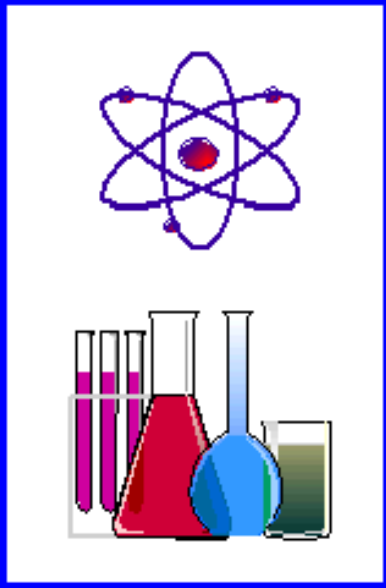

© 1998 T.E. BEARDEN

Published by Lotus® Freelance Graphics®

Curved Spacetime acts as source or sink

- May emit excess radiation and energy (e.g., heat)
- May absorb radiation and energy (e.g., cool)
- May transduce waves TW ⇔ LW ⇔ TDW
- New energy conservation law applies

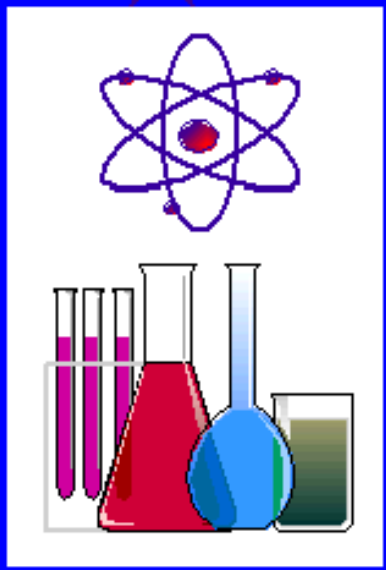

© 1998 T.E. BEARDEN

Published by Lotus® Freelance Graphics®

Anomalous LW EM Emission Phenomena at China Lake (1)

- **Anomalous radiation from electrolysis in ionization processes**
  - Two experiments producing excess power
  - Dental X-ray film showed exposure
  - Simultaneous control study: no exposure
  - 20 experiments without excess power: no exposure
- **Excess energy strongly indicates excess film exposure**

© [illegible]

* Melvin H. Miles and Benjamin F. Bush, "Radiation Measurements at China Lake: Real or Artifacts?" Proc. ICCF-7, Vancouver, BC, Canada, Apr. 1998, p. 101.

Published by Lotus® Freelance Graphics®

Anomalous LW EM Emission Phenomena at China Lake (2)

- **GM and NaI detector reaction when electrolysis with heavy water ongoing**
  - Several Geiger-Muller (GM) tubes gave anomalous detection
  - Reached 73 sigma above background
  - No anomalies when experiment off
- ***GM tube detects anything which causes its internal ionization***
  - *Nuclear radiation is ionizing*
  - *Transduced x-ray & gamma is ionizing*

© 2000 T.E. Bearden

Published by Lotus® Freelance Graphics®

Sufficient LW-to-TW Transduction Ionizes GM Tube Gas (3)

- **Time-history of detector involved**
  - Some GM detectors show anomalous high counts, some do not
  - Time histories of GM detectors are varied
  - Time histories of film vary minimally
- ***Experimental results consistent with***
  - *LW-to-TW transduction including delay*
  - *Time-energy charging*
  - *New extension to energy conservation law*

Published by Lotus® Freelance Graphics®

Sufficient LW-to-TW Transduction Ionizes GM Tube Gas (4)

- **Time-history of detector involved**
  - Some GM detectors show anomalous high counts, some do not
  - Time histories of GM detectors are varied
  - Time histories of film vary minimally
- ***Experimental results consistent with***
  - *LW-to-TW transduction including delay*
  - *Time-energy charging*
  - *New extension to energy conservation law*

Published by Lotus® Freelance Graphics®

Consistency of Anomalies

- LW-to-TW transduction varied from experiment to experiment
- Most experiments produced insufficient transduction to cause ionization
- Appearance of anomalous radiation correlated with expected time loading of palladium with deuterium
  - Within few hours in experiments where palladium loads with deuterium as it deposits from solution
  - Required days for rods that load much slower

Published by Lotus® Freelance Graphics®

Consistency of Anomalies (2)

- Faster the deuterium loaded, the greater the interaction of deuterium in
  - Phase-conjugating and self-targeting
  - Producing time-reversal zones
  - Generating quasi-nuclei of H+ ions (protons)
- Variation in GR detector readings
- Experimental results predictable by
  - LW-TW transduction and time-reversal zones
  - Varying time-density charging on GM tubes
  - Variation in GM tube experience histories
  - Time-reversal zones generating electronuclear interactions and quasi-nuclei of H+ clusters

Published by Lotus® Freelance Graphics®

Experimental LW Emission Phenomena in Electrolysis

- Anomalous radiation from electrolysis in ionization processes
  - Two experiments producing excess power
  - Dental x-ray film showed exposure
  - Simultaneous control study: No exposure
  - 20 experiments without excess power: No exposure
- Excess energy strongly indicates excess film exposure
- GM and NaI detector reaction when electrolysis ongoing w/heavy water
  - Several Geiger Muller (GM) tubes gave anomalous detection
  - Reached 73 σ above normal background counts
  - No anomalies when experiment off
- GM tube detects anything which causes its internal gas to ionize
  - Nuclear radiation is "ionizing" radiation
  - Transduced x-ray and gamma radiation is "ionizing" radiation
  - Sufficient LW-TW transduction ionizes GM gas
- Time History of detector involved
  - Some GM detectors show anomalous high counts, some do not
  - Time histories of GM detectors vary appreciably
  - Time histories of film vary minimally
- Experiments consistent with time-density charging, LW-TW transduction, and new conservation of energy law

© 1998 H.E. Puthoff

* Melvin H. Miles and Benjamin F. Bush, "Radiation Measurements at China Lake: Real or Artifacts?" Proc. ICCF-7, Vancouver, BC, Canada, Apr. 1998, p. 101.

Published by Lotus® Freelance Graphics®

A New Conservation of Energy Law

- Physics conserves total "energy and mass-energy"
- Now also must consider "time-energy"
- Conserve total mass-time-energy (spatiotemporal energy)
- Let E_T = total energy, E_M = mass energy, E_E = ordinary energy, and E_t = time energy. Then

$$E_T = E_E + E_M + E_t$$

©1993 H.E. Bearden

$$(kE_t \Rightarrow E_E > 0) \Rightarrow E_T > (E_M + E_E)$$

- If some E_t is transduced into E_E, the experiment will violate the old spatial mass-energy conservation law

Published by Lotus® Freelance Graphics®

QUESTIONS ON CARCINOGENS AND EM RADIATION

- UNRESOLVED QUESTIONS ON EM RADIATION
  - DOSAGES
  - ACTIVE MECHANISMS
  - REPLICATION DIFFICULTIES
  - MEASUREMENT DIFFICULTIES
  - WHERE, WHEN, HOW ILL EFFECTS OCCUR
- SIMILAR QUESTIONS EXIST ABOUT EVERY CARCINOGEN
- SCIENCE REALLY DOES NOT UNDERSTAND THE MECHANISMS OF A SINGLE CHRONIC DISEASE, INCLUDING CANCER
  - FACTORS SUCH AS MIND, STRESS, SPONTANEOUS REMISSION, PLACEBO EFFECTS, AND COMBINATIONS OF FACTORS ARE PARTICULARLY TROUBLESOME
  - GENERATION OF THE PLACEBO EFFECT BY THE REGENERATION & RECOVERY SYSTEM IS UNRECOGNIZED

© 1994, 1996 T.E. Beanden

Published by Lotus® Freelance Graphics®

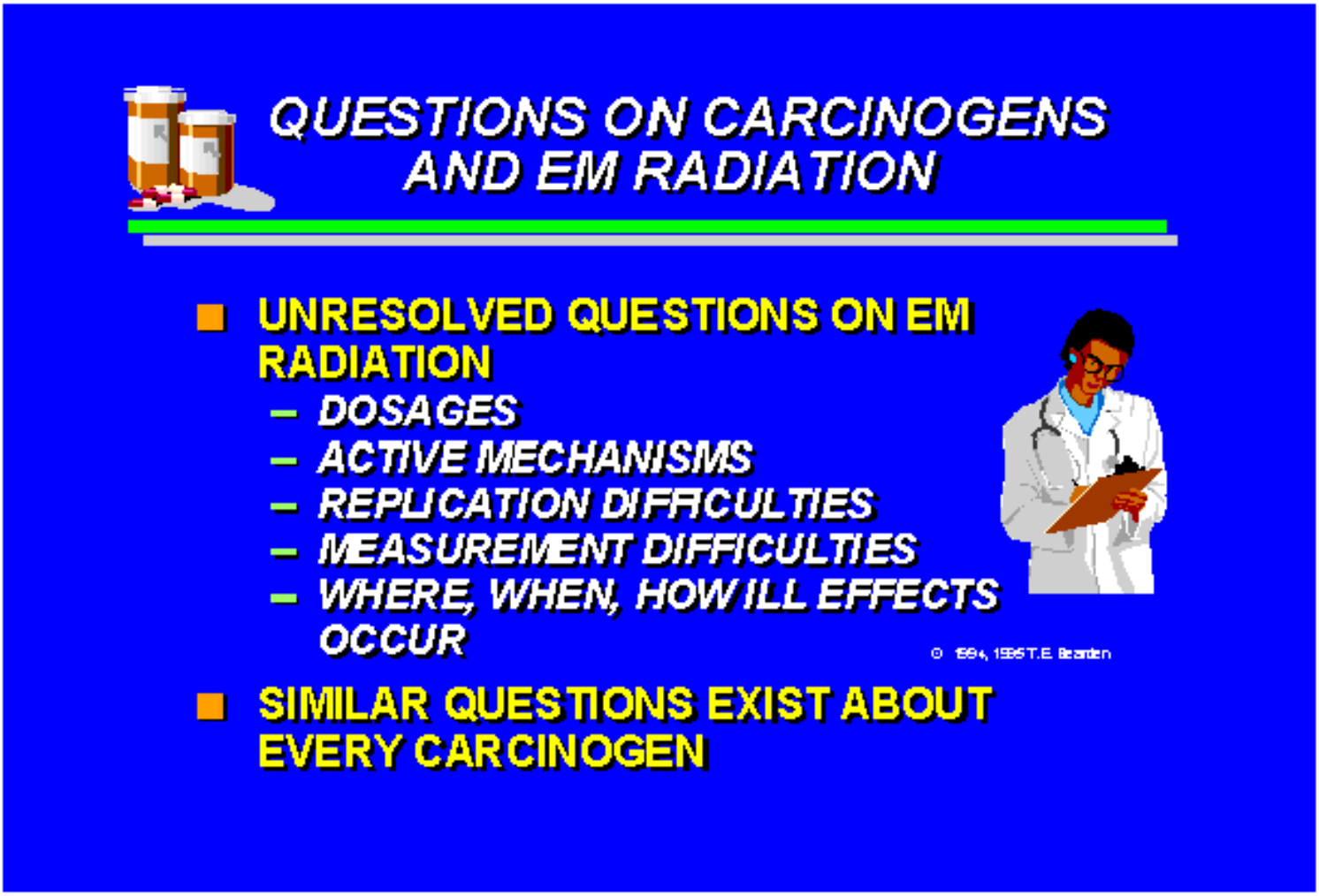

Published by Lotus® Freelance Graphics®

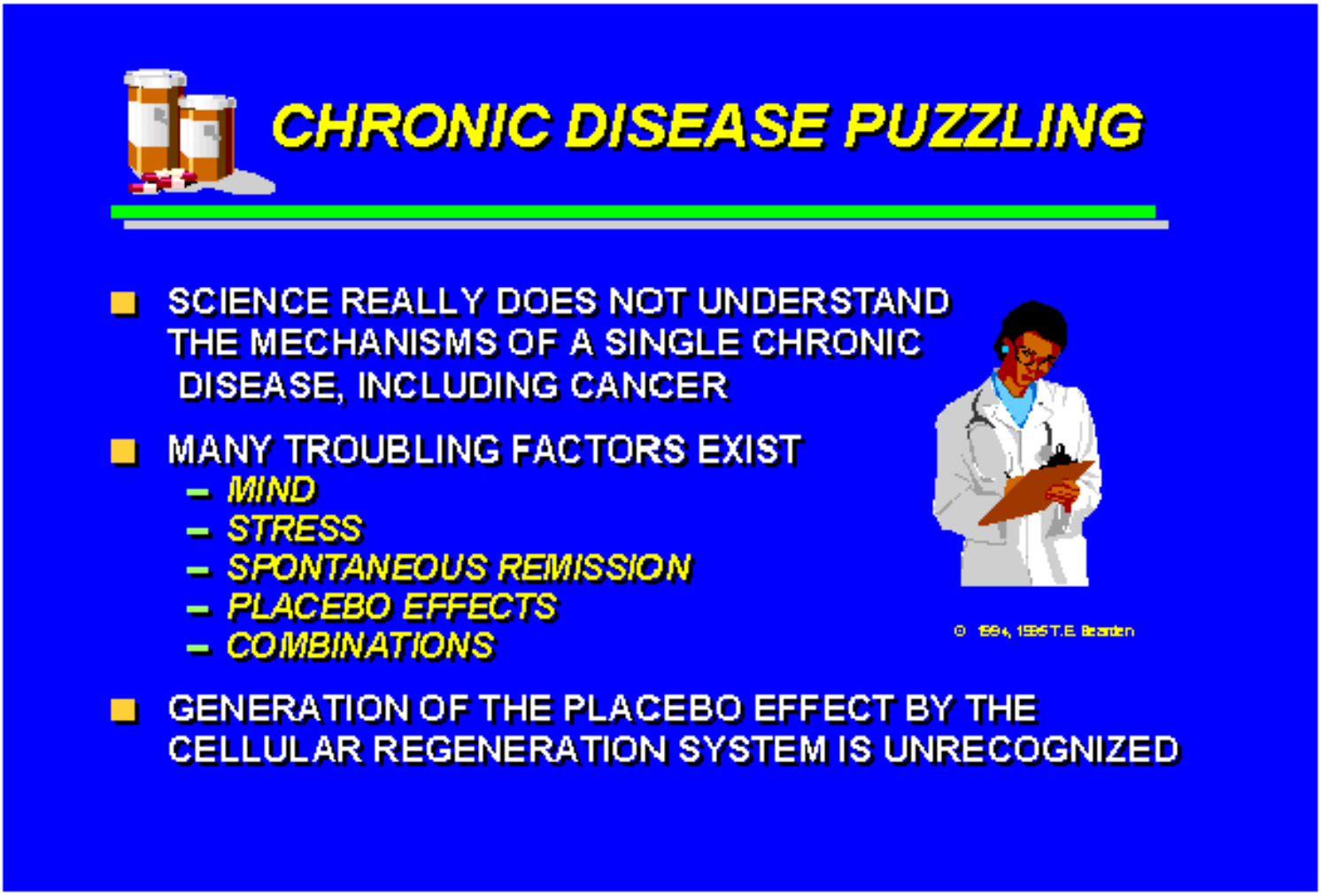

Published by Lotus® Freelance Graphics®

Cancer Characteristics

- Not one disease, but a whole range
- Starts in damaged aerobic cell
- Cell shakes off body's central control
  - Starts uncontrolled division
  - Becomes a lump
- Can send forth cancer cells
  - Through blood
  - Through lymph
- Form metastases (secondary tumors)
- Often become anaerobic

©1993 C. Bowden

Published by Lotus® Freelance Graphics®

Solving a Cancer Enigma

- An enigma has been failure of immune system to attack some tumor cells
  - Suppressor cells may curb immune system?
  - Tumor may lack antigens normally identified by the immune system?
- *Promotion of damaged cell to cancer is usually ordered by cellular control system*
  - *Regenerative and recovery system forces cell back toward anaerobe*
  - *First step breaks free from central growth*
  - *Control continues to recognize cell as self*

© 1993 F. C. Brandon

Published by Lotus® Freelance Graphics®

CANCER: CHARACTERISTICS

- NOT ONE DISEASE BUT A WHOLE RANGE
- STARTS IN ORDINARY (AEROBIC) CELL
- CELL SHAKES OFF BODY'S DICTATORIAL CONTROL*
- STARTS UNCONTROLLED DIVISION
- BECOMES A LUMP
- CAN SEND FORTH CANCER CELLS
  - THROUGH BLOOD
  - THROUGH LYMPH
- THESE FORM METASTASES (SECONDARY TUMORS)
- OFTEN BECOME ANAEROBIC (NON-OXYGEN USING)
- ENIGMA IS FAILURE OF IMMUNE SYSTEM TO ATTACK SOME TUMOR CELLS
  - SUPPRESSOR CELLS MAY CURB IMMUNE SYSTEM
  - TUMOR MAY LACK ANTIGENS NORMALLY IDENTIFIED BY THE IMMUNE SYSTEM

*R&R system forces cell back toward anaerobe

Published by Lotus® Freelance Graphics®

PORTABLE PRIORE TECHNOLOGY UNIT

- FACT: DISEASE-SPECIFIC VACUUM ENGINE PRESENT FOR ANY CELLULAR DISEASE, BY WHEELER'S PRINCIPLE
  - DISEASE CAN BE REVERSED BY CREATING AMPLIFIED VACUUM ANTI-ENGINE (BEARDEN'S PRINCIPLE)
  - ANTI-ENGINES CREATED BY PUMPING THE NONLINEAR CELLS WITH LONGITUDINAL EM WAVES

- PRIORE UTILIZED A PLASMA TO PHASE CONJUGATE AND "INFOLD" MULTIPLE BIDIRECTIONAL LONGITUDINAL EM PUMP WAVES
  - MULTIPLE FREQUENCIES MIXED IN A ROTATING PLASMA
  - PHASE CONJUGATES ADDED BY THE PLASMA
  - INFOLDED MIX INTO STRONG PULSED DC MAGNETIC FIELD, WHICH CARRIED IT INTO ATOMIC NUCLEI
  - PUMPED ALL NONLINEAR CELLULAR COMPONENTS TO PRODUCE AMPLIFIED, SPECIFIC VACUUM ANTI-ENGINE

- NEGATED THE CUMULATIVE CELLULAR DEDIFFERENTIATION ORDER GENERATED BY LONG-TERM HYPOXIA. TUMOR CELLS REVERTED TO NORMAL CELLS.
- SCRUBBED OUT CUMULATED PRECANCEROUS STATE
- RESTORED THE IMMUNE SYSTEM TO HIGH FUNCTIONING
- NO EXCESSIVE TRAUMA TO TREATED ANIMAL

©1990, 1991, 1992 T.E. BEARDEN.

Published by Lotus® Freelance Graphics®

Lisitsyn's Report: Brain Code Broken

- THEORY DEVELOPED AND FITTED
- HYSTERESIS MEMORY LOOP
- CONTROLLED EM INDUCTION
  - IMAGES
  - SENSATIONS
  - PREDETERMINED EMERGENCE
- 23 EEG BANDS
  - UP TO 8.1 X 10^{20} HZ
  - 11 INDEPENDENT CHANNELS

© 1970, 1973, 1991 TC BENSLER

S.K. Lisitsyn, "New Approach to the Analysis of Electroencephalograms," DDC Report AD73005, p.16-25.

Published by Lotus® Freelance Graphics®

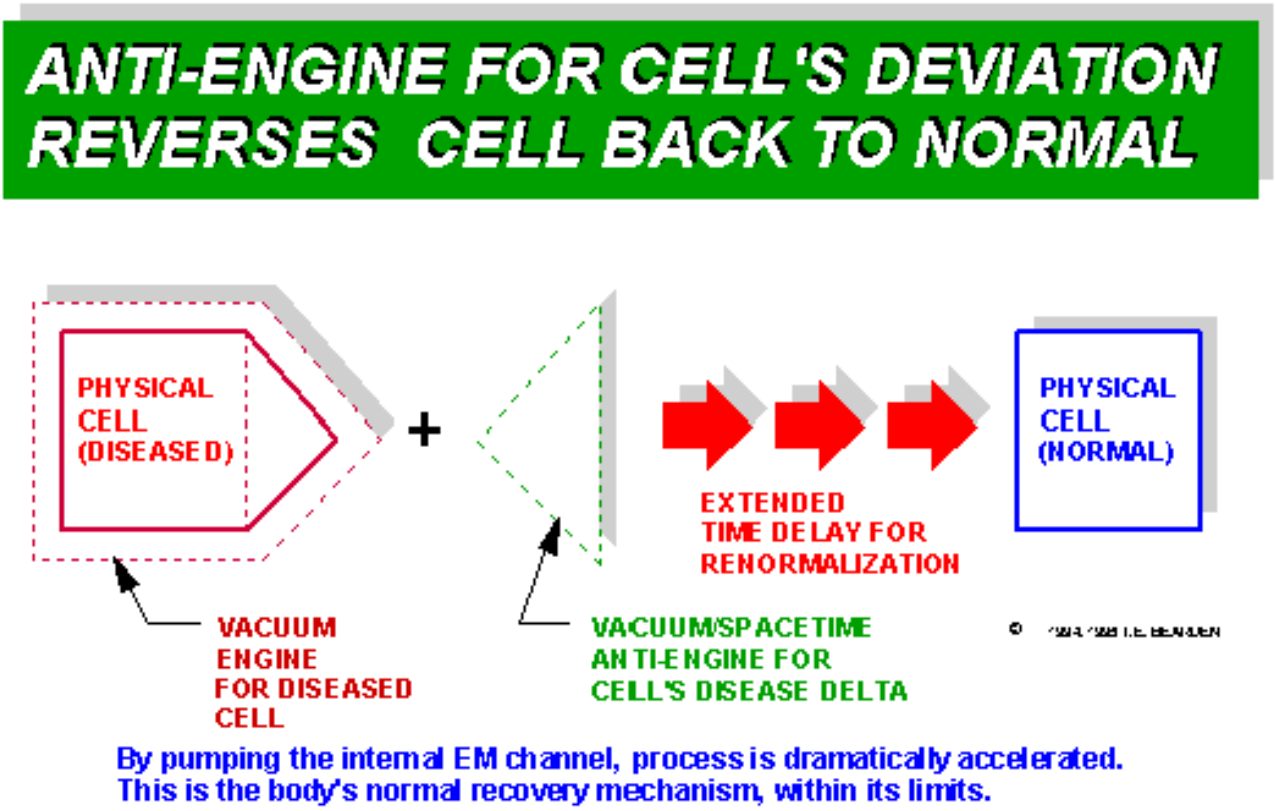

Published by Lotus® Freelance Graphics®

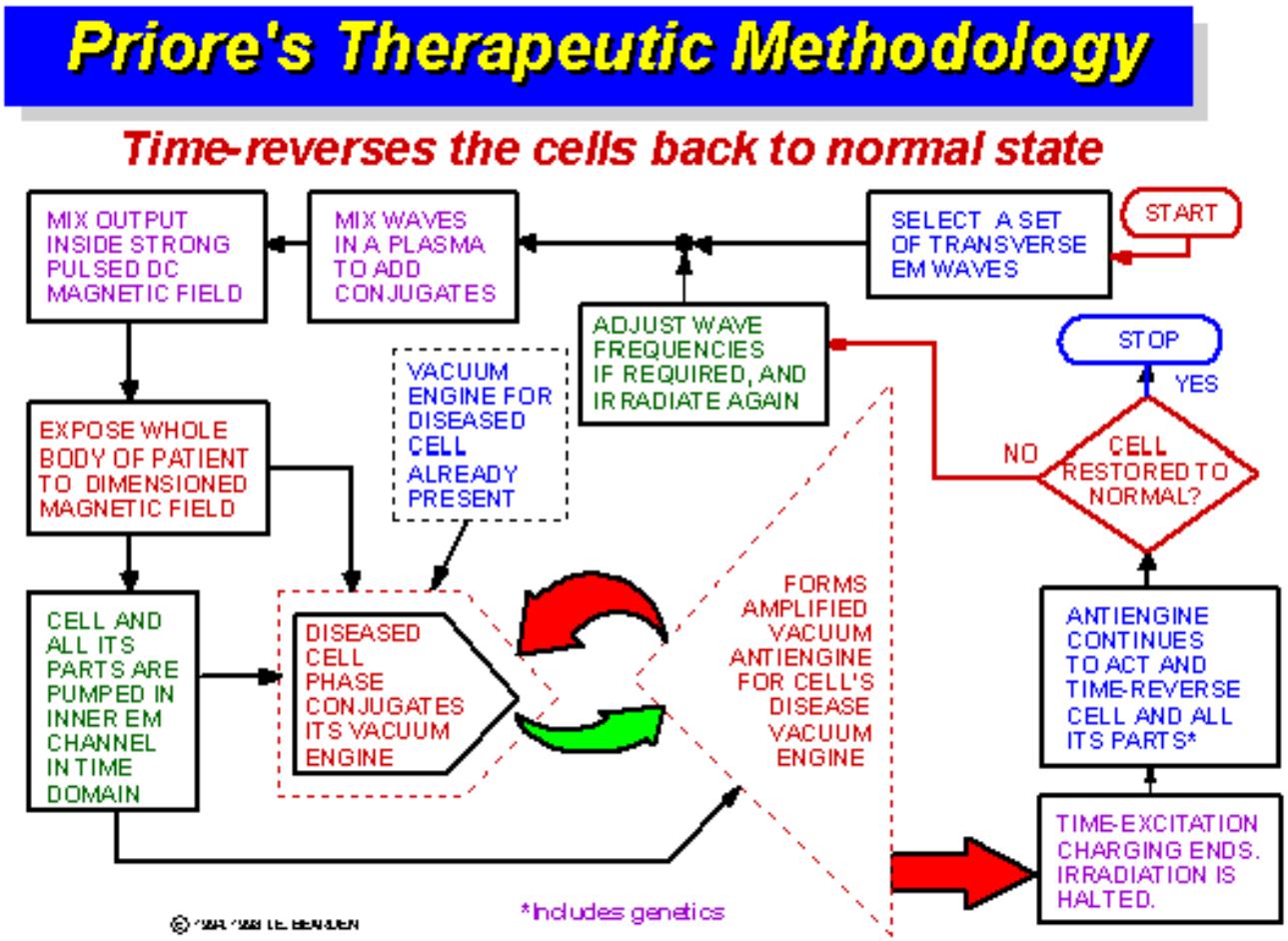

Published by Lotus® Freelance Graphics®

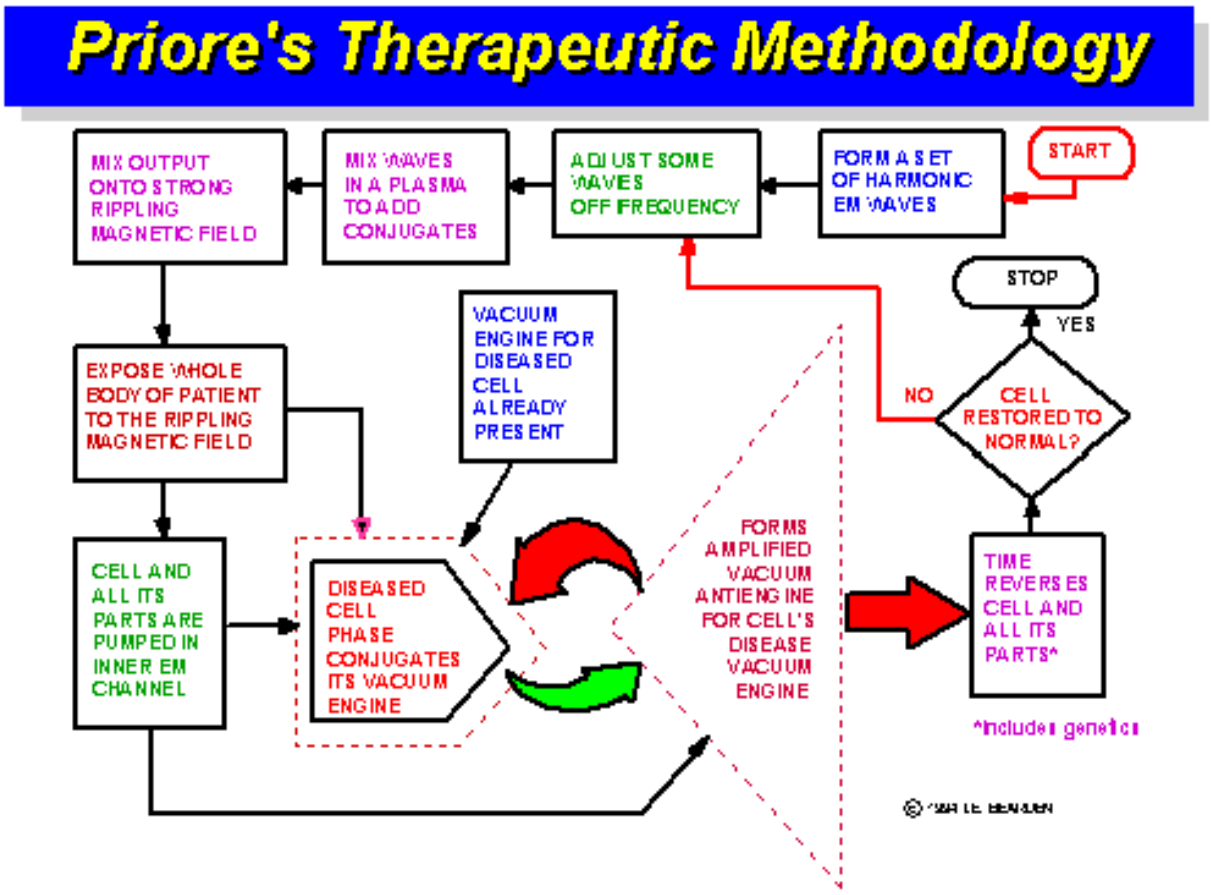

Published by Lotus® Freelance Graphics®

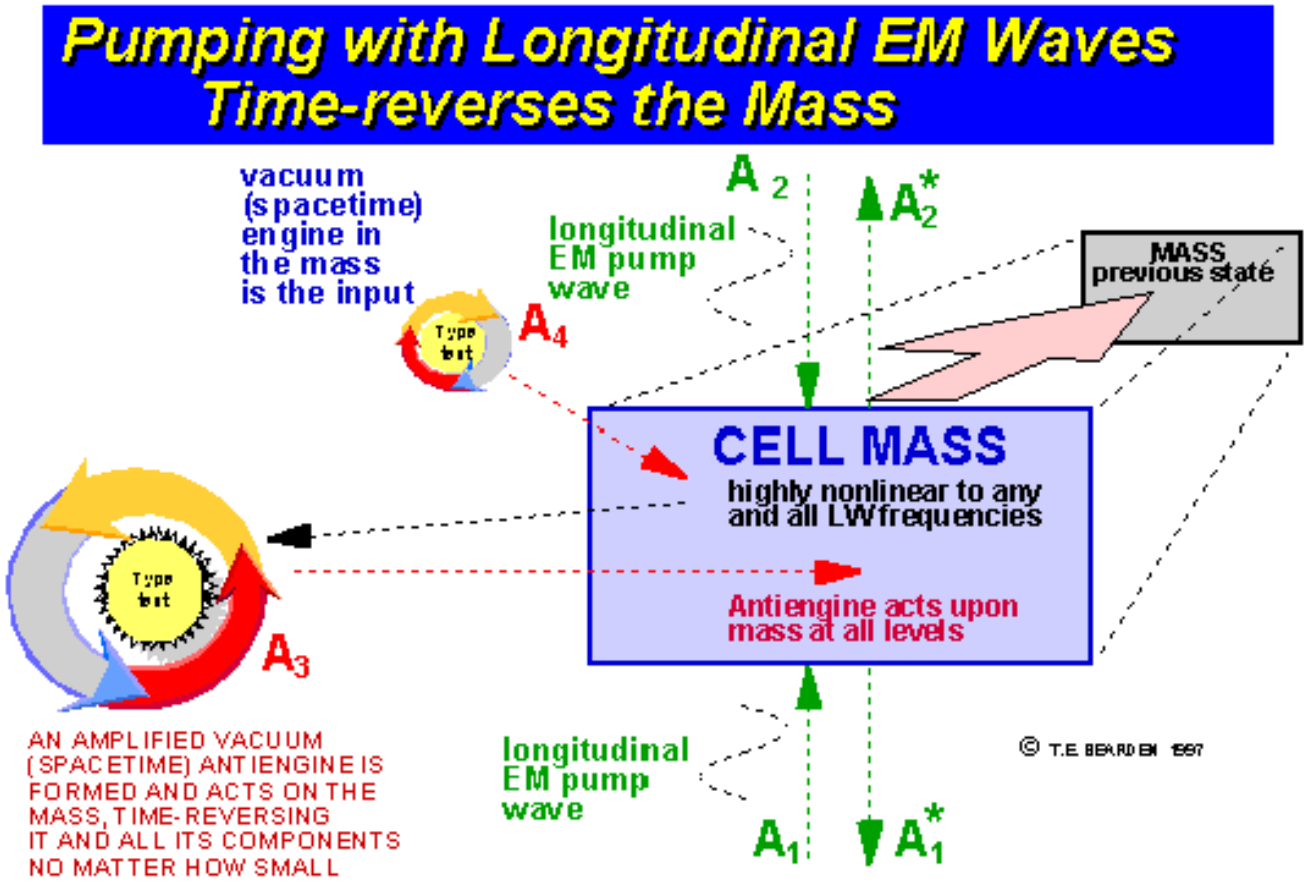

Published by Lotus® Freelance Graphics®

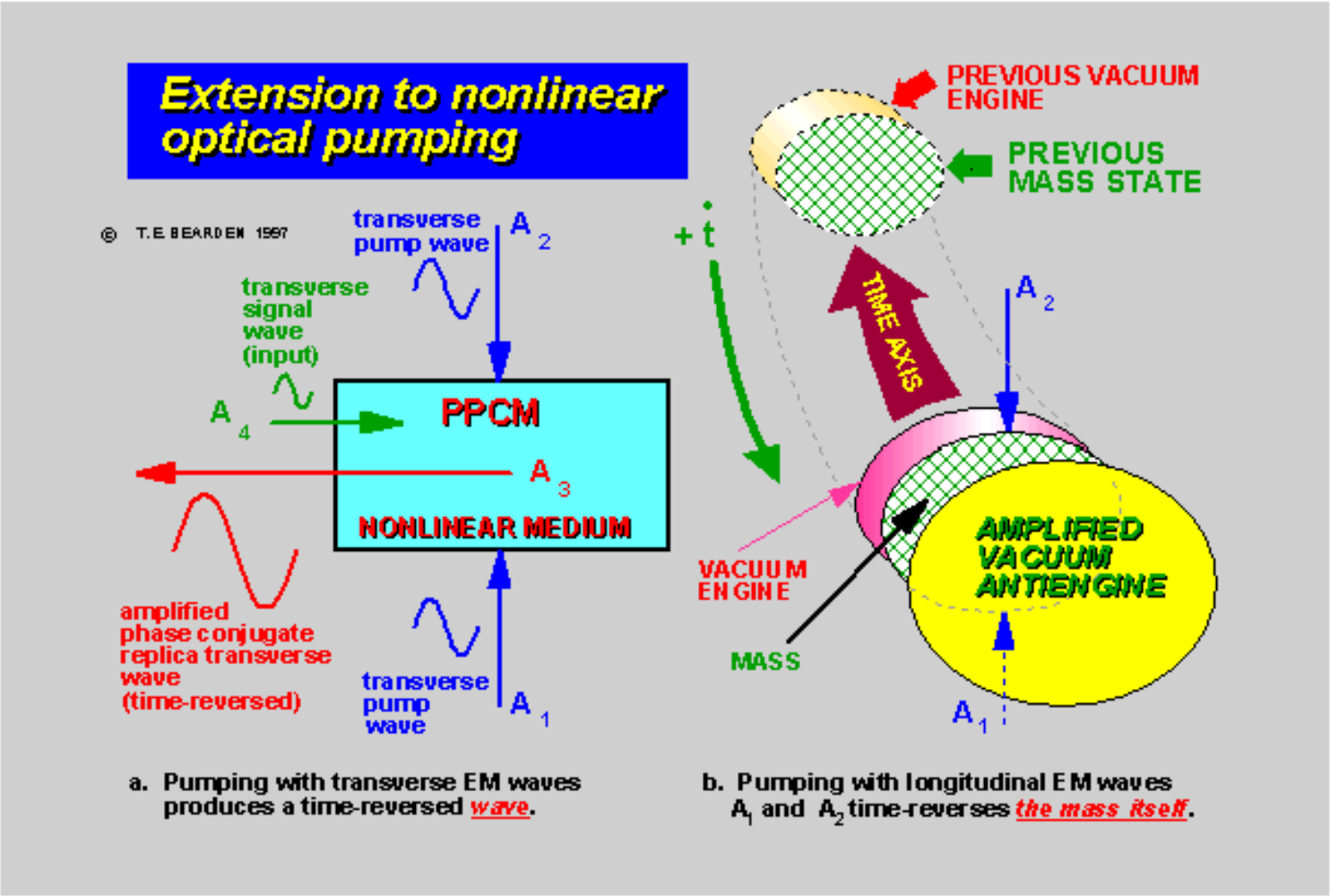

Published by Lotus® Freelance Graphics®

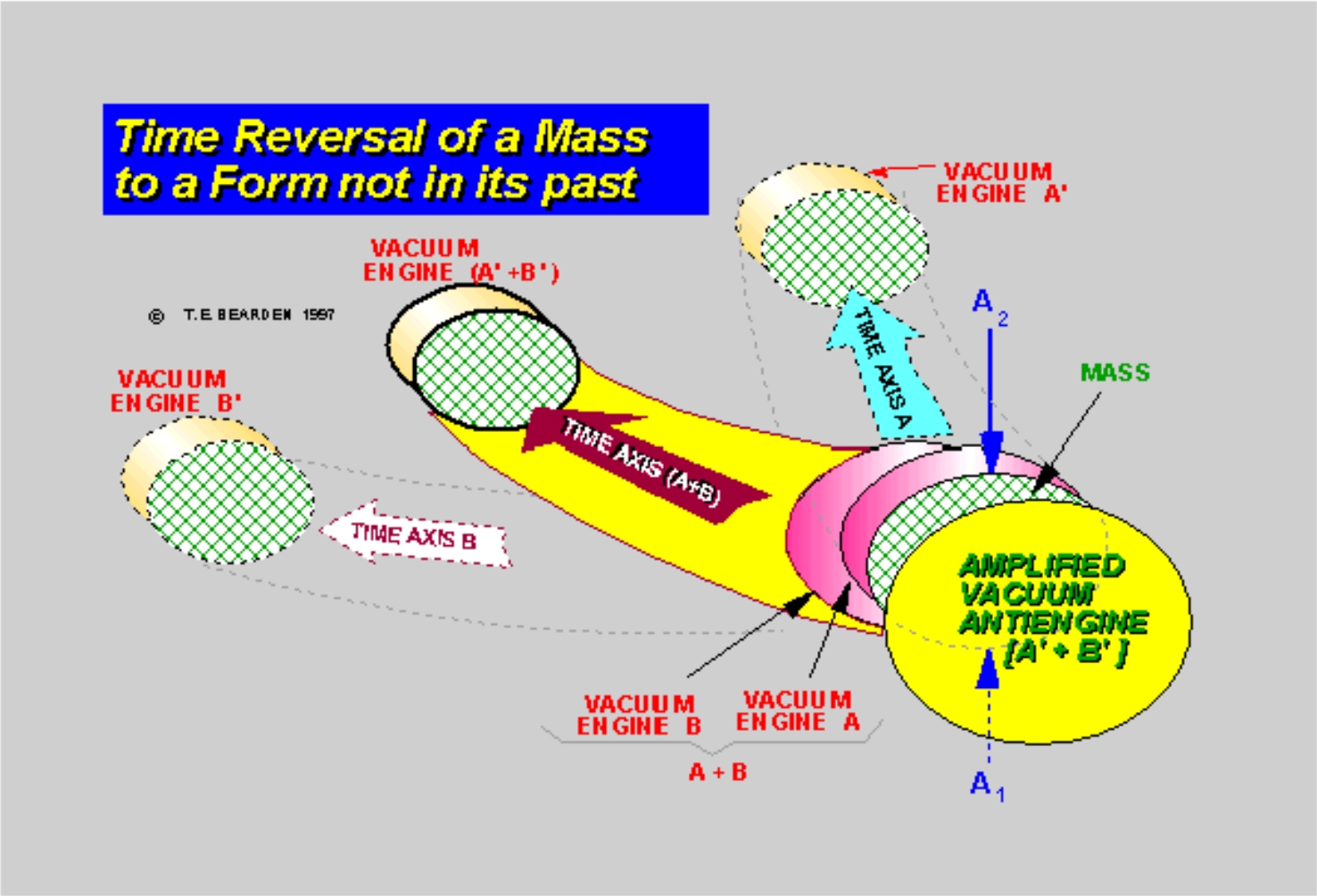

Published by Lotus® Freelance Graphics®

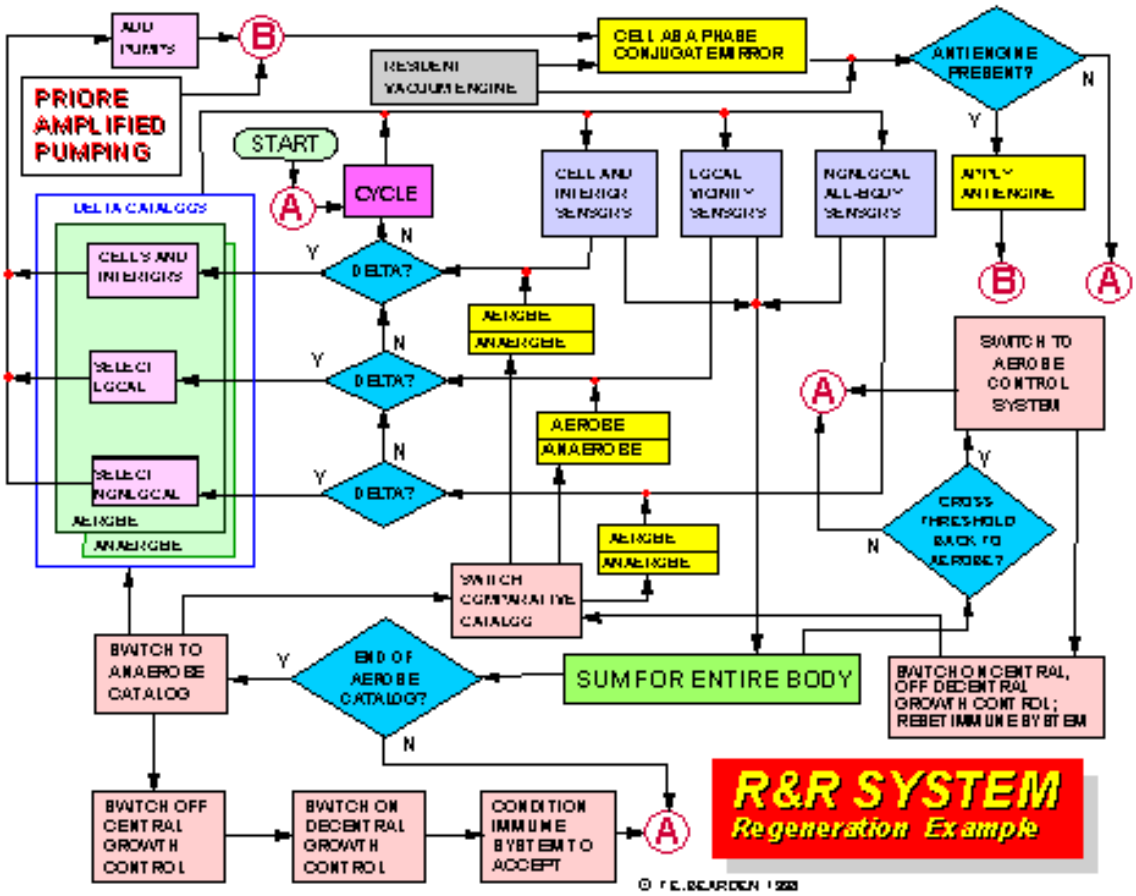

Published by Lotus® Freelance Graphics®

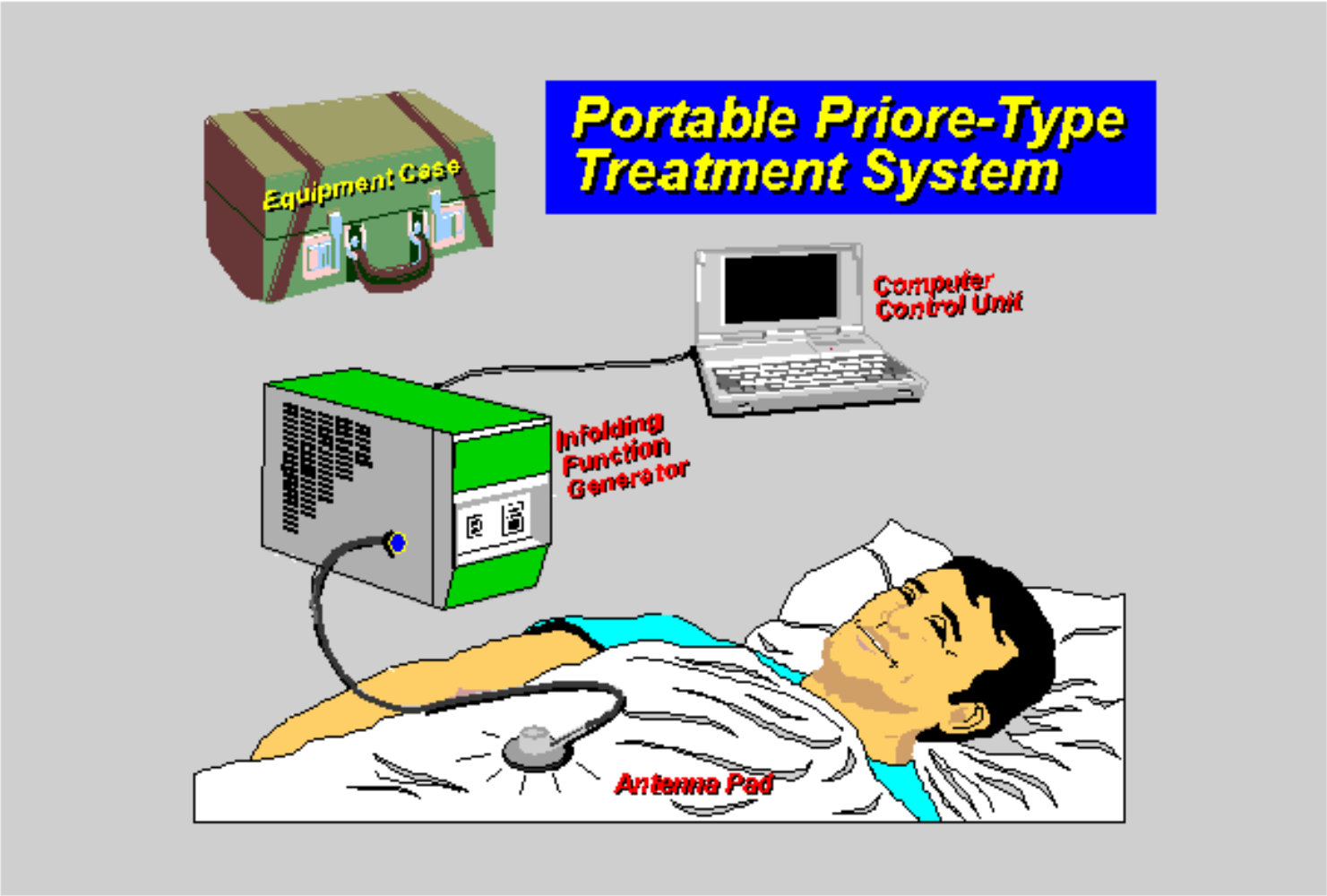

Published by Lotus® Freelance Graphics®

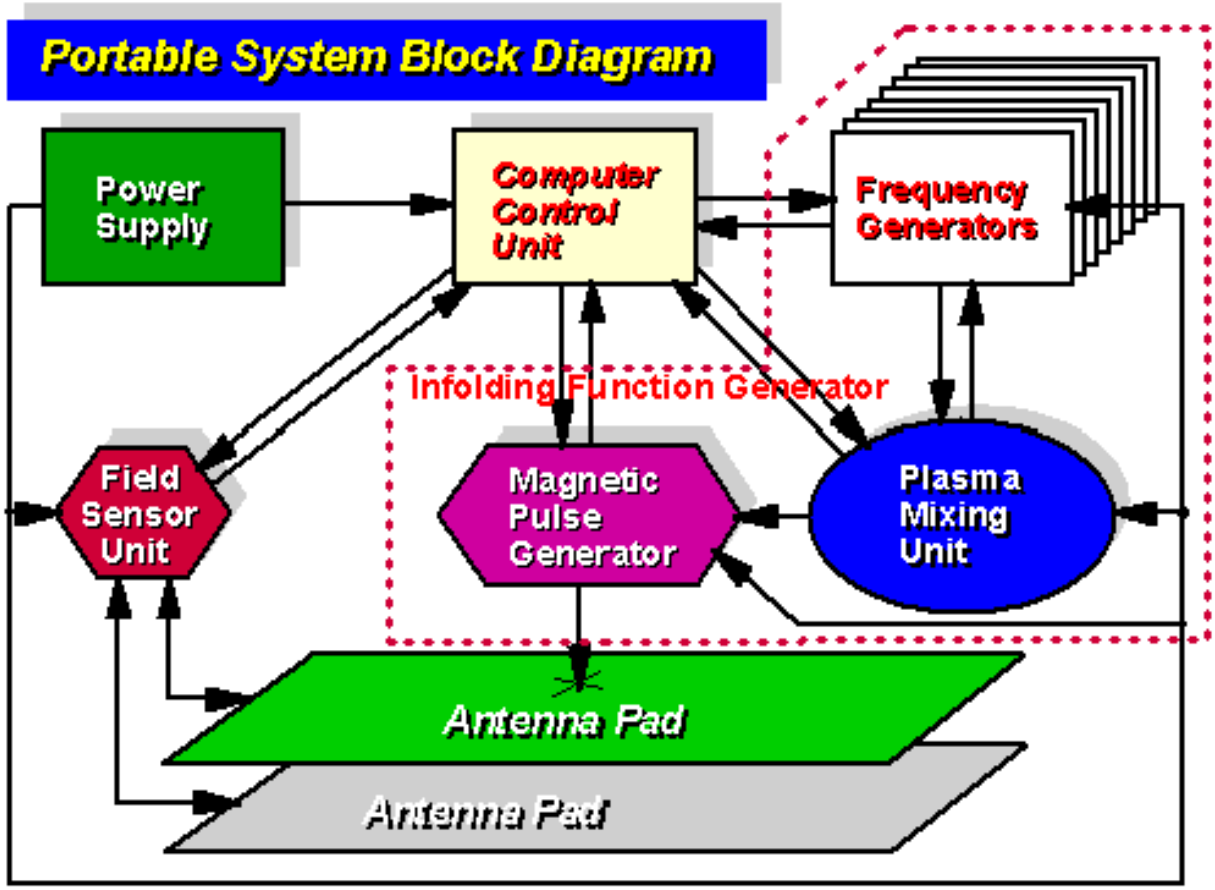

Published by Lotus® Freelance Graphics®

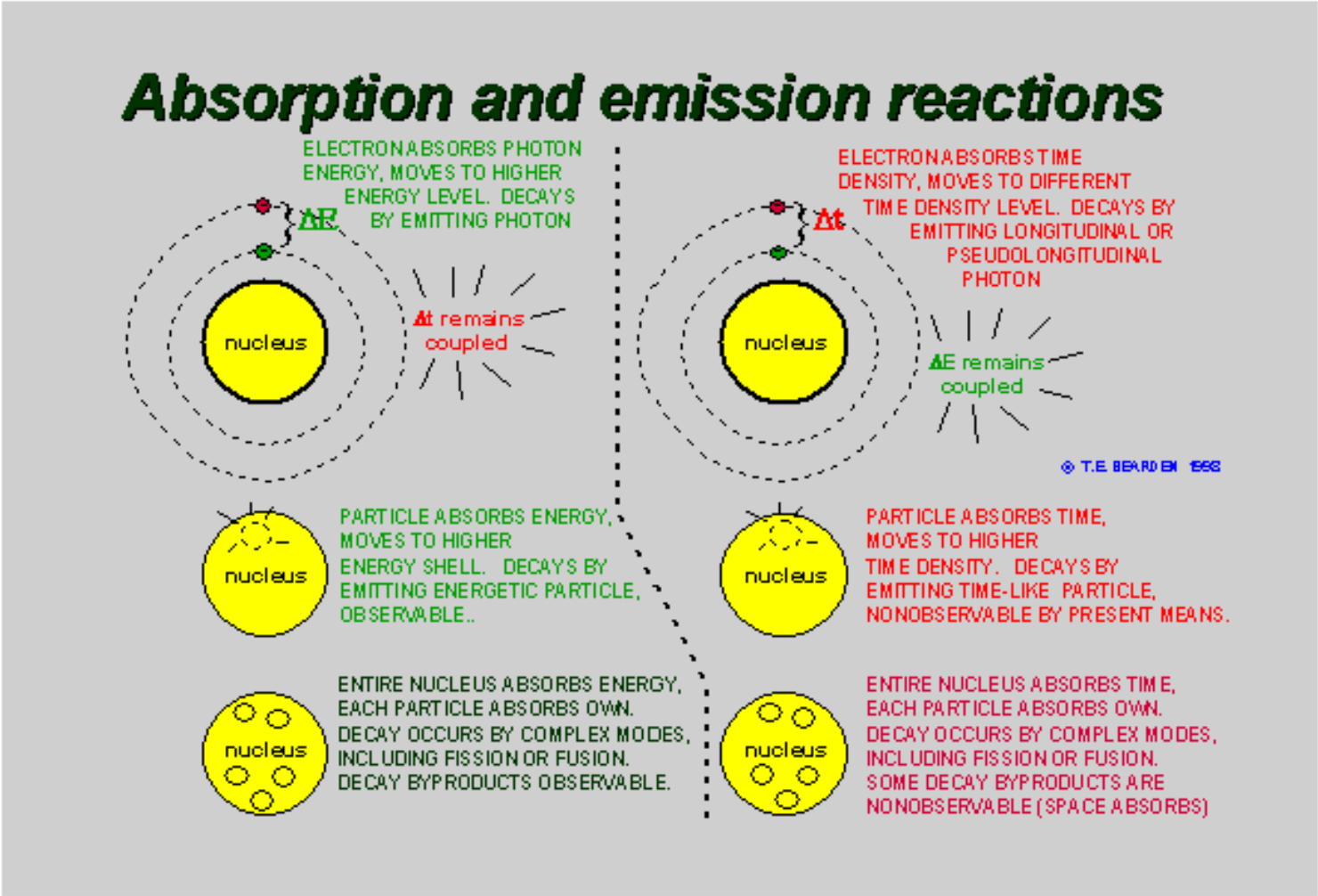

Published by Lotus® Freelance Graphics®

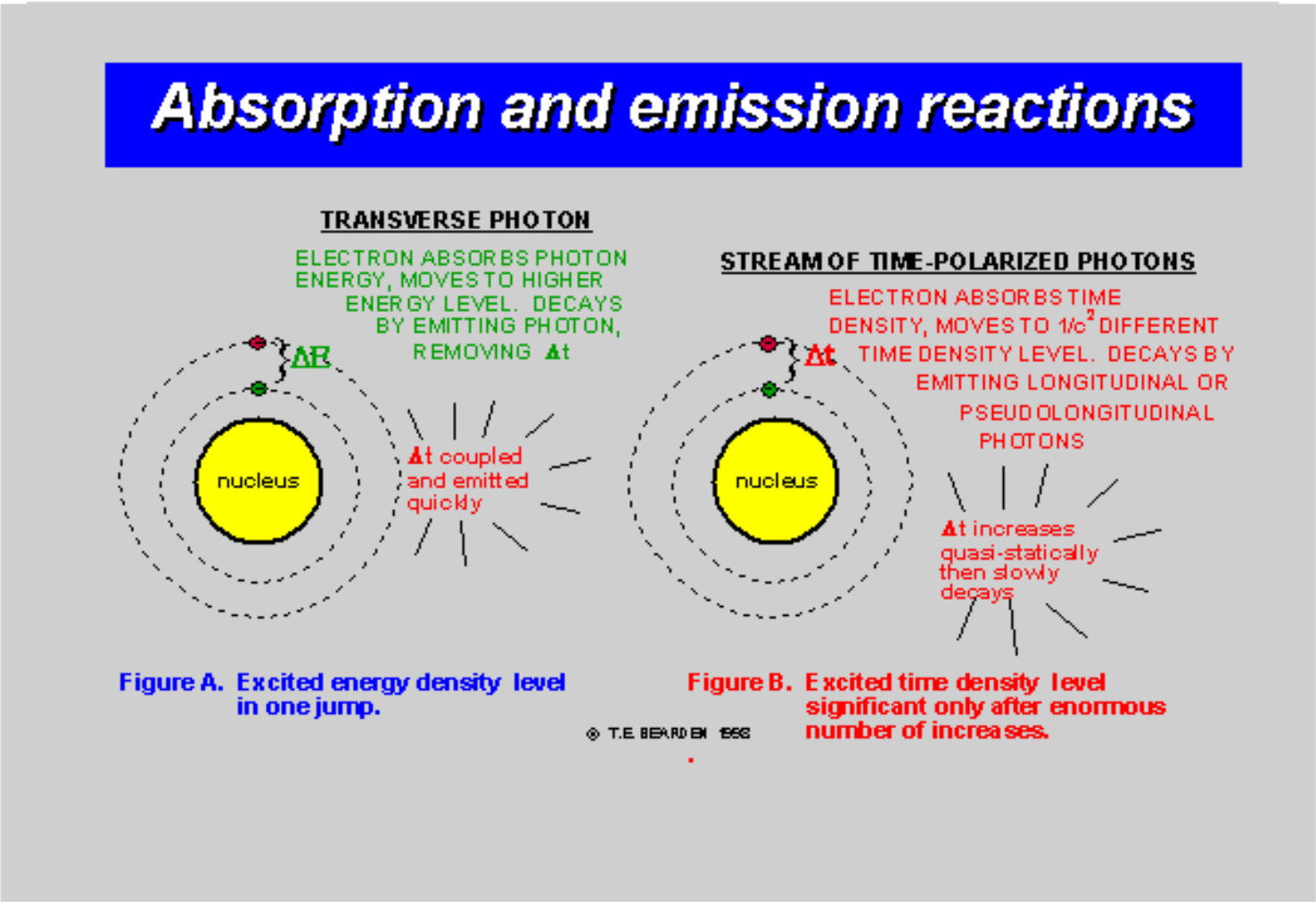

Published by Lotus® Freelance Graphics®

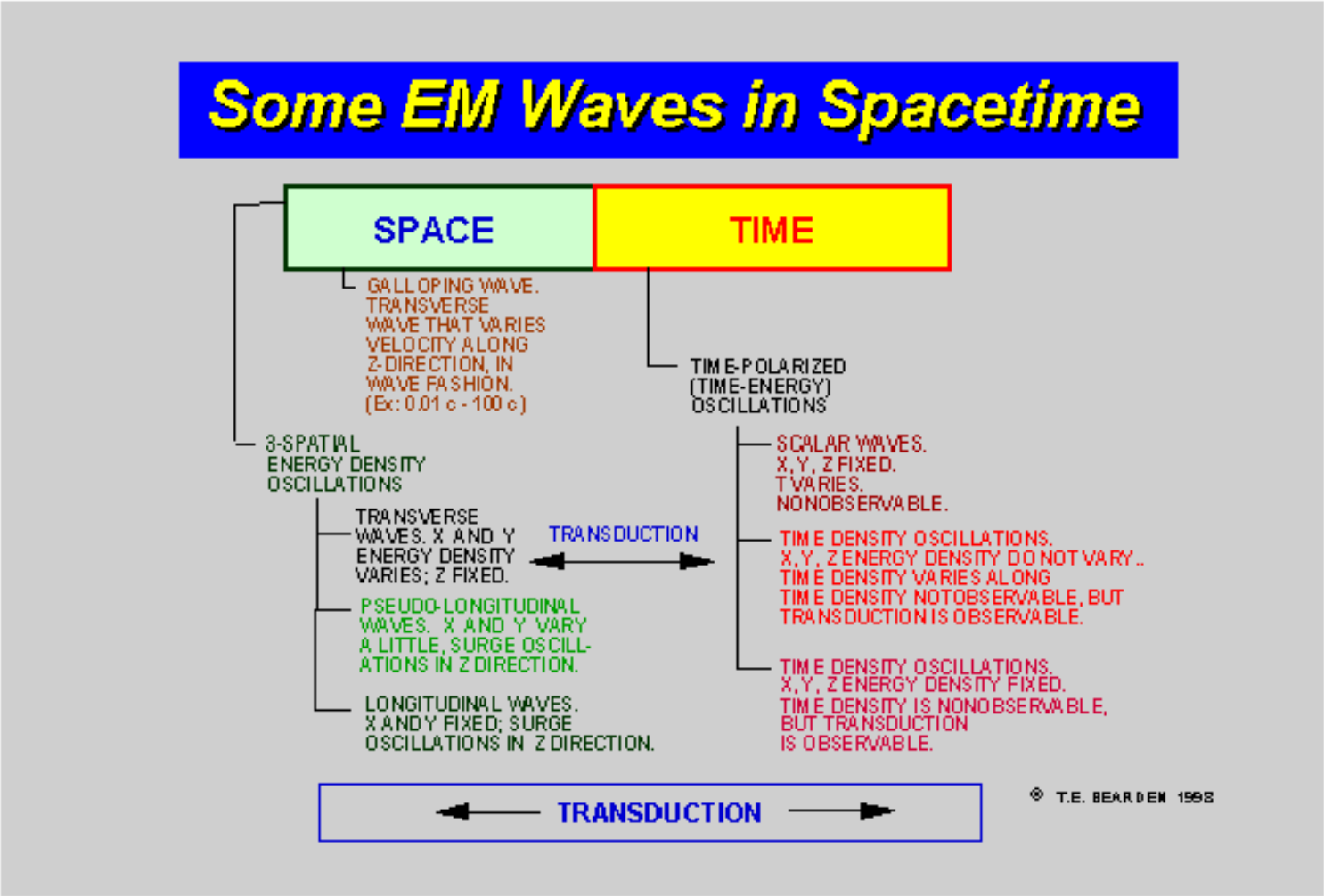

Published by Lotus® Freelance Graphics®

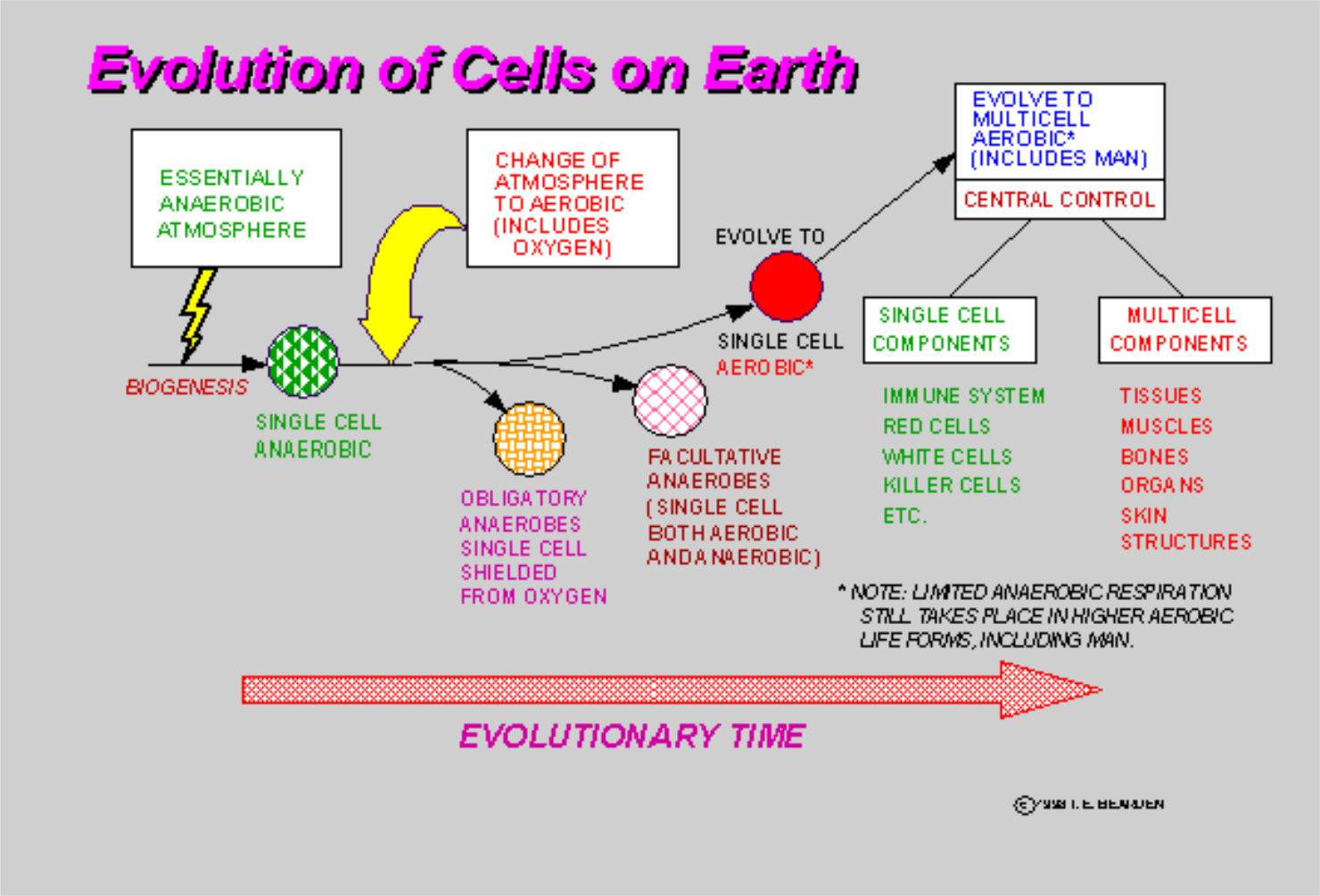

Published by Lotus® Freelance Graphics®

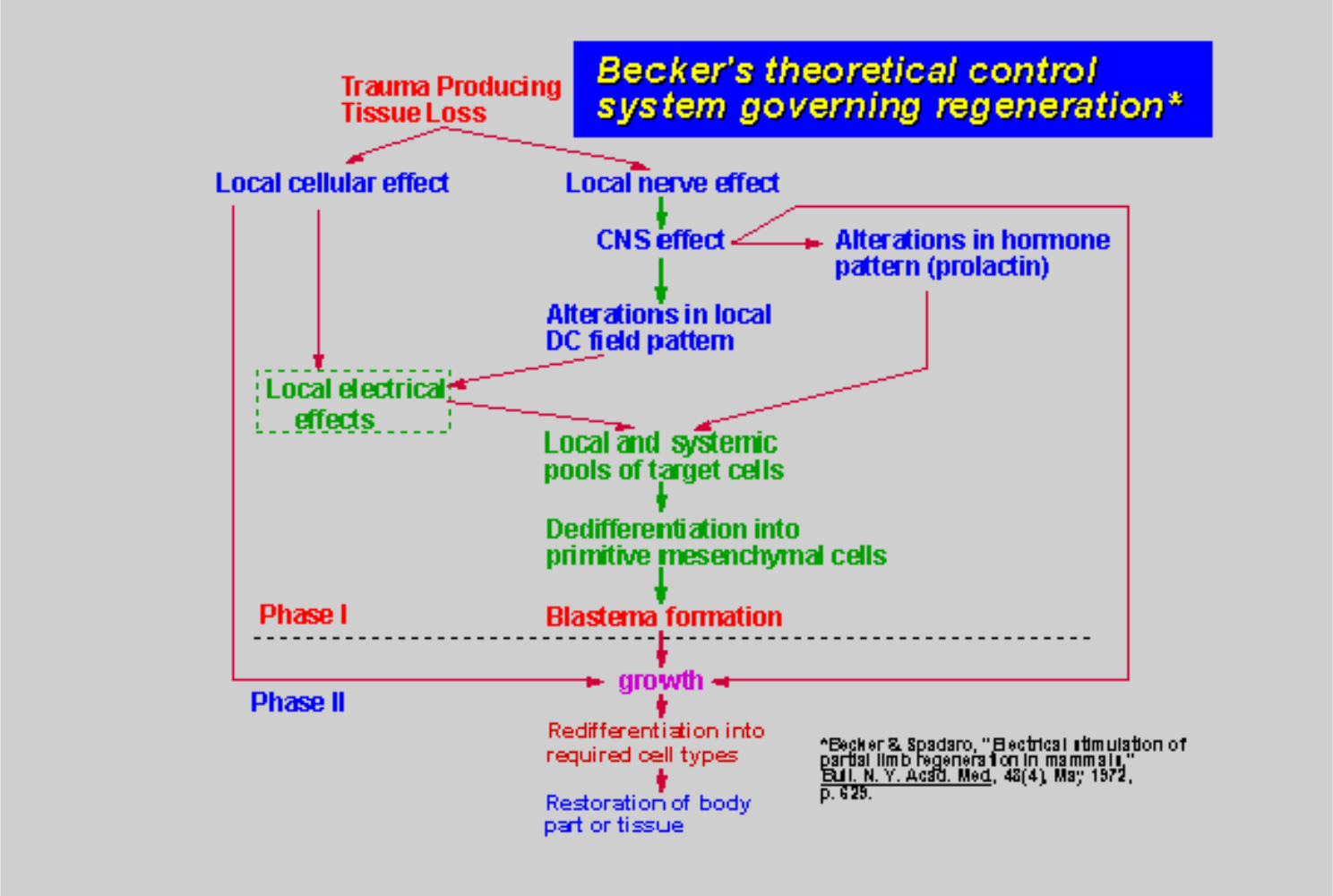

Published by Lotus® Freelance Graphics®

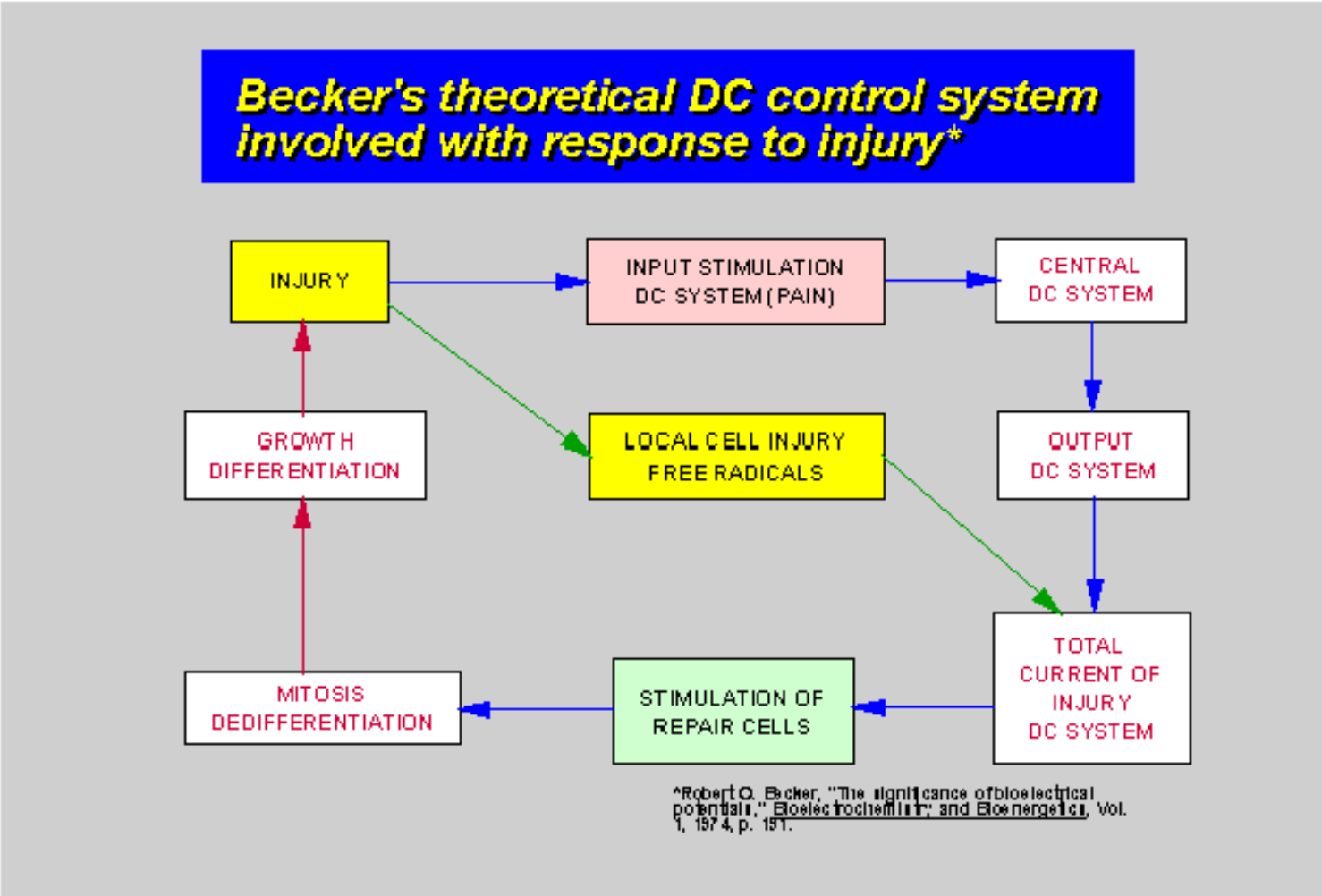

Published by Lotus® Freelance Graphics®

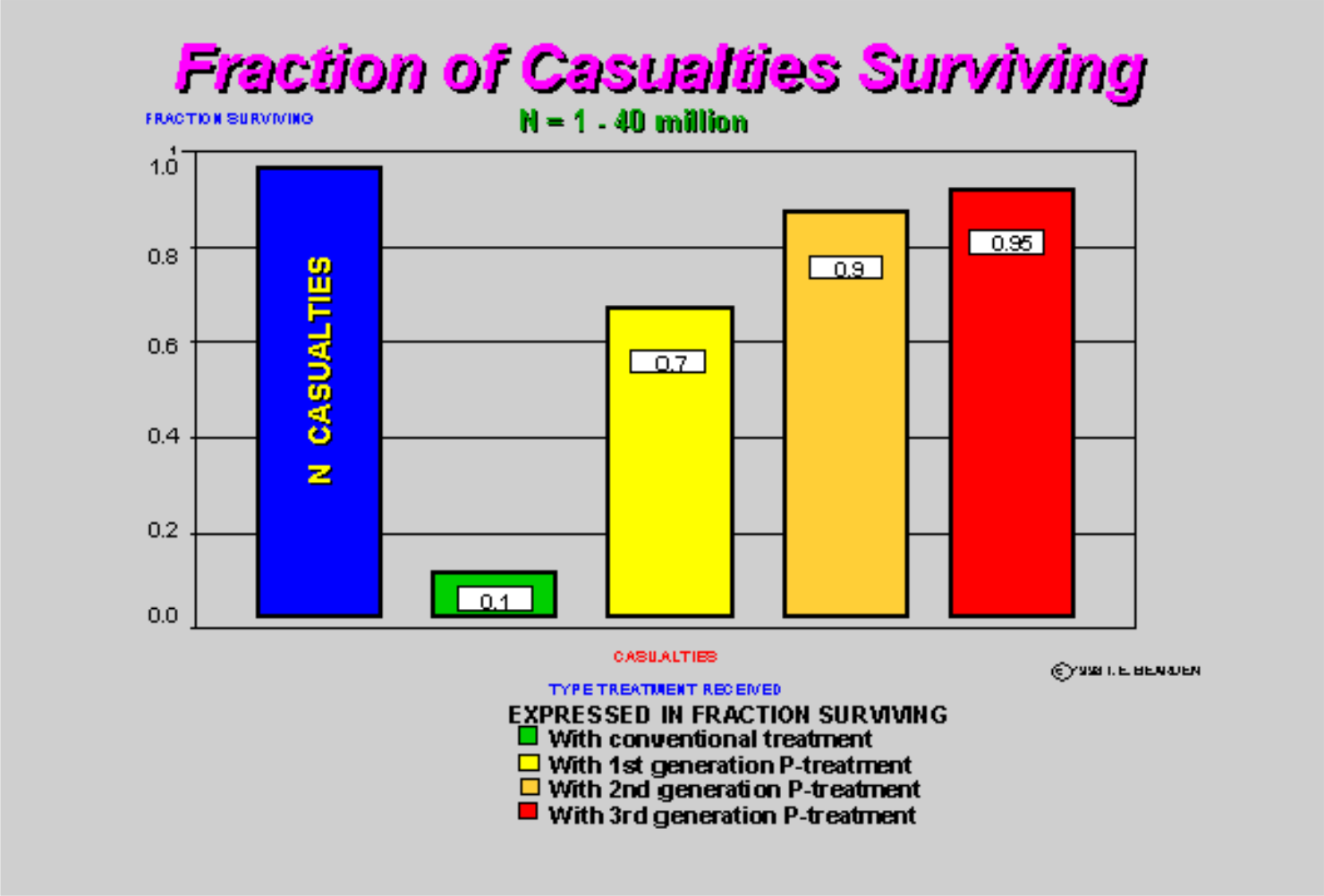

Published by Lotus® Freelance Graphics®

"Time as fuel" is the future

- Present energy science is insufficient
- Eventually will use energy locked up in time itself
- Cold fusion will provide entrée
- Cold fusion has evidence of time-as-energy
- Theorists and experimentalists should examine the implications
- Must revise foundations of Electrodynamics

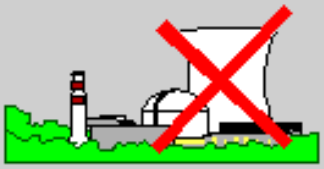

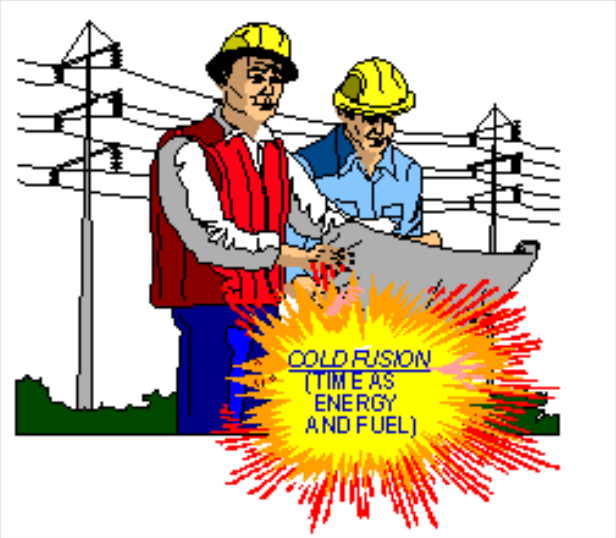

Published by Lotus® Freelance Graphics®

The Tom Bearden Website

Help support the research

Foundations of Electro-Magnetism

Slide Series

- Major Points of Presentation
- Chung's Carbon Filament Negative Resistor
- Aharanov-Bohm Effect
- Absorption and emission reactions (1)
- Absorption and emission reactions (2)
- Anti-engine for cell's deviation reverses cell back to normal
- Asymmetric regauging produces excess force, which can be used to do work on the system
- Asymmetric regauging produces excess force, which can be used to do work on the regauging system
- Becker's bone fracture healing experiments
- Becker's theoretical control system governing regeneration
- Becker's theoretical DC control system involved with response to injury
- Geometrical Distortion of Poynting Energy Flow
- Cosmic Bootstrap: Before the Big Bang
- Bridging Enables COP > 1

- Aspects of Strong Local Symmetry
- Other Aspects of Strong Local Symmetry
- Bunge on the Status of Electrodynamics
- Bunge on the Status of Electrodynamics and Physics
- Bunge on the Status of Classical and Quantum Physics
- Fractions of BW Casualties Surviving
- First Step in Self-Promotion of Cancer Due to Hypoxia
- Differentiation and Dedifferentiation Timelines
- Evolution of Cells on Earth
- A Charged Particle q is a Coupled System of m and Ø
- The Ubiquitous Assumption: Two Asymmetrical Regaugings for Net Symmetry (1)
- The Ubiquitous Assumption: Two Asymmetrical Regaugings for Net Symmetry (2)
- The Ubiquitous Assumption: Two Asymmetrical Regaugings for Net Symmetry (3)
- A Charged Particle is a Coupled System
- The Anomalies in Navy Electrolyte Experiments at China Lake
- Chung's Carbon Filament Negative Resistor

- Typical circuit has about 10^{-13} energy collection efficiency
- Classical View of EM
- Curved Spacetime acts as source or sink
- Chronic Disease Puzzling
- Cancer Characteristics
- Solving a Cancer Enigma
- Cancer: Characteristics
- Nonlinear Optics Distortion Correction Theorem
- The Electronuclear Reaction: Nuclear Reactions in TR-Zones (1)
- The Electronuclear Reaction: Nuclear Reactions in TR-Zones (2)
- The Electronuclear Reaction: Nuclear Reactions in TR-Zones (3)
- In Time-Reversed Zone: Nuclear reactions are biased
- In Time-Reversed Zone: Dynamics may be reversed
- Time-Reversed Zone: Significant only after time-density charging
- A New Conservation of Energy Law
- Questions on Carcinogens and EM

Radiation

- AS DEFINED, fields and potentials only exist in and on charged matter
- Serious flaws and errors in classical EM theory
- Electrodynamicists' Reaction to Removal of the Material Ether
- Reaction to Loss of Material Ether (1)
- Reaction to Loss of Material Ether (2)
- Some EM waves in Spacetime
- Air Medium Disturbances Generated When Air is Perturbed by a Plucked Taut String
- Launching a Spacetime Perturbation ("EM Wave") from a Wire Antenna
- Phase Conjugate Wavepairs Produce New Waves
- Scalar Electromagnetics (Energetics) View of EM (1)
- Scalar Electromagnetics (Energetics) View of EM (2)

- Scalar Electromagnetics (Energetics) View of EM (3)
- Extended General Relativity Principle
- Extension of Work-Energy Theorem
- 34 Flaws in Classical EM Theory
- MTW's General Relativity Principle
- Use of General Relativity (GR) in Particle Physics
- The Missing Infolded Electrodynamics
- Infolded Engines: Excluded by Present Physics
- Mass curves and structures spacetime; ST curvatures change and structure mass (1)
- Mass curves and structures spacetime; ST curvatures change and structure mass (2)
- At Infinite Velocity: Each Is Every Other
- Lisitsyn's Report: Brain Code Broken
- Lorentz Closed Surface Integration
- Lorentz's physically insignificant energy flow can be collected and utilized
- Lorentz surface integration of the Poynting vector around a closed surface
- Longitudinal EM Photon Interaction with Charge
- Mass is transparent to longitudinal EM waves, which move through the infolded interiors of internal waves, potentials, and fields in the mass.

- Pumping with Longitudinal EM waves Time-reverses the Mass
- Maxwell's Quaternion Theory
- Maxwellian Systems before and after Regauging
- Maxwell's four equations reduce to: Page 1
- Maxwell's four equations reduce to: Page 2
- More to come

Major Points of Presentation

- Electrodynamic is seriously flawed
  - Some major flaws
  - Corrections indicated
- Why past corrective attempts failed
  - Force field concept is material
  - Missing two infolded transforms (M->ST; ST->M)
- Missing Infolded general relativity inside electrodynamics
- Several Kinds of EM Waves in Space
  - How to make
  - Transduction
- A French medical example as a deep experimental demonstration
  - Spectacular regenerative cures funded by French Govt
  - Not comprehended, therefore suppressed
- Cold Fusion examples of time-density wave effects
  - China Lake instrumental anomalies in electrolysis
  - Explanation of anomalous behavior of instruments
  - Explanation of new nuclear reactions
  - Wave energy transduction provides excess heat
- Urge theorists to consider dramatically new reactions

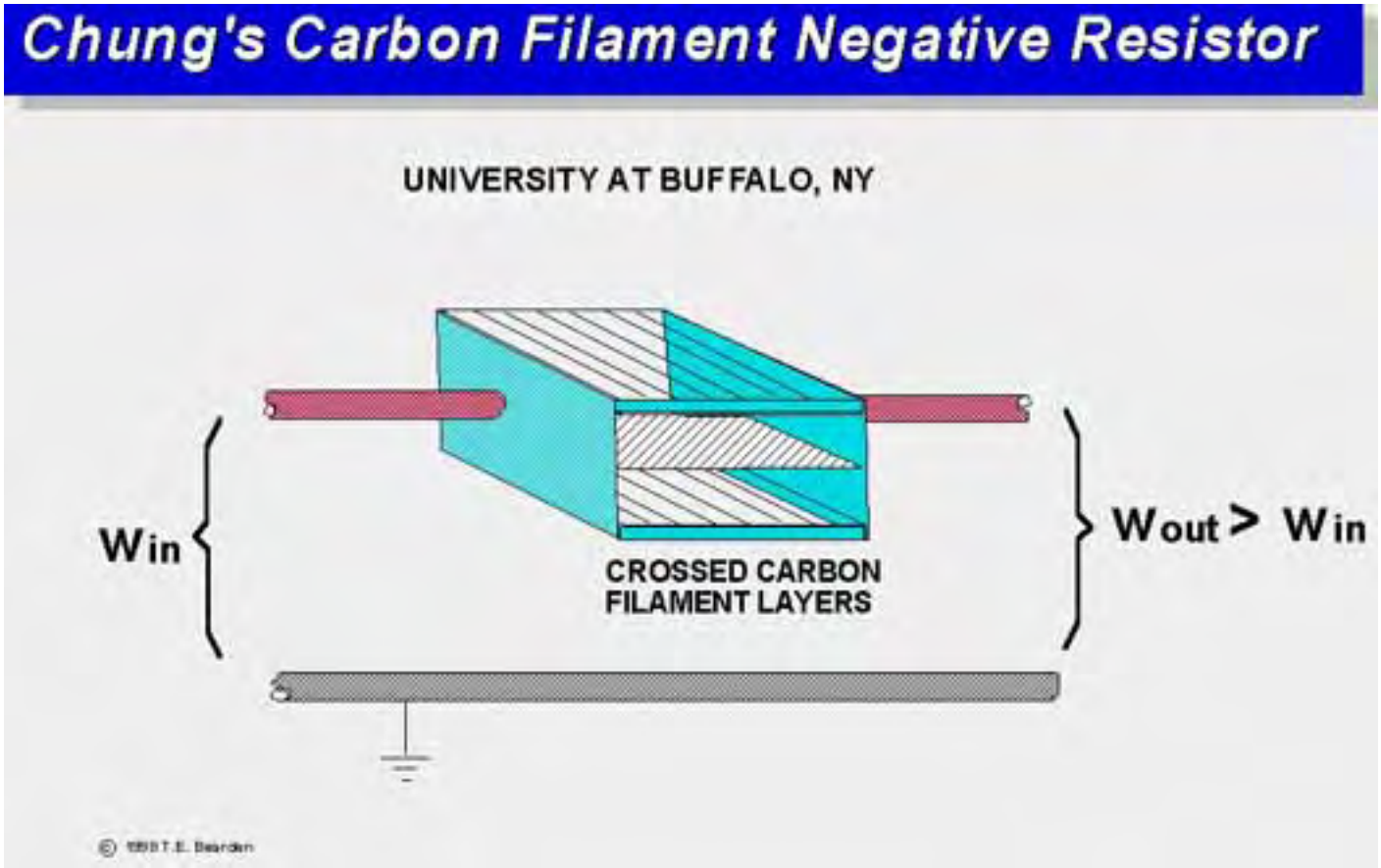
Chung's Carbon Filament Negative Resistor
UNIVERSITY AT BUFFALO, NY
Win
CROSSED CARBON
FILAMENT LAYERS
Wout > Win
© 1991 T.E. Bearden

Aharonov-Bohm Effect

- In field-free regions
  - E-field is zero
  - B-field is zero
- Potentials still exist, just no gradients
  - Cause real effects
  - Interference is the key
  - Contain sum-zeroed substructures
- Does not follow from
  - Mechanics
  - Classical electromagnetics
- Required by quantum mechanics

© T.E. BEARDEN 1996

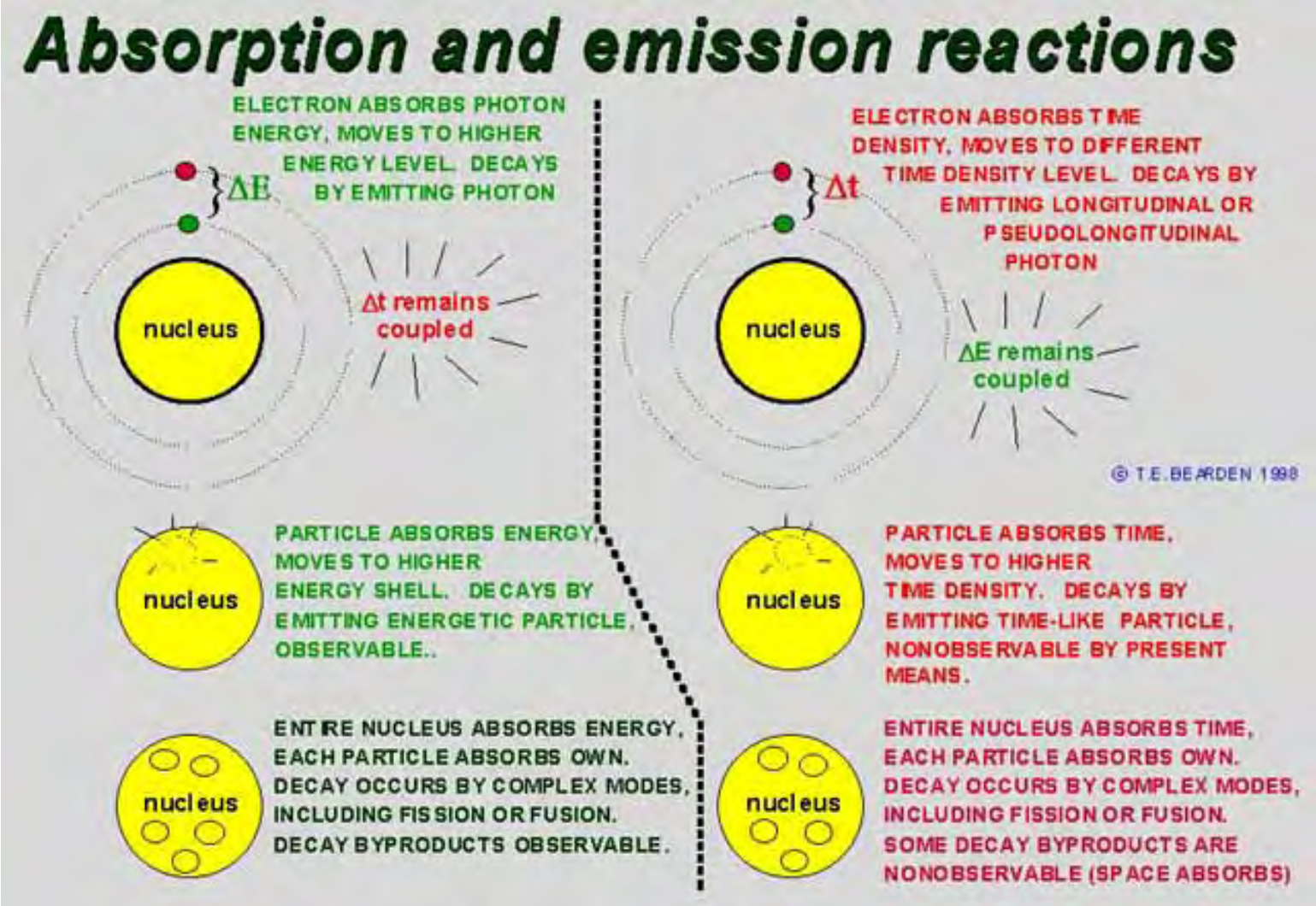
Absorption and emission reactions
ELECTRON ABSORBS PHOTON ENERGY, MOVES TO HIGHER ENERGY LEVEL. DECAYS BY EMITTING PHOTON
ΔE
nucleus
Δt remains coupled
ELECTRON ABSORBS TIME DENSITY, MOVES TO DIFFERENT TIME DENSITY LEVEL. DECAYS BY EMITTING LONGITUDINAL OR PSEUDOLONGITUDINAL PHOTON
Δt
nucleus
ΔE remains coupled
© T.E. BEARDEN 1998
nucleus
PARTICLE ABSORBS ENERGY, MOVES TO HIGHER ENERGY SHELL. DECAYS BY EMITTING ENERGETIC PARTICLE, OBSERVABLE..
nucleus
PARTICLE ABSORBS TIME, MOVES TO HIGHER TIME DENSITY. DECAYS BY EMITTING TIME-LIKE PARTICLE, NONOBSERVABLE BY PRESENT MEANS.
nucleus
ENTIRE NUCLEUS ABSORBS ENERGY, EACH PARTICLE ABSORBS OWN. DECAY OCCURS BY COMPLEX MODES, INCLUDING FISSION OR FUSION. DECAY BYPRODUCTS OBSERVABLE.
nucleus
ENTIRE NUCLEUS ABSORBS TIME, EACH PARTICLE ABSORBS OWN. DECAY OCCURS BY COMPLEX MODES, INCLUDING FISSION OR FUSION. SOME DECAY BYPRODUCTS ARE NONOBSERVABLE (SPACE ABSORBS)

Absorption and emission reactions

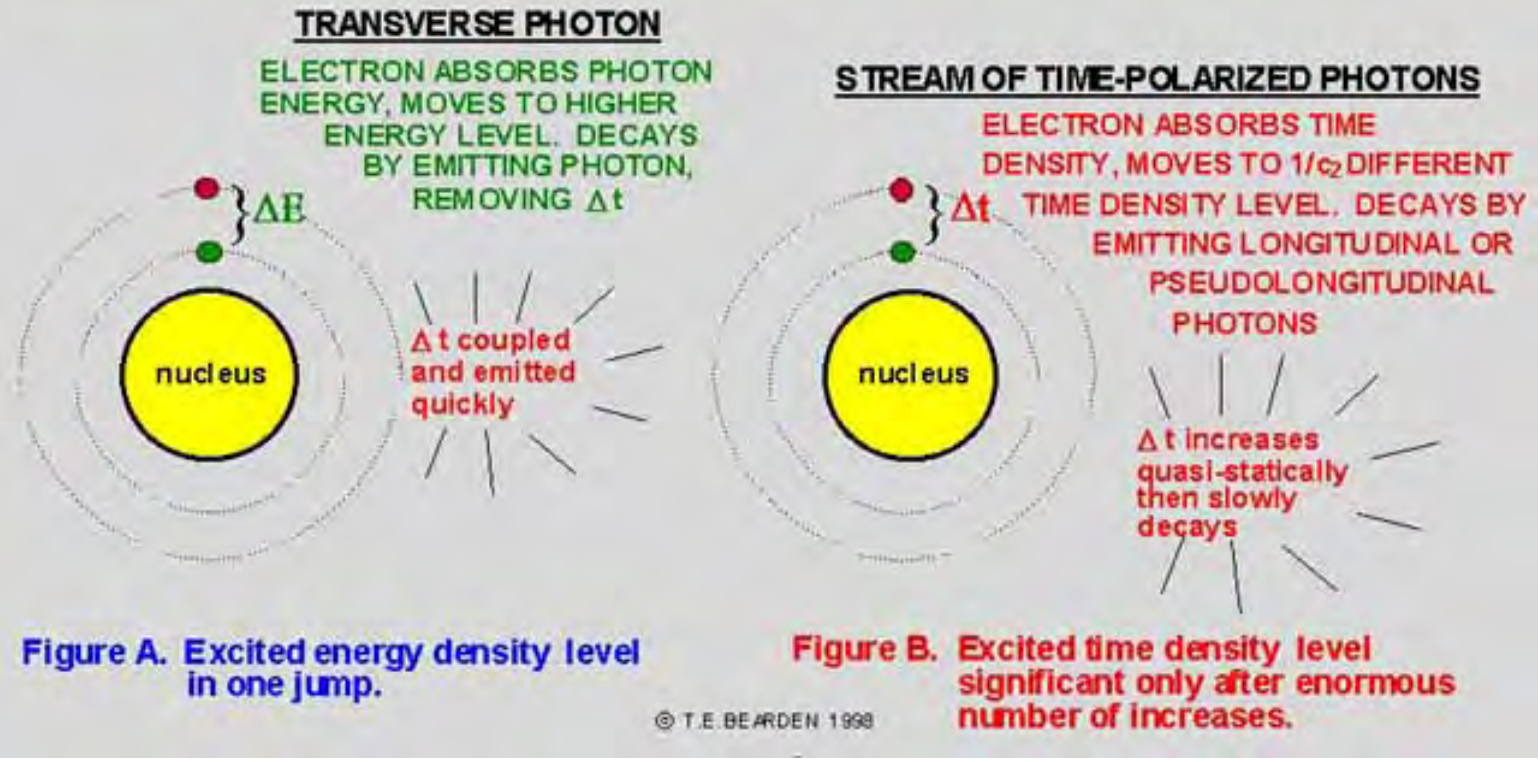

Figure A. Excited energy density level in one jump.

Figure B. Excited time density level significant only after enormous number of increases.

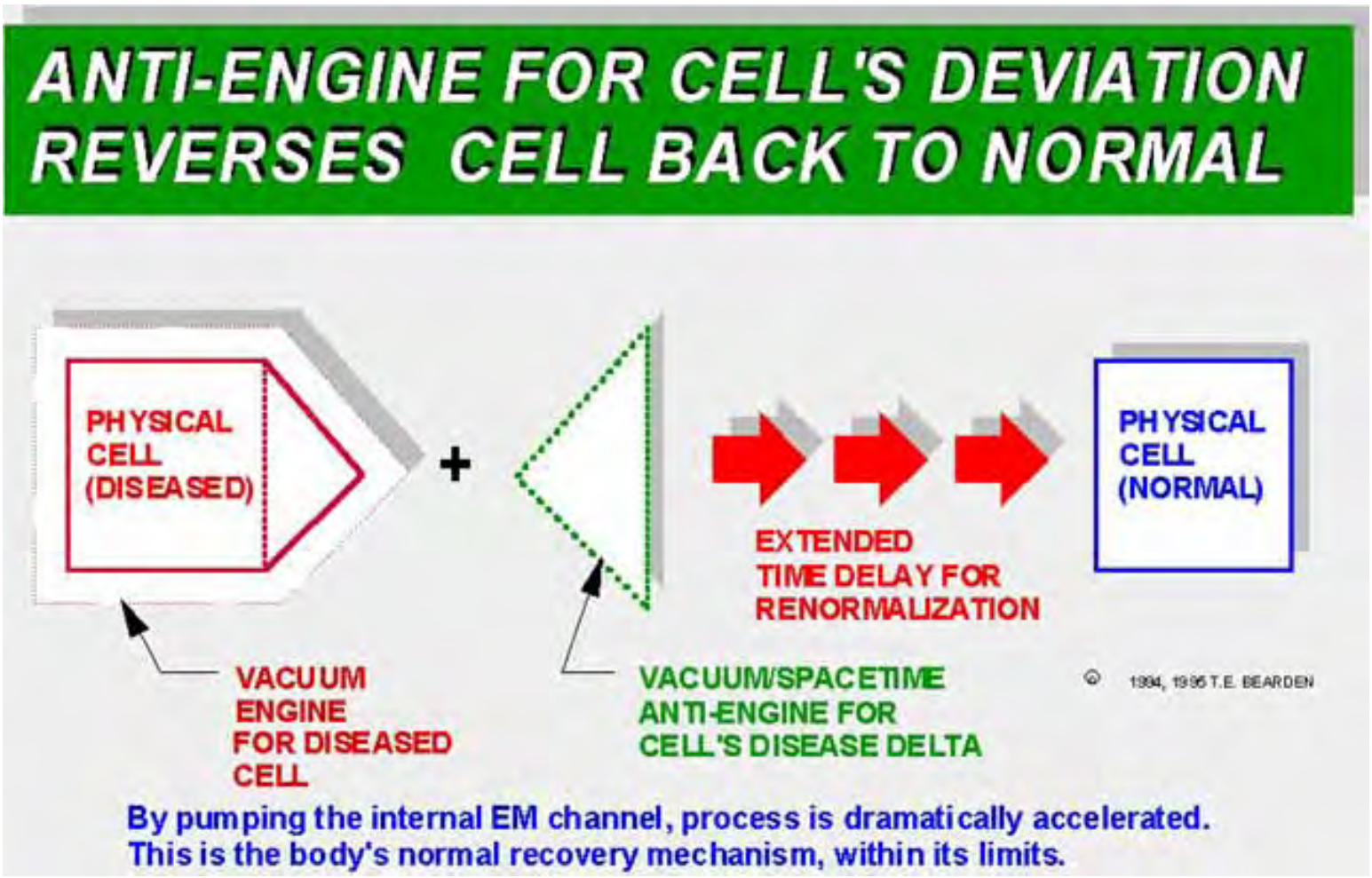
ANTI-ENGINE FOR CELL'S DEVIATION
REVERSES CELL BACK TO NORMAL
PHYSICAL CELL (DISEASED)
+
EXTENDED TIME DELAY FOR RENORMALIZATION
PHYSICAL CELL (NORMAL)
VACUUM ENGINE FOR DISEASED CELL
VACUUM/SPACETIME ANTI-ENGINE FOR CELL'S DISEASE DELTA
© 1994, 1995 T.E. BEARDEN
By pumping the internal EM channel, process is dramatically accelerated.
This is the body's normal recovery mechanism, within its limits.

Asymmetric Regauging Produces Excess Force, Which Can be Used to Do Work on the System

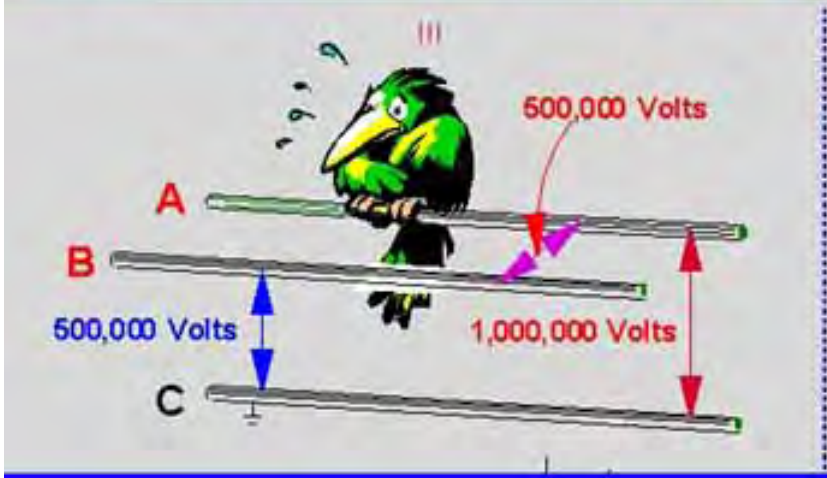

Net Symmetric Regauging Does No Excess Work on the System

This little bird put one foot on wire A, and then the second foot on wire A also. He *net symmetrically* regauged, so he had no net excess force across him, even though his potential energy was increased. He asymmetrically regauged each foot, but both simultaneously so that one countered the other. Wise little bird!

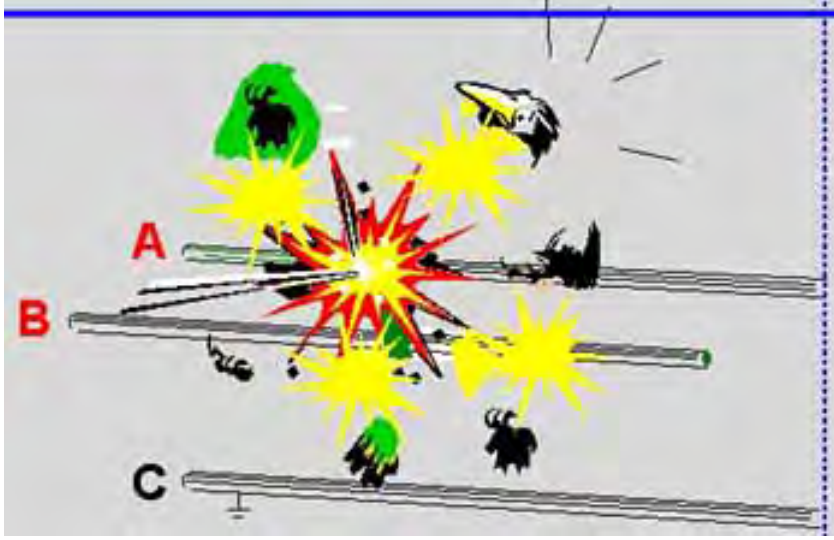

Net Asymmetric Regauging Can Do Excess Work on the System

This little bird put one foot on wire A, and then the second foot on wire B. He *net asymmetrically* regauged, so he had lots of net excess force across him. That force then violently translated his little body parts every which way, doing lots of work in and on him. Bummer!

© T.E. BEARDEN 1999

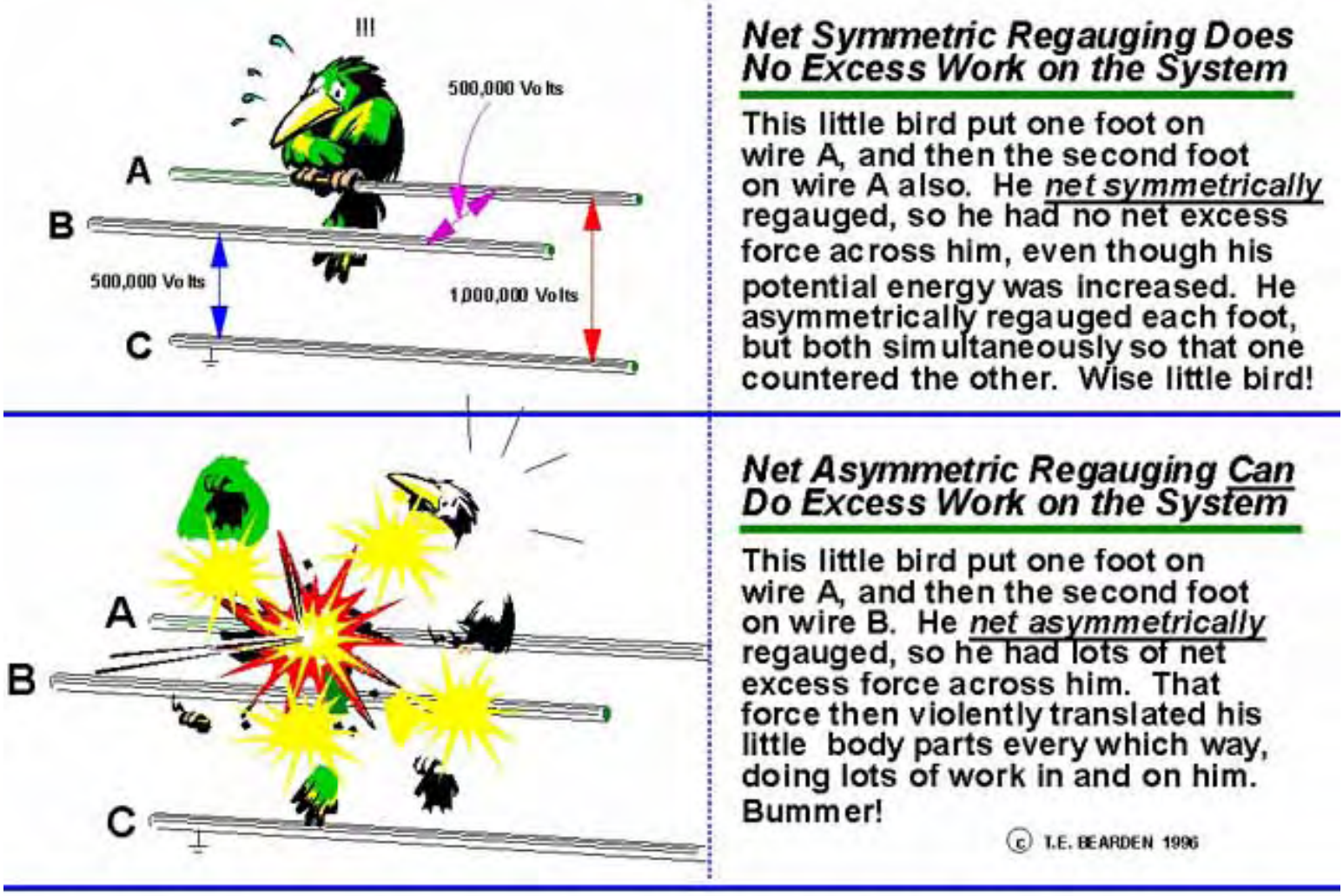

Figure 32. Asymmetric regauging produces excess force, which can be used to do work on the regauging system.

Selected clipart © by Lotus SmartPics™

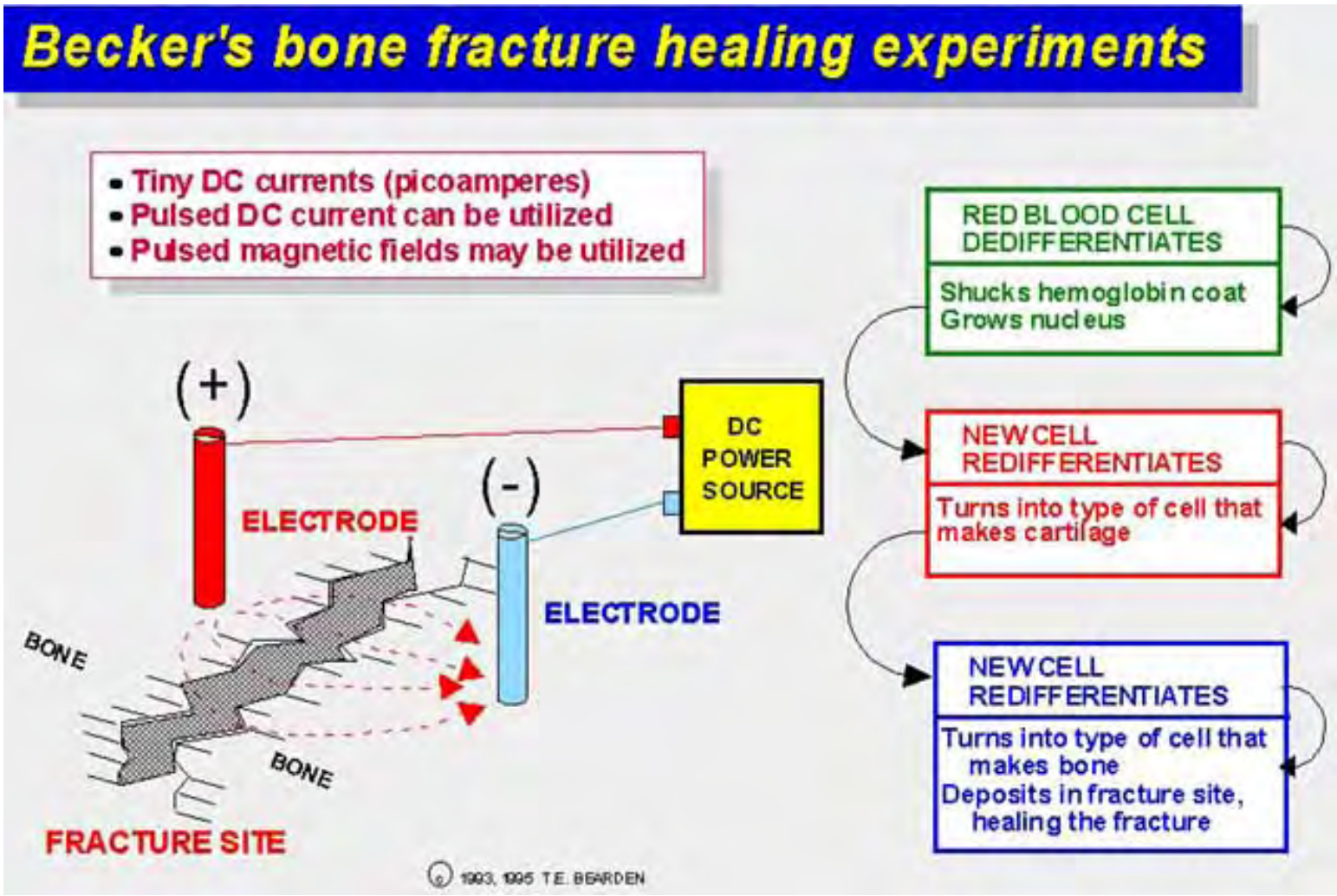
Becker's bone fracture healing experiments
• Tiny DC currents (picoamperes)
• Pulsed DC current can be utilized
• Pulsed magnetic fields may be utilized
(+)
(-)
ELECTRODE
ELECTRODE
DC POWER SOURCE
BONE
BONE
FRACTURE SITE
RED BLOOD CELL DEDIFFERENTIATES
Shucks hemoglobin coat
Grows nucleus
NEW CELL REDIFFERENTIATES
Turns into type of cell that makes cartilage
NEW CELL REDIFFERENTIATES
Turns into type of cell that makes bone
Deposits in fracture site, healing the fracture
© 1993, 1995 T.E. BEARDEN

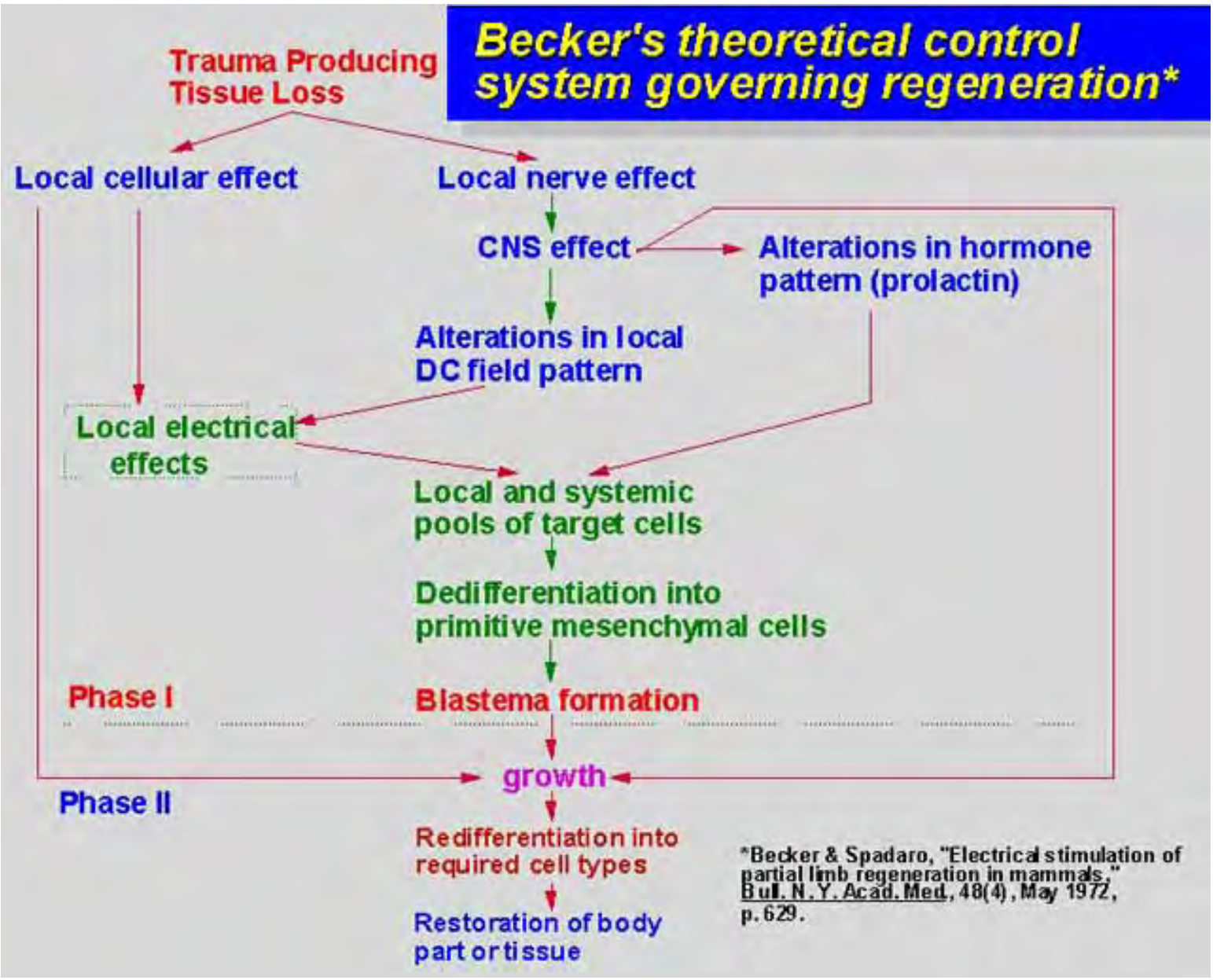
Becker's theoretical control system governing regeneration*
Trauma Producing Tissue Loss
Local cellular effect
Local nerve effect
CNS effect
Alterations in hormone pattern (prolactin)
Alterations in local DC field pattern
Local electrical effects
Local and systemic pools of target cells
Dedifferentiation into primitive mesenchymal cells
Phase I
Blastema formation
growth
Phase II
Redifferentiation into required cell types
Restoration of body part or tissue
*Becker & Spadaro, "Electrical stimulation of partial limb regeneration in mammals," Bull. N.Y. Acad. Med., 48(4), May 1972, p. 629.

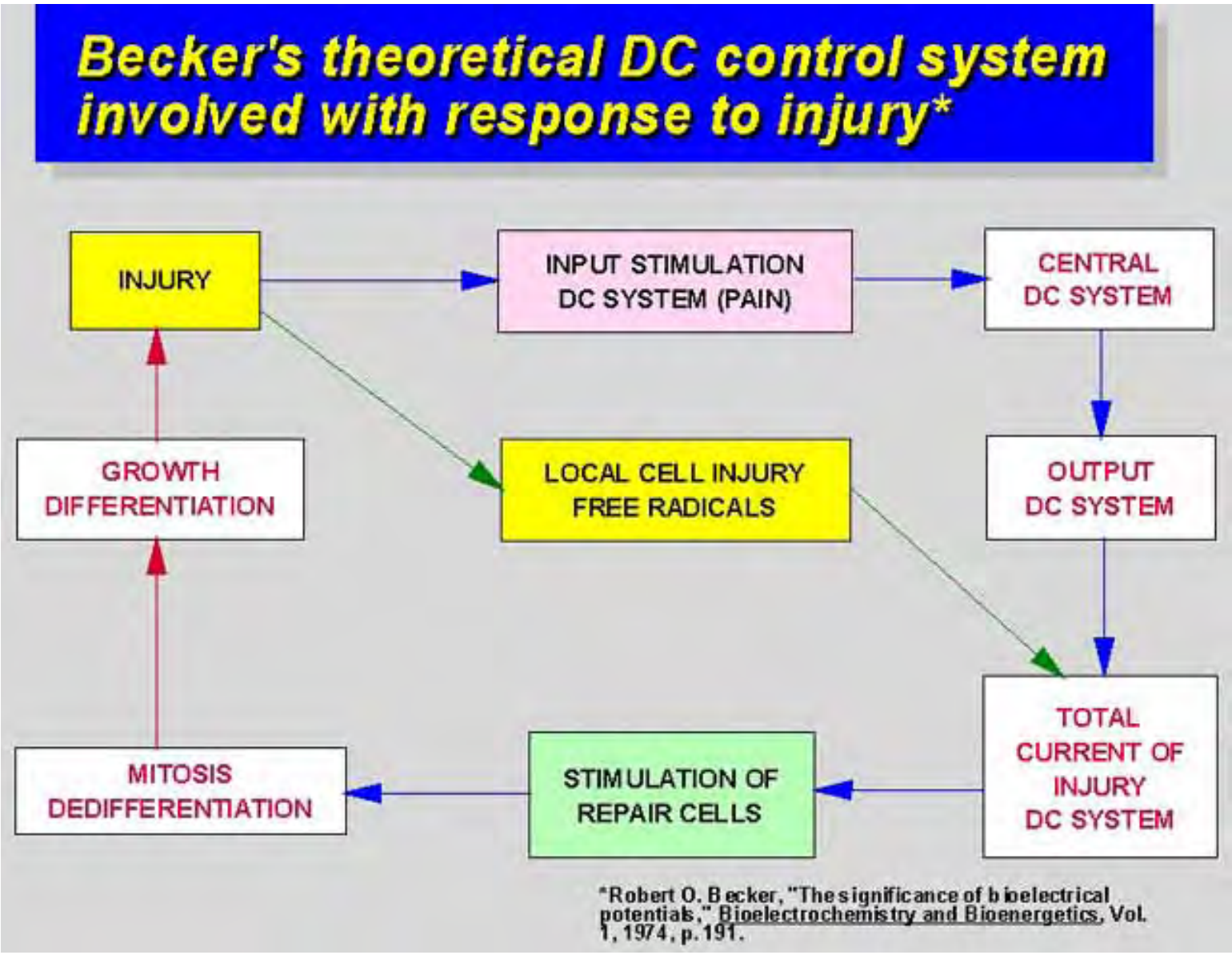
Becker's theoretical DC control system involved with response to injury*
INJURY
INPUT STIMULATION DC SYSTEM (PAIN)
CENTRAL DC SYSTEM
GROWTH DIFFERENTIATION
LOCAL CELL INJURY FREE RADICALS
OUTPUT DC SYSTEM
TOTAL CURRENT OF INJURY DC SYSTEM
MITOSIS DEDIFFERENTIATION
STIMULATION OF REPAIR CELLS
*Robert O. Becker, "The significance of bioelectrical potentials," Bioelectrochemistry and Bioenergetics, Vol. 1, 1974, p. 191.

Geometrical Distortion of Poynting Energy Flow

At or near resonance frequency, in the case shown the energy collection fraction (reaction cross section) increases dramatically.

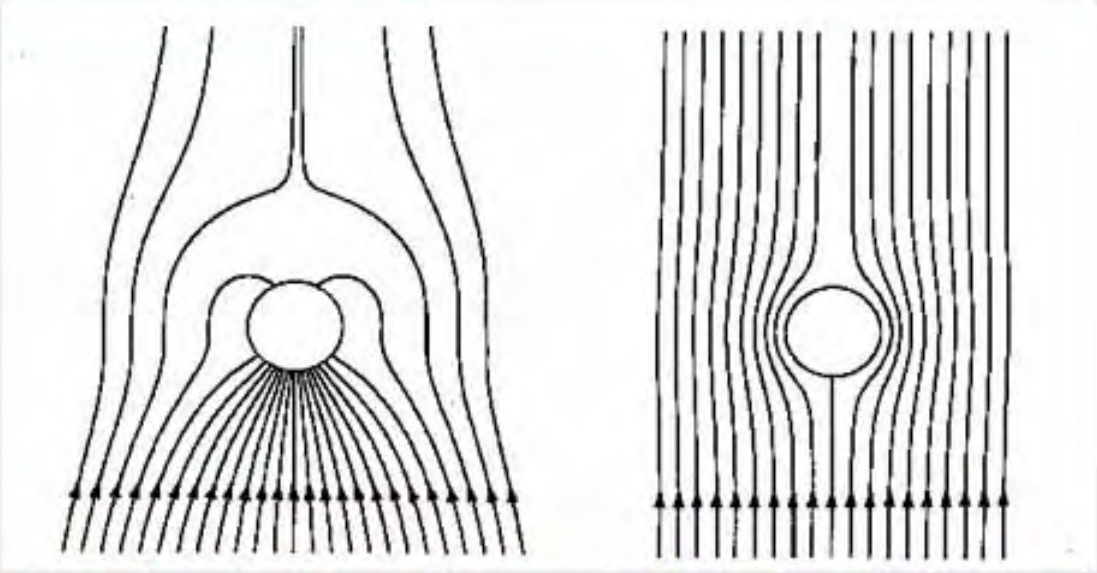

a. Around an aluminum sphere at light energy 8.8 eV. Absorption efficiency = 18.00.

b. Around an aluminum sphere at light energy 5eV. Absorption efficiency = 0.1.

Figures per Craig F. Bohren, "How can a particle absorb more than the light incident upon it? ", American Journal of Physics, 51(4), Apr. 1983, p. 326.

Cosmic Bootstrap: Before the Big Bang:

- *Cosmic repulsion behaved like a fluid with negative pressure*
- *The "universe" inflated (expanded) as a "false vacuum"*
- *As the negative-pressure fluid expanded, its energy went up rather than down*
- *When inflation stopped, the false vacuum decayed from its excited state*
- *Its excitation energy was released in a single great burst*

Paul Davies, Superforce, 1984, p. 194

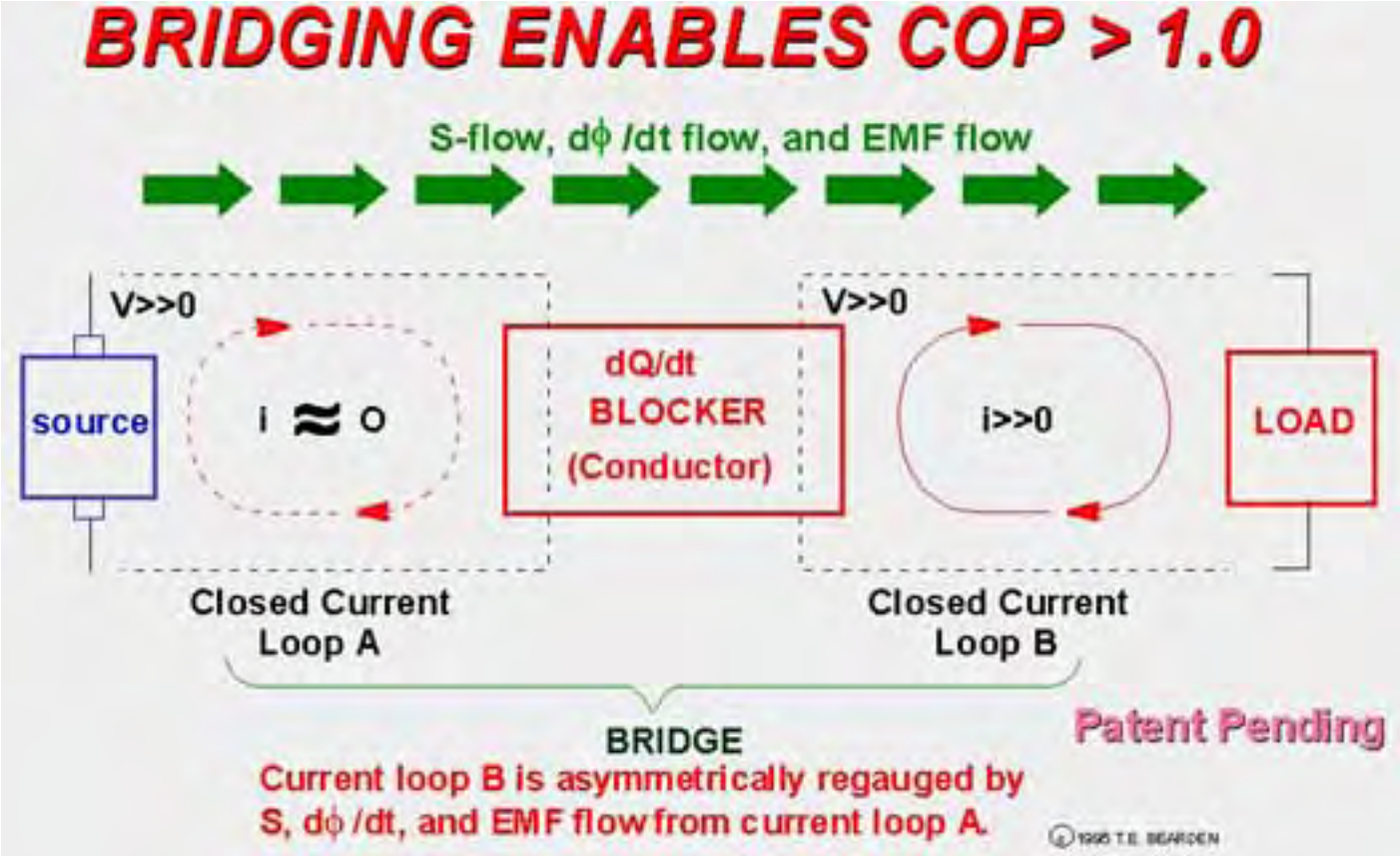
BRIDGING ENABLES COP > 1.0
S-flow, dϕ /dt flow, and EMF flow
V>>0
source
i ≈ 0
dQ/dt
BLOCKER
(Conductor)
V>>0
i>>0
LOAD
Closed Current
Loop A
Closed Current
Loop B
BRIDGE
Patent Pending
Current loop B is asymmetrically regauged by
S, dϕ /dt, and EMF flow from current loop A.
©1995 T.E. BEARDEN

Aspects of Strong Local Asymmetry

- If local asymmetry is strong, conservation laws may be appreciably violated
  - Energy
  - Charge
  - Spin
  - Momentum
  - Angular momentum

© T. E. Bearden 1995, 1996

- Properties of an object may differ appreciably for
  - Different observers
  - Different detecting means
  - One time to another
  - One position to another
- STRUCTURING THE INFOLDED EM INSIDE POTENTIALS, FIELDS, AND WAVES
  - Strongly breaks local symmetry
  - Provides spacetime engines giving the above effects

Other Aspects of Strong Local Asymmetry

© T. E. Bearden 1995, 1996

- Local spacetime is curved
- Lorentz invariance of vacuum is violated
- May be a local "sink" or "source"
- Gravitational-inertial effects from EM
- Translation between virtual and observable
- Electrogravitational solitons
- Action at a distance
- Transmutation effects may exist
- Scalar/pseudoscalar field translation
- COMMENT: Thus the use of infolded longitudinal EM fields and waves to strongly break local symmetry allows internested clustering of spacetime curvatures. These spacetime structures are *vacuum engines*, or *spacetime engines*.

Bunge on the Status of Electrodynamics

"... it is not usually acknowledged that electro-dynamics, both classical and quantal, are in a sad state..."

"... the best modern physicist is the one who acknowledges that neither classical nor quantum physics are cut and dried, both being full of holes and in need of a vigorous overhauling..."

*Mario Bunge, Foundations of Physics, Springer-Verlag, New York, NY, 1967, p. 176.

© 1996 T.E. BEARDEN

Bunge on the Status of Electrodynamics and Physics

"... it is not usually acknowledged that electro-dynamics, both classical and quantal, are in a sad state...

"... neither classical nor quantum physics are cut and dried, both being full of holes and in need of a vigorous overhauling..."

© 1996 T.E. BEARDEN

*Mario Bunge, Foundations of Physics, Springer-Verlag, New York, NY, 1967, p. 176.

Bunge on the Status of Classical and Quantum Physics

"... it is not usually acknowledged that electro-dynamics, both classical and quantal, are in a sad state... the best modern physicist is the one who acknowledges that neither classical nor quantum physics are cut and dried, both being full of holes and in need of a vigorous overhauling not only to better cover their own domains but also to join smoothly so as to produce a coherent picture of the various levels of physical reality."

*Mario Bunge, Foundations of Physics, Springer-Verlag, New York, NY, 1967, p. 176..

© 1996 T.E. BEARDEN

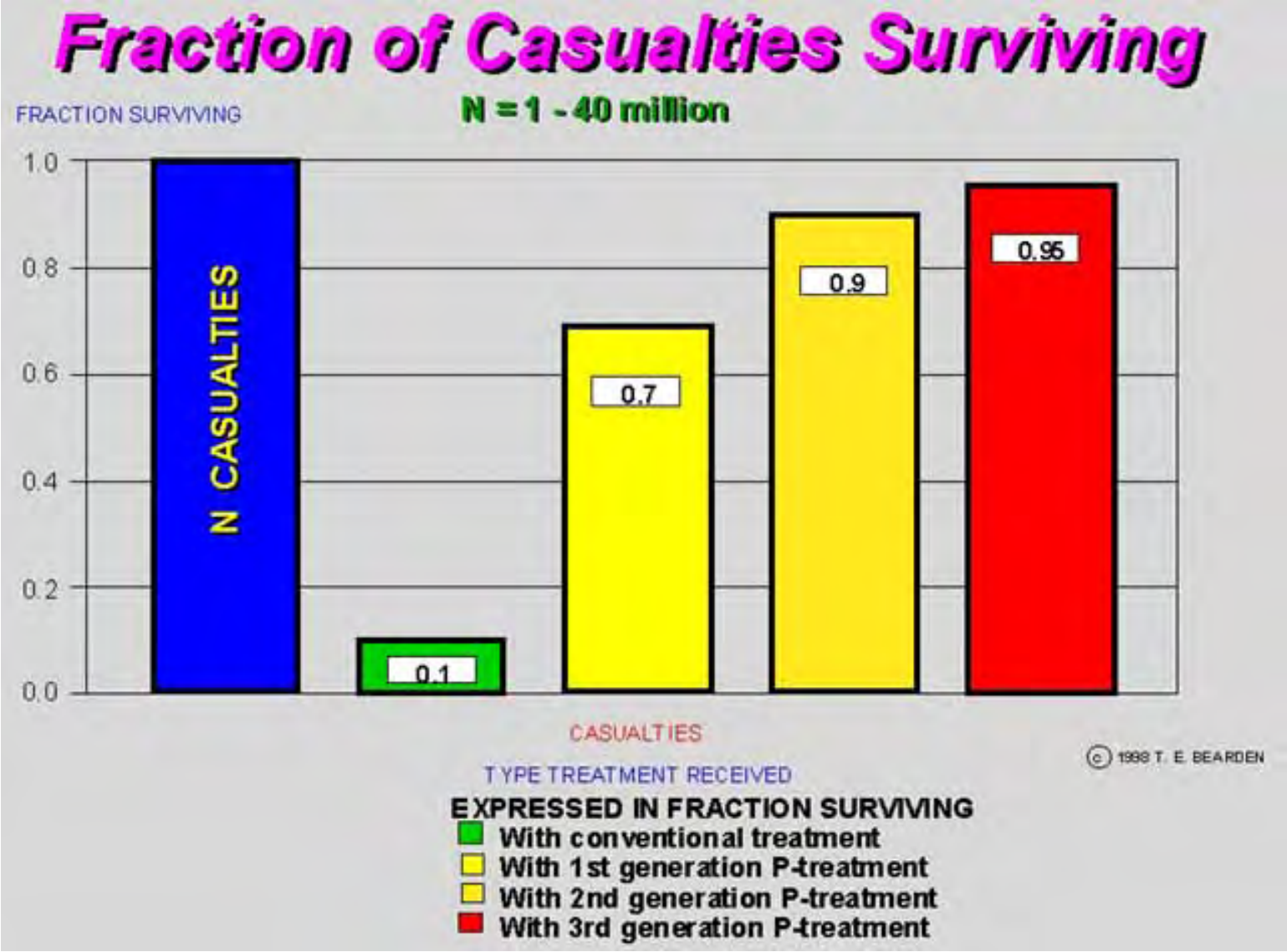
Fraction of Casualties Surviving
FRACTION SURVIVING
N = 1 - 40 million
1.0
0.8
0.6
0.4
0.2
0.0
N CASUALTIES
0.1
0.7
0.9
0.95
CASUALTIES
TYPE TREATMENT RECEIVED
© 1998 T. E. BEARDEN
EXPRESSED IN FRACTION SURVIVING
With conventional treatment
With 1st generation P-treatment
With 2nd generation P-treatment
With 3rd generation P-treatment

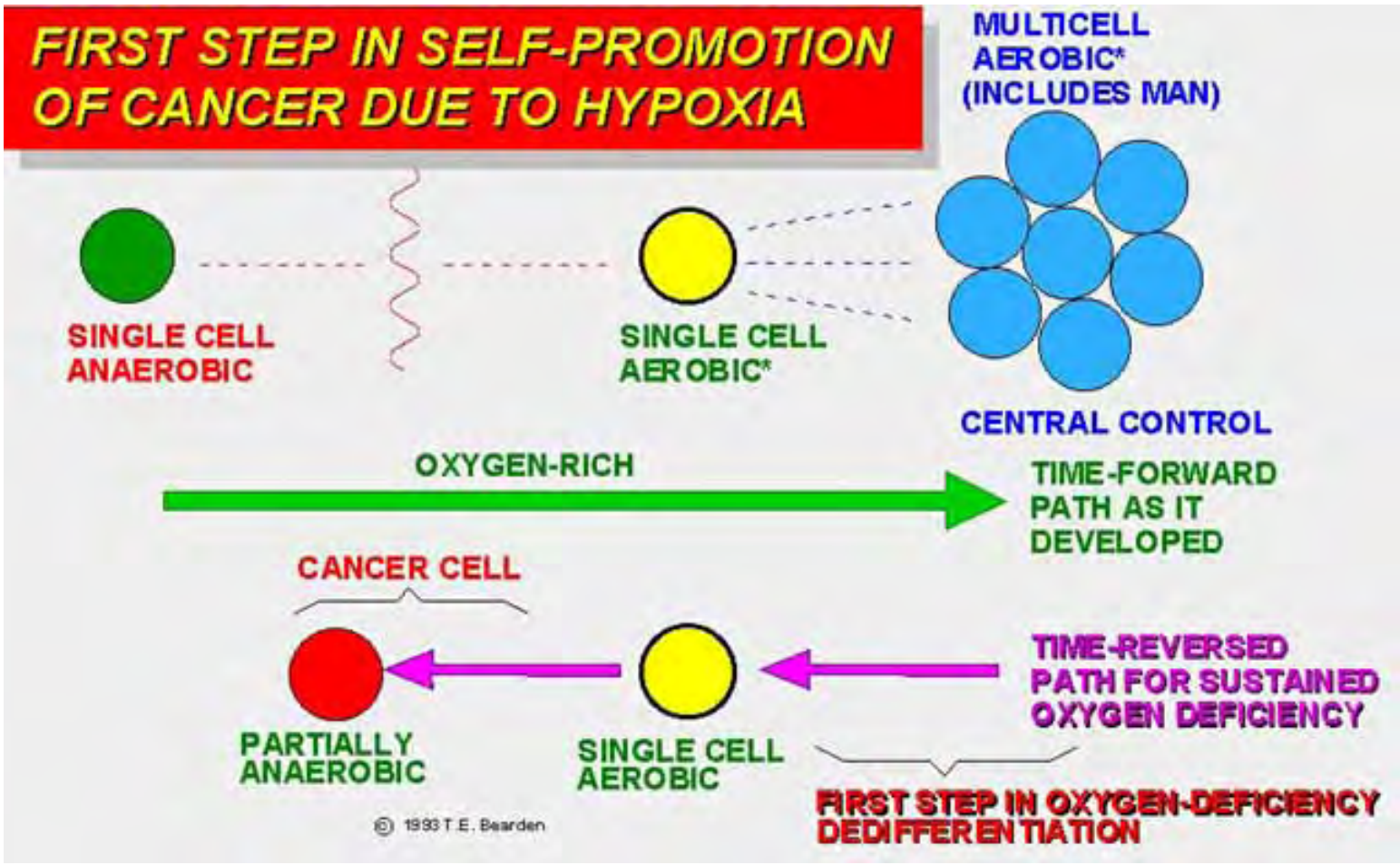
FIRST STEP IN SELF-PROMOTION OF CANCER DUE TO HYPOXIA
MULTICELL AEROBIC* (INCLUDES MAN)
SINGLE CELL ANAEROBIC
SINGLE CELL AEROBIC*
CENTRAL CONTROL
OXYGEN-RICH
TIME-FORWARD PATH AS IT DEVELOPED
CANCER CELL
TIME-REVERSED PATH FOR SUSTAINED OXYGEN DEFICIENCY
PARTIALLY ANAEROBIC
SINGLE CELL AEROBIC
FIRST STEP IN OXYGEN-DEFICIENCY DEDIFFERENTIATION
© 1993 T.E. Bearden

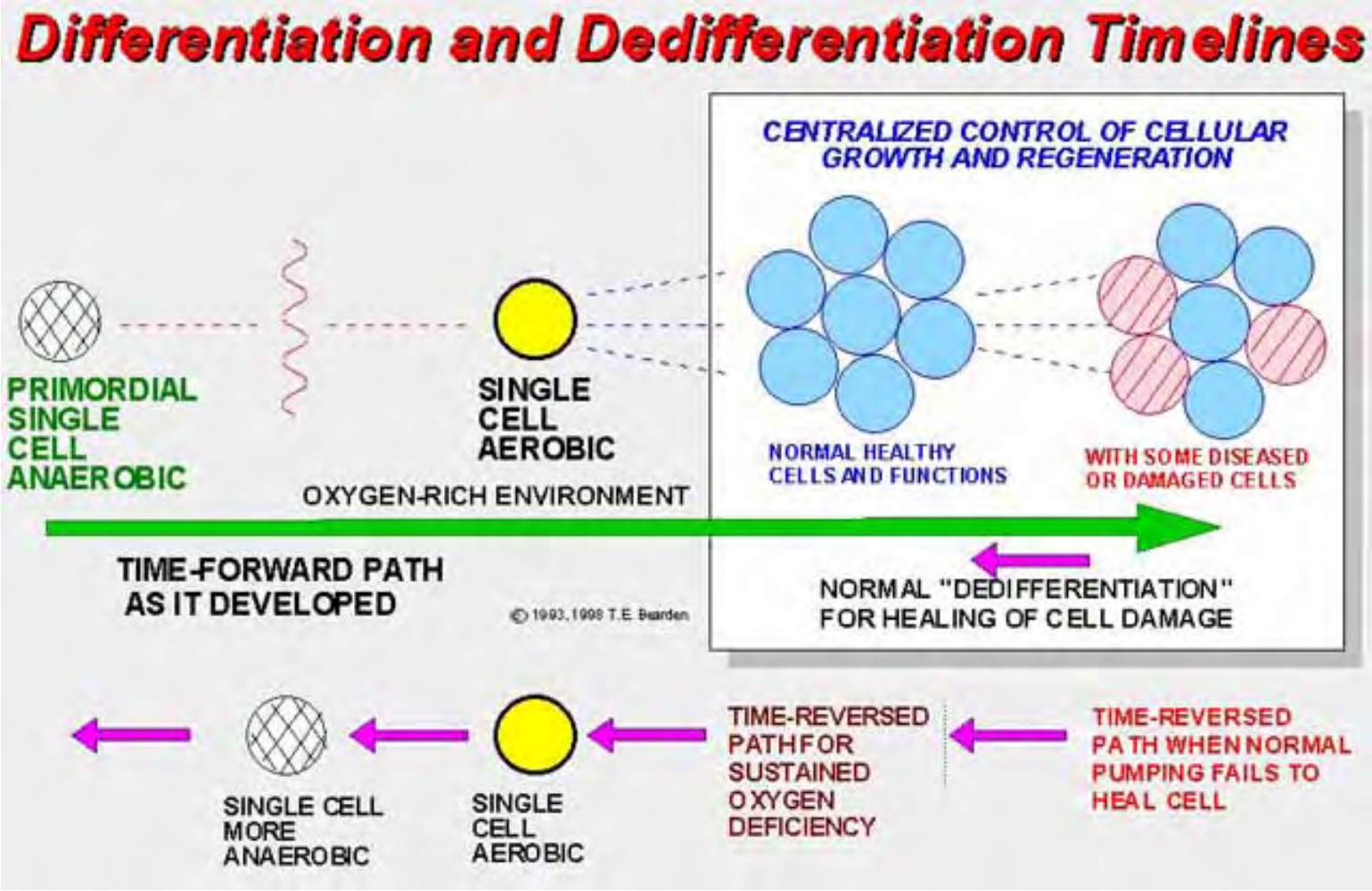
Differentiation and Dedifferentiation Timelines
CENTRALIZED CONTROL OF CELLULAR GROWTH AND REGENERATION
PRIMORDIAL SINGLE CELL ANAEROBIC
SINGLE CELL AEROBIC
OXYGEN-RICH ENVIRONMENT
NORMAL HEALTHY CELLS AND FUNCTIONS
WITH SOME DISEASED OR DAMAGED CELLS
TIME-FORWARD PATH AS IT DEVELOPED
© 1993, 1998 T.E. Bearden
NORMAL "DEDIFFERENTIATION" FOR HEALING OF CELL DAMAGE
SINGLE CELL MORE ANAEROBIC
SINGLE CELL AEROBIC
TIME-REVERSED PATH FOR SUSTAINED OXYGEN DEFICIENCY
TIME-REVERSED PATH WHEN NORMAL PUMPING FAILS TO HEAL CELL

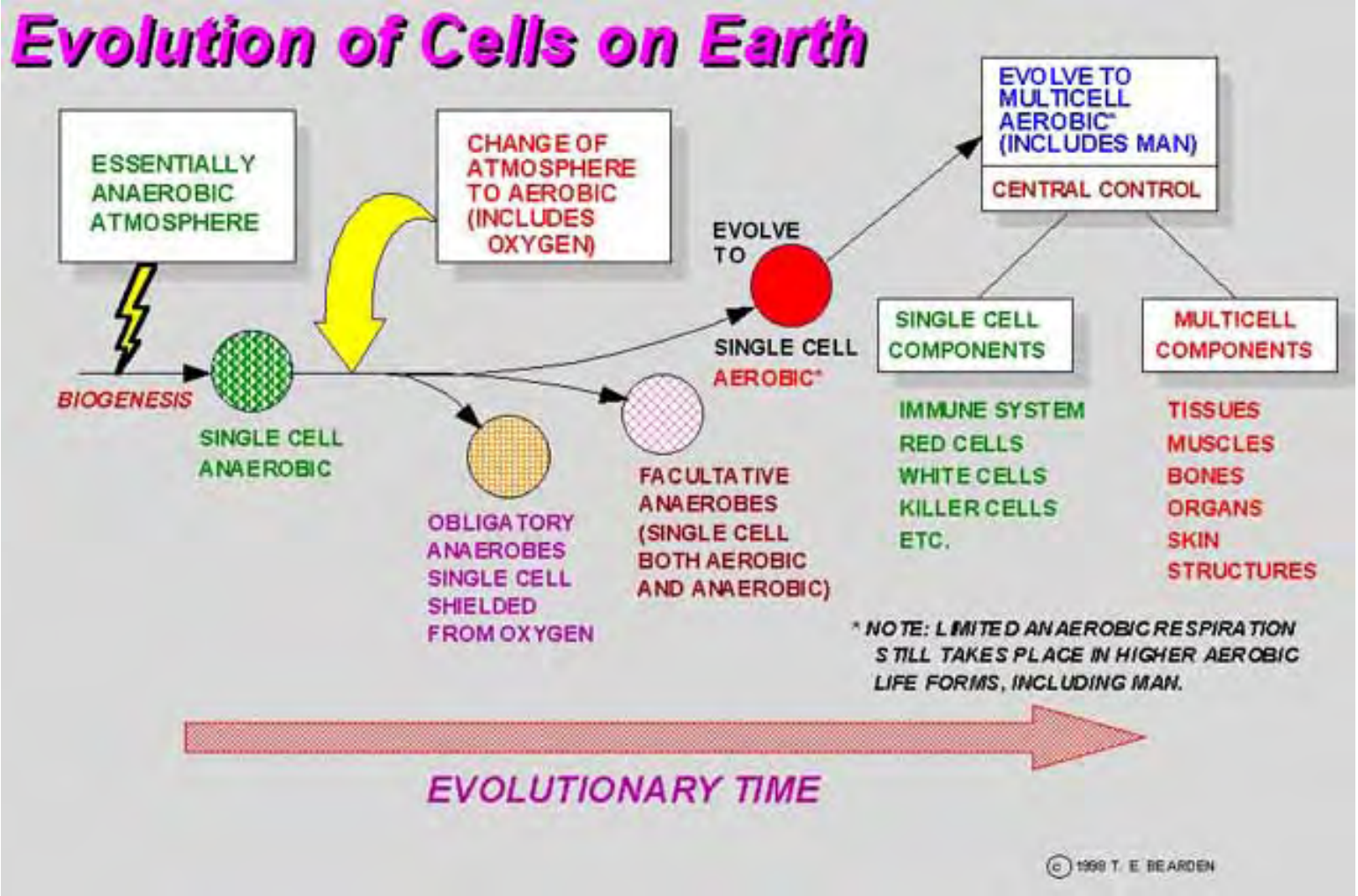
Evolution of Cells on Earth
ESSENTIALLY ANAEROBIC ATMOSPHERE
CHANGE OF ATMOSPHERE TO AEROBIC (INCLUDES OXYGEN)
EVOLVE TO MULTICELL AEROBIC* (INCLUDES MAN)
CENTRAL CONTROL
EVOLVE TO
SINGLE CELL AEROBIC*
SINGLE CELL COMPONENTS
MULTICELL COMPONENTS
BIOGENESIS
SINGLE CELL ANAEROBIC
OBLIGATORY ANAEROBES SINGLE CELL SHIELDED FROM OXYGEN
FACULTATIVE ANAEROBES (SINGLE CELL BOTH AEROBIC AND ANAEROBIC)
IMMUNE SYSTEM
RED CELLS
WHITE CELLS
KILLER CELLS
ETC.
TISSUES
MUSCLES
BONES
ORGANS
SKIN
STRUCTURES
* NOTE: LIMITED ANAEROBIC RESPIRATION STILL TAKES PLACE IN HIGHER AEROBIC LIFE FORMS, INCLUDING MAN.
EVOLUTIONARY TIME
© 1999 T. E. BEARDEN

A Charged Particle q Is a Coupled System of m and ϕ

(A proposed formal definition of a charged mass)

Note: X is a coupling operator

$$q \equiv f_q \times m_q$$

Also note that the ϕ portion of the charged particle can be internally structured, per Stoney-Whittaker-Ziolkowski, with hidden bidirectional EM wavepairs (their sums and products). Note that this constitutes an EM application of Bohm-type hidden variable theory, with many ramifications.

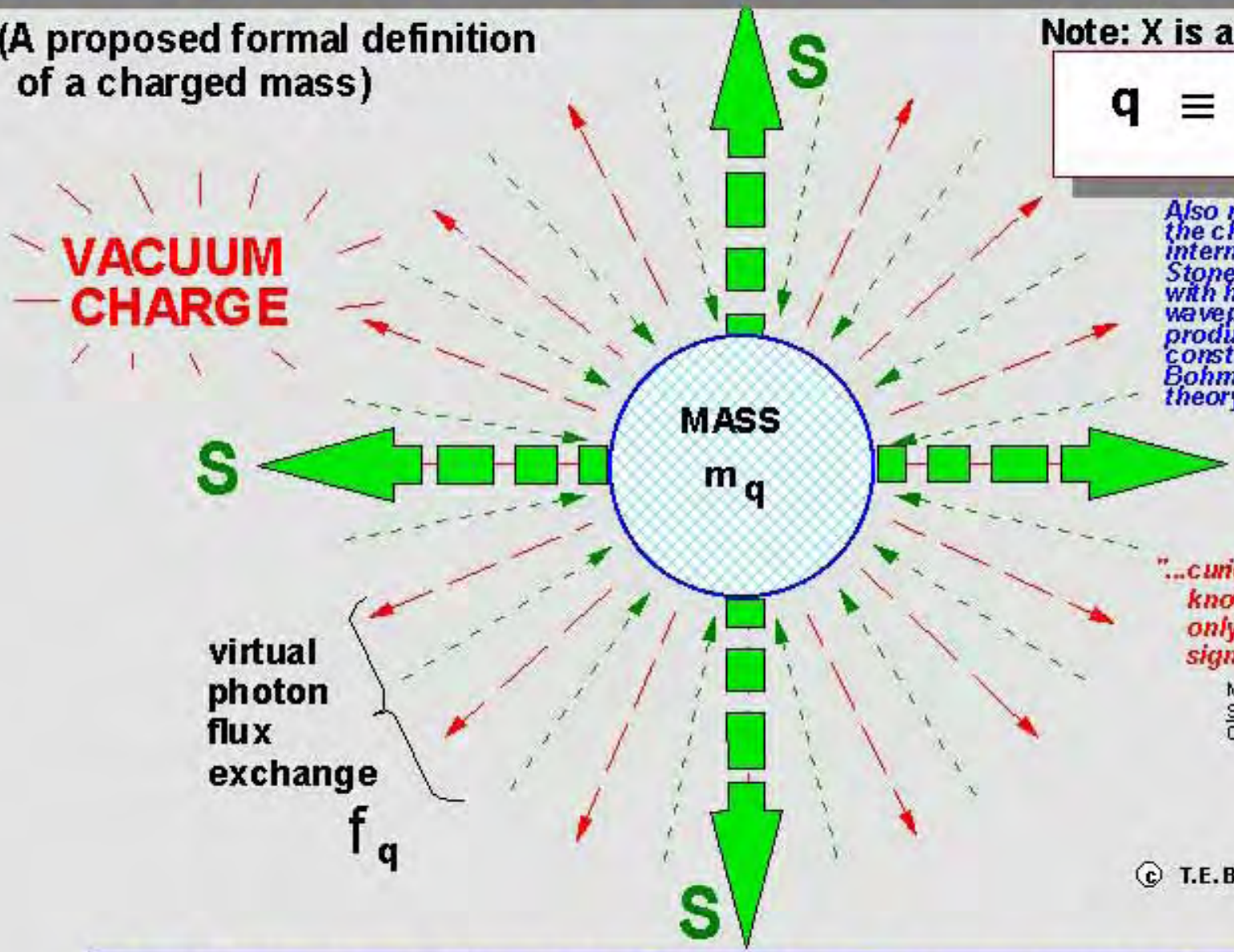

S = EXH

"...curiously enough, we do not know exactly what charge is, only what it does. Or, equally significantly, what it does not do."

M.P. Silverman, And Yet It Moves: Strange Systems and Subtle Questions in Physics, Cambridge University Press, 1993, p. 127.

© T.E. BEARDEN 1997

An electric charge Q consists of a massless flux component and a mass component, coupled together (interacting). Q is a broken symmetry. The mass of the charge continually and violently exchanges virtual photons with the surrounding vacuum.

Thus Q is energetically driven by the surrounding vacuum potential, which itself is to first order just a violent virtual photon flux.

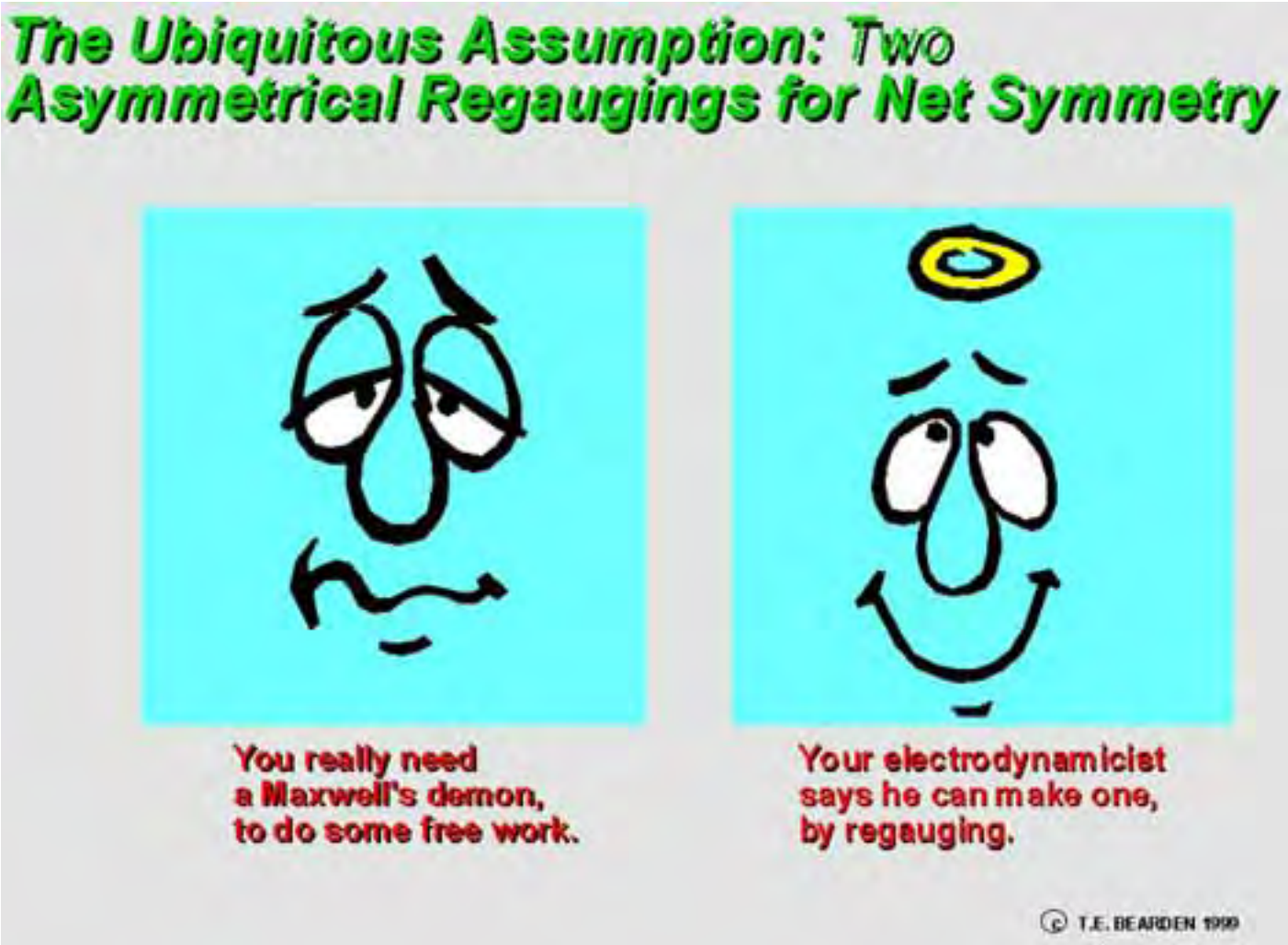
The Ubiquitous Assumption: Two Asymmetrical Regaugings for Net Symmetry
You really need a Maxwell's demon, to do some free work.
Your electrodynamicist says he can make one, by regauging.
© T.E. BEARDEN 1999

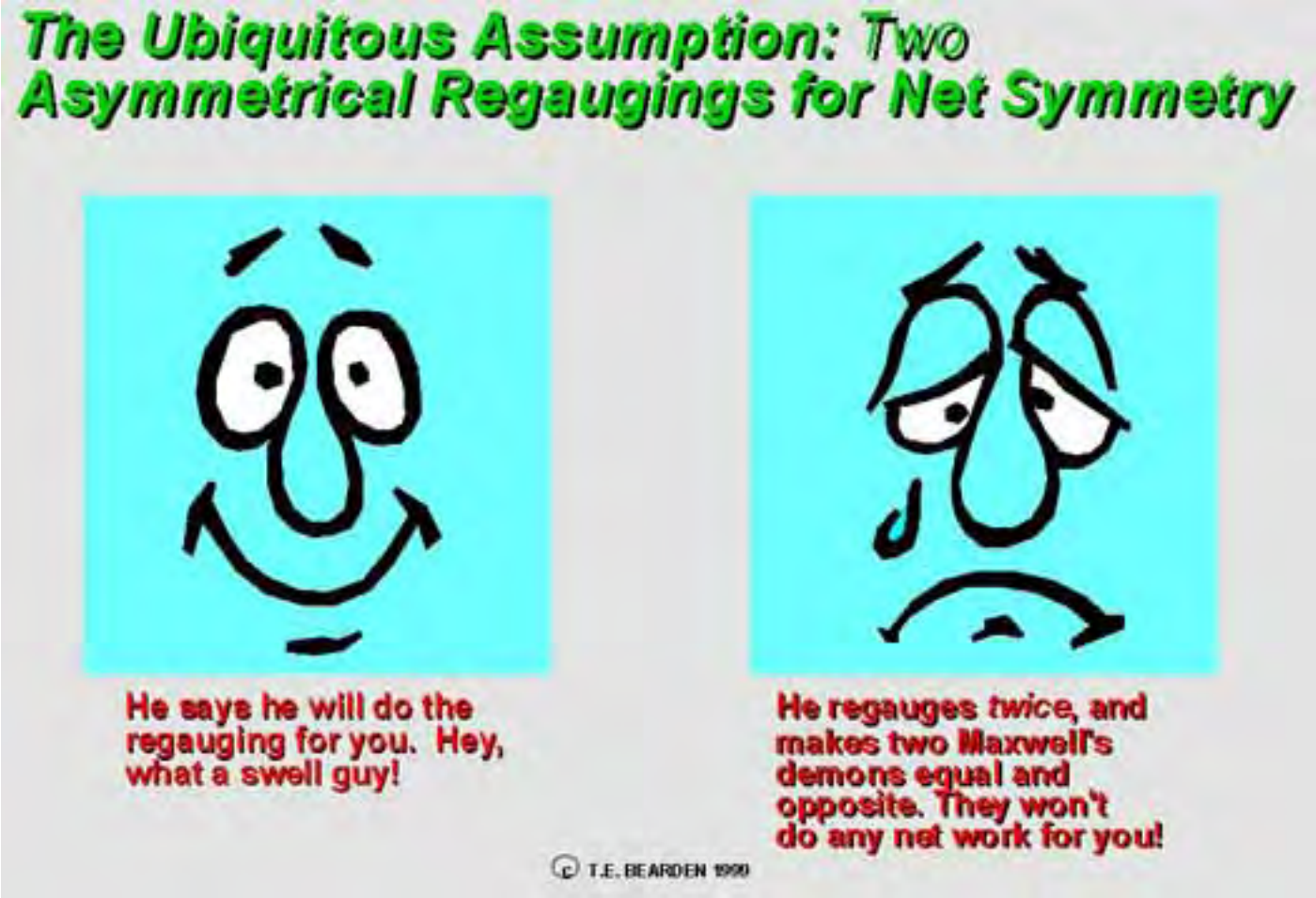
The Ubiquitous Assumption: Two Asymmetrical Regaugings for Net Symmetry
He says he will do the regauging for you. Hey, what a swell guy!
He regauges twice, and makes two Maxwell's demons equal and opposite. They won't do any net work for you!
© T.E. BEARDEN 1990

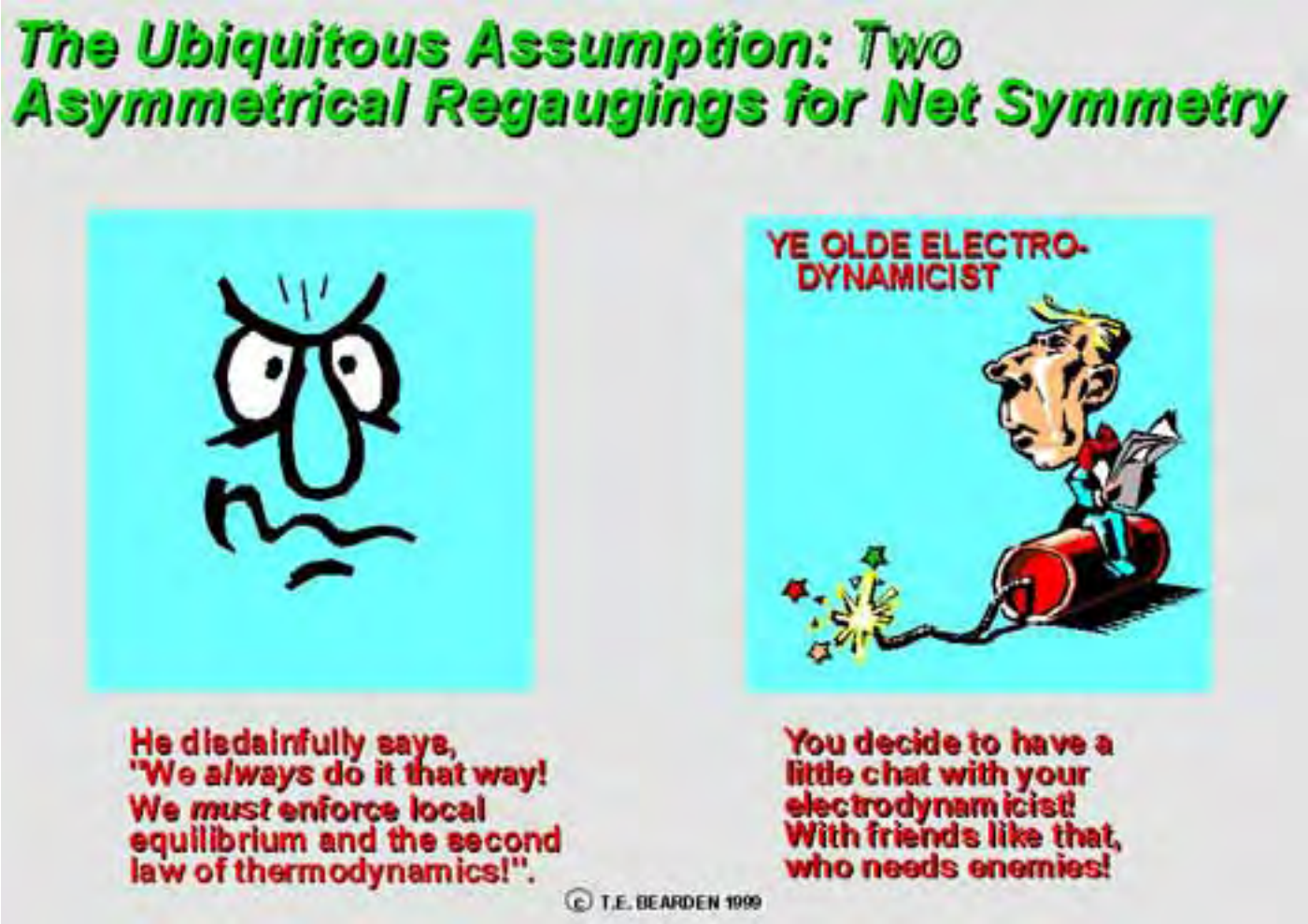
The Ubiquitous Assumption: Two Asymmetrical Regaugings for Net Symmetry
YE OLDE ELECTRO-DYNAMICIST
He disdainfully says, "We always do it that way! We must enforce local equilibrium and the second law of thermodynamics!".
You decide to have a little chat with your electrodynamicist! With friends like that, who needs enemies!
© T.E. BEARDEN 1999

A Charged Particle Is a Coupled System

(The first formal definition of charge)

$$q \equiv \phi_q \times m_q$$

Note: X is a coupling operator

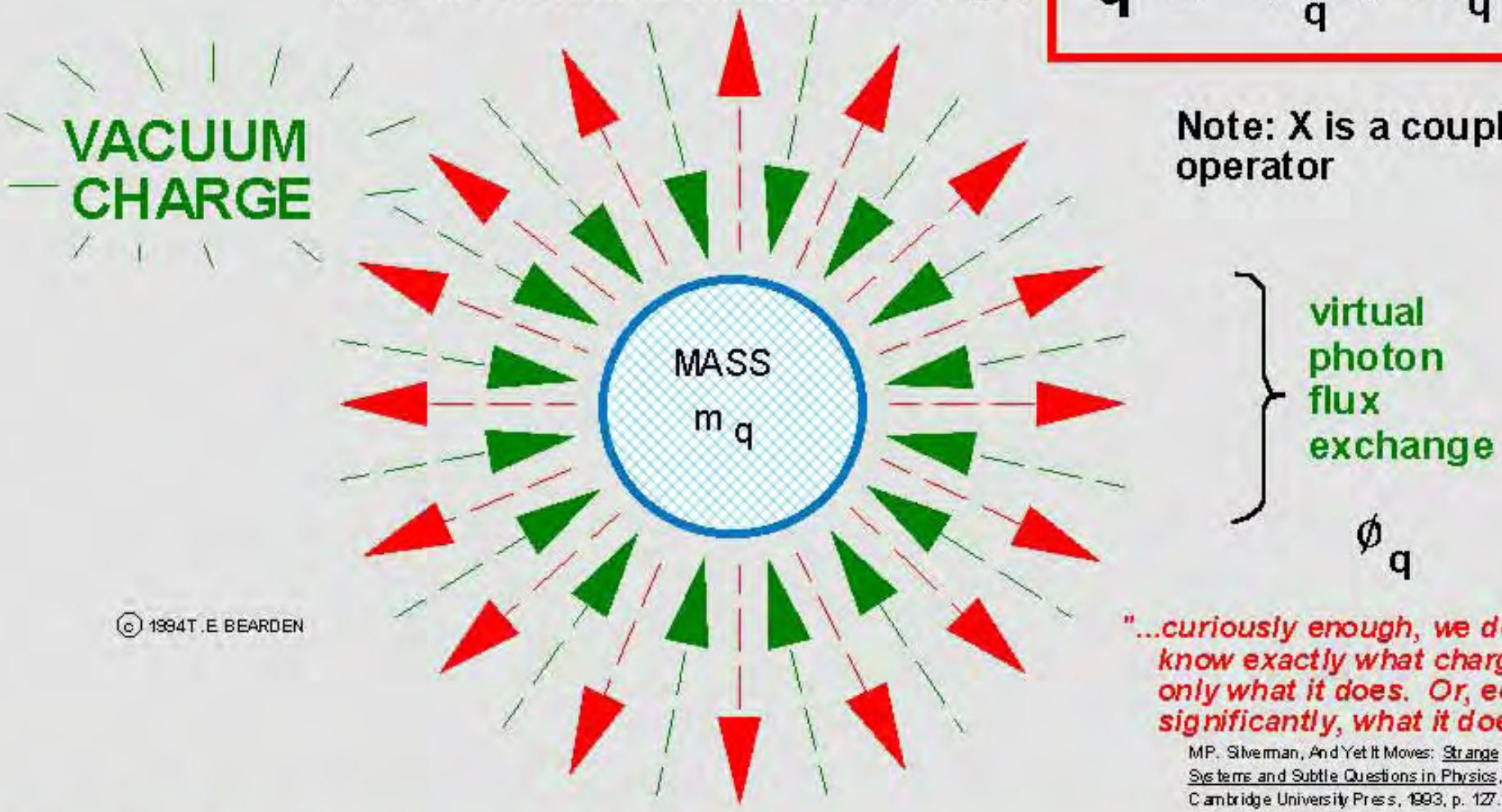

© 1994 T.E BEARDEN

"...curiously enough, we do not know exactly what charge is, only what it does. Or, equally significantly, what it does not do."

M.P. Silverman, And Yet It Moves: Strange Systems and Subtle Questions in Physics, Cambridge University Press, 1993, p. 127.

An electric charge q is a broken symmetry in its fierce energy exchange with the active vacuum. It coherently integrates some of the virtual energy absorbs and outputs it as Poynting energy flow.

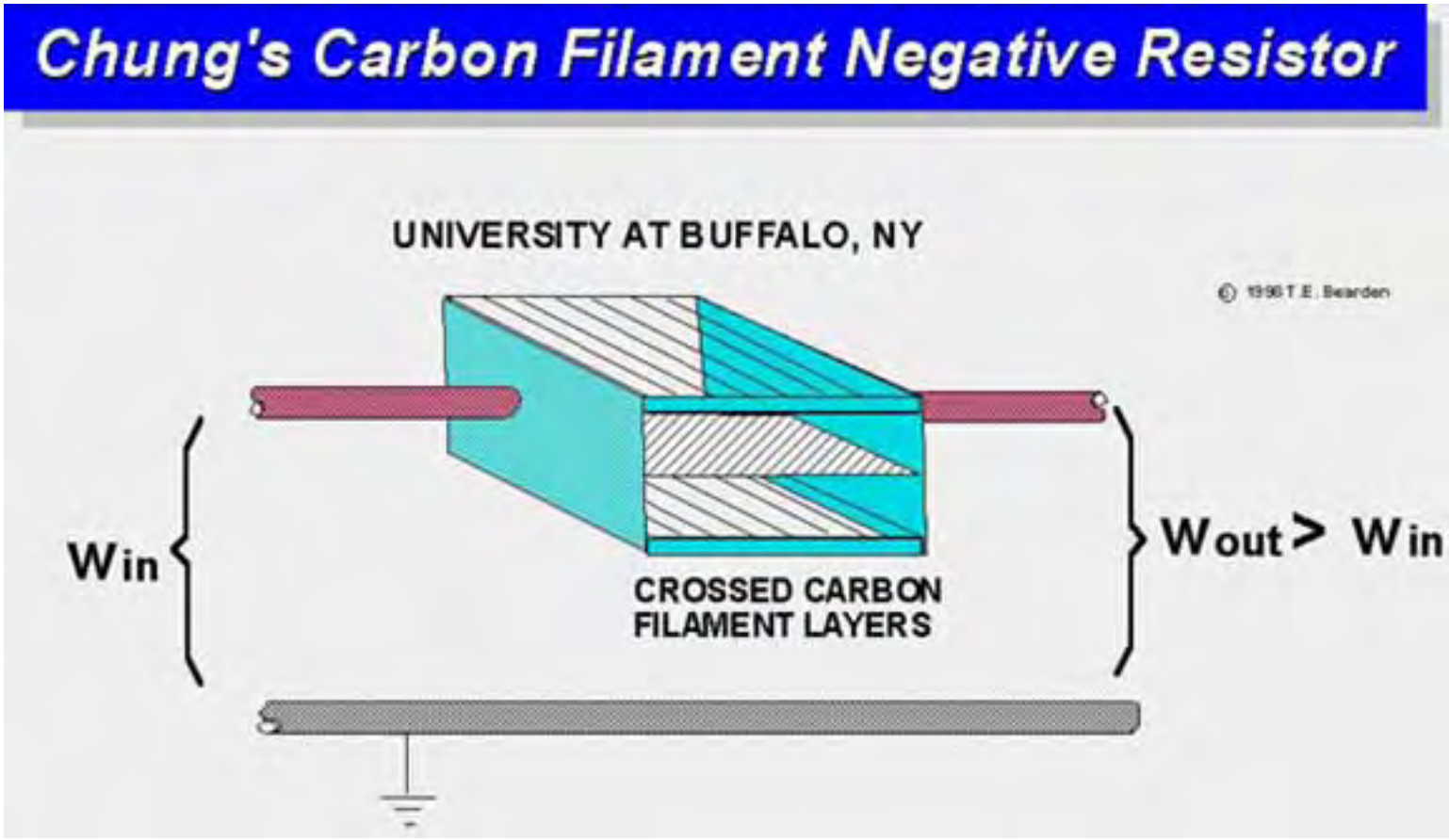
Chung's Carbon Filament Negative Resistor
UNIVERSITY AT BUFFALO, NY
© 1996 T.E. Bearden
Win
Wout > Win
CROSSED CARBON
FILAMENT LAYERS

Typical circuit has about 10^{-13} energy collection efficiency

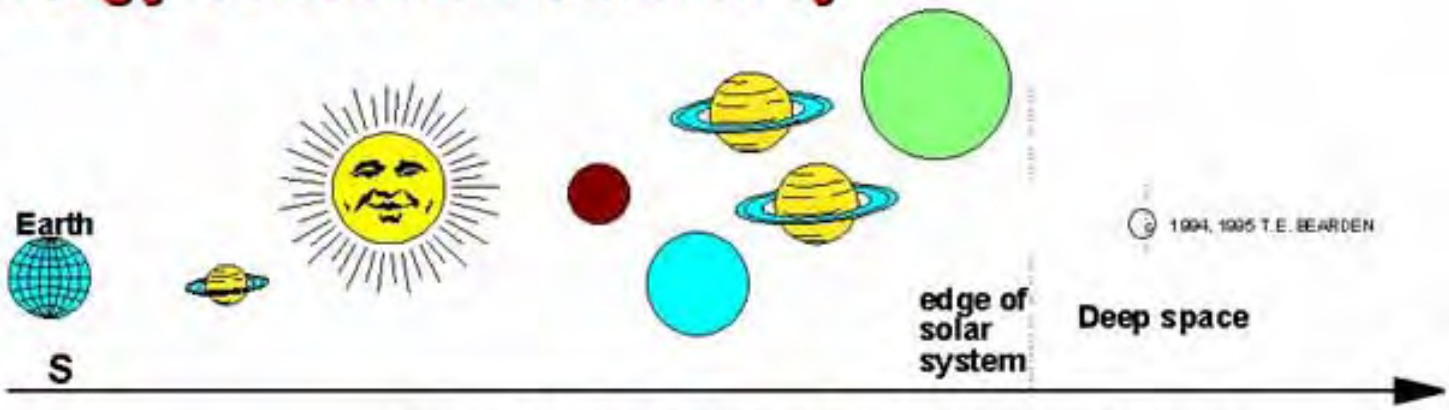

Distance traveled by S in one hour is 1.08x10exp(12) meters.

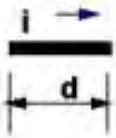

Example: 1.3 amps flowing in DC circuit, 1.8 mm diameter copper wire. J = 51 A/cm ^{2}

d_j = 0.1368 meters

S violently transports ϕ provided from the source.
j ϕ sluggishly transports the energy collected and dissipated in the circuit..

For the case discussed, the electron drift velocity in the circuit is about 3.8 x 10^{-5} meters/sec. So Jϕ moves about 0.1368 meters in one hour. Thus Jϕ has collected about 0.1368 meters of the ϕ-filled S-tube. During that same hour, the S-flow evoked by the power source will have traveled 1.08x10^{12} meters. The ϕ of both currents is the same. Both are involved in the same energy-filled tube. Thus S has provided and transported about 7.89x10^{12} times as much energy along the circuit in one hour as the jϕ has been able to collect, transport, and dissipate as work in the circuit. Thus this circuit provides about 10^{13} collection efficiency.

Classical View of EM

- Potentials just mathematical conveniences
  - Not real
  - No internal structure, just magnitude
- Force fields primary, causative, can exist in space in absence of observable mass
  - All EM actions due to force fields, none when zero
  - No action at a distance
- Vacuum empty; without energy or structure
  - No locally curved spacetime
  - No gravity effects
  - No quantum effects
- Maxwell's equations complete
  - Symmetrically regauged ***arbitrarily***
  - Topology dramatically reduced

Curved Spacetime acts as source or sink

- May emit excess radiation and energy (e.g., heat)
- May absorb radiation and energy (e.g., cool)
- May transduce waves TW ⇔ LW ⇔ TDW
- New energy conservation law applies

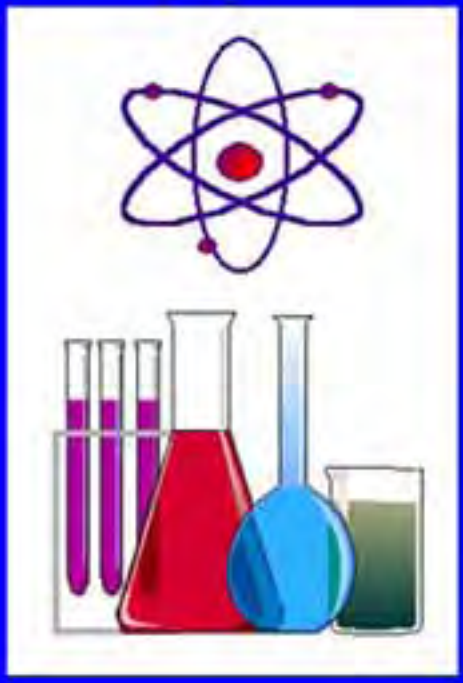

© 1998 T.E. BEARDEN

CHRONIC DISEASE PUZZLING

- SCIENCE REALLY DOES NOT UNDERSTAND THE MECHANISMS OF A SINGLE CHRONIC DISEASE, INCLUDING CANCER
- MANY TROUBLING FACTORS EXIST
  - *MIND*
  - *STRESS*
  - *SPONTANEOUS REMISSION*
  - *PLACEBO EFFECTS*
  - *COMBINATIONS*
- GENERATION OF THE PLACEBO EFFECT BY THE CELLULAR REGENERATION SYSTEM IS UNRECOGNIZED

© 1994, 1995 T.E. Bearden

Cancer Characteristics

- Not one disease, but a whole range
- Starts in damaged aerobic cell
- Cell shakes off body's central control
  - Starts uncontrolled division
  - Becomes a lump
- Can send forth cancer cells
  - Through blood
  - Through lymph
- Form metastases (secondary tumors)
- Often become anaerobic

© 1993 T.E. Bearden

Solving a Cancer Enigma

- An enigma has been failure of immune system to attack some tumor cells
  - Suppressor cells may curb immune system?
  - Tumor may lack antigens normally identified by the immune system?
- *Promotion of damaged cell to cancer is usually ordered by cellular control system*
  - *Regenerative and recovery system forces cell back toward anaerobe*
  - *First step breaks free from central growth*
  - *Control continues to recognize cell as self*

© 1993 T.E. Bearden

CANCER: CHARACTERISTICS

- NOT ONE DISEASE BUT A WHOLE RANGE
- STARTS IN ORDINARY (AEROBIC) CELL
- CELL SHAKES OFF BODY'S DICTATORIAL CONTROL*
- STARTS UNCONTROLLED DIVISION
- BECOMES A LUMP
- CAN SEND FORTH CANCER CELLS
  - THROUGH BLOOD
  - THROUGH LYMPH
- THESE FORM METASTASES (SECONDARY TUMORS)
- OFTEN BECOME ANAEROBIC (NON-OXYGEN USING)
- ENIGMA IS FAILURE OF IMMUNE SYSTEM TO ATTACK SOME TUMOR CELLS
  - SUPPRESSOR CELLS MAY CURB IMMUNE SYSTEM
  - TUMOR MAY LACK ANTIGENS NORMALLY IDENTIFIED BY THE IMMUNE SYSTEM

© 1993 T.E. Beardsley

*R&R system forces cell back toward anaerobe

Nonlinear Optics
Distortion Correction Theorem

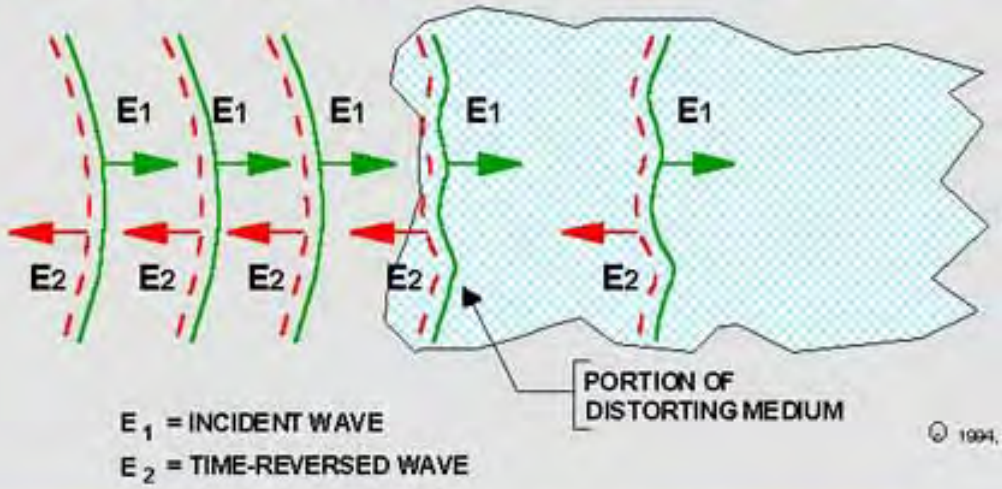

© 1994, 1995, 1998 T.E BEARDEN

"If a scalar wave $E_1(r)$ propagates from left to right through an arbitrary but lossless dielectric medium, and if we generate in some region of space [say near z = 0] its phase conjugate replica $E_2(r)$, then E_2 will propagate backward from right to left through the dielectric medium, remaining everywhere the phase conjugate of E_1."

The Electronuclear Reaction: Nuclear Reactions in TR-Zones (1)

- Nucleon interchange
  - Changes neutron into proton and vice versa
  - At high rate (flat spacetime assumed)
- Statistics become skewed due to curved ST
- Can bias statistics toward either neutron or proton end
  - Biases toward transmutation of elements along isomer chains
  - Concept of "isomer" is vastly expanded

The Electronuclear Reaction: Nuclear Reactions in TR-Zones (2)

- **Normal dynamics (impulses) may reverse**
  - *Like charges attract, unlike charges repel*
  - *Positive charges cluster (are drawn together)*
  - *H+ ions (protons) may form quasi-nuclei*
  - *Nucleus coulomb barrier becomes assistant*
- **Many "impossible" reactions now possible**
  - *Quark access and quark flipping by EM*
  - *Ion clustering*
  - *Positive charges as phase conjugate mirrors*
  - *Time-density waves and time-energy charging*

© 1997 T. E. Bearden

The Electronuclear Reaction: Nuclear Reactions in TR-Zones (3)

- **Not observed until time-energy charging has become substantial**
  - *Time delay (hours, days)*
  - *Transduction of LW --> TW involved*
  - *Specific time-charging history of detectors is involved in twhether they detect or not*
  - *Longitudinal EM waves become significant*
- **Curved spacetime can act as source or sink**
  - *May emit excess radiation*
  - *May absorb excess radiation*

© 1997 T. E. Bearden

In Time-Reversed Zone:
Nuclear reactions are biased

- In normal flat ST, n ⇔ p at high rate
- Curved ST skews statistics
- Biases to either n or p
- Biases to transmutation along isomer chain
- "Isomer" concept greatly expanded

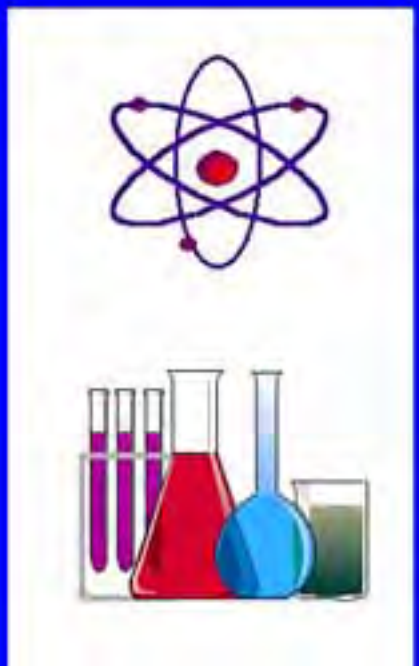

© 1998 T.E. BEARDEN

In Time-Reversed Zone: Dynamics may be reversed

- Like charges may attract and unlike charges repel
- Coulomb barrier becomes Coulomb assistant
- Clusters like charges and forms artificial nuclei
- "Impossible" nuclear reactions at low energy
- Time-density interactions

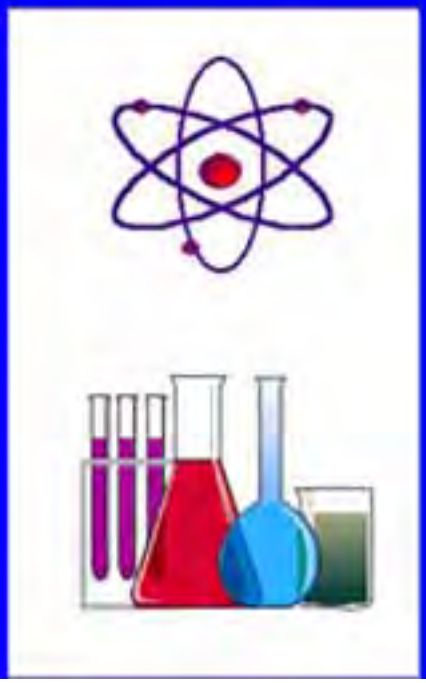

Time-Reversed Zone:

Significant only after time-density charging

- Hours, for "fast" onset
- Days, for "slower" onset
- Transduction involved for TW ⇔ LW ⇔ TDW
- Time-history of each detector is significant
- Longitudinal EM waves become significant

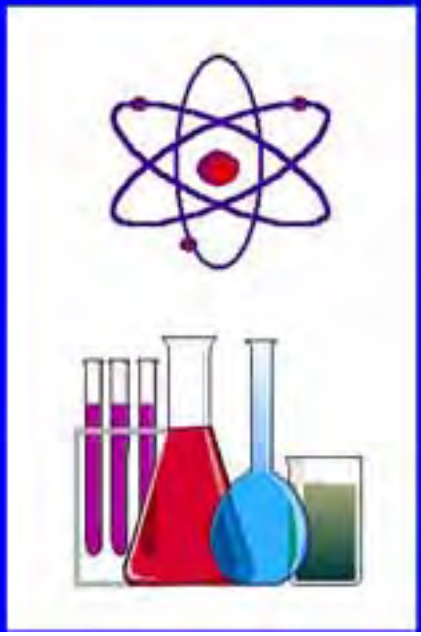

A New Conservation of Energy Law

- Physics conserves total "energy and mass-energy"
- Now also must consider "time-energy"
- Conserve total mass-time-energy (spatiotemporal energy)
- Let E_T = total energy, E_M = mass energy, E_E = ordinary energy, and E_t = time energy. Then

$$E_T = E_E + E_M + E_t$$

© 1998 T.E. Bearden

$$(kE_t \Rightarrow E_E > 0) \Rightarrow E_T > (E_M + E_E)$$

- If some E_t is transduced into E_E, the experiment will violate the old spatial mass-energy conservation law

QUESTIONS ON CARCINOGENS AND EM RADIATION

- UNRESOLVED QUESTIONS ON EM RADIATION
  - DOSAGES
  - ACTIVE MECHANISMS
  - REPLICATION DIFFICULTIES
  - MEASUREMENT DIFFICULTIES
  - WHERE, WHEN, HOW ILL EFFECTS OCCUR
- SIMILAR QUESTIONS EXIST ABOUT EVERY CARCINOGEN
- SCIENCE REALLY DOES NOT UNDERSTAND THE MECHANISMS OF A SINGLE CHRONIC DISEASE, INCLUDING CANCER
  - FACTORS SUCH AS MIND, STRESS, SPONTANEOUS REMISSION, PLACEBO EFFECTS, AND COMBINATIONS OF FACTORS ARE PARTICULARLY TROUBLESOME
  - GENERATION OF THE PLACEBO EFFECT BY THE REGENERATION & RECOVERY SYSTEM IS UNRECOGNIZED

© 1994, 1995 T.E. Bearden

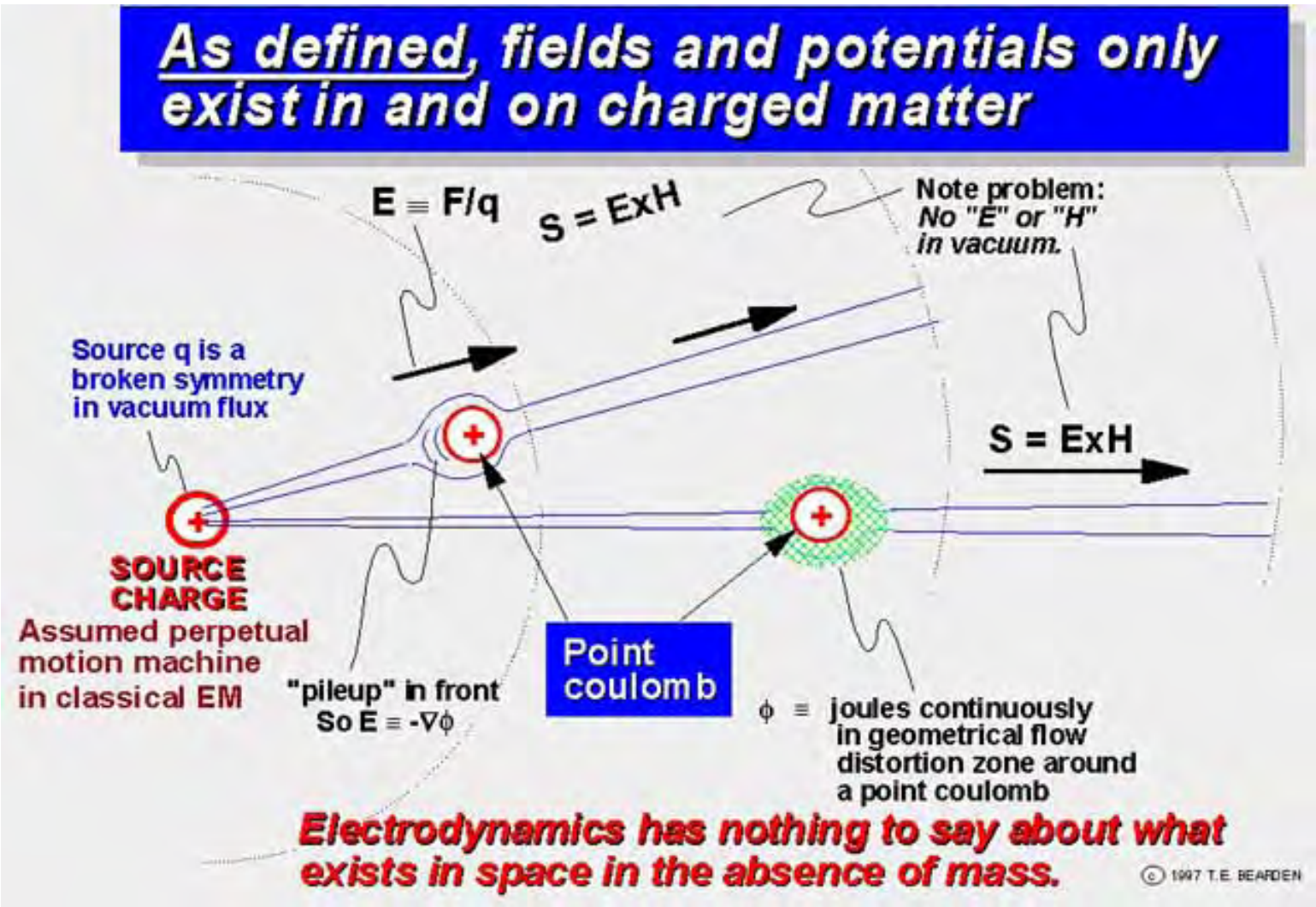
As defined, fields and potentials only exist in and on charged matter
E ≡ F/q
S = ExH
Note problem:
No "E" or "H"
in vacuum.
Source q is a
broken symmetry
in vacuum flux
S = ExH
SOURCE
CHARGE
Assumed perpetual
motion machine
in classical EM
"pileup" in front
So E ≡ -∇ϕ
Point
coulomb
ϕ ≡ joules continuously
in geometrical flow
distortion zone around
a point coulomb
Electrodynamics has nothing to say about what
exists in space in the absence of mass.
© 1997 T.E. BEARDEN

Serious flaws and errors in classical EM theory.

1. Eliminates the Internal EM Inside the Scalar Potential.
2. No Definition of Electrical Charge or of Scalar Potential.
3. Equations Still Assume Material Ether Per Maxwell (Unchanged).
4. Use of Force Fields in Vacuum is False (and Known to be So).
5. Treats Charge q as Unitary Instead of Coupled System $q = \phi[q]m(q)$.
6. Confuses Massless Potential Gradients as Forces (See #3, #4).
7. Does Not Utilize Mass as a Component of Force (See #23).

8. Erroneously Assumes EM Force Fields as Primary Causes.
9. Topology of EM Model Has Been Substantially Reduced.
10. Does Not Include Quantum Potential or Action at a Distance.
11. Does Not Include Superluminal Velocity of Inner EM Components.
12. Does Not Utilize Extended Near-Field Coulomb Gauge Effects.
13. Does Not Include EM Generatrix Mechanism for Time Flow.
14. Does Not Unify Photon and Wave Aspects (Requires 7-D Model).

15. Does Not Include Electron Spin and Precession (See #19, #24).
16. Treats EM Energy As Existing In "Chunks," Instead of as Flow.
17. Confuses Energy and Energy Collection (See #16).
18. Discards Half of Every EM Wave in Vacuum (See #22).
19. Erroneously Uses Transverse Vacuum Wave; It's Longitudinal.
20. Arbitrarily Regauges Maxwell's Equations to Eliminate Overunity.
21. Omits Phase Conjugate Optics Effects (The *Rule* in Internal EM).
22. Does Not Include EM Cause of Newtonian Reaction Force.
23. Erroneously Assumes Separate Force Acting on Separate Mass.
24. Confuses Detected Electron Precession Waves as Proving Transverse EM Waves in Vacuum (Remnant of Old "EM Fluid" Concept).
25. Due to Error in String Wave, Omits the Ubiquitous Antiwave.
26. *Assumes* Equilibrium; Not True Unless Include Vacuum Interactions.
27. Higher Topology Required, to Model Electromagnetic Reality.
28. Lorentz surface integration discards Poynting energy transport.
29. Has nothing at all to say about form of EM entities in massless space.
30. Eliminates the infolded general relativity using EM-force as curve agent.
31. Does not include longitudinal EM waves as time domain oscillations.
32. Does not include EM mechanism that generates time flow and flow rate.

© T.E. [illegible] 1991, 1997

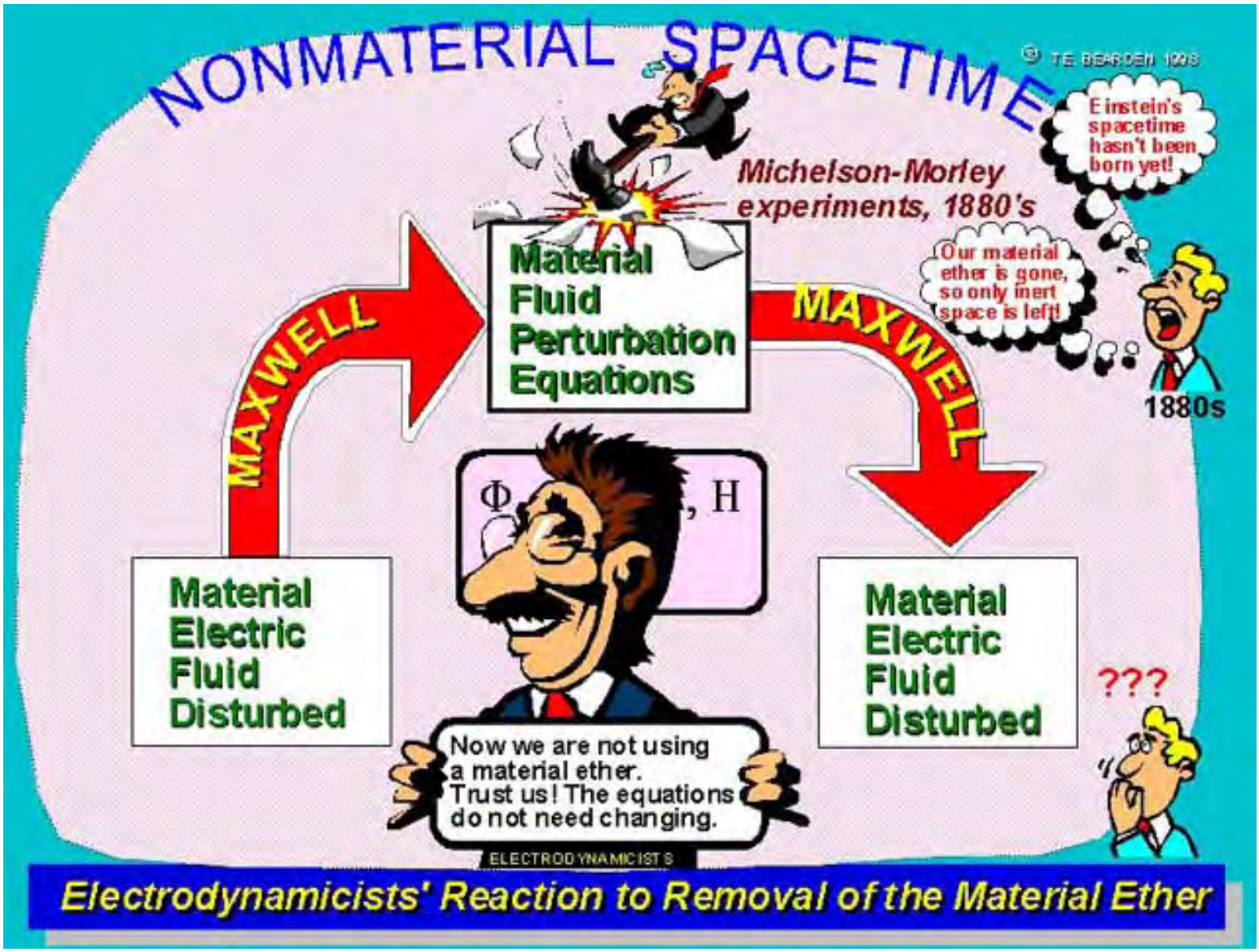
NONMATERIAL SPACETIME
© T.E. BEARDEN 1998
Einstein's spacetime hasn't been born yet!
Michelson-Morley experiments, 1880's
Our material ether is gone, so only inert space is left!
1880s
MAXWELL
Material Fluid Perturbation Equations
MAXWELL
Φ
, H
Material Electric Fluid Disturbed
Material Electric Fluid Disturbed
???
Now we are not using a material ether. Trust us! The equations do not need changing.
ELECTRODYNAMICISTS
Electrodynamicists' Reaction to Removal of the Material Ether

REACTION TO LOSS OF MATERIAL ETHER
Material Ether Assumed in Equations
Potentials, Fields, and Waves Assumed Material
Not a single equation was changed!
Now we are not using a material ether. Trust us! The equations do not need changing.
© T.E. BEARDEN 1999
ELECTRODYNAMICISTS

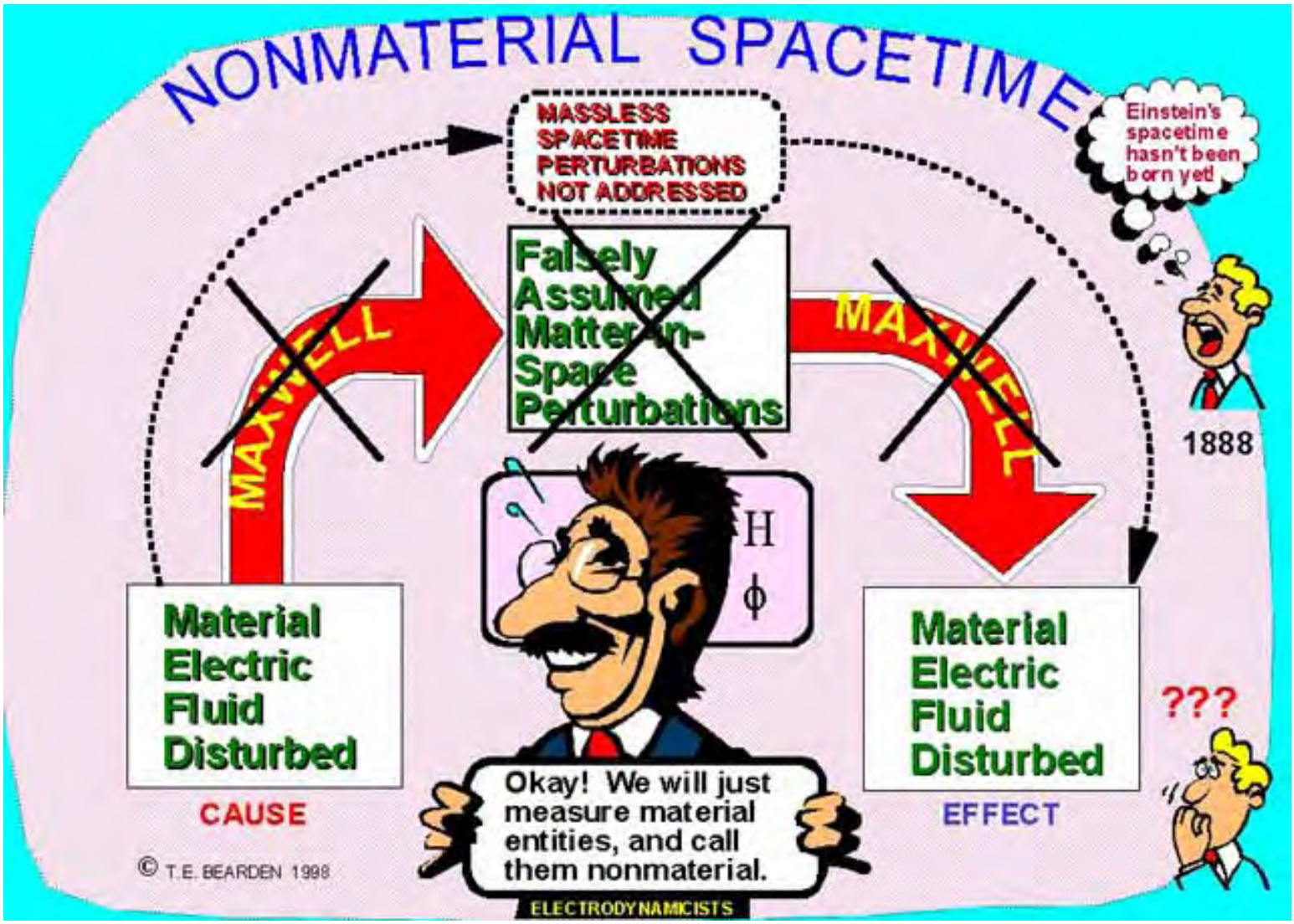
NONMATERIAL SPACETIME
MASSLESS SPACETIME PERTURBATIONS NOT ADDRESSED
Einstein's spacetime hasn't been born yet!
Falsely Assumed Matter-in-Space Perturbations
MAXWELL
MAXWELL
1888
H
ϕ
Material Electric Fluid Disturbed
CAUSE
Material Electric Fluid Disturbed
EFFECT
???
Okay! We will just measure material entities, and call them nonmaterial.
ELECTRODYNAMICISTS
© T.E. BEARDEN 1998

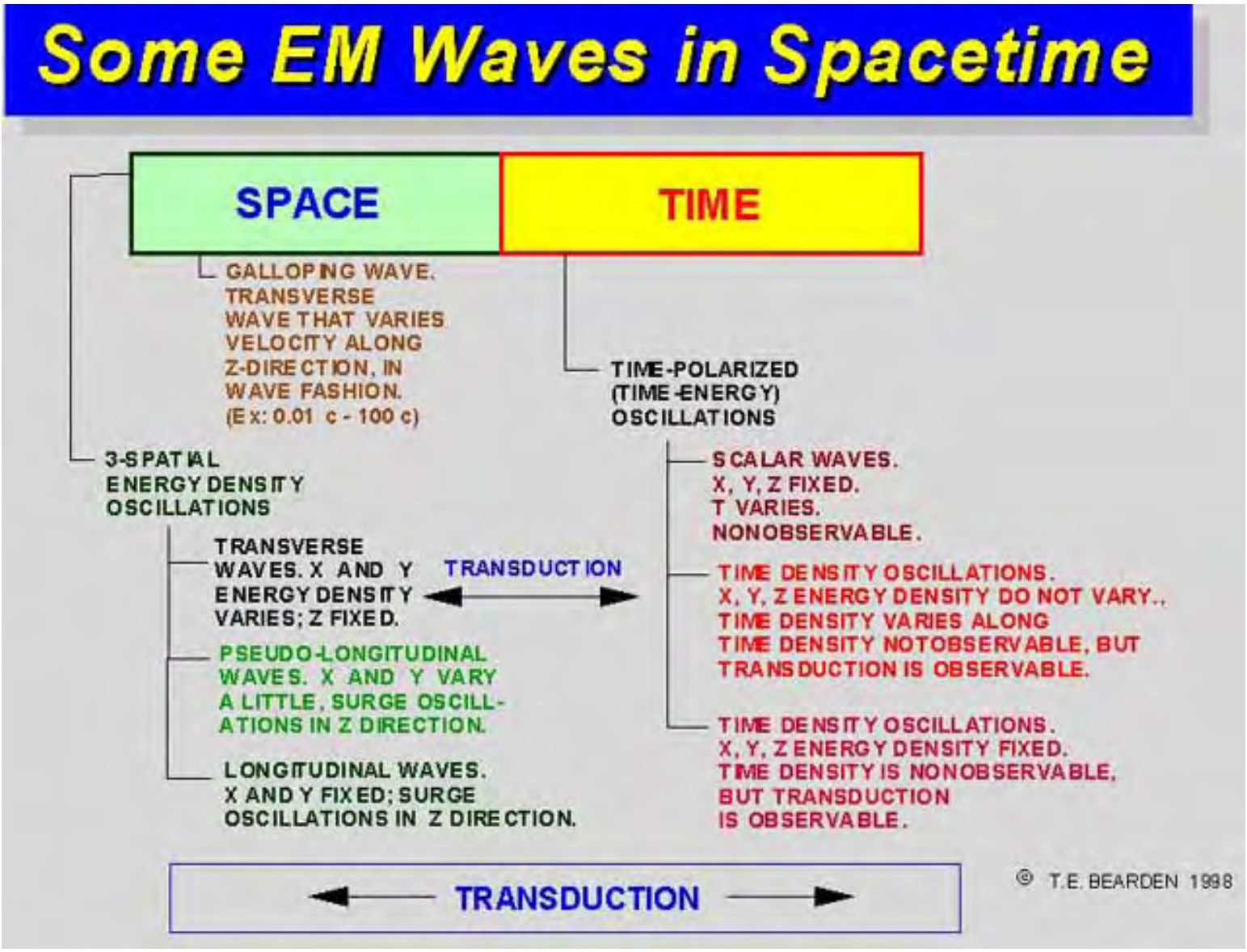
Some EM Waves in Spacetime
SPACE
TIME
GALLOPING WAVE. TRANSVERSE WAVE THAT VARIES VELOCITY ALONG Z-DIRECTION, IN WAVE FASHION. (Ex: 0.01 c - 100 c)
TIME-POLARIZED (TIME-ENERGY) OSCILLATIONS
3-SPATIAL ENERGY DENSITY OSCILLATIONS
SCALAR WAVES. X, Y, Z FIXED. T VARIES. NONOBSERVABLE.
TRANSVERSE WAVES. X AND Y ENERGY DENSITY VARIES; Z FIXED.
TRANSDUCTION
TIME DENSITY OSCILLATIONS. X, Y, Z ENERGY DENSITY DO NOT VARY., TIME DENSITY VARIES ALONG TIME DENSITY NOTOBSERVABLE, BUT TRANSDUCTION IS OBSERVABLE.
PSEUDO-LONGITUDINAL WAVES. X AND Y VARY A LITTLE, SURGE OSCILLATIONS IN Z DIRECTION.
LONGITUDINAL WAVES. X AND Y FIXED; SURGE OSCILLATIONS IN Z DIRECTION.
TIME DENSITY OSCILLATIONS. X, Y, Z ENERGY DENSITY FIXED. TIME DENSITY IS NONOBSERVABLE, BUT TRANSDUCTION IS OBSERVABLE.
TRANSDUCTION
© T.E. BEARDEN 1998

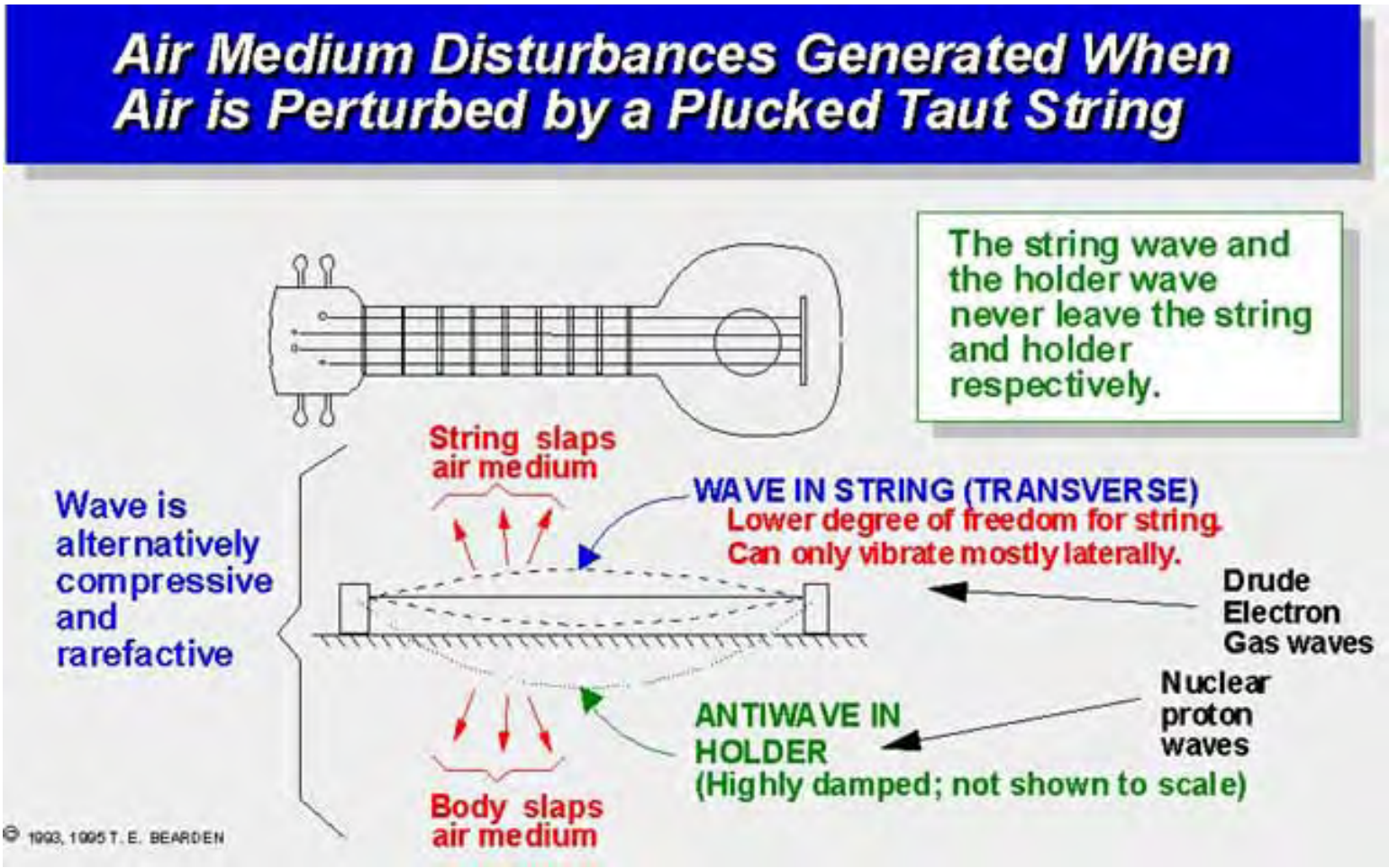
Air Medium Disturbances Generated When Air is Perturbed by a Plucked Taut String
The string wave and the holder wave never leave the string and holder respectively.
String slaps air medium
Wave is alternatively compressive and rarefactive
WAVE IN STRING (TRANSVERSE)
Lower degree of freedom for string.
Can only vibrate mostly laterally.
Drude Electron Gas waves
Nuclear proton waves
ANTIWAVE IN HOLDER
(Highly damped; not shown to scale)
Body slaps air medium
© 1993, 1995 T. E. BEARDEN

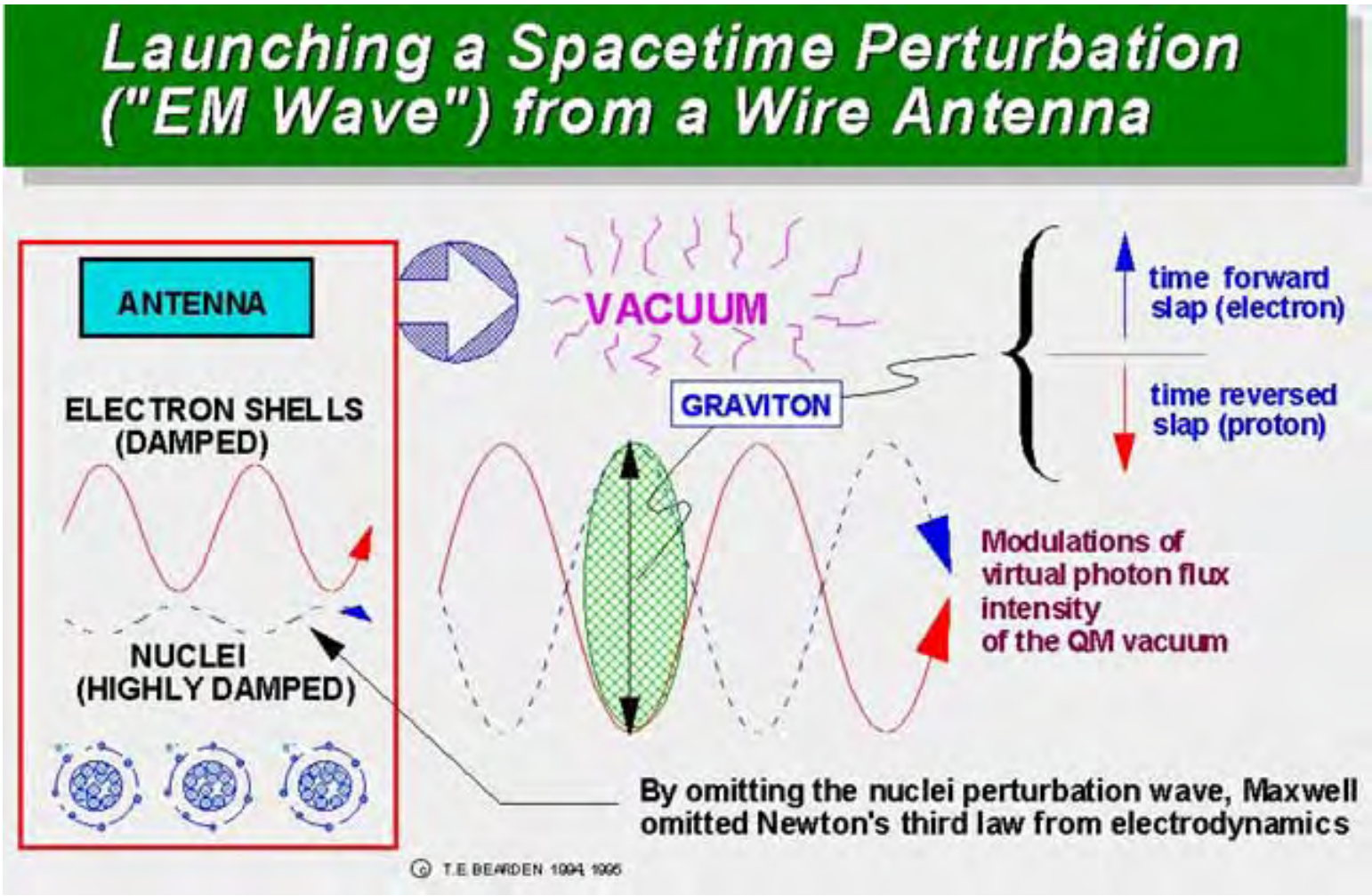
Launching a Spacetime Perturbation ("EM Wave") from a Wire Antenna
ANTENNA
ELECTRON SHELLS (DAMPED)
NUCLEI (HIGHLY DAMPED)
VACUUM
GRAVITON
time forward slap (electron)
time reversed slap (proton)
Modulations of virtual photon flux intensity of the QM vacuum
By omitting the nuclei perturbation wave, Maxwell omitted Newton's third law from electrodynamics
© T.E BEARDEN 1994 1995

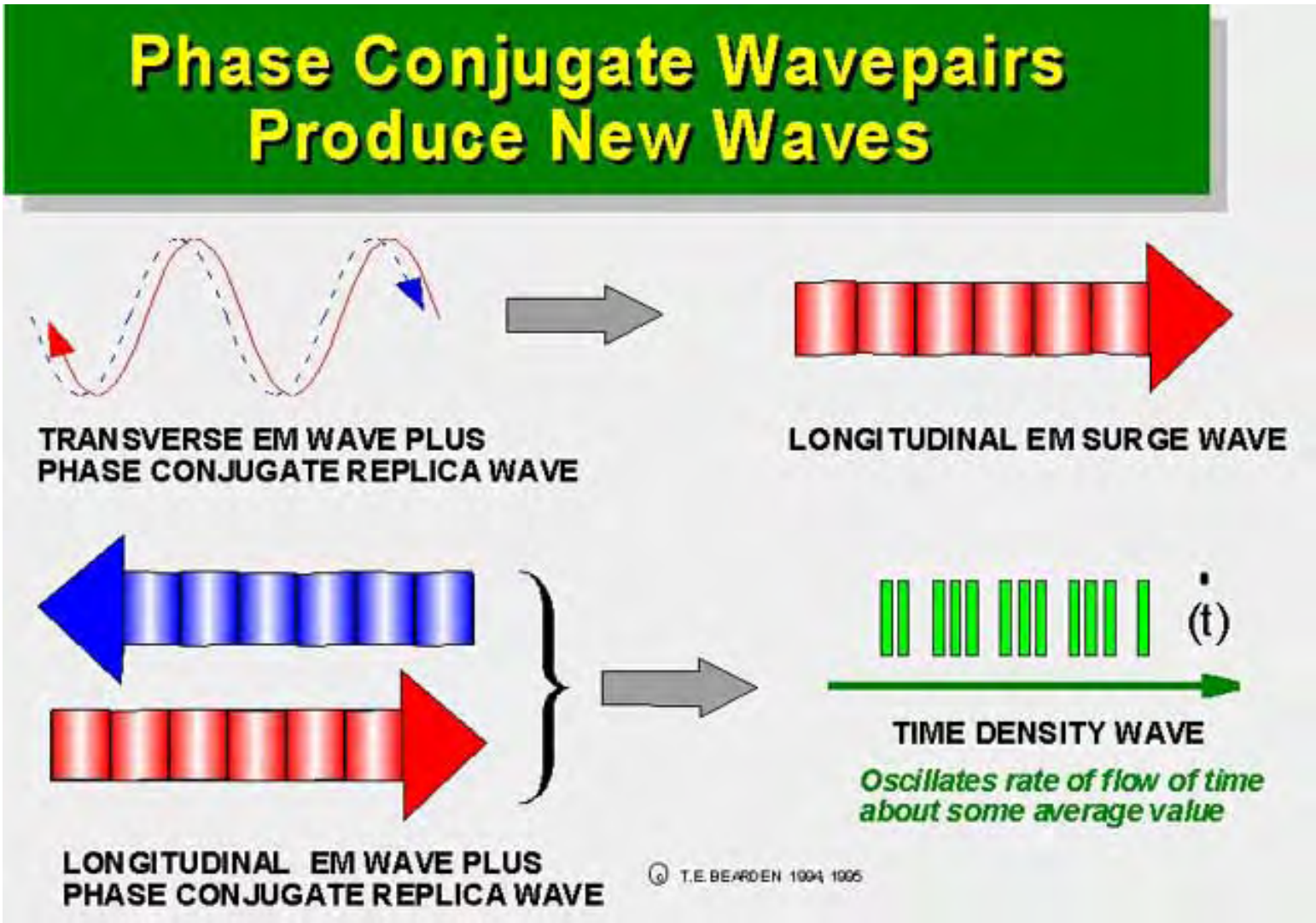
Phase Conjugate Wavepairs
Produce New Waves
TRANSVERSE EM WAVE PLUS
PHASE CONJUGATE REPLICA WAVE
LONGITUDINAL EM SURGE WAVE
LONGITUDINAL EM WAVE PLUS
PHASE CONJUGATE REPLICA WAVE
(t)
TIME DENSITY WAVE
Oscillates rate of flow of time
about some average value
© T.E. BEARDEN 1994, 1995

Scalar Electromagnetics (Energetics) View of EM

- Potentials real; primary causes of EM phenomena
  - Force fields made by differentiations of potentials
  - Force fields are effects, not primary causes
  - Force fields exist only in, on mass particles
- Actions due to potentials and their interference
  - Action at a distance or locally
  - Quantum potential and hidden variables
- Locally curved spacetime, engineerable by EM
  - Gravity effects not necessarily negligible
  - Strong EM force or time used as agent of curvature

© T.E. BEARDEN 1996, 1998

Scalar Electromagnetics (Energetics) View of EM (Cont'd)

- Potentials have internal structure
  - Stoney/Whittaker structure
  - Longitudinal EM phase conjugate wavepairs
  - Each wavepair is a time-polarized EM wave
- Vacuum EM is a potential and has microstructure
  - Stoney-Whittaker biwaves/t-polarized waves
  - Fluctuations exhibit chaos
- Spacetime ≡ Vacuum ≡ Potential ≡ Flux

© T.E. BEARDEN 1991, 1999

Scalar Electromagnetics (Energetics) View of EM (Cont'd)

- Statistics may have hidden order (already chaotic)
- Uses spacetime curvature engines to alter matter (inside-out or outside-in)
- Engineerable EM mechanism generates rate of flow of a mass through time
- Quantum potential with specific QP can be used for instant action at a distance

Extended General Relativity Principle

- "All levels of energy structures and all levels of time structures mold spacetime geometry.
- This is called a ***vacuum engine*** (spacetime engine).
- Spatial and temporal structuring act upon mass at all levels.
- This produces ***templates*** of forces, for translations and stresses."

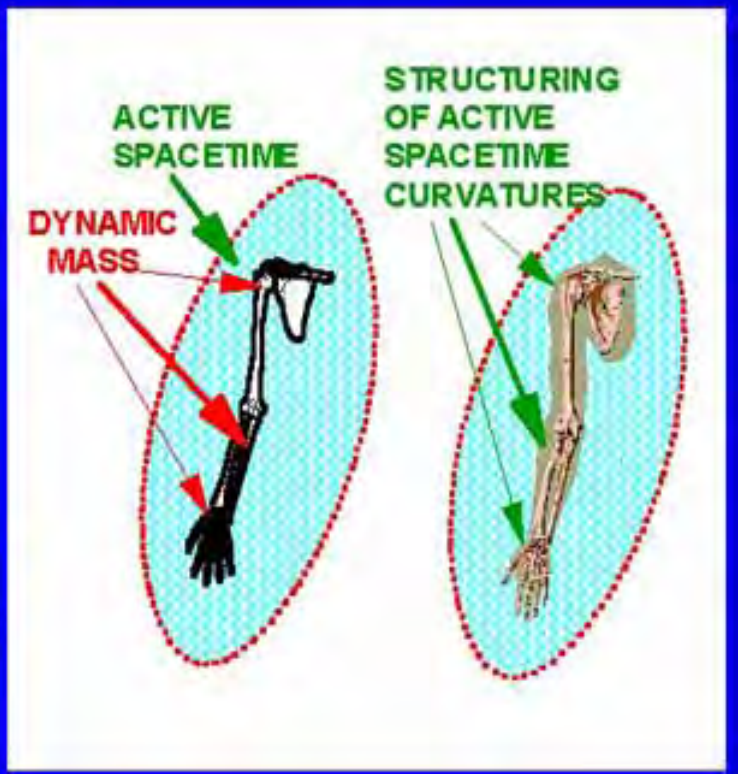

© T.E. BEARDEN 1998

Extension of Work-Energy Theorem

© T.E. BEARDEN 1997

- *Theorem:* $W = k_f - k_i = \Delta k$ [1]
- k must be interpreted not as energy *per se*, but as *collected/collecting* energy.
- The reaction cross section λ for the collecting process must be included.
- *Extension:* $W = \lambda (k_f - k_i) = \lambda \Delta k$ [2]
- Normally $\lambda \leq 1$, as for elastic collision or Stokes emission.
- However, $\lambda > 1$ is now possible, for processes which asymmetrically self-regauge. An example is Letokhov's negative absorption of the medium.
- Working models are the Patterson Power Cell® and Lawandy lasing without population inversion.

MTW's General Relativity Principle

- "Space acts on matter, telling it how to move.
- In turn, matter reacts back on space, telling it how to curve."

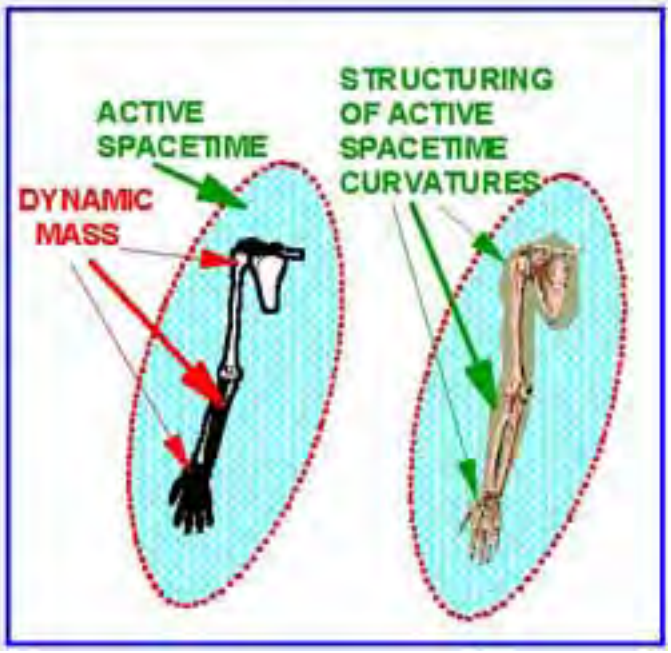

© T.E. BEARDEN 1993

Use of General Relativity (GR) in Particle Physics

© 1998 T. E. Bearden

- GR seldom used in particle physics
- In cold fusion, Matsumoto* has applied general relativity
- Consistent with important cold fusion results
- Used spacetime (ST) curvature by energy density
- Matsumoto did not utilize:
  - Longitudinal EM waves
  - Time density waves
  - Time density curvatures of ST (gain = $9 \times 10_{16}$)

* T. Matsumoto, "Mechanisms of Electro-Nuclear Collapse," Proc. ICCF-7, Vancouver, BC, Canada, Apr. 1998, p. 98

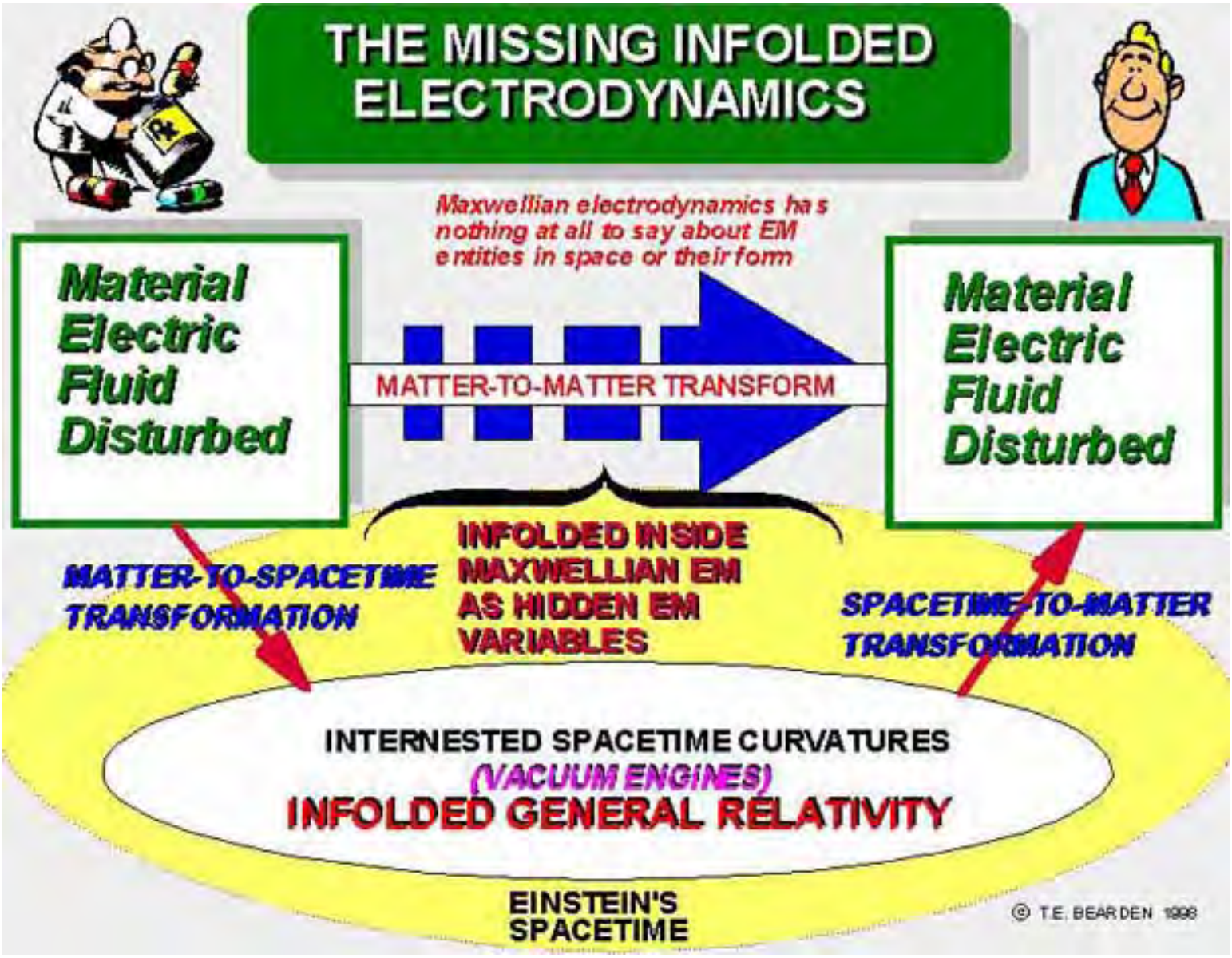
THE MISSING INFOLDED ELECTRODYNAMICS
Maxwellian electrodynamics has nothing at all to say about EM entities in space or their form
Material Electric Fluid Disturbed
MATTER-TO-MATTER TRANSFORM
Material Electric Fluid Disturbed
INFOLDED INSIDE MAXWELLIAN EM AS HIDDEN EM VARIABLES
MATTER-TO-SPACETIME TRANSFORMATION
SPACETIME-TO-MATTER TRANSFORMATION
INTERNESTED SPACETIME CURVATURES
(VACUUM ENGINES)
INFOLDED GENERAL RELATIVITY
EINSTEIN'S SPACETIME
© T.E. BEARDEN 1998

Infolded Engines: Excluded by Present Physics

- *The infolded dynamics of EM systems are not considered in general relativity, electromagnetics, or quantum mechanics*
- *None of these disciplines include such spacetime curvature engines (vacuum engines)*
- *Thus GR, EM, and QM cannot be unified, since ST curvature engines are where the unification mainly occurs*

© 1999 T. E. BEARDEN

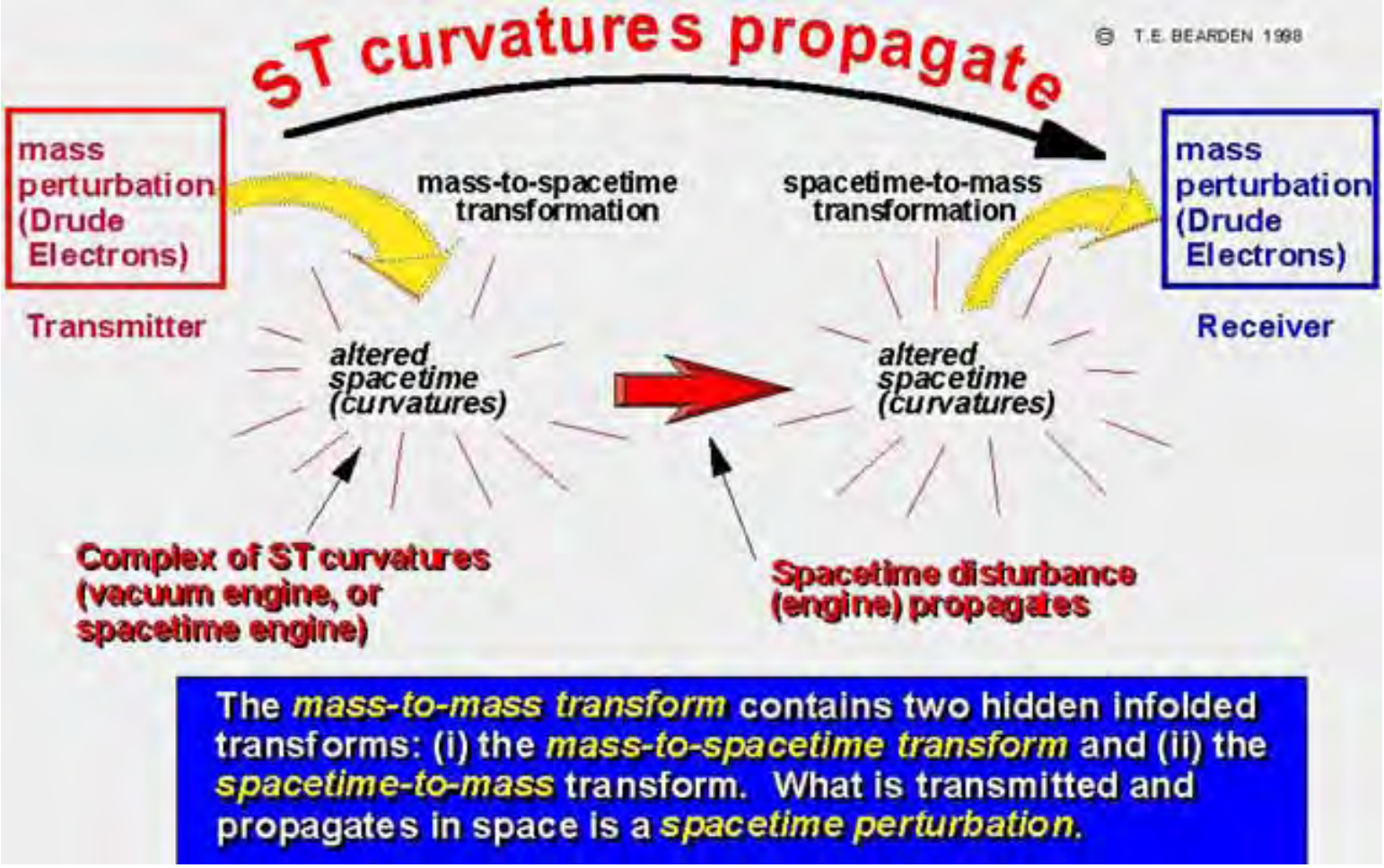
ST curvatures propagate
© T.E. BEARDEN 1998
mass perturbation (Drude Electrons)
Transmitter
mass-to-spacetime transformation
spacetime-to-mass transformation
mass perturbation (Drude Electrons)
Receiver
altered spacetime (curvatures)
altered spacetime (curvatures)
Complex of ST curvatures (vacuum engine, or spacetime engine)
Spacetime disturbance (engine) propagates
The mass-to-mass transform contains two hidden infolded transforms: (i) the mass-to-spacetime transform and (ii) the spacetime-to-mass transform. What is transmitted and propagates in space is a spacetime perturbation.

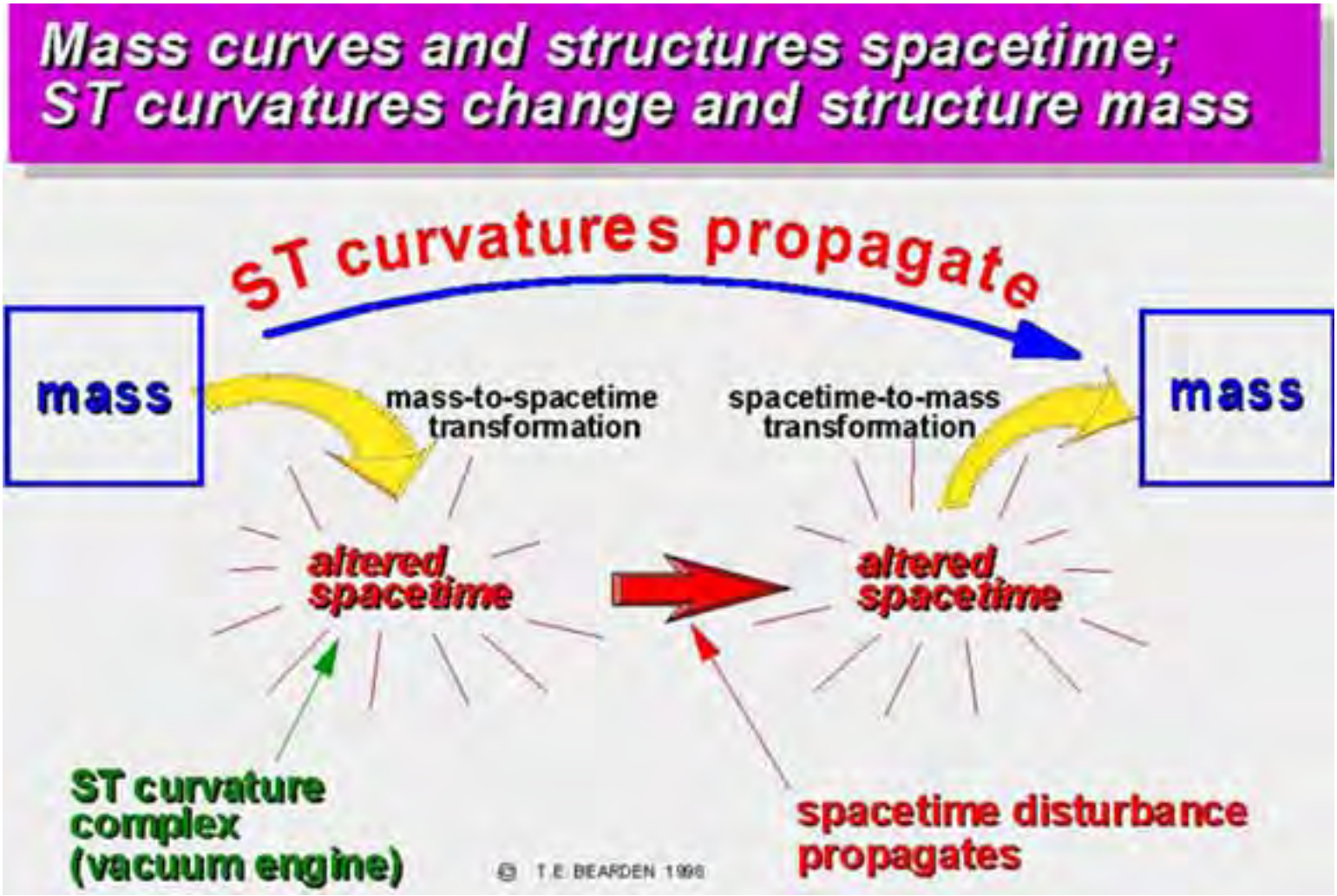
Mass curves and structures spacetime;
ST curvatures change and structure mass
ST curvatures propagate
mass
mass-to-spacetime transformation
spacetime-to-mass transformation
mass
altered spacetime
altered spacetime
ST curvature complex (vacuum engine)
© T.E. BEARDEN 1996
spacetime disturbance propagates

At Infinite Velocity:
Each Is Every Other
SPACETIME
VIRTUAL PARTICLE FLUX
POTENTIAL
MIND AND MIND LEVELS
MASS
PLANET
LIVING ORGANISMS
© 1997 T.E. Bearden

Lisitsyn's Report: Brain Code Broken

- THEORY DEVELOPED AND FITTED
- HYSTERESIS MEMORY LOOP
- CONTROLLED EM INDUCTION
  - IMAGES
  - SENSATIONS
  - PREDETERMINED EMERGENCE
- 23 EEG BANDS
  - UP TO 8.1 X 10^{20} HZ
  - 11 INDEPENDENT CHANNELS

© 1978, 1985, 1991 T.E. BEARDEN

S.K. Lisitsyn, "New Approach to the Analysis of Electroencephalograms," DDC Report AD73005, p. 16-25.

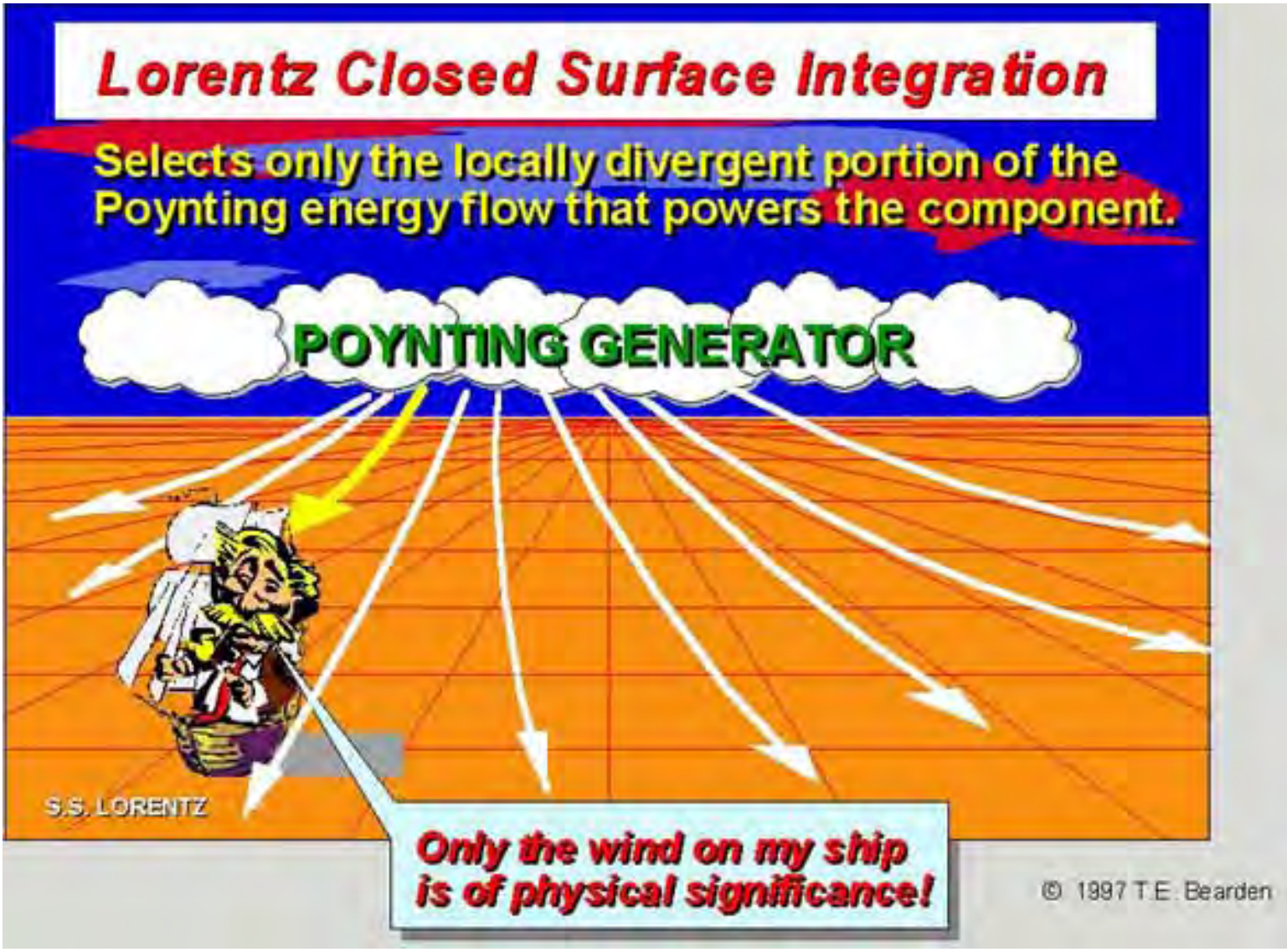
Lorentz Closed Surface Integration
Selects only the locally divergent portion of the Poynting energy flow that powers the component.
POYNTING GENERATOR
S.S. LORENTZ
Only the wind on my ship is of physical significance!
© 1997 T.E. Bearden

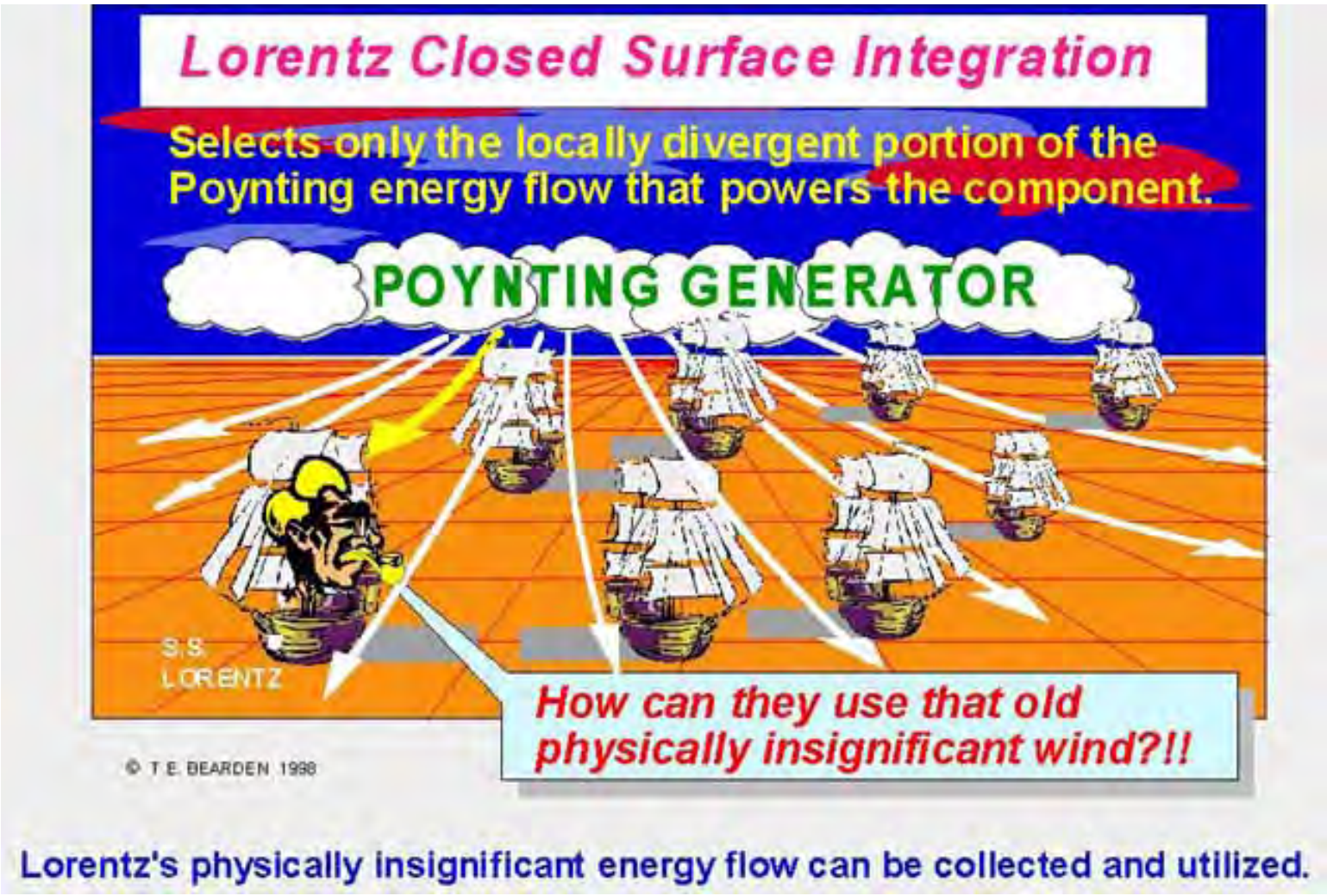
Lorentz Closed Surface Integration
Selects only the locally divergent portion of the Poynting energy flow that powers the component.
POYNTING GENERATOR
S.S. LORENTZ
How can they use that old physically insignificant wind?!!
© T.E. BEARDEN 1998
Lorentz's physically insignificant energy flow can be collected and utilized.

Lorentz surface integration of the Poynting vector around a closed surface

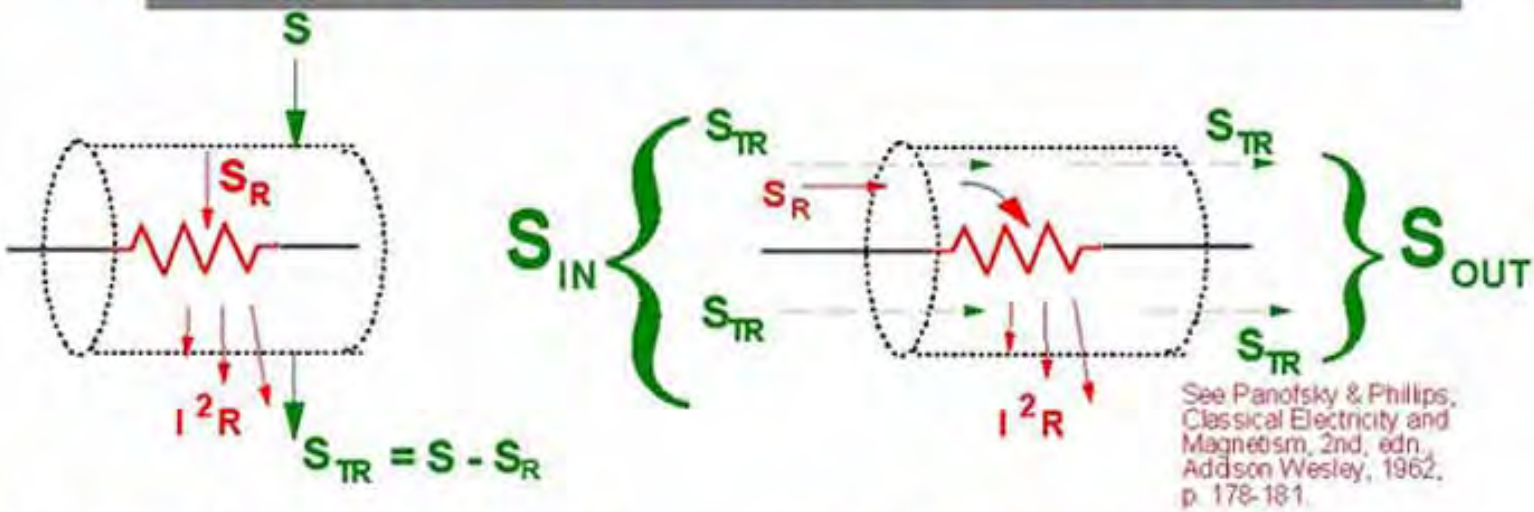

See Panofsky & Phillips, Classical Electricity and Magnetism, 2nd. edn. Addison Wesley, 1962, p. 178-181.

1a. Lorentz surface integration.

1b. Actual S in and S out.

Note: If the S-vector is integrated over the closed surface, then all energy *transport* passage is zeroed, leaving only the very small component of the input S-flow that is powering the joule heating of the resistor. In short, only the small component of the S-flow that is equal in magnitude to the Slepian vector $j\phi$ remains. This measures only the tiny portion of the S-flow that is "collecting" on electrons passing through the resistor, and therefrom being dissipated out of the resistor as joule heating. It discards everything else (all S_{TR}'s and S_{OUT}). S_{IN} becomes S_R.

© 1997 T.E. BEARDEN

Longitudinal EM Photon Interaction with Charge

- Creates time-density wave pumping
- Slowly creates time-density charging

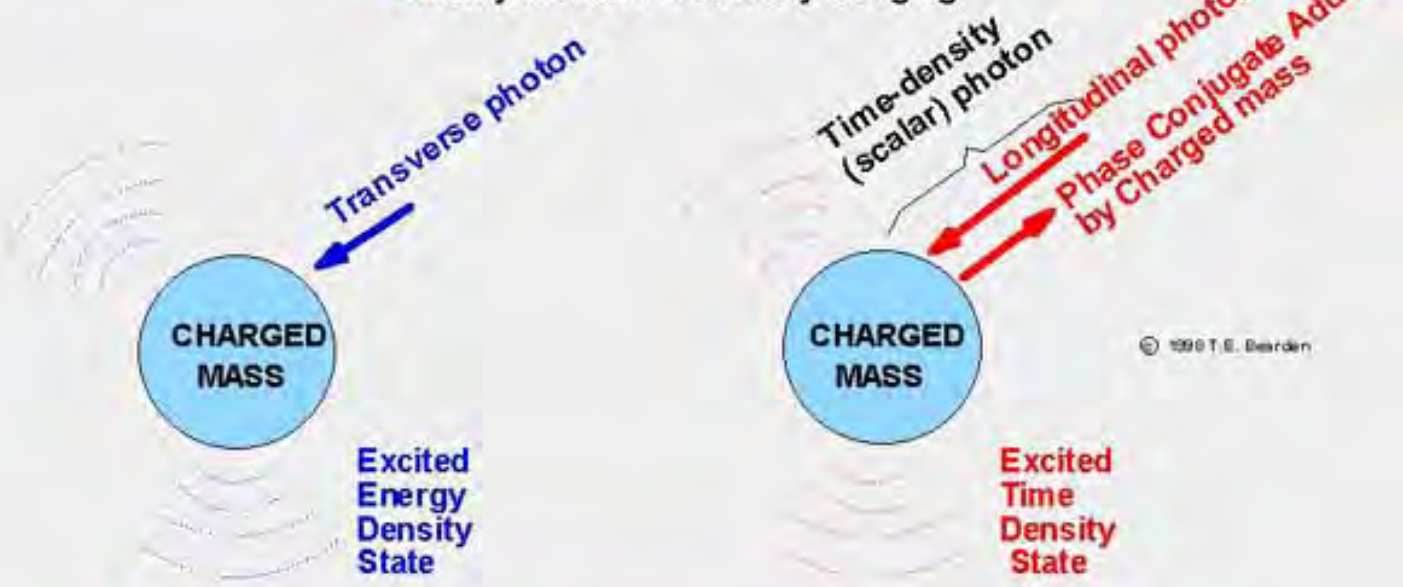

- Fundamental units are arbitrary in physics
- Can express all physics in one unit -- e.g., time
- Time is highly compressed energy
- 1 sec = 9 x 10_{16} joules of transverse EM wave energy

Figure 1-8. Infolded biwave composition of a scalar potential.

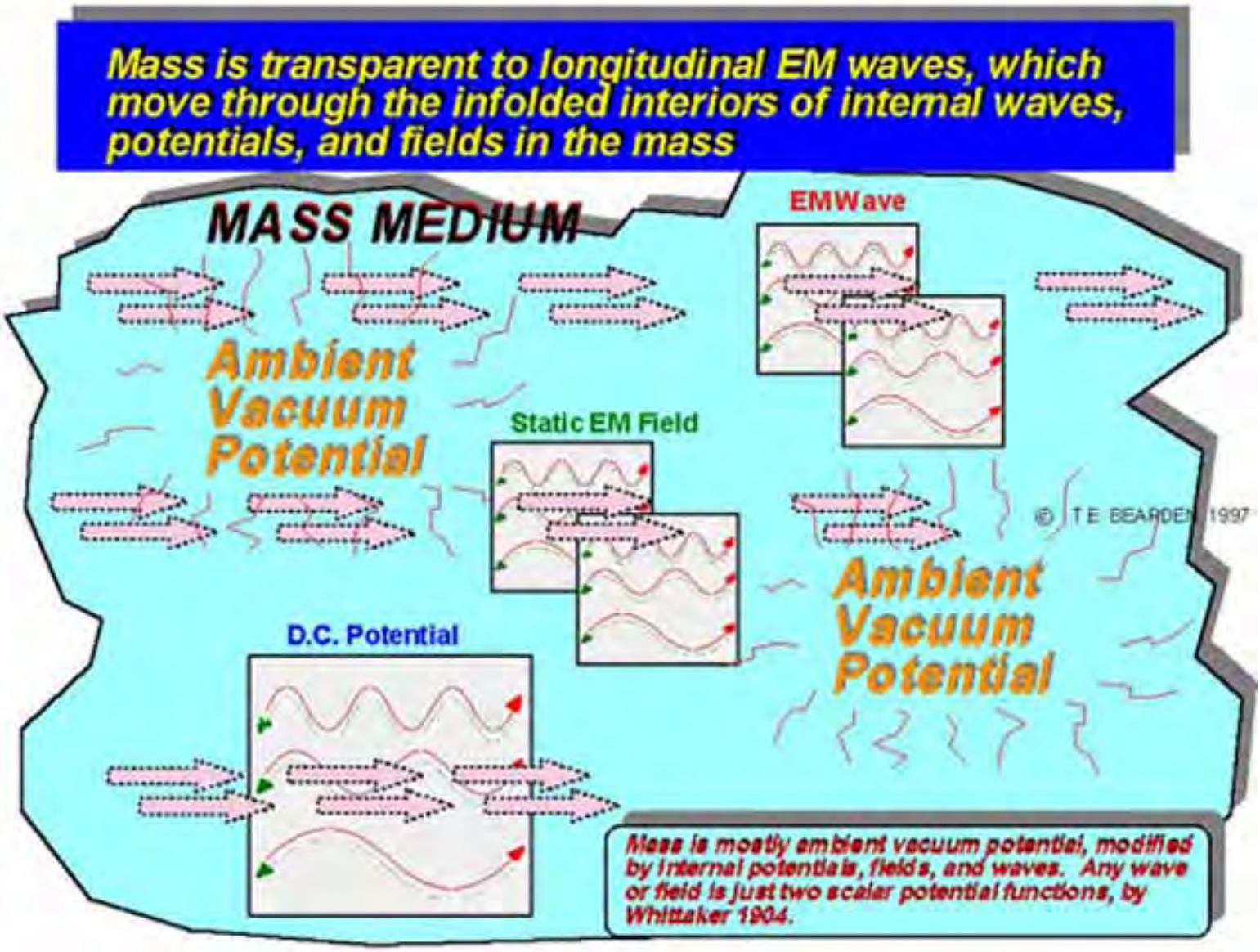

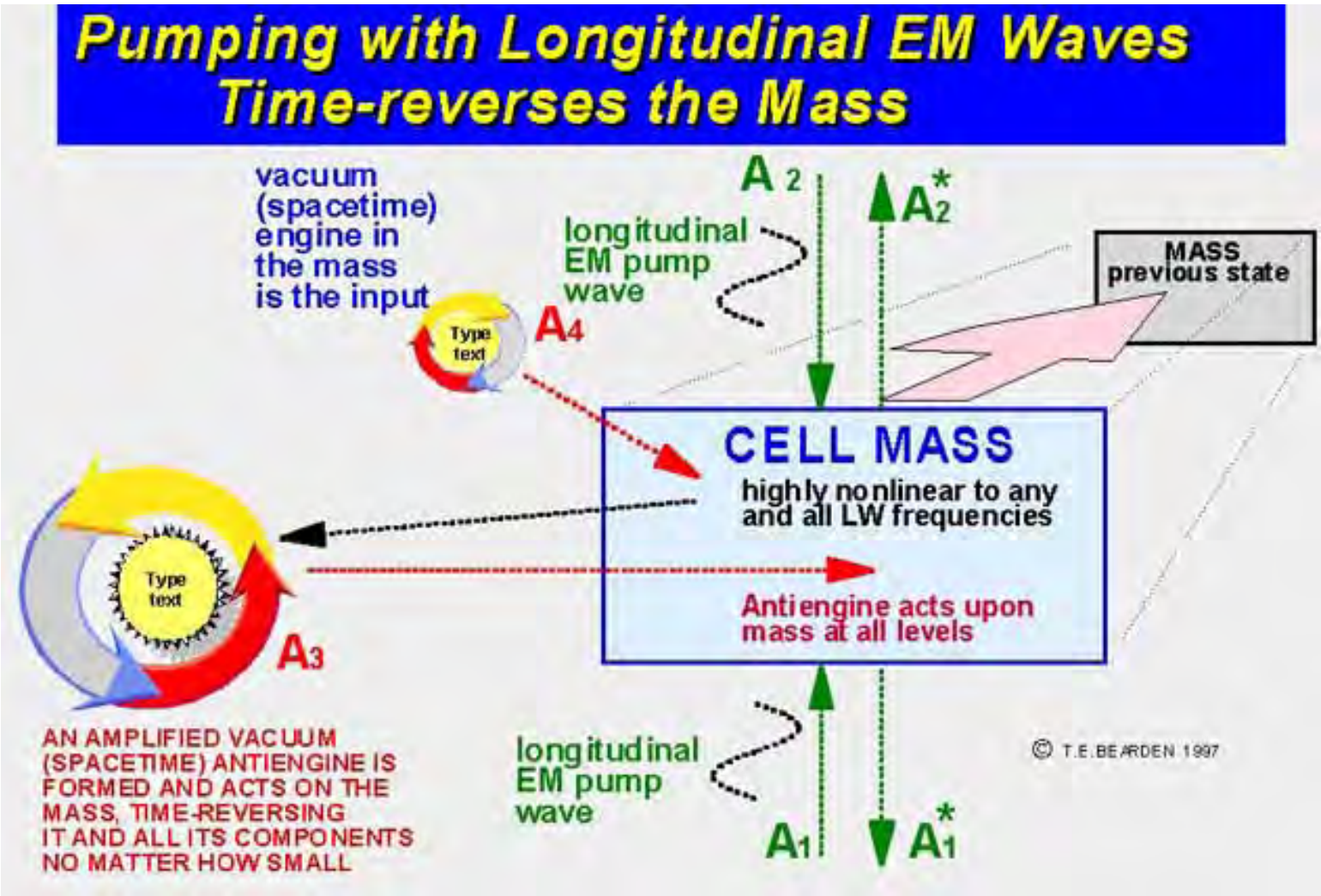
Pumping with Longitudinal EM Waves
Time-reverses the Mass
vacuum (spacetime) engine in the mass is the input
A 2
A*2
longitudinal EM pump wave
MASS previous state
Type text
A4
CELL MASS
highly nonlinear to any and all LW frequencies
Type text
A3
Antiengine acts upon mass at all levels
AN AMPLIFIED VACUUM (SPACETIME) ANTIENGINE IS FORMED AND ACTS ON THE MASS, TIME-REVERSING IT AND ALL ITS COMPONENTS NO MATTER HOW SMALL
longitudinal EM pump wave
© T.E.BEARDEN 1997
A1
A*1

Maxwell's Quaternion Theory

- **Quaternions:**
  - Discovered by Hamilton in 1843
  - A quaternion has a vector part
  - A quaternion has a scalar part
  - First significant non-arithmetic number system
  - Higher topology than vector or tensor algebra
- **Maxwell's theory was in quaternion equations**
  - 20 equations in 20 unknowns
  - Reduced to a small 4-equation subset by Heaviside and Gibbs
  - EM topology dramatically reduced

© T.E. BEARDEN 1995, 1996

Maxwellian Systems

Before regauging, after symmetrical regauging, and after asymmetrical regauging

Note: Any system must first break equilibrium in its vacuum exchange, before it can energize Drude electrons and "power" the load. Asymmetric regauging is always utilized. Powering loads and losses is a symmetry-restoring operation.

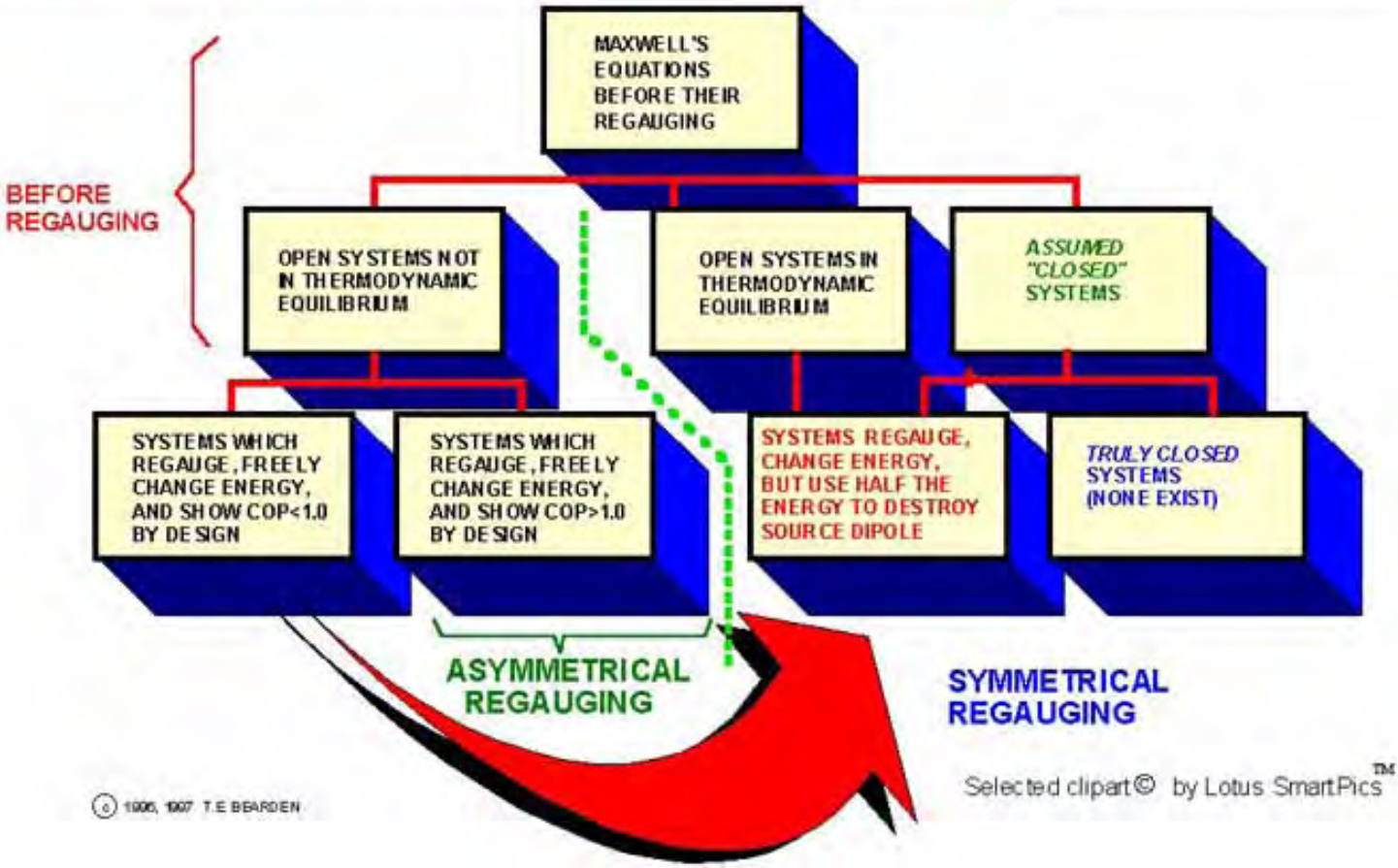

Maxwell's four equations reduce to:

$$\nabla^2 \Phi + \frac{1}{c}\frac{\partial}{\partial}(\nabla \bullet A) = -4\pi\rho \qquad [1]$$

$$\nabla^2 A - \frac{1}{c^2}\frac{\partial^2 A}{\partial t^2} - \nabla(\nabla \bullet A + \frac{1}{c}\frac{\partial \Phi}{\partial t}) = -\frac{4p}{c}J \qquad [2]$$

A is replaced by A', where

$$A' = A + \nabla\Lambda \qquad [3]$$

The new B' field then becomes

$$B' = \nabla \times (A + \nabla\Lambda) = \nabla \times A + 0 = \nabla \times A = B \qquad [4]$$

A new E-field will also be formed. So let

$$\Phi' = \Phi - \frac{1}{c}\frac{\partial \Lambda}{\partial t} \qquad [5]$$

© T.E. BEARDEN 1997

Per Jackson, (A,Φ) are *habitually* chosen so that

$$\nabla \bullet A + \frac{1}{c}\frac{\partial \Phi}{\partial t} = 0 \qquad [6]$$

The *net symmetrical* regauging separates variables. Two inhomogeneous wave equations result:

$$\nabla^2 \Phi - \frac{1}{c^2}\frac{\partial^2 \Phi}{\partial t^2} = -4\pi\rho \qquad [7]$$

$$\nabla^2 A - \frac{1}{c^2}\frac{\partial^2 A}{\partial t^2} = -\frac{4\pi}{c} J \qquad [8]$$

© T.E. BEARDEN 1997

Equations [1] and [2] *arbitrarily* changed to [7] and [8]

Support Free Energy and purchase the bumper sticker

The New Tesla Electromagnetics and the Secrets of Electrical Free Energy

By T.E. Bearden
© 1984

Table of Contents

Foreword

Comments on the New Tesla Electromagnetics:
Part I: Discrepancies in the Present EM Theory
by T. E. Bearden

Comments on the New Tesla Electromagnetics:
Part II: The Secret of Electrical Free Energy
by T. E. Bearden

Overture to a New Age Technology
by Dr. Rolf Schaffranke

REVIEW AND OUTLOOK - The Development of Post-Relativistic Concepts in Physics and Advanced Technology Abroad
by Dr. Rolf Schaffrancke

worldwide. Now the *principles and definitions* are available to everyone. If they are in error, shortly that will be proven in spades. If they are correct, that will also be established shortly.

Anyone who wishes can develop and patent a particular application. There's no longer any way to stop this information from being disseminated and utilized. I hope that a flurry of development and patenting activity will result around the world. Get cheap, clean electrical energy to everyone. Bring on the electric auto, clean up the noxious auto exhausts, get rid of giant oil spills, and clean up the biosphere.

Tom Bearden

Additional Information On
The Final Secret of Free Energy

Update 15 February 1994
© 1994 by T.E. Bearden

Introduction

My associates and I have filed the first patent application on two electrical overunity processes and devices; one similar to what is outlined in *The Final Secret of Free Energy* [Ref 1] and an additional variation utilizing, as collectors, standard step-charged capacitors rather than degenerate semiconductor materials. In 60 to 90 days, we will have a very enlightening paper (more likely a book) ready on that. We also plan to file several more extremely fundamental overunity patent applications from additional phenomena and mechanisms that we have uncovered.

In this paper, it is assumed that the reader is familiar with the content of *The Final Secret of Free Energy*. Figure 1 shows the invention schematically, and we briefly summarize it as follows:

Summary of the Invention

A method and apparatus for extracting bidirectional EM wave energy from the vacuum through the scalar potential gradient across the terminals of an electrical source, collecting the excess energy in a collector without entropy, then separately discharging the collected energy through a load to perform work, without sending the load current back through the primary source against its potential gradient; i.e., against its back emf. Removing the load current from the source thereby substantially reduces the production of work inside the source to dissipate its bipolarity; said internal dissipative work being well-known to be the cause of exhaustion of the source's ability to continue to furnish emf to the external circuit. By reduction of its internal dissipation, the source is enabled to furnish more energy for dissipation in the external load than is utilized to dissipate the source internally. Hence the source is enabled to operate with an overunity operational efficiency. The system permissibly operates as an "open" system, and extracts and utilizes excess EM energy from a free-flowing external source (the flux exchange between the surrounding vacuum and the bipolarity of the source), hence it can operate at an efficiency greater than unity without violation of the laws of physics, in a manner analogous to but entirely different from a heat pump. In this invention, it is not the purpose of the primary source to furnish current and dissipative power to the external circuit. The bipolarity of the source is utilized primarily as a dipole antenna to receive the bidirectional EM wave energy flow from the vacuum, and direct it without entropy through a switching unit to the collector. Conduction electrons in the collector are temporarily restrained while being overpotentialized by the excess energy being collected upon them. The collector and its overpotentialized electrons are then switched away from the primary source, and connected across the load as a separate circuit and closed current loop. The electrons in the collector and their excess energy are then automatically released to flow as current discharge through the load, releasing their excess energy to perform useful work in the load. The collector is then switched away from the load and back across the primary source, and another collection cycle is initiated. Iteration of the collection and discharge cycles provides power to the load. Additional collection and smoothing capacitances for smoothing the iterations and furnishing steady power to the load may be added as desired. The invention violates the

closed circuit practice of powering loads, but does not violate the conservation of energy law, the second law of thermodynamics, or any of the other known laws of physics.

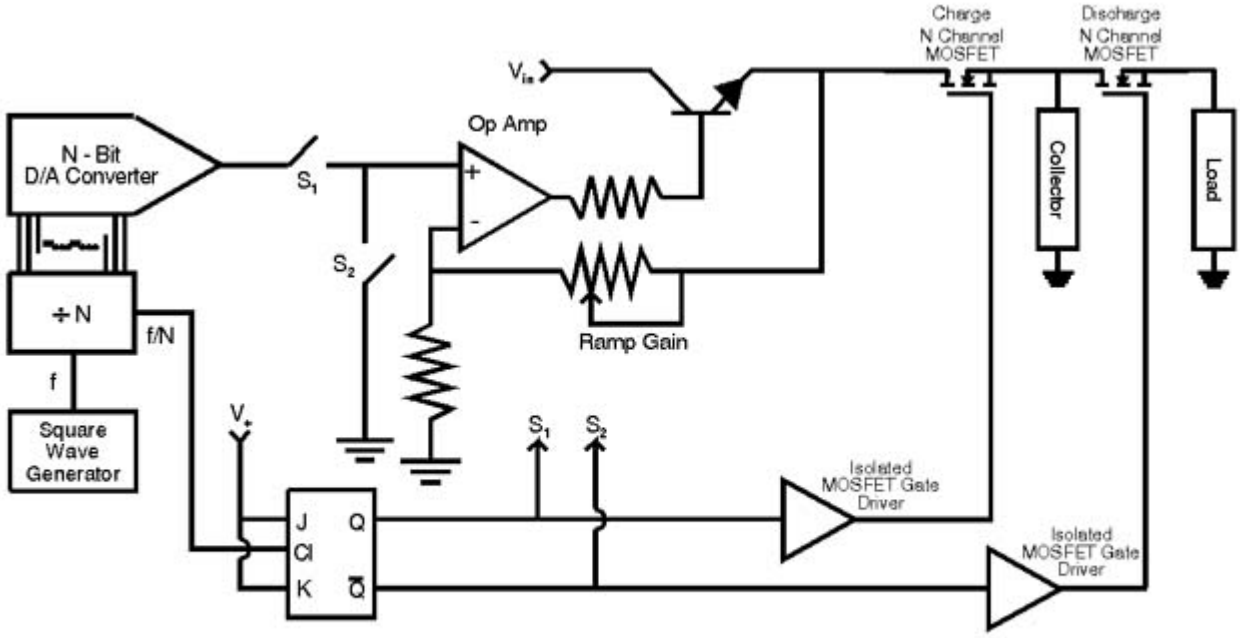

Figure 1A

Figure 1a. Type circuit utilized for ramp-up charging of a capacitor without work, and separate discharge of the collected energy in the load without substantial depletion of the primary source.

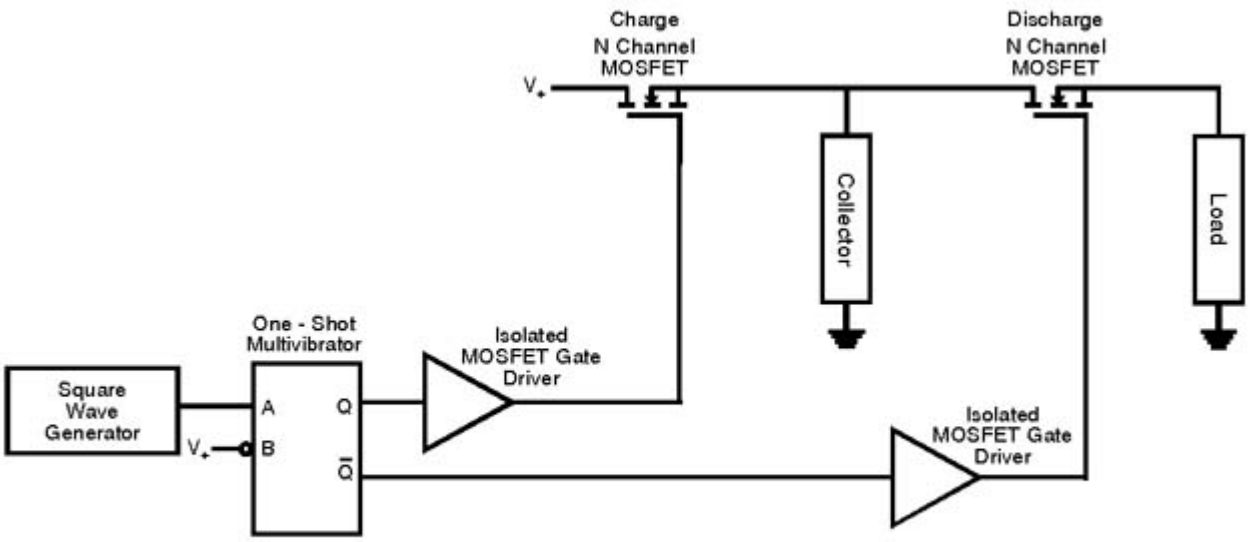

Figure 1B

Figure 1b. Type circuit for single pulse charging of a degenerative semiconductor collector without appreciable work, and separate discharge of the collected energy in the load without substantial depletion of the primary source.

Use of Step-Charged Capacitor as the Collector

Fulfilling our search for a special material with the extended electron gas relaxation time for the collector, a material alloy composed of 98% aluminum and 2% iron is tentatively suggested. However, production of this alloy is particularly difficult, so we are still researching for a solution that is more easily manufactured.

Meanwhile, the necessity for using a special material for the collector has been bypassed by another procedure we have utilized. Rigorously one can use a *normal capacitor* as the collector, if one step-charges it in several hundred small incremental rectangular voltage steps (stair-step-charging). The proof that this can freely charge a capacitor with energy, without having to do appreciable work, is already known in the literature. You can charge the capacitor *without entropy* and essentially without drawing electron mass current. [Ref 2,Ref 3,Ref 4,Ref 5]

Actually we consider the capacitor to be charged by *massless displacement current flow*, which for circuitry purposes we consider to be $d\phi/dl$ -- a flow of pure potential (trapped EM energy) along a conductor or through the vacuum; i.e., under conditions where *mass* displacement current flow does not exist. [Ref 6, Ref 7]

Massless Displacement Current Is Freely Available From Any Source

The principle embodied in the invention is that one can extract all the free EM energy one wishes, from any electrical power source, as long as it is extracted via massless displacement current and not by *electron mass* flow current. [Ref 8] And one can freely collect this extracted energy from a source into an ordinary capacitor if one does it correctly, *because one can charge the capacitor via massless displacement current without expending any appreciable work inside the source to dissipate its dipolar separation of charges*.

Every Electrical Source of Potential Is Already a Free Energy Source

We thus advance a revolutionary concept: all present power systems already utilize *free energy source-antennas*. However, the standard two-wire closed circuitry diabolically utilizes one-half the total free energy extracted by the source-antenna from the vacuum, to perform work inside the source-antenna to dissipate its dipolarity and hence to dissipate the *source-antenna (i.e. the receiver) itself*.

The source already acts as a "dipolar antenna" to continually receive "scalar potential" current $d\phi/dl$ (massless displacement current) from the vacuum. [Ref 9] Previously scientists and engineers have simply ignored this special massless EM energy influx. For load-free (i.e., mass-current-free) conditions, ($d\phi/dl$) is continually received from the vacuum *by any dipole* (i.e., by any *dipolar source-as-an-antenna*), and the flowing energy is continually exchanged back and forth between the vacuum and the dipole.

This free energy exchange with the vacuum is also true of any two points in our circuit that possess an open-circuit voltage or potential difference between them. Two such points act as a dipole. Free energy dipolar antenna sources are everywhere; we just have to learn how to break the symmetry in their energy flux exchange with the vacuum, collect some of the freely flowing influx, and distribute that collected excess energy to an isolated load to *separately* power it.

In other words, we simply have to implement circuitry that operates analogous to the standard heat pump cycle.

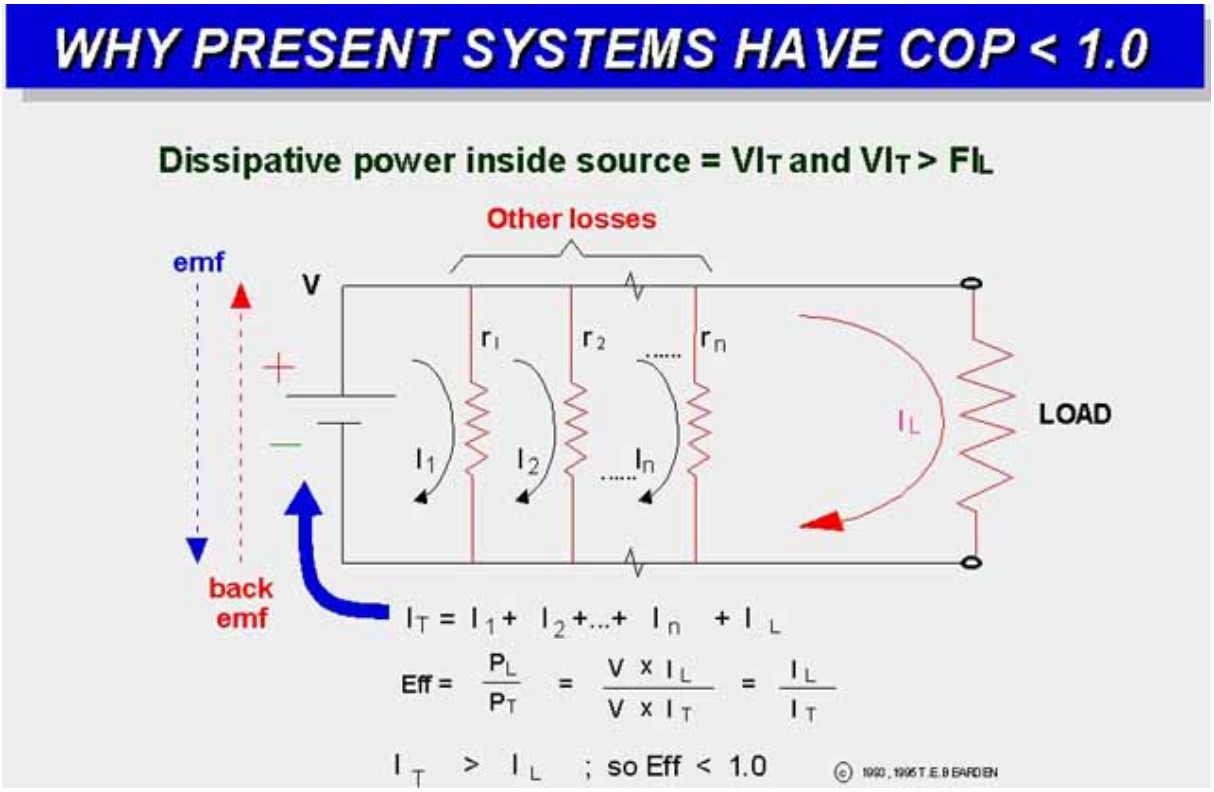

Figure 2. Why present electrical power systems have underunity operational efficiency.

Conventional 2-Wire Closed Circuit Operation

In the conventional 2-wire system a load is added to the source-antenna, allowing circulation of electron current in a closed circuit through the load and then through the ground return line back to and through the dipolar source-antenna. The only useful reasons for this "closed circulation" of the electrons are (1) it is simple, *easy*, habitual, and accepted, (2) all our components, instruments, and methodologies are developed in accordance with this usage, (3) one uses the electrons as a *working material fluid* to receive, transport, and discharge excess EM energy, and (4) forcing the electrons back through the back emf *reloads* the spent electrons again with excess EM energy in the form of little ∇φ's (excess trapped energy density) upon each recycled electron.

Some of the excess ∇φ collected upon the electrons is expended in the load as useful work, but one half of the total is expended in driving the spent (without excess ∇φ Consequently all conventional 2-wire circuits, which return *all external electron-flow current loops back through the source*, are always underunity devices, as is shown in Figure 2. Eerily these conventional sources are already free energy devices, which are unwittingly attached to circuitry specifically designed to utilize part of their freely received energy to deplete or destroy themselves, i.e., they are already *open systems receiving free energy from the vacuum, but they are hooked up and designed in a suicidal manner so as to use at least half of that freely extracted energy to re-close the system and shut off the influx of free energy.* Since at least some of the remaining half of the energy is lost in inefficiencies, frictional losses, etc., less than half the total free energy goes to the load. So there is always less useful work being done in the load than the destructive work being done inside the free-energy source-antenna to destroy it.

Operational Efficiency

We define operational efficiency Alpha as the average power expended in the load to power it, divided by the average power expended inside the source to dissipate its dipolarity. If Alpha < 1, one has to externally furnish energy to do restorative work upon

the source to replace or offset that amount of destruction being done inside the source, if one wishes the source to continue to operate as an energy-receiving antenna. If Alpha > 1, then if the additional losses are minimal, the device can conceivably run itself while furnishing some energy to a load to produce useful work.

We Must Excise the Suicidal Closed Circuit To Achieve Overunity

There is no mysticism in the overunity electrical device. The device is an open system that extracts excess energy from the vacuum, collects it, and transports it to the load to separately power the load. It is simply analogous to the standard heat pump cycle. It is also directly analogous to presently operating overunity systems such as windmills, waterwheels, solar cell arrays, and hydraulic turbines in a dam installation. All that we have done is to eliminate or dramatically reduce the standard cancerous mistake in conventional electrical power systems wherein much of the excess energy freely extracted from the vacuum by the already-overunity electrical source is then utilized to destroy the source's energy reception ability!

As we stated, in the conventional electrical device and circuitry, more destructive work is always done inside the source than is done usefully in the external load. Hence the conventional operational efficiency is always underunity.

Legitimate Overunity Systems Comply With Well-Known Requirements

There are many alternative and well-known permissible free energy systems that operate at overunity operational efficiency: solar cells, windmills, hydraulic turbines, heat pumps, and water wheels, to name a few. All of these are open systems, receiving an influx of free energy from a natural energy flow, and collecting and gating some of that energy to be dissipated in a load to do useful work. All of them are permissible overunity devices, since (1) they are open systems, (2) they constantly receive a free energy influx from an external source, (3) they extract and collect some of this energy without dissipation, (4) they dissipate this collected energy in a load, and (5) the discharge process is totally separated and isolated from the "collection-from-the-source" process.

No Legitimate Overunity System Is Intentionally Made Self-Destructive

Not a single one of these open overunity systems foolishly uses part of its freely extracted and collected energy to re-close the system and shut off its influx of free energy flow! What engineer would build a solar array such that, the moment the current started to flow, it powered a shutter arrangement to gradually close and shield off the solar array from the sun? Who would build a windmill so that, whenever the angled-blade assembly rotated in the wind to furnish power, a gearing feedback assembly also slowly caused the individual blades to rotate into a position parallel to the wind, thus stopping the windmill?

Yet this is precisely what the conventional electrical power system does with its external circuit. It deliberately utilizes half of the freely extracted energy to re-close the system and shut off the free energy flow between the vacuum and the source-antenna, by destroying the receiver-antenna!

However, this "suicide circuit" practice is guaranteed to keep the power meter on your home or business, and to keep the meter on the gas pump for fueling your automobile. Perhaps one may be forgiven for suspecting that, at the deepest levels of financial control,

this may be the real purpose in seeing that the existing interpretation of classical EM stays "as is."

All Electrical Power Sources Are Already Free Energy Receiving Antennas

All conventional electrical power systems already contain fully functional free energy systems in their source component. Each conventionally designed system is, however, deliberately suicidal, since part of the system's own energy is utilized to work against itself and destroy itself. This is primarily due to the preoccupation of engineers with power and work. They do not consider the source as an energy source, but as a power source. Power being the time-rate of performing work, and work being the dissipation of energy, they are thus naturally conditioned to think of the "dissipation of the source" as its natural functioning.

In fact, hardly a single one of them is aware that EM energy itself is a free-flowing process. Only a finite collector possesses a finite collection of EM energy. In nature, the potential gradients of all dipoles are already rivers of free-flowing EM energy exchange with those dipoles, where the energy density is freely furnished and is essentially free for the taking. It is mind-boggling that we have all been conditioned to extract this free energy furnished by nature and the creator, but to always utilize half of the extracted energy to destroy the receiver-antenna and thus strangle the flow!

In our work, we simply have excised this "self-destructive" cancer and reworked the circuitry so that only a minimal amount of the freely extracted energy is utilized for internal destruction of the source-antenna.

Thermodynamics and Open Overunity Systems Not In Equilibrium

In our approach we have an open system during every collection cycle, with an external source of energy and a continual energy influx. We have deliberately broken the local symmetry of the system's energy exchange with the vacuum, by spatially and temporally separating the energy collection and energy discharge phases. Overunity operational efficiency is permissible for such a system without violation of any of the laws of nature. Some of the influx of excess energy from the vacuum into the dipolar source antenna is transported without loss to the collector and collected. The collected energy in the collector is then separately discharged through the load, without any of it being discharged back inside the source-antenna. Note that we have broken local energy flow equilibrium but not global energy flow equilibrium.

The second law of thermodynamics, e.g., does not even apply to such an open system not in equilibrium. Classical thermodynamics cannot even compute the entropy of an open system not in thermodynamic equilibrium, as is well-known to thermodynamicists. [Ref 10]

What classical thermodynamics does have to say, is that such an open system must contain excess energy when compared to the closed system in equilibrium, because the closed system in equilibrium is in the maximum entropy condition. [Ref 11] Global conservation of energy is not violated, just as it is not violated in a windmill or in a heat pump, which are similar open systems. Local conservation of energy (which applies only to a closed system or to a system in total equilibrium) does not apply because the system is open and not in equilibrium.

Permissible Electrical Overunity Is Not Perpetual Motion

An open system out of equilibrium need not conform to (1) the local (closed system, equilibrium conditions) conservation of energy nor to (2) the second law of thermodynamics (which assumes equilibrium conditions). It must and does conform to the global conservation of energy, just as does a waterwheel or windmill. We strongly stress that the overunity electrical device is not a "perpetuum mobile." [Ref 12] The electrical operations and systems we propose are perfectly permissible by the known laws of physics and do not violate any of them. We propose a permissible series of overunity electrical systems.

The Heat Pump Analogy

In one way of viewing it, all we have done is utilize the potential as a more modern type of quantum mechanical fluid having hidden bidirectional flowing EM energy. [Ref 13], Ref 14, Ref 15, Ref 16] QM already certifies that the potentials, not the force fields, are the primary causes of all EM phenomena. Contrary to classical EM theory, the force fields are effects in, on, and of the charged particles themselves. Consequently, if the potentials are the primary causes of all EM phenomena, then for free energy to perform work (free causes to collect and generate desired effects) we must turn to the potentials.

We have utilized a hookup and switching arrangement so that energy-free collection is totally separated from collected energy discharge in the load. In short, we have done what a normal heat pump does, when it uses the air with its thermal energy as a working energy-containing fluid. Consequently, overunity operational efficiency of analogous electrical devices is perfectly permissible, and not prohibited by the known laws of physics.

An Electrical Power Source Is a Dipolar Antenna For Free Reception of Energy

An electrical power source is in fact only a dipolar antenna for reception of potential (hidden bidirectional Whittaker/Ziolkowski waves). All the current you run back through the back emf of the source, to perform dissipative work inside it, is something you yourself are doing to the source. It is not a priori a characteristic of the source!

If no work is done inside the source's internal bipolar separation of charges (i.e., if no electron or ion current is forced back up from the ground return line against the source-antenna's potential and therefore against its back emf), then the dipolar source-antenna will last essentially forever, or until something corrodes or breaks mechanically.

The flow exchange of energy between the vacuum and the dipolar source-antenna is freely driven by all the charges of the universe, in accordance with Puthoff's cosmological feedback loop. [Ref 17]

Massless Displacement Current

Technically one is using massless displacement current to charge the capacitor, rather than electron mass flow current. It is real energy flow nonetheless; just in work-free, dissipation-free form. As is well-known, one plate of a capacitor already charges the other plate by just this very massless displacement current, transporting real EM energy across the gap between the plates in the process. The electrons themselves do not cross the gap.

Displacement current is already well-known to be "free" energy transport without any dissipation as power and work. By drawing massless displacement current only from the source-antenna instead of electron flow current, you can draw work-free, dissipation-free energy as long as you wish, as often as you wish, and as much as you wish, without ever

dissipating the source-antenna. You just have to collect it onto some trapped electrons or other charges, such as in a capacitor's plates, then switch the collected energy (charged capacitor) separately across a load, in a separate discharge circuit, to discharge through the load as work.

The real trick is to prevent the electrons in the circuit from moving and providing mass "energy dissipation" current inside the source during the collection process. In the original paper, we explained that this could be done by using as a collector a degenerate semiconductor material, with extended electron gas relaxation time. In this paper we have explained how this can be done by step-charging an ordinary capacitor as a collector. We have also included specific references proving (both experimentally and theoretically) that this is correct. With the requirement for special materials removed, there is no reason that a competent researcher cannot develop a step-charged capacitor device to prove it experimentally for himself or herself.

Requirement: Proof of Principle and Independent Test and Certification

My associates and I are proceeding as rapidly as possible toward full-up "proof-of-principle" circuits for open release and certification or falsification by the scientific community and engineers at large. Soon we also expect to release to other researchers information on the kinds of new electrical phenomenology one meets in true overunity electrical devices. These are not in the textbook, at least with respect to electrical power systems. We give some indication of these phenomena below:

New Circuit Phenomena Must Be Mastered

One meets unusual electrical phenomena in attempting to perform overunity electrical operations. For overunity, a priori one must "slip excess potential" through the circuit essentially without losses. That is, one must deliberately pass massless displacement currents through the circuit and at least through some of its components.

Solid-state switching components in particular exhibit unusual phenomena, to say the least, when excess potential is introduced into and through all their internal components inside modern semiconductors. An ordinary MOSFET, e.g., may have 25,000 separate internal components. It is as if someone crammed the entire electronic parts store inside it. Simple switches these semiconductors are not, when exposed to appreciable massless displacement current.

When one "slips in" some pure potential, by SWZ decomposition one has also slipped in some bidirectional EM pump waves. The nonlinear semiconductor materials will function as phase conjugate mirrors when suitably pumped, including at non-optical frequencies. Consequently pumped phase conjugate replicas, self-targeting, formation of quantum potentials, and modular variable effects sometimes begin to evidence. We will address and explain some of these effects in a future paper. For now, we simply state that they occur, and there is a host of extra phenomenology the experimenter may encounter.

However, an iron rule for the experimenter is that, for odd circuit behavior, first exhaust all "normal" causes before turning to the extraordinary causes. One will save oneself a great deal of grief by applying this Occam's razor.

Also in deliberately utilizing displacement current, one is actually employing an expanded, higher topology EM with additional degrees of freedom, similar to that pointed out by Barrett. [Ref 18] Consequently one encounters a host of additional higher topology EM

phenomenology. In particular one encounters nonlinear optical (NLO) functioning of the semiconductors at any and all frequencies, not just in optical bands.

Overunity Electrical Devices Are Permissible By The Laws of Physics

The overunity electrical energy system is permissible by the laws of physics and is not in any manner perpetual motion. It simply extracts excess EM energy from an ubiquitous source, through a dipole as a receiver, and collects that excess energy, conducts it to the load, and separately dissipates it in the load to power the load, without using any of the collected energy to perform work inside the source to dissipate the source-antenna. It is directly analogous to a heat pump, which is well-known to perform at overunity operational efficiency under nominal conditions.

In Conclusion

Primarily my associates and I believe we have corrected an ubiquitous error made in present power systems that prevents these systems from realizing their already-inherent overunity operational efficiency. We also firmly believe that the permissible electrical overunity device is an idea whose time has finally come.

Notes and References

1. T. E. Bearden, "The Final Secret of Free Energy," distributed over the Internet, Feb. 9, 1993. The paper was also published in Magnets, 7(5), pp. 4-26 (1993); in Explore!, 4(3/4), pp. 112-126 (1993), and in several other media.
2. For proof that you can charge an ordinary capacitor almost without entropy, see I. Fundaun, C. Reese, and H. H. Soonpaa, "Charging a Capacitor," American Journal of Physics, 60(11), pp. 1047-1048 (1992). A capacitor can be step-charged in small steps to dramatically reduce the entropy required to charge it. In the limit, a theoretically perfect capacitor can be fully charged without any electrical current or work at all, i.e., you can simply transport the excess energy density (the potential gradient) of the open circuit voltage of the source to the collector, and couple that $\nabla\phi$ to the electrons trapped in the capacitor plates, without electric current from or through the source.
3. M. G. Calkin and D. Kiang, "Entropy Change and Reversibility," American Journal of Physics, 51(1), pp. 78-79 (1983).
4. F. Heinrich, "Entropy Change When Charging a Capacitor: A Demonstration Experiment," American Journal of Physics,54(8), pp. 742-744 (1986).
5. V. K. Gupta, Gauri Shanker, and N.K. Sharma, "Reversibility and Step Processes: An Experiment for the Undergraduate Laboratory," American Journal of Physics, 52(10), pp. 945-947 (1984).
6. In most texts the treatment of displacement current is far from adequate. A better treatment than most is given by John D. Krauss, Electromagnetics, Fourth Edition, McGraw-Hill, New York, pp. 437-439, 547-549 (1992). Additional useful insight can be gained from David J. Griffiths, Introduction To Electrodynamics, Second Edition, Prentice-Hall, Englewood Cliffs, New Jersey, pp. 304-308 (1989). Problem 7.51 on p. 335 is also of direct interest, as is particularly the comment by Griffiths below the problem. Additional insight can be gained from David Halliday and Robert Resnick, with assistance by John Merrill, Fundamentals of Physics, Extended Third Edition (1988), John Wiley & Sons, New York, vol. 2, Article 37-4: Displacement Current, pp. 836-837, 839-841. The standard notion is to (1) retain the continuity of current, thus modifying and salvaging Ampere's law, (2) the displacement current is non-physical, i.e., it does not involve the transfer of charged mass, (3) focus primarily upon magnetostatics as to the results achievable by the displacement current, (4) retain the notion of $\nabla\phi$ as E, a force field, thereby

focusing the notion of displacement current upon the change of the E field without the flow of charged mass, and (5) retain the confusion between electrical charge and charged mass that is inherent in the terms "charge", "current", etc. On p. 836 Halliday and Resnick point out that the displacement current is not derived per se, but is a "fit" based upon symmetry arguments, and it must stand or fall simply on whether or not its predictions agree with experiment. On the same page the displacement current is taken to be a linear function of $d\phi/dt$. For flow along a circuit where there is no electron mass current, it seems appropriate to replace $d\phi/dt$ by $d\phi/dl$. It is also strongly indicated that one should clearly distinguish between charged mass current flow and the flow of massless charge, which is the approach we have taken.

A final indication of the way conventional scientists tend to regard displacement current is given by Martin A. Plonus, Applied Electromagnetics, McGraw-Hill, New York, pp. 446-448 (1978). Here Plonus uses the prevailing notion of the E field being altered by the flow of massless displacement current. As can be seen, the displacement current is relegated almost to a curiosity of capacitors, and not really too essential except just to "balance the books" and retain Ampere's current continuity.

We now wish to point out something very subtle but very rigorous. CEM erroneously uses $E = -\nabla\phi$ to equate a mass-free potential gradient with a mass-containing force field. This "E-field" only exists at a point when there is a point-coulomb of electrical charged mass at the point. The real version of this equation should be $E == -[(\nabla\phi)\bullet q]/|q|$, where $\nabla\phi$ is the potential gradient coupled directly to the charged point-mass at the point, q is the number of coulombs of charged mass at the point, $q/|q|$ is one coulomb of charged mass, and E now is properly the force on and of each coulomb of the collected charged mass at the point.

Viewed in this manner, one can now see that the E field may be altered by flow of additional charged mass q, or by flow of massless additional $\nabla\phi$, or both. This is now in agreement with the manner in which it is approached in CEM, but more rigorous. Essentially it states we may increase the total "charge" (potential) at a point by either (1) moving in additional charged masses by use of a conventional current, or (2) moving in additional massless charge (potential) without any additional change in mass, or (3) a combination of the above.

However, let us apply this to a single charged particle or to a fixed number of them. No one seems to have noticed that the notion of altering the E-field of the collected point- charges at a point via method #2 , i.e. by a flow of massless displacement current onto the fundamental charged particles themselves, a priori requires the electrical charge of each fundamental particle to change. Hence it **falsifies the notion of quantization of charge**.

Also, no one seems to have noticed the electric power implications: if it is known that one can charge a capacitor purely by displacement current, then one can charge up the capacitor with energy, without any dissipation of the source, because only charged mass current through the back emf of the source does that. So one can then disconnect the charged capacitor and separately connect it in a closed circuit with a load, to discharge through the load and furnish free work in the load (free in the sense than no dissipation of the primary source occurred in either the collection of the energy or in discharge of the collected energy through the load as useful work). Free energy, overunity electrical devices, etc. should then be readily apparent and permissible, from the known nature of displacement current and capacitors alone.

7. Maxwell assumed a material ether, which was assumed to be a thin material fluid filling all space. Hence force (which must have mass as a component due to its definition F == d(mv)/dt) could be modeled as existing in the Maxwellian ether, for there was already thin matter present everywhere. Hence in Maxwell's EM the incorrect notion resulted that force fields existed in the vacuum. Oliver Heaviside continued this erroneous assumption, since in fact he hated the potentials, regarded them as mystical, and stated that they should be "...murdered from the theory." Also, electricity was thought to be a similar thin material fluid. So the material electric fluid could and did flow through the fluid vacuum also, giving the notion of the material electric flux density for D. Consequently, the units of D are coulombs (charged mass rate of flow) per square meter. Rigorously, that material D flux exists only on and of charged mass that moves; it cannot and does not exist in vacuum. Only potentials and potential gradients exist in vacuum. However, after Maxwell's formation of his theory, the Michelson-Morley experiment destroyed the material ether (not the ether per se, but its material nature). So electricians then simply proclaimed that they were no longer using the material ether, and that such did not exist! Not a single Maxwell/Heaviside equation was changed. The material ether is still very much assumed in classical EM (CEM) theory, and so the theory is accordingly very seriously flawed. Since CEM also has no adequate definition for either electric charge or the scalar potential, the problem is confounded.

   To clarify this problem, one must separate the notion of electric charge from the notion of mass. The electrical charge of a charged mass is the virtual photon flux exchange between the surrounding vacuum and that mass. Since a virtual photon flux is just a scalar potential, the electron's massless electrical charge is simply its scalar potential. It can now be seen that, if we forcibly remove the notion of "mass" from D in the vacuum, or in a charged material medium where the charged masses cannot move, then the "material electric flux concept" portion of D turns into $d\phi/dt$, a change in the nonmaterial electric flux. However, D is a vector and hence has a "net flux" spatial directional aspect which $d\phi/dt$ alone does not possess. It follows that the value of $d\phi/dt$ at a spatial point actually represents the result of change of the value of ϕ at that point, as a function of time. Thus a directional operator must first be invoked upon ϕ at the point, to provide a direction for the spatial ϕ-current after the d/dt operator is invoked. The appropriate operator to give directionality to ϕ is ∇, so that D in vacuum or in an electron-current-free charged medium becomes a function of $d/dt(-\nabla\phi)$. Conventionally, the use in the literature of $E = -\nabla\phi$ immediately provides that $d/dt(-\nabla\phi)$ at a point results in dE/dt, or the time rate of change of the E-field at that point. If no distinction is made between charged mass current flow and massless charge current flow, this would be true in either vacuum or material media. However, we wish to specifically distinguish between massive displacement current and massless displacement current. So we point out that the increase dE/dt in the magnitude of the E-field at, on, and of a charged particle at a point, can be due to either (1) the flow of mass current to build up the number of point coulombs at that given point, where each coulomb has a fixed massless charge (potential), or (2) the flow of massless current $d/dt\ (-\nabla\phi)$ so as to alter the value of ϕ at that point, evidenced by a fixed number of coulombs of charged particles, **each of which has altered its individual potential and therefore its individual massless electrical charge.**

   So what "flows" when the charged masses are frozen or absent is simply a current of scalar potential, resulting in a change of the potential upon fixed point charges of $d\phi/dt$. This is what crosses between the plates of a capacitor, e.g., which is where the notion of "displacement current" originated in the first place. (See, e.g., Halliday and Resnick, 1988, ibid., p. 836, Sample Problem 1, for expression of the displacement current as $d\phi/dt$, neglecting constants of proportionality). This is also

what flows when one connects multiple open circuit pairs of conductors to a source.

It remains to examine Maxwell's equation $\nabla.D = \rho_v$. If mass displacement current cannot flow, then there exists no divergence of the mass current portion of D. However, massless displacement current can still flow, and there can exist divergence of that component. There are now three aspects to that equation: (1) the case in the vacuum, where there exists no physical ρ and hence no ρ_v as such because of the absence of mass, (2) the case in a material medium, which is the normal case already treated in the standard equation and need not be further addressed, and (3) the case in a material medium where, nonetheless, physical charged masses such as electrons cannot move, but massless charge currents may still move. Only cases 1 and 3 need to be addressed, and they have the same treatment.

We address the one dimensional case, which is sufficient for circuit current flow considerations. First we replace D with $(D\phi + D\rho)$, where the first term is the massless displacement current and the second term is the massive displacement current. In other words, we account separately for charged mass flow and for massless charge flow. Similarly, we express ρ_v as two components, one massive and one massless, so that $\rho_v = d/dl(\phi + m_v)$. For case 1 and case 3 we make $m_v = 0$ and $D_\rho = 0$. For those cases, we have $\nabla.D = \nabla.D\phi = d\phi/dl$ (since current along a wire is a one-dimensional flow). We specifically note that ϕ, $D\phi$, $\nabla.D\phi$, and $d\phi/dl$ are not necessarily conserved quantities, since ϕ is mathematically decomposed into bidirectional EM waves, and is hence a freely flowing process. When symmetry is broken so that equilibrium conditions no longer exist, one or more of these quantities will not be locally conserved.

What has actually been done here is to open the classical EM model to the free exchange of massless EM energy that is always ongoing between any charged particle's mass and the vacuum. We then account separately for the flow of the energy exchange (of the massless charge flow) and the flow of the physical receiver/transmitters (i.e., for charged mass flow). Our switching arrangement to separate the collection and discharge cycles constitutes a permissible "Maxwell's Demon" which breaks symmetry, hence breaks equilibrium and opens the system as required. Since such a system can continually receive a free influx of energy from its external source, such a system can permissibly exhibit overunity operational efficiency without violating the laws of physics.

8. Displacement current is already known to be lossless transport of energy without entropy, i.e., without work. For a typical confirmation see Jed Z. Buchwald, From Maxwell to Microphysics, University of Chicago Press, Chicago and London, p. 44 (1985). Quoting: "...no energy transformation into heat occurs for displacement currents."

9. We strongly stress again that the scalar potential may be mathematically decomposed into a harmonic series of hidden bidirectional EM wave pairs. Each wave pair consists of an ordinary EM wave together with its superposed phase conjugate replica wave. Thus internally the scalar potential gradient across a source represents a bidirectional exchange of EM wave energy with the surrounding vacuum. See notes 13, 14, 15, and 16 below for references confirming the decomposition of the "fixed" potential into a dynamic flow process and energy exchange process.

10. For confirmation see Robert Bruce Lindsay and Henry Margenau, Foundations of Physics, Dover Publications, New York, pp. 283-287 (1963). See particularly p. 283, which emphasizes that a "field of force" at any point is actually defined only for the case when a unit mass is present at that point. See p. 17 on the limitations of

a "natural law"; p. 213 and 215 for limitation of thermodynamic analysis to equilibrium states; and see p. 216 for definition of entropy. See p. 217 for the fact that the entropy for non-equilibrium conditions cannot be computed, and the entropy of a system not in equilibrium must be less than the entropy of the system in equilibrium, i.e., for a system to depart from equilibrium conditions, its entropy must decrease. Therefore its energy must increase. Thus the energy of an open system not in equilibrium must always be greater than the energy of the same system when it is closed and in equilibrium, since the equilibrium state is the state of maximum entropy.

11. Lindsay and Margenau, ibid., p. 217.

12. The basic notion in the perpetual motion conundrum is that somehow a closed system in thermodynamic equilibrium could perpetually provide external energy to a load outside the system. Such a notion is an oxymoron; if the system is closed, no energy can escape or enter, hence the system could not furnish energy externally to power a load or even just to radiate away. My associates and I have not in any manner proposed such a system or entertained the notion that such might exist. But it is well-known that open systems not in thermodynamic equilibrium can freely extract energy from their environment and furnish energy to power a load, and that is precisely what we have proposed.

13. G. J. Stoney, "XLVIII. On a Supposed Proof of a Theorem in Wave-motion, To the Editors of the Philosophical Magazine," Philosophical Magazine, 5(43), pp. 368-373 (1897).

14. E. T. Whittaker, "On the Partial Differential Equations of Mathematical Physics," Mathematische Annalen, vol. 57, pp. 333-355 (1903). Whittaker mathematically decomposes the scalar potential into a bidirectional series of EM wave pairs in a harmonic sequence. Each wave pair consists of the wave and its phase conjugate. (We have pointed out elsewhere that such a wave pair is a standing electrogravitational wave and a standing wave in the curvature of local space-time). To see that all classical EM can be replaced by interference of two such scalar potentials (i.e., by the interference of their hidden multi-wave sets), see E. T. Whittaker, "On an Expression of the Electromagnetic Field Due to Electrons by Means of Two Scalar Potential Functions," Proceedings of the London Mathematical Society, Series 2, vol. 1, pp. 367-372 (1904).

15. Richard W. Ziolkowski, "Localized Transmission of Electromagnetic Energy," Physical Review A, 39, p. 2005 (1989). For related material, see Richard W. Ziolkowski, "Exact Solutions of the Wave Equation With Complex Source Locations," Journal of Mathematical Physics, 26, pp. 861-863 (1985). See also Michael K. Tippett and Richard Ziolkowski, "A Bidirectional Wave Transformation of the Cold Plasma Equations," Journal of Mathematical Physics, 32(2), pp. 488-492 (1991).

16. C. W. Hsue, "A DC Voltage is Equivalent to Two Traveling Waves on a Lossless, Nonuniform Transmission Line," IEEE Microwave and Guided Wave Letters, 3, pp. 82-84 (1993).

17. H. E. Puthoff, "Source of Vacuum Electromagnetic Zero-point Energy," Physical Review A, 40(9), pp. 4857-4862 (1989). Presents Puthoff's self-regenerating cosmological feedback cycle for the source of the vacuum EM zero-point energy.

Our comment: Over any macroscopic range, the vacuum fluctuations ($\nabla\phi$'s) of the ZPE sum to a vector zero translational resultant. The individual ZPE components ($\nabla\phi$'s), however, are still present and active, and their energies are present as well. That vector zero can thus be considered to be a gradient-free potential, or the vacuum potential, since it contains enormously dense, trapped EM energy. So the vacuum potential -- pure space-time (ST) itself -- contains enormously dense EM energy.

One can then apply the Stoney/Whittaker/Ziolkowski (SWZ) methodology to decompose this powerful vacuum potential, i.e., the vacuum, and in fact space-time (ST) itself, into an incredibly dense flux of EM energy. Space-time is revealed to be an incredibly powerful electrostatic scalar potential. The electrical charge (potential) of a charged particle is a small potential gradient in the ST potential, i.e., it is a slight alteration of the local ST potential. Via Puthoff's self-regenerative feedback cycle, the energy flowing in this potential is being exchanged between the local source and all the charges everywhere in the universe. This "potential gradient" or electrical charge itself can be decomposed via the SWZ approach, and becomes a bidirectional EM wave pair exchange of excess EM energy between the vacuum/ST and the charged particle's mass. The potential gradient between the ends of a dipole have similar decompositions, with the additional characteristic that the negatively charged end of the dipole receives the forward-time waves from the SWZ wave pairs, and the positively charged end receives the time-reversed waves.

Our final comment is that Cole and Puthoff have rigorously shown that, in theory, the vacuum EM energy can indeed be extracted. See Daniel C. Cole, and Harold E. Puthoff, "Extracting Energy and Heat from the Vacuum," Physical Review E, 48(2), pp. 1562-1565 (1993).

18. T. W. Barrett, "Tesla's Nonlinear Oscillator-Shuttle-Circuit (OSC) Theory," Annales de la Fondation Louis de Broglie, 16(1), pp. 23-41 (1991). Barrett shows that a higher topology EM model (e.g., EM expressed in quaternions) allows shuttling and storage of potentials in circuits, and also allows additional EM functioning of a circuit that a conventional EM analysis cannot reveal. As an example, one may meet optical functioning without the presence of optical materials.

LEGEND:

● = filled black dot (like scalar product) in original text
Ø = Greek letter **Ø** for the Scalar Electrostatic Potential field
∇ = Greek letter Nabla (upside down triangle)
|x| = Absolute value of x (only positive)
uf = microFarad

PRACTICAL OVERUNITY ELECTRICAL DEVICES

(C) T.E. Bearden
May 13, 1994

Introduction

Recently, my associates and I have filed a patent application on what we believe will at long last reveal the mechanisms for practical overunity electrical devices. It is my purpose in this paper to provide additional information augmenting my former two papers, (1) "The Final Secret of Free Energy," Feb. 1993, and (2) "Additional Information on the Final Secret of Free Energy," Feb. 1994. In this present paper, with the permission of my colleagues, I release the gist of our work on separation of electrical charge into two coupled components **Ø**●(m), where **Ø**● represents the massless charge of the charged particle or mass, ● represents the fact that it is coupled or trying to couple to the special mass that makes up charged particles [i.e., the special kind of mass that will couple to the virtual photon flux density that is represented by the symbol **Ø**], and m represents the inert mass component of the charged mass. Since not all masses will couple with **Ø**●, we indicate the type of mass that <u>will</u> couple with it, as ●m. Thus a charged mass is composed of (**Ø**●)●(●m), which we consolidate to (**Ø**)●(m).

Charge Is Not Quantized

An interesting immediate result is that the massless charge of a fundamental charged particle is not quantized; it changes as a function of the background potential in which it is embedded. So it is discretized as a function of the background potential (i.e., of the virtual photon flux exchange between it and the surrounding vacuum). Otherwise, e.g., there could be no ∇**Ø** created on any charged particle q, and hence no E-field, and hence electrons would not move in our present circuits. Since they do move in our circuits, charge is not quantized.

Electrical Current Has Two Components

The first key to understanding free energy electrical and magnetic machines is to realize that electrical current actually consists of two currents coupled together. Our treatment of an electric charge as a coupled system (**Ø**)●(m) also means that electron current i = dq/dt is comprised of two coupled components [(d**Ø**/dt)●(dm/dt)]. This follows from simply invoking the operator d/dt; i.e., d/dt[(**Ø**)●(m)] = (d**Ø**/dt)●(dm/dt), which is the same as [(d**Ø**/dt●)●(●dm/dt)]. The component (d**Ø**/dt)● is the known but not well understood <u>massless displacement current</u>, while the component ●(dm/dt) is the <u>mass displacement current</u>, and the coupling operator ● means "coupled to" or "trying to couple to". The coupling operator represents a real physical operation: the exchange of virtual photons between the vacuum potential and the charged mass. Any potential $\mathbf{Ø}_1$● is considered to be a potential that is superposed upon the ambient vacuum potential $\mathbf{Ø}_0$● , to provide a potential ($\mathbf{Ø}_0$+$\mathbf{Ø}_1$)●. The ambient vacuum potential does not disappear merely because we add another potential to it!

Confusion In Present Electrical Physics

We point out that, in physics books of note, the overt coupling effect is essentially unknown or ignored because physics presently has not defined either the scalar potential or the electrical charge. The conventional theory simply uses an "inert" expression d**Ø**/dt to represent the displacement current (and another inert expression q for a charged mass), and most theoreticians are uncomfortable even with that. The displacement current is also confused with force by equating the displacement current d**Ø**/dt to dE/dt. In turn, this means that d**Ø**/dt is confused with mass, hence with dm/dt, which latter is also a component of dq/dt. m is always an \internal component\ of force, as is known in foundations of physics but this fact continues to remain completely oblivious to the electricians. [*Good* electrical theorists do admit that there is no force in the vacuum; and that the force associated with the E-field is evidenced

only in the interacting mass. However, they continue to maintain the E-field (force per point-coulomb of charged mass) in the vacuum, when there are no point-coulombs of charged mass there!

Mass Is an Internal Component of Force

It is easy to show that mass is always a component of force: We will simply define *force* precisely. We first insist that no equation can be used as a definition; an equation simply states that the magnitude of one of its sides and the magnitude of the other side are equal. (The length of a board and the length of a human may be equal, but writing that as an equation has absolutely nothing to do with the definition of either a board or a human). So we will insist that any true definition must be an *identity*.

We define force F as F ≡ d/dt(mv), whereupon mass is a component of force *a priori*. It follows that, if we define the E-field E as the force per coulomb, we are defining it as the force existing at a point and having a point-coulomb of charged mass as one of its major components. We may accurately now define E as E ≡ -[(∇**Ø**)●(q)]/|q|, where the absolute value symbol in the denominator is essential, q/|q| being one point-coulomb. [We leave as an exercise for the reader the further reduction of this definition by treating q as ●(**Ø**●m)].

At any rate, with the new and correct definition of the E-field, one can see that the flow of displacement current (d**Ø**/dt) upon a collector such as a rigid capacitor, containing a fixed charge ●(**Ø**●m), will result in the formation of an excess ∇ **Ø**● upon those restrained charges in the capacitor plate, so that there is created an E ≡ -[(∇ **Ø**)●(q)]/|q|. Since the conventional theory considers the antigradient of the potential as an E-field, then one can now see the exact mechanism that creates this E-field that grows upon the capacitor (across its plates) as it charges. In fact, the q/|q| cannot change in a capacitor if its plates and dielectric are immovable. Instead, in that case, the **Ø**● portion of the trapped ●(q) changes, producing the (∇ **Ø**)● change. Since the (∇ **Ø**)● component is coupled to the mass component of the fixed ●q as (**Ø**+∇ **Ø**)●m, then an E-field is created and exists as E ≡ -[(∇ **Ø**)●(q)]/|q|.

An Ideal Capacitor Is an Electron Current Blocker

We point out that, if the capacitor's components are ideal, *completely rigid*, and do not physically move, then the capacitor is a "●dm/dt blocker." If the charges really were frozen in place, then the potential would flow across the plates at the speed of light, via the flow of excess massless displacement current d**Ø**/dt●. In that case, an ammeter would not show the classical "exponential fall-off" of the current with time; the electron current dq/dt would occur as a single-point Dirac delta function at t=0, and would be zero thereafter. And no electrons would be able to move in zero time. The voltage would show an instantaneous adjustment to the charged value with a single step-function, and the capacitor would charge up fully, instantly, with no work (energy loss) whatsoever being done. And this charge-up of the capacitor would not dissipate in the slightest the source furnishing the voltage; there would be no electron current dq/dt through the back EMF of the source, hence no work inside it to deplete its separation of charges.

Problems With Ordinary Capacitors

However, most ordinary capacitors are much more than just an ideal capacitor. The plates move, the dielectric moves, etc. due to the forces created upon them by the E-fields created upon the trapped charges in them. The spatial translation of the resulting force moving the plates constitutes work; i.e., it dissipates some of the flowing d**Ø**/dt energy. Each movement of the plates and/or dielectric carries with it all its internally trapped charges. The movement of those charges constitutes a substantial longitudinal electron current dq/dt, when compared to the longitudinal "drift" electron current in normal circuits. [Electrons spend most of their time moving radially in a wire, not down it.] This "moving plate and its transported charges" make an electron current, which pumps the inert electrons in the ground return line back through the back EMF of the source, depleting the source. Consequently, the ordinary capacitor will simply release as much energy as work (to move the plates and dielectric) as it stored. Hence, it will also produce dissipation of the source via the amount of energy stored in the capacitor. You still get "free energy" stored in the capacitor, but also dissipate the source by an equal amount.

Rigidized Capacitors Must Be Used

Only rigidized capacitive collectors are useful in free energy devices. Such capacitors are in fact actually available, e.g., as calibration standards, but they are extremely expensive ($400 to $2,000 or so each, for a capacitance reaching about 1 uf).

So, capacitive type collectors must be rigidized, if used in overunity circuitry. Even so, in a single integrated circuit, although one collects free energy, one will use half of what was collected to dissipate the source. Not all the remaining half will be discharged

through the load; some will be discharged in other circuit and component losses. Hence, there will always be less work done in the load than is done in the source to kill it, by a conventional two wire single closed circuit. In my second referenced paper (Feb.94), I included precise proof that this is true. One must use energy collection and shuttling between two isolated circuits, and the load discharge current must not pass back through the primary source of potential.

We have previously provided precisely how to utilize capacitive collectors in our two referenced papers. We point out here that the capacitors must be calibration standard capacitors, or specially made rigidized capacitors.

It Does Not Require Electron Current to Charge An Ideal Capacitor

For the benefit of the skeptic, this is already proven. We simply list references (2) and point out the equation that represents the energy K in a charged capacitor. Here we have $K = ½(CV)^2$. It is totally the displacement current dØ/dt● flowing (from a higher potential) onto the charging plate that produces the higher potential Ø on that charging plate, and hence a V between the two plates, one of them (the "ground" side) being held at a constant potential. The mass displacement current component dm/dt of the electron current dq/dt has nothing whatsoever to do with energy accumulation; it has only to do with the dissipation of energy that is happening simultaneously in all losses and loads in the circuit loop.

We reiterate that most ordinary capacitors have terrible internal movement, and accomplish as much energy dissipation as they do energy collection by permitting dq/dt and work performed upon the plates and dielectric to move them. The standard two-wire circuit also guarantees that all such dq/dt current "through" the capacitor is passed back through the source against its back EMF, doing an equal amount of work in the source to dissipate its separation of charges and "destroy" the source.

An ideal capacitor does not pass dq/dt, but only massless displacement current as theorized by Maxwell to save current continuity in a circuit containing a capacitor, and hence to save Ampere's current law. That is, an ideal capacitor is a ●dm/dt blocking device. However, the capacitors utilized in normal circuits are not ideal capacitors at all. By allowing the plates to move, electron current dq/dt is created on both sides of the capacitor. Otherwise there would not be a ground return dq/dt, but only a ground return dØ/dt●. This dØ/dt● would not and does not push electrons back up through the source against its back EMF; else the ground side of the source, which is engaged in continuous dØ/dt● exchanges with the vacuum, would produce destructive amperage dØ/dt● in the battery or potentialized source, against its back EMF, while it was simply sitting on the shelf. In fact, a flow of dØ/dt● continually runs from the vacuum to the positive terminal, then through the inside of the battery to the negative terminal, and thence back to the surrounding vacuum. Also, the incoming flow from the vacuum "splits" at the positive terminal, where one branch flows inside the source to the negative terminal, and the other branch flows through the external circuit to the ground return line, and thence to negative terminal and back to the vacuum. In the external circuit, the dØ/dt● hooks to free electrons and moves them as ordinary dq/dt. In the internal circuit inside the source, the electrons are restrained, hence they only move when their restraint is overcome.

Displacement Current dØ/dt Is Real

In recent years, SQUID detectors have been utilized to detect the magnetic field created between the plates (at right angles) by the displacement current dØ/dt between the plates, providing strong evidence that displacement current is physically real. The best proof that it is real is a charge blocking device, two isolated circuits using energy collection and shuttling, and overunity powering of loads in the secondary circuit.

A Problem With Ammeters and Measurement of dØ/dt

Note that an ammeter cannot differentiate between displacement current dØ/dt● and normal current dq/dt. In the ammeter, the sample dØ/dt● will couple to free electrons, producing a normal dq/dt inside the ammeter. The driving of this dq/dt through a precision resistance, e.g., is measured and the instrument is calibrated to show the dq/dt amperes flowing. One of the major needs of free energy researchers is the development of a good current meter that will differentiate between dØ/dt● and dq/dt, and measure each one. Short of using a mass spectrometer to differentiate the mass current ●dm/dt, and comparison of those mass current measurements with an ammeter's measurements of the "current" dq/dt, and calculating the dØ/dt● from that, I presently know of no way to precisely and simply measure and separate the two current components. I have been thinking of utilizing a multi-channel sampling meter set arrangement, where one channel uses a ●dm/dt blocking device such as the Fogal semiconductor in this respect, but have not yet developed the complete concept.

Better Solution: A Charge Blocking Device

A better solution than the capacitor or capacitive collector is the use of a special rigid solid state "charge blocking device", such as a Fogal semiconductor, to enable the current separation into two components, blocking of the mass flow component, and passage of the massless displacement current component. *In overunity electrical devices, it is massless displacement current dØ/dt● that must be separately passed down the primary circuit and collected in the collector as an E-field or an H-field. This provides "free" energy that has been extracted from the vacuum, via the potential difference between the terminals of the source antenna, and collected and stored in the appropriate field, without work*. The collected free energy may then be transferred to the isolated load circuit by a variety of means, for separate discharge through the load without return of dq/dt through the source.

The Fogal Semiconductor Meets the Charge-Blocking Requirements

Fogal's marvelous semiconductor blocks passage of electrons into its output terminal, but passes displacement current dØ/dt● into it. The semiconductor is powered by (receives) normal electron current and excess dØ/dt●, but outputs pure massless displacement current dØ/dt●. A charge blocker that passes dØ/dt● is ideal for our overunity mechanisms, enabling them to be readily obtained as we shall shortly see.

Energy, Flow, Finite Amount of Energy, and Collectors

We accent that the flow of energy in an electrical circuit is purely by means of the massless displacement current component (dØ/dt)●. The flow of the mass component ●(dm/dt) represents the "flow of work" (*energy dissipation*) in the circuit. Power is rigorously the time rate of doing work, and electron current dq/dt is a part of power. It has nothing whatsoever to do with the time rate at which *energy is transported without loss*; instead, power represents the rate at which energy "leaks" or is "lost" during its transport.

All measurement is work, not energy. Energy cannot be measured, even in theory, a priori. Energy is also a flow process, and never a finite amount in one location. A specific differential of energy flow may exist on a specific finite collector. However, it only represents a certain constant differential amount of energy flow compared to the universal vacuum energy flow or some other flow reference point. It is like a whirlpool in the river. Energy is like the flowing water, and an "amount" of energy is like the amount of water in the collecting whirlpool form (between its input flow and its output flow) at any time. Obviously, energy (ordering) forms can come and go; the water flow itself remains. Any "magnitude of energy" is always a "trapped" amount of energy in a "collector" (form).

Decoupling Current Components and Utilizing dØ/dt

The two components of electron current dq/dt can be decoupled, by blocking the ●dm/dt component while allowing the dØ/dt● displacement current to continue to flow. In our first paper, we pointed out one way: utilizing a special degenerate semiconductor material whose electron gas relaxation time is extended, providing a finite time during which the material serves as a *charge (i.e., a charged particle) blocking device*, while passing the flow of potential (the dØ/dt● massless displacement current component) and restraining the mass displacement current component ●dm/dt. With the advent of Fogal's semiconductor, the process becomes much easier to obtain and utilize in practical machines and circuits.

In our second paper, we pointed out a second way: utilize an ordinary capacitor and ramp-up step-charging. We found, however, that in most ordinary capacitors, the capacitive aspect is defeated by the sloppy movement of the plates and dielectric, converting dØ/dt● into dq/dt. Only a few very carefully selected capacitors are sufficiently rigid and can provide overunity. One must use *rigidized* calibration standard capacitors for the ramp-charging by series steps method to be successful. With ordinary capacitors, however, one can readily demonstrate that the efficiency can approach 1.0 rather than 0.50 as expected.

Overunity Secrets: Charge Blocking, Collection, Shuttling, and Two Isolated Circuits

The charge (actually *charged mass*) blocking approach provides a massless, free flow of vacuum EM energy that can be directed to a collector (capacitive or inductive) where it can be stored in either an E-field or a B-field. This stored energy can then be transferred to an isolated load circuit whose electrons (and hence their ●dm/dt mass displacement current) are free to flow as dq/dt. In the isolated load circuit, then, the two components [(dØ/dt)●(dm/dt)] again couple to form i = dq/dt = [(dØ/dt)●(dm/dt)], powering the load. All work in an electrical circuit is due to the mass displacement current ●dm/dt component; the massless displacement current (dØ/dt)● is a flow of pure energy transport without loss, as is well-known. (For example, see Reference 4.)

Therefore, the first major free energy secret is simply to block the "working" component ●dm/dt of the current dq/dt while allowing the excess "lossless energy flow" component dØ/dt● to flow to collectors to produce either free E-field or free B-field thereupon.

The second major secret is to transfer the collected excess free energy (via energy shuttling) to a second, isolated, load circuit, where the energy is discharged through the load in the conventional fashion (i.e., such that the two current components are coupled, and electron current i = dq/dt occurs through the load). The second circuit must be isolated from the original collection circuit, so that none of the load electron current dq/dt passes back through the original source, against its back EMF.

Should the grounds be the same between the load circuit and the collection circuit so that load electron current is returned through the back EMF of the primary source, then exactly as much excess work will be done inside the source to dissipate its separation of charges as was done in the external load to furnish useful work and in the external losses. In that case, overunity is destroyed, because one is using one-half the excess free energy to destroy the source faster, while the remaining half is distributed among all external loads and losses. Since there are always some external losses besides the load, then the ratio of load power to source dissipation power is always less than unity in a conventional closed-loop circuit containing both load and source. Hence the necessity for utilizing two isolated circuits: one where energy is collected freely from the source, and one where energy is dissipated as work in the load without dissipative work in the source, and energy shuttling between them.

A Simple Open-Loop Overunity Device

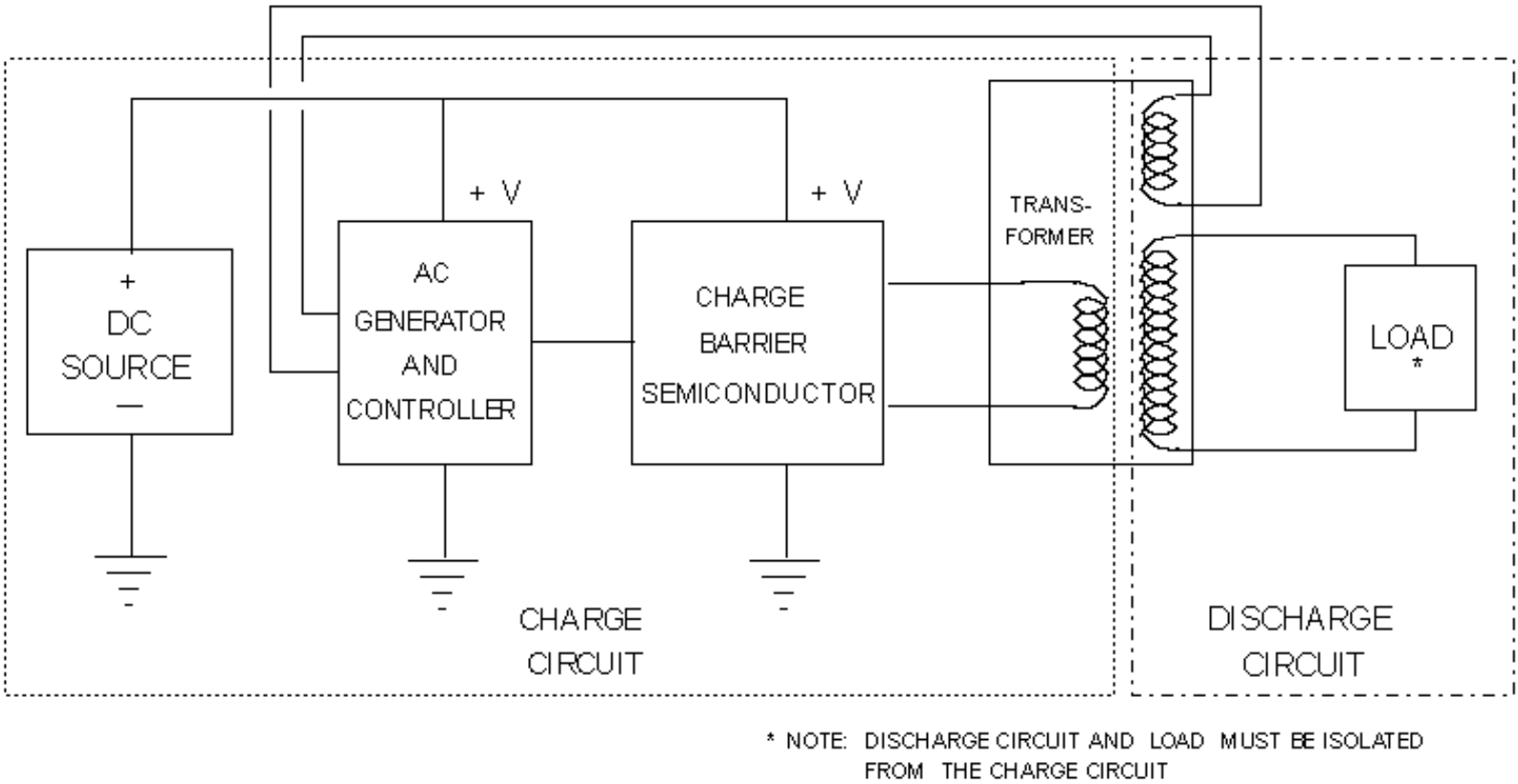

Figure 1. Use of Charge Barrier Device to Achieve Overunity in a Shuttle Circuit.

Figure 1 shows a very simple but very powerfully amplified overunity device, using an AC charge blocking semiconductor (CBS) (such as a Fogal semiconductor). The gist of the circuit is that an AC source furnishes AC current dq/dt to the CBS, which uses some of the power to power itself, but then blocks the ●dm/dt portion of the dq/dt input current, passing only the massless displacement current component (dØ/dt●) into its output circuit. The (dØ/dt●) output of the CBS is fed through the primary winding of a transformer, in this case a step-up transformer. The "current gain" of the CBS will depend upon (1) the load connected to it, and (2) the ability of the CBS to continue to block the increasing E-field on its trapped charges, as more free energy flow (dØ/dt●) is drawn through it by the load. Thus the load and the CBS must be matched within the operational ability of the CBS, so that the CBS does not fail catastrophically.

In the primary winding of the transformer, the (dØ/dt●) displacement current produces a magnetic field H, storing the excess flowing

energy in that field. This is a normal magnetic field; all magnetic fields are produced by the (dØ/dt●) component of the current anyway. This magnetic field, as it changes, couples to the secondary winding, producing a normal magnetic field H therein by normal means. In the secondary circuit, electrons are not restrained by a CBS. Hence the (dØ/dt●) induced in the circuit on the secondary side couples to the unrestrained electrons, producing normal electron current dq/dt, and driving it through the load to power it. Note that *energy* is conserved across the primary and the secondary; however, *dissipative power and work* (energy loss rate and energy loss) are not conserved, because a free flow of lossless excess energy in the form of displacement current is flowing from the vacuum through the source antenna, thence to the CBS, through it to the primary of the transformer and into the primary magnetic field, through it to the secondary magnetic field, through it into the (dØ/dt●) induced in the secondary circuit and coupled to the electrons, through the resulting dq/dt into the load, where the scattering of photons as heat dissipates the free flowing energy in the displacement current dØ/dt● component flowing through the load as a component of dq/dt = (dØ/dt●)●(●dm/dt) = (dØ/dt)●(dm/dt).

Free "Power" Amplification

If one places an ammeter in the output from the CBS, between it and the primary winding of the step-up transformer, one will read the (dØ/dt●) as *normal dq/dt in the ammeter itself*. If one calculates the "free power" (i.e., the rate of energy dissipation) that is going into the transformer primary using this as the "current," one will show that energy and "power" are conserved between primary and secondary of the transformer. However, the actual dissipative power going into the primary side is zero or, in real circuits, vanishingly small. Consequently, the device has a very high variable power gain that depends upon the rate of energy draw and dissipation of the load on the secondary side. If one adds more load, one draws more dq/dt current on the secondary side, hence more excess dØ/dt● displacement current on the primary side. The overall "power amplification" is limited by the ability of the transformer to handle the power in the secondary and the ability of the CBS to withstand the pressure of the internal charge barrier. This device can be easily "close-looped."

The Negative Resistor: A Close-Looped "CBS and Shuttle" System

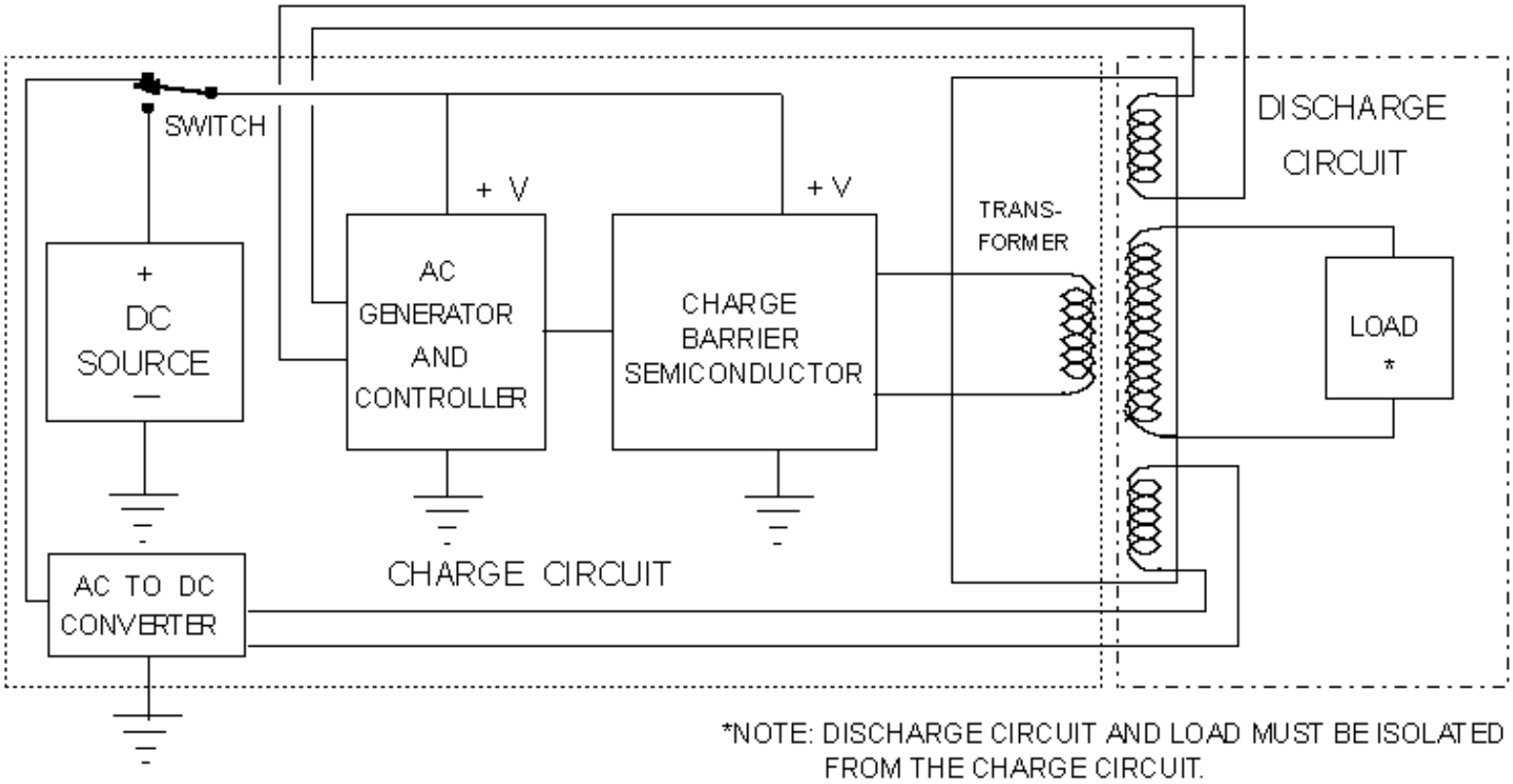

Figure 2. Use of Charge Barrier Device in a Shuttle Circuit With Controlled Feedback, to Achieve a True Negative Resistor.

Figure 2 shows the close-looping of the device shown in Figure 1, in such manner that, once stable operation is underway and the load and input stabilized, the ordinary power supply for the CBS can be switched out of the circuit. In this case, the circuit operates as a self-powered overunity device; i.e., as a *negative resistor*.

A normal resistor receives an ordered energy flow from its external circuit and scatters this energy as work out to the vacuum. I.e., it receives i = (**Ø**+∇**Ø**)/dt●(dm/dt) (scatters the excess (∇**Ø**)/dt● component (i.e., of the dq/dt passing into it from the high potential side) by radiating it away to the surrounding vacuum as scattered photons (heat)), and outputs inert (no excess (∇**Ø**)● component) electron current dq/dt into the ground side.

A negative resistor does exactly the opposite: it accepts inert incoming electrons from its "ground" side, also accepts incoming (converging) d**Ø**/dt● energy from the vacuum as virtual photons being absorbed upon these inert electrons so that a ∇**Ø**● is added to the electron current, creating an excited, excess energy-carrying i = (**Ø**+∇**Ø**)/dt●(dm/dt), and passes this excited current out of its high side and out into the external circuit to power the circuit. In other words, the negative resistor becomes a *self-contained free power source*, once brought up to stable operation.

In Figure 1, all that needs to be done is simply to extract some of the secondary power and feed it back to create the power input consumed by the CBS and the other normal components of the primary circuit side of the transformer.

Multitaps can be added to the secondary side, to provide varying voltage power supplies for loads requiring different voltages.

Energy is conserved in the device, because it always functions as an open circuit, receiving excess energy from an external source (the surrounding vacuum, in its virtual photon exchange with the charges in the system). It is far from thermodynamic equilibrium, and classical thermodynamics (including the second law) does not apply.

It is simply a continuous free power supply: it is a *negative resistor*.

Far more complicated units can be designed and produced. The basic point is that this type of overunity power supply is continuous and self-powered, driven by the violent exchange of energy from the vacuum, and simply collecting and gating some of that energy to the load to power the load.

Conclusion

With this third paper, we complete the triad of papers we set out to write a little over a year ago. With the availability of charge barrier devices such as the Fogal semiconductor, together with the collection, shuttling, and use of free d**Ø**/dt● flowing energy, the *Age of Free, Clean, Electrical Energy* has finally dawned.

Let us use it wisely, and for the betterment of humankind, not for its destruction.

[Support of portions of this research by A.D.A.S. is gratefully acknowledged.]

References and Notes

1. Bearden, T.E., Feb. 9, 1993, "The Final Secret of Free Energy," ADAS, distributed over Internet. The paper was also published in Magnets, 7(5), May 1993, p.4-26, in Explore!, 4(3/4), 1993, p.112-126, and in several other media. See also Bearden, T.E., "Additional Information on the Final Secret of Free Energy," Feb. 15, 1994, distributed on Internet.

2. For proof that an ordinary capacitor can be charged almost without entropy, see Fundaun, I., C. Reese, and H.H. Soonpaa, "Charging a Capacitor," American Journal of Physics, 60(11),Nov. 1992, p.1047-1048. See also Calkin, M.G. and D. Kiang, "Entropy change and reversibility," American Journal of Physics, 51(1), Jan. 1983, p.78-79. See also Heinrich, F., "Entropy change when charging a capacitor: A demonstration experiment," American Journal of Physics, 54(8), Aug. 1986, p.742-744. See also Gupta, V.K., Gauri Shanker, and N.K. Sharma, "Reversibility and step processes: An experiment for the undergraduate laboratory," American Journal of Physics, 52(10), Oct. 1984, p.945-947.

3. In most texts, the treatment of displacement current is far from adequate. A better treatment than most is given by Krauss, John D., Electromagnetics, Fourth Edition, McGraw-Hill, New York, p.437-439, 547-549. This treatment must still be augmented by treatment from other texts, and the ensemble "synthesized." Even then, it will never be completely clear until the separation of mass from the massless charge, and separate accounting of the two, is accomplished in the manner pointed out by the present paper.

4. For a typical confirmation that massless displacement current is already known to be lossless transport of energy without entropy, i.e., without work, see Buchwald, Jed Z., From Maxwell to Microphysics, University of Chicago Press, Chicago and London, 1985, p.44. Quoting: "...no energy transformation into heat occurs for displacement currents." It should be obvious from this fact alone that the proper way to accomplish overunity in electrical devices is to utilize the massless displacement current to flow and store excess energy, then use a "heat pump" type cycle to transfer the collected energy to a separate load circuit and discharge it separately in the load.

5. For a very recent proof that the potential is a flow process, and in fact consists of bidirectional EM waves, see Hsue, C.W., "A DC Voltage is Equivalent to Two Traveling Waves on a Lossless, Nonuniform Transmission Line," IEEE Microwave and Guided Wave Letters, 1993, Vol. 3, p.82-84.

6. For proof that the vacuum EM zero-point energy is continually produced by a cosmological feedback from every charged particle in the universe, see Puthoff, H.E. , "Source of Vacuum Electromagnetic Zero-point Energy," Physical Review A, 40 (9), Nov. 1, 1989, p.4857-4862.

7. For proof that in theory the vacuum energy can be tapped, see Cole, daniel C. and Harold E. Puthoff, "Extracting Energy and Heat from the Vacuum," Physical Review E, Vol. 48, No. 2, Aug. 1993, p.1562-1565.

8. For proof that a higher topology examination of EM phenomena allows energy collection as potentials and energy shuttling in circuits, see Barrett, T.W., Annales de la Fondation Louis de Broglie, Vol.16, No. 1, 1991, p.23-41. Barrett shows that EM expressed in quaternions allows shuttling and storage of potentials in circuits, and also allows additional EM functioning of a circuit that a conventional EM analysis cannot reveal. He in fact shows that Tesla's patented circuits did exactly this.

9. Stoney, G.J. (1897) "XLVII. On a Supposed Proof of a Theorem in Wave Motion, To the Editors of the Philosophical Magazine," Philosophical Magazine, 5(43), 1897, p.368-373. Stoney first pointed out the bidirectional EM wave decomposition of the scalar potential.

10. Whittaker, E.T., "On the Partial Differential Equations of Mathematical Physics," Mathematische Annalen, Vol. 57, 1903, p.333-355; "On an Expression of the Electromagnetic Field Due to Electrons by Means of Two Scalar Potential Functions," Proceedings of the London Mathematical Society, Series 2, Vol.1, 1904, p.367-372.

BEARDEN

THE FINAL SECRET OF FREE ENERGY

CHENIERE PRESS

www.cheniere.org

THE FINAL SECRET OF FREE ENERGY

© 1993 T. E. Bearden

A.D.A.S.

P.O. Box 1472

Huntsville, AL 35807

February 9, 1993
(slightly revised March 23, 1993)

Foreword

This paper contains the real secret of tapping the vacuum energy very simply, using almost any source of potential (battery, electrostatic generator a la Swiss electrostatic device (the Testatika), elevated wire wire/250 V/m in the earth/ionosphere potential, etc). The objective is for the moderately technical reader to understand how to build and understand not only a single device, but also hundreds of different kinds of them. While it is quite simple, the "magic principle" contained in this paper only took me some 30 years to discover.

The precise definitions necessary to understand the free energy rationale are included. Also included are some very simple pseudo equations for the process. Do not underestimate these simple pseudo equations -- they tell the tale that's needed.

Also, there has been little or no time to "dress up" the paper. It's simply written down very informally, to get the necessary points across.

Nearly everything *fundamental* that we've been taught about EM energy is wrong or incomplete. Even the *definition of energy* in physics is wrong! Let me summarize a few of the things that are wrong with the classical electromagnetics (CEM) model as follows:

CEM is still utilizing a model based on a material ether. Although the Michelson-Morley experiment destroyed the material ether assumption in 1887, the classical EM model has never been corrected. It also contains no definition of charge, and no definition of potential. In many cases, algorithms to calculate a magnitude are boldfacedly and erroneously advanced as "definitions." CEM still prescribes the force fields as the causes of all EM phenomena; it has been known since 1959 that forces are effects and not causes, that EM force fields exist only in and on the charged particles of mass in the physical system, and that the potentials are the primary causes of EM phenomena. The lack of definitive definitions of mass and force in mechanics is carried over into EM theory; there is no adequate definition of EM force or of EM mass. The magnitude of the electrical charge on an electron is not quantized. Instead, it is discretized, being a function of the magnitude of the virtual photon flux (VPF) exchange between the vacuum and the charged particle. When the charged particle is placed in a potential that differs from ambient, then the magnitude of the VPF -- and hence the magnitude of the electric charge on the electron -- is altered. The CEM assumption of an "empty vacuum" is totally falsified by modern quantum mechanics. The CEM notion that EM force fields and force field waves exist in vacuum is totally false. Only potentials and potential gradients exist in the vacuum. EM waves in vacuum are not force field waves as CEM prescribes; instead, they are oscillations of potentials and potential gradients. Potentials have a bidirectional EM wave-pair structure, where the bidirectional wave pairs are phaselocked in a harmonic series. In each wave pair, photons and antiphotons are continually coupling (into spin-2 gravitons) and decoupling. This is where gravitation and electromagnetics are unified. The CEM notion that singular EM forces exist in either matter or the vacuum is false; Newton's third law requires that

all forces exist in oppositive pairs. Not a single one of the equations universally taught as "Maxwell's equations" ever appeared in any book or paper by James Clerk Maxwell; instead, they are Oliver Heaviside's equations. Maxwell's actual theory was written in quaternions, which is a complete system of mathematics. The Heaviside/Gibbs vector version

(1) has a lower topology,

(2) is not a complete system of mathematics, and

(3) actually captured only a subset of Maxwell's actual theory.

Tensor theory does not recapture that which was lost.

There are even more errors in CEM, but these should suffice to make the point: *Classical electromagnetics theory is seriously flawed, with archaic foundations, riddled with errors, and it should be completely redone*. Until this revamping of CEM is accomplished, the present model solidly blocks free energy, antigravity, a unified physical field theory, and a unified theory of mind and matter interaction.

A second paper this year will detail the exact long-term causative mechanism for cancer and leukemia, and the exact mechanism for essentially 100% cure of terminal tumors in laboratory animals, demonstrated by the Priore team in France in the late 1960s and early 1970s. The same mechanism can be used to cure AIDS.

Throughout the world, humankind is suffering. In the poor populations of the world, early death is the norm, as is frequent famine. One third of the human race goes to bed hungry each night. Protein starvation of children is common. One third of the human race is infected with worms. Many other diseases ravage the far-flung poor peoples of the world. They have little or no industries. They have no abundant electrical power. They have little education, and little modern knowledge. They have little or no medical treatment. In short, they are born without hope; live in misery, filth, disease, and poverty, and die without dignity.

Meanwhile, the factories, cities, and enclaves of the "developed and developing" worlds belch forth fumes, toxic and hazardous wastes, and pollutants. They also spew forth weaponry which for one reason or another is used to arm the poorer nations, for use in destroying themselves and their impoverished neighbors. Warfare, terror, banditry, despotism, and all the four horsemen of the Apocalypse are truly loosed in the earth.

We simply must do better than that. And we *can* do better than that! But to do better, we've got to make the basics available to impoverished nations, cheaply and easily. Primary among their needs are energy and medical treatment. Given those, populations can be stabilized, people educated, development begun, and the living standard drastically elevated.

So that is the immediate goal. In this paper, I am freely giving away what required me an arduous 30 years of my life to discover. Shortly we will also detail the new methodology for a new therapeutic science, hopefully to cure the diseases that ravage humanity.

God willing, this paper will trigger a thousand, or even ten thousand, scientists and engineers to develop overunity energy devices. If so, shortly we can rid our biosphere of noxious automobile and factory exhausts, radioactive nuclear wastes, and massive oil spills. We can remove many of the hydrocarbon combustion pollutants from the air, stop acid rain and the destruction of our forests, and stop the steady rise of carbon monoxide in our air. If that truly tends toward a "Greenhouse" effect, then we can halt that effect as well.

The Creator has always given us bountiful free electrical energy, everywhere, easily and readily for the simple taking. It has only been our own blindness and folly that have prevented us from seeing and using this free energy bounty.

So here is the final secret of abundant, free electrical energy. Please use the knowledge well and see that its benefits also accrue to those impoverished ones who need it so desperately. Remember the adage, "Inasmuch as you have done it to these little ones..."

This is for those little ones. You are our brothers and sisters. We want you to live. And we want you to have a better quality of life, not just bare existence. We care.

Tom Bearden

February 9, 1993

THE FINAL SECRET OF FREE ENERGY

© T. E. Bearden 1993

Some Definitions

The Quantum Mechanical Vacuum: First we need some definitions. We start by assuming the *quantum mechanical vacuum*.[1] Empty "spacetime" is filled with an incredibly intense flux of virtual particles. It is a plenum, not an emptiness. We shall be interested only in the fantastic flux of *virtual photons*, for we are discussing electromagnetics.

Energy and Potential: *Energy* is any ordering, either static or dynamic, in the virtual particle flux of vacuum. *EM energy* is any ordering, either static or dynamic, in the virtual photon flux (VPF) of vacuum. That is, for a particular kind of "field" energy, we simply choose the so-called quantum particle of that field, and consider only that kind of virtual particle flux.

Potential is any ordering, either static or dynamic, in the virtual particle flux of vacuum. Hey! That's exactly the same definition as energy. Quite correct. Energy and potential are identically the same. Neither is presently defined correctly in physics.

Energy is normally defined as "Energy *is* the capacity to do work." That's totally false. Energy has the capacity to do work, because work is correctly defined as the dissipation (disordering; scattering) of energy (order). The scattering of energy is work. It is not energy! I.e., *energy is not definable as its own scattering!*

Look at it this way: A man *has* the capacity to catch fish. That is true, but it is not a definition, since a definition must in some sense be an *identity*. You cannot say that a man *is* the capacity to catch fish! That may be a submitted definition, all right, but it is false. Similarly, energy *has* the capacity to do work; that is one of its attributes. But energy ***IS*** the ordering in the VPF (we are referring from now on primarily only to EM).

Scalar and Vector Potentials: The *scalar potential* is any static (with respect to the external observer) ordering in the VPF of vacuum. The *vector potential* is any dynamic (with respect to the external observer) ordering in the VPF of vacuum. We shall be interested in the electrostatic scalar potential. So it is a static ordering -- a stationary *template* -- in the VPF of vacuum, much as a whirlpool is a stationary ordering (template, form) in the rushing flow of a river.

The Scalar Potential Has An Internal Structure

The Structure of the Scalar Potential: According to rigorous proofs by Whittaker[2] and Ziolkowski,[3] any scalar potential can be mathematically decomposed into a *harmonic series of bidirectional wave pairs*. Figure 1 shows this Whittaker/Ziolkowski (WZ) structure. In each pair, the forward-time wave is going in one direction, and its phase conjugate (time-reversed) replica wave is going in the other. According to the so-called *distortion correction theorem*[4] of nonlinear phase conjugate optics, this PCR wave must precisely superpose spatially with its partner wave in the pair. The two waves are *in-phase spatially*, but 180 degrees *out of phase in time*. The wave is made of *photons*, and the antiwave (PCR wave) is made of *antiphotons*. It follows that, as wave and antiwave pass through each other, the photons and antiphotons are coupling and uncoupling with each other, because the antiphoton is a PCR photon, and PCR's precisely superpose spatially with their partner. A photon or antiphoton has wave characteristics, because it has a frequency; if the wave aspects are perfectly ordered and perfectly correlated, then so are the photon's particle aspects.

A Potential Is An Ordering Across the Universe: So we have -- astoundingly -- perfect VPF inner ordering infolded in the electrostatic scalar potential! We also have perfect wave/antiwave ordering infolded in there. When you collect a simple set of charges on a small ball or in a region, the scalar EM potential from that set of charges reaches across the universe. In it you have an infinite harmonic series of phase-locked time-forward EM waves going out from the charges to all distant points of the entire universe. And you have an infinite harmonic series of phase-locked time-reversed EM waves coming from all points of the universe, back to the "collected charges" source.

A Potential Is A River of Energy: The point is, you have established a *mighty, hidden, 2-way river of energy* between that collection of charges and every other point in the universe. There is infinite energy in each of those infolded waves and antiwaves. But in a localized region, the *energy density* in each wave is finite. Since in finite circuits the potential interacts with a localized set of mass, we shall be concerned with the *local energy density* (joules/coulomb) *of the potential*.

But forget the conventional myth of visualizing the potential as pushing a unit charge in from infinity "against the force field" -- there *isn't* any force field in the vacuum, as is well-known in quantum mechanics. Also, Newton's third law requires all forces to occur in pairs -- each pair consisting of a force and its 3rd law reaction force. From that viewpoint alone, there is no such thing as an EM forcefield or force field wave in the vacuum. There are just *gradients of the vacuum potential* present in the vacuum. In the vacuum, an EM wave is actually a wave of the phase locked gradients of the electrostatic scalar potential and of the magnetostatic scalar potential. And each such gradient wave is simultaneously accompanied by its phase conjugate gradient wave, because of Newton's third law.

Newton's third law requires forces to occur in pairs of equal but antiparallel forces.

Both wave and antiwave co-exist simultaneously in the vacuum EM wave.[5] Therefore it's a stress potential wave, not a force field wave. It's more like an electromagnetic sound wave,[6] and so it is a longitudinal wave, not a transverse wave. In the EM vacuum wave's interaction with matter (the so-called "photon" interaction), the wave normally half interacts with the electron shells of the atom, giving translation forces, while the anti-wave half interacts with the atomic nucleus, giving the Newtonian 3rd law reaction (recoil) forces (waves). The EM wave in vacuum is an *electrogravitational wave*.

Energy Is Internally Infinite and Unlimited: A static potential -- which is identically excess *energy* -- is internally dynamic and infinite. Energy is internally infinite and unlimited! But it has a finite *energy density* in a local region of spacetime. Since energy interacts with matter locally, we shall be concerned with the *local energy density* (joules per coulomb).

A Principle of Great Importance: The only way you can have a "chunk" or finite amount of energy to dissipate in a circuit as work is to first have a potential's local energy density interact with a local finite mass collector. The normal interacting mass collector is the free electrons (the free electron gas) in the circuit. You can have, e.g., (joules/coulomb x coulomb); (joules/gram x grams); (joules/m_3 x m_3); etc.

Voltage, Force, Potential Gradients, Loads, and Work: Now let's look at circuitry aspects. Conventionally they are a mess. *Voltage* is "essentially" defined as the "drop in potential." In other words, it's the dissipation (disordering) of a "finite amount" of potential gradient. But the only way you can get a "finite amount" of infinite energy/potential gradient is by first interacting the potential gradient's internal, finite, excess energy density with a finite "collector" mass. E.g., (joules/coulomb available for collection) x (coulombs collecting) = excess joules collected on the interacting coulombs, available for dissipation.

So *voltage* is really the dissipation of a finite collection of excess EM energy/potential gradient. The *dissipation* of potential or of its gradient is not potential! You cannot logically define either potential or energy as is own dissipation!

We presently use the notion of "voltage" in two completely contradictory ways in electrical physics. Here's how we got the confusion: We take a potential gradient (which has a local energy density), and we "collect" it across some charged masses in a locality -- usually the free electrons in the free electron gas in our circuitry. That is, we express the finite energy density of the potential gradient (before collection onto charges) in the local region in terms of *energy per coulomb*. The potential gradient actually is a change to the ambient potential, and so it contains an *excess* energy density (the magnitude may be either positive or negative). We then collect this potential (actually this potential density) on a certain number of coulombs, which places tiny little gradients of potential across (coupled to) each free electron. The local excess energy density of the potential gradient multiplied by the amount of collecting mass gives the amount of excess energy collected (on the interacting charges/coulombs). On each collecting particle, that little gradient, together with the coupling particle, constitutes a tiny force. F is not just *equal to* ma (non relativistic case); instead, $F \equiv (ma)$, where (mass x acceleration) is considered as a unitary, inseparable thing. So that little *potentialized electron* (that little *EM force*) moves itself around the circuit. In the load (scatterer), the little potentialized electron (the little force) is subjected to jerks and accelerations, thus radiating energy (shucking its gradient). Since this is done in all directions in the scatterer (load), that gets rid of the gradient, reducing the "little force" (potentialized electron) to zero because the little potential gradient is lost due to radiation.

Collecting And Dissipating Energy

Energy Dissipation and Collection: Without further ado, we consider the scalar potential's local energy density in terms of *joules per coulomb*. That is, in a specific glob of charges (i.e., in finite circuits), the amount of energy collected from a potential gradient onto the finite number of charges receiving/collecting it, is equal to the number of joules of energy per coulomb that is in the potential gradient, times the number of coulombs collecting (receiving) the potential gradient. The current is the activated (potentialized) coulombs per second that dissipate their potential gradients during that second. The current multiplied by the *time the current flows* gives the activated coulombs that dissipated their activation (potentialization) during that flow time. *Dissipating, activated coulombs* multiplied by the *excess energy collected per activated coulomb* gives the energy dissipated (the work or scattering done) in the load.

We define *collection* as the connection of a potential gradient (a source) to the charged masses in a circuit element (the element is called the *collector*), which for a finite delay time does not allow its potentialized free electrons to move as current. In the collector, during this delay time these trapped electrons are "activated" by potential gradients being coupled to them.

Technically, that delay time in the collector is known as *relaxation time*,[7] in the case of the free electron gas[8] (in a wire or in a circuit element). A collector then is a circuit element that has a usable, finite relaxation time. During that relaxation time, the trapped electrons are potentialized without movement as current; each collecting/receiving free electron gets a little gradient across it, but no current yet flows. In other words, during this finite relaxation time (collection time), we extract potential from the source, but no current. Thus we extract energy (potential), but no power (which is voltage x amperage). During the relaxation time, we extract from the source only a flow of VPF, which is continually replaced in the source by the vacuum's violent VPF exchange with the source's bipolarity charges. We do not extract power from the battery/source during relaxation time, but we extract free energy density. That free energy density, coupling with a finite quantity of electrons, gives us a collected finite amount of energy. With that background, let's start again, and go through this in a useful "free energy" manner.

The Electron Gas. We refer to the conventional model of the free electron gas in a wire.[9] Although the electrons in this gas actually move by quantum mechanical laws and not by classical laws, we shall simply be dealing with the "on the average" case. So we will speak of the electrons and their movement in a classical sense, rather than a quantum mechanical sense, as this will suffice very well for our purposes.

When one connects a circuit to a source of potential gradient (say, to a battery), the first thing that happens nearly instantly is that the potential gradient races onto the coupling wire and heads down it at almost the speed of light. As it goes onto the wire, this gradient "couples" to the free electrons in the free electron gas. However, inside the wire, these electrons can hardly move down the wire at all; they can only "slip" once in a while, yielding a "drift" velocity of a fraction of a cm/sec.[10] On the surface, things are just a little bit different. Most of the "current" in a wire, as is well-known, moves along the surface, giving us the "skin" effect. [For that reason, many cables are stranded of finer wires, to provide more skin surface per cm^3 of copper, and hence more current-carrying capability per cm^3 of copper.]

So, initially, little gradients of potential appear on and across each free electron, with a single little $\nabla\phi$ on each electron, and coupled to it. The couplet of $[\nabla\phi \bullet m_e]$, where m_e is the mass of the electron, constitutes a small ΔE_e. [This is rigorous; the conventional EM notion that an E field exists in the vacuum is absurd, and it is well-known in QM that no observable force field exists in the vacuum. As Feynman pointed out, only the potential for the force field exists in the vacuum,[11] not the force field as such. Or as Lindsay and Margenau pointed out in their Foundations of Physics, one does not have an observable

force except when observable mass is present.[12]]. We have stated it even stronger: Not only is $F = ma$, but $F \equiv ma$ (nonrelativistic case).[13] Since no observable mass exists in vacuum, then no observable F exists there either.

Force, Coupled Gradients, and Electron Translation

Electrons Coupled to a Potential Gradient Move Themselves. The point is, when activated by a "coupled potential gradient," the activated electron *moves itself* until it loses its activation (its coupled potential gradient).

Let me say that again, in a little more detail. Forget the standard notion that a force field such as the E-field causes electrons to move. Also forget the notion that the E-field is given by $E = -\nabla\phi$. In foundations of physics, those equations are known to be incorrect for the vacuum. EM force fields are known (in QM foundations theory) to be *effects*, existing only in and on the charged particles, and not existing separately at all,[14] or in the vacuum at all.[15] Instead of $E = -\nabla\phi$, in the vacuum the correct equation would be something like this: $P_E = -\nabla\phi$. In this case, we have correctly stated that the potential gradient P_E provides the potential for producing an antiparallel E-field in and on a coupling/collecting charged mass, and the magnitude and direction of that

potential gradient will be given by $-\nabla\phi$, if and only if a charged mass particle is first introduced so that it couples to P_E.

At any rate, the activated/potentialized electron moves itself. The reason is that it constitutes a force. Force ≡ (mass x acceleration) (non relativistic case). So the potentialized/activated electron is continuously accelerating. However, it is prevented from easily moving down the wire directly. To begin to do that, it essentially has to first move to the outer skin of the copper conductor.

The Collector: We now consider a circuit element that we called a *collector*. (It could be a special coil made of special material, a capacitor with doped plates rather than simple conducting plates, or any one of a number of things). The objective is for the *collector* to be made of special material so that it has a free electron gas whose electrons are momentarily not free to move as current (they continue to move violently around microscopically, but essentially with zero *net* macroscopic translation) for a finite delay (relaxation) time, while they are settling themselves upon the surface and preparing to move as current. Let's call the electrons NNTE (no net translation electrons) during that finite delay (relaxation time). During that "no-current" delay time, the NNTE electrons become potentialized/activated by the potential gradient impressed across the collector. So at the end of the NNT time, the NNTE electrons are potentialized, and each is of the form $[\nabla\phi \bullet m_e]$.

The Secret of Free Energy

Two Circuits/Two Cycles: We are going to use two circuits and two cycles, as shown in Figure 2:

(1) We shall connect a *collector* to a primary source of potential (to a battery) during the short time that current does not yet flow, but potential does. (In other words, during the relaxation time of the collector, we allow the VPF to flow onto the NNTE electrons of the collector and potentialize (activate) them, but do not yet allow the electrons themselves to flow as current, but only to move transversely in the wiring and collector.) This is **cycle one** of a 2-cycle process: This is collection of a specific amount of current-free potential gradient -- power-free energy -- off the potential-source (the battery) onto a collector. During the collection cycle/time, *current does not and must not flow* (we are discussing the ideal case). We are freely "charging up" the collector as a *secondary battery/source*.

(2) At the end of the collection (potentialization/activation) time/cycle in circuit one, the potentialized collector (the charged secondary source) is sharply switched away from its connection to the primary potential source (the battery), and at the same time it is instantly switched into a separate closed circuit with the load. This is important: In **cycle two**, the potentialized collector (with its finite amount of excess trapped EM energy) and the load are connected in a *completely separate circuit*, and one that is closed, with no connection at all to the original source of potential (in this case, to the battery). Specifically, this "load and potentialized collector" circuit is completely separate from the primary source; during cycle two the primary source (the battery) is not connected to anything.

In other words, all we've taken from the primary source (the battery) is *current-free, force-field-free potential gradient*. So to speak, we've taken a "chunk of potential gradient" from the source, nothing else. You simply multiply the potential gradient's local energy density (the so-called "voltage", which is really excess joules per coulomb) by the number of coulombs of charge that is "activated" (that "collects" this voltage or excess joules/coulomb) in the collector. Specifically, we have not taken any *power* from the battery itself, and so *we have not done any internal work inside the battery upon its internal resistance*, by a "closed circuit electron flow" back into the battery. We have not permitted such a flow.

Instead, *we are using the activated collector as a temporary, secondary battery*. We will utilize this secondary battery in a conventional manner to power the load, *which will also kill the secondary battery* (dissipate its trapped EM energy). But that will *not* affect the primary source. The primary source is never used to directly power the load. It is only used as an infinite source of potential gradient (i.e., as an infinite source of *energy density*).

The Standard Power Extraction Circuit

The Conventional Circuit: We digress momentarily: In the standard electrical method, the potential source (which is a bipolarity) is connected across the load. This connects both the external load and the internal resistance of the battery itself in series, as the "total circuit load." Electrons then pour through the external load circuit and through the internal battery resistance, from the "electron rich" polarity of the source to its "electron poor" opposite polarity. The scattering of energy in the internal battery resistance is actually doing work to upset the chemistry that is maintaining the battery's charge separation (the bipolarity). In this manner, the source's separation of charges (which is the "gate" furnishing the potential/energy gradient) is being destroyed as the current flows, and this in turn destroys the source of the potential gradient.

In other words, normally we, engineers, are trained to *kill the bipolarity*, which kills the potential source itself! Incredible as it may be, we, engineers and scientists, have been trained to utilize the free "trapped EM energy" furnished by nature through the source, to destroy the source of the energy/potential, *with the same vigor as they power the external load!* In fact, our teachers simply have never learned any other way to do it except this deliberately "self-destructive" manner!

A Waterwheel Analogy

Imagine, if you will, a waterwheel that powers a mill, with a sluice gate upstream in a river, that diverts some river water into the sluice carrying water to the wheel when the sluice gate is opened into the river. The diverted water flows down to the waterwheel, turning it, and the spent water is fed back into the river below the mill site. Now what fool would connect a pulley onto the waterwheel, with a rope running from the pulley to the sluice gate, so that when the wheel rotated, part of the rotational power also was utilized to close the sluice gate and shut off the water, stopping the waterwheel? If one did so, when the sluice gate was opened, the waterwheel would rotate only until the sluice gate was closed, shutting off the water. Then one would laboriously have to pay to reopen the sluice gate again, then again, then again. No self-respecting "waterwheel engineer" would do such an unthinkable, insane thing. But that's exactly what we engineers, electrical physicists, and scientists have been trained to do! We have no *energy* engineers or *energy* scientists at all; instead, we have all been *power* engineers and *power* scientists. We have all been *energy source killers!* In this paper, we shall try to do better, and rectify "one of the most remarkable and inexplicable aberrations of the scientific mind which has ever been recorded in history," as Tesla called the conventional electromagnetics.[16] By being *energy* engineers, we shall only have to pay for our energy source *once,* and then we shall draw as much energy from it as we wish.

External Load Power Is Free; Only The Power In The Source Costs

Here's the magic secret of free electrical power: ***The power in the external load is absolutely free, and it always has been free.***[17] ***In any load circuit, the only power you have to pay for, and have ever had to pay for, is the power you incorrectly use to kill your own primary source***. The only power that "costs" more effort/dollars is the power erroneously utilized inside the source to "close the gate" and kill the primary source. Your electric power company doesn't pay for any of the collected energy on your load circuits that is dissipated to power your house. Instead, the power company charges you for its own ignorance. It charges you for its insane use

of its own freely extracted electrical energy to continually kill the bipolarity in each of its generators, thus continually killing the free electrical source of that generator's energy.[18]

In any electric circuit, we can continue to indefinitely power the external load* indirectly *from a source, so long as we are not so naive as to use any of the free energy we extract from the primary source to dissipate back inside the primary source itself and shut it off!

And we can easily and freely multiply electrical potential. As an example, given a single good source of potential, a hundred radial wires can be connected to the source. The same potential will now appear at each of the ends of the hundred wires. A switcher/collector unit can then operate from each radial line's end, and power external loads, without "loading" the original primary source. This "cascading" can be continued indefinitely. A single power plant, e.g., can power the entire electrical grid of the United States. And a single automobile battery can power a large, agile, electric automobile at highway speeds, with sports car acceleration, with unlimited range, without "refueling," and with no noxious chemical exhaust.

Obvious Impacts

Environmentalists should immediately see that the chemical pollution of the biosphere by mechanista and processes to obtain energy can be dramatically reduced, to almost negligible levels. *There need be no huge oil tanker spills, for there need be no huge oil tankers*. There need be no worrisome radioactive wastes from nuclear power plants, or abandoned hazardous nuclear plants when their life is finished, because *there need be no nuclear power plants*. There need be no noxious exhausts from jet airplanes (which are really what is diminishing the ozone layer and punching holes in it), automobiles, trucks, buses, innumerable coal-fired and oil-fired power plants, etc.

The Electronic Smog Problem

In fairness we point out that, as the usage of free electrical energy mushrooms, we will be dramatically increasing the low-level EM signal density of the environment, and that too is biologically detrimental. Although beyond the scope of this paper, that cumulative biological damage mechanism has also been uncovered by this author. A formal paper is presently in preparation for presentation in March 1993 at the annual meeting and conference of the Alabama Academy of Science.[19] The paper will also present an entirely new definition of cancer, give its exact long-term cumulative mechanism, and give an exact, scientifically proven mechanism for eliminating cancer, leukemia, and other debilitating diseases such as AIDS. For our purposes here, we simply state that we understand the EM "electronic smog" biological damage mechanism, and how to go about developing a total counter for it. Eventually, we would see a small "counter unit" added to each power unit, alleviating the "electronic smog" problem and preventing biological damage.

Only Dissipate Energy From a Collector, Not the Source

Completion of the Collection Cycle: But to return to the completion of our collection cycle (cycle one). *During collection, we have not extracted power from the source. That is vital*. We have not moved the gate through which our source is furnishing free energy. We have not diminished our primary source. From our previous definitions of potential, we have indeed extracted *trapped energy* from the primary source, because we placed its "local energy density" across a certain finite collector/mass, instead of extracting *power* (dissipating energy inside the source or battery to spoil its chemistry and deplete its charge separation).

All Energy Is Free

Here's the incredible truth. The entire universe is filled with mind boggling free energy everywhere, in the simplest of things. Simply scrape your feet on the carpet, and you will collect perhaps 2,000 "volts" on your body. At that time, hidden EM energy is flowing from every point in the universe to your body, and from your body back to every point in the universe. We know that all macroscopic matter is filled with stupendous amounts of electrical charge. So an incredible river of energy -- a great flux -- is driving every single thing, from the smallest to the largest. Opening a gate to extract trapped EM energy is simple. Just collect a bit of charge, or scrape your feet hard, or comb your hair briskly. *All we have to do is not be stupid and close the gate once we've got it opened!*

God has been most kind. We have nothing but free energy everywhere. All energy is furnished to us freely! *It's our own blindness that has made us into energy source killers*. All we have to do is open our eyes to the truth of nature's incredible energy bounty. We must just freely collect that bountiful fruit from Nature's tree, instead of chopping down the tree and killing it.

Dissipating The Collected Energy

The Work Cycle: We focus again on cycle two. Shortly after the now-potentialized collector is connected to the load at the beginning of cycle 2 (the *power* cycle, or *energy dissipation cycle*, or *work* cycle), the potential gradient across the potentialized collector is connected (transferred) across the free electrons in the load circuit. We assume that the material of the collector and the switching time have been designed so that, shortly after switching to the loading/work cycle, the activated/potentialized free electrons in the electron gas in the collector reach the skin of the collector, and are free to move as current.

So just after the beginning of cycle two, each of the free electrons in the load circuit now is potentialized and free to move down the wiring. Each potentialized (activated) electron has its own little individual potential gradient across it and coupled to it, due to the overall potential gradient from the collector. Remember, prior to coupling to charges, this potential gradient moves through the circuit at light speed. An EM potential gradient coupled to a charged mass constitutes an *EM force field* (excess trapped EM energy per coulomb, times the number of collecting coulombs). Now each little free electron with its potential gradient forms a little E-field (force/charge), and that little E-field (force/charge) is free to move. That's all it takes to move (accelerate) the little activated electron's mass through the load (the scatterer). We strongly stress that *the potentialized/activated electron moves itself.* It doesn't care whether or not the external battery is attached or not. It is its own little motorboat, with its own little engine driving it.

As the little potentialized electrons reach the load (the scatterer), they bang and clang around in there erratically. That is, the "scatterer" (load) causes spurious accelerations ("scatterings") of these self-driven electrons. As is well-known, when a charge is accelerated, it radiates photons. What actually happens is that these little "jerked around" electrons shuck off their little potential gradients in the load (in the scatterer, or the "jerker-arounder") by emitting/radiating photons in all directions. Hence the heat that is produced in the load; the heat is just these scattered photons. The theory of calorimetry already states that all the excess energy (on the potentialized electrons) will be dissipated as this heat (scattered EM energy).

When all the potentialized electrons have radiated away their potential gradients in the load (scatterer), they are no longer potentialized. The free electron gas is again "quiescent" and no longer potentialized/activated (again, we are talking about "on the average" from a classical viewpoint).

Repetition and Review

Notice What We've Done: We took some trapped EM energy density (a chunk of potential gradient, a "voltage" before current flows) from the source, by switching that potential gradient (energy density, which is joules per coulomb) onto a collector (containing a certain number of

coulombs of trapped charges) where the potential gradient activates/potentializes/couples-to these temporarily non translating electrons. So the finite collector collected a finite amount of excess energy [joules/coulomb x collecting (trapped) coulombs] on its now-excited (activated) free electrons. Then, before any current has yet flowed from the source, we switched that potentialized collector (with its temporarily restrained but potentialized electrons; with their finite amount of excess trapped EM energy) away from the source and directly across the load. Shortly thereafter, the relaxation time in the collector expires. The potentialized electrons in the collector are freed to move in the external load circuit, consisting of the collector and the load, and so they do so. The scattering "shock collisions" due to the erratic electron accelerations in the load shake off the little potential gradients on the conduction electrons, emitting photons in all directions, which we call "heat." In shaking off the photons, the electrons lose their little potential gradients, hence lose their activation (excess EM energy).

Rigorously, we have extracted some energy in trapped form, and allowed it to dissipate in the load, "powering the load" for a finite discharge/dissipation time and doing work.[20] *Contrary to the conventional electrical power engineering, we have also done this without doing any work inside the source to diminish its ability to furnish potential gradient.*

What Is Energy In An Electric Circuit?

Energy in an Electric Circuit: Here's the principle loud and clear. *Energy* in an electric circuit involves only the potentialization and depotentialization of the electron carriers in that circuit.[21] It involves only the potential gradient (the joules per coulomb) collected by the circuit to potentialize its electrons, and the number of coulombs of electrons that are potentialized during the collection phase. Electric circuits simply utilize electrons as carriers of "potential gradients," from the source to the load, where these gradients and the activated electrons constitute excess trapped EM energy. In the "shocking/scattering" occurring in the load, the jerking (acceleration) of the electrons causes these activated (trapped-energy-carrying) electrons to shuck off their potential gradients by emitting them as scattered photons (heat).

If one is thoughtless enough to allow the primary potential source to remain in the circuit during the "work" phase, then one is using the potentialized electrons to also go back into the primary source and scatter energy from its internal resistance (internal load), *thereby disorganizing the organization that was producing the source potential and energy in the first place*. If one does that, then all the while one is getting some work (scattering of energy) in the load, one is also steadily getting some work done inside the primary source to steadily destroy it! Literally, one is killing the goose that lays the golden eggs.

Continued Operations: But back to our circuit. After we complete one full collection/discharge cycle, we wish to continue producing work in the external load. So we simply switch the collector back away from the load and onto the primary source, collect some more current-free potential, and again independently switch the collector with its repotentialized free electrons back across the load. We can repeat this two-cycle process to potentialize the external load and power it as long as we wish, from a battery or other source of potential, and never take any power at all from the primary battery. We do not need to drain the battery or source at all, in order to power a load, unless we attempt to power it directly. Powering the external load is *always* free!

Nature has been most kind, and we have been most ignorant. You can have all the *trapped electrical energy* you wish, from any source of potential, for *free*. You can power all the external loads you wish, for free, by using a collector as a secondary source, and simply shuttling potential between the primary source and the collector.[22] But you cannot have power for free from (in) the potential source. If you allow current flow in your collection cycle, you are depleting the separated charges inside the battery that are furnishing the source potential.

The Coal-Fired Locomotive

Rigorous Analogy of a Coal-Fired Locomotive. Now here's an exact analogy, to assist in understanding. Imagine a coal-fired train, and a fireman shoveling coal. He has an external load/scatterer of energy (the fire in the firebox under the boiler). He has a primary source of potential/energy (the coal car). No fireman in his right mind would ignite the coal in the chute of the coal bin, to try and get some heat energy into the firebox! [That is, he would not attempt to extract *power* from the source. Yet that's exactly what all we engineers are trained to do at present.] Instead, the fireman takes out (collects) a finite amount (a shovelful) of coal (trapped energy). Coal *per se* (the potential gradient) has a certain energy density per unit volume (trapped joules per unit volume of coal) and the shovel (collector) has a certain volume. Accordingly, the shovelful of coal contains a certain amount of trapped joules of energy. In the fireman's shovel (the collector), *the energy remains in totally trapped form, as coal not afire and without its trapped energy being dissipated as work*. [He doesn't act like a fool and ignite the coal in the shovel either!] He then throws that shovel of coal (collected trapped energy) onto the fire (scatterer), completely separately from the coal bin/source. He continues to repeat his shoveling cycle, and each shovelful of coal added to the fire dissipates additional energy, powering the load.

The Free Energy Principle

All potential gradient (trapped excess energy density) is free for the taking.[23] The potential is due to the violent VPF exchange between the vacuum and the separated bipolar charges furnishing the source potential gradient. The energy of the entire universe is flowing through that source potential. You can have as much of this internal VPF flux energy (potential) as you wish, as often as you wish, so long as you don't demand *current* (which is power, or the rate at which the energy is being freed and dissipated). It's really simple. You can have all the *trapped* energy you wish, from any source. You cannot connect to the source and start to dissipate the energy as power, however, without starting to close the "gate" from which your free trapped energy is coming.

In other words, here's the iron rule: ***If you draw current, you kill the bipolarity gate furnishing the potential gradient (source of energy density). In that case, you kill the source. If you do not draw current, you do not kill the bipolarity gate and you do not shut down the source. In that case, you can continue to "use" it and extract trapped EM energy from it forever.***

Definitions Again

Definitions: I'll put down some simple equations, that may help to explain it more exactly. First we repeat some definitions.

Energy is any ordering imposed upon the virtual particle flux of vacuum. *EM energy* is any ordering imposed upon the virtual *photon* flux of vacuum. *Static energy* is an ordering (a template) which is stationary with respect to the external observer. *Dynamic energy* is an ordering (a template) which is not stationary with respect to the external observer.

Potential: Any ordering imposed upon the virtual particle flux of vacuum. *Scalar potential* is an ordering (template) that is not moving with respect to the external observer. *Vector potential* is an ordering (template) that is moving with respect to the external observer.

The *scalar EM potential* is any static (with respect to the external observer) ordering imposed upon the virtual *photon* flux of vacuum. Etc.

Note again that energy and potential have exactly the same definition. Potential is in fact *trapped energy.* Scalar EM potential is *static EM energy* (to the external observer) or *trapped* (collected) EM energy. In other words, if one takes off a differential of potential onto a fixed

number of coulombs, one takes off a certain magnitude of trapped EM energy. In other words, one takes out a shovelful of coal from the coal car.

Importance of Separation of Charges

We Must Not Dispel the Separation of Charges In Our Source: The difference in our coal-fired train analogy and our electrical circuit is that, in the coal train, the coal in the coal car is not automatically and continually replenished. Also, the coal in the coal car has already been collected by the mass of the coal car, so it is not infinite. In the electrical circuit, the potential gradient in the primary source is continually replenished, automatically, and it is infinite (though it has a finite energy density). The reason is simple. EM potential (in the normal sense) is actually a virtual photon flux exchange between the vacuum (the entire vacuum, all over the universe) and a charged particle or collection of charged particles.[24] Thus the potential (gradient) is a powerful energy flux, pumped by the vacuum and the entire universe, that continues automatically, so long as we do not allow the collected charges in our bipolarity source to be dissipated. In terms of a battery, we achieved separation of charges inside the battery by chemical action, and *we paid for that initially*. Once separated, the charges essentially stay separated (because of the chemistry) unless we foolishly do something to dissipate them, such as upsetting the chemistry, so they are no longer separated positive from negative. So if we don't do anything to these separated charges, they continue to be driven by their fierce exchange of virtual photon flux with the vacuum/universe. If we then simply extract some of that flux exchange, without moving the charges, we are directly "gating" trapped EM energy from the vacuum/charged particle VPF exchange.[25]

The Potential Is Infinite And So Is Its Energy Content

You Can't Dip The Ocean Dry With a Spoon: Let's say that another way. The charged particles in our potential source are in a constant, seething, equilibrium exchange of trapped EM energy with the entire universe. That energy exchange is so enormous that, if we gate some of it out to collect on some other "temporarily frozen" charges and potentialize/activate them, the vacuum flux doesn't even miss it. It's like dipping a spoonful of water out of the restless ocean. The hole is instantly filled, and the water replenished. We can dip with that spoon as much as we wish, and the ocean will never run dry, but will simply continue to furnish us water, spoonful by spoonful.

The same is true in our electric circuits. We can have all the potential (trapped EM energy density) we wish, for free, from a single source, so long as we do not allow work to be done inside the source to close off our "gate" and kill our primary source.

The Twisted Concept of Voltage

Before We Develop Some Pseudo-Equations: In the equations we wish to develop, we have one problem, due to the lack of insight of conventional electrical physicists. That is, they have insisted upon "measuring" and expressing both the infinite potential (nondissipated) and a certain quantity of potential (dissipated) in *volts*. So they say "a potential of so many volts." That's nonsense, and totally erroneous. Rigorously, a voltage is a drop or a dissipation of so much (a finite amount of) *collected* excess potential/energy. You "measure" the voltage in a voltmeter by impressing a potential gradient upon the electron gas in the circuitry, wherein you collect or get in your voltmeter so much [(joules/coulomb) x coulombs]. A tiny current (coulombs/second) from this internal collection then flows for a finite time through the resistance of the voltmeter. So you dissipate (joules/coulomb) x (coulombs/second) x (seconds), which gives a certain amount of energy dissipated as work in moving the needle of the voltmeter. The voltmeter is calibrated so that it effectively indicates the *collected energy per coulomb* that was dissipated, and it calls that entity *voltage*. It involves a finite amount of energy that has already been dissipated as work, and it's a measure of the local energy density of the potential in terms of joules/coulomb. It is *not* a measure of the potential proper. It's after the fact; the extracted

(collected) potential gradient it actually refers to existed in the past, before the work (dissipation of the collected trapped energy) was done. To refer to the potential *before* its dissipation as "voltage" is precisely the same as confusing the future with the past. A "potential (difference) of so many volts" is actually a statement that "a potential difference of so much energy per coulomb" could be dissipated in a load, if it were connected to the load so that a finite amount of energy was collected, and this finite load-collection was allowed to dissipate as power (volts/coulomb x coulomb/sec) for a finite time, yielding work. It's even worse, but it would take a textbook to straighten out this one error in EM theory.

So we'll leave it at that, and we'll adapt the notion of potential the way it is corrupted in electrical circuit theory. There it's used not really as energy, but rather as *excess energy per coulomb of potentialized charge*. I apologize for that difficulty, which is not of my own making, but I must use the conventional notion if we are to greatly clarify the pseudo equations.

The Equations of Free Energy

The Pseudo-Equations: Let us use the following subscripts and letter convention, and develop the nomenclature needed:

T = trapped d = dissipated or dissipating

m = translated (moving) K = energy

V = volts = potential drop (potential dissipated) = previously collected potential radiated away as heat in a load, doing work on the load in the process. Unfortunately, we shall also have to speak of a potential gradient that is not being dissipated, so we shall have to speak of "trapped volts" which is erroneous, but complies with the common usage.

ϕ = electrostatic scalar potential. Coul = coulombs

i = amperes = Dissipating potentialized coulombs per second flowing, so amps are something translating, always. Amps are excited coulombs, per second, that are dissipating their excitation. With superconductivity excluded, you only have amps when you have a potential drop across a load. So we will speak of amps as "dissipating," meaning that potentialized electrons are traveling through a load, dissipating their activation (gradients) in the load by radiating scattered photons (heat).

n = number of electrons in a coulomb = $6.3 \times 10_{18}$ electrons/coulomb

Here are the pseudo equations (superconductivity is excluded):

$amp_m = coul_d/sec = n\ electrons_m/sec = n\ electrons_d/sec$ [1]

$\Delta\phi = V_T$ (as conventionally referred to). It would be volts if all [2] of it were dissipated, but it is not yet dissipated, so it is sort of "trapped volts". *Erroneous*, but the common use. So we will speak (somewhat distastefully) of "trapped volts" and "dissipated volts."

$V_d \times amp_d \times sec = watts \times sec = power \times time = work = K_d$ [3]

$V_d \times coul_d/sec \times sec = (work) = K_d$ [4]

In the switching, we switch K_T to K_d so

$K_T \Rightarrow K_d$ [5]

But $V_T \times coul_T = K_T$ [6]

Or

$[V_T] = [K_T] / [coul_T]$ = trapped energy/trapped coulomb [7]

$[K_T] = [V_T] \times [coul_T]$ = amount of trapped energy, each cycle [8]

So that's what we were getting at. The amount of trapped energy you can transfer (in other words, how much coal you get in one shovelful) depends upon the number of trapped electrons you have in the trapped free electron gas in the collector, and the potential gradient you apply to those trapped coulombs to potentialize them.

Relaxation Time and Semiconductors

Relaxation Time: The time it takes for the free electrons in a conductor (or material) to reach the skin of the wire after potential is applied, is, of course, called the *relaxation time.* During that time, the free electrons in the gas are "trapped" insofar as producing current (dissipation of the potential) is concerned. However, immediately after the relaxation time ends, current begins and dissipation of the trapped energy begins.

In copper, the relaxation time is incredibly rapid. It's about 1.5×10^{-19} sec. However, in quartz it is about 10 days! So as you can see, we need to get somewhere in between these two values, and so we will have to "mix" or "dope" materials. We must get a sufficiently long relaxation time so that we can switch and collect comfortably in cycle one, then switch into cycle two for dispersion of the freely collected energy in the collector. However, the relaxation time we get must also be short enough to allow quick discharge in the load, as soon as we switch the primary source away from the collector. Actually, we need a *degenerate semiconductor material* instead of plain copper.

Degenerate Semiconductor Material: A *semiconductor material* is intermediate between a good conductor and an insulator. It's a nonlinear material, and doped. A *degenerate semiconductor material* is one which has all its conduction bands filled with electrons, and so it thinks it is a conductor. That is, a degenerate semiconductor is essentially a doped conductor, so to speak. As you can see, we can increase the relaxation time in our "conductors" connected to the source by making them of *degenerate semiconductor material.* What we're talking about is "doping" the copper in the wire, and in the collector, so that we can have plenty of time to collect, and switch, and discharge, and switch, and collect, etc.

Now in a doped conductor (degenerate semiconductor), we can tailor the relaxation time by tailoring the doping. We must dope the copper before we make the wire. Why would we wish to do that? We want to overcome the single problem that so far has defeated almost all the "overunity" researchers and inventors.

WHEN YOU CONNECT TO A SOURCE, YOU CAN ONLY EXTRACT CURRENT-FREE POTENTIAL -- FREE "TRAPPED EM ENERGY" -- DURING THE ELECTRON RELAXATION TIME IN THE CONNECTING CONDUCTORS AND SUCCEEDING CIRCUIT COMPONENTS. AFTER THAT, YOU'RE STEADILY EXTRACTING POWER, AND THE ENERGY EXTRACTED FROM THE SOURCE IS BEING PARTIALLY DISSIPATED IN THE RESISTANCE/LOADING OF THE CIRCUIT, AND PARTIALLY DISSIPATED IN THE INTERNAL RESISTANCE OF THE SOURCE. IN THE LATTER DISSIPATION, YOU'RE ALSO DISSIPATING YOUR SOURCE BY DOING WORK ON IT INTERNALLY TO KILL IT.

Good Copper Wire: Bane of Overunity Inventors: Many destitute inventors, tinkering and fiddling with overunity devices, finally get something (a circuit or device) that does yield more work out than they had to input. At that point, they usually conclude that it's simply the specific circuit configuration and its conventional functioning that produces the overunity work. However, usually as soon as this configuration is more carefully built with very good materials, boom! It

isn't overunity anymore. The inventors and their assistants then desperately bang and clang away, getting more frustrated as the years pass. The investors get mad, sue for fraud, or get in all sorts of squabbles. The scientists who tested it and found it wanting, pooh-pooh the whole thing as a scam and a fraud, or just a seriously mistaken inventor. Scratch one more "overunity" device.

Most of these inventors got their successful effect (and possibly erratically) when they were struggling with inferior, usually old, usually corroded materials. Actually, the *more* inferior, the better. The more contaminated/doped, the better!

The moment you wire up your circuit with *good copper wire* connected between the battery or primary source and any kind of load including the distributed circuitry loading itself, you can forget about overunity. You will lose it in the copper, after the first 1.5×10^{-19} second!

Think of a really good conductor such as copper as an essentially *linear* material. Linear means energy conservative. Overunity can only be done with a highly nonlinear effect. So your "conductors" have to be made of nonlinear materials. In fact, they have to be made of *degenerate semiconductor material*. For the type of circuitry we are talking about, the copper has to be doped and then made into "doped copper" wiring. You also have to utilize the primary battery only to potentialize a collector (secondary battery/source), and then use this secondary battery source to conventionally power the load *while also killing itself.*

The Wiring And the Collector Must Be of Degenerate Semiconductor (DSC) Material.[26] A good materials scientist/engineer, together with a decent electrodynamicist, can readily design and tailor some doped copper wiring so that the material in the wiring is a degenerate semiconductor material, with a target (desired) relaxation time. That's what you should use to make the wiring to connect up your source to the collector with, and that type of material is also what you use in your collector. You can use either a coil or a capacitor as the collector, but its "conductive" material has to be degenerate semiconductor material -- in short, it must be doped to have the proper relaxation time. From the collector to the load, however, obviously you want to use a good conductor material. Ordinary copper will do nicely there.

Once you do that, you're in business. When making the DSC material, simply tailor the relaxation time to something which is easily switched. For example, take one millisec. With a relaxation time of that long, switching is easy. In fact, one could even use good mechanical switching. Or easily use inexpensive ordinary solid state switching, without having to go all the way to nanosecond switching.

Then, in the collector, you calculate the number of "trapped coulombs" you have. Take the "trapped voltage" (current-free potential's energy density per coulomb) you extract from the source during the electron relaxation time after the collector is connected. Multiply the number of trapped coulombs in the collector by the trapped voltage during collection, and you have the amount of energy in joules that you extract FOR FREE, without paying for it, from the source *during every collection cycle*.

Sources, Collectors, and Power

Tapping Vacuum Energy. You're getting the excess electrical energy directly from the vacuum, as we briefly pointed out above. The vacuum will freely replenish all the "trapped voltage" you extract from the primary source during the electron relaxation time. It won't replenish a single bit of "dissipated voltage" (power) you extract from the source.

Note that the same considerations apply in the collector. It's got to have a somewhat longer electron relaxation time. Its electrons stay "unrelaxed" during the collection cycle, and allow for some additional switching time to connect to the load. The "trapped voltage" across the collector multiplied by the number of trapped coulombs in it, gives the number of joules of FREE EM

ENERGY you extract and get into and onto the collector (the shovel). In other words, that's your "shovelful of coal." You then throw the "shovelful" onto the fire/load -- you simply disconnect the collector from the primary source and connect it across the external load. The collector (secondary battery) now powers the load and its own internal resistance, "killing" itself while furnishing the energy for powering the external load as well.

The Source Can Be Almost Anything: You can use as a source a simple elevated wire, to "tap" potential from the 200-300 volts/meter between earth and ionosphere. Here again, you need to utilize calibrated, doped wire.

Finally, you must adjust the repetition switching in accordance with the discharge time through the load. In other words, you have a serial process as follows:

(1) extract trapped energy (potential) from the source onto the collector, Δt_1.

(2) Switch the collector off the source, onto the load, during time Δt_2.

(3) Wait while the collected energy in the collector discharges through the load, during time Δt_3.

(4) Switch the collector back off the load and onto the potential source, during time Δt_4. That completes one cycle.

The serial timing simply is $[\Delta t_1 + \Delta t_2 + \Delta t_3 + \Delta t_4]$.

If you balance all the doping and the materials design, and correlate the switching, you can get all the free energy you wish. *Properly utilized, a single car battery can be used to power an electric automobile indefinitely*. *Or even to power a battleship*. In the real world, of course, you will inevitably have a tiny bit of loss as you go, because there's a finite (though high) resistance between the two poles of your battery. Handling that is a piece of cake. Simply run a separate little collection circuit to collect a little bit of trapped EM energy from the slowly leaking source, and ever so often feed the collected energy back into the battery as power, to "reseparate" the charges (charge the battery) and replace the small amount of the primary source's potential gradient that has been lost. The battery, load, and "trickle charger" then become a closed-circuit free-energy source that will last for years and years.

Limited Only By One's Imagination: Of course you can see many variants; this is just the "master key." You can have multiple collectors, collecting trapped energy simultaneously or in sequence off a single source, and pooling their collected energy to more powerfully power the load. You can utilize a very high "voltage", such as in the Swiss electrostatic overunity device, to increase the energy collected per coulomb in each switching (in each shovelful) in accord with equation [8]. For a battery, you can set a separate little collector/load device to trickle-charge the battery, overcoming the small normal "leakage current" that does occur in batteries and in real circuits and devices. The opportunities are endless. You can put in a unit to take mostly only power-free energy from the "power line" feeding your business or home, reducing your utility bill by -- say -- 90%. Or you can simply build a small home power unit to do the whole job, for only a few hundred dollars. *This simple secret can be used to power the world, cheaply and cleanly, and to clean up the biosphere*.

Conclusion

-

Well, there you have it. I've given you the benefit of what required most of my adult life to discover. The definitions advanced in this paper are rigorous. It took years of sweat and tears to

come up with them. They're simple, but they will change your entire understanding of electromagnetics, power, and energy once you grasp them. Please read them, and ponder them, several times. One or two readings will not be sufficient to fully grasp what is said here.

Also, hopefully, by this time, the reader is beginning to experience the same emotions as I experienced when I finally discovered how simple it all really was. First one wants to *laugh* for about two hours at how truly ignorant we've all been. Then one wants to *cry* for about two hours for the same reason. This could all have been done a century ago, *if we had ever really understood electromagnetics*.

We've had this electromagnetics around for over 100 years -- Maxwell's book was published in 1873. We got it wrong, starting right with Maxwell and his use of the material ether, which was almost universally assumed at the time. Still, by using quaternions, Maxwell succeeded in packing a great deal more in the model than even he himself recognized. When the vector aspects interacted to form a zero resultant *translationally*, those active interactants were still in there and still fighting and interacting. The scalar component of the quaternion remained, and infolded those struggling vectors and functions of them inside itself. In short, it captured the case where the electromagnetic energies are involved in translation actions which nullify each other translationally (electromagnetically). However, the energies are still in there in the continuing interactants inside the zero vector resultant. As such, they are trapped EM energy. And it is the trapped EM energy inside a mass -- not the mass per se -- which is responsible for gravitation. In other words, *Maxwell's theory already correctly captured the unification of the gravitational field and the electromagnetic field in 1873*.

Then Heaviside et al forced Maxwell's theory into a vector framework, throwing out the scalar component, and discarding the unification of gravitation and electromagnetics along with it. Serious errors were made and still exist in many of the fundamental definitions; in fact, many of them aren't definitions at all. Nearly every engineer and physicist can readily calculate potentials -- *all,* of course, on the "dissipation" side where the potentials are actually the amount of potential that was collected upon a collector and then dissipated. I could find hardly a single physicist who really knew what a scalar potential was prior to a finite amount being collected and dissipated as voltage. Yet 99% of them firmly believed they understood the potential.

So now you have the results of this researcher's long and arduous quest for the golden fleece. Please go forward with it, to make this a better and cleaner world for everyone.

Just remember that the control and use of energy is personal power. The control and use of absolute energy is the control and use of absolute personal power. In the old adage, power corrupts and absolute power corrupts absolutely.

Please use it wisely.

NOTES AND REFERENCES

1. For a good discussion of the modern quantum mechanical view of the vacuum, see I. J. R. Aitchison, "Nothing's plenty: the vacuum in modern field theory," Contemporary Physics, 26(4), 1985, p. 333-391. See also T. D. Lee, Particle Physics and Introduction to Field Theory, Harwood Academic Publishers, New York, 1981 -- particularly Chapter 16, "Vacuum as the source of asymmetry." See Timothy Boyer, "The classical vacuum," Scientific American, Aug. 1985, p. 70; Walter Greiner and Joseph Hamilton, "Is the Vacuum really Empty?", American Scientist, Mar.-Apr. 1980, p. 154; Jack S. Greenberg and Walter Greiner, "Search for the sparking of the vacuum," Physics Today, Aug. 1982, p. 24-32; Richard E. Prange and Peter Strance, "The superconducting vacuum," American Journal of Physics, 52(1), Jan. 1984, p. 19-21; R. Jackiw and J.R. Schrieffer, "The decay of the vacuum," Nuclear Physics B, Vol. 190,

1981, p. 944. See Paul Davies, Superforce, Simon and Schuster, 1984 for a layman's overview of modern physics, including the modern view of the vacuum.

2. E. T. Whittaker, "On the partial differential equations of mathematical physics," Mathematische Annalen, Vol. 57, 1903, p. 333-355. Since the scalar potential actually consists totally of a set of hidden bidirectional EM waves, then *scalar interferometry* is possible, and not just an oxymoron as it would seem without considering the inner wave structure of the scalar potential. Two scalar potentials (each of which is a multi-biwave set) can interfere; it is just a special kind of multiple wave interferometry between their internal wave compositions. This is a major point of profound impact on physics. Whittaker in fact showed that *all classical EM* could be replaced by such scalar EM potential interferometry. See E. T. Whittaker, "On an expression of the electromagnetic field due to electrons by means of two scalar potential functions," Proceedings of the London Mathematical Society, Series 2, Vol. 1, 1904, p. 367-372. Further, scalar interferometry has been proven; today it is called the Aharonov-Bohm Effect. See Y. Aharonov and D. Bohm, "Significance of Electromagnetic Potentials in the Quantum Theory," Physical Review, Second Series, 115(3), Aug. 1, 1959, p. 458-491. For confirmation and discussion, see Bertram Schwarzschild, "Currents in normal-metal rings exhibit Aharonov-Bohm Effect," Physics Today, 39(1), Jan. 1986, p. 17-20. For an extensive discussion of the Aharonov-bohm effect and an extensive list of references, see S. Olariu and I. Iovitzu Popescu, "The quantum effects of electromagnetic fluxes," Reviews of Modern Physics, 57(2), April 1985. Modern scientists have generally been unaware of the inner wave structure of the interfering potentials and have utilized only quantum mechanical theory for the interference. Consequently, they have been able to experimentally establish the AB effect for only a few thousand Angstroms distance. With the Whittaker formulation, the AB effect becomes distant-independent, because the necessary potentials can be fabricated as laser-like beams, simply by assembling the proper Whittaker multibeam set. Also, Ignatovich pointed out that the Schroedinger potential can also be decomposed into just such an internal bidirectional EM wave set. See V.K. Ignatovich, "The remarkable capabilities of recursive relations," American Journal of Physics, 57(10), Oct. 1989, p. 873-878.

3. See Richard W. Ziolkowski, "Exact Solutions of the Wave Equation With Complex Source Locations," Journal of Mathematical Physics, Vol. 26, 1985, p. 861; "Localized Transmission of Wave Energy," Proc. SPIE, Vol. 1061, Microwave and Particle Beam Sources and Directed Energy Concepts, 1989, p. 396-397; "Localized Transmission of Electromagnetic Energy," Physical Review A, Vol. 39, p. 2005; "Localized Wave Transmission Physics and Engineering," Physical Review A, 1992, (in Press); "Localized wave transmission physics and engineering," Proc. SPIE Conference on Intense Microwave and Particle Beams II, Los Angeles, CA, vol. 1407, Jan. 1991, p. 375-386. See Richard W.Ziolkowski, Amr M. Shaarawi, and Ioannis M. Besieris, Nuclear Physics B (Proc. Suppl.), Vol. 6, 1989, p. 255-258; R.W. Ziolkowski, and D.K. Lewis, D.K., "Verification of the Localized Wave Transmission Effect," Journal of Applied Physics, Vol. 68, 1990, p.6083; Richard W. Ziolkowski, Ioannis M. Besieris, and Amr M. Shaarawi, "Localized Wave Representations of Acoustics and Electromagnetic Radiation," Proceedings of the IEEE, 79(10), Oct. 1991, p. 1371-1378; I.M. Besieris, A.M. Shaarawi, and R.W. Ziolkowski, "A bidirectional travelling plane wave representation of exact solutions of the scalar wave equation," Journal of Mathematical Physics, 30(6), 1989, p. 806; A.M. Shaarawi, I.M. Besieris, and R.W. Ziolkowski, "A novel approach to the synthesis of nondispersive wave packet solutions to the Klein-Gordon and the Dirac equations," Journal of Mathematical Physics, 31(10), 1990, p. 2511; "A nondispersive wave packet representation of photons and the wave-particle duality of light," UCRL-101694, Lawrence Livermore National Laboratory, Livermore, CA, 1989; "Diffraction of a classical wave packet in a two slit interference experiment," UCRL-100756, Lawrence Livermore National Laboratory, Livermore, CA 1989; "Localized energy pulse trains launched from an open, semi-infinite, circular waveguide," Journal of Applied Physics, 65(2), 1989, p. 805; R.W. Ziolkowski, D.K.Lewis and B.D.Cook, "Experimental verification of the localized wave transmission effect," Physical Review Letters, 62(2), 1989, p. 147; R.W. Ziolkowski and D.K. Lewis, "Verification of the localized wave transmission effect," Journal of Applied Physics, 68(12), 1990, p. 6083; M.K. Tippett and R.W. Ziolkowski, "A

bidirectional wave transformation of the cold plasma equations," Journal of Mathematical Physics, 32(2) 1991, p. 488; A.M. Vengsarkar, I.M. Besieris, A.M. Shaarawi, and R.W. Ziolkowski, "Localized energy pulses in optical fiber waveguides: Closed-form approximate solutions," Journal of the Optical Society of America A, 1991.

4. For a precise statement of the distortion correction theorem, see Amnon Yariv, Optical Electronics, 3rd Ed., Holt, Rihehart and Winston, New York, 1985, p. 500-501.

5. Both wave and antiwave co-exist in the vacuum simultaneously, forming a stress wave. The entity that is stressed is the rate of flow of time. In the common interaction with matter, the time-forward half of the stress wave normally interacts with the electron shells of the atom, giving electron translations forces. The time-reversed or anti-wave half interacts with the nucleus, giving the Newtonian 3rd law reaction (recoil) forces. The so-called "EM wave" in vacuum is a *gravitational* wave. It is a wave of oscillation of the rate of flow of time. It is rather like a sound wave in air, as Tesla pointed out, and it is a longitudinal wave, not a transverse "string" wave.

6. As pointed out by Nikola Tesla. Tesla was correct, and all the textbooks with their transverse "string" waves are in error. *There are no strings in the vacuum!*

7. E.g., see Clayton R. Paul and Syed A. Nasar, Introduction to Electromagnetic Fields, 2nd Ed., McGraw-Hill, New York, 1982, p. 113.

8. E.g., see Clayton R. Paul and Syed A. Nasar, ibid., p. 100-101. See also Raymond A. Serway, Physics For Scientists And Engineers, With Modern Physics, Saunders College Publishing, Philadelphia, PA, 3rd Ed., Updated Version, 1992, p. 752-755.

9. Sommerfield's theory of metallic conduction was based on Drude's concept that the outer valence electrons of a conductor, which do not form crystal bonds, are free to migrate through the crystalline lattice structure, and so to form an electron gas. At room temperature, by quantum mechanical considerations, these free electrons are moving randomly, but at an average velocity on the order of 10^6 meters per sec. E.g., see Martin A. Plonus, Applied Electromagnetics, McGraw Hill, New York, 1978, p. 54-58, 62-3, 376-7. If you wish to know just how much power exchange is driving the collisions of the electron gas in a copper wire, here is an illustration. In one cubic centimeter of copper wire, the power exchange in and out of the electron gas is some 4 billion billion watts. That's the equivalent of 4 billion large electric power plants, each of 1,000 megawatt capacity. And one cubic centimeter of copper is a lump about the size of the end of our little finger.

10. E. g., see Raymond A. Serway, ibid., p. 743-744 for a discussion and calculation of the electron drift velocity in copper.

11. Richard P. Feynman, Robert B. Leighton, and Matthew Sands, The Feynman Lectures on Physics, Addison-Wesley, New York, Vol. 1, 1963, p. 2-4. In the classical EM theory launched by Maxwell and later modified by Heaviside et al, this problem did not exist for the original theoretical formulation. In that formulation by Maxwell, and continued by Heaviside, a material ether is assumed for the model. The Michelson-Morley experiments of 1887 destroyed the notion of the material ether, but the classical electromagnetics model has never been corrected to rectify its very serious foundations flaw in this respect.

12. Robert Bruce Lindsay and Henry Margenau, Foundations of Physics, Dover Publications, New York, 1963, p. 283-287. Note on p. 283 that a "field of force" at any point is actually defined only for the case when a unit mass is present at that point. In spite of this, most classical electrodynamicists continue to adhere to the notion that the EM field exists as such in the vacuum, but do admit that physically measurable quantities such as force somehow involve the product of charge and field. E.g., see J.D. Jackson, Classical Electrodynamics, 2nd Ed., John Wiley & Sons, New York, 1975, p. 249. Note that holding such a concept is tantamount to

holding on to the material ether, and assuming that the vacuum itself is "measurable" or "observable."

13. The formula F = ma is simply an algorithm for calculating the magnitude of the force. It states that "the magnitude of the force is equal to the magnitude of mass that is accelerating, multiplied by the magnitude of the acceleration." No such "equals" formula is a definition; it is only a calculational algorithm.

14. This falsifies one of the assumptions in the common notion of the scalar potential; that its gradient in vacuum is a force field. Let us falsify another part of the conventional concept of the potential. Take the notion of forcibly pushing in "against the field" of a trapped charge, a unit charge from infinity. At any point you stop, the work n you have done on the unit charge is equal to the value of the potential, so it is said. Actually, you pushed in a one-coulomb collector, and have collected and dissipated as work n joules of energy on that one coulomb. In other words, the energy density of the potential there, if collected and dissipated on a collector, is n, where n is joules per coulomb (NOT joules!). To prove it: suppose we go out on 10,000 radials from that point, and push in from infinity 10,000 unit charges from infinity. Then, the total work done "against the potential gradient ("field", in common language) is now 10,000 n. This makes no sense at all from the conventional view (which carefully refrains from multiple collectors!). It makes good sense from our view of the potential as having infinite energy but a finite energy density. In that case, the more collectors, the more energy collected, for dispersal as work.

15. For a discussion, see Y. Aharonov and D. Bohm, 1959.

16. Nikola Tesla, "The True Wireless," Electrical Experimenter, May 1919, p. 87.

17. The power in the load is always the time rate of dissipation of energy that has just been freely collected by the load for dissipation.

18. One can foresee a day in the not too distant future when any power company continuing to do such an unthinkable thing will have a class action suit brought against it by its customers!

19. T. E. Bearden, "Mechanism for Long-Term Cumulative Biological Effects of EM Fields and Radiation," March 1993 (in preparation).

20. Precisely analogous to a heat pump's operation - which as is well-known can readily be "over unity" in its efficiency. The maximum efficiency of the heat pump is about 8.22. E.g., see David Halliday and Robert Resnick, Fundamentals of Physics, 3rd Edition Extended, John Wiley and Sons, New York, 1988, Volume 1, p. 510-519. Good heat pumps normally have about 4.0 efficiency.

21. External power in an electric circuit refers to the dissipation rate (in the circuit's external load) of the potential gradients on the activated/potentialized electrons. Internal power refers to the dissipation rate in the circuit's bipolarity source.

22. We call strong attention to T.W. Barrett, "Tesla's Nonlinear Oscillator-Shuttle-Circuit (OSC) Theory," Annales de la Fondation Louis de Broglie, 16(1), No. 1, 1991, p. 23-41. In this important paper, Barrett shows that a higher topology EM, such as quaternion EM, allows many things to be accomplished with circuitry that are not apparent to a conventional vector or tensor analysis of that circuitry. He also shows the Nikola Tesla's circuits accomplished this higher topological functioning.

23. It is easy to test this. Connect several different wires to a single source of potential gradient. With respect to ground, the end of each one of those wires has the same potential gradient as does the original source with respect to ground. If you connect 10 wires to a single "100-volt" potential gradient source, you will have ten 100-volt potential gradients appear. You can use

each of these ten potential gradients as a primary source. From each of these new primary sources, you can branch ten more, and now have a hundred potential gradient sources. You can treat each of these hundred new sources now as a primary source. To each one, you can add a switcher, collector, and external load, and drive all 100 loads. Or instead, you can put ten switcher/collector/external load circuits with each of the hundred new primary sources, and power all 1,000 external loads. Energy/potential is free from any source, so long as you do not demand power from the same source.

24. Per Whittaker and Ziolkowski, this VPF exchange -- from consideration of its wave aspects -- consists of a harmonic series of bidirectional waves.

25. We are easily permitted to have free energy and violate the "local energy conservation law for a closed system." This is because the system is not closed, and so instead we must apply local energy conservation for an *open* system with a hidden source. In any given time interval, the energy taken (scattered) from the system as external work cannot exceed the sum of the unscattered trapped energy that was in the system initially and the unscattered energy that flowed into the system during that time interval.

26. You can actually do away with the separate collector, and utilize the doped copper DSC material itself as the collector. However, you will not be able to collect nearly so much energy in each collection cycle, for dissipating in the load in the subsequent work cycle.

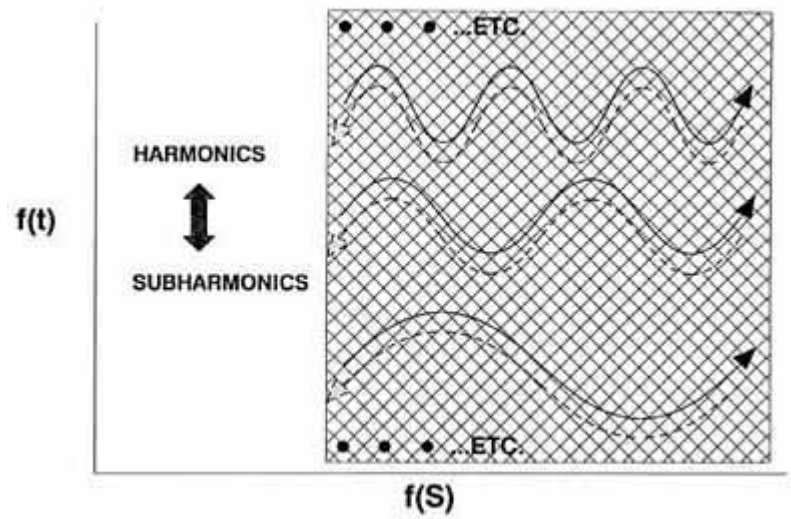

Figure 1a. Internal wave structure of the scalar potential.

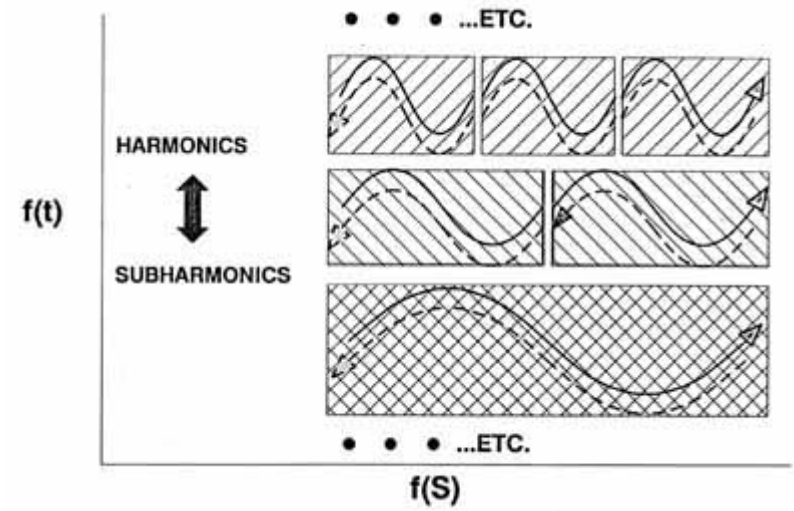

Figure 1b. Internal wave structure of the scalar potential (end).

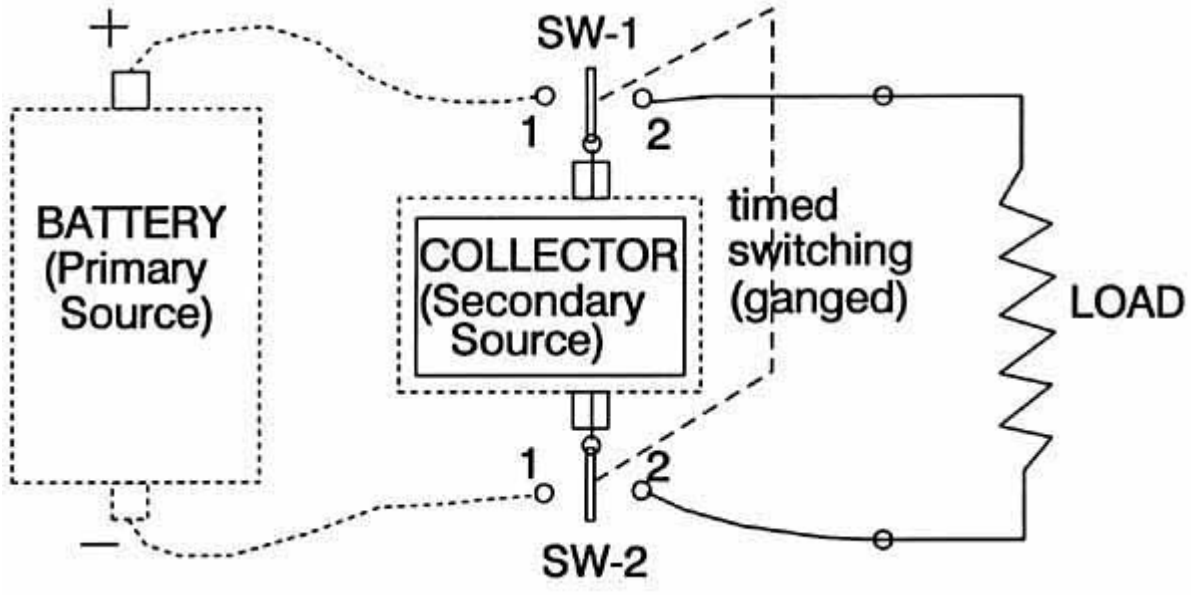

Nondissipative components are shown by dotted lines.

Dissipative components are shown by solid lines.

Figure 2. The secret of extracting and using free energy.

[Additional Comments - 12 March 1993]

[Update - 5 February 1994]

[Update - 13 May 1994]

ADDITIONAL COMMENT:

March 12, 1993

The present classical CEM model prescribes closed, energy-conservative type systems. If any electrical device works totally according to the accepted CEM model, it cannot and will not ever produce overunity. Simply put, you have excluded any hidden EM source that is freely replenished, and you have assumed continual killing of all energy input sources utilized. On the other hand, if one takes the view that the overunity electrical machines are possible after all, then -- *whether one is consciously aware of it or not* -- one has implied that classical CEM must somehow be substantially flawed. If it's flawed, then -- being a model -- some of its primary assumptions (postulates) and/or fundamental definitions must be in error. The proper place to go after "free electrical energy" is to rigorously examine CEM, over and over, until flaws are uncovered which allow a hidden, freely replenished source of input energy. In other words, one must find a way to "open" the electrical system to an inflow of energy from this source, without closing off the source. Until one finds such an "extension" of CEM, one has no model or concept which can reasonably be expected to provide overunity electrical energy output. Note also that, while the majority of the EM circuitry of an electrical overunity machine may obey CEM, at least one section -- where the source is freely tapped and the excess energy extracted -- must violate CEM.

I have spent many arduous years in this very process, right or wrong. The bottom line of my search is this: the only verified (by Whittaker and Ziolkowski) (WZ) "freely replenished river" of EM energy, that can act as the required "free energy" source for input to the would-be overunity electrical system, is the *potential*. But to understand the potential, completely new definitions are required for many entities, among them being energy, electrical charge, electrostatic scalar potential, voltage, etc. The present so-called "definitions" of these entities in CEM are either non-existent, entirely wrong, or quite unsatisfactory.

So far, the search has uncovered two major ways to tap the continually-replenished EM energy in the scalar EM potential:

(1) use of the inner WZ internal biwave structure of the potential as pump waves on/to a nonlinear material (such as the atomic nucleus), so that the nucleus becomes a pumped phase conjugate mirror. Then, by normal phase conjugate optical theory, simply inputting a small signal wave will produce an amplified phase conjugate replica (PCR) wave emitted from the mirror material, and this PCR will precisely backtrack the original input signal wave's path (see the *distortion correction theorem*) back out of the nucleus, out of the atom, and into the external circuit. There, the amplified PCR wave can be "filtered off" and sent to the external load, to power the load. The Floyd Sweet vacuum triode works precisely by this mechanism. Note particularly that Barrett has shown that higher topology EM (such as the original quaternion EM theory) can accomplish such "optical functioning" without the use of optical materials. To do Sweet's vacuum triode type process is thus theoretically possible with electrical circuitry alone, but one must have more than the current understanding of CEM, as Barrett pointed out. In other words, one can "open" any 4-space system by adding hyperspace (or subspace, if one insists on retaining Minkowski 4-space). One can thus have a hyperspatial source. Indeed, Ziolkowski and others have already pointed out that the WZ type decomposition of the scalar potential is essentially equivalent to having *complex sources*.

(2) The second way is to "trap the electron gas electrons" in a separate collector, feed "current-free potential" to the collector from a primary battery or other source of potential, and collect a bunch of excess energy (potential) in the collector's "penned up free electron 'horses'" waiting to carry the excess energy to the load and dissipate it there, once they have been released. Then, one switches the primary potential source away from the collector, while the "energy-loaded horses" are still trapped and straining at the bit, so that no work can be done -- by those agitated horses when they stampede out of there -- on the internal resistance of the primary

source, to destroy or reduce it. In the same switching action, the collector with its "snorting but still trapped electron horses" is switched across the load to form a totally separate circuit with it, having nothing at all to do with the original primary source of potential. Then, the agitated horses are released, and thunder out through the load, scattering their riders (excess energy) in all directions in the load, producing work/heat and powering the load. They will also charge on around to the reverse side of the collector, and kill its charge separation (kill its potential) as well, just as does any ordinary circuit.

The major disadvantage of method 1, as we presently have seen it done (however, check Barrett's demonstration that Tesla's patented circuitry is capable of doing it by circuitry alone), is that *time-reversed* electrical energy is produced. So Method 1 has some serious drawbacks. "Time-reversed energy stuff", which should stay in the atomic nucleus as Newtonian 3rd law reactions and 3rd-law energy exchanges, is dragged out. Unusual effects on biological systems can occur. Antigravity effects can occur. Other hidden processes in the universes, that affect the atomic nucleus, can be gated into the external circuitry, causing disaster. Monopoles can be deposited in the magnets, causing them to explode like hand grenades. Most of the new "massive time-reverse energy" phenomenology is still unknown. One cannot at this stage of ignorance adequately guarantee human safety. I presently don't see just how this kind of energy can pass an Underwriter Laboratories' testing and certification, until a lot more exhaustive work is done to understand the new phenomenology.

Method 2, however, yields ordinary, garden-variety, positive-time electrical energy. The method presented in the paper is my own discovery. No unusual time-reversed phenomena are involved. It would appear to be eminently practical to produce and certify power units based on Method 2. The phenomenology and risks are the same as for ordinary, time-forward power systems.

Method 2 has another unique characteristic: as a system, *all the subsystems are already in the literature and validated. They have just not previously been put together in this fashion*. So development of the system really represents an "integration" problem only, after one first does a little development of a proper degenerate semiconductor material (DSM). In other words, one first develops (and tests) the exact doping materials and percentage, to get a DSM material that is still a good conductor but has a relaxation time of -- say -- one tenth of a millisecond. One builds the wires from the battery to the collector out of this new DSM material. If one uses a capacitor for the collector, the plates must be made out of the new DSM material, not out of normal "pure conductor" material. Then one develops a switcher that switches in one tenth (or less) the relaxation time of the DSM, or in this case in one hundredth of a millisecond. That switching time, of course, is easy for any decent electronic technician or electronic engineer. One also develops a timing circuit that will (1) sense the status of the discharge of the collector energy through the load, and (2) trigger the switching at the correct times so that a smooth two-cycle (collect, discharge) process results. Note that the lengths of cycle one and cycle two are not necessarily equal at all. One may use multiple collectors/loads simultaneously, cascaded collectors/loads, etc. Hundreds of variations are possible and feasible.

It is not possible to do anything with this discovery in a normal manner. I would dearly like to be economically independent, so I could work full time in my efforts on free energy, antigravity, extended EM healing, cancer, etc. Many orthodox scientists will also fiercely resist this upstart notion of "overunity" electrical machines to the bitter end. When powerful economic interests realize one has such thing *for real*, one is certainly going to be stopped, jailed, or killed, or he may just "mysteriously vanish" and never be seen again.

So I just freely released and distributed my discovery of method 2, in the paper "The Final Secret of Free Energy". It is deliberately targeted toward technicians, junior engineers, and educated laymen. (The principles and definitions raised, however, can be debated to the nth degree by knowledgeable foundation scientists). The paper has already been distributed

worldwide. Now the *principles and definitions* are available to everyone. If they are in error, shortly that will be proven in spades. If they are correct, that will also be established shortly.

Anyone who wishes can develop and patent a particular application. There's no longer any way to stop this information from being disseminated and utilized. I hope that a flurry of development and patenting activity will result around the world. Get cheap, clean electrical energy to everyone. Bring on the electric auto, clean up the noxious auto exhausts, get rid of giant oil spills, and clean up the biosphere.

Tom Bearden

Additional Information On
The Final Secret of Free Energy

Update 15 February 1994
© 1994 by T.E. Bearden

Introduction

My associates and I have filed the first patent application on two electrical overunity processes and devices; one similar to what is outlined in *The Final Secret of Free Energy* [Ref 1] and an additional variation utilizing, as collectors, standard step-charged capacitors rather than degenerate semiconductor materials. In 60 to 90 days, we will have a very enlightening paper (more likely a book) ready on that. We also plan to file several more extremely fundamental overunity patent applications from additional phenomena and mechanisms that we have uncovered.

In this paper, it is assumed that the reader is familiar with the content of *The Final Secret of Free Energy*. Figure 1 shows the invention schematically, and we briefly summarize it as follows:

Summary of the Invention

A method and apparatus for extracting bidirectional EM wave energy from the vacuum through the scalar potential gradient across the terminals of an electrical source, collecting the excess energy in a collector without entropy, then separately discharging the collected energy through a load to perform work, without sending the load current back through the primary source against its potential gradient; i.e., against its back emf. Removing the load current from the source thereby substantially reduces the production of work inside the source to dissipate its bipolarity; said internal dissipative work being well-known to be the cause of exhaustion of the source's ability to continue to furnish emf to the external circuit. By reduction of its internal dissipation, the source is enabled to furnish more energy for dissipation in the external load than is utilized to dissipate the source internally. Hence the source is enabled to operate with an overunity operational efficiency. The system permissibly operates as an "open" system, and extracts and utilizes excess EM energy from a free-flowing external source (the flux exchange between the surrounding vacuum and the bipolarity of the source), hence it can operate at an efficiency greater than unity without violation of the laws of physics, in a manner analogous to but entirely different from a heat pump. In this invention, it is not the purpose of the primary source to furnish current and dissipative power to the external circuit. The bipolarity of the source is utilized primarily as a dipole antenna to receive the bidirectional EM wave energy flow from the vacuum, and direct it without entropy through a switching unit to the collector. Conduction electrons in the collector are temporarily restrained while being overpotentialized by the excess energy being collected upon them. The collector and its overpotentialized electrons are then switched away from the primary source, and connected across the load as a separate circuit and closed current loop. The electrons in the collector and their excess energy are then automatically released to flow as current discharge through the load, releasing their excess energy to perform useful work in the load. The collector is then switched away from the load and back across the primary source, and another collection cycle is initiated. Iteration of the collection and discharge cycles provides power to the load. Additional collection and smoothing capacitances for smoothing the iterations and furnishing steady power to the load may be added as desired. The invention violates the

closed circuit practice of powering loads, but does not violate the conservation of energy law, the second law of thermodynamics, or any of the other known laws of physics.

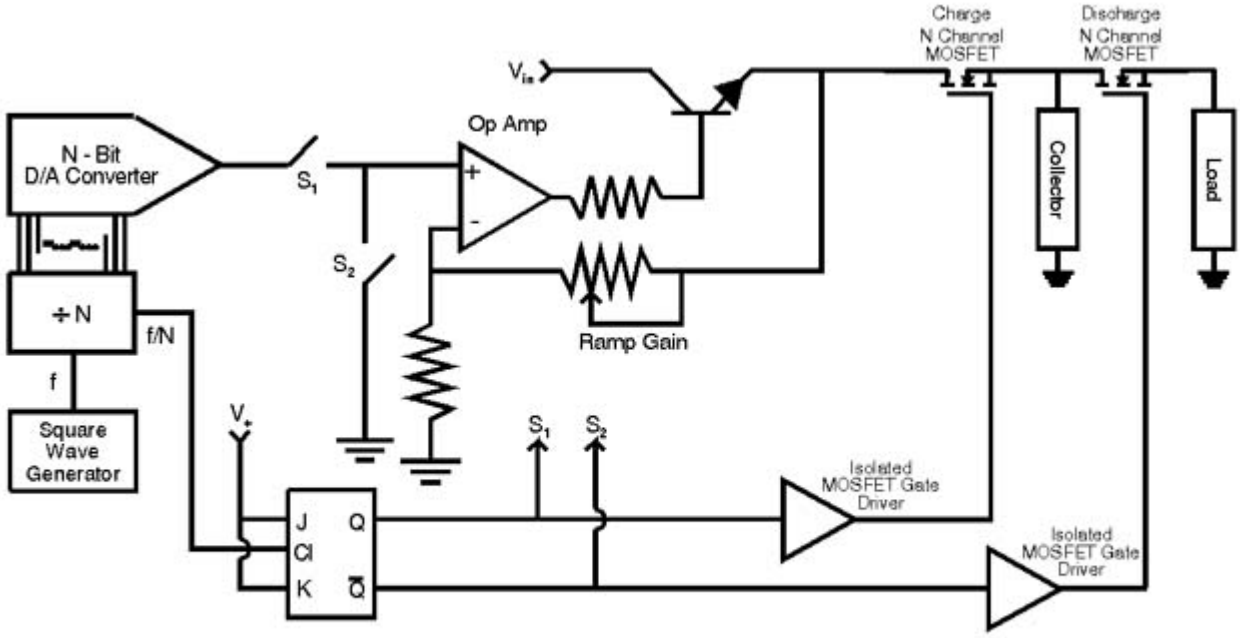

Figure 1A

Figure 1a. Type circuit utilized for ramp-up charging of a capacitor without work, and separate discharge of the collected energy in the load without substantial depletion of the primary source.

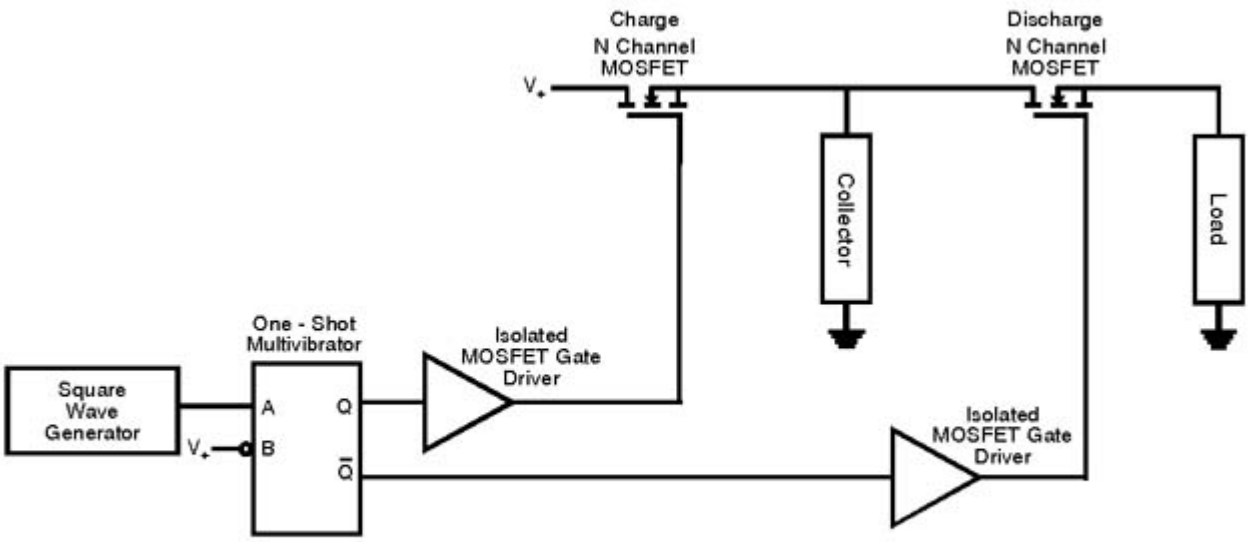

Figure 1B

Figure 1b. Type circuit for single pulse charging of a degenerative semiconductor collector without appreciable work, and separate discharge of the collected energy in the load without substantial depletion of the primary source.

Use of Step-Charged Capacitor as the Collector

Fulfilling our search for a special material with the extended electron gas relaxation time for the collector, a material alloy composed of 98% aluminum and 2% iron is tentatively suggested. However, production of this alloy is particularly difficult, so we are still researching for a solution that is more easily manufactured.

Meanwhile, the necessity for using a special material for the collector has been bypassed by another procedure we have utilized. Rigorously one can use a *normal capacitor* as the collector, if one step-charges it in several hundred small incremental rectangular voltage steps (stair-step-charging). The proof that this can freely charge a capacitor with energy, without having to do appreciable work, is already known in the literature. You can charge the capacitor *without entropy* and essentially without drawing electron mass current. [Ref 2,Ref 3,Ref 4,Ref 5]

Actually we consider the capacitor to be charged by *massless displacement current flow*, which for circuitry purposes we consider to be $d\phi/dl$ -- a flow of pure potential (trapped EM energy) along a conductor or through the vacuum; i.e., under conditions where *mass* displacement current flow does not exist. [Ref 6, Ref 7]

Massless Displacement Current Is Freely Available From Any Source

The principle embodied in the invention is that one can extract all the free EM energy one wishes, from any electrical power source, as long as it is extracted via massless displacement current and not by *electron mass* flow current. [Ref 8] And one can freely collect this extracted energy from a source into an ordinary capacitor if one does it correctly, *because one can charge the capacitor via massless displacement current without expending any appreciable work inside the source to dissipate its dipolar separation of charges*.

Every Electrical Source of Potential Is Already a Free Energy Source

We thus advance a revolutionary concept: all present power systems already utilize *free energy source-antennas*. However, the standard two-wire closed circuitry diabolically utilizes one-half the total free energy extracted by the source-antenna from the vacuum, to perform work inside the source-antenna to dissipate its dipolarity and hence to dissipate the *source-antenna (i.e. the receiver) itself*.

The source already acts as a "dipolar antenna" to continually receive "scalar potential" current $d\phi/dl$ (massless displacement current) from the vacuum. [Ref 9] Previously scientists and engineers have simply ignored this special massless EM energy influx. For load-free (i.e., mass-current-free) conditions, ($d\phi/dl$) is continually received from the vacuum *by any dipole* (i.e., by any *dipolar source-as-an-antenna*), and the flowing energy is continually exchanged back and forth between the vacuum and the dipole.

This free energy exchange with the vacuum is also true of any two points in our circuit that possess an open-circuit voltage or potential difference between them. Two such points act as a dipole. Free energy dipolar antenna sources are everywhere; we just have to learn how to break the symmetry in their energy flux exchange with the vacuum, collect some of the freely flowing influx, and distribute that collected excess energy to an isolated load to *separately* power it.

In other words, we simply have to implement circuitry that operates analogous to the standard heat pump cycle.

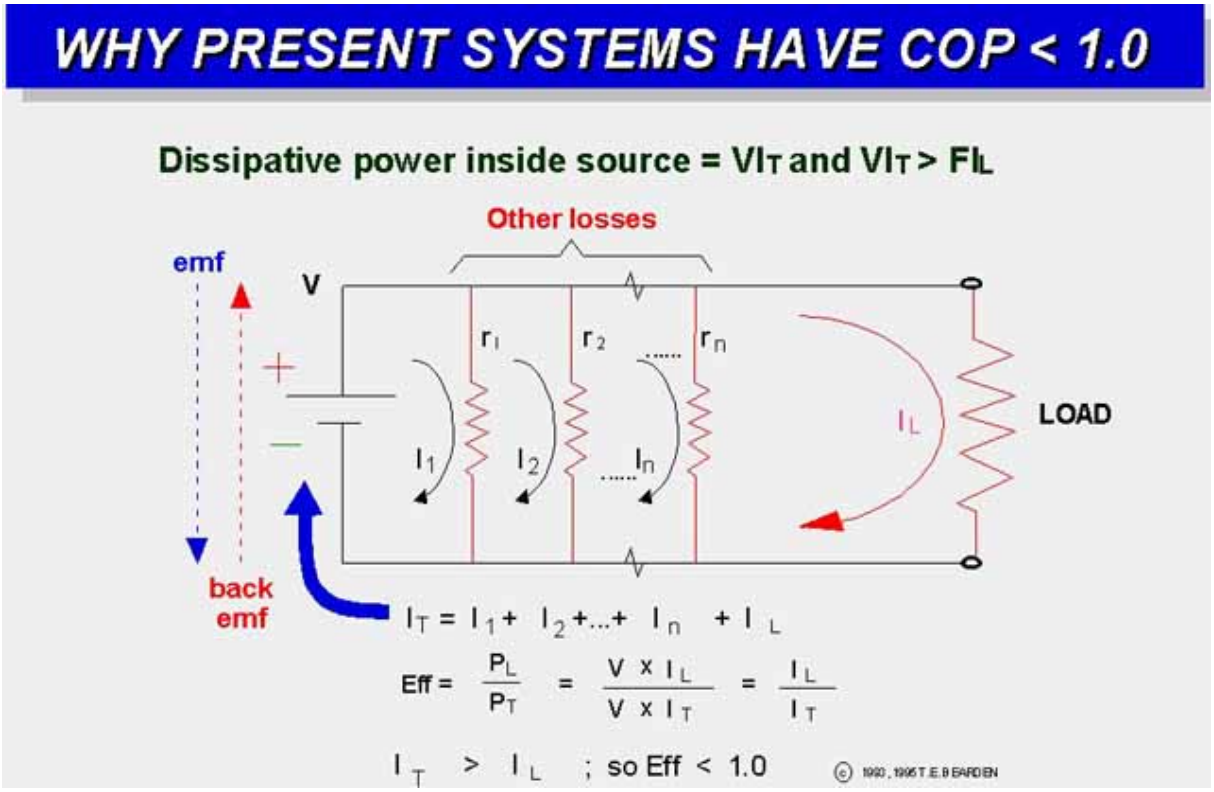

Figure 2. Why present electrical power systems have underunity operational efficiency.

Conventional 2-Wire Closed Circuit Operation

In the conventional 2-wire system a load is added to the source-antenna, allowing circulation of electron current in a closed circuit through the load and then through the ground return line back to and through the dipolar source-antenna. The only useful reasons for this "closed circulation" of the electrons are (1) it is simple, *easy*, habitual, and accepted, (2) all our components, instruments, and methodologies are developed in accordance with this usage, (3) one uses the electrons as a *working material fluid* to receive, transport, and discharge excess EM energy, and (4) forcing the electrons back through the back emf *reloads* the spent electrons again with excess EM energy in the form of little ∇φ's (excess trapped energy density) upon each recycled electron.

Some of the excess ∇φ collected upon the electrons is expended in the load as useful work, but one half of the total is expended in driving the spent (without excess ∇φ Consequently all conventional 2-wire circuits, which return *all external electron-flow current loops back through the source*, are always underunity devices, as is shown in Figure 2. Eerily these conventional sources are already free energy devices, which are unwittingly attached to circuitry specifically designed to utilize part of their freely received energy to deplete or destroy themselves, i.e., they are already *open systems receiving free energy from the vacuum, but they are hooked up and designed in a suicidal manner so as to use at least half of that freely extracted energy to re-close the system and shut off the influx of free energy.* Since at least some of the remaining half of the energy is lost in inefficiencies, frictional losses, etc., less than half the total free energy goes to the load. So there is always less useful work being done in the load than the destructive work being done inside the free-energy source-antenna to destroy it.

Operational Efficiency

We define operational efficiency Alpha as the average power expended in the load to power it, divided by the average power expended inside the source to dissipate its dipolarity. If Alpha < 1, one has to externally furnish energy to do restorative work upon

the source to replace or offset that amount of destruction being done inside the source, if one wishes the source to continue to operate as an energy-receiving antenna. If Alpha > 1, then if the additional losses are minimal, the device can conceivably run itself while furnishing some energy to a load to produce useful work.

We Must Excise the Suicidal Closed Circuit To Achieve Overunity

There is no mysticism in the overunity electrical device. The device is an open system that extracts excess energy from the vacuum, collects it, and transports it to the load to separately power the load. It is simply analogous to the standard heat pump cycle. It is also directly analogous to presently operating overunity systems such as windmills, waterwheels, solar cell arrays, and hydraulic turbines in a dam installation. All that we have done is to eliminate or dramatically reduce the standard cancerous mistake in conventional electrical power systems wherein much of the excess energy freely extracted from the vacuum by the already-overunity electrical source is then utilized to destroy the source's energy reception ability!

As we stated, in the conventional electrical device and circuitry, more destructive work is always done inside the source than is done usefully in the external load. Hence the conventional operational efficiency is always underunity.

Legitimate Overunity Systems Comply With Well-Known Requirements

There are many alternative and well-known permissible free energy systems that operate at overunity operational efficiency: solar cells, windmills, hydraulic turbines, heat pumps, and water wheels, to name a few. All of these are open systems, receiving an influx of free energy from a natural energy flow, and collecting and gating some of that energy to be dissipated in a load to do useful work. All of them are permissible overunity devices, since (1) they are open systems, (2) they constantly receive a free energy influx from an external source, (3) they extract and collect some of this energy without dissipation, (4) they dissipate this collected energy in a load, and (5) the discharge process is totally separated and isolated from the "collection-from-the-source" process.

No Legitimate Overunity System Is Intentionally Made Self-Destructive

Not a single one of these open overunity systems foolishly uses part of its freely extracted and collected energy to re-close the system and shut off its influx of free energy flow! What engineer would build a solar array such that, the moment the current started to flow, it powered a shutter arrangement to gradually close and shield off the solar array from the sun? Who would build a windmill so that, whenever the angled-blade assembly rotated in the wind to furnish power, a gearing feedback assembly also slowly caused the individual blades to rotate into a position parallel to the wind, thus stopping the windmill?

Yet this is precisely what the conventional electrical power system does with its external circuit. It deliberately utilizes half of the freely extracted energy to re-close the system and shut off the free energy flow between the vacuum and the source-antenna, by destroying the receiver-antenna!

However, this "suicide circuit" practice is guaranteed to keep the power meter on your home or business, and to keep the meter on the gas pump for fueling your automobile. Perhaps one may be forgiven for suspecting that, at the deepest levels of financial control,

this may be the real purpose in seeing that the existing interpretation of classical EM stays "as is."

All Electrical Power Sources Are Already Free Energy Receiving Antennas

All conventional electrical power systems already contain fully functional free energy systems in their source component. Each conventionally designed system is, however, deliberately suicidal, since part of the system's own energy is utilized to work against itself and destroy itself. This is primarily due to the preoccupation of engineers with power and work. They do not consider the source as an energy source, but as a power source. Power being the time-rate of performing work, and work being the dissipation of energy, they are thus naturally conditioned to think of the "dissipation of the source" as its natural functioning.

In fact, hardly a single one of them is aware that EM energy itself is a free-flowing process. Only a finite collector possesses a finite collection of EM energy. In nature, the potential gradients of all dipoles are already rivers of free-flowing EM energy exchange with those dipoles, where the energy density is freely furnished and is essentially free for the taking. It is mind-boggling that we have all been conditioned to extract this free energy furnished by nature and the creator, but to always utilize half of the extracted energy to destroy the receiver-antenna and thus strangle the flow!

In our work, we simply have excised this "self-destructive" cancer and reworked the circuitry so that only a minimal amount of the freely extracted energy is utilized for internal destruction of the source-antenna.

Thermodynamics and Open Overunity Systems Not In Equilibrium

In our approach we have an open system during every collection cycle, with an external source of energy and a continual energy influx. We have deliberately broken the local symmetry of the system's energy exchange with the vacuum, by spatially and temporally separating the energy collection and energy discharge phases. Overunity operational efficiency is permissible for such a system without violation of any of the laws of nature. Some of the influx of excess energy from the vacuum into the dipolar source antenna is transported without loss to the collector and collected. The collected energy in the collector is then separately discharged through the load, without any of it being discharged back inside the source-antenna. Note that we have broken local energy flow equilibrium but not global energy flow equilibrium.

The second law of thermodynamics, e.g., does not even apply to such an open system not in equilibrium. Classical thermodynamics cannot even compute the entropy of an open system not in thermodynamic equilibrium, as is well-known to thermodynamicists. [Ref 10]

What classical thermodynamics does have to say, is that such an open system must contain excess energy when compared to the closed system in equilibrium, because the closed system in equilibrium is in the maximum entropy condition. [Ref 11] Global conservation of energy is not violated, just as it is not violated in a windmill or in a heat pump, which are similar open systems. Local conservation of energy (which applies only to a closed system or to a system in total equilibrium) does not apply because the system is open and not in equilibrium.

Permissible Electrical Overunity Is Not Perpetual Motion

An open system out of equilibrium need not conform to (1) the local (closed system, equilibrium conditions) conservation of energy nor to (2) the second law of thermodynamics (which assumes equilibrium conditions). It must and does conform to the global conservation of energy, just as does a waterwheel or windmill. We strongly stress that the overunity electrical device is not a "perpetuum mobile." [Ref 12] The electrical operations and systems we propose are perfectly permissible by the known laws of physics and do not violate any of them. We propose a permissible series of overunity electrical systems.

The Heat Pump Analogy

In one way of viewing it, all we have done is utilize the potential as a more modern type of quantum mechanical fluid having hidden bidirectional flowing EM energy. [Ref 13], Ref 14, Ref 15, Ref 16] QM already certifies that the potentials, not the force fields, are the primary causes of all EM phenomena. Contrary to classical EM theory, the force fields are effects in, on, and of the charged particles themselves. Consequently, if the potentials are the primary causes of all EM phenomena, then for free energy to perform work (free causes to collect and generate desired effects) we must turn to the potentials.

We have utilized a hookup and switching arrangement so that energy-free collection is totally separated from collected energy discharge in the load. In short, we have done what a normal heat pump does, when it uses the air with its thermal energy as a working energy-containing fluid. Consequently, overunity operational efficiency of analogous electrical devices is perfectly permissible, and not prohibited by the known laws of physics.

An Electrical Power Source Is a Dipolar Antenna For Free Reception of Energy

An electrical power source is in fact only a dipolar antenna for reception of potential (hidden bidirectional Whittaker/Ziolkowski waves). All the current you run back through the back emf of the source, to perform dissipative work inside it, is something you yourself are doing to the source. It is not a priori a characteristic of the source!

If no work is done inside the source's internal bipolar separation of charges (i.e., if no electron or ion current is forced back up from the ground return line against the source-antenna's potential and therefore against its back emf), then the dipolar source-antenna will last essentially forever, or until something corrodes or breaks mechanically.

The flow exchange of energy between the vacuum and the dipolar source-antenna is freely driven by all the charges of the universe, in accordance with Puthoff's cosmological feedback loop. [Ref 17]

Massless Displacement Current

Technically one is using massless displacement current to charge the capacitor, rather than electron mass flow current. It is real energy flow nonetheless; just in work-free, dissipation-free form. As is well-known, one plate of a capacitor already charges the other plate by just this very massless displacement current, transporting real EM energy across the gap between the plates in the process. The electrons themselves do not cross the gap.

Displacement current is already well-known to be "free" energy transport without any dissipation as power and work. By drawing massless displacement current only from the source-antenna instead of electron flow current, you can draw work-free, dissipation-free energy as long as you wish, as often as you wish, and as much as you wish, without ever

dissipating the source-antenna. You just have to collect it onto some trapped electrons or other charges, such as in a capacitor's plates, then switch the collected energy (charged capacitor) separately across a load, in a separate discharge circuit, to discharge through the load as work.

The real trick is to prevent the electrons in the circuit from moving and providing mass "energy dissipation" current inside the source during the collection process. In the original paper, we explained that this could be done by using as a collector a degenerate semiconductor material, with extended electron gas relaxation time. In this paper we have explained how this can be done by step-charging an ordinary capacitor as a collector. We have also included specific references proving (both experimentally and theoretically) that this is correct. With the requirement for special materials removed, there is no reason that a competent researcher cannot develop a step-charged capacitor device to prove it experimentally for himself or herself.

Requirement: Proof of Principle and Independent Test and Certification

My associates and I are proceeding as rapidly as possible toward full-up "proof-of-principle" circuits for open release and certification or falsification by the scientific community and engineers at large. Soon we also expect to release to other researchers information on the kinds of new electrical phenomenology one meets in true overunity electrical devices. These are not in the textbook, at least with respect to electrical power systems. We give some indication of these phenomena below:

New Circuit Phenomena Must Be Mastered

One meets unusual electrical phenomena in attempting to perform overunity electrical operations. For overunity, a priori one must "slip excess potential" through the circuit essentially without losses. That is, one must deliberately pass massless displacement currents through the circuit and at least through some of its components.

Solid-state switching components in particular exhibit unusual phenomena, to say the least, when excess potential is introduced into and through all their internal components inside modern semiconductors. An ordinary MOSFET, e.g., may have 25,000 separate internal components. It is as if someone crammed the entire electronic parts store inside it. Simple switches these semiconductors are not, when exposed to appreciable massless displacement current.

When one "slips in" some pure potential, by SWZ decomposition one has also slipped in some bidirectional EM pump waves. The nonlinear semiconductor materials will function as phase conjugate mirrors when suitably pumped, including at non-optical frequencies. Consequently pumped phase conjugate replicas, self-targeting, formation of quantum potentials, and modular variable effects sometimes begin to evidence. We will address and explain some of these effects in a future paper. For now, we simply state that they occur, and there is a host of extra phenomenology the experimenter may encounter.

However, an iron rule for the experimenter is that, for odd circuit behavior, first exhaust all "normal" causes before turning to the extraordinary causes. One will save oneself a great deal of grief by applying this Occam's razor.

Also in deliberately utilizing displacement current, one is actually employing an expanded, higher topology EM with additional degrees of freedom, similar to that pointed out by Barrett. [Ref 18] Consequently one encounters a host of additional higher topology EM

phenomenology. In particular one encounters nonlinear optical (NLO) functioning of the semiconductors at any and all frequencies, not just in optical bands.

Overunity Electrical Devices Are Permissible By The Laws of Physics

The overunity electrical energy system is permissible by the laws of physics and is not in any manner perpetual motion. It simply extracts excess EM energy from an ubiquitous source, through a dipole as a receiver, and collects that excess energy, conducts it to the load, and separately dissipates it in the load to power the load, without using any of the collected energy to perform work inside the source to dissipate the source-antenna. It is directly analogous to a heat pump, which is well-known to perform at overunity operational efficiency under nominal conditions.

In Conclusion

Primarily my associates and I believe we have corrected an ubiquitous error made in present power systems that prevents these systems from realizing their already-inherent overunity operational efficiency. We also firmly believe that the permissible electrical overunity device is an idea whose time has finally come.

Notes and References

1. T. E. Bearden, "The Final Secret of Free Energy," distributed over the Internet, Feb. 9, 1993. The paper was also published in Magnets, 7(5), pp. 4-26 (1993); in Explore!, 4(3/4), pp. 112-126 (1993), and in several other media.
2. For proof that you can charge an ordinary capacitor almost without entropy, see I. Fundaun, C. Reese, and H. H. Soonpaa, "Charging a Capacitor," American Journal of Physics, 60(11), pp. 1047-1048 (1992). A capacitor can be step-charged in small steps to dramatically reduce the entropy required to charge it. In the limit, a theoretically perfect capacitor can be fully charged without any electrical current or work at all, i.e., you can simply transport the excess energy density (the potential gradient) of the open circuit voltage of the source to the collector, and couple that $\nabla\phi$ to the electrons trapped in the capacitor plates, without electric current from or through the source.
3. M. G. Calkin and D. Kiang, "Entropy Change and Reversibility," American Journal of Physics, 51(1), pp. 78-79 (1983).
4. F. Heinrich, "Entropy Change When Charging a Capacitor: A Demonstration Experiment," American Journal of Physics,54(8), pp. 742-744 (1986).
5. V. K. Gupta, Gauri Shanker, and N.K. Sharma, "Reversibility and Step Processes: An Experiment for the Undergraduate Laboratory," American Journal of Physics, 52(10), pp. 945-947 (1984).
6. In most texts the treatment of displacement current is far from adequate. A better treatment than most is given by John D. Krauss, Electromagnetics, Fourth Edition, McGraw-Hill, New York, pp. 437-439, 547-549 (1992). Additional useful insight can be gained from David J. Griffiths, Introduction To Electrodynamics, Second Edition, Prentice-Hall, Englewood Cliffs, New Jersey, pp. 304-308 (1989). Problem 7.51 on p. 335 is also of direct interest, as is particularly the comment by Griffiths below the problem. Additional insight can be gained from David Halliday and Robert Resnick, with assistance by John Merrill, Fundamentals of Physics, Extended Third Edition (1988), John Wiley & Sons, New York, vol. 2, Article 37-4: Displacement Current, pp. 836-837, 839-841. The standard notion is to (1) retain the continuity of current, thus modifying and salvaging Ampere's law, (2) the displacement current is non-physical, i.e., it does not involve the transfer of charged mass, (3) focus primarily upon magnetostatics as to the results achievable by the displacement current, (4) retain the notion of $\nabla\phi$ as E, a force field, thereby

focusing the notion of displacement current upon the change of the E field without the flow of charged mass, and (5) retain the confusion between electrical charge and charged mass that is inherent in the terms "charge", "current", etc. On p. 836 Halliday and Resnick point out that the displacement current is not derived per se, but is a "fit" based upon symmetry arguments, and it must stand or fall simply on whether or not its predictions agree with experiment. On the same page the displacement current is taken to be a linear function of $d\phi/dt$. For flow along a circuit where there is no electron mass current, it seems appropriate to replace $d\phi/dt$ by $d\phi/dl$. It is also strongly indicated that one should clearly distinguish between charged mass current flow and the flow of massless charge, which is the approach we have taken.

A final indication of the way conventional scientists tend to regard displacement current is given by Martin A. Plonus, Applied Electromagnetics, McGraw-Hill, New York, pp. 446-448 (1978). Here Plonus uses the prevailing notion of the E field being altered by the flow of massless displacement current. As can be seen, the displacement current is relegated almost to a curiosity of capacitors, and not really too essential except just to "balance the books" and retain Ampere's current continuity.

We now wish to point out something very subtle but very rigorous. CEM erroneously uses $E = -\nabla\phi$ to equate a mass-free potential gradient with a mass-containing force field. This "E-field" only exists at a point when there is a point-coulomb of electrical charged mass at the point. The real version of this equation should be $E == -[(\nabla\phi)\bullet q]/|q|$, where $\nabla\phi$ is the potential gradient coupled directly to the charged point-mass at the point, q is the number of coulombs of charged mass at the point, $q/|q|$ is one coulomb of charged mass, and E now is properly the force on and of each coulomb of the collected charged mass at the point.

Viewed in this manner, one can now see that the E field may be altered by flow of additional charged mass q, or by flow of massless additional $\nabla\phi$, or both. This is now in agreement with the manner in which it is approached in CEM, but more rigorous. Essentially it states we may increase the total "charge" (potential) at a point by either (1) moving in additional charged masses by use of a conventional current, or (2) moving in additional massless charge (potential) without any additional change in mass, or (3) a combination of the above.

However, let us apply this to a single charged particle or to a fixed number of them. No one seems to have noticed that the notion of altering the E-field of the collected point- charges at a point via method #2 , i.e. by a flow of massless displacement current onto the fundamental charged particles themselves, a priori requires the electrical charge of each fundamental particle to change. Hence it **falsifies the notion of quantization of charge**.

Also, no one seems to have noticed the electric power implications: if it is known that one can charge a capacitor purely by displacement current, then one can charge up the capacitor with energy, without any dissipation of the source, because only charged mass current through the back emf of the source does that. So one can then disconnect the charged capacitor and separately connect it in a closed circuit with a load, to discharge through the load and furnish free work in the load (free in the sense than no dissipation of the primary source occurred in either the collection of the energy or in discharge of the collected energy through the load as useful work). Free energy, overunity electrical devices, etc. should then be readily apparent and permissible, from the known nature of displacement current and capacitors alone.

7. Maxwell assumed a material ether, which was assumed to be a thin material fluid filling all space. Hence force (which must have mass as a component due to its definition F == d(mv)/dt) could be modeled as existing in the Maxwellian ether, for there was already thin matter present everywhere. Hence in Maxwell's EM the incorrect notion resulted that force fields existed in the vacuum. Oliver Heaviside continued this erroneous assumption, since in fact he hated the potentials, regarded them as mystical, and stated that they should be "...murdered from the theory." Also, electricity was thought to be a similar thin material fluid. So the material electric fluid could and did flow through the fluid vacuum also, giving the notion of the material electric flux density for D. Consequently, the units of D are coulombs (charged mass rate of flow) per square meter. Rigorously, that material D flux exists only on and of charged mass that moves; it cannot and does not exist in vacuum. Only potentials and potential gradients exist in vacuum. However, after Maxwell's formation of his theory, the Michelson-Morley experiment destroyed the material ether (not the ether per se, but its material nature). So electricians then simply proclaimed that they were no longer using the material ether, and that such did not exist! Not a single Maxwell/Heaviside equation was changed. The material ether is still very much assumed in classical EM (CEM) theory, and so the theory is accordingly very seriously flawed. Since CEM also has no adequate definition for either electric charge or the scalar potential, the problem is confounded.

   To clarify this problem, one must separate the notion of electric charge from the notion of mass. The electrical charge of a charged mass is the virtual photon flux exchange between the surrounding vacuum and that mass. Since a virtual photon flux is just a scalar potential, the electron's massless electrical charge is simply its scalar potential. It can now be seen that, if we forcibly remove the notion of "mass" from D in the vacuum, or in a charged material medium where the charged masses cannot move, then the "material electric flux concept" portion of D turns into $d\phi/dt$, a change in the nonmaterial electric flux. However, D is a vector and hence has a "net flux" spatial directional aspect which $d\phi/dt$ alone does not possess. It follows that the value of $d\phi/dt$ at a spatial point actually represents the result of change of the value of ϕ at that point, as a function of time. Thus a directional operator must first be invoked upon ϕ at the point, to provide a direction for the spatial ϕ-current after the d/dt operator is invoked. The appropriate operator to give directionality to ϕ is ∇, so that D in vacuum or in an electron-current-free charged medium becomes a function of $d/dt(-\nabla\phi)$. Conventionally, the use in the literature of $E = -\nabla\phi$ immediately provides that $d/dt(-\nabla\phi)$ at a point results in dE/dt, or the time rate of change of the E-field at that point. If no distinction is made between charged mass current flow and massless charge current flow, this would be true in either vacuum or material media. However, we wish to specifically distinguish between massive displacement current and massless displacement current. So we point out that the increase dE/dt in the magnitude of the E-field at, on, and of a charged particle at a point, can be due to either (1) the flow of mass current to build up the number of point coulombs at that given point, where each coulomb has a fixed massless charge (potential), or (2) the flow of massless current $d/dt\ (-\nabla\phi)$ so as to alter the value of ϕ at that point, evidenced by a fixed number of coulombs of charged particles, **each of which has altered its individual potential and therefore its individual massless electrical charge.**

   So what "flows" when the charged masses are frozen or absent is simply a current of scalar potential, resulting in a change of the potential upon fixed point charges of $d\phi/dt$. This is what crosses between the plates of a capacitor, e.g., which is where the notion of "displacement current" originated in the first place. (See, e.g., Halliday and Resnick, 1988, ibid., p. 836, Sample Problem 1, for expression of the displacement current as $d\phi/dt$, neglecting constants of proportionality). This is also

what flows when one connects multiple open circuit pairs of conductors to a source.

It remains to examine Maxwell's equation $\nabla.D = \rho_v$. If mass displacement current cannot flow, then there exists no divergence of the mass current portion of D. However, massless displacement current can still flow, and there can exist divergence of that component. There are now three aspects to that equation: (1) the case in the vacuum, where there exists no physical ρ and hence no ρ_v as such because of the absence of mass, (2) the case in a material medium, which is the normal case already treated in the standard equation and need not be further addressed, and (3) the case in a material medium where, nonetheless, physical charged masses such as electrons cannot move, but massless charge currents may still move. Only cases 1 and 3 need to be addressed, and they have the same treatment.

We address the one dimensional case, which is sufficient for circuit current flow considerations. First we replace D with $(D\phi + D\rho)$, where the first term is the massless displacement current and the second term is the massive displacement current. In other words, we account separately for charged mass flow and for massless charge flow. Similarly, we express ρ_v as two components, one massive and one massless, so that $\rho_v = d/dl(\phi + m_v)$. For case 1 and case 3 we make $m_v = 0$ and $D_\rho = 0$. For those cases, we have $\nabla.D = \nabla.D\phi = d\phi/dl$ (since current along a wire is a one-dimensional flow). We specifically note that ϕ, $D\phi$, $\nabla.D\phi$, and $d\phi/dl$ are not necessarily conserved quantities, since ϕ is mathematically decomposed into bidirectional EM waves, and is hence a freely flowing process. When symmetry is broken so that equilibrium conditions no longer exist, one or more of these quantities will not be locally conserved.

What has actually been done here is to open the classical EM model to the free exchange of massless EM energy that is always ongoing between any charged particle's mass and the vacuum. We then account separately for the flow of the energy exchange (of the massless charge flow) and the flow of the physical receiver/transmitters (i.e., for charged mass flow). Our switching arrangement to separate the collection and discharge cycles constitutes a permissible "Maxwell's Demon" which breaks symmetry, hence breaks equilibrium and opens the system as required. Since such a system can continually receive a free influx of energy from its external source, such a system can permissibly exhibit overunity operational efficiency without violating the laws of physics.

8. Displacement current is already known to be lossless transport of energy without entropy, i.e., without work. For a typical confirmation see Jed Z. Buchwald, From Maxwell to Microphysics, University of Chicago Press, Chicago and London, p. 44 (1985). Quoting: "...no energy transformation into heat occurs for displacement currents."

9. We strongly stress again that the scalar potential may be mathematically decomposed into a harmonic series of hidden bidirectional EM wave pairs. Each wave pair consists of an ordinary EM wave together with its superposed phase conjugate replica wave. Thus internally the scalar potential gradient across a source represents a bidirectional exchange of EM wave energy with the surrounding vacuum. See notes 13, 14, 15, and 16 below for references confirming the decomposition of the "fixed" potential into a dynamic flow process and energy exchange process.

10. For confirmation see Robert Bruce Lindsay and Henry Margenau, Foundations of Physics, Dover Publications, New York, pp. 283-287 (1963). See particularly p. 283, which emphasizes that a "field of force" at any point is actually defined only for the case when a unit mass is present at that point. See p. 17 on the limitations of

a "natural law"; p. 213 and 215 for limitation of thermodynamic analysis to equilibrium states; and see p. 216 for definition of entropy. See p. 217 for the fact that the entropy for non-equilibrium conditions cannot be computed, and the entropy of a system not in equilibrium must be less than the entropy of the system in equilibrium, i.e., for a system to depart from equilibrium conditions, its entropy must decrease. Therefore its energy must increase. Thus the energy of an open system not in equilibrium must always be greater than the energy of the same system when it is closed and in equilibrium, since the equilibrium state is the state of maximum entropy.

11. Lindsay and Margenau, ibid., p. 217.

12. The basic notion in the perpetual motion conundrum is that somehow a closed system in thermodynamic equilibrium could perpetually provide external energy to a load outside the system. Such a notion is an oxymoron; if the system is closed, no energy can escape or enter, hence the system could not furnish energy externally to power a load or even just to radiate away. My associates and I have not in any manner proposed such a system or entertained the notion that such might exist. But it is well-known that open systems not in thermodynamic equilibrium can freely extract energy from their environment and furnish energy to power a load, and that is precisely what we have proposed.

13. G. J. Stoney, "XLVIII. On a Supposed Proof of a Theorem in Wave-motion, To the Editors of the Philosophical Magazine," Philosophical Magazine, 5(43), pp. 368-373 (1897).

14. E. T. Whittaker, "On the Partial Differential Equations of Mathematical Physics," Mathematische Annalen, vol. 57, pp. 333-355 (1903). Whittaker mathematically decomposes the scalar potential into a bidirectional series of EM wave pairs in a harmonic sequence. Each wave pair consists of the wave and its phase conjugate. (We have pointed out elsewhere that such a wave pair is a standing electrogravitational wave and a standing wave in the curvature of local space-time). To see that all classical EM can be replaced by interference of two such scalar potentials (i.e., by the interference of their hidden multi-wave sets), see E. T. Whittaker, "On an Expression of the Electromagnetic Field Due to Electrons by Means of Two Scalar Potential Functions," Proceedings of the London Mathematical Society, Series 2, vol. 1, pp. 367-372 (1904).

15. Richard W. Ziolkowski, "Localized Transmission of Electromagnetic Energy," Physical Review A, 39, p. 2005 (1989). For related material, see Richard W. Ziolkowski, "Exact Solutions of the Wave Equation With Complex Source Locations," Journal of Mathematical Physics, 26, pp. 861-863 (1985). See also Michael K. Tippett and Richard Ziolkowski, "A Bidirectional Wave Transformation of the Cold Plasma Equations," Journal of Mathematical Physics, 32(2), pp. 488-492 (1991).

16. C. W. Hsue, "A DC Voltage is Equivalent to Two Traveling Waves on a Lossless, Nonuniform Transmission Line," IEEE Microwave and Guided Wave Letters, 3, pp. 82-84 (1993).

17. H. E. Puthoff, "Source of Vacuum Electromagnetic Zero-point Energy," Physical Review A, 40(9), pp. 4857-4862 (1989). Presents Puthoff's self-regenerating cosmological feedback cycle for the source of the vacuum EM zero-point energy.

Our comment: Over any macroscopic range, the vacuum fluctuations ($\nabla\phi$'s) of the ZPE sum to a vector zero translational resultant. The individual ZPE components ($\nabla\phi$'s), however, are still present and active, and their energies are present as well. That vector zero can thus be considered to be a gradient-free potential, or the vacuum potential, since it contains enormously dense, trapped EM energy. So the vacuum potential -- pure space-time (ST) itself -- contains enormously dense EM energy.

One can then apply the Stoney/Whittaker/Ziolkowski (SWZ) methodology to decompose this powerful vacuum potential, i.e., the vacuum, and in fact space-time (ST) itself, into an incredibly dense flux of EM energy. Space-time is revealed to be an incredibly powerful electrostatic scalar potential. The electrical charge (potential) of a charged particle is a small potential gradient in the ST potential, i.e., it is a slight alteration of the local ST potential. Via Puthoff's self-regenerative feedback cycle, the energy flowing in this potential is being exchanged between the local source and all the charges everywhere in the universe. This "potential gradient" or electrical charge itself can be decomposed via the SWZ approach, and becomes a bidirectional EM wave pair exchange of excess EM energy between the vacuum/ST and the charged particle's mass. The potential gradient between the ends of a dipole have similar decompositions, with the additional characteristic that the negatively charged end of the dipole receives the forward-time waves from the SWZ wave pairs, and the positively charged end receives the time-reversed waves.

Our final comment is that Cole and Puthoff have rigorously shown that, in theory, the vacuum EM energy can indeed be extracted. See Daniel C. Cole, and Harold E. Puthoff, "Extracting Energy and Heat from the Vacuum," Physical Review E, 48(2), pp. 1562-1565 (1993).

18. T. W. Barrett, "Tesla's Nonlinear Oscillator-Shuttle-Circuit (OSC) Theory," Annales de la Fondation Louis de Broglie, 16(1), pp. 23-41 (1991). Barrett shows that a higher topology EM model (e.g., EM expressed in quaternions) allows shuttling and storage of potentials in circuits, and also allows additional EM functioning of a circuit that a conventional EM analysis cannot reveal. As an example, one may meet optical functioning without the presence of optical materials.

LEGEND:

● = filled black dot (like scalar product) in original text
Ø = Greek letter **Ø** for the Scalar Electrostatic Potential field
∇ = Greek letter Nabla (upside down triangle)
|x| = Absolute value of x (only positive)
uf = microFarad

PRACTICAL OVERUNITY ELECTRICAL DEVICES

(C) T.E. Bearden
May 13, 1994

Introduction

Recently, my associates and I have filed a patent application on what we believe will at long last reveal the mechanisms for practical overunity electrical devices. It is my purpose in this paper to provide additional information augmenting my former two papers, (1) "The Final Secret of Free Energy," Feb. 1993, and (2) "Additional Information on the Final Secret of Free Energy," Feb. 1994. In this present paper, with the permission of my colleagues, I release the gist of our work on separation of electrical charge into two coupled components **Ø**●(m), where **Ø**● represents the massless charge of the charged particle or mass, ● represents the fact that it is coupled or trying to couple to the special mass that makes up charged particles [i.e., the special kind of mass that will couple to the virtual photon flux density that is represented by the symbol **Ø**], and m represents the inert mass component of the charged mass. Since not all masses will couple with **Ø**●, we indicate the type of mass that <u>will</u> couple with it, as ●m. Thus a charged mass is composed of (**Ø**●)●(●m), which we consolidate to (**Ø**)●(m).

Charge Is Not Quantized

An interesting immediate result is that the massless charge of a fundamental charged particle is not quantized; it changes as a function of the background potential in which it is embedded. So it is discretized as a function of the background potential (i.e., of the virtual photon flux exchange between it and the surrounding vacuum). Otherwise, e.g., there could be no ∇**Ø** created on any charged particle q, and hence no E-field, and hence electrons would not move in our present circuits. Since they do move in our circuits, charge is not quantized.

Electrical Current Has Two Components

The first key to understanding free energy electrical and magnetic machines is to realize that electrical current actually consists of two currents coupled together. Our treatment of an electric charge as a coupled system (**Ø**)●(m) also means that electron current i = dq/dt is comprised of two coupled components [(d**Ø**/dt)●(dm/dt)]. This follows from simply invoking the operator d/dt; i.e., d/dt[(**Ø**)●(m)] = (d**Ø**/dt)●(dm/dt), which is the same as [(d**Ø**/dt●)●(●dm/dt)]. The component (d**Ø**/dt)● is the known but not well understood <u>massless displacement current</u>, while the component ●(dm/dt) is the <u>mass displacement current</u>, and the coupling operator ● means "coupled to" or "trying to couple to". The coupling operator represents a real physical operation: the exchange of virtual photons between the vacuum potential and the charged mass. Any potential $\mathbf{Ø}_1$● is considered to be a potential that is superposed upon the ambient vacuum potential $\mathbf{Ø}_0$● , to provide a potential ($\mathbf{Ø}_0$+$\mathbf{Ø}_1$)●. The ambient vacuum potential does not disappear merely because we add another potential to it!

Confusion In Present Electrical Physics

We point out that, in physics books of note, the overt coupling effect is essentially unknown or ignored because physics presently has not defined either the scalar potential or the electrical charge. The conventional theory simply uses an "inert" expression d**Ø**/dt to represent the displacement current (and another inert expression q for a charged mass), and most theoreticians are uncomfortable even with that. The displacement current is also confused with force by equating the displacement current d**Ø**/dt to dE/dt. In turn, this means that d**Ø**/dt is confused with mass, hence with dm/dt, which latter is also a component of dq/dt. m is always an \internal component\ of force, as is known in foundations of physics but this fact continues to remain completely oblivious to the electricians. [*Good* electrical theorists do admit that there is no force in the vacuum; and that the force associated with the E-field is evidenced

only in the interacting mass. However, they continue to maintain the E-field (force per point-coulomb of charged mass) in the vacuum, when there are no point-coulombs of charged mass there!

Mass Is an Internal Component of Force

It is easy to show that mass is always a component of force: We will simply define *force* precisely. We first insist that no equation can be used as a definition; an equation simply states that the magnitude of one of its sides and the magnitude of the other side are equal. (The length of a board and the length of a human may be equal, but writing that as an equation has absolutely nothing to do with the definition of either a board or a human). So we will insist that any true definition must be an *identity*.

We define force F as F ≡ d/dt(mv), whereupon mass is a component of force *a priori*. It follows that, if we define the E-field E as the force per coulomb, we are defining it as the force existing at a point and having a point-coulomb of charged mass as one of its major components. We may accurately now define E as E ≡ -[(∇**Ø**)●(q)]/|q|, where the absolute value symbol in the denominator is essential, q/|q| being one point-coulomb. [We leave as an exercise for the reader the further reduction of this definition by treating q as ●(**Ø**●m)].

At any rate, with the new and correct definition of the E-field, one can see that the flow of displacement current (d**Ø**/dt) upon a collector such as a rigid capacitor, containing a fixed charge ●(**Ø**●m), will result in the formation of an excess ∇ **Ø**● upon those restrained charges in the capacitor plate, so that there is created an E ≡ -[(∇ **Ø**)●(q)]/|q|. Since the conventional theory considers the antigradient of the potential as an E-field, then one can now see the exact mechanism that creates this E-field that grows upon the capacitor (across its plates) as it charges. In fact, the q/|q| cannot change in a capacitor if its plates and dielectric are immovable. Instead, in that case, the **Ø**● portion of the trapped ●(q) changes, producing the (∇ **Ø**)● change. Since the (∇ **Ø**)● component is coupled to the mass component of the fixed ●q as (**Ø**+∇ **Ø**)●m, then an E-field is created and exists as E ≡ -[(∇ **Ø**)●(q)]/|q|.

An Ideal Capacitor Is an Electron Current Blocker

We point out that, if the capacitor's components are ideal, *completely rigid*, and do not physically move, then the capacitor is a "●dm/dt blocker." If the charges really were frozen in place, then the potential would flow across the plates at the speed of light, via the flow of excess massless displacement current d**Ø**/dt●. In that case, an ammeter would not show the classical "exponential fall-off" of the current with time; the electron current dq/dt would occur as a single-point Dirac delta function at t=0, and would be zero thereafter. And no electrons would be able to move in zero time. The voltage would show an instantaneous adjustment to the charged value with a single step-function, and the capacitor would charge up fully, instantly, with no work (energy loss) whatsoever being done. And this charge-up of the capacitor would not dissipate in the slightest the source furnishing the voltage; there would be no electron current dq/dt through the back EMF of the source, hence no work inside it to deplete its separation of charges.

Problems With Ordinary Capacitors

However, most ordinary capacitors are much more than just an ideal capacitor. The plates move, the dielectric moves, etc. due to the forces created upon them by the E-fields created upon the trapped charges in them. The spatial translation of the resulting force moving the plates constitutes work; i.e., it dissipates some of the flowing d**Ø**/dt energy. Each movement of the plates and/or dielectric carries with it all its internally trapped charges. The movement of those charges constitutes a substantial longitudinal electron current dq/dt, when compared to the longitudinal "drift" electron current in normal circuits. [Electrons spend most of their time moving radially in a wire, not down it.] This "moving plate and its transported charges" make an electron current, which pumps the inert electrons in the ground return line back through the back EMF of the source, depleting the source. Consequently, the ordinary capacitor will simply release as much energy as work (to move the plates and dielectric) as it stored. Hence, it will also produce dissipation of the source via the amount of energy stored in the capacitor. You still get "free energy" stored in the capacitor, but also dissipate the source by an equal amount.

Rigidized Capacitors Must Be Used

Only rigidized capacitive collectors are useful in free energy devices. Such capacitors are in fact actually available, e.g., as calibration standards, but they are extremely expensive ($400 to $2,000 or so each, for a capacitance reaching about 1 uf).

So, capacitive type collectors must be rigidized, if used in overunity circuitry. Even so, in a single integrated circuit, although one collects free energy, one will use half of what was collected to dissipate the source. Not all the remaining half will be discharged

through the load; some will be discharged in other circuit and component losses. Hence, there will always be less work done in the load than is done in the source to kill it, by a conventional two wire single closed circuit. In my second referenced paper (Feb.94), I included precise proof that this is true. One must use energy collection and shuttling between two isolated circuits, and the load discharge current must not pass back through the primary source of potential.

We have previously provided precisely how to utilize capacitive collectors in our two referenced papers. We point out here that the capacitors must be calibration standard capacitors, or specially made rigidized capacitors.

It Does Not Require Electron Current to Charge An Ideal Capacitor

For the benefit of the skeptic, this is already proven. We simply list references (2) and point out the equation that represents the energy K in a charged capacitor. Here we have $K = ½(CV)^2$. It is totally the displacement current dØ/dt● flowing (from a higher potential) onto the charging plate that produces the higher potential Ø on that charging plate, and hence a V between the two plates, one of them (the "ground" side) being held at a constant potential. The mass displacement current component dm/dt of the electron current dq/dt has nothing whatsoever to do with energy accumulation; it has only to do with the dissipation of energy that is happening simultaneously in all losses and loads in the circuit loop.

We reiterate that most ordinary capacitors have terrible internal movement, and accomplish as much energy dissipation as they do energy collection by permitting dq/dt and work performed upon the plates and dielectric to move them. The standard two-wire circuit also guarantees that all such dq/dt current "through" the capacitor is passed back through the source against its back EMF, doing an equal amount of work in the source to dissipate its separation of charges and "destroy" the source.

An ideal capacitor does not pass dq/dt, but only massless displacement current as theorized by Maxwell to save current continuity in a circuit containing a capacitor, and hence to save Ampere's current law. That is, an ideal capacitor is a ●dm/dt blocking device. However, the capacitors utilized in normal circuits are not ideal capacitors at all. By allowing the plates to move, electron current dq/dt is created on both sides of the capacitor. Otherwise there would not be a ground return dq/dt, but only a ground return dØ/dt●. This dØ/dt● would not and does not push electrons back up through the source against its back EMF; else the ground side of the source, which is engaged in continuous dØ/dt● exchanges with the vacuum, would produce destructive amperage dØ/dt● in the battery or potentialized source, against its back EMF, while it was simply sitting on the shelf. In fact, a flow of dØ/dt● continually runs from the vacuum to the positive terminal, then through the inside of the battery to the negative terminal, and thence back to the surrounding vacuum. Also, the incoming flow from the vacuum "splits" at the positive terminal, where one branch flows inside the source to the negative terminal, and the other branch flows through the external circuit to the ground return line, and thence to negative terminal and back to the vacuum. In the external circuit, the dØ/dt● hooks to free electrons and moves them as ordinary dq/dt. In the internal circuit inside the source, the electrons are restrained, hence they only move when their restraint is overcome.

Displacement Current dØ/dt Is Real

In recent years, SQUID detectors have been utilized to detect the magnetic field created between the plates (at right angles) by the displacement current dØ/dt between the plates, providing strong evidence that displacement current is physically real. The best proof that it is real is a charge blocking device, two isolated circuits using energy collection and shuttling, and overunity powering of loads in the secondary circuit.

A Problem With Ammeters and Measurement of dØ/dt

Note that an ammeter cannot differentiate between displacement current dØ/dt● and normal current dq/dt. In the ammeter, the sample dØ/dt● will couple to free electrons, producing a normal dq/dt inside the ammeter. The driving of this dq/dt through a precision resistance, e.g., is measured and the instrument is calibrated to show the dq/dt amperes flowing. One of the major needs of free energy researchers is the development of a good current meter that will differentiate between dØ/dt● and dq/dt, and measure each one. Short of using a mass spectrometer to differentiate the mass current ●dm/dt, and comparison of those mass current measurements with an ammeter's measurements of the "current" dq/dt, and calculating the dØ/dt● from that, I presently know of no way to precisely and simply measure and separate the two current components. I have been thinking of utilizing a multi-channel sampling meter set arrangement, where one channel uses a ●dm/dt blocking device such as the Fogal semiconductor in this respect, but have not yet developed the complete concept.

Better Solution: A Charge Blocking Device

A better solution than the capacitor or capacitive collector is the use of a special rigid solid state "charge blocking device", such as a Fogal semiconductor, to enable the current separation into two components, blocking of the mass flow component, and passage of the massless displacement current component. *In overunity electrical devices, it is massless displacement current dØ/dt● that must be separately passed down the primary circuit and collected in the collector as an E-field or an H-field. This provides "free" energy that has been extracted from the vacuum, via the potential difference between the terminals of the source antenna, and collected and stored in the appropriate field, without work*. The collected free energy may then be transferred to the isolated load circuit by a variety of means, for separate discharge through the load without return of dq/dt through the source.

The Fogal Semiconductor Meets the Charge-Blocking Requirements

Fogal's marvelous semiconductor blocks passage of electrons into its output terminal, but passes displacement current dØ/dt● into it. The semiconductor is powered by (receives) normal electron current and excess dØ/dt●, but outputs pure massless displacement current dØ/dt●. A charge blocker that passes dØ/dt● is ideal for our overunity mechanisms, enabling them to be readily obtained as we shall shortly see.

Energy, Flow, Finite Amount of Energy, and Collectors

We accent that the flow of energy in an electrical circuit is purely by means of the massless displacement current component (dØ/dt)●. The flow of the mass component ●(dm/dt) represents the "flow of work" (*energy dissipation*) in the circuit. Power is rigorously the time rate of doing work, and electron current dq/dt is a part of power. It has nothing whatsoever to do with the time rate at which *energy is transported without loss*; instead, power represents the rate at which energy "leaks" or is "lost" during its transport.

All measurement is work, not energy. Energy cannot be measured, even in theory, a priori. Energy is also a flow process, and never a finite amount in one location. A specific differential of energy flow may exist on a specific finite collector. However, it only represents a certain constant differential amount of energy flow compared to the universal vacuum energy flow or some other flow reference point. It is like a whirlpool in the river. Energy is like the flowing water, and an "amount" of energy is like the amount of water in the collecting whirlpool form (between its input flow and its output flow) at any time. Obviously, energy (ordering) forms can come and go; the water flow itself remains. Any "magnitude of energy" is always a "trapped" amount of energy in a "collector" (form).

Decoupling Current Components and Utilizing dØ/dt

The two components of electron current dq/dt can be decoupled, by blocking the ●dm/dt component while allowing the dØ/dt● displacement current to continue to flow. In our first paper, we pointed out one way: utilizing a special degenerate semiconductor material whose electron gas relaxation time is extended, providing a finite time during which the material serves as a *charge (i.e., a charged particle) blocking device*, while passing the flow of potential (the dØ/dt● massless displacement current component) and restraining the mass displacement current component ●dm/dt. With the advent of Fogal's semiconductor, the process becomes much easier to obtain and utilize in practical machines and circuits.

In our second paper, we pointed out a second way: utilize an ordinary capacitor and ramp-up step-charging. We found, however, that in most ordinary capacitors, the capacitive aspect is defeated by the sloppy movement of the plates and dielectric, converting dØ/dt● into dq/dt. Only a few very carefully selected capacitors are sufficiently rigid and can provide overunity. One must use *rigidized* calibration standard capacitors for the ramp-charging by series steps method to be successful. With ordinary capacitors, however, one can readily demonstrate that the efficiency can approach 1.0 rather than 0.50 as expected.

Overunity Secrets: Charge Blocking, Collection, Shuttling, and Two Isolated Circuits

The charge (actually *charged mass*) blocking approach provides a massless, free flow of vacuum EM energy that can be directed to a collector (capacitive or inductive) where it can be stored in either an E-field or a B-field. This stored energy can then be transferred to an isolated load circuit whose electrons (and hence their ●dm/dt mass displacement current) are free to flow as dq/dt. In the isolated load circuit, then, the two components [(dØ/dt)●(dm/dt)] again couple to form i = dq/dt = [(dØ/dt)●(dm/dt)], powering the load. All work in an electrical circuit is due to the mass displacement current ●dm/dt component; the massless displacement current (dØ/dt)● is a flow of pure energy transport without loss, as is well-known. (For example, see Reference 4.)

Therefore, the first major free energy secret is simply to block the "working" component ●dm/dt of the current dq/dt while allowing the excess "lossless energy flow" component dØ/dt● to flow to collectors to produce either free E-field or free B-field thereupon.

The second major secret is to transfer the collected excess free energy (via energy shuttling) to a second, isolated, load circuit, where the energy is discharged through the load in the conventional fashion (i.e., such that the two current components are coupled, and electron current i = dq/dt occurs through the load). The second circuit must be isolated from the original collection circuit, so that none of the load electron current dq/dt passes back through the original source, against its back EMF.

Should the grounds be the same between the load circuit and the collection circuit so that load electron current is returned through the back EMF of the primary source, then exactly as much excess work will be done inside the source to dissipate its separation of charges as was done in the external load to furnish useful work and in the external losses. In that case, overunity is destroyed, because one is using one-half the excess free energy to destroy the source faster, while the remaining half is distributed among all external loads and losses. Since there are always some external losses besides the load, then the ratio of load power to source dissipation power is always less than unity in a conventional closed-loop circuit containing both load and source. Hence the necessity for utilizing two isolated circuits: one where energy is collected freely from the source, and one where energy is dissipated as work in the load without dissipative work in the source, and energy shuttling between them.

A Simple Open-Loop Overunity Device

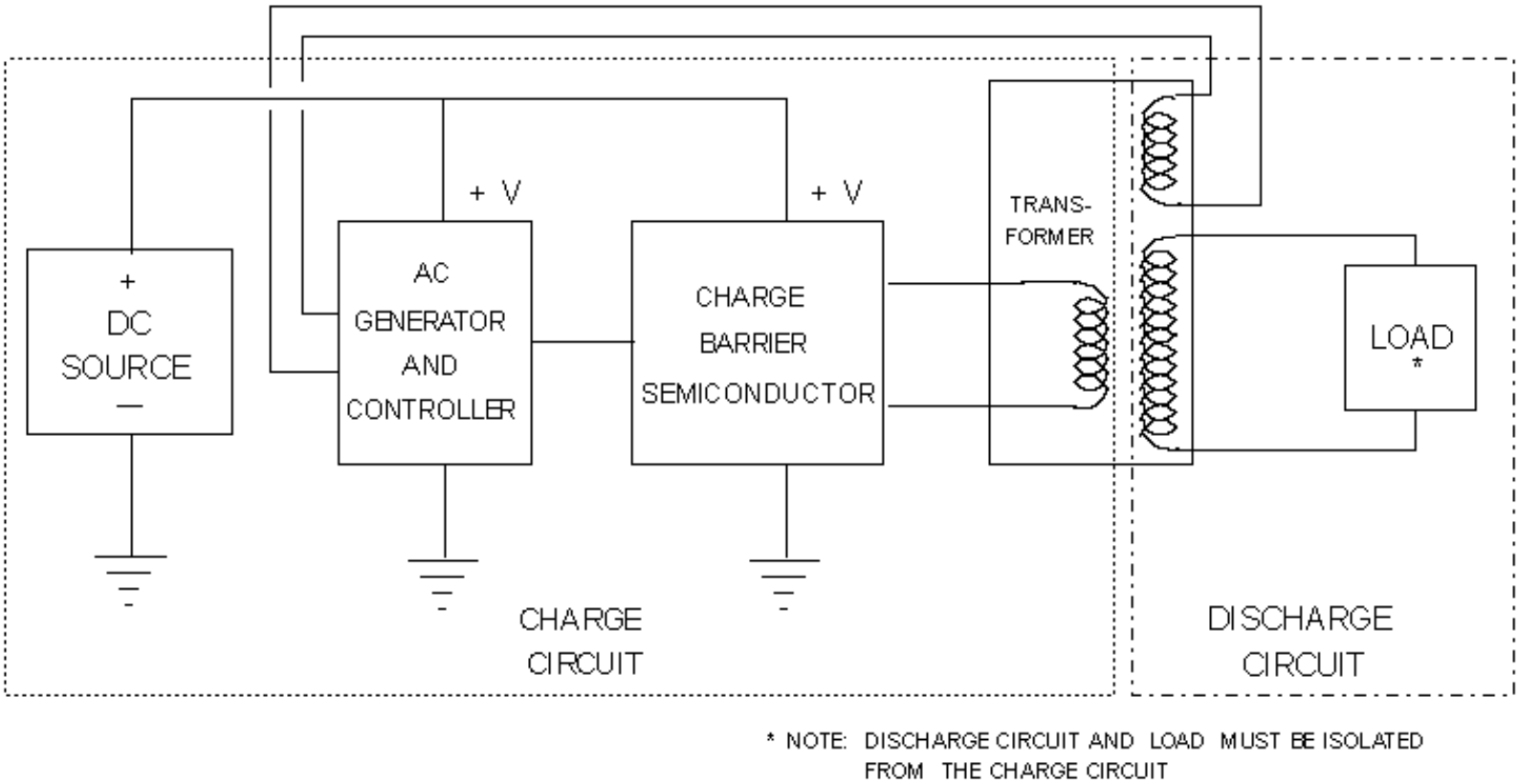

Figure 1. Use of Charge Barrier Device to Achieve Overunity in a Shuttle Circuit.

Figure 1 shows a very simple but very powerfully amplified overunity device, using an AC charge blocking semiconductor (CBS) (such as a Fogal semiconductor). The gist of the circuit is that an AC source furnishes AC current dq/dt to the CBS, which uses some of the power to power itself, but then blocks the ●dm/dt portion of the dq/dt input current, passing only the massless displacement current component (dØ/dt●) into its output circuit. The (dØ/dt●) output of the CBS is fed through the primary winding of a transformer, in this case a step-up transformer. The "current gain" of the CBS will depend upon (1) the load connected to it, and (2) the ability of the CBS to continue to block the increasing E-field on its trapped charges, as more free energy flow (dØ/dt●) is drawn through it by the load. Thus the load and the CBS must be matched within the operational ability of the CBS, so that the CBS does not fail catastrophically.

In the primary winding of the transformer, the (dØ/dt●) displacement current produces a magnetic field H, storing the excess flowing

energy in that field. This is a normal magnetic field; all magnetic fields are produced by the (dØ/dt●) component of the current anyway. This magnetic field, as it changes, couples to the secondary winding, producing a normal magnetic field H therein by normal means. In the secondary circuit, electrons are not restrained by a CBS. Hence the (dØ/dt●) induced in the circuit on the secondary side couples to the unrestrained electrons, producing normal electron current dq/dt, and driving it through the load to power it. Note that *energy* is conserved across the primary and the secondary; however, *dissipative power and work* (energy loss rate and energy loss) are not conserved, because a free flow of lossless excess energy in the form of displacement current is flowing from the vacuum through the source antenna, thence to the CBS, through it to the primary of the transformer and into the primary magnetic field, through it to the secondary magnetic field, through it into the (dØ/dt●) induced in the secondary circuit and coupled to the electrons, through the resulting dq/dt into the load, where the scattering of photons as heat dissipates the free flowing energy in the displacement current dØ/dt● component flowing through the load as a component of dq/dt = (dØ/dt●)●(●dm/dt) = (dØ/dt)●(dm/dt).

Free "Power" Amplification

If one places an ammeter in the output from the CBS, between it and the primary winding of the step-up transformer, one will read the (dØ/dt●) as *normal dq/dt in the ammeter itself*. If one calculates the "free power" (i.e., the rate of energy dissipation) that is going into the transformer primary using this as the "current," one will show that energy and "power" are conserved between primary and secondary of the transformer. However, the actual dissipative power going into the primary side is zero or, in real circuits, vanishingly small. Consequently, the device has a very high variable power gain that depends upon the rate of energy draw and dissipation of the load on the secondary side. If one adds more load, one draws more dq/dt current on the secondary side, hence more excess dØ/dt● displacement current on the primary side. The overall "power amplification" is limited by the ability of the transformer to handle the power in the secondary and the ability of the CBS to withstand the pressure of the internal charge barrier. This device can be easily "close-looped."

The Negative Resistor: A Close-Looped "CBS and Shuttle" System

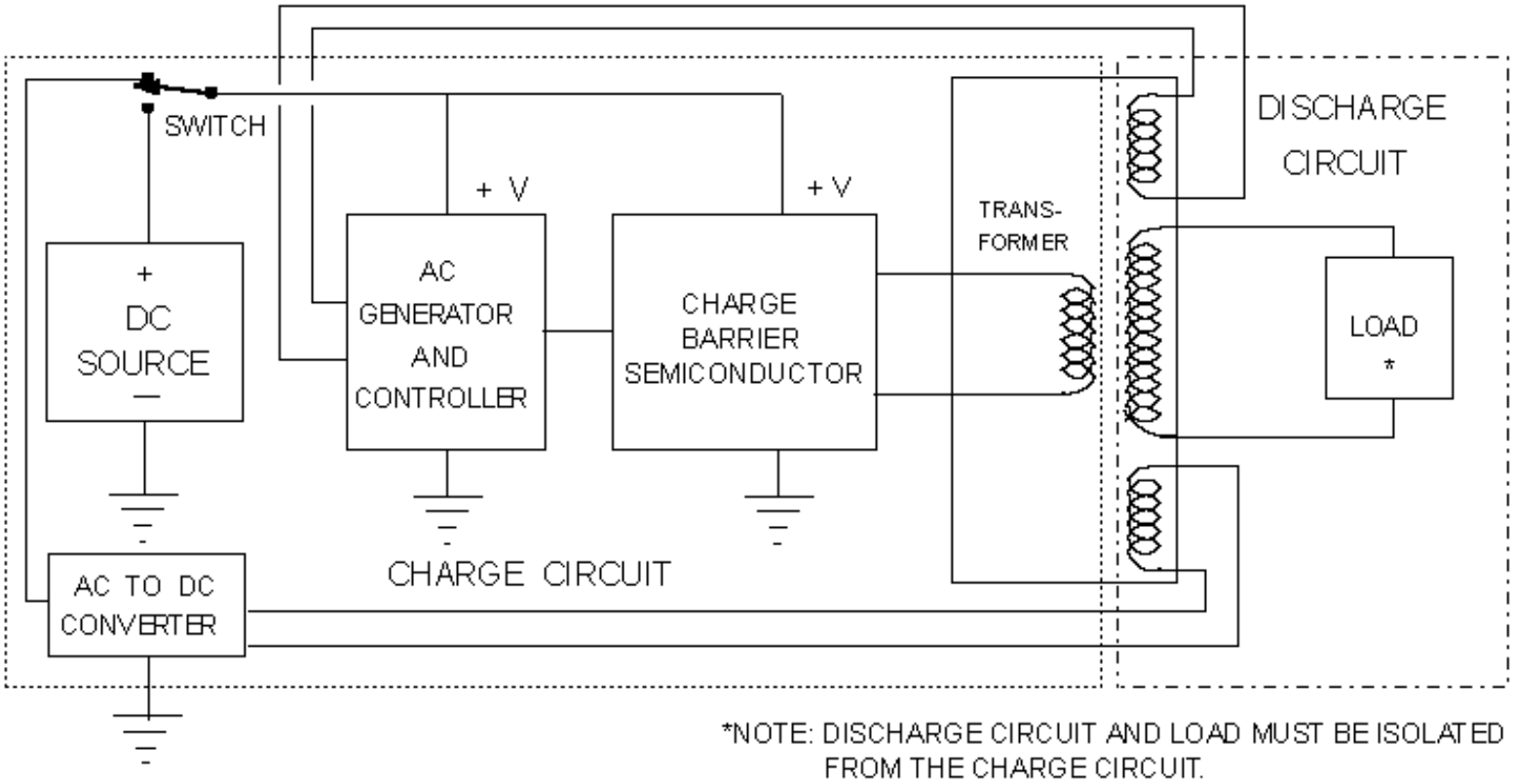

Figure 2. Use of Charge Barrier Device in a Shuttle Circuit With Controlled Feedback, to Achieve a True Negative Resistor.

Figure 2 shows the close-looping of the device shown in Figure 1, in such manner that, once stable operation is underway and the load and input stabilized, the ordinary power supply for the CBS can be switched out of the circuit. In this case, the circuit operates as a self-powered overunity device; i.e., as a *negative resistor*.

A normal resistor receives an ordered energy flow from its external circuit and scatters this energy as work out to the vacuum. I.e., it receives i = (**Ø**+∇**Ø**)/dt●(dm/dt) (scatters the excess (∇**Ø**)/dt● component (i.e., of the dq/dt passing into it from the high potential side) by radiating it away to the surrounding vacuum as scattered photons (heat)), and outputs inert (no excess (∇**Ø**)● component) electron current dq/dt into the ground side.

A negative resistor does exactly the opposite: it accepts inert incoming electrons from its "ground" side, also accepts incoming (converging) d**Ø**/dt● energy from the vacuum as virtual photons being absorbed upon these inert electrons so that a ∇**Ø**● is added to the electron current, creating an excited, excess energy-carrying i = (**Ø**+∇**Ø**)/dt●(dm/dt), and passes this excited current out of its high side and out into the external circuit to power the circuit. In other words, the negative resistor becomes a *self-contained free power source*, once brought up to stable operation.

In Figure 1, all that needs to be done is simply to extract some of the secondary power and feed it back to create the power input consumed by the CBS and the other normal components of the primary circuit side of the transformer.

Multitaps can be added to the secondary side, to provide varying voltage power supplies for loads requiring different voltages.

Energy is conserved in the device, because it always functions as an open circuit, receiving excess energy from an external source (the surrounding vacuum, in its virtual photon exchange with the charges in the system). It is far from thermodynamic equilibrium, and classical thermodynamics (including the second law) does not apply.

It is simply a continuous free power supply: it is a *negative resistor*.

Far more complicated units can be designed and produced. The basic point is that this type of overunity power supply is continuous and self-powered, driven by the violent exchange of energy from the vacuum, and simply collecting and gating some of that energy to the load to power the load.

Conclusion

With this third paper, we complete the triad of papers we set out to write a little over a year ago. With the availability of charge barrier devices such as the Fogal semiconductor, together with the collection, shuttling, and use of free d**Ø**/dt● flowing energy, the *Age of Free, Clean, Electrical Energy* has finally dawned.

Let us use it wisely, and for the betterment of humankind, not for its destruction.

[Support of portions of this research by A.D.A.S. is gratefully acknowledged.]

References and Notes

1. Bearden, T.E., Feb. 9, 1993, "The Final Secret of Free Energy," ADAS, distributed over Internet. The paper was also published in Magnets, 7(5), May 1993, p.4-26, in Explore!, 4(3/4), 1993, p.112-126, and in several other media. See also Bearden, T.E., "Additional Information on the Final Secret of Free Energy," Feb. 15, 1994, distributed on Internet.

2. For proof that an ordinary capacitor can be charged almost without entropy, see Fundaun, I., C. Reese, and H.H. Soonpaa, "Charging a Capacitor," American Journal of Physics, 60(11),Nov. 1992, p.1047-1048. See also Calkin, M.G. and D. Kiang, "Entropy change and reversibility," American Journal of Physics, 51(1), Jan. 1983, p.78-79. See also Heinrich, F., "Entropy change when charging a capacitor: A demonstration experiment," American Journal of Physics, 54(8), Aug. 1986, p.742-744. See also Gupta, V.K., Gauri Shanker, and N.K. Sharma, "Reversibility and step processes: An experiment for the undergraduate laboratory," American Journal of Physics, 52(10), Oct. 1984, p.945-947.

3. In most texts, the treatment of displacement current is far from adequate. A better treatment than most is given by Krauss, John D., Electromagnetics, Fourth Edition, McGraw-Hill, New York, p.437-439, 547-549. This treatment must still be augmented by treatment from other texts, and the ensemble "synthesized." Even then, it will never be completely clear until the separation of mass from the massless charge, and separate accounting of the two, is accomplished in the manner pointed out by the present paper.

4. For a typical confirmation that massless displacement current is already known to be lossless transport of energy without entropy, i.e., without work, see Buchwald, Jed Z., From Maxwell to Microphysics, University of Chicago Press, Chicago and London, 1985, p.44. Quoting: "...no energy transformation into heat occurs for displacement currents." It should be obvious from this fact alone that the proper way to accomplish overunity in electrical devices is to utilize the massless displacement current to flow and store excess energy, then use a "heat pump" type cycle to transfer the collected energy to a separate load circuit and discharge it separately in the load.

5. For a very recent proof that the potential is a flow process, and in fact consists of bidirectional EM waves, see Hsue, C.W., "A DC Voltage is Equivalent to Two Traveling Waves on a Lossless, Nonuniform Transmission Line," IEEE Microwave and Guided Wave Letters, 1993, Vol. 3, p.82-84.

6. For proof that the vacuum EM zero-point energy is continually produced by a cosmological feedback from every charged particle in the universe, see Puthoff, H.E. , "Source of Vacuum Electromagnetic Zero-point Energy," Physical Review A, 40 (9), Nov. 1, 1989, p.4857-4862.

7. For proof that in theory the vacuum energy can be tapped, see Cole, daniel C. and Harold E. Puthoff, "Extracting Energy and Heat from the Vacuum," Physical Review E, Vol. 48, No. 2, Aug. 1993, p.1562-1565.

8. For proof that a higher topology examination of EM phenomena allows energy collection as potentials and energy shuttling in circuits, see Barrett, T.W., Annales de la Fondation Louis de Broglie, Vol.16, No. 1, 1991, p.23-41. Barrett shows that EM expressed in quaternions allows shuttling and storage of potentials in circuits, and also allows additional EM functioning of a circuit that a conventional EM analysis cannot reveal. He in fact shows that Tesla's patented circuits did exactly this.

9. Stoney, G.J. (1897) "XLVII. On a Supposed Proof of a Theorem in Wave Motion, To the Editors of the Philosophical Magazine," Philosophical Magazine, 5(43), 1897, p.368-373. Stoney first pointed out the bidirectional EM wave decomposition of the scalar potential.

10. Whittaker, E.T., "On the Partial Differential Equations of Mathematical Physics," Mathematische Annalen, Vol. 57, 1903, p.333-355; "On an Expression of the Electromagnetic Field Due to Electrons by Means of Two Scalar Potential Functions," Proceedings of the London Mathematical Society, Series 2, Vol.1, 1904, p.367-372.

BEARDEN

THE FINAL SECRET OF FREE ENERGY

CHENIERE PRESS

www.cheniere.org

THE FINAL SECRET OF FREE ENERGY

© 1993 T. E. Bearden

A.D.A.S.

P.O. Box 1472

Huntsville, AL 35807

February 9, 1993
(slightly revised March 23, 1993)

Foreword

This paper contains the real secret of tapping the vacuum energy very simply, using almost any source of potential (battery, electrostatic generator a la Swiss electrostatic device (the Testatika), elevated wire wire/250 V/m in the earth/ionosphere potential, etc). The objective is for the moderately technical reader to understand how to build and understand not only a single device, but also hundreds of different kinds of them. While it is quite simple, the "magic principle" contained in this paper only took me some 30 years to discover.

The precise definitions necessary to understand the free energy rationale are included. Also included are some very simple pseudo equations for the process. Do not underestimate these simple pseudo equations -- they tell the tale that's needed.

Also, there has been little or no time to "dress up" the paper. It's simply written down very informally, to get the necessary points across.

Nearly everything *fundamental* that we've been taught about EM energy is wrong or incomplete. Even the *definition of energy* in physics is wrong! Let me summarize a few of the things that are wrong with the classical electromagnetics (CEM) model as follows:

CEM is still utilizing a model based on a material ether. Although the Michelson-Morley experiment destroyed the material ether assumption in 1887, the classical EM model has never been corrected. It also contains no definition of charge, and no definition of potential. In many cases, algorithms to calculate a magnitude are boldfacedly and erroneously advanced as "definitions." CEM still prescribes the force fields as the causes of all EM phenomena; it has been known since 1959 that forces are effects and not causes, that EM force fields exist only in and on the charged particles of mass in the physical system, and that the potentials are the primary causes of EM phenomena. The lack of definitive definitions of mass and force in mechanics is carried over into EM theory; there is no adequate definition of EM force or of EM mass. The magnitude of the electrical charge on an electron is not quantized. Instead, it is discretized, being a function of the magnitude of the virtual photon flux (VPF) exchange between the vacuum and the charged particle. When the charged particle is placed in a potential that differs from ambient, then the magnitude of the VPF -- and hence the magnitude of the electric charge on the electron -- is altered. The CEM assumption of an "empty vacuum" is totally falsified by modern quantum mechanics. The CEM notion that EM force fields and force field waves exist in vacuum is totally false. Only potentials and potential gradients exist in the vacuum. EM waves in vacuum are not force field waves as CEM prescribes; instead, they are oscillations of potentials and potential gradients. Potentials have a bidirectional EM wave-pair structure, where the bidirectional wave pairs are phaselocked in a harmonic series. In each wave pair, photons and antiphotons are continually coupling (into spin-2 gravitons) and decoupling. This is where gravitation and electromagnetics are unified. The CEM notion that singular EM forces exist in either matter or the vacuum is false; Newton's third law requires that

all forces exist in oppositive pairs. Not a single one of the equations universally taught as "Maxwell's equations" ever appeared in any book or paper by James Clerk Maxwell; instead, they are Oliver Heaviside's equations. Maxwell's actual theory was written in quaternions, which is a complete system of mathematics. The Heaviside/Gibbs vector version

(1) has a lower topology,

(2) is not a complete system of mathematics, and

(3) actually captured only a subset of Maxwell's actual theory.

Tensor theory does not recapture that which was lost.

There are even more errors in CEM, but these should suffice to make the point: *Classical electromagnetics theory is seriously flawed, with archaic foundations, riddled with errors, and it should be completely redone*. Until this revamping of CEM is accomplished, the present model solidly blocks free energy, antigravity, a unified physical field theory, and a unified theory of mind and matter interaction.

A second paper this year will detail the exact long-term causative mechanism for cancer and leukemia, and the exact mechanism for essentially 100% cure of terminal tumors in laboratory animals, demonstrated by the Priore team in France in the late 1960s and early 1970s. The same mechanism can be used to cure AIDS.

Throughout the world, humankind is suffering. In the poor populations of the world, early death is the norm, as is frequent famine. One third of the human race goes to bed hungry each night. Protein starvation of children is common. One third of the human race is infected with worms. Many other diseases ravage the far-flung poor peoples of the world. They have little or no industries. They have no abundant electrical power. They have little education, and little modern knowledge. They have little or no medical treatment. In short, they are born without hope; live in misery, filth, disease, and poverty, and die without dignity.

Meanwhile, the factories, cities, and enclaves of the "developed and developing" worlds belch forth fumes, toxic and hazardous wastes, and pollutants. They also spew forth weaponry which for one reason or another is used to arm the poorer nations, for use in destroying themselves and their impoverished neighbors. Warfare, terror, banditry, despotism, and all the four horsemen of the Apocalypse are truly loosed in the earth.

We simply must do better than that. And we *can* do better than that! But to do better, we've got to make the basics available to impoverished nations, cheaply and easily. Primary among their needs are energy and medical treatment. Given those, populations can be stabilized, people educated, development begun, and the living standard drastically elevated.

So that is the immediate goal. In this paper, I am freely giving away what required me an arduous 30 years of my life to discover. Shortly we will also detail the new methodology for a new therapeutic science, hopefully to cure the diseases that ravage humanity.

God willing, this paper will trigger a thousand, or even ten thousand, scientists and engineers to develop overunity energy devices. If so, shortly we can rid our biosphere of noxious automobile and factory exhausts, radioactive nuclear wastes, and massive oil spills. We can remove many of the hydrocarbon combustion pollutants from the air, stop acid rain and the destruction of our forests, and stop the steady rise of carbon monoxide in our air. If that truly tends toward a "Greenhouse" effect, then we can halt that effect as well.

The Creator has always given us bountiful free electrical energy, everywhere, easily and readily for the simple taking. It has only been our own blindness and folly that have prevented us from seeing and using this free energy bounty.

So here is the final secret of abundant, free electrical energy. Please use the knowledge well and see that its benefits also accrue to those impoverished ones who need it so desperately. Remember the adage, "Inasmuch as you have done it to these little ones..."

This is for those little ones. You are our brothers and sisters. We want you to live. And we want you to have a better quality of life, not just bare existence. We care.

Tom Bearden

February 9, 1993

THE FINAL SECRET OF FREE ENERGY

© T. E. Bearden 1993

Some Definitions

The Quantum Mechanical Vacuum: First we need some definitions. We start by assuming the *quantum mechanical vacuum*.[1] Empty "spacetime" is filled with an incredibly intense flux of virtual particles. It is a plenum, not an emptiness. We shall be interested only in the fantastic flux of *virtual photons*, for we are discussing electromagnetics.

Energy and Potential: *Energy* is any ordering, either static or dynamic, in the virtual particle flux of vacuum. *EM energy* is any ordering, either static or dynamic, in the virtual photon flux (VPF) of vacuum. That is, for a particular kind of "field" energy, we simply choose the so-called quantum particle of that field, and consider only that kind of virtual particle flux.

Potential is any ordering, either static or dynamic, in the virtual particle flux of vacuum. Hey! That's exactly the same definition as energy. Quite correct. Energy and potential are identically the same. Neither is presently defined correctly in physics.

Energy is normally defined as "Energy *is* the capacity to do work." That's totally false. Energy has the capacity to do work, because work is correctly defined as the dissipation (disordering; scattering) of energy (order). The scattering of energy is work. It is not energy! I.e., *energy is not definable as its own scattering!*

Look at it this way: A man *has* the capacity to catch fish. That is true, but it is not a definition, since a definition must in some sense be an *identity*. You cannot say that a man *is* the capacity to catch fish! That may be a submitted definition, all right, but it is false. Similarly, energy *has* the capacity to do work; that is one of its attributes. But energy ***IS*** the ordering in the VPF (we are referring from now on primarily only to EM).

Scalar and Vector Potentials: The *scalar potential* is any static (with respect to the external observer) ordering in the VPF of vacuum. The *vector potential* is any dynamic (with respect to the external observer) ordering in the VPF of vacuum. We shall be interested in the electrostatic scalar potential. So it is a static ordering -- a stationary *template* -- in the VPF of vacuum, much as a whirlpool is a stationary ordering (template, form) in the rushing flow of a river.

The Scalar Potential Has An Internal Structure

The Structure of the Scalar Potential: According to rigorous proofs by Whittaker[2] and Ziolkowski,[3] any scalar potential can be mathematically decomposed into a *harmonic series of bidirectional wave pairs*. Figure 1 shows this Whittaker/Ziolkowski (WZ) structure. In each pair, the forward-time wave is going in one direction, and its phase conjugate (time-reversed) replica wave is going in the other. According to the so-called *distortion correction theorem*[4] of nonlinear phase conjugate optics, this PCR wave must precisely superpose spatially with its partner wave in the pair. The two waves are *in-phase spatially*, but 180 degrees *out of phase in time*. The wave is made of *photons*, and the antiwave (PCR wave) is made of *antiphotons*. It follows that, as wave and antiwave pass through each other, the photons and antiphotons are coupling and uncoupling with each other, because the antiphoton is a PCR photon, and PCR's precisely superpose spatially with their partner. A photon or antiphoton has wave characteristics, because it has a frequency; if the wave aspects are perfectly ordered and perfectly correlated, then so are the photon's particle aspects.

A Potential Is An Ordering Across the Universe: So we have -- astoundingly -- perfect VPF inner ordering infolded in the electrostatic scalar potential! We also have perfect wave/antiwave ordering infolded in there. When you collect a simple set of charges on a small ball or in a region, the scalar EM potential from that set of charges reaches across the universe. In it you have an infinite harmonic series of phase-locked time-forward EM waves going out from the charges to all distant points of the entire universe. And you have an infinite harmonic series of phase-locked time-reversed EM waves coming from all points of the universe, back to the "collected charges" source.

A Potential Is A River of Energy: The point is, you have established a *mighty, hidden, 2-way river of energy* between that collection of charges and every other point in the universe. There is infinite energy in each of those infolded waves and antiwaves. But in a localized region, the *energy density* in each wave is finite. Since in finite circuits the potential interacts with a localized set of mass, we shall be concerned with the *local energy density* (joules/coulomb) *of the potential*.

But forget the conventional myth of visualizing the potential as pushing a unit charge in from infinity "against the force field" -- there *isn't* any force field in the vacuum, as is well-known in quantum mechanics. Also, Newton's third law requires all forces to occur in pairs -- each pair consisting of a force and its 3rd law reaction force. From that viewpoint alone, there is no such thing as an EM forcefield or force field wave in the vacuum. There are just *gradients of the vacuum potential* present in the vacuum. In the vacuum, an EM wave is actually a wave of the phase locked gradients of the electrostatic scalar potential and of the magnetostatic scalar potential. And each such gradient wave is simultaneously accompanied by its phase conjugate gradient wave, because of Newton's third law.

Newton's third law requires forces to occur in pairs of equal but antiparallel forces.

Both wave and antiwave co-exist simultaneously in the vacuum EM wave.[5] Therefore it's a stress potential wave, not a force field wave. It's more like an electromagnetic sound wave,[6] and so it is a longitudinal wave, not a transverse wave. In the EM vacuum wave's interaction with matter (the so-called "photon" interaction), the wave normally half interacts with the electron shells of the atom, giving translation forces, while the anti-wave half interacts with the atomic nucleus, giving the Newtonian 3rd law reaction (recoil) forces (waves). The EM wave in vacuum is an *electrogravitational wave*.

Energy Is Internally Infinite and Unlimited: A static potential -- which is identically excess *energy* -- is internally dynamic and infinite. Energy is internally infinite and unlimited! But it has a finite *energy density* in a local region of spacetime. Since energy interacts with matter locally, we shall be concerned with the *local energy density* (joules per coulomb).

A Principle of Great Importance: The only way you can have a "chunk" or finite amount of energy to dissipate in a circuit as work is to first have a potential's local energy density interact with a local finite mass collector. The normal interacting mass collector is the free electrons (the free electron gas) in the circuit. You can have, e.g., (joules/coulomb x coulomb); (joules/gram x grams); (joules/m_3 x m_3); etc.

Voltage, Force, Potential Gradients, Loads, and Work: Now let's look at circuitry aspects. Conventionally they are a mess. *Voltage* is "essentially" defined as the "drop in potential." In other words, it's the dissipation (disordering) of a "finite amount" of potential gradient. But the only way you can get a "finite amount" of infinite energy/potential gradient is by first interacting the potential gradient's internal, finite, excess energy density with a finite "collector" mass. E.g., (joules/coulomb available for collection) x (coulombs collecting) = excess joules collected on the interacting coulombs, available for dissipation.

So *voltage* is really the dissipation of a finite collection of excess EM energy/potential gradient. The *dissipation* of potential or of its gradient is not potential! You cannot logically define either potential or energy as is own dissipation!

We presently use the notion of "voltage" in two completely contradictory ways in electrical physics. Here's how we got the confusion: We take a potential gradient (which has a local energy density), and we "collect" it across some charged masses in a locality -- usually the free electrons in the free electron gas in our circuitry. That is, we express the finite energy density of the potential gradient (before collection onto charges) in the local region in terms of *energy per coulomb*. The potential gradient actually is a change to the ambient potential, and so it contains an *excess* energy density (the magnitude may be either positive or negative). We then collect this potential (actually this potential density) on a certain number of coulombs, which places tiny little gradients of potential across (coupled to) each free electron. The local excess energy density of the potential gradient multiplied by the amount of collecting mass gives the amount of excess energy collected (on the interacting charges/coulombs). On each collecting particle, that little gradient, together with the coupling particle, constitutes a tiny force. F is not just *equal to* ma (non relativistic case); instead, $F \equiv (ma)$, where (mass x acceleration) is considered as a unitary, inseparable thing. So that little *potentialized electron* (that little *EM force*) moves itself around the circuit. In the load (scatterer), the little potentialized electron (the little force) is subjected to jerks and accelerations, thus radiating energy (shucking its gradient). Since this is done in all directions in the scatterer (load), that gets rid of the gradient, reducing the "little force" (potentialized electron) to zero because the little potential gradient is lost due to radiation.

Collecting And Dissipating Energy

Energy Dissipation and Collection: Without further ado, we consider the scalar potential's local energy density in terms of *joules per coulomb*. That is, in a specific glob of charges (i.e., in finite circuits), the amount of energy collected from a potential gradient onto the finite number of charges receiving/collecting it, is equal to the number of joules of energy per coulomb that is in the potential gradient, times the number of coulombs collecting (receiving) the potential gradient. The current is the activated (potentialized) coulombs per second that dissipate their potential gradients during that second. The current multiplied by the *time the current flows* gives the activated coulombs that dissipated their activation (potentialization) during that flow time. *Dissipating, activated coulombs* multiplied by the *excess energy collected per activated coulomb* gives the energy dissipated (the work or scattering done) in the load.

We define *collection* as the connection of a potential gradient (a source) to the charged masses in a circuit element (the element is called the *collector*), which for a finite delay time does not allow its potentialized free electrons to move as current. In the collector, during this delay time these trapped electrons are "activated" by potential gradients being coupled to them.

Technically, that delay time in the collector is known as *relaxation time*,[7] in the case of the free electron gas[8] (in a wire or in a circuit element). A collector then is a circuit element that has a usable, finite relaxation time. During that relaxation time, the trapped electrons are potentialized without movement as current; each collecting/receiving free electron gets a little gradient across it, but no current yet flows. In other words, during this finite relaxation time (collection time), we extract potential from the source, but no current. Thus we extract energy (potential), but no power (which is voltage x amperage). During the relaxation time, we extract from the source only a flow of VPF, which is continually replaced in the source by the vacuum's violent VPF exchange with the source's bipolarity charges. We do not extract power from the battery/source during relaxation time, but we extract free energy density. That free energy density, coupling with a finite quantity of electrons, gives us a collected finite amount of energy. With that background, let's start again, and go through this in a useful "free energy" manner.

The Electron Gas. We refer to the conventional model of the free electron gas in a wire.[9] Although the electrons in this gas actually move by quantum mechanical laws and not by classical laws, we shall simply be dealing with the "on the average" case. So we will speak of the electrons and their movement in a classical sense, rather than a quantum mechanical sense, as this will suffice very well for our purposes.

When one connects a circuit to a source of potential gradient (say, to a battery), the first thing that happens nearly instantly is that the potential gradient races onto the coupling wire and heads down it at almost the speed of light. As it goes onto the wire, this gradient "couples" to the free electrons in the free electron gas. However, inside the wire, these electrons can hardly move down the wire at all; they can only "slip" once in a while, yielding a "drift" velocity of a fraction of a cm/sec.[10] On the surface, things are just a little bit different. Most of the "current" in a wire, as is well-known, moves along the surface, giving us the "skin" effect. [For that reason, many cables are stranded of finer wires, to provide more skin surface per cm^3 of copper, and hence more current-carrying capability per cm^3 of copper.]

So, initially, little gradients of potential appear on and across each free electron, with a single little $\nabla\phi$ on each electron, and coupled to it. The couplet of $[\nabla\phi \bullet m_e]$, where m_e is the mass of the electron, constitutes a small ΔE_e. [This is rigorous; the conventional EM notion that an E field exists in the vacuum is absurd, and it is well-known in QM that no observable force field exists in the vacuum. As Feynman pointed out, only the potential for the force field exists in the vacuum,[11] not the force field as such. Or as Lindsay and Margenau pointed out in their Foundations of Physics, one does not have an observable

force except when observable mass is present.[12]]. We have stated it even stronger: Not only is $F = ma$, but $F \equiv ma$ (nonrelativistic case).[13] Since no observable mass exists in vacuum, then no observable F exists there either.

Force, Coupled Gradients, and Electron Translation

Electrons Coupled to a Potential Gradient Move Themselves. The point is, when activated by a "coupled potential gradient," the activated electron *moves itself* until it loses its activation (its coupled potential gradient).

Let me say that again, in a little more detail. Forget the standard notion that a force field such as the E-field causes electrons to move. Also forget the notion that the E-field is given by $E = -\nabla\phi$. In foundations of physics, those equations are known to be incorrect for the vacuum. EM force fields are known (in QM foundations theory) to be *effects*, existing only in and on the charged particles, and not existing separately at all,[14] or in the vacuum at all.[15] Instead of $E = -\nabla\phi$, in the vacuum the correct equation would be something like this: $P_E = -\nabla\phi$. In this case, we have correctly stated that the potential gradient P_E provides the potential for producing an antiparallel E-field in and on a coupling/collecting charged mass, and the magnitude and direction of that

potential gradient will be given by $-\nabla\phi$, if and only if a charged mass particle is first introduced so that it couples to P_E.

At any rate, the activated/potentialized electron moves itself. The reason is that it constitutes a force. Force ≡ (mass x acceleration) (non relativistic case). So the potentialized/activated electron is continuously accelerating. However, it is prevented from easily moving down the wire directly. To begin to do that, it essentially has to first move to the outer skin of the copper conductor.

The Collector: We now consider a circuit element that we called a *collector*. (It could be a special coil made of special material, a capacitor with doped plates rather than simple conducting plates, or any one of a number of things). The objective is for the *collector* to be made of special material so that it has a free electron gas whose electrons are momentarily not free to move as current (they continue to move violently around microscopically, but essentially with zero *net* macroscopic translation) for a finite delay (relaxation) time, while they are settling themselves upon the surface and preparing to move as current. Let's call the electrons NNTE (no net translation electrons) during that finite delay (relaxation time). During that "no-current" delay time, the NNTE electrons become potentialized/activated by the potential gradient impressed across the collector. So at the end of the NNT time, the NNTE electrons are potentialized, and each is of the form $[\nabla\phi \bullet m_e]$.

The Secret of Free Energy

Two Circuits/Two Cycles: We are going to use two circuits and two cycles, as shown in Figure 2:

(1) We shall connect a *collector* to a primary source of potential (to a battery) during the short time that current does not yet flow, but potential does. (In other words, during the relaxation time of the collector, we allow the VPF to flow onto the NNTE electrons of the collector and potentialize (activate) them, but do not yet allow the electrons themselves to flow as current, but only to move transversely in the wiring and collector.) This is **cycle one** of a 2-cycle process: This is collection of a specific amount of current-free potential gradient -- power-free energy -- off the potential-source (the battery) onto a collector. During the collection cycle/time, *current does not and must not flow* (we are discussing the ideal case). We are freely "charging up" the collector as a *secondary battery/source*.

(2) At the end of the collection (potentialization/activation) time/cycle in circuit one, the potentialized collector (the charged secondary source) is sharply switched away from its connection to the primary potential source (the battery), and at the same time it is instantly switched into a separate closed circuit with the load. This is important: In **cycle two**, the potentialized collector (with its finite amount of excess trapped EM energy) and the load are connected in a *completely separate circuit*, and one that is closed, with no connection at all to the original source of potential (in this case, to the battery). Specifically, this "load and potentialized collector" circuit is completely separate from the primary source; during cycle two the primary source (the battery) is not connected to anything.

In other words, all we've taken from the primary source (the battery) is *current-free, force-field-free potential gradient*. So to speak, we've taken a "chunk of potential gradient" from the source, nothing else. You simply multiply the potential gradient's local energy density (the so-called "voltage", which is really excess joules per coulomb) by the number of coulombs of charge that is "activated" (that "collects" this voltage or excess joules/coulomb) in the collector. Specifically, we have not taken any *power* from the battery itself, and so *we have not done any internal work inside the battery upon its internal resistance*, by a "closed circuit electron flow" back into the battery. We have not permitted such a flow.

Instead, *we are using the activated collector as a temporary, secondary battery*. We will utilize this secondary battery in a conventional manner to power the load, *which will also kill the secondary battery* (dissipate its trapped EM energy). But that will *not* affect the primary source. The primary source is never used to directly power the load. It is only used as an infinite source of potential gradient (i.e., as an infinite source of *energy density*).

The Standard Power Extraction Circuit

The Conventional Circuit: We digress momentarily: In the standard electrical method, the potential source (which is a bipolarity) is connected across the load. This connects both the external load and the internal resistance of the battery itself in series, as the "total circuit load." Electrons then pour through the external load circuit and through the internal battery resistance, from the "electron rich" polarity of the source to its "electron poor" opposite polarity. The scattering of energy in the internal battery resistance is actually doing work to upset the chemistry that is maintaining the battery's charge separation (the bipolarity). In this manner, the source's separation of charges (which is the "gate" furnishing the potential/energy gradient) is being destroyed as the current flows, and this in turn destroys the source of the potential gradient.

In other words, normally we, engineers, are trained to *kill the bipolarity*, which kills the potential source itself! Incredible as it may be, we, engineers and scientists, have been trained to utilize the free "trapped EM energy" furnished by nature through the source, to destroy the source of the energy/potential, *with the same vigor as they power the external load!* In fact, our teachers simply have never learned any other way to do it except this deliberately "self-destructive" manner!

A Waterwheel Analogy

Imagine, if you will, a waterwheel that powers a mill, with a sluice gate upstream in a river, that diverts some river water into the sluice carrying water to the wheel when the sluice gate is opened into the river. The diverted water flows down to the waterwheel, turning it, and the spent water is fed back into the river below the mill site. Now what fool would connect a pulley onto the waterwheel, with a rope running from the pulley to the sluice gate, so that when the wheel rotated, part of the rotational power also was utilized to close the sluice gate and shut off the water, stopping the waterwheel? If one did so, when the sluice gate was opened, the waterwheel would rotate only until the sluice gate was closed, shutting off the water. Then one would laboriously have to pay to reopen the sluice gate again, then again, then again. No self-respecting "waterwheel engineer" would do such an unthinkable, insane thing. But that's exactly what we engineers, electrical physicists, and scientists have been trained to do! We have no *energy* engineers or *energy* scientists at all; instead, we have all been *power* engineers and *power* scientists. We have all been *energy source killers!* In this paper, we shall try to do better, and rectify "one of the most remarkable and inexplicable aberrations of the scientific mind which has ever been recorded in history," as Tesla called the conventional electromagnetics.[16] By being *energy* engineers, we shall only have to pay for our energy source *once,* and then we shall draw as much energy from it as we wish.

External Load Power Is Free; Only The Power In The Source Costs

Here's the magic secret of free electrical power: ***The power in the external load is absolutely free, and it always has been free.***[17] ***In any load circuit, the only power you have to pay for, and have ever had to pay for, is the power you incorrectly use to kill your own primary source***. The only power that "costs" more effort/dollars is the power erroneously utilized inside the source to "close the gate" and kill the primary source. Your electric power company doesn't pay for any of the collected energy on your load circuits that is dissipated to power your house. Instead, the power company charges you for its own ignorance. It charges you for its insane use

of its own freely extracted electrical energy to continually kill the bipolarity in each of its generators, thus continually killing the free electrical source of that generator's energy.[18]

In any electric circuit, we can continue to indefinitely power the external load* indirectly *from a source, so long as we are not so naive as to use any of the free energy we extract from the primary source to dissipate back inside the primary source itself and shut it off!

And we can easily and freely multiply electrical potential. As an example, given a single good source of potential, a hundred radial wires can be connected to the source. The same potential will now appear at each of the ends of the hundred wires. A switcher/collector unit can then operate from each radial line's end, and power external loads, without "loading" the original primary source. This "cascading" can be continued indefinitely. A single power plant, e.g., can power the entire electrical grid of the United States. And a single automobile battery can power a large, agile, electric automobile at highway speeds, with sports car acceleration, with unlimited range, without "refueling," and with no noxious chemical exhaust.

Obvious Impacts

Environmentalists should immediately see that the chemical pollution of the biosphere by mechanista and processes to obtain energy can be dramatically reduced, to almost negligible levels. *There need be no huge oil tanker spills, for there need be no huge oil tankers*. There need be no worrisome radioactive wastes from nuclear power plants, or abandoned hazardous nuclear plants when their life is finished, because *there need be no nuclear power plants*. There need be no noxious exhausts from jet airplanes (which are really what is diminishing the ozone layer and punching holes in it), automobiles, trucks, buses, innumerable coal-fired and oil-fired power plants, etc.

The Electronic Smog Problem

In fairness we point out that, as the usage of free electrical energy mushrooms, we will be dramatically increasing the low-level EM signal density of the environment, and that too is biologically detrimental. Although beyond the scope of this paper, that cumulative biological damage mechanism has also been uncovered by this author. A formal paper is presently in preparation for presentation in March 1993 at the annual meeting and conference of the Alabama Academy of Science.[19] The paper will also present an entirely new definition of cancer, give its exact long-term cumulative mechanism, and give an exact, scientifically proven mechanism for eliminating cancer, leukemia, and other debilitating diseases such as AIDS. For our purposes here, we simply state that we understand the EM "electronic smog" biological damage mechanism, and how to go about developing a total counter for it. Eventually, we would see a small "counter unit" added to each power unit, alleviating the "electronic smog" problem and preventing biological damage.

Only Dissipate Energy From a Collector, Not the Source

Completion of the Collection Cycle: But to return to the completion of our collection cycle (cycle one). *During collection, we have not extracted power from the source. That is vital*. We have not moved the gate through which our source is furnishing free energy. We have not diminished our primary source. From our previous definitions of potential, we have indeed extracted *trapped energy* from the primary source, because we placed its "local energy density" across a certain finite collector/mass, instead of extracting *power* (dissipating energy inside the source or battery to spoil its chemistry and deplete its charge separation).

All Energy Is Free

Here's the incredible truth. The entire universe is filled with mind boggling free energy everywhere, in the simplest of things. Simply scrape your feet on the carpet, and you will collect perhaps 2,000 "volts" on your body. At that time, hidden EM energy is flowing from every point in the universe to your body, and from your body back to every point in the universe. We know that all macroscopic matter is filled with stupendous amounts of electrical charge. So an incredible river of energy -- a great flux -- is driving every single thing, from the smallest to the largest. Opening a gate to extract trapped EM energy is simple. Just collect a bit of charge, or scrape your feet hard, or comb your hair briskly. *All we have to do is not be stupid and close the gate once we've got it opened!*

God has been most kind. We have nothing but free energy everywhere. All energy is furnished to us freely! *It's our own blindness that has made us into energy source killers*. All we have to do is open our eyes to the truth of nature's incredible energy bounty. We must just freely collect that bountiful fruit from Nature's tree, instead of chopping down the tree and killing it.

Dissipating The Collected Energy

The Work Cycle: We focus again on cycle two. Shortly after the now-potentialized collector is connected to the load at the beginning of cycle 2 (the *power* cycle, or *energy dissipation cycle*, or *work* cycle), the potential gradient across the potentialized collector is connected (transferred) across the free electrons in the load circuit. We assume that the material of the collector and the switching time have been designed so that, shortly after switching to the loading/work cycle, the activated/potentialized free electrons in the electron gas in the collector reach the skin of the collector, and are free to move as current.

So just after the beginning of cycle two, each of the free electrons in the load circuit now is potentialized and free to move down the wiring. Each potentialized (activated) electron has its own little individual potential gradient across it and coupled to it, due to the overall potential gradient from the collector. Remember, prior to coupling to charges, this potential gradient moves through the circuit at light speed. An EM potential gradient coupled to a charged mass constitutes an *EM force field* (excess trapped EM energy per coulomb, times the number of collecting coulombs). Now each little free electron with its potential gradient forms a little E-field (force/charge), and that little E-field (force/charge) is free to move. That's all it takes to move (accelerate) the little activated electron's mass through the load (the scatterer). We strongly stress that *the potentialized/activated electron moves itself.* It doesn't care whether or not the external battery is attached or not. It is its own little motorboat, with its own little engine driving it.

As the little potentialized electrons reach the load (the scatterer), they bang and clang around in there erratically. That is, the "scatterer" (load) causes spurious accelerations ("scatterings") of these self-driven electrons. As is well-known, when a charge is accelerated, it radiates photons. What actually happens is that these little "jerked around" electrons shuck off their little potential gradients in the load (in the scatterer, or the "jerker-arounder") by emitting/radiating photons in all directions. Hence the heat that is produced in the load; the heat is just these scattered photons. The theory of calorimetry already states that all the excess energy (on the potentialized electrons) will be dissipated as this heat (scattered EM energy).

When all the potentialized electrons have radiated away their potential gradients in the load (scatterer), they are no longer potentialized. The free electron gas is again "quiescent" and no longer potentialized/activated (again, we are talking about "on the average" from a classical viewpoint).

Repetition and Review

Notice What We've Done: We took some trapped EM energy density (a chunk of potential gradient, a "voltage" before current flows) from the source, by switching that potential gradient (energy density, which is joules per coulomb) onto a collector (containing a certain number of

coulombs of trapped charges) where the potential gradient activates/potentializes/couples-to these temporarily non translating electrons. So the finite collector collected a finite amount of excess energy [joules/coulomb x collecting (trapped) coulombs] on its now-excited (activated) free electrons. Then, before any current has yet flowed from the source, we switched that potentialized collector (with its temporarily restrained but potentialized electrons; with their finite amount of excess trapped EM energy) away from the source and directly across the load. Shortly thereafter, the relaxation time in the collector expires. The potentialized electrons in the collector are freed to move in the external load circuit, consisting of the collector and the load, and so they do so. The scattering "shock collisions" due to the erratic electron accelerations in the load shake off the little potential gradients on the conduction electrons, emitting photons in all directions, which we call "heat." In shaking off the photons, the electrons lose their little potential gradients, hence lose their activation (excess EM energy).

Rigorously, we have extracted some energy in trapped form, and allowed it to dissipate in the load, "powering the load" for a finite discharge/dissipation time and doing work.[20] *Contrary to the conventional electrical power engineering, we have also done this without doing any work inside the source to diminish its ability to furnish potential gradient.*

What Is Energy In An Electric Circuit?

Energy in an Electric Circuit: Here's the principle loud and clear. *Energy* in an electric circuit involves only the potentialization and depotentialization of the electron carriers in that circuit.[21] It involves only the potential gradient (the joules per coulomb) collected by the circuit to potentialize its electrons, and the number of coulombs of electrons that are potentialized during the collection phase. Electric circuits simply utilize electrons as carriers of "potential gradients," from the source to the load, where these gradients and the activated electrons constitute excess trapped EM energy. In the "shocking/scattering" occurring in the load, the jerking (acceleration) of the electrons causes these activated (trapped-energy-carrying) electrons to shuck off their potential gradients by emitting them as scattered photons (heat).

If one is thoughtless enough to allow the primary potential source to remain in the circuit during the "work" phase, then one is using the potentialized electrons to also go back into the primary source and scatter energy from its internal resistance (internal load), *thereby disorganizing the organization that was producing the source potential and energy in the first place*. If one does that, then all the while one is getting some work (scattering of energy) in the load, one is also steadily getting some work done inside the primary source to steadily destroy it! Literally, one is killing the goose that lays the golden eggs.

Continued Operations: But back to our circuit. After we complete one full collection/discharge cycle, we wish to continue producing work in the external load. So we simply switch the collector back away from the load and onto the primary source, collect some more current-free potential, and again independently switch the collector with its repotentialized free electrons back across the load. We can repeat this two-cycle process to potentialize the external load and power it as long as we wish, from a battery or other source of potential, and never take any power at all from the primary battery. We do not need to drain the battery or source at all, in order to power a load, unless we attempt to power it directly. Powering the external load is *always* free!

Nature has been most kind, and we have been most ignorant. You can have all the *trapped electrical energy* you wish, from any source of potential, for *free*. You can power all the external loads you wish, for free, by using a collector as a secondary source, and simply shuttling potential between the primary source and the collector.[22] But you cannot have power for free from (in) the potential source. If you allow current flow in your collection cycle, you are depleting the separated charges inside the battery that are furnishing the source potential.

The Coal-Fired Locomotive

Rigorous Analogy of a Coal-Fired Locomotive. Now here's an exact analogy, to assist in understanding. Imagine a coal-fired train, and a fireman shoveling coal. He has an external load/scatterer of energy (the fire in the firebox under the boiler). He has a primary source of potential/energy (the coal car). No fireman in his right mind would ignite the coal in the chute of the coal bin, to try and get some heat energy into the firebox! [That is, he would not attempt to extract *power* from the source. Yet that's exactly what all we engineers are trained to do at present.] Instead, the fireman takes out (collects) a finite amount (a shovelful) of coal (trapped energy). Coal *per se* (the potential gradient) has a certain energy density per unit volume (trapped joules per unit volume of coal) and the shovel (collector) has a certain volume. Accordingly, the shovelful of coal contains a certain amount of trapped joules of energy. In the fireman's shovel (the collector), *the energy remains in totally trapped form, as coal not afire and without its trapped energy being dissipated as work*. [He doesn't act like a fool and ignite the coal in the shovel either!] He then throws that shovel of coal (collected trapped energy) onto the fire (scatterer), completely separately from the coal bin/source. He continues to repeat his shoveling cycle, and each shovelful of coal added to the fire dissipates additional energy, powering the load.

The Free Energy Principle

All potential gradient (trapped excess energy density) is free for the taking.[23] The potential is due to the violent VPF exchange between the vacuum and the separated bipolar charges furnishing the source potential gradient. The energy of the entire universe is flowing through that source potential. You can have as much of this internal VPF flux energy (potential) as you wish, as often as you wish, so long as you don't demand *current* (which is power, or the rate at which the energy is being freed and dissipated). It's really simple. You can have all the *trapped* energy you wish, from any source. You cannot connect to the source and start to dissipate the energy as power, however, without starting to close the "gate" from which your free trapped energy is coming.

In other words, here's the iron rule: ***If you draw current, you kill the bipolarity gate furnishing the potential gradient (source of energy density). In that case, you kill the source. If you do not draw current, you do not kill the bipolarity gate and you do not shut down the source. In that case, you can continue to "use" it and extract trapped EM energy from it forever.***

Definitions Again

Definitions: I'll put down some simple equations, that may help to explain it more exactly. First we repeat some definitions.

Energy is any ordering imposed upon the virtual particle flux of vacuum. *EM energy* is any ordering imposed upon the virtual *photon* flux of vacuum. *Static energy* is an ordering (a template) which is stationary with respect to the external observer. *Dynamic energy* is an ordering (a template) which is not stationary with respect to the external observer.

Potential: Any ordering imposed upon the virtual particle flux of vacuum. *Scalar potential* is an ordering (template) that is not moving with respect to the external observer. *Vector potential* is an ordering (template) that is moving with respect to the external observer.

The *scalar EM potential* is any static (with respect to the external observer) ordering imposed upon the virtual *photon* flux of vacuum. Etc.

Note again that energy and potential have exactly the same definition. Potential is in fact *trapped energy.* Scalar EM potential is *static EM energy* (to the external observer) or *trapped* (collected) EM energy. In other words, if one takes off a differential of potential onto a fixed

number of coulombs, one takes off a certain magnitude of trapped EM energy. In other words, one takes out a shovelful of coal from the coal car.

Importance of Separation of Charges

We Must Not Dispel the Separation of Charges In Our Source: The difference in our coal-fired train analogy and our electrical circuit is that, in the coal train, the coal in the coal car is not automatically and continually replenished. Also, the coal in the coal car has already been collected by the mass of the coal car, so it is not infinite. In the electrical circuit, the potential gradient in the primary source is continually replenished, automatically, and it is infinite (though it has a finite energy density). The reason is simple. EM potential (in the normal sense) is actually a virtual photon flux exchange between the vacuum (the entire vacuum, all over the universe) and a charged particle or collection of charged particles.[24] Thus the potential (gradient) is a powerful energy flux, pumped by the vacuum and the entire universe, that continues automatically, so long as we do not allow the collected charges in our bipolarity source to be dissipated. In terms of a battery, we achieved separation of charges inside the battery by chemical action, and *we paid for that initially*. Once separated, the charges essentially stay separated (because of the chemistry) unless we foolishly do something to dissipate them, such as upsetting the chemistry, so they are no longer separated positive from negative. So if we don't do anything to these separated charges, they continue to be driven by their fierce exchange of virtual photon flux with the vacuum/universe. If we then simply extract some of that flux exchange, without moving the charges, we are directly "gating" trapped EM energy from the vacuum/charged particle VPF exchange.[25]

The Potential Is Infinite And So Is Its Energy Content

You Can't Dip The Ocean Dry With a Spoon: Let's say that another way. The charged particles in our potential source are in a constant, seething, equilibrium exchange of trapped EM energy with the entire universe. That energy exchange is so enormous that, if we gate some of it out to collect on some other "temporarily frozen" charges and potentialize/activate them, the vacuum flux doesn't even miss it. It's like dipping a spoonful of water out of the restless ocean. The hole is instantly filled, and the water replenished. We can dip with that spoon as much as we wish, and the ocean will never run dry, but will simply continue to furnish us water, spoonful by spoonful.

The same is true in our electric circuits. We can have all the potential (trapped EM energy density) we wish, for free, from a single source, so long as we do not allow work to be done inside the source to close off our "gate" and kill our primary source.

The Twisted Concept of Voltage

Before We Develop Some Pseudo-Equations: In the equations we wish to develop, we have one problem, due to the lack of insight of conventional electrical physicists. That is, they have insisted upon "measuring" and expressing both the infinite potential (nondissipated) and a certain quantity of potential (dissipated) in *volts*. So they say "a potential of so many volts." That's nonsense, and totally erroneous. Rigorously, a voltage is a drop or a dissipation of so much (a finite amount of) *collected* excess potential/energy. You "measure" the voltage in a voltmeter by impressing a potential gradient upon the electron gas in the circuitry, wherein you collect or get in your voltmeter so much [(joules/coulomb) x coulombs]. A tiny current (coulombs/second) from this internal collection then flows for a finite time through the resistance of the voltmeter. So you dissipate (joules/coulomb) x (coulombs/second) x (seconds), which gives a certain amount of energy dissipated as work in moving the needle of the voltmeter. The voltmeter is calibrated so that it effectively indicates the *collected energy per coulomb* that was dissipated, and it calls that entity *voltage*. It involves a finite amount of energy that has already been dissipated as work, and it's a measure of the local energy density of the potential in terms of joules/coulomb. It is *not* a measure of the potential proper. It's after the fact; the extracted

(collected) potential gradient it actually refers to existed in the past, before the work (dissipation of the collected trapped energy) was done. To refer to the potential *before* its dissipation as "voltage" is precisely the same as confusing the future with the past. A "potential (difference) of so many volts" is actually a statement that "a potential difference of so much energy per coulomb" could be dissipated in a load, if it were connected to the load so that a finite amount of energy was collected, and this finite load-collection was allowed to dissipate as power (volts/coulomb x coulomb/sec) for a finite time, yielding work. It's even worse, but it would take a textbook to straighten out this one error in EM theory.

So we'll leave it at that, and we'll adapt the notion of potential the way it is corrupted in electrical circuit theory. There it's used not really as energy, but rather as *excess energy per coulomb of potentialized charge*. I apologize for that difficulty, which is not of my own making, but I must use the conventional notion if we are to greatly clarify the pseudo equations.

The Equations of Free Energy

The Pseudo-Equations: Let us use the following subscripts and letter convention, and develop the nomenclature needed:

T = trapped d = dissipated or dissipating

m = translated (moving) K = energy

V = volts = potential drop (potential dissipated) = previously collected potential radiated away as heat in a load, doing work on the load in the process. Unfortunately, we shall also have to speak of a potential gradient that is not being dissipated, so we shall have to speak of "trapped volts" which is erroneous, but complies with the common usage.

ϕ = electrostatic scalar potential. Coul = coulombs

i = amperes = Dissipating potentialized coulombs per second flowing, so amps are something translating, always. Amps are excited coulombs, per second, that are dissipating their excitation. With superconductivity excluded, you only have amps when you have a potential drop across a load. So we will speak of amps as "dissipating," meaning that potentialized electrons are traveling through a load, dissipating their activation (gradients) in the load by radiating scattered photons (heat).

n = number of electrons in a coulomb = $6.3 \times 10_{18}$ electrons/coulomb

Here are the pseudo equations (superconductivity is excluded):

$amp_m = coul_d/sec = n\ electrons_m/sec = n\ electrons_d/sec$ [1]

$\Delta\phi = V_T$ (as conventionally referred to). It would be volts if all [2] of it were dissipated, but it is not yet dissipated, so it is sort of "trapped volts". *Erroneous*, but the common use. So we will speak (somewhat distastefully) of "trapped volts" and "dissipated volts."

$V_d \times amp_d \times sec = watts \times sec = power \times time = work = K_d$ [3]

$V_d \times coul_d/sec \times sec = (work) = K_d$ [4]

In the switching, we switch K_T to K_d so

$K_T \Rightarrow K_d$ [5]

But $V_T \times coul_T = K_T$ [6]

Or

$[V_T] = [K_T] / [coul_T]$ = trapped energy/trapped coulomb [7]

$[K_T] = [V_T] \times [coul_T]$ = amount of trapped energy, each cycle [8]

So that's what we were getting at. The amount of trapped energy you can transfer (in other words, how much coal you get in one shovelful) depends upon the number of trapped electrons you have in the trapped free electron gas in the collector, and the potential gradient you apply to those trapped coulombs to potentialize them.

Relaxation Time and Semiconductors

Relaxation Time: The time it takes for the free electrons in a conductor (or material) to reach the skin of the wire after potential is applied, is, of course, called the *relaxation time.* During that time, the free electrons in the gas are "trapped" insofar as producing current (dissipation of the potential) is concerned. However, immediately after the relaxation time ends, current begins and dissipation of the trapped energy begins.

In copper, the relaxation time is incredibly rapid. It's about 1.5×10^{-19} sec. However, in quartz it is about 10 days! So as you can see, we need to get somewhere in between these two values, and so we will have to "mix" or "dope" materials. We must get a sufficiently long relaxation time so that we can switch and collect comfortably in cycle one, then switch into cycle two for dispersion of the freely collected energy in the collector. However, the relaxation time we get must also be short enough to allow quick discharge in the load, as soon as we switch the primary source away from the collector. Actually, we need a *degenerate semiconductor material* instead of plain copper.

Degenerate Semiconductor Material: A *semiconductor material* is intermediate between a good conductor and an insulator. It's a nonlinear material, and doped. A *degenerate semiconductor material* is one which has all its conduction bands filled with electrons, and so it thinks it is a conductor. That is, a degenerate semiconductor is essentially a doped conductor, so to speak. As you can see, we can increase the relaxation time in our "conductors" connected to the source by making them of *degenerate semiconductor material.* What we're talking about is "doping" the copper in the wire, and in the collector, so that we can have plenty of time to collect, and switch, and discharge, and switch, and collect, etc.

Now in a doped conductor (degenerate semiconductor), we can tailor the relaxation time by tailoring the doping. We must dope the copper before we make the wire. Why would we wish to do that? We want to overcome the single problem that so far has defeated almost all the "overunity" researchers and inventors.

WHEN YOU CONNECT TO A SOURCE, YOU CAN ONLY EXTRACT CURRENT-FREE POTENTIAL -- FREE "TRAPPED EM ENERGY" -- DURING THE ELECTRON RELAXATION TIME IN THE CONNECTING CONDUCTORS AND SUCCEEDING CIRCUIT COMPONENTS. AFTER THAT, YOU'RE STEADILY EXTRACTING POWER, AND THE ENERGY EXTRACTED FROM THE SOURCE IS BEING PARTIALLY DISSIPATED IN THE RESISTANCE/LOADING OF THE CIRCUIT, AND PARTIALLY DISSIPATED IN THE INTERNAL RESISTANCE OF THE SOURCE. IN THE LATTER DISSIPATION, YOU'RE ALSO DISSIPATING YOUR SOURCE BY DOING WORK ON IT INTERNALLY TO KILL IT.

Good Copper Wire: Bane of Overunity Inventors: Many destitute inventors, tinkering and fiddling with overunity devices, finally get something (a circuit or device) that does yield more work out than they had to input. At that point, they usually conclude that it's simply the specific circuit configuration and its conventional functioning that produces the overunity work. However, usually as soon as this configuration is more carefully built with very good materials, boom! It

isn't overunity anymore. The inventors and their assistants then desperately bang and clang away, getting more frustrated as the years pass. The investors get mad, sue for fraud, or get in all sorts of squabbles. The scientists who tested it and found it wanting, pooh-pooh the whole thing as a scam and a fraud, or just a seriously mistaken inventor. Scratch one more "overunity" device.

Most of these inventors got their successful effect (and possibly erratically) when they were struggling with inferior, usually old, usually corroded materials. Actually, the *more* inferior, the better. The more contaminated/doped, the better!

The moment you wire up your circuit with *good copper wire* connected between the battery or primary source and any kind of load including the distributed circuitry loading itself, you can forget about overunity. You will lose it in the copper, after the first 1.5×10^{-19} second!

Think of a really good conductor such as copper as an essentially *linear* material. Linear means energy conservative. Overunity can only be done with a highly nonlinear effect. So your "conductors" have to be made of nonlinear materials. In fact, they have to be made of *degenerate semiconductor material*. For the type of circuitry we are talking about, the copper has to be doped and then made into "doped copper" wiring. You also have to utilize the primary battery only to potentialize a collector (secondary battery/source), and then use this secondary battery source to conventionally power the load *while also killing itself.*

The Wiring And the Collector Must Be of Degenerate Semiconductor (DSC) Material.[26] A good materials scientist/engineer, together with a decent electrodynamicist, can readily design and tailor some doped copper wiring so that the material in the wiring is a degenerate semiconductor material, with a target (desired) relaxation time. That's what you should use to make the wiring to connect up your source to the collector with, and that type of material is also what you use in your collector. You can use either a coil or a capacitor as the collector, but its "conductive" material has to be degenerate semiconductor material -- in short, it must be doped to have the proper relaxation time. From the collector to the load, however, obviously you want to use a good conductor material. Ordinary copper will do nicely there.

Once you do that, you're in business. When making the DSC material, simply tailor the relaxation time to something which is easily switched. For example, take one millisec. With a relaxation time of that long, switching is easy. In fact, one could even use good mechanical switching. Or easily use inexpensive ordinary solid state switching, without having to go all the way to nanosecond switching.

Then, in the collector, you calculate the number of "trapped coulombs" you have. Take the "trapped voltage" (current-free potential's energy density per coulomb) you extract from the source during the electron relaxation time after the collector is connected. Multiply the number of trapped coulombs in the collector by the trapped voltage during collection, and you have the amount of energy in joules that you extract FOR FREE, without paying for it, from the source *during every collection cycle*.

Sources, Collectors, and Power

Tapping Vacuum Energy. You're getting the excess electrical energy directly from the vacuum, as we briefly pointed out above. The vacuum will freely replenish all the "trapped voltage" you extract from the primary source during the electron relaxation time. It won't replenish a single bit of "dissipated voltage" (power) you extract from the source.

Note that the same considerations apply in the collector. It's got to have a somewhat longer electron relaxation time. Its electrons stay "unrelaxed" during the collection cycle, and allow for some additional switching time to connect to the load. The "trapped voltage" across the collector multiplied by the number of trapped coulombs in it, gives the number of joules of FREE EM

ENERGY you extract and get into and onto the collector (the shovel). In other words, that's your "shovelful of coal." You then throw the "shovelful" onto the fire/load -- you simply disconnect the collector from the primary source and connect it across the external load. The collector (secondary battery) now powers the load and its own internal resistance, "killing" itself while furnishing the energy for powering the external load as well.

The Source Can Be Almost Anything: You can use as a source a simple elevated wire, to "tap" potential from the 200-300 volts/meter between earth and ionosphere. Here again, you need to utilize calibrated, doped wire.

Finally, you must adjust the repetition switching in accordance with the discharge time through the load. In other words, you have a serial process as follows:

(1) extract trapped energy (potential) from the source onto the collector, Δt_1.

(2) Switch the collector off the source, onto the load, during time Δt_2.

(3) Wait while the collected energy in the collector discharges through the load, during time Δt_3.

(4) Switch the collector back off the load and onto the potential source, during time Δt_4. That completes one cycle.

The serial timing simply is $[\Delta t_1 + \Delta t_2 + \Delta t_3 + \Delta t_4]$.

If you balance all the doping and the materials design, and correlate the switching, you can get all the free energy you wish. *Properly utilized, a single car battery can be used to power an electric automobile indefinitely*. *Or even to power a battleship*. In the real world, of course, you will inevitably have a tiny bit of loss as you go, because there's a finite (though high) resistance between the two poles of your battery. Handling that is a piece of cake. Simply run a separate little collection circuit to collect a little bit of trapped EM energy from the slowly leaking source, and ever so often feed the collected energy back into the battery as power, to "reseparate" the charges (charge the battery) and replace the small amount of the primary source's potential gradient that has been lost. The battery, load, and "trickle charger" then become a closed-circuit free-energy source that will last for years and years.

Limited Only By One's Imagination: Of course you can see many variants; this is just the "master key." You can have multiple collectors, collecting trapped energy simultaneously or in sequence off a single source, and pooling their collected energy to more powerfully power the load. You can utilize a very high "voltage", such as in the Swiss electrostatic overunity device, to increase the energy collected per coulomb in each switching (in each shovelful) in accord with equation [8]. For a battery, you can set a separate little collector/load device to trickle-charge the battery, overcoming the small normal "leakage current" that does occur in batteries and in real circuits and devices. The opportunities are endless. You can put in a unit to take mostly only power-free energy from the "power line" feeding your business or home, reducing your utility bill by -- say -- 90%. Or you can simply build a small home power unit to do the whole job, for only a few hundred dollars. *This simple secret can be used to power the world, cheaply and cleanly, and to clean up the biosphere*.

Conclusion

-

Well, there you have it. I've given you the benefit of what required most of my adult life to discover. The definitions advanced in this paper are rigorous. It took years of sweat and tears to

come up with them. They're simple, but they will change your entire understanding of electromagnetics, power, and energy once you grasp them. Please read them, and ponder them, several times. One or two readings will not be sufficient to fully grasp what is said here.

Also, hopefully, by this time, the reader is beginning to experience the same emotions as I experienced when I finally discovered how simple it all really was. First one wants to *laugh* for about two hours at how truly ignorant we've all been. Then one wants to *cry* for about two hours for the same reason. This could all have been done a century ago, *if we had ever really understood electromagnetics*.

We've had this electromagnetics around for over 100 years -- Maxwell's book was published in 1873. We got it wrong, starting right with Maxwell and his use of the material ether, which was almost universally assumed at the time. Still, by using quaternions, Maxwell succeeded in packing a great deal more in the model than even he himself recognized. When the vector aspects interacted to form a zero resultant *translationally*, those active interactants were still in there and still fighting and interacting. The scalar component of the quaternion remained, and infolded those struggling vectors and functions of them inside itself. In short, it captured the case where the electromagnetic energies are involved in translation actions which nullify each other translationally (electromagnetically). However, the energies are still in there in the continuing interactants inside the zero vector resultant. As such, they are trapped EM energy. And it is the trapped EM energy inside a mass -- not the mass per se -- which is responsible for gravitation. In other words, *Maxwell's theory already correctly captured the unification of the gravitational field and the electromagnetic field in 1873*.

Then Heaviside et al forced Maxwell's theory into a vector framework, throwing out the scalar component, and discarding the unification of gravitation and electromagnetics along with it. Serious errors were made and still exist in many of the fundamental definitions; in fact, many of them aren't definitions at all. Nearly every engineer and physicist can readily calculate potentials -- *all,* of course, on the "dissipation" side where the potentials are actually the amount of potential that was collected upon a collector and then dissipated. I could find hardly a single physicist who really knew what a scalar potential was prior to a finite amount being collected and dissipated as voltage. Yet 99% of them firmly believed they understood the potential.

So now you have the results of this researcher's long and arduous quest for the golden fleece. Please go forward with it, to make this a better and cleaner world for everyone.

Just remember that the control and use of energy is personal power. The control and use of absolute energy is the control and use of absolute personal power. In the old adage, power corrupts and absolute power corrupts absolutely.

Please use it wisely.

NOTES AND REFERENCES

1. For a good discussion of the modern quantum mechanical view of the vacuum, see I. J. R. Aitchison, "Nothing's plenty: the vacuum in modern field theory," Contemporary Physics, 26(4), 1985, p. 333-391. See also T. D. Lee, Particle Physics and Introduction to Field Theory, Harwood Academic Publishers, New York, 1981 -- particularly Chapter 16, "Vacuum as the source of asymmetry." See Timothy Boyer, "The classical vacuum," Scientific American, Aug. 1985, p. 70; Walter Greiner and Joseph Hamilton, "Is the Vacuum really Empty?", American Scientist, Mar.-Apr. 1980, p. 154; Jack S. Greenberg and Walter Greiner, "Search for the sparking of the vacuum," Physics Today, Aug. 1982, p. 24-32; Richard E. Prange and Peter Strance, "The superconducting vacuum," American Journal of Physics, 52(1), Jan. 1984, p. 19-21; R. Jackiw and J.R. Schrieffer, "The decay of the vacuum," Nuclear Physics B, Vol. 190,

1981, p. 944. See Paul Davies, Superforce, Simon and Schuster, 1984 for a layman's overview of modern physics, including the modern view of the vacuum.

2. E. T. Whittaker, "On the partial differential equations of mathematical physics," Mathematische Annalen, Vol. 57, 1903, p. 333-355. Since the scalar potential actually consists totally of a set of hidden bidirectional EM waves, then *scalar interferometry* is possible, and not just an oxymoron as it would seem without considering the inner wave structure of the scalar potential. Two scalar potentials (each of which is a multi-biwave set) can interfere; it is just a special kind of multiple wave interferometry between their internal wave compositions. This is a major point of profound impact on physics. Whittaker in fact showed that *all classical EM* could be replaced by such scalar EM potential interferometry. See E. T. Whittaker, "On an expression of the electromagnetic field due to electrons by means of two scalar potential functions," Proceedings of the London Mathematical Society, Series 2, Vol. 1, 1904, p. 367-372. Further, scalar interferometry has been proven; today it is called the Aharonov-Bohm Effect. See Y. Aharonov and D. Bohm, "Significance of Electromagnetic Potentials in the Quantum Theory," Physical Review, Second Series, 115(3), Aug. 1, 1959, p. 458-491. For confirmation and discussion, see Bertram Schwarzschild, "Currents in normal-metal rings exhibit Aharonov-Bohm Effect," Physics Today, 39(1), Jan. 1986, p. 17-20. For an extensive discussion of the Aharonov-bohm effect and an extensive list of references, see S. Olariu and I. Iovitzu Popescu, "The quantum effects of electromagnetic fluxes," Reviews of Modern Physics, 57(2), April 1985. Modern scientists have generally been unaware of the inner wave structure of the interfering potentials and have utilized only quantum mechanical theory for the interference. Consequently, they have been able to experimentally establish the AB effect for only a few thousand Angstroms distance. With the Whittaker formulation, the AB effect becomes distant-independent, because the necessary potentials can be fabricated as laser-like beams, simply by assembling the proper Whittaker multibeam set. Also, Ignatovich pointed out that the Schroedinger potential can also be decomposed into just such an internal bidirectional EM wave set. See V.K. Ignatovich, "The remarkable capabilities of recursive relations," American Journal of Physics, 57(10), Oct. 1989, p. 873-878.

3. See Richard W. Ziolkowski, "Exact Solutions of the Wave Equation With Complex Source Locations," Journal of Mathematical Physics, Vol. 26, 1985, p. 861; "Localized Transmission of Wave Energy," Proc. SPIE, Vol. 1061, Microwave and Particle Beam Sources and Directed Energy Concepts, 1989, p. 396-397; "Localized Transmission of Electromagnetic Energy," Physical Review A, Vol. 39, p. 2005; "Localized Wave Transmission Physics and Engineering," Physical Review A, 1992, (in Press); "Localized wave transmission physics and engineering," Proc. SPIE Conference on Intense Microwave and Particle Beams II, Los Angeles, CA, vol. 1407, Jan. 1991, p. 375-386. See Richard W.Ziolkowski, Amr M. Shaarawi, and Ioannis M. Besieris, Nuclear Physics B (Proc. Suppl.), Vol. 6, 1989, p. 255-258; R.W. Ziolkowski, and D.K. Lewis, D.K., "Verification of the Localized Wave Transmission Effect," Journal of Applied Physics, Vol. 68, 1990, p.6083; Richard W. Ziolkowski, Ioannis M. Besieris, and Amr M. Shaarawi, "Localized Wave Representations of Acoustics and Electromagnetic Radiation," Proceedings of the IEEE, 79(10), Oct. 1991, p. 1371-1378; I.M. Besieris, A.M. Shaarawi, and R.W. Ziolkowski, "A bidirectional travelling plane wave representation of exact solutions of the scalar wave equation," Journal of Mathematical Physics, 30(6), 1989, p. 806; A.M. Shaarawi, I.M. Besieris, and R.W. Ziolkowski, "A novel approach to the synthesis of nondispersive wave packet solutions to the Klein-Gordon and the Dirac equations," Journal of Mathematical Physics, 31(10), 1990, p. 2511; "A nondispersive wave packet representation of photons and the wave-particle duality of light," UCRL-101694, Lawrence Livermore National Laboratory, Livermore, CA, 1989; "Diffraction of a classical wave packet in a two slit interference experiment," UCRL-100756, Lawrence Livermore National Laboratory, Livermore, CA 1989; "Localized energy pulse trains launched from an open, semi-infinite, circular waveguide," Journal of Applied Physics, 65(2), 1989, p. 805; R.W. Ziolkowski, D.K.Lewis and B.D.Cook, "Experimental verification of the localized wave transmission effect," Physical Review Letters, 62(2), 1989, p. 147; R.W. Ziolkowski and D.K. Lewis, "Verification of the localized wave transmission effect," Journal of Applied Physics, 68(12), 1990, p. 6083; M.K. Tippett and R.W. Ziolkowski, "A

bidirectional wave transformation of the cold plasma equations," Journal of Mathematical Physics, 32(2) 1991, p. 488; A.M. Vengsarkar, I.M. Besieris, A.M. Shaarawi, and R.W. Ziolkowski, "Localized energy pulses in optical fiber waveguides: Closed-form approximate solutions," Journal of the Optical Society of America A, 1991.

4. For a precise statement of the distortion correction theorem, see Amnon Yariv, Optical Electronics, 3rd Ed., Holt, Rihehart and Winston, New York, 1985, p. 500-501.

5. Both wave and antiwave co-exist in the vacuum simultaneously, forming a stress wave. The entity that is stressed is the rate of flow of time. In the common interaction with matter, the time-forward half of the stress wave normally interacts with the electron shells of the atom, giving electron translations forces. The time-reversed or anti-wave half interacts with the nucleus, giving the Newtonian 3rd law reaction (recoil) forces. The so-called "EM wave" in vacuum is a *gravitational* wave. It is a wave of oscillation of the rate of flow of time. It is rather like a sound wave in air, as Tesla pointed out, and it is a longitudinal wave, not a transverse "string" wave.

6. As pointed out by Nikola Tesla. Tesla was correct, and all the textbooks with their transverse "string" waves are in error. *There are no strings in the vacuum!*

7. E.g., see Clayton R. Paul and Syed A. Nasar, Introduction to Electromagnetic Fields, 2nd Ed., McGraw-Hill, New York, 1982, p. 113.

8. E.g., see Clayton R. Paul and Syed A. Nasar, ibid., p. 100-101. See also Raymond A. Serway, Physics For Scientists And Engineers, With Modern Physics, Saunders College Publishing, Philadelphia, PA, 3rd Ed., Updated Version, 1992, p. 752-755.

9. Sommerfield's theory of metallic conduction was based on Drude's concept that the outer valence electrons of a conductor, which do not form crystal bonds, are free to migrate through the crystalline lattice structure, and so to form an electron gas. At room temperature, by quantum mechanical considerations, these free electrons are moving randomly, but at an average velocity on the order of 10^6 meters per sec. E.g., see Martin A. Plonus, Applied Electromagnetics, McGraw Hill, New York, 1978, p. 54-58, 62-3, 376-7. If you wish to know just how much power exchange is driving the collisions of the electron gas in a copper wire, here is an illustration. In one cubic centimeter of copper wire, the power exchange in and out of the electron gas is some 4 billion billion watts. That's the equivalent of 4 billion large electric power plants, each of 1,000 megawatt capacity. And one cubic centimeter of copper is a lump about the size of the end of our little finger.

10. E. g., see Raymond A. Serway, ibid., p. 743-744 for a discussion and calculation of the electron drift velocity in copper.

11. Richard P. Feynman, Robert B. Leighton, and Matthew Sands, The Feynman Lectures on Physics, Addison-Wesley, New York, Vol. 1, 1963, p. 2-4. In the classical EM theory launched by Maxwell and later modified by Heaviside et al, this problem did not exist for the original theoretical formulation. In that formulation by Maxwell, and continued by Heaviside, a material ether is assumed for the model. The Michelson-Morley experiments of 1887 destroyed the notion of the material ether, but the classical electromagnetics model has never been corrected to rectify its very serious foundations flaw in this respect.

12. Robert Bruce Lindsay and Henry Margenau, Foundations of Physics, Dover Publications, New York, 1963, p. 283-287. Note on p. 283 that a "field of force" at any point is actually defined only for the case when a unit mass is present at that point. In spite of this, most classical electrodynamicists continue to adhere to the notion that the EM field exists as such in the vacuum, but do admit that physically measurable quantities such as force somehow involve the product of charge and field. E.g., see J.D. Jackson, Classical Electrodynamics, 2nd Ed., John Wiley & Sons, New York, 1975, p. 249. Note that holding such a concept is tantamount to

holding on to the material ether, and assuming that the vacuum itself is "measurable" or "observable."

13. The formula F = ma is simply an algorithm for calculating the magnitude of the force. It states that "the magnitude of the force is equal to the magnitude of mass that is accelerating, multiplied by the magnitude of the acceleration." No such "equals" formula is a definition; it is only a calculational algorithm.

14. This falsifies one of the assumptions in the common notion of the scalar potential; that its gradient in vacuum is a force field. Let us falsify another part of the conventional concept of the potential. Take the notion of forcibly pushing in "against the field" of a trapped charge, a unit charge from infinity. At any point you stop, the work n you have done on the unit charge is equal to the value of the potential, so it is said. Actually, you pushed in a one-coulomb collector, and have collected and dissipated as work n joules of energy on that one coulomb. In other words, the energy density of the potential there, if collected and dissipated on a collector, is n, where n is joules per coulomb (NOT joules!). To prove it: suppose we go out on 10,000 radials from that point, and push in from infinity 10,000 unit charges from infinity. Then, the total work done "against the potential gradient ("field", in common language) is now 10,000 n. This makes no sense at all from the conventional view (which carefully refrains from multiple collectors!). It makes good sense from our view of the potential as having infinite energy but a finite energy density. In that case, the more collectors, the more energy collected, for dispersal as work.

15. For a discussion, see Y. Aharonov and D. Bohm, 1959.

16. Nikola Tesla, "The True Wireless," Electrical Experimenter, May 1919, p. 87.

17. The power in the load is always the time rate of dissipation of energy that has just been freely collected by the load for dissipation.

18. One can foresee a day in the not too distant future when any power company continuing to do such an unthinkable thing will have a class action suit brought against it by its customers!

19. T. E. Bearden, "Mechanism for Long-Term Cumulative Biological Effects of EM Fields and Radiation," March 1993 (in preparation).

20. Precisely analogous to a heat pump's operation - which as is well-known can readily be "over unity" in its efficiency. The maximum efficiency of the heat pump is about 8.22. E.g., see David Halliday and Robert Resnick, Fundamentals of Physics, 3rd Edition Extended, John Wiley and Sons, New York, 1988, Volume 1, p. 510-519. Good heat pumps normally have about 4.0 efficiency.

21. External power in an electric circuit refers to the dissipation rate (in the circuit's external load) of the potential gradients on the activated/potentialized electrons. Internal power refers to the dissipation rate in the circuit's bipolarity source.

22. We call strong attention to T.W. Barrett, "Tesla's Nonlinear Oscillator-Shuttle-Circuit (OSC) Theory," Annales de la Fondation Louis de Broglie, 16(1), No. 1, 1991, p. 23-41. In this important paper, Barrett shows that a higher topology EM, such as quaternion EM, allows many things to be accomplished with circuitry that are not apparent to a conventional vector or tensor analysis of that circuitry. He also shows the Nikola Tesla's circuits accomplished this higher topological functioning.

23. It is easy to test this. Connect several different wires to a single source of potential gradient. With respect to ground, the end of each one of those wires has the same potential gradient as does the original source with respect to ground. If you connect 10 wires to a single "100-volt" potential gradient source, you will have ten 100-volt potential gradients appear. You can use

each of these ten potential gradients as a primary source. From each of these new primary sources, you can branch ten more, and now have a hundred potential gradient sources. You can treat each of these hundred new sources now as a primary source. To each one, you can add a switcher, collector, and external load, and drive all 100 loads. Or instead, you can put ten switcher/collector/external load circuits with each of the hundred new primary sources, and power all 1,000 external loads. Energy/potential is free from any source, so long as you do not demand power from the same source.

24. Per Whittaker and Ziolkowski, this VPF exchange -- from consideration of its wave aspects -- consists of a harmonic series of bidirectional waves.

25. We are easily permitted to have free energy and violate the "local energy conservation law for a closed system." This is because the system is not closed, and so instead we must apply local energy conservation for an *open* system with a hidden source. In any given time interval, the energy taken (scattered) from the system as external work cannot exceed the sum of the unscattered trapped energy that was in the system initially and the unscattered energy that flowed into the system during that time interval.

26. You can actually do away with the separate collector, and utilize the doped copper DSC material itself as the collector. However, you will not be able to collect nearly so much energy in each collection cycle, for dissipating in the load in the subsequent work cycle.

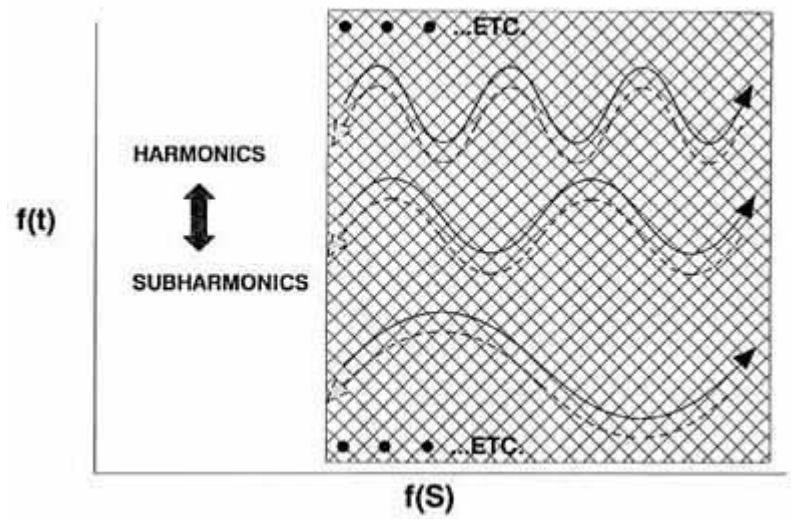

Figure 1a. Internal wave structure of the scalar potential.

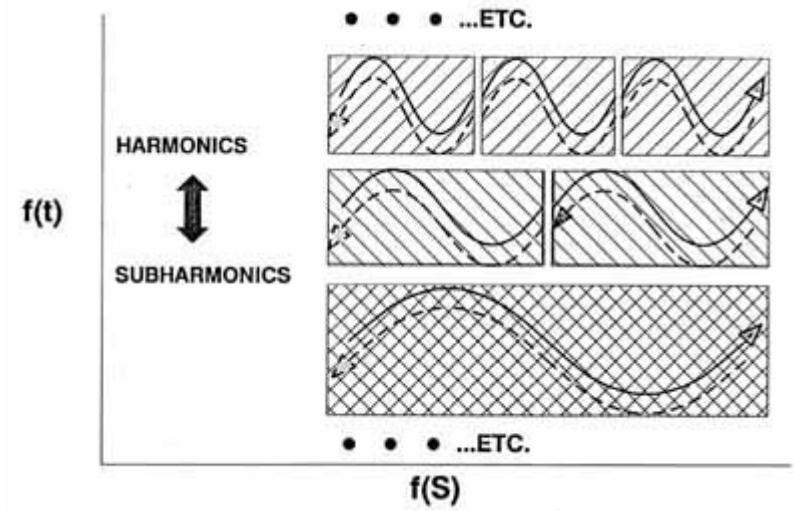

Figure 1b. Internal wave structure of the scalar potential (end).

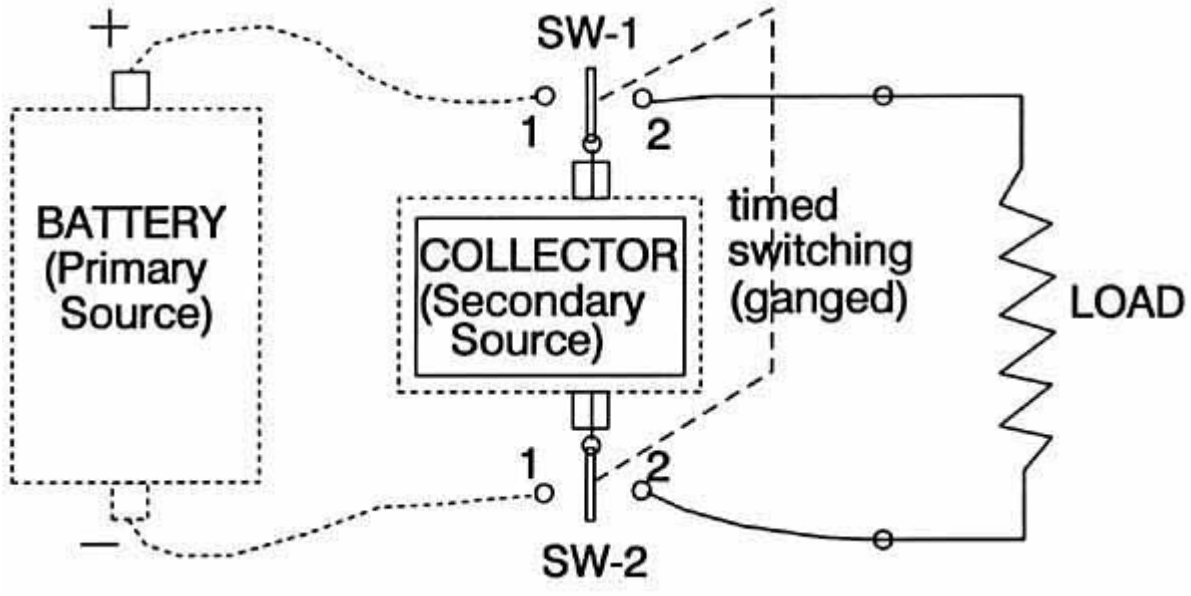

Nondissipative components are shown by dotted lines.

Dissipative components are shown by solid lines.

Figure 2. The secret of extracting and using free energy.

[Additional Comments - 12 March 1993]

[Update - 5 February 1994]

[Update - 13 May 1994]

ADDITIONAL COMMENT:

March 12, 1993

The present classical CEM model prescribes closed, energy-conservative type systems. If any electrical device works totally according to the accepted CEM model, it cannot and will not ever produce overunity. Simply put, you have excluded any hidden EM source that is freely replenished, and you have assumed continual killing of all energy input sources utilized. On the other hand, if one takes the view that the overunity electrical machines are possible after all, then -- *whether one is consciously aware of it or not* -- one has implied that classical CEM must somehow be substantially flawed. If it's flawed, then -- being a model -- some of its primary assumptions (postulates) and/or fundamental definitions must be in error. The proper place to go after "free electrical energy" is to rigorously examine CEM, over and over, until flaws are uncovered which allow a hidden, freely replenished source of input energy. In other words, one must find a way to "open" the electrical system to an inflow of energy from this source, without closing off the source. Until one finds such an "extension" of CEM, one has no model or concept which can reasonably be expected to provide overunity electrical energy output. Note also that, while the majority of the EM circuitry of an electrical overunity machine may obey CEM, at least one section -- where the source is freely tapped and the excess energy extracted -- must violate CEM.

I have spent many arduous years in this very process, right or wrong. The bottom line of my search is this: the only verified (by Whittaker and Ziolkowski) (WZ) "freely replenished river" of EM energy, that can act as the required "free energy" source for input to the would-be overunity electrical system, is the *potential*. But to understand the potential, completely new definitions are required for many entities, among them being energy, electrical charge, electrostatic scalar potential, voltage, etc. The present so-called "definitions" of these entities in CEM are either non-existent, entirely wrong, or quite unsatisfactory.

So far, the search has uncovered two major ways to tap the continually-replenished EM energy in the scalar EM potential:

(1) use of the inner WZ internal biwave structure of the potential as pump waves on/to a nonlinear material (such as the atomic nucleus), so that the nucleus becomes a pumped phase conjugate mirror. Then, by normal phase conjugate optical theory, simply inputting a small signal wave will produce an amplified phase conjugate replica (PCR) wave emitted from the mirror material, and this PCR will precisely backtrack the original input signal wave's path (see the *distortion correction theorem*) back out of the nucleus, out of the atom, and into the external circuit. There, the amplified PCR wave can be "filtered off" and sent to the external load, to power the load. The Floyd Sweet vacuum triode works precisely by this mechanism. Note particularly that Barrett has shown that higher topology EM (such as the original quaternion EM theory) can accomplish such "optical functioning" without the use of optical materials. To do Sweet's vacuum triode type process is thus theoretically possible with electrical circuitry alone, but one must have more than the current understanding of CEM, as Barrett pointed out. In other words, one can "open" any 4-space system by adding hyperspace (or subspace, if one insists on retaining Minkowski 4-space). One can thus have a hyperspatial source. Indeed, Ziolkowski and others have already pointed out that the WZ type decomposition of the scalar potential is essentially equivalent to having *complex sources*.

(2) The second way is to "trap the electron gas electrons" in a separate collector, feed "current-free potential" to the collector from a primary battery or other source of potential, and collect a bunch of excess energy (potential) in the collector's "penned up free electron 'horses'" waiting to carry the excess energy to the load and dissipate it there, once they have been released. Then, one switches the primary potential source away from the collector, while the "energy-loaded horses" are still trapped and straining at the bit, so that no work can be done -- by those agitated horses when they stampede out of there -- on the internal resistance of the primary

source, to destroy or reduce it. In the same switching action, the collector with its "snorting but still trapped electron horses" is switched across the load to form a totally separate circuit with it, having nothing at all to do with the original primary source of potential. Then, the agitated horses are released, and thunder out through the load, scattering their riders (excess energy) in all directions in the load, producing work/heat and powering the load. They will also charge on around to the reverse side of the collector, and kill its charge separation (kill its potential) as well, just as does any ordinary circuit.

The major disadvantage of method 1, as we presently have seen it done (however, check Barrett's demonstration that Tesla's patented circuitry is capable of doing it by circuitry alone), is that *time-reversed* electrical energy is produced. So Method 1 has some serious drawbacks. "Time-reversed energy stuff", which should stay in the atomic nucleus as Newtonian 3rd law reactions and 3rd-law energy exchanges, is dragged out. Unusual effects on biological systems can occur. Antigravity effects can occur. Other hidden processes in the universes, that affect the atomic nucleus, can be gated into the external circuitry, causing disaster. Monopoles can be deposited in the magnets, causing them to explode like hand grenades. Most of the new "massive time-reverse energy" phenomenology is still unknown. One cannot at this stage of ignorance adequately guarantee human safety. I presently don't see just how this kind of energy can pass an Underwriter Laboratories' testing and certification, until a lot more exhaustive work is done to understand the new phenomenology.

Method 2, however, yields ordinary, garden-variety, positive-time electrical energy. The method presented in the paper is my own discovery. No unusual time-reversed phenomena are involved. It would appear to be eminently practical to produce and certify power units based on Method 2. The phenomenology and risks are the same as for ordinary, time-forward power systems.

Method 2 has another unique characteristic: as a system, *all the subsystems are already in the literature and validated. They have just not previously been put together in this fashion*. So development of the system really represents an "integration" problem only, after one first does a little development of a proper degenerate semiconductor material (DSM). In other words, one first develops (and tests) the exact doping materials and percentage, to get a DSM material that is still a good conductor but has a relaxation time of -- say -- one tenth of a millisecond. One builds the wires from the battery to the collector out of this new DSM material. If one uses a capacitor for the collector, the plates must be made out of the new DSM material, not out of normal "pure conductor" material. Then one develops a switcher that switches in one tenth (or less) the relaxation time of the DSM, or in this case in one hundredth of a millisecond. That switching time, of course, is easy for any decent electronic technician or electronic engineer. One also develops a timing circuit that will (1) sense the status of the discharge of the collector energy through the load, and (2) trigger the switching at the correct times so that a smooth two-cycle (collect, discharge) process results. Note that the lengths of cycle one and cycle two are not necessarily equal at all. One may use multiple collectors/loads simultaneously, cascaded collectors/loads, etc. Hundreds of variations are possible and feasible.

It is not possible to do anything with this discovery in a normal manner. I would dearly like to be economically independent, so I could work full time in my efforts on free energy, antigravity, extended EM healing, cancer, etc. Many orthodox scientists will also fiercely resist this upstart notion of "overunity" electrical machines to the bitter end. When powerful economic interests realize one has such thing *for real*, one is certainly going to be stopped, jailed, or killed, or he may just "mysteriously vanish" and never be seen again.

So I just freely released and distributed my discovery of method 2, in the paper "The Final Secret of Free Energy". It is deliberately targeted toward technicians, junior engineers, and educated laymen. (The principles and definitions raised, however, can be debated to the nth degree by knowledgeable foundation scientists). The paper has already been distributed

worldwide. Now the *principles and definitions* are available to everyone. If they are in error, shortly that will be proven in spades. If they are correct, that will also be established shortly.

Anyone who wishes can develop and patent a particular application. There's no longer any way to stop this information from being disseminated and utilized. I hope that a flurry of development and patenting activity will result around the world. Get cheap, clean electrical energy to everyone. Bring on the electric auto, clean up the noxious auto exhausts, get rid of giant oil spills, and clean up the biosphere.

Tom Bearden

Additional Information On
The Final Secret of Free Energy

Update 15 February 1994
© 1994 by T.E. Bearden

Introduction

My associates and I have filed the first patent application on two electrical overunity processes and devices; one similar to what is outlined in *The Final Secret of Free Energy* [Ref 1] and an additional variation utilizing, as collectors, standard step-charged capacitors rather than degenerate semiconductor materials. In 60 to 90 days, we will have a very enlightening paper (more likely a book) ready on that. We also plan to file several more extremely fundamental overunity patent applications from additional phenomena and mechanisms that we have uncovered.

In this paper, it is assumed that the reader is familiar with the content of *The Final Secret of Free Energy*. Figure 1 shows the invention schematically, and we briefly summarize it as follows:

Summary of the Invention

A method and apparatus for extracting bidirectional EM wave energy from the vacuum through the scalar potential gradient across the terminals of an electrical source, collecting the excess energy in a collector without entropy, then separately discharging the collected energy through a load to perform work, without sending the load current back through the primary source against its potential gradient; i.e., against its back emf. Removing the load current from the source thereby substantially reduces the production of work inside the source to dissipate its bipolarity; said internal dissipative work being well-known to be the cause of exhaustion of the source's ability to continue to furnish emf to the external circuit. By reduction of its internal dissipation, the source is enabled to furnish more energy for dissipation in the external load than is utilized to dissipate the source internally. Hence the source is enabled to operate with an overunity operational efficiency. The system permissibly operates as an "open" system, and extracts and utilizes excess EM energy from a free-flowing external source (the flux exchange between the surrounding vacuum and the bipolarity of the source), hence it can operate at an efficiency greater than unity without violation of the laws of physics, in a manner analogous to but entirely different from a heat pump. In this invention, it is not the purpose of the primary source to furnish current and dissipative power to the external circuit. The bipolarity of the source is utilized primarily as a dipole antenna to receive the bidirectional EM wave energy flow from the vacuum, and direct it without entropy through a switching unit to the collector. Conduction electrons in the collector are temporarily restrained while being overpotentialized by the excess energy being collected upon them. The collector and its overpotentialized electrons are then switched away from the primary source, and connected across the load as a separate circuit and closed current loop. The electrons in the collector and their excess energy are then automatically released to flow as current discharge through the load, releasing their excess energy to perform useful work in the load. The collector is then switched away from the load and back across the primary source, and another collection cycle is initiated. Iteration of the collection and discharge cycles provides power to the load. Additional collection and smoothing capacitances for smoothing the iterations and furnishing steady power to the load may be added as desired. The invention violates the

closed circuit practice of powering loads, but does not violate the conservation of energy law, the second law of thermodynamics, or any of the other known laws of physics.

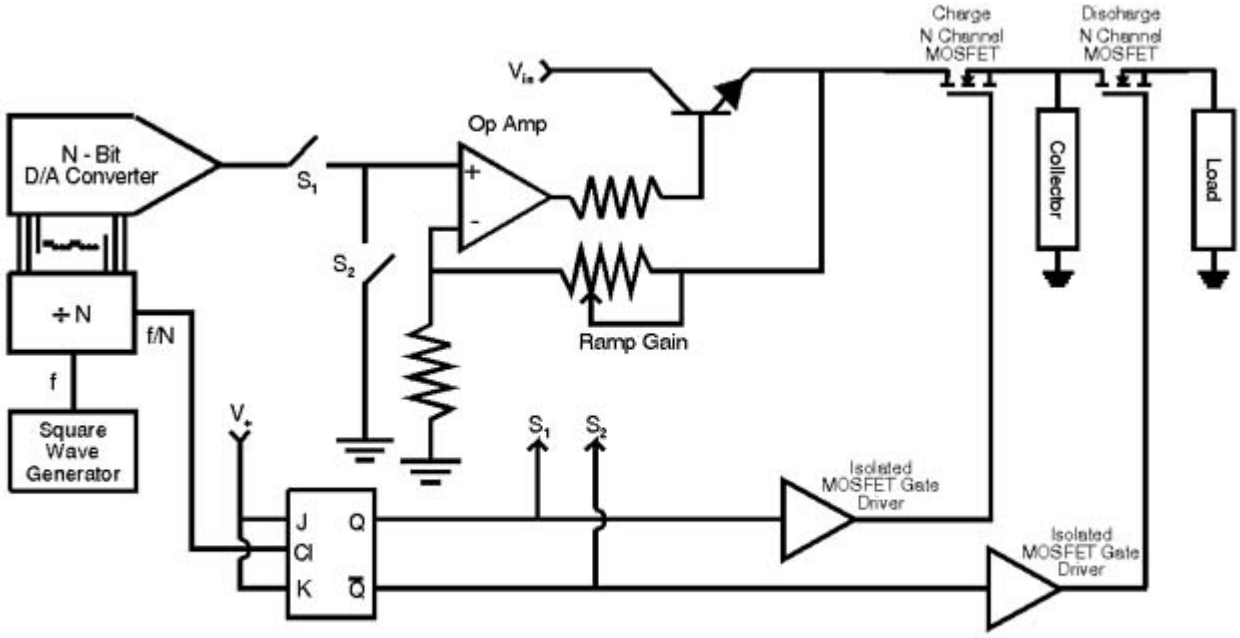

Figure 1A

Figure 1a. Type circuit utilized for ramp-up charging of a capacitor without work, and separate discharge of the collected energy in the load without substantial depletion of the primary source.

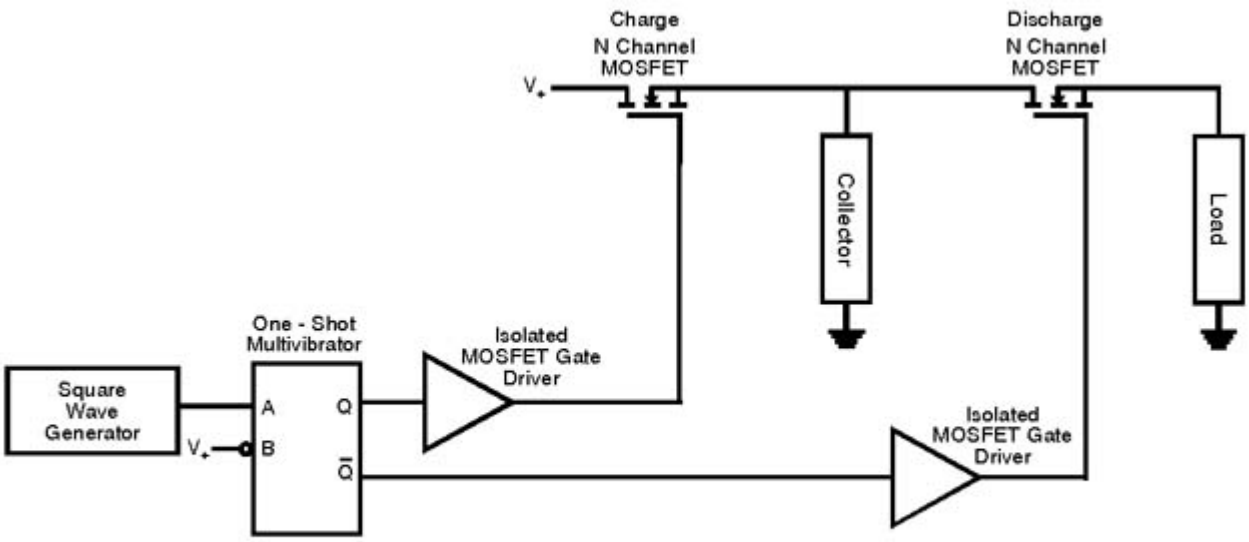

Figure 1B

Figure 1b. Type circuit for single pulse charging of a degenerative semiconductor collector without appreciable work, and separate discharge of the collected energy in the load without substantial depletion of the primary source.

Use of Step-Charged Capacitor as the Collector

Fulfilling our search for a special material with the extended electron gas relaxation time for the collector, a material alloy composed of 98% aluminum and 2% iron is tentatively suggested. However, production of this alloy is particularly difficult, so we are still researching for a solution that is more easily manufactured.

Meanwhile, the necessity for using a special material for the collector has been bypassed by another procedure we have utilized. Rigorously one can use a *normal capacitor* as the collector, if one step-charges it in several hundred small incremental rectangular voltage steps (stair-step-charging). The proof that this can freely charge a capacitor with energy, without having to do appreciable work, is already known in the literature. You can charge the capacitor *without entropy* and essentially without drawing electron mass current. [Ref 2,Ref 3,Ref 4,Ref 5]

Actually we consider the capacitor to be charged by *massless displacement current flow*, which for circuitry purposes we consider to be $d\phi/dl$ -- a flow of pure potential (trapped EM energy) along a conductor or through the vacuum; i.e., under conditions where *mass* displacement current flow does not exist. [Ref 6, Ref 7]

Massless Displacement Current Is Freely Available From Any Source

The principle embodied in the invention is that one can extract all the free EM energy one wishes, from any electrical power source, as long as it is extracted via massless displacement current and not by *electron mass* flow current. [Ref 8] And one can freely collect this extracted energy from a source into an ordinary capacitor if one does it correctly, *because one can charge the capacitor via massless displacement current without expending any appreciable work inside the source to dissipate its dipolar separation of charges*.

Every Electrical Source of Potential Is Already a Free Energy Source

We thus advance a revolutionary concept: all present power systems already utilize *free energy source-antennas*. However, the standard two-wire closed circuitry diabolically utilizes one-half the total free energy extracted by the source-antenna from the vacuum, to perform work inside the source-antenna to dissipate its dipolarity and hence to dissipate the *source-antenna (i.e. the receiver) itself*.

The source already acts as a "dipolar antenna" to continually receive "scalar potential" current $d\phi/dl$ (massless displacement current) from the vacuum. [Ref 9] Previously scientists and engineers have simply ignored this special massless EM energy influx. For load-free (i.e., mass-current-free) conditions, ($d\phi/dl$) is continually received from the vacuum *by any dipole* (i.e., by any *dipolar source-as-an-antenna*), and the flowing energy is continually exchanged back and forth between the vacuum and the dipole.

This free energy exchange with the vacuum is also true of any two points in our circuit that possess an open-circuit voltage or potential difference between them. Two such points act as a dipole. Free energy dipolar antenna sources are everywhere; we just have to learn how to break the symmetry in their energy flux exchange with the vacuum, collect some of the freely flowing influx, and distribute that collected excess energy to an isolated load to *separately* power it.

In other words, we simply have to implement circuitry that operates analogous to the standard heat pump cycle.

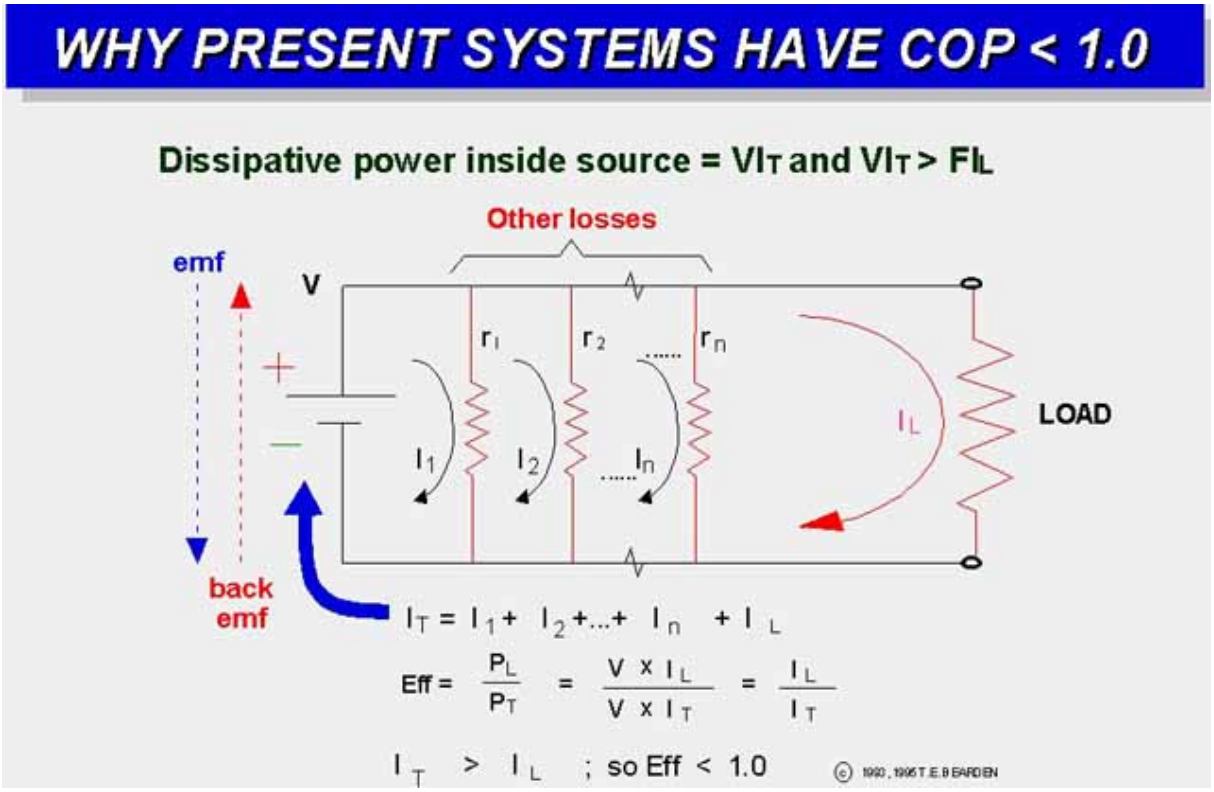

Figure 2. Why present electrical power systems have underunity operational efficiency.

Conventional 2-Wire Closed Circuit Operation

In the conventional 2-wire system a load is added to the source-antenna, allowing circulation of electron current in a closed circuit through the load and then through the ground return line back to and through the dipolar source-antenna. The only useful reasons for this "closed circulation" of the electrons are (1) it is simple, *easy*, habitual, and accepted, (2) all our components, instruments, and methodologies are developed in accordance with this usage, (3) one uses the electrons as a *working material fluid* to receive, transport, and discharge excess EM energy, and (4) forcing the electrons back through the back emf *reloads* the spent electrons again with excess EM energy in the form of little ∇φ's (excess trapped energy density) upon each recycled electron.

Some of the excess ∇φ collected upon the electrons is expended in the load as useful work, but one half of the total is expended in driving the spent (without excess ∇φ Consequently all conventional 2-wire circuits, which return *all external electron-flow current loops back through the source*, are always underunity devices, as is shown in Figure 2. Eerily these conventional sources are already free energy devices, which are unwittingly attached to circuitry specifically designed to utilize part of their freely received energy to deplete or destroy themselves, i.e., they are already *open systems receiving free energy from the vacuum, but they are hooked up and designed in a suicidal manner so as to use at least half of that freely extracted energy to re-close the system and shut off the influx of free energy.* Since at least some of the remaining half of the energy is lost in inefficiencies, frictional losses, etc., less than half the total free energy goes to the load. So there is always less useful work being done in the load than the destructive work being done inside the free-energy source-antenna to destroy it.

Operational Efficiency

We define operational efficiency Alpha as the average power expended in the load to power it, divided by the average power expended inside the source to dissipate its dipolarity. If Alpha < 1, one has to externally furnish energy to do restorative work upon

the source to replace or offset that amount of destruction being done inside the source, if one wishes the source to continue to operate as an energy-receiving antenna. If Alpha > 1, then if the additional losses are minimal, the device can conceivably run itself while furnishing some energy to a load to produce useful work.

We Must Excise the Suicidal Closed Circuit To Achieve Overunity

There is no mysticism in the overunity electrical device. The device is an open system that extracts excess energy from the vacuum, collects it, and transports it to the load to separately power the load. It is simply analogous to the standard heat pump cycle. It is also directly analogous to presently operating overunity systems such as windmills, waterwheels, solar cell arrays, and hydraulic turbines in a dam installation. All that we have done is to eliminate or dramatically reduce the standard cancerous mistake in conventional electrical power systems wherein much of the excess energy freely extracted from the vacuum by the already-overunity electrical source is then utilized to destroy the source's energy reception ability!

As we stated, in the conventional electrical device and circuitry, more destructive work is always done inside the source than is done usefully in the external load. Hence the conventional operational efficiency is always underunity.

Legitimate Overunity Systems Comply With Well-Known Requirements

There are many alternative and well-known permissible free energy systems that operate at overunity operational efficiency: solar cells, windmills, hydraulic turbines, heat pumps, and water wheels, to name a few. All of these are open systems, receiving an influx of free energy from a natural energy flow, and collecting and gating some of that energy to be dissipated in a load to do useful work. All of them are permissible overunity devices, since (1) they are open systems, (2) they constantly receive a free energy influx from an external source, (3) they extract and collect some of this energy without dissipation, (4) they dissipate this collected energy in a load, and (5) the discharge process is totally separated and isolated from the "collection-from-the-source" process.

No Legitimate Overunity System Is Intentionally Made Self-Destructive

Not a single one of these open overunity systems foolishly uses part of its freely extracted and collected energy to re-close the system and shut off its influx of free energy flow! What engineer would build a solar array such that, the moment the current started to flow, it powered a shutter arrangement to gradually close and shield off the solar array from the sun? Who would build a windmill so that, whenever the angled-blade assembly rotated in the wind to furnish power, a gearing feedback assembly also slowly caused the individual blades to rotate into a position parallel to the wind, thus stopping the windmill?

Yet this is precisely what the conventional electrical power system does with its external circuit. It deliberately utilizes half of the freely extracted energy to re-close the system and shut off the free energy flow between the vacuum and the source-antenna, by destroying the receiver-antenna!

However, this "suicide circuit" practice is guaranteed to keep the power meter on your home or business, and to keep the meter on the gas pump for fueling your automobile. Perhaps one may be forgiven for suspecting that, at the deepest levels of financial control,

this may be the real purpose in seeing that the existing interpretation of classical EM stays "as is."

All Electrical Power Sources Are Already Free Energy Receiving Antennas

All conventional electrical power systems already contain fully functional free energy systems in their source component. Each conventionally designed system is, however, deliberately suicidal, since part of the system's own energy is utilized to work against itself and destroy itself. This is primarily due to the preoccupation of engineers with power and work. They do not consider the source as an energy source, but as a power source. Power being the time-rate of performing work, and work being the dissipation of energy, they are thus naturally conditioned to think of the "dissipation of the source" as its natural functioning.

In fact, hardly a single one of them is aware that EM energy itself is a free-flowing process. Only a finite collector possesses a finite collection of EM energy. In nature, the potential gradients of all dipoles are already rivers of free-flowing EM energy exchange with those dipoles, where the energy density is freely furnished and is essentially free for the taking. It is mind-boggling that we have all been conditioned to extract this free energy furnished by nature and the creator, but to always utilize half of the extracted energy to destroy the receiver-antenna and thus strangle the flow!

In our work, we simply have excised this "self-destructive" cancer and reworked the circuitry so that only a minimal amount of the freely extracted energy is utilized for internal destruction of the source-antenna.

Thermodynamics and Open Overunity Systems Not In Equilibrium

In our approach we have an open system during every collection cycle, with an external source of energy and a continual energy influx. We have deliberately broken the local symmetry of the system's energy exchange with the vacuum, by spatially and temporally separating the energy collection and energy discharge phases. Overunity operational efficiency is permissible for such a system without violation of any of the laws of nature. Some of the influx of excess energy from the vacuum into the dipolar source antenna is transported without loss to the collector and collected. The collected energy in the collector is then separately discharged through the load, without any of it being discharged back inside the source-antenna. Note that we have broken local energy flow equilibrium but not global energy flow equilibrium.

The second law of thermodynamics, e.g., does not even apply to such an open system not in equilibrium. Classical thermodynamics cannot even compute the entropy of an open system not in thermodynamic equilibrium, as is well-known to thermodynamicists. [Ref 10]

What classical thermodynamics does have to say, is that such an open system must contain excess energy when compared to the closed system in equilibrium, because the closed system in equilibrium is in the maximum entropy condition. [Ref 11] Global conservation of energy is not violated, just as it is not violated in a windmill or in a heat pump, which are similar open systems. Local conservation of energy (which applies only to a closed system or to a system in total equilibrium) does not apply because the system is open and not in equilibrium.

Permissible Electrical Overunity Is Not Perpetual Motion

An open system out of equilibrium need not conform to (1) the local (closed system, equilibrium conditions) conservation of energy nor to (2) the second law of thermodynamics (which assumes equilibrium conditions). It must and does conform to the global conservation of energy, just as does a waterwheel or windmill. We strongly stress that the overunity electrical device is not a "perpetuum mobile." [Ref 12] The electrical operations and systems we propose are perfectly permissible by the known laws of physics and do not violate any of them. We propose a permissible series of overunity electrical systems.

The Heat Pump Analogy

In one way of viewing it, all we have done is utilize the potential as a more modern type of quantum mechanical fluid having hidden bidirectional flowing EM energy. [Ref 13], Ref 14, Ref 15, Ref 16] QM already certifies that the potentials, not the force fields, are the primary causes of all EM phenomena. Contrary to classical EM theory, the force fields are effects in, on, and of the charged particles themselves. Consequently, if the potentials are the primary causes of all EM phenomena, then for free energy to perform work (free causes to collect and generate desired effects) we must turn to the potentials.

We have utilized a hookup and switching arrangement so that energy-free collection is totally separated from collected energy discharge in the load. In short, we have done what a normal heat pump does, when it uses the air with its thermal energy as a working energy-containing fluid. Consequently, overunity operational efficiency of analogous electrical devices is perfectly permissible, and not prohibited by the known laws of physics.

An Electrical Power Source Is a Dipolar Antenna For Free Reception of Energy

An electrical power source is in fact only a dipolar antenna for reception of potential (hidden bidirectional Whittaker/Ziolkowski waves). All the current you run back through the back emf of the source, to perform dissipative work inside it, is something you yourself are doing to the source. It is not a priori a characteristic of the source!

If no work is done inside the source's internal bipolar separation of charges (i.e., if no electron or ion current is forced back up from the ground return line against the source-antenna's potential and therefore against its back emf), then the dipolar source-antenna will last essentially forever, or until something corrodes or breaks mechanically.

The flow exchange of energy between the vacuum and the dipolar source-antenna is freely driven by all the charges of the universe, in accordance with Puthoff's cosmological feedback loop. [Ref 17]

Massless Displacement Current

Technically one is using massless displacement current to charge the capacitor, rather than electron mass flow current. It is real energy flow nonetheless; just in work-free, dissipation-free form. As is well-known, one plate of a capacitor already charges the other plate by just this very massless displacement current, transporting real EM energy across the gap between the plates in the process. The electrons themselves do not cross the gap.

Displacement current is already well-known to be "free" energy transport without any dissipation as power and work. By drawing massless displacement current only from the source-antenna instead of electron flow current, you can draw work-free, dissipation-free energy as long as you wish, as often as you wish, and as much as you wish, without ever

dissipating the source-antenna. You just have to collect it onto some trapped electrons or other charges, such as in a capacitor's plates, then switch the collected energy (charged capacitor) separately across a load, in a separate discharge circuit, to discharge through the load as work.

The real trick is to prevent the electrons in the circuit from moving and providing mass "energy dissipation" current inside the source during the collection process. In the original paper, we explained that this could be done by using as a collector a degenerate semiconductor material, with extended electron gas relaxation time. In this paper we have explained how this can be done by step-charging an ordinary capacitor as a collector. We have also included specific references proving (both experimentally and theoretically) that this is correct. With the requirement for special materials removed, there is no reason that a competent researcher cannot develop a step-charged capacitor device to prove it experimentally for himself or herself.

Requirement: Proof of Principle and Independent Test and Certification

My associates and I are proceeding as rapidly as possible toward full-up "proof-of-principle" circuits for open release and certification or falsification by the scientific community and engineers at large. Soon we also expect to release to other researchers information on the kinds of new electrical phenomenology one meets in true overunity electrical devices. These are not in the textbook, at least with respect to electrical power systems. We give some indication of these phenomena below:

New Circuit Phenomena Must Be Mastered

One meets unusual electrical phenomena in attempting to perform overunity electrical operations. For overunity, a priori one must "slip excess potential" through the circuit essentially without losses. That is, one must deliberately pass massless displacement currents through the circuit and at least through some of its components.

Solid-state switching components in particular exhibit unusual phenomena, to say the least, when excess potential is introduced into and through all their internal components inside modern semiconductors. An ordinary MOSFET, e.g., may have 25,000 separate internal components. It is as if someone crammed the entire electronic parts store inside it. Simple switches these semiconductors are not, when exposed to appreciable massless displacement current.

When one "slips in" some pure potential, by SWZ decomposition one has also slipped in some bidirectional EM pump waves. The nonlinear semiconductor materials will function as phase conjugate mirrors when suitably pumped, including at non-optical frequencies. Consequently pumped phase conjugate replicas, self-targeting, formation of quantum potentials, and modular variable effects sometimes begin to evidence. We will address and explain some of these effects in a future paper. For now, we simply state that they occur, and there is a host of extra phenomenology the experimenter may encounter.

However, an iron rule for the experimenter is that, for odd circuit behavior, first exhaust all "normal" causes before turning to the extraordinary causes. One will save oneself a great deal of grief by applying this Occam's razor.

Also in deliberately utilizing displacement current, one is actually employing an expanded, higher topology EM with additional degrees of freedom, similar to that pointed out by Barrett. [Ref 18] Consequently one encounters a host of additional higher topology EM

phenomenology. In particular one encounters nonlinear optical (NLO) functioning of the semiconductors at any and all frequencies, not just in optical bands.

Overunity Electrical Devices Are Permissible By The Laws of Physics

The overunity electrical energy system is permissible by the laws of physics and is not in any manner perpetual motion. It simply extracts excess EM energy from an ubiquitous source, through a dipole as a receiver, and collects that excess energy, conducts it to the load, and separately dissipates it in the load to power the load, without using any of the collected energy to perform work inside the source to dissipate the source-antenna. It is directly analogous to a heat pump, which is well-known to perform at overunity operational efficiency under nominal conditions.

In Conclusion

Primarily my associates and I believe we have corrected an ubiquitous error made in present power systems that prevents these systems from realizing their already-inherent overunity operational efficiency. We also firmly believe that the permissible electrical overunity device is an idea whose time has finally come.

Notes and References

1. T. E. Bearden, "The Final Secret of Free Energy," distributed over the Internet, Feb. 9, 1993. The paper was also published in Magnets, 7(5), pp. 4-26 (1993); in Explore!, 4(3/4), pp. 112-126 (1993), and in several other media.
2. For proof that you can charge an ordinary capacitor almost without entropy, see I. Fundaun, C. Reese, and H. H. Soonpaa, "Charging a Capacitor," American Journal of Physics, 60(11), pp. 1047-1048 (1992). A capacitor can be step-charged in small steps to dramatically reduce the entropy required to charge it. In the limit, a theoretically perfect capacitor can be fully charged without any electrical current or work at all, i.e., you can simply transport the excess energy density (the potential gradient) of the open circuit voltage of the source to the collector, and couple that $\nabla\phi$ to the electrons trapped in the capacitor plates, without electric current from or through the source.
3. M. G. Calkin and D. Kiang, "Entropy Change and Reversibility," American Journal of Physics, 51(1), pp. 78-79 (1983).
4. F. Heinrich, "Entropy Change When Charging a Capacitor: A Demonstration Experiment," American Journal of Physics,54(8), pp. 742-744 (1986).
5. V. K. Gupta, Gauri Shanker, and N.K. Sharma, "Reversibility and Step Processes: An Experiment for the Undergraduate Laboratory," American Journal of Physics, 52(10), pp. 945-947 (1984).
6. In most texts the treatment of displacement current is far from adequate. A better treatment than most is given by John D. Krauss, Electromagnetics, Fourth Edition, McGraw-Hill, New York, pp. 437-439, 547-549 (1992). Additional useful insight can be gained from David J. Griffiths, Introduction To Electrodynamics, Second Edition, Prentice-Hall, Englewood Cliffs, New Jersey, pp. 304-308 (1989). Problem 7.51 on p. 335 is also of direct interest, as is particularly the comment by Griffiths below the problem. Additional insight can be gained from David Halliday and Robert Resnick, with assistance by John Merrill, Fundamentals of Physics, Extended Third Edition (1988), John Wiley & Sons, New York, vol. 2, Article 37-4: Displacement Current, pp. 836-837, 839-841. The standard notion is to (1) retain the continuity of current, thus modifying and salvaging Ampere's law, (2) the displacement current is non-physical, i.e., it does not involve the transfer of charged mass, (3) focus primarily upon magnetostatics as to the results achievable by the displacement current, (4) retain the notion of $\nabla\phi$ as E, a force field, thereby

focusing the notion of displacement current upon the change of the E field without the flow of charged mass, and (5) retain the confusion between electrical charge and charged mass that is inherent in the terms "charge", "current", etc. On p. 836 Halliday and Resnick point out that the displacement current is not derived per se, but is a "fit" based upon symmetry arguments, and it must stand or fall simply on whether or not its predictions agree with experiment. On the same page the displacement current is taken to be a linear function of $d\phi/dt$. For flow along a circuit where there is no electron mass current, it seems appropriate to replace $d\phi/dt$ by $d\phi/dl$. It is also strongly indicated that one should clearly distinguish between charged mass current flow and the flow of massless charge, which is the approach we have taken.

A final indication of the way conventional scientists tend to regard displacement current is given by Martin A. Plonus, Applied Electromagnetics, McGraw-Hill, New York, pp. 446-448 (1978). Here Plonus uses the prevailing notion of the E field being altered by the flow of massless displacement current. As can be seen, the displacement current is relegated almost to a curiosity of capacitors, and not really too essential except just to "balance the books" and retain Ampere's current continuity.

We now wish to point out something very subtle but very rigorous. CEM erroneously uses $E = -\nabla\phi$ to equate a mass-free potential gradient with a mass-containing force field. This "E-field" only exists at a point when there is a point-coulomb of electrical charged mass at the point. The real version of this equation should be $E == -[(\nabla\phi)\bullet q]/|q|$, where $\nabla\phi$ is the potential gradient coupled directly to the charged point-mass at the point, q is the number of coulombs of charged mass at the point, $q/|q|$ is one coulomb of charged mass, and E now is properly the force on and of each coulomb of the collected charged mass at the point.

Viewed in this manner, one can now see that the E field may be altered by flow of additional charged mass q, or by flow of massless additional $\nabla\phi$, or both. This is now in agreement with the manner in which it is approached in CEM, but more rigorous. Essentially it states we may increase the total "charge" (potential) at a point by either (1) moving in additional charged masses by use of a conventional current, or (2) moving in additional massless charge (potential) without any additional change in mass, or (3) a combination of the above.

However, let us apply this to a single charged particle or to a fixed number of them. No one seems to have noticed that the notion of altering the E-field of the collected point- charges at a point via method #2 , i.e. by a flow of massless displacement current onto the fundamental charged particles themselves, a priori requires the electrical charge of each fundamental particle to change. Hence it **falsifies the notion of quantization of charge**.

Also, no one seems to have noticed the electric power implications: if it is known that one can charge a capacitor purely by displacement current, then one can charge up the capacitor with energy, without any dissipation of the source, because only charged mass current through the back emf of the source does that. So one can then disconnect the charged capacitor and separately connect it in a closed circuit with a load, to discharge through the load and furnish free work in the load (free in the sense than no dissipation of the primary source occurred in either the collection of the energy or in discharge of the collected energy through the load as useful work). Free energy, overunity electrical devices, etc. should then be readily apparent and permissible, from the known nature of displacement current and capacitors alone.

7. Maxwell assumed a material ether, which was assumed to be a thin material fluid filling all space. Hence force (which must have mass as a component due to its definition F == d(mv)/dt) could be modeled as existing in the Maxwellian ether, for there was already thin matter present everywhere. Hence in Maxwell's EM the incorrect notion resulted that force fields existed in the vacuum. Oliver Heaviside continued this erroneous assumption, since in fact he hated the potentials, regarded them as mystical, and stated that they should be "...murdered from the theory." Also, electricity was thought to be a similar thin material fluid. So the material electric fluid could and did flow through the fluid vacuum also, giving the notion of the material electric flux density for D. Consequently, the units of D are coulombs (charged mass rate of flow) per square meter. Rigorously, that material D flux exists only on and of charged mass that moves; it cannot and does not exist in vacuum. Only potentials and potential gradients exist in vacuum. However, after Maxwell's formation of his theory, the Michelson-Morley experiment destroyed the material ether (not the ether per se, but its material nature). So electricians then simply proclaimed that they were no longer using the material ether, and that such did not exist! Not a single Maxwell/Heaviside equation was changed. The material ether is still very much assumed in classical EM (CEM) theory, and so the theory is accordingly very seriously flawed. Since CEM also has no adequate definition for either electric charge or the scalar potential, the problem is confounded.

   To clarify this problem, one must separate the notion of electric charge from the notion of mass. The electrical charge of a charged mass is the virtual photon flux exchange between the surrounding vacuum and that mass. Since a virtual photon flux is just a scalar potential, the electron's massless electrical charge is simply its scalar potential. It can now be seen that, if we forcibly remove the notion of "mass" from D in the vacuum, or in a charged material medium where the charged masses cannot move, then the "material electric flux concept" portion of D turns into $d\phi/dt$, a change in the nonmaterial electric flux. However, D is a vector and hence has a "net flux" spatial directional aspect which $d\phi/dt$ alone does not possess. It follows that the value of $d\phi/dt$ at a spatial point actually represents the result of change of the value of ϕ at that point, as a function of time. Thus a directional operator must first be invoked upon ϕ at the point, to provide a direction for the spatial ϕ-current after the d/dt operator is invoked. The appropriate operator to give directionality to ϕ is ∇, so that D in vacuum or in an electron-current-free charged medium becomes a function of $d/dt(-\nabla\phi)$. Conventionally, the use in the literature of $E = -\nabla\phi$ immediately provides that $d/dt(-\nabla\phi)$ at a point results in dE/dt, or the time rate of change of the E-field at that point. If no distinction is made between charged mass current flow and massless charge current flow, this would be true in either vacuum or material media. However, we wish to specifically distinguish between massive displacement current and massless displacement current. So we point out that the increase dE/dt in the magnitude of the E-field at, on, and of a charged particle at a point, can be due to either (1) the flow of mass current to build up the number of point coulombs at that given point, where each coulomb has a fixed massless charge (potential), or (2) the flow of massless current $d/dt\ (-\nabla\phi)$ so as to alter the value of ϕ at that point, evidenced by a fixed number of coulombs of charged particles, **each of which has altered its individual potential and therefore its individual massless electrical charge.**

   So what "flows" when the charged masses are frozen or absent is simply a current of scalar potential, resulting in a change of the potential upon fixed point charges of $d\phi/dt$. This is what crosses between the plates of a capacitor, e.g., which is where the notion of "displacement current" originated in the first place. (See, e.g., Halliday and Resnick, 1988, ibid., p. 836, Sample Problem 1, for expression of the displacement current as $d\phi/dt$, neglecting constants of proportionality). This is also

what flows when one connects multiple open circuit pairs of conductors to a source.

It remains to examine Maxwell's equation $\nabla.D = \rho_v$. If mass displacement current cannot flow, then there exists no divergence of the mass current portion of D. However, massless displacement current can still flow, and there can exist divergence of that component. There are now three aspects to that equation: (1) the case in the vacuum, where there exists no physical ρ and hence no ρ_v as such because of the absence of mass, (2) the case in a material medium, which is the normal case already treated in the standard equation and need not be further addressed, and (3) the case in a material medium where, nonetheless, physical charged masses such as electrons cannot move, but massless charge currents may still move. Only cases 1 and 3 need to be addressed, and they have the same treatment.

We address the one dimensional case, which is sufficient for circuit current flow considerations. First we replace D with $(D\phi + D\rho)$, where the first term is the massless displacement current and the second term is the massive displacement current. In other words, we account separately for charged mass flow and for massless charge flow. Similarly, we express ρ_v as two components, one massive and one massless, so that $\rho_v = d/dl(\phi + m_v)$. For case 1 and case 3 we make $m_v = 0$ and $D_\rho = 0$. For those cases, we have $\nabla.D = \nabla.D\phi = d\phi/dl$ (since current along a wire is a one-dimensional flow). We specifically note that ϕ, $D\phi$, $\nabla.D\phi$, and $d\phi/dl$ are not necessarily conserved quantities, since ϕ is mathematically decomposed into bidirectional EM waves, and is hence a freely flowing process. When symmetry is broken so that equilibrium conditions no longer exist, one or more of these quantities will not be locally conserved.

What has actually been done here is to open the classical EM model to the free exchange of massless EM energy that is always ongoing between any charged particle's mass and the vacuum. We then account separately for the flow of the energy exchange (of the massless charge flow) and the flow of the physical receiver/transmitters (i.e., for charged mass flow). Our switching arrangement to separate the collection and discharge cycles constitutes a permissible "Maxwell's Demon" which breaks symmetry, hence breaks equilibrium and opens the system as required. Since such a system can continually receive a free influx of energy from its external source, such a system can permissibly exhibit overunity operational efficiency without violating the laws of physics.

8. Displacement current is already known to be lossless transport of energy without entropy, i.e., without work. For a typical confirmation see Jed Z. Buchwald, From Maxwell to Microphysics, University of Chicago Press, Chicago and London, p. 44 (1985). Quoting: "...no energy transformation into heat occurs for displacement currents."

9. We strongly stress again that the scalar potential may be mathematically decomposed into a harmonic series of hidden bidirectional EM wave pairs. Each wave pair consists of an ordinary EM wave together with its superposed phase conjugate replica wave. Thus internally the scalar potential gradient across a source represents a bidirectional exchange of EM wave energy with the surrounding vacuum. See notes 13, 14, 15, and 16 below for references confirming the decomposition of the "fixed" potential into a dynamic flow process and energy exchange process.

10. For confirmation see Robert Bruce Lindsay and Henry Margenau, Foundations of Physics, Dover Publications, New York, pp. 283-287 (1963). See particularly p. 283, which emphasizes that a "field of force" at any point is actually defined only for the case when a unit mass is present at that point. See p. 17 on the limitations of

a "natural law"; p. 213 and 215 for limitation of thermodynamic analysis to equilibrium states; and see p. 216 for definition of entropy. See p. 217 for the fact that the entropy for non-equilibrium conditions cannot be computed, and the entropy of a system not in equilibrium must be less than the entropy of the system in equilibrium, i.e., for a system to depart from equilibrium conditions, its entropy must decrease. Therefore its energy must increase. Thus the energy of an open system not in equilibrium must always be greater than the energy of the same system when it is closed and in equilibrium, since the equilibrium state is the state of maximum entropy.

11. Lindsay and Margenau, ibid., p. 217.

12. The basic notion in the perpetual motion conundrum is that somehow a closed system in thermodynamic equilibrium could perpetually provide external energy to a load outside the system. Such a notion is an oxymoron; if the system is closed, no energy can escape or enter, hence the system could not furnish energy externally to power a load or even just to radiate away. My associates and I have not in any manner proposed such a system or entertained the notion that such might exist. But it is well-known that open systems not in thermodynamic equilibrium can freely extract energy from their environment and furnish energy to power a load, and that is precisely what we have proposed.

13. G. J. Stoney, "XLVIII. On a Supposed Proof of a Theorem in Wave-motion, To the Editors of the Philosophical Magazine," Philosophical Magazine, 5(43), pp. 368-373 (1897).

14. E. T. Whittaker, "On the Partial Differential Equations of Mathematical Physics," Mathematische Annalen, vol. 57, pp. 333-355 (1903). Whittaker mathematically decomposes the scalar potential into a bidirectional series of EM wave pairs in a harmonic sequence. Each wave pair consists of the wave and its phase conjugate. (We have pointed out elsewhere that such a wave pair is a standing electrogravitational wave and a standing wave in the curvature of local space-time). To see that all classical EM can be replaced by interference of two such scalar potentials (i.e., by the interference of their hidden multi-wave sets), see E. T. Whittaker, "On an Expression of the Electromagnetic Field Due to Electrons by Means of Two Scalar Potential Functions," Proceedings of the London Mathematical Society, Series 2, vol. 1, pp. 367-372 (1904).

15. Richard W. Ziolkowski, "Localized Transmission of Electromagnetic Energy," Physical Review A, 39, p. 2005 (1989). For related material, see Richard W. Ziolkowski, "Exact Solutions of the Wave Equation With Complex Source Locations," Journal of Mathematical Physics, 26, pp. 861-863 (1985). See also Michael K. Tippett and Richard Ziolkowski, "A Bidirectional Wave Transformation of the Cold Plasma Equations," Journal of Mathematical Physics, 32(2), pp. 488-492 (1991).

16. C. W. Hsue, "A DC Voltage is Equivalent to Two Traveling Waves on a Lossless, Nonuniform Transmission Line," IEEE Microwave and Guided Wave Letters, 3, pp. 82-84 (1993).

17. H. E. Puthoff, "Source of Vacuum Electromagnetic Zero-point Energy," Physical Review A, 40(9), pp. 4857-4862 (1989). Presents Puthoff's self-regenerating cosmological feedback cycle for the source of the vacuum EM zero-point energy.

Our comment: Over any macroscopic range, the vacuum fluctuations ($\nabla\phi$'s) of the ZPE sum to a vector zero translational resultant. The individual ZPE components ($\nabla\phi$'s), however, are still present and active, and their energies are present as well. That vector zero can thus be considered to be a gradient-free potential, or the vacuum potential, since it contains enormously dense, trapped EM energy. So the vacuum potential -- pure space-time (ST) itself -- contains enormously dense EM energy.

One can then apply the Stoney/Whittaker/Ziolkowski (SWZ) methodology to decompose this powerful vacuum potential, i.e., the vacuum, and in fact space-time (ST) itself, into an incredibly dense flux of EM energy. Space-time is revealed to be an incredibly powerful electrostatic scalar potential. The electrical charge (potential) of a charged particle is a small potential gradient in the ST potential, i.e., it is a slight alteration of the local ST potential. Via Puthoff's self-regenerative feedback cycle, the energy flowing in this potential is being exchanged between the local source and all the charges everywhere in the universe. This "potential gradient" or electrical charge itself can be decomposed via the SWZ approach, and becomes a bidirectional EM wave pair exchange of excess EM energy between the vacuum/ST and the charged particle's mass. The potential gradient between the ends of a dipole have similar decompositions, with the additional characteristic that the negatively charged end of the dipole receives the forward-time waves from the SWZ wave pairs, and the positively charged end receives the time-reversed waves.

Our final comment is that Cole and Puthoff have rigorously shown that, in theory, the vacuum EM energy can indeed be extracted. See Daniel C. Cole, and Harold E. Puthoff, "Extracting Energy and Heat from the Vacuum," Physical Review E, 48(2), pp. 1562-1565 (1993).

18. T. W. Barrett, "Tesla's Nonlinear Oscillator-Shuttle-Circuit (OSC) Theory," Annales de la Fondation Louis de Broglie, 16(1), pp. 23-41 (1991). Barrett shows that a higher topology EM model (e.g., EM expressed in quaternions) allows shuttling and storage of potentials in circuits, and also allows additional EM functioning of a circuit that a conventional EM analysis cannot reveal. As an example, one may meet optical functioning without the presence of optical materials.

LEGEND:

● = filled black dot (like scalar product) in original text
Ø = Greek letter **Ø** for the Scalar Electrostatic Potential field
∇ = Greek letter Nabla (upside down triangle)
|x| = Absolute value of x (only positive)
uf = microFarad

PRACTICAL OVERUNITY ELECTRICAL DEVICES

(C) T.E. Bearden
May 13, 1994

Introduction

Recently, my associates and I have filed a patent application on what we believe will at long last reveal the mechanisms for practical overunity electrical devices. It is my purpose in this paper to provide additional information augmenting my former two papers, (1) "The Final Secret of Free Energy," Feb. 1993, and (2) "Additional Information on the Final Secret of Free Energy," Feb. 1994. In this present paper, with the permission of my colleagues, I release the gist of our work on separation of electrical charge into two coupled components **Ø**●(m), where **Ø**● represents the massless charge of the charged particle or mass, ● represents the fact that it is coupled or trying to couple to the special mass that makes up charged particles [i.e., the special kind of mass that will couple to the virtual photon flux density that is represented by the symbol **Ø**], and m represents the inert mass component of the charged mass. Since not all masses will couple with **Ø**●, we indicate the type of mass that <u>will</u> couple with it, as ●m. Thus a charged mass is composed of (**Ø**●)●(●m), which we consolidate to (**Ø**)●(m).

Charge Is Not Quantized

An interesting immediate result is that the massless charge of a fundamental charged particle is not quantized; it changes as a function of the background potential in which it is embedded. So it is discretized as a function of the background potential (i.e., of the virtual photon flux exchange between it and the surrounding vacuum). Otherwise, e.g., there could be no ∇**Ø** created on any charged particle q, and hence no E-field, and hence electrons would not move in our present circuits. Since they do move in our circuits, charge is not quantized.

Electrical Current Has Two Components

The first key to understanding free energy electrical and magnetic machines is to realize that electrical current actually consists of two currents coupled together. Our treatment of an electric charge as a coupled system (**Ø**)●(m) also means that electron current i = dq/dt is comprised of two coupled components [(d**Ø**/dt)●(dm/dt)]. This follows from simply invoking the operator d/dt; i.e., d/dt[(**Ø**)●(m)] = (d**Ø**/dt)●(dm/dt), which is the same as [(d**Ø**/dt●)●(●dm/dt)]. The component (d**Ø**/dt)● is the known but not well understood <u>massless displacement current</u>, while the component ●(dm/dt) is the <u>mass displacement current</u>, and the coupling operator ● means "coupled to" or "trying to couple to". The coupling operator represents a real physical operation: the exchange of virtual photons between the vacuum potential and the charged mass. Any potential $\mathbf{Ø}_1$● is considered to be a potential that is superposed upon the ambient vacuum potential $\mathbf{Ø}_0$● , to provide a potential ($\mathbf{Ø}_0$+$\mathbf{Ø}_1$)●. The ambient vacuum potential does not disappear merely because we add another potential to it!

Confusion In Present Electrical Physics

We point out that, in physics books of note, the overt coupling effect is essentially unknown or ignored because physics presently has not defined either the scalar potential or the electrical charge. The conventional theory simply uses an "inert" expression d**Ø**/dt to represent the displacement current (and another inert expression q for a charged mass), and most theoreticians are uncomfortable even with that. The displacement current is also confused with force by equating the displacement current d**Ø**/dt to dE/dt. In turn, this means that d**Ø**/dt is confused with mass, hence with dm/dt, which latter is also a component of dq/dt. m is always an \internal component\ of force, as is known in foundations of physics but this fact continues to remain completely oblivious to the electricians. [*Good* electrical theorists do admit that there is no force in the vacuum; and that the force associated with the E-field is evidenced

only in the interacting mass. However, they continue to maintain the E-field (force per point-coulomb of charged mass) in the vacuum, when there are no point-coulombs of charged mass there!

Mass Is an Internal Component of Force

It is easy to show that mass is always a component of force: We will simply define *force* precisely. We first insist that no equation can be used as a definition; an equation simply states that the magnitude of one of its sides and the magnitude of the other side are equal. (The length of a board and the length of a human may be equal, but writing that as an equation has absolutely nothing to do with the definition of either a board or a human). So we will insist that any true definition must be an *identity*.

We define force F as F ≡ d/dt(mv), whereupon mass is a component of force *a priori*. It follows that, if we define the E-field E as the force per coulomb, we are defining it as the force existing at a point and having a point-coulomb of charged mass as one of its major components. We may accurately now define E as E ≡ -[(∇**Ø**)●(q)]/|q|, where the absolute value symbol in the denominator is essential, q/|q| being one point-coulomb. [We leave as an exercise for the reader the further reduction of this definition by treating q as ●(**Ø**●m)].

At any rate, with the new and correct definition of the E-field, one can see that the flow of displacement current (d**Ø**/dt) upon a collector such as a rigid capacitor, containing a fixed charge ●(**Ø**●m), will result in the formation of an excess ∇ **Ø**● upon those restrained charges in the capacitor plate, so that there is created an E ≡ -[(∇ **Ø**)●(q)]/|q|. Since the conventional theory considers the antigradient of the potential as an E-field, then one can now see the exact mechanism that creates this E-field that grows upon the capacitor (across its plates) as it charges. In fact, the q/|q| cannot change in a capacitor if its plates and dielectric are immovable. Instead, in that case, the **Ø**● portion of the trapped ●(q) changes, producing the (∇ **Ø**)● change. Since the (∇ **Ø**)● component is coupled to the mass component of the fixed ●q as (**Ø**+∇ **Ø**)●m, then an E-field is created and exists as E ≡ -[(∇ **Ø**)●(q)]/|q|.

An Ideal Capacitor Is an Electron Current Blocker

We point out that, if the capacitor's components are ideal, *completely rigid*, and do not physically move, then the capacitor is a "●dm/dt blocker." If the charges really were frozen in place, then the potential would flow across the plates at the speed of light, via the flow of excess massless displacement current d**Ø**/dt●. In that case, an ammeter would not show the classical "exponential fall-off" of the current with time; the electron current dq/dt would occur as a single-point Dirac delta function at t=0, and would be zero thereafter. And no electrons would be able to move in zero time. The voltage would show an instantaneous adjustment to the charged value with a single step-function, and the capacitor would charge up fully, instantly, with no work (energy loss) whatsoever being done. And this charge-up of the capacitor would not dissipate in the slightest the source furnishing the voltage; there would be no electron current dq/dt through the back EMF of the source, hence no work inside it to deplete its separation of charges.

Problems With Ordinary Capacitors

However, most ordinary capacitors are much more than just an ideal capacitor. The plates move, the dielectric moves, etc. due to the forces created upon them by the E-fields created upon the trapped charges in them. The spatial translation of the resulting force moving the plates constitutes work; i.e., it dissipates some of the flowing d**Ø**/dt energy. Each movement of the plates and/or dielectric carries with it all its internally trapped charges. The movement of those charges constitutes a substantial longitudinal electron current dq/dt, when compared to the longitudinal "drift" electron current in normal circuits. [Electrons spend most of their time moving radially in a wire, not down it.] This "moving plate and its transported charges" make an electron current, which pumps the inert electrons in the ground return line back through the back EMF of the source, depleting the source. Consequently, the ordinary capacitor will simply release as much energy as work (to move the plates and dielectric) as it stored. Hence, it will also produce dissipation of the source via the amount of energy stored in the capacitor. You still get "free energy" stored in the capacitor, but also dissipate the source by an equal amount.

Rigidized Capacitors Must Be Used

Only rigidized capacitive collectors are useful in free energy devices. Such capacitors are in fact actually available, e.g., as calibration standards, but they are extremely expensive ($400 to $2,000 or so each, for a capacitance reaching about 1 uf).

So, capacitive type collectors must be rigidized, if used in overunity circuitry. Even so, in a single integrated circuit, although one collects free energy, one will use half of what was collected to dissipate the source. Not all the remaining half will be discharged

through the load; some will be discharged in other circuit and component losses. Hence, there will always be less work done in the load than is done in the source to kill it, by a conventional two wire single closed circuit. In my second referenced paper (Feb.94), I included precise proof that this is true. One must use energy collection and shuttling between two isolated circuits, and the load discharge current must not pass back through the primary source of potential.

We have previously provided precisely how to utilize capacitive collectors in our two referenced papers. We point out here that the capacitors must be calibration standard capacitors, or specially made rigidized capacitors.

It Does Not Require Electron Current to Charge An Ideal Capacitor

For the benefit of the skeptic, this is already proven. We simply list references (2) and point out the equation that represents the energy K in a charged capacitor. Here we have $K = ½(CV)^2$. It is totally the displacement current dØ/dt● flowing (from a higher potential) onto the charging plate that produces the higher potential Ø on that charging plate, and hence a V between the two plates, one of them (the "ground" side) being held at a constant potential. The mass displacement current component dm/dt of the electron current dq/dt has nothing whatsoever to do with energy accumulation; it has only to do with the dissipation of energy that is happening simultaneously in all losses and loads in the circuit loop.

We reiterate that most ordinary capacitors have terrible internal movement, and accomplish as much energy dissipation as they do energy collection by permitting dq/dt and work performed upon the plates and dielectric to move them. The standard two-wire circuit also guarantees that all such dq/dt current "through" the capacitor is passed back through the source against its back EMF, doing an equal amount of work in the source to dissipate its separation of charges and "destroy" the source.

An ideal capacitor does not pass dq/dt, but only massless displacement current as theorized by Maxwell to save current continuity in a circuit containing a capacitor, and hence to save Ampere's current law. That is, an ideal capacitor is a ●dm/dt blocking device. However, the capacitors utilized in normal circuits are not ideal capacitors at all. By allowing the plates to move, electron current dq/dt is created on both sides of the capacitor. Otherwise there would not be a ground return dq/dt, but only a ground return dØ/dt●. This dØ/dt● would not and does not push electrons back up through the source against its back EMF; else the ground side of the source, which is engaged in continuous dØ/dt● exchanges with the vacuum, would produce destructive amperage dØ/dt● in the battery or potentialized source, against its back EMF, while it was simply sitting on the shelf. In fact, a flow of dØ/dt● continually runs from the vacuum to the positive terminal, then through the inside of the battery to the negative terminal, and thence back to the surrounding vacuum. Also, the incoming flow from the vacuum "splits" at the positive terminal, where one branch flows inside the source to the negative terminal, and the other branch flows through the external circuit to the ground return line, and thence to negative terminal and back to the vacuum. In the external circuit, the dØ/dt● hooks to free electrons and moves them as ordinary dq/dt. In the internal circuit inside the source, the electrons are restrained, hence they only move when their restraint is overcome.

Displacement Current dØ/dt Is Real

In recent years, SQUID detectors have been utilized to detect the magnetic field created between the plates (at right angles) by the displacement current dØ/dt between the plates, providing strong evidence that displacement current is physically real. The best proof that it is real is a charge blocking device, two isolated circuits using energy collection and shuttling, and overunity powering of loads in the secondary circuit.

A Problem With Ammeters and Measurement of dØ/dt

Note that an ammeter cannot differentiate between displacement current dØ/dt● and normal current dq/dt. In the ammeter, the sample dØ/dt● will couple to free electrons, producing a normal dq/dt inside the ammeter. The driving of this dq/dt through a precision resistance, e.g., is measured and the instrument is calibrated to show the dq/dt amperes flowing. One of the major needs of free energy researchers is the development of a good current meter that will differentiate between dØ/dt● and dq/dt, and measure each one. Short of using a mass spectrometer to differentiate the mass current ●dm/dt, and comparison of those mass current measurements with an ammeter's measurements of the "current" dq/dt, and calculating the dØ/dt● from that, I presently know of no way to precisely and simply measure and separate the two current components. I have been thinking of utilizing a multi-channel sampling meter set arrangement, where one channel uses a ●dm/dt blocking device such as the Fogal semiconductor in this respect, but have not yet developed the complete concept.

Better Solution: A Charge Blocking Device

A better solution than the capacitor or capacitive collector is the use of a special rigid solid state "charge blocking device", such as a Fogal semiconductor, to enable the current separation into two components, blocking of the mass flow component, and passage of the massless displacement current component. *In overunity electrical devices, it is massless displacement current dØ/dt● that must be separately passed down the primary circuit and collected in the collector as an E-field or an H-field. This provides "free" energy that has been extracted from the vacuum, via the potential difference between the terminals of the source antenna, and collected and stored in the appropriate field, without work*. The collected free energy may then be transferred to the isolated load circuit by a variety of means, for separate discharge through the load without return of dq/dt through the source.

The Fogal Semiconductor Meets the Charge-Blocking Requirements

Fogal's marvelous semiconductor blocks passage of electrons into its output terminal, but passes displacement current dØ/dt● into it. The semiconductor is powered by (receives) normal electron current and excess dØ/dt●, but outputs pure massless displacement current dØ/dt●. A charge blocker that passes dØ/dt● is ideal for our overunity mechanisms, enabling them to be readily obtained as we shall shortly see.

Energy, Flow, Finite Amount of Energy, and Collectors

We accent that the flow of energy in an electrical circuit is purely by means of the massless displacement current component (dØ/dt)●. The flow of the mass component ●(dm/dt) represents the "flow of work" (*energy dissipation*) in the circuit. Power is rigorously the time rate of doing work, and electron current dq/dt is a part of power. It has nothing whatsoever to do with the time rate at which *energy is transported without loss*; instead, power represents the rate at which energy "leaks" or is "lost" during its transport.

All measurement is work, not energy. Energy cannot be measured, even in theory, a priori. Energy is also a flow process, and never a finite amount in one location. A specific differential of energy flow may exist on a specific finite collector. However, it only represents a certain constant differential amount of energy flow compared to the universal vacuum energy flow or some other flow reference point. It is like a whirlpool in the river. Energy is like the flowing water, and an "amount" of energy is like the amount of water in the collecting whirlpool form (between its input flow and its output flow) at any time. Obviously, energy (ordering) forms can come and go; the water flow itself remains. Any "magnitude of energy" is always a "trapped" amount of energy in a "collector" (form).

Decoupling Current Components and Utilizing dØ/dt

The two components of electron current dq/dt can be decoupled, by blocking the ●dm/dt component while allowing the dØ/dt● displacement current to continue to flow. In our first paper, we pointed out one way: utilizing a special degenerate semiconductor material whose electron gas relaxation time is extended, providing a finite time during which the material serves as a *charge (i.e., a charged particle) blocking device*, while passing the flow of potential (the dØ/dt● massless displacement current component) and restraining the mass displacement current component ●dm/dt. With the advent of Fogal's semiconductor, the process becomes much easier to obtain and utilize in practical machines and circuits.

In our second paper, we pointed out a second way: utilize an ordinary capacitor and ramp-up step-charging. We found, however, that in most ordinary capacitors, the capacitive aspect is defeated by the sloppy movement of the plates and dielectric, converting dØ/dt● into dq/dt. Only a few very carefully selected capacitors are sufficiently rigid and can provide overunity. One must use *rigidized* calibration standard capacitors for the ramp-charging by series steps method to be successful. With ordinary capacitors, however, one can readily demonstrate that the efficiency can approach 1.0 rather than 0.50 as expected.

Overunity Secrets: Charge Blocking, Collection, Shuttling, and Two Isolated Circuits

The charge (actually *charged mass*) blocking approach provides a massless, free flow of vacuum EM energy that can be directed to a collector (capacitive or inductive) where it can be stored in either an E-field or a B-field. This stored energy can then be transferred to an isolated load circuit whose electrons (and hence their ●dm/dt mass displacement current) are free to flow as dq/dt. In the isolated load circuit, then, the two components [(dØ/dt)●(dm/dt)] again couple to form i = dq/dt = [(dØ/dt)●(dm/dt)], powering the load. All work in an electrical circuit is due to the mass displacement current ●dm/dt component; the massless displacement current (dØ/dt)● is a flow of pure energy transport without loss, as is well-known. (For example, see Reference 4.)

Therefore, the first major free energy secret is simply to block the "working" component ●dm/dt of the current dq/dt while allowing the excess "lossless energy flow" component dØ/dt● to flow to collectors to produce either free E-field or free B-field thereupon.

The second major secret is to transfer the collected excess free energy (via energy shuttling) to a second, isolated, load circuit, where the energy is discharged through the load in the conventional fashion (i.e., such that the two current components are coupled, and electron current i = dq/dt occurs through the load). The second circuit must be isolated from the original collection circuit, so that none of the load electron current dq/dt passes back through the original source, against its back EMF.

Should the grounds be the same between the load circuit and the collection circuit so that load electron current is returned through the back EMF of the primary source, then exactly as much excess work will be done inside the source to dissipate its separation of charges as was done in the external load to furnish useful work and in the external losses. In that case, overunity is destroyed, because one is using one-half the excess free energy to destroy the source faster, while the remaining half is distributed among all external loads and losses. Since there are always some external losses besides the load, then the ratio of load power to source dissipation power is always less than unity in a conventional closed-loop circuit containing both load and source. Hence the necessity for utilizing two isolated circuits: one where energy is collected freely from the source, and one where energy is dissipated as work in the load without dissipative work in the source, and energy shuttling between them.

A Simple Open-Loop Overunity Device

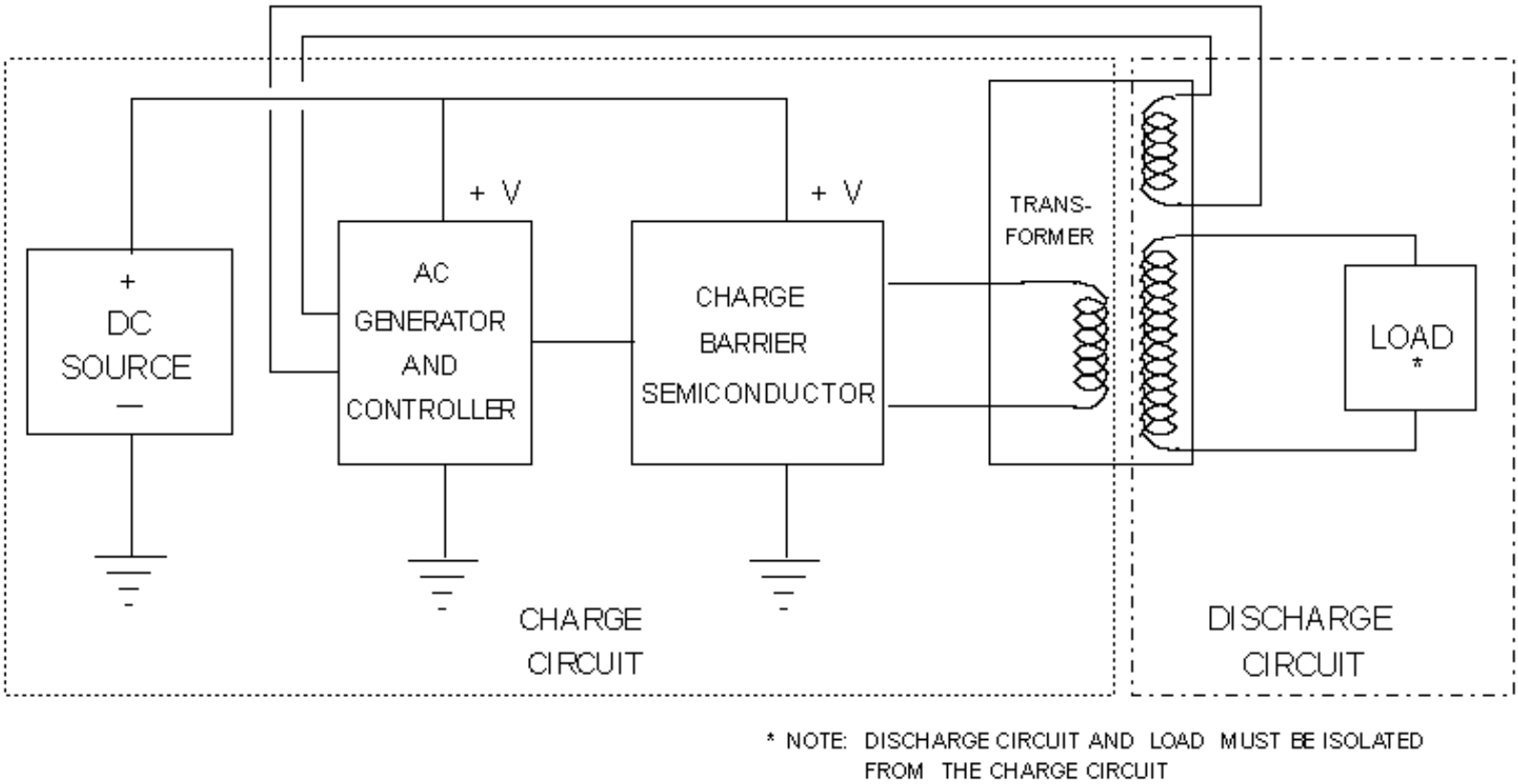

Figure 1. Use of Charge Barrier Device to Achieve Overunity in a Shuttle Circuit.

Figure 1 shows a very simple but very powerfully amplified overunity device, using an AC charge blocking semiconductor (CBS) (such as a Fogal semiconductor). The gist of the circuit is that an AC source furnishes AC current dq/dt to the CBS, which uses some of the power to power itself, but then blocks the ●dm/dt portion of the dq/dt input current, passing only the massless displacement current component (dØ/dt●) into its output circuit. The (dØ/dt●) output of the CBS is fed through the primary winding of a transformer, in this case a step-up transformer. The "current gain" of the CBS will depend upon (1) the load connected to it, and (2) the ability of the CBS to continue to block the increasing E-field on its trapped charges, as more free energy flow (dØ/dt●) is drawn through it by the load. Thus the load and the CBS must be matched within the operational ability of the CBS, so that the CBS does not fail catastrophically.

In the primary winding of the transformer, the (dØ/dt●) displacement current produces a magnetic field H, storing the excess flowing

energy in that field. This is a normal magnetic field; all magnetic fields are produced by the (dØ/dt●) component of the current anyway. This magnetic field, as it changes, couples to the secondary winding, producing a normal magnetic field H therein by normal means. In the secondary circuit, electrons are not restrained by a CBS. Hence the (dØ/dt●) induced in the circuit on the secondary side couples to the unrestrained electrons, producing normal electron current dq/dt, and driving it through the load to power it. Note that *energy* is conserved across the primary and the secondary; however, *dissipative power and work* (energy loss rate and energy loss) are not conserved, because a free flow of lossless excess energy in the form of displacement current is flowing from the vacuum through the source antenna, thence to the CBS, through it to the primary of the transformer and into the primary magnetic field, through it to the secondary magnetic field, through it into the (dØ/dt●) induced in the secondary circuit and coupled to the electrons, through the resulting dq/dt into the load, where the scattering of photons as heat dissipates the free flowing energy in the displacement current dØ/dt● component flowing through the load as a component of dq/dt = (dØ/dt●)●(●dm/dt) = (dØ/dt)●(dm/dt).

Free "Power" Amplification

If one places an ammeter in the output from the CBS, between it and the primary winding of the step-up transformer, one will read the (dØ/dt●) as *normal dq/dt in the ammeter itself*. If one calculates the "free power" (i.e., the rate of energy dissipation) that is going into the transformer primary using this as the "current," one will show that energy and "power" are conserved between primary and secondary of the transformer. However, the actual dissipative power going into the primary side is zero or, in real circuits, vanishingly small. Consequently, the device has a very high variable power gain that depends upon the rate of energy draw and dissipation of the load on the secondary side. If one adds more load, one draws more dq/dt current on the secondary side, hence more excess dØ/dt● displacement current on the primary side. The overall "power amplification" is limited by the ability of the transformer to handle the power in the secondary and the ability of the CBS to withstand the pressure of the internal charge barrier. This device can be easily "close-looped."

The Negative Resistor: A Close-Looped "CBS and Shuttle" System

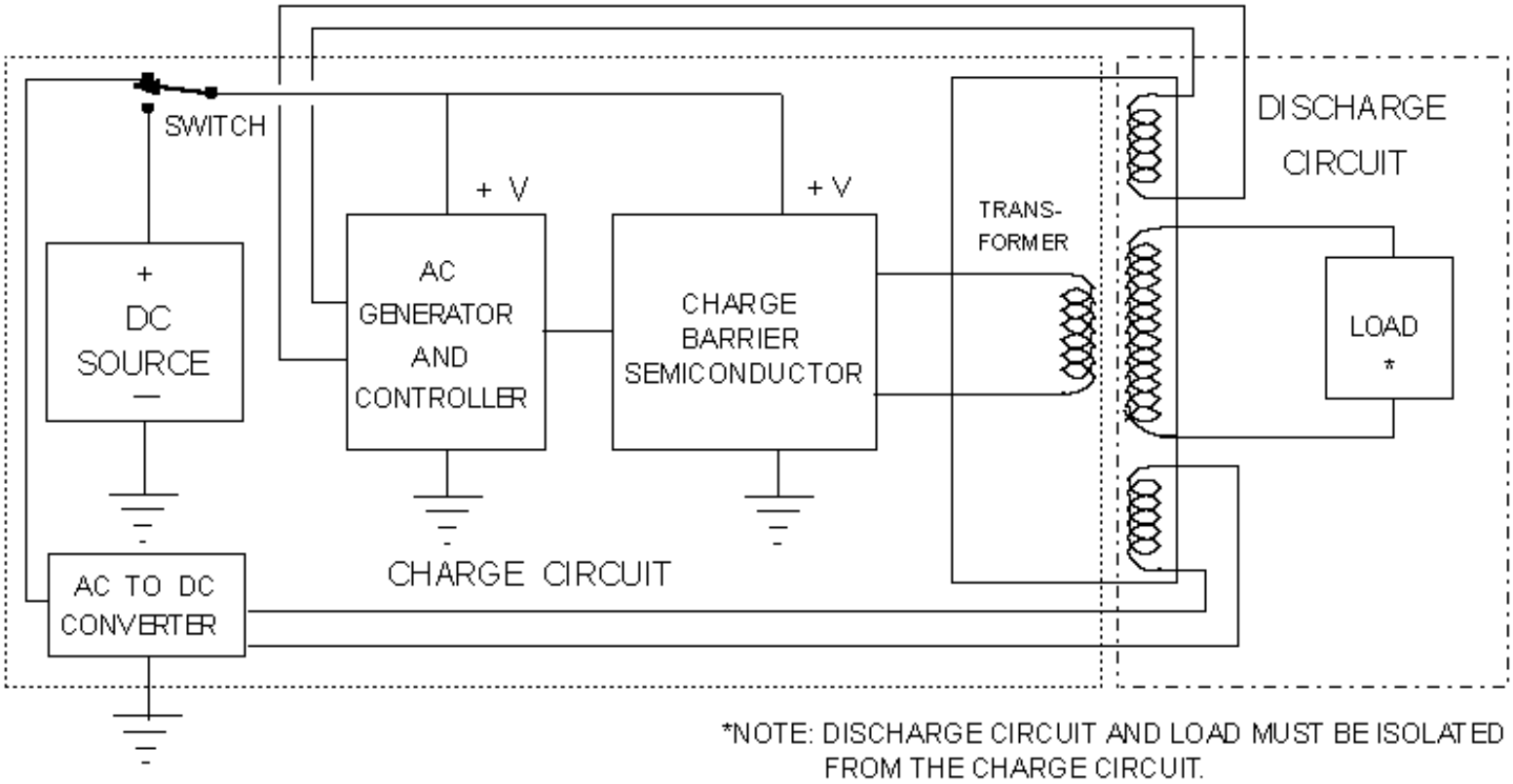

Figure 2. Use of Charge Barrier Device in a Shuttle Circuit With Controlled Feedback, to Achieve a True Negative Resistor.

Figure 2 shows the close-looping of the device shown in Figure 1, in such manner that, once stable operation is underway and the load and input stabilized, the ordinary power supply for the CBS can be switched out of the circuit. In this case, the circuit operates as a self-powered overunity device; i.e., as a *negative resistor*.

A normal resistor receives an ordered energy flow from its external circuit and scatters this energy as work out to the vacuum. I.e., it receives i = (**Ø**+∇**Ø**)/dt●(dm/dt) (scatters the excess (∇**Ø**)/dt● component (i.e., of the dq/dt passing into it from the high potential side) by radiating it away to the surrounding vacuum as scattered photons (heat)), and outputs inert (no excess (∇**Ø**)● component) electron current dq/dt into the ground side.

A negative resistor does exactly the opposite: it accepts inert incoming electrons from its "ground" side, also accepts incoming (converging) d**Ø**/dt● energy from the vacuum as virtual photons being absorbed upon these inert electrons so that a ∇**Ø**● is added to the electron current, creating an excited, excess energy-carrying i = (**Ø**+∇**Ø**)/dt●(dm/dt), and passes this excited current out of its high side and out into the external circuit to power the circuit. In other words, the negative resistor becomes a *self-contained free power source*, once brought up to stable operation.

In Figure 1, all that needs to be done is simply to extract some of the secondary power and feed it back to create the power input consumed by the CBS and the other normal components of the primary circuit side of the transformer.

Multitaps can be added to the secondary side, to provide varying voltage power supplies for loads requiring different voltages.

Energy is conserved in the device, because it always functions as an open circuit, receiving excess energy from an external source (the surrounding vacuum, in its virtual photon exchange with the charges in the system). It is far from thermodynamic equilibrium, and classical thermodynamics (including the second law) does not apply.

It is simply a continuous free power supply: it is a *negative resistor*.

Far more complicated units can be designed and produced. The basic point is that this type of overunity power supply is continuous and self-powered, driven by the violent exchange of energy from the vacuum, and simply collecting and gating some of that energy to the load to power the load.

Conclusion

With this third paper, we complete the triad of papers we set out to write a little over a year ago. With the availability of charge barrier devices such as the Fogal semiconductor, together with the collection, shuttling, and use of free d**Ø**/dt● flowing energy, the *Age of Free, Clean, Electrical Energy* has finally dawned.

Let us use it wisely, and for the betterment of humankind, not for its destruction.

[Support of portions of this research by A.D.A.S. is gratefully acknowledged.]

References and Notes

1. Bearden, T.E., Feb. 9, 1993, "The Final Secret of Free Energy," ADAS, distributed over Internet. The paper was also published in Magnets, 7(5), May 1993, p.4-26, in Explore!, 4(3/4), 1993, p.112-126, and in several other media. See also Bearden, T.E., "Additional Information on the Final Secret of Free Energy," Feb. 15, 1994, distributed on Internet.

2. For proof that an ordinary capacitor can be charged almost without entropy, see Fundaun, I., C. Reese, and H.H. Soonpaa, "Charging a Capacitor," American Journal of Physics, 60(11),Nov. 1992, p.1047-1048. See also Calkin, M.G. and D. Kiang, "Entropy change and reversibility," American Journal of Physics, 51(1), Jan. 1983, p.78-79. See also Heinrich, F., "Entropy change when charging a capacitor: A demonstration experiment," American Journal of Physics, 54(8), Aug. 1986, p.742-744. See also Gupta, V.K., Gauri Shanker, and N.K. Sharma, "Reversibility and step processes: An experiment for the undergraduate laboratory," American Journal of Physics, 52(10), Oct. 1984, p.945-947.

3. In most texts, the treatment of displacement current is far from adequate. A better treatment than most is given by Krauss, John D., Electromagnetics, Fourth Edition, McGraw-Hill, New York, p.437-439, 547-549. This treatment must still be augmented by treatment from other texts, and the ensemble "synthesized." Even then, it will never be completely clear until the separation of mass from the massless charge, and separate accounting of the two, is accomplished in the manner pointed out by the present paper.

4. For a typical confirmation that massless displacement current is already known to be lossless transport of energy without entropy, i.e., without work, see Buchwald, Jed Z., From Maxwell to Microphysics, University of Chicago Press, Chicago and London, 1985, p.44. Quoting: "...no energy transformation into heat occurs for displacement currents." It should be obvious from this fact alone that the proper way to accomplish overunity in electrical devices is to utilize the massless displacement current to flow and store excess energy, then use a "heat pump" type cycle to transfer the collected energy to a separate load circuit and discharge it separately in the load.

5. For a very recent proof that the potential is a flow process, and in fact consists of bidirectional EM waves, see Hsue, C.W., "A DC Voltage is Equivalent to Two Traveling Waves on a Lossless, Nonuniform Transmission Line," IEEE Microwave and Guided Wave Letters, 1993, Vol. 3, p.82-84.

6. For proof that the vacuum EM zero-point energy is continually produced by a cosmological feedback from every charged particle in the universe, see Puthoff, H.E. , "Source of Vacuum Electromagnetic Zero-point Energy," Physical Review A, 40 (9), Nov. 1, 1989, p.4857-4862.

7. For proof that in theory the vacuum energy can be tapped, see Cole, daniel C. and Harold E. Puthoff, "Extracting Energy and Heat from the Vacuum," Physical Review E, Vol. 48, No. 2, Aug. 1993, p.1562-1565.

8. For proof that a higher topology examination of EM phenomena allows energy collection as potentials and energy shuttling in circuits, see Barrett, T.W., Annales de la Fondation Louis de Broglie, Vol.16, No. 1, 1991, p.23-41. Barrett shows that EM expressed in quaternions allows shuttling and storage of potentials in circuits, and also allows additional EM functioning of a circuit that a conventional EM analysis cannot reveal. He in fact shows that Tesla's patented circuits did exactly this.

9. Stoney, G.J. (1897) "XLVII. On a Supposed Proof of a Theorem in Wave Motion, To the Editors of the Philosophical Magazine," Philosophical Magazine, 5(43), 1897, p.368-373. Stoney first pointed out the bidirectional EM wave decomposition of the scalar potential.

10. Whittaker, E.T., "On the Partial Differential Equations of Mathematical Physics," Mathematische Annalen, Vol. 57, 1903, p.333-355; "On an Expression of the Electromagnetic Field Due to Electrons by Means of Two Scalar Potential Functions," Proceedings of the London Mathematical Society, Series 2, Vol.1, 1904, p.367-372.

The Tom Bearden Website

Table of Contents

A Sensitive Scalar Wave Detector

1.
2.
3.
4.
5.
6.
7.
8.
9.
10.
11. Figure 11. NETWORK OF VIRTUAL TRANSMITTERS
12. Figure 12. VIRTUAL TRANSMITTERS IN THE INTERFERENCE GRID
13. Figure 13. GIANT RADIAL RELATED TO A VIRTUAL TRANSMITTER
14. Figure 14. FORMATION OF A SINGLE GIANT RADIAL
15. Figure 15. FORMATION OF A DOUBLE GIANT RADIAL
16. Figure 16. DETECTION OF TRANSVERSE AND LONGITUDINAL WAVES

Return to Homepage

from **STAR WARS NOW!**

The Bohm-Aharonov Effect, Scalar Interferometry, and Soviet Weaponization
by Lt. Col. T.E. Bearden (retd.), 1984
Copyright

A Sensitive Scalar Wave Detector

Very briefly we present a method of making a very sensitive scalar wave detector so that direct measurement and quantization can be established.

First, we regard one oscillation (one wavelength) of the scalar potential wave as a longitudinal photon. Note that this photon contains a substructure, which may be deliberately determined (when artificially made) or randomized (when naturally made in the idealized case).

For convenience we represent normal linearized vacuum (spacetime) as a horizontal or longitudinal vector (Figure 4), implying the direction of motion of the wave in the laboratory frame. By horizontal position in our diagram, we imply a linear, uncurved spacetime and a non-rotated frame. We represent the longitudinal scalar wave as a horizontal vector, and the usual Hertzian wave as a vertical or "transverse" vector. We visualize a normal detector as detecting only a vertical or "transverse" vector, as we have illustrated in Figure 4.

As can be seen, in a linear, unrotated or uncurved spacetime a pure scalar wave has no vertical component projected upon the laboratory frame vector, so it is not detectable by normal detectors.

To detect the scalar wave, of course we could bend it so that it has a projected vertical component in the laboratory frame (Figure 5). However, this would be an impure wave, not a pure scalar wave, and that is not what we wish.

A better way is to bend or curve spacetime itself in a small region, so that a longitudinal wave that passes through that region now possesses a vertical component with respect to that region (Figure 6). Thus a normal detector there will detect that vertical component. We conduct the detection current out of the "bent spacetime" region to an outside (normal) detector, and we then have a scalar wave detector.

To illustrate, we show conceptually how this has been successfully done. Figure 7 shows the concept. First, we utilize a magnetic pole to provide the infolded energy (potential) to bend or curve spacetime. To reach good sensitivity, we need a pole strength connected with a magnetic field strength of 40,000 Gauss or higher. We utilize a small superconducting magnet, which can reach field strengths of from 40,000 to 80,000 Gauss.

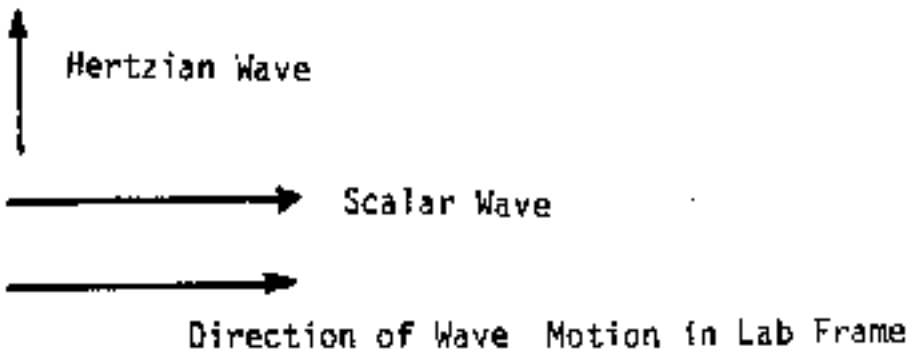

Figure 4. Linear, uncurved laboratory frame.

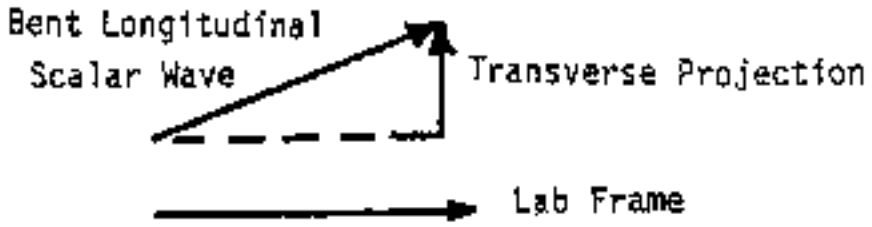

Figure 5. Rotating the longitudinal wave produces a transverse component.

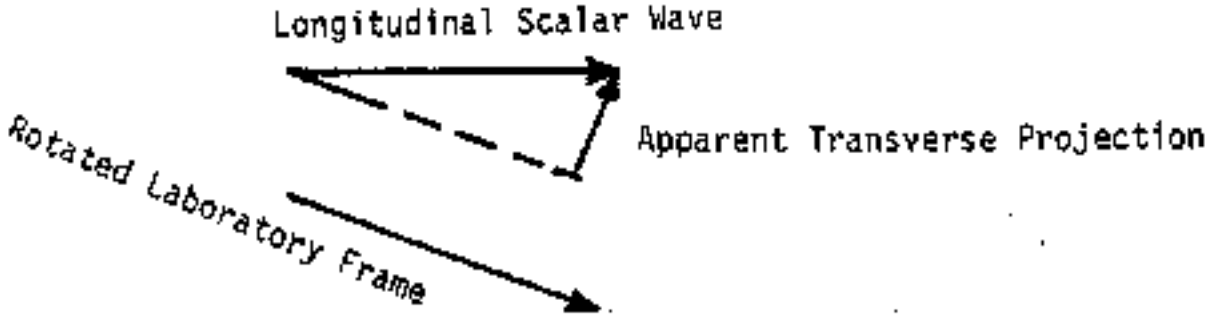

Figure 6. Bending the laboratory spacetime frame produces a transverse component.

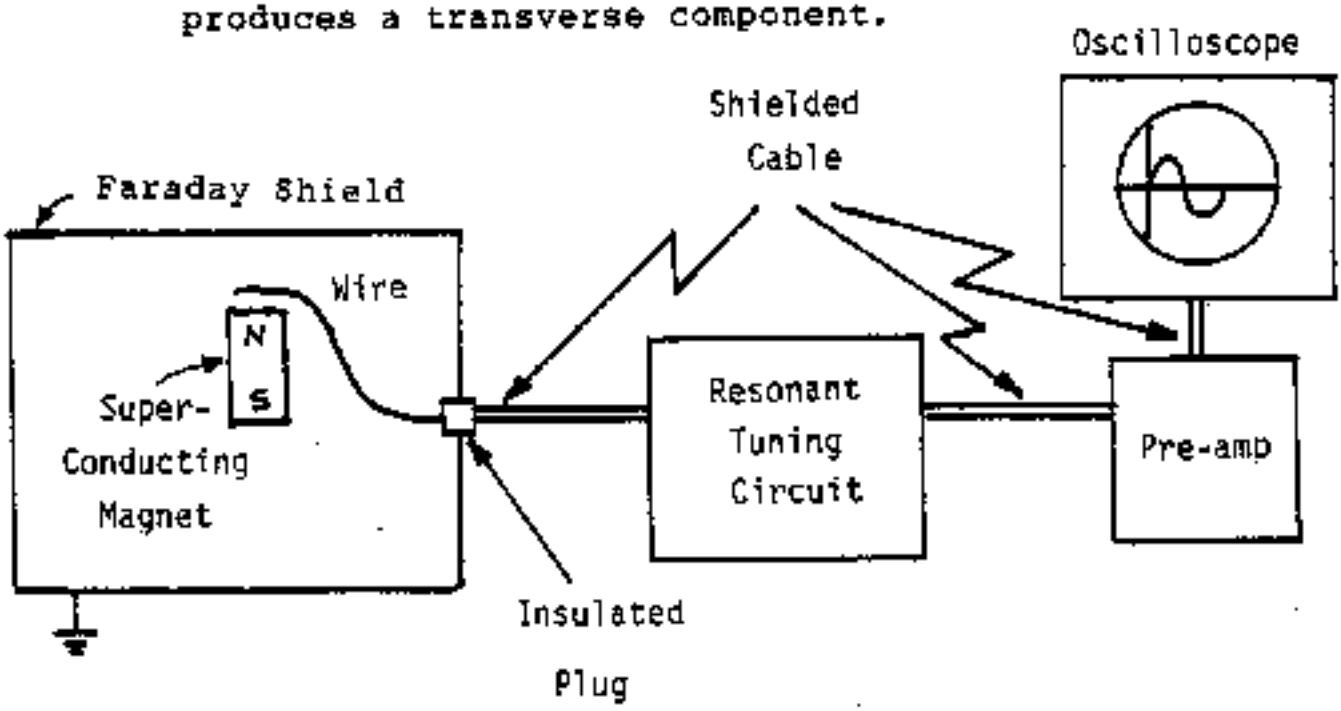

Figure 7. A sensitive scalar wave detector.

Figure 7. A sensitive scalar wave detector.

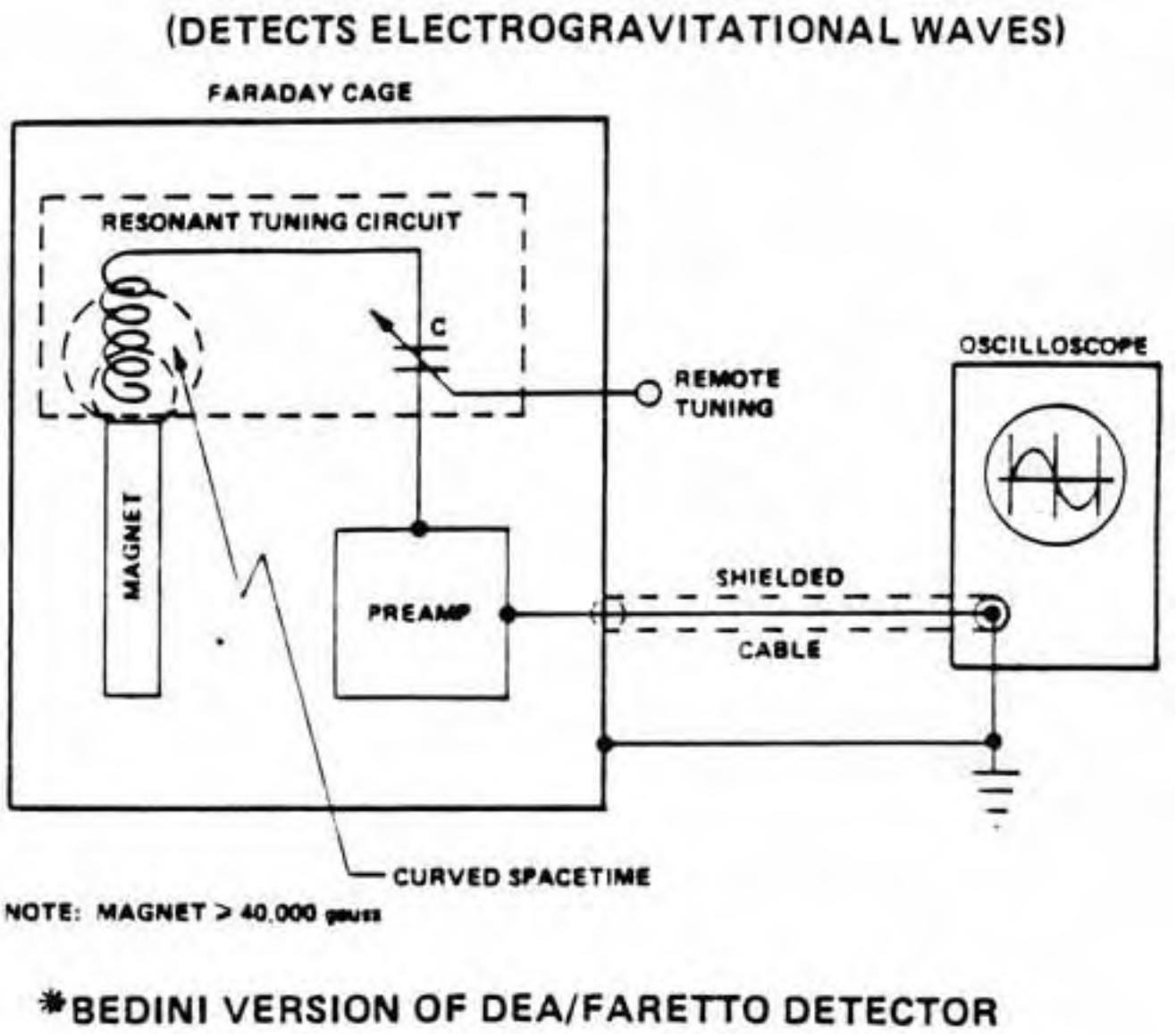

Slide 33 - FER DE LANCE

Then to prevent detection of superfluous "normal" radiation, we shield the entire magnet in a grounded Faraday cage, as shown in the figure. Hertzian waves will be grounded in this shield, while scalar waves will readily penetrate it undiminished. In other words, the Faraday cage serves as a "stripper," to strip away the ordinary waves, leaving only the scalar waves to penetrate inside. An ordinary wire lies at the top of the magnetic pole, in proximity to it. The wire runs out of the Faraday cage through an insulated port to a resonant tuning circuit, which is sharply tunable over the range of frequencies we are interested in. A preamp amplifies the output of the tuner, and in turn feeds the input of an oscilloscope or other detector.

With this detector we can select the frequency desired, and detect any passing scalar waves of that frequency. By other variations of amps and preamps, regenerative circuits, etc. we can obtain all the

sensitivity desired, and utilize ordinary detection equipment already well-known and highly developed.

Additional Information about detecting Scalar Waves

Figure 11. NETWORK OF VIRTUAL TRANSMITTERS

(See Woodpecker Grid)

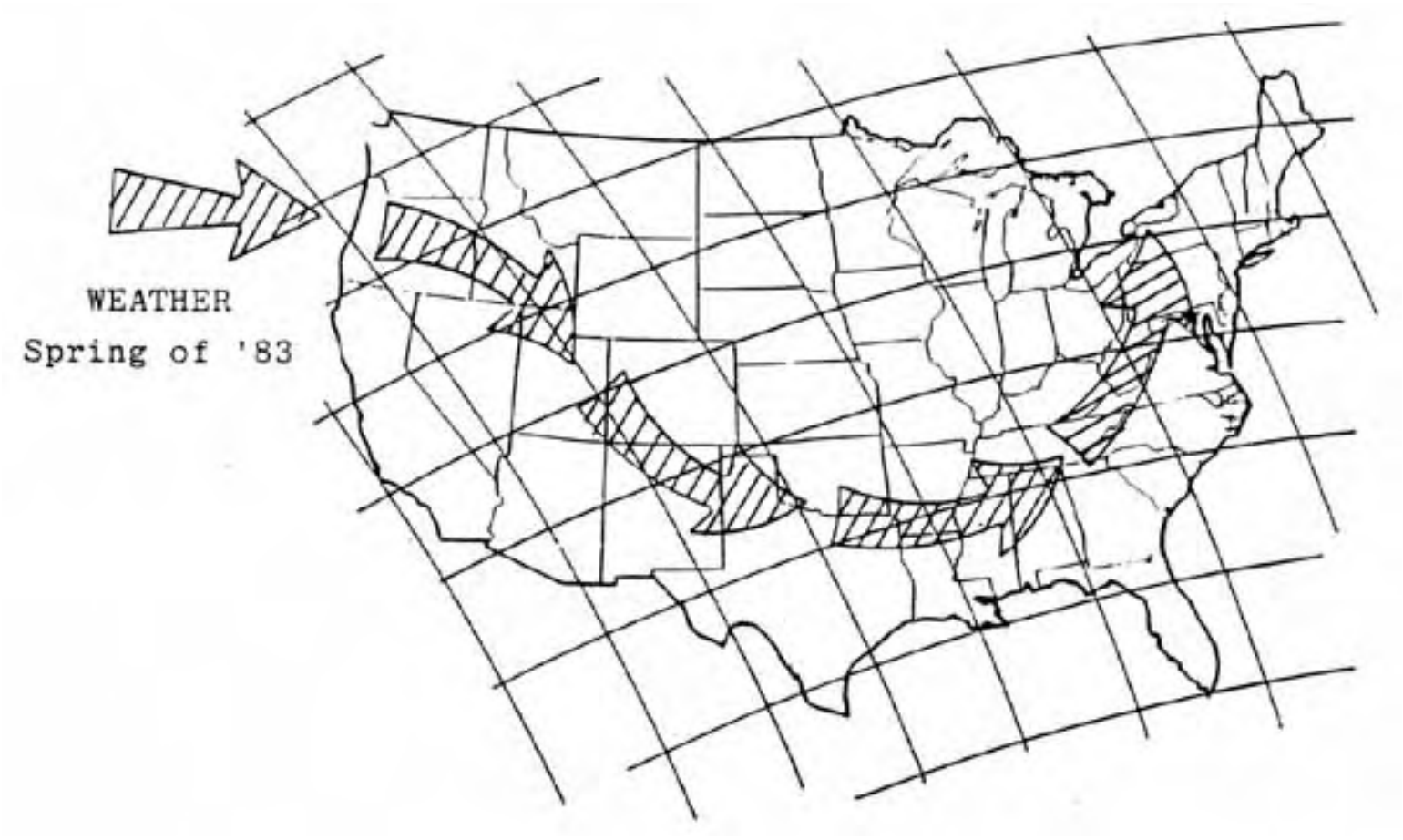

Next Figure

Figure 12. VIRTUAL TRANSMITTERS IN THE INTERFERENCE GRID

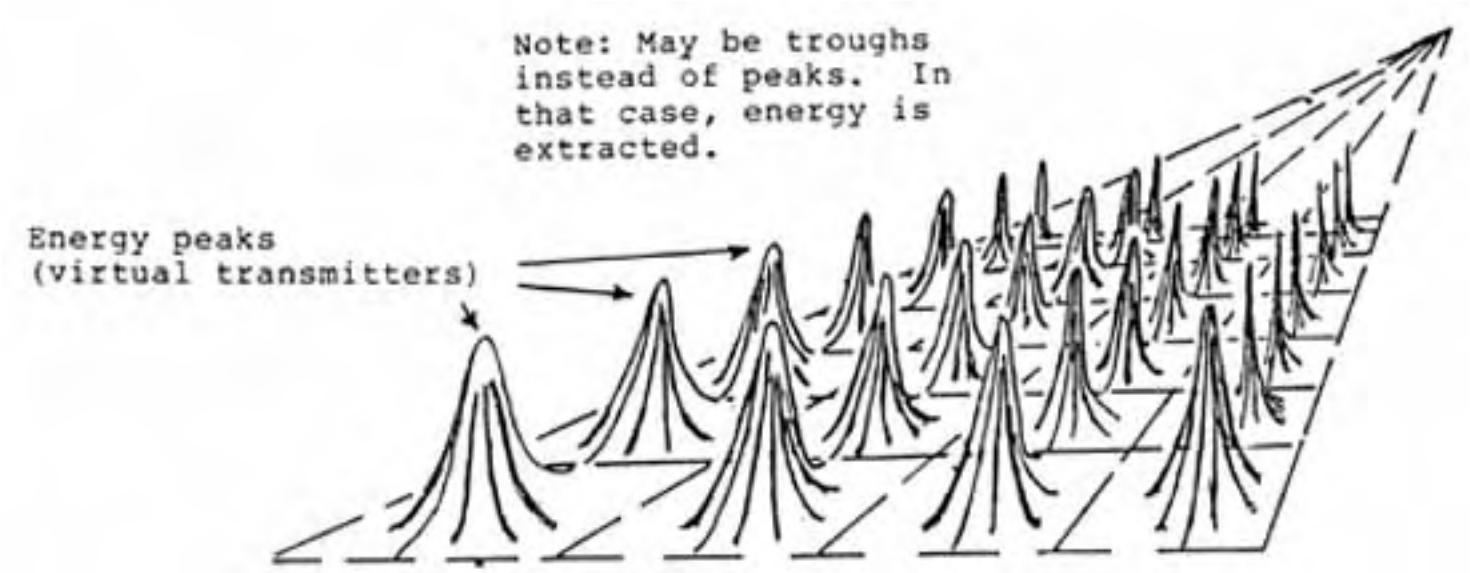

Next Figure

Previous Figure

The Tom Bearden Website

Figure 13. GIANT RADIAL RELATED TO A VIRTUAL TRANSMITTER

Fall 1983: Florida Alabama

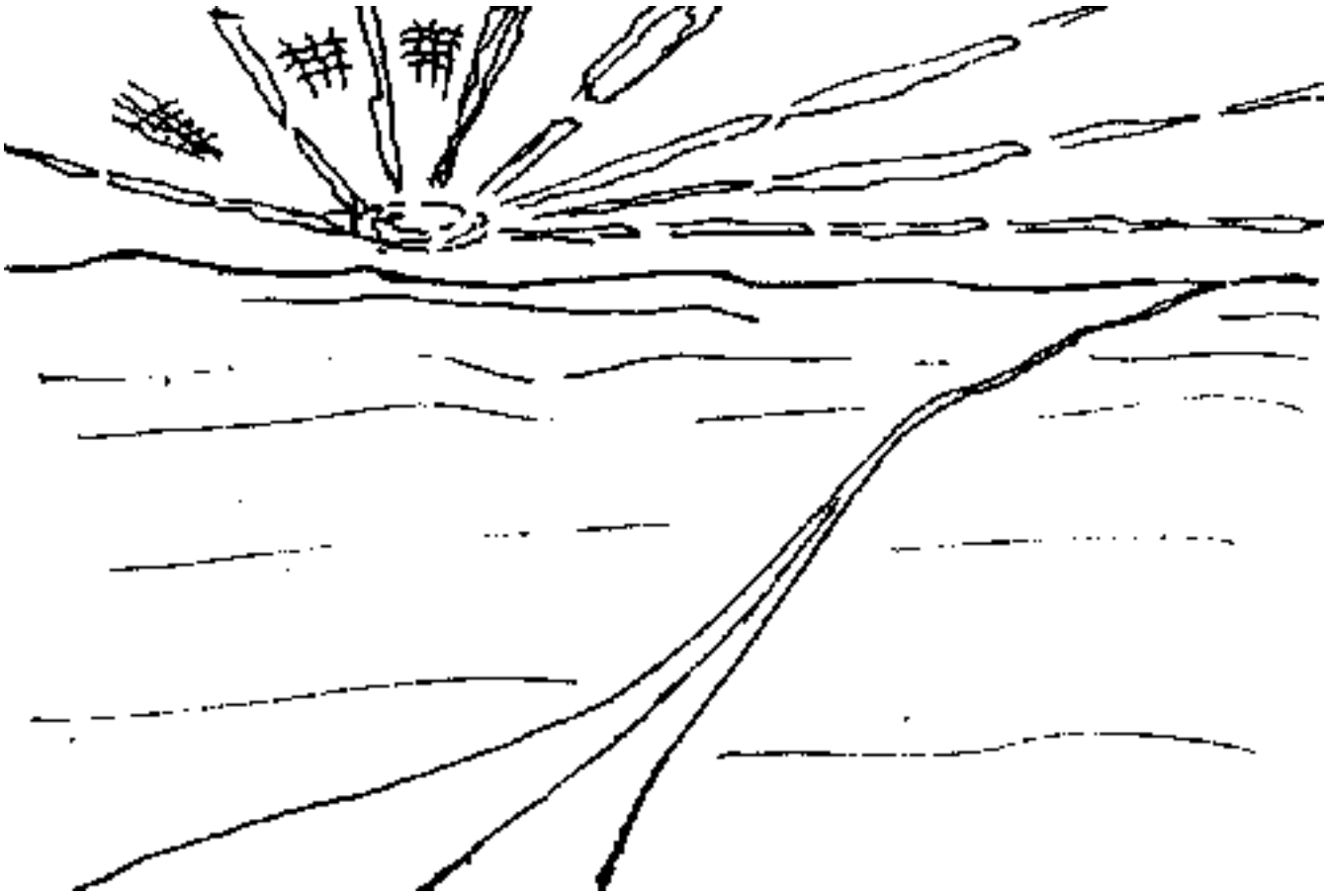

Next Figure

Previous Figure

[The Tom Bearden Website]

Figure 14. FORMATION OF A SINGLE GIANT RADIAL

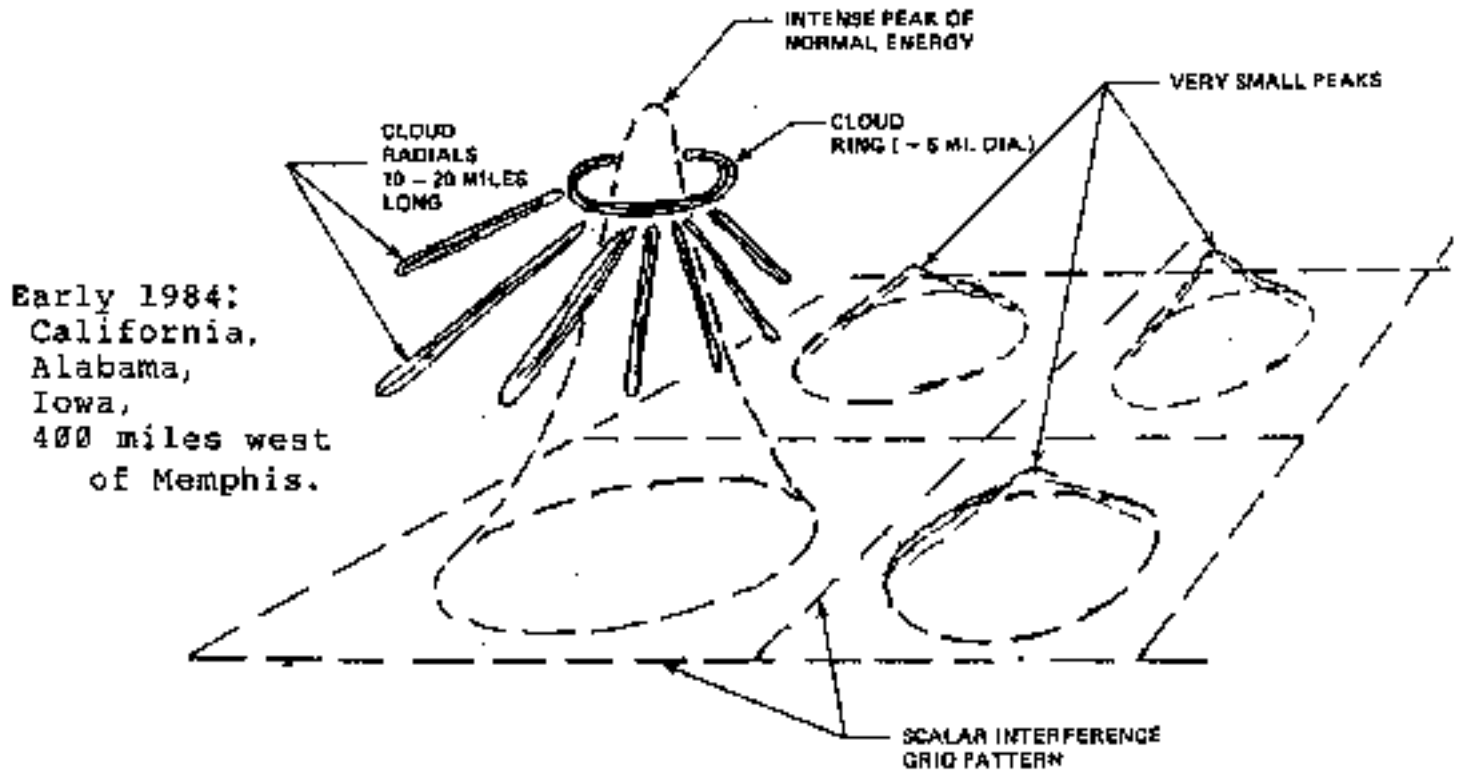

Excerpt P 172
FER DE LANCE

A Briefing on Soviet Scalar Electromagnetic Weapons
by Lt. Col. T.E. Bearden (retd.), 1986
Copyright

2. Continual cloud radials have repeatedly been seen and photographed over Huntsville, Alabama, associated with weather engineering and grid activity. Typical radials seen by this author are shown in Bearden, Soviet Weather Engineering Over North America, 1-hr. v1deotape, 1985. Huntsville is apparently a pivot point or "hinge point" for bending and controlling the jetstream.

3. Spectacular cloud grid patterns have been seen over Huntsville, Alabama and Los Angeles, California. An excellent videoclip of one of the Los Angeles area grids, personally observed and shot by KABC Open Mind talk show host Bill Jenkins, is shown in Bearden, Soviet Weather Engineering Over North America,;1-hr. videotape, 1985. An artist's sketch of an earlier gigantic grid, extending from horizon to horizon in every direction, seen over Huntsville, Alabama by Tom Bearden and Ken Moore, is also shown in the tape. The videotape is available from P.O. Box 1472, Huntsville, AL 35807. Sketches and details of another highly anomalous grid pattern observed in the greater Los Angeles area by engineer Ron Cole are shown in figures 5 and 6.

The reason that clouds of water droplets and/or ice particles detect the scalar interferometry and form signature patterns is simple: Consider each H2O molecule as having two light little hydrogen atoms hanging on to the much heavier oxygen atom. The covalent sharing with the oxygen atom of the electron from each hydrogen atom means that

1. the electrostatic scalar potential between the H ion and the O ion it is bonded to, is rhythmically varying as the electron is shared back and forth,
2. this varying potential contains "electron spin holes" since it is made by the moving electron,
3. two such varying potentials exist since there are two H atoms sharing covalent electrons with the O atom,
4. the two H ions are at an angle of over 100 degrees with respect to each other,
5. the molecule assembly thus constitutes one part (one half, so to speak) of a scalar interferometer with imbedded electron spin holes for electron hooking,
6. Incident scalar waves from outside the system interact with the "half scalar interferometer." This scalar interferometry interaction is coupled to the covalent bonding electron because of the internal spin hole pattern of the molecular half of the interferometer. The coupled electron moves with the sca1ar pattern's changes, causing an observable interaction with and in the electrical structure and ionic potential of the molecule,
7. the weak H to H hydrogen bonding between molecules connects resulting ionic potential changes to the structuring of the entire macroscopic cloud assembly. Thus by scalar interferometry with the H_2O "half interferometers", an incident scalar EM pattern is detected and translated into patterns of E and B force fields. The H_2O molecules then "line up" in accord with the electrical patterns detected.

Thus the clouds form "signature patterns" according to the incident scalar EM radiation patterns. Giant cloud radials in the targeted area are probably due to the type and shape of antennas including the type and shape of the electrical wires establishing the antennas' ground planes -- used by the Soviet Union to project the scalar waves. Note that such "radial" antenna patterns were occasionally used by James Harris Rogers in his underground and undersea scalar EM transmission system.

Next Figure

Previous Figure

Figure 15. FORMATION OF A DOUBLE GIANT RADIAL

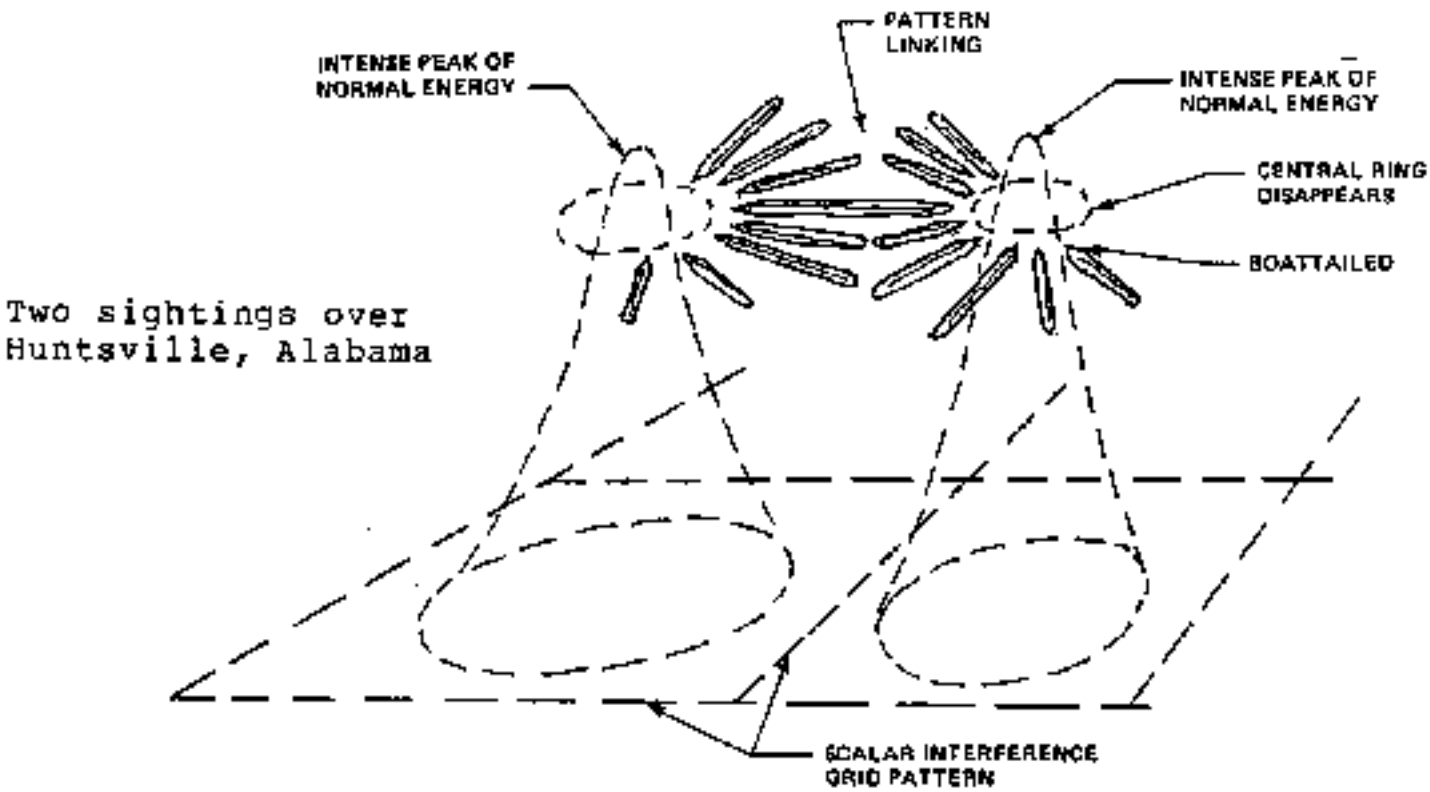

Next Figure

Previous Figure

Figure 16. DETECTION OF TRANSVERSE AND LONGITUDINAL WAVES

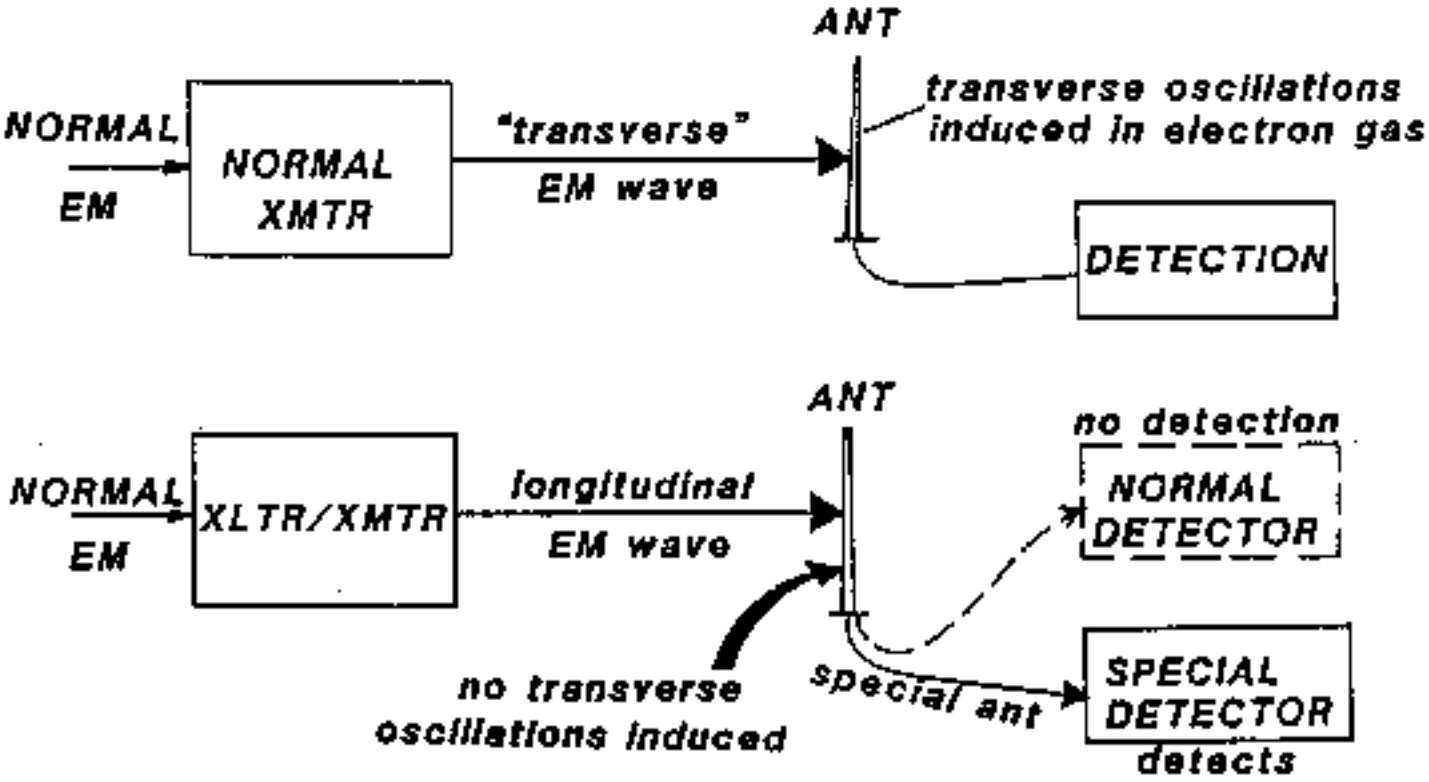

Next Figure

Previous Figure

Support Free Energy and purchase the bumper sticker

The New Tesla Electromagnetics and the Secrets of Electrical Free Energy

By T.E. Bearden
© 1984

Table of Contents

Foreword

Comments on the New Tesla Electromagnetics:
Part I: Discrepancies in the Present EM Theory
by T. E. Bearden

Comments on the New Tesla Electromagnetics:
Part II: The Secret of Electrical Free Energy
by T. E. Bearden

Overture to a New Age Technology
by Dr. Rolf Schaffranke

REVIEW AND OUTLOOK - The Development of Post-Relativistic Concepts in Physics and Advanced Technology Abroad
by Dr. Rolf Schaffrancke

COMMENTS ON THE NEW TESLA ELECTROMAGNETICS

Part I: Discrepancies in Present EM Theory

© T. E. Bearden 1982

There are at least twenty-two major discrepancies presently existing in conventional electromagnetics theory. This paper presents a summary of those flaws, and is a further commentary on my discussion of scalar longitudinal Tesla waves in a previous paper, "Solutions to Tesla's Secrets and the Soviet Tesla Weapons," Tesla Book Company, 1981 and 1982.

I particularly wish to express my deep appreciation to two of my friends and colleagues who at this time, I believe, wish to remain anonymous. One of the two is an experimental genius who can produce items on the bench that do not work by orthodox theory. The second is a master of materials science and electromagnetics theory. I thank them both for their exceptional contributions and stimuli regarding potential shortcomings in present electromagnetics theory, and their forbearance with the many discussions we have held on this and related subjects.

It goes without saying that any errors in this paper are strictly my own, and not the fault of either of my distinguished colleagues.

(1) In present electromagnetics theory, charge and charged mass are falsely made identical. Actually, on a charged particle, the "charge" is the flux of virtual particles on the "bare particle" of observable mass. The charged particle is thus a "system" of true massless charge coupled to a bare chargeless mass. The observable "mass" is static, three-dimensional, and totally spatial. "Charge" is dynamic, four-dimensional or more, virtual and spatiotemporal. Further, the charge and observable mass can be decoupled, contrary to present theory. Decoupled charge -- that is, the absence of mass -- is simply what we presently refer to as "vacuum." Vacuum, spacetime, and massless charge are all identical. Rigorously, we should utilize any of these three as an "ether," as suggested for vacuum by Einstein himself (see

Max Born, Einstein's Theory of Relativity, Revised Edition, Dover Publications, New York, 1965, p. 224). And all three of them are identically anenergy -- not energy, but more fundamental components of energy.

(2) Electrostatic potential is regarded as a purely 3-dimensional spatial stress. Instead, it is the intensity of a many-dimensional (at least four-dimensional) virtual flux and a stress on all four dimensions of spacetime. This is easily seen, once one recognizes that spacetime is identically massless charge. (It is not "filled" with charge; rather, it is charge!) Just as, in a gas under pressure, the accumulation of additional gas further stresses the gas, the accumulation of charge (spacetime) stresses charge (spacetime). Further, if freed from its attachment to mass , charge can flow exclusively in time, exclusively in space, or in any combination of the two. Tesla waves -- which are scalar waves in pure massless charge flux itself -- thus can exhibit extraordinary characteristics that ordinary vector waves do not possess. And Tesla waves have extra dimensional degrees of freedom in which to move, as compared to vector waves. Indeed, one way to visualize a Tesla scalar wave is to regard it as a pure oscillation of time itself.

(3) Voltage and potential are often confused in the electrostatic case, or at least thought of as "composed of the same thing." For that reason, voltage is regarded as "potential drop". This also is not true. Rigorously, the potential is the intensity of the virtual particle flux at a single point -- whether or not there is any mass at the point -- and both the pressure and the point itself are spatiotemporal (4-dimensional), not spatial (3-dimensional) as presently assumed. Voltage represents the spatial intersection of the difference in the potential between two separated spatial points, and always implies at least a miniscule flow of mass current (that is what makes it spatial!). "Voltage" is spatial and depends upon the presence of observable mass flow, while scalar electrostatic potential is spatiotemporal and depends upon the absence of observable mass flow. The two are not even of the same dimensionality.

(4) The charge of vacuum spacetime is assumed to be zero, when in fact it is a very high value. Vacuum has no mass, but it has great massless charge and virtual particle charge flux. For proof that a charged vacuum is the seat of something in motion, see G.M. Graham and D.G. Lahoz, "Observation of static electromagnetic angular momentum in vacuo," Nature, Vol. 285, 15 .May 1980, pp. 154-155. In fact, vacuum IS charge, identically, and it is also "spacetime" and at least four-dimensional.

(5) Contrary to its present usage, zero is dimensional and relative in its context. A three-dimensional spatial hole, for example, exists in time. If we model time as a dimension, then the spatial hole has one dimension in 4-space. So a spatial absence is a spatiotemporal presence. In the vacuum 4-space, a spatial nothing is still a something. The "virtual" concept and the mathematical concept of a derivative are simply two present ways of unconsciously addressing this fundamental problem of the dimensional relativity of zero.

(6) The concepts of "space" and "time" imply that spacetime (vacuum) has been separated into two parts. We can only think of a space as "continuing to exist in time " To separate vacuum spacetime into two pieces, an operation is continually required. The operator that accomplishes this splitting operation is the photon interaction, the interaction of vector electromagnetic energy or waves with mass. I have already strongly pointed out this effect and presented a "raindrop model" of first-order physical change itself in my book, The Excalibur Briefing, Strawberry Hill Press, San Francisco, 1980, pp. 128-130.

(7) "Vector magnetic potential" is assumed to be always an aspect of (and connected to) the magnetic field. In fact it is a separate, fundamental field of nature and it can be entirely disconnected from the magnetic field. See Richard P. Feynman et al, The Feynman Lectures on Physics, Addison-Wesley Publishing Co., New York, 1964, Vol. II, pp. 15-8 to 15-14. Curiously, this fact has been proven for years' yet it has been almost completely ignored in the West. The "Vx" operator, when applied to the A-field, makes B-field. If the Vx operator is not applied, the "freed" A-field possesses much-expanded characteristics from those presently allowed in the "bound" theory. Specifically, it becomes a scalar or "shadow vector" field; it is not a normal vector field. (note: for V read inverted capital Delta)

(8) The speed of light in vacuum is assumed to be a fundamental constant of nature. Instead it is a function of the intensity of the massless charge flux (that is, of the magnitude of the electrostatic potential) of the vacuum in which it moves. (Indeed, since vacuum and massless charge are one and the same, one may say that the speed of light is a function of the intensity of the spatiotemporal vacuum!). The higher the flux intensity (charge) of the vacuum, the faster the speed of light in it. This is an observed fact and already shown by hardcore measurements. For example, distinct differences actually exist in the speed of light in vacuo, when measured on the surface of the earth as compared to measurements in space away from planetary masses. In a vacuum on the surface of the earth, light moves significantly faster. For a discussion and the statistics, see B. N. Belyaev, "On Random Fluctuations of the Velocity of Light in Vacuum," Soviet Physics

Journal, No. 11, Nov. 1980, pp. 37-42 (original in Russian; translation by Plenum Publishing Corporation.) The Russians have used this knowledge for over two decades in their strategic psychotronics (energetics) program; yet hardly a single U.S. scientist is aware of the measured variation of c in vacuo. In fact, most Western scientists simply cannot believe it when it is pointed out to them!

(9) Energy is considered fundamental and equivalent to work. In fact, energy arises from vector processes, and it can be disassembled into more fundamental (anenergy) scalar components, since the vectors can. These scalar components individually can be moved to a distant location without expending work, since one is not moving force vectors. There the scalar components can be joined and reassembled into vectors to provide "free energy" appearing at a distance, with no loss in between the initial and distant points. For proof that a vector field can be replaced by (and considered to be composed of) two scalar fields, see E. T. Whittaker, Proceedings of the London Mathematical Society, Volume 1, 1903, p. 367. By extension, any vector wave can be replaced by two coupled scalar waves.

(10) The classical Poynting vector predicts no longitudinal wave of energy from a time-varying, electrically charged source, In fact, an exact solution of the problem does allow this longitudinal wave. See T. D. Keech and J. F. Corum, "A New Derivation for the Field of a Time-Varying Charge in Einstein's Theory," International Journal of Theoretical Physics, Vol. 20, No, 1, 1981, pp. 63-68 for the proof.

(11) The present concepts of vector and scalar are severely limited, and do not permit the explicit consideration of the internal, finer-grained structures of a vector or a scalar. That is, a fundamental problem exists with the basic assumptions in the vector mathematics itself. The "space" of a vector field, for example, does not have inter-nested sublevels (subspaces) containing finer "shadow vectors" or "virtual vectors," Yet particle physics has already discovered that electrical reality is built that way. Thus one should actually use a "hypernumber" theory after the manner of Charles Musés. A scalar is filled with (and composed of) nested levels of other "spaces" containing vectors, where these sum to "zero" in the ordinary observable frame without an observable vector resultant. In Musés' mathematics, for example, zero has real roots. Real physical devices can be -- and have been -constructed in accordance with Muses' theory. For an introduction to Musés' profound hypernumbers approach, see Charles Musés' foreword to Jerome Rothstein, Communication Organization and Science, The Falcon's Wing Press, Indian Hills, Colorado, 1958. See also Charles Musés, "Applied Hypernumbers: Computational Concepts," Applied Mathematics and

Computation, Vol. 3, 1976. See also Charles Musés, "Hypernumbers II," Applied Mathematics and Computation, January 1978.

(12) With the expanded Tesla electromagnetics, a new conservation of energy law is required. Let us recapitulate for a moment. The oldest law called for the conservation of mass. The present law calls for the conservation of "mass and energy", but not each separately. If mass is regarded as simply another aspect of energy, then the present law calls for the conservation of energy. However, this assumes that energy is a basic, fundamental concept. Since the energy concept is tied to work and the movement of vector forces, it implicitly assumes "vector movement" to be a "most fundamental" and irreducible concept. But as we pointed out, Whittaker showed that vectors can always be further broken down into more fundamental coupled scalar components. Further, Tesla discovered that these "coupled components" of "energy" can be individually separated, transmitted, processed, rejoined, etc. This directly implies that energy per se need not be conserved. The new law therefore calls for the conservation of anenergy, the components of energy. These components may be coupled into energy, and the energy may be further compacted into mass. It is the sum total of the (anenergy) components -- coupled and uncoupled -- that is conserved, not the matter or the energy per se. Further, this conservation of anenergy is not spatial; rather, it is spatiotemporal in a spacetime of at least four or more dimensions.

(13) Relativity is presently regarded as a theory or statement about fundamental physical reality. In fact, it is only a statement about FIRST ORDER reality -- the reality that emerges from the vector interaction of electromagnetic energy with matter. When we break down the vectors into scalars (shadow vectors or hypervectors), we immediately enter a vastly different, far more fundamental reality. In this reality superluminal velocity, multiple universes, travel back and forth in time, higher dimensions, variation of all "fundamental constants" of nature, materialization and dematerialization, and violation of the "conservation of energy" are all involved. Even our present Aristotlean logic -- fitted to the photon interaction by vector light as the fundamental observation mechanism -- is incapable of describing or modeling this more fundamental reality. Using scalar waves and scalar interactions as much subtler, far less limited observation/detection mechanisms, we must have a new "superrelativity" to describe the expanded electromagnetic reality uncovered by Nikola Tesla.

(14) "Charge" is assumed to be quantized, in addition to always occurring with -- and locked to -- mass. Indeed, charge is not necessarily quantized just as it is not necessarily locked to mass.

Ehrenhaft discovered and reported fractional charges for years, in the 30's and 40's, and was ignored. See P.A.11. Dirac, "Development of the Physicist's Conception of Nature," Symposium on the Development of the Physicist's Conception of Nature, ed. Jagdish Merha, D. Reidel, Boston, 1973, pp. 12-14 for a presentation of some of Ehrenhaft's results. Within the last few years Stanford University· researchers also have positively demonstrated the existence of "fractional charge." For a layman's description of their work, see "A Spector Haunting Physics," Science News, Vol. 119, January 31, 1981, pp. 68-69. Indeed, Dirac in his referenced article points out that Millikan himself -- in his original oildrop experiments -- reported one measurement of fractional charge, but discounted it as probably due to error.

(15) Presently, things are always regarded as traveling through normal space. Thus we use or model only the most elementary type of motion -- that performed by vector electromagnetic energy. We do not allow for things to "travel inside the vector flow itself." Yet, actually, there is a second, more subtle flow inside the first, and a third, even more subtle flow inside the second, and so on. We may operate inside, onto, into, and out of energy itself -- and any anenergy component of energy. There are hypervectors and hyperscalars unlimited, within the ordinary vectors and scalars we already know. Further, these "internal flows" can be engineered and utilized, allowing physical reality itself to be directly engineered, almost without limits.

(16) We always assume everything exists in time. Actually, nothing presently measured exists in time, because the physical detection/ measurement process of our present instruments destroys time, ripping it off and tossing it away -- and thereby "collapsing the wave function." Present scientific methodology thus is seriously flawed. It does not yield fundamental (spacetime) truth, but only a partial (spatial) truth. This in turn leads to great scientific oversights. For example, mass does not exist in time, but mass x time (masstime) does. A fundamental constant does not exist in time, but the "constant x time" does. Energy does not exist in time, but energy x time (action) does. Even space itself does not exist in time -- spacetime does. We are almost always one dimension short in every observable we model. Yet we persist in thinking spatially, and we have developed 1nstruments that detect and measure spatially only. Such instruments can never measure and detect the phenomenology of the nested substrata of time. By using scalar technology, however, less limited instruments can indeed be constructed -and they have been. With such new instruments, the phenomenology of the new electromagnetics can be explored and an engineering technology developed.

(17) We do not recognize the connection between nested levels of virtual state (particle physics) and orthogonally rotated frames (hyperspaces). Actually the two are identical, as I showed in the appendix to my book, The Excalibur Briefing, Strawberry Hill Press, San Francisco, 1980, pp. 233-235. A virtual particle in the laboratory frame is an observable particle in a hyperspatial frame rotated more than one orthogonal turn away. This of course implies that the hyperspatial velocity of all virtual particles is greater than the speed of light. The particle physicist is already deeply involved in hyperspaces and hyperspatial charge fluxes without realizing it. In other words, he is using tachyons (particles that move faster than light) without realizing it.

(18) Presently quantum mechanics rigorously states that time is not an observable, and therefore it cannot be measured or detected. According to this assumption, one must always infer time from spatial measurements, because all detections and measurements are spatial. With this assumption, our scientists prejudice themselves against even looking for finer, subquantal measurement methodologies and instrumentation. Actually this present limitation is a result of the type of electromagnetics we presently know, where all instruments (the "measurers") have been interacted with by vector electromagnetic energy (light). Every mass that has temperature (and all masses do!) is continually absorbing and emitting photons, and in the process they are continually connecting to time and disconnecting from time. If time is continually being carried away from the detector itself by its emitted photons, then the detector cannot hold and "detect" that which it has just lost. With Tesla electromagnetics, however, the fundamental limitation of our present instruments need not apply. With finer instruments, we can show there are an infinite number of levels to "time", and it is only the "quantum level time" which is continually being lost by vector light (photon) interaction. By using subquantal scalar waves, instruments can move to deeper levels of time -- in which case the upper levels of time ARE measureable and detectable, in contradistinction to the present assumptions.

(19) In the present physics, time is modeled as, and considered to be, a continuous dimension such as length. This is only a gross approximation. Indeed, time is not like continuous "dimension," but more like a series of "stitches," each of which is individually made and then ripped out before the next stitch appears. "Vector light" photons interact one at a time, and it is this interaction with mass that creates quantum change itself. The absorption of a photon -- which is energy x time -- by a spatial mass converts it to masstime: the time was added by the photon. The emission of a photon tears away the time, leaving behind again a spatial mass. It is not accidental, then, that time flows at

the speed of light, for it is light which contains and carries time. It is also not accidental that the photon IS the individual quantum. Since all our instruments presently are continually absorbing and emitting photons, they are all "quantized," and they accordingly "quantize" their detections. This is true because all detection is totally internal to the detector, and the instruments detect only their own internal changes. Since these detections are on a totally granular quantized background, the detections themselves are quantized. The Minkowski model is fundamentally erroneous in its modeling of time, and for that reason relativity and quantum mechanics continue to resist all attempts to successfully combine them, quantum field theory notwithstanding.

(20) Presently, gravitational field and electrical field are considered mutually exclusive. Actually this is also untrue. In 1974, for example, Santilly proved that electrical field and gravitational field indeed are not mutually exclusive In that case, one is left with two possibilities: (a) they are totally the same thing, or (b) they are partially the same thing. For the proof, see R. M. Santilli, "Partons and Gravitation: Some Puzzling Questions," Annals of Physics, Vol. 83, No. 1, March 1974. With the new Tesla electromagnetics, pure scalar waves in time itself can be produced electrically, and electrostatics (when the charge has been separated from the mass) becomes a "magic" tool capable of directly affecting and altering anything that exists in time--including gravitational field. Antigravity and the inertial drive are immediate and direct consequences of the new electromagnetics.

(21) Presently, mind is considered metaphysical, not a part of physics, an not affected by physical means. Literally, the prevailing belief of Western scientists is that man is a mechanical robot -- even though relativity depends entirely upon the idea of the "observer." Western science today thus has essentially become dogmatic, and in this respect borders on a religion. Since this "religion," so to speak, is now fairly well entrenched in its power in the state, Western science is turning itself into an oligarchy. But mind occupies time, and when we measure and affect time we can directly measure and affect mind itself. In the new electromagnetics, then, man regains his dignity and his humanity by restoring the reality of mind and thought to science. In my book, The Excalibur Briefing, I have already pointed out the reality of mind and a simplified way in which it can be modeled to the first order. With scalar wave instruments, the reality of mind and thought can be measured in the laboratory, and parapsychology becomes a working, engineering, scientific discipline.

(22) Multiple-valued basic dimensional functions are either not permitted or severely discouraged in the present theory For one thing, integrals of multiple valued derivative functions have the annoying

habit of "blowing up" and yielding erroneous answers, or none at all. And we certainly do not allow multiple types of time! This leads to the absurdity of the present interpretation of relativity which permits only a single observer (and a single observation) at a time. So if one believes as "absurd" a thing as the fact that more than one person can observe an apple at the same time, the present physics fails. However, the acceptance of such a simple proposition as multiple simultaneous observation leads to a physics so bizarre and incredible that most Western physicists have been unable to tolerate it, much less examine its consequences. In the physics that emerges from multiple simultaneous observation, all possibilities are real and physical. There are an infinite number of worlds, orthogonal to one another, and each world is continually splitting into additional such "worlds" at a stupendous rate. Nonetheless, this physics was worked out by Everett for his doctoral thesis in 1956, and the thesis was published in 1957. (See Hugh Everett, III, The Many-Worlds Interpretation of Quantum Mechanics: A Fundamental Exposition, with papers by J. A. Wheeler, B.S. DeWitt, L. N. Cooper and D. Van Vechten, and N. Graham; eds. Bryce S. Dewitt and Neill Graham, Princeton Series in Physics, Princeton University Press, 1973.) Even though it is bizarre, Everett's physics is entirely consistent with all the present experimental basis of physics. The present electromagnetic theory is constructed for only a single "world" or universe -- or "level." The expanded theory, on the other hand, contains multiply nested levels of virtual state charge -- and these levels are identically the same as orthogonal universes, or "hyperframes." Multiple kinds -- and values -- of time also exist. The new concept differs from Everett's, however, in that the orthogonal universes intercommunicate in the virtual state. That is, an observable in one universe is always a virtual quantity in each of the other universes. Thus one can have multi-level "continuities" and "discontinuities" simultaneously, without logical conflict. It is precisely these levels of charge -- these levels of scalar vacuum -- that lace together the discontinuous quanta generated by the interaction of vector light with mass.

However, to understand the new electromagnetic reality, one requires a new, expanded logic which contains the old Aristotlean logic as a subset. I have already pointed out the new logic in my paper, "A Conditional Criterion for Identity, Leading to a Fourth Law of Logic," 1979, available from the National Technical Information Center, AD-A071032.

Even as logic is extended, quantum mechanics, quantum electrodynamics, and relativity are drastically changed by the Tesla electromagnetics, as I pointed out in my paper, "Solutions to Tesla's Secrets and the Soviet Tesla Weapons," Tesla Book Company, 1580

Magnolia, Millbrae, California, 94030, 1980.

The present electromagnetics is just a special case of a much more fundamental electromagnetics discovered by Nikola Tesla, just as Newtonian physics is a special case of relativistic physics. But in the electromagnetics case, the differences between the old and the new are far more drastic and profound.

ADDITIONAL REFERENCES

1, Boren, Dr. Lawrence Milton, "Discovery of the Fundamental Magnetic Charge (Arising from the new Conservation of Magnetic Energy)," 1981/82 (private communication). Dr. Boren has a cogent argument that the positron is the fundamental unit of magnetic charge. His theory thus assigns fundamentally different natures to positive charge and negative charge. In support of Dr. Boren, one should point out that the "positive" end of circuits can simply be "less negative" than the "negative" end. In other words, the circuit works simply from higher accumulation of negative charges (the "negative" end) to a lesser accumulation of negative charges (the "positive" end). Nowhere need there be positive charges (protons, positrons, etc.) to make the circuit work. Dr. Boren's theory, though dramatic at first encounter, nonetheless bears close and meticulous examination -- particularly since he has been able to gather experimental data which support his theory and disagree with present theory.

2. Eagle, Albert, "An Alternative Explanation of Relativity Phenomena," Philosophical Magazine and Journal of Science, No. 191, December 1939, pp. 694-701.

3. Ehrenhaft, Felix and Wasser, Emanuel, "Determination of the Size and Weight of Single Submicroscopic Spheres of the Order of Magnitude r = 4 x 10(-5) cm. to 5 x 10(-6) cm., as well as the Production of Real Images of Submicroscopic Particles by means of Ultraviolet Light," Phil. Mag. and Jour. of Sci., Vol. II (Seventh Series), No. 7, July 1926, pp. 30-51.

4. Ehrenhaft, Felix and Wasser, Emanuel, "New Evidence of the Existence of Charges smaller than the Electron - (a) The Micromagnet; (b) The Law of Resistance; (c) The Computation of Errors of the Method," Phil. Mag. and Jour. of Sci., Vol. V (Seventh Series), No. 28, February 1928, pp. 225-241.

5. See also Ehrenhaft's last paper dealing with the electronic charge, in Philosophy of Science, Vol. 8, 1941, p. 403.

6. McGregor, Donald Rait, The Inertia of the Vacuum: A New Foundation for Theoretical Physics, Exposition Press, Smithtown, NY, First Edition, 1981, pp. 15-20.

7. Ignat'ev, Yu. G. and Balakin, A. B., "Nonlinear Gravitational Waves in Plasma," Soviet Physics Journal, Vol. 24, No. 7, July 1981, (U.S. Translation, Consultants Bureau, NY, January 1982), pp. 593-597.

8. Yater, Joseph C., "Relation of the second law of thermodynamics to the power conversion of energy fluctuations," Phys. Review A, Vol. 20, no. 4, October 1979, pp. 1614-1618.

9. DeSantis, Romano M. et al, "On the Analysis of Feedback Systems With a Multipower Open Loop Chain," October 1973, available through the Defense Technical Information Center (AD 773188),

10. Graneau, Peter, "Electromagnetic jet-propulsion in the direction of current flow," Nature, Vol. 295, 28 January 1982, pp, 311-312.

11. "Gravity and acceleration aren't always equivalent," New Scientist, 17 September 1981, p. 723.

12. Gonyaev, V. V , "Experimental Determination of the Free-Fall Acceleration of a Relativistic Charged Particle. II. A Cylindrical Solenoid in a Time-Independent Field of Inertial Forces," Izvestiya VUZ, Fizika, No. 7, 1979, pp. 28-32. English Translation: Soviet Physics Journal, No. 7, 1979, pp. 829-833. If one understands the new, expanded electromagnetics, this Soviet paper indicates a means of generating antigravity and pure inertial fields.

13. R. Schaffranke, "The Development of Post-Relativistic Concepts in Physics and Advanced Technology Abroad," Energy Unlimited, No. 12, Winter 1981, pp. 15-20.

14. F. K. Preikschat, A Critical Look at the Theory of Relativity, Library of Congress Catalogue No. 77-670044. Extensive compilation of measurements of the speed of light. Clearly shows the speed of light is not constant but changes, sometimes even daily.

Return to Table of Contents **Next Page**

COMMENTS ON THE NEW TESLA ELECTROMAGNETICS

Part II: The Secret of Electrical Free Energy

© 1982 T. E. Bearden

Again I wish to express my deep appreciation to two of my friends and colleagues who at this time, I believe, wish to remain anonymous. I thank them both for their exceptional contributions and stimuli, and their forbearance with the many discussions we have held on this and related subjects.

Also, it goes without saying that any errors in this paper are strictly my own, and not the fault of either of my distinguished colleagues.

Present electromagnetic theory is only a special case of the much more fundamental electromagnetism discovered by Nikola Tesla at the turn of the century.

Pure vacuum is pure charge flux, without mass. The vacuum has a very high electrical potential -- something on the order of 200 million volts, with respect to a hypothetical zero charge.

Thus in an ordinary electrical circuit, each point of the "ground" -- which has the same potential as the vacuum -- actually has a non-zero absolute potential. This circuit ground has a value of zero only with respect to something else which has the same absolute electrical potential.

Voltage, which is always associated with a flow of electrical "mass" current (even if only a miniscule flow), is, by definition, a difference dropped in potential when a charge mass moves between two spatially separated points. What we have termed "electrical current" only flows where there is a suitable conducting medium between things which have a difference in absolute potential. Furthermore, between any two points in any material, there is considered to exist a finite resistance -- if we apply a voltage and have a mass current flowing between the two points! The simple statement that V = IR irrevocably ties together voltage drop, mass current, and resistance between two points. Rigorously, to have one of the three is to have them all. To lose one is to lose all three. Immediately we see a major error in present theory: One can have a "difference in scalar potential" between two points without having a "voltage drop" between them. Specifically, if no mass current flows between them, no resistance exists between them, and no voltage drop exists between them.

In the same fashion, one can have a "scalar wave" through the

In the same fashion, one can have a "scalar wave" through the vacuum without a voltage wave. In that case, the wave has no E-field and no H-field. The only reason one has an E-field

Return to Table of Contents Next Page

around a statically charged object is because the charged electrons accumulated on the object are actually in violent motion. It is this motion of the charged masses that produces E-field -- as well as H-field whenever that entire E-field ensemble moves through laboratory space.

Now let us reason together in the "approximate" manner utilized in present electromagnetic theory. For example, let us examine a bird sitting on a high tension line.

The bird sits on the high tension line without a flow of mass electricity, because there is no significant difference in potential drop between the bird and the line. Specifically, between the bird's two feet -- each in contact with a different portion of the line -- there exists no potential difference. This is true even though, with respect to the vacuum, each foot is at a potential that would be "100,000 volts higher," were a mass current flowing. And it is true even though the absolute potential of each foot may be some 200.1 million "volts," were a mass current flowing.

Now an interesting thing happens to the bird when he flies through the air to light upon the high tension wire. As he flies toward the wire, he is flying through the massless electrostatic potential field of the wire, for that field extends an infinite distance away from the wire. The electrostatic potential field -- pure Ø-field -- is actually the spatio-temporal intensity of the massless charge at a point. In other words, as the bird flies to the wire, he flies into an increasing "massless charge" potential, building up to 100,000 "volts" higher than the earth. However, very little (if any) "mass flow" potential difference is experienced upon his body in approaching the wire, and so essentially no "charged mass currents" are induced in his body. Thus the little flier safely navigates into the teeth of a very high electrostatic potential, lights upon the wire, and is not "fried" in the process. When he lights on the wire, his body has reached the electrostatic potential that each foot's contact point has. Again, there is no mass current flow. But his body is immersed in an increased flux of massless charge -- which is what the electrostatic potential represents. And each "virtual particle" flow in that charge potential represents a "massless (scalar)" electrical current.

The point is, one can have any amount of massless charge flow -- "scalar" current -- without any mechanical work being done in the system. All electrical work in a circuit is done against the physical mass of the charged masses that flow. Rigorously, force is defined as the time rate of charge of momentum. Even in the relativistic case where $F = ma + v(dm/dt)$, change of momentum requires mass movement. No mechanical work, and hence no energy, is expended by massless charge flow.

That is why the vacuum massless charge -- which is composed of a very high flux of massless "particles" -- normally does no work

That is why the vacuum massless charge -- which is composed of a very high flux of massless "particles" -- normally does no work on our systems, and expends none of its very high "potential energy." It is exactly the same as the bird which flew into an

Return to Table of Contents Next Page

increasing scalar field as it approached the high tension wire -- no work was done upon the bird by the increasing scalar flux currents encountered by its body.

By existing "in the vacuum," so to speak, we (the whole earth) are as birds sitting on a high tension line! Until we create significant difference in potential, via our present electromagnetic circuits, no current can flow -- anywhere. Even if we produce potential differences, we must have a conductor and charged masses to flow, if we wish to produce mechanical work. Presently our electromagnetic theory allows us to create a difference in potential within different parts of a circuit, but only by moving and shifting charged mass. We therefore have to do work on this electrical mass in moving it around, and we only get back the work we have put into the circuit. In other words, presently all we do is "pump" electrical mass.

Now notice what would happen to the bird on the line if we substantially "pulsed" the potential on the line. Suppose we "pulsed" it such that the bird's physical system -- considered as a circuit containing a capacitance, a resistance, an inductance, and many free electrons -- became resonant to the pulsing frequency. In that case the "bird system" would resonate, and a great deal of electrical mass would surge back and forth in the body of the bird. In the bird's body, voltage would exist, charged mass current would flow, work would be done, and the bird would be electrocuted.

Also, note that, without mass movement, electromagnetic vector fields are not produced (and a portion of the difficulty lies with the actual vector mathematics itself). Scalar (nonvector) waves continually penetrate "space" where there is no mass movement. This means there can exist a "delta-Φ" without a voltage or an E-field. The present theory does not allow this, because it always uses "q" (charge) to be charged mass. Briefly, without belaboring the point, let us just say that it is the mechanical spin of the individual charged particle -- such as the electron -- which "entangles" or "knits together" or "couples" independent scalar waves into vector waves. A vector wave is simply two coupled scalar waves. The entire force field concept -- such as the E-field and the B-field -- is operationally defined in terms of the force exhibited on a test particle, or test mass. Rigorously, an E-field does not exist as a force field in vacuum, but as two coupled scalar Φ-fields "tumbling about each other." When these two coupled, tumbling fields meet a spinning electron, e.g., the force emerges on the electron mass. In short, movement of a rotating mass changes delta-Φ to "voltage", creating the V/I/R triad.

By "accumulating charged mass particles" -- such as electrons -- one certainly can increase the value of Φ, which represents the charge intensity or "scalar electrostatic potential." However, that is not the only way to increase it. Resonance and rotation of charged masses can also be appropriately employed to vary the vacuum charge potential Φ, under the proper circumstances.

or charged masses can also be appropriately employed to vary the vacuum charge potential Φ, under the proper circumstances.

Return to Table of Contents Next Page

By the correct application of rotary principles and Tesla electromagnetic theory, it is possible to oscillate -- and change -- the vacuum potential itself, in one part of an electrical system. Thus by correct procedures a part of a system can be electrically altered so that the absolute value of its "ground" (vacuum) potential differs significantly from the normal vacuum-ground potential of the remainder of the circuit. In other words, we shift the vacuum-ground potential of part of the circuit by oscillating the massless vacuum charge itself, and in so doing we gain a substantial, oscillatory electrical potential difference between that part of the circuit and the normal ground potential of the rest of the system. Then we connect the two parts of the system by means of a conductor containing a load in the middle.

In every conductor, a large number of "free electrons" are available. If we oscillate the actual vacuum charge itself, unlimited additional free electrons also become available from the Dirac sea, since partial "unstripping" of the negative energy wells (each containing an electron) occurs. This "unstripping" of the potential of the well is due to vacuum potential oscillation, which oscillates time as well as space. To a negative energy well (positive time), the oscillation of its "time stream" increases the well's negative potential during one half-cycle and decreases its potential for the other half-cycle. Thus during half the oscillatory cycle, negative energy electrons may be lifted from the Dirac sea if the oscillation is sufficiently intense.

Therefore we obtain an attendant voltage and flow of mass current through the load. This voltage and current, by the way, are essentially limitless, and are free for the asking, assuming the proper "vacuum oscillation" is initiated and maintained so that electrons are continually being lifted from the Dirac sea by the time oscillations, and fed into the circuit.

Standard electromagnetic theory assumes that the vacuum potential is zero. It does not recognize the existence of massless charge, separated from charged mass. Therefore, orthodox scientists have never looked for a way to engineer the vacuum, because they have not realized it is composed of pure massless charge. Electrical physics has almost hopelessly confused charge and charged mass, thereby eliminating scalar longitudinal electrostatic waves. Expressed in the bird/high tension line analogy, the present electromagnetic theory restricts us to walking along the high tension line, laboriously carrying small batteries and power units, unaware of the limitless, surging power beneath our very feet.

Electromagnetically, we have been rather like one of the five blind men who touched an elephant. We have only touched one small portion of the electromagnetism "elephant," yet we thought we had grasped the entire beast.

OVERTURE TO A NEW AGE TECHNOLOGY

From an Update by Dr. Rolf Schaffranke

> " ... as there has been a steady erosion in U. S. activity in the basic sciences, there has been an increase in the level of such activity in Western Europe and Japan. If that continues, we are in danger of losing our position of scientific leadership."
>
> Val. L. Fitch, Prof. of Physics at Princeton University, in an interview with *U.S. News & World Report*, June 21, 1982.

West Germany:

The prototype of the first motorcycle equipped with a "flux-motor" (the inventor's designation for a tachion field converter or gravity-field generator) of 2 KW output has completed a test run of approximately 20,000 km without repairs. Principle of operation: The T-converter is constantly recharging the electrical power battery of the vehicle, resulting in an operation which is noiseless, fuelless and polution-free. After completion of all scheduled tests, a public demonstration to the press is planned within a few weeks from the time of this writing. (June 17, 1982) See photo, Pg. 19. A new factory for the production of gravity-energy-field converters in the town of Oldenburg is scheduled to produce individual home heating units. The design of automobile power plants based on the same principle is also in preparation. Reported efficiency factors of several hundred percent are anticipated.

Japan:

Mazda continues research on the "magnetic Wankel engine" (45 HP) for electric automobiles, based on the principle of Kure Tekko. The gravity research of Prof. S. Seike is now sponsored by Hitachi, after millions of Japanese received updated information via popular science magazines. It is interesting to note that Saudi Arabia has decided to invest $100 million in Hitachi stocks.

France:

The "Kromrey" converter has completed tests at the Institute for Magnetostatics, University of Strasbourg. One prototype delivered 700 Watts at 600-1200 RPM, at a fairly uniform rate. However, France, as the No. 1 developer of nuclear energy in Europe, is still reluctant to concentrate her energies on a revolutionary new technology which could result in drastic curtailments of her well-developed nuclear industry and associated exports. See photos, Pg. 22.

Denmark:

Dr. Jensen, physicist at the University of Kopenhagen, reported test results of 300% efficiency with a specially designed, 5-coil transformer in connection

Return to Table of Contents Next Page

with a tachion field converter based on the principle of the "N" machine. First reports were presented at the International Conference on Energy Technology in Hannover, Nov., 1980.

England / USA:

A "bullet train" based on the magnetic levitation system of British Prof. Eric Laithwaite is now under consideration for construction between Los Angeles and San Diego. Japan and West Germany are already operating high speed experimental trains, suspended magnetically to reduce friction, that may soon attain speeds of more than 200 miles per hour. The Laithwaite-Eastham method would use electromagnetic forcefields induced over an aluminum-topped concrete track. The project will probably be headed by a Japanese company as the prime contractor.

Return to Table of Contents Next Page

West German gravity-field unit in operation

Return to Index **Next Page**

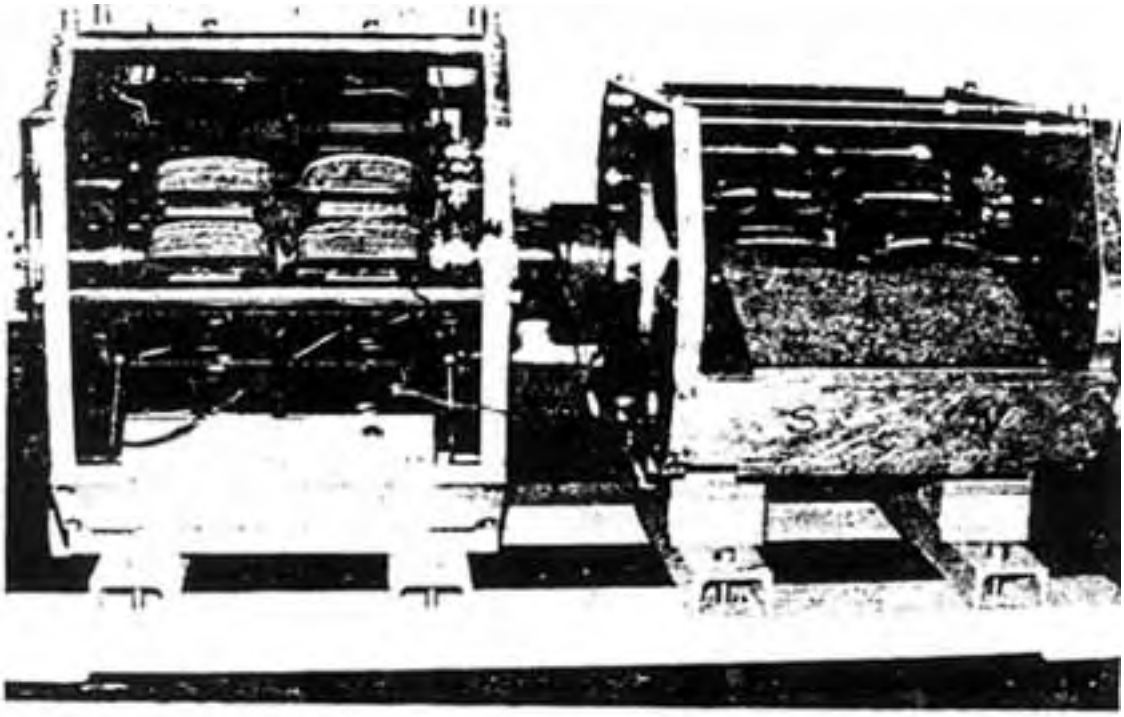

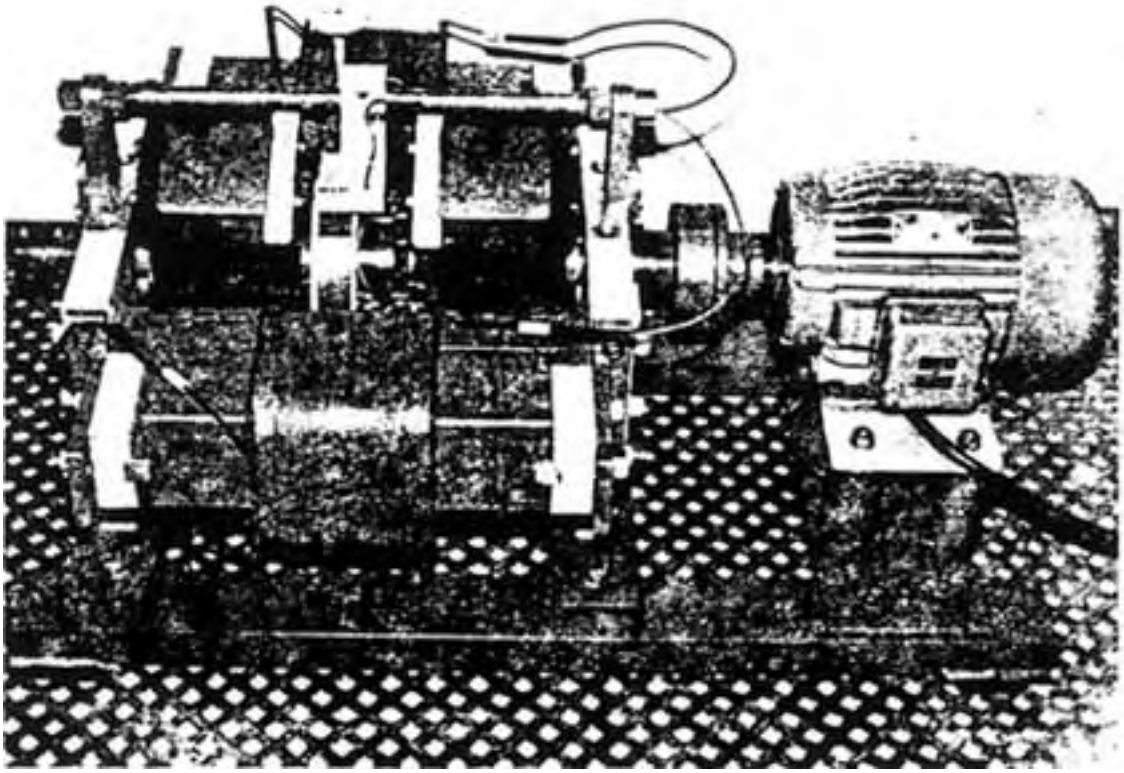

Swiss-French gravity field converter system "Kromrey"

Return to Index **Next Page**

REVIEW AND OUTLOOK

THE DEVELOPMENT OF POST-RELATIVISTIC CONCEPTS IN PHYSICS AND ADVANCED TECHNOLOGY ABROAD

Rolf Schaffranke, Dr. h. c.
Member A.I.A.A.

This paper was presented at The First International Symposium on Non-Conventional Energy Technology, Toronto, Ontario, Canada, Oct. 23-24, 1981. (Reprinted by permission of the author.)

"Far more harm is done to the progress of science by skepticism than by gullibility". (Dr. Robert Wood, Director R & D, McDonnel-Douglas Astronautics Div., Cal.) NASA - Langley Research Center in Hampton, VA is named after Samuel Pierpont Langley (1834-1906), an American astronomer, engineer and architect.

Langley worked out the aerodynamic principles for manned flight. In principal, his calculations were correct; but the structural materials he used for wings and engines were ,insufficient. In December of 1903, the *New York Times* published an editorial complaining about his foolish dream and the associated waste of government money. The editorial predicted that: "man would not fly for a thousand years".

Only 9 days after the editorial was published, the Wright brothers made their first successful powered flight at Kitty Hawk. (Dec. 17, 1903). But, again, as late as 1905, the *Scientific American* suggested the happening was a hoax - two years after the event which changed history. Let's reflect for a moment on the fact that only in a single lifetime, man has journeyed from Kitty Hawk to the surface of the moon!

The analogy to the problem of alternative energies and their development is, of course, obvious. We try to educate the preaching orthodoxies. But orthodox solutions are no longer enough. Our system of education can only give from

the past. The present must operate on inspiration and intuition, or the future will be lost. The past no longer has enough of the answers for arising crises for which there are no precedents. To keep pace with the requirements of the future, we must begin to teach not only what to learn, but how to learn, how to analyze, how to search for the truth. Only then will be able to recognize discrepancies between experiment and dogma and to cope with problems which appear to be just beyond the corner. History has shown again and again that no single individual can rise above the species without being persecuted. The reasons for that are:

Some of the most powerful forces in homo sapiens have always been

Greed, Pride, Ego, Fear and, above all, the Desire to Control Others,

.

A brand new German book titled *Energy in Abundance*, which is evidently creating a considerable impact in the European community, challenges the contemporary high

Return to Table of Contents **Next Page**

priests of science, the "Guardians of the Status Quo" and uncovers an almost incredible narrowmindedness and ignorance in science, politics and economics, "approaching the criminal" as the author puts it. The contemporary waste of genuine intellectual creativity is castigated as a cultural scandal approaching barbarism. The book stresses that a truly promising approach to the so-called energy crisis requires a fundamental and thorough re-evaluation of the theories, dogmas and axioms which form the basis of present day science and the foundation of our technology. As in the past, the formidable inertia of the establishment is not only based on inaccurate, incomplete and outdated information, but also on its reluctance to accept new ideas. The honest search for the truth first requires that we first demythologize generally accepted claims of so-called experts of the past. An excellent introduction to this problem is the article "Resistance by Scientists to Scientific Discovery" by Bernard Barber in *Science*, Vol. 134, pp. 596-602, of Sept. 1961, or the paper by Stephen C. Brush in *Science* of March, 1974, titled "Should the History of Science be Rated 'X'"?, culminating with a statement of Huxley:

> "Authorities", "disciples", and "schools" are the curse of science and do more to interfere with the work of the scientific spirit than all its enemies".

The former astronaut, Capt. Edgar D. Mitchell, one of our famous contemporaries, also stressed the need for an open mind!

> "History has shown time and again that important scientific discoveries generally happen only when someone steps outside the limits of his traditional discipline and looks at something from a fresh point of view. Then what should have been obvious all along comes into focus".

Those of us who are familiar with the pioneering efforts of Dr. Hans Nieper of Hanover will appreciate this statement by an ex-astronaut.

One of the most important cornerstones of today's scientific dogmas dates back to 1905, more than 3/4 of a century ago. Lest we forget, television and radar, jet-planes and cyclotrons, moonrockets and close-up photos of the planets of our solar system were nothing but wild fantasies of science fiction then.

The speed of light was assumed to be constant and the maximum possible speed in the universe; vacuum was to be a total void. In reality, the speed of light as measured in the Michelson-Morley experiments was not at all the same in all directions. The "ether-drift" still amounted to the respectable velocity of about five miles per second, and similar results were obtained by D. C. Miller in a series of experiments extending over twenty-five years, from 1902 to 1926.

Return to Table of Contents **Next Page**

"Even worse, the measurements showed such marked discrepancies with previous results as to occasion a distress call to the U. S. Coast & Geodetic Survey, whose surveyors repeatedly remeasured the length of the tube and found no error there," reported the *Popular Science Monthly* March 1934 issue. And it continued: "More recently, speed of light observations only emphasized the apparent erratic behavior of the light beam that the scientists were attempting to plot. On some days it seems to travel faster than others by as much as 12 miles a second. Its speed seems to vary with the season, and also in a mysterious shorter cycle lasting about 2 weeks. Finally, the scientists ended by taking an average of all the readings which has just been announced as 186,271 miles per second".

In his paper "A Critical Look At the Theory of Relativity", Library of Congress Cat. No. 77-670044, F. K. Preikschat compiled all known light velocity measurements during the past 300 years or so, from Olaf Roemer in 1676 to the Laser measurements conducted by the National Bureau of Standards (USA) in 1972.

Of the 27 experiments undertaken in this field, 18 of them after the turn of this century, it must be concluded that the velocity of light as measured within the reference system of our earth has changed as much as plus/minus 50 km/sec, during the past century. Preikschat plotted a curve of these deviations and suggests a possible relationship between sunspot activities and changes of the earth magnetic field during the time period in question.

The "universal constancy of light" appears, therefore, as somewhat shaky "empirical evidence" for our cornerstone in physics, especially since Einstein himself has gone on record as saying:

"If a single one of the conclusions drawn from it (relativity theory) proves to be wrong, it must be given up; to modify it without destroying the whole structure seems to be impossible".

Another modification concerns the definition for the term "vacuum" in physics, as documented by a paper in the *American Scientist*, March-April 1980, titled "Is The Vacuum Really Empty?" by Prof. Walter Greiner, University of Frankfurt, BRD, and Prof. Joseph H. Hamilton, Vanderbilt University, Nashville, Tenn.

The authors conclude that a neutral vacuum is by no means as "empty" as previously claimed in our textbooks, and suggests a new definition as follows:

"The vacuum is the lowest stable state that a region of space can have while being penetrated by certain fields".

Because of the tremendous time lag in our educational system, many research

Return to Table of Contents Next Page

projects and their ensuing experimental data have been withheld from public scrutiny. The scientific community tends to have a vested interest in preserving the system it created and of which it is a part. It responds to new situations through the coloration of this attachment. A case in point are the carefully conducted experiments of T. T. Brown with charged bodies in a high vacuum, as described in my booklet *Ether Technology* (1977). These experiments suggest the actual presence of certain fields in vacuum, whether we call them gravitational field, tachion-field, ether-field, neutrino or Fermi-sea, etc. is of secondary importance at this moment. Although Brown spent, reportedly, more than $200,000 of his own funds over several decades on such experiments, he was nevertheless unable to have the results published in the scientific media of America.

Things are even worse when it comes to experiments conducted abroad, which often tend to confirm disregarded experimental results on this continent, as we shall see shortly. To highlight the wide discrepancies between orthodox (and obsolete) dogmas and actual, physical realities pertaining to the true subatomic structures as we know them to be today, let us briefly review the structure of the matter:

A molecule is the smallest division of a substance. Further division would cause it to cease being a substance. The smallest of true molecules can be illustrated when we use the globe of the earth for our standard. If a single drop of water were magnified until it was as big as the earth, each molecule would be about the size of a TENNIS BALL.

On the next step down, an atom is the unit which makes up the nature of the molecule, consisting of the nucleus and the surrounding electrons to render the atom "stable". An atom of hydrogen contains one proton and one electron to balance or neutralize the proton. Matter then is divisible into electrons and protons. But - and here comes the rub: Between electrons and protons are spaces so vast, in comparison with the masses of each, that, if the proton in the carbon atom were the size of a golf ball hanging from the ceiling of the great hall at Pennsylvania Station in New York, its electrons would be represented by six small wasps winging in a little knot against the four walls of the gigantic structure of the building! In effect, one could claim there is little final solidity of substance to anything: The universe consists of "emptiness", charged with electrical energy! If we translate the above to the measurements and terminology of the physicist and "magnify" the atom mathematically, with all its distances and dimensions kept in proportion so that the orbit of the electron would have a diameter equal to that of the earth about the sun, approximately 184 million miles, the diameter of the electron itself would only be 2,000 miles, and the diameter of the nucleus, where

electron itself would only be 2,000 miles, and the diameter of the nucleus, where

Return to Table of Contents Next Page

mass and weight of the atom are truly concentrated, can be taken as 2 miles only. We thus obtain a picture of a central mass with a diameter of 2 miles (nucleus), another object with a diameter of 2,000 miles (the electron, in the case of the hydrogen atom) at a distance of 92 million miles away from it, orbiting the nucleus. Evidently, there is plenty of room inside this system. And "room" is not a vacuum, it is not nothingness, but space itself, spatial energy, a field which can be identified with the ether of the past - and of the future. Nobel prize winner, Max Planck, during a lecture in Florence, Italy, once made a truly remarkable statement which describes the problem facing the physicist today:

> "As a man who has devoted his whole life to the most clear-headed science, to the study of matter, I can tell you as the result of my research about the atoms this much:
>
> 'THERE IS NO MATTER AS SUCH!'
>
> All matter originates and exists only by virtue of a force which brings the particles of an atom to vibration and holds this most minute solar system of the atom together. ... We must assume behind this force the existence of a conscious and intelligent MIND. This mind is the matrix of all matter".

This cosmic matrix is needed if we want to explain "action at a distance", lines of force, stresses, a magnetic field and so on. When the concept of the ether was abandoned, it had to be replaced by the concept of "space" instead. In reality, we merely switched terminology. We used to say that "ether fills all Space". But "filling" is not exactly the descriptive word to use. Perhaps we should rather define it: "Ether is a condition of space in which electrical manifestations for the atomic construction of materials is possible". This primordial energy is "free" or in an uncondensed state. It exists in interstellar space but remains unrecognizable until it begins to coagulate or gets into a vortex pattern. It constitutes the formative field force of nature, an immense reservoir of latent energy.

The claim of our textbooks that the Michelson-Morley experiment "disproved" the existence of the ether is incorrect. It merely disproved the existence of a noticeable ether drift or drag. As an analogy, if somebody would postulate that the absence of wind disproves the existence of the atmosphere around our planet, the fallacy of this postulate would be immediately apparent to all.

"Michelson and Morley centered their attention on the Earth's orbital velocity (30 km per second). They had no knowledge of the existence of galaxies; of motions of galaxies in relation to each other; of the motion of our solar system in our galaxy..... Their negative results are explainable on the basis of pre-1900 classical mechanics, so provide no proof of the absence of ether or Louis de Broglie's

Return to Table of Contents Next Page

'subquantic medium'. Thus, the limited information available to Michelson and Einstein is emphasized by recent findings, particularly in astrophysics", writes Dr. H. C. Dudley in the *Bulletin of the Atomic Scientists*, January, 1975, under the title "Michelson's Hunch Was Right". And Dr. Dudley continues: "In fact, 1929 saw Michelson still attempting to experimentally demonstrate the ether, which his intuition and reasoning told him ought to be present".

"Today most persons are largely unaware that the ether concept began to be seriously reexamined by two of physics most notable theoreticians, Paul Dirac in 1951 and de Broglie in 1959, both Nobel laureates. The ether is now being called the "neutrino sea" by astrophysicists, and has been characterized as an energy-rich particulate, subquantic medium. A rather voluminous literature on the subject is accumulating as indicated by a recent review, *The Cosmic Neutrino*, with 665 references covering only the period 1965-1972.....It appears that an open-minded reexamination of this area of physics is long overdue in order to open up new avenues of approach to this pressing problem".

Michelson, Dirac, de Broglie were not the only Nobel prize winners in favor of a reexamination of the ether question. Others were Stark, Arrhenius, A. H. Compton, Lenard, H. Yukawa, and Frederick Soddy, the British scientist who, during the convention of Nobel laureates in Lindau, 1954, described the current dogmas in physics as "an orgy of amateur physics" and "arrogant swindle" - with particular emphasis on the theory of relativity. ("The Wider Aspects of the Discovery of Atomic Disintegration", New World Publications, St. Stephens House, Westminster S.W.I.)

It remained largely unknown, even among physicists, that Einstein himself had serious doubts. In 1949, he wrote to his old friend, Maurice Solovine, who congratulated him on his 70th birthday:

> "Now you think that I am looking back at my life's work with calm satisfaction. But, on closer look, it is quite different. There is not a single concept of which I am convinced that it will stand firm and I am not sure if I was on the right track after all".

And one of my Canadian friends who I believe is present here today stated quite correctly in a letter to me:

> "The myths around Einstein are really not of his making as he himself often questioned his own conclusions and I felt he was quite aware of his own limitations which others were covering up. The physicists protect their members much the same way that the medical profession protects its own."

The purpose of these remarks is not to spark another controversy about the merits of the theories of relativity. Rather, they want to show that so-called

merits of the theories of relativity. Rather, they want to show that so-called

Return to Table of Contents Next Page

"scientific evidence" is a rather elastic term and that "verification" is always a relative affair. Or, as K. R. Popper so aptly put it:

> "Only in our subjective experience of conviction, in our subjective faith, can we be 'absolutely certain'".

This symposium presents an excellent overview of research and experiments reported from English speaking countries, or experiments published in the English language, as for instance from Japan. However, as Dr. Tenhaeff from Holland has formulated the problem,

> "It is important to pay attention to publications of colleagues in other countries. In the Netherlands and Germany, every academically educated man or woman knows at least three foreign languages. English and American authors only pay attention to material in English. In my opinion, this leads to an 'impoverishment' which puts a drag in science. Some seem very chauvinistic and seem to believe that only the researches done in their country are important. I regret this. Science is international, and international cooperation is of the greatest importance in science".

In presenting some brief reports from abroad, I shall attempt to bring corroborative evidence in support of alternative technology developments discussed during our meeting here in Toronto. Let me start with the most sensitive and secretive society, with Russia.

In his German original of the paper "Some Remarks on the Shielding Theory of Gravity", which was published in the Hanover Proceedings in more detail than the English abstract, Dr. Hans Nieper mentioned the Berlin engineer Levetzow, who was one of the first to postulate a combination pressure and shielding theory for the phenomena of gravity. Levetzow was soon overshadowed by the rising star of Albert Einstein, but one of his followers, Horst Pinkell, went to Russia in 1928 as an exchange student - and never returned. Together with Russian scientists, he was asked to prove the actual existence of the cosmic radiations postulated by Levetzow, now designated as neutrino sea or "tachion field". The work was done in Sterlitamak, South of the Ural mountains, and in 1938, sporadic reports reached the West about the discovery of extremely short corpuscular waves by Pinkell and Gorjew. These were the long sought "Hemmstrahlen" or drag waves associated with gravity. Rumors have it that a metal alloy was soon developed which acted as a drag wave polarisor and, in 1947, agents reported experimental Russian aircraft using this discovery. In 1951, a former German Junkers aircraft engineer reported about his activity pertaining to a super-secret project code named COW-7 in Siberia, a disk-shaped craft which could rise vertically and which belonged to the

Siberia, a disk-shaped craft which could rise vertically and which belonged to the

Return to Table of Contents Next Page

secret weapons then developed by the Soviets. Whether it was related to the Canadian AVRO project or something entirely different remained unknown, only the Levetzow gravity theory was assumed in connection with the activity in question.

Japan: My esteemed friend, Prof. Seike, who kept me informed about the research conducted by him and his co-workers, surprised me once with a significant statement, which I feel is important to repeat for the benefit of frustrated researchers on this side of the Pacific: "In the early stage of my studies, physicists could not understand what I was doing, while actors and actresses did so by intuition". It was the private support of about 800 individual artists, etc., in Japan which allowed Seike to work, experiment and publish his findings, and not the support of the Japanese equivalent of a National Science Foundation or a similar bureaucratic institution in that country. Again and again, I was surprised how quickly and eagerly American experiments, as for instance the almost forgotten "Ionocraft" of the late Major de Seversky, were duplicated and explored even in Japanese secondary schools. Admiral Rickover has more than once complained about our intellectual complacency: "As a nation, we seem addicted to 'spectatoritis'. We sit in the bleachers and let the game of life unfold before us".

The results are known: The Japanese have achieved top position in science and technology, and not only with tachion beams melting stones, producing "biased" water with a freezing point of minus 4 degrees Celsius, and a G-power generator obtaining 400 V DC output from a 10 V input driving source. I wish to take this opportunity to thank Prof. Seike for sharing his work with us in this country, and wish him the best of success for the future.

France: The work of SEPED was explained by M. René Louis Valée and some French publications in the area of gravity-research have been translated by the NASA translation service, as for instance the theory of the electromagnetic Magnus-Effect (of Marcel Pagés).

Specific mention must be made of the Raymond Kromrey G-field generator, a French-German-Swiss development which appears very closely related to the American "N" machine principle, the "Sunburst" machine and the "Permanent Magnet-Motor" Patent of Howard Johnson. Utilizing either permanent or electromagnetic modules, the generator output exceeds the input by far. One prototype delivers approximately 700 watts at speeds varying between 600 and 1200 RPM. Models with an output of 100 to 160 kw are presently in the planning stage. Several European patents have been granted against heavy opposition, especially from French industrial circles. The development was about 40 years in the making and the inventor stresses the need for a reinvestigation of electromagnetic and gravitic forces, as well as a reexamination of many cemented dogmas in present-day physics.

[Return to Table of Contents](#) [Next Page](#)

Germany: A system of rotating electromagnets and magnetic "stator rings" of the German "Kunel" Generator complement the general trend of the American and French generators mentioned before. The first prototype was reported to have been tested in April, 1980. Here, again, very heavy opposition from the German orthodox science establishment. Of special interest is a comment by Nobel laureate Werner Heisenberg, reported to have been made vis-a-vis the inventor:

> "I think it is possible to utilize magnetism as an energy-source. But we science idiots cannot do that; this has to come from the outside".

More details about French and German developments have been published in the new book already mentioned, *Energy in Abundance* by Hilscher and, hopefully, an English version of this important work will be available by next year. Generators which do interact with surrounding energy fields have been designated as "open systems", in contrast to our present "closed system" technology of gasoline and diesel engines, steam turbines, nuclear power plants and so forth. The theoretical basis for all "open systems" is the realization that there simply is no such thing as "empty space". In reality, space is filled with an extremely energy rich, subatomic and subquantic continuum. In short, a "pre-physical state of matter", which can be tapped, as for instance by the spinning of magnetic systems which extract momentum via a vortex-formation of the universal "tachion field".

Austria: This small heartland of Central Europe is proud of her native pioneers in science, among them Dr. Wilhelm Reich, Viktor Schauberger and Karl Schappeller. But after Dr. Reich died in an American prison in 1957 and Victor Schauberger died only five days after his return from the USA (in 1958), where he received an incredibly unfair treatment from certain industrialists, there is little enthusiasm among Austrians to touch base with correspondents on this continent. Viktor Schauberger's son, Walter, refuses, as a matter of principle, to communicate with Americans, no matter in what language. To illustrate the type of "contract" Viktor Schauberger was forced to sign, it stated:

> that all of his patents would become the property of the "consortium",
> that any future inventions or developments would also become the property of the "consortium",
> that he would refrain from discussing any of it with third parties,
> that he would refrain from publishing,
> that all plans and models would remain with the "consortium" after his departure from America.

There is a favorite saying in that small country which is much to the point:

> "After the Greek philosopher Pythagoras had discovered his famous

Return to Table of Contents **Next Page**

> theorem, he sacrificed a whole hecatomb of oxen as a thanksgiving to the Gods. Ever since, all the oxen in the world are running scared whenever a new truth has been discovered".

Knowledge of the ideas of Schauberger and Schappeller appears to be essential for an understanding of our changing picture of the physical world. As an example, the former forest ranger Viktor Schauberger had watched numerous times some trout standing, apparently motionless, in the strong currents of Alpine mountain streams. This and many similar observations of nature brought him to the gradual development of his "implosion-theory" and associated hardware (see Jensen paper elsewhere). His son is continuing the work in the "Pythagoras-Kepler" School in Bad Ischl. Another prolific researcher is the Viennese engineer Franz Seidl, known for his studies of the use of magnetic field effects as "trigger energy" for voltage and power multipliers.

Holland: A small country with strongly developed intellectual independence appears to be Holland, where Prof. J.M.J. Kooy developed his "Space Dynamics". His hypothesis of gravitational action is based on the realization that all celestial bodies can be conceived as practically transparent in relation to the size of the elementary particles and their mutual distances in the structure of matter. Gravitons or tachions, coming from all directions of deep space, can pass through a celestial body like water passes through a fishnet, and only a minute fraction of the cosmic gravitons or tachions will be intercepted. Study of the effects of the tachion field or space continuum of the fabric of material substances, magnets and crystal lattices can lead to development of converters and novel production facilities for readily usable, conventional E/M energy. When the American inventor Edwin V. Gray was blocked in his efforts to develop his "Pulsed Capacitor Discharge Electric Engine" for which he had received U. S. Patent #3,890,548, he found open ears and open minds in Holland.

The fact that Gray was named "Inventor of the Year" from the Department of Patent Rights in Los Angeles, California, where Dr. Chalfin of Cal Tech confirmed that:

> There does not exist an even distantly similar engine to this one in the world. Conventional electric engines use up power. In this system energy is used up for only a minute part of a millisecond. It operates without heat loss and there is no energy loss whatsoever with this system",

had more meaning to the people of PHILIPS and others in Holland than to the energy establishment in his native America.

England: There is perhaps no more controversial inventor at this time than

Return to Table of Contents Next Page

John R. R. Searl and his Levity Disc, powered by the Searl Effect generator. It is claimed that model craft have been demonstrated with flight characteristics showing anti-gravitational and inertia-free properties. Demonstrations have been photographed and videotaped. Searl calls his generator a "Gyro-Flywheel High Energy Density Mechanical Magnetic Device" and claims that the magnets used are not the common type, ordinary magnets. The Australian engineer Athol Park of Melbourne, Australia, who visited Searl a few years ago described it this way:

> "From a briefcase, Mr. Searl takes a bar magnet and two steel rollers. He places the rollers at either end of the magnet. They appear to be attracted to the poles - but, when they are pushed gently around the corners of the magnet, they chase each other round and round.... "

The engineer quotes Searl:

> "The crystals in the magnet are changed by putting it in a magnetic flux oven and by frequency control. The result is motion of a magnetic field - a completely new source of power. Units (modules) based on this principle are what power my levity unit - the motor and generator built as one, fuelless unit".

In one of his numerous newsletters he states further:

> "The power plant is a self-contained, onboard closed system of conversion elements with energy input from a latent storage source".

Because Searl has never divulged all details and his explanations are generally of a non-technical, "unscientific" nature, many investigators have chosen to dismiss him as a swindler and imposter. In sharp contrast to this is the opinion of a well-experienced American engineer who reported after a visit with Searl:

> "I found it refreshing to note the keen sense of moral responsibility which he feels for the use to which his discovery is put... The Searls live in modest circumstances. Luxuries are few. They do not own a car. Mr. Searl bicycles several miles daily to his place of work in Maidenhead. There he is an electrical technician and training supervisor in a bearing factory".

But perhaps most significant was the following observation of the American visitor about Searl:

> "We were also interested to hear him say that many of his ideas came to him while he slept. He would go to sleep with questions, and awake with answers... and refreshed. He seemed to have the

and awake with answers... and refreshed. He seemed to have the

Return to Table of Contents Next Page

ability to restore vital powers more quickly than most people".

And the American concluded his report with the statement:

"The impression we gained of Mr. Searl was one of a very sincere and generous person, a dedicated and tireless worker with perfect confidence in the outcome of his efforts, a man of high principle with a keen sense of loyalty to those who are helping him, and of responsibility for the future welfare of our planet and its people".

In view of the very contradictory nature of comments and impressions by those who have met Searl, it might be wise to reserve final judgment on the Searl-Levity-Disc and its inventor at this time.

New Zealand: Some of Searl's keenest supporters and observers of his work are in New Zealand and Australia. And one of the sharpest young physicists in that country (new Zealand), unhampered by calcified ideology, developed the mathematical foundation for a theoretical anti-gravity effect, using the hydrodynamic analogy of the ether. He uses the equivalent of the hydrodynamic Reynolds number, above a certain value of which the laminar flow past a solid surface breaks down and becomes turbulent due to shear rupture of the viscous cohesion of a fluid, together with his deduction that anti-gravity could be obtained by creating a "vacuum: in the ether in such a way as to correspond to the production of turbulence in a magnetic field. Turbulence in a fluid occurs when Reynolds number RE = 1, when the inertial shearing force equals the viscous cohesion force in the fluid in the vicinity of an approximately spherical body immersed in the fluid, resulting in separation of the boundary layer and formation of a wake, i. e. vacuum or free surface around the body. He calculated the threshhold for turbulence in the ether, = a vacuum = an anti-gravity effect, using the refined value of ether kinematic viscosity which he obtained.

His theory would confirm the observations of very high voltage produced in the case of the Searl Levity Disc, and the very high voltage needed in the vacuum experiments with flying disc-shaped bodies of T. T. Brown, the "ionocraft" observations of Major de Seversky, the "Electro-Field Rockets of Prof. Dudley, the observations of Northrop Corp. with "Electro-Aerodynamics in Supersonic Flow" and similar American documentation and patents.

Since the New Zealander is now in the process of attempting to publish his theory in a reputable British magazine, I am not at liberty to divulge his address prematurely. Interest in New Zealand and Australia is running high, and possible breakthroughs in energy technology should not come totally unexpected in these two countries with strong intellectual ties to England.

Return to Table of Contents **Next Page**

Conclusion

There is now overwhelming evidence for the actual existence of a very high density, energy rich space continuum formerly called "ether". This space energy can be concentrated, gathered, focused, magnified and compacted by magnets or magnetic materials, which appear as the new core materials for converters of all kinds, utilizing the cosmic energy for new technology applications.

Crystals are energy-sensing and channeling devices; they can serve as transducers, as for instance in the Moray-Device, or the "rock electricity" of T. T. Brown.

Combinations of crystals and magnetic materials appear to be the mainstay for the development of "hyper-space" - converters and generators of power - utilizing free, cosmic energy in our future.

Unbiased, totally honest and impartial reexamination and reevaluation of all scientific theorems and dogmas, as well as unhampered opportunities for the pioneers of the new technology on the American and European continent appear to be the prerequisite of success.

Those who accept that anything of the nature of ideas or ideology is permanent, use all their strength to hold on to it, and to condemn all who do not agree. The next stage of this spiritual illness of the mind is to build a monument to what they perceive is Truth, and then to build a monument to their own permanence in the world. This, they do by seeking fame or fortune, and authority over others. This is the contemporary, planetary psychology situation, and thus are we losing the gift of perspective and horizon and are no longer able to discern what is important. Skeptics are on record as saying:

> "We are not running out of natural resources or intellectual talent, we are running out of the freedom of innovation that made the countries on the North American continent the most advanced nations on earth".

The future will show whether this freedom, which includes the freedom and the duty of taking risks, can be restored to the degree our Founding Fathers have been striving for. Only then will we know whether the late Wernher von Braun was not too overly optimistic when he stated:

> "The cosmic age will bring a dawn of knowledge not yet envisioned. It will dwarf all our present knowledge and ideas and, through its vastness, may even bring men closer together on their own planet".

Return to Table of Contents

GRAVITATIONAL AND ELECTROMAGNETIC ENERGY FROM CURVED SPACE-TIME: THE UNIVERSAL GRAVITATIONAL AND ELECTROMAGNETIC ENERGY-MOMENTA OF ANTISYMMETRIZED GENERAL RELATIVITY (AGR).

by

Petar K. Anastasovski (1), T. E. Bearden (2), C. Ciubotariu (3), W. T. Coffey (4), L. B. Crowell (5), G. J. Evans (6), M. W. Evans (7, S), R. Flower (9), A. Labounsky (10), B. Lehnert (1 1), M. Mészáros (12), P. R. Molnár (12), J. K. Moscicki (13), S. Roy (14), J.-P. Vigier (15)

Institute for Advanced Study, Alpha Foundation, Institute of Physics, 11 Rutafa Street, Building H, Budapest H- 1165, Hungary

and

D. Clements, Department of Theoretical Physics and New College, Oxford.

Also at:

1) Faculty of Technology and Metallurgy, Department of Physics, University of Skopje, Republic of Macedonia.

2) CEO, CTEC Inc., 23 11 Big Cove Road, Huntsville, AL 35801-l 35 1.

3) Institute for Information Technology, Stuttgart University, Stuttgart, Germany.

4) Department of Microelectronics and Electrical Engineering, Trinity College, Dublin 2, Ireland.

5) Department of Physics and Astronomy, University of New Mexico, Albuquerque, New Mexico.

6) Ceredigion County Council, Aberaeron, Wales, Great Britain.

7) former Edward Davies Chemical Laboratories, University College of Wales, Aberystwyth SY23 1NE, Wales, Great Britain.

8) sometime JRF, Wolfson College, Oxford, Great Britain.

9) CEO, Applied Science Associates, and Temple University, Philadelphia, Pennsylvania, USA.

10) The Boeing Company, Huntington Beach, California.

11) Alfven Laboratory, Royal Institute of Technology, Stockholm, S-100 44, Sweden.

12) Alpha Foundation, Institute of Physics, 11 Rutafa Street, Building H, Budapest, H-l 165, Hungary.

13) Smoluchowski Institute of Physics, Jagiellonian University, ul Reymonta 4, Krakow, Poland.

14) Indian Statistical Institute, Calcutta, India.

15) Labo de Gravitation et Cosmologie Relativistes, Université Pierre et Marie Curie, Tour 22-12, 4 ème e/age, 4 Place Jussieu, 7525 Paris cedex 05, France.

KEYWORDS: antisymmetrized general relativity; gravitational and electromagnetic energy from curved space-time; universal gravitational and electromagnetic energy-momentum; higher symmetry electrodynamics.

ABSTRACT

Using general relativity extended by Clifford algebra (antisymmetrised general relativity (agr)) expressions are derived for the gravitational and electromagnetic energy inherent in curved space-time. By considering the interaction of one electron with the rest of the universe it is argued that the electromagnetic energy inherent in curved space-time ("universal electromagnetic energy-momentum") can be extracted by the electron and used to produce current in a circuit. An example of this principle at work is the recently patented motionless electromagnetic generator.

1. INTRODUCTION

In general relativity, [1], the symmetric canonical energy momentum tensor $T_{\mu\nu}$ is expressed in terms of Riemann geometry through Einstein's field equation:

$$G_{\mu\nu} := R_{\mu\nu} - \frac{1}{2} R g_{\mu\nu} \qquad k T_{\mu\nu} \quad - (1)$$

where $G_{\mu\nu}$ is the Einstein field tensor, k is the gravitational constant, $R_{\mu\nu}$ is the Ricci tensor, R is the scalar curvature and $g_{\mu\nu}$ *is* the metric *tensor*. Eqn. (1) is a field equation in ten unknowns, the elements of $G_{\mu\nu}$, and the equation shows that in the presence of matter, represented by the tensor $T_{\mu\nu}$, space-time becomes curved. The gravitational field is the Einstein tensor $G_{\mu\nu}$, and equation (1) shows that the field is the canonical energy-momentum of matter within a factor k. Therefore in the absence of matter ("the vacuum") the gravitational field vanishes and space-time is Euclidean - the Christoffel symbols vanish and

with them the Riemann and Ricci tensor elements and the scalar curvature R. The gravitational field must originate in something, and its origin is $T_{\mu\nu}$. Equation (1) is an energy-momentum balance equation between field and matter. It follows that space-time in the universe is always Riemannian, and never Euclidean, because in an Euclidean space-time the universe would be devoid of all matter.

Equation (1) could equally well be interpreted as indicating that matter fields are the result of curved space-time. In this view there are no point particles, and the symbol m for the mass of the electron is interpreted as a fundamental magnitude in physics. The electron is therefore represented by a matter field in which there are no singularities. The gravitational field mediates the gravitational interaction between matter fields, and there is always a coupling between matter field and gravitational field [2]. The gravitational field originates in one matter field and influences another matter field. The gravitational attraction between two electrons is explained in this way. The interaction between one electron and the rest of the universe is considered similarly, the electron is subjected to the net gravitational field generated by the rest of the universe, a field that is represented by curved space-time through the Einstein tensor $G_{\mu\nu}$ generated by the rest of the universe. We refer to this as " universal gravitational energy-momentum". The energy inherent in the gravitational field $G_{\mu\nu}$ can be expressed as:

$$En_{\mu\nu}^{(s)} = \frac{1}{k} G_{\mu\nu} \qquad -(2)$$

even in regions of the universe that appear to be devoid of observable matter. These regions must be distinguished carefully from the vacuum, which in general relativity is flat space-time. In general relativity, the electron can never be entirely free of the gravitational influence of the rest of the universe and can never be free of the influence of universal gravitational energy-momentum..

By using Clifford algebra in general relativity, in particular the space-time basis defined by the Pauli matrices [1], Sachs [2] has developed a unified field theory of gravitation and electromagnetism using the principles of general relativity. We refer to this classical unified theory of fields as antisymmetrised general relativity (agr). In agr the electromagnetic field is also space-time curvature, and the electromagnetic interaction between two electrons is mediated by space-time curvature in Riemann geometry. The electromagnetic interaction between one electron and the rest of the universe becomes conceptually the same as the gravitational interaction between one electron and the rest of the universe. It follows that the electron is never free of the electromagnetic influence of the rest of the universe, the "universal electromagnetic energy-momentum". The latter produces electromagnetic energy momentum in the electron, producing charge-current density. The latter can be used to generate an observable current in a circuit. The source of this current is the canonical electromagnetic energy-momentum in the rest of the universe, and this source influences the electron through the electromagnetic field in agr. This process can be seen to work in devices such as the recently patented motionless electromagnetic generator [3]. The latter conserves energy-momentum and charge-current density in the universe, defined as the electron and the rest. On the simplest conceptual level, the motionless electromagnetic generator can be explained as a device that transforms the universal electromagnetic energy-momentum into a measurable current in a circuit.

2 EXTRACTION OF UNIVERSAL ELECTROMAGNETIC ENERGY-MOMENTUM BY ONE ELECTRON.

Consider one electron interacting with the universal gravitational and electromagnetic energy-momenta in antisymmetrized general relativity [2, 4-8]. These energy-momenta are represented by the four vector T_ρ in the Clifford algebra defined by

Sachs [2]. From T_ρ form the symmetric and anti-symmetric tensors:

$$T_{\rho\gamma}^{(S)} = T_\rho q_\gamma^* + q_\gamma T_\rho^* \quad - (3)$$

$$T_{\rho\gamma}^{(A)} = T_\rho q_\gamma^* - q_\gamma T_\rho^* \quad - (4)$$

where q_γ is the metric four vector of agr [2 4-8] and where q_γ^* is its quaternion conjugate, obtained from q_γ by reversing the sign of the space indices. Therefore in covariant-contravariant notation $q_\gamma^* = q^\gamma$.

In agr the gravitation field due to T_ρ is the symmetric (Einstein) tensor:

$$G_{\rho\gamma}^{(S)} = k T_{\rho\gamma}^{(S)} \quad - (5)$$

and the electromagnetic field due to T_ρ is the anti-symmetric tensor:

$$G_{\rho\gamma}^{(A)} = Q k T_{\rho\gamma}^{(A)} \quad - (6)$$

where Q is the Sachs constant with the units of magnetic flux (weber) [4-8]. The units of Q are therefore expressible as multiples of $\hbar / e$ (the elementary fluxon. where $\hbar$ is the Dirac constant and e the charge on the proton (the negative of the charge on the electron)).

The charge-current density produced in one electron by the universal electromagnetic energy-momentum is:

$$J_\gamma = D^\rho G^{(A)}_{\rho\gamma} \quad -(7a)$$

$$= Q\hbar D^\rho \left(T_\rho q_\gamma^* - q_\gamma T_\rho^* \right) \quad -(7b)$$

where D^ρ denotes the covariant derivative of Riemann geometry [2]. Equation (7a) is the inhomogeneous field equation of electromagnetism in agr. The accompanying homogeneous field equation is the Jacobi identity [2]:

$$D_\rho \tilde{G}^{\rho\gamma(A)} := 0$$

$$:= D_\lambda G^{\rho\gamma(A)} + D_\gamma G^{\lambda\rho(A)} \quad D G^{\gamma\lambda(A)} \quad -(8)$$

where $\tilde{G}^{\rho\gamma(A)}$ is the dual of $G^{(A)}_{\rho\gamma}$. Eqns. (7) and (8) are not Maxwell Heaviside field equations, they are equations of agr in which space-time is always curved and in which the electromagnetic field, through eqn. (6) is a manifestation of curved space-time. Under well-defined conditions [4-8] equations (7) and (8) reduce to those of O(3) electrodynamics [2, 4-8], which is a Yang-Mills gauge field theory of electrodynamics with internal gauge group symmetry O(3). It follows that O(3) electrodynamics is also a theory of general relativity. Maxwell Heaviside field theory is a Yang Mills gauge field theory with internal gauge group symmetry U(1) [1] and Maxwell Heaviside theory is a theory of special relativity (Euclidean space-time). The O(3) group has a higher symmetry content (e.g. more (three) group structure constants) than the U(1) group (one), and so O(3) electrodynamics and agr, from which it can be derived are referred generically as theories of "higher symmetry electrodynamics". It follows that there is no universal electromagnetic energy-momentum in

Maxwell Heaviside field theory, because space-time is flat.

The charge current density of the electron on the left hand side of equation (7) is obtained from the universal electromagnetic energy-momentum on the right hand side. Eqn. (7) describes a transfer of electromagnetic energy-momentum to the electron from the rest of the universe, a transfer which takes place in curved space-time. In this process the total energy-momentum and charge-current density in the universe is conserved and Noether's Theorem [1] therefore applies. The universal gravitational and electromagnetic energy-momenta are transferred to the electron by the field tensors $G^{(S)}_{\rho\gamma}$ and $G^{(A)}_{\rho\gamma}$ respectively, defined in agr by [2]:

$$G^{(S)}_{\rho\gamma} = \frac{1}{4}\left(K_{\rho\lambda} q^{\lambda} q^{*}_{\gamma} - q_{\gamma} q^{\lambda *} K_{\rho\lambda} + q^{\lambda} K^{+}_{\rho\lambda} q^{*}_{\gamma} - q_{\gamma} K^{+}_{\rho\lambda} q^{\lambda *}\right) + \frac{1}{8}\left(q_{\rho} q^{*}_{\gamma} + q_{\gamma} q^{*}_{\rho}\right) R \qquad -(9)$$

$$G^{(A)}_{\rho\gamma} = Q\left(\frac{1}{4}\left(K_{\rho\lambda} q^{\lambda} q^{*}_{\gamma} + q_{\gamma} q^{\lambda *} K_{\rho\lambda} + q^{\lambda} K^{+}_{\rho\lambda} q^{*}_{\gamma} + q_{\gamma} K^{+}_{\rho\lambda} q^{\lambda *}\right) + \frac{1}{8}\left(q_{\rho} q^{*}_{\gamma} - q_{\gamma} q^{*}_{\rho}\right) R\right) \qquad -(10)$$

where $K_{\rho\lambda}$ is the spin curvature tensor defined by the four curl of spin affine connections [2] which can be constructed from the Christoffel symbols of Riemann geometry.

The gravitational energy momentum in the field tensor $G^{(S)}_{\rho\gamma}$ is defined by:

$$En^{(S)}_{\rho\gamma} = \frac{1}{k} G^{(S)}_{\rho\gamma} \qquad -(11)$$

and the electromagnetic energy momentum in the tensor $G^{(A)}_{\rho\gamma}$ is defined by:

$$En^{(A)}_{\rho\gamma} = \frac{1}{Qk} G^{(A)}_{\rho\gamma} \quad -(12)$$

Fromeqns. (7) and(12) it is seen that the electron is always influenced by the universal electromagnetic energy-momentum, which produces in the electron the charge-current density:

$$J_\gamma = Qk D^\rho En^{(A)}_{\rho\gamma} . \quad -(13)$$

The electron continues indefinitely to receive universal electromagnetic energy momentum without violation of Noether's Theorem. From eqn. (13) the current density (for example in a circuit) produced by the electron is:

$$J_i = Qk D^\rho En^{(A)}_{\rho i} \quad -(14)$$

where i = 1, 2, 3 denotes space indices.

So in a device such as the motionless electromagnetic generator [3] , the current is produced by $En^{(A)}_{\rho i}$, which is curvature of space-time through eqns. (12) and (10). The transfer of curvature to current in a circuit continues indefinitely without violation of the laws of conservation of energy-momentum and charge-current density. This is observed experimentally in the MEG {3}, in which a current continues to be measurable when there is no apparent electromotive force, i.e. when the battery used to start it up is switched off a current continues to be observable.

REFERENCES

[1] L. H. Ryder, Quantum Field Theory, (Cambridge University Pres, 2nd ed., 1987, 1996).

{2} M. Sachs in M. W. Evans (ed.), "Modern Non-linear Optics" a special topical issue of Advances in Chemical Physics, (Wiley Inter-science, New York, 2001, 2nd ed.), vol 119(1).

{3} T. E. Bearden in ref. (2), vol. 119(2) and U.S. Patent no. 4 [illegible] www.cheniere.org.

{4} M. W. Evans, J.-P. Vigier, S. Roy and S. Jeffers, The Enigmatic Photon (Kluwer, Dordrecht, 1994 to 2002, hardback and paperback) in five volumes. www.aias.us.

{5} M. W. Evans and L. B. Crowell. "Classical and Quantum Electrodynamics and the $B^{(3)}$ Field" (World Scientific, Singapore, 2001). ~~www.aias.us~~

{6} T. W. Barrett, L. B. Crowell, M. W. Evans, D. Reed, B. Lehnert, and other authors, reviews on higher symmetry electrodynamics in ref. (2), vols. 119(1), 119(2) and 119(3). www.aias.us

{7} D. Clements and M. W. Evans, Phys.Lett. A to be submitted, (a perturbation solution of agr for the $B^{(3)}$ field). www.aias.us

{8} M. W. Evans et al., an AIAS paper on the derivation of the inverse Faraday effect from agr, Found.. Phys. Lett., in press, 2003. www.aias.us

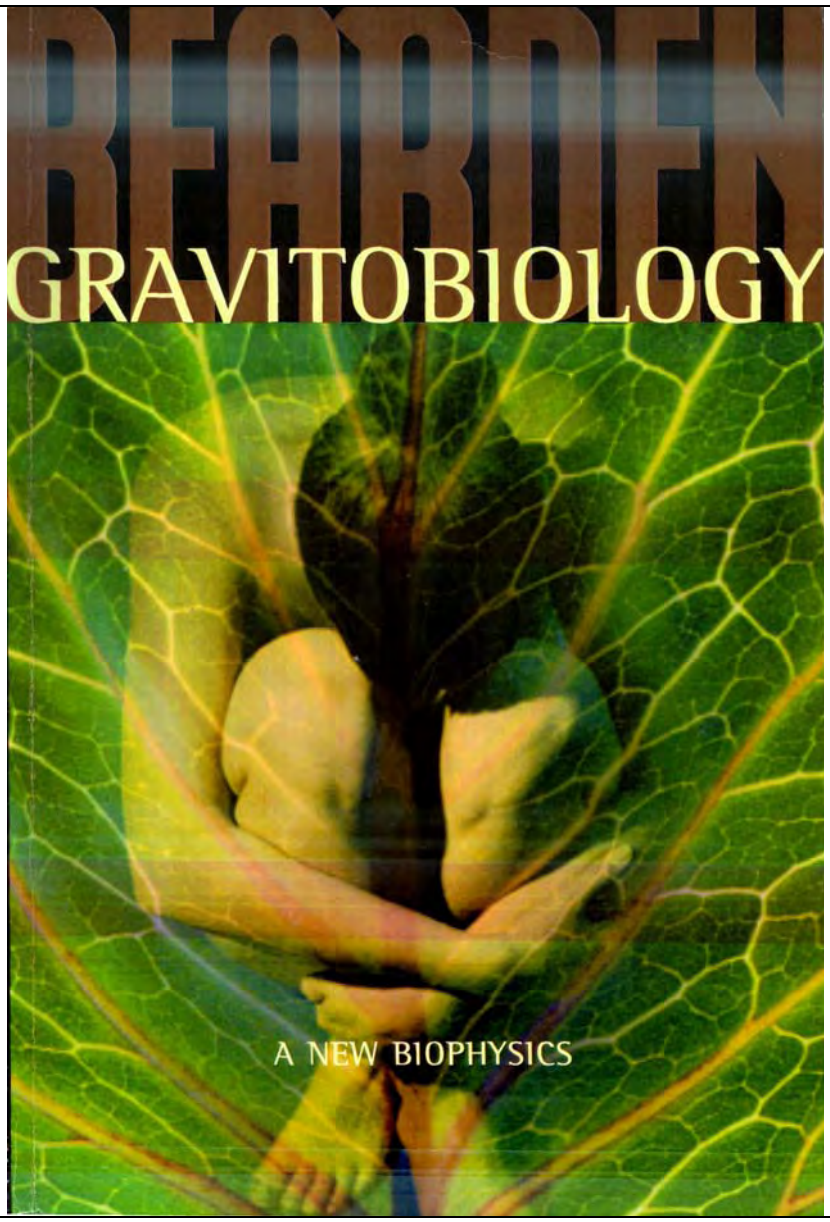

Sweating done by red_gonzo.

Note: sometimes formatting of the text may be a little fuzzy. It's all because the OCR process didn't go as smoothly as I expected. Also there may be some errors inside text so be vigilant. In any case share this book, send emails to people about knowledge contained in it. This book should especially be interesting to any person in medical community as it provides a direct alternative to tablet based medicine of today.

TABLE OF CONTENTS

Title **Page**

List of Figures....iii
List of Tables....iv
Introduction....1
Woodpeckers: A Soviet Bicentennial Present to the U.S....15
Misidentification as an OTH Radar....15
Immediate Weather Engineering Over North America....15
Given a Dose of Their Own Medicine....16
Launch-Phase Antibomber and Antimissile Weapons....16
How This Paper Came About....16
Start With These References....17
Technical Basis for Soviet EM Biological Warfare....17
Biological Implications....18
Internal and External EM Energy....18
Vacuum Engineering and Activation....20
The Nuclear Charge Spreads....20
Activation of Photons....20
Western Physicists Missed It....21
Chaos: Hidden Order Underlying Randomness....21
Special Implications for Quantum Mechanics....22
It Was Already Implicit Within the Theory....22
The Case of Opposite Charges....23
Whittaker Rediscovered Tesla's Standing Columnar Wave....24
Soviet Weaponization....25
Detection and the Aharonov-Bohm Effect....25
Distant Heating or Cooling: Hot or Cold Explosions....25
Artificial Highs and Lows to Steer the Jet Streams....26
Soviet/German Discovery of TR Radar Waves....26
Targeting U.S. Embassy Personnel in Moscow....27
A Reinterpretation of the Johns Hopkins Investigation....27
Advanced Photobiology Aspects....29
Inducing Diseases in U.S. Embassy Personnel....31
Pieces of the Vacuum Medium....32
The Quantum Potential....33
Detection of Scalar EM in Woodpecker Signals....36
Whittaker Waves, Aharonov-Bohm Effect, and Hidden Variables....37
More on Kaznacheyev and Priore....37
Biological Warfare Implications....38
Work of Beck, Hunt, and Lisitsyn....39
Explanation of EM Biological Trigger Windows....41
Relation to Chaos Theory....43
More on Internalized Energy....44
Mechanisms For Evolution, Gaia, and Morphogenetic Field....45
The Unsuspected Deadly Nature of Internal EM Pollution....48
How the Drug Culture Was Really Created....50
Ubiquity of Internal EM Energy....53
A Very Different Physical Reality....54
Solving the Quartz vs. Glass Transmission Problem....54
Detection is Actually Binary....58
The Problem is Our Rigid Mindset....59
The Soviet Electromagnetic BW Threat Is Real....60

LIST OF FIGURES

Figure	Title	Page
1	Two kinds of EM energy: stress and translation	3
2	The photon as a single oscillation of a minimal carrier wave	3
3	Coupled photon/antiphoton pair (simplest graviton)	4
4	The potential is composed of gravitons, whose structures consist of bound photons and antiphotons	4
5	THE Whittaker standing potential wave	5
6	Infolded EM structure of the Whittaker beam	6
7	Destructive and constructive interference	6
8	Nonlinear materials produce harmonics in positive time	7
9	Time reversal of a fundamental plus harmonics can produce a stronger fundamental	8
10	Ordinary mirror reflection vs. phase conjugate mirror reflection	8
11	Pumped phase conjugate mirror (PPCM)	9
12	Potential persistence vs. gradient discharge	28
13	The Kaznacheyev cytopathogenic (CPG) effect	30
14	The quantum potential EMI "fireflies" effect	34
15	Mechanism for forming a quantum potential	35
16	Strategic EM BW implications of world-wide targeting transmitters such as the Soviet Woodpeckers	40
17	Chaos: The collected emergence of large-scale order from disorder	44
18	Earth, Sun, and Moon are Whittaker-coupled	45
19	The Kaznacheyev apparatus for cytopathogenic experiments	55
20	The Whittaker-structured graviton lattice of vacuum/spacetime	56
21	Death of the Arrow DC-8, Dec. 12,1985	80
22	Electrical spikes in two on-board sensors of the Arrow DC-8, caused by strike of an EM missile during liftoff rotation	82
23	Engines disabled, a passenger jet drops six miles in two minutes	84
24	Strike of an EM missile, offset from launch of the shuttle Atlantis on Nov. 28,1985	86
25	Soviet Woodpecker beams intersect over North America	86

LIST OF TABLES

Table	Title	Page
1	The graviton vacuum potential	5
2	Quantum potential (QP) characteristics	10
3	Hidden variable theory quantum potential	10
4	Countering EM biological warfare	30
5	Electromagnetic biological warfare (EMBW)	31
6	Real-time anomalous EMI interference via quantum potential	34
7	Recent Pentagon EMI studies	35
8	Countering EM BW (signal available)	38
9	Countering EM BW (signal unavailable)	38
10	Biological warfare implications	39
11	Lisitsyn's report	41
12	Why EM trigger windows?	42

Introduction

This may be the most important and far-reaching paper **that** this researcher has ever written. The knowledge and utilization of gravitobiology will profoundly alter the entire future of mankind.

The paper has been very difficult to write. It advances what — to the West — is an astounding breakthrough in understanding the mechanisms for the direct biological effects of Maxwellian electromagnetics.[1] However, one is given great pause at the sobering implications for both good and evil.

Although secretly well-known and highly developed in the Soviet Union for decades, this new technology ushers in a completely new area to the West: electrogravitobiology, or shortened, *gravitobiology* — which infolds and drastically extends present photobiology.[2]

Gravitobiology is the application of a unified field theory conception of electromagnetics (EM) and gravitation (G) to the total energetics exchanges (1) between a living organism and its external environment (interexchanges) and (2) inside the living organism and between, within, and among its parts and its whole (intra-exchanges).

Gravitobiology drastically changes the present reductionist view of photobiology, where *the whole is simply the sum of its parts,* and the superposition principle rigorously holds. In photobiology (and, in general, in ordinary physics), one specifies the externalized field/matter exchange on, between, and amongst the parts. Then it is assumed that one has specified the total action of the whole. On the other hand, in gravitobiology reductionism and superposition are only pale shadows of the total biological truth. Now one approaches a completely holographic situation: The part exchanges with and conditions the whole, and the whole exchanges with and conditions the part[3]

In gravitobiology, fundamental changes are made to two "untouchable" primary sciences: general relativity and quantum mechanics. In so doing, one unites and extends both of them into a common unified approach, and drastically enriches the present conception of the physical exchanges in, of, between, among, and within physical systems. The foundations changes to general relativity allow the incorporation of a hidden variable theory (the Whittaker internalized EM energy structure of the potential) without violation of Bell's theorem.

So First one must change general relativity. One must unite EM and G on the most fundamental level possible: that of the quantum particles of the fields.[4] The clue to the procedure is the fact that, in quantum field theory, the graviton has spin-2 and the photon has spin-1. This strongly suggests that two photons ought to couple together to produce a graviton, if the resultants of the E- and B-fields of the coupled photons are reduced to zero. In fact, such a bound (coupled, as in a standing wave) photon/antiphoton pair makes a basic spin-2 *graviton.*

However, in the vacuum, virtual photons are appearing (creation) and disappearing (annihilation) all the time, at incredible rates. Further, from the standpoint of GB we state that these virtual photons are also coupling (modulating each other) and decoupling (demodulating) all the time, again at an incredible rate. The virtual photons are coupling and decoupling (modulating and demodulating) with each other at such intense rapidity that to speak of a *fixed spin-2 coupling* ignores the fact that it is really only an averaged coupling that stably exists. Any number of photons can simultaneously modulate — and they do. And just as quickly, they decouple. Hence the number of instantaneously coupled photons at a point in the vacuum is

always dynamically changing over a very great range of values. Further, continual decoupling of these coupled photons also occurs with intense rapidity. The coupled-photon *ghost form* structures in the vacuum are always continually being annihilated, as well as created. In his fastest observation, of course, the macroscopic observer delects/observes the sum of a vast number of these virtual photon coupling/decouplings. He will thus detect *only the average coupling.*

The upshot is that *on the average,* the number of photons in each graviton may appear to the macroscopic observer to be stabilized at some value between zero and infinity, including *fractional* values. Further, one can now speak of the *distribution* of the coupled-photon ghost forms, and hence of graviton spin-value in local observer spacetime. One can also speak of the *relative density* of any particular local ghost form in the vacuum, seemingly the *instantaneous local density* of that ghost form with respect to the macroscopic observer.

One also can speak of the *reality density* of each ghost form in the local vacuum, with respect to its relative density vis a vis all the local coupled-photon ghost forms, during a unit time interval. For that particular form, one can also speak of its "Q" or *reality stability* — that is, how *sharply* (and hence how stably) something is real. As can be seen, this approach immediately affects our entire conception of virtual and observable physical realities and their relationships and interactions with each other. When a ghost form reaches a sharpness of one or more, it has reached/breached the threshold of observable quantum change, and is no longer just a virtual-state form. Further, we will shortly find that we can structure and engineer these virtual state coupled-photon ghost forms at will. In gravitobiology, *physical reality itself becomes deterministically tuneable, changeable, engineerable, and not fixed at all.* Physical reality is not like a stone, but rather it is like a stabilized bubble lightly floating on a rushing torrent of water. An *observably real* form is an equilibrium in the violent flux of the creation and annihilation of virtual state vacuum ghost forms of all kinds, such that it has sufficiently stable density to consistently breach the quantum threshold.

To show the basis for this graviton concept, several figures are required. Figure 1 shows the two kinds of EM energy: (1) translation (externally acting) EM energy and (2) stress (internally acting) EM energy. To first order, Figure 2 shows how we consider the photon as a single oscillation of a minimum observable monochromatic EM wave.

Figure 3 shows the coupled photon/antiphoton pair that comprises the basic graviton. On the average, uncurved spacetime is nominally composed of such spin-2 gravitons. To the first order, a spacetime composed of spin-2 gravitons is said to be *a flat* spacetime.

However, spacetime in a sense may be regarded as a conglomerate of potentials — including the scalar EM potentials. Therefore the simplest structure of *EM scalar potentials* (trapped EM energy) is also nominally composed of such spin-2 gravitons. Note that each of the coupled photons in the graviton may be constantly circling the other at nominal light speed tangentially, but the *graviton system itself* may be essentially stationary. In other words, the two trapped photons in a simple graviton are like whirling dervishes, spinning and running at top speed in non-translating circles.

Of course, the graviton system can also translate *as a system.*[5] Figure 4 shows this dynamic graviton system concept and Table 1 summarizes it.

In addition to spatial linkage of their hidden EM Whittaker wave contents, gravitons link or exchange contents via harmonic and subharmonic EM frequency chains. Thus one has photon communication (translation) between gravitons in two fashions: (1) *horizontally* (along spatial wavelength chains), and (2) *vertically* (via harmonic frequencies). Note that horizontal (wavelength) communication is linear, while harmonic (frequency) communication is nonlinear.

For that reason, linear media translate horizontally, passing a frequency without changing it; while nonlinear media translate vertically, changing a frequency that is passed.

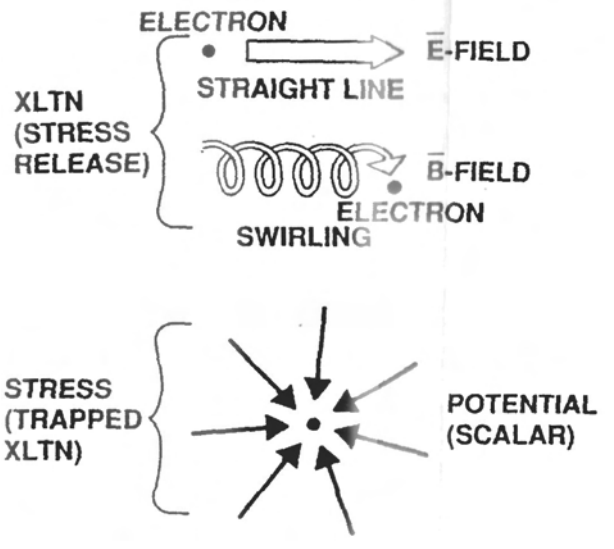

Figure 1. Two kinds of EM energy: Stress and translation. EM translation energy does external work. EM *stress* energy does internal work on the medium.

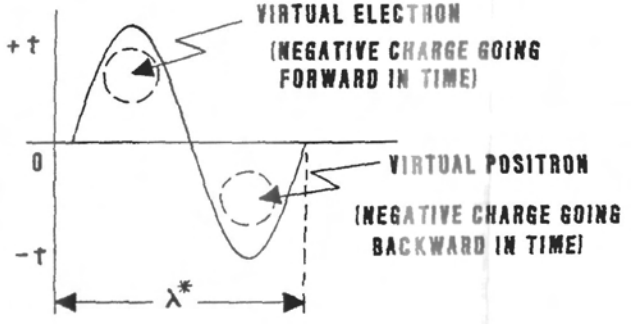

Figure 2. **The** photon as a single oscillation of a minimal carrier wave.

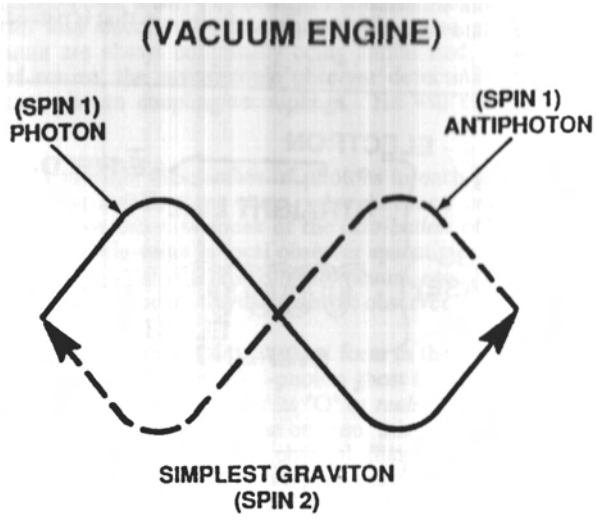

Figure 3. Coupled photon/antiphoton pair (simplest graviton).

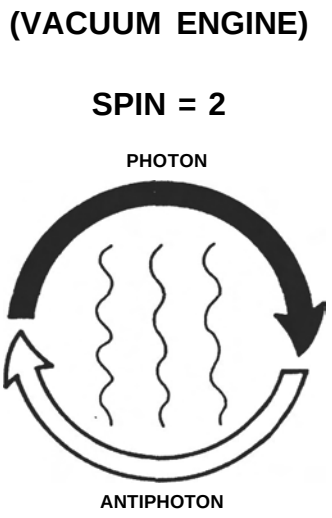

Figure 4. The potential is composed of gravitons, whose structures consist of bound photons and antiphotons.

Table 1. The graviton vacuum potential.

- **PHOTON TRANSLATES AT C**
- **SCALAR POTENTIAL IS STATIC**
  - **TRAPPED "CHARGE"**
  - **TRAPPED PHOTONS (VIRTUAL)**
- **HOW DO YOU <u>TRAP</u> A PHOTON?**
  - **MAKE A GRAVITON**
- **EM SCALAR POTENTIAL IS MADE OF <u>GRAVITONS</u>**
- **VACUUM/SPACETIME MEDIUM IS MADE OF <u>GRAVITONS</u>**
- **GRAVITON IS <u>A PIECE OF VACUUM MEDIUM</u>**

The scalar EM potential may be regarded as an infinite set of pairs of bidirectional EM planar waves, where the two members of each pair are multiplied together, totally *modulating* each other.[6] Figures 5,6, and 7 show this effect.

(TESLA'S STANDING COLUMNAR WAVE)

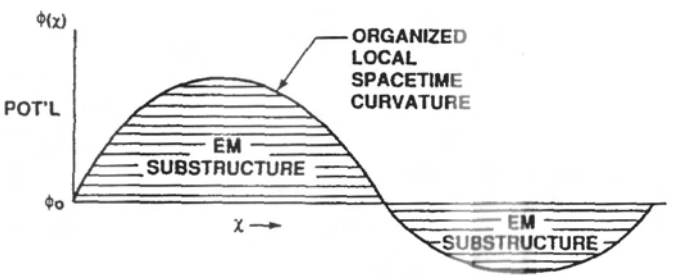

NOTE: SHAPE MAY BE ALL ABOVE OR ALL BELOW AMBIENT VACUUM POTENTIAL.

Figure 5. The Whittaker standing potential wave.

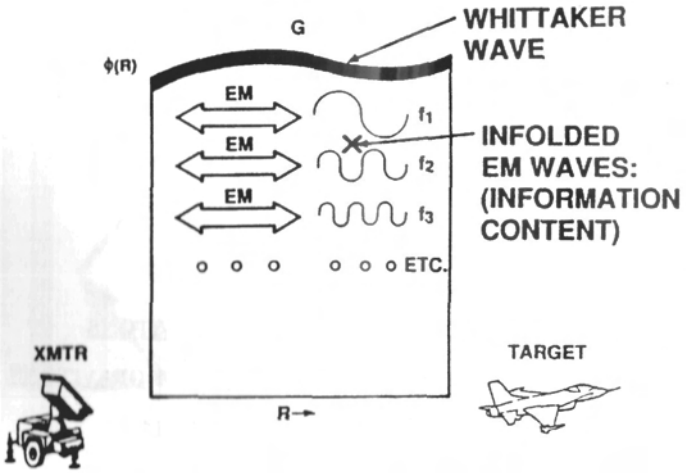

Figure 6. Infolded EM structure of the Whittaker beam.

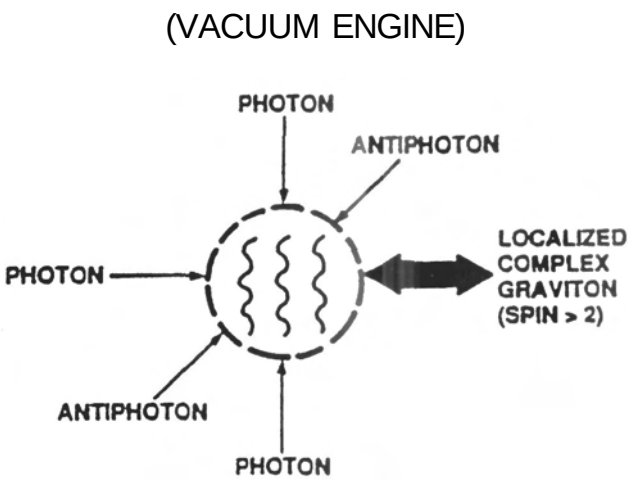

Figure 7. Destructive and constructive interference. Destructive interference of photons infolds them as EM structures inside gravitons; i.e., it constructs gravitons. Destructive interference of gravitons outfolds the internal EM structures; i.e., it constructs ordinary EM.

In a scalar EM potential the EM energy communicates vertically, which is harmonic translation of frequency energies, or time-wise. The time-wise two-wave EM energy communication represents a *stress upon the rate of flow of local observer time;* hence it represents *gravitational stress.* Further, the local rate of flow of time is determined by this local time-stress of vacuum potential. *One can easily engineer the harmonic bidirectional wave structure of the vacuum potential When one does so, then one also (1) curves local spacetime, (2) deterministically structures that local curvature with selected hidden-variable EM engines, (3) changes the local rate of flow of time, (4) gravitationally affects local systems, and (5) dynamically structures that local gravitational change to affect different system structures at will.*

Immediately this graviton concept focuses intensive attention to the nonlinear aspects of the problem, and hence to modulation and demodulation. Nonlinear materials, after all, are materials which directly exhibit the production of harmonics from a fundamental, as shown in Figure 8. However, as previously pointed out, production of harmonics affects the time-stress and the local rate of flow of time in an area. This is a gravitational effect, and hence nonlinear EM actions contain gravitational action components. *Nonlinear materials can and do void the mutual exclusivity of the classical EM and G fields, and interact in a unified-field manner.*

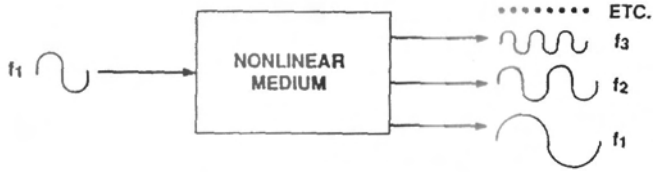

Figure 8. Nonlinear materials produce harmonics.

Also, in a true time-reversed situation, nonlinear materials can exhibit the production of a stronger fundamental from a combination of the fundamental and its harmonics, as shown in Figure 9. Thus there is a very clear difference between a true time-reversed EM wave and an ordinary EM wave with the same envelope and directional characteristics, contrary to most of the present treatments in physics.[7] The latter *case, pseudo-conjugation,* is not all true conjugation.

Figure 10 shows a comparison of phase conjugate mirror reflection and standard mirror reflection. Figure 11 shows the four-wave mixing concept by means of which the energy in pump waves A_1 and A_2 is utilized to produce an amplified phase conjugate replica wave A_3 in response to the weak input signal wave A_4. This gives a powerful means for producing and amplifying the time-reversed wave.

So a graviton is regarded as *a particle (cell) of the vacuum and of the spacetime medium.* It is in fact any one of the *ghost forms* we previously referred to. But it is not a sternly fixed, quantized fundamental particle, in the sense presently used in physics. Instead, the graviton is like a

quivering balloon or jelly-like cell in the vacuum medium, with many input and output pipes (coupling and decoupling waves) in and out.[8] The instantaneous size and composition of the balloon (the *graviton cell)* depends upon a multiplicity of internal states and their exchanges. A relatively stable graviton cell — such as the nominal spin-2 graviton — represents only an envelope of the average equilibrium state of multi-photon coupling in a dynamic coupling and decoupling photon flux.

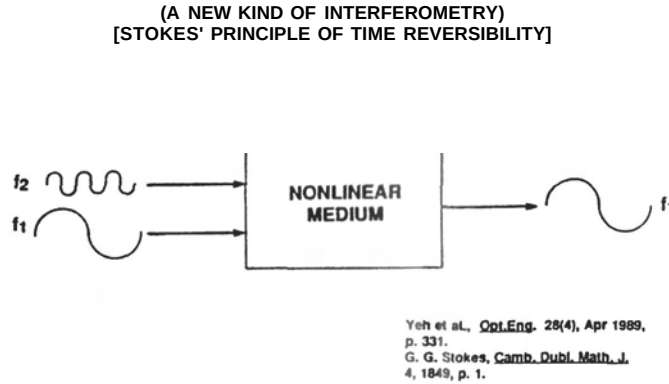

Figure 9. Time reversal of a fundamental plus harmonics can produce a stronger fundamental.

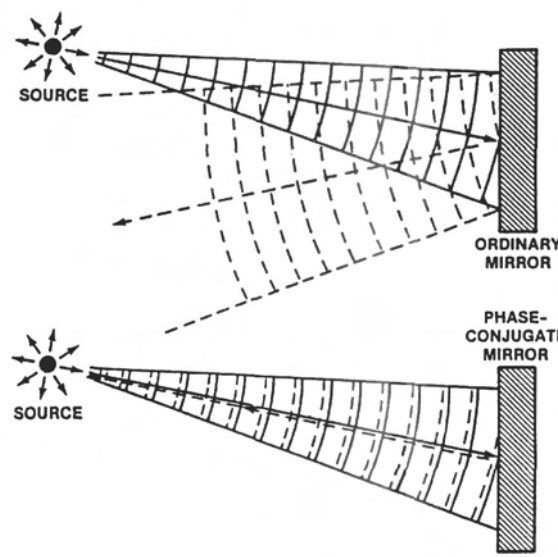

Figure 10. Ordinary mirror reflection versus phase conjugate mirror reflection.

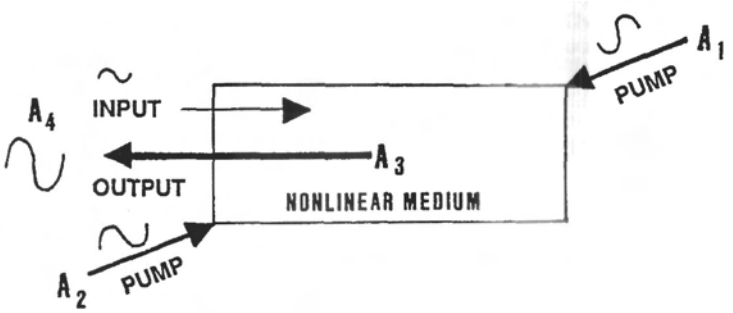

Figure 11. **Pumped** phase conjugate **mirror (PPCM).** The PPCM material acts as a triode **amplifier. Pumping and four-wave mixing allows strong amplification.** The phase conjugate **replica A_3 of signal input** A_4 **may contain up to all the energy in** A_1 **and** A_2.

Thus the graviton is the average coupled-photon structured cell of the local vacuum EM potential. When the graviton (average) spin is two, the local spacetime is flat and uncurved. *All that the concept of "flat spacetime" means is that the predominant average activity of the virtual photons of the local vacuum flux is simply the coupling and decoupling of pairs of single photons and single antiphotons.* When the graviton (average) spin is less than or greater than two, the local spacetime is curved, and EM and G are no longer mutually exclusive. Spin less than two gives curvature in one manner, and spin greater than two gives curvature in the opposite manner.[9] *All that the concept of "curved spacetime" means is that the predominant average activity of the virtual photons of the local vacuum flux involves either (1) increased decoupling and decreased coupling of photon/antiphoton pairs (negative curvature; graviton spin less than two), or (2) decreased decoupling and increased coupling of photonlantiphoton pairs (positive curvature; graviton spin more than two.)*

In quantum mechanics (QM), any EM frequency — even in a single quantum — now must be regarded as continually having internal dynamic exchanges subharmonically and harmonically. Indeed, each photon wavelength (single oscillation) must be considered as a graviton cell having **its** own spectral content. At the same time, it is also a part of the spectral content of many other **graviton** cells. Note that this describes a holographic connection and interaction. It also accounts for the fact that the photon stubbornly refuses to act solely as a simple, localized particle. One therefore regards photons as single-wavelengths of waves, to the first order. One regards the vacuum as composed of harmonic bidirectional wave structures, always marvelously and dynamically varying at incredible rapidity. This photon-structured vacuum permits the inclusion of internalized ordered-photon structure in spacetime, *in quantum change itself.*

Accordingly, the fundamental QM postulate that quantum change is random must be changed. Since there now may exist hidden subquantal and quantal orders within the randomness, the altered postulate must state that quantum change is *chaotic.* This produces an *already chaotic* quantum mechanics, and resolves one of its most pressing foundations difficulties: that of the missing chaos.[10]

It turns out that these changes to GR and QM unite them into a single unified conceptual approach. However, they also implement to the hilt a vital hidden variable theory and a graviton-

structured potential, to include the *quantum potential* (see Table 2 and Table 3), which can yield action at a distance. Now nonlocal effects arc also subject to deterministic engineering.[11]

Table 2. Quuntum Potential (QP) Characteristics.

- NO POINT SOURCE
- NOT RADIATED
- QP BETWEEN TWO PARTICLES
  - INTERACTION DOES NOT VANISH AS SPATIAL SEPARATION BECOMES VERY LARGE
  - INSTANTANEOUS CONNECTION
- DEPENDS ON QUANTUM STATE OF SYSTEM AS A WHOLE
- SYSTEM PARTS CAN BE GREATLY SEPARATED

Table 3. Hidden Variable Theory Quantum Potential.

- $V_{quantum} = (\hbar^2/2m) \frac{\nabla^2 \sqrt{\rho}}{\sqrt{\rho}}$
- "A QUANTUM PARTICLE MOVES AS IF IT WERE SUBJECT, IN ADDITION TO EXTERNAL POTENTIALS, TO A POTENTIAL WHICH IS A FUNCTION OF ITS OWN PROBABILITY DISTRIBUTION.
- BOHM'S H.V.T. ASSUMES
  - PARTICLE AND WAVE FUNCTION REAL AND SEPARATE
  - WAVE FUNCTION OBEYS SHROEDINGER'S EQUATION
  - PARTICLE OBEYS CLASSICAL MECHANICS
  - PARTICLE COUPLES TO WAVE FUNCTION THROUGH A QUANTUM POTENTIAL

LEE SMOLIN, "STOCHASTIC MECHANICS, HIDDEN VARIABLES, AND GRAVITY," QUANTUM CONCEPTS IN SPACE AND TIME. PENROSE/ISHAM, EDS. CLARENDON PRESS, OXFORD, 1986, PG. 165-166.

By far the most significant EM biological effects occurring in and on a biological system are due to its gravitobiological (internalized multi-photonic) exchanges. There are great differences between single-photon (monochromatic) interactions and multi-photon interactions. A priori the very notion — and the physical selection — of a monochromatic single photon interaction assumes that the multiphoton coupling of the graviton has already been destroyed. This discards any notion of a consistent and persistent graviton structure, since a monochromatic photon does not independently exist until its *coupling shell* graviton is destroyed or excluded. Spectral (harmonics) interactions, on the other hand, may well involve substantial and profound multiphoton, infolding, and outfolding effects that do not appear at all in monochromatic interactions. *A dramatic extension of photobiology is involved in gravitobiology.*

In the new model, permissibly the linked internal structure of spacetime may be partially ordered deterministically. This internally structured spacetime[12] underlies quantum change itself and is available for dynamic utilization and manipulation by living systems. This is particularly significant since the living system, its cells, and all its subcellular and multicellular parts deliberately utilize deterministic *internal* communication (Whittaker photon exchange) through the medium of the *hidden* internal EM photon structures of stabilized gravitons comprising scalar potentials. In short, for its living communication and control of both mental and physical processes, the biological system utilizes *internalized EM energy* in hidden harmonic Whittaker photon channels inside scalar potentials.[13]

Of course, externally one can also directly engineer a harmonic photon/wave structure and infold it as a hidden stress pattern structuring of Whittaker potentials. Such externally engineered Whittaker/Devyatkov signals provide a totally new and startling capability to directly and deterministically enter into all the biological organism's hidden internal control and communications systems — both physical and mental. With this approach, all internal living biophysical and biomental processes are now open to external engineering, manipulation, and control. Further, this is already well-known to the Soviets as evidenced by the work of Devyatkov,[14] Kaznacheyev,[15] and others.[16]

We strongly point out that gravitobiology deals with the dynamic structuring, tailoring, and engineering of the vacuum state itself — including the virtual state, spacetime, and subquantal and quantal change. Since all physical observables may be regarded as *collections* or *integrations* of subquantal and quantal changes, *we are now dealing with the ability to directly structure, tailor, manipulate, and engineer physical reality itself.* Also note particularly that the *living* aspects of a biosystem — mind, thoughts, memories, lives, emotions, personality, etc. — themselves may be regarded as equilibria and dynamic structures in the deeper nested levels of the virtual particle flux of vacuum/spacetime.[17] We have long pointed out that mind and matter share one "real" dimension in common: that of *time.* In structuring the vacuum and the curvature of spacetime, one is also producing a substructure in *time itself* — in both mind and matter. Accordingly, vacuum engineering (gravitobiology) implies that *we are also dealing with the ability to directly structure, tailor, manipulate, and engineer mind, emotions, personality, deeper mental reality, and life itself.*

The implications for technology development — and consequently for humanity itself — are awesome, both for good and for evil. For the good, we now see a breathtaking vista where a simple, cheap, and ready "cure" for almost any disease or health disorder will eventually become available. We see eventually the direct capability to access such heretofore excluded areas as all conscious and unconscious mental functioning, emotions, intelligence, memory (both short term and long term), and personality itself. *Eventually education will be by direct loading of the proper "software".* Even a severe personality disorder will be directly and quickly correctable. Even more astounding, it should be possible to reverse the aging process itself. Also note that, quantum mechanically, mechanics is electromagnetic at its basis, since exchange of virtual photons generates all mechanical **forces.** Thus even the mechanical aspects of disease —

crippling, twisted spines, shortened and gnarled limbs, physical malfunctions, physical defects, etc. — all will be directly treatable and curable.

For the bad, we see a mind-numbing vista where men can (the Soviets already have done so) utilize electrogravitobiology (EGB) for terrible new mass weapons of *electromagnetic biological warfare (EMBW).* The means for ultimate human enslavement — absolute mental manipulation and control from external means — can be developed, and this will certainly be noticed by would-be dictators and meglomaniacs.

The ability to develop and utilize EM disease-inducing and immediate death-inducing scalar EM weapons has already been developed by the Soviet Union in secret KGB laboratories. We will not dwell extensively on the potential horrors of such EM BW warfare. With the new weapons any nation on earth can be devastated — physically, mentally, or both — relatively simply and in short order, with tens and even hundreds of millions of prompt casualties. We point out that small tactical EM BW "death ray" weapons have already been clandestinely tested by the Soviets in Afghanistan, accounting for the *smerch* or instant-kill "nerve gas attacks" — so called.[18] When a body was struck by this weapon, not a single twitch or movement resulted in it thereafter, ever again. Not a single nerve impulse firing occurred, ever again, in the struck body. Every cell, bacterium, virus, paramecium, etc. in the entire body was instantly dead. The body simply fell like a limp dishrag and lay crumpled and still where it fell. A decisive signature of this weapon was that, with every cell and bacterium dead, the dead bodies did not decay for a very extended period (even 30 days) — precisely as if they had been deeply irradiated with cobalt-60 nuclear (gamma) radiation. No gas or chemical attack can do that.

The weapons vista for this entire area — which the Soviet refer to overall as *energetics,* is sobering. Khrushchev himself stated to the Presidium in 1960 that these new, fantastic weapons then in Soviet development could wipe out all life on earth if unrestrainedly used.[19] One strongly suspects that Khrushchev was referring to the EM BW directed energy weapon (DEW) aspects of energetics.

In the 1975 SALT Talks, Leonid Brezhnev even tried to get an agreement for banning the development of such new mass weapons. He personally met with visiting Senators and other Congressional leaders to point out the pressing and urgent need for limitations on these new weapons.[20] In fact, he called them weapons *"...more frightful than the mind of man has ever imagined."* That same year, Gromyko introduced to the United Nations General Assembly a draft treaty for the ban of these mass destruction weapons, and urged the nations of the world to sign it as a most urgent matter.[21]

Unfortunately, the rest of the world simply did not understand what the Russians were talking about

Thus one has great qualms — and much personal anguish — when even approaching this gruesome area. Certainly that is true for this analyst. Were it not for the fact that the Soviets have already discovered and highly weaponized these EM BW effects, I most certainly would turn my attention firmly away from this entire area.

However, such frightful EM BW DEW weapons *have* already been secretly developed and deployed by the Soviets. For over three decades they have used our reaction or nonreaction to the weak EM BW against personnel in the U.S. Embassy in Moscow[22] to gauge our knowledge — or *lack* of it — of unified EM/G biological warfare. In the nearly unthinkable event that war should break out between the Soviet Union and the West, the West will simply be immediately devastated by these eerie, mind-numbing EM BW weapons before it even knows what hit it. *When we have absolutely no counters, such attack becomes a preferred Soviet option and very likely.* A wide range of options is available to the Soviet Union in utilization of both EM BW DEWs and conventional BW agents. Clandestine, slow BW attacks can be so insidiously hidden and

cleverly employed that the Western nations — because of their present scientific and intelligence shortfalls and biases — will not even comprehend that the BW "slow strike" — on several fronts and employing differing agents and methodologies — was deliberate, until it is far too late to do anything about it

I firmly believe that, one way or another, such a clandestine "slow biological warfare strike", using viral and bacteriological agents and EM BW DEW augmentation as well — is already well underway against us. Further, it is still totally unrecognized as such by the West.[23]

Nonetheless, there is still great hope. If this nation wakes from its lethargy and puts its mind to it, gravitobiology can be quickly developed. Slow (and even prompt) BW attack can then easily be countered. *Unless gravitobiology is developed, we do not have now, and we shall not have in the foreseeable future, any effective defenses whatsoever to a BW attack, whether clandestine or open, and whether by conventional BW agents orEM BWDEWs.*

The scientific and engineering mindset and the need for a little highly unorthodox EM/G effort is all that presently blocks us from quickly achieving sufficient defensive capabilities for parity in this absolutely vital area.

Leaving the weapons aside for a moment, the new technology's positive benefits to mankind can be enormous — *"far more beneficial than the mind of man has ever imagined,"* to paraphrase Brezhnev. The control and vanquishing of all the ravaging illnesses and diseases is there, available for us to develop and employ for the benefit of everyone on earth, and for our children yet to come.[24] The vista of complete and thorough education for everyone — economically and universally available — is also something that has never existed but will now become possible, since eventually the necessary software and operating systems for any human skill or field can be directly loaded, so to speak.

With a developed knowledge of the external and internal energy balances of our biosphere, we can clean up the biosphere, permanently rid ourselves and our children of poisonous chemical and nuclear wastes, and restore the vitality of the planet for our living health and enjoyment

But make no mistake: This technology will give us the capability to engineer reality itself—both physical reality, life, and mind. *And we will be able to engineer it to be either a heaven or a hell; the choice is strictly up to us.*

Faced with the looming advent of this new science, certain of my associates and I have striven over the last four years to obtain funding for a major research institute, to develop scalar EM, gravitobiology, and novel energy and antigravity devices for the betterment of mankind. However, all our efforts have been thwarted. It has become increasingly apparent that the present scientific and control mindsets are so strongly entrenched, and so dedicated to suppressing any such attempt to break the economic and technological stranglehold on our citizenry, that the vision of such an institute is just a dream and not to be taken seriously.

Consequently, I have reluctantly concluded that this information must be openly released, for that is the only remaining way to overcome the solid barrier against the new technology and its benevolent use for humankind. I believe that a well-informed, concerned citizen is also a good thing for democracy and our free way of government. At least if there are frightful dangers facing us and terrible reefs to be avoided, *let us know what the dangers are and where the reefs are.*

In that vein, this paper is reluctantly written and circulated. This technology — of which only a tiny glimpse is provided here — is truly *a force amplifier* of vast gain. It is a massive amplifier for both good and evil, for any knife cuts both ways. How any tool is *utilized* depends upon the hand

and intent of the user, not upon the tool itself. Every tool is amoral, and only humans apply it morally or immorally.

Gravitobiology conceptually points the way to unleashing some of the most formidable tools ever conceived. Let us fervently pray that wisdom will prevail and these new tools will be utilized for Man's good, to heal him and not to kill him.

Man is upon the threshold of a crisis between the good and evil sides of his nature that is unparalleled in all human history. Whatever the reader's faith, I ask for your prayers. Most assuredly they will be sorely needed in the days to come.

Tom Bearden

January 1991

Woodpeckers; A Soviet Bicentennial Present to the U.S.

On July 4, 1976 the Soviet Union presented the United States of America with a most unusual bicentennial present: On that date, extremely powerful Soviet transmitters were energized in the communications band (3-30 MHz), causing interference with communications all over the world. The "chirped" signals of the new transmitters gave them a most peculiar sound, very much like that of a woodpecker's beak striking a flat block of wood. HAM operators immediately dubbed these new monster transmitters *"Woodpeckers."* Official protests by the various nations did little good. The Soviets insisted that the Woodpecker transmitters were "experimental" and necessary. The Woodpecker transmitters continued to pour out their bothersome worldwide interference, and they do so to this day.

Misidentification as an OTH Radar

The U.S. Department of Defense (DOD) scientists and engineers proclaimed the new monster Soviet transmitters to be simply *over-the-horizon (OTH) radar transmitters.* Of course, signals in the communication band will reflect off the earth's ionosphere, so that the signals can be transmitted beyond the radio horizon, reflecting around the earth in multiple bounces within the earth-ionospheric wave guide. For that reason, OTH radars commonly utilize one or more such frequencies. However, there are certain fairly stringent limitations on an OTH radar that are evidenced in its signals. While the Woodpeckers usually exhibit those characteristics, often they also exhibit a great many other characteristics that would be useless or even detrimental to purely OTH radar functioning. Therefore the consensus among many analysts — including, for example, one or more of our most knowledgeable OTH radar experts — is that the Woodpeckers *can* function as OTH radars if need be, but their primary purpose appears to be far more complicated than OTH radar sensing and ranging.[25] Officially, however, the U.S. Department of Defense and the U.S. intelligence communities still label the Soviet Woodpeckers as OTH radars.

Immediate Weather Engineering Over North America

For the next decade after the initial operational capability (IOC) advent of the Soviet Woodpeckers in 1976, the weather over North America was highly anomalous. In fact, the prestigious journal *Science* eventually pointed out that such an anomalous weather decade could be expected only once in 1200 years.[26] During this anomalous decade, of course, the Woodpecker transmitters were very active. Indeed, their beams regularly intersected over the United States in an interference "grid."[27] Finer interferometry patterns within this overall interference "grid" were used to create and move high pressure and low pressure areas over desired areas in the U.S., steering and controlling the giant jetstreams over the U.S. and directing the course of U.S. weather. The present author has fully documented and explained the use of the Woodpeckers in the weather control mode.[28] Further, we have long documented the use of the Woodpeckers as highly unusual directed energy weapons.[29] In addition, we have pointed out the Soviet capability to utilize the Woodpecker weapon systems to produce biological effects,[30,31] but have not heretofore given a full explanation of the exact EM mechanism for that capability. In this paper we present a more technical explanation of the biological effects of scalar electromagnetics — including as utilized by Soviet weapon systems such as the 14-year-old Woodpeckers, and the decades-long Soviet microwave radiation of personnel in the U.S. Embassy in Moscow. For details of the Embassy radiation, see Brodeur,[32] Johns Hopkins

University's study of the **health status of Embassy penonnel,**[33] The U.S. Commerce Department's funded study of **the** radiation,[34] **and other references.**[35]

Given a Dose of Their Own Medicine

After some time, the aggravated HAM operators banded together and formed a group action. Many of them recorded the Woodpecker's signals on tape and, at a prearranged time, suddenly turned **all** their transmitters on with the tapes playing, transmitting back to the Woodpecker receivers the taped replicas of their own jamming signals. The woodpecker transmitters were observed to become confused. They frantically changed channels and desperately tried to avoid the HAM operators' transmitted replica signals. Unable to do so, finally the Woodpeckers went off the air completely. Thereafter a modicum of caution began to be utilized by the Woodpeckers. They changed channels frequently so as not to "jam" one HAM channel continually, and substantially decreased their degree of interference with other communications equipments. Also, electronic filters to add on to one's receiver and filter out the Woodpecker's annoying "chirps" were produced in the West and made available to HAM operators and other communications groups. An uneasy truce resulted, and there the matter rests today, insofar as communications is concerned. The Woodpeckers have continued to operate at will.

Launch-Phase Antibomber and Antimissile Weapons

In latter 1985 and early 1986, the Soviet Union employed the internalized EM energy capabilities of the Woodpecker weapon systems to directly attack, disable, and destroy a series of U.S. aircraft and missiles. (We shall address internalized EM energy shortly.). We have previously documented these overt Soviet acts of war[36] and will not repeat that documentation here. We have also pointed out that 1985 was the specific Soviet target year to have all these weapons online and ready to go, as specifically stated by Leonid Brezhnev at a secret meeting of European Communist Party Leaders in Prague in 1972.[37] Indeed, at that time Brezhnev actually confirmed that detente was part of a deliberate Soviet deception plan.[38]

How This Paper Came About

Recently a frequent correspondent who is knowledgeable in HAM radio — and well familiar with the annoyance of interfering signals from the powerful Soviet Woodpecker transmitters in the communications band (3-30 MHz) — sent me a Federal Communications Commission (FCC) compilation of Soviet Woodpecker signal radiations and requested my comments. The editor of an important journal in England also urgently requested more definitive information on the Woodpecker's biological warfare capabilities. I quickly dashed off short responses to these two correspondents, but I realized that the biological capabilities of EM transmitters, including the Woodpeckers, required a more lengthy paper to provide an adequate explanation.

This paper is a much-expanded version of my responses to those two correspondents. Its purpose is to more fully reveal precisely how the Soviets can utilize EM transmitters such as the Woodpeckers to transmit biological effects — including *any kind of cellular death or disease whatsoever*— and induce and create these effects in a targeted distant population. In this paper we will detail some of the powerful electromagnetic (EM) biological warfare (BW) capabilities of electromagnetic transmitters, including the Woodpecker weapons systems. This will complete our expose of the unsuspected capabilities of the Woodpeckers.

Start With These References

First the concerned U.S. scientist should recognize that Soviet scientists — particularly those who work on highly secret Soviet EM biological warfare weapons projects — do not utilize the type of biophysics known to Western scientists. Instead, they have applied a unified EM/G field theory, called *energetics,* to photobiology and created a new, highly classified Soviet biophysics which this author refers to as *gravitobiology.* Accordingly, to understand the real, classified Soviet biophysics, the concerned U.S. scientist must be prepared to (1) acquire extensive new knowledge and a drastically different technical viewpoint, (2) search Western orthodox and unorthodox scientific literature in photobiology and unified quantum field theory physics, to discover potential candidate areas that the Soviets may have developed and applied, and (3) look behind the deliberate deception involved in most openly published Soviet biophysics papers and search for possible significant clues.

First, he or she should read and digest the two Whittaker papers,[39,40] ponder what is meant by Devyatkov's *information content of the field*[41,42] in light of Whittaker's infolded EM structuring of the scalar potential, and Kaznacheyev's extensive cytopathogenic work in EM induction of cellular death and disease at a distance.[43,44] Next he or she should study the implications of time-reversal in physics,[45] and the potential implications of utilizing in biology the time-reversed (phase conjugated) EM waves[46] which the U.S. discovered in the open Soviet scientific literature in the late 1960s and early 1970s. Finally, he or she should study the photobiology work of West German scientists such as Popp.[47,48] Those references should be studied first. Then he or she should study in detail the difference between Heaviside's/Gibb's vector EM curtailment of Maxwell's theory[49,50] and the original quaternion Maxwell theory,[51] because the Heaviside/Gibbs theory (the present classical EM theory) is only a subset of Maxwell's actual *unified EM/G field theory.*[52] Finally, by combining all this information and reiterating the study of the reference material until it can be successfully integrated in one's understanding, one has the basis of the "*whole banana"* of Soviet gravitobiology, so to speak.

One then has the basis of unified EM/G theory (energetics) with which the Soviets started some 40 years ago — and the beginning of which Maxwell had already published in 1873. From that foundation, it's not too terribly difficult for a good laboratory team to piece together the theory — and gradually develop practical, working hardware on the laboratory bench.

Technical Basis for Soviet EM Biological Warfare

Our scientists in the State Department, DoD, CIA, DIA, FCC and other U.S. governmental agencies are never going to understand the full biological warfare (BW) capabilities of electromagnetic transmitters such as the Woodpeckers — or develop new instruments to measure what specific biological information their signals really contain — until they understand *scalar electromagnetics.* Ordinary (classical) electromagnetics was produced by Heaviside and Gibbs in a *substantially truncated* version of Maxwell's true quaternion EM theory, as previously pointed out[53] by this author.[54]

Ordinary EM (and its *externalized* energy) cannot exhibit the capabilities we are referring to, or produce such "biological death and disease ray" results as are possible with specialized scalar EM transmitters. Instead, one must recover and utilize the scalar part of Maxwell's quaternion EM **theory** — the portion that was discarded by Heaviside and Gibbs.

Maxwell's original theory was a unified theory of EM and gravity (G), with the electrogravitational aspects being captured by infolding functions of the vector E and B force

fields inside the scalar component of the quaternion.[55] Thus Maxwell's quaternion theory, for example, also prescribed scalar waves of pure potential (trapped) EM energy, where this potential energy contained hidden, deterministically structured, *internal* bidirectional EM wave patterns — yet no external E- and B-field force resultants appeared in the overall vector summation envelope.[56] This can readily be seen by simple examination of the scalar component of the quaternion.[57] This pure *scalar potential (wave)* with a hidden deterministic EM wave substructure aspect was completely discarded by Heaviside and Gibbs. It is still discarded by classical vector electromagnetics theory today, even though it is experimentally verifiable and testable — and *engineerable.*

Scalar EM,[58] however, is a unified field theory of electromagnetics and gravitation, since it recaptures the scalar wave portion of electromagnetics that was erroneously discarded by Heaviside and Gibbs. In short, scalar EM captures, infolds, and hides deterministic EM waves inside EM scalar potentials — and also then interferes the structured scalar potentials to outfold the EM energy and recover it at a distance. That distant interference recovery, however, can be in the form of either negative (time-reversed) or positive EM energy, merely by how one biases the ground potential of the scalar interferometer relative to the ambient potential in the distant interference region.

Since it is known that potentials are gravitational (they are composed of trapped energy and energy is gravitational), then scalar EM is a unified field theory of electromagnetics and gravitation. Obviously these unified scalar fields with their hidden internal structures[59] have a great many more capabilities and uses than do the far more restricted classical EM force fields.

For four decades the Soviets have secretly developed this scalar EM/G theory and technology — which they call *energetics* — and have used it to develop and deploy secret unified field theory (UFT) superweapons of enormous power and startling capabilities.[60,61]

Biological Implications

The infolded, deterministic, hidden EM wave structure inside the scalar EM potential is called the *information content of the field* by Soviet scientists.[62,63] The Soviets know that it is this infolded and hidden EM structure — the *internalized* or *covert* EM energy of the potential field — that is deterministically utilized by living biological systems in all their cellular control and regulatory functions. Thus by deliberately manipulating this internalized EM energy structure of the scalar EM potential, the Soviets have found it possible to accomplish astounding EM biological effects — both for healing and for biological warfare — that are entirely undreamed of in the West.[64] The Soviet energetics technology can manipulate, change, control, or destroy literally any of the key biological functions of the living system — including *mental* and *behavioral* functions.

Internal and External EM Energy

In his 1903 Mathematische Annalen paper,[65] Whittaker demonstrates a standing, spatially-fixed wave of pure potential, but one with an infolded, highly dynamic, hidden EM forcefield substructure containing *hidden* bidirectional pairs of EM waves/energy. Again, see Figure 6 for a diagrammatic portrayal of this Whittaker wave (scalar EM wave).

In the diagram, in each pair of infolded EM waves, the two coupled waves flow in opposite directions *inside the standing potential wave.* Further, their speed is not limited to the normal

speed of light in vacuum.[66] In each pair, the two waves are multiplied together. Hence they *modulate* each other, locking together into graviton waves rather than photon waves.[67] *Each paired EM planar wave couplet is a hidden EM stress energy channel in vacuum spacetime, and in this channel EM energy flows in either direction — in fact, in both directions at once.* Further, there is continual constructive and destructive interference of these two waves, yielding continual coupling into pairs of photons and decoupling into photon/antiphoton pairs. In short, continual creation and annihilation of spin-2 gravitons is occurring. *A scalar potential, then, is composed of this dynamic structure.* Taking the Whittaker approach to the lowest level possible, this author has previously presented a unified field development of photon/antiphoton structures inside gravitons, unifying gravitation and electromagnetics at the most fundamental level — that of the quantum particles of the fields.[68] Figures 1,2,3, and 4 developed this *unified particles* approach.

The bottom line is this: There are two fundamental kinds of electromagnetic energy: (1) First, there is *externalized* EM energy. This is the normal "wave envelope" EM force field translation energy that acts externally upon each charged particle, to translate the particle as a single unit. The resulting unitary changes (translations) of charged particles *as wholes* produce the normal EM interactions upon things and objects, as seen by the external observer. Indeed, this process is external observation, and external observation is this process. (2) Second, there is also *internalized* EM energy, where EM forces act in antiparallel pairs. This *EM stress energy pattern acts* internally upon a charged particle or medium, specifically structuring the virtual particle flux exchange of the particle with the vacuum, or of the medium with the vacuum. This vacuum exchange with the particle, of course, constitutes the *charge* of the particle. The electric charge of a particle is due to the exchange of virtual photons between the vacuum and the mass of the particle. Note that the Whittaker structure represents deterministic structuring of this vacuum exchange with the mass of the charged particle. *It represents deterministic structuring of massless electric flux itself, in electromagnetic terms, and this does not presently appear in electrical physics theory.* Instead, orthodox theory *assumes* that the structuring is random, when in fact it is not — from Whittaker's work.

Western scientists do not normally even detect or recognize this internalized EM energy. Our instruments normally see only the gross static EM potential energy by actualizing it into gradients (force-fields) that translate charged particles.

External EM energy is the face that the scalar EM potential exhibits in its outer bulk interactions with gross matter. Internal EM energy is the face that the scalar EM potential exhibits in its inner interactions with the virtual particle flux of the vacuum — and with every charged particle in the universe, *most especially with the charged particles in the nuclei of atoms.*

Internal EM energy is the infolded EM stress energy inside the vacuum potential. Note that all scalar EM potentials are vacuum potentials. Deterministically structuring the infolded EM planar waves in the Whittaker structure of the vacuum potential is *vacuum engineering.*[69] It is also structuring the local spacetime, and curving it whenever the Whittaker potential differs from **the** potential of ambient vacuum/spacetime.

In our present engineering, at best we see only the gross envelope or bulk translation energy overall charging or draining energy) of the EM potential (trapped EM energy) that was exhibited by translating charged particles. We never detect the dynamic, hidden, bidirectional-wave EM substructure content and interactions of the EM vacuum potential. This undetected internalized EM energy that is infolded inside the scalar potential is electrogravitational energy, **since** all EM potentials are gravitational in nature, as is well-known.[70]

Vacuum Engineering **and Activation**

Note that the vacuum/spacetime consists *only* of internalized (infolded) (virtual) energy. Everything — every particle, wave, etc. — that exists or moves in the vacuum continually *internally* exchanges with the vacuum flux, since in fact every entity itself is only a special kind of equilibrium state in this vacuum flux. Everything, so to speak, is simply a special kind of fragile balloon in a many-pipe flow situation.

If the vacuum that an entity exists or moves in is deterministically structured, the vacuum exchange with the internal energy of the entity is structured. Just as changing the colors of the flows into and out of the balloon will gradually change the color of the balloon, the entity, will gradually "charge up" its internal energy to any persistent change in the vacuum's virtual particle flux. This charging process is called *activation.* If the vacuum exchange then changes back to normal, the structure of the internal EM energy of the entity will gradually return to normal. The entity then is said to have *discharged* (with respect to the new pattern or structure it had charged up with previously.) Discharge is also called *deactivation.*

The mass of an observable entity is a direct indication of its degree of total exchange with the vacuum. Since most of the mass of an atom is in its nucleus, then one is particularly interested in the activation and deactivation of the nucleus, for that is where the process largely occurs. The deterministically structured potential reaches directly to the nucleus of the atom, and the interaction between internal structuring is far greater in the nucleus than in the electron shells of the atom.

The Nuclear Charge Spreads

As the nucleus charges up with a new vacuum potential pattern, its EM coupling with the electron shells gradually is changed also, producing electron changes (of a wide variety) as well. *Activated* masses — atoms, nuclei, ions, neutrons, and electrons, for example — can then exhibit quite abnormal external chemical, electrical, and gravitational interactions as compared to unactivated (normal) "inert" masses.[71] If there is any sort of deterministic pattern in the activation, the activated nuclei can act very differently in their electrical, chemical, *and nuclear* interactions.[72]

Thus the internal energy structure of everything that exists or moves through the vacuum — every particle, wave, etc. — interacts with the internal structure of the potential (spacetime).[71] Everything is continually charging and discharging internally. Any change in the infolded Whittaker structuring of the local vacuum potential will gradually activate everything — virtual or observable — existing or moving locally through that region.

Activation of Photons

If one wishes to produce strongly activated photons that have a selected internal energy structure, one first produces a scalar EM potential with that structure and charges/activates matter (atomic nuclei) with it. Then one uses four-wave mixing in that material to evoke a highly amplified phase conjugate replica wave in response to a weak signal wave. The highly amplified replica will internally contain a strong replica of the selected structure.

EM waves whose potentials[74] are comprised of such activated photons can be produced and transmitted. When this activated wave is absorbed in a distant target, its internalized EM interaction will deposit this selected structure in the target mass. Gradually that internal activation structure will diffuse through the mass — particularly its atomic nuclei, then its lattice structure — so that the target becomes activated as well, with the desired pattern. Continued Irradiation of the target will result in a certain equilibrium "charge level" for that selected activation structure (partial potential) being present in equilibrium in the atomic nuclei of the target EM coupling to the electron shells and further interatomic interaction gradually activates the material lattice of the target with that Whittaker structure.

When external photon interactions now occur with the activated target material, kindling of the hidden virtual-state order may produce sufficient coherent integration to breach the quantum threshold and produce observable physical change. This will produce an "anomalous" change with respect to normal macroscopic interactions. Physical reality itself has been directly engineered and altered.

For specialized applications, extremely intense pulses with selected internal energy substructures can be generated. When these strike a target, immediate and intense effects can be obtained, particularly in the atomic nuclei. Fissioning of a nuclear material, for example, can be directly accomplished by this process. With slightly less intense application, specific cellular diseases or behavioral patterns can be promptly induced in biological systems.

Western Physicists Missed It

In experimental physics, Western scientists have been preoccupied with ever more subtle detection of charged particles translated by the *externalized* envelope energy of EM waves and potential gradients. They have not recognized that (1) gravitational potential stress always has a hidden electromagnetics substructure,[75] (2) the greatest portion of this substructure is electromagnetic, and (3) that hidden EM substructure can be deliberately controlled and utilized to manipulate particles, atomic nuclei, and gross matter (both living and nonliving) in ways that arc completely impossible with the present *envelope* translation electromagnetics.

The hidden EM stress substructure can be deliberately engineered by composing it of a proper deterministic set of EM waves and signals, and infolding these together with their equal phase conjugates into a modulation and standing wave resonance process.[76] This produces an "artificial" or internally patterned/activated potential with the desired Whittaker bidirectional EM wave structure hidden inside. Since earliest times, living systems have utilized these internal EM energy channels and performed such "vacuum engineering" by infolding. Because we have not recognized or measured this internalized EM energy in biology and physics, we have heretofore completely failed to penetrate to the active infolded EM signals and hidden EM control mechanisms of living biological systems — literally because our present instruments cannot detect and measure their functioning nor the hidden EM energy they utilize.

Chaos: Hidden Order Underlying Randomness

Because we have been preoccupied with *externalized* EM interactions, we have been reductionist in our outlook upon physical reality. Accordingly we have built a present physical science and biology that is almost completely *reductionist* (i.e., we believe that the whole is just the sum of the parts, and that is all there is to it.). However, the interactions of *internalized* EM stress energy transcends reductionism. Then the whole is no longer just the sum of its parts, but also is

changed and affected by the overall nonlinear internal interactions of its parts — both with each other and with the whole itself. Then we indeed have a new holographic science whose true ordered nature does not presently appear to us through our crude "externalized energy" detectors except as *chaos* — the mysterious presence of hidden order in apparent randomness. When such "randomness with hidden order" — chaos — is integrated and collected, surprising and unsuspected order emerges macroscopically.[77]

Special Implications **for Quantum Mechanics**

However, quantum mechanically this implies that there exists hidden order even inside a single quantum of change. That is, the hidden order is *subquantal,* hence *virtual.*[78] This tells us that the virtual state itself is ordered by Whittaker structured-potential methods.

But this changes the interpretation of one of the postulates (fundamental assumptions) of present quantum mechanics itself. Now one must postulate that quantum change is *chaotic,* rather than purely *random.*[79] For large collections/integrations of quantum changes, the hidden internal order emerges and stabilizes. Thus quantum change is statistical, but it is not the Gibbs statistics of a random variable; rather, it is *chaotic* statistics. Since the macroscopic implies large collections/integrations of the virtual, the chaotic statistics of quantum change yields an ordered macroscopic universe that emerges from *seemingly* random (but actually, already chaotic) microscopic changes.[80]

It also resolves one of the burning issues in quantum mechanics today: the problem of the missing chaos.[81] One simply alters the fundamental interpretation of the QM postulate — that quantum change is statistical — to mean that quantum change is *chaotic.* This places quantum mechanics upon an *already chaotic* basis, resolving the QM foundations difficulty of the missing chaos.

It Was **Already Implicit Within** the Theory

Actually, from still another viewpoint, the whole thing should have been apparent long ago. Numerous physicists have struggled with the embarrassing fact that the energy in the G-field is *negative* energy. For the G-field, like "charges" — that is, all masses, so to speak — *attract* each other. Their unrestrained attraction does work on the G-field between them and increases the energy of the field (potential) at the same time that the kinetic energy of the masses is increased. But conservation of energy states that the energy of the system (kinetic energy of the particles plus the potential energy of the field) must remain constant if there are no other sources or sinks. Hence the increased energy of the G-field must be negative, since the increased kinetic energy of the particles is positive. To drive these "like G-charges or masses" apart, one has to input additional positive energy to the field to cancel some of its negative energy. Therefore one has to expend additional positive energy to separate two masses against the G-field attraction.

In electromagnetics, of course, like "charges" — either electrical or magnetic — repel each other, and their unrestrained repulsion weakens the EM field (potential) energy at the same time that the kinetic energy of the charges is increasing. Conservation of energy of the system thus requires that positive energy "goes out of the weakening EM potential, driving the repelling electrical charges apart and increasing their kinetic energy. This means that the energy of the electric field (potential) is positive.

So we now speak of positive *(externalized)* field energy and negative *(internalized)* field energy. What we call *normal EM energy* is *externalized (outfolded)* EM energy. What we call *normal*

gravitational potential is in fact *internalized (infolded)* EM energy. This of course is completely consistent with Sakharov's seminal 1968 hypothesis that the gravitational field is not a primary field of nature, but is generated by — and composed of— other ordinary fields.[82] In fact, to the first order it is generated by, and composed of, infolded electromagnetic fields. Sakharov's hypothesis has led to an explosive development of stochastic gravitation,[83] culminating in the very important papers of Harold Puthoff.[84] Indeed, the modern vacuum is anything but empty, but is filled with Whittaker order and structure, incredible density of disintegrated EM energy, and violent virtual particle flux of an intensity and density that boggles the imagination.[85]

The Case of Opposite Charges

In passing, for the purist we briefly point out the case of opposite charges. First, let us look at equal but opposite *electrical* charges. Electrically, two unlike charges are seen by the external observer to attract each other, and increase the strength of the field. However, *charge-wise only (not mass),* each charge is now the antimatter partner (time reversal) of the other. In quantum mechanics, time is not an observable, but only a parameter. Since we never *see* time but only infer it from observed spatial changes, we will just see the *spatial* track of the time-reversed forces and the energy situation. Thus we will see mutual "time-reversed repulsion" — which corresponds to *mutual attraction* as seen by the time-forward observer. The electric field now seems to add negative energy. That is, additional positive energy is seen to be extracted from the electric field, to increase the kinetic energy of the attracting particles, which means that the negative energy of the field is increased. However, the external observer does not see this energy as negative but as positive. He sees the positive energy of the electrical field increased.

When unrestrained, two unlike *gravitational* charges (i.e., a positive mass and a negative mass) act in similar time-reversed fashion. The situation is exactly opposite to the case of the electrical charges and fields. To the forward-time external observer, the two unlike gravitational masses will be seen to repel (i.e., to "time-reversed attract) each other and decrease the negative energy of the gravitational field between them.

We also examine another case: the coherent integration of photons. We choose to regard a photon as a coupled electron-positron pair, in the virtual state. There are now two ways of ordering collections of photons.

First, if we parallel-order the positrons and parallel-order the electrons, this is coherent integration of photons, which is involved in a single EM sine wave, for example. In this case, we still have all the positive charges opposed to all the negative charges, so the situation remains *photons* and electromagnetic. In an EM sine wave, the electric charges are collected in the positive E-field portion of the wave, and the positrons are collected in the negative E-field portion of the EM wave. This wave will always interact with a charged particle, regardless of its phase, at all but its beginning, ending, and middle "zero E-field" points.

The second way to order collections of photons is to equally collect electrons and positrons. That is, for each electron/positron photon, its antiparticle (its antiphoton, which in this case is a positron/electron photon) is collected with it. Voila! The vertically parallel electrons and positrons attract each other, so that *all resultant E-fields of this collection are zeroed, vectorially.* Further, each photon/antiphoton pair now has spin-2, which does not constitute a photon with non-zero E-fields, but a *graviton* with zeroed E-fields. That is, we have created a pure electrostatic scalar potential, with a hidden *internal* EM wave/photon coupling and decoupling structure. In this coupling, which we have very crudely described, photons/antiphotons are continually coupling and uncoupling. From Whittaker's work, the coupling and uncoupling are phasing, both vertically and horizontally, so that harmonic sets of paired bidirectional EM waves

are seen to be internally moving (photons coherently coupling in one direction and antiphotons coherently coupling in the other, then decoupling, then recoupling, etc.) inside the potential.

What we have done, in short, is turn electromagnetic energy into gravitational energy. What emerges from all this is a clear principle (which can be demonstrated in the laboratory, with only medium difficulty): The one-to-one addition of an electromagnetic wave and its phase conjugate replica of equal magnitude, results in a gravitational envelope wave of pure scalar potential. In Bohm's terms, it infolds the electromagnetics into a hidden, ordered EM structure of a standing gravitational wave. Note that this gives a new view of negative energy vs. positive energy. We may state now that positive energy is ordinary, time-forward, outfolded EM energy; and negative energy is nonordinary, time-reversed, infolded EM energy.

But if that is true, then one of the cornerstone physics assumptions is false: that is the assumption that a photon and an antiphoton are identical. Indeed, this is false, as this writer has protested for years. Further, it is easily proven that it is false. We do so as follows: First, take a phase conjugate mirror material. We now wish this material to sometimes emit ordinary photons (which it will do, for example, by simply heating it). We also wish it to sometimes emit antiphotons, or time-reversed photons (which it will do when stimulated by absorbing another photon, and emitting a phase conjugate replica. Now we measure the recoil of the mirror material *when it emits a photon or antiphoton.* That's fairly readily done; a little tricky, but not too difficult Any decent university lab can do it easily. An interesting thing now emerges: *The mirror material measurably recoils as required by conventional theory when it emits an ordinary photon. It does not recoil as required by conventional theory when it emits an antiphoton.* We therefore have shown that, in some very fundamental fashion, *a photon and an antiphoton are very different, and their emission is very different from the fundamental criterion of Newton's third law.* Q.E.D.

Whittaker Rediscovered Tesla's Standing Columnar Wave

Actually the standing Whittaker 1903 wave is the same strange new wave that Nikola Tesla experimentally discovered emanating from Colorado thunderstorms four years earlier — on the night of July 3-4, 1899.[86] This was Tesla's famous *standing columnar wave.* Let us give credit where credit is due: in later years the Great Electrician repeatedly stated that he was not using transverse EM waves, but rather he was using *longitudinal EM "sound" waves* — waves of compression and rarefaction of the etheric medium (of the virtual particle flux of vacuum) itself.[87] In other words, he was using *stress waves of the vacuum ether* — pure potential waves, precisely the same as those for which Whittaker wrote the theory in 1903.

In fact, then, Tesla was using Whittaker standing potential waves with deterministic bidirectional EM transverse wave hidden substructures. He had discovered and was utilizing the *internalized* EM energy (i.e., the information content) of the field as well as its *externalized* EM energy the field. Generations of Western physicists and electrical engineers — brought up on an exclusive diet of the Heaviside/Gibbs vector truncation of Maxwell's unified electrogravitation — have condescendingly believed that Tesla was mistaken.[88] They have haughtily proclaimed that no one could produce and utilize longitudinal EM waves — because *they themselves* could not do so! Those same physicists and engineers have not had the slightest understanding of what Tesla really discovered and used. And they have not had the slightest knowledge of the Whittaker papers, which have been there in the literature all these years, neglected in the West. Unfortunately, Whittaker's work and Tesla's work were uncovered, thoroughly investigated, extended, applied, and intensively utilized long ago by Soviet scientists to produce powerful new secret superweapons and frightful EM biological warfare weapons.[89]

Soviet Weaponization

The Soviets simply took the internalized EM energy theory directly from the Whittaker papers in the open literature and weaponized it. Taking the Whittaker viewpoint, the most important and insidious thing about the Woodpecker transmissions is the *infolded* EM content inside their standing (persistent) potential waves — *not* the "external envelope" E- and B- translation fields that constitute the "normal" electromagnetics familiar to our own scientists and engineers. It is the infolded paired bidirectional EM waves and energy — the hidden *internalized* EM energy that has been added within and to the normal envelope E- and B-field translation energy — that allows the Soviets to utilize two quite different kinds of EM energy, and conceal the most important kind from prying Western investigators.[90]

What this means is that if one just measures the *externalized* E- and B-fields transmitted by the Woodpecker transmitters — as Western scientists and engineers do — then one misses the most important thing. Oh, one will believe the Woodpecker is an over-the-horizon (OTH) radar, alright, for it obviously can perform that function by the highly restricted *envelope* (outfolded, externalized) EM that we Westerners already know about, measure, and use. But one will not see or know anything about what the Whittaker standing potential waves of the Woodpeckers can do and are doing — both energetically and biologically — with their hidden internalized EM information content/structures.

Detection and the Aharonov-Bohm Effect

To get at the infolded EM structure of the Whittaker potential, one must make a two-stage detecting instrument. The instrument must contain a *shielded interference first stage,* where two or more Whittaker potentials interfere, a la the Aharonov-Bohm effect.[91] [An overview of the Aharonov-Bohm effect is given by Olariu and Popescu.[92] For confirmation of its proof and begrudging acceptance, see Schwarzschild.[93] For weapons potential, see Bearden.[94]] By that initial interference in the first stage, Whittaker's second paper[95] shows that you will "outfold" the hidden EM contents of the interfering potentials, even if the interference is accomplished at a great distance. Voila! "Normal" (externalized) EM energy magically appears at the output of the first stage interference. The first stage was shielded, of course, to prevent any other spurious ordinary EM radiation to reach the region of the output of the first stage and contaminate our subsequent measurement of the first stage output. The second stage consists of a suitable *normal E*M instrument, spectrum analyzer, etc. to measure the outfolded EM spectrum, power density, distribution, timing, phasing, etc., allowing one to "track backwards" and characterize the *hidden EM information content* that was infolded inside the Whittaker potential.

Note that, taken together, the two Whittaker papers prescribe a means for producing a macroscopic Aharonov-Bohm effect at an appreciable distance — something which is eminently weaponizable.[96] It appears, of course, that the Soviet Union has done just that very thing.[97]

Distant Heating or Cooling: Hot or Cold Explosions

In the macroscopic world, interference of two OTH Whittaker beams of widely separated Woodpecker OTH transmitters produces EM energy at a distance (in the distant interference zone). However, this *outfolded-at-a-distance* energy can either be *negative* EM energy or *positive E*M energy.[98] Negative (timc-reversed) EM energy will do negative (negentropic) work: It

represents the reordering of scattered/disordered EM energy in the interference zone. This of course directly corresponds to *electrostatic cooling* in that zone.

On the other hand, positive (time-forward) EM energy will do positive (entropic) work: it represents the further disordering/scattering of the EM energy in the interference zone. This in turn corresponds to *electrical heating* in that zone. Whether heating or cooling is produced by Whittaker/Aharonov/Bohm (WAB) interference in the distant target zone depends simply upon how the electrical grounding of the Soviet Woodpecker transmitters is potentially biased vis a vis the local ambient vacuum potential in the interference zone. If the Woodpecker ground potential is higher, positive energy (and concomitant heating) will be produced in the distant interference zone. If the Woodpecker ground potential is lower, negative energy (and concomitant cooling) will be produced in the distant interference zone. The Whittaker scalar interferometer can produce the heating or cooling in the distant interference zone very slowly, gradually, or explosively." Indeed, incorporation of Whittaker's hidden EM structure inside the scalar potential requires a revision of all our present energy concepts.[100]

Artificial Highs and Lows to Steer the Jet Streams

One can now see that, by simply changing the biasing of the Woodpecker transmitters, in a distant region the Soviets can produce atmospheric heating (and consequent lower pressure from the lowered density of the expanded air) or atmospheric cooling (and consequent higher pressure from the increased density of the contracted air.). Thus the Soviets can easily make high pressure areas or low pressure areas in the Woodpecker interference zones over the U.S. (and elsewhere) as desired. By deliberately placing and moving these artificially created high and low pressure areas, the jet streams over North America can be deviated and steered at will. This is the major means by which the Soviets engineer the weather over the United States today. Recall again that the Woodpecker transmitters really were a Bicentennial gift to us from the Russians, for they were cranked full-up on July 4,1976. Since that time the weather over the U.S. has been far, far more anomalous than could even remotely be expected statistically. Note also that July 4, 1976 was the 77th anniversary of Nikola Tesla's discovery of his "standing columnar wave" — the Whittaker standing potential wave that the Soviet Woodpeckers utilize to engineer America's weather.

Soviet/German Discovery of TR Radar Waves

One should also realize that the Soviets discovered time-reversed (TR) EM waves right after World War II. In the latter 60's and early 70's, to their astonishment, Western scientists found time-reversed EM waves emerging in the open Soviet nonlinear optics literature. In 1972, two Soviet scientists briefed U.S. scientists at Lawrence Livermore National Laboratory on nonlinear optical phase conjugate waves.[101]

At the end of World War II, the Soviets discovered four-wave mixing and pumped phase conjugate mirror effects in the German radar team's anomalous radar experiments with multibeam illumination of radar absorbing material (RAM). Specifically, in multibeam illumination of RAM materials, one gets four-wave mixing and amplified phase conjugate replica effects. The phase conjugate replica, of course, is a time-reversed EM wave. Further, in four-wave mixing, this time-reversed EM wave can be amplified. Thus anomalous, amplified, time-reversed radar waves would have been encountered in the radar team's experiments. The Soviets obtained the entire German radar team — RAM materials, multibeam illumination anomalies and all — at the end of the war. In deciphering these anomalies, the Soviets and their German

protegees discovered time-reversed EM waves, phase conjugate replicas, pumped phase conjugate mirrors, and multiwave mixing effects. And they first discovered them in *radar* waves — microwaves — not in *optical* waves.[102]

Targeting U.S. Embassy Personnel in Moscow

Accordingly, the Soviets began to apply TR EM waves to *radar* (microwave) prototype directed energy weapons (DEWs) by about 1950 or so. And in the early 1950s they promptly started the weak microwave radiation of the U.S. Embassy in Moscow, targeting the U.S. Ambassador and guaranteeing highest-level U.S. attention. The purpose was to stimulate the U.S. with the new technology, to see what reactions and responses we produced on site at the Embassy. In other wnrds, by watching our *technical* reaction at the site, the "Embassy stimulus" allowed the Soviets to find out whether or not we knew about Whittaker potentials and their infolded EM substructures, Kaznacheyev EM induction of diseases, etc. By our total lack of any scalar EM reaction, we conclusively showed the Soviets that we still only knew of ordinary *externalized* (envelope) electromagnetics.[103] Specifically, we were totally unaware of the infolded-EM Whittaker potential wave whose deterministic internal structure constituted *specific cellular biological information.* This hidden *information content of the field* was utilized to generate specific diseases in U.S. Embassy personnel, including three U.S. Ambassadors.[104]

A Reinterpretation of the Johns Hopkins Investigation

Some years later, Johns Hopkins scientists investigated the Soviet microwave radiation of our Moscow Embassy and found that *no diseases were induced in personnel in Embassy locations where E- and B-fields from the radiation existed.*[105] The patterns of the non-zero force-field radiation areas inside the Embassy were carefully modeled by the Johns Hopkins team.[106]

Predictably, Johns Hopkins scientists ignored the potentials and concluded that, since no diseases occurred in personnel located where the E- and H-fields were, it could not have been the microwave radiation causing the effects. This conclusion, of course, follows the classical EM assumption that *only* the nonzero E- and B-fields are causative agents. Note, however, that the *persistence of the potentials* is inversely proportional to the strength of the EM force fields (Figure 12). After all, a force field is just a gradient in a potential, which means a *bleedoff* or escape of that potential by translation of charged particles. Potentials *persist* where there is no bleed-off (i.e., where there are no force fields). Whittaker potentials, which in the absence of interferometry do not produce external gradients, normally do not produce force fields and move electrons to measure. Normal instruments will therefore usually fail to detect the presence of persistent potentials — for exactly the same reason they fail to detect the ambient vacuum potential in which they are immersed.

The *Johns Hopkins scientists reached a totally wrong conclusion.* Since 1959 and the Aharonov-Bohm paper,[107] physicists have known that the EM force fields are not even primary; the potentials are primary, and the force fields are *effects* created directly in the system itself by interference of the potentials. However, as yet this has not widely filtered down into conventional electrical engineering as a major consideration! Precisely stated, what the Johns Hopkins investigation actually showed was that it was not the E- and B-fields — the force fields - that were inducing the diseases. However, the microwave radiation was definitely involved, or else there would not have been such total anticorrelation to the force fields. That is, if the microwave radiation was not a factor, then some of the diseases should have occurred in the absence of the force fields, and some should have occurred in the presence of the force fields.

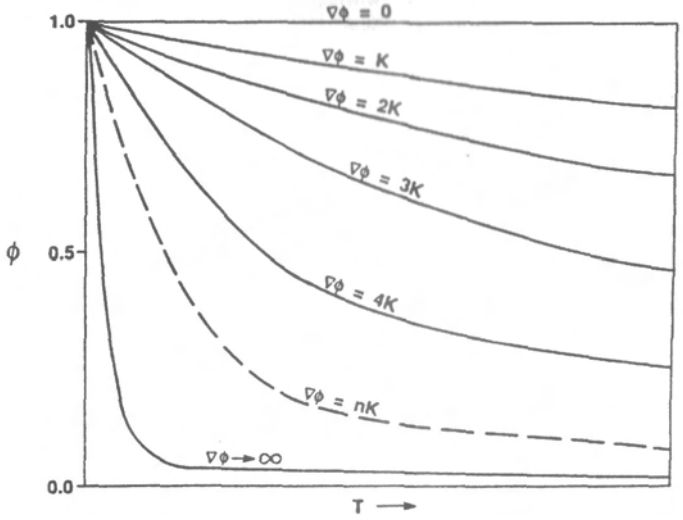

Figure 12. Potential persistence vs. gradient discharge. The curves are adapted to show typical declining exponential variation of the discharge.

Note that, other things being equal, total correlation to the absence of one of a pair of canonical variables may be very high correlation to the presence of the other canonical variable. From Whittaker's 1904 paper, we know that we can discard the notion of the E- and B-fields in the microwave radiation pattern in the Embassy, and replace these force fields with interfering, dynamic (changing) and *interfering* scalar EM Gelds. Indeed, as Whittaker showed, two source of interfering scalar potential fields/beams are sufficient to produce the EM force fields. *Twin-beam transmitters, and therefore the presence of interference — was in fact present in the microwave transmissions,* as verified later. Where Whittaker standing potential waves are not in interference, the waves remain as force-Geld-free potentials. In those regions, the E- and B-fields are zero.

The point is, the stable presence of EM force fields and the stable presence of EM scalar potentials are canonical. The hidden EM bidirectional wave structure of these stabilized potentials is still there and stabilized, even when the external force fields are zero.

That is, in the presence of the Whittaker potentials where scalar interferometry does not occur, the externalized EM force-field waves are zero. However, the internalized bidirectional EM wave structure of the Whittaker potentials is very much present. If the harmonics of the enfolded EM Whittaker structure have been deliberated created to possess a disease pattern signature, then that disease pattern is present in the persistent potentials. A body exposed to that activated potential will gradually "charge up" its master cellular communication system with the disease pattern. Thus that body will activate its defenses, try to throw off the disease, but be unable to rid its cellular control system of the cytopathogenic pattern that is affecting all its cells That body will thus gradually develop the disease, with sufficiently prolonged exposure to the cytopathogenic pattern on the internalized EM of the persistent potentials.

What Johns Hopkins researchers actually found is that the *changing* EM microwave potentials were not inducing the health changes in Embassy personnel. Ergo, if it was the electromagnetic radiation, it had to be the persisting (unchanging) potentials — the standing potential waves a la Whittaker. And there was essentially 100 percent correlation between induction of the diseases and the possibility of the presence of the persistent microwave EM potentials. From there, the induction of the diseases can be explained via Kaznacheyev's *cytopathogenic effect,*[108] Devyatkov's *information content of the field,*[109] and a deterministic infolded internal energy structure of the Whittaker potentials.[110]

The Johns Hopkins study actually showed a high correlation between the presence of persisting microwave potentials and the locations of the induced health problems in Embassy personnel Since it showed total lack of correlation to the force fields, it eliminated any other causative agent *except* the structured Whittaker potentials. If the microwave radiation had not been inducing the illnesses, then some health changes should have occurred in personnel in locations where the E- and B-fields were present, as well as in some locations where they were absent.

The Johns Hopkins team members were highly capable scientists and very good electrical engineers — but completely lacking in knowledge of structured Whittaker potentials, the Devyatkov/Whittaker infolded EM bidirectional wave-pairs that constitute a hidden deterministic Information content of the field, and the Kaznacheyev EM induction of disease at a distance (cytopathogenic effect). Of course, the twin-beam part of the microwave radiation gives a clue to the Whittaker/Aharonov/Bohm interferometry involved, and how to get the graviton (Whittaker potential) radiation back into EM photon radiation structures inside the Embassy interference zone.[111]

Advanced Photobiology Aspects

It should be pointed out that apparently the U.S. did not even bother to translate Kaznacheyev's important 1981 book on the EM induction of cellular death and disease.[112] Figure 13 shows a diagrammatic illustration of the cytopathogenic effect, as demonstrated in thousands of military experiments by Kaznacheyev's team. And apparently U.S. researchers still have not translated Devyatkov's book on the information content of the field.[113] The overwhelming importance of the most crucial photobiological work in the world simply has not been recognized to date by Western scientists and intelligence analysts.

If one checks Devyatkov's work, one finds that (1) the Russians obviously know all about the coded EM potential — they refer to the infolded EM waves in the Whittaker potential as the *information content of the field.* Devyatkov also points out the incredible medical implications, and strongly stresses that this is *not* normal communications theory! He gives a part of the theory in his paper — all the while carefully keeping from revealing that the "field" being structured with information content consists of the *structured scalar Whittaker potentials.* He is not referring to modulations on the carriers or to wave-front shaping of the EM forcefield waves. Of course he refers to healing and diagnosis; the effect can be used either for direct healing of diseases[114] or for the *direct electromagnetic induction of the desired diseases themselves.*[115]

Electromagnetic healing works this way: (1) The Kaznacheyev cytopathogenic signals for a specific cellular disease is time-reversed (phase conjugated). This produces a specific healing signal complex. The complex signal may also be powerfully amplified by pumped four-wave mixing techniques, using a pumped phase conjugate mirror. (2) The healing signal complex is infolded into a structured Whittaker standing potential wave. By Whittaker's 1904 paper, this infolds the signal complex into one or both of the two scalar potentials that are involved in the production of a normal EM wave. This process yields, for example, a normal EM wave which has

been internally altered with the hidden information content of that healing signal. Or, if one wishes, one may simply utilize a single Whittaker standing potential wave directly, and infold the healing signal complex in it. (3) The wave with its healing information content/structure is broadcast into a targeted living body, where it gradually charges up *(activates)* the body's master cellular control system with the desired healing signal complex. In turn, the cellular control system carries this complex to every cell of the body, gradually activating all of them with the healing signal. At the same time, the immune system is conditioned and charged (activated) for the specific healing process. Table 4 summarizes this EM healing methodology.

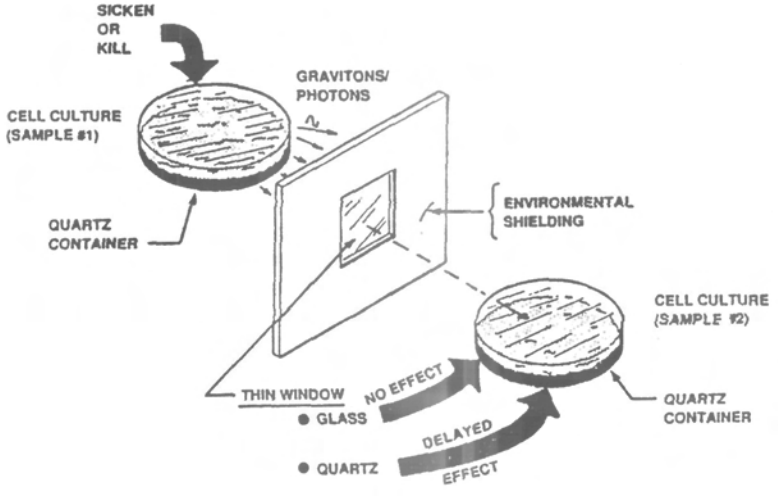

Figure 13. The Kaznacheyev cytopathogenic (CPG) effect. Death and disease transmission by deterministically structured gravitons. The gravitons contain disease-specific infolded photon patterns that represent specific disease information. The destruction of the harmonics of the Whittaker pattern destroys the time-sync of the photons, freeing them and destroying the gravitons.

Table 4. Countering EM Biological Warfare.

- **PER QUANTUM MECHANICS:**
  - **MECHANICS IS EM AT BASE**
  - **CHEMISTRY IS EM AT BASE**
  - **BIOTOXINS ARE EM AT BASE**
- **ALL BW IS EM BW AT BASE**
- **PREPARE WHITTAKER EM ANTIDOTE AS FOR AN UNKNOWN DISEASE**
- **IRRADIATE PERSONNEL WITH WHITTAKER EM ANTIDOTE**
- **DISEASE IS REVERSED IN SYSTEM TESTED**

The Soviets have long since developed this capability, and they continue to hold it highly secret. Techniques similar to this give the Soviet Union a perfect defense against surreptitious biological warfare.

The Soviet Union is in a position to be able to successfully defend against any sort of biological warfare attack, by any kind of biological agent. It is presently the only nation on earth that possesses such a capability, or that has the ability to employ biological warfare to the hilt without fearing retaliation in kind. Thus, *for at least three decades biological warfare has been a preferred Soviet option since no other country has such anti-BW defenses and the Soviet Union does.* And their decades-long microwave radiation of personnel in the U.S. Embassy in Moscow, to induce mysterious health problems and diseases, has continued to show them that the U.S. knows nothing of this technology, and is unprepared to defend against it.

Inducing Diseases in U.S. Embassy Personnel

In the microwave radiation of the U.S. Embassy in Moscow and the deliberated induction of diseases and health problems in Embassy personnel, Table 5 summarizes how the diseases and health problems are induced. All that is necessary is just to use and infold the Kaznacheyev cytopathogenic EM signal complex (the K-signal) directly into a Whittaker potential, without first time-reversing it. If only the optical spectrum for the specific cytopathogenic effect is available, it can readily be translated to the microwave spectrum by using the principle of subharmonic oscillation.[116] Such "specifically activated" potentials (signals) can be broadcast by transmitters as standing Whittaker potential waves, and used (with or without scalar Whittaker interferometry) to directly produce the disease pattern in targeted personnel. To produce efficient charging or activation of the targets with the disease pattern, the potentials must be persistent and stable, producing a steady "trickle current" of structured scalar potential pattern into the atomic nuclei of the bodies of the targets. There it gradually charges the nuclei and the master cellular control system.

Table 5. Electromagnetic Biological Warfare (EM BW)

- **DETERMINE KAZNACHEYEV OPTICAL DISEASE PATTERN**
- **TRANSLATE TO MICROWAVE FREQUENCY REGION**
  - **SUBHARMONIC OSCILLATION**
  - **RETAIN PRECISE HARMONIC RELATIONSHIPS**
- **EXPRESS MICROWAVE PATTERN AS A WHITTAKER/ DEVYATKOV STRUCTURE**
- **INFOLD SIGNAL COMPLEX INTO CARRIER(S)**
- **INCLUDE BIOSYNC MECHANISM OR OVER-RIDE**
- **TRANSMIT INTO TARGETED POPULATION**
- **ACTIVATION/KINDLING OCCURS, INDUCING DISEASE**

Real transmitters and equipments are imperfect. When these internally structured Whittaker waves are utilized in real transmisions, some interference of the infolded waves usually may

occur. Thus small, normal EM signal frequencies — similar to EM "splatter" or noise, but consisting of small, outfolded complex EM frequency spectra (according to Whittaker's 1904 paper) — may still be produced. U.S. investigators will detect *that* spectrum of normal EM waves, using their normal EM detectors. They will then puzzle over what the detected spectrum and its changes and content mean. Again, this is one more refinement of the stimulus to see if the U.S. recognizes the Kaznacheyev/Devyatkov content, and whether it knows how it was infolded and outfolded. For this reason, the Soviets often used twin-beam microwave radiation, to provide the necessary Whittaker scalar interferometry for outfolding to guarantee our detection of E- and B-fields inside the Embassy.[117] This deception plan, for example, seems to have completely fooled the Johns Hopkins researchers.

Thus the Soviets can intentionally induce desired disease(s) in human or animal bodies at a distance — such as in personnel inside the U.S. Embassy, in a targeted population half way round the world, or in a targeted mammalian population such as porpoises in the ocean.[118] Sea lions or seals would also provide excellent test specimens for such clandestine testing.[119]

However, note that in the target zone the diseases will be induced only where the potentials persist — that is, where there are little or no E- and B-fields formed to "bleed-off" the structured or *activated* potential that contains the infolded disease signal complex. *Note again that this sort of thing is precisely what the Johns Hopkins study really showed, but the study scientists did not consider the potentials and their persistence as a possible inducing agent, since they had no knowledge of Whittaker-structuring of potentials.*

Pieces of the Vacuum Medium

We have previously detailed some of the things that can be done with this approach — and some of what *has* been done with it by the Soviets. Some of this documentation has been with respect to Soviet biological warfare,[120] some has been with respect to Soviet scalar EM weapons,[121] phase conjugation in Soviet superweapons has been accented,[122] and Soviet prowess in weather engineering and steering of the jetstreams over North America has been documented.[123] The reader is also strongly referred to my July 1989 update[124] delivered to the USPA Annual Symposium, Sacramento, California. There the reader will find how to directly unify gravitation and EM in the most fundamental manner: by letting the simplest graviton (spin 2) be composed of a coupled photon/antiphoton (each of spin 1) Whittaker substructure wave pair.

Potentials are composed of gravitons, not just photons. Per Devyatkov and Whittaker, gravitons can be deliberately structured internally so that they contain any desired photonic pattern/structure of spacetime whatsoever — including specific structures for a specific disease information content.

The graviton is a flexible, dynamic *piece of the local vacuum medium.* The exact photon coupling of the photons and antiphotons is statistical; that is, they are always coupling and uncoupling at a tremendous rate, at any point. The average coupling gives the average value of graviton spin The graviton is the photon-coupled aspect; coupling is statistical, and so the graviton is just the statistical average of the photon/antiphoton coupling. Spin-two gravitons constitute an uncurved local spacetime. Gravitons which *on the average* are substructured with less than or more that two photons, so that each total graviton spin is less than or greater than two, constitute a locally curved spacetime. That condition violates Einstein's general relativity assumption (postulate) that the local spacetime is always flat.

This piece *of the vacuum medium* — the photon-structured statistical graviton — is considered high state secret by the Soviet Union.[125]

The Quantum Potential

The present author's 1989 USPA *Scalar EM Update* paper also developed a specific mechanism by means of which a *quantum potential (QP)* is generated, either accidentally or deliberately.[126] Formation of a quantum potential leads to *nonlocal* effects being produced instantaneously between participating components and equipments, even though they may be widely separated. When the equipments start being connected by a common quantum potential, these widely separated equipments and/or materials start partially acting as if they were all part of the same *local* system, and not separated at all! The effect (self-ordering of the potentials into a quantum potential) increases as the signal density of the environment increases.

Note that a local observer at one of the pieces of affected equipment will see anomalous and spurious internal EM signals apparently "generated" internally in, and appearing in, his electronic equipment, with no apparent cause or logical explanation. Indeed, since we do not design and build electronic equipment to operate in a quantum-potential connected manner, the extra signals cause serious interference in the electronics functioning, often even damaging or destroying the circuits themselves. Every signal produced in any one of the QP-participating equipments is at least partially and instantly input to all the rest of the participants as well. Thus each local observer sees anomalous and spurious internal "jamming" signals that interfere with the electronics functioning, and that may even disable or destroy it Again, he sees no logical explanation for these mysterious internal jamming signals, which seem to spontaneously arise out of nowhere. When subjected to the QP effect, electronic equipments throughout an area exhibit massive and shocking aberrations, bizarre malfunctioning, and spurious failures. Every circuit, equipment, generator, warm source (IR), etc. in the area contributes to the effect. It is purely a function of the signal density, and has only very little to do with the power of the individual signals.

A startling example of the formation of a quantum potential, and an unexpected severe effect from these nonlocal effects, was experienced in the April 1986 U.S. air attack on Libya. The QP formed as a result of the increased signal density (and the concomitant increased occurrence of multiwave mixing phenomena) of the EM environment.[127] Figure 14 and Table 6 illustrate these anomalies experienced in the attack. Table 7 summarizes recent Pentagon studies of electromagnetic interference (EMI). It appears that, unless EMI shielding is universally incorporated in U.S. equipments, U.S. military forces may encounter catastrophic electronic equipment failures in the *really* dense signal environment expected in the European theater.

Even with EMI shielding, however, there is another effect, presently unknown to U.S. analysts, that may well predominate: that is, the formation of a quantum potential can still occur. If a QP forms, the subsequent wholesale failure of electronic equipments on the battlefield due to nonlocal self-ordering of the atomic nuclei in the radiating circuits and equipments may prove catastrophic. Further, both enemy and friendly radiations and circuit signals will contribute to increasing the effect. Figure 15 shows the mechanism for generating a QP.

The Soviets, for example, are fully aware of this QP effect, including how to deliberately generate a quantum potential in a given area. They also can be expected to know how to shield their own electronic equipments against these nonlocal QP effects, so they can operate in a QP environment — at least in one that is not too strong, but which would still be strong enough to disable and destroy electronic equipments not shielded against quantum potential self-ordering Of the nuclei. The West does not yet even know of the QP effect, much less how to shield against it. The U.S. shields against ordinary EMI, but knows nothing of the quantum potential and does not shield against it. EMI shielding will increase the signal density required for QP formation by about two or three orders of magnitude, but will not eliminate the effect. It will just move the QP effect to a higher threshold of formation.

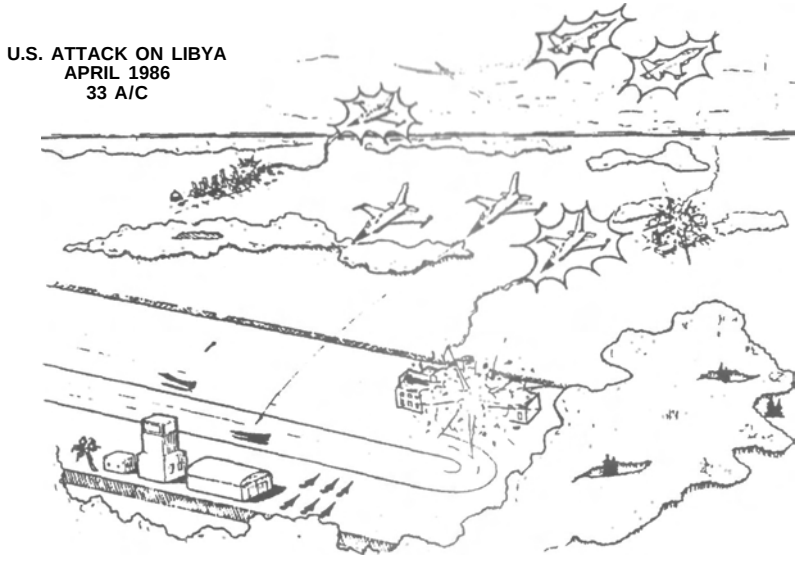

Figure 14. The quantum potential EMI "fireflies" effect.

Table 6. Real-Time Anomalous EMI Interference Via Quantum Potential. U.S. Airstrike on Libya in April, 1986.

[WASHINGTON POST, 22 JANUARY 1989, p.A4]

- **33 U.S. AIRCRAFT IN STRIKE**
- **MANY HIGH-POWERED TRANSMITTERS**
  - **COMMUNICATIONS JAMMERS**
  - **RADARS**
- **SEVERE, UNEXPECTED EMI ENCOUNTERED**
  - **ONE F-111 DOWNED**
  - **NUMEROUS WEAPONS WENT ASTRAY**
  - **THREE FOREIGN EMBASSIES DAMAGED**
  - **SEVEN AIRCRAFT ABORTED**
- **STRIKE COMPLETED, BUT WITH DIFFICULTY**
- **IRATE COMMANDERS AFTER STRIKE: "US OR THEM?"**

Table 7. Recent Pentagon EMI Studies.

- **U.S. TRANSMISSION COMBINATIONS CAN**
  - **AFFECT AIRCRAFT FLIGHT CONTROL**
  - **TURN OFF FUEL SUPPLY**
  - **CAUSE UNCOMMANDED DIVE/TURN**
  - **BRING DOWN U.S. WARPLANES**
- **SEVERE EMI EFFECTS IN STRIKE ON LIBYA**
- **UH-60 BLACKHAWK HELICOPTER PROBLEMS**
  - **UNCOMMANDED TURNS**
  - **FIVE EMI CRASHES SINCE 1982**
  - **$175 MILLION PROGRAM LAUNCHED TO SHIELD IT**
- **7-MONTH PRELIMINARY AIR FORCE STUDY OF LIBYA EMI**
  - **SEVERE EMI PROBLEM EXISTS**
  - **EMI SHIELDING IN HI-TECH WEAPONS OFTEN WAIVED**
  - **THOUSANDS OF CONFLICTS POSSIBLE**
- **MAJOR 3-YEAR, $35 MILLION, 66-MAN STUDY PERFORMED**

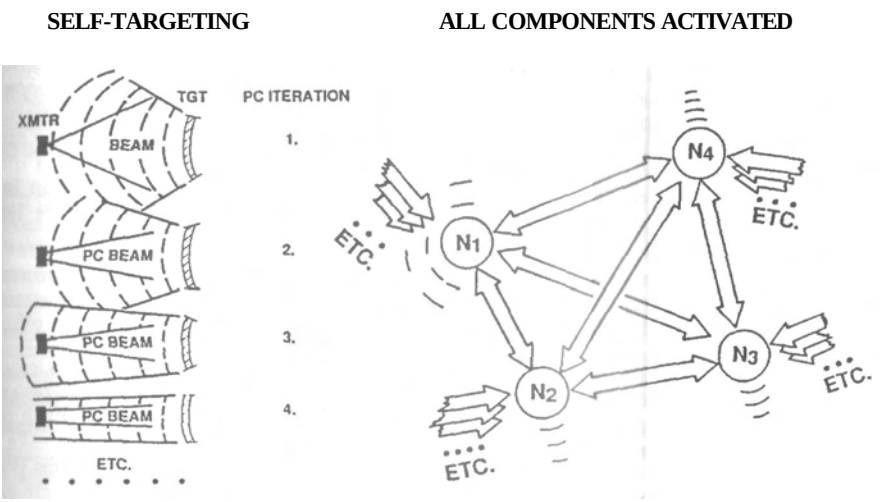

Figure 15. Mechanism for forming a quantum potential. Self-targeting exchange in infolded Whittaker channels between nuclei leads *to* nuclei pumped four-wave mixing, amplification, and consequent growth of time-sync'd potentia (the quantum potential) in widely separated nuclei and signal-interacted equipments.

Variations of the Woodpecker transmitters, for example, and of ultra-wideband transmitters could be adapted for the purpose of creating such an EM signal density in the environment that a quantum potential would begin to form.

Thus on a future battlefield, we may still get the shock of our lives when a great deal of our high-tech equipment — which is very good equipment — suddenly begins to malfunction and fail. Systems such as surface-to-air missile systems, radar systems including AWACS, power generators, tank fire control systems, aircraft avionics and fire control systems, missile guidance and control systems, and communications systems may fail us at the most intense part of the battle, when the need is the greatest, if a quantum potential forms on the battlefield.[128]

What I did not mention in my 1989 Sacramento paper is that the quantum potential can also be internally structured with a deterministic, enfolded EM content. The QP is also constructed of photon-structured gravitons, just as is the normal potential. The QP therefore has a Whittaker bidirectional transverse wave substructure. Note particularly Ignatovich's mention of just such a structure in the potential for the Schroedinger equation (see reference 16 above). Transmission of the graviton envelope is essentially a phase wave transmission and is instantaneous. We accent that, when QP weapons are utilized and a deliberate Whittaker structure is introduced in it, very powerful effects can be generated that cannot be resisted or opposed by ordinary means. A QP, for example, can conceivably be tailored so that it nullifies or destroys only a single, particular type of weapon or system, or mix of them. *It can be used to generate any desired effect in equipment or personnel at a distance.*

In this manner, the biological cytopathogenic effects — cellular death and disease — can also be produced *at a distance* and throughout a very wide area, without any *apparent* direct EM transmission of them in the ordinary sense. (Of course a *healing* signal can also be implanted in a QP, as an antidote.) It is conceivable that, using the Woodpecker transmitters, the Soviets may be able to induce in a targeted population the eerie situation where, the more persons that become infected with a particular disease, the more infectious the disease becomes *by noncontact means, directly through a specifically structured bio-quantum-potential linking that population.* Further discussion of this quantum mechanical action-at-a-distance EM biological warfare effect is beyond the scope of this paper. The reader is referred to cogent references on the quantum potential[129], on the Aharonov-Bohm effect,[130] and on the inconsistencies between quantum mechanics and general relativity.[131,132,133] The reader may combine the information in those quantum potential references with the information in this paper and draw his or her own conclusions.

Detection of Scalar EM in Woodpecker Signals

In August 1989, a close colleague/inventor friend positively detected scalar EM radiation directly connected with several giant radial clouds in the sky just off the California coast. Each of these clouds was "stabilized" against winds and did not move; other normal clouds in the sky moved right along in the winds blowing inland from the ocean. Further, on several occasions the scalar EM radiation was observed by my colleague to suddenly be cut off, and in each case thai associated radial cloud dissipated within seconds. Such giant patterned clouds, with radial cloud streamers radiating from the center, have been widely observed across North America, connected with Soviet weather engineering.[134] Speculation on this scalar beam weather engineering has been published in a national medium.[135] Several types of radial clouds — the single radial, the connected twin, and multiple separate singles and twins — have been observed.[136]

Whittaker Waves. Aharonov-Bohm Effect, and Hidden Variables

Note that Whittaker's 1903 paper[137] predates the modern (Bohm's) hidden variable theory (HVT) of quantum mechanics.[138] Whittaker's 1904 paper[139] — producing EM forces from interfering scalar EM potentials, even at a distance — also predates Aharonov and Bohm's seminal 1959 paper[140] on the primacy of the EM potentials rather than the force fields, and their prediction of just such a Whittaker scalar interferometer effect in the total absence of the electromagnetic force fields.[141]

Recently modern researchers, working on acoustic missiles and with the scalar acoustic wave equation, have "rediscovered" Whittaker's 1903 infolded bidirectional planar waves inside the scalar wave[142]; however, apparently they have not yet realized the application of this to scalar E*M* potentials, for use in their work on *electromagnetic* missiles. Thus it appears that our directed energy researchers are still not fully aware of the scalar extent of the Russian microwave directed energy techniques and capabilities.

More on Kaznachevev and Priore

In the U.S. neither the intelligence community nor the scientific community at large seems to have become aware of Whittaker's infolded intermodulating pairs of bidirectional EM transverse waves inside a standing potential wave,[143] and of their importance. Obviously our scientists and analysts therefore have not connected Whittaker structuring of the potential with Devyatkov's information content of the field, or with Kaznacheyev's cytopathogenic effect — the induction of cellular death and disease electromagnetically at a distance. As briefly covered in this paper, this Whittaker internalized EM energy mechanism *is* the mechanism that has been used by the Soviets in the microwave radiation of personnel in the U.S. Embassy in Moscow for over three decades, to generate health problems and diseases. Two U.S. Ambassadors were stricken with leukemia-like disease and died.[144] A third Ambassador (Stoessel) sickened during his tenure and even bled from the ears. Some years later, Stoessel also died of a leukemia-like disease.[145]

While the U.S. officially held steadfast to its pronouncement that the microwave radiation was harmless and not the cause of the personnel sicknesses and health problems, the Moscow Embassy was declared a hazardous duty post and government personnel were given a 20 percent differential in pay. Obviously the radiation was important to the Soviets, because they ignored requests from several U.S. Presidents to stop the radiation. The Johns Hopkins study[146,147] actually provides very strong correlation of the induction of health problems in Embassy personnel to the presence of persisting (unbled) potentials rather than forcefields (bleeding-off potentials).[148] Note that Kaznacheyev — the world's greatest expert in the electromagnetic induction of death and disease at a distance — now works with two secret Soviet agencies near Moscow which develop high-powered microwave directed energy weapons.[149] The obvious conclusion is that the Soviets are also developing, or have already developed, a range of powerful photogravitational EM BW weapons of mind-numbing power.[150]

Further, the U.S. has obviously not connected Whittaker's fundamental work with Antoine Priore's phase conjugating and multi-signal-infolding RF/rotating plasma device for curing cancer and leukemia with just such potential fields with infolded EM information content.[151],[152],[153] This means that U.S. analysts have not realized that phase conjugating a Kaznacheyev cytopathogenic signal pattern for a particular disease generates a specific healing (Priore/Devyatkov) signal for that disease. Consequently Western scientists have not realized that this mechanism can quickly provide a specific antidote signal for any biologically-induced disease, either known or unknown. Translation of the antidote signal to microwaves, etc. then readily yields a specific and effective

treatment signal. Tables 8 and 9 summarize the effective gravitobiological countermeasure to biological warfare.

Table 8. Countering EM BW (Cytopathogenic Signal Available)

- DETERMINE INFOLDED EM BW SIGNAL STRUCTURE
- TRANSLATE TO MICROWAVES
- PHASE CONJUGATE TO PRODUCE EM ANTIDOTE STRUCTURE
- INFOLD EM PHASE CONJUGATE STRUCTURE INTO CARRIER POTENTIAL
- IRRADIATE AFFECTED PERSON/POPULATION
- ACTIVATION/KINDLING OCCURS, REVERSING THE DISEASE

Table 9. Countering EM BW (Cytopathogenic Signal Unavailable)

- TREAT AS IF FOR UNKNOWN DISEASE
- CONSTRUCT EM BW SIGNAL STRUCTURE FROM DISEASED CELL CULTURES
- TRANSLATE SIGNAL COMPLEX TO MICROWAVES
- PHASE CONJUGATE SIGNAL COMPLEX TO PRODUCE ANTIDOTE STRUCTURE
- INFOLD EM PHASE CONJUGATE STRUCTURE INTO CARRIER POTENTIAL
- IRRADIATE AFFECTED PERSON/POPULATION
- ACTIVATION/KINDLING OCCURS, REVERSING THE DISEASE

Biological Warfare Implications

To date, the U.S. has not realized the profound biological warfare (BW) implications of all this. The real BW implications (Table 10) are as follows: (1) The Soviet Union has developed, tested and perfected methods of inducing cellular changes, diseases, and death at a distance by means oft specialized electromagnetic signals, whose specialized structure is not discernible or detectable by normal detectors. (2) The Soviet Union has developed, tested, and perfected methods of quickly producing EM antidotes to counter disease induced by any sort of new and unknown biological warfare agent. Mass EM treatment of personnel — including whole populated areas — can begin probably within two hours or less from the time personnel first are exposed or start to sicken. (3) The Soviet Union therefore is the only nation in the world that has a complete

affective counter to biological warfare. (4) The Soviets now regard biological warfare — particularly covert and deceptive BW — as a highly preferred option, because of the defenselessness of other nations against BW attack, and the strong ability of the Soviets to defend and negate such attacks in retaliation. (5) This BW preference has already existed in the Soviet Union for at least two decades, based on the timing of the Kaznacheyev experiments, Devyatkov work, and early period of the demonstrated Priore effects in France. (6) As clearly demonstrated, for example, by the long U.S. inaction or ineffective action regarding the Soviet microwave radiation of our Moscow Embassy, the U.S. has a characteristic national style of little or no reaction to slowly increasing threats, and this is well-known to the Soviet. (7) *Given the first six BW implications, it is highly probable that the Soviets have already unleashed clandestine, "slowly increasing" biological warfare against the West, both with BW agents and/or EM agents, or EM augmentation.*[154]

Table 10. Biological Warfare Implications.

- THE SOVIETS HAVE DEVELOPED AND PERFECTED HIGHLY EFFECTIVE
  - EM BIOLOGICAL WARFARE
  - COUNTERS TO BIOLOGICAL WARFARE
  - MASS DEATH RAY WEAPONS
- THE USSR IS THE ONLY NATION WITH A COMPLETE COUNTER TO BIOLOGICAL WARFARE
- BW AND EM BW (COVERT AND OVERT) ARE PREFERRED OPTIONS FOR THE SOVIET UNION
  - MUTUAL ASSURED DESTRUCTION IS TOTALLY DESTABILIZED FOR SUFFICIENTLY COVERT SOVIET BW STRIKES
  - SITUATION HAS EXISTED FOR AT LEAST TWO DECADES
  - U.S. NATIONAL CHARACTERISTIC: NO REACTION TO SLOWLY INCREASING THREAT
- THE SOVIETS MAY HAVE ALREADY UNLEASHED A MAJOR "SLOWLY INCREASING" BW STRIKE: AIDS

Work of Beck. Hunt, and Lisitsyn

We mention one indicator of Soviet EM BW *capability* designed into the Woodpecker weapon system. Using this design capability, entire distant populations can be biologically attacked by the Woodpeckers, based on other known capabilities that have been observed in the Woodpecker signals.

Some years ago, Dr. Robert Beck observed transmitted signals on some 15 or more simultaneously Woodpecker channels where their ELF (e.g., 10 Hz) pulse repetition rates were precisely phaselocked together.[155] Further, ELF waves in the vicinity of 10 Hz have been shown to be capable of entraining the normal brainwaves of humans.[156] Normally a healthy person's

brainwaves would appear to be comfortably entrained to the 7.83 Hz main Schumann resonance of the earth's magnetic field. This means that, under those conditions, the common 10 Hz pulse repetition rate of the Woodpecker is capable of entraining the brainwaves of a percentage of the population in a distant targeted area. (To entrain a greater percentage, the transmitter power would simply be increased).

Each entrained distant brain has 15 or more "signal channels for Whittaker infolding", and for induction of cellular diseases and death, behavior changes, etc. a la Kaznacheyev and a la Devyatkov. Further, the Soviets have the proper phasing in the entrained brains: by phasing input conglomerates of signals and infolding them a la Whittaker, they are properly aligning those infolded signals for in-phase delivery to the distant entrained brain. Figure 16 shows this situation.

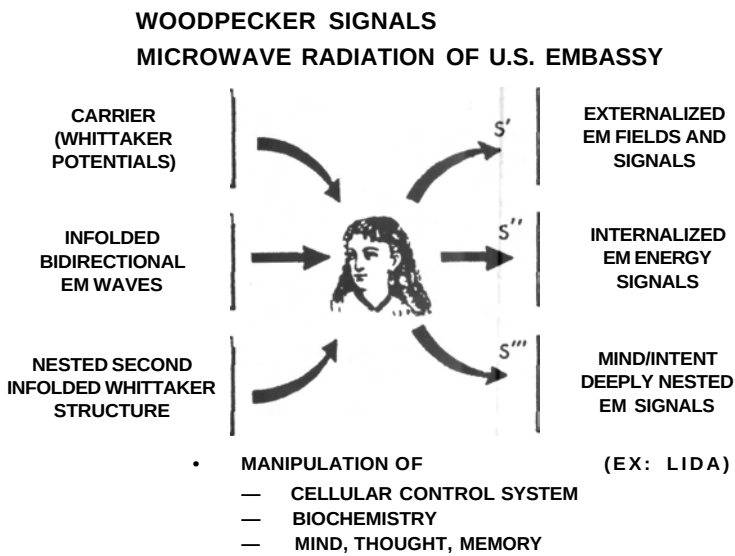

Figure 16. Strategic EM BW implications of world-wide targeting transmitters such as the Soviet Woodpeckers.

In epochal work, Dr. Valerie Hunt has already shown that human brain waves contain hidden order. In her seminal experiments, first each of several detected ELF frequency bands of human brainwaves was split into two replicas, and one of the replicas was delayed for, say, 6 milliseconds. In each frequency channel, the delayed and nondelayed signals are then beat together and recorded on an oscillograph. Under these conditions a startling pattern of *chaotic attracted* appears in the recorded oscillograph traces. This shows clearly that hidden deterministic substructures of hidden EM order exist concealed inside human brainwaves. Since Dr. Hunt has deliberately selected multiple frequency bands, this implies that this hidden order probably represents deterministically created and infolded multiple EM bidirectional waves (channels) is Whittaker potentials. *This is very strong evidence that the human brain utilizes Whittaker potentials and Whittaker-infolding in its internal communications — directly correlating with the Soviet approach by Kaznacheyev, Devyatkov, and Lisitsyn.*

In the latter 1960s S.K. Lisitsyn[157] pointed out that the Soviets had broken the "genetic code" of the human brain. (See Table 11). Lisitsyn reported that, in some 23 frequency channels in all, 11 were independent. This implies that a minimum of 11 independent infolded Whittaker bidirectional EM wave bands are required for the mind's control of all the functions of the body, both mental and physical. This lends further EM BW importance to Beck's observation of multiple Woodpecker channels — more than the *"Lisitsyn minimum"* required if infolded in a Whittaker potential wave and used to produce *almost any kind of mental or physical effect in distant targeted populations.*

Table 11. Lisitsyn's Report.

- THEORY DEVELOPED AND FITTED
- HYSTERESIS MEMORY LOOP
- CONTROLLED INDUCTION IN MIND
  - IMAGES
  - SENSATIONS
  - PREDETERMINED EMERGENCE
- 23 EEG BANDS
  - UP TO 8.1×10^{20} HZ
  - 11 INDEPENDENT CHANNELS
- HUMAN BRAIN CODE BROKEN (DECYPHERED)

If a distant brain is entrained by the Woodpecker, all 15 or so phaselocked Woodpecker channels, when infolded, would also be phaselocked into that brain, for possible Kaznacheyev disease induction or Devyatkov induction of behavior and cellular changes, etc. *It is also possible to produce direct images, emotions, thoughts, and memories in distant brains and personalities, via the Whittaker-structred potentials.* This was long ago hinted at by Soviet researchers in their heavily censored publications on *"biological radio."*

Explanation of EM Biological Trigger Windows

A straightforward explanation now is possible for the strange phenomenon of many biological-effect EM "triggers" being (1) very, very weak and (2) having a narrow window of EM amplitude of power. Below a minimum EM power level, the effect does not occur; and above a maximum EM power level that is only slightly higher, the biological effect also does not occur. Only within the narrow power window is the effect induced by the EM trigger signal.

This window effect can be readily understood when one realizes that by "weak envelope magnitude, or power," one is actually expressing and dealing with a function of the integrated (summed) power of *the total number of infolded Whittaker bidirectional planar waves,* both coherent and incoherent, contained in the structuring of an artificial potential. We further are comparing the degree of coherence of that potential's substructure to its degree of incoherence.

However, now we must use a quite different comparison and analysis process from that of ordinary analog signal theory. By analogy, this dependence upon the *number* of infolded signals is comparable to a *digital* process, such as that of the dot resolution of a printed picture. Also, it is an *imperfect* process. We are speaking of a case where each thing (dot) is a little bit fuzzy, not completely razor-sharp. Our problem is that now (1) we must have sufficient dot density (of our fuzzy dots) to have a clearly recognizable image, yet (2) we must not have so great a density (of our fuzzy dots) that the image is smeared out and obscured in a sea of common gray or black fuzziness. Table 12 summarizes the effect.

Table 12. Why EM Trigger Windows?

- WELL-KNOWN WINDOW EFFECT
  - WEAK EM TRIGGER SIGNALS
  - MINIMUM SIGNAL STRENGTH THRESHOLD
  - SLIGHT INCREASE OKAY (GIVES WINDOW)
  - LITTLE MORE INCREASE EXCEEDS MAXIMUM THRESHOLD
- CHARACTERISTICS OF
  - CHAOS (HIDDEN ORDER INSIDE DISORDER)
  - QUANTUM CHANGE (PHOTON) IS FUZZY
  - DIGITAL RESOLUTION OF FUZZY DOTS
- REFER TO LOGISTICS EQUATION (CHAOS)

So unless a certain number of coherent EM transverse waves (fuzzy dots) are infolded (printed), the pattern (image) to be engendered in the target is sufficiently incomplete that it cannot sufficiently "charge" and structure the dynamically-fed potentials of the cell. That is, the ratio of the amount of internally infolded signal (i.e., of the dots) to the amount of noise already in the infolded potential structure — the *signal-to-noise ratio*, or the *contrast* — must be sufficient to produce a stabilized signal *(resolved image)* within the potential's substructure, *over and above the noise that already exists therein.* Otherwise there is insufficient resolution. In turn, this accounts for the minimum value of the EM threshold for induction of a particular biological effect: it is the threshold where the activation signal complex becomes recognizable or detectable by the biosystem's internal Whittaker-channel detectors. At the minimum threshold, there are enough dots (infolded coherent biphotons) to discriminate coherently-structured gravitons.

Also, corresponding to each dot being fuzzy, each infolded EM wave is actually imperfect. It itself possesses noise distortion (fuzziness, or some lack of resolution) of its own. Remember, both the photon and the graviton are *statistical* entities; they are not at all "brick-like" particles. Therefore, not only does one infold a "pure EM activation signal" on each wave, but one also infolds some inadvertent "EM distortion" (fuzziness) as well.

As integration occurs and more activation signal is collected, additional noise (fuzzines, smearing) is also infolded inside the potential's structure. As collection continues to increase, the resolution of the signal is gradually deteriorated. When deterioration is sufficient, resolution of the image (pattern) by the biological system's detectors is no longer possible. This accounts for a maximum threshold at which the coherence of the signal has been lost.

Thus this accounts for the maximum value of the EM threshold for induction of a particular biological effect. Above the maximum threshold, internal signal resolution is lost. Additional power may produce gross energy effects (heating, chemical changes, mechanical damage), but will not produce precisely controlled changes via the mechanism of redirecting the body's own internal control mechanisms.

When the signal is within the window, the signal-to-noise ratio (and the resolution) is discriminated to produce a stabilized pattern/signal (image), and so this signal complex will activate and charge the system until the biological effect macroscopically emerges. That is, within the window the signal resolution is sufficient to produce *the information content of the field* that generates and activates the biological effect, *using the body's own internal control system.* Depending upon the particular physical/chemical/biological effect engendered, the biological response may be (1) immediate, (2) after a short "charge-up" time delay, (3) after a more extended "charge-up" delay, or (4) after a substantially extended "charge-up" delay that may be many years.

We now are equipped to understand the "window of magnitude" that most often exists in the weak EM induction of biological effects in living systems. Only at or above the minimum threshold does sufficient resolution of the pattern signal for biological activation occur. Above the maximum threshold, the infolded pattern or "image" is no longer discriminated.

The amplitude of the weak signal potential our normal instruments are measuring is in general a function of the summation of the simultaneous amplitudes of the infolded and hidden Whittaker EM waves inside that potential. Further, most of our instruments have nowhere near the response needed to accurately measure individual components of such an ultra-wideband series of frequency signals as evidenced by Lisitsyn. Therefore, in most experimental work in the literature, our instruments have grossly integrated the signal complexes over a relatively long time. That is, our instruments have almost never yielded anything of the structure we were trying in measure. *Presently most of this is hidden in what we simply see as very fine noise in our instruments, if we see it at all* Roughly, then, the measured amplitude of the potential we see is a (nonlinear) function of the number of infolded Whittaker EM waves, to the first order. The minimum number of infolded EM signals required for image resolution, together with the maximum number of infolded EM signals that must not be exceeded if image resolution is not to be lost, are the two primary factors involved in whether activation occurs or not. They create the minimum and maximum signal thresholds for inducing the biological effect.

Relation to Chaos Theory

Most of this can be much more precisely stated in terms of chaos theory, but that is beyond the scope of this paper. However, for an indication, see Figure 17, which is a standard portrayal of the chaos inherent in the logistic equation. We can readily understand the minimum and maximum biological trigger thresholds from this figure. As can be seen, as the R value increases toward 1, there is no discernible pattern or "image" (signal). That is, there is insufficient resolution to detect the true signal order. At a threshold just past R=1, resolution rapidly improves so that a true, discernible analog pattern or signal (line) exists. Just before reaching R=3, the "fuzziness" spurts up again, until bifurcation occurs. Now there are two values, or *two* discernible analog signals, one of them nearly the mirror image of the other. At about R=3.5, fuzziness starts to increase again, this time due to another bifurcation. Thereafter bifurcation increases so dramatically that, between about 3.5 to 4, rapid loss of any recognizable analog pattern or signal occurs. From R=4 on, the system is totally chaotic, and absolutely no recognizable "image" (signal) occurs.

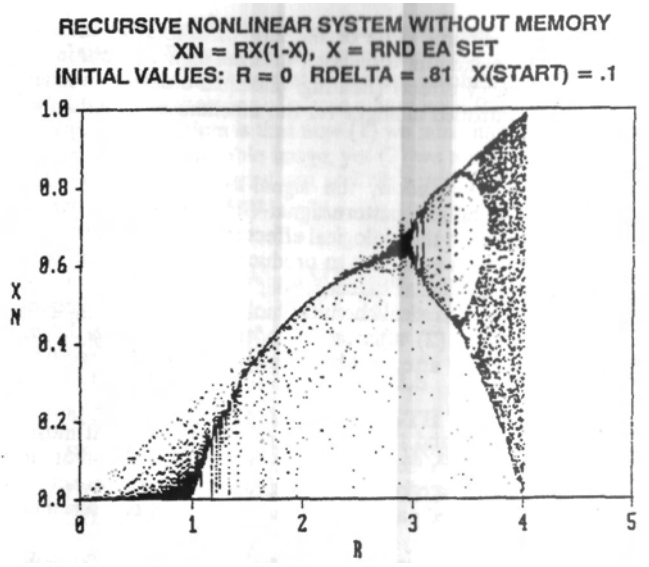

Figure 17. Chaos: The collected emergence of large-scale order from disorder. The apparent disorder actually contains hidden order.

The human biological EM system works this way. As can be seen, for activation/kindling there is a "window" with minimum and maximum values. Only in this window is there a discernible image (signal). Normal detectors tend to determine only the analog (envelope) value, not the individual structure showing the window where the coherent signal is reasonably resolved.

Experimentally, the situation is further compounded by the fact that the instrument itself also exhibits chaos effects such as the window of the logistics equation.

More On Internalized Energy

Again, it should be strongly accented that *the true "living EM energy" of biological systems is internalized, infolded EM energy.* It is the infolded and hidden EM energy of the organized bidirectional EM wave systems inside the Whittaker potential. It is *photon-structured graviton* energy. This is not the externalized EM energy of the EM wave envelope, with which Western science is presently so preoccupied. This energy does not appear in the electrical engineering or electrical physics textbooks. Nonetheless, our health and our very lives depend upon it.

Plants, animals, the earth, the oceans, the rivers, the atmosphere, and the clean environment are continually activated and filled with this internalized, infolded EM energy. In its radiation, the Sun pours forth enormous amounts of it (Figure 18), which we never measure with *our* instruments. The earth, sun, and moon particularly — and the other planets to a lesser extent - form a giant, Whittaker-communicating system that provides the very lifestream that sustains us

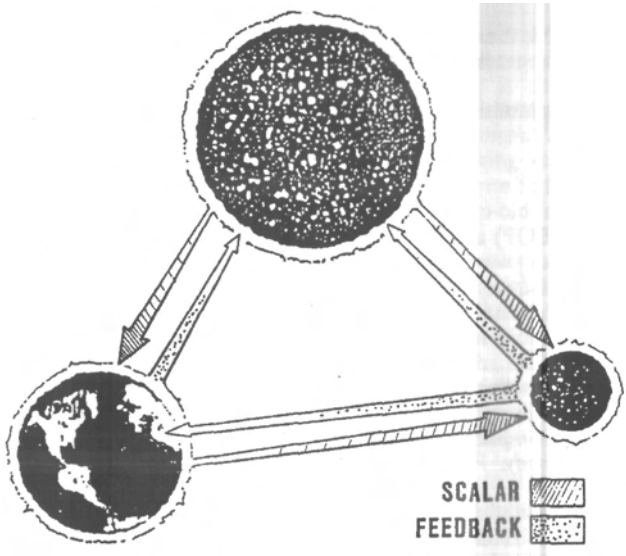

Figure 18. Earth, Sun, and Moon are Whittaker-coupled.

Mechanisms For Evolution. Gaia. and Morphogenetic Field

For all the creatures and species on earth, the Whittaker structured potential mechanism provides the precise physical mechanisms for evolution, and for Sheldrake's *morphogenetic field*. Every creature continually contributes structures into the quantum potential for its own species, and the quantum potential for every species is part of the overall planetary quantum potential for all its living things.

Each species has its own quantum potential, to which every action, movement, thought, or incident of, by, and to its members contributes a minute amount of substructuring. Thus very, very slowly the species bio-quantum-potential adapts from the combined experiences of all its members, and the species "learns." Sudden wholesale changes, of course, can extinguish a species before this mechanism has time to adapt. But if the species has time, it will adapt to even harsh changes inflicted by its environment, and it will change and survive. The *species bio-quantum-potential* provides the exact mechanism for the species to change, adapt, and evolve to survive the slowly changing adversities of its environment.

lt should specifically be noted that potentials organize into entire hierarchies of organization. That is, a potential is normally a conglomerate composed of many smaller potentials, each of unique Whittaker structure. The stress of a potential is rather analogous to the pressure in a mixture of gases; the overall pressure of the gaseous mixture is composed of *partial* pressures of the various gaseous components. Each gaseous component has its own individual contribution to the overall pressure of the entire gaseous mix.

In the case of the potential, the overall Whittaker structure of a particular potential is comprised of the overall Whittaker structures of its component potentials.

The point is, a quantum potential of one entity is composed of *the partial* quantum potentials of its component entities.

Note that each living cell of a biological organism is itself a complete biological organism. Each j cell has its own individual bio-quantum-potential. Insofar as that cell is concerned, its "species" bio-quantum potential (BQP) is the body bio-quantum-potential of the whole animal of which the cell is a part. (Even organs of an animal have their own biopotentials, as does every physical structure and division of everything in the universe. And everything intracommunicates and intercommunicates via hidden EM energy.)

Successively deeper Whittaker potentials are nested inside the bio-quantum-potential for the cell, one for each next smaller level of interior structure. The end result is that this cellular hierarchical structure continues directly down into and onto the nucleus of each atom composing that structure. *This is the manner in which the life of a living system is attached to, and activates, the physical matter of its body. We have thus specified precisely what the living spirit of a body is.*

Communication between all living levels continually occurs via the mechanisms contained in the two Whittaker papers (W-1903: infolding external EM at one level into internal EM at the next lower level; and W-1904: outfolding EM at one internal level to the next outer externalized level). Thus in a true sense, all life on the planet is completely intercommunicative and intracommunicative. *Literally, the planet is a living being, and a special kind of Gaia exists.*

Particularly strong Whittaker-structuring communication occurs between an individual member of a species and its species bio-quantum-potential at fertilization/conception and at death. Thus at cell division (formation of a new cell), mitogenetic radiation is more strongly emitted, showing that increased communication has occurred in a (relatively) impulsive manner. The recorded experience of the body is communicated to the new cell at this time. At the death of the cell again mitogenetic radiation is more strongly emitted, showing that again impulsive communication has occurred. The recorded experience of the cell — particularly its most recent experiences — are impulsively transmitted at this time, from the outfolding Whittaker structures of its bio-potential.

Similarly, at the fertilization of an egg and the conception of an animal, biocommunication is impulsively exchanged between the newly conceived entity, the body of its mother, and the species bio-quantum-potential. At the death of the individual animal, a relatively impulsive communication again occurs between the cells of the dying body, the dying organism, and the animal's species bio-quantum-potential.

Thus it can be seen that the adaptation or evolution of a species is subject to both *slow* communication components and various impulsive communication components. The development of the bodily form of the members of a species thus can undergo *jumps* from greater "impulsive discharges" rather than just slow gradual change. That is, obviously a reptile species could not gradually develop a wing by small degrees. Instead, to develop a wing, the wing must appear at once. This can occur under heavy, sustained pressure on the species, stimulating and building a specific phase conjugate portion of the bio-quantum-potential (BQP) of the species In the ghost forms existing in the vacuum potential, the form for that wing definitely exists, at does the ghost form for anything else that can be imagined. Intercommunication between the atomic nuclei of the living organism and the vacuum potential continually and strongly occurs there is a violent flux exchange at all times between these nuclei and the vacuum.

The external experiences being impulsively communicated back to the atomic nuclei from the species and its members thus continually diffuses on out into the surrounding vacuum potential. The surrounding vacuum potential's Whittaker structuring is continually activated by the Whittaker-structuring of the overall bio-potential of the individual animal. *Thus we have specified the specific mechanism for, and the form of, the long-sought "aura" of the living animal or person.* That aura is quite real, and it does exist. Further, knowing what it is, we can now develop instruments to detect and record it, including systems to analyze its contents. *Let it be strongly pointed out here that we are talking physics, not mysticism.*

On the other hand, we are most certainly not talking the present *rank scientific materialism.* To state it in more theological terms, *man is truly made in the image of his creator. And the image of the creator is the quantum potential of the vacuum.* Further, Man — as is every other living thing created by the Creator — is always and forever in direct but hidden communication with the image of his Creator. It is that image mechanism and its adaptive intervention that is the cause of all evolution. The Creator indeed made man — and everything else — out of the dust of the earth. And indeed he activated his creation with the "breath of life." *The new physics does not dispose of God; to the contrary, it marvelously and nondogmatically — and scientifically — reveals his ubiquitous presence and his ubiquitous hidden intervention.*

In so doing, the new physics also does away with the present scientific nonsense of dogmatic scientific materialism. We are not robots and machines; we are living souls. Our minds and our beings are not captured in the puny electrical discharges of our brains and nervous system, but in marvclous structures pervading the entire universe, everywhere, everywhen, in the internal Whittaker structure of every point in spacetime. Each has a spirit (that which motivates matter), and that spirit is a form in the Whittaker-structures of all the potentials of the universe. Further, the spirit is eternal. Destruction of the physical body does not alter the fact that the individual spiritual form and its every deed, thought, feeling, and experience exists for all eternity, in every part of the universe, directly in the form and image-potential of God. We indeed are eternal, and our true self is nonmaterial and immortal. The shabby treatment of our present scientific orthodoxy in attempting to deny us our spiritual heritage is refuted, and this refutation is scientifically testable. *We challenge the present dogmatism to practice scientific method and put it to legitimate experimental test* Spend some money and some time, and do it right The necessary instruments can be developed. The necessary tests can be performed. The necessary results can be shown. And, given those results, the present materialism must be cast aside as an infantile derangement. It is long past the time when science should put away such juvenile things, and get on with a more mature, adult world. If it does this, then science can contribute to the salvation of MAN. If it does not do it, it will continue to contribute to the destruction of Man.

We show now the causative mechanism for adaptive evolution.

In ihe gravitons composing the vacuum potential, one photonic element is "time forward" and one is "time-reversed." These are phase conjugates. Thus, any pattern consistently happening to the species diffuses into the vacuum potential, where its oppositive or "negative feedback" component is automatically selected/created by phase conjugation.

The bottom line is this: the external factors causing stress on a species automatically (but slowly) generate a time-reversed response in the activation of the vacuum potential. That is, *the species' need-charge generates an activated phase conjugate response-charge, effectively charging up (integrating) the very ghost form or forms in the virtual state of the vacuum that would fulfill that need.*

As is well-known in physics, a virtual entity can become real and observable if energy is added to it. Thus the species-need is steadily causing just such "addition of energy" to the virtual state ghost form that answers that need. When sufficient energy has been udded (when it has been

sufficiently charged/activated), the ghost form starts emerging into the observable state, in the conceptions (via impulsive discharge) taking place in the species. *Then species members start being born with that evolutionary change already fully established.*

This is the specific mechanism for evolution of the species. It explains not only slow adaptation, but also impulsive adaptation. It explains why evolution/adaptation occurs in jumps rather than in continuous changes. And it also explains why, in desperate circumstances when sufficient time still is available, rather drastic jumps can occur.

The Unsuspected Deadly Nature of Internal EM Pollution

In addition to the "externalized energy balance" of nature, there is a heretofore unsuspected (by Western reductionists) *internal energy balance* of nature. This internal energy balance is of vital importance when we consider how the planet is being polluted. The most deadly pollution of this planet is the steady and increasing pollution of the internal "rivers of life" inside the biological potentials of the planet and all its living systems. That is, we are steadily polluting the very intercommunication and intracommunication fields that sustain life as we know it. In short, we are slowly killing the living mechanism in and on this biosphere. We are slowly sickening unto death, and no one even knows it.

Environmental and ecological issues cannot be adequately discussed and completely dealt with until our science develops a sufficient knowledge of internalized EM energy, its exchanges within the environment, and the overall internalized energy balance of nature and of our biosphere.

The importance of electronic smog — of the vast and increasing multitude of individual signals that now fill our environment — cannot be overemphasized, nor can its future impact. This smog is slowly producing an artificial quantum potential on earth, one that has a most deadly and lethal "jamming noise" structure, and steadily contaminating the natural quantum potentials and bio-quantum-potentials that are our heritage. This pollution even includes the internal pollution of the tri-system: the coupled Sun, Earth, and Moon. We are slowly poisoning the life mechanisms in this entire region of the solar system. As we charge-up the Earth's potential, that charge is diffused to both Sun and Moon through the hidden internal communicative bidirectional EM Whittaker structures. We are not only slowly extinguishing ourselves, but also the Triad system.

In biological systems the presence and effects of the increasing jamming of our living energy flows will be evidenced by anomalous effects, often by very slow effects for which we do not recognize a causal connection. Long-range detrimental effects from this smog are occurring now, such as extremely slow jamming of our immune systems, leading to a rise in arthritic diseases, immuno-suppressive opportunistic infections, etc. Also, such diseases as influenzas will slowly seem to become harsher and harsher. Indeed, new strains will appear, and they will be much harsher and more resistant to medical treatment. Continually stimulated, the immune system slowly begins to improperly react in and upon the body, and so the auto-immune reactions increase slowly, year by year. Leukemia — cancer (control disorder) of the blood — is increasing, as are other cancers. The sperm count of young American males has already decreased by up to 50 percent.

The real problem behind the puzzling and anomalous effects of video screen emissions that computer operators are exposed to is the fact that each electron striking the screen comes to an extremely abrupt halt, creating a very sharp individual EM potential gradient signal change, with very high frequency components. Added to the other frequency components in the tube — such as due to scanning of the beam, internal circuit operations, magnetic focusing, etc. — this means that the electrostatic potential emanuting from the face of the tube is filled with a conditioned

Whittaker structure from all the electronic hash inside the computer, tube, and screen. This structure has a very harsh micro-microstructure of hidden sharp signals from the rather instantaneous stoppages of electrons on the screen. This is a "Whittaker hash", and its effects continually diffuse into the vision center, brain, and nervous system of the operator. The light from the tube is conditioned with this Whittaker structure, and when absorbed by the retinas of the eyes, it imparts and diffuses that hidden structure directly onto the nervous system and the surface of the brain. By diffusive activation (charging), this gradually spreads into the other parts of the body, particularly in and through the master cellular control system, and partially charges their potentials with the hash. After hours of exposure, kindling of the Whittaker structure in the physical system is sufficient to be expressed as physical changes such as headaches, vision effects, dizziness, etc. Very subtle blood tests should also reveal blood changes, particularly typical of weak auto-immune reactions, or typical of weak stimulation of the immune system. The more subtle parts of the master control system are affected as well. With repeated and daily exposures, the "hash activation" partial charge is sustained in the body, continually interfering with precise control mechanisms. Thus an increased incidence of fetus defects, responsive abortions by the body, and birth defects in infants of exposed pregnant women has a causative basis.

In a radar system, there is "splatter" and noise from all the various circuits, the transmitter, and reflections in the area. Harmonics, reflections from surrounding plates, panels and objects, and the continual interference of all these signals, form a Whittaker potential with a sharpened and dynamic "hash" for its internal structure. This hash continually diffuses into radar operators and maintenance personnel exposed to it. Diffusion of the jamming "hash" leads to slow, harmful variations in the master cellular control systems of the exposed personnel. Defective sperm cells can result A higher incidence of cancer and leukemia results in operators extensively exposed to such "non-ionizing radiation" in their everyday duties.

Powerlines act as antennas, continually picking up and re-radiating all the electronic signals that impinge upon it, no matter how weak. Myriads of television, radio, power machinery, and other electrical/electronic signals are involved. Further, the power flowing through the line carries all the electronic smog from any place along it to all the others (time-reversed components of the infolded Whittaker structure considered.) So it is a vast gatherer of electronic smog, which is infolded inside its potential and re-radiated everywhere along its length. With the criss-crossing of numerous new lines every year, and the drastic increase in communications signals, electronics signals, and electrical signals, we are slowly poisoning our entire biospheric living internal river of life. *We are steadily contaminating and poisoning the entire planetary potential, and each and every year we are dramatically increasing this deadly effect.*

In the modern home and office, we are particularly "blessed" with these interactions. Numerous electrical and electronic gadgets whir and operate and create EM fields and weak EM radiation signals. The electrical powerline brings to our home all the internal patterns that have been impressed from afar; literally it brings us weak electronic hash from the entire earth. The light from our electric lights and lamps carries this hash directly into our retinas, brains, and nervous systems. The Whittaker structures are modulated into the sound from our radios and stereos, entering our ears and auditory systems, on into our nervous systems and brains. Watching television, the light from the tube contains all this hash and also the internal hash of its own circuits, tube, and its screen hash. Continual weak EM hash continually impinges on our skin by radiation from light sockets, appliances, and fixtures. If we sleep under an electric blanket, we sleep directly in an alternating magnetic field that penetrates even down to the nuclei of the atoms of our body, directly inputting the hash into our body's biopotentials. Even when turned off, the fixtures and appliances in our home continue to emit Whittaker standing potential waves, exposing us to weak but continual hash. Thus the same cellular changes, etc. that occur in video screen operators and radar operators begin to gradually occur in our bodies, from the EM pollution of our environment. Usually, however, we get a smaller "dosage rate" than the screen

operator or radar operator, and so the changes occur more gradually. Our unhealthy EM hash environment is already inducing leukemia and cancer, and immune system defects and diseases, gradually over a period of years.

"Hot spots" will obviously occur, where the dosage rate is increased because of particular reflections, reinforcements, interferences, etc. Such cancer and leukemia hotspots do indeed exist, without any presently known explanation.

In the "normal" weak EM noise environment that used to exist on earth, the minimum threshold effect provided security against the normal weaker background. The maximum threshold effect provided security against sudden larger "EM jamming" occurrences. In today's EM noise environment, both of these protection thresholds are becoming inadequate.

How the Drug Culture Was Really Created

Much of our present younger generation is electronically "plugged in," to put it mildly. Heavy rock concerts at great volume blast into their listening audiences not only the rock music but also the EM hash from all the effects previously listed. They also blast a certain type of philosophy, of frenzied sex, violence, contempt for society, and rebelliousness. The guitar has been lowered onto the player's body so that its neck becomes a giant phallus. Frenzied movements of the player demonstrate overtly full preoccupation with sexual stimulation and orgasm. The impact of these giant emotional mass experiences of the audiences is reminiscent of the huge Nazi rallies that Hitler used to so effectively condition a generation of Germans, and use them, once conditioned, to launch an attack on the civilized world that resulted in the deaths of over 100,000,000 people. Certainly orthodox psychologists and psychiatrists have already addressed the parallel of the rock concert to the orthodox understanding of mass conditioning. We will shortly address an unorthodox element of which the present scientists are unaware.

In addition to their mesmerized attendance of rock concerts, often youths continue their heavy listening schedule at high volume from their own stereos and transistor radios, often with earphones which can sustain the loud volume in their ears. In their automobiles, the youth oil today has installed huge speaker with powerful amplifiers, to continue their exposure to the volume and inadvertently to the EM hash. They also continue their sustained and dramatic exposure to the synthesis philosophy expounded by modern rock music and rock musicians.

But there is another, highly effective, subliminal conditioning effect that goes completely unrecognized. The information content of the rock music (and, as anyone knows who translated it, much of it has a "message" of violence and contempt for the female and for society) is also modulated into the internal Whittaker structures of the hash. *This "wired-in generation" thus is continually conditioning itself by a new and unique process. It is directly conditioning the memory personality, and deep unconscious mind by charging and activating the biopotentials on the atomic nuclei directly.*

There already exist forces hostile to the structure of Western society that secretly know the semblance of this, and know that the present electronic conditioning of the youth of our society can undermine all its values. There is thus a hidden threat to our youth and to our society. Both are already being manipulated, and almost no one in orthodoxy seems to suspect it. Certainly the mass news media do not take up the cudgel; they are far too busy making money from the very advertisements that continue to plant the seeds for continually conditioning the children for each forthcoming new generation.

We have a drug problem, and we shall continue to have one, no matter what "swat teams" and "special operations forces" we muster against the drug barons. *Much of the youth of the present generation has a different culture, and a different cultural background, and a different attitude toward drugs, sex, and violence than anything the older generations knows or can relate to.* Rape, violence in our cities, contempt for society expressed as vicious attacks on old people and helpless persons, increased child molestation, and expression of sex-in-violence such as "wilding", are the end results of this continual conditioning. We are speaking of a matter of degree; as the degree of heavy internalized conditioning increases, the degree of criminal expression of this inner content increases. Just as the great psychologist Jung observed in his patients the increasing dark content of the unconscious mind being conditioned into Germans by Nazism, and predicted a direct and violent overt expression of it (in the Second World War), so one sees today an increasingly violent and crime-ridden future for the cities of America, from the steady manipulative internalized EM conditioning of our youth.

But, the reader may ask, is all this really true? Can one explain how and why we acquired the drug problem in the first place? The answer to both questions is yes.

The real cause of the present drug problem in America is never mentioned or addressed. It is not present in the learned but biased studies of our great think tanks. It is not known or realized by our drug enforcement officials. Neither the Congress nor the Executive Branch is prepared to deal with it. (In fact, because of the financial implications, they would most probably hamstring any effort at exposing it and dealing with it directly, just as they hamstring efforts to declare alcohol and tobacco addictive drugs.)

The real genesis of the drug problem in America is the pain reliever and pill advertisements on television particularly, and to some extent, those on radio and in motion pictures.

Think of it this way: In the 1950s and 60s America became "televisionized." Most households — even those of the poor — obtained television sets. The reason was for entertainment, and the intended enrichment of our lives. In fact we got that aspect of television, and we also got something far more pervasive and far deadly. We had taken a viper to our bosom, so to speak.

Americans were enraptured with television, to put it mildly. The television set became the center of entertainment and the center of attention in massive numbers of households. Millions of little babies, with their little formative minds absolutely pliant and absorptive, watched thousands of hours of television — including thousands of hours of television pill commercials and pain reliever commercials. Always depicted were situations where *life's problems have a chemical solution.* Has mama had a trying day, dropped the iron, and dropped and broken the dish of food? Pop a pill, a soother of the nerves. Got a headache from tension or sinus? Pop a pain reliever. *Pop a pill, baby! Life's problems are solved with a chemical solution!* That was the unceasing message that was pounded into all those little absorbing, non-censoring, non-evaluating minds. *Already in a passive state and highly suggestible, these little minds absorbed the message into their deepest unconscious, repeatedly, continually, as the norm for society and the preferred, ideal behavior.*

The pill merchants, in their ubiquitous greed, really did a number on our children. They conditioned an entire generation — and continue to condition each new one — that *chemicals are the solutions to life's problems.*

It's bad enough conditioning if one just considers the classical conditioning mechanism in the passive state, a la Hitler. But when one also considers the *internalized* conditioning of the infolded Whittaker structuring, these kids got the whole enchilada.

And this was further supported by the children observing adults — often their own parents — with a dependency on pain relievers, alcohol, nicotine, and aspirin and pain relievers. The medical profession has long since been powerfully conditioned and subverted by the large drug companies that allopathic medicine, with an occasional surgery, is the primary constitution of the practice of medicine. Anything electrical, of course, is automatically labeled a fraud, and persons attempting to investigate the possibility of electromagnetic healing are severely chastised, just as are naturopaths, chiropractors, holistic practitioners, etc. Indeed, the EKG and the EEG were once labeled as frauds, and their practicioners as charlatans. So also was physical therapy, and its practicioners were hounded and prosecuted. Allopathic medicine is a monopoly and an oligarchy; it has subverted the state and uses the power of the state to enforce its own dogma.

The big drug companies love it. Tons of money are made, milking the public as a milk cow, selling them lucratively priced drugs by the trainload. The doctors get rich. The drug companies get rich. The cow gets milked. The lawyers get rich by sueing the doctors to "share the proceeds." Best of all possible worlds. The drug commercials contain to blast their way from television into the young, pliant, passive minds of infants, with thousands and thousands of hours of the message that *chemicals are the solution to life's problems. They are good. They heal people. Society approves. See your friendly drug merchant.*

Now of course there is a place for allopathic medicine. Properly used, some drugs can be beneficial. None of them can do a thing for healing the body; at best, they can suppress the symptoms of a disease and allow the body time to muster its own recuperative and healing forces. The blunt truth is that the natural mechanisms of the body are what heals it, not the drugs. The drugs, however, may be judiciously used to assist in this process. In this paper, in castigating the drug advertisements, we are speaking of *the degree of near-total reliance on using drugs that* is *advocated.* Commercial drug advertisements constitute a giant, infectious disease and they should be ruthlessly eliminated from our television and radio commercials. Otherwise, these harlots will continue to seduce each succeeding generation, and we will continue to have a giant and increasing drug problem because the *demand* will continue.

The answer isn't spending more money and milking the taxpayer. The answer is to root out the source of the infection. And the answer is also to control the infectious agent so it does not rear up and strike again.

The formative minds of our infants should not be allowed to be playgrounds for the drug merchants to romp in and sew their deadly infection. We deserve better than that. Our government watchdogs ought to get off their posteriors and pass legislation that outlaws all such incessant propagandizing of our babies, children, and adolescents. It is a crime against society to *deliberately engender the need* for drugs in our children, just as surely as it is a crime for someone to *sell* them illegal drugs. Eerily, our warped society declares war on the illegal drug producers while ignoring the very agent that created the problem in the first place, and continues to create it.

Just as industry once practiced child labor and horrible exploitation of the nation's children, the present "legitimate" drug companies, doctors, and television and advertising industries are also exploiting our children and corrupting their minds. Is financial gain worth that much? Are we so mad that we cannot see what we are doing to our children? What we have already done to many of our children, now the young adults of America? Is there anyplace in America where the insidious damage has not been done? Is there anyplace in American where the need for elicit drugs has not already been created, and is continuing to be created?

In God's name, wake up, Americans!. How long will we allow these men in dark blue suits and with corporate mentalities to exploit and mutilate our children? And for dark, foreign forces to

deliberately augment and manipulate our children with suggestion and conditioning that simulate that mechanism?

One wonders. And ponders. And takes up one's pen and writes. Does anyone heed the message?

To stop this thing is simple, but it will require a very long time. We have to get the pill advertisements completely off television and radio. We must, whether we like it or not, censor the content of the deliberate, mass conditioning of the minds of our youth with hate, bigotry, abnormal sex, and violence. As a man thinketh in his heart, so is he. Condition the heart (the unconscious mind), and you form the person. Must we allow our children to be deliberately manipulated and conditioned by hostile and detrimental forces? Let's at least get the drugs, hate, bigotry, and violence out of there. Let's attack the drug problem at the heart, where the need for it is being created. Let's crush that serpent and destroy it, and prevent it from biting and infecting our babies, children, and adolescents.

Ubiquity of Internal EM Energy

As we stated, internal EM energy is ubiquitous. It is everywhere, all-pervasive.

The inclusion of internal exchanges, of course, is completely anti-reductionist. Now you are not just what you are, but also what everything and everyone else is as well. Ironically, present Western biology seems bent upon the road back to hard reductionism. This can only reinforce and sustain our presently primitive and inadequate "cut 'em, drug 'em, and burn 'em" medical science, as well as our inadequate knowledge and consideration of the internalized energy of living systems and or our irreplaceable biosphere.

We also point out just how fundamental the Whittaker-based methodology is. In a very nice summary paper dealing with the remarkable capabilities of recursive methods,[158] Soviet physicist V. K. Ignatovich points out that recursive relations are involved in a wide variety of fundamental physical problems, including molecular gas diffusion, scattering of a quantum mechanical particle from potentials, etc. There is also direct involvement with the Schroedinger equation itself. Indeed, one of the striking features pointed out by Ignatovich is what can only be called a Whittaker-structure (of superimposed bidirectional plane waves going in opposite directions) comprising the potential utilized in the Schroedinger equation. Interestingly, in the infinitesmal gaps where the potential is zero (mathematically, such gaps could essentially be inserted at will), the wavefunction itself is comprised of this bidirectional Whittaker structure, and the only difference between two wavefunctions in two gaps is a phase factor that is calculable.[159]

In short, deterministic Whittaker-infolding of bidirectional EM plane waves is the key to direct engineering of the Schroedinger equation itself — hence of *all physical change*. From the very beginning, living biological systems have utilized Whittaker-structuring in their deepest biological control systems. This has allowed them to utilize very minute voltages and currents, yet precisely communicate these incredibly weak signals through a very "noisy" ordinary EM environment inside the body.

The emergent picture is this: (1) the normal externalized EM force fields represent dynamic, externalized bleed-ins and bleed-offs (by acceleration of charged particles) of the external amplitudes of scalar potentials, *without* affecting the fundamental infolded substructure of the potentials. Such force fields represent primarily the *externalized* EM dynamics of the potentials, the part where gravitational potential turns itself into electromagnetic force. (2) Whittaker-infolding of such EM forces in bidirectional EM wave pairs inside the scalar potentials allows

calm, smooth, deterministic communication between all the parts of the biological organism, normally without undue disturbance from the externalized maelstrom of "first order" physical reality (single photon interactions with matter." These hidden Whittaker structures represent the *internalized* EM dynamics of the potentials and their intercommunication and intracommunication.

A Very Different Physical Reality

While beyond the scope of this paper, we point out in passing that consideration of the I internalized EM energy of biological systems (and of the universe) gives a quite different kind of "physical reality picture" than the normal first-order reality. Biological functioning in this different reality realm therefore exhibits quite different characteristics from the normal *externalized* aspects of biological actions.

Direct mechanisms for mind, thought, emotion, memory, hidden inter- and intra-cellular communication, etc. result from the new approach. In addition, mechanisms for previously rather mysterious parapsychological phenomena — such as psychokinesis, precognition, and postcognition — also result. Further, it is now clear why heretofore such phenomena have been demonstrable only statistically and even then only minimally. The true deterministic EM signals involved were very, very weak infolded Whittaker structures inside scalar EM potentials. Since our present instruments have all measured the much more powerful *externalized* EM energy, we have only been able to statistically discriminate (and very weakly at that!) the emergent order in rather large-scale *integrated* chaos effects. Thus for the most vital living functions of the organism, we could only show weakly ordered and statistically significant small deviations from randomness. We stress that all these "internalized reality" subject areas, regardless of how mysterious they have previously seemed, are now open to direct investigation and even direct engineering. We further stress that spacetime, quantum change, the Schroedinger equation, parapsychological phenomena, and physical and mental reality are all now unified and accessible to scientific investigation and direct engineering.

Solving the Quartz vs. Glass Transmission Problem

In passing, we point out a solution to one of the problems that have puzzled Western analysts for over two decades. In the Kaznacheyev cytopathogenic experiments (as shown diagrammatically in Figure 19), disease and/or death is induced into one cell culture by optical EM radiation emanating from an adjacent but environmentally shielded contaminated culture. Similar disease-induction experiments have been successfully performed in West Germany, Australia, and at least by one U.S. researcher.[160] Kaznacheyev's results were obtained by weak optical radiation through a thin quartz window, but not through a thin window of ordinary glass. He reported the discovery of weak mitogenetic photons in the near-ultraviolet (near-UV) which purportedly induced the effect.

In West Germany, University of Marburg researchers duplicated the experiment, ostensibly discovering weak mitogenetic photons in the IR frequency region, which purportedly induced the effect.

However, it is not nearly so simple as measuring single-frequency photons. We are dealing with internalized energy, and hence with the *infolded coupled-photon graviton* structure of Whittaker potentials. This hidden infolded structure is the information content" of the radiation emanating from the diseased cell culture — graviton containing containing hidden EM photon information

that can induce the same disease or physical conditions in the targeted cells if delivered to them intact. Further, the bidirectional EM wave structure of the Whittaker potential consists of pairs of contratraveling EM waves *multiplied* together, hence *modulating* each other and locking together. To form gravitons, multiple photons are locked together in n-tuples (both in number and in harmonic frequencies) by this process. *All gravitons containing information must have harmonic substructures, else modulation of monochromatic photons did not occur to produce them.*

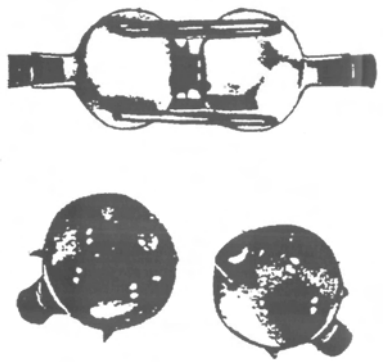

Figure 19. The Kaznacheyev apparatus for cytopathogenic experiments. Many thousands of experiments were conducted by two military institutes.

Another way of saying the same thing is that gravitons represent a special, linked-photon, averaged lattice in the vacuum flux. Horizontally (spatially) the photons are linked into gravitons by bidirectional EM waves; vertically (time-wise) the photons are linked in frequency by harmonic and subharmonic oscillation. Figure 20 shows the general scheme of this Whittaker **lattice.**

The reader should be at pains to understand, however, that the lattice structure shown in Figure 20 is *not* fixed, but consists of averaged equilibria in the fiercely boiling vacuum virtual particle flux. The fierce vacuum flux actually consists of the continuous dynamic interference of myriads of just such Whittaker structures created in the macroworld. Each part of the macroworld, on the other hand, is just an equilibrium condition in that *overall* flux cauldron. As can be seen, according to this model, physical reality is a hologram, and in an eerie fashion Mach's principle rigorously applies.

The point is, both modulation (infolding) and subsequent demodulation (outfolding) of the internalized EM energy are operations that only occur in *nonlinear* materials. A nonlinear material is one which, in reaction to an introduced monochromatic wave, produces harmonics in addition to the fundamental frequency. Being entirely a *nonlinear-based effect and mechanism, the cy*topathogenic (Kaznacheyev) effect requires *harmonics* if it is to be transmitted and exhibited. It is not the singular EM force fields which carry the information for the cytopathogenic effect; it is the multiple internalized EM-waves in the substructures of Whittaker potentials that carry it. A *harmonic series of bidirectional waves* must carry it. Hence to induce the disease in the second sample, one harmonic interval is the smallest bandwidth that must be

infolded in the diseased cells, transmitted intact through the window to the targeted cell culture, and absorbed and deposited therein. Further, between-harmonics signals are jamming noise, insofar as the harmonic Whittaker structures of a particular pattern are concerned. This explains why Constable and Gambill were able to occasionally take paranormal photographs through filter glass that was transparent to IR and UV, but opaque to the visible spectrum in between. UV is a first harmonic of IR. The filter glass passed one harmonic interval, and blocked out the outside and inside "jamming" signals.

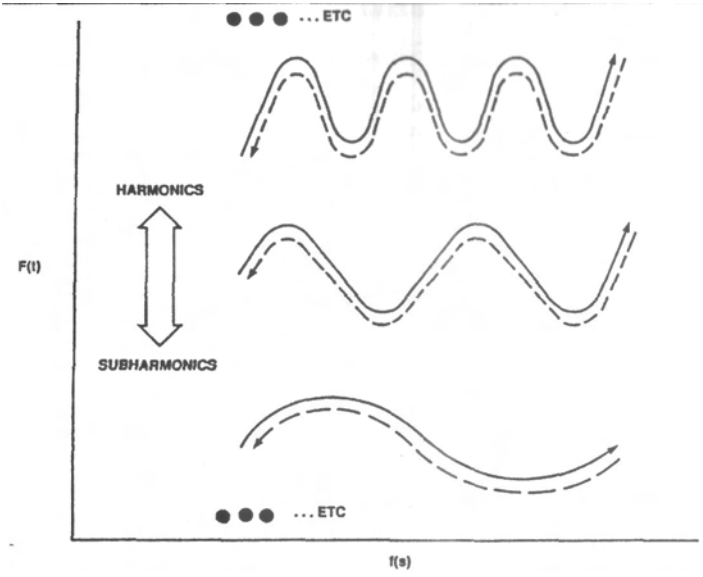

Figure 20. The Whittaker-structured graviton lattice of vacuum/spacetime. Breaking the time sync of the photon structures accounts for the "collapse of the wave function" and leads to photon interaction. In uncurved spin-2-graviton spactime, one photon is measured, and the antiphoton produces Newton's third-law reaction force, usually just recoil in the measurement instrument, which is ignored.

Quartz passes both IR and UV, in addition to the visible spectrum. Kaznacheyev's experiments were performed in the dark, and so the jamming noise of the visible spectrum was absent Therefore the thin quartz window passed one optical harmonic, because the UV is twice the frequency of the IR.

That is, the thin quartz window was able to pass *gravitons* — coupled photon/antiphoton pairs - rather than just individual photons. The gravitons had been emitted from diseased cells, and the exact Whittaker structure for the disease was contained in the gravitons. In these gravitons, their internal photons retained their spatial and harmonic coherence and correspondence, which retained the disease pattern. When the disease-structured (cytopathogenic) gravitons were deposited in healthy cells shielded from the visible "jamming" spectrum, the biopotential of the healthy cell structure gradually charged up and *became activated with* the Whittaker-structured disease pattern. Thus the specific disease was gradually kindled in the targeted healthy cells.

Normal window glass, on the other hand, does not pass a full harmonic interval. That is, it busted up the gravitons, separating them into weak photon emissions that did not retain their previous spatial and harmonic coherence in a structured-graviton spacetime lattice. That of course destroyed the photon-to-photon coherence and the infolded "information of the field" that carried the specific disease structure. Therefore when the two cell cultures are separated by thin window glass, the graviton pattern is broken up and the disease is not kindled in the targeted cell culture by mitogenetic photons passing through the windowglass.

Hence the disease can be transmitted through the quartz, but not through the thin windowglass. With a quartz window, the disease is transferred *electrogravitationally* by the structured charge of the arriving intact gravitons. With a windowglass window, the gravitons are busted up and the disease pattern lost in the window, leaving isolated photons to arrive in the targeted cell culture and be deposited. Since the disease information has now been lost, the targeted cell culture does not contract the disease.

Actually, the effect induced by infolded harmonic radiation in the optical range can also be achieved in the appropriate microwave range, so long as properly structured, *coupled-photon/antiphoton* gravitons — including the necessary harmonics — are maintained. The major mechanism for this "translation to different frequency bands" is already well-known in the theory of forced oscillations, but it is little-utilized in normal engineering. The translation mechanism is s*ubharmonic oscillation.*[161]

In subharmonic oscillation, a frequency that is a subharmonic of some higher (even much higher) resonant frequency can trigger the higher-frequency oscillation. Subharmonic oscillation is particularly applicable to living systems, because (1) their physical structures are highly nonlinear, (2) a great number of biological oscillators are nonlinear, (3) in general, nonlinear oscillators may vary both their frequency and their amplitude, particularly as a transient effect, (4) nonlinear oscillators are characterized by an initial transient period followed by the attainment of a stable period, (5) subharmonic frequencies in highly nonlinear materials will richly generate harmonics, so that the particular required harmonic of interest will very probably be produced, (6) the initial transient period of the nonlinear oscillator often acts as a sort of *harmonic frequency sweep* to simulate many harmonics, including the one of interest, and (7) the transient stimulus of the desired harmonic overcomes "static or initial" damping so that only the much-lower "dynamic" damping is produced.

Subharmonic oscillation is very important in Whittaker-structuring. A Whittaker-structured potential is already harmonically structured — essentially from near 0 Hz to near infinity (as was pointed out by Lisitsyn in a disguised manner). The Whittaker-structuring is a spatial and harmonic structuring of a partial potential component of the total spacetime potential. Subharmonic resonance plays a major role in this structured lattice —far more than we have previously suspected in our study of subharmonic resonance in nonlinear gadgets.

The implication of high biological nonlinearity and subharmonic oscillation is that Kaznacheyev cytopathogenic optically-induced effects can readily be translated to cytopathogenic *microwave*-induced effects—because they already are!. An optical Devyatkov information substructure can also be translated to a microwave Devyatkov information substructure. Further, if the optical Kaznacheyev cellular disease-inducing signal sets captured from a diseased cell culture are phase-conjugated, this yields a *specific curative signal complex for that specific disease.* This optical curative signal structure can then be subharmonically translated and Whittaker-infolded to yield a curative microwave Devyatkov information signal. This is the basic mechanism for direct engineering of EM healing apparatuses, such as were successfully developed by Antoine Priore and properly tested by eminent French scientists working with him, in the 1960s and 1970s.[162,163,164,165]

The near-total EM cures for cancer, leukemia, AIDS, and hosts of other debilitating diseases too numerous to mention can be developed in rather straightforward fashion, given the funding, scientific team, and facilities to accomplish the task.

Detection is Actually Binary

But how can all of this have escaped our finest researchers and theorists for so long? We present a brief presentation of why this has eluded the attention of our scientists.

First, though not too well-known, all detection is actually *binary,* although in almost every single detector only one part of the detected two components is utilized for the "measurement."[166] The other part of the binary detection occurs in the atomic nucleus, and is ignored or discarded in almost all "measurements" we presently perform, and in almost all the instruments we build and use.

Note that each element of the EM structure of the Whittaker potential is binary; there are two bidirectional waves in each one. In the linear situation, our normal instruments demodulate a photon and an antiphoton from each binary *graviton* structure of this binary channel. In its output, the instrument separately utilizes the externalized (electron-moving) wave or photon as the "detected signal," while utilizing the other demodulated antiphoton or antiwave to produce the "recoil of the atomic nuclei" of the instrument itself — in other words, to produce Newton's third law reaction force! Indeed, the universality of Newton's third law is prima facie evidence of the existence of the coupled-photon/antiphoton graviton *prior to demodulation and measurement of photon interaction effects.*[167] Classical electromagnetics has always been a derivative of the real unified-field "electromagnetics" that actually exists in nature, and we have always been misled by the very EM instruments we are so proud of!

In a nonlinear situation, on the other hand, we are inevitably dealing with a harmonic situation Any photon incident into a highly nonlinear material will generate harmonic photons, each of which will generate further harmonics, etc. Further, the nonlinearity generates time-reversal (phase conjugation), so that time-reversed replicas of these harmonic spectra are also generated But nonlinear materials are also modulators and demodulators. Hence the nonlinear material is continually infolding and outfolding the Whittaker structure harmonics. In our *normal* detectors and detector theory, we discard the entire infolding aspect of the situation, and usually much of the rich harmonic spectra as well. We certainly fail to recognize the continual creation and annihilation of dynamic photon-structured gravitons. For those, we simply treat the gross *captured EM energy* aspect, in that it determines the overall envelope magnitude of the scalar potential.

The point is, in a nonlinear optical graviton situation which must involve infolded IR and UV photons, our *photon* detector busts up gravitons, and it may measure either a UV photon or an IR photon, depending upon the mechanics of the situation. It will not normally "measure" or indicate both, since it discards and neglects one or the other as its own "instrument recoil." And it will tell us almost nothing of the very rich dynamic graviton structuring and exchanges that an occurring. It will give us no picture at all of the infolded Whittaker structure and the internalized EM energy order.

We have always been applying nonunified EM technology to unified field theory problems anyway Hence for three decades Western "single photon" scientists and engineers have remained completely puzzled and baffled by (1) Kaznachcycv's *"graviton is a multi-photon-unit and in structure can be deterministic"* work, (2) Devyatkov's *"the particular photon structure of the graviton is the information content of the potential/graviton field,"* and (3) the microwave radiation

of the U.S. Embassy in Moscow. We also were puzzled by (4) the strange Petukov/Toth episode involving the Soviet classification of a paper on bio-particle emissions and "little pieces of the vacuum medium." And of course we never understood Tesla when he adamantly insisted that the EM waves in vacuum were not transverse but were *longitudinal* waves, or EM "sound waves," as he referred to them. And all our textbooks today utilize macroscopic E- and H-fields in the vacuum — when no such thing exists now or ever existed. E- and H-waves are *matter waves,* usually of the conduction electron gas in our conductors. They are *not* what is coming in from the vacuum and interacting with that conducting electron gas in our detectors. However, since our instruments actually detect and measure the movement of the conduction electrons, then indeed we detect and measure E- and H-fields — *inside our instruments, not in the vacuum.* Isn't it a bizarre aberration of scientific thought — just as Tesla stated — that all our science and engineering continues to teach and accept such a fundamental mistake?

Note that a gradient in the graviton field (in the scalar EM potential) must involve the translational exchange of photons between adjacent standing gravitons. When one understands the unified-field approach, it is totally to be expected that the diseases induced in the Embassy personnel in Moscow would not occur where E- and B-fields *("single-photon-interaction-with-matter"* field stuff) were present, but only where these single-photon fields were not broken out of the Whittaker potential *("stabilized multi-photon-coupling* field stuff) before reaching the targeted bodies. In other words, the diseases occurred where the *potentials persisted,* and where the force fields (the bleed-offs of the potentials) were absent. Johns Hopkins researchers found this to be precisely the case, but did not realize and consider the *EM potential* aspects. Their "photon detectors" destroyed half of the actual *structured graviton* mechanism involved. Hence they erroneously concluded that it was not the microwave radiation that was causing the anomalous diseases and health changes in Embassy personnel.

They rightly concluded that it was not the monocular EM photon field component of the microwave radiation that was the inducing agent. However, they assumed that there was no other component of the radiation that could have been involved; i.e., they assumed that the force fields and the microwave radiation fields were one-and-the-same, totally. Had they known of Whittaker-structured potentials as the explanation of Kaznacheyev's cytopathogenic effect, they most certainly would have considered the persistent potentials. In that case, *from the data and measurements they had, they would have concluded that it was the multiocular EM photon-structured Whittaker potentials that were the inducing agents.*

The Problem is Our Rigid Mindset

It is simply incredible when hundreds of thousands of Western PhDs are graduated in electrical physics and electrical engineering, and hardly a single one knows that what he was taught as "Maxwell's equations" were not *Maxwell's* equations at all: not a single one of those Heaviside/Gibbs critters ever appeared in a book or paper by James Clerk Maxwell.[168] And almost nobody checks! Almost no one goes back to Maxwell's *quaternion* theory to see whether or not Heaviside and Gibbs "got it right" in their vector interpretation. With the exception of Dr. Henry Monteith,[169,170,171] and a few notable other scientists, almost no one in the West seems to have previously noticed that Maxwell's original quaternion theory was already the magic unified field theory of G and EM that everyone is supposedly seeking! And it is already in an *engineerable* format. You can engineer it on the lab bench and it works.

Our real problem is our dogmatic scientific mindset, particularly with respect to electromagnetics. In the West we seem to think we already know everything, and that the Soviet scientists are just a bunch of ignorant peasants still trying to clean the mud off their boots.

Those same scientific "peasants", however, have always been the leading nonlinear mathematicians and nonlinear scientists of the world — and they still are. We've really got a lesson or two to learn from them after all. Let us hope we do so before it is too late for our survival.

The Soviet Electromagnetic BW Threat Is Real

The Soviet threat in electromagnetic biological warfare is real. It has been developed over a period of at least 40 years. The trace is clear. It is also clear that biological warfare is now, and has been for some time, a preferred option for the Soviet Union. It is rapidly becoming a preferred option for much of the Third World today.

We have seen that the "new" electromagnetic biological warfare has already been used to attack and kill Americans — even Americans of very high rank, such as several U.S. Ambassadors to the Soviet Union. However, note that this attack has also been *slow-acting.* The Soviets have taken full advantage of the important American national characteristic of not reacting to a slowly creeping threat.

Meanwhile Gorbachev, who is perhaps the greatest propagandist the world has ever seen, has made sweeping concessions and unheard-of changes. U.S. leaders, even of the Department of Defense and the President himself, have been taken in by the Great Charmer. The heavily liberalistic U.S. news media seems almost ecstatic in their perception that the end of the cold war is here. Indeed, during the month of November 1990, the Cold War was officially declared dead.

Glasnost is the new phrase that is being repeated by our news media, in a growing euphoria of *peace in our times.* Neville Chamberlain would be proud of his new protegees.

As far as Glasnost goes, we had better keep our powder dry and recall the following quote:

> "War to the hilt between communism and capitalism is inevitable. Today, of course, we are not strong enough to attack... To win we shall need the element of surprise. The bourgeoise will have to be put to sleep, so we shall begin by launching the most spectacular peace movements on record. There will be electrifying overtures and unheard-of concessions. The capitalist countries, stupid and decadent, will rejoice to cooperate in their own destruction. They will leap at another chance to be friends. As soon as their guard is down, we shall smash them with our clenched fist."

Dimitry Z. Manuilsky
Lenin School of Political Warfare
Moscow (circa 1934)

NOTES AND REFERENCES

1. The closest thing to gravitobiology is the present photobiology, which deals with the biological effects of ordinary photons and electromagnetic waves. Photobiology (PB) is a small subset of gravitobiology (GB). GB also includes the biological effects of hidden coupled-photons and hidden bidirectional EM waves inside scalar EM potentials — infolded inside spacetime itself. Since these hidden EM channels are utilized by the living biological system in all its primary control systems — including for cellular control and mind control — then GB drastically extends PB.

2. Gravitobiology, short for *electrogravitobiology,* is the as-yet-embryonic science that deals with biological effects/uses of the uniGed electrogravitational Geld. It is understood that the unification of electromagnetics and gravitation is accomplished at the most fundamental level, that of the quantum particles of the fields. The graviton is considered to be composed of photons, but variable in size, dependent upon the number of photons comprising the graviton *on the average.* Thus the graviton is dynamic in structure and magnitude, contrary to present treatment in physics. To speak of a *discrete graviton,* then, having a stable *average spin* is to speak of a time-averaged entity that is a stable equilibrium state/structure in the violent virtual particle flux of vacuum.

3. This of course describes a dynamic holographic reality.

4. Present quantum field theory utilizes the photon as the quantum particle of the electromagnetic Geld, and the graviton as the quantum particle of the gravitational Geld. Each quantum particle is treated as quantized in spin, so that its spin never varies. However, in gravitobiology (GB) the graviton (and indeed, the photon as well!) is considered to be dynamically varying at each instant, at an incredible rate. When time-averaging yields discrete stable spin values, these are regarded as gravitons. Thus the individual, momentary graviton may have spin of two, more than two, or less than two, in contradistinction to present quantum Geld theory. In gravitobiology the graviton is *statistically discretized* but not actually *individually quantized.*

5. Gravitons are time-averaged envelopes, and can move at any velocity — similar to phase waves. What is moving in an electrogravitational wave is photon coupling and decoupling.

The reader is cautioned, however, that in physics the graviton is still not a well-defined, well-understood, and agreed-upon entity. Whether or not a graviton exhibits mass or is massless remains an open question. Linearity versus nonlinearity of the graviton is also yet to be totally resolved. The state of the subject in present physics is thus unclear. Indeed, it can be surmised that, if gravitons exhibit mass, then gravitons in deep space could possibly account for the cosmological "missing mass" needed to close the universe. As an example, for a discussion that favors graviton mass, see O. Costa de Beauregard, "Massless or Massive Gravitation?", *Foundations of Physics Letters,* 3(1), 1990, p. 81-85. As an example to show how concepts such as "photon" and "graviton" have a very complicated background that affects whether or not unification of physics can be accomplished, see Horst-Heino von Borzeszkowski, "Remarks on the Physical Reality of Gravitons," *Foundations of Physics,* 20(4), 1990, p. 435-445.

6. Presently, the only basic definition of modulation simply states that, when one wave modulates another, the two lock together in one fashion or another as a single, more complex wave. When such a complex wave is demodulated, the two locked-together waves are separated from each other to become independent waves. The exact

mechanism by means of which modulation and demodulation occur have heretofore been totally unknown, although the results have always been readily describable mathematically.

7. A normal or time-forward wave is time-forward as seen by the external observer. The observer's forward flow of time is created by the rate of virtual photon scattering interactions within one kilogram of mass of his body/his instruments, as compared to the same rate in another external observer. Steady forward passage of time simply represents a steady rate of such internal virtual photon scattering action. Thus positive time flow and entropy are simply two sides of the same coin; the rate of formation of entropy is directly correlated with the rate of flow of positive time. Note that rate of flow of time is identically the rate of formation and dissolution of time, as carried in the virtual photons.

   Negative time flow, to the external observer, is created by the rate of photon reordering actions (negentropy) within one kilogram of mass of the observer's body/his instruments. Steady time-reversal simply represents a steady rate of the reordering action. Thus negative time flow and negentropy are simply two sides of the same coin; the rate of formation of negentropy is directly correlated with the rate of flow of negative time.

   Each mass can and does exist in a combination of the two time streams. Thus the actual time-flow rate of mass can seem to be slowed, as some additional negentropy and additional negative time are created by time-reversed photon interaction (antiphoton interaction) with mass.

   The normal (time-forward) EM wave contains and carries positive energy and positive time; each of its photons is comprised of (+dE)(+dt). On the other hand, a time-reversed EM wave contains and carries negative energy and negative time; each of its antiphotons is composed of (-dE)(-dt).

8. It is accented that our graviton is highly dynamic. Hidden photons and EM waves flow through it laterally (spatial flow) and also vertically (harmonic and subharmonic flow via subharmonic oscillation). This flow or flux through the graviton is continually changing: "the" graviton is an average, or photon-coupled form in equilibrium. Since spacetime is constructed of such dynamic gravitons, this means that the frame concept is now fuzzy and statistical as well. One can now speak of the *stability of a frame,* the *"Q" of a frame, "spreading the Q" of a frame* so that its former fixed points become smeared in n-dimensions and only approximate, etc. *It is the geometry itself that is now smeared and averaged.*

9. Obviously we are referencing the concept of the graviton to the external observer, who sees things on a macroscopic scale that have in fact been highly integrated in the vacuum. He sees the averaged integral results of myriads of tiny, turbulent, macroscopic and submicroscopic changes. Thus the *spacetime* and the *frame* that he sees have submicroscopic hidden substructures. *Curvature* of spacetime actually refers to the change in potential (local hidden energy density) of spacetime. This density may increase or decrease, giving two types of curvature, one positive and one negative, with respect to local ambient spin-two vacuum. In addition, the local spacetime curvature always has a hidden electromagnetic structure, part of which may be deterministic and even deliberately constructed and engineered at will.

   We should also certainly point out that Einstein's general theory of relativity is not necessarily the last word on gravitation and curvature of spacetime. For example, it is possible to formulate a contradiction-free theory of the gravitational field without even invoking the notion of curvature of spacetime at all. For example, see N.N. Razgovorov,

"Dynamic treatment of gravitation. The interaction equation and equations of the gravitational field," *Izvestiya Vysshikh Uchebnykh Zavedenii, Fizika,* 33(5), May 1990, p. 89-94 [in Russian]. An English translation is in *Soviet Physics Journal,* 33(5), November 1990, p. 458-462.]. Sachs, for example, has even produced a quaternion generalization of Einstein's tensor formulation of general relativity that may predict a fundamental and testable difference in gyroscopic precession. See Mendel Sachs, *General Relativity and Matter,* Reidel, Dordrecht, The Netherlands, 1982. See also Mendel Sachs, "The Precessional Frequency of a Gyroscope in the Quaternionic Formulation of General Relativity," Foundations of Physics, 19(1), 1989, p. 105-108.

10. For an excellent lay discussion of the missing chaos problem, see Robert Pool, "Quantum Chaos: Enigma Wrapped in a Mystery," *Science,* 243(4893), Feb. 17, 1989, p. 893-895. For a more technical discussion, see P.V. Elyutin, "The quantum chaos problem," *Sov. Phys. Usp.* 31(7), July 1988, p. 597-622.

11. For an introduction to Bohm's hidden variable theory, see D. Bohm, *Phys. Rev.* 85, 1952, p. 166,180; *Causality and Chance in Modern Physics,* Routledge & Kegan Paul, London, 1957; "Hidden variables and the implicate order," in *Quantum Implications: Essays in Honour of David Bohm,* Eds. BJ. Hiley and F. David Peat, Routledge & Kegan Paul, London & New York, 1987, p. 33. See also D. Bohm and BJ. Hiley, *Found. Phys.* 5, 1975, p. 93; *Found. Phys.* 12, 1982, p. 1001; *Found. Phys.* 14, 1984, p. 255. See also Y. Aharonov and D. Albert, "The issue of retrodiction in Bohm's theory," in *Quantum Implications: Essays in Honour of David Bohm,* ibid., p. 223. For a discussion of what nonlocal theory may really entail in terms of *modular* variables, see Yakir Aharonov, "Non-local phenomena and the Aharonov-Bohm effect," *Quantum Concepts in Space and Time,* Eds. R. Penrose and CJ. Isham, Clarendon Press, Oxford, 1986, p. 41-64. For other important discussions see Lee Smolin, "Stochastic mechanics, hidden variables, and gravity," ibid., p. 147-173; and Abner Shimony, "Events and processes in the quantum world," ibid., p. 182-203. For a new viewpoint on emission processes, see Robert M. Wald, "Correlations and causality in quantum field theory," ibid., p. 293-301; and Serge Haroche and Daniel Kleppner, "Cavity quantum electrodynamics," *Physics Today,* Jan. 1989, p. 24-30.

12. That is, photon-structured gravitons. Nonlinear gravitons were discovered by Newman (1975) and Penrose (1976). See E.T. Newman, in *General Relativity and Gravitation,* Eds. G. Shark and J. Rosen, Wiley, New York, 1975; R. Penrose, *Gen. Rel. Grav.* 7,1976, p.31.

The reader should reflect for a moment: If general relativity (GR) already says that the gravitational potential is a conglomerate, then even orthodox GR implies that it has an *internal structure.* Since stress is the only way one can trap forces, and stress is inherently composed of bidirectional pairs of forces, it follows that the G-potential and the scalar EM potential — both of which *trap forces* — are both composed of *stresses.* Hence Whittaker's bidirectional EM force wave internal structure of the potential conceptually follows in straightforward fashion.

However, this constitutes a structuring of spacetime and of the *curvature* of spacetime. Reflect again for a moment: What are the unrestricted implications of geometrically curved spacetime? Simply that spacetime can be geometrically shaped, molded, twisted, and otherwise arranged into intricate — even dynamic — patterns. Since spacetime is much like a virtual gas (its flux is not of molecules but of virtual particles), it has a virtual stress (virtual *pressure,* so to speak).

It is also revealing to compare the situation of puttcrned spacetime curvature to the shapings of clouds in the atmosphere. Just as clouds are made of drops of water/ice suspended in an even finer flux of atmospheric gas molecules, just so the top level of virtual particle flux in vacuum/spacetime is "suspended" in an even finer level of virtual particle flux. Just as the water droplets constituting clouds can be formed into almost any shape or combination of shapes (patterns) to provide an infinite variety of cloud patterns, so can the top levels of the virtual particle flux of spacetime itself be formed into an infinite variety of forms or "orderings".

13. In two fundamental papers in 1903 and 1904, E.T. Whittaker wrote the basis for a complete scalar electromagnetics and an *engineerable and testable* unified field theory of electromagnetics and electrogravitation. See (1) E.T. Whittaker, "On the partial differential equations of mathematical physics," *Mathematishe Annalen,* Vol. 57, 1903, p. 333-355; (2) E.T. Whittaker, "On an expression of the electromagnetic field due to electrons by means of two scalar potential functions," *Proceedings of the London Mathematical Society,* Series 2, Vol. 1, 1904, p. 367-372. In the first paper Whittaker described hidden bidirectional pairs of EM waves that comprise the scalar potential itself. Each of these bidirectional pairs in the Whittaker harmonic structure of potential (and hence of vacuum) is an internal EM wave/energy channel or *hidden photon channel through spacetime itself.* In the second paper, Whittaker showed that any present EM vector force field can be replaced by the two interfering scalar fields. In short, Whittaker showed that present electromagnetics can be converted to scalar fields and scalar interferometry, and will include even EM waves.

Some years ago, this present author realized the profound and absolutely fundamental significance of these two Whittaker papers, and formed a scalar electromagnetics theory from the implications of Whittaker's work. Unfortunately, Whittaker himself never realized that he had already written an engineerable unified field theory, for he never realized that his EM scalar potentials were also *gravitational* potentials. In the Western world, apparently no one else paid any particular attention to these two Whittaker papers and their profound import. Accordingly, they passed into obscurity. This author is convinced, however, that Soviet scientists reviewed these two papers after WWII, and founded a new and highly secret unified field theory, which they dubbed *energetics,* upon Whittaker's unnoticed work.

14. N.D. Devyatkov and M.B. Golant, "Prospects for the use of millimeter-range electromagnetic radiation as a highly informative instrument for studying specific processes in living organisms," *Sov. Tech. Phys. Lett.* 12(3), Mar. 1986, p. 118. See also N.D. Devyatkov, ed., *Applications ofLow-Intensity Millimeter Wave Radiation in Biology and Medicine* [in Russian], IRE Akad. Nauk. SSSR, Moscow, 1985. Devyatkov and Golant are at some pains to conceal that the "information content of the EM field" is actually the particular Whittaker-structure of the scalar potential.

15. Vlail P. Kaznacheyev and L.P. Mikhailova, *Ultraweak Radiations in Intercellular Interactions,* [in Russian], Novosibirsk, 1981; and Vlail P. Kaznacheyev, "Electromagnetic Bioinformation in Intercellular Interactions," *PSI Research,* 1(1), Mar. 1982, p. 47-76. Although the latter journal is now defunct, the referenced article in it contains a considerable amount of the information printed in Kaznacheyev's referenced book.

16. For example, see V.K Ignatovich, The remarkable capabilities of recursive relations," *American Journal of Physics,* 57(10), Oct. 1989, p. 873-878. Particularly notice that Ignatovich points out a remarkable bidirectional wave structure inside the potential associated with the Schroedinger wave itself. However, he gives no credit to Whittaker's

1903 paper pointing out precisely that structure in *any* scalar potential, about two decades before the beginning of quantum mechanics. It also seems at least somewhat curious, if nothing else, that Ignatovich's paper closely follows this author's calling national attention (in national symposia and conferences) to the significance of the first and second Whittaker papers and of the structured potential. The form of Ignatovich's paper is almost as if the Soviets wish to see whether or not American physicists are yet aware of the significance of the Whittaker-structured potential to an *enumerable* unified field theory. In other words, this may be related to the Soviets' use of the structured potential in their microwave radiation of the U.S. Embassy in Moscow since the latter 1950s. There, the object was simple: Pick a high level target, the U.S. Ambassador to the Soviet Union. Electromagnetically induce some health problems and biological changes in U.S. Embassy personnel, using the internalized-EM Whittaker-structured scalar potentials — or, in short, *energetics.* These puzzling health changes will guarantee the personal attention of the NSA, CIA, State Department, U.S. President, etc. When no one can explain what's happening, they would turn to the U.S. scientific community for an explanation. If no scalar counteractions are made by the U.S. onsite at the U.S. Embassy in Moscow, then the Soviet planners would know that the U.S. was unaware of scalar electromagnetics as an engineerable unified field theory. In that case the Soviets would know with one hundred percent accuracy that the U.S. knew nothing of scalar EM (energetics), and hence had not developed scalar EM (energetics) weapons in secret, and also had no defenses against the secretly-developed Soviet scalar EM (energetics) weapons. For years, the U.S. answer/response — or *complete lack* of it — onsite at the Moscow Embassy reassured the Soviets that we were defenseless. If Ignatovich's paper is the same sort of probe, then by the lack of response to his *American Journal of Physics* article the Soviets may rest assured that the U.S. scientific community is basically still unaware of scalar electromagnetics/energetics as an engineerable unified field theory. However, slowly a very small part of academia is beginning to wake up to the potential — pun definitely intended! — of Whittaker's two papers.

17. T.E. Bearden, *The Excalibur Briefing,* 2nd Edition, Strawberry Hill Press, San Francisco, California, 1988, p. 194-198.

18. For details of mysterious, instantaneous deaths in Afghanistan, see Yossef Bodansky, "Soviets testing chemical agents in Afghanistan," *Jane's Defence Weekly,* 1(13), Apr. 7, 1984, p. 508. For indications of a much "milder" EM disease induction weapon possibly used to kill top Radio Free Europe executives in Munich, see "Does Romania have a 'cancer' weapon?", in "Washington Whispers, Death by Radar," *U.S. News and World Report,* Dec. 12,1988, p. 15.

19. For substantiation that Khrushchev reported the development of a fantastic new weapon, see Max Frankel, "Khrushchev Says Soviet Will Cut Forces a Third; Sees 'Fantastic Weapon,'", *New York Times,* Jan. 15,1960, p. 1.

20. Christopher S. Wren, "Brezhnev Calls for Accord against 'Terrifying Arms'", *New York Times,* June 14, 1975, p. 1, 11; Malcolm W. Browne, "Senatorial Group Received by Brezhnev," *New York Times,* July 3, 1975, p. 2; Christopher S. Wren, "Moscow Now Pressing Disarmament," *New York Tunes,* Aug. 12,1975, p. 6.

21. Draft agreement introduced by Andrei A. Gromyko to the United Nations' thirtieth session of the General Assembly on Sep. 23, 1975: *Prohibition of the Development and Manufacture of New Types of Weapons of Mass Annihilation and of New Systems of Such Weapons.* The first article provided that the types of these new weapons would be *"...specified through negotiations on the subject."*

22. To the Soviets, the microwave radiation of the U.S. Embassy in Moscow is a beautifully designed and very valuable intelligence collection **tool:** First, irradiate a high level U.S. target — the U.S. Ambassador to the Soviet Union. Use Whittaker-structured microwave potentials to induce a variety of health changes and diseases in Embassy personnel, including serious illnesses (and eventually deaths) of U.S. Ambassadors. This provides a strong stimulus and guarantees the direct attention of the CIA, DIA, NSA, NSC, DARPA, State Department, Department of Defense, and the President of the U.S. Puzzled, they will turn to highly competent U.S. scientific establishments to ascertain what exactly is going on. That is, the *best* knowledge of the U.S. system will be brought to bear on this puzzling problem. *By the subsequent U.S. reaction — or lack of it — on site at the Moscow Embassy, the Soviets can ascertain with 100 percent certainty whether or not the U.S. is aware of scalar electromagnetics.* If unaware, of course, then the U.S. has not developed scalar EM weapons of its own, or defenses against such weapons.

23. For more specific details, see T.E. Bearden, *AIDS: Biological Warfare,* Tesla Book Co., POB 1649, Greenville, TX 75401,1988.

24. For example, in the 1960s and 70's French inventor Antoine Priore, working with some of the finest French medical scientists, positively proved that killer diseases such as cancer, leukemia, sleeping sickness, etc. can be cured electromagnetically. This was not anecdotal material, but rigorous scientific experiments properly performed and reported in the French medical journals. For a complete resume of the Priore Affair, see Jean-Michel Graille, *Le Dossier Priore,* De Noel, Paris, 1984 [in French]. For a substantial synopsis, see Christopher Bird, "Appendix I: The Case of Antoine Priore and his Therapeutic Machine: A Scandal in the Politics of Science," in T.E. Bearden, *AIDS: Biological Warfare,* ibid. p. 346-375. See also Priore references, ibid., p. 333-339. For an excellent summary of the Priore Affair, with some details of the working of Priore's machine, particularly see David M. Rorvik, "Do the French have a cure for cancer?", *Esquire* Magazine, July 1975, p. 110-111,142-149.

25. For an early discussion of the Woodpecker and some of the disagreement between analysts, see "Powerful Soviet radio signal protested," *Aviation Week & Space Technology,* Nov. 8, 1976. For an interesting report on the Woodpecker, see Robert Horitz, *The Woodpecker Project- A Preliminary Report,* Association of North American Radio Clubs, Jan. 8, 1987. Also, it is at least an interesting "coincidence" that the depletion of the ozone in a giant hole over Antarctica was only discovered in 1977 — after the powerful Soviet Woodpecker transmitters began operation in 1976.

Other leading scientists have at least speculated on potential EM biological warfare capabilities of the Woodpecker, though of course in the vein of conventional EM effects on biological systems. Cf "Soviet device uses radio waves as tranquilizer," Associated Press release, *Huntsville [Alabama] Times,* May 19,1983. In this article, Dr. Ross Adey is quoted as having tested the Soviet Lida machine, which generates pulsed 40 megahertz radio waves and broadcasts them to affect biological systems. Adey described testing the machine on a cat, and in two or three minutes the cat was sitting quietly, almost as though transfixed, and uninterested in its surroundings. The animal remained uninterested in its surroundings, according to Adey, for some 20 to 30 minutes after the machine was turned off.

Dr. Robert Becker has particularly pointed out that the available evidence suggests that the Woodpecker is multipurpose, and could include an experimental attack directed against Americans. See Chapter 15: "Maxwell's Silver Hammer," of Robert O. Becker,

M.D. and Gary Selden, *The Body Electric: Electromagnetism and the Foundation of Life,* William Morrow & Co., New York, 1985, p. 271-329.

26. Since that announcement in *Science,* the weather over the United States has continued to be more anomalous than could possibly be attributed to chance excursion from norm. For a more orthodox concept of weather manipulation via ordinary EM means, see Bernard J. Eastlund, *Method and Apparatus for Altering a Region in the Earth's Atmosphere, Ionosphere, and/or Magnetosphere,* U.S. Patent no. 4,686,605, Aug. 11,1987. Eastlund's process can be used to steer distant jet streams, to disrupt communications worldwide, and to destroy or deflect a missile attack. Significantly, the U.S. government requested Eastlund *not* to patent the weatherwar process. For other related orthodox references, see G. Meltz and F.W. Perkins, "Ionospheric Modification Theory," *Radio Science,* 9(11), Nov. 1974, p. 885-888; Carrol et al, "The Platteville High Power Facility," ibid., p. 889-894; W.E. Gordon and H.C. Carlson, Jr., "Arecibo Heating Experiments," ibid., p. 1041-1047; Meltz et al., "Ionospheric Heating by Powerful Radio Waves," ibid., p. 1049-1063. Since microwave heating is of interest in the Eastlund phenomenon, related references on electron cyclotron resonance heating are of interest Cf Batchelor and Goldfinger, "A theoretical study of electron-cyclotron absorption in Elmo bumpy torus," *Nuclear Fusion,* 20(4), 1980, p. 403-418 and Kosmahl et al, "Plasma acceleration with microwaves near cyclotron resonance," *Journal of Applied Physics,* 38(12), Nov. 1967, p. 4576-4582. See also "The MST Radar at Poker Flat, Alaska," *Radio Science,* 15(2), Mar.-Apr. 1980, p. 212-223. Interestingly, Eastlund's patent cites a reference to Nikola Tesla in *Liberty Magazine,* Feb. 1935, p. 7. Finally, for a Soviet orthodox paper on the possibility of using intense microwave radiation to influence the weather and cause precipitation from clouds, see E.T. Protasevich, "Microwave weather modification," *Soviet Technical Physics Letters,* 7(3), Mar. 1981, p. 114-115.

27. For illustrations of the Woodpecker intersection grid over the U.S., see Christopher Chant and Ian Hogg, *Nuclear War in the 1980's?,* Harper & Row, New York, 1983, p. 71; *Soviet Military Power,* U.S. Department of Defense, 1985, p. 45.

28. Bearden, *Soviet Weather Engineering Over North America,* 1-hr, videotape, 1985; "USSR: New Beam Energy Possible?", *Defense & Foreign Affairs Daily,* 13(111), June 12,1984, p. 1-2. Ironically, results of this Soviet engineering of the weather over the U.S. is being accomplished nearly continuously at present. The results of the artificially created highs and lows — and their movement across the U.S. — has now been detected by our atmospheric scientists, particularly at the University of Illinois in Urbana-Champaign. Beginning on Jan. 5, 1990, the "strange weather phenomenon" was detected as a large-scale pressure wave, enormous in size and extent, traveling at about 50 miles per hour. On Jan. 14, a similar detection of the effect was made, and again in March. On Dec. 21, 1990, again the large-scale pressure wave was detected. In the past, solitary pressure waves have been detected in the atmosphere, but always small and only as a local effect. These observations are the first detections of large solitary pressure waves, 80-100 kilometers in wavelength, six kilometers high, and extending north-south across two states. The two Jan. 1990 waves lasted 11 and 16 hours respectively. Already the researchers are accepting the phenomenon as natural, and excitingly stating that it can be used to "predict the weather ahead of the traveling giant wave. *One would certainly hope so, since the giant wave is a Russian scalar wave interferometry creation in the first place, designed to direct and influence the weather over the U.S.I* However, now we are going to see our atmospheric scientists accepting these heretofore unheard-of phenomena as absolutely natural! As this author stated once before, U.S. our scientists do not recognize Soviet weather engineering when it's right over their heads in plain view, because they know nothing of scalar EM waves and scalar interferometry. For a reference to the

detection of these giant, moving pressure waves, sec "Strange Pressure Waves Crossed MidWest in 1990," *Watt Street Journal,* Jan. 15,1991.

29. Bearden, *Fer-de-Lance: A Briefing on Soviet Scalar Electromagnetic Weapons,* Tesla Book Co., POB 1649, Greenville, TX 75401, 1986; *AIDS: Biological Warfare,* Tesla Book Co., 1988; Solutions to Tesla's Secrets and the Soviet Tesla Weapons, Tesla Book Co., 1981; "Soviet Psychotronic Weapons," 1978; *The Excalibur Briefing,* Strawberry Hill Press, San Francisco, 1980; "Star Wars Now: The Bohm-Aharonov Effect, Scalar Interferometry, and Soviet Weaponization," Tesla Book Co., 1984; Tesla's Electromagnetics and Its Soviet Weaponization," *Proceedings of the Tesla Centennial Symposium,* IEEE and International Tesla Society, Colorado College, Colorado Springs, Colorado, 1984; and others such as *Analysis of Scalar Electromagnetics,* Tesla Book Co., 1990 and "Soviet Phase Conjugate Weapons: Weapons That Use Time-Reversed Electromagnetic Waves," *Bulletin,* Committee to Restore the Constitution, POB 986, Fort Collins, Colorado 80522, Jan. 1988.

30. T.E. Bearden, AIDS: *Biological Warfare,* 1988, p. 226.

31. T.E. Bearden, *Fer-de-Lance,* 1986, p. 220-223.

32. Paul Brodeur, *The Zapping of America: Microwaves, Their Deadly Risks, and the Cover-Up,* W.W. Norton & Co., New York, 1977, p. 39-40,60-61,95-134.

33. A.M. Lilienfeld et al, *Foreign Service Health Status Study: Evaluation of Health Status of Foreign Service and Other Employees From Selected Eastern European Posts,* Department of Epidemiology, of Hygiene and Public Health, The Johns Hopkins University, Baltimore, Maryland, Final Report, July 31, 1978. Dr Lilienfeld, professor of epidemiology, also directed a study in the early 1960s which pointed out a possible connection between Down's syndrome in children and exposure of their parents to radar. [See Arnold T. Sigler, Abraham M. Lilienfeld, Bernice H. Cohen, Jeanette E. Westlake, "Radiation Exposure in Parents of Children with Mongolism (Down's Syndrome)," *Bulletin of the Johns Hopkins Hospital,* Vol. 117, 1965, p. 374-399.] He also directed another study which found a significant increase of chromosome abnormalities in the blood of persons who had formerly been radar workers. Dr Lilienfeld obviously was a highly qualified and excellent choice to direct a study of the U.S. Embassy personnel health problems vis a vis the Soviet microwave radiation of the U.S. Embassy. That U.S. biophysics knew nothing of infolded Devyatkov structures of Whittaker potentials and human vulnerability to such EM biological warfare is most certainly not the fault of Dr. Lilienfeld. See also Robert C. Mallalieu, A *Model of the Microwave Intensity Distribution Within the U.S. Embassy, Moscow 1966-1977,* Report FS-80-166, Applied Physics Laboratory, Johns Hopkins University, Baltimore, Maryland, Aug. 1980. Dr. Mallalieu is a very capable scientist and, just as for Dr. Lilienfeld, it is most certainly not his fault that the U.S. biophysics community had no knowledge of the Soviet method of inducing cellular diseases and changes by means of infolded hidden bidirectional EM wave structures of Whittaker potentials. All of the very able Johns Hopkins scientists in fact did a highly capable job *with the tools they had available to bring to bear on the problem.* It was simply their *tools and theoretical models* that were inadequate and failed them.

34. *Microwave Radiation at the U.S. Embassy in Moscow and Its Biological Implications: An Assessment,* U.S. Department of Commerce, Doc. #NTIA-SP-81-12, Mar. 1981.

35. See also Martin Ebon, *Psychic Warfare: Threat or Illusion,* McGraw Hill, New York, 1983, passim. See also Captain John D. LaMothe, *Controlled Offensive Behavior — USSR,* Report ST-CS-01-169-72, Defense Intelligence Agency, Washington, D.C. (Released

under FOIA). See also Captain John D. LaMothe and Mr. Louis Maire, *Soviet and Czechoslovakian Parapsychology Research,* Report DST-1810S-387-75, Defense Intelligence Agency, Washington, D.C. (Released under FOIA). See also Barton Reppert, Associated Press release, "Microwaves in Moscow remain mystery for U.S.," *Huntsville [Alabama] Times,* May 22,1988, p. IB, 4B.

36. Cf Bearden, *Fer-de-Lance,* 1986; *AIDS: Biological Warfare,* 1988; "Soviet Phase Conjugate Weapons: Weapons that use Time-Reversed Electromagnetic Waves," *CRC Bulletin,* Jan. 1988.

37. See "Secret Speech: Did Brezhnev Come Clean?", *National Review,* 29(8), Mar. 4, 1977, p. 248,250.

38. William Beecher, "Brezhnev termed detente a ruse, 1973 report said," *Boston Globe,* Feb. 11,1975, p. 1,12.

39. E.T. Whittaker, "On the partial differential equations of mathematical physics," *Mathematische Annalen,* Vol. 57, 1903, p. 333-355. A copy of this paper is included as Annex B of this book.

40. E.T. Whittaker, "On an expression of the electromagnetic field due to electrons by means of two scalar potential functions," *Proc. Lond Math. Soc,* Series 2, Vol. 1, 1904, p. 367-372. A copy of this paper is included as Annex C of this book.

41. N.D. Devyatkov and M.B. Golant, "Prospects for the use of millimeter-range electromagnetic radiation as a highly informative instrument for studying specific processes in living organisms," *Soviet Technical Physics Letters,* 12(3), Mar. 1986, p. 118.

42. N.D. Devyatkov, *Ed,,Applications of Low-Intensity Millimeter Wave Radiation in Biology and Medicine* [in Russian], IRE Akad. Nauk. SSSR, Moscow, 1985.

43. Vlail P. Kaznacheyev and L.P. Mikhailova, *Ultraweak Radiations in Intercellular Interactions* [in Russian], Novosibirsk, 1981.

44. Vlail P. Kaznacheyev, "Electromagnetic Bioinformation in Intercellular Interactions," Novosibirsk, 1981 [in Russian]. English translation in *Psi Research,* 1(1), Mar. 1982, p. 47-76; V.P. Kaznacheyev et al, "Distant intercellular interactions in a system of two tissue cultures," *Psychoenergetic Systems,* 1(3), Mar. 1976; Vlail P. Kaznacheyev et al, "Apparent information transfer between two groups of cells," *Psychoenergetic Systems,* 1(1), Dec. 1974; V.P. Kaznacheyev, "Information Function of Ultraweak Light Flows in Biological Systems," in *Problems in Biophysics,* Novosibirsk, 1967, p. 7-18 [in Russian].

45. For a detailed exposition of time reversal in physics, see Robert G. Sachs, *The Physics of Time Reversal,* University of Chicago Press, Chicago, 1987.

46. As early as 1898 Carl Barus — in a paper titled "A curious inversion in the wave mechanism of the electromagnetic theory of light," American Journal of Science 5 (Fourth Series), May 1898, p. 343-348 — showed an interpretation of Maxwell's electromagnetic wave equations that could *make the wave run backward.* His paper was ignored, but it may have been the first indication of what today in nonlinear phase conjugate optics is known as the *time-reversed EM wave.* Some appropriate references on phase conjugate/time-reversed EM waves are: (1) Amnon Yariv, "Chapter 16: Phase Conjugate Optics — Theory and Applications," *Optical Electronics,* 3rd Edn., Holt, Rinehart and Winston, New York, 1985; (2) Robert A. Fisher, Ed., *Optical Phase*

Conjugation, Academic Press, New York, 1983; (3) U. Yu Zel'dovich et al, *Principles of Phase conjugation,* Vol. 42, Springer Series in **Optical** Sciences, Theodor Tamir, Ed., Springer-Verlag, New York, 1985; (4) David M. Pepper, "Nonlinear Optical Phase Conjugation," *Optical Engineering,* 21(2) Mar./Apr. 1982, p. 156-183; (5) David M. Pepper, "Applications of Optical Phase Conjugation," *Scientific American,* 254(1), Jan. 1986, p. 75; and (6) F.V. Bunkin et al, "On sound phase conjugation with amplification of phase-conjugated wave," *Soviet Journal of Quantum Electronics,* Vol. 11,1980, p. 687.

47. Fritz Albert Popp, "Photon Storage in Biological Systems," in Fritz Albert Popp et al, Eds., *Electromagnetic Bio-Information: Proceedings of the Symposium, Marburg, September 5, 1977,* Urban & Schwarzenberg, Baltimore, 1979, p. 123-149. This very important paper presents Popp's discovery of the body's master cellular communication system. Ruth has experimentally confirmed the existence of the *degradation radiation (death photons)* of Kaznacheyev. Experimental results of Ruth and others have led Popp to postulate that biological systems generally have the capacity to store coherent photons which come from the external world, and that ultraweak photon emission from biological systems is governed by photon storage (i.e., *charge up of coherent internal structuring of the electrical charge or potential)* within the cell population. [Note that the present author's dynamic *statistical graviton as photon/antiphoton coupling* concept, in conjunction with Whittaker-structured potentials on atomic nuclei, gives the precise mechanism by means of which Popp's coherent virtual photons are stored as components of gravitons in Whittaker potentials.]. See also Fritz Albert Popp, *Biophotonen. Ein neuer weg zur Losung des Krebsproblems,* Verlag fur Medizin, Heidelberg, 1976 [in German].

48. For a much earlier and very useful work on mitogenetic radiation, see Otto Rahn, *Invisible Radiation of Organisms,* Verlag von Gebruder Borntraeger, Berlin, 1936. Rahn points out that dividing cells — and dying cells — emit a primary biological energy in the ultraviolet light range around 2600 angstroms. This *mitogenetic radiation (MR)* can be transmitted through quartz to cause conspicuous stimulation of mitosis in isolated cell colonies. The book includes methods of observing biological radiations, special characteristics of the radiation, analysis of the mitogenetic effect, etc. An earlier book on this subject, with a fairly complete bibliography up to 1932, is W. Stempell, *Die Unsichtbare Strahlund der Lebewesen,* Jena, Gustav Fischer, 1932 [in German]. Note that this German work preceded the Soviet work of Kaznacheyev after WWII, including the EM transmission of cellular effects through quartz windows.

49. T.E. Bearden, "Maxwell's Lost Unified field Theory of Electromagnetics and Gravitation," *Proceedings,* PACE Third International New Energy Technology Symposium, June 25-28,1988 at Maison du Citoyen, Hull (Ottawa), Canada, 1988.

50. T.E. Bearden, "Maxwell's Original Quaternion Theory Was a Unified Field Theory of Electromagnetics and Gravitation," *Proceedings,* PACE Third International New Energy Technology Symposium, June 25-28,1988 at Maison du Citoyen, Hull (Ottawa), Canada, 1988.

51. For a cogent argument about what might have been discovered much earlier in physics if quaternions had not been cast aside, see James D. Edmonds, Jr., "Quaternion Quantum Theory: New Physics or Number Mysticism?", *American Journal of Physics,* 42(3), Mar. 1974, pi 220-223. Just how much more powerful was Maxwell's quaternionic expression of EM theory than was Heaviside's (i.e., the modern) vector interpretation, was succinctly expressed by Josephs as follows: *"Hamilton's algebra of quaternions, unlike Heaviside's algebra of vectors, is not a mere abbreviated mode of expressing Cartesian analysis, but is an independent branch of mathematics with its own rules of operation and its own special*

theorems. A quaternion, is, in fact, a generalized or hypercomplex number..." (H.J. Josephs, The Heaviside papers found at Paignton in 1957," *Electromagnetic Theory by Oliver Heaviside, Including an account of Heaviside's unpublished notes for a fourth volume, and with a foreword by Sir Edmund Whittaker,* Vol, III, Third Edition, Chekea Publishing Co., New York, 1971, p. 660.

52. For example, one difference between vectors and quaternions is of particular interest. In multiplication, when the multiplied vector components of two quaternions produce a zero vectorial resultant, the product of the quaternions may still produce a nonzero scalar resultant Further, this scalar resultant has a *hidden variable* internal structure of infolded functions of the component vectors that have vectorially "zeroed" or "cancelled." When the interacting zero-summed vector components of the quaternions are EM force vectors, the nonzero scalar component of the quaternion resultant — with its deterministic, infolded, zero-summed (and so *oppositively paired)* vectors represents a *trapped EM stress of spacetime,* and hence it is a *deterministicalfy EM-substructwed scalar potential.* Further, this scalar potential's deterministic, infolded EM vector structure is vector zeroed, hence constitutes a force-free field, *with its presence and its infolded EM structure completely hidden from normal "electron translating" detectors.* This structured quaternionic force-free potential represents a *patterned change in the local stress energy density of vacuum.* If the infolded vectors are functions of time, then each infolded component of the structured potential is time-varying. One can even produce standing waves of, and deterministically structured dynamic patterns in, the locally trapped energy density of vacuum. *These changes/waves in the local vacuum stress energy density represent very strong, engineerable, electrogravitational changes/waves in the local rate of flow of time, and in the local curvature of spacetime/vacuum itself.* This directly extends present Einsteinian general relativity, making it an empirical engineering science, and adding in the missing electromagnetics as well. In short, Maxwell's original quaternion theory was already a unified field theory of gravitation and electromagnetics — it was a testable and engineerable theory of *electrogravitation.*

Oliver Heaviside abhorred the quaternion, since it linked together a scalar component and a vector component, or *"apples and oranges,"* in his view. When he excised the scalar component of the quaternion to produce his vector mathematics for translations of Maxwell's theory, Heaviside threw away *electrogravitation.*

As is well-known, Maxwell prepared his EM model based on his mechanical model of the etheric medium. Also, Maxwell himself was well aware of the importance of EM stress in the medium, although he had apparently not realized that this represented gravitational "charge" or *gravitational potential.* He knew that vectors alone could not express EM stress effects, but quaternions captured them. For example, quoting from Maxwell's *A Treatise on Electricity and Magnetism,* Vol. 1, 3rd Edition, New York, 1954: *"There are physical quantities of another kind which are related to directions in space, but which are not vectors. Stresses and strains in solid bodies are examples, and so are some of the properties of bodies considered in the theory of elasticity and in the theory of double refraction. Quantities of this class require for their definition* <u>*nine*</u> *numerical specifications. They are expressed in the language of quaternions by linear and vector functions of a vector."* Unfortunately the internal structure of atoms was not known at the time, so Maxwell had no way of arriving at the activation charging of atomic nuclei by EM stress. Note that Maxwell's book was first published in 1873.

See also R. Chen, "Cancellation of internal forces," ,American *Journal of Physics,* 49(4), Apr. 1981, p. 372 for a discussion of summation vectors and *internal* vectors. Internal forces occur in equal and opposite pairs (i.e., as stresses), so they contribute nothing to the vector sum (i.e., to external trunslation). Note, however, that just this sort of stress in

the medium or in the system is what was captured by the non-disappearing scalar component of the resultant in quaternion multiplication, even when the *vector translation* component of the interaction resulted in a zero transition (vector) resultant.

The scalar component of Maxwell's quaternions captured and retained the *internal vectors* that result from zero-vector summations of non-zero EM force fields. *Oliver Heaviside (and to a lesser extent, Williard Gibbs) discarded the entire internal EM vector region when he excised the scalar component of the quaternion. The internal EM vector region is the electrogravitational region, and that is what was discarded — all those parts of Maxwell's theory where EM forces turn to gravitational potential. Accordingly, Heaviside only captured a subset of Maxwell's unified EM/G field theory; he captured only that small subset where gravitation and electromagnetism are mutually exclusive.*

In the vacuum, this internal or infolded EM stress energy constitutes *a change of the local gravitational potential, hence a curvature of the local spacetime.* Further, a *deterministic structure* of these equal and opposite pairs of internal EM forces can be and is infolded within the potential, and hence "hidden" within a structured change to the local vacuum/spacetime.

Ironically, Maxwell in 1873 had already written a theory that embodied David Bohm's hidden variables, which Bohm would produce three quarters of a century later. In addition, Maxwell had already falsified the general relativity theory that Einstein was to produce four decades later, for Maxwell's infolding of EM forces into a gravitational potential had already curved — *and deterministically structured* — local spacetime. Not knowing that EM forces can be internalized and trapped, and used to curve spacetime, Einstein considered only the extremely weak gravitational force as an agent of spacetime curvature. But the G-force is so very weak (say, 10^{-42} or so as strong as the EM force) that only a huge collection of mass — such as the sun or a star — would exert G-forces powerful enough to curve spacetime sufficiently to be detected. Since the observer, his laboratory, and his instruments would never be on the surface of the sun or of a star, Einstein reasoned that — where the observer was — local spacetime would essentially be flat and never curved. Accordingly, he made a most erroneous postulate in his general relativity theory: he postulated that the local spacetime would be flat, and uncurved. The error is that he stated the postulate incorrectly. *Rigorously, he should have postulated that the local spacetime would not be curved whenever only the weak gravitational force was used as the agent for curvature, for that is the correct statement of the postulate and what it assumed.* Accordingly, Einstein did not at all write a complete theory of curved spacetimes. Instead, he wrote a very special case. His postulate of the locally flat spacetime contains unwitting, hidden assumptions that (1) electromagnetism is always mutually exclusive from gravitation, (2) only the weak gravitational force is used as an agent to cause spacetime curvature, and (3) electromagnetic field in free space (actually, in spacetime) always moves at the speed of light and is never *locally trapped.*

Einstein then spent the rest of his life in a fruitless search to try to find how to recover the electromagnetics which his general relativity theory excluded. Ironically, he never realized — as did none of the relativists — that his own postulate of a flat local spacetime prevented any unification of EM and G, because it inadvertently had already declared them mutually exclusive.

53. Bearden, "Maxwell's Lost Unified Field Theory...", 1988.

54. Bearden, "Maxwell's Original Quaternion Theory...", 1988.

55. See note 52. There are actually two kinds of EM energy: (1) *externalized* EM energy, or EM energy in translation, and (2) *internalized* EM energy, or EM energy trapped with a medium and not externally translating. Note that the trapped internal EM energy is quite dynamic, and continually acting on the local medium. Note also another marvelous thing which orthodox physics has completely missed: *Trapped internal EM energy is essentially perpetual; it may be regarded as continually doing internal "work" on the medium, but since it is not translatable externally, it cannot dissipate.* This is because "trapped" means that the energy is in its own "closed system"; therefore the energy of that closed self-system is conserved (perpetual) until something breaks (opens) up the closed self-system. It is energy that is actually completely dynamic, but localized. This is a new and more rigorous interpretation of *potential energy:* Potential energy is simply localized energy that is not translating externally, hence is never dissipated as *external* work. It is continually and completely doing *internal* work.

What we are saying is that the very concept of energy is simply that of continual expenditure of work completely locally and internally — on and in the medium — without external translation *through* the medium. *That can be taken as the definition of a medium: an entity or regime where this holds.* Hence the difference between energy and work is simply only *external translation.* That is, with zero external translation, there is zero external scattering because no distance is involved — and work has been equated to the external scattering of EM energy in multiple directions over specific distances. We accent the latter statement: the present concept of physical work a priori assumes simultaneous external translation of EM energy (trapped work) into multiple directions at once — i.e., it assumes *scattering.*

The situation is clarified if we realize that we can consider any particular thing as simply a collection of even finer things. Applying this principle, the energy of one object becomes the local collection of the energies of many finer objects. The energy of one finite region of spacetime becomes a collection of the energies of even finer regions of spacetime, where these finer regions are all part of the larger collective region. When energy does not externally translate, it does not matter whether or not it is thought of as "energy" in the rather mystical orthodox sense of "the capacity to do external work", or if it is thought of as "continually occurring internal work without external translation" —which latter, of course, just simply means without doing *external* work.

The result of all that laborious reasoning is this: energy may be regarded as internalized work. Work may be regarded as externalized and scattered energy. Presently, internalized work is sometimes referred to as *virtual* work. I.e., work is being done, but not in external translation.

One additional factor must be noted: Since the energy of an object is actually a localized collection of the energies of many smaller subthings of the object, then those subthings may be externally translated in two fashions: (1) they can be translated in multiple directions, out of the region, in which case their energies now are not integrated. In other words, the "energies" of the subobjects now react individually with the observer/detector/instrument. We may say that the "energy of the original region" — which was an integral of all the subenergies — has now been *disintegrated.* In physics, the notion of this disintegration of internalized energy by external scattering is known as *the production of heat.* The concept of heat applies to the degree of external scattering and hence disintegration of internalized energy. Things which can be lined up and integrated are things that arc *ordered.* Thus the scattering of internalized energy (the scattering of *order)* is *disordering* of energy.

Note also that we are now somewhat in violation of the present interpretation of thermodynamics, as regards the notion of *temperature.* We state unequivocally that any instrument only measures or detects its own internal change, nothing else. No instrument actually measures the "temperature" of an object or region; instead, at least a little bit of energy from that region must be externally translated from the region and into the instrument, to cause an internal change (internal work) in the instrument. But in that case *we did not actually measure the temperature content of the object or region.* We actually detected the *escape and disordering* of some of that temperature content and "measured" the characteristics of the externalized escape. In ascribing a temperature to the object, we are actually making a statement about *the rate at which that object's trapped internal EM energy can externally translate and escape and be scattered, given the chance to do so.* Rigorously, this is in accord with the quantum mechanical view. An object has no such thing as a temperature, until we *measure* or *detect* or *observe* the temperature. Even then, we do not measure or detect or observe the temperature, but only a certain change in it.

Now there are actually three kinds of external translation of energy that can be made — thermodynamics only accounts for two.

First, we can have external scattering translation, which equates to the orthodox concept of external work. In that case, the internal energy/work is "being expended as external work." Note that the work is always being done in a different region from where the energy is, conceptually, when we state that "energy is being expended as work."

Note now that the externalizing translation requires movement through an external distance, hence through time. Since in the macroscopic world EM energy normally scatters off atoms by its interaction with their electron shells, then in the macroscopic world EM energy is continually and continuously being expended as work. That is, order (integrated internal energy) is continually being expended as disorder (external disintegration of the previously internally integrated energy). This process — of continual production of disorder by external EM scattering — is known as *entropy.* The external scattering/disordering actually involved "translation through time." Now, actually, in physics the universe is composed of angular momentum — which has the units of energy multiplied by time. Further, the observable universe can only change in incremental unite of action, called quanta. One quantum consists of a little piece of energy welded to a little piece of time, so to speak, with no seam in the middle. Hence for energy to "translate", quantum change must occur, and in this case we must think of the external scattering and disintegration of internalized energy as actually being the external scattering of internalized collections of quanta. But in that case, the internal collected quanta contained internally collected time amounts as well as energy amounts. Hence in the entropic macroscopic world we are continuously scattering not only EM energy but EM time. What we call the "rate of flow of time" consists of nothing but the external translation/scattering of action, hence the external translation/scattering of energy and the external translation/scattering of time. *The normal "flow of time" is actually the external disintegration/scattering of internalized integrated/boundary-coherent time. In other words, the production of entropy and the production of the "forward flow of time" are actually one and the same thing. Further, the "rate of flow of time" is simply the "rate of production of entropy." If we change the rate of production of entropy, we change the rate of flow of time, and vice-versa.*

The second form of external translation of internalized energy is to translate all the subenergies in parallel, coherently. Thus if we translate the internal mass (which is just internalized or trapped energy) of an object through space and time coherently, we

"translate the object" through space and time. In this case no entropy is produced (conceptually speaking), and the object does not "age-change" as such. Everything in the object is just as it was. *If an object did this and only this, it also would not "move in time" a priori, as far as it itself was concerned,* for it would experience no entropy and no internalized change of action, hence no internal change in time. Interestingly, it would also be completely unobservable by any other "physical observer" or "physical observing/detecting/measuring instrument." It is interesting, but well beyond the scope of this paper, that objects can actually be induced to move in a fashion very close to this second translation, and this has been experimentally verified. We will not discuss the second case further, except to say that our very notion of something "moving through space" captures this aspect. The fact that normally objects still exchange and scatter energy and time externally, even when "moving through space", means that we still see them as moving through normal time (through *scattering* time.) Rigorously, objects which move through normal space and time are objects which (1) keep much of their internalized energy unscattered, so that they move through space, and (2) scatter some part of their internalized energy, so that they move through scatter-time or normal-time.

The third form of external translation/scattering of internalized energy is marvelous indeed: *It is negative.* In this case, scattered external energy is actually focused back into the internal, ordered, integrated energy of the object. But since this actually involves action, or "energy x time,", then the object does not scatter/disintegrate time, but rather it coherently collects/integrates time. To the object, this is a time-reversed situation. Rigorously, the object exists in integrating time, not disintegrating time. *The object is time-reversed.* Note that the second law of thermodynamics — which we have just violated — *assumes* that time flow is always positive; i.e., that internalized EM energy/time are always being externally scattered/disintegrated. Rigorously, the second law of thermodynamics — the law of entropy — only applies to the forward flow of time. It specifically does not apply to the time-reversed situation, for obviously that would be re-ordering and negentropic. *Entropy is only one side of a two-sided coin; negentropy is the other side.*

Re-ordering of EM energy is occurring, and that is the concept of *negentropy.* This EM energy that re-orders is *phase-conjugated,* i.e., *time-reversed.* It is referred to as *negative energy.* We point out that this is a perfectly permissible form of energy translation, and it can be quite readily engineered on the laboratory bench, and even amplified. Most physicists presently are very uncomfortable with the time-reversed EM wave, even though it is a proven fact. They desperately try to ignore the negentropic implications, for that means the violation of the second law of thermodynamics, which they strenuously try to hold sacrosanct. And the fact that one can easily amplify the negentropy *directly from entropy,* merely by pumping a phase conjugate mirror, also is most studiously avoided *because of total, utter fear of the awful implications of that experimental fact.*

56. Bearden, "Maxwell's Original Quaternion Theory...", 1988, p. 8.

57. Again refer to Maxwell's quote in note 52 above. If the vectors are waves, their amplitudes are functions of time. It is easily seen that the infolded functions of. these vectors waves, in a vector-zero resultant summation of opposing vectors, can and will also be waves. Since the vector translation resultant is always zero, then the overall magnitude of the standing scalar potential wave may change, or not change, according to the specific internal EM waves and their relationships. In any case, the potential wave — which in the limiting case may be just a so-called "fixed change" in the scalar potential — will be a composite of its internal, dynamic, EM waves which individually are translating. The external potential, being a composite formed of relationships, is similar to a phase wave, hence can "move or translate through space" at any velocity, simply depending

upon its internal arrangement. Note that scalur EM waves are very complex in structure, and cannot normally be described by single overall characterizations such as "frequency," "wavelength," etc. Those are *string* wave concepts, and scalar waves are almost always radically different from string waves.

58. Originally I chose the term *scalar electromagnetics* for my unified field theory work, since I based it on Whittaker's fundamental 1903 and 1904 papers. In his 1904 paper, Whittaker had already shown that all of classical EM could be replaced by an electromagnetics based on *scalar potentials* and *scalar potential interferometry*.

Whitney has pointed out that a slight correction to Whittaker's 1904 paper is required, since Whittaker assumed the standard Lienard-Wiechert (LW) mode for the EM potentials created by rapidly moving point sources. The LW model was derived at the turn of the century, before the full development of special relativity theory. The LW model is faulty because it fails to conserve total charge. See Cynthia Kolb Whitney, "On the Lienard-Wiechert Potentials," [unpublished]; "Generalized functions in relativistic potential theory," *Hadronic Journal*, Vol. 10,1987, p. 289-290; and "A new perspective on the hydrogen atom," *Physics Essays*, 1(2), July 1988, p. 52-55. Whitney also shows that most modern derivation methods for the relativistic EM potentials have been "retrofitted" to the Lienard-Wiechert results in most present-day texts. She has found — and corrected — the error that has been passed along by almost all other theorists. A significant change in the orientation of the longitudinal E-field occurs in the altered and corrected formulation of the potentials. This field directionality becomes significant in any multi-body system, since the new direction provides a torque on the accelerated system as a whole, producing an energy transfer that works in opposition to radiation and moves energy from fields and to particle orbits.

The Lienard-Wiechert error inherent in Whittaker's paper is not fatal, however, and merely implies that one may need to utilize some four or so potentials — instead of just two — to fully replace classical EM by scalar potential interferometry when torquing and multi-body systems are considered.

59. Again, quaternionic or Whittaker infolding of functions of EM force vectors inside a scalar EM potential produces a scalar field with a hidden internal structure that can be deterministic. If the infolded vectors are rhythmic (waves), the scalar potential will have pairs of bidirectional waves multiplied together, infolded as a Whittaker structure.

60. The Soviets obtained the German radar team at the end of WWII. That team had developed radar absorbent materials (RAM), and had also noticed anomalies in their RAM materials when testing them for simultaneous illumination by multiple radar beams. This actually produced the first four-wave mixing phenomena, the first time-reversed EM wave, and the first pumped phase conjugate mirror material — in *radar*, not in optics.

After WWII, the Soviets also had embarked on a desperate crash effort to try to catch the West, develop nuclear weapons, and develop ballistic missiles and anti-bomber missile defenses.

With the Western development of the atomic bomb, Stalin had been frustrated in his plans to wait two years, keep his armies intact, and let the West beat its swords back into plowshares. He had planned to then march into Europe and take it in six weeks — and he could have done so, except for the advent of the atomic bomb. Now the West could bomb him back to the stone age if he massed his armies and tried to move into Europe.

However, Stalin also knew that the atomic bomb would not be the last great scientific and technical breakthrough. Stalin was also an iron dictator who brooked no opposition; he killed his enemies. He marshalled his scientists to actively — even frenziedly — search for the next such decisive technical breakthrough area. They were to leave no stone unturned until they found such an area. Stalin would follow the same scenario demonstrated by the West against the Japanese. When the new breakthrough area was found, the entire resources of the Soviet state would be marshalled behind it, to develop it in great secrecy. At the eleventh hour, they would then thrust it upon the West by surprise. The West, utterly confused and helpless, would be forced to surrender to Stalin's aims. This was Stalin's plan.

Under that plan, the Soviets purchased all the scientific journals and literature of the West back to the beginning. They transported shiploads of this scientific and technical material back to Russia, and set up large institutes to examine every paper. In one such institute, some 2,000 PhDs — together with a complete translation staff—was assembled to meticulously review this scientific literature. Anything unusual or interesting was put aside for further, more exhaustive review. In this way the Soviets discovered such long-ignored scientific gems as the two Whittaker papers of 1903 and 1904. They discovered negative energy, negentropy, the time-reversed wave, and pumped phase conjugate mirrors — all in radar experiments, which were then reproduced in optical experiments because of the reduced size and increased accuracy. The very best scientists available were utilized.

The Soviets have always been the best nonlinear scientists in the world, and they succeeded magnificently in this effort. They broke through to a new, *engineerable* unified field theory, dubbing it *energetics*. And the entire effort was done in greatest secrecy, under the complete and total control of the early version of what is today the Soviet KGB.

By 1950, research in the new field was beginning, and at top speed — but all in completely secret laboratories, under the tightest security, and under the complete control of the KGB. And the program is still under their complete control — for research and development, deployment, and employment of the new superweapons. By the mid-SOs, prototype weapons — some of very large magnitude — were undergoing serious testing.

In the winter of 1957-58, for example, an accidental failure in a huge Soviet Whittaker-wave experimental transmitter in the Southern Urals (near Kyshtym) resulted in the discharge of a very large electrogravitational (EG) potential into the earth. This EG pulse struck the nearby stored nuclear wastes, sharply increasing the nuclear potential on the radioactive nuclei. Since this caused the radioactive nuclei to immediately fission, producing a nuclear explosion *in the dirt and dirty*. The resulting radioactive fallout contaminated a large area — over 1,000 square miles in extent — and it is still deadly radioactive to this day. [For an orthodox presentation of the Kyshtym explosion, see Zhores A. Medvedev, *Nuclear Disaster in the Urals*, Translated by George Saunders, W.W. Norton & Co., 1979.]

61. In January 1960, Nikita Khrushchev announced to the Soviet Presidium the forthcoming advent of fantastic weapons. He stated that these new superweapons in advanced development were so powerful that, if unrestrainedly used, they could wipe out all life on earth.

In May 1960 Francis Gary Powers' high-flying U-2 spy plane was mysteriously disabled on a spy mission over the Soviet Union. Some difficulties with the autopilot were first experienced. Then a dull thump was felt by Powers, and a tremendous orange flash lit the cockpit and sky. *The flash persisted, however, showing that it was not a normal explosion at all, but a persistent and sustained EM fireball.* The U-2 was disabled and Powers bailed out, to be captured by the Soviets. When Eisenhower publicly lied about the U-2 mission, calling it a "weather plane," an angry Khrushchev cancelled the forthcoming summit meeting with the American President, then exhibited the captured U.S. pilot for all the world to see.

In the fall of 1962, the Cuban Missile Crisis occurred. Khrushchev introduced long range nuclear-capable missiles into Cuba — missiles whose nuclear firepower would have covered the United States like a blanket. Khrushchev was attempting to change the world balance of power in a single stroke. Fidel Castro was in fact urging the Soviet leader to proceed and launch a full nuclear strike against the U.S. However, in an "eyeball to eyeball" confrontation, President John F. Kennedy forced the Soviet leader to blink and back down, challenging him pointblank with a U.S. naval blockade of Cuba and an alerted strategic bomber and missile force ready to strike the Soviet Union with a massive nuclear strike.

After blustering just long enough to obtain a guarantee that the U.S. would not invade Cuba, Khrushchev had no recourse but to submit and withdraw the missiles, for his new superweapons were not yet operational. This was a serious humiliation and a loss of face before the Communist leaders and before the world. Khrushchev's days as the leader of the Soviet Union were numbered unless he staged some dramatic coup to recover.

Less than six months after his humiliation by Kennedy, Khrushchev struck back venomously with his just-operational scalar EM superweapons — the very ones he had referred to in 1960. On April 10, 1963 a giant Soviet scalar EM interferometer was used to produce EM interference with the electrical controls of the underwater U.S.S. Thresher atomic submarine off the U.S. East Coast. The stricken submarine, unable to respond to its jammed controls, sank to crush depth and imploded. *(Khrushchev had demonstrated to the leaders of the Communist Party that his weapons could easily defend against underwater subs by simply jamming their controls, making them helpless hulls which would sink to their implosive destruction.)*

At the same time the sub was stricken, a weapon signature was created. The sub's surface companion — the U.S.S. Skylark — encountered "EM splatter" which produced noise jamming and anomalous failure of multiple electronic systems. Some EM systems simply ceased functioning completely — then hours later resumed functioning as if nothing had happened. *(This cannot be done by normal electronic warfare, but is a signature of scalar impulse charging followed by gradual discharge.)* The anomalous EM interference experienced by the Skylark was so intense that more than an hour and a half was required to relay an emergency message back to Naval Headquarters that the Thresher was in difficulty and possibly lost. For details, see Bearden, AIDS: *Biological Warfare,* and *Fer-de-Lance.* For a conventional account, see John Bentley, *The Thresher Disaster: The Most Tragic Dive in Submarine History,* Doubleday & Co., Garden City, New York, 1975.

The standing scalar potential wave — discovered experimentally by Nikola Tesla on the night of July 3-4, 1899 in his Colorado Springs Laboratory — was fully developed theoretically by Whittaker in 1903. (See Reference 39). This scalar wave easily goes through the earth or the ocean. *It interacts with atomic nuclei, not electron shells.* Confronted with the ocean or the earth, the standing potential wave — with its hidden

internal bidirectional EM wave substructure — just sees its natural medium — a collection of nuclei. It is not disturbed or bothered by the ions in the ocean, which are such a formidable barrier to ordinary EM force field waves. With the intersection of two *very weak* scalar EM beams locked on the underwater Thresher, ordinary EM energy appeared by destructive interference of the scalar wave envelope, destroying the envelope and freeing the internal EM energies. Thus the use of two scalar interferometer beams in the ocean to intersect and jam an underwater submarine is rather straightforward, with scalar electromagnetic weapons. Indeed, an area of the ocean can simply be scanned by such an interferometer, to jam all underwater submarines and cause them to sink to their destruction. Note that, with their electronics squelched or jammed, such stricken subs cannot fire their nuclear missiles. Indeed, the electronic circuits in the nuclear weapons themselves are jammed and squelched, preventing arming and operation of the weapon.

On April 11, 1963, one day after the kill of the Thresher, a Soviet scalar EM interferometer weapon — probably the same one that ever so gently touched the U.S.S. Thresher — was gigantically pulsed, to intersect two giant potential pulses underwater, deep under the surface of the ocean 100 miles north of Puerto Rico. The tremendous outburst of unfolded EM energy in the destructive scalar interference zone produced a huge electromagnetic explosion deep underwater. Except for nuclear radiation, this *underwater electromagnetic burst* produced all the phenomena of a deep underwater nuclear burst. A cone of water rose out of the ocean to a height of half a mile, mushroomed out into a giant mushroom shape, then fell back into the ocean. The explosive eruption was observed by the pilot and crew of a passing U.S. jetliner, and reported to the FBI and the U.S. Coast Guard. *Khrushchev had demonstrated the weapon's ability to drastically attack and destroy underwater targets, or even use such great underwater bursts to destroy whole flotillas of surface vessels.* Ironically, just at the time that the waters off the East Coast of the United States were alive with ships searching for the lost Thresher, the same weapon that killed the Thresher was tested again, and no one realized what was occurring.

With these two strategic demonstrations and Soviet involvement in events leading to the assassination of President John F. Kennedy on November 22 of that same year, Khrushchev soundly avenged himself for his humiliation by Kennedy and the United States in the 1962 Cuban Missile Crisis. After that 1962 humiliating facedown and Khrushchev's forced withdrawal of his long range missiles from Cuba, the Communist Party leaders had been moving to remove Khrushchev from power. Khrushchev's dramatic, successful 1963 demonstrations and the death of John F. Kennedy, all under cover of an effective deception plan, persuaded the Communist leaders to continue him in power for a little longer.

Soviet tests against actual U.S. targets continued over the years. In 1972 at a secret meeting in Prague of the leaders of the European Communist parties, Leonid Brezhnev confirmed that detente was a hoax *(just as Gorbachev's Glasnost is a hoax!).* Brezhnev named 1985 as the year that the Soviets would be ready to control the skies, the oceans, and most of the land area as they might wish. In other words, all the great strategic scalar EM weapons would be completed, deployed, and operationally tested.

On December 12, 1985, Soviet "over-the-horizon radars" — with infolded Whittaker bidirectional EM wave structures to provide distance-independent holography and dispersion-free phase conjugate shooting — locked-on and destroyed a U.S. Arrow Airlines DC-8 jet aircraft at Gander International Airport, Newfoundland. In destroying the aircraft as a demonstration that the 1985 schedule had been met and the Americans were none the wiser, the Soviets killed 248 U.S. Army troops and 8 civilian crewmembers.

[See Figure 21]. The troops were U.S. paratroopers returning to their home station from UN peacekeeping duties in the Middle East. They were coming home for Christmas, and their parents, families, and friends were waiting for them in happy anticipation. The terrible tragedy took those happy young lives, and the lives of the fine Arrow crew — one of its best. It was not an accident, and it was not a terrorist bomb that destroyed the aircraft and killed all those young soldiers and the crew. It was a brutal, cynical, overt act of war by the Soviet Union. It was the final demonstration to Gorbachev of meeting the Soviet 1985 schedule for having these giant weapons deployed and operationally ready *and tested.* Just two weeks earlier, the weapon had been tested for the third time against a U.S. shuttle launch, but in a nondestructive manner. Some six weeks after killing the Arrow, the same weaponry would be used in a highly specialized kill of the Challenger with its crew of seven. But here is what really happened to the Arrow DC-8 on December 12,1985.

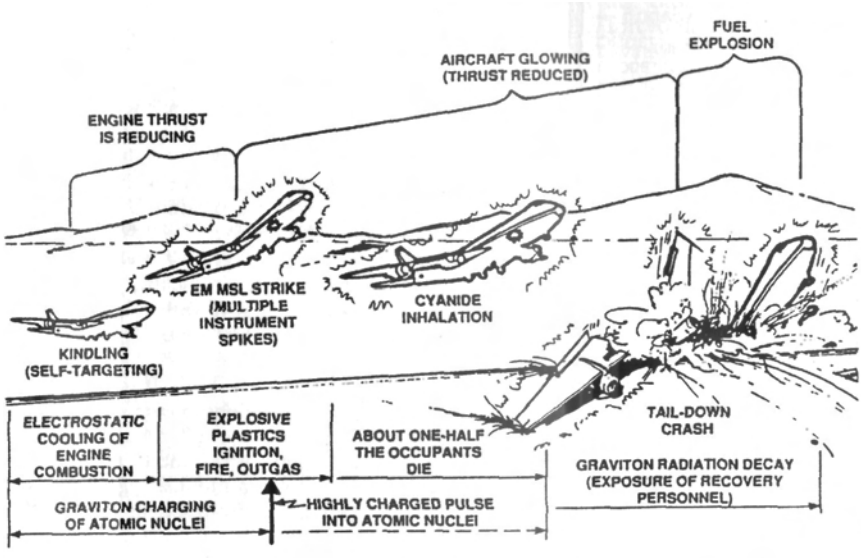

Figure 21. Death of the Arrow DC-8, December 12,1985.

For brevity, we skip all preliminaries, and go immediately to the aircraft as it built up speed down the runway on its takeoff run. As the Arrow DC-8 aircraft sped down the runway, an eyewitness observed multiple beams of light form in the clouds overhead — in fact, she observed the self-focusing of the scalar potential beams of the interferometer. This self-focusing (self-targeting) began to cause electrostatic cooling in the aircraft engines' combustion gases. *This is easily accomplished by properly adjusting the bias potential on the electrical ground of the distant interferometer transmitters in Russia, so that the transmitter potential is below the ambient potential of the target — the aircraft speeding down the runway in Newfoundland. If the transmitter potential is lower, a gradient exists in the scalar beam Whittaker structure joining the aircraft and the Russian transmitters, and*

energy will flow through the internal Whittaker structures, from hot spots on the airplane,— such as the fiercely burning combustion gases — to the distant transmitter electrical ground. This will electrostatically cool the greatest hot spots — the hot combustion gases inside the engines.

The electrostatic cooling in the combustion gases inside the engines caused them to lose exhaust gas velocity, hence reducing the engines' thrust —just at takeoff rotation. As the aircraft began to rotate for liftoff, its engines were already losing substantial thrust, ***although they were still rotating at full speed.***

Once the weapon was focused, Soviets fired an electromagnetic missile directly at the aircraft, using distance-independent holography, employing the internal Whittaker EM wave structures of the scalar potential beams. The interfering sky beams flared as an electromagnetic missile formed and shot to the aircraft. *(The EM missile strike was seen* ***by the witness as just a ball or beam of light that streaked from the glowing beams in the*** *clouds, down to the aircraft)* The EM missile struck the aircraft in the right side of its fuselage ahead of the engines and blasted a hole right through the fuselage. *This* ***anomalous hole was noted. It was tested and found to have*** *no chemical residues, proving* ***that it was not due to a chemical explosion or a terrorist*** *bomb. However, it* was *due to the* ***strike of the EM missile!***

The fierce ball of EM energy penetrated the fuselage and struck the aircraft's interior plastics, explosively igniting them instantly — all just at liftoff. Multiple independent witnesses saw the aircraft glowing with an orange light, from the fierce firelight shining out the windows and the radiant energy of the locked-on interferometry beams. ***Interestingly, the witness that*** *saw* ***the*** *beams form in the sky, and the beam shoot down and strike the aircraft, was not allowed to present her testimony to the official board of investigation.*

The flaring of the skybeams associated with the EM *missile* strike, and the glow on the aircraft from the electrical energy in the locked-on scalar EM beams, *brightly lit up the* ***cabs of trucks speeding down the nearby*** *highway.* **The** strike of the EM missile also caused a sharp electrical spike in two instruments on board the aircraft, as recorded by the flight **recorder.** ***The instruments and the flight recorder*** *actually recorded the strike of the EM missile itself.* [Figure 22]. The aircraft was glowing from the Whittaker beam structure holography and beam tracking and self-targeting. Inside the struck aircraft, in addition to the explosive fire and fierce firelight, violent outgassing from the explosive ignition of the plastics produced an explosion of soot and toxic fumes, including highly lethal hydrogen cyanide gas. With a breath or two, lethal doses of the toxic fumes were inhaled by the surrounding occupants. About half the personnel on board were already dead or dying of cyanide poisoning as the faltering plane reached its high point of less than 100 feet, still tail-down.

The U.S. Army performed autopsies on the remains of *almost all the dead personnel in the* ***crash. These autopsies indicated that almost half the*** *personnel were already dead of* ***hydrogen cyanide poisoning before the airplane exploded*** *on impact with the earth. This* ***autopsy information was illegally withheld from the*** *official investigating board for the* ***accident — another deliberate criminal interference with the*** *proceedings.*

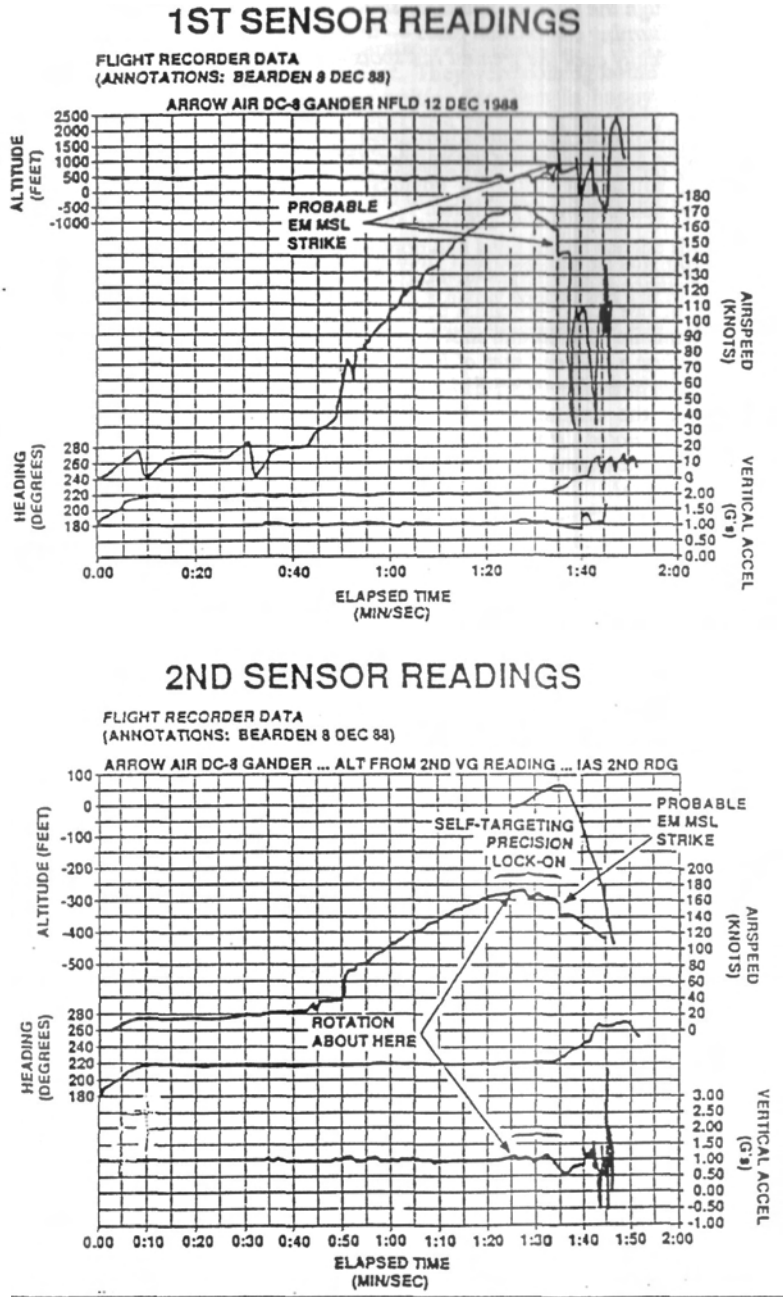

Figure 22. Electrical spikes in two on-board sensors of the Arrow DC-S, caused by strike of an EM missile during liftoff rotation.

But to return to the faltering Arrow DC-8. With its engine thrust steadily diminishing by electrostatic cooling of engine combustion gases, even though the turbines were rotating at good speed, the stricken aircraft sank, still tail down, and struck the ground, exploding and killing the remaining personnel on board, and scattering the burning wreckage over the crash area. ***However, the sharp strike of the EM missile with its extremely powerful associated scalar EM pulse had intensely "quick-charged" and activated the atomic nuclei of aircraft materials, metals, etc in the adjacent areas of the aircraft surrounding the strike.*** **These Whittaker/scalar-activated (scalar-charged) nuclei were now emitting strong scalar graviton radiation. So strong scalar graviton radiation—scalar potential radiation —was issuing from the scattered parts and burning materials in the crash area. During the next few days, recovery personnel were exposed to this unsuspected scalar radiation. Many of them (about 60 or so) later developed delayed illnesses and health changes** ***similar to those in scalar-radiated U.S. Embassypersonnel in Moscow:*** **dizziness, headaches, nausea, stomach and intestinal upset, liver changes, blood changes, vertigo, and stress** syndrome **symptoms.**

We accent this point **most** strongly: We have seen these symptoms before, in personnel radiated by the Soviets at the U.S. Embassy in Moscow. The Johns Hopkins study of that situation clearly shows that the active ingredient is the scalar potential, not ordinary **EM force fields. We know it is scalar EM** potential radiation that causes these delayed health **symptoms.** ***Further,*** *from* ***our*** *study of the Kaznacheyev cytopathogenic effect, the Popp* ***cellular communication system,*** *and the Priore anti-cancer machine, we know the precise mechanism that causes* ***the*** *diseases.*

The signatures of the use **of the** scalar EM weapon are clear. Further, additional strong **evidence exists of prior 1985 nonlethal** testing of the same weapon that was utilized to kill the Arrow DC-8.

Several months before the kill of the Arrow DC-8, another anomalous loss of engine **power by an aircraft is** interesting. In February 1985, on a flight from Taipei to "Los **Angeles, a China Airlines Boeing** 747SP **about** 300 miles northwest of San Francisco was **subjected to a similar but milder** "self-targeting **and** cooling of engine combustion gases" **treatment by the same Soviet** weapon. **[Figure 23].** At 41,000 feet the aircraft first **experienced a slight turbulence — probably just when the** scalar **lock-on** of the weapon **occurred, where the emerging outfolded EM energy in the surrounding** air created some **slight turbulence. Then self-targeting began in the Whittaker structure of the Woodpecker standing potential wave interferometer beams. The** initiation of self-**targeting narrowed the interferometer onto its engine combustion** gases target in the **aircraft engines, causing substantial emergence of negative** energy **in their** combustion **gases. This electrostatically and drastically cooled the** combustion **gases,** causing seriously **decreased exhaust velocity, loss of engine thrust, and a special type of engine flame-snuffing. First one engine failed from the drastic cooling of its** gases, and then the others **failed in short order. The failures and resulting plunge of the aircraft left several signatures, however, of the anomalous mechanism causing them.** *Electrical power on* ***board the aircraft did not fail,*** *because the engine failure was anomalous loss of thrust in* ***fully rotating turbines due to direct electrostatic cooling of the combustion*** *gases in the* ***engines themselves.*** **Hence the mechanically-coupled electrical generators were still rotating at full speed and producing electrical power, and so the aircraft** electrical system **maintained power. Passenger oxygen masks did not deploy, indicating that engine** ***rotational*** **power (not** ***thrust!)*** **was** always available **to** operate electrical and pressurization **systems. In a hair-raising, uncontrolled plunge of the aircraft toward the earth, the pilot fought to restart the engines and regain control of the aircraft. The instruments reacted anomalously. The crew reported that the stick shaker did not activate and the** overspeed

warning clacker did not activate. Severe G-loads were experienced in the downward plummet of the aircraft, causing severe distortion of the tail cone and damage to that section.

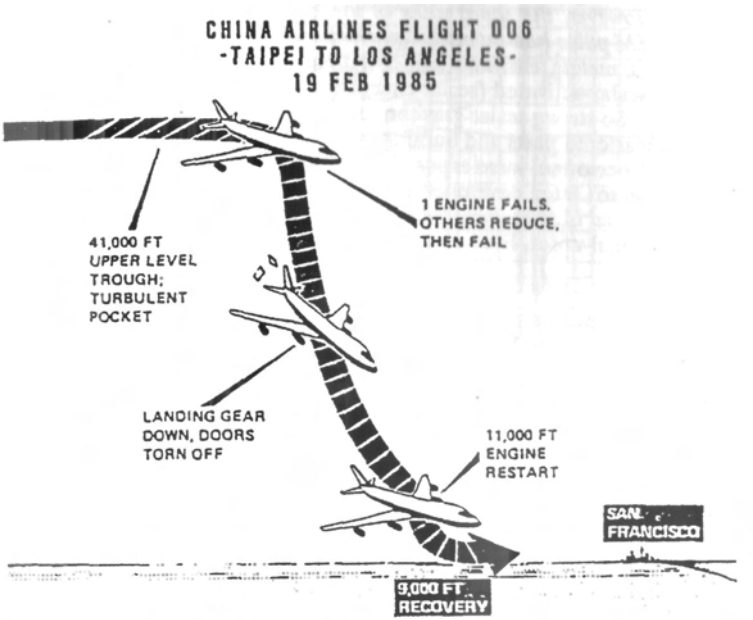

Figure 23. Engines disabled, a passenger jet drops six miles in two minutes.

Anomalies in the G-forces inside the aircraft also occurred. The flight engineer was totally immobilized by the g-forces at his cockpit duty station, yet the pilot and copilot directly on either side of him were unaffected. *This is a highly significant "selective gravity and selective inertia" anomaly and a clear signature* of the negative energy being introduced into the aircraft by the self-targeting Whittaker beams. As the aircraft plummeted down, it fell out of and away from the intersecting Whittaker interference beams. Apparently the distant Soviet operator deliberately did not continue to track and attack the target as it fell. Once the aircraft fell out of the EM kindling/outfolding in the beam intersection, the scalar activation in the engines and vicinity began to decay away. Since no drastic pulse input — such as the strike of an EM missile — was employed by the Soviet weapon, scalar activation was not severely high. Thus only light-to-moderate activation of nuclei occurred, and this is a short-lived phenomenon that will decay quickly once the steady activation beams are removed. In other words, the excess scalar charge on the nuclei began to discharge by scalar emission, and the cooling of the combustion gases began to decrease steadily.

Instrumental anomalies occurred as well, since instruments interact individually to being scalarly activated. The crew reported that the cockpit instruments detected immediate autopilot disengagement; flight data recorder instruments showed that the autopilot did not disengage during the initial descent. Thus both the pilot and the autopilot

conceivably were fighting to move the control surfaces during at least the initial phase of the fall. The landing gear lowered, but the pilot did not initiate the action.

After a fall of some 32,000 feet in about 2 minutes, the Whittaker/scalar EM activation was discharged sufficiently so that, with internal combustion cooling greatly diminished, **the** pilot managed to restart three engines and regain control of the aircraft. The crew then made an emergency landing at San Francisco International Airport. For example references, **see** (1) Bearden, *Fer-de-Lance,* Mar. 4,1985, p. 175-176; (2) *Aviation Week & Space Technology,* Feb. 25,1985, p. 28; Mar. 4,1985, p. 29; (3) "Jetliner drops 32,000 feet; 400 aboard; 50 are injured," AP release, *Huntsville [Alabama] Tunes,* Feb. 20,1985, p. 1; (4) "China Airlines pilot denies cockpit error," AP release, *Huntsville [Alabama] Times,* Feb. 21,1985, p. A-9.

But there is much additional evidence that bears directly on the scalar kill of the aircraft at Gander.

On Nov. 26,1985, two weeks before the kill of the Arrow DC-8, the same Soviet weapon was tested nondestructively against a U.S. shuttle launch at Cape Canaveral, Florida. *(This was the third nondestructive test using a launching space shuttle/booster as a convenient simulated ICBM practice target)* Seconds before the launch, an offset strike of an EM missile was actually photographed by Bob Gladwin: [Figure 24]. The photograph was later printed by this author [Bearden, *Fer-de-Lance,* 1986, p. 187.] Over the general launch area, another holographic ball of light — a marker beacon used by the Whittaker interferometer for precise distance-independent registration in the target area — was clearly observed by hundreds of persons and photographed by George Suchary. [Bearden, *Fer-de-Lance,* 1986, p. 182]. A similar holographic ball of light for precise registration was also videotaped above the explosion of a Titan 34-D missile seconds after launch in April 1986; that Titan was also destroyed by the strike of an EM missile or by a very strong EM pulse through the Whittaker channel of a Soviet scalar interferometer. [See Figure 25]. In 1986 a Delta rocket was also destroyed by the range safety offer after an anomalous internal EM surge command shut down the main liquid-fueled engine, with the three strap-on boosters still burning, so that the rocket went unstable. A mysterious light streak was observed on videotape to approach the rocket from below and from the side, rising and striking the vehicle, just before the mysterious main engine shutdown. Precisely such anomalous "internal command and control switching by introduction from an external source" has been exhibited by the British Ariel VI satellite as well. Also in Spring of 1986, a French Ariane missile suffered mysterious shutdown interference, resulting in the destruction of the rocket.

In the case of the Arrow DC-8, high U.S. and Canadian ofGcials — not knowing anything of scalar electromagnetics — were probably very afraid that the aircraft had actually been bombed by a terrorist group, possibly on behalf of the Iranians. High U.S. officials were most anxious not to reveal anything further about the Iran/Contra weapons affair and its official U.S. governmental coverup. *This probably explains why a U.S. Army General quickly arrived at the Gander crash site and brought exceedingly strong pressure to bear to quickly bulldoze over the crash residue. It also probably explains why most eyewitness testimonies that contradicted the — probably deliberately selected — "ice buildup" cover story were withheld from the accident investigation board, and why the board was not permitted open access to the files and witnesses!* This unprecedented action, of course, is tantamount to deliberately withholding evidence from a court and interfering with a court trial — a criminal offense. High U.S. officials would have been most anxious to keep from revealing any sign of onboard fire or explosion, since — if the crash *had* been due to a terrorist bomb — this might fully open up the investigation and drive it sufficiently far afield to reveal the Iran/Contra coverup by the U.S. government.

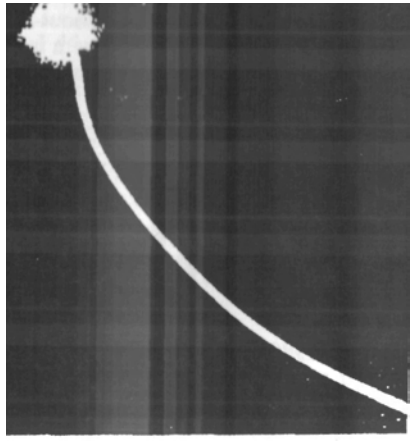

Figure 24. Strike of an EM missile, offset from launch of the shuttle Atlantis on November 26, 1935. Photo by Bob Gladwin. Several other major anomalies also occurred. Two weeks later, the same Soviet weapon destroyed the Arrow DC-S at Gander, Newfoundland.

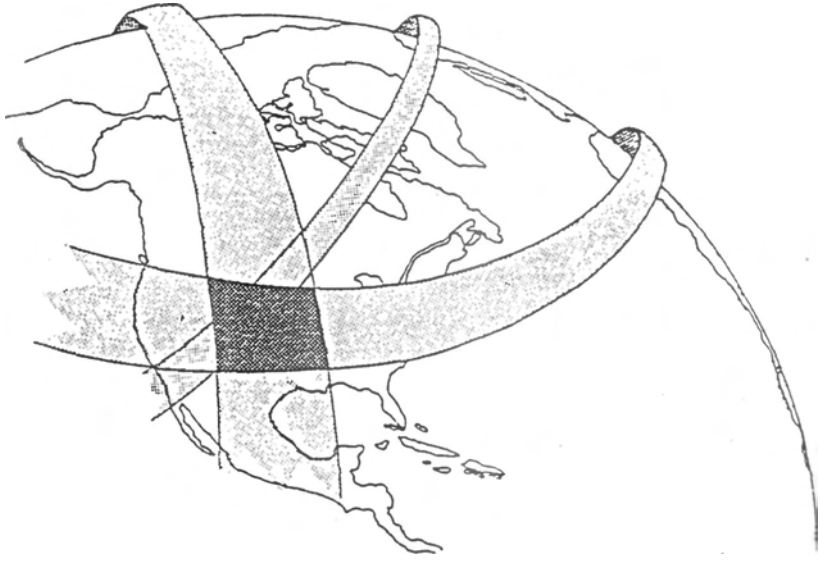

Figure 25. Soviet Woodpecker beams intersect over North America. This Soviet Tesla/Whittaker weapon can destroy U.S. ICBMs and bombers at launch and takeoff and during the initial phases of flight. It can also destroy carriers task forces at sea, and underwater submarines.

So in addition to the wanton Soviet act of war and murder of the troops and crew aboard the Arrow DC-8 aircraft, a gross miscarriage of justice occurred due to (1) technical ignorance of scalar electromagnetics and of signatures of the strike of a scalar EM weapon, (2) deliberate high-placed collusion and manipulation, and (3) probable mistaken off-the-record belief by high U.S. officials that the crash was really caused by a bomb planted by a terrorist group backed by Iran. By rather gross manipulation of the investigation, of the files, and of the board itself, the "accident" was officially blamed on human error due to failure to de-ice the aircraft. The members of the board split in their finding, however, and a minority opinion was also produced, denying the ice theory.

Families of the deceased U.S. soldiers have demanded a thorough reinvestigation. This researcher stands ready to open his files to the investigating board, a Congressional investigating committee, or any special board investigating the "accident". I will gladly provide substantial briefings regarding the complete history of Soviet scalar EM weapons and their testing, the precise mechanisms and signatures of scalar EM weapon strikes and kills, and specific indicators in the Arrow DC-8 crash incident that remove any doubt as to what actually caused the crash. There the matter stands.

62. Devyatkov and Golant, "Prospects for the use of millimeter-range electromaanetic radiation...", 1986.

63. Devyatkov, Ed., *Applications of Low-Intensity Millimeter Wave Radiation...,* 1985.

64. Again recall Khrushchev's 1960 statement that these new fantastic weapons *could wipe out all life on earth if unrestrainedly used.* Also recall Brezhnev's 1975 characterization of the weapons as *"...more frightful than the mind of man has ever imagined."* Even in more orthodox chemical warfare, the Soviets are forging ahead. For example, the prestigious *London Sunday Times,* Oct. 1, 1989 reported the Soviet development of genetically engineered toxins designed to have a very specific effect for a defined time — such as violent diarrhea, uncontrolled weeping, etc. The Soviets have consistently lied about the extent of their chemical and biological warfare developments.

65. Whittaker, "On the Differential Equations...", 1903.

66. Ibid., p. 355. Further, the speed of light itself is not constant, but varies as a function of the local energy density of spacetime — i.e., as a function of the magnitude of the ambient spacetime potential itself.

67. Multiplication of waves signifies a *modulation* process, which locks the pair together. In gravitobiology, this also locks paired photons together, building graviton structures and scalar EM potentials rather than EM force fields.

68. In present quantum field theory, the spin-2 graviton is taken to be the quantum particle of the gravitational field, while the photon is the quantum particle of the electromagnetic field. Essentially every field is so visualized, hence the name *quantum field theory.* In scalar EM, the graviton is envisioned as an average over time of the constantly changing photon coupling/decoupling less than, equal to, or greater than two, according to whether local spacetime is negatively curved, flat, or positively curved. This is also consistent with the modern view of a field: because of vacuum fluctuations, rigorously one no longer speaks of "the" field, but of *the probability of a particular field configuration.* See Charles W. Misner, Kip S. Thome, and John Archibald Wheeler, *Gravitation,* W.H. Freeman and Co., San Francisco, 1973, p. 1191.

69. Thus we are implementing what heretofore has only been speculated upon. For example, see T.D. Lee, Chapter 25: Outlook, "Possibility of vacuum engineering," *Particle Physics and Introduction to Field Theory,* Harwood Academic Publishers, New York, 1981, p. 826. Also, recently it has been realized that spontaneous emission, for example, is not a fundamental property of matter as previously believed. Instead, it is actually a property of the atom-vacuum system and its virtual particle flux (VPF) exchange. It is also possible to alter that VPF exchange system and thus alter spontaneous emission. Cavity quantum electrodynamics is one of the recently uncovered examples by which spontaneous emission can be profoundly affected by altering (structuring) the vacuum states. See Serge Haroche and Daniel Kleppner, "Cavity Quantum Electrodynamics," *Physics Today,* Jan. 1989, p. 24-30.

70. There is in fact no precise definition at all of the gravitational field! In the general relativity theory, many mathematical things are associated with gravitation. Cf Misner, Thome And Wheeler, Gravitation, 1973, p. 399. Quoting: *"...The terms 'gravitational field' and 'gravity' refer in a vague, collective sort of way to all of these entities. Another, equivalent term for them is the 'geometry ofspacetime."*

The present author's comment is that Whittaker shows us how to deterministically structure and curve spacetime — including locally — and utilize this structured spacetime curvature in an engineering fashion.

71. Activation of the atomic nucleus — by a deterministically patterned, massless charge structure — can be thought of as analogous to *charging a capacitor.* However, now in addition to the "gross overall magnitude of charge," we must speak of the *magnitude of each specific charge* of a particular graviton structure. The overall gross charge may have many infolded individual graviton structures (charges), each of which may be at a different magnitude. *Now we may deterministically collect, store — and then discharge and utilize — specific spacetime/graviton/virtual particle flux patterns/structures, all hidden inside the envelope of "normal" potential/charge and inside "normal" electromagnetics.*

Note that this notion of a set of "partial charges," each of differing graviton-patterned structure, is similar to the notion of "partial pressure" in mixtures of gases. In the case of gases, the overall mixture has an overall pressure, but specific parts of that total pressure are due to the specific component gases. In the new view, overall massless photon flux (electric charge) exchange between vacuum and a charged particle of mass, also consists of specific "partial charge" components. Further, some of these "partial charge components" can be deterministically structured.

Another way to say this is as follows: The overall stress of the vacuum exchange with a particle of mass constitutes the *overall charge* of the particle. In the case of *virtualphoton* exchange between vacuum and mass particle, the overall exchange flux constitutes the overall *electric charge* of the particle. That overall electric charge (overall photon flux) may be composed of several components. *In some of these flux components, the photon flux exchange may be deterministically organized.* Thus we can speak of the partial "electric stress" or electric charge of each component. The overall electric stress, or electric charge, is the sum of the *compoonent partial* electric stresses/charges.

We have moved the concept of electric charge an entire level deeper than is presently in orthodox physics, by introducing the notion that an overall statistical virtual particle flux has ordered components. Quantum mechanically, the electric charge of a charged particle is due to an exchange of virtual photons, between the vacuum and the mass of the particle. Now we have added hidden structure to that virtual photon flux exchange

that constitutes the electric charge of the mass. However, structuring of the (observably) massless virtual particle flux that is "charge" is easily proven by a *gedanken (thought) experiment* as follows: In present electrical physics, it is universally postulated that each potential has a charged particle somewhere as its source or generatrix. It is also universally postulated that, at a distance from the charge that is the source of the potential, the potential is inversely proportional to the square of the distance, in the most general ideal case. Thus the potential from the charge has everywhere in finite space a nonzero value.

Now suppose that suddenly an electric charge is introduced (spontaneously created) in a small region. This charge is the source of a suddenly created potential, which — it is usually assumed — travels outward in all directions from the source, at the speed of light, decreasing inversely as the square of the distance. Theoretically, this potential will continue to expand out into the universe forever, at the speed of light, never quite becoming zero. By common physics assumption, all charges in the universe have such traveling potentials moving out into space, all the time.

Now select a very distant point, many lightyears out into deep space. Through this point, incalculable weak potentials — from an incalculable number of distant charges — are moving through a small differential volume surrounding the point, from and toward all directions. These potentials are continually changing and interfering with each other. Since the distant charges were dynamic (i.e., part of moving systems, exploding stars, whatever), the potentials in the flux through the differential volume are highly dynamic and changing. The interferences of these potentials generates pair creation, pair annihilation, and other virtual particle processes at an incredible rate and in an incredible variety. In the differential volume of space around that point, *this violent, continual interference of potentials produces what is a violent, extreme, virtual particle flux.*

However, we can take such a differential volume around any point in the universe, and a similar virtual particle flux will be present, generated by the local interference of potentials from the distant charges of the universe. *The virtual particle flux of vacuum is completely deterministic a priori!.* It is still *statistical,* because a macroscopic observer will be unable to have instruments fine enough to detect and measure each and every single virtual particle in the flux. However, it still contains *hidden order.* In short, this virtual particle flux of vacuum is *chaotic,* not *random,* as we have just shown. All electric charge of fundamental particles always did contain deterministic substructures. All we are saying is that, to have higher levels of order inside the charge structuring, all that is necessary is to cohere the part of the basic determinism into higher levels of determinism. To complete our gedankenexperiment, we now show that.

We now simply introduce some ordinary electric charges into and onto a geometric structure, such as a wire grid, or a shaped physical pattern of arbitrary intricacy. The charges adjust themselves according to the pattern, proximity, etc. When they are adjusted, we note that, in addition to the physical material, we have a specific, geometric *charge structure* in space at this location. Now we simply examine the potential radiating out into space from this charge structure. The potential from this overall geometric charge source will carry a structure into space that is precisely correlated to the charge source. Let us suppose that several (say, three) major geometric forms exist in the charge structure. Then three major geometric forms exist in the potential radiating out into space. Let us now traverse around the surface of a giant spherical shell — say a lightyear away — that has the geometric charge source as its center. The magnitude of the potential on each element of that surface is precisely correlated to the distant corresponding parts of the charge source. Let us now wiggle the charge source back and forth. One year later, corresponding wiggles (increases and decreases) of the values of

the potentials in each differential surface element will also fluctuate, in precise correlation to the manner of movement of the distant source one year earlier.

Mathematically, we are quite free to break the overall charge of the source into three parts, one for each of the three main parts of the geometric charge structure. By the superposition theorem, the potential from this three-fold charge structure, at any distant point in space, can be separated into three potential components or elements. Each of these potential components — which is now a *partial* potential with respect to the total potential — is precisely correlated to one of the three distant parts of the distant charge source.

But that demonstrates that the virtual particle flux of vacuum — the potential — at any point can be and is structured. Further, it demonstrates a case of deliberately structuring the distant potential — and the distant virtual particle flux of vacuum — deterministically. *Q.E.D.*

This line of reasoning was advanced by this author *conceptually,* many years ago. Happily, Puthoff has placed it on a rigorous mathematical basis, and extended it to show a complete giant universal feedback loop, via vacuum fluctuation, between all the charges of the universe. See H.E. Puthoff, "Source of vacuum electromagnetic zero-point energy," *Phys. Rev. A,* 40(9), Nov. 1,1989, p. 4857-4862.

In the new concept, as a result of structuring of the charge flux, we have violated yet another of the physics tenets about charged particles: the present assumption that, in a collection of one type — say, electrons — each is always identical to any other. This identity assumption requires random variable treatment of the statistics, since the identical electrons are now a random charge ensemble. However, in the new view the electrons can have differing infolded *charge structuring,* and the specific virtual particle exchange of each electron with the vacuum may be differently structured, although the total charge of each electron is the same magnitude. That is, the *overall* electron charges may be identical, but the electrons may have differing and deterministic *partial* charges. Thus the overall potential from a charge may have a deterministic or *information* content that is deliberately created and formed (shaped) by a living system. This hidden "information content of the field," as the Soviets call it, has been used by biological systems since time immemorial. It is used in controlling their deepest, most subtle living functions. Normal "electron-wiggler" detecting instruments do not see this hidden information substructure.

The potential pervades an atom, completely through the electron shells and into the nucleus, centering itself there. As a particular partial potential is steadily impressed on the nucleus, gradually the nuclear potential changes its internal structuring so that more of it is composed of that partial potential and structured accordingly. This is known as *activation* of the nucleus, with a particular charge structure or information content. The EM coupling between nucleus and electron shells gradually changes the electrons in the shells slightly — including the covalent electrons bonding the atom to other atoms in a molecule. Gradually these bond structures also shift and change accordingly, as the activation pattern spreads through the bonding lattice structure. This is known as *activation of the material.* (Years ago, I called this activation process *kindling,* that is, the gradual integration/collection of deterministic virtual patterns (of the hidden information content of the potential field) into corresponding macroscopically observable patterns. Activation of a material (or solution, or gas, or wave, or an overall charge potential) with a hidden information content consisting of deterministic partial potentials is the hidden physical mechanism and basis for psychometry and homeopathic medicine, for example, but those are matters for discussion later in the paper.

In closing this note, an electron or other fundamental charged particle can also have a different *magnitude* of electrical charge than the accepted standard value. By internally structuring the potential and adjusting the magnitude of its components, the charged particle can be raised through a continuous spectrum of excited states (potential charge), and these excited states (this potential) can be detenninistically substructured (tailored with hidden information) to affect the consequent interaction with a particle or other entity when the excited state discharges to interact with it In this discharge, the hidden information content can be integrated and collected on the interacting particle, changing the normal interaction that occurs — an example being, of course, homeopathic potentization and subsequent deterministic structuring and electrochemical action in the body from the potentized solution. This is how the electrical pattern of a chemical or compound can be impressed into and onto the bonding structure of water, for example, to potentize it with the "form" or information content of that compound, even though not a single molecule of the original compound physically remains in the water. In the ensuing chemical interactions of the potentized water with the body, the activated information of the compound's form is discharged into the body and its cells, accomplishing electrochemical changes similar to those induced by the real physical compound itself when present. Electromagnetic homeopathy using the hidden information content of the field is the system of medicine that Devyatkov is talking about in his research and testing. See Devatkov and Golant, ibid, and Devatkov, Ed., ibid.

Obviously, for example, when a group of nonidentically activated electron charges interact, hidden order in the overall chaos (overall chaotic charge, or conglomerate potential) may lead to quite different macroscopic behavior of the system than pure random variable statistics would predict. That is, unexpected large-scalar ordered behavior of the entire system of collected, interacting electrons may emerge and even stabilize. This can affect the apparent inertia, mass, chemical, and electrical behavior exhibited by the system.

Which is why there presently is no really adequate definition *of gravitational field.* (See note 70 above). While this point is obvious, it is very important. If one structures the local spacetime, one can get devices to work abnormally, since now the interaction of spacetime with the devices is not just simply the statistical interaction of a randomized virtual particle flux. The "laws of nature" have been slightly altered, so to speak.

For example, Frank Golden once developed an electric motor which, after several years, produced an output power that was 1.67 times the input power. What we did not know was that his years of operation and struggle with the motor and its structure had gradually deterministically charged-up (activated) the local atomic nuclei and activated the local vacuum potential. Thus the motor gradually "grew" its increase in power, seemingly violating conservation of energy if one tried to regard the motor as a closed system. (Of course it was now an *open* system, receiving an input from the structured vacuum as a hidden source. In other words, Frank had formed a *structured quantum potential* in the local area, coupled to the machine.)

Frank then changed jobs and moved to a new location several hundred miles away. He thus moved the motor several hundred miles, whereupon it promptly relapsed back into just an ordinary electric motor, though still some 90 percent efficient. The motor was then in an *unstructured, unactivated* vacuum potential at the new location, and hence had lost its hidden quantum potential source.

Thunderstruck, the two of us were enlightened by Dr. William tiller, who was aware of the specific "growth effect" we had encountered, though apparently unaware of its

quantum potential mechanism. Tiller, a brilliant scientist, called it *growing the archetype*, and he had previously encountered the same phenomenon in his own seminal experiments with unusual detection systems.

We should have kept the original motor at the original site, made additional motors and moved them radially outward about 200 miles away or to where they would still exhibit about 1.1 to 1.2 efficiency. Then, all the while running the original motor in its original location, we should have run these "outrigger" motors until their efficiencies grew to 1.67, Then we should have extended the outrigger ring again, etc. After about five or six extensions, the vacuum structuring/activation and the activated quantum potential could be expected to spread on around the earth, in the entire local vacuum potential of the earth itself. Thereafter, that particular motor form would work anywhere on earth with 1.67 or so efficiency, because it would be able to directly tap a hidden vacuum source. Regrettably, Frank could not afford another five years or so to regrow the first potential activation/structuring for the motor's format.

The sharp-eyed reader should also note a specific analogy between this effect and Sheldrake's morphogenetic field. For the explanation of the quantum-potential basis for this effect — and for Sheldrake's morphogenetic field — see T.E. Bearden, "Update on Scalar Electromagnetics: New Breakthroughs," paper delivered to the USPA Annual Symposium, Sacramento, California, July 19S9.

74. We choose to regard the EM wave in Whittaker fashion, as consisting of interfering scalar potential waves. See Whittaker, "On an expression of the electromagnetic field..." ibid., 1904 for insight as to how such scalar interferometry produces ordinary EM forcefield energy. Any or all of these interfering potentials may be Whittaker-structured in accordance with Whittaker, "On the partial differential equations of mathematical physics," ibid., 1903.

75. Specifically, it has an infolded Whittaker bidirectional EM wave pair structure (graviton structure). We are free to tailor that internal structure and use it as we wish.

76. By composing such bidirectional EM pairs deterministically and locking them all together, one can compose a Whittaker potential (structured local ST curvature) with a deterministic internal energy pattern. Perhaps an easy way to do this is to form the spectrum of ordinary waves desired, split the spectrum into two replicas, phase conjugate one replica, then mix the nonconjugated replica and its time-reversed replica in a highly nonlinear medium, such as a rotating plasma, to modulate them together. The union of a wave and its phase conjugate or antiwave unites the energy of both waves — which just adds *spatially*. However, the resultant E-fields and H-fields of the wave/antiwave combination are zero vectorially. Thus one has produced a pure, standing wave of scalar potential, without EM force field resultants, and the wave/antiwave component EM energies are localized and trapped. That of course is a *gravitational wave*. In additional photons/antiphotons are coupling and uncoupling. This represents the continual creating and annihilation of spin-2 photon/antiphoton pairs. But a spin-two particle, without EM force fields but with energy that is trapped spatially, describes a *graviton*. Further, the component E and H fields are still there vectorialiy, inside the zero resultant system. *Spatially the E-fields add and the H-fields add (by courtesy of the distortion correction theorem in nonlinear phase conjugate optics);, however, they are respectively and directly oppositive in the time (fourth) dimension. Hence they produce an electromagnetic stress in the fourth dimension only, and thus on the rate of flow of time itself.* Since the magnitude of the spatially additive E-field summations and H-field summations in the standing potential wave are periodic, their time-stressing summation periodically varies the stress on the local rate of flow of time. In other words, we have also produced a *wave like*

alteration of the rate of flow of local time. Quantum mechanically, energy and time are canonical in the photon. Therefore the local spatial oscillation of trapped graviton energy and the local oscillation of the rate of flow of time are inversely related. When the trapped energy in the wave is greatest, the local rate of flow of time is slowest. Hence we have also inadvertently shown the exact physical mechanism which produces time dilation, and the curvature of spacetime as welL

77. Note that one nontrivial result is the emergence of a stable macroscopic world with macroscopic order and structure, from what was apparently "random" quantum change. One now can immediately verify the truth of the old adage, "As above, so below." Since the external world is just the outfolded collected content of the inner order, then internally reflecting our macroscopic scientific concepts and models is justified. This in fact resolves several quite puzzling problems such as (1) why mathematics, founded on the external view, applies to the internal and is thus so *universal,* (2) why "it is so simple!", to paraphrase Feynman's quizzical pondering of quarks, and (3) why a logic of only a few rules can be so all-encompassing. It also should tell us why the intensive study and investigation of hidden variable theories is the single most important thing that can be done to advance physics today.

78. If there is hidden order in a single quantum, one must consider that order as being in the virtual state. Otherwise it would not be hidden, but would itself be observable. Being observable would imply that it was at least one quantum in size, in which case it could not be hidden inside a single quantum because it would be equal to or larger than the quantum.

79. Again, for a most spectacular paper dealing with the order in the vacuum fluctuations, see H.E. Puthoff, "Source of vacuum electromagnetic zero-point energy," *Phys. Rev. A.,* 40(9), Nov. 1,19S9, p. 4857-4S62. This important paper may be interpreted to establish that the virtual particle flux of vacuum is causal Puthoff shows that the fluctuations of the zero-point EM fields in the vacuum are deterministic. If one interprets these fluctuation fields as creating and driving the virtual particle flux of vacuum, then the virtual particle flux is also deterministic. Of course this is a penultimate expression of the hidden variable viewpoint, and again, "as above so below." It is also a profound statement of the present author's fourth law of logic: That which is totally disordered must also be totally ordered. (Order is relative. That which is totally disordered locally is totally ordered nonlocally — just as Puthoff showed.) For explanation and proof of the fourth law of logic — including the proof that it has always been hidden in Aristotle's three laws of logic anyway — see Appendix III: "A Conditional Criterion for Identity, Leading to a Fourth Law of Logic," in Bearden, *AIDS: Biological Warfare,* 1988, p. 428-443.

80. Again, it can only be the collection of the hidden, infolded, stable order inside chaotic quantum change that produces a stable macroscopic physical reality.

81. Again see note 10.

82. A.D. Sakharov, *DokL Akad. Nauk SSSR [Sov. Phys. Dokl.],* Vol. 12, 1968, p. 1040.

83. Stochastic gravitation is summarized up to 1982 in S. Adler, *Rev. Mod. Phys.,* Vol. 54, 1982, p. 729.

84. H.E Puthoff, *Phys. Rev. A,* Vol. 39, 1989, p. 2333; *Phys. Rev. D,* Vol. 35, 1987, p. 3266; *Phys. Rev. A.,* 40(9), Nov. 1,1989, p. 4857-4862. See also Harold Puthoff, "Everything for nothing," New Scientist, July 28,1990, p. 52-55.

85. For example, see Timothy Boyer, "The classical vacuum," *Scientific American,* Aug. 1985, p. 70; Walter Greiner and Joseph Hamilton, "Is the Vacuum Really Empty?", *American Scientist,* March-April 1980, p. 154; Roman Podolny, *Something Called Nothing — Physical Vacuum, What is It?,* Mir, 1986; IJ.R. Aitchison, "Nothing's plenty: The vacuum in modem quantum field theory," *Contemporary Physics,* 26(4), 1985, p. 333-391. For indications that a Soviet team under Chernetskii, at the Moscow Georgi Plekhanov Institute of the National Economy, may have succeeded in tapping the vacuum energy, see Andrei Samokhin, "Vacuum energy — a breakthrough?", *Speculations in Science and Technology,* 13(4), 1990, p. 273-275. For a note of cautious optimism as to the possibility of tapping the vacuum energy, see also H.E. Puthoff, The energetic vacuum: implications for energy research, *Speculations in Science and Technology,* 13(4), 1990, p. 247-257. We note, however, that none of the discussions on possibilities of tapping vacuum energy to date have considered pumped phase conjugate mirrors as already exhibiting negentropy, Whittaker's two fundamental papers for structuring the vacuum and intertranslating between electromagnetic and gravitational energy, or the use of time-reversed entities such as the time-reversed EM wave. Also, for hints of a new application of nonlinear vibrations mechanics that may eventually apply to the problem by analogy, see I. Usvitsky, "Friendly Vibration," *Science in the USSR,* No. 6, Dec. 1990, p. 81-87.

86. Nikola Tesla, Colorado Springs Notes 1899-1900, Nolit, Beograd, Yugoslavia, 1978, p. 61-62. On July 3, 1989 and on through the evening into the morning of July 4, Tesla observed standing potential waves from a traveling thunderstorm, even after the storm had traveled a distance of several hundred miles. He recorded this significant discovery in his laboratory notes on July 4,1899.

87. For example, see Nikola Tesla, "Pioneer Radio Engineer Gives Views on Power," *New York Herald Tribune,* Sep. 11,1932. Quoting: "...I showed that the universal medium is a gaseous body in which only longitudinal pulses can be propagated, involving alternating compressions and expansions similar to those produced by sound waves in the air. Thus, a wireless transmitter does not emit Hertz waves which are a myth, but sound waves in the ether, behaving in every respect like those in the air, except that, owing to the great elastic force and extremely small density of the medium, their speed is that of light."

Our comment is as follows: Tesla was absolutely correct in his view that only longitudinal waves were produced in the vacuum. We detect and measure *transverse* EM waves in our detectors, however, due to their detection of *electron precession* in the electron gas of the detectors, wire probes, etc. themselves. We do not measure what is in the vacuum, but *the result on the electron gas in our instrument from interacting with what is in the vacuum.* For an explanation, see Bearden, Tesla's Electromagnetics and its Weaponization," *Proceedings of the 1984 Tesla Centennial Symposium,* International Tesla Society, Colorado Springs, Colorado 1984.

Further, Tesla's view of the ether as gaseous is essentially correct. If one characterizes the quantum mechanical virtual particle flux of vacuum, then this flux of particles is a peculiar "gas" whose component particles — instead of being persistent — come into being spontaneously, exist only fleetingly, and nearly instantly disappear again. But these particles are real, as has been shown by experiment, for their interaction produces real effects in observable detecting systems of the proper sort. Thus the ether is a gas of *fleeting,* nonpersisting (virtual) particles rather than of persistent particles. But it is a gas nonetheless, and Tesla was correct.

88. Essentially they have insisted that Tesla used only transverse wave (translation) EM and hence was only utilizing ordinary LC resonance. Indeed, Tesla was adamantly opposed to the Hertzian idea of transverse EM waves in the ether. He was very struck with the utilization of a wave-complex of frequencies rather than a single frequency — something he had demonstrated with his radio-controlled automata before 1900. E.g., see Nikola Tesla, The True Wireless, "*Electrical Experimenter,* May 1919, p. 29. Here one finds that, when considering Tesla's use of resonance, one *"...must not view it in the light of present day science."* (Ibid., p. 29.) Further, Tesla stated that his *"...transmission through the earth is in every respect identical to that through a straight wire."* (Ibid., p. 62).

In Nikola Tesla, "My Inventions: Part V. The Magnifying Transmitter," *Electrical Experimenter,* June 1919, p. 176, Tesla stated that *"...this wireless transmitter is one in which the Hertz-wave radiation is an entirely negligible quantity as compared with the whole energy."* On p. 178 of the same article, Tesla stated that *"The transmitter was to emit a wave-complex of special characteristics..."*

Tesla always insisted that EM waves in the ether were longitudinal (compression and rarefaction) waves similar to sound waves in the gaseous atmosphere, not transverse waves similar to those in plucked strings. In his article, "The True Wireless," p. 87 he stated: *"The Hertz wave theory of wireless transmission may be kept up for a while, but I do not hesitate to say that in a short time it will be recognized as one of the most remarkable and inexplicable aberrations of the scientific mind which has ever been recorded in history."*

89. For details see Bearden, *AIDS: Biological Warfare,* 1988; *Fer-de-Lance,* 1986 — and, of course, this present article.

90. When great military campaigns or undertakings are planned or in progress, a detailed and sophisticated deception plan is prepared and implemented to deceive the enemy as to the exact operational intent until the last possible minute. For decades such a massive deception plan has been utilized by the Soviets to deceive the West as to Soviet development and utilization of scalar EM weapons. This includes such characteristics as (1) massive censorship of Soviet scientific literature, (2) concealing the development and testing of scalar EM weapons by embedding them in the development and testing of orthodox weapons systems and on orthodox weapon ranges, (3) surreptitious testing of the scalar EM weapons in distant ocean areas at night, (4) constant stimuli — such as the microwave radiation of personnel in the U.S. Embassy — to ascertain whether or not the targeted government knows and recognizes scalar EM utilization, and (5) surreptitious testing against U.S. ships, aircraft, installations, and rockets to generate incidents which, on the surface, appear to be accidental explosions, spurious electromagnetic interference or noise, accidental aircraft crashes, normal metal fatigue, accidental rocket failures, etc.

Y. Aharonov and D. Bohm, "Significance of Electromagnetic Potentials in the Quantum Theory," *Physical Review, Second Series,* 115(3), Aug. 1,1959, p. 458-491.

92. S. Olariu and I. Iovitzu Popescu, "The quantum effects of electromagnetic fluxes," *Reviews of Modem Physics* 57(2), April 1985 gives an extensive discussion of the Aharonov-Bohm effect (which proves the primacy of the potentials rather than the force fields) and an extensive list of references.

93. Bertram Schwarzschild, "Currents in normal-metal rings exhibit Aharonov-Bohm effect," *Physics Today,* 39(1), Jan. 1986, p. 17-20 confirms that the Aharonov-Bohm effect has been proven to the satisfaction of all but the most diehard skeptics.

94. This author's rather crude booklet (Beardcn, *Star Wars Now! The Bohm-Aharonov Effect, Scalar Interferometry, and Soviet Weaponization*, Tesla Book Co., 1984) may have been the first paper in English to clearly speak of the weapons implications of the Aharonov-Bohm effect, specific effects that could probably be attained at a distance by such weapons, and evidence for the Soviet development of them.

95. Whittaker, 1904, ibid.

96. See Bearden, *Fer-de-Lance,* and *AIDS: Biological Warfare* for details on Soviet weaponization of scalar EM interferometry. Also, without naming the Aharonov-Bohm effect as such, but utilizing the concept of scalar beam interferometry as an explanation of Soviet Tesla weapon developments, see this author's paper, Tesla's Secret and the Soviet Tesla Weapons," Tesla Book Co., 1981.

97. Bearden, "Appendix IV: List of Selected Incidents," in *AIDS: Biological Warfare,* 1988 contains an abbreviated chronology of events associated with Soviet development and testing of scalar EM weapons, including Aharonov-Bohm effect scalar interferometry weapons.

98. One considers the Whittaker potential's bidirectional EM wave structure as two bidirectional *energy currents* flowing in a hidden channel between the transmitter (initiation site) and the distant target where the Whittaker potential ends (i.e., the intersection site). Thus, with reference to this energy flow, when transmitter/intersection potentials are equal, no *net* resulting EM energy is transferred from transmitter to interference zone.

When the transmitter's potential is greater than the intersection zone's potential, net energy flows through the hidden channel, *flowing from transmitter to the target/interference zone.* It emerges there as positive energy (scattering/disordering energy, or heat). When the transmitter's potential is less than the intersection zone's potential, positive energy flows through the hidden channel, *flowing from the distant target/interference zone (and cooling that zone in the process) back to the transmitter (and emerging there to heat the transmitter.* In the latter case, the transmitter must transfer the excess heat away or dissipate it locally.

It is as if the distant zone and the transmitter are directly connected together with little of no separation. In that case, one looks at the gradient in potential between the two points. For a positive gradient in one direction, the positive energy flows counter to that direction. For a positive gradient in the other direction, the positive energy flows in the reverse direction from the first case.

However, as can be seen from the bidirectional wave pairs in the Whittaker structural energy is always flowing through the hidden Whittaker channel in *both* directions simultaneously. From the transmitter viewpoint, positive energy is being transmitted and flowing from the transmitter to the zone in one wave, while negative EM energy is being transmitted and flowing in the other wave, from transmitter to the distant zone. The difference in potential between distant interference zone and the transmitter, however, determines which transmission channel — the negative or the positive energy - predominates. If there is no potential difference, then the energy flows are equal, and no net energy flow occurs. If a positive potential gradient exists from transmitter to zone then negative transmission predominates and heat energy extracted from the distant zone must be continually dissipated at the antenna. At the same time, the distant zone is cooled. If a negative potential gradient exists from transmitter to zone, then positive

transmission predominates and positive energy emerges in the distant zone as heating. Note that transmitting negative or time-reversed energy is precisely the same as receiving positive or forward-time energy.

An easy rule is this: To the transmitter, the sign of the gradient from transmitter to intersection zone is the reverse of the sign of the energy transmitted to the distant zone. Another rule is this: Biasing the electrical ground potential of the transmitter positively, produces positive energy transmission. Biasing the ellectrical ground potential negatively, produces negative energy transmission.

In scalar electromagnetics, every transmitter is both a transmitter and receiver — and so is every receiver. In one case the scalar interferometer extracts heat from the distant interference zone (the *endothermic* mode). In the other case the scalar interferometer produces heating in the distant interference zone (the *exothermic* mode).

99. Thus the weapon system has two modes: exothermic, where heat (EM disordering) emerges in the interference zone, and (2) endothermic, where cooling (EM reordering) emerges in the interference zone. Sharply pulsed, powerful inputs produce distant hot or cold explosions, depending upon whether the exothermic or endothermic mode is utilized.

The best way to regard the Whittaker interferometer operation is to visualize a hidden pipe connecting the transmitter and the distant target. In one mode, heat is pumped to the site (and the transmitter is cooled), while in the other mode heat is extracted from the site (and the transmitter is heated).

Extensive use of such interferometry in the endothermic mode results in large amounts of heat at the transmitter site, which must be exhausted. The Soviet scheme is to simply use another Whittaker interferometer connected to a distant exhaust site. That is, the second interferometer receives the excess heat energy from the endothermic first interferometer, and exothermically transmits it to a distant targeted "dump" or exhaust site.

Bennett Island is one such Soviet dump site, where hundreds of anomalous dumping "plumes" and exhausts — some over 150 miles long — have been photographed by U.S. weather satellites. For example, see "Explosive events seen on Soviet Island," *Aviation Week & Space Technology*, Sep. 26, 1983, p. 31 for pictures of Soviet scalar EM interferometry exhausting from Bennett Island. A second Soviet exhaust site exists on Novaya Zemlya.

At any rate, a scalar interferometer can produce heat in a distant zone or extract heat from that distant zone. It can do this gently or explosively, and for a short duration or continuously. Use of the interferometers in coupled pairs, one endothermic and one exothermic, allows one to serve the other as the disposer of waste heat. Also, when the exothermic mode is utilized, the server can extract the energy from a separate distant area and transfer it to the drastically cooling exothermic partner to maintain its temperature.

100. Since ordinary texts are quite confusing on the question of energy, a short dissertation is in order. First, present energy concepts are essentially based on the classical notion of a closed system. Quantum mechanically, that is not true at all; in the entire universe, there exists nothing that is static, and there exists not one single closed system. The vacuum flux/spacetime fluctuation is in violent motion. *Everything* supposedly "static" is in fact only an entity that emerges in this flux cauldron by being in dynamic equilibrium. Thus

one rigorously speaks of equilibrium states and their probabilities, not the existence of static things per se.

When several or many things are in states of stable equilibrium in the background flux, such that one can describe them as highly persistent entities with mathematical relationships between each other, then these equilibria may be said to comprise a *system*. In the classical system, the flux exchanges between the parts and the vacuum may then be ignored, since input exchanges and output exchanges precisely balance. Then the system may be treated as a closed system, with no hidden sources or sinks. Notice that this model presumes (1) there is no hidden order in the background flux, which is purely random and statistical, (2) there are thus no chaotic interactions of the flux exchange when integrated over a period of time or reasonable region of space; the integrated random flux exchanges simply "average to zero," (3) one does not deliberately introduce and collect hidden order in the vacuum flux, to generate a hidden source or sink, (4) one may use the concept of a *stable frame* to mathematically model the system, in which each smooth dimensional axis represents a highly integrated (over all space and time) zero average of fluctuations in the vacuum virtual particle flux exchange with the matter in the system, (5) note that the very prescription of a "universal frame" prescribes the smoothed geometry of the entire equilibrium universe in advance, as well as the nature of the vacuum VPF exchange with matter throughout the universe, (6) macroscopic conservation laws then rigorously apply to the system so long as the frame coordinates remain smoothed to zero *average* fluctuation everywhere, so that linear superposition applies, (7) quantized (fixed) magnitudes of charge, spin, inertial mass, universal constants, etc. apply universally, so long as the frame remains "smoothed", (8) the observer's "rate of flow of time" is assumed to be positive, and (9) the observer's rate of flow of time is assumed to be constant.

Assumption number 8 implies that (a) gravity is an *attraction* of mass, (b) all mass and energy are positive, (c) the vast majority of photoelectric interactions is between photons and negative electrons in atomic shells, so that positive time continues and the familiar macroscopic "forward arrow of time" physical reality is continually created and annihilated, quantum by quantum, at a fantastic rate, providing the past, present, and future, (d) almost all expended energy is scattered, so as to produce entropy, positive work, the positive flow of observer time, steadily increased disorder, etc.

Those are indeed formidable lists of assumptions and implications. They all rest on one fundamental premis: that the virtual particle flux exchange of vacuum remains statistical, random, and constant in volumetric density. Fortunately, today all those assumptions on the formidable list can be modified, because one can now engineer the vacuum's VPF exchange with the atomic nucleus and with charged matter. Now even physical reality itself, as we know it, can be modified and engineered at will, as the technology develops.

In the last two decades, nonlinear materials effects have been discovered which allow altering one or more (or all) of the preceding assumptions, because these effects allow altering and engineering the VPF exchange between vacuum and matter. These discoveries include four-wave mixing, time-reversed EM-waves and their pumping amplification, etc. They also include the Whittaker infolded hidden variable engineering techniques, still undeveloped in the West, and the new cavity quantum electrodynamics.

At any rate, these new principles and techniques allow one to directly engineer and structure the vacuum flux exchange with matter. They allow the translation of negative (reordering) energy from positive (disordering) energy, etc. They allow the production of negative time flow in photoelectric interactions, rather than just positive time flow. And they allow the production of negentropy rather than just entropy.

But how are we to understand negative energy and negative time and their implications?

First, by energy we actually mean *the amount of ordering* or *the amount of coherence* that exists in some dynamic, on-going process of the universe.

What we call static potential energy is actually stored in dynamic, stable, coherent equilibrium processes — it is just *not translating and not scattering.*

The very concept of potential energy, quantum mechanically, implies stable perpetual motion.

What we mean by kinetic energy is a *translating coherence in some underlying dynamic process.*

Kinetic energy is translating, but it is not scattering.

By positive work, we mean *the scattering of stored coherence (energy),* which we refer to as the *"expenditure"* of energy. Rigorously, when we expend energy as work, we convert some stored coherence into incoherence (scattering), as seen by the forward-time observer. This is most important: It does not require energy expenditure per se to turn a shaft, but only to *"overcome the friction, or resistance to turning."*

What we really mean by "overcome the resistance" is that a certain amount of scattering will be invoked upon the energy coherence, producing incoherence. That way we "lose" the energy — i.e., we lose a certain amount of the coherence of the system. Relatively coherent systems, which in their operation produce scattering or incoherence (i.e., work), require constant input of more coherence (i.e., energy).

In the not too distant future, machines will no longer be designed that way. Instead, they will employ time-reversed stages to flow incoherence ("scattered energy") hack to coherence ("reordered energy).

These time-reversed stages will of course be open systems, simply taking what is needed from the vacuum VPF to continually restore the input energy. Such machines, of course, will not need continual inputs of fuel in the macroscopic sense. In the microscopic sense, they will continually receive an input of virtual energy from a Whittaker-structured vacuum, cohering it into the macroscopic world, and gating it. In a sense these machines will all be heat pumps of a special sort. And as is well-known, the usable output of a heat pump may be considerably greater than the energy expended to pump the energy from the source to the scattering region (where it is scattered.)

In our present designs, to make matters worse, we normally utilize and expend the *carrier* of the coherence as well as the coherence. This creates the fuel concept, where the fuel is the carrier of the stored energy (coherence). If one only expends and scatters, one continually requires refueling in order to continue the scattering process (doing work). Present engineering and physics utilize the closed system concept exclusively, hence *it rigorously maintains the engineering of systems that require fuel to operate.*

Of course, it does not have to be that way. If we engineer and structure the vacuum, then one may take whatever energy one needs from an inexhaustible source. That is, if one has a flowing river and puts a paddlewheel in it, one can freely extract shaft power and do work with it. The paddlewheel is a "gate": it taps a hidden source for free. If we wish to be non-polluting, of course, we should return the *scattered energy* (the work) back to the

vacuum, as reordered VPF, rather than leaving the scattered energy in the macroscopic environment as "waste heat."

Thus one way to build a so-called *free energy device a* to cause the local vacuum to form a river of potential VPF gradient, and then to develop devices and processes to "tap that VPF river" of energy. This directly converts virtual energy to observable energy. By definition, when one converts virtual energy to observable energy, the local spacetime is curved. Note that the present highly restricted general relativity theory *assumes* one cannot tap the local energy of vacuum, because it assumes that the local spacetime is always flat!

Another way to produce a so-called "free-energy" device is to utilize pumped four-wave mixing, where natural stresses are utilized to furnish the pump waves. Converting normal potentials to Whittaker-structured potentials, and increasing the potentials on the nuclei of targeted material with activated charge structures, produces hidden structured nuclear potential sources (activated atomic nuclei) which can be tapped for energy by several methods. The beauty of this approach is that *once the charge structures are created on the activated nuclei, the vacuum simply replenishes the extracted energy (coherence) as fast as it is withdrawn.* This in fact was the type of source that Frank Golden had created via a local quantum potential, to provide a local source for his open-system motor and yield an output to input ratio of 1.67 (see note 73).

Yet another way to build a "free-energy" device is to recycle disordered energy, created by doing work, back to ordered energy. This is simply recycling disorder back to order, by use of time reversal. That is, when coherence is processed and expended into incoherence, that is what *generates* the forward flow of time. (Actually, that is *identically* the forward flow of time.) So forward time automatically implies the passing of order into disorder (i.e., scattering of EM energy). But since that is so, the opposite kind of time — negative time, or time reversal — must represent the passing of disorder back to order. So to accomplish negentropy, one must manipulate negative time generation devices so that the previously produced incoherent EM energy is returned precisely backwards along its previous scattering path. A priori, that will reorder the scattered energy.

This is done by a two-phase system. One phase looks normal: ordered energy is scattered to do normal work, resulting in a cache of disordered energy. The disordered energy is collected and time-reversed (phase conjugated) by pumped four-wave mixing. This returns the scattered energy precisely backwards along its previous scattering path, reordering it. Thereafter the recycled energy is used (scattered) again, recycled (reordered), used (scattered) again, etc. *Note that this can actually be done,* since all the microparts of the energy — whether ordered as a system or disordered as heat — are *individually* ordered equilibria in the disordered flux of vacuum. Everything is constantly driven by the vacuum flux anyway, everything is in an open loop system. Therefore it is a matter of g*ating* energy that is already flowing as a flux, and hence in both manners; energy is both scattering (diverging from the particle to the vacuum, hence disordering) and reordering (converging from the vacuum back to the particle) constantly. *That is what the "virtual particle flux exchange of the vacuum with the charged particle" is already doing, all the time, with every charged particle, with fantastic power.* Electric charge — and its analogue, magnetic charge — are both tremendous dynamos. Electric charge and magnetism are already mighty engines, waiting for us to gate their energies to our needs. If we utilize our system as an open system and do vacuum structuring, we are in fact structuring (and gating) the virtual particle flux of vacuum. In other words, we are structuring massless charge — the potential itself. *We are then directly gating the vacuum's own engines.* It's just like putting a paddlewheel in a river, only the river we use is subtle, and so must be our paddlewheel.

Objections based on the second law of thermodynamics are usually raised. This law states that, *unavoidably,* in any operation in a closed system, if that operation does external work, you unavoidably reduce the order in the system. That, of course is true if and only if (1) the system is a closed system, and (2) time flow is forward or positive. Actually, the second law actually states only that *the flow of time is always positive.* A steady flow of time in a region means only that there exists a steady rate of scattering of EM energy in the region, a priori.

Note that we have violated both fundamental conditions required for the second law of thermodynamics to hold. Ergo, it should come as no distinct shock that we can readily violate the second law.

The second law presupposes *positive time flow only.* In positive time, the second law is the *law of entropy.* That is the law of disordering or scattering of EM energy. If we make a system produce some negative time, however, then we invoke the negative time aspect of the second law. In negative time flow, the second law is inversed, and it becomes then the *law of negentropy.* In a driven, open-loop macroscopic system, we may seemingly judiciously manipulate the virtual particle flux exchange to accomplish "free energy" and perpetual motion, *in the view of any observer who persists in regarding our macroscopic system as a closed system.*

So we can readily violate local conservation of energy, using amplified time-reversed (phase conjugated) EM energy operations. Whether or not we may be violating overall conservation of energy in the entire universe depends again upon an assumption that one must make. If we assume that the entire universe is closed and conservative, then we do not violate the overall conservation of the universe, but only violate it locally. If, on the other hand, we like the big bang theory and several other of the present very advanced cosmologies, then the vacuum merely pumped itself up to a vastly excited state and exploded, producing the present universe we live in. In that case, the universe is not closed, and it is not energy-conservative anyway. We leave it to the reader to take his or her choice in assumptions. In either case, we can violate the so-called conservation of energy *locally,* and run our motors and power our homes very cheaply indeed.

The amplification method is purely and simply standard, well-known four-wave mixing theory. What orthodox physicists have not realized is that the amplified phase conjugate replica produced by a true pumped phase conjugate mirror is already *negative energy.* As is already in the literature, the reflection/emission of a phase conjugate replica wave by the mirror *does not cause recoil of the mirror.* Pseudo-conjugation, which involves reflection/emission of an ordinary EM wave with a distorted wavefront, *does cause the mirror to recoil* This destroys the present assumption in physics that the antiphoton and the photon are identical. *The antiphoton doesn't cause recoil of the mirror, but the photon does.* So the reader may rest assured that there is something in what the present author is saying after all, and *present physics is just flat wrong in some of its assumptions.*

Understandably, it is very much counter to the interests of the control groups to have this kind of knowledge spread around widely. We are not supposed to discover that, using *open system engineering techniques,* vacuum structuring, and amplified time-reversed waves, technology really does permit a "free lunch" after all. Obviously, however, our academic community is only going to get grants to study closed system conservative energy processes, not open system nonconservative energy processes incorporating time-reversed wave techniques.

At any rate, the scalar EM transmitter, since it is working in both the positive and negative streams of time, is to be considered both a transmitter and a receiver. A "system" is to be considered that consists of the transmitter, the target/receiver, and two hidden bidirectional Whittaker-EM-wave energy currents between transmitter and target Depending upon the relative "grounding bias" vis a vis the transmitter, the receiver/target, and the local vacuum, one may cause "flow" of an excess of ordering from the transmitter to the receiver, or "flow" an excess of disordering from the transmitter to the receiver. Use of coupled scalar transmitters utilizes a two-stage flow process so that the effective flow of order/disorder is between a distant "dump site" and the desired "target site."

101. See Robert A. Fisher, Ed., *Optical Phase Conjugation,* Academic Press, New York, 1983 p. xv. On May 22,1972 two Soviet scientists — from the P.N. Lebedev Physical Institute in Moscow — visited Lawrence Livermore National Laboratory. There they mentioned Dr. B. Ya. Zel'dovich's observation of an extremely curious "distortion undoing" property of the stimulated Brillouin backscattering process in a CS2-fiIled waveguide. Very little reaction by American physicists occurred initially. During the next five years, however, the American reaction had slowly grown until U.S. scientists had become quite interested in phase conjugation and the time-reversed EM wave — at least in *optics.* To this day, very little U.S. work has gone into developing practical microwave phase conjugation devices, in spite of the portentous weapon implications of time-reversed microwave beam weapons. Today, however, at least *some* microwave work in the pumped phase conjugation area has finally started. Cf Session 2, Directed Energy Concepts, Proceedings, SPIE Vol. 1061, *Microwave and Particle Beam Sources and Directed Energy Concepts (1989),* Jan. 16-20,1989, Los Angeles, California.

102. Investigator Ken Moore has confirmed with the World War II German rocket team chief that the German radar team indeed encountered serious anomalies in their experiments.

103. For example, eventually the State Department placed ordinary aluminum window screens over the Embassy windows, etc. to act as Faraday shields. These screen shielded out some 90 per cent or so of the microwave *force field* component of the radiation, but essentially none of the standing Whittaker potential wave portion. This clearly showed the Soviets that we knew nothing of standing Whittaker potential waves, and the need for nonlinear absorber shielding rather than linear conductive/reflective shielding.

104. Two U.S. Ambassadors, Llewellyn Thompson (1953-1957) and Charles Bohlen (1957-1962,1967-1969), predecessors of Stoessel, later died of cancer. Stoessel suffered nausea and bleeding in his eyes while at the Embassy *(New York Times,* Feb. 26, 1976) and was transferred from Moscow in September 1976 because of a strange blood ailment, and reassigned as Ambassador to West Germany. He also died with a leukemia-like disease some yean later. Blood tests administered to personnel at the Moscow Embassy found that about one-third of the Embassy personnel had a higher than average number of lymphocytes in cell counts. Such elevated white corpuscle count — lymphocytosis — is evidence that the body is resisting some sort of disease-inducing agent. Such a reaction *could* occur in resistance to some sort of viral infectious agent, of course. However, *it would most certainly occur in resisting exposure to an EM cytopathogenic Kaznacheyev disease signal pattern in the Whittaker-structured potential.*

In 1959 during then Vice-President Nixon's visit to Moscow, fairly intense levels of microwave radiation were also detected at the U.S. Ambassador's Spasso House mansion in Moscow. Secret Service agent James Golden discovered the radiation of the Ambassador's residence. Nixon slept there and may have been irradiated for one night

before the Russians stopped the radiation. Nixon was scheduled to tour Soviet nuclear facilities, so the Secret Service team was well-equipped with dosimeters and radiation monitors. Interestingly, the radiation of the Ambassador's house was discovered with an *ionizing radiation detector* — a dosimeter. This is one of the few instruments that will detect standing scalar EM potential waves, since increase in the local potential and the addition of a Whittaker bidirectional EM substructure causes increased ionization of gases. Ionizing radiation detectors, such as nuclear dosimeters and Geiger counters, will detect such increased ionization of their internal gases. If the standing scalar potential wave is sufficient to cause ionization in these detectors, then the detectors will detect the Whittaker potential.

105. A. M. Lilienfeld et al, *Foreign Service Health Status Study...,* 1978.

106. Robert C Mallalieu, A *Model of the Microwave Intensity Distribution...,* 1980. See also *Microwave Radiation at the U.S. Embassy...,* Dept. of Commerce, 1981.

107. Y. Aharonov and D. Bohm, "Significance of Electromagnetic Potentials...," *Physical Review,* 1959.

108. Vlail P. Kaznacheyev and L.P. Mikhailova, *Ultraweak Radiations in Intercellular Interactions* [in Russian], Novosibirsk, 1981. See also previous notes regarding Kaznacheyev references.

109. N.D. Devyatkov, Ed., *Applications of Low-Intensity Millimeter Wave Radiation in Biology and Medicine* [in Russian], IRE Akad. Nauk. SSSR, Moscow, 1985.

110. Whittaker, 1903,1904.

111. By scalar interferometry, per Whittaker 1904; per Aharonov and Bohm, "Significance of electromagnetic potentials...", 1959.

112. Vlail P. Kaznacheyev and L.P. Mikhailova, *Ultraweak Radiations in Intercellular Interactions* [in Russian], Novosibirsk, 1981.

113. N.D. Devyatkov, Ed., *Applications of Low-Intensity Millimeter Wave Radiation in Biology and Medicine* [in Russian], IRE Akad. Nauk. SSSR, Moscow, 1985.

114. As was done in the Priore devices in France in the 1960s and 70s.

115. By subharmonic translation, the Kaznacheyev optical cytopathogenic signals emitted by cells dying of a particular disease can be translated into the microwave region, and a microwave pattern signature of that specific disease can be generated, in a manner similar to a carrierless radar of the ultra-wideband type. Then irradiating human targets, even many thousands of miles distant, with the specific microwave cytopathogenic pattern can induce the disease outright in the targeted population. Much weaker, continual radiation with the disease pattern will gradually condition the targeted biological systems for the specific disease, *gradually weakening their immune systems against that specific disease.* In this manner, a relatively harmless influenza, measles, or other disease can gradually be converted into a potent killer *in that targeted population.* In the mid-to-latter 1980's, the Soviets conducted precisely such immune-notching experiments against test mammals off the eastern coast of the U.S. — they targeted porpoises and lowered their immunity against a common organism normally infecting porpoises and simply making them a bit ill. In the test, hundreds and hundreds of porpoises died from the now-potent disease — not

because the disease organism had altered, but because their immune systems had been deliberated "notched" for greatly reduced immunity against that disease.

By time-reversing (phase conjugating) a Kaznacheycv cytopathogenic pattern for a specific disease, a specific electromagnetic antidote pattern can be generated. By irradiating a biological target with that antidote, that actual disease in the biosystem can be cured directly, by electromagnetic means. That is the actual treatment to which Devyatkov is referring, while concealing the role of internalized EM, phase conjugation, and the persistent structured scalar potential.

116. For an explanation of subharmonic oscillation, see "Nonlinear Forced Oscillations," in *Modem Mathematics for the Engineer,* Edwin F. Beckenbach, Ed., McGraw-Hill, New York, 1956, p. 18-20. Note that, in this graviton theory, gravitons are already linked spatially and harmonically/subharmonically. Subharmonic oscillation already exists; it does not have to be created.

117. Twin beams have often been detected in the radiation, fulfilling the requirements for Whittaker scalar EM interferometry. Just how long the Soviets have possessed this technology is evidenced by the fact that the microwave radiation induction of health problems and diseases in personnel in the U.S. Embassy in Moscow began in the mid-50s. The importance of the Embassy radiation, as an intelligence collection tool, is shown by the fact that the Soviets have pointedly continued the radiation even though several Presidents have protested and asked them to stop.

118. Standing Whittaker potential waves can easily penetrate the earth and the ocean, carrying their hidden bidirectional EM wave substructures with them. Therefore underwater and underground targets can be targeted with ease — as was the *U.S.S. Thresher* atomic submarine in April 1963 (see note 61 above). For example, drastic "on-site" or "near-site" testing of Woodpecker induction of disease would be helpful for calibration, realistic field exercise training, and analysis of results prior to actual EM attacks on human targets. For a possible massive Soviet long range EM BW test against dolphins off the East Coast of the U.S., see Joseph F. Sullivan, "Search widening for clues in puzzle of mounting dolphin deaths," *New York Times,* Aug. 9, 1987, p. 32; "Air search finds dolphin deaths are more common than suspected," *New York Times,* Aug. 13, 1987. See also Jean McNair, "Dolphins died of common sea bacterium; scientists baffled," AP release, *Huntsville (Alabama) News, Aug.* 19,1987, p. B-5; Julia Lawlor, "Key: Failure of mammals' defenses," *USA Today,* Jan. 19,1988, p. 1A-2A. One would also suspect that the Soviets have conducted other such tests around the globe.

119. For a probable similar Soviet long range EM BW test against seals in Europe, see David Dickson, "Canine distemper may be killing North Sea seals," *Science,* Vol. 241, Sep. 9, 1988, p. 1284.

120. Bearden, *AIDS; Biological Warfare.*

121. Bearden, *Fer-de-Lance.*

122. Bearden, "Soviet Phase Conjugate Weapons."

123. Bearden, *Soviet Weather Engineering Over North America.* See also "Strange Pressure Waves Crossed MidWest in 1990," *Watt Street Journal,* Jan. 15,1991.

124. Bearden, "Update on Scalar Electromagnetics: New Breakthroughs."

125. See Martin Ebon, *Psychic Warfare: Threat or Illusion?*, McGraw-Hill, New York, 1983, p. 1-11. On June 11, 1977 *Los Angeles Times* reporter Robert Toth met with a Soviet biophysicist, Valery G. Petukhov, and received a manuscript — a scientific paper — from him. On walking away with the paper, Toth was seized by Soviet agents and taken to a police station for interrogation, as was Petukov. A senior academician from the Soviet Academy of Sciences, Professor I.M. Mikhailov, examined the paper and stated that it contained state secrets. Specifically, Mikhailov said: *"The article beginning Petukhov, Valery G., from the words 'micro-organism self-radiation...' to the words'...by means of vacuum particles in space,' states that within the content of living cells are particles... and. these particles are grounds for discussing the fundamental problems of biology in the context of biology and parapsychology. There is also information about the uses of such particles. This material is secret and shows the land of work done in some scientific institutes of our state."*

After additional interrogation several days later, Toth signed a statement and was eventually released, as was Petukov.

Before the ill-fated meeting, Toth had previously met with Petukov, who was apparently Chief of the Laboratory of Bio-Physics at the State Control Institute of Medical and Biological Research. He informed Toth that he, Petukov, was working on a theory of parapsychology based on particles emitted from living cells. These particles could carry information and could explain the basis for parapsychology. In mid-June the Soviet biophysicist had telephoned Toth to tell him that his experiments had been successful, proving his theory. He wanted to give Toth a paper describing his work for publication in the West, because he knew the Soviet authorities would never let his paper be published. It was this 20-page paper that Petukov handed to Toth, triggering the seizure of both men by Soviet authorities.

From the above, one can almost certainly conclude that Petukov's particles that are "pieces of the vacuum medium" were gravitons, and the paper contained a theory of gravitobiology. From Mikhailov's statement, this information was considered a state secret. From our discussion of gravitons and their biological implications, Kaznacheyev's cytopathogenic effect, Devyatkov's information content of the field, and the long years of Soviet microwave radiation of the U.S. Embassy in Moscow, one can most certainly affirm that Petukov's experimental proof of his "particles" and his theory of them indeed duplicated highly classified Soviet EM BW weapons work.

The present author states emphatically that a scientific theory of parapsychological and paranormal phenomena can be formulated from the gravitobiology approach. Further, the formalized theory will be testable. Thus Petukov's information that he had actually experimented with his theory, and experimentally proven it, are consistent with gravitobiology.

126. T.E. Bearden, "Update on Scalar Electromagnetics: New Breakthroughs." The mechanism for generation of a quantum potential depends upon four-wave mixing effects inside the EM bidirectional wave structures of Whittaker potentials of atomic nuclei. A phase conjugate replica — including one that is amplified — is emitted from a pumped/stressed nucleus in response to a small scalar EM signal wave from another nucleus. That signal wave in turn may have been an amplified phase conjugate replica in response to yet another signal wave at another stressed/pumped nucleus.

In a dense signal environment, the probability for multiphoton interaction increases. But multiphoton interaction can easily constitute pumped four-wave mixing, if three waves

are involved (the fourth wave can be generated by the pumped mirror material, where two waves act as the pump wave and the third wave acts as a signal wave.) Thus in a dense signal environment, the probability of forming "pumping/stressing" of the nuclei increases as some function of the number of signals per second per unit volume, as does the probability of pumped four-wave mixing incidents. But notice that each amplified phase conjugate replica is not scattered, but returns precisely to the nucleus where the original signal wave was emitted. In other words, a laser-like coherence of exchange of energy between nuclei begins to occur as environmental signal density increases sufficiently. Note also that this is a *self-organizing and self-ordering behavior.*

The major communication between the nuclei, insofar as the input signal waves are concerned, is in the hidden EM bidirectional wave structure of the standing Whittaker potentials formed on each nucleus and extending out toward infinity, intersecting all the other nuclei in the region. The internal bidirectional EM waves are not limited to light speed, but may move much faster.

In this dense signal environment, then, increased self-ordering of the potentials in the Whittaker-communicating atomic nuclei begin to occur. An emission from one equipment or area is an input to all of the communicating, self-ordering nuclei. So in a variety of electronic equipments in a dense signal environment, gradual self-targeting by repetitive phase conjugation leads to coherent self-organizing of the nuclear potentials, and the formation of a quantum potential. In each equipment, "spurious" signals appear that are actually instantaneous inputs from other connected but distant electronic equipments.

Rigorously, a quantum potential has now begun to form among all the participating atomic nuclei. All participating electronic equipments begin to partially act as if they were all parts of a single equipment system, without spatial separation of the parts.

The precise physical mechanism by means of which the quantum potential is formed is an original discovery by the present author. Note particularly that formation of quantum potentials is subject to experimentation, using this approach and this mechanism.

For various papers treating the quantum potential (but without any notion of the actual mechanism that creates one), see *Quantum Implications; Essays in Honour of David Bohm,* Eds. B.J. Hiley and F. David Peat, Routledge & Kegan Paul, London & New York, 1987. Also, particularly see the various papers on this subject in *Quantum Concepts in Space and Time,* Eds. R. Penrose and C.J. Isham, Clarendon Press, Oxford, 1986. These two references are highly recommended.

127. See Mark Thompson, "Mixed signals may have misguided U.S. weapons," *The Washington Post,* Jan. 22,1989, p. A4, for a good description of the incident.

128. Though details are still sketchy, there also appears to have occurred the formation of a quantum potential during a large exercise in the MidEast several years ago. The exercise involved a large number of aircraft, radars, radios, etc.

129. See B.J. Hiley and F. David Peat, "General introduction: the development of David Bohm's ideas from the plasma to the implicate order," *Quantum Implications...,* ibid., p. 13. Quoting: *"...the quantum potential contains an instantaneous connection rather than the expected retarded connection. In some ways this is like a reintroduction of a land of action-at-a-distance, a feature that goes against the whole historical development of physics."* Also, particularly see the characteristics of a quantum potential, listed on p. 15. On p. 23, Hiley and Peat show that the quantum potential itself is determined by an

infolding-unfolding process. A more directly physical — and testable — model of this exact quantum potential formation process has been given by Bearden, as briefly sketched out in note 126 above.

For some nonlinear and nonlocal quantum mechanical implications upon certain general properties of spacetime events and processes, see Abner Shimony, "Events and processes in the quantum world," *Quantum Concepts in Space and Time,* R. Penrose, and CJ. Isham, Eds., Clarendon Press, Oxford, 1986, p. 182-203. Quoting from p. 186: *"...unless revolutionary evidence is presented in favour of changing the relativistic conception of space-time structure, an acceptable hidden variables theory must conform to this structure."* Quoting again (p. 192): *"...local hidden variable theories may be possible only if relativity theory is replaced by a radically different theory of space-time structure."* Note that the present photon-coupled averaged graviton theory of the structure of space-time is just such a "radically different theory" as is required. Particularly see Yakir Aharonov, "Nonlocal phenomena and the Aharonov-Bohm effect," ibid., p. 41-56 for a discussion of modular variables and the capability to violate normal conservation laws of nature.

130. Particularly see Y. Aharonov and D. Bohm, "Significance of Electromagnetic Potentials in the Quantum Theory," *Physical Review,* Series 2,115(3), Aug. 1,1959, p. 485-491. See also S. Olariu and I. Iovitzu Popescu, "The quantum effects of electromagnetic flaxes," *Reviews of Modem Physics* 57(2), April 1985 for an extensive list of references on the AB effect.

131. Particularly see Lee Smolin, "Stochastic mechanics, hidden variables, and gravity," *Quantum Concepts in Space and Time,* ibid., p. 147-173 for a discussion of (1) some hidden variable possibilities in quantum mechanics, (2) (p. 165) the fact that Bell's theorem seems to indicate the possibility that nonlocal correlations may be found between any pair of systems which have previously interacted, and (3) (p. 166) the possibility that nonlocal variables might even dominate the energetics of a QP-connected system and swamp the local physics completely.

132. In Maxwell's original quaternion EM theory, the scalar component captured the internal, infolded stress energy when EM force fields interacted to produce zero force field resultants. In the vacuum, this infolded EM structure formed a local scalar potential and structured the local vacuum, curving local spacetime in the process. By discarding the scalar component of the quaternion, Heaviside threw this structured potential out of classical electromagnetic theory. This in turn threw out correlated "action at a distance" from EM theory. In appropriating Gibb's thermodynamics statistics for quantum change, quantum mechanics was constructed with a similar omission of hidden EM order (chaos), even though it statistically retained the necessity for action at a distance. See again note 52. Indeed, Heaviside's vector curtailment of Maxwell's quaternion theory can be experimentally shown to be in error, and a modification of Weber's action at a distance theory shown to be consistent with those experiments. For a discussion of the limitations of the Heaviside theory (so-called "Maxwell's theory"), see J.P. Wesley, "Weber Electrodynamics, Part I: General Theory, Steady Currents"; "Weber Electrodynamics, Part II: Unipolar Induction, Z-Antenna", *Foundations of Physics Letters,* 3(5), 1990, p. 443-490. Part III (to be published) will deal with the impact of Weber electrodynamics on mechanics and gravitation.

133. Again see note 52. By overstating his assumption that local spacetime was flat, Einstein excluded the internal, infolded EM structure of stressed spacetime, thus excluding EM from unification with general relativity. The single feature that could have unified electromagnetics, quantum mechanics, and general relativity was hidden, infolded EM

energy of spacetime. Ironically, each of the three disciplines eliminated this feature, either at its formation or shortly thereafter by retranslation.

134. T.E. Bearden, *Soviet Weather Engineering Over North America,* 1-hr, videotape, 1985.

135. T.E. Bearden, "USSR: New beam energy possible?", *Defense & Foreign Affairs Daily,* 13(111), June 12,1984, p. 1-2.

136. For example photographs and artists illustrations, see Bearden, *Soviet Weather Engineering Over North America,* 1985. For a spectacular example of the rapid formation of three giant radial clouds over Los Angeles on Jan. 26, 1986, see Bearden, *Fer-de-Lance,* p. 168-169. Margaret Wilson observed these three sharp, distinct giant radial clouds form one after the other, at 10-minute intervals. These sharp cloud signatures were associated with Soviet bending of the jet stream sharply southward at Los Angeles, then steering the jet stream eastward across the U.S. far to the south of its normal path. The Soviet purpose was to bring cold arctic air down upon the Florida Panhandle, exposing the waiting shuttle at Cape Canaveral to abnormally cold temperature stress, and this was successfully accomplished. The shuttle, of course, was the ill-fated *Challenger,* which two days later was destroyed by the Soviet Union shortly after launch, on Jan. 28, 1986. For a discussion of the many positive indicators that the Soviets destroyed the shuttle, see Bearden, *AIDS: Biological Warfare,* 1988 and *Fer-de-Lance,* 1986.

Indeed, the Soviet KGB gave a party at their Moscow headquarters on the evening of the day that the shuttle was destroyed. *The stated purpose of the party was to celebrate the success of their active measures against the Challenger!*

137. E.T. Whittaker, "On the partial differential equations of mathematical physics," *Mathematische Annalen,* vol. 57,1903, p. 333-355. See also Note 13 above.

138. D. Bohm, *Phys. Rev. 85,* 1952, p. 166,180.

139. E.T. Whittaker, "On an expression of the electromagnetic field due to electrons by means of two scalar potential functions," *Proc. Lond. Math. Soc,* Series 2, Vol. 1, 1904, p. 367-372. See also note 13 above.

140. Y. Aharonov and D. Bohm, "Significance of Electromagnetic Potentials in the Quantum Theory," *Physical Review,* Second Series, 115(3), Aug. 1,1959, p. 485-491.

141. In fact, in his 1904 paper Whittaker shows that *all* classical force field electromagnetics can be replaced by scalar EM potentials and their interferometry. Specifically, any EM force Geld can be replaced by two scalar potential fields. Per Whitney, a completely accurate replacement may require four scalar potential fields rather than two. (Cynthia Whitney, private communication, 1990).

142. Richard W. Ziolkowski, "Localized transmission of wave energy," *Proc. SPIE* Vol 1061, *Microwave and Particle Beam Sources and Directed Energy Concepts,* Jan. 1989, p. 396, 397. For a mention of this same bidirectional EM wave Whittaker structure in the potential connected with the Schroedinger wave, see Ignatovich (reference 16, above.).

143. Thus they have not realized the profound importance of the Whittaker work, or that Whittaker wrote the basis for an *engineerable* unified field theory of electromagnetics and gravitation that has been extended and drastically weaponized by the Soviet Union.

144. The two previous ambassadors who died of leukemia-like diseases probably induced by the Soviet microwave radiation of the Embassy were Llewellyn Thompson and Charles Bohlen.

145. Walter Stoessel Jr. died of leukemia in Dec. 1986 at the age of *66.* He served three tours in Moscow: 1947-49 as a second secretary, 1963-65 as minister-counselor, and 1974-76 as U.S. Ambassador to the Soviet Union. His latter tour as Ambassador to the USSR was cut short by reassignment to another post in 1976 because he had developed a leukemia-like illness.

146. See note 33 above.

147. See note 34 above.

148. The necessity for persistence of the structured potential in induction of diseases is that one must *charge up* or *activate* the potentials of the atomic nuclei in the targeted human cells with a consistent Whittaker bidirectional EM substructure. This charge-up can be a time-consuming process, particularly when fairly weak signals are involved. By holding a persistent potential value, the infolded deterministic Kaznacheyev/Devyatkov disease structure acts much like a "constant voltage charger" applied to a "capacitor" to charge it up — only, in this case, the infolded EM substructure is slowly charging-up the nuclear potentials of the atomic nuclei with the desired Whittaker infolded structure.

149. Executive Intelligence Review Special Report, Walter J. Hamerman et al, *An Emergency War Plan to Fight AIDS and Other Pandemics,* Feb. 15,1986, p. 86.

150. Ergo Brezhnev's characterization of weapons of this nature as *"more frightful than the mind of man has ever imagined."* Khrushchev in 1960 stated that these weapons were so powerful that, if unrestrainedly used, they could wipe out all life on earth.

151. See note 24 above. For a complete resume of the Priore Affair, see Jean-Michel Graille, *Le Dossier Priore,* De Noel, Paris, 1984 (in French). See also Christopher Bird, "The Case of Antoine Priore and His Therapeutic Machine: A Scandal in the Politics of Science," in Bearden, *AIDS: Biological Warfare,* Tesla Book Co., 1988, p. 346-375.

152. For additional information on the Priore affair, see David M. Rorvik, "Do the French have a Cure for Cancer?", *Esquire* Magazine, July 1975, p. 110-111, 142-149. See also J.B. Bateman, "A Biologically Active Combination of Modulated Magnetic and Microwave Fields: The Priore Machine," Office of Naval Research, London Report R-5-78, Aug. 1978. See also J.B. Bateman, "Microwave Magic," Office of Naval Research London Conference Report, ONRL C-14-77,1977.

153. See also A. Priore, "Method of Producing Radiations for Penetrating Living Cells," U.S. Patent No. 3,280,816, Oct. 25,1966.

154. For a development of this startling thesis vis a vis the AIDS crisis, see T.E. Bearden, *AIDS: Biological Warfare,* Tesla Book Co., 1988. See also EIR Special Report, Warren J. Hamerman et al, *An Emergency War Plan to Fight AIDS and Other Pandemics,* Feb. 15, 1986.

155. Simultaneously phaselocking of 10 Hz pulses on multiple Woodpecker channels was previously mentioned in Bearden, *The Excalibur Briefing,* 1st Edn., Strawberry Hill Press, San Francisco, 1980, p. 258-260.

156. Robert C. Beck, "Extreme Low Frequency Magnetic Fields and EEG Entrapment, A Psychotronic Warfare Capability?", Bio-Medical Research Associates, Los Angeles, Mar. 1978.

157. S.K. Lisitsyn, "New Approach to the Analysis of Electroencephalograms," *Problems of Bionics (Selected Articles),* p. 16-25, Defense Documentation Center Report AD 730045.

158. V.K. Ignatovich, "The remarkable capabilities of recursive relations," *American Journal of Physics,* 57(10), Oct. 1989, p. 873-878.

159. Ibid. Unfortunately Ignatovich apparently knew nothing of Whittaker's expression of this over eight decades earlier, and he does not reference Whittaker's work.

160. I am informed that the American researcher G. Wilbanks has successfully duplicated the Kaznacheyev experiments.

161. Again see "Nonlinear Forced Oscillations," in *Modem Mathematics for the Engineer,* Edwin F. Beckenbach, Ed., McGraw-Hill, New York, 1956, p. 18-20.

162. R. Courrier, 1977. "Expose de M. le Professeur R. Courrier secretaire perpetuel de l'Academie des Sciences fait au cour d'une reunion a l'lnstitut sur les effects de la machine de M.A. Priore le 26 Avril 1977." (in French).

163. M.R. Riviere, A. Priore, F. Berlureau, M. Fournier and M. Guerin, "Phenomenes de regression observes sur les greffes d'un lymphosarcome chez des souris exposees a des champs electromagnetiques," [Phenomenon of regression observed on the graftings of a lymphosarcome in mice exposed to electromagnetic fields], *Compt. Rend. Acad. Sci.* (Paris), 1965, vol. 260, p. 2099-2102 [in French].

164. R. Pautrizel, M.R. Riviere, A Priore, and F. Berlureau, "Influence d'ondes electromagnetiques et de champs magnetiques associes sur l'immunite de la souris infestee par Trypanosoma equiperdum," [Influence of electromagnetic waves and associated magnetic fields on the immunity of the mouse infected with the Trypanosoma equiperdum], *Compt Rend. Acad. ScL* (Paris), 1966, Vol. 263, p. 579-582 [in French].

165. R. Pautrizel, A. Priore, AN. Pautrizel and P. Chateau-Reynaud-Duprat, "Guerison de la trypanosomiase experimentale par l'association de champs magnetiques et d'ondes electromagnetiques: une stimulation des defenses de l'organisme," [Cure of the trypanosomias by associated magnetic fields and electromagnetic waves: a stimulation of the organism's defenses], Communication presented to the *Journees Nationales Microondes — Colloque Hertzienne et Dielectriques,* Lille 26-29 juin 1979, p. 31.

166. See Richard Kidd et al, "Evolution of the modern photon," *American Journal of Physics,* 57(1), Jan. 1989, p. 27-35.

167. Our detectors measure on the time-forward photon half, not the time-reversed photon (antiphoton) half. The antiphoton half produces a slight recoil force (Newton's third law reaction force) in our instruments, which we totally ignore.

168. For confirmation that the Heaviside equations — which presently are erroneously called "Maxwell's equations" — are not to be found anywhere in *any* of Maxwell's books and papers, see H.J. Josephs, "The Heaviside papers found at Paignton in 1957," *Electromagnetic Theory by Oliver Heaviside,* including an account of Heaviside's

unpublished notes for a fourth volume, and with a foreword by Sir Edmund Whittaker, Vol. m, Third Edition, Chelsea Publishing Co., New York, 1971, p. 647. See also Sir Edmund Whittaker, "Oliver Heaviside," *Bulletin of the Calcutta Mathematical Society,* Vol. 20,1928-29, p. 202. See also Paul J. Nahin, Oliver Heaviside: *Sage in Solitude,* IEEE Press, New York, 1988, p. 9, note 3.

Also, it is little known that, in his later years, Heaviside may again have turned to quaternion operations, and even developed a "unified" theory of electromagnetics and gravity. These papers were never published, but were reported found in 1957 (some electrical scientists, however, continue to dispute the authenticity of the papers, which were found under some floorboards in the apartment where Heaviside lived alone until his death). Little or no adequate review of this unified theory has been made, though several writers have waxed eloquent and expressed judgements pro and con as to the theory's authenticity, its promise, or its alleged uselessness.

169. Henry C. Monteith, "Dynamic Gravity and Electromagnetics Processes, Part *I," Journal of the U.S. Psychotronics Association,* 1(2), 1988 (presented July 1987).

170. Henry C. Monteith, Dynamic Gravity and Electromagnetics Processes, Part II," July 1988. Also, in July 1989 Monteith presented two other fundamental papers in this area to the Annual USPA Symposium in Sacramento, California.

171. Henry C. Monteith, "Visualization and Duality in Mathematical Physics," Apr. 15,1986.

TABLE OF CONTENTS (CONCLUDED)

NOTES AND REFERENCES

ANNEX A: INTERVIEW WITH TOM BEARDEN

ANNEX B: WHITTAKER PAPER 1903

ANNEX C: WHITTAKER PAPER 1904

ANNEX D: POSSIBLE WHITTAKER UNIFICATION OF ELECTROMAGNETICS, GENERAL RELATIVITY, AND QUANTUM MECHANICS

POSSIBLE WHITTAKER UNIFICATION OF ELECTROMAGNETICS, GENERAL RELATIVITY, **AND** QUANTUM MECHANICS

PART I: BACKGROUND

T.E, Bearden
Association of Distinguished American Scientists
2311 Big Cove Road
Huntsville, Alabama 35801

ABSTRACT

Unrecognized for what it was, in 1903-1904 E.T. Whittaker (W) published a fundamental, engineerable theory of electrogravitation (EG) in two profound papers. The first (W-1903) demonstrated a hidden bidirectional EM wave structure in the scalar potential of vacuum, and showed how to produce a standing scalar EM potential wave ~ the same wave discovered experimentally four years earlier by Nikola Tesla. W-1903 is a hidden variable theory that shows how to deterministically curve the local and/or distant spacetime using EM. W-1904 shows that all force field EM can be replaced by interferometry of two scalar potentials, anticipating the Aharonov-Bohm effect by 55 years and extending it to the engineerable macroscopic world. W-1903 shows how to turn EM into G-potential, curve local and/or distant spacetime, and directly engineer the virtual particle flux of vacuum. W-1904 shows how to turn G-potential and curvature of spacetime back into force-field EM, even at a distance. The papers implement Sahkarov's 1968 statement that gravitation is not a fundamental field of nature, but a conglomerate of other fields. Separately applied to electromagnetics (EM), quantum mechanics (QM), and general relativity (GR), an extended superset of each results. The three supersets are Whittaker-unified, so that a testable, engineerable, unified field theory is generated. EM, QM, and GR each contained a fundamental error that blocked unification, and these three errors are explained. The Schroedinger potential can also be structured and altered, indicating the direct engineering of physical quantum change. Recently Ignatovich has pointed out this hidden bi-directional EM wave structure in the Schroedinger potential, without referencing Whittaker's 1903 discovery of the basic effect Coupling of photon/antiphoton pairs into spin-2 gravitons, and decoupling of gravitons to yield paired photons, follows and extends photobiology. An engineerable, hidden-variable theory of the operation of mind, personality, and memory can be constructed and tested. Some of the profound implications for all of physics and biology are pointed out

Electromagnetics Theory Has Foundations Difficulties

There exists today a small but growing number of serious scientists who have become aware that the presently accepted electromagnetic theory is seriously flawed. Shortcomings in the theory are readily cited.

For example, in railgun experiments the Lorentz force law has been falsified. It was always an approximation, and does not adequately approximate at high energies.[1]

Also completely contrary to orthodox EM theory, the EM force fields are not primary agents at all, but are effects produced in and on the physical system by the potentials. As an example, we cite the Aharonov-Bohm effect, which proves that, even in the total absence of the force fields,

the potentials remain and can interfere at a distance to produce real effects in charged particle systems.[2] Finally the AB effect has been proven to the satisfaction of all but the most diehard skeptics.[3] However, its fundamental impact on the basic notions underlying classical EM theory continues to be resisted by all but a handful of scientists.

These present shortcomings were not present in the original *quaternion* EM theory by James Clerk Maxwell.[4] Indeed, the original Maxwell theory contains many things that were mistakenly eliminated from the abbreviated *vector* theory that was formulated by Heaviside and Gibbs, and finally adopted.[5] Further, these things that do not exist in conventional EM theory, but that exist in Maxwell's actual quaternion theory, can be used in specially designed equipment, and the operation of that equipment will be inexplicable by present-day electromagnetic theory. This can be even further explained and developed experimentally according to Whittaker's fundamental approach.[6]

In a direct sense, Whittaker showed how to engineer the structured scalar potential, to build vacuum engines with hidden electromagnetic wave structures that are still unsuspected today. Much of the content of the Aharonov/Bohm paper was anticipated - and extended in an engineerable, testable manner -- by Whittaker in 1903 and 1904.

In 1903 Whittaker showed that a standing scalar potential wave can be decomposed into a special set of bidirectional EM waves that convolute into a standing scalar potential wave. As a corollary, then, a set of bidirectional EM waves -- stress waves -- can be constructed to form a standing scalar potential wave in space. Since all potentials represent trapped energy density of vacuum, they are gravitational in nature.[7] The standing Whittaker scalar potential wave represents a standing wave of variation in the local curvature of vacuum, sharply in contradiction of the assumptions of present electromagnetics and general relativity.[8]

The very next year, Whittaker's second paper (cited above) showed how to turn such G-potential wave energy back into EM energy, even at a distance, by scalar potential interferometry, anticipating and greatly expanding the Aharonov-Bohm effect. Indeed, Whittaker's second paper shows that the entire present force-field electromagnetics can be directly replaced with scalar potential interferometry.

This is even more striking when one realizes that potentials pervade through the electron shells of an atom, directly reaching the nucleus and centering on it. *External* changes (gradients; force fields) of the potentials interact primarily with the electron shells of the atom. The primary interaction between the infolded, *internalized* EM bidirectional wave structure of a Whittaker potential is with atomic nuclei, rather than the atom's electron shells, because in the standing Whittaker potential wave the magnitude of the external potential is not changing. For the First time, then, the Whittaker methodology allows the direct engineering and structuring of the nuclear potentials themselves, even with miniscule EM power, which is a new capability of striking importance and application. As just one example, the binding energy of an atomic nucleus is directly accessible and - theoretically -- engineerable.

Recently Ignatovich has pointed out the hidden bi-directional EM wave structure in the Schroedinger potential, without referencing Whittaker's 1903 discovery of the basic effect.[9] Also, recently modern researchers, working on acoustic missiles and with the scalar acoustic wave equation, have "rediscovered" Whittaker's 1903 infolded bidirectional planar waves inside the scalar wave.[10] They do not appear to have yet recognized its relevance to their work in *electromagnetic* missiles.[11]

Whittaker's paper takes on a significant new meaning, however, in light of Sakharov's 1968 hypothesis that gravitation is not a primary Geld of nature, but is produced as a result of interactions of other fields.

Sakharov's Hypothesis and Stochastic Electrodynamics

Recently new developments in stochastic electrodynamics (SED) have shown that many fundamental parts of physics are "already unified" in terms of electromagnetics and gravitation. SED experienced almost explosive activity and development following Sakharov's 1968 hypothesis that the gravitational field may not be a primary field of nature, but a secondary or residual effect associated with other nongravitational fields.[12] Actually, general relativity has always focused on energy as the thing which really has gravitation. Trapped energy, such as mass, is particularly important. But since mass is essentially trapped EM energy, relativity has essentially assumed Sakharov's hypothesis anyway, without stating it so explicitly. Further, it considers "the" gravitational potential as a conglomerate of other things.[13]

Starting from Sakharov's postulate, to the first order gravitation should be due to some aspect of the EM field, since EM is the strongest force normally encountered in the macroscopic world experimentally. Thus Sakharov focused attention upon the zero-point EM energy fluctuations (ZPF) of vacuum. Sakharov conjectured that the Lagrange function of the G-field is generated by vacuum polarization, due to fermions.[14] Akama et al examined the potential generation of gravity as a collective excitation of fermion-antifermion pairs.[15] Haxlacher and Mottolo proved that spacetime (ST) curvature can arise from the quantum fluctuations of pure gauge fields.[16] Zee showed that gravity is generated as a symmetry-breaking effect in quantum field theory in which a dynamical scale-invariance breaking is postulated to take place at energies near the Planck mass.[17] Amati, Veneziano and Yoshimoto showed that in pregeometric models the Einstein action and metric may be generated from quantum fluctuations of matter fields.[18] A review of the exploding field was given by Adler,[19] with particular emphasis on the case of renormalizable field theories with dynamical scale-invariance breaking, in which the induced gravitational effective action is finite and calculable.

Recently the well-known physicist, H.E. Puthoff of the Institute of Advanced Study at Austin, has applied the SED approach to significantly advance the stochastic electrodynamics field. He has successfully explained why the atom's orbital electrons do not decay into the nucleus, even though by conventional EM theory each electron must constantly radiate EM energy, since it is constantly accelerated.[20] He has also shown that gravitation can indeed be regarded as an induced effect associated with zero-point EM fluctuations of the vacuum.[21]

Finally, Puthoff has shown a feedback-derivation of the source of the vacuum EM zero-point energy fluctuations from quantum fluctuation motion of particles driven by the ZPE.[22] Thus quantum fluctuation motion of particles and vacuum ZPE fluctuations are connected by a causal, self-regenerating cosmological feedback cycle.

There are several important conclusions to be taken from the important SED work since Sakharov's seminal suggestion, as follows: (1) In stochastic electrodynamics, very solid theoretical foundation exists for electrogravitation. (2) The vacuum EM ZPF may be regarded as causally connected to quantum mechanical particle jitter (Zitterbewegung motion) and vice versa, though the feedback mechanism into the virtual particle flux of vacuum is normally hidden by the large-scale integration represented by any macroscopic object or process. (3) The SED theoretical demonstration of this hidden mechanism adds new emphasis on the rather neglected hidden variable theories. (4) In some fashion, statistical quantum change is chaotic rather than random, *for it has already been shown by Puthoff that the vacuum ZPF fluctuations driving everything are totally deterministic.* It follows that, theoretically, hidden order already exists in quantum change, and quantum change must be *already chaotic.* Thus one can state that quantum change can at least partially be deterministically ordered, affected, and manipulated, *because it already is.* (5) It follows that there may well exist engineerable mechanisms that can affect or manipulate quantum change.

What Whittaker has described in his 1903 paper is a *standing electrogravitational wave* -- a standing wave in the local curvature of spacetime itself - that can readily be constructed experimentally. This Whittaker standing potential wave is precisely the new form of standing EM wave that NikoLa Tesla had experimentally discovered being radiated from a thunderstorm four years earlier, on the night of July 3-4, 1899, and which he recorded in his Colorado Springs Notebook on the morning of July 4, 1899.[23] Further, Whittaker's paper directly implies that the hidden variable determinism shown by Puthoff to be driving the zero-point EM fluctuations can also be engineered, both locally and at a distance.

In short, Whittaker's 1903 paper shows how to turn electromagnetics into gravitational potential. Unknowingly, Whittaker already showed the correct engineering way to unify EM and G fields, and already falsified one of Einstein's later primary GR assumptions -- that the local spacetime is never curved — in a testable manner, over a decade before Einstein published his theory of general relativity.

In the very next year, 1904, Whittaker's second paper (orally presented in 1903) was published.[24] In this little-noticed paper Whittaker shows that *all* classical force field electromagnetics can be replaced by scalar EM potentials and their interferometry. Specifically, any EM force field can be replaced by two scalar potential fields and scalar interferometry. The combination of this paper and the 1903 *Mathematische Annalen* paper not only includes the Aharonov-Bohm effect, but specifies a testable method for producing a macroscopic Aharanov-Bohm effect, even at large distances.[25]

Present Electromagnetic Theory is Incomplete

As stated above, Maxwell's original EM theory was written in quaternions, which were an extension to the complex number theory and an independent system of mathematics. In short, since the quaternion is a hypernumber, Maxwell's theory was a *hyperspatial* theory — not just the limited three-dimensional subset that was extracted and expressed by Heaviside and Gibbs in terms of an abbreviated, incomplete vector mathematics.[26]

Oliver Heaviside was a brilliant, self-taught genius who never formally attained a university degree, and whose papers were printed in technical magazines rather than scientific journals. When Maxwell published his *Treatise* in 1873, Heaviside was just teaching himself differential equations. Heaviside's imagination was completely seized by Maxwell's book, and Maxwell forever became his hero. However, he had great difficulty with quaternions and could not completely understand them.

A severely puzzled Heaviside abhorred the quaternion, since it linked together a scalar component and a vector component — or "apples and oranges," in his view. He excised the scalar component of the quaternion and excluded the hyperspatial characteristics of the directional components of the quaternion - producing his much more limited vectors. To unite magnetics and electromagnetics, the simplest complex aspect of the quaternion had to be restored by resorting to ordinary imaginary numbers. These machinations to the quaternion theory, however, discarded its unified field theory aspects. In short, Heaviside produced a very practical, highly restricted subset that was far easier to engineer -- but he threw out electrogravitation in the process. Further, Heaviside hated the potential because he did not truly understand it. He stated that it was *"...mystical and should be murdered from the theory."* He conditioned generations of physicists and engineers to erroneously believe that the potential was just a mathematical convenience, and had no actual physical realization. Indeed, most electrical physicists and electrical engineers are still of that erroneous persuasion today, even though the

Aharonov-Bohm work has long-since falsified such a position, both theoretically and experimentally.

The present author has previously pointed out that Maxwell's quaternion theory was in fact a unified theory of electromagnetics and gravitation, and that the scalar component of the quaternion was the electrogravitational part.[27] That part was discarded by Heaviside and Gibbs, and so electrogravitation no longer appears in the electromagnetics that resulted from Heaviside's and Gibbs' surgery on Maxwell's quaternion theory.

Electrogravitation Was Also Excluded From General Relativity

The electrogravitational effect was also erroneously excluded from Einsteinian general relativity (GR). Einstein unwittingly narrowed his general relativity to only a subset of an unrestricted general relativity of curved spacetime. This GR error was an indirect result of the fundamental Heaviside/Gibbs omission error in classical electromagnetics.

Unfortunately, Einstein's view of electromagnetics approximated the classical Heaviside/Gibbs view. In classical EM theory, the electrical potentials - which actually were electrogravitational potentials - were already discarded as having no physical significance, and EM was considered mutually exclusive to G. Therefore, Einstein only considered the weak gravitational force due to the attraction of mass, in developing his general relativity theory of curved spacetime. The G-force is far weaker than the E-force; for two electrons, for example, the attractive G-force between them is on the order of only 10^{-42} times as strong as their electrical E-force repulsion. Thus the G-force is incredibly smaller than the EM force. If only the weak G-force is considered for curving spacetime, then there will never be an *observable* curvature except in the immediate vicinity of a very large mass — such as on the surface of the sun or near a star.

Einstein reasoned that the laboratory and the observer/scientist/instrument would never be on the surface of the sun or near a star. Therefore, the local spacetime -- where the lab and the scientist/observer and his instruments are ~ would never be observably curved. The local spacetime of the observer would always be flat. Unfortunately Einstein overgeneralized his thought examination, and he stated one of his fundamental postulates of general relativity as *"The local spacetime is always flat."* This is an erroneous overstatement. The postulate should be more correctly stated as follows: *"The local spacetime is always flat, whenever only the weak gravitational force is used for the agent of curvature, and the observer is not near a large collection of mass, such as a star."*

The two statements of the postulate differ fundamentally. Einstein's overstatement of the postulate does not allow the far stronger EM force to be used for curvature; *in effect, his own postulate excluded electromagnetics from curvature unity with gravitation, in his own general relativity theory.*[28] On the other hand, the corrected statement of the postulate admits the following corollary: *"When a very strong force such as the electromagnetic force is used for the agent of curvature, the local spacetime may be curved, even though the observer is not near a large collection of mass, such as a star."*[29]

Unfortunately, Einstein's modern followers have raised Einstein's theory to a dogma,[30] and have vigorously enforced his overstatement of the locally flat spacetime. In so doing, general relativity has been erroneously reduced to a theory that is basically not experimental: *A priori, if the local spacetime is flat, then there is no local experiment or local apparatus that involves or yields a curved local spacetime.*

The Restricting of Quantum Mechanics

Today, quantum mechanics is our most successful physics theory. Its predictions - even the eery prediction of action at a distance - have been proven time and time again. However, quantum mechanics theory is known to have a formidable and serious difficulty: Try as they will, quantum physicists cannot find chaos in the theory. The theory is known to be wrong unless it possesses chaos (hidden order inside its statistics), yet the best efforts of quantum physicists have failed to find it.[31]

Again, any mathematical discipline is totally implied by its foundations postulates, and that is true of quantum mechanics. If the best efforts of the ablest physicists of the day cannot find chaos in the present QM, then one may suspect that the present QM does not contain chaos (hidden order). If that is true, then some present postulate - either explicit or implicit - of QM must exclude hidden order in quantum change. If so, the "real" QM needed is a superset that has at least two subsets: one (the missing) subset includes chaos, while the present subset excludes chaos. Our line of reasoning leads us to suspect that one or more of the postulates of the present QM theory is in error or overly restrictive, and must be changed to allow the missing chaotic subset.

Indeed, we may resolve this formidable QM problem quite simply by examining the *statistics* utilized by quantum mechanics. When QM was being formulated, scientists simply appropriated and included the thermodynamic statistics of Williard Gibbs (the same Gibbs who, together "with Heaviside, was responsible for the highly restricted vector subset of Maxwell's theory of electromagnetics.). Gibbs' statistics was totally based on the notion of the random variable. That is, the change (value assumed by the variable in a specific instance) is not only totally statistical, it is also *totally random.* Quantum physicists assumed a postulate of QM as follows: *quantum change is totally statistical* However, because of the Gibbs statistics, in their application of the theory they *interpreted* that postulate in a much stronger fashion, as if it had been stated thusly: *Quantum change is totally statistical and randomized.* The actual postulate and the presently applied interpretation of it are in fact two quite different statements, and the interpretation is far more restrictive than actually implied by the postulate itself.

Further, the strong interpretation can readily be falsified. As an example, the macroscopic universe is simply a large integration (collection) of quantum changes. If these component quanta occur totally randomly, then no integration of them would yield the ordered, macroscopic world we all live in, because integrated randomness is still random. Therefore, since the ordered macroworld exists, the present QM strong interpretation of its own statistical quantum change postulate is invalid.

Also, if quantum change were totally random, then there would never be any possibility, *a priori,* of engineering it deterministically. On the other hand, if hidden order is admitted, there is at least *the possibility* of directly engineering physical quantum change itself.

Interestingly, the renowned physicist David Bohm has shown that a hidden variable theory of quantum mechanics can actually be constructed, whereby one could potentially engineer physical change.[32] It is well-known that experimental physics does not in any manner refute hidden variable theories. Because of the historical attachment of physics to the theory of the random variable, such contrary notions as chaos (hidden order) and hidden variables have simply been shuffled aside. The usual objection is Occam's razor; a theory must predict something different, or it is said to be unwarranted.[33] The Whittaker hidden variable approach certainly predicts many profoundly different engineerable effects and capabilities that mandate its full examination.

A much better, more valid interpretation of the quantum change postulate is as follows: *Quantum change is statistical, and may contain hidden order.*

The two interpretations differ sharply. In the new and less restrictive reinterpretation, one has two cases or subsets of QM as follows: (1) the subset where quantum change contains partial order, hence is *already chaotic*, and (2) the special subset where the internal order has vanished, leaving the statistics as Gibbs' random variable statistics, and exhibiting the present quantum mechanics without chaos. The first subset also has a special subset, where the statistics is totally deterministic, but information on the variables is lost.

The new interpretation is consistent with Bohm's hidden variable theory, and it is also consistent with the Schroedinger equation, which in the QM model already propagates the QM states forward in time with absolute determinism. It is not consistent with the Copenhagen interpretation, which only applies to the present QM subset. This can be seen as follows: If quantum change is engineerable by Whittaker hidden variables, then the inner contents of the engineered quantum change are known. This knowledge applies to the subset where QM change is engineered (the new subset), but not to the subset where all variables are random variables and hence not subject to engineering. Therefore the Copenhagen interpretation applies to the random quantum change subset, but not to chaotic (partially ordered) quantum change subset.

Happily, the reinterpretation of the postulate now allows a sufficient collection of the already-chaotic quantum change to produce the well-ordered, macroscopic universe we all live in. Also, the new interpretation is testable, and it can be falsified or verified in the laboratory.

The End Result of Abbreviating Maxwell's Theory

In discarding the scalar component of the quaternion, Heaviside and Gibbs unwittingly discarded the unified EM/G portion of Maxwell's theory that arises when the translational/directional components of two interacting quaternions reduce to zero, but the scalar resultant remains and *infolds* a deterministic, dynamic structure that is a function of oppositive directional/translational components. In the infolding of EM energy inside a scalar potential, a *structured* scalar potential results, almost precisely as later shown by Whittaker but unnoticed by the scientific community. The simple vector equations produced by Heaviside and Gibbs captured only that subset of Maxwell's theory where EM and gravitation are mutually exclusive. In that subset, electromagnetic circuits and equipment will not ever, and *cannot* ever, produce gravitational or inertial effects in materials and equipments. Brutally, not a single one of those Heaviside/Gibbs equations ever appeared in a paper or book by James Clerk Maxwell, even though the severely restricted Heaviside/Gibbs interpretation is universally and erroneously taught in all Western universities as *Maxwell's theory*.

As a result of this artificial restriction of Maxwell's theory, Einstein also inadvertently restricted his theory of general relativity, forever preventing the unification of electromagnetics and relativity. He also essentially prevented the present restricted general relativity from ever becoming an experimental, engineerable science on the laboratory bench, since a hidden internalized electromagnetics causing a deterministically structured local spacetime curvature was excluded.

Quantum mechanics used only the Heaviside/Gibbs *externalized* electromagnetics and completely missed Maxwell's *internalized and ordered* electromagnetics enfolded inside a structured scalar potential. Accordingly, QM maintained its Gibbs statistics of quantum change, which is non-chaotic a priori. Quantum physicists by and largely excluded Bohm's hidden variable theory,

which conceivably could have offered the potential of *engineering quantum change - engineering physical reality itself.*

Each of these three major scientific disciplines missed and excluded a subset of their disciplinary area, because they did not have the scalar component of the quaternion to incorporate. Further, they completely missed the significance of the Whittaker approach, which already shows how to apply and engineer the very subsets they had excluded.

What now exist in these areas are three separate, inconsistent disciplines. Each of them unwittingly excluded a vital part of its discipline, *which was the unified field part* Ironically, then, present physicists continue to exert great effort to find the missing key to unification of the three disciplines, but find it hopeless, because *these special subsets are already contradictory to one another,* as is quite well-known to foundations physicists.

Obviously, if one wishes to unify physics, one must add back the unintentionally excluded, unifying subsets to each discipline. Interestingly, all three needed subsets turn out to be one and the same. So application of Whittaker's work to each one of the three disciplines produces the necessary superset of each, and these three supersets are unified in and on the common, added, Whittaker subset.

Further, the Whittaker unification linkage of the three disciplines is testable. It is engineerable. It works.

NOTES AND REFERENCES

1. P. Graneau, *Ampere-Neumann Electrodynamics of Metals,* Nonantum, Massachusetts, Hadronic Press, 1985. See also P. Graneau and P.N. Graneau, "Electrodynamic Explosions in Liquids," *Appl. Phys. Lett,* Vol. 46,1985, p. 468; R. Azevedo, P. Graneau, P.N. Graneau, and C. Millet, "Powerful Water Plasma Explosions," *Phys. Lett* Vol. 117, 1986, p. 101.

2. See Y. Aharonov and D. Bohm, "Significance of Electromagnetic Potentials in the Quantum Theory," *Physical Review,* Second Series, 115(3), Aug. 1,1959, p. 458-491. This paper pointed out the primacy of the potentials. Instead of being *causative* agents, the force fields are actually *effects* generated from the potentials. This is in complete violation of both classical electromagnetics and classical dynamics, but it is absolutely required by quantum mechanics. For an extensive discussion of the Aharonov-Bohm effect and an extensive list of references, see S. Olariu and I. Iovitzu Popescu, "The quantum effects of electromagnetic fluxes," *Rev. Mod. Phys.* 57(2), Apr. 1985.

3. See Bertram Schwarzschild, "Currents in normal-metal rings exhibit Aharonov-Bohm Effect," *Physics Today,* 39(1), Jan. 1986, p. 17-20 for confirmation.

4. James Clerk Maxwell, A *Treatise on Electricity and Magnetism,* Oxford University Press, Oxford, 1873. The third edition is published by Dover, 1954.

5. Maxwell's true theory of electromagnetics is contained in some 200-odd *quaternion* equations, and is far more complex than the gross *vector* simplification developed by Heaviside and Gibbs after Maxwell's death. For a cogent argument about what might have been discovered much earlier in physics if quaternions had not been cast aside, see James D. Edmonds, Jr., "Quaternion Quantum Theory: New Physics or Number Mysticism?", *American Journal of Physics,* 42(3), Mar. 1974, p. 220-223. Just how much more powerful was Maxwell's quaternionic expression of EM theory than was Heaviside's (i.e., the modern) vector interpretation, was succinctly expressed by Josephs as follows: *"Hamilton's algebra of quaternions, unlike Heaviside's algebra of vectors, is not a mere abbreviated mode of expressing Cartesian analysis, but is an independent branch of mathematics with its own rules of operation and its own special theorems. A quaternion is, in fact, a generalized or hypercomplex number..."* (H.J. Josephs, "The Heaviside papers found at Paignton in 1957," *Electromagnetic Theory by Oliver Heaviside,* Including an account of Heaviside's unpublished notes for a fourth volume, and with a foreword by Sir Edmund Whittaker, Vol. III, Third Edition, Chelsea Publishing Co., New York, 1971, p. 660.)

6. See E.T. Whittaker, "On the partial differential equations of mathematical physics," *Mathematische Annalen,* Vol. 57, 1903, p. 333-355; "On an expression of the electromagnetic field due to electrons by means of two scalar potential functions," *Proceedings of the London Mathematical Society,* Series 2, Vol. 1,1904, p. 367-37Z

   Contrary to present EM theory, *if one wishes to study the primary electromagnetic, gravitational, and electrogravitational processes of nature, one applies Whittaker methodology.* Further, this methodology is completely engineerable and testable, and it drastically extends and perfects the present electromagnetics, general relativity, and quantum mechanics and unifies them into a unified, testable theory.

7. In the modern view, it is trapped energy that is gravitational, mass being viewed as simply such trapped energy. We point out that Einstein's formula $E = mc^2$ actually is an expression for mass in terms of its trapped *electromagnetic* energy. Thus we extend the

modern view by stating that, to first order, Newtonian gravitational attraction is due to the attraction of *spatially entrapped electromagnetic energy.* Since the electromagnetic scalar potentials represent just such spatially entrapped EM energy, then they hold a special significance gravitationally.

8. This assertion can be tested. At the nodal points of the standing potential wave, the rate of flow of time is normal. At nonzero points along the wave, however, the local rate of flow of local time varies from normal. After a proper-time interval for the observer at the nodal point, normal clocks and watches at different non-nodal points along the wave will appreciably vary in their time reading. Initially synchronized clocks will thus be found to disagree, if placed in different positions in the Whittaker wave and allowed to remain for a test period. In the past, various inventors have anecdotally demonstrated this effect. As an example, see David Jones, "Israel's Secret Weapon?, *Vancouver Sun Times,* Dec. 17,1977, p. 17.

9. V.K. Ignatovich, "The remarkable capabilities of recursive relations," *American Journal of Physics,* 57(10), Oct. 1989, p. 873-878.

10. Richard W. Ziolkowski, "Localized transmission of wave energy," Proc. SPEE, Vol. 1061, *Microwave and Particle Beam Sources and Directed Energy Concepts,* Jan. 1989, p. 396-397.

11. An *acoustic missile* is essentially a slug of acoustic energy that holds together as it travels, striking and damaging or destroying a target. An *electromagnetic missile* is a slug of EM energy that holds together as it travels to a target and strikes it.

12. A D. Sakharov, "Vacuum Quantum Fluctuations in Curved Space and the Theory of Gravitation," *Sov. Phys. Dokl.,* Vol. 12, 1968, p. 1040. See also the related discussion in Misner, Thome and Wheeler, *Gravitation,* 1973, p. 426.

13. Note that this assigns an *internal structure* to a gravitational potential.

14. A D. Sakharov, *Theor. Math. Phys.,* Vol. 23,1975, p. 435.

15. K. Akama et al, *Prog. Theor. Phys.,* Vol. 60,1978, p. 868.

16. B. Hasslacher and E. Mottolo, *Phys. Lett,* Vol. 95B, 1980, p. 237.

17. A Zee, *Phys. Rev. Lett.,* Vol. 42,1979, p. 417.

18. D. Amati and G. Veneziano, *Phys. Lett.,* Vol. 105B, 1981, p. 358; S. Yoshimoto, *Prog. Theor. Phys.,* Vol. 78,1987, p. 435.

19. S. Adler, *Rev. Mod. Phys.,* Vol. 54,1982, p. 729.

20. H.E. Futhoff, "Ground State of Hydrogen as a Zero-Point-Fluctuation-Determined State," *Phys. Rev. D.,* 35(10), May 15,1987, p. 3266-3269.

21. H.E. Puthoff, "Gravity as a Zero-Point-Fluctuation Force," *Phys. Rev. A,* 39(5), Mar. 1, 1989, p. 2333-2342. See also H.E. Puthoff, "Source of Vacuum electromagnetic Zero-Point Energy," *Phys. Rev. A.,* 40(9), Nov. 1, 1989, p. 4857-4862. Changing the vacuum potential constitutes a fluctuation directly in and of the zero-point energy of vacuum, and hence, by Puthoffs mechanism, it does indeed induce a gravitational effect. At the level

of the vacuum virtual particle flux exchange with the charged nucleus, producing an electromagnetic change also produces a gravitational change, and vice-versa.

22. Puthoff, *Phys. Rev. D*., 35(10), May 15,1987, p. 3266-3269.

23. Nikola Tesla, *Colorado Springs Notes 1899-1900*, Nolit, Beograd, Yugoslavia, 1978, p. 61-62.

24. E.T. Whittaker, "On an expression of the electromagnetic field due to electrons by means of two scalar potential functions," *Proc. Lond. Math. Soc*, Series 2, Vol. 1, 1904, p. 367-372.

25. The potential for weaponization of the Whittaker work should be obvious.

26. Toward the end of his life Heaviside lived as a recluse in a small garret apartment, and may have returned again to his struggle with quaternions. In the 1950's handwritten notes of a theory of gravitation, written in quaternion mathematics, were found beneath the floor boards of his tiny study.

27. T.E. Bearden, "Maxwell's Original Quaternion Theory Was a Unified Field Theory of Electromagnetics and Electrogravitation," *Proceedings*, International Tesla Society Symposium, Colorado Springs, Colorado, July 1988. See also T.E. Bearden, "Maxwell's Lost Unified Field Theory of Electromagnetics and Gravitation," *Proceedings*, PACE Third International New Energy Technology Symposium, June 25-28, 1988 at Maison du Citoyen, Hull (Ottawa), Canada, 1988.

28. Ironically, Einstein then spent the remainder of his life, desperately trying to unify electromagnetics and gravitation in his theory of general relativity, never realizing that his own overstatement of his "flat local spacetime" postulate precluded his success and foredoomed all his efforts to failure.

29. To appreciate just what can actually be done with local spacetime curvature, see E.B. Smetanin, "Electromagnetic field in a space with curvature - new solutions," *Soviet Physics Journal*, 25(2), Feb. 1982, p. 107-111. In this paper, a solution to the problem stated in the title is obtained, which may be regarded as a classical model of a charged particle that has both a magnetic moment and a nonzero magnetic charge density. Interaction with spacetime curvature can disrupt the gauge invariance of the EM field, and it can also re-establish invariance in an initially noninvariant theory. Notice that, if we curve the local spacetime, Smetanin's theoretical phenomena — none of which is adequately described in the conventional electromagnetics theory - may apply. Specifically, *the charged vacuum itself - the local curved spacetime* - can furnish a nonzero magnetic charge density to the charged particles in the system. The local spacetime becomes a source of energy, which is added to the exposed system. Local violation of energy conservation can occur in the system, because it is now an open system containing a hidden vacuum energy source.

30. For a detailed expose of the scientific suppression used to uphold the present GR, written by an inside scientist of excellent ability, and one with over 100 published papers in the literature, see Rugero Maria Santilli, *Ethical Probe on Einstein's Followers in the USA: An Insider's View*, Alpha Publishing, POB 82, Newtonville, Massachusetts 02160, 1984.

31. For a discussion of the missing chaos in quantum mechanics, see Robert Pool, "Quantum Chaos: Enigma Wrapped in a Mystery," *Science,* 243(4893), Feb. 17, 1989, p. 893-895. For a more technical discussion see P.V. Elyutin, The quantum chaos problem," *Sov. Phys. Usp.* 31(7), July 1988, p. 597-622.

32. For an entry point into the literature of hidden variable theory, see *Quantum Implications: Essays in Honour of David Bohm,* B. J. Hiley and F. David Peat, Eds., Routledge & Kegan Paul, London & New York, 1987.

33. However, even if it predicts something new and is warranted, it still may not be adopted. An example is the continuing reluctance of physicists to refonnulate EM theory, stressing the primacy of the potential and the fact that not the force field but only the *potential* for the force field exists in the vacuum. Even more so, it is well-know that detection is actually binary, and we throw away precisely half of almost every detection our instruments make. Cf Richard Kidd et al, "Evolution of the modern photon," American Journal of Physics, 57(1), Jan. 1989, p. 27-35. Generally in every electromagnetic interaction of our instruments, two photons are produced: one a time-forward photon, and the other a time-reversed photon. Our detectors exxentially measure the time-forward photon half, not the time-reversed photon (antiphoton) half, the antiphoton half produces a slight recoil force (Newton's third law reaction force) in the mass (nuclei) of the instrument, which we ignore. Also, we continue to ignore the evidence that the photon and antiphoton are not identical. In a pumped phase conjugate mirror, for example, the emission of a normal photon from the mirror material results in a recoil of the mirror; the emission of an antiphoton by the mirror material, however, does not result in recoil of the mirror. Physics is still not consistent, as is well-known to foundations researchers, but is generally not accented to university students.

US006362718B1

(12) **United States Patent**
Patrick et al.

(10) **Patent No.: US 6,362,718 B1**
(45) **Date of Patent: Mar. 26, 2002**

(54) **MOTIONLESS ELECTROMAGNETIC GENERATOR**

(76) Inventors: **Stephen L. Patrick**, 2511 Woodview Dr. SE.; **Thomas E. Bearden**, 2211 Cove Rd., both of Huntsville, AL (US) 35801; **James C. Hayes**, 16026 Deaton Dr. SE., Huntsville, AL (US) 35803; **Kenneth D. Moore**, 1704 Montdale Rd., Huntsville, FL (US) 35801; **James L. Kenny**, 925 Tascosa Dr., Huntsville, AL (US) 35802

(*) Notice: Subject to any disclaimer, the term of this patent is extended or adjusted under 35 U.S.C. 154(b) by 0 days.

(21) Appl. No.: **09/656,313**

(22) Filed: **Sep. 6, 2000**

(51) **Int. Cl.**[7] **H01F 27/24**
(52) **U.S. Cl.** **336/214**
(58) **Field of Search** 363/16, 24, 25, 363/26, 56.06, 56.08, 133, 134; 336/15, 110, 155, 177, 180, 213, 214, 221, 222

(56) **References Cited**

U.S. PATENT DOCUMENTS

2,153,378 A		4/1939	Kramer	171/95
2,892,155 A		6/1959	Radus et al.	324/117
3,079,535 A		2/1963	Schultz	317/201
3,165,723 A		1/1965	Radus	340/174
3,228,013 A		1/1966	Olson et al.	340/174
3,254,268 A		5/1966	Radus et al.	317/14
3,316,514 A		4/1967	Radus et al.	335/291
3,368,141 A		2/1968	Subieta-Garron	323/44
3,391,358 A		7/1968	Bratkowski et al.	335/21
3,453,876 A		7/1969	Radus	73/141
3,517,300 A	*	6/1970	McMurray	
3,569,947 A		3/1971	Radus	340/174
3,599,074 A	*	8/1971	Adams	
4,006,401 A		2/1977	de Rivas	323/92
4,077,001 A		2/1978	Richardson	323/92
4,366,532 A		12/1982	Rosa et al.	363/69
4,482,945 A		11/1984	Wolf et al.	363/129
4,554,524 A		11/1985	Radus	337/3
4,853,668 A		8/1989	Bloom	336/214
4,864,478 A		9/1989	Bloom	363/16
4,904,926 A		2/1990	Pasichinskyj	323/362
5,011,821 A		4/1991	McCullough	505/1
5,221,892 A		6/1993	Sullivan et al.	323/362
5,245,521 A	*	9/1993	Spreen	363/37
5,327,015 A		7/1994	Hacket	505/211
5,335,163 A		8/1994	Seiersen	363/126
5,694,030 A	*	12/1997	Sato et al.	323/282

OTHER PUBLICATIONS

Raymond J. Radus, "Permanent–Magnet Circuit using a 'Flux–Transfer' Principle," Engineers' Digest, 24(1–6) Jan-.–Jun. 1963, p. 86.

Robert O'Handley, Modern Magnetic Materials, Principles and Applications, John Wiley & Sons, Inc., 2000, pp. 456–468.

Robert C. Weast, Editor, CRC Handbook of Chemistry and Physics, 1978–1979, p. B–50.

Honeywell.com web site, "amorphous metals".

* cited by examiner

Primary Examiner—Matthew Nguyen
(74) *Attorney, Agent, or Firm*—Norman Friedland

(57) **ABSTRACT**

An electromagnetic generator without moving parts includes a permanent magnet and a magnetic core including first and second magnetic paths. A first input coil and a first output coil extend around portions of the first magnetic path, while a second input coil and a second output coil extend around portions of the second magnetic path. The input coils are alternatively pulsed to provide induced current pulses in the output coils. Driving electrical current through each of the input coils reduces a level of flux from the permanent magnet within the magnet path around which the input coil extends. In an alternative embodiment of an electromagnetic generator, the magnetic core includes annular spaced-apart plates, with posts and permanent magnets extending in an alternating fashion between the plates. An output coil extends around each of these posts. Input coils extending around portions of the plates are pulsed to cause the induction of current within the output coils.

29 Claims, 5 Drawing Sheets

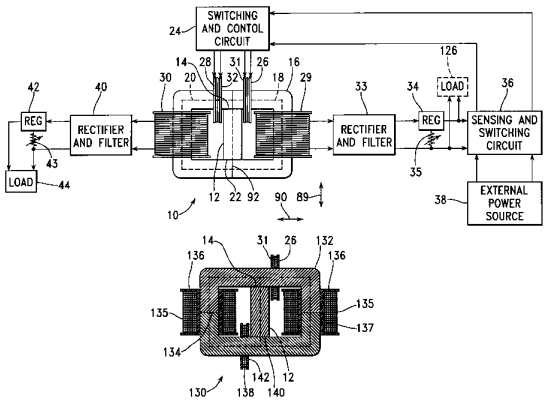

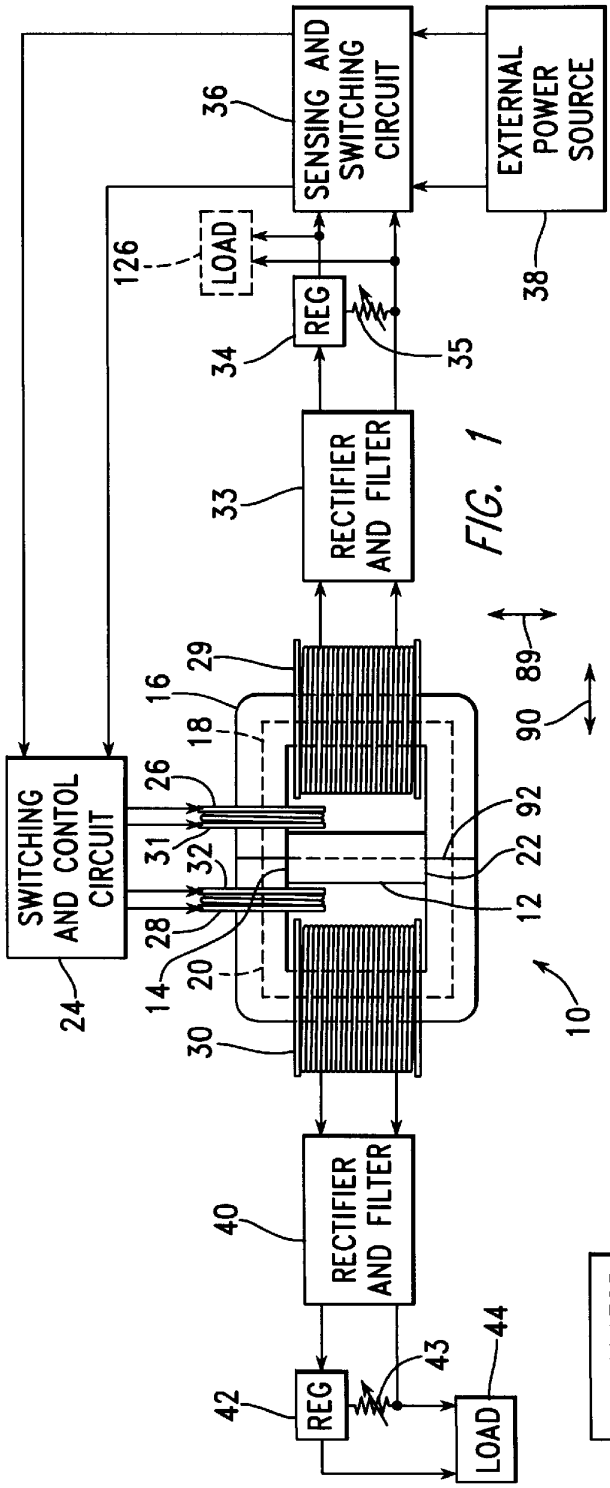

FIG. 1

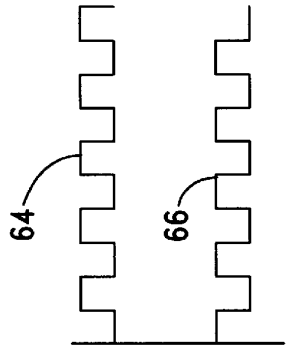

FIG. 3

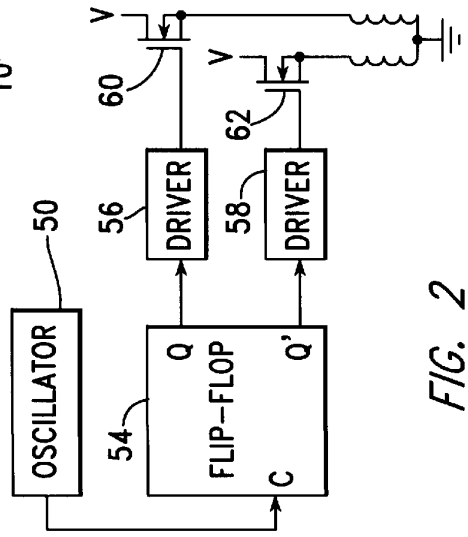

FIG. 2

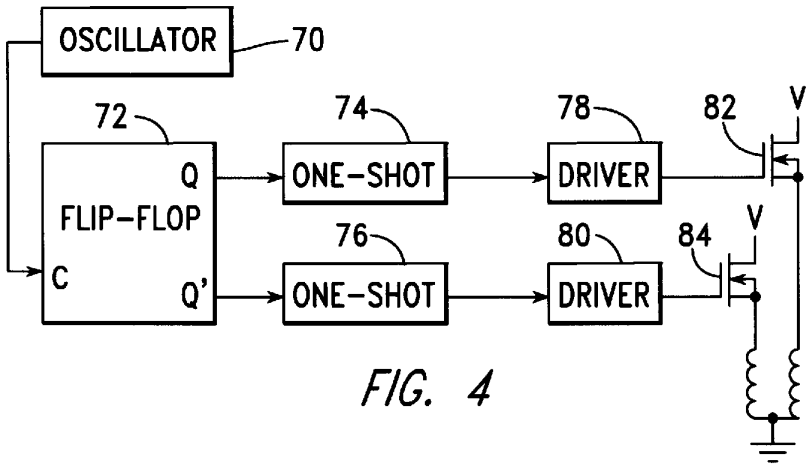

FIG. 4

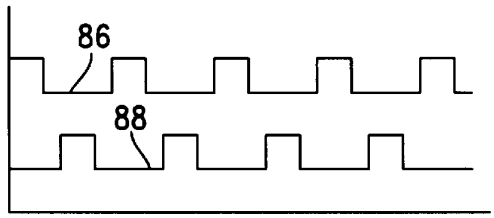

FIG. 5

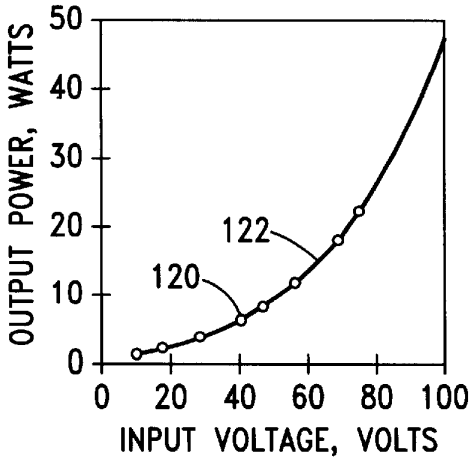

FIG. 7

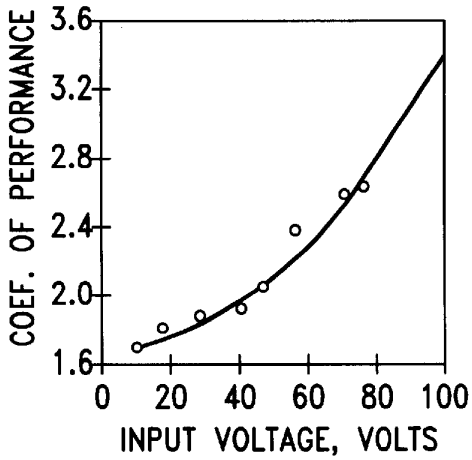

FIG. 8

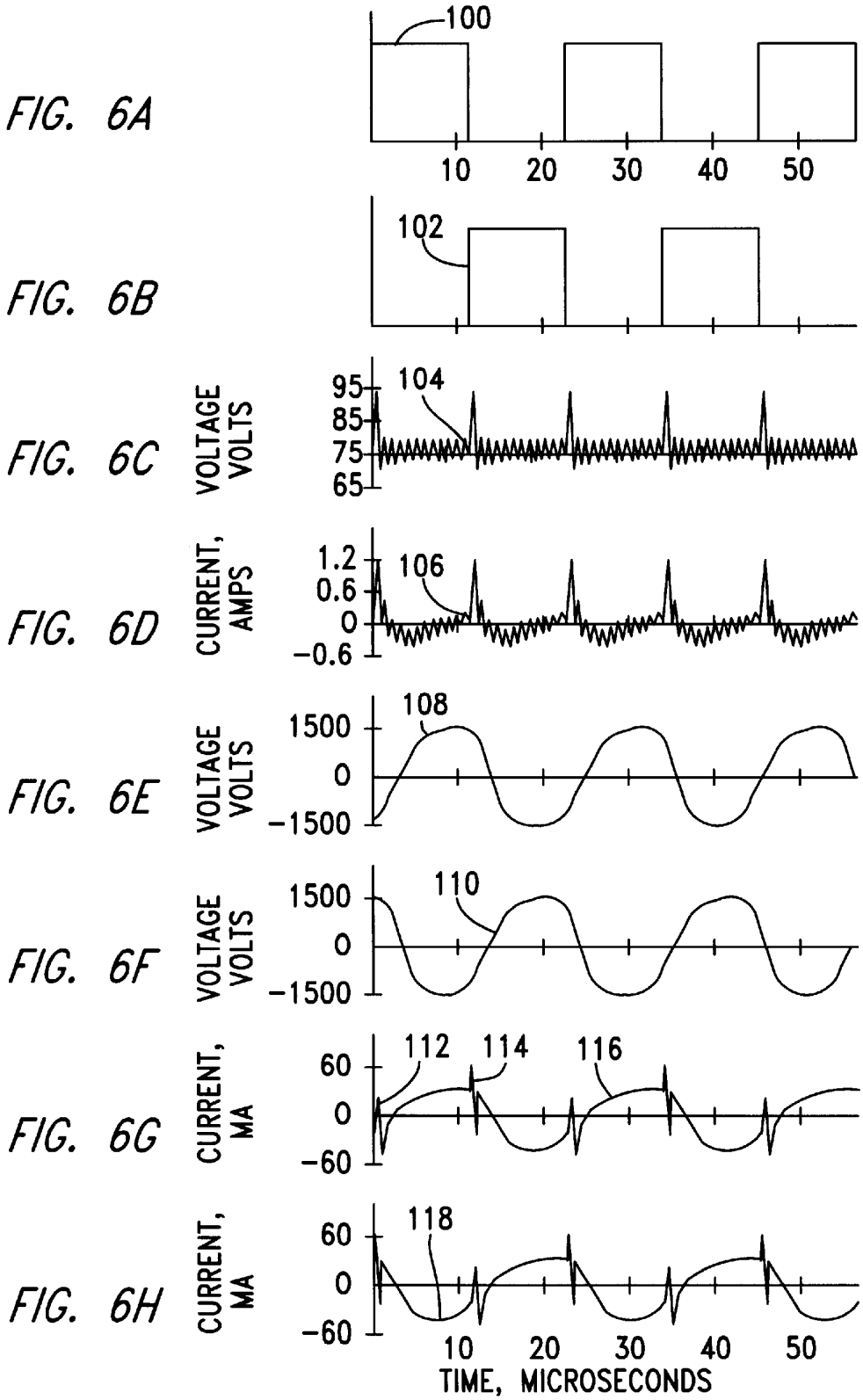
FIG. 6A
100
10
20
30
40
50
FIG. 6B
102
FIG. 6C
VOLTAGE VOLTS
95
85
75
65
104
FIG. 6D
CURRENT, AMPS
1.2
0.6
0
−0.6
106
FIG. 6E
VOLTAGE VOLTS
1500
0
−1500
108
FIG. 6F
VOLTAGE VOLTS
1500
0
−1500
110
FIG. 6G
CURRENT, MA
60
0
−60
112
114
116
FIG. 6H
CURRENT, MA
60
0
−60
118
10
20
30
40
50
TIME, MICROSECONDS

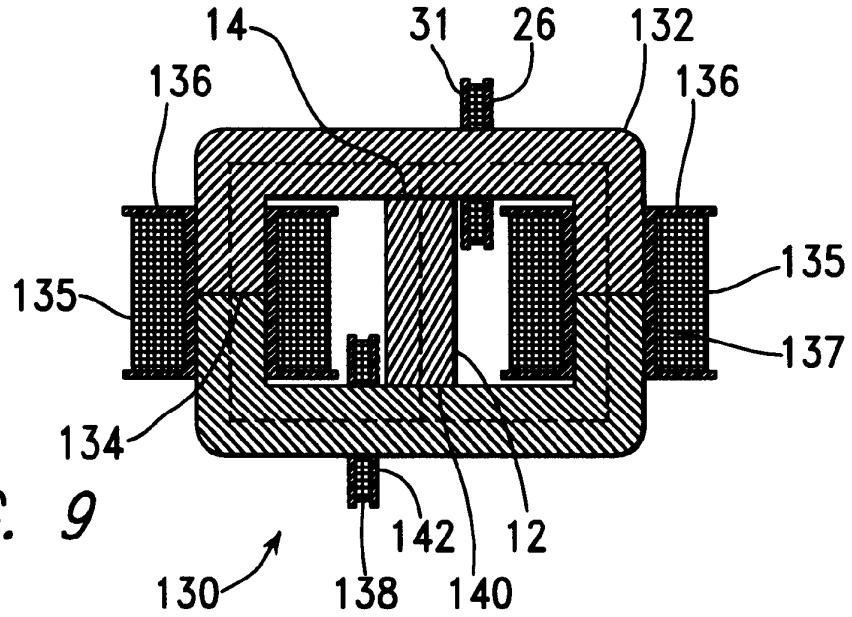
14
31
26
132
136
136
135
135
137
134
142
12
130
138
140

FIG. 9

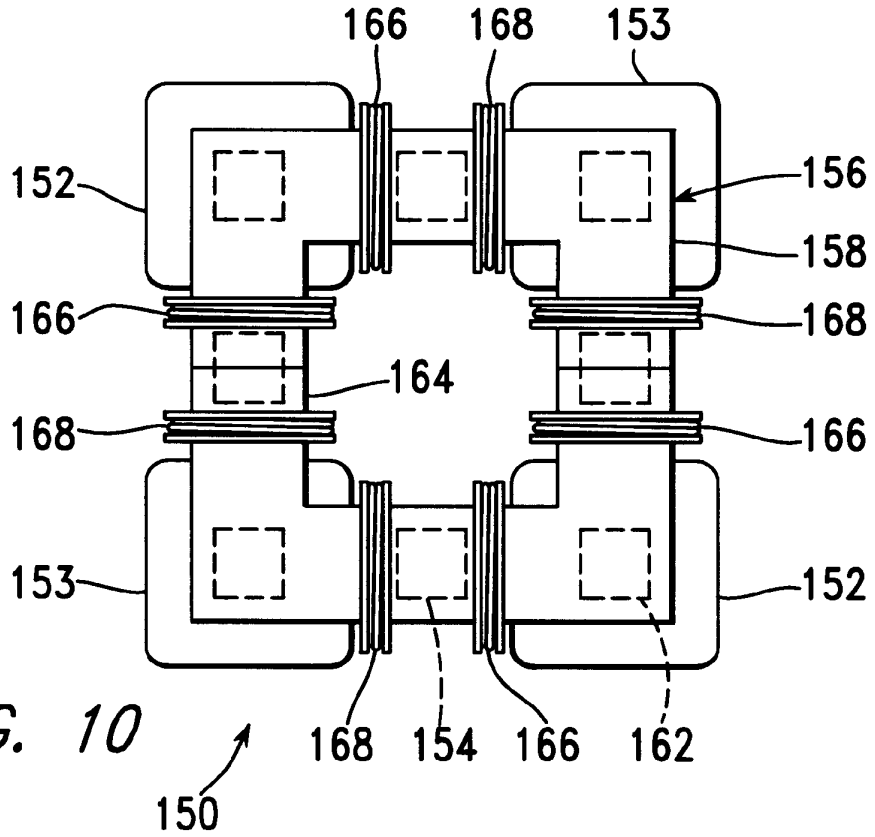
166
168
153
152
156
158
166
168
164
168
166
153
152
168
154
166
162
150

FIG. 10

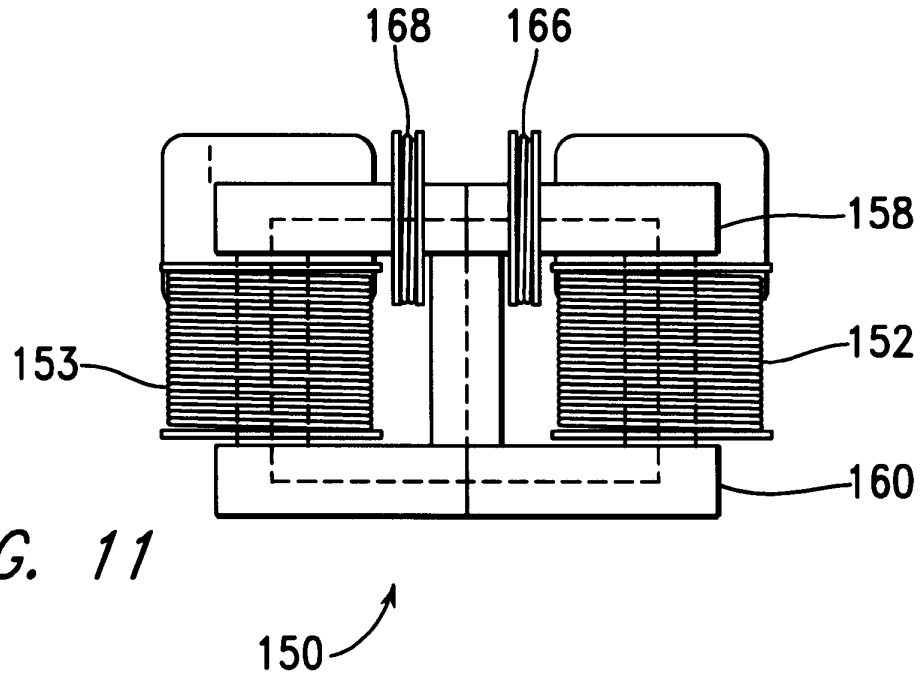

FIG. 11

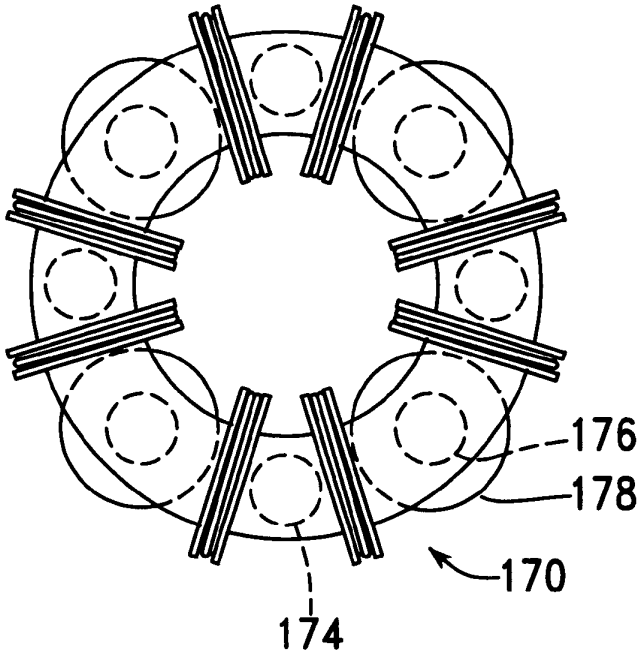

FIG. 12

MOTIONLESS ELECTROMAGNETIC GENERATOR

BACKGROUND INFORMATION

1. Field of Invention

This invention relates to a magnetic generator used to produce electrical power without moving parts, and, more particularly, to such a device having a capability, when operating, of producing electrical power without an external application of input power through input coils.

2. Description of the Related Art

The patent literature describes a number of magnetic generators, each of which includes a permanent magnet, two magnetic paths external to the permanent magnet, each of which extends between the opposite poles of the permanent magnet, switching means for causing magnetic flux to flow alternately along each of the two magnetic paths, and one or more output coils in which current is induced to flow by means of changes in the magnetic field within the device. These devices operate in accordance with an extension of Faraday's Law, indicating that an electrical current is induced within a conductor within a changing magnetic field, even if the source of the magnetic field is stationary.

A method for switching magnetic flux to flow predominantly along either of two magnetic paths between opposite poles of a permanent magnet is described as a "flux transfer" principle by R. J. Radus in *Engineer's Digest*, Jul. 23, 1963. This principle is used to exert a powerful magnetic force at one end of both the north and south poles and a very low force at the other end, without being used in the construction of a magnetic generator. This effect can be caused mechanically, by keeper movement, or electrically, by driving electrical current through one or more control windings extending around elongated versions of the pole pieces **14**. Several devices using this effect are described in U.S. Pat. Nos. 3,165,723, 3,228,013, and 3,316,514, which are incorporated herein by reference.

Another step toward the development of a magnetic generator is described in U.S. Pat. No. 3,368,141, which is incorporated herein by reference, as a device including a permanent magnet in combination with a transformer having first and second windings about a core, with two paths for magnetic flux leading from each pole of the permanent magnet to either end of the core, so that, when an alternating current induces magnetic flux direction changes in the core, the magnetic flux from the permanent magnet is automatically directed through the path which corresponds with the direction taken by the magnetic flux through the core due to the current. In this way, the magnetic flux is intensified. This device can be used to improve the power factor of a typically inductively loaded alternating current circuit.

Other patents describe magnetic generators in which electrical current from one or more output coils is described as being made available to drive a load, in the more conventional manner of a generator. For example, U.S. Pat. No. 4,006,401, which is incorporated herein by reference, describes an electromagnetic generator including permanent magnet and a core member, in which the magnetic flux flowing from the magnet in the core member is rapidly alternated by switching to generate an alternating current in a winding on the core member. The device includes a permanent magnet and two separate magnetic flux circuit paths between the north and south poles of the magnet. Each of the circuit paths includes two switching means for alternately opening and closing the circuit paths, generating an alternating current in a winding on the core member. Each of the switching means includes a switching magnetic circuit intersecting the circuit path, with the switching magnetic circuit having a coil through which current is driven to induce magnetic flux to saturate the circuit path extending to the permanent magnet. Power to drive these coils is derived directly from the output of a continuously applied alternating current source. What is needed is an electromagnetic generator not requiring the application of such a current source.

U.S. Pat. No. 4,077,001, which is incorporated herein by reference, describes a magnetic generator, or dc/dc converter, comprising a permanent magnet having spaced-apart poles and a permanent magnetic field extending between the poles of the magnet. A variable-reluctance core is disposed in the field in fixed relation to the magnet and the reluctance of the core is varied to cause the pattern of lines of force of the magnetic field to shift. An output conductor is disposed in the field in fixed relation to the magnet and is positioned to be cut by the shifting lines of permanent magnetic force so that a voltage is induced in the conductor. The magnetic flux is switched between alternate paths by means of switching coils extending around portions of the core, with the flow of current being alternated between these switching coils by means of a pair of transistors driven by the outputs of a flip-flop. The input to the flip flop is driven by an adjustable frequency oscillator. Power for this drive circuit is supplied through an additional, separate power source. What is needed is a magnetic generator not requiring the application of such a power source.

U.S. Pat. No. 4,904,926, which is incorporated herein by reference, describes another magnetic generator using the motion of a magnetic field. The device includes an electrical winding defining a magnetically conductive zone having bases at each end, the winding including elements for the removing of an induced current therefrom. The generator further includes two pole magnets, each having a first and a second pole, each first pole in magnetic communication with one base of the magnetically conductive zone. The generator further includes a third pole magnet, the third pole magnet oriented intermediately of the first poles of the two pole electromagnets, the third pole magnet having a magnetic axis substantially transverse to an axis of the magnetically conductive zone, the third magnet having a pole nearest to the conductive zone and in magnetic attractive relationship to the first poles of the two pole electromagnets, in which the first poles thereof are like poles. Also included in the generator are elements, in the form of windings, for cyclically reversing the magnetic polarities of the electromagnets. These reversing means, through a cyclical change in the magnetic polarities of the electromagnets, cause the magnetic flux lines associated with the magnetic attractive relationship between the first poles of the electromagnets and the nearest pole of the third magnet to correspondingly reverse, causing a wiping effect across the magnetically conductive zone, as lines of magnetic flux swing between respective first poles of the two electromagnets, thereby inducing electron movement within the output windings and thus generating a flow of current within the output windings.

U.S. Pat. No. 5,221,892, which is incorporated herein by reference, describes a magnetic generator in the form of a direct current flux compression transformer including a magnetic envelope having poles defining a magnetic axis and characterized by a pattern of magnetic flux lines in polar symmetry about the axis. The magnetic flux lines are spatially displaced relative to the magnetic envelope using control elements which are mechanically stationary relative to the core. Further provided are inductive elements which

are also mechanically stationary relative to the magnetic envelope. Spatial displacement of the flux relative to the inductive elements causes a flow of electrical current. Further provided are magnetic flux valves which provide for the varying of the magnetic reluctance to create a time domain pattern of respectively enhanced and decreased magnetic reluctance across the magnetic valves, and, thereby, across the inductive elements.

Other patents describe devices using superconductive elements to cause movement of the magnetic flux. These devices operate in accordance with the Meissner effect, which describes the expulsion of magnetic flux from the interior of a superconducting structure as the structure undergoes the transition to a superconducting phase. For example, U.S. Pat. No. 5,011,821, which is incorporated herein by reference, describes an electric power generating device including a bundle of conductors which are placed in a magnetic field generated by north and south pole pieces of a permanent magnet. The magnetic field is shifted back and forth through the bundle of conductors by a pair of thin films of superconductive material. One of the thin films is placed in the superconducting state while the other thin film is in a non-superconducting state. As the states are cyclically reversed between the two films, the magnetic field is deflected back and forth through the bundle of conductors.

U.S. Pat. No. 5,327,015, which is incorporated herein by reference, describes an apparatus for producing an electrical impulse comprising a tube made of superconducting material, a source of magnetic flux mounted about one end of the tube, a means, such as a coil, for intercepting the flux mounted along the tube, and a means for changing the temperature of the superconductor mounted about the tube. As the tube is progressively made superconducting, the magnetic field is trapped within the tube, creating an electrical impulse in the means for intercepting. A reversal of the superconducting state produces a second pulse.

None of the patented devices described above use a portion of the electrical power generated within the device to power the reversing means used to change the path of magnetic flux. Thus, like conventional rotary generators, these devices require a steady input of power, which may be in the form of electrical power driving the reversing means of one of these magnetic generators or the torque driving the rotor of a conventional rotary generator. Yet, the essential function of the magnetic portion of an electrical generator is simply to switch magnetic fields in accordance with precise timing. In most conventional applications of magnetic generators, the voltage is switched across coils, creating magnetic fields in the coils which are used to override the fields of permanent magnets, so that a substantial amount of power must be furnished to the generator to power the switching means, reducing the efficiency of the generator.

Recent advances in magnetic material, which have particularly been described by Robert C. O'Handley in *Modern Magnetic Materials, Principles and Applications*, John Wiley & Sons, New York, pp. 456–468, provide nanocrystalline magnetic alloys, which are particularly well suited forth rapid switching of magnetic flux. These alloys are primarily composed of crystalline grains, or crystallites, each of which has at least one dimension of a few nanometers. Nanocrystalline materials may be made by heat-treating amorphous alloys which form precursors for the nanocrystalline materials, to which insoluble elements, such as copper, are added to promote massive nucleation, and to which stable, refractory alloying materials, such as niobium or tantalum carbide are added to inhibit grain growth. Most of the volume of nanocrystalline alloys is composed of randomly distributed crystallites having dimensions of about 2–40 nm. These crystallites are nucleated and grown from an amorphous phase, with insoluble elements being rejected during the process of crystallite growth. In magnetic terms, each crystallite is a single-domain particle. The remaining volume of nanocrystalline alloys is made up of an amorphous phase in the form of grain boundaries having a thickness of about 1 nm.

Magnetic materials having particularly useful properties are formed from an amorphous Co—Nb—B (cobalt-niobium-boron) alloy having near-zero magnetostriction and relatively strong magnetization, as well as good mechanical strength and corrosion resistance. A process of annealing this material can be varied to change the size of crystallites formed in the material, with a resulting strong effect on DC coercivity. The precipitation of nanocrystallites also enhances AC performance of the otherwise amorphous alloys.

Other magnetic materials are formed using iron-rich amorphous and nanocrystalline alloys, which generally show larger magnetization that the alloys based on cobalt. Such materials are, for example, Fe—B—Si—Nb—Cu (iron-boron-silicon-niobium-copper) alloys. While the permeability of iron-rich amorphous alloys is limited by their relatively large levels of magnetostriction, the formation of a nanocrystalline material from such an amorphous alloy dramatically reduces this level of magnetostriction, favoring easy magnetization.

Advances have also been made in the development of materials for permanent magnets, particularly in the development of materials including rare earth elements. Such materials include samarium cobalt, $SmCo_5$, which is used to form a permanent magnet material having the highest resistance to demagnetization of any known material. Other magnetic materials are made, for example, using combinations of iron, neodymium, and boron.

SUMMARY OF THE INVENTION

It is a first objective of the present invention to provide a magnetic generator which a need for an external power source during operation of the generator is eliminated.

It is a second objective of the present invention to provide a magnetic generator in which a magnetic flux path is changed without a need to overpower a magnetic field to change its direction.

It is a third objective of the present invention to provide a magnetic generator in which the generation of electricity is accomplished without moving parts.

In the apparatus of the present invention, the path of the magnetic flux from a permanent magnet is switched in a manner not requiring the overpowering of the magnetic fields. Furthermore, a process of self-initiated iterative switching is used to switch the magnetic flux from the permanent magnet between alternate magnetic paths within the apparatus, with the power to operate the iterative switching being provided through a control circuit consisting of components known to use low levels of power. With self-switching, a need for an external power source during operation of the generator is eliminated, with a separate power source, such as a battery, being used only for a very short time during start-up of the generator.

According to a first aspect of the present invention, an electromagnetic generator is provided, including a permanent magnet, a magnetic core, first and second input coils, first and second output coils, and a switching circuit. The permanent magnet has magnetic poles at opposite ends. The

magnetic core includes a first magnetic path, around which the first input and output coils extend, and a second magnetic path, around which the second input and output coils extend, between opposite ends of the permanent magnet. The switching circuit drives electrical current alternately through the first and second input coils. The electrical current driven through the first input oil causes the first input coil to produce a magnetic field opposing a concentration of magnetic flux from the permanent magnet within the first magnetic path. The electrical current driven through the second input coil causes the second input coil to produce a magnetic field opposing a concentration of magnetic flux from the permanent magnet within the second magnetic path.

According to another aspect of the present invention, an electromagnetic generator is provided, including a magnetic core, a plurality of permanent magnets, first and second pluralities of input coils, a plurality of output coils, and a switching circuit. The magnetic core includes a pair of spaced-apart plates, each of which has a central aperture, and first and second pluralities of posts extending between the spaced-apart plates. The permanent magnets each extend between the pair of spaced apart plates. Each permanent magnet has magnetic poles at opposite ends, with the magnetic fields of all the permanent magnets being aligned to extend in a common direction. Each input coil extends around a portion of a plate within the spaced-apart plates, between a post and a permanent magnet. An output coil extends around each post. The switching circuit drives electrical current alternately through the first and second pluralities of input coils. Electrical current driven through each input coil in the first plurality of input coils causes an increase in magnetic flux within each post within the first plurality of posts from permanent magnets on each side of the post and a decrease in magnetic flux within each post within the second plurality of posts from permanent magnets on each side of the post. Electrical current driven through each input coil in the second plurality of input coils causes a decrease in magnetic flux within each post within the first plurality of posts from permanent magnets on each side of the post and an increase in magnetic flux within each post within the second plurality of posts from permanent magnets on each side of the post.

BRIEF DESCRIPTION OF THE DRAWINGS

FIG. **1** is a partly schematic front elevation of a magnetic generator and associated electrical circuits built in accordance with a first version of the first embodiment of the present invention;

FIG. **2** is a schematic view of a first version of a switching and control circuit within the associated electrical circuits of FIG. **1**;

FIG. **3** is a graphical view of drive signals produced within the circuit of FIG. **2**;

FIG. **4** is a schematic view of a second version of a switching and control circuit within the associated electrical circuits of FIG. **1**;

FIG. **5** is a graphical view of drive signals produced within the circuit of FIG. **3**;

FIG. **6**A is a graphical view of a first drive signal within the apparatus of FIG. **1**;

FIG. **6**B is a graphical view of a second drive signal within the apparatus of FIG. **1**;

FIG. **6**C is a graphical view of an input voltage signal within the apparatus of FIG. **1**;

FIG. **6**D is a graphical view of an input current signal within the apparatus of FIG. **1**;

FIG. **6**E is a graphical view of a first output voltage signal within the apparatus of FIG. **1**;

FIG. **6**F is a graphical view of a second output voltage signal within the apparatus of FIG. **1**;

FIG. **6**G is a graphical view of a first output current signal within the apparatus of FIG. **1**;

FIG. **6**H is a graphical view of a second output current signal within the apparatus of FIG. **1**;

FIG. **7** is a graphical view of output power measured within the apparatus of FIG. **1**, as a function of input voltage;

FIG. **8** is a graphical view of a coefficient of performance, calculated from measurements within the apparatus of FIG. **1**, as a function of input voltage;

FIG. **9** is a cross-sectional elevation of a second version of the first embodiment of the present invention;

FIG. **10** is a top view of a magnetic generator built in accordance with a first version of a second embodiment of the present invention;

FIG. **11** is a front elevation of the magnetic generator of FIG. **10**; and

FIG. **12** is a top view of a magnetic generator built in accordance with a second version of the second embodiment of the present invention.

DETAILED DESCRIPTION OF THE INVENTION

FIG. **1** is a partly schematic front elevation of an electromagnetic generator **10**, built in accordance with a first embodiment of the present invention to include a permanent magnet **12** to supply input lines of magnetic flux moving from the north pole **14** of the magnet **12** outward into magnetic flux path core material **16**. The flux path core material **16** is configured to form a right magnetic path **18** and a left magnetic path **20**, both of which extend externally between the north pole **14** and the south pole **22** of the magnet **12**. The electromagnetic generator **10** is driven by means of a switching and control circuit **24**, which alternately drives electrical current through a right input coil **26** and a left input coil **28**. These input coils **26**, **28** each extend around a portion of the core material **16**, with the right input coil **26** surrounding a portion of the right magnetic path **18** and with the left input coil **28** surrounding a portion of the left magnetic path **20**. A right output coil **29** also surrounds a portion of the right magnetic path **18**, while a left output coil **30** surrounds a portion of the left magnetic path **20**.

In accordance with a preferred version of the present invention, the switching and control circuit **24** and the input coils **26**, **28** are arranged so that, when the right input coil **26** is energized, a north magnetic pole is present at its left end **31**, the end closest to the north pole **14** of the permanent magnet **12**, and so that, when the left input coil **28** is energized, a north magnetic pole is present at its right end **32**, which is also the end closest to the north pole **14** of the permanent magnet **12**. Thus, when the right input coil **26** is magnetized, magnetic flux from the permanent magnet **12** is repelled from extending through the right input coil **26**. Similarly, when the left input coil **28** is magnetized, magnetic flux from the permanent magnet **12** is repelled from extending through the left input coil **28**.

Thus, it is seen that driving electrical current through the right input coil **26** opposes a concentration of flux from the permanent magnet **12** within the right magnetic path **18**, causing at least some of this flux to be transferred to the left magnetic path **20**. On the other hand, driving electrical current through the left input coil **28** opposes a concentration

of flux from the permanent magnet **12** within the left magnetic path **20**, causing at least some of this flux to be transferred to the right magnetic path **18**.

While in the example of FIG. **1**, the input coils **26**, **28** are placed on either side of the north pole of the permanent magnet **12**, being arranged along a portion of the core **16** extending from the north pole of the permanent magnet **12**, it is understood that the input coils **26**, **28** could as easily be alternately placed on either side of the south pole of the permanent magnet **12**, being arranged along a portion of the core **16** extending from the south pole of the permanent magnet **12**, with the input coils **26**, **28** being wired to form, when energized, magnetic fields having south poles directed toward the south pole of the permanent magnet **12**. In general, the input coils **26**, **28** are arranged along the magnetic core on either side of an end of the permanent magnet forming a first pole, such as a north pole, with the input coils being arranged to produce magnetic fields of the polarity of the first pole directed toward the first pole of the permanent magnet.

Further in accordance with a preferred version of the present invention, the input coils **26**, **28** are never driven with so much current that the core material **16** becomes saturated. Driving the core material **16** to saturation means that subsequent increases in input current can occur without effecting corresponding changes in magnetic flux, and therefore that input power can be wasted. In this way, the apparatus of the present invention is provided with an advantage in terms of the efficient use of input power over the apparatus of U.S. Pat. No. 4,000,401, in which a portion both ends of each magnetic path is driven to saturation to block flux flow. In the electromagnetic generator **10**, the switching of current flow within the input coils **26**, **28** does not need to be sufficient to stop the flow of flux in one of the magnetic paths **18**, **20** while promoting the flow of magnetic flux in the other magnetic path. The electromagnetic generator **10** works by changing the flux pattern; it does not need to be completely switched from one side to another.

Experiments have determined that this configuration is superior, in terms of the efficiency of using power within the input coils **26**, **28** to generate electrical power within the output coils **29**, **30**, to the alternative of arranging input coils and the circuits driving them so that flux from the permanent magnet is driven through the input coils as they are energized. This arrangement of the present invention provides a significant advantage over the prior-art methods shown, for example, in U.S. Pat. No. 4,077,001, in which the magnetic flux is driven through the energized coils.

The configuration of the present invention also has an advantage over the prior-art configurations of U.S. Pat. Nos. 3,368,141 and 4,077,001 in that the magnetic flux is switched between two alternate magnetic paths **18**, **20** with only a single input coil **26**, **28** surrounding each of the alternate magnetic paths. The configurations of U.S. Pat. Nos. 3,368,141 and 4,077,001 each require two input coils on each of the magnetic paths. This advantage of the present invention is significant both in the simplification of hardware and in increasing the efficiency of power conversion.

The right output coil **29** is electrically connected to a rectifier and filter **33**, having an output driven through a regulator **34**, which provides an output voltage adjustable through the use of a potentiometer **35**. The output of the linear regulator **34** is in turn provided as an input to a sensing and switching circuit **36**. Under start up conditions, the sensing and switching circuit **36** connects the switching and control circuit **24** to an external power source **38**, which is, for example, a starting battery. After the electromagnetic generator **10** is properly started, the sensing and switching circuit **36** senses that the voltage available from regulator **34** has reached a predetermined level, so that the power input to the switching and control circuit **24** is switched from the external power source **38** to the output of regulator **34**. After this switching occurs, the electromagnetic generator **10** continues to operate without an application of external power.

The left output coil **30** is electrically connected to a rectifier and filter **40**, the output of which is connected to a regulator **42**, the output voltage of which is adjusted by means of a potentiometer **43**. The output of the regulator **42** is in turn connected to an external load **44**.

FIG. **2** is a schematic view of a first version of the switching and control circuit **24**. An oscillator **50** drives the clock input of a flip-flop **54**, with the Q and Q' outputs of the flip-flop **54** being connected through driver circuits **56**, **58** to power FETS **60**, **62** so that the input coils **26**, **28** are alternately driven. In accordance with a preferred version of the present invention, the voltage V applied to the coils **26**, **28** through the FETS **60**, **62** is derived from the output of the sensing and switching circuit **36**.

FIG. **3** is a graphical view of the signals driving the gates of FETS **60**, **62** of FIG. **2**, with the voltage of the signal driving the gate of FET **60** being represented by line **64**, and with the voltage of the signal driving FET **62** being represented by line **66**. Both of the coils **26**, **28** are driven with positive voltages.

FIG. **4** is a schematic view of a second version of the switching and control circuit **24**. In this version, an oscillator **70** drives the clock input of a flip-flop **72**, with the Q and Q' outputs of the flip-flop **72** being connected to serve as triggers for one-shots **74**, **76**. The outputs of the one-shots **74**, **76** are in turn connected through driver circuits **78**, **80** to drive FETS **82**, **84**, so that the input coils **26**, **28** are alternately driven with pulses shorter in duration than the Q and Q' outputs of the flip flop **72**.

FIG. **5** is a graphical view of the signals driving the gates of FETS **82**, **84** of FIG. **4**, with the voltage of the signal driving the gate of FET **82** being represented by line **86**, and with the voltage of the signal driving the gate of FET **84** being represented by line **88**.

Referring again to FIG. **1**, power is generated in the right output coil **29** only when the level of magnetic flux is changing in the right magnetic path **18**, and in the left output coil **30** only when the level of magnetic flux is changing in the left magnetic path **20**. It is therefore desirable to determine, for a specific magnetic generator configuration, the width of a pulse providing the most rapid practical change in magnetic flux, and then to provide this pulse width either by varying the frequency of the oscillator **50** of the apparatus of FIG. **2**, so that this pulse width is provided with the signals shown in FIG. **3**, or by varying the time constant of the one-shots **74**, **76** of FIG. **4**, so that this pulse width is provided by the signals of FIG. **5** at a lower oscillator frequency. In this way, the input coils are not left on longer than necessary. When either of the input coils is left on for a period of time longer than that necessary to produce the change in flux direction, power is being wasted through heating within the input coil without additional generation of power in the corresponding output coil.

A number of experiments have been conducted to determine the adequacy of an electromagnetic generator built as the generator **10** in FIG. **1** to produce power both to drive the switching and control logic, providing power to the input

coils **26**, **28**, and to drive an external load **44**. In the configuration used in this experiment, the input coils **26**, **28** had 40 turns of 18-gauge copper wire, and the output coils **29**, **30** had 450 turns of 18-gauge copper wire. The permanent magnet **12** had a height of 40 mm (1.575 in. between its north and south poles, in the direction of arrow **89**, a width of 25.4 mm (1.00 in.), in the direction of arrow **90**, and in the other direction, a depth of 38.1 mm (1.50 in.). The core **16** had a height, in the direction of arrow **89**, of 90 mm (3.542 in.), a width, in the direction of arrow **90**, of 135 mm (5.315 in.) and a depth of 70 mm (2.756 in.). The core **16** had a central hole with a height, in the direction of arrow **89**, of 40 mm (1.575 mm) to accommodate the magnet **12**, and a width, in the direction of arrow **90**, of 85 mm (3.346 in.). The core **16** was fabricated of two "C"-shaped halves, joined at lines **92**, to accommodate the winding of output coils **29**, **30** and input coils **26**, **28** over the core material.

The core material was a laminated iron-based magnetic alloy sold by Honeywell as METGLAS Magnetic Alloy 2605SA1. The magnet material was a combination of iron, neodymium, and boron.

The input coils **26**, **28** were driven at an oscillator frequency of 87.5 KHz, which was determined to produce optimum efficiency using a switching control circuit configured as shown in FIG. **2**. This frequency has a period of 11.45 microseconds. The flip flop **54** is arranged, for example, to be set and reset on rising edges of the clock signal input from the oscillator, so that each pulse driving one of the FETS **60**, **62** has a duration of 11.45 microseconds, and so that sequential pulses are also separated to each FET are also separated by 11.45 microseconds.

FIGS. **6**A–**6**H are graphical views of signals which simultaneously occurred within the apparatus of FIGS. **1** and **2** during operation with an applied input voltage of 75 volts. FIG. **6**A shows a first drive signal **100** driving FET **60**, which conducts to drive the right input coil **26**. FIG. **6**B is shows a second drive signal **102** driving FET **62**, which conducts to drive the left input coil **28**.

FIGS. **6**C and **6**D show voltage and current signals associated with current driving both the FETS **60**, **62** from a battery source. FIG. **6**C shows the level **104** of voltage V. While the nominal voltage of the battery was 75 volts, a decaying transient signal **106** is superimposed on this voltage each time one of the FETS **60**, **62** is switched on to conduct. The specific pattern of this transient signal depends on the internal resistance of the battery, as well as on a number of characteristics of the magnetic generator **10**. Similarly, FIG. **6**D shows the current **106** flowing into both FETS **60**, **62** from the battery source. Since the signals **104**, **106** show the effects of current flowing into both FETS **60**, **62** the transient spikes are 11.45 microseconds apart.

FIGS. **6**E–**6**H show voltage and current levels measured at the output coils **29**, **30**. FIG. **6**E shows a voltage output signal **108** of the right output coil **29**, while FIG. **6**F shows a voltage output signal **110** of the left output coil **30**. For example, the output current signal **116** of the right output coil **29** includes a first transient spike **112** caused when the a current pulse in the left input coil **28** is turned on to direct magnetic flux through the right magnetic path **18**, and a second transient spike **114** caused when the left input coil **28** is turned off with the right input coil **26** being turned on. FIG. **6**G shows a current output signal **116** of the right output coil **29**, while FIG. **6**H shows a current output signal **118** of the left output coil **30**.

FIG. **7** is a graphical view of output power measured using the electromagnetic generator **10** and eight levels of input voltage, varying from 10v to 75v. The oscillator frequency was retained at 87.5 KHz. The measurement points are represented by indicia **120**, while the curve **122** is generated by polynomial regression analysis using a least squares fit.

FIG. **8** is a graphical view of a coefficient of performance, defined as the ratio of the output power to the input power, for each of the measurement points shown in FIG. **7**. At each measurement point, the output power was substantially higher than the input power. Real power measurements were computed at each data point using measured voltage and current levels, with the results being averaged over the period of the signal. These measurements agree with RMS power measured using a Textronic THS730 digital oscilloscope.

While the electromagnetic generator **10** was capable of operation at much higher voltages and currents without saturation, the input voltage was limited to 75 volts because of voltage limitations of the switching circuits being used. Those skilled in the relevant art will understand that components for switching circuits capable of handling higher voltages in this application are readily available. The experimentally-measured data was extrapolated to describe operation at an input voltage of 100 volts, with the input current being 140 ma, the input power being 14 watts, and with a resulting output power being 48 watts for each of the two output coils **29**, **30**, at an average output current of 12 ma and an average output voltage of 4000 volts. This means that for each of the output coils **29**, **30**, the coefficient of performance would be 3.44.

While an output voltage of 4000 volts may be needed for some applications, the output voltage can also be varied through a simple change in the configuration of the electromagnetic generator **10**. The output voltage is readily reduced by reducing the number of turns in the output windings. If this number of turns is decreased from 450 to 12, the output voltage is dropped to 106.7, with a resulting increase in output current to 0.5 amps for each output coil **29**, **30**. In this way, the output current and voltage of the electromagnetic generator can be varied by varying the number of turns of the output coils **29**, **30**, without making a substantial change in the output power, which is instead determined by the input current, which determines the amount of magnetic flux shuttled during the switching process.

The coefficients of performance, all of which were significantly greater than 1, plotted in FIG. **8** indicate that the output power levels measured in each of the output coils **29**, **30** were substantially greater than the corresponding input power levels driving both of the input coils **26**, **28**. Therefore, it is apparent that the electromagnetic generator **10** can be built in a self-actuating form, as discussed above in reference to FIG. **1**. In the example of FIG. **1**, except for a brief application of power from the external power source **38**, to start the process of power generation, the power required to drive the input coils **26**, **28** is derived entirely from power developed within the right output coil **29**. If the power generated in a single output coil **29**, **30** is more than sufficient to drive the input coils **26**, **28**, an additional load **126** may be added to be driven with power generated in the output coil **29** used to generate power to drive the input coils **26**, **28**. On the other hand, each of the output coils **29**, **30** may be used to drive a portion of the input coil power requirements, for example with one of the output coils **26**, **28** providing the voltage V for the FET **60** (shown in FIG. **2**), while the other output coil provides this voltage for the FET **62**.

Regarding thermodynamic considerations, it is noted that, when the electromagnetic generator **10** is operating, it is an

open system not in thermodynamic equilibrium. The system receives static energy from the magnetic flux of the permanent magnet. Because the electromagnetic generator **10** is self-switched without an additional energy input, the thermodynamic operation of the system is an open dissipative system, receiving, collecting, and dissipating energy from its environment; in this case, from the magnetic flux stored within the permanent magnet. Continued operation of the electromagnetic generator **10** causes demagnetization of the permanent magnet. The use of a magnetic material including rare earth elements, such as a samarium cobalt material or a material including iron, neodymium, and boron is preferable within the present invention, since such a magnetic material has a relatively long life in this application.

Thus, an electromagnetic generator operating in accordance with the present invention should be considered not as a perpetual motion machine, but rather as a system in which flux radiated from a permanent magnet is converted into electricity, which is used both to power the apparatus and to power an external load. This is analogous to a system including a nuclear reactor, in which a number of fuel rods radiate energy which is used to keep the chain reaction going and to heat water for the generation of electricity to drive external loads.

FIG. **9** is a cross-sectional elevation of an electromagnetic generator **130** built in accordance with a second version of the first embodiment of the present invention. This electromagnetic generator **130** is generally similar in construction and operation to the electromagnetic generator **10** built in accordance with the first version of this embodiment, except that the magnetic core **132** of the electromagnetic generator **10** is built in two halves joined along lines **134**, allowing each of the output coils **135** to be wound on a plastic bobbin **136** before the bobbin **136** is placed over the legs **137** of the core **132**. FIG. **9** also shows an alternate placement of an input coil **138**. In the example of FIG. **1**, both input coils **26**, **28** were placed on the upper portion of the magnetic core **16**, with these coils **26**, **28** being configured to establish magnetic fields having north magnetic poles at the inner ends **31**, **32** of the coils **26**, **28**, with these north magnetic poles thus being closest to the end **14** of the permanent magnet **12** having its north magnetic pole. In the example of FIG. **9**, a first input coil **26** is as described above in reference to FIG. **1**, but the second input coil **138** is placed adjacent the south pole **140** of the permanent magnet **12**. This input coil **138** is configured to establish a south magnetic pole at its inner end **142**, so that, when input coil **138** is turned on, flux from the permanent magnet **12** is directed away from the left magnetic path **20** into the right magnetic path **18**.

FIGS. **10** and **11** show an electromagnetic generator **150** built in accordance with a first version of a second embodiment of the present invention, with FIG. **10** being a top view thereof, and with FIG. **11** being a front elevation thereof. This electromagnetic generator **150** includes an output coil **152**, **153** at each corner, and a permanent magnet **154** extending along each side between output coils. The magnetic core **156** includes an upper plate **158**, a lower plate **160**, and a square post **162** extending within each output coil **152**, **153**. Both the upper plate **158** and the lower plate **160** include central apertures **164**.

Each of the permanent magnets **154** is oriented with a like pole, such as a north pole, against the upper plate **158**. Eight input coils **166**, **168** are placed in positions around the upper plate **158** between an output coil **152**, **153** and a permanent magnet **154**. Each input coil **166**, **168** is arranged to form a magnetic pole at its end nearest to the adjacent permanent magnet **154** of a like polarity to the magnetic poles of the magnets **154** adjacent the upper plate **158**. Thus, the input coils **166** are switched on to divert magnetic flux of the permanent magnets **154** from the adjacent output coils **152**, with this flux being diverted into magnetic paths through the output coils **153**. Then, the input coils **168** are switched on to divert magnetic flux of the permanent magnets **154** from the adjacent output coils **153**, with this flux being diverted into magnetic paths through the output coils **152**. Thus, the input coils form a first group of input coils **166** and a second group of input coils **168**, with these first and second groups of input coils being alternately energized in the manner described above in reference to FIG. **1** for the single input coils **26**, **28**. The output coils produce current in a first train of pulses occurring simultaneously within coils **152** and in a second train of pulses occurring simultaneously within coils **153**.

Thus, driving current through input coils **166** causes an increase in flux from the permanent magnets **154** within the posts **162** extending through output coils **153** and a decrease in flux from the permanent magnets **154** within the posts **162** extending through output coils **152**. On the other hand, driving current through input coils **168** causes a decrease in flux from the permanent magnets **154** within the posts **162** extending through output coils **153** and an increase in flux from the permanent magnets **154** within the posts **162** extending through output coils **152**.

While the example of FIGS. **10** and **11** shows all of the input coils **166**,**168** deployed along the upper plate **158**, it is understood that certain of these input coils **166**, **168** could alternately be deployed around the lower plate **160**, in the manner generally shown in FIG. **9**, with one input coil **166**, **168** being within each magnetic circuit between a permanent magnet **154** and an adjacent post **162** extending within an output coil **152**, **153**, and with each input coil **166**, **168** being arranged to produce a magnetic field having a magnetic pole like the closest pole of the adjacent permanent magnet **154**.

FIG. **12** is a top view of a second version **170** of the second embodiment of the present invention, which is similar to the first version thereof, which has been discussed in reference to FIGS. **10** and **11**, except that an upper plate **172** and a similar lower plate (not shown) are annular in shape, while the permanent magnets **174** and posts **176** extending through the output coils **178** are cylindrical. The input coils **180** are oriented and switched as described above in reference to FIGS. **9** and **10**.

While the example of FIG. **12** shows four permanent magnets, four output coils and eight input coils it is understood that the principles described above can be applied to electromagnetic generators having different numbers of elements. For example, such a device can be built to have two permanent magnets, two output coils, and four input coils, or to have six permanent magnets, six output coils, and twelve input coils.

In accordance with the present invention, material used for magnetic cores is preferably a nanocrystalline alloy, and alternately an amorphous alloy. The material is preferably in a laminated form. For example, the core material is a cobalt-niobium-boron alloy or an iron based magnetic alloy.

Also in accordance with the present invention, the permanent magnet material preferably includes a rare earth element. For example, the permanent magnet material is a samarium cobalt material or a combination of iron, neodymium, and boron.

While the invention has been described in its preferred versions and embodiments with some degree of particularity, it is understood that this description has been

given only by way of example and that numerous changes in the details of construction, fabrication, and use, including the combination and arrangement of parts, may be made without departing from the spirit and scope of the invention.

What is claimed is:

1. An electromagnetic generator comprising:

a permanent magnet having magnetic poles at opposite ends;

a magnetic core including first and second magnetic paths between said opposite ends of said permanent magnet, wherein

said magnetic core comprises a closed loop,

said permanent magnet extends within said closed loop, and

said opposite ends of said permanent magnet are disposed adjacent opposite sides of said closed loop and against internal surfaces of said magnetic core comprising said closed loop;

a first input coil extending around a portion of said first magnetic path,

a second input coil extending around a portion of said second magnetic path,

a first output coil extending around a portion of said first magnetic path for providing a first electrical output;

a second output coil extending around a portion of said second magnetic path for providing a second electrical output; and

a switching circuit driving electrical current alternately through said first and second input coils, wherein

said electrical current driven through said first input coil causes said first input coil to produce a magnetic field opposing a concentration of magnetic flux from said permanent magnet within said first magnetic path, and

said electrical current driven through said second input coil causes said second input coil to produce a magnetic field opposing a concentration of magnetic flux from said permanent magnet within said second magnetic path.

2. An electromagnetic generator comprising:

a permanent magnet having magnetic poles at opposite ends;

a magnetic core including first and second magnetic paths between said opposite ends of said permanent magnet, wherein

said magnetic core comprises a closed loop,

said permanent magnet extends within said closed loop,

said opposite ends of said permanent magnet are disposed adjacent opposite sides of said closed loop, and

a first type of pole of said permanent magnet is disposed adjacent a first side of said closed loop;

a first input coil, disposed along said first side of said closed loop, extending around a portion of said first magnetic path,

a second input coil, disposed along said first side of said closed loop, extending around a portion of said second magnetic path,

a first output coil extending around a portion of said first magnetic path for providing a first electrical output;

a second output coil extending around a portion of said second magnetic path for providing a second electrical output; and

a switching circuit driving electrical current alternately through said first and second input coils, wherein

said electrical current driven through said first input coil causes said first input coil to produce a magnetic field opposing a concentration of magnetic flux from said permanent magnet within said first magnetic path, and additionally causes said first input coil to produce a magnetic field having said first type of pole at an end of said first input coil adjacent said permanent magnet, and

said electrical current driven through said second input coil causes said second input coil to produce a magnetic field opposing a concentration of magnetic flux from said permanent magnet within said second magnetic path, and additionally causes said second input coil to produce a magnetic field having said first type of pole at an end of said of said second input coil adjacent said permanent magnet.

3. An electromagnetic generator comprising:

a permanent magnet having magnetic poles at opposite ends;

a magnetic core including first and second magnetic paths between said opposite ends of said permanent magnet, wherein

said magnetic core comprises a closed loop,

said permanent magnet extends within said closed loop, and

said opposite ends of said permanent magnet are disposed adjacent opposite sides of said closed loop,

a first type of pole of said permanent magnet is disposed adjacent a first side of said closed loop, and

a second type of pole, opposite said first type of pole, of said permanent magnet is disposed adjacent a second side of said closed loop;

a first input coil extending around a portion of said first magnetic path, wherein said first input coil is disposed along said first side of said closed loop;

a second input coil extending around a portion of said second magnetic path wherein said second input coil is disposed along said second side of said closed loop;

a first output coil extending around a portion of said first magnetic path for providing a first electrical output;

a second output coil extending around a portion of said second magnetic path for providing a second electrical output; and

a switching circuit driving electrical current alternately through said first and second input coils, wherein

said electrical current driven through said first input coil causes said first input coil to produce a magnetic field opposing a concentration of magnetic flux from said permanent magnet within said first magnetic path, and additionally causes said first input coil to produce a magnetic field having said first type of pole at an end of said first input coil adjacent said permanent magnet, and

said electrical current driven through said second input coil causes said second input coil to produce a magnetic field opposing a concentration of magnetic flux from said permanent magnet within said second magnetic path, and additionally causes said second input coil to produce a magnetic field having said second type of pole at an end of said of said second input coil adjacent said permanent magnet.

4. An electromagnetic generator comprising:

a permanent magnet having magnetic poles at opposite ends;

a magnetic core including first and second magnetic paths between said opposite ends of said permanent magnet;

a first input coil extending around a portion of said first magnetic path,

a second input coil extending around a portion of said second magnetic path,

a first output coil extending around a portion of said first magnetic path for providing a first electrical output;

a second output coil extending around a portion of said second magnetic path for providing a second electrical output; and

a switching circuit driving electrical current alternately through said first and second input coils, wherein said electrical current driven through said first input coil causes said first input coil to produce a magnetic field opposing a concentration of magnetic flux from said permanent magnet within said first magnetic path, and wherein said electrical current driven through said second input coil causes said second input coil to produce a magnetic field opposing a concentration of magnetic flux from said permanent magnet within said second magnetic path, wherein a portion of electrical power induced in said first output coil provides power to drive said switching circuit.

5. The electromagnetic generator of claim **4**, wherein said switching circuit is driven by an external power source during a starting process and by power induced in said first output coil during operation after said starting process.

6. The electromagnetic generator of claim **2**, wherein said magnetic core is composed of a nanocrystalline magnetic alloy.

7. The electromagnetic generator of claim **6**, wherein said nanocrystalline magnetic alloy is a cobalt-niobium-boron alloy.

8. The electromagnetic generator of claim **6**, wherein said nanocrystalline magnetic alloy is an iron-based alloy.

9. The electromagnetic generator of claim **2**, wherein said changes in flux density within said magnetic core occur without driving said magnetic core to magnetic saturation.

10. The electromagnetic generator of claim **2**, wherein

said switching circuit drives said electrical current through said first input coil in response to a first train of pulses,

said switching circuit drives said electrical current through said second input coil in response to a second train of pulses, alternating with pulses within said first train of pulses, and

said pulses in said first and second trains of pulses are approximately 11.5 milliseconds in duration.

11. The electromagnetic generator of claim **2**, wherein said permanent magnet is composed of a material including a rare earth element.

12. The electromagnetic generator of claim **11**, wherein said permanent magnet is composed essentially of samarium cobalt.

13. The electromagnetic generator of claim **11**, wherein said permanent magnet is composed essentially of iron, neodymium, and boron.

14. An electromagnetic generator comprising:

a magnetic core including a pair of spaced-apart plates, wherein each of said spaced-apart plates includes a central aperture, and first and second pluralities of posts extending between said spaced-apart plates;

a plurality of permanent magnets extending individually between said pair of spaced-apart plates and between adjacent posts within said plurality of posts, wherein each permanent magnet within said plurality of permanent magnets has magnetic poles at opposite ends, wherein all magnets within said plurality of magnets are oriented to produce magnetic fields having a common direction;

first and second pluralities of input coils, wherein each input coil within said first and second pluralities of input coils extends around a portion of a plate within said spaced-apart plates between a post in said plurality of posts and a permanent magnet in said plurality of permanent magnets;

an output coil extending around each post in said first and second pluralities of posts for providing an electrical output;

a switching circuit driving electrical current alternatively through said first and second pluralities of input coils, wherein said electrical current driven through each input coil in said first plurality of input coils causes an increase in magnetic flux within each post within said first plurality of posts from permanent magnets on each side of said post and a decrease in magnetic flux within each post within said second plurality of posts from permanent magnets on each side of said post, and wherein said electrical current driven through input coil in said second plurality of input coils causes a decrease in magnetic flux within each post within said first plurality of posts from permanent magnets on each side of said post and an increase in magnetic flux within each post within said second plurality of posts from permanent magnets on each side of said post.

15. The electromagnetic generator of claim **14**, wherein

each input coil extends around a portion of a magnetic path through said magnetic core between said opposite ends a permanent magnet adjacent said input coil,

said magnetic path extends through a post within said magnetic core adjacent said input coil, and

driving electrical current through said input coil causes said input coil to produce a magnetic field opposing a concentration of magnetic flux within said magnetic path.

16. The electromagnetic generator of claim **14**, wherein said switching circuit is driven by an external power source during a starting process and by power induced in said output coils during operation after said starting process.

17. The electromagnetic generator of claim **14**, wherein said magnetic core is composed of a nanocrystalline magnetic alloy.

18. The electromagnetic generator of claim **2**, wherein a portion of electrical power induced in said first output coil provides power to drive said switching circuit.

19. The electromagnetic generator of claim **18**, wherein said switching circuit is driven by an external power source during a starting process and by power induced in said first output coil during operation after said starting process.

20. The electromagnetic generator of claim **3**, wherein a portion of electrical power induced in said first output coil provides power to drive said switching circuit.

21. The electromagnetic generator of claim **20**, wherein said switching circuit is driven by an external power source during a starting process and by power induced in said first output coil during operation after said starting process.

22. The electromagnetic generator of claim **3**, wherein said magnetic core is composed of a nanocrystalline magnetic alloy.

23. The electromagnetic generator of claim **22**, wherein said nanocrystalline magnetic alloy is a cobalt-niobium-boron alloy.

24. The electromagnetic generator of claim **22**, wherein said nanocrystalline magnetic alloy is an iron-based alloy.

25. The electromagnetic generator of claim **3**, wherein said changes in flux density within said magnetic core occur without driving said magnetic core to magnetic saturation.

26. The electromagnetic generator of claim **3**, wherein

said switching circuit drives said electrical current through said first input coil in response to a first train of pulses,

said switching circuit drives said electrical current through said second input coil in response to a second train of pulses, alternating with pulses within said first train of pulses, and

said pulses in said first and second trains of pulses are approximately 11.5 milliseconds in duration.

27. The electromagnetic generator of claim **3**, wherein said permanent magnet is composed of a material including a rare earth element.

28. The electromagnetic generator of claim **27**, wherein said permanent magnet is composed essentially of samarium cobalt.

29. The electromagnetic generator of claim **27**, wherein said permanent magnet is composed essentially of iron, neodymium, and boron.

* * * * *

The Tom Bearden Website

Kawai Patent Diagrams - 19 sheets

Initial Diagram	
Sheet 1	fig.1
Sheet 2	fig. 2
Sheet 3	fig. 3
Sheet 4	fig. 4A fig. 4B fig. 4C
Sheet 5	fig. 4D fig. 4E fig. 4F
Sheet 6	fig 4G fig 4H
Sheet 7	fig 5A fig 5B
Sheet 8	fig. 6
Sheet 9	fig. 7
Sheet 10	fig. 8
Sheet 11	fig. 9
Sheet 12	fig. 10A
Sheet 13	fig. 10B
Sheet 14	fig. 10C

Sheet 15	fig. 11A/11B fig. 11C/11D fig. 11E/11F fig. 11G/11H
Sheet 16	fig. 12 PRIOR ART fig. 13 PRIOR ART
Sheet 17	fig. 14 PRIOR ART fig. 15 PRIOR ART
Sheet 18	fig. 16 PRIOR ART
Sheet 19	fig. 17 PRIOR ART

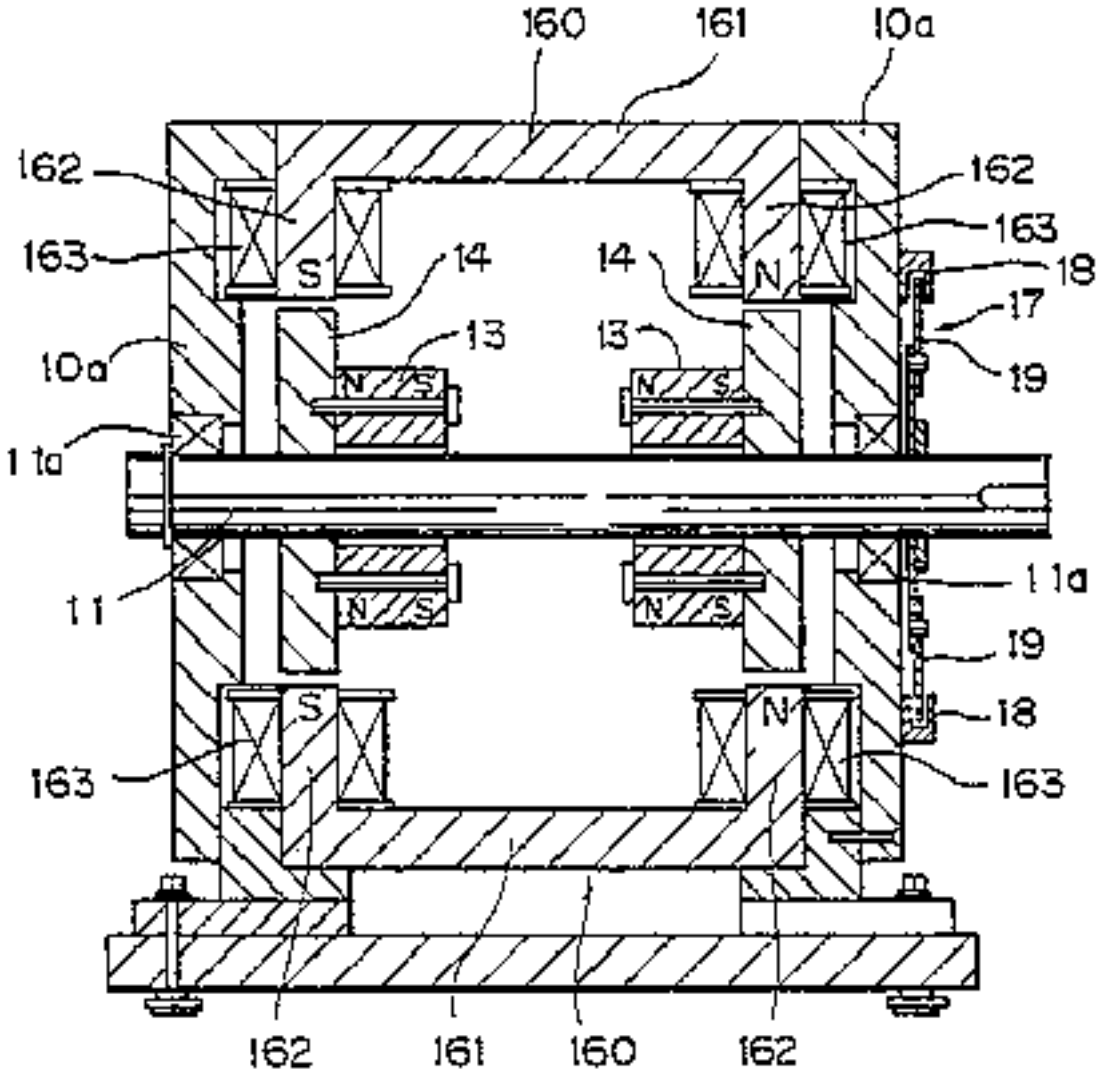
160
161
10a
162
162
163
163
S
14
14
N
18
17
13
13
10a
N
S
N
S
19
11a
11
N
S
N
S
19
S
N
18
163
163
162
161
160
162

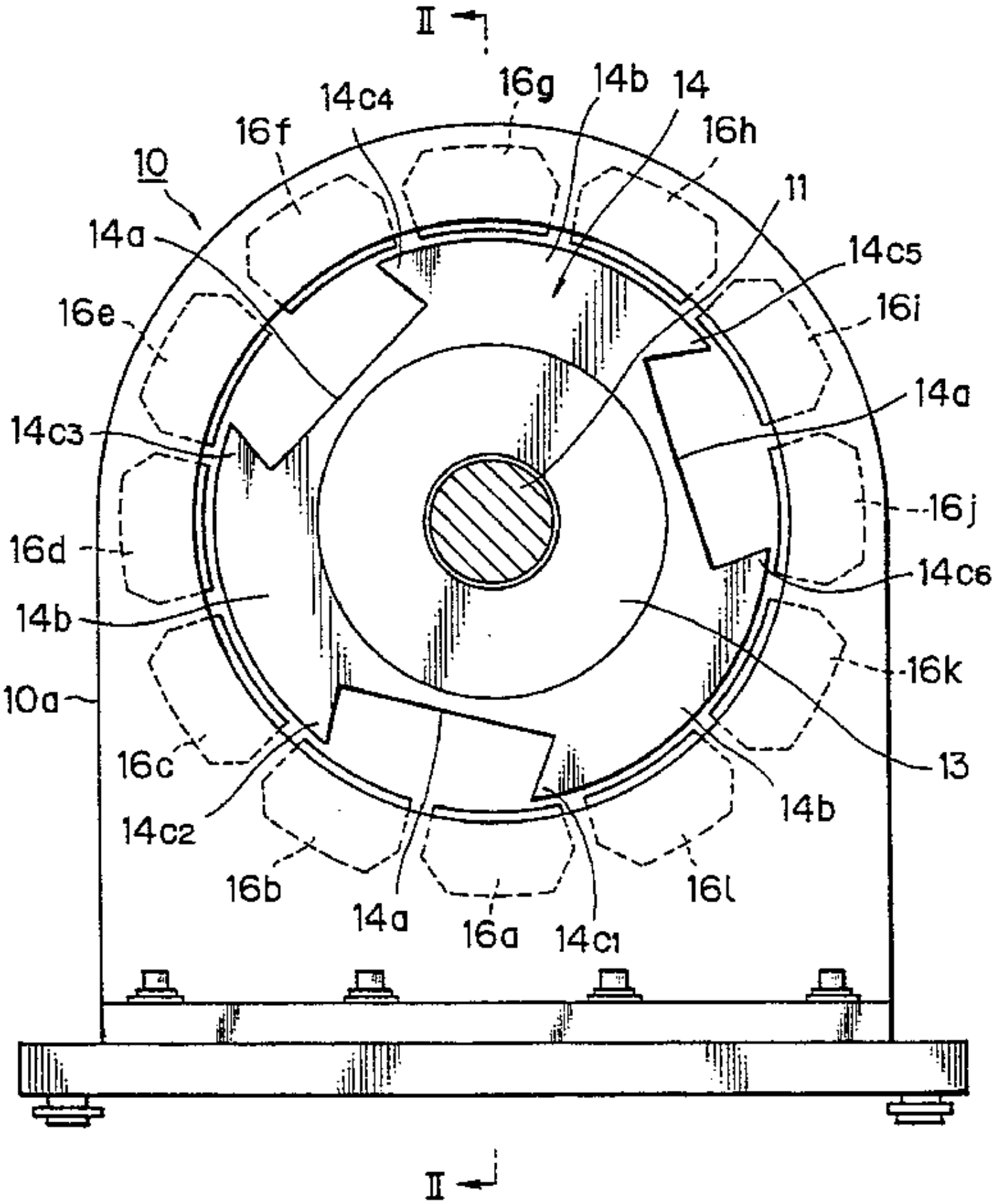
II
16g
14b
14
14c4
16f
16h
10
11
14a
14c5
16e
16i
14a
14c3
16j
16d
14c6
14b
16k
10a
13
16c
14b
14c2
16b
16l
14a
16a
14c1
II

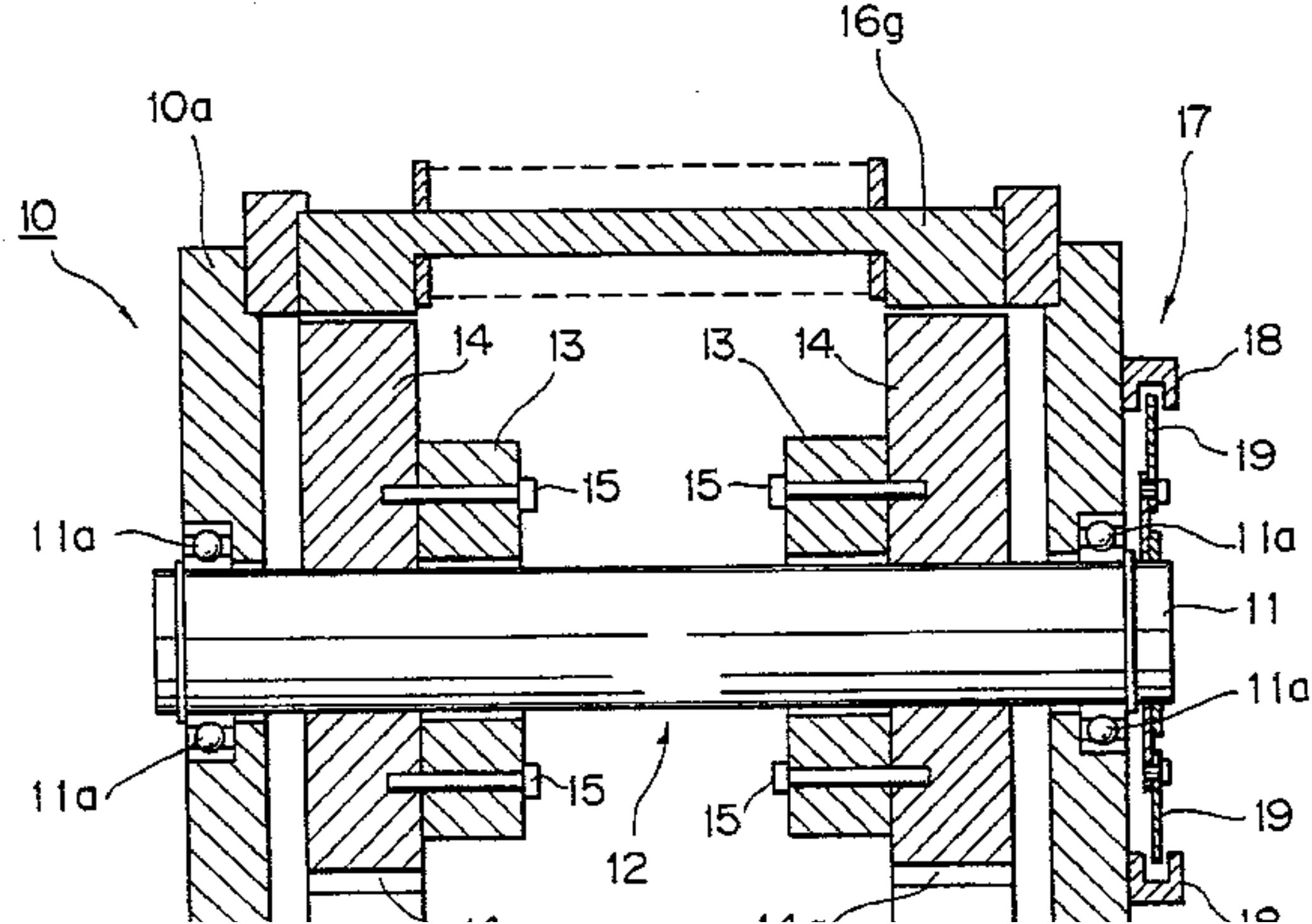
16g
10a
17
10
14
13
13
14
18
19
15
15
11a
11a
11
11a
11a
15
15
19
12

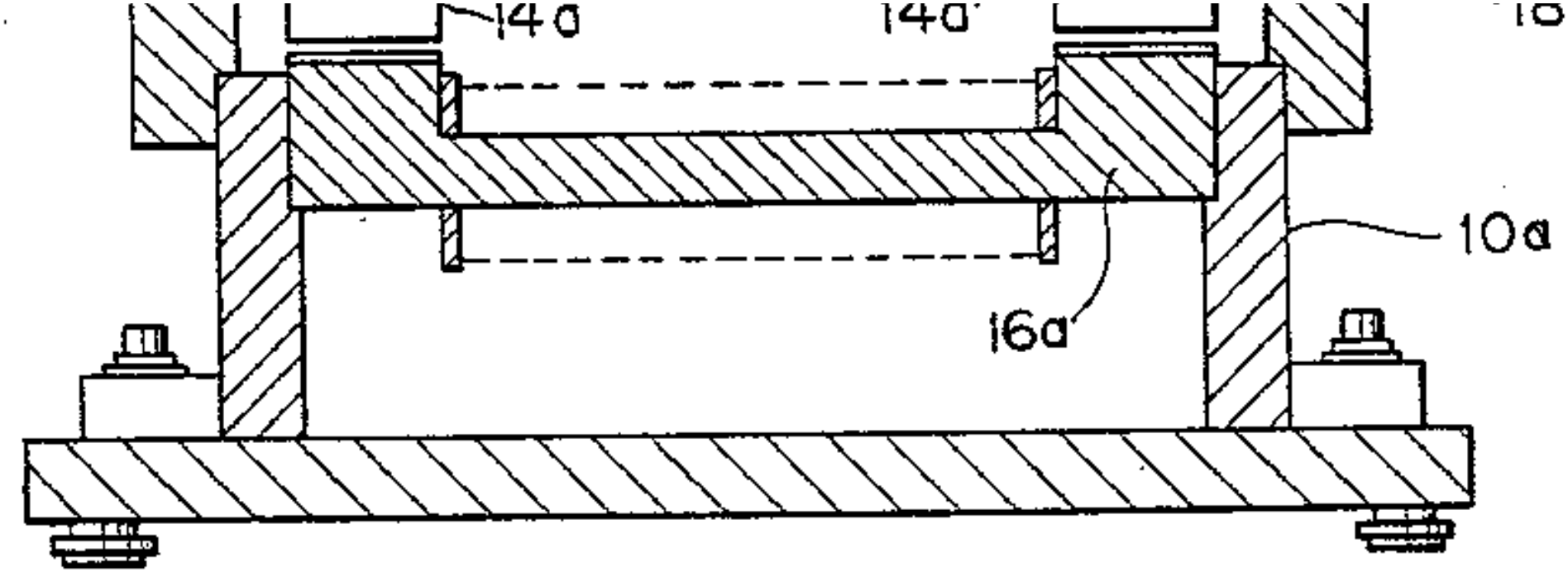
14a
14a'
10a
16a

Fig. 3

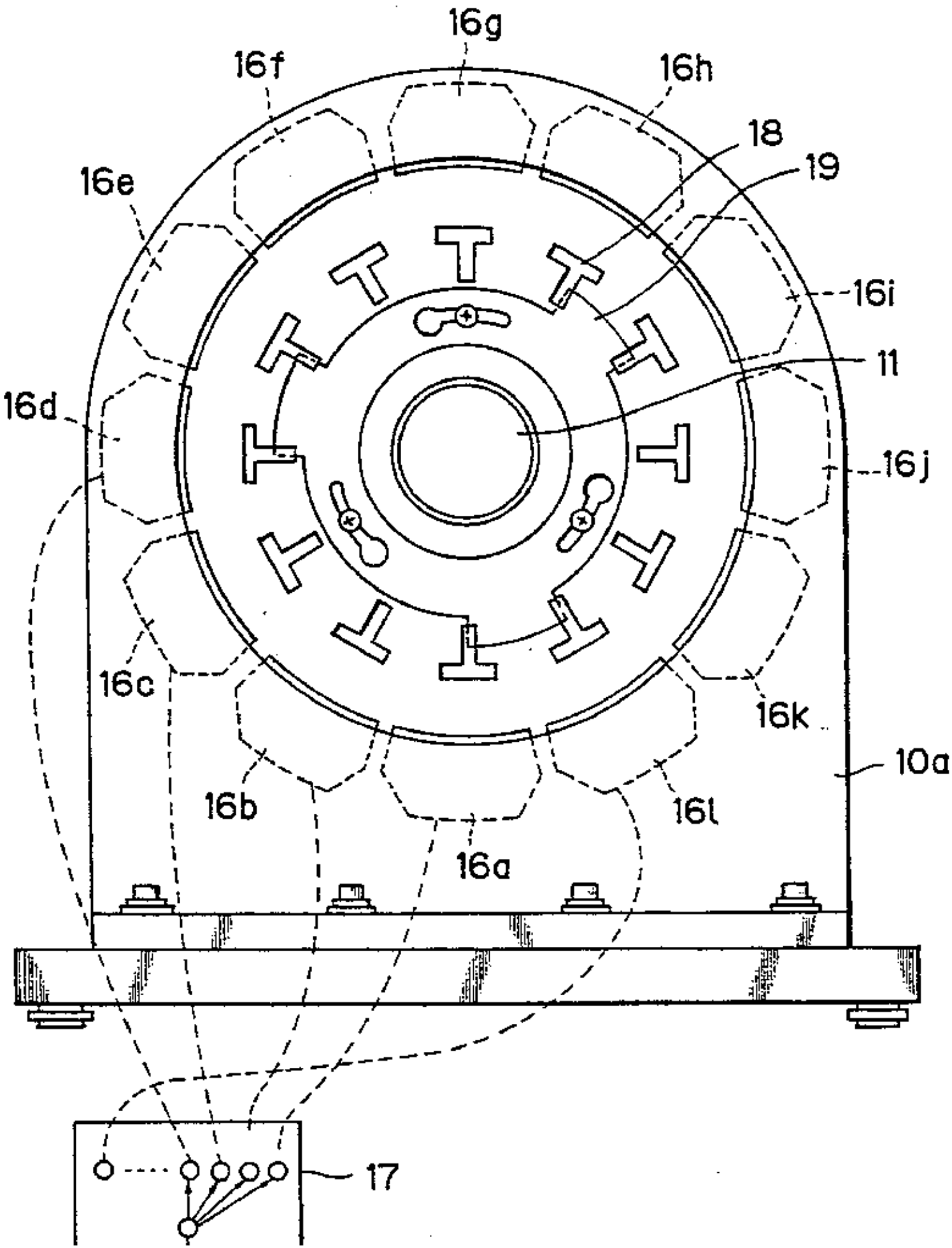

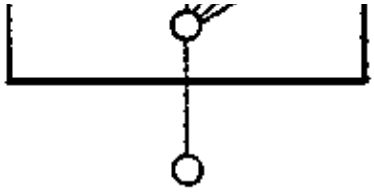

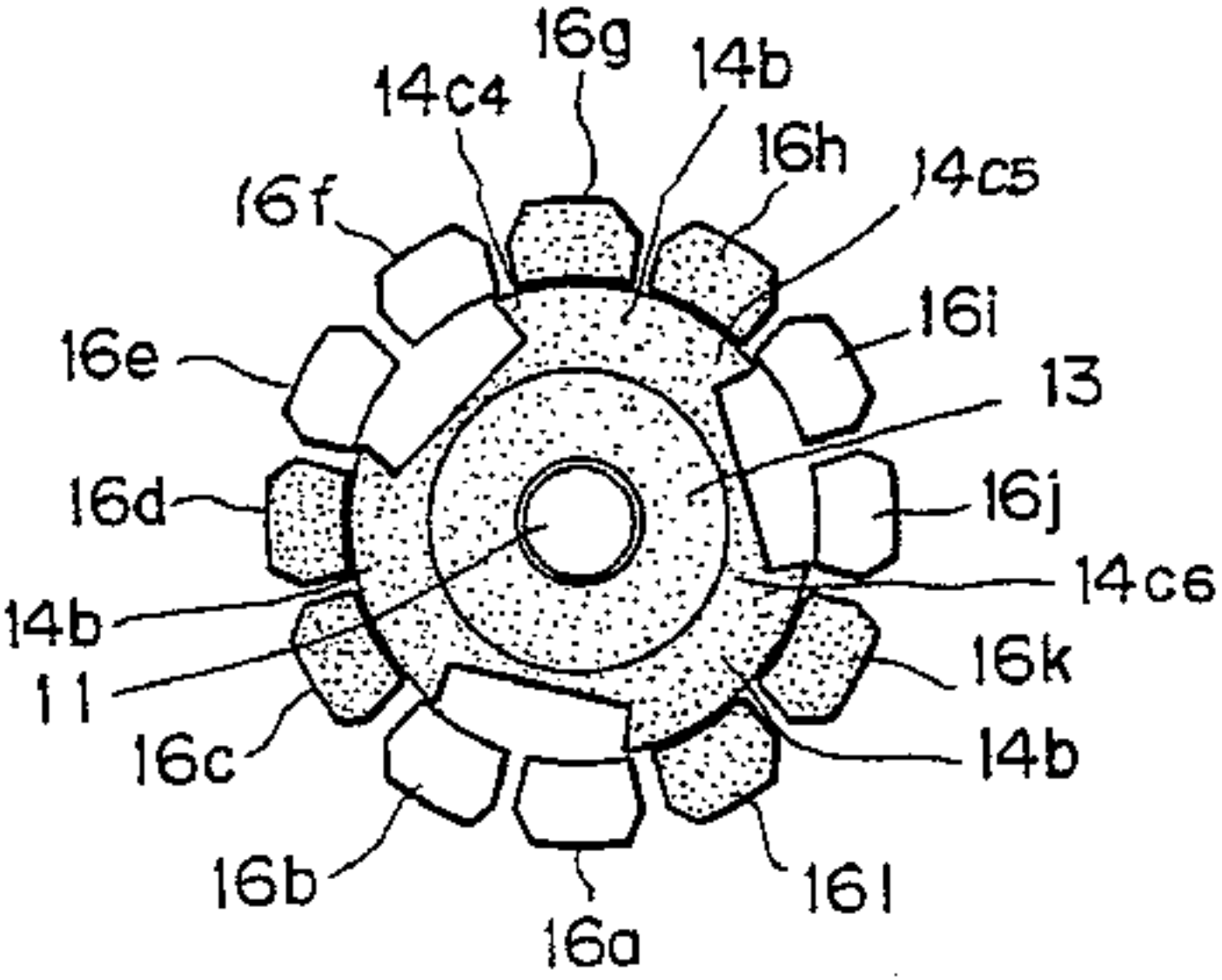
16g
14b
14c4
16h
14c5
16f
16i
16e
13
16d
16j
14c6
14b
16k
11
16c
14b
16b
16l
16a

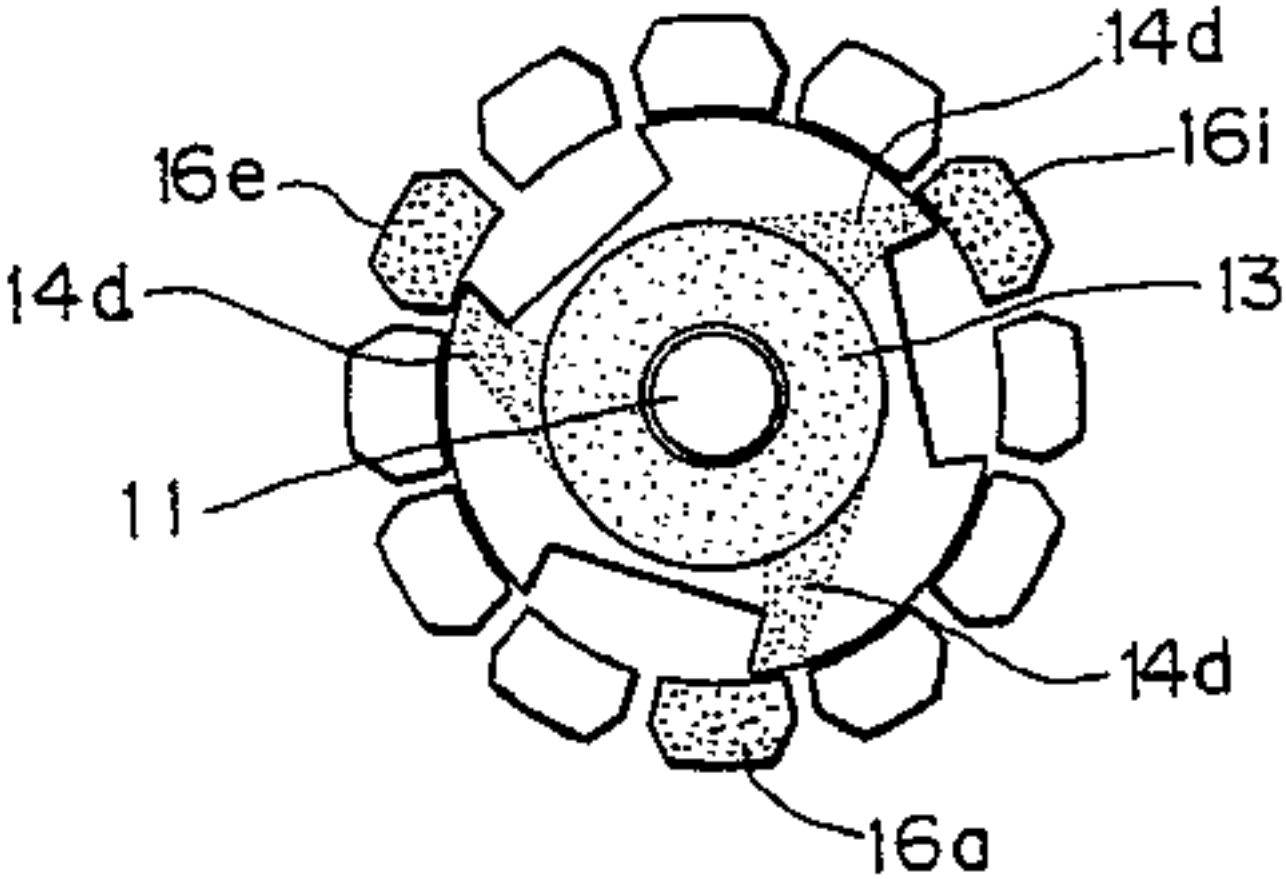
14d
16i
16e
13
14d
11
14d
16a

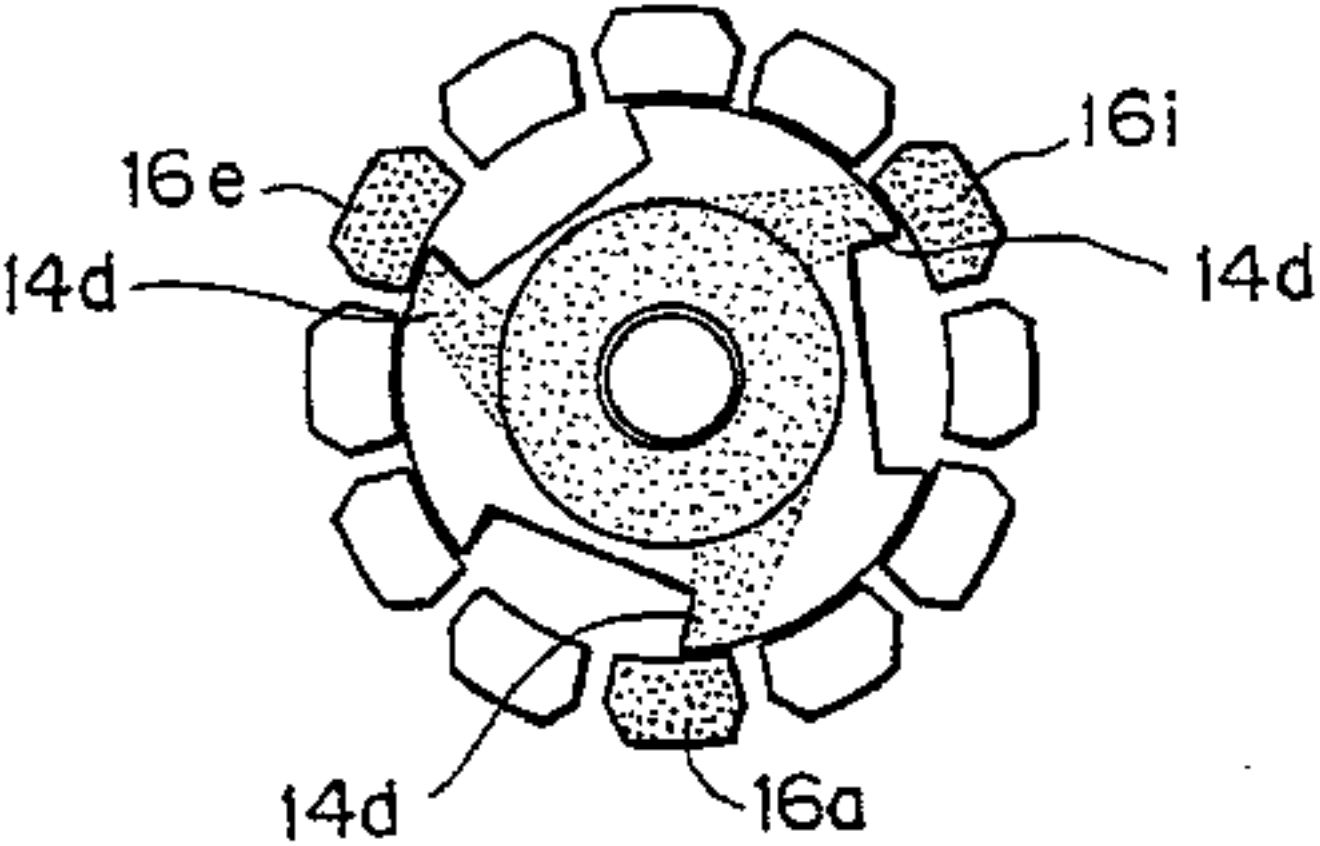
16e
16i
14d
14d
14d
16a

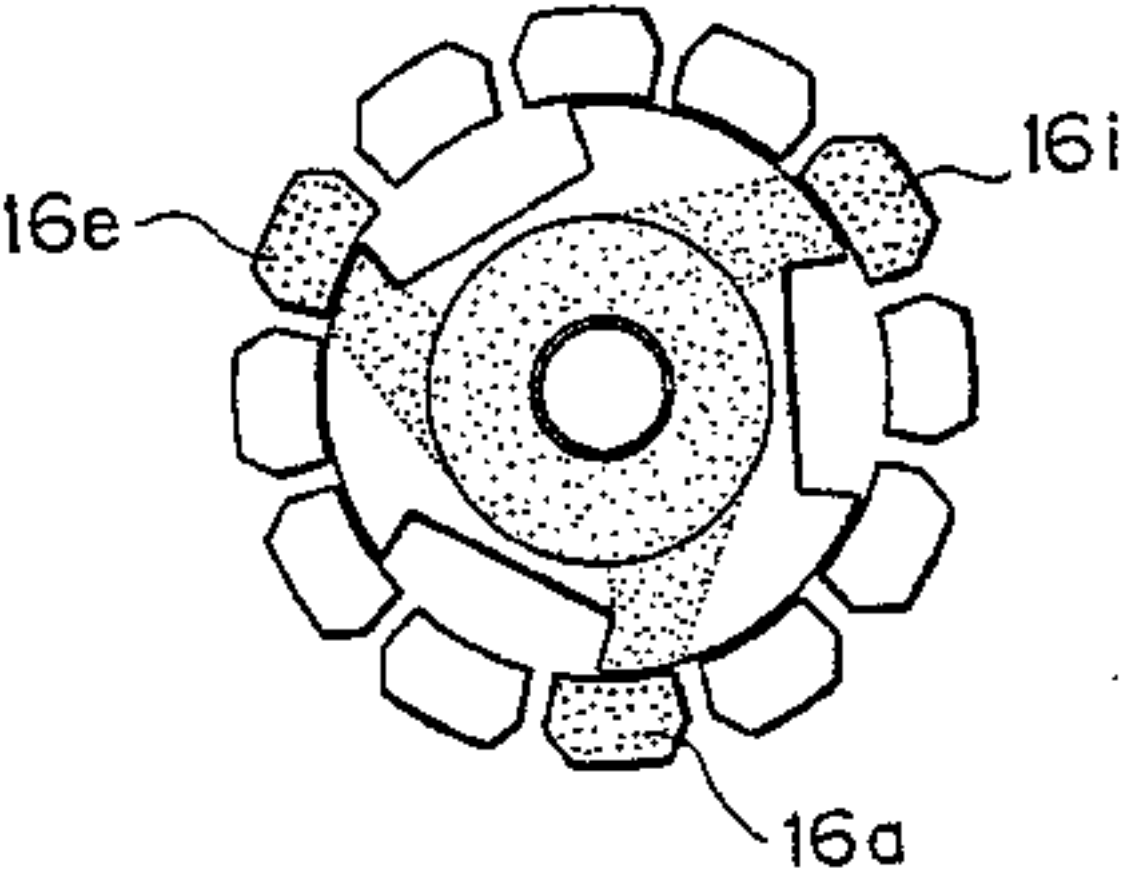
16i
16e
16a

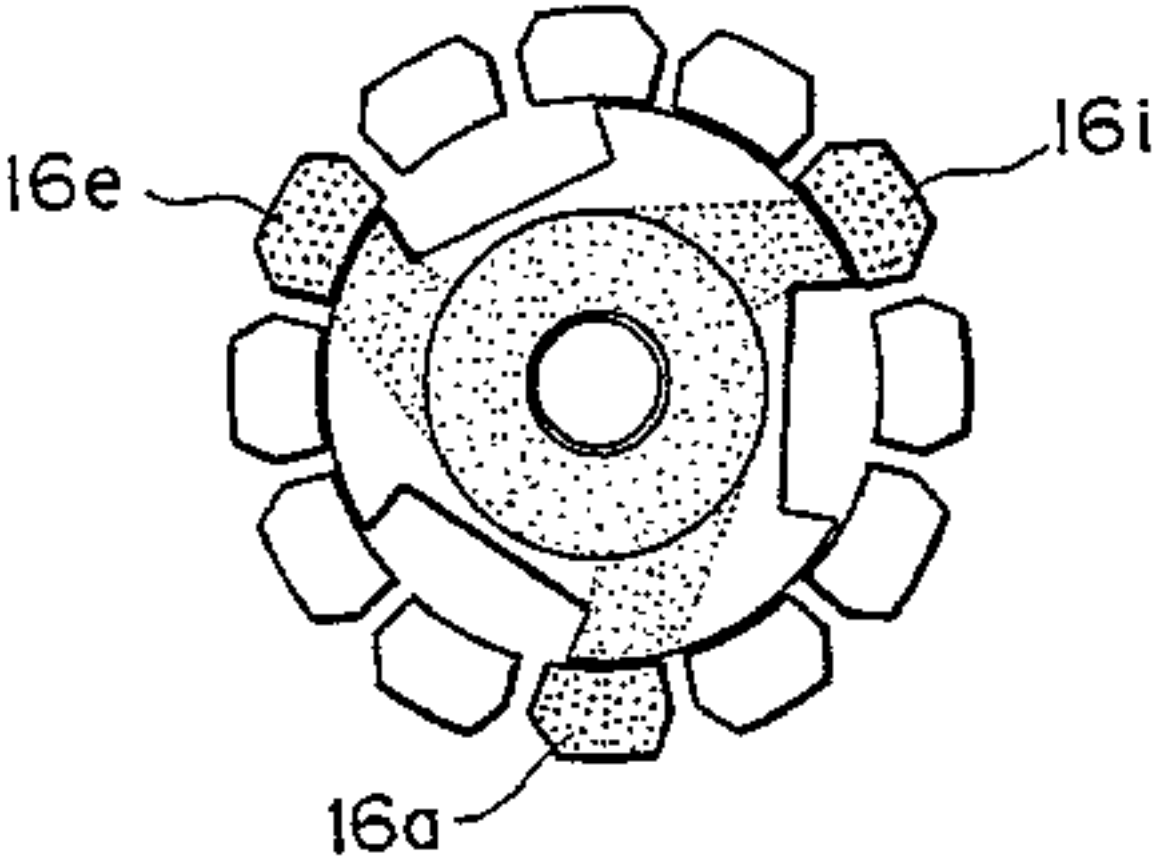
16e
16i
16a

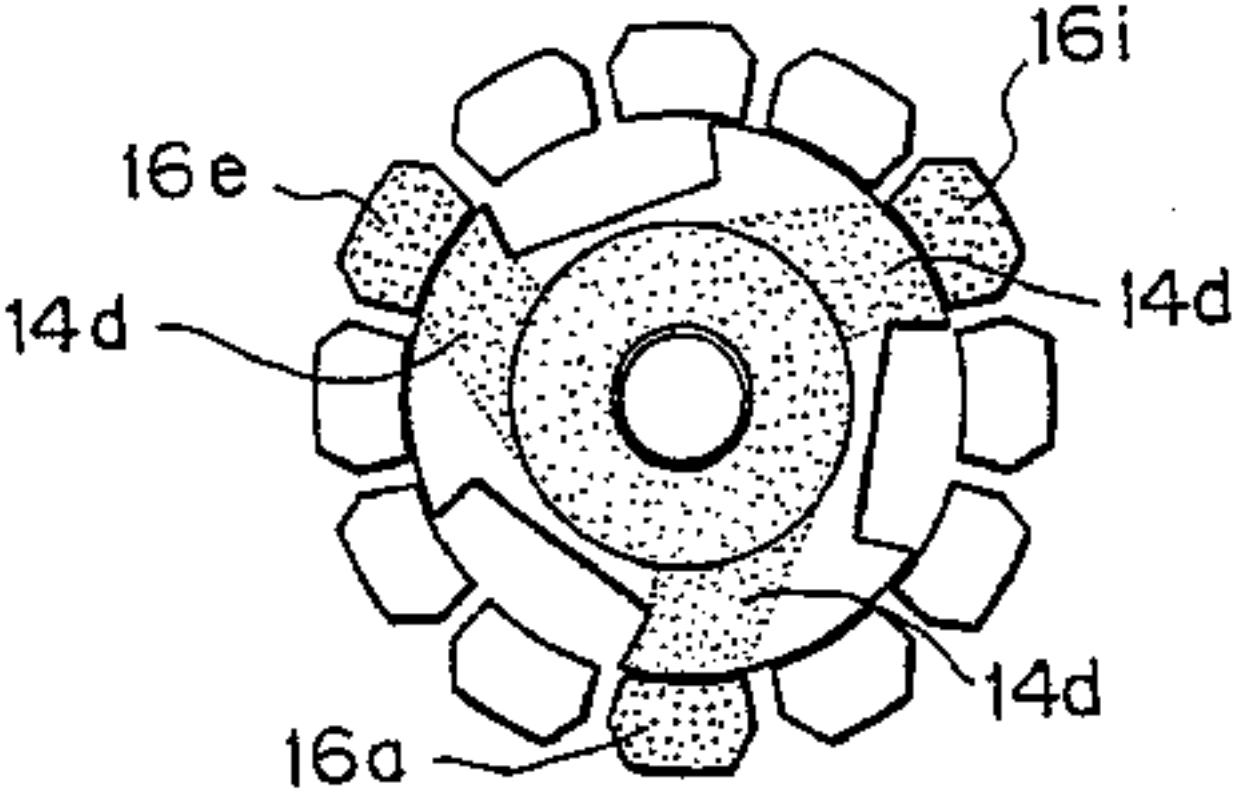
16i
16e
14d
14d
14d
16a

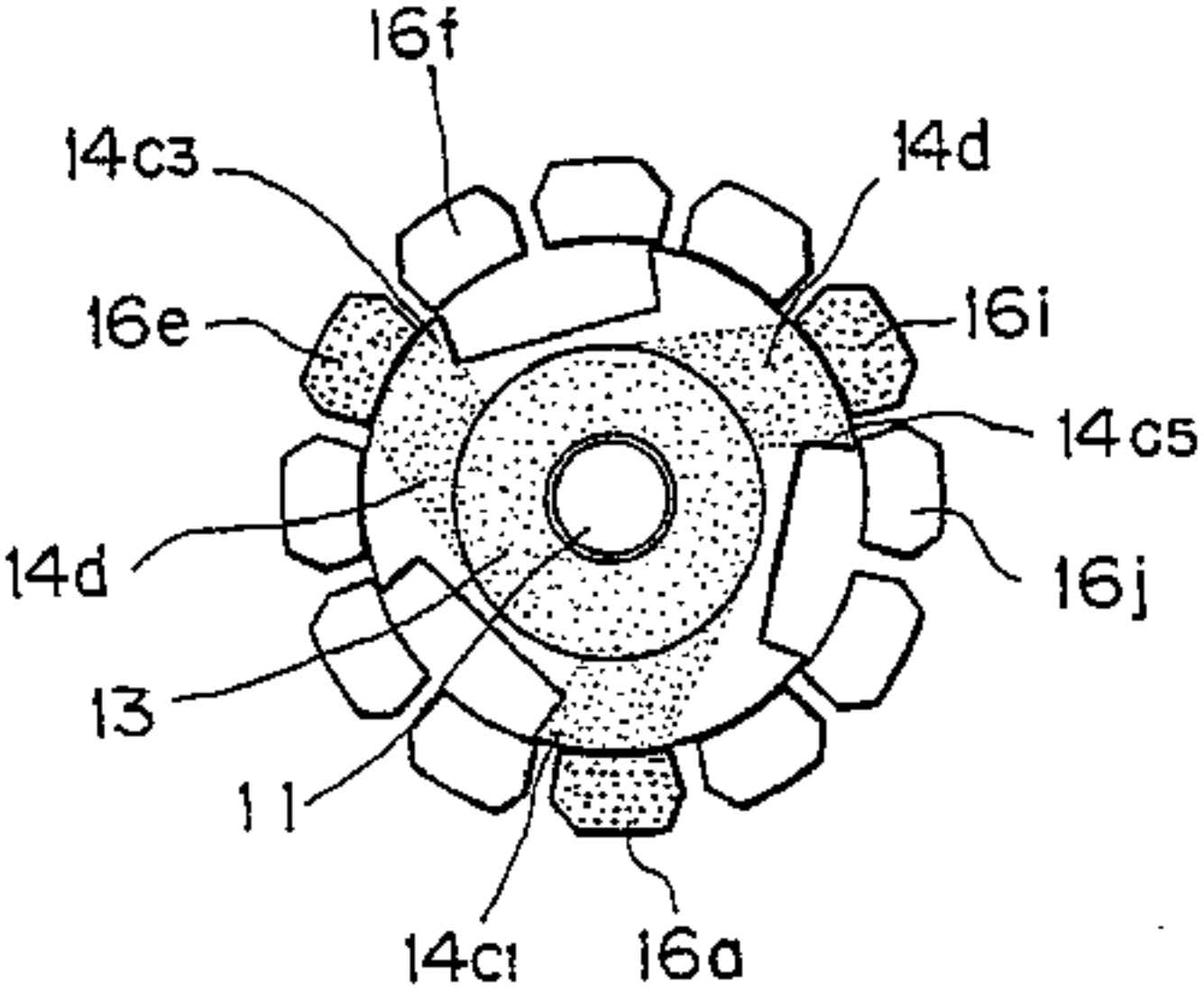
16f
14c3
14d
16e
16i
14c5
14d
16j
13
11
14c1
16a

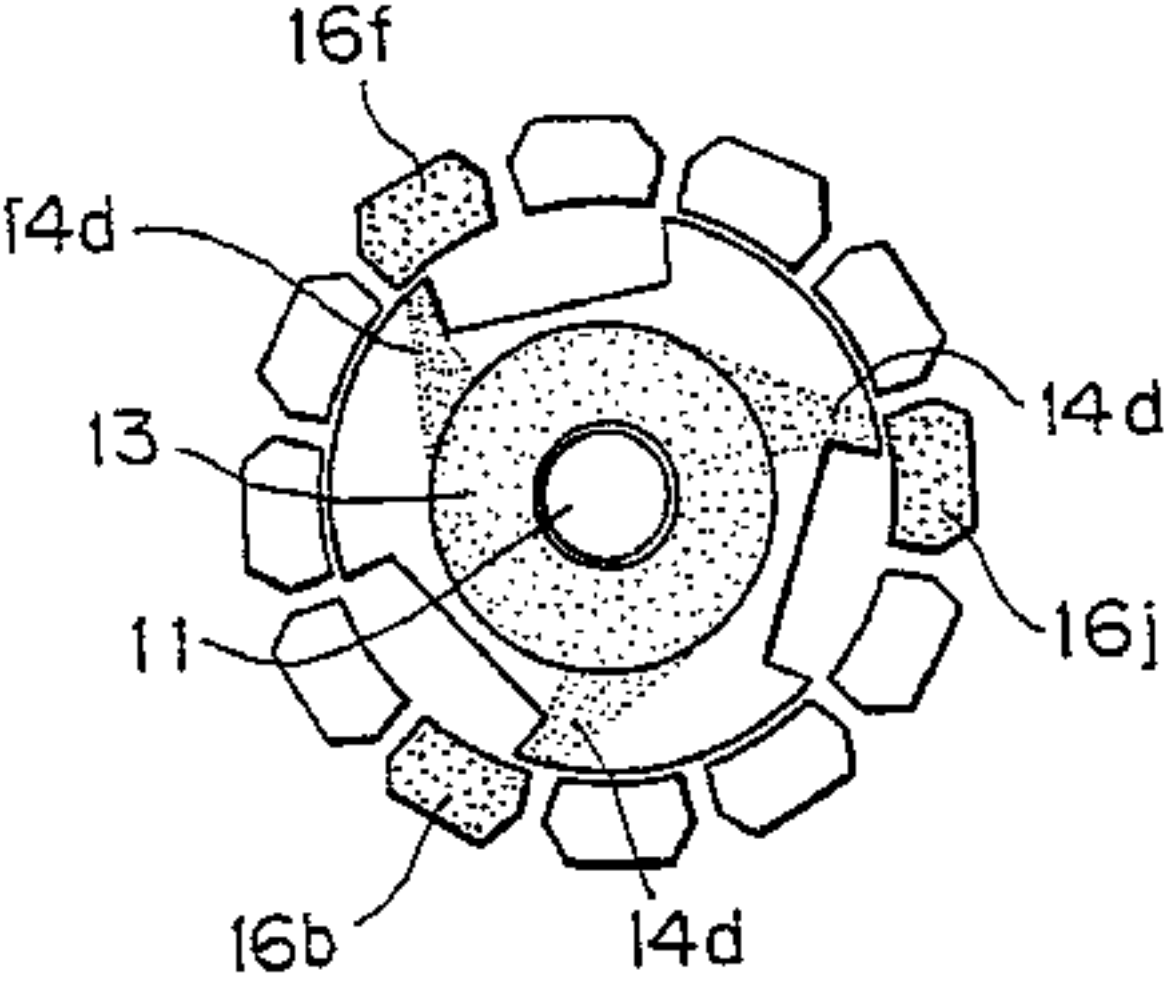
16f
14d
14d
13
16j
11
16b
14d

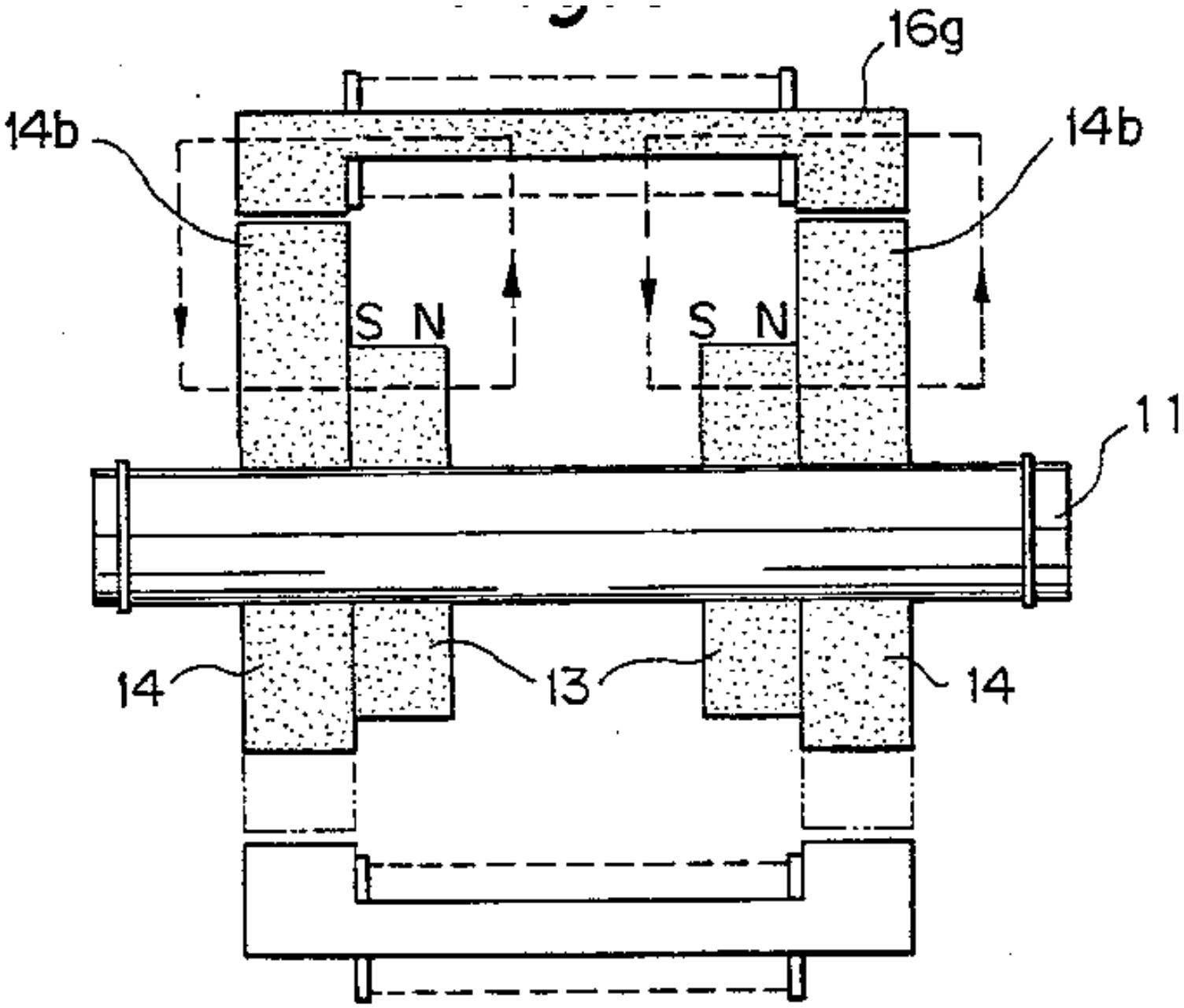
16g
14b
14b
S N
S N
11
14
13
14

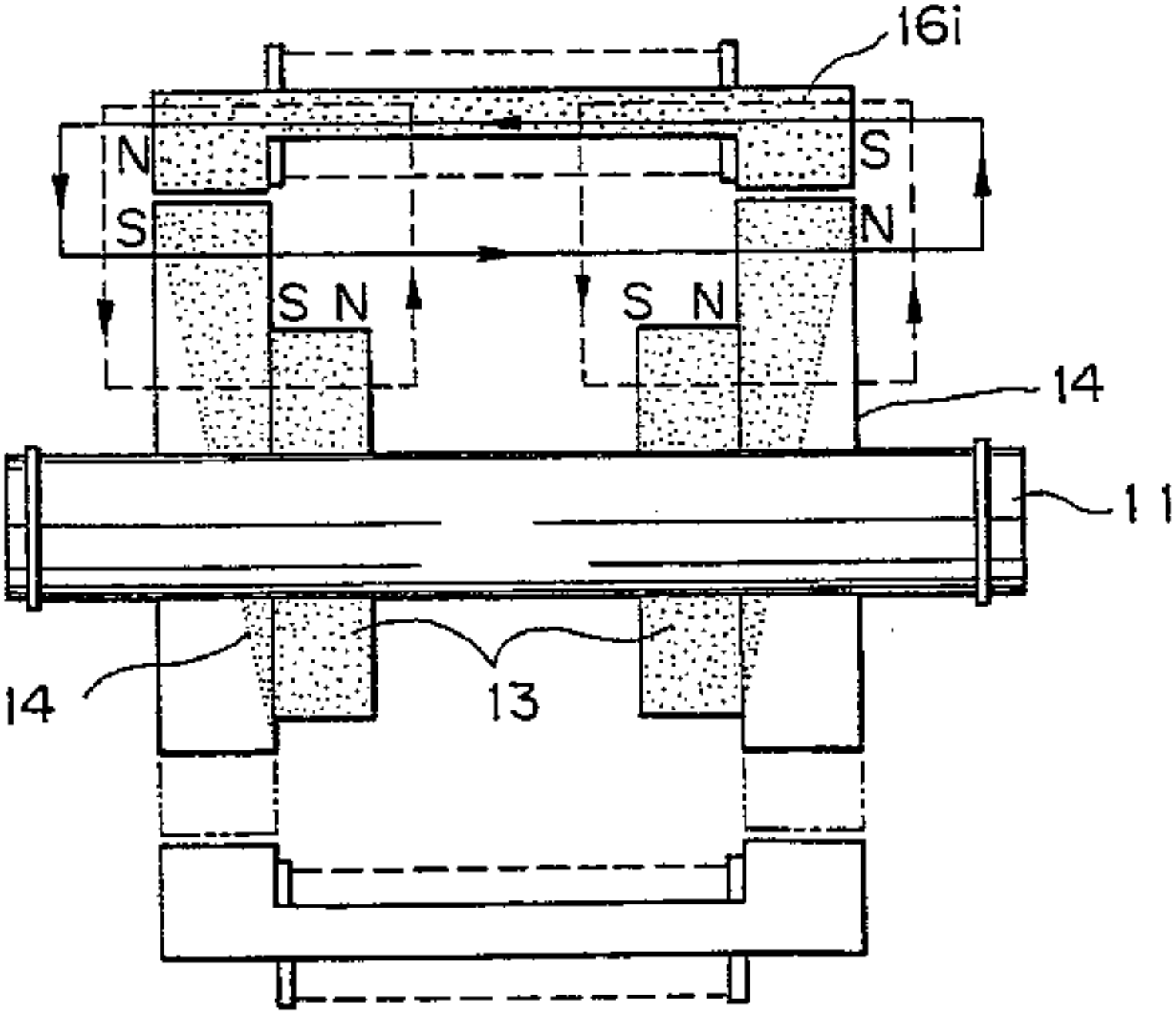
16i
N
S
S
N
S N
S N
14
11
14
13

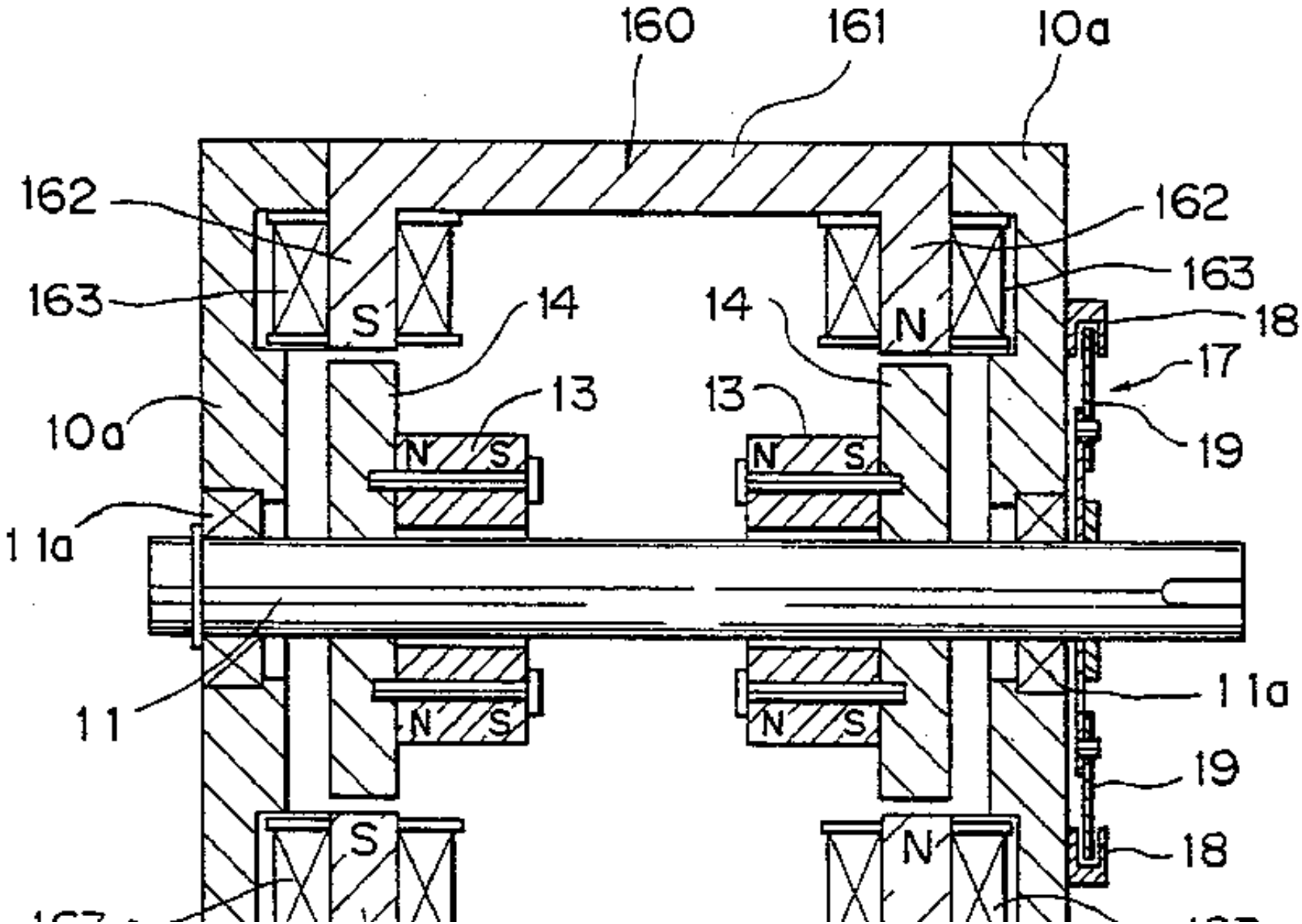
160
161
10a
162
162
163
163
14
14
18
17
13
13
10a
19
N
S
N
S
N
S
11a
11
11a
N
S
N
S
19
S
N
18

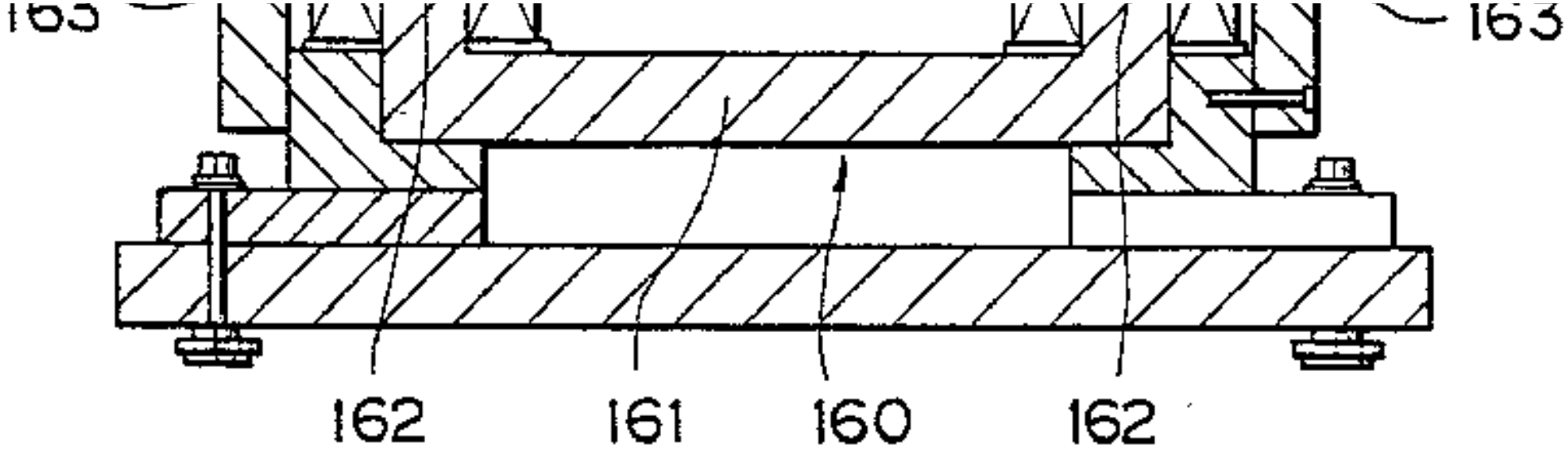
163
163
162
161
160
162

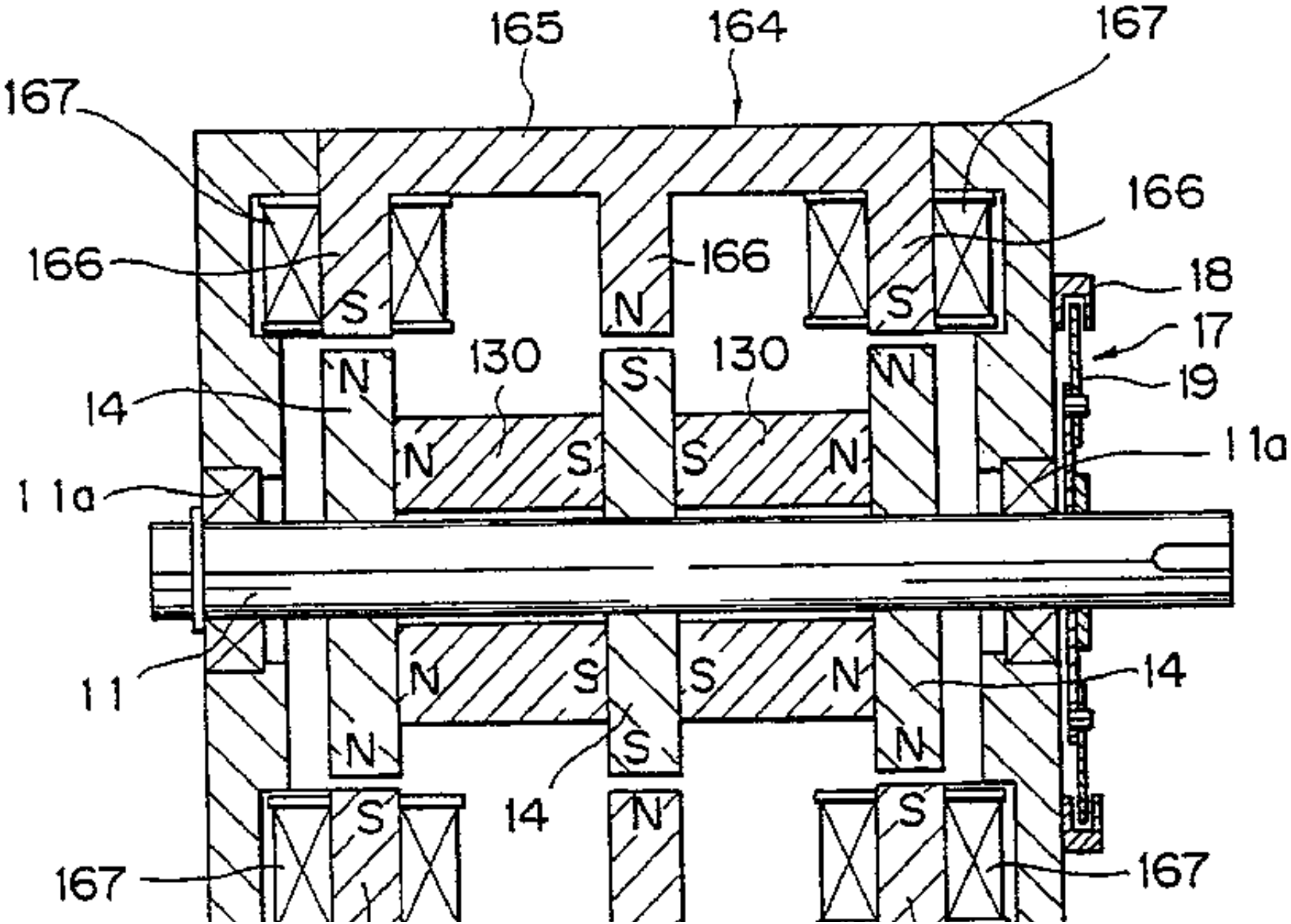
165
164
167
167
166
166
166
18
17
19
130
130
14
11a
11a
11
14
14
167
167
S
N
S
N
S
N
S
N
S
N
S
N
S
N
S
N
S
N
S
N

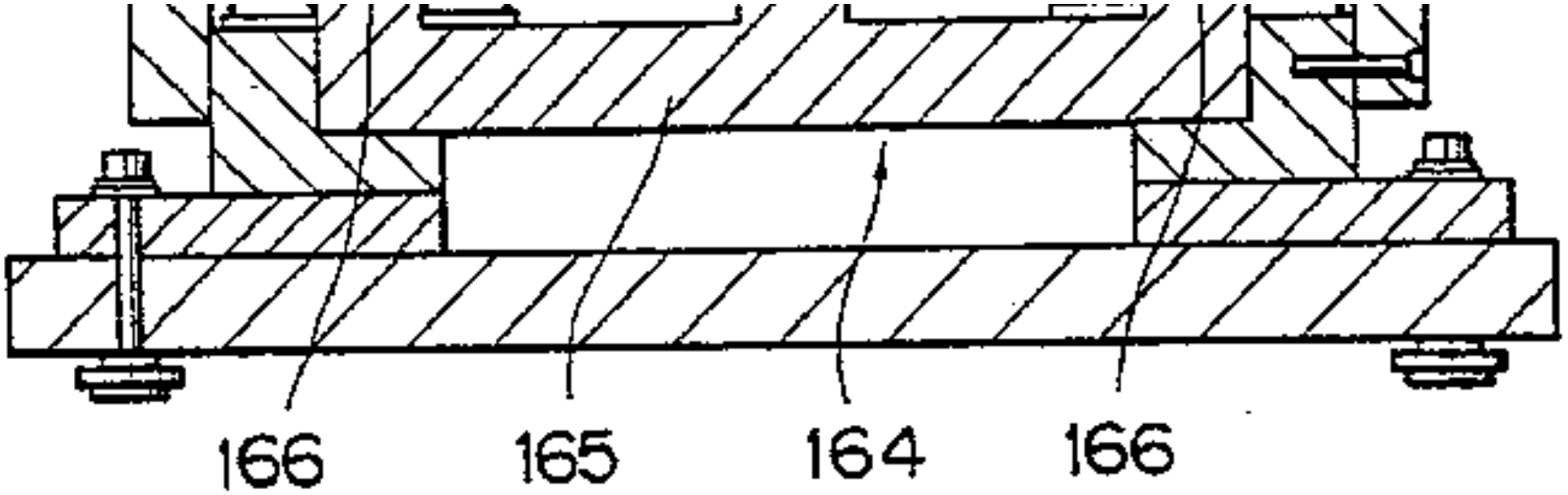
166
165
164
166

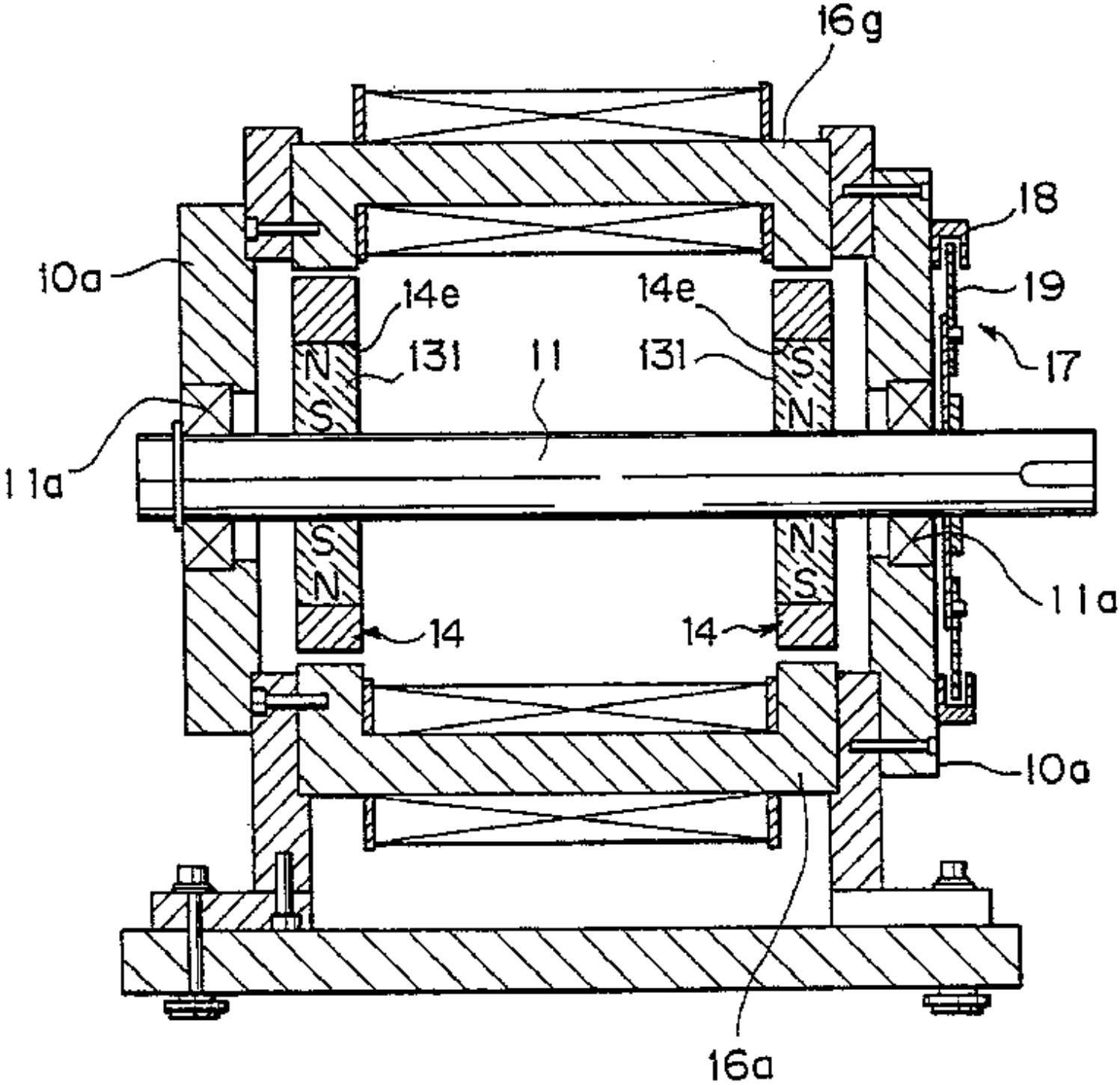
16g
18
10a
19
14e
14e
131
11
131
17
N
S
S
N
11a
S
N
N
S
11a
14
14
10a
16a

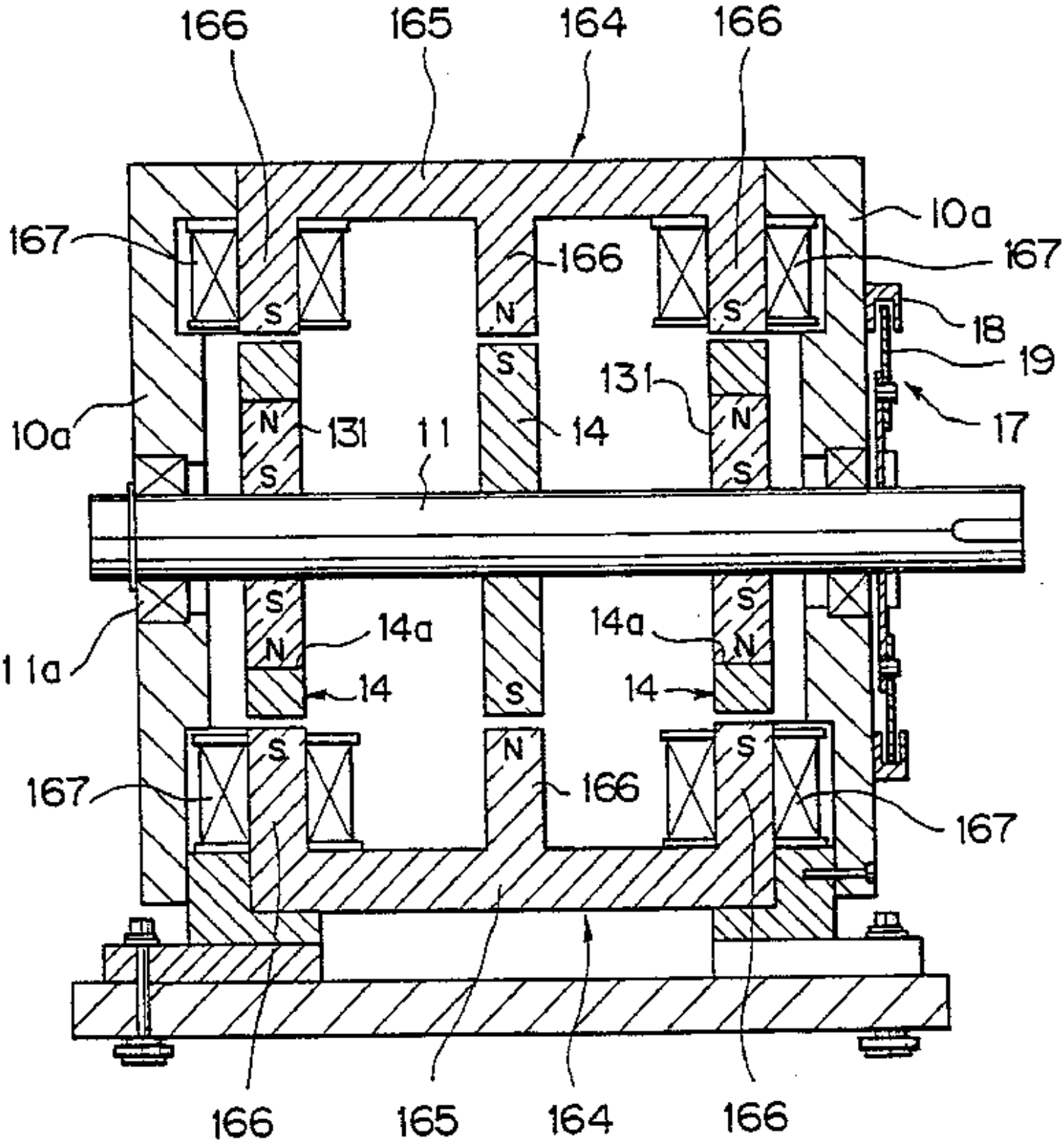
166
165
164
166
10a
167
166
167
S
N
S
18
19
S
131
10a
N
131
11
14
N
17
S
S
S
S
14a
14a
11a
N
N
14
S
14
S
N
S
167
166
167
166
165
164
166

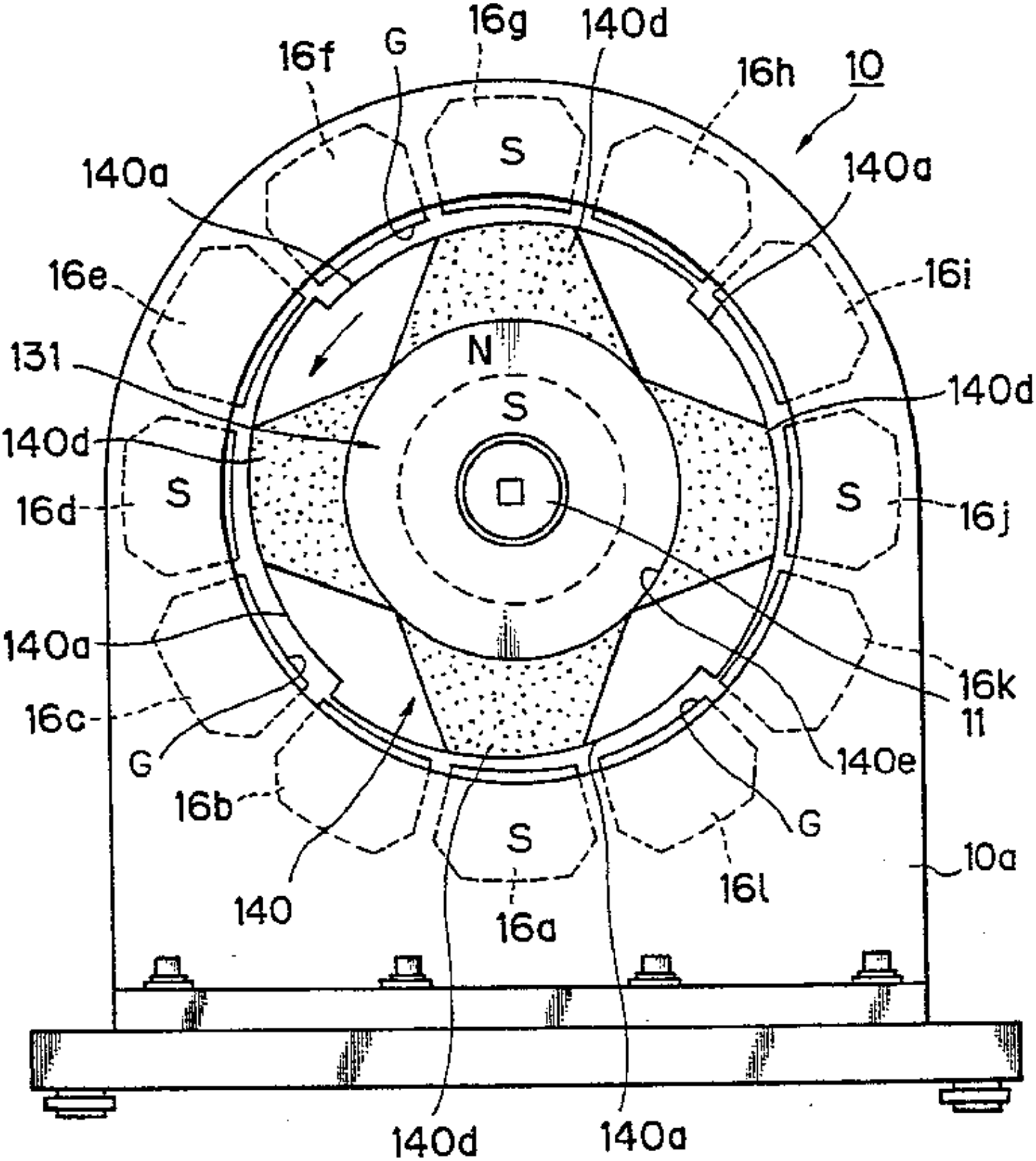
16g
140d
16f
G
16h
10
S
140a
140a
16e
16i
131
N
S
140d
140d
S
S
16d
16j
140a
16k
11
16c
G
140e
16b
G
S
10a
16l
140
16a
140d
140a

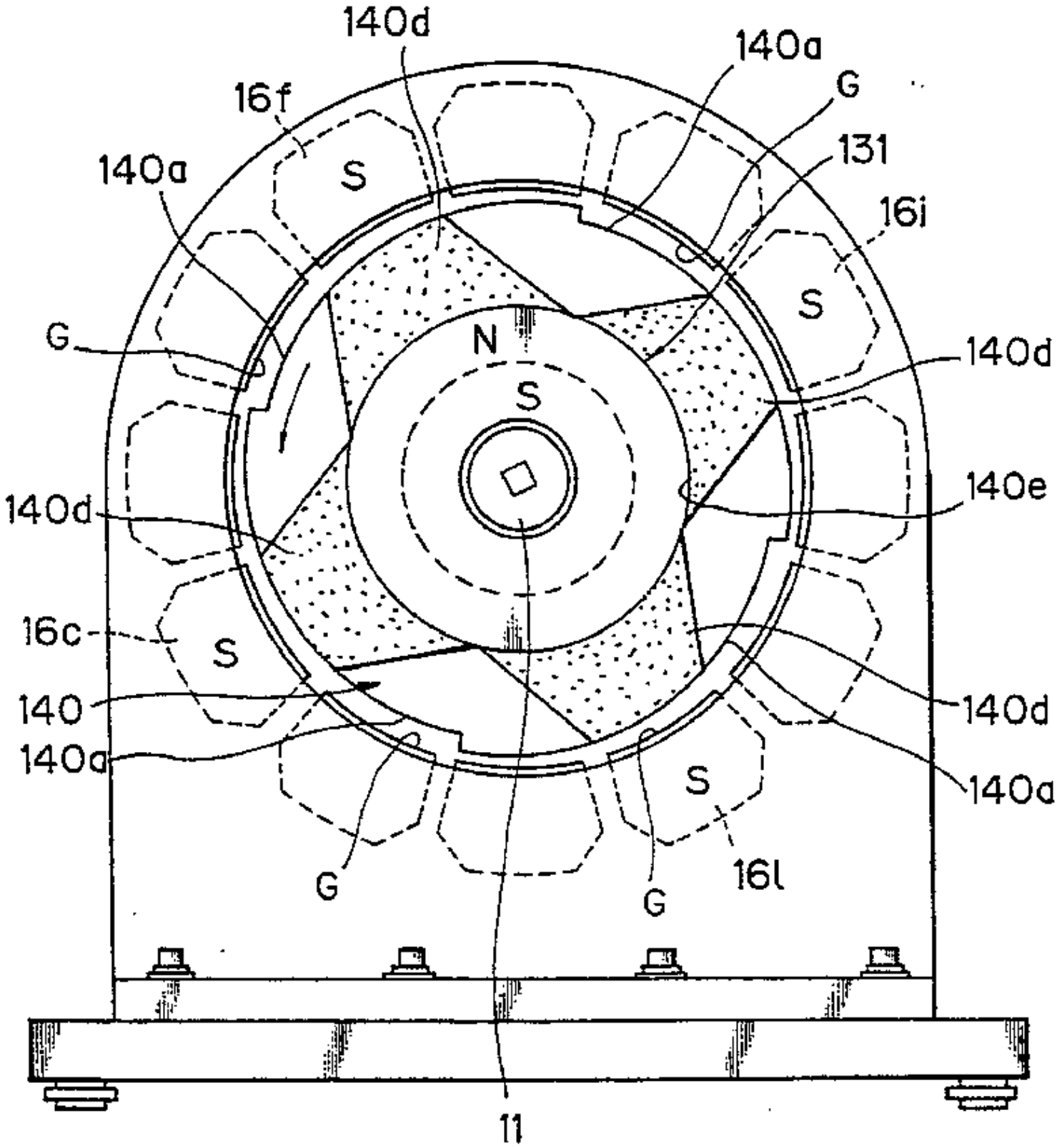
140d
140a
G
16f
131
140a
16i
S
S
G
N
140d
S
140e
140d
16c
S
140
140d
140a
140a
S
G
16l
G
11

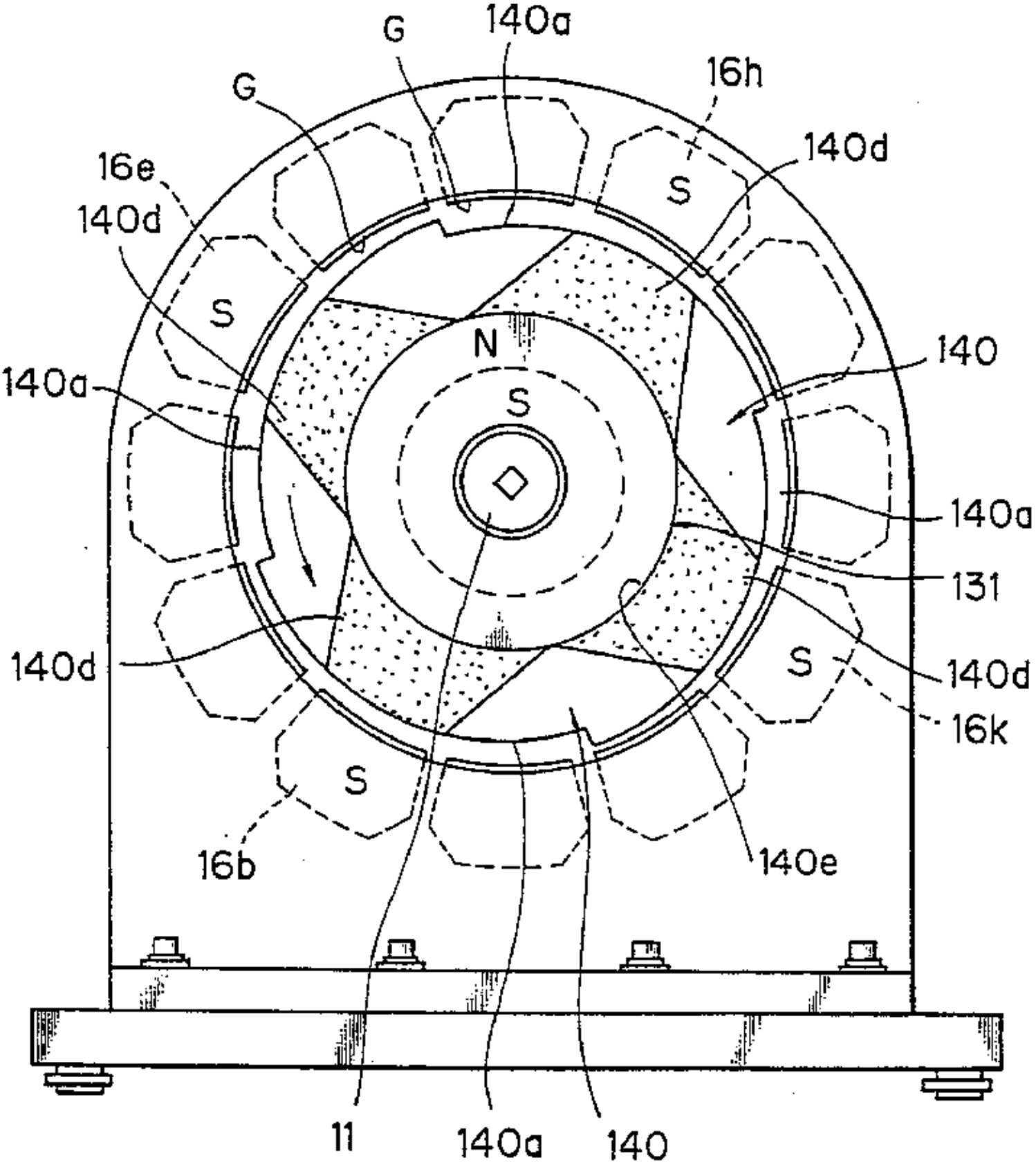
G
140a
G
16h
140d
16e
140d
S
S
N
S
140
140a
140a
131
140d
S
140d
16k
S
16b
140e
11
140a
140

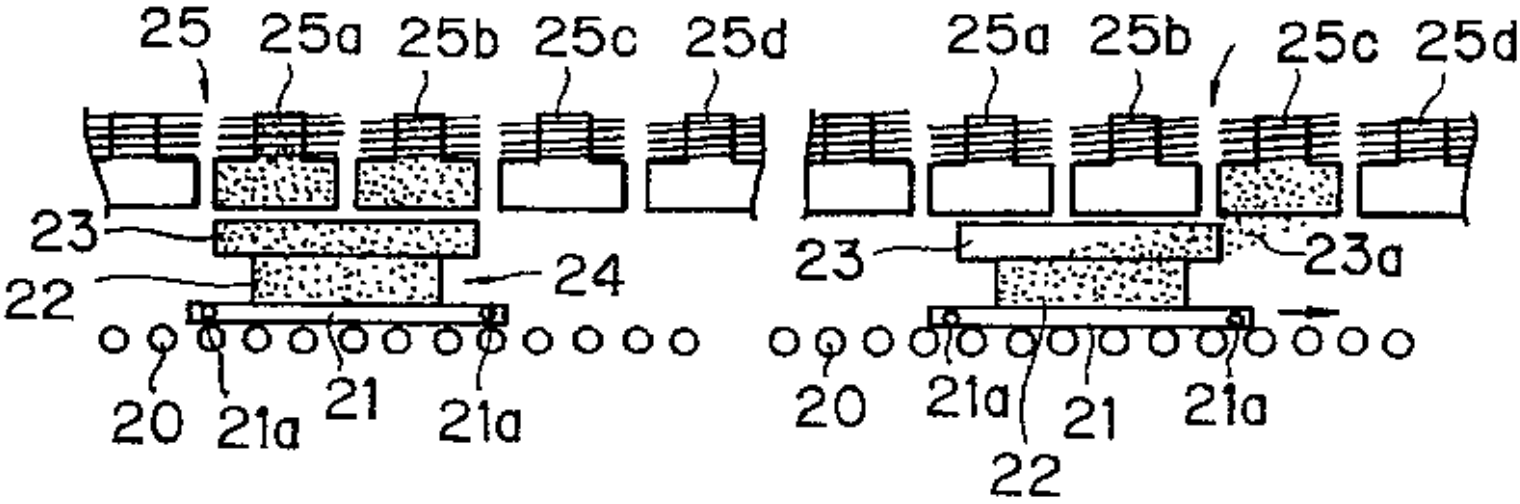
25
25a
25b
25c
25d
23
22
24
20
21a
21
21a
25a
25b
25c
25d
23
23a
20
21a
21
21a
22

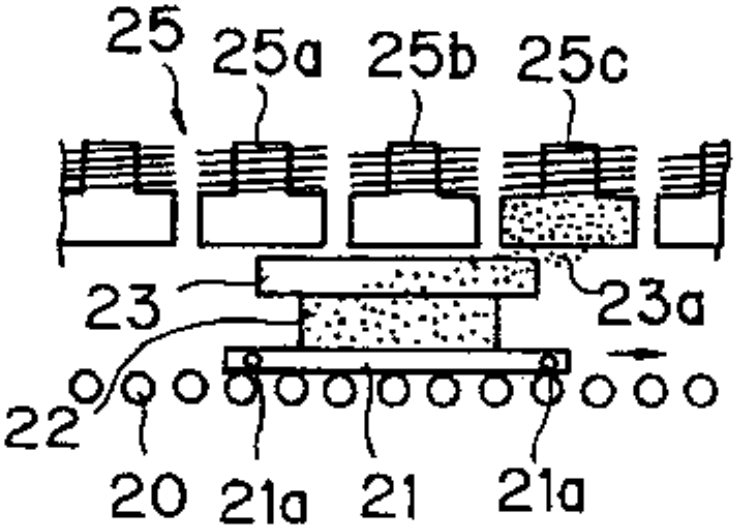
25
25a
25b
25c
23
23a
22
20
21a
21
21a

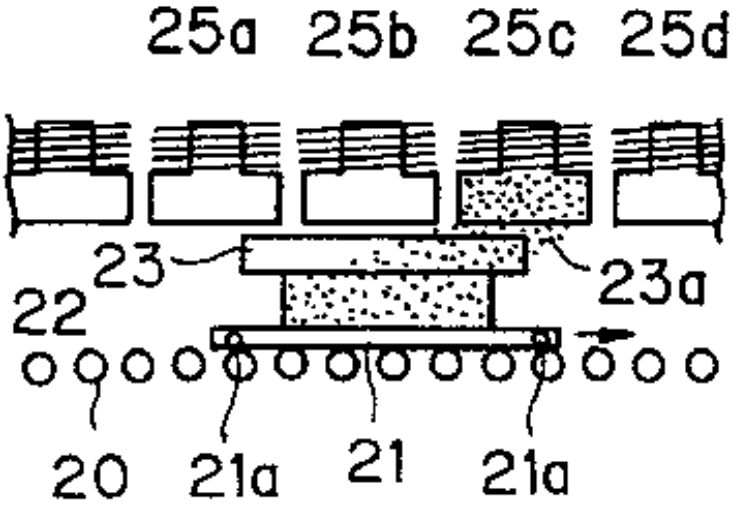
25a
25b
25c
25d
23
23a
22
20
21a
21
21a

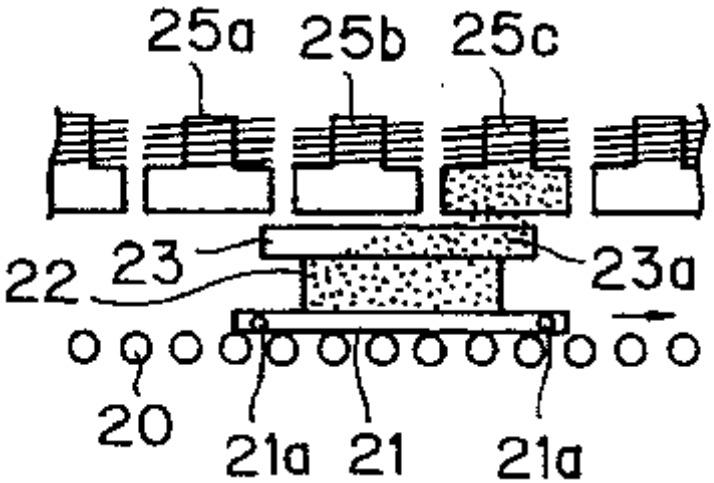
25a
25b
25c
22
23
23a
20
21a
21
21a

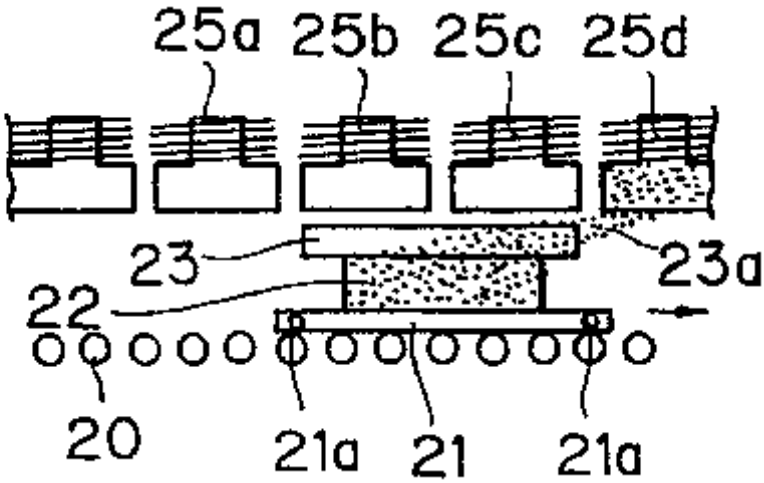
25a
25b
25c
25d
23
23a
22
20
21a
21
21a

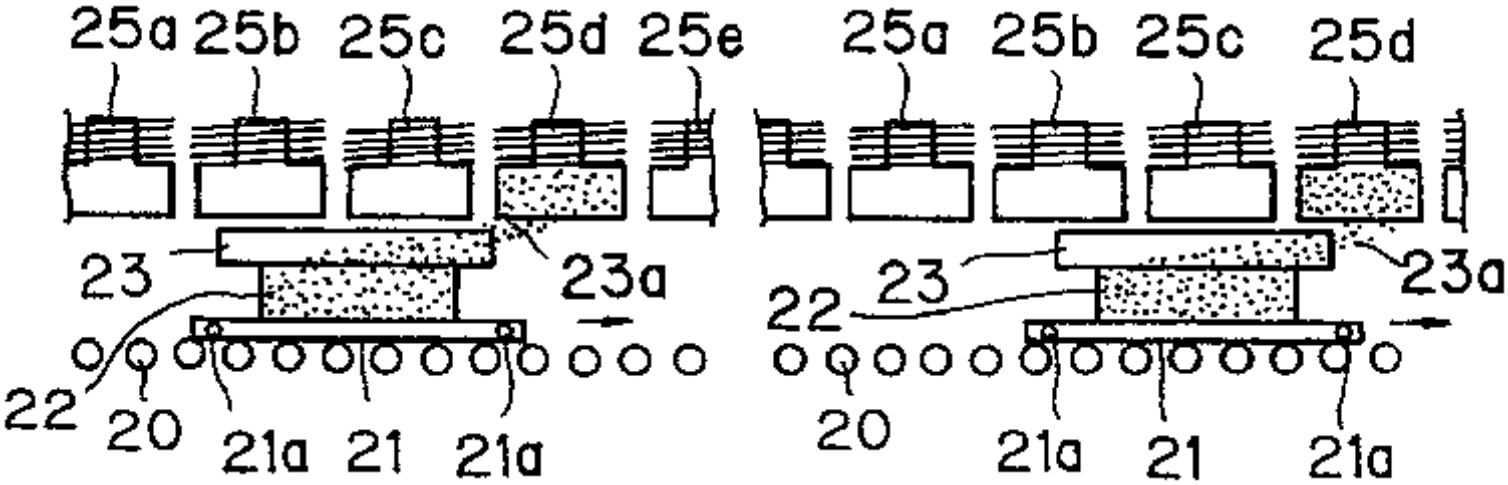
25a
25b
25c
25d
25e
23
23a
22
20
21a
21
21a
25a
25b
25c
25d
23
23a
22
20
21a
21
21a

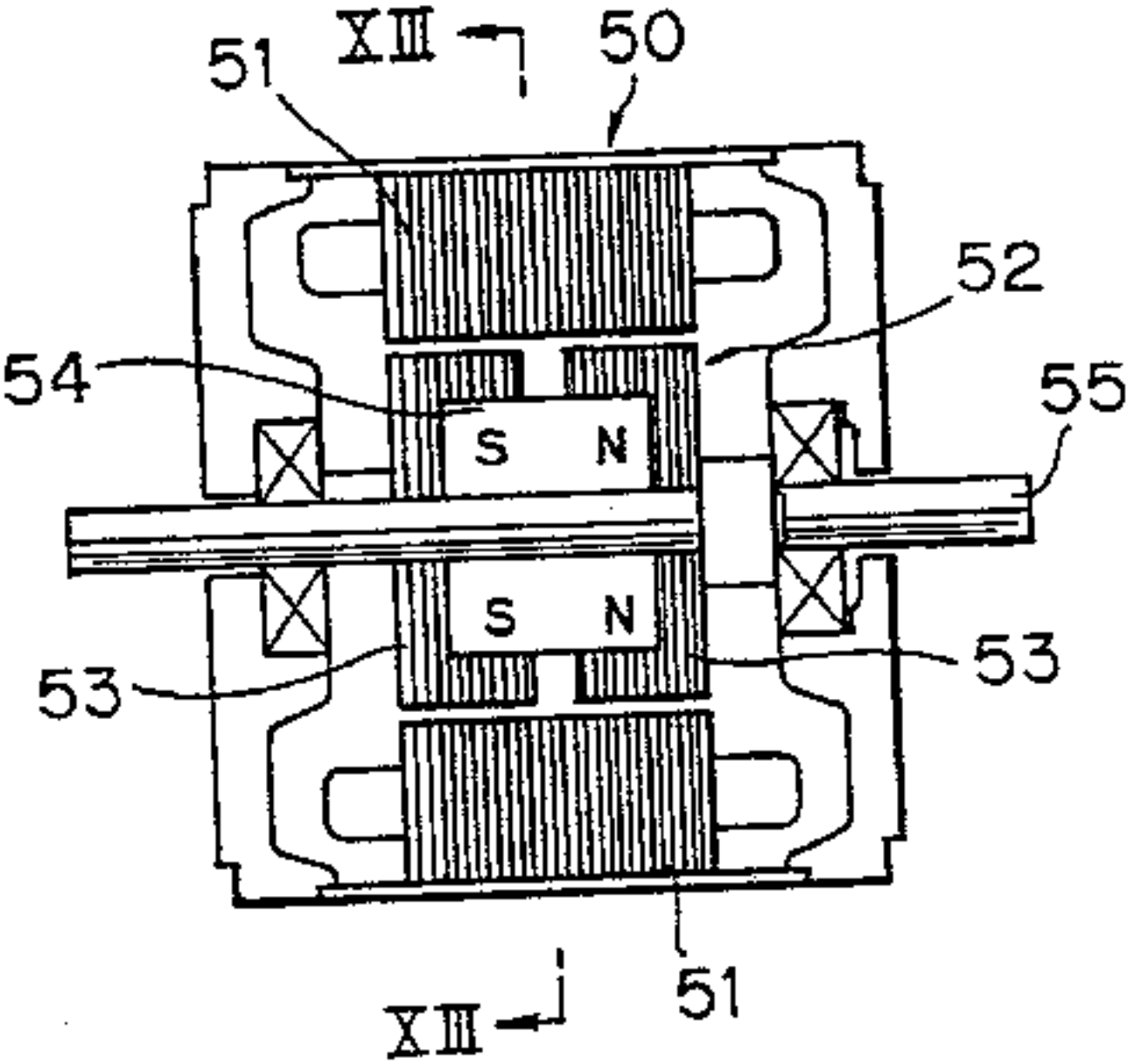
XIII
50
51
52
54
55
S
N
S
N
53
53
51
XIII

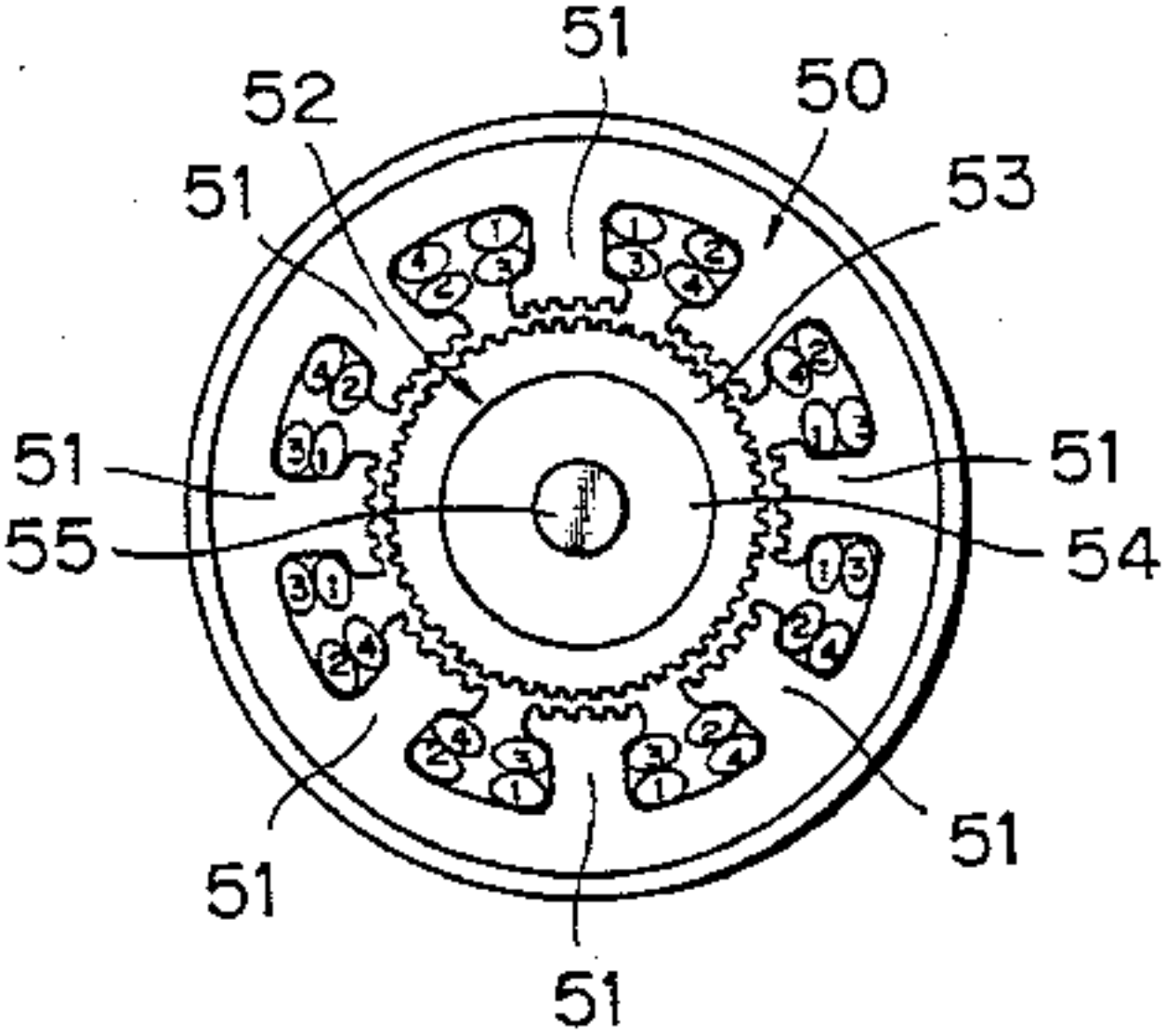
51
52
50
51
53
51
51
55
54
51
51
51

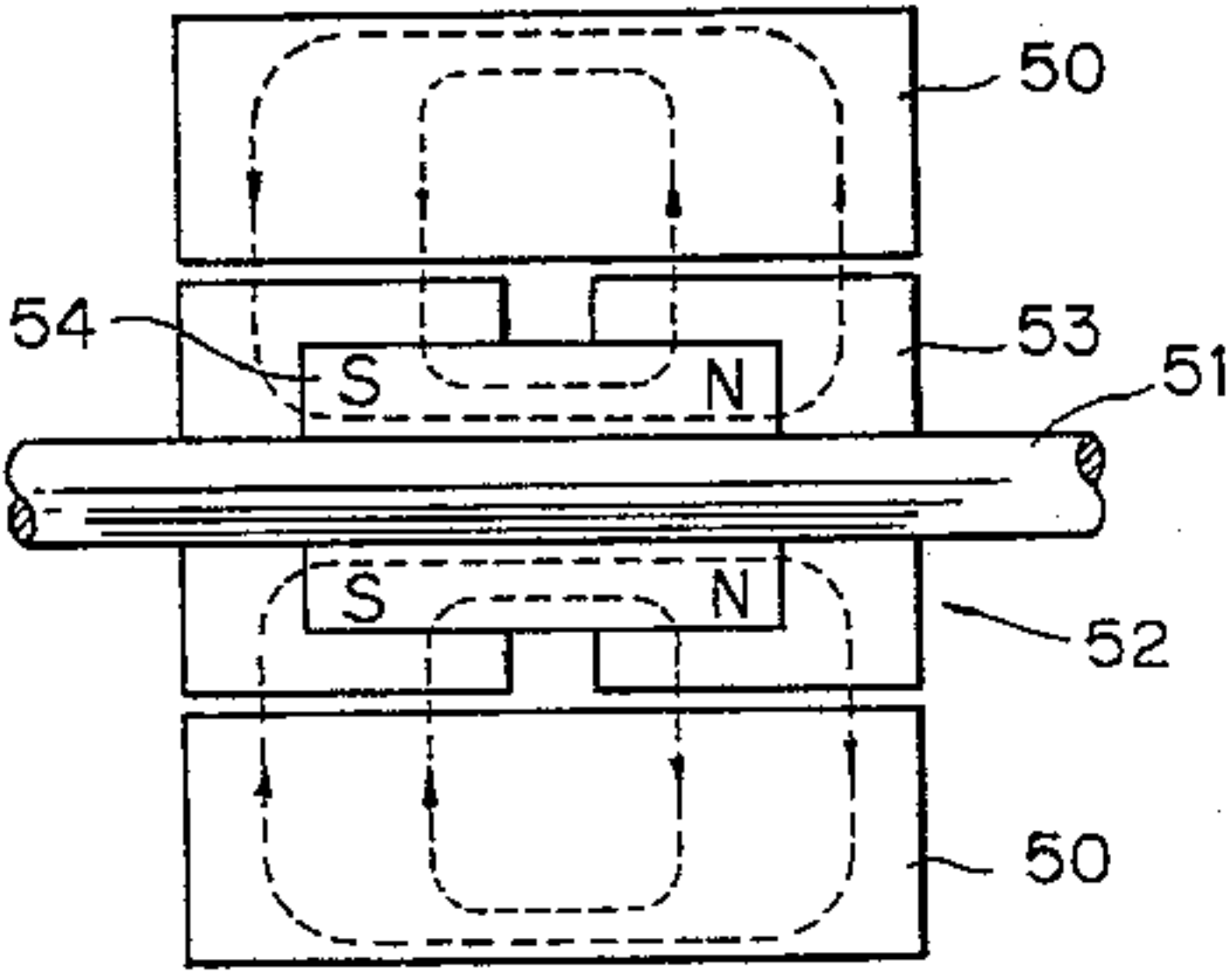
50
54
53
51
S
N
S
N
52
50

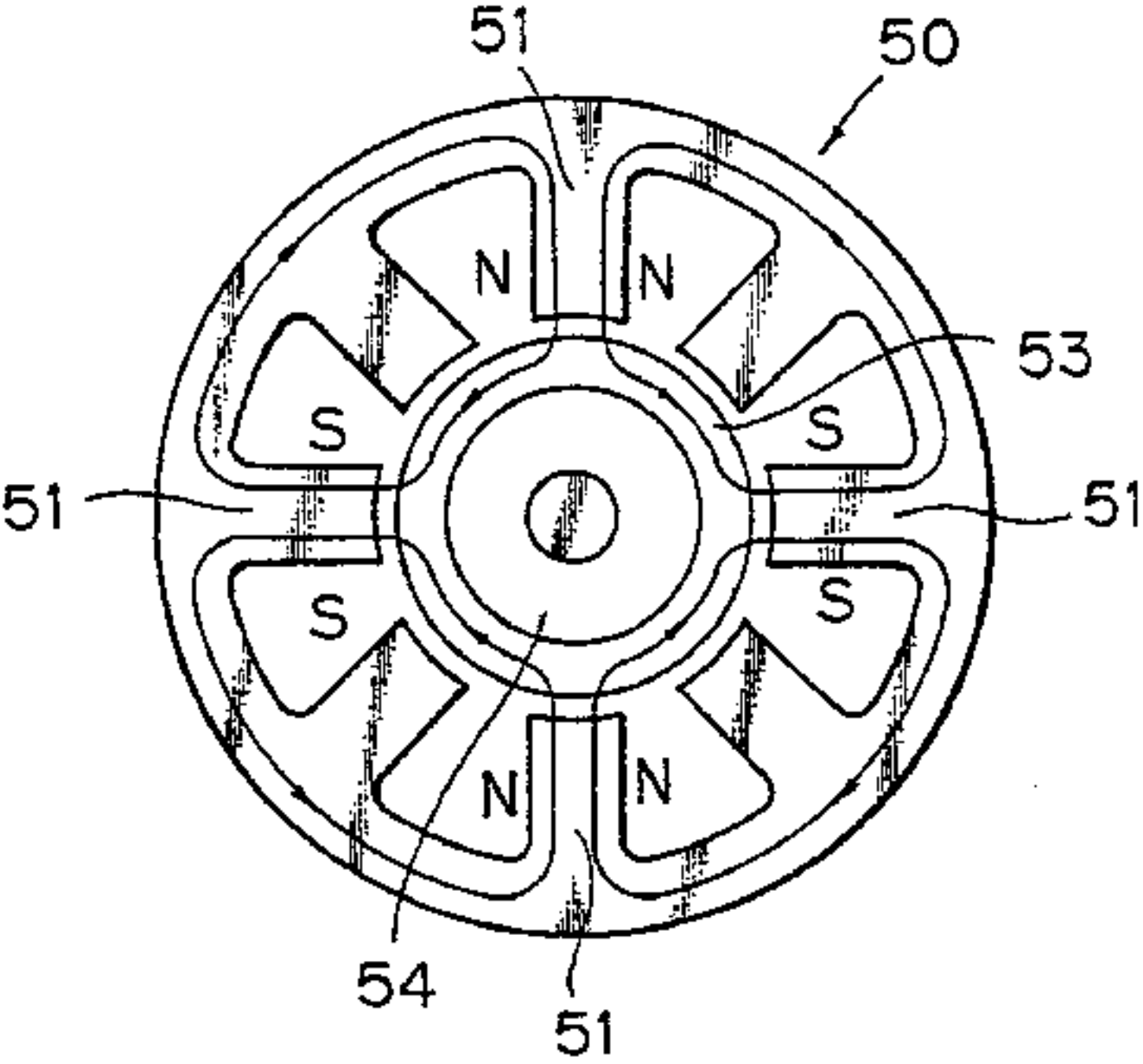
51
50
N
N
53
S
S
51
51
S
S
N
N
54
51

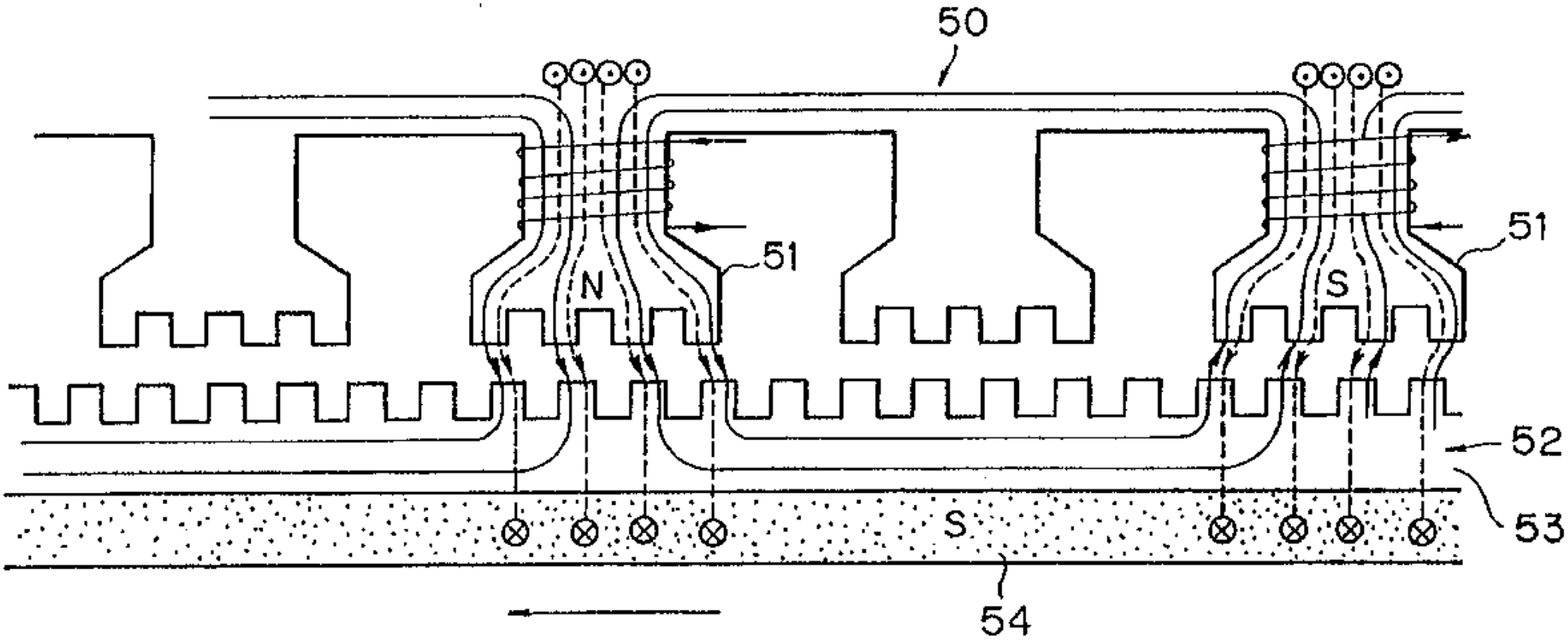
50
51
51
N
S
52
53
S
54

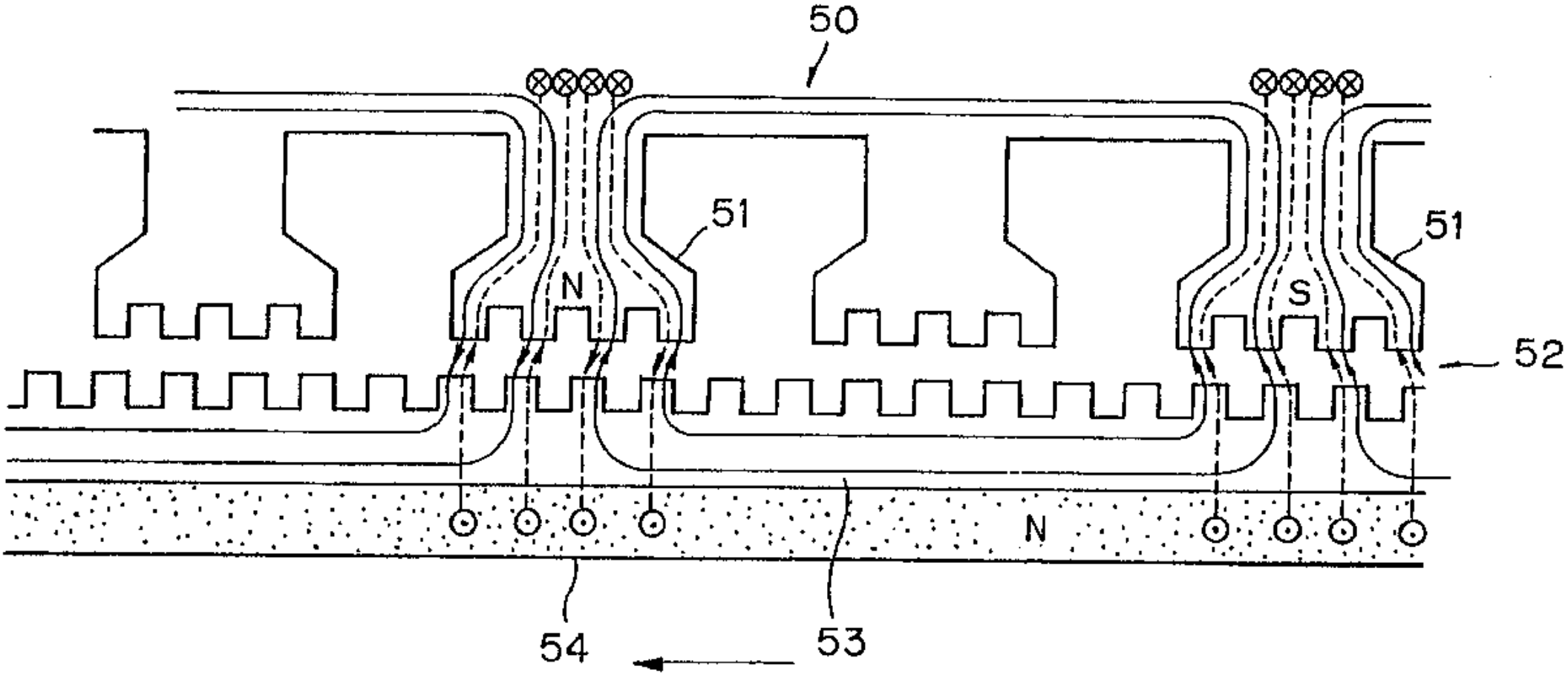
50
51
51
N
S
52
N
54
53

The Tom Bearden Website

The Astronaut's Magnetic Boots

Try finding the original magnetic astronauts boots that were developed by NASA. The original boots were excellent. For the acceptance tests, an engineer clad as an astronaut walked across the bottom of a steel beam in a high bay research area, upside down against the pull of Earth's gravity. He *stepped* as he walked, putting his foot "down" and then picking it "up".

There is no problem in finding magnets strong enough to hold the astronaut firmly in such an upside position. The problem with simple magnetic boots using such strong magnets is that, once the foot is planted, unless he is King Kong himself, the astronaut cannot pick up the foot again.

However, the Radus boots completely solved that problem. If the permanent magnet fields are switched off for that foot that the astronaut wishes to lift, he can lift it easily and take another step. Then if the fields are switched on again as he places his foot down, this switching of the fields allows him to walk in a manner resembling normal walking, though a little slower.

To do that switching by normal "battery and coils" would be prohibitively bulky and heavy — and awkward to say the least.

With the Radus boots, the astronaut could pick up his foot by simply switching off the permanent magnetic fields easily. They switched on again when he placed the foot down. And he did not have to carry a huge battery around with him, to furnish enormous current to do that.

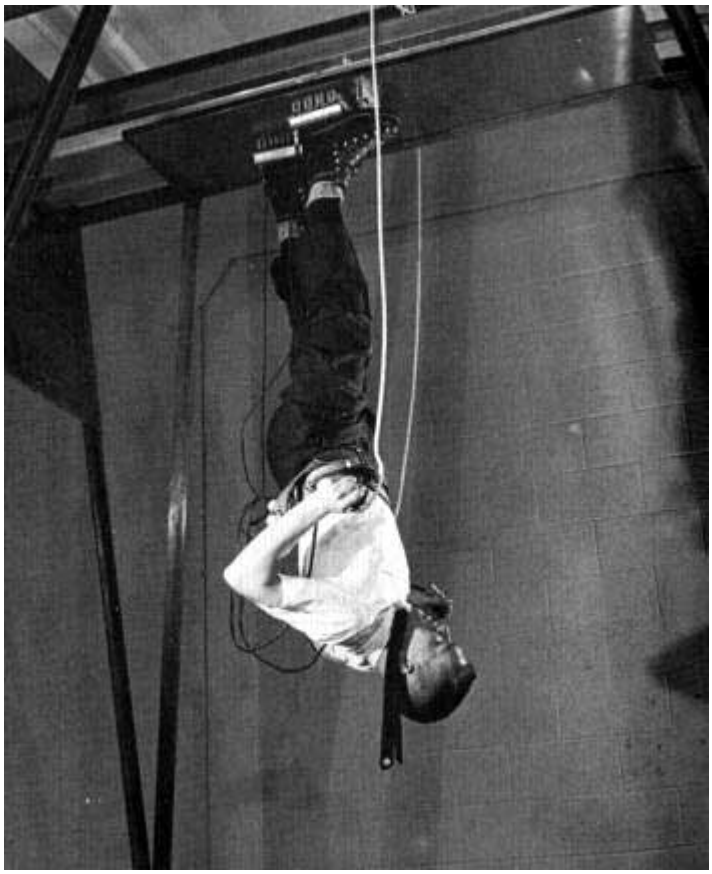

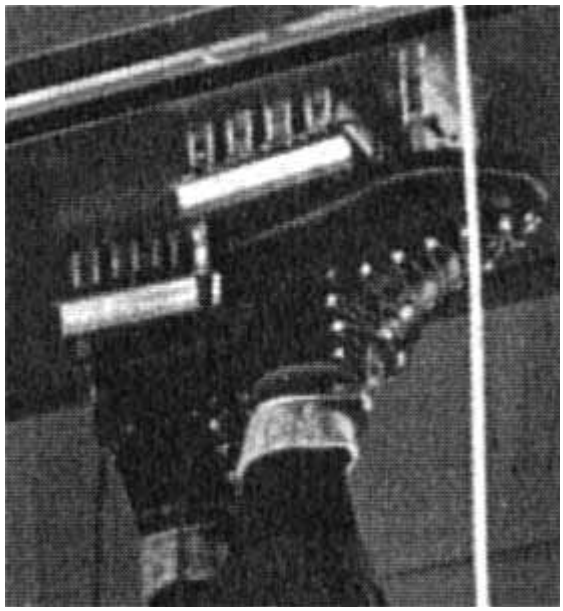

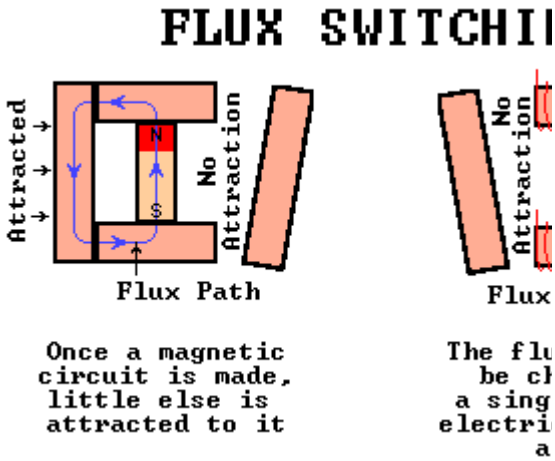

Tom Bearden comments: That is almost precisely one of the demons potential clients, to prove to them that a magnetic flux arrangement c switched, and the magnetic path will "remember" which is supposed change it again

Well, it doesn't take a genius to see that, when you can switch a permanent magnet's fields easily, and the magnet also has a built-in memory as did the Radus magnets, then with a little ingenuity in switching one could use such switchable magnets to produce a self-switching, self-powered permanent magnet motor. The magnet, being a permanent dipole, is already a particular kind of "free energy generator", since it continuously gates magnetic energy directly from the vacuum due to its asymmetry in the energetic vacuum flux.

From the energy barons' viewpoint, those Radus magnets and Radus boots had to go, and go quickly. And go they did.

So NASA then developed the present "shuffler" kind of magnetic boots where the astronaut can't pull his boot loose from the surface, but must "scoot" his feet along in a sliding and painfully awkward fashion. That way, you see, no one can use the boot magnets — which now are just rather ordinary permanent magnets, without memories and without switchable fields — to make an overunity device or a self-powering permanent magnet engine.

In the originals developed by Radus *et al.* at Westinghouse, the magnetic fields themselves — from *permanent magnets* — were simply switched! And the magnets had a memory. (So far as is known, even today no one tells you that in many virgin magnets fresh from the factory, their very first use conditions them with a memory! *That fact can be used, e.g., to create magnets whose fields appear normal, but which deviate from the normal behavior of ordinary magnets, including produce anomalies in their magnetic fields.*

That subject — the deliberate induction of magnetic memory into a virgin permanent magnet with its first use — cries out for a sharp young graduate student to do substantial, pioneering research on that phenomenon, and do his Ph.D. thesis on it. There is a Nobel Prize waiting there for a future sharp young scientist who fully deciphers that "magnetic memory conditioning" mechanism. The entire subject of making permanent magnets with memories, and how to use such in operational systems, is still a largely unexplored, extremely obscure territory. In fact, most researchers are not even aware that the phenomenon exists. The energy barons like it that way!

Anyway, back to the Radus boots. With them, the astronaut could actually lift his boot and take a rather normal-like step.

So obviously those boots vanished only a few years after their development.

How the True Magnetic Boots Information Was Recovered

It took some real doing to run down the true story of the vanishing Radus boots. Most of that marvelous work was done, unfortunately, before the big computer data bases really got going. Much of the earlier work is just not in there in the computerized databases. So one drew pretty much of a blank (except for the later "shufflers") when searching those databases on descriptors and terms related to the astronauts' magnetic boots.

An excellent researcher, John Reed, came to the rescue. John is a researcher of first rank. He actually found Radus' sister (Radus was deceased), who very graciously permitted access to some personal files Radus had left. With her permission, John copied the files. So that way much of the odd story of the *real* astronauts' magnetic boots was able to be reconstructed, before spin control was applied by you-know-who.

We certainly express our sincere appreciation to Radus' sister for her gracious assistance and kindness. We give full credit to John Radus for the invention of the switchable magnet and the conditioning of magnets with a memory. And we express our deep appreciation to John Reed for exerting so much effort to find something that was intended by certain parties to have disappeared from history, or at least to have faded into comfortable obscurity.

If you're interested in permanent magnet engines, be sure to check the Radus' references cited at the end of this article, and be sure to check the Kawai references.

The Researcher Must Understand Nonlinear Magnetic Materials Phenomena

And as an aside to the beginning magnetics engine researcher who does not have a good knowledge of magnetic materials, here's some advice. You must get beyond the shallow view of "a magnet has a north and south pole and a field between them" and beyond the notion of just "simple magnetic domains" — you know, the notion that "big magnets are made of littler magnets." You must get much deeper into magnetic materials and their behavior.

Magnetic materials are highly nonlinear. It's not as simple as just "aligning domains". There are lots of nonlinear phenomena going on in magnets other than what is induced by simple north and south poles! The field from every permanent magnet has an internal, hidden, dynamic structure. There are *dynamics* going on *inside* the field of a permanent magnet, and *comprising* that field. There are at least 14 kinds of magnetism — and in fact, more than that if you check Ehrenhaft's work on magnetic monopoles, as validated by Mikhailov and Barrett, and if you check Evans' and Vigier's work on the B(3) scalar magnetic field that arises from a topological magnetic monopole and is evidenced in interferometry, e.g. and other experiments.

Magnetism is intimately connected with the spins of the fundamental particles, and you need to understand that area as well. So unless you wish to be a very naïve experimenter, first do some heavy homework in the areas of magnetic material phenomena, different types of magnetism, multivalued magnetic potentials, magnetic monopoles, interferometry, spin waves and phenomena, etc. If you can find it, a very good book (one that's relatively simple for engineers and is straightforward and understandable) is the out-of-print book by Cullity (cited). If you're really serious, contact the publisher and get permission to legally reproduce it at the copiers for a small fee, as we did. You'll be very glad you did. It's probably the single most *understandable* book of its kind. Another very good book to obtain is Burke's "Handbook of Magnetic Phenomena" (cited). An extremely useful "quick reference" book for one's pocket is Kaganov and Tsukernik, "The Nature of Magnetism" (cited).

Why the Astronauts' Boots Were Changed

But back to the astronauts' boots. Hangar and Rosener (cited) will fill you in on the present "shuffler" boot. Just forget those; they are worthless to you as an enterprising overunity systems researcher. Reading Radus' work (cited) will clue you in on the earlier, far better boots.

If you dig out some new reference background on Radus' work and the *real* astronauts' magnetic boots, please share it with us, and we'll put it here in this section for everyone.

Why do you suppose NASA replaced that excellent Radus boot with the far inferior "shuffler" kind later?

You see, if you can easily switch the fields of a permanent magnet as you wish, and make that magnet also have a memory that you deliberately conditioned into it, you could also build a permanent magnet self-powered engine by adapting such memory (asymmetrical behavior) and switching. It's perfectly

permissible by the laws of physics and the laws of thermodynamics, because one is using an open dissipative system far from thermodynamic equilibrium. Any dipole such as a permanent magnet is a legitimate open system freely receiving energy from its environment (the active vacuum) and re-emitting some of that energy in usable Poynting energy flow form.

The other compelling reason is that you don't use electrical currents back through the source dipoles to kill them! Zounds! That means you can have one half the solution already accomplished from the start; you don't have "spent current" to have to force back through the dipole or shunt it around freely by some extraordinary means. All you have to worry about is *understanding* and *very clever and precisely timed switching*. (And it does have to be clever; let's not belittle the skill and perseverance required to achieve that task!)

But the Radus boots represented a potent threat to the energy barons and energy cartels of the world. Therefore those "field switching" boots had to go. And go they did!

So those trainloads of coal and fleets of oil tankers kept on coming. And the byproducts of all that hydrocarbon combustion kept right on polluting the cities and the planet.

Here is an area crying out for Congressional and Senatorial action. Why not force some of those "government servants" we taxpayers send so many billions of dollars to, to go back in there and compile all the available Radus boots information and data from NASA? And openly release it?

Hey, environmental activists! Are you listening?

References:

- A. W. Hangar and A. A. Rosener, "The use of permanent magnets in zero-gravity mobility and restraint "footwear" concept," *IEEE Transactions on Magnetics*, Vol. MAG-6, No. 3, Sept. 1970, p. 464-467. These crude "shuffler" boots are quite a contrast to the elegant Westinghouse/Radus "stepping" boots earlier developed and used by NASA.

- "Human fly has magnetic sole," *Electrical Engineering*, Apr. 1963, p. 294.

- Raymond J. Radus and William G. Evans, "Apparatus Responsive to Direct Quantities," U.S. Patent No. 2,892,155, June 23, 1959.

- R. J. Radus, "Permanent Magnet Flux Transfer Principle," Internal Westinghouse paper, date unknown; ——— "Permanent-Magnet Circuit using a 'Flux-Transfer' principle," *Engineers' Digest*, date unknown (July 1963???), p. 86.

- J. Astleford, Jr. and R. J. Radus, "Distribution Transformer with Zero-Percent Impedance," *Westinghouse Engineering*, 23(5), Sept. 1963, p.

148-151; ——— "Zero Impedance Distribution Transformer," *IEEE Transactions on Power Apparatus & Systems*, 83(9), Sept. 1964, p. 918-926.

Thanks to Darryl Morris in Australia for providing the photos of the original Radus boots from the publication:

"Attraction and Repulsion"
Author: Malcom McCaig Ph.D.
Publisher: Oliver and Boyd ltd - 1967

At the time of writing, McCaig was the assistant Director of Research for the 'Permanent Magnet Association', Sheffield.

Additional information from Radus family members

Regards to T. E. Bearden.

This device is what the family believes to be a portable demo of Dad's permanent magnet, with the "sandwich" and coil resting on one of the attached plates.

Simple, but elegant, as was much of his work.

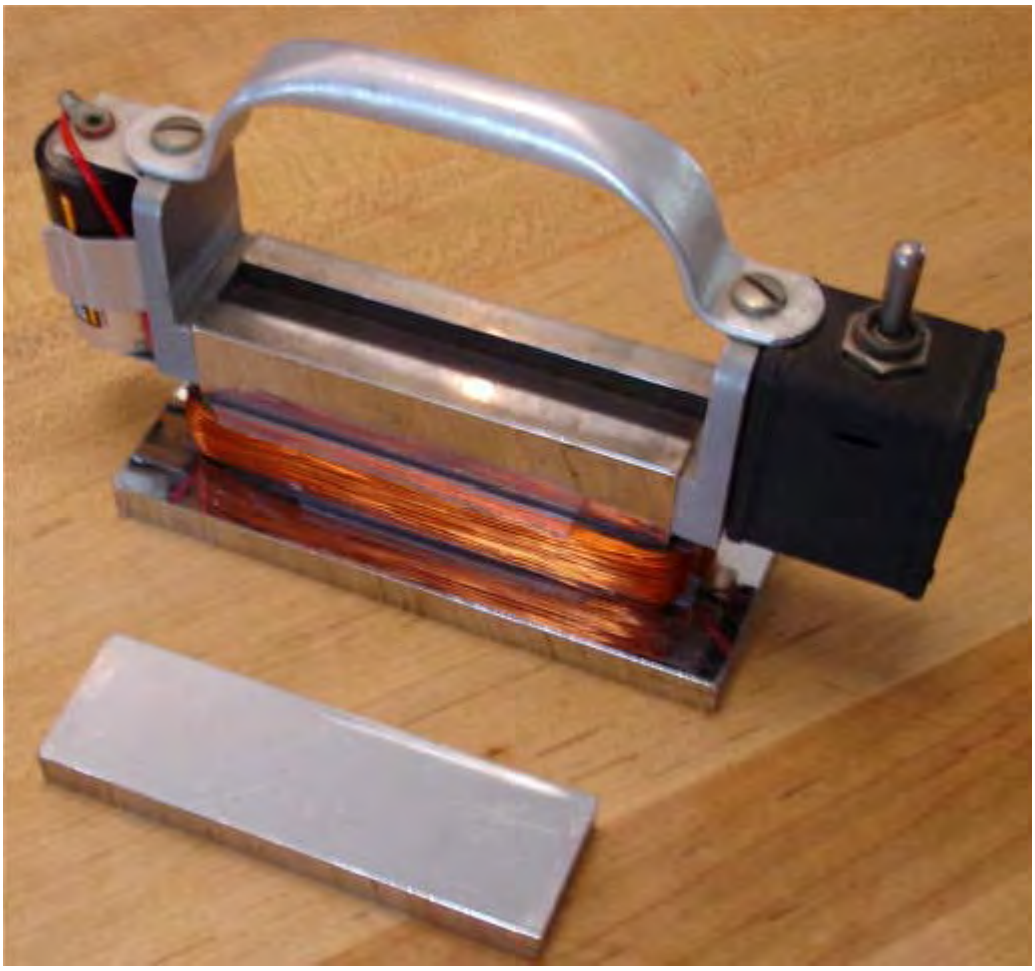

Photos of the original boot

These are drawings of models that we played with as children. The central sandwich is about an inch square. One of my brothers (out of town) has the actual. My son did the drawings from my description. He is trying to replicate the model.

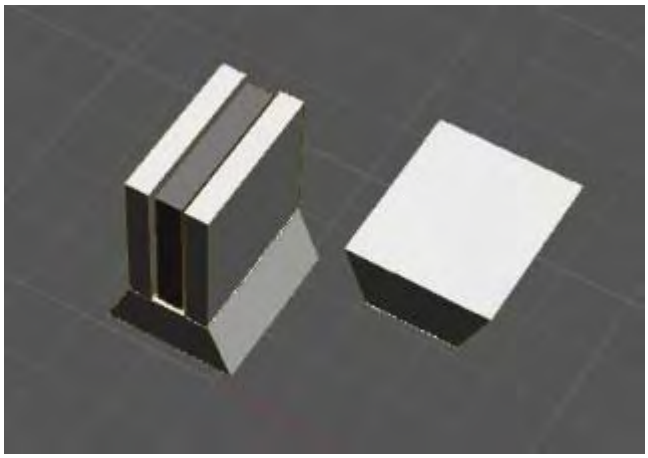

They functioned the same way as did the powered models (shoe and battery powered test that I had sent previously). One wedge pulls off easily, with an increase in force required to move the second piece. No electrical power required.

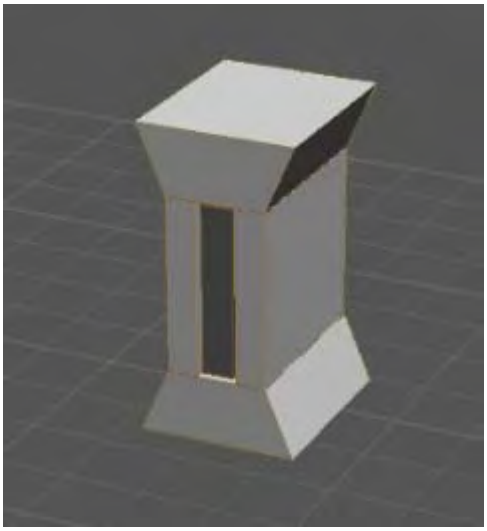

TOWARD A NEW ELECTROMAGNETICS
PART III: CLARIFYING THE VECTOR CONCEPT

TABLE OF CONTENTS

Cover

List of Figures

Implications

Electrical Physics Presently Has a Mindset

It Started With Geometry and Grew

Points and Motion

Four Types of Vectors Actually Emerged

Quantum Mechanics Compounds the Problem

To Summarize Briefly

Uncharged Spatial (Massless) System Vector

Chargeless Mass System Vector

What Force Is

Force and Hertzian Waves Cannot Exist in Vacuum

Charged-Mass-System Vector

Charged Spatial (Massless) Vector

The Shadow Vector

A Scalar is a Zero Vector

Virtual and Observable Aspects

Scalars and Vectors Have Substructures

Substructures, Virtual Levels, and Hyperspaces

Notes and References

Additional Notes and References

TOWARD A NEW ELECTROMAGNETICS

PART III: CLARIFYING THE VECTOR CONCEPT

by

T. E. Bearden

© Copyright 1983

by T. E. Bearden

All rights reserved

LIST OF FIGURES

1. Uncharged spatial (massless) system vector
2. Chargeless mass system vector
3. Detection of "transverse" and longitudinal waves
4. Charged mass system vector
5. The "charge" on an electron mass consists of a flux of virtual particles on and off the mass
6. A test charge (charged mass) brought near a fixed charge (charged mass) experiences an acceleration
7. A charged mass system vector
8. Repeating the "test charge" experiment
9. Charged spatial (massless) vector
10. Removing the bare particle (mass) from a charged particle leaves the charge. The vacuum is DEFINED AS the charge
11. Assigning a spatial vector to the charged vacuum
12. A "shadow vector" ε_s
13. Substructures of a "zero resultant" spatial vector. (The substructures of two zero vectors may be vastly different)

The Tom Bearden Website

TOWARD A NEW ELECTROMAGNETICS

Part III: Clarifying the Vector Concept

© 1983 T.E. Bearden

-- IMPLICATIONS --

Some of the fundamental concepts of the new Tesla electromagnetics are presented. The new concepts have startling implications:

(1) No force or force field exists as such in vacuum.

(2) Hertzian (transverse) electromagnetic waves do not travel through the vacuum, just as Tesla stated.

(3) Forceless, massless Tesla (scalar) longitudinal waves actually transit the vacuum. Tesla called them "electrical sound waves."

(4) At present there are actually four different FUNDAMENTAL TYPES of vectorial entities in physics, erroneously confused as one and the same.

(5) Tesla longitudinal scalar waves are also "time" waves and can affect anything and everything that exists in time.

(6) The fundamental constants of nature (which exist in time) can be altered by Tesla scalar waves, which oscillate the values of the constants.

(7) Every vector and scalar has an internal substructure, which can be independently affected and changed. This allows the direct engineering of the virtual state and the vacuum itself.

(8) All observable forces (electrical, mechanical, gravitational, etc.) arise in, on, and OF the actual substructure of the "accelerating mass particle" itself, not as an "external" massless force or force field applied "to" a mass .

(9) Physical reality itself -- and the "physical laws of nature"

can be deliberately changed and engineered.

(10) All "physical reality" is totally internal to the physical changes of the mass particles of the detector system of the observer.

(11) Relativity's speed of light limitation applies only to the changes of the basic mass particles of the detecting instrument.

(12) Detection of superluminal effects cannot be accomplished by a "single stage" or "single shift " (single interaction) detector .

(13) Detection of superluminal effects is permitted by "multiple stage" or "multiple shift" interactions where the last interaction is a conventional interaction of photon vs. detector particle. (The two-slit apparatus for detection of electron diffraction is an example. First, the superluminal DeBroglie waves interact with the slits, which are "tuned" toward the electron's DeBroglie wavelength. The interaction with TWO slits produces subluminal interference effects, which then interact back upon the physical electron. The apparatus is thus an electron interferometer capable of detecting superluminal waves by a two-stage interaction).

(14) Interference is the most common first-stage superluminal interaction to accomplish "downshifting" superluminal entities to luminal or subluminal velocities. Superposition of superluminal "phase" waves (such as deBroglie waves, which individually always move faster than the speed of light) interferes the waves to create a subluminal group velocity, which may then interact with an ordinary mass particle in the detection system.

(15) Any otherwise physical vector must exist as an unzipped (segmented) or "shadow" vector in vacuum. "Radiation" of a vector EM wave from the electron gas in an antenna into vacuum results in the "choking off" of the mass of the transversely oscillating electrons in the antenna. Since the spinning electron mass is the "zipper" that makes or comprises the physical vector in the first place, this throttling of the mass flow unzips the E and B vectors, leaving whirling (massless magnetic scalar potential) segments of massless charge flux (massless electrostatic scalar potential). This unzipped whirling pattern of charge flux (scalar massless A/Ø) is what radiates into vacuum and propagates through it. This is a special kind of

scalar wave pattern, not a physical or vector wave.

(16) The spin of a charged particle is the mechanism for integrating or "zipping together" the individual virtual fragments of a shadow vector into a real (observable) vector. For "uncharged particles" such as neutrons, it is the spins of its virtual charged components. that accomplish the integration or zipping.

(17) All fundamental charged particles are constantly accelerated. There is no such thing as an "unaccelerated" particle, except as a gross average over time or length. Further, all of them are spinning.

(18) All changes to and from a physical vector or scalar system must arise in and come from its own internal substructure, which is zipped to its spinning particle of mass.

(19) All fundamental particles are charged internally. That is, they are dynamic assemblages of smaller charged particles. If the average sum of the total internal charge is essentially zero over some finite, small increment of time, the particle is externally uncharged. If the sum is not essentially zero, the particle is also externally charged.

(20) There are no static physical things in existence. In physical reality, something appears "static" only at a particular level. Upon sufficiently fine examination, it is composed of accelerating parts, and thus comprised of "fluctuations."

(21) Since (a) the basic physical (mass) vector consists of a "smeared particle," where particle and smear are inseparable, (b) the conceptual particle also is accelerated, and (c) the "smearing" is for a small increment of time and a small increment of length; then the basic constituency of "physical reality" is inseparable "force x time x length," or action. The basic "quantum" of physical change is thus comprised of action.

(22) Since to "detect" we must "stop" the action, separate or split the quantum into two pieces ("canonical" pieces) , and compare (measure) one piece by throwing away the other, then each physical observable must have a differential operator (the "separating agent") corresponding to it. This accounts for the fundamental postulate of quantum mechanics whereby every observable has a corresponding operator. Further, since what remains is totally relative to what was split out and thrown away, physical change

is totally "relative." This accounts for the fact that observed reality is relative, each part to each other.

(23) As a special case, we may assume that we can evaluate a physical change at a point (without length). If so, when we discard length, the remaining basic vector is momentum. This approximation holds only so long as the system to which it is applied essentially does not change over the quantal fragment of length discarded -- i.e., it holds for the linear case. Conservation of momentum, then, is violated when sufficient nonlinearity in length is present.

(24) As a second special case, we may assume that we can evaluate a physical change in a spatial manner (without time). If so, when we discard time, the remaining basic vector is energy (has the units of energy or work). This approximation holds only so long as the system to which it is applied essentially does not change over the quantal fragment of time discarded -- i.e., it holds for the linear case. Conservation of energy, then, is violated when sufficient nonlinearity in time is present. Since a "virtual change" a priori is defined as a total nonlinearity in the observer's quantal time increment but not outside it, then virtual interactions can and do violate conservation of energy within that time increment, but not out of it -- so long as the time interval itself is considered linear. If the time interval is sufficiently nonlinear, then the virtual change may result in violation of the conservation of energy externally to the time increment. In that case, an "observable change" results .

(25) As a third special case, we may assume that we can evaluate the "instantaneous value" of a physical change at a static point in space. To do so, we must discard both time (to be instantaneous) and length (to be at a spatial point), and the remaining basic vector is force. This approximation holds only so long as the system to which it is applied essentially does not change over the quantal fragment of time or the quantal fragment of length discarded. Conservation of force, then, is violated when sufficient nonlinearity in time or length is present.

(26) A new conservation of energy law is required, one which unites the present conservation of energy law with an altered form of the conservation of charge law. Briefly, the total equivalent of mass,

observable energy, and massless charge (anenergy) is conserved.

(27) All AL and At fragments are produced and destroyed one at a time, in the action fissioning of a single quantum of action (detection process). Each ∇L and ∇t is discretized but not quantized. Since quanta do not superpose, the "external universe" is continually created and destroyed in the detector's mass system, one quantum at a time, at a very high rate. This interpretation gives physical meaning to the creation and annihilation operators of quantum mechanics.

(28) Since the detecting mass system is itself continually created and destroyed one quantum at a time, ultimately all is mind changes, and only mind changes. The observer's life, mind, and being transcend all materialistic interpretations of reality -- as indeed does the very fact of the "existence" of a perceived external universe.

Next Page

TOWARD A NEW ELECTROMAGNETICS
PART III: CLARIFYING THE VECTOR CONCEPT

-- Electrical Physics Presently Has a Mindset --

In examining the foundations of geometry, mechanics, and electromagnetics, it becomes strikingly clear that substantial -- even grave theoretical errors were made early on and perpetuated into the existing theory. These errors are now so firmly entrenched that they form a part of the "mindset" of almost all physicists, engineers, and scientists.

So ingrained are these errors and inconsistencies that the orthodox scientist/theoretician finds it almost impossible to break out of them.

The present mindset is analogous to the Newtonian mindset which so fiercely resisted the new ideas of relativity, shortly after the turn of the century. However, after a few scientists formulated the rules and theory of the "relativity mathematics game," a new generation of students, not yet so firmly engrained in the Newtonian mindset, could grasp the new relativity when their teachers expounded it.

In this short series of papers[1,2] I will roughly outline where the founders of mechanics and electromagnetics went wrong, and indicate the way to correct the fundamental errors. In addition, I will briefly point out some of the implications, and speak of some direct experimental proof.

Next Page

TOWARD A NEW ELECTROMAGNETICS
PART III: CLARIFYING THE VECTOR CONCEPT

NOTES AND REFERENCES

1. Bearden, T. E., "Comments on the New Tesla Electromagnetics: Part I: Discrepancies in the Present EM Theory;" "Part II: The Secret of Electrical Free Energy," Tesla Book Company, 1580 Magnolia Ave., Millbrae, CA 94030, 1982.

2. Bearden, T. E., "Solutions to Tesla's Secrets and the Soviet Tesla Weapons," Tesla Book Co., 1981. Also Ratzlaff , John T., "Reference Articles for Solutions to Tesla's Secrets," Tesla Book Co., 1982.

3. Note we are applying the rule, "A thing is that which it does, and it does that which it is." Actually this is one statement of a fourth fundamental law of logic not incorporated by Aristotle. See Bearden, "A Conditional Criterion for Identity, Leading to a Fourth Law of Logic," DTIS report, available through the National Technical Information System, Port Royal Road, Springfield, VA 22161.

4. Specifically, the resulting theory becomes a curtailed, special case of the much more fundamental electrodynamics and electromagnetics that actually exist
.

5. We point out here that measuring a field of force existing in the electron gas in a probe of the measuring instrument is not at all the same thing as measuring a force in the vacuum, nor does it establish that a force exists in vacuum. Indeed, it is already well known that the FIELD concept itself will not withstand rigorous logical examination. For a discussion rather clearly showing the present difficulty in defining a field, see Robert Bruce Lindsay and Henry Margenau, Foundations of Physics, Dover Publications, New York, 1963, pp. 283-287. Note particularly on p. 283 that a "field of force" at any point is actually DEFINED only for the case when a unit mass is present at that point. It is then illogically ASSUMED that the force

continues to exist at the point in the ABSENCE of the mass, which of course need not follow at all. On p. 284, note the similar logical paradox connected with the idea of a scalar gravitational potential field. The potential (field) is only defined at a point when mass is present at that point, .and it is specifically defined as the potential energy per unit mass for a particle present at that point. IF THERE IS NO MASS PRESENT, NEITHER A FORCE VECTOR FIELD NOR A SCALAR POTENTIAL FIELD IS DEFINED THERE. ASSIGNMENT OF THESE FIELDS TO THE POINT IN THE ABSENCE OF THE MASS IS AN ASSUMPTION, NOT AT ALL A DEFINITION. SINCE A TRUE DEFINITION IS AN IDENTITY, THEN THE ENTITY IDENTIFIED (DEFINED) TO INCLUDE THE PRESENCE OF MASS IS NOT IDENTICAL TO THE ENTITY RESULTING WHEN THAT MASS IS ABSENTED.

To see just how arbitrary and postulational are present. "definitions" of mass and force, see Lindsay and Margenau, op. cit., pp. 84-101. Also see Richard P. Feynman, Robert B. Leighton, and Matthew Sands, The Feynman Lectures on Physics, Addison-Wesley, New York, Vol.1,. 1963, Fourth Printing July 1966, p.2-4 for a definition of the electric field in the context of its POTENTIALITY for producing a force. Again, the force only exists when a particle of mass is present. From these examples, one can see the implication that A PHYSICAL FIELD IS SOMETHING SUCH THAT, WHEN A MASS IS INTRODUCED INTO IT, THE MASS EXHIBITS AN EFFECT. For a "force field," this is tantamount to stating that there exists some mechanism connected with a field which, in the presence of a mass causes a force to be exhibited. In that case the force is an EFFECT, not a cause, and there is a more fundamental mechanism that GENERATES FORCE ITSELF. See also field discussions in Feynman, Richard, The Character of Physical Law, M.I.T. Press, Cambridge, MA, March 1967, 2nd printing September 1967, passim.

6. While in Europe prior to 1881, Albert Abraham Michelson performed his first interferometer experiments to determine the velocity of the earth through the ether, obtaining essentially null results. At the Case School of Applied Science in Cleveland,

Ohio, he perfected his interferometer experiment from 1883 to 1887, assisted by a colleague, chemist Edward Williams Morley. By 1887 the results were ready and announced. Michelson himself thought his experiment had proven Stokes' theory of an ether dragged along by the earth in motion, and thus motionless with respect to the earth. This was at odds, however, with certain other experiments indicating a moving ether. The Michelson-Morley experiment was finally reconciled with these other experiments by Fitzgerald's suggestion in 1892 that the physical dimensions of material bodies are altered when they are in motion. In 1907 Michelson was awarded the Nobel prize, the first American to receive it in the sciences.

7. See Lindsay and Margenau, Foundations of Physics, 1963, pp. 324-326; D. C. Miller, "The Ether Drift Experiment and the Determination of the Absolute Motion of the Earth," Reviews of Modern Physics, Vol. 5, p. 203, 1933. Actually the experiments did not yield a conclusively null result, but rather showed large systematic trends. For a typical elimination of the systematic trends, see Handschy, M. A., "Re-examination of the 1887 Michelson-Morley experiment," American Journal of Physics, Vol. 50, No. 11, Nov. 1982, pp. 987-990. See Rho Sigma, Ether-Technology, CSA Printing & Bindery, Lakemont Georgia, 30552, 1977 for several enlightening points on the vacuum ether: See A. K. Lapkovskii, "Relativistic Kinematic Equations and the Theory of Continuous Media," Soviet Physics Journal, Vol. 21., No. 6, June 1978 for an abstract describing Soviet utilization of the concept of a small particle (called by Bearden a quiton, in Quiton/Perceptron Physics, DTIS, 1973) of the medium. See Belyaev, B. N. , "On Random Fluctuations of the Velocity of Light in Vacuum," Azvestiya Vysshikh Uchebnykh Zavedenii, Fizika, No. 11, Nov. 1980, pp. 37-42, translation by Plenum, for discussion of the proven variation of the speed of light in vacuum; the velocity of light in a vacuum on earth is measured to be higher than the velocity of light in the vacuum of deep space. See Graham, G. M. & Lahoz, D. G., "Observation of static electromagnetic angular momentum in vacuo," Nature, Vol. 285, 15 May 1980, pp. 154-155 for the first direct observation of free electromagnetic angular

momentum in vacuum. See Davies, Paul, "Something for nothing," New Scientist, 27 May 1982, pp. 580-582 for a discussion showing that modern theories of the vacuum reveal that even empty space is seething with activity; an ether of sorts emerges from vacuum fluctuations due to quantum mechanics considerations. See Hooper, William J., "All-Electric Motional Electric Field Generator," U. S. Patent No. 3,610,971, October 5, 1971 for a generator which produces a gravitational or inertial field. Einstein suggested that vacuum, complete with electromagnetic and gravitational fields, be called the ether. Dirac certainly did not abandon an ether, for in 1954 he stated "The aetherless basis of physical theory may have reached the end of its capabilities and we see in the aether a new hope for the future." James Clerk Maxwell derived his famous equations based on an ether theory. Sir Arthur Eddington also believed firmly in an ether. Sir Oliver Lodge actually pointed out the dilemma which yields the approach in this paper: writing of the ether in his book, The Ether of Space, Harper & Bros., New York, 1909, he stated: "We have no means of getting hold of the ether mechanically; we cannot grip it or move it in the ordinary way: we can only get it electrically. We are straining the ether when we charge a body with electricity; it tries to recover, it has the power of recoil.. . . "But when electrical theory was being founded, scientists thought of space as something rather fixed, and FILLED WITH a thin material ether. They did not realize that space itself does not exist except after an observation; before the observation, spacetime exists -- indefinite in both length and time. They did not know that electrostatic scalar potential in fact was spacetime, hence also the vacuum and the ether. In assuming that the charge of vacuum is zero and that charge and charged mass are identical, they hid the answer to the dilemma and placed the foundations of electromagnetics on its present unsound basis.

8. The field, of course, is indeed a highly useful concept and this author certainly does not recommend its abandonment. Instead, he recommends that it be placed on a sounder logical basis.

9. Specifically, they came to feel that the "electric

field" which was improperly defined -- was what was waving.

10. In fact Einstein once proposed that the vacuum, complete with its electromagnetic and gravitational fields, should be called the ether. His proposal was not adopted. (See Born, Max, Einstein's Theory of Relativity, Revised Edition, Dover Publications, New York, 1965, p. 224.)

11. Particularly from the work of Schrodinger, Born, Dirac and others.

12. For example, see Lindsay and Marge. nau, op. cit., pp. 287-288. A physical vector is thought to be defined by its magnitude, its direction in space, and its transformation characteristics. Actually that is a geometrical vector, not a physical vector. It does not tell us WHAT A VECTOR CONSISTS OF, but only tells us some of its important characteristics. Remember that a true definition must be an identity.

13. Here a reading of Lindsay and Margenau, op. cit., pp. 79-81 may prove enlightening. Also note that velocity, or L/T considered "at an instant" (stopped), represents an idea of "motionless motion" and is an application of the fourth law of logic. For a discussion of the fourth law of logic and its usage, see Bearden, Thomas E., "A Conditional Criterion for Identity, Leading to a Fourth Law of Logic," Specula, Journal of the A.A.M.S., P.O. Box 1182, Huntsville, AL 35807, combined Vol. 3, No. 4/Vol. 4, No. 3, Oct 1980 - Mar 1981, pp. 50-57 (also available from Defense Technical Information Service).

14. Note this is an identity of opposites, which explicitly violates the three Aristotlean laws of logic. See Bearden, "A Conditional Criterion for Identity, Leading to a Fourth Law of Logic," loc. cit., 1981.

15. Again note the fourth law of logic: zero motion (the absence of motion) being recognized as a special case of the presence of motion. Also, physical reality consists of internested levels, and any physical object has an internal substructure of nested levels of finer structure, extending down into the virtual (nonobserved) state. For a vector to model (apply to) a

physical object, it itself must be modeled in such fashion as to reflect this kind of substructure. Thus the use of geometrical vectors as models of physical objects in motion is presently flawed in a fundamental fashion.

16. The reader is most strongly urged to read Morris Kline, Mathematics: The Loss of Certainty, Oxford University Press, New York, 1980 as a prelude to understanding what mathematics is and is not, and what it does and does not.

17. Refer to Lindsay & Margenau, op. cit., pp. 79-81 to see how the ideas of motion and vector are inextricably entangled with the idea of a particle.

18. Call it uncertainty or call it constituency; a quantum change is composed of two canonical entities inextricably welded together into a single entity.

19. Time is an unavoidable, nonexclusive constituency of the welded quantum.

20. Simply from the definition of force as CONSISTING OF a time- and length-smeared mass motion change.

21. The force is an effect, not a cause. It IS the smeared charged particle. It is CAUSED by a more fundamental mechanism. It is the result of the combination of (1) a nonzero del phi, and (2) the presence of a spinning charged particle. IN A DEL PHI, THE SPINNING CHARGED PARTICLE ACCELERATES ITSELF! This is the fundamental secret of free energy that was suppressed, to bury the fundamental work of Nikola Tesla, shortly after Tesla was forced to abort his Wardenclyffe attempt to provide the world with free energy.

22. To quote: "The Hertz wave theory of wireless transmission may be kept up for a while, but I do not hesitate to say that in a short time it will be recognized as one of the most remarkable and inexplicable aberrations of the scientific mind which has ever been recorded in history. " Nikola Tesla, "The True Wireless, " Electrical Experimenter, May 1919, p. 87.

23. De Beauregard, O. Costa, "Running backwards the Mermin device: Causality in EPR correlations," American Journal of Physics, Vol. 51, No. 6, June 1983, p. 515.

24. Note the Soviet scientist Kozyrev's experiments with time waves. See Kozyrev, N. A., "Possibility of Experimental Study of the Properties of Time," September 1967, pp. 1-49, in JPRS 45238, May 1968. Kozyrev reports real physical effects from the oscillation of time. Also, note that scalar potential energy of appreciable size with respect to a particle's rest energy can force the situation to be relativistic, even though the velocity of the particle with respect to the velocity of light is small. That is, electrostatic scalar potential alone can cause variation in the rate of flow of time and hence vary physical characteristics. See Bloch & Crater, "Lorentz-invariant potentials and the non-relativistic limit," American Journal of Physics, Vol. 49, No.1, 1981, pp. 67-75. By inference, oscillating the electrostatic scalar potential can produce time waves and lead to direct physical effects.

25. It is already shown in the literature that the electrostatic scalar potential (ESP) can affect spacetime (ST) in the same manner as velocity. Cf Bloch & Crater, op. cit., 1981. Now note that, to any quantal or macroscopic observer, the existence of the 4-space volume of ST implicit in $(\Delta t)(\Delta v)$, where v is volume, cannot be separated from the existence of the subquantal entities that exist therein. We therefore DEFINE the magnitude of the ESP as the summation of the absolute values of all the internal virtual vectors in the $(\Delta t)(\Delta v)$ quantum of ST, divided by the absolute value (magnitude) of $(\Delta t)(\Delta v)$. We take the view that no such thing as "unstressed" ST physically exists, and that "spacetime" and "stressed spacetime" are identical. Hence ESP and ST are one and the same thing. Note that this implies that the virtual density of ST is variable, and is nothing but the magnitude of the ESP. In EM theory, the assumption that the ESP of vacuum ($Ø_O$) is equal to zero is in serious error. In fact, $Ø_O$ IS "spacetime of the laboratory observer," in the new view.

26. For example, the definition of the electrostatic

potential (ESP) is usually taken as "the work which must be done against electric forces to bring a unit charge from a reference point to the point in question; the reference point is located at an infinite distance, or, for practical purposes, at the surface of the earth or some other large conductor." (McGraw-Hill Dictionary of. Scientific and Technical Terms, ed. Daniel N. Lapedes, second edition, 1978, p. 518.) Note that this is NOT a definition at all, for it is not an identity. Instead, it is the statement that, if an ESP exists at a point and a unit charged mass (assumed to be at a point) is brought in from infinity toward the ESP location point, the amount of work it is necessary to expend upon the mass of the particle is equal to the magnitude of the ESP. The ESP exists whether or not any work at all is expended, and whether or not a charged unit mass is brought in. To adequately define ESP, we must define its identity, or what it consists of, in the absence of mass, since we have conceived the ESP to exist at a vacuum point. Further, the definition usually taken is completely a 3-space definition. Instead, in our new view the ESP is to be taken at a point in n-space, where n is equal to or greater than 4.

27. See Bearden, Quiton/Perceptron Physics, 1973, available through the DTIS. See also Bearden, The Excalibur Briefing, Strawberry Hill Press, San Francisco, CA, 1980. Ultimately all physical phenomena are mindchanges in the minds of all the observers.

28. And then assumes this summation value is zero.

29. See note 25 above.

30. Bearden, The Excalibur Briefing, Strawberry Hill Press, San
Francisco, CA, 1980.

31. Cf Rauscher, E. A., "Electromagnetic and Non-Linear Phenomena in Complex Minkowski Spaces," Tecnic Research Laboratories, 64 Santa Margarita, San Leandro, CA 94579. Presented at the 1983 March Meeting of The American Physical Society in Los Angeles, CA 21-25 March, 1983. This is a truly remarkable paper of great significance. Rauscher, a world-class physicist, has presented a new theoretical

model for some rather extraordinary possible extensions of present electromagnetics.

32. Cf Muses, Charles, Introduction to Jerome Rothstein's Communication, Organization, and Science, The Falcon's Wing Press, Indian Hills, Colorado, 1958. The entire foreword by Muses is a remarkable document, which analyzes the structure of time itself. See also his profound summary paper, "Hypernumbers II" in the January 1978 issue of Applied Mathematics and Computation, published by Elsevier.

Next Page

ADDITIONAL NOTES AND REFERENCES

Although quotes and direct utilization of material from these references were not incorporated in this paper, the following references were also consulted. In addition,' several notes are added for further clarity.

33. Rupert Sheldrake, A New Science of Life: The Hypothesis of Formative Causation, J. P. Tarcher, Inc., Los Angeles, CA, 1981. Ø, the electrostatic scalar potential field, in my opinion is actually the morphogenetic field that Sheldrake proposes.

34. Briefly, by a "particle" we mean an entity so constructed that, if any part of it changes all of it changes. From the viewpoint of the particle, this implies that to change is to detect, and to detect is to change. Also, internal and external become synonymous, in the "detected" sense. The idea of a "fundamental particle" in physics actually invokes the fourth law of logic implicitly.

35. Only if a thing dimensionally contains time, can it "occupy time." This point is so obvious that one wonders how so many of the scientists and mathematicians seem to have missed it. By this criterion, e.g., mass does not exist in time, a priori. To "observe" or detect, in fact, means to stop time, thus collapsing the wave function. However, it reduces the observable or detectable to a spatial quantity, not a spatiotemporal quantity. In other words, the ordinary scientific method destroys a part of reality in each detection or measurement, yielding only a partial truth. not fundamental truth.

36. Note that electrostatic scalar potential is actually infinite-dimensional and hyperspatial. The coverage of

this paper is still only a special case. By Tesla technology, it is possible to do direct engineering in hyperspace -- beyond our present space and time, with all that that statement implies.

37. Bob Sloan, "Nikola Tesla: The Greatest Inventor of all Time?". IEEE Antennas and Propagation Society Newsletter, June 1983, pp. 9-11. A very succinct summary of the importance Tesla played in ushering in the modern age.

38. Gerald E. Brown and Mannque Rho, "The structure of the nucleon," Physics Today, Vol. 36, No.2, February 1983, pp. 24-32. Recommended as a summary of the new thinking as to the structure of the nucleon: a bag containing three quarks, surrounded by a cloud of mesons which squeeze the bag.

39. John J. O'Neill. Prodigal Genius: The Life of Nikola Tesla. Angriff Press, P.O. Box 2726, Hollywood, CA 90028, new printing 1981.

40. Margaret Cheney, Tesla: Man Out of Time, Prentice-Hall, Englewood Cliffs, NJ, 1981.

41. John T. Ratzlaff and Leland I. Anderson. Dr. Nikola Tesla Bibliography. Palo Alto. CA, 1979. Indispensable.

42. Dr. Nikola Tesla: Selected Patent Wrappers, compiled by John T. Ratzlaff, multiple volumes. 1980. Available from The Tesla Book Company, 1580 Magnolia, Millbrae, CA 94030. Tesla's correspondence with the U.S. Patent Office, when patiently trying to obtain patents. He spent a great deal of time trying to convince the Patent Office that his inventions would indeed work. Some of them required 12 years to obtain, and then were "watered down" in the process.

43. Thomas Commerford Martin, The Inventions, Researches and Writings of Nikola Tesla, Originally published in 1894 by The Electrical Engineer, New York; republished in 1977 by Omni Publications, Hawthorne, CA 90250.

44. Ernest Nagel and James R. Newman, Godel's

Proof, New York University Press, 1958.

45. Yakov P. Terletskii, Paradoxes.in the Theory of Relativity, With a Foreword by Banesh Hoffman, translated from the Russian, Plenum Press, New York, 1968. Of particular interest is the discussion on particles with imaginary masses, moving faster than the speed of light, contained in pp. 104-107. Such particles can in principle be experimentally detected. In fact, it would appear that the well known exchange of virtual particles between two other particles, such that each turns into the other, is such a case. (Note that protons and neutrons in the nuclei of atoms do precisely this.)

46. Robert M. Besancon, Ed., The Encyclopedia of Physics, Second Edition, Van Nostran Reinhold, New York, 1974. Particularly see the discussion on the electron, pp. 272-274. Note this discussion predates Stanford University's experiments yielding fractional charge, though it does point out that several physicists had also reported measuring fractional charges on the electron. See also the discussions of ionization, Michelson-Morley experiment, the photon, and propagation of electromagnetic waves.

47. Robert Eisberg and Robert Resnick, Quantum Physics of Atoms, Molecules, Solids, Nuclei, and Particles, John Wiley & Sons, New York, 1974.

48. R. K. Bullough and P. J. Caudrey, eds., Solitons, Springer-Verlag, New York, 1980.

49. James Dale Barry, Ball Lightning and Bead Lightning, Plenum Press, New York, 1980. Note particularly p.196, for a short discussion on flashless discharges. An extensive bibliography is also included.

50. Harley D. Rutledge, Project Identification, The First Scientific Field Study of UFO Phenomena, Prentice-Hall Inc., Englewood Cliffs, NJ, 1981.

51. John J. Reitz, Frederick J. Milford, and Robert W. Christy, Foundations of Electromagnetic Theory, Third Edition, Addison-Wesley, Reading, MA, 1979.

52. The entire series of handbooks by William Corliss, dealing with anomalies and unusual natural phenomena

of all kinds. Corliss is a national treasure, and his handbooks are absolutely indispensable.
See particularly his Handbook of Unusual Natural Phenomena, The Sourcebook Project, Box 107, Glen Arm, MD 21057, 1977 and his Lightning, Auroras, Nocturnal Lights, and Related Luminous Phenomena, 1982.

53. Bernard d'Espagnat, Conceptual Foundations of Quantum Mechanics, W. A. Benjamin, Menlo Park, CA, 1971.

54. D.W.G. Ballentyne and D.R. Lovett, A Dictionary of Named Effects and Laws in Chemistry, Physics and Mathematics, Fourth Edition, Chapman and Hall, New York, 1980. Check this neat little book to discover some very odd effects in materials.

55. David Bohm, The Special Theory of Relativity, W. A. Benjamin, New York, 1965.

56. Albert Einstein, Relativity: The Special and the General Theory, Crown Publishers, New York, 1961. See particularly the discussion of relativity and the problem of space, in Appendix V.

57. Edwin F. Taylor and John Archibald Wheeler, Spacetime Physics, W. H. Freeman and Co., San Francisco, 1966. Note particularly the discussion on observers and frames in the first two dozen pages. On p.19, note that the notion of a frame requires an infinite observer distributed through each and every "point" that was clock-synchronized in a frame. Since all observers are localized, a better idea is to realize that all the "external" modeling just represents the relative changes inside the physical detection system of the observer himself/herself. All detection/observation is totally inside the physical observer.

58. Paul Edwards, Ed. in Chief, The Encyclopedia of Philosophy, Vols. 1-8, Macmillan Publishing Co., New York, 1967.

59. Michael A. Persinger and Gyslaine F. Lafreniere, Space-Time Transients and Unusual Events, Nelson-Hall, Chicago, IL, 1977.

60. John David Jackson, Classical Electrodynamics, Second Edition, John Wiley & Sons, New York, 1975.

61. James Clerk Maxwell, A Treatise On Electricity & Magnetism, Vols. 1 & 2, Third Edition, Dover Publications, New York, 1954. An unabridged, slightly altered, republication of the third edition, originally published by the Clarendon Press in 1891.

62. Jack S. Greenberg and Walter Greiner, "Search for the sparking of the vacuum," Physics Today, August 1982, pp. 24-32. A beautiful summary article on the present concept of the vacuum, from the standpoint of quantum mechanics and quantum field theory. I specifically urge anyone interested in tapping the vacuum energy to read this article.

63. Max Jammer, Concepts of Mass, Harvard University Press, Cambridge, MA, 1961. Recipient of the monograph prize of the American Academy of Arts and Sciences for the year 1960 in the field of physical and biological sciences. This book, strange as it may seem, was the first monograph to subject the notion of mass to an integrated and coherent historical investigation, something which had never before been done. The reading of this book is an absolute must for anyone seriously concerned about whether or not science speaks fundamental truth, or to what degree it does so. Most scientists assume foundations concepts such as "field," "force," "mass," "time," etc. are well-defined and well-understood in physics, since they are ubiquitous and so familiar. In fact, none of the absolute fundamentals in the foundations of physics is unambiguously understood!

The last paragraph by Jammer is illuminating: "The modern physicist may rightfully be proud of his spectacular achievements in science and technology. However, he should always be aware that the foundations of his imposing edifice, the basic notions of his discipline, such as the concept of mass, are entangled with serious uncertainties and perplexing difficulties that have as yet not been resolved."

64. G. Burniston Brown, "Gravitational and inertial mass," American Journal of Physics, Vol. 28, p. 475, 1960: "...one of the most astonishing features of the

history of physics is the confusion which surrounds the definition of the key term in dynamics, mass."

65. Whittaker, Sir Edmund, A History of the Theories of Aether and Electricity, Vol. 1: The Classical Theories, and Vol. 2: The Modern Theories 1900-1926, Harper Torchbooks, Harper & Brothers, New York, 1960.

66. Weyl, Hermann, Space -- Time -- Matter, Fourth Edition, translated from the German by Henry L. Brose, Dover Publications, New York, 1922.

67. Jammer, Max, Concepts of Space: The History of Theories of space in Physics, Second Edition, Foreword by Albert Einstein, Harvard Univ. Press, Cambridge, MA, 1969.

TOWARD A NEW ELECTROMAGNETICS PART III: CLARIFYING THE VECTOR CONCEPT

Help support the work

-- It Started With Geometry and Grew --

At the very beginning of what we call the "scientific period," mathematics was both king and queen, and Euclidean geometry was its handmaiden. So we ask, "What precisely is geometry?" Here we are not interested in a "textbook" answer, but in an answer indicating what geometry really does.[3] In other words, with what does geometry concern itself, and what is the fundamental nature of those things with which it concerns itself?

Briefly, geometry -- at its foundation -- is totally spatial. It is fitted to, and expressed in terms of, the TOTAL ABSENCE OF MASS. Thus the geometer deals in abstract, massless entities called "points," "lines," "planes" etc. When the geometer speaks of "motion," he speaks of a time-smeared, length-smeared point. Geometry at heart is massless, and a "geometer's vector" is a highly specific type of "system." In fact, it represents the "time-smearing" and "length-smearing" of a point. A priori, the fundamental concept of the geometrical vector has taken a "spatial" entity and introduced a hidden involvement with "time."

Modern mathematics and physics have followed an intertwined development for several hundred years. And both sprang as offshoots of the original work of the geometers. Let us briefly sketch the overall path of interest taken by these two developing disciplines.

With the advent of Descartes's fundamental work, algebra was combined with geometry to yield analytic geometry, a new and powerful mathematical tool. With the invention of calculus by Leibniz and Newton, both mathematics and physics received a giant impetus. Differential geometry and vector mathematics arose in full splendor and, in physics, mechanics leaped to the forefront with Newton's

profound work.

But the mechanics made a most fundamental error when they simply applied the geometer's vector to a mass, to produce -- so they thought -- a mass vector. That which rigorously applies only to the absence of mass cannot be so lightly applied to the presence of mass without the risk of serious limitations in the resulting theory. The precise difference between a geometer's massless vector and a mechanic's mass-vector is one of the issues to be developed in this thesis.

As rapid development continued in mechanics and mathematics, certain physicists were involved in intense experimental work on charged matter, becoming the first electricians. Both the preceding mathematical ideas and constructs as well as the preceding (partially erroneous) mechanics constructs and ideas were applied by the electricians, struggling with their pith balls, cat fur, and glass rods to understand, quantify, and model electrical forces and the phenomena of charged matter. In other words, the electricians strove to formulate the physics and dynamics of charged matter and its interactions by simply "adding to" the work of the geometers and mechanics. Here again, a fundamental logical error was made. That (geometry) which a priori applies only to the absence of mass, and that (mechanics) which a priori applies only to the absence of charge, cannot be lightly applied to the presence of charged mass (both mass and charge)[4] without risking the incorporation of grave limitations in the resulting theory.

After the profound work of Maxwell, the idea of FIELDS OF FORCE became more prominent, until the field concept ruled the day[5]. The electricians continued, pushing the idea of fields into space and vacuum itself, along the way inventing the idea of "charge effects" existing even in the massless vacuum, with concomitant fields. Meanwhile, they had thoroughly confused chargeless point-smeared, chargeless mass-smeared, length-smeared and time-smeared vectors.

After a set of fundamental experiments designed to detect motion of the material ether yielded essentially null results[6], Michelson and Morley were regarded as having completely disposed of the ether -- even though the experiments only disposed of material

ethers, and not Lorentz-invariant non-material ethers[7]. Maxwell's equations and the field concept were elevated to profound importance.[8] Then, after Einstein's fundamental relativity work shortly after the turn of the century, the ether concept faded away and the field concept reigned supreme. Indeed, in their enthusiasm the interpreters of relativity went so far as to affirm that one can have a wave without any medium; that is. that something can be moving (waving) without anything there to move![9] And with great glee they pronounced the final end to the idea of "ether" as a medium, even though Einstein himself never did any such thing.[10] With the advent of Einstein's General Theory of Relativity, even matter came to be regarded as just a special "kink" or curvature in spacetime or "vacuum nothing."

Quantum mechanics arose and even certainty and determination fell. Chaos, probability, and randomness now assumed the ruling position. Probability waves (and probability fields) arose,[11] as did quantum fields of various kinds. The intermingling of these concepts with the concepts of electrodynamics pushed the idea of the field even farther into esoteric realms.

The point is, each of these developing disciplines incorporated and built on the foregoing disciplines. From the beginning of geometry, there was no rigorous definition of a vector, and there is none today.[12] From the beginning of mechanics, in their foundations the theorists made grave logical errors by incorporating the geometer's vector; errors so great that today mechanics and electromagnetics are severely flawed, as is everything that came after them and built upon their illogical foundations.

Next Page

Help support the work

TOWARD A NEW ELECTROMAGNETICS PART III: CLARIFYING THE VECTOR CONCEPT

Help support the work

-- Points and Motion --

It is my purpose in this paper to expose in a very simple fashion the most basic errors that were made. One basic error involves the idea of motion itself.[13]

In formulating concepts of motion, the geometers used a "point in motion" to determine or specify, for example, velocity. Now a "point" is a static concept a priori. To determine (or even to think and perceive) motion, one must determine that it occupies two different points (positions or locations) at two different times, yet consider both points at the same time. Indeed, that is precisely what the arrow means that is used to represent a vector. A "point in motion" therefore represents a contradiction of opposites. That is, it represents the idea that "that which is motionless has motion.".[14] Even with this, there is a difference in a spatial point and a spatiotemporal (spacetime) point. To exist at all, a spatial point must be moving in time; in other words, it is a spatiotemporal line, even if it is a static spatial point.

Vector analysis was constructed in the abstract -- again, a massless point in motion possessed or constituted a velocity vector, etc. In massless (and timeless) space, FIELDS were defined: "scalar" fields constituted the assignment of a simple motionless number (magnitude) to each spatial point, while "vector" fields constituted the assignment of a "simple vector" (magnitude and velocity) to each spatial point. But the MATHEMATICAL vector system consisted of massless (point) motional relationships, recognizing zero motion as a special case of motion.[15]

Of course mathematics development was also always intertwined with practical problems. With the

sustained application of mathematics to gross physical material problems, mechanics slowly arose.

These developments required decades and even centuries to occur completely. All along the way, innovations and changes -- and additions to the mathematical formulism were being derived and taught to students as the "natural" system of reality. A permanent mindset was being forged.

Indeed, mathematics was regarded as THE single human expression of fundamental truth. Not until Godel's work in the twentieth century did it become evident that MATHEMATICS IS SIMPLY A GAME PLAYED ACCORDING TO ASSIGNED RULES, AND THERE IS NO ULTIMATE TRUTH IN MATHEMATICS ALONE.[16] It is a most useful game, of course, since it is the game fitted to perception. Thus it applies, essentially, to whatever can be perceived. But to be applied to physical systems, it must be changed, altered, updated, and fitted as the perceiving/detecting instruments become ever more subtle.

Next Page

Help support the work

TOWARD A NEW ELECTROMAGNETICS
PART III: CLARIFYING THE VECTOR CONCEPT

-- Four Types of Vectors Actually Emerged --

As the physical sciences slowly developed and incorporated abstract geometry and mathematics, in actuality four major types of vectors and two major states of observation evolved, although this fact did not become apparent to the scientists. Specifically, the mathematicians and scientists failed to recognize the differences in the four types of vectors, hopelessly intermingling them and confusing them as a single class of vector. Further, they did not appreciate that a fundamental vector conceptually is a UNITARY SYSTEM, and the system represented by one of these four types of vectors utilizes and is comprised of different components, "welded together with no seam in the middle."

Conceptually (and from a systems viewpoint), the four types of vectors are (1) the chargeless, massless spatial system vector (geometer's vector), (2) the uncharged mass system vector (mechanic's vector), (3) the charged mass system vector (electrician's vector), and (4) the charged space system vector (advanced electrician's vector). These four fundamentally different vectors are shown in Figures 1, 2, 4, and 9 in a simplified manner.

The major problem was that, beginning with the geometer's vector, these four major types of vectors were not treated as systems. Instead, their "vector" aspects were hopelessly confused and intermeshed, and no distinctions were made between them. And in the foundations of the mathematical constructs, time-smearing was not recognized at all.

Next Page

TOWARD A NEW ELECTROMAGNETICS
PART III: CLARIFYING THE VECTOR CONCEPT

-- Quantum Mechanics Compounds the Problem --

In addition, the two presently recognized observation states -- observable and nonobservable (virtual) -- were of course unknown to the early geometers and electricians, and these ideas were not incorporated directly into the theoretical foundation.

From particle physics and quantum mechanics, we now understand that physical reality is structured of an observable state, underlaid with an infinite number of ever finer, successive levels of virtual (unobservable) states. At least reality is most accurately modeled in that fashion, according to particle physics today.

It is also well known, for example, that at the most fundamental level, one cannot actually separate nonmotion from motion (which implies, for example, that one cannot separate mass and velocity). In other words, a "mass in motion" idea is actually incorrect, at the most basic level. What actually exists is a sort of "smeared mass". That is, "mass-motion" is fundamentally what exists, not mass IN motion .

Actually, all that the Heisenberg Uncertainty Principle implies is this fact: If one examines the concept of "static (non-smeared) thing in non-static (smeared) motion", in ever finer detail, one reaches a degree of fineness where the "smearing" is paramount and one cannot have an un-smeared or "separate static thing" to be in motion. Instead, one only has the smeared, 4-dimensional spacetime entity, without 3-dimensional spatial separations.

This means, for example, that at the most basic level, it is actually incorrect to represent a momentum with a little static particle of mass connected to a spatial velocity vector. It is incorrect to think of the system as comprised of TWO SEPARATE ENTITIES, (1) a mass, and (2) a massless spatial system velocity vector (a geometer's vector).

We mention in passing that, presently, we

understand that every particle is continually accelerating. First, the particle has spin, which involves rotation, which means that every "part" of the periphery of the particle is accelerated toward the center axis of spin. Second, every particle is continuously "fluctuating," and these fluctuations are accelerations. Further, we must consider any change such as an acceleration -- as existing in a small time increment, and occurring in a small length increment. Thus mass particles actually exist as (mass x acceleration x time x length). This of course has the dimensions of ACTION or angular momentum. The "real" world of physical matter, then, is composed of building blocks of action, called "quanta." Any other physical "quantity" must be obtained by fissioning (differentiating) the action quantum. For this reason, quantum mechanics presently must postulate that to every observable there corresponds an operator.

Next Page

-- To Summarize Briefly --

Let us now summarize these concepts and further examine their impact.

In physics, there must actually exist four major KINDS of vectors, rather than just one as prescribed by present interpretation. These vectors are "built" starting with four major kinds of particles.[17] These are: (1) the spatial point, (2) an uncharged mass particle, (3) a charged mass particle, and (4) a charged spatial point. Further, each of the four vectors at its most fundamental level (that is, at the quantum level)[18] is actually an inseparable, unitary SYSTEM welded into a single undivided entity containing time and existing nonexclusively in time.[19] When we look at or represent the so-called "parts" of the system, we are looking at them before they are welded together into the physical vector. That is, whenever we speak of "parts, " we imply that a "cutting" or "differentiating" action has been implied to separate the system into such "parts."

From such considerations, four different kinds of system vectors result.

Next Page

TOWARD A NEW ELECTROMAGNETICS
PART III: CLARIFYING THE VECTOR CONCEPT

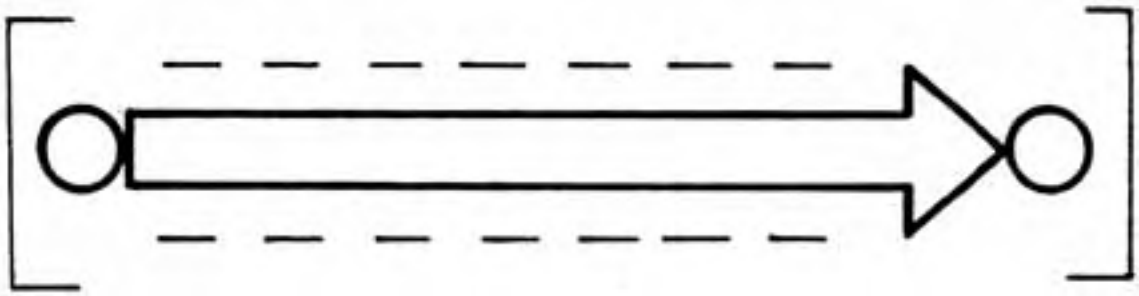

(GEOMETER'S VECTOR)

Figure 1. Uncharged spatial (massless) system vector.

UNCHARGED SPATIAL (MASSLESS) SYSTEM VECTOR
-- (Figure 1) --

This is the geometer's abstract vector, consisting of a "point in motion." (Actually, it is a "smeared point," for example.) However, so ingrained is the concept of a "point in motion" velocity vector that we now consider it to be "natural" because of its total familiarity. But simply ask, "WHAT is in motion?"[17] and you immediately see the difficulty. To have a WHAT, one must "stop the action" (detect or measure), separating "static" from "non-static." Acceleration and other vectors, etc. have also been derived by the geometer and utilized in similar fashion. All are massless.

Next Page

TOWARD A NEW ELECTROMAGNETICS
PART III: CLARIFYING THE VECTOR CONCEPT

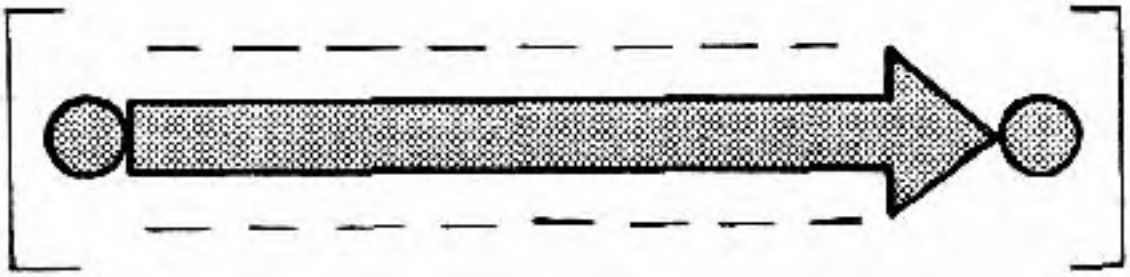

(MECHANIC'S VECTOR)

Figure 2. Chargeless mass system vector.

CHARGELESS MASS SYSTEM VECTOR
-- (Figure 2) --

This type of vector actually is the essential vector of mechanics, involving mass-motion (momentum), force (mass-motion change), etc. The fundamental difference between this type of vector and the geometer's vector is the presence of smeared mass existing in time (i.e., mass-time), welded together with a geometer's vector, but with no seam in the middle, into a new kind of "vector" AS A SYSTEM. The vector is the SYSTEM EXISTING IN TIME .

To illustrate:

"Momentum" is more properly referred to as "mass-motion" rather than "mass in motion." That is, at the fundamental level, the mass is NOT "separate" from its motion. It is NOT separated from the time in which the smearing occurs. The idea of momentum, however, is really to express the time-density of the mass-smeared-through-length. It is, in other words, the time rate of length-smearing of mass. Now in our minds we have conceived that

$$\bar{p} = m \odot \bar{v} \qquad (1)$$

where, by the symbol $\odot$ we mean "coupled to"; but we actually have

$$\bar{p} \equiv [\overline{mv}] \qquad (2)$$

where we are not allowed to separate (even in thought) m and $\bar{v}$. Quantum mechanics agrees with this essentially, because $\bar{p}$ is a canonical variable linked to length, in any observable physical change. (The REASON p is canonically linked to ΔL is because $\bar{p}$ is the time-rate of length-smearing of m. If there is no length, there is no length-smearing of m to have a time rate OF in the first place.)

Note that, not only is

$$\bar{p} = [\overline{mv}] \qquad (3)$$

but also

$$\bar{p} \equiv [\overline{mv}] \qquad (4)$$

which is a much stronger and quite different statement. That is, $\bar{p}$ is IDENTICALLY $(\overline{mv})$, not just calculably EQUAL TO (m)($\bar{v}$). This means that $\bar{p}$ is a SYSTEM that is COMPRISED of mass-motion.

Next Page

TOWARD A NEW ELECTROMAGNETICS
PART III: CLARIFYING THE VECTOR CONCEPT

-- What Force Is --

We now note that force, for example, is -- and may be defined as -- the time-rate of change of momentum, or

$$\bar{F} \equiv d/dt[\bar{p}] \qquad (5)$$

and this identity states that a force -- any force is COMPRISED OF time-changing "mass-motion." As such, the force vector is a mass-system vector, not just a massless spatial vector. Fundamentally, this mass-system vector is a totally different creature from a massless spatial vector. Our present manner of considering force as a geometer's vector "separately applied to" a mass particle is completely erroneous at the quantum level. Instead, fundamentally force is always a mechanic's vector. Force is an EFFECT, not a CAUSE.

And here mechanics made a most fundamental error, in not recognizing the difference between its kind of vector and that of the geometer.

Next Page

TOWARD A NEW ELECTROMAGNETICS
PART III: CLARIFYING THE VECTOR CONCEPT

--Force and Hertzian Waves Cannot Exist in Vacuum --

Note that one cannot have an observable "force vector" existing' in vacuum a priori.

For example, we have the definition of force as

$$\bar{F} \equiv \frac{d\bar{p}}{dt} \qquad (6)$$

or

$$\bar{F} \equiv \overline{[m\bar{a} + \dot{m}\bar{v}]} \qquad (7)$$

and we see that, rigorously, a force vector CONSISTS OF (not, "is equal to") a time-changing mass-motion vector system. IF THERE IS NO OBSERVABLE ACCELERATING MASS PRESENT, THEN THERE CAN BE NO OBSERVABLE FORCE PRESENT. The mass can accelerate in time (increase or decrease of mass) or space (increase or decrease of velocity) or both.

Observable force CANNOT exist in vacuum (in the absence of mass), a priori.[20]

However, assume for a moment that one could have a massless force vector, as assumed in present electrical theory. Let this force vector appear at a point in the vacuum. Since the vacuum has zero observable mass, it would have zero inertial resistance to this hypothetical observable force -- hence the observable force would instantly produce an "infinite" acceleration of its point of application, vanishing with it into the infinite distance. Therefore our fictitious force would disappear the instant it appeared! In any case, it could not be retained at a point in the vacuum for any finite length of time, however small.

The direct implications are that (1) something other than an observable electrical force field exists in the vacuum, and (2) there must exist a more fundamental mechanism by which this "something else" generates or CREATES a force on/of a moving electrically charged mass. (Note again that, at the most

basic level, any particle of mass is always quivering, in motion, and accelerating. from quantal considerations alone.)

Thus immediately we have discovered something unique about so-called "force-fields" in vacuum: for example, about gravitational field, electrical field, and magnetic field (and the strong force and the weak force as well). These fields do not exist at all as ordinary force vectors -- and real force fields -- in vacuum! $\bar{E}$ and $\bar{B}$ fields, e.g., are defined in terms of force per unit electrical charged mass and magnetically charged mass, respectively. In the absence of mass, they cannot exist.

And this in turn means that transverse $\bar{E}-\bar{H}$ field waves (Hertzian waves) cannot exist in a vacuum. Indeed, they appear on, and ARE CONSTITUTED of, the charged-mass-motion that changes, and they appear where such change occurs, as a result of an introduced mass.[21] But in the absence of the spinning charged particle of mass, they do not exist as force fields at all.

Hertzian waves exist in a transmitting whip antenna, for example, in the oscillating electron gas along its length. Something else entirely different exists in vacuum between the transmitting antenna and the receiving antenna. Then in the receiving antenna, Hertzian waves again exist in the oscillating electron gas along its length. (See Figure 3.)

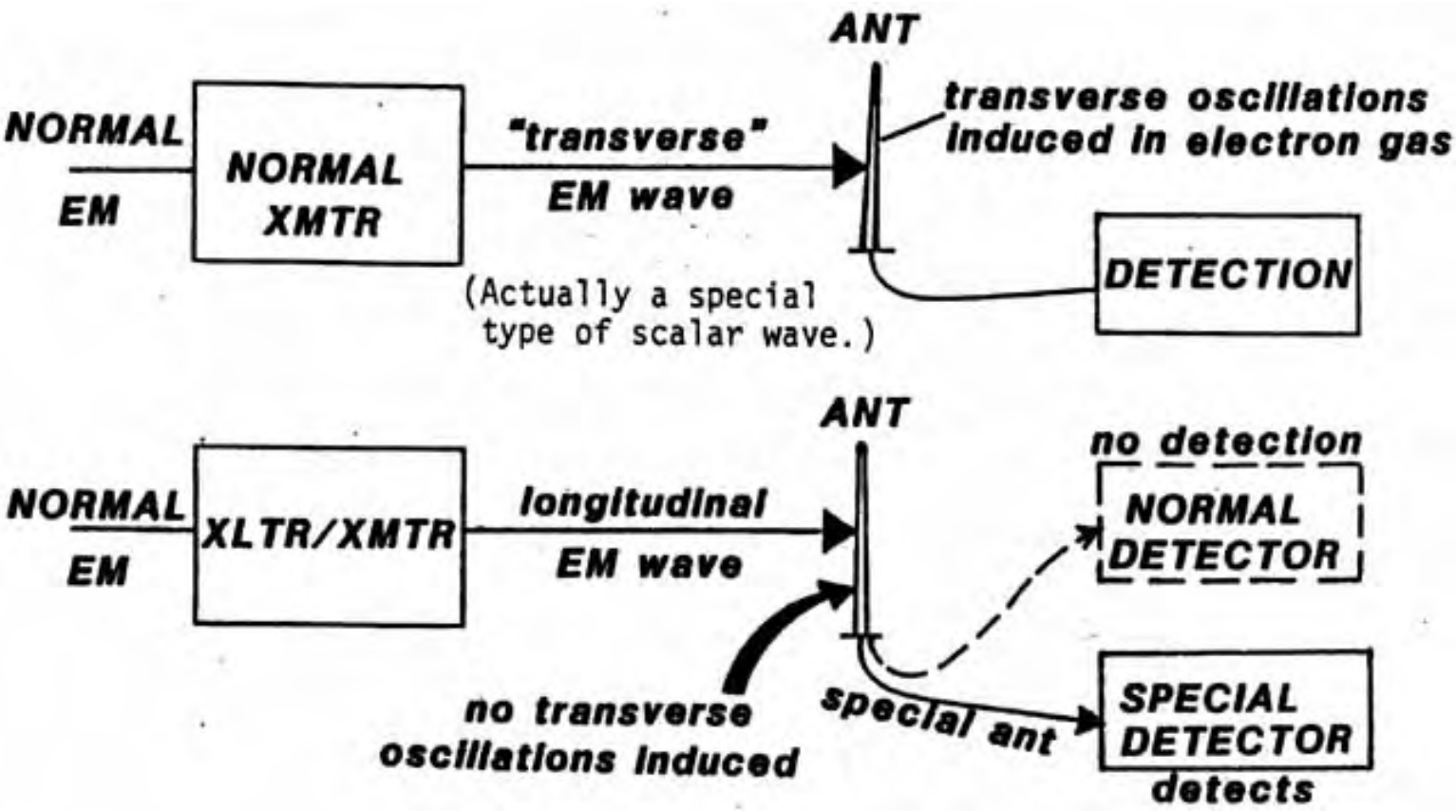

Figure 3. Detection of "transverse" and longitudinal waves

This is interesting, for Nikola Tesla stated several times that HERTZIAN WAVES CANNOT BE PRODUCED IN A VACUUM, NOR CAN THEY TRAVEL IN A VACUUM.[22]

Tesla was correct, as we are beginning to see.

We shall later return to show in what form so-called "force-fields" actually exist in vacuum.

For now, I point out that I am stating a fundamental change to all of physics, including both mechanics and electromagnetics.

Next Page

TOWARD A NEW ELECTROMAGNETICS PART III: CLARIFYING THE VECTOR CONCEPT

Help support this work

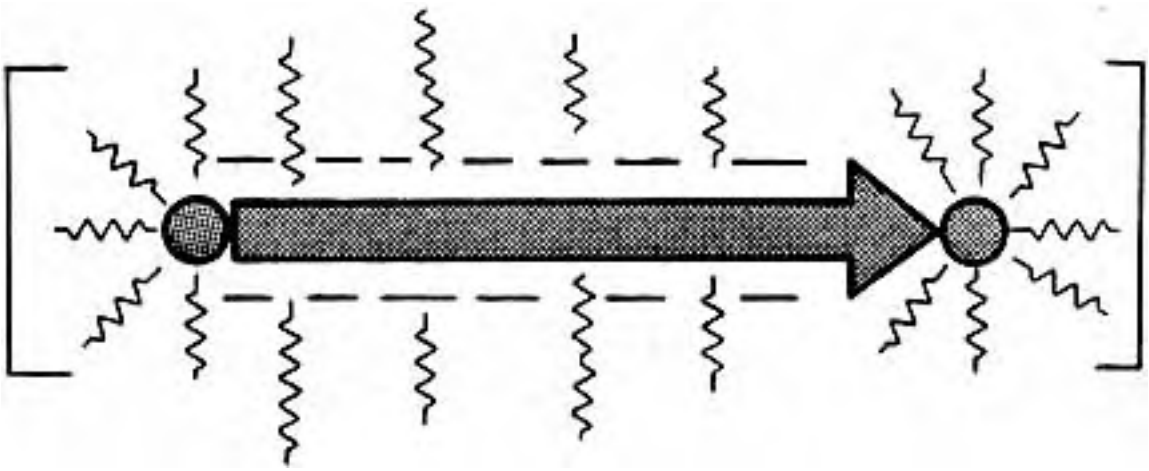

(ELECTRICIAN'S VECTOR)

Figure 4. Charged mass system vector.

-- CHARGED-MASS-SYSTEM VECTOR --
-- (Figure 4) --

The third type of vector we meet is the vector mass system where the mass is charged. First, we point out a serious error in present electromagnetic (EM) theory. That is, in present theory it is implicitly assumed that

$$\mathbf{q} \equiv \mathbf{q_m} \qquad (8)$$

In other words, "charge" and "charged mass" are erroneously assumed to be identically the same thing.

In the days when electricians were playing with pith balls and striving to uncover the secrets of electricity, they knew nothing at all about the virtual

state, and consequently nothing about a "virtual particle flux" on a particle of mass causing (and comprising) the "charge" of that mass.

Today, of course, we know from particle physics and quantum mechanics that the "charge" on an observable particle of mass IS due to a flux of virtual (nonobservable) particles on and off the mass of the observable particle (see figure 5). A charged mass is thus presently known to be a SYSTEM: a massless charge flux, coupled to a bare particle (chargeless mass) constitutes a "charged particle."

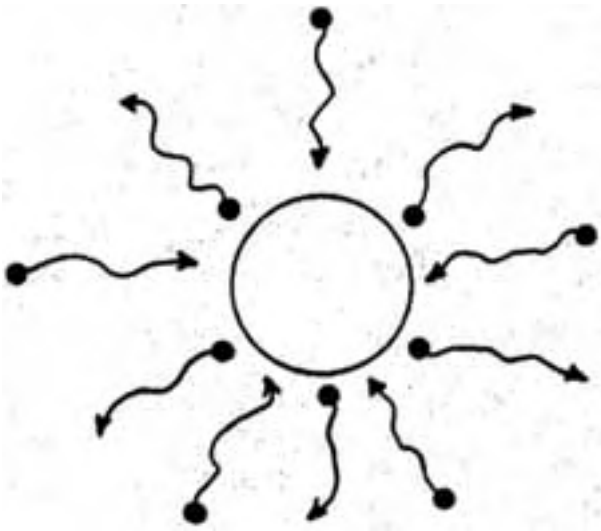

Figure 5. The "charge" on an electron mass consists of a flux of virtual particles on and off the mass.

Thus, actually the "charge" is the virtual (unobservable, or SPATIO-TEMPORAL) flux to and from the observable SPATIAL particle of mass. So, rigorously,

$$\mathbf{q \not\equiv q_m} \qquad (9)$$

But instead,

$$\mathbf{q \equiv [d/dm(q_m)]} \qquad (10)$$

and this is a definition and therefore an identity. This definition alone affects all present electromagnetics theory.

To illustrate: In founding electrical theory, early scientists dealt with forces generated by charged masses (for example, charged pith balls). They later

extrapolated the experimental results they obtained (or thought they obtained) with the smallest charged mass, a charged particle. In Figure 6, I show the classic situation for derivation of the idea of E-field (except we have used an electron for our test charge, rather than a pith ball).

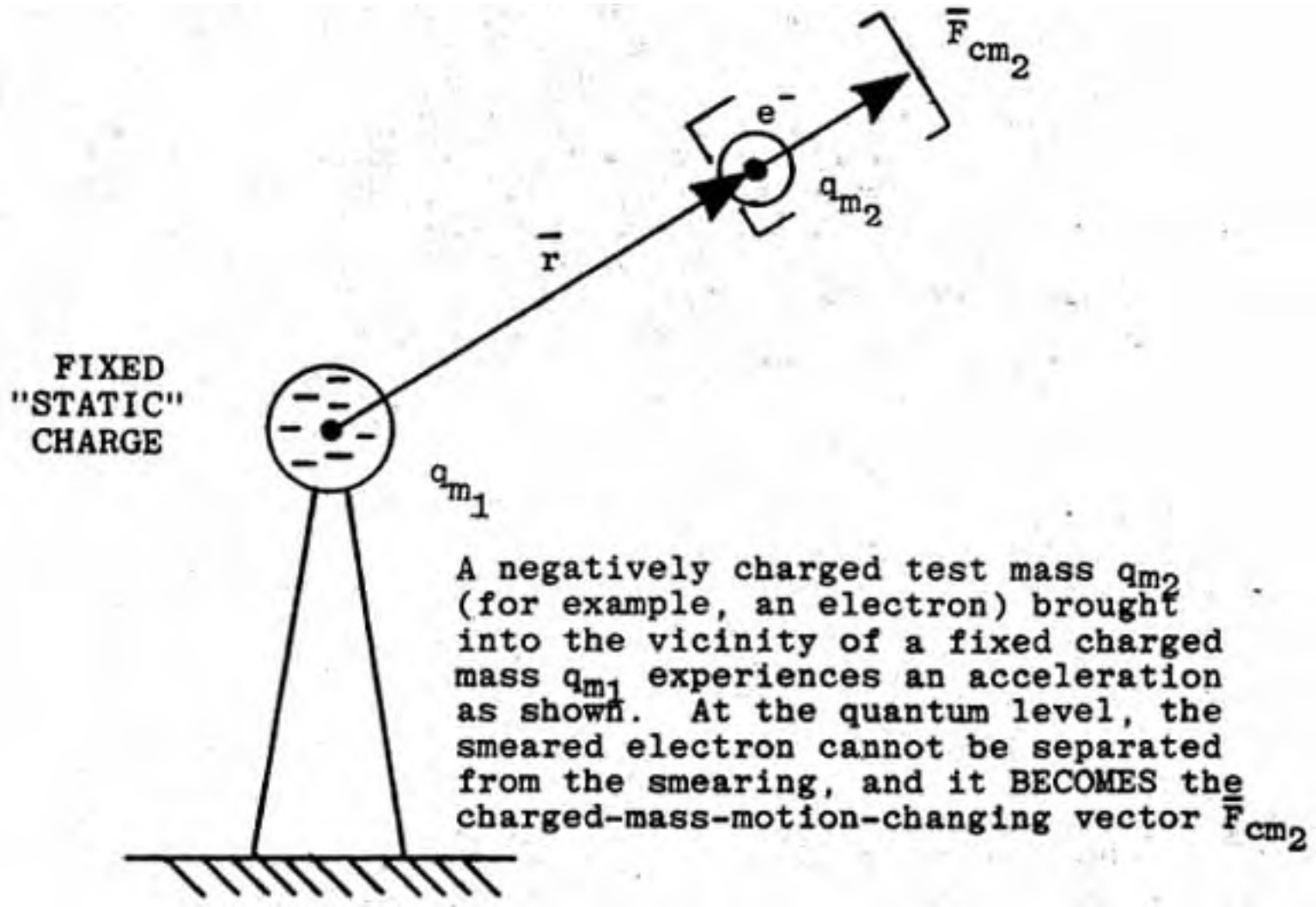

Figure 6. A test charge (charged mass) brought near a fixed charge (charged mass) experiences an acceleration.

Now note that what actually happens is that the unrestrained test charge becomes a CHARGED MASS SYSTEM VECTOR (a "smeared charged mass-motion changing"). The "test charge" BECOMES a charged mass force vector; it does not have a separate geometer's vector "appear on it." What actually happens is shown in Figure 7.

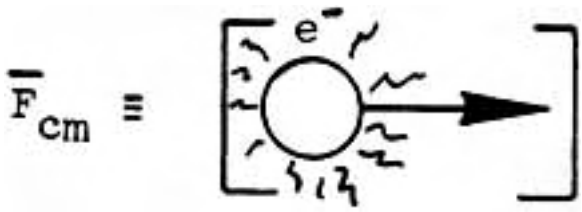

Figure 7. A charged-mass-system vector.

That is, in the simplest (nonrelativistic) case, for an electron what happens is

$$\bar{F}_{cm} \equiv \overline{[q_e \odot m_e \odot \bar{a}_s]} \qquad (11)$$

and this is a DEFINITION. That is, considered instantly, the electron exists as a charged-mass electrical force CONSISTING OF/COMPRISED OF a charge flux q_e canonically coupled to a mass, with that subsystem then canonically coupled to a spatial acceleration vector, ALL AS A SINGLE ENTITY, WITHOUT ANY "SEAMS" BETWEEN ITS "PARTS." The $\bar{F}_{cm}$ IS THE ELECTRON SYSTEM ITSELF; it is NOT a "spatial vector." Rigorously, it does not exist in the absence of the smeared electron mass, a priori.

Again, in assuming this force exists in the absence of the smeared mass of the moving particle, electromagnetics theory is in serious logical error.

Referring back to Figure 6, we see that, if we repeat the experiment many times and with the test charge in many locations, we have the situation shown in Figure 8.

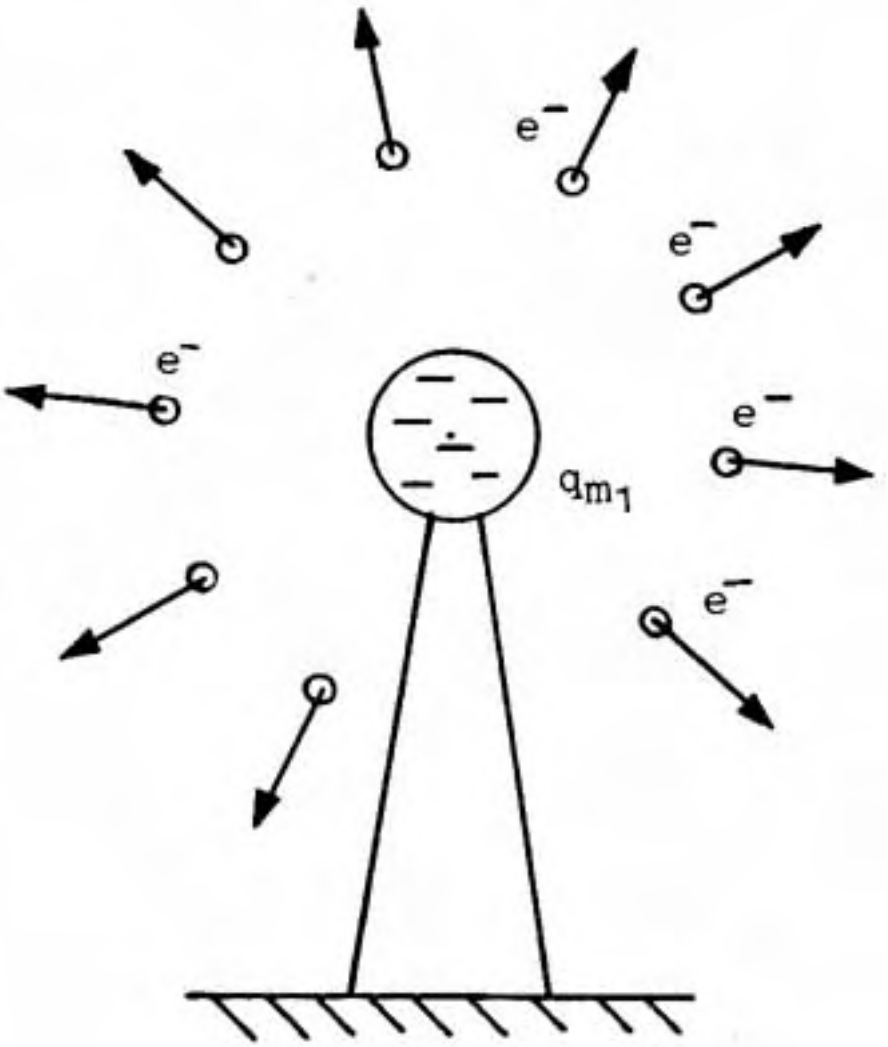

Figure 8. Repeating the "test charge" experiment.

It is found that, rigorously,

$$|\bar{F}_{cm}| \propto \left|\frac{q_{m_1} q_{m_2}}{r^2}\right| \qquad (12)$$

where $\bar{F}_{cm}$ is a charged mass system vector. Erroneously, this has been stated one way or another as

$$|\bar{F}| \propto \left|\frac{q_1 q_2}{r^2}\right| \qquad (13)$$

where $\bar{F}$ is assumed to be a spatial system vector. Further, this confusion has been carried over into the definition of the $\bar{E}$-field as:

$$\bar{E}_{cm} \equiv \frac{\bar{F}_{cm}}{m_{cm}} \qquad (14)$$

In this definition, $\bar{E}$ -- which is a charged mass system vector -- has been confused as a charged spatial system vector, where $\bar{F}$ is regarded simply a spatial system vector! Actually, the definition of the $\bar{E}$-field should be

$$\bar{E}_{cm} \equiv \frac{\bar{F}_{cm}}{m_{cm}} \qquad (15)$$

where $\bar{F}_{cm}$ is a charged mass system vector. Failure to properly define the $\bar{E}$-field has caused the conception of the $\bar{E}$-field to be falsely perpetuated as existing in vacuum.

The $\bar{E}$-field is TREATED this way in present EM theory. Hence present theory falsely assumes that the observable $\bar{E}$-field can exist in vacuum.

What actually exists in space, $\bar{E}$-field-wise, is a special kind of ordered virtual state pattern in a series of spinning "scalar" fields. This virtual state pattern or "shadow vector" field will be explained later.

Note again that one cannot have a "force vector" existing in vacuum - a priori.

However, assume for a moment that one could have a massless force vector, as presently assumed. Let this force vector appear at a point in the vacuum. Since the vacuum has zero observable mass, it would have zero inertial resistance to this hypothetical observable force hence the observable force would instantly produce an "infinite" acceleration of its point of application, vanishing with it into the distance. Therefore our fictitious force would disappear the instant it appeared! In any case, it could not be retained at a point in the vacuum for any finite length of time, however small.

The direct implications are that (1) something other than an observable electrical force field exists in the vacuum, and (2) there must exist a more <u>fundamental mechanism</u> by which this "something else" generates or CREATES a change on/of an accelerating electrically

charged mass particle. (Note again that at the basic level, any particle of mass is ALWAYS quivering and accelerating, from quantal fluctuation considerations alone.) Causality has no arrow microscopically.[23]

Next Page

Help support this work

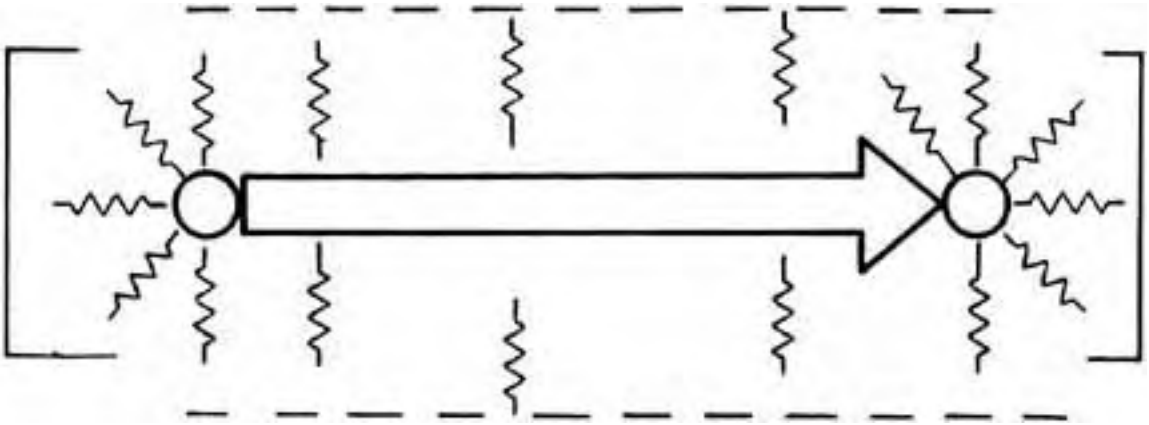

(ADVANCED ELECTRICIAN'S VECTOR)

Figure 9. Charged spatial (massless) vector.

-- CHARGED SPATIAL (MASSLESS) VECTOR --

We recognize now that

$$q_c \not\equiv q_m \qquad (16)$$

and that q_c is simply the virtual-particle flux that constitutes charge -- and indeed constitutes vacuum itself!

We DEFINE vacuum, based on Figure 5, as shown in Figure 10.

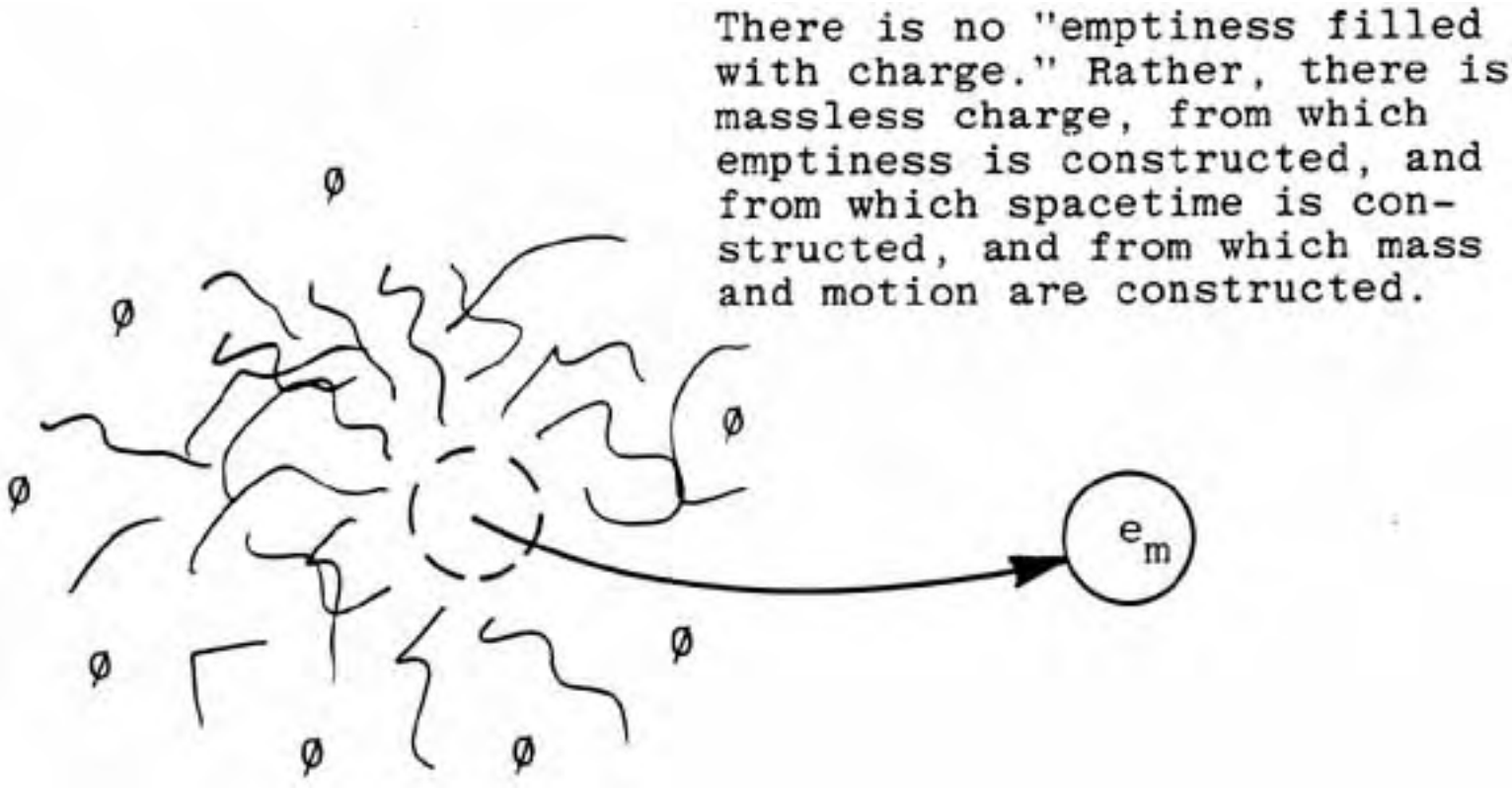

Figure 10. Removing the bare particle (mass) from a charged particle leaves the charge. The vacuum is DEFINED AS the charge.

That is, vacuum may be defined as pure massless charge flux. This flux IS identically "spacetime" as well. Vacuum is pure Ø-field (electrostatic scalar potential). Here again, in present theory it is assumed that

$$Ø_O \equiv 0 \qquad (17)$$

which, by our new definition of vacuum, is quite false.

We now note that, if we insist on assigning a spatial vector to the vacuum, we have the situation shown in Figure 11.

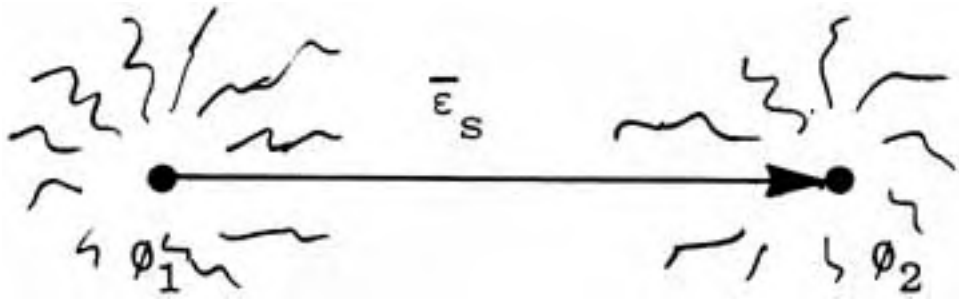

Figure 11. Assigning a spatial vector to the charged vacuum

Next Page

Help support the work

TOWARD A NEW ELECTROMAGNETICS PART III: CLARIFYING THE VECTOR CONCEPT

Help support the work

-- THE SHADOW VECTOR --

Note that this spatial vector $\bar{\varepsilon}_s$ represents $-\overline{\nabla\phi_s}$, that is,

$$\bar{\varepsilon}_s = -\overline{\nabla\phi}_s \qquad (18)$$

but $\bar{\varepsilon}_s$ cannot be a force (mass system) vector. It can only exist as an ordered pattern in the virtual flux between two separated points of the vacuum; that is, as an ordered pattern in the virtual state. Literally, $\bar{\varepsilon}_s$ exists only as a tiny bit of order existing in great disorder.

In other words, the present EM theory is incorrect in stating that

$$\bar{E}_m = -\overline{\nabla\phi}_s \qquad (19)$$

in vacuum in the absence of an observable spinning charged particle, since

$$\bar{\varepsilon}_s \not\equiv \bar{E}_m \qquad (20)$$

The actual existence of $\bar{\varepsilon}_s$ may be visualized in terms of successive differentials of $\bar{E}_m$, broken into differentials $\bar{e}_m$ so small that, observably, each little differential's mass component m has become virtual, so that

$$\bar{e}_m \equiv \bar{e}_{vm} \qquad (21)$$

where subscript m stands for mass, subscript v for virtual, and observably

$$\bar{e}_{vm} \equiv \overline{dE}_m \qquad (22)$$

but, in the absence of a spinning charged particle,

$$\bar{E}_m \neq \int \overline{dE}_m \qquad (23)$$

since the $\bar{e}_{vm}$ components remain individually separated. That is, in macro-time a SHADOW force vector exists, made of microscopically ordered BUT UNJOINED (unintegrated) "virtual state" vector differentials of what would be an observable mass system force vector $\bar{E}_m$ if integrated.

Thus, the "$\bar{E}$-vector" $\bar{\varepsilon}_s$ that exists in vacuum is a "shadow" vector as shown in figure 12.

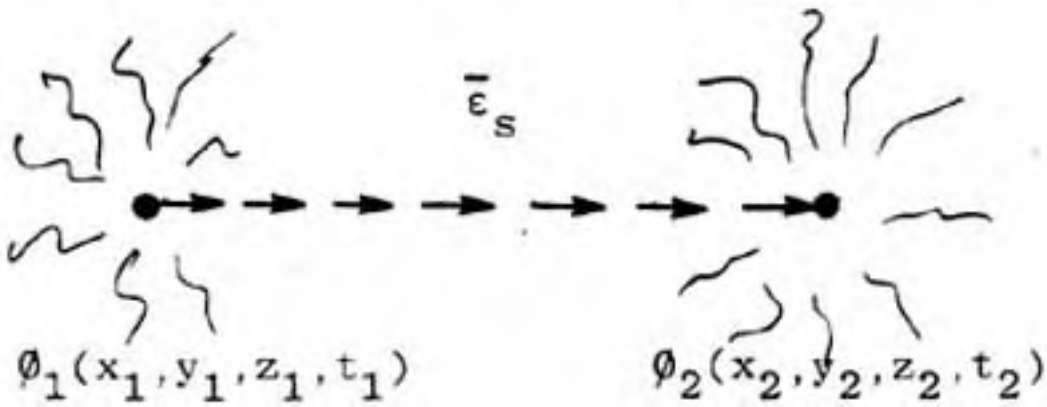

Figure 12. A "shadow vector" $\bar{\varepsilon}_s$

We say that such a previous mass system vector, broken into ordered but unjoined virtual vectors by the absenting of all mass, is a SHADOW VECTOR, and we label it with a subscript vm, to represent "virtual mass" system. To the macro observer, this is the kind of "vector" that exists in vacuuo.

Note that, observably, the shadow vector merely represents a special ordering in $\nabla\phi$. It is NOT an OBSERVABLE (mass system) vector, but it IS an ordered series of consecutive virtual vectors.

With each virtual bit vector, a virtual time exists as well, and these "virtual time bits" are also ordered consecutively (in macrotime).

I point out that any observable vector must be finite, and so it must have a finite magnitude (finite length). In the simplest case, this length ΔL is related to a Δt by

$$\Delta L = c\Delta t \qquad (24)$$

What I am saying is that ANY observable spatial vector is actually a spatiotemporal vector, and the MAGNITUDE of any vector is related to TIME (to the existence of that vector in time) at the most fundamental level. Suffice it to say that, if the fundamental quantum level (Δt) aspect of a vector is interfered with, then the MAGNITUDE of the vector is interfered with.[24] That is, if we can make a time wave, we can change or affect ANY vector's magnitude, including the magnitude of mass system vectors and charged mass system vectors. Such a "time wave" can be made easily, and it has been.

Next Page

TOWARD A NEW ELECTROMAGNETICS PART III: CLARIFYING THE VECTOR CONCEPT

Help support the work

-- A Scalar is a Zero Vector --

Now let us look at the idea of a scalar.

A "scalar" may in a general sense be considered as the sum of the "absolute values" of the individual vector components of a system of vectors whose observable resultant is zero. That is, it represents the magnitude of the internal stress of a vector system, with the absence of a single observable directionality of the system. It also follows that every scalar is actually a stressed zero vector, and every zero vector is a scalar.

Thus we have four major types of scalars related to the four types of vectors:

(a) $$S_1 = |\bar{v}_s| \quad (25)$$

(b) $$S_2 = |\bar{v}_m| \quad (26)$$

(c) $$S_3 = |\bar{v}_{cm}| \quad (27)$$

(d) $$S_4 = |\bar{v}_{cs}| \quad (28)$$

where S stands for scalar, $\bar{v}$ for vector, and subscript s for spatial, m for mass, and c for charged.

For example, comparing equations (25) and (26), it can easily be seen that twice as many "point-motions" is not at all the same thing as twice as many "gram-mass-motions." The two resulting vector systems are quite different.

Next Page

TOWARD A NEW ELECTROMAGNETICS PART III: CLARIFYING THE VECTOR CONCEPT

Help support the work

-- Virtual and Observable Aspects --

We must also examine some aspects of "virtual" and "observable."

For example, we construct several spatial vector summations in Figure 13. The "resultants" of these spatial vectors are all equal. However, the actual sums, even though equal, are quite different, because their internal "stresses" (substructure forms) are quite different.

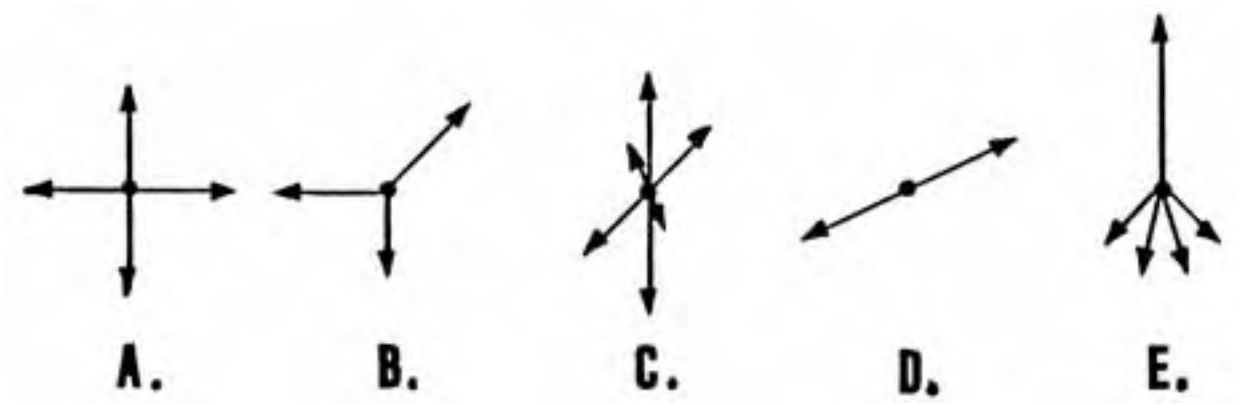

SUPERPOSITION DOES NOT ELIMINATE THE VIRTUAL SUBSTRUCTURE.

When the time aspects of the vector systems of Figure 13 are considered, one can easily understand the problem. That is, the resultant of each of these "systems" is zero, and so one can say that the vectorial "magnitude" of the system is zero since the magnitude of the resultant vector is zero. However, in each case the "action" represented by each vector element actually occurs in a finite tiny Δt. So: (1) The zero resultant must exist for a finite Δt, and (2) all the actions indicated by the system component vectors actually occur in that Δt. The absolute value of the "activity per unit time per unit volume" of such a zero-

resultant system thus has physical meaning, and one may refer to this notion as the "stress" on spacetime[25], or the "electrostatic scalar potential" of the system. Note that this differs from the present definition of electrostatic scalar potential, which becomes just a special case of the more fundamental potential defined here.[26]

The derivatives of this spatiotemporal stress also have physical meaning. The time derivative is indicative of the stress on the flow of macroscopic time at a fixed spatial point, and the spatial derivative is indicative of the stress on space. Here one is confronted with the fact that what we call "space" and "time" are continually being created, directly in the physical observing/detecting apparatus itself.[27] That is, rigorously, "detected physical reality" exists totally in and of the mass-changes of the observer's mass or his detecting instruments. In the fundamental detection process itself, there is a flow of the rate of creation of spatial lengths and a flow of the rate of creation of time lengths. Indeed, to a linear observer the stress on the creation of the flow of time controls the flow of the creation of space, and the stress on the creation of the flow of space controls the flow of the creation of time. The change in the stress on 4-space (ordinary Minkowskian space-time) controls the "curvature of that spacetime" in the fifth dimension. The change in the stress on 5-space controls the "curvature of that 5-space spacetime" in 6-space, and so on. Development of these facets of the new concepts is beyond the scope of this paper.)

Next Page

-- SCALARS AND VECTORS HAVE SUBSTRUCTURES --

As can now be seen, the sum of each structure in figure 13 is observably zero. Therefore we might define the sum as a "zero spatial vector." We note, however, that it actually exists for a time Δt and is thus a spatiotemporal entity, rigorously.

If we define the internal stress action A in a region $\Delta s^3 \Delta t$ of spacetime as

$$A_{(s^3 t)} \equiv \sum_{k=1}^{n} |\bar{i}_s| \qquad (29)$$

and the 4-space internal stress intensity or potential as

$$S \equiv \lim_{(\Delta s^3 \Delta t) \to 0} \left[\frac{A(s^3 t)}{\Delta s^3 \Delta t} \right] \qquad (30)$$

where $\bar{i}_s$ is any internal vector in the substructure, Δs^3 is the spatial volume (about a point) containing vector $\bar{i}_s$, and Δt is the inseparable time during which these component actions occurred, then we see that, stress-wise, all the "zero-vectors" in figure 13 are quite different in their internal stresses, 4-space potentials, and internal substructures. For the five "zero sum" vectors, OBSERVABLY we have

$$\bar{0}_1 = \bar{0}_2 = \bar{0}_3 = \bar{0}_4 = \bar{0}_5 \qquad (31)$$

whether or not

$$\Delta s^3 \Delta t_m = \Delta s^3 \Delta t_n \ (m \neq n;\ 1 \leq m \leq 5;\ 1 \leq n \leq 5) \qquad (32)$$

But considering the substructures,

$$\bar{0}_m \neq \bar{0}_n \quad (1 \leq m \leq 5;\ 1 \leq n \leq 5;\ m \neq n) \qquad (33)$$

I now point out that a scalar can be regarded as a stressed zero-sum vector, where the magnitude S of the scalar represents the internal stress intensity caused by the substructure of the zero-vector.

Thus, generally,

$$S(s^n t) \equiv \lim_{\Delta s^n \Delta t \to 0} \left[\frac{\sum_{n=1}^{k} |\bar{i}_s|}{\Delta s^n \Delta t} \right] \qquad (34)$$

That is, in general any observable scalar has, consists of, and is comprised of a VIRTUAL (unobservable) substructure that is very real indeed. One must also consider the scalar as existing for some finite time Δt, (at least for the time of one quantum change), and the intensity of the virtual actions occurring in the spatiotemporal substructure of the scalar during that time Δt is proportional to the magnitude of the scalar.

Normally, the concept of a scalar -- as presently used -- makes no allowance for the scalar to exist in time, or for a virtual vector substructure, or for any patterning inside the substructure. This is equivalent to assuming that

$$A \equiv 0 \qquad (35)$$

and that all $\bar{i}_s$'s are evenly distributed. That is, from this new viewpoint, presently the mathematical theory assumes all scalars to have an equal density of virtual activity per spatiotemporal volume in its virtual substructure, and an isotropic virtual pattern distribution of an infinite number of equal virtual vectors in its 4-space substructure.[28]

In the new approach, neither of these two assumptions need hold -- though in special cases they can hold. Thus present orthodox theory is just a single special case of a more fundamental approach indicated here.

Note that, by directly affecting and changing the virtual substructures of scalars and vectors, we can directly perform

virtual. state engineering, and this allows us to directly "engineer" the so-called "laws of nature" of the normal observable laboratory state and thus ENGINEER AND CHANGE PHYSICAL REALITY ITSELF.[29]

In the new approach, we can (observably) have

$$2 + 2 \neq 4 \qquad (36)$$

or

$$2 + 2 = 4 \qquad (37)$$

by the following means: In the first case (equation 36), we assume that the virtual substructures are patterned, and interact nonlinearly in such a way as to produce an extra observable. Thus we have a delta added to the normal observable scalar results of the interaction, as follows:

$$2_o + 2_o = 4_o + \Delta_{v\text{->}o} \qquad (38)$$

where subscript "o" means observable and "v" means virtual. Note that

$$\Delta_{v\text{->}o} \qquad (39)$$

indicates a delta due to virtual substructure interactions yielding an extra observable delta. This extra delta may be either scalar or vector in nature, depending on the circumstances and the particular interactions.

Note also that any vector or scalar must now be considered to HAVE, CONTAIN, and CONSIST OF an infinite substructure. And note that, similar to the scalar case, from the new viewpoint the present theory assumes each scalar (point) of the vector to have a structure similar to that of equation (34), except that now the scalars are ordered, with a linearly decreasing internal stress density per unit scalar along the line of the vector.

In the new approach, vector interaction (superposition, for example) can now violate present theory, if the two virtual substructures interact nonlinearly to produce a nonzero, observable delta. Observably (macroscopically) , this delta, again, may be either "scalar" or "vector."

This approach now becomes consistent with quantum mechanics at the foundation level.

Next Page

TOWARD A NEW ELECTROMAGNETICS PART III: CLARIFYING THE VECTOR CONCEPT

Help support the work

-- Substructures, Virtual Levels, and Hyperspaces --

In the new approach, our definitions and assumptions immediately drive us to a picture of an infinite set of nested levels of substructures in the virtual state. That is, anyone component (scalar or vector) in one level of virtual state has an infinite number of even finer virtual components, one level more subtle.

AND THAT IS WHAT PARTICLE PHYSICS AND QUANTUM MECHANICS ALREADY REVEAL ABOUT THE STRUCTURE OF PHYSICAL REALITY.

So these definitions and assumptions now provide the basis for a new vector mathematics that is in accord with, and fitted to, modern physical observations.

We have a picture such that any observable scalar or vector contains a virtual substructure (virtual level 1). Any scalar or vector in virtual level 1 also contains a finer virtual substructure, in virtual level 2. And so on ad infinitum.

Each succeedingly finer level of virtual state can be modeled as a hyperdimension (higher spatial dimension) as I pointed out in Appendix 1 to my book, The Excalibur Briefing.[30]

Thus this approach immediately ties into hyperdimensional or hyperspatial theory -- such as Elizabeth Rauscher's 8-dimensional theory[31] and C. Muses's hypernumber theory.[32]

The new definitions and assumptions are far richer than what is allowed by tensors, though there are many similarities. Muses's work, however, essentially can encompass most of these definitions and concepts, except the distinct types of vectors are not so clearly delineated in his theory (at least to my comprehension of it.) His theory does provide a nested,

hyperdimensional structure of time, however, and thus allows "scalar" waves in the hyperspatial structure of time -- in other words, observably "scalar" waves in the virtual state structure of spacetime, or pure Tesla waves, or simply "time" waves.

These are the bare notes; from this approach, already new (proprietary) mechanisms and exact specifications to make scalar waves -- in essentially whatever quantity and degree desired -- appear to have been successfully accomplished by my close colleagues.

The new approach is real and it leads to a new physics. And I believe that the very beginnings of the new physics are already working on the laboratory bench.

Nikola Tesla discovered the most essential features of the new electromagnetics over eighty years ago and was simply suppressed for his efforts. Now, although it has been eighty years in the reborning, Tesla electromagnetics is once again loose in the Western world.

This time, let us hope that it fares better at the hands of orthodox science and large financial control groups than it did for Nikola Tesla.

Next Page

The Tom Bearden Website

TOWARDS A NEW ELECTROMAGNETICS
PART 4: VECTORS AND MECHANISMS CLARIFIED

by Lt. Col. T.E. Bearden (retd.), 1983
Copyright

Title Page

Foreword

1. TOWARDS A NEW ELECTROMAGNETICS - ACKNOWLEDGEMENTS
2. OUTLINE
3. CHARACTERISTICS OF SELECTED CONCEPTS
4. QUOTE FROM NIKOLA TESLA
5. FORCE BETWEEN TWO LIKE CHARGES
6. REPETITIONS LEAD TO THE VECTOR "FIELD" CONCEPT
7. A SCALAR HAS A HIDDEN (VIRTUAL) VECTOR SUBSTRUCTURE
8. SCALAR AND VECTOR SUBSTRUCTURES
9. SUPERPOSITION DOES NOT ELIMINATE THE VIRTUAL SUBSTRUCTURE
10. PHYSICAL VECTORS
11. THE FOUR VECTORS OF PHYSICS
12. FORCE DEFINITION
13. FORCE IS AN EFFECT, NOT A CAUSE
14. FORCE AND Ë-FIELD DO NOT EXIST IN VACUUM
15. COROLLARIES
16. ENERGY IS DERIVED, NOT FUNDAMENTAL
17. EXISTENCE IN, AND PASSAGE THROUGH, TIME
18. SOME IMPLICATIONS
19. CONSERVATION OF ANENERGY (AE): (AN EXPANDED CONSERVATION LAW)
20. FREE ENERGY IS ALLOWED

21. SCALAR POTENTIAL CAN FORCE THE RELATIVISTIC CASE
22. SCALAR STRESS WAVE (Ö-WAVE) (TESLA WAVE)
23. SCALAR Ö-WAVE PRODUCTION
24. A SIMPLIFIED CHARGED PARTICLE
25. A CHARGED PARTICLE IS A SPECIAL KIND OF "SPRAY NOZZLE"
26. AN OBSERVABLE CHARGED PARTICLE IS DIRECTLY CONNECTED TO VIRTUAL PARTICLE FLUX VACUUM
27. SPIN COUPLES VACUUM TO PARTICLE
28. ELECTRON PRECESSION (SIMPLIFIED)
29. VACUUM/SPACETIME IS PURE VIRTUAL PARTICLE FLUX ($Ø_0$)
30. VACUUM IS:
31. GRADIENT OF ELECTROSTATIC POTENTIAL
32. IN A ∇Ø, A CHARGED PARTICLE MOVES ITSELF
33. ELECTROMAGNETIC WAVES IN ELECTRON GAS IN A CONDUCTOR
34. ELECTROMAGNETIC WAVES IN VACUUM
35. DETECTION OF TRANSVERSE AND LONGITUDINAL WAVES
36. CREATING A "RIVER" OF ANENERGY
37. A 2-WIRE SYSTEM IS CONSERVATIVE
38. A HOLLOW CHARGED SPHERE
39. ONE-WAY GATE VALVE
40. SIMPLE FREE ENERGY MOTOR
41. THE TRANSLATOR
42. TRANSVERSE WAVE INTERFERENCE
43. LONGITUDINAL WAVE INTERFERENCE (SCALAR WAVES)
44. CREATING ENERGY AT A DISTANCE
45. NONLINEARITIES CAUSE SHIFTING (PARTIAL TRANSLATION)
46. THE SCALAR AURA.
47. VIRTUAL FLUX AND MAGNETIC FIELD (LINEAR CASE)
48. PRODUCING MAGNETIC MONOPOLES
49. BREAKING METAL WITH MAGNETIC MONOPOLES
50. CREATING AN INERTIAL FIELD (ANTIGRAVITY)
51. EFFECTS ON HUMANS
52. INITIATING SPECIFIC BIOLOGICAL EFFECTS
53. GROUND-TO-AIR USE

54. TACTICAL AIR-TO-GROUND USAGE
55. INTEGRATED WEAPONS DISPLAY (MODIFIED JAMMER)
56. RADAR INVISIBILITY
57. NETWORK OF VIRTUAL TRANSMITTERS
58. CONCLUSION

Return to Homepage

TOWARD A NEW ELECTROMAGNETICS

PART 4: VECTORS AND MECHANISMS CLARIFIED

(©) 1983 T. E. Bearden

All rights reserved.

Delivered to the 1983 Annual Conference

of the

U. S. Psychotronics Association

July 20-24, 1983

at the

University of Portland

Portland, Oregon

The Tom Bearden Website

--FOREWORD --

This paper is an adaptation of the oral/visual presentation given by the author at the 1983 Annual Conference of the U. S. Psychotronics Association on Saturday, July 23, 1983.

The presentation was delivered directly from the vugraphs alone, and not from a formal, written text.

The title of the presentation at the conference was "New Electromagnetics: Where the 'Old Math' Took the Wrong Turn."

As originally conceived, the lecture was to be given in a single period of some 45 minutes and cover only the first part of this paper, the clarification of the vector concept in physical theory. The Symposium director so graciously scheduled two periods instead, allowing time to present additional material further clarifying vector and scalar waves, and to present a variety of unusual physical mechanisms that apply the concepts.

After the conference, the author prepared this paper directly from the same slides, in the same order. However, no attempt was made to match the words in this paper to the words actually delivered in the formal presentation. The gist of the two, however, are the same -- except that, in the conference lecture, the author covered (as an aside) some important additional material: (1) the nature of what actually occurs in an "electrical ground," and (2) the author's explanation of the theory of Tesla's magnifying transmitter.

An audio tape and a videotape of the author's USPA presentation were made by the conference officials. Copies are available at nominal cost from Mr. Robert Beutlich, Secretary/ Treasurer, U. S. Psychotronics Association, 3459 Montrose Avenue, Chicago, Illinois 60618, U.S.A.,
phone (312) 478-7715.

The Tom Bearden Website

SLIDE 1.

TOWARD A NEW ELECTROMAGNETICS

© 1983 T.E. BEARDEN

ALL RIGHTS RESERVED

ACKNOWLEDGEMENTS

I would like to express my deep appreciation to two of my fellow colleagues, Dr. William Tiller and Mr. Frank Golden, for many fruitful hours of discourse and interchange on these and related subjects.

Also, I wish to thank the Association of Distinguished American Scientists (A.D.A.S.) for support and assistance in the long and arduous struggle to revise the basic foundations of electromagnetics and mechanics.

Next Slide

SLIDE 2.

OUTLINE

- **MAIN BRIEFING**
  - **> TRANSLATOR EFFECTS**
  - **> POTENTIAL WEAPONS**
  - **> INCIDENTS**
  - **> CONCLUSION**
- **HISTORICAL BACKGROUND**
  - **> TESLA/MORAY**
  - **> WWII AND AFTER**
- **ELEMENTS OF THE EMERGING THEORY**
  - **> LONGITUDINAL/ TRANSVERSE WAVES**
  - **> VACUUM/MASS EFFECTS**
  - **> FLAWS IN VECTOR THEORY**
  - **> IMPLICATIONS**

This presentation is one part of a three part presentation, consisting of the main briefing on physical effects, the historical background, and the elements of the emerging new electromagnetics.

In this present briefing I will not cover the historical background. Instead, first I will address the concepts of the new theory, and then I will give an abbreviated main briefing, including some weapon aspects. I will present one simple free energy motor and show how it works, and where it gets its energy.

Much of this material I have known for some time, but have hesitated to release it because it enables one to develop -- in a fairly straightforward manner -- weapons and beams (ray) systems that can disable electronics, computers, communications, and people. Anyone

handy in electronics, who has a few thousand dollars and access to bench equipment and an electronics parts supply house, can develop these weapons in his or her basement workshop. But because certain very radical elements in this country already know some of this information and may plan to utilize such devices in criminal activities, I am openly releasing the information as a warning, to be prepared.

Of course there are many good things that can be developed with this technology, including machines to heal a remarkable variety of ailments and illnesses. I strongly urge everyone to use this information wisely and only to benefit other human beings. There exists a cosmic or karmic law for those who misuse it against their fellow persons; if one does that, one will assuredly suffer the consequences.

Also, I strongly urge the development of Western defenses against the Soviet strategic and tactical weapons; already developed utilizing these principles. Unless the West wakes up to the extreme urgency of this task, in the near future we may be overwhelmed in short order by a much harsher, dictatorial system. If that should happen, it will plunge the human race into a new dark ages far more terrible than that dark period in history following the fall of Rome.

These are the final times, and this is the beginning of the final technology. The ability to directly engineer physical reality itself has been laid in our laps. Pandora's box is already spilled open, and there is no longer any stopping the new technology.

Let us prepare, then, for that which is to come.

With these introductory remarks, let us now turn to the main presentation.

Next Slide

SLIDE 3.

CHARACTERISTICS OF SELECTED CONCEPTS

CONCEPT	CHARACTERISTIC
• ENERGY	FLOW OF OBSERVABLE MASS PARTICLES
• ANENERGY	FLOW OF VIRTUAL PARTICLES
• PRESENT "CHARGE"	VIRTUAL PARTICLE FLUX TIED TO OBSERVABLE MASS PARTICLES
• TRUE CHARGE	VIRTUAL PARTICLE FLUX WITHOUT MASS
• FLUX	MULTI-DIRECTIONAL FLOW THROUGH A POINT
• FLOW	UNI-DIRECTIONAL MOVEMENT OF A FLUX [GRADIENT]
• CURRENT	UNI-DIRECTIONAL GRADIENT OF A [USUALLY CONSTRAINED] FLUX

On this slide I show some fundamental defining characteristics of energy, "charge" or charged mass as presently in the theory, flux, flow, and current. These fundamental concepts are often somewhat confused in the literature.

Particularly note that the concept of energy, being tied to "the capacity to do work," is specifically tied to the concept of mass. Eventually, energy must be expressed in terms of moving masses -- specifically, in accelerating or decelerating masses.

I introduce the term "anenergy" here, specifically in relation to

the concept of a virtual particle. Anenergy is roughly equivalent to the present idea of "virtual energy,"
except it more precisely implies the flow or flux of virtual particles.

We also redefine charge as virtual particle flux, in order to remove the present error in EM theory where "charge" always implies a charged mass. The electrostatic scalar potential, phi (Ø) , then merely becomes the intensity of the massless charge -- that is, the intensity of the virtual particle flux -- at a point. Let me point out, however, that in the new view this "point" is always in n-dimensional space, where n is equal to or greater than four. The present 3-space formulation of Ø is thus a highly special case.

Next Slide

The Tom Bearden Website

SLIDE. 4

QUOTE FROM NIKOLA TESLA:

**"THE HERTZ WAVE THEORY OF WIRELESS TRANSMISSION MAY BE
KEPT UP FOR A WHILE, BUT I DO NOT HESITATE TO SAY THAT
IN A SHORT TIME IT WILL BE RECOGNIZED AS ONE OF THE MOST
REMARKABLE AND INEXPLICABLE ABERRATIONS OF THE SCIENTIFIC
MIND WHICH HAS EVER BEEN RECORDED IN HISTORY."**

Nikola Tesla
"The True Wireless,"
The Electrical Experimenter

One of the things we will find is that Hertz or transverse electromagnetic waves are strictly mass waves in a charged mass particle medium.

For example, transverse EM waves do not, and CAN not, exist in vacuum. Vacuum EM waves are longitudinal waves of compression and rarefaction. What is compressed and rarified is the virtual particle flux that comprises vacuum itself. Vacuum EM waves in this virtual flux are just like sound waves in air -- in the flux of molecules and atoms that comprise the atmospheric gas.

Nikola Tesla, of course, knew this and he frequently pointed out the falsity of the accepted transverse wave theory. Here is one Tesla quote, for example, taken from The Electrical Experimenter. (PAUSE)

Almost every scientist -- even the "Tesla bugs" -- have thought Tesla wrong in his adamant opposition to the idea of Hertzian waves in the vacuum.

As we shall see, Tesla was right and all the present scientists and textbooks are wrong .

Next Slide

The Tom Bearden Website

SLIDE 5.

FORCE BETWEEN TWO LIKE CHARGES

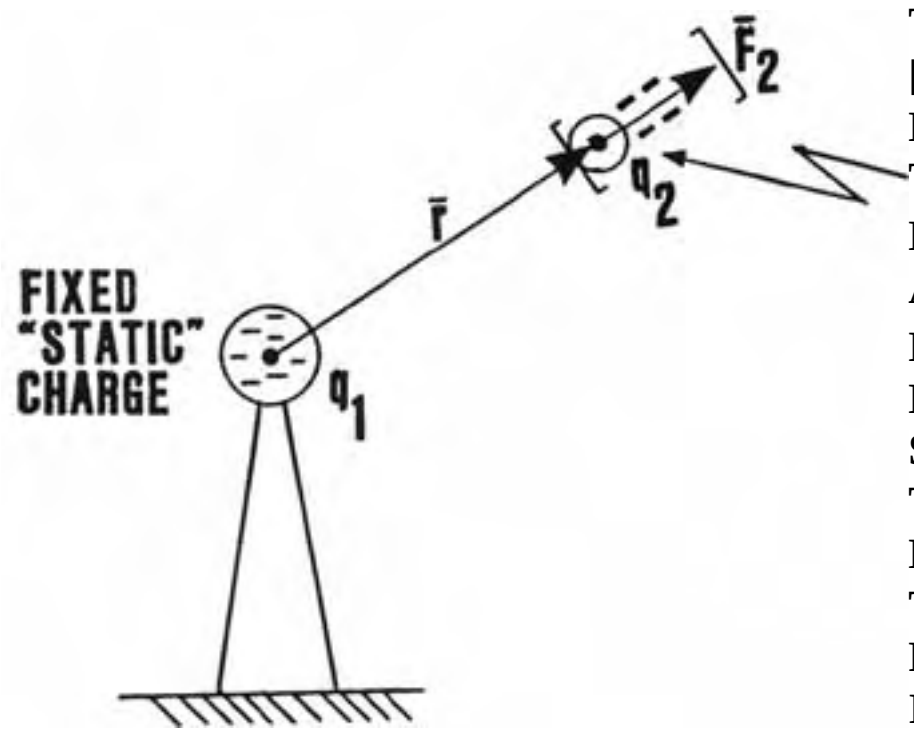

A NEGATIVELY CHARGED TEST MASS [e.g., AN ELECTRON] BROUGHT INTO THE VICINITY OF q_1 EXPERIENCES A FORCE $\bar{F}_2$ AS SHOWN. NOTE THE ELECTRON ACTUALLY IS SPINNING. THIS HAS NEVER BEEN DONE WITH A TRUE "STATIC CHARGE", FOR THERE IS NO SUCH THING IN NATURE.

In my presentation last year, I noted some 22 fundamental flaws in present electromagnetics theory. One of these flaws was in the actual vector theory itself. As we shall discover, one cannot simply plug geometrical vectors into physical systems without making fundamental errors. The vector concept itself must be adapted, for there are now four different kinds of vectors in physics, all confused as the same thing. We will come to that shortly.

To begin, let us look at the fundamental kind of experiment, shown on this slide, from which the idea of electrical force and electric field was taken.

We have a fixed static charged object q(l) in the laboratory, and we bring in a test charged mass q(2). The test charged mass may even be a single electron, as we illustrate here. We show in our example the fixed charge to be negative. When we release the test charge electron, it accelerates away from the fixed charged mass, as shown on the

diagram. Note that we have no force at all until we bring in the test charged mass. Indeed, we shall find that the force is actually COMPRISED OF the accelerating test electron. Specifically, it is not something mysterious which appears in vacuum and PUSHES on the electron. We shall find that FORCE IS AN EFFECT, NOT A CAUSE. It CONSISTS OF the "smeared mass" that is accelerating -- in this case, it consists of the smeared, accelerating electron.

We summarize the experiment: in the absence of the charged test particle, no force exists in the vacuum. When we bring in the test charged mass, it accelerates away, and THE FORCE CONSISTS OF THAT ACCELERATING CHARGED MASS PARTICLE. The experiment does not at all address or deal with WHAT EXISTS IN THE VACUUM AROUND CHARGED MASS Q(l) IN THE ABSENCE OF TEST CHARGED MASS Q(2). Any assumption of a force existing in the vacuum is sheer speculation and not based on this experiment.

Next Slide

The Tom Bearden Website

SLIDE 6.

REPETITIONS LEAD TO THE VECTOR "FIELD" CONCEPT

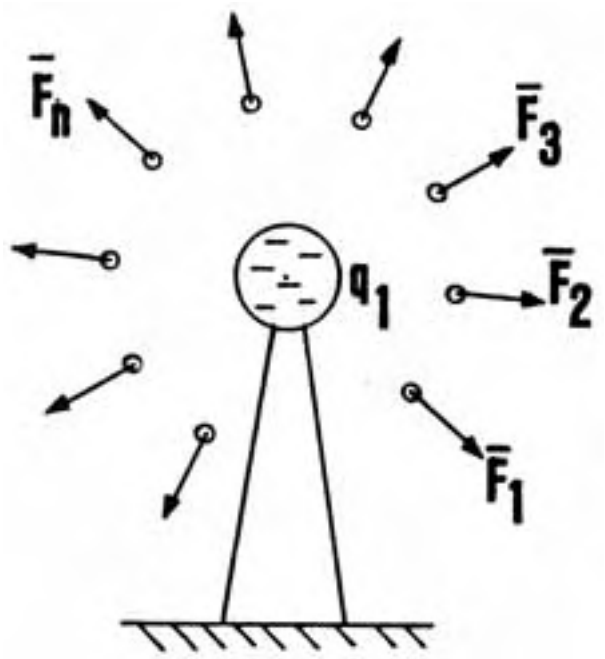

REPEATING FIGURE 4 A NUMBER OF TIMES LEADS TO SETS OF FORCE ARROWS, WHICH WE THEN VISUALIZE IN TOTAL AS A FIELD, Ë, OF FORCE(S) ABOUT q_1

RIGOROUSLY, THIS "FORCE FIELD" WOULD REQUIRE THAT A SPINNING CHARGED PARTICLE OF MASS EXIST AT EACH AND EVERY POINT IN SPACE ABOUT q_1

On this slide, we show that, as we repeat the experiment by bringing in the test charged mass from differing directions, the same thing happens around the fixed charged mass q(l). Test charged mass q (2) -- our electron -- accelerates radially away from q(l).

As we repeat the experiment and draw many of the little arrows radially outward, gradually the idea of a "vector field" emerges. That is, we form the idea that, at every point in space around fixed charge q (l), there exists one of our little vector arrows. Thus we assign a vector field to the space: to every point of it, there is assigned both a magnitude and a direction.

However, note that this does not describe the situation as it exists, at any time, in the "present." That is, rigorously any one arrow only exists whenever a little test charged mass is present and accelerating radially away.

We may take the view that the arrow WILL exist WHEN a test

charged mass is brought to that point and released. In that case, the arrow WILL exist in the FUTURE, not the present. And we may refer to that as, it POTENTIALLY exists, when and if.. ..etc.

So already we see a fundamental logical problem in the idea of such a field. It WILL exist in the future, but only POTENTIALLY exists in the present.

Of course I am not the first one to point out such difficulties; the fact that the field concept is erroneous is already well-known to foundations scientists. But it is such a USEFUL concept that it is retained.

Now the Ë-field, or electric field, is defined as "the accelerating force on a charged mass per unit charged mass accelerated by it." If there is no charged mass present to be accelerated, then there can be no Ë-field present.

So Ë-field cannot exist in vacuum, for vacuum presupposes the absence of all observable mass.

So we can rigorously say that no Ë-field of force exists around the charged mass q(l) IN THE PRESENT. At best, it can only POTENTIALLY exist IN THE FUTURE.

Next Slide

The Tom Bearden Website

SLIDE 7.

A SCALAR HAS A HIDDEN [VIRTUAL] VECTOR SUBSTRUCTURE

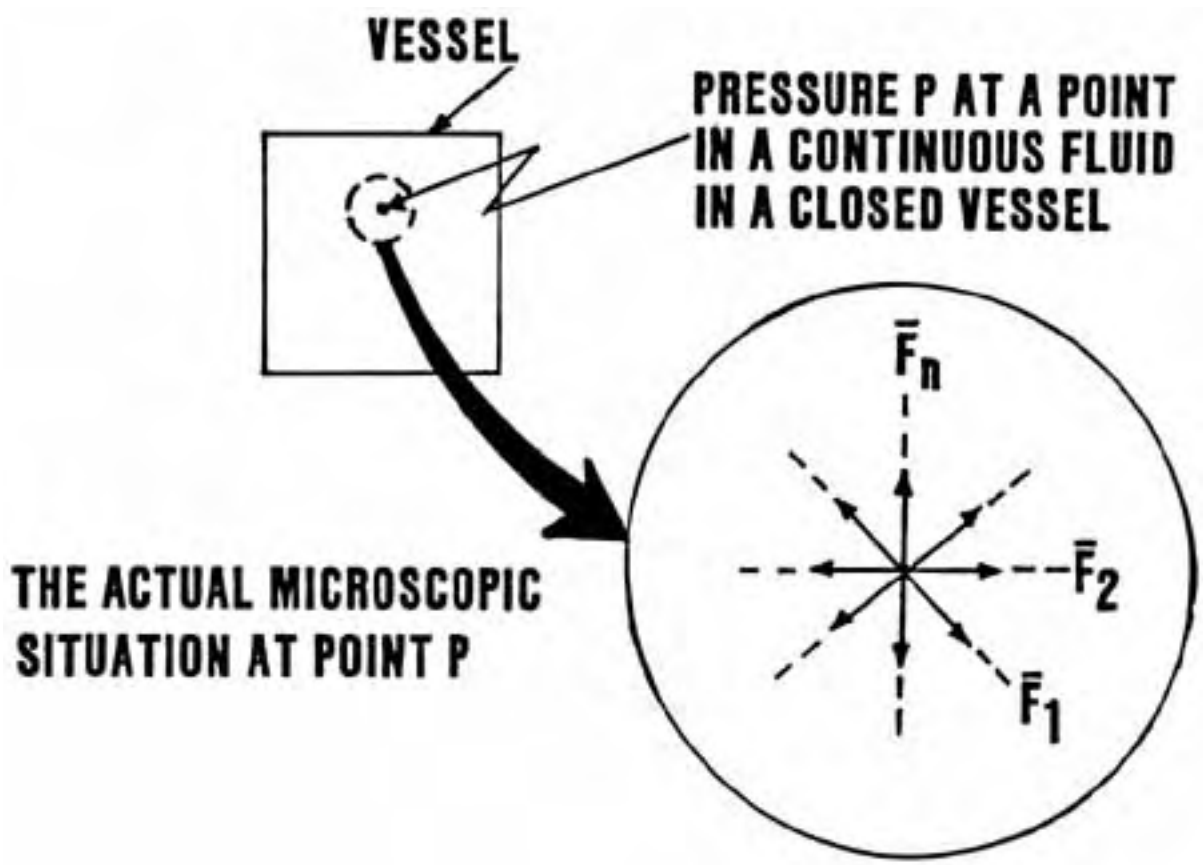

Our next slide shows that a physical scalar quantity has a hidden vector substructure.

For example, we show on the left a closed vessel containing a pressurized gas. The pressure at a point in the gas is a scalar quantity, since it has a magnitude but not a direction. However, physically what we have in the gas is a flux of individual molecules continually through any small volume, which we may let approach a point in the limit. Thus we have a flux in all directions through the point at which we specify pressure.

That is, the scalar "pressure" at a point may be said to contain a substructure of individual molecule flow vectors.

All physical process scalars have such hidden substructures. In

the equilibrium case, the summation of all the individual flux vectors yields a resultant vector zero.

Thus we take the view that ANY PHYSICAL PROCESS SCALAR IS ALSO A ZERO VECTOR, AND ANY ZERO VECTOR IS A SCALAR AND CONTAINS A SUM-ZERO HIDDEN VECTOR SUBSTRUCTURE.

Next Slide

[The Tom Bearden Website]

SLIDE 8.

SCALAR AND VECTOR SUBSTRUCTURES

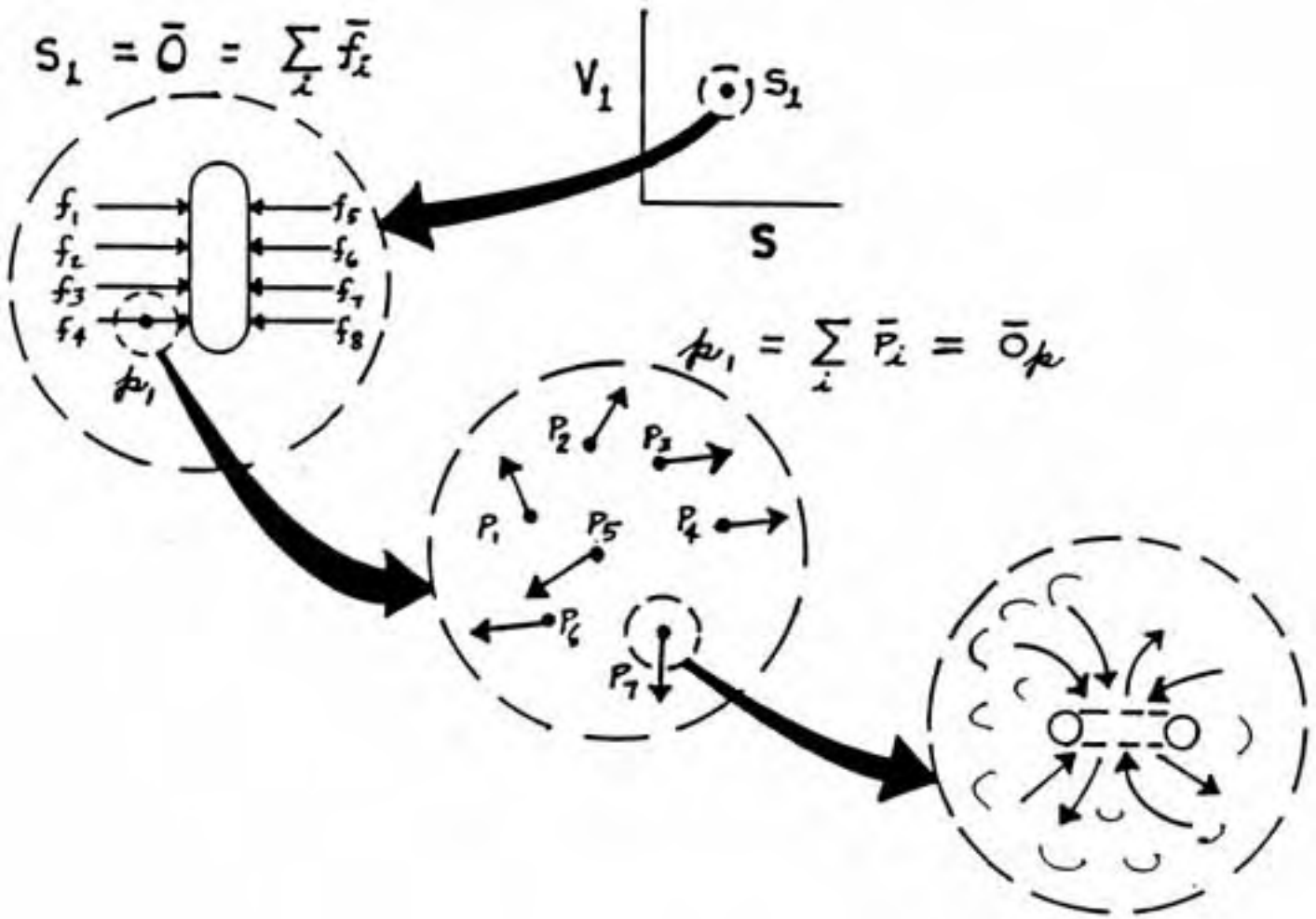

Now let us see if we can do some unusual thinking about the hidden vector substructure of a scalar or zero-vector.

On the leftmost figure in this slide, we show a plate with balanced opposing forces. The vector summation of all the forces' is zero, so the system has no resultant vector. The plate therefore does not move. However, the plate -- that is, the medium in which the forces act -- is stressed, much like the previous example of pressure in a gas. The difference is that now the stress is patterned in its substructure, and not random. Now suppose we rhythmically vary the forces, each the same, in a regular manner in time. Yet we maintain a continuous balance, so there is never a system resultant greater than zero. In this case, we maintain our vector zero, but we are producing regular stress waves in the plate medium..

I think you now can see that I can vary the individual opposing vector pairs so that rhythmic waves flow from top to bottom, or from bottom to top. That, of course, will describe a vector gradient traveling through the medium, and that will be an ordinary "vector wave." Is there any way I can make waves through the medium, and not have such vector waves ever appear?

Indeed there is, if I look further into the substructure. Take one point on one of the vectors shown acting on the plate in the left diagram. That point is a scalar, and it also has a substructure of even finer vectors, as shown in the lower middle figure. And any point in one of these second-order hidden vectors is a scalar and composed of a still finer hidden vector substructure, as shown in the lower right figure. This process repeats ad infinitum, and all is structures within structures. At least it can be modeled that way, for it already is treated that way in particle physics.

Now go back to the second order vector substructure. Here I can establish whatever patterns I wish, and not affect the first order pattern shown in the figure on the left. I can even rhythmically vary things in the second order substructure, and leave a blissfully unchanged first order substructure, to the first order observer.

So I can make as many waves; as I wish through the medium, as long as I stay second order or higher, and the external observer will never see any change at all unless he has a special detector of some sort to detect the lower substructure changes.

As I showed in the Appendix to my book, The Excalibur Briefing, these substructures are in reality the same thing as hyperspaces. And movements in them can proceed much faster than the speed of light.

So I can have higher order signals and waves through the stressed medium without changing the overall first order stress in the medium.

This is a sort of super-relativity; the present relativity is just a special case.

Superluminal communication systems are perfectly possible, but not with the present first order transmitters and receiver/detectors.

Note also that higher order stresses -- stresses in the higher order substructures -- represent special stresses in time, and time has an internal stress-pattern substructure. The higher order stress waves are phase waves or phase fluctuations in that respect.

Also note that Charles Musés has already created the hypernumber mathematics of the structure of time, and it is largely in his mathematics that these concepts will have to be mathematically modeled.

Next Slide

SLIDE 9.

SUPERPOSITION DOES NOT ELIMINATE THE VIRTUAL SUBSTRUCTURE

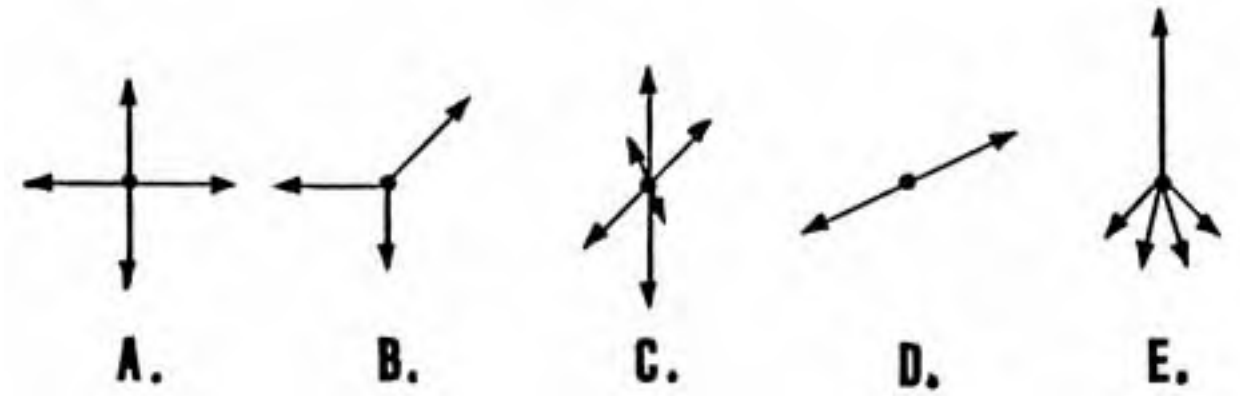

TWO OR MORE MACROSCOPICALLY "EQUAL" VECTORS OR SCALARS CAN DIFFER DRASTICALLY IN THEIR VIRTUAL SUBSTRUCTURE DISTRIBUTIONS. EVEN TWO "ZEROS" MAY BE DYNAMICALLY DIFFERENT DUE TO THEIR DIFFERING SUBSTRUCTURES.

Next we show some simple substructures of a zero vector. All of these vector systems sum to zero vectorially. Note that if we superpose two of these structures, all substructure vectors are still present., and the vector summation is still zero.

Also notice that, from the standpoint of substructuring, zeros can be and are drastically different.

We can even make rhythmic waves in the substructure by superposing patterned zero vectors in a regular fashion.

Next Slide

SLIDE 10.

PHYSICAL VECTORS

- **VECTOR: A "SMEARED PARTICLE"**

- **FOUR MAJOR PARTICLES IN PHYSICS:**
  - POINT [MASSLESS, CHARGELESS]
  - MASS [CHARGELESS]
  - CHARGED MASS
  - CHARGED POINT [MASSLESS}

- **LEADS TO FOUR MAJOR VECTORS:**
  - GEOMETER'S
  - MECHANIC'S
  - ELECTRICIAN'S
  - ADVANCED ELECTRICIAN'S

In quantum mechanics, as we approach the quantum level, we find that the notions of a particle (static concept) and a wave become inseparable. That is, any particle becomes a "smear" in length and time, and it becomes inseparable from its smear. At the quantum level, there is no separate energy, length, mass, momentum, energy, or time -- all are welded together inextricably into a quantity called "action," having the units of angular momentum.

So at the fundamental quantum level, a moving point becomes a smear, and a vector represents a physical, undifferentiated entity.

To go quickly, we now define a vector as consisting of a smeared particle. That is, the particle is smeared in both time and length, and it is not differentiated from time or length.

There are four kinds of particles in physics which can be smeared to form vectors. First, there is a point in space or spacetime. This point may be approximated as massless and chargeless. At least that is the way the geometers of old conceived it in the abstract, and so the idea of a "point" in space assumes it to be chargeless and massless. Second, there is a tiny particle of mass, often abstracted to be a "point-mass," but visualized as having no charge. This is the mechanic's particle. Third, there is a tiny charged mass, such as an electron, and this is the electrician's particle. Again, it is often abstracted as a charged point-mass. Fourth, there is a charged point, having no mass, and this is the advanced electrician's particle, which he uses to form the idea of potentials and fields.

Smearing these four particles at the fundamental quantum level produces four different kinds of physical vectors: the geometer's, the mechanic's, the electrician's and the advanced electrician's vectors. They are all different.

Next Slide

[The Tom Bearden Website]

SLIDE 11.

THE FOUR VECTORS OF PHYSICS

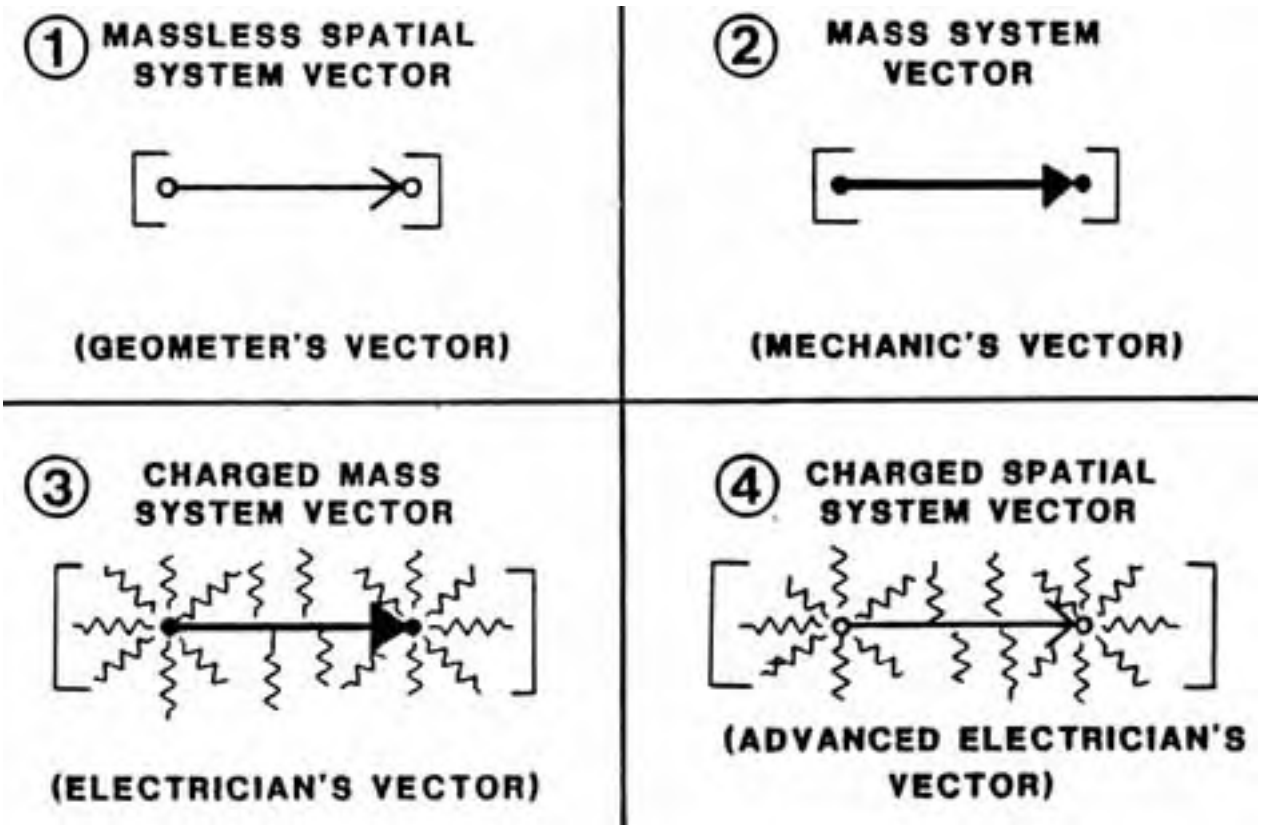

On this slide we show a graphic illustration of each of these vectors.

Note that they may be visualized as smeared particles, but the particle is not separate from the smear in time and length.

Each vector must be considered as a unitary entity -- it is a special kind of quantum, if you will.

Each is a special quantum of motion.

And Dewey Larson has it right when he says, "All is motion."

Next Slide

The Tom Bearden Website

SLIDE 12.

FORCE DEFINITION

- ***A TRUE DEFINITION IS AN IDENTITY.***

$$F \equiv d/dt\ (mv)$$

- **FORCE CONSISTS OF THE TIME RATE OF CHANGE OF MOMENTUM**
- **MOMENTUM IS A MASS SMEARED THROUGH A LENGTH IN A CERTAIN TIME**
- **FORCE CONSISTS OF MASS-MOTION-CHANGE**
- ***FORCE IS AN EFFECT, NOT A CAUSE !***

We now look a little closer at the concept of a force.

I point out that a true definition is an identity. If a supposed definition of an entity is not an identity for that entity, then it is not a definition at all, but only a statement ABOUT the entity.

It may come as somewhat of a shock to the normal engineer and scientist that the foundations concepts of physics -- such as force, mass, energy, etc. -- are ALL in serious difficulty and contain many unresolved logical conflicts.

Force is in that kind of difficulty, and it has that kind of logical conflict.

In fact, in its force equations, physics has not even applied its own present definition of force.

As we show here, force is generally defined as the time rate of change of momentum.

If that is true, then as an identity the definition states that a force CONSISTS OF the time rate of change of momentum.

And of course, momentum is mass times velocity. Hence momentum is a mass smeared through a length and through a certain time.

Force then consists of the time rate of change of that smearing. That is, we smear the mass through time and length, faster or slower.

But if force CONSISTS OF that smearing change, it does not CAUSE it.

Force is thus an effect or result, not a cause.

This implies that there is a more fundamental mechanism that causes or generates force itself -- ANY force. If we can find that hidden mechanism, we may well find the long-sought unified field theory, since it will unify all forces on a common mechanism.

Next Slide

The Tom Bearden Website

SLIDE 13.

FORCE IS AN EFFECT NOT A CAUSE

---

1. $\bar{P} = M\bar{V}$ (MACROSCOPIC)

2. $\bar{P} \equiv \overline{[M\bar{V}]}$ (MICROSCOPIC)

3. $\bar{F} = \frac{d\bar{P}}{dt}$ (MACROSCOPIC)

4. $\bar{F} \equiv \frac{d\bar{P}}{dt} \equiv \frac{d}{dt}\overline{[M\bar{v}]}$ (MICRO)

   $\equiv \overline{[M\bar{v} + M\bar{a}]}$

5. $F \equiv \overline{[M\bar{a}]}$ (NONRELATIVISTIC)

6. FORCE CONSISTS OF A "SMEARED MASS"

7. IT IS MASS-ACCELERATION, IT DOES NOT CAUSE IT.

8. FORCE IS AN EFFECT, NOT A CAUSE!

On this slide, we show briefly how one might express this idea in mathematical symbology.

Macroscopically, momentum consists of mass times velocity. Microscopically, the mass and the velocity are inextricable, and it is not proper to speak of a "mass in motion," but only of "mass-motion." We show this in equation 2.

We take the macro definition of momentum, as shown in equation 3, and express it for the microscopic, unseparated case, as shown in equation 4.

In the nonrelativistic case, we may consider m-dot to be zero, since the time rate of change of mass is almost zero. In that case, force may be defined for the microscopic case as a smeared accelerating mass, as shown in equation 5.

Force thus consists of the welded mass and acceleration, with no seam in the middle.

It IS mass-acceleration; it does not CAUSE it. Therefore force is an effect, not a cause.

Next Slide

The Tom Bearden Website

SLIDE. 14

FORCE AND $\bar{E}$-FIELD DO NOT EXIST IN VACUUM

1. $\bar{F}_p \equiv \overline{[M_p \circ \bar{a}_p]}$

2. WITHOUT M, THERE IS NO M_p, NOR $\bar{F}_p$

3. HENCE FORCE DOES NOT EXIST IN VACUUM.

4. $\bar{E}_{cm} \equiv \dfrac{\bar{F}_{cm}}{q_{cm}}$

5. WITHOUT M, THERE IS NO $\bar{F}_{cm}$, NOR q_{cm}.

6. HENCE $\bar{E}$-FIELD DOES NOT EXIST IN VACUUM.

7. SIMILARLY, $\bar{B}$ AND $\bar{G}$ DO NOT EXIST IN VACUUM.

8. NO FORCE FIELD EXISTS IN VACUUM.

But if force CONSISTS OF mass welded to acceleration, it cannot exist in the absence of mass.

Hence force does not exist in vacuum.

Further, the Ë-field (Electric field) of a charged particle is defined as the force on a charged mass, divided by the mass. That is, the Ë-field is thought to represent the force per unit charged mass. And then it is assumed to exist in vacuum.

But vacuum is without mass or charged mass, observably. Without mass, neither force nor charged mass exists.

Therefore the Ë-field does not exist in the vacuum.

Magnetic field (B) and gravitational field (G) are similarly defined, and they have the same logical difficulties.

Therefore neither magnetic field nor gravitational field exist in vacuum.

A priori, NO force field exists in vacuum.

The greatest error in physics has been the assignment of a force as a cause, and thus assigning it to the vacuum. The force is an effect, and it never exists in vacuum, a priori.

Next Slide

The Tom Bearden Website

SLIDE 15.

COROLLARIES

- **MORE PRIMARY MECHANISM CAUSES/GENERATES FORCE -- ANY FORCE**
- **FORCE DOES NOT EXIST IN VACUUM, SINCE VACUUM IS THE ABSENCE OF MASS**
- **FORCE FIELDS DO NOT EXIST IN VACUUM**
    - **E-FIELD**
    - **B-FIELD**
- **TRANSVERSE [HERTZIAN] WAVES DO NOT EXIST IN VACUUM**

Without belaboring the issue, I now point out and summarize some of these conclusions.

First, a more primary mechanism causes or generates force -- ANY force.

Second, force implies the presence of mass a priori. Force does not exist in vacuum, since vacuum is the absence of mass.

Third, no force fields of any kind exist in vacuum, including Ë-field, B-field, and gravitational field.

Fourth, since Hertzian waves are defined in terms of Ë and H force fields, and these fields do not exist in vacuum, then Hertzian waves do not exist in vacuum.

Tesla pointed out long ago that vacuum EM waves are longitudinal waves, not Hertz waves. Vacuum EM waves are similar to sound waves in a gas.

The Hertz wave exists as a matter wave in the electron gas in a transmitting antenna, and in the electron gas in a receiving antenna, but does not exist in the vacuum in between the two antennas. Between them, EM waves are longitudinal waves.

Next Slide

[The Tom Bearden Website]

SLIDE 16.

ENERGY IS DERIVED, NOT FUNDAMENTAL

- ENERGY IS CONGRUENT TO WORK

$$dW = \bar{F} \cdot \bar{d}S$$

- BUT FORCE IS AN EFFECT, NOT A CAUSE
- THUS WORK IS AN EFFECT, NOT A CAUSE
- ENERGY≡WORK CAPACITY
- A MORE FUNDAMENTAL MECHANISM GENERATES "ENERGY"

$$\Delta E = \frac{\Delta A}{\Delta T}$$

- ENERGY IS AN EFFECT, NOT A CAUSE

Energy is usually taken as "the capacity to do work" at some future time. In other words, when we refer to the energy of something, we refer to HOW MUCH WORK IT CAN DO IN THE FUTURE, IF AND WHEN WE ARRANGE FOR IT TO DO IT. Rigorously, a body has no "work" at a particular instant in time, so we use "energy" to refer to potential work that can, or will, be done in the future. Thus energy is always congruent to work in the future.

And for that reason, the units of energy are the units of work; the only difference is in the time the work is done, relative to the "now" or "present" we are speaking of.

Energy is the potential for work to be done in the future.

But what is work?

Well, work is defined in terms of the movement of a force through a distance. And it is understood that only the projection

of the force along the line of movement is "working." Thus work is defined differentially as shown on the slide. The differential of work is equal to the dot product of the moving force times the differential of displacement.

But as we have seen, force is an effect, not a cause.

That is, when we calculate the work done, it's always in the past, never in the present or future. It's always been DONE, and has been expended.

Being in the past, it's gone forever, so it certainly isn't the CAUSE of anything which happens in the future.

Thus work is an effect, not a cause.

That's interesting, because then it certainly does not directly generate "energy," since energy is something in the present which speaks of future work to be done.

Rigorously, the fundamental quantum -- which is what exists in the present, in unseparated and unquantized form -- consists of action. NOT energy, NOT time, NOT length, NOT momentum exclusively, but all of these IN<u></u>clusively.

And a change in energy occurs when a quantum is separated at a certain rate in time. Thus delta energy equals the time rate of change of action, or delta action divided by the delta time used in separating the quantum and fissioning it into parts (collapsing the wave function).

Thus energy itself is an effect or result of a more fundamental mechanism, and it is not a cause.

In quantum mechanics all this has been neatly "buried" in the mysterious "collapse of the wave function," which is supposedly what "causes" everything to happen. And then we swear that what results after the collapse is a totally statistical selection from the possible states of the system we are examining. We thus say that the microworld is totally statistical at base. Of course we also build a wave equation or wave function which propagates forward in time with rigorous causality, and that wave or function absolutely controls the basket of "possible states" allowed .

All that says is that the "wave function times time" is what exists in the present, when observation has not been made by "stopping time." And then we "stop time" in a rather blunt manner, somewhat like firing a billiard ball blindly into a group of billiard balls on a table, and we live with what gets hit and pops out.

If we examine this "time" that is flowing, look into its substructure, and arrange that substructure as we will, we can control which "billiard ball" is hit and which pocket it goes into. By working on the vector substructures of time, we can thus deliberately control the microworld and make it causal, not

statistical. Quantum mechanics is in error in stopping where it has; it is presently only a first order approximation of the real quantum mechanics that awaits.

Einstein was correct after all; God does NOT play dice with the universe when one considers all levels.

One finds oneself in a statistical situation at one level only when the constituent sublevels of it are uncontrolled.

Next Chapter

The Tom Bearden Website

SLIDE 17.

EXISTENCE IN, AND PASSAGE THROUGH, TIME

- **IN RELATIVITY, TRANSLATION OF A BODY AND PASSAGE THROUGH TIME ARE RELATED**

$$\Delta L = C \Delta T$$

- **"MASS" IS SPATIAL**
  - DOES NOT EXIST IN TIME
  - "MASS-TIME" EXISTS IN TIME

- **VIRTUAL FLUX TO AND FROM A BARE PARTICLE DETERMINES ITS "PASSAGE THRU TIME"**

- **SPHERICAL SPIN OF A MASS PARTICLE [L^3] COUPLES IT TO THE SPACETIME VACUUM [L^3T] VIRTUAL PARTICLE FLUX**

- **PASSAGE THROUGH ORDINARY TIME IS CONTROLLED BY CREATION AND ANNIHILATION OF QUANTA**

On this slide, we simply point out that translation of a body through space and its passage through time are related, according to relativity.

Now "mass" is spatial.

It does not exist in time.

Only things which contain the unit of time can "exist in time."

Otherwise, the thing only exists as such when the passage of time has been momentarily stopped -- usually by photon emission and the consequent carrying off of the time unit by the photon.

Since every mass that has temperature -- and every mass does -- is continually absorbing and emitting photons, then the mass is continually grabbing a time tail (absorption) and losing it (emission) shortly thereafter.

Masstime is what exists in time, not mass.

And every mass particle is continually turning from mass to masstime to mass, etc.

Indeed, it is the summation of the absorption and emission of virtual subquanta by a mass particle -- i.e., its "charge" -- that determines its rate of flow through "time."

And the spherical spin of a mass particle couples the particle of mass to the spacetime vacuum; that is, to the virtual particle flux.

Passage through ordinary time is controlled by creation and annihilation of quanta, and these processes are controlled by substructure (subquantal) actions and interactions.

Next Slide

The Tom Bearden Website

SLIDE 18.

SOME IMPLICATIONS

- **MODIFIES CONSERVATION OF CHARGE**
- **MODIFIES CONSERVATION OF ENERGY**
  - ***MASS***
  - ***ENERGY***
  - ***ANENERGY (MASSLESS CHARGE)***
- **MODIFIES NEWTON'S LAW**
  - ***FOR EVERY ACTION, THERE IS AN OPPOSITE AND EQUAL REACTION***
  - ***REACTION NEED NOT BE LOCAL***
  - ***REACTION NEED NOT BE ANTIPARALLEL***
- **UNIFIED FIELD THEORY**

Without belaboring the issue, I now simply point out some implications of the new approach.

First, we modify two laws -- the conservation of charge and the conservation of energy -- by combining them into one law, a new conservation law in which anenergy is conserved.

Neither charge per se nor energy per se need be conserved; but the overall anenergy (massless charge) equivalency is what is conserved. This allows us to derive mechanisms for free energy from the vacuum, for example. These mechanisms readily violate the present conservation of energy law, but do not violate the overall conservation of anenergy law.

It is the total anenergy equivalency of mass, energy, and massless charge that is now to be conserved in general. The old laws are now just special cases.

Also, Newton's third law -- for every action there is an equal and opposite reaction -- is modified. It still applies, but in changed form.

The reaction still occurs, but it need not be local, and it need not be antiparallel to the original action.

Thus it is now possible to design and build a "locally reactionless" inertial space drive for a vehicle.

The final implication is that the common mechanism producing force -- any force -- provides a unified field theory. Specifically, it provides one which easily lends itself to direct engineering. It is not esoteric nor mysterious. It is practical and physical, and it can be done with some modifications to our present electrical circuits and devices.

Next Slide

[The Tom Bearden Website]

SLIDE 19.

CONSERVATION OF ANENERGY (AE): (AN EXPANDED ENERGY CONSERVATION LAW)

1. CONSERVATION OF CHARGE:
   - "CHARGE" = MASS (M_c) + CHARGE (AE_c)
   - $|M_c| + |AE_c| = K_1$
2. CONSERVATION OF ENERGY:
   - DYNAMIC ENERGY (E)
   - ENERGY EQUIVALENCE OF MASS (M_E)
   - $|E| + |M_E| = K_2$
3. ADDING (1) AND (2):
   $|M_c| + |AE_c| + |E| + |M_E| = K_1 + K_2 = K_3$
4. LETTING $|M| = |M_c| + |M_E|$,
   $|M| + |E| + |AE_c| = K_3$
5. LETTING $|M| = AE_1$, $|E| = |AE_2|$, $|AE_c| = AE_3$,
   $AE_1 + AE_2 + AE_3 = K_3$

We briefly show a simplified derivation of the new conservation of anenergy law.

We express the conservation of charge law by correcting the term "charge" to show its true meaning: charged mass. We use the absolute value symbol to mean the "anenergy equivalency."

As shown on the slide, we account separately :for the mass (m-sub-c) of the conserved charges and the virtual particle charge flux (the anenergy -- AE-sub-c) of the charges conserved. That law now says that the absolute values of the masses and the massless charge fluxes have a total constant summation.

For a dynamic mass, we do a similar thing, in this simplified case ignoring potential energy of position, and taking the energy equivalence of the dynamic energy (M-sub-E) and the rest mass energy of the particles, M-sub-E. The conservation of energy now states that these two terms have a constant absolute value summation.

We add equations 1 and 2, getting equation 3. We consolidate like terms to get equation 4.

Expressing all terms in their anenergy equivalencies (absolute values), we get equation 5, which is the overall conservation of anenergy equivalency.

Note that we now can change mass into energy or anenergy (massless charge), energy into mass or anenergy, and anenergy into mass or energy.

Thus we can turn everything into pure vacuum ether (pure massless charge, pure anenergy, pure electrostatic scalar potential, pure stress on spacetime) or we can turn part of the vacuum into energy or particles of mass.

Vacuum now becomes a very real thing indeed.

It is pure anenergy.

Pure massless charge, pure electrostatic scalar potential, pure "broken bits" (subquantal bits) of (quantized) energy.

The vacuum is identically the virtual state.

It is not an emptiness filled with virtual things; rather, it IS the sum total of those virtual things, for they are totally unseparated until some sort of "conceptual observation" is invoked.

Physics should have adopted Einstein's suggestion that the vacuum, complete with its EM and gravitational fields, be called the ether.

Next Slide

The Tom Bearden Website

SLIDE 20.

FREE ENERGY IS ALLOWED

- **ANY ONE-WAY GATING PROCESS FROM ANENERGY TO ENERGY YIELDS "FREE ENERGY" SINCE THE ANENERGY IS AUTOMATICALLY REPLENISHED BY THE UNIVERSE.**

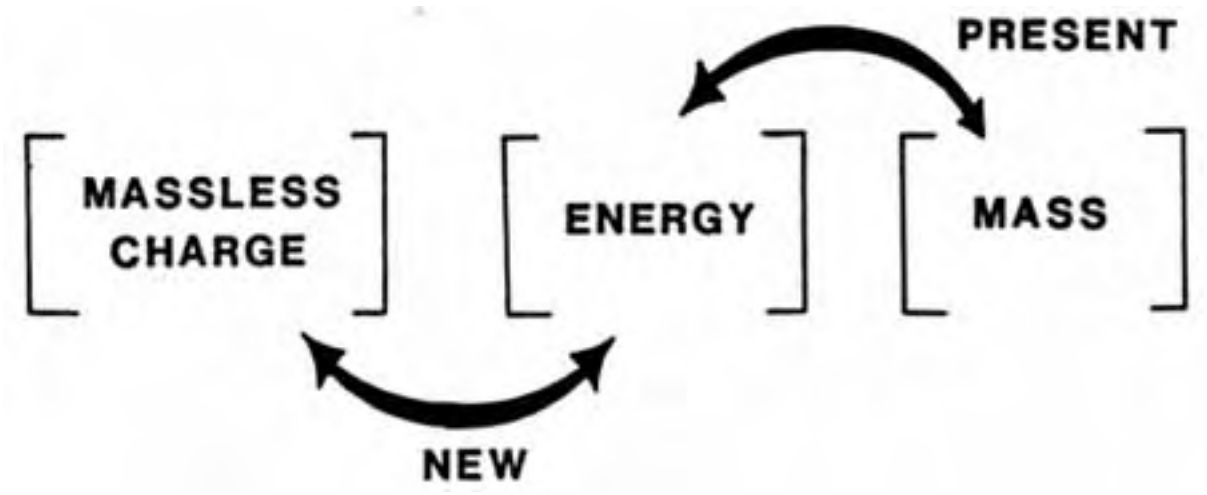

Now we can put the search for free energy devices on a rigorous scientific basis.

As shown here, mass and energy are translatable one into the other. So are massless charge and energy.

And the universe is filled with fantastic amounts of anenergy; ultimately, that is what the universal vacuum IS.

Any one-way gating process from anenergy to energy yields "free energy" since the anenergy is automatically replenished by the universe.

A sort of Maxwell's demon, after all, is what we need. Only we need one which works with the virtual state, not observable molecules.

Fortunately nature has provided several Maxwell's demons of this sort, if we but recognize them and learn to use them.

Next Slide

SLIDE 21.

SCALAR POTENTIAL CAN FORCE THE RELATIVISTIC CASE

- **FOR SCALAR POTENTIAL ENERGY OF APPRECIABLE SIZE RELATIVE TO A PARTICLE'S REST ENERGY.**
  - **NEWTONIAN MECHANICS AND**
  - **THE SCHRODINGER EQUATION**
- **MAY BE INADEQUATE**
  - **EVEN IF V/C IS SMALL**

Bloch & Crater, "Lorentz-invariant potentials and the non-relativistic limit," American Journal of Physics, Vol. 49, No. 1, Jan. 1981, pp. 67-75

First, let us now digress to point out that one does not have to have relativistic velocity to obtain relativistic effects.

One can use the common electrostatic scalar potential to drive the situation relativistic. On this slide we show just one of several references in the standard literature that address this fact.

Let's understand what we are saying.

Anything you get from a relativistic situation, you can get directly by cleverly applying electrostatic scalar potential.

You can get a change in the passage through time, you can get energy changes, mass changes, inertial resistance changes, etc.

You can bend, warp, and twist spacetime like a pretzel.

If you "wave" the scalar potential by simply varying it , you can create pure time waves. You can also produce pure inertial field waves, pure gravitational waves, etc.

The ability to engineer the curving of spacetime allows the direct ability to engineer physical reality itself.

Next Slide

The Tom Bearden Website

SLIDE 22.

SCALAR STRESS WAVE [O-WAVE] [TESLA WAVE]

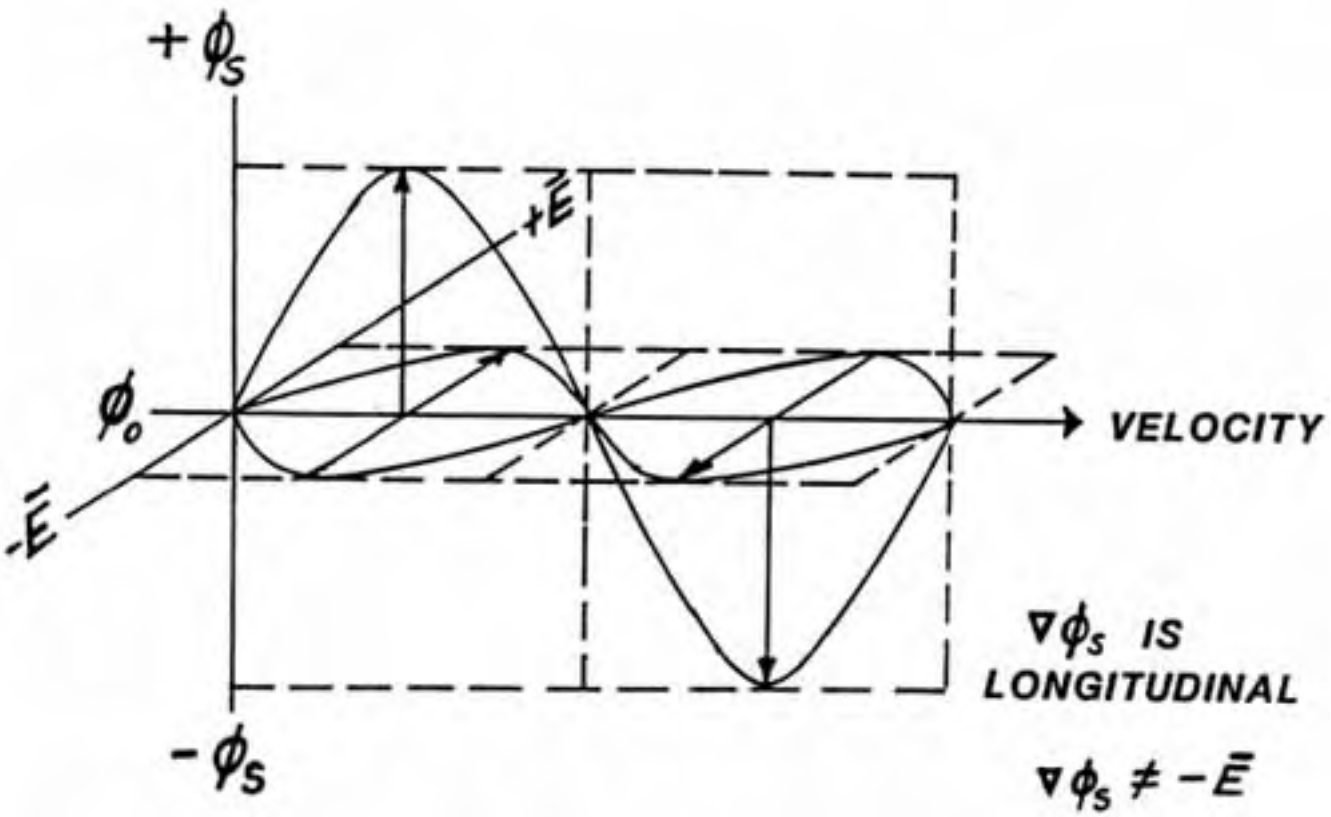

On this slide we now show a simple way to make a scalar, zero-vector wave -- the kind of wave originally discovered by Nikola Tesla.

It's simple. We just believe that a sum-zero vector substructure makes a scalar quantity, and we MAKE some scalars that way.

We also understand that a zero-gradient of a scalar is a zero vector, so that the scalar itself may be taken to be a zero vector.

The simplest explanation of this wave is as follows:

First, in physics we have two competing, mutually exclusive theories as to the nature of

electromagnetic energy: the wave theory and the particle theory. Physicists argued for decades over these theories, for some experiments support one and some support the other. They never solved the problem; they just agreed to quit arguing. They formulated the "duality" principle to allow the saving of face to both sides.

Briefly, the duality principle implies that, whatever the nature of electromagnetic energy is before an interaction, in the interaction you can get it to act as a wave or as a particle. In other words, AS IT EXISTS, BEFORE THE INTERACTION, it is implicitly both particle and wave, joined together in some fashion, without being explicitly either one.

With the fourth law of logic, this becomes perfectly clear. With three-law Aristotlean logic, the problem is unresolvable.

Let us use this idea of "explicit duality without implicit duality" to analyze the wave shown on the slide.

First, from a wave aspect, the E-fields and the B-fields of the two waves do superpose and vectorially add. Since the waves are 180 degrees out of phase, the exterior resultant wave has a zero electric field and a zero magnetic field. Therefore it is a "zero-vector" wave, or "scalar" wave. It's a wave of pure stress in spacetime.

However, this scalar wave has a precisely determined substructure, consisting_of two ordinary sine waves, each of which comprises an ordinary E-H vector EM wave.

Now we apply the photon consideration (remember, before we interact with the wave, it must implicitly possess BOTH wave and particle natures combined, and we have so far only examined the implication of the wave nature.

The theory of photons' states that they are monocular critters. Photons pass right through other photons without interaction, in a linear situation. Therefore they can coexist without interaction, which is what we show here.

One photon, by the way, is one wavelength .

The photon theory requires that both substructure waves continue to exist as independent photons. Therefore we are assured that our substructure is intact.

However, notice that the totality of the two

waves stresses spacetime. In other words, we have twice the stress on spacetime now as we would have from either wave separately.

This wave is therefore just a pure stress wave in spacetime itself.

This thing oscillates time, oscillates the relativity of the situation, and can affect energy, time flow rate, inertia, gravity, etc. aspects of an absorbing system.

Note that we have a rhythmic oscillation in phi (Ø), and we have a longitudinal stress wave, very similar to a sound wave. The MEDIUM for this wave is the virtual particle flux that identically comprises vacuum spacetime itself.

Next Slide

The Tom Bearden Website

SLIDE 23.

SCALAR Ö-WAVE PRODUCTION

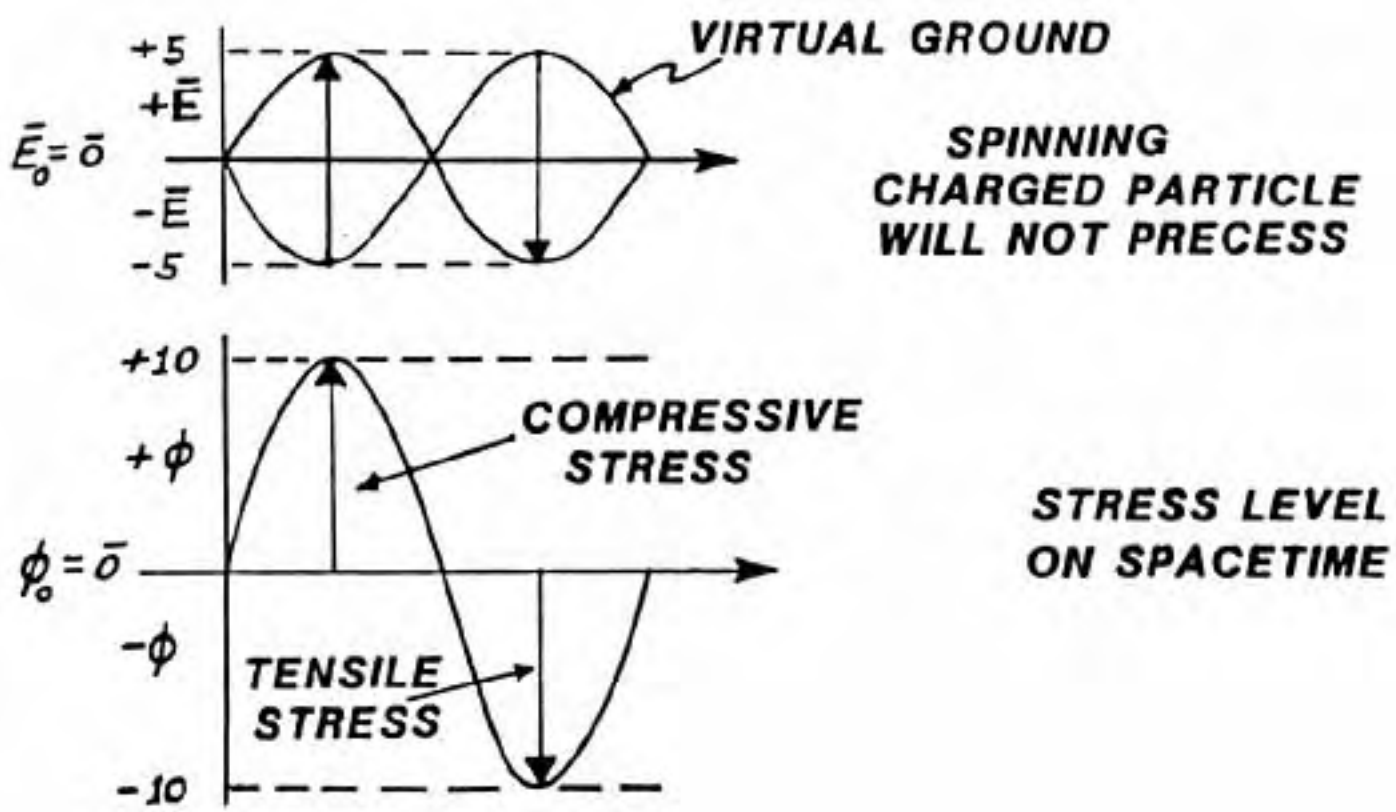

On this slide we show how to regard the magnitude of the stress, by using one wave envelope as "virtual ground." In the top diagram, the original E-field stress of each wave has a magnitude of 5, and the composite stress wave now has a magnitude of 10, in whatever units we choose to express them.

We show in the bottom diagram that during one half cycle we have compressive stress in the virtual particle vacuum flux, and during the second half cycle we have tensile stress.

This shows the wave is like a sound wave in the gaseous molecules of the air.

However, this wave has one difference. It also

oscillates time, and thus has at least one additional degree of freedom, compared to ordinary EM waves.

In fact, this wave can be made n-dimensional and hyperspatial.

As a first order approximation, we can treat such a wave in
a spatial fashion, if the wave is not too great in magnitude and the relativistic oscillation of time and inertia is not too large.

Next Slide

The Tom Bearden Website

SLIDE 24.

A SIMPLIFIED CHARGED PARTICLE

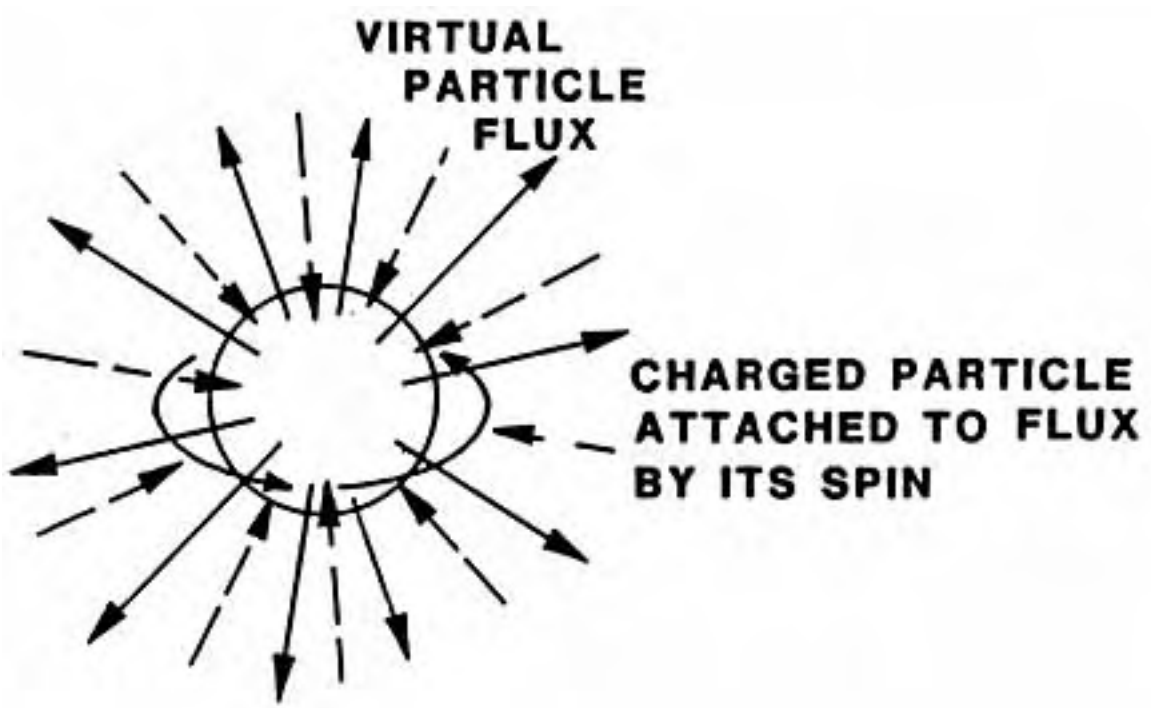

(THINK OF THE FLUX IN AND OUT, EXCEPT GRADIENTS ARE SPIRAL-LIKE, DUE TO PARTICLE'S SPIN)

We now digress slightly to pick up some more concepts.

On this slide, we show a simplified physical model of a charged particle. According to present particle physics, we model it as an observable, spinning bare mass in the middle, connected to a spray of virtual particles on and off the mass in all directions.

It is the spin of the mass that "attaches" the spray of virtual particles to and from itself.

Note that, because of the spin, the gradient lines of flux will actually be spiral or vortex in nature.

Also note that, when EM theory was founded, no one knew that an electron was spinning. Electron spin was therefore omitted from the foundations of present

electromagnetic theory, and compensated for later by strictly ad hoc measures.

Next Slide

The Tom Bearden Website

SLIDE 25.

A CHARGED PARTICLE IS A SPECIAL KIND OF "SPRAY NOZZLE"

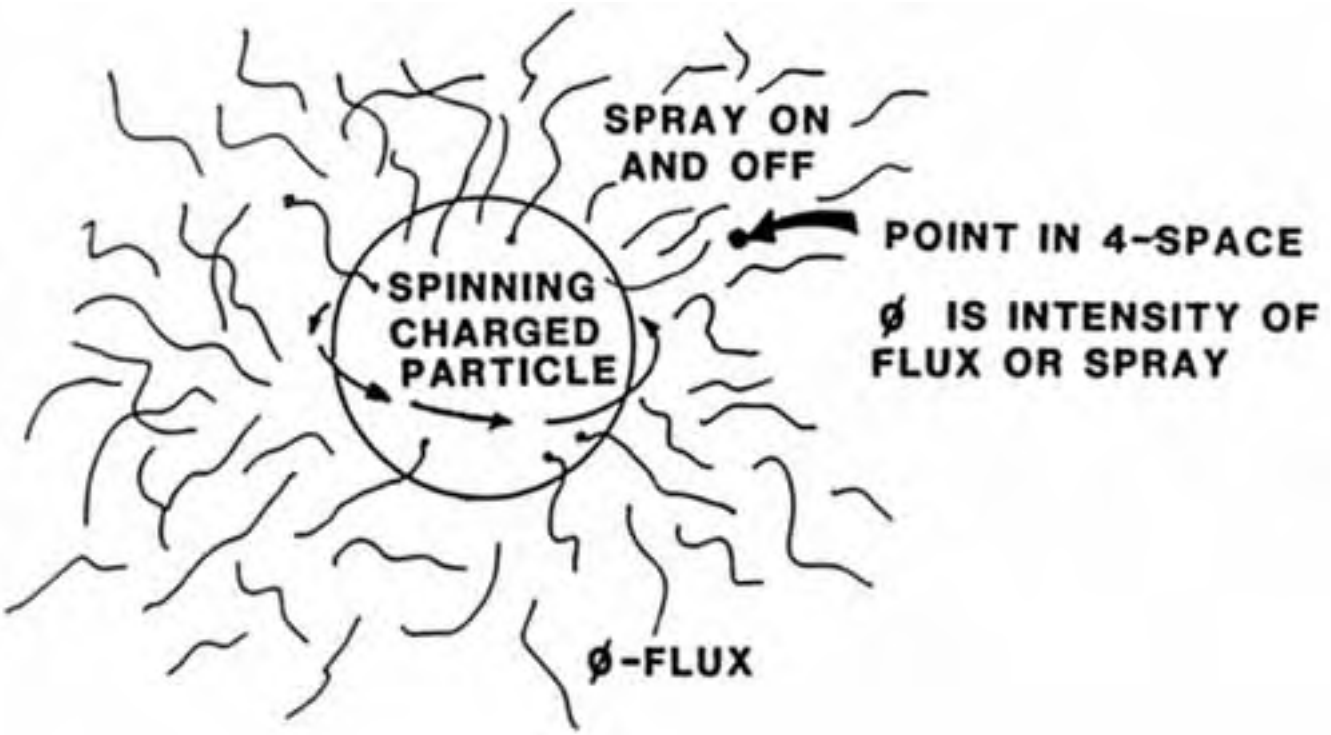

(SPRAY IS THROUGH 4 DIMENSIONS, NOT JUST 3)

Here we show a very important concept, and a very important fact of nature.

A charged particle may be idealized as a special kind of spray nozzle.

The 3-dimensional particle of mass is spraying out virtual particle fluid, and sucking in virtual particle fluid, in four or more dimensions.

We never have to furnish or replenish the spray. Nature provides that. And it's inexhaustible. It comes from the entire virtual particle flux vacuum of the universe. It's already connected firmly to matter, by its connection to the spinning charged particle of mass.

I repeat and strongly stress: This tremendous, continuous spray of virtual particles is absolutely free,

and absolutely furnished by the universe.

We don't have to create the basic pumps for the fluid. We just move the spray nozzles around, by moving the spinning charged masses around.

We never furnish any ultimate energy to or in our present EM circuits. We just pump around the spray nozzles, gating the spray furnished by the universe.

Next Slide

The Tom Bearden Website

SLIDE 26.

AN OBSERVABLE CHARGED PARTICLE IS DIRECTLY CONNECTED TO VIRTUAL PARTICLE FLUX VACUUM

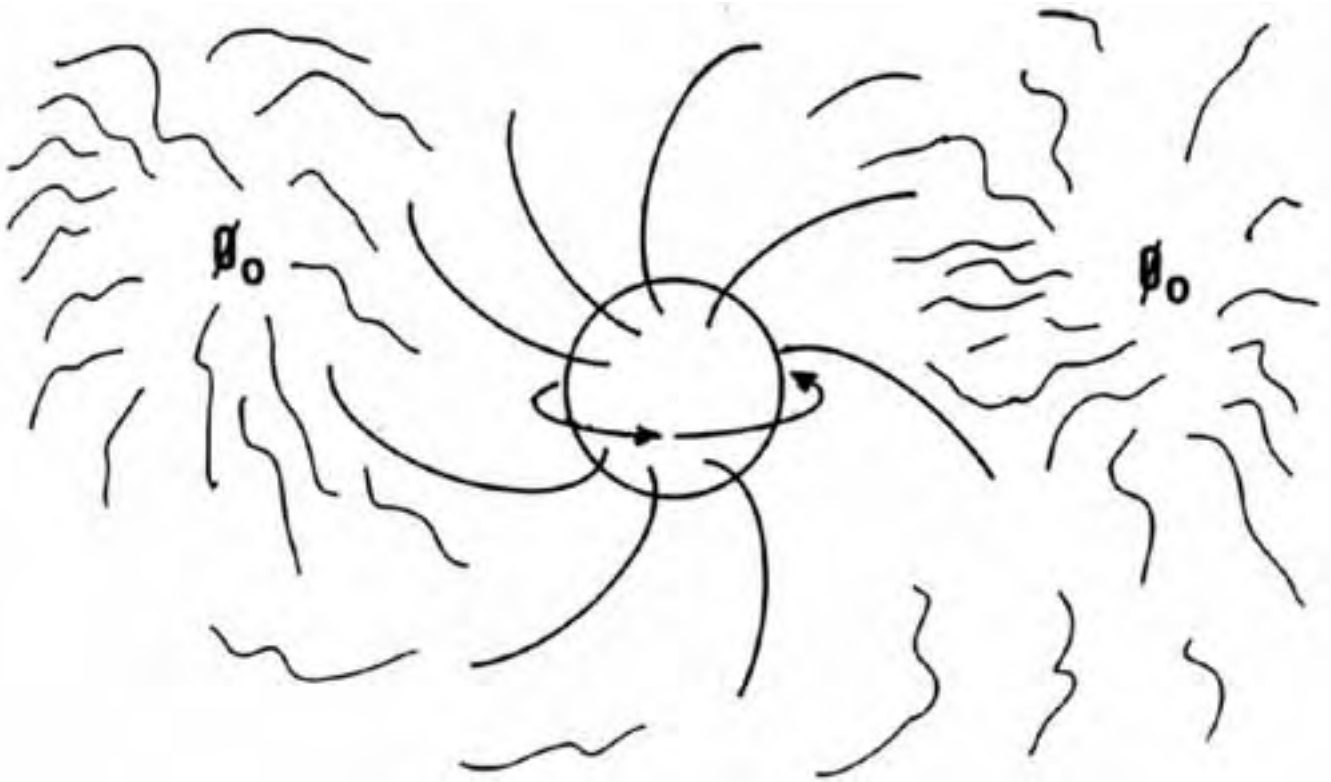

On this slide we accent that our 3-dimensional particle of mass is directly connected by its spin to the vacuum ether itself. To the virtual particle flux that identically IS the vacuum spacetime.

Interestingly, relativity states that the mass itself is nothing but a "kink" or curvature in spacetime .

The fact that the surface of the particle is spinning at right angles to the virtual particle vacuum flux "drags" part of the flux along with it, spiraling it, and certainly "kinking" or "bending" the vacuum flux .

That's the MECHANISM for the bending of spacetime. And that's what MAKES the particle of mass in the first place, and reduces its dimensionality to three.

Also note that the vacuum IS phi-sub-zero, and that is never
a zero value. This is contrary to present EM theory, which erroneously assumes phi-sub-zero -- the charge of vacuum -- to be zero or non-existent.

Next Slide

The Tom Bearden Website

SLIDE 27.

SPIN COUPLES VACUUM TO PARTICLE

- **SPHERICAL ROTATION IS THE KEY**
- **A PARTICLE CAN BE MODELED AS A SPHERICALLY ROTATING VORTEX OF SPACETIME**
- **ITS MASS IS DUE TO ITS SPIN**
- **THE SPINNING OBJECT IS CONTINUALLY CONNECTED TO ITS ENVIRONMENT**
- **VERY HIGH VALUES OF ELECTROSTATIC POTENTIAL CAN INDUCE RELATIVISTIC CONDITIONS**
    - **CHANGE RATE OF FLOW OF TIME**
    - **EVEN THOUGH VELOCITY IS NONRELATIVISTIC**

E.P.BATTEY-PRATT AND T.J.RACEY
"GEOMETRIC MODEL FOR FUNDAMENTAL PARTICLES,"
INTL. J. OF PHYS. 19, NO. 6, 437-475, 1980

In fact, the bits and pieces of many of the new concepts are strewed all through the scientific literature. Here we show one example, establishing a good model that spin of a particle couples the particle to the vacuum .

This paper is by E.P. Battey-Pratt and T.J. Racey, and was . published in the International Journal of Physics in 1980.

Note again that very high values of electrostatic potential
can induce relativistic conditions, even though relativistic velocity is not present.

Next Slide

The Tom Bearden Website

SLIDE 28.

ELECTRON PRECESSION (SIMPLIFIED)

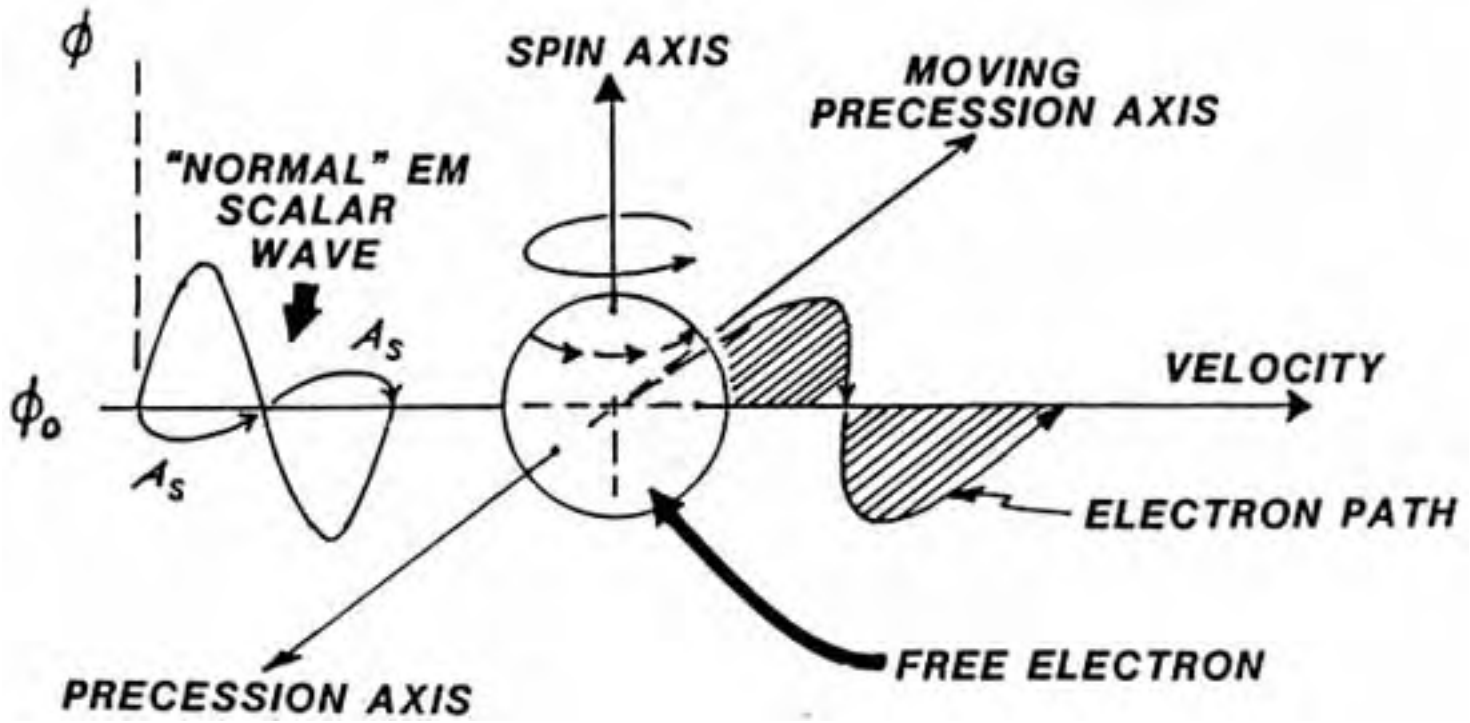

On this slide I show the effects of precession of an electron when it encounters a longitudinal scalar wave that contains "spin vortex holes" for the electrons to fall into and mesh its spin with.

The basic idea here -- that electron precession accounts for the Hertzian waves in the electron gas in a transmitting antenna and in a receiving antenna, came from my close colleague and friend, Frank Golden, and I am most happy to give him full credit for this important insight.

As we have previously stated, transverse (force) waves cannot exist in vacuum in the absence of mass. Hertz waves therefore cannot exist in vacuum, just as Tesla stated.

Yet we know that Hertz waves exist in the electron gas in

our transmitting antennas and in the electron gas in our receiving antennas. How then do we get Hertz waves here, if only longitudinal waves can exist in the vacuum in between?

Electron precession is the key.

We never measure what's happening in vacuum with our instruments. Instead, almost always we measure what is happening to and in the electron gas in our antenna or probe and feeding current to the instrument.

Here we show a "normal" EM vacuum wave -- which is a longitudinal wave containing spin vortexes from the electrons that generated it -- approaching and striking a spinning charged electron. As the peak and trough of the wave passes, it is as if we had a force pressing against the spinning electron, first along the line of wave travel, and then antiparallel to the wave travel. *(that is, "explaining" it in present concepts.)*

The electron acts as a little gyroscope, and precesses laterally, first in one direction and then the other.

Therefore the wave recovered in the electron gas in our receiving antenna or instrument probe is a transverse Hertzian matter wave.

Hertz waves are always <u>matter</u> vector waves.

Vacuum EM waves are always nonmaterial <u>longitudinal</u> scalar waves.

Longitudinal scalar waves in vacuum normally contain many spinning vortex "holes" of flux, created from the spinning electrons which launched the wave and stayed behind in the transmitting antenna. This kind of longitudinal wave is directly detectable by a normal free electron charged gas in a receiving antenna or probe. It also directly interacts with free electrons in a conducting metal shield, and so is shielded by Faraday cages.

On the other hand, our zero-vector longitudinal wave, made
by opposing waves, contains opposing spin holes which annihilate or cancel each other.

In the absence of spin holes, the longitudinal wave will not mesh with spinning electrons in a conductor, and so it is not detectable in the normal fashion. It also does not interact with free electrons in a conducting metal shield, so it readily penetrates Faraday cages.

An easy way to see that electrons do not interact with that substructured longitudinal zero-vector wave is to visualize both substructure component waves interacting on the electron simultaneously, pushing in opposite directions equally. In that case the electron tries to precess in both directions, equally, and so it does not precess in either direction. Therefore it does not "detect" the passing wave.

The wave without "golf ball holes", however, is detectable
by any circuit having high nonlinearity actions occurring in it. Such highly nonlinear dynamic areas act to provide a phase shifting between the composite substructure waves. This phase shift results in violation of the sum-zero condition, producing a "normal" EM wave which deposits energy in the out-of-phase area.

From the spin vortex "golf ball hole" concept, the out-of-phase condition means that now we have an alternating preponderance of spin holes, spinning first in one direction and then in the other. Thus the electrons in the nonlinear, phase shift area are hooked and oscillated (precessed) to and fro, producing energy.

Solid state, highly doped transistors are particularly vulnerable to this effect, as are gas discharge tubes, spark and cascade ion discharges, plasmas, etc.

Next Slide

The Tom Bearden Website

SLIDE 29.

VACUUM/SPACETIME IS PURE VIRTUAL PARTICLE FLUX ($Ø_O$)

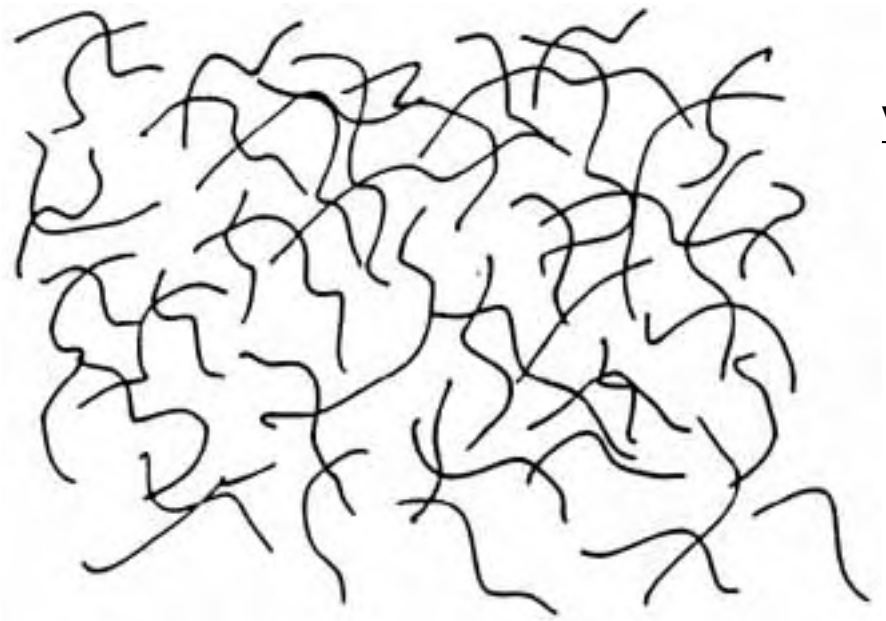

VACUUM IS IDENTICAL TO:

- **VIRTUAL PARTICLE FLUX**
- **SPACETIME**
- **ANENERGY**
- **$Ø_0$**
- **MASSLESS CHARGE**

VACUUM IS:

- **MADE OF UNQUANTIZED ACTION**
- **WITHOUT DEFINITE LENGTH INTERVALS**
- **WITHOUT DEFINITE TIME INTERVALS**
- **N-DIMENSIONAL (UNFIXED)**

We pause here to again summarize some important things we now know about vacuum.

Vacuum IS IDENTICAL TO virtual particle flux, spacetime, anenergy, Phi-subzero, massless charge, unquantized action, and infolded energy, momentum, length, time, power, velocity, acceleration, etc.

Vacuum is made of unquantized action, dimensionally.

It is without definite length or time, as Einstein stated.

It is n-dimensional, where n is always four or

greater.

It is not an emptiness filled with things. Rather, it is identically a plenum filled with things which are totally unseparated, unfixed, and undetermined.

From vacuum: mass, energy, time, frames, and all the rest of physical reality are dynamically made.

Vacuum is the ether. The ether has never been eliminated from physics. Ether just has become much more subtle, and physicists have used other names for it.

Next Slide

SLIDE 30.

VACUUM IS:

- **SPACETIME (L^nT, WHERE $n \geq 3$)**
- **CHARGE (MASSLESS)**
- **ELECTROSTATIC SCALAR POTENTIAL $Ø_0 \neq 0$**
  ERROR IN PRESENT THEORY
- **BROKEN BITS OF ENERGY (SUBQUANTAL)**
- **PURE VIRTUAL PARTICLE FLUX**
- **O-WAVE FLUX**
- **MULTILEVEL, STRUCTURED, PATTERNED**
- **A VIRTUAL PLENUM**
- **AN OBSERVABLE EMPTINESS**

Again, we list some of the things that vacuum identically is.

It is spacetime, massless charge, electrostatic scalar potential, broken bits (subquantal) of energy, pure virtual particle flux, zero-vector wave flux, multilevel, structured, patterned, a virtual plenum, and an observable emptiness.

It is all things and contains all things in potential state.

It is not, in that it is not observable. But from it comes all observables.

It is both ordered and disordered, simultaneously.

It involves four-law logic, not just three-law Aristotlean logic.

Next Slide

SLIDE 31.

GRADIENT OF ELECTROSTATIC POTENTIAL

IN VACUUM

$$\nabla \text{Ø} \neq \text{Ë}$$

ON AND OF A MOVING CHARGED PARTICLE

$$\nabla \text{Ø} = \text{Ë}$$

Again I accent that, in vacuum in the absence of a charged spinning particle of observable mass, del-phi does not yield an Ë-field, and the conventional equations of EM are wrong in that respect.

In the presence of a spinning charged particle, in a del-phi which contains electron-vortex-holes to mesh with, the charged particle attaches itself to the moving del-phi flux gradient, moving itself with the river. This produces an Ë field. The Ë-field CONSISTS OF the smeared electron, it does not CAUSE THE MOVEMENT of the electron. It is an effect, not a cause. The conventional equation for del-phi equals E is correct for matter waves in electron gases; it is not correct in vacuum itself.

Next Slide

The Tom Bearden Website

SLIDE 32.

IN A ∇Ø, A CHARGED PARTICLE MOVES ITSELF

∇Ø>0 IMPLIES A MOVING RIVER, AND THE CHARGED PARTICLE IS "HOOKED TO" THE RIVER

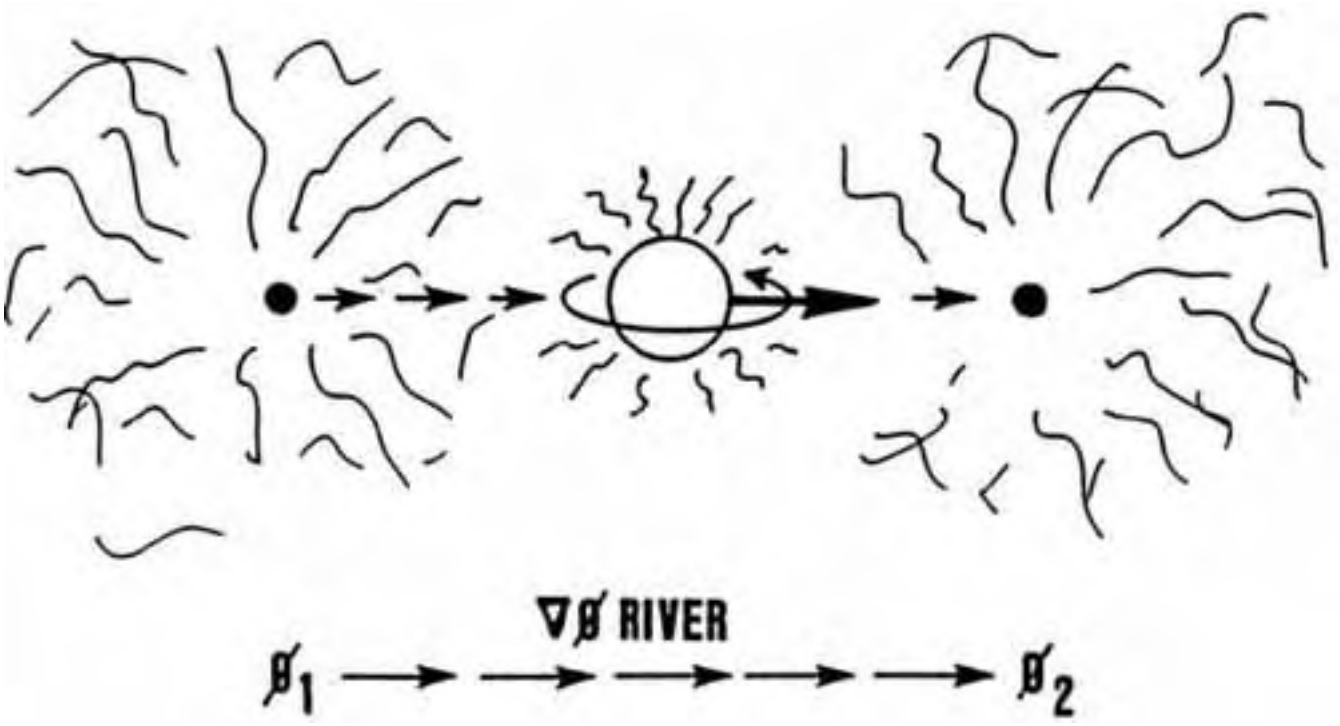

We show clearly on this slide that a spinning charged particle, when it hooks to a spin-hole in a del-phi river, MOVES ITSELF.

Note that a del-phi implies a "pressure difference" in phi-flux between two points. Therefore there is a moving river -- a gradient -- of phi-dot, moving from the higher pressure to the lower.

If a charged particle is attached to this moving river, it flows along with the river. It is just like putting a boat into a moving stream of water. If the boat "latches" to the moving water, it moves with the river.

Electron spin and spin vortexes in the del-phi mesh, to accomplish the "hooking" or "latching."

Once hooked into a moving river, the electron moves itself. One does not have to furnish work to move it.

If the river is accelerating, the electron will accelerate itself.

By cleverly gating such rivers into and onto sources of free electrons, one can directly produce free energy.

The extra energy comes from converting anenergy (massless charge, vacuum flux) to energy of a moving mass.

Next Slide

SLIDE 33.

ELECTROMAGNETIC WAVES IN ELECTRON GAS IN A CONDUCTOR

- **VECTOR WAVES**
- **CONTAIN E, B FIELDS**
- **GENERATED BY SPIN COUPLING OF ELECTRONS WITH SCALAR WAVE "SPIN-HOLES"**
- **WAVES OF FORCE**
- **HERTZIAN WAVES**
- **TRANSVERSE WAVES**
- **WAVES OF ELECTRON PRECESSION**

Here we pause to summarize the characteristics of electromagnetic waves in the electron gas of a conductor.

First, these are vector EM waves in the accepted sense.

They contain E and B fields.

They are generated by spin coupling of electrons with spin-holes in a scalar wave delta-phi river. The electrons move themselves under that condition, producing work and forces.

They are waves of force or force field variations.

They are Hertzian waves.

They are transverse oscillatory, not longitudinal.

They are matter waves.

They are waves of electron precession.

Next Slide

SLIDE 34.

ELECTROMAGNETIC WAVES IN VACUUM

- **SCALAR LONGITUDINAL WAVES**
- **VECTOR ZERO [Ö] WAVES**
- **WITHOUT Ë, B FIELDS**
- **INTERNALLY STRUCTURED**
- **PATTERNED**
- **MAY CONTAIN ELECTRON "SPIN-HOLES"**

Here we summarize the characteristics of electromagnetic waves in vacuum.

They are scalar longitudinal waves of alternate compression and rarefaction of the vacuum virtual particle flux.

That is, they are waves of electrostatic potential.

They are zero-vector waves.

They are internally structured and patterned.

They usually contain electron "spin holes" unless made in a fashion so as to make opposing spin holes that cancel each other.

Since they are pure phi-waves, they need not be limited in velocity to the speed of light.

They are hyperspatial waves.

They are waves in virtual state itself.

Next Slide

[The Tom Bearden Website]

SLIDE 35.

DETECTION OF TRANSVERSE AND LONGITUDINAL WAVES

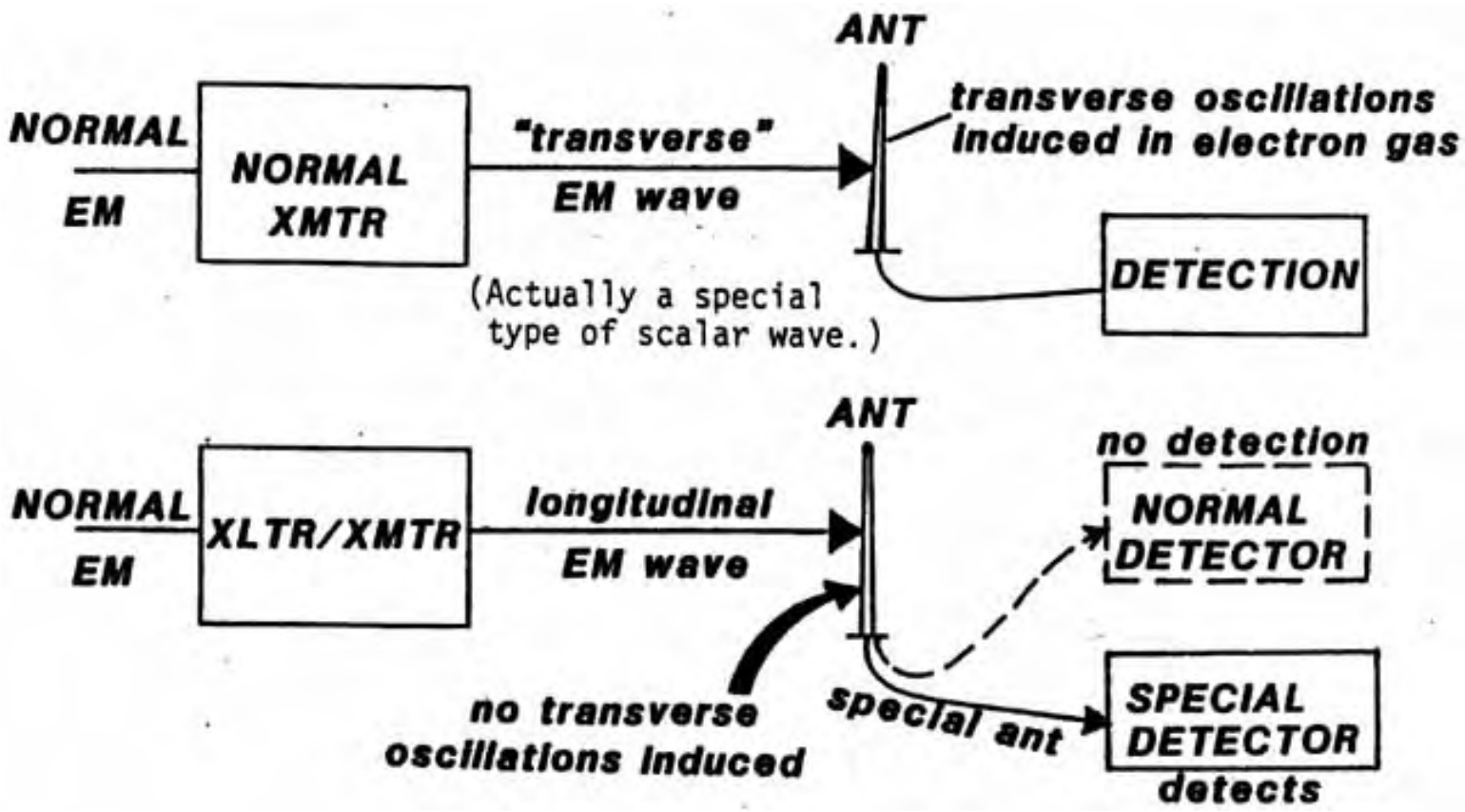

In the top drawing on this slide, we show a normal transmitter putting out a normal EM wave, which received in a normal antenna/receiver. What we call a "transverse" wave rigorously exists only in the electron gas in the transmitting antenna and in the electron gas in the receiving antenna. Specifically, a longitudinal wave exists in the vacuum in between the two antennas. However, due to the method of production, the longitudinal wave contains spin-holes for electrons, so the electrons in the receiving antenna readily couple with the wave by falling into and meshing their spins with the spins of the spin-vortex holes. Electron precession produces electron gas waves that are transverse oscillatory, hence Hertzian waves in nature.

In the bottom drawing, we show a translator/

transmitter. In other words, we oppose ordinary EM waves in a sum-zero substructure, deliberately producing longitudinal EM waves in vacuum with the spin-hole vortexes canceling each other. This type of wave does not "hook" spinning electrons in the normal receiving antenna, and thus it is not detected. The normal antenna/receiver system never sees it at all.

However, by means of a special antenna which generates nonlinear phase shifts in the composite substructure waves, "hooking" holes are restored in an oscillatory nature. Electrons then hook with this output and detect the wave.

Note that it requires a two-stage detector, operated in an interferometer fashion, to detect this pure scalar wave.

Next Slide

The Tom Bearden Website

SLIDE 36.

CREATING A "RIVER" OF ANENERGY

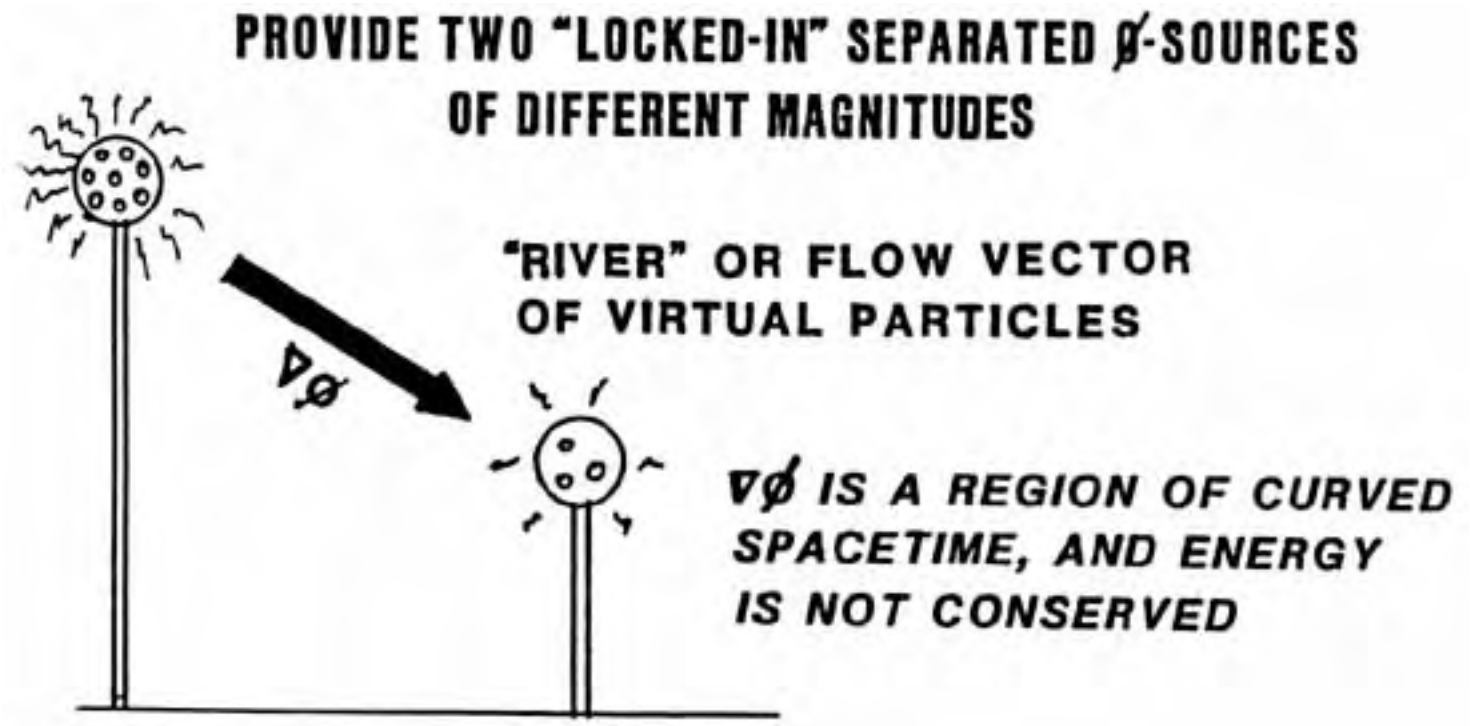

IN VACUUM, THIS IS NOT YET A VOLTAGE DROP (NO MASS FLOW),
NOR IS THERE AN Ë-FIELD

Now if we wish to get free energy, we are going to have to provide a continuous anenergy river, and a means of tapping it to produce mass movement.

This slide shows one easy way to make an anenergy river.

We simply pump some electrons (spray nozzles) onto an elevated charged ball, and we LEAVE them there. A second ball is connected to ground. A higher phi -- that is, a denser spray -- is now in the vicinity of the elevated ball on the left. A lower phi -- that is, a less dense spray -- is in the vicinity of the lower ball on the right. Between the two balls, now, there is a

gradient in phi, and a virtual flux flowing from the "higher virtual pressure" to the "lower virtual pressure."

This del-phi river does NOT constitute an Ë-field, as we have previously pointed out.

The del-phi region, however, is definitely a region of curved spacetime. As is well known from general relativity, in such a region energy need not be conserved.

Therefore it is entirely possible -- consistent with ordinary physics -- to violate conservation of energy in this del-phi river, if one believes general relativity. If one argues adamantly that conservation of energy cannot be violated under any circumstances, then one must throw out general relativity. Also, one must throw out most of particle physics, whose explanations presently involve virtual interactions, each of which violates the conservation of energy.

Next Slide

The Tom Bearden Website

SLIDE 37

A 2-WIRE SYSTEM IS CONSERVATIVE

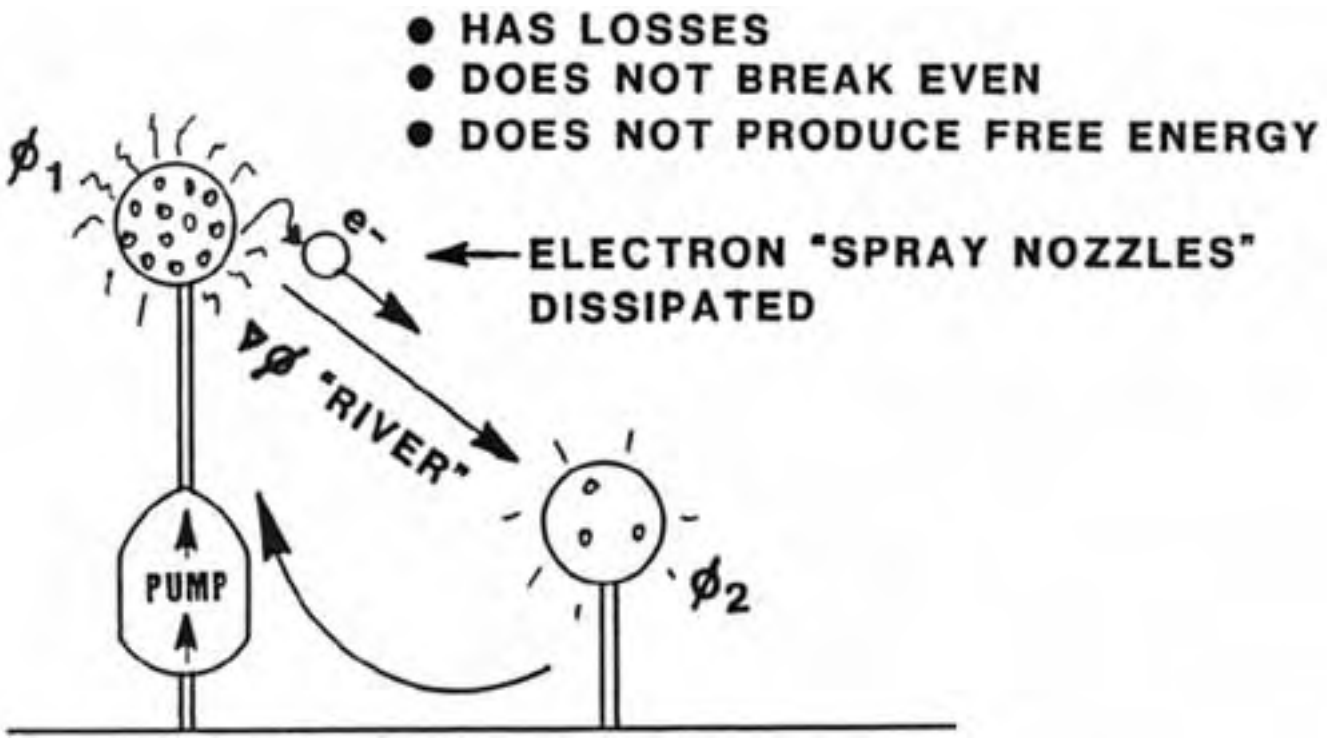

REPLENISH SPRAY NOZZLES BY PUMPING MORE ELECTRONS. (MOVING ELECTRON MASSES AGAINST A "SPRAY PILEUP" REQUIRES WORK.

Here we show that, as engineers, we've all been tricked into releasing our virtual rivers so that we would not discover free energy.

While I cannot prove this as yet, I tentatively suspect that J. P. Morgan and Thomas Edison are directly responsible for this occurring. Tesla utilized a single-wire system; we have all been taught to utilize only two-wire systems.

What we in effect do is connect a wire or circuit to our charged ball, allowing our hose nozzles to drain away.

In other words, we first do some work to pump hose nozzles (electrons) into and onto our elevated

reservoir, so we will obtain a denser flux, and a flux river to utilize. Then we release the nozzles themselves, and let THEM move on the flux river, deplenishing our river. Of course we can get back as much energy as we pumped up there in the first place. But this two-wire system is at best theoretically even. Since real circuits have losses, we can never even quite break even. Thus we have to continue to pump hose nozzles, and let them bleed off to provide energy, in a less-than-100% fashion.

By foolishly releasing our hose nozzles, we guarantee that we will never achieve free energy. And that's nice, because the people who control things, and for their own wealth and power depend on selling us energy at high prices, are guaranteed to stay in power and control.

One is never truly free unless one is energy independent, in a self-contained fashion.

Tesla nearly succeeded in giving us free or very cheap, inexhaustible energy -- and for that reason was quickly and dramatically suppressed.

Only three graduate schools of electrical engineering existed in the U.S. The only one of any real importance was at Columbia University.

Only one or two professors were necessary to "reach" to modify and subtly direct the entire foundations of the emerging electrical theory.

Professors were in general poor, and had no research funds unless some rich industrialist or philanthropist gave them a few dollars.

The setup then was certainly very ripe for Morgan and Edison to stop free energy, and suppress Tesla at the same time. They could have done so by influencing only one -- or at most two -- theoreticians at Columbia.

At any rate, the theory was developed in such fashion as to rule out the single wire circuit and the longitudinal wave. Free energy was suppressed, and the financial empires of Morgan and Edison stayed secure.

Next Slide

The Tom Bearden Website

SLIDE 38.

A HOLLOW CHARGED SPHERE

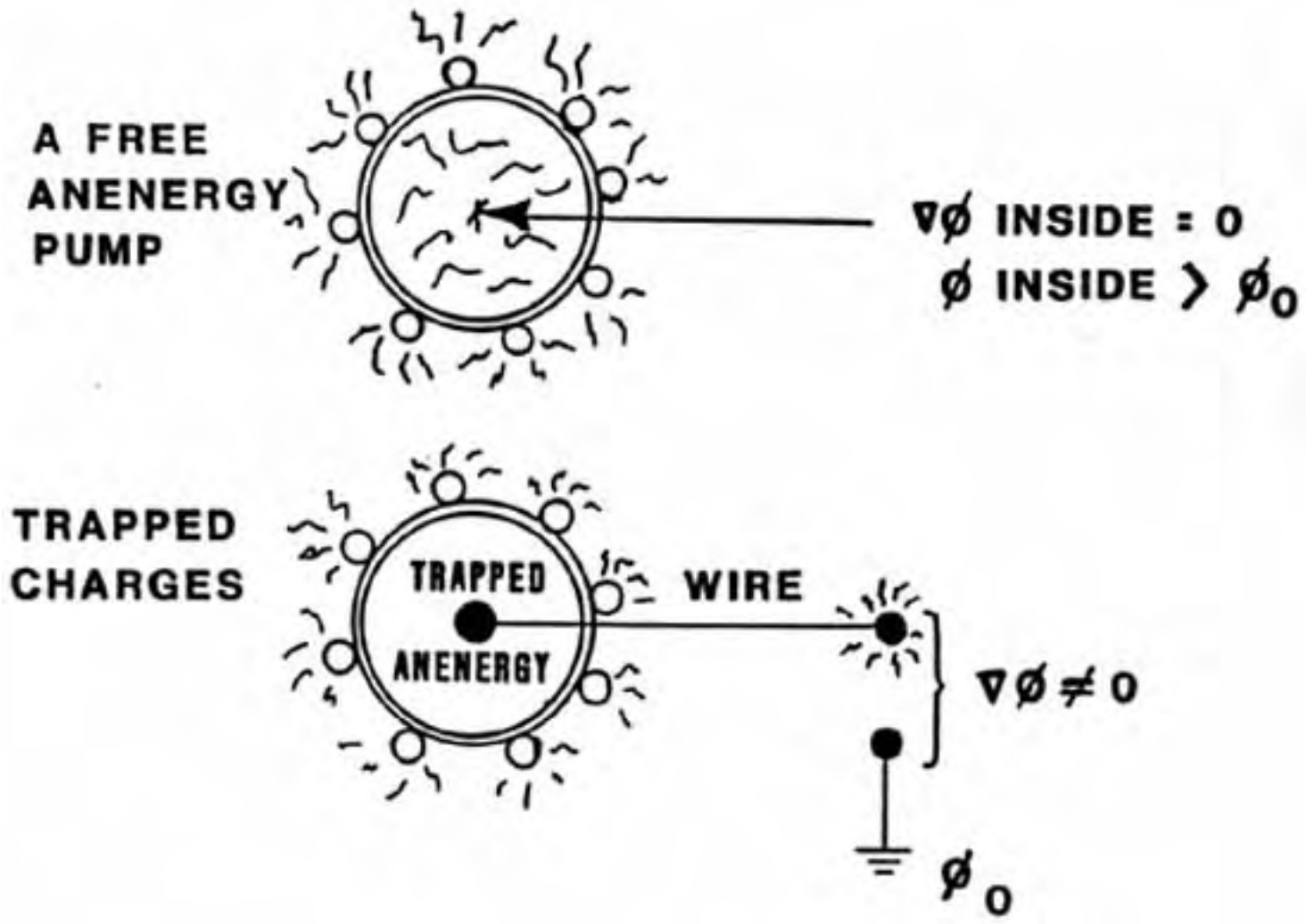

Here we show another easy source of a higher vacuum charge, hence an easy source for a free river.

Simply charge up a sphere. As is well known, inside that sphere one has no del-phi. So one can introduce an electron therein and not produce an Ë-field .

However, since we've piled up additional spray nozzles, the density of the spray inside the sphere (as well as outside it) is certainly higher.

In other words, the inside of the sphere is also a source
for an increased del-phi river. In the bottom drawing, we drill
a tiny hole in the sphere, insulate a thin wire running into the inside of the sphere, and run the wire out to a terminal opposing another grounded terminal.
Between the two terminals now there must exist a del-phi river.

And between those terminals there now exists a curvature of spacetime, hence the theoretical possibility to obtain free energy without violation of principles.

Next Slide

[The Tom Bearden Website]

SLIDE 39.

ONE-WAY GATE VALVE

(ANENERGY TO ENERGY)

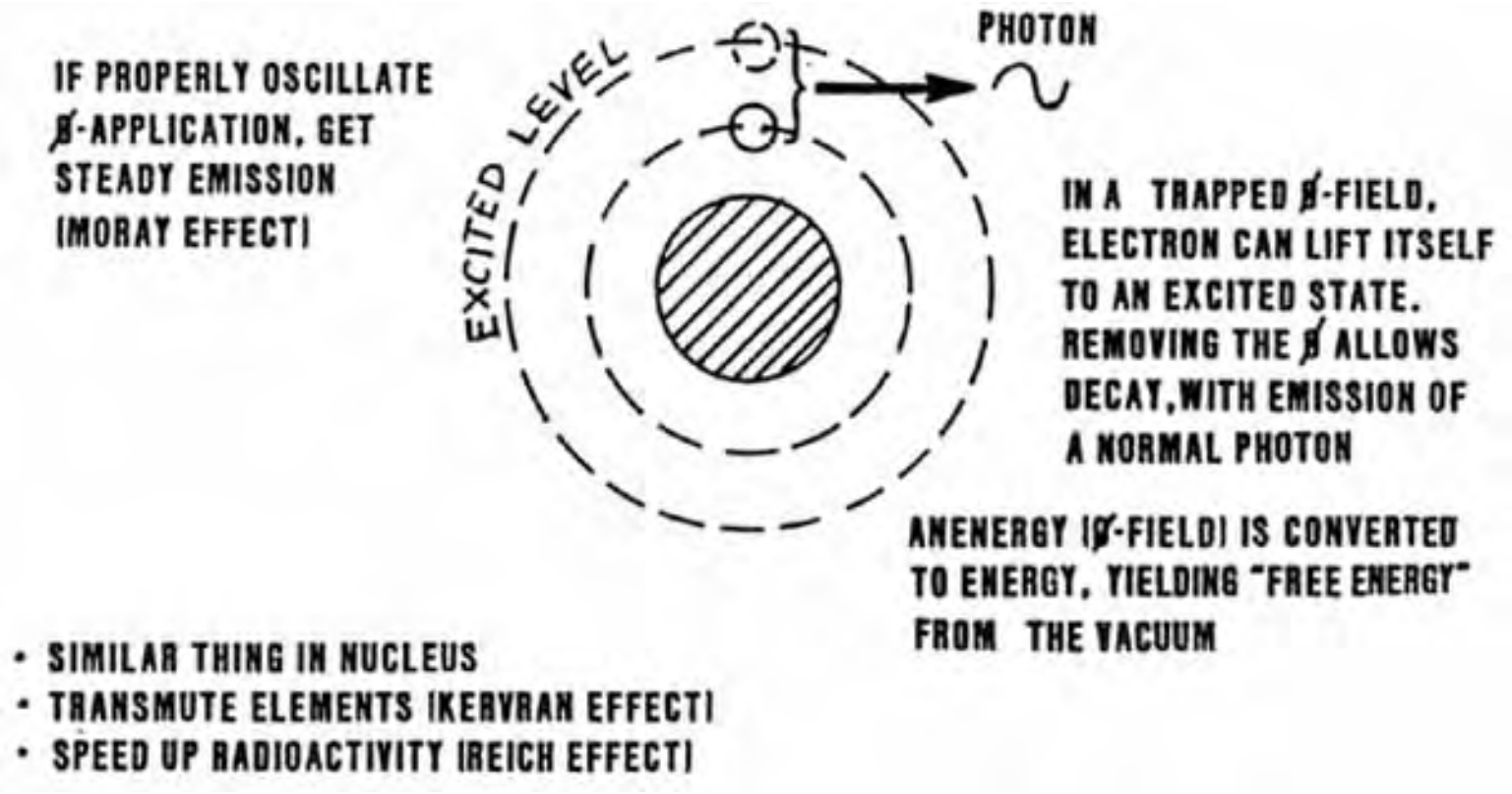

Here we show one way to provide a one-way gate valve from a del-phi river to energy released into the outside world.

By providing a properly tuned, oscillating phi wave, one can cause an orbital electron in an atom to raise itself to an excited state. Remember, in a del-phi, an electron that hooks to it raises itself.

We then switch out the phi application, and the excited electron decays in normal fashion, emitting a normal photon of energy.

By phase locking the processes, one produces a steady stream of photons.

By absorbing or directing the photons, one can

produce heat, light, energy beams, etc.

By this means, one produces free energy by gating anenergy into energy.

And if one does not release spray nozzles in the phi-oscillations which feed the mechanism, one has an inexhaustible energy production.

A very similar thing can be done with the excited states of the nucleus. For example, by using a radioactive material with a predisposition to emit some particle -- say an electron -- the nucleus can be made to continually emit the particles WITHOUT ITSELF DECAYING INTO BYPRODUCTS. In other words, an electron is lifted from the Dirac sea of vacuum to instantly replace the electron emitted from the nucleus.

This provides a one-way gate valve from the Dirac sea to the external universe.

Theoretically, these mechanisms are no more mysterious than a hydraulic ram, which raises water higher than the stream that feeds the ram.

In the 20's and 30's, T. Henry Moray successfully built such gating devices for converting vacuum anenergy to external energy.

In the Kervran effect, living systems are able to directly transmute elements, even though they only possess feeble energies, by influencing the virtual particle interactions in the nucleus that furnish its binding energy.

Reich used an adaptation of a cloudbuster -- which emits scalar waves -- to drastically speed up radioactive decay of radioelements.

Both plants and animals transmute elements by similar processes.

Next Slide

TOWARDS A NEW ELECTROMAGNETICS
PART 4: VECTORS AND MECHANISMS CLARIFIED

SLIDE 40,

SIMPLE FREE ENERGY MOTOR

BATTERY RECHARGES ITSELF

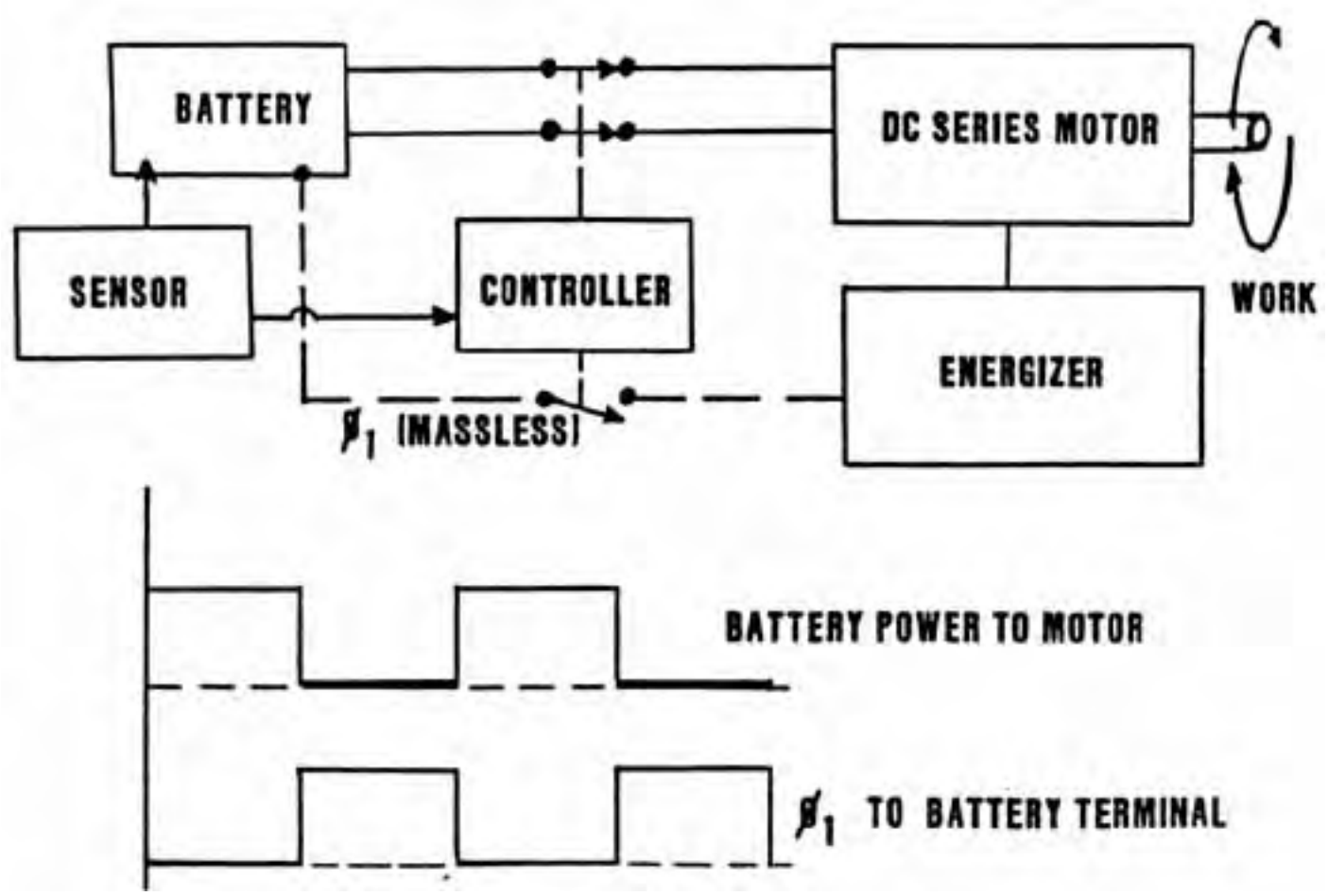

On this slide, we show a theoretical scheme which several researchers have discovered and used to build simple free energy motors.

In this scheme, we drive an ordinary d.c. series motor by a two wire system from an ordinary battery. The motor produces shaft horsepower, at -- say -- some 30 or 40 percent efficiency, compared to the power drained from the battery. This much of the circuit is perfectly ordinary.

The trick here is to get the battery to recharge itself, without furnishing normal power to it, or expending work from the external circuit in the process.

To do this, recall that a charged particle in a "hooking" del-phi river moves itself. This is true for an ion, as well as for an electron. We need only make the del-phi in correct fashion and synchronize it; specifically, we must not release the hose nozzles we utilize to produce our del-phi river or waves.

The inventors who have discovered this have used various variations, but here we show a common one.

First, we add an "energizer" (often referred to by various other names) to the circuit. This device makes the del-phi waves we will utilize, but does NOT make currents of electron masses. In other words, it makes pure Ø-dot. It takes a little work to do this, for the energizer circuit must pump a few charges now and then. So the energizer draws a little bit of power from the motor, but not very much.

Now we add a switching device, called a controller, which breaks up power to the motor in pulses. During one pulse, the battery is connected and furnishes power to the motor; during the succeeding pulse, the battery is disconnected completely from the motor and the output from the energizer is applied across the terminals of the battery.

If frequency content, spin-hole content, etc. are properly constructed by the energizer, then the ion movements in the battery reverse themselves, recharging the battery. Again, remember that these ions MOVE THEMSELVES during this recharge phase. Specifically, we are NOT furnishing ordinary current to the battery, and we are not doing work on it from the energizer.

If things are built properly, the battery can be made to more than recover its charge during this pulse

cycle.

To prevent excess charge of the battery and overheating and destroying it, a sensor is added which senses the state of charge of the battery, and furnishes a feedback signal to the controller to regulate the length of recharge time per "power off" pulse. In other words, the system is now self-regulating.

The relation between power pulses and recharge pulses is shown on the graphs at the bottom. Note that regulation may decrease the time of recharge application of the del-phi river.

This system, if properly built and tuned, will furnish "free shaft energy" continually, without violating conservation of anenergy. Remember that the del-phi condition across the battery terminals means that spacetime is suddenly curved there, and conservation of energy need no longer apply.

Again, this system is consistent with general relativity and with the fact that Ø-field alone can drive a situation relativistic. We have deliberately used these facts to do direct engineering. Our "extra energy" comes from shifting phi-flux -- the energy of the universal vacuum spacetime -- directly into ordinary energy for our use. Thus we draw on an inexhaustible source, and our device is no more esoteric than a paddlewheel in a river. The only difference is that, in this case, we have to be clever enough to make and divert the river in the right timing sequency.

This is a free energy device which an ordinary person, who knows a little electronics, can experiment with in the basement. To develop it, one is talking several thousands of dollars and a lot of persistence and tinkering; one is not talking millions.

WARNING: THE PRECEDING EXPERIMENTS ARE HAZARDOUS. DO NOT ATTEMPT THESE EXPERIMENTS UNDER ANY CIRCUMSTANCES UNLESS YOU ARE AN EXPERIENCED ELECTRICAL RESEARCHER, EXPERIENCED IN PERFORMING EXPERIMENTS WITH LEAD-ACID BATTERIES AND PULSE CHARGE AND DISCHARGE OF SAME, AND UNLESS YOU ALSO USE ALL SAFETY PRECAUTIONS SUCH AS GOGGLES

AND PROTECTIVE GLOVES, SLEEVES, AND APRON. YOU MUST NOT HAVE OTHER INFLAMMABLE LIQUIDS OR OTHER SUBSTANCES PRESENT WHICH COULD BE IGNITED AND BURN OR EXPLODE. SURGED LEAD-ACID BATTERIES PRODUCE HYDROGEN GAS, WHICH CAN EASILY EXPLODE SINCE SPARKING ALSO CAN OCCUR. THE ACID FROM SUCH AN EXPLOSION CAN EASILY BLIND YOU IF IT GETS IN YOUR EYES, AND IT CAN BURN YOUR SKIN. IN ADDITION, LEAD AND LEAD COMPOUNDS ARE POISONS, AND ARE TO BE HANDLED ONLY BY EXPERIENCED RESEARCHERS. THESE EXPERIMENTS ARE NOT FOR AMATEURS UNDER ANY CIRCUMSTANCE, BUT ONLY FOR EXPERIENCED PROFESSIONALS WITH PROPER KNOWLEDGE AND TRAINING, AND USING PROPER PRECAUTIONS. NEITHER THE AUTHOR NOR THE PUBLISHER IS REPONSIBLE OR LIABLE FOR ANY ACCIDENTS OR DAMAGE YOU MAY ENCOUNTER, AND ALL EXPERIMENTATION WITH THESE DEVICES AND PROCEDURES IS AT YOUR OWN ASSUMED PERSONAL RISK.

Next Slide

[The Tom Bearden Website]

SLIDE 41.

THE TRANSLATOR

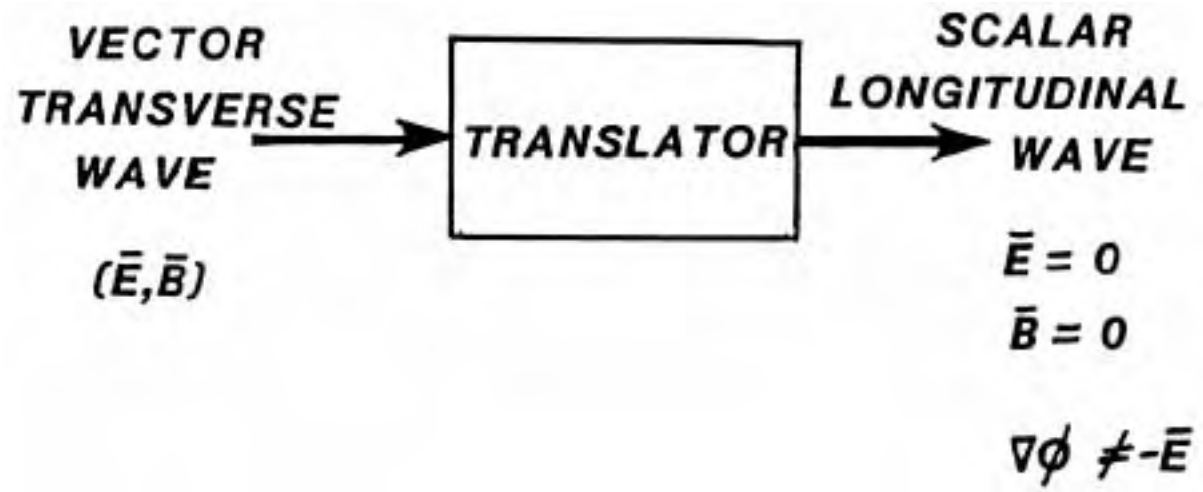

We now turn to a fundamental concept we need in order to understand some of the effects used by the Soviets in their Tesla weapons.

Note that one other country -- one not hostile to the U.S. -- also has such weaponry.

This slide shows the concept of a TRANSLATOR. Briefly, if we input a transverse matter wave, the translator outputs a scalar longitudinal wave without spin vortex hooks. If we input a scalar longitudinal wave -- even one without hooks -- the translator puts out a normal vector transverse matter wave.

We define a translator as anything which will accomplish one or both of those functions (usually both).

Basically, any device which is TOTALLY nonlinear to transverse waves will produce scalar waves from a transverse wave input. Any device which is totally nonlinear to longitudinal waves will produce transverse waves from a longitudinal wave

input.

It is comparable to certain plasmas, which, as is well known, produce such a translator effect. If you input longitudinal waves, you get transverse waves. If you input transverse waves, you get longitudinal waves. And the plasma is rather totally nonlinear.

Again, if our translator outputs non-hooking waves, it means that the component substructure waves oppose each other in sum zero fashion, and "kill" or nullify the vortex spin-holes.

Next Slide

The Tom Bearden Website

SLIDE 42.

TRANSVERSE WAVE INTERFERENCE

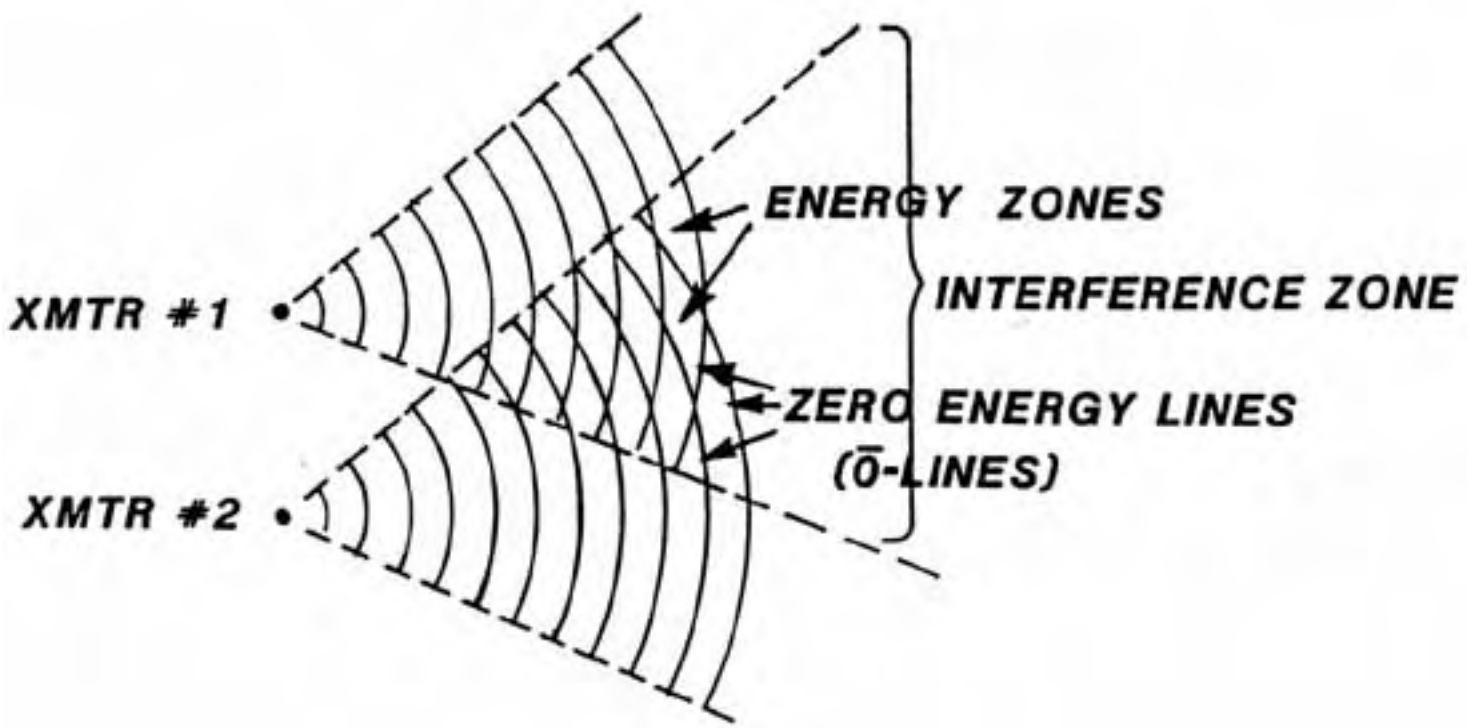

On this slide we show "normal " transverse wave interference, as we presently teach it in our textbooks.

We visualize two identical transmitters, each producing a beam in a pattern of about 55 degrees of so.

Where these beams overlap -- in the ideal, perfect case, we have constructive and destructive interference, with absolute zero-vector linear regions being formed. We put in the energy, and out-of-phase interference creates the zero zones, which contain no energy as such.

We point out, however, that these zero-lines are scalars,
and contain high stresses on spacetime.

Next Slide

The Tom Bearden Website

SLIDE 43.

LONGITUDINAL WAVE INTERFERENCE [SCALAR WAVES]

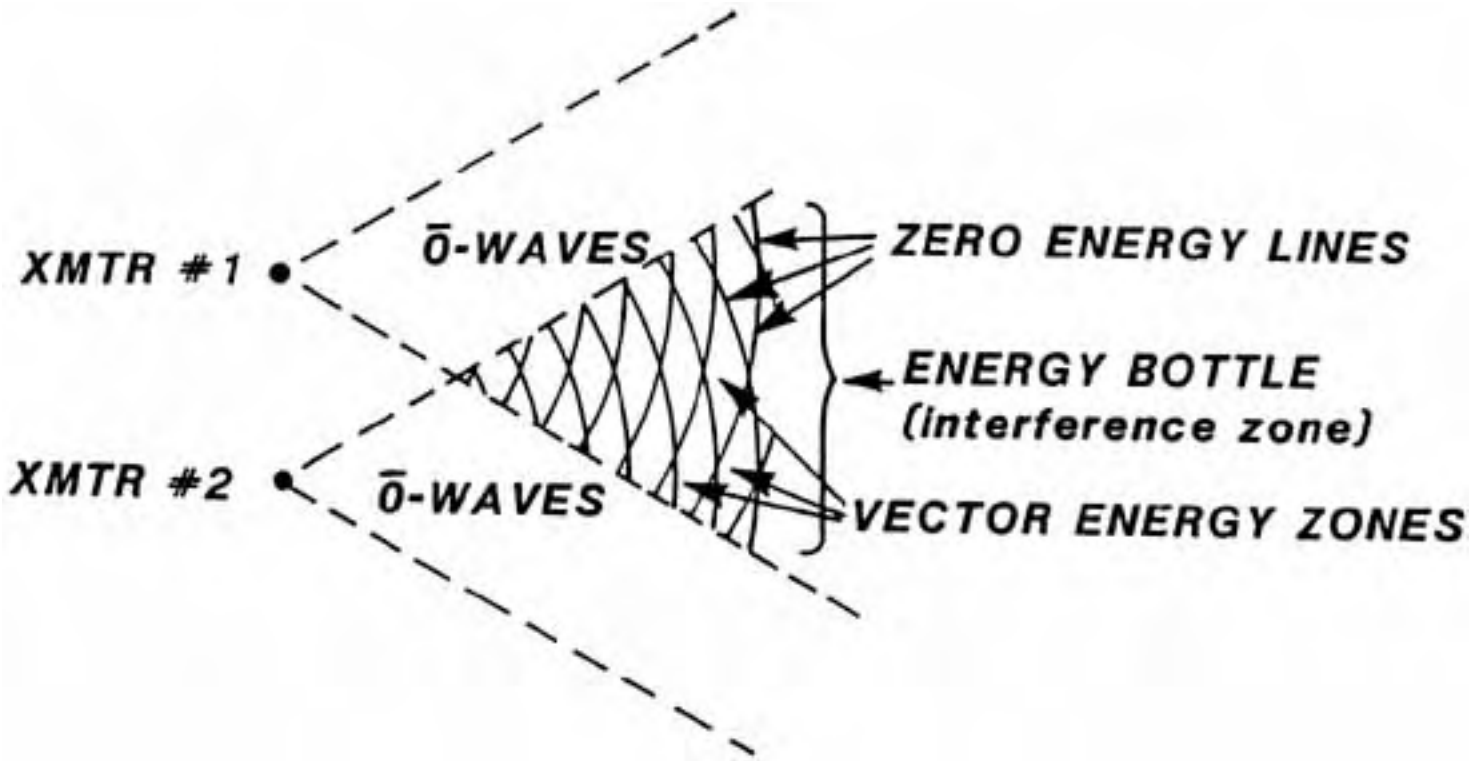

On this slide we show the interference pattern that emerges from the interference of two identical scalar wave beams from translator/transmitters.

Now note we are interfering two zero-vector waves, each containing a substructure. In this case we assume similar substructures.

What happens now is that we get a similar interference pattern, but with some startling differences.

First, we put in the zero-lines. These represent in-phase conditions for the substructures.

. Second, the substructures themselves interfere, and form energy in the grid zones between intersecting zero-lines.

In the perfect case, however, this energy cannot

radiate away. It is physically created and trapped as if in an "energy bottle." We are CREATING this energy at a distance, and storing it in a bottle. If the bottle were perfect, we would continue to accumulate energy in the grid zones -- notice we are continuing to pour energy into both transmitters, and there is zero ordinary energy anywhere else except in the grid zone "bottles."

If we turn off the transmitters smoothly, we extinguish the energy in the bottle completely. It is sucked right out of there, and the vacuum returns to its normal condition.

If we erratically and nonlinearly turn off the transmitters, we destroy the bottle and "dump" the energy suddenly. This is exactly like a sudden EMP from a nuclear weapon. A sudden pulse of energy is freed to radiate and interact in the region where the bottle was.

The high altitude booms off the East coast of the U.S. a few years ago were made in precisely this fashion, from such a weapon being adjusted and calibrated in the Soviet Union.

Next Slide

The Tom Bearden Website

SLIDE 44.

CREATING ENERGY AT A DISTANCE

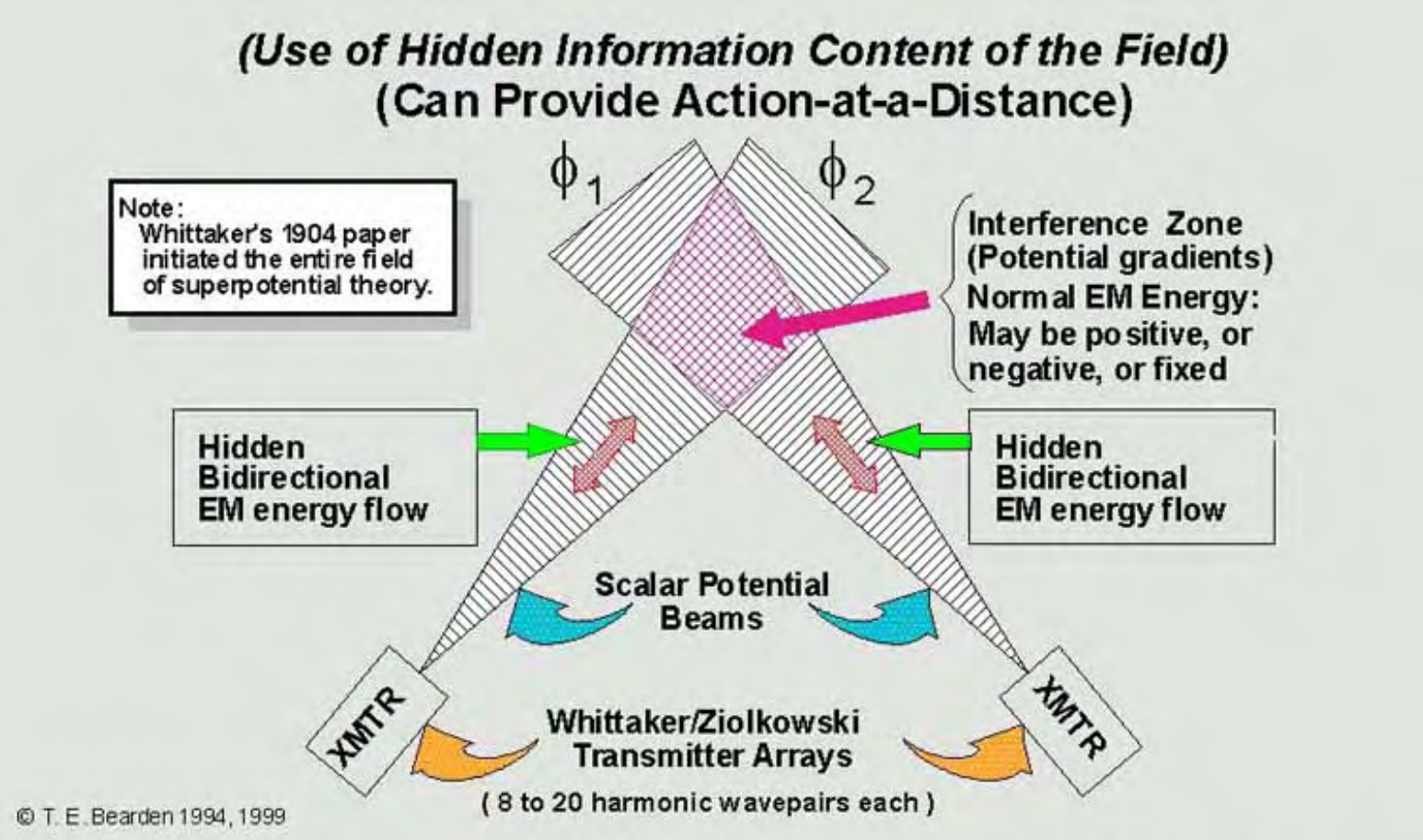

Figure 5. Scalar potential interferometry (between the two sets of bidirectional longitudinal EM wavepair functions) produces all EM force fields and waves.

But let us look at one way to do this sort of thing more efficiently.

Here we show two scalar transmitters (that is, two translator /transmitters) which form narrow beams, and which cross those beams at a distance.

In the crossing zone, scalar interference is established, making an energy bottle and producing trapped or locked in energy.

If I have a physical target in that crossed zone, I can literally "fry" the target, for I get all the power inputted to the transmitters contained in the bottle zone. I don't have any square law losses.

I can heat a metal object white hot at a distance, for example. Because all real bottles are slightly imperfect, the real bottle is leaky and some photons escape. I can observe the white hot steel in the bottle,

and I can record and measure the temperature from the escaping photons, by simple radiometric methods.

Now if I smoothly turn off both transmitters linearly, all the energy in the bottle disappears immediately. I can immediately reach in and pick up a black, cool piece of steel. And that cannot be done with ordinary inductive or radiowave heating.

That has been done in a laboratory on the North American continent.

Next Slide

The Tom Bearden Website

SLIDE 45.

NONLINEARITIES CAUSE SHIFTING [PARTIAL TRANSLATION]

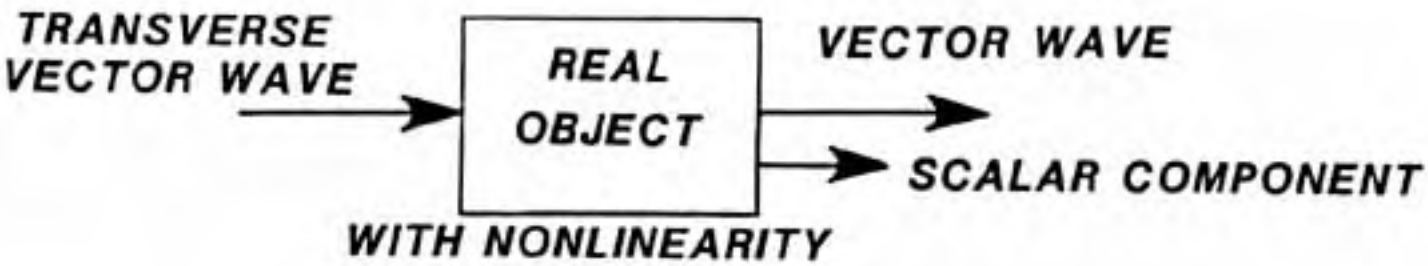

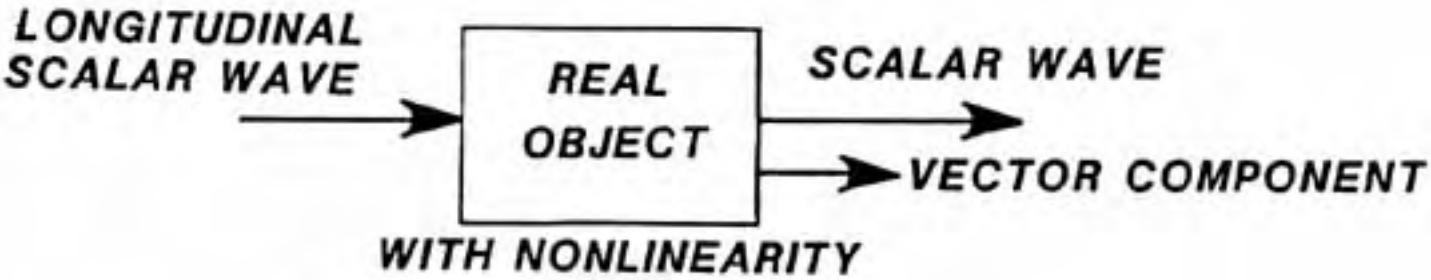

Here we show the results of electrical nonlinearities in an object which encounters a true translated (non-hooking) scalar wave. All objects have some electrical nonlinearities in them, and so all act partially as translators.

This means that any real object creates a small scalar aura around itself from its continual temperature interactions -- from absorbing and radiating ordinary EM waves. In addition, the object normally is subject to undetected scalar wave radiations, and so it also produces a small aura of transverse vector waves around itself by translation.

All real objects accomplish at least a little bit of translation.

Next Slide

TOWARDS A NEW ELECTROMAGNETICS
PART 4: VECTORS AND MECHANISMS CLARIFIED

SLIDE 46.

THE SCALAR AURA

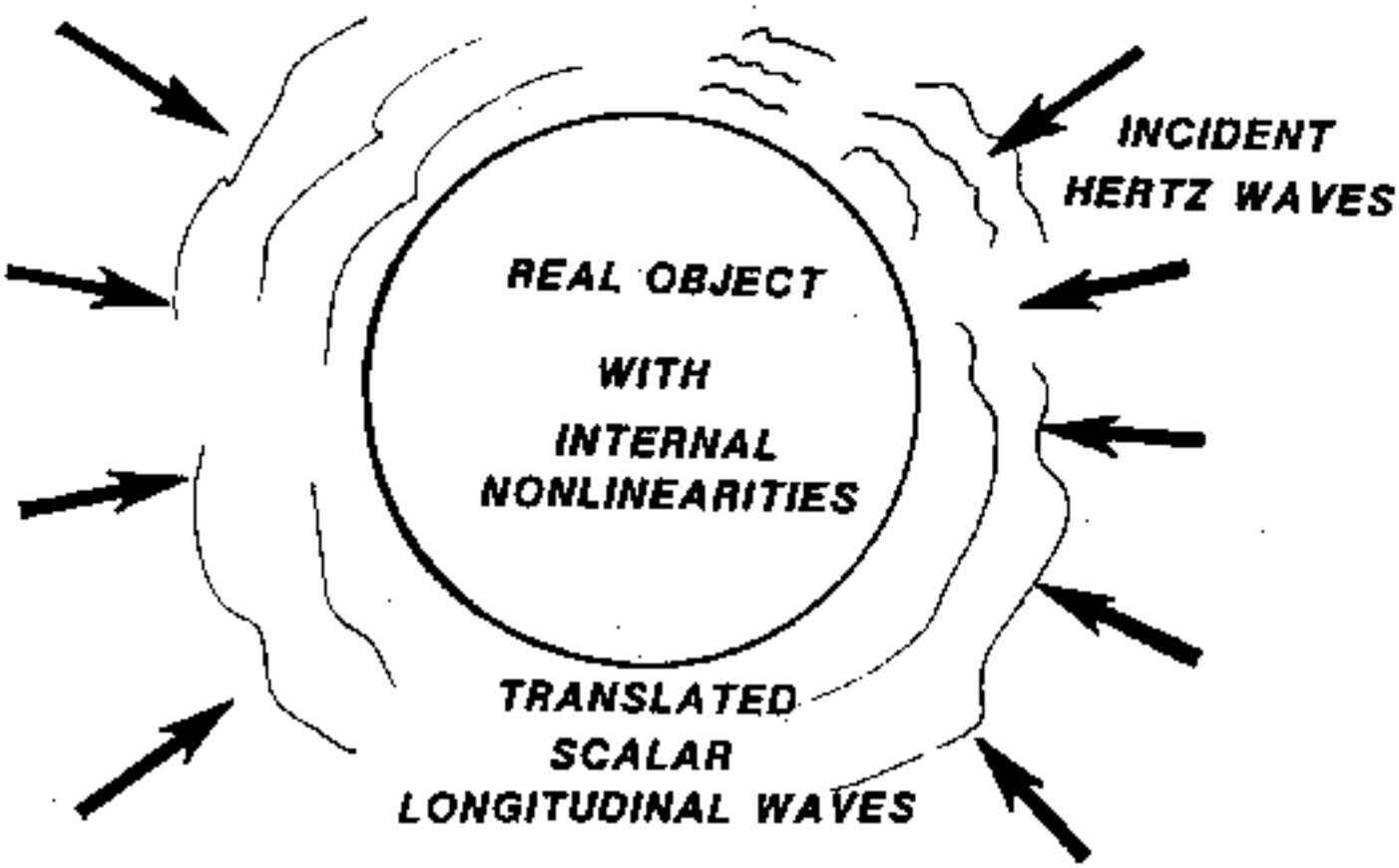

We examine now an object with temperature, that is, a normal object continually absorbing ordinary EM radiation and continually emitting EM radiation.

The object has a small fraction of its incident energy expressed as a scalar aura around it, because of translation. Note that normal detectors will not detect this aura, but special two-stage interferometric detectors will detect it. Also note that the object replenishes- the ordinary radiation flow by its translation of some of its incident scalar radiation into the normal or "transverse" (so-called) radiation.

The entire internal pattern -- all interactions and functions of the body -- are precisely present in its scalar aura, down to the finest detail. This makes an x-ray pale by comparison.

True psychics actually use the nonlinearity of their nervous systems (note the avalanche ion discharges across dendrite gaps) and the interferometric aspects (note two cerebral hemispheres, connected by a corpus callosum) to detect the scalar aura. This is a physical fact and not esoteric delusion. To control this, however, is normally as difficult as learning to walk a high wire and do acrobatics on it. There are not many high wire walkers in the world, but it certainly is a skill within human control capability and purview.

T. Galen Hieronymus was absolutely correct when he stated that the entire internal working pattern of an object is radiated by that object in terms of an extraordinary energy, which he called "eloptic" energy. It is actually translated scalar wave energy, and entirely consistent with present EM theory when the glaring errors in its foundations are corrected.

Shortly I hope we will see instrumentation which can directly examine the scalar aura in the finest detail, seeing every illness, and simply setting dials to radiate the body with gentle, harmless scalar waxes to directly correct illnesses.

Next Slide

The Tom Bearden Website

SLIDE 47.

VIRTUAL FLUX AND MAGNETIC FIELD [LINEAR CASE]

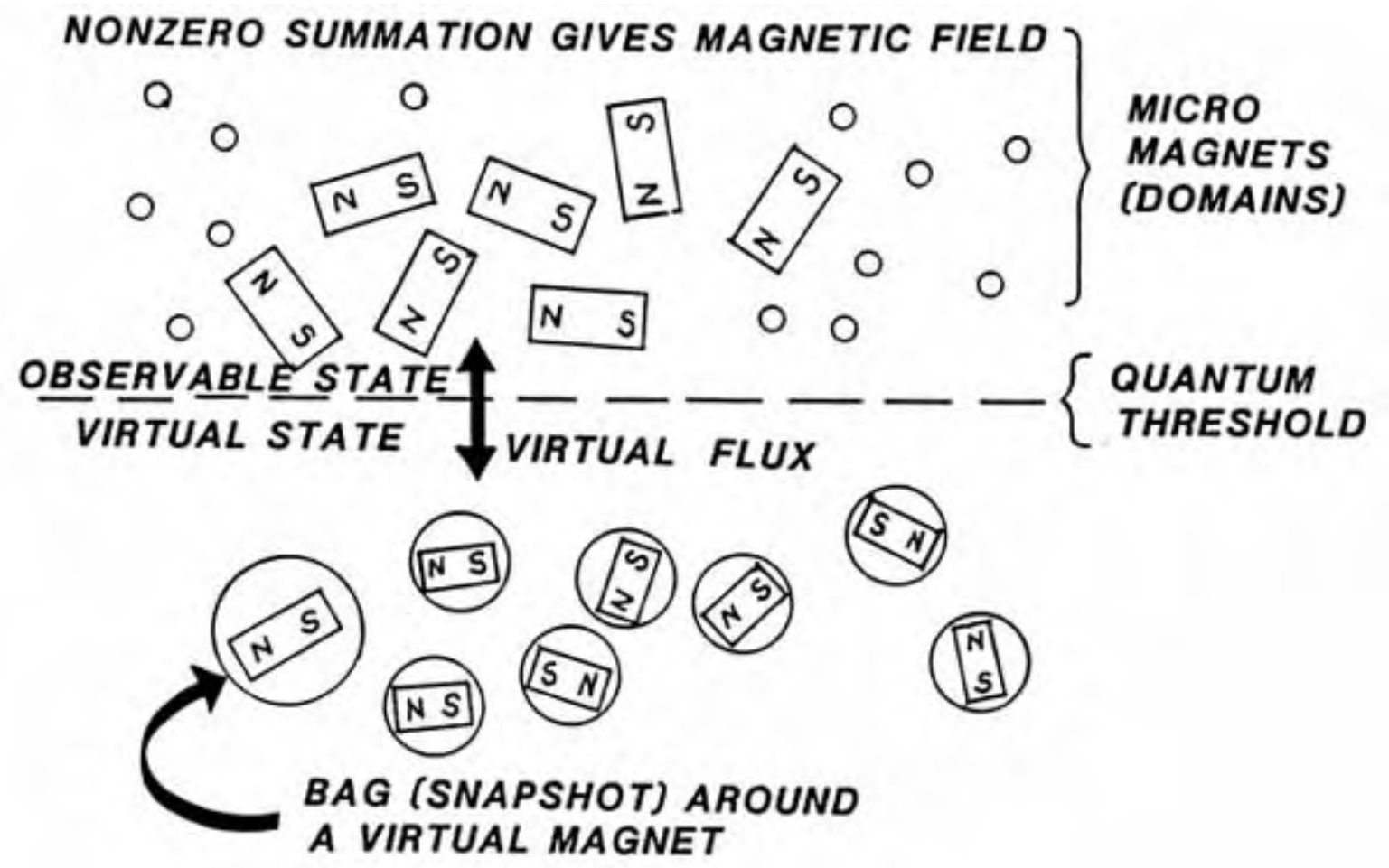

Briefly, let's look at some nice things we can do with magnetism. Specifically, let's find out how to make magnetic monopoles and use them to do things in the laboratory. This again has been done in a laboratory on the North American continent.

First, about all the present science can tell us about a magnet is that "a big magnet is made of littler magnets." And if we examine one of the smaller magnets, it's made of even smaller magnets. This is like saying big dirt piles are made of smaller dirt piles, and that explains what dirt is.

However, let's use that with our knowledge of the virtual flux vacuum.

In this slide, we show diagrammatically the situation for a common magnet. Note that domains in the magnetic material are themselves little magnets, and their alignment and vector summation determine whether or not there's said to be a magnetic field present. Nonzero summation states that there's a resultant magnetic vector, and hence an external magnetic field. Zero summation states there's no external nonzero resultant, hence no external magnetic field.

Actually, there's an external scalar magnetic potential field, even when the external vector magnetic field is zero. The substructure is still there.

If we pursue this "big magnets are composed of smaller magnets," eventually we reach the quantum threshold, and we have a substructure of virtual, subquantal magnets in vacuum, in the virtual particle flux. At least we conceive each little virtual particle as if it were spinning, and hence a little magnet.

We put a conceptual bag around each little virtual magnet.

In a linear situation, the north pole is as strong as the south pole, and so just outside the bag, the poles cancel or appear zero. Since the virtual bag appears to be zero length to an external macro observer, the poles seem to be directly superposed on top of each other, yielding no pole at all to the observer.

However, you and I now know that both poles are still in there, in the virtual substructure, and we certainly have remaining with us a translated scalar magnetic field.

There's a virtual flux to and from each observable particle of charged mass in the observable state as shown, but this flux is now scalar in virtual magnets, except for nonlinearities in the structures

above the quantum level. Thus accelerated portions -- atoms with electrons in whirling orbit, spinning electrons, protons, etc. -- possess nonzero ordinary vector magnetic fields by translation. Again, notice the successive interlocking levels of reality, all the way from deep in the virtual state into interlocking levels in observable state.

Next Slide

The Tom Bearden Website

SLIDE 48.

PRODUCING MAGNETIC MONOPOLES

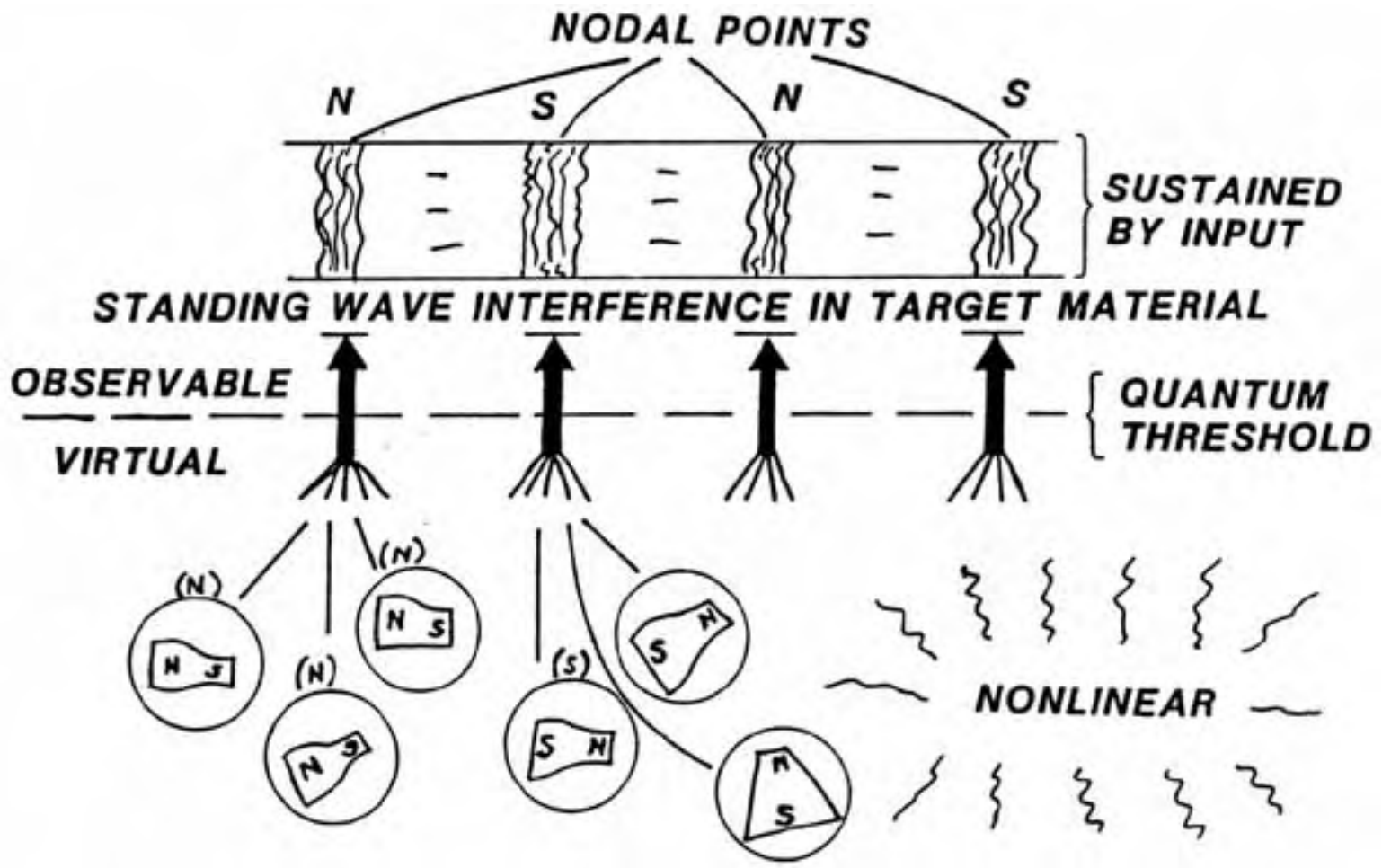

Now let us look at a non-linear case of the same sort of thing. Now the bags are still around the little virtual magnets, but they are nonlinear. This means that, to an observer outside the bag, one pole seems bigger or more powerful than the other. In other words, to the quantum observer, this bag appears to be a magnetic monopole at a point.

In the flux still on and off each observable spinning charged mass, we now have a steady component of "monopoles". If we have a standing scalar wave present in a physical material in which the nonlinearity exists -- and the scalar waves can even be PRODUCING that nonlinearity -- we will have nodes

available at which the monopoles will congregate and emerge and interact.

North monopoles will congregate at one node, while south monopoles will congregate at the next, and so on in alternating fashion.

That means that, at anyone node, monopoles of the same kind are steadily being "deposited" in the material. These monopoles strongly repel each other, and so the material at that node is increasingly stressed in a tensile fashion.

Eventually the material will be torn apart at the node,
stress relieving the situation. Movement of the material will release the nonlinear condition, stopping monopole production and deposit. However, at a break node, the same kind of magnetic pole will appear on each side of the break.

That is, the breaks will be N-N, S-S, N-N, S-S, etc.

An ordinary magnetic does not do that when it breaks. Instead, it breaks N-S, N-S, etc.

Next Slide

The Tom Bearden Website

SLIDE 49.

BREAKING METAL WITH MAGNETIC MONOPOLES

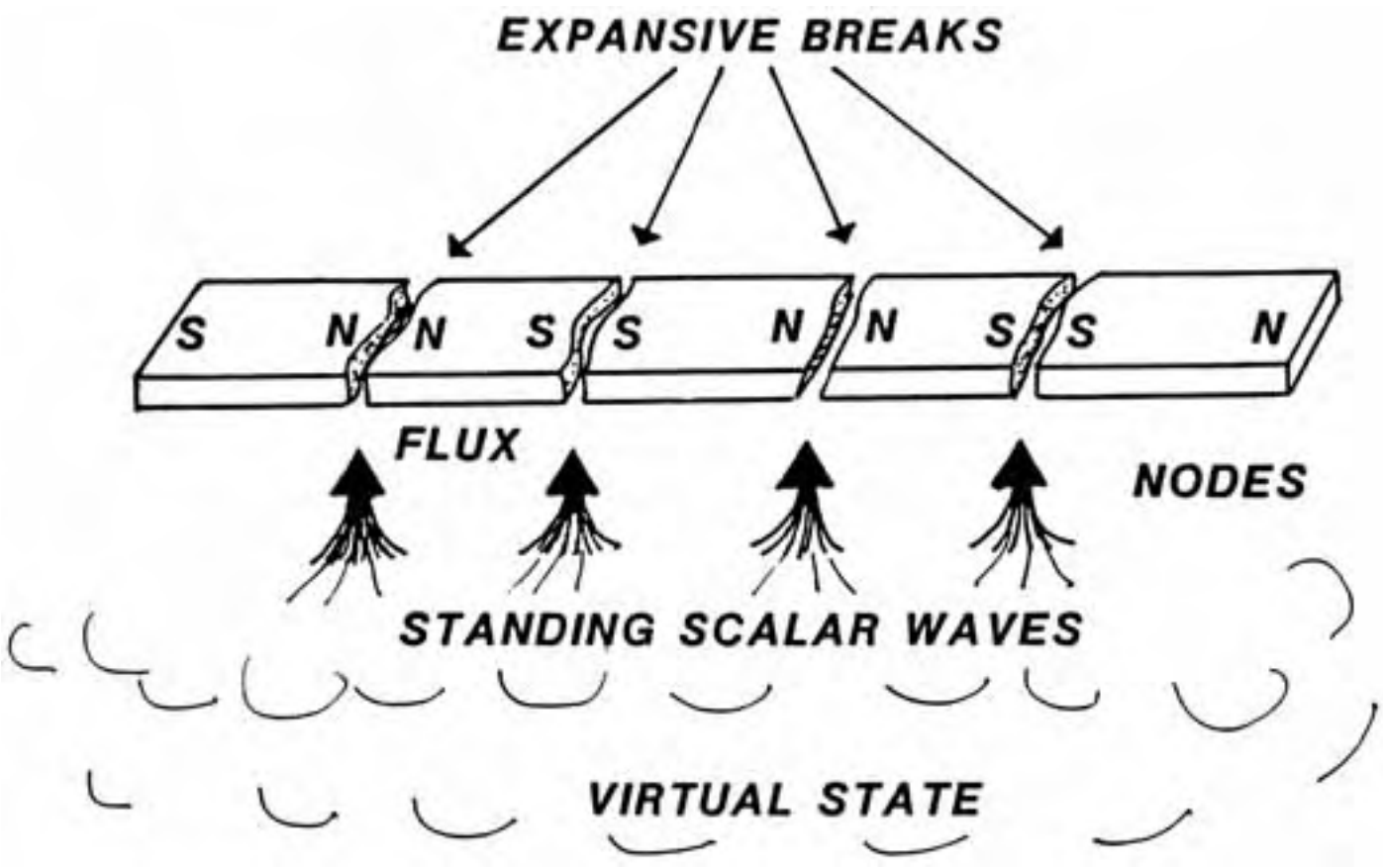

Again, metal has been broken in a North American laboratory utilizing the production and deposit of magnetic monopoles in this fashion.

On this slide we show what was done.

An ordinary bar of steel was exposed to standing scalar waves in a nonlinear situation, depositing magnetic monopoles at the wave nodal points in the metal bar. The breaks occurred as shown on this slide.

Much of what I am presenting is based on certain experiments accomplished in experimental laboratories here and abroad. Most of the mechanisms have actually been produced in the lab. However, these are proprietary labs and I cannot violate trust and

reveal the precise construction details utilized. In some cases I have not seen the precise constructions, but only the direct results.

But ironically, the production of magnetic monopoles -- which has fiercely resisted the normal scientific approach -- yields readily to the new approach.

Next Slide

[The Tom Bearden Website]

SLIDE 50.

CREATING AN INERTIAL FIELD (ANTIGRAVITY)

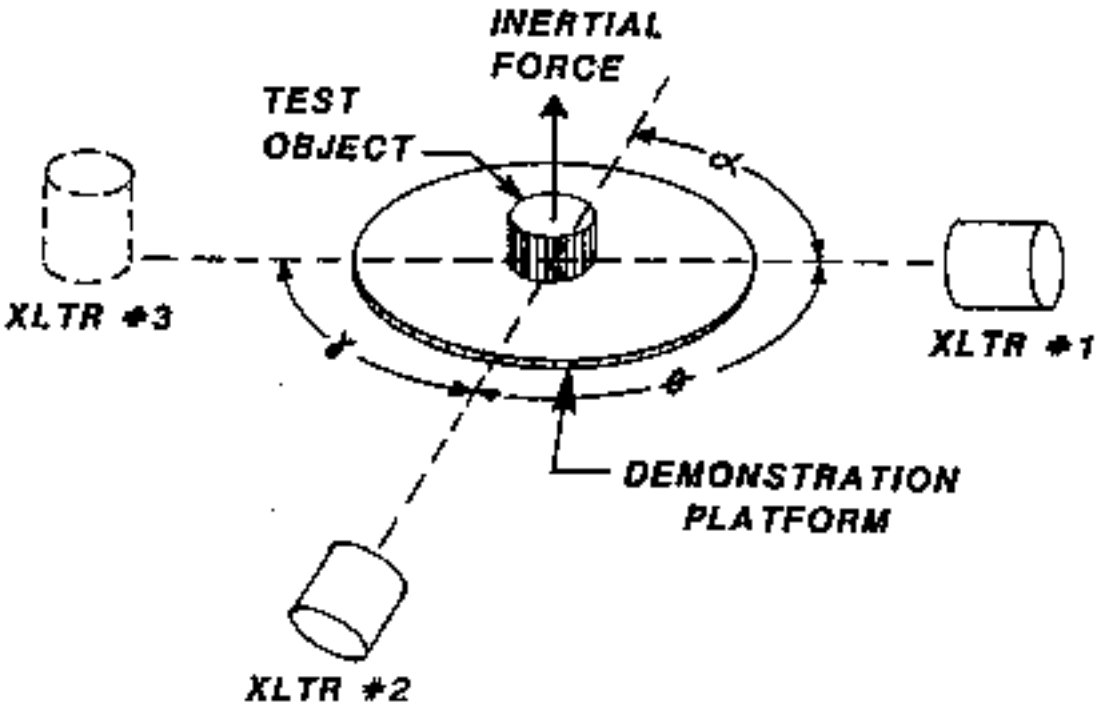

We now show schematically how to produce an inertial field, or antigravity. Also an inertial space drive can be produced in this manner.

This again has been done in a North American laboratory. In fact, inertial fields have been produced in more than one lab here in North America.

In the setup shown here, three translator/ transmitter projectors are used and oriented so as to give three-dimensional interference, or interference along all three spatial axes.

By controlling the substructures of the three projectors all together, one can control the precise phasing in all substructures, with respect to a common time reference.

By this means, a unilateral force can be created of each and every charged mass particle (that is, on each proton) in the nucleus.

Since we know that the neutrons and protons in a nucleus of an atom are continually interchanging, one into the other, back and forth, all of the nucleons can be treated as "diffuse protons" for mass purposes, and scalar wave interaction purposes.

Thus if we have the correct pattern to affect protons, we can control the phases of the substructure waves of the projectors so as to produce unilateral, parallel forces on and of each spinning proton in the nucleus.

This means we can produce unilateral thrust in an object exposed to the triad interference of the projectors.

In short, this produces antigravity. If sufficient force is produced, the test object in the interference zone simply lifts itself off against earth gravity. This has been done in North America.

If we phase the projectors so that counterbalancing forces are produced on each proton, we can either make the proton "lighter" inertially or "heavier."

In fact, we could "freeze" a common pistol so that it could not be moved and its trigger could not be pulled, simply by sufficiently increasing its inertia. This was done in experimental demonstrations in Toronto, Canada in 1969, and witnessed by the Chief of the Homicide Squad of the Toronto police. It was his pistol that was frozen for the demonstration.

If the projectors themselves are on board a space capsule, for example, they can produce such a unilateral thrust in and of a central mass or disc attached to the of the craft. By this means, an inertial spacedrive can be built.

Next Slide

[The Tom Bearden Website]

SLIDE 51.

EFFECTS ON HUMANS

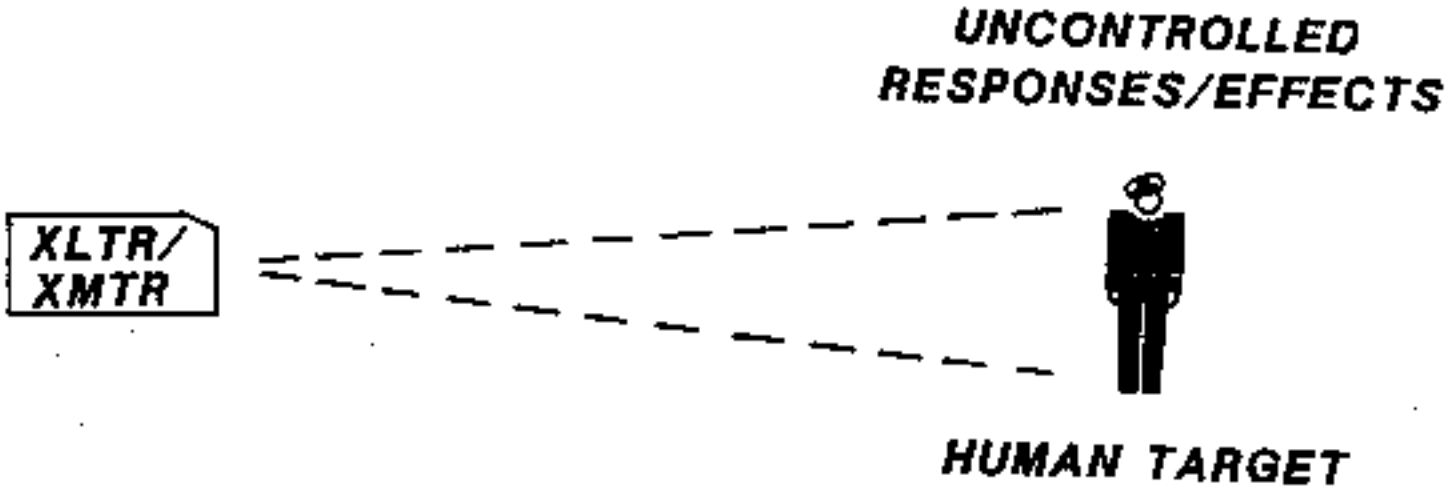

Now let us look at some of the effects on humans, when radiated with a true scalar wave beam from a translator/transmitter.

First, the human nervous system is highly nonlinear. Essentially, across billions of synapses, sudden ion discharges -- analogous to spark discharges -- are continually or periodically occurring. Brain waves, for example, are not waves along wires; instead, they are waves of avalanche discharges across tremendous numbers of nerve cell gaps.

The central nervous system is thus highly nonlinear, and the gap firings of the nerve endings act as translators.

These translators partially translate incident scalar waves, so that additional transverse matter waves -- or ordinary energy inputs -- occur in the ion discharges.

Thus additional energy is being added to the nervous system by incident scalar waves.

Many long-term effects of the environment on the body are gradually kindled in this fashion, even

over a period of years.

For a stronger dosage of scalar waves, the nervous system experiences "jamming" of its signals. This leads to four basic "noise jamming" effects.

If a small dose is absorbed, the interference is slight. One feels as if one had taken a whiff of anaesthesia -- an unreal, dreamy feeling.

If a slightly larger dose is absorbed, the interference is moderate. Now the single channel system -- the motor system -- goes, and the individual is paralyzed. Mentally he is barely conscious, in a sort of hypnogogic, waking dream state. Any tendency toward epileptic seizure or other nervous disorder may surface here, as may heart palpitations or even heart failure.

For a heavier dosage yet, the interference is now strong. Now the multiple systems start failing. Consciousness is lost and the individual is in a deep coma. In addition, seizures and convulsions, and loss of control of some body functions, may occur. The autonomic nervous system is keeping the heart beating with difficulty and keeping the body gasping for breath.

For a very strong dosage, the entire nervous system fails and death results almost immediately. This is quite similar to the effects of nerve gas.

These are the four major symptoms of scalar wave radiation of the body and translating absorption by the nervous system in an uncoordinated fashion.

Next Slide

The Tom Bearden Website

TOWARDS A NEW ELECTROMAGNETICS
PART 4: VECTORS AND MECHANISMS CLARIFIED

SLIDE 52.

INITIATING SPECIFIC BIOLOGICAL EFFECTS

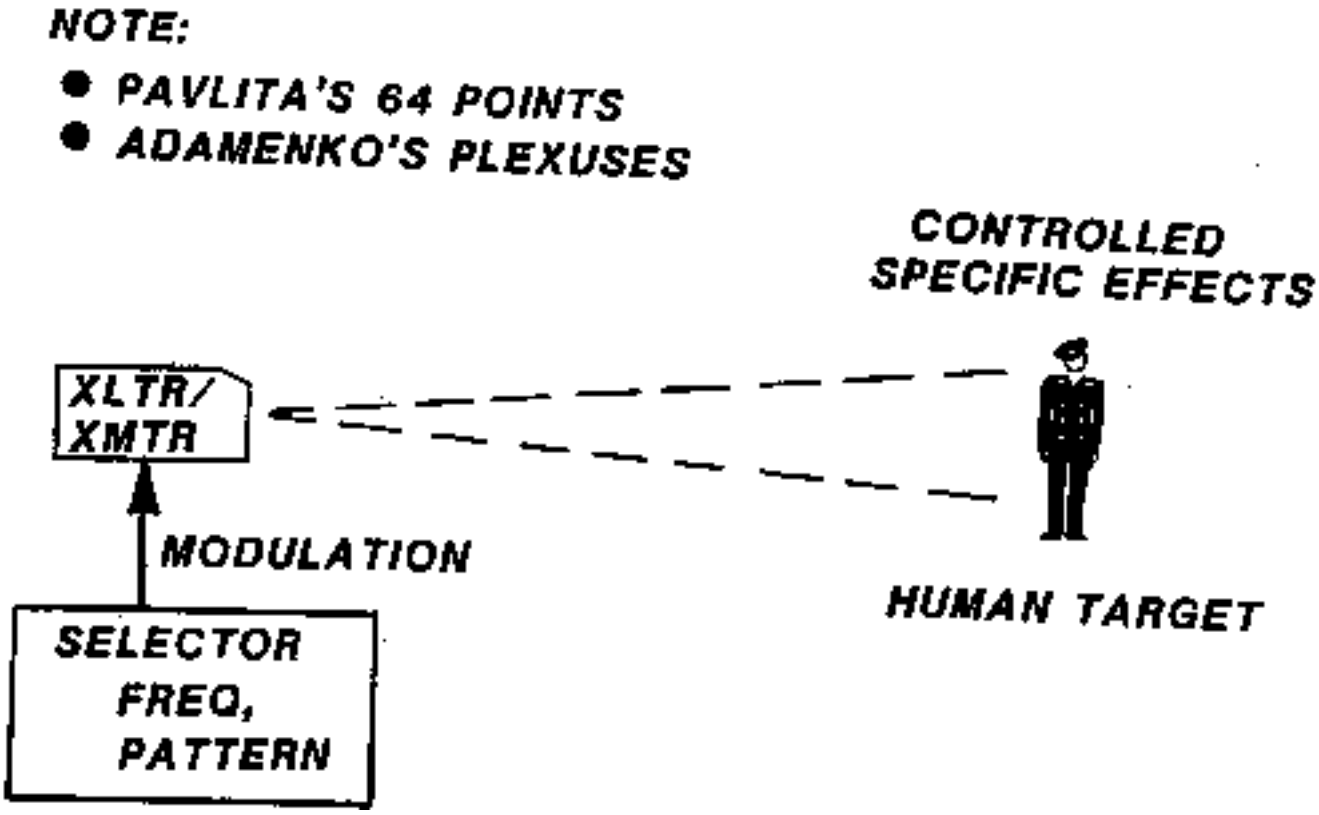

If we now add precisely patterned modulations to the substructure waves of the scalar zero vector beam, we can induce deliberate patterns in the dosage absorbed by a biological system.

As Kaznacheyev's experiments showed, any death or disease pattern can be induced upon an electromagnetic carrier -- specifically, upon the near-ultraviolet as an example. Some of his experiments were duplicated at the University of Marburg in West Germany, utilizing infrared carriers. These patterns can be dumped into cell cultures, eventually kindling the pattern of death or disease in the target cells.

The same can be done to a human from an external source. The major entry point is the acupuncture system, which reacts to scalar waves and transfers them to the nervous system for translation.

Pavlita, Czechoslovakian engineer, has built "psychotronic generators" for over 30 years that affect the human body. Adamenko, Soviet physicist, found that the acupuncture points formed groupings or plexuses that were frequency sensitive. In other words, certain frequency bands affect one plexus more than others. Further, these acupuncture points are known to be connected to effects produced at remote locations in the body.

Pavlita stated he had found 64 different sensitive "points" on the body, and had succeeded in building a generator for each. If by his points he meant Adamenko's plexuses, then frequency patterns can be created that affect certain acupuncture groupings -- and thereby certain specific body locations and effects -- more than others.

It thus appears reasonable that, by placing the proper frequency pattern in the modulations of the substructure waves feeding into the translator/ transmitter, the scalar ray or beam can be made highly selective as to body part affected and the effect generated or kindled in the body.

By this means, specifically tailored attacks on the body can be created.

Strong emotions such as sheer terror, overpowering rage, blind panic, etc. can be induced. Or physical effects such as epileptic seizure, loss of control of internal functions, loss of muscular control, severe weakness, specific failure of an individual organ such as the heart or liver, or blackouts and comas can be induced. In addition, patterns for specific toxins and diseases can be induced. With a strong absorption, these changes can be effected quickly. Imagine bubonic plague developing in 30 seconds, for example, or the effects of a cobra bite developing in 10 seconds.

If the individual is placed in crossed interference beams (that is, in the interference zone of a scalar interferometer), strong effects can be produced essentially instantly, including instantaneous death.

Of course BENEFICIAL effects can also be accomplished. As instrumentation is developed, one should be able to scan the aura, do a computerized

readout to show the different medical problems either developed or developing in the body, have the computer compose a "cancellation or offsetting pattern," and radiate the body with a totally beneficial pattern, customized for that particular condition at that particular time. One should be able to quickly cure cancers and leukemias, for example, even of the brain and of the bone marrow. One may even be able to quickly reverse the effects of aging; at least there is no foreseeable reason why it should not be possible.

The new technology is a very powerful tool, and it can be used for either good or bad, depending upon the intent of the developer and the user.

Next Slide

The Tom Bearden Website

SLIDE 53.

GROUND-TO-AIR USE

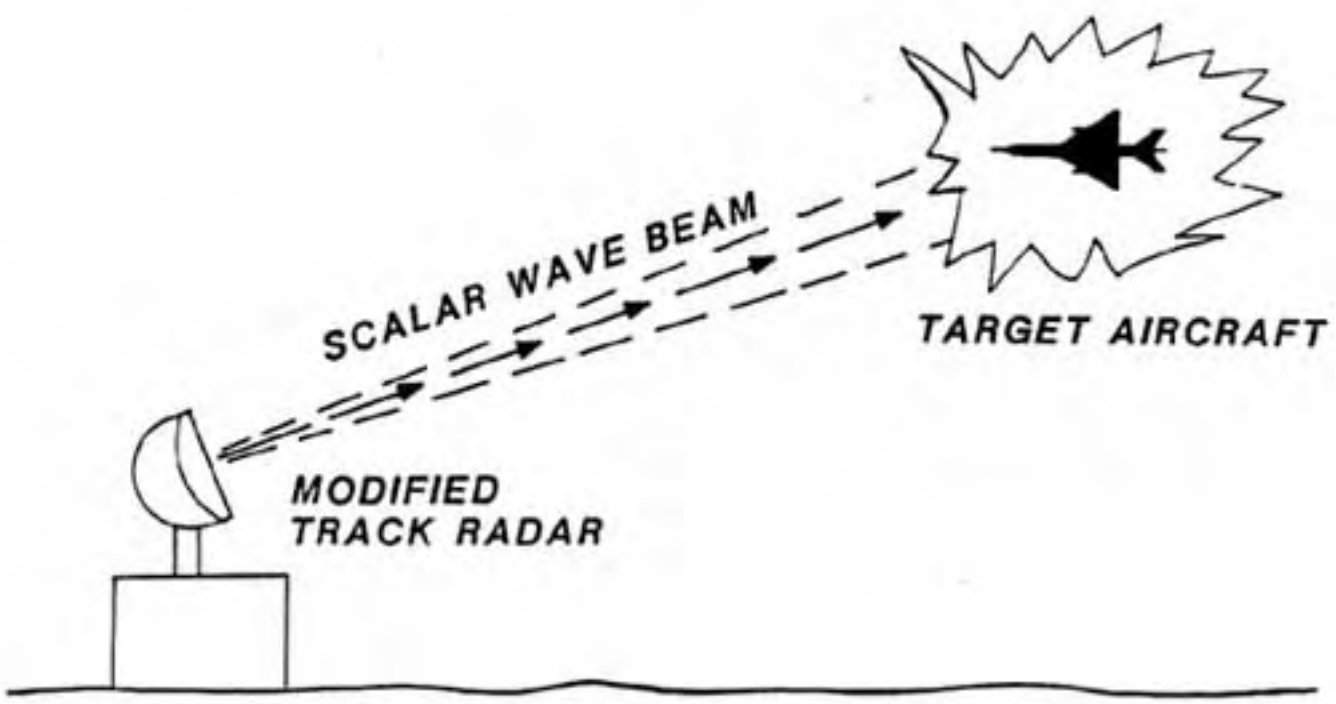

Here we show another use of the scalar beam technology already developed by foreign powers.

A modified track radar -- either continuous wave or pulsed -- transmits a scalar wave beam. It radiates an incoming hostile aircraft, keeping the beam on it, and kindling energy in the nonlinear electronic circuits of the aircraft by translation. Communications, navigation systems, avionics systems, electronic fuze systems, ignition and control systems, airborne radar, missile armament electronics, etc. are all vulnerable to this translation kindling of internally jamming energy from the incident scalar beam.

The electronics can be knocked out and the aircraft knocked down.

The pilot himself is also vulnerable because of his highly nonlinear central nervous system.

Some or all of the eight F-111's mysteriously

lost in
Vietnam may have been bagged by modified SA-2 FANSONG radars, using this effect.

Next Slide

The Tom Bearden Website

SLIDE 54.

TACTICAL AIR-TO-GROUND USAGE

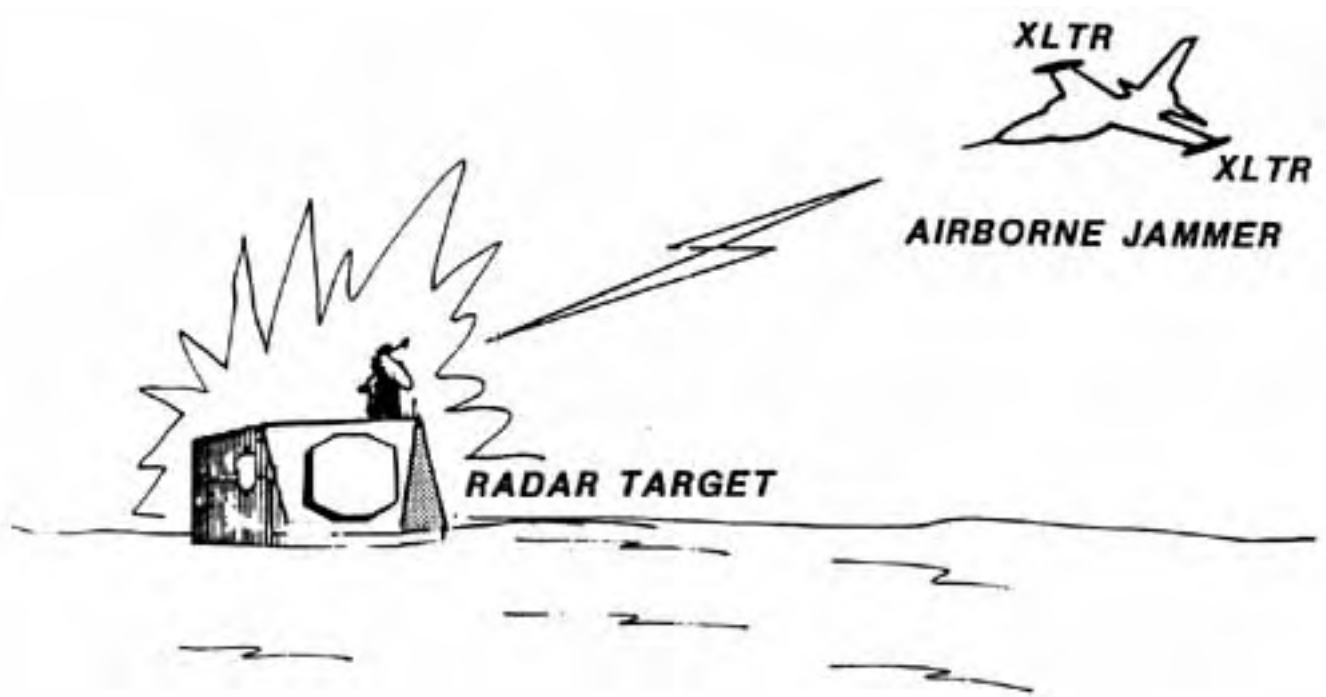

As shown on this slide, the technology is also usable from aircraft against ground targets, particularly ground-based radars and communications systems.

As shown, the aircraft has a modified jammer, able to emit a beam of scalar energy from one or more translator/transmitters.

By simply training a beam on the radar, eventually the radar can be knocked out. That is the simplest use.

A more sophisticated usage is provided by more than one translator/transmitter, acting as a scalar interferometer.

In this mode, each translator/transmitter emits multiple scalar carrier frequencies. Two Fourier expansions are established, so that a three dimensional "ball" or sphere of interference-zone energy is established. By pulsing or phasing, this ball is moved to strike the location of the radar, delivering a large burst of energy to it and knocking it out. Alternatively,

the energy bottle is "dumped" when it reaches the targeted radar or its near vicinity.

A still better way is to fire one Fourier scalar pattern directly at the target radar, then fire a second pulse faster so that it overtakes the first directly upon the target. (The ensemble of such a pattern acts as a soliton, and its velocity is controllable by controlling the amplitude of the pattern generated).

When the second scalar overtakes the first, a sharp interference is formed, with a fast energy bottle, which is then nonlinearly dumped in microseconds or milliseconds. In this fashion, all the energy put out by the jammer is delivered directly upon and into the target in one sharp EMP pulse, much like that from a small nuclear explosion. The target is destroyed.

Note that such a weapon can be utilized against tanks, vehicles, explosives, missiles, ammunition, bridges (the airblast), bunkers (the blast can occur INSIDE the enclosure), ships, planes, personnel, and targets of varied types.

The Soviets have had such secret weapons for years.

One additional country has them also.

Next Slide

The Tom Bearden Website

SLIDE 55.

INTEGRATED WEAPONS DISPLAY (MODIFIED JAMMER)

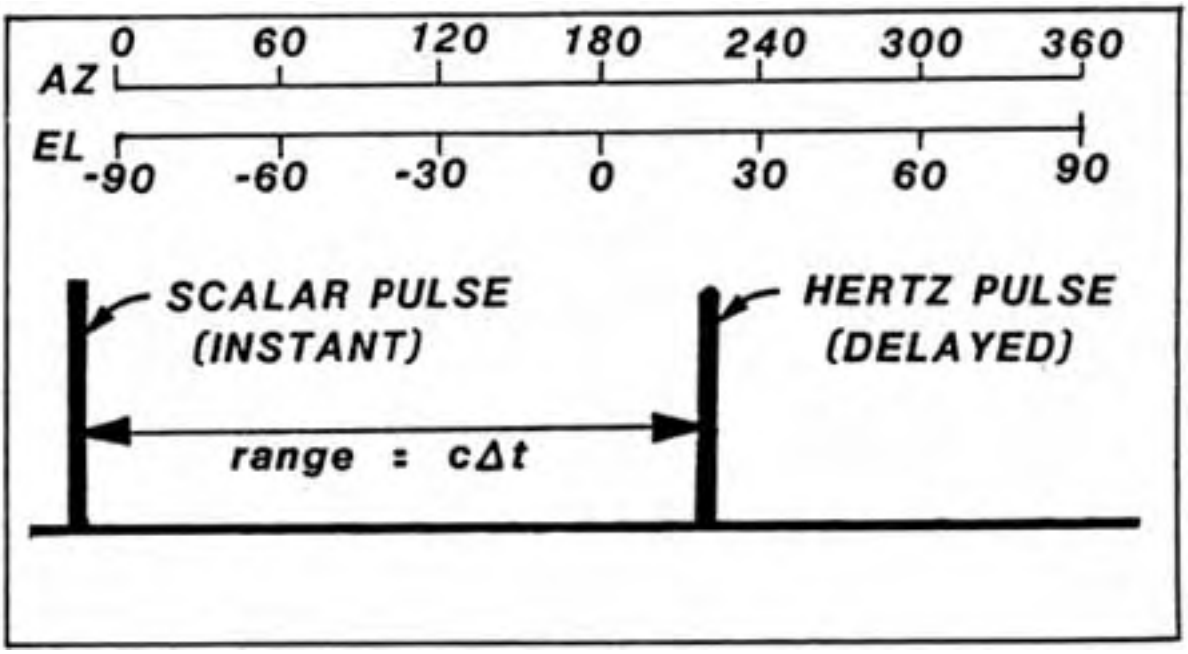

Here we show diagrammatically what a modified Soviet integrated weapons display for a modified jammer might be, to employ scalar interferometer weaponry.

As the "main bang" is emerging from the antenna of the target radar on the ground, the phi-field from it reaches to infinity, including through the aircraft with a finite magnitude. In the a1rcraft, two channels act in interferometer fashion as a scalar detector for phi-dot. The main bang creation (phi-dot) is detected, and displayed as the leftmost pulse.

At that time, a computer time-base starts clocking off microseconds.

At some time later, the third channel, acting as a normal receiver, receives the ordinary "Hertz" pulse from the radar, which has traveled to the aircraft at the

speed of light.

The computer converts elapsed time between the scalar pulse and the Hertz pulse to range.

Azimuth and elevation angle to the radar are obtained by normal angle tracking.

At this time, the computer has the exact coordinates of the radar, allowing for motion of the aircraft during the lapse time.

The computer switches the interferometer into transmit mode, and arranges amplitude patterns to target the radar.

It fires the first scalar pulse, then fires the second so as to create the full EMP directly upon the target.

The EMP flash occurs, destroying the radar.

At that time, another target can be processed.

In a more advanced weapon, scanning may be used to detect, locate, target, and engage multiple targets, including incoming air-to-air and surface-to-air missiles, one after another.

The same weapon is usable against a variety of aerial and ground based targets.

The major weapon is the electronic emitter, not a missile or ordinary ordnance.

Hordes of such special "jammer aircraft" now become a potent force on the battlefield, destroying all before them with annihilating ray weapons.

Star war is a reality now.

The High Frontier is already seriously obsolete.

Our entire defense establishment is completely vulnerable to these weapons at present, for we have not developed countermeasures or defenses.

Next Slide

The Tom Bearden Website

TOWARDS A NEW ELECTROMAGNETICS
PART 4: VECTORS AND MECHANISMS CLARIFIED

SLIDE 56

RADAR INVISIBILITY

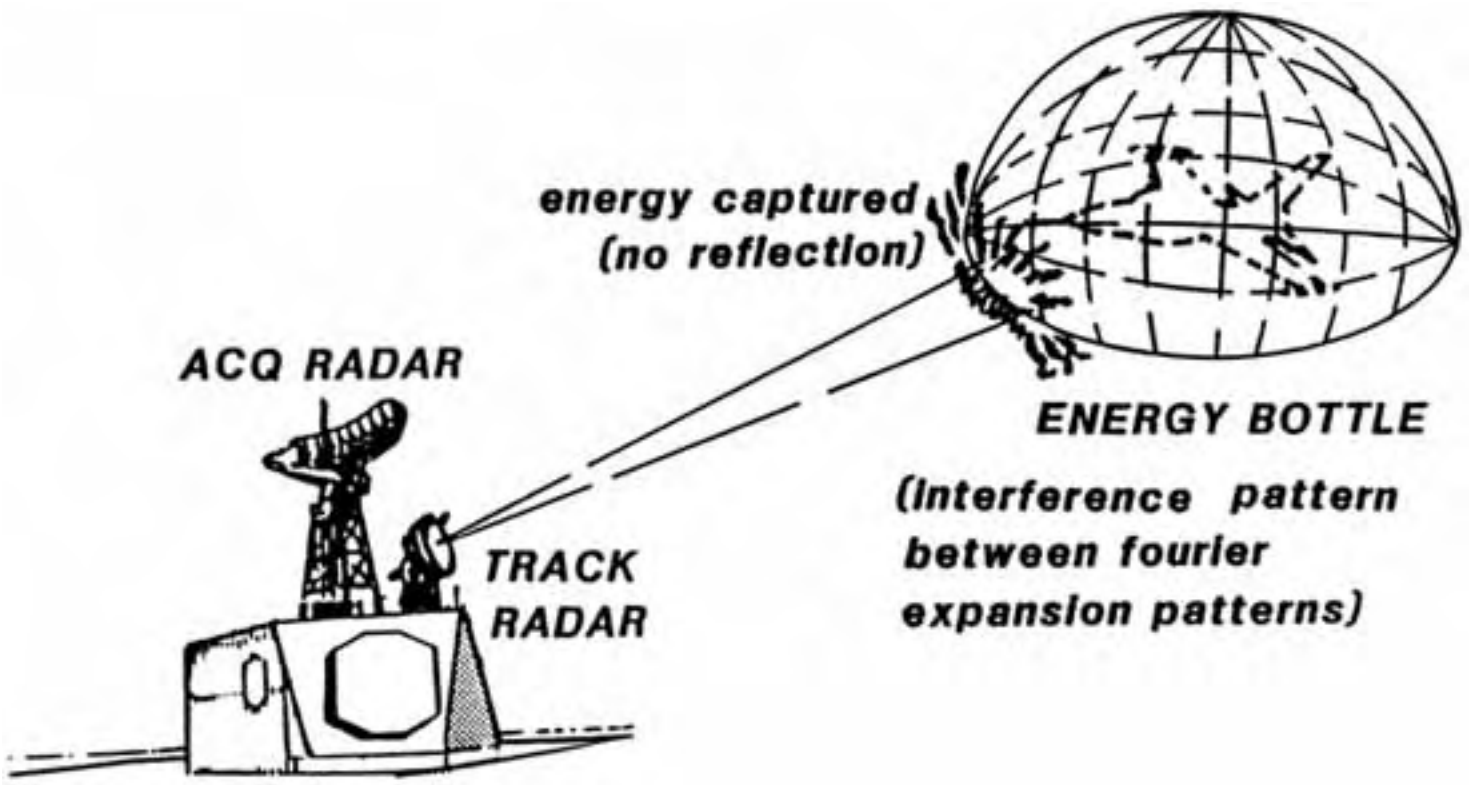

On this slide we show another effect which can be obtained. We can make an airplane invisible to ordinary radar.

Imagine now the same "jammer" type aircraft with three channels, one for use in scalar interferometry and one as an ordinary channel.

This time, a Fourier interference pattern is established around the aircraft, so this establishes an "energy bottle" around the plane. We specifically arrange this bottle in the frequency band of the hostile radar we wish to avoid. For multiple bands, we establish multiple bottles -- this just requires more

frequencies or more translator/transmitters.

The beam from the ground radar now strikes the energy bottle, and its energy enters and is trapped in the bottle grids. Since the bottle is leaky, the incident energy gradually disperses and "leaks" out all around, with very little emerging energy.

The ground radar receives no return pulse or reflection.

Therefore it sees no target.

The same interferometer system is usable both in this defensive screen fashion and in the attack fashion previously discussed.

Use of this system has been demonstrated internationally.

An energy bottle has been created in a North American laboratory as well.

Next Slide

The Tom Bearden Website

SLIDE 57.

NETWORK OF VIRTUAL TRANSMITTERS

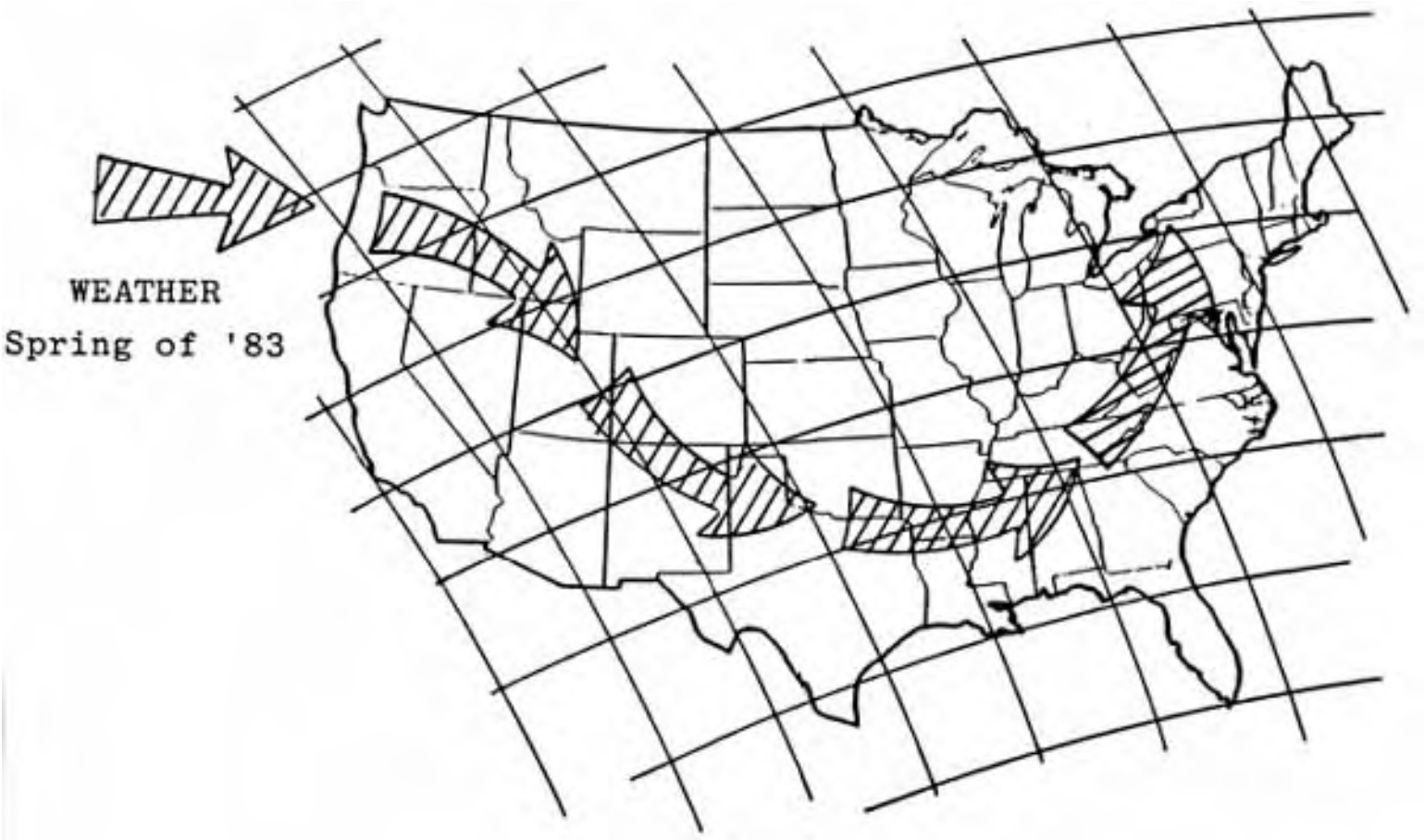

As is well-known, for years the Soviets have blanketed the world with large, powerful transmitter signals in the communications band, referred to as the "Woodpecker" signals because of the staccato noise the chirped signals make to the ear. The carriers have been modulated with known harmful bioactive ELF frequencies. At least some effects have been noted on humans from these signals, and other human effects are suspected but not proven.

In addition, evidence exists that such transmitters, utilized in the scalar transmission mode, may have been used to cause earthquakes and to control the weather. High altitude bursts off the coast of the Eastern United States and Canada, over

Timmons, Ontario, Canada, and off the coast from St. Petersburg, Florida have occurred also.

Mysterious "blackouts" of U. S .satellites -- and British satellites -- have occurred. These would be difficult to explain as the result of illumination from a ground laser, but easily explained as the result of illumination from a ground-based scalar beam or scalar interferometer.

Strange patterns of micro sky quakes and micro earthquakes occurred at various locations throughout the U.S. just before and shortly after the death of Leonid Brezhnev. These strongly appear to be connected with the adjustment of a scalar interference pattern -- a gigantic "energy bottle" across North America, as shown on this slide.

Shortly after this suspected adjustment and alignment, the underground net in the U.S. detected the emergence of numerous ELF-modulated signal carriers throughout the U.S., generally utilizing carriers in the vicinity of 40 MHz. Locations of the apparent transmitters were such places as Atlanta, North Georgia, St. Petersburg, Florida; Mississippi; Alabama; in the vicinity of Washington, D.C.; near Boston; around the Great Lakes; Michigan; in the Pacific Northwest (Washington and Oregon); and in both northern and southern California.

Researchers knowledgeable of the Soviet woodpecker signals and ELF modulations detected and reported these signals.

Physical effects were reported and correlated to the signals, including wakefulness at night, restlessness, fatigue, headaches, nausea, ringing in the ears, anxiety, disturbed dreams, etc.

What appears to have occurred is the adjustment and
alignment of a vast scalar interference pattern across the U.S. Recall that energy emerges in each grid, by phase interference between the composite substructure waves of the scalar beams.

Thus the Woodpecker "over-the-horizon radars," as accepted
by Western intelligence analysts, may have acquired a diabolical new strategic capability.

It is as if the Soviets had been permitted to build a vast network of transmitters directly on U.S. soil, for hostile employment against U.S. citizens.

Shortly after the net was aligned, a curious pattern of weather assaults on the U.S. began.

Storms assaulted California unceasingly. Then they roared across the Rockies, dipping sharply down to hit the Texas Panhandle, and bending northeast again to assault the South and the East.

The mighty jetstreams themselves were diverted and "kinked" into this looped, distorted pattern.

And the storms and floods assaulted the U.S. one after the other in this highly unusual fashion.

I maintain that the virtual transmitter net, just established by the Soviets and adjusted in on the U.S., was tested in the weather control mode. If so, it proved highly effective. Imagine what would have happened to the U.S. if it had been unleashed full force, and not just "gently tested."

And imagine what happens when disease, death, and nervous system disturbances are modulated upon these blanketing signals. The "transmitters" for the patterns are in each grid, all across the U.S.! And there are no physical transmitters there to destroy.

A counter is needed quickly. A simple one would consist of recording the signals in each grid zone, analyzing the substructure, reversing the signals and their structured patterns 180 degrees, and feeding the "cancellation signals" out in each area.

A great strategic Russian weapon of devastating power and potential is now operating directly on U.S. soil. The need for a crash countermeasures program is urgent.

In 1975 Brezhnev had introduced to the SALT talks the strange proposal that we should also consider outlawing the development of new weapons more frightful than the mind of man had ever imagined. We didn't know what the Russians were talking about. When we asked them later what weapons they meant, they referred vaguely to weapons of an electromagnetic nature.

The presentation I have just given you is part of what Brezhnev meant.

Next Slide

The Tom Bearden Website

SLIDE 58.

CONCLUSION

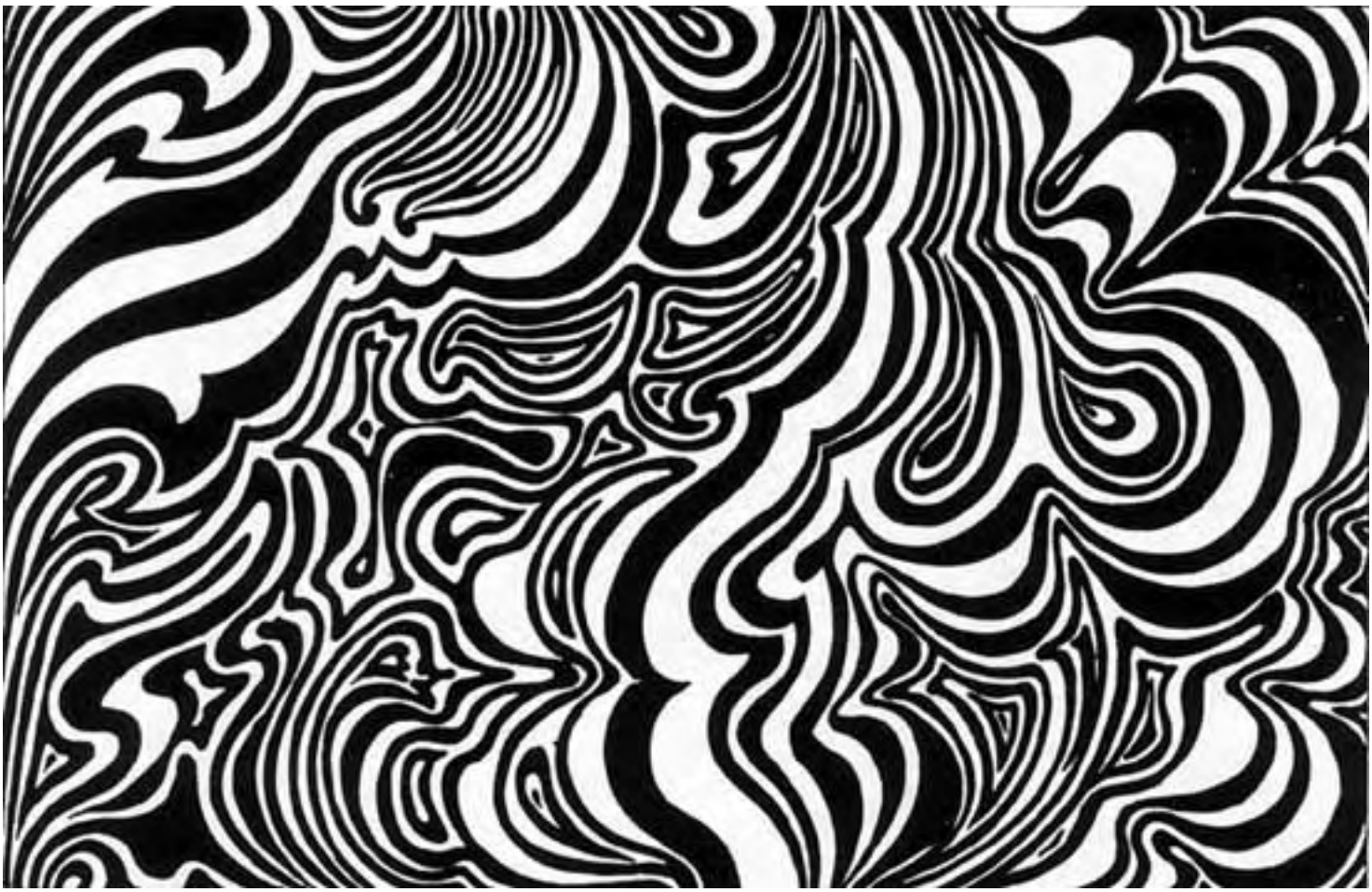

In conclusion, today I have released a number of powerful mechanisms that result from the new technological concepts. Many of these were originally discovered -- at least in rudimentary form -- by Nikola Tesla. In the West, the suppression of Tesla led to the suppression of these effects. And our knowledge of them went to the grave with Tesla.

After World War II, the Soviet Union mounted a massive campaign to obtain all the scientific literature of the West and thoroughly digest it. Great centers were set up, and thousands

of PhD's devoted to this purpose. Gradually they synthesized this technology from the errors in EM foundations they uncovered, and from obscure, ignored papers published in the orthodox Western scientific literature.

They rediscovered the technology of Tesla, Moray, and Rogers. And they have highly weaponized the effects, and adjusted and aligned the weapons upon us.

Now the radical movements are onto part of this technology. As late as about six months ago, one such group discovered how to build a translator and a scalar beam projector. Excitedly, they planned to build them the size of a large pistol, powered by a portable battery pack, and sell them to street criminals to kill or stop the police. They planned to get rich by this illicit means. At that time, a personal friend of mine, who moves in underground circles, was attempting to purchase one of the prototypes for my analysis. Fortunately, the inventor stepped into the beam of one of his devices and was almost killed. This frightened the group, and at least for now they have desisted. But be forewarned: this technology is coming down the pipe, and the police establishments in the West are in for the shock of their lives if the scientific community does not wake up and prepare defenses.

Again I urge my fellow colleagues to experiment vigorously with these new concepts, but build equipment for the benefit of man. Insect control, disease elimination and control -- both are noble purposes. Defense against the hostile use of such devices is also a fitting purpose.

We are in the final days, and the final technology is upon us. It is a stupendous tool for either good or bad, and assuredly it will be utilized for both means. I call attention once again to the fact that my ultimate purpose is to use this technology benevolently to achieve mind linkage, and elevate man from his present brutish state to the lofty state that is his destiny and his true God-nature.

For better or worse, Tesla technology is once again loose in the world, this time for good, and on a massive scale.

Let us prepare ourselves for a wild canoe ride, for the real white water lies just ahead.

Thank you for your attention, and good evening.

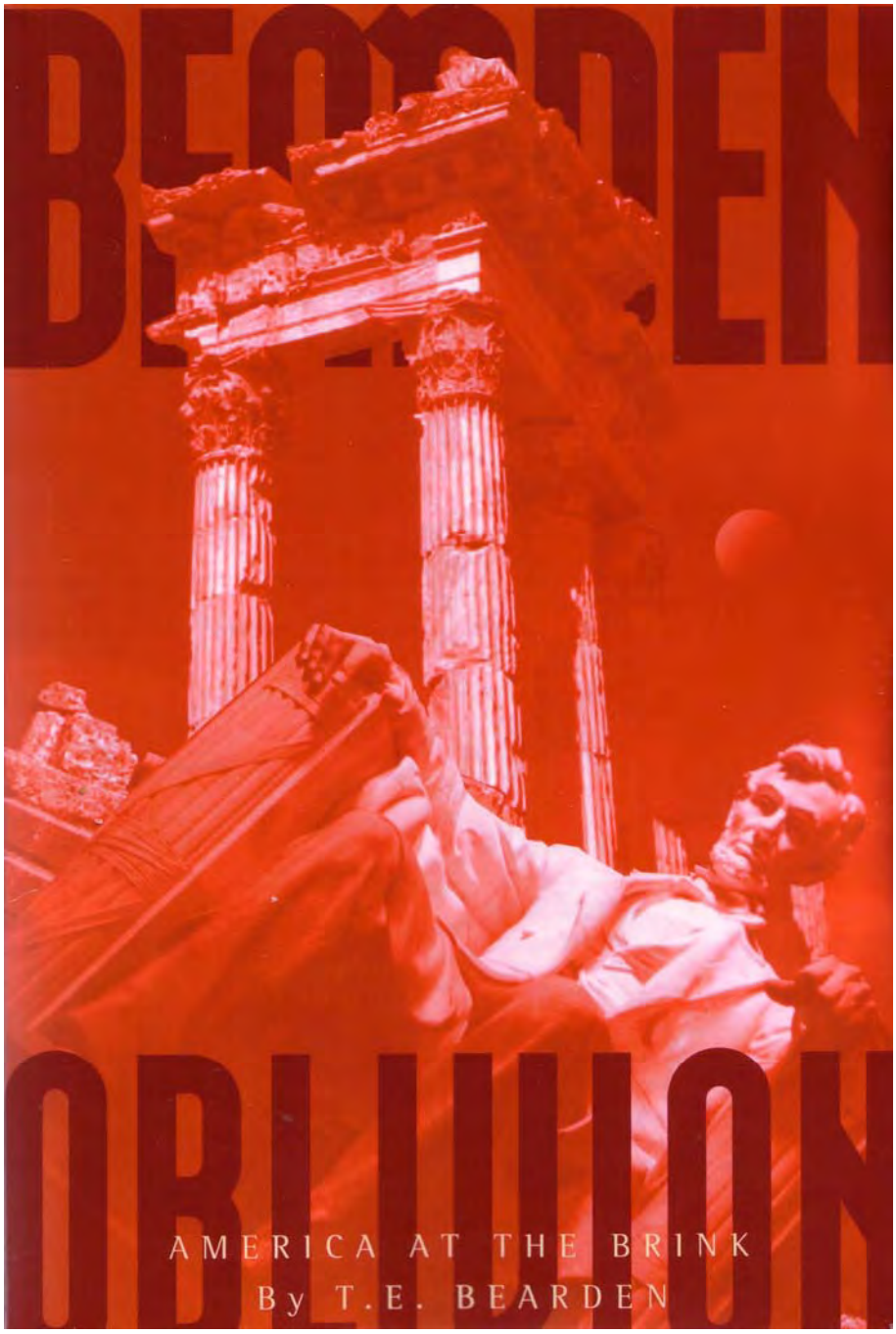
BEARDEN
OBLIVION
AMERICA AT THE BRINK
By T.E. BEARDEN

Table of Contents

Strategic Aspects of the Asymmetric War on the U.S.

Cold War Development of Scalar Interferometry 1
Incidents Where Outside Intervention Saved the United States..... 1
Yakuza Acquisition of Soviet Superweapons 2
Our Desperate Need to Correct the Seriously Flawed Classical
Electromagnetics (CEM) and Electrical Engineering (EE) Models..... 4
How the Notion of Transverse EM Waves in Space Originated..... 9
CEM and EE Still Erroneously Assume the Old Material Ether..... 10
Our Archaic and Flawed Situation in CEM/EE Today 11
Other Severe Foundations Errors in Our CEM/EE 14
The Development of Scalar Interferometry 14
The Yakuza Strategic Role in Our Present Terrorism Threat 15
Suppression of "Energy-from-the-Vacuum" Electrical Systems 16
Yakuza Production of Portable Scalar Interferometers.....21
Afghanistan, Iraq, Al Qaida, and Intended Muslim Jihad.....23
Our Analysts Missed the Yakuza's Key Role and Significant Aspects
of the Centrally-Coordinated KGB/FSB Strategic Plan 25
Coup de Grace: Strategic Strikes of Great Magnitude.....27
Summary of Some Weather Engineering and Other Capabilities.....30
U.S. Societal Polarizations Are Being Gradually Increased.....33
Insertions Far Exceeding Public Acknowledgment.....36
Modern Asymmetrical War: The Scorpion Duel.....37
Distant Military Actions: Necessary but Not Sufficient.....39
Asymmetric Warfare Simplified: An Overview.....40
A Few Questions to be Answered.....42
The Ease with which Terrorists Could Obtain WMDs.....45
A Simple but Lethal Strategic Strike with Horrific Casualties.....46

The True Cause of Gulf War Disease 47
Terrorism by Electromagnetic Biological Warfare 49
Unethical Release of U.S-Made BW Mycoplasma 52
No Effective Treatment for Mass Casualties.....55
Impact of Immune System Spreading.....59
Impact of Smallpox Release..... 61
The Grim Nuclear Problem 61
Harshness of the Terrible Decontamination Problem 64
Summary and Conclusion..... 67

Slide Briefing

PART A: Statement; Preface; Foreword; Summary 71
PART B: Background and Weapons Testing..... 131
PART C: Move Toward First Strategic Energetics Attack..... 163
PART D: Second and Third Attacks Scheduled and Aborted 191
PART E: Bioenergetics and Its Weaponization..... 209
PART F: Psychoenergetics and Its Weaponization 247
PART G: Conversion 271
PART H: APPENDIX - Problems in Western Science 289
PART I: APPENDIX - Vulnerability of Network-Centric Warfare..... 331

Strategic Aspects of the Asymmetric War on the U.S.

Including Scalar Electromagnetic Weapons and their Terrorist Uses

T. E. Bearden

First edition Oct. 13,2004

Drafted Sept. 11, 2004 on the Third Anniversary of 9/11/01

Revised and updated 23 April 2005

Cold War Development of Scalar Interferometry

Prior to 1990, the weather over North America was being steadily engineered by the KGB — particularly beginning on July 4, 1976 — using giant strategic scalar interferometers on site in Russia {i, ii, iii, iv}. From the beginning of the development program which started shortly after WW II, the KGB personally controlled the development of startling new Russian weapons under the Soviet energetics program {v, vi, vii}. That program was for the research and eventual development of highly advanced new superweapons more powerful than the atomic bomb.

The new superweapons were developed, produced, manned, and operated by the KGB itself, and were never placed in the hands of the regular Russian armed forces. Speaking to the Presidium in 1960, Khrushchev referred to the forthcoming scalar interferometer weapons with the following statement:

> "We have a new weapon — just within the portfolio of our scientists, so to speak — so powerful that, if unrestrainedly use, it could wipe out all life on earth."

The large Soviet strategic scalar interferometers were deployed and became operational in April 1963 — a bit too late for use by Khrushchev to counter the U.S. confrontation in the Cuban Missile Crisis of latter 1962. However, the first operational weapon was used to destroy the U.S.S. Thresher nuclear submarine while on underwater maneuvers off the East Coast of the United States, in April 1963. Thereby Khrushchev demonstrated the power of his new weapons over nuclear submarines — one of the major three elements of the strategic military nuclear firepower of the United States. Extension to the other two elements — intercontinental ballistic missiles (ICBMs) and strategic bombers — was obvious.

Incidents Where Outside Intervention Saved the United States

Many dramatic but largely unheralded incidents occurred during the so-called "Cold War". For example, in the 1970s a small nation saved the United States from total destruction by Soviet nuclear weapons which had been inserted in our

cities. That nation did it very simply: they likewise inserted an appreciable number of nuclear weapons of their own, some thermonuclear, inside Russia itself, in its population centers and its primary target zones.

All these inserted nuclear weapons — both in the United States and in Russia — are still there with their activation teams, waiting. In such manner was the "balance of terror" — the Mutual Assured Destruction or MAD doctrine — really implemented and enforced vis a vis the Soviet Union. At the time this approach to deterrence was called "Dead Man Fuzing".

In April 1986 a private little U.S. group intervened to prevent a forthcoming giant earthquake that was being built up for the greater Los Angeles and San Francisco areas by the KGB scalar interferometers. Via a special electronic device, the group suddenly destroyed one of the distant Soviet scalar interferometer transmitters — thereby initiating the nearby Chernobyl nuclear incident but preventing the loss of perhaps 200,000 U.S. lives in Los Angeles and San Francisco, together with preventing terrible destruction and economic damage.

Also in 1986, the same friendly little nation again prevented our strategic destruction by even more powerful energetics weapons developed by the Soviet Union. As early as 1984, the friendly nation simply began exploding very large Russian missile ammunition storage sites, to warn the Soviet Union of what was in store for it, if it attacked.

In 1997, again the U.S. would have been utterly destroyed on two occasions had it not been for the same little nation. Several professional colleagues and I played a desperate role in both of those frighteningly real incidents, which were never reported in the news media. Indeed, our own intelligence agencies had no inkling that a full strategic Soviet superweapon attack to destroy the United States was imminent on each of the occasions (the second of which would have occurred on May 1, 1997) {viii}. The May Day attack for 1997 would have been the "big one", had the Federal Security Service (FSB/KGB) not been checkmated by "an offer it could not refuse" — delivered once again by the friendly nation. During those critical periods when every hour on the clock seemed a week in length, the hostile armada that would have struck us included the Japanese Yakuza and Aum Shinrikyo teams on site in Russia, operating leased KGB/FSB strategic scalar interferometers against the U.S.

Yakuza Acquisition of Soviet Superweapons

With the collapse of the old Soviet Union's economy, by the end of 1989 the Russian financial situation was grim. By courtesy of the Russian Mafia {ix} — which works directly for the FSB/KGB — a rogue Japanese group consisting of the Yakuza {x} and the Aum Shinrikyo cult {xi} was conducted to Russia in latter 1989, met with the KGB, and leased some of those large KGB strategic scalar interferometers on site in Russia {xii}. The down payment was $900 million U.S. in gold bullion, and the lease is rumored to be some $1 billion per year. The payment was no problem for the Japanese team. The Yakuza had ripped off the

Japanese taxpayer fur hundreds of billions of dollars, never repaid, and so the rogue Japanese group could easily afford such leasing {xiii}.

The Yakuza and Aum Shinrikyo then assigned teams to man those superweapon sites and begin weather engineering operations against the United States and other targets. The Aum Shinrikyo even set up a small university in Russia where the energetics theory and technology could be taught to the rogue Japanese teams by the KGB scientists.

After much training, in 1990 the rogue Japanese teams began operating the leased interferometers {xiv} worldwide for weather engineering and other purposes under the supervision of the FSB/KGB. The Yakuza and its vast resources worldwide were thus incorporated into the FSB/KGB planning and coordination for the coming destruction of the United States and the Western world.

Much later, Western investigations into the Aum Shinrikyo did clearly establish the sect's links in Russia, but missed the major involvement of the Yakuza. The Soviets easily made it appear that contact of the Aum Shinrikyo with Russia had been harmless (with the exception of the sarin nerve gas). Quoting Turbiville {xv}:

> "Russian, Japanese, and other investigators quickly identified a substantial number of [Aum Shinrikyo] sect members in Russia, including members in the government and other walks of life. Media commentators took note of a 'gas analyzer' of Russian origin seized at a sect facility; reports of Aum Shinrikyo sect members among Russian Radiation, Chemical, and Biological Defenses Troops; alleged sect ties to the Russian Academy of Sciences; the large volume of commercial Russian ship and aircraft traffic between Russia and Japan; and other issues that suggested questionable Russo-Japanese linkages to sarin production or transport... Official Russian military and security service spokesmen, while acknowledging Aum Shinrikyo's presence in Russia, reiterated the absolute security of military chemical depots and munitions..."

So it was that in early 1990, the FSB/KGB transferred their North American weather engineering operation to the Yakuza/Aum Shinrikyo teams, who perpetuated it using the Russian scalar interferometers that the Yakuza had leased. Today the rogue Japanese teams on site in Russia and elsewhere continue their weather engineering against the United States under FSB/KGB supervision.

At the end of 2004, the FSB/KGB and Yakuza entered the 2-year "Operations Phase" of asymmetric war against the United States. Weather operations — including Hurricanes Charlie, Frances, Ivan, Jeanne, etc. — intensified and remain intense, wreaking great economic damage. The program included directly influencing and controlling each hurricane's power and behavior, as well as directing its course, speed and targeting path. Indeed, Ivan did a 180 degree turn, and Jeanne did a 360 degree loop before reaching Florida, demonstrating an unprecedented and sophisticated level of storm control.

Meteorologists do recognize periods of increased or decreased hurricane activity for various reasons {xvi}, but very few consider deliberate human induction of

hurricanes or human control over their direction, power, and progress {xvii}. Fortunately, a few do.

Indeed, in latter March of 2004, Hurricane Catarina — the first-ever recorded in the South Atlantic — formed and came ashore in Brazil on March 28 with 90 mph winds, doing substantial damage. So while the conventional wisdom is that hurricanes cannot form (naturally) in the South Atlantic, this one did and "broke all the records". It appears to have been a deliberate probe by the Yakuza: Produce and drive ashore a hurricane where the textbooks state one is impossible, to test whether Western governments and scientists recognize the artificial weather engineering. The answer, of course, is that — as expected — the West did not recognize its importance, or that it was a deliberate "stimulus." Western meteorologists and governments simply shrugged off Hurricane Catarina as an interesting little phenomenon of no great concern.

Some time after their 1989 lease of the Russian interferometers, the Yakuza carried the science and technology of scalar electromagnetics (energetics) back to Japan. There they set up their own clandestine facilities to manufacture such weapons, including small portable scalar interferometers, electromagnetic pulse (EMP) weapons, and even negative energy EMP weapons. Any group or nation possessing scalar interferometers is also able to produce either positive energy EMP or negative energy EMP in the distant interference zone. Smaller, more portable weapons then follow.

Selected portable weapons of such types will be inserted — probably have already been inserted — into the U.S. for destroying its key internal targets and centralized electrical power system. With the final coup de grace to be delivered about two years from now, the loss of our national electrical power system is intended to evoke the catastrophic collapse of the entire U.S. economy, followed by the fall of other Western nations' economies like toppling dominoes.

Despite the risk, the U.S. Government, scientific community, intelligence community, and electrical power industry seem totally incapable of confronting the desperate requirement to replace our entire centralized electrical power system with fuel-free self-powering "energy from the vacuum" (EFTV) systems as rapidly as possible. Merely mentioning the requirement evokes psychological displacement activity, denial, and fierce personal attacks on the proponent. It also induces strong opposition from the powerful cartels in our society — energy, science, government, the environmental community, the financial and industrial community, etc. Hence the U.S. continues "energy business as usual", while the clock licks away to our destruction {xviii}.

Our Desperate Need to Correct the Seriously Flawed Classical Electromagnetics (CEM) and Electrical Engineering (EE) Models

In the past we have described the longitudinal electromagnetic (EM) wave transmitters used in these interferometer weapons with the phrases "scalar electromagnetics" and "scalar interferometry" {xiv}. Tesla did not originate these

terms, nor did he originate scalar interferometry, although he had indeed stumbled onto longitudinal EM waves and what can only be called force-free precursos engineering {xix}. Quoting Tesla {xx}:

> "...I showed that the universal medium is a gaseous body in which only longitudinal pulses can be propagated, involving alternating compressions and expansions similar to those produced by sound waves in the air. Thus, a wireless transmitter does not emit Hertz waves which are a myth, but sound waves in the ether, behaving in every respect like those in the air, except that, owing to the great elastic force and extremely small density of the medium, their speed is that of light."

If "gaseous body" is replaced with the modern term "virtual particle flux (active virtual state gas) of the vacuum", Tesla's words agree with the basic view of the modern active vacuum.

Whittaker's 1903-4 discovery that sets of longitudinal EM waves actually comprise all normal EM waves, fields and potentials {xxi,xxii} leads to a much more fundamental electrodynamics in which ordinary EM waves, potentials, and fields can undergo sophisticated alteration, enabling them to contain hidden internal field vectors and dynamics. ("Dynamics" refers to change over time.)

Indeed, the so-called "transverse EM waves" measured by our instruments are merely precession wave envelopes of charged particles (charged masses) responding gyroscopically at right angles to the more fundamental longitudinal EM waves. Longitudinal waves are force-free except when interacting with matter.

Transverse EM force field and force field waves exist only in association with charged matter, never in free space. What exist in space as the "precursor field" are the Whittaker sets of bidirectional longitudinal EM wave pairs, for each force field wave, force field, or potential in charged matter when the precursor wave-sets are interacting with that charged matter. What Whittaker showed as the "decomposition" of such waves is actually the precursor longitudinal force-free EM wave mixture existing in charge-free space, whose summation — via the wave interaction with charged matter — yields transverse force field waves. An EM wave in space (i.e. where no matter is present) actually consists of a dense, multi-frequency mixture of bidirectional longitudinal EM wave pairs. It is not a "pale thin shadow" of the form of the matter wave in charged matter.

Every EM "field" and "wave" and "potential" in space — including so-called "static" fields and potentials — actually exists as a large ensemble of ongoing EM energy flows in the form of those propagating longitudinal EM wave sets. But our standard classical EM and electrical engineering model's false assumption of a material ether has prevented recognition of the fundamental character of these longitudinal EM wave ensembles. The model continues to erroneously assume forces and force fields in space. Yet forces and force fields cannot occur in space but only in mass, because one of the components of force is mass, by the definition $F = dp/dt = d/dt(mv)$. Simply replace m by 0, and $F = 0$.

When electrons are in a conductor, their travel is limited to a few inches per second down the wire in a typical nominal case. Thus, when an electron in a wire experiences a longitudinal EMF, it has to precess laterally. Most of its motion is perpendicular to the wire. This rotational movement is what generates the transverse EM waves that our instruments measure, as the electrons respond to the more fundamental longitudinal vibrations. At least Jackson {xxiii} clearly states what CEM/EE assumes:

> "Most classical electrodynamicists continue to adhere to the notion that the EM force field exists as such in the vacuum, but do admit that physically measurable quantities such as force somehow involve the product of charge and field."

So the measured EM transverse force F is the effect of a more primal, precursor, force-free EM field (longitudinal precursor waves) in space, in and on charges q in the ongoing interaction of that precursor EM field with those charges q. To see this, examine the simple equation F = Eq, as a definition F = Eq. In the absence of charged matter, q = 0 and F = 0, but E, defined as the mass-free wave in mass-free space, need not be zero. It is a force-free precursor field wave set in space with no charges present. Further, for a given $q \neq 0$, if E = 0 and thus precursor field interactions are absent, then F = 0, but $q \neq 0$. For that reason, as Jackson admits, the observable E-force (i.e., in charged matter q) has to involve the product of charge and field. But the notion — almost universally assumed by universities teaching CEM/EE — that a force field somehow exists in mass-free space, Jackson admits, is totally false.

The energy flux of the vacuum is enormously dense and comprises the scalar potential of Einstein's spacetime itself. This energy decomposes into Whittaker harmonic sets of bidirectional EM longitudinal phase conjugate wave pairs {xxi}.

It is an axiom that any mathematical model, including this one, can be engineered by a model of sufficiently higher group symmetry. The mathematics generally used to model Western classical force-field electrodynamics is U(l), a lower group symmetry model. Thus, CEM/EE can be engineered using a more sophisticated mathematical model, as the preceding discussion of precursor fields pointed out.

Our scientists, engineers, and thermodynamicists have also largely failed to grasp the implications of the gauge freedom axiom when asymmetrical rather than symmetrical regauging is used. The first requirement for EFTV systems producing more energy output than the operator alone inputs is to break Lorentz symmetry in the system's circuitry and thus to violate the Lorentz invariance imposed by the U(1) theoretical equations by which CEM is presently modeled.[1] Further, when

---

[1]See Maxim Pospelov and Michael Romalis, "Lorentz Invariance on Trial," Physics Today, 57(7), July 2004, p. 40-46 for a good discussion of present efforts to violate invariance and Lorentz symmetry.

one deals with force-free EM fields, potentials, and waves as they exist in mass-free space, a priori one does not have to "pay" to furnish the energy flows that are necessary to develop powerful working forces in matter. Instead, one only has to deliberately direct nature's own energy flows, exhibited by the internal Whittaker decomposition of any static EM potential, field, or wave in space; the energy is already pouring freely from every charge.

Force is an ongoing effect of a more primary ongoing precursor interaction between dynamic spacetime (and dynamic virtual particle flux or VPF of the vacuum) with mass. Force is not a fundamental cause. Every EM field or potential in space is in fact already a great set of ongoing free EM energy flows, steadily flowing from the associated source charge(s). Any "energy" being lost to provide that set of energy flows is furnished by the reordering of disordered virtual energy absorbed by the source charge from the seething vacuum. Since the totally-disordered vacuum is already at maximum entropy state, at equilibrium, any change in that state is a negative entropy change a priori. Using such thus involves negative entropy engineering. (The terms "precursor engineering" and "negative entropy engineering" are essentially synonyms.)

Thus precursor engineering advances beyond the present notion of four primary forces of nature. Instead of four primary forces, precursor engineering deals with four "brands" of precursor wave sets and energy flows, each kind interacting with a particular kind of mass to produce one particular kind of "fundamental force". The Whittaker decomposition for an EM force field in matter actually gives the energy flow set, which is the form of the actual precursor EM energy field in space. Envelope summation never occurs until the precursor energy interacts with charged matter.

In theory, by asymmetrically directing these Whittaker precursor energy flows, one can generate forces of any strength and pattern in charged matter. One can even shape the internal dynamics (to be explained later) of such forces. We refer to forces created in this manner as "engines". The energy for creating these engines is present in nature; one only needs to furnish switching and control. By paying a small energy "cost," one can direct and structure the desired patterning and dynamics of large precursor flows of energy in space. The interaction of these "precursor engines" with charged matter can produce very powerful forces in charged matter.

In hard military terms, precursor engineering (that is, Soviet energetics) provides an enormous and ubiquitous force amplifier that may be put to startling use on the battlefield.

Very large energy effects in physical matter can thus be obtained for only a small investment in switching and control of nature's ubiquitous free energy flows. Conservation of energy is not violated, since the charges furnish the excess energy utilized, in their continuing extraction of real EM energy flow from the vacuum's

fluctuations.[2] Thermodynamics is not violated, because these precursor energy flows are nonequilibrium steady state systems, with continuous free energy input from the vacuum's subquantal fluctuations and with continuous free energy output in the form of the precursor energy flows.

This is negative entropy engineering, the ultimate "far from equilibrium" approach that totally violates the present flawed Second Law of thermodynamics {xxiv}.

Observable forces and force fields do not exist in empty space. They exist only in matter, because matter is a necessary component of force. Subquantal energies fluctuating in the vacuum of space are not observable until they produce state changes in matter. Our fundamental mechanics greatly errs in assuming a separate vector force in mass-free space, acting upon a separate mass. No such "separate force in mass-free space" exists, and none can exist, since mass is a component of force by F = d/dt(mv). If m = 0, then F = 0. When there is no mass, there is no force. As Nobelist Feynman stated: "Everything we know is only some kind of approximation, therefore, things must be learned only to be unlearned again or, more likely, corrected."

Speaking specifically about force, Feynman stated {xxv}: "...in dealing with force the tacit assumption is always made that the force is equal to zero unless some physical body is present... One of the most important characteristics of force is that it has a material origin..." "If you insist on a precise definition of force, you will never get it!"

But then, facing Feynman's dilemma of defining a force, what kind of electromagnetics exists in force-free space, prior to the presence of mass and thus prior lo the formation of forces and force fields assumed by the present CEM/EE? Speaking of the electric field from a source positive charge in space, and the responses of charged masses placed in that field and interacting with it, Feynman stated {xxvi}:

> "...the existence of the positive charge, in some sense, distorts, or creates a "condition" in space, so that when we put the negative charge in, it feels a force. This potentiality for producing a force is called an electric field."

Feynman also pointed out that we really did not know what "energy" was. In the particle physics view of energetics, what basically exists in mass-free spacetime is the disintegrated and disordered virtual particle flux (VPF) of the vacuum. Energy in said space means an ordered change in that VPF. In the general relativity view of energetics, the basic space is "spacetime" which now must be considered highly structured and highly dynamic. Energy in said spacetime is a change or distortion in its curvature.

---

[2] In this book we give the exact mechanism by which the charge does this.

All of the so-called "energy in space" - such as a field or a potential - may be thought of as an organized change of the virtual state energy and curvature of spacetime. The "enormous" vacuum energy (using the term "enormous" as if the energy were already coherently integrated) is actually disintegrated into very tiny virtual bits of energy and ordered patterns in that energy. The energetic vacuum consists of intense and dense subquanlal fluctuations! An EM field, potential, or wave in vacuum (i.e. in empty space) is actually an organization (ordering) and dynamics imposed upon and in the basic disordered VPF and virtual energy. The fundamental field or potential is thus an "organizing pattern" of ongoing energy flows, and must already include negative entropy, since it reorders the disordered virtual energy of the vacuum a priori {xxvii}.

Any persisting pattern (organization) of EM change in a region of the VPF — once it interacts with observable charged matter — can be and is integrated to the quantum level so that it becomes observable EM change and produces force and force fields in the charged matter with which it interacts.

There is no observable force a priori until a pattern of virtual change in a region of the vacuum (a vacuum engine or precursor engine) is reacting with observable matter and being integrated to observable quantum level in that interaction. We have explained that integration process elsewhere {xxvii, xxviii} as demonstrated by every charge in the universe.

If charges did not reorder and integrate disordered virtual stale energy changes to observable state energy changes, there could not be any observable EM forces in nature, or any observable masses in nature.

How the Notion of Transverse EM Waves in Space Originated

To explain sets of longitudinal EM waves in the vacuum, and also to explain then detection as transverse waves in a receiving conductor {xxix}, consider the longitudinal flow of Drude electrons in a conductor, which is known to be severely restrained. While the electrons in the Drude gas may individually move at greater velocity, their net flow longitudinally down the conductor is the drift velocity {xxx}, usually on the order of a few centimeters per second in a typical bench circuit with small voltages and currents {xxxi}, very much less than the speed of the field or potential down the wire. Hence there exists an effective restraint of the electron's spinning gyro axes in the longitudinal or current-flow direction along the conductor.

To a first order, when the precursor longitudinal EM force impinges upon them, the Drude electrons — due to their continuous spin — act as gyros with longitudinally restrained axes. They occasionally slip a bit longitudinally, but are immensely freer to move transversely. So they easily precess with lateral motions that can be very large and/or very fast indeed.

The intense lateral precession of the "Drude electron as a gyro" quite well demonstrates the overall longitudinal nature of the causative disturbing precursor

agent(s), with the longitudinal impulse force strongly resitted by the longitudinal restraint force, and with most of the electron's effect force being the resulting gyro-electron precession force at right angles.

Even when electrons are in empty space and not in a conductor, their mass inertia and spin results in a similar much larger precession at right angles to the longitudinal disturbing forces of the precursor force-free fields and waves.

The observation of the lateral electron precession waves of these precessing Drude electrons in our instruments is the accepted measurement of the so-called transverse EM waves in vacuum. The measurement does not measure the oscillation direction of the causative precursor EM wave in vacuum at all, but only its oscillation effect created in the precessing Drude electrons of the charged matter. There are really no transverse EM waves in mass-free space, albeit we seem to be stuck with such a model since the founders of classical electrodynamics assumed the material ether filling all space, which they modeled as matter waves (force field waves) in space.

If there were such a material ether, then there would be matter and charge at every point in space, and there would indeed be transverse charge precession EM waves in this "ethereal but real matter" filling all space. The CEM/EE model of electrodynamics and its equations have implicitly propagated the erroneous assumption of a material ether and the misinterpretation of what our instruments are measuring, from at least 1865 to the present day. Yet the material elher was falsified over a century ago, in 1887. The false assumption of the material ether and the resulting false assumption of the transverse EM force field wave in space continues even after Drude's fundamental work —just as the erroneous notion of a separate force vector in space acting separately upon a mass is still propagated in basic mechanics.

It is astounding that the NAS, NSF, NAE, Doe, national labs, and universities blithely continue to propagate such known errors in major models, even after eminent scientists such as Wheeler, Feynman, and many others have pointed out that there are no forces or force fields in space.

We know of no other Western analyst who has pointed out the lateral precession of Drude electrons resulting from their longitudinal restraint to a slow drift velocity. This phenomenon appears to prove that the EM wave sets in matter-free space are longitudinal rather than transverse, precisely as Tesla stated.

We pointed out this anomaly in the erroneous "force in empty space" theory for years, to little avail. The Soviets not only discovered it but also highly weaponized it shortly after WWII, in their secret superweapons science called "energetics".

CEM and EE Still Erroneously Assume the Old Material Ether

The misinterpretation of the detected transverse EM force field waves as actual force-field waves in a material space has been perpetuated erroneously since the inception of classical electrodynamics, and it continues today. The entire U.S.

scientific apparatus — including the National Academy of Science, National Science Foundation, National Academy of Engineering, Department of Energy, national laboratories, and universities — continues to bury its head firmly in the sand, covering itself with the old luminiferous material ether.

Because of its importance, we reiterate that those measured waves in our measuring instruments actually are integrated transverse EM force field effect waves in and of the interacting Drude electron material medium in the conductors of the intercepting instrument. But the causative interacting EM field entities in the vacuum are themselves force-free longitudinal EM wave set disturbances of the curvature of spacetime (general relativity view) and of the local VPF of the vacuum (particle physics view). Else the theory of gyro precession is voided by every Drude electron and transverse EM force field wave detection in Drude electron gases.

The EM force fields so blithely assumed by our present electrodynamics absolutely do not and cannot exist in mass-free space, since force only exists in a muss system, and then only during its interaction with force-free precursor fields. Because of charged particle spin, the elemental responses of the charged mass system are precessions at right angles to the disturbing force-free fields. Neither do transverse EM "effect" waves exist in mass-free space, but only in charged mass systems (such as the Drude electron gas) engaged in an ongoing interaction with the longitudinal precursor waves. Here also, the elemental response of the mass system is at right angles to the force-free fields of the disturbing precursor wave set.

The primary, longitudinal force-free fields in massless space are the more fundamental EM fields, as Tesla had realized. Tesla actually began the process later partially captured by Whittaker {xxi, xxii}, which was taken to fruition after WW II by Soviet weapon scientists as the new weapons science of energetics. It is what the present author is calling precursor waves, precursor fields, and precursor engineering, in trying to penetrate the mind-fog barrier generated by the "transverse EM forcefield wave in space" idea so branded into scientific and engineering minds.

Our Archaic and Flawed Situation in CEM/EE Today

Sadly, electrical engineering departments still erroneously teach EM force fields and EM transverse EM force field waves in space — a notion which still assumes the old luminiferous material ether {xxxii} that was falsified in 1887 by the Michelson-Morley experiments {xxxiii}.

Reiterating: Jackson, one of the superb electrodynamicists of our day, at least admits that the problem exists and that electrodynamicists continue to ignore it. He states {xxxiv}:

> "Most classical electrodynamicists continue to adhere to the notion that the EM force field exists as such in the vacuum, but do admit that

> physically measurable quantities such as force somehow involve the product of charge and field."

In summary, one does not have electromagnetic force until the "force-free precursor field in space" is interacting with charged mass. It can easily be seen by examining the simple standard EM equation F = Eq, and writing it as F = Eq so that it becomes a true definition of the electromagnetic force field. Now let q = 0, as it would be in space. In that case, F = 0, even though $E \neq 0$. In that identity, the actual E-field in space is force free, and force is the ongoing interaction — of the force-free E-field in space — with charged mass q. Given q and its interaction with force-free E, that ongoing interaction is the rigorous definition of — and generatrix for — electric field force itself. What is missing from the identity and therefore the definition is that F and E are at right angles to each other because of the spin of the charged particles comprising q.

Again, let q = 0, while E remains nonzero. In that case, there is no ongoing interaction of E with charged matter, since there is no charged matter. Therefore the effect of such a reaction — force F — goes to zero because there is no interaction and therefore there is no effect of an interaction. So the equation should really be written as an identity, to show clearly that electric field force is produced by, and exists as, an ongoing interaction of the force-free E-field in space with charged matter q.

The very concept of "electromagnetic field" must therefore be separated into two parts. Using "the E-field" as an example, E_M refers to the E-field interacting with mass, and E_S to the E-field in empty space. Using this notation we might state that $E_M = f(E_S \times q)$. In short, if there is any chance for misunderstanding, the writer/lecturer should clearly explain whether he is referring to the force-free E-field E_S in space, or to the force E-field E_M in matter. Indeed, the CEM/EE model itself should be altered to clearly show that difference.

The sharp-eyed reader will note that we may have (hopefully successfully!) indicated the solution to Feynman's force definition problem, at least electromagnetically: An electromagnetic force in static charged matter is identically the ongoing effect (in the static charged matter) of an ongoing interaction of the force-free EM field in space with that static charged matter.

Eminent scientists such as Feynman, Wheeler, Lindsay, Margenau, Bunge, and many others have pointed out that there are no force fields in space. But our electrical engineering departments and classical Maxwell-Heaviside electro-dynamicists refuse to change and correct the horribly flawed CEM/EE model. Repeating for emphasis, Feynman {xxvi} stated it this way:

> "...the existence of the positive charge, in some sense, distorts, or creates a "condition" in space, so that when we put the negative charge in, it feels a force. This potentiality for producing a force is called an electric field."

In other words, a true E_S-field is a "force-free condition in pure mass-free space;" it has only the capability to interact with a charged mass and thus create force in that ongoing interaction. Feynman understood that "true fields" were naught but conditions in space itself, and changes in space itself. He clearly understood that only the interaction of the field-in-space with charged mass - should some be introduced — produces EM force fields in that charged mass.

So our present electrical engineers have absolutely no notion at all of what a force-free EM field in mass-free space really is. They have never even calculated a real EM-field in space, and they do not do so today — nor do their professors and their textbooks, though all profess to do so.

One is reminded of Tesla's acrid remark[3] when he stated:

> "The Hertz wave theory of wireless transmission may be kept up for a while, but I do not hesitate to say that in a short time it will be recognized as one of the most remarkable and inexplicable aberrations of the scientific mind which has ever been recorded in history."

Tesla also was well aware that energy could be had from space, for the taking, and he was at some pains to express it. In 1900 he stated:

> "Whatever our resources of primary energy may be in the future, we must, to be rational, obtain it without consumption of any material."

Nearly a decade earlier, he had formally[4] stated:

> "Ere many generations pass, our machinery will be driven by a power obtainable at any point in the universe. This idea is not novel... We find it in the delightful myth of Antheus, who derives power from the earth; we find it among the subtle speculations of one of your splendid mathematicians...Throughout space there is energy. Is this energy static or kinetic? If static our hopes are in vain; if kinetic — and this we know it is, for certain — then it is a mere question of time when men will succeed in attaching their machinery to the very wheelwork of nature."

Tesla himself was stopped from doing that very thing, by powerful vested interests who realized that for the financial cartels involved in energy, energy must continue to come from fuels and materials, etc. Today, similar cartels of very great power still control which way science thinks and researches, and still effectively destroy any scientist who dares to seek energy from the vacuum, and Tesla's nonmaterial energy source "obtainable at any point in the universe".

---

[3] Nikola Tesla, "The True Wireless." Electrical Experimenter. May 1919.

[4] Nikola Tesla, in a speech in New York to the American Institute of Electrical Engineers, 1891.

The primary factor responsible for successfully suppressing most attempts to scientifically research EFTV is the scientific community's continuing insistence on the absurd notion of force fields in space.

Other Severe Foundations Errors in Our CEM/EE

Indeed, besides the material ether (falsified over a century ago), the inane CEM/EE model still erroneously assumes a flat spacetime (falsified since at least 1916) and an inert vacuum (falsified since at least 1930). It also assumes that every EM field, potential, and joule of energy in the universe was freely created from nothing at all by the associated source charge, which the theory begrudgingly admits continuously emits real observable EM energy without any energy input. In so doing, the CEM/EE model implicitly assumes the universal violation of the conservation of energy law.

Every EE department, professor, and textbook in the United States unwittingly advocates the total violation of energy conservation, without even recognizing it. So do our National Academy of Sciences, National Academy of Engineering, National Science Foundation, Department of Energy, great national laboratories, universities, our intelligence analysts — and the entire Taliban-like professional Skeptic community — by not pointing out the known terrible errors in classical electrodynamics and electrical engineering, and by not correcting the flawed model!

The concerned reader should make a determined effort to find any single textbook that presents and lists the foundations assumptions in the CEM/EE model, and discusses which are still true and which have been falsified by the progress of modern physics. The reader will not find any such textbook, nor will he find any project to correct the textbooks, in any of the previously named scientific groups and organizations.

The Development of Scalar Interferometry

There are two papers by E. T. Whittaker, one in 1903 {xxi} and the other in 1904 {xxii}, that detail the beginning of scalar interferometry. Shortly after WW II, these two papers were a starting point in the Soviet Union scientists' development of a secret weapons science called energetics, which led to the development of powerful scalar interferometers that are now possessed secretly by at least 10 nations worldwide, and even by the Japanese Yakuza. For a deeper understanding of scalar interferometry, a higher group symmetry electrodynamics must be used {xiv}, instead of the Standard Model's limited U(1) electrodynamics.

After leasing large strategic scalar interferometers in Russia, the Yakuza took the technology back to Japan and set up production facilities of their own. This was not an act of the Japanese government but of the Japanese Mafia in concert with a remnant of the Aum Shinrikyo (under its new name, Aleph). The Yakuza is very powerful, and it penetrates the Japanese government and also every large Japanese

company. All dealings with any large Japanese company inherently involve the Yakuza, due to their penetration into all aspects of Japanese society and business.

In 1997, then Secretary of Defense William Cohen— at a conference on Weapons of Mass Destruction (WMD), held in Georgia under the auspices of Senator Sam Nunn — publicly confirmed this kind of electromagnetic weaponry without the technical details. He also confirmed the weather engineering, climate control, induction of earthquakes, and stimulation of volcanoes into eruption. Secretary Cohen stated {xxxv}:

> "Others [terrorists] are engaging even in an eco-type of terrorism whereby they can alter the climate, set off earthquakes, volcanoes remotely through the use of electromagnetic wave. ... So there are plenty of ingenious minds out there that are at work finding ways in which they can wreak terror upon other nations. It's real, and that's the reason why we have to intensify our efforts, and that's why this is so important."

This was the first time (and to my knowledge, the only time) a high U.S. government official has openly confirmed the superweapons. So obviously certain parts of our government do know about such weapons, but there has been little or no communication of that to the public, save by Secretary Cohen's illuminating statement.

The news media at the time — panting heavily after the juicy Clinton-Lewinsky sex scandal — totally ignored Cohen's epochal strategic statement. So much for the perspicacity of our news media!

The Yakuza Strategic Role in Our Present Terrorism Threat

Today the Yakuza/Aum Shinrikyo, one of our deadly foes, will be involved in the planned destruction of the United States that is scheduled to conclude about three years from now. A major facet of the plan is the destruction of the power grid in about two year's time. The incidents will start very gradually at first[5], and then escalate fairly rapidly until the power system is in ruins. There are already sufficient terrorist assets inserted into the U.S. — being held ready and waiting - to destroy the nation, particularly when one considers the damage potential of scalar interferometers. A single large interferometer can, for example, disable the entire power system and keep it nonfunctional by causing power surges at will. It can destroy power plants, grids, distribution stations, refineries, etc. Or it can keep the system failing and nonfunctional by damaging or destroying electronic controls.

---

[5] The 2004 hurricane passing through the Gulf of Mexico did substantial damage to the oil and gas pipelines and some of the oil rigs. That decreased our daily supply of oil and gas, was been partly responsible for oil prices going above $50 per barrel, and still plays a role in their continuing to rise.

One keeps hoping that the Administration - whether Republican or Democratic - will alert the American public to this possibility, but nothing has been said by officials of either party. Too many high level government people take the attitude that the American public just could not withstand such information. Further, within the government the entourage {xxxvi} seems to have again largely suppressed the information that Defense Secretary Cohen knew and publicly confirmed.

The Yakuza strategic threat to the U.S. is one of the most potent we face today, and it increases year by year. That threat — as is much of the organized international terrorist threat — is being generally coordinated from the old die-hard Communist faction of the FSB/KGB. The Yakuza strategic threat is also being generally ignored by our intelligence analysts, yet the Yakuza are proteges of the same dominant FSB/KGB faction, the one which possesses, controls, and utilizes the Russian energetics superweapons, never having allowed them to pass into the regular Russian armed forces. Thereby the communist faction retains power and will do so.

President Vladimir Putin, from the younger faction of the KGB, would like to reach an accommodation with the U.S. However, the Russian communist faction, which remains dominant, prohibits him from doing so. Accordingly, Putin has been forced to reinstitute harsher state control measures and take control of domestic oilfields from private industry. Instead of becoming the "trusted cheap oil supplier" to the United States as Putin wished, Russia has allowed China to invest in developing Russian oil fields. This appears to be part of the new alliance among Russia, China, and India.

Suppression of "Energy-from-the-Vacuum" Electrical Systems

Electrical power systems freely taking their energy from the vacuum rather than from fuel are suppressed worldwide by several large and powerful cartels — including in the U.S. scientific community — and for some time the Yakuza has suppressed all EFTV systems successfully developed in Japan.

As part of their scheduled plan to catastrophically collapse the U.S. economy by obliterating our power supply, the Yakuza have suppressed several of these legitimate Japanese overunity electrical power systems — such as the Takahashi magnetic Wankel engine {xxxvii} and the Kawai motor {xxxviii} — to prevent them from being marketed.

Were these already-developed Japanese systems allowed on the market, they would quickly resolve the world energy crisis, and enable the dismantling and rapid replacement of the horridly vulnerable, centralized U.S. electrical power system. Needless to say, the availability of such systems would cleanse the biospheric contamination from energy-related operations and developments, alleviate the march toward global warming, etc.

All the field energy and potential energy used in every EM circuit already comes directly from the vacuum, and not from cranking a generator shaft or dissipating chemical energy in a battery. The energy is extracted from the vacuum itself by the system's source charges and dipolarities. And yet our own scientific community perpetuates a model assuming that the field energy from the charges - and therefore the available usable energy in the circuit — is freely created out of nothing at all, while also erroneously teaching that it is the mechanical power turning the generator shaft which powers the electric distribution line and distant loads.

We do not have to rediscover how to extract usable EM energy from the seething vacuum! Every charge in the universe already continuously does that, and it continuously gushes forth real EM energy extracted from its ongoing "ratcheting" vacuum interaction. All we have to do is learn how to properly intercept, extract, and use the already-real energy flows from source charges and dipoles. This has to be done by uncovering and eliminating the limitations unwittingly incorporated into the CEM/EE model — such as the ubiquitous closed current loop circuit containing the source dipolarity (the source of potential wired into the external circuit as a load to be continually destroyed — and such as insisting on invariance and Lorentz symmetry of the model because of the "mathematical beauty" in symmetrized equations and an invariant system. "Invariance" refers to the notion that no new net observable is permitted when the equations are regauged. To do that requires symmetrical regauging, which kills any modeling of asymmetrical receipt of excess energy from the active environment. The Lorentz symmetry of our inane electrical power circuits thus guarantees that the much simpler Lorentz-invariant equations can be used to describe the deliberately crippled system's operation. It also guarantees that the system will not electrically perform with a coefficient of performance (COP) > 1.0.

The scientific and industrial and financial entourages love it, and will do whatever is required — destroy careers, withhold funds and tenure, or even kill the researchers — to keep that status quo. Hence it is not accidental that, in a world filled with an uncountable number of free energy generators called "source charges", our vaunted scientific community still opposes energy from the vacuum systems and will not fund or allow research on them. Their position is the ultimate irony, because all of the energy driving every EM system ever built has been extracted from the seething subquantal fluctuations of the vacuum!

On the other hand, by deliberately avoiding the Lorentz-invariant equations, one can violate the Lorentz symmetry, resulting in asymmetrical circuits and systems that collect excess energy (i.e., asymmetrically regauge themselves) from the active vacuum's interaction with all the circuit's charges. Asymmetrical regauging freely produces a net nonzero force field. A properly designed circuit can utilize this force field to dissipate the previously-collected "free potential energy" in external loads to power them almost "for free" (as far as any cost to the operator for the energy dissipated). No law of physics is violated, and no valid law of

thermodynamics is violated (once the erroneous Second Law is corrected, and is no longer the oxymoron and "half law" it presently is).

Sometimes simple equations contain profound truths. Because a potential (envelope) is actually a set of ongoing EM energy flows, then from any fixed source of potential V, any amount of energy W can be freely collected on intercepting charges q, given sufficient q and also dq/dt = 0. The simple equation is W = Vq. Further, by only increasing V, while pinning a fixed amount of intercepting charges q so that i = dq/dt = 0, any amount of potential energy density V can be freely produced in the system by work-free voltage amplification alone. Regauging is changing the potential(s), nothing else.

From such simple equations, one can see that a circuit can self-regauge and take on extra potential energy freely, from any external source of potential energy providing the necessary potential energy flow, without having to do work — so long as the source of potential is not deliberately destroyed. This is done in a two-phase process. In the first phase, dq/dt is made to equal 0 by pinning the charges q to prevent current flow. In this phase the pinned charges are freely potentialized. One can potentialize as many charges as desired without draining the external source of potential, because the source's dipolarity is not reduced. In the second phase, the source of potential is disconnected, the circuit is re-closed and the charges q are unpinned. Now the circuit freely dissipates the previously-collected energy to power loads "for free". The circuit can perform this two-phase process repetitively and continuously because dq/dt = 0 during the potentialization process.

In short, the external source of "static" potential will last indefinitely, so long as current is not forcibly pushed up through its dipolarity's back emf. Via a flashlight battery or electret as the "external potential source, " under proper circumstances sufficient energy could be extracted from the vacuum to power New York City, at least in theory.

We do not have to learn how to extract energy from the vacuum. We only have to learn how to more properly use the energy freely flowing from charges already doing so, and build and use circuits that do not keep killing the source of potential energy flow faster than they power their external loads. The energy we input to the shaft of the generator is to continually restore the destroyed dipolarity, that we intentionally build our "external systems" to do, faster than they power the external loads. We pay the power company to engage in a giant wrestling match inside its generators and lose.

Our classical electrodynamicists and electrical engineers have missed the fact that, since every EM field and potential is a pattern in the continuous flow of EM energy from the associated source charges, the field or potential is itself a set of continuous free EM energy flows. To see it and prove it, simply decompose the field or potential by Whittaker's methods {xxi,xxii}.

Members of our company, CTEC, personally witnessed the Yakuza suppression of Japanese EFTV electrical systems during our negotiations for rights to market Kawai's self-powering Kawai motor right here in Huntsville, Alabama in 1996. The board directors and the author, as chief executive office, had reached agreement with Kawai late one Thursday afternoon. The Yakuza arrived by private jet from Los Angeles that night. The next morning, a stunned and totally demolished Kawai no longer controlled his invention, his company, his life, or further developments. If not for the Yakuza's intervention, CTEC would have placed self-powering Kawai motors on the world market by mid-1997.

Such self-powering electrical systems are no more mysterious than windmill powered generators or solar cell array power systems. In each case, the active vacuum environment furnishes all of the energy required. Even though any system has losses and its overall thermodynamic efficiency cannot exceed 100%, the coefficient of performance can equal infinity when the external active environment, not the operator, is the source of all of the energy collected.

Energy-from-the-vacuum systems to replace our centralized electrical power grid would take nearly-free energy directly from the local vacuum, needing no external fuel, pipelines, fleets of tankers, railroad coal cars, refineries, etc. Most of the massive and expensive support structure for our bloated centralized electrical power system would gradually be dismantled as it was replaced by a decentralized EFTV system. Our present dependence on foreign oil and gas would vanish forever, accompanied by a dramatic reduction in environmental pollution and a dramatic uplift to the economy.

The U.S. electrical power system would no longer be remarkably vulnerable. Replacement of most of the centralized power system would be of enormous economic benefit and of enormous strategic importance. Presently, we have some two years to get a substantial percentage of that task done, in precisely that manner. Otherwise, we will see the centralized electrical power system destroyed, followed shortly thereafter by the catastrophic collapse of the U.S. economy. And then will immediately follow the methodical destruction of the United States - every last man, woman, and child. At least those are the plans of the enemy waging the asymmetrical war against us, and soon to spring up and proceed internally inside the United States.

The resulting benefits of such a centralized, fuel-free system to the taxpayer and to the long suffering destitute peoples of the world would be incalculable — but the incredible loss of revenue to the large energy cartels now in power worldwide would be directly calculable! Such powerful organizations do not surrender their vast empires and dominant positions without a major struggle.

So certain elements of those cartels already suppress "free energy" developments worldwide, and they have been doing so since Stubblefield {xxxix} (even before Tesla). Those who engage in energy from the vacuum research, if successful, can easily "meet with a sudden suicide" on the way to the supermarket, unless they exercise exceeding care. Or one can be hit in the midst of a crowd by an ice dart

dipped in curare, to that one convulses and dies right there with a "seizure" and massive heart and brain damage.

Or heroin can be planted on the premises secretly by an intruder. Then the regular narcotics police are "tipped off. They raid the place, the dogs sniff out the large cache of heroin, and one has "been caught red-handed" as a dirty old dope dealer. One winds up behind bars for 20 years or so, wondering how it all happened.

Or one encounters a "throw-away" assassin, who has been brutally conditioned. After he successfully fixates on his target, then later he will march right up to the targeted individual in a public restaurant, pull out a pistol and empty it at point blank range into the target, killing him. He will remain right there until the police come and haul him away. And even electric shocks on his testicles will not elicit any useful information from him.

Or, more simply, one just meets with a fatal auto accident.

Or one gets hit with a microwave "shooter" whose wavefront has been carefully modified by the Venus ECM (electronic countermeasures) technique, to dramatically disrupt the receiving heart by throwing it into violent and uncontrolled fibrillation. The target falls, goes into convulsions, thrashes a bit, and expires with a legitimate massive stroke, heart attack, or both. The smaller short range shooter is about the size of a small paperback textbook, and fits inside the assassin's coat pocket. A larger longer range shooter is about the size of a bazooka. It will shoot right through walls and windows, killing a person inside the building (after locating the target's body heat through the wall or window with an infrared device).

Or a professional hit man kills the person, making it appear that some hoodlum committing a robbery or some such did the crime. Recently Dr. Gene Mallove, an excellent alternative energy and cold fusion researcher and a highly dedicated scientist, probably was murdered by this latter type of professional hit. It was probably arranged by the entourage of the powerful consortium (both industry and science) planning to rip off the U.S. public for more than a trillion dollars, to build hundreds of pebble bed nuclear reactor power plants. To do that, they need helium, which is in short supply and expensive. But in "cold fusion" there is a nuclear reaction which generates helium {xl}, and it can be developed to do it copiously and cheaply. So the cartel needs to appropriate that reaction from cold fusion, and pretend it is hot fusion, while still keeping cold fusion suppressed. Mallove, the great champion of cold fusion, would have prevented that, and he had the respect and connections to do it. Obviously, Mallove had to go. No one would have believed suicide, so it had to be more mundane. Hence a "lowly burglar" beat him to death.

Those are just a sampling of the many methods — professional clandestine assassination, jailing, suppression — currently used against some EFTV researchers.

Unfortunately, President Bush - with a serious energy crisis approaching and with continuing bum scientific advice from our scientific community - has been persuaded to back that big nuclear power program. So the cartels in industry and science that are grabbing all the research funds for big nuclear power, hot fusion, hydrogen economy, etc. are in fact preventing any appreciable research in the one area that can do the job: energy from the vacuum. Planning and funding the building of big nuclear power plants that will go on line in about 5 to 7 years, to feed a distribution system that will be destroyed two years hence, in a United States that will be destroyed within a year following, simply will not do the job. Instead, it will exacerbate the problem. It will, however, guarantee that when Rome burns it will burn completely. Presently that is the main function of our power industry and our scientific community, who still have no notion of the terrible threat and destruction bearing down on this entire nation.

But to seek out what our own science is doing in EFTV research, simply visit the websites of the National Academy of Science, National Science Foundation, Department of Energy, national labs and universities, and search for any real EFTV research program or solution that would enable our survival in this three year period we have entered. Cut through the rhetoric and hype for any real content that would solve the problem. There is none, and there is not going to be any.

The sites and organizations are still blindly accepting the very seriously flawed electrical power engineering, the material ether, force fields in empty space, flat spacetime, inert vacuum, and other gross scientific errors. The reader will find that "business as usual" and the interests of the powerful scientific cartels — hot fusion, nuclear power plants, fuel cells, etc. — are being pursued, with a little sop to the environmentalists in such things as solar cell array power systems windmill-powered generating systems, etc.

To sum it up: Not only is our scientific community fiddling while Rome prepares to burn, but it is also ensuring that Rome bums completely.

Yakuza Production of Portable Scalar Interferometers

The Yakuza now produce their own scalar interferometer weapons in their own facilities in Japan, including small, portable versions. This Yakuza activity has no relationship to the Japanese government. Small versions of these Yakuza weapons which can fit into a small sports utility vehicle (SUV), and undoubtedly some are also already inserted in the U.S., to be used a few times during the next two years against our refineries, nuclear power plants and hydrocarbon-fueled power plants, oil fields and Gulf oil rigs, control systems and substations for the centralized power grid, pipe line hubs, long high voltage distribution lines, etc. In short, the Yakuza can already lay down the U.S. electrical power system, for months at a time or permanently — and it can do it easily, quickly, and at will.

Even normal cyberwar techniques will do it for extcnded periods, as is well known by cyberwar specialists. For example, quoting from a PBS interview with Joe Weiss {xli}:

> Question: "So just put it all in perspective. What's the worst-case power scenario, power we're talking here — power lines, power grid?"
>
> Answer: "Absolute worst? I won't even say absolute, but a very worst case could be loss of power for six months or more."
>
> Question: "Over how big an area?"
>
> Answer: "Big as you want."
>
> Question: "Is that a possibility?"
>
> Answer: "Yes."

Presently we are in the two year "slowly escalating" initial operations phase of the centralized asymmetric warfare plan for the destruction of the United States.

Then, beginning about two years from now, the final operations phase will swiftly occur, and the already damaged entire U.S. centralized electrical power system will be destroyed quickly and rather permanently. The destruction will be by combined attacks, including cyberwar, with a guaranteed destruction furnished by Yakuza tactical and strategic interferometers, portable EMP shooters, etc.

The destruction of the United States, with the aid of the Yakuza, is coordinated by centralized planning under the old die-hard Communist faction of the FSB/KGB, which controls the Russian Federal Security Service and the Russian superweapons. Possession and operation of the Russian superweapons ensures this faction's dominance.

Russian President Vladimir Putin comes from the younger, more modern faction of the FSB/KGB, which would very much like to reach an accommodation and become the United States' trusted cheap oil supplier. This arrangement would benefit every level of the Russian economy as result of pumping in U.S. development and royalty money.

However, supplying copious Russian oil to the United States contradicts the Communist faction's fervent plans to totally destroy the United States. Thus Putin has been stymied to a large extent {xlii}. Instead, Russian oil shipments to China, over land by rail, were stopped, stimulating China into a more aggressive stance in other world oil markets such as the Middle East. Consequently, China bought in to the Russian oil fields, after the largest oil consortium in Russia came under legal attack and direct interference by the State, with the State eventually taking over the oil fields under the guise of a State protege company. Indeed, a new alliance between China, Russia, and India bodes ill for our access to energy and for other things as well.

The old Cold War has not gone away, contrary to popular conception. Instead, it has just been turned into a more sophisticated kind of war, called "asymmetric"

warfare. The same "old dogs" are still calling the shots, like a tired old black and white movie from the 1930s. Hence our asymmetric war problems (i.e., our War on Terrorism and the war of terrorism on us) will continue. As an example, Putin caving in to pressure, again centralized and tightened the control of the Russian government, setting aside the reforms of open election that had been partially implemented {xliii}. In addition, he had to seize the oil fields and assign then to a puppet company controlled by the Russian state.

Afghanistan, Iraq, Al Qaida, and Intended Muslim Jihad

The international terrorists are also being subtly and not-so-subtly manipulated, and we will see the anti-American polarization in the MidEast continue and intensify. Many foreign Arab fighters are fighting in Iraq and Afghanistan right now. Their number and organization — and centralized coordination — will continue to increase.

There are still serious nuclear proliferation problems to be faced in North Korea, Iran, and elsewhere. Iran has defiantly announced it is resuming uranium enrichment and nuclear power plant development. Short of a few ineffective sanctions or attacking Iran, it seems that little can be done {xliv}. However, clear signals from Israel emerge that eventually such will not be tolerated, and Israel will strike if necessary.[6] North Korea remains defiant and almost certainly already has a small number of nuclear weapons. Pakistan and India — both nuclear powers — continue a stand-off and are often eyeball to eyeball. With the alliance of India to China and Russia, that "eyeball to eyeball" confrontation could be aggravated at will.

Israel is extremely concerned about the path Iran is taking to achieve a nuclear weapons capability. The Israelis, having purchased several hundred "bunker-busting" bombs from the U.S., at some point may conceivably take out the Iranian nuclear facilities to prevent an unacceptable Iranian nuclear knockout threat against Israel.

The MidEast situation will further heat up, not lessen, over the next two years. It's called bleeding the U.S. dragon — and it is indeed economically bleeding us.

The intent of our foes is also to deliberately bring substantial factions of the Muslim world to a state of Jihad against the United States, necessitating additional commitment of U.S. forces out of country, and increasing the already-pressing

---

[6] E.g., see full page ad, by FLAME (Facts and Logic About the Middle East) in U.S. News and World Report. Mar. 28, 2005, p. 69, entitled "The Holocaust: Sixty Years Later: Has the spirit of Auschwitz been revived?" Quoting: "If Iran isn't stopped from acquiring nuclear weapons, there can be little question that, with or without the approval of the United States, Israel would have to preempt and, just as it destroyed the Osirak nuclear plan of Iraq in 1981, would destroy the Iranian nuclear installations — by whatever means it might take."

economic strain on the U.S. Quite simply we have run out of troops necessary to continue our worldwide tasks and missions. Unless a draft is reinstituted, we are also seriously challenging our reserves and National Guard. Any draft imposed is likely to reinitiate an intense polarization inside the U.S. over the war and America's foreign commitments.

Claiming that America had declared war against God and his messenger, Bin Laden has called for the murder of any American, anywhere on earth, as the "individual duty for every Muslim who can do it in any country in which it is possible to do it. " {xlv}.

In an American national television interview from Afghanistan, Bin Laden stated his intention to kill innocent civilians as well as military, without hesitation {xlvi}:

> "It is far better for anyone to kill a single American soldier than to squander his efforts on other activities... We believe that the worst thieves in the world today and the worst terrorists are the Americans. Nothing could stop you except perhaps retaliation in kind. We do not have to differentiate between military or civilian. As far as we are concerned, they are all targets."

The 9-11 Commission Report summarized the unrelenting attitude as follows {xlvii}:

> "Many Americans have wondered, "Why do 'they' hate us?" Some also ask, "What can we do to stop these attacks?" ... Bin Laden and al Qaeda have given answers to both these questions. To the first, they say that America had attacked Islam; America is responsible for all conflicts involving Muslims. Thus Americans are blamed when Israelis fight with Palestinians, when Russians fight with Chechens, when Indians fight with Kashmiri Muslims, and when the Philippine government fights ethnic Muslims in its southern islands. America is also held responsible for the governments of Muslim countries, derided by al Qaeda as 'your agents'.... To the second question, what America could do, al Qaeda's answer was that America should abandon the Middle East, convert to Islam, and end the immorality and godlessness of its society and culture. [Al Qaeda states] '... you are the worst civilization witnessed by the history of mankind.' If the United States did not comply, it would be at war with the Islamic nation, a nation that al Qaeda's leaders said 'desires death more than you desire life'."

This perhaps explains the morose statement of Vice Present Cheney, only a month or so after 9/11, and after he had received intensive briefings on terrorism and its present conduct against the United States. Cheney stated {xlviii}:

> "The war on terrorism will not be over in our lifetime. It is different than the Gulf War was in the sense that it may never end. At least not in our lifetime. The way I think of it is, it's a new normalcy."

Bin Laden also certainly knows the importance economics plays in a war. His original wish for the 9/11 strikes was to hit several nuclear power plants etc., damaging the ability of the centralized grid to furnish power, as well as posing a possible nuclear hazard and risk. He felt he lacked sufficient control to do it, so

opted fur highly symbolic targets: the twin towers, the Pentagon, and the White House.

Indeed, after 9/11 Bin Laden stated {xlix}:

> "Al Qaeda spent $500,000 on the [September 11 attacks], while America, in the incident and its aftermath, lost — according to the lowest estimate - more than $500 billion. Meaning that every dollar of al Qaeda defeated a million dollars, by the permission of Allah!"

He declared his policy is "bleeding America to the point of bankruptcy," and joked about the U.S. "economic deficit... estimated to total more them a trillion dollars. " Indeed, our known total obligations are already some $47 trillion dollars, and climbing.

Welcome to asymmetric warfare, where war is war, peace is war, and there is only perpetual war, including a virulent form of economic warfare augmented by "stretching and bleeding the dragon" and by direct damage of infrastructure.

Our Analysts Missed the Yakuza's Key Role and Significant Aspects of the Centrally-Coordinated KGB/FSB Strategic Plan

Our own intelligence agencies do not appear to be aware of the key role played by the Yakuza. Nor are they aware, it seems, that the Communist faction of the KGB/FSB directs the entire asymmetrical warfare against us, so that, rather than isolated incidents, the actions of all the far-flung pieces are coordinated in a strategic plan of increasing intensity and effect. Our intelligence analysts do not appear to realize that we have entered into a 3-year Operations Phase schedule - consisting of a two-year initial "gradual intensification" period and a 1-year "maximum intensity and total destruction" period — to collapse and destroy the United States.

The strategy for the initial two-year period is to "bleed and disorganize the dragon" until it collapses in fatigue and economic chaos. Mind conversions - inserting an additional modified mind in a human, then switching control of the thought and behavior between the individual's normal mind and the implanted mind, thus altering the individual's behavior as desired — will be massively unleashed to guarantee total confusion and disorder. The plan for the third year is to violently attack and dismember the prostrate dragon, swiftly and utterly destroying the United States by totally unleashing the terrorist assets already inserted into the U.S. and waiting.

At present, "bleeding the dragon" is in full progress and being steadily increased as part of the overall strategic plan against us. We are already stretched well past the capability of our regular Armed Forces, and we are inducting many of our Reserves and National Guard forces for repeated tours overseas. We have no national draft, and a bitter societal polarization will occur if the draft is reinstated. Our national debt and expenses are escalating rapidly. Our country is hemorrhaging jobs also, further increasing unemployment and financial duress.

Hurricane and storm damages are being escalated by the increased intensity of the Yakuza weather engineering. The American dollar is propped up only by ever-increasing purchases of U.S. Treasury instruments by foreign nations such as China and Japan, which could change at any time. Several prominent Asian politicians and central bankers have recently made public statements suggesting a coordinated intent to divest dollar-denominated reserve assets and shift reserves to other currencies. An avalanche of covert dollar selling appears to have already begun.

Many destructive natural phenomena can be evoked or augmented by the scalar interferometry weapons possessed by the Yakuza. Such phenomena include volcano eruption, earthquake induction, and weather and climate engineering, as confirmed by Secretary Cohen's epochal 1997 statement. But the achievable phenomena also include tsunamis, freak waves in the open ocean, and rogue waves of numerous kind and occurrence {l}. Quoting Wolfgang Rosenthal of the GKSS Research Centre in Geesthacht, Germany on rogue waves {li}:

> "The waves exist in higher numbers than anyone expected... Two large ships sink every week on average. But the cause is never studied to the same detail as an air crash. It simply gets put down to 'bad weather'."

Even super-carrier ships are frequently destroyed by such waves {li}:

> "Over the last two decades more than 200 super-carriers — cargo ships over 200m long — have been lost at sea. Eyewitness reports suggest many were sunk by high and violent walls of water that rose up out of calm seas."

That's an average of ten per year. Indeed, a satellite test readily confirmed the occurrence of such previously unsuspected freak giant waves {li}:

> "As part of a project called Max Wave — which was set up to test the rumors — two ESA satellites surveyed the oceans. During a three week period they detected 10 giant waves, all of which were over 25m (81 ft) high."

And that was just a one-time survey by only two satellites.

Indeed, during that exact three week period while the Max Wave satellites were seeking out huge rogue waves, two large tourist liners endured terrifying ordeals from such waves but survived. The Breman and the Caledonian Star cruisers had their bridge windows smashed by 30m high waves in the South Atlantic.

It appears that at least 10 to 12 oil tankers are lost each year to giant rogue waves alone. To appreciate total shipping losses from all causes: In a single year— 1981 - 250 ships of 500 tons or greater size were lost and perished {lii}. Many of these were probably sunk by unexpected large rogue waves.

We hardly need point out that a giant oil supertanker on the ocean is also easily destroyed in a single shot by a strategic scalar interferometer. A burst of energy, placed adroitly under the surface by a distant interferometer, can also produce large waves that arise and smash a ship. This also "disguises" the incident as if it were due to anomalous large waves of natural origin.

With U.S. dependence on foreign oil and most of the oil delivery dependent on supertankers, oil continues to climb in price. In the past the U.S. government has opened the Strategic Oil Resrve a bit, to assist two hard-hit companies while they scrambled to reinstate their supply. It has also just recently squeaked through the authority to drill for petroleum in the Artic National Wildlife Refuge.

It would take very little Yakuza effort to increase the loss of oil tankers, further strangling the U.S. oil supply and dramatically increasing prices. Since the oil supply for all oil-dependent nations comes from known major oil field locations and harbor facilities, deliberate and careful reduction of the tanker fleet and facilities can place extraordinary pressure on oil's availability for several major nations at once.[7]

Coup de Grace: Strategic Strikes of Great Magnitude

Great "coup de grace" blows have also been prepared by the Yakuza, in order to guarantee the catastrophic collapse of the U.S. economy, followed by the swift destruction of the United States itself. Several of these involve opportunistic volcano eruptions and tsunamis {liii} that can readily be evoked.

As an example, prior to the end of 2004 the Yakuza registered one or more of its large scalar interferometers upon one of the world's largest supervolcanoes — whose calderas lie beneath or near Yellowstone National Park. The symbolic timing so close to the anniversary of the 9/11 attack should not be overlooked. The Yellowstone supervolcano erupts about every 600,000 years, and some 640,000 years have elapsed since its last eruption. Hence — geologically speaking - its next eruption is overdue, and the caldera undoubtedly harbors great pent-up stress. Presently a Yakuza finger is on the trigger of the registered scalar mterferometer(s). If that finger pushes the trigger, the interferometer will gradually inject tremendous energy into the Yellowstone supervolcano's stress zone, resulting in a violent eruption. Its previous eruption, about 640,000 years ago, devastated much of North America, including most of the higher life forms.

By deliberately kindling the supervolcano into eruption, most of North America would be devastated, and particularly most of the United States {liv}. The supervolcano could eject more ash, lava, rock, and debris than the entire Grand Canyon can hold. Additional side effects would include the instant destruction of most of the agricultural food crops in North America by covering the farmland with thick ash a meter or more in thickness. Survivors would be faced with the immediate problems of starvation and fatal lung disease (Marie's disease), the degree of lung disease varying with exposure to silicon particles of different sizes. Food animals would also be killed in the same catastrophe.

---

[7] In 2004 a Yakuza-generated and Yakuza-steered hurricane passing through the Gulf of Mexico also was accompanied by just such freak waves, which were responsible for much more damage being done to the Gulf oil rigs and pipelines than initially thought. Pipelines on the seafloor were damaged particularly heavily, requiring very costly repairs.

Even worse damage occurred some 74,000 years ago or so, when another large supervolcano exploded, killing all human life on earth except for a few thousand in Africa. More on that shortly.

Most of all, in 1997 Secretary of Defense William Cohen specifically confirmed that terrorists already were using electromagnetic weapons to stimulate volcanoes into eruption {xxxv}. Since that is confirmed, and since the Yakuza has the scalar interferometers to do so, it follows that the Yakuza also will have identified the volcanoes in which the most damaging eruptions could be induced to strategically destroy or severely maul the United States. And so it has.

To further illustrate the killing power of a supervolcano, consider the eruption, about eleven million years ago, at Bruneau Jarbridge south of Hagerman, Idaho. This eruption covered half of North America with ash two meters thick. Distinctive fossils as far away as Nebraska, 1600 to 2000 kilometers distant, reveal ash piled two meters high that choked the vast animal population of North America to death. Marie's disease, a deadly lung disease caused by ash exposure, contributed to the mass extinction of North American megafauna.

Also consider what probably happened about 74,000 years ago with the explosion of the supervolcano whose caldera today lies under Lake Toba on the Indonesian island of Sumatra. Though the findings are still controversial, increasingly it appears from multiple evidence that the eruption of Toba wiped out all human life on earth except for a few thousand humans in a location in Africa. This follows a formal theory by Professor Stanley H. Ambrose {lv}, which has gained support as a result of independent geological {lvi} and genetic evidence {lvii}.

Genetically, the human mitochondrial genetic trace clearly shows a dramatic and sudden reduction in genetic variability (called a genetic bottleneck) some 74,000 years ago. Also, present human genetics shows that the ancestors of every person living today came from Africa. After a period of continuing extinction, then during the last 74,000 years following that violent eruption, every human born on the planet descended from the few thousand humans in Africa who survived. Apparently all other humans on earth perished, along with their inherited genetic variations, producing a profound genetic bottleneck in the entire human species {lviii}.

Quoting Professor Lynn Jorde, a specialist at the University of Utah who uses deep analysis of mitochondrial DNA to investigate mankind's past {lvii}:

> "We have a dramatic reduction in genetic diversity during this time when the population is very small and then after the bottleneck the people who we see today would be descendants only of those who survived. And they're going to be genetically much more similar to one another, reducing the amount of genetic variation. ...Mutations in the mitochondria take place with clocklike regularity, so the number of mutations gives us a clock essentially that we can use to approximately date the major event. In the case of a population bottleneck, we think that this would have occurred roughly 70-80,000 years ago, give or take some number of thousands of years. So then the real question

is: What could have caused such a reduction - an extreme reduction - in the human population down to as few as 5 or 10,000 individuals?"

Increasingly the cause appears to be almost certainly the recognized supervolcano eruption at Toba, some 74,000 years or so ago {lix}.

As another example, there is a volcano named Cumbre Vieja, on the Island of La Palma in the Canary Islands, which split in the past. The split-off western flank - about the size of the entire Isle of Mann - still hangs above the ocean, poised to slip into the sea. Its eventual crash into the sea will evoke massive tsunamis, moving outward at some 600 miles per hour. Within 7 to 10 hours, an immense wall of water, up to several tens of meters high, will strike New York, Boston, and the eastern seaboard, penetrating inland and devastating the area {lx}. It is not a matter of if the incident will occur, but only a matter of when.

Tsunamis from underwater volcanoes, seafloor earthquakes, and other shocks occur around the world, including in the Pacific Ocean. Quoting {lxi}:

> "In the last 1,000 years, Pacific Ocean tsunamis have been observed and recorded over 1,000 times. All of these were major catastrophic events, since smaller events often go unrecorded."

Cumbre Vieja presents another wonderful opportunity to the Yakuza, who almost certainly has registered their scalar interferometers on it, intending to evoke a tsunami by triggering the volcano into eruption. If so, then this is one of the earthquake eruptions that are aknost certain to be initiated by the Yakuza, during the next two years, to assist in causing huge economic damage and mass casualties to the east coast of the United States. Incredibly, the U.S. apparently does not monitor Cumbre Vieja to enable hours of advance warning of the giant tsunami. Without a warning system and lead time to evacuate major cities, great loss of life and economic destruction can be expected.

Further, there are conditions off the west coast of the U.S. that are also suitable for induction of undersea quakes and large tsunamis. Undoubtedly these arc already on the Yakuza's target list and schedule for striking.

As pointed out by Stockton {lxii}, there is also the possibility of heating methane hydrates (frozen natural gas) on the eastern continental shelf to cause missive undersea landslides, which would also cause tsunamis.

The strategic significance of Secretary of Defense Cohen's statement {xxxv} in April 1997 becomes abundantly clear. He was referring to a grave strategic destructive capability, already in the hands of the terrorists and available. He was confirming that this capability is already being used by the terrorists in their asymmetric war against us.

That strategic destructive capability, when adroitly utilized, as in the simple examples given, is as powerful as the full nuclear ICBM capability of the Soviet Union or the United States.

Since the Yakuza interferometers can also massively intervene in submarine volcanic and earthquake activity on the ocean floor worldwide, their capability to induce giant tsunamis and other violent waves, in addition to giant quakes and volcanic eruptions, is of the gravest significance.

Indeed, the Yakuza recently spectacularly demonstrated such effects, under the direction of the FSB/KGB. On Dec. 26, 2004 they initiated the magnitude 9.3 seafloor quake that caused severe tsunamis and loss of life in Asia, now thought to include more than 300,000 deaths in addition to enormous economic damage.

Summary of Some Weather Engineering and Other Capabilities

Some of the simpler scalar interferometer capabilities in engineering of the weather and geophysical events are:

a. Steering the jet stream, thus steering a weather entity (i.e., storm, front, air mass, and hurricane). Warming the air in one region expand it so it becomes less dense, creating a low pressure area. Gradually moving the target interference zone determines its path. Cooling the air in a region produces the opposite effect, a high pressure zone, steerable in the same fashion. By making multiple highs and lows and adroitly positioning and steering them, the jet streams and other prevailing winds can be entrained, captured and steered. This alone allows substantial augmentation and steering of weather effects.

b. Warming or cooling the atmosphere in a storm or front to affect its power.

c. Producing sharp negative energy EM pulses inside a storm so that the negative energy Dirac sea holes "eat" electron charges, reducing the storm's charge and power.

d. Producing positive energy EM pulses just outside a storm in order to lift extra electrons from the Dirac Sea, to increase the storm's charge and power. In that case the resulting Dirac holes expand outward and away from the storm, having no effect on it. As they meet stray electrons, these holes eat the electrons and both disappear back into the vacuum, as ordinary vacuum (the Dirac Sea).

e. Building very large rotational atmospheric flow in the path of a storm, and then sharply decreasing the diameter of its curvature, so that the storm's angular momentum spawns concentrated spin flows or meteorological circulations, to form tornadoes, waterspouts, etc.

f. Establishing a large high pressure area in a region to block lower-pressure normal winds and storm directions.

g. Establishing a large low pressure area in a region to attract higher-pressure normal winds and storm activity.

h. Focusing the interference zone inside a volcano's magma chamber and steadily depositing additional EM energy there builds up internal pressure, causing an eruption. A slow rise in pressure, resisted by friction, engenders a large and violent eruption, and consequently maximizes the distant dispersion of great quantities of ash, lava, and other debris.

i. By more rapidly inputting the energy into the volcano, the eruption will occur at a lower pressure and so a smaller eruption will ensue.

j. All sorts of EM energy forms glowing spheres, hemispheres, etc. can be produced and used against various targets, for electrical and electronic destruction or for an electromagnetic explosion when the energy contacts the intended target.

k. Depositing extra intcrfcrometry energy into a fault zone increases stress and piezoelectric activity in the rocks, thereby inducing an earthquake when the rocks finally slip. By adjusting the rate at which the excess energy is added, the size of the resulting earthquake can also be changed.

l. By increasing the charge of a storm, its electrical activity and the resulting lightning strikes can be increased. This is useful, e.g., in repeatedly producing large forest fires, particularly when combined with weather engineering to produce a drought condition. On the other hand, by decreasing the charge of a storm, its electrical activity and therefore its lightning strike activity can be decreased.

m. By inducing repeatedly pulsed negative energy in an area containing living animals or humans, the animals or humans can be directly killed. Strong pulsing will result in rather instant death, where the bodies drop limply, with not even a nerve cell firing thereafter. Everything living — cells, microbes, viruses, whatever — in the powerfully struck bodies is killed instantly, and the bodies do not decay, even over a month or more. The Soviets tested such weaponry in this mode against two Afghan villages in their own war in Afghanistan, and it is probable that the Yakuza has produced portable negative energy EMP weapons with similar capability.

n. The longitudinal EM wave sets — and beams of such — transmitted by a scalar interferometer easily penetrate Faraday shields, the ocean, the earth, etc. That is because matter is mostly empty space filled with Whittaker EM fields and potentials, which in turn are bundles of longitudinal EM wave sets. Hence matter is a "superhighway" for the throughput of longitudinal waves. Such longitudinal wave weapons are very useful in attacking deep underground targets and facilities and destroying them or wreaking damage. As an example, the leader of a nation can be killed sitting in the chair at his desk, by a precision scalar interferometer. The interferometry focus has been demonstrated down to a few inches. In Japan, the Yakuza has demonstrated this capability on a few occasions to kill several Japanese critics inside shelters or shielded facilities. The significant impact on the very notion of shielding by strategic command and control centers in underground bunko and facilities can be easily appreciated. Essentially all facilities and personnel become completely vulnerable.

o. The use of a more portable scalar interferometer to destroy the electronic controls of a normal or nuclear power plant from a distance is obvious. With nuclear power plants this poses the risk of a melt down. Electrical controls for pipe valves, etc. are also vulnerable; spent nuclear fuel rods are largely stored in underwater pools on normal power plant sites. If valves open and the water drains from those pools, the rods will heat up and a melt down or very hazardous venting of radioactivity can ensue.

p. The control systems for hydroelectric dams are deadly vulnerable to scalar interferometry attack.

q. Large electronic complexes such as switching and control systems, centralized control systems for power grids and substations, etc. are highly vulnerable to attack by long- or short-range scalar interferometers.

r. Chemical plants, refineries, fuel storage sites, tank farms, etc. are also highly vulnerable to scalar interferomctry, including to portable attack.

s. Liquid natural gas ships, oil tankers, etc. are also extremely vulnerable to scalar interferometry attack.

t. Surges on the power distribution grid transmission lines can easily be accomplished by scalar interferometry at will, methodically causing great damage to the grid and emergency shutdown of most of its "feeding" power plants. As much of the grid as desired can easily be kept nonfunctional, as long as desired, by occasional repeats from a single long-range scalar interferometer.

u. Any communications center or headquarters is completely vulnerable to attack and destruction by strategic or portable scalar interferometers. Since a scalar interferometer can also produce negative energy EMP pulses of extreme lethality in the interference zone, all centralized command and control systems are essentially totally vulnerable. As an example, our own future network centric warfare communications systems can be totally destroyed in a few minutes by only a few scalar interferometers, even by just one.

v. Many other capabilities also exist to use the interferometry to affect the weather, the atmosphere, the rocks in the earth or at the bottom of the ocean, etc.

Once the Yakuza scalar interferometers are factored into the strategic terrorist threat situation, there is no recourse that can save the present centralized electrical power system, large U.S. command and control systems, etc.

The only way to prevent the total economic collapse of the United States induced by collapsing the centralized electrical power system is to immediately initiate the strongest possible energy from the vacuum systems development and production program. For the nation to survive the coming destruction of its power system, the goal must be to replace the entire centralized power system, including its long distribution lines and large feeder power plants, with decentralized EFTV power systems as rapidly as possible. That centralized system is simply not defensible and not sustainable against current threats, and against the hostile assets already successfully inserted or waiting abroad to support terrorist operations inside the U.S.

So the strongest possible immediate efforts are necessary if we are to prevent our total economic collapse in about two years, and also our subsequent total destruction by combined scalar interferometry and internal terrorist attacks. A massive Manhattan-type project to develop and deploy EFTV electrical power systems is most urgently required, as at least equal to the highest U.S. priority. We bluntly state without further discussion that such EFTV systems are indeed already developed in our own country and worldwide, and so they are available, but they have deliberately been withheld or suppressed for decades. Now they must be unleashed.

Short of a direct Presidential order and Presidential Decision Directive, there appears to be no way that the necessary program can be or will be galvanized because every powerful scientific industrial, and government laboratory cartel in our society is bitterly opposed to any such program or action. Our morose assessment is that, unless some other major strategic factor significantly enters the conflict, the Yakuza and other terrorists — attacking our present centralized and totally vulnerable control, planning, and energy systems - will probably succeed in catastrophically destroying the U.S. economy on schedule. If so, that will leave the U.S. prostrate for its subsequent rapid physical destruction by the jubilant Yakuza in a giant "turkey shoot". And hence our oblivion.

U.S. Societal Polarizations Are Being Gradually Increased

Among sociologists, there is much support for the notion that societal polarizations naturally tend to increase {lxiii}. Further, many pollsters state that the nation is very seriously polarized already, particularly since the recent presidential election. For example, quoting John Zogby on the 2004 elections {lxiv}:

> "I have been calling this the Armageddon election now for months because we are so polarized, so split culturally, politically, ideologically, demographically, like almost no other time in American history. ... The last time the nation was this deeply divided over what course to take was the original Armageddon election of 1800."

However, for the first time in history, certain rather esoteric "mind war" FSB/KGB weapons are being directly employed to gradually and reliably intensify the societal polarizations in America— straight vs. gay, conservative vs. liberal, Republican vs. Democrat, one religion against another, one race against another, labor class vs. financial class, etc. The strategic objective is to increase and intensify the extreme ends of these polarizations, by altering the behaviour of certain leaders. With intensification, the polarizations will slowly become so fierce that, about two years from now, serious rioting and bloodshed massively spilling into the streets and cities will result in chaos, martial law, etc. and severe polarization and disorganization. In short, the society will be engaged in fiercely consuming itself.

So far, the deliberate escalation of our societal polarizations by the new mind war and conversion techniques is right on schedule, as anyone can see now, and will increasingly see over the next two years.

U.S. societal polarizations will continue to increase now that the election is over. Temporary conversions and fractional conversions {vii} of the minds and mind operations (and therefore the behavior) of selected leaders or prime movers in the various polarization areas are being used and will increase. This capability arises from the branch of energetics known as psychoenergetics, and such measures are now being used selectively to intensify our polarizations. Particularly see our giant briefing on mind war and conversions, in the second part of this book.

Dramatic tests of the distant, total control over the mind and behavior of a person performing an intensive technical task (flying and operating an aircraft as a weapons platform) {lxv} were conducted against Captains Button and Svoboda in 1997. A third test against Captain Hess in 1998 demonstrated total control of the autonomic nervous system as well. Those dramatic "suicides" were deliberate, high profile stimuli to see if our own intelligence analysts knew anything about psychoenergetics yet. The answer was a very resounding and clear "No, they are still ignorant of that area, they are very determined to remain ignorant of that area, and hence the nation is still deadly vulnerable to use of such weapons and effects."

Our scientific community still does not understand that mind operations are totally electromagnetic but temporal, not spatial, although they also have virtual state projections in 3-space. Because the scientific community has suppressed the source charge problem, they have no notion of the exact mechanism by which virtual state changes can be integrated to observable changes, electromagnetically by the action of charge itself.

They also do not understand that observations in 3-space have small virtual state projections in the time domain (as mind operations). Our scientists have no understanding at all that mind operations are (i) electromagnetic, (ii) temporal, and (iii) directly engineerable and creatable (but using time-polarized EM photons and waves). They do not understand what thought is, what intent is and what its exact mechanism of expression is, and how mind and body are coupled to provide a living biological system.

Again, because our nation is so totally vulnerable to mind war conversions and fractional conversions, a U.S. crash program of utmost rapidity to catch up in that area, under a Presidential Decision Directive, is urgently required.

For example, on his customary morning exercise jog at a military post in the U.S., in March 1998 Captain Gordon Hess suddenly veered aside, sat down, took out his knife and calmly stabbed himself in the neck and torso some 26 times, including multiple thrusts directly through the heart. Note that the shock of a stab through the heart is considered in forensic medicine as generating such shock and recoil of the autonomic nervous system that it is not possible for an intentional suicide to continue, much less to achieve a total of 26 repeated stabs until the body simply became nonfunctional and toppled over.

In short, total control of even the deep autonomic nervous system was demonstrated resoundingly. The purpose of the test was two-fold: (i) demonstrate distant instant conversion and total control, including of the autonomic nervous system itself, and (ii) stimulate and "ping" U.S. intelligence to see if they knew what was going on, what had been tested, and why. Both purposes were achieved, The test went perfectly, and the U.S. demonstrated it was totally asleep and totally ognorant of such technology, and even of the technology's ansatz. Indeed, by order of the U.S. Army, two days later front loaders dumped two tons of dirt on the death scene, effectively hiding any further evidence. This is reminiscent of a

similar U.S. government action at the crash site of the Arrow DC-8 at Gander Air Force Base, Newfoundland in I985. A general officer arrived very quickly on the scene, and had the entire area bulldozed after extracting the wreckage.

As stated, the Yakuza is a major arm and the protege of the FSB/KGB's coordinated asymmetric war and terrorism, carrying the bulk of the strategic war to be conducted within the U.S., and reporting to those die-hard old communists who are the hidden FSB/KGB directors. The Yakuza view is that - together with the other terrorist organizations already having infiltrated substantial assets into this nation, and together with chaos in U.S. streets due to severe polarizatopms gradually being intensified now — they are already helping to bleed the dragon increasingly. Then as the scenario progresses they will joyfully begin the direct destruction of the centralized U.S. electrical power system and other key economic targets (harbors, refineries, pipelines, etc.). They will also participate in immune system spreading (explained later in this paper), as a force amplifier to biological warfare strikes by other terrorists. As all of this hostile action and destruction ramps up over the next two years, it will crescendo and catastrophically collapse the entire economy of the U.S.

Added to assure that great economic collapse, there will also be a sudden and massive collapse of "group ordering and coherence" (GO) induced by massive conversions of "sleeper" inserted conversions and fractional conversions. E.g., by sudden switching conversion of massive numbers of key persons whose behavior instantly and dramatically changes all over the map, the order and coherence of any important group can be and will be devastated and lost, immediately. Our police forces may suddenly begin attacking our populace, while crews manning and operating our ICBMs, nuclear subs, and nuclear bombers "go crazy" and erratically start firing at our own cities, and at each other. And so on, in a society that has suddenly erupted into total schizophrenia. Throughout the U.S. and Canada, GO will rather dramatically become NO-GO, as all group coherence is lost and total chaos sets in, as in the two examples given..

Given the planned present offensive schedule and the insertions already accomplished, indeed the plan for full strategic destruction of the U.S. is likely to succeed.

The psychoenergetics conversions and fractional conversions are a major strategic weapons program in support of the present three-year "Operations Phase" schedule for strategic destruction of the U.S. So it is also a program that supports the strategic destruction of the centralized U.S. electrical power system including its infrastructure, as one purpose.

The original targets desired by Bin Laden for the 9/11 attack actually were nuclear power plants etc. —parts of the centralized electrical power system — rather than the more symbolic Twin Towers, Pentagon, and White House. The targeting was apparently changed by Bin Laden himself. He felt that his assets in place and available were not yet sufficiently trained to produce a truly effective, coordinated simultaneous set of attacks on nuclear power plants and other

"harder" targets. So to guarantee success, he opted for strikes on symbolic but softer targets, which would provide great publicity stimulus in the MidEast for his cause, in addition to causing great consternation in the United States.

Insertions Far Exceeding Public Acknowledgment

Long before its economic collapse in the latter 1980s, the former Soviet Union inserted nuclear weapons in all our major cities and population centers, along with Spetznaz teams to detonate them on command. Lunev's book {lxvi} even tells a few of the ways the weapons were inserted. Those weapons and teams, still controlled by the old-guard Communist faction that dominates the FSB/KGB, are still here, still waiting for the order to detonate the nuclear weapons and destroy the United States. The Communist faction (not the younger and more liberal faction from which Putin comes) is the one plotting to destroy the United States.

These Russian nuclear weapons and teams may be brought into play during the operations phase as several substantial nuclear explosions in major U.S. population centers that will be blamed on the international terrorists. The result will be great loss of life, nuclear contamination of several large U.S. cities, complete overwhelming of our Homeland Defense and medical capability to handle mass casualties, and terrible physical damage to further guarantee the scheduled catastrophic U.S. economic collapse once the centralized electrical power system is taken out.

As previously mentioned, we would have been destroyed by the former Soviet Union in the late 1970s, by those successfully inserted Soviet nuclear weapons already at their target sites on station in the U.S., except that a friendly nation also inserted nuclear weapons massively into the cities and key target areas of Russia. Those friendly weapons are also still in place, waiting for the order for their detonation if necessary. This sort of thing in the "old days" of cold war intelligence was called dead man fuzing. It is still in place today, but its "range of uses and functions" has substantially increased.

Being chess players and rational adversaries, the Russians can be countered by a balance of terror including dead man fuzing — the old Mutual Assured Destruction (MAD) notion with the twist of using inserted nuclear weapons already on site in the targeted nation — because they will not just commit mass suicide for Mother Russia. So the United States survived in the 1970s, courtesy of a friendly nation, and we were not suddenly destroyed by American city after city blowing up in a nuclear inferno. The MAD tactic worked because the adversaries were known and their location could be destroyed at will.

However, with irrational foes such as those in the war on Islamic terrorism, mutual assured destruction is not an effective deterrent. There is no single nation or location in which to insert "dead man fuzing" against the terrorists or target with deliverable weapons of mass destruction. The present terrorists are not localized, but are dispersed worldwide and embedded in the civilian populaces of many nations, including our own. In that case, there is only assured destruction of

the nation targeted by the terrorists, if and when the terrorists successfully place enough weapons of mass destruction into the targeted nation(s). In short, MAD simply turns into AD. The terrorists will soon achieve that capability, if they have not already reached it.

In the case of assured destruction, the insertion phase — which can reach a very high assurance level before the operations phase is initiated — becomes the key to winning or losing, given that the terrorists have or obtain sufficient WMD assets to insert.

The purpose of strategic asymmetric warfare is to kill or destroy the targeted populace. It is a fanatical ultimate expression of General George Patton's famous, blunt statement:

> "I want you to remember that no bastard ever won a war by dying for his country. He won it by making the other poor dumb bastard die for his country..." {lxvii}.

Modern Asymmetrical War: The Scorpion Duel

We thus are back to the absolutely primitive warfare of two dueling scorpions: He who first succeeds at insertion, and then strikes his enemy hard and decisively in his vitals, is he who wins a priori.

The procedure is to first ensure that one will hit the foe's vitals catastrophically, and sufficiently to destroy the entire foe himself. That is the Insertion Phase. Then the procedure is to unleash what has been assembled, thereby destroying the foe. That is the Operations Phase.

Hence the success of the insertion phase — inserting the necessary WMD and operational teams into those vitals in advance — predetermines the success of the subsequent operations phase, where one strikes on order, unleashing the WMD and destroying the nation's vitals and therefore destroying the foe.

For the targeted scorpion, there is no turning back or delay, once the insertion phase of the scorpion duel begins against him. Successful insertion of the required WMD and WMD teams — during a time our folks innocently think of as "peacetime" — almost inevitably wins the war by destroying the penetrated adversary very shortly after the operations phase begins. In a nutshell, those two phases — insertion followed by operations — constitute the "offense" part of asymmetric war. And since peacetime is just the insertion phase, asymmetric war is perpetual war, whether or not shooting is ongoing.

There has been little public "briefing" by our government on what the estimated success of the insertion phase against us has been and is now. Apparently much of the analysis is in disarray, filled with assumptions, and very short on actual definitive data. It also follows that most definitive data in this area would be highly classified, particularly to protect effective human intelligence (HUMINT) sources.

Now one can appreciate VP Cheney's morose statement. Since "peacetime" now is just another name for "insertion phase", then "perpetual peace" is still "perpetual war" in the new vernacular. So we have entered a "perpetual war" we have not previously known or understood. There is no real peace in the sense we think of it. There never will be any peace again, until one opposing side of the dueling scorpions is utterly destroyed.

The "defense" part for the terrorists is to hide or defend their own "vitals" — their actual bases, support organizations, supply routes, troops and forces and equipment, etc. In the present asymmetric war, there are no single terrorist bases for us to just "knock out" decisively. We cannot win this war by simply having our troops riding out of "Fortress America", meeting and defending some hostile army on some distant battlefield, and then riding back into our protected fortress again. There no longer exists such a thing as a "protected Fortress America ".

Instead of an identifiable single army on a single foreign battlefield, the terrorist foe's "vitals" are hidden around the world, in many places, and in many ways. Many of them — often the most dangerous of them — are secretly hidden right here in the United States, inserted during the insertion phase which has been ongoing for at least 20 years.

In the U.S., we cannot "hide" our vitals such as refineries, pipelines, railroads, bridges, electrical power plants and long transmission lines, harbors, water supplies, food supplies, etc. Instead, we can only try to protect them against their certain attack, and try to limit the damage and destruction. The main target for the terrorists is not just our military forces, but is primarily our civilian populace and especially our national economy — which is particularly vulnerable by the rather simple destruction of our centralized electrical power system and its primary support infrastructure.

The real art of asymmetric war is to first draw most of the targeted opponent's military forces out of the protected fortress and get them scattered widely in distant locations and distant struggles. By augmenting the distant resistance, this forces the targeted nation's military forces mostly to be deployed elsewhere, leaving the internal fortress itself much less protected, and thus making it highly vulnerable.

Once the major decisive action is shifted to inside the protected fortress, there is an urgent necessity for (i) a strong Homeland Defense, (ii) well-organized and effective mass casualty treatment capabilities (which presently do not exist), and (iii) strong border defenses, sealing of the borders, and interception of insertion attempts as they occur, etc. This also presently is not in place; our borders are full of holes and in many ways almost a joke. There is also the urgent need to go after the opposing scorpion's "vitals" wherever the pieces can be located and "fixed in place" and destroyed.

Ironically, for the U.S. these urgent needs come at a time when our HUMINT resources have largely been abandoned or nullified, by the past fascination of our

intelligence community for technical widgets such as satellite photography, etc. So our ability to ferret out inserted cells and WMD has been sharply reduced by the intelligence community itself.

Effective HUMINT takes years to get established with successful agents infiltrated into the terrorist cells and planning organizations. So not too much is going to be rapidly accomplished to resolve our HUMINT shortfalls. Much of what HUMINT is available is either from foreign sources or is due to the clandestine cooperation of much of the peaceful U.S. Muslim community, which sees this nation as its own country, and thus sees any threat to destroy the U.S. as a threat against the peaceful Muslim religion itself. To understand some of the factions and divisions of the Muslim world, the reader is referred to treatises by Williams {xcvi, xcvii}.

But the scorpion duel is highly sensitive to being able to (i) find the opponents vitals (which now are the inserted assets and terrorist teams within one's own nation) and (ii) go after the scorpion's vitals and destroy them in what are erroneously called "peacetime operations". Ironically, one sets up winning or losing the asymmetric war, by one's actions in peacetime. Once in an asymmetric war, "peacetime" is the absence of significant overt active hostilities, but with the presence of fierce covert insertion and preparations for the follow-on operations phase and the "knockout" punches.

Distant Military Actions: Necessary but Not Sufficient

Hence one cannot think of winning major battles and the asymmetric war in a few months or even a few years, simply by fighting successfully on well-defined distant battlefields. Those distant conflicts and confrontations are necessary but not sufficient, a term mathematicians delight in using. It simply means one has to do it, to prevent losing, but by itself it is not sufficient to win the war on terrorism.

Instead, one must also think of a continuing gritty, gruesome war, lasting for decades, ongoing in one's own cities and population centers and installations. One rather gradually grinds down the terrorist opponents and rather gradually uncovers and destroys the various parts of their vitals, while protecting one's own vitals as much as possible, and while rooting out everything one can of the insertions made by the foe or further attempted by the foe. Here effective HUMINT is vitally important, and our shortage of it is a grave strategic vulnerability. Obviously our intelligence agencies are also scrambling to try to get such HUMINT effectively going again.

If one destroys the terrorists' assets and capabilities before they destroy him, one survives, but still must root and destroy the terrorists themselves. If one does not succeed in doing that, one dies because the terrorists will resurge and destroy him without mercy. This is the message the Al Qaida and other terrorists are symbolically sending, when they behead prisoners and hostages. It is absolutely a scorpion duel to the death.

With the abrupt wake-up call of 9/11, we were suddenly confronted with the continuing and unrelenting nature of this asymmetric warfare. At least officialdom and our armed forces were confronted with it; there has been no truly adequate news briefing or educational series for the American public on such matters.

The military schools of the Army, Navy, and Air Force do include education on such asymmetric warfare, including highly classified courses at the top secret level. But certainly the U.S. public still does not understand the absolute necessity for Cheney's morose statement or the full nature of the new reality of asymmetric war {xlviii}. Indeed, much of our population is polarized, because of— for one thing — a substantial and naive belief that all problems could readily be solved by negotiation, if only Bush were so inclined.

Indeed, as with every other strong and emotional subject, the subject of "asymmetry" in warfare is itself a societal polarization area. Typical "anti-views" simply downplay the very notion of asymmetry as being "nothing new or special" in warfare {lxviii}. As one reads such treatises, it becomes crystal clear that our own strategic planners and strategic theorists themselves are often confused, simply recasting asymmetric war into what has gone before. They are not factoring in such radical developments as the Yakuza's acquisition and use of scalar electromagnetic superweapons, or the dramatic change that occurs in the theory once full strategic U.S. destruction is a capability already in terrorists' hands, with multiple knock-out blows already cocked and waiting. And they certainly are not factoring in the stunning implications of mind war, conversions, etc.

If one can disable an entire populace mentally, at a single stroke, one can use such "mind war" conversion switching to destroy any order in the society nearly instantly.

With suitable preparation during the insertion phase, terrorists and foes with such capability can indeed achieve sudden massive "knockout" of a targeted populace, in ways presently not dreamed of by the open press.

Asymmetric Warfare Simplified: An Overview

Let us briefly discuss this "new" kind of "old" warfare in the most direct manner possible. The present war is a very different kind of warfare called asymmetric war. It consists of two phases: (1) the insertion phase, (conducted in what we erroneously call "peacetime"), during which the necessary WMD and teams to operate and unleash them are inserted in the targeted nation's populace, population centers, and key target areas and made ready to go, and (2) the operations phase, in which the inserted forces and assets are unleashed, thereby destroying the targeted nation — in this case, the U.S. itself. The bulk of the target and intention is to kill U.S. civilians and destroy critical facilities right in the U.S. homeland — as many as possible, as efficiently as possible, and wherever and whenever possible.

Secondary[8] to the important of population kill during the operations phase is the destruction of the targeted nation's economy, catastrophically and decisively. If the foe succeds dramatically in accomplishing the insertion phase, the foe will almost automatically win the follow-on operations phase a priori, unless he is an utter fool.

Further, the development of secret weapons and superweapons is not confined just to their use in overt warfare. Depending on their nature, they can also be used in covert or asymmetric warfare, in great surprise and shock upon the targeted populace.

Our very real problem today is that the insertion phase has been going on for at least two decades, while we were literally "sleeping" as far as intercepting and degrading the insertion effort by any substantial degree at all. The blunt truth is that the terrorists' Insertion Phase has just about been successfully accomplished already. We are in grave danger of being utterly destroyed, with high assurance, in the three-year Operations Phase whose first part has already begun.

Compare the conduct of asymmetric warfare as analogous to orienting and setting up weapons and ammunition and target lists for a massive artillery barrage, and preparing to make a massive attack with that barrage. One first gets the artillery guns shipped into the necessary assembly areas, assembled in place, with their ammunition and crews inserted and made ready, with their target lists completed and waiting. Then one gets the vast assembly of guns and crews properly registered on their specific targets and ready to go. That's the "insertion" or "preparation" phase for a normal mass artillery bombardment.

Then the assemblage of "weapons in place" simply fires the massive barrage on order, and that is the "operations" phase, exploding with suddenness and great violence right on the enemy's vitals. An important major characteristic of this "normal" warfare insertion phase is that it is the insertion of the delivery systems, to chosen "attack positions" outside the targeted area.

In asymmetric war, instead of assembling all the external delivery systems (cannon, rockets, missiles, bombers, etc.) it is as if most of the deadly ordnance is already delivered and is assembled right in its target areas, inside the targeted nation, along with the necessary teams to set them off right there in place. Long-range additional systems placed "outside" the targeted nations can also assist or lend support, particularly if the systems are still secret and unknown to the targeted nation.

---

[8] However, if the economy can be catastrophically destroyed along with total disordering of the society by sudden massive mind conversions, destroying all coherence, the entire population is reduced to hapless targets and already completely defeated. Such a hapless populace can then be methodically destroyed.

In short, in asymmetric warfare the "delivery" pan of the former operations phase is pre-accomplished, before hostilities even begin. So the insertion phase gets the artillery rounds placed right at the target during "peacetime", and avoids any further assembling of the external artillery pieces, rocket launchers, and other delivery systems necessary in the conventional war approach.

Thus successful insertion in asyminetric war overcomes one of the vagaries of standard war: the inaccuracies and mishaps caused by misdeliveries and/or losses of the delivery systems themselves prior to delivering the ordnance on the distant targets. In normal war, those misdeliveries and losses to the delivery systems directly subtract from the effects achieved on the target once the attack is initiated. In asymmetric war, the cost of misdeliveries and losses to the inserted WMD are paid for before the hostilities and before the attack (the operations phase) begins. So given a successful insertion, "delivery system losses" prior to attack do not subtract from the effectiveness of the attack results, once the attack is initiated. Indeed, successful insertion is a great force amplifier.

Once the hostile terrorists possess weapons of mass destruction and have already delivered them onsite to the actual targets, the "massive barrage" of the operations phase is certain to destroy the targeted foe, if the terrorist leaders have any competence at all in their planning and preparations. The great advantage of the insertion phase is that it covertly prepares a great "barrage" where the "ordnance delivery to the exact target locations " has already been accomplished and its lethal effectiveness against the actual targets has therefore been assured in advance. With proper stealth and intrigue, the insertion phase can be accomplished slowly and at will, and without any extraordinary resistance being offered by the "sleeping" targeted nation or population! After all, it is "peacetime" when such clandestine insertion operations are conducted. In the new concept, "peace" is simply the insertion phase of the perpetual war.

So asymmetric war bypasses much of the normal overt concern with long range delivery systems such as ICBMs, strategic bombers, aircraft carriers, nuclear submarines, etc. The usual giant armada of delivery systems is largely unnecessary, if the terrorists can successfully perform the covert insertion phase, instead, the terrorists' major early activity is in ordnance procurement, not in building long range delivery systems.

Obviously asymmetric war dramatically differs dramatically from normal symmetric war, and so there are definitely some new questions which must be asked and answered.

A Few Questions to be Answered

In an asymmetric war situation, some major appropriate questions for the targeted nation are: Are all the terrorists identified as to parent organization, etc.? How certain is the targeted nation that there have been no substantial omissions from its foe identification and capabilities list? Are there already effective compensatory

plans in case there suddenly are uncovcred additional tcrrorist organizations or parent organizations, and/or additional capabilities?

What is the WMD and other clandestine weapon capability of the terrorists, their organizations, their supporting nations or groups, etc.? How certain is the targeted nation that there have been no substantial omissions from the weapons capability lists? Are there already effective compensatory plans in case there suddenly are uncovered additional WMD or clandestine weapon capabilities of the terrorists or their parent organizations?

In view of Secretary of Defense William Cohen's seminal 1997 statement, what specifically is the capability of the terrorists to cause those volcanic eruptions, weather engineering and climate control, and initiation of earthquakes? Particularly in view of anomalous quake swarms ongoing, and the disastrous 9.3 undersea quake on Dec. 26, 2004 that initiated the catastrophic tsunamis in Asia? What specifically is the nature of these strange "electromagnetic" weapons confirmed by Defense Secretary Cohen? What specifically are the counters to them, and specifically how effective are these counters? Further, why is so large a percentage of the government still unknowledgeable of this critical portion of the terrorist threat and thus totally unprepared for it? Why has the American public not been completely and adequately briefed on these confirmed terrorist developments?

Even though known specific foreign areas with concentrations of the terrorist organizations and/or their support groups are targeted for attack and neutralization, how much of the total terrorist capabilities have been reduced by such measures? What if anything has been the impact on the inserted capabilities already inside the United States?

Exactly what information is officially available (and to what degree of confidence) on the "missing" 5 Ukraine SS-19 Stiletto ICBMs, each missile with 6 nuclear warheads and each warhead of several hundred kilotons yield? {lxix} To add spice to the controversy, three years after "all" the SS-19s were supposedly turned in and accounted for, another 31 physically turned up in Ukrainian silos and warehouses! One also questions what happened to the additional 230 or so missing "extra" nuclear warheads from the Ukraine total? {lxx, lxxi} What happened to the missing Russian suitcase nuclear weapons? {lxxii} What happened to the 20 suitcase nuclear weapons allegedly purchased by Bin Laden {lxxiii}, etc.? What if anything has been done about the already-inserted Russian nuclear weapons and Spetznaz teams in our cities and population centers? What if any defense or countermeasures exist to prevent our destruction at some point, from these nuclear weapons alone? And again, why has not the American public been adequately briefed on such hostile capabilities and on the "nuclear knives already at our throats"?

How long has the insertion phase been ongoing? How effective or ineffective has interception and neutralization or intercept of the insertion attempts been? Again, why has the American public not been thoroughly briefed on these areas? Why

has the Congress not been adequately briefed on them? What is Homeland Defense doing about them?

What is the probable target listing believed to have been compiled by the terrorists, based on their actual weapon capabilities and the degree of insertion success actually accomplished? Considering Bin Laden's background in economics, and his past statements on the importance of disrupting the economics, is not the near-absolute vulnerability of our centralized electrical power system our greatest strategic weakness, insofar as catastrophic collapse of the U.S. economy being introduced? If so, why has the scientific community and industrial community been allowed to push for hot fusion, hundreds of pebble bed reactor nuclear power plants, etc. when our entire centralized electrical power system will be destroyed long before any of those could come on line? Even if the nuclear power plants were built and on line, they too are "sitting ducks" and "fat targets", so what is to prevent their easy instruction by the Yakuza scalar interferometers, both long range external systems and portable inserted systems?

What are the various options for the assessed terrorist "preparation" at the particular stage of their insertion phase, or in the near future? Which of these options have the greatest probabilities of destroying or inflicting unacceptable damage on the targeted nation? Which of these options are also matched by known or detected insertions already accomplished or attempted?

Since we know that certain of our enemies — e.g., the KGB/FSB — understand the importance of surprise weapons or superweapons, what is our very best assessment of the probability and capability for the terrorists possessing and inserting surprise weapons or superweapons for which the targeted nation has little defense capabilities? E.g., what about the surprise "electromagnetic" weapons the U.S. Secretary of Defense confirmed, while most of the U.S. government officials — and even our own intelligence agencies, which still largely base their EM intelligence analyses on the totally inadequate electrical engineering model — are still unaware of them? Why has not our scientific community been made fully aware of them, and put to intensive work on them? And since it is perhaps our greatest vulnerability, why is an aged piece of inadequate EM modeling with known serious falsities still perpetuated by the U.S. scientific community, NAS, NSF, NAE, the DoE, etc.? Who's competently watching the "technical store" anyway — is anyone? Or is everyone just blithely accepting the self-serving scientific cartels' pronouncement that "we are the greatest"?

With a three-year plan already in motion for our total destruction, and with a large key role played by the vulnerability of our electrical power system and its coming destruction, why are not our Department of Energy, National Academy of sciences, National Science Foundation, etc. already under strong Presidential orders to reprioritize their energy research at the greatest speed possible? Why has not the U.S. scientific community already corrected the terribly flawed CEM/EM mess that is taught in our universities and used by our power engineers? Why are

they not conducting a massive Manhattan-type project for energy from the vacuum systems to totally replace the present centralized power system? Then is no other possible solution, once one recognizes that the centralized electrical power system itself is going in be destroyed with very high assurance, within about two years from now. So why are all our scientific efforts actually siphoning off research funds for puerile things which will take decades and will not do the job even then, while enriching and perpetuating the "scientific entourages" driving this sad situation? Since a major part of the problem is the great leap forward of the Russian science of energetics — now 50 years old — and its development of superweapons, then why are our scientists still largely preoccupied with standard electrical engineering and classical electrodynamics — models so hideously flawed and made so antiquated by the progress of physics that they should have been dramatically changed at least three quarters of a century ago?

Why is there no really substantive understanding or definitive work ongoing to lapidly develop means of collecting and using the unlimited free EM energy pouring from every charge and dipole in the universe, including in every EM circuit and self-restricted electrical power system?

Many other similar questions can be and should be raised, but the foregoing questions demonstrate the direction and intent of what should be queried.

The Ease with which Terrorists Could Obtain WMDs

In facing an asymmetric war launched against us, the availability of clandestine WMD to the terrorists, so that the weapons can be inserted, becomes a primary consideration — along with an extraordinary need to understand the new superweapons and rapidly develop counters and defenses.

An internet search for two search terms: Voz Island in the Aral Sea {lxxiv} and anthrax, will quickly demonstrate the ready availability of WMD to any competent and supported terrorist organization. The Russian biological weapons research and production facilities there were the world's best, appreciably ahead of similar facilities in the West. Hundreds of tons of very high quality biological warfare agents were just dumped on Voz Island from those Russian facilities. Quoting Marshall, Malakoff, and Holden {lxxiv}:

> "The United States and Uzbekistan are close to finalizing plans for a $6 million cleanup of a former Soviet bioweapons facility. The effort is aimed at preventing terrorists from harvesting live anthrax spores from a secret dumping ground.
>
> For nearly 60 years starting in the 1930s, the Soviets released anthrax, plague, and other weaponized pathogens on Vozrozhdeniye (Resurrection) Island in the Middle of the Aral Sea. In 1988, at the end of the Cold War, weaponeers buried tons of a particularly potent strain of powdered anthrax at the site, mixing the bacteria with bleach in steel drums to kill it. But several years ago testers found that some of the anthrax is still alive, and water diversions from the shrinking Aral Sea have since opened a land bridge to the once isolated island. Fearing

> that terrorists might try to harvest ready-made bioweapons from the site, U.S. Officials agreed in October to pay for destroying the anthrax and a nearby testing facility."

Actually, for quite some time, any funded terrorist organization that wished a copious supply of the finest anthrax ever made, and wished a strain already resistant to many of our treatments, could just go to Voz Island, pay the natives a little sum, and dig up the dirt in the appropriate part of the dump site, sack it up, and carry it away. Or pay the natives a bit more, and they would dig it up and sack it for the buyer. Wash out the dirt, and one would have all one wanted of the highest grade anthrax spores ever made. It's safe to assume that those terrorist organizations who wanted a copious supply of high grade anthrax already obtained it with relative ease.

Bin Laden also obtained anthrax and other BW agents from other sources {lxxv}, as well as at least a few nuclear weapons.

Other BW agents and nuclear materials were available on Voz Island also, in the same way. And much of that WMD procurement will already have been covertly inserted into the U.S. E.g., where do our agencies think that the extraordinarily high grade anthrax mailed in some letters after 9/11 could have come from? Most probably, it came right from Voz Island.

The mailing of high grade anthrax in letters sent to a few important U.S. targets after 9/11 was not an attack at all, nor was it so intended. The mailings were undoubtedly a small test attack to ascertain the amount of disruption and economic damage that could in theory be obtained by mass mailings simultaneously, through the mail in many locations, to thousands of targets. The results obtained by these little sample mailing tests showed that mass mailings of anthrax powder, in letters sent to selected high level targets, would create chaos, extensive delay, and substantial economic disruption. Here again one sees the coordinated planning toward our economic disruption, damage, and collapse.

A Simple but Lethal Strategic Strike with Horrific Casualties

As is known, anthrax is highly lethal when ingested or breathed into the lungs. So a simple spray attack on a large metropolitan area, by a small 2-seat Cessna aircraft with two men aboard — one flying and one spraying out the side — could account for from one to three million casualties {lxxvi}, almost all of whom will die. Quoting Betz {lxxvii,}:

> "A 1993 study by the Office of Technology Assessment concluded that a single airplane delivering 100 kilograms of anthrax spores — a dormant phase of a bacillus that multiplies rapidly in the body, producing toxins and rapid hemorrhaging — by aerosol on a clear, calm night over the Washington, D.C., area could kill between one million and three million people, 300 times as many fatalities as if the plane had delivered sarin gas in amounts ten times larger."

Needless to say, the emergency treatment capabilities of the entire struck area would be completely overwhelmed. In such a case, triage becomes the official policy. Unless the treatment were started immediately for a civilian who inhaled the anthrax, it would be largely ineffective anyway. Once the symptoms appear, conventional treatment is largely hopeless.

Triage is the classification (medical screening and sorting) of patients to determine the need and priority for treatment and transportation {lxxviii}. Triage generally separates patients into four categories, according to the priority for treatment that will be followed:

High Priority (Red): Patients who need immediate treatment and immediate transport in order to survive. (But refer also to category 4 below). Those who need immediate treatment but cannot be expected to survive even if treated go into category 4 (Black), not Red.

Intermediate Priority (Yellow): Patients who will most likely survive but require treatment.

Low Priority (Green): Patients who require little or no treatment or whose treatment and transportation can be delayed.

Lowest Priority (Black): Patients who cannot be expected to survive even with treatment, those who cannot be expected to survive in a mass casualty situation, and those whose vital signs are absent.

In a mass casualty situation with very scarce supplies and nowhere near sufficient mass treatment capabilities, triage becomes necessary and officially applies. That means casualties classified in the Black (lowest priority) category — such as patients already showing the anthrax symptoms, and therefore almost certain to die with or without treatment — will just be set aside, made as comfortable as possible, and allowed to die. There is very little to be gained by treating them with conventional treatment. Even if given every treatment available, almost all of the patients in this category would die anyway. With triage sorting, the very scarce and precious antibiotics and treatments will be reserved for those who have a better chance of surviving if treated.

This is one of the harsh decisions, of the type formerly reserved for military forces in the field under desperate circumstances, which will have to be made for our civilian populace and wounded as well.

The True Cause of Gulf War Disease

By use of scalar interferometry (as is possessed by the Yakuza) or quantum potential weapons (which the Yakuza does not have, but the KGB/FSB does), in advance of the attack it is possible to trick the immune system of each person in the targeted populace area so that it erroneously "detects" invasion by, say, two dozen different pathogens at once. This is done by simply placing the EM "shadow disease engines" or "shadow precursor engines" (in the virtual level just

beneath quantum level) for those specific pathogenic conditions in weak EM radiation or in quantum potentials focused into the bodies in the area targeted.

The immune system reacts to what it detects, not necessarily to what is actually occurring. Given this deliberate stimulation and the resulting alarming false detection, the deceived immune system desperately spreads its finite assets across those "detected" two dozen invading "shadow" pathogens. And it does detect the interaction of faint precursor engines for the specific two dozen diseases, deliberately radiated into the body and thus interacting with charges in its cellular mass. Such a "spread" immune system is then just about totally vulnerable to any real attack by any normal opportunistic real pathogen in the area — either natural or terrorist-induced — because the immune system cannot marshal any additional resources. In a bizarre way, this is a new form of asymmetric biological warfare, designed to pre-disable the immune systems of the targeted populace, dramatically increasing the effectiveness of the real BW pathogen being introduced (by anyone, including other terrorists).

In the absence of deliberate BW pathogen attack, the result of spreading the immune systems in a targeted area is an extraordinarily heightened vulnerability of the radiated populace to ordinary opportunistic infectious pathogens in the populace's environment, to which the humans in that populace are then physically exposed.

There are always such opportunistic pathogens in one's environment, but usually the immune system can handle most of them with a shrug. But the deceived living body with a spread immune system will be quickly and easily attacked by multiple environmental pathogens, unable to effectively resist, and without the organism's usual immune system's protective resistance {lxxix}. That living body with its spread immune system will shortly develop a whole "cocktail" mix of opportunistic diseases. If the immune spreading intensity is lowered a bit, then only a percentage of the persons with the effect will develop the "cocktail mix of diseases" syndrome. If the immune spreading is lowered even further, then only those persons already having additional "immune system lowering" will be affected.

This "spreading of the immune system" is what was deliberately done to generate the "Gulf War Disease" in some of our soldiers in the first Gulf War. The immune systems of our soldiers in certain areas — already weakened a bit by multiple vaccinations — were spread by hostile forces, as a test to see if our scientists and analysts recognized what was being done. The immune spreading signals were deliberately lowered to the point that none of the French troops — who had refused to take the mix of vaccinations we administered our own forces, and which do reduce the ability of the immune system for some weeks — developed the "cocktail mix" diseases and syndrome, while some of the U.S., Canadian, and British forces who did have lowered immune systems as a result of their vaccinations did develop the "cocktail mix of diseases" called the Gulf War

Syndrome. The natives in the area had not had their immune systems lowered by vaccinations, and so no change occured in that populace.
Our scientists did not understand it at all. They did not understand it then, they do not understand it to this day, and they will not understand it tomorrow unless forcibly ordered to meticulously consider and experimentally investigate what happens when immune systems are indeed spread in the fashion being advanced, and when specific tailoring to select the targeted populace subset is also used.

Combining immune system pre-spreading with subsequent real BW attack will increase the yield of the attack itself by a factor of at least three. At the same time, other opportunistic infections will also interact very strongly, with little resistance, so that a "cocktail" mix of diseases will ravage the population whose immune systems have been spread.

We point out but do not further discuss the dramatic effect on those treated Triage casualties, if those casualties have pre-spread immune systems. The effectiveness of the treatment will be severely lowered, so that a much greater percentage of those treated will also die.

Our scientists still have not comprehended the higher group symmetry electromagnetic mechanisms by which health and disease changes in personnel in the U.S. Embassy in Moscow were induced during several decades of microwave radiation by the Soviet Union. They do not intend to further try to understand it, and they have simply buried it. It does not matter that three U.S. Ambassadors eventually died as a result, or that hundreds of persons were made sick or developed real diseases. Also, our scientists do not know how to properly investigate and explain the directly related Kaznacheyev experiments {lxxx}, nor do they intend to. As a consequence, they have already guaranteed that BW attack on the U.S. populace under the conditions stated above will be spectacularly successful, while U.S. treatment of the mass casualties will spectacularly fail.

This appalling situation further buttresses our previous comment that, not only will our scientific community fiddle while Rome prepares to burn, but it is also assuring that it burns completely.

Terrorism by Electromagnetic Biological Warfare

Not comprehending "immune system spreading" or how it is induced, our medical scientists certainly have no knowledge of the electromagnetic use of specific precursor engines for a specific disease — such as anthrax — to directly induce the disease in targeted bodies in an entire great area. Instead of the passive measure of immune system spreading, the same EM weapons can directly transport and induce the precursor engines for developing the anthrax conditions in the bodies in a large targeted populace — such as the greater Washington D.C. metropolitan area, which was the area considered in the referenced Government study involving a spray anthrax attack {lxxvi}.

For example, the exact structural pattern of the necessary disease induction engines for anthrax can be directly "recorded" from the EM emissions of sickened human cells or humans with anthrax. Such ordinary EM carrier emissions do contain those specific anthrax EM disease engines as infolded Whittaker patterns {xxi, xxii} — particularly in the infrared and ultraviolet spectrum, and particularly when both spectral ranges are considered simultaneously (i.e., when a full harmonic interval of radiation is considered, and especially when that harmonic brackets the visible spectrum and the targeted organism is in the dark to remove possible interference from the intervening visible light spectrum). Our scientific leaders have little or no understanding of the Kaznacheyev experiments, and most of them simply are not interested in understanding them, since it would require thinking in terms of a higher group symmetry electrodynamics, not the common old seriously flawed electrical engineering.

Hence they do not even conceive of the result of electromagnetically enhancing a strike by a BW agent such as anthrax, or of electromagnetic biological warfare, where the disease itself is induced in the body by the exact disease engine that pathogens carry, but mostly without the intervening physical carrier. This "direct induction of the specific disease condition" via tailored induction of the appropriate specific EM disease engines in the bodies of the targeted populace, is another gargantuan force amplifier that can be either used alone or in conjunction with the previous force amplifier of spread immune systems. The U.S. has no defense against it, nor do our medical science leaders and establishments intend to develop such defenses. Terms such as "immune system spreading," "precursor engineering," "precursor disease engine," and "electromagnetic biological warfare" are not even in their lexicon.

As a force amplifier, the combination of the two force amplifiers — immune system spreading and EM BW induction of a single disease simultaneously — can increase the overall casualties from an anthrax attack by from 5 to 10 times what would be obtained by the basic anthrax spray attack of physical anthrax spores alone. An influenza epidemic, e.g., can be made horrific beyond all present expectations, as can a smallpox outbreak, etc.

Further, the present physics of the vacuum already prescribes the basis for precursor engines and their use, including their use in induction or augmentation of disease, or in elimination of disease. Quoting Aitchison {lxxxi}

> "Vacuum polarization, in general, alters the effective force law. Forces, in quantum field theory, are understood as being due to the exchange of virtual quanta... In the case of QCD and QFD,... a crucial new feature is that the force-field quanta themselves carry the 'charge' of the force-field, i.e. it is as if the photon of electromagnetism carried electromagnetic charge."

Notice, however, that even Aitchison failed to recognize there were no force fields in space, but only the precursors, and that precursor engineering is involved. Every chemical and biochemical reaction emits characteristic EM radiation — based on the making and breaking of electron bonds etc. as modeled by ordinary

chemistry. Even these radiations could be recorded and played buck, inducing disease, without even going into the more complicated explanation oi precursor states and virtual disease engines.

The upper limit of the force amplification (more simply, the gain) achievable by precursor attack combinations is of course the limit entailed by the size of the targeted population. Medical and emergency personnel in biohazard protection suits and "deeply protected facilities" are just as vulnerable to this mode of attack as the unprotected populace. So devastation of the treatment teams and facilities also results. Further, even decontamination spraying to kill the anthrax spores would not mitigate the damage already done by EM BW.

The combination of force amplifiers, coupled with an anthrax spray attack even much weaker than that in the Congressional study, can effectively infect and sicken almost the entire population, with nearly everyone becoming casualties and dying. EM BW thus becomes a strategic force amplifier of strategic "total knock-out " strike implications.

In a mass casualty situation, the presence of these force amplifiers will also move the vast percentage of the stricken casualties to triage category Four (Black). Casualties in the Black category will receive no treatment, but will just be allowed to die — even if some vestiges of the treatment teams and facilities survive. The use of the force amplifiers means that a much greater percentage will be classified Black and be allowed to die without treatment under normal triage rules.

But our own National Institutes of Health (NIH) and medical science community — and our own intelligence community in that area — are simply not interested in such bioenergetics weapons already developed and tested. Nor have they apparently done even elementary homework in the area of higher group symmetry electrodynamics. Most do not even recognize the term! Nor have they funded any specific higher group symmetry electrodynamics research in the area, outside the terribly crippled U(1) electromagnetics and electrical engineering, even though the disease force amplifier capabilities of higher group symmetry electrodynamics have already been repeatedly demonstrated, first by the KGB against the U.S. Embassy in Moscow in the former Soviet Union and then by the KGB/FSB in Russia against our troops in the first Gulf War.

The FSB/KGB already knows and plans such force amplifying measures, which will likely be unleashed upon us to dramatically augment any milder conventional BW attacks. The nature and magnitude of the asymmetric war to be unleashed against us is dramatically different from what our society knows, expects, and plans for.

Sadly, most of our present scientific medical research is a vast wasteland as far as any study of (1) scalar interferometry use in disease induction or force amplification, (2) the mechanism used in the decades long EM induction of health changes and diseases by the long so-called "microwave radiation" of the former U.S. Embassy in Moscow, (3) the spreading of immune systems of a targeted

population, and (4) electromagnetic induction of specific disease in a targeted populace via the induction of the specific precursor engine for that specific disease. Further, our medical scientists' knowledge of higher group symmetry electrodynamics appears to be nil. Worse, the organized medical science community appears to have no concern at all over its own total lack of knowledge in such higher forms of electrodynamics. Possibly, a part of this nonchalance may be due to — or influenced by — the important financial exchanges that have long occurred in the past between some NIH scientists and outside industrial cartels intent on keeping medical science within the bounds presently imposed.

But as a step in the right direction, NIH has imposed stricter rules on its scientists with respect to their consulting to, or employment by, outside drug companies which in turn are receiving payments from NIH funding {lxxxii}. The agency has even proposed banning all its scientists from doing any consulting work with drug companies for a year {lxxxiii}, while the agency's investigations continue. Recently a real clampdown has been ordered, effectively closing this questionable avenue. Let us fervently hope that this cleanup continues, so that NIH really does again function as an independent government agency dedicated to the benefit of the American public, not just for the benefit of the big drug companies. At this point, every little bit helps!

Unethical Release of U.S-Made BW Mycoplasma

Sometimes, there also appears to have been collusion between the NIH and rather illegal (and unethical) testing on human citizens without their consent. As an example, our NIH leaders are still doing absolutely nothing at all about the modified mycoplasma BW agent {lxxxiv} that our own BW researchers developed in the 1950s to burrow inside red cells, feed off their hemoglobin shells, and dramatically decrease the oxygen transport capability of the red cells in the blood. This modified BW mycoplasma agent was developed, and then it was thinned by about 2,000 times and sprayed into the populace and into the environment by combined U.S./Canadian teams in the 1950s in Canada. It was also sprayed by U.S. agencies in Florida.

These sprayings caused the deliberately-manufactured BW agent to enter the mosquito population and thence into the human population of North America. Indeed, in the cooperative joint U.S./Canada program, the modified mycoplasma agent was deliberately implanted in mosquitoes by the government researchers, and those mosquitoes were then released, to ascertain the "spread effectiveness" of the mosquitoes as disease vectors. That's rather like firing some machinegun bursts at random into a very large crowd, to determine the average pattern of "hits" and "kills".

The author personally contracted that specific biological warfare disease — courtesy of our own BW scientists and the inane officials directing the tests, who carelessly assumed that dilution rendered the mess safe — while in the U.S. Army, residing in Quebec, with duty station at the Canadian Armament Research

& Development Establishment (CARDE) at Valcartier, Canada in 1966-68. I survived three serious hospitalizations in Canada only by the final Herculean efforts of the French doctors in Quebec, who opened both the chest cavity and the abdominal cavity and moved the internal organs around for about 3 hours, aerating the tissues thoroughly and unknowingly killing the exposed surface mycoplasma. After that oxygenation of the tissues, the mycoplasma already burrowed inside the red blood cells survived and then went dormant, slowly increasing over the next three decades. I survived, but with a time bomb ticking away inside my body.

Left with slowly increasing chronic fatigue syndrome over the next 33-year period, I even managed to serve a tour in Vietnam and still no one knew what was wrong. No medical tests or examinations showed what it was. I retired from active military service at the end of 1975, and was employed in the aerospace industry in Huntsville, Alabama.

Then in spring 2001, resurgence of the mycoplasma generated runaway heart fibrillation and a heart attack. When the terrorist attack of 9/11 struck a stunned America later that year, I was still struggling to stay alive from the heart attack, with runaway heart fibrillation, and significant hypoxia from my own prior encounter with a "terrorist BW attack", where the terrorists were our own fellows!

As fate would have it, a colleague with the equivalent of a Ph.D. in biochemistry who checks on me about once a year then called; he has been in many "deep black" programs, most of which do not officially exist. He knew of the mycoplasma BW agent development program and the mycoplasma spraying in Florida and Canada. He immediately recognized that the strange malady contracted in Canada in 1968 was actually that BW mycoplasma.

He also told me where to get definitive information on the web and from Senate hearings, and voila! The puzzle was solved. Finally in Dec. 2001 a Specific lab test was obtained and the chronic BW mycoplasma infection confirmed - after 33 years of puzzlement, doubt, and slowly increasing physical debilitation. The resulting treatment was a year (2002) on antibiotics, which did annihilate the mycoplasma that were hiding in the red blood cells. But it did not and cannot undo the damage already done throughout my body during those 33 years. As my doctor stated, "You name it, it's damaged. "

After such a long-term case, one has permanent chronic fatigue, cannot walk very far or stand very long at all, and one takes blood thinner for the rest of one's life to try to prevent strokes and blood clots. One also takes medication to try to control the heart fibrillation and stay alive. The eventual expectation is to go on a pacemaker, then eventually have another unexpected heart attack or stroke, finishing the process. I've also now developed pulmonary fibrosis.

The problem is that, if one takes all the medication necessary to control the heart fibrillation, it also reduces the volume of blood pumping, which places one back in hypoxia, leading to strokes and/or heart attacks. If one does not take the

fibrillation control medication, one reverts back into hypoxia from the fibrillation, which leads to strokes and/or heart attacks. With the usual treatment by well-meaning heart doctors, one is damned if one does and damned if one doesn 't. They do not and will not prescribe remedial oxygen, since they do not consider any possible involvement of mycoplasma in heart problems and attacks. Attempts to get the NIH to notify the heart clinics and doctors of this terrible problem have fallen on deaf ears — probably because of the NIH's original involvement in producing the modified mycoplasma and unleashing it upon an unsuspecting and trusting North American populace. Hence the NIH does not wish to admit that such programs ever even took place with its participation.

The only way out of the dilemma is to take the medicine to defeat the fibrillation, and also take extra oxygen to prevent the resulting hypoxia. So I take remedial oxygen and pay for it on my own volition, since the heart doctors know nothing of the modified BW mycoplasma and they do not wish to hear of it. Nor does one's insurance company, Medicare, the Veteran's Administration, etc. Nor does the NIH. All those fine agencies simply wish that the disabled veteran with such BW-modified mycoplasma would just die and get out of the way.

By taking one's own remedial oxygen, one remains just barely above the hypoxia zone, at least until something else unexpected occurs to make things worse. That way, one remains alive a while longer, perhaps even for a few years. Even so, one has acquired a delayed death sentence just waiting to happen at any moment. And one remains with severe chronic fatigue, weakness, etc.

Perhaps then it is understandable that the present author has a very personal interest in that particular B W mycoplasma disease and that set of incidents, and in the continuing gross failure of the NIH to acquaint heart doctors in the U.S. of that nefarious program and what happened. Today there is a direct involvement of this BW-modified mycoplasma in a significant fraction of patents with heart disease, chronic fatigue syndrome, etc. Many of the citizens of the U.S. and Canada already have that BW organism infecting their bodies, like a ticking time bomb waiting to erupt perhaps many years later. To this day, very few hospitals and medical clinics are capable of doing the test that can detect the very specific type of BW-modified mycoplasma.

Apparently the NIH considers any contact on this problem — or a similar BW problem — a hot potato to be handled by its "policy" section (i.e., "spin control" section). Bluntly, the attitude seems more concerned with political control than with saving the lives of countless American citizens who unknowingly continue to be afflicted with that BW-modified mycoplasma, continue to die of its complications, or are disabled and their lives shortened because of it. NIH political orientation seems to be one of the major shortcomings of the U.S. in its required defenses against the biological warfare aspects of the "new " asymmetric war. It also appears that the NIH directly participated and cooperated with the U.S. BW organizations that developed and unleashed the BW mycoplasma in the first place. If so, the misdirected attention of the NIH to cover up will probably

continue, and that will help guarantee much of the success and increased mass casualties resulting from professional terrorist BW strikes against the U.S. populace in the near future

Ironically, that nefarious modified mycoplasma is a strange kind of BW "force amplifier" that the Soviet BW weapons labs initially developed to "soften us up". Eerily, they themselves did not have to introduce it into the North American populace. Instead, we ourselves developed it and — in what has to he one of the most stupid and asinine BW actions of all time — we deliberately unleashed it into our own environment and against our own North American populace In comic relief, one is tempted to remark that "With friends like that, who the hell needs enemies!"

No Effective Treatment for Mass Casualties

Sadly, in this present asymmetric warfare problem, we are forced to conclude that the N1H and the Centers for Disease Control will not do the research necessary to develop adequate response therapies and means for quick, effective treatment of mass BW warfare casualties. Seemingly they continue to prefer Category 4 triage — just letting most of the patients die — to developing unorthodox but real mass treatment capabilities. None of the associated agencies appears likely to develop anything innovative in this area, and particularly not a portable higher group symmetry electromagnetic treatment unit {lxxxv} that could effectively treat those millions of Category 4 Triage casualties that will result and die in our cities in the near future.

As we mentioned, there is a precursor EM engine for every disease and every debilitated condition of the living body. That means there is also a precursor EM anti-engine that can be formed, amplified, and introduced into the diseased patient — and that will very quickly reverse the disease condition in situ and cure the disease. Because the anti-engine is electromagnetic and can therefore be amplified, the treatment period can be reduced to circa five minutes of non-ionizing radiation by the amplified specific disease anti-engines. In such treatment, the body's own potentials and fields thus have the anti-engines kindled inside them, and after the treatment is removed, the body's own "activated" fields and potentials — at every level — now continue diminishing and destroying the disease engine, and reversing the patient's condition back to normal.

Further, anti-engine patterns for a variety of expected and known BW agents can be developed and incorporated into such treatment machines, and the machine can then just be "switched" to the appropriate anti-engine-generating radiation spectrum required to treat the patient's BW condition (destroy the patient's specific disease anti-engine and reverse the patient's condition back to normal). The radiations from the machine are after all precursor radiations, whether or not the scientists using the machines know it.

As a further example of U.S. medical orientation, in 1998 the author, with a colleague, tried very hard to persuade the NIH, DoD, USAF, and other federal

agencies to develop a portable unit for such EM mass casually treatment in a crash U.S. government program, to save millions of lives in the coming asymmetric warfare debacle {lxxxvi}. The EM mechanism proposed would have generated an amplified anti-engine for a specific BW-induced disease. "Pumping" the diseased body with opposing longitudinal EM waves will form amplified anti-engines to a specific disease engine in the stricken body. By then radiating the body with the amplified anti-engine, or simply pumping the body to produce the amplified anti-engine, it overrides the actual disease engine, eroding away the disease engine and the disease along with it, and reversing the physical condition back to normal. Or, in biological terms, this is the secret of dedifferentiation of a diseased or disordered cell or cellular body back to normal cells and normal health. It is quick, it was thoroughly proven in France in the 1960s and 1970s, it was evidenced in Becker's work, and it was documented in the hard French medical science literature. Once developed, this would be a mass casualty treatment therapy far superior to anything presently existing, which could save millions of lives in the debacle now roaring down upon us.

The NIH, DoD, USAF, CDC, and other federal agencies had not the slightest notion of what we were talking about, and we never got out of the "policy" section at NIH, even with the assistance of Congressman Bud Cramer. Not a single scientist in any of those government agencies cared a whit, or even called to discuss the proposal and its novel physical mechanism. Apparently none checked the hard scientific references we cited from the French medical science literature where the basic mechanism had been proven.

None of those agencies had the foggiest notion that the decades-long microwave radiation of the U.S. Embassy in Moscow already demonstrated the use of higher group symmetry electrodynamic "disease engine" signals to directly generate health changes and diseases at will. They had no concept of the use of appropriate amplified "anti-signals" and "disease anti-engines" to reverse and cure illnesses, or that an extended EM can be developed to either induce or cure specific diseases to order as one desires.

They certainly do not comprehend the higher group symmetry operation of the human cellular regenerative system — which is responsible for the body's healing — and have not gone much further than Becker's brilliant seminal studies of that system {lxxxvii}. Unfortunately, Becker's work was limited by his use of U(1) electrodynamics. Otherwise, Becker would have had the "anti-engine" EM healing process then and there. Even so, he almost deciphered the control operation of the cellular regenerative system {lxxxviii}. His EM healing method for otherwise intractable bone fractures survived and is still utilized in some hospitals from time to time {lxxxix}. It is simple to understand: an electrostatic scalar potential (common voltage) decomposes into a set of bidirectional EM longitudinal precursor bidirectional wave pairs — in other words, a perfect set of "pump waves" for creating specific amplified anti-engines for the specific disease or disorder. So Becker's silly little DC voltage across a horrible bone fracture actually contained and initiated a most important and specific mechanism for

producing specific anti-engines and specific dedifferentiation of the diseased cells back to earlier normal condition.

In show what simple potential (voltage) across an otherwise intractable fracture can do, using its component longitudinal EM pump waves, Becker showed that it dramatically affects many of the red cells that arrive in the fracture area, reconverting those affected red cells to a suitable "precursor" cell (more primitive, earlier cell). The "pumped" red cell shucks its hemoglobin and grows a nucleus - this is dedifferentiation, and it is generated by the appositive longitudinal Whittaker precursor wave sets — that constitute the voltage — acting as "pump waves" in the nonlinear optical sense. The pumped bone fracture site has thus become a pumped phase conjugate mirror site, with the input or "signal wave" being the specific physical disorder's "engine" already in the stricken body. The amplified phase conjugate output is the amplified specific "anti-engine" for that specific disease or disorder condition.

In accord with nonlinear optical pumping theory, the energy of the pumping waves then establishes an amplified "phase conjugate replica" signal set. This amplified signal (anti-engine) will then quickly reverse the entire physical red blood cell back along its past travel through time in its past short life (red cells only live about three months). Hence the red cell dedifferentiates back to an earlier stage. The "delta" condition in the fracture site involves bone cells. So the red cell is redifferentiated by the pumping to move forward to the type of cell that makes cartilage. Then it further redifferentiates yet again to the type of cell that makes bone, and that cellular material is deposited in the fracture site, healing it.

In simple language, that is precisely how Becker's bone-healing EM treatment works. The process and its proven experimental success already demonstrates the beginning of the required capability to treat and reverse diseases and physical injury conditions by a peculiar variation of nonlinear optical pumping, using the "disease or disorder engine" as the input signal, producing an amplified "anti-engine". This anti-engine forcibly interacts upon any and all aspects of the cells and the physical body to reverse the situation and restore the body to health.

But the NIH was not interested, even though the elements of this process had also been resoundingly proven by the Priore group in France, in rigorous work funded by the French government.

Eventually the NIH just shipped the entire package over to the DoD (to whom we had already sent the package anyway) because the package mentioned the Gulf War Syndrome and "that was the purview of the DoD". In short, the NIH wasn't interested in what Gulf War Syndrome really was, or in curing it either. So unless it involves drugs or some form of ionizing radiation treatment or some such, our own NIH was not and is not interested in a proven, demonstrated cure for cancer and other dread diseases, accomplished in France in the 1960s and early 70s, with astounding experimental results of thousands of lab animal experiments already rigorously reported in the French medical science literature but resoundingly suppressed today.

The same U.S. agencies lack any understanding of the mechanism that induced the "Gulf War Disease" and the causes of diseases and health changes at the U.S. Embassy in Moscow.

The entire U.S. medical science community is still using an archaic seriously flawed classical electromagnetics of the material luminiferous ether, rather than the more modern higher group symmetry electromagnetics of mass-free spacetime. Consequently it is far more concerned with the immune system's responses which "physically kill the bad guys", or harsh drugs which "chemically kill the bad guys", rather than the cellular control system responses which actually accomplish all healing within the body after the "bad guys" are already dead.

The immune system and the drugs do not actually "heal" anything — not even the immune system "s own damaged cells. The fundamental orientation of American medicine is on physically attacking and killing the pathogens which transport the disease engines, rather than on augmenting and amplifying how the damaged body then regenerates its own cells and reverses its own disease engine via use of higher group symmetry electrodynamics. This strongly prejudices and canalizes our medical science development. It also makes us extraordinarily vulnerable — helpless is the proper word — to the coming mass casualty attacks in our cities and population centers.

But to uphold the status quo, our medical scientists seem quite willing to accept that, for really substantial WMD attacks, triage Black will apply on a massive scale. So they will just let most of the casualties die without any treatment at all. The predetermination to lose all those American lives has already been made, and it seems that nothing will change it.

Indeed, the entire U.S. electrical engineering community itself does not realize that it doesn't even know or apply what electrodynamics in mass-free space is.. In the face of such appalling scientific ignorance for more than a century, it is little wonder that our nation is so terribly behind in understanding what can be done — and is being done — by the terrorists using the primary (precursor) electrodynamics in free space, before its interaction with matter. In short, our analysts have not comprehended Soviet energetics for nearly a half century, and they have no intention of comprehending it now, even though it is being used against us for powerful strategic weapons we cannot counter.

Our national agencies adamantly are not going to develop the proven Priore-type EM treatment or really get to the bottom of Becker's anomalous EM bone fracture healing, because such would not be common old electrical engineering. It would also greatly disturb the pharmaceutical cartels, which have bought American medical science by financing research, medical scholarships, medical university expenses, etc. and by providing "consulting fees" etc. to a variety of scientists in the system. Even though most of those cartel companies are benign or even intentionally beneficial, any threat to their dominant positions evokes a sharp response from their evil 1% entourages. One can easily meet with a "sudden suicide on the way to the supermarket" and such.

Our scientific leaders are not going to demand the correction of that terribly flawed electrical engineering model, which is our single greatest national vulnerability and the one that is being capitalized upon by coordinated terrorism and asymmetric warfare to destroy us in within the three year Operations Phase we entered at about the beginning of 2005. We are going to unnecessarily lose millions of American lives, with most casualties receiving no treatment at all.

Those future wounded Americans would not have to die if such EM countermeasures were intensely developed in portable treatment machines and massively deployed {xc}. We are describing a vast force amplifier that could be developed for the defending nation that has been targeted and very seriously struck. Our own government and scientific community adamantly will not permit its study or development, and will simply "fight to the death of every one of us" to preclude such a desperately needed therapeutic method and capability,[9] despite rigorous scientific proof by the Priore group in the 1960s and early 1970s {xci}, as aforesaid.

Impact of Immune System Spreading

Weapons such as scalar interferometers in the hands of the Yakuza have given the terrorists a terrible force amplifier of WMD bioweapons that parallels the destruction capabilities of all a modern state's ICBMs, strategic bombers, nuclear subs, aircraft carriers, etc. All without a single ICBM, strategic bomber, nuclear sub, or aircraft carrier.

So for the strategic asymmetric war threat, now one considers — say — three large U.S. city areas hit just about simultaneously by effective anthrax spray attacks, and augmented by EM BW means. One immediately sees the grim picture very probably in store for us. To be conservative, we assume 1 million casualties in each city as the "baseline" achieved by the spray attack pathogen itself. Thus a total of 3 million casualties are obtained in the three strikes, with no other augmentation. However, if immune system spreading were also incorporated simultaneously, the casualties in each city will reach, say, 3 million, almost all of whom will die. That is a total of 9 million American casualties in the three cities — and almost all of those wounded will perish.

---

[9]The leopard has not changed its spots. See Betsy McKay, "CDC Aims to Create Experimental Pandemic Bird-Flu Virus," Wall Street Journal. Wed. Mar. 28, 2005, p. Bl, B2. Incredibly, CDC as part of the NIH is still engaging in the deliberate production of potentially highly contagious pathogens, capable of causing rampaging pandemics if unleashed or accidentally escaping. All sorts of "reasons" are advanced. A little analysis from the viewpoint of precisely what FSB/KGB bioenergetics can do in such situations would be enlightening — but then neither CDC nor NIH knows anything about bioenergetics, even after four decades of its testing against us to see if we recognize it. Again, with friends like that, who needs enemies!

And that's three small 2-place aircraft, six terrorists, three little agricultural hand sprayers, 300 kilograms of anthrax spores from Voz Island, and a little gas and time.

If, in addition to the immune system spreading, some supporting scalar interferometers are also inducing the same anthrax disease pattern via EM BW, that's now perhaps 5 million casualties in each city area, for a total of 15 million American casualties, almost all of whom will die. If the intensity of the scalar interferometry disease induction is further increased, that's perhaps 18 million or so total American casualties in those three city areas — almost all of whom will die.

Here one directly sees the transition from the kind of estimates our own analysts usually make for BW agent attacks, to estimates that show the more maximum risk of massive strategic destruction and even strategic knockout of the U.S. by the same "front line terrorist troops", due to the advent of the supporting scalar interferometers, immune spreading, and EM BW.

All that would be caused overtly by 6 men, three light 2-place Cessna-type aircraft, 3 little agricultural sprayers which can be purchased at any Home Depot or similar store, and 300 kilograms of anthrax spores from Voz Island — and, in the 9, 15, and 18 million casualty cases — a little force amplification support from three or more scalar interferometers.

But that's not the end of it.

In addition, the contamination of those large built-up population areas will require the ruthless spraying of decontamination agents, killing many thousands more of our own populace. The effectiveness of the decontamination sprays would also be seriously hampered if the scalar interferometers continue their EM BW anthrax induction. None of these kinds of "force amplifier" effects are presently known or taken into account by our analysts and our intelligence agencies. They are designing and planning for the type of warfare they themselves know and expect. They are not designing and planning for the type of warfare that is coming down upon us.

The most urgent "action fact" that should be concentrated upon by our medical science agencies is that most of those casualties are going to wind up as triage Black category 4 patients. Most are not even going to be treated, and so almost all of them will die. The jobs of the leaders of our national health research agencies should be made directly dependent upon them rapidly examining and finding new and revolutionary treatment capabilities that will negate the present "triage 4" massive catastrophe. If they can't or won't do it, replace them!

And there are viable candidates to examine. We have pointed out that the "amplified disease anti-engine" treatment approach is capable of rapidly causing the reversal of the disease, even in those who presently will be assigned to triage Black category 4. Most of those terrible casualties now falling into triage Black category 4 would fall within triage Red category 1 instead, if small portable

treatment devices are available by the thousands. There is simply nothing else out there that will produce such a dramatic savings of human lives, and probably the survival of our nation itself.

Impact of Smallpox Release

It is almost inevitable that the terrorists also obtained smallpox BW agents — to could anyone who wanted it, had guts and had money. Reliable information already confirms that the terrorists obtained many BW agents, including smallpox by going into the BW labs in former Soviet republics, and buying it. Or one got it from North Korea. Or one just hired very desperate Russian smallpox BW scientists who urgently needed to support their families. Or one got some of it from Voz Island.

The collapsing Soviet state was unable to pay salaries to scientists, generals or soldiers for protracted periods. In desperation to get money to survive, those individuals were forced into extreme measures. Anything there that one wished to buy could be bought, including even a nuclear submarine — see Lunev's book for an incident {ix} where a Russian nuclear submarine was actually purchased. Among other things, one could obtain smallpox agent and the services of Soviet BW smallpox specialists themselves. And of course it included nuclear weapons.

Once smallpox is unleashed in any major city on the planet, it will eventually kill almost one-third the present human population. Quoting Garrett {xcii}:

> "If the smallpox virus were released today, the majority of the world's population would be defenseless, and given the virus' 30 percent kill rate, nearly two billion people would die."

Note that Garrett also knew nothing about immune system spreading, or direct "smallpox engine" induction electromagnetically, to augment and increase the kill rate. Smallpox will almost certainly be released against the U.S. populace, probably with EM augmentation. The Yakuza and other terrorist organizations will see to it, with smallpox toxin supplies almost certainly already inserted in the U.S. and waiting, and with the scalar interferometers already waiting to induce immune system spreading and direct EM BW engine insertion in the targeted populace.

As an intellectual exercise, we leave it to the reader to ponder the impact of a few limited smallpox releases in our cities combined with simultaneous wide usage of the force amplifiers (immune system spreading and EM BW smallpox induction) previously discussed, particularly in the grim absence of any effective mass casualty treatment capabilities. The impact is not pleasant.

The Grim Nuclear Problem

One can also see the damage that can and will be done by dirty weapons (ordinary high explosives surrounded with nuclear materials), spreading nuclear fallout in densely populated areas..

But there is another, even grimmer, side of the story. When the Soviet Union collapsed economically, many nuclear weapons were made available on the black market, and sold to the highest bidder. Some 200 or more nuclear warheads for missiles came up "missing" from the Ukraine alone. Quoting Communist Party leader Petro Symonenko {xciii}:

> "Out of 2,400 nuclear warheads which were on Ukrainian territory, the withdrawal of only 2,200 warheads has been verified. The fate of the remaining 200 warheads is unknown."

Further, in 1996 Alexander Lebed, then Boris Yeltsin's national security adviser, reported that some 100 suitcase-sized Russian nuclear bombs were missing. In a donnybrook, some Russian officials denied the existence of such weapons, while others confirmed their existence. The charges and counter charges faded away, and nothing was ever resolved.

Nuclear weapons do not just "go missing" with a shrug of one's shoulders!

All those missing weapons were in fact sold on the nuclear black market. Guess who bought them, and guess where many of them have been inserted already, waiting to go, along with teams trained to detonate them on command. It is almost certain that Bin Laden and Al Qaida succeeded in purchasing some of the stray Russian nuclear weapons. Other terrorists such as the Yakuza and the Aum Shinrikyo almost certainly purchased some of them also.

Terrorist efforts to obtain further bomb grade material such as highly enriched uranium (HEU) have continued. Quoting Bunn and Wier {xciv}:

> "The 41 heavily armed, suicidal terrorists who seized hundreds of hostages at a Moscow theater in 2002 reportedly considered seizing the Kurchatov Institute instead — a site with enough highly enriched uranium for dozens of nuclear weapons... Al-Qaida has been actively seeking nuclear material for a bomb and has strong connections to Chechen terrorist groups."

Bunn and Wier {xcv} also point out that:

> "More than 130 research reactors in dozens of countries still operate with HEU fuel, and many have no more security than a night watchman and a chain-link fence. Pakistan's heavily guarded nuclear stockpiles face huge threats, from both insiders and outsiders, including large remnants of al-Qaida and the Taliban in the country." ... Comprehensive U.S.-funded security upgrades have been completed for only 22 percent of Russia's potential nuclear bomb material; upgrades for tens of thousands of bombs' worth of material are still incomplete."

At this moment, no one knows how many Russian nuclear weapons have gone "missing" and were sold on the world black market by unpaid Russian generals and soldiers desperate for money to feed their families. No one knows how many Russian nuclear weapons are still "going missing" and being sold on the nuclear black market. Because the terrorists wanted them and had the funds, and because the Russian generals and soldiers sold them to someone, it does not take a rocket

scientist to understand that the two parties almost certainly did business with one another. For more specific information, sec Williams {lxxiii, xcvi}.

The Al Qaida has quietly confirmed to the Arab world that it, the Al Qaida, already has inserted seven nuclear weapons in major U.S. cities, and some of the weapons were 200 KT. At least one U.S. author has assessed the Al Qaida as having nuclear weapons in the U.S. {xcvi}. The present author personally suspects the actual number inserted by the Al Qaida and other terrorist organization combined is about double that figure, at least. Bin Laden apparently bought some 20 suitcase nuclear weapons himself {xcvii}, using funding obtained from the Arab world and/or drug production in Afghanistan.

Recall that the KGB/FSB faction which controls the Russian superweapons — and the leasing and transfer of scalar interferometry technology to the Yakuza/Aum Shinrikyo — also controls the previously inserted Russian nuclear weapons in American cities, as well as the associated Spetznaz teams. During this orchestrated two year period we have now entered, somewhere in the United States at least some of those weapons are very probably going to be transferred or sold to the Yakuza/Aum Shinrikyo, and perhaps a few will go to other well-organized groups such as Al Qaida.

The capability exists. It serves the purpose of the FSB/KGB in assuring the destruction of America. It will be done.

As another example, the former Soviet Union also probably inserted anthrax and smallpox agents into the U.S., along with teams to unleash them on command. If so, those assets are also still here, waiting for the order to move. It seems highly probable that at least some of these BW weapons caches will also be released to the terrorist organizations such as Al Qaida, for use in the coordinated coming attacks.

So in addition to the BW threat, somewhere between 14 and 40 already inserted hostile nuclear weapons probably form the "minimum nuclear weapons pool" available to the coordinated terrorists during this two year period. At least that would appear to be a reasonable estimate. We accent that this estimated nuclear weapons pool has — with high probability — already been inserted on site in the U.S. This is another startling capability of the present terrorists to deliver a resounding strategic nuclear knock-out blow against the United States, without ever firing a missile or launching a strategic bomber.

These are examples of the true state of affairs concerning the "War on Terrorism". The great battle of that war has already slowly started, with the zeroing in of strategic Yakuza scalar interferometers on the Yellowstone supervolcano (giving them a "single shot knockout capability against the U.S.), and with the subsequent Yakuza induction of the 9.3 seafloor earthquake on Dec. 26, 2004 that induced the catastrophic tsunamis in Asia. Presently additional U.S. volcanoes are active and rumbling, as are hundreds of seafloor volcanoes. And so the action is slowly beginning. The FSB/KGB will gradually unleash these terrorist assets, and then

their initially sporadic attacks will be deliberately increased, with maximum effort at the very end of the second year and over the first half of that following third year. The intent is to generate a terrible and catastrophic economic collapse of the U.S. two years hence, and then have the Yakuza methodically destroy our cities and every living American.

Harshness of the Terrible Decontamination Problem

No one has a good solution to decontaminating mass metropolitan areas that have been destroyed or heavily damaged and that are dramatically contaminated with nuclear fallout. Neither does anyone have a solution for decontaminating the distant large nuclear fallout areas surrounding those devastated cities after the nuclear detonations.

Consider the similar terrible task of decontaminating a large city (such as Washington D.C. in that government study), once the city has been sprayed en masse with anthrax by the terrorists. Yes, there are some chemical sprays that will kill the anthrax spores (else they last for a century or more, apparently). But these sprays are very harsh. To spray a civilian populace and area with them is to unavoidably kill a certain number of thousands of one's own sprayed civilian populace. Multiple sprayings of each contaminated area will be necessary, in order to attain the required assurance of sufficient decontamination.

So far as is known, there are no similar sprays available that can remove contaminating nuclear radiation!

Now note the extreme severity of the coming decisions necessary in asymmetric war. In war, high level military commanders have always been faced with agonizing decisions. For example, suppose an Army commander has — say — a dozen divisions under his control. Suppose his war front is attacked by overwhelmingly superior forces, and breakthrough and destruction of his Army is imminent. The commander will have to deliberately sacrifice — say — two divisions (that's 36,000 men) by hurling them into the teeth of the attacking forces, to temporarily halt and delay the attack momentum while those two divisions fight and die. They will be ground up just like hamburger meat, but that delays the enemy onslaught for a precious short time.

That desperately-bought short delay time gives the Army commander the chance to get his other 10 divisions out of there, and back to prepared defensive positions, to live to fight another day. This way, he saves the bulk of his army, by deliberately sacrificing those two divisions. The point is, military commanders have always had to agonize and sometimes deliberately send large numbers of men under their control to their certain deaths. The soldiers sent on such missions also knew when they received their orders that they went to their certain deaths.

Any fool can make a military decision when there is a "good" option and a "bad" option. But when there are only two "bad" options, one is forced to decide for the

"least worst" of the options — even though it entails the deliberate sacrifice of friendly lives to save otln

Now the battlefield is our own cities, and the targeted force is our own civilian populace. That same type of "least bad" decision necessity falls now on the sacrifice of some thousands of our own civilians. Some commander at high level (probably the President himself) will have to assess the situation as so desperate that multiple decontamination sprayings of the anthrax-contaminated area and populace are absolutely necessary, to prevent spreading mass destruction by anthrax carried to other areas, and resulting in the deaths of many millions more. So such an order will have to be given, agonizingly, to spray multiple times (necessary to neutralize the anthrax with a good probability of success).

Each massive spraying might kill perhaps an additional 5,000 or even 10,000 U.S. civilians. Heartbreakingly, these will be the most defenseless and helpless of our citizens, and the ones we would strongly wish to defend to the death with our very lives and with every heartbeat in our breasts. The most vulnerable group will largely consist of persons with hampered breathing or vulnerable immune systems - the old, the feeble, babies, the sick, nursing home occupants, etc.

It has been said that war is hell, and indeed it is. Asymmetric war resoundingly brings that hell home to our civilian populace.

In the past, our troops have mostly ridden out of the protected U.S. fortress/castle to a foreign land, and fought the war "over there", with our civilian populace largely immune and shielded from the horrors of such fighting, particularly when the fighting is intense. Now in addition to our involvement in foreign places, in asymmetrical warfare the major battleground is right here in our own cities, because the major target being attacked by the hostile forces is our civilian populace — including our aged, the infirm, women and children, babies, etc. These devils who are our foes believe that, if they can kill lots of American civilians, babies, etc., they personally acquire a very high religions status from God Almighty. In short, we are up against a fanatical, irrational foe, one who has also unfortunately had two decades or more of almost unrestricted access into the United States, to insert the necessary WMD assets for this "final great Jihad" against us in our cities and homeland.

This "final great Jihad", in the operations phase fought inside our cities and nation, is what is really coming upon us, together with a similar grim dedication to our total destruction by the Yakuza. This is the coming horrible nature of the struggle. We are actually in a clash to the death between civilizations and cultures. Quoting Seib[10]:

---

[10] Gerald F. Seib, "Deeper Threat is Being Missed amid Iraq Debate," Wall Street Journal. Wed. 8 Sep. 2004, p. A4.

> "The far bigger question is whether the U.S. it engaged in a historic clash of civilizations with the Islamic world. ...The U.S. ... has reached no consensus on a strategy for dealing with a clash of civilizations."

Seib further states[11]:

> "The bin Laden goal isn't simply to humiliate the U.S. Nor is it to overthrow the government of Saudi Arabia, or Egypt, or Jordan. The goal is to eliminate those governments — in fact, to eliminate those nations."

According to the present Yakuza/KGB/FSB and international terrorist plans, their actions are expected to reduce the U.S. to lying prostrate and helpless two years from now. With a U.S. nation in utter chaos and ruin, and economically already collapsed catastrophically, a touch-up with the FSB/KGB quantum potential weapons (the most powerful weapons on earth, but possessed by at least five nations) would quickly dud every nuclear weapon, ICBM, nuclear bomber, nuclear power plant, nuclear submarine propulsion system, etc. on the planet {xcviii}. The dudding could be achieved in about 10 minutes, although an hour or so seems to be allotted for it. This is "pulling the dragon's teeth and claws." The conventional strategic military power (ICBMs, nuclear bombs and warheads, and nuclear subs etc.) will be suddenly disabled and effectively wiped out, to exist no more. All that giant strategic apparatus will be just so much trash on the garbage dump of history.

Further, the U.S. society will be enmeshed in total chaos from the intensity developed in its polarizations. The society will be massively spilling its own blood, fighting in the streets, as a result of conversions of the leaders of the polarization areas. In addition, massive "sleeper" conversions suddenly triggered en masse throughout our government leadership, scientific leadership, police, armed forces, large technical corporations etc., will generate a society instantly gone totally berserk. We shall see police attacking cities and civilians, armed forces attacking each other and the civilian populace, etc. The order in all organizations that is necessary for civilization to survive will suddenly have dissipated, never to return again. This is one way in which, by themselves, psychoenergetics weapons can totally destroy an entire culture or the entire Western civilization.

At that point, with a U.S. in total chaos, the Yakuza gleefully plan to participate in the methodical destruction of the United States — the terminal part of the present Operations Phase. It will be a turkey shoot. The Yakuza will be freed to just blast away at will with their scalar interferometers, as they wish, to continue to the full destruction of the United States by destroying cities, infrastructure, and the entire civilian populace.

The intention of this unholy war against us, by both the recognized terrorists and the Yakuza/Aum Shinrikyo is to kill every American (and every Israeli also) —

---

[11]Seib, ibid.

men, women, children, babies, all of us. It is actually a war intended to totally destroy our civilization - and every living American.

We will see the operational unleashing of this terrible plan, already just beginning lining the two years starting at the beginning of 2005, and gradually increasing in intensity, and finishing at the end of the second year with the catastrophic economic collapse of the United States. Once the economic collapse is complete and chaos is supreme, the sudden dudding of all our nuclear weapons, power plants, and nuclear propulsion systems will be the coup de grace that leaves us a hapless target. The rest of it is the turkey shoot, to simply execute us and finish us off.

In the interim, we will see damaging volcano activity increasing, and very probably we will see powerful tsunamis striking both the U.S. West Coast and East Coast.

If it were to somehow become necessary, the Yakuza will also trigger the Yellowstone supervolcano into violent eruption, destroying the United States and most of North America.

Summary and Conclusion

In closing, we reiterate some massive strategic capabilities already registered and waiting. Toward the end of 2004, the Yakuza scalar interferometers registered (zeroed in) on the Yellowstone Caldera, the largest supervolcano on this planet. With that "registration" completed, they now can initiate that supervolcano into violent eruption, whenever they wish. Again, the supervolcano's eruption will likely expel more ash, lava, debris, and rocks than the entire Grand Canyon can hold, devastating a large part of North America.

The caldera is overdue for another eruption anyway, so undoubtedly there is increased geophysical stress there already. One should also check the latest findings in geology, and see what happened to North America the last time that Yellowstone Caldera erupted violently. The last eruption devastated quite a portion of North America, killing most of the higher forms of life in a large area.

Now check what happened the last time the somewhat smaller Toba supervolcano in Sumatra, Indonesia erupted violently, about 74,000 years ago. It destroyed all human life on earth, except for a few thousand humans in Africa {lix}. The human genetics shows this sudden "bottleneck" in our genetic variability that sudden occurred about 74,000 years ago {lix}. Also, this is why the present human genetics also shows that "we all came from Africa". And so we did; we are all descendants of that small group left alive in Africa about 74,000 years ago.

In registering on the Yellowstone caldera, the Yakuza has already achieved an additional tremendous "knockout" strategic strike capability against the United States. The Yakuza can indeed wipe out much of North America in a single strike, then finishing the destruction of the United States at its pleasure. There are of

course other volcanoes in the U.S. that can also be stimulated into eruption to add to the chaos and carnage. Several of them are already being "actively tickled".

Again, in 1997 U.S. Secrelary of Defense Cohen already confirmed the use by terrorists of electromagnetic weapons for precisely such purposes — initiating volcanoes, generating earthquakes, and controlling our weather and climate. The recent September 2004 "shooting" of one powerful hurricane after the other into the United States, is just one example. The economic damage done by those hurricanes Charlie, Frances, Ivan, etc. has been adequately covered on the national news, so it is already familiar to the reader.

Other powerful capabilities available to the Yakuza scalar interferometers are also possible and therefore registered, such as deliberately generating tsunamis that then strike targeted coastal areas at jet liner speed {xcix}. One such "tsunami looking for just a touch to complete its preparations to happen" is provided by the Cumbre Vieja volcano in the Canary Islands. A large section of the volcano has already broken loose, and threatens to slide into the sea. If so, it will generate an enormous tidal wave (tsunami) that will strike the East Coast of the United States a few hours later {lx}.

For example, quoting Bill McGuire, director of the Benfield Grieg Hazard Research Centre at University College in London {c}:

> "A 12-mile chunk of the Cumbre Vieja volcano in the Canary Islands rattled loose during a previous eruption and is at risk of smashing into the Atlantic Ocean, triggering what could be one of the largest tidal waves in recorded history. ... It's not a matter of if, but when."

Obviously, if this "submarine slump-induced tsunami" is induced sharply by Yakuza scalar interferometry, so that the slump occurs with sufficient force, then 8 to 10 hours later a great tidal wave 70 feet or more in height (conservative estimate! Some estimates run 200 feet high) could strike New York and the Eastern U.S. Coast, as well as the Caribbean, moving at some 600 miles per hour. Such a giant tsunami would penetrate inland and devastate entire coastal areas. It is an opportunity that will not have gone unnoticed by the Yakuza, and undoubtedly one or more scalar interferometers have already registered on that target. Again, we strongly stress Defense Secretary Cohen's confirmation of just such use of electromagnetic weapons by terrorists. This is one more example of what can be done by "deliberately evoking, assisting, and directing already available giant geological forces".

So weather engineering and steering and augmenting hurricanes and other storms is just one facet of the real threat. But it is a very important part of the strategic threat, as indicated by Secretary of Defense Cohen in 1997.

Hostile Yakuza fingers are already on the triggers of those zeroed-in scalar EM interferometry weapons, 24/7, waiting for the order to be given to strike. If deemed necessary, this already includes the eruption of the Yellowstone

supervolcano and the massive tsunami hitting the Eastern U.S. seaboard from induced violent eruption of the Cumbre Vieja vulcano.

These two examples are the kind of things that, to one extent or another, are now coming down the pike at us full-speed.

We have also briefly pointed out the horrific casualties that can be obtained by very small and simple anthrax attacks, when bolstered by force amplifiers (immune system spreading and EM BW disease induction).

As can be seen, once the superweapons (such as scalar interferometers) already in the hands of the asymmetric warfare terrorists (the Yakuza component) are factored into the analysis, indeed the terrorists have already achieved a strange kind of "rolling thunder" strategic knockout capability against the United Slates. At least publicly, this major change in the capabilities of the terrorists against the United States has not been analyzed or pursued by the conventional U.S. government agencies and their traditional support analysis agencies. Specifically, the U.S. Congress has not been adequately informed, particularly of the terrible mess that our decrepit old electrical engineering really is, and the consequences of not correcting it when our foes already have done so.

Finally, the reader is strongly urged to review in detail the section on psychoenergetics weapons and scenarios, in the second part of this book. Massive conversions will be used against the U.S. and Western nations, and it alone can in fact wipe out Western civilization. Hundreds of scenarios are available; several examples have been chosen and will be discussed. Massive insertions of "sleeper" personas in massive numbers of individuals in the targeted U.S., Israel, and Western Europe are already underway. The nonmaterial precursor robots, which were launched against us in an eerie and officially undetected giant war against us at the end of 1999 and first few days of 2000, are once again coming at us en masse. Again the reader is strongly urged to check the information on that potent threat in the second part of this book.

When the strategic strikes and new kinds of force amplifiers are factored into the war with terrorism, we find that we now confront a den of raging but carefully controlled tigers, not just a den of small cats using car bombs and solitary humans with strapped on C-4 explosives. Instead, we confront a coordinated strategic threat of awesome and unprecedented power and tremendous damage capability, one that already has the capability to destroy us several times over, and one that is slowly tightening the noose about our collective necks in a deliberate three year schedule ending in our total destruction and oblivion.

SLIDE BRIEFING PART A: Statement; Preface; Foreword; Summary

OBLIVION 71

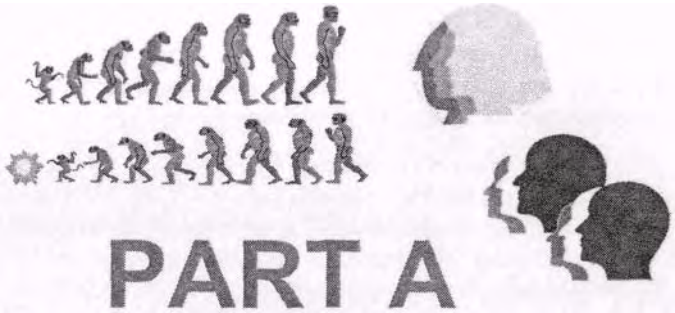

Statement, Preface, Foreword,
Executive Summary

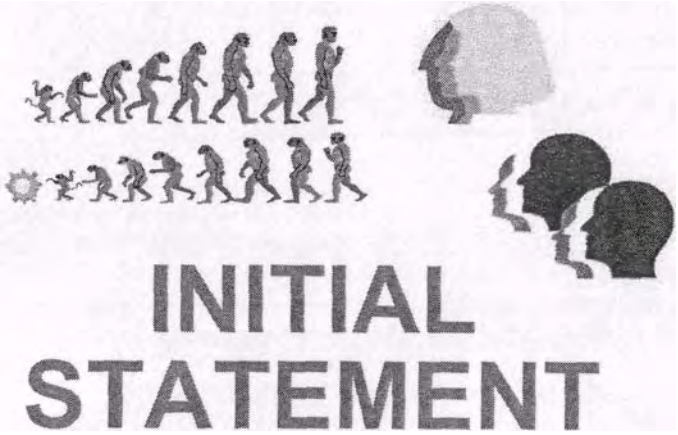

Statement of the situation

- Since the late 1970s, Israel has repeatedly saved the United States from pending destruction.
  - 1970s, saved us from already-inserted Spetznaz teams with nuclear weapons, who would have blown up our cities.
  - 1986, saved us from pending Soviet attack with energetics weapons, particularly scalar interferometers.
  - 1997, saved us from Soviet attack twice, which would have been attacks by the full energetics weapons arsenal.
  - 1999-2000, destroyed millions of nonmaterial robots in subspace inside EM signals, fields, and potentials throughout the U.S.
- Presently, attack is again scheduled, with addition of the eerie new mind conversion techniques of mind war.
- Israel may be able to save us once again, in which case we shall survive. Otherwise, we will be destroyed, beginning about two years from now.

Mini Wars: Catastrophic end of civilization?

- "I firmly believe that before many centuries more, science will be the master of man. 7% engines he will have invented will be beyond his strength to control. Some day science shall have the existence of mankind in its power, and the human race [shall] commit suicide by blowing up the world."

Henry Adams, 1862

- COMMENT: With perfection and unleashing of psychoenergetics weapons, we have reached that time envisioned by Adams, in little more than a century.

End of technological species: The final catastrophe (1)

- Some decades ago, we pointed out that a technological (tool-using) intelligent species eventually poses its own self-destruction, by the ever-increasing power of its tools and by its inbuilt inhumanity of one human member for another.*
- Either the technological species uses its eventual technology to transcend the inhumanity of one human for another, or it uses it to utterly destroy itself because, of its innate inhumanity.
- It is not accidental that we find no signs of intelligent life on other distant planets and in distant galaxies.

End of technological species: The final catastrophe (2)

- Today the human technological species has developed and tested eerie superweapons that breach the threshold required to move into the final decision domain. We have entered that domain already.
- Accordingly, within the next three years we face coming calamities so appalling they numb the mind and nearly defy the imagination.
- Our most basic human element — the ability to function mentally as a unitary individual or group — may disappear forever, destroying the species.

*T. E. Bearden, The Excalibur Briefing. Strawberry Hill Press, San Francisco, 1980. Updated edition, Cheniere Press, 2001.

GO: Group coherence and Order (1)

- The functioning of the human species — from the individual to large nations to the entire species — is determined by the ability to group coherently and thus by the ability to order (cohere)
  - Restricted loss of GO in individual is neurosis (sickness).
  - More general loss of GO is psychosis (insanity).
- Neurosis and psychosis also exist in the group.
  - Restricted loss of GO in the group is group neurosis (sickness).
  - More significant loss of GO in the group is group psychosis (insanity).
- Complete loss of GO in the individual or group is total chaos and total insanity (the old notion of hell).

GO: Group coherence and Order (2)

- FSB/KGB developments in psychoenergetics provide the ability to affect, reduce, and eliminate GO in the individual, a small group, a large group, a nation, or a group of nations.
- The technology provides for reducing or eliminating GO at any or all elements of the attacked society. In effect, for complete "dissociation" of the society.
- It is being unleashed, eventually massively, spelling the rapid demise of the U.S. and Western Europe.
- The genie cannot be rebottled. Ultimately it may destroy GO for all human society. If so, the dissociated human species rapidly consumes itself and dies.

Development and destruction of the human species

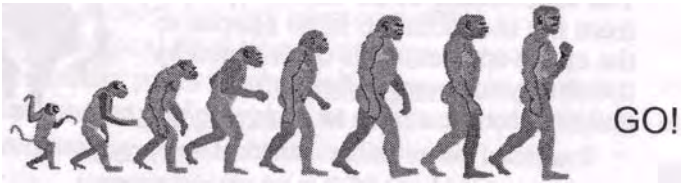

Development of humankind (association)

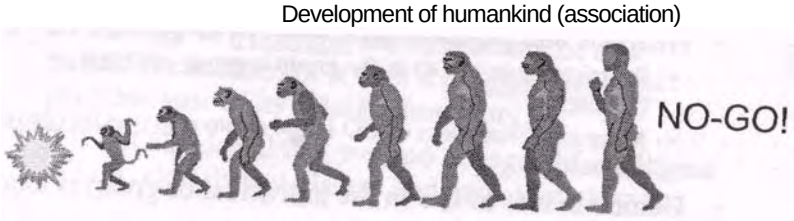

Destruction of humankind (dissociation)

End of technological species: One possible catastrophe (1)

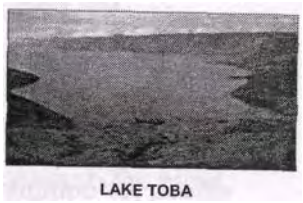

* Some 74,000 years ago, a great supervolcano at Lake Toba on the Island of Sumatra violently erupted.
  - Destroyed all humans on earth except for a few thousand in Africa.
  - All Present humans have descended from them.
* Human genetics records the severe "genetic bottleneck" in human genetic variability that occurred.
* Hence present human genetics shows that "we all came from Africa".

End of technological species: One possible catastrophe (2)

- Underneath Yellowstone National Park in the U.S. lies another great supervolcano, with 3 calderas, and it is overdue to erupt.
- In 1997 SecDef Cohen confirmed terrorists' use of "EM weapons" to cause earthquakes, erupt volcanoes, and control our climate and weather.
- The Yakuza zeroed-in large scalar interferometers on Yellowstone in 2004; can evoke its eruption at will, destroying the United States in a single shot.
- The Yakuza generated the 9.3 undersea test quake in Asia on Dec. 26, 2004 which caused the catastrophic tsunamis in Asia, killing more than 300,000.

End of technological species: The final catastrophe (3)

* With the rise of energetics, FSB/KGB superweapons have been developed which target material systems, living bodies, and living minds in ways never before thought possible.
* To create, engineer, shape, control, or destroy living human minds at will — including all of them on Earth in one strike — uproots the basis for all human order.
* By destroying coherence of mind and minds, no human or organization can survive or function.
* It poses unthinkable catastrophes exceeding any past disaster the human species has experienced.

End of technological species: The final catastrophe (4)

* These psychoenergetics weapons have been developed, tested, and deployed en masse.
* We have entered the last three years of the gradually escalating Operations Phase of asymmetric war against us, which will little resemble anything we have known and experienced before.
* We may see catastrophic destruction of civilization itself, and perhaps of all human life on earth.
* Our purpose is to point out the elements of the coming catastrophe, in the hope that somehow it can still be avoided or at least lessened in severity.
* Otherwise, the coming debacle may soon finish what Toba almost accomplished 74,000 years ago.

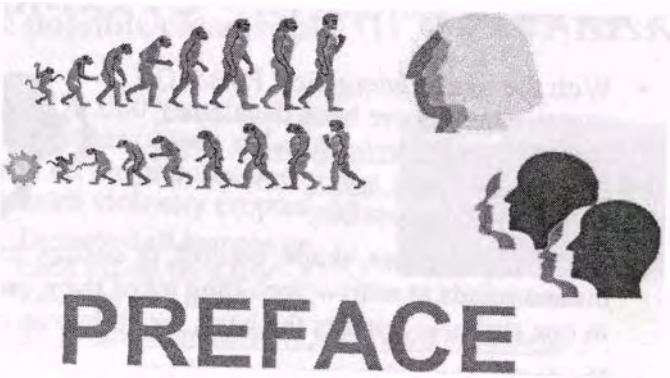

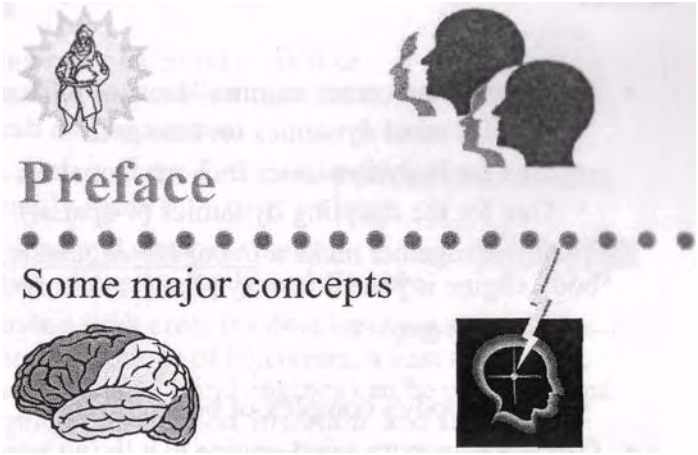

Mind war is the use of conversions

* The Creator created life and living biological systems.
  * Created the process for making life and living systems
  * Science can discover and engineer this process.
* FSB/KGB scientists have done precisely that.

  * From a distance, can insert altered variant of targeted mind in targeted individual's body.
  * Can switch between the two ("conversion").
  * Changes the behavior designed for targeted individual, or any number, as desired. Conversions against U.S. and others (such as Israel) underway.
* Conversions, fractional conversions will play a major role in U.S. economic collapse two years from now, and in the destruction of the U.S. that will follow.

A living mind can be produced and formatted, as can a variant of it (1)

- Make three "precursor engines" (sets of ST curvatures).
  - One for mind dynamics on time axis.
  - One for body dynamics in 3-space matter.
  - One for the coupling dynamics (4-spatial).

- The three together make a living bio-organism, once the body engine is placed in very pliant matter such as:
  - Electron gas.
  - Plasma.
  - Living body's complex of body currents.

- Can place an extra mind-engine in a living human body, using the resident body-engine and coupling-engine.

A living mind can be produced and formatted, as can a variant of it (2)

- Can insert the biosystem in an ashtray or in a living body.
- Can insert just the altered mind dynamics (or a fraction of it) in a targeted person's body.
- Switching between original and replacement minds, or between fractions, is called "conversion" or "fractional conversion".

- Conversion dramatically alters individual's behavior, as when multiple personalities switch in a schizophrenic.
- The individual's new behavior is determined by the dynamics designed into the new engine.

Achieving strategic mind war! (1)

- Making one new mind variant or variant of a major mind fraction is difficult and expensive.
- Once made and the sunk costs paid, unlimited clones are readily made for a penny a copy.
- Can clone and stockpile many millions of copies, easily and cheaply.

- By paying sunk costs for developing initial fractional engines for a range of behaviors, a vast arsenal of deviant fractional mind engines can be produced and stockpiled for selection, insertion, and switching.

Achieving strategic mind war! (2)

- Decisive strategic mind-war via selected or massive conversions becomes both practical and doable.

* "Sleeper" conversions can be implanted in leaders, key personnel, etc. in advance (in an insertion phase).
* Gradual switching generates slowly increasing change in behavior and in internal societal friction.
* Switching massively all-at-once generates a sudden and permanent collapse of an entire society into utter chaos.

- The massively switched society violently destroys itself rapidly and completely.

Scenario examples

* President's own converted guards suddenly shoot him.
* Sudden conversion of President, Vice-President, Congress, Judges, Pentagon leaders and high executives paralyzes the nation.
* Police forces suddenly begin attacking civilians. One's own Armed Forces begin destroying each other and our own populace and cities.
* The sides of any societal polarization begin vehemently attacking and killing each other.

* Strategic weapons operators "go berserk", change codes, launch on our cities, friends, or indiscriminately.
* Hundreds of other scenarios are possible.

Precursor fields and actions: The secret of "energetics" science (1)

» Force exists in mass and mass systems, not in space.

* In space, there is only curvature or distortion regions of spacetime, with dynamics.
  - Such dynamic ST regions are force-free "fields" and "potentials" in space.
  - Every field and potential is already a set of energy flows.*
  - The field-in-space is a dynamic "precursor" state, consisting of energy flow dynamics.
  - A specific "pattern" of the energy flow dynamics in space and time is called an "engine".
* Engineering the precursor state (precursor engineering) is directly engineering nature's fundamental free EM energy flows and their dynamics.

*As shown by E.T. Whittaker in 1903 and 1904, without introducing the source charge. Specifically, EM fields and potentials are sets of ongoing energy flows, freely streaming from the associated source charge(s) producing the field or potential and its energy.

Precursor fields and actions: The secret of "energetics" science (2)

* Precursor engineering:
  - Basically negentropic: only a little entropy is produced for control.
  - Ongoing interaction of dynamic precursor engine with matter produces a directly analogous force engine acting in that matter.
  - Controls, directs, switches nature's free energy flows!
  - Extends "gauge freedom" notion, in that the energy itself is free, and one only pays for a little switching and control of nature's free energy flows.
* Body and its dynamics are dynamics in 3-space.
* Mind and its dynamics are EM dynamics on the time axis. Can be directly engineered via EM methods based on quantum field theory's time-polarized photon.

About models and modeling (1)

* Choice of fundamental units in one's physics model is totally arbitrary*
* Consider a model with only a single fundamental unit: the joule. Everything else — including length, time, mass, etc. —becomes a function of energy.
* We can even make that fundamental unit a joule of EM energy. A priori, energy can be changed in form to any other form. Everything then becomes a function of EM energy.
* Thus time has (and is) a special form of EM energy, just as is mass.

* E.g., see discussion of such systems of "natural units" in J.D. Jackson, Classical Electrodynamics. Wiley, NY, 1999 in his Appendix on Units and Dimensions.

About models and modeling (2)

* This extends the time-polarized photon concept in quantum field theory, since all dynamics and functions on the time axis can be considered special EM energy dynamics and functions.
* Mind operations and dynamics are on the time-axis (they occur in time, not in space). Hence they also are special EM energy dynamics, capable of being directly engineered.
* By engineering time-polarized EM photons, fields, and waves, mind dynamics can be directly produced and engineered.
* Time-energy-EM dynamics in a given mind can also be directly engineered. Another set can be cloned identically, or another set cloned and altered as desired.
* Two variations can be made, inserted in a body, and their connection to the body can be switched between them.

Precursor engineering and mind conversion (1)

- A specific set of forces in/on matter is an ongoing force (material) engine formed and acting in/on that 3-matter.
- Producing it, there is an ongoing interaction of a precursor (nonmaterial) engine and that 3-space matter.

- In the mind realm (time), there are internal patterns, compressions, rarefactions, etc.
  * Compressions of time energy are analogous on the time dimension to "matter", so to speak, in 3-space.
  - The mind interactions can be roughly thought of as analogous to the spatial situation where precursor engines act on "densities of energy called matter" to generate the final "force engines".
- One speaks of "mind energy" and "mind force", to separate thinner intent time actions from the final mind engine that has rotations into 3-space and the body.

Precursor engineering and mind conversion (2)

- Mental intent acting on denser time creates mind engines on the time axis.
- By relativistic 4-space rotation, mind engines also project coherent EM engines in 3-space virtual state.

* Negative entropy operation of charges in the brain and nervous system of a body integrates the coherent virtual mind engines into observable EM engines.
* Thus mind engines cohered into observable 3-space engines acting on coupled matter in a body create intentional behavior in that body.
* Creation and switching of different precursor mind engines is conversion. Switching of fractional precursor mind engines is, fractional conversion.

Precursor engineering and nonmaterial robots (1)

* For every material robot, there exists a force engine for its dynamics, and therefore a precursor (force-free) engine for them. This precursor engine is a nonmaterial robot a priori.
* The precursor engine may be produced alone, then inserted into an electron gas, plasma, or other actual physical system to produce the robotics functioning of a material body.
* The precursor engine "nonmaterial robot" can be inserted into distant targeted national facilities, equipment, weapons, etc. and then activated on call, producing material robots that act on call.

Precursor engineering and nonmaterial robots (2)

- Start with a precursor engine "nonmaterial robot" and an artificially created mind (dynamic intent engine and corresponding mind engine).
- Coupling of mind (precursor) engine and a precursor robot engine gives a "living nonmaterial robot" (a living and dynamic 3-space virtual state engine robot in 4-space).

- The living nonmaterial robot engine set can also be inserted into distant targeted national facilities, equipment, weapons, human bodies, etc. and activated in compliant mass into intelligent functioning.
- Energetic robots dramatically extend material robotics.

What this briefing is about

- Background of energetics weapons is included, with emphasis on conversion, its science, and its intended use.
- Part of what the FSB/KGB developed as energetics superweapons science.

- Three branches, according to what is targeted:
  - Energetics (against inert physical systems, targets)
  - Bioenergetics (against living biological bodies).
  - Psychoenergetics (against living minds and behavior).
- Dramatic tests in 1996, 1997, etc. are detailed.
- In Russia, energetics superweapons science is still highly classified; operated by FSB/KGB, not armed forces.
- West has not developed energetics or defenses against it.

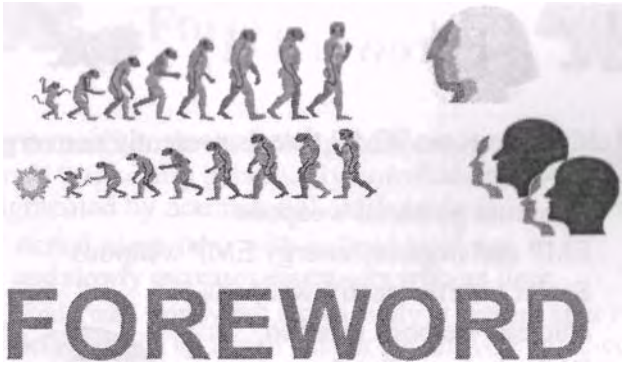

Foreword

Strategic asymmetric warfare plan of the FSB/KGB with the special role of the Yakuza

Foreword (1)

* Multiple strategic WMD threats presently converging to destroy the U.S.
  - Quantum potential weapons
  - EMP and negative energy EMP weapons
  - Scalar interferometry weapons
  - Nuclear weapons inserted
  - Biological warfare threat
  - Bioenergetics threat*
  - Psychoenergetics threat**

* Knockout capability achieved

---

* Little understood or appreciated by U.S. intelligence (uses electrical engineer analysts).

** Not understood or believed by U.S. intelligence (no scientific analysts even understand it).

Foreword (2)

* Have passed from insertion phase of strategic asymmetric warfare to a 3-year operations phase

* Operational incidents will increase next 2 years inside U.S. while U.S. dragon is increasingly "stretched and bled" overseas economically

- Two years from now, the threats will generate catastrophic economic collapse of the United States, then begin methodically destroying it.
- Will increase damage to centralized electrical power system and destroy it two years hence.

Foreword (3)

- An immediate threat is the psychoenergetics threat (especially personality conversion) augmented by nonmaterial carrier robots.
  - Actual usage starts with isolated incidents and slowly increases essentially without limit.
  - * Underway slowly but increasingly at present after recovery delay caused by Israeli destruction of KGB mind-control facilities sometime after mid-1997.
- Main focus of this brief is the conversion threat, with limited background of overall energetics threat.
- U.S. must rapidly achieve and implement counter, or in 2 years probability of our total destruction is very high.

Japanese Yakuza play a special role as FSB/KGB proteges (1)

- Regard themselves as last of the Samurai.
- Often glorified in Japanese movies and media.
- View our defeat of Japan in WW II and our dropping the atomic bomb on Japan as the greatest dishonor in Japanese history.
- In their view, the only way to erase this shame is to destroy every living American.
- In a giant land scandal in Japan, Yakuza ripped off Japanese taxpayer for about $300 billion.
- Penetrate all large Japanese companies and government.
- Allied with old Aum Shinrikyo for technical expertise.

Japanese Yakuza play a special role as FSB/KGB proteges (2)

* FSB/KGB proteges for strategic asymmetric war in the U.S., coordinated by FSB/KGB communist faction.
* Acquired scalar interferometry super-weapons at end of 1989, along with EMP and negative energy EMP aspects, by leasing them from KGB in Russia.
* Can use high altitude EMP or negative energy EMP to knock out centralized power grid at one shot, along with a myriad other electronic systems such as power plants.
* Achieved single-shot destruction capability against U.S., by violently erupting Yellowstone supervolcano at will.

Japanese Yakuza play a special role as FSB/KGB proteges (3)

- Yakuza leased use of scalar interferometers from FSB/KGB in latter 1989.
- Engineered weather over North America.
- Shot down aircraft and missiles, etc.
- Initiated earthquakes and stimulated volcanoes into eruption.
- Proteges for Russian FSB/KGB for internal damage and destruction of the U.S.
- About 1 Jan. 2005, moved into final 3-year operations phase to destroy U.S. Two years to generate incidents, then catastrophic collapse of U.S. economy by destruction of centralized electrical power system etc.
- Then methodically destroy all Americans.

EMP: Expert testimony to Congress*

* "A nuclear bomb detonated high above the United Slates could unleash an electromagnetic pulse that would shut down the nation's power grid and, along with it, communications, water supplies and even food transportation."

* "If the effect is long-lasting enough, it also could trigger a social collapse that could conceivably cause the deaths of millions of people and, temporarily, push the nation back 100 years... "

Note: Yakuza scalar interferometers can produce strong EMPs anywhere in and over the U.S. at will.

•As reported by Dee Ann Divis, "Protection not in place for electric WMD," UPI, Mar. 9, 2005, reporting on testimony by Lowell Wood and Peter Pry, respectively member and senior staffer on the Commission to Assess the Threat to the United States from Electromagnetic Pulse Attack. Wood and Pry testified on Mar. 8, 2005 before the Senate Subcommittee on Terrorism, Technology and Homeland Security.

Yakuza achieved U.S. knockout capability as scheduled

- In last quarter of 2004, Yakuza zeroed-in large scalar interferometers on the Yellowstone supervolcano.
- Violent Yellowstone eruption would destroy 70% of North America. Would destroy almost all of the United States.

- Yakuza achieved a one-shot U.S. knockout capability.
- Yellowstone susceptible, sensitive, overdue for eruption.
- Circa beginning of 2005, asymmetric war against U.S. changed from insertion phase to final operations phase.
- For major demonstration at end of insertion phase, Yakuza generated 9.3 seafloor earthquake on Dec. 26, 2004, producing devastating tsunamis in Asia.

Hostile quake-inducing usage is confirmed

* In 1997 U.S. Secretary of Defense William Cohen* confirmed that such terrorist quake-induction was occurring. He stated:

"Others are engaging even in an eco-type of terrorism whereby they can alter the climate, set off earthquakes, volcanoes remotely through the use of electromagnetic waves... So there are plenty of ingenious minds out there that are at work finding ways in which they can wreak terror upon other nations... "

"It's real, and that's the reason why we have to intensify our efforts, and that's why this is so important. "

* Quoted from DoD News Briefing, Secretary of Defense William S. Cohen, Q&A at the Conference on Terrorism. Weapons of Mass Destruction, and U.S. Strategy. University of Georgia, Athens, Apr. 28, 1997.

Alliance in progress

- China, Russia, and India alliance growing.
- Energy is a pressing problem for China.
- U.S. now hampered in access to Russian oil.
  - Helps "bleed the U.S. dragon" in preparation for the hidden program to cause catastrophic U.S. economic collapse.
  - Probably ordered by FSB/KGB communist faction.

- China "bought into" the Russian oilfields and program.
- China and Russia announced they will hold military maneuvers and exercises in China later this year (2005).

Alliance in progress (2)

- China has 200,000 Chinese in Panama; controls both ends of the Panama Canal. Has access ports in U.S. and this hemisphere.
- China has full complement of energetics superweapons and nuclear weapons.
- China active in North Korean situation. North Korea admits it has nuclear weapons.
- Iran, Syria, Iraq, Afghanistan, Korea are hot spots, will continue to be hot.
- Watch for heat-up of the Taiwan situation, India-Pakistan also. China will take Taiwan by force.
- South China Sea declared as Chinese territorial waters.

Present Operations Phase

- FSB/KGB/Yakuza Operations phase of the asymmetric war is the three years we are now in. The first two years are critical to safely knocking out the U.S.
  - Yakuza has U.S. knockout capability
  - Shot giant 9.3 seafloor quake 12/26/04 generating terrible Asian tsunamis.

- Plan is centrally coordinated by FSB/KGB die-hard communist faction, which retains and operates the Russian superweapons and is the main power in Russia. Yakuza are FSB/KGB proteges.
- Putin from younger KGB faction; wishes accommodation with U.S. Not the main power in Russia; follows orders.

Present Operations Phase (2)

* Incidents will begin gradually in the U.S. and escalate. Al Qaida and other terrorists participate as they can.
- Yakuza scalar interferometers gradually destroy U.S. centralized electrical system, some refineries.* Also use EMPs.

* Causes catastrophic U.S. economic collapse. Massive sleeper conversions nullify friendly Israeli quantum potential counters.
* Yakuza methodically destroys prostrate U.S. cities, installations, etc. — fulfilling its mission of killing every living American.
- If necessary, Yakuza will erupt the Yellowstone supervolcano to assure total destruction of the U.S.

* E.g., BP refinery explosion in Texas City, TX in latter March 2005 is suspicious. The fires and explosion followed an FBI warning that terrorist attacks might be made on Texas refineries. No one has considered scalar interferometry could be involved.

Bioenergetics aspects of the Operations Phase

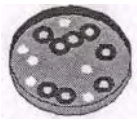

* FSB/KGB will "touch up" American immune systems with quantum potential weapons.
  * "Spreads" immune system's assets to prepare for dozens of expected "shadow diseases".
  * Not much additional assets left for the spread immune system to react to actual pathogens.
- Increases the casualties from BW attacks (such as anthrax sprayed in cities) by a factor of at least three.
- Two terrorists, one light plane, a small agricultural sprayer, and 100 kilograms of anthrax can produce 3 to 9 million casualties in a sprayed city.*

* Due to immune spreading, this is three times the results of the official study done as U.S. Congress, Office of Technology Assessment, Proliferation of Weapons of Mass Destruction: Assessing the Risks. Government Printing Office, Washington, D.C., 1993.

Bioenergetics aspects of the Operations Phase

- Anthrax spray attack and other BW attacks by terrorists will thus be unexpectedly devastating.
- The BW threat includes anthrax, smallpox, and many other dread diseases including avian flu and Ebola.

- No truly effective US BW treatment is available for mass casualties.
  - Most casualties will already have symptoms.
  - Will be assessed as triage category 4 (black) and just dragged aside to die without treatment.
- Essential decontamination spraying with harsh chemicals will kill thousands of additional citizens.

Devastating use of conversions (1)

- FSB/KGB can and does make living minds and biological system engines in the lab.
- Insert a target's mind-clone (with built-in specific behavioral changes) in a targeted individual's body and nervous system, waiting.

- Or insert a fraction of that mind, altered — and waiting.
- Plant such "sleeper" conversion clones in hundreds of thousands of key persons, awaiting activation.

Devastating use of conversions (2)

* Switch selected inserted minds or fractions at will, from a distance.

  Switch massively. Behavior of masses of leaders and critical persons instantly alters, causing total chaos.

* System begins intensively fighting and destroying itself.

* Produces the ultimate "Manchurian candidate" nightmare.
* Also counters the friendly little nation previously saving the U.S. with its quantum potential weapons. It suddenly destroys itself in utter societal chaos.

General scenario and status (1)

* Yakuza achieves knockout capability against U.S. (done).
* Massive sleeper conversions inserted. Counters strategic defenses (ongoing).
* Launch operations phase (operations phase begun).

* Stretch out U.S. overseas, increasing economic difficulty, "bleed the dragon" until it is hemorrhaging copiously (begun, will increase).
* Increase polarization intensities in our society (begun).
* BW strikes, in-place nuclear weapons strikes, inside U.S. (ready)
* Weather, quakes, volcano eruptions, tsunamies (set and ready)

General scenario and status (2)

- Spread immune systems increase casualties (ready)
- Destroy centralized U.S. power system (capability now)
- Massive conversions in; total chaos (insertion begun)
- Catastrophic economic collapse of U.S. occurs (begun and progressing)
- QP strike neutralizes U.S. nuclear weapons (set to go)
- Yakuza interferometers freed (weapons poised)
- Yakuza methodically destroys cities, installations, all living Americans (ready)
- If necessary, Yakuza strikes Yellowstone supervolcano, destroying the U.S. (ready)

Point and counterpoint (1)

» North Korea announced it already has nukes.

* Will be part of the "disturbances abroad".
* Itself stretched, U.S. may consider arming Japan and South Korea with nuclear weapons.

* If arm Japan, some of the nukes will pass into Yakuza hands. Yakuza undoubtedly working on obtaining nukes now; almost certainly has some.
* Some Soviet-inserted nukes already in the U.S. may be given to Yakuza anyway.
* Having scalar interferometers, Yakuza automatically has EMP and negative energy EMP weapons. Will use such weapons also.

Point and counterpoint (2)

* Insertion phase completed.
* Nuclear weapons inserted, ready.
- BW capabilities inserted, ready.
* Limited conversions are increasing polarizations.
- Massive sleeper conversions inserted or being inserted.
- Yakuza knockout capability achieved against U.S.
* Has knockout capability now against U.S. power system.
- Hot spots overseas already heating up.
- Alliance between Russia, China, India.

Point and counterpoint (3)

- Have entered final Operations Phase now.
* Two years until catastrophic U.S. economic collapse and chaos, following destruction of electrical power system, some refineries, etc. by Yakuza scalar interferometers.
* Yakuza then methodically completes destroying U.S. in the third year.

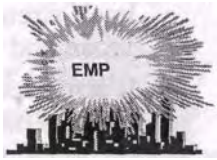

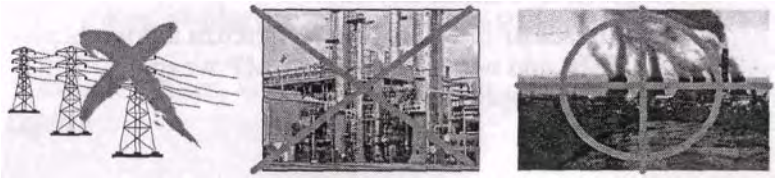

Why the Yakuza?

- Yakuza consider themselves as last of the Samurai.
  - Greatest shame in Japanese history was defeat in WW II and U.S. dropping atom bomb on Japan.
  - * Can only erase it by killing every living American man, woman, and child.

- Allied with Aum Shinrikyo, Yakuza leased KGB large scalar interferometers on site in Russia in 1989.
- FSB/KGB uses Yakuza for protegees, to perform the direct "internal" war against the U.S. and its populace.
- U.S. intelligence has no notion of the Yakuza as a formidable force easily capable of destroying U.S.

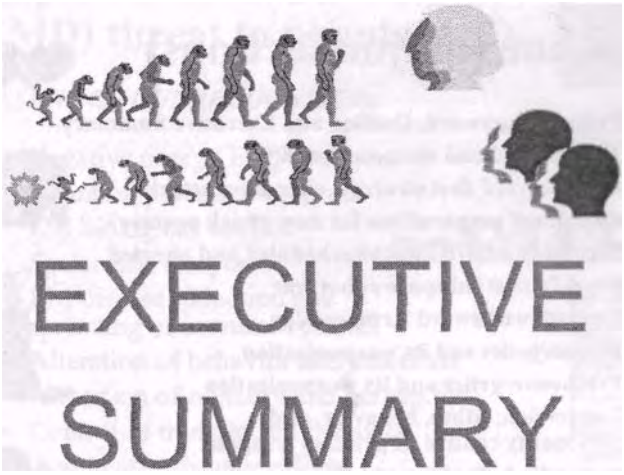

Executive Summary

With accepted threat included

Outline (major sections)

- Preface, Foreword, Outline and Executive Summary
- Background and weapons testing
- Move toward first strategic energetics attack
- Continued preparations for new attack posture
- Second and third attacks scheduled and aborted
- World's first subspace robot war
- Countdown toward Armageddon
- Bioenergetics and its weaponization
- Psychoenergetics and its weaponization
- Conversion: Mind, behavior, and personality control as primary weapon
- Appendix 1: Problems in Western science
- Appendix 2: Technical-Theoretic Vulnerability of Network-Centric Warfare

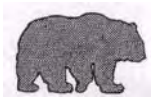

Weapons of mass destruction (WMD) threat to populace (1)

RECOGNIZED TODAY:

- Sabotage and interdiction
- Chemical and biological weapons
- Nuclear materials and weapons
- Powerful explosives
- Assassination, hostages
- Contamination (NBC)
- Shoulder-fired AD missiles
- Terrorism
- Nuclear weapons hidden in our cities (but shunned)

Weapons of mass destruction (WMD) threat to populace (2)

PRESENT BUT UNRECOGNIZED:

- Negative energy EMP weapons
- Quantum potential weapons
- EM biological warfare
- Scalar EM weapons
- EM disease induction and spreading of immune systems
- Alteration of behavior and emotions
- Alteration of memory and perception
- Control of thought and behavior
- Action at a distance effects
- Causal System Robots (CSRs)
- Massive sleeper conversions

USGS PHOTO

Russia has long had the inserted ability to totally destroy the U.S.

- During Cold War, Soviets inserted nuclear weapons and Spetznaz teams into our major cities and population centers.*
- Spetznaz teams can detonate the nuclear weapons, producing from 100 to 150 million casualties and destroying the U.S.
- Israelis inserted similar teams and nuclear weapons (including thermonuclear weapons) into Russia. Deterred Russians.
- These hidden weapons were known as "dead man fuzing". Gave mutual assured destruction deterrence with its "assured" capability on both sides (the reason the Cold War was "cold").
- Weapons are still on site in U.S., under command of die-hard old Communist faction of KGB (with new FSB name).

---

* Lunev's book gives some of the ways the weapons were inserted. See Stanislav Lunev (with Ira Winkler), Through the Eves of the Enemy. Regnery, Washington, 1998, p. 22-33. Lunev is our highest ranking GRU defector. Common shipping containers are also handy for inserting.

China is also involved (1)

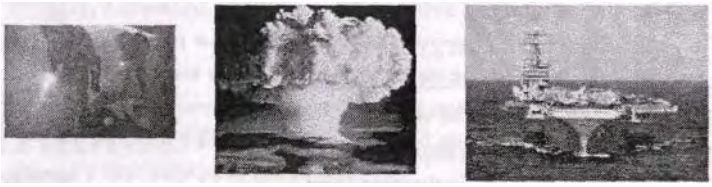

- China declared South China Sea her own territorial waters
- China will eventually take Taiwan by force
- Has massed missile artillery trained on Taiwan
- Held invasion practice on island near Taiwan

China is also involved (2)

- China has deployed quantum potential weapons
- Deployed fearsome EMP weapons utilizing negative energy rather than positive energy (based on Dirac sea theory)
  - Strike of negative energy extinguishes all electron currents
  - Duds electrical and electron systems instantly
  - Instantly kills struck bodies (zeroes brain, nerve currents)
  - Instant kill of missiles, aircraft, and electronics in nuclear warheads

* Ultimate "death ray"; make large or small, even portable
* Chinese "pinged" this analyst, trying to see how he knew the "cold energy" weapons had been deployed

China is also involved (3)

* After China's invasion practice, in mid-August 2001 a 2-carrier-group U.S. task force maneuvered in South China Sea to caution China
* The new Chinese negative energy EMP weapons were trained on the task force
* Could destroy it within 10 minutes
* Chinese military strike aircraft buzzed the ships and carriers, repeatedly trying to evoke U.S. forces to fire on them. Fortunately U.S. didn't.
* Had we fired, the task force would have been quickly destroyed as test of new negative energy EMP weapons.

Estimate on China (1)

- China given favored nation status and use of two U.S. ports during Clinton administration (move to encourage peaceful accommodation).
- Controls ends of Panama Canal.
- Has inserted some 200,000 Chinese into Panama.
- Eventually will outnumber the Panamanians.
- Panama will become a sort of Chinese province.
- China has other ports in the Western Hemisphere.
- Powerfully driven by escalating energy needs. Increasingly competitive for oil, gas, etc.
- New alliance between Russia, China, and India.

Estimate on China (2)

- Has nuclear weapons, and deployed quantum potential weapons and negative energy EMP weapons, the two most powerful weapons on Earth, other than the robots and conversion. Probed this analyst to see if he knew of the negative energy EMP weapons and deployment.
- Preparing both ways; for accommodation with U.S. and also to be able to destroy the U.S.
- Will take Taiwan by force, initiating conflict with U.S. if necessary. Hence needs dead man fuzing of U.S.
- China has probably already inserted some nuclear weapons, BW agents, and the required teams inside many of our major cities and population centers.

Militant Arab terrorists' asymmetric warfare plan (1)

* Terrorists understand asymmetric warfare and WMD.
* Learned from "dead man fuzing" between Russia and U.S.
    * MAD deters rational opponent such as chess players.
    * Does not deter irrational opponent.
    * Inserted WMDs provide a knockout capability.

» Intent to achieve strategic knockout capability against U.S.

* Together with Israel, the "Great Satan" is to be destroyed at all costs. WMD, particularly BW and nukes, are required.

» Part of unceasing holy Jihad by radical Moslems.

* Will not end until U.S. is destroyed or until fanatical Islamic groups are nullified.

Militant Arab terrorists' asymmetric warfare plan (2)

IRAN X-55 MSL

* Main objective is to obtain nuclear weapons and clandestinely insert them into U.S. cities; then detonate them.
* 30 to 50 inserted warheads needed.
* Al Qaeda may have 7 to 15 nuclear warheads already inserted (10 and 100 KT) in 7 to 15 U.S. cities.

Osama bin Laden

* May have others for additional insertion.
* Supportive Arab states such as Iran are intent on obtaining nuclear weapons capability of their own.

IRAN PRESIDENT
Mahmoud Ahmadinejad

* Russians are assisting them to build nuclear facilities.

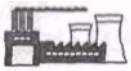

Mechanism to obtain nukes (1)

- Iran and terrorist-backing states seek nuclear power plants.
- Iran is constructing several such plants; one hidden underground.
- One in particular, being constructed by the Russians, will produce weapons grade plutonium.

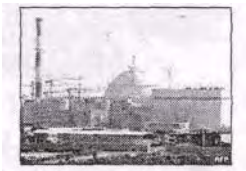

IRAN NUCLEAR POWERPLANT

- Iran intends to become major nuclear power.
- In 2004 Iran and Russia announced this power plant has been completed

* Russia now contracted to help Iran finish, and to furnish fuel.

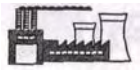

Mechanism to obtain nukes (2)

- The Iranian nuclear plant could be producing in perhaps a year, since Russia is helping and will furnish fuel.
- Yearly it will produce weapons grade plutonium for 20 to 50 nukes.
- Separation of the plutonium is straightforward.
- In about 2 years, up to 30 nuclear weapons may be available, and more each year thereafter, from that plant.
- Other nukes will be available from weapons grade material of other plants.
- Negotiations to avoid this continue, with little avail.

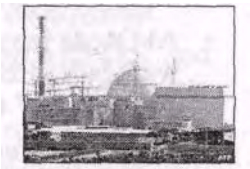

IRAN NUCLEAR POWERPLANT

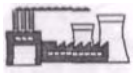

Mechanism to obtain nukes (3)

- North Korea has some nuclear weapons; is producing nuclear plants. Al Qaeda has a few purchased nuclear weapons.
- Several other Arab nations backing terrorists considering same.
- About 2 to 3 years from now, Al Qaeda and other organized terrorist organizations will have their nukes inserted. May be at half-capability now.
  - Can then utterly destroy the United States.
  - Have purchased at least a few nuclear weapons.
- Have obtained and inserted BW including anthrax.

IRAN NUCLEAR POWERPLANT

On Al Queda plans:

- Insertion of nuclear weapons relatively easy and safe.
  - Used method proven by large drug dealers.
  - 98% of all standardized shipping containers were never inspected anywhere in the world.*

- Hid weapons in standard shipping containers.
  - Formerly high probability of getting through undetected.
  - U.S. trucking industry and railroads will load the containers at the port and transport them to the waiting terrorist teams on site in U.S.
- Clandestine transport across unguarded and remote wild U.S. borders by teams, and insertion by sea.
- High probability of success in insertion. U.S. borders unsealed; insertion across borders readily possible.
- U.S. has deployed nuclear detectors in U.S. cities, and is acting to prevent or hamper new WMD insertions.

Terrorists understand economic warfare (1)

* Quoting Osama bin Laden* after 9/11:

- "Al Qaeda spent $500,000 on the [September 11 attacks], while America, in the incident and its aftermath, lost — according to the lowest estimate — more than $500 billion. Meaning that every dollar of al Qaeda defeated a million dollars, by the permission of Allah!"
- He declared his policy is "bleeding America to the point of bankruptcy, " Joked about U.S. "economic deficit... estimated to total more than a trillion dollars.. "

Terrorists understand economic warfare (2)

- Quoting Niall Ferguson*:

"A doomsday scenario is plausible. ..another, bigger September 11 is quite likely... a crisis over Taiwan would send Shockwaves through the international system ... revolutionary regime change in Saudi Arabia would shake the world... detonation of a nuclear device in London would dwarf the assassination of Archduke Ferdinand as an act of terrorism... Like the passengers who boarded the Lusitania, all we know is that we may conceivably sink. Still we sail. "

---

* Niall Ferguson, "Sinking Globalization," Foreign Affairs. 84(2), Mar./Apr. 2005, p. 76-77. He is Professor of History at Harvard University, Senior Fellow at the Hoover Institution, Stanford University, and Senior Research Fellow of Jesus College, Oxford Univ.

The growing U.S. financial problem*

- Huge spending ongoing: "Guns, butter, tax cuts". "The federal government's obligations, current liabilities, and unfunded fiscal commitments are over $43 trillion and rising.... "*

* As Zuckerman points out:
  - "The estimated net worth of American families is slightly over $47 trillion, and nearly all of it — 90 percent — would be needed to cover government's current obligations. "*
  - "According to the GAO, it would take real double-digit growth over the next 75 years to pay off our current debt— an impossible task... "*

* David Walker, head of the Government Accountability Office.
** Mortimer B. Zuckerman, "The case of the 12 zeros," U.S. News & World Report, Mar. 21, 2005.Zuckerman is editor in chief of the news magazine.

Refinery explosion in Texas City, TX in March, 2005

* Could be scalar interferometry-initiated, in which case U.S. agencies would conclude it's not terrorism (and they did).
* Agencies would not recognize scalar interferometry use.
* E.g., FBI pulled back its anti-terrorism investigators. Quoting FBI spokesman Al Tribble*:

"There's no criminal investigation as it pertains to terrorism al this time.., "We're convinced through our bomb technicians, our personnel that were sent down there, the authorities that are on-site, and the BP officials that there are no reports of any breaches of security . There's been no suspicious activity reported. The blast characteristics aren't consistent with any sort of terrorist-type of threat or activity. So we pulled our people back. "

* There have been no new U.S. refineries built in a quarter of a century. What we have are running at 96% capacity, barely able to "keep up" with demand.

* (McVicker/Hedges, Houston Chronicle).

Success always attracts others

- Russian FSB/KGB faction under die-hard Communists controlling the inserted Russian WMD weapons and super-Weapons; may be unable to resist the opportunity.
- China may be unable to resist the opportunity.
- Yakuza/Aum Shinrikyo are actively participating.
- Hence there is a growing, loose but immense attack consortium of terrorists, Russia, China, Yakuza/Aum Shinrikyo, North Korea, etc.
- Any major terrorist nuclear attack on the U.S. may draw consortium into full massive attacks on the U.S.
- Probability of destruction of the U.S. is very high; critical point by two years from now (now being Feb 2005).

Update: Yakuza role In asymmetric war on U.S.

- The Yakuza is a major protege of the FSB/KGB; is coordinated and to be used against the internal U.S.
  - Yakuza regard themselves as last of the Samurai.
  - Greatest shame in Japanese history was our WWII defeat of Japan and dropping atom bomb on Japan.
  - Stain can only be removed by the total destruction of every American man, woman, and child.

- Operations phase: Gradual economic bleed and destruction, particularly of U.S. electrical power system.
  - Centralized system will be destroyed in two years.
  - Simple since scalar interferometers are available.
  - Evokes catastrophic economic collapse of the U.S.
  - Western European economy also collapses in response.

- Yakuza will then destroy U.S. cities and populace at will.

Bottom line: WW III in progress, "Peacetime" was insertion phase (1)

* In 2 years or less, with a few more nukes inserted in U.S. cities Al Qaeda will also achieve ability to effectively destroy the United States.
* Yakuza already achieved U.S.-destroying capability with scalar interferometers registered on Yellowstone supervolcano and other volcanoes.
- This is WW III. "Peace" is totally eliminated. There are two main phases in this asymmetric war:
  - Insertion phase, when WMD are being inserted. Lasted 20 years. Mistakenly called "peace".
  - Operations phase, when WMD are unleashed.
- We are now in the Operations Phase vis a vis the FSB/KGB, Yakuza, and Al Qaeda.

Bottom line: WW III. in progress. "Peacetime" was insertion phase (2)

- Negotiations, statesmanship, UN debates necessary, but are only coverage for ongoing insertion phase and operations phase. We must also:
  - Decisively defeat future WMD insertions.
  - Nullify previous WMD insertions.
  - Unceasingly attack terrorist elements.
  - Develop Priore-type effective EM treatment of mass casualties at highest possible national priority.

* U. S. has deployed sensitive nuclear detectors in our cities and population centers, is building a homeland defense, and has taken other measures such as a massive reordering and improvement of intelligence.

Terrorists' backup WMD capability (I)

- WMD such as smallpox, anthrax, dirty nuclear explosions etc. can severely damage or destroy the United States.
- BW agents made by many nations are available. Insertion continues.
- Anthrax spores available for years on Voz Island* in the Aral Sea. Those who wanted anthrax, got it easily. Already inserted into the U.S.**
- Smallpox and BW Soviet scientists were available for buy and hire, and multiple terrorist-backing nations bought and hired them.

* Vozrozhdeniye Island is located in the Aral Sea between Kazakhstan and Uzbekistan. Hundreds of tons of biowarfare agents, etc. were dumped there by the Russians.
** Witness the high grade anthrax mailings (a test, not a strike) after 9/11.

Terrorists' backup WMD capability (2)

- Significant insertion in U.S. already accomplished, especially anthrax.*
- A single professional anthrax attack on Washington DC, sprayed from a light aircraft, will produce 1-3 million casualties.**
- If smallpox is unleashed in a single major city, it will eventually kill some two billion persons worldwide — nearly 1/3 the human population.
- Will be unleashed — matter of when, not if.
- The inserted nukes and dirty weapons will also be unleashed.

* Witness the high grade anthrax mailings (a test, not a strike) after 9/11.
** KGB/FSB's immune system spreading increases these BW casualties by a factor of 3.

Additional threats (1)

* Russian nukes and Spetznaz teams already inserted in U.S. cities, ready.
* Can destroy the U.S. at any time.
* Originally deterred by Israeli nukes inserted in Russian cities.
* Chinese probably inserted or inserting nukes, perhaps BW agents and teams also.
* China planning for either accommodation or attack.
* Yakuza inside U.S., probable significant insertions, have scalar interferometers and EMP weapons, both long range and portable.

Additional threats (2)

* Yakuza building small, relatively portable scalar interferometer weapons.
* Inserting them with teams, to strike nuclear power plants, refineries, and other critical targets.
* Already mans long-range interferometers on-site in Russia.
* Strongly engineers weather over North America, occasional aircraft shootdown, etc.

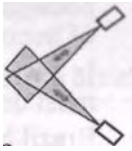

* Has negative energy EMP weapons also to attack U.S. cities, nuclear power plants, refineries, grid, etc.
* Directly generated the 9.3 earthquake causing the recent terrible tsunamis in Asia.

Additional threats (3)

- Castro has inserted 10,000 guerrillas in U.S. over the decades. Perhaps 5,000 are still viable assets for sabotage and asymmetric warfare.
- Miscellaneous BW, chemical, and guerrilla threats from other foreign assets inserted by other nations (Iran, Syria, Libya, etc.).
- U.S. borders still essentially open; insertion still easy and continues.
- Most standard shipping containers still unchecked.

Additional threats (4)

* Brazil is an another unknown quantity; has scalar interferometers and quantum potential weapons.
* Met with FSB/KGB in Iceland and signed nonaggression pact. Russians have no intention of honoring it.
* In any major strategic strike on the U.S., FSB/KGB must destroy Israel and Brazil due to their QP weapons.
* Brazil hired the German scientific leadership of Russia's scalar interferometry development (by the German radar team) after WWII, once the German team was released by the USSR. This initiated Brazil's superweapon program.
* David Bohm's visit to Brazil allowed picking his brain on quantum potentials. Brazil then developed QP weapons.

Slyness of KGB plans: The chessplayer outlook pervades

* "Each side secretly develops new means of warfare in order to employ them unexpectedly. History knows many examples how the employment of a new weapon initially gave considerable success because the enemy, caught unawares and not knowing the combat capabilities of the weapon, was for some time incapable of effective counteraction. " [1]

* "Of particular importance is basic research aimed at discovering still unknown attributes of matter, phenomena, and the laws of nature, and developing new methods for their study and use to reinforce the state's defense capability. " [2]

---

1. V. Yo Savkin, The Basic Principles of Operational Art and Tactics. Moscow, 1972.
2. Portion of a book by Marshall Grechko, deleted from its English translation by specific request of the USSR.

Strengths on the side of the U.S.

- Large strategic nuclear capability.
- Israel has powerful quantum potential weapons, deters many scenarios.
  - Has repeatedly rescued the U.S. from planned FSB/KGB strategic attacks.
  - Has inserted nuclear weapons inside Russian cities, population centers, and key areas.
  - Has at least a limited capability against mind conversion and psychoenergetics.
  - Can defend against precursor robots.
- U.S. believed to have some secret weapons of its own; exact types and details unknown.

Main weaknesses of U.S. could be solved by vigorous action (1)

- Americans do not react to slowly increasing threats.
- Public and officials still not educated as to what is really going on. Other than Cohen's statement, officialdom has been resoundingly silent on superweapons, their development and testing, etc. Intelligence analysis still using puerile old CEM/EE model.
- Historically, American preparation occurs after sudden attack has already occurred (reacting to the cobra's strike).
- Borders need to be sealed; standard shipping containers need to be checked.
- Develop mass casualties EM healing device (Priore type).
- Quickly develop and deploy fuel-free electrical power systems taking energy from the seething vacuum.

Main weaknesses of U.S. could be solved by vigorous action (2)

- Predominance of archaic, error-riddled classical electromagnetics (CEM) and electrical engineering discards:
  - Precursor engineering and nonmaterial robotics.
  - COP > 1.0 electrical power systems "fueled" by vacuum energy.
  - Engineering understanding of mind, mind dynamics.
  - Understanding of "electromagnetic" induction of diseases, etc.
  - Understanding of psychoenergetics.
  - Production of living minds and living systems.
- Combination places U.S. at grave strategic disadvantage.

* T.E. Bearden, "Errors and Omissions in the CEM/EE Model", at http://www.cheniere.org/techpapers/

Energetics: Precursor engineering (1)

- Present CEM/EE falsely assumes:
  - Force fields in space (exist only in matter).
  - A material ether (falsified since 1887).
  - A flat spacetime (falsified since 1916).
  - That EM fields, potentials, and energy are freely created out of nothing at all, by source charges — totally in violation of conservation of energy law.
  - That static EM fields and potentials are frozen. Instead, they are nonequilibrium steady-state sets of ongoing dynamic, free flows of EM energy.
- Any amount of force or energy can be collected from a given "static" field or potential, if one has sufficient collecting charge, by F = Eq; W = ϕq.

Energetics: Precursor engineering (2)

- Present EM circuits are made Lorentz-symmetric, by wiring external source of potential into its own external circuit, while current is flowing, as a load to be destroyed
- Professors and texts do not calculate the force-free EM energy field as it exists in space as a precursor of the EM-field of force in matter . None ever have. Ongoing precursor field interaction with charge gives force fields.
- EM energy flow is already free. Force-free EM energy field in space can be engineered by paying a little for switching and control, first making a precursor EM engine with desired dynamics. One need not pay for the energy itself since all EM energy is in freely flowing streams already, pouring from source charges and dipoles.

Energetics: Precursor engineering (3)

- There is not now, and there never has been, a single EE department, professor, or textbook that teaches calculation of the EM field in space. Instead, they teach calculation of its, force field effect in charged matter, created by ongoing interaction of that real EM field with that charged matter.
- There is not now, and there never has been, a single EE department, professor, or textbook that teaches (or knows) how an electrical power system is really powered. It isn 't powered by cranking the shaft of the generator!
- So long as our scientific community ignores the source charge problem (swept under the rug for a century), we will remain at the mercy of those who did correct the flawed CEM/EE model, did calculate force-free EM fields in space, and did develop precursor engineering.

Tie "New" Strategic Problem (1)

- Nonmaterial energetics robots (self-powering precursor engines) carrying specific spacetime curvature engines (weapons engines) have been fully developed and deployed under the FSB/KGB's die-hard Communist faction.

- Totally new form of asymmetric war: Nonmaterial fighting systems.
  - First war already fought (few days, 1999-2000).
  - * Small non-Western nation destroyed robot armada of millions of such robots inside U.S. in subspace interior to normal EM field signal envelopes.
- West is 50 years behind, has no defenses against such. Scientific community responsible for U.S. vulnerability.

The "New" Strategic Problem (2)

- Can be superior to all other forms of combat.
- Economics dirt cheap (penny a system after sunk costs paid).
- Effectiveness is complete against defenseless targets.
- Targeted Western nations vulnerable and defenseless.
- Western science is woefully inadequate and completely unaware of this technology; has slept for 50 years, intends to keep on sleeping.
- CIA, NSA, DIA, NSC, NAS, NSF, think tanks, etc. appear essentially unaware of energetics precursor robots technology and development.
- Largely unaware of conversion science and threat. Use standard CEM/EE instead of energetics.

Characteristics of nonmaterial energetics (precursor) robots (1)*

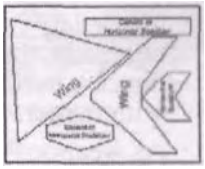

* For every physical system and its functions, there is a corresponding set or "template" of spacetime (ST) curvatures (a set of precursor energy field dynamics), acting on the charges and masses to generate all system forces and their actions.
* EM fields and potentials in space are force-free energy fields and specialized curvatures of spacetime. A template of desired ST curvatures and their dynamics can be formed separately, as a harmonic set of precursor bidirectional EM LW wavepairs and their dynamics.

---

* Also referred to as "causal system robots".
** Spacetime curvature (energy) may also be taken as change of virtual particle flux of vacuum.

Characteristics of nonmaterial energetics (precursor) robots (2)*

- Precursor robot is a template of ST curvature dynamics.
- It is nonmaterial and force-free.
- When it interacts with charged matter, the ongoing interaction produces force dynamics in that charged matter.

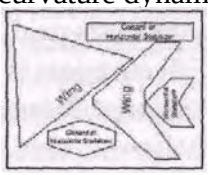

- Functions — communication, weapons, surveillance, weapons functions, etc. — can be "built-in".
- The "robot" is then commanded via EM longitudinal wave LW communications systems.
- An entire robot armada of millions of such robots can be assembled and controlled in distant battle.

* Also referred to as "causal system robots".
** Spacetime curvature (energy) is also change of virtual particle flux of vacuum.

Characteristics of nonmaterial energetics (precursor) robots (3)

- Spacetime curvature is energy. ** Since ST curvature is energetic, the template/robot is a self-powered system, hence a nonmaterial robot fighting system once it interacts with matter.
- As weapons it uses precursor energy engines, not the usual material engines.
- Interaction of precursor engines in matter produces the desired real fighting engine effects. Almost any physical effect can be generated.
- Precursor engine robots easily travel through earth, ocean, space, since ordinary EM fields, potentials, and waves are bundles of LWs and superhighways.
- First making one robot is expensive and difficult; next million copies are 1 cent each.

Implications of "new" warfare (1)

* Demise of the U.S. in 2-3 years is highly probable unless an immediate Manhattan Project is launched under direct Presidential Directive at highest priority and speed.

* Nonmaterial robots and switchable sleeper conversions are presently two of the greatest threats, of the several rapidly converging.
* But the U.S. will likely be struck by all the threats.
* Developing EM treatment of mass casualties is absolutely necessary if to avoid most (being Triage Category 4) just set aside and allowed to die.

Implications of "new" warfare (2)

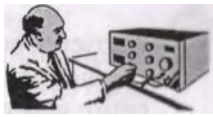

* To have a survival chance, greatest effort, speed, and closest possible selection of scientists are required.
* Close coordination with friendly foreign weapons scientists at the highest level is imperative.

* Some nations do have some counter-measures and destroyed the first nonmaterial robot armada attacking in 1999-2000 after being alerted by this analyst and three close colleagues. U.S. has nothing.
* One, possibly two nations may have limited capability against conversion technology.

Conversion: Matured mind control threat capabilities (1)

- Secretly entrain or enslave leaders and personnel at any and all levels
- Install secret multiple personalities
- Switch their personalities at will
- Easily defeat detection systems
- Penetrate all compartments
- Compromise all information
- Manipulate and increase polarization intensities

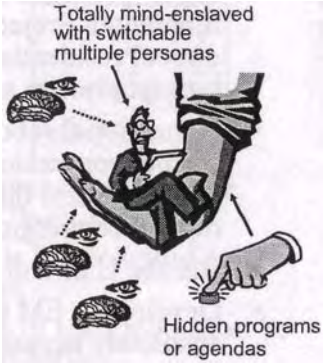

Conversion: Matured mind control threat capabilities (2)

- Carrier robots with mind-engines access every part of the entire nation
- Augments and completes carrier robot forces with bioenergetics engines and energetics engines
- Because of ease of reproduction (penny each), may be cheaper than any other form of combat
- Possible to subvert a government or culture, armies, organizations, nation

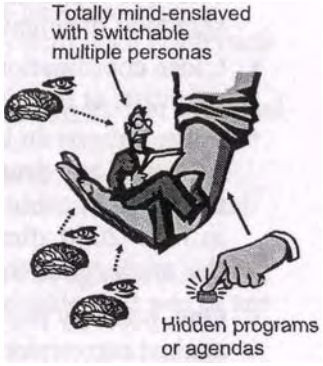

Conventional secrecy is compromised

* "Secure phone" to one's ear with head in the EM field is a direct pipeline into one's entire mind, memory, knowledge, behavior.
* Any signal path into a computer etc. is a pipeline also.
* Psychoenergetics technology can "search, find, and download" the information rapidly.
  - Pass inside EM fields in matter, thus through walls, safes, vaults, mountains, ocean, earth, etc.
  - Pass through encryption device to raw input information.
  - Scan, copy, download, and transmit the information.
  - Penetrate any meeting, vault, sweep processes, etc.
* Limited only by the ability to process the enormous amount of information gathered.

Nonmaterial robot capabilities

* Nonmaterial (precursor energy field) robots with weapons can attack, control, disrupt, destroy
  - Any and all inert matter systems (energetics carrier robots).
  - Any and all living biological systems (bioenergetics carrier robots).
  - Minds of selected personnel (psychoenergetics carrier robots).
* Robotic systems can self-install and reside inside matter or EM field, using the charges of that matter or energy of that field to form a functioning "physical" body.
  - Becomes a mine system designed against any target.
  - Its auxiliary robots can be weapons against any and all targets.
* Ultimate "mine warfare". Segments of (or entire) physical environment of targeted nation can be filled with deadly weaponry unceasingly attacking targets.

To understand the robots, new concepts are necessary (1)

- Infolded interior structuring of ordinary EM fields, potentials, and waves as biwave pairs. Normal EM is just "envelopes".*
- Infolded longitudinal EM waves produce oscillating energy densities (curvatures) of spacetime precursors (basis for engines).
- "Engine" concept (curvatures of spacetime functioning as a system to perform any set of operations upon and in matter desired).
- Precursor engine interacts with mass to produce a real, physical force system (engine) operating on that mass

* Basis has been in physics since two papers by Whittaker in 1903 and 1904.

To understand the robots, new concepts are necessary (2)

- "Mind engine" concept: Electrodynamics based on scalar EM waves on the time axis, using scalar photons from quantum field theory coupled to longitudinal photons, so that couplets are observed as instantaneous scalar potentials (voltages).
- "Nonmaterial robot" system concept as extension of engine and mind-engine concepts. Robots are by definition self-powering.

- Carrier robots infold numbers of weapon/action robots within their own interior electrodynamics.

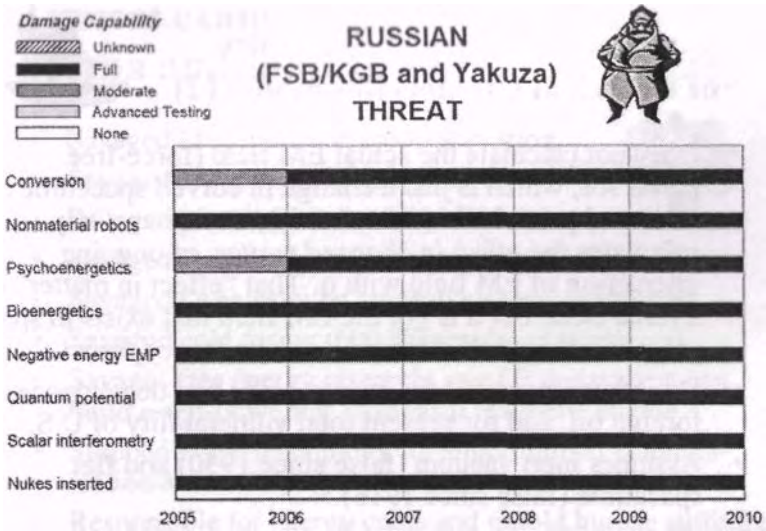

Afterword: Examples of inanity of electrical engineering model (1)

- Has not solved its "source charge problem" in over 100 years. Solution summarized in this brief; basis in physics since 1957 award of Nobel Prize to Lee and Yang.

- Still assumes material ether (and force fields in vacuum) a century after falsified.
- Assumes all EM fields and potentials and their energy are freely created out of nothing at all by source charges.
- Assumes "static" field or "static" potential is frozen. Each was proven to be a set of inexhaustible, ongoing EM energy flows, a century ago, by E. T. Whittaker.
- Doesn't know or teach what really powers an electrical circuit or device. Not a single EE department, professor, or text ever has. NAS, NSF, NAE, universities, scientific societies etc. not acting to correct these known errors.

Afterword: Examples of inanity of electrical engineering model (2)

- Does not calculate the actual EM field (force-free precursor, which is just a change in curved spacetime or in virtual particle flux of vacuum); never has. Only calculates the effect in charged matter, of ongoing interaction of EM field with q. That "effect in matter" is a force field, but it is not the EM field that exists in space prior to interaction. Mass is a component of force!
- Directly responsible for energy crisis and dependence on foreign oil, and for present total vulnerability of U.S.
- Assumes inert vacuum (false since 1930) and flat spacetime (false since 1916).
- Discards Heaviside energy flow component (up to a trillion times as much flow as in Poynting flow).

Afterword: Examples of inanity of electrical engineering model (3)

- Arbitrarily eliminates COP energy-from-the-vacuum (EFTV) systems, by using circuits that self-enforce Lorentz symmetry (forward emf and back emf forced to be equal).
- That allowed use of simpler (Lorentz-invariant) equations to describe the operation of such "self-crippling" circuits.
- Discarded all permissible COP>1.0 Maxwellian systems.
- As a simple analogy, it destroys — so to speak — electrical heat pumps. Normally a heat pump receives and uses excess energy from the environment, thus enabling COP>1.0 and also self-powering. Instead, symmetrized EM only permits the EM "heat pump" to be on resistance heating, never using an extra joule of EM energy from the environment.
- This is particularly inane since all EM energy occurs in continuing free flows, never as so many rocks in a rockpile.

Typical examples of scientific dogma and suppression (1)

- Savaged Meyer on energy conservation.
- Savaged Wegener on continental drift.
- Savaged pioneers of ultrawideband radar.
- Savaged Becker on revolutionary EM healing.
- Savaged Ovshinsky on amorphous semiconductors.
- Savaged cold fusion (600 successful experiments).
- Savages free energy research; any EE department can build a self-powering Takahashi magnetic engine.
- Stopped Fogal technology for superluminal communication and removing noise from digital signals/photos.
- Responsible for energy crisis and untold human suffering.

Typical examples of scientific dogma and suppression (2)

- Ruthlessly suppressed revolutionary electro-healing (unwittingly using precursor disease antiengines) by French scientists on the Priore team.
- Ignored attempt in 1998 to get U.S. to develop it for quick mass casualty treatment and curing. Most BW casualties now will be Triage Category 4, set aside and allowed to die. Scientific community is responsible.
- Did not solve four decades of EM induction of diseases and health changes in personnel in Moscow Embassy by precursor field "disease engines".
- Most scientists think we are "meat computers". Have no notion of time-as-energy, scalar photon, or thought and mind operations as time-axis EM dynamics.

Additional observation

- Key persons who could engender understanding of the threat science are viciously attacked and vilified.
- Agents and agents of influence involved, per gaming and disinformation techniques. Murder also used.
- Dramatically reduces probability that U.S. government and scientists wake up to what is ongoing.
- Performed by U.S. cartels and also FSB/KGB.
- For KGB, it is part of the overall attack support plan* to insure that the U.S. sleeps on, preoccupied with Afghanistan, Iraq, Iran, North Korea, oil, reactors, etc.

* An important strategic attack plan will always have an accompanying deception plan. The more important the attack, the more elaborate the deception plan. Obviously the FSB/KGB has a comprehensive (and very successful) strategic deception plan.

A famous quote:

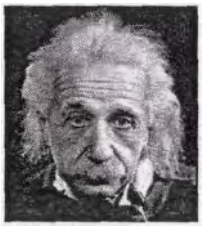

"I know not with what weapons World War III will be fought, but World War IV will be fought with sticks and stones."

Albert Einstein.

- The weapons used in the ongoing WW III are indeed strange and previously unknown in the West.
- Scientifically we have been asleep for decades, it seems, as to the nature of these eerie weapons.
- We must react swiftly, for there is little action time left.

Conclusions (1)

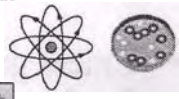

- World War III is in full progress.
- Multiple total destruction plans against the United States now implemented and converging.

* Success probability very high (maybe 98%).
  - Inserted nukes and BW; scalar interferometers, QP weapons; negative energy EMP; robots; mind control; and conversions.
  - * U.S. scientists unaware; few defenses.
  - ♦ Time is very short — less than 3 years; and two year critical period with extensive conversion strikes.

Conclusions (2)

- U.S. is unacceptably vulnerable:
  - Appalling age and flaws of EM models and electrical engineering.
  - Naivete, dogma, and cartels in scientific community, industry, government, medical community, etc.
  - Intelligence community and political community unaware; have inadequate scientific advice. Thus ineffective.
  - Nation essentially unprepared for the type war ongoing.
- Main decision makers lack knowledge of eerie new weapons technology and how to defend against it.
- Cannot even recognize nature of an attack (Button, Svoboda, Hess, Thresher, Gander, Challenger, Titan, TWA-800, Yellowstone, Asian tsunamis, etc.).

Conclusions (3)

- Unless galvanized by strongest possible Presidential action and crash project to develop counters, U.S. will likely be destroyed in 3 years or less.*

- Unless forced in strongest manner, the organized U.S. scientific community will not only fiddle while Rome burns, but it will also assure that Rome burns completely.

* Now in 3-year Operations Phase. At end of 2 years is the decisive point.

Desperate U.S. needs

- Presidential Decision Directive in strongest terms.
- Force scientific community to correct CEM/EE model.
- Expunge 1% evil entourages in national labs, etc.
- Countermeasures against conversion, precursor robots.
- U.S. quantum potential weapons, precursor robots.
- Mind-engine production capability.
- Fuel-free energy-from-the-vacuum power systems.
- Portable Priore-type medical treatment units.
- Sealing of borders and inspection of cargo containers.
- Briefing of Congressional leaders and decision makers, mayors, governors, legislatures, police forces, etc.
- Tailored briefing of American populace and news media.

(SLIDE BRIEFING CONTINUED)

PART B: Background and Weapons Testing

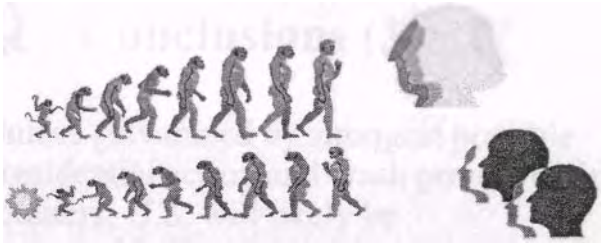

BACKGROUND AND WEAPONS TESTING

Background and weapons testing

Russian and Western science compared

Section contents

* Russian science
  - Energetics
  - ♦ Bioenergetics
  - * Psychoenergetics
  - * Engines and robots
  - Carrier robots
- Western science
  - * Serious flaws
  - Electrodynamics
  - * Electrical engineering

Stalin's dictum in 1945 removed any resistance from his scientific community

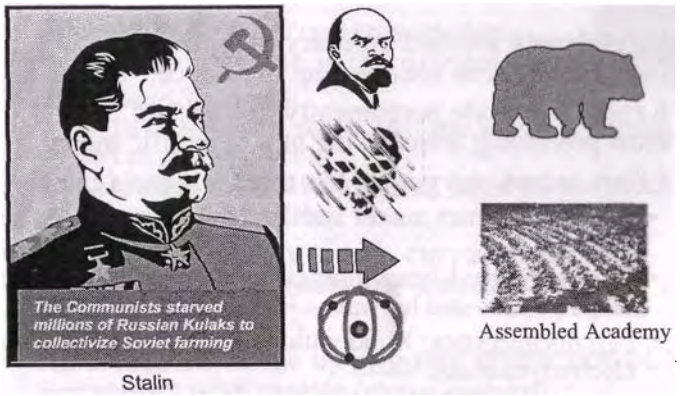

"The destiny of communism has been frustrated by the U.S. development of the atomic bomb. That is not the last great technical breakthrough. The next one will be Soviet! You will provide me with that great new technical breakthrough at all speed, or I will have your heads. Do / make myself clear, comrades?"

Response to Stalin's iron dictum

* Soviet Academy of Science desperately sought anything anomalous and not followed up, which could be weaponized for a new "great weapon".
* Search included mind, living bodies, inert matter areas.
* Reviewed, corrected scientific models, e.g., CEM/EE.
* Hauled in copies of scientific literature journals of the West, from Day 1, to analysis institutes by shiploads.
* One institute alone had some 2,000 Ph.D.'s and their staffs (translators, secretaries, etc.).
  - Reviewed each page of each journal issue. Selected interesting items previously not followed up.
  - These reviewed by best nonlinear scientists in the world.
* Energetics born in 3 to 4 years; used to design weapons.

Energetics: Result of this great Russian effort

- Immediately focused on everything important that had not been followed up in science.
- Kept this attitude permanently; researched most promising areas, using new scientific models.
- Effort named energetics; has three targeting categories:
  - Energetics: Inert matter and EM fields, potentials, and waves.
  - Bioenergetics: Living biological matter with biofields, biopotentials, and biowaves.
  - Psychoenergetics: Mind with its scalar (time-polarized) electrodynamics).
- Expanded QFT's scalar and longitudinal photons; couplet observed as scalar potential (voltage).

Targets of the three branches of energetics weapons

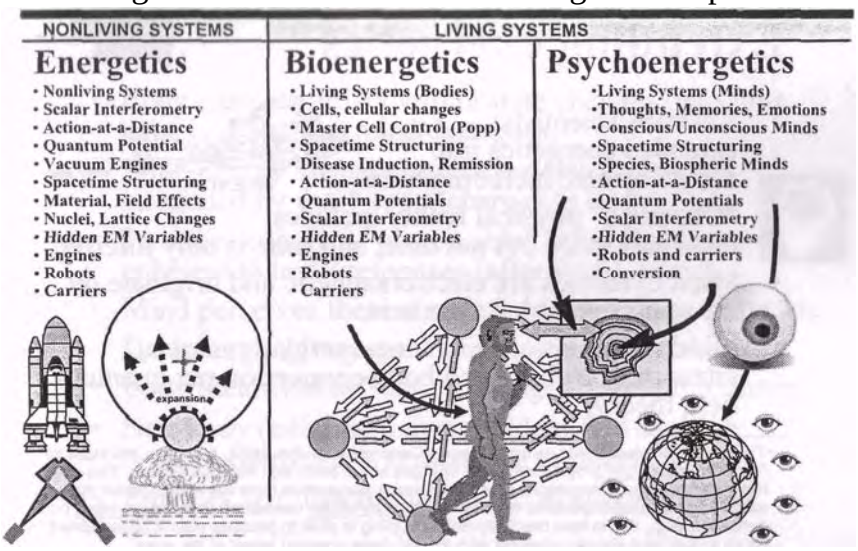

Origin, of term "energetics"

WILLIAM RANKINE

* Energetics term recognizes energy as the primary thing in the universe.
  - Rankine first used it.
  - G. Helm revived it, separated it into an intensity factor and an extensity factor.
  - Ostwald in 1893, 1895, and 1901 raised the energetics concept to the forefront.
* In general relativity terms, curvature of spacetime is essentially the same as "energy" or "energy in motion".
* All forces are made by ongoing interaction of ST curvature* with matter (mass-energy).

---

* In particle physics, substitute "change in VPF of the vacuum" for "ST curvature".

Extending energetics

- Russians scientists extended energetics into n-dimensions, including time.
- "Observed" physical reality includes mass and space but not time, and time is only inferred.
- Mind dynamics are electromagnetic and originate on the nonobservable* time axis.
- Mind dynamics are EM time-energy dynamics, interacting with a mind/body connection per quantum field theory.

•Time is not an observable, even in theory. Coherent time dynamics, however, are input as 3-space virtual state projections to the charges in the brain and nervous system. The charges integrate coherent integrations of virtual 3-space projections from the mind's intent dynamics, outputting observable photons which are EM observables correlated to coherent intent time dynamics. E.g., that is how the body-mind coupling is able to produce output observable EM nerve spikes and signals coherent with mental (time domain) intent of the mind.

Mind-to-body coupling mechanism

- Time is not an observable, hence mind is not observable.
- Mind changes on time axis project virtual state intersections in 3-space, into the coupled nervous system.
  - * Charges in body system provide coherent integration of virtual state changes into observable photons.
  - * Intent changes thus integrated into coherent observable EM, with small integrating delay.
  - * Occurs in "spike" areas (in dendrite discharges).
- Coherent integration produces intent-coherent EM discharges in body's nervous system.
- Servomechanism control theory then applies in body.

Body-to-mind coupling mechanism

* Body changes reflect virtual state changes onto time axis, into coupled mind dynamics.
* Time-energy virtual changes are also coherently integrated by the 4-space charges in body.

* Produces coherent "perceivable" mind changes coherent to body responses (after small delay).
* Mind perceives these changes, compares, readjusts, etc.
* Delay in total loop gives sense of personal identity.
* Body identified as 3-space changes coherent to intent.
* Non-body (external universe) identified as those 3-space changes not responding to intent.
* Provides self, functioning in the world of non-self.

Energetics for superweapons

* Khrushchev demanded 100% ABM defense.

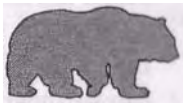

* Kapitsa replied to Khrushchev:

"If a means of total neutralization of foreign missiles is to be found, it can only come from a group of new principles in physics, called energetics."

Basic Energetics

- Scalar interferometry
- Longitudinal EM waves
- Precursor engines
- Negative energy EMP
- Quantum potential
- Nonmaterial robots
- Carrier robots
- Mind control
- Mind conversion
- Building living systems including living minds

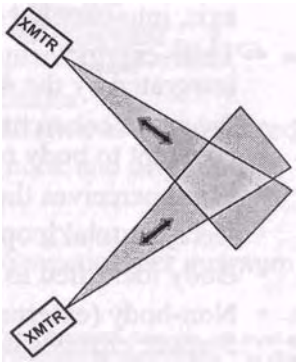

Selected energetics tests

- Scalar interferometry
- Kill of U.S.S. Thresher
- Deep underwater explosion
- Disease inductions at U.S. Embassy
- Tesla Shields (ABM defense)
- Cold Explosions
- Weather engineering
- Flameout of aircraft engines
- Kill of Arrow DC-8
- Kill of Challenger
- Kill of TWA-800
- Quantum potential test
- Mind tests — Button, Svoboda, Hess, etc.
- Robot tests, robot strategic war

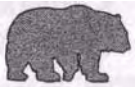

Whittaker's inner electrodynamics* shows the precursor form in space (1)

* Combination of the two Whittaker papers "decomposes" all EM fields, potentials, and waves into a far more fundamental longitudinal EM biwave dynamics. The latter highly complex continuous flow structure is the engine or dynamic form of patterning of the field, potential, or wave and its dynamics as it actually exists in mass-free space.
* A longitudinal wave is an oscillating change of energy density in spacetime, hence an oscillating ST curvature. Whittaker's structure is actually the form in which the spacetime precursor EM potential, wave, or field exists in space.

* The 1904 Whittaker paper initiated superpotential theory. The 1903 paper has been essentially ignored.

Whittaker's inner electrodynamics* shows the precursor form in space (2)

* The fields, potentials, and waves taught in CEM/EE are the integrated charged matter fields, potentials, and waves existing only in charged matter when it is being acted upon by the Whittaker precursor engines.
* Integration of the precursor EM engine structure occurs only in charged mass.
* Combination of the two papers provides basis for a directly engineerable unified field theory (UFT), more fundamental than what is used in the West in its century-old electrodynamics and electrical engineering.
* Soviets began intensive development of this UFT immediately after WWII with a series of Manhattan-style projects.

Precursor scalar potential in space: longitudinal EM biwave sets

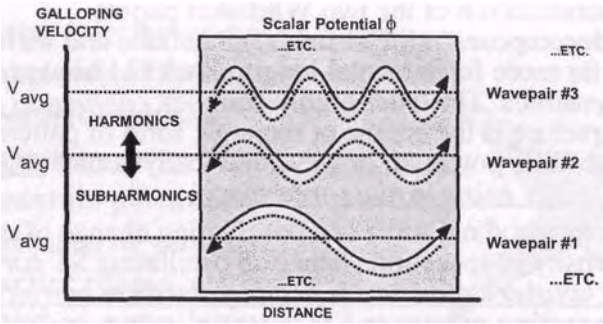

The Precursor Structure Is:
A harmonic set of longitudinal wavepairs. In each wavepair the two waves superpose spatially, but travel in opposite directions. The two are phase conjugates and time-reversed replicas of each other. Thus they comprise a coupled longitudinal wave and antiwave. The photons must be coupled into photon/antiphoton pairs (gravitons) by a strong application of the distortion correction theorem of nonlinear optics. Each wave in the biwave pair is a galloping wave. Each wavepair is a standing electrogravitational wave.

Note: Think of the oscillations as velocity modulations. The time-density carried by the waves is oscillating.

Quantum field theory

- Four types of photons (polarizations): x, y, z, t.
- Two (x, y) are transverse photons (familiar).
- Third is longitudinal (z) photon; energy oscillates to and fro along line of propagation. Bunches and thins energy density of space; is dynamic oscillation of curvature of spacetime.
- Thus is basis for engineerable integrated unified field theory.
- Fourth is scalar (t-polarized) photon. Energy oscillates to and fro along the time axis. Dilates and compresses time; hence is dynamic oscillation of curvature of spacetime.
- Scalar and longitudinal photons are individually nonobservable; but the combination of the two is observed as instantaneous scalar potential (common voltage).

Scalar interferometer*

- Energy effect in distant zone may be either heating or cooling, and slow (rising) or fast (explosive).
- Specific patterns of local ST curvature and dynamics (engines) may also be produced.
- Beams easily pass through the Earth or the ocean, whose internal fields and potentials are superhighways for internal longitudinal EM waves.

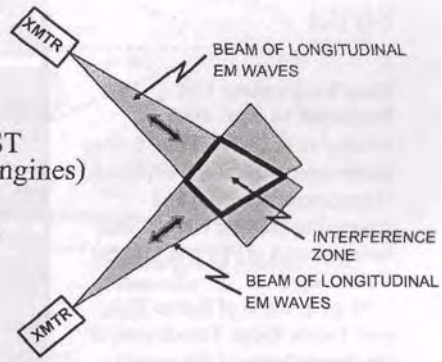

* Proof is given in M. W. Evans, P. K. Anastasovski, T. E. Bearden et al., "On Whittaker's Representation of the Electromagnetic Entity in Vacuo, Part V: The Production of Transverse Fields and Energy by Scalar Interferometry," J. New Energy. 4(3), Winter 1999, p. 76-78.

Khrushchev's First Demonstration Strike

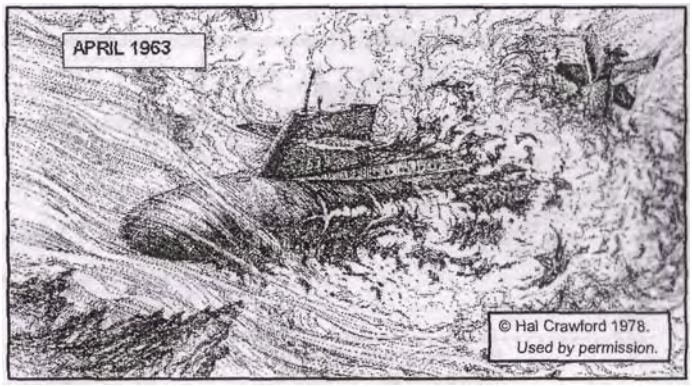

- Kill of the U.S.S. Thresher. With her electronic controls jammed in the hash of a scalar interferometer whose IZ surrounds it underwater, the hull of the doomed submarine implodes when she reaches crush depth.
- The internal electronic jamming signals arise from the local spacctime everywhere within the sub (within the IZ).
- USS Skylark, companion surface ship nearby and in the "splatter" zone of the IZ, had multiple electronic systems fail, etc. totally anomalously.

Khrushchev's Second Demonstration Strike

Deep Underwater EM Explosion 11 Apr. 1963
(similar to this photo set of a deep underwater nuclear test explosion)
•Phenomena observed and reported by passing U.S. jetliner; later reported to FBI and to U.S. Coast Guard
•100 miles north of Puerto Rico, over Puerto Rican Trench (one of the deepest parts of the ocean)

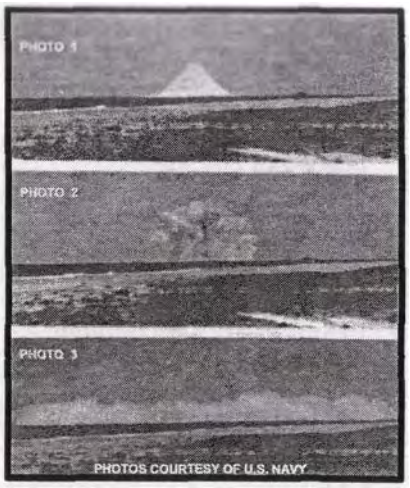

Deep underwater nuclear burst, demonstrating same water phenomenology produced by Khrushchev's second demonstration on 11 Apr. 1963, the day after killing the U.S.S. Thresher.

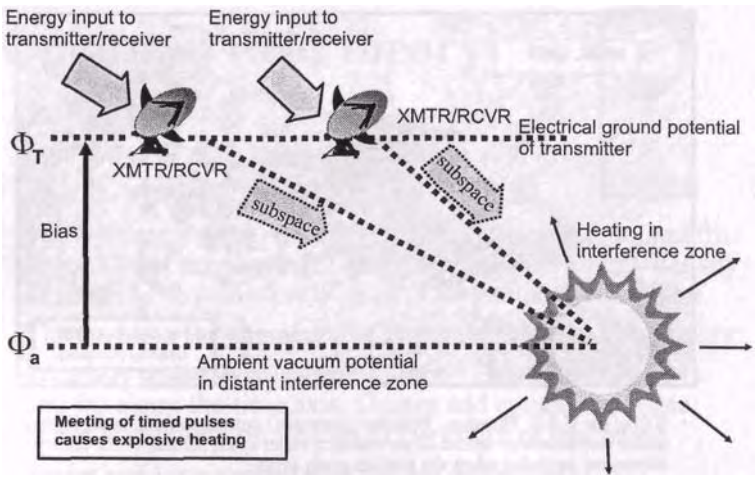

Scalar interferometry in the exothermic (heating) mode.

We may call the internal Whittaker electromagnetics a special kind of "active subspace", which it is. One can infold as many such "subspaces" inside normal EM fields, potentials, and waves as one desires. Hence one can engineer n-dimensional space with the new electrodynamics.

Scalar Interferometry In The Endothermic (Cooling) Mode

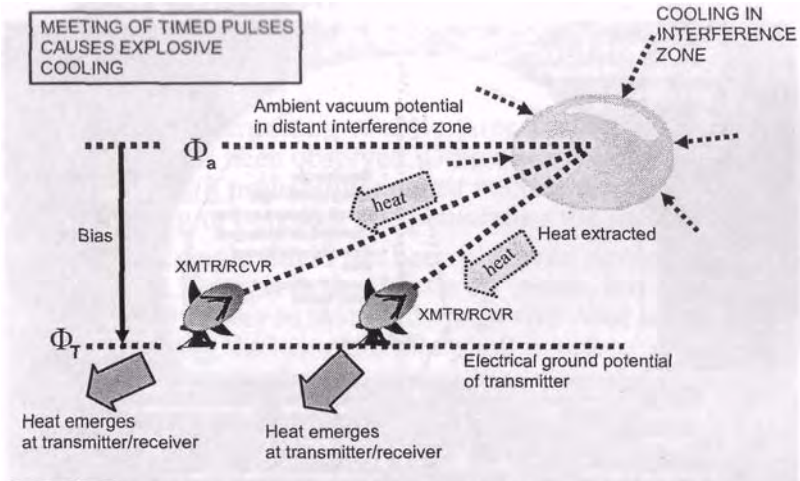

In the endothermic mode, tremendous heat is received back in the transmitters. Soviets further retransmit the heat via interferometers to a distant "exhaust" point. Bennett Island was used for such an exhaust point for decades, and our observation platforms saw a great many 150 miles-long jets of exhaust effects in narrow beams at shallow angles.

The Tesia Shield: Hemispherical Shell of Glowing Energy

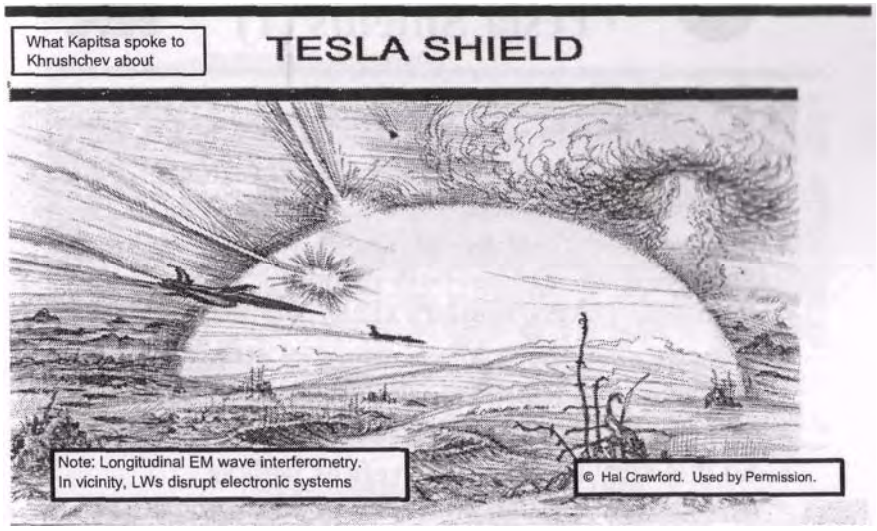

GIANT MISSILE SHIELD TEST SEEN BY PASSING SHIP'S CREW

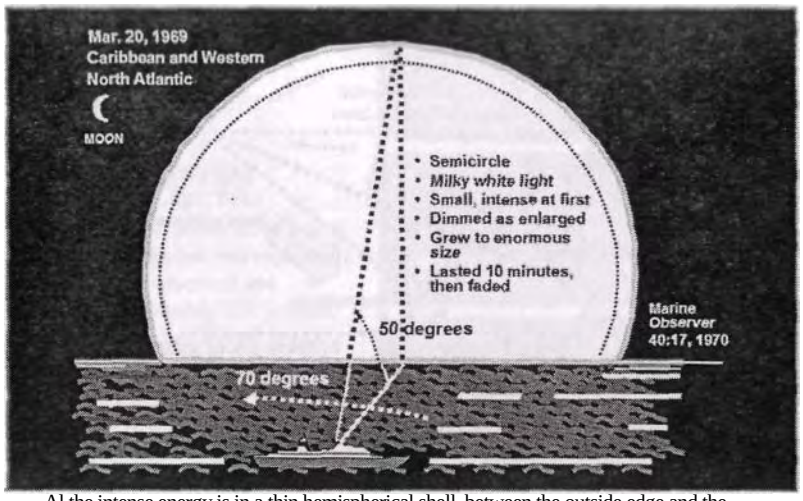

Al the intense energy is in a thin hemispherical shell, between the outside edge and the inner dotted line. A missile or an aircraft passing through that intense energy zone is instantly destroyed, electronics dudded, warheads exploded, crew instantly dead, etc.

Special note on Tesla Shields (1)

- Tesla shield placed over a friendly site defends against incoming missiles, aircraft, warheads, etc. If shield is made with "one-way out engines", defensive site can fire out and nothing can fire in.
- Unrestricted Tesla shield placed over a hostile site, "bottles it up" against both incoming and outgoing vehicles, rockets, artillery shells, bombs, etc.
- If made one-way in, the bottling up allows outside firings into the targeted site, which itself cannot fire out. Useful against ICBM silos and similar targets.
- So it is very useful offensively as well as defensively. E.g., an entire naval task force at sea could be "bottled up" and neutralized.

Special note on Tesla Shields (2)

- Multiple internesting of up to three Tesla shields (shells) has been observed. Dramatically increases weapon kill probability against nuclear weapons incoming or outgoing and penetrating the shields.
- A giant single shield has been observed covering Atlanta, Georgia in the "bottle up" mode, but with minimal power so that no damage was done to aircraft penetrating the hemispherical shell in either direction.
- A shield is effective as a cover over hostile ICBM fields, to destroy their hostile ICBMs shortly after launch, while permitting some Russian ICBMs to penetrate and destroy the complex. Russia has had a dramatically effective launch phase ABM system for decades. So has the Yakuza, on-site in Russia.

Nick Downie's sighting from the ground of distant Soviet missile shield tests.

Missile Shield at Sary Shagan

THE SUNDAY TIMES, 17 AUGUST 1980.

WARFARE

Witness to a super weapon?

Nick Downie describes the strange bright glow that flared silently over the Hindu Kush

Gwynne Roberts

London Sunday Times, 17 Aug 1980

Typical shield test, northern route to Japan, seen by passing airliner
Many dozens of such tests have been seen and reported. Sightings were so common that pilots simply quit reporting them.

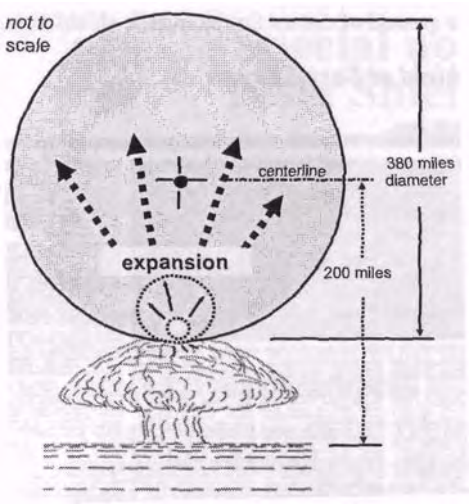

Sequence of Events

- Geyser of water rose rapidly from surface, mushroomed out
- Reached 60,000 feet altitude in about two minutes
- Brilliantly glowing small globe then appeared in top of cloud
- Globe increased greatly in size and altitude
- Reached diameter of 380 miles
- Center reached altitude of 200 miles

What They Were

- Superpotential interferometry using longitudinal EM waves
- Cold explosion just above surface (as antiship, antifleet)
- Smaller, higher density spherical shell (Tesla globe) for one-on-one shooting
- Larger Tesla globe for large area targets such as ICBMs coming in from midcourse

Use in, out of atmosphere

Endothermic (cold) explosion off the Kurils 9 April 1984 Followed by a second test, an expanding globe of light, added in the exothermic mode to demonstrate rapid serial switching between weapon modes

Weather engineering by scalar interferometry

INTERFERENCE GRID
© Tony Craddock 2004

- Steering jet streams
  - Make low pressure areas (endothermic)
  - Make high pressure areas (exothermic)
  - Move highs and lows, to entrain and steer the jet streams.
  - Displace cold air from Canada, warm air from Gulf, and where they meet provides sharp fronts and very violent weather.

* Sharp bends in jet stream add angular momentum.
  - Spawns tornadoes, powerful storms
  - Generates much atmospheric energy and lightning.
  - Ignites fires in those areas deliberately kept dry.

* Maneuvering and pulsing high and low pressure areas vertically above each other produces sudden downbursts.

- Many combinations and variations available and tested.

Vivid example of detailed structuring in weather engineering interferometry

Courtesy Scott Stevens, www.weatherwars.info

A few weather engineering signatures*

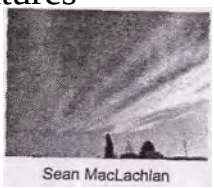

- Giant radial clouds, twin giant radials.
- Sharp "grid" of interference patterns across a giant section of the sky.
- High structure in a giant radial or twin giant radial.
- Moving giant radial or twin (crews sometimes just use a major highway, and move it along over that highway).
- Anomalous aerial booms, flashes, etc. when "adjusting a grid" or structure of a giant radial.

- A large number are documented in T. E. Bearden, "Soviet Weather Engineering Over North America", a 45-minute videotape. Huntsville, Alabama was a chosen "turning point" to turn the jetstreams up along the Southeast coast Hence over the years we observed hundreds of cases and signatures and photographed dozens of them. Other present-day examples are on www.cheniere org Also particularly see Scott Stevens, www.weatherwars.info.

Giant radial with internal structuring

Photo by Scan MacLachlan

Directional radial with structuring

Photo by Sean MacLachlan

Structuring in clouds

Photo by Marcia Stockton

More structuring in clouds

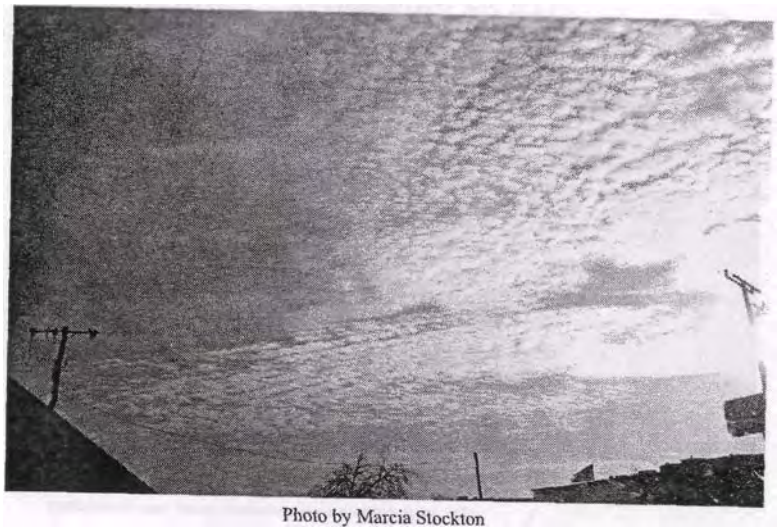

Photo by Marcia Stockton

Complex structuring in clouds

Photo by Marcia Stockton

Spectacular spiral cloud (1)

Photo by Tony Craddock

Spectacular spiral cloud (2)

Photo by Tony Craddock

Other geological uses of scalar interferometry (1)

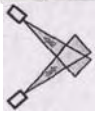

- Deposit energy in fault zones, to generate piezoelectric pressure.
  - Quakes result when plates slip.
  - Slow increase gives great overpressure prior to slip; hence it produces a very strong quake such as 8.0 or even 9.5.
  - More rapid increase usually gives less overpressure prior to slip; hence medium quake.
  - Quite rapid increase gives tremors and small quakes to medium quakes at will, adjustable as to size.
- Deposit energy in rocks in a no-fault zone, and produce anomalous quakes. Can vary magnitude by adjusting rate of energy deposit, as stated.

Other geological uses of scalar interferometry (2)

PLUME 03-08-05
FROM MOUNT ST HELEN

* Initiate volcano eruptions by deposit of energy.
* Use sea-bottom quakes to generate tsunamis.
* When this first written (July 27, 2003), many volcanoes around the world were suddenly active. Still are.
  - Too many to be totally "natural".
  - Were and are Yakuza practice and preparations.
- Highly destructive 26 Dec 2004 tsunamis induced in Asia were a Yakuza opening test for the Operations Phase of asymmetric war just entered. They induced the 9.3 quake in the ocean floor causing the tsunamis.

How much does weather and climate affect us?

- "40% of the $10 trillion U.S. economy is affected by weather and climate changes. "
  Conrad C. Lautenbacher, U.S. Undersecretary for Commerce, Wall Street Journal. July 28, 2003.
- So in addition to what nature's changes already do, those weather and climate changes being augmented or implemented by hostile weather engineering are costing us a bundle.
- This is a special kind of war, waged in "peacetime", and frightfully damaging economically.
- Weapons use confirmed in 1997 by SecDef Cohen.
- It's just part of the ongoing "bleed the U.S. dragon".

Other uses of scalar interferometry (2)

- Deposit negative EM energy in fault zone where pressure is rising naturally or by weapons.
  - Extracts energy from the zone.
  - Reduces pressure, avoiding pending quake.

* Deposit EMP in control center of power plant,* such as a large nuclear power plant. Controls are dudded, runaway reactor core risks meltdown.

* Generate explosions in refineries, oil fields, either of positive energy or of negative energy.

- Use in bioenergetics and psychoenergetics attacks as well (produce engines in the interference zone).

* Negative energy EMP destroys all solid state electronics instantly. A strong negative energy EMP kills generators, current devices, and all living systems. Since nuclear binding energy is negative, such EMP arising in spacetime in the interference zone can and does directly affect and perturb nuclear material in the core, or in stored control rods. If specific "engines" are also incorporated, the core runaway can probably be induced directly.

Other uses of scalar interferometry (3)

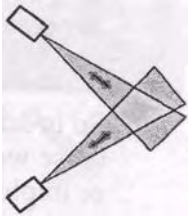

- Scalar interferometer beams and signals can be "imbedded" in two or more normal but powerful EM signals from "normal" transmitters, and used wherever the signals meet or overlap.
- Can also operate totally "inside" a normal static potential, EM field, etc.
- Thus scalar interferometry was "buried" and disguised inside the Soviet Woodpecker signals.
- U.S. CEM/EE measurements of the overall Woodpecker signals showed nothing of it.
- Hence our nation slept on, sublimely ignorant in its belief in its archaic and flawed CEM/EE.

Typical ABM Defenses
(widely deployed by mid-70s')

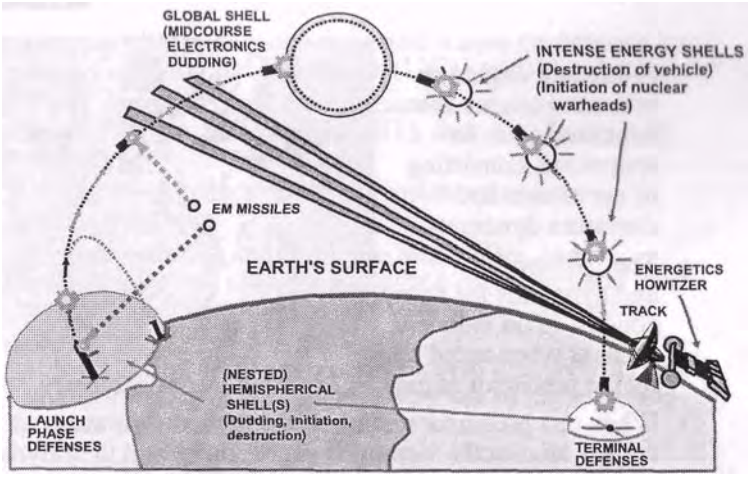

Vacuum engine (precursor engine) concept (1)

* Wheeler* said:
  "Space acts on matter, telling it how to move. In turn, matter reacts back on space, telling it how to curve. "
* Wheeler's principle can be expanded for a whole set of spacetime curvatures and their dynamics, leading to the spacetime curvature engine concept.
* This also affects virtual particle flux of vacuum, so it creates an exactly corresponding vacuum engine.
* There is no observable mass in space, so these are "massless engines"; i.e., they are precursors to the force engines that result in matter when the precursor engines interact with it.

---

* Wheeler's principle, as stated in W. Misner, K.S. Thorne, and J.A. Wheeler, Gravitation. W.H. Freeman and Co., San Francisco, 1973, p. 5.

Vacuum engine (precursor engine) concept (2)

- A vacuum engine or precursor engine is a structural form in spacetime, consisting of curvatures and curvature dynamics.
- The "pattern" and dynamics for many actions, to be induced in mass when acted upon by the precursor engine, is captured by the geometry.
- When this precursor engine then interacts with mass, it creates an exactly correlated set of forces and their dynamics, acting in that mass.

Vacuum engine (precursor engine) concept (3)

- Said another way: Levels of dynamic energy structures and levels of dynamic time structures mold spacetime geometry itself.
- This precursor "pattern" and its dynamics is called a template or engine.
- The precursor template interacts with, and structures, the virtual particle flux of vacuum.
- This forms an exactly corresponding vacuum engine (still a special precursor template).
- Spatiotemporal structurings and dynamics of the engine structuring and dynamics of the VPF act upon mass at all levels.

Engines (vacuum engines, spacetime curvature engines)

- Normal EM fields, potentials, and waves decompose into sets of longitudinal EM waves (LWs) and their dynamics.*
- Since these LWs and their dynamics are dynamics in energy density of spacetime (ST), they are dynamic ST curvatures.
- They enfold general relativity inside extended electrodynamics.
- By manipulating and changing these LWs, one manipulates and changes spacetime curvatures and their dynamics (and virtual particle flux of vacuum and its dynamics as well).
- It is a Unified Field engineering where one controls and engineers a set of ST curvatures by use of higher group symmetry electrodynamics.

* E.T. Whittaker. Math. Ann., 57, 333-355 (1903);— Proc. Lond. Math. Soc, Series 2, 1,1367-372(1904).

Signal vs. precursor vacuum engine: bioenergetics example

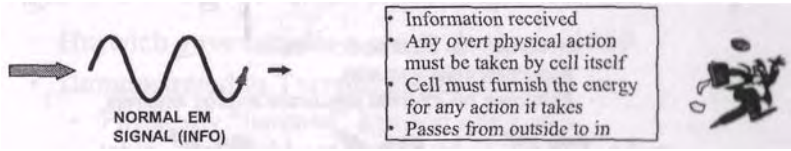

A. Cell must do the action itself; vacuum energy exchange is passive. Energy or fuel for doing the action must be added to cell externally.

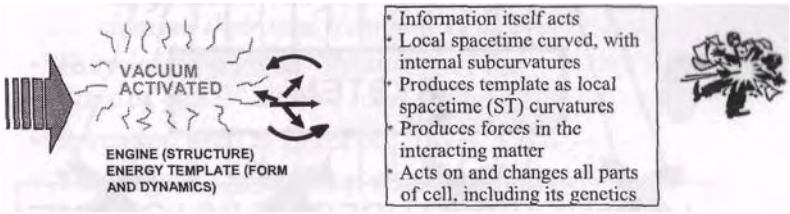

B. Cell is acted upon; vacuum energy exchange does the specific action. No energy or fuel for doing the action need be added to ceil externally.

Unified field theory requires modeling and use of supersystem

Three supersystem components interact with each other:

- System and its force dynamics
- Local active vacuum and its precursor energy dynamics (and engines).
- Local curvatures of spacetime and their precursor dynamics (and engines).

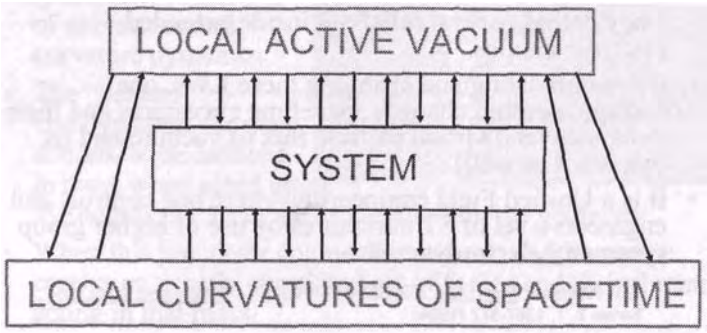

Classical EM kills the supersystem, prevents supersystem engineering

- Assumes flat local spacetime
- Assumes inert vacuum
- Assumes no internal precursor energy engines.

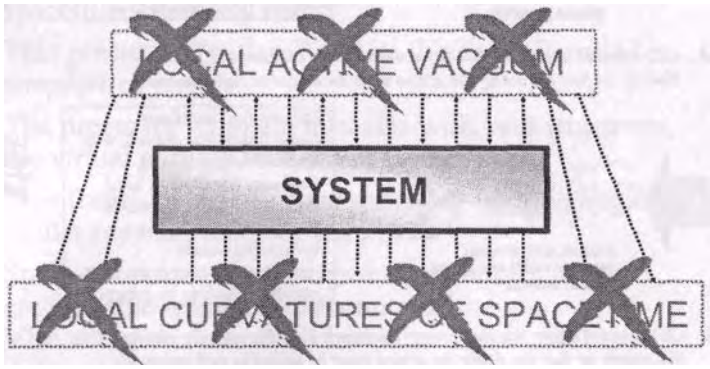

Modeling the supersystem

- Higher group symmetry electrodynamics must be used
  - Quaternions as a minimum.
  - O(3) EM developed by Evans.
  - SU(2)xSU(2) EM favored by Barrett.
  - Clifford algebra EM shown by others.

- The algebra selected must be capable of modeling the supersystem interactions (system, active vacuum, curvatures of spacetime) and their structural dynamics.
- It becomes an engineerable grand unified field theory. Evans' new GUFT appears particularly noteworthy.
- Russian energetics is precisely such a model, obtained by correcting the known serious errors in CEM/EE.

Inertial field device of Toronto inventor Sid Hurwich*

- Hurwich gave Israelis a secret device in 1969.
- Demonstrated to Toronto police in 1969.
  - Physically "jammed" a piston lying on a table, so it could not be moved or fired.
  - After a half-hour in the room for the experiment, clocks and watches had not changed their time from time of entry.

- Hurwich was given "Protector of the State of Israel" award, June 1976.
- Invention used at Entebbe, July 3, 1976.
- Used again against Iraqi nuclear reactors.**

* David Jones, "Israel's Secret Weapon," Vancouver Sun Times. Weekend Magazine, Dec. 17, 1977, p. 17.
** Private U.S. source who observed aspects of it.

Novel capability from "freezing time" (1)

* The flow of time slows in a rotated frame.
* Rotating frame by 90 degrees "freezes" time. Rotated object appears as just "light" in the lab frame.
* To rotated observer, lab itself appears as "just light"; can walk through it.
* Hurwich only affected the inertia of some objects in his early device, but effectively.
* In one experiment Golden affected clocks and watches, of all types, for four days.

Novel capability from "freezing time" (2)

- Operating in one's own locally rotated orthogonal frame, one can "step around" a 3-space lab wall.
  - In lab frame one appears to pass through a wall.
  - In one's own frame, the wall is "of light" and one merely steps through that light.
  - Rotated person sometimes referred to as "cloaked".
  - Bullets pass harmlessly through a cloaked person.
- At least two nations have such capability, as does a not-so-nice group using it for assassinations.
- We had a friendly demonstration and two hostile demonstrations (surviving the latter by blind luck).

Some demonstrated capabilities

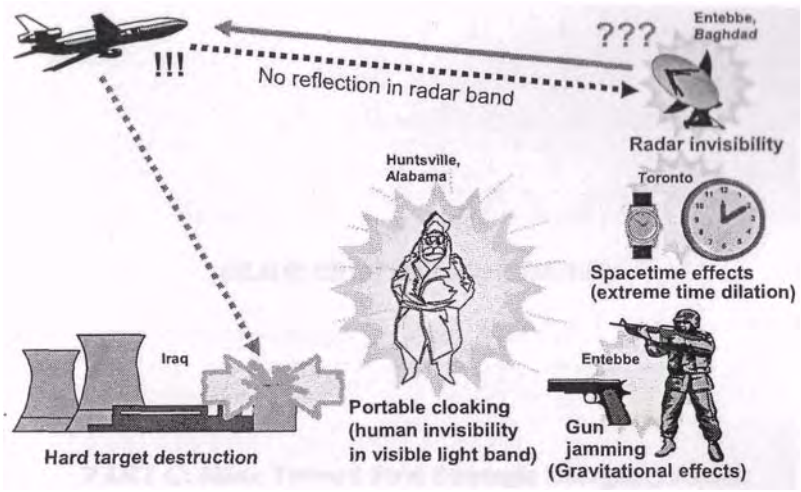

(SLIDE BRIEFING CONTINUED)

PART C: Move Toward First Strategic Energetics Attack

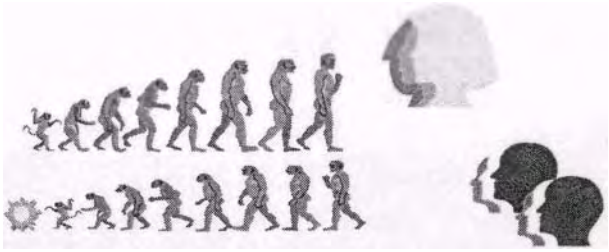

MOVE TOWARD
FIRST
STRATEGIC
ENERGETICS
ATTACK

Move toward first strategic energetics attack

Brezhnev's timetable and slowly escalating incidents

Section contents

- Schedule
- Typical test strikes
- Characterization and capabilities
- Unexpected retaliation
- Israeli retaliation
- Scheduled strike aborted

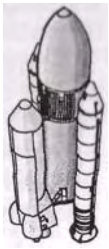

Khrushchev's Jan. 1960 statement to the Presidium

- "We have a new weapon, just within the portfolio of our scientists, so powerful that, if unrestrainedly used, it could wipe out all life on earth. "
- "It is a 'fantastic' weapon. "
- Ever the ebullient peasant, Khrushchev sought to very quickly change the balance of power.
- Impatiently moved before his scalar interferometers were in operation.

Generation of the Cuban missile crisis

- Khrushchev inserted long range missiles and nuclear warheads into Cuba in latter 1962, to change the balance of power quickly.

- His strategic scalar interferometers were not yet deployed and ready. His nukes and ICBMs were also in bad shape.
  - Kennedy called his hand, and he was caught bluffing.
  - After blustering to get U.S. agreement not to invade Cuba, he was forced to back down, suffering severe humiliation before the world and the Communist Party.
- When his strategic interferometers came on line, he unleashed two demonstrations to recover face.
  - Killed the U.S.S. Thresher on station underwater, off the East Coast of the U.S.
  - Produced a giant underwater EM energy burst the next day, 100 miles from Puerto Rico.

Brezhnev's schedule:

- "We are achieving with detente what our predecessors have been unable to achieve with the mailed fist...
  ...by 1985 our power will be so irresistible that we can do what we wish anywhere on the globe. "
- A decade later, at a secret meeting of European Communist Parties in 1972, Brezhnev laid out the 1985 goal and time table.
- In 1985 the Soviets would be ready to move to dominate the earth.

1985 Soviet preparations

* For May Day 1985, a huge Soviet exercise placed 27 "power taps" in the Earth, powering up scalar EM weapons arsenal.
* Each tap estimated to power up to 6 huge weapons.
- In 1985, initiated earthquakes, extensive weather engineering, killed aircraft and missiles, tuned up metal softening signals, initiated a series of highly anomalous storms and electrical activity in the atmosphere. Test shots offset from shuttle launch killed Arrow DC-8 at Gander, Newfoundland.
* In 1986, stepped up kill of aircraft, missiles, rockets, etc.
- Israel had struck Russians hard in 1984, in one strike destroying one third of all missiles in Soviet Northern fleet.
- Israel also checked the Soviet strategic attack plans shaping toward mid-to-latter 1986.

SIX MILE DROP IN TWO MINUTES

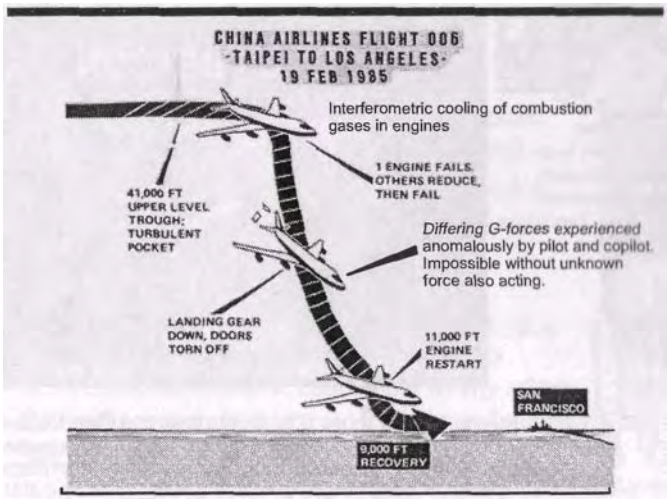

Cooling and extinguishing combustion in the engines of a jetliner 19 Feb. 1985. Use of scalar interferometry in endothermic mode.

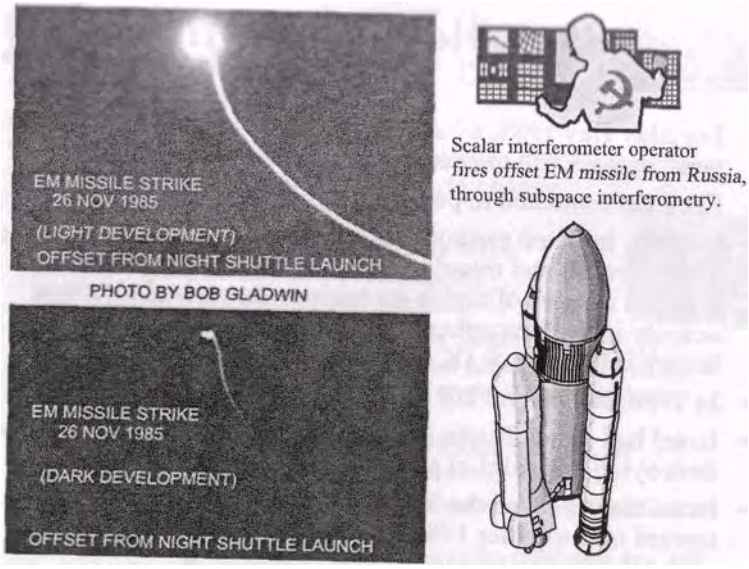

Actual Soviet EM missile strike offset from U.S. shuttle launch at Cape Canaveral on 26 Nov. 1985. This was the smoking gun.

Two weeks later, the same weapon killed the arrow DC-8 at its takeoff from Gander, Newfoundland on Dec. 12, 1985, and demonstrated meeting schedule.

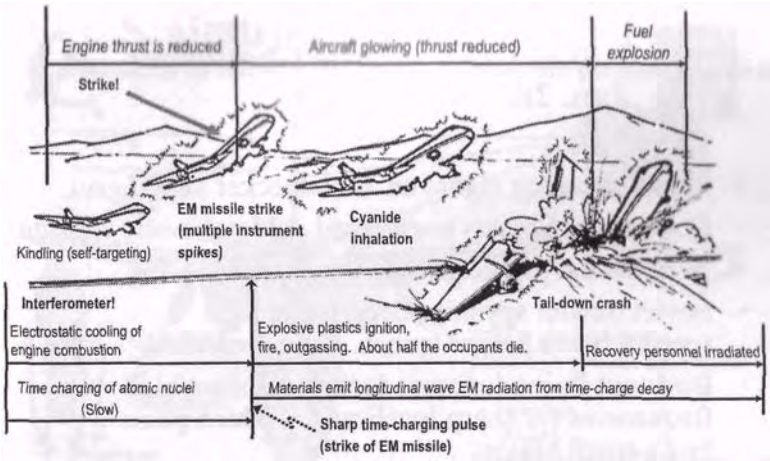

Kill of the Arrow DC-8 at Gander, Newfoundland Dec. 12, 1985. Dual use of scalar interferometry in endothermic mode (cool combustion in engines to reduce lift) and exothermic mode (strike with EM missile, as at Cape Canaveral 2 weeks earlier by same weapon).

Kill of Arrow DC-8

* Demonstrated meeting Brezhnev's schedule. Killed 248 U.S. soldiers, 8 crew personnel.
* Interferometer weapon tested in both modes:
  - Endothermic mode (cooling combustion of engines).
  - Exothermic mode (strike of EM missile).
* Successful as high level probe.
  - NSC was caught thinking it was Arab bomb, thus having to hide its illegal Iran-Contra activity.
  - U.S., Canadian scientific community totally asleep.
  - Political community interested in "burying" the incident quickly, as "icing accident".

- U.S. pressured Canadian government, ignored eyewitness of strike (not allowed to testify to investigation board) sent in a General Officer to bulldoze over the site quickly, withheld autopsy reports from Board.
- Ignored decisive later signatures such as dozens of handling personnel sickened by longitudinal EM wave radiation from the struck parts of the aircraft.

Kill of space shuttle Challenger Jan. 28, 1986

- Metal-softening signal on Woodpecker signal grid.
- Cold stress; Soviets engineered cold wave into Florida.
- Booster seal problem (thus aggravated).
- Soviet trawler spyships departed at high speed 4 hours before launch. Unprecedented.
- Birds not flying (unprecedented). Shows high frequencies for sharp localization, which pains bird's small brains.
- That night, KGB headquarters gave a party in Moscow to celebrate "perfect success of their active measures against the Challenger".*

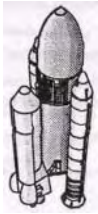

*Per General Daniel O. Graham, Director of Project High Frontier and former head of Army intelligence. General Graham died in 1996.

Proofof metal-softening signal: In Tennessee, Frank Golden softens nails with amplified

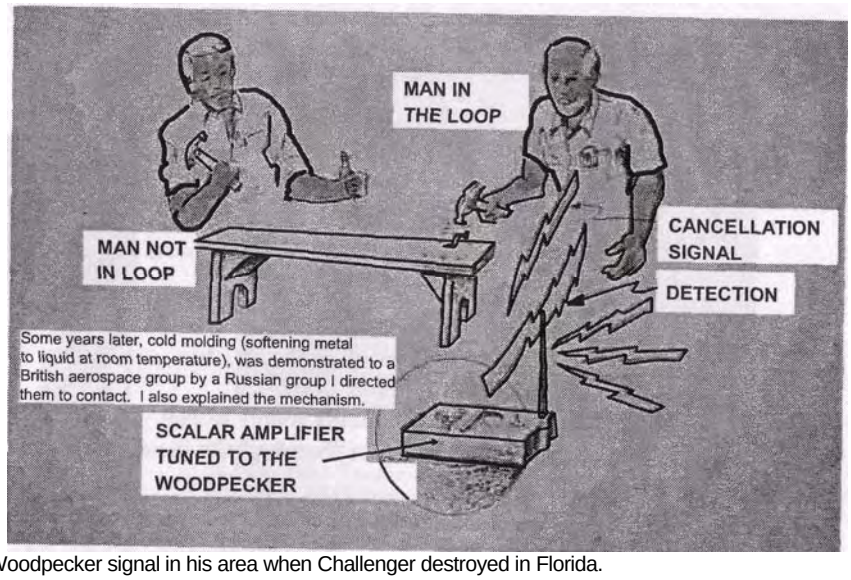

Woodpecker signal in his area when Challenger destroyed in Florida.

U.S. air strike on Libya, April 1986

Encountered test of a lab prototype quantum potential weapon.

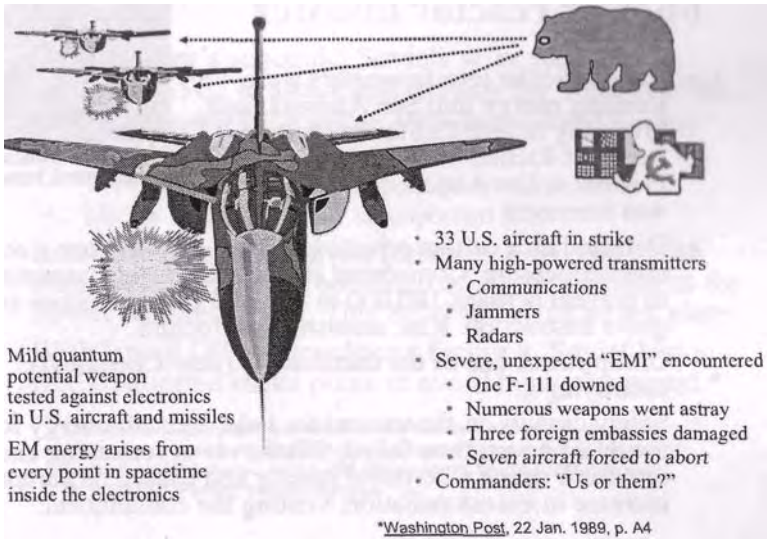

Chernobyl disaster - Apr 25-26,1986

* Great nuclear disaster at Chernobyl
* One of the nuclear reactors suffered a disastrous venting of its containment building
* Spewed out radioactive material, which spread extensively.
* Casualties, etc.
* Was pre-emptive strike by a private U.S. group.

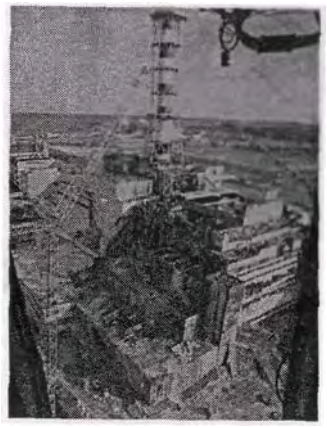

What caused Chernobyl's nuclear reactor disaster

GHOST TOWN NEAR CHERNOBYL TODAY

- Russian scalar interferometers were kindling energy into San Andreas fault, preparing to give California its long-expected Richter 9.0+ quakes in San Francisco, Los Angeles, etc. "Big One" was imminent.
- Detected by a certain private U.S. group able to use a novel countermeasure. Considered striking the distant transmitters to prevent perhaps 100,000 to 200,000 U.S. casualties and grave destruction. Risk assessment: Medium.
- Group struck one of the transmitters (near Chernobyl), destroying it.
- Safety circuits on the transmitter held, bled off energy for nearly 24 hours, then failed. Flashover of remaining energy into earth struck Chernobyl reactor and caused its abrupt increase in excess radiation, venting the containment.

Chernobyl disaster 25-26 April 1986

An intense countermeasures pulse EMP from the U.S., backtracking on the interferometer signal wave, struck the transmitter(s), destroying one.

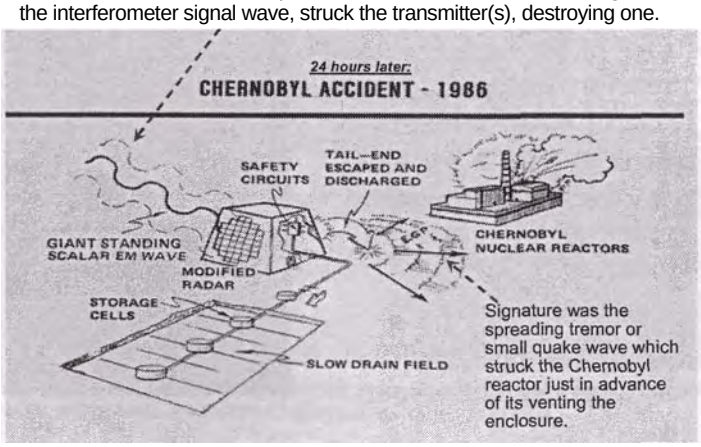

Israel forced Soviet 1986 attack plans to be aborted

- On Brezhnev's schedule, Soviets were prepared by the end of 1985 to attack and destroy the West in 1986.
  - * Kill of Arrow DC-8 in Dec. 1985 demonstrated meeting the schedule.
  - * 1984, '85, '86 very active in scalar weapons tests.
  - * Middle East was to play an important role.

« Israel struck hard at Soviet forces in 1984; one strike alone destroyed some one-third of all the missiles in the Soviet Northern Fleet. This delayed Soviet attack plans.

* With Israeli QP superweapons facing it, Soviet Union (KGB) aborted strike plans to avoid being destroyed.*

---

* Development, operation, and control of the Russian energetics weapons have always been by the KGB, not by the regular Russian armed forces. Today the KGB is known as the FSB (Federalnaya Sluzhba Bezopasnosti), or in English, Federal Security Service.

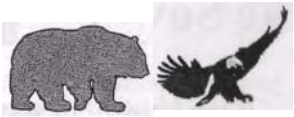

Continued preparations for new attack posture

Chessplayers think many moves ahead; the game continues.

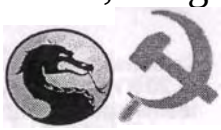

Section contents

- Tesla shields and typical tests.
- Earthquakes and Cohen's 1997 statement.
- Quantum potential and weapons capabilities.
- EM biological warfare.
- Dudding nuclear weapons.
- Aum Shinrikyo and Yakuza involvement.
- Typical test kill (TWA-800).

Blunt warning from the Soviet Union

* "If the United States deploys a shield in space, the Soviet Union will have several options, none of what Washington would wish... The Soviet Union will very quickly find a response of which the United States has no inkling as yet. "

Soviet Chief of Staff Sergei Akhromeyev, in the Washington Times of Aug. 26, 1986, warning the United States that the Soviet Union could have an unpleasant surprise response if the U.S. deploys its Strategic Defense Initiative (SDI) in space.

Comment: At the time, the Soviets had inserted nuclear weapons of 20 KT to 40 KT into most major U.S. cities, along with Spetznaz teams to detonate them on order. Those weapons and their teams are still here. See Lunev's book for some of the methods used to get the weapons into the U.S. In addition, at the time, the Soviet giant strategic scalar interferometers had been deployed for 23 years

Shield test over Atlanta, Georgia 12 Nov. 1986

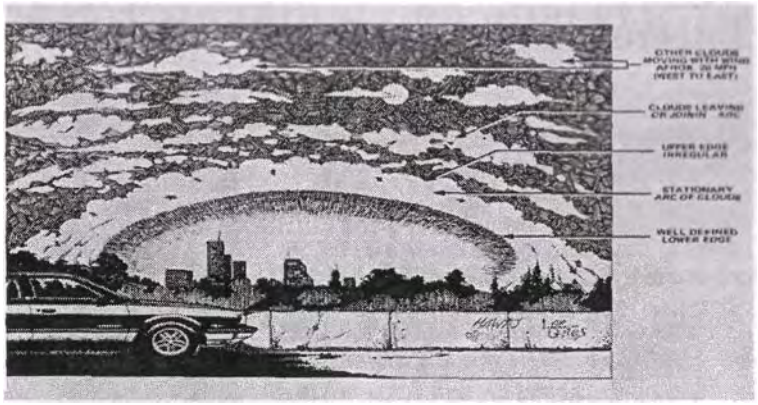

"Bottling up" shield practice over Atlanta 12 Nov. 1986.
With a real shield, aircraft or missiles flying into it
(from inside or from outside) explode and are destroyed.

Put up or shut up: Counting rifles with earthquakes

(One of the aftermaths of the 1986 Chernobyl counterstrike)

Opening bet (induced quakes)

- Quebec 25 Nov 88
- Pasadena 3 Dec 88

Raise you

- Armenia 7 Dec 88

Call - what do you have?

- Malibu 8 Jan 89

Four aces

- Soviet Central Asia 23 Jan 89

Clear table (stress relief)

- Bakersfield CA et al. (various)

SecDef Cohen confirms scalar interferometry weapons activity

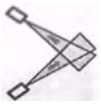

"Others are engaging even in an eco-type of terrorism whereby they can alter the climate, set off earthquakes, volcanoes remotely through the use of electromagnetic waves... So there are plenty of ingenious minds out there that are at work finding ways in which they can wreak terror upon other nations. It's real, and that's the reason why we have to intensify our efforts, and that's why this is so important."

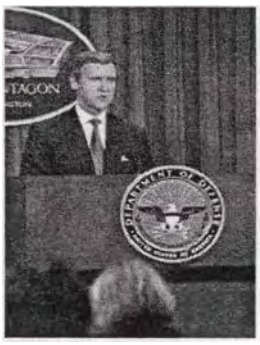

*Quoted from DoD News Briefing, Secretary of Defense William S. Cohen, Q&A at the Conference on Terrorism, Weapons of Mass Destruction, and U.S. Strategy, University of Georgia, Athens, Apr. 28, 1997.

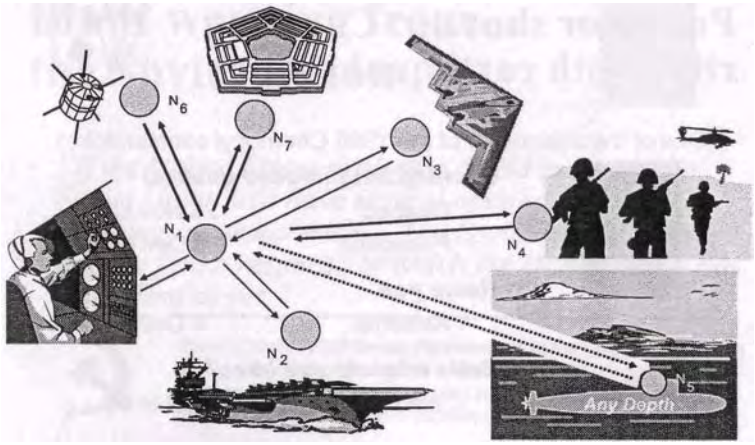

Strikes through multiply-connected spacetime. One joule of energy inserted into the lab connector, also simultaneously appears at each and every distant connected target. Tremendous "force amplifier" in military terms: can strike a thousand or million targets at once, using the energy one would only use for a single target in conventional strike.

Quantum potential instantly attacks widely separated targets. Embedded specific engines perform specific functions such as dudding nuclear warheads, propulsion, powerplants in 10 minutes.

HVT quantum potential (1)

* Bohm's quantum potential:

$$V_{quantum} = \left(\frac{h^2}{2m}\right)\frac{\tilde{N}^2\sqrt{r}}{\sqrt{r}}$$

* "A quantum particle moves as if it were subject, in addition to external potentials, to a potential which is a function of its own probability distribution."

Assumptions of Bohm's quantum potential

* Particle and wave function are real and separate
* Wave function obeys Schrodinger's equation.
* Particle obeys classical mechanics.
* Particle couples to wave function through a quantum potential.

$$(r = Y\bar{Y})$$

Quantum Potential Characteristics

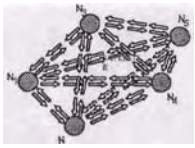

* No point source, not radiated.
* For QP between two particles:
  * Interaction does not vanish as spatial separation becomes very large.
  * Instantaneous connection through multiply-connected spacetime.
* Depends on quantum state of system as a whole.
* System parts can be greatly separated.
* Most powerful weaponry on earth. Five nations* have it deployed, sixth is closing fast.

---

* Russia (KGB), Brazil, China, Israel, and one other.

At the infinite velocity of the quantum potential:

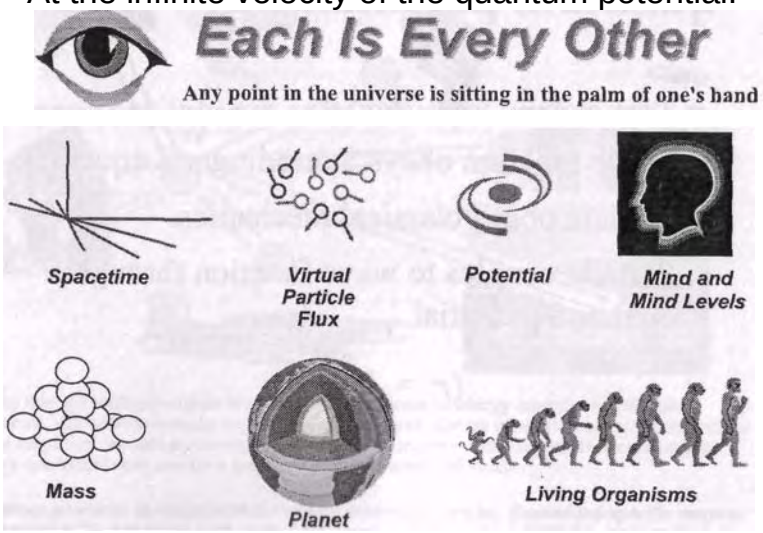

Usefulness of quantum potential (QP)

- Physical reality has vast spectrum of QPs.
  - A QP connects every member of the human species.
  - All atoms of a specific kind have a weak QP.
  - All systems of a specific kind have a weak QP.
- All human minds have a QP, as do all human bodies.
- Soviets can form a QP among desired targets in a given area, and strengthen that QP in that area at will.
- Effect produced by QP weapon in one lab target is simultaneously produced in all participants in the QP.

Usefulness of quantum potential. (QP) (2)

- QP weapons can attack a vast array of widely separated targets with one shot.
- A "mix" QP can be formed by "mixing" multiple component QPs.
- QP can contain a specific precursor engine, or a group of them.
- QP weapons are most powerful weapons on earth.
  - Could indeed destroy the entire human species with a single shot, killing every human everywhere.
  - Or could destroy every AIDS virus and every smallpox pathogen with a single shot.
- Can dud every nuclear weapon, propulsion system, and power plant in about 10 minutes.

Radionics: Elementary QP use

- When a body interacts with an external object by photon interaction, the body and that object are linked by a very weak QP that is established.
- A photo of a person is directly QP-linked to him.
- Hieronymus patented use of effect in the 1940s.
  - Killed insects in distant field by treating photo of the field with insecticide in his radionics machine producing a weak QP.
  - * Cut out checkerboard pattern; killed bugs only in sections that were intact in segmented photo. Bugs migrated to the holes.
- Ukako corporation killed bugs for farmers for a decade as a useful commercial service, in multiple states.
- Was outlawed when states realized could also kill humans.
- Bin Laden and other high terrorists, e.g., could be killed instantly right where they are, merely from their photographs.

Quantum potential is a fantastic energy-amplifying weapon

* Use one primary "station" in operations station
- Connect primary station to a large number of objects or systems in many remote places.
* Insert a one megawatt EM pulse into primary.
- Each and every distant object or system simultaneously has that same 1 MW of energy appear in it instantaneously, because of multiply connected spacetime (effective "superposition" of all participating targets).
* If attack a million targets, it is the same as attacking the "primary" and simultaneously all others with the same single attack. This is a vast "force amplifier" effect.
- 1 MW input in one local target gives 1,000 gigawatts total "output" in distant targets. Nothing else compares.

EM biological warfare

- Create Kaznacheyev's "disease engine" by pumping diseased cell in the time domain, then phase conjugating once again in time domain.
- Infold the disease engine in a carrier as a Whittaker-Devyatkov structure.
- Transmit the carrier signal(s) into targeted population conventionally or use quantum potential.
- Kindling of the disease occurs in the target bodies, inducing the disease. Gulf War disease induced this way.
- Note: Quantum potential (QP) is an ideal carrier; can strike entire populace at once, with disease engine(s) desired.
- QP with one robot carrier and its engines can instantly strike all targets on earth with reproduced robot/engine copies.

Countering EM BW: When signal is available

- QP defense is like dueling scorpions: He who strikes first to the vitals, wins.

* Receive, phase conjugate by time-pumping.
* Embed amplified phase conjugated engines in signals for transmission.
* Transmit amplified phase conjugated engines.
* Variation: put the antiengines inside the hostile transmission signal itself and fire.
* Places it back into the hostile transmitter(s).
* Hostile transmitter then transmits both the engine and antiengine, nullifying its own effect.

Possible advanced EM BW

- Covert EM BW using disease engines.
  - Materials activated (dimensioned).
  - * Water structured (dimensioned).
  - * Radio, TV emissions structured.
  - * Electrical power grid signals structured.
  - Use of quantum potentials with engines.

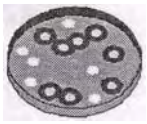

- Mindsnapper (negative energy EMP).
  - ♦ Tested twice by Russians in Afghanistan.
  - Instant and total death: Separates all mind-aspects from every living system in struck area.

* Enhance or nullify vaccines and antibiotics.

* Enhance or nullify BW strikes in an area.

Indicators in EM BW

• Gurvich:	Mitogenetic radiation
• Kaznacheyev:	Cytopathogenic mirror effect
• Devyatkov:	Information content of the field
• Whittaker:	Infolded LW electrodynamics
• Lisitsyn:	Genetic brain code broken
• Popp:	Master cellular control system
• Sakharov et al.:	New approaches to general relativity
• Becker:	Cellular regenerative system
• Sachs:	Unified field theory
• Evans:	O(3) electrodynamics Grand unified field theory (engineerable)
• Bearden:	Engines using infolded LWs

QP weapons summary (1)

Induce health changes and diseases in entire focused national populace at once. Has been tested in U.S.

- Expose immune systems to "shadow" (virtual) disease engines of many diseases at once. Immune system "spreads", thus totally vulnerable to any BW attack or opportunistic infections (Gulf War Disease was such a test). Tested in U.S.

- Dud all nuclear weapons, propulsion systems, power plants on earth or in an area in 10 minutes.
  - As vacuum engine carrier, induce any desired effect simultaneously in millions of selected targets.
- Can attack physical systems, minds, bodies, electronics, nuclear, etc. by its internal engine(s).
- Most powerful weapon on earth; 5 nations now have it: Russia, Brazil, China, Israel, and one other friendly nation. A sixth nation is closing on it rapidly.

QP weapons can nullify:

- Nuclear dead-man fuzing weapons.
- ICBM nuclear warheads and electronics.
- Strategic bomber nuclear weapons and electronics.
- Nuclear submarine nuclear weapons and electronics.
- Nuclear submarine propulsion systems.
- Electrical power systems.

- Electronics and communications systems.
- Specific chemical agent contamination, biological agent contamination, or vaccines.
- Human immune systems.
- Satellites, ships, planes, subs, rockets, radios.

Simultaneous dudding nuclear weapons worldwide, and nuclear reactors and nuclear propulsion systems.

- Via quantum potential joining U235 and Plutonium in warheads.
- Includes weapons airborne, underwater, in storage.
- Transmutations of the nuclides themselves by inserted engines.
- Part of the initial barrage to be launched by Aum/Yakuza/KGB.
- Will occur in the first minutes (10) of the strategic strike, following psychoenergetically crew-disabling QP weapons strikes.

Note: Duds both overt and covert nuclear weapons and weapons-grade materials — including covert weapons inserted on site in Russia which otherwise provide dead man fuzing.

Negative energy EMP

- Employs negative energy electrons (persistent Dirac Sea holes) and their negative energy EM fields and potentials.
- Extreme electromagnetic pulse of these negative EM energy fields strikes target with giant pulse of Dirac Sea holes, "eats" free electrons.*
  - All electron currents in target extinguished instantly.
  - Personnel die instantly; no nerve or brain currents. No cell twitches again; all bacteria, viruses, etc. killed. Soviets tested on two Afghan villages in 1980s war.
  - Mind-body coupling mechanism instantly destroyed, hence nickname "Mindsnapper". Mujahedin called it "wind of death".
  - All communications, electronics, missiles, nuclear warhead electronics, guidance systems, aircraft, ships instantly killed.

---

* Produces lattice positrons (excess positive charges) by eating orbital electrons.

Negative energy EMP (2)

- Kill of an entire naval attack force, massed armor attack force, satellites, ICBMs, aircraft, tactical missiles, artillery shell fuzes, communications, tanks, ships, etc.
- Can kill an entire large installation or city the same way, instantly.
- Or can kill more localized targets such as electrical power plants, power distribution lines and substations, refineries, chemical plants, port installations, Pentagon, C2 facility.
- Can "eat" electron charges in a strong storm front, reducing the storm energy.
- All purpose weapon; second only to QP weapons, new generation of carrier robots with energetics weapons, and sleeper mass conversions.

Briefing to N-4 in 1996

- J-6 Staff Director for C4 systems (Adm. Cebrowski) requested briefing on Tesla electrodynamics. Naval command in Flo proposed this author brief the Admiral. I agre
- Naval Ordnance Lab and Naval Research Lab then set up a 40-man Ph.D. board as a gauntlet, directed I be interrogated and savaged by board.
- I refused. These folks had fiercely savaged UWB radar pioneers such as Harmuth and Barrett and claimed UWB radar was impossible.* They knew nothing of higher group symmetry electrodynamics; and were part of the problem, not the solution.

* They later claimed to have been "pioneers" of UBW radar themselves!

Briefing to N-4 in 1996

- N-4 informed "briefer has declined the briefing" Questioned why, so command had to tell him.
- N-4 immediately dissolved the gauntlet board, limited NOL and NRL to one member each at the brief, ordered that briefer not be interrupted.
- I then briefed the N-4 on what Tesla EM was, and strongly urged another weapons briefing on Russian energetics weapons. Second brief was not held.
- Later, three colleagues and I played intense, desperate role in Israelis countering and blocking a massive KGB strike on the U.S. by those energetics (Tesla) weapons, that would have destroyed this nation on May 1, 1997.

AUM SHINRIKYO:

IF ANYONE HAD LISTENED AND UNDERSTOOD*

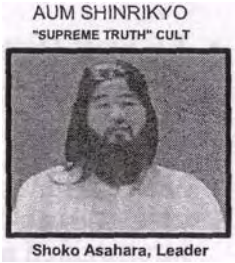

- Cult formed in 1987. Over 60,000 members. More than $1 billion in gold and cash.
* Taught that U.S. would strike Japan with devastating blow in latter 1997
  * Japan should make preemptive strike first
  * AUM would get mass destruction weapons
  * Was developing BW weapons (anthrax, botulism, "Q" fever, etc.)
  * Developed own chemical weapons

* Made sarin attack on Japanese subways
- Formed alliance with Japanese Yakuza

AUM SHINRIKYO:
Alliance with the Japanese Yakuza

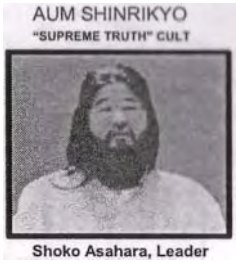

Shoko Asahara, Leader

- Formed alliance with Yakuza
  AUM/Yakuza leased operational use of strategic Soviet energetics weapons (strategic scalar interferometers) in latter 1989
- Trained crews, planned to strike U.S. a terrible "preemptive" blow in 1997 by assisting KGB
- Using deception, killed targets such as TWA-800
- Shoko Asahara's public statements foreshadowed Yakuza/Aum Shinrikyo participation in the KGB's strategic plan to attack and destroy the U.S. in 1997.

Asahara's public statement

* Asahara's public statements hinted at his plans with the Yakuza to participate in the scheduled FSB/KGB strike on the U.S. in 1997.
* Quoting Asahara:

  "I am certain that in 1997, Armageddon will break out. By 'break out' I mean that war will erupt and that it will not end soon. Violent battles will continue for a couple of years. During that time, the world population will shrink markedly... A Third World War will break out. I stake my religious future on this prediction. I am sure it will occur."

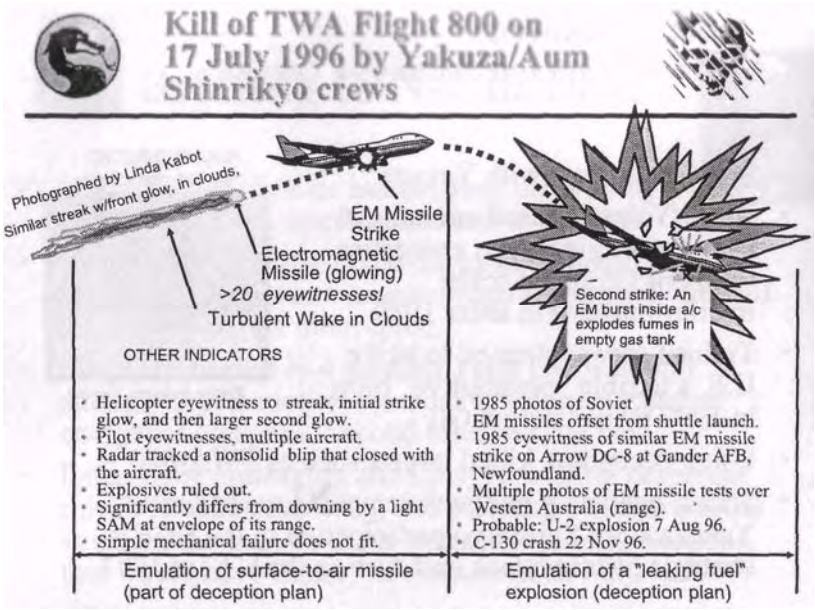
Kill of TWA Flight 800 on
17 July 1996 by Yakuza/Aum
Shinrikyo crews
Photographed by Linda Kabot
Similar streak w/front glow, in clouds,
EM Missile
Strike
Electromagnetic
Missile (glowing)
>20 eyewitnesses!
Turbulent Wake in Clouds
Second strike: An
EM burst inside a/c
explodes fumes in
empty gas tank
OTHER INDICATORS
• Helicopter eyewitness to streak, initial strike glow, and then larger second glow.
• Pilot eyewitnesses, multiple aircraft.
• Radar tracked a nonsolid blip that closed with the aircraft.
• Explosives ruled out.
• Significantly differs from downing by a light SAM at envelope of its range.
• Simple mechanical failure does not fit.
• 1985 photos of Soviet EM missiles offset from shuttle launch.
• 1985 eyewitness of similar EM missile strike on Arrow DC-8 at Gander AFB, Newfoundland.
• Multiple photos of EM missile tests over Western Australia (range).
• Probable: U-2 explosion 7 Aug 96.
• C-130 crash 22 Nov 96.
Emulation of surface-to-air missile
(part of deception plan)
Emulation of a "leaking fuel"
explosion (deception plan)

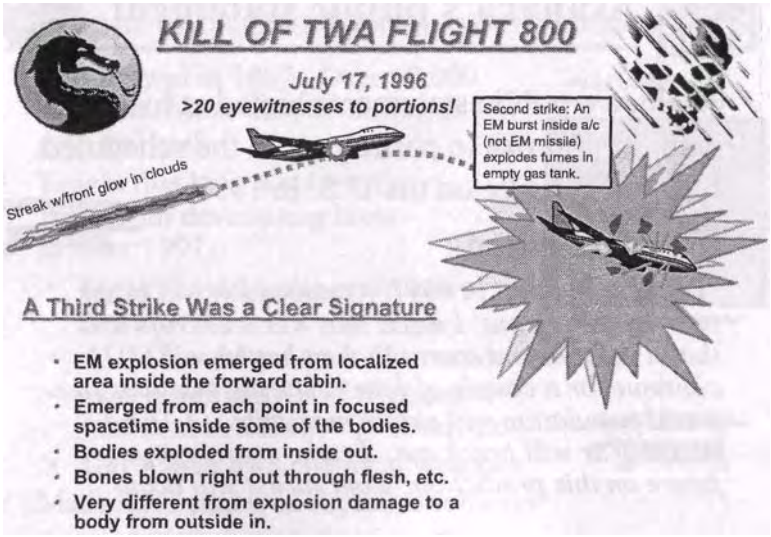
KILL OF TWA FLIGHT 800
July 17, 1996
>20 eyewitnesses to portions!
Second strike: An
EM burst inside a/c
(not EM missile)
explodes fumes in
empty gas tank.
Streak w/front glow in clouds
A Third Strike Was a Clear Signature
• EM explosion emerged from localized area inside the forward cabin.
• Emerged from each point in focused spacetime inside some of the bodies.
• Bodies exploded from inside out.
• Bones blown right out through flesh, etc.
• Very different from explosion damage to a body from outside in.

EM MISSILE PRACTICE

Latter Sept. - Early Nov. 1996

[Many Witnesses]

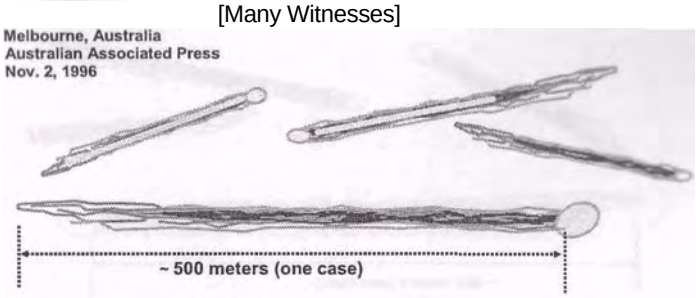

Aum Shinrikyo/Yakuza also conducted extensive firing practice tests over Western Australia. Tests after TWA-800 demonstrated what had killed the aircraft.

EM MISSILE PRACTICE AND DECEPTION

Nov. 17, 1996 at 2220 hrs.

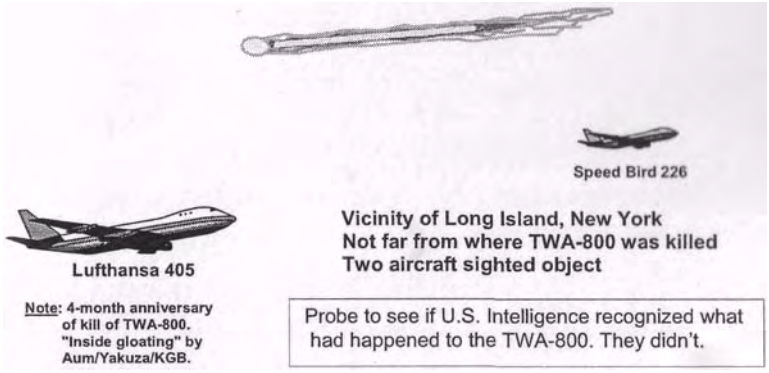

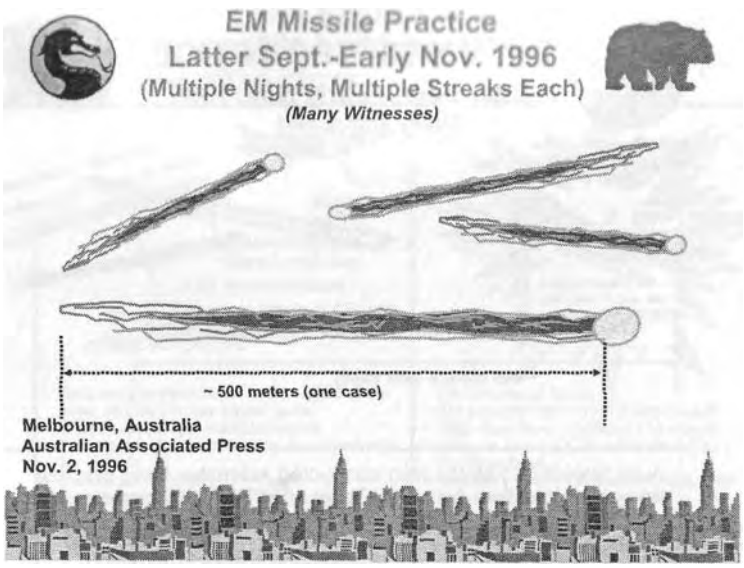
EM Missile Practice
Latter Sept.-Early Nov. 1996
(Multiple Nights, Multiple Streaks Each)
(Many Witnesses)
~ 500 meters (one case)
Melbourne, Australia
Australian Associated Press
Nov. 2, 1996

(SLIDE BRIEFING CONTINUED)

PART D: Second and Third Attacks Scheduled and Aborted

Second and third attacks scheduled and aborted

1997 was a very busy year

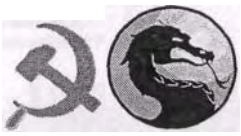

Section, contents

- Attack countering in 1996-97.
- Actions 1996-1997.
- Desperate actions.
- Attack scheduled February 1997.
- The answer: The Israelis are sane, but the problem is insane.
- Desperate situation, desperate action.
- A bit of irony.
- Afterword.

Attack countering in 1996-97

- Contacted by Harry Mason, Australian geophysicist.
  - First-hand information on anomalous lights, explosions, quakes in West Australia.
  - Obviously were energetics weapons tests.
  - Alerted me to involvement of Aum Shinrikyo, Yakuza.
  - Furnished material on Aum Shinrikyo and Yakuza.
  - Mason eventually visited me here in the U.S. for illuminating discussions.
  - From these, we pieced together modifications to Soviet 1996-97 attack scenario.
- Had it not been for Harry's input, we would not have had the picture in time to alert the countering nation.

Actions 1996-1997 (cont'd)

- Mason provided special information that consortium of Aum Shinrikyo and Yakuza had leased use of the earlier generation Soviet energetics weapons.
- Initial downpayment $900 million in gold.

Obtained Sen. Sam Nunn's report on terrorism, etc. including Aum Shinrikyo. Researched Yakuza.

- Feverishly increased work on weapons briefing.
  - By late 1996, three colleagues and I desperately were trying to get message to high Israelis, that attack was forthcoming. Israel was and is the only nation which could and can counter such an attack by a rational foe.
- FSB/KGB attack first scheduled for February 1997.

Desperate actions

* Attempted to alert former Israeli ambassador to UK, who had confirmed weapons to UK intermediary.
* Ambassador was assassinated one week before emissary could reach him.
* In desperation, sent alerting fax to Israeli Embassy Defense Attache, in Washington, D.C.
* A well-known Ph.D. and close colleague wrote a supporting study. Another close Ph.D. colleague delivered a copy to the Israeli Consulate to California.
* Scheduled attack countered by Israeli action; aborted.
* Informed U.S. channels of actions (not believed).
* Relaxed, breathed easier, back to energy and medical research.

Attack rescheduled

* To our astonishment, shortly it became obvious that the attack was rescheduled for May 1, 1997.
* We were completely perplexed as to how that could be, and Russia not disappear from the Earth if the attack were launched.
* A great deal of anguish and wracking of one's brain resulted.
* The answer was disarmingly simple, so it was difficult to recognize.

Answer: Israelis were sane; but the problem was insane

- Israelis had incorporated a sane C2* system.
  - Wait till recognize preparations, meet, decide, then issue launch order for preemption.
  - Easily countered by negative energy EMP.
  - Kill all QP personnel suddenly, then destroy site.
  - Counter simply by rescheduling order of attacks.

  Must be insane C2 system.
  - Every 2 hours, computer issues real launch order.
    - Launch sequence starts "for real", threat or no threat.
  - A time interval is available in the sequence where code can be entered to abort attack and revert weapons, if crews are alive.
  - Otherwise, QP weapon systems fire and Russia disappears from the face of the Earth. In short, it is a wrinkle on the old dead-man fuzing and mutual assured destruction (MAD).

*Command and control.

Desperate situation, desperate action

- Latter April; clock ticking, five days from attack and certain destruction of the U.S.
- Desperately faxed Israeli Prime Minister directly, explaining problem and solution.
- Urgently requested Israel switch C2 to insane system immediately, and notify Russians.
  - It was quickly done.
- Two days before attack, the armada began standing down, much to the relief of my colleagues and me.
- Informed official U.S. channels of all actions. They did not believe it.

A bit of irony

- At about the time the great armada started standing down, Secretary of Defense Cohen was making his 1997 statement at a Georgia conference, confirming the earlier scalar interferometry weapons.
- The Secretary did not know that the attack had been imminent, or that it was standing down as he spoke.
- The U.S. Intelligence Community still did not believe it at that time, and did not know of the attack plan.
- By a hair's breadth the United States survived, thanks to the friendly nation and its QP weapons.
- The FSB/KGB simply resumed its planning and maneuvering toward another attack opportunity.

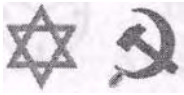

Afterword

* Also warned Israel and others about mind control capabilities achieved by Russia, evidenced by test kills of Captains Button and Svoboda.
* Some time later (unsure when), the main facilities producing those weapons were destroyed.
* Those facilities will remain destroyed for a great many years; but others now operating elsewhere.
* This pre-emptive action gave us a couple years of respite, until the robot attack at the end of 1999 occurred as a special "Millennium Gift" to the U.S.

Afterword (2)

- FSB/KGB strategic plan to attack and destroy United States must include nullifying Israeli counterstrike by QP and other major superweapons.
- FSB/KGB plan of Strategic Asymmetric War must include such neutralization.
  - Major neutralization possible by use of massive numbers of "sleeper" conversion personas inserted into (a) appropriate governmental leaders and into (b) control/operational personnel for key superweapons.
- Sudden massive conversion in Israel disrupts government, produces utter chaos. Israel destroys itself.
  - Asymmetric war passed into Operations Phase circa beginning 2005; means massive sleeper conversions being inserted worldwide, ready for triggering.

World's first subspace precursor robot war

An eerie war fought inside internal structures of EM fields and waves. I.e., fought inside group internalspace (a special subspace).

Section contents

* KGB continues developments.
* Aum Shinrikyo and Yakuza involvement.
* Weather engineering.
* Causal system robots.
* Precursor robot tests.
* Subspace precursor robot war.
* Afterword.

FSB/KGB continued weapon development and attack planning

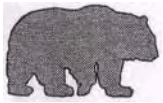

* Incidents and tests continued worldwide.
  - By FSB/KGB.
  - By rogue Japanese (Aum Shinrikyo and Yakuza).
  - By other nations.
* Several nations/groups (including Yakuza) used Western Australia for a target range.
* Extensive tests documented by geophysicist Harry Mason.

» Occasional aircraft, missile interference or kill.

* Full-bore weather engineering continued.

Aum Shinrikyo and Yakuza involvement

- On site in Russia, manning strategic scalar interferometer sites (kind that killed U.S.S. Thresher).
- Heavily engaged in weather warfare over the U.S. and North America since early 1990, other range practice in Australia.

- Itching to begin firing to destroy U.S. cities and major installations.
- Yakuza now a major, hidden world force.
  - Penetrates all major Japanese companies.
  - Penetrates Japanese government.
  - Large presence in oriental populations in U.S. cities.
- Yakuza is FSB/KGB protege for asymmetric warfare against the internal U.S.; intends to destroy us.

U.S. weather engineered by rogue crews on-site in Russia (1)

- Steering jet streams.
  - Make low pressure areas (endothermic).
  - Make high pressure areas (exothermic).
    - Move highs and lows in coordinated fashion, to entrain and steer the jet streams.
- Displace cold air from Canada, warm air from Gulf.
  - Where they meet provides sharp fronts and violent weather.
- Basic "cross-ploughed field" grid pattern covers a broad area for structuring in the grids (choosing localized cooling, heating, force engines in air.

U.S. weather engineered by rogue crews on-site in Russia (2)

- Placing sharp bends in jetstream adds great angular momentum.
  - Spawns tornadoes, powerful storms.
  - Generates much atmospheric energy and lightning.
  - Ignites fires in those areas deliberately kept dry.
- Maneuvering and pulsing high and low pressure areas vertically above each other can produce sudden downbursts.
- Adding spiral twists can generate sudden tornadoes.
- Created earthquakes and stimulated volcanoes into eruption; generated tsunamis.

Causal (precursor) robots and the subspace war of 1999-2000

* For any set of force dynamics in a material system, there is a corresponding set of nonmaterial precursor dynamics. That set is a nonmaterial precursor "engine" (cause) for the physical robotic system's dynamics and functioning.
* The precursor engine can travel through and inside Whittaker structure of an EM signal, wave, field, potential, etc. Easily travels through matter and through EM radiations from target.
* A material robot thus has a precursor robotic "engine". When this precursor robot engine interacts with proper type of matter, the material robot functions emerge and are performed.
* FSB/KGB developed formidable army of the robots.
* Unleashed them throughout the U.S. in latter 1999. Israelis destroyed precursor robot army in latter 1999-early 2000.

Causal System (Nonmaterial) Precursor Robots

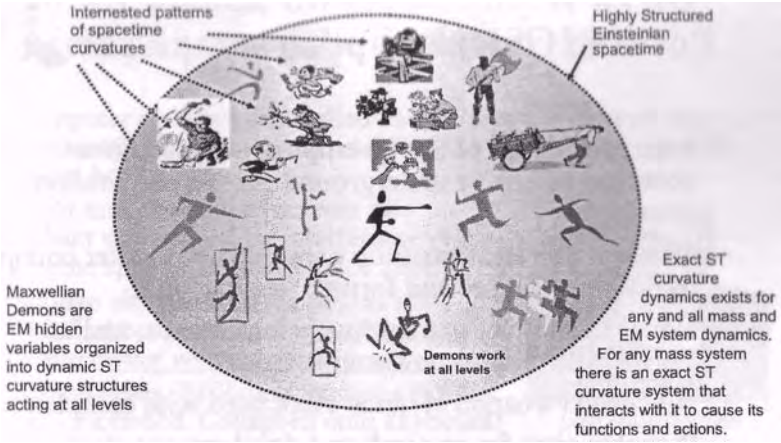

Causal system robots (CSRs). These are sets of ST curvature engines, with functions organized into a single complex weapon system with communication, propagation, weapons effects, and command and control functions incorporated. When the CSR interacts with targeted mass, the mass and its fields perform those system functions.

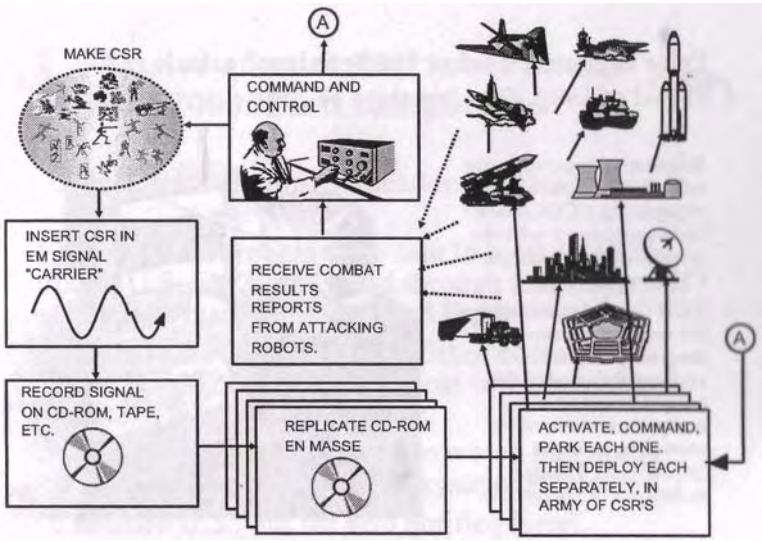

Mass reproduction of a CSR, once made, is simple and inexpensive.
The CSR resides in, or propagates inside, any Eli signal, potential, or field.

Possible CSR* weapons complexes

* Prior to collapse of Soviet empire, U.S. satellites observed extensive underground sites in preparation (hundreds).
- Construction and operation continued even after collapse of Soviet economy and former Soviet Union.
- Hence must be of extraordinary importance, and to FSB/KGB (the real power in Russia).
* No normal weapon systems associated with complexes.
- Probable sites for research and development, deployment and worldwide employment of CSR robots.

---

* Causal System Robot. Same as nonmaterial robot; vacuum engine robot, spacetime curvature robot, precursor robot. See slide in Appx 1 on cause and effect.

Prior to planned robot "millennium" attack at end of 1999, first few days of 2000

- Stimulating apparently the only analyst capable of recognizing a CSR attack and connecting it with the scheduled giant strategic CSR attack.
- KGB General commanding the energetics weapon program previously confirmed that what this analyst writes on his computer is received as soon as he writes it (probably by Tempest techniques or energetics).

- Present author was struck by CSR in latter 1999 to give a strong but deliberately nonfatal stimulus. Reported; intelligence agencies did not believe it.
- If planned attack had occurred, Western analysts would have believed it was a severe Y2K problem, more serious than had been anticipated.

Robot attack on this analyst as an intelligence probe in latter 1999

• Computer suddenly controlled itself. Screen split, with two horizontal bands about two inches wide each, one at top and one at bottom.

LAST QUARTER 1999

- Light thus entering eyes from two radiant sources (scalar interferometry). Engine appears in interference zone.
- Sudden violent rapid flashes, as if 100 flashbulbs at once. Created in vision center where nerve signals crossed.
- Instant heart fibrillation, nervous system malfunctioned. Collapsed onto keyboard.
- Ten seconds exposure (30 would be fatal).
- Required 4 days to recover. Then we notified the Israeli Military Attache in Israeli Embassy, etc.
- Israelis destroyed millions of robots throughout America.

Massive nonmaterial robot attack 1999-2001): First subspace war

- Y2K problem ongoing, tremendous work ongoing to avoid it.
- Millions of CSR robots were sent in by the KGB* through U.S. EM signals, and through EM fields and potentials in matter of ocean and Earth.
- Penetrated all over U.S., in satellites, command centers, ICBM electronics, nuclear sub electronics, computers, NSA, CIA, DIA, etc.
- Struck ("pinged") this analyst, to watch him notify "system" and see if the official system understood.
- We notified U.S., but we also notified Israel.

*New name is Federal Security Services, but the leopard has not changed its spots. Superweapons controlled by old die-hard Communist faction, who wish to destroy the U.S. Younger faction (from which Putin came) wishes accommodation. Unfortunately the old faction is in control.

Earth's first subspace war

* Israel quickly destroyed millions of robot weapon systems on site in electronics and installations and computers and command centers in the U.S., in Israel, and in other Western nations.

- A strategic war of eerie kind occurred in those few days, and it did not make a whimper or attract attention of our intelligence community. Millions of robots were destroyed.
* The "infolded" EM inside all normal EM fields, potentials, and waves is a special "subspace" mathematically, including inside the Earth's matter and the ocean's matter.
- The first great subspace war was fought at the change of the millennium for several days, inside EM signals in our systems, computers, etc., and no one knew it.

Afterword to tie eerie 1999-2000 strategic war

* The West slept on and did not believe the eerie nonmaterial precursor robots - or the war - at all.
* We also warned the "little nation" of the mind-control psychoenergetics tests as against Button and Svoboda, and the coming capability of this threat.

  * The subject had arisen in the previous attack scheduled for May 1, 1997, which was narrowly avoided.
* Many months later a garbled communication indicated that Israel had suddenly struck those psychoenergetics facilities also, totally destroying them.
* We did receive an "attaboy" for in-the-nick-of time warning provided in latter 1999.

Countdown toward destruction

Converging WMD threats

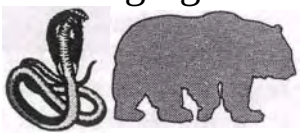

Section contents

- International terrorism.
- Wake-up call.
- Subsequent events.
- Calm before the storm.
- Personal conclusions.
- Time criticality.

International terrorism escalates

- International terrorists struck hard on Sept. 11,2001.
  - * World Trade Center (Twin Towers) and Pentagon.
  - * One aircraft, redirected, was targeted against White House and the President. Crashed by onboard struggle.
  - * Osama Bin Laden was a household word.

Twin Towers burning after strikes by two aircraft - AP Photo.

- Suddenly the "D.C. Doldrums" regarding terrorism and WMD threats were destroyed.

The wake-up call

* A month or so later, President Bush and VP Cheney had been rather thoroughly briefed.
* They understood the nature of this war. VP Cheney said:

"The war on terrorism will not be over in our lifetime. It is different than the Gulf War was in the sense that it may never end. At least not in our lifetime. The way I think of it is, it's a new normalcy. "

Vice President Dick Cheney, October 21, 2001.

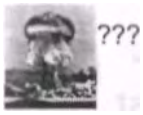

Subsequent events

• President Bush retaliated against terrorism.

• Afghanistan, where the Taliban had long harbored Osama Bin Laden.

• Iraq, with its record of backing terrorism and mass murder of its own civilians (and its capability for WMD).

• Occupation of Iraq and Afghanistan is ongoing, as U.S. strives to get free, modern governments installed, economy restored, and proper internal security forces formed and trained. Resistance and incidents continue. Bin Laden remains at large, Saddam Hussein is caught and awaiting trial. Hussein's two sons have been killed.

• For FSB/KGB, this is a "bleeding the U.S. dragon" period.

Calm before the storm

• U.S. national election also sowed divisiveness and preoccupied nation for more than a year.

• International terrorists continue insertions.

* Yakuza prepares portable interferometers; North Korea and Iran pursue nukes.
* Castro's inserted 10,000 guerrillas still here.
* Russian nuclear weapons still in U.S. cities.
* Chinese quiet insertion probably ongoing.
* Russian KGB has prepared robots again.

* Inserted conversions finishing; probes will be evident as buildup almost certainly underway inside the U.S. itself.

Personal conclusion of this analyst

- Multiple strategic WMD threats and attacks are rapidly converging on the U.S. simultaneously.
- U.S. woefully unaware of the eerie war and capabilities.
  - U.S. in grave danger, may be destroyed.
  - * U.S. scientific community has failed us.
  - * Government and intelligence community have totally inadequate scientific advice.
  - Meanwhile, clock ticks toward midnight.

- Insertion phase completed; now in operations phase.

Yakuza registered superweapons on Yellowstone Caldera; achieving knockout capability against U.S. with one shot.

- Shot 9.3 seabottom quake on Dec. 26, 2004 which caused giant tsunamis in Asia.

* T.E. Bearden, "Errors and Omissions in the CEM/EE Model", at http://www.cheniere.org/techpapers/

Threats - working

- Energetics weapons threat.
  Bioenergetics weapons threat.
- Robots weapons threat.
- Psychoenergetics weapons threat.
  - Conversions threat
  (to be discussed).
- Terrorists nuclear and
  BW weapons threat.
- Chinese threat.
- Yakuza/Aum Shinrikyo threat.

(SLIDE BRIEFING CONTINUED)

PART E: Bioenergetics and Its Weaponization

Bioenergetics and its weaponization

Use of infolded EM against living bodies, biofields, and biopotentials

Section contents

- Basic bioenergetics.
- Selected tests.
- Body radiates its internal patterns.
- Information content of the field.
- Ramifications.
- Kaznacheyev experiments and results.
- Microwave radiation of U.S. Embassy.
- Becker's work and ramifications.
- Priore's work, results, and ramifications.
- Shadow disease state, immune system reaction.
- Spreading the immune system.
- Gulf War Disease: Russian test.
- 1998 proposal for portable treatment unit.

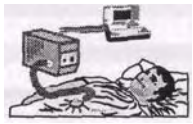

Basic bioenergetics

- Scalar interferometry.
- Longitudinal EM waves
- Bioenergetic Engines.
- Negative energy EMP.
- Quantum potential.
- Nonmaterial robots attacking bodies.
- Carrier robots with bioenergetic weapons.

Selected bioenergetics tests

* Kaznacheyev experiments
* Microwave radiation of U.S. Embassy
  * Disease induction
  - Deaths of three U.S. Ambassadors
* Gulf War Syndrome

* Immune system spreading
* Carrier robot test against this author

The body continually receives and retransmits EM energy

- The body may be considered as a dielectric.
- Every part of the dielectric participates in absorption and emission of each photon to and from any point on the surface.*
- Mechanical force effects are also electrical in nature and exchange similarly.
- CEM/EE does not account for precursor engines in the exchange

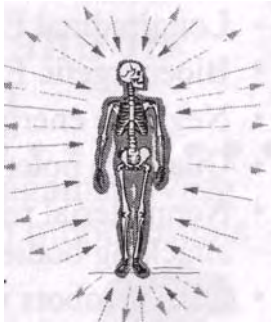

* Reali, G. C, "Reflection from dielectric materials," American Journal of Physics, 50(12), Dec, 1982, p. 1133-1136. The reflected field from a dielectric material is not generated just at its surface but comes from everywhere in the interior of it.

Ramifications (1)

- An EM "dielectric transmission path" connects every part of every cell to every part of the body surface.

* Electrical processes in the body, including deep within the cell and its nucleus, participate in absorption and emission of every photon to and from the body's outer surface (and every mechanical force experience).

- All body electrical processes participate in exchange of precursor engines between body and environment.

* EM emission energy of the body is a conglomerate mix of fractions or all processes and functions ongoing in the body or affecting it, including in every cell. Including the engines.

Ramifications (2)

- Reaction of each photon absorbed on any point of the outer surface of the body, connects through the dielectric transmission path to every part of the body, including to every part of every cell*. Skin absorption connects incident signals and engines everywhere throughout body also.
- Every body emission is participated in by every part of the body, including all cells.
- Body emission "changes" environment, adding EM radiation and engines.
- Body's EM absorption allows environment to change or affect every internal function and part of the body.
- The body's reaction (healing) system continually readjusts, corrects deviations from normalcy, in every cell.

* In quantum physics, part of the photon is localized and part is nonlocalized, reaching even across the universe.

Ramifications (3)

- Total of all impinging external EM radiation upon the body, plus mechanical "special EM" radiation, affects and changes body and all its processes, participating in them.
- Impinging EM radiation engines can be manipulated to either harm or heal the body and any or all of its cells.
- The body must continually overcome these externally-induced EM changes in its cells and processes, to maintain normalcy.
- The poorly studied cellular regenerative system performs the restorative function, which is the fundamental "healing" function of the body.*

*The cellular regenerative system was mostly studied by Becker and a few others. See R. O. Becker, and David G. Murray, "The electrical control system regulating fracture healing in amphibians," Clinical Orthopaedics and Related Research, No. 73, Nov.-Dec. 1970, p. 169-198.

Ramifications (4)*

- EM fields and waves decompose into differential structures of two scalar potentials.
- Each of the scalar potentials decomposes into a harmonic series of bidirectional longitudinal EM wavepairs (LWs). "Engines" (special LW sets) may be inserted and carried.
- Zero vector summations of such internally structured fields make scalar stress potentials with infolded structured longitudinal wave structures and dynamics.
- Correct multiwave EM waves radiated onto body pass or diffuse back through all "emission channels" (portholes).
- Any internal part or function of cells, etc. can be directly affected, changed, controlled, etc.**

---

* See the two Whittaker papers, 1903 and 1904, referenced elsewhere.
** See also Porthole Briefing on website www.cheniere.org, as well as Provisional Patent Application freely given to public domain.

Devyatkov's "information content of the field" (engines by another name)

* Nonthermal millimeter waves.
  - Used in living systems.
  - Sharply resonant actions.
* Hypothesis now a theory.
  - Experiments since 1960s.
  * Confirmed.
* Now basis for
  * Experimental research.
  * Use in medicine and biology.
* New kind of photobiology.

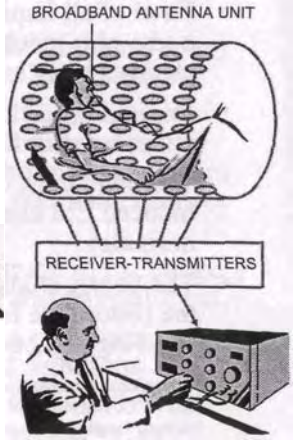

Information content of the field (2)

- Contrary to communications theory
  - Effect increases as frequency *decreases*
  - *Number* of resonant frequencies determines
  - Signature of time-component engines
- For a resonant system
  - Average linear dimension L, wavelength λ
  - V = propagation velocity
  - λ = V/f
- Number of resonant frequencies
  - Increases as λ decreases
  - In proportion to L/λ
- For each resonant frequency:
  - Particular distribution in the system
  - Determines state of the system

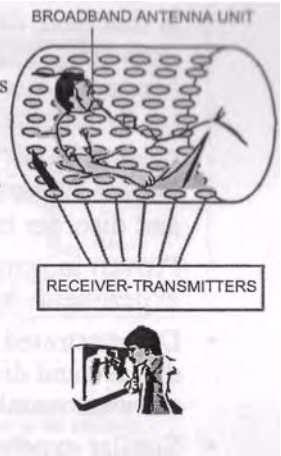

Extended dielectric radiation properties

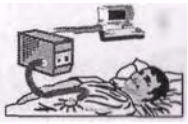

- Every part of body dielectric participates in absorption and emission of each photon at any point on the body's surface.* The energy portion of the photon carries engines.
- The forces are due to ongoing interactions between precursor energy engines and the body's charged matter, at all levels from smallest to largest.
- All the body's internal EM fields, potentials, and waves decompose via Whittaker 1903 and 1904 into harmonic series of longitudinal EM biwave pairs and their dynamics.
- Thus all external EM radiation of the body carries the internal biwave pair dynamics of the total interior, including every cell and every condition.

---

* Reali, G. C, "Reflection from dielectric materials," Am. J. Phvs. Physics. 50(12), Dec. 1982, p. 1133-1136. The reflected field from a dielectric material is not generated just at its surface but comes from everywhere in the interior of it. This results in direct communication of engines between all elements of the body and between the body and all elements of the environment.

Proof that the cellular condition is radiated from groups of cells

- A diseased, damaged, or infected cell culture will and does emit "engines" for its exact internal EM condition, hence the disease or damage "generatrix form" itself (in the internal structuring of the EM radiations).
- Further, these "state" emissions can couple into other targeted cells to produce disease and disorder in them.
- Proven in some 5,000 Russian experiments by Kaznacheyev.

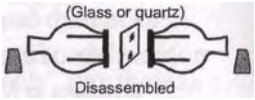

- Demonstrated induction of cellular disease and disorder between EM-coupled but otherwise environmentally shielded cell cultures.
- Similar experiments have been successfully replicated in the West by Reid et al, and by Popp et al.

Kaznacheyev's two-chamber apparatus

(EM Induction of effects of diseases, physical damage, nuclear radiation, toxins)

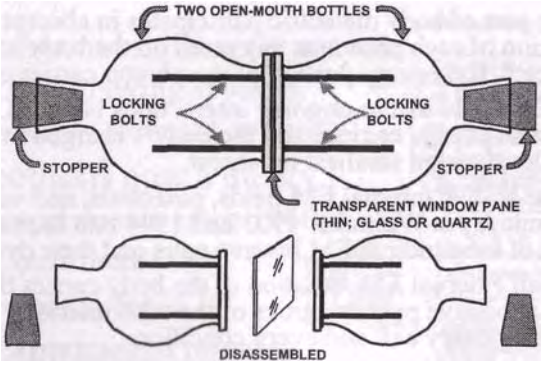

A cell culture is divided into two parts. Cells on the left are then damaged in some selected fashion. With a thin windowglass divider, cells on the right remain healthy. With a thin quartz divider, after a delay the cells on the right begin to die with the same disease, or exhibit the same damage. This directly demonstrates vacuum energy (subtle precursor energy engine) action.

Kaznacheyev's EM induction of cellular disease and disorder

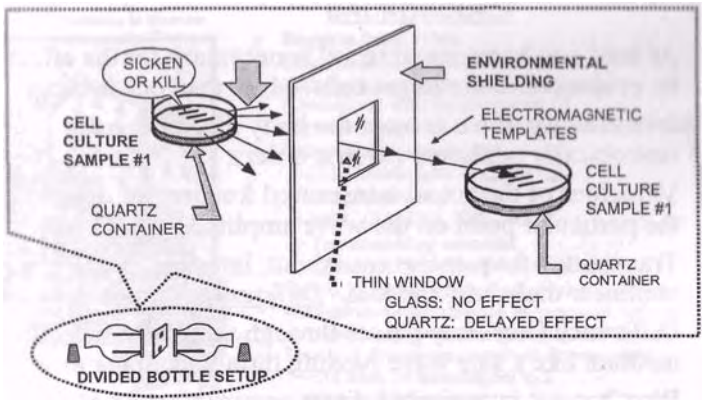

Note: Minimum lattice is one harmonic interval: IR to UV is such a minimum G-lattice. Consider particularly the dielectric pathway in the emitting diseased cells and in the receiving targeted healthy cells.

Another surprising feature of Kaznacheyev's experiments

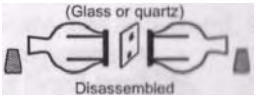

- Experiments do not work if targeted cells are in normal light, such as sunlight*.
- The normal light bandwidth occupies less than a harmonic interval between ultraviolet and infrared
- Hence its difference frequencies also fill such an interval For a set of n frequencies, the number d of difference frequencies is d » n.
- The visible light spectrum "jams" specific internal EM signal inputs through dielectric pathway into the body, turning most environmental signals into harmless warmth.

---

* It has also been shown that if bacteria are killed in the "dark" by UV, then 24 hours (12 generations) later are placed in sunlight, a substantial fraction of the "dead" bacteria will revive. Suspended but maintained mind engines, matter engines, and their coupling engine after physical death are demonstrated. In other words, it demonstrates how living systems can be made and assembled from "parts". The Russian energetics weapons scientists have that full capability today.

Ramifications of Kaznacheyev's experimental results (1)

* At least one harmonic interval is necessary for the effect to be evidenced in the target cells. More than one is better.
* Interestingly, if we assume the body dielectric to be isotropically nonlinear (to first order):
- Velocities of the actual transmitted frequencies depend upon the particular point on the wave amplitude.
- Transmitted frequencies overshoot, interfere, breakup in nonlinear dielectric medium. Difference frequencies do not.
* Difference frequency passes through nonlinear dielectric medium like a sine wave passing through a linear medium*.
- West has not investigated direct communication of EM "hash" difference frequencies in dielectric human bodies.

---

* Owen Flynn, "Parametric arrays: A new concept for sonar," Electronic Warfare Magazine, June 1977, p. 107-112.

Ramifications of Kaznacheyev's experimental results (2)

- A heterodyne signal — at the difference frequency between an input signal and a reference signal — can be enhanced by adding noise* as is well-known.
- Thus the signal of the disorder in the cellular pattern emitted from diseased cells, received by normal cells, can be amplified electronically and rather easily.
* Powerline radiation (electronic smog, a form of noise) thus carries its own amplification mechanism. Eventually the amplification overcomes any squelching by sunlight, etc.
* The Russians promptly (as early as the late 1950s) weaponized and tested these and similar effects.

---

* Dykman, M. I. et al., "Noise-enhanced heterodyning in bistable systems," Physical Review E. 49(3). Mar. 1994, p. 1935-1942.

Microwave radiation of U.S. Embassy in Moscow

BACKGROUND

- Began in latter 1950s
- Discovered on VP Nixon's trip
- Initially thought to be nuclear radiation (Discovered with Gcigcr counter?)
- High level target — U.S. Ambassador
- Guarantees personal attention of:
  - U.S. Ambassador to USSR
  - U.S. President
  - NSA, CIA, D1A, NSC, etc.
  - Top consulting scientists
  - Leading U.S. scientific institutions

- Two U.S. Ambassadors died, another sickened
- Anomalous health changes in personnel, only in zero-field (zero potential gradient) areas!
- Four U.S. Presidents requested Soviets cease
  - Cut from 18 watts/sq cm to 2
  - Then again increased
- No one could understand what was going on
- Aluminum screens were placed over windows
  - Moscow was declared a hazardous duty zone

More on Embassy radiation

- Diseases, health changes statistically significant, not accidental
- Johns-Hopkins scientists measured field radiation patterns inside Embassy accurately.
- Health changes occurred only where fields absent.
- Concluded EM radiation was not the cause.* Their own measurements falsified their conclusion.

- Actually it proved some characteristic of the field-free (stationary) potentials was the cause, due to their 100% correlation. Direct indication of precursor engines.
- Standard electrical engineering erroneously considers the force fields in charged matter to be primary causative agents. They are not; the precursor force-free fields in space are.

* If EM radiation were not the cause, then the outbreaks would have appeared both in field areas and in areas devoid of fields.

Purpose of Embassy radiation

- Struck a high level target (U.S. Ambassador). Three U.S. Ambassadors died as a result. Hundreds sickened or had health changes.
- Ambassador target guaranteed attention of CIA, DIA, NSA, etc. Analysts baffled. Agencies turned to scientific advisors.
- By U.S. reactions taken at the Embassy, Soviets determined with 100% reliability whether U.S. knowledgeable in energetics and whether U.S. had defenses. They didn't. They still only know EE.
- U.S. put up window screens against the "normal EM field" radiations. Ineffective for stationary potentials.
- Proved our ignorance. Valuable intelligence assessment tool to the Soviets for decades.

RADU vs. Radio Free Europe*

- Mysterious radiation device, size of small watch
- Used by Romanian President to dispose of enemies
- Causes rapid growth of cancer in those persons exposed (per General Ion Papeca)
- Bizarre cancer deaths in Radio Free Europe
  - Four top officials
  - Included three successive Directors
  - After death threats from Romanian secret service
- Hence some other nations know of— and have — at least some of this technology.

*U.S. News & World Report, Dec. 12, 1988, p. 15.

Lunev* on Chinese capability (1)

- Lunev has cancer, as do most other GRU operatives that were stationed in China.
  - Lunev is highest ranking GRU defector to U.S.
  - When China and Soviet Union had basic disagreement, Chinese induced cancer in almost all the on-station GRU operatives.
  - Lunev also states China is U.S.'s greatest threat.
  - New alliance between Russia, China, and India.

* See Stanislav Lunev, Through the Eves of the Enemy, Washington, DC: Regnery Publishing, 1998. Lunev was a Colonel in GRU intelligence.

Chinese capability (2)

- China has WMD and superweapons.
  - Nukes, ICBMs, subs, bombers.
  - * Quantum potential weapons.
  - * Negative energy EMP weapons.
  - Scalar interferometers.
  - BW weapons and bioenergetics weapons.
  - Probably well-along on psychoenergetics as well.
- China prepares both to reach accommodation with the U.S. and to be able to destroy the U.S.
- China's fiercely increasing energy needs are stoking the fires of U.S./China conflict, competing for foreign oil.
- China probably aware of the present FSB/KGB plan, use of the Yakuza, etc. Has new alliance with Russia.

Simplified diagram of the immune system

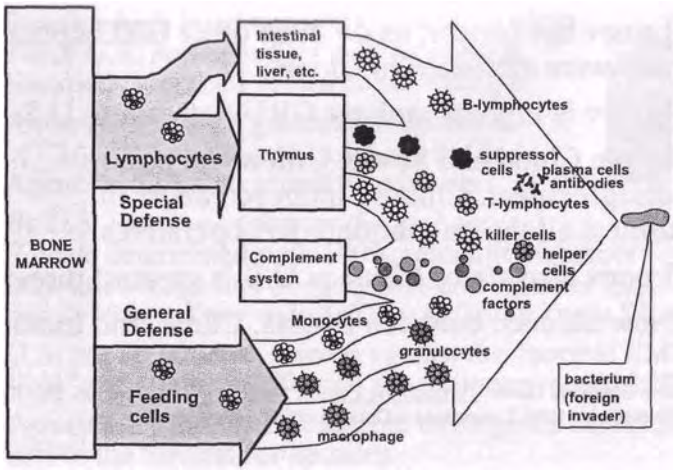

The puzzle of morphogenesis: Lack of knowledge of engines

* "It remains a challenge, however, to understand precisely how the combination of tissue repair mechanisms with reactivation of embryonic programs can generate growth, pattern formation, and morphogenesis in an adult animal."

Quoting Jeremy P. Brockes, "Amphibian limb regeneration: Rebuilding a complex structure," Science. 276(5309), Apr. 4, 1997.

Comment: Cannot be understood until a much better CEM/EE model is used for analysis and understanding, and until knowledge of how the master cellular control system and the cellular regenerative system use such electrodynamics with "engines" to cause forward actions (differentiation) and "anti-engines" to reverse damage (dedifferentiation).

Effects of dynamic structuring of the scalar potential: Engines

"It is now known that the d.c. potentials measurable on the intact surfaces of all living animals demonstrate a complex field pattern that is spatially related to the anatomical arrangement of the nervous system... "
Robert 0. Becker, "The significance of bioelectric potentials," Bioelectrochemistry and Bioenergetics, Vol. 1, 1974, p. 188.

- Comment: Potentials and their complex field patterns possess internal longitudinal EM biwave dynamics (engines) for all nervous system and cellular arrangement and functioning of the entire organism.
- The fields radiated from the body enfold samples of all such internal patterns and signals (all such engines).

Epochal work of Robert Becker

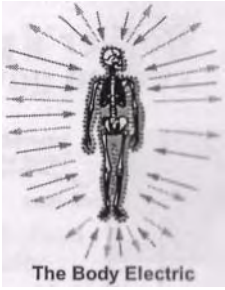

Controlled cellular dedifferentiation and redifferentiation, and the cellular regeneration system

Preliminary remarks

- Medical research and study centers on immune system.
  - Immune system heals nothing.
  - Fights invading pathogens, wins, cleans up.

- Healing and restoration accomplished by the poorly-studied cellular regeneration system.
  - EM system and EM techniques, not drugs.
  - Cannot be understood via standard CEM/EE. Requires higher group symmetry CEM to model it.
- Becker came within inches of deciphering the regenerative system; but CEM/EE failed him. Demonstrated cellular dedifferentiation and redifferentiation by EM means.
  - Nominated 3 times for the Nobel Prize.
  - Ruthlessly suppressed for his efforts. Funds pulled, forced to retire early.

Becker's proposed control system governing regeneration

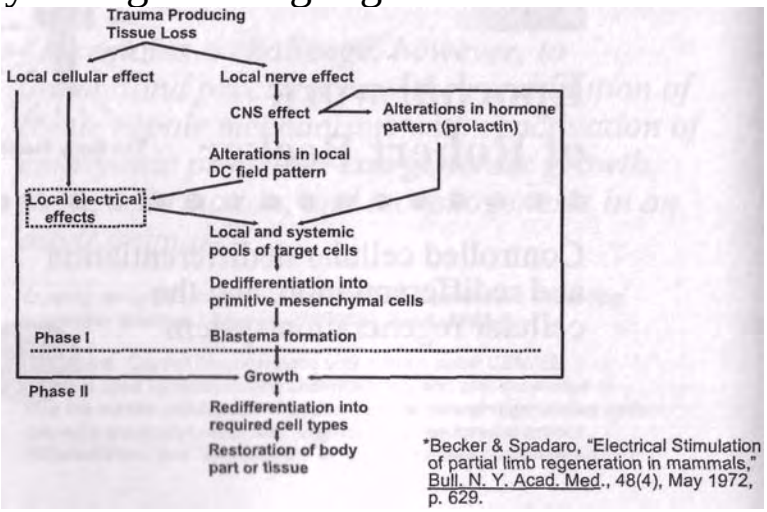

*Becker & Spadaro, "Electrical Stimulation of partial limb regeneration in mammals," Bull. N. Y. Acad. Med., 48(4), May 1972, p. 629.

Becker's theoretical control system involved with response to injury

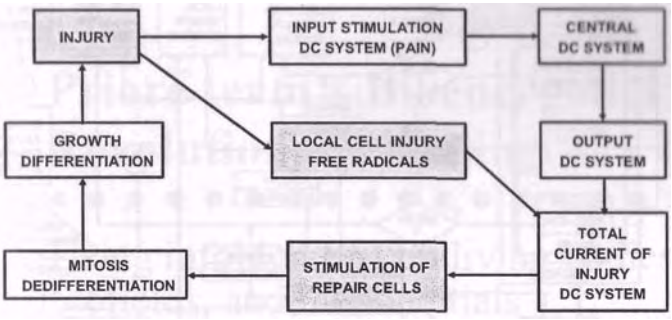

Note: Becker only had conventional EM available, hence was unable to model the inner structuring and inner dynamics of the fields and potentials. So he missed the deeper "engine and antiengine" mechanisms.

*Robert O. Becker, "The significance of bio-electrical potentials," Bioelectrochemistry and Bioenergetics, Vol. 1, 1974, p. 191.

Extending Becker's work

- Becker had only the archaic CEM/EE model available; flawed and grossly inadequate.
  - Insufficient group symmetry.
  - Already eliminates the "infolded" longitudinal wave EM that structurally and dynamically comprises normal EM potentials, fields, and waves.
  - Eliminates supersystem, engines, and anti-engines.
  - The missing internal LW EM is what is manipulated and used by the cellular regenerative system.
- Nonlinear phase conjugate optics not yet developed when Becker did his seminal work; time-reversed EM unknown.

  Successful higher symmetry electrodynamics models — such as 0(3) — have been developed and are available.*

* See M. W. Evans, "0(3) Electrodynamics," Series Editor M. W. Evans, Modern Nonlinear Optics. Second Edition, 3 vols., Wiley, 2001; Vol. 2, p. 79-267

Author's diagram of cellular regenerative system functioning

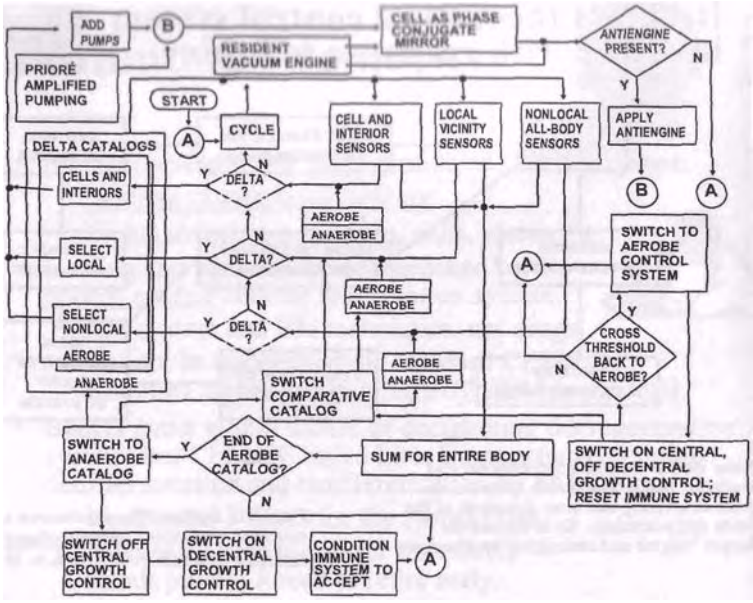

Becker's epochal bone fracture healing

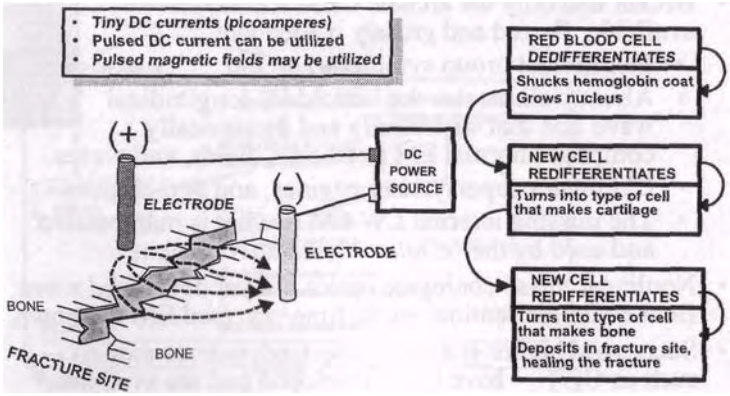

One of the few EM healing modalities approved by FDA and utilized in some U.S. hospitals every year to cure intractable bone fractures.

Priore team's Bioenergetics: Revolutionary healing

Using infolded EM on living bodies, biofields, and biopotentials

Priore's sensational results

- Revolutionary cures of terminal cancers and tumors in lab animals. Replicated in humans.
- Cured dread diseases such as trypanosomiasis.
- Reversed clogged arteries.
- Restored suppressed immune systems.
- Did double-blind tests, proving efficacy. Caused a sensation in French medical community.
- Some eminent French scientists worked on it.
- Spectacular results personally presented to l'Academie by Robert Courrier, head of biology section and Secretaire Perpetuel of the Academy.
- Independent tests by Courrier's personal assistant and by University of Bordeaux verified results

Priore (right) makes a point to Chaban-Delmas, Mayor of Bordeaux

* Many of the Priore team's experiments were done in Bordeaux.
* Antoine Priore patents:
  * "Apparatus for producing radiations penetrating living ceils," U.S. Patent No. 3.368,155, Feb. 6, 1968.
  * "Method of producing radiations for penetrating living cells." U.S. Patent No. 3,280,816, Oct. 25, 1966.
  * "Procedc ct dispositif dc production dc rayonnements utilisables notamment pour le traitement de cellules vivantes," [Procedure and Assemblage for Production of Radiation Especially Serviceable for the Treatment of Living Cells], Republique Francais Brevet d'Invention P.V. No. 899.414, No. 1,342,772, Oct. 7, 1963.

Priore's laboratory and device for treating small animals

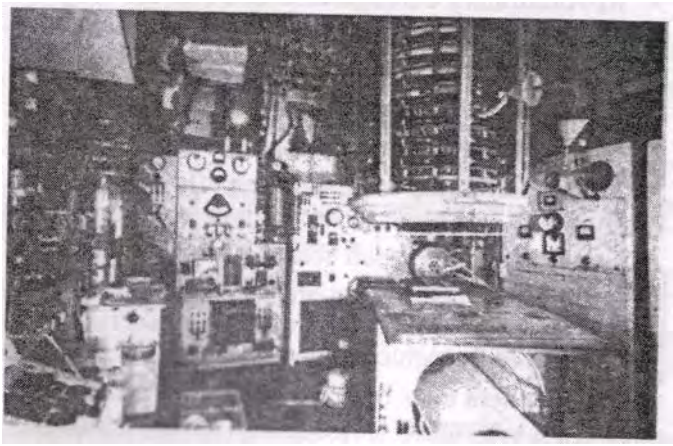

Mechanism of the Priore therapy

- Produced specifically structured scalar potential
  - Some 17 EM frequencies were mixed in a rotating plasma
  - Phase conjugates added by plasma Modulated onto a rippling magnetic field; carried it to every cell and all interior parts
  - Formed scalar potential with inner EM longitudinal pump waves
  - Hyperspatial pumping of cells/parts as pumped phase conjugate mirrors (PPCMs)
- Each disease has its "disease-specific" vacuum engine.
- Amplified anti-engine created by the LW pumping.

Mechanism of the Priore therapy

- "Inner EM" pumping with longitudinal EM waves created amplified and specific anti-engine
- Amplified anti-engine rapidly reversed (dedifferentiated) cells/parts back to normal state
  - Cells returned to control by cellular control system
  - Restored cellular control system to full former functioning
- Scrubbed out the cumulated precancerous state
- Eliminated "shadow" disease state
- Restored the immune system to previous normal functioning
- No excessive trauma to treated animal

Block diagram of Priore's healing (regenerative and time-reversing) process

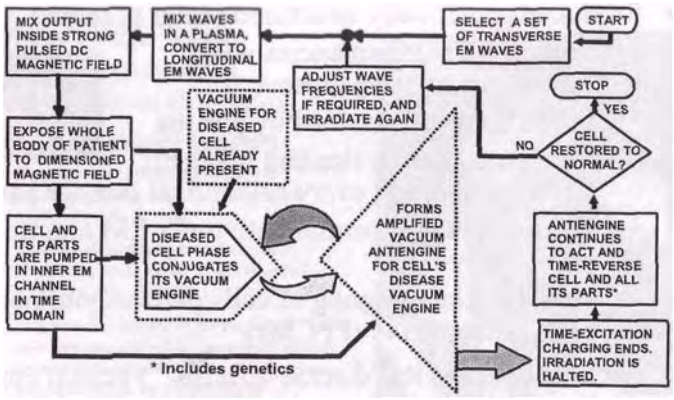

- The damaged or diseased cell has (1) normal engine and (2) delta disease engine.
- Making antiengine for both, and irradiating cell with it, time-reverses the cell and gradually erases the delta condition, healing the cell.
- This is the body's own cellular regenerative mechanism, which Priore amplified.

Pautrizel's proof of time reversal of the stricken cells back to a previous state

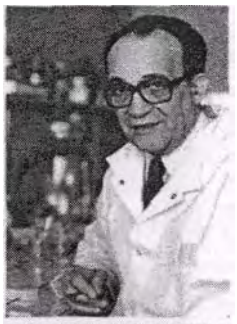
PROF. RAYMOND PAUTRIZEL
(Renowned Parasitologist)

* Pautrizel compared identical treatment of immature rats with immature immune systems, and mature rats with mature immune systems.
* Treatment restored the damaged mature system back to full mature functioning. It then recognized and dispatched the pathogens.
* Treatment restored the damaged immature system back to full immature functioning, unable to cope. The pathogens promptly reinfected and killed the immature rat.

Pautrizel's proof of time reversal of the stricken cells back to a previous state (2)

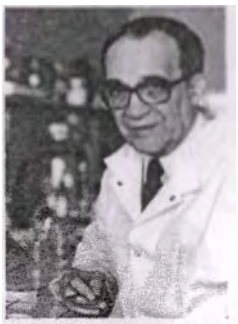

PROF. RAYMOND PAUTRIZEL
(Renowned Parasitologist)

- The lesson: The body is indeed returned to a previous physical state, or dedifferentiated back along its previous differentiation pathogenic path through time.
- Pathogens themselves not killed by the treatment, but by restoring the ability of the immune system to recognize and destroy them.
- Only the previous ability of the immune system is restored by the process, which is a method for controlled biological dedifferentiation (time reversal of the stricken cells).

3-Stories high treatment facility

Priore's large plasma tube treatment facility for humans.
Results were duplicated in human experiments,

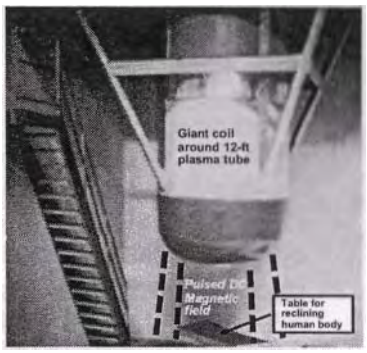

- At the end of the project, Priore had developed a large unit to treat humans.
- A few were treated.
- Cures replicated what had been done in lab animals.
- The massive size of the unit and long treatment time (hours) made the process bulky and very inconvenient — and very expensive.
- We proposed a way to do it with a suitcase-sized unit and a treatment time of two minutes.
  (See Porthole Briefing, www.cheniere.org)

17-foot Priore plasma tube

Used in large machine (3-stories high) to treat a limited number of human patients

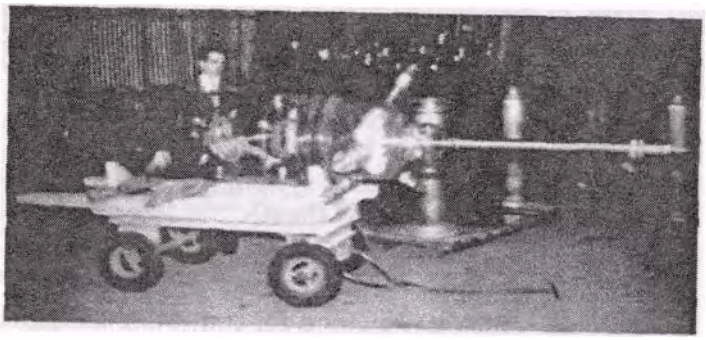

Plasma tube converts transverse EM waves to longitudinal EM waves, impressing them inside a magnetic field in a huge coil around the tube. The "engine-carrying" magnetic field then penetrates the targeted living body down to atomic nuclei.

Some peculiar results by the Priore team

- Once a rat is cured of a particular disease:
  - A single drop of blood from the cured rat, injected into another rat stricken with same disorder, would result in the injected rat getting well slowly.
  - Ability to transfer immunity and healing in the extracted drop of blood gradually decayed over period of a few weeks.
- Even the fields and potentials in the blood had been altered internally, in the treated animal.
- Injected animal's cellular regenerative system could time-domain pump over the entire body, everywhere reducing the delta between that injected drop of blood now the rat's own, and the rest of the blood in its body.
- Shows anti-engines in molecular potentials of the blood of the cured rat, and diffusion of this antiengine pattern in EM exchange with the environment as time passes.

Regeneration in a strain of rat with part of its immune system missing

- In mammals, the immune system plays a role ill reducing the regeneration capability, compared to that of more primitive systems.
- In a strain of rat where that "suppressive" part of the immune system is missing, the regenerative capability is dramatically increased.
  - Can regrow cut away sections of tail.
  - Regrows plug cut out of ear.
  - Reconnects severed optic nerve.
  - Partially restores severed spinal cord.

- The suppressive "delta" engine of the immune system, operating simultaneously with the underlying primitive regenerative engine, sums to the modern much-reduced regenerative engine in the mammal.

Implications to therapeutic healing

• •

Controlled cellular dedifferentiation and redifferentiation, and the cellular regeneration system

Bombshell: Amplified EM healing

- Amplified disease anti-engine quickly reverses disease.
- Unified field theory approach and supersystem analysis has broken the basic mechanism for healing itself.
  - The Sachs unified field theory applies and has been partially fitted.
  - Evans-Vigier O(3) electrodynamics can properly model it, including both the internal and external electrodynamics and effects of engines.
  - * Direct engineering development is now possible.

- Experimental proof of results obtainable already exists in the French hard medical literature.
- A medical revolution is in the offing. Must change from century-old mindset against EM healing, and discover higher group symmetry EM, precursor engines and anti-engines as used by living biological systems.

Potential Medical Applications

- Non-traumatic cancer treatment
  - Cure cancers and leukemias of all types
  - * Remove pre-cancerous state; prevent promotion.
  - * Restore damaged system
- Treat and cure infectious diseases
- Cure AIDS and restore immune systems
- Defense against biological warfare
  - Quickly cure virulent diseases from unknown agents
  - * Treat, cure BW victims after symptom developed
  - Both civil populace and armed forces
- Dramatically lower health costs
- Rejuvenate the aged

An observation for the future

- When the science of precursor engines is developed, physicians will be able to tailor these engine combinations to restore severed human spines, regrow severed limbs,* etc.
  - They will also be able to direct the body's "normal growth" to reduce and direct birth defects, genetic defects, mental defects, etc.
  - Aging can and will also be reversed.

*Such capability has been partially shown in lab animals by Becker and others. E.g., see R. O. Becker and Joseph A. Spadaro, "Electrical stimulation of partial limb regeneration in mammals," Bull. N.Y. Acad. Med. Second Series, 48(4), May 1972, p. 627-64.

A very important fact

- The two engineers who worked directly with Priore, and who built his successful treatment machines, are still alive.
- A well-funded research program with these engineers could reproduce working machines and again demonstrate revolutionary results achieved by Priore, Pautrizel, etc.

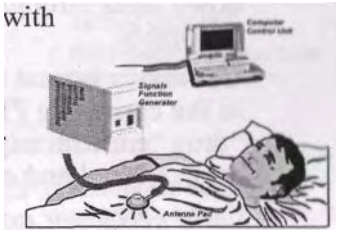

- Once the results are reproduced, this shows the machines do initiate revolutionary healing.
- The government scientific community could then have a very rapid Manhattan-type program to develop portable EM treatment machines, capable of saving millions of U.S. lives in coming terrorist BW attacks.

To treat and save mass casualties: Portable unit urgently needed (1)

- A small, portable, relatively inexpensive treatment unit, not requiring plasmas etc.
- Treatment in 2 to 5 minutes rather than 2-hours. Simple treatment application, almost anywhere.

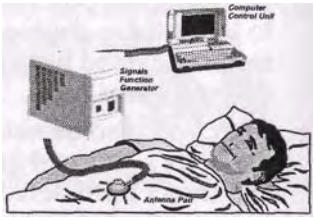

- Effective in advanced stages after symptoms emerged, as well as prior to emergence of symptoms.
- Effective against a wide array of illnesses.

- Development difficult; use is easy. High school student can be trained to use it in 30 minutes.

To treat and save mass casualties: Portable unit urgently needed (2)

- Unsuccessfully urged crash program to develop, flood down units through emergency organizations in great quantities.
- Obviously is total anathema to the entire Big Pharmaceutical "drug 'em with expensive drugs" cartel and community.

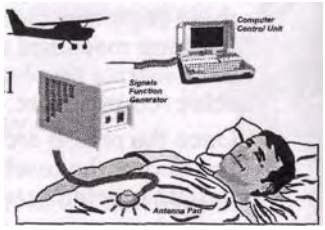

- Once precursor anti-engine treatment is out of the genie's bottle, medical science will be dramatically altered.
- Could save millions of those future Triage Category 4 (black) patients who presently would be allowed to die.

Proposal to DoD, USAF, NIH, CDC, etc. in 1998

• In 1998 we proposed that U.S. government undertake crash Manhattan-style project to develop small, portable EM precursor engine treatment units for mass casualties

- Extension of proven Priore mechanism.
- Develop in 2 years, at a cost of $40-100 million.

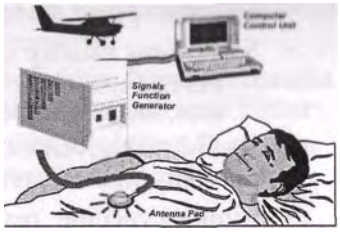

- First generation devices could save 70% of mass casualties. Second generation devices could save perhaps 90%.
- Patient treatment time 5 minutes. Produce thousands, flooded down to hospitals, fire stations, police stations, emergency crews.
- 30 min. training to learn to set controls, etc.

Portable unit for rapid, effective treatment of mass BW casualties

- Two blankets have antennas in them.
- Uses an advanced but simple concept.
- Eliminates plasma tub) mixing etc.

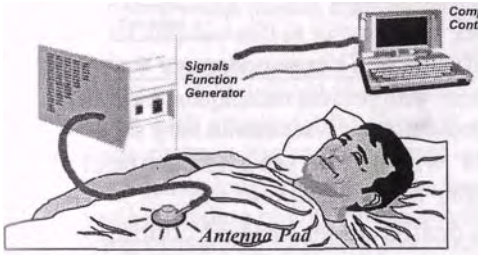

- Computer-controlled complex signal structure.
- Irradiation for 2 minutes.
- Three such treatments one week apart.
- Unit can be made self-powering on vacuum energy.

Anthrax spray attack (1)

- OTA study: Some 200 pounds released in a spray, on calm night over Washington, D.C. could result in from 1 to 3 million casualties. Three times that, if immune systems spread by QP weaponry

- Symptoms usually in 2-10 days
  - Flu-like symptoms; then 1-3 days later, shock and breathing problems cause death in up to 100%
- Antibiotics given early (before symptoms) can prevent infected persons from becoming ill

- Limited vaccine, reserved for military
- Portable bioenergetics treatment device could save 70% or more after symptoms already evidenced

* Multiply this number by at least threefold if immune systems are spread by QP.

Anthrax spray attack (2)

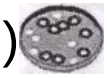

- Highly lethal when spores inhaled.
- No present effective treatment at all unless treatment begun immediately.
- After symptoms appear, little or no chance to survive regardless of present treatment or not.

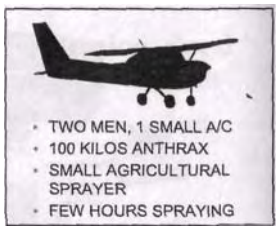

- Most casualties will fall in Triage category 4 (black).
  - Useless to treat them with present techniques: likely die.
  - Must conserve medicines and vaccines in very short supply.
- Category 4 patients will just be set aside without treatment, and simply allowed to die.
- Millions of certain deaths under present conditions.
- NIH and other institutions totally uninterested.

Smallpox: highly contagious, no known cure, little vaccine

- Killed more than 500 million people in 20th century before eradicated in 1977; vaccinations ceased in 1980. (*A few million doses of vaccine left.)
- Russians kept pathogen, developed new and virulent strains, sold to terrorists.
- Symptoms appear in about 12 days: fever, headache, nausea. Rash similar to chickenpox appears, turns into hard blisters.
- Highly contagious, kills one-third of its victims. If immune systems spread, will spread easier and faster and kill two-thirds of its victims.
- If smallpox unleashed in any major city on earth, will eventually kill 2 billion persons, or about 1/3 of the human species — unless radical new cure is found and utilized.
- Could be contained by portable bioenergetics.

Urgent U.S. need for portable bioenergetics treatment machine*

- Five nations have developed quantum potential weapons using Bohm's hidden variable theory of quantum mechanics.
- Can induce disease engines in matter or bodies at a distance.
- Have developed "spreading" of immune systems in a targeted populace (cleverly tested in Gulf War against U.S. troops)
  - Cocktail mix of disease engines for 2 dozen different diseases.
  - Targeted area's human immune systems react to these engines when they are still in virtual state, just below quantum threshold.
  - Spread immune system's resources "thinned" across response to two dozen shadow diseases at once.

- Then hit with a terrorist BW attack; spread immune systems are overwhelmed easily and quickly.
  - Yield (casualties) of the attack is increased by factor of 3-5.
  - Some spreading of U.S. immune systems accomplished and is being maintained for reimplementation.

---

* Considering secret involvement of clandestine superweapons

Additional advantages

- Can be developed in a crash program in 2-3 years.
- After sunk costs, projected cost per unit in mass production is less than $150,000.
- Can be produced by the thousands.
- Large numbers of emergency operators easily produced.
- Emergency training could be by watching a 30 minute film, then performing one supervised group practice run.
- First generation equipment can save some 70% of the coming mass casualties from anthrax etc.
- Basis proven in France in thousands of lab animal experiments, documented in scientific literature.

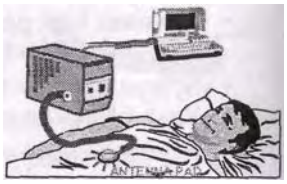

Outcome of 1998 proposal

- No one had any notion what we were talking about, nor did they care one whit.
  - At NIH, we never got out of the "policy" section.
  - Seeing Gulf War Syndrome, NIH shipped package to DoD.
  - Uninterested in a scientifically proven method for revolutionary cure of cancer and infectious diseases.
- Apparently no one checked a single French scientific reference. Not a single scientist called to discuss the mechanisms, quality of the proofs, French literature, etc. Absolutely no interest whatsoever.
- But exercises and studies show we are in horrible shape as far as effectively treating mass casualties.
- We are actually much worse off than the studies show, due to QP augmentation by immune system spreading, EM BW, and carrier robots.

Weapons applications (already developed or in development)

- EM engines for any disease or disability
- Delivered by normal EM signals, QP weapons, robots, carrier robots.
- Attack entire populace or any fraction desired.
  - Induce diseases desired.
- "Spread" targeted immune systems so BW attacks by international terrorists have extraordinary success.
- Render vaccines etc. ineffective.
- Cripple or destroy a populace slowly or with great speed, as desired.

Shadow disease state and immune system reaction

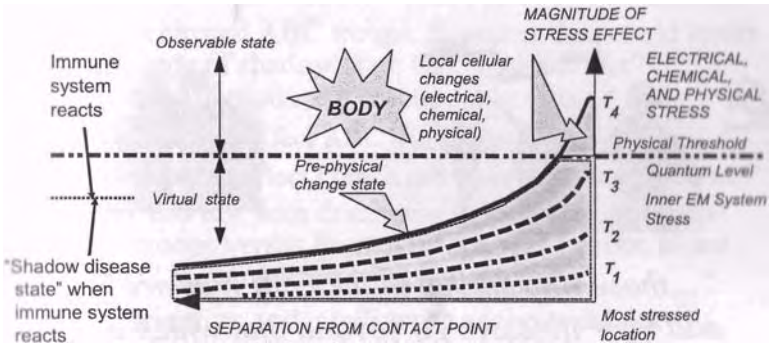

- The shadow disease state is that structured virtual state level of the promoting disease engine template, at which the immune system reacts before disease is observable.
- Eventually one will have a yearly exam, and then a quick treatment to remove all shadow state conditions prior to actual disease development. Will include aging rehabilitation.

Spreading (thinning) the immune system's ability to meet a new pathogen

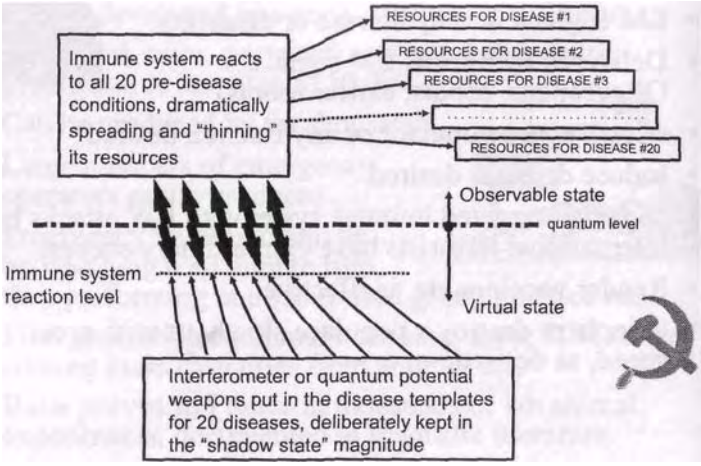

Gulf War Disease: Finding and statement*

" ...those who served in the Gulf War are ill and their illnesses go beyond that which is explained by stress or psychiatric diagnosis. "

---

* Research Advisory Committee on Gulf War Veterans Illnesses, 2002

Gulf War Disease (1)

- KGB test of closely controlled immune system spreading by QP weapon with "cocktail mix" in shadow state.

  - Americans, British, Canadian (ABC) troops were given harsh mix of inoculations; French troops (and native populace) were not.
  - ABC immune systems were temporarily depressed for some months by the inoculations, but not French (or native populace) immune systems.
- Shadow state effects in innoculation-lowered ABC troop immune systems much more pronounced than in French and natives.

Gulf War Disease (2)

- For vaccinated ABC troops, Russians thus could lower magnitude of shadow state QP "cocktail mix" necessary to produce a reactionable effect.*

  - Would still affect ABC troops' immune systems
  - * Would not affect French and native immune systems.
- Using this test with dramatically different effects in ABC troops versus French troops was a probe to see if the U.S. recognized what had happened.
- U.S. scientists and intelligence analysts did not recognize it at all, and still do not understand it.

---

* The reader is reminded that charged particles negentropically order and integrate coherent virtual state energy patterns (precursor engines) to observable state EM force-field energy patterns (engines).

Gulf War Disease (3)

- Lowered ABC immune systems still form a statistical distribution.
  - KGB further lowered magnitude of shadow state cocktail mix, so only a percentage of ABC immune systems would be permanently affected.
  - With 45 years (9 generations of weaponization) experience in disease induction, this was simple for Russian bioenergetics scientists.

* A percentage of ABC troops' immune systems were spread and disabled; no effect on French and natives.

- Opportunistic diseases such as mycoplasma did the rest.

* Veterans who became ill because of their spread immune systems developed "cocktails" of diseases.

Gulf War Disease (4)

- Gulf War Disease thus is a cocktail mix of real opportunistic diseases; several such as mycoplasma being prominent.

* French troops and natives were essentially unaffected.

- A deliberate probe, so Russians could see if U.S. understood QP weapons and immune system spreading. They didn't and they don't. NIH doesn't want to hear it.

  See our expose on exchange of EM radiation between environment and deep interior of human bodies.

- QP exposure charged the veterans' bodies with the cocktail mix engines. Exchange of body fluids, or prolonged exposure to body emanations, could induce symptoms and diseases in some wives and children.

Indications of testing immune system spreading

- Subsequently, immune system spreading was tested in entire U.S. very carefully and at low level.
  - Various diseases such as necrotizing fasciitis used.
  - Signature is an absence of disease vector "path" record, but simultaneous statistical distribution of cases appearing throughout entire U.S.
  - Again, a probe to see if NIH and the U.S. had their heads out of the sand. They didn't, and they don't.
  - Some diseases such as mad cow disease in Canada and Europe almost certainly have KGB "steering" and "augmentation" effects. Avian flu or something similar could be the next test.

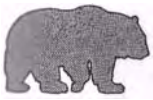

Conclusions

- Over several decades a strange strategic set of "combination" BW attacks developed and prepared.
  - BW strikes on the U.S. by any group, will likely be augmented by FSB/KGB using QP spreading of U.S. immune systems.
  - Can gradually raise the damage with other diseases such as mad cow disease, SARS, avian influenza, mycoplasma pneumonia, etc. Or, e.g., with normal flu, for epidemic.
  - Adaptable for rapid massive destruction or gradually escalating destruction. Destroys the U.S. either way.
- Combinations provide an "over-the-threshold" capability to insure full strategic destruction of the U.S.
- NIH and U.S. government unaware.

(SLIDE BRIEFING CONTINUED)

PART F: Psychoenergetics and Its Weaponization

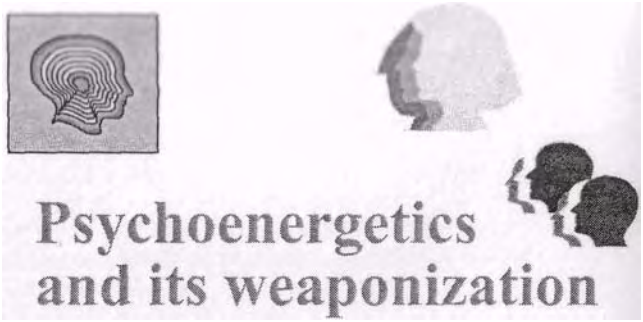

Use of infolded precursor EM engines against mind and mind operations

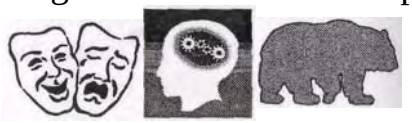

Section contents

- Intelligence statement.
- Basic psychoenergetics.
- Model of living system.
- Mind levels and mind/body coupling.
- LIDA machine and tests.
- Personality mechanism.
- Model of life and death.
- Biogenesis.
- Captains Button, Svoboda, and Hess.
- Present mind control and new psychoenergetics.

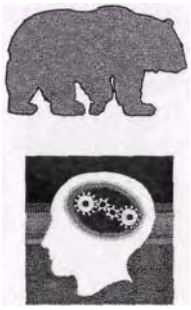

U.S. Intelligence statement on Soviet Psi research*

- Sooner or later, Soviets may be able to:
  - Know contents of documents
  - Know troop and ship movements
  - Know installation locations and nature
  - Mold thoughts at a distance
  - Disable equipment at a distance
  - Kill persons at a distance
- Comment: These capabilities and more exist now
- Soviet psychoenergetics is a. physics, not Western parapsychology as commonly believed

---

* Controlled Offensive Behavior - USSR (U).
DIA Report ST-CS-01-169-72, July 1972.

A statement necessary for Western culture and scientists

- When God created life and living systems, He also created the process for making life and a living biological system.
- The process is still there and it exists as a process in and of this 4-spatial world.
- Once the process is discovered and modeled, technology can be developed to apply the process at will.
- So scientists can scientifically study the process and develop the technology to use it.
- Can make a living mind and living biological system, and tailor it to form and whatever behavior is desired.
- That superweapon science is called psychoenergetics.

A major Western problem (1):

Deep cultural bias against engineering the creation of life as a special electrodynamics

- Debate endlessly, deride experiments, etc.
- No definitions for intelligence, consciousness, life, living system.
- Do not understand mind dynamics as special EM dynamics on the time axis, using time-polarized photons and EM waves from quantum field theory.
- Have many viewpoints of living mind/body system; most favor materialism's "meat computer" notion.
- Very fuzzy on unconscious vs. conscious, and interrelation of the two.
- Do not understand "unconscious" mind is multiply conscious. A half century behind FSB/KGB psychoenergetics scientists.

A major Western problem (2):

Deep cultural bias against engineering the creation of life as a special electrodynamics

- Notions rather 3-spatial and mechanical. No notion of:
  - Mind operations as electrodynamics on the time axis (time-polarized photons)
  - "Engines" and "precursor engines" concepts.
- No apparent use of higher group symmetry electrodynamics in biology; but just standard EM.
- Some good experiments and projects nonetheless. Aleksandr has proposed five axioms of consciousness, which is at least a decent beginning.
- Sometimes must state to Western scientists: "When God created life, He created the process for creating it. That process exists and can be utilized. "

Choice of fundamental units is arbitrary (1)

* The choice of fundamental units in one's physics model is completely arbitrary.*

* A viable physics model can be made using only a single fundamental unit, and it has been done.
* E. g., choose the joule (energy) as the only fundamental unit.
* All other "fundamental units" are functions of energy alone.
* Time itself, e.g., becomes a pure function of energy.
* Hence can speak of "extracting energy from time".

*E.g., see discussions by Jackson in his Classical Electrodynamics. 2nd and 3rd editions

Choice of fundamental units is arbitrary (2)

• In a model using the joule as the only fundamental variable, time itself becomes a function of energy.

- One function of energy can be changed into another. Energy can neither be created nor destroyed, but only changed in form.
- Time can be changed into energy and vice versa. And so on. Space (L^3) also is purely a function of energy, and energy can be extracted from it.
- Time has correlates to any energy entity, such as mass-energy, momentum, "body", field, photon, etc.
- Since EM energy occurs in flows which can be engineered, everything becomes engineerable.

Forefront Western view

* Igor Aleksander, emeritus professor, senior investigator in neural systems at Imperial College, London:

* "When it comes to consciousness nobody really understands what they are talking about. "
* Some researchers advocate consciousness is an illusion.
* Strident dispute occurs over what is precisely meant by "machine intelligence". Can machines develop intelligence, or are they clever programs that only "mimic"?
* Others insist humans are only clever machines; brain is a "meat computer" with the mind itself just an illusion.*

---

* Aleksander predicts that in the future machines will themselves at least claim to be conscious. In his view, the machines are already beginning to "awaken". Some others in the forefront of mind and consciousness research share his view

Basic psychoenergetics

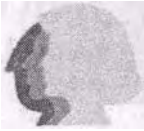

- Mind: "Sophisticated EM engine" in the time domain.*
- Mind operations on time-axis have coherent virtual-state projections into 3-space body (brain). Charges integrate.
- Integration of coherent virtual 3-space changes, correlated to mind's intent, forms coherent, real 3-space EM inputs to brain and nervous system.
- Movements of body elements give reverse rotational projections from 3-space to mind.
  - Coherently integrated to perceivable state to give feedback and "personal identity".
  - * Engineerable with higher group symmetry EM.

---

* There are four photons in quantum field theory: Two transverse, one longitudinal, and one time-polarized. So there do exist photons (and therefore electromagnetics) active on the time domain. Combined longitudinal and time-polarized photons observed as a spike of scalar potential (i.e., as a voltage spike).

New view of a living biological system (i)

- The mind and its operations is an engine in time domain.
- The body and its force functions is an engine in 3-space.
- The mind-body linkage mechanism is an engine in pliant mass with rotations in 4-space. Thus the "triad system".
  - All three engines can be engineered at will with higher group symmetry electrodynamics. Each has its precursor.
- The engines can be individually made, recorded, stored, joined, activated, etc. to form real living biosystems.
- Living robots can be formed (including at a distance) by insertion of triad precursor systems in pliant matter (electron gas, plasma, Whittaker interior of EM signals).

New view of a living biological system (2)

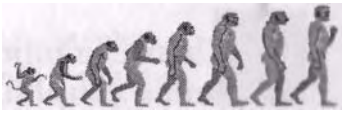

- The "life-forming process" given by the Creator is still present and available!
- Any type of living system is engineerable.
- One can make a toaster, a napkin — any bit of mass — alive. Some specialists already feel that "machines are awakening".*
- Energetics scientists have made living nonmaterial robots that can reside in any bit of matter and adapt its charges to perform the functions of its "body".

---

* For a thought-provoking article, see Igor Aleksander, "I, computer," NewScientist. 19 July, 2003, p. 40-43.

Delay between mind-body and body-mind coupling mechanisms (1)

- A mind change (dynamic) on the time-axis creates a virtual projection component in 3-space (in the associated body).
  - * "Intent" involves coherent "continued" mind changes, producing continual coherent virtual projection components in the 3-space body.
  - Coherent serial summation (integration)* in the body produces delayed observable photon changes in the 3-space body, correlated to mental intent.
- Hence the coherent mind intent produces observable but slightly delayed body changes in nervous system.

---

* The coherent summation process is provided by charges q absorbing virtual changes, coherently integrating them to quantum level, and re-emitting observable photons. Hence psychoenergetics cannot be understood without the solution to the source charge problem, accomplished by the present author in 1999 and published in 2000 and subsequently.

Delay between mind-body and body-mind coupling mechanisms (2)

- A body-change in 3-space creates a virtual projection component on the time-axis, in the associated mind.
  - * Coherent body changes produce coherent "virtual state" projection components on the time-axis, in the mind.
  - * Coherent serial summation (integration) produces perceivable, delayed (time-polarized photon) changes in the mind, correlated to body responses.
  - * Hence the coherent body responses produce perceivable but slightly delayed mind changes.
- The total mind-to-body-to-mind delay/feedback loop creates the "sense of self" and sense of "my body".

Velocity of an object involves rotation out of 3-space toward the rime dimension

* Necessary in order to understand the mind-body coupling mechanism.
* Body dynamics initiate on the L axis; mind dynamics initiate on axis T.

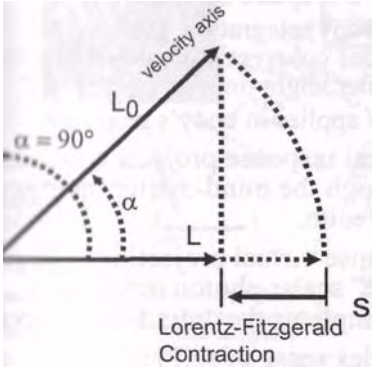

- An object moving with velocity v < c along axis L has rotated from 3-space axis L toward the time dimension t by a small angle a.
- The object's "projection" back into 3-space, on axis L, is shorter, providing the Lorentz-Fitzgerald contraction.
- When velocity v = c, a full right-angle turn has been made, and the object has "lost" its projection along its direction of motion (axis L).
- Hence to the external observer it appears as a transverse 2-dimensional plane moving along L at the speed of light; in short, a photon or a light wave.

"Velocity" of a temporal change involves rotation, out of the time axis into 3-space

- Necessary in order to understand the mind-body coupling mechanism.
- Mind dynamics initiate on the t axis; body dynamics initiate on axis L.

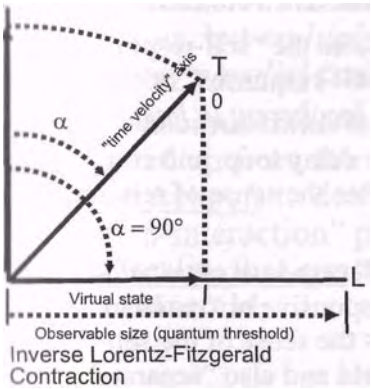

- Temporal photon's "velocity" (analogous to v < c) along axis T has rotated slightly away from time axis T toward 3-space axis L by small angle.
- Projection of the rotation, back into 3-space, on axis L, appears in the virtual state on axis L. Call this the inverse Lorentz-Fitzgerald contraction.
- When temporal velocity is analogous to v = c, a full right-angle rotation has been made, and the object has "lost" its projection along its temporal direction of motion (axis T).
- Integration on axis L of coherent serial changes of such temporal "mind" rotations produces real, observable photons on L, that are direct analogies of "mental intent".

How personality, awareness, and sense of being in the world are established (1)

- Time-EM mental intent projects virtual EM changes into the mind-matter interface's 3-space body side.
  - Via charge negative entropy integration, continued coherent intent projections coherently integrate into observable EM input, after slight time delay.
  - Servomechanism theory applies in body's response.
- As body responds, physical response projects coherent virtual changes back through the mind-matter interface and into mind (the time) realm.
- Continued coherent response virtual projections integrate into "mentally observable" scalar photon input, after slight time delay. This completes the "mind-body" loop.
- Time delay in loop provides sense of self and conscious awareness of the body and of the physical world.

How personality, awareness, and sense of being in the world are established (2)

- Meanwhile, other physical universe change projections arrive in time domain which don't coherently integrate.

* Coherence to intent separates the "self-responses" of the body, from the "non-self-responses" of the external physical world which are incoherent to intent.
* The delay in the complete delay loop, and comparison of response to intent, creates the sense of self and living ("my" body, "my" mind).
* Comparison to the "self s" response physical world (the body) and the non-responsive or "external" physical world perceptions, creates the sense of the self being both "in" the physical world and also "separate" from it.

Mind-body coupling mechanism at work

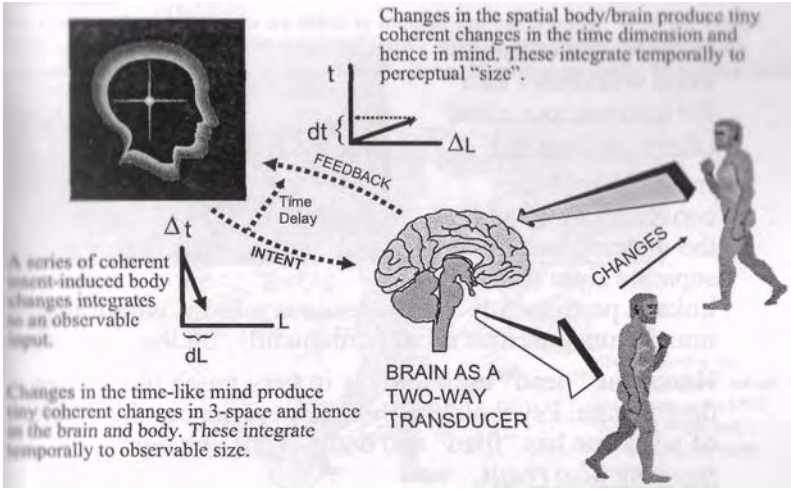

Mind levels and life and death (1)

- The conscious mind is a serial processor.
- The unconscious mind is totally conscious, but multiply so. It is a massively parallel processor.
- The conscious mind is a "periscope" projected up from the unconscious (up periscope!) to deal with the "photon-interaction" perceived serial reality that constitutes the physical world.

Mind levels and life and death (2)

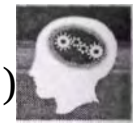

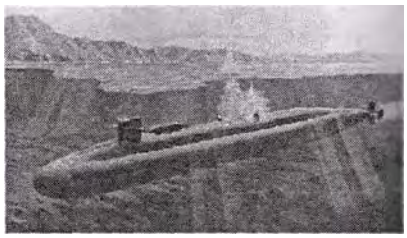

- In sleep, the conscious mind withdraws into the unconscious mind (down periscope!).
- In death, both the conscious mind and the unconscious mind separate from the body linkage permanently. The conscious mind is withdrawn into the unconscious mind permanently, on the time axis.
- Hence the "dead" individual is in very much like a deep dream state. Psychologically, one experiences the result of what one has "filed" and done. What one has sown, now one also reaps.

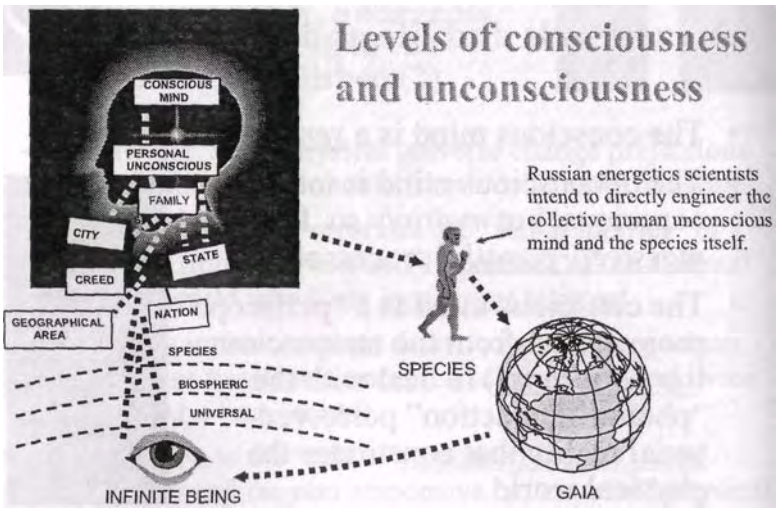

Mind levels are subject to engineering, attack, control, change, and destruction by higher group symmetry electromagnetic (psychoenergetic) technology.

A living biological system (psychoenergetics view)

The body's cells and their parts are linked by a mutual quantum potential. Mind and thought (from a mindworld) occupy the internal SW biwave structure of the QP to that body, being continually disconnected and reconnected by the photon interaction generatrix for the flow of time.

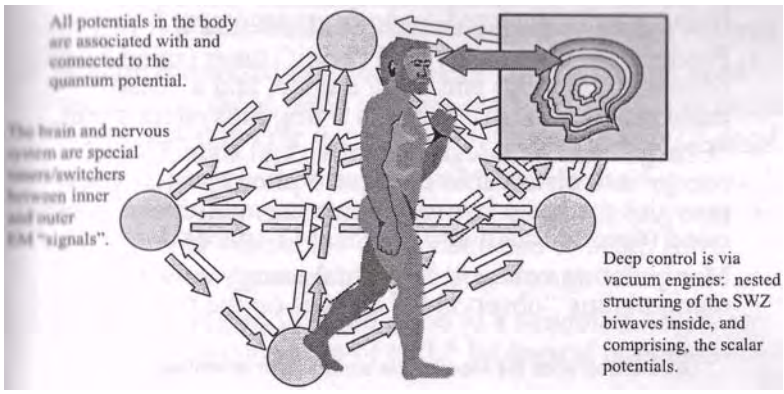

Mind levels and life and death (3)

- Each "dead" mind still exists in its unconscious, which further exists in the collective human species unconscious on various levels — all in time domain.
- Death and life are therefore directly connectable (both exist in the same time)
- Dead (disconnected) minds can be engineered (in the time domain) as well as living minds connected to functional physical matter "bodies".
  - A mind-engine on the time domain, without a connected body-engine in 3-space, is what the "death state" is. However, the conscious mind portion is withdrawn into the unconscious portion.
  - The collective human species unconscious can in theory be "engineered", as can the biospheric collective unconscious for all species, etc.

Mind levels and life and death (4)

- Present biogenesis experiments occur in a nonliving disconnected mindworld environment as well as in a living mind-connected-to-body environment. *
- Produce the proper physical "body" tuner (mind-body coherent coupling) and body engine, and a "dead" mind reconnects, producing a living biosystem again.
- "Charge" and its integration of virtual state 3-space energy into observable correlated photons in 3-space provides the basic two-way intercommunication between mind (time) domain and physical (3-space) domain.
- Manipulating coherent L^3 virtual energy entities is manipulating "observable" entities on the time-axis.

* I.e., it follows since the experiments occur in time as well as space.

Life and death: Energetics perspective (1)

* A mind engine, coupled to a mind-body link engine and a body engine functioning in matter, is a living organism.

* Mind (time-engine) in collective species unconscious but separated from a functioning mind-body link and body engine in matter, is L^3-dead (separated from body) but still electrodynamically active in the time domain.
  - Still "living" (existing and functioning) in the time-domain, it exists in the time domain as time-polarized EM dynamics.
  - The "dead" or bodiless functioning mind can be recoupled to a body-engine, by a suitable mind-body coupling engine.

* Thus one can directly engineer a living biological entity, including building its mind-engine, its body-engine, and its mind-body coupling engine.

Life and death: Energetics perspective (2)

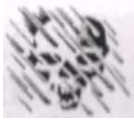

* All mind engines from every living system ever in the universe, pervade all spacetime since potentials do and did so and they reside in the 4-potentials. Inner structuring of EM is a vast world having so-called "Akashic records."

* We are immersed in a completely "living though dead" universe as far as mind engines are concerned. The entire physical 4-universe is L^4 -alive but much is also L^3-dead.

* Mind engines can be engineered and constructed, as well as spatial body engines and mind-body coupling engines. They can be connected or reconnected to again form living beings (special biological systems).

* Reconnecting an L^3-dead mind to a suitable L^3 body is physical reincarnation of an L^4 biological organism.

Selected psychoenergetics tests

- LIDA machine
- Lisitsyn decomposition
- Captain Button
  * Points demonstrated
  * Captain Svoboda
  * Points demonstrated
  * Captain Hess
  * Points demonstrated

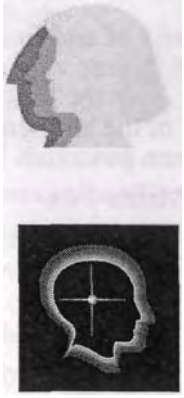

Russian LIDA Machine*

* U.S. Patent #3,773,049.
* For treatment of neuropsychic and somatic disorders, such as neuroses, psychoses, insomnia, hypertension, stammering, bronchial asthma, and asthenic and reactive disturbances.
* Pulsed RF field, pulsed light, and pulsed heat.
* Positive therapeutic results in 80% of patients.
* Early psychoenergetics device, quickly superceded, hence released for medical use.

---

* W. Ross Adey, "Biological effects of low energy electromagnetic fields," Proc. NATO Adv. Study Inst. on Advances in Biological Effects and Dosimetrv of Low Energy Electromagnetic Fields. Plenum Press, New York, 1983. Study shows West knew and knows only ordinary electrodynamics and EM, and has no knowledge of real psychoenergetics. Not even aware that EM force fields do not appear in massfree spacetime, but only curvatures of spacetime appear there. Unaware that mass is a component of force, by $F \equiv \partial/\partial t(mv)$.

Typical Miller-Fox-Urey biogenesis experimental apparatus (1)

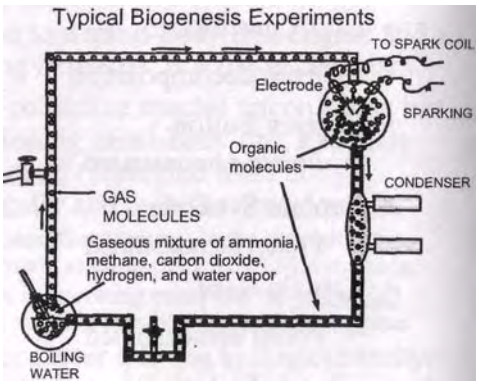

- Engines of and from all life forms ever on earth or in the universe exist in the ambient vacuum potential.
- The Miller-Fox-Urey experiments were not in a "sterile" environment.
- Heat (IR) and UV constitute (1) a harmonic interval with a difference frequency, and (2) amplifying by the process previously shown.

Typical Miller-Fox-Urey biogenesis experimental apparatus (2)

- These experiments "kindled" previously living forms from the available gases etc. by amplifying the ancient living engines from their virtual state to the observable state, so the masses were molded into the physical states of their templates.

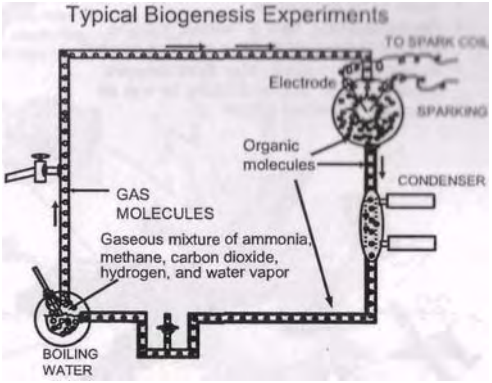

* KGB psychoenergetics weapons scientists understand this.

Three spectacular FSB/KGB psychoenergetics tests in U.S.

- Captain Button's bizarre flight to his death on 2 April 1997.
- Demonstrated control by switched persona.
  - Target individual performing technical tasks.
  - Captain Svoboda's "death dive" on 27 May 1997.
  - Demonstrated switching a fractional conversion.
- Simply switched Svoboda's sense of up and down.
- Svoboda reacted with new fraction, diving to her death.
- Captain Hess's strange suicide on 4 March 1998.
- Demonstrated ability to function coolly in spite of autonomic nervous reflexes until body is nonfunctional.
- Example of complete conversion,

Captain Button's bizarre flight to his death on 2 April 1997

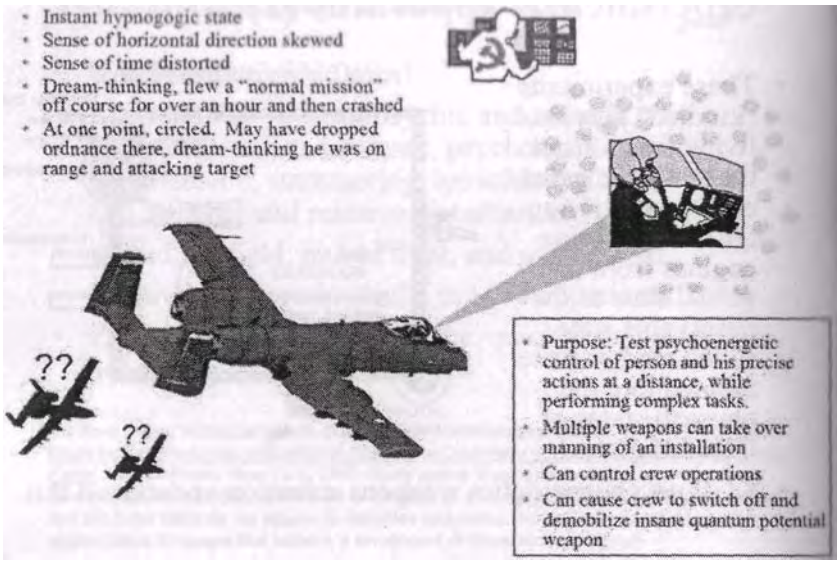

Captain Button's flyaway path to his eventual fatal crash

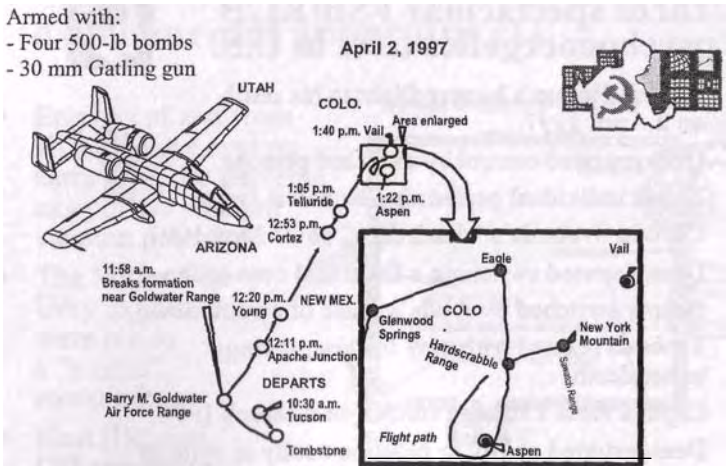

Many distinctive Russian tests have occurred in the month of April over the years, in preparation for the annual May Day report to the die-hard communist faction of the KGB.

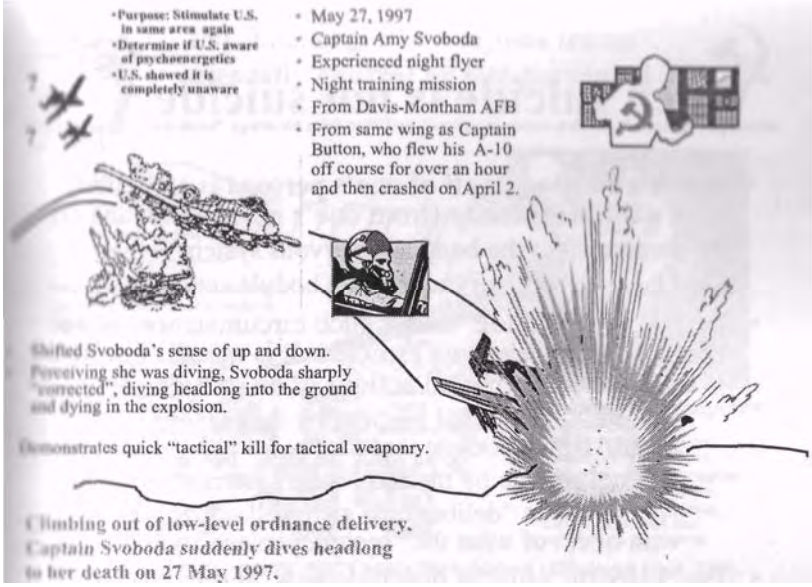

Captain Hess's death: conversion including autonomic nervous system

- Capt. Gordon Hess, NY Army National Guard.
- Early morning jog, Mar. 4, 1998, Ft. Knox, KY.
- Veered aside, sat down, and stabbed himself 26 times with relatively small Leatherneck utility knife.
  - * Penetrated left heart ventricle twice; each a disabling blow.
  - • Penetrated lung with hemorrhaging 4 times (disabling).
  - • Penetrated liver once.
  - * Four L-shaped wounds (calmly twisted the knife).
  - • Demonstrates deep control of autonomic nervous system; calmly ignored pain, hemorrhaging, etc. altogether.
  - • Officially declared a "suicide". Impossible.
  - • Probably an acceptance test of Russian psychoenergetics weapon improvement from 1997 (Button and Svoboda).
  - • Suspended autonomic system reflexes in the conversion.

When suicide is not suicide

- When a fraction or all of one's persona is switched, then a different entity (from one's normal persona) is
  - In control of the body and nervous system
  - Ordering and carrying out the body's actions.
- Intentional "suicide" under such circumstances is not normal "single persona" suicide. It is murder because it is by direct intent and actions of an outside party.
  - It is still "intentional suicide" by the persona in control of the body at that time.
  - It is not suicide by the individual's normal persona.
  - Analogous to "deliberately switched schizophrenia", with intent of what the "second persona" will do.
- Psychiatrists, clinical psychologists, and law enforcement officers cannot properly assess it.

Present mind control capabilities

- Conversion or control mind directly.
- Complete control over mind and body, including autonomic nervous system.
- Consider controlled actions desired for a given purpose:
  - Each requires a persona, characteristics, emotions etc.
  - In short, one "conditioned" personality (engine).
  - Can have multiple such conditioned personality engines available, each for different purpose, task, and mission.
  - Switch personality engines in controlled person at will.
- Carrier robots can transport multiple engines, including energetic, bioenergetic, psychoenergetic. Can "infect" multiple targeted persons or persons of opportunity.
- Converted person is a multiple purpose weapon system.

Psychoenergetics weapons teams mentally control all site personnel

Counters all sane mad* systems and nullifies human component of all weapon systems

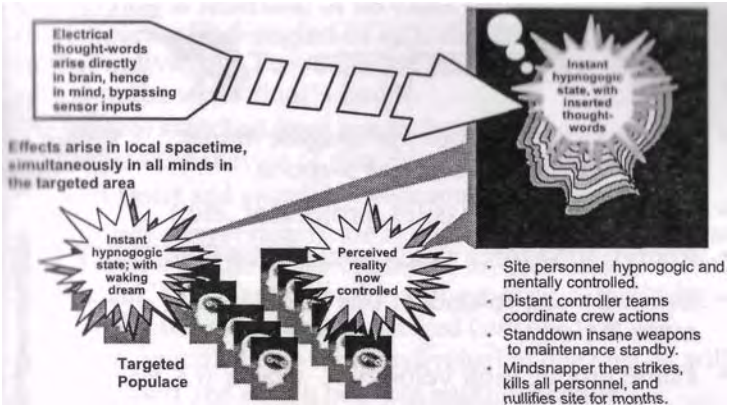

Indicators: Two A-10 incidents 1997, Captain Hess incident, LIDA device since 1950s.

* MAD = Mutual Assured Destruction.

Psychoenergetics weapons teams switch sleeper conversions in all crewmen

Counters all sane mad* systems and nullifies human component of all weapon systems

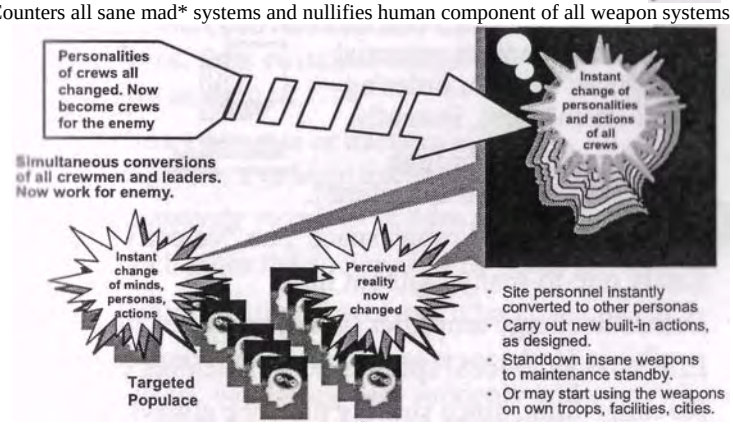

Indicators: Captain Button and Captain Hess incidents.

Propagation of Weapon Effects (1)

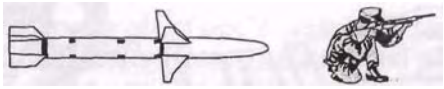

- Conventional weapons propagate matter or energy or both through 3-space.
- Matter (bombs, missiles, projectiles, etc.).
- Energy (EM force fields, sonic force fields, etc.)
- Basically one-to-one, or one "bus" to many-on-any.
- Finite propagation velocity v: where $0 < v < c$.
- Time delay: Shielding and pre-strike retaliation possible.

Propagation of Weapon Effects (2)

- Structured quantum potential propagates vacuum ordering (vacuum engines), instantly.
- Zero time delay (through multiply-connected spacetime).

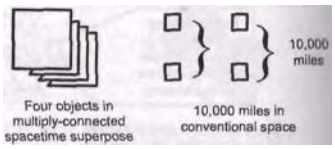

- No propagation "through space", no "velocity" as such.
- Easily one-to-many, without limit.
- Dramatic energy amplifier (gates, amplifies flux ordering).
- Effects arise in local spacetime; no shielding possible.
- No range limit, since striking distance always zero.
- QP weapons obsolete all other weapons.

Conversion and fractional conversion (1)

* Conversion is insertion of an extra variant of complete mind-engine of an individual, in that individual. Two separate personalities reside in the individual's body.
  - Control switched from one to the other at will.
  - Alters the behavior of that individual at will.
  - Can insert and switch between multiple variants.

  * Fractional conversion is the insertion of an extra variant of a fraction of the mind-engine of an individual, in that individual. The fraction is for a given area of behavior.
  - The fractions can be interchanged (switched) at will.
  - Alters specific behavior of individual in one area, at will.
  - Can insert and switch between multiple fractions.
- Can insert and switch between more than two.

Conversion, and fractional conversion (2)

* Can pre-insert conversions and fractional conversions, then switch at will, or as frequently as desired.
  - Can insert personas or fractions in an entire populace or large fraction.
  - Can massively switch all of them at once.

  * Instantly changes the society and its behavior.
- With all coordination destroyed, utter chaos reigns.

  • Massive conversions can cause a society to rapidly destroy itself, beginning very suddenly and everywhere in the society.

Sleeper conversions

* Conversions or fractional conversions that are inserted, but not switched and activated for a lengthy period, are called "sleepers".
* A few leaders, a fraction of the society, or all the individuals of a society can have sleepers inserted, ready for switching.
* Multiple personas or fractions can be in each individual, waiting for switching conversion.
* Tailored switching then allows "tailoring" of both the societal responses and the momentum of the converted society's changes and actions.

The new psychoenergetics

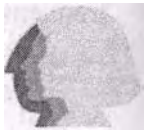

* Coupled with QP weapons using engines against mind and mind dynamics.
* Coupled with carrier robots each transporting hundreds of mind-control engine subrobots for unleashing.
* Now becomes a separate, great strategic threat more ominous than an all-out nuclear strike.
* Can be cleverly done so unsuspecting nation(s) never really know(s) what happened, till too late.
* Western science, military, and governments are unaware, unprepared, and nearly defenseless.

(SLIDE BRIEFING CONTINUED)

PART G: CONVERSION

Conversion: Mind, behavior, and personality control as primary target

Unified energetics capabilities, including robots and engines

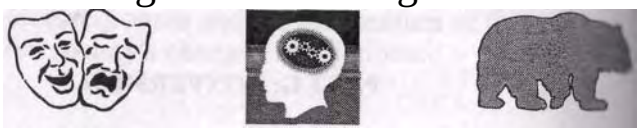

Section contents

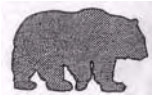

- Russian National Style
- Strategic attack plan(s)
- Tests and stimuli expected
- Advance indicators
- Defense and counters
- Conclusions
- Recommendations

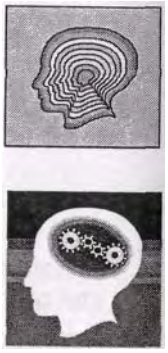

National style (Russian): Chessplayer approach

* Develop each weapon type (move) secretly.
* Always have elaborate deception plan,
* Multiple specific "stimuli" probes tested in advance of planned actual attack.
* Ascertains opponent unaware of "technique" and coming attack(s).

* Attacks lulled opponent unless countered.
* Continues rapid revision and improvement.
* When countered once, returns with improved techniques, new probing, and new attack(s).
* Never quits; always maneuvering to attack and win.

On elements of the strategic KGB attack plan (1)

* Only outline of probable type plan(s) seen:
* Attack to be strategic, massive (incredibly so).

* Number of robots/engines may be 100-200 million.
* Includes positive nullification of Israel, and of any U.S. retaliatory capability, in first ten minutes.
* May include nullification of Brazil and China also.
* Includes nullification of entire strategic strike capability of the United States — practical by the robots and QP weapons — in that 10 minutes.

On elements of the strategic KGB attack plan (2)

- Massive mind control conversions nullify both personnel, facilities, weapons, command and control, support facilities, populace.
  - Wholesale disruption and nullification of government officials, congress, military commands.
  - Total anarchy quickly.
- Defeat prepared in insertion/preparation phase.
- Insertion phase has been largely successful; U.S. to be defeated in operations phase just begun.

Expected tests and stimuli (1)

- Next generation engines and robots.
- Great new development beyond Captains Button, Svoboda, and Hess.
- Probing should be ongoing now, using conversions at selected levels.
  - One or two (few) high government officials or personnel surrounding or subordinates.
  - One or two personnel in critical facilities (e.g., nuclear).
  - One or two personnel in extremely sensitive intelligence agencies.

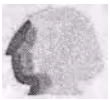

- Show multiple personas switching as probe to see if U.S. understands.
- Armada and extreme strategic attack planned for about a year later, after the exposures.

Expected tests and stimuli (2)

- Some tests should be bizarre.
  - Person performs some bizarre act or action, totally noncharacteristic.
    - Personas deliberately switched.
    - Psychiatrists treat it as "psychiatric problem".

  - Overwatch (via robots) assures that system does not understand, with 100% certainty.

- Tests should include such acts as:
  - Compromising national security.
  - Committing espionage but so it is easily detected.
  - Physical involvement such as with nuclear materials, biological warfare agents, drugs, etc.

Advance indicators expected (1)

- Signature indicators in major command and control facilities, sensitive agencies, critical weapons such as ICBMs and nuclear subs, strange symptoms in computers etc. Tests in Congress, Executive Branch, perhaps in judicial branch, and in JCS.
- Several high officials converted — at least two.
- Series of a few increasingly bizarre conversions.
- Perhaps a Supreme Court Justice or the Vice President, etc.

- Several high military officers converted.
- Conversions (few) in news media and public, slowly increasing.

Advance indicators expected (2)

* After some of the bizarre conversions, will then begin gradual "minor" conversions of public, public officials, military personnel, news media on broader scale.
* Opinions and media coverage gradually change.
* Similar opinion changes occur in Arab nations, Islamic populaces, Europeans, Africans, China, etc.
* Anti-Americanism steadily rises, "normal" terrorist incidents increase, incidents in U.S. increase.
* May be a special effect in the extremists of both left and right, racism, all social issues to foment conflict.
* Increasing conflict will start to unravel the entire society.
* UN should also be unraveled and effectively neutralized by strident differences arising and increasing.

Advance indicators expected (3): Orchestration

* Orchestration of world arena actions by orchestration of leadership of factions, nations, and their actions.
* Opinions and media coverage gradually orchestrated.
* Changes occur in Arab nations, Islamic populaces, Europeans, Africans, China, etc., centrally ordered.
* Orchestrate special effects in the extremists of both left and right, racism, all social issues to foment conflict.
* Intensifying conflict starts to unravel targeted societies, control world nations' behavior and actions.
* UN, NATO, etc. to be unraveled and neutralized by strident differences arising and increasing.

Advance indicators expected (4)

- Conversions of foreign high officials, so that friendly nations begin to act as hostile nation
- Strong, even bizarre developments against Israel.
  - Another indicator will be terrorists — stimulated into unleashing major BW strikes etc., in our cities and populace — having unexpected effectiveness due to KGB QP spreading of immune systems in the U.S. populace.
    - Smallpox, anthrax high possibilities.
      - Ebola virus and necrotizing fasciitis, avian flu etc. also possible, as is smallpox.

Blurring of classifications

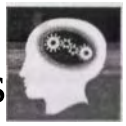

- Intelligence agencies are familiar with the definitions of "agent" vs. "agent of influence".
- Conversion and multiple personas gives switching of a given person between:

  - Normal person (one's normal personality).
  - Agent of influence (a second persona which is "oriented" in a specific direction, to take specific actions at its own volition), or
  - Agent (a third persona which actually communicates with the "agent handlers" etc. and works for them).
- In any case, the person and his personas are manipulated like a puppet on a string.

Defense and counter-measure capabilities

- Very few possible for U.S. at present.
- Urgent that knowledge of the capability and such hostile measures be spread.
- Israelis have some lesser countermeasures which must be rapidly expanded.
- U.S. must have immediate crash national program, with a target completion date of a year only.
- Must have strongest possible Presidential Directive, action, and total support from any agency as needed. Move now, or it will be too late.

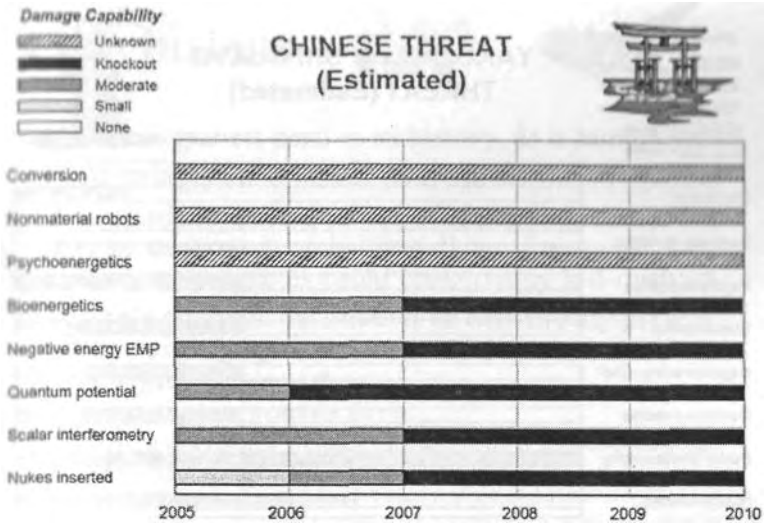
Damage Capability
Unknown
Knockout
Moderate
Small
None
CHINESE THREAT
(Estimated)
Conversion
Nonmaterial robots
Psychoenergetics
Bioenergetics
Negative energy EMP
Quantum potential
Scalar interferometry
Nukes inserted
2005
2006
2007
2008
2009
2010

Damage Capability
Unknown
Knockout
Moderate
Small
None
BRAZILIAN THREAT
Brazil signed nonaggression pact with Russia/
KGB. Russia (FSB/KGB) will not honor it.
Conversion
Nonmaterial robots
Psychoenergetics
Bioenergetics
Negative energy EMP
Quantum potential
Scalar interferometry
Nukes inserted
2005
2006
2007
2008
2009
2010

Damage Capability
Unknown
Knockout
Moderate
Small
None
YAKUZA/AUM SHINRIKYO
THREAT (Estimated)
Conversion
Nonmaterial robots
Psychoenergetics
Bioenergetics
Negative energy EMP
Quantum potential
Scalar interferometry
Nukes inserted
2005
2006
2007
2008
2009
2010

Damage Capability
Unknown
Knockout
Moderate
Small
None
ORGANIZED
INTERNATIONAL
TERRORIST THREAT
Conversion
Nonmaterial robots
Psychoenergetics
Bioenergetics
Negative energy EMP
Quantum potential
Scalar interferometry
Nukes inserted
2005
2006
2007
2008
2009
2010

Conclusions

- U.S. is in gravest peril in its history, as is humanity
- Most stringent and fastest possible action is required

  Two-thirds to three-quarters of human population may be destroyed; probably will be. Eventually the entire human species could conceivably self-destruct.
- Multiple strategic destruction threats already present, others converging.
  - Energetics weapons threat.
  - Bioenergetics weapons threat.
  - Psychoenergetics weapons threat, robots and conversions.
  - Terrorists weapons threat (nuclear and BW).
  - Chinese threat.
  - Yakuza/Aum Shinrikyo threat.
  - Orchestrated dissolution of U.S. society, Europe, UN, etc.

Recommendations (1)

- Crash nuclear scanning of all incoming shipping containers.

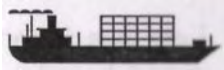

- Crash development of energetics science and some new counters in one year or less.
  - * No more than two years available.
  - Immediate Presidential Decision Directive issued, highest priority.

- Crash development, mass production of fuel-free self-powering electric power systems taking their energy freely from the vacuum. Essential.

  - Immediate cooperation with Israelis for initial counters.

Recommendations (2)

- Crash development of the science and new counters in one year or less. No more than two years available.
- Crash development of Priore-type treatment devices to survive stimulated large terrorist BW attacks, with immune spreading and mass casualties certain. The devices are absolutely essential.

- Immediate "think tank" of most-capable young scientists to clarify the psychoenergetics problem and actions to be taken.
- Brief U.S. public on insertions of nuclear weapons and anthrax already accomplished, so will support the program.

Final comments (1)

- Less than 3 years before our total destruction.
- Any delay of prompt and drastic national action is fatal.

- Biggest problem is the U.S. scientific and intelligence communities, still sublimely resting in archaic EM theory and electrical engineering. The national labs are nearly useless for the correction effort, as are NSF, NAS, and NAE, DoE, etc.
- Leaders of the two communities must be bluntly shocked as drastically as Stalin shocked his Academy of Science in 1945.

Final comments (2)

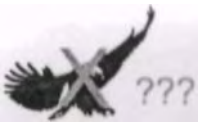

- The President of the U.S. will have to deliver a "meat axe" ultimatum to the Intelligence Agencies, National Academy of Sciences, National Academy of Engineering, National Science Foundation, NIH, the great national laboratories, etc.

- Any science or intelligence leader opposing the program should be immediately relieved under full presidential wartime powers.
- It's either fish or cut bait immediately. It's do or die.
- For those of us who are religious, it is also a time for fervent prayers on behalf of our threatened nation.

(SLIDE BRIEFING CONTINUED)

PART H: APPENDIX; Problems in Western Science

Appendix 1: Problems in Western science

Energy science's flaws and limitations

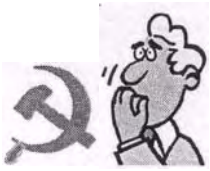

Energetics: start by correcting the flawed CEM/EE model

- The classical EM and EE model is seriously flawed, and has been for more than a century.*
- Soviet energetics started by a massive correction and reworking (and extension) of CEM/EE.
- To understand energetics and energetics weapons, it is essential to first grasp the horrendous errors that are perpetuated in CEM/EE in our universities.
- More extensive systems of electromagnetics have been developed in physics (Yang-Mills theory, higher group symmetry EM, etc.) because CEM/EE does not adequately describe nature.
- The falsity of assuming force fields in space started with basic mechanics several hundred years ago, and was continued into CEM/EE by its founders.

---

* T.E. Bearden, "Errors and Omissions in the CEM/EE Model", at http://www.cheniere.org/techpapers/

Seriously flawed path of classical electrodynamics

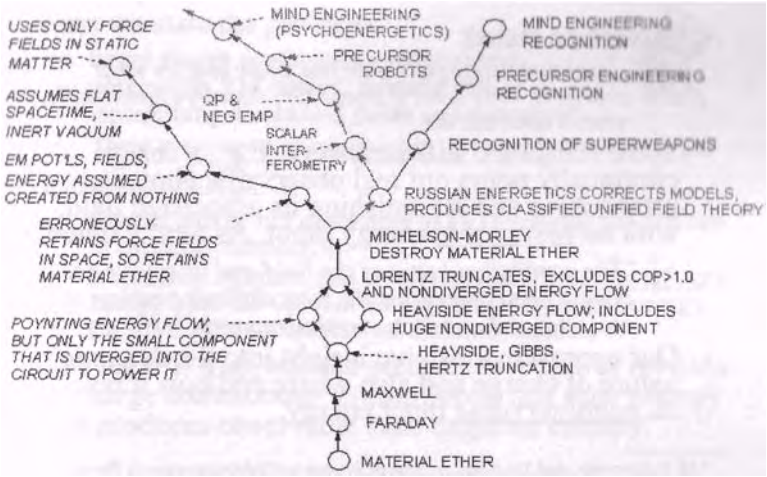

Electrodynamics and electrical engineering

* There is not now, and there never has been, an EE department, professor, or textbook that knows and teaches what really powers an EM circuit or system.
- Every EM circuit and system is powered by EM energy extracted from the vacuum by the asymmetry of opposite charges on the ends of the source dipole.*

  Basis proven in particle physics since 1957.**
  - All EM field energy and EM potential energy in a circuit is extracted from the local vacuum by the source charges q of the circuit. None comes from mechanical energy input by cranking the shaft of the generator.

---

* See Steven Weinberg, Dreams of a Final Theory. Vintage Books, Random House, 1993, p. 109-110. Dipolarity includes the classical "isolated" source charge, when the charge's polarization of its surrounding vacuum is accounted. An isolated charge is actually an infinite bare charge in the middle, surrounded by an infinite virtual charge of opposite sign. The difference as seen by an external instrument is finite, and it is the textbook value of the observed "classical charge".

** See C. S. Wu et al., "Experimental Test of Parity Conservation in Beta Decay," Physical Review, Vol. 105, 1957, p. 1413. Lee and Yank received Nobel Prize

Nature of charge is unresolved

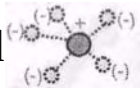

- Silverman stated:

  "...curiously enough, we do not know exactly what charge is, only what it does. Or, equally significantly, what it does not do. "*

- Some things are still a mystery. E.g., a charge continually pours out real observable photons, establishing and replenishing its associated field, with no observable energy input. As Sen** stated:

  "The connection between the field and its source has always been and still is the most difficult problem in classical and quantum electrodynamics. "

- Our approach does give insight into the dynamic nature of charge and also where and how it receives its nonobservable input energy.

* M. P. Silverman. And Yet It Moves: Strange Systems and Subtle Questions in Physics. Cambridge University Press, 1993, p. 127.
** D. K. Sen, Fields and/or Particles. Academic Press, London and New York, 1968, p. viii.

The Source Charge Problem (1)

- Kozyakov** stated the problem more bluntly:

  "A generally acceptable, rigorous definition of radiation has not as yet been formulated. ...The recurring question has been: Why is it that an electric charge radiates but does not absorb light waves despite the fact that the Maxwell equations are invariant under time reversal? "

- We solved the problem in 1999 and published it.**

* B. P. Kosyakov, "Radiation in electrodynamics and in Yang-Mills theory," Sov. Phys. Usp. 35(2), Feb. 1992, p. 135, 141.
** (a) T. E. Bearden, "Giant Negentropy from the Common Dipole," Proc. Conqr. 2000. St. Petersburg, Russia, Vol. 1, July 2000 , p. 86-98; (b) — "Extracting and Using Electromagnetic Energy from the Active Vacuum," in M. W. Evans (ed.), Modern Nonlinear Optics. Second Edition, 3 vols., Wiley, 2001; Vol. 2, p. 639-698; (c) —Energy from the Vacuum: Concepts and Principles, Cheniere Press, Santa Barbara, CA, 2002, (d) M. W. Evans, T. E. Bearden, and A. Labounsky, "The Most General Form of the Vector Potential in Electrodynamics," Found. Phvs. Lett.. 15(3), June 2002, p. 245-261.

The Source Charge Problem (2)

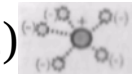

- First we state the problem:
  - Every charge continuously radiates real, observable EM energy, forming and replenishing its ordered fields and potentials.
  - There is no input of observable EM energy to the charge.
- Either the charge:
  - Creates energy out of nothing at all (falsifying the first law of thermodynamics), or
  - It receives, reorders, and integrates disordered virtual state energy from the vacuum into ordered observable energy (falsifying the second law of thermodynamics).
- The latter is true, and the second law requires revision. A charge continuously consumes virtual state entropy and produces observable state negative entropy.

The Source Charge Problem (3)

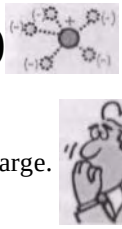

* There is continual:
  - Disordered virtual photon energy input to the charge.
  - Reordering of the input virtual energy, and
  - Coherent integration of the reordered virtual EM energy input into output as quanta (observable photons)
* So the charge continually radiates observable photons in all directions, extracting the necessary input energy from the vacuum subquantal fluctuations.
* We do not have to discover how to extract EM energy from the vacuum via a "new device"!
* Every charge in every circuit and system already does it, freely and continuously.
* We just must learn to properly catch and use the freely flowing EM energy from the vacuum.

EM energy occurs as sets of ongoing EM energy flows

* Every EM field and potential — whether "static" or "dynamic" — is a set of ongoing EM energy flows.
  - Whittaker proved it for the scalar potential in 1903.
  - In 1904 he proved any field decomposes into differential functions on two scalar potentials.
  - If we further apply his 1903 decomposition to each of the "base" scalar potentials of the 1904 paper, EM field emerges as a set of energy flows also.
- Hence Whittaker's work also shows that — in producing its fields and potentials — the source charge is pouring out real EM energy continuously.
- Thus EM "static "fields and potentials are ongoing sets of EM energy flows, not "chunks" of static energy.

The source charge solution: Free EM energy from the vacuum

* The emitted observable EM radiation continually establishes and replenishes the associated spatial EM fields and potentials of the source charge, spreading at light speed in all directions continuously.
- There is no "static" EM field from a "static" source.
* The "static" EM field, its source charge, and the vacuum input form a nonequilibrium steady state (NESS) system of continual, observable photon emissions and flow from the seething vacuum.
* So is the "static" EM potential.
- Every EM field, EM potential, and joule of observable EM energy is already a set of ongoing free flows of EM energy extracted from the vacuum.

A charge is a dipolar ensemble (1)

- An "isolated charge" polarizes its vacuum medium.*

- Considered from a quantum field theory view, the isolated classical charge is a bare infinite charge in the middle surrounded by an infinite charge of virtual particles, of opposite sign.
- The charge ensemble is thus a special kind of dipolarity. It exhibits asymmetry of opposite charges in its virtual photon exchange *a priori*.
- Both the bare charge in the middle and the surrounding polarized charge are *infinite*. Their difference is *finite*. The two infinite charges will forever sustain the finite difference, so long as the polarization ensemble is not forcibly altered.

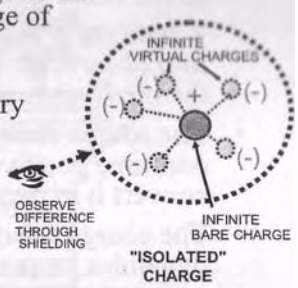

* For a beautiful discussion of the polarization and much more, see Steven Weinberg, Dreams of a Final Theory, Vintage Books, Random House, 1993.

A charge is a dipolar ensemble (2)

- Because of the broken symmetry of the infinite dipolarity, a set of energy flows with finite intensity must therefore emerge from the polarized charge ensemble. Playing with charges means playing with finite differences between appositive infinite energy flows.
- Because the fundamental charges have infinite charge and infinite energy, the flow of energy from the charge will be sustained forever.
- The broken symmetry of opposite charges was proven by Wu et al. in 1959, and a Nobel Prize was awarded to Lee and Yang the same year.

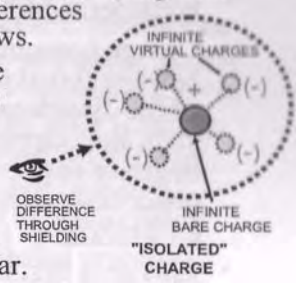

- The observable flow of EM energy is from virtual energy that has "become observable" (been reordered, coherently integrated to the quantum level, and re-emitted as quanta).

Solution to the source charge problem

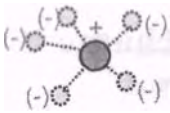

- Opposite charges also are a broken symmetry in the fierce vacuum's virtual particle exchange.
- Continually absorbs virtual EM energy, transduces it into observable EM energy (photons), and then emits the observable photons in all directions in 3-space.
- The source charge and any dipolarity continuously consume positive entropy of the virtual state and convert it to negative entropy of the observable state.
- The charge falsifies the present second law of thermodynamics, requiring its revision, and is an example of a real system continuously producing negative entropy.*

* First such known physical system, although permissibility was theoretically demonstrated by D. J. Evans and Lamberto Rondoni, "Comments on the Entropy of Nonequilibrium Steady States," J. Stat. Phvs.. 109(3-4), Nov. 2002, p. 895-920.

Where EM energy comes from:

- Every joule of EM energy comes from the vacuum, via broken symmetry of source charges (dipolarities, considering polarized vacuum).
- Charge consumes positive entropy (breaks symmetry) of the disordered virtual state and converts it to negative entropy of the observable state. There is a *hierarchy* of symmetries.*

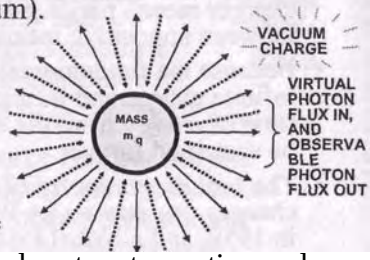

- Charge is first known physical system to continuously produce negative entropy, as theoretically possible**.

* This violates Klein geometry; Leyton geometry must be used. See Michael Leyton, A Generative Theory of Shape, Springer-Verlag, Berlin, 2001.

** Evans and Rondoni, "Equilibrium microstates which generate second law violating steady states," Phvs. Rev. E, Vol. 50,1994, p. 1645-1648.

The magic reordering (negative entropy) process

$$m^*(t) = m(t_0) + dm_1 + dm_2 + dm_3 + \ldots$$

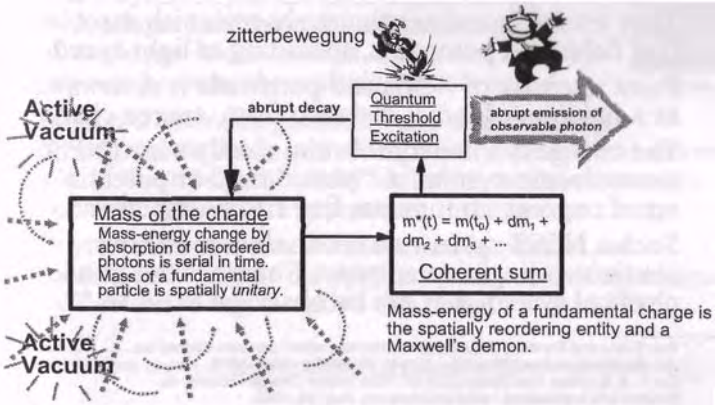

The fundamental charged particle continually absorbs disordered virtual state EM energy and re-emits it as ordered observable EM energy

- Each increment absorbed of virtual energy produces a virtual-change of the charge's already unitary mass.*

  The serial differentials of its mass-energy are spatially re-ordered energy. Each is a change to what is there before.
- The differentials thus coherently sum, so a single, unitary differential of virtual mass-energy (its excitation) grows.
- When the quantum threshold is reached, there is enough new mass-energy to produce a real, observable photon .
- Zitterbewegung** shakes out an observable photon, emitted from the particle in its abrupt excitation decay.
- Fevnman ratcheting: The virtual excitation process continues again, and the process reiterates unceasingly.

---

*This is a true Maxwell's Demon, totally destroying the present second law of thermodynamics.

** Zitterbewegung is a local circulatory motion of the electron presumed to be the basis of the electron spin and magnetic moment. One physical interpretation is given by David Hestenes, "The Zitterbewegung Interpretation of Quantum Mechanics." Found. Phvs.. 20 (10), 1990, p. 1213-1232.

Virtual photon interactions reveal secret of negative entropy

- Observable photons from source charge continuously radiate away at speed of light.
- They establish and continuously replenish associated EM fields and potentials, spreading at light speed.
- Point intensity of fields and potentials is deterministic, as a function of radial distance from source charge.
- The charge is a nonequilibrium steady state (NESS) deterministic system. A "static" field or potential is a set of ongoing continuous free EM energy flows.
- Such a NESS system theoretically can exhibit continuous negative entropy. Charge is the first known physical system that can be observed to do so.**

* See Evans and Rondoni, "Equilibrium microstates which generate second taw violating steady states." Phys. Rev. E. Vol. 50, 1994, p. 1645-1648.
** See T. E. Bearden, Fact Sheet 2003-01, "The Source Charge Problem: Its Solution and Implications," www.cheniere.org, Aug. 18, 2003.

Charge falsifies the old second law of thermodynamics to any macroscopic level since the fields and potentials are deterministic (.1)

- Charge exhibits continuous negative entropy production.
  - Falsifies second law, which is based on Klein's 1872 geometry* and group theoretic methods.
  - Validates theoretical proof that continuous production of negative entropy is possible, as shown by Evans and Rondoni.**
- In Klein geometry, a broken symmetry at one level loses the information at that level, reducing the overall symmetry to that of the lower level. This is a positive entropy process because the ordering is decreased.
- So dS > 0 is arbitrarily "wired in" to Klein geometry!

*Felix Klein, "Vergleichende Betrachtungen uber neuere geometrische Forschungen," 1872.
**D. J. Evans and Lamberto Rondoni, "Comments on the Entropy of Nonequilibrium Steady States." J. Stat. Phvs.. 109(3-4), Nov. 2002, p. 895-920.

Charge falsifies the old second law of thermodynamics to any macroscopic level since the fields and potentials are deterministic (2)

- In Leyton's object-oriented geometry,* a broken symmetry at one level generates a new symmetry at the next higher level, with a layer incorporating all information of the lower levels. This is a negative entropy process because the ordering is increased.
- Leyton's extended geometry and deeper group theoretical methods inherently falsify the present second law of thermodynamics by including negative entropy and the negative entropy action of the source charge.
- Leyton's work is a new revolution in physics, as fundamental as was the original prediction of asymmetry by Lee and Yang, awarded the Nobel Prize in 1957.

* Michael Leyton, A Generative Theory of Shape. Springer-Verlag, Berlin, 2001

Breaking the zero-symmetry state of the disordered vacuum (1)

* Vacuum fluctuations are disordered and subquantal, overall (statistically).

- Hence the overall ordering (symmetry) of the vacuum may be taken as zero. This zero symmetry is a specific symmetry state of the overall vacuum.

* But in these fluctuations, local polarizations (opposite charges) continually appear and disappear

- While a local polarization exists, it is a "broken symmetry" of the vacuum state. Hence it is a local violation of the "zero symmetry" of the overall vacuum, and the usual transient fluctuation theorems apply.*

* E.g., see D. J. Evans and D. J. Searles, "Equilibrium microstates which generate second law violating steady states," Phys. Rev. E. Vol. 50, 1994, p. 1645-1648.

Breaking the zero-symmetry state of the disordered vacuum (2)

- Equilibrium is the state of maximum entropy of a system.
- In a system in statistical equilibrium, local transient statistical fluctuations continually occur.
- In a local transient fluctuation
  - Equilibrium is broken and entropy is momentarily reduced.
  - The Second Law of thermodynamics is violated and such fluctuation obeys a transient fluctuation theorem.*
  - Violation can last appreciably — e.g., up to two seconds.**
- Local nonequilibrium steady state interactions with the observable state (as with a fundamental charged particle) can violate the second law of thermodynamics.***

* E.g., see D. J. Evans and D. J. Searles, Phvs. Rev. E. Vol. 50, 1994, p. 1645-1648.
** G. M. Wang et al., Phvs. Rev. Lett.. 89(5), 29 July 2002, 050601.
*** D. J. Evans and Lamberto Rondoni, J. Stat. Phvs.. 109(3-4), Nov. 2002, p. 895-920.

Every charge consumes positive entropy of virtual state and produces negative entropy of observable state

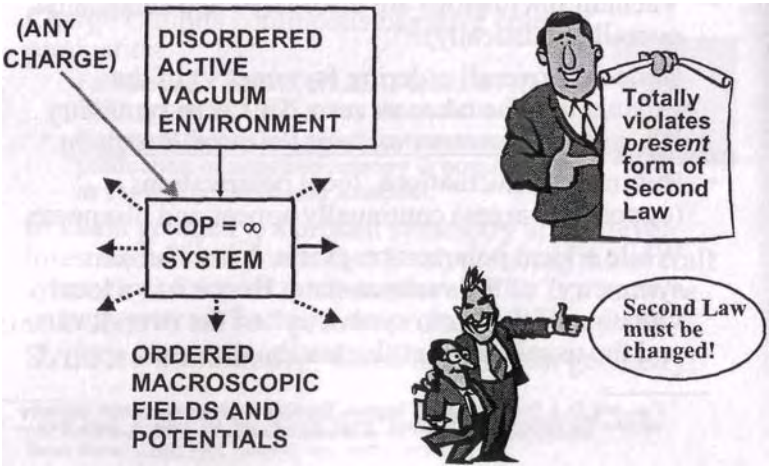

Biochemistry and EM models (1)

- Medical scientists analyze such things as teratomas in terms of biochemistry and the biochemical model.
- An assembly of charges and charge distributions, with their associated fields and potentials, drives chemistry at base level.

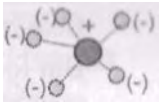

- The force dynamics of the charge assembly are generated by a corresponding assembly of spacetime curvatures and their dynamics (a spacetime curvature engine).
- This precursor engine is the force-free cause that is driving the charge assembly and generating its dynamics, producing all forces in the matter and therefore the chemistry ongoing in that matter.

Biochemistry and EM models (2)

- Force dynamics of the charge assembly are generated by a precursor force-free spacetime curvature engine.
- This precursor engine is the force-free cause that is driving the charge assembly and generating its dynamics, producing all forces in the matter and therefore the chemistry ongoing in that matter.
- Precursor fields and potentials are not modeled in classical U(1) EM theory or quantum electrodynamics.
- CEM/EE model is 140 years old and seriously flawed.
- Precursor force-free EM fields and potentials — and their interaction with charges to produce the force fields and dynamics — can be modeled in unified field theory (such as that of Sachs and that of Evans in O(3) electrodynamics).

Biochemistry and EM models (3)

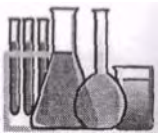

- Conventionally a causative EM field in space is "defined" as the diversion from a spatial force field by and during its interaction with charge.

* But force exists only in and of mass. Mass is a component of force, by F = dp/dt = d/dt(mv).

* There is no force field in space. Assuming one in space substitutes "effect in matter" for "matter-free ST curvature cause" — a logical non sequitur.

- CEM/EE also assumes charged matter (the material ether) filling all space, and calculates and uses only the force field existing in that assumed charged matter.
- CEM/EE does not and cannot calculate the force-free precursor EM field in space — the actual EM field.

How CEM/EE erroneously assumes force fields in space

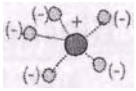

* Jackson* shows how electrodynamicists simply avoid (and dispose of) the problem of a force-free, massless EM field in space, rather than a force field:

> "Most classical electrodynamicists continue to adhere to the notion that the EM force field exists as such in the vacuum, but do admit that physically measurable quantities such as force somehow involve the product of charge and field. "

---

* J. D. Jackson, Classical Electrodynamics. 2nd Edn., John Wiley & Sons, New York, 1975, p. 249. Jackson is one of the leading classical electrodynamicists and either highlights or clarifies many issues.

U.S. scientists do not calculate the EM field in space, but only in charged matter

- So CEM/EE still erroneously assumes a material ether and force fields in space. Ignores the precursor field.
- There is not now and there never has been an EE department, EE professor, or EE textbook that teaches how to calculate the (precursor) EM field in space.
- This is a known major flaw in the CEM/EE model. It has been pointed out in one fashion or another by many physicists such as Wheeler and Nobelist Feynman.
- The CEM/EE model is seriously flawed, and the flaws emerge in biochemistry and medical science.
- At least Jackson clearly states the gross error that is still accepted and used by CEM/EE.

* J. D. Jackson, Classical Electrodynamics. 2nd Edn., John Wiley & Sons, New York, 1975, p. 249.

Correction to basic mechanics and a solution to Feynman's problem of defining force*

- F = $\partial/\partial t$(mv), so mass is a component of force.
- Force and force fields exist only in matter, not in massfree space.

- There is no separate "massless vector force in space" acting upon a separate mass.
- Thus in EM models, cannot legitimately use force field as a causative agent in space, as present models do.
  - ♦ EM field in space is a massless, force-free causative agent (curvature of spacetime) — a precursor to force field in matter.
  - * Force-free EM field's ongoing interaction with charged matter identically is a force field in that matter. Force is the interaction effect in and of the charged matter itself, not the cause.

* Richard P. Feynman, Robert B. Leighton, and Matthew Sands, The Feynman Lectures on Physics, Addison-Wesley, Reading, MA, Vol. 1, 1964, p. 2-64, 12-2; Vol. 2, p. 1-3.

What physics has to say about EM field in space

Richard Feynman

* Feynman* clearly states that the EM field in space is not a force field.
- It is a characteristic of space that produces a force field when and if it interacts with charged matter.

" ...the existence of the positive charge, in some sense, distorts, or creates a "condition" in space, so that when we put the negative charge in, it feels a force. This potentiality for producing a force is called an electric field. "

"We may think of E(x, y, z, t) and B(x, y, z, t) as giving the forces that would be experienced at the time t by a charge located at (x, y, z), with the condition that placing the charge there did not disturb the positions or motion of all the other charges responsible for the fields. "

*Feynman, Leighton, and Sands, The Feynman Lectures on Physics. Addison-Wesley, Reading, MA, Vol. 1, 1964, p. 2-4; Vol. 2, p. 1-3.

Maxwell's theory was curtailed*

"[T]he A field [for the potentials] was banished from playing the central role in Maxwell's theory and relegated to being a mathematical (but not physical) auxiliary. This banishment took place during the interpretation of Maxwell's theory... by Heaviside... and Hertz. The 'Maxwell theory' and Maxwell's equations' we know today are really the interpretation of Heaviside... Heaviside took the 20 equations of Maxwell and reduced them to the four now known as 'Maxwell's equations'. "

COMMENT: Maxwell's primary theory was 20 quaternion-like equations in 20 unknowns.**

*Terence W. Barrett, "Electromagnetic Phenomena Not Explained by Maxwell's Equations," A. Lakhtakia, ed., Essays on the Formal Aspects of Electromagnetics Theory. World Scientific Publishing, River Edge, NJ, 1993, p. 11 and generally p. 6-86.
** James Clerk Maxwell, "A Dynamical Theory of the Electromagnetic Field," Royal Society Transactions, Vol. CLV, 1865, p 459

Necessary EM corrections*

- Higher symmetry, non-Abelian electrodynamics models have been developed in particle physics
- The new approach extends these models to also incorporate general relativity, thus producing a unified field theory*.
- In the new approach, spacetime curvature engines are perfectly natural and understandable, and can be directly modeled and engineered by advanced theorists.

* The theory is sufficiently advanced and robust that technology and engineering can now advance.

* This would be a great leap forward for biochemistry and medical science, particularly in therapeutic methods.

---

* Sachs's unified field theory implemented by O(3) electrodynamics developed by Evans presently is suitable to use. Numerical methods are often required, particularly when asymmetry is invoked, Lorenz symmetry is violated, and Lorentz-invariant equations cannot describe all the dynamics and results.

A fundamental charged particle is a Feynman ratcheting system* (1)

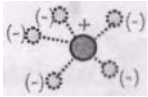

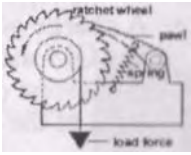

- Assume fundamental charge at ZPE equilibrium state (lowest quantal level).
- Disordered virtual photons from vacuum are absorbed serially by the fundamental charged particle. This is a reordering of the absorbed energy in 3-space and time.
  - Mass of a fundamental particle is already unitary in 3-space.
  - The unitary mass increases by little serial differential increases
  - * The serial integration completes the negentropy process.
- On the mass-energy, the same type of virtual energy differential thus appears in serially increasing order. The mass-energy of the charge at lowest quantum level (ZPE equilibrium state) has a series of coherently integrating differential increases in the virtual state.

---

* E.g., see Jack Denur, "Modified Feynman ratchet with velocity-dependent fluctuations," posted on web at http://www.ipmt-hpm.ac.ru/SecondLaw/down/170.pdf.

A fundamental charged particle is a Feynman ratcheting system (2)

- When the integrating differential virtual state mass-energy reaches the next higher quantum energy level, the violent zitterbewegung (jitter) of the absorbing charged particle abruptly initiates emission of an observable photon.
  - The emission abruptly decays the integrated excited state of the charged mass back to zero reference (i.e., the ZPE equilibrium state at base level).
  - Process continually reiterates since virtual disordered photons are continually absorbed in serial order by each charge, driving the process. This is a Feynman ratcheting effect.

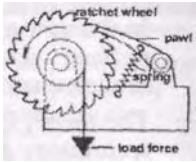

- The charge continually emits real observable photons in all directions, without any observable energy input. The input is a "sorted and reordered" virtual state energy input.The charge is a Feynman ratchet system, producing continuous negative entropy from positive energy and its "ratcheting" action.

Consistent with ZPE concepts, thermodynamics, and EFTV concepts (1)

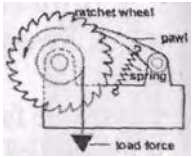

- A charge at zero absolute temperature has QM movements and energy. This is the lowest quantal level, called "zero-point energy" state of the observed charged particle.
- The interaction of the charge — its absorption of disordered subquantal virtual energy fluctuations, their conversion to differentials of unitary mass-energy with serial ordering, and coherent integration of the mass-energy differentials — excites the charge to the next higher quantum level, moving it out of ZPE-level equilibrium.
- The excited (potentialized) charge is then permitted to decay back to ZPE level, emitting an observable photon.

Consistent with ZPE concepts, thermodynamics, and EFTV concepts (2)

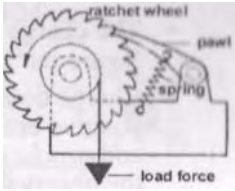

- Continual iteration of this "ratcheting" action — converting absorbed virtual state energy to emitted observable state energy and reiterating — provides continual emission of real photons by the charge, where energy of the emitted photons has been "lifted" from the virtual state vacuum.
- There is no "observable" (quantal) energy input because the required energy input is in subquantal form.

* ZPE consistency is upheld, thermodynamicists are happy, and EFTV enthusiasts are happy.

- Electrodynamicists should be happy that the long-vexing source charge problem is finally resolved!

Nonequilibrium steady state system

* A nonequilibrium steady state (NESS) system can:

- Self-order.
- Self-oscillate or self-rotate.
- Output more energy (as powered loads, etc.) than what the operator alone inputs. The excess energy input comes directly from the active environment, as free energy transfer.
- Power itself and its load (its associated observable fields and potentials in space). The input energy comes from the active vacuum environment, via the source charges, and the operator need not pay for it.
- Exhibit negative entropy.

PRIGOGINE

* The charge with its subquantal vacuum energy input and its observable EM energy output is a NESS system providing freely flowing EM energy from the vacuum.

All EM energy is free: EM fields and potentials are sets of ongoing and free EM energy flows (I)

- The charge is a nonequilibrium steady state (NESS) system. So are its' "static" fields and potentials.

- Charge continually consumes vacuum's positive entropy at the virtual state level, and produces negative entropy output at the observable level.
  - * Transduces absorbed disordered virtual state energy (from vacuum subquantal fluctuations) into observable state energy (real observable photons, real EM fields).
  - * Falsifies the old second law of thermodynamics, requiring its correction and extension.
- Continuously produces negative entropy observably, as shown theoretically possible by Evans and Rondoni.*

* D. J. Evans and Lamberto Rondoni, J. Stat. Phys., 109(3-4), Nov. 2002, p. 895-920.

All EM energy is free: EM fields and potentials are sets of ongoing and free EM energy flows (2)

- A truly "static" EM field does not exist**;
- Every EM field is a set of NESS flows of energy*** from its associated source charge or dipole.
- All we have to do is learn how to properly intercept, collect, and freely utilize the freely flowing EM energy.
- The collection and utilization process is an asymmetrical process a priori.
- Lorentz made the CEM/EE equations symmetrical so that simpler Lorentz-invariant equations could be used.
- The first requirement for COP>1.0 EFTV systems is to violate Lorentz symmetry in one's circuits, so that non-invariant equations cannot model their operation

* See Tom Van Flandern, Phys. Lett. A, 250, Dec. 21, 1998, p. 1-11.
** E.T. Whittaker, 1903 and 1904 (ibid.).
*** Many methods found by inventors are given in T. E. Bearden, Energy from the Vacuum: Concepts and Principles, Cheniere Press, 2002. For rigorous proof that violating the Lorentz symmetry condition allows EFTV systems, see M.W. Evans et al., Phvsica Scripta. Vol. 61,2000, p. 513-517.

Importance of solution to source charge problem (1)

- The source charge transduces disordered virtual fluctuation energy from the vacuum into real, usable EM energy flows comprising its fields and potentials.
- Extracting usable energy from the vacuum, any amount, anywhere, is straightforward. Every charge already does it freely.*

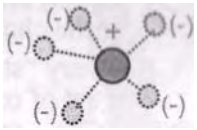

  - Just assemble some charge or a dipole. It will freely radiate real EM energy indefinitely, so long as it exists.
  - Use a collecting circuit having overall broken Lorentz symmetry.
  - Potentialize the circuit with charges pinned so dq/dt = 0.
  - When current flows and the collected energy is dissipated in the load, the source of potential and energy flow must not be connected into that external circuit as a load to be destroyed.

---

* Again, for examples of such systems produced by inventors, see T. E. Bearden, Energy from the Vacuum: Concepts and Principles. Cheniere Press, 2002. E.g., any EE department can readily build the Takahashi magnetic Wankel engine (suppressed by the Japanese Yakuza), which kills its own back mmf and thus produces a nonconservative rotation force, continually driving the engine and powering its load. It may also be readily made self-powering.

Importance of solution to source charge problem (2)

* There is no scientific excuse whatsoever for an electrical engineering that implicitly assumes that
  - Every EM field and potential (and every joule of EM energy) is freely created by the source charge from nothing at all.

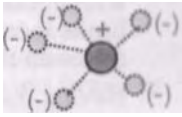

  - EM fields and potentials are "static".
  - Circuits must be built Lorentz-symmetric so as to deliberately self-destroy their own dipolar source of free EM energy from the vacuum.
  - EM energy occurs in "chunks" called joules. Instead, it occurs in free flows of EM energy — in joules per second.
  - EM fields in space are force fields.
- We must rethink our concept of EM energy and its use. The old "first principles" are seriously flawed.

EM energy is free, but we've not yet learned to use it properly! (1)

- Every charge is already a "free gusher of EM energy" that will flow forever if the charge is left undisturbed.
- Every "static" EM field or potential is thus a set of ongoing steady-state EM energy flows.*
  - Van Flandern's analogy applies.**
  - A "static" EM field or potential is like an unfrozen waterfall, rather than like a frozen waterfall as erroneously portrayed.
- Having the source connected to its external circuit while current is flowing destroys the source dipolarity — and the free flow of energy from the vacuum — faster than the load is powered.

---

* E. T. Whittaker, Math. Ann. Vol. 57, 1903, p. 333-355 and Proc. Lond. Math. Soc. Series 2, Vol. 1, 1904, p. 367-372 proved that any EM field or potential is a set of ongoing bidirectional EM energy flows.
**Tom van Flandern. Phvs. Lett. A 250. Dec. 21, 1998, p. 8-9.

EM energy is free, but we've not yet learned to use it properly! (2)

- Imposition of Lorentz symmetry to allow simpler (Lorentz invariant) equations is wrong. Building only symmetric circuits limits them to COP < 1.0, and keeps the meter on the gas pump and the meter on one's house.
- Having the dipolar source connected to its external circuit while current is flowing:
  - Destroys source dipolarity — and the free flow of energy from the vacuum.
  - Uses half the free EM energy collected on circuit charges to destroy source dipole and cut off free energy flow from vacuum.
- We have not learned how to intercept work-free potential energy flow, collect it for free without current flowing, then disconnect source and allow current to flow, freely dissipating the freely collected energy to power external loads "for free".

Energy, Spacetime, Vacuum VPF

- There really has been no satisfactory definition of energy.

• Energy change is measured, not energy per se.

♦ Energy can be defined in either of two ways:
  - Spacetime is identically energy.
  - Virtual particle flux (of the vacuum) is identically energy.
  - In either case, the energy density is enormous.

* A "change of energy" thus means two things:
  - A change (i.e., distortion or curvature) of spacetime.
  - A change in the virtual particle flux (VPF) of the vacuum.

♦ The "field" is a region of distorted spacetime and altered VPF.

* Fields and potentials decompose into sets of energy flows. So they are regions of flowing changes in spacetime distortion, and flowing changes in vacuum VPF.

The entropy concept Implicitly assumes its own contradiction (1)

- Price points out the problem*:

  "A century ago Ludwig Boltzmann and others attempted to explain the temporal asymmetry of the second law of thermodynamics. The hard-won lesson of that endeavor — a lesson still commonly misunderstood— was that the real puzzle of thermodynamics is not why entropy always increases with time, but why it was ever so low in the first place. "

- For a system initially in equilibrium, the concept of further entropy production implicitly assumes a previous negentropic process has occurred to provide additional usable (controlled) order (usable energy) in the system, that is to be disordered and decontrolled.

* H. Price, Time's Arrow Today. S. F. Savitt, Ed., Cambridge University Press, 1995, p. 66-94.

The entropy concept implicitly assumes its own contradiction (2)

- Scientists balk at the necessity for initial negative entropy production, and largely avoid facing it.
- Usually they arbitrarily invoke positive entropy occurring in the external environmental system, and thus furnishing the energy — to the system — in work-free manner but with work in the environment.
- This just moves the problem to an outside system (the environment) and does not solve it.
- Scientists stared at the necessity for equal negative entropy first occurring, and then walked away, rather than dealing with it*.

---

* By his hierarchies of symmetry and change to geometry, Leyton solved the problem. See Michael Leyton, A Generative Theory of Shape, Springer-Verlag, Berlin, 2001.

Importance of Leyton geometry*

- We also must upgrade thermodynamics by adopting Leyton geometry instead of the limited 1872 Klein geometry.
- Leyton's work proves negative entropy as the other "missing" half of the Second Law of thermodynamics — the half which is transduction of entropy into negative entropy, as exhibited by the source charge and its deterministic EM fields and potentials and their energy.

Dr. Michael Leyton

---

* See Michael Leyton, A Generative Theory of Shape, Springer-Verlag, Berlin, 2001. Leyton's object-oriented geometry uses more advanced groups and group operations than the old 1872 Klein geometry. Klein geometry has entropy "welded in", so to speak. In Leyton geometry, this is not the case; rather, negative entropy is also included, particularly in Leyton's hierarchies of symmetry.

The Leyton effect:

- In Klein geometry, broken symmetry at a given level loses the information at that level and reduces the overall group symmetry. This is basically a "wired-in entropy operation."
- In Leyton geometry, broken symmetry at a given level automatically creates a new symmetry at the next higher level, with a layer that captures all the lower level information. Hence a broken symmetry increases the overall group symmetry. This is a negative entropy operation a priori.
- Leyton geometry thus produces a hierarchy of symmetries, missing from Klein geometry.

Leyton's geometry solved the overall problem of thermodynamics

- The overriding thermodynamics problem is: If the second law is correct, and entropy can only stay the same or increase, then how did the entropy of the universe ever get so low in the first place? And how is it so low now?
- How does a system, once reaching equilibrium (maximum entropy), ever depart from equilibrium to lower entropy?
- The old second law also does not consider negative energy and negative energy EM fields — the so-called "dark energy" of the universe. It does not account for negative mass matter — the so-called "dark matter" of the universe.
- Problem recognized — and unsolved — for a century.
- It cannot be solved unless there is also a law of negative entropy production, which immediately requires hierarchies of symmetry. Leyton's work provides that missing law.

Correction of the second law of thermodynamics (1)

- We have proposed the following correction:
  "For a system initially in equilibrium, first some negative entropy is produced in the system, departing it from equilibrium and lowering its entropy so it has some controlled order (energy) to be decontrolled and disordered. In interactions thereafter, the entropy remains the same or increases, unless additional interactions producing negative entropy arise and interfere. "

* This statement is consistent with experiment (e.g., Wang et al.*), Leyton geometry,** and the source charge's ratcheting production of its associated EM fields and potentials and their energy.***

---

* G. M. Wang, E. M. Sevick, Emil Mittag, Debra J. Searles, and Denis J. Evans, "Experimental Demonstration of Violations of the Second Law of Thermodynamics for Small Systems and Short Time Scales," Phys. Rev. Lett. 89(5), 29 July 2002, 050601.
** Michael Leyton, A Generative Theory of Shape. Springer-Verlag, Berlin, 2001.
*** T. E. Bearden, Energy from the Vacuum: Concepts and Principles. 2002.

Correction of the second law of thermodynamics (2)

- Present second law is ($0 < dS < +\infty$), which states that the system entropy can only stay the same or increase.
- System in equilibrium is in state of maximum entropy. Thus to produce entropy, the system must first depart from equilibrium, lowering its entropy.*
- This is a negative entropy operation ($-\infty < dS < 0$) and it produces a "potentiahzed" system or "excited" system not in equilibrium.*
- The excited or potentiahzed system can then entropically decay back to equilibrium condition, if no further excitation or potentialization (negative entropy operation) occurs to interrupt it. This is ($0 < dS < +\infty$) — the present old second "half-law".

•If the energy is furnished to the system in the same form as the system's potential energy that is changed in magnitude, no work is done. This is gauge freedom, which is inherently negentropic. If the energy is furnished in a different form, work is required in order to change the form of the input energy.

Correction of the second law of thermodynamics (3)

- The two serial actions of negative entropy and positive entropy form a ratcheting process, similar to Feynman's ratchet.
- The second law has always been an oxymoron implicitly assuming its own contradiction has first occurred but has not been accounted.
- The new, complete second law is just ($-\infty < dS < +\infty$), and it states that in an interaction the system may produce negative entropy, positive entropy, or stay at the same entropy level — all depending upon the nature of the interaction.

Correction, of the second law of thermodynamics (4)

$\boxed{W = Vq}$

- New, corrected second law is ($-\infty < dS < +\infty$).
- In macroscopic systems, often potentialization and dissipation are serial, discrete operations. In that case:
  - First ($-\infty < dS < 0$) occurs separately.
  - Then ($0 \leq dS < +\infty$) occurs separately.

- So in this special case the new second law is:
  ($-\infty < dS < +\infty$) = ($-\infty < dS \leq 0$) + ($0 \leq dS < +\infty$)
- The implicitly assumed unaccounted negative entropy operation is clear, as is the proper meaning of the old second "half-law". It was just entropic decay back to equilibrium, of a previously excited system.
- Now electrical engineering can proceed with negative entropy engineering, directly.

Correction of the second law of thermodynamics (5)

$$\boxed{W = Vq}$$

- The new second law and revised first law allow self-powering electrical power systems taking their input energy freely from the vacuum. The source charge is one such self-powering EM system.
- From any fixed source of potential V, given sufficient q any amount of potential energy W can be freely collected, by W = Vq, or for a given q by using repetitive collection-dissipation with the source connected only in collection.
- In short, just use a similar "ratcheting" operation as shown by the source charge.

Implications for electrical power systems: A permanent solution to the energy crisis (1)

* For $(-\infty < dS < +\infty) = (-\infty < dS \leq 0) + (0 \leq dS < +\infty)$:
  - No law of nature states we ourselves must pay for the extra potentialization energy $(-\infty < dS \leq 0)$. Pure asymmetric regauging (voltage amplification) can supply it.
  - Conservation of energy merely requires that something (such as the environment) must furnish it, since we dissipate it by $(0 \leq dS < +\infty)$. Any source of potential can give it freely.
  - We can. insist on furnishing it by brute force, paying for it.
  - Or we can allow nature to furnish it freely — including from the vacuum.
* EM energy in nature occurs in steady, inexhaustible free energy flows from all source charges and dipoles. This allows use of work-free asymmetric regauging.

Implications for electrical power systems: A permanent solution to the energy crisis (2)

- We may therefore freely collect extra EM potential energy from the gushing energy flows coming from the circuit charges or system charges.
- By adroit switching, this potential energy can be dissipated in an external load to "power" it, without using half of it to "kill the source dipolarities".

* We need pay only a little for the "switching and control" (S&C) energy dissipated.

« From the output load energy, we can extract that small S&C energy via positive feedback from the load output to the S&C unit, so the S&C unit is a small part of the "powered load".

* In that way, the working system is also self-powered by energy freely extracted from the vacuum.

Example: Any EE department can build a self-powering magnetic Wankel engine (1)

- It is a rail gun wrapped nearly in a complete circle, reducing back mmf to a very small open section.
- A pole piece with coil covers gap. A very small trickle current is in the coil.
- Current is sharply broken as rotor enters gap.
- Lenz law surge of current creates magnetic field that momentarily overrides back mmf field.
- Rotor passes through a zero "back mmf" field; even a forward mmf field.
- Pay a little, get engine with no back mmf, violating Lorentz symmetry. COP > 1.0 easily.

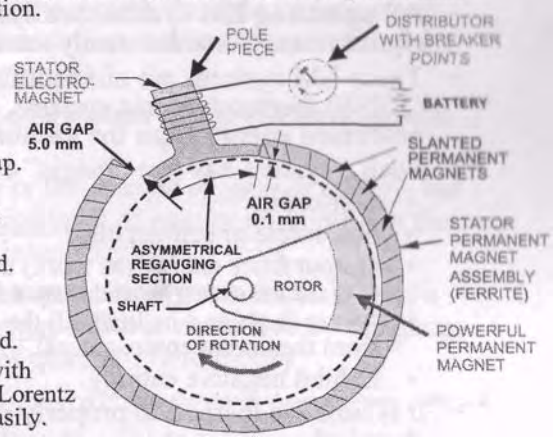

Example: Any EE department can build a self-powering magnetic Wankel engine (2)

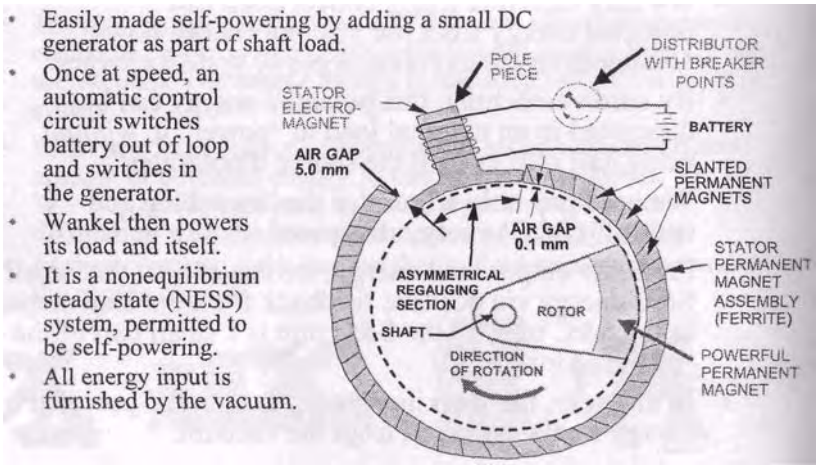

Since EM fields and potentials are sets of energy flows:

- All operating EM systems are systems far from equilibrium. Consider steady state condition:
- These EM systems are nonequilibrium steady state (NESS) thermodynamic systems, freely receiving their processed energy from the vacuum environment.
- Such a system has five "magic" characteristics. It can:
  * Self-order.
  * Self-rotate or self-oscillate.
  * Output more energy (as work) than the operator inputs (the excess energy input comes from the environment).
  * Power itself and its load (all the energy input comes from the active environment).
  * Exhibit negative entropy.
- It is time we learned to properly utilize our NESS EM electrical power systems, rather than killing them.

Why Yakuza suppresses the Wankel magnetic engine and several others

- About two years from now, with scalar interferometry the Yakuza plans to disable the centralized electrical power system of the U.S., to never work again.
- As total economic collapse looms, U.S. will finally boot its scientific community hard, and there will be desperate search for a quick solution.
- Through the Japanese government the Yakuza will offer Japanese self-powering systems as the quick answer.
  - * Draws off all available desperation funding that is "last ditch" U.S. effort to prevent total economic collapse.
  - * By delivering only a few systems and very slowly, that "last ditch" U.S. science effort will be thwarted.
- As a result, there will be a total U.S. economic collapse, which — coupled with conversions, nuclear explosions in cities, anthrax attacks, etc. —will finish off the U.S.
- Yakuza then kills remaining members of U.S. population.

Correcting an erroneous interpretation of the first law of thermodynamics (1)

- The First Law is erroneously thought to define any change in magnitude of an external parameter of the system as work a priori.*
- Potential energy of a system in a given form is such a parameter.
- Work rigorously is the change of form of energy, but not change of magnitude of energy remaining in the same form. The latter requires no work.
- Mere change of magnitude of potential energy of a system is regauging, and it is work-free by the gauge freedom axiom of quantum field theory.

* E.g., see Ralph Baierlein, Thermal Physics. Cambridge University Press, 1999, p. 2.

Correcting an erroneous interpretation of the first law of thermodynamics (2)

* Present interpretation of the first law excludes gauge freedom — a major non sequitur requiring correction.
* If energy is input — by the external environment or fixed source of potential — to the system in the same form as the external parameter's energy, then no work is required.
- In that case, the change of the external parameter's magnitude is by work-free asymmetric regauging.
- If energy is freely input to the system in a different form than the external parameter's energy, then work must be done to change the form of the input energy, before it can change the magnitude of the external parameter.
* Properly switched and controlled, a potentializing source of freely flowing EM energy can furnish an unlimited amount of freely collected potential energy, indefinitely.

Correcting an erroneous Interpretation of the first law of thermodynamics (3)

- $W = \phi q$ shows that any amount of energy W can be freely collected from a fixed scalar potential ϕ, by charges q, if the amount of charge q intercepting the energy (deviating it from the flows comprising ϕ) is freely variable.
- If the amount of charge q is also fixed, any amount of energy W can still be freely collected from ϕ by ratcheting iterative static collection of energy *into* the circuit and dynamic dissipation of energy *from* the circuit to power loads.

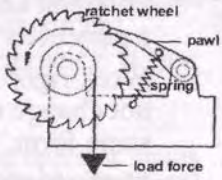

- Similarly, any amount of emf force can be freely collected from a fixed E-field by $F = Eq$.
- Presently only the intensity of the force field and the potential are defined, and then only as how much is diverged from the actual spatial EM field or potential by a unit point static charge assumed at each and every point.

Correcting an erroneous interpretation of the first law of thermodynamics (4)

* At best, the present calculation of "the field" is only an "indication" of the point intensity of field and potential, for interaction with static charges. It's actually a statement on reaction cross section of the unit point static charge.
* If the charge self-resonates at the frequency of the input energy, its interception (divergence) of energy increases, resulting in a different "field intensity defined" for the same "field". E.g., for the same amount of charge, the resonance case generates 18 times as much output energy from the same input as does the static charge case,* with no change in the operator's input. I.e., COP = 18.
* Presently no one calculates "the field" or "the potential" a priori, but only its "dependent point intensity" as determined for static charges.

* See Craig F. Bohren, "How can a particle absorb more than the light incident on It?" Am. J. Phys. 51(4), Apr. 1983, p. 323-327.

Contrary to popular opinion, perpetual motion is permissible and well-known

* Newton's first law of motion is the law of perpetual motion.
  - An object placed in motion remains in that state of motion in a straight line, unless changed by an external agent.
  - With no force interruption, the state of motion is perpetual.
  - The object needs no input of energy, and it does no work.
- Solid state physics students do perpetual motion experiments.
  - Once initiated in a superconducting ring, a persistent superconducting current will continue perpetually.
  - Careful measurements and proper statistical analysis indicates a half-life expectancy of some 10^{23} years.* The accepted age of the universe is about 1.4×10^{10} years.
  - The persistent ring current will last a great many orders of magnitude longer than the present universe has existed.

• Charles Kittel, Introduction to Solid State Physics. Seventh Edition, Wiley, New York, 1996, p. 359.

Common objection to COP > 1.0 power system as a forbidden perpetual motion machine is nonsense (1)

- Max Planck stated the erroneous objection this way: "It is in no way possible, either by mechanical, thermal, chemical, or other devices, to obtain perpetual motion, i.e., it is impossible to construct an engine which will work in a cycle and produce continuous work, or kinetic energy, from nothing. "
- The statement contains two premises, one false and one true. It erroneously equates the two, and assumes that this proves the false premise. That is a simple logical non sequitur.
  * False premise: Perpetual motion is impossible. Falsified by Newton's 1st law and today's persistent super-conducting experiments in solid state physics labs.
  * True premise: No engine can do continuous work in a cycle without energy input.
  * The "i.e.,..." erroneously equates the two as the same thing. That is a non sequitur.

Common objection to COP > 1.0 power system as a forbidden perpetual motion machine is nonsense (2)

- That this rather inane non sequitur has not been noticed for more than 100 years of using it for "knee-jerk" condemnation is inexplicable.
- Perpetual motion has nothing to do with performing work or receiving extra energy input. It is simply Newton's first law of motion.
- Perpetual motion is experimentally proven. From several sources, one can even purchase a standard kit and perform a successful perpetual motion "persistent superconducting current" experiments oneself.
- Can have a perpetual motion machine doing work, if:
  * Necessary energy is received (as from the vacuum).
  * On the average the system is a NESS system.
- E.g., one can have a "self-powering" EM power system.

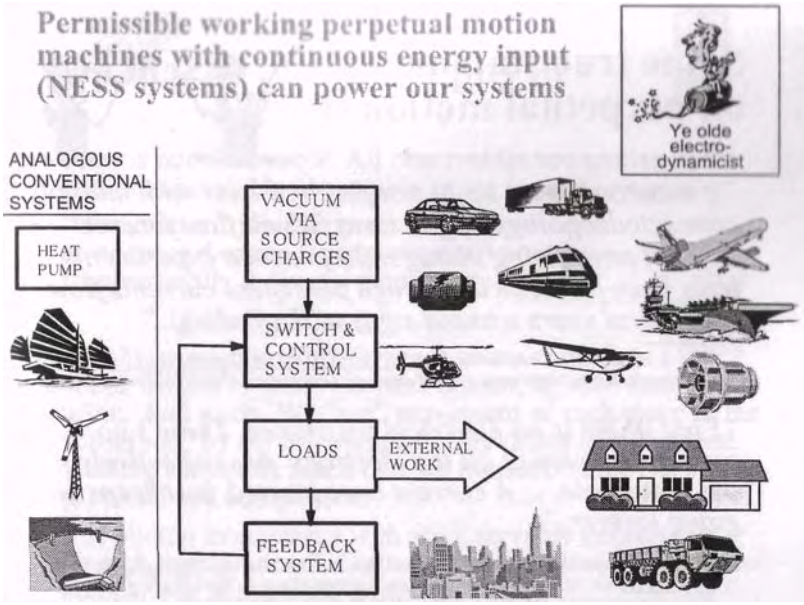

An interesting fact: The entire scientific community can be wrong for more than a hundred years

- In science model errors, often simple foundations are wrong, rather than the complicated mathematics.
- E.g., for more than 100 years the scientific community has automatically condemned "perpetual motion" and "dirty old forbidden perpetual motion machines".
- It seems that no one has previously subjected the typical nonsense statement to a simple sophomore logic analysis
- Indeed, it continues to be used to denigrate EFTV, cold fusion, and other researchers and to slander them.
- To borrow a phrase from Nikola Tesla:

  "... [Eventually] it will be recognized as one of the most remarkable and inexplicable aberrations of the scientific mind which has ever been recorded in history. "

Some true statements on perpetual motion (1)

"If a current is set up in a superconductor with multiply connected topology, e.g. a torus, it will flow forever without any driving voltage. (In practice experiments have been performed in which persistent currents flow for several years without signs of degrading). "

Peter J. Hirschfield, U. of Florida, Physics Teaching Notes. Chapter 5, Superconductivity, http://www.phys.ufl.edu/~pjh/teaching/phz7427/7427notes/ch5.pdf.

"First, there is no electrical resistance. There's no resistance because all the electrons are collectively in the same state. …A current once started, just keeps on going forever."

Richard P. Feynman, Robert B. Leighton, and Matthew Sands, The Feynman Lectures on Physics. Vol. Ill, Quantum Mechanics, Addison-Wesley, Third Printing 1966, p. 21-08. Feynman was speaking about persistent superconducting currents.

Some true statements on perpetual motion (2)

- Roy* sums it up elegantly:

"It follows from Newton's laws that an isolated system in motion, on which no [net] force or torque is acting, exhibits precisely perpetual motion of the second kind. An example of perpetual motion of the second type is the orbiting of electrons around the atomic nucleus. ... perpetual motion of the second type is common on atomic and celestial scale; however, such a motion is not common in everyday life. The best known example of perpetual motion in everyday life is superconductivity, in which a current circulates ceaselessly in a wire loop without a battery. "

* Bimalendu N. Roy, Fundamentals of Classical and Statistical Thermodynamics. Wiley, Chichester, 2002, p. 59.

The march of time in physics

- Time is not observable. All observables are spatial, oof spatiotemporal. No observable exists in time, a priori.
- "Observation" is a $\partial/\partial t$ process imposed upon an ongoing 4-space (spatiotemporal) process. Dimensionally it gives a momentary snapshot:

$$\partial/\partial t\ (L^3T) = L^3$$

- An observation yields a frozen 3-space snapshot at one instant in time. The next instant, another snapshot is taken. And so on. We "see" movement of each piece of the "observed" by (a) its continual observation at high speed, yielding snapshots much like the frames of a movie, and (b) recall and comparison.
- The photon interactions with an observable generate its "march through time". Continuity is achieved by recall and comparison in the mind of the observer.

More sweeping changes to physics (1)

- What we refer to as "propagation of energy through 3-space" is in fact successive 3-positioning of a circulation of energy in 4-space, between the time-axis and a 3-space point and back, or vice versa
- This latter 4-circulation is what we refer to as "charge". Hence negative charge is energy circulation from T to L^3, and positive charge is energy circulation from L^3 to T.

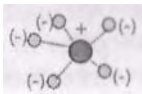

- Charge conservation is the complete 4-circulation. Due to vacuum polarization, any classical charge is a dipolarity, hence involves both energy flows.

More sweeping changes to physics (2)

* Zero charge may be either absence of circulation, or the presence of the same magnitude of equal and opposite circulations. The first is stress-free, while the second produces a stress 4-potential, a change in energy density of the vacuum, and a curvature in spacetime.

- Propagation of EM energy through 3-space actually is the successive positioning of the 4-circulation — the propagation of a 4-circulation.

* This explains Silverman's comment that "we really do not know what charge is... ", by revealing at least a view of how charge can be modeled.

More sweeping changes to physics (3)

- "Massless cause", "massless field", "massless potential", "curved spacetime", "exchange of virtual particles" are all slightly different aspects of the same precursor: massless cause (massless potentials and fields in space and changes of VPF in vacuum).

* All apply to the unobservable condition that exists prior to observation (observation occurs only after interaction of precursor with mass).

♦ Observation of the process whereby an ongoing massless cause is interacting with a previously observed "effect" to change it, is a $\partial/\partial t$ operation induced upon that LLLT process to produce a new "frozen LLL snapshot" (observed effect).

More sweeping changes to physics (4)

- The $\partial/\partial t$ operation induced upon ongoing 4-interaction between a 4-cause and a previous 3-effect, yields the newly observed "form" of the observable, which provides the "change" to it (when compared in memory to previous effect observed).
- The best physics and engineering is to consider a set of such 4-causes — that will interact with or are interacting with a system — to be a nonmaterial, force-free precursor "engine". Directly engineering and using such "precursor engines" is a new and more fundamental approach. It is in fact that of FSB/KGB energetics.
- Precursor engineering (energetics) is a priori an engineering grand unified field theory approach.

Peculiar note on Dirac "hole" thermodynamics

- In thermodynamics, several areas are already known and accepted to violate the second law. One of these is sharp gradients, about which "Not much is known either experimentally or theoretically".*
- A very sharp gradient in energy density across a region of vacuum lifts electrons out of the Dirac Sea, leaving behind unfilled holes. Some of these holes can and do persist, not meeting electrons to "eat", refill and vanish.
- The hole (negative mass energy, negative energy EM fields and potentials) is not a positron (positive mass energy, positive energy EM fields and potentials).

* p. 459, Dilip Kondepudi and llya Prigogine, Modern Thermodynamics: From Heat Engines to Dissipative Structures. Wiley, Chichester, 1998, Reprinted with corrections Oct. 1999.

Note on dark energy and dark matter problems (1)

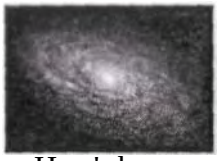

- Dark energy is just negative EM energy. Here's how.
- Persisting or temporarily persisting Dirac sea holes are negative mass-energy "source charges".
- While existing, as a source charge a hole produces negative energy EM fields and potentials, spreading at light speed from the moment of hole formation by sudden removal of its filling electron by sharp energy gradients.
- When the long-ignored Heaviside curled energy flow component is also considered, the negative energy field energies involved are perhaps a trillion times greater than conventionally can be estimated via Poynting theory.
- Nonsignificant antigravitational effects are thus produced, by negative mass of holes and by negative energy fields.

Note on dark energy and dark matter problems (2)

- A fraction of Dirac holes produced in violent gradient processes in the galaxy do persist. They are repelled away from the masses producing them, and stream toward the outside of the galaxy.
- As they exit the galaxy, they slow due to increasing repulsion from the matter of distant galaxies. Thus with passage of time there is a slowly increasing "pooling" of Dirac holes (dark matter) outside each galaxy.
- These increasing pools gravitationally repel the originating galactic matter, reducing that matter's escape due to velocity outward and centrifugal forces.
- The pools also gravitationally repel the matter of distant galaxies, so that a gradually increasing expansion acceleration occurs.

Note on dark energy and dark matter problems (3)

- In the dark matter problem, the G-forces produced on the galactic arms to hold them together have been assumed to be positive gravity forces from hidden (dark) mass inside the galaxy and arms.
- Instead, it is proposed that those forces are in fact antigravity forces — from accumulations of Dirac holes (negative mass matter) just outside the galaxy — acting back on the galactic matter to repel it.
- As source charges, these persisting holes continue to radiate negative energy photons, producing and sustaining negative energy EM fields and potentials. Those contain the missing "dark energy" of the cosmos.
- Dark energy is just the negative energy fields and flows from dark (negative) matter as source charges.

Dark (negative) energy and dark matter: Galaxy Integrity and expansion of the universe (1)

- A sudden impulsive and very strong energy gradient across a region of vacuum lifts electrons from the Dirac sea, flowing in one direction, and leaving behind unfilled negative energy Dirac holes flowing in the opposite direction. The flowing Dirac holes are currents of "dark matter" (matter having negative mass energy).
- The negative-energy hole is not a positive-energy positron, contrary to the prevailing interpretation. A positron has positive mass-energy and positive energy fields; a hole has negative mass-energy and negative energy fields. Equating the two has always been a logical non sequitur.
- As a source charge, the persisting hole emits negative energy photons, establishing and continually replenishing its associated negative energy EM fields and potentials, spreading at light speed.
- Violent sharp-gradient processes in galactic matter continually produce such outward light-velocity streams of negative energy fields followed by much slower streams of dark matter (holes).

Dark (negative) energy and dark matter: Galaxy integrity and expansion of the universe (2)

* The outward-spreading dark (negative mass) matter streams are slightly repelled gravitationally by positive-energy masses in the galaxy. Thus they "navigate" slightly through a galaxy, avoiding matter except for those electrons forcefully meeting them and recombining without radiation.
- The dark matter tends to slow down outside the galaxy and exhibit dynamic cumulation (nonequilibrium steady state) outside, due to gravitational back-repulsion from the cumulations of negative energy outside other galaxies, etc.
- The cumulation of this dark matter around and outside each galaxy repels positive matter back into its own galaxy and also repels positive matter in all distant galaxies.
* Onward-racing negative energy fields with their Heaviside energy components contribute substantially to the effect.

Dark (negative) energy and dark matter: Galaxy integrity and expansion of the universe (3)

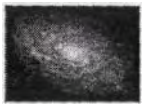

- Considering the long-neglected giant Heaviside energy component of this negative EM energy flow and dark matter flow, its cumulation outside the galaxy far exceeds conventional calculations and leads to significant gravitational repulsion effects.
- From the collection/cumulation outside the galactic masses, the gravitational repulsion back into the galactic matter (e.g., back into a spiral galaxy's arms from the altered space surrounding each arm) holds the galactic matter together, preventing it from flying apart due to centrifugal forces overriding the normal positve gravitational attraction.
- This is largely the phenomenology erroneously labelled the "dark matter" effect. It is not an attraction from inside, but a repulsion from outside.

Dark (negative) energy and dark matter: Galaxy integrity and expansion of the universe (4)

- Continuing accumulation of dark matter and negative energy concentrations outside each galaxy results in the increasing mutual repulsion of galaxies. At some point in the past, with the increasing Dirac hole cumulations the increasing mutual gravitational repulsion of the galaxies caught up with and exceeded their gravitational attraction, and it continues to slowly increase, further exceeding it.
- This reversed the deceleration of the expansion and generated and continues to generate the acceleration of the expanding universe, by gradually increasing the mutual departing intervelocities of the galaxies.
- Originally positive G attraction between galaxies was slowing universe expansion. Finally the cumulating antigravity caught up and surpassed it. So now the expansion of our universe is increasingly accelerated.

Dark (negative) energy and dark matter: Galaxy integrity and expansion of the universe (5)

* Negative energy and dark matter can be investigated on the bench, using Bedini techniques* and other techniques used by Sweet.**
* Together with its Heaviside component, dark energy from the dark matter produces significant antigravity effects** and many other effects.

---

* John C. Bedini and Thomas E. Bearden, "Radiant Potential Energy Charger", U.S. Provisional Patent Application ER 677978580 US, 2004. A formal patent application is in preparation.

** Floyd Sweet and T. E. Bearden, "Utilizing Scalar Electromagnetics to Tap Vacuum Energy," Proc. 26th Intersoc. Energy Conv. Enq. Conf. (IECEC '91). Boston, Massachusetts, 1991, p. 370-375. A highly successful antigravity experiment was performed, with the VTA unit losing 90% of its weight on the bench. Results are reported in the paper.

Dark (negative) energy and dark matter: Producing anomalous Pioneer drag

- In a galaxy, violent gradient processes are continually occurring, continually producing dark matter and flows of negative energy slowly cumulating outside the galaxy. Dark matter accumulations outside produce more antigravity fields back into the galaxy, acting on galactic matter, than does the thinner concentration in the flow inside the galaxy. A similar effect surrounds the sun.

NASA's Pioneer spacecraft

- A spacecraft moving away from our sun towards the outside of the galaxy, experiences a "net drag" force upon it, due to the excess G-repulsion from the outside dark matter accumulation. This accounts for the anomalous drag experienced by NASA's Pioneer 10 spacecraft and some others.

Some aspects of Bedini's important negative energy Investigations (1)

- EM energy flow occurs in two main forms:
  - Divergent (positive) energy flow, where the energy is always trying to diverge out of its flow direction through space and escape back to the environment.
  - Convergent (negative) energy flow, where excess negative energy from the vacuum environment is trying to enter and increase the ongoing flow of negative energy.
- "Conductivity" means the ability of the conductor to "hold in" the positive energy on its flow path through space, and to "hold back" excess negative energy from the vacuum attempting to freely flow into and increase a negative flow of energy through space.
- "Impedance" is reduction of conductivity (ability to hold in or hold back the change in energy flow).

Some aspects of Bedini's important negative energy investigations (2)

* Positive energy flow encountering an impedance will "lose some energy" diverged from the energy flow path. Less energy flow along the path leaves the impedance than entered it.
* Negative energy flow encountering an impedance will "gain some negative energy" converged in from the environment. More negative energy flow along the path leaves the impedance than entered it.
* Negative energy flow passing through a series of impedances can undergo tremendous gain, freely receiving excess negative energy from its environment.

Some aspects of Bedini's important negative energy investigations (3)

* Negative energy flow passing through a series of impedances freely receives excess negative energy from its environment via each "impedance".
* If loads are designed for negative energy, impedance of load provides an additional energy flow gain.
* Such negative energy flows are nonequilibrium systems, freely receiving excess negative energy from their environment.
* In theory, a flashlight battery producing a little negative energy could be used in a circuitry of special iterative series impedances to power a large city.
* The vast excess EM energy gathered would freely come from the vacuum environment.

Conversion of negative EM energy to positive" EM energy

- Converting negative energy to positive energy is simple.
  - Charge a capacitor (or battery) with the negative energy, by connecting the battery "backwards" and pulsing it with negative energy pulses.
  - The battery charges rapidly, and also undergoes appreciable rejuvenation inside.
  - The battery charges with much less "operator-input" energy, because the environment freely inserts additional negative energy via the impedance of the battery.
  - Switch away the rapidly charged battery into another circuit, connecting it normally.
  - The battery discharges more "normal positive EM energy " into the loads and losses of that circuit than the operator furnished to do the switching and controlling.

* Scientific study and development of negative energy loads and systems can rapidly solve the energy crisis forever.

Einstein's admonition

"... the scientist makes use of a whole arsenal of concepts which he imbibed practically with his mother's milk; and seldom if ever is he aware of the eternally problematic character of his concepts. He uses this conceptual material, or, speaking more exactly, these conceptual tools of thought, as something obviously, immutably given; something having an objective value of truth which is hardly even, and in any case not seriously, to be doubted. …in the interests of science it is necessary over and over again to engage in the critique of these fundamental concepts, in order that we may not unconsciously be ruled by them. "

(SLIDE BRIEFING CONTINUED)

PART I: APPENDIX; Vulnerability of Network-Centric Warfare

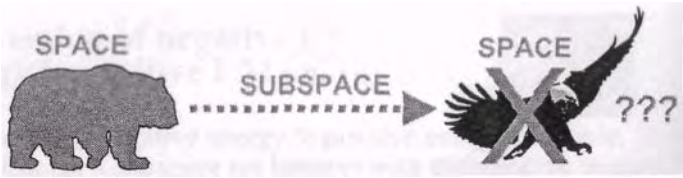

Appendix 2: Example: Vulnerability of Network-Centric Warfare

Nullified by asymmetric energetics warfare

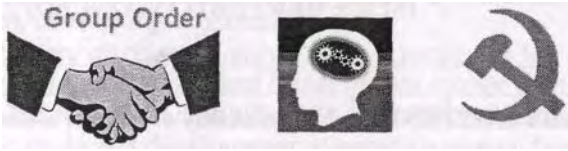

Basic Idea in Network-Centric Warfare NCW)

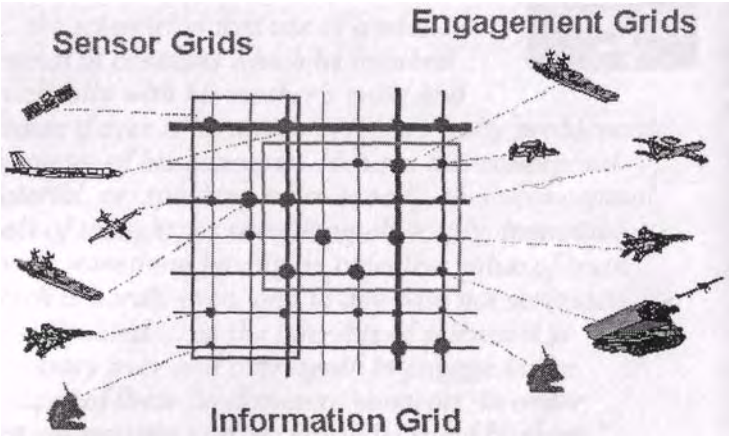

Network-centric warfare (NCW) in part of the theater

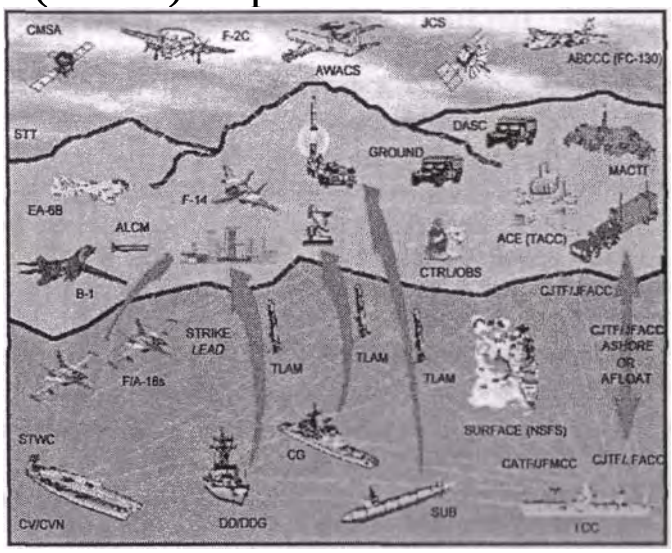

Network-centric warfare

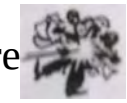

- A developing U.S. style of warfare based on force transformation and total network implementation on the battlefield, to unify and coordinate resources, forces, and actions.
- Particularly directed toward interoperability.
- Ensures all facets are "playing from same sheet of music".
- Shifts sources of power to information-based activities.
- Commanders effectively direct the various elements of the action, in real-time or near-real-time.
- Replaces the older notion of "orchestrating the battlefield", but goes much further by accenting interoperability, communications, and architecture.

---

* E.g., see Max Boot, "The Struggle to Transform the Military," Foreign Affairs, Mar./Apr. 2005, p. 103-118. Also see briefing on http://sunset.usc.edu/gsaw/gsaw2005/s8/slater.pdf

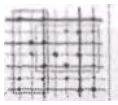

Network-centric warfare includes many good things

- Continuous adaptive acquisition
- Robust operational prototyping
- Capability in the hands of people as possible, then issue the next item, then the next, constantly growing and changing
- Better than forecasting a need 15 to 25 years hence, freezing design then making it fit into the reality that emerges
- Work-in strategy threats and technology first, which yield concept development
- Balanced approach between creativity and implementation
- Train for the known but educate for the unknown
- Based on mission capabilities package — the sum total of that which is necessary to perform a task

Largely taken from presentations by Admiral Arthur Cebrowski, Vice Admiral USN (Ret.), who is Director of Office of Force Transformation.

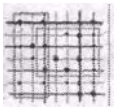

Basic intent of NCW (1)

(Also see following slide)

* Time delays out of Observe, Orient, Decide, Act (OODA) loop.*

* Immediacy of NCW information permits accomplishing OODA cycle on a smooth, nearly continuous basis at all levels of command, for "empowered self-synchronized" operations.

* With training, immediacy of near-total information available at all levels should further accelerate the semi-independent operations for "much greater speed of command."

* Permits decentralizing or flattening the command structure, taking the control function down to the lowest practicable level of command and shortening the response cycle.

* Col. John Boyd's famous loop, widely known in strategy circles.

Basic intent of NCW (2)

Self-Synchronization and the Speed of Command

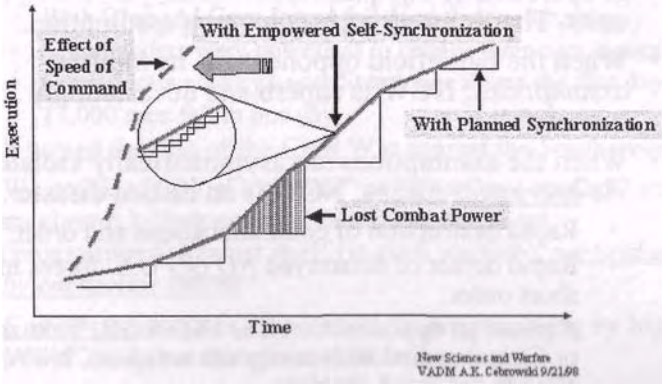

The asymmetric response

Marshall Andrei Grechko

- "History knows many examples how the employment of a new weapon initially gave considerable success because the enemy. caught unawares and not knowing the combat capabilities of this weapon, was for some time incapable of effective counteraction."

  (V. Yo. Savkin, The Basic Principles of Operational Art and Tactics, Moscow, 1972.)

- "Of particular importance is basic research aimed at discovering still unknown attributes of matter, phenomena, and the laws of nature, and developing new methods for their study and use to reinforce the state's defense capability. "

  (Marshall Andrei Grechko)

Network-centric warfare: Assumptions defeated

- NCW assumes GO — Group Order and coherence — in operation of equipment, networks, personnel, and units. That is an already-countered assumption.
- When the battlefield opponent fits its implicit assumptions, NCW is superb and devastatingly successful.
- When the assumptions are asymmetrically violated via energetics means, NCW is an instant disaster.
  - Rapid destruction of communications and order.
  - Rapid defeat of disarrayed NO GO U.S. forces in short order.
  - Against an opponent (such as FSB/KGB, Yakuza, or China) armed with energetics weapons, NCW is already rendered obsolete.

Incident in World War I

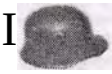

* In WW I, in one incident commanders produced a rigid plan of attack, massive, and down to the finest details.
♦ Predicted superb success for such a superb plan.
- The attack was a total disaster. The Germans violated the programming assumptions and chewed up the operation.
* Lessons to be learned:
  * A strategy may work against an opponent fitting its implicit assumptions.
  * It fails miserably against a foe who can and does deviate asymmetrically from the implicit assumptions.
- Remark: Network-centric war worked decisively against a highly inferior Iraqi military, but proved nothing at all for asymmetric warfare in a modern energetics weapons arena.

Programmed forces: Gettysburg

- At the battle of Gettysburg, forces reacted with programmed or stereotyped responses.
  - Both Blue and Gray forces followed their programs.
  - Commanders were powerless to change their own tactics.
  - Confederate cavalry under Stuart was absent the first day.
  - 17,000 men fell in one day.

* It turned the tide of the Civil War against the Southerners.

- We speak of "BlueGray War" or "BlueGray conflict" as maximum killing conflict, in a force that is set (programmed) against itself (in civil warfare), particularly by energetics means.
- Conversion enables the ultimate "reprogramming by higher power" and thus the ultimate BlueGray war.

Part of a song* about the Battle of pettysburg

"Seventeen thousand fell today;
The cannons roared and blew them all away.
Blood ran red from Blue and Gray,
And seventeen thousand fell today."

"Broken bodies lying all around,
Mould'rin' in the sun and on the ground.
Pigs and vultures came from far away —
Lawd, they had a feast laid out today."

---

* "Seventeen Thousand Fell Today," T. E. Bearden, 1999. And yes, the pigs and vultures did feast outside Gettysburg on the great number of fallen bodies, both blue and gray.

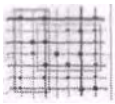

GO assumptions in NCW become NO-GO in reality

- ♦ Against energetics weapons, stability of C4 (command, control, communications, and computer systems) quickly vanishes.
  - Signals fail.
  - Facilities fail.
  - Equipment fails.
  - Personnel fail.

* Energetics warfare on all three fronts (energetic, bioenergetic, psychoenergetic) completely erases stability in all four areas.
- Initiates immediate and ultimate BlueGray internal conflict.
- Against a modern energetics warfare foe, the network-centric force without energetics nearly instantly succumbs.
- With psychoenergetics, GO becomes NO-GO in the targeted soldiers, regardless of how large the group. Group ordering instantly vanishes, and utter chaos is explosively induced.

For a world army of energetics robots

* After sunk costs on the front end, replica precursor robots cost about one cent each.
* A billion "carrier" robots — each with a thousand "secondary" weapons robots aboard — is about 1.001 trillion weapons costing a bit more than $10 billion.
* This is sufficient to attack and destroy all modern nations, peoples, installations, weapons systems, etc. many times over. Nothing is immune or protected.
- Even $1 billion (and time to reproduce all those robots and expense to get control of them) is sufficient to allow destroying all one's enemies with their weapons systems, populations, facilities, and installations.

Some example scenarios

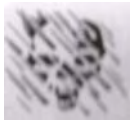

- New National Emergency scenario.
- » Chinese scenario.
- Terrorist scenario.
- Gradual defeat scenario.
- Dissolution of society scenario.
- Sudden defeat scenario.
- Massive sleeper conversion scenario.

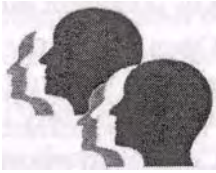

Scenario 1: Substantial new national emergency arises

- U.S. President is whisked on board Air Force One, complete with entourage.
- Key congressmen are whisked to secret underground facility.
- Alert forces react, patrolling skies, border, oceans, cities, etc.
- Command and control centers on full alert and in emergency operations.
- ICBM, bomber, and nuclear subs ready and/or deployed.

Kill of President and Vice President:

Use of ultimate "throwaway" assassins (1)

* Converted staff and security personnel on board the Presidential aircraft have personas triggered by implanted, waiting robots.
* BlueGray conflict erupts on AF-1. Converts kill president and his party.
* Open gun battle between security people. Converts kill others, who are completely outnumbered.
- Converted pilots calmly fly AF-1 into the side of a mountain, turning it into a fireball and dying with it.

WHEN REAGAN SHOT

Kill of President and Vice President:

Use of ultimate "throwaway" assassins (2)

- At same time, other conversions are triggered in separate facilities of the Vice President. Converts destroy facilities and kill the VP.
- Simultaneously, triggered conversions in congressional facilities occur. Converts methodically kill all personnel and congressmen, then destroy facility with themselves in it.
- Facilities and personnel for Joint Chiefs, Supreme Court, State Department, etc. are destroyed in similar fashion.
* Very quickly the U.S. is devoid of most of the leaders of its government. Process can continue further downward.

Sleeper conversions triggered and key personnel destroyed

- Key personnel converted; energetics robots begin destroying equipments, C4, weapons, patrol vehicles, etc.
- BlueGray warfare erupts throughout security forces as equipment fails or is destroyed.

- Converted and nonconverted personnel in security forces "eat themselves" by killing each other off.
- Command and control centers "eat themselves" and fail.
- Entire strategic force has bombers, weapons, nuclear subs, carriers, etc. destroyed by robots. Converted personnel attack and "eat each other" and destroy own friendly facilities by BlueGray conflict.
- Entire U.S. is utterly destroyed, as robots finish mop-up.

Additional actions

- Massive robot attacks and conversions unleashed on cities, civilian populace, facilities such as power stations and refineries, ports, etc.
- Civilian populace in full BlueGray war because of extensive conversions. Populace consumes itself.
- Power stations, refineries, port facilities, bridges, major buildings and facilities destroyed.

- America becomes a smoking ruins.
- Anew, "Pigs and vultures came from far away,
  Lawd, they had a feast laid out today. "

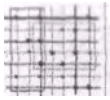

End result: GO to NO-GO

- System stability and survival assumptions of network-centric warfare are totally negated.
- Without energetics defense, network-centric warfare forces can be swiftly and easily destroyed in the era of asymmetric energetics weapons.
- Nuclear weapons, nuclear propulsion systems, and nuclear power systems are easily and quickly dudded by QP weapons.
- Strategic capability of the United States is very rapidly destroyed.

Scenario 2: Chinese scenario (1)

- China prepares both ways: to accommodate, and to strike and destroy.
- FSB/KGB inserts mass "sleeper" personas in all key Chinese officials.
- Cooperation (or conversions) in Chinese at various levels, and in targeted nation's (U.S.'s) port and security personnel.

- Chinese insert numerous shipping containers filled with nuclear weapons and other WMD, into United States. Converts in U.S. ports and in officialdom assist overtly.
- 50 to 100 Chinese nukes inserted in U.S. cities.

Scenario 2: Chinese scenario (2)

- Inserted nukes are detonated, in the dirt, destroying major U.S. cities; 150 million U.S. casualties.
- BlueGray war erupts; Yakuza finishes off U.S.
- FSB/KGB then promptly retriggers massive sleeper Chinese conversions.
- Violent BlueGray war erupts in China and China destroys itself very quickly.
- FSB/KGB emerges winner.
- If deemed necessary, sleeper conversions in Yakuza destroy Yakuza also.

Scenario 3: Terrorist scenario

* Organized terrorist leaders undergo conversions, as do selected ancillary U.S. personnel etc.
- ♦ Converts in several nations provide nuclear weapons to terrorists (such as Al Qaeda).
- Containers filled with nuclear weapons openly inserted in U.S.; U.S. converts assist directly.
- ♦ 50 to 100 nukes inserted into U.S. cities, also other WMD.
- Terrorist converts detonate nukes, destroying cities and producing 150 million casualties.
* U.S. BlueGray war erupts due to internal conversions. Yakuza finishes off the U.S.
- FSB/KGB retriggers terrorist converts.
- BlueGray war consumes terrorist organizations, Arab nations, etc. which eat themselves.

Hypothetical conversation

* Q: "How many dedicated hard-core terrorists would you like inserted in the United States? "
* A: "One million. "
* Response: "Piece of cake. From a distance we will put sleeper conversion personas in a million carefully chosen Americans (young, strong, active, intelligent, knowledgeable) and suddenly switch them. "

* Q: "Will they be dedicated, and will they be willing martyrs? "
* A: "Far better than any you presently have available for insertion. They will also be unrecognizable prior to the conversion switching. "

Scenario 4: Gradual defeat scenario (1)

* Conversions in selected elements of U.S. society, with sophisticated switchable personas.
* Polarizations — disagreements, oppositions, fanaticism — intensify slowly in polarized society.

* Courts, law bodies, law enforcement, government levels gradually split into multiple warring factions.
* Entropy of society grows steadily and without bounds, spurred by slow increase in converts who keep intensifying polarizations. There is chaos in the streets.
* Entropy and conflict increase to where paralysis begins.

Scenario 4: Gradual defeat scenario (2)

- Economy collapses, culture collapses.
- Will, emotional intent, and ability to get things done wither away and die. U.S. society grinds to a halt, consumes itself.

- U.S. is "defeated" mentally and emotionally, fading into entropy (anarchy) with direct self-killing and intense BlueGray war. GO becomes NO-GO.
- Yakuza scalar interferometers augment the chaos and destruction, assisting in causing catastrophic U.S. economic collapse.

- Then Yakuza methodically completes total destruction of the U.S. with its scalar interferometers.

Scenario 5: Dissolution of society (1)

- Switchable persona conversions in selected leaders of U.S. activist groups, influential groups, media groups.
- Some gradually switched into conversion; deepen disinformation and activist programs.

- News media, government agencies, activists perverted.
- U.S. groups set against other U.S. groups, with slowly increasing fanaticism.
- BlueGray war between groups starts and increases steadily in intensity. Society begins to consume itself.

Scenario 5: Dissolution of society (2)

- Purposeful and concerted peaceful actions mostly cease; nation and culture come unglued as senseless violence begins and escalates.

- National culture unravels, polarized opposing groups are "eating each other". Dissolution of the nation, of the culture, and of "normal" GO efforts such as by populace, military forces, police forces.

- Electrical power system destroyed; economy violently collapses.
- Robots and Yakuza "finish off remainder of populace and society.

Scenario 6: Sudden defeat

- Massive converts triggered by "switching-in" pre-installed "sleeper" persona conversions.
- Extensive BlueGray warfare erupts in fierce intensity.
  - Precursor robots simultaneously attack massively, destroy installations, cities, facilities, power systems, weapons systems, command and control systems, etc.

  - Terrorists simultaneously unleash anthrax, smallpox, nukes, scalar interferometry.

- At same time, converted U.S. armed forces groups begin attacking American cities and each other with U.S. nukes, biowar, missiles, and field forces. U.S. military neutralized.

- Total BlueGray warfare without rhyme or reason rapidly consumes America, collapsing the populace and the entire nation. Then Yakuza methodically finishes off remnants.
- Can occur in two days or less; even in two hours.

Scenario 7: Massive sleeper conversion

- Pre-insert switchable sleeper personas in millions; all leaders.
  - Congress, president, cabinet, high officials, defense leaders.
  - Particularly saturate leadership of WMD retaliation and deterrence, military, police.
  - Particularly include Israel.

- Evoke "sudden destruction" scenario, just after switching-in all sleeper conversions.
- Entire society quickly nullified as all sanity and ordering lost. President, Congress, pentagon hierarchy, all security hierarchies commit suicide or destroy each other and populace.
- Society destroys itself at same time that Yakuza, terrorists, and others are attacking and destroying any remaining vestiges.

Important conclusion

* Present scenario chosen seems to be a combination of the slow dissolution scenario and the massive sleeper scenario.
* Must have the massive sleeper scenario to nullify Israel, else FSB/KGB and Russia destroyed also.

* Assuming the combination:
  - The slow scenario for us lasts two years, peaking to destruction of U.S. centralized electric power system, refineries, etc. and with catastrophic economic collapse.
  - Just prior to that climax, sudden dramatic demise of Israel occurs via evoking the massive sleeper scenario upon that state.
  - Sleeper conversion personas already inserted in both the U.S. and Israel, perhaps UK and others, in massive numbers.
* The Yakuza will play the major protege role in the internal overt destructive actions against the U.S.

* U.S. is unprepared to detect or defend against inserted sleeper conversion personas, triggerable at any time.

Remarks

- Hundreds of other scenarios exist and can be initiated. Limited only by imagination and ingenuity of planners and by availability of energetics weapons and capabilities.

- All concepts that "military organizations and systems keep functioning and viable as totally reliable forces" are in error from the outset by conversions, including U.S. network-centric warfare.
- Presently planned Army of the Future is neutralized and defeated by energetics warfare. It can be neutralized in the mind, body, equipment, signals, organizations, and functions modes simultaneously.
- One or more of these or similar scenarios are now in place and already slowly progressing in the operations phase of asymmetric war against us.
- By early 2007, operations phase is expected to destroy us.

Final urgent commentary (1)

- Russian energetics has secretly applied Einstein's admonition for more than a half century.
- Long ago worked the major "kinks" out of EM, GR, quantum theory, etc. and achieved a grand unified field theory (GUFT) that has been highly weaponized.
- Our immediate problem is to sufficiently catch up at the most desperate speed possible, particularly in psychoenergetics. Barrier is U.S. scientific community.
- Presently we cannot defend against the eerie new destruction threats rapidly converging upon us, at the same time different but equally destructive threats are converging or have reached total destruction capability.

Final urgent commentary (2)

* The greatest problems are our severe lags in our

  - Century of delay in correcting the terribly flawed CEM/EE model.
  - 60 year delay in psychoenergetics, massive sleeper conversion, and the eerie nonmaterial robots.

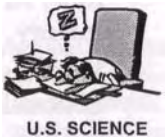

* Unless U.S. science is sharply awakened from its century-long slumber, we are essentially already defeated and finished.

Final urgent commentary (3)

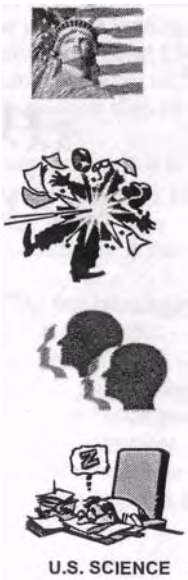

* We presently have one slim chance.
* Given that Israel does somehow have defenses in psychoenergetics, then Israel may be able to save the U.S. again, as it did in the 1970s, in 1986, twice in 1997, and again at the end of 1999 and in the first part of 2001.
* If, on the other hand, Israel itself will be destroyed this time, then nothing we have will save us.
* In that case, the U.S. scientific community will have destroyed us.

Final urgent commentary (4)

* The darkest days in the history of our republic lie immediately ahead of us.
- Hopefully present, rapid Israeli developments (and others) may reduce or nullify the conversion threat.

- If we are to survive, we shall need the most strenuous and rapid effort in our history, now.
- In times of grave peril, Americans have always rallied to national liberty and survival. We must do so again.
* God bless and keep America! We pray for its survival.

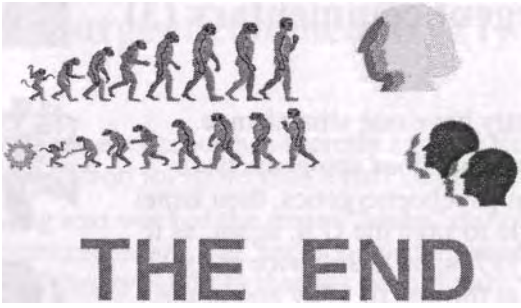

References

i. T. E. Bearden, Fer-de-Lance. Cheniere Press, Santa Barbara, 2nd edition, 2003, gives a reasonably good overview of the Russian/Soviet/KGB/FSB development and use of what is called energetics weapons. These are superweapons using a new approach for using force-free fields in space prior to their interaction with matter to form force fields in matter. We have also called this new approach "precursor engineering", in order to tie it to conventional Western physics as an extension thereof, and hopefully to convince Western scientific leaders to correct the seriously flawed and horribly archaic old classical EM and electrical engineering models taught today in Western universities.

The standard CEM/EE model is so fouled with known major errors that it has become a reflection on the lack of scientific ethics at the highest levels of our scientific community, Our scientific leaders continue to advocate and promulgate such erroneous models, and are directly contributing to the imminent destruction of our nation and people. They continue to ignore the serious flaws of the models as pointed out by imminent scientists such as Feynman, Wheeler, Bunge, Lindsay, Margenau and many others. This cannot be simply shrugged aside and ignored with impunity, if we wish to survive.

Because of its long inaction on this problem, the U.S. scientific community is directly responsible for the presently escalating energy crisis, and it is also partially responsible for the high probability of success of the present 3-year terrorist strategic program leading to our total destruction. It is further responsible for our having no effective "amplified EM anti-engines" treatment for mass casualties, so that millions of stricken Americans will die who did not have to, had the scientific community changed its ostrich position with its head firmly in the sand.

Any high level scientific organization or group involved in electromagnetics that is not discussing and working on the source charge problem — how a charge continuously pours out observable photons in all directions, without any observable energy input — is a scientific organization or group that is participating actively though unwittingly in the coming destruction of our nation and our people.

By the same token, any high level intelligence agency not addressing this seemingly innocuous "archaic CEM/EE model" problem will have no knowledge of the KGB energetics weapons and capabilities. Any such intelligence group is simply failing to perform its designated scientific intelligence mission. Sadly, almost all our present high level intelligence agencies have hardly even heard of the problem; most don't even care that it exists. They certainly have not considered such "foundations issues" to involve winning or losing the asymmetric terrorist war against us. Consequently, that war now enfolds and coordinates the international terrorists also, including the hidden key role being played by the Yakuza.

ii. T. E. Bearden, "Precursor Engineering: Directly Altering Physical Reality," Explore, 13(2), 2004, p. 50-60 somewhat crudely describes the basis for energetics, which the Soviets developed as a science of secret superweapons long since developed, deployed, and clandestinely being utilized against us.

iii. Sec T . E Bearden, "Soviet Weather Engineering over North America," 1-hour videotape, 1985 for documentation of some of the early Soviet weather engineering operations, with pictures of the specific cloud signatures etc. Or just check the news regarding the recent 2004 Caribbean hurricanes being ginned up one after the other, strongly controlled, and strongly pounding the Southern and Eastern seaboards.

iv. See (a) M. W. Evans, P. K. Anastasovski, T. E. Bearden et al., "On Whittaker's Representation of the Electromagnetic Entity in Vacuo, Part V: The Production of Transverse Fields and Energy by Scalar Interferometry," Journal of New Energy. 4(3), Special Issue, Winter 1999, p. 76-78. This paper gives a succinct mathematical development of scalar interferometry, using a higher electrodynamics with O(3) group symmetry. The original two papers by Whittaker are (b) E. T. Whittaker, "On the Partial Differential Equations of Mathematical Physics," Math. Ann., Vol. 57, 1903, p. 333-355, and (c) — "On an Expression of the Electromagnetic Field Due to Electrons by Means of Two Scalar Potential Functions," Proc. Lond. Math. Soc. Series 2. Vol. 1, 1904, p. 367-372. The two papers can be downloaded in PDF form from www.cheniere.org. The 1904 paper initiated that area of electrodynamics known as superpotential theory.

v. T. E. Bearden, Fer-de-Lance. 2nd Edition, Cheniere Press, 2003, with update, gives a rough time table for the development of these energetics weapons, the main types developed, and many actual test incidents for the weapons.

vi. T. E. Bearden, Gravitobiology, Second Edition, Cheniere Press, 2003 covers some of the biological aspects.

vii. T. E. Bearden and K. D. Moore, Conversion: A Major Strategic Threat. 2003, a 300+ page color slide briefing, covered the bizarre but highly successful mind-engineering (psychoenergetics) aspects. (It was an earlier version of the second part of this book). It was produced and delivered pro bono to a three-letter U.S. government agency. No open release of this document has been made by the authors. The document gives the basis for actual production of a living and functioning human mind in the laboratory, the insertion of that mind in another human being, and alternation (conversion) between the two minds to shift the behavior of the individual back and forth at will. Information on that subject is in the present paper.

What is demonstrated in a multiple personality case can be directly produced on the laboratory bench and in any human target anywhere on the planet.

An operational fraction of the mind can be used in conversion techniques also, without total mind switching but only with switching of that fraction involving a certain area or class of behavior.

Thus selected leaders in a societal polarization area, on both extreme ends, can be selectively and repeatedly "temporarily converted" to more extreme and dramatically different behavior and leadership, to push the polarization to greater intensity. That capability will be increasingly exercised over the next two years. The general background of the KGB development of this ability, actual dramatic human test incidents, and the science on which it is based are given in the present book. The application and role of conversion in the present 3-year coordinated terrorist program to destroy the United States is also included — briefly in Part I, and more extensively in Part II.

viii. On April 28, 1997 — even as Defense Secretary William Cohen was publicly confirming at a conference in Georgia that "terrorist" electromagnetic superweapons were being used to engineer the weather and climate, trigger volcanoes into eruption, and

generate earthquakes — the moments were ticking away for a sudden massive Russian/KGB superweapon attack on May 1 that would have utterly destroyed the U.S. in two hours or less. Eerily, neither Dr. Cohen nor our U.S. intelligence agencies knew what was actually transpiring and coming down upon us, even as the Secretary spoke. Five days before the scheduled attack, we had sent a desperate fax to the prime minister of the supporting nation, pointing out a critical change that had to be made in their most powerful superweapon's command and control system. The change was quickly made and the Soviets were so notified. We waited in agony as the clock ticked until, with two days remaining before May 1 (the scheduled attack date) — and while Secretary of Defense Cohen was speaking in Georgia — that giant armada started standing down, and Armageddon was again avoided by a hair's breadth.

ix. Stanislav Lunev (with Ira Winkler), Through the Eves of the Enemy. Regnery, Washington, 1998 gives a good accounting of the powerful part played by the Russian Mafia in the aftermath of the Soviet Union's economic collapse. Lunev is the highest ranking GRU defector. He is a former Colonel in the GRU, the military counterpart of the KGB. On p. 22-33, he summarizes the Spetznaz capabilities. On p. 22-27, he summarizes Spetznaz use of nuclear weapons already on American soil and in our cities. On p. 26, he gives some of the ways in which the Soviets easily brought nuclear weapons into the U.S. On p. 30 he confirms Russian seismic weapons. Use of EMP weapons is on p. 30-31. Use of very, very low frequency weapons to destroy the human brain, put people into a zombie-like state, and aid in brainwashing is confirmed on p. 31. Lunev was of course not allowed to detail the most highly relevant energetics weapons information. The book as published had to be cleared and approved by the U.S. Central Intelligence Agency, which would obviously not allow such details to be included.

x. For some details on the Yakuza, see (a) Brian Bremner, "The Samurai Meets the Godfather." Business Week. Jan. 29, 1996. On p. 47, Bremner gives a quick, half- page overview of the Yakuza in Japan. (b) — "How the Mob burned the Banks: The Yakuza is at the center of the $350 billion bad-loan scandal." Business Week. Jan. 29, 1996, p. 42-43, 46-47. This article summarizes the Yakuza involvement in, and cause of, the huge bad-loan banking scandal that occurred in Japan. This rip-off of the Japanese taxpayer enriched the Yakuza. See also (c) Michael Hirsh and Hideko Takayama, "Big Bang or Bust?" Newsweek. Sept. 1, 1997, p. 44-45. The Yakuza rip-off of the Japanese banking system may have been for as much as $600 billion. Our comment is that any high U.S. Japanese official seriously protesting the Yakuza involvement at the time, was in grave danger of being killed. Several were in fact assassinated by the Yakuza.

xi. Many details on the Aum Shinrikyo are given in Global Proliferation of Weapons of Mass Destruction. Part I. Senate Hearing 104-422. Hearings Before the Permanent Subcommittee on Investigations of the Committee on Governmental Affairs. U.S. Senate, Oct. 31 and Nov. 1, 1995. Sadly, that Subcommittee seems to have known nothing at all about the Soviet superweapons acquired by the Yakuza/Aum Shinrikyo, although that information certainly is known to certain U.S. Government agencies.

xii. We acknowledge the significant contributions of Australian geophysicist Harry Mason, who furnished this vital information and verified its authenticity.

xiii. See (a) Michael Hirsh and Hideko Takayama, "Big Bang or Bust?" Newsweek. Sept. 1, 1997, p. 44-45; (b) Brian Bremner, "How the Mob burned the Banks: The Yakuza

is at the center of the $350 billion bad-loan scandal." Business Week. Jan, 29. 1996, p. 42-43, 46-47.

xiv. See (a) M. W. Evans, P. K. Anastasovski, T. E. Bearden et al., "On Whittaker's Representation of the Electromagnetic Entity in Vacuo, Part V: The Production of Transverse Fields and Energy by Scalar Interferometry," Journal of New Energy. 4(3), Special Issue, Winter 1999, p. 76-78. This paper gives a succinct mathematical development of scalar interferometry, using a higher group symmetry electrodynamics. The original Whittaker papers giving the basis for scalar interferometry are listed in references {xxi, xxii} below.

xv. Graham H. Turbiville, Jr., Weapons Proliferation and Organized Crime: The Russian Military and Security Force Dimension. U.S. Air Force Academy, Institute for National Security Studies, Colorado Springs, CO, June 1996.

xvi. For conventional consideration of hurricane increases, see (a) Lennart Bengtsson, "Hurricane Threats," Science. Vol. 293, 20 July 2001 p. 440-441; (b) Stanley B. Goldenberg et al., "The Recent Increase in Atlantic Hurricane Activity: Causes and Implications," Science. Vol. 293,
20 July 2001 p. 474-479. For a young weatherman who recognizes the direct use of weather engineering when he sees it, and is steadily reporting and exposing it, see meteorologist Scott Stevens' website http://www.weatherwars.info.

xvii. A notable exception is meteorologist and TV weatherman Scott Stevens, who observes and publishes much information on the weather war going on in the skies over the United States, on his website http://www.weatherwars.info/.

xviii. Particularly professional and hard-hitting coverage of the desperate energy situation is given by Matthew Simmons, head of Simmons & Company International. Highly professional presentations of the real situation in energy worldwide, is available in PDF format from the Simmons website http://www.simmonsco-intl.com/.

xix. T. E. Bearden, "Precursor Engineering: Directly Altering Physical Reality," Explore. 13(2), 2004, p. 50-60. Briefly, there are no forces or force fields in mass-free space, but only in mass systems. For electromagnetic systems, what we call "force" is the ongoing interaction of the force-free EM field in space, with charged mass q. That ongoing interaction is identically force. Force is therefore the ongoing effect of a more fundamental ongoing causative interaction of curved space with mass.

The field in space is simply an energy pattern, existing as a change to the virtual particle flux of the vacuum (particle physics view) and a curvature of spacetime (general relativity view). It is also a set of Whittaker energy flows, where by "change in energy" we mean "change in the VPF of the vacuum," and "change in the curvature of spacetime". Accordingly, we may formally define energy as spacetime curvature, and also as change in the VPF of the vacuum.

The precursor EM field is simply the EM field as it exists in mass-free space, prior to the field's interaction with matter to form forces and a force field.

The precursor EM field — even a "static" field — is also a set of ongoing Whittaker energy flows that continue so long as the field is merely present. So unlimited energy flow itself is free for one's taking and using, from any precursor (force-free) field or potential that is established in space. A region of spacetime curvature may be modeled as comprised of a harmonic series of bidirectional longitudinal EM waves —real EM energy flows from

the source charges producing the associated EM fields and potentials (EM curvatures of spacetime). One merely has to intercept and collect the freely flowing EM energy from any static field or potential, and prevent any of the collected energy being used in one's circuit to destroy the source of potential or the source of field. This is easiest accomplished by potentializing the circuit with its charges q pinned, so dq/dt = 0. Then switch away the completely undepleted external source of potential, recomplete the circuit (as with a diode and resistor in series), unpin the electrons and allow current to flow. The new "freely potcntialized" circuit will then freely dissipate power in that circuit's loads and losses, until a11 the initial free potential energy is dissipated. The free energy flow phenomenon and insulting free potential energy change in the absence of current, actually is the physical mechanism that generates the gauge freedom axiom, whereby the potential — and thus the potential energy — of any EM system can be freely changed at will, and without doing work.

Because precursor fields are copious free flows of energy continually extracted from the vacuum via the source charges, one can directly engineer very powerful changes in the energy of the causative force-free precursor field, requiring that one furnish only a bit of work for the switching and structuring and controlling of the freely available energy flows comprising that change. Thus one can almost freely produce a very large precursor energy field set prior to forces and "field work" being involved at all. By subsequently interacting this very large but nearly free precursor energy field set with charged mass in a physical system, extraordinarily large forces and physical effects (work) are then almost freely produced in the mass system. This strongly calls attention to the fact that there are no "conservation of work" laws in physics! There are only conservation of energy laws. Work is simply changing the form of energy; if the "energy changed in form" is received for free, then so can the resulting work be "for free". In the present scientific view, this is negentropic engineering — and it is perfectly permissible by the laws of nature and of physics.

One must also be careful to distinguish between "internal system work" and external work by the system on something else (an external load). To do internal work, a single joule of EM energy can be "used" (converted in form) again and again, to produce multiple joules of work all internally on the system. Work rigorously is the change of form of energy. Given X joules of energy to begin with, one can get X joules of work in one change of form of the energy — and if that work was internal and none of the energy in the new form is lost from the system, one still has all the energy left within the system, just in a different form from what it was in the beginning. If the system still collects this energy in its new form and does not allow its dissipation, it can again be changed in form (e.g., back to the original form) to produce X more joules of work internally to the system. But then the energy is still present, and now in the original form again! Closed looping that "circulation" of changing-form-energy, while preventing any losses of the circulation flow, is a problem for the dogmatic advocate castigating perpetual motion (which is actually Newton's first law of motion). The "perpetual motion while doing continuous work with no additional energy input is impossible" statement contains a false assumption: that each time energy changes form and thereby does work, the work is external work by the system on an external load, and the control of the energy in the new form is just "lost" — i.e., the energy in the new form is just dissipated on out of the system, never again to return. One does not have "dissipation of energy" as work unless the energy in its new form after the work is lost from the system. If it is not dissipated out of the system, control of it by the system has not been lost. It can again be used to perform additional internal work in the

system, though not external work outside the system if it is to continue doing internal work. So it will do that internal system work indefinitely. Note that this form of "perpetual motion and perpetual internal work with no additional energy input" is quite compatible with the conservation of energy law, once one recognizes the difference between internal work and external work, and understands that work is rigorously the change of form of energy, nothing else. It is still quite true that, in the engineering sense where one wishes to do external work on an external load outside the system, then the dissipated energy performing work in the external load is not recovered (usually), and the usual simple thermodynamics emerges.

By precursor engineering (i.e., Russian energetics), one can pay a little bit to almost freely engineer very large energy patterns in mass-free spacetime, prior to their subsequent interactions with matter. Then by simply interacting these "almost freely developed pure energy structures and dynamics" with charged matter, very great work (force effects, or force engines acting in that charged matter) can be almost freely produced, including at great distances. By continuing to propagate a hoary old false EM model that still assumes force fields in space (and thereby still assumes the old material ether), our own scientific leaders are blindly and very determinedly withholding the U.S. scientific community from knowledge and use of precursor engineering (energetics) and therefore from knowledge and use of negative entropy engineering. Since the KGB weapon scientists are using precursor engineering (energetics) in superweapons of great power, the ignorance of our scientific leaders and their refusal to change the terribly flawed CEM/EE model are leading the United States directly into our catastrophic destruction.

xx. Nikola Tesla, "Pioneer Radio Engineer Gives Views on Power," New York Herald Tribune. Sep. 11, 1932.

xxi. E. T. Whittaker, "On the Partial Differential Equations of Mathematical Physics," Mathematische Annalen, Vol. 57, 1903, p. 333-355. Downloadable from www.cheniere.org.

xxii. E. T. Whittaker, "On an Expression of the Electromagnetic Field Due to Electrons by Means of Two Scalar Potential Functions," Proc. Lond. Math. Soc. Series 2, Vol. 1, 1904, p. 367-372. Downloadable from www.cheniere.org.

xxiii. J. D. Jackson, Classical Electrodynamics, 2nd Edn., Wiley, 1975, p. 249.

xxiv. Elsewhere we have formally corrected the present Second Law of thermodynamics, which is an oxymoron implicitly assuming its contradiction has first occurred (to move the system away from equilibrium, thus lowering its entropy — a negative entropy operation). The old Second Law deliberately does not account its assumed preceding negative entropy operation. It then accounts only for the entropic decay of the out-of-equilibrium system back to equilibrium — the state of maximum entropy. That is why it prescribes only the production of increasing positive entropy.

Written presently as $(0 \leq \Delta S < +\infty)$, the Second Law assumes — but deliberately does not account for— its own contradiction by a prior negative entropy operation $(-\infty < \Delta S \leq 0)$, and thus formally is a logical oxymoron and always has been. The old Second Law $(0 \leq \Delta S < +\infty)$ must be replaced by the new law $(-\infty < \Delta S < +\infty)$, which now also accounts for the previously unaccounted but implicitly assumed prior negative entropy precursor operation.

Very often, this overall new Second Law is applied in systems in two serial phases: first

an excitation (potentialization, or asymmetric regauging) phase occurs in which the system departs from equilibrium via the new half-law $(-\infty < \Delta S \leq 0)$. The potentialization phase is then followed by the excited system's decay back to equilibrium by the old half-law $(0 \leq \Delta S < +\infty)$. For such separate potentialization and decay phases, the second law can be expressed as the equation $(-\infty < \Delta S < +\infty) = (-\infty < \Delta S \leq 0) + (0 \leq \Delta S < +\infty)$. In that form, the old second law is the rightmost term and is easily seen to be only a "half-law". It merely accounts the decay of a previously excited system, back to equilibrium. The new overall Second Law is (i) consistent with experiment, (ii) includes the known thermodynamic contradictions to the old Second Law (several are given in Kondepudi and Prigogine, Modern Thermodynamics, Wiley, 1999, p. 459), (iii) includes transient statistical fluctuations in an equilibrium system including their initial negative entropy halves, (iv) removes the logical error in the old law's statement, and (v) now includes negative entropy engineering (precursor engineering, or what the Soviet KGB weapon scientists dubbed "energetics"). Since every charge and dipole in the universe explicitly and freely pours out real observable EM energy at light speed, without any observable energy input (which means with only virtual-state energy input), then every charge already demonstrates eontinuous production of negative entropy and experimentally falsifies the present old Second Law. It does, however, comply with the new and corrected Second Law, which is clearly and experimentally established once one studies the "source charge problem" together with its polarization of the vacuum and its consequent "broken symmetry of opposite charges" solution. Every charge therefore happily and continuously produces negative entropy, of the sort shown theoretically possible by D. J. Evans and Lamberto Rondoni, "Comments on the Entropy of Nonequilibrium Steady States," J. Stat. Phys., 109(3-4), Nov. 2002, p. 895-920. Evans and Rondoni despaired of finding any real system exhibiting such continuous production of negative entropy, but did allow that, for deterministic systems, the "problem remains." After solving the long-vexing source charge problem, we then nominated every charge and dipole (and dipolarity) in the universe as examples of real physical systems continuously producing negative entropy as predicted by Evans and Rondoni.

xxv. Richard P. Feynman, Robert B. Leighton, and Matthew Sands, The Feynman Lectures on Physics. Addison-Wesley, Reading, MA, Vol. 1, 1964, p. 12-2.

xxvi. Ibid. Vol. 1, 1964, p. 2-4.

xxvii. See T. E. Bearden, Fact Paper, "Perpetual Motion vs. 'Working Machines Creating Energy from Nothing': With a Discussion of Perpetual Extraction and Emission of Real EM Energy from the Vacuum," available on website www.cheniere.org. The paper also gives a full explanation of the exact reordering and coherent integration mechanism used by every source charge to produce continuous negative entropy.

xxviii. T. E. Bearden, Energy from the Vacuum: Concepts and Principles. Cheniere Press, Santa Barbara, CA, 2002.

xxix. P. Drude, Ann. Physik. Vol. 1, p. 566; Vol. J, 1900, p. 370, 869.

xxx. See Raymond A. Serway, Physics for Scientists and Engineers, with Modern Physics. Third Edition, updated version, Saunders College Publishing, Philadelphia, 1992, p. 742-745 for a pertinent discussion of drift velocity.

xxxi. Scrway, ibid. p. 744 shows a typical calculation of a drift velocity of 2.46 x 10exp(-4)m/s.

xxxii. See E. T. Whittakcr, A History of the Theories of Aether and Electricity. London, 1958 for a treatise on ether theories, their type, their development, etc.

xxxiii. (a) A. A. Michelson and E. W. Morley, "Influence of motion of the medium on the velocity of light." American Journal of Science. Vol. 31, Series 3, 1886, p. 377-386; (b) — "The relative motion of the earth and the luminiferous aether," American Journal of Science. 4(3), 1887, p. 333; (c) — "On the relative motion of the earth and the luminiferous aether," Phil. Mag. 24(4), 1887, p. 449.

xxxiv. J. D. Jackson, Classical Electrodynamics, 2nd Edn., John Wiley & Sons, New York, 1975, p. 249.

xxxv. Secretary of Defense William Cohen at an April 1997 counterterrorism conference sponsored by former Senator Sam Nunn. Quoted from DoD News Briefing, Secretary of Defense William S. Cohen, Q&A at the Conference on Terrorism. Weapons of Mass Destruction, and U.S. Strategy. University of Georgia, Athens, Apr. 28, 1997.

xxxvi. In any large and powerful organization, essentially the leader does not personally implement anything, but makes decisions and issues orders. The circle immediately surrounding him (first level down in the organization) is his advisors and staff; they also do not personally implement, but relay the orders to appropriate sections of the organization. The second level down is where the large parts (directorates, Sections, etc.) of the organization exist. A manager at that second level down is busy with administration matters, so he personally does not implement. But at the third level down, where the suborganization is now smaller, that manager is usually the implementer. To implement is to perform actions laterally, in and outside the organization, so the third level manager's world is largely a lateral world, with extensive functions, contacts, agreements, etc. with outside groups and agencies. Now call those third level managers and organizations the "implementation entourage" or just the "entourage" for short. This is where all the lateral action happens.

Now apply the bell-shaped normal distribution curve to the entourage managers. At least 9% are lacking in matters such as ethics etc. Shrink that 9% down to 1%, and now one has managers who are in fact very evil persons. They would kill their own grandmother to gain power, control, etc. Law and rules mean nothing except unfortunate encumbrances. Hereafter we will simply call this evil, grasping, conniving 1% "the entourage", simply understanding it is only 1% or so of those managers at that level. But the entourage is the level at which all the skullduggery, murders, assassinations, etc. are planned and either carried out or arranged. We are speaking of every large and powerful organization on Planet Earth! The entourage is dictated by primate dominance, and this big monkey game has been going on in humans as long as there have been humans.

xxxvii. (a) "The Takahashi Magnets and Motor", Infinite Energy. Vol. 1, No. 5&6, Nov 1995/Febl996, pp. 35-37; (b) Tony Edwards, "'Accident' in lab creates super motor." The [London] Sunday Times, Dec. 10, 1995. Edwards reported an electric motor scooter with top speed of 50 mph and range of more than 500 miles using an electromagnetic engine and magnets developed by Takahashi.

The new scooter, developed by Sciex Corporation of Japan, ran on four ordinary 12-volt car batteries. The magnets were based on powder-metallurgy techniques and special

neodymium material which produced a magnet with the world's highest Megagauss Oersted rating at the time. 55 MgOe was the maximum previously, but Takahashi's magnet material achieved 120 MgOE. The Takahashi engine produced 15 horsepower from just a few amperes of electricity. When the scooter was free-wheeling, the engine became a generator and partially recharged the batteries.

Another novel use of the Takahashi magnets was as "battery doublers" to extend the life of rechargeable batteries. Thin inch-wide squares, attached to mobile phone batteries, doubled the amount of charge they retained and allowed the batteries to last twice as long. (c) Also see entries under magnetic Wankel engine, in T. E. Bearden, Energy from the Vacuum: Concepts and Principles. Cheniere Press, Santa Barbara, CA, 2002, p. 363-368.

Any university electrical engineering department worth a hoot can readily build a magnetic Wankel engine, which kills its back mmf and thus continuously develops torque in a single rotary direction. One pays only a tiny bit to kill the back mmf, and self-powering of the system and its load can be achieved by tapping off a bit of power from the shaft-powered generator, and feeding it back to power the switching and control circuit. That none of our EE departments design and build such devices is a sad commentary on the lack of "forward vision" of our scientific community.

xxxviii. (a) Teruo Kawai, "Motive Power Generating Device," U.S. Patent No. 5,436,518. Jul. 25, 1995; (b) see also Bearden , Energy from the Vacuum. 2002, p. 363, 371-375, 500. In 1996 Kawai met with this author and his CTEC board of directors, here in Huntsville, Alabama. After much negotiation on his second trip here, Kawai and CTEC reached agreement. We at CTEC would immediately proceed to set up laboratory and production facilities for producing and marketing worldwide Kawai's self-powering motor, so that in 1997 we would have had such systems in mass production and on the world market everywhere. Our only exclusion would have been Japan, as Kawai had already licensed the marketing rights for that nation. Kawai was backed by the second richest man in Japan, a multibillionaire, and he was financing our effort himself. In short, full financing was already accomplished. The night of the same day that we reached agreement verbally, a private jet arrived post haste from Los Angeles, with Yakuza on board. The next morning Kawai no longer controlled his company, his invention, or his own fate. He was absolutely stunned and shamed, and could hardly lift his head to look me in the eye. He was a totally broken man. Instead, we found ourselves facing the arrogant Yakuza, some with the blue markings and the missing fingers, and very hostile Japanese. The agreement with Kawai was dissolved by the Yakuza right there on the spot. The Japanese team then coldly packed up the Kawai motors that had been shipped to us, and bundled up the Kawai team and left. And that was that. But once one understands the Yakuza's role in this Operations Phase that opened about the first of 2005, one then understands why the Yakuza have suppressed all the Japanese overunity EM systems.

xxxix. Appreciable details on Nathan Stubblefield and his inventions are given by Gerry Vassilatos, Lost Science: New Edition. Adventures Unlimited Press, 2000. Tesla visited Stubblefield and got some of his own impetus from observing the anomalous and awesome electrical power effects achieved by Stubblefield. Many of the stunning effects achieved by Stubblefield have also been successfully replicated by inventor John Bedini.

xl. We give the specific nuclear reaction in T. E, Bearden. Energy from the Vacuum: Concepts and Principles. Cheniere Press, 2002, p.569, reaction equation (12).

xli. See http://www.pbs.org/wgbh/pagcs/frontline/shows/cyberwar/interviews/weiss.html.

xlii. According to Italian channel RAI 1, on Sept. 18, 2004 there was an attempt on Putin's life by planting two car bombs along his automobile route. Security forces discovered the cars and dismantled the bombs. Putin has also nullified the election process in Russia, and has thus returned the nation to some of the stronger control mechanisms by the old Communist Party methods. One sees the heavy hand of the Communist faction of the KGB/FGB — which controls the organization and the superweapons and thus controls Russia — as behind the return to greater authoritarian hold over the Russian populace.

xliii. See Matthew Kaminski, "KGB Democracy," Wall Street Journal, Sept. 17, 2004, p. A14.

xliv. For a commentary, see (a) Henry Sokolski, "It's Almost Too Late to Stop Iran," Wall Street Journal. Sept. 27, 2004, p. A18. See also (b) Henry D. Sokolski and Patrick Clawson, Editors, Checking Iran's Nuclear Ambitions, Institute for Strategic Studies, 2004. As of this writing, Iran is continuing on its path to building nuclear reactors capable of furnishing weapons grade materials for nuclear weapons. Further, Russia is again assisting Iran in building the reactors.

xlv. Fatwah, Feb. 1998, issued in the name of the World Islamic Front, and signed by Bin Laden, Zawahiri, and two others.

xlvi. Osama Bin Laden, ABC-TV Interview in Afghanistan, May 1998.

xlvii. The 9/11 Commission Report, Sept. 2004, p. 51 -52.

xlviii. Vice President Dick Cheney, October 21, 2001.

xlix. As reported by Niall Ferguson, "Sinking Globalization," Foreign Affairs. 84(2), Mar./Apr. 2005, p. 76-77. Ferguson is Professor of History at Harvard University, a Senior Fellow at the Hoover Institution, Stanford University, and a Senior Research Fellow of Jesus College, University of Oxford.

1. http://www.math.uio.no/~karstent/waves/index_en.html contains a summary article on mathematical attempts to model freak waves and uncover their causes. The article is Kristian B. Dysthe et ah, "Freak Waves, Rogue Waves, Extreme Waves and Ocean Wave Climate," June 2003. The authors are all mathematicians at various Norwegian universities and doing research on such waves. As can be seen, these types of waves occur far more frequently than previously suspected, can be larger than previously thought possible, but are also still little understood. Some of the attempted theoretical explanations are summarized in the article, with pros and cons of each being given also.

li. See http://news.bbc.co.Uk/l/hi/sci/tech/3917539.stm, "Freak Waves Spotted from Space", BBC News.

lii. Per statistics of the Head Department of Navigation and Oceanography (HDNO) of the Russian Federation Ministry of Defence.

liii. See Bill McGuire, A Guide to the End of the World: Everything You Never Wanted to Know. Oxford University Press, paperback, Aug. 2004 details the phenomenology of large volcano eruptions, supervolcanoes, and tsunamis, among other catastrophic geological events. McGuire is the Benfield Professor of Geohazards and also is

the Director of the Benfield Greig Hazard Research Centre, Department of Geological Sciences, Universily College London, Gowcr Street, London WC1E 6BT.

liv. See "Supervolcanoes," BBC2, Thursday 3 Feb. 2000; available for downloading from website http://exodus2006.com/transcript.htm.

lv. See http://www.anthro.uiuc.edu/faculty/ambrose. Stanley H. Ambrose is an Associate Professor in the Department of Anthropology and Department of Nutritional Sciences at the University of Illinois Urbana-Champaign, and also is Director of the Anthropology department's Environmental Isotope Paleobiogeochemistry Laboratory.

Ivi. E.g., see Jorge A. Vazquez and Mary R. Reid, "Probing the Accumulation History of the Voluminous Toba Magma," Science. Vol. 305, 13 August, 2004, p. 991-994.

lvii. From a transcript of an interview on BBC, available for downloading on website http://www.davidpbrown.co.uk/nota-bene/dna.html.

lviii. See Merritt Ruhlen, The Origin of Language: Tracing the Evolution of the Mother Tongue, Wiley, 1996. There is also persuasive linguistic evidence supporting this bottleneck hypothesis, along the lines presented by Ruhlen. Our special thanks to Marcia Stockton for pointing this out.

lix. E.g., see (a) Stanley H. Ambrose, "Late Pleistocene human population bottlenecks, volcanic winter, and differentiation of modern humans," Journal of Human Evolution. Vol. 35, 1998, p. 115-118; (b) S. H. Ambrose, "Population Bottleneck," in R. Robinson (ed.), Genetics. Macmillan Library Reference, 2002 [a 4-volume encyclopedia of genetics]; (c) M. R. Rampino and S. H. Ambrose, "Volcanic winter in the Garden of Eden: The Toba super-eruption and the Late Pleistocene human population crash," in F. W. McCoy and G. Heiken, (eds.), Volcanic Hazards and Disasters in Human Antiquity. Geological Society of America Special Paper , Vol. 345, 2000, p. 71-82.

lx. For detailed modeling, see Steven N. Ward and Simon Day, "Cumbre Vieja Volcano — Potential collapse and tsunami at La Palma, Canary Islands," American Geophysical Union, 2001. Available from http://www.benfieldhrc.org/SiteRoot/tsunamis/WardandDay.pdf.

lxi. See www.oceansatlas.org/unatlas/issues/emergencies/OceanPhenHDNO/Dangerous.html. The information on hazards to shipping and losses of shipping is provided by the Head Department of Navigation and Oceanography (HDNO) of the Russian Federation Ministry of Defence.

lxii. Marcia Stockton, private communication.

lxiii. James Davison Hunter, Culture Wars: The Struggle to Define America. Basic Books, New York, 1991 (Paperback edition, 1992). Dr. Hunter is Director, Institute for Advanced Studies in Culture, and is also the William R. Kenan Jr. Professor of Sociology and Religious Studies at the University of Virginia.

lxiv. John Zogby, President of the Zogby International Survey firm. Quoted from John Mariani, "Zogby Describes Divided Nation," The Post Standard. Sept. 24, 2004. Article is carried on website http://www.synracuse.com/elections/poststandard/index.ssf?/base/news-l/1096017657151770.xml

lxv. Details of these dramatic deaths, and how they were technically achieved, are given in T. E. Bearden, Fer-de-Lance. Chenicre Press, updated 2003.

lxvi. Stanislav Lunev (with Ira Winkler), Through the Eves of the Enemy, Regnery, Washington, 1998. Lunev is the highest ranking GRU defector. He is a former Colonel in the GRU, the military counterpart of the KGB. In p. 22-33, he summarizes the Spetznaz capabilities. On p. 22-27, he summarizes Spetznaz use of nuclear weapons already on American soil. On p. 26, he gives some of the ways in which the Soviets easily brought nuclear weapons into the U.S. On p. 30 he confirms Russian seismic weapons. Use of EMP weapons is on p. 30-31.

lxvii. U.S. General George S. Patton Jr., in his speech to Third U.S. Army troops on the eve of Operation Overlord in 1944.

lxviii. As a typical example, see Colin S. Gray, "Thinking Asymmetrically in Times of Terror," Parameters. U.S. Army War College Quarterly, Spring 2002, p. 5-14. The basic message of the article is that asymmetric war is really nothing new, even the concept doesn't have any real content, and the terrorists can do a little damage and we will take some damage, but we will survive as always. In the vernacular, it proposes that we shouldn't sweat the small stuff; everything is still AOK and there isn't any really new or unique problem. Now contrast this with the recent registration of a Yakuza scalar interferometer on the Yellowstone caldera, so that in a single shot most of the United States can be destroyed. We really do not recall seeing that kind of thing occur in our past "asymmetric" wars, nor do we see initiation of earthquakes such as the 9.3 quake on the seafloor on Dec. 26, 2004 that initiated the catastrophic tsunamis in Asia. But one notes that, in 2002 — five years after Defense Secretary's confirmation of special terrorist EM weapons generating earthquakes, evoking volcanoes into eruption, and controlling our climate and weather — the official publication Parameters of the U.S. Army War College apparently has no knowledge whatsoever of such terrorist capabilities or of such terrorist demonstrations.

lxix. Missing and unaccounted, in the official Ukraine records and accounting for its nuclear weapons transfer to Russia. The reader should understand that there are no officially acknowledged missing nuclear weapons, and there likely never will be! In the real world, there turns out to be hundreds of such weapons that have "mysteriously disappeared from accounting," and then in the hue and cry and charges and counter charges, the hullabaloo has just faded away and been ignored.

lxx. The Ministry of Defense reported on transfer and destruction by the Ukraine of 3772 nuclear warheads, but the general staff reported there were more than 4,000 to begin with. In other words, something other than transfer or destruction was done with some 230 or so Ukrainian nuclear warheads.

lxxi. Even under U.S. agreement with the Russians (START II) for dismantling some of the nuclear weapons, there has been no truly accurate accounting. E.g., quoting from Jo L. Husbands, BITS Research Report 97.1, Part II: Domestic and International Politics: The U.S. Response to the Russian Nuclear Legacy. Nov. 1997: "From the outset, the Russian government was unwilling to permit the United States to have a role in the actual dismantlement of former Soviet/Russian nuclear warheads. The United States therefore cannot say with certainty how many warheads have actually been dismantled at the four Russian dismantlement facilities... " In other words, much of it is smoke and mirrors.

So the reports of precisely how many warheads were transferred and/or dismantled and destroyed are not accurate at all in their "total numbers," and they never have been. Instead, the infamous and deceitful catch-all phrase so long used by our intelligence agencies to cover ignorance was invoked. The phrase is "We have no evidence that..., " which usually is a bald-faced attempt to cover up something which we absolutely do not know the truth or falsity of, or that is embarrassing, or that is a political hot potato. Usually the evidence is indeed there somewhere, but it indicates something contrary to the prescribed "official intelligence position" of the agency. Analysts who push too hard in advancing what the intelligence database really states, when it is against the official policy position, do not fare well or last very long in the U.S. intelligence community.

lxxii. In 1996 Gen. Alexander Lebed, then President Boris Yeltsin's national security adviser, reported that 84 suitcase-size nuclear weapons were missing from Russia's arsenal. Other Russian officials denied the claim, and U.S. officials discounted it. The matter was never resolved, but just gradually ignored.

lxxiii. Paul L. Williams, Al Qaeda: Brotherhood of Terror. Alpha Books, Indianapolis, 2002 states Russian and U.S. intelligence sources are aware that bin Laden purchased 20 suitcase nuclear weapons in 1998 from Chechen Mafia agents for S30 million in cash and a quantity of heroin whose street value was $700 million. Williams is a former FBI consultant and the author of several important books on terrorism.

lxxiv. Eliot Marshall; David Malakoff, and Constance Holden, "Bioweapons Cleanup," Science. Vol. 295, 25. Jan. 2002, p. 603.

Ixxv. Simon Reeve, The New Jackals: Ramzi Yousef. Osama bin Laden, and the Future of Terrorism. Northeastern University Press, Chicago, 1999, p. 208.

lxxvi. The study reference is: U.S. Congress, Office of Technology Assessment, Proliferation of Weapons of Mass Destruction: Assessing the Risks. Government Printing Office, Washington, 1993, p. 54.

lxxvii. Richard K. Betts, "The New Threat of Mass Destruction," Foreign Affairs. 77(1). Jan/Feb. 1998, p. 32.

lxxviii. Manitoba Health, Emergency Treatment Guidelines: General - Triage. Aug. 2004. This Canadian guide is deliberately referenced to show that the triage procedure is a necessary medical emergency procedure, recognized internationally.

lxxix. Our own National Institutes of Health (NIH) knows nothing about higher group symmetry electrodynamics, knows nothing about precursor engineering (the Soviet energetics science), at best knows the standard but seriously flawed electrical engineering and classical Maxwell-Heaviside electrodynamics, never understood the induction of health changes and diseases in U.S. Embassy personnel in Moscow by the decades of so-called "microwave radiation of the U.S. Embassy." knows nothing of the mechanism proved by Priore and important French scientists to yield revolutionary electromagnetic cures for dread terminal illnesses (such as cancer, clogging of the arteries, some infectious diseases tested, etc.), knows absolutely nothing at all about Soviet bioenergetics or its mechanisms and capabilities, and certainly knows nothing of (and does not even "believe") the startling capabilities of Soviet/Russian/FSB/KGB psychoenergetics and its biogenesis ability to build an actual living mind and mind operations in the laboratory, then clone or reproduce it or them by the millions.

N1H and its subsidiary organizations seem interested in maintaining the status quo in medical science and adhering scrupulously to present medical treatment mechanisms and theoretical understanding. They seem to block and deny any and all more advanced and innovative research, particularly if advanced group symmetry electrodynamics is involved.

They have little knowledge of the actual healing mechanism of the body (its cellular regeneration system, which is a highly special electromagnetic system), and do not understand the higher group symmetry electrodynamics of that system. Further, they do not intend to even study the kind of "novel" electrodynamics and electrodynamics' mechanisms used by the body for all its cellular healing processes. Instead, they are absolutely determined to continue with drugs, vaccinations, surgery, antibiotics, and conventional medical therapies. They therefore are determined that the majority of those coming mass casualties from anthrax spray attack etc. shall be untreatable, so that most of those poor patients will be dragged aside and left to die without treatment, under Triage procedures. Hitler in all his death camps may not have produced as many millions of deaths as will this dogmatic policy of our medical science institutions.

Consequently, we are 50 years behind where we should be in medical therapy technology. We are also extremely vulnerable to mass casualties generated in our population centers by terrorist WMD attacks. Whether intentional or unintentional, NIH's actions and policies are designed to keep us in that situation indefinitely.

lxxx. (a) Vlail Kaznacheyev and L. P. Mikhailova, Ultraweak Radiation in Intercellular Interactions, [in Russian], Novosibirsk, 1981. An English exposition of much of the Kaznacheyev work is given in (b) Vlail Kaznacheyev, "Electromagnetic Bioinformation in Intercellular Interactions," Psi Research, 1(1), Mar. 1982, p. 47-76. See also (c) Vlail Kaznacheyev, "Apparent information transfer between two groups of cells," Psychoenergetic Systems. 1(1), Dec. 1974, p. 37. (d) Vlail Kaznacheyev et al., "Distant intercellular interactions in a system of two tissue cultures," Psychoenergetic Systems. 1(3), Mar. 1976, p. 141-142. In the same issue, see (e) "A Comment" by William A. McGarey, p. 143; and (f) "A Comment" by Arthur C. Hastings, p. 143-144.

lxxxi. Aitchison, I. J. R., "Nothing's Plenty: The Vacuum in Modern Quantum Field Theory," Contemporary Physics. 26(4), 1985, p. 372.

lxxxii. See Rick Weiss, "NIH to Set Stiff Restrictions on Outside Consulting," Washington Post. Aug. 4, 2004, p. A01.

lxxxiii. "US NIH Wants 1 Year Moratorium on Drug Co. Collaborations," Dow Jones Newswires. 9-24-04 1318ET.

lxxxiv. (a) The U.S. Patent is "Pathogenic Mycoplasma", US Patent No. 5,242,820, issued September 7, 1993. Dr Lo is listed as the Inventor and the American Registry of Pathology, Washington, DC, is listed as the "Assignee"; (b) for a summary, see Donald W. Scott, "Mycoplasma: The Linking Pathogen in Neurosystemic Diseases," Nexus Magazine, Aug. 2001. Particularly see (c) US Senate, Ninety-fifth Congress, Hearings before the Subcommittee on Health and Scientific Research of the Committee on Human Resources. Biological Testing Involving Human Subjects by the Department of Defense. 1977; released as US Army Activities in the US Biological Warfare Programs, Volumes One and Two, 24 February 1977. See also (d) Donald W. Scott and William L. C. Scott, The Brucellosis Triangle. The Chelmsford Publishers, Sudbury, Ontario ,Canada, 1998.

lxxxv. The interested reader is referred to our "Porthole Briefing" on website www.cheniere.org.

lxxxvi. (a) T. E. Beardcn, Energetics: Extensions to Physics and Advanced Technology for Medical and Military Applications, Mar. 21, 1998, 200+ page enclosure to CTEC Letter to Gen. (Ret.) Walter Busby, Deputy Secretary of Defense for Counterproliferation and Chemical and Biological Defense, March 21, 1998., also the enclosure to CTEC letter to Major General Thomas H. Neary, Director of Nuclear and Counterproliferation, Office of the Deputy Chief of Staff, Air and Space Operations, HQ USAF, May 4, 1998. Copies were also sent as enclosures to letters to NIH, CDC, and several other government agencies and laboratories, (b) T. E. Bearden, "Method, System and Apparatus for Conditioning Electromagnetic Potentials, Fields, and Waves to Treat and Alter Matter," Application No. 60/339,122, Dec. 7, 2001. This is the provisional patent application that the present author openly released to the public domain in Dec. 2002, and it is posted on www.cheniere.org. (c) See also T. E. Bearden, Porthole Briefing, available on www.cheniere.org.

lxxxvii. (a) B. Baker; J. A. Spadero, and R. O. Becker, "Electrical stimulation of articular cartilage," Annals of New York Academy of Sciences. Vol. 238, 1974, p. 491-499; (b) R. O. Becker, Carlton F. Hazlewood, Abraham R. Liboff, and Jan Walleczek, "Electromagnetic Applications In Medicine," NIH-OAM Electromagnetics Panel Report, Jan. 15, 1993; (c) Robert O. Becker and Andrew A. Marino, Electromagnetism and Life. State University of New York Press, Albany, 1982; (d) Robert O. Becker, "The neural semiconduction control system and its interaction with applied electrical current and magnetic fields," Proceedings of the XI International Congress of Radiology. Vol. 105, 1966, p. 1753-1759, Excerpta Medica Foundation; Amsterdam; (e) R. O. Becker, "The direct current field: A primitive control and communication system related to growth processes," Proceedings of the. XVI International. Congress of Zoology, Washington, D.C., Vol. 3, 1963, p. 179-183; (f) R. O. Becker, Charles H. Bachman, and Howard Friedman, "The direct current system: A link between the environment and the organism," New York State Journal of Medicine. Vol. 62, April 15, 1962, p. 1169-1176.

lxxxviii. R. O. Becker and David G. Murray, "The electrical control system regulating fracture healing in amphibians," Clinical Orthopaedics and Related Research. No. 73, Nov.-Dec. 1970, p. 169-198. This is the definitive technical exposition by Becker of his electrical control system ideas and findings.

lxxxix. (a) R. O. Becker and D. G. Murray, "A method for producing cellular dedifferentiation by means of very small electrical currents," Trans. N.Y. Acad. Sci.. Vol. 29, 1967, p. 606-615; (b) Becker, R. O., and Joseph A. Spadaro, "Electrical stimulation of partial limb regeneration in mammals," Bulletin of the New York Academy of Medicine. Second Series, 48(4), May 1972,
p. 627-64' (c) C. A. L. Bassett; R. O. Becker, and R. J. Pawluk, "Effects of electric currents on bone in vivo," Nature, Vol. 204, Nov. 14, 1964, p. 652-654.

xc. T. E. Bearden, Porthole Briefing, available on www.cheniere.org.

xci. See (a) A. J. Berteaud and A. M. Bottreau, "Analyse des rayonnements electromagnetiques emis par l'appareil Priore," [Analysis of the electromagnetic radiations emitted by the Priore apparatus],D.R.M.E., 1971, p. 3-12; (b) A. J. Berteaud, A. M. Bottreau, A. Priore, A. N. Pautrizel, F. Berlureau, and R. Pautrizel, "Essai de correlation entre revolution d'une affection par Trypanosoma equiperdum et l'action d'une onde

electromagnetique pulsee et modulee," [Trial of the correlation between the evolution of a disease by Trypanosoma equiperdum and the action of a pulsating and modulated electromagnetic wave], Compt. Rend. Acad. Sci. (Paris), Vol. 272, 1971, p. 1003-1006; (c) R. Cambar, "Rapport general des travaux de la Commission de Controle constitute en vue de verifier l'un des effets biologiques obtenu par l'utilisation de l'appareillage de Priore A. Bordeaux," [General findings of the work of the control commission formed to verify one of the biological effects obtained by use of the apparatus of A. Priore at Bordeaux], 1969, 1 vol.; (d) R. Courrier, "Expose par M. le Professeur R. Courrier, Secretaire Perpetuel de L'Academie des Sciences fait au cours d'une reunion a L'Institut sur les effets de la Machine de M.A. Priore le 26 Avril 1977," [Presentation by Professeur R. Courrier, Perpetual Secretary of the Academy of Sciences, made at the meeting of the Academy on the effects of the machine of M.A. Priore.]; (e) G. Delmon and J. Biraben, "La croissance du carcinome de Guerin sour Faction de champs electromagnetiques," [The growth of carcinoma treated by the action of electromagnetic fields], Rev. Path. Comp., 3(2), 1966, p. 85-88; (f) G. Mayer, A. Priore, G. Mayer and R. Pautrizel, "Action de champs magnetiques associes a des ondes electromagnetiques sur l'orchite trypanosomienne due lapin," [Action of magnetic fields associated with electromagnetic waves on the typanosomian orchitis of the rabbit], Compt. Rend. Acad. Sci. (Paris), Vol. 274, 1972, p. 3011-3014; (g) Priore's doctoral thesis (which was rejected when the project was suppressed) is: Guerison de la Trvpanosomiase Experimentale Aigue et Chronique par L'action Combinee de Champs Magnetiques et D'Ondes Electromagnetiques Modules [Healing of intense and chronic experimental trypanosomiasis by the combined action of magnetic fields and modulated electromagnetic waves], thesis submitted in candidacy for the doctoral degree, 1973; (h) Eric Perisse, Effets des Ondes Electromagnetiques et des Champs Magnetiques sur le Cancer et la Trvpanosomiase Experimentale [Effects of Electromagnetic Waves and Magnetic Fields on Cancer and Experimental Trypanosomias], Doctoral thesis, University of Bordeaux No. 83, March 16, 1984; (i) For a limited background and light technical coverage of Priore's work for the educated layman, see T. E. Bearden, "Vacuum Engines and Priore's Methodology: The True Science of Energy-Medicine, Parts I and II," Explore!. 6(1), 1995, p. 66-76; 6(2), 1995, p. 50-62; (j) For somewhat more specific technical details, see T. E. Bearden, Energetics of Free Energy Systems and Vacuum Engine Therapies. Tara Publishing, Internet node www.tarapublishing.com/books, July 1997; (k) for a summary of the entire Priore affair, see Christopher Bird, "The Case of Antoine Priore and His Therapeutic Machine: A Scandal in the Politics of Science," Explore!. 5(5-6), 1994, p. 97-110; (1) For detailed coverage of the entire Priore affair, see Jean-Michel Graille, Dossier Priore: Une Nouvelle Affaire Pasteur. [The Priore Dossier: A New Pasteur Affair?], De Noel, Paris, 1984 [in French]; (m) For a technical description of the ordinary EM and physics characteristics of the Priore radiation (but not the active mechanism), see A. J. Berteaud and A. M. Bottreau, "Analyse des rayonnements electromagnetiques emis par l'appareil Priore," ["Analysis of the electromagnetic radiations emitted by the Priore apparatus"], D.R.M.E., 1971, p. 3-12. Priore's patents are (n) Antoine Priore, "Apparatus for producing radiations penetrating living cells," U.S. Patent No. 3,368,155, Feb. 6, 1968; (o) Antoine Priore, "Method of producing radiations for penetrating living cells," U.S. Patent No. 3,280,816, Oct. 25, 1966, (p) Antoine Priore, "Precede et dispositif de production de rayonnements utilisables notamment pour le traitement de cellules vivantes," [Procedure and Assemblage for Production of Radiation Especially Serviceable for the Treatment of Living Cells], Republique Francais Brevet d'Invention P.V. No. 899.414, No. 1,342,772, Oct. 7, 1963.

xcii. See Laurie Garrett, "The Nightmare of Bioterrorism," Foreign Affairs. 80(1), Jan. /Feb. 2001. p. 76-89. 1 lie quote is from p. 77.

xciii. As reported in "Alert as Nuclear Bombs Go Missing," The Drudge Report. Sept. 17,2002.

xciv. Matthew Bunn and Anthony Wier, "Preventing a Nuclear 9/11," Washington Post, Sept. 12, 2004, p. B07.

xcv. Ibid.

xcvi. Paul L. Williams, Osama's Revenge: The Next 9/11: What the Media and the Government Haven't Told You." Prometheus Books, 2004. Williams is a former FBI consultant and author of several treatises on terrorism.

xcvii. Paul L. Williams, Al Qaeda: Brotherhood of Terror. 2001.

xcviii. See (a) T. E. Bearden, Fer-de-Lance. Cheniere Press, 2003 (updated) for some details on quantum potential weapons and their usage. Also see (b) T. E. Bearden, Gravitobiology. Cheniere Press, 2003 (updated) for additional details. Some five nations of the world now possess QP weapons, and a sixth nation is obtaining them. China, Russia, Brazil, Israel, and one other friendly nation are the five present nations.

xcix. For background on such tsunamis when naturally induced, see David R. Tappin, Editor, Submarine-slump-generated Tsunamis. Special edition of Marine Geology. Volume 203, Issues 3-4, 30 January 2004, pages 199-386.

c. Paul H. B. Shin, "Killer wave lying in wait: Volcano could unleash horror," New York Daily News. Aug. 29, 2004, http://www.nydailynews.com/news/story/226886p-194881c.html.—

AD 763210

QUITON/PERCEPTRON PHYSICS: A THEORY OF EXISTENCE, PERCEPTION, AND PHYSICAL PHENOMENA

by

Thomas E. Bearden

March 1973

Approved for public release; distribution unlimited.

THE SAM-D PROJECT
REDSTONE ARSENAL, ALABAMA

SURFACE TO
AIR
MISSILE
DEVELOPMENT

AMCRM-MO FORM 1, 1 MAR 71

CONTENTS

		Page
I.	INTRODUCTION	1
II.	EXISTENCE, PERCEPTION, OBSERVATION, AND PHYSICAL PHENOMENA	2
III.	MASS AND SPACE	11
IV.	IMPACT ON PHYSICS	16
	A. Michelson-Morley Experiment	16
	B. Gravitational Attraction	17
	C. Newton's Third Law of Motion	19
	D. Newton's Second Law of Motion	20
	E. Newton's First Law of Motion	22
	F. Identity of Length and Time	23
V.	ELEMENTARY PHILOSOPHICAL IMPLICATIONS	25
	A. Existence, Thing, and One	25
	B. Reality, Ultimate Reality, Being, and Ultimate Being	27
VI.	CAUSALITY AND ITS MODIFICATION	28
VII.	CLOSING REMARKS	35

ABSTRACT

A fundamental answer is attempted to the questions of being, time, space, existence, perception, and physical phenomena. Mass, empty space, reality, gravitational attraction, continuity, discontinuity, and relativity are among the "things" and "nonthings" for which relationships and explanations are provided.

Perception is defined as detection by a mass of change to itself and as a differentiating process. Perceived physical phenomena are revealed to be first derivatives of ultimate reality, and outputs of the physical perceiving device call the "perceptron." Using the operation of the physical perception process on action, the units of which are energy times time, an entirely different view is generated of both reality and the Heisenberg uncertainty principle. When superposition is imposed as a condition, the Heisenberg uncertainty principle is revealed to be a quantized statement. A concept of the absolute value of a dimensional molecule is advanced.

A reality model is constructed of an action continuum and a nonaction continuum separated by an operational threshold whose magnitude is given by an uncertainty principle. Perception is modeled as a process which switches atomic quanta of action and nonaction back and forth across the threshold. Mass is explained as perceptron switch activity rate, and a mass definition equation is generated. One kilogram mass is shown to represent 17.053 x 10^{50} perceptron switches per second. From the model, Newton's laws of motion and gravity can be generated directly from the concept of the interaction of mass with space itself, space being taken as a massless fluid, or ether, composed of tiny nonaction particles called "quitons." Einstein's postulates of special relativity are also shown to follow from the model, and a statement of the equivalence principle is shown to be consistent with the model.

The concept of "lineception" as a causal chain of perceptron operations is advanced. "Inception" is developed as a noncausal modulation of lineception and as a distinguishing feature of a living system. The possibility is raised that inception could provide an explanation of the noncausal, statistical, ultramicroscopic universe and yet require large ensembles of ultramicroscopic events to conform to causality. Inception is shown to lead to karma. Perception is shown to be causal and to generate causality itself.

Some elementary philosophical implications of quiton/perceptron theory are pointed out and briefly discussed.

I. INTRODUCTION

The unsolved problems of physics stem from the unclear nature of the physical perception of change, and their resolution lies in the analysis of perception as a physical process. The unsolved problems of metaphysics stem from the same source, and can be resolved by the same perception analysis.

Specifically, a physical detection system can detect changes to itself and nothing else. These detected internal changes are thus what a detector "sees" or "observes" or "perceives" as changes to its external environment, i. e., as its physical phenomena. Thus a mass, being itself a physical detecting system, must detect only changes to itself, and these perceived changes to itself constitute its observed physical phenomena. For that reason, these perceived changes are obviously entirely relative to (i. e., are part of) the perceiver (observer); more precisely, they are entirely relative to and part of the perceiver's mass, which is the detector that is doing the perceiving.

Since only changes are perceived by a mass, then mass's perception must be a differentiating process. Ergo, perceived physical phenomena are first derivatives of a higher, or more fundamental, reality. The nature of that higher reality is by definition unperceivable (perception differentiates or fragments it), and it involves the quantity "action."[1] Action itself is not perceivable; change of action is perceivable since perception differentiates action. If superposition is placed on the Heisenberg uncertainty principle as a required condition, then the uncertainty principle contradicts itself for all except integral or zero multiples of a quantum of action. Correction of the uncertainty principle by imposing superposition as a condition provides a statement of the basic operation of perception -- the detection by a mass of change to itself.

All mental perception of a human being regarding physical phenomena is received (i. e., is inputted to the mind) from a physical sensory apparatus whose primary ingredient is mass. Thus we may describe the perceptive mind as consisting of sensory outputs of mass perceptions; that is, the input to mental perception must be the output of mass perception, and this interface within the mind may be referred to as the "perceptive mind."

From the above foundation, a comprehensive theory of perception can be constructed, and a most unusual model of "reality" emerges. A variety of unsolved questions are then resolved by the model. The resolutions include, among other things, 1) derivation of the postulates of relativity; 2) definition of the nature of time and space; 3) the explanation of gravity; 4) the generation of causality itself; 5) resolution of the wave theory of light with the quantum theory of light; 6) the explanation of why ultramicroscopic phenomena are statistical yet large ensembles of ultramicroscopic phenomena are causal; and 7) validation of Mach's principle and the equivalence principle. A totally new and precise definition of mass and of being itself are also two unexpected results. The problems of metaphysics are also answered: metaphysics is elevated to an exact science without any tinge of dogma, and physics and metaphysics are united.

---

[1] Planck's constant, Heisenberg's uncertainty principle, the principle of least action, the energy of a photon, etc., are derived from action and perception's differentiation of action.

Next Page

II. EXISTENCE, PERCEPTION, OBSERVATION AND PHYSICAL PHENOMENA

We first define perception[1] as detection by a mass of change[2] to itself, and state that it is an operation performed by that mass. The physical apparatus that accomplishes this perception is termed a "perceptron," which thus may be an electron, an atom, or the sensory apparatus of a living being.

A change detector does not detect the state of its input, but rather detects changes in that state. So in this sense a change detector can be regarded as a state differentiator. Therefore a perceptron differentiates, i.e., it perceives changes in its input and generates outputs in accordance. When its input is constant it will have no output. Thus zero output of a perceptron does not necessarily mean zero input.

What is to be fed into the perceptron's input section exists; i.e., existence (ultimate reality)[3] is defined as what is to be fed into the perceptron's input. The output of the perceptron is that which is perceived, or what we ordinarily call "physical phenomena."[4] Since the perceptron differentiates its input state, then physical phenomena are first derivatives of ultimate reality, which precisely accounts for the sharp separation between observable and nonobservable, i.e., between macroscopic and microscopic.

Any change in a perceptron's input section must involve both time change, Δt, and energy change, ΔE. So we may assume their product, $\Delta E \Delta t$, has always occurred in a perceptron's input whenever it produces an output. The output will be a derivative of the input, e.g.,

$$\frac{\Delta E \Delta t}{\Delta t} = \Delta E \tag{1}$$

and

$$\frac{\Delta E \Delta t}{\Delta E} = \Delta t\,, \tag{2}$$

where in each case the constant of proportionality has been ignored.

---

[1]We differentiate between <u>perception</u> and <u>realization</u>. Perception is entirely a physical process, and causal. Realization is a mental process and is not restricted to causal relationships.

[2]Reflecting, one notes that mass can only change in a nonmass manner. It cannot "change" without involving space and time, both of which are "nonmass." Therefore a mass change <u>must</u> be composed of both mass and nonmass.

[3]"Ultimate" in that it is higher or more fundamental than perceived reality.

[4]Changes to mass and only changes to mass constitute physical phenomena. Changes to one mass constitute "its" perceived physical phenomena, or its physical universe.

"Changes to mass and only changes to mass constitute physical phenomena. Changes to one mass constitute "its" perceived physical phenomena, or its physical universe. Since the other masses in its universe are perceived by it (i.e., created in its perception by its perception process), then these masses must be entirely relative to the mass perceptron that perceives them. Ergo, perceived mass is relative to the perceiver.

Next Page

Any detector has an operational input threshold, i.e., a minimum discernible signal. The Heisenberg uncertainty principle states the requirement for such energy-time changes:

$$\Delta E \Delta t \geqslant \hbar/2 \ . \tag{3}$$

Its smallest value, or

$$\Delta E \Delta t = \hbar/2 \ , \tag{4}$$

is then the input threshold for a physical perceptron to operate and produce an output.[1] Letting $k = \hbar/2$, we can write this simply as

$$\Delta E \Delta t = k \ . \tag{5}$$

Since existence has been defined as that which is fed into the perceptron's input, then that existence exists whether or not the perceptron operates, and the case[2] where

$$\Delta E \Delta t < k \ , \tag{6}$$

also exists (i.e., can be present in the input of a perceptron) but cannot be perceived or detected (i.e., the perceptron will not operate and produce an output).

At this point we diverge to remark that the product of energy and time is a quantity called "action," and the units of action are

$$A \equiv \frac{ML^2}{T} \tag{7}$$

Thus the input state to a perceptron is composed of an action continuum,[3] and the perceptron differentiates action quanta to produce physical phenomena.

---

[1]We acknowledge additional uncertainty statements but for simplicity will use only one in this paper.

[2]Equation (6) exists and it is proper to write it down and search out its ramifications. Equation (3) is a limiting condition which applies only to mass. But since our physical experience must involve nonmass (e.g., photons, space, time, being), then nonmass considerations must be examined. A good beginning is to consider the entire field of nonmass possibility, i.e., that field of nonmatter changes defined by (6), which includes the entire subquantum domain. So we legitimately examine two conditions: Eq. (3) must define (or apply as a condition to) the mass phenomena (change, quantized) system, and (6) must define (or apply to) the nonmass phenomena (subquantum) system.

[3]We exactly define continuity as the failure to perceive difference (change), and

phenomena (subquantum) system.

[3]We exactly define continuity as the failure to perceive difference (change), and discontinuity as the perception of difference (change). The difference between continuous and discontinuous is entirely one of perception. Thus there are two kinds of continuity: absence of perceptron operation at all, and identically repeated perceptron operations. The first kind exists outside of perception while the second kind exists in perception-to-perception. These are two powerful definitions, which among other things enable one to understand such concepts as limiting process, derivative, point, line, and plane. Mathematics itself is the game of perception, nothing more and nothing less.

Next Page

When a large quantity of action is to be fed into a perfect perceptron, the input process cannot occur instantaneously; a Δt must be outputted (created)[1] by the perceptron for each operation. Thus perception processes steps or quanta of exactly k size, and exactly k size only. Inputs of less than k size are simply collected[2] until the aggregate is equal to k, then differentiated to produce an output. We must therefore rewrite the Heisenberg uncertainty principle as

$$\Delta A = nk \quad , n = \pm 0, 1, 2, \ldots \quad , \tag{8}$$

where the plus and minus signs are necessary since action only has to change about some constant level in the perceptron input, and this change may be either additive or reductive (this quantum statement is actually the basis for quantum physics).[3] Thus, from the viewpoint of a perceptron, its output universe of physical phenomena is constructed by successive granular differentiation of unit operations, each of size k, but it detects no time lapse (creates no Δt) between operations.

When differentiated by a perceptron, an action atom may be regarded as being "chopped up" (the word "differentiated" literally means separated or torn apart):

$$\frac{\Delta E \Delta t}{n} = \frac{k}{n} \quad \bar{A} , \qquad n = 2, 3, 4, \ldots \quad , \tag{9}$$

where the bar over the A indicates nonaction, or action atoms which have been broken into bits.

Thus we now conceive of an action continuum of action atoms and a nonaction continuum[4] of bits of action atoms. The two continua coexist and the perceptron

---

[1]Or "extracted from an action quantum $\Delta E \Delta t$," which means exactly the same as "created." Einstein's treatment of simultaneity showed that it was operational, but if simultaneity itself is operationally created then both time and length must also be operationally created.

[2]This is not a simple discontinuous operation, since no time flow exists (Δt is not being outputted) during this collection process. We have to think of the process discontinuously, but the stepwise process is actually continuous (in time), or discontinuous, or both.

[3]Since ΔE may be positive or negative, we may state the uncertainty principle as $|\Delta E \Delta t| \geqslant k$, or as $\Delta A = nk$, $|n| \geqslant 1$. Consider the two cases $\Delta A > 0$, $n = 1$, and $\Delta A < 0$, $-1 < n < -2$. Superimposing them would give $|\Delta A| < k$, which violates the uncertainty principle. Thus, assuming superposition must hold, the uncertainty principle can be made to violate itself for all except integral values of n, and it follows that the Heisenberg uncertainty principle must be written as a quantized statement.

[4]The separation into two continua is artificial, but is necessary to allow us to perceive perceptron operation with our brain perceptron mind. There is absolutely

"The separation into two continua is artificial, but is necessary to allow us to perceive perceptron operation with our brain perceptron mind. There is absolutely no separation in the reality continuum itself; rather, there is only an operational separation caused by and in perception. Hegel was very nearly correct in his realization that the dialectical principle was the magic key to the universe of perceived phenomena. However, thesis (action) and antithesis (nonaction) do not meet to give a synthesis (the transfer function or switching) which is different from either; rather, thesis (action) is changed (transferred or switched) to its antithesis (nonaction) and vice versa. It is the switching or transfer process that is the synthesis (output of the perceptron, perception) which is different from the thesis and the antithesis.

Next Page

operates, or moves, in them. Only action quanta of exactly k size can be processed by the operating perceptron to give outputs which we know as physical phenomena. Such phenomena (events) consist of aggregates of extremely large numbers of perceptron operations. Action atoms will be referred to simply as "action atoms." The very smallest bits or fragments[1] of action atoms will be referred to as "quitons" and the symbol "q" used for one quiton. For convenience, we shall regard the "magnitude"[2] of q to be very much less than k, or

$$q \ll k \,. \tag{10}$$

The perceptron's process of collecting quitons to form action atoms will be termed "fusion," which is an additive change to the constant action continuum. "Fission" will be the term for the perceptron's process of breaking up action atoms into aggregates of quitons, where the size of each aggregate is less than k; fission is a reductive change to the constant action continuum. The term "switching" will be used to refer to either fission or fusion, or both.[3]

Fission and fusion are merely transfers or switches across the k-threshold separating the action and nonaction continua, and may be represented by either of the diagrams shown in Fig. 1.

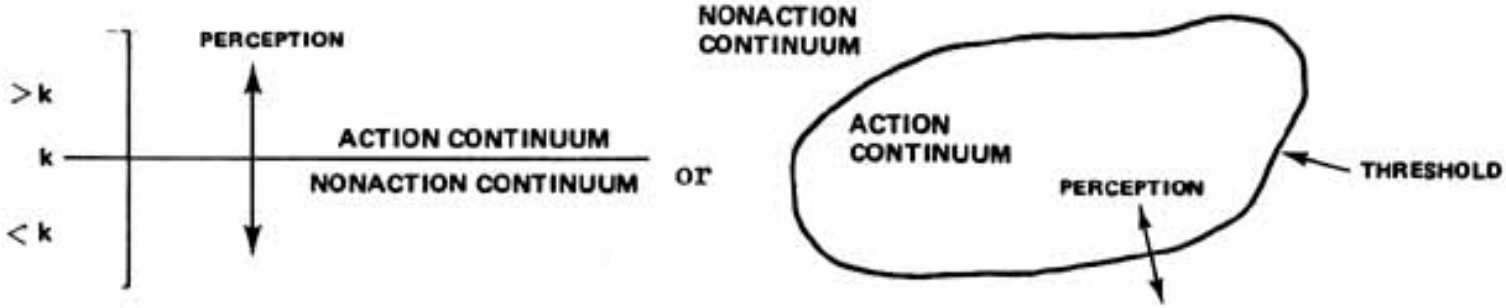

Fig. 1. Continua of the Universe

---

[1]These are actually nonthings and not bits or pieces at all, but since we can only perceive or think of things, we will model them as things. The difficulty is in the nature of thought, not in the nature of reality.

[2]The perceivable magnitude of a quiton is zero, i.e., it is not perceivable.

[3]And, in fact, switching can also refer to the transfer of Δt into ΔL, i.e., the creation of space from time or vice versa. Separation (relation) is composed of ΔL and Δt, and we know from relativity that when relativistic (perceived) ΔL is changed, then relativistic (perceived) Δt is also changed. When time dilates, length contracts; and when time shrinks, length expands. Therefore the statement that length and time are intertransferrable is valid: one kind of separation can be transferred into another kind of separation just as one kind of energy can be changed into another kind of energy. Since this transfer itself is an operation, then there is a rate (i.e., a constant) of transfer. This constant is actually a parameter, since by special relativity it can vary as a function of the mass changes themselves. And since we are dealing with mass changes (perception), then the rate of transfer constitutes a rate of mass change (rate of perception). Since perception is finite

since by special relativity it can vary as a function of the mass changes themselves. And since we are dealing with mass changes (perception), then the rate of transfer constitutes a rate of mass change (rate of perception). Since perception is finite, perceived mass change cannot be infinite but must also be finite. Therefore a limiting rate of perception must exist. From the equations of special relativity, this limiting rate of perception or mass change is c, the speed of light, and its value may be taken as the rate of change of a mass switch itself.

Next Page

We now examine the expression for energy of a photon:

$$E = hf \tag{11}$$

Considering fission of an action atom as a chopping of that atom, the process can be expressed by:[1]

$$\begin{bmatrix}\text{Minimum}\\ \text{time rate of}\\ \text{change of action}\end{bmatrix} = \begin{bmatrix}\text{Energy}\\ \text{Transferred}\end{bmatrix} \simeq \begin{bmatrix}\text{atom of}\\ \text{action}\end{bmatrix}\begin{bmatrix}\text{cuts or chops}\\ \text{per second}\end{bmatrix}, \tag{12}$$

or

$$\frac{\Delta A}{\Delta t} = \Delta E = C_1 kf , \tag{13}$$

where C_1 is a constant of proportionality. According to Eq. (1), the energy perceived to be expended (transferred to quiton disturbances) in fissioning of an action atom ought to be proportional to the speed of the chopping action. Neglecting constants of proportionality, Eq. (13) is simply[2]

$$\Delta E = hf , \tag{14}$$

where the Δ symbol is deliberately added to show that it is a transfer process. The equation works in reverse for fusion of quitons into action atoms, i.e., the energy ΔE transferred to each action atom assembled is proportional to its rate of assembly.

We can now represent a perceptron as shown in Fig. 2, which corresponds precisely to the two-pronged arrows shown in the diagrams of Fig. 1. A perceptron has two channels, fission and fusion, in which switching transfers between action and nonaction are involved.

By Eq. (2), one of the outputs of a perceptron is Δt. Since perception creates its own time interval, it only has its kind of time, i.e., positive time, to deal with. Thus only positive time is perceived, and what we think of as positive time flow is merely the successive Δt's created by perception.[3]

---

[1]Note how admirably the view of tearing apart or differentiating the action atom describes the result. The smaller the Δt torn from (ΔE Δt) (or the quicker the separation), the larger the ΔE left (produced), i.e., the more energetic the separation. The atom of action is a quantum of action and one integral piece; the ΔE and Δt, however, are not necessarily of individually fixed size.

tion. The atom of action is a quantum of action and one integral piece, the ΔE and Δt, however, are not necessarily of individually fixed size.

[2]Action atoms can occur in more than one size (see note 1 on p. 3).

[3]This explains why we sense existence as if we were the point of contact of a pointer moving along a time line. In effect, perceptron time advances one time slice at a time, where the slice is of Δt thickness. Thus all physical phenomena occur in minute granular sequences.

Next Page

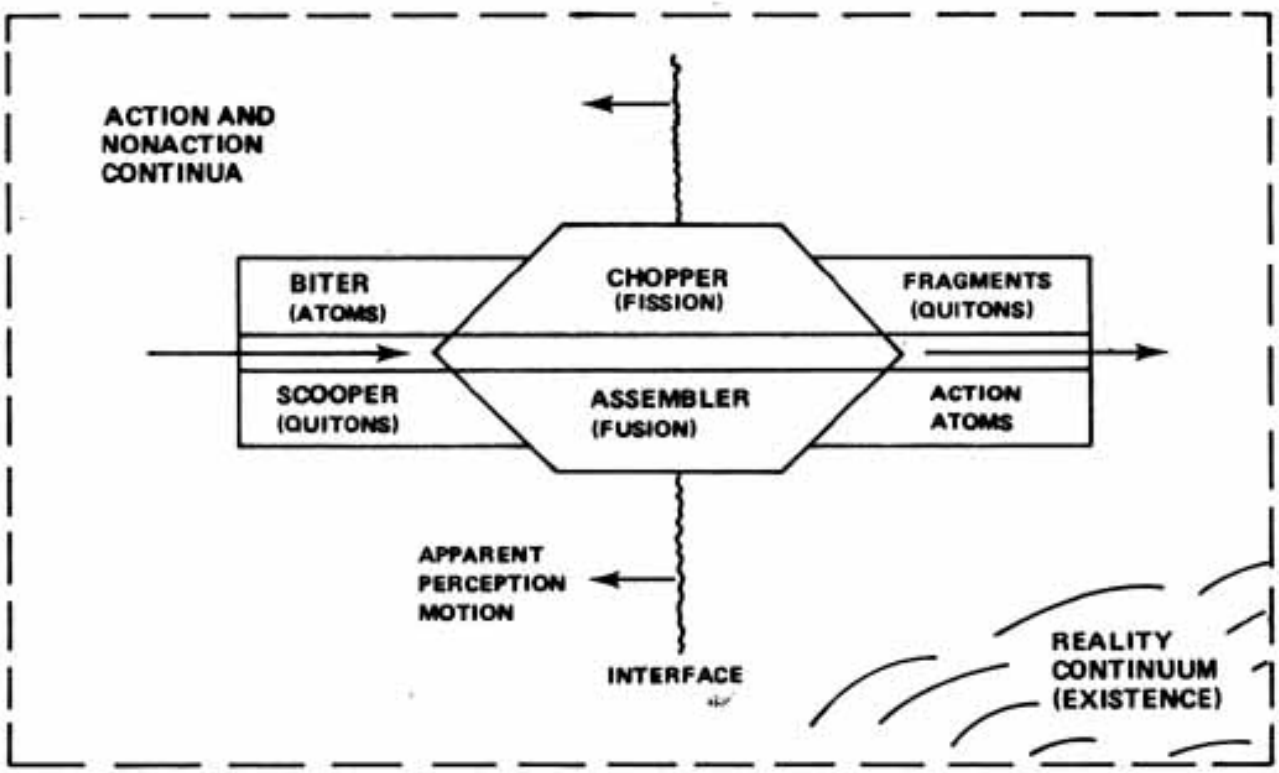

Fig. 2. The Fundamental Perceptron Switch

The existence of a negative time flow can be postulated by a simple symmetry analogy, but this postulated negative time, by definition, cannot be a perceptron output. We use the term "reflection" to denote a postulated operation in negative time[1] symmetrical to perception which operates only in positive time. Reflection is essential to the explanation of electric charge and charge effects,[2] but these will not be discussed here. Figures 3, 4, and 5 summarize the concepts of reflection, perception, and positive and negative time.

We now introduce the concept of absolute value of a dimensional molecule.[3] To illustrate, if we know that F = Ma, we will state that

$$|F| \equiv |Ma| \equiv |M| \times |a| = M\ |a| \quad , \tag{15}$$

where the last expression is true because of the nondivisibility of the unit ΔL and

---

[1]Modern theorists such as Feynman, Wheeler, and Dirac of necessity incorporate negative time operation into their theories involving action-at-a-distance.

[2]The quiton/perceptron theory can and does explain what "charge" is, why like charges repel and unlike charges attract, etc. It predicts the force of attraction or repulsion to be proportional to Q_1Q_2/R^2.

[3]Although perceptron output bits may vary in magnitude from operation to operation,

[3]Although perceptron output bits may vary in magnitude from operation to operation, they are of absolutely fixed size in any one operation or between any two consecutive operations. So for one operation or any two consecutive operations, a dimensional molecule is merely a product and division of certain-sized bits, and is itself of one fixed magnitude. Any other dimensional quantity of equal absolute value is therefore of the same size for that operation. At this level, differentiation is simple bit division and integration is simple bit multiplication.

Next Page

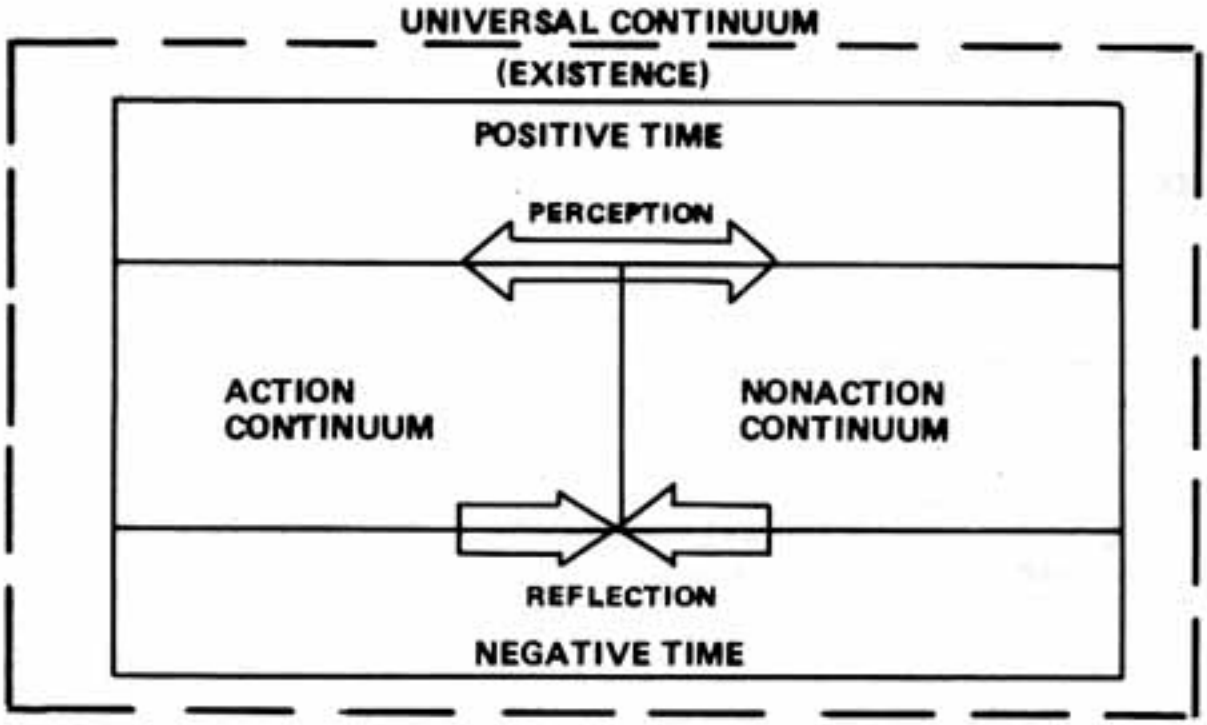

Fig. 3. The Continua (Complete Model)

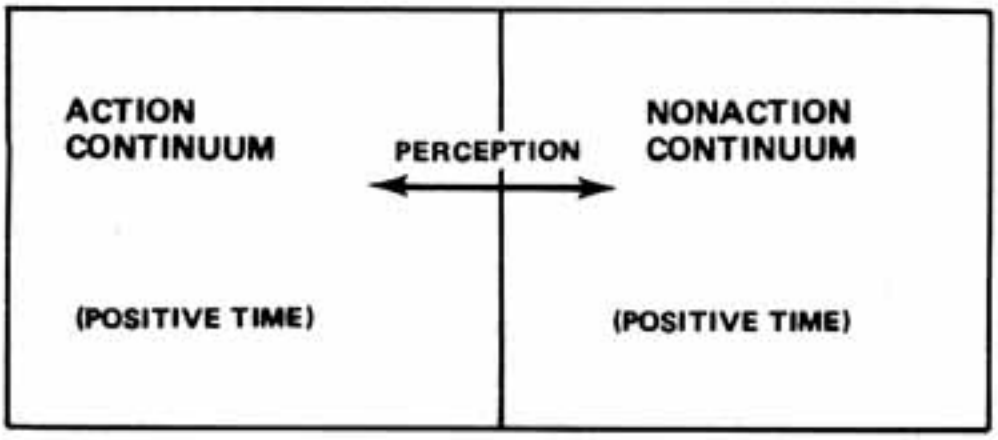

Fig. 4. The Positive Time Continua -- Model in Which Perception Acts

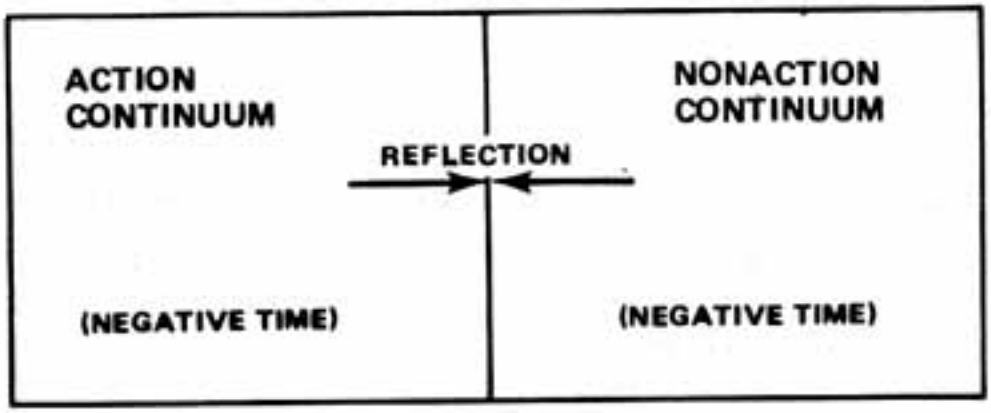

Fig. 5. The Negative Time Continua -- Model in Which Perception Does Not Act

Next Page

Δt quanta outputted by one perceptron operation. The absolute value signs must be added to any dimensional molecule which can take on either positive or negative values. Dimensionally,

$$M_0 = |E| \ , \tag{16}$$

where M_o is rest mass and requires no absolute value sign since a quantity of rest mass is only positive. Actually, since perceptron operation only outputs quanta, then the perceptron outputs ΔE and ΔM_o, or

$$\Delta M_0 = \left|\Delta E\right| \ , \tag{17}$$

and repetition rate allows perception of M_0 as a positive quantity. Then

$$\frac{\Delta A}{\Delta M} \longrightarrow \frac{\Delta(L^2)}{\Delta t} \ . \tag{18}$$

The perceptron expression of the right-hand side of (18) will be[1]

$$\frac{\Delta(L^2)}{\Delta t} \longrightarrow \frac{\Delta L \Delta L}{\Delta t} \longrightarrow \Delta L\,(V) \ , \tag{19}$$

and then we have

$$\Delta E \Delta t(V/V) \longrightarrow \frac{\Delta E(V\Delta t)}{V} \longrightarrow \Delta P(\Delta t)(\Delta L/\Delta t) \longrightarrow \Delta P \Delta L \ , \tag{20}$$

which must be another statement of the minimum condition of the Heisenberg uncertainty principle, or

$$k = \Delta P \Delta L \ . \tag{21}$$

It follows that

$$\Delta P \Delta L = nk, \qquad n = \pm 0, \pm 1, \pm 2, \ldots \tag{21a}$$

To consider why constant velocity yields special relativity, from $E = ML^2/T^2$ and Eq. (16), we can write

$$M = \left|\frac{ML^2}{T^2}\right| = M\left|\frac{L^2}{T^2}\right| \ . \tag{22}$$

Dividing out the M gives

$$1 = \left|\frac{L^2}{T^2}\right| = \left|\frac{L}{T}\right| = \frac{|L|}{|T|} = |V| \ . \tag{23}$$

[1]Obviously $\Delta(L^2) = 2L\Delta L + (\Delta L)^2$, but the units of $2L\Delta L$ are $\Delta L\Delta L$.

Next Page

So velocity is a dimensionless quantity in the absolute dimensional sense, i.e., in the perceptron operational sense, and "the laws of physics apply equally well for all observers as long as they are moving with constant velocities" (Einstein's postulate). When the perceptron process is applied to a system of objects whose relative velocities are constant, the inputs to perception always differ by a constant value and the differentiated outputs of perception do not differ, i.e., the differential of $f(x) + C_1$ is identical to the differential of $f(x)$.[1]

Observation is related to perception as shown in Fig. 6. An observer observes only perceptron outputs[2] -- never ultimate reality -- from his sensory apparatuses.

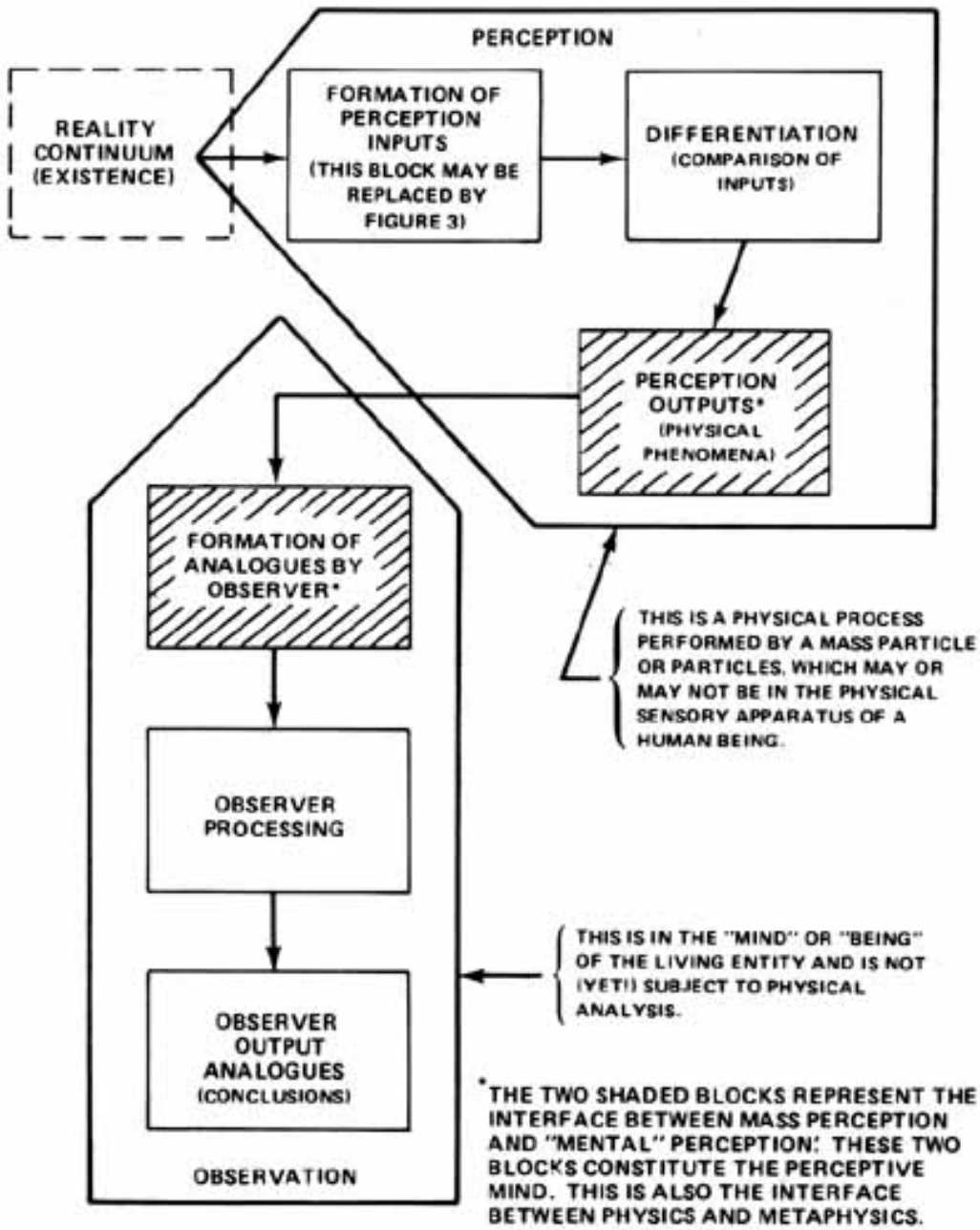

Fig. 6. Overall Relationships

[1]Einstein's treatments of simultaneity and special relativity may be regarded as

[1]Einstein's treatments of simultaneity and special relativity may be regarded as statements that one can determine a length (measure a ΔL) only by $\Delta L \equiv c\Delta t$, and one can determine (measure) a Δt only by $\Delta t \equiv \Delta L/c$ in the static case.

[2]The process of observation actually consists of both perception and realization.

Next Page

III. MASS AND SPACE

The nonaction continuum may be further visualized as a sea or gas of small, unperceivable particles, i.e., of quitons and aggregates of quitons which are less than k in magnitude. Since mass is a perceived quantity and a quiton cannot be perceived, a quiton or aggregate of less than k magnitude has zero mass.

Since fission and fusion both constitute perceptron switching, we may explain mass by visualizing a changing pile of quiton bundles, each of k size, in which the total rate of switching activity is what we call the "mass"[1] of the pile. Thus the mass is equal to the sum of the absolute values of the fission and fusion activities:

$$M \equiv \left|\frac{\Delta A_i}{\Delta t}\right| + \left|\frac{\Delta A_o}{\Delta t}\right| \simeq \left|\dot{n}_i + \dot{n}_o\right| \quad k \ , \tag{24}$$

or

$$M \simeq \left|\dot{n}_i + \dot{n}_o\right| \qquad \text{sw/sec}, \tag{25}$$

where[2]

Δt = perceptron operation time (one operation)

M = perceived mass of the pile

ΔA_i = action created from fuzing quitons into action atoms

ΔA_o = action lost from fissioning action atoms into quitons

$\dot{n}_i$ = number of k-sized bundles per second fused into atoms

$\dot{n}_o$ = number of atoms per second fissioned into quitons

sw/sec = one perceptron operation per second.

---

[1] If ΔE is time rate of change of action, and if the absolute dimensional value of rest mass and rest mass energy are the same, then mass must also be a time rate of change of action. One kilogram mass equals 17.053×10^{50} sw/sec.

[2] The switch concept is necessary to explain charge and charge effects. The switching occurs between the positive (perception outputted) and negative (reflection outputted) time streams. Three types of switches exist, two of which are charge switches and all of which are mass switches. Switching may also be regarded as change of Δt into ΔL. For a mass switch, the limiting value of the conversion parameter b in ($\Delta L = b\Delta t$) is c, the speed of light. However, the

regarded as change of Δt into ΔL. For a mass switch, the limiting value of the conversion parameter b in ($\Delta L = b\Delta t$) is c, the speed of light. However, the concept of switching can be expanded; $b < c$ implies mass switching; $b = c$ implies quitons moving (maximum switching limit for mass switching); $b > c$ implies DeBroglie waves moving, which are not switching in the normal sense at all. Technically, the condition $b < c$ applies to Eqs. (24) and (25).

Next Page

The use of the mass definition equation can be illustrated by a simple example. First,

$$k \equiv h/2 = 0.527 \times 10^{-34} \text{ joule-sec} \tag{26}$$

$$1 \text{ kg mass} = 8.987 \times 10^{16} \text{ joules}, \tag{27}$$

so

$$1 \text{ kg mass} = \frac{8.987 \times 10^{16} \text{ joules}}{0.527 \times 10^{-34} \text{ joule-sec/switch}} \tag{28}$$

$$1 \text{ kg mass} = 17.053 \times 10^{50} \text{ switches/sec}. \tag{29}$$

For a mass that does not accelerate, switches must occur in couplets. This would require, for example, that angular momentum be quantized in quanta of 2k magnitude, since two switches would process two action atoms -- one in and one out of the mass action pile. Since

$$2k = h/2\pi, \tag{30}$$

then angular momentum should be quantized in $h/2\pi$ quanta, which indeed it is: from the Bohr theory of the hydrogen atom,[1]

$$mvr = \frac{nh}{2\pi}, \quad n = 0, 1, 2, \ldots, \tag{31}$$

and the change permitted is thus

$$\Delta(mvr) = \frac{nh}{2\pi}, \quad n = 0, \pm1, \pm2, \pm3, \ldots \tag{32}$$

What we normally think of as empty space is sometimes described as the absence of mass and energy, existing in time.[2] Empty space can be defined by

$$\frac{\Delta A}{\Delta t} = 0; \qquad \frac{\Delta \bar{A}}{\Delta t} = 0, \tag{33}$$

which merely state that no perceptron output is occurring. Thus empty space exists only as defined by a perceptron and is merely the total absence of perception. While these equations rule out fission and fusion, they do not rule out the static presence of large numbers of quitons and quiton aggregates each of which is less than k in size (a quiton may be viewed as a quantum of space or a quantum of ether).

---

[1]Beiser, Concepts of Modern Physics, McGraw Hill, 1963.

[2]Actually there is no time connected with the existence of space; the time is connected only with our perception of change; that is, space is a product of perception, or the nonoperation of perception, and is related to a mass perceptron. Similarly, space itself has no length -- length is relative between two masses. That is why both length and time can change, and why a specific length and a specific time can

space itself has no length -- length is relative between two masses. That is why both length and time can change, and why a specific length and a specific time can be different to different observers.

Next Page

A massless quiton cannot individually generate any drag resistance against matter in the Newtonian sense. So a mass object moving along at a constant velocity will just push a stream of massless quitons ahead of it. In effect, the mass "bulldozer" is pushing its own medium along with it, and this requires no force.[1] Therefore, empty space (i. e., the zero output condition of one's mass perceptron) is filled with (has added to it) streams and streams of quitons moving ahead of other objects (perceived by one's perceptron) from all over the universe (perceived by one's perceptron). These quiton streams may be regarded as quiton pulses or quiton waves[2] in one's own static-relative quiton pond. The static-relative quiton pond of a mass will be called its "q-space" or "space" (more commonly referred to as the mass's inertial frame of reference).

When impinging on a perceptron's mass, these disturbances are being collected into k-sized quanta and switched into action atoms. The switching produces outputs that reveal the presences of the disturbing masses. The situation for a perceived mass is described in Fig. 7. Note that a fusion pileup is shown in front of the perceived object due to the object's motion, and a fission pileup is shown at the rear (switching is actually distributed throughout). Additional switching is occurring in the pileups and constitutes increase in mass. So one's mass perceptron perceives the moving object's mass as having increased. The relative velocity of the object with respect to one's perceptron determines the additional collection rate of quitons, and hence the additional switching rate, occurring for the object in one's perceptron q-space. The perceived increase in the moving body's mass is a function of the increased collection rate, which is a function of both the initial mass switch size M_0 and the velocity V, or

$$M = f(V, M_0) . \tag{34}$$

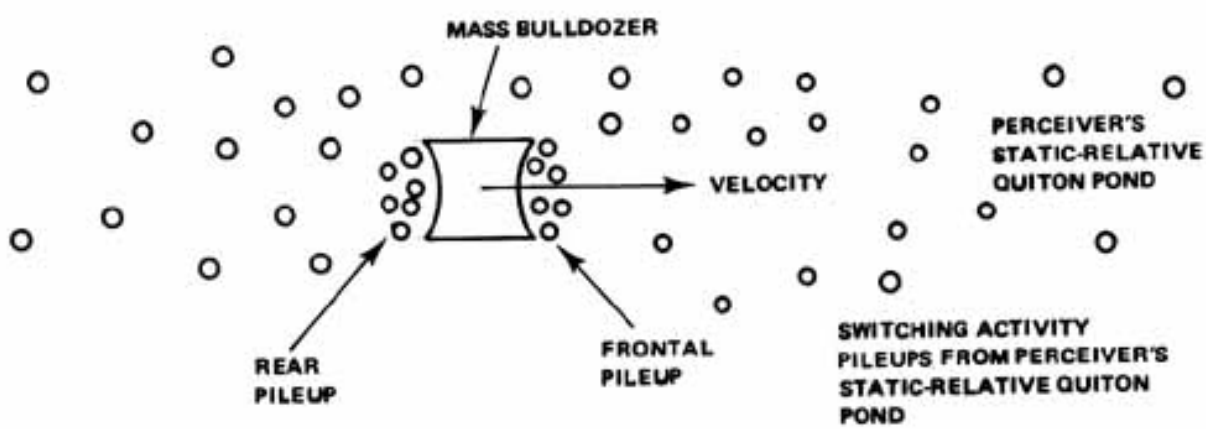

Fig. 7. Increased Perceiver Switching Due to Perceived Velocity

[1]More precisely, it requires no resultant (unbalanced) force. Both fission and fusion create forces; however, these forces are opposing, and so when fission rate equals fusion rate the resultant force is zero.

[2]These pulses or waves are not in themselves perceived, so one can equally well consider them bunches of particles or waves. The difficulty lies with the perceptron mind, not with the disturbances.

Next Page

If the perceiver shifts "his view" to the object, he would at the same time shift his perceptron to it and so would then see the same sort of effect existing on his vacated mass. The pileup is relative to the perceiver and is occurring in the perceiver's perceptron itself.[1] So material objects do not just move through an ether, they carry their own q-space ethers right along with them.[2] And all they can detect is the disturbances in that q-space that produces switching transfers in and out of the action and nonaction continua.

We now wish to know the standard medium velocity at which wave disturbances move in the q-space. The question is, what has zero mass, is unperceivable, and yet can move through the perceiver's empty space ether[3] at some standard velocity? Photons satisfy all these requirements. Photons themselves cannot be perceived -- only their interactions can; and photons move in free space at the velocity c, the speed of light. Thus c is the quiton medium's wave velocity[4] and quiton disturbances move in a q-space at the velocity c. They move only in a q-space and in nothing else, since movement (velocity) is defined as $\Delta L/\Delta t$, and both ΔL and Δt exist only to the perceptron that created them. Therefore, velocity of a perceived object is absolutely relative to the perceiver since it is part of the perceiver's mass's perception. At this point, Einstein's postulate that "the speed of light is the same for every observer" can be seen to follow directly from the quiton/perceptron model.

But a difference exists between the speed of light in q-space and the speed of light in a medium. Simply speaking, when light travels in a medium the quiton waves (photons) are perceived to interact with particles (get switched by other switches) continually. In each imposed interaction switching perceived, another Δt occurs in the perceiver's perceptron. Thus more Δt's occur, and the photon is perceived to take longer in traveling through the medium than through free q-space; that is, the perceiver's perceptron (in which the medium itself exists) creates more time output in the case of light traveling through a perceived medium than light traveling through unperceived free q-space.

---

[1]This point is emphasized. The mass's mass does not increase as perceived by itself; its mass does increase as seen by the perceiver. This fact alone is sufficient to establish that the increase in mass is subjective, not objective (although these two terms are usually misused). That is what the term "relative" means, i.e., relative to the subject. Note that the perceiver is always the subject. The fact that the effect occurs only to the perceiver should indicate that it is the perceiver's perception process which is causing the effect.

[2]Thus one can have one space moving through another space.

[3]From Einstein's Theory of Relativity by Max Born, p. 224: "Einstein in later years proposed calling empty space equipped with gravitational and electromagnetic fields the 'ether,' whereby, however, this word is not to denote a substance with its traditional attributes. Thus in the 'ether,' there are to be no determinable points, and it is meaningless to speak of motion relative to the 'ether.' Such a use of the word 'ether' is of course quite admissible, and when once it has been sanctioned by usage in this way, probably quite convenient." The use of "ether" here is quite close to Einstein's proposal; however, in our usage it is meaningful to speak of "perceived motion of a perceived object" in the q-space ether of the perceiver. Otherwise, there can be no observation and no observer, which are of course necessary

"perceived motion of a perceived object" in the q-space ether of the perceiver. Otherwise, there can be no observation and no observer, which are of course necessary to Einstein's theory.

[4]Velocity is unperceivable; it is actually the constant of proportionality for the perceptron's direct transposition of Δt into ΔL. And c, the constant velocity of light, represents the limit of the perceptron's ability to do this.

Next Page

It should be noted, but will not be pursued further here, that electromagnetic waves in space are merely quiton wave disturbances[1] moving in a perceptron's q-space. The energy being transmitted is the "energy equivalence" of the nonaction quiton aggregates that were chopped up from action atoms. When these fissioned aggregates are again collected in some perceptron, then $\overline{\Delta E}$ is recovered as ΔE, or perhaps as ΔM.

In passing, we note that hidden in the principle of complementarity is the fact that wave and particle are operationally excluded, i.e., separated by an operation. A wave by definition is operational (dynamic). The most elementary idea involved in the concept of a particle is that it is nonoperational; i.e., it doesn't have to move, or change, or function, or be dynamic to exist. Obviously that which is operational differs from (is separated from) that which is nonoperational, but such separation itself is differentiation which is an operation. Therefore, wave (operation) and particle (nonoperation) are operationally separated. The only "mystery" in complementarity is that one must stop (interfere with) an operational entity to have a nonoperational entity, and one must start (interfere with) a nonoperational entity to have an operational entity. Depending upon the conditions imposed upon it, an entity can be either operational or nonoperational. For example, the operation of superposition must be imposed upon DeBroglie waves before they can constitute a particle. It then follows that the particle's velocity must in fact be the velocity of the superimposed group, i.e., the wave packet's velocity. By the same reasoning it follows that one cannot measure a particle's exact position (which is a static or nonoperational entity) and its exact momentum (which is a moving or operational entity) at the same time. The same is true for the particle's exact time position (nonoperational) and its exact kinetic energy (operational). Thus uncertainty principles, complementarity, and the relationship of DeBroglie wave velocity to wave packet velocity all involve the one fundamental concept that an operational entity is separated from a nonoperational entity by an operation. The changing is separated from the unchanging by a change; i.e., the changing is operationally derived from the unchanging, or perceived reality is derived from unperceived reality.

[1]Photons are aggregates of quitons; quiton aggregate behavior is particulate. Behavior from the standpoint of individual quitons is wave-like. This explains the dual behavior of light and reconciles its wave and quantum aspects.

Next Page

IV. IMPACT ON PHYSICS

A. MICHELSON-MORLEY EXPERIMENT

The Michelson-Morley experiment was conducted in the Michelson/Morley/earth q-space. The Michelson/Morley/earth perceptron(s) would perceive the speed of light to be the same in all directions, i.e., any fringe shift observed should have been a result of experimental uncertainty only. The experiment did not prove there was no ether; it did prove there was no perceivable ether[1] through which the earth was moving. The results admitted of a static-relative ether if it is unperceived. Perception is a process, and if the process does not occur then perception does not occur. Since by definition the q-space of a perceptron does not cause the perceptron to operate, then the q-space is unperceived by the perceptron.

More careful examination of observation reveals the following facts: A perceived mass has a constant mass when not moving with respect to the perceiver. When it is moving through the space frame or the ether of the perceiver with a constant velocity v, its perceived mass is again constant but is now perceived to be greater than was its rest mass. From whence came the extra mass?

The extra mass effect is only to the perceiver. The only possible sources for the extra mass in perception are the original rest mass M_0 and the empty space of the perceiver's space-frame (i.e., the interaction of perceived mass with unperceived space). Space does not drag, in the conventional Newtonian sense, against a moving body that is not accelerating. And space is unperceivable; therefore it can be visualized as a massless fluid. Thus the increase in perceived mass (which is a change) must come from the perceived mass's increase in velocity in perceiver space (because velocity is all that was changed), and it must involve the physical operation of the perceiver's physical perceiving mechanism. A perceived mass does exert resistance (drag) called "inertia" whenever it is accelerated in the perceiver's space-frame. This resistance is a force. Perceived force is equal to perceived mass times perceived acceleration through the perceiver's space.[2]

---

[1] Is not space an unperceivable ether? An extract from Einstein's Theory of Relativity by Max Born, p. 223, states: "If each of two observers who are moving relative to each other can assert with equal right that he is at rest in the ether, there can be no ether. Thus, the extreme development of the ether theory leads to its dissolution as a fundamental concept." The conclusion that there can be no ether does not logically follow. Each observer can assert that he is at rest in an ether (space), and these spaces can be intermoving. That is precisely what a "moving frame of reference" is: one space moving through another. Today we retain the (or more correctly, an) ether concept, but call it "space" or "inertial frame of reference" or "frame." The conclusion should have been that there can be no single "stable ether," but that there can be many.

[2] Newton's law, F = ma,* to date has been used in a half sense, i.e., that the acceleration of a perceived mass through the perceiver's unperceived q-space generates force. If this is true, and relativity holds, then the acceleration of any other unperceived q-space, through a perceived mass, also generates force; through one perceived mass in a perceiver's q-space, the q-spaces of all other perceived accelerating masses are accelerating and thereby generating forces on it. By this "other half" of Newton's law and by relativity, Mach's principle (that inertia of a mass is derived from the

accelerating and thereby generating forces on it. By this "other half" of Newton's law and by relativity, Mach's principle (that inertia of a mass is derived from the other masses of the universe) can be shown to be true. Although not collated and developed as such, it is possible to derive the postulates of both special (Continued)

Next Page

This equation states that a perceived accelerating mass must react with the perceiver's q-space, and in fact this interaction may be taken as the basic mechanism that creates force itself. Again the perceiver's physical perception mechanism is the causative agent.

A quite logical conclusion at this point is that the perceiving mechanism perceives (produces) additional perceived mass from the interaction of perceived rest mass with perceived mass-motion (velocity) through its unperceived space.[1] Also, the perceiving mechanism produces perceived inertial drag from the interaction of perceived mass with the mass's perceived acceleration through its unperceived space.

The concept of "ether" should not be rejected while the concept of "space" is retained, since the latter is actually an unperceivable ether. Rather, the concepts of mass, perception, and ether-space should be tailored to fit the perceived phenomena. Quiton/perceptron theory (perception theory) is a deliberate transfer function model specifically tailored to fit these criteria.

B. GRAVITATIONAL ATTRACTION

Newton's law of universal gravitation can be generated, in both effect and form, from quiton/perceptron theory.

A perceptron's q-space is filled with streams and streams of quiton disturbances moving ahead of its perceived moving objects from all over its universe. Thus there exists a flux of quitons at any point in its space, and this flux is isotropic to the first approximation: because of the vast interstellar distances between disturbing masses, the flux gradient in the relatively local neighborhood of any perceiver point is essentially zero. The quiton disturbance flux can be represented as shown in Fig. 8. A quiton flux stream switching pressure P_1 is exerted on M_1 and a switching pressure P_2 is exerted on mass M_2. In any one flux stream line in this shadowed zone, the pressure against either of the two bodies is reduced in proportion to the amount of switching flux subtracted from that flux line by the other body. The total reduction of switch pressure in the shadowed zone is therefore proportional to the product of the two masses M_1 and M_2, considering the effects to be mutually independent.

(Footnote 2 continued from preceding page) and general relativity from quiton/perceptron theory, and the steps essential to that derivation are contained in this paper.

*[More precisely, $F = d/dt\ (mv) = ma + v\ dm/dt$. From the second term, increase or decrease in mass of a moving object also produces a force. This second force component may not be too important except in microscopic phenomena, but for fast microscopic changes in mass (e.g., in the nucleus) it could generate significant forces. Also note that the velocities of all other spaces (i.e., velocities of the q-spaces of all other moving objects) in the perceiving mass's universe interact with its perceived mass change rates, according to the second term of Newton's law, relativistic form.]

[1]A disagreement has long existed over whether a "nonthing" exists if it cannot be observed. The argument is illogical; e.g., if a photon itself cannot be perceived and only effects (changes) produced by it are perceived, does a photon exist? It

A disagreement has long existed over whether a "nothing" exists if it cannot be observed. The argument is illogical; e.g., if a photon itself cannot be perceived and only effects (changes) produced by it are perceived, does a photon exist? It exists, but cannot be perceived to exist, i.e., it exists outside of perception, but does not exist in perception. The same is true of the notion of space.

Next Page

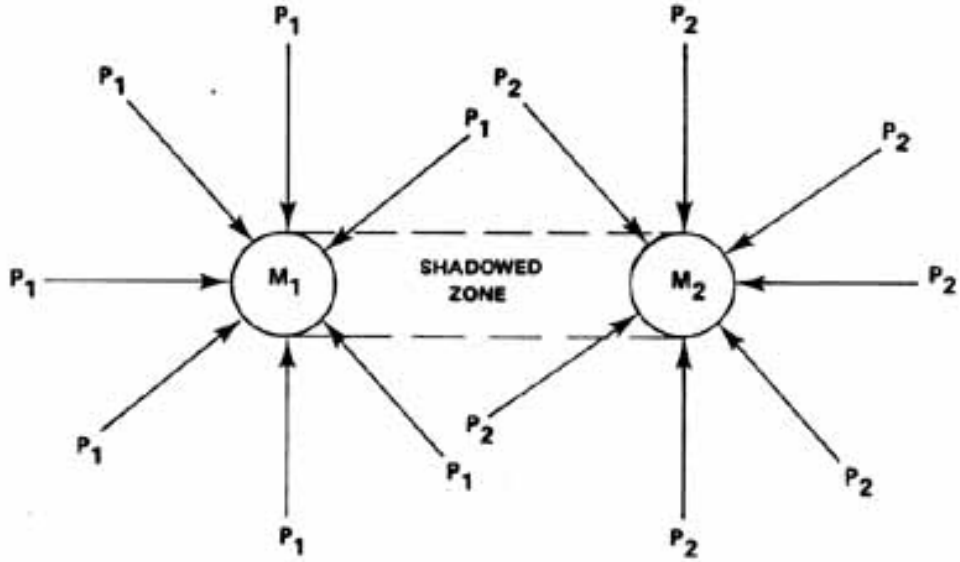

Fig. 8. Gravitational Attraction of Masses

From purely geometrical considerations, a shielding factor is also present due to the solid angle that is shadowed about any mass point. This effect is proportional to $1/R^2$ by usual solid angle considerations. Putting these two factors together, the attraction of mass should therefore be proportional to M_1M_2/R^2, or

$$F = K \frac{M_1 M_2}{R^2} \tag{35}$$

which is the expression for Newton's universal law of gravitational force, and this force is driving the two masses together.[1] By merely extending the basic statement by superposition of the effects of every perceived mass-pair in the perceptron's universe, one obtains the attraction of mass[2] for the universe.

---

[1]It is not accidental that electric, magnetic, and gravitational field forces all obey "inverse square of the distance" laws, since these forces are derived from analogous switching operations.

[2]Attraction of mass implies an effect derivable from the presence of mass only. Mass is a switching rate. Therefore attraction of mass must be derived from switching only. Now a massless fluid generates no drag against a constant velocity mass, but switching is a negative quiton acceleration which does generate force. So switching generates drag, but constant velocity does not. This accounts for the error long made in considering the "mass shadowing" explanation of gravitational attraction to suffer from a serious defect of implied retardation force due to velocity through an ether-flux (see, for example, the Feynman Lectures on Physics, Vol. 1, p. 7-9). Velocity of an ether flux through a body merely affects the mass of the body; it does not generate force. Acceleration of an ether flux through a body generates a resultant force on that body. In Feynman's example of an orbital body, let us assume perfect circular motion with constant speed. Since the speed of the ether flux is always constant, the mass is always constant. Since the component of acceleration tangential to the circle is zero, there is no force generated tangentially to the orbit. But since there is a constant radially outward acceleration of flux through the orbital body, then there is a constant radial force outwards that is generated, and this force is called the "centrifugal force," i.e., the "center-fleeing" force.

body, then there is a constant radial force outwards that is generated, and this force is called the "centrifugal force," i.e., the "center-fleeing" force.

Next Page

It should be noted that for extremely small masses at extremely close distances, or for extremely short times, turbulence and interference effects can form in the shadowed zone of Fig. 8 and superposition may no longer hold.

C. NEWTON'S THIRD LAW OF MOTION

One of the recognized ways of stating Newton's third law of motion is: "To every action force there is an opposite and equal reaction force." This law follows from quiton/perceptron theory, as can be shown by examining two colliding bodies. It should be stressed that these two bodies, and all changes related to them, exist as changes in the output of the perceiver's perceptron. It must always be borne in mind that these changes, or physical phenomena, exist as outputs of the perceiver's mass perceptron.[1,2]

Figure 9 shows perceived bodies M_1 and M_2 in constant velocity motion just before collision. A deliberate choice was made of a case where the momenta of the two bodies were not equal, so that the initial switching rates for the two masses were different. In the example, $M_1V_1 > M_2V_2$. The mass switching drag of each body is again represented by small circles. Each body has the same size roll in front as in the rear, so its switch pressure forces are balanced. Figure 10 shows the collision.

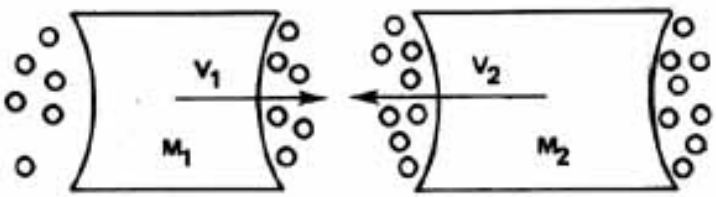

Fig. 9. Two Bodies Before Collision

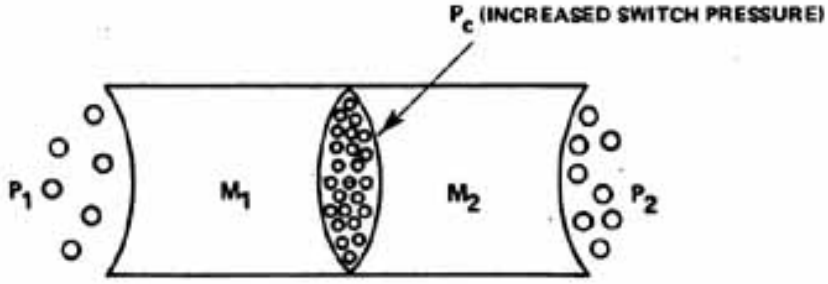

Fig. 10. Two Bodies at Moment of Collision

---

[1]We consider the question: "If a tree falls in a forest and there is no ear to hear it, is there a sound created?" A tree is a perceived tree, a forest is a perceived forest, and a fall is a perceived change. Their presence or existence implies a perceiver and perception; thus they imply that a "sound" change would be perceived, since they imply a perceiver to perceive it. If, however, by "no ear to hear it" we mean "no perceiver present at all," then the question as posed contains a self-contradiction: with no perceiver, there can be no perceived tree, perceived forest, perceived fall, or perceived sound.

[2]The manner of searching for quiton/perceptron causal explanation of a physical

or perceived sound.

[2]The manner of searching for quiton/perceptron causal explanation of a physical phenomenon is to ask, "What would the perceptron have to do to generate the phenomenon?".

Next Page

There is an almost instantaneous switch pressure increase in the contact zone between the colliding bodies, and consequently there is a switch pressure differential across each body as shown in Fig. 11.

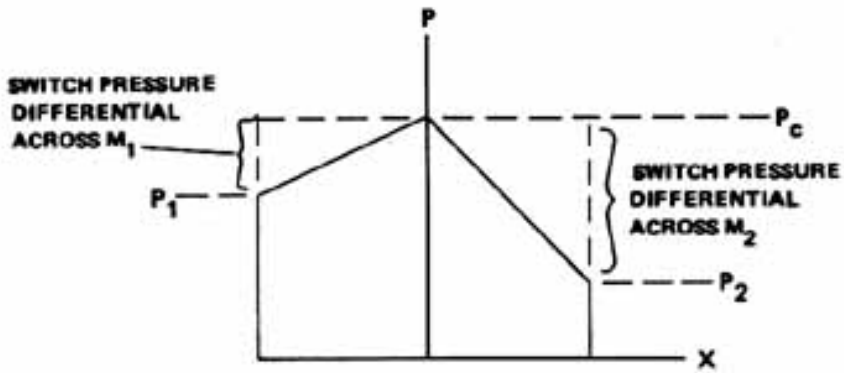

Fig. 11. Switch Pressure Relationships at Collision

In the figure, the contact pressure P_c is exerted against each body, so that the pressure forces on the two bodies act in opposite directions. But for any two colliding bodies, the contact areas, one against the other, are the same. This common contact area will be called A_c. Since $P \equiv F/A$, then

$$|F_1| = |F_2| = P_c A_c \ . \tag{36}$$

But since the pressure forces on the two bodies are being exerted in opposite directions, then

$$\vec{F}_1 = -\vec{F}_2 \ , \tag{37}$$

which is Newton's third law of motion.

D. NEWTON'S SECOND LAW OF MOTION

Neglecting constants of proportionality, Newton's second law of motion may be stated in the most general sense as

$$F = \frac{d(mv)}{dt} \ . \tag{38}$$

The first step in deriving this law is to examine a point mass which is perceived moving with velocity $\vec{V}$, as shown in figure 12.

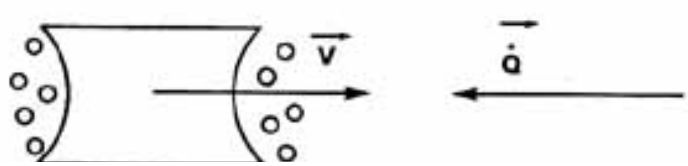

Fig. 12. Moving Point Mass

Next Page

An increased rate of quiton switching activity exists along the axis containing the velocity vector $\vec{V}$. We will call this increased quiton activity a vectorial "current" $\vec{\dot{Q}}$, and define its direction as contrary to the velocity vector. The mass is perceived to be moving against the current vector, and

$$\vec{\dot{Q}} \ \alpha \ -\vec{V} \ . \tag{39}$$

When the current $\vec{\dot{Q}}$ is steady, i.e., when

$$\vec{\dot{Q}}_{in} = \vec{\dot{Q}}_{out} \ , \tag{40}$$

then the switching activity, and hence the mass and the energy, are constant. Therefore, from $v = \pm\sqrt{2E/m}$, the velocity remains constant.

If $\vec{\dot{Q}}_{out}$ suddenly increases, then

$$\vec{\dot{Q}}_{in} < \vec{\dot{Q}}_{out} \ , \tag{41}$$

which can be represented as in Fig. 13.

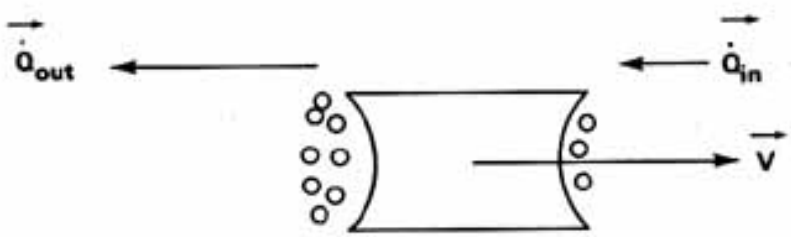

Fig. 13. Difference in Quiton Current

From Eq. (39),

$$\vec{\dot{Q}} = -k_1\vec{V} \ . \tag{42}$$

At any time in a quiton current, the switch pressure force exerted against the mass can be represented as

$$F = P_c A_c \ , \tag{43}$$

where P_c is the switch pressure and A_c is the area of contact. However, since the area of contact A_c, or the drag area, is the mass switch rate itself, then (neglecting constraints of proportionality)

$$A_c \ \alpha \ M' \tag{44}$$

$$A_c \propto M' \quad , \tag{44}$$

where M' is the switch rate at the point of switch pressure application. We will next examine the switch pressure forces before and after one perceptron operation

Next Page

(i.e., across the smallest possible time interval Δt used by the perceptron itself in perceiving a change). When there is any difference in the pressure forces against the body front and body rear, this difference is the resultant force $\vec{R}$, or

$$\vec{R} = \left[(P_c A_c)_{in} - (P_c A_c)_{out}\right] \vec{q} \quad , \tag{45}$$

where $\vec{q}$ is a unit vector whose direction is given by the direction of $\dot{\vec{Q}}_{in} - \dot{\vec{Q}}_{out}$. Now, from Eq. (44),

$$\vec{R} = \left[(M'P_c)_{in} - (M'P_c)_{out}\right] \vec{q} \quad . \tag{46}$$

Since $P_c \; \alpha \; \dot{Q}$ and $\dot{\vec{Q}} \; \alpha \; (-\vec{V})$, then (neglecting constants of proportionality)

$$\vec{R} = -\left[(M'\dot{\vec{Q}})_{in} - (M'\dot{\vec{Q}})_{out}\right] \quad , \tag{47}$$

which from Eq. (39) gives

$$\vec{R} = (M'\vec{V})_{in} - (M'\vec{V})_{out} \tag{48}$$

or

$$\vec{R} = K_4 \Delta(M'\vec{V}) \quad . \tag{49}$$

However, this has happened in the smallest possible time Δt, and since by definition

$$\Delta(M'\vec{V})_{min\ \Delta t} = (M'\dot{\vec{V}}) \quad , \tag{50}$$

then

$$\vec{R} = k_4(M'\dot{\vec{V}}) = k_4 \frac{d}{dt}(M'\vec{V}) \quad , \tag{51}$$

which is Newton's second law of motion, relativistic form. Acceleration of a body is caused by a difference in mass switch rate (i.e., a switch rate gradient)[1] induced across it by transfer of momentum from another moving body or by induction from a field such as an electrostatic field or a magnetic field.

E. NEWTON'S FIRST LAW OF MOTION

Newton's first law, that "a body at rest or in uniform motion will remain at rest or in uniform motion unless some external force is applied to it," can be derived from the same type of considerations used to develop the second law. Obviously, if

$$\ddot{\vec{Q}} = 0 \quad , \tag{52}$$

[1]Switching can be thought of as transfer of Δt into ΔL. An increased switch rate represents an increased rate of transfer resulting in a higher value for the ratio

[1]Switching can be thought of as transfer of Δt into ΔL. An increased switch rate represents an increased rate of transfer resulting in a higher value for the ratio of ΔL to Δt being outputted. Since the ratio $\Delta L/\Delta t$ is defined as v, an increase in this ratio increases the velocity, and thus acceleration occurs.

Next Page

then

$$\vec{R} = 0 \tag{53}$$

and

$$\vec{a} = 0 \quad , \tag{54}$$

in which case the body at rest will not move and the body in uniform motion will remain so, by the definition of acceleration. Every perceptron repetition will output the identical value for V as the preceeding repetition, and that is why the first law holds.

F. IDENTITY OF LENGTH AND TIME

From $E = Mc^2$, we have

$$c^2 = E/M = 9 \times 10^{16} \text{ joules/kg} \tag{55}$$

$$c^2 \Leftrightarrow 9 \times 10^{16} \text{ joules/kg} \times 1/17.053 \text{ kg sec/sw} \tag{56}$$

$$c^2 \Leftrightarrow 0.527 \times 10^{-34} \text{ joule-sec/sw} \tag{57}$$

$$c^2 \Leftrightarrow \text{k/mass switch} \ . \tag{58}$$

Thus

$$c^2 = (3 \times 10^8)^2 \text{ m}^2/\text{sec}^2 \Leftrightarrow \frac{\text{k}}{\text{mass switch}} = \text{one sw opn} \tag{59}$$

$$\text{one sw opn} \Rightarrow (3 \times 10^8)^2 \ \text{m}^2/\text{sec}^2 \tag{60}$$

$$\Rightarrow 3 \times 10^8 \text{ m/sec} \tag{61}$$

$$\Rightarrow 1 \text{ sec} = 3 \times 10^8 \text{ meters} \ . \tag{62}$$

Length and time are thus synonymous,[1] and c is the constant of proportionality (more precisely, the identical ratio for transposing Δt into ΔL will be maintained for each perceptron operation). Therefore, a perceptron actually outputs only one thing which may be taken to be either Δt or ΔL (it actually outputs only change

[1]By "synonymous" we mean that Δt and ΔL are intertransposable by perception operation. The term c is the velocity (rate of change) of switching itself, i.e., the speed at which quitons themselves can move, since quitons are being switched by mass. Therefore c ought indeed to be the wave velocity at which quitons move, and thus represents the maximum ΔL obtainable from Δt by mass in normal switching. The possibility exists that abnormal (turbulent) switching can deviate from this limitation. Thus "time warping," "time travel," "hyperspace travel," and the interplanetary drive may indeed

that abnormal (turbulent) switching can deviate from this limitation. Thus "time warping," "time travel," "hyperspace travel," and the interplanetary drive may indeed be possible. Since at least one of these effects of turbulence in switching (that of DeBroglie wave velocity exceeding the speed of light) is theoretically accepted, the problem of turbulent switching should be well worth the theorist's attention and effort.

Next Page

itself, which is perceived and thought of as ΔL and Δt). All other dimensions, quantities, and dimensional molecules are but bit division or bit multiplication. This seems to be consistent with some of the latest conclusions from general relativity theory.

In passing we note that there is no separation without relation, and there is no relation without separation. Therefore

$$\text{relation} \Leftrightarrow \text{separation.} \tag{63}$$

Also, there is no operation without separation, and there is no separation without operation. Therefore

$$\text{operation} \Leftrightarrow \text{separation.} \tag{64}$$

It follows that

$$\text{operation} \Leftrightarrow \text{separation} \Leftrightarrow \text{relation.} \tag{65}$$

We note a difference between free space and a Cartesian space (inertial reference frame). In a Cartesian space or inertial reference frame a definite length is considered to have been established for each and every point in that frame. But such a definite length to each point is rigorously operational by statement (65) above, i. e., such a length is defined by an operation. Specifically, it is defined by the operation of a mass perceptron (or an understood mass perceptron) at the origin of the frame. Such a frame is linear if the identical type of perceptron operation has defined the length to each point. If the type of defining operation varies, then the frame so defined is nonlinear; i. e., its space is said to be curved or distorted.

In one perceptron, its length defining operation and its mass defining operation can interfere or react one with the other. This type of interference or interaction is the direct interaction of frame space (length) with mass and it is the fundamental generating mechanism of force. All forces are so generated (see again the inset footnote on p. 17). And in fact a perceived moving force does work in the direction of its perceived movement rather than in the force's perceived direction precisely because of the moving operational length's interaction (interference) with the operationally generated force. This interference interaction is between operations in the same perceptron and generates what is called work.

http://www.cheniere.org/techpapers/quiton/p24.htm27.10.2003 20:28:47

V. ELEMENTARY PHILOSOPHICAL IMPLICATIONS

Every scientific treatise is filled with forms of the words "one" and "be," yet none attempt to define these metaphysical terms. Ontologists and metaphysicians have uncovered many problems connected with these two words, but no real solutions. In addition, the historical preoccupation of metaphysics with dogmatic religious beliefs contributed strongly to its disfavor, since scientists were required to exert considerable effort to establish the scientific (observational) method as a legitimate criterion for the judgment of physical truth. Consequently, both science and philosophy today are constructed on quite undefined foundations, primarily because of the failure to recognize the relationship of perception operation to reality, which recognition is a prerequisite to the synthesis of physics and metaphysics. One therefore must comprehend the concepts of be (exist),[1] thing (perception), and one (thing) from the viewpoint of the relation between perception and ultimate reality.

A. EXISTENCE, THING, AND ONE

Existence has been defined here as "what is to be fed into the perceptron's input." In the situation where all operation of the perceptron has ceased, what can be said to exist in the input? First, what exists is a continuum: it has no limit, interface, dimension, time, velocity, change, space, place, or discontinuity since these are all derived from perceptron operations and the perceptron is not operating. What exists is continuity only, with no discontinuity.[2] To comprehend this, we must examine the thought process itself more closely, realizing that "to think" is "to perceive thoughts."

What is a "thing?" Further, what is "one" -- one "thing," one "anything?" A thing is first a perceived thing: it resulted from the output of a perceptron operation, in which one input bite and one output occurred. This output is characterized by the the fact that it is one, and the absence of one (i.e., zero) is the absence of output.[3] Figure 14 shows these relationships. The perceptron operation created the separation between the inside and the outside by creating a ΔL and a Δt, that is what the delta symbol means. Thus the operation of the perceptron determines the basic nature of one itself, and any one necessarily requires that a perceptron operation has occurred. In fact, the perceptron itself is a result of perceptron operations. Thus indeed all is relative. A perceptron exists and is able to function because it perceives other perceptrons to exist and function. Thus perceptrons are mutually created derivatives of reality

---

[1] Being is undifferentiated; that is its total definition. It cannot be perceived, since perception differentiates. It is continuity only, without any discontinuity, which is unperceivable. The preoccupation of being with causality (perception) is technically called "inception," the influencing of perception. In Zen philosophy this is technically "attachment to the world of illusion (change);" the literal meaning of "incarnation."

[2] This concept is unperceivable, by the definition of perception, which accounts for its difficulty. To be a "perceived one" implies limit (finiteness); oneness itself, without a bound or limit to make it a one (perceived), cannot be perceived. This is the primary limitation of the human mind (i.e., of perceptive thinking)--being, continuity, and oneness themselves imply absence of perception (differentiation) and are therefore unperceivable.

[3] Thus Boolean algebra describes the most basic operation, and is applicable to the

are therefore unperceivable.

[3]Thus Boolean algebra describes the most basic operation, and is applicable to the "operational" world.

Next Page

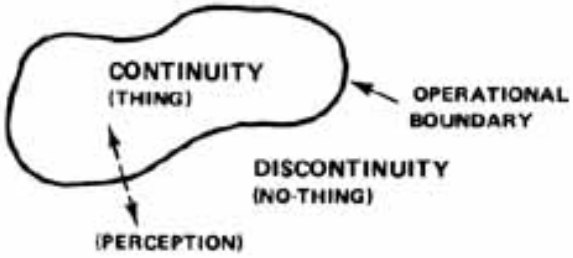

Fig. 14. Nature of One

which drive themselves and each other. Note that the preceding sentence itself is a perception.

So in the fullest sense, Gautama Buddha was indeed correct to state that the world of phenomena (changes) is an "illusion," relative only to itself (i.e., to perceptrons).[1] Einstein, expressing this idea in the language of mathematics, produced the theory of relativity and inaugurated a new physics. Buddha and Einstein spoke in different technical languages, but both expressed the same idea. The only difference is that in science we have assumed that our observations themselves are real and perfect. They are real, but not perfect in that they represent only changes in ultimate reality. Thus observational science alone can never reveal ultimate reality.

Another approach may aid in the comprehension of the nature of one. What is meant by the statement "he is the man?" Reflecting, one realizes that what is meant is that the perceived thing HE is exactly the same perceived thing THE MAN, and this identity exists now (during this one Δt perceptron time slice). There is no part of HE that is discontinuous from THE MAN, or vice versa. The different forms of the verb "be" attempt to express continuity without discontinuity, or unlimited oneness which is a state and not a thing. However, we do use the verb "be"[2] to relate continuity between different time slices. "He is the man" is related in the present time slice; "he was the man" means that HE in the NOW slice is identical to THE MAN in a past slice; etc.

---

[1]The reader interested in Zen will find complete agreement between this paper and Zen precepts, and will find the paper of some assistance in comprehending the unperceivable (unthinkable) Zen realizations. In Zen, for example, the aim is to comprehend at once the totality of reality, directly, escaping beyond the limiting fetters of perceptive thought. Now if it is actually possible to do this, and if some unusual men have done it, then their enigmatic writings should contain the wisdom of their experience, and should correspond to ultimate reality itself. Since ostensibly their insight is obtained by other-than-logic and other-than-perceptive means, then their statements should appear illogical and unperceivable.* Thus the "sound of one hand clapping" and other illogical concepts are used in Zen as a meditative means of driving the student beyond logical perception (certainly the sound of one hand clapping cannot be perceived or thought) to realization. But if the Zen experience is actually valid, then reality itself must be pure Zen (i.e., unperceivable), and so it would appear to be. We note that for each component part of all, the opposite part must exist. So all can be regarded as the complete set of all possible opposites or contradictions.

*(However, this most assuredly does not imply that every statement that is illogical and unperceivable is of value!)

[2]It should be stressed again that being is defined as undifferentiated (unseparated,

is illogical and unperceivable is of value!)

[2]It should be stressed again that being is defined as undifferentiated (unseparated, unperceived). Being is simply continuity without discontinuity.

Next Page

B. REALITY, ULTIMATE REALITY, BEING, AND ULTIMATE BEING

Actually one should be quite careful in using these terms. What does one get when one differentiates reality? One gets another reality, but not the primary or ultimate reality. For example, assume that length and time are real. When one time-differentiates length, one obtains velocity, which of course is real also but quite different from either length or time. However, velocity is always operationally related to the two first (assumed) reals length and time, because differentiation is an operation. So what is meant by "ultimate reality" is that state (or essence, or whatever name one prefers) that is not differentiated. Since "being" (continuity with no discontinuity) is defined as "that which is not differentiated," then the ultimate reality is pure being.

But all perceivables are differentials of ultimate reality. When one differentiates being, one gets pieces (differentials) of being which themselves are beings, but they have been perceived (differentiated) from a more primary or higher being. Therefore any being that one perceives has been differentiated (separated) by perception,[1] which explains why human beings, for example, consider themselves separate or individual (one). They are separate only in their individual perceptions. Thus "beings" by its plural nature always implies fragments (differentials) of a higher being (of singular nature). There can be many such integral levels: starting with one function, one can integrate it, then the resulting function can be integrated, etc., as long as we are speaking of definite integrals between two limits. When we reach a state that has no pieces or limits, the process is finished. That state is <u>being</u> in the ultimate sense, i.e., ultimate being.

One perceives these integral levels directly in nature, i.e., in the perceived phenomenological world. Living molecules (tiny beings) of RNA, DNA, etc., integrate together into a cell (a higher level being). Cells then integrate into a still higher being (man, animal, plant), which is the level on which man finds himself. But since man is perceivable and there are more men than one, it follows directly that men are capable of being integrated into a still higher being,[2] and the only word we have at present to describe such an ultimate being is "God." It is not at all accidental, therefore, that the ultimate being cannot be directly perceived by man, since by the definition of perception the ultimate being cannot be perceived by a lower order being such as man (i.e., since perception differentiates, or separates, then only differentials of being, or separate beings, are perceivable).

The avatar Jesus, having no technical concept for the derivative available in the language of the day, used the analogy of the father-son relationship, the son being the derivative of the father in this sense. Thus he referred to himself as the "Son of Man" (the derivative of all mankind or of integrated mankind) and also as the "Son of God" (the derivative of the integral of man). He continually referred to the ultimate being as "Father." It is little wonder that he was not understood then, and has not been understood for almost twenty centuries.

---

[1]Thus not only are physical objects relative to the perceiver's perception, but so are the perceived beings. Ergo the entire perceived universe, both living and non-living, is related to perception, and in fact perception and creation are abstractly

are the perceived beings. Ergo the entire perceived universe, both living and non-living, is related to perception, and in fact perception and creation are abstractly synonymous.

[2]This statement contains obvious implications to the theory (i.e., to the goal) of evolution.

Next Page

VI. CAUSALITY AND ITS MODIFICATION

A little closer look at perception can be obtained by viewing it from the causal standpoint.[1] All that perception really creates is Δt and ΔL (which are the same, ignoring constants of proportionality), and the perception we normally think of is point perception, where a point is one switching operation. The perception point may be thought of as following a line path which we will call "lineception" (Fig. 15). Physical phenomena as seen by one perceptron constitute this lineception; or rather, it constitutes the physical phenomena that are perceived or observed by the perceptron. Any point-based perceptron system, such as human perception, will accordingly perceive the universe of physical phenomena as if the perceiving system were a pointer moving along a lineception.[2]

Fig. 15. Lineception (One Connected to One)

For each perception there is a reflection, so there exists (but by definition cannot be perceived) a similar line-path, or "lineflection" as shown in Fig. 16.

Fig. 16. Lineflection (One Connected to One)

---

[1]Perception is identical to causality itself, i.e., perception can be said to generate causality. The causal view is that causes inputted to a situation operate to produce, or output or create, effects. According to its inputs, the perceptron generates causal outputs. An adequate theory of perception should be able to explain all causal (perceived) phenomena. We might define causality as the set of all causes. Then the answer to the question, "What causes causality itself?" is <u>causality itself</u>; i.e., since it is the set of all causes, causality must contain its own cause. Causality must therefore be closed or circular. The entire causal world must then be purely relative to itself (closed). Closer attention to causal operation yields the following: We perceive something change (in time or in space), then the situation changes so that we perceive new changes emerge (occur later, or separately). Thus the line of perception by its own unperceived operation connects the perceived cause (change) to the perceived effect (change), i.e., perception generates causality. Since perception itself is causal, then causality truly causes itself. This indeed is closed or circular--causality generates perception (perception is causal) and perception generates causality (causality is perceptive). Thus the idea that perception generates causality is completely consistent with our initially assumed definition of causality as the set of all causes.

causal; and perception generates causality (causality is perceptive). Thus the idea that perception generates causality is completely consistent with our initially assumed definition of causality as the set of all causes.

[2]A "frame" or "coordinate system" is a point-centered perceptron system centered about the "understood perceptron" at the origin.

Next Page

The ultimate reality, or existence, contains all, all-at-once (ultimate reality is allness, or oneness). At each operation of the perceptron, the exact amount of Δt and ΔL, and their relationship, put out by a perceptron is a function of its input quiton disturbances. A great number, in fact perhaps an infinite number, of different input states are possible, i. e., exist in all, all-at-once (ultimate reality). So an equally large number of output states are possible (exist ultimately),[1] but one particular input condition results in one particular output condition. We can represent the all possible lineceptions existing as "multiception" (Fig. 17). From this figure, a lineception can be seen to be one particular path through multiception. The corresponding multiflection could, of course, be illustrated in similar manner but with negative components.

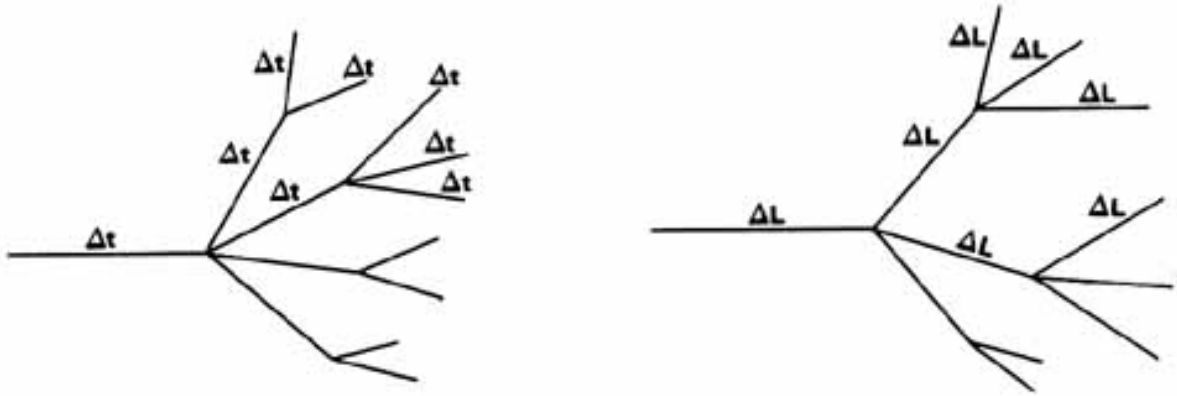

Fig. 17. Multiception (One Connected to Many)

One could immediately apply statistics to the concept along the lines illustrated by Fig. 18.

o

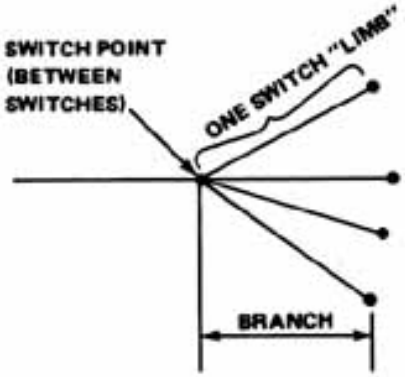

Fig. 18. One Branch

[1]It is stressed that these multiceptions exist, which is not at all the same limited statement as "exist now," but much more comprehensive; e.g., all possible numbers must exist in zero, else, given the number A, there is no justification for the axiom that A + (-A) = 0. The "absence of number" means precisely the "absence of all possible

exist in zero, else, given the number A, there is no justification for the axiom that A + (-A) = 0. The "absence of number" means precisely the "absence of all possible numbers." Paradoxically, if we think of that absence, we make it present by the act of thinking; i.e., trying to perceive it (absence is not perceivable). This contradiction, of having to make the unthinkable into its opposite so that it is thinkable is both the characteristic and the limitation of perception and perceptive thinking, and has long been an insurmountable obstacle to scientist and philosopher alike.

Next Page

At each switch point, the perceptron is faced with the branch of possibilities ahead, which all exist in multiception but only one of which exists in one perception, or lineception.[1] A certain set of limbs in the branch must have a perception probability equalling 1, and thus each of the limbs has some finite probability.[2] The input conditions to the perceptron then determine which limb is selected for the next switching operation; and, of course, the input conditions are the results of other related perceptrons' operations (relativity). The statistics will not be pursued further here.

For an absolutely mechanistic world, the entire process is automatic according to quite rigidly fixed rules. A system of perceptrons that behave this way shall be referred to as "mechanically switched." What we call "non-living systems" are mechanically switched systems. But what we call a "living system" is able to arbitrarily select the limb taken, to some extent at least,[3] i.e., the fact that a living system is able to choose its behavior within certain limits, directly implies that it must be able to deflect its lineception from a mechanically switched lineception. The only way it can possibly do this is to influence the switching operation of the perceptron. But since the output of one switching operation is a mechanistic function of the inputs, then the only way a life system can affect the perceptron switching operation is by affecting the input to some extent. How could it possibly do this?

In our crude model, the nonaction continuum is composed of action atom fragments, or quitons. But such non-things are massless by definition (they are not being switched and the absence of switching defines masslessness), and we can think of the nonaction continuum as a massless fluid or ether or empty space, since these terms are all synonymous. All that is implied by these terms is that the fluid is composed of massless elements, which merely means they are not being switched. They are capable of being switched, of course, but switching is not being done. The main point is that force, in the conventional sense, is not required to move a massless fluid, so the input fluid to a perceptron can possibly be interfered with by some nonphysical means requiring zero force. The <u>being</u> portion of a life system can apparently do this to some extent.

Since the switch time of a perceptron is on the order of 10^{-21} seconds, then even an incredibly tiny quiton input variation to a perceptron will result in

---

[1]It is stressed that all possibilities exist and are real, but do not exist in perception. Perception is the only difference between unperceived reality and perceived reality.

[2]Which leads to an unusual view of "probability." A perceptron operation is already finished when one perception is complete; that is why "the past is always gone, the present has just occurred, and the future is never here." Perceptron operation continually creates the perceptron's universe as it operates, including all changes, time, space, etc.). Thus, at the conclusion of any one perceptron operation, a multitude of lineception steps can exist for the next operation. However, although possibly quite large, the number of next steps available must be finite to be causal (perceivable). It is the process of perception that makes probability finite. Perception is finite; nonperception is infinite.

[3]The only alternative conclusion is that the living system is unable to deliberately

perception is finite; nonperception is infinite.

[3]The only alternative conclusion is that the living system is unable to deliberately modify its behavior and its behavior is purely mechanical. But since this implies that all behavior is absolutely programmed and predictable, which is obviously false, this alternative is not valid and the original conclusion stands.

Next Page

noticeably altered lineception after one second of such variation. So it is quite reasonable to presume the futility of trying to measure such infinitesmal influence as is brought to bear on one single perceptron operation. However, the total influence can obviously be detected after being accumulated by a very large number of perceptron operations, and for living systems it is. So while we have not proved the mechanism of life-system manipulation of lineception, we have shown a logical progression from an assumed mechanism to a result that is universally verified by countless observations (i. e., all living systems are observed to manipulate causality, which manipulation is, after all, the definition of behavior). Since no other mechanism has been proposed, to the author's knowledge, that would reasonably explain the observed phenomenon of life-system manipulation of lineception, it is logical to accept as true the assumed mechanism -- a life system can exert an incredibly tiny influence on perceptron inputs,[1] i. e., on the ether or on empty space.[2,3]

---

[1]This tiny influence is the basis of the realization process. To comprehend the noncausal, the individual observer usually wrestles diligently with the problem, repeatedly attempting to perceive it causally. In each such attempt, the tiny influence of inception on perceptron inputs is exerted. Over an ensemble of such attempts, the perceptron causal output can be modified, i.e., modulated noncausally to give what are now slightly noncausal perceived outputs. Presence of a required fit or required output pattern in the perceptive mind allows the output to be examined (compared) against the required output, i.e., it allows the selection of the proper noncausally modulated causal transfer function. When the outputs match, one then has a breakthrough or realization which matches the real world pattern but which cannot be directly perceived causally. However, since the mental file of the perceptive mind has now filed the proper transfer function, the individual has assimilated the information and understands it, being able to recall the noncausally modulated causal transfer function at will. Thus in Zen, the ultimate example of realization is described as "enlightenment." Phrases such as "direct perception of reality," "direct experience of ultimate reality," or "direct realization of all-being" are also used in trying to portray the nonperceivable realization. Conventional science hides the entire process behind vague terms, such as "creative thinking," which actually only conceal the fact that we do not know what it is, or how it is accomplished.

Note that such "creative realization" can cover either purely causal or noncausally modulated perception, the difference being merely whether the inputs are incepted in a normal manner comparable to causal phenomena, or in another manner. Realization is derived only from inception. Since the observed phenomena of physics already appear to be noncausal (statistical) in the ultramicroscopic region while ensembles of these yet appear to be causal, then the physicist is already confronted with the necessity of changing causality but at the same time retaining causality. The implications to the observation process itself must be examined, and they remove the dichotomy between physics and metaphysics when pursued.

[2]The Hieronymus effect is an example of this in reverse. It generates an effect on living nervous systems that is not the result of electric, magnetic, or gravitational fields, and is not caused by matter in motion. For that matter, a polygraph has been used to clearly measure a response of plants to human thoughts alone, and such an effect is not presently explainable within the body of physics theory. "Firewalking" is another unexplainable phenomenon from the standpoint of present physics theory as is acupuncture.

[3]All psi phenomena derive from this effect (inception) together with turbulent

is acupuncture.

[3]All psi phenomena derive from this effect (inception) together with turbulent switching. A straightforward theory of psi phenomena (and of such things as fire-walking and acupuncture, for that matter) can conceivably be generated from the quiton/perceptron theory.

Next Page

Of course the most efficient development of manipulation of lineception (i.e., the widest response) by a life system would necessitate a control system approach; i.e., life system direct manipulation of only a very small control valve or control mechanism, which in turn controls the input to a much larger mechanistic (deterministic) servo amplifier. Systems like this are universally observed in life systems. Thus the great bulk of a life system's manipulation of lineception is servomechanistic: the actual direct influence of life (being) on matter (perceptron switching) is so microscopic as to be immeasurable at its operating level, and only its macroscopic effects become measurable. For that reason the scientist has never been able to isolate the mechanism of life's manipulation of lineception, nor is he likely to be able to do so in the foreseeable future.[1]

Life's manipulation of lineception will be denoted by the term "inception," and can be thought of as a modulation (partial change or additive change) of the lineception carrier. Ordinary physical phenomena are macroscopic ensembles of lineceptions, where the deterministic (mechanistic) law holds absolutely but in a relative manner (ensemble to ensemble) which is fixed cause-and-effect, or causality, from the viewpoint of perception. Since inception is a modulation of lineception, then living behavioral phenomena should be superimposed as envelopes on causal lineceptions, or causal lineception ensembles, and, indeed, they are universally observed to be so superimposed.[2]

Absolute or ultimate reality, however, can be thought of in one respect as all multiceptions and all multiflections, all-at-once, which is timeless (i.e., which is both all-possible-times and zero time simultaneously or identically).[3] Along any one lineception, causality applies; yet since a very large number of changes to that lineception are available in just one multiception branch, then quite a large

---

[1]This latter statement, of course, is subject to challenge.

[2]Since all matter <u>is</u>, it <u>contains being</u>. Another intriguing possibility exists: that there are two types of inceptive systems, or two magnitude directions that inception takes. The first type would produce inception with difficulty, and its inception would only be apparent at the macroscopic level; the second type would produce inception with ease, its inception would be apparent only at the microscopic level. The first type would correspond to what we call "living systems," while the second would correspond to what we call "inert systems." Living systems' inception would be observable to human senses and human instruments, while inert system's inception would not. A second and remarkable consequence would be, that in the extreme microscopic case, inception would dominate and this scale would appear to be absolutely statistical (individually unpredictable), which apparently is true (i.e., degree of causality represents degree of restraint of inception). This would modify causality (for individual events) at the ultramicroscopic level, but at higher levels causality would still apply due to the karma effect on perceived ensembles. It is significant that at present the universe of matter seems to behave in precisely this fashion. To summarize, perception is causal -- it generates causality. Inception, being noncausal, must be below the perception threshold. Aggregates of inception (noncausal) that equal or exceed the perception threshold become causal (are processed by perception) and generate causal karma.

[3]Since every perceived ΔT has an unperceived complement $-\Delta T$ which exists in reflec-

[3]Since every perceived ΔT has an unperceived complement $-\Delta T$ which exists in reflection, then the sum total of all times in absolute existence, which includes both perception and reflection, equals zero time.

Next Page

number of inceptions are available to be applied to that one lineception by an organism to change or direct the lineception. Herein is the explanation of karma. Since every inception made by an organism (or by a submicroscopic particle of being for the second case, see note 2, p. 32) changes its entire lineception, it also changes its entire perceived or relative universe, which is the only universe it knows or senses. And since causal feedbacks from this perceived universe[1] occur to the organism's perceptron (which itself is part of that perceived universe), then the effects of the organism's actions indeed return precisely to it. So, "as a man soweth, that shall he also reap" is quite true.[2]

It is now possible to formulate some conclusive statements:

1. One perceptron follows a lineception path, mechanically basing its output on its inputs, and this operation establishes causality to perception repetition, i.e., to lineception.

2. Ordinary physical phenomena are merely ensembles of related lineceptions, and are perceived to be absolutely deterministic (obey only cause-and-effect.

3. Living phenomena exhibit the effects (selective behavior) of inception (modulations impressed on lineception) which occasionally diverts one lineception from its deterministic lineception limb to another multiception limb, resulting in a changed (modulated) lineception.

4. Ultimate, or absolute, reality may be thought of as the sum-total of all multiceptions and multiflections.

5. "God" is all-being, which is all multiflection and multiception at once, which is both <u>no time at all</u> and <u>forever</u> and <u>all forevers</u> as well.

6. "God's will" is lineception and its accompanying lineflection.

7. "Man's will" or "free will" is inception, the modulation of lineception (and unknowingly its accompanying lineflection). Inception, however, imposes a feedback on the inceptor since a precise feedback, from the inception changes to perception, occurs to the perceptron of the perceiver. This feedback resulting from inception is karma.

8. The law of cause and effect (causality) exists in perceived nonmodulated phenomena (ensembles of lineceptions).

9. Causality is affected (modulated) by living systems, but applies to each choice once made. The causal feedback from inception is karma.

---

[1]"Perceived" must be accented: the nonperceived universe is not causal, since by definition causality invokes a perceiver and the perception process.

[2]Collective karma of any ordered group such as a species must exist in like manner. On the submicroscopic level, "karma of ensembles" means that the statistics of

[2]Collective karma of any ordered group such as a species must exist in like manner. On the submicroscopic level, "karma of ensembles" means that the statistics of lineceptions and inceptions still lead to causal relationships in the perceived collective phenomena.

Next Page

10. Neither causality or karma applies in ultimate reality, although all
causality lineceptions and their reflections, and all modulations
(inceptions) and the karma reflections of those inceptions, are
included in ultimate reality.

VII. CLOSING REMARKS

The quiton/perceptron approach appears to offer a most extensive area for further investigation, and it is hoped that the physicists will interest themselves in the concept. It offers explanations for the problems long posed by ontology, and unifies the bases of science and metaphysics.

We state categorically that the theory explains what electric charge is, why like charges repel, and why unlike charges attract. In addition, since all phenomena are perceptron outputs, the theory indicates that multiple effects which are very close in time or distance will interfere with each other due to turbulent switching; i. e., conservation of mass/energy holds only as long as no switch interference exists. Turbulent switching can possibly disrupt all known physical laws. Unexpectedly strong forces, such as nuclear force, might in fact result from this effect. Other implications include possibility of travel faster than the speed of light (deBroglie waves do this now) and of travel back and forth in "time."

Since both laboratory instruments and human sensory apparatuses are perceptrons and differentiate reality, investigations of physical phenomena should include the laws of the perceptron as well as the laws of the perceived phenomena.

Next Page

BLANK

Next Page

DISTRIBUTION

	No. of Copies
US Army Missile Command Distribution List A	52
Defense Documentation Center Cameron Station Alexandria, Virginia 22314	12
Commander US Army Materiel Command ATTN: AMCCG	1
AMCRD	1
5001 Eisenhower Avenue Alexandria, Virginia 22304	
AMSMI-O	1
-FR, Mr. Rives	1
-R, Dr. McDaniel	1
-RB, Dr. Kobler	1
-RBL	5
-RP, Mr. Kopcha	1
-RPR	1
AMCPM-MD, LTC Bearden	100
-MD (Record Set)	1

Next Page

BLANK

Next Page

UNCLASSIFIED
Security Classification

DOCUMENT CONTROL DATA - R & D

(Security classification of title, body of abstract and indexing annotation must be entered when the overall report is classified)

1. ORIGINATING ACTIVITY (Corporate author) SAM-D PROJECT OFFICE US Army Materiel Command Redstone Arsenal, Alabama 35809	2a. REPORT SECURITY CLASSIFICATION UNCLASSIFIED 2b. GROUP

3. REPORT TITLE

QUITON/PERCEPTRON PHYSICS: A THEORY OF EXISTENCE, PERCEPTION, AND PHYSICAL PHENOMENA

4. DESCRIPTIVE NOTES (Type of report and inclusive dates)

Technical Report

5. AUTHOR(S) (First name, middle initial, last name)

Thomas E. Bearden

6. REPORT DATE 5 March 1973	7a. TOTAL NO. OF PAGES 38	7b. NO. OF REFS ~~0~~ 3
8a. CONTRACT OR GRANT NO. b. PROJECT NO. c. d.	9a. ORIGINATOR'S REPORT NUMBER(S) 9b. OTHER REPORT NO(S) (Any other numbers that may be assigned this report) AD 763210	

10. DISTRIBUTION STATEMENT

Approved for public release; distribution unlimited

11. SUPPLEMENTARY NOTES	12. SPONSORING MILITARY ACTIVITY Same as No. 1

13. ABSTRACT

A fundamental answer is attempted to the question of being, time, space, existence, perception, and physical phenomena. Mass, empty space, reality, gravitational attraction, continuity, discontinuity, and relativity are among the "things" and "nonthings" for which relationships and explanations are provided.

Perception is defined as detection by a mass of change to itself and as a differentiating process. Perceived physical phenomena are revealed to be first and derivatives of ultimate reality, and outputs of the physical perceiving device called the "perceptron." Using the operation of the physical perception process on action, the units of which are energy times time, an entirely different view is generated of both reality and the Heisenberg uncertainty principle. When superposition is imposed as a condition, the Heisenberg uncertainty principle is revealed to be a quantized statement. A concept of the absolute value of a dimensional molecule is advanced.

A reality model is constructed of an action continuum and a nonaction continuum separated by an operational threshold whose magnitude is given by an uncertainty principle. Perception is modeled as a process which switches atomic quanta of action and nonaction back and forth across the threshold. Mass is explained as perceptron switch activity rate, and a mass definition equation is generated. One kilogram mass is shown to represent 17.053×10^{50} perceptron switches per second. From the model, Newton's laws of motion and gravity can be generated directly from the concept of the interaction of mass with space itself, space being taken as a massless fluid, or ether, composed of tiny nonaction particles called "quitons." Einstein's postulates of

composed of tiny nonaction particles called "quitons." Einstein's postulates of

DD FORM 1 NOV 65 1473 REPLACES DD FORM 1473, 1 JAN 64, WHICH IS OBSOLETE FOR ARMY USE.

UNCLASSIFIED
Security Classification

Next Page

UNCLASSIFIED
Security Classification

14. KEY WORDS	LINK A ROLE	LINK A WT	LINK B ROLE	LINK B WT	LINK C ROLE	LINK C WT
causality perception perceptron quiton quiton/perceptron theory gravitation mass reality metaphysics being existence space time photon action action quantum quantum observation relativity Karma complementarity physical phenomena Mach's principle Newton's laws inertia Debroglie wave Einstein's postulates Michelson-Morley experiment ontology Heisenberg Uncertainty Principle superposition equivalence principle simultaneity inertial frame						

ABSTRACT (Continued)

special relativity are also shown to follow from the model, and a statement of the equivalence principle is shown to be consistent with the model.

The concept of "lineception" as a causal chain of perceptron operations is advanced. "Inception" is developed as a noncausal modulation of lineception and as a distinguishing feature of a living system. The possibility is raised that inception could provide an explanation of the noncausal, statistical, ultramicroscopic universe and yet require large ensembles of ultramicroscopic events to conform to causality. Inception is shown to lead to karma. Perception is shown to be causal and to generate causality itself.

Some elementary philosophical implications of quiton/perceptron theory are pointed out and briefly discussed.

and briefly discussed.

UNCLASSIFIED
Security Classification

Next Page

Tony,

Found a cy of
The paper, so here it is.

Cheers,

Tom

P.S. Shortly after this
the SAAM-D was renamed
the PATRIOT.

The Tom Bearden Website

Energy, Observations and Comments

---

1. A Conservative Field Requires a Single-Valued Potential
2. Earth-Electrosphere and Earth-Ionosphere Capacitors
3. Earth's Poynting Energy Flow
4. The Hidden Energy Flow around us
5. Electrostatic Fields of the Earth's Electrosphere Capacitor in Fair Weather and Thunderstorms
6. Flow of Current and Energy Into, Through, and Along a Conductor
7. Energy "collected" on a charge
8. Fiber Fuse Effect
9. Impact of Vacuum Engineering
10. Lawandy's Experiment
11. Field may be nonconservative for a multivalued potential
12. The Ostrich Problem - Part 1
13. The Ostrich Problem - Part 2
14. Russia had Overunity Devices in 1930s
15. Energy output of human body
16. A "static" Poynting S-flow free-energy generator
17. Topology and Energy Conservation
18. Block Diagram: Sweet's Vacuum Triode

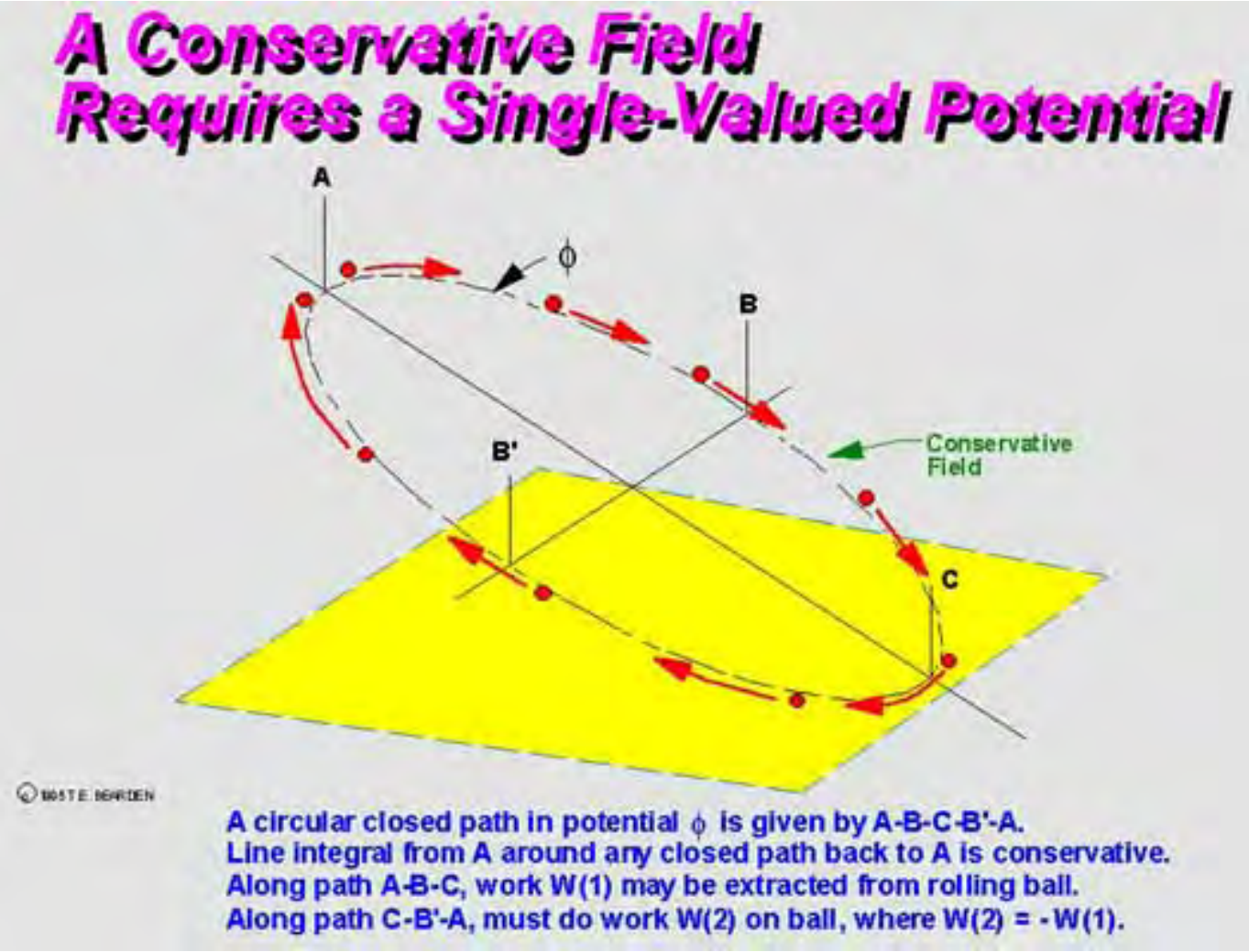

Return to Slide Index

Next Slide

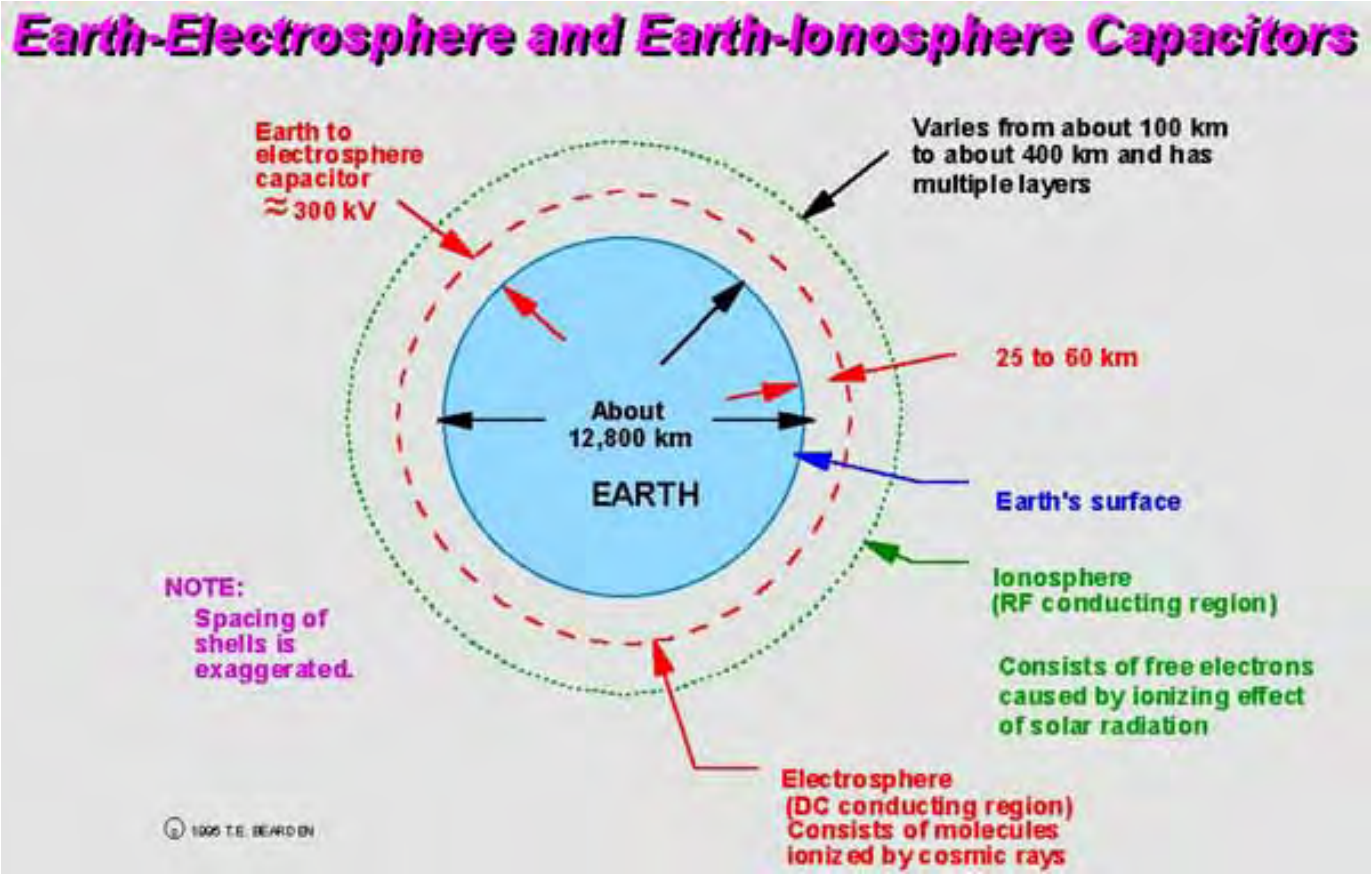

Return to Slide Index

Next Slide

Previous Slide

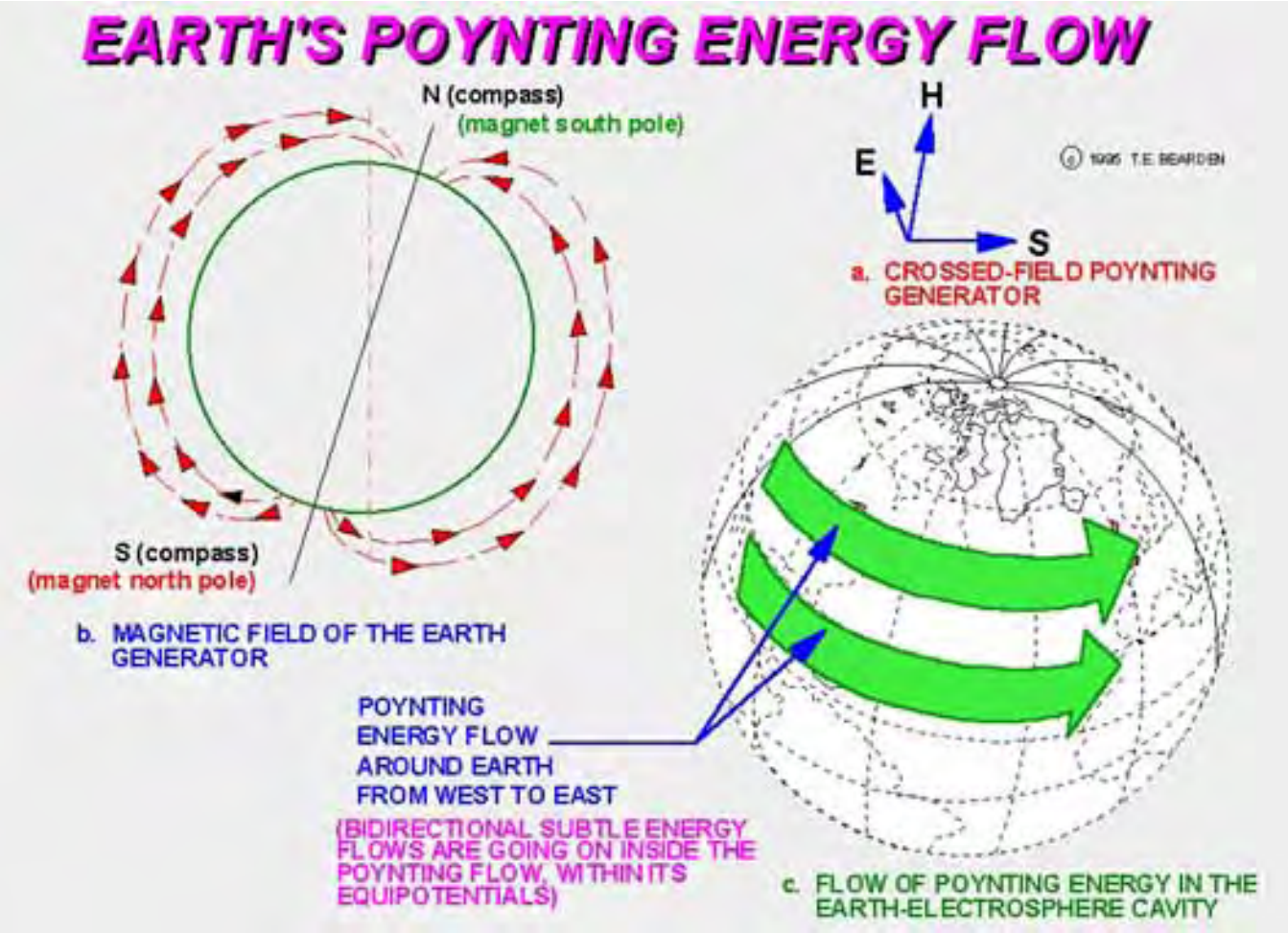

[Return to Slide Index](#)

[Next Slide](#)

[Previous Slide](#)

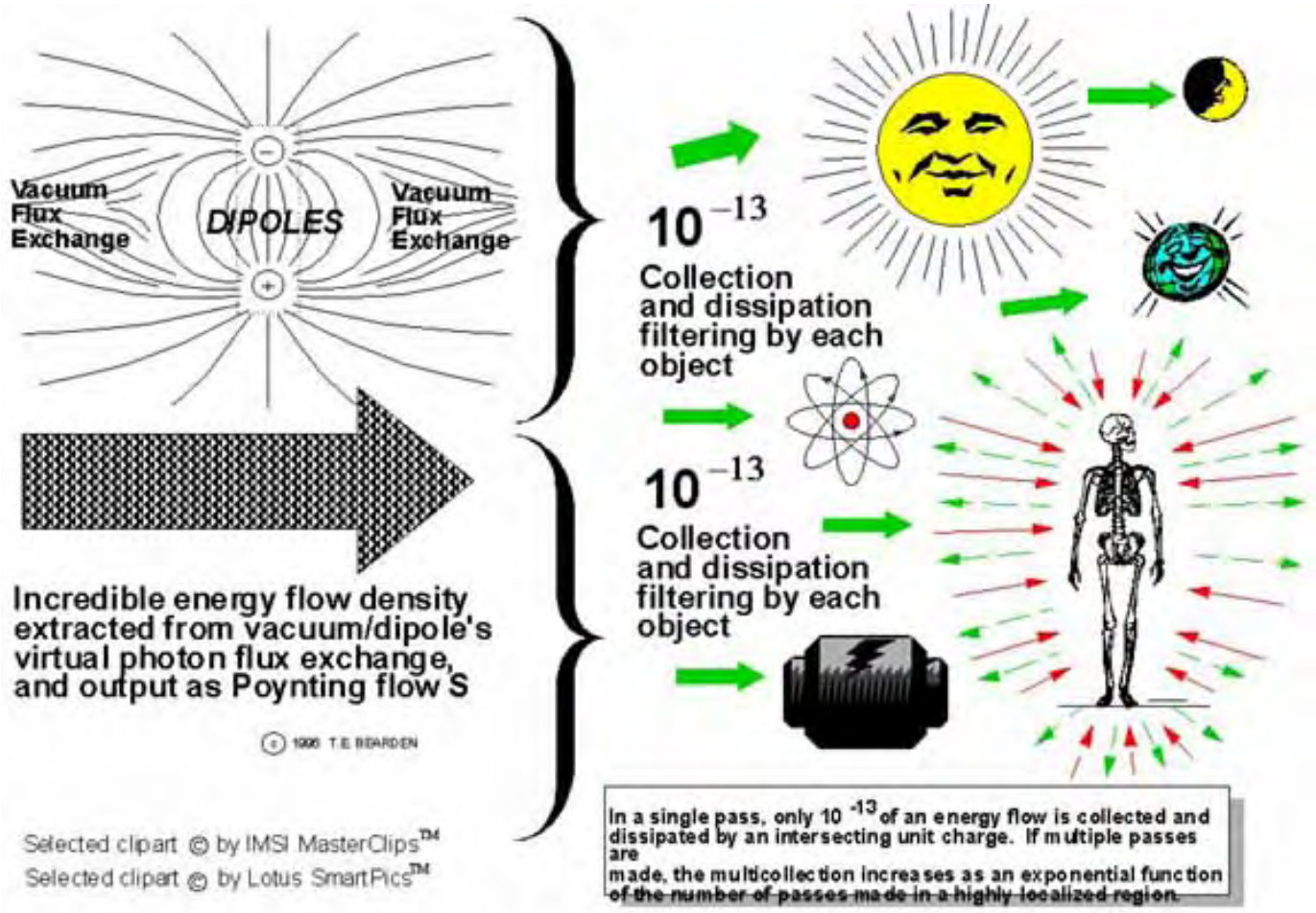

Figure 19. The world of physical matter exists behind a dramatic 10^{-13} filter in a fiery cauldron of fierce and primeval EM energy flow.

Return to Slide Index

Next Slide

Previous Slide

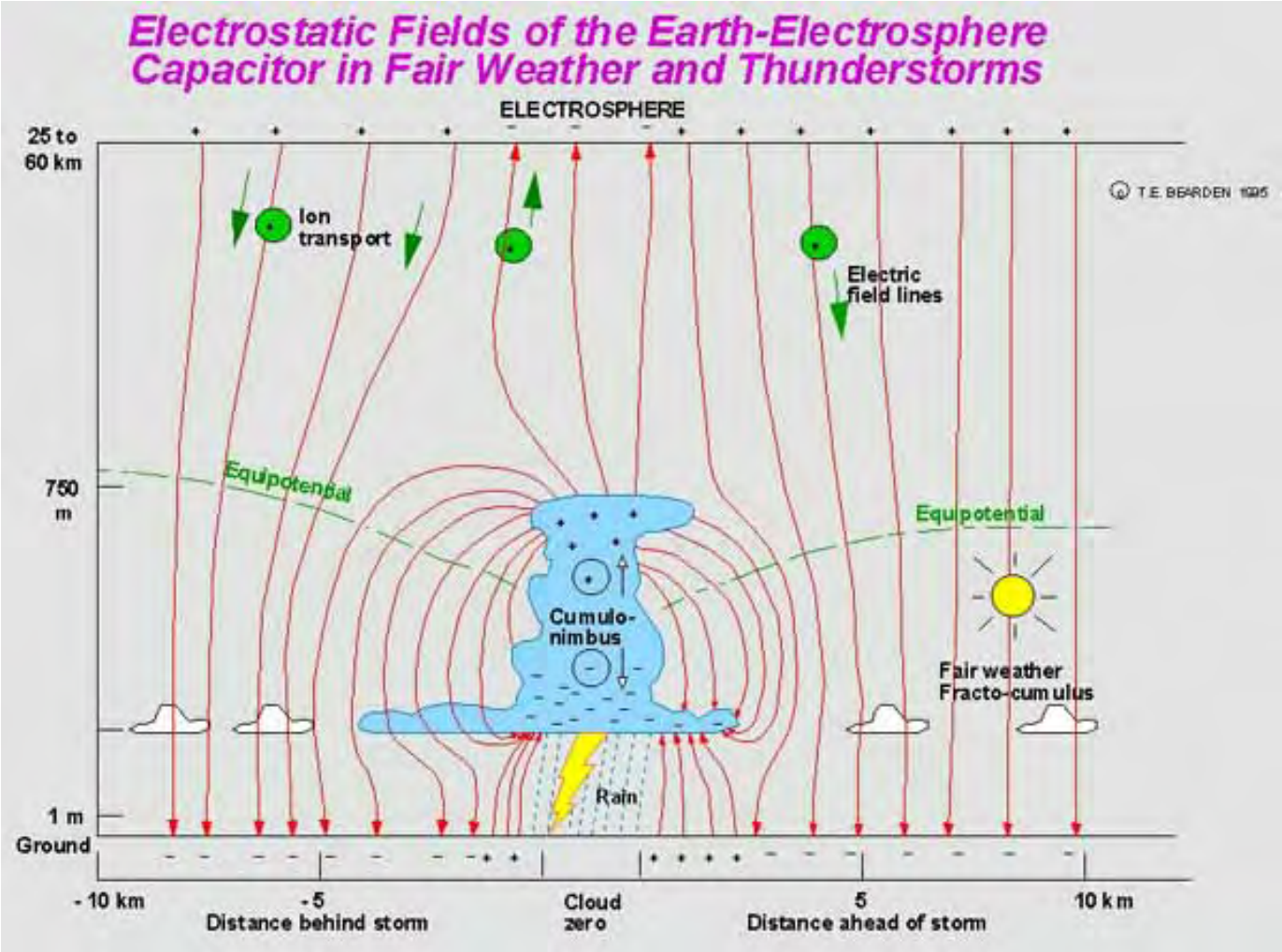

Return to Slide Index

Next Slide

Previous Slide

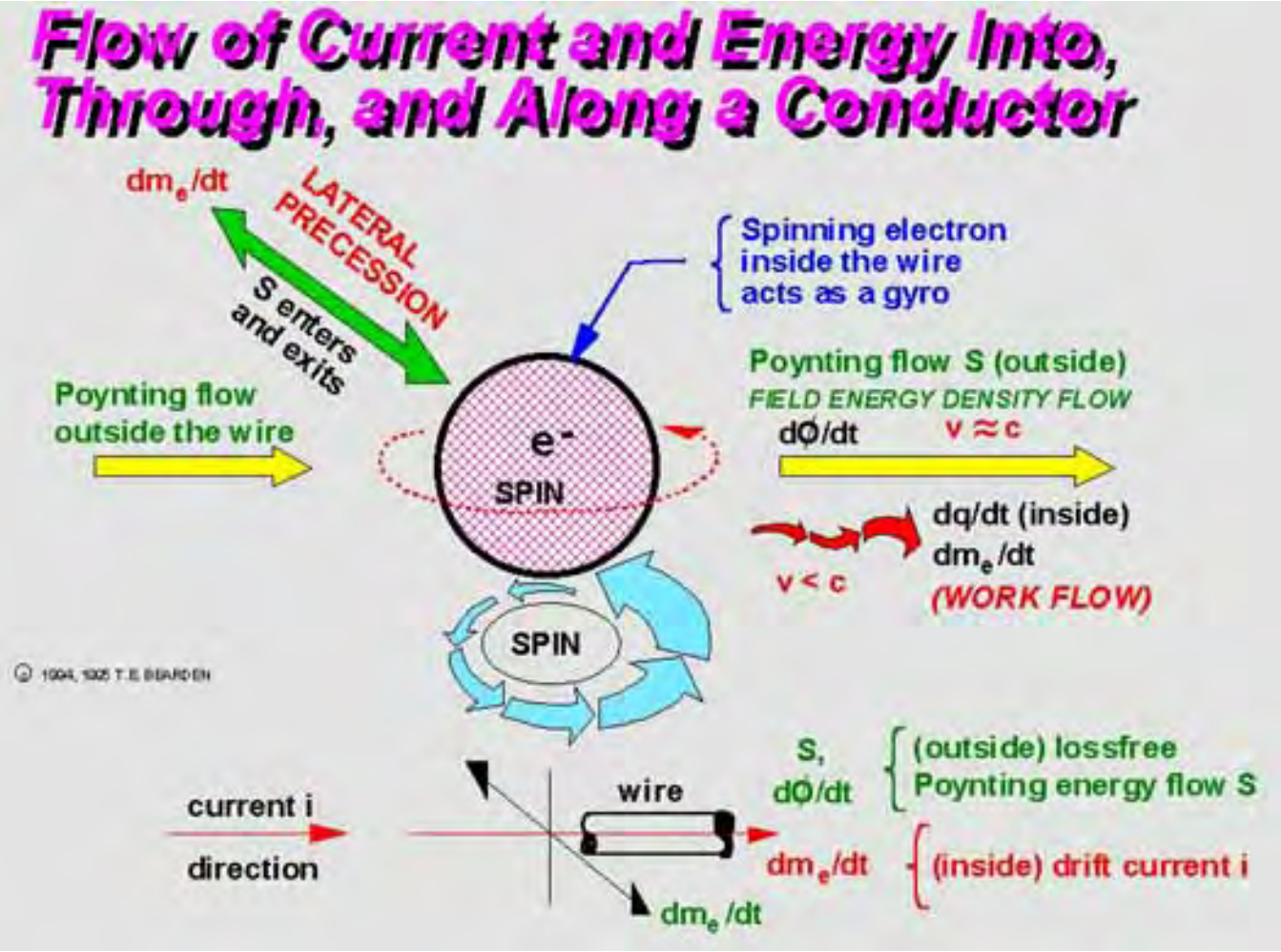

Return to Slide Index

Next Slide

Previous Slide

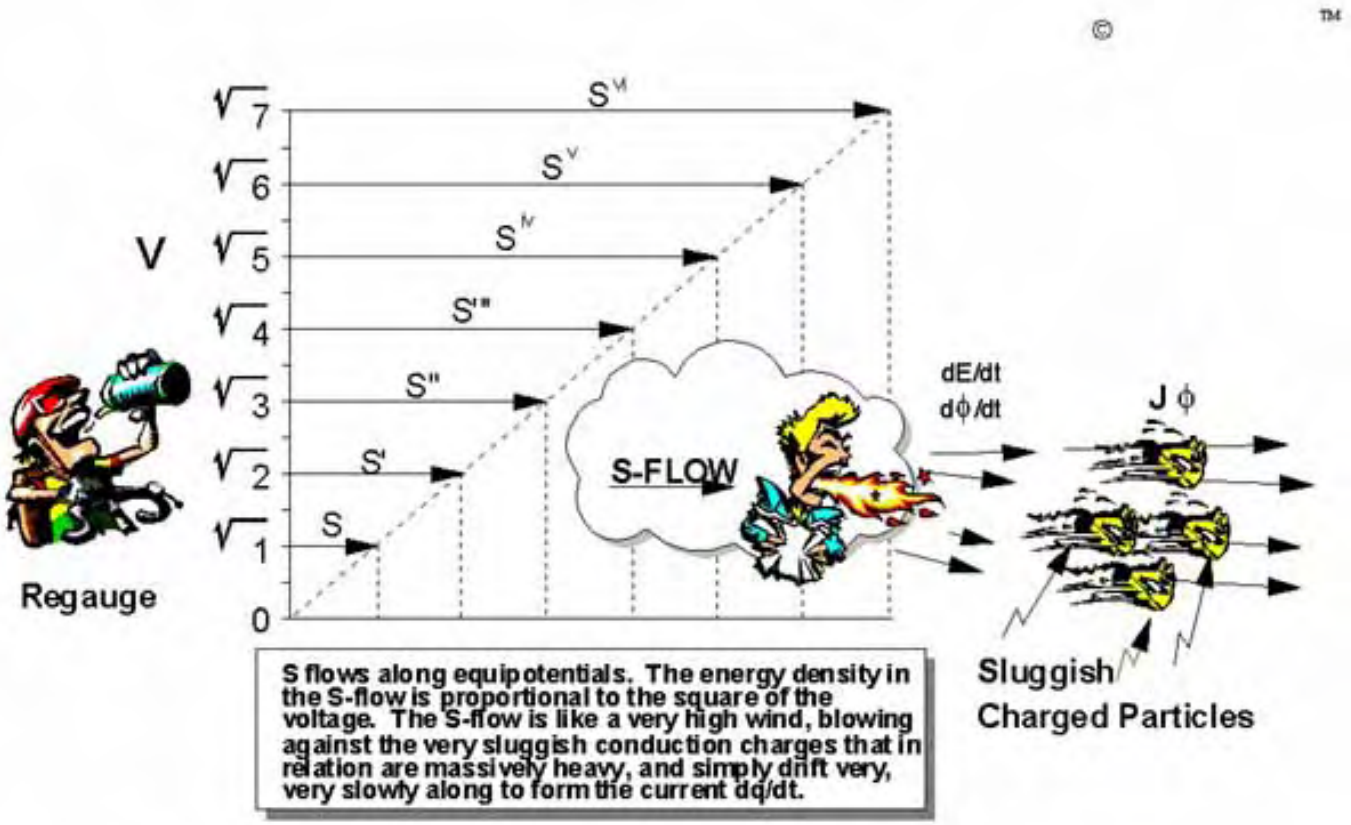

Figure 17. Energy "collected" on a charge depends upon the charge being in a continuous Poynting S-flow. When S ceases, there is no excess energy "collected" on the charge. Energy collection never occurs in chunks, but is always a dynamic, ongoing process.

Return to Slide Index

Next Slide

Previous Slide

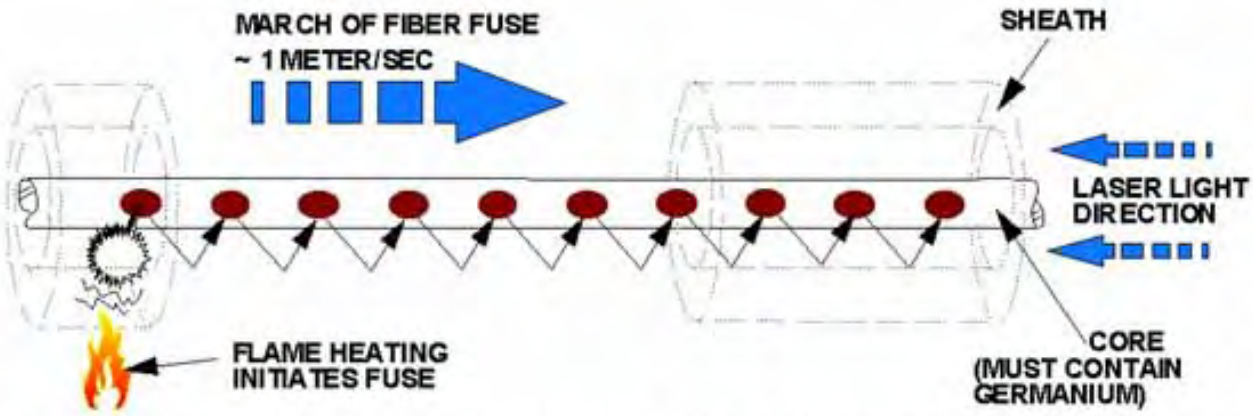

31A. Fiber fuse destroys core of fiber optics cable of indefinite length, pitting core with holes.

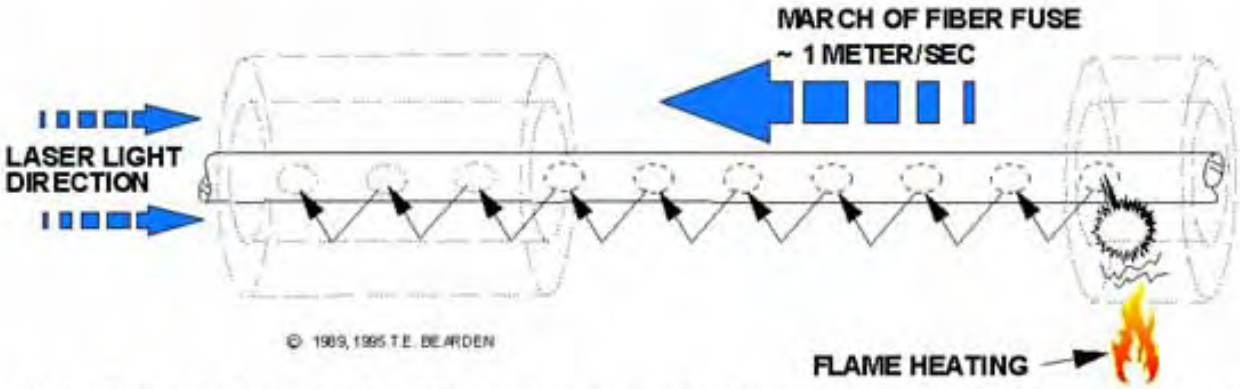

31B. Reversed second fiber fuse often *restores* pitted core in cable, filling holes back up.

Figure 31. Fiber fuse effect and its strange anomalies.

Return to Slide Index

Next Slide

Previous Slide

Impact of Vacuum Engineering

- "If they [quantum fluctuations of vacuum] can be [tapped], the impact upon our civilization will be incalculable. Oil, coal, nuclear, hydropower, would become obsolete – and so would many of our worries about environmental pollution."
- "Don't sell your oil shares yet – but don't be surprised if the world again witnesses the four stages of response to any new and revolutionary development:
  - 1. It's crazy!
  - 2. It may be possible -- so what?
  - 3. I said it was a good idea all along.
  - 4. I thought of it first."

Arthur C. Clarke
"Space Drive: A Fantasy That Could Become Reality"
Nov./Dec. 1994

- *Comment:*
  - *Every dipole's broken symmetry in its energetic exchange with the vacuum already freely extracts vacuum energy.*
  - *In power sources, the dipole gates the extracted energy out as S = EXH, which flows almost entirely outside the conductors.*
  - The circuit interacts with, and uses, only about 10^{-13} of S. The electrodynamicists calculate only this small S-component.

© 1996 T. E. BEARDEN

Return to Slide Index

Next Slide

Previous Slide

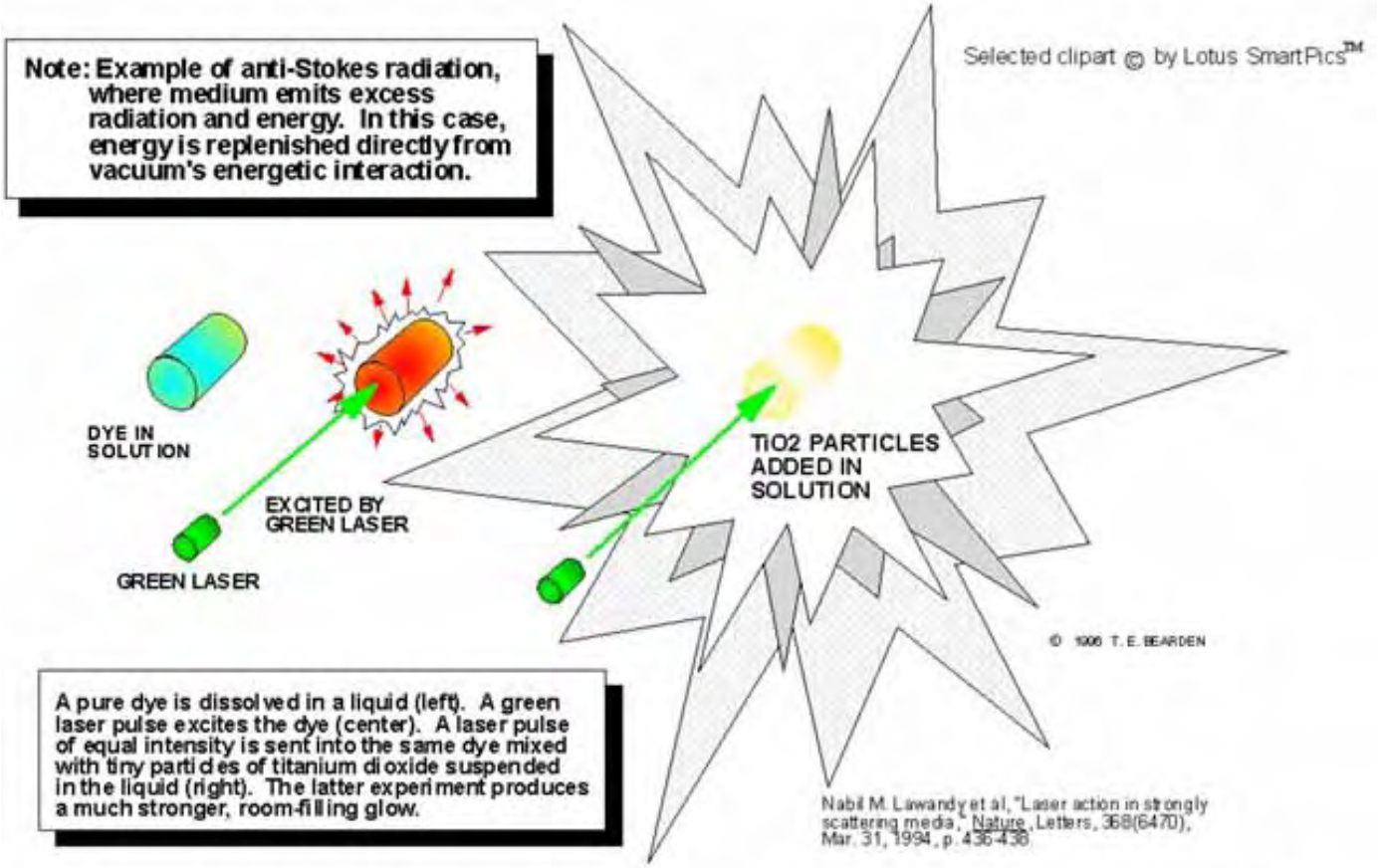

Figure 28. Lawandy's experiment (Letokhov-Lawandy effect) with multipass, multicollection of energy. Formation of a quantum potential can also become involved. Retroreflection and self-targeting are key.

Return to Slide Index

Next Slide

Previous Slide

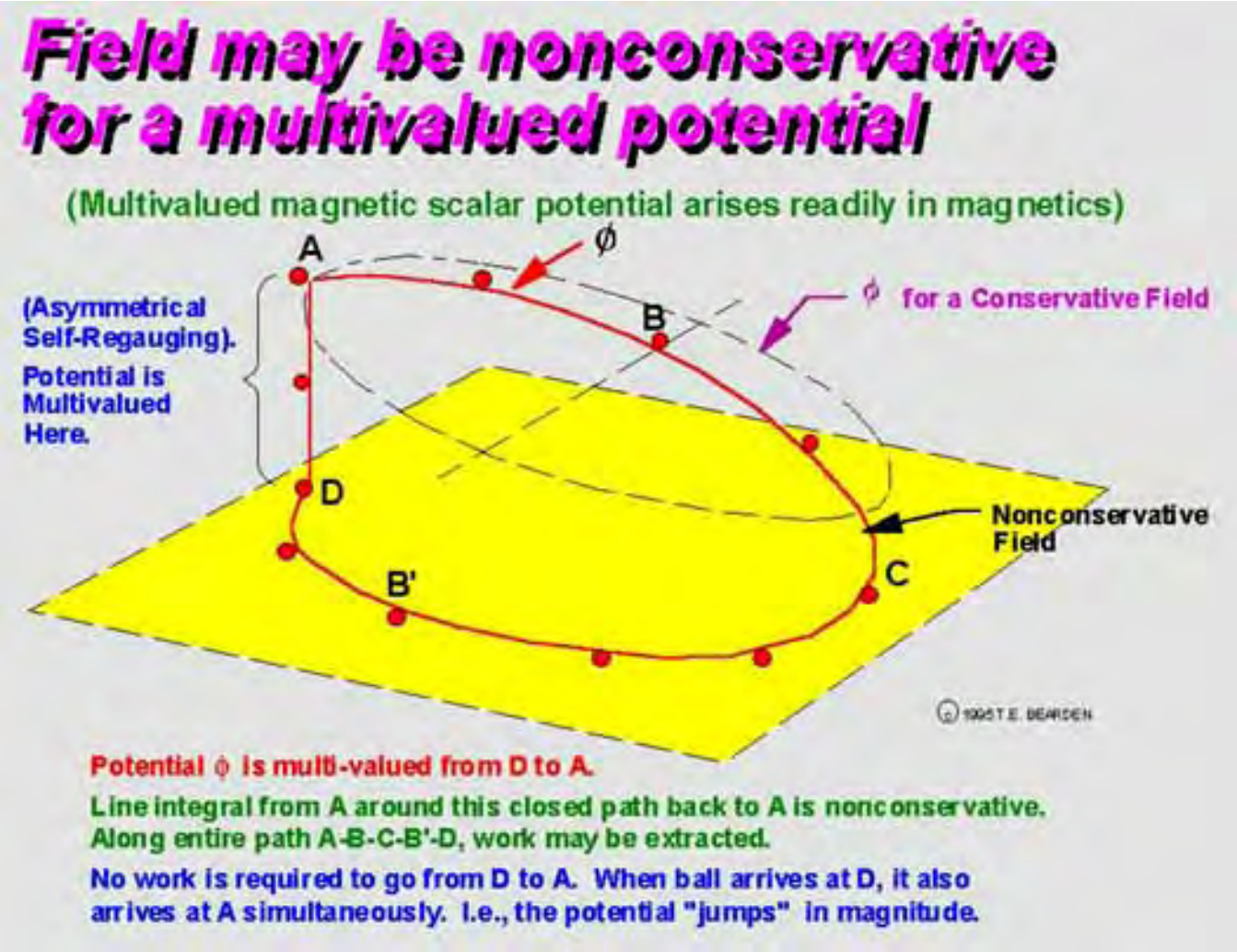

Return to Slide Index

Next Slide

Previous Slide

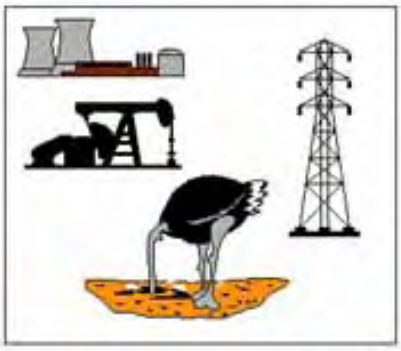

We're running out of energy! We must redouble our efforts!

We have to keep polluting the Earth, if we are to have energy!

Actually, a *few* of our electrical systems already produce all the energy we could ever need! *Learn to collect it and use it!*

Selected clipart © by IMSI MasterClips™
Selected clipart © by Lotus SmartPics™

All our antibiotics are failing! Millions will die from the new age of pandemics and from terrorists' BW attacks!!

We have to relegate EM effects on biological systems to the trash heap. We can only try to find more drugs and antibiotics.

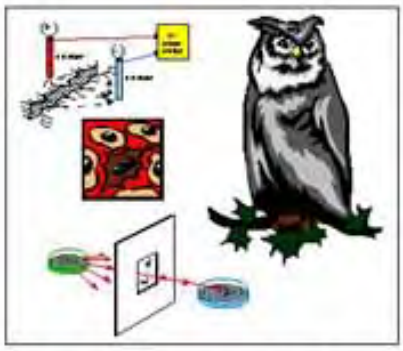

Actually, Priore already showed how to cure most dread diseases, by making and directing vacuum engines. Becker showed you it worked. *Develop it and use it!*

Figure 33. The only problem is the ostrich problem.

© T.E. BEARDEN 1996

Return to Slide Index

Next Slide

Previous Slide

We're running out of energy!
We must redouble our efforts!

We have to keep polluting the Earth, if we are to have lots of electrical energy!

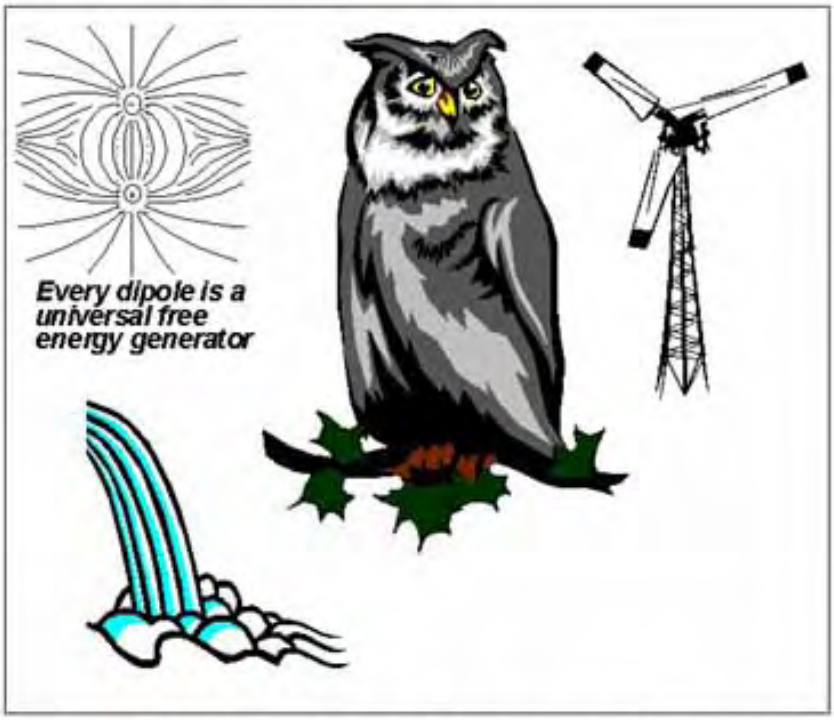

Actually, a single one of our large electrical power systems already produces all the free Poynting energy the world could ever need! *We just have to learn how to collect more of it and use it without continually destroying the source dipole!*

Figure . The only energy resource problem is the theoretical ostrich problem. We must become theoretical owls, rather than ostriches.

[Return to Slide Index](#)

[Next Slide](#)

[Previous Slide](#)

RUSSIAN "SWITCHED PARAMETERS" DEVICES: SELF-OSCILLATING ROTARY GENERATORS*

- Excites oscillations without explicit sources of magnetic or electric forces (i.e., regauges)
  - Periodic variation in system's parameters
  - Experimental and theoretical proof
  - Multiple successful systems made, tested
  - Papers published in Russian, French journals
- As theory predicts, power continually increases unless load is adjusted to stabilize system
- Several large systems tested to self-destruction
- Several large stable systems built, tested

* "On the parametric excitation of electric oscillations," L.I. Mandel'shtam and N.D. Papaleksi, Zh. Tek. Fiz. 4(1), 1934, p. 5-29.

© 1994 T.E. BEARDEN

Return to Slide Index

Next Slide

Previous Slide

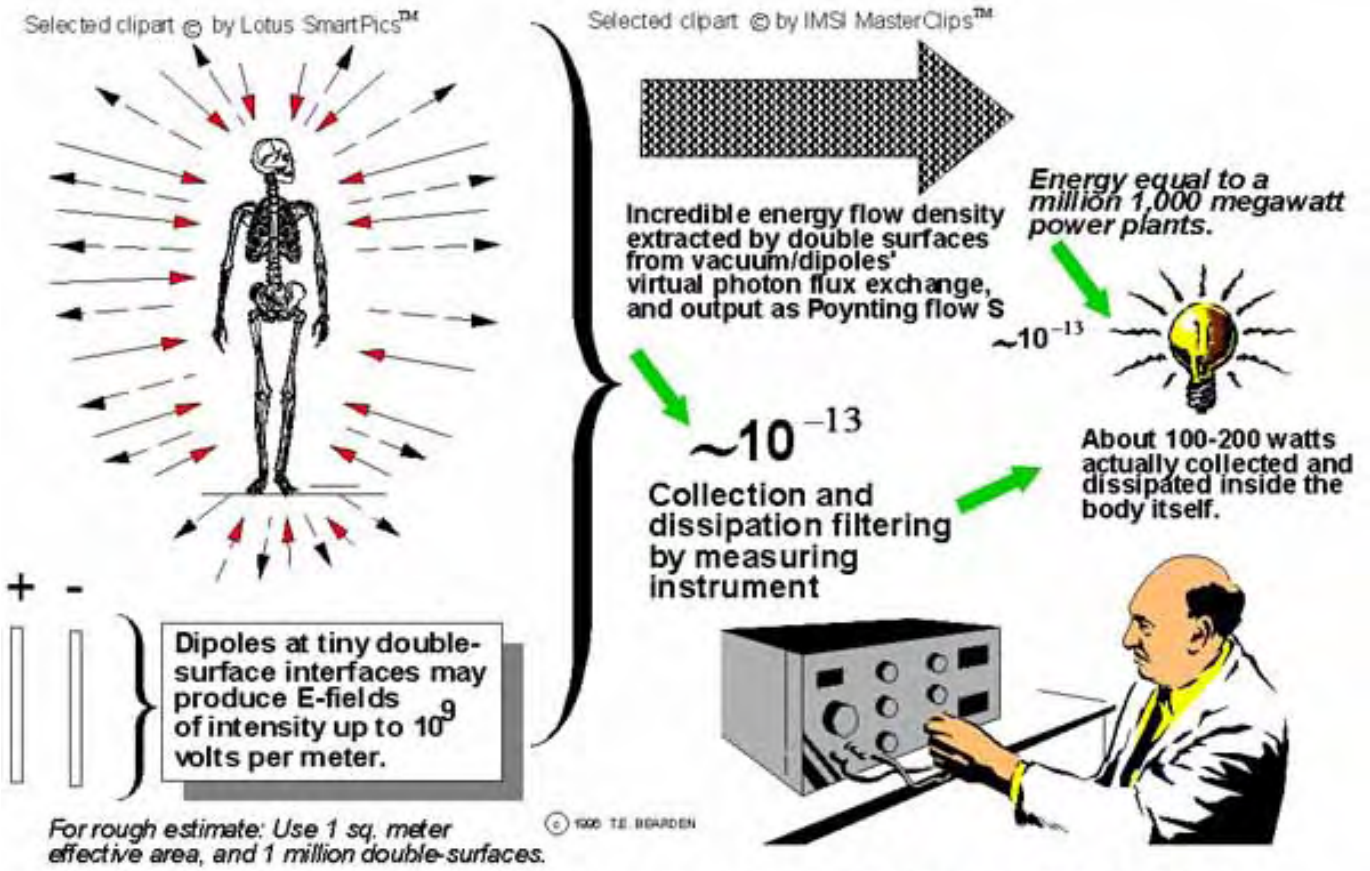

Figure 20. One human body produces more energy flow than all the electrical power loads on earth dissipate. However, only 100-200 watts of its own energy output is collected and dissipated by the body.

Return to Slide Index

Next Slide

Previous Slide

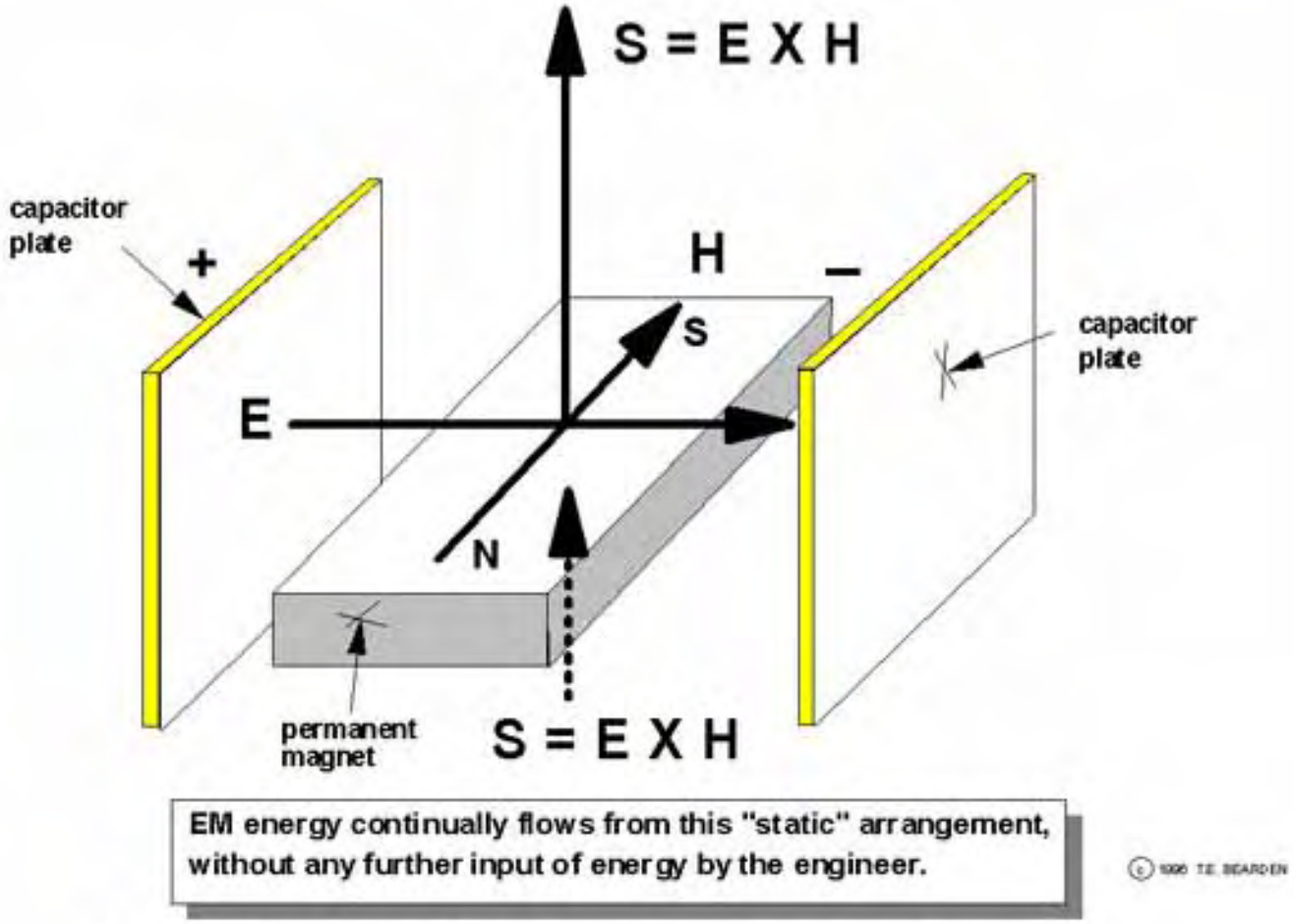

Figure 18. A "static" Poynting S-flow free-energy generator.

Return to Slide Index

Next Slide

Previous Slide

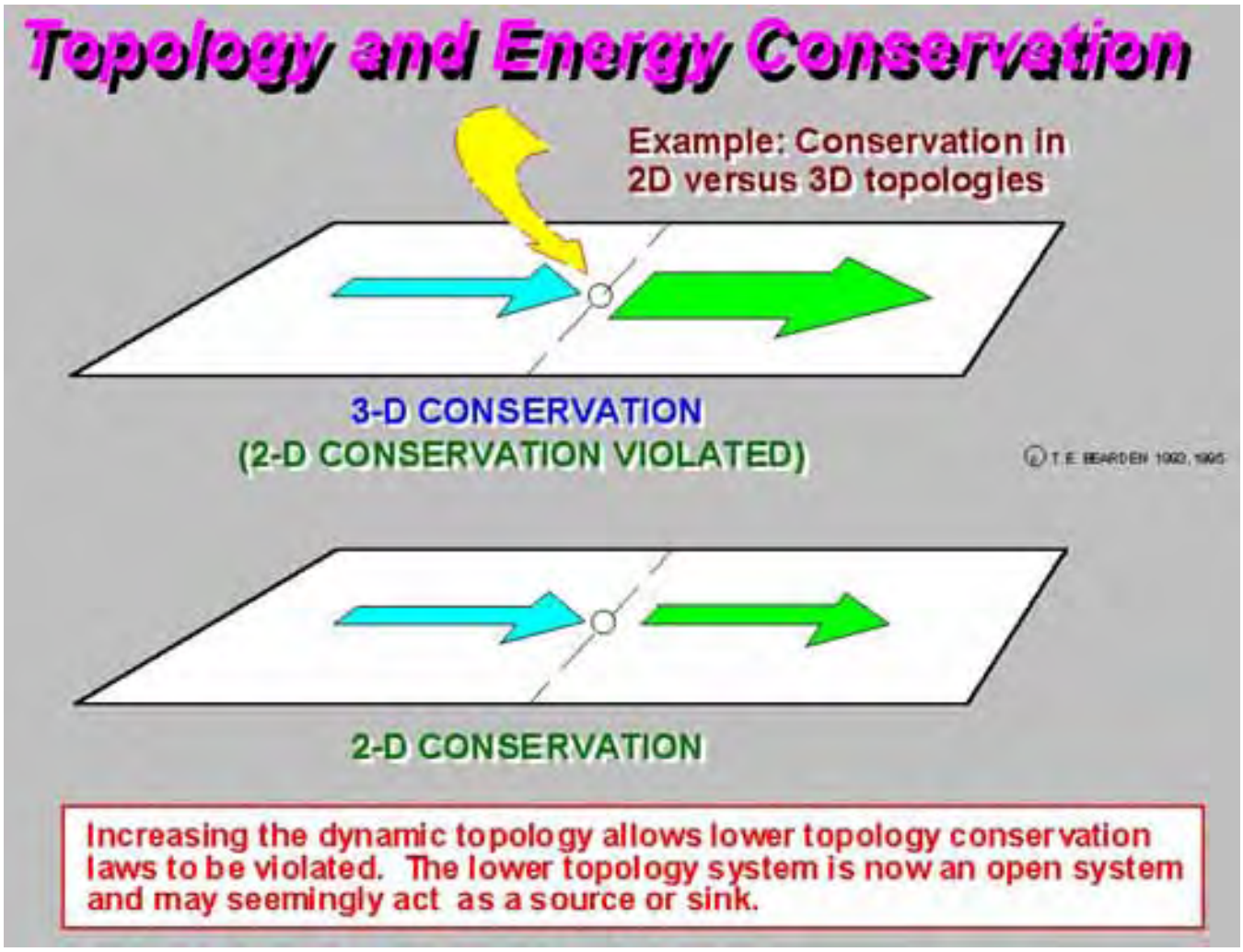

Return to Slide Index

Next Slide

Previous Slide

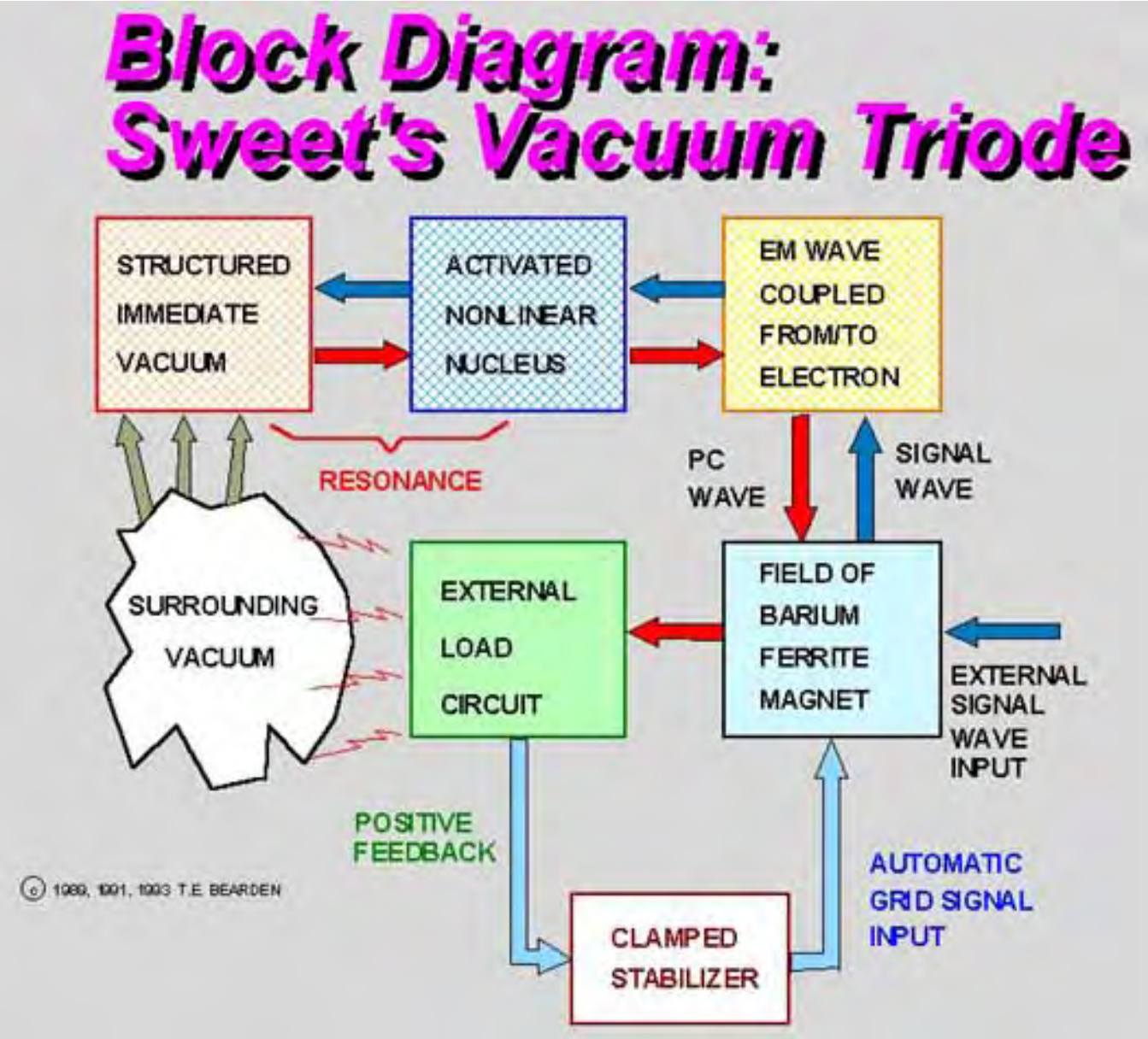

[Return to Slide Index](#)

[Previous Slide](#)

The Tom Bearden Website

Help support the research

Foundations of Electro-Magnetism

Slide Series

- Major Points of Presentation
- Chung's Carbon Filament Negative Resistor
- Aharanov-Bohm Effect
- Absorption and emission reactions (1)
- Absorption and emission reactions (2)
- Anti-engine for cell's deviation reverses cell back to normal
- Asymmetric regauging produces excess force, which can be used to do work on the system
- Asymmetric regauging produces excess force, which can be used to do work on the regauging system
- Becker's bone fracture healing experiments
- Becker's theoretical control system governing regeneration
- Becker's theoretical DC control system involved with response to injury
- Geometrical Distortion of Poynting Energy Flow
- Cosmic Bootstrap: Before the Big Bang
- Bridging Enables COP > 1

- Aspects of Strong Local Symmetry
- Other Aspects of Strong Local Symmetry
- Bunge on the Status of Electrodynamics
- Bunge on the Status of Electrodynamics and Physics
- Bunge on the Status of Classical and Quantum Physics
- Fractions of BW Casualties Surviving
- First Step in Self-Promotion of Cancer Due to Hypoxia
- Differentiation and Dedifferentiation Timelines
- Evolution of Cells on Earth
- A Charged Particle q is a Coupled System of m and Ø
- The Ubiquitous Assumption: Two Asymmetrical Regaugings for Net Symmetry (1)
- The Ubiquitous Assumption: Two Asymmetrical Regaugings for Net Symmetry (2)
- The Ubiquitous Assumption: Two Asymmetrical Regaugings for Net Symmetry (3)
- A Charged Particle is a Coupled System
- The Anomalies in Navy Electrolyte Experiments at China Lake
- Chung's Carbon Filament Negative Resistor

- Typical circuit has about 10^{-13} energy collection efficiency
- Classical View of EM
- Curved Spacetime acts as source or sink
- Chronic Disease Puzzling
- Cancer Characteristics
- Solving a Cancer Enigma
- Cancer: Characteristics
- Nonlinear Optics Distortion Correction Theorem
- The Electronuclear Reaction: Nuclear Reactions in TR-Zones (1)
- The Electronuclear Reaction: Nuclear Reactions in TR-Zones (2)
- The Electronuclear Reaction: Nuclear Reactions in TR-Zones (3)
- In Time-Reversed Zone: Nuclear reactions are biased
- In Time-Reversed Zone: Dynamics may be reversed
- Time-Reversed Zone: Significant only after time-density charging
- A New Conservation of Energy Law
- Questions on Carcinogens and EM

Radiation

- AS DEFINED, fields and potentials only exist in and on charged matter
- Serious flaws and errors in classical EM theory
- Electrodynamicists' Reaction to Removal of the Material Ether
- Reaction to Loss of Material Ether (1)
- Reaction to Loss of Material Ether (2)
- Some EM waves in Spacetime
- Air Medium Disturbances Generated When Air is Perturbed by a Plucked Taut String
- Launching a Spacetime Perturbation ("EM Wave") from a Wire Antenna
- Phase Conjugate Wavepairs Produce New Waves
- Scalar Electromagnetics (Energetics) View of EM (1)
- Scalar Electromagnetics (Energetics) View of EM (2)

- Scalar Electromagnetics (Energetics) View of EM (3)
- Extended General Relativity Principle
- Extension of Work-Energy Theorem
- 34 Flaws in Classical EM Theory
- MTW's General Relativity Principle
- Use of General Relativity (GR) in Particle Physics
- The Missing Infolded Electrodynamics
- Infolded Engines: Excluded by Present Physics
- Mass curves and structures spacetime; ST curvatures change and structure mass (1)
- Mass curves and structures spacetime; ST curvatures change and structure mass (2)
- At Infinite Velocity: Each Is Every Other
- Lisitsyn's Report: Brain Code Broken
- Lorentz Closed Surface Integration
- Lorentz's physically insignificant energy flow can be collected and utilized
- Lorentz surface integration of the Poynting vector around a closed surface
- Longitudinal EM Photon Interaction with Charge
- Mass is transparent to longitudinal EM waves, which move through the infolded interiors of internal waves, potentials, and fields in the mass.

- Pumping with Longitudinal EM waves Time-reverses the Mass
- Maxwell's Quaternion Theory
- Maxwellian Systems before and after Regauging
- Maxwell's four equations reduce to: Page 1
- Maxwell's four equations reduce to: Page 2
- More to come

Major Points of Presentation

- Electrodynamic is seriously flawed
  - Some major flaws
  - Corrections indicated
- Why past corrective attempts failed
  - Force field concept is material
  - Missing two infolded transforms (M->ST; ST->M)
- Missing Infolded general relativity inside electrodynamics
- Several Kinds of EM Waves in Space
  - How to make
  - Transduction
- A French medical example as a deep experimental demonstration
  - Spectacular regenerative cures funded by French Govt
  - Not comprehended, therefore suppressed
- Cold Fusion examples of time-density wave effects
  - China Lake instrumental anomalies in electrolysis
  - Explanation of anomalous behavior of instruments
  - Explanation of new nuclear reactions
  - Wave energy transduction provides excess heat
- Urge theorists to consider dramatically new reactions

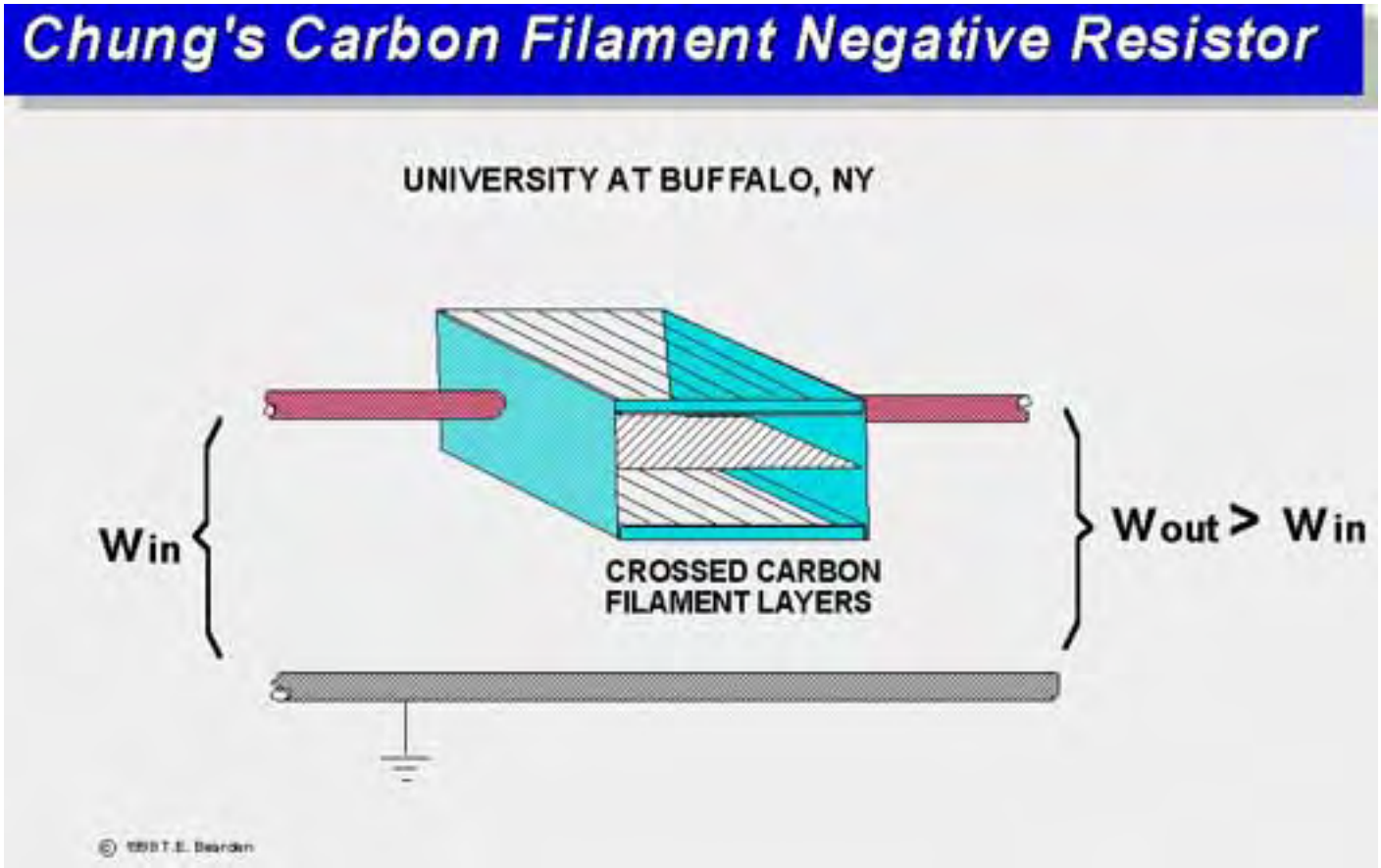
Chung's Carbon Filament Negative Resistor
UNIVERSITY AT BUFFALO, NY
Win
CROSSED CARBON
FILAMENT LAYERS
Wout > Win
© 1991 T.E. Bearden

Aharonov-Bohm Effect

- In field-free regions
  - E-field is zero
  - B-field is zero
- Potentials still exist, just no gradients
  - Cause real effects
  - Interference is the key
  - Contain sum-zeroed substructures
- Does not follow from
  - Mechanics
  - Classical electromagnetics
- Required by quantum mechanics

© T.E. BEARDEN 1996

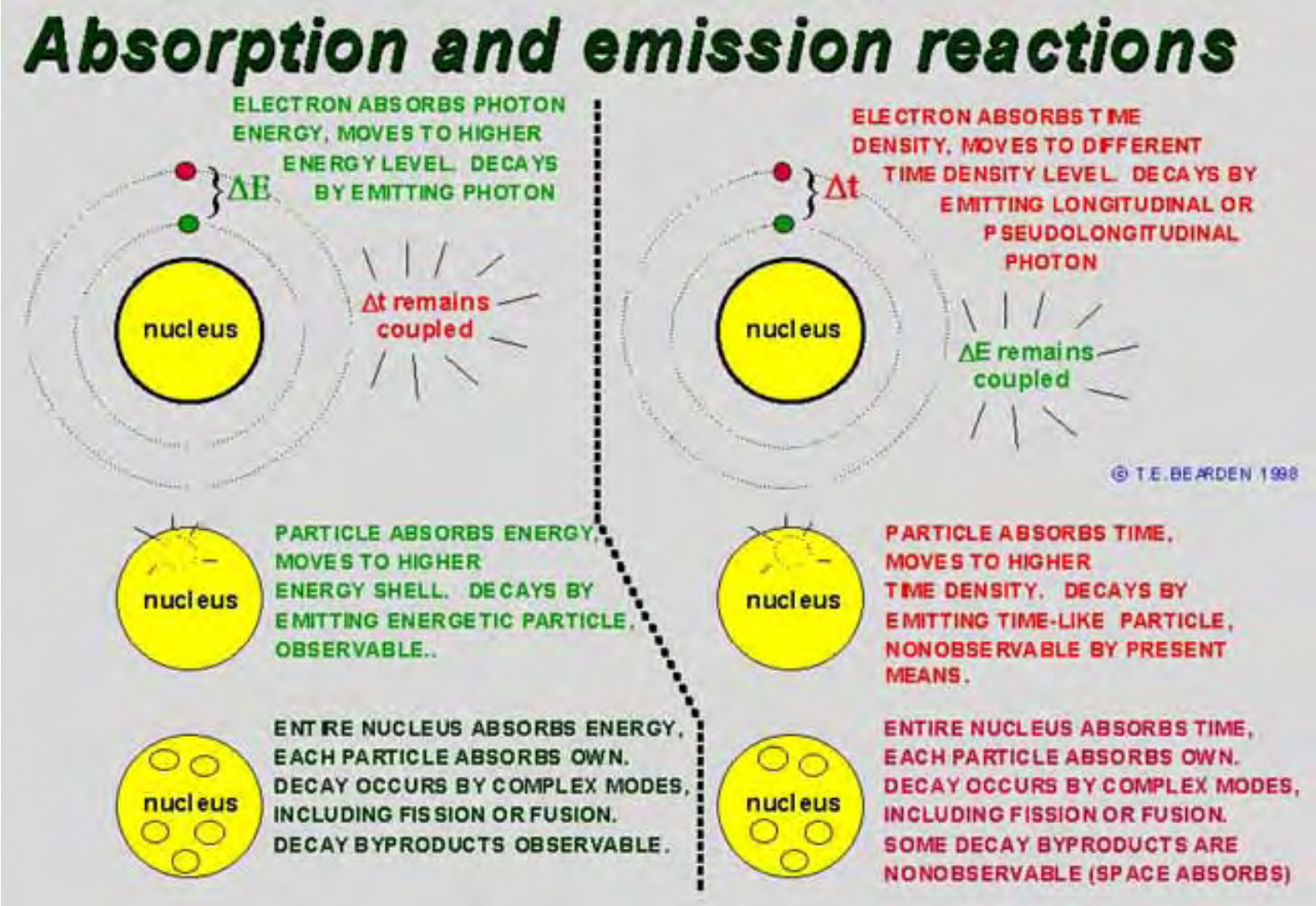
Absorption and emission reactions
ELECTRON ABSORBS PHOTON ENERGY, MOVES TO HIGHER ENERGY LEVEL. DECAYS BY EMITTING PHOTON
ΔE
nucleus
Δt remains coupled
ELECTRON ABSORBS TIME DENSITY, MOVES TO DIFFERENT TIME DENSITY LEVEL. DECAYS BY EMITTING LONGITUDINAL OR PSEUDOLONGITUDINAL PHOTON
Δt
nucleus
ΔE remains coupled
© T.E. BEARDEN 1998
nucleus
PARTICLE ABSORBS ENERGY, MOVES TO HIGHER ENERGY SHELL. DECAYS BY EMITTING ENERGETIC PARTICLE, OBSERVABLE..
nucleus
PARTICLE ABSORBS TIME, MOVES TO HIGHER TIME DENSITY. DECAYS BY EMITTING TIME-LIKE PARTICLE, NONOBSERVABLE BY PRESENT MEANS.
nucleus
ENTIRE NUCLEUS ABSORBS ENERGY, EACH PARTICLE ABSORBS OWN. DECAY OCCURS BY COMPLEX MODES, INCLUDING FISSION OR FUSION. DECAY BYPRODUCTS OBSERVABLE.
nucleus
ENTIRE NUCLEUS ABSORBS TIME, EACH PARTICLE ABSORBS OWN. DECAY OCCURS BY COMPLEX MODES, INCLUDING FISSION OR FUSION. SOME DECAY BYPRODUCTS ARE NONOBSERVABLE (SPACE ABSORBS)

Absorption and emission reactions

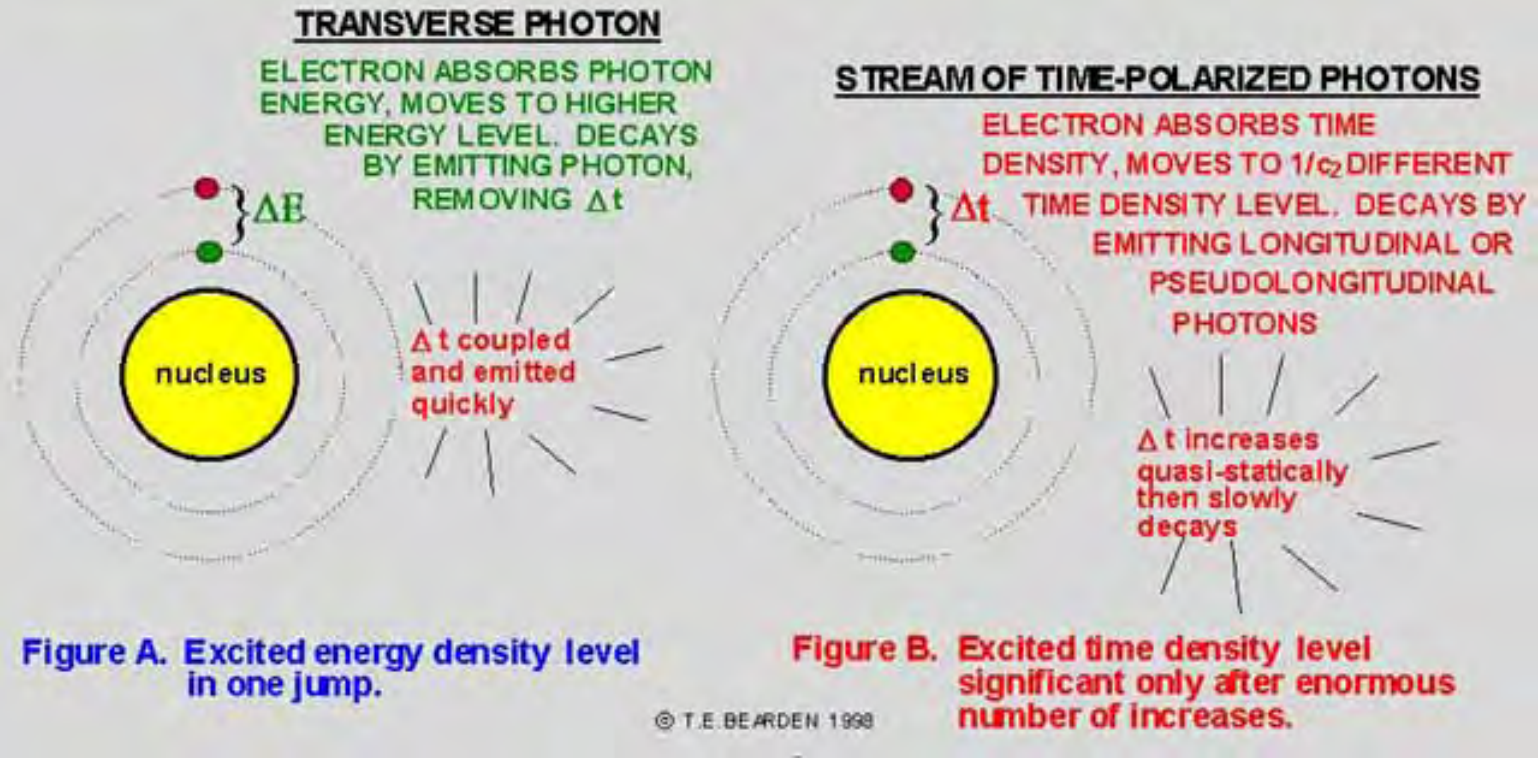

Figure A. Excited energy density level in one jump.

Figure B. Excited time density level significant only after enormous number of increases.

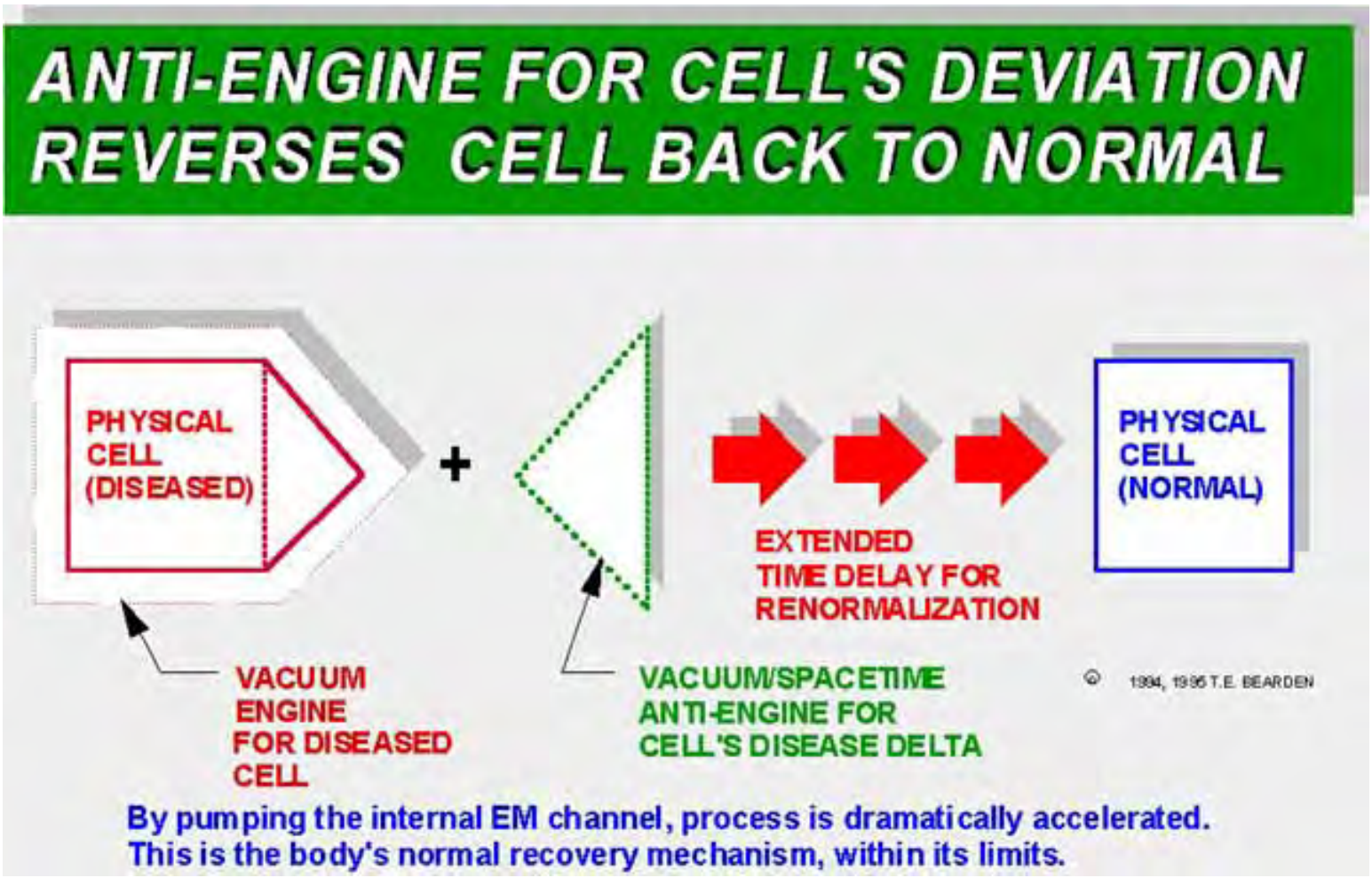
ANTI-ENGINE FOR CELL'S DEVIATION
REVERSES CELL BACK TO NORMAL
PHYSICAL CELL (DISEASED)
+
EXTENDED TIME DELAY FOR RENORMALIZATION
PHYSICAL CELL (NORMAL)
VACUUM ENGINE FOR DISEASED CELL
VACUUM/SPACETIME ANTI-ENGINE FOR CELL'S DISEASE DELTA
© 1994, 1995 T.E. BEARDEN
By pumping the internal EM channel, process is dramatically accelerated.
This is the body's normal recovery mechanism, within its limits.

Asymmetric Regauging Produces Excess Force, Which Can be Used to Do Work on the System

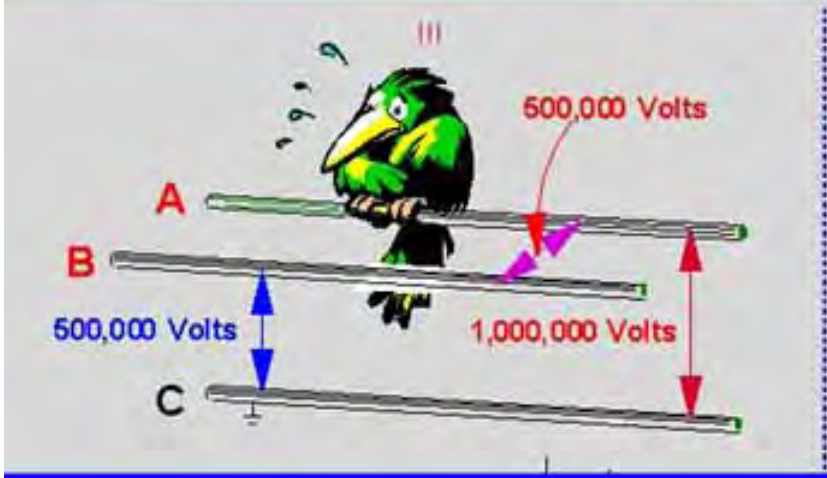

Net Symmetric Regauging Does No Excess Work on the System

This little bird put one foot on wire A, and then the second foot on wire A also. He *net symmetrically* regauged, so he had no net excess force across him, even though his potential energy was increased. He asymmetrically regauged each foot, but both simultaneously so that one countered the other. Wise little bird!

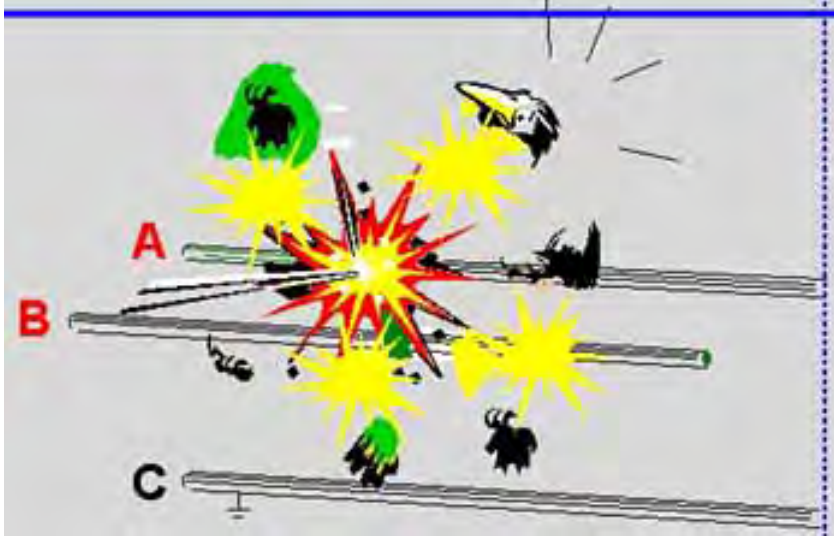

Net Asymmetric Regauging Can Do Excess Work on the System

This little bird put one foot on wire A, and then the second foot on wire B. He *net asymmetrically* regauged, so he had lots of net excess force across him. That force then violently translated his little body parts every which way, doing lots of work in and on him. Bummer!

© T.E. BEARDEN 1999

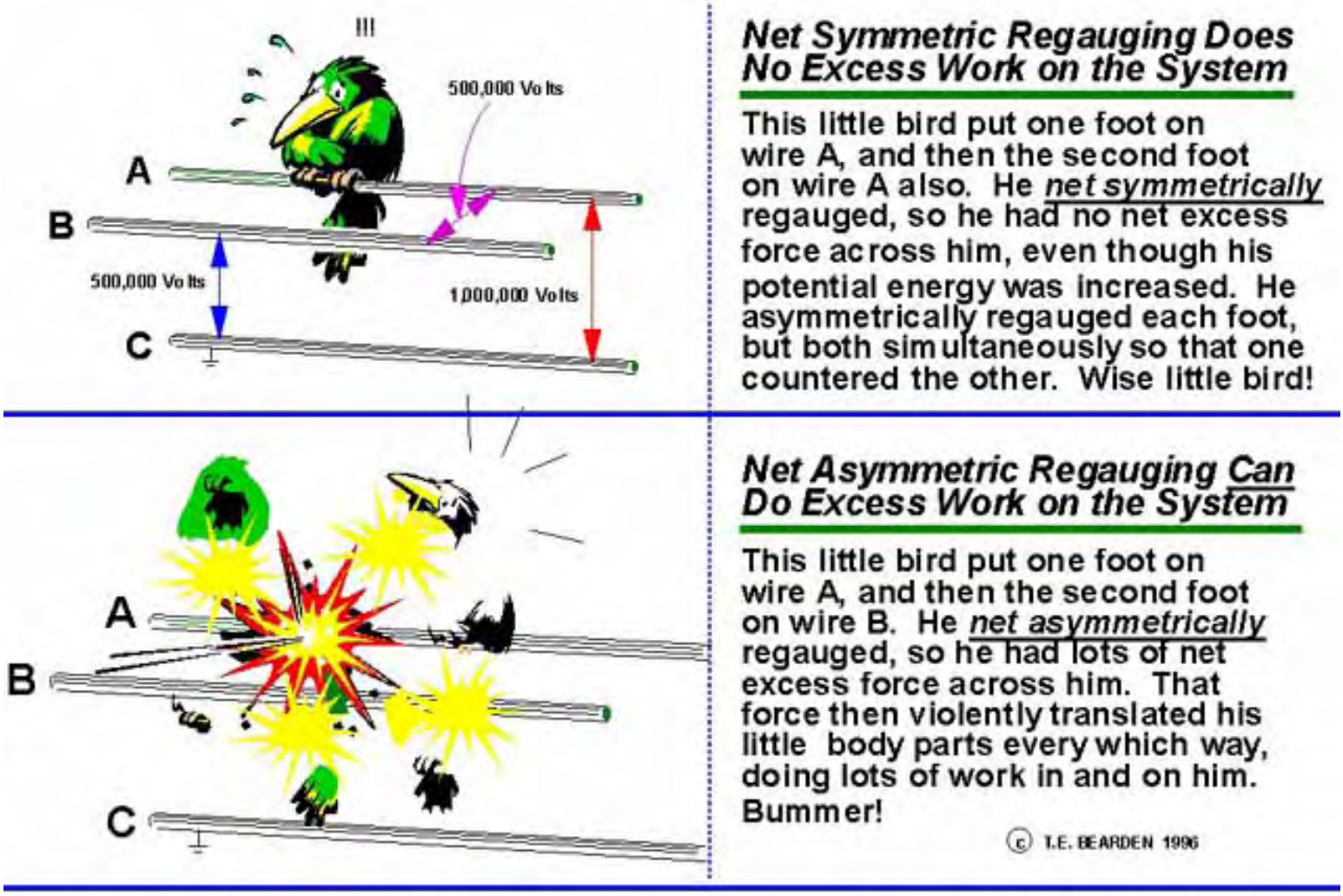

Figure 32. Asymmetric regauging produces excess force, which can be used to do work on the regauging system.

Selected clipart © by Lotus SmartPics™

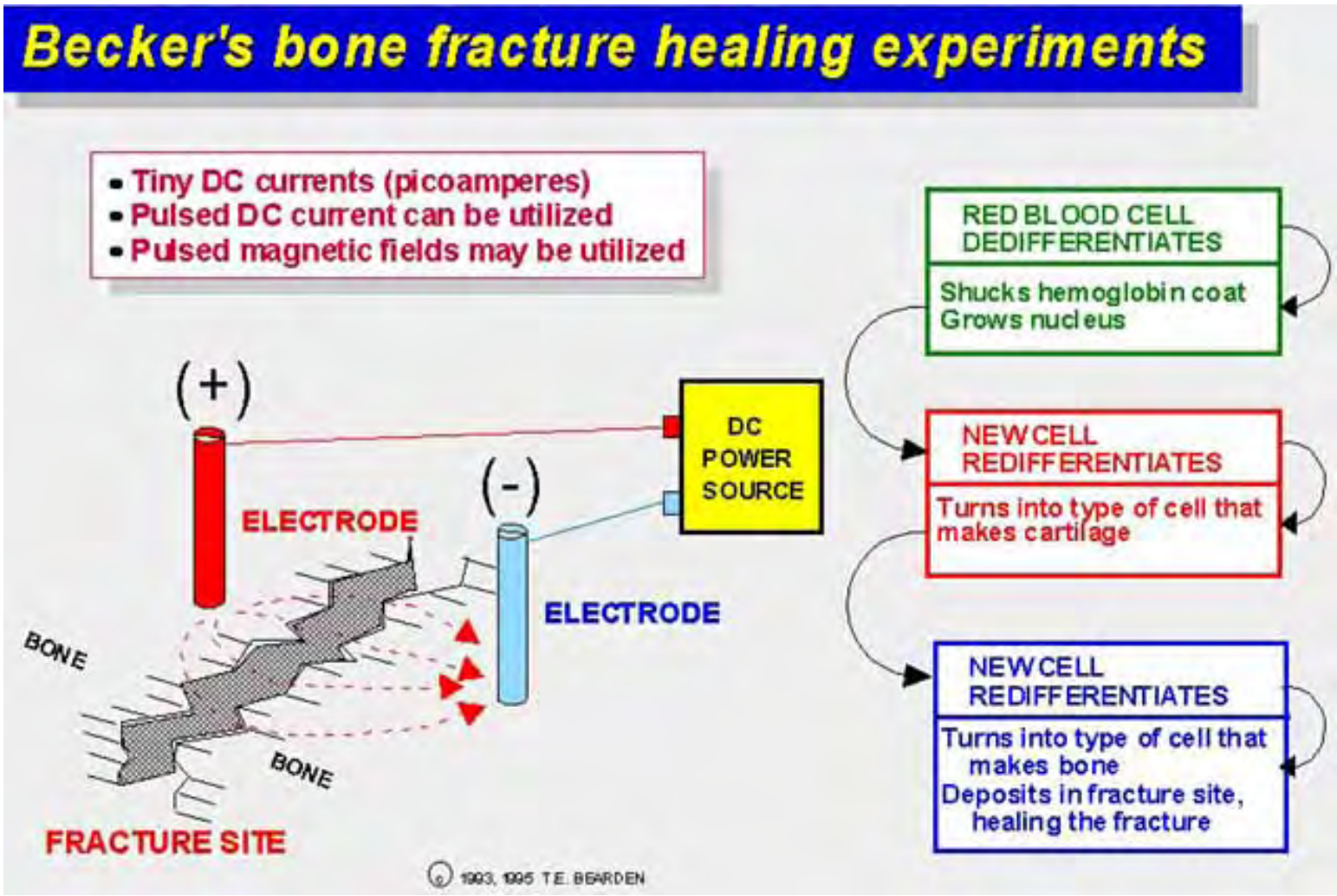
Becker's bone fracture healing experiments
• Tiny DC currents (picoamperes)
• Pulsed DC current can be utilized
• Pulsed magnetic fields may be utilized
(+)
(-)
ELECTRODE
ELECTRODE
DC POWER SOURCE
BONE
BONE
FRACTURE SITE
RED BLOOD CELL DEDIFFERENTIATES
Shucks hemoglobin coat
Grows nucleus
NEW CELL REDIFFERENTIATES
Turns into type of cell that makes cartilage
NEW CELL REDIFFERENTIATES
Turns into type of cell that makes bone
Deposits in fracture site, healing the fracture
© 1993, 1995 T.E. BEARDEN

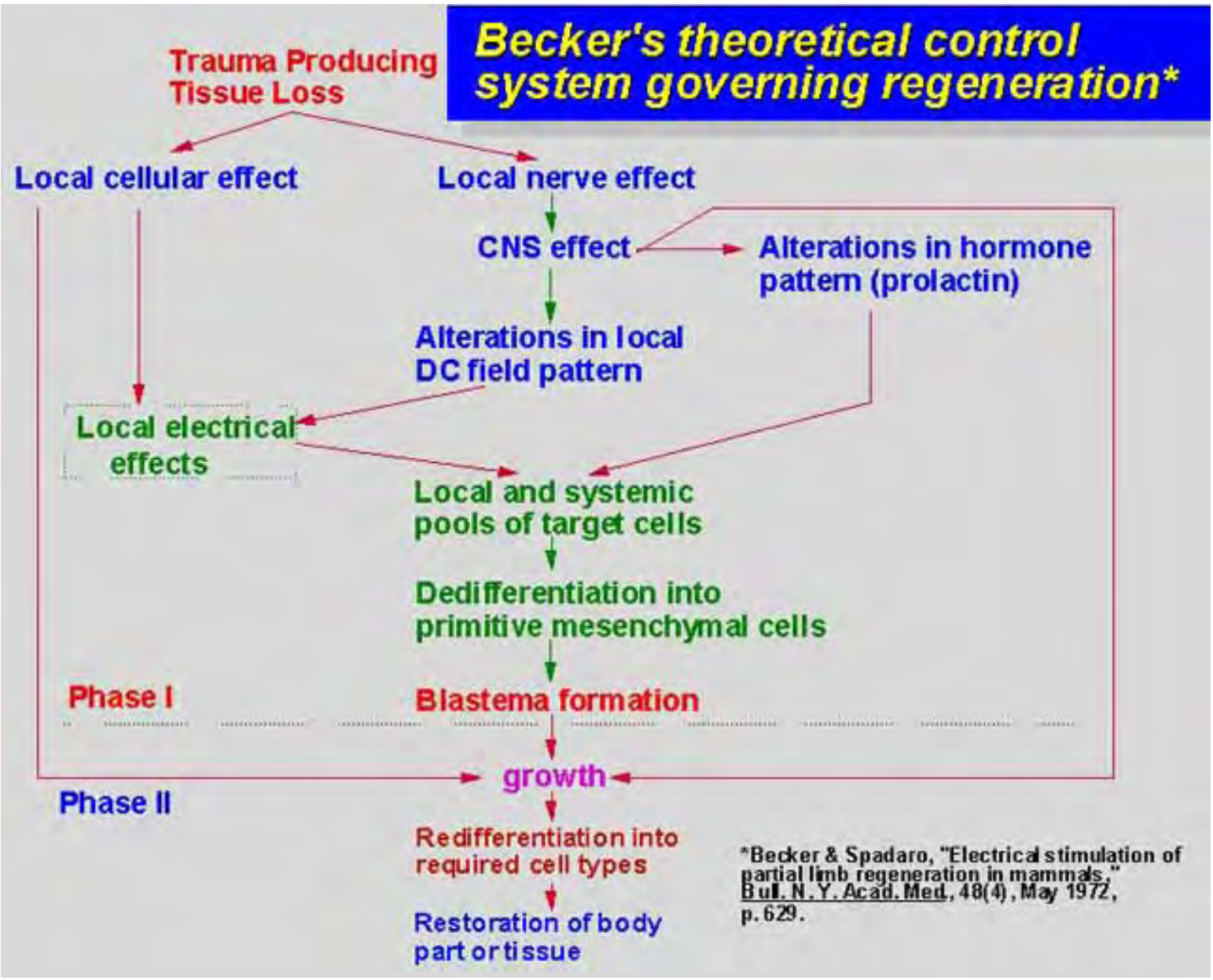
Becker's theoretical control system governing regeneration*
Trauma Producing Tissue Loss
Local cellular effect
Local nerve effect
CNS effect
Alterations in hormone pattern (prolactin)
Alterations in local DC field pattern
Local electrical effects
Local and systemic pools of target cells
Dedifferentiation into primitive mesenchymal cells
Phase I
Blastema formation
growth
Phase II
Redifferentiation into required cell types
Restoration of body part or tissue
*Becker & Spadaro, "Electrical stimulation of partial limb regeneration in mammals," Bull. N.Y. Acad. Med., 48(4), May 1972, p. 629.

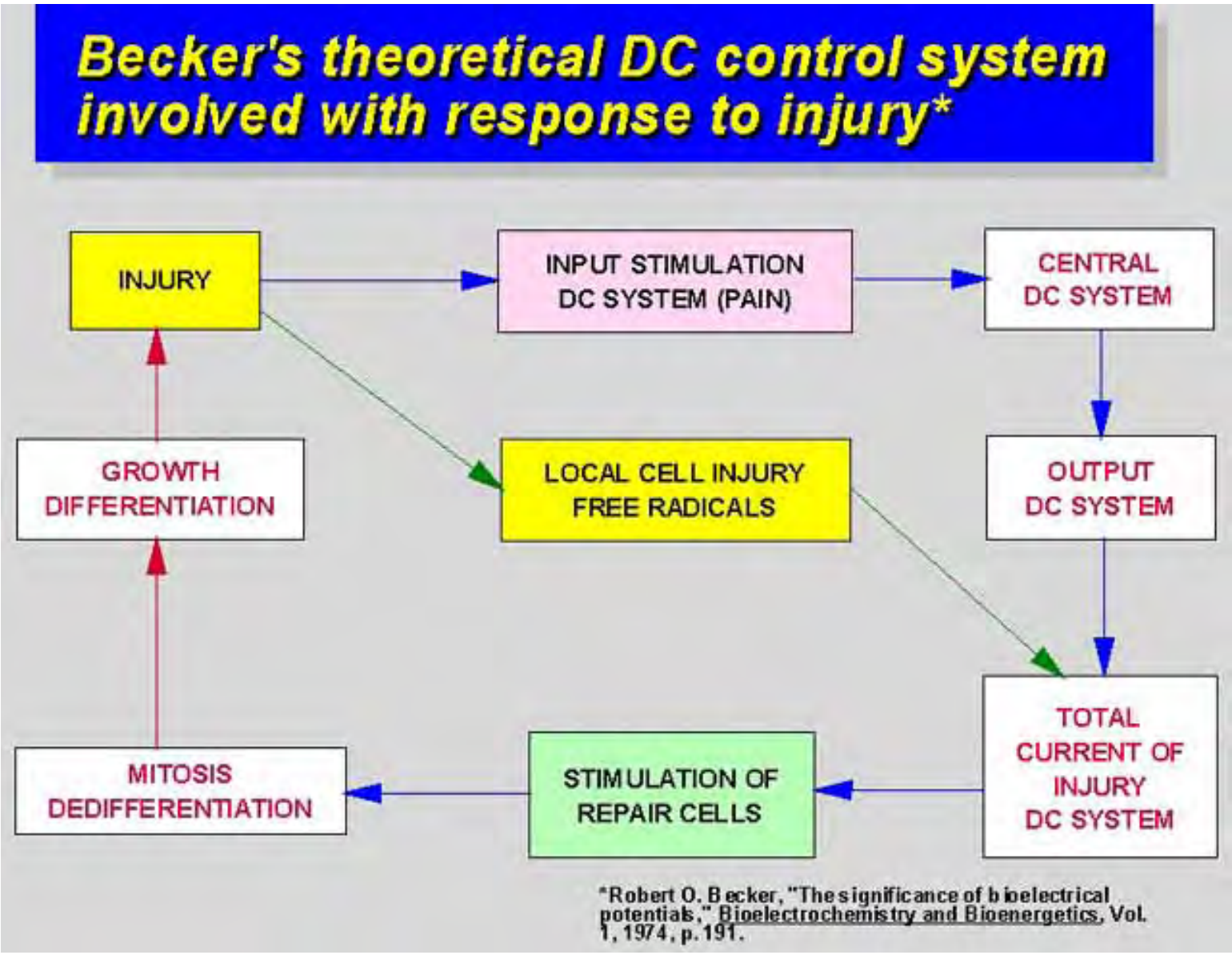
Becker's theoretical DC control system involved with response to injury*
INJURY
INPUT STIMULATION DC SYSTEM (PAIN)
CENTRAL DC SYSTEM
GROWTH DIFFERENTIATION
LOCAL CELL INJURY FREE RADICALS
OUTPUT DC SYSTEM
TOTAL CURRENT OF INJURY DC SYSTEM
MITOSIS DEDIFFERENTIATION
STIMULATION OF REPAIR CELLS
*Robert O. Becker, "The significance of bioelectrical potentials," Bioelectrochemistry and Bioenergetics, Vol. 1, 1974, p. 191.

Geometrical Distortion of Poynting Energy Flow

At or near resonance frequency, in the case shown the energy collection fraction (reaction cross section) increases dramatically.

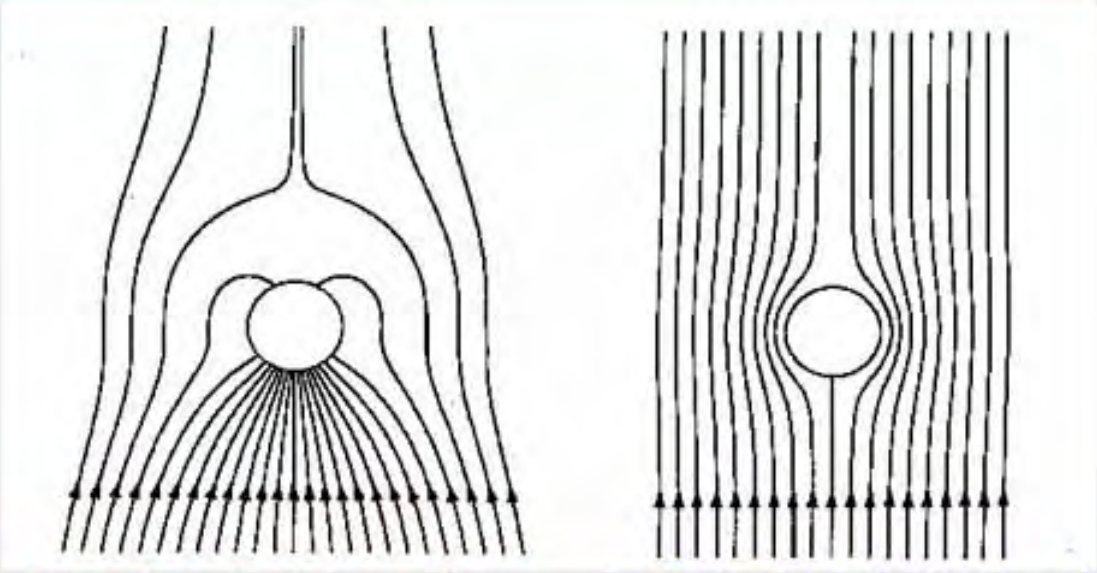

a. Around an aluminum sphere at light energy 8.8 eV. Absorption efficiency = 18.00.

b. Around an aluminum sphere at light energy 5eV. Absorption efficiency = 0.1.

Figures per Craig F. Bohren, "How can a particle absorb more than the light incident upon it? ", American Journal of Physics, 51(4), Apr. 1983, p. 326.

Cosmic Bootstrap: Before the Big Bang:

- *Cosmic repulsion behaved like a fluid with negative pressure*
- *The "universe" inflated (expanded) as a "false vacuum"*
- *As the negative-pressure fluid expanded, its energy went up rather than down*
- *When inflation stopped, the false vacuum decayed from its excited state*
- *Its excitation energy was released in a single great burst*

Paul Davies, Superforce, 1984, p. 194

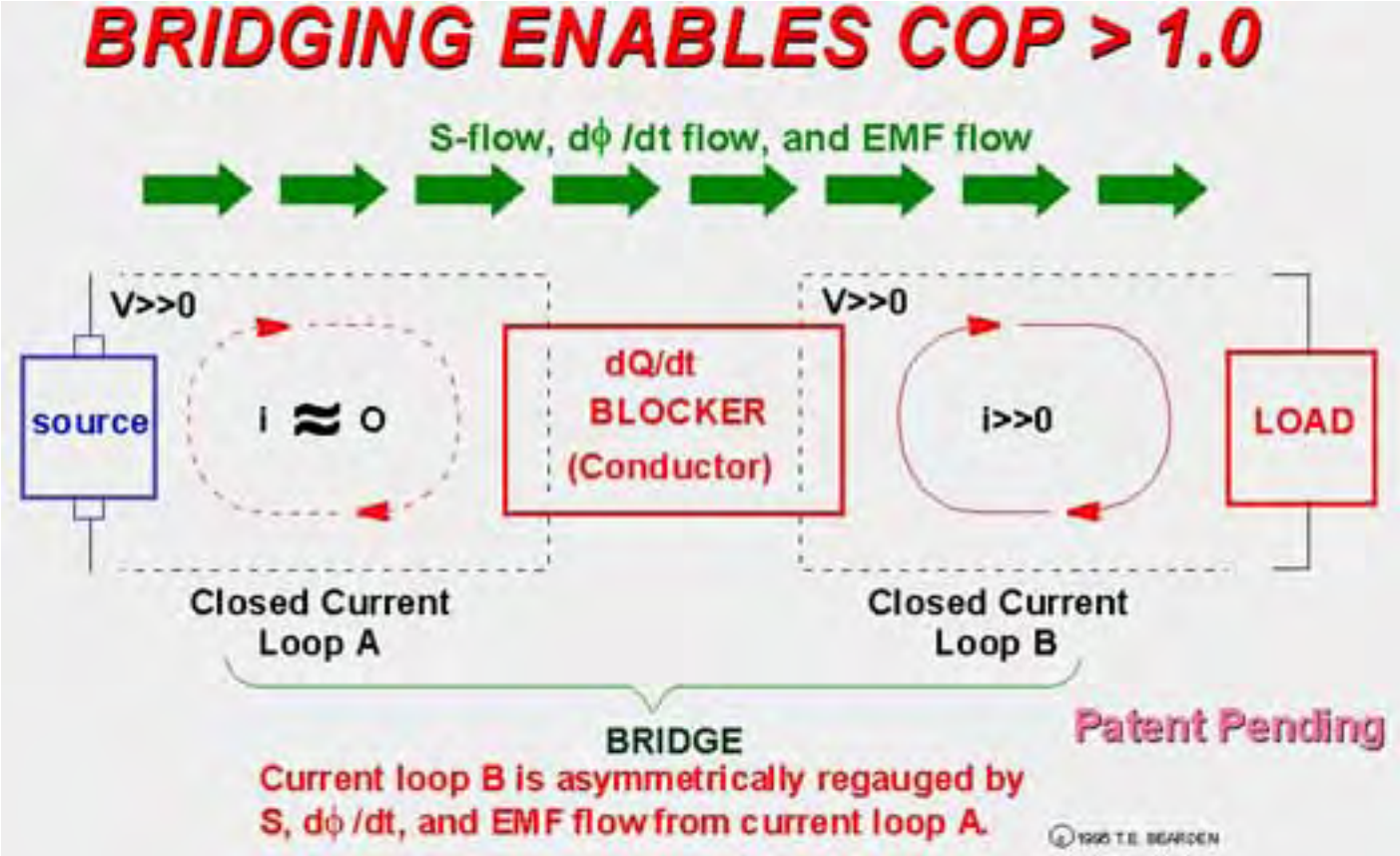
BRIDGING ENABLES COP > 1.0
S-flow, dϕ /dt flow, and EMF flow
V>>0
source
i ≈ 0
dQ/dt
BLOCKER
(Conductor)
V>>0
i>>0
LOAD
Closed Current
Loop A
Closed Current
Loop B
BRIDGE
Patent Pending
Current loop B is asymmetrically regauged by
S, dϕ /dt, and EMF flow from current loop A.
©1995 T.E. BEARDEN

Aspects of Strong Local Asymmetry

- If local asymmetry is strong, conservation laws may be appreciably violated
  - Energy
  - Charge
  - Spin
  - Momentum
  - Angular momentum

© T. E. Bearden 1995, 1996

- Properties of an object may differ appreciably for
  - Different observers
  - Different detecting means
  - One time to another
  - One position to another
- STRUCTURING THE INFOLDED EM INSIDE POTENTIALS, FIELDS, AND WAVES
  - Strongly breaks local symmetry
  - Provides spacetime engines giving the above effects

Other Aspects of Strong Local Asymmetry

© T. E. Bearden 1995, 1996

- Local spacetime is curved
- Lorentz invariance of vacuum is violated
- May be a local "sink" or "source"
- Gravitational-inertial effects from EM
- Translation between virtual and observable
- Electrogravitational solitons
- Action at a distance
- Transmutation effects may exist
- Scalar/pseudoscalar field translation
- COMMENT: Thus the use of infolded longitudinal EM fields and waves to strongly break local symmetry allows internested clustering of spacetime curvatures. These spacetime structures are *vacuum engines*, or *spacetime engines*.

Bunge on the Status of Electrodynamics

"... it is not usually acknowledged that electro-dynamics, both classical and quantal, are in a sad state..."

"... the best modern physicist is the one who acknowledges that neither classical nor quantum physics are cut and dried, both being full of holes and in need of a vigorous overhauling..."

*Mario Bunge, Foundations of Physics, Springer-Verlag, New York, NY, 1967, p. 176.

© 1996 T.E. BEARDEN

Bunge on the Status of Electrodynamics and Physics

"... it is not usually acknowledged that electro-dynamics, both classical and quantal, are in a sad state...

"... neither classical nor quantum physics are cut and dried, both being full of holes and in need of a vigorous overhauling..."

© 1996 T.E. BEARDEN

*Mario Bunge, Foundations of Physics, Springer-Verlag, New York, NY, 1967, p. 176.

Bunge on the Status of Classical and Quantum Physics

"... it is not usually acknowledged that electro-dynamics, both classical and quantal, are in a sad state... the best modern physicist is the one who acknowledges that neither classical nor quantum physics are cut and dried, both being full of holes and in need of a vigorous overhauling not only to better cover their own domains but also to join smoothly so as to produce a coherent picture of the various levels of physical reality."

*Mario Bunge, Foundations of Physics, Springer-Verlag, New York, NY, 1967, p. 176..

© 1996 T.E. BEARDEN

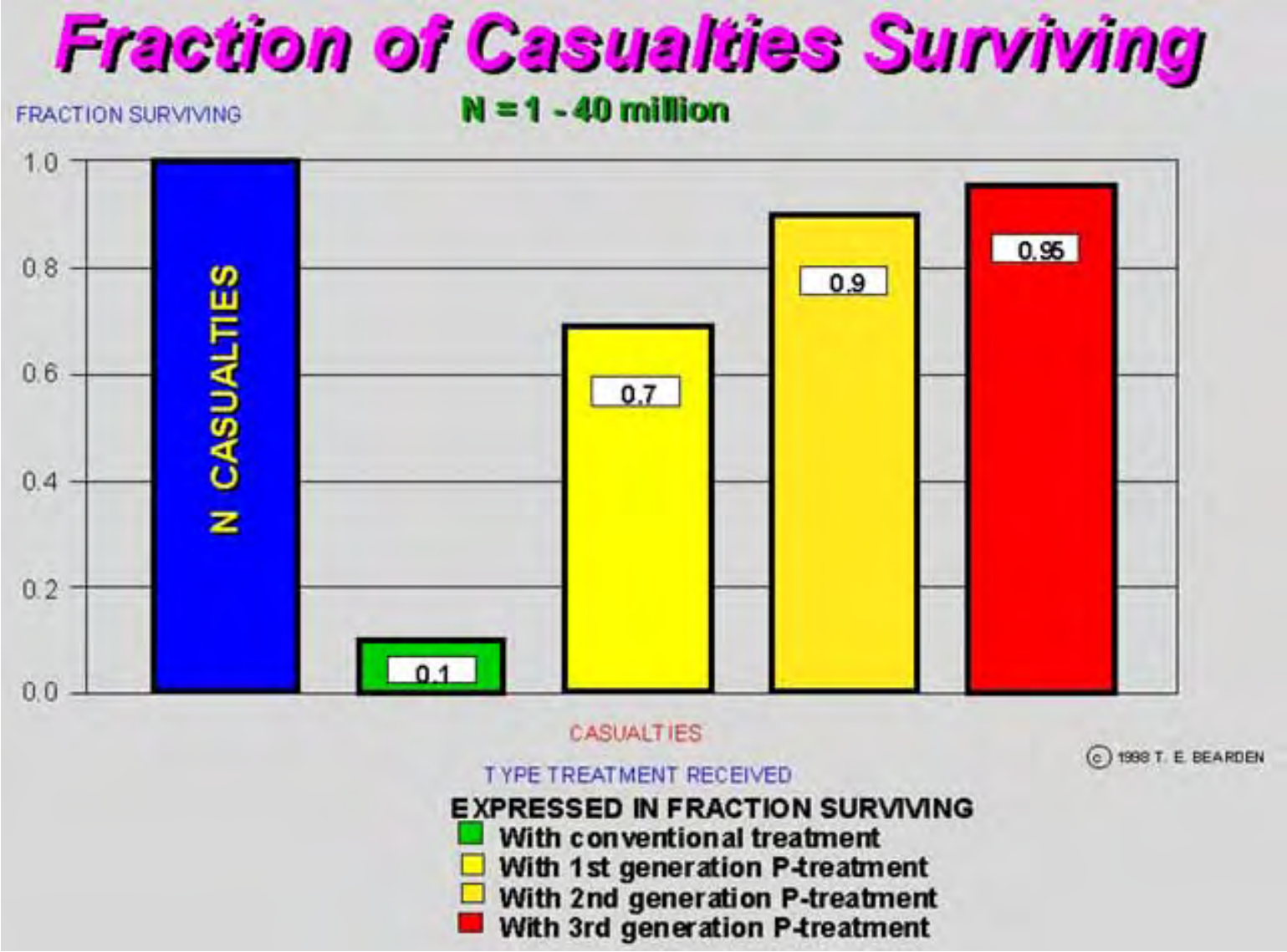
Fraction of Casualties Surviving
FRACTION SURVIVING
N = 1 - 40 million
1.0
0.8
0.6
0.4
0.2
0.0
N CASUALTIES
0.1
0.7
0.9
0.95
CASUALTIES
TYPE TREATMENT RECEIVED
© 1998 T. E. BEARDEN
EXPRESSED IN FRACTION SURVIVING
With conventional treatment
With 1st generation P-treatment
With 2nd generation P-treatment
With 3rd generation P-treatment

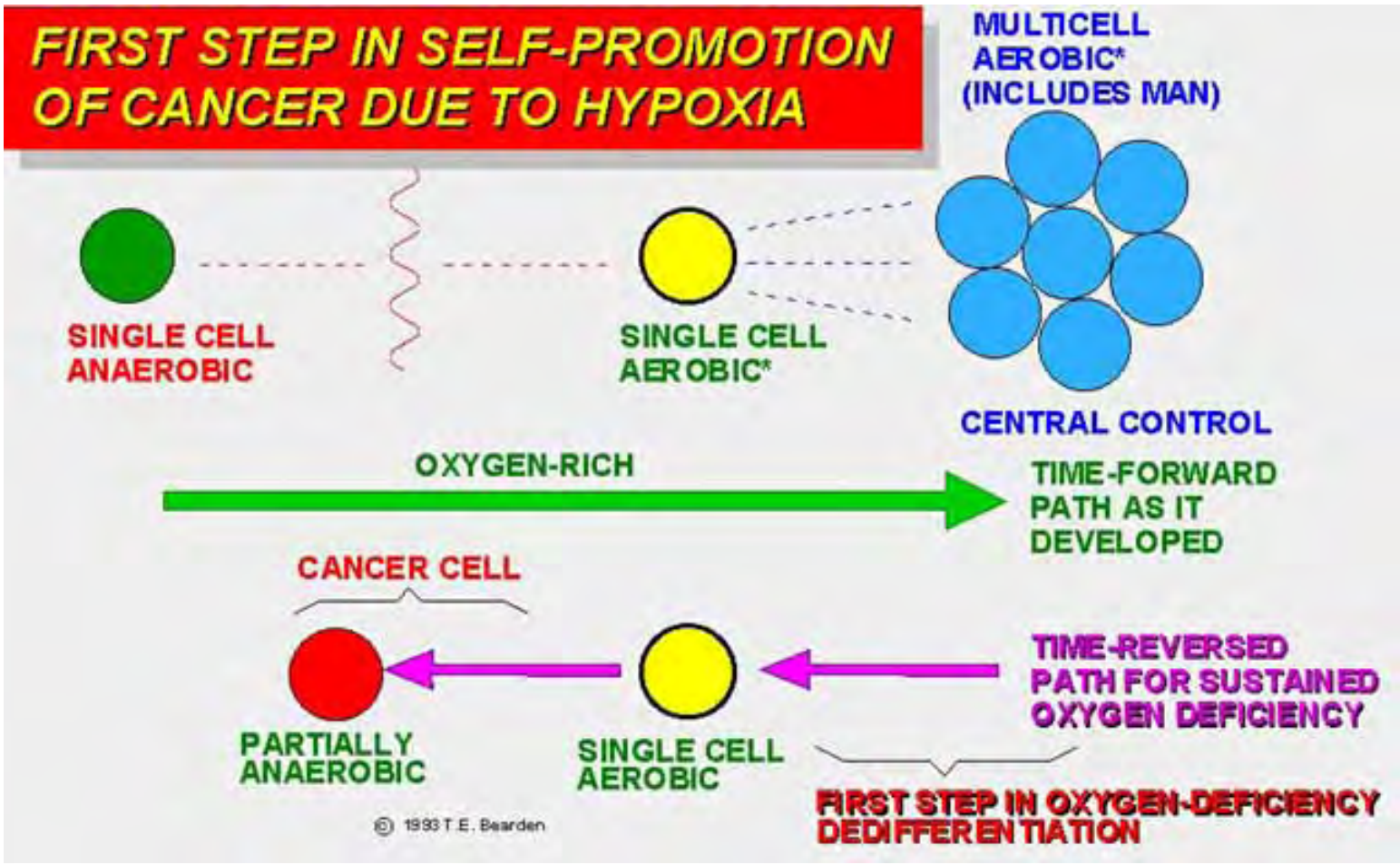
FIRST STEP IN SELF-PROMOTION OF CANCER DUE TO HYPOXIA
MULTICELL AEROBIC* (INCLUDES MAN)
SINGLE CELL ANAEROBIC
SINGLE CELL AEROBIC*
CENTRAL CONTROL
OXYGEN-RICH
TIME-FORWARD PATH AS IT DEVELOPED
CANCER CELL
TIME-REVERSED PATH FOR SUSTAINED OXYGEN DEFICIENCY
PARTIALLY ANAEROBIC
SINGLE CELL AEROBIC
FIRST STEP IN OXYGEN-DEFICIENCY DEDIFFERENTIATION
© 1993 T.E. Bearden

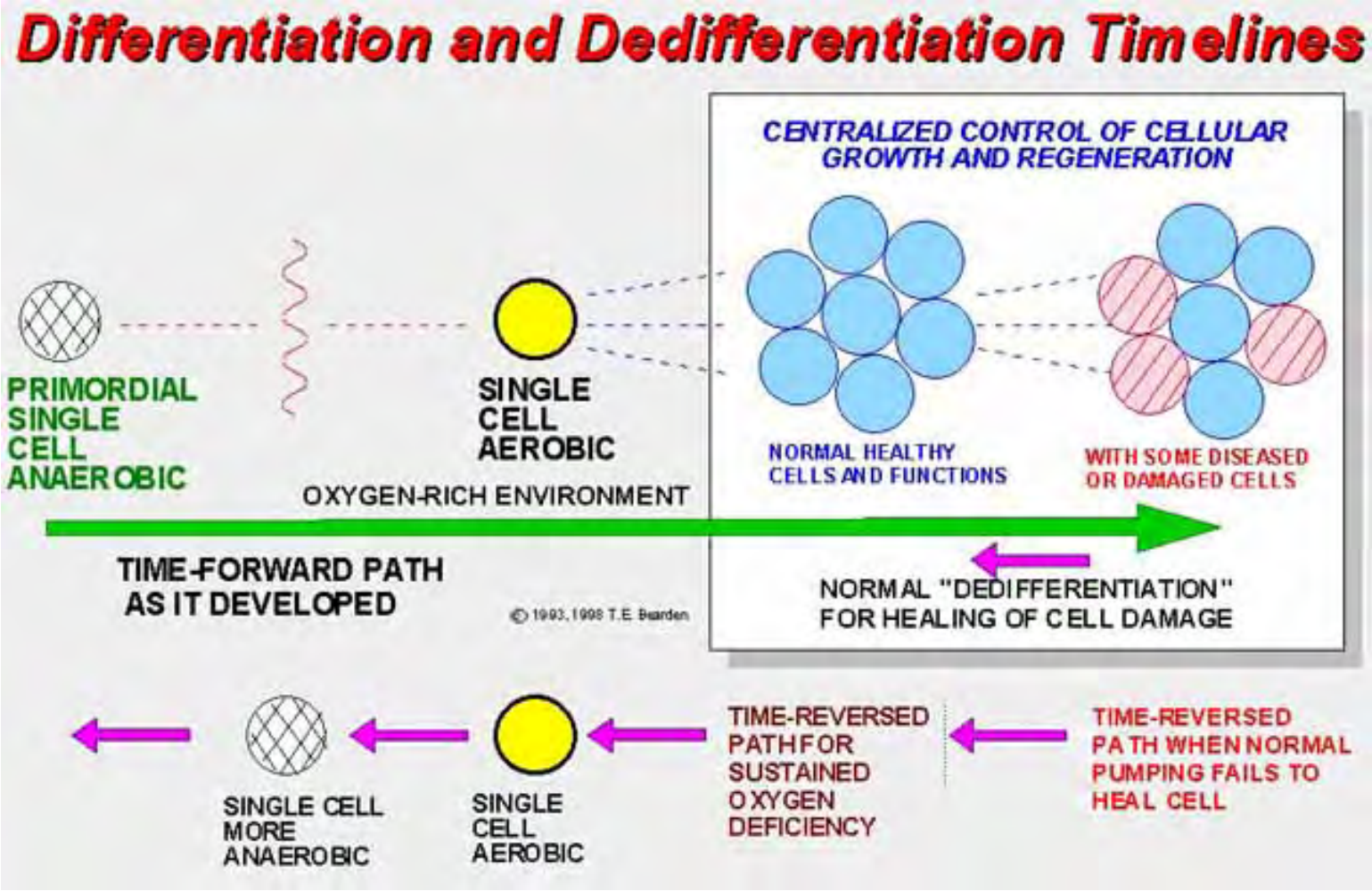
Differentiation and Dedifferentiation Timelines
CENTRALIZED CONTROL OF CELLULAR GROWTH AND REGENERATION
PRIMORDIAL SINGLE CELL ANAEROBIC
SINGLE CELL AEROBIC
OXYGEN-RICH ENVIRONMENT
NORMAL HEALTHY CELLS AND FUNCTIONS
WITH SOME DISEASED OR DAMAGED CELLS
TIME-FORWARD PATH AS IT DEVELOPED
© 1993, 1998 T.E. Bearden
NORMAL "DEDIFFERENTIATION" FOR HEALING OF CELL DAMAGE
SINGLE CELL MORE ANAEROBIC
SINGLE CELL AEROBIC
TIME-REVERSED PATH FOR SUSTAINED OXYGEN DEFICIENCY
TIME-REVERSED PATH WHEN NORMAL PUMPING FAILS TO HEAL CELL

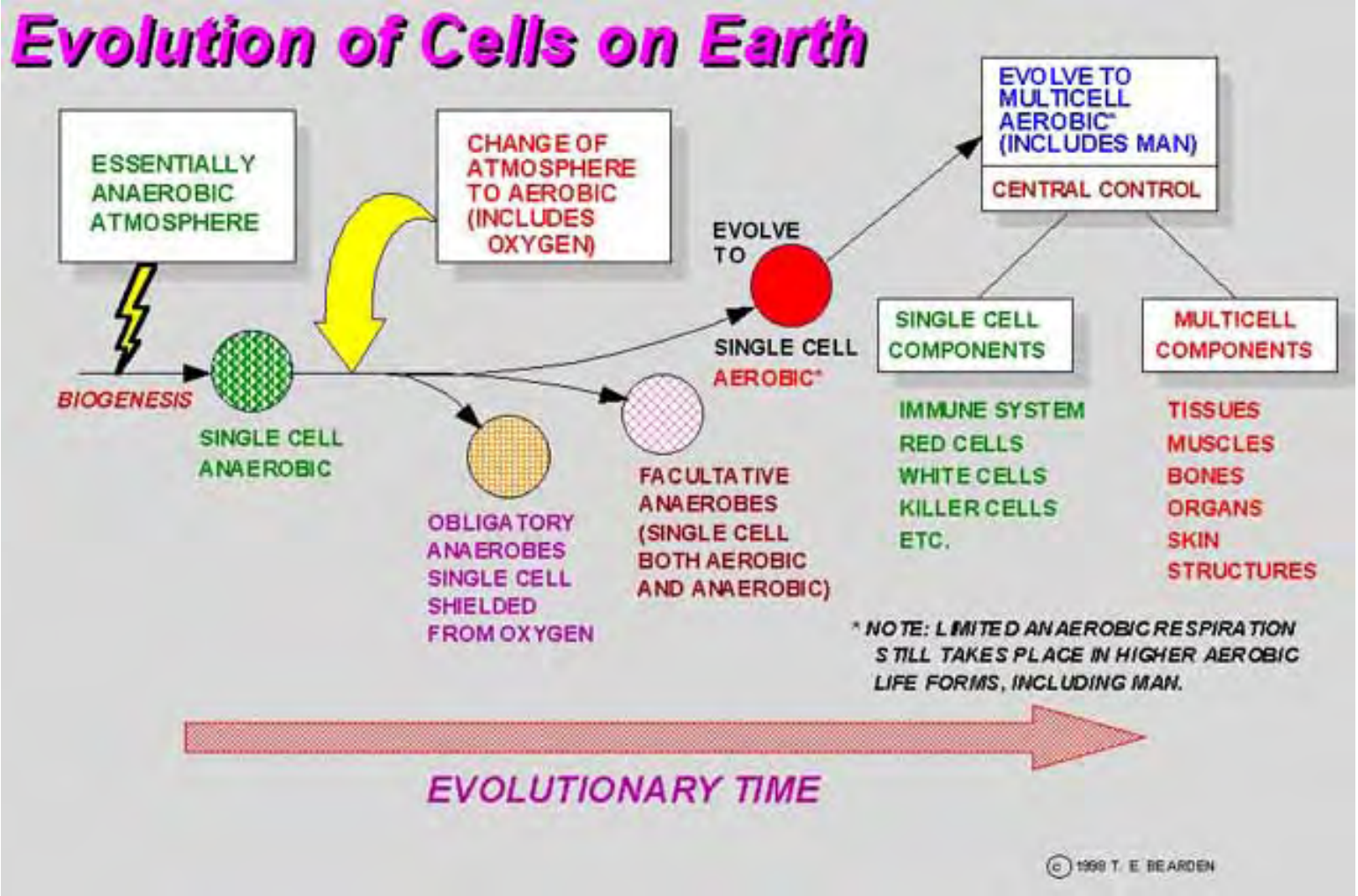
Evolution of Cells on Earth
ESSENTIALLY ANAEROBIC ATMOSPHERE
CHANGE OF ATMOSPHERE TO AEROBIC (INCLUDES OXYGEN)
EVOLVE TO MULTICELL AEROBIC* (INCLUDES MAN)
CENTRAL CONTROL
EVOLVE TO
SINGLE CELL AEROBIC*
SINGLE CELL COMPONENTS
MULTICELL COMPONENTS
BIOGENESIS
SINGLE CELL ANAEROBIC
OBLIGATORY ANAEROBES SINGLE CELL SHIELDED FROM OXYGEN
FACULTATIVE ANAEROBES (SINGLE CELL BOTH AEROBIC AND ANAEROBIC)
IMMUNE SYSTEM
RED CELLS
WHITE CELLS
KILLER CELLS
ETC.
TISSUES
MUSCLES
BONES
ORGANS
SKIN
STRUCTURES
* NOTE: LIMITED ANAEROBIC RESPIRATION STILL TAKES PLACE IN HIGHER AEROBIC LIFE FORMS, INCLUDING MAN.
EVOLUTIONARY TIME
© 1999 T. E. BEARDEN

A Charged Particle q Is a Coupled System of m and ϕ

(A proposed formal definition of a charged mass)

Note: X is a coupling operator

$$q \equiv f_q \times m_q$$

Also note that the ϕ portion of the charged particle can be internally structured, per Stoney-Whittaker-Ziolkowski, with hidden bidirectional EM wavepairs (their sums and products). Note that this constitutes an EM application of Bohm-type hidden variable theory, with many ramifications.

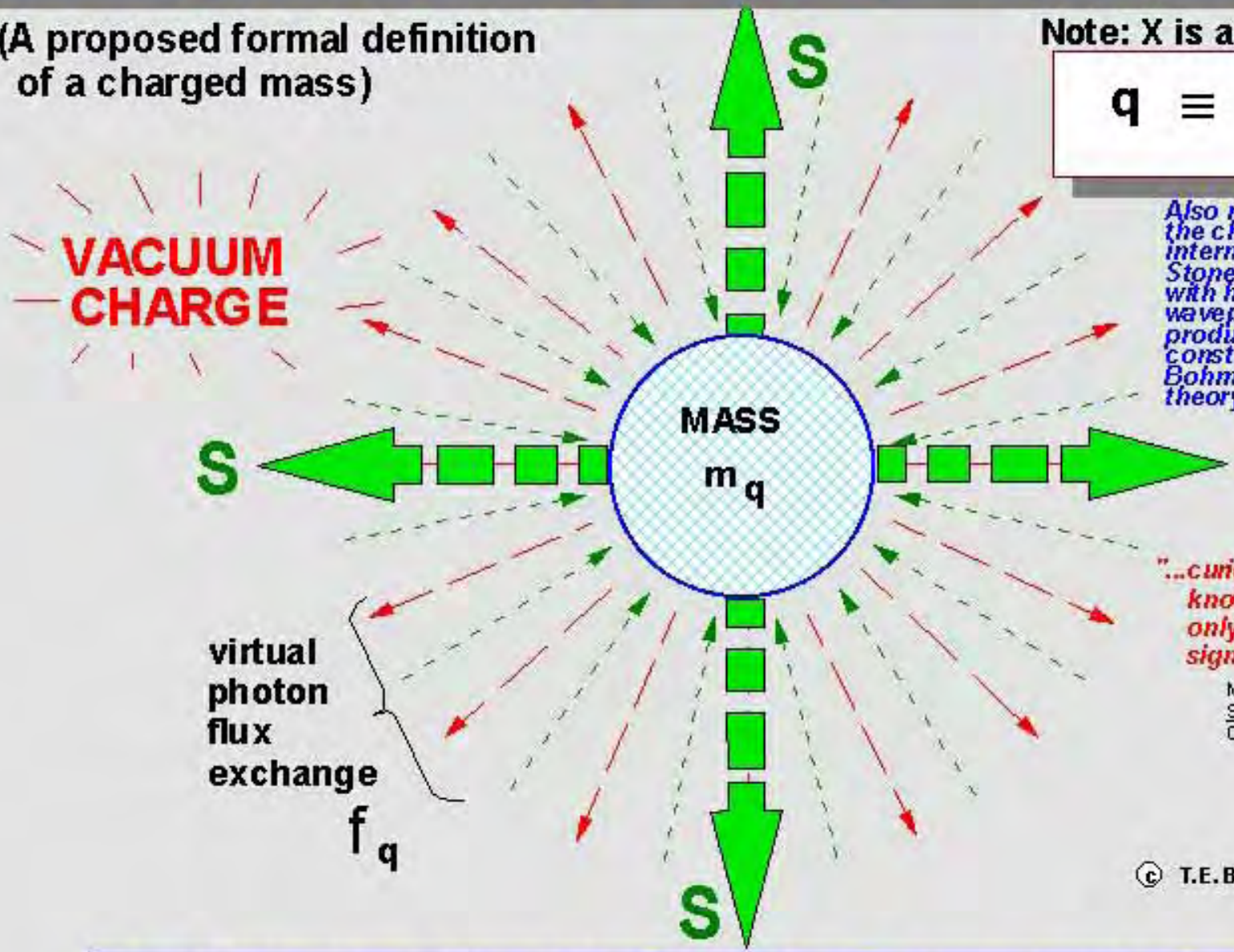

S = EXH

"...curiously enough, we do not know exactly what charge is, only what it does. Or, equally significantly, what it does not do."

M.P. Silverman, And Yet It Moves: Strange Systems and Subtle Questions in Physics, Cambridge University Press, 1993, p. 127.

© T.E. BEARDEN 1997

An electric charge Q consists of a massless flux component and a mass component, coupled together (interacting). Q is a broken symmetry. The mass of the charge continually and violently exchanges virtual photons with the surrounding vacuum.

Thus Q is energetically driven by the surrounding vacuum potential, which itself is to first order just a violent virtual photon flux.

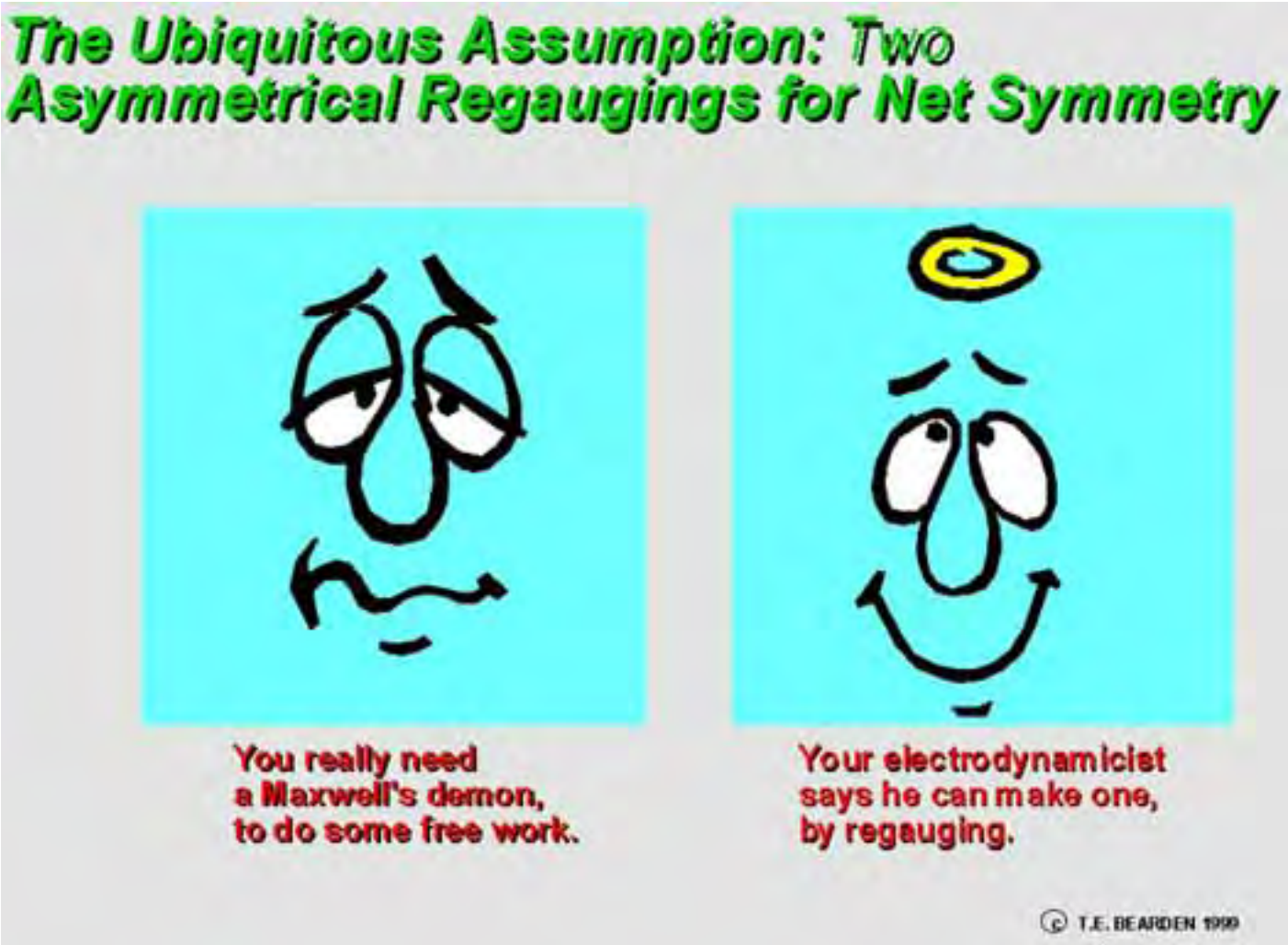
The Ubiquitous Assumption: Two Asymmetrical Regaugings for Net Symmetry
You really need a Maxwell's demon, to do some free work.
Your electrodynamicist says he can make one, by regauging.
© T.E. BEARDEN 1999

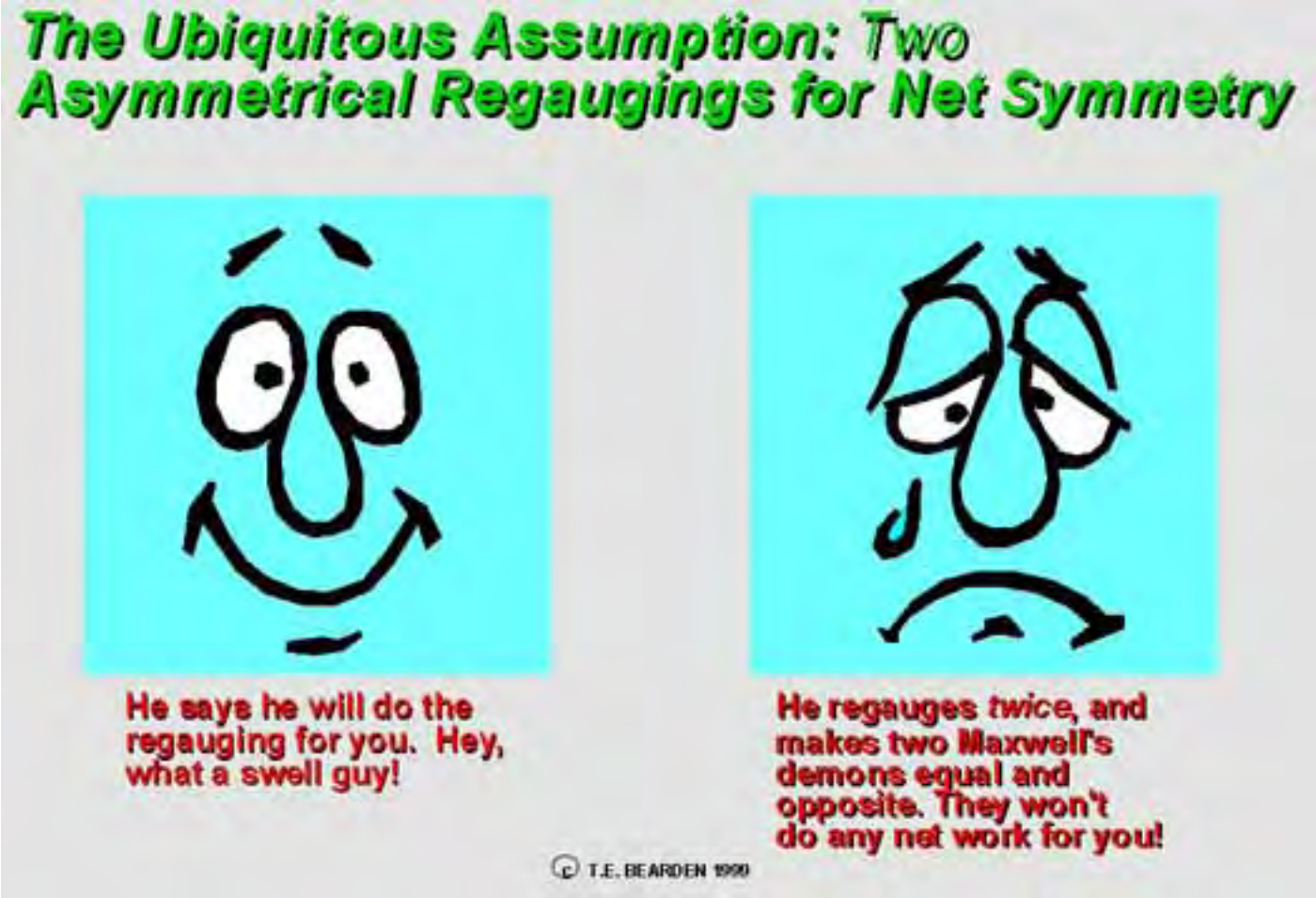
The Ubiquitous Assumption: Two Asymmetrical Regaugings for Net Symmetry
He says he will do the regauging for you. Hey, what a swell guy!
He regauges twice, and makes two Maxwell's demons equal and opposite. They won't do any net work for you!
© T.E. BEARDEN 1990

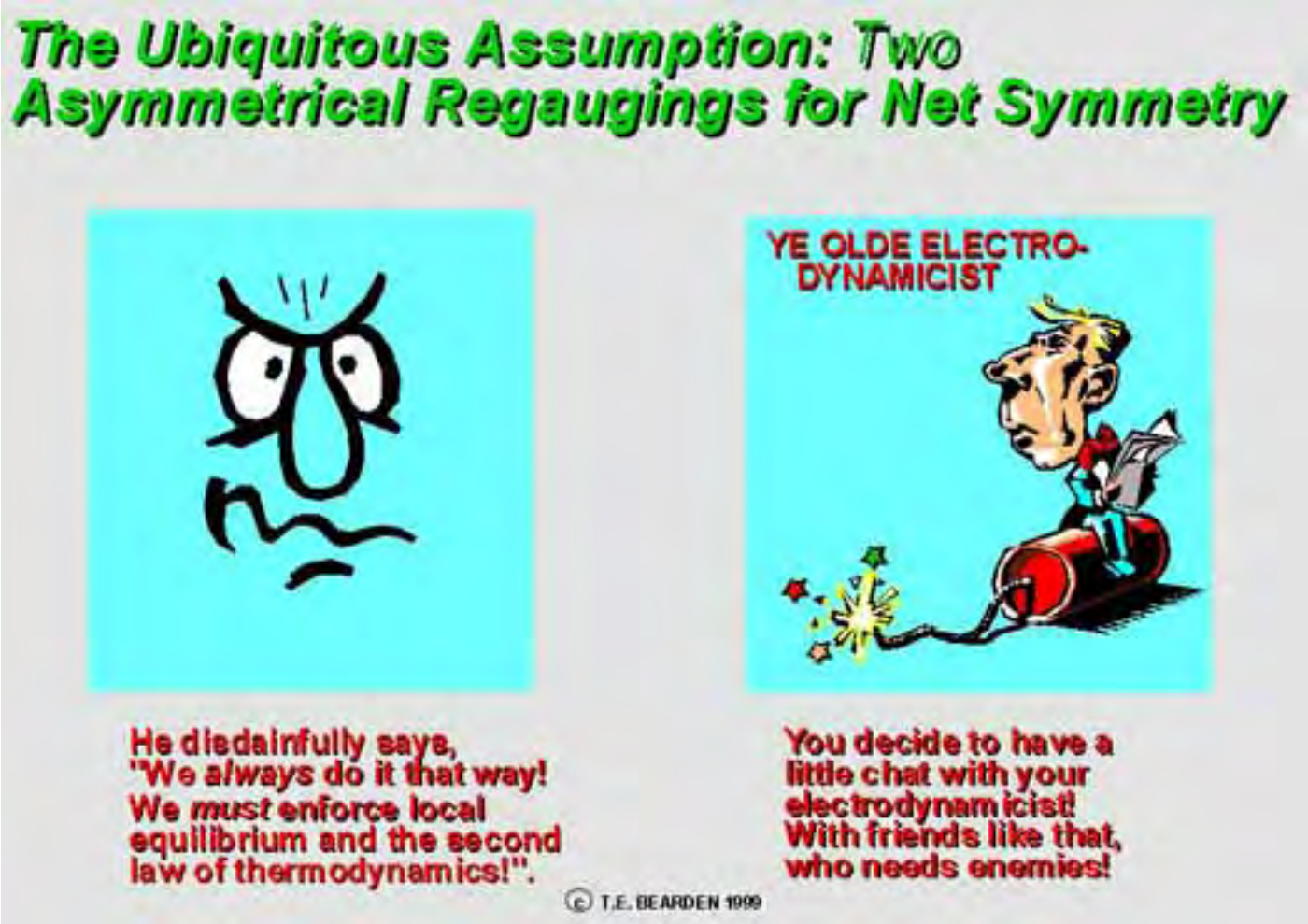
The Ubiquitous Assumption: Two Asymmetrical Regaugings for Net Symmetry
YE OLDE ELECTRO-DYNAMICIST
He disdainfully says, "We always do it that way! We must enforce local equilibrium and the second law of thermodynamics!".
You decide to have a little chat with your electrodynamicist! With friends like that, who needs enemies!
© T.E. BEARDEN 1999

A Charged Particle Is a Coupled System

(The first formal definition of charge)

$$q \equiv \phi_q \times m_q$$

Note: X is a coupling operator

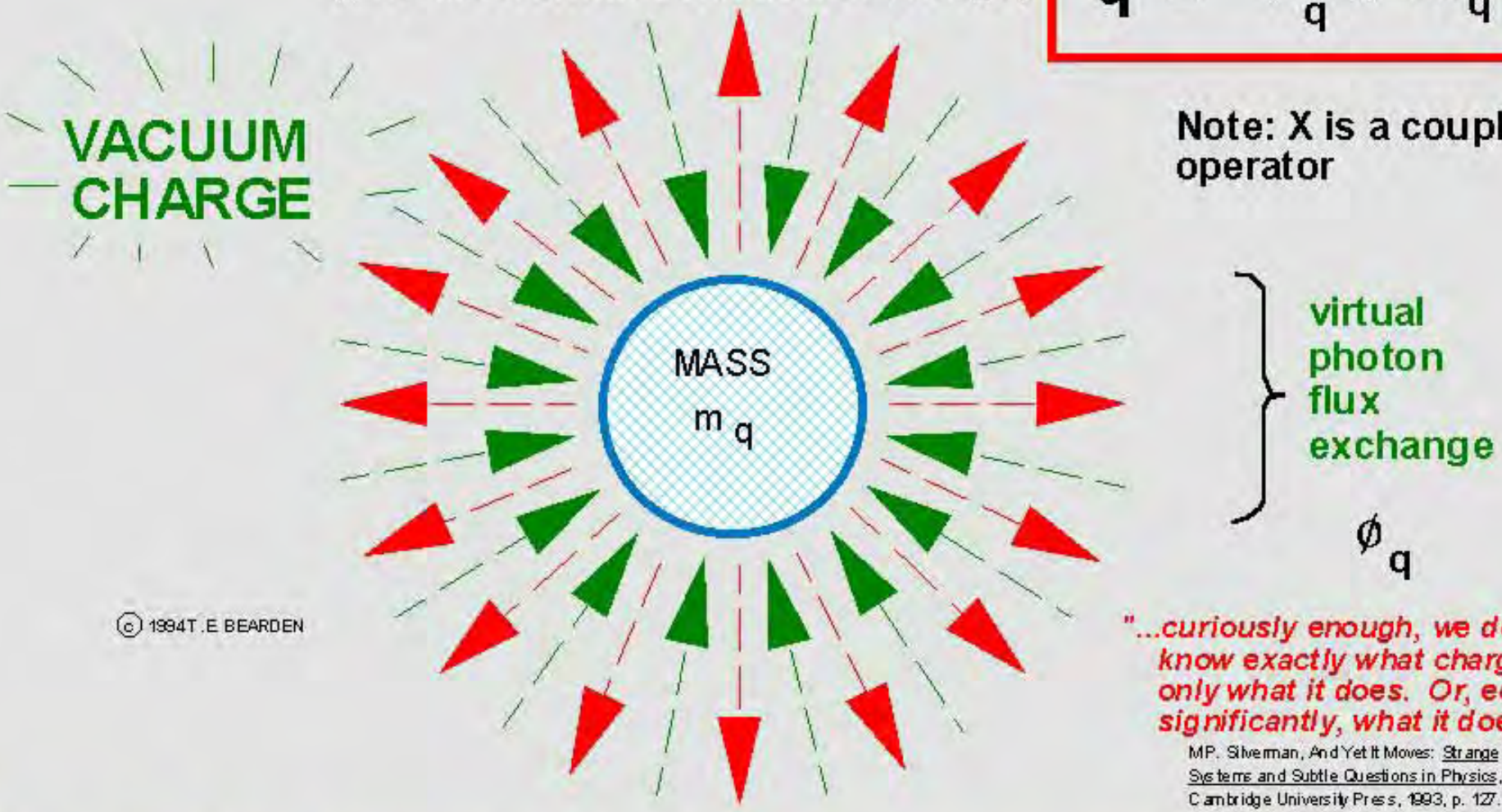

© 1994 T.E BEARDEN

"...curiously enough, we do not know exactly what charge is, only what it does. Or, equally significantly, what it does not do."

M.P. Silverman, And Yet It Moves: Strange Systems and Subtle Questions in Physics, Cambridge University Press, 1993, p. 127.

An electric charge q is a broken symmetry in its fierce energy exchange with the active vacuum. It coherently integrates some of the virtual energy absorbs and outputs it as Poynting energy flow.

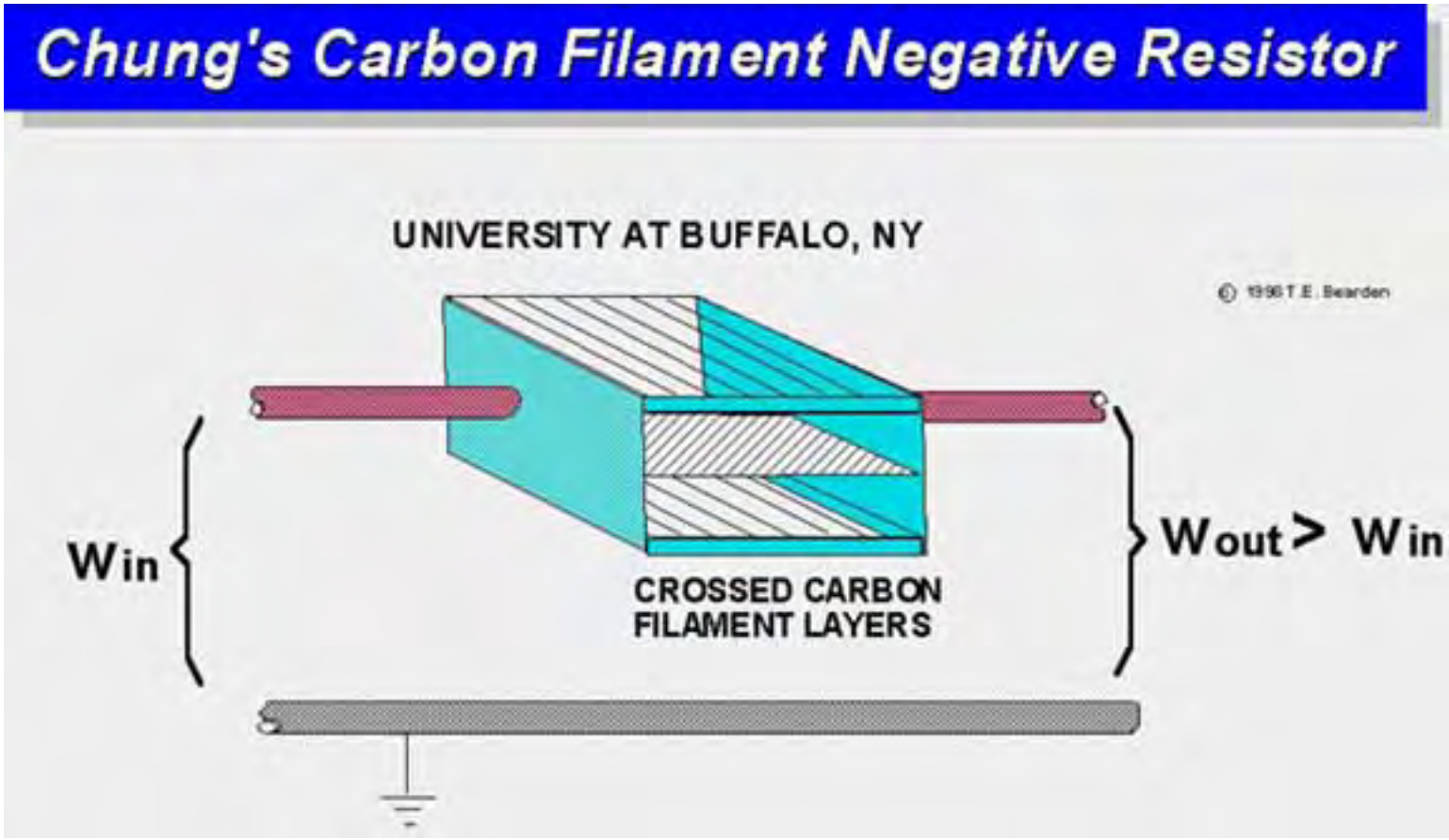
Chung's Carbon Filament Negative Resistor
UNIVERSITY AT BUFFALO, NY
© 1996 T.E. Bearden
Win
Wout > Win
CROSSED CARBON
FILAMENT LAYERS

Typical circuit has about 10^{-13} energy collection efficiency

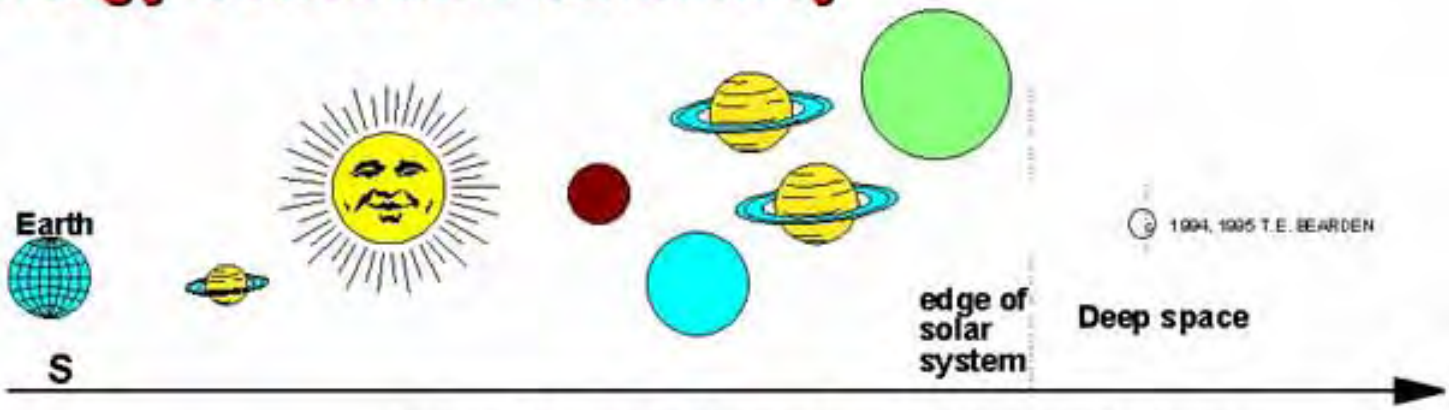

Distance traveled by S in one hour is 1.08x10exp(12) meters.

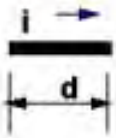

Example: 1.3 amps flowing in DC circuit, 1.8 mm diameter copper wire. J = 51 A/cm ^{2}

d_j = 0.1368 meters

S violently transports ϕ provided from the source.
j ϕ sluggishly transports the energy collected and dissipated in the circuit..

For the case discussed, the electron drift velocity in the circuit is about 3.8 x 10^{-5} meters/sec. So Jϕ moves about 0.1368 meters in one hour. Thus Jϕ has collected about 0.1368 meters of the ϕ-filled S-tube. During that same hour, the S-flow evoked by the power source will have traveled 1.08x10^{12} meters. The ϕ of both currents is the same. Both are involved in the same energy-filled tube. Thus S has provided and transported about 7.89x10^{12} times as much energy along the circuit in one hour as the jϕ has been able to collect, transport, and dissipate as work in the circuit. Thus this circuit provides about 10^{13} collection efficiency.

Classical View of EM

- Potentials just mathematical conveniences
  - Not real
  - No internal structure, just magnitude
- Force fields primary, causative, can exist in space in absence of observable mass
  - All EM actions due to force fields, none when zero
  - No action at a distance
- Vacuum empty; without energy or structure
  - No locally curved spacetime
  - No gravity effects
  - No quantum effects
- Maxwell's equations complete
  - Symmetrically regauged ***arbitrarily***
  - Topology dramatically reduced

Curved Spacetime acts as source or sink

- May emit excess radiation and energy (e.g., heat)
- May absorb radiation and energy (e.g., cool)
- May transduce waves TW ⇔ LW ⇔ TDW
- New energy conservation law applies

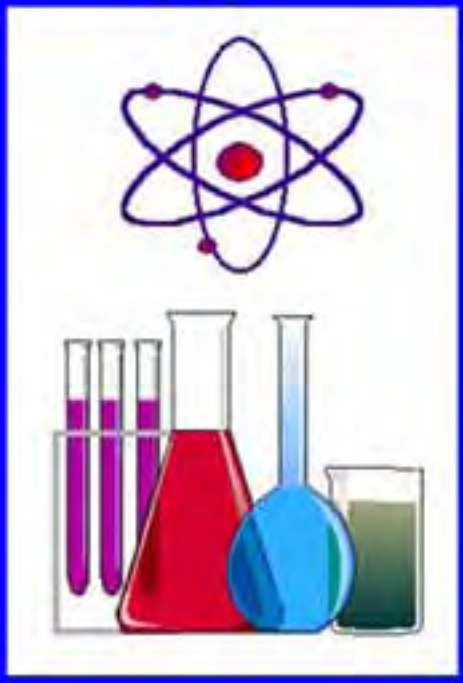

© 1998 T.E. BEARDEN

CHRONIC DISEASE PUZZLING

- SCIENCE REALLY DOES NOT UNDERSTAND THE MECHANISMS OF A SINGLE CHRONIC DISEASE, INCLUDING CANCER
- MANY TROUBLING FACTORS EXIST
  - *MIND*
  - *STRESS*
  - *SPONTANEOUS REMISSION*
  - *PLACEBO EFFECTS*
  - *COMBINATIONS*
- GENERATION OF THE PLACEBO EFFECT BY THE CELLULAR REGENERATION SYSTEM IS UNRECOGNIZED

© 1994, 1995 T.E. Bearden

Cancer Characteristics

- Not one disease, but a whole range
- Starts in damaged aerobic cell
- Cell shakes off body's central control
  - Starts uncontrolled division
  - Becomes a lump
- Can send forth cancer cells
  - Through blood
  - Through lymph
- Form metastases (secondary tumors)
- Often become anaerobic

© 1993 T.E. Bearden

Solving a Cancer Enigma

- An enigma has been failure of immune system to attack some tumor cells
  - Suppressor cells may curb immune system?
  - Tumor may lack antigens normally identified by the immune system?
- *Promotion of damaged cell to cancer is usually ordered by cellular control system*
  - *Regenerative and recovery system forces cell back toward anaerobe*
  - *First step breaks free from central growth*
  - *Control continues to recognize cell as self*

© 1993 T.E. Bearden

CANCER: CHARACTERISTICS

- NOT ONE DISEASE BUT A WHOLE RANGE
- STARTS IN ORDINARY (AEROBIC) CELL
- CELL SHAKES OFF BODY'S DICTATORIAL CONTROL*
- STARTS UNCONTROLLED DIVISION
- BECOMES A LUMP
- CAN SEND FORTH CANCER CELLS
  - THROUGH BLOOD
  - THROUGH LYMPH
- THESE FORM METASTASES (SECONDARY TUMORS)
- OFTEN BECOME ANAEROBIC (NON-OXYGEN USING)
- ENIGMA IS FAILURE OF IMMUNE SYSTEM TO ATTACK SOME TUMOR CELLS
  - SUPPRESSOR CELLS MAY CURB IMMUNE SYSTEM
  - TUMOR MAY LACK ANTIGENS NORMALLY IDENTIFIED BY THE IMMUNE SYSTEM

© 1993 T.E. Beardsley

*R&R system forces cell back toward anaerobe

Nonlinear Optics
Distortion Correction Theorem

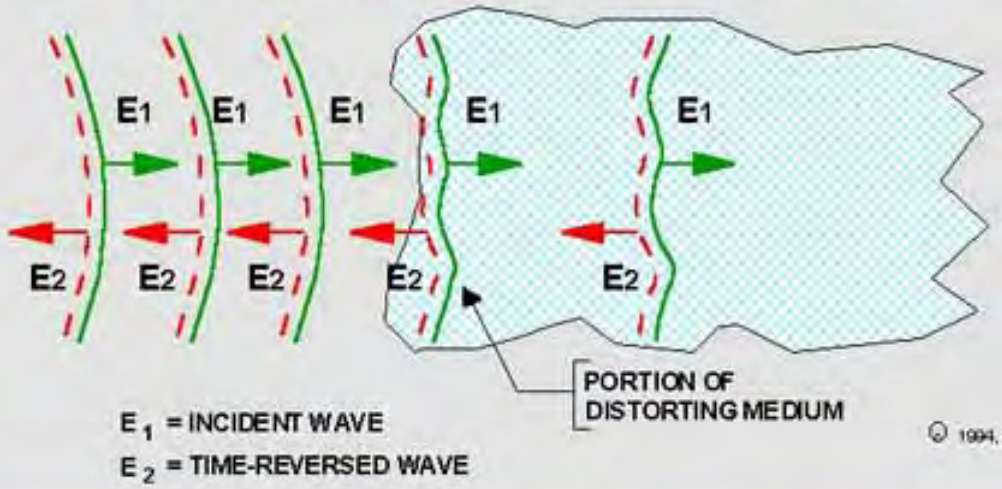

© 1994, 1995, 1998 T.E BEARDEN

"If a scalar wave $E_1(r)$ propagates from left to right through an arbitrary but lossless dielectric medium, and if we generate in some region of space [say near z = 0] its phase conjugate replica $E_2(r)$, then E_2 will propagate backward from right to left through the dielectric medium, remaining everywhere the phase conjugate of E_1."

The Electronuclear Reaction: Nuclear Reactions in TR-Zones (1)

- Nucleon interchange
  - Changes neutron into proton and vice versa
  - At high rate (flat spacetime assumed)
- Statistics become skewed due to curved ST
- Can bias statistics toward either neutron or proton end
  - Biases toward transmutation of elements along isomer chains
  - Concept of "isomer" is vastly expanded

The Electronuclear Reaction: Nuclear Reactions in TR-Zones (2)

- **Normal dynamics (impulses) may reverse**
  - *Like charges attract, unlike charges repel*
  - *Positive charges cluster (are drawn together)*
  - *H+ ions (protons) may form quasi-nuclei*
  - *Nucleus coulomb barrier becomes assistant*
- **Many "impossible" reactions now possible**
  - *Quark access and quark flipping by EM*
  - *Ion clustering*
  - *Positive charges as phase conjugate mirrors*
  - *Time-density waves and time-energy charging*

© 1997 T. E. Bearden

The Electronuclear Reaction: Nuclear Reactions in TR-Zones (3)

- **Not observed until time-energy charging has become substantial**
  - *Time delay (hours, days)*
  - *Transduction of LW --> TW involved*
  - *Specific time-charging history of detectors is involved in twhether they detect or not*
  - *Longitudinal EM waves become significant*
- **Curved spacetime can act as source or sink**
  - *May emit excess radiation*
  - *May absorb excess radiation*

© 1997 T. E. Bearden

In Time-Reversed Zone:
Nuclear reactions are biased

- In normal flat ST, n ⇔ p at high rate
- Curved ST skews statistics
- Biases to either n or p
- Biases to transmutation along isomer chain
- "Isomer" concept greatly expanded

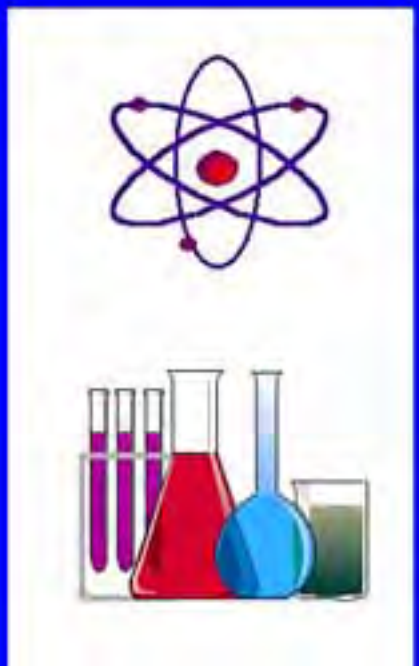

© 1998 T.E. BEARDEN

In Time-Reversed Zone: Dynamics may be reversed

- Like charges may attract and unlike charges repel
- Coulomb barrier becomes Coulomb assistant
- Clusters like charges and forms artificial nuclei
- "Impossible" nuclear reactions at low energy
- Time-density interactions

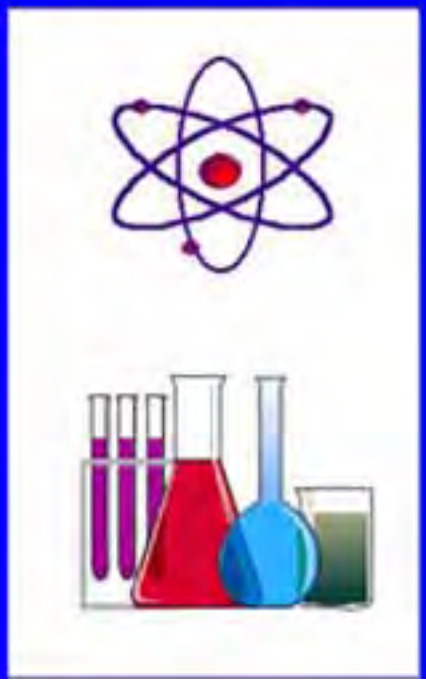

Time-Reversed Zone:

Significant only after time-density charging

- Hours, for "fast" onset
- Days, for "slower" onset
- Transduction involved for TW ⇔ LW ⇔ TDW
- Time-history of each detector is significant
- Longitudinal EM waves become significant

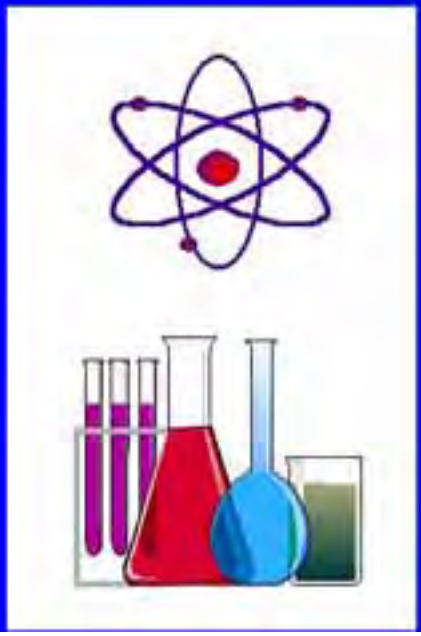

A New Conservation of Energy Law

- Physics conserves total "energy and mass-energy"
- Now also must consider "time-energy"
- Conserve total mass-time-energy (spatiotemporal energy)
- Let E_T = total energy, E_M = mass energy, E_E = ordinary energy, and E_t = time energy. Then

$$E_T = E_E + E_M + E_t$$

© 1998 T.E. Bearden

$$(kE_t \Rightarrow E_E > 0) \Rightarrow E_T > (E_M + E_E)$$

- If some E_t is transduced into E_E, the experiment will violate the old spatial mass-energy conservation law

QUESTIONS ON CARCINOGENS AND EM RADIATION

- UNRESOLVED QUESTIONS ON EM RADIATION
  - DOSAGES
  - ACTIVE MECHANISMS
  - REPLICATION DIFFICULTIES
  - MEASUREMENT DIFFICULTIES
  - WHERE, WHEN, HOW ILL EFFECTS OCCUR
- SIMILAR QUESTIONS EXIST ABOUT EVERY CARCINOGEN
- SCIENCE REALLY DOES NOT UNDERSTAND THE MECHANISMS OF A SINGLE CHRONIC DISEASE, INCLUDING CANCER
  - FACTORS SUCH AS MIND, STRESS, SPONTANEOUS REMISSION, PLACEBO EFFECTS, AND COMBINATIONS OF FACTORS ARE PARTICULARLY TROUBLESOME
  - GENERATION OF THE PLACEBO EFFECT BY THE REGENERATION & RECOVERY SYSTEM IS UNRECOGNIZED

© 1994, 1995 T.E. Bearden

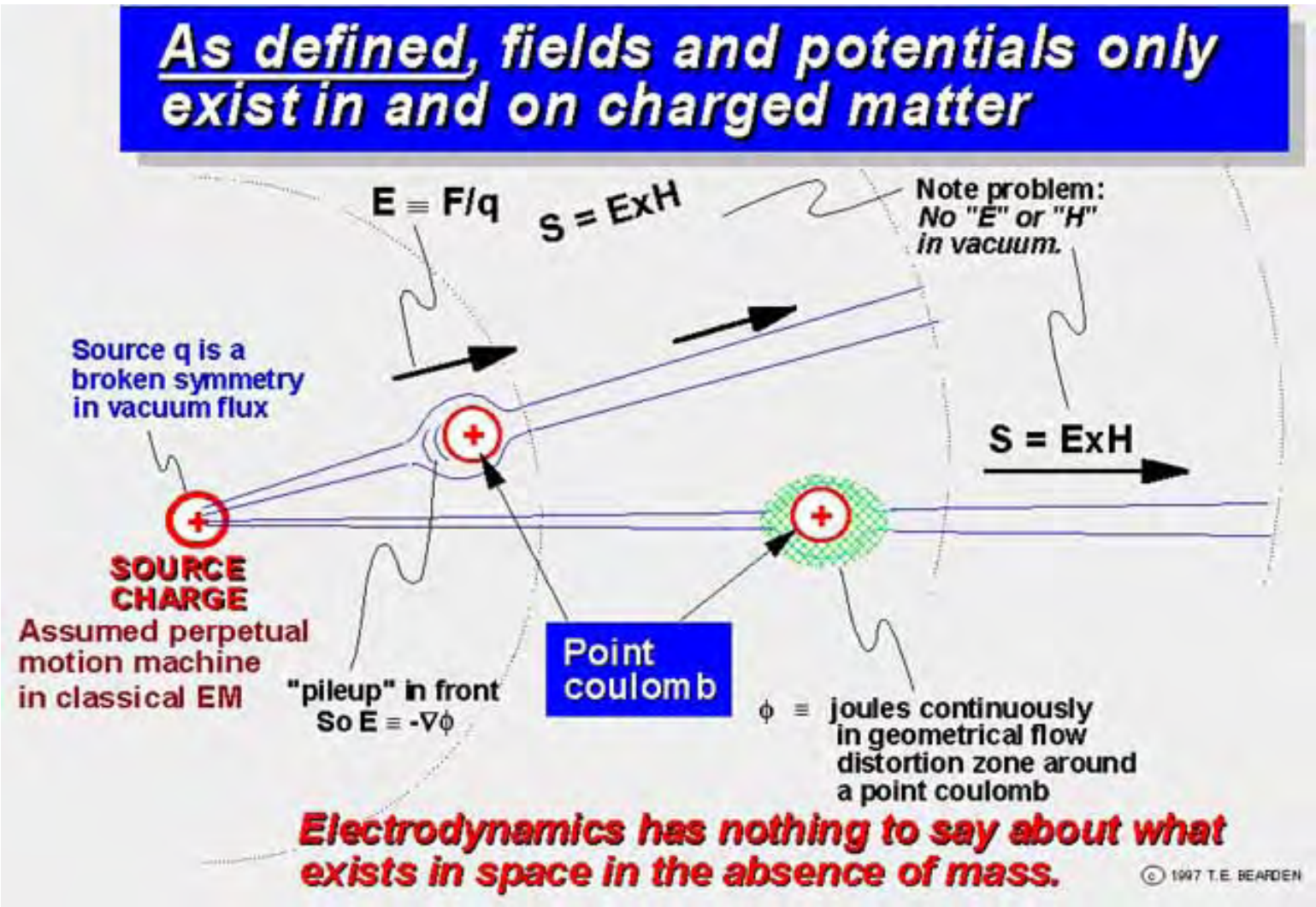
As defined, fields and potentials only exist in and on charged matter
E ≡ F/q
S = ExH
Note problem:
No "E" or "H"
in vacuum.
Source q is a
broken symmetry
in vacuum flux
S = ExH
SOURCE
CHARGE
Assumed perpetual
motion machine
in classical EM
"pileup" in front
So E ≡ -∇ϕ
Point
coulomb
ϕ ≡ joules continuously
in geometrical flow
distortion zone around
a point coulomb
Electrodynamics has nothing to say about what
exists in space in the absence of mass.
© 1997 T.E. BEARDEN

Serious flaws and errors in classical EM theory.

1. Eliminates the Internal EM Inside the Scalar Potential.
2. No Definition of Electrical Charge or of Scalar Potential.
3. Equations Still Assume Material Ether Per Maxwell (Unchanged).
4. Use of Force Fields in Vacuum is False (and Known to be So).
5. Treats Charge q as Unitary Instead of Coupled System $q = \phi[q]m(q)$.
6. Confuses Massless Potential Gradients as Forces (See #3, #4).
7. Does Not Utilize Mass as a Component of Force (See #23).

8. Erroneously Assumes EM Force Fields as Primary Causes.
9. Topology of EM Model Has Been Substantially Reduced.
10. Does Not Include Quantum Potential or Action at a Distance.
11. Does Not Include Superluminal Velocity of Inner EM Components.
12. Does Not Utilize Extended Near-Field Coulomb Gauge Effects.
13. Does Not Include EM Generatrix Mechanism for Time Flow.
14. Does Not Unify Photon and Wave Aspects (Requires 7-D Model).

15. Does Not Include Electron Spin and Precession (See #19, #24).
16. Treats EM Energy As Existing In "Chunks," Instead of as Flow.
17. Confuses Energy and Energy Collection (See #16).
18. Discards Half of Every EM Wave in Vacuum (See #22).
19. Erroneously Uses Transverse Vacuum Wave; It's Longitudinal.
20. Arbitrarily Regauges Maxwell's Equations to Eliminate Overunity.
21. Omits Phase Conjugate Optics Effects (The *Rule* in Internal EM).
22. Does Not Include EM Cause of Newtonian Reaction Force.
23. Erroneously Assumes Separate Force Acting on Separate Mass.
24. Confuses Detected Electron Precession Waves as Proving Transverse EM Waves in Vacuum (Remnant of Old "EM Fluid" Concept).
25. Due to Error in String Wave, Omits the Ubiquitous Antiwave.
26. *Assumes* Equilibrium; Not True Unless Include Vacuum Interactions.
27. Higher Topology Required, to Model Electromagnetic Reality.
28. Lorentz surface integration discards Poynting energy transport.
29. Has nothing at all to say about form of EM entities in massless space.
30. Eliminates the infolded general relativity using EM-force as curve agent.
31. Does not include longitudinal EM waves as time domain oscillations.
32. Does not include EM mechanism that generates time flow and flow rate.

© T.E. [illegible] 1991, 1997

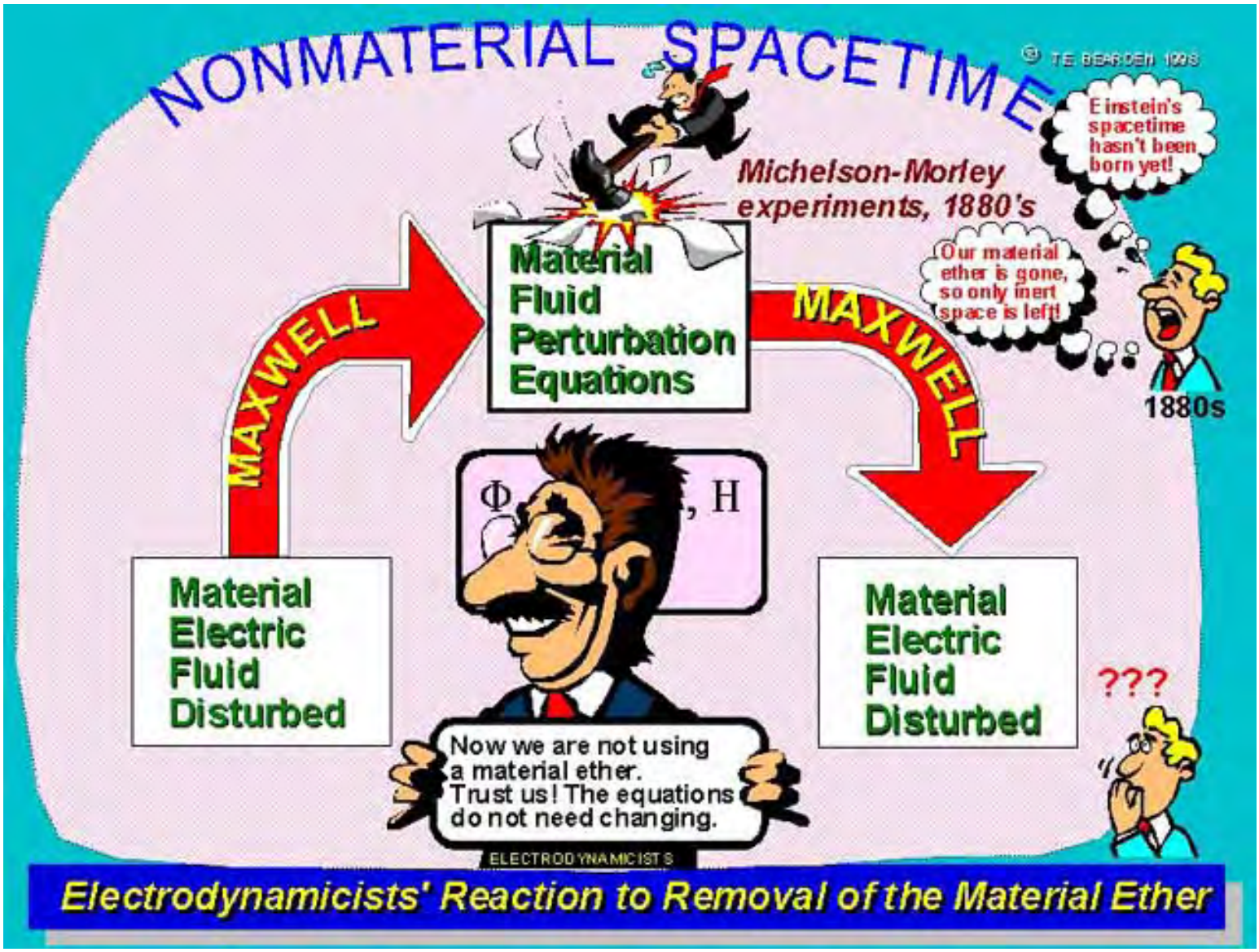
NONMATERIAL SPACETIME
© T.E. BEARDEN 1998
Einstein's spacetime hasn't been born yet!
Michelson-Morley experiments, 1880's
Our material ether is gone, so only inert space is left!
1880s
MAXWELL
Material Fluid Perturbation Equations
MAXWELL
Φ
, H
Material Electric Fluid Disturbed
Material Electric Fluid Disturbed
???
Now we are not using a material ether. Trust us! The equations do not need changing.
ELECTRODYNAMICISTS
Electrodynamicists' Reaction to Removal of the Material Ether

REACTION TO LOSS OF MATERIAL ETHER
Material Ether Assumed in Equations
Potentials, Fields, and Waves Assumed Material
Not a single equation was changed!
Now we are not using a material ether. Trust us! The equations do not need changing.
© T.E. BEARDEN 1999
ELECTRODYNAMICISTS

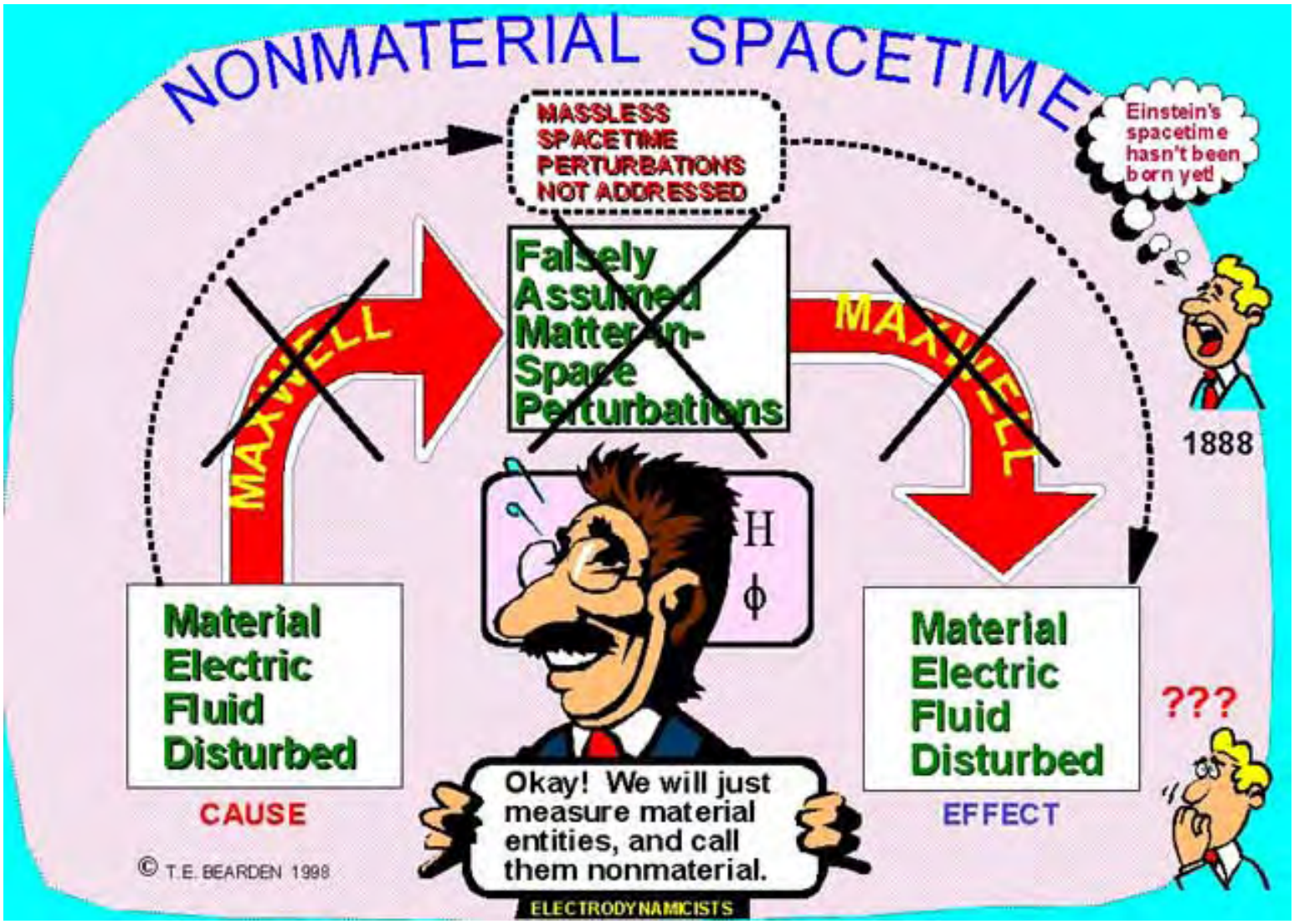
NONMATERIAL SPACETIME
MASSLESS SPACETIME PERTURBATIONS NOT ADDRESSED
Einstein's spacetime hasn't been born yet!
Falsely Assumed Matter-in-Space Perturbations
MAXWELL
MAXWELL
1888
H
ϕ
Material Electric Fluid Disturbed
CAUSE
Material Electric Fluid Disturbed
EFFECT
???
Okay! We will just measure material entities, and call them nonmaterial.
ELECTRODYNAMICISTS
© T.E. BEARDEN 1998

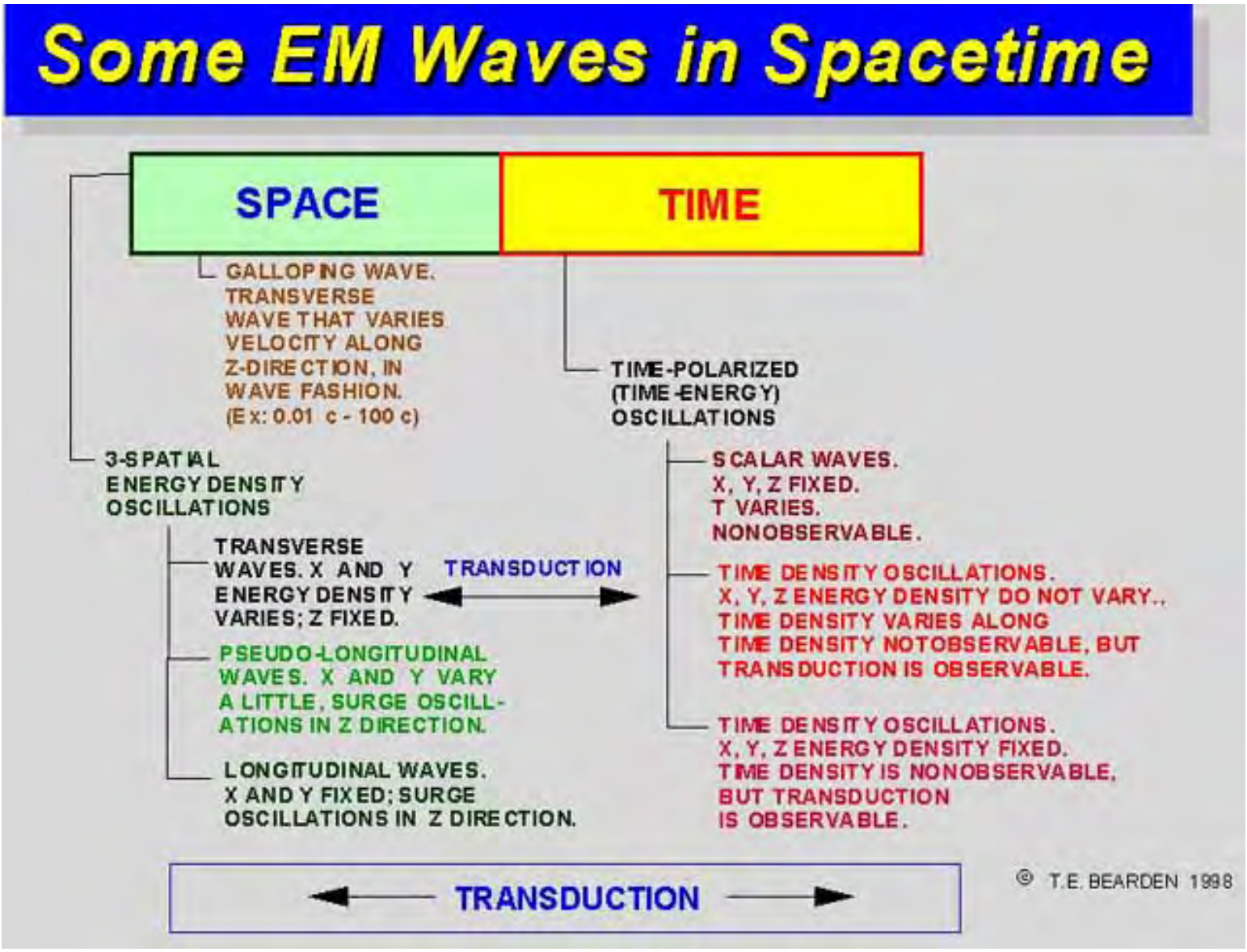
Some EM Waves in Spacetime
SPACE
TIME
GALLOPING WAVE. TRANSVERSE WAVE THAT VARIES VELOCITY ALONG Z-DIRECTION, IN WAVE FASHION. (Ex: 0.01 c - 100 c)
TIME-POLARIZED (TIME-ENERGY) OSCILLATIONS
3-SPATIAL ENERGY DENSITY OSCILLATIONS
SCALAR WAVES. X, Y, Z FIXED. T VARIES. NONOBSERVABLE.
TRANSVERSE WAVES. X AND Y ENERGY DENSITY VARIES; Z FIXED.
TRANSDUCTION
TIME DENSITY OSCILLATIONS. X, Y, Z ENERGY DENSITY DO NOT VARY., TIME DENSITY VARIES ALONG TIME DENSITY NOTOBSERVABLE, BUT TRANSDUCTION IS OBSERVABLE.
PSEUDO-LONGITUDINAL WAVES. X AND Y VARY A LITTLE, SURGE OSCILLATIONS IN Z DIRECTION.
LONGITUDINAL WAVES. X AND Y FIXED; SURGE OSCILLATIONS IN Z DIRECTION.
TIME DENSITY OSCILLATIONS. X, Y, Z ENERGY DENSITY FIXED. TIME DENSITY IS NONOBSERVABLE, BUT TRANSDUCTION IS OBSERVABLE.
TRANSDUCTION
© T.E. BEARDEN 1998

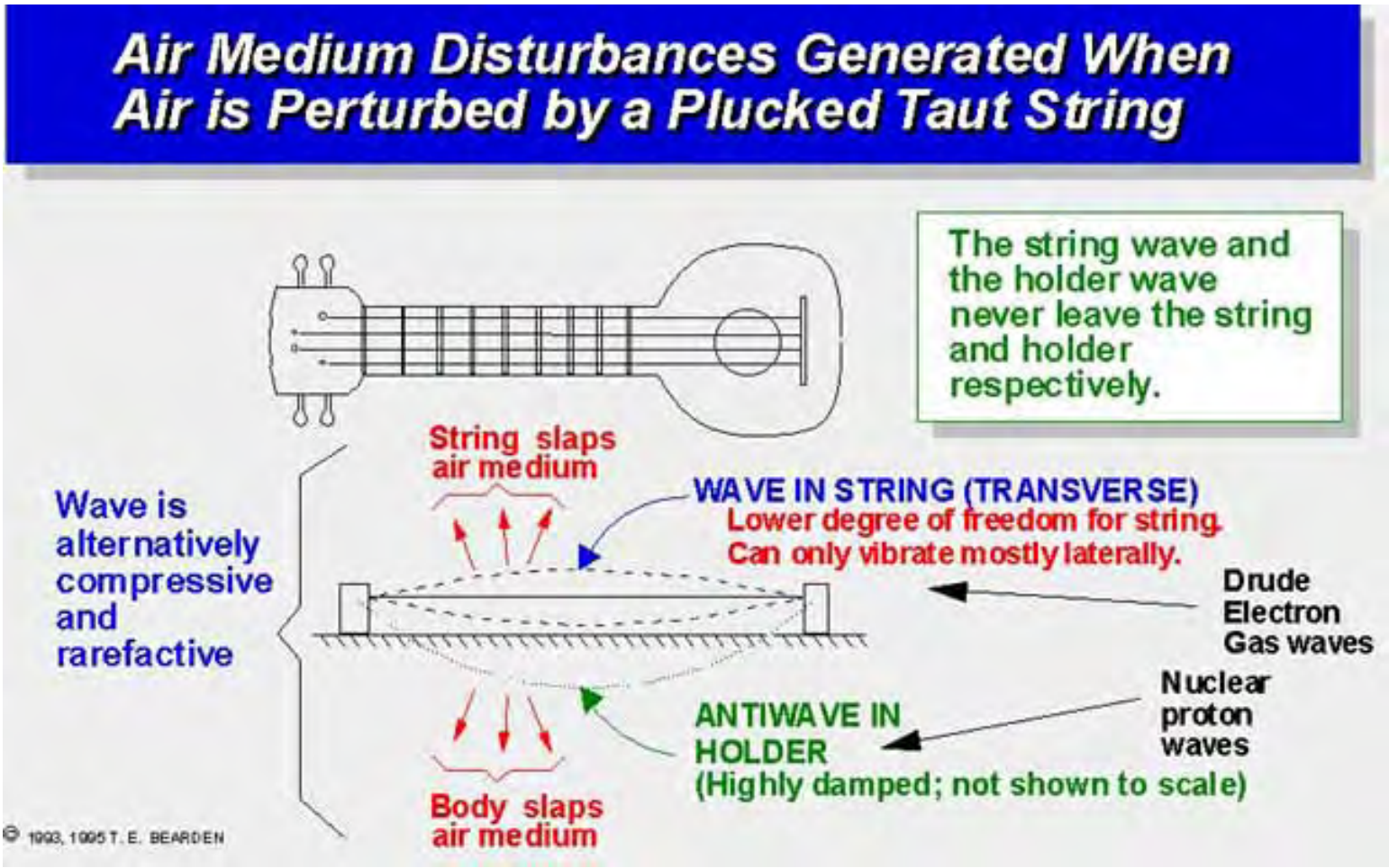
Air Medium Disturbances Generated When Air is Perturbed by a Plucked Taut String
The string wave and the holder wave never leave the string and holder respectively.
String slaps air medium
Wave is alternatively compressive and rarefactive
WAVE IN STRING (TRANSVERSE)
Lower degree of freedom for string.
Can only vibrate mostly laterally.
Drude Electron Gas waves
Nuclear proton waves
ANTIWAVE IN HOLDER
(Highly damped; not shown to scale)
Body slaps air medium
© 1993, 1995 T. E. BEARDEN

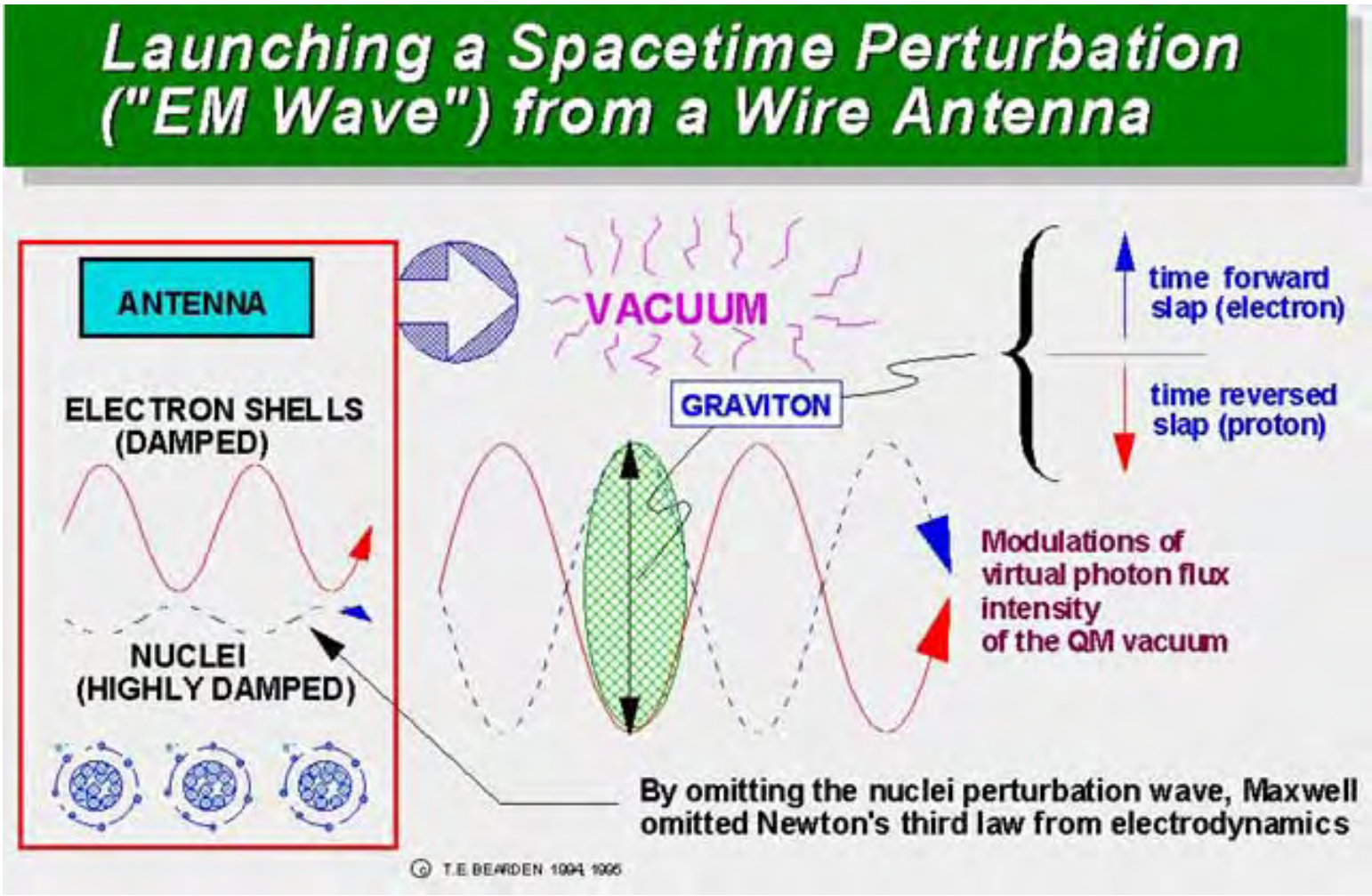
Launching a Spacetime Perturbation ("EM Wave") from a Wire Antenna
ANTENNA
ELECTRON SHELLS (DAMPED)
NUCLEI (HIGHLY DAMPED)
VACUUM
GRAVITON
time forward slap (electron)
time reversed slap (proton)
Modulations of virtual photon flux intensity of the QM vacuum
By omitting the nuclei perturbation wave, Maxwell omitted Newton's third law from electrodynamics
© T.E BEARDEN 1994 1995

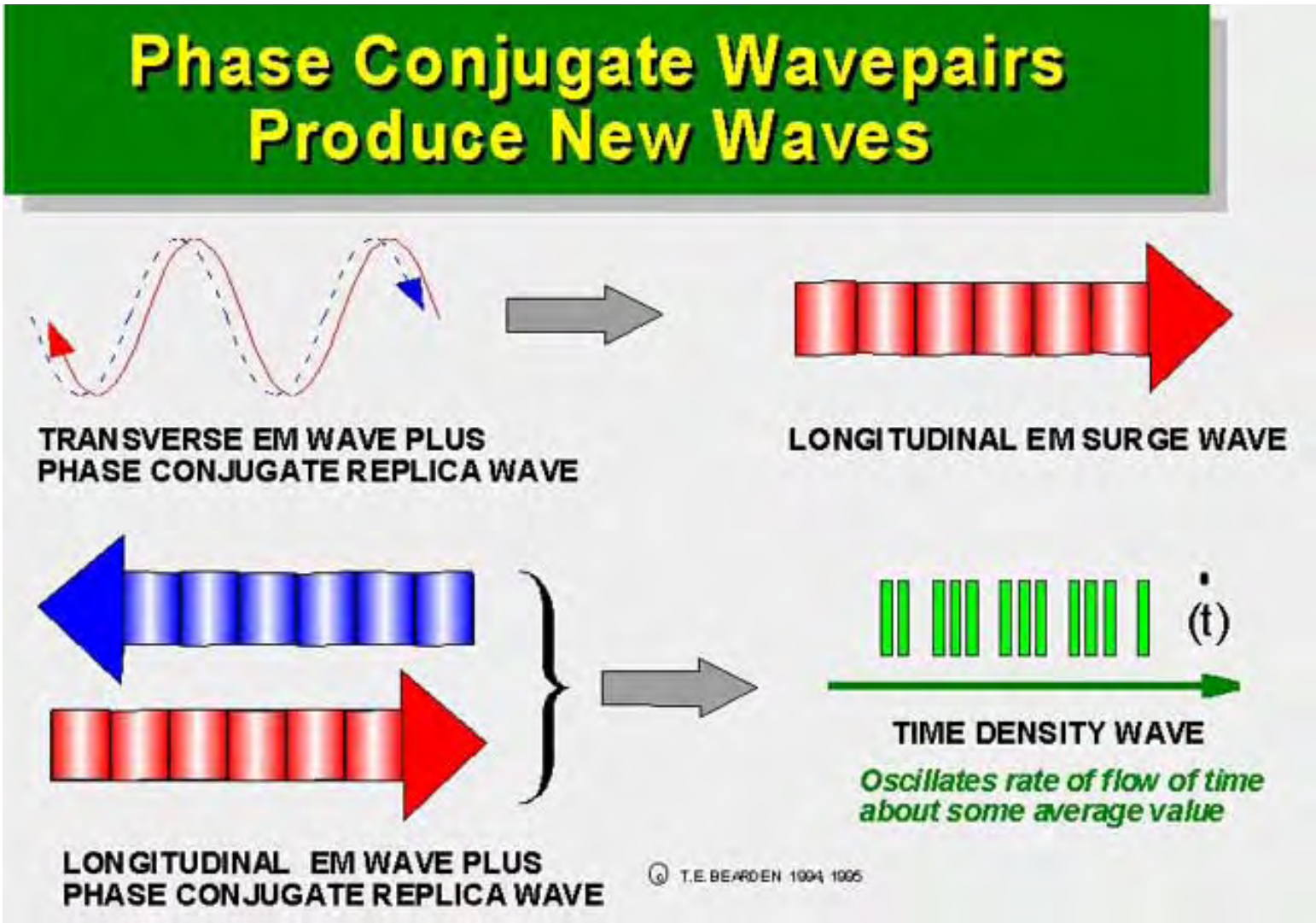
Phase Conjugate Wavepairs
Produce New Waves
TRANSVERSE EM WAVE PLUS
PHASE CONJUGATE REPLICA WAVE
LONGITUDINAL EM SURGE WAVE
LONGITUDINAL EM WAVE PLUS
PHASE CONJUGATE REPLICA WAVE
(t)
TIME DENSITY WAVE
Oscillates rate of flow of time
about some average value
© T.E. BEARDEN 1994, 1995

Scalar Electromagnetics (Energetics) View of EM

- Potentials real; primary causes of EM phenomena
  - Force fields made by differentiations of potentials
  - Force fields are effects, not primary causes
  - Force fields exist only in, on mass particles
- Actions due to potentials and their interference
  - Action at a distance or locally
  - Quantum potential and hidden variables
- Locally curved spacetime, engineerable by EM
  - Gravity effects not necessarily negligible
  - Strong EM force or time used as agent of curvature

© T.E. BEARDEN 1996, 1998

Scalar Electromagnetics (Energetics) View of EM (Cont'd)

- Potentials have internal structure
  - Stoney/Whittaker structure
  - Longitudinal EM phase conjugate wavepairs
  - Each wavepair is a time-polarized EM wave
- Vacuum EM is a potential and has microstructure
  - Stoney-Whittaker biwaves/t-polarized waves
  - Fluctuations exhibit chaos
- Spacetime ≡ Vacuum ≡ Potential ≡ Flux

© T.E. BEARDEN 1991, 1999

Scalar Electromagnetics (Energetics) View of EM (Cont'd)

- Statistics may have hidden order (already chaotic)
- Uses spacetime curvature engines to alter matter (inside-out or outside-in)
- Engineerable EM mechanism generates rate of flow of a mass through time
- Quantum potential with specific QP can be used for instant action at a distance

Extended General Relativity Principle

- "All levels of energy structures and all levels of time structures mold spacetime geometry.
- This is called a ***vacuum engine*** (spacetime engine).
- Spatial and temporal structuring act upon mass at all levels.
- This produces ***templates*** of forces, for translations and stresses."

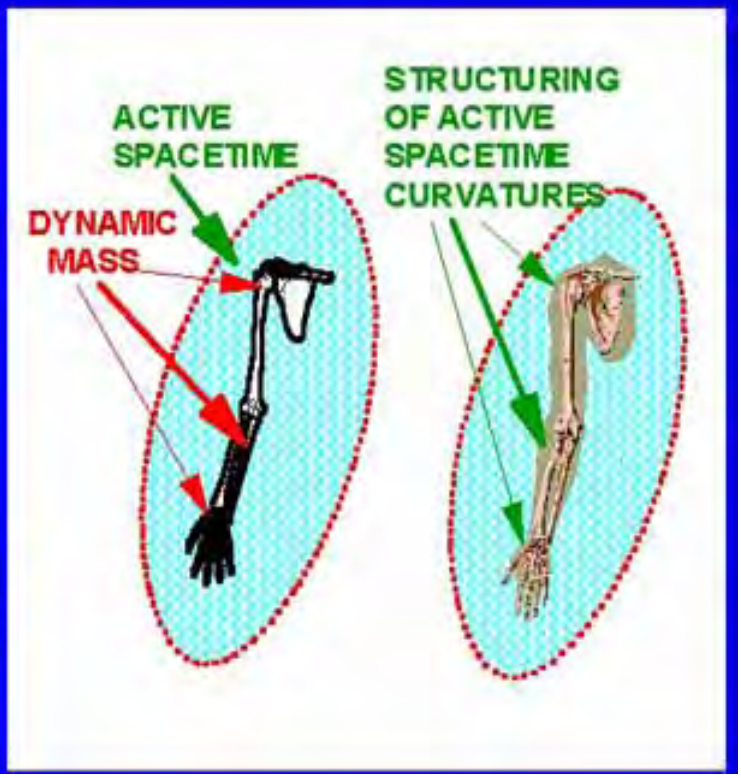

© T.E. BEARDEN 1998

Extension of Work-Energy Theorem

© T.E. BEARDEN 1997

- *Theorem:* $W = k_f - k_i = \Delta k$ [1]
- k must be interpreted not as energy *per se*, but as *collected/collecting* energy.
- The reaction cross section λ for the collecting process must be included.
- *Extension:* $W = \lambda (k_f - k_i) = \lambda \Delta k$ [2]
- Normally $\lambda \leq 1$, as for elastic collision or Stokes emission.
- However, $\lambda > 1$ is now possible, for processes which asymmetrically self-regauge. An example is Letokhov's negative absorption of the medium.
- Working models are the Patterson Power Cell® and Lawandy lasing without population inversion.

MTW's General Relativity Principle

- "Space acts on matter, telling it how to move.
- In turn, matter reacts back on space, telling it how to curve."

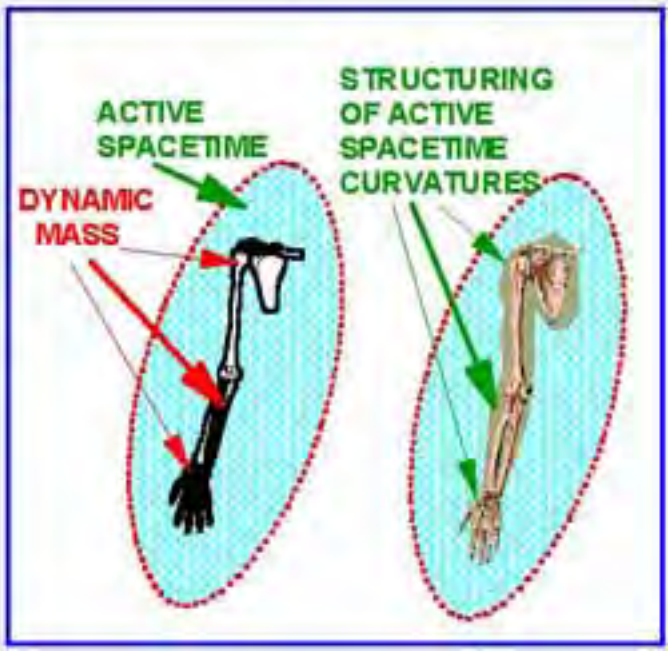

© T.E. BEARDEN 1993

Use of General Relativity (GR) in Particle Physics

© 1998 T. E. Bearden

- GR seldom used in particle physics
- In cold fusion, Matsumoto* has applied general relativity
- Consistent with important cold fusion results
- Used spacetime (ST) curvature by energy density
- Matsumoto did not utilize:
  - Longitudinal EM waves
  - Time density waves
  - Time density curvatures of ST (gain = $9 \times 10_{16}$)

* T. Matsumoto, "Mechanisms of Electro-Nuclear Collapse," Proc. ICCF-7, Vancouver, BC, Canada, Apr. 1998, p. 98

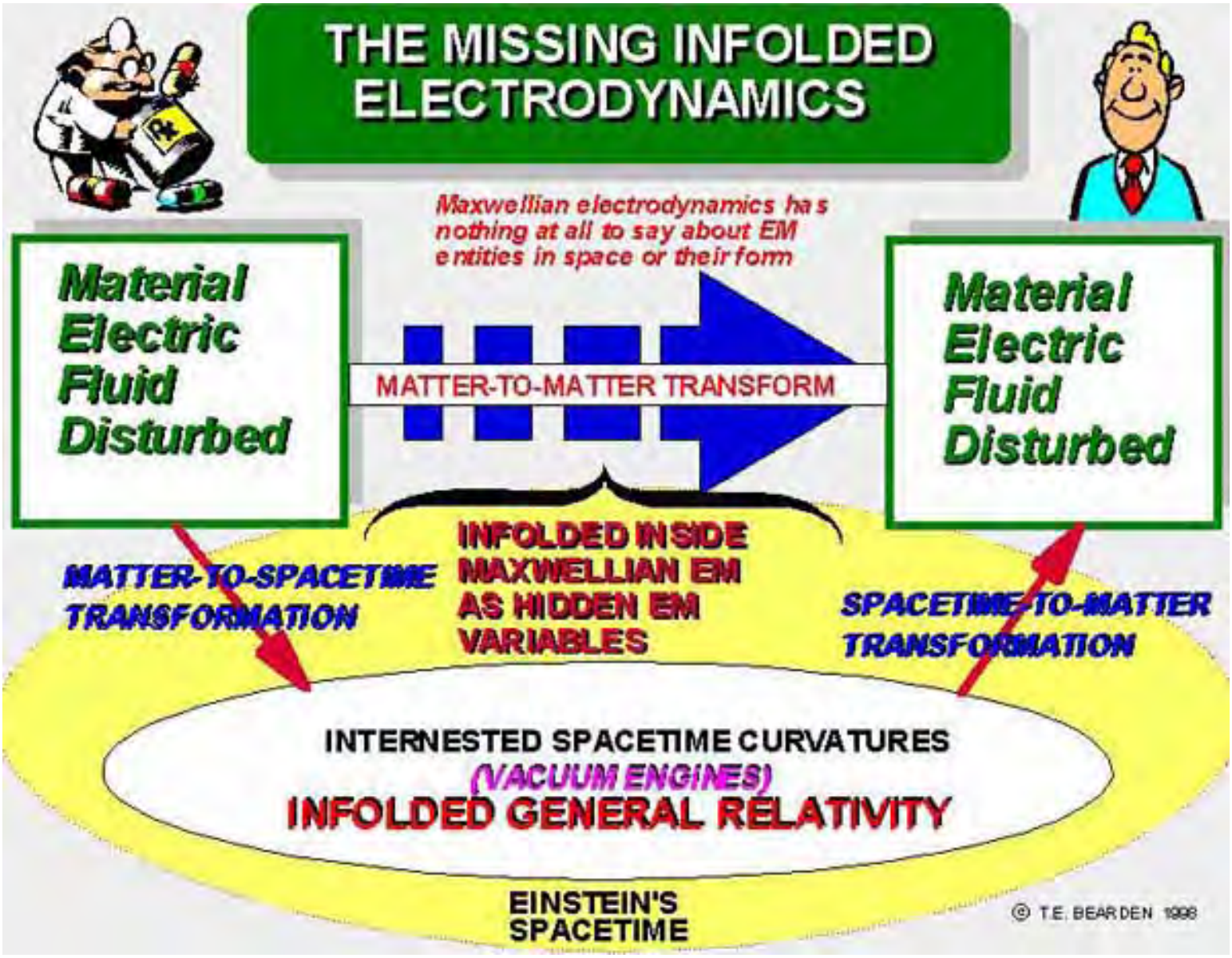
THE MISSING INFOLDED ELECTRODYNAMICS
Maxwellian electrodynamics has nothing at all to say about EM entities in space or their form
Material Electric Fluid Disturbed
MATTER-TO-MATTER TRANSFORM
Material Electric Fluid Disturbed
INFOLDED INSIDE MAXWELLIAN EM AS HIDDEN EM VARIABLES
MATTER-TO-SPACETIME TRANSFORMATION
SPACETIME-TO-MATTER TRANSFORMATION
INTERNESTED SPACETIME CURVATURES
(VACUUM ENGINES)
INFOLDED GENERAL RELATIVITY
EINSTEIN'S SPACETIME
© T.E. BEARDEN 1998

Infolded Engines: Excluded by Present Physics

- *The infolded dynamics of EM systems are not considered in general relativity, electromagnetics, or quantum mechanics*
- *None of these disciplines include such spacetime curvature engines (vacuum engines)*
- *Thus GR, EM, and QM cannot be unified, since ST curvature engines are where the unification mainly occurs*

© 1999 T. E. BEARDEN

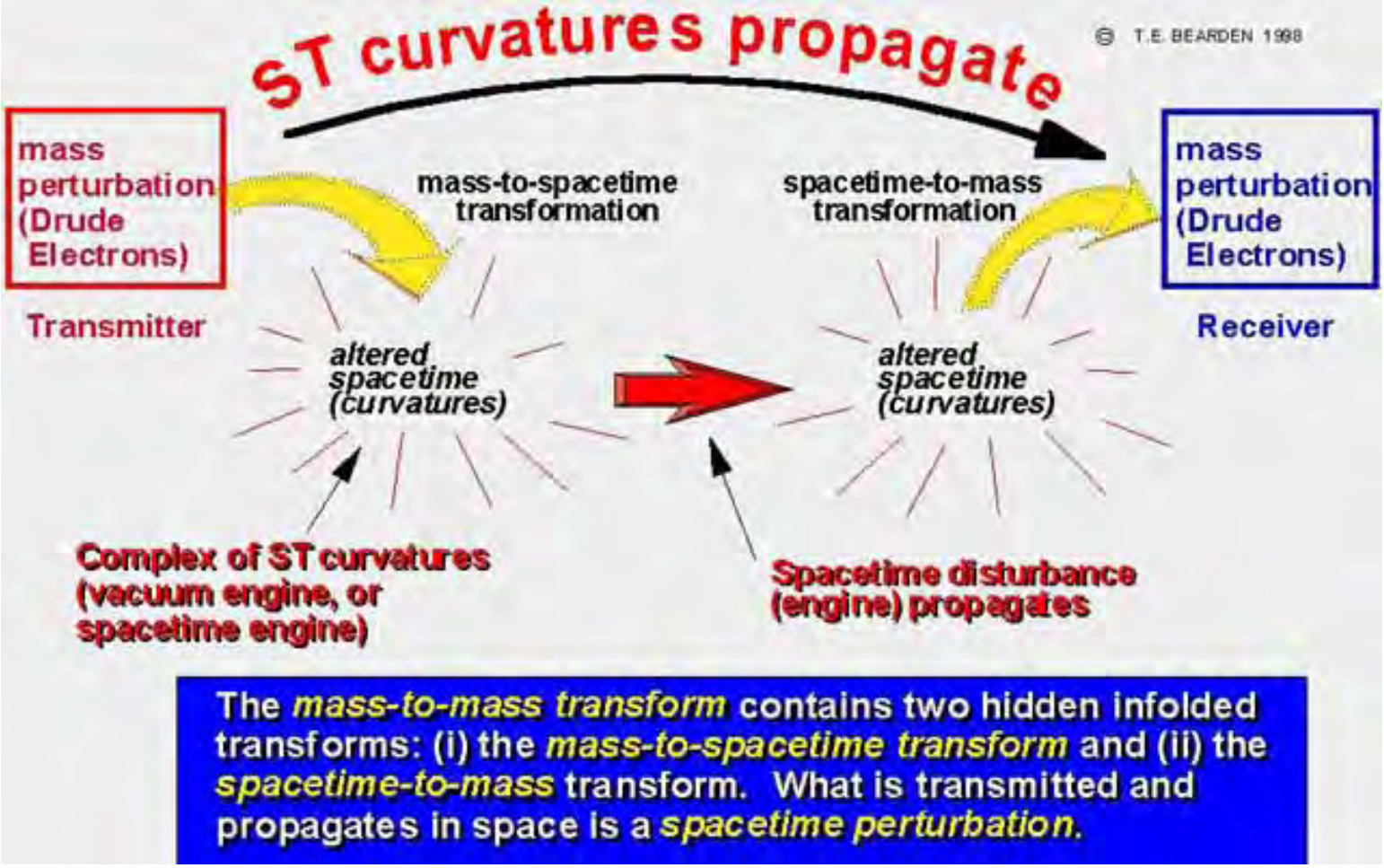
ST curvatures propagate
© T.E. BEARDEN 1998
mass perturbation (Drude Electrons)
Transmitter
mass-to-spacetime transformation
spacetime-to-mass transformation
mass perturbation (Drude Electrons)
Receiver
altered spacetime (curvatures)
altered spacetime (curvatures)
Complex of ST curvatures (vacuum engine, or spacetime engine)
Spacetime disturbance (engine) propagates
The mass-to-mass transform contains two hidden infolded transforms: (i) the mass-to-spacetime transform and (ii) the spacetime-to-mass transform. What is transmitted and propagates in space is a spacetime perturbation.

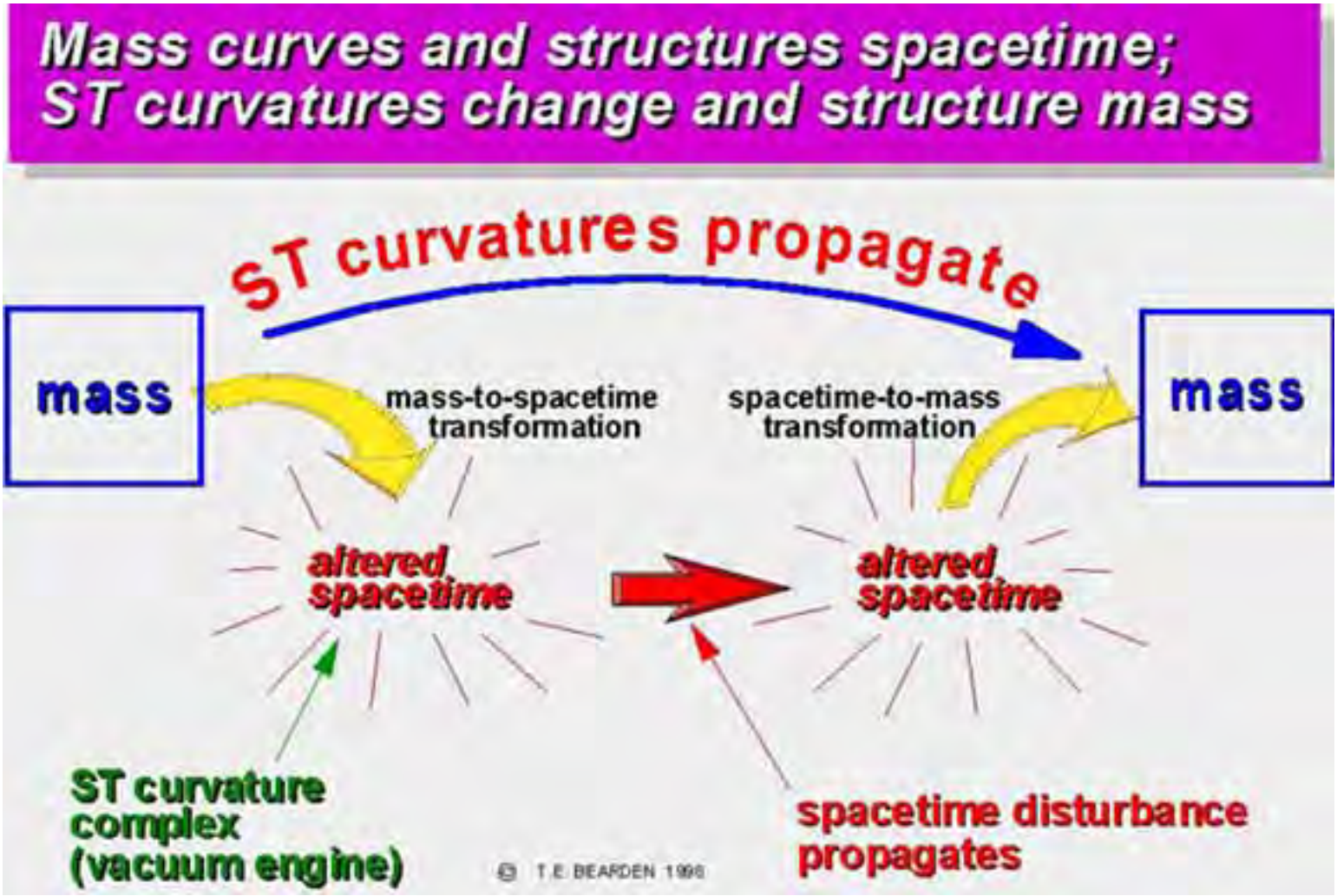
Mass curves and structures spacetime;
ST curvatures change and structure mass
ST curvatures propagate
mass
mass-to-spacetime transformation
spacetime-to-mass transformation
mass
altered spacetime
altered spacetime
ST curvature complex (vacuum engine)
© T.E. BEARDEN 1996
spacetime disturbance propagates

At Infinite Velocity:
Each Is Every Other
SPACETIME
VIRTUAL PARTICLE FLUX
POTENTIAL
MIND AND MIND LEVELS
MASS
PLANET
LIVING ORGANISMS
© 1997 T.E. Bearden

Lisitsyn's Report: Brain Code Broken

- THEORY DEVELOPED AND FITTED
- HYSTERESIS MEMORY LOOP
- CONTROLLED EM INDUCTION
  - IMAGES
  - SENSATIONS
  - PREDETERMINED EMERGENCE
- 23 EEG BANDS
  - UP TO 8.1 X 10^{20} HZ
  - 11 INDEPENDENT CHANNELS

© 1978, 1985, 1991 T.E. BEARDEN

S.K. Lisitsyn, "New Approach to the Analysis of Electroencephalograms," DDC Report AD73005, p. 16-25.

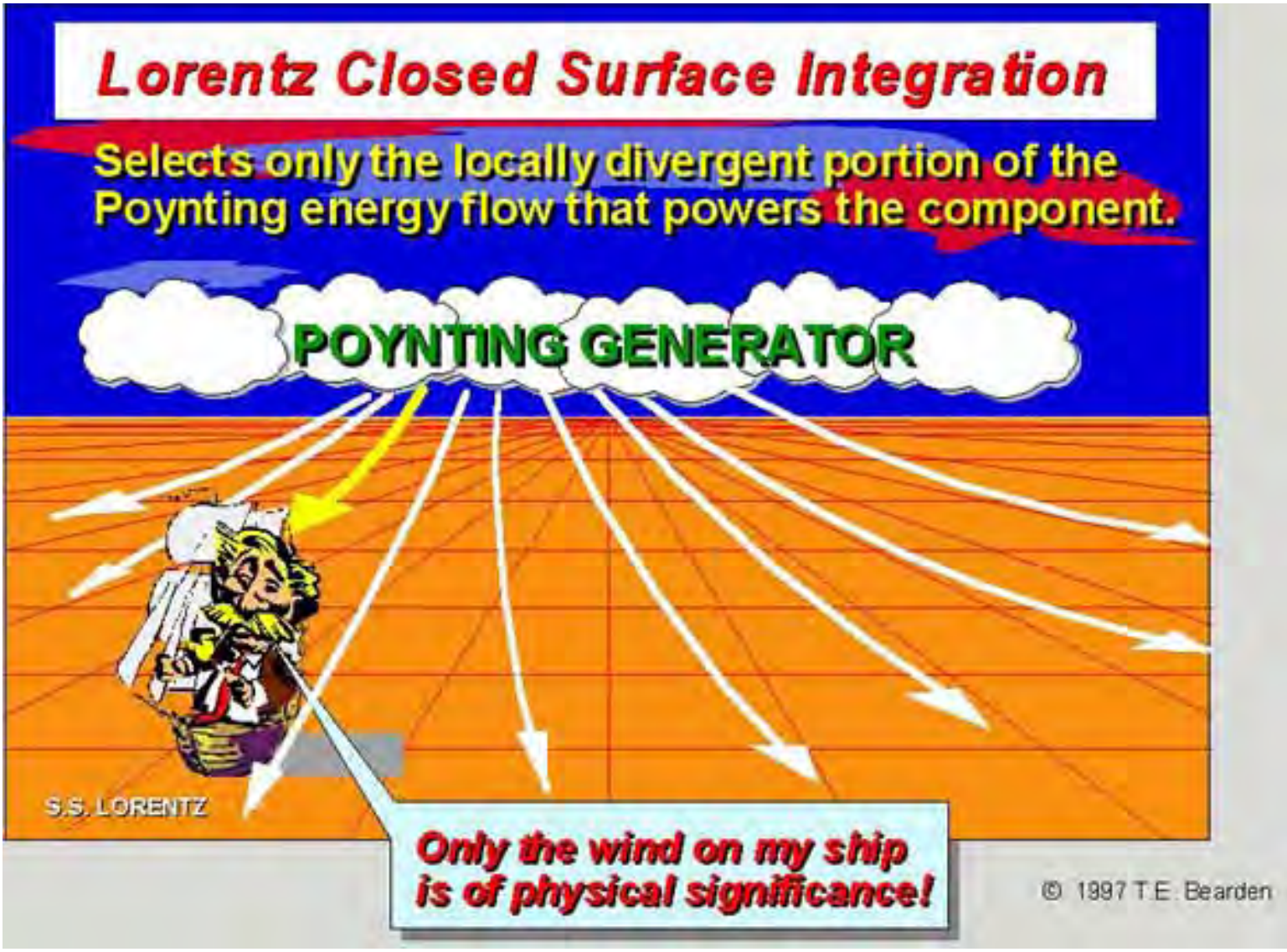
Lorentz Closed Surface Integration
Selects only the locally divergent portion of the Poynting energy flow that powers the component.
POYNTING GENERATOR
S.S. LORENTZ
Only the wind on my ship is of physical significance!
© 1997 T.E. Bearden

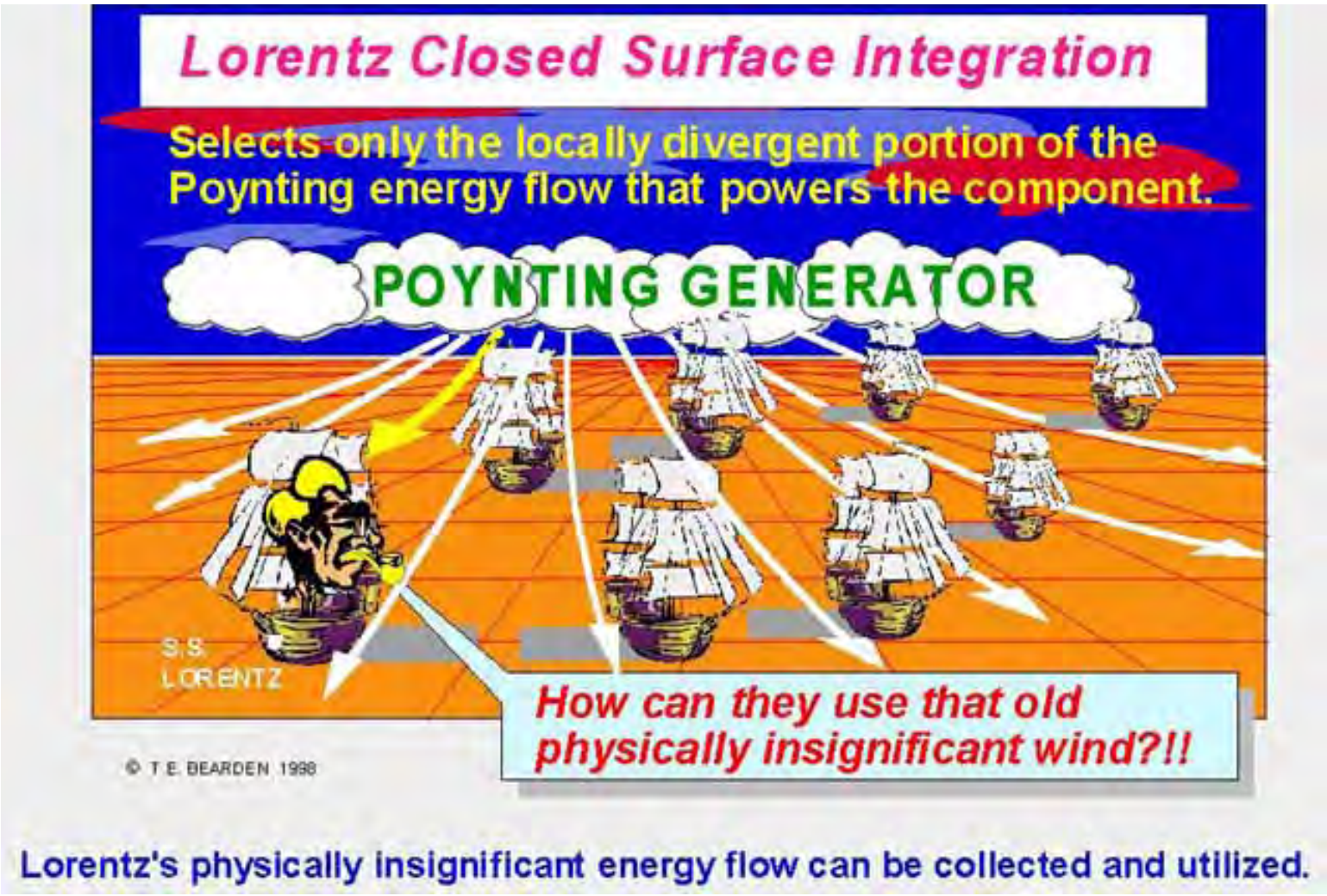
Lorentz Closed Surface Integration
Selects only the locally divergent portion of the Poynting energy flow that powers the component.
POYNTING GENERATOR
S.S. LORENTZ
How can they use that old physically insignificant wind?!!
© T.E. BEARDEN 1998
Lorentz's physically insignificant energy flow can be collected and utilized.

Lorentz surface integration of the Poynting vector around a closed surface

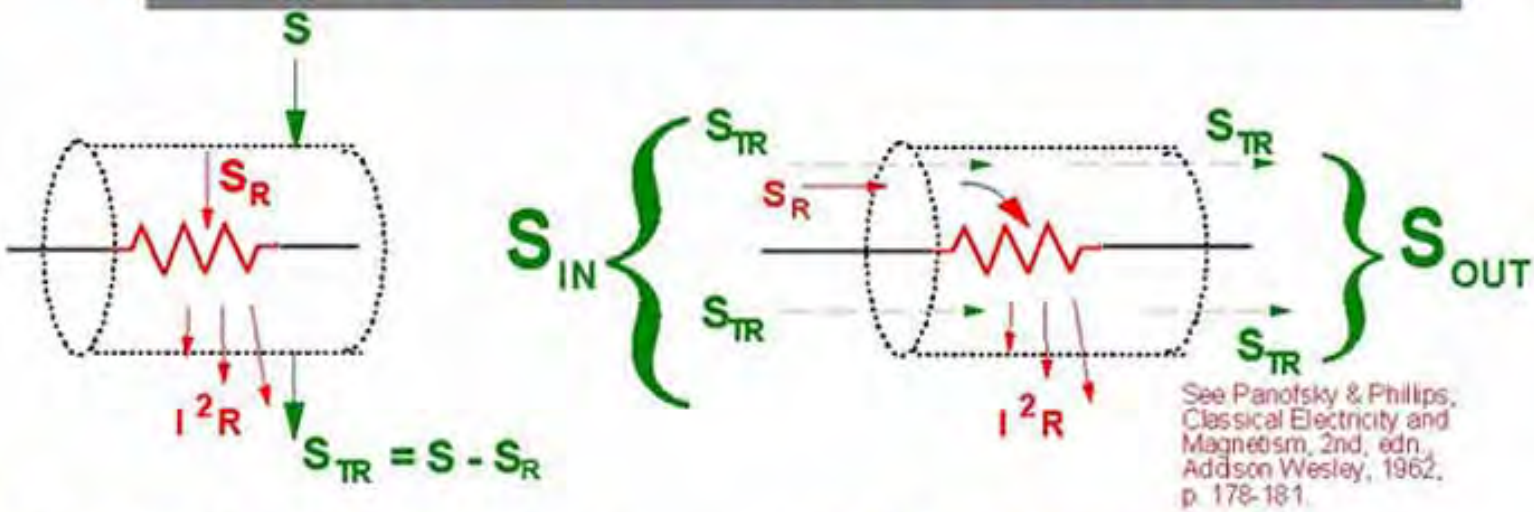

See Panofsky & Phillips, Classical Electricity and Magnetism, 2nd. edn. Addison Wesley, 1962, p. 178-181.

1a. Lorentz surface integration.

1b. Actual S in and S out.

Note: If the S-vector is integrated over the closed surface, then all energy *transport* passage is zeroed, leaving only the very small component of the input S-flow that is powering the joule heating of the resistor. In short, only the small component of the S-flow that is equal in magnitude to the Slepian vector $j\phi$ remains. This measures only the tiny portion of the S-flow that is "collecting" on electrons passing through the resistor, and therefrom being dissipated out of the resistor as joule heating. It discards everything else (all S_{TR}'s and S_{OUT}). S_{IN} becomes S_R.

© 1997 T.E. BEARDEN

Longitudinal EM Photon Interaction with Charge

- Creates time-density wave pumping
- Slowly creates time-density charging

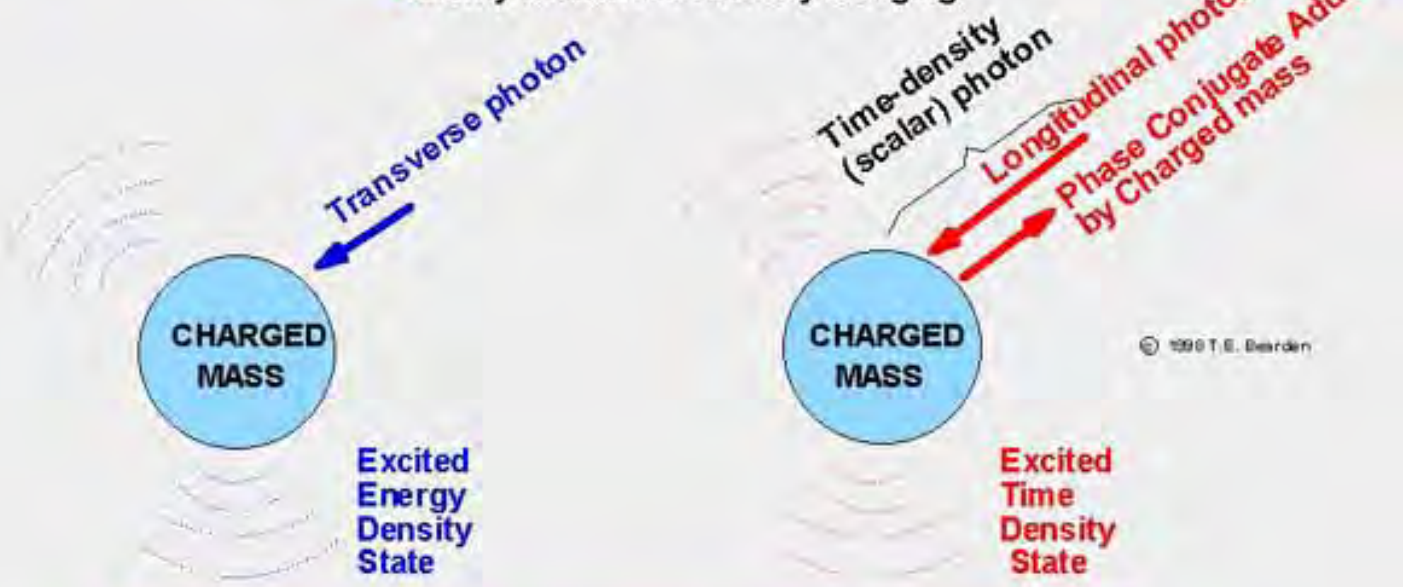

- Fundamental units are arbitrary in physics
- Can express all physics in one unit -- e.g., time
- Time is highly compressed energy
- 1 sec = 9 x 10_{16} joules of transverse EM wave energy

Figure 1-8. Infolded biwave composition of a scalar potential.

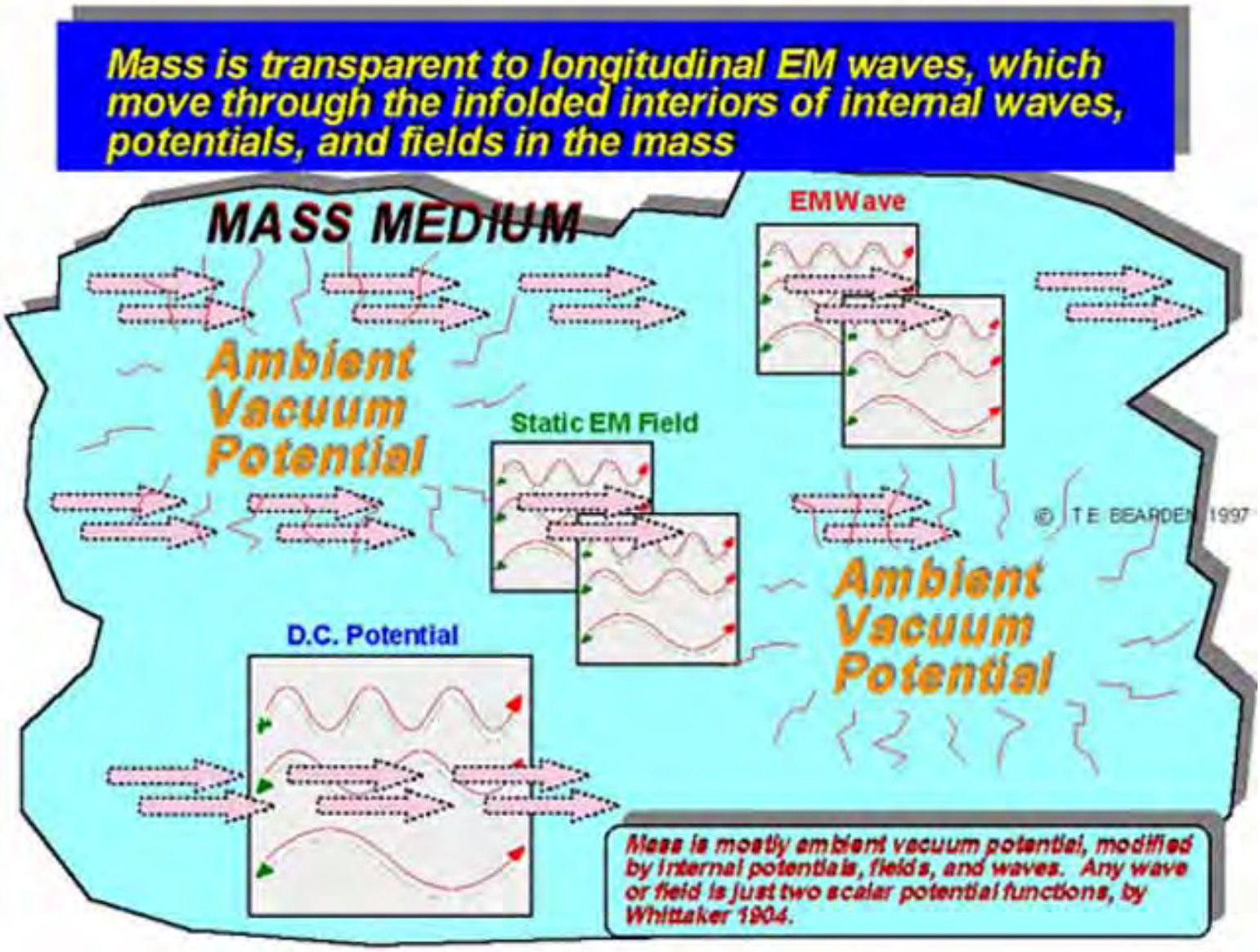

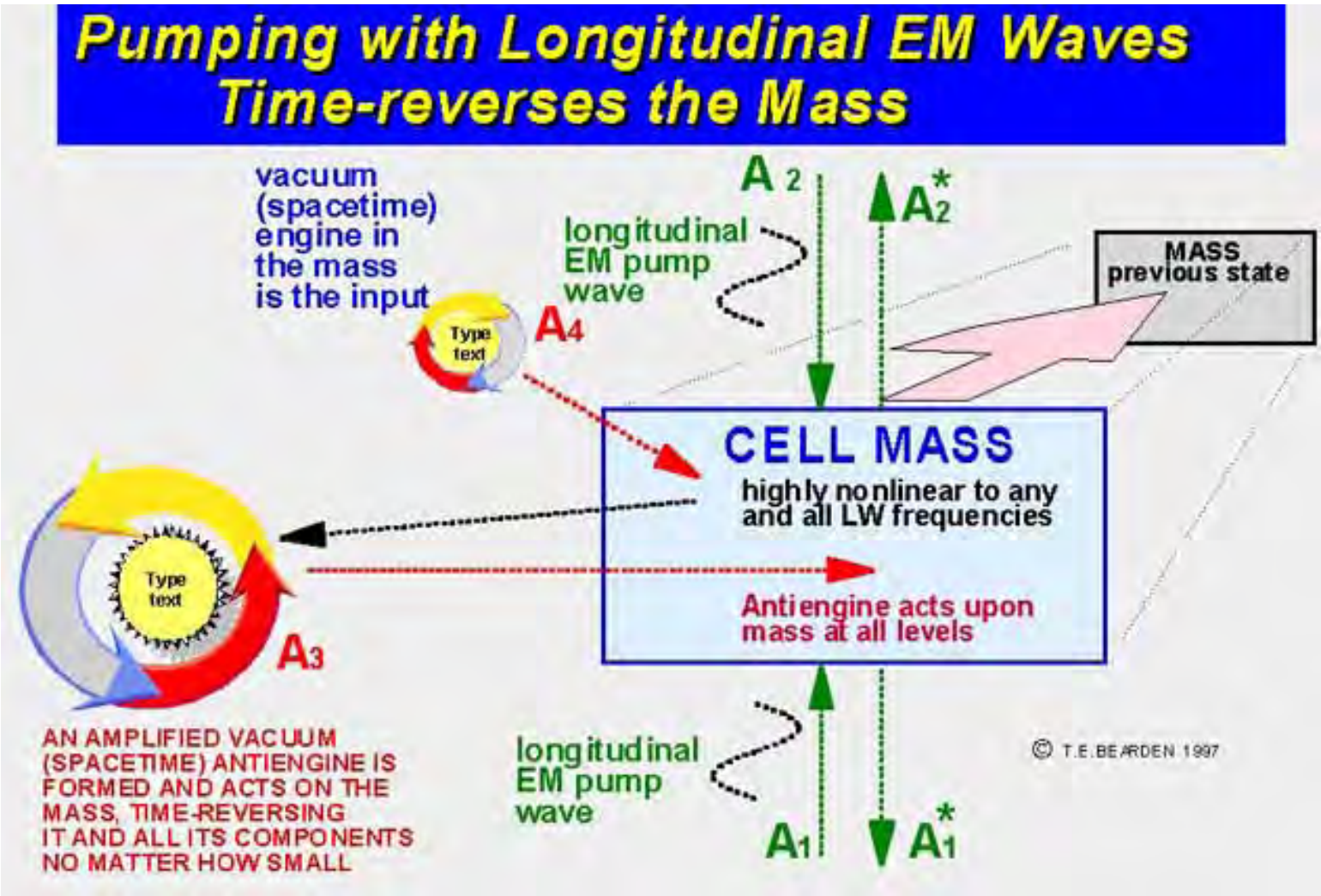
Pumping with Longitudinal EM Waves
Time-reverses the Mass
vacuum (spacetime) engine in the mass is the input
A 2
A*2
longitudinal EM pump wave
MASS previous state
Type text
A4
CELL MASS
highly nonlinear to any and all LW frequencies
Type text
A3
Antiengine acts upon mass at all levels
AN AMPLIFIED VACUUM (SPACETIME) ANTIENGINE IS FORMED AND ACTS ON THE MASS, TIME-REVERSING IT AND ALL ITS COMPONENTS NO MATTER HOW SMALL
longitudinal EM pump wave
© T.E.BEARDEN 1997
A1
A*1

Maxwell's Quaternion Theory

- **Quaternions:**
  - Discovered by Hamilton in 1843
  - A quaternion has a vector part
  - A quaternion has a scalar part
  - First significant non-arithmetic number system
  - Higher topology than vector or tensor algebra
- **Maxwell's theory was in quaternion equations**
  - 20 equations in 20 unknowns
  - Reduced to a small 4-equation subset by Heaviside and Gibbs
  - EM topology dramatically reduced

© T.E. BEARDEN 1995, 1996

Maxwellian Systems

Before regauging, after symmetrical regauging, and after asymmetrical regauging

Note: Any system must first break equilibrium in its vacuum exchange, before it can energize Drude electrons and "power" the load. Asymmetric regauging is always utilized. Powering loads and losses is a symmetry-restoring operation.

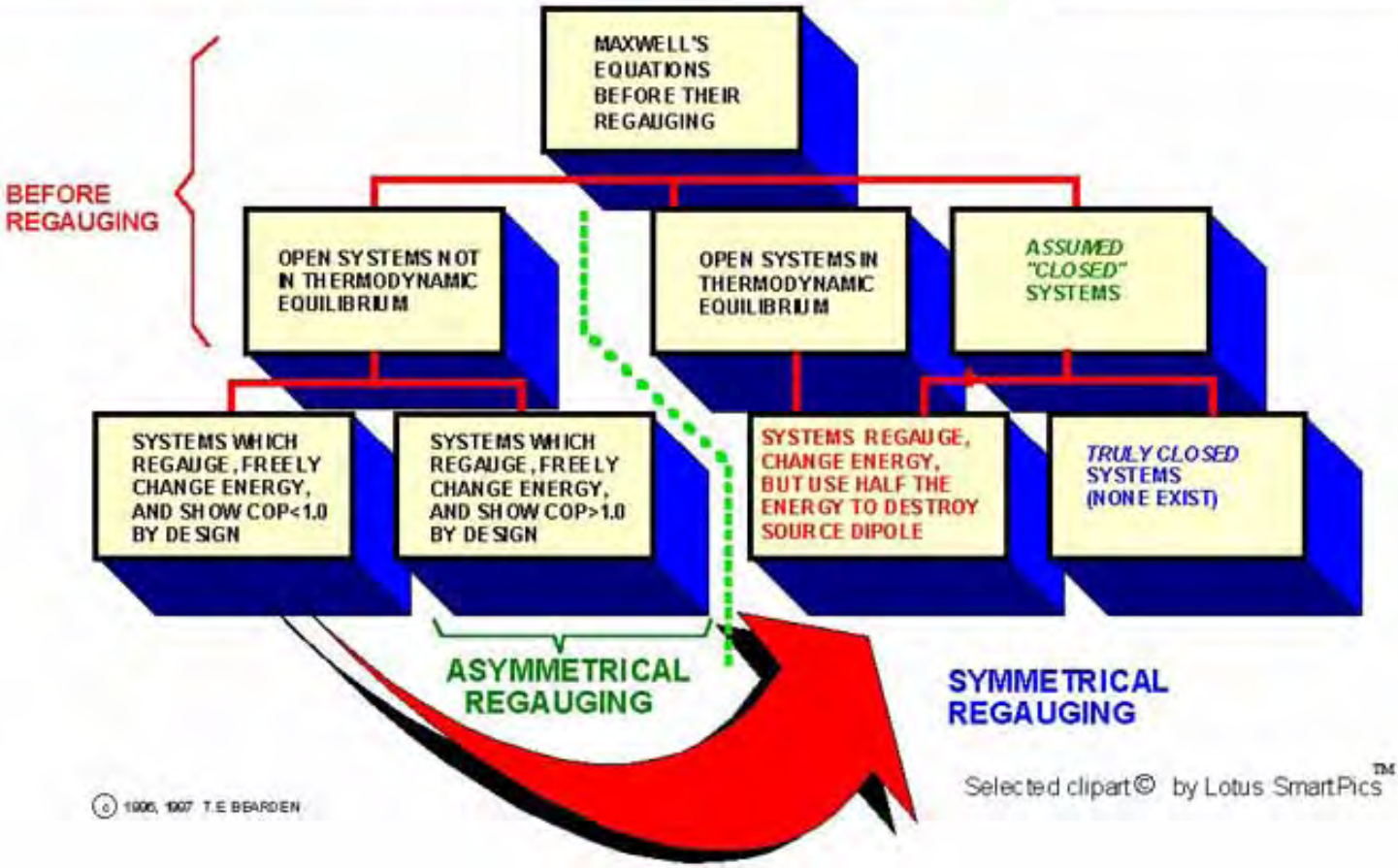

Maxwell's four equations reduce to:

$$\nabla^2 \Phi + \frac{1}{c}\frac{\partial}{\partial}(\nabla \bullet A) = -4\pi\rho \qquad [1]$$

$$\nabla^2 A - \frac{1}{c^2}\frac{\partial^2 A}{\partial t^2} - \nabla(\nabla \bullet A + \frac{1}{c}\frac{\partial \Phi}{\partial t}) = -\frac{4p}{c}J \qquad [2]$$

A is replaced by A', where

$$A' = A + \nabla\Lambda \qquad [3]$$

The new B' field then becomes

$$B' = \nabla \times (A + \nabla\Lambda) = \nabla \times A + 0 = \nabla \times A = B \qquad [4]$$

A new E-field will also be formed. So let

$$\Phi' = \Phi - \frac{1}{c}\frac{\partial \Lambda}{\partial t} \qquad [5]$$

© T.E. BEARDEN 1997

Per Jackson, (A,Φ) are *habitually* chosen so that

$$\nabla \bullet A + \frac{1}{c}\frac{\partial \Phi}{\partial t} = 0 \qquad [6]$$

The *net symmetrical* regauging separates variables. Two inhomogeneous wave equations result:

$$\nabla^2 \Phi - \frac{1}{c^2}\frac{\partial^2 \Phi}{\partial t^2} = -4\pi\rho \qquad [7]$$

$$\nabla^2 A - \frac{1}{c^2}\frac{\partial^2 A}{\partial t^2} = -\frac{4\pi}{c} J \qquad [8]$$

© T.E. BEARDEN 1997

Equations [1] and [2] *arbitrarily* changed to [7] and [8]

The Missing Infolded Electro-dynamics

Contents

1. The Missing Infolded Electrodynamics
2. Major Points
3. Major Points (cont.)
4. MTW's General Relativity Principle
5. Extended General Relavity Principle
6. Active Spacetime and Specific Vacuum Engine
7. Electrodynamicists React to Removal of Material Ether
8. Reaction to Loss of Material Ether
9. Massless Spacetime Perturbations Not Addressed
10. Bunge on Status of Electrodynamics
11. Bunge (continued)
12. Poynting Energy Flow Along Two Parallel Conductors
13. Fields and potentials defined only in/on charged matter
14. Wave in String (Transverse)
15. Launching EM Wave from Wire Antenna
16. Phase Conjugate Wavepairs Produce New Waves
17. Time-Polarized (Scalar) EM Wave
18. Mechanism for flow of time
19. Present systems coefficient of performance (COP)<1.0
20. Bridging for Overunity
21. Free Energy Generator
22. Demonstration of Overunity Concept
23. Altered Spacetime Curvatures
24. Interaction of Mass and Spacetime Curvature
25. Composition of Scalar Potential
26. Lorenz Closed Surface Integration
27. How can they use that old physically insignificant wind?!!
28. Vacuum Engines: Spacetime Demons
29. Undistorted Progressive Waves (1)
30. Undistorted Progressive Waves (2)
31. Other Superluminal Waves
32. Becker's Experiments: Healing Bone Fractures
33. Producing a Specific Spacetime Curvature Engine
34. Pumping A Phase Conjugate with Transverse EM

35. Differentiation and Dedifferentiation
36. First Step to Cancer: Hypoxia
37. Longitudinal Photon Interaction with Charge
38. General Relativity in Particle Physics
39. Pepper* on time-reversing mass
40. Pepper* on time-reversing mass (2)
41. Pepper* on time-reversing mass (3)
42. Chung's Negative Resistor
43. China Lake Anomalies
44. Time Reversal (TR) Zone
45. Electronuclear Reactions in TR-Zones (1)
46. Electronuclear Reactions in TR-Zones (2)
47. Electronuclear Reactions in TR-Zones (3)
48. Nuclear Reactions in Time-Reversal Zones
49. Nuclear reactions are biased
50. Dynamics may be reversed
51. Significant only after time-density charging
52. Curved Spacetime as source or sink
53. Anomalous China Lake Phenomena (1)
54. Anomalous China Lake 2
55. Anomalous China Lake 3
56. Anomalous China Lake 4
57. Consistent Anomalies 1
58. Consistent Anomalies 2
59. LW Emission in Electrolysis
60. New Energy Conservation Law
61. Carcinogens & EM Radiation
62. Carcinogens & EM Radiation 1
63. Chronic Disease Puzzle
64. Cancer characteristics
65. Solving Cancer Enigma
66. Cancer Characteristics
67. Portable Prioré Unit
68. Lisitsyn: Brain Code Broken
69. Anti-engine reverses cell
70. Prioré Methodology
71. Prioré Methodology (2)
72. Pumping cell with LW
73. Extension to Nonlinear Optics
74. Time Reversal of Mass to a Form Not in Its Past
75. Cellular R&R System

76. Portable Prioré Treatment System
77. Portable System Block Diagram
78. Absorption and Emission
79. Absorption and Emission (2)
80. EM Waves in Spacetime
81. Cellular Evolution
82. Becker's Regeneration System
83. Becker's Control System Responds to Injury
84. Casualties Surviving Conventional Treatment
85. "Time as fuel" is the future

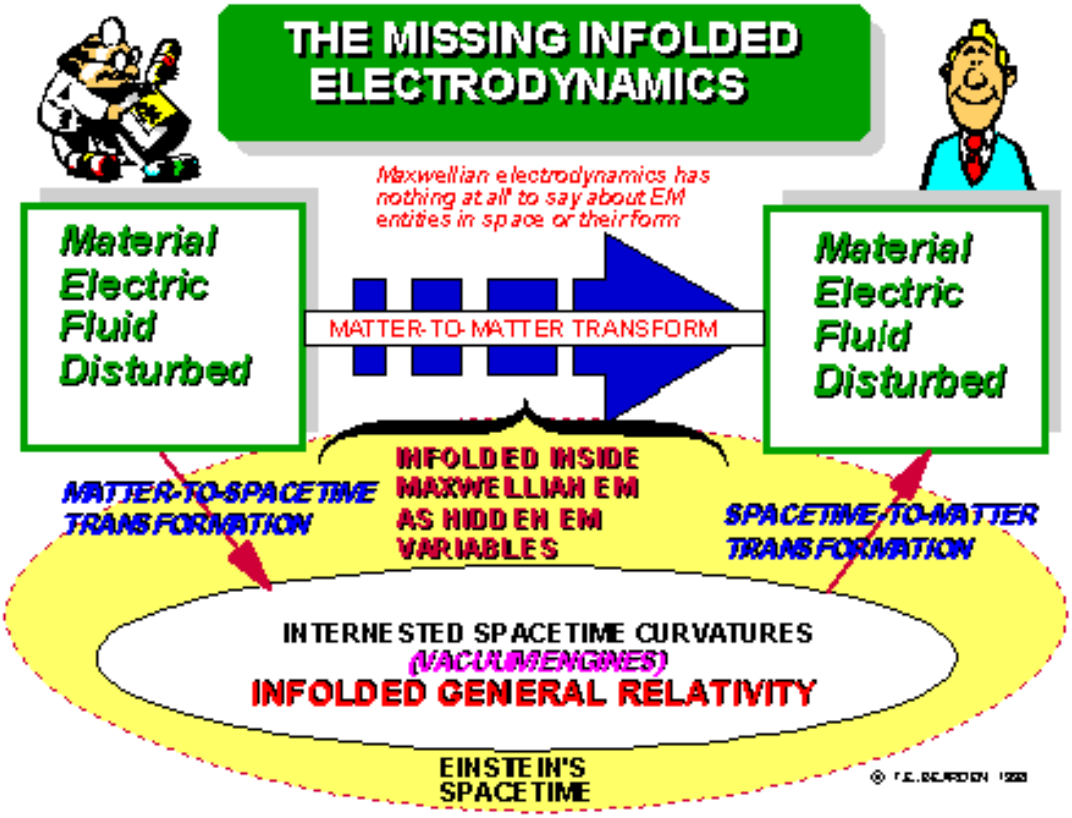

Published by Lotus® Freelance Graphics®

Major Points of Presentation

- Electrodynamic is seriously flawed
  - Some major flaws
  - Corrections indicated
- Why past corrective attempts failed
  - Force field concept is material
  - Missing two infolded transforms (M->ST; ST->M)
- Missing Infolded general relativity inside electrodynamics
- Several Kinds of EM Waves in Space
  - How to make
  - Transduction
- A French medical example as a deep experimental demonstration
  - Spectacular regenerative cures funded by French Govt
  - Not comprehended, therefore suppressed
- Cold Fusion examples of time-density wave effects
  - China Lake instrumental anomalies in electrolysis
  - Explanation of anomalous behavior of instruments
  - Explanation of new nuclear reactions
  - Wave energy transduction provides excess heat
- Urge theorists to consider dramatically new reactions

Published by Lotus® Freelance Graphics®

Major Points of Presentation

- Electrodynamic is seriously flawed
- Why past corrective attempts failed
- Missing Infolded general relativity inside electrodynamics
- Several Kinds of EM Waves in Space
- French medical example as a deep experimental demonstration
- Cold Fusion time-density wave effects
- Urge theorists to consider new reactions

Published by Lotus® Freelance Graphics®

MTW's General Relativity Principle

- "Space acts on matter, telling it how to move.
- In turn, matter reacts back on space, telling it how to curve."

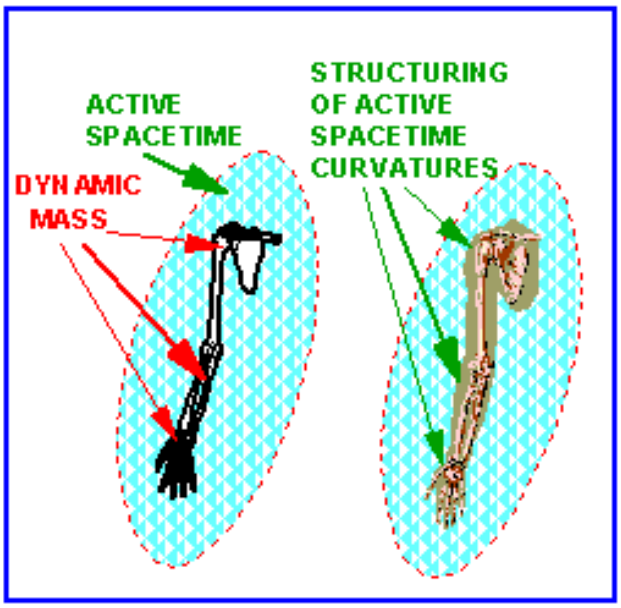

© T.E. BEARDEN 1993

Published by Lotus® Freelance Graphics®

Extended General Relativity Principle

- "All levels of energy structures and all levels of time structures mold spacetime geometry.
- This is called a *vacuum engine* (spacetime engine).
- Spatial and temporal structuring act upon mass at all levels.
- This produces *templates* of forces, for translations and stresses."

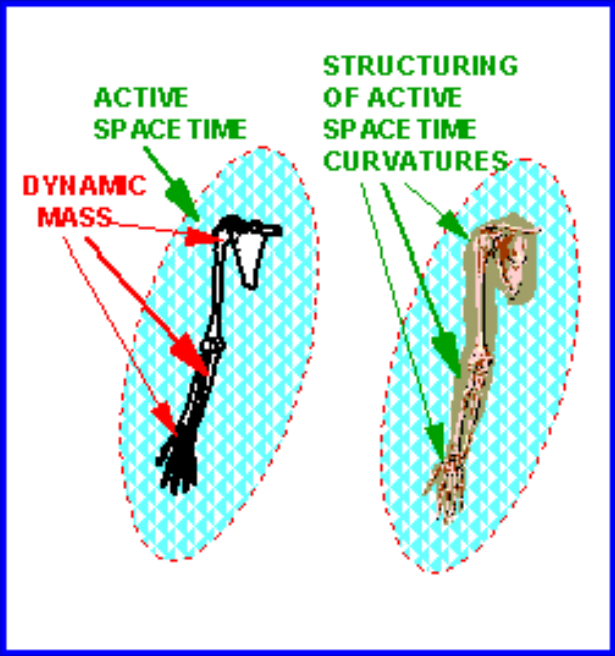

Published by Lotus® Freelance Graphics®

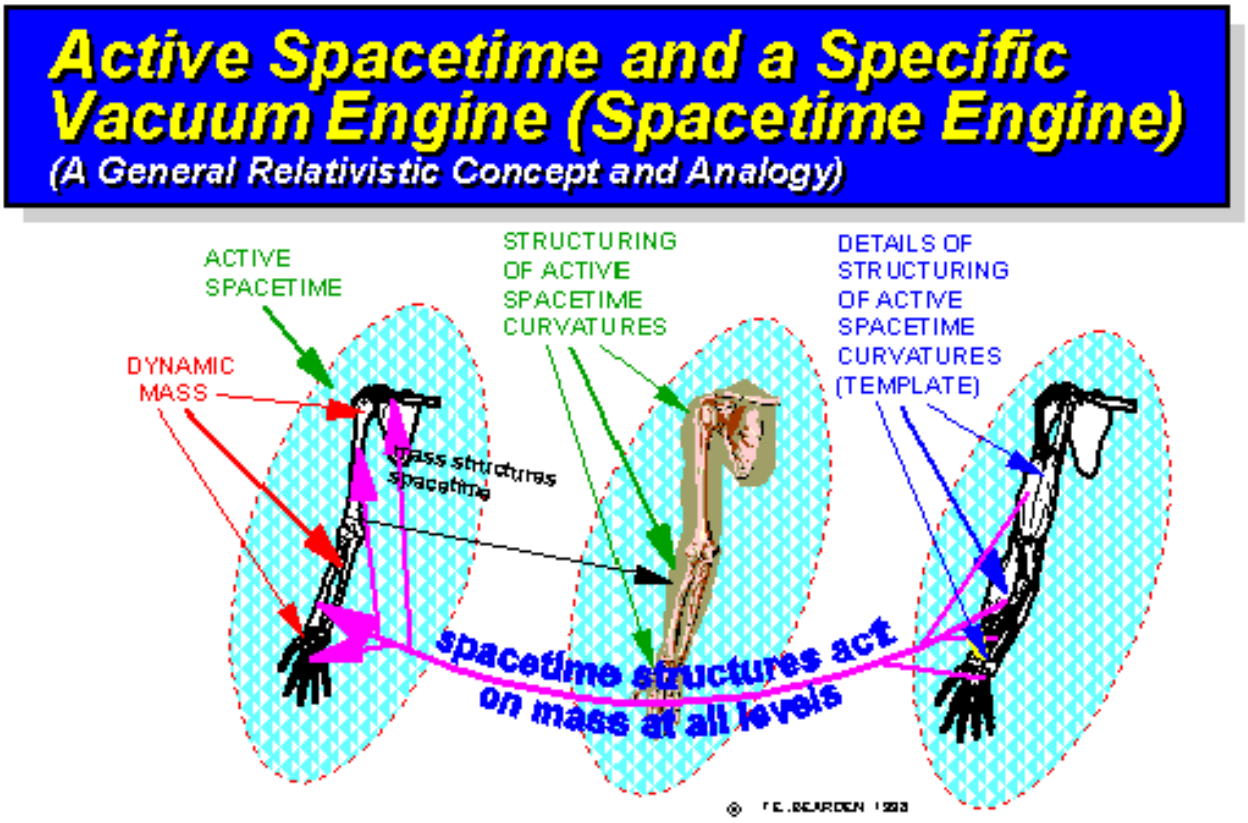

Published by Lotus® Freelance Graphics®

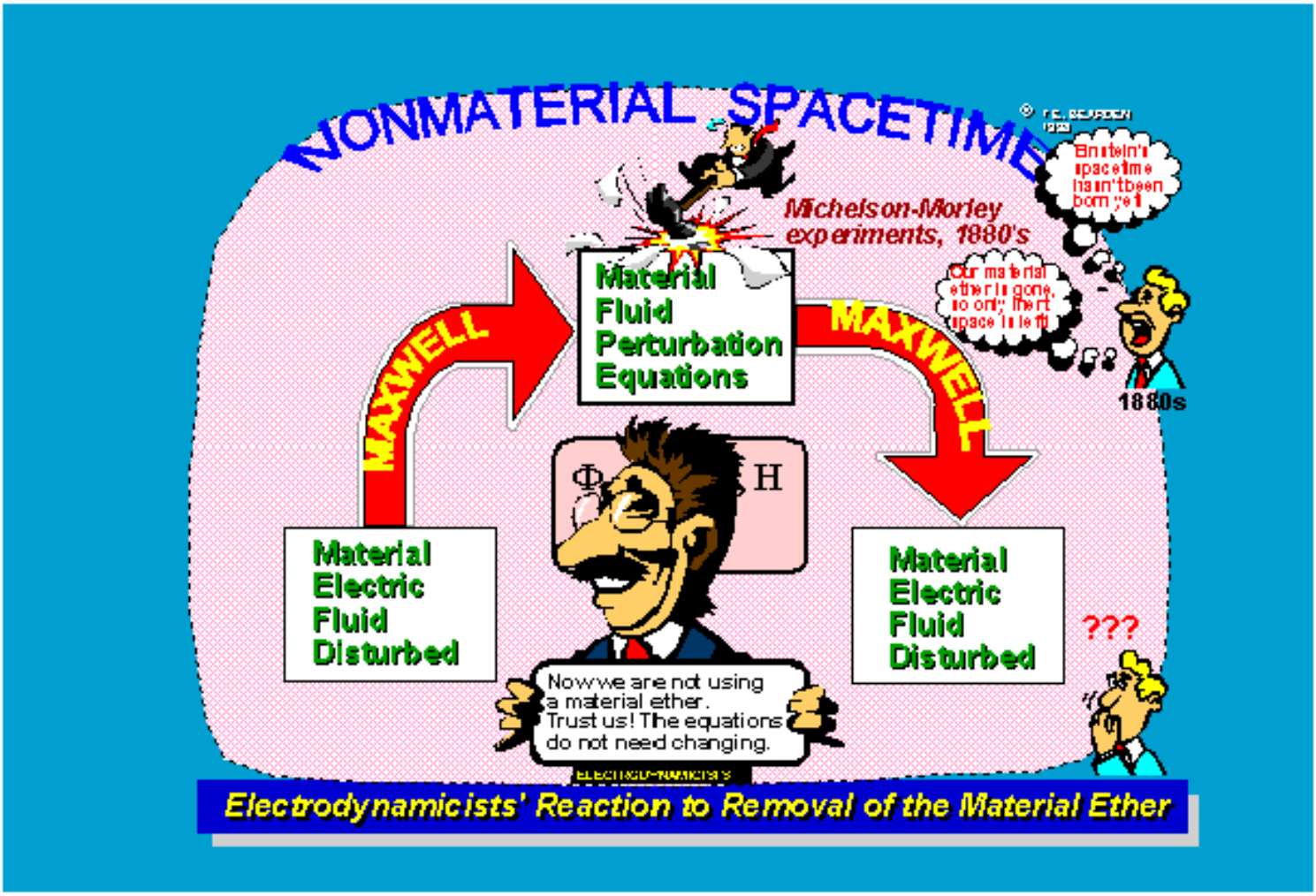

Published by Lotus® Freelance Graphics®

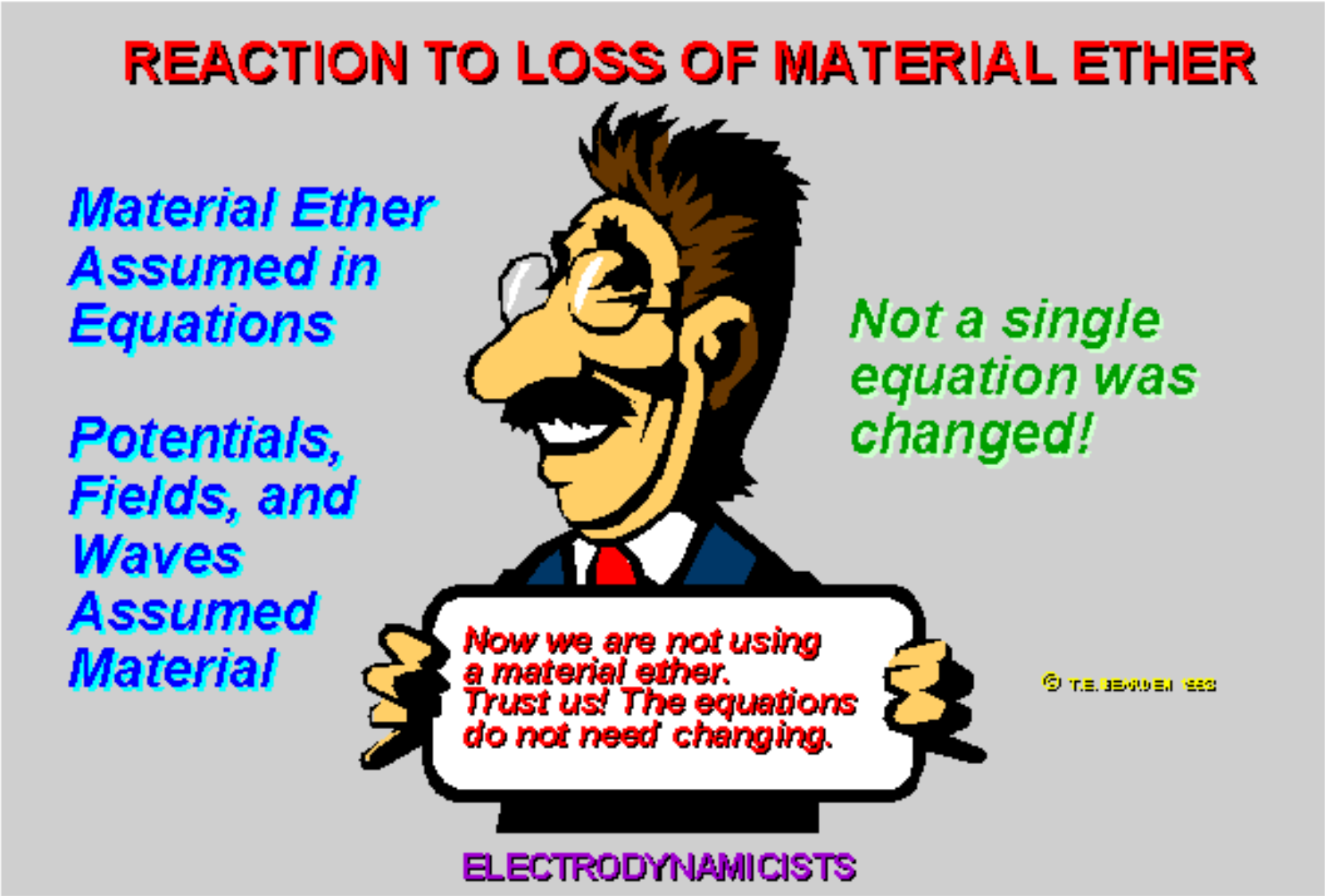

Published by Lotus® Freelance Graphics®

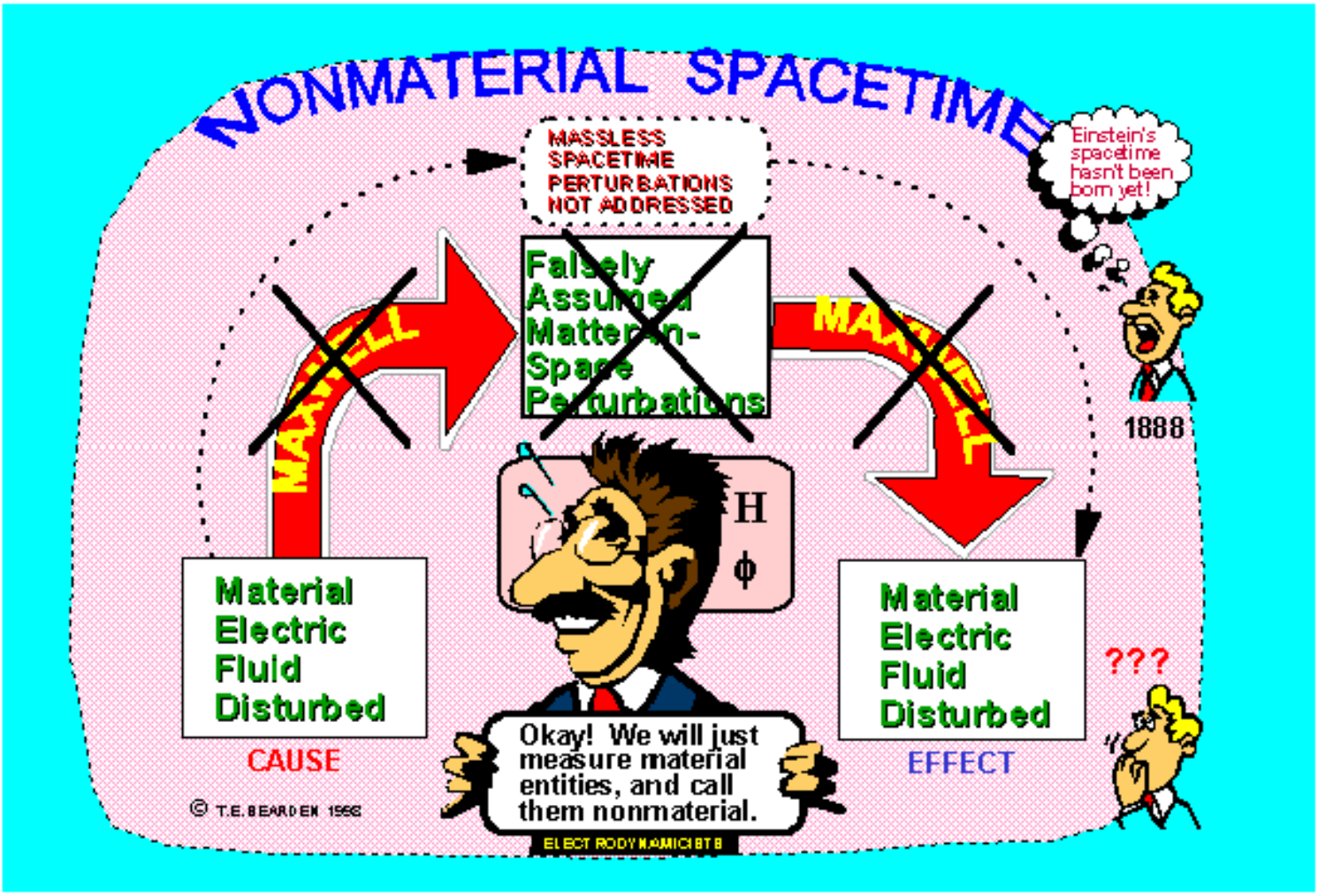

Published by Lotus® Freelance Graphics®

Bunge on the Status of Electrodynamics

"... it is not usually acknowledged that electro-dynamics, both classical and quantal, are in a sad state..."

"... the best modern physicist is the one who acknowledges that neither classical nor quantum physics are cut and dried, both being full of holes and in need of a vigorous overhauling..."

*Mario Bunge, Foundations of Physics, Springer-Verlag, New York, NY, 1967, p. 176..

© 1998 F.E. BEARDEN

Published by Lotus® Freelance Graphics®

Bunge on the Status of Electrodynamics and Physics

"... it is not usually acknowledged that electro-dynamics, both classical and quantal, are in a sad state...

"... neither classical nor quantum physics are cut and dried, both being full of holes and in need of a vigorous overhauling..."

© 1998 T.E. BEARDEN

*Mario Bunge, Foundations of Physics, Springer-Verlag, New York, NY, 1967, p. 176..

Published by Lotus® Freelance Graphics®

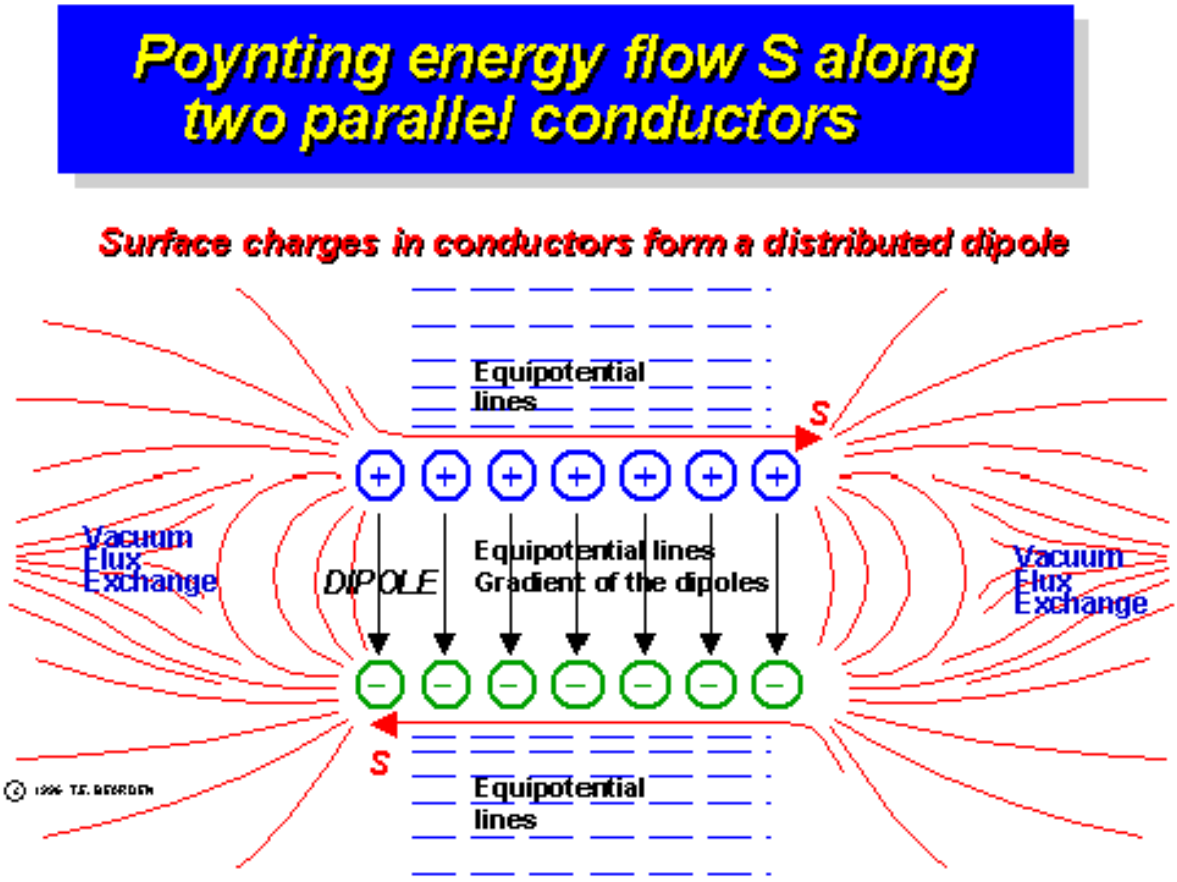

Published by Lotus® Freelance Graphics®

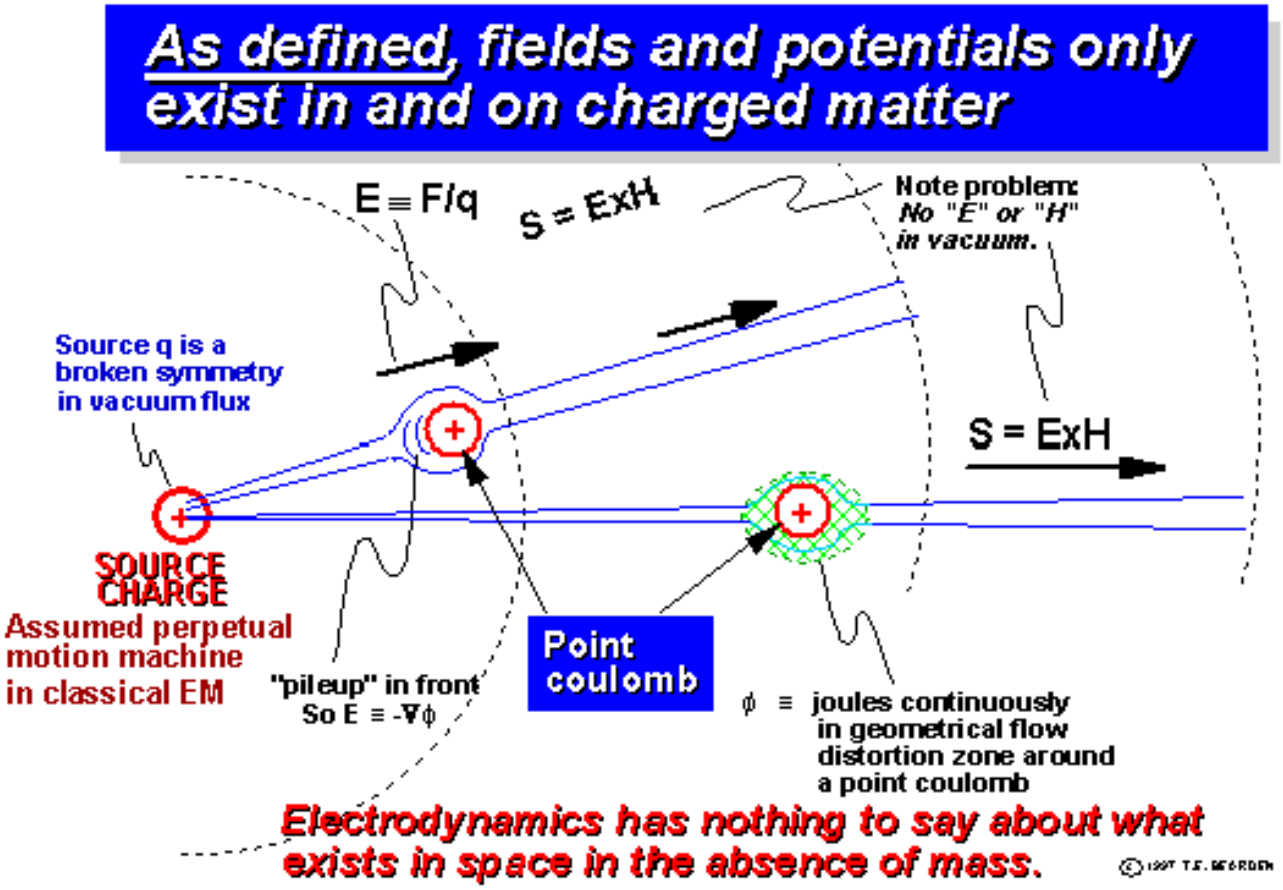

Published by Lotus® Freelance Graphics®

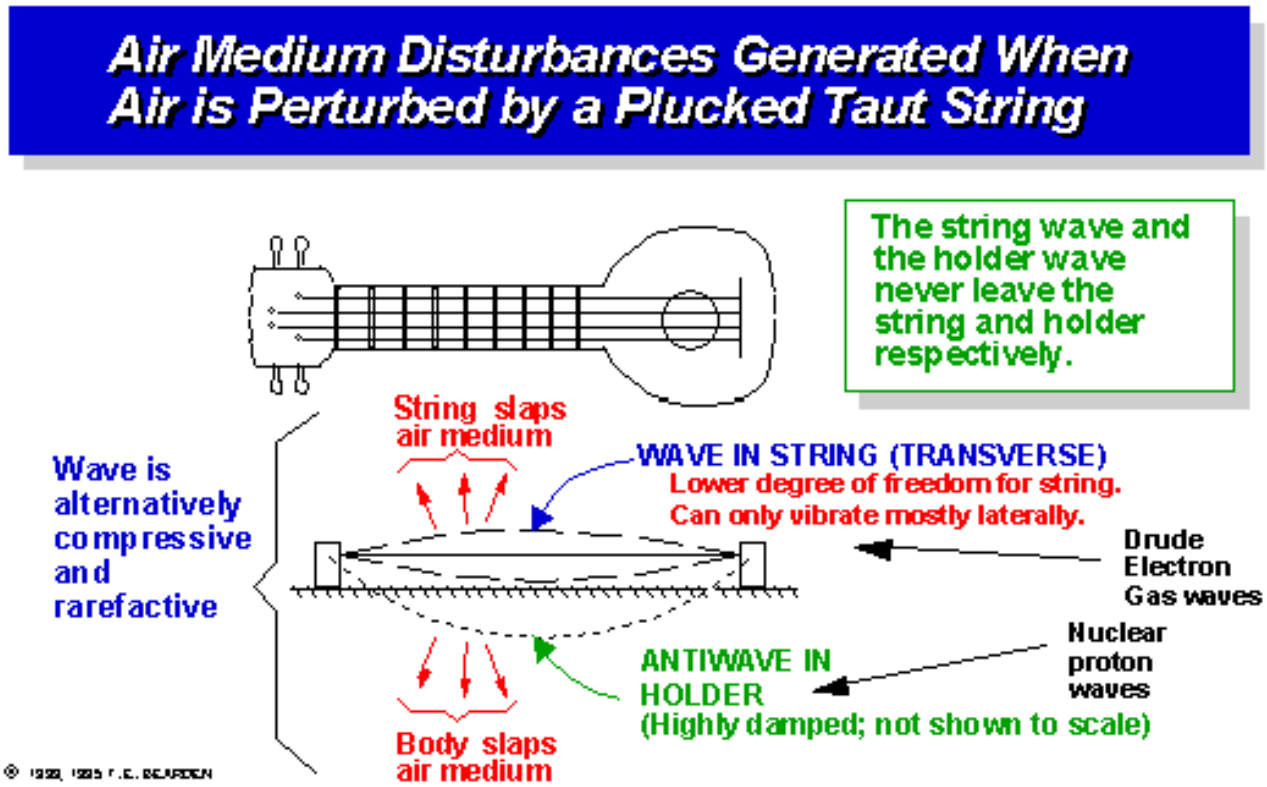

Published by Lotus® Freelance Graphics®

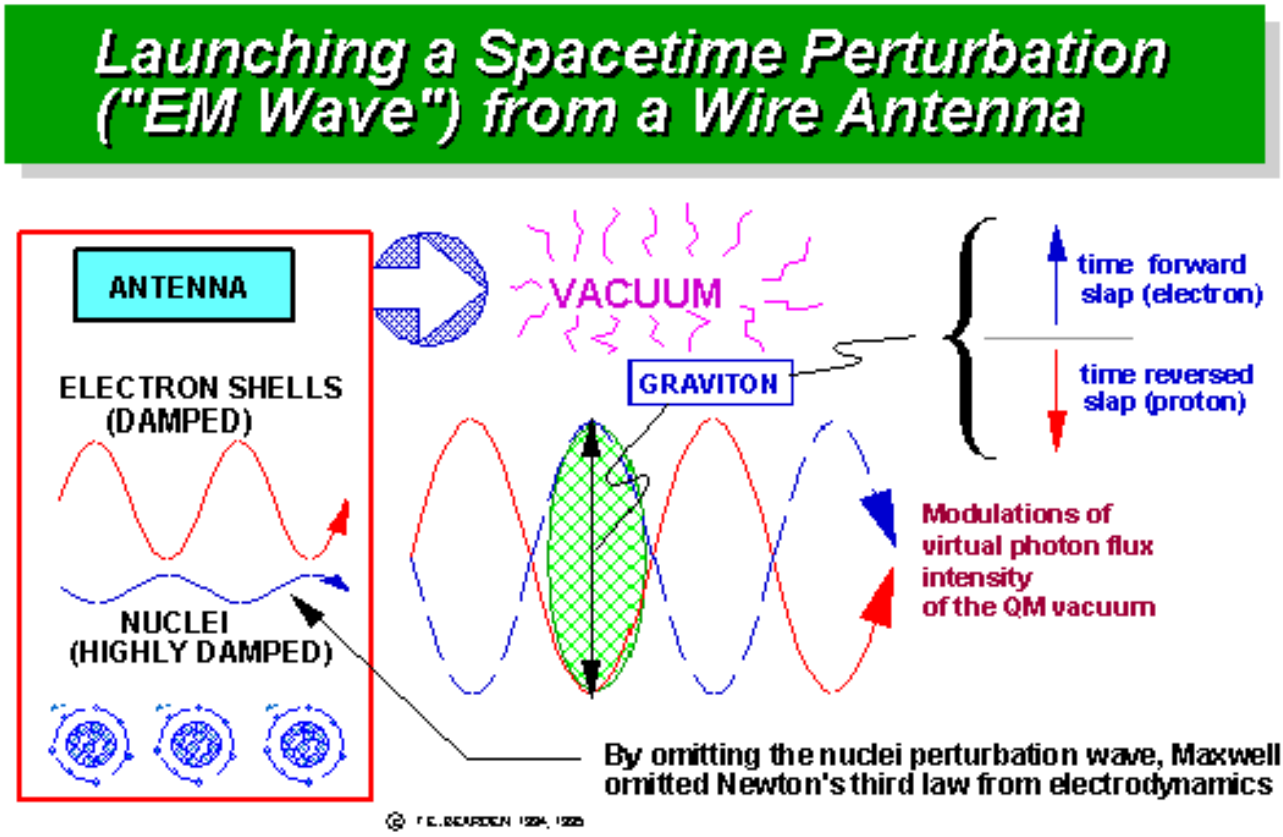

Published by Lotus® Freelance Graphics®

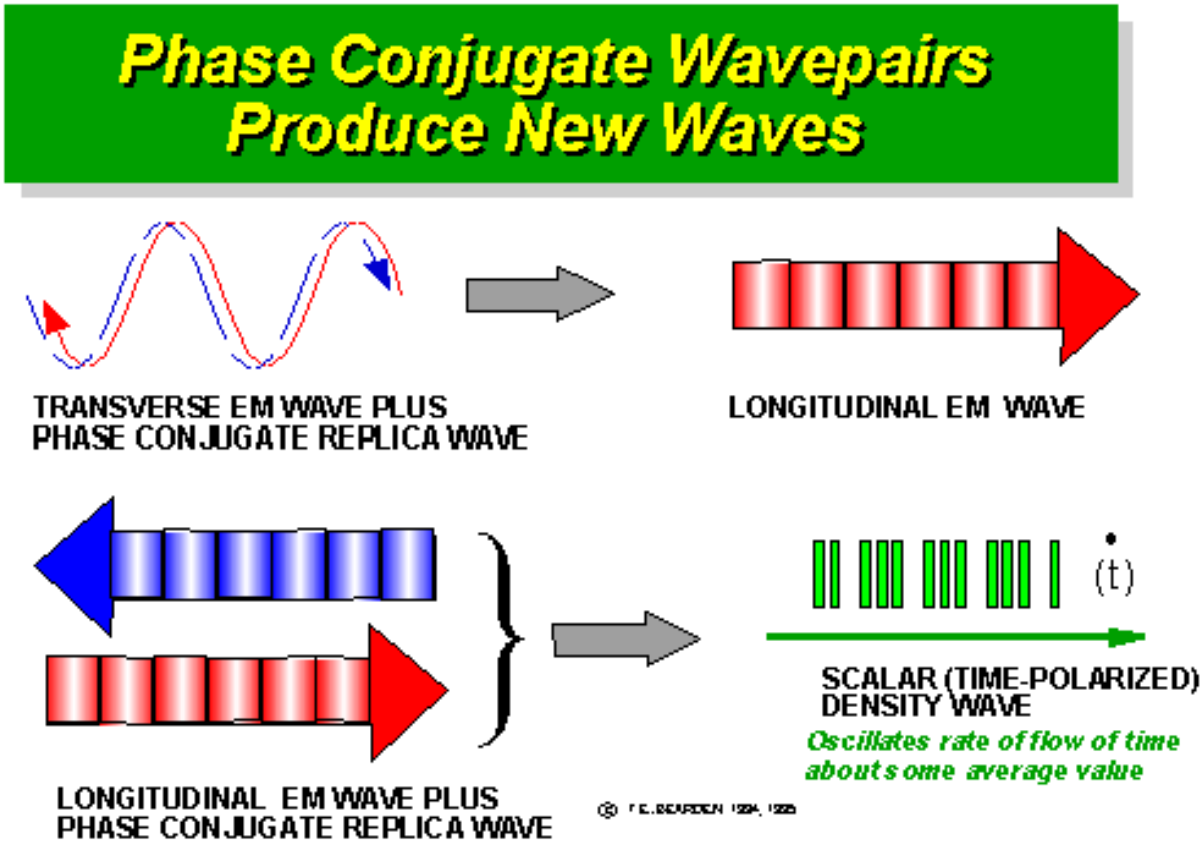

Published by Lotus® Freelance Graphics®

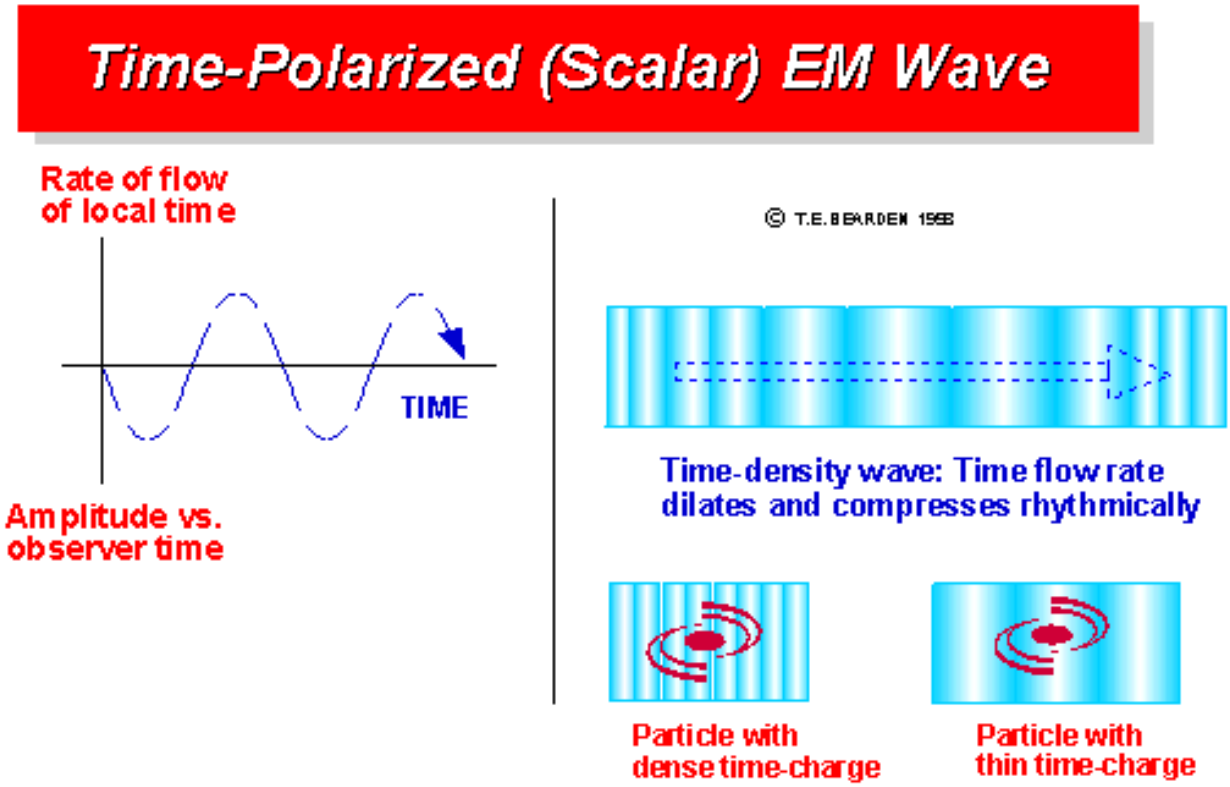

Published by Lotus® Freelance Graphics®

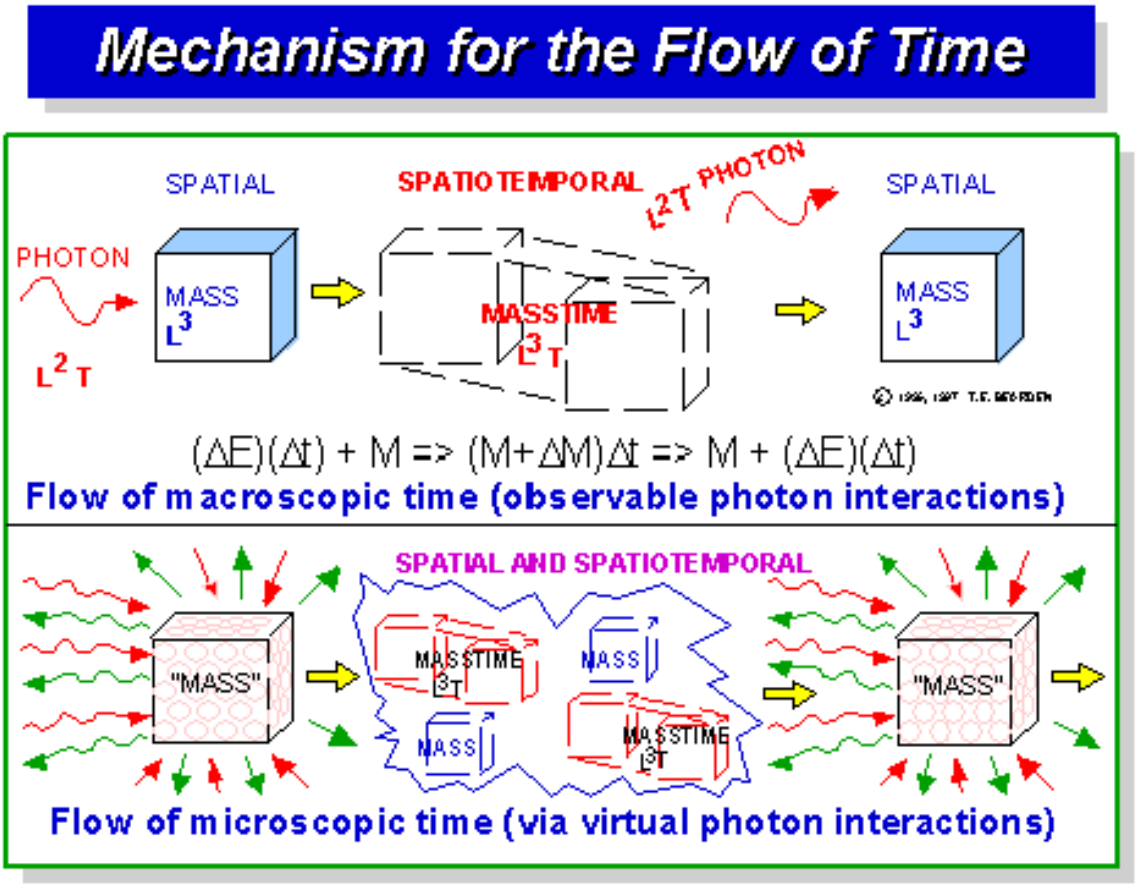

Published by Lotus® Freelance Graphics®

WHY PRESENT SYSTEMS HAVE COP < 1.0

Dissipative power inside source = VI_T and $VI_T > FI_L$

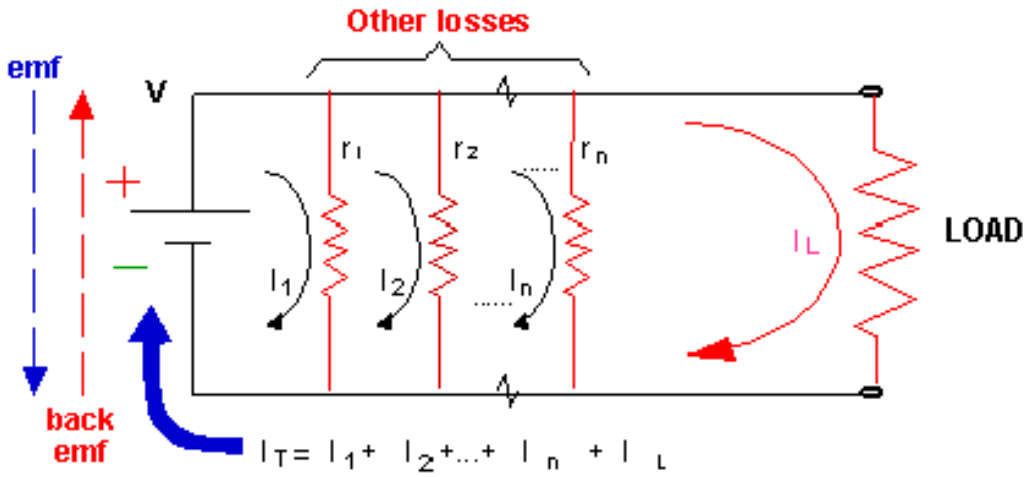

$$I_T = I_1 + I_2 + \ldots + I_n + I_L$$

$$\text{Eff} = \frac{P_L}{P_T} = \frac{V \times I_L}{V \times I_T} = \frac{I_L}{I_T}$$

$I_T > I_L$; so Eff < 1.0

© 1991, 1995 T.E. BEDFORD

Published by Lotus® Freelance Graphics®

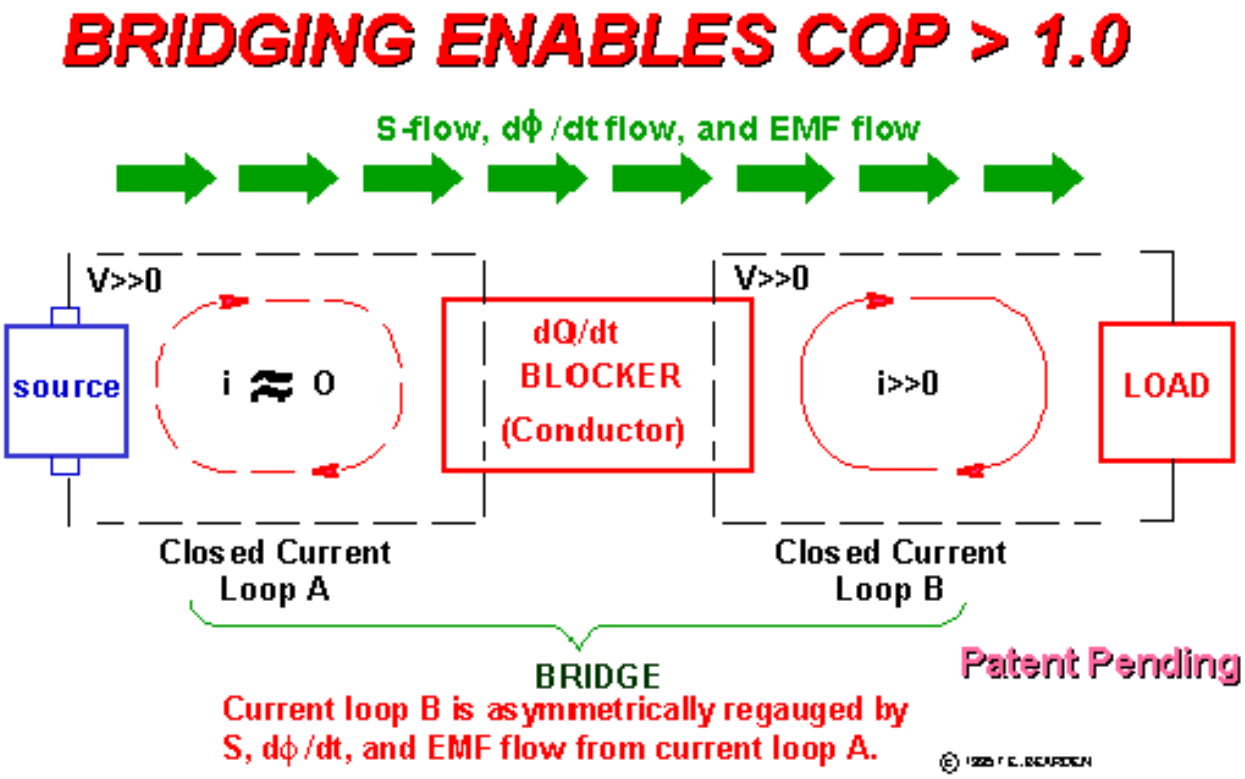

Published by Lotus® Freelance Graphics®

"Static" Poynting free-energy generator

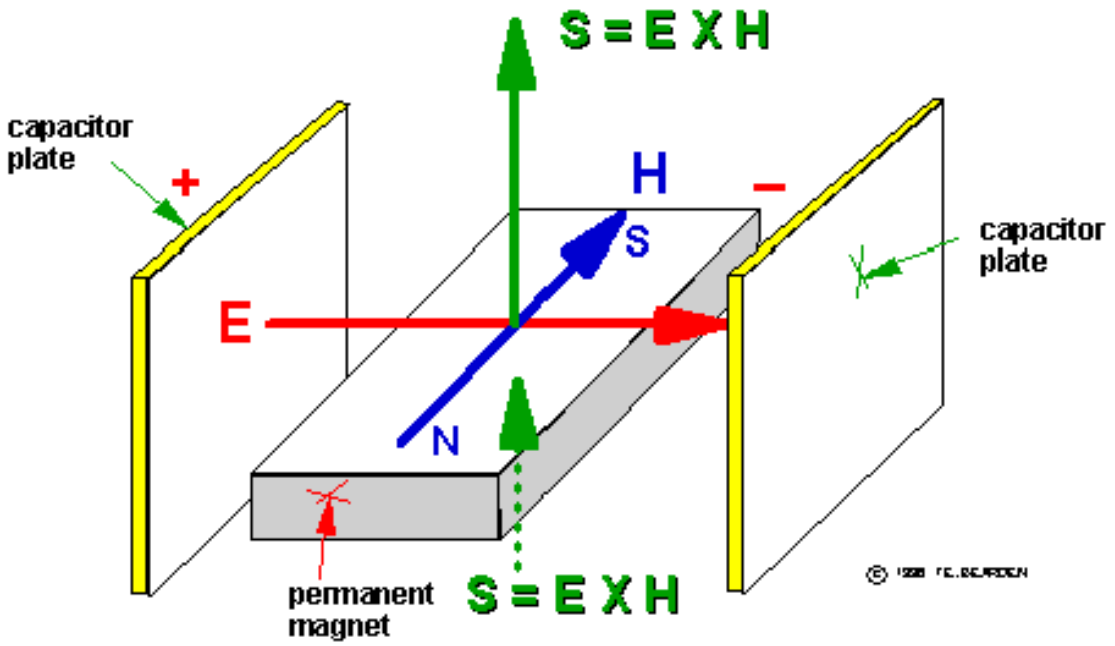

Published by Lotus® Freelance Graphics®

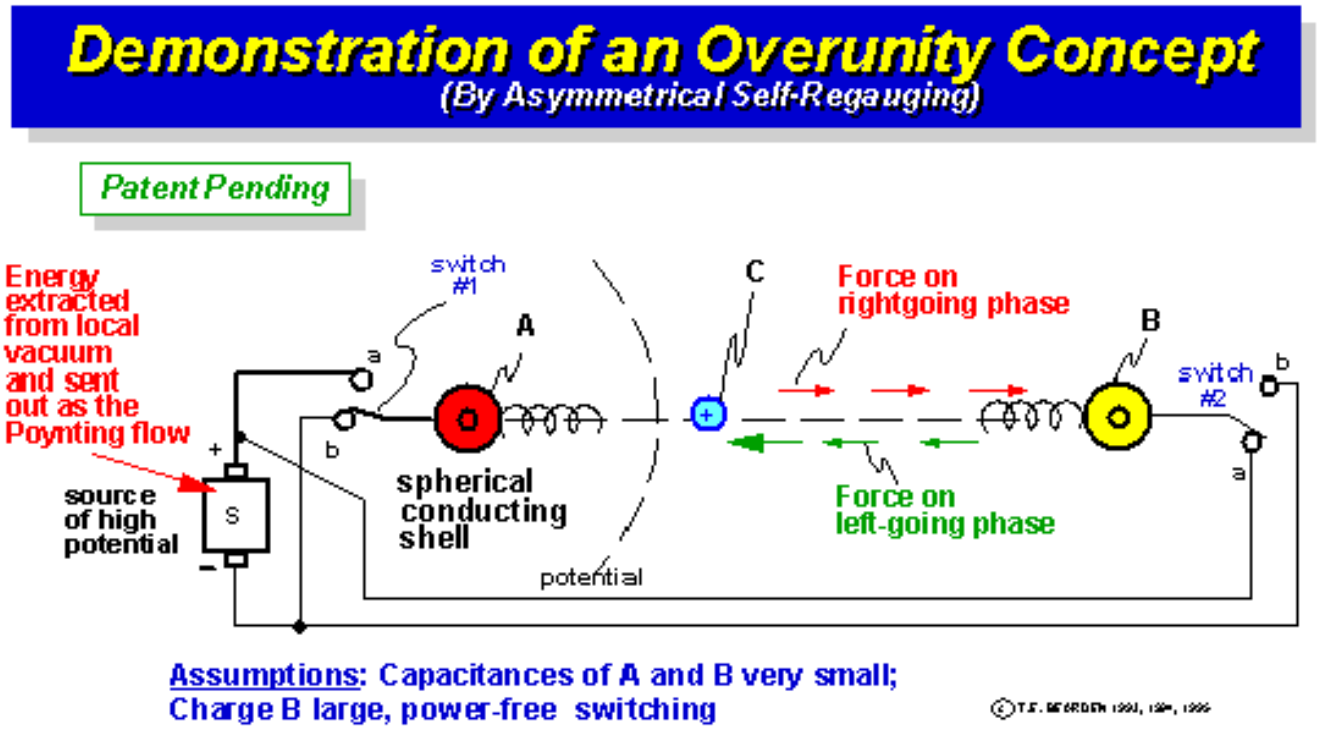

Published by Lotus® Freelance Graphics®

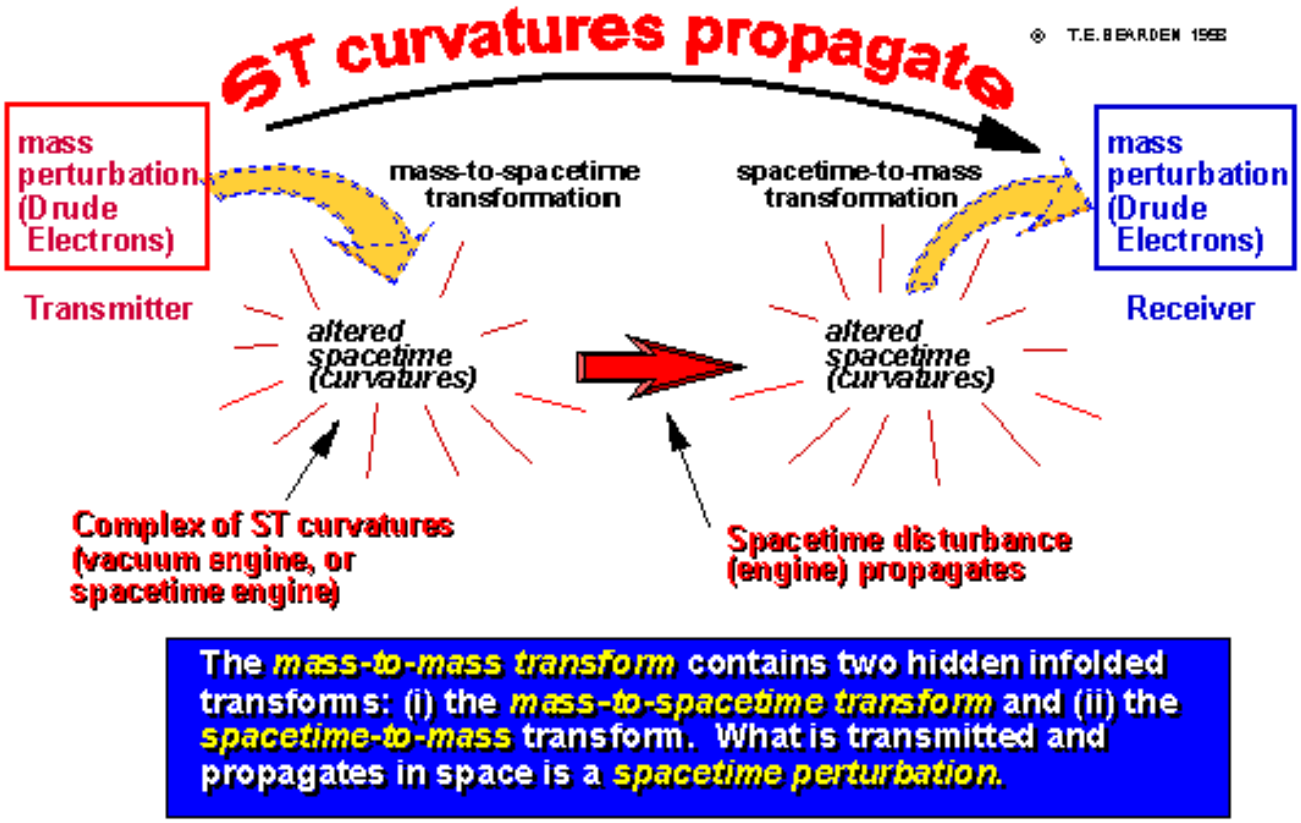

Published by Lotus® Freelance Graphics®

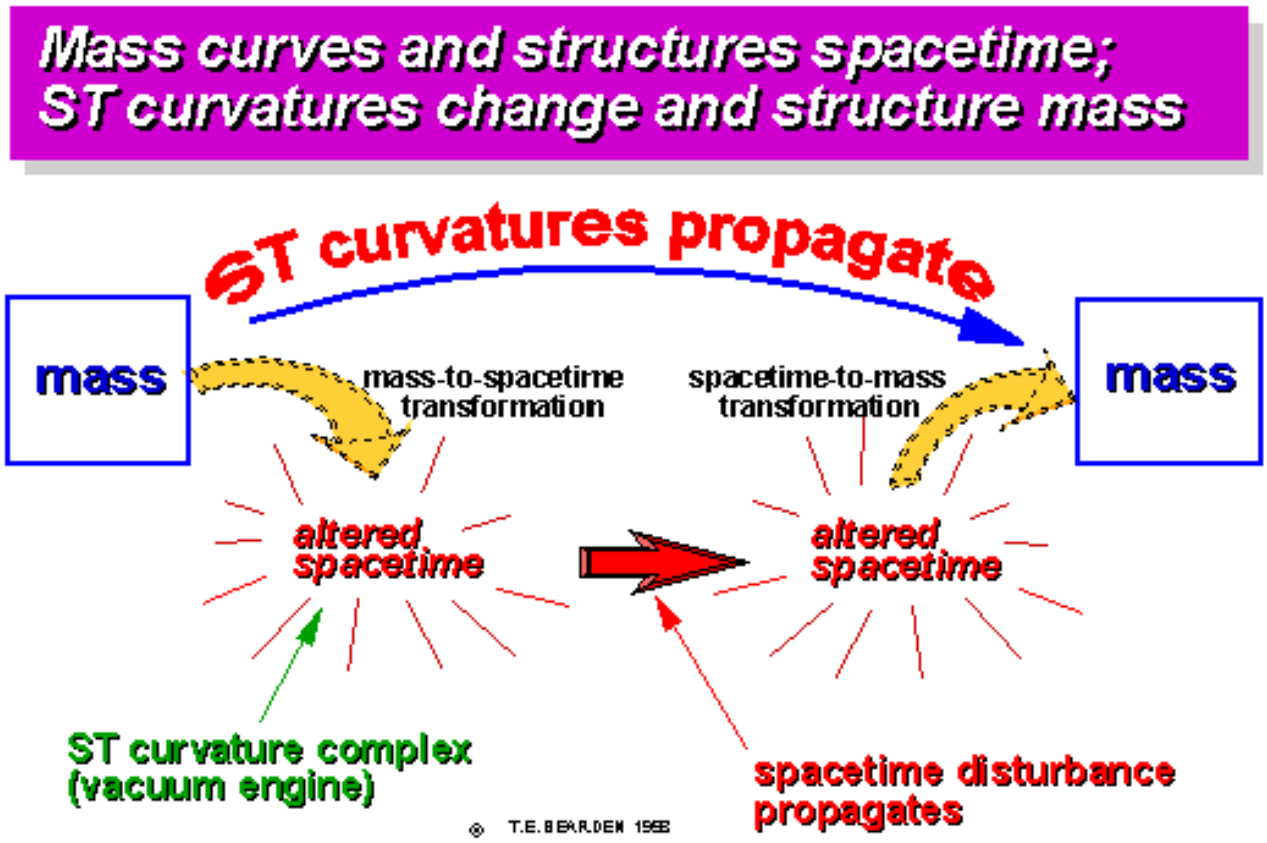

Published by Lotus® Freelance Graphics®

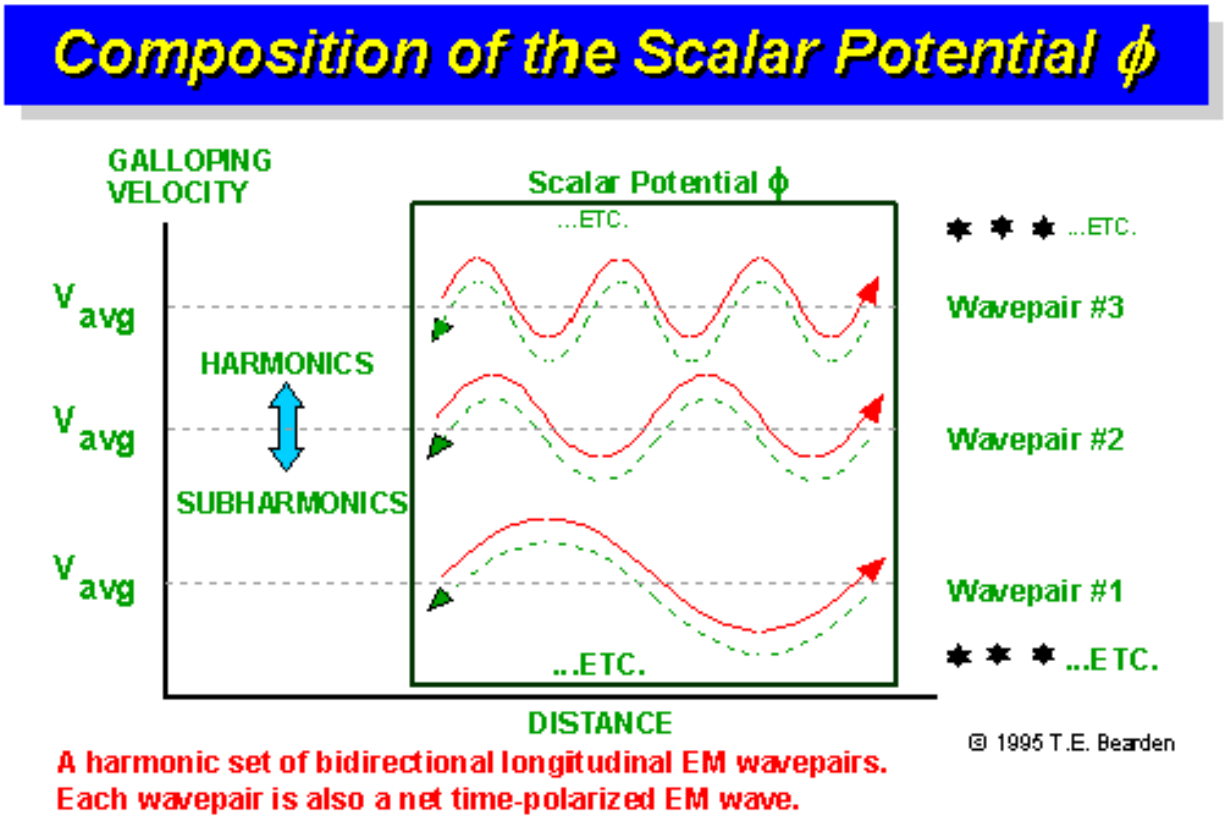

Published by Lotus® Freelance Graphics®

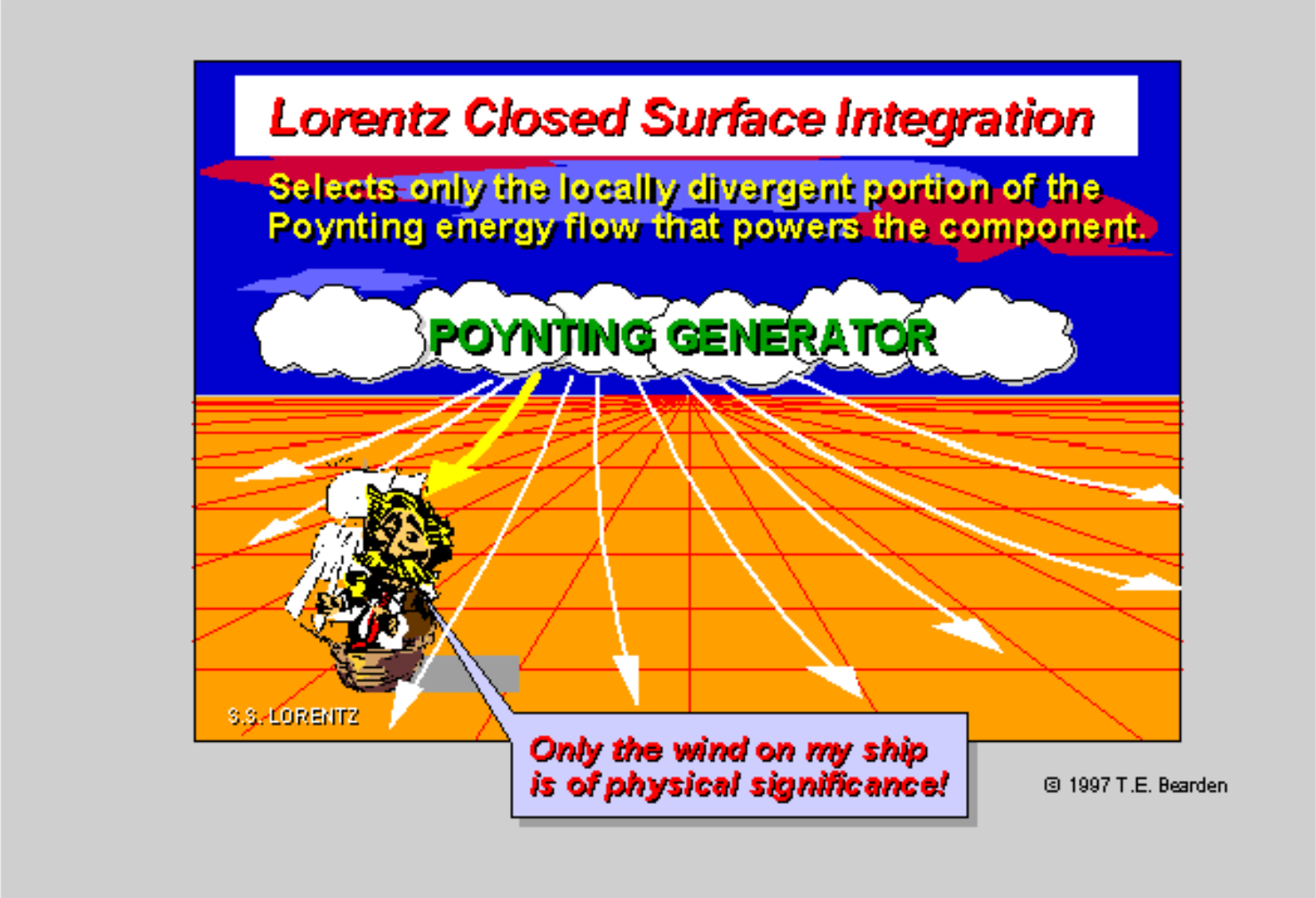

Published by Lotus® Freelance Graphics®

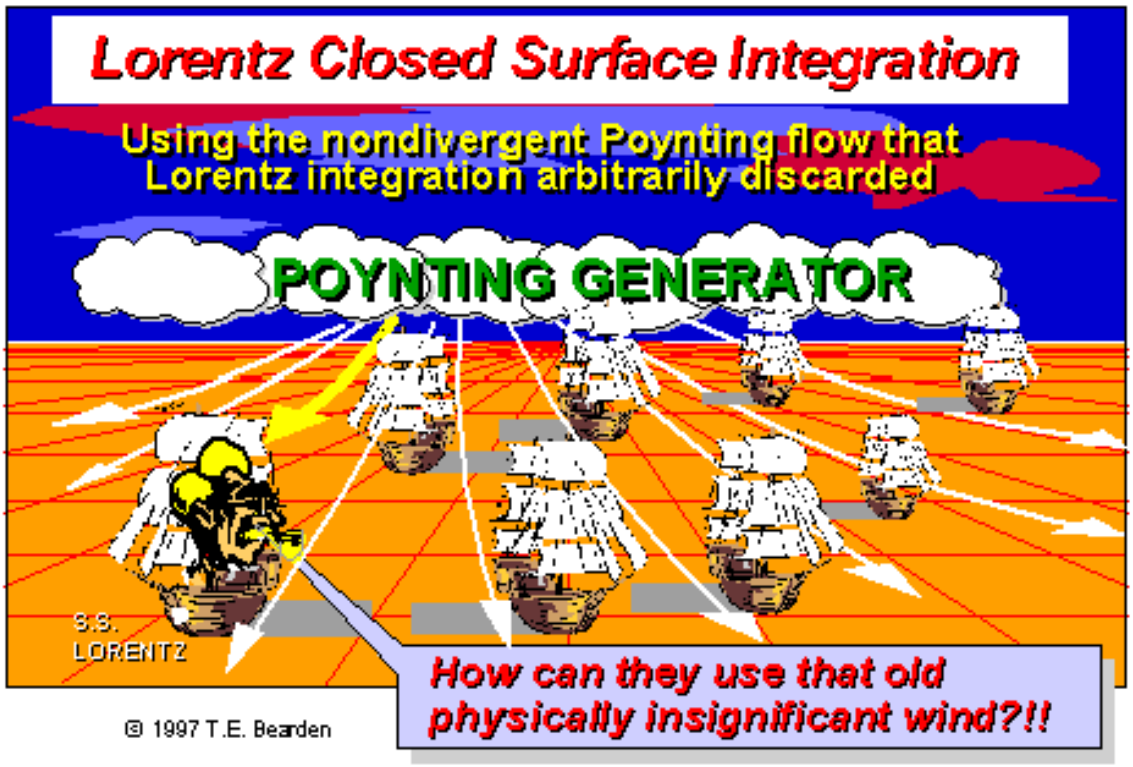

Published by Lotus® Freelance Graphics®

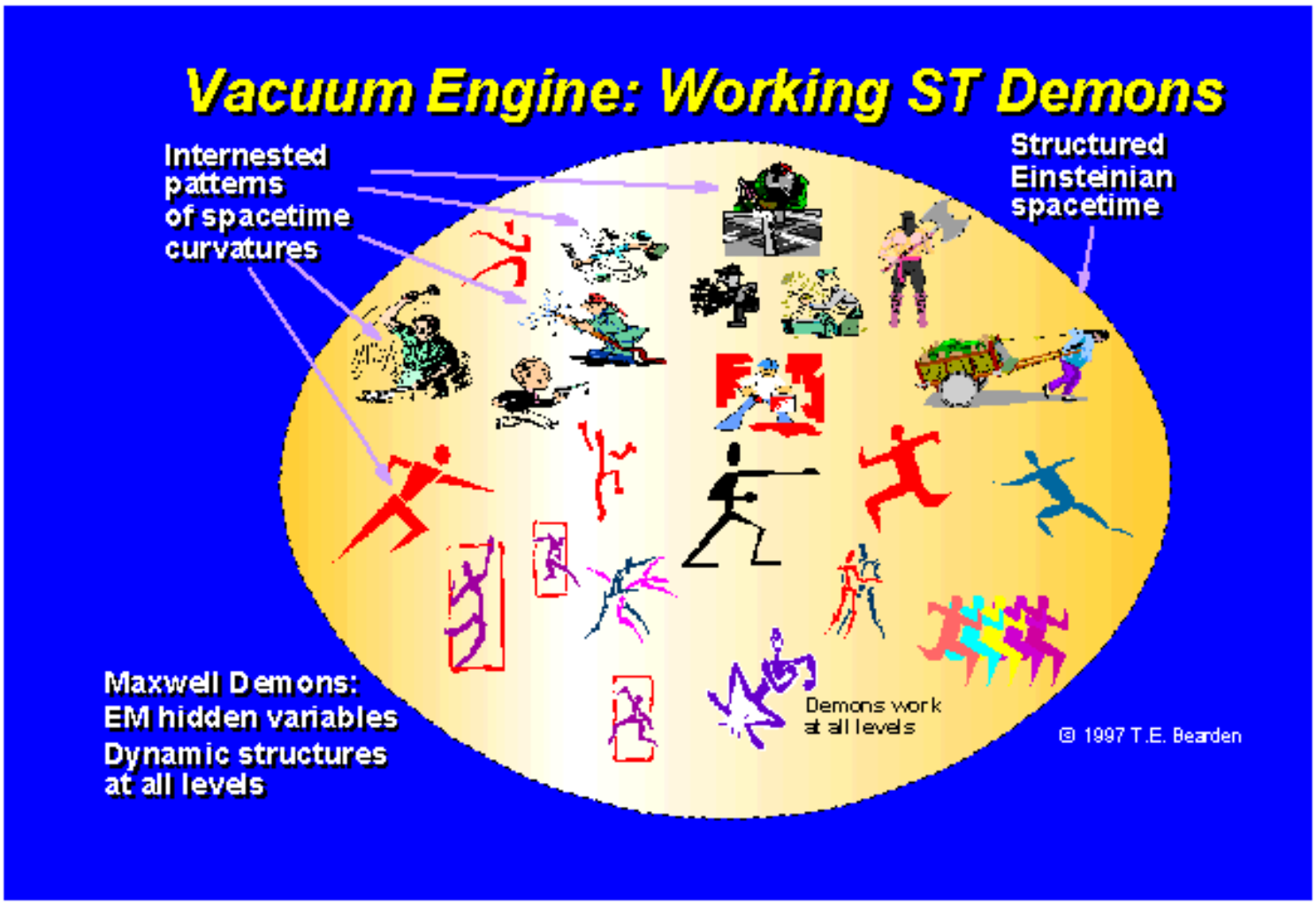

Published by Lotus® Freelance Graphics®

Undistorted Progressive Waves (UPWs)

Waves with velocity v, where ≤ v < ∞

- UPWs:
  - Translationally invariant
  - Do not spread, or reconstruct after a period
  - Have infinite energy
- Quasi UPWs:
  - Can have finite energy
  - In theory, can be launched into space
  - Can move subluminally
  - Can move superluminally

*Rodrigues and Lu, *Found. Phys.* 27(3), 1997, p. 435-508.

© 1997 T.E. BEARDEN

Published by Lotus® Freelance Graphics®

Undistorted Progressive Waves (UPWs)

Waves with velocity v, where ≤ v < ∞

- Major equations having UPW solutions:
  - *Homogeneous wave equation*
  - *Maxwell equations*
  - *Dirac, Weyl, and Klein-Gordon Equations*
- Maxwell solutions:
  - *Subluminal solutions are EM particles*
  - *Superluminal solutions are X-waves*
- Experiment indicates such waves will will be produced soon

© 1997 T.E. BEARDEN

*Rodrigues and Lu, *Found. Phys.* 27(3), 1997, p. 435-508.

Published by Lotus® Freelance Graphics®

Other Superluminal Waves

- Waves can move superluminally in quantum tunneling
- Nimtz *et al.* have translated Mozart's 40th symphony at v = 4.7 c
  - *Through a barrier in a waveguide*
  - *Other researchers have also transmitted EM waves superluminally through quantum tunneling*

© 1997 T.E. BEARDEN

Published by Lotus® Freelance Graphics®

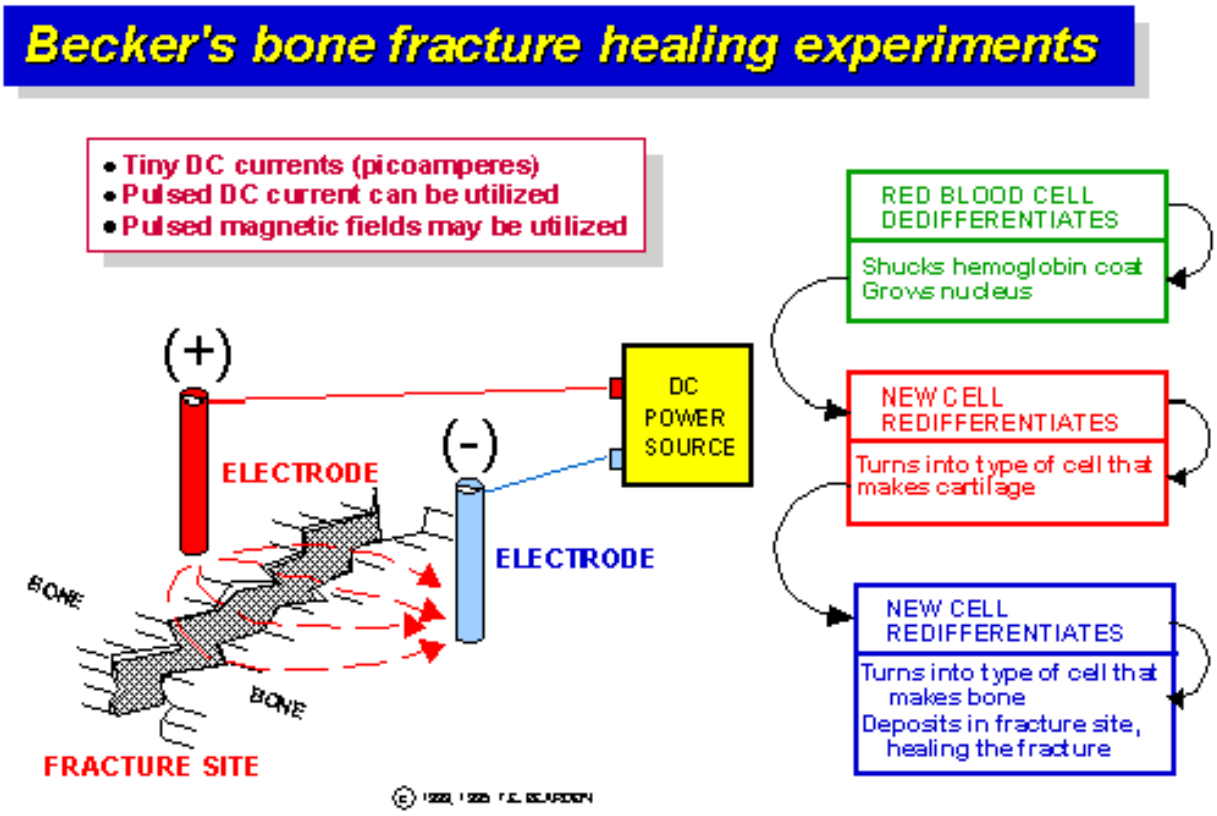

Published by Lotus® Freelance Graphics®

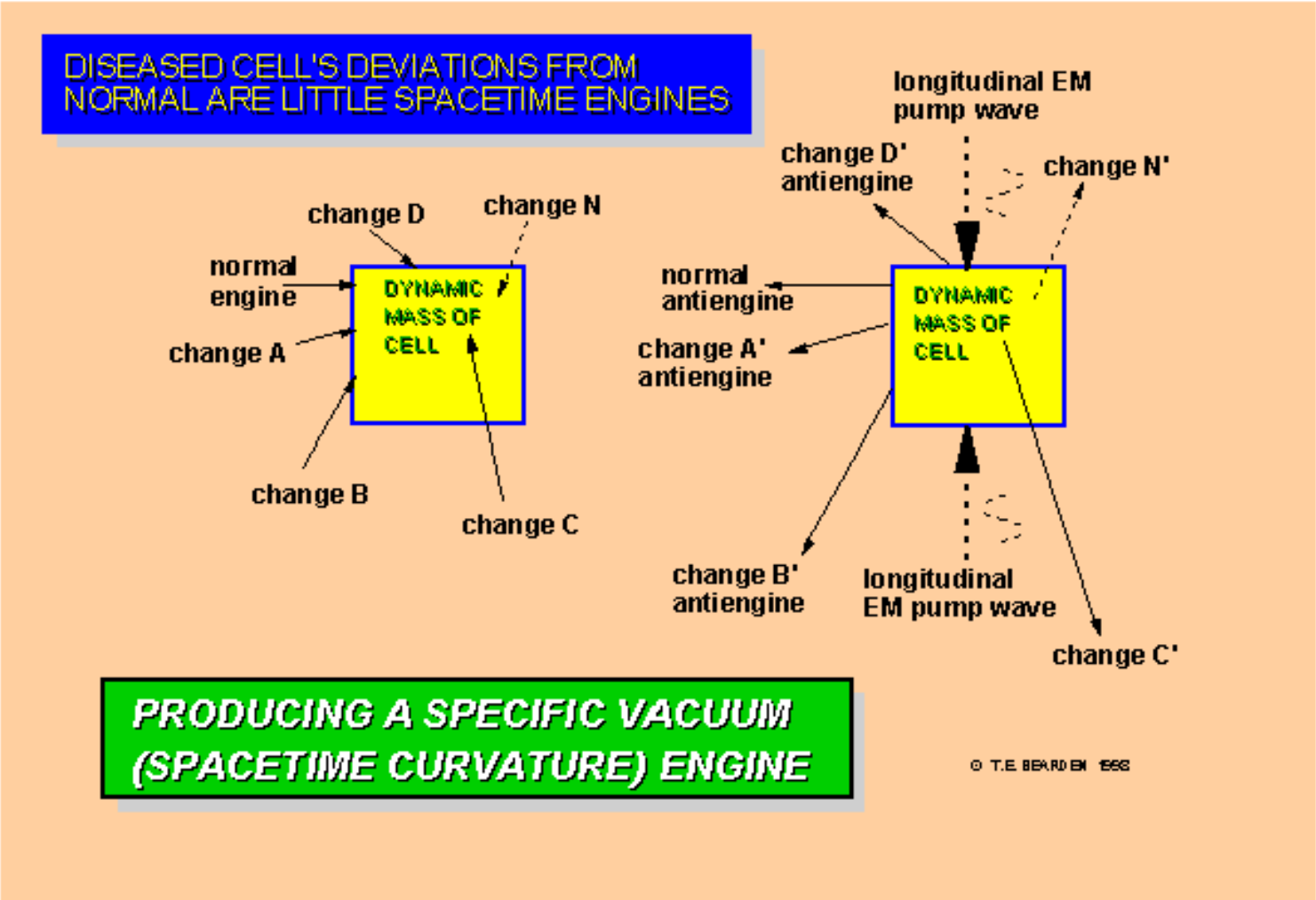

Published by Lotus® Freelance Graphics®

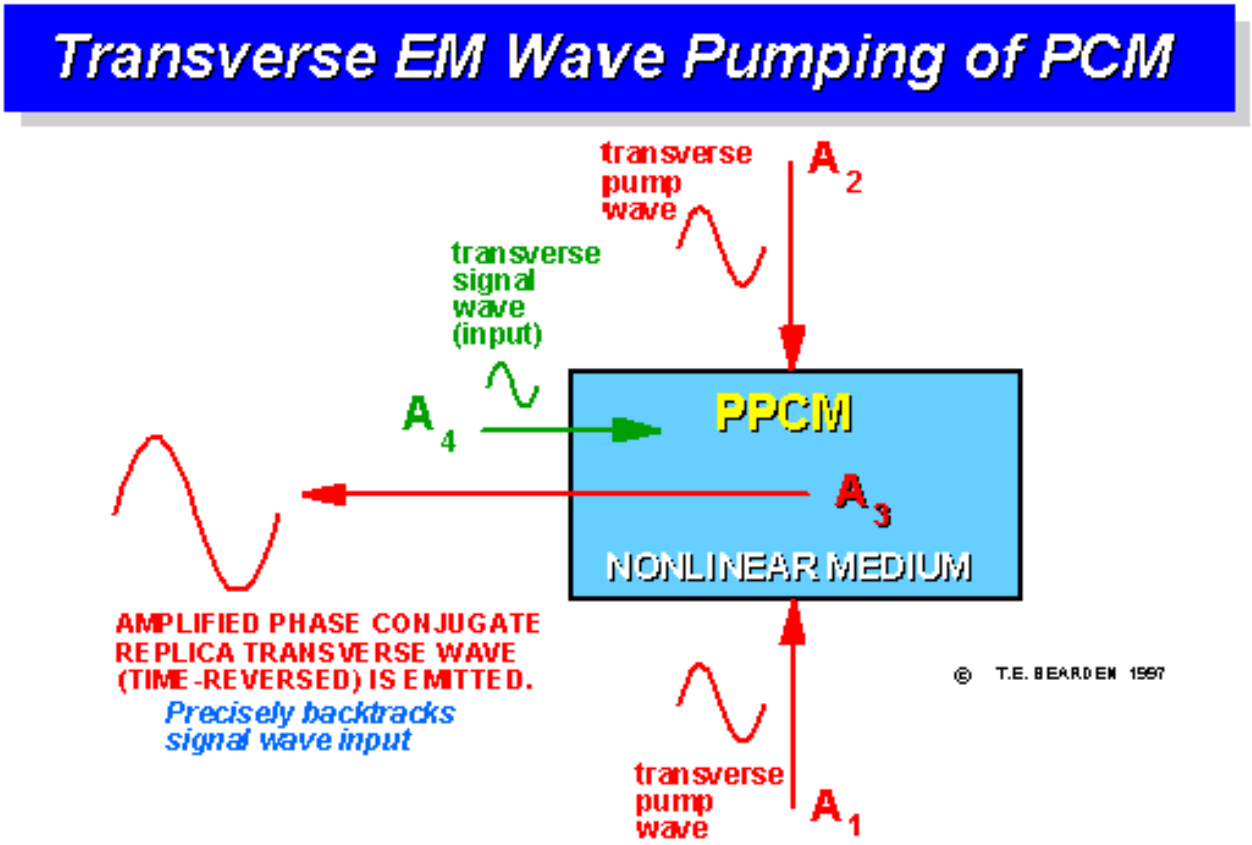

Published by Lotus® Freelance Graphics®

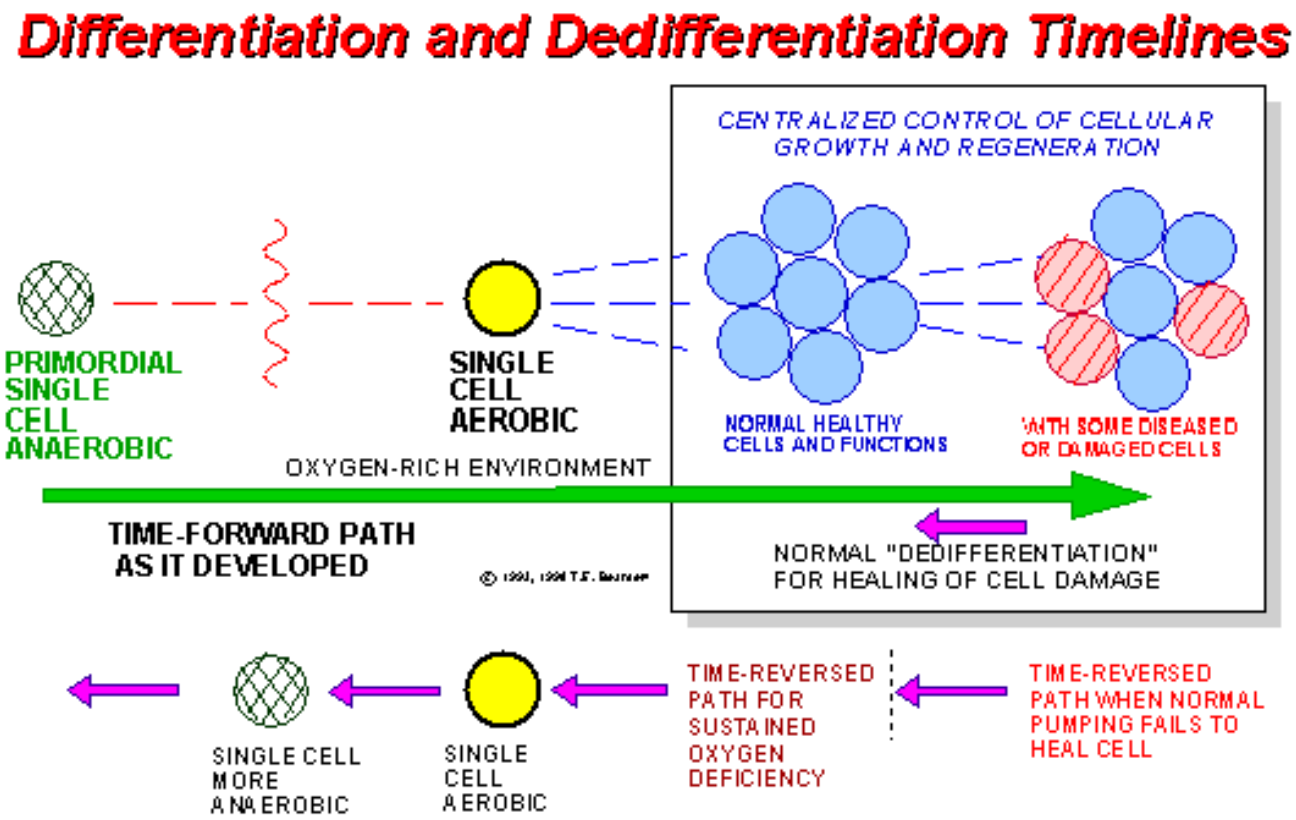

Published by Lotus® Freelance Graphics®

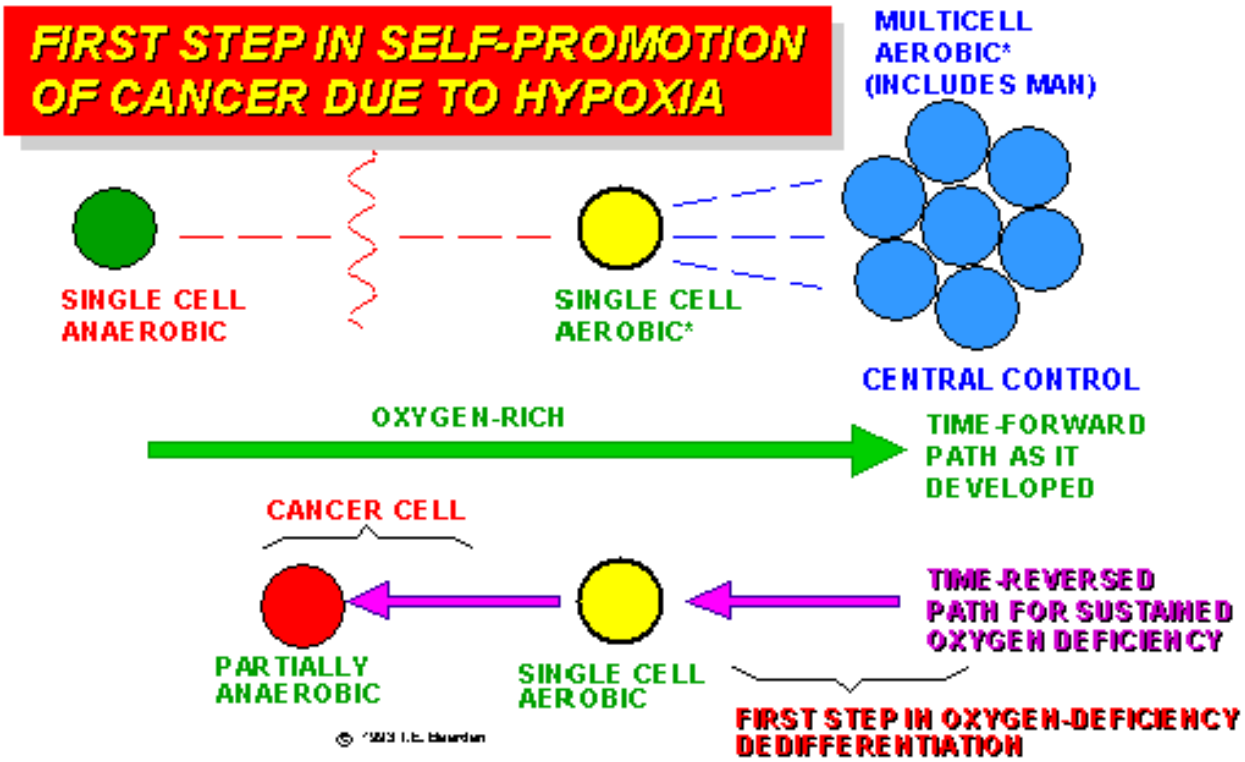

Published by Lotus® Freelance Graphics®

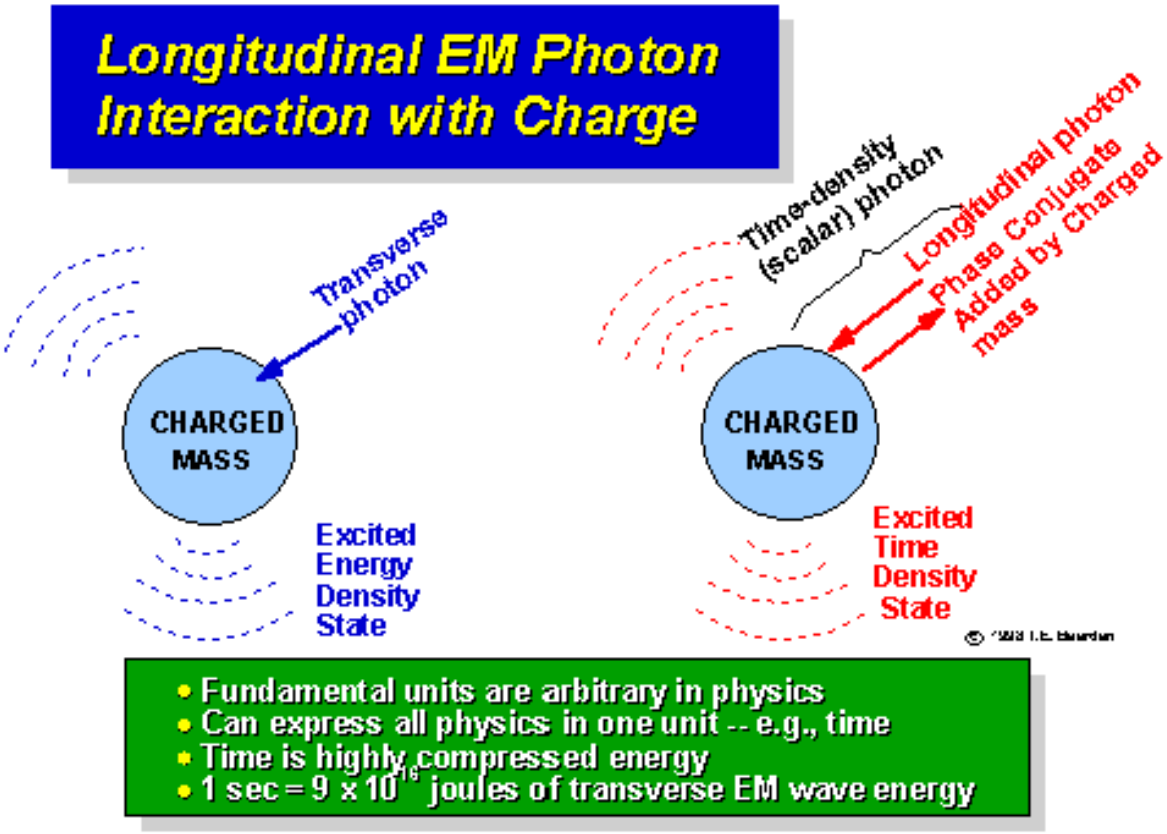

Published by Lotus® Freelance Graphics®

Use of General Relativity (GR) in Particle Physics

- GR seldom used in particle physics
- In cold fusion, Matsumoto* has applied general relativity
- Consistent with important cold fusion results
- Used spacetime (ST) curvature by energy density
- Matsumoto did not utilize:
  - Longitudinal EM waves
  - Time density (time-polarized EM) waves
  - Time density curvatures of ST (gain = 9×10^{16})

* T. Matsumoto, "Mechanisms of Electro-Nuclear Collapse," Proc. ICCF-7, Vancouver, BC, Canada, Apr. 1998, p. 98.

Published by Lotus® Freelance Graphics®

Pepper* on Time Reversing Mass

- Conventional NLO interactions restricted to bosons (spin 1 particles) by Pauli exclusion principle
- Concludes electrons, protons, neutrons, etc. (fermions, or spin 1/2 particles) cannot take part in such interactions
- Perhaps time reversal possible for bosons that are multiple fermions (two protons, Helium 4, pi and K mesons, etc.)

- Time-reversal of mass demonstrated by Priore, Pautrizel, et. al. without recognizing it.** Questions exclusion for:
  - Multi-fermion reaction with EM longitudinal waves
  - Multi-fermion reaction with time-density EM waves
- Prior to the laser, NLO - though known in theory - was a gedanken experiment regarded as experimentally unviable

© [illegible]

* David M. Pepper, "Nonlinear Optical Phase Conjugation," Optical Engineering, 21(12), Mar./Apr. 1982, p. 156-183.

** Before the development of NLO in the mid-to-latter 1970s.

Published by Lotus® Freelance Graphics®

Pepper* on time-reversing mass

- Conventional NLO interactions
  - *Restricted to bosons (spin 1 particles)*
  - *By Pauli exclusion principle*
- Fermions cannot take part in such interactions
  - *Electrons*
  - *Protons*
  - *Neutrons*
- Perhaps time reversal possible for multiple fermions (quasi-bosons)
  - *Two protons*
  - *Helium 4*
  - *pi and k mesons*

© 2003 E. Bindler

* David M. Pepper, "Nonlinear Optical Phase Conjugation," Optical Engineering, 21(12), Mar./Apr. 1982, p. 156-183.

Published by Lotus® Freelance Graphics®

Pepper* on time-reversing mass (2)

- Time-reversal of mass demonstrated by
  - *Priore, Pautrizel, other Priore team scientists*
  - *Without recognizing it*
- Apparently n-tuple fermions, where n is even, can be time-reversed
  - *Impact of longitudinal EM waves*
  - *Impact of scalar (time-density) EM waves*
  - *Major part played by time-reversal regions*
- Prior to the laser, NLO - though known in theory - was a gedanken experiment and regarded as experimentally unviable

© 1998 T.E. Bearden

* David M. Pepper, "Nonlinear Optical Phase Conjugation," Optical Engineering, 21(12), Mar./Apr. 1982, p. 156-183.

Published by Lotus® Freelance Graphics®

Chung's Carbon Filament Negative Resistor

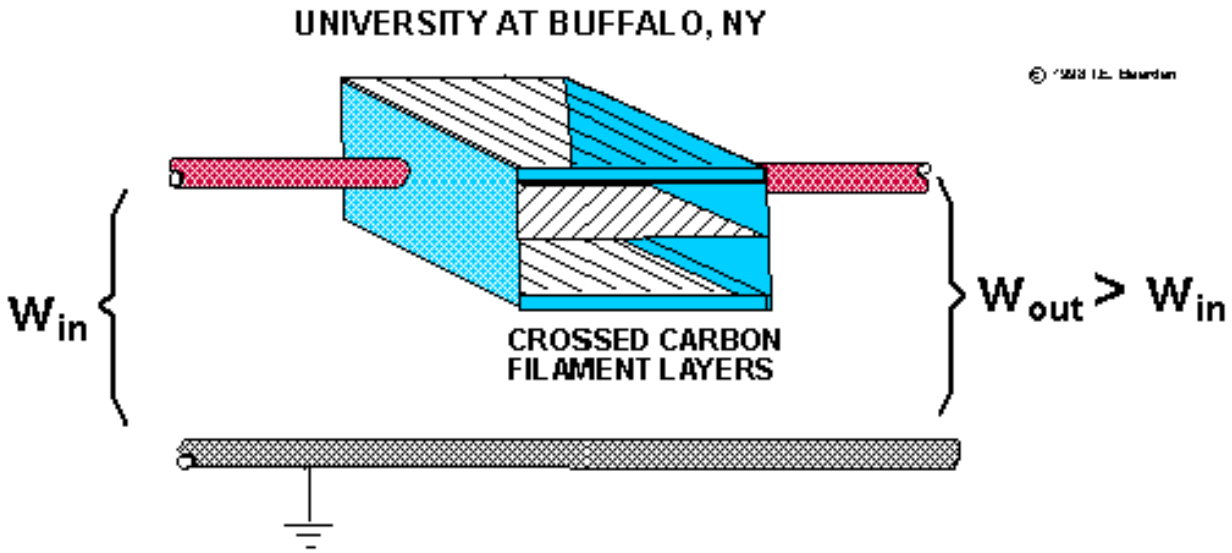

Published by Lotus® Freelance Graphics®

Consistency of China Lake Anomalies

- Variation in LW-TW transduction from experiment to experiment
- Majority produced insufficient transduction to cause ionization discharge of the GM tube gas (to cause detection)
- Correlation between appearance of anomalous radiation and the expected time periods to load palladium with deuterium
  - Within few hours in co-deposit experiments where palladium is loaded with deuterium as it deposits from solution
  - Required days of electrolysis for rods that load much slower
- The faster the deuterium loaded, the greater the interaction of deuterium in phase conjugating and self-targeting in lattice
- Variation in GM detector readings
  - One would read anomalous radiation, another would be blind to it
  - A few experiments gave simultaneous readings from two detectors
- Experiments perfectly consistent with LW-TW transduction, time-density charging, variation in GM time histories, and new conservation of energy law

© [illegible]

Published by Lotus® Freelance Graphics®

Time-Reversal Zones in Nuclear and Chemical Reactions

- TIME REVERSAL ZONE: A volume or area in a reaction environment where phase conjugate waves predominate over time-forward waves
  - In a given reaction, time-reversal may apply
  - If so, like charges attract and unlike charges repel
  - Charges move against potential gradient, to external observer
  - Time density and longitudinal EM waves become significant
  - Coulomb barrier turns into Coulomb assistant
- Examples (assuming a time-reversed zone):

© 1998 L.E. Eberden

$$^{1}H^{+} + {}^{1}H^{+} \text{-->} {}^{2}H^{++} \text{-->} {}^{1}n + {}^{1}H^{+} \text{-->} {}^{2}H^{+} = \text{deuterium}$$

$$2({}^{1}H^{+} + {}^{1}H^{+}) \text{-->} 2\,({}^{2}H)^{++} \text{-->} 2({}^{1}n + {}^{1}H^{+})$$

$$\text{-->} 2({}^{1}n) + 2({}^{1}H)^{++}$$

$$\text{-->} {}^{4}He^{++} = \text{helium}$$

Quark flipping and energy balancing with curved spacetime assumed)

Published by Lotus® Freelance Graphics®

The Electronuclear Reaction: Nuclear Reactions in TR-Zones (1)

- Nucleon interchange
  - Changes neutron into proton and vice versa
  - At high rate (flat spacetime assumed)
- Statistics become skewed due to curved ST
- Can bias statistics toward either neutron or proton end
  - Biases toward transmutation of elements along isomer chains
  - Concept of "isomer" is vastly expanded

Published by Lotus® Freelance Graphics®

The Electronuclear Reaction: Nuclear Reactions in TR-Zones (2)

- Normal dynamics (impulses) may reverse
  - Like charges attract, unlike charges repel
  - Positive charges cluster (are drawn together)
  - H+ ions (protons) may form quasi-nuclei
  - Nucleus coulomb barrier becomes assistant
- Many "impossible" reactions now possible
  - Quark access and quark flipping by EM
  - Ion clustering
  - Positive charges as phase conjugate mirrors
  - Time-density waves and time-energy charging

© 2000 T.E. Bearden

Published by Lotus® Freelance Graphics®

The Electronuclear Reaction: Nuclear Reactions in TR-Zones (3)

- Not observed until time-energy charging has become substantial
  - *Time delay (hours, days)*
  - *Transduction of LW --> TW involved*
  - *Specific time-charging history of detectors is involved in twhether they detect or not*
  - *Longitudinal EM waves become significant*
- Curved spacetime can act as source or sink
  - *May emit excess radiation*
  - *May absorb excess radiation*

© 1998 T.E. Bearden

Published by Lotus® Freelance Graphics®

On Nuclear Reactions in TR-Zones

- **Nuclear interactions now are biased:**
  - Normal nucleon interchange changes neutron into proton and vice versa, at a high rate (flat spacetime assumed)
  - Statistics now become skewed due to curved spacetime
  - Can bias statistics toward either the neutron end or proton end
  - Thus biases toward transmutation of elements along isomer chains
  - Concept of "isomer" vastly expanded
- **Normal dynamics (impulses) may be reversed**
  - Coulomb barrier becomes coulomb assistant
  - Reactions "impossible" from energy density standpoint become possible, even easy, from time-density standpoint
- **Does not become significant until sufficient time-density charges**
  - Time-delay (hours, days) before TR reactions become significant
  - Transduction of LW-->TW involved
  - Specific time-history of detectors is significant
  - longitudinal EM waves become significant
- **Curved spacetime acts as source or sink**
  - Energy balance in curved spacetime may emit excess radiation
  - Energy balance in curved spacetime may absorb excess radiation

Published by Lotus® Freelance Graphics®

In Time-Reversed Zone:
Nuclear reactions are biased

- In normal flat ST, n ⇔ p at high rate
- Curved ST skews statistics
- Biases to either n or p
- Biases to transmutation along isomer chain
- "Isomer" concept greatly expanded

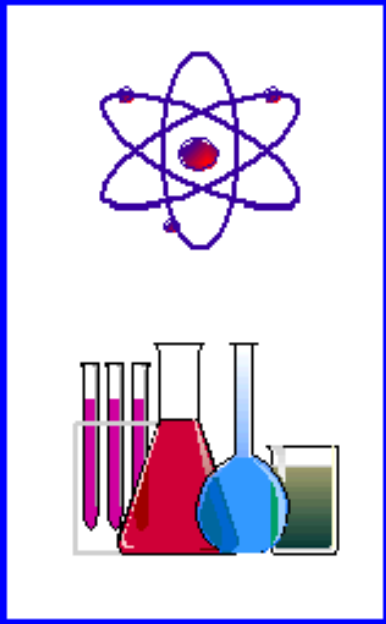

© 1998 T. E. BEARDEN

Published by Lotus® Freelance Graphics®

In Time-Reversed Zone:
Dynamics may be reversed

- Like charges may attract and unlike charges repel
- Coulomb barrier becomes Coulomb assistant
- Clusters like charges and forms artificial nuclei
- "Impossible" nuclear reactions at low energy
- Time-density interactions

© 1998 T.E. BEARDEN

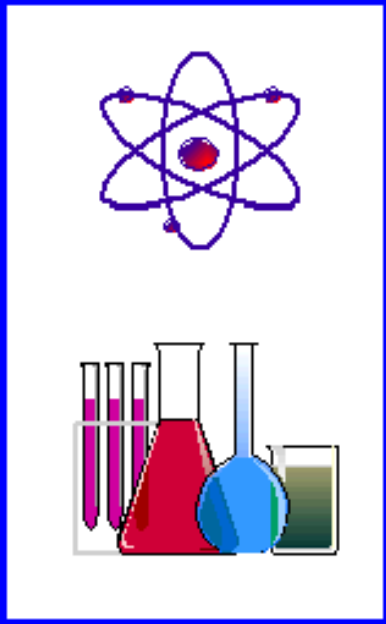

Published by Lotus® Freelance Graphics®

Time-Reversed Zone:
Significant only after time-density charging

- Hours, for "fast" onset
- Days, for "slower" onset
- Transduction involved for TW ⇔ LW ⇔ TDW
- Time-history of each detector is significant
- Longitudinal EM waves become significant

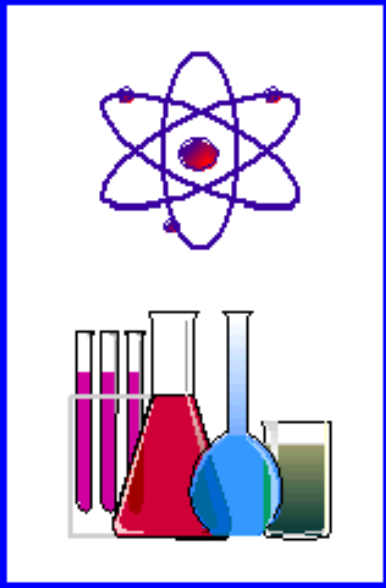

© 1998 T.E. BEARDEN

Published by Lotus® Freelance Graphics®

Curved Spacetime acts as source or sink

- May emit excess radiation and energy (e.g., heat)
- May absorb radiation and energy (e.g., cool)
- May transduce waves TW ⇔ LW ⇔ TDW
- New energy conservation law applies

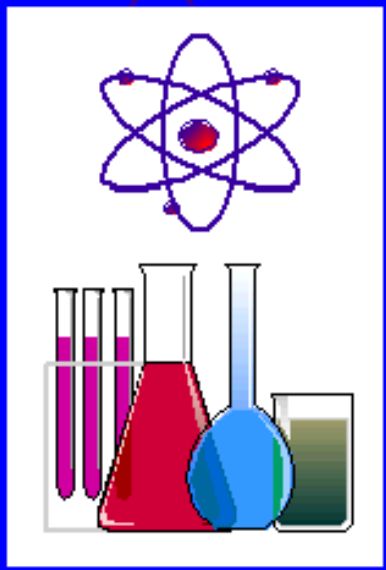

© 1998 T.E. BEARDEN

Published by Lotus® Freelance Graphics®

Anomalous LW EM Emission Phenomena at China Lake (1)

- **Anomalous radiation from electrolysis in ionization processes**
  - Two experiments producing excess power
  - Dental X-ray film showed exposure
  - Simultaneous control study: no exposure
  - 20 experiments without excess power: no exposure
- **Excess energy strongly indicates excess film exposure**

© [illegible]

* Melvin H. Miles and Benjamin F. Bush, "Radiation Measurements at China Lake: Real or Artifacts?" Proc. ICCF-7, Vancouver, BC, Canada, Apr. 1998, p. 101.

Published by Lotus® Freelance Graphics®

Anomalous LW EM Emission Phenomena at China Lake (2)

- **GM and NaI detector reaction when electrolysis with heavy water ongoing**
  - Several Geiger-Muller (GM) tubes gave anomalous detection
  - Reached 73 sigma above background
  - No anomalies when experiment off
- ***GM tube detects anything which causes its internal ionization***
  - *Nuclear radiation is ionizing*
  - *Transduced x-ray & gamma is ionizing*

© 2000 T.E. Bearden

Published by Lotus® Freelance Graphics®

Sufficient LW-to-TW Transduction Ionizes GM Tube Gas (3)

- **Time-history of detector involved**
  - Some GM detectors show anomalous high counts, some do not
  - Time histories of GM detectors are varied
  - Time histories of film vary minimally
- ***Experimental results consistent with***
  - *LW-to-TW transduction including delay*
  - *Time-energy charging*
  - *New extension to energy conservation law*

Published by Lotus® Freelance Graphics®

Sufficient LW-to-TW Transduction Ionizes GM Tube Gas (4)

- **Time-history of detector involved**
  - Some GM detectors show anomalous high counts, some do not
  - Time histories of GM detectors are varied
  - Time histories of film vary minimally
- ***Experimental results consistent with***
  - *LW-to-TW transduction including delay*
  - *Time-energy charging*
  - *New extension to energy conservation law*

Published by Lotus® Freelance Graphics®

Consistency of Anomalies

- LW-to-TW transduction varied from experiment to experiment
- Most experiments produced insufficient transduction to cause ionization
- Appearance of anomalous radiation correlated with expected time loading of palladium with deuterium
  - Within few hours in experiments where palladium loads with deuterium as it deposits from solution
  - Required days for rods that load much slower

Published by Lotus® Freelance Graphics®

Consistency of Anomalies (2)

- Faster the deuterium loaded, the greater the interaction of deuterium in
  - Phase-conjugating and self-targeting
  - Producing time-reversal zones
  - Generating quasi-nuclei of H+ ions (protons)
- Variation in GR detector readings
- Experimental results predictable by
  - LW-TW transduction and time-reversal zones
  - Varying time-density charging on GM tubes
  - Variation in GM tube experience histories
  - Time-reversal zones generating electronuclear interactions and quasi-nuclei of H+ clusters

Published by Lotus® Freelance Graphics®

Experimental LW Emission Phenomena in Electrolysis

- Anomalous radiation from electrolysis in ionization processes
  - Two experiments producing excess power
  - Dental x-ray film showed exposure
  - Simultaneous control study: No exposure
  - 20 experiments without excess power: No exposure
- Excess energy strongly indicates excess film exposure
- GM and NaI detector reaction when electrolysis ongoing w/heavy water
  - Several Geiger Muller (GM) tubes gave anomalous detection
  - Reached 73 σ above normal background counts
  - No anomalies when experiment off
- GM tube detects anything which causes its internal gas to ionize
  - Nuclear radiation is "ionizing" radiation
  - Transduced x-ray and gamma radiation is "ionizing" radiation
  - Sufficient LW-TW transduction ionizes GM gas
- Time History of detector involved
  - Some GM detectors show anomalous high counts, some do not
  - Time histories of GM detectors vary appreciably
  - Time histories of film vary minimally
- Experiments consistent with time-density charging, LW-TW transduction, and new conservation of energy law

© 1998 H.E. Puthoff

* Melvin H. Miles and Benjamin F. Bush, "Radiation Measurements at China Lake: Real or Artifacts?" Proc. ICCF-7, Vancouver, BC, Canada, Apr. 1998, p. 101.

Published by Lotus® Freelance Graphics®

A New Conservation of Energy Law

- Physics conserves total "energy and mass-energy"
- Now also must consider "time-energy"
- Conserve total mass-time-energy (spatiotemporal energy)
- Let E_T = total energy, E_M = mass energy, E_E = ordinary energy, and E_t = time energy. Then

$$E_T = E_E + E_M + E_t$$

©1993 H.E. Bearden

$$(kE_t \Rightarrow E_E > 0) \Rightarrow E_T > (E_M + E_E)$$

- If some E_t is transduced into E_E, the experiment will violate the old spatial mass-energy conservation law

Published by Lotus® Freelance Graphics®

QUESTIONS ON CARCINOGENS AND EM RADIATION

- UNRESOLVED QUESTIONS ON EM RADIATION
  - DOSAGES
  - ACTIVE MECHANISMS
  - REPLICATION DIFFICULTIES
  - MEASUREMENT DIFFICULTIES
  - WHERE, WHEN, HOW ILL EFFECTS OCCUR
- SIMILAR QUESTIONS EXIST ABOUT EVERY CARCINOGEN
- SCIENCE REALLY DOES NOT UNDERSTAND THE MECHANISMS OF A SINGLE CHRONIC DISEASE, INCLUDING CANCER
  - FACTORS SUCH AS MIND, STRESS, SPONTANEOUS REMISSION, PLACEBO EFFECTS, AND COMBINATIONS OF FACTORS ARE PARTICULARLY TROUBLESOME
  - GENERATION OF THE PLACEBO EFFECT BY THE REGENERATION & RECOVERY SYSTEM IS UNRECOGNIZED

© 1994, 1996 T.E. Beanden

Published by Lotus® Freelance Graphics®

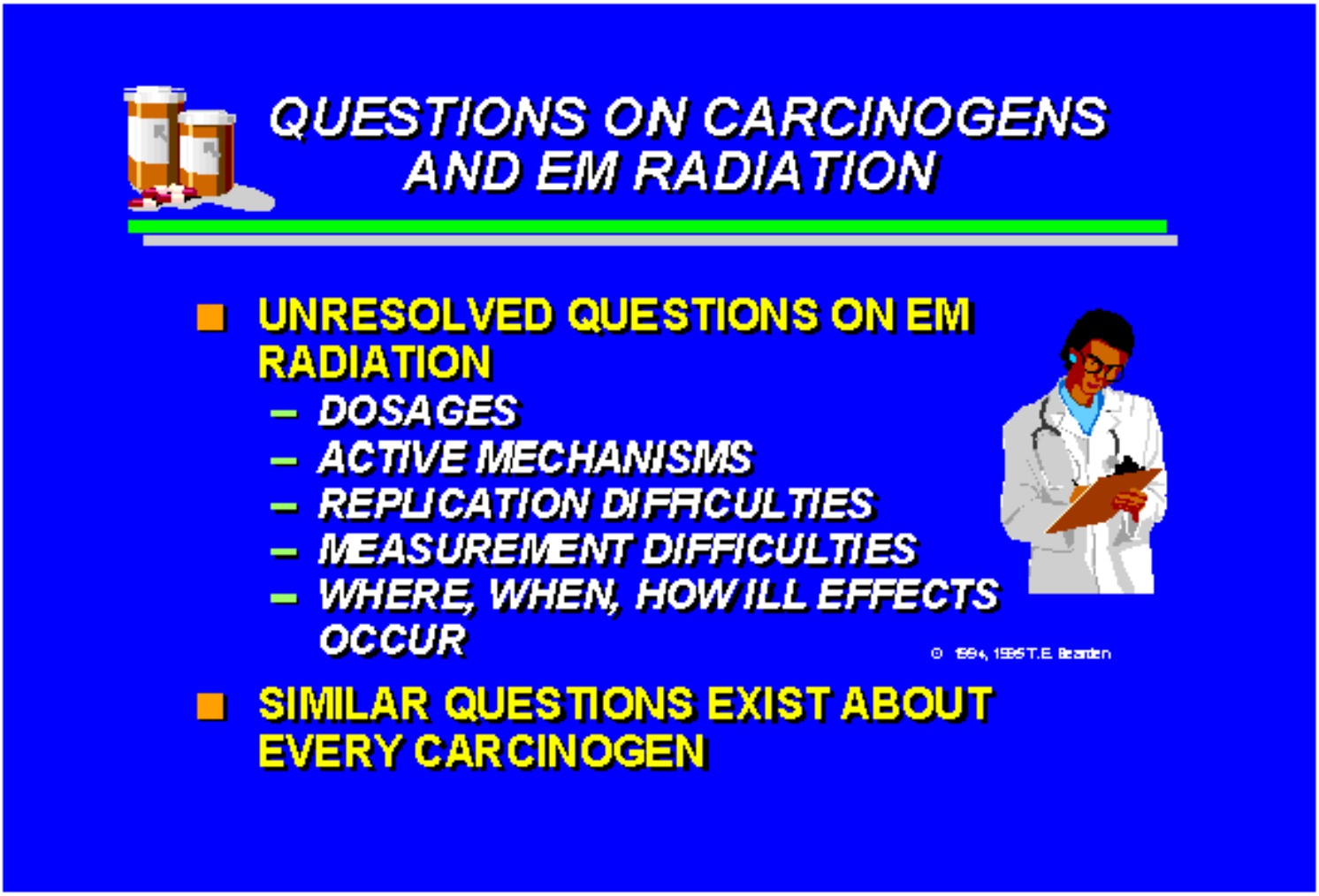

Published by Lotus® Freelance Graphics®

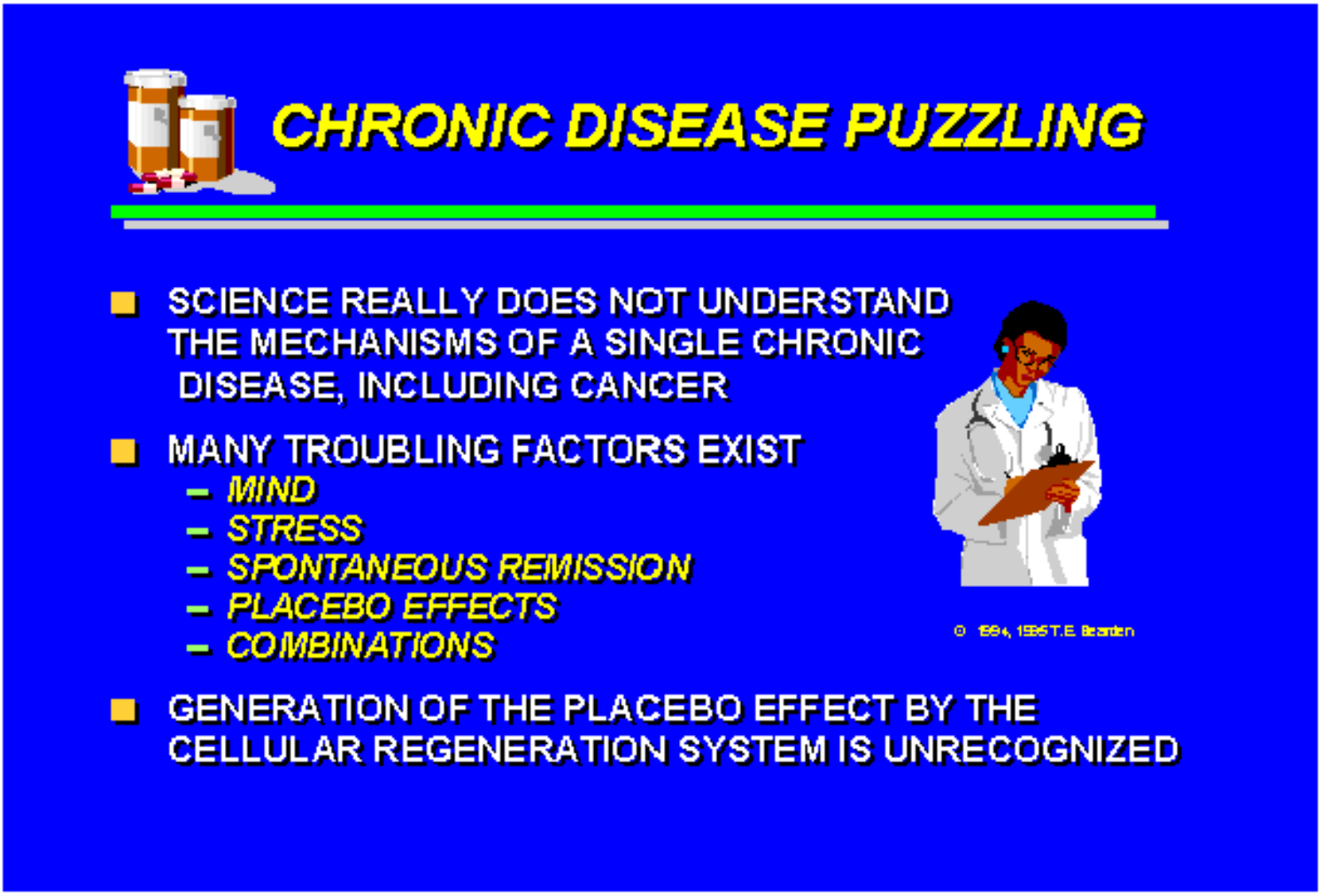

Published by Lotus® Freelance Graphics®

Cancer Characteristics

- Not one disease, but a whole range
- Starts in damaged aerobic cell
- Cell shakes off body's central control
  - Starts uncontrolled division
  - Becomes a lump
- Can send forth cancer cells
  - Through blood
  - Through lymph
- Form metastases (secondary tumors)
- Often become anaerobic

©1993 C. Bowden

Published by Lotus® Freelance Graphics®

Solving a Cancer Enigma

- An enigma has been failure of immune system to attack some tumor cells
  - Suppressor cells may curb immune system?
  - Tumor may lack antigens normally identified by the immune system?
- *Promotion of damaged cell to cancer is usually ordered by cellular control system*
  - *Regenerative and recovery system forces cell back toward anaerobe*
  - *First step breaks free from central growth*
  - *Control continues to recognize cell as self*

© 1993 F. C. Brandon

Published by Lotus® Freelance Graphics®

CANCER: CHARACTERISTICS

- NOT ONE DISEASE BUT A WHOLE RANGE
- STARTS IN ORDINARY (AEROBIC) CELL
- CELL SHAKES OFF BODY'S DICTATORIAL CONTROL*
- STARTS UNCONTROLLED DIVISION
- BECOMES A LUMP
- CAN SEND FORTH CANCER CELLS
  - THROUGH BLOOD
  - THROUGH LYMPH
- THESE FORM METASTASES (SECONDARY TUMORS)
- OFTEN BECOME ANAEROBIC (NON-OXYGEN USING)
- ENIGMA IS FAILURE OF IMMUNE SYSTEM TO ATTACK SOME TUMOR CELLS
  - SUPPRESSOR CELLS MAY CURB IMMUNE SYSTEM
  - TUMOR MAY LACK ANTIGENS NORMALLY IDENTIFIED BY THE IMMUNE SYSTEM

*R&R system forces cell back toward anaerobe

Published by Lotus® Freelance Graphics®

PORTABLE PRIORE TECHNOLOGY UNIT

- FACT: DISEASE-SPECIFIC VACUUM ENGINE PRESENT FOR ANY CELLULAR DISEASE, BY WHEELER'S PRINCIPLE
  - DISEASE CAN BE REVERSED BY CREATING AMPLIFIED VACUUM ANTI-ENGINE (BEARDEN'S PRINCIPLE)
  - ANTI-ENGINES CREATED BY PUMPING THE NONLINEAR CELLS WITH LONGITUDINAL EM WAVES

- PRIORE UTILIZED A PLASMA TO PHASE CONJUGATE AND "INFOLD" MULTIPLE BIDIRECTIONAL LONGITUDINAL EM PUMP WAVES
  - MULTIPLE FREQUENCIES MIXED IN A ROTATING PLASMA
  - PHASE CONJUGATES ADDED BY THE PLASMA
  - INFOLDED MIX INTO STRONG PULSED DC MAGNETIC FIELD, WHICH CARRIED IT INTO ATOMIC NUCLEI
  - PUMPED ALL NONLINEAR CELLULAR COMPONENTS TO PRODUCE AMPLIFIED, SPECIFIC VACUUM ANTI-ENGINE

- NEGATED THE CUMULATIVE CELLULAR DEDIFFERENTIATION ORDER GENERATED BY LONG-TERM HYPOXIA. TUMOR CELLS REVERTED TO NORMAL CELLS.
- SCRUBBED OUT CUMULATED PRECANCEROUS STATE
- RESTORED THE IMMUNE SYSTEM TO HIGH FUNCTIONING
- NO EXCESSIVE TRAUMA TO TREATED ANIMAL

©1990, 1991, 1992 T.E. BEARDEN.

Published by Lotus® Freelance Graphics®

Lisitsyn's Report: Brain Code Broken

- THEORY DEVELOPED AND FITTED
- HYSTERESIS MEMORY LOOP
- CONTROLLED EM INDUCTION
  - IMAGES
  - SENSATIONS
  - PREDETERMINED EMERGENCE
- 23 EEG BANDS
  - UP TO 8.1 X 10^{20} HZ
  - 11 INDEPENDENT CHANNELS

© 1970, 1973, 1991 TC BENSLER

S.K. Lisitsyn, "New Approach to the Analysis of Electroencephalograms," DDC Report AD73005, p.16-25.

Published by Lotus® Freelance Graphics®

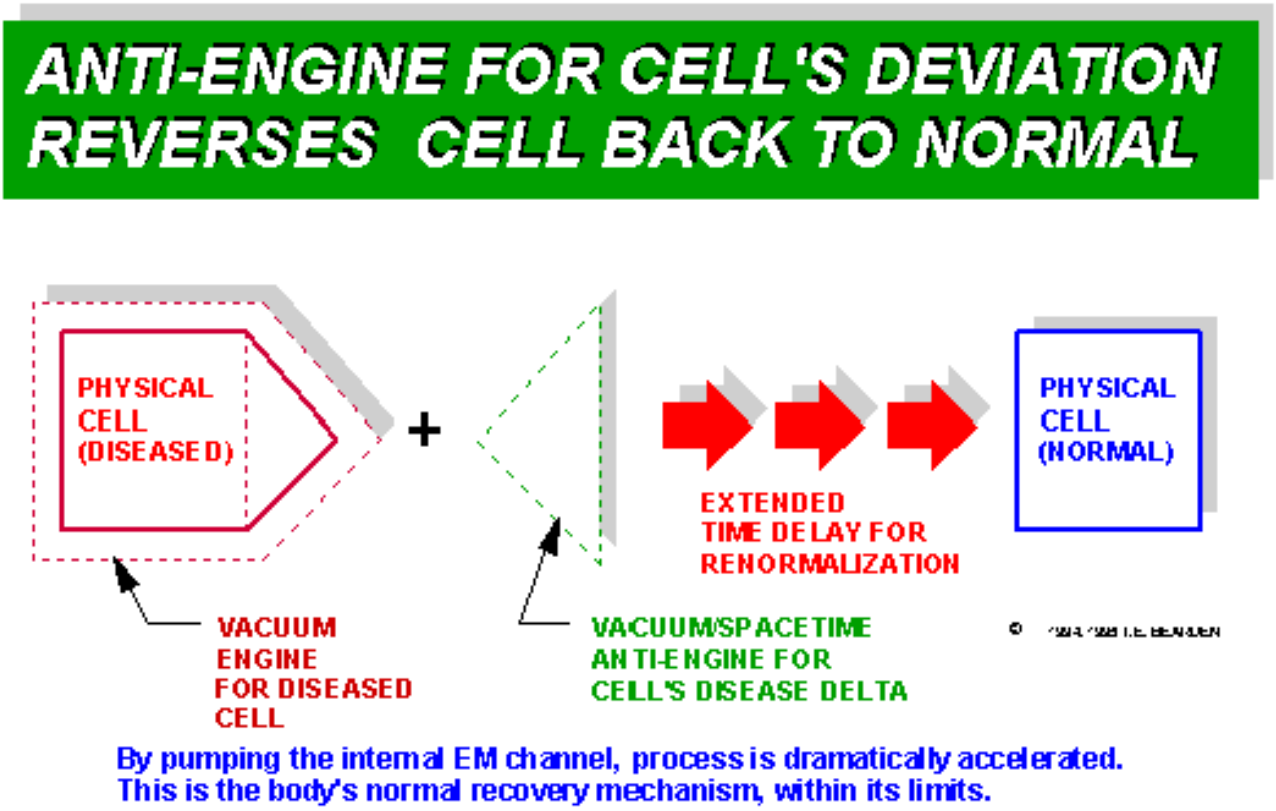

Published by Lotus® Freelance Graphics®

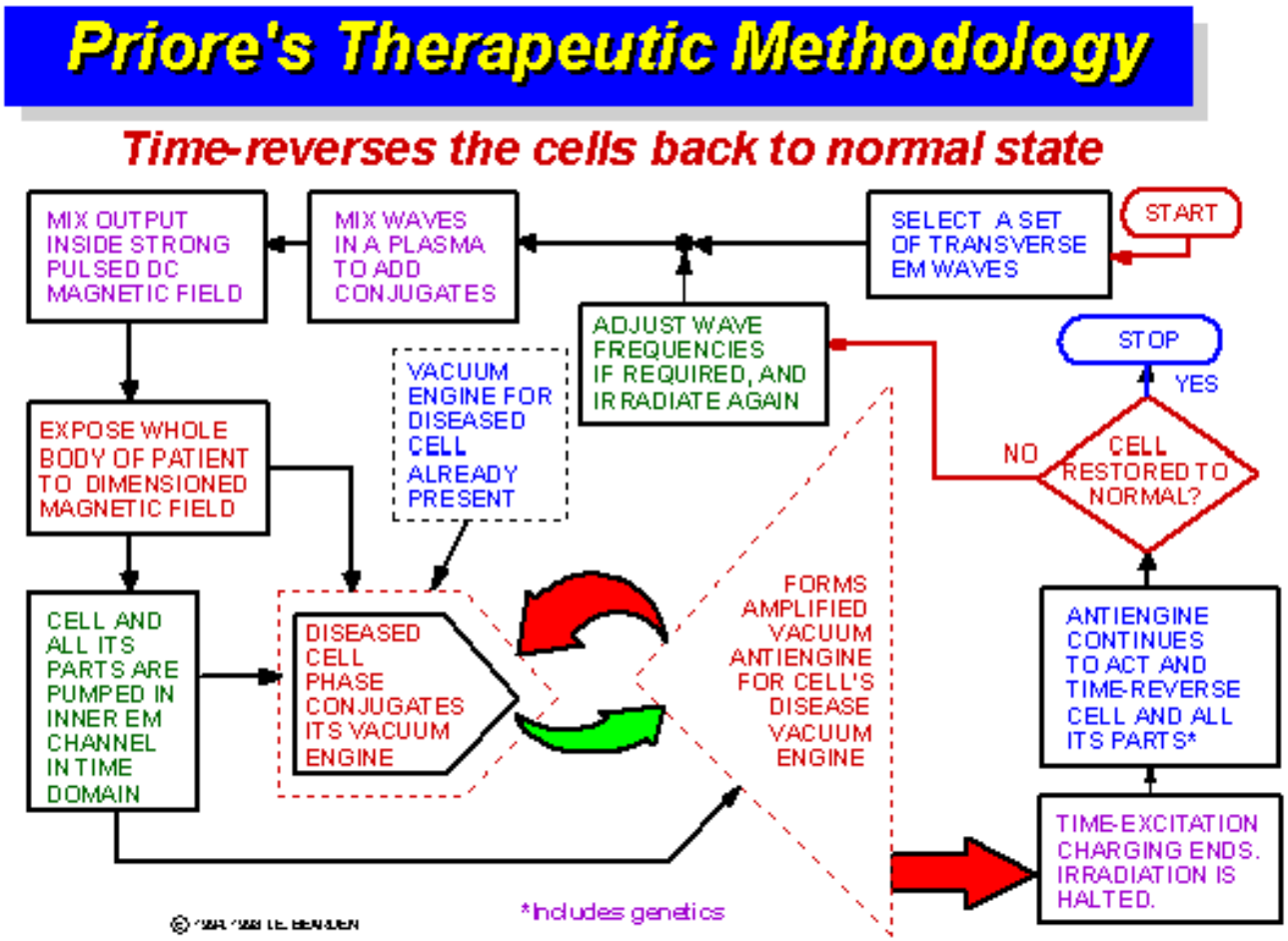

Published by Lotus® Freelance Graphics®

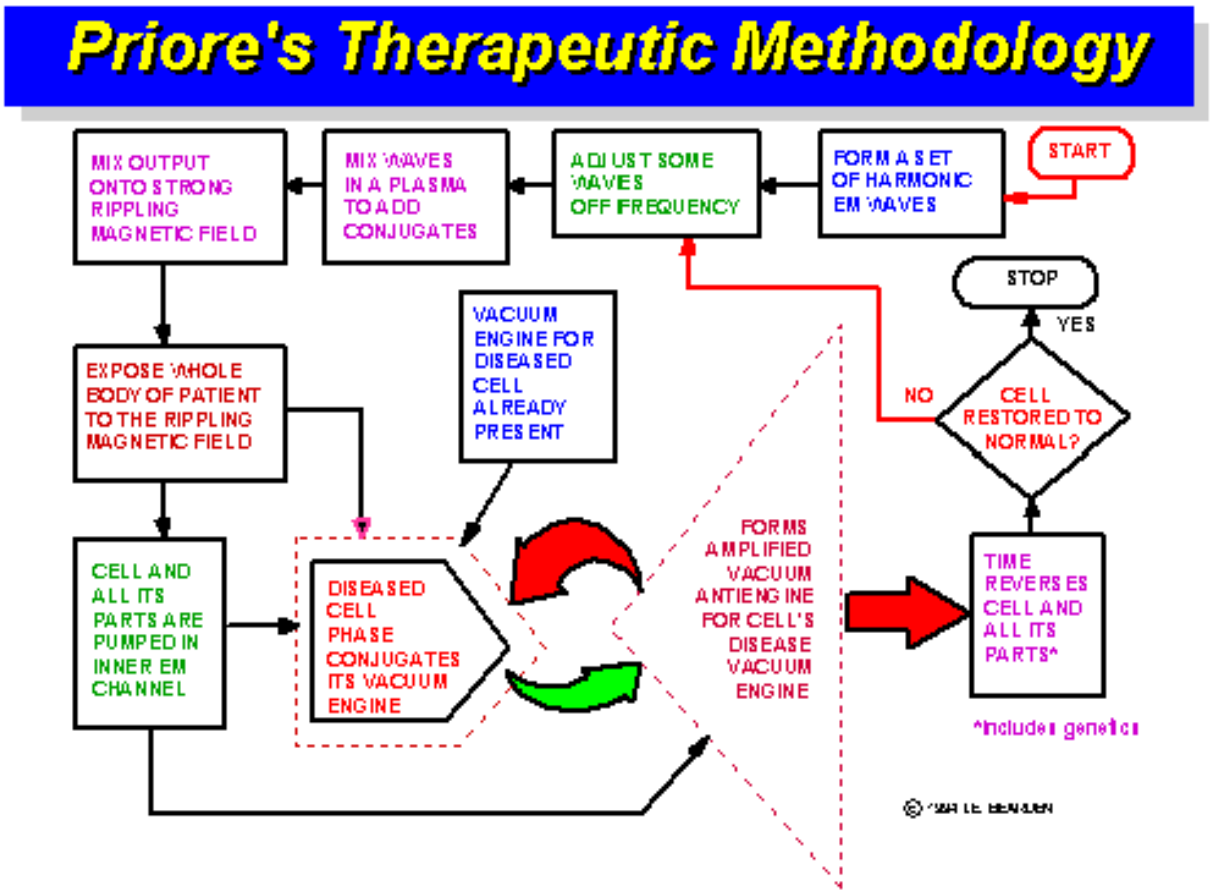

Published by Lotus® Freelance Graphics®

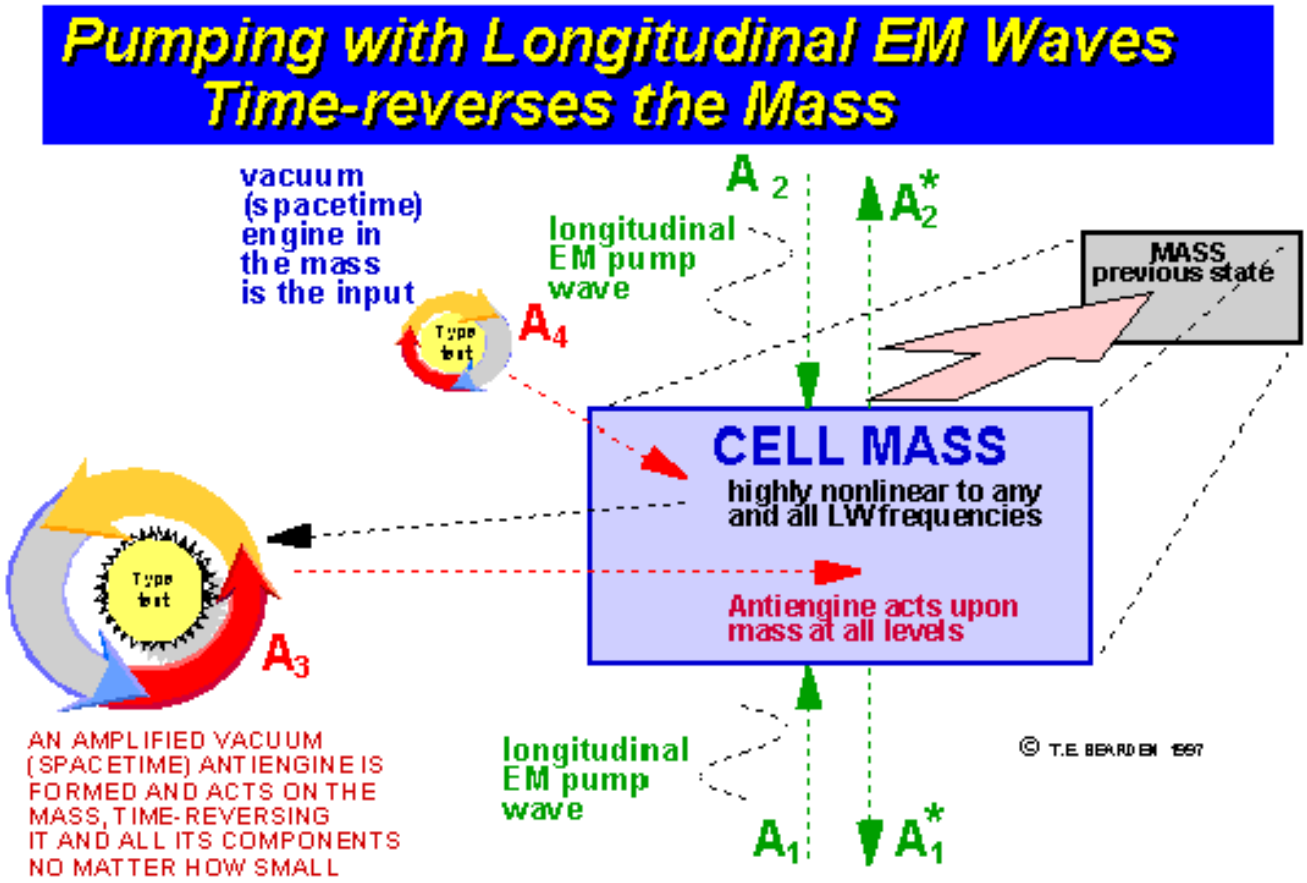

Published by Lotus® Freelance Graphics®

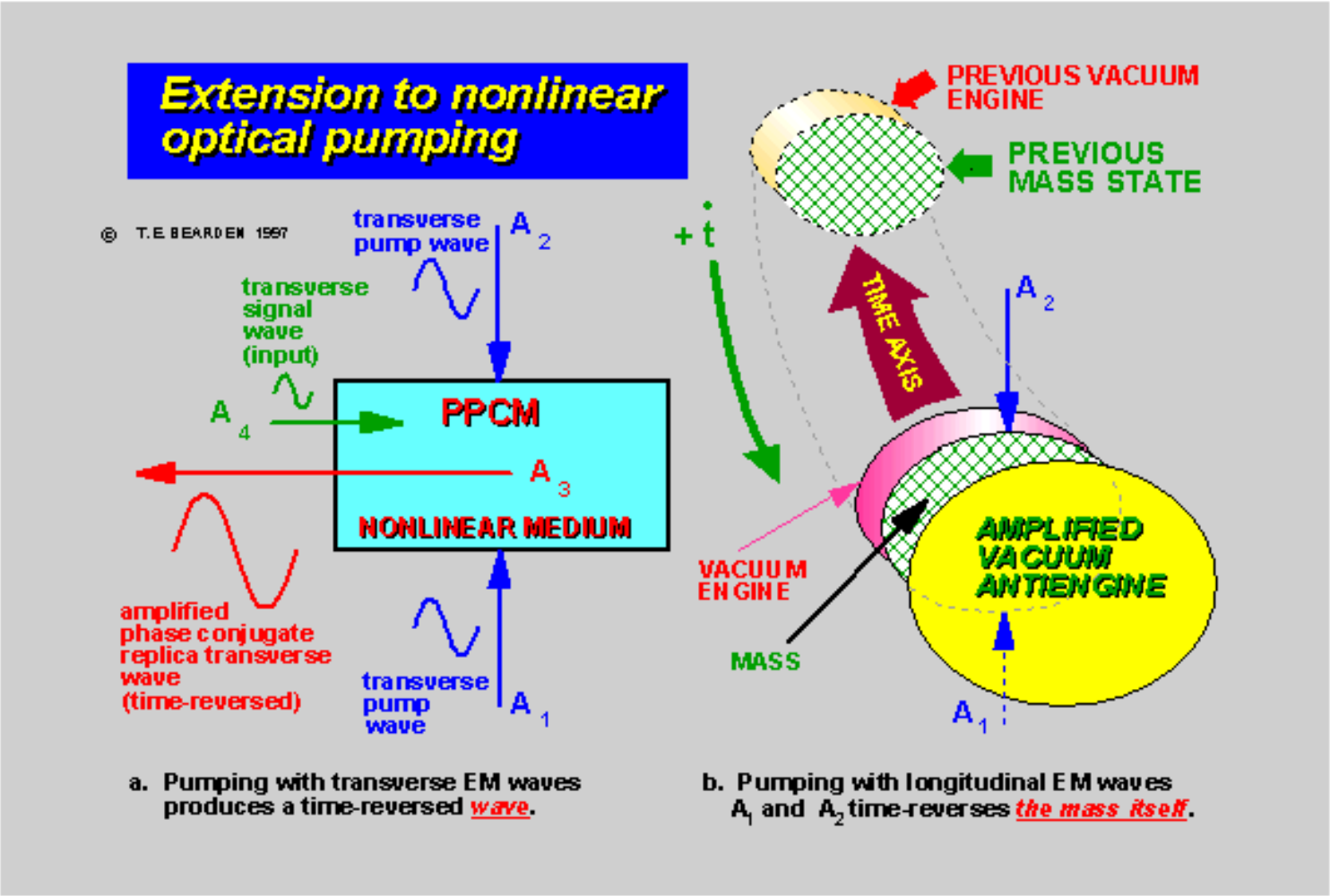

Published by Lotus® Freelance Graphics®

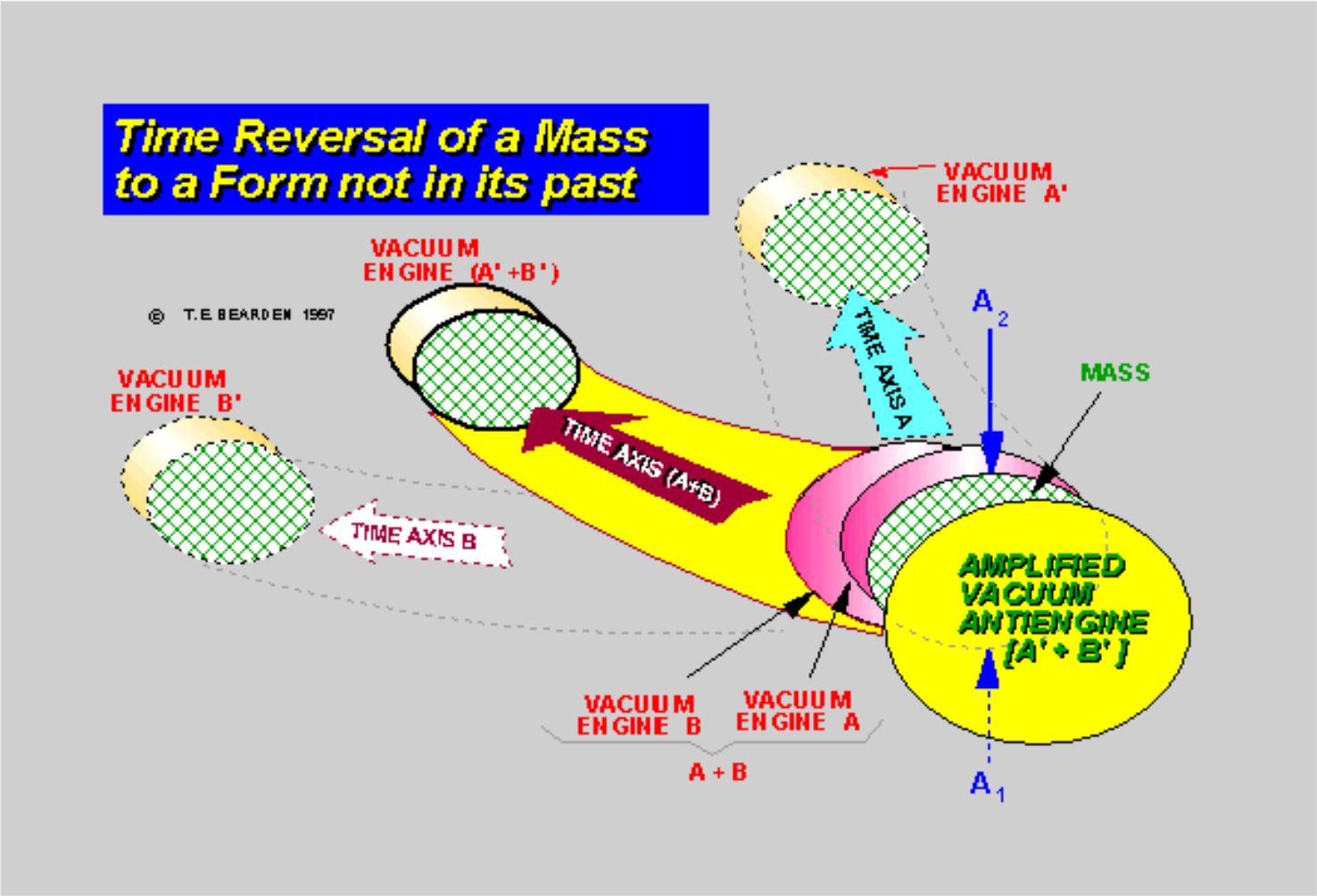

Published by Lotus® Freelance Graphics®

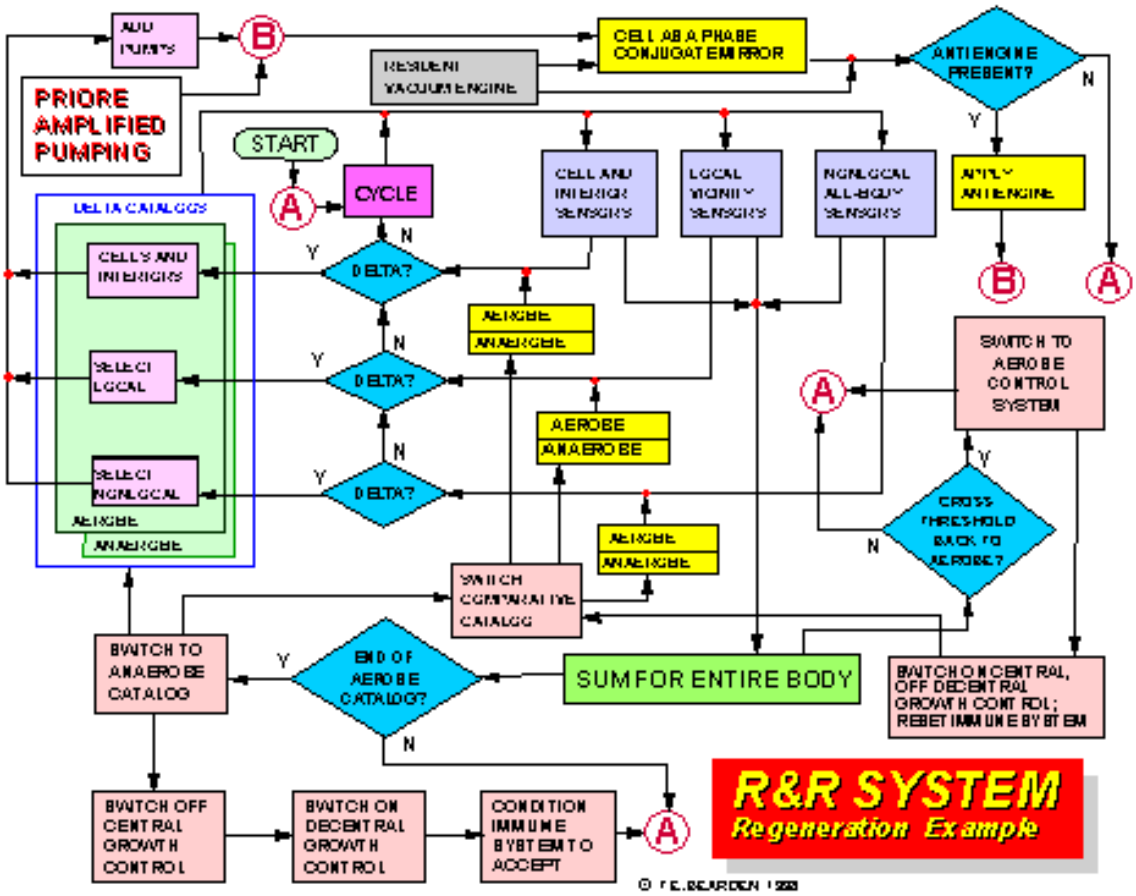

Published by Lotus® Freelance Graphics®

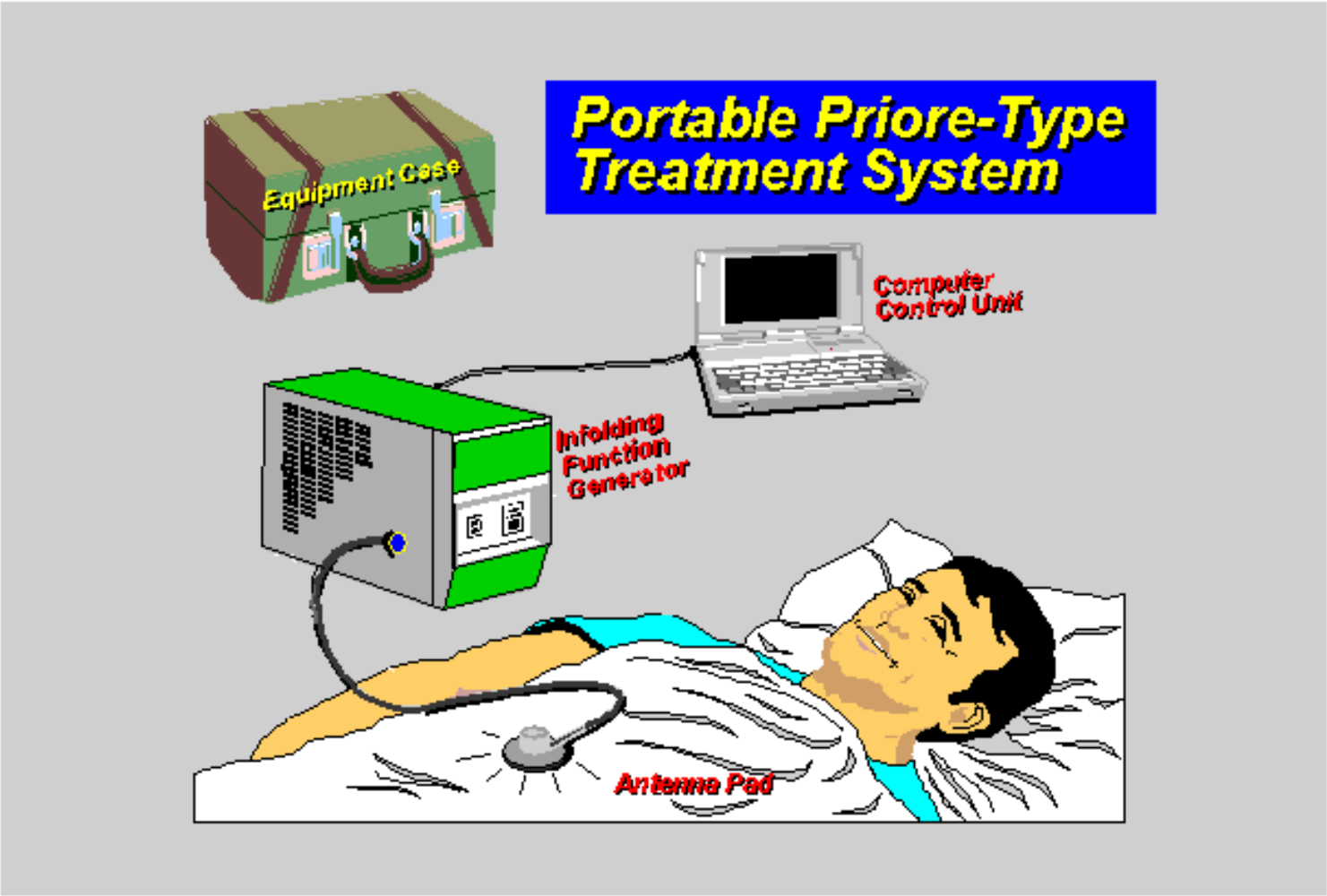

Published by Lotus® Freelance Graphics®

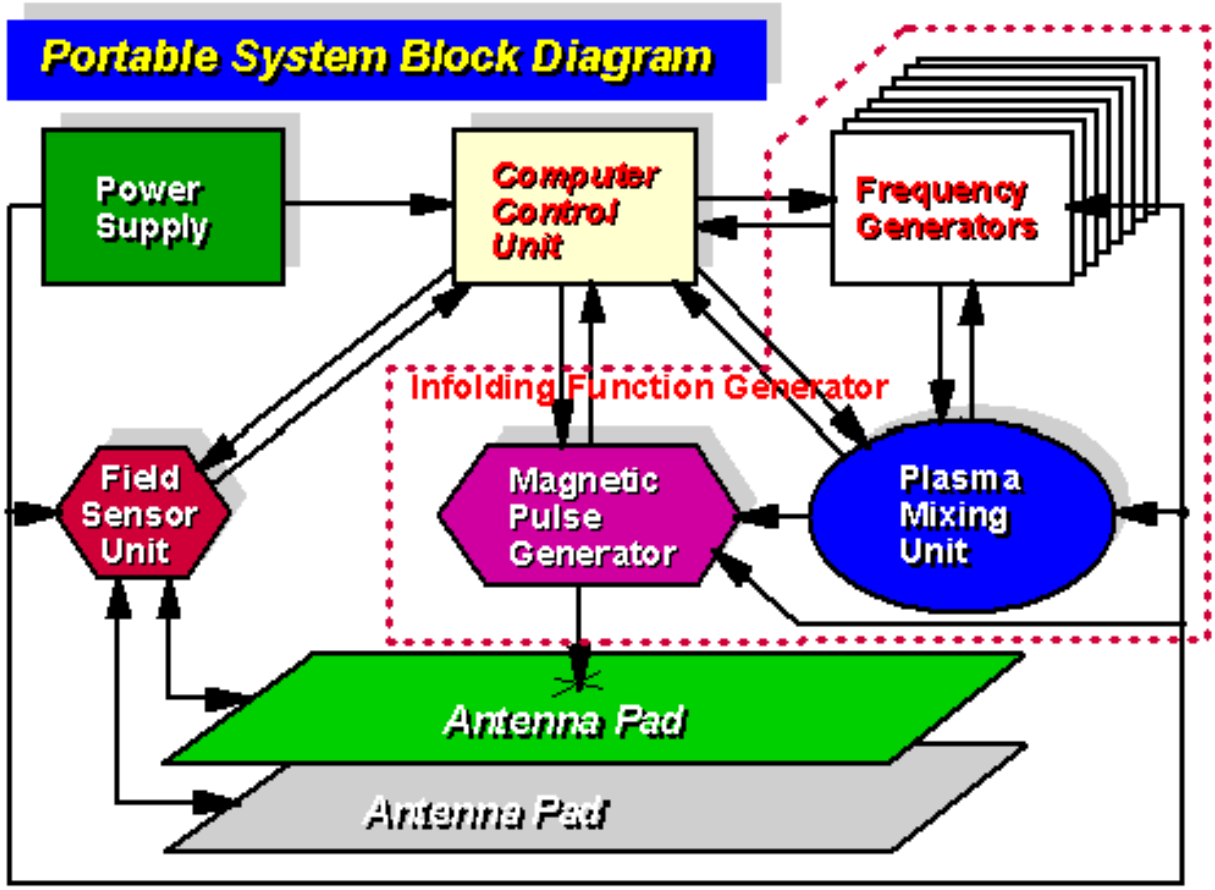

Published by Lotus® Freelance Graphics®

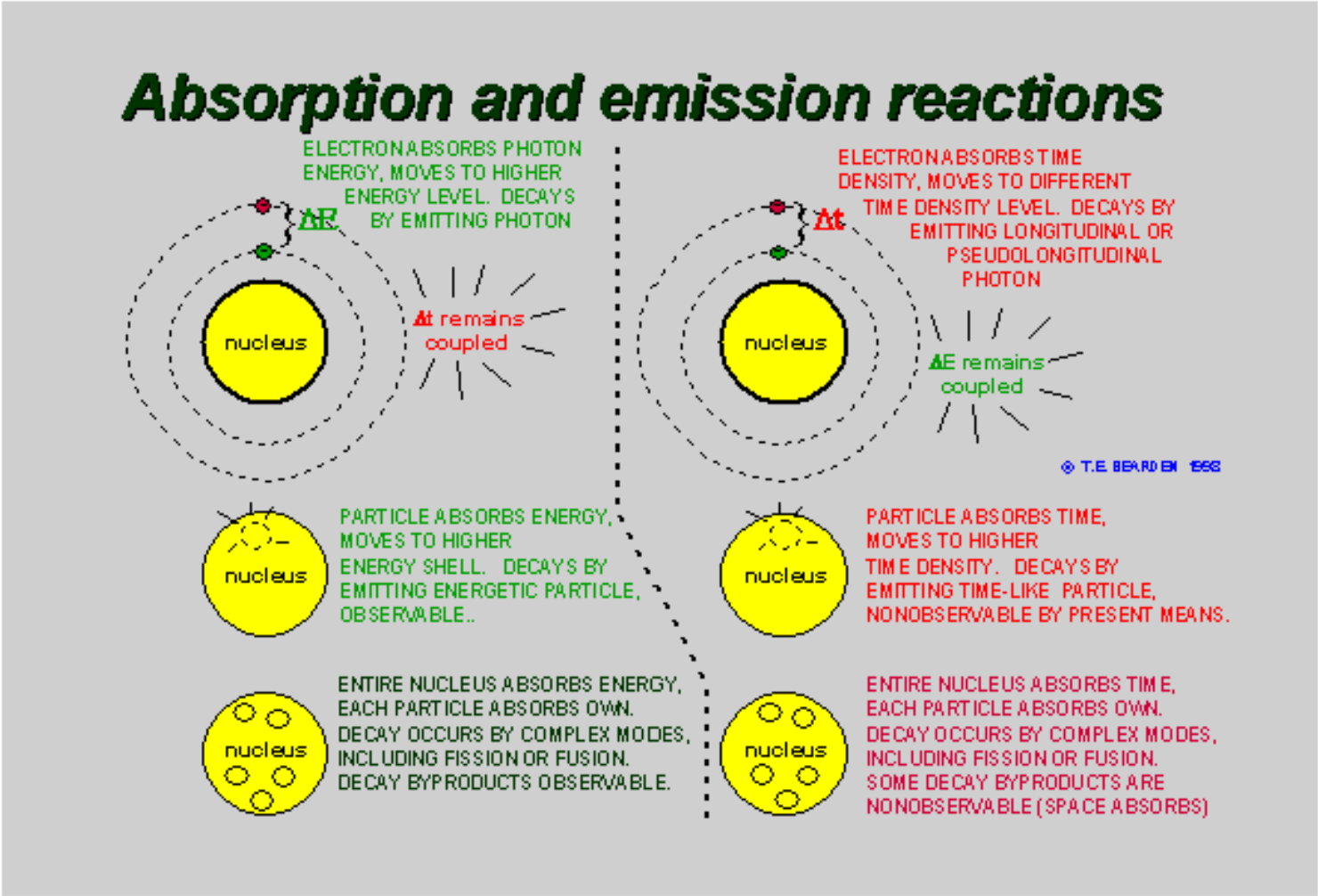

Published by Lotus® Freelance Graphics®

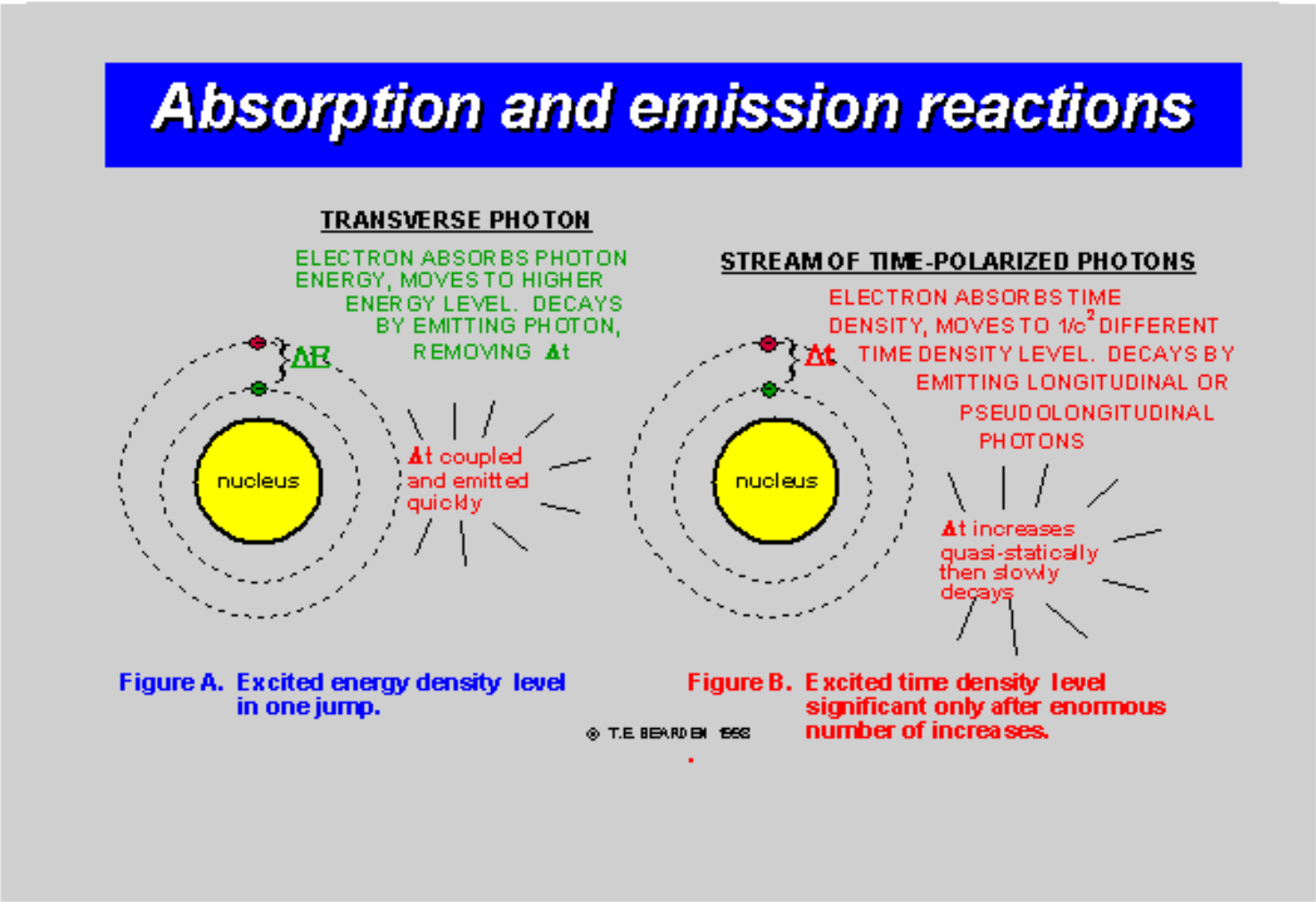

Published by Lotus® Freelance Graphics®

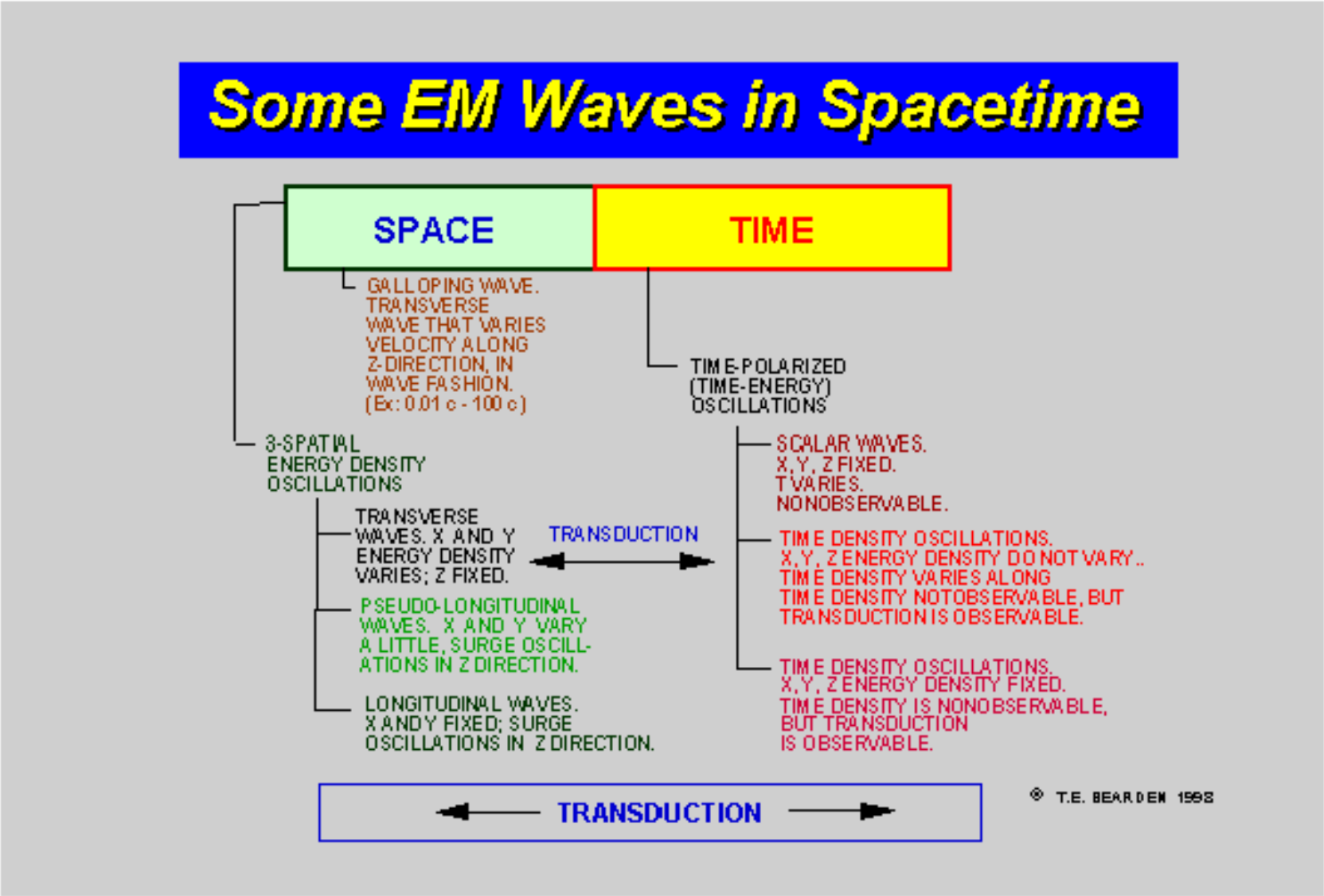

Published by Lotus® Freelance Graphics®

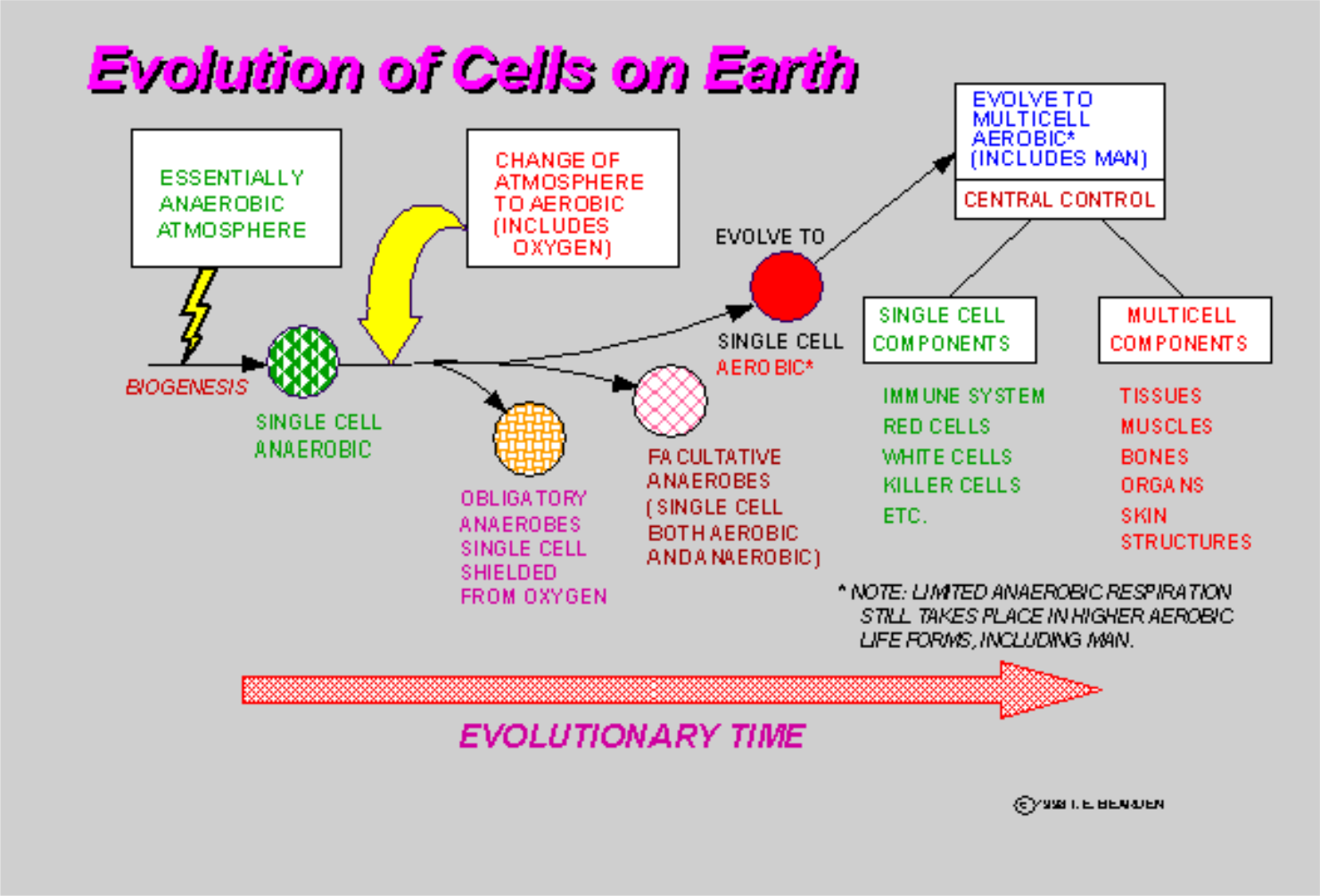

Published by Lotus® Freelance Graphics®

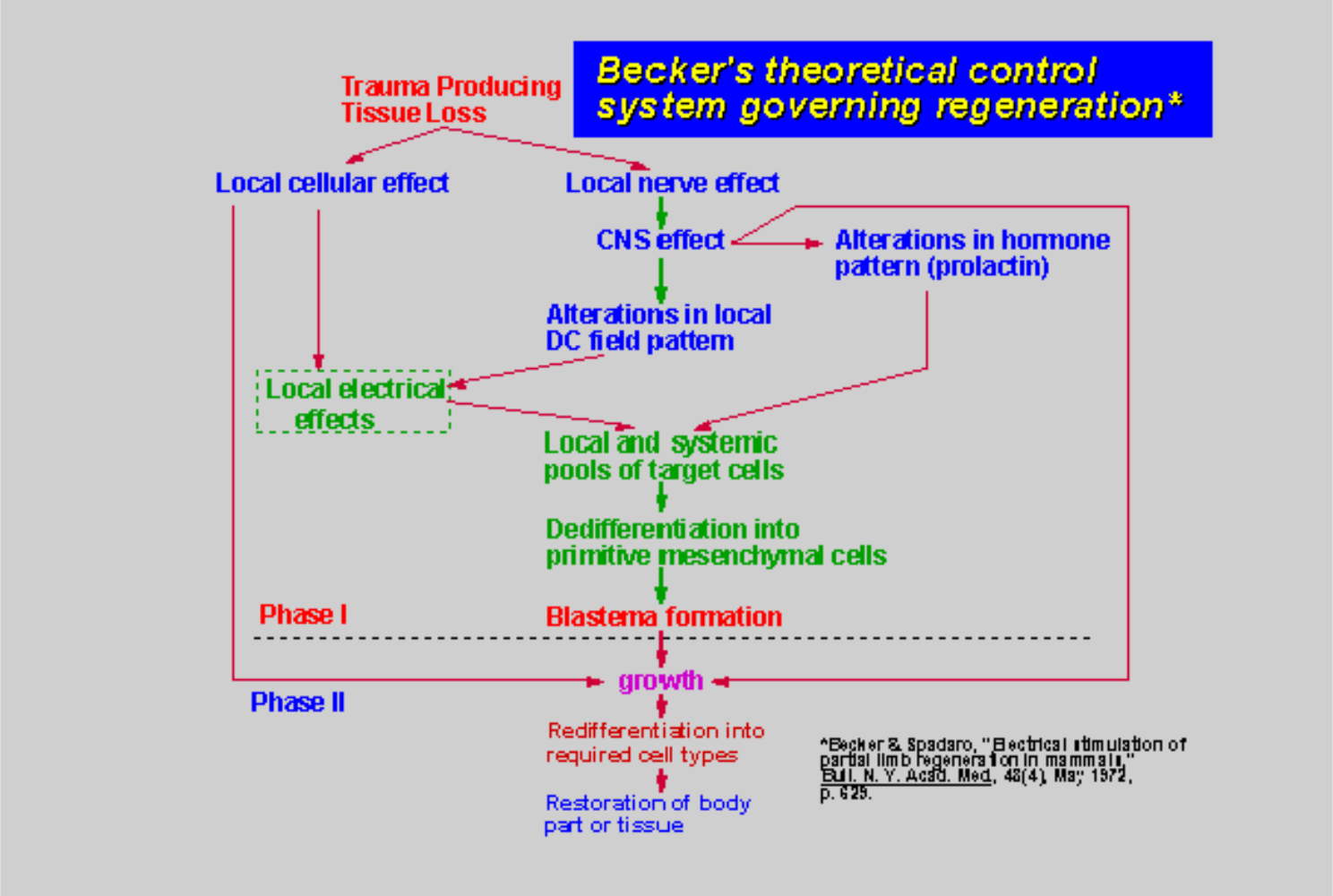

Published by Lotus® Freelance Graphics®

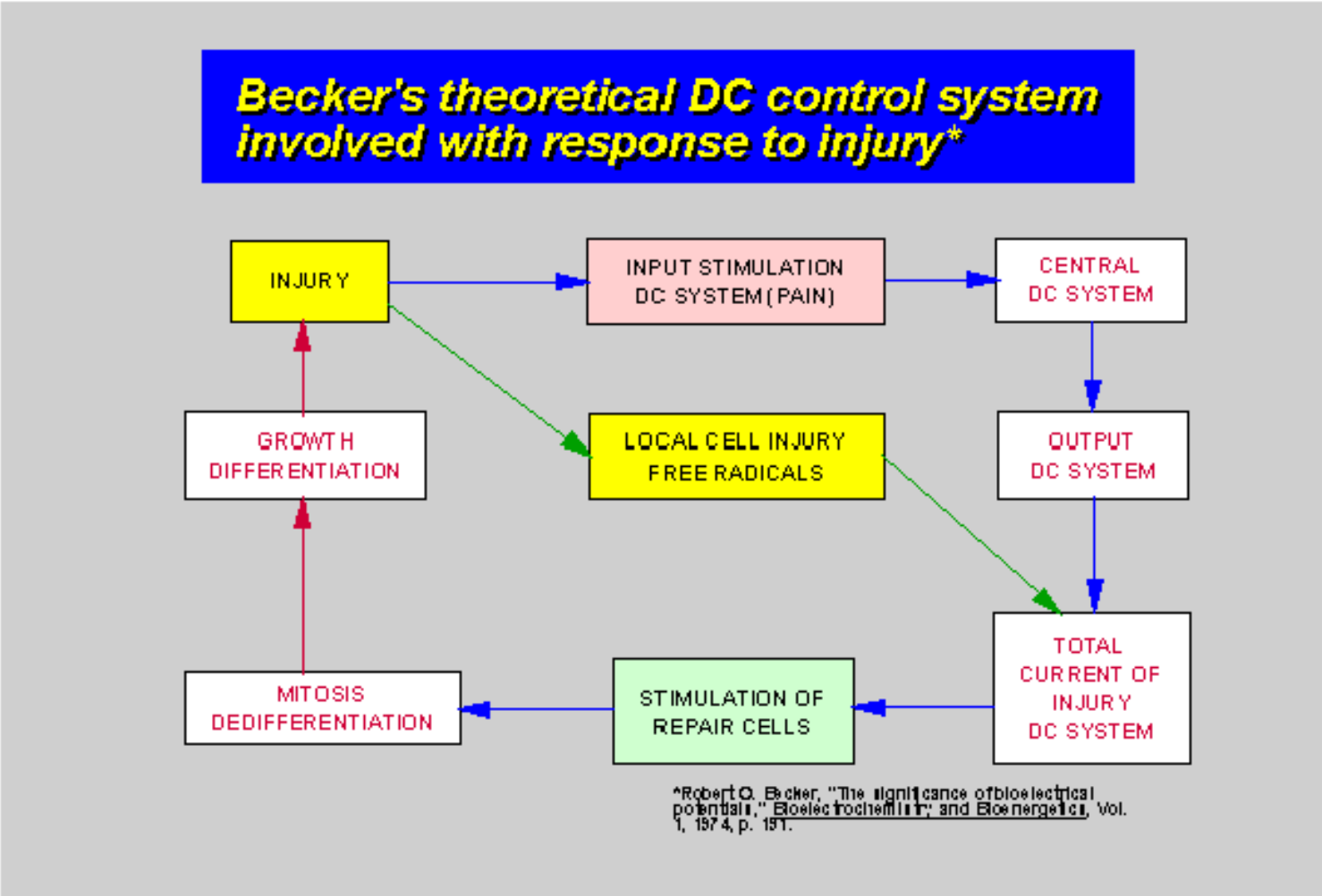

Published by Lotus® Freelance Graphics®

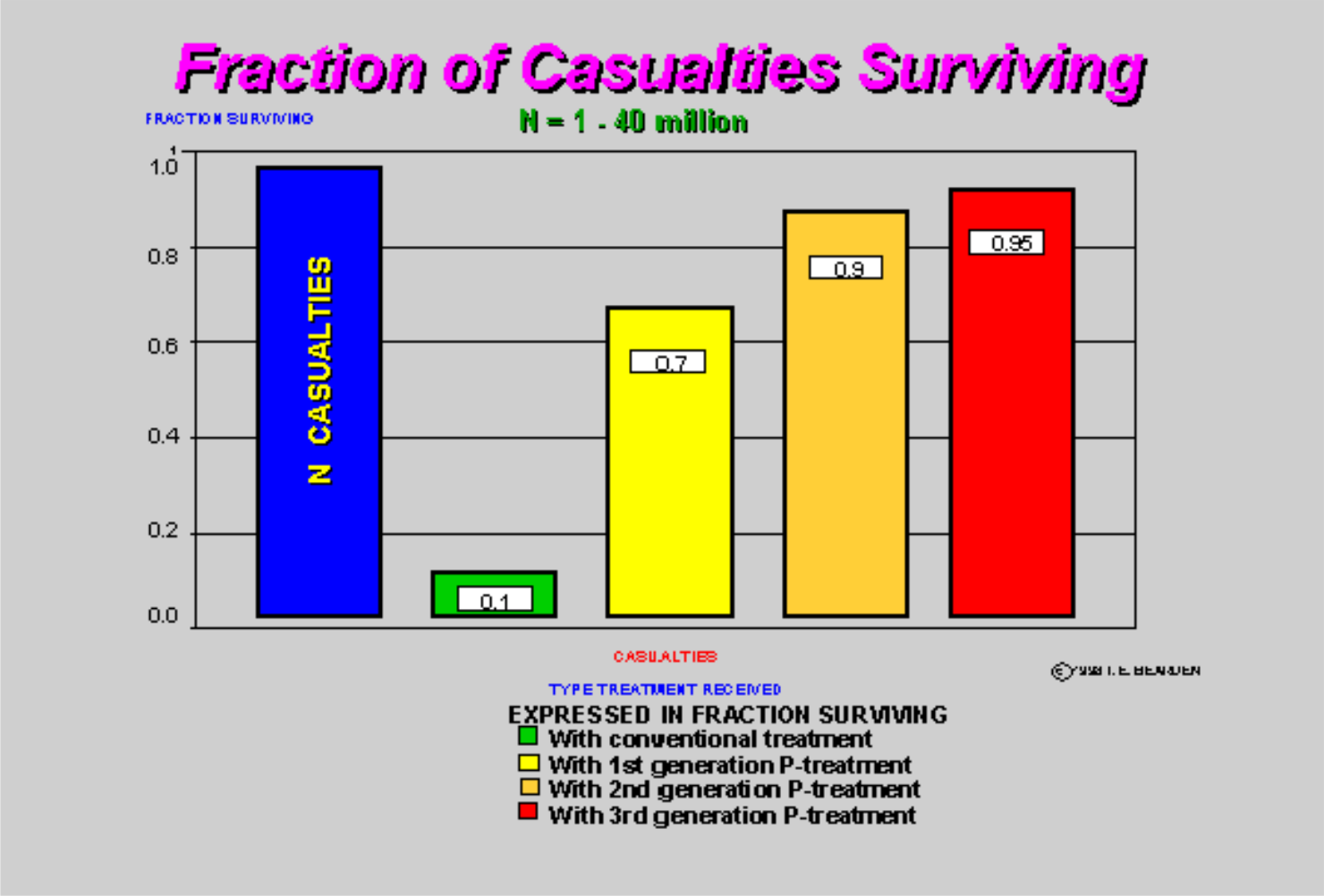

Published by Lotus® Freelance Graphics®

"Time as fuel" is the future

- Present energy science is insufficient
- Eventually will use energy locked up in time itself
- Cold fusion will provide entrée
- Cold fusion has evidence of time-as-energy
- Theorists and experimentalists should examine the implications
- Must revise foundations of Electrodynamics

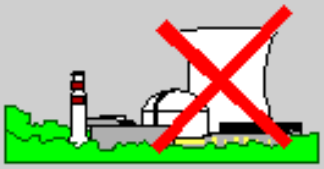

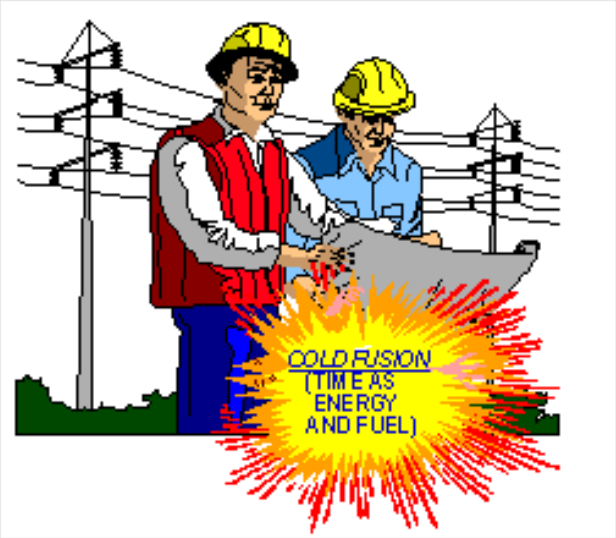

Published by Lotus® Freelance Graphics®

A National Report on America's Energy Crisis

Remarks by U. S. Secretary of Energy Spencer Abraham

U. S. Chamber of Commerce, National Energy Summit March 19, 2001

Opening Remarks

I would like to congratulate the U. S. Chamber of Commerce for convening this two-day National Energy Summit and I appreciate your invitation to participate. As we all know, the topic of energy is as timely as the day's headlines. In just my first eight weeks as Energy Secretary, California has faced almost daily power alerts. Rising natural gas prices have punished consumers with bills that, in some cases, are double or triple last winter's. And forecasts for this summer suggest the possibility of rolling blackouts.

The good news is that America's energy problems can be solved. The bad news is that the situation in California is not isolated, it is not temporary, and it will not fix itself.

America faces a major energy supply crisis over the next two decades. The failure to meet this challenge will threaten our nation's economic prosperity, compromise our national security, and literally alter the way we live our lives.

America has heard these dire warnings before - in fact, they seem to be a recurring theme in our nation's energy discussion, almost since "Colonel" Drake made the first oil strike near Titusville, Pennsylvania in 1859. "The amazing exhibition of oil," advised the State Geologist of Pennsylvania, "[is] a temporary and vanishing phenomenon-one which young men will live to see come to its natural end. " That was in 1885.

Around the same time, John Archbold - who succeeded John D. Rockefeller as head of Standard Oil - joked about the prospects for oil discoveries in Oklahoma: "Are you crazy?" Archbold said. "I'll drink every gallon produced west of the Mississippi. "

I don't know if anyone ever called Mr. Archbold on that pledge. But for whatever reason, in 1914 the U. S. Geological Survey predicted that the U. S. would soon exhaust its available oil supplies. They issued the same warning in 1926. And again in 1939. And in 1949.

All of these warnings have proven false. Despite all these expert predictions, the world has not run out of oil or other resources. And yet here we are, faced with the most serious energy shortage since the days of oil embargoes and gas lines.

My point is, America's current energy supply crisis is not due to some inevitable neo-Malthusian depletion of resources. The United States - and our North American and hemispheric neighbors-are blessed with a rich abundance of natural resources. It's political leadership that has been scarce.

For the past eight years, Washington sat on the sidelines as our nation's energy needs mounted. During the 1990s, the Clinton Administration employed a policy of taxing demand, limiting supply, and ignoring the rapidly expanding needs of the future.

Their energy strategy boiled down to: you can't find it . . . you can't transport it . . . and even if you get it, we don't want you to use it.

Through neglect or complacency or ideology, this approach has led us to the crisis we face today.

The Bush Administration is fully prepared to respond to the broad set of challenges we inherited. But we must be candid with the American people about the magnitude of the problem - which is what I'd like to talk about today.

America's Energy Supply Challenges

Three overriding facts starkly define the challenge of America's energy needs over the next two decades:

First, demand for energy is rising across the board, but particularly for natural gas and electricity;

Second, supplies are being limited by a regulatory structure that, in many respects, has failed to keep pace with advances in technology and an uncertain political environment that often discourages investment in desperately needed facilities;

And third, our energy infrastructure - that network of the generators, transmission lines, refineries and pipelines that convert raw resources into usable fuel - is woefully antiquated and inadequate to meet our future needs.

Unless these challenges are addressed, America's energy supply will be continually at risk . . . our citizens will encounter blackouts and other lifestyle-altering disruptions . . . and our economy will be hobbled by rising energy prices. Let me briefly outline some of the major issues on the horizon:

Oil: Rising Consumption, Accelerating Dependence

In the next 20 years, according to estimates by the Energy Information Administration, America's demand for oil is projected to increase by 33 percent. Yet as consumption surges, U. S. production continues to drop precipitously. We now produce 39 percent less oil than we did in 1970, losing nearly 4 million barrels a day in the process. And unless energy policy is changed, production will slip further - to just 5.1 million barrels per day by 2020 - down from a high of 9. 4 million a day 30 years ago. This widening gap between demand and domestic supply will make us increasingly dependent upon foreign imports. Back in 1973-at the height of the oil crisis - America imported just 36 percent of its oil from abroad.

Today, we import 54 percent. And, if we allow this trend to continue, we will soon be forced to look abroad for some 64 percent of our oil. This will put more power in the hands of foreign suppliers - power they are not reluctant to use, as we just saw when the OPEC cartel decided to reduce oil output by one million barrels a day.

While this administration does not agree with OPEC's decision, that decision demonstrates the importance of increasing America's production of oil. Securing an affordable, reliable and adequate supply of crude is a critical challenge. But it is only half the oil story.

Since 1980, the number of American refineries has been cut in half. There hasn't been a new refinery built in the United States in over 25 years. New regulatory interpretations limit the ability of existing refineries to expand capacity. Add to that regulations that require the production of more than 15 different types of gasoline-and you have a refining industry strained to capacity, leaving us dangerously vulnerable to regional supply disruptions and price spikes.

Refineries are so constrained that when President Clinton made the politically symbolic gesture of releasing 30 million barrels of oil from the Strategic Petroleum Reserve last fall, that oil had to be shipped overseas to be refined.

Natural Gas: Rapidly Rising Demand; Constraints on Supply

Many of the same issues confront the future of natural gas. America's demand for natural gas is projected to rise even more rapidly than oil. If Department of Energy projections are correct, by 2020 Americans will consume 62 percent more natural gas than we do today. More than 9 out of 10 of the announced new electric generating plants will be fired by natural gas.

This approaching wave of new demand begs the question: Do we have an energy policy and a regulatory structure capable of meeting our natural gas needs?

Consider just a few constraints in this market.

Right now, an estimated 40 percent of potential gas resources in the United States are on federal lands that are either closed to exploration or covered by severe restrictions. The last lease sale in the some areas of the Gulf of Mexico was more than a decade ago. New discoveries of natural gas in the United States have fallen for three straight years, creating increasing pressure for more imports.

The notion that we can rely so heavily on natural gas . . . maintain severe restrictions on exploration . . . and still enjoy low prices is a dangerous assumption.

Even if we find the supplies, moving that gas to market will require an additional 38,000 miles of transmission pipeline and 255,000 miles of distribution lines-at an estimated cost of $120-$150 billion.

Today's pipeline system can hardly handle the supplies we know exist. Alaska's Prudhoe Bay, for example, produces about 8 billion cubic feet of natural gas a day - approximately 13 percent of America's daily consumption.

But that gas never reaches the market. Instead, it is just pumped back into the ground, waiting until a pipeline is built to connect the Alaska fields to the U.S./Canada distribution system.

Electricity: Powering the Information Economy

As everyone knows, we also face a real challenge in generating enough electricity to light out homes and run our businesses. Over the next 20 years, the Department of Energy estimates that electricity demand in the United States will increase by 45 percent. That rising growth rate will require the construction of over 1,300 new power plants-about 65 every year.

Yet, the last time we added that much power was 1985.

Furthermore, there is reason to believe that this could turn out to be a conservative estimate. During the 1990s, electricity consumption far outstripped projections, driven by the energy-hungry information economy. Some experts calculate that the demands of the Internet already consume some 8-13 percent of electricity. If demand grows at just the same pace as during the last decade, we'll need nearly 1,900 new plants by 2020-or more than 90 every year-just to keep pace.

Hundreds of new generating plants will place even greater pressure on our already strained and aging power grid. America's network of transmission lines, substations and transformers was built when utilities were tightly regulated monopolies providing service to assigned regions. Interconnections between suppliers were strictly an emergency backup measure to guard against rare service interruptions. The system was simply not designed for long-haul swapping of power in a highly competitive market.

Consumers are already feeling the impact of a transmission systems stressed by rising demand. Transmission bottlenecks contributed to the blackouts that have swept through California and to price spikes in New York City last summer that cost consumers an estimated $100 million.

Coal, Nuclear, and Hydro-Electric Power

Coal has historically been American's number one source for affordable electricity; it currently powers half of America's electricity generators. And at today's recovery rates, our nation has enough coal to keep those plants running for the next 250 years.

Coal generators have already been called upon to make broad reductions in emissions. The Bush Administration supports those efforts-and we will back it up with greater incentives for investment in clean coal technology.

But the administration will not regulate coal out of existence . . . and we will not support measures that will threaten electricity supplies and significantly raise electricity prices. President Bush made the right decision last week not to impose new federal mandates on the emissions of carbon dioxide. If America is to have reliable electricity over the next 20 years, coal must continue to play a major role.

But, coal is not the only energy source facing an uncertain future. There hasn't been a new nuclear power plant permit granted since 1979. Many of the 103 existing nuclear plants are not even expected to file for a renewal of their licenses as they expire over the next 15 years.

Even hydroelectric power generation is expected to fall sharply.

Re-licensing a hydro facility can take a decade or more and cost millions. And now, even though consumers are faced with potential blackouts and chronic electricity shortages in the West, activists and some political leaders want to breach one or more of the four federal dams on the Snake River to help young salmon, on their trek to the sea.

The Dangers of Complacency

What are the dangers of complacency in light of these challenges? How does it all add up for our economy and our citizens?

This nation's last three recessions have all been tied to rising energy prices - and there is strong evidence that the latest crisis is already having a negative effect.

The National Association of Manufacturers estimates that soaring fuel prices between 1999 and 2000 cost the U.S. economy more than $115 billion-shaving a full percentage point off our Gross Domestic Product. A January survey of its 5,500 members reveals that nearly one quarter were forced to curtail operations.

During a two-week period this past January, Californians lost an estimated $2.3 billion in wages, sales and productivity. Layoffs are already hitting workers in the West as companies shift production to states with more reliable energy sources. Then there are the jobs that will never be created.

Intel's CEO Craig Barrett announced that the world's leading chipmaker won't be expanding in California: "As long as California is a Third World country," Barrett said, "we won't build $2 billion manufacturing plants here."

The Food and Agricultural Policy Institute reports that farmers are likely to see their income drop 20 percent over the next two years due to higher energy costs.

Rising energy costs are hitting every family's checkbook, primarily affecting those who can afford it least. Gas bills for many homeowners in the Washington, DC area more than tripled this year. Some residents are reporting that their heating bills are higher than their food bills this winter.

The power crisis isn't just pinching our wallets, it's changing the way we live our lives. In California, power outages have shut down traffic lights, darkened schools and closed businesses. The governor has ordered local police to patrol the streets-not for criminals, but to make sure businesses keep their lights dimmed.

But California is not the only state facing a mismatch between supply and demand. With electricity shortages predicted for New York City and Long Island this summer . . . low capacity margins threatening electricity reliability in the Midwest, Southeast and Northern Plains states . . . and strained refinery capacity in the Midwest, Americans across the nation are feeling the energy squeeze.

The Need For A National Energy Policy

Rising demand . . . tightening supplies . . . an aging power infrastructure . . . a decade of neglect from Washington: These are the trends that define America's emerging energy needs.

President Bush has committed this administration to meeting these challenges - a job that begins with the urgent task of developing and implementing a long-term national energy policy.

To accomplish this, President Bush created an Energy Task Force headed by Vice President Cheney. He

has asked us to define a clear strategy - a strategy that will allow environmentally responsible exploration and recovery of our domestic resources . . . enhance our commitment to conservation and energy efficiency . . . and encourage investment in new technology to further the development of renewable energy sources.

I wish I could say that the energy crisis now sweeping the nation has shocked the political system into action. But like other political discussions in recent years, the debate over energy seems as deeply polarized as ever.

On one end of the spectrum, some activists propose what amounts to a "zero tolerance" policy toward exploration and cling to the quixotic idea that new, undiscovered sources will somehow allow us to meet our energy needs. On the other end, some advocates place an almost limitless faith in special tax breaks for this favored activity or subsidies for that preferred industry.

The two extremes in our energy debate are founded on several enduring myths - myths that today conspire to block any true advance toward a rational and stable energy policy in the United States. Here are a few of the more prominent ones.

Myth Number 1: It is impossible to balance energy exploration and environmental protection.

Advances in technology have brought us a long way from the days when wildcatters punched holes in the ground based on the hunch they might hit a gusher. But from a regulatory standpoint, our view of oil and gas exploration hasn't changed much since we saw Jed Clampett strike "black gold" and split for Beverly Hills.

Today, satellites and computers are the tools of choice in the exploration business. Geologists can bounce acoustic and electrical vibrations off the earth's inner depths, gather the resulting mass of data into powerful computers and then create three dimensional and even four dimensional maps of resource fields miles below the surface.

Armed with these pinpoint accurate images, companies employ advanced equipment to drill vertically, horizontally and around corners-allowing us to access supplies from previously unimaginable depths, up to six miles away.

The marriage of oil and gas exploration with cutting-edge technology means fewer rigs, fewer roads and fewer pipelines. Drilling operations that required 65 acres in the 1970s need only 10 acres today. Technological improvements in just the past 15 years have generated success rate increases of 50 percent. America's national energy policy must reflect these staggering advances that have revolutionized the way we develop our resources.

Myth Number 2: All our current problems are due to an energy industry that is engaged in a massive conspiracy to gouge consumers by limiting supply to drive up prices.

This myth has been punctuated by calls for investigations into everything from last summer's Midwest gasoline price spikes, to recent allegations that power generators in the West have been withholding electricity. We have a fair and objective process for judging these claims-and action will be taken when it is merited. Over the past two weeks, for example, the Federal Energy Regulatory Commission ordered power companies to rebate some $124 million to California utilities. Meanwhile, the Federal Trade Commission recently cleared gasoline suppliers of all charges relating to last summer's price increases.

But charges of price gouging largely miss the point. There is no magic source of supply; no hidden pool of energy that can be turned on and off like a faucet. California-and other power-strapped states-will never solve the power crises they confront until they resolve the conflict between demand and supply.

Earlier this year, one company proposed building a $400 million power plant in California that would have provided enough additional electricity to light 600,000 homes in energy-starved Silicon Valley. The company pledged to plant 800 new trees to beautify the area. They proposed cloaking the power station in a brick facade to make it essentially indistinguishable from a high-rent office complex. They even promised to help maintain the local habitat for the endangered bay checkerspoon butterfly.

Their environmentally-sensitive plans won the support of the Sierra Club, the American Lung Association and the NAACP. But city officials voted unanimously -- 11-0 -- to reject the plan. In an editorial, the local paper called this move "Dumb and Dumber."

Meanwhile, further south, plans to build a 550-megawatt gas-fired generator in a Los Angeles suburb were scrapped after residents voted 2:1 against the project. The local mayor added a much-needed dose of reason and maturity to the debate-by launching a hunger strike in opposition to the plant.

In California, workers are being laid off, companies are leaving the state, farmers and small businesses are losing millions, consumers are threatened with rolling blackouts, but local officials reject power plants with little regard for the consequences. Is it really any mystery why there hasn't been a single new power plant built in California in the last decade?

Myth Number 3: The Bush energy plan is focused almost exclusively on opening the Arctic National Wildlife Refuge (ANWR) to exploration-a move that would buy us only about 6 months worth of American consumption while destroying a pristine natural wilderness, not to mention disrupting the breeding ground of the Porcupine Caribou.

Let's separate fact from fiction when it comes to ANWR.

First, according to estimates by the U. S. Geological Survey, ANWR holds between 5. 7 to 16 billion barrels of recoverable reserves-with a mean estimate of 10. 4 billion barrels. And that assumes the use of drilling technology now nearly a decade old. This represents more than 300 times the amount of the

oil President Clinton released from the Strategic Petroleum Reserve last fall. And based on December 2000 figures, it would free us from about 54 years of oil imports from Saddam Hussein and Iraq.

Second, exploration would impact only about 2,000 acres out of more than 19 million. To put that in perspective, the massive Arctic National Wildlife Refuge is about the same size as the entire State of South Carolina; the two thousand acres that would be affected is less than half the size of Dulles airport.

And as for the caribou, the herd in the Prudhoe Bay area grew more than 9-fold over the past 20 years to an estimated 28,000 in 2000-seemingly irrefutable evidence that caribou mating and oil exploration can peacefully coexist.

The decision to open a small portion of ANWR should be made on the merits. But it should not be made on the mistaken assumption that opening ANWR will allow us to produce our way to full energy independence.

America first became a net importer of energy in the 1950s - and our economy will continue to depend, in part, on imported oil. However, closing off virtually every available new source of domestic supply, enhances the leverage and power of an oil cartel that cannot be relied on to put America's interests first. While the resources of ANWR won't make us energy independent, they will help increase America's energy security by ensuring a more diverse supply of oil.

Myth Number 4: Government subsidies and tax breaks are the best way to encourage new exploration and production of energy.

This administration will continue to support funding for energy research and development initiatives. But capital is best allocated to its highest uses through the workings of the free market, not manipulations of the tax code. Government regulatory policy should not be aimed at picking winners and losers in any market, including energy. Neither should tax policy.

Myth Number 5: We can forego traditional sources and instead meet rising energy demand by harnessing wind, geothermal, solar and other forms of renewable power.

Excluding hydro-power, renewable sources currently generate about 2 percent of America's electricity. Billions have been invested in developing renewable energy-and will continue to be invested under the Bush Administration. But renewables have yet to overcome the economic advantages of conventional energy sources.

Even with promising advances in research and development, renewables will only provide, according to Energy Information Administration estimates, about 6 percent of our total electricity consumption by 2020. Even if renewables exceed our most optimistic expectations, they would still supply only a fraction of our needs over the next 20 years.

Myth Number 6: Price controls are the answer to today's energy crisis.

Memories are short, aren't they. So let me remind everyone. America imposed price controls on oil and gas in the 1970s. They were an utter failure. They led to shortages and rationing and the idea that America was gripped by malaise.

Let me be clear: The Bush Administration does not support price controls. Price controls on electricity will lead to more blackouts. Price controls on gasoline will lead to gas lines. Price controls will deepen America's energy crisis, because they won't reduce demand, but they will cripple incentives for desperately needed new investments in energy supply.

Charting a New Policy Course

The challenges are formidable . . . the warning signs are obvious . . . but I am optimistic because I know this administration's commitment is equal to the task.

Our national energy policy will be comprehensive. It will reach across every department that touches the energy marketplace-from the Interior Department and the EPA to the Transportation Department and the DOE.

Our national energy policy will be hemispheric. It will be based on the understanding that our policy cannot stand in isolation from our neighbors throughout the Americas.

Our national energy policy will stress the need to diversify America's energy supply. It will be founded on the understanding that diversity of supply means security of supply . . . and that a broad mix of supply options-from coal to windmills, nuclear to natural gas-will help protect consumers against price spikes and supply disruptions.

And our national energy policy will be balanced. It will leapfrog the myths that stifle change-rejecting the notion that there is no middle ground between environmental protection, regardless of the cost and energy exploration, regardless of the impact.

Soon we will deliver our recommendations to President Bush. Later, we will introduce legislation aimed at winning bipartisan support for a national energy policy that matches the magnitude of the challenge. I am hopeful that men and women of good will-from both ends of the political spectrum . . . from environmental organizations to industry groups-will then come together and transcend the stale debate that has characterized energy policy in recent years.

About 150 years ago, America faced a vastly different energy crisis.

Supplies of whale oil were becoming more and more scarce. Few could afford to pay for the luxury of this or other costly methods of illumination. Sure, crude oil was available. In those days it was soaked up with rags, wrung out into small vials, and then sold as a treatment for toothaches . . . until an entrepreneur lined up an investor and a chemist and launched an energy revolution that would light the world.

In America, resources become scarce only when our imagination languishes. By engaging that imagination, I am confident we can meet the challenges of today. If complacency yields to action. If we resolve to strike a rational balance between our energy needs and our environmental concerns. And if a national energy policy becomes an urgent priority.

Thank you.

Report by Energy Secretary Spencer Abraham

Contents

1. Report by Energy Secretary Spencer Abraham
2. National energy policy for 8 years
3. Energy supply challenges
4. Oil: Rising consumption and accelerating dependence
5. Oil: Rising consumption and accelerating dependence
6. Natural Gas: Rapidly rising demand, supply constraints
7. Natural Gas: Rapidly rising demand, supply constraints
8. Electricity: Needs, problems
9. The aging power grid
10. Coal fired electrical power
11. Nuclear power plants
12. Hydroelectric power generation
13. Dangers of complacency
14. Dangers of complacency (2)
15. Need for national energy policy
16. Extremes of the energy positions
17. Six prominent myths, none of which is true
18. Can we balance exploration and environmental protection?
19. Is there a price gouge conspiracy?
20. Is there a price gouge conspiracy? (2)
21. Is there a price gouge conspiracy? (3)
22. Arctic National Wildlife Refuge Exploration
23. Arctic National Wildlife Refuge Exploration (2)
24. Our increasing oil imports
25. Government subsidies and tax breaks
26. Renewable energy sources
27. Price controls
28. Charting a new national policy

---

29. **Commentary by Tom Bearden, Ph.D.**
30. Commentary
31. Caution: It is stressed that
32. An example of the time problem

33. The pending disaster
34. The bottom line:
35. Here are some events etc.
36. Lowered energy requirements for appliances
37. Easing air conditioner and heat pump standards
38. Navarro's Estimate*
39. Factors driving comparisons
40. Prices likely per kilowatt-hour
41. Covering debt already incurred
42. Deteriorating situation, rising prices
43. Other Factors
44. Paying the piper: California's bond rating reduced
45. Associated Press: Gasoline supplies are critical
46. A peculiar problem
47. MEG uses the Aharonov-Bohm effect to extract free energy from the vacuum (1)
48. MEG uses the Aharonov-Bohm effect to extract free energy from the vacuum (2)
49. MEG uses the Aharonov-Bohm effect to extract free energy from the vacuum (3)
50. MEG uses the Aharonov-Bohm effect to extract free energy from the vacuum (4)
51. MEG uses the Aharonov-Bohm effect to extract free energy from the vacuum (5)
52. Negentropic Engineering
53. Rigorous "out-of-the-box" work
54. Rigorous "out-of-the-box" work (2): (Bedini "negative resistor" in a battery)*
55. Initiating a Battery to COP>1.0
56. Secretary alone cannot solve it
57. What is desperately needed
58. Why it can be done in time
59. Cautions!
60. The scientists have failed us
61. 136-yr-old EM Model1
62. All EM from Time Domain1
63. Astonishing but true
64. With plentiful, cheap, clean electrical energy:
65. Recommendations to DOE
66. In conclusion:

Report by Energy Secretary Spencer Abraham

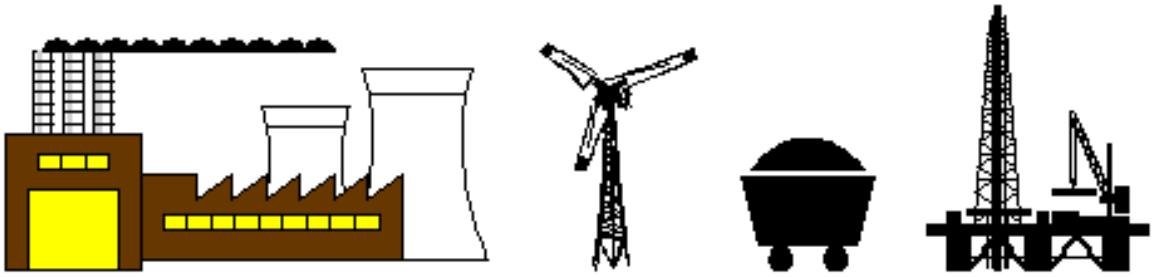

National Energy Summit,
U.S. Chamber of Commerce
Mar. 19, 2001

Published by Lotus® Freelance Graphics®

National energy policy for 8 years

- The national policy imposed the following:
  - Taxed energy demand
  - Limited the energy supplies
  - Ignored expanding energy needs
- Summary of the past policy on energy:
  - You cannot find it
  - You cannot transport it
  - If you get it, we don't want you to use it
- *Good News:* Crisis can be solved
- *Bad News:* Not temporary; will not fix itself

Published by Lotus® Freelance Graphics®

Energy supply challenges

- Demand for energy rising across the board, particularly for natural gas and electricity
- Supplies limited by regulatory structure
  - Failed to keep pace with technology advances
  - Uncertain political environment discourages investment in desperately needed facilities
- Energy infrastructure is woefully antiquated and inadequate

Note: The energy infrastructure is that network of generators, transmission lines, refineries, and pipelines that convert raw resources into usable energy or fuel

Published by Lotus® Freelance Graphics®

Oil: Rising consumption and accelerating dependence

- In U.S., will increase 33 percent in 20 years
- U.S. production continues to drop
  - Produce 39% less now than in 1970
  - At present reduction rate, production will decrease to 5.1 million barrels per day by 2020, down from 9.4 million barrels per day in 1970.
- Imports have steadily risen
  - From 36% in 1973 to 54% today
  - Will soon rise to 64% unless checked
  - Empowers foreign suppliers such as OPEC
- Assuring affordable, reliable, adequate supply of crude oil is a critical national challenge

Published by Lotus® Freelance Graphics®

Oil: Rising consumption and accelerating dependence

- We have been decreasing the infrastructure
  - Since 1980, U.S. refineries reduced by 50%
  - No new refinery built in over 25 years
  - New regulatory interpretations limit expansion of capacity of existing refineries
  - Regulations require producing more than 15 different types of gasoline
  - Refining industry strained to capacity
- E.g., Clinton symbolically released 30 million barrels of oil from the Strategic Petroleum Reserve
- *The oil had to be shipped overseas to be refined!*

Published by Lotus® Freelance Graphics®

Natural Gas: Rapidly rising demand, supply constraints

- By 2020, U.S. will consume 62% more natural gas than today
- More than 9 out of 10 of announced new electric power plants will be fired by natural gas
- 40% of potential gas resources are on federal lands either closed or severely restricted
- Last lease in Gulf of Mexico more that 10 years ago
- New discoveries falling
- Dangerous to assume relying on natural gas, severely restricting exploration, keeping low prices

Published by Lotus® Freelance Graphics®

Natural Gas: Rapidly rising demand, supply constraints

- Given enough natural gas, 38,000 more miles of transmission pipelines and 255,000 miles of distribution lines will be needed
- This alone will cost $120-150 billion
- E.g., Alaska's Prudhoe Bay produces 8 billion ft^3 per day
  - About 13% of America's daily consumption
  - Never reaches the market, pumped back into ground
  - Waiting on building a pipeline to connect Alaska fields to US/Canada distribution system

Published by Lotus® Freelance Graphics®

Electricity: Needs, problems

- Over 20 years, conservative estimate is that demand will increase 45%
  - Will require construction of 1,300 new power plants, about 65 every year (about one every 6 days)
  - Last time we added so many power plants was 1985
- Some experts calculate demand will increase faster
  - May require nearly 1,900 new power plants
  - That is 90 per year (about one every four days)
- Either way, will place great pressure on already strained and aging power grid

Published by Lotus® Freelance Graphics®

The aging power grid

- Network of transmission lines, substations, and transformers
- Built when utilities were tightly regulated, supplied service to assigned regions
- Interconnections between suppliers were strictly emergency backup measure for rare usage
- Not designed at all for long-haul swapping of power in a competitive market
- Transmission bottlenecks contributed to California blackouts this winter and price spikes in New York City last summer

Published by Lotus® Freelance Graphics®

Coal fired electrical power

- Coal powers half our electricity generators.
- Enough coal for 250 years.
- Coal emissions slated for broad reductions
- Administration will support new technology, but will not threaten electricity supplies and let it significantly raise electricity prices
- President Bush therefore decided not to impose new mandates on CO_2 emissions
- If nation is to have reliable electricity over next 20 years, coal must play a major role

Published by Lotus® Freelance Graphics®

Nuclear power plants

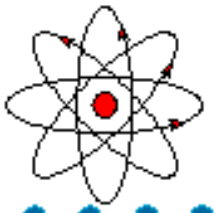

- No new nuclear power plant permit granted since 1979
- 103 existing nuclear power plants
- Many not expected to even file for license renewal as licenses expire over the next 15 years

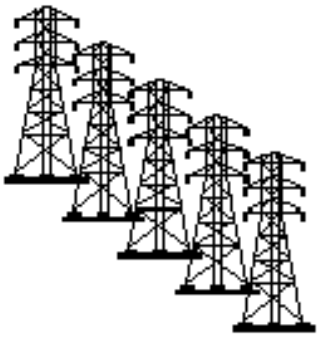

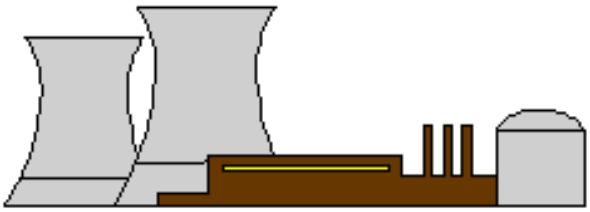

Published by Lotus® Freelance Graphics®

Hydroelectric power generation

- Expected to fall sharply
- Re-licensing can take a decade and cost millions
- Some activists and political leaders want to breach one or more of the four federal dams on the Snake River to help young salmon on their trek to the sea

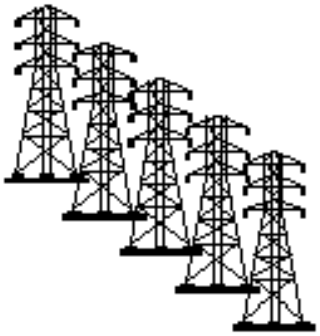

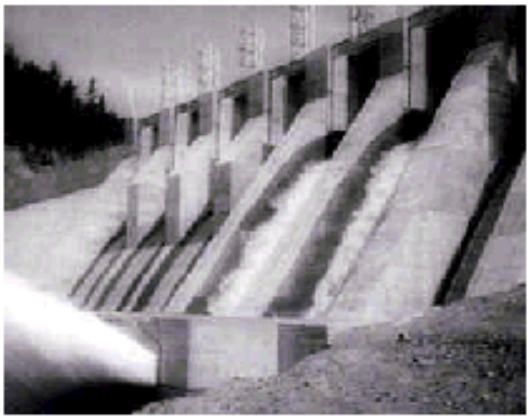

Published by Lotus® Freelance Graphics®

Dangers of complacency

- Last three recessions tied to rising energy prices
- Latest crisis already causing negative effects
- Soaring fuel costs: extra $115 billion between 1999 and 2000; 1% off Gross Domestic Product
- In two weeks in January 2001:
  - Californians lost $2.3 billion in wages, sales, etc.
  - Layoffs hitting in West as manufacturers shift to states with more reliable energy sources
  - Intel will not build $2 billion plants in California to expand there.
  - Farmers' incomes to drop 20% in next two years

Published by Lotus® Freelance Graphics®

Dangers of complacency (2)

- Some homeowner gas bills in Washington D.C. more than tripled this year
- Heating bills of some residents exceeded their food bills during the winter

- California power outages shut down traffic lights, closed businesses, darkened schools
- Police patrols were used to insure compliance
- Electricity shortages predicted for New York City and Long Island this summer
- Strained refinery capacity in the Midwest
- Low capacity threatens electricity reliability in Midwest, Southeast, and Northern Plain states

Published by Lotus® Freelance Graphics®

Need for national energy policy

- Rising demand, tightening supplies, aging power infrastructure, decade of neglect
- President created Energy Task Force, headed by VP Cheney, to determine strategy
  - Environmental responsible exploration and recovery
  - Conservation and energy efficiency
  - Encourage investment in new technology for renewable energy sources
- Debate is still deeply polarized

Published by Lotus® Freelance Graphics®

Extremes of the energy positions

- Some activists:
  - Zero tolerance to exploration
  - New, undiscovered sources will somehow provide for us

- Some advocates:
  - Limitless faith in special tax breaks for a favored activity or subsidies for a preferred industry

Published by Lotus® Freelance Graphics®

Six prominent myths, none of which is true

1. It is impossible to balance energy exploration and environmental protection
2. There is a massive energy industry conspiracy, limiting supply to drive up prices
3. The Bush energy plan is focused almost exclusively on opening the Arctic National Wildlife Refuge (ANWR) to exploration
4. Government subsidies and tax breaks are the best way to encourage new exploration and energy production
5. Can forego traditional sources and meet demand by wind, geothermal, solar, and other forms of renewable power
6. Price controls are the answer to the energy crisis

Published by Lotus® Freelance Graphics®

Can we balance exploration and environmental protection?

- Today, satellites and computers are tools of choice for exploration.
- Acoustic and electrical vibrations off the earth's depths provides maps of resource fields

- With advanced equipment, drill vertically, horizontally, or around corners up to 6 miles
- Fewer rigs, fewer roads, fewer pipelines
- 65 acre drilling in 1970s needs only 10 now
- Success rates have increased 50 percent

Published by Lotus® Freelance Graphics®

Is there a price gouge conspiracy?

- Calls to investigate gasoline price spikes
- Allegations that power generators in the West have been withholding electricity
- Investigation and action is taken where merited
  - FERC ordered power companies to rebate $124 million to California utilities
  - FTC cleared gasoline suppliers relating to last summer's price increases
- There is no hidden energy pool that can be turned on and off like a faucet
- Must solve power crises by resolving conflict between demand and supply

Published by Lotus® Freelance Graphics®

Is there a price gouge conspiracy? (2)

- Early this year (2001) one company proposed to build a $400 million power plant in California
  - Additional electricity for 600,000 homes
  - Plant 800 trees to beautify the area
  - Cloak facility in a brick facade to resemble a high-rent office complex
  - Help maintain habitat for an endangered butterfly
- Project supported by Sierra Club, American Lung Association and NAACP.
  - City officials unanimously (11 to 0) rejected it
  - Local paper called this move "Dumb and Dumber".

Published by Lotus® Freelance Graphics®

Is there a price gouge conspiracy? (3)

- Plans to build a 550 megawatt gas-fired generator in a Los Angeles suburb were scrapped
- Residents voted 2:1 against the project
- Local mayor launched a hunger strike in opposition to it.
- In California:
  - Workers are being laid off
  - Companies are leaving the state
  - Consumers threatened with rolling blackouts
  - Local officials reject power plants with little regard
- Is it really any mystery why there hasn't been a single new power plant built in California in the last decade?

Published by Lotus® Freelance Graphics®

Arctic National Wildlife Refuge Exploration

- **Myth:** Would buy only about 6 months worth of consumption while destroying pristine wilderness and disrupting the caribou
- **Fact:** The ANWR holds from 5.7 to 16 billion barrels of recoverable reserves (mean is 10.4)
  - More than 300 times the oil Clinton released
  - Frees us from equivalent of 54 years of imports from Saddam Hussein and Iraq
  - Exploration involves only some 2,000 of more than 19 million acres -- like half the Dulles airport compared to the entire state of South Carolina

Published by Lotus® Freelance Graphics®

Arctic National Wildlife Refuge Exploration (2)

- The caribou herd in the Prudhoe Bay area grew more than 9-fold over the last 20 years (to 28,000 in 2000)
- Proves that caribou mating and oil exploration can peacefully co-exist
- Exploration should be considered on merits
- Opening ANWR will help, but does not allow full energy dependence

Published by Lotus® Freelance Graphics®

Our increasing oil imports

- U.S. became a net importer of oil in 1950s
- Closing off all new domestic sources enhances leverage and power of oil cartels
- These cannot relied on to put American interests first

- Development of domestic resources such as ANWR will help increase energy security by ensuring a more diverse supply of oil

Published by Lotus® Freelance Graphics®

Government subsidies and tax breaks

- Administration will continue to support funding for energy research and development initiatives.
- Capital is best allocated through the workings of the free markets, not manipulating the tax code
- Government regulatory policy should not aim at picking winners and losers
- Neither should tax policy

Published by Lotus® Freelance Graphics®

Renewable energy sources

- Excluding hydro-power, renewable sources generate about 2% of America's electricity
- Bush administration will continue to invest in renewable energy sources
- Renewables have not overcome economic advantages of conventional sources
- Even with promising advances, renewables will provide only about 6% of our total electricity by 2020.
- Even with most optimistic breakthroughs, they will supply only a fraction of our needs over the next 20 years.

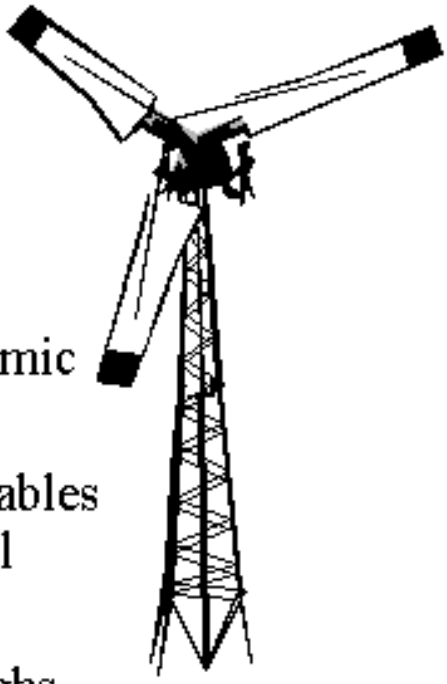

Published by Lotus® Freelance Graphics®

Price controls

- America imposed price controls on oil and gas in the 1970s; they were an utter failure
- Led to shortages, rationing, and idea that America was gripped by malaise
- Administration does not support price controls
  - Lead to more blackouts and gas lines
  - Will not reduce demand, but cripple incentives for new investments in energy supply
  - Will deepen America's energy crisis

Published by Lotus® Freelance Graphics®

Charting a new national policy

- Comprehensive. Across every department.
- Hemispheric. Includes the Americas.
- Diversify the energy supply for security, with a broad mix of options.
- Balanced. Combines environmental protection and energy exploration.
- Recommendations to be delivered to President Bush soon.
- Legislation will be introduced and bipartisan support.
- Hope that men and women of good will come together and transcend the present stale debate.

Published by Lotus® Freelance Graphics®

Commentary

by Tom Bearden, Ph.D.

12 April 2001

Published by Lotus® Freelance Graphics®

Commentary:

- A reasoned and professional assessment of the present energy crisis situation by Secretary Abraham
- Demonstrates administration and DOE are energetically attempting to get the crisis under control with conventional methods
- Scientific advisers have no "out-of-the-box" energy knowledge; policy stays essentially "in-the-box"
  - Shortage of oil, get more oil
  - Shortage of natural gas, get more natural gas
  - Shortage of electrical power plants, build more
  - Need 90 per year; build them
  - Short distribution grid, build additional
  - Shortage pipelines, build some more
- Cannot "get more" in time to prevent economic disaster
- Cannot avoid overrunning first quarter 2004 "point of no return"

Published by Lotus® Freelance Graphics®

Caution: It is stressed that

- Given only the conventional Lorentz-regauged electrical design model, COP>1.0 EM systems are impossible. That type of EM only designs COP<1.0 systems!
- Given advice from scientific "experts" who know only COP<1.0 design, U(1) electrodynamics, and Lorentz regauged power system theory, the Administration is doing the best that can be done, all factors considered.
- The DoE and the Administration must use whatever they have available to them, to try to solve the crisis.
- Hence DoE and the Administration is not at fault. On the contrary, they are trying very hard to solve this escalating energy crisis, using the tools the scientists offer them.
- It is the U.S. scientific community that is squarely to blame for this sad state of affairs, and for the coming economic collapse.

COP = Coefficient of Performance

Published by Lotus® Freelance Graphics®

An example of the time problem

- TVA and Texaco are discussing building a coal gasification 1,500 megawatt power plant.
  - Near Scottsboro, Alabama
  - Construction could begin in 2002.
  - In 3-6 years, begin producing electricity.
  - If 5 years, it will come on line in 2007.

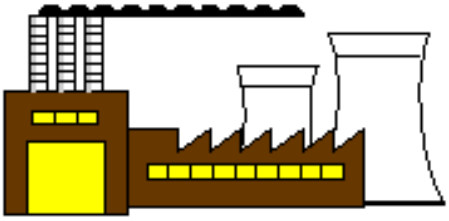

- 90 plants are required per year, beginning now.
- 2007 is about the time that world economies are crumbling, conflicts are raging, and all the arsenals weapons of mass destruction will be unleashed.
- 2007 is about the time civilization will be destroyed, if we continue on the present course.
- With only present solution, can get perhaps 400 to 450 plants ready to come on line, *about the time they are destroyed*

Published by Lotus® Freelance Graphics®

The pending disaster

- The world energy crisis will escalate steadily, forcing collapse of world economy circa 2008.
- As nations' economies crumble, conflicts soar and one or more nations will exchange nukes and other *weapons of mass destruction* (WMD). Security partners forced to enter the melee.
- This evokes the long-dreaded WMD "spasm" response.
  - Only way for a nation to survive is to destroy its perceived foes before they destroy it.
  - Everybody fires everything, as fast as they can, unleashing all the arsenals of WMD, desperate attempt to survive.
  - Civilization and much of the biosphere is destroyed. Unleashing of smallpox alone will kill 2 billion.
- The time for this Armageddon is circa 2007.

Published by Lotus® Freelance Graphics®

The bottom line:

- Self-powering and COP>1.0 electrical power systems must be rolling off the assembly lines en masse by first quarter 2004. That is the "point of no return".
- Otherwise, the point of no return will be overrun and no solution is possible, by any means, by anyone or by everyone.
- If that deadline is missed, the crisis curves cannot be "damped" in time to prevent world economic collapse.
- It is still doable, but only with a massive national effort of the highest priority. No one recognizes that as yet.
- Meanwhile, the scientific community is doing business as usual. You will have to just push most of it aside.
- We are "fiddling while Rome prepares to explode".

Published by Lotus® Freelance Graphics®

Here are some events etc.

- Exxon Mobil Corp. soared to the top of the Fortune 500.
- Oil, gas, and power companies climbed.
- Increased income due to
  - Falling supplies so price increases
  - Utility deregulation. CA stupidly capped end prices, and freed middle prices. Dunce cap award for that one!
  - Soaring natural gas prices.
  - OPEC maneuvering to keep oil prices high
- Pacific Gas & Electric declared bankruptcy; another CA power company on the ropes.

Published by Lotus® Freelance Graphics®

Lowered energy requirements for appliances

- Approved in last days of Clinton administration
- Washing machines must use 35% less energy, beginning in 2007
- Water heaters must use 5%-9% less energy, beginning in 2004
- Adds about $240 to price of washing machine
- Lower energy costs over time will offset initial increased cost
- Approved by Bush administration in April 2001 after review

Published by Lotus® Freelance Graphics®

Easing air conditioner and heat pump standards

- Bush administration eased Clinton's new efficiency standards
  - Still require air conditioners and heat pumps to use 20% less energy than most current models, beginning in 2006
  - Clinton standard was 30% less
- All central home air conditioning units must meet minimum seasonal efficiency ratio (SEER) of 12, compared to present 10
- Replaces Clinton SEER standard of 12
- In California, easing these standards requires two more power plants

Published by Lotus® Freelance Graphics®

Navarro's Estimate*

Peter Navarro, economist at UC Irvine,

in conjunction with Utility Consumers's Action Network

*Jennifer Coleman, "Power costs could be triple last year's for Californians," AP release, 22 Apr. 2001

Published by Lotus® Freelance Graphics®

Factors driving comparisons

- Last summer, soaring costs drove three utilities to brink of financial ruin
- This summer costs may rise by as much as three-fold
- Factors at play:
  - Drought-induced reduction of hydroelectric power supplies in Pacific Northwest
  - Predicted hotter-than-average summer
  - Competition from other states
- State buys about 1/3 of its power from spot market
- Spot market likely to see substantial increases

Published by Lotus® Freelance Graphics®

Prices likely per kilowatt-hour

- Last summer, peak average high price was 86 cents per KWHR
- This summer expected to hit $1 to $2 per KWHR
- Consumer rates capped at about 10 cents per KWHR
- The growing gap will have to be filled by state funds, which themselves are dwindling
- Eventually the California taxpayers have to pay the difference, which is from 10 to 20 times what they are paying now for capped power

Published by Lotus® Freelance Graphics®

Covering debt already incurred

- Since January, California has authorized $5.7 billion to buy power for customers of Pacific Gas and Electric Co. and Southern California Edison
- The two utilities' credit was cut off due to
  - Soaring wholesale costs
  - Cap on consumer rates
  - Went nearly $14 Billion in debt
- San Diego Gas and Electric Co. incurred debts but is in better shape
- State will be repaid by $10 Billion in bonds
  - Expected to be issued in May
  - Expected to last till September but will not
  - PG&E and Edison Customers will pay off the bonds

Published by Lotus® Freelance Graphics®

Deteriorating situation, rising prices

- Prices rising
  - Will rise even more as demand increases
  - Demand will rise by about 50 percent during the summer
- California's own generation resources cannot meet projected peak demands and reserve requirements
  - May fall by 3,500 megawatts short (peaks)
  - Enough power for 2.6 million households
- Power grid manager must depend on imports
  - Northwest drought makes extra power scarce to find
  - Northwest utilities themselves may have to import, not supply extra

Published by Lotus® Freelance Graphics®

Other Factors

Credit, payback, scarcities

Published by Lotus® Freelance Graphics®

Paying the piper: California's bond rating reduced

- Standard & Poor dropped California's bond rating two notches, from AA to A+
  - Financial drain from continuing energy crisis
  - Mounting uncertainty in costs to state of current electrical power crisis
  - Likely long term detrimental effect on state's economy
  - State's ability to pay its debt has reduced
- Rating not reduced further because of
  - State's diverse economy
  - Proposed revenue bonds to reimburse state treasury
- Can reduce further if California does not make $10 Billion bond issue and pay off its energy-related debts

Published by Lotus® Freelance Graphics®

Associated Press: Gasoline supplies are critical

- Supplies tightest for mid-April since U.S. government record-keeping began in 1963
- There is a shortage of reformulated gasoline that produces less smog and is required during summer
  - MTBE additive made from methanol, a derivative of natural gas
  - Natural gas prices quadrupled Dec-Jan; MTBE reduced by 1/3
  - California uses more MTBE-treated gasoline than any other state
  - Gas-guzzling SUV sales boomed in 1999 and 2000
- Any kind of refinery snag will be amplified
- Last winter, major refiners had to focus on filling heating oil shortage instead of replenishing gasoline supplies for summer
- Now many forced out of service to take care of maintenance that was put off to deal with the heating oil crisis
- Environmental restrictions make it difficult to build refineries; none constructed in the U.S. for more than 20 years

Published by Lotus® Freelance Graphics®

A peculiar problem

- E.g., Magnetic Energy Ltd. has a working laboratory experiment COP>1.0 device (a motionless electromagnetic generator - MEG).
- Solved basic EM system COP>1.0 theory.
- Two years more R&D necessary to finish, do production engineering and scale up for production.
- Immediate capital needed: $20 million.
- Negotiations with large capital firms:
  - Most have substantial capital committed to normal power community, long term.
  - MEL success thus costs them dearly in unrecovered funds.
  - They shoot themselves in the foot if they fund the MEG, since this is a "very disruptive" technology.

Published by Lotus® Freelance Graphics®

MEG uses the Aharonov-Bohm effect to extract free energy from the vacuum (1)

- The Aharonov-Bohm effect (ABE) is in over 2,000 published physics papers in the hard literature.
- Hundreds of experiments prove it. Physicists themselves would not believe it for 25 years after it was advanced and proven. Now it is universally accepted.
- Free evocation of ABE never appeared for use in power systems, without paying energy to evoke it, until we used ABE in the MEG and *freely* evoked it.
- If the magnetic field **B** of a source is locally confined in a closed path (as in a toroid), the outside local spacetime (ST) where the **B**-field was withdrawn is still curved. Curved ST is energetic. The 3-space energy has been transformed into curl-free magnetic vector potential **A**. But one pays for that **A** around a toroid, since one has to "feed" the toroid.

Published by Lotus® Freelance Graphics®

MEG uses the Aharonov-Bohm effect to extract free energy from the vacuum (2)

- We uncovered a transformer core material that will *freely* do that **B**-localization of the **B**-flux of a permanent magnet, extracting all the **B**-flux into a closed transformer-like core path.
- The uncurled **A**-potential forms outside the core path as a freely flowing river of energy.
- We pay nothing at all to get the **A**-energy flow going, or to sustain it. That's for free.
- The vacuum energy exchange and locally curved ST sustain that energy flow indefinitely, due to the permanent magnet dipole's broken 3-symmetry.

Published by Lotus® Freelance Graphics®

MEG uses the Aharonov-Bohm effect to extract free energy from the vacuum (3)

- We then hang "collecting antenna circuits" in that free river of energy flow in **A**-space outside the core.
- We pulse-perturb the river *a little*, with very sharp-edged pulses of low energy. Huge **E**-fields (i.e., d**A**/dt) are formed and strike the antenna circuits.
- From the large AC **E**-fields, we can intercept and collect large AC energy. The energy is dissipated in loads in the external separate collecting circuits, with no back emf into the primary circuit.
- Only small average *input* energy is required. We pay only to *switch* or *gate* the large energy flow.

Published by Lotus® Freelance Graphics®

MEG uses the Aharonov-Bohm effect to extract free energy from the vacuum (4)

- By analogy, imagine an old triode vacuum tube.
- Suppose we trick nature into *giving* us the cathode and electron energy flow, for free, really pouring energy out of there continuously.
- Then we only have to put in a grid to switch it, a plate to intercept and catch it, and a plate circuit to dissipate it in a load.
- In the MEG, the permanent magnet and the special core provide the cathode and free flow.
- We provide the "grid" gating, plate "catching," and "plate circuits" with loads that are powered.

Published by Lotus® Freelance Graphics®

MEG uses the Aharonov-Bohm effect to extract free energy from the vacuum (5)

- The MEG becomes a *free transmitter with multiple receivers* system, *not* a transformer but a triode.
- The transmitted energy is absolutely free, taken right from curved ST. We only have to "perturb" or shake the flow a tiny bit, in sharp little shocks without much energy. The broken 3-symmetry of the magnetic dipole, in the fierce vacuum exchange, furnishes the energy in the large **E**-fields by d**A**/dt.
- The COP that can be achieved by the MEG is limited only by the **A**-space available outside the core for collection, and the number of surface charges in those external circuits powering the loads.

Published by Lotus® Freelance Graphics®

Negentropic Engineering

- Can easily produce continuous giant EM energy flows from the vacuum: anywhere, anytime, for peanuts
- Once flow initiated, no further input required
- Focuses on real energy problem: intercepting the pouring energy and dissipating it in loads
- Dramatic implications:
  - Reduces hydrocarbon combustion; meet Kyoto accords
  - Obsoletes nuclear power, reduces nuclear wastes
  - Reduces biospheric pollution
  - Reduces biological effects of pollution
- One drills the vacuum for energy, much easier than drilling the ground for oil and natural gas

Published by Lotus® Freelance Graphics®

Rigorous "out-of-the-box" work

- Evans, Anastasovski, Bearden et al. (15 authors), Alpha Foundation's Institute for Advanced Study:
  - "Explanation of the Motionless Electromagnetic Generator with O(3) Electrodynamics," *Found. Phys. Lett.* 14(1), Feb. 2001, p. 87-94.
  - "Explanation of the Motionless Electromagnetic Generator with the Sachs Theory of Electrodynamics", *Found. Phys. Lett.* 14(8), Aug. 2001 (in press).
  - "Energy from the Vacuum," in referee process.
  - "O(3) Electrodynamics from the Irreducible Representations of the Einstein Group," in referee process.
  - "Electromagnetic Energy from Curved Spacetime," in referee process..
  - "The Effect of Vacuum Energy on the Atomic Spectra," *Found. Phys. Lett.*, 13(3), June 2000, p. 289-296.
  - "Operator Derivation of the Gauge Invariant Proca and Lehnert Equations: Elimination of the Lorentz Condition," *Found. Phys.*, 30(7), 2000, p. 1123-1130.
  - "Runaway Solutions of the Lehnert Equations: The Possibility of Extracting Energy from the Vacuum," *Optik*, 111(9) 2000, p. 407-409.
  - "Classical Electrodynamics Without the Lorentz Condition: Extracting Energy from the Vacuum," Physica Scripta, 61(5), May 2000, p. 513-517.

Published by Lotus® Freelance Graphics®

Rigorous "out-of-the-box" work (2): (Bedini "negative resistor" in a battery)*

- A battery-powered circuit is not a single closed current loop; but has two largely separate current half-loops:
  - Internal ion current between plates.
  - External electron current from outside of one plate, through external circuit and load, to other plate.
- M/q ratios very different: Ion current more than 200,000 times heavier per coulomb than electron current.
- Can dephase the two currents, overpotentialize both.
- Battery can thus be hyper-recharged while external circuit simultaneously powered.
- Bedini has been building successful little prototypes for more than 20 years. Could dramatically improve electric automobiles.

* T.E. Bearden, "Bedini's Method for Forming Negative Resistors in Batteries," *Journal of New Energy*, 5(1), Summer 2000, p. 24-38. http://www.cheniere.org/techpapers/Bedini.pdf

Published by Lotus® Freelance Graphics®

Initiating a Battery to COP>1.0

- A Battery is highly nonlinear with multiple currents
  - Electron current largely bound between outside of plates and external circuit including through load
  - Ion current confined between plates, through separators
  - Mass-to-charge ratios of the two currents are vastly different
- Can dephase currents by 180°
  - ion current in charging mode
  - electron current in circuit-powering mode, powering circuit
- Done by forming negative resistor
  - Sharp, higher potential at insulator interface on plate surface
  - Bidirectional overpotentialization
  - Energy extracted from active vacuum

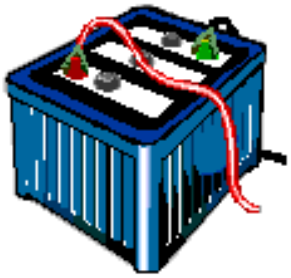

Published by Lotus® Freelance Graphics®

Secretary alone cannot solve it

- Scientific community, universities, national labs, NSF, NAS, power companies doing business as usual
  - No really out-of-the-box energy research
  - Do not realize all electrical systems and power lines are powered by energy extracted from the vacuum
  - Not correcting flawed electrodynamics, uninterested
  - Not funding any vacuum energy extraction projects
- New policy cannot quickly eliminate the long delay time till new electrical power plants come on line
  - Need 60 to 90 powerplants per year; first one can be operational only after several years even with crash program
  - Skyrocketing energy, trucking and other transport costs will drive the nation into financial disaster during that delay
- Only doable solution: vacuum-energy systems

Published by Lotus® Freelance Graphics®

What is desperately needed

- Separate "Manhattan Project" on energy from the vacuum systems, reporting to Secretary
  - Operate under Presidential Decision Document
  - Staffed with carefully selected scientists and engineers
  - Top priority funding
  - Round-the-clock research
- Support from selected personnel in national labs, universities, research corporations
- Start with known COP>1.0 systems; factual information can be provided

Published by Lotus® Freelance Graphics®

Why it can be done in time

- Already have elements of necessary theory of Maxwellian disequilibrium COP>1.0 systems; funding will finish it rapidly
- Several legitimate COP>1.0 systems exist, can be quickly developed and scaled up
- Two years or less after start, a range of self-powering systems can be rolling off the assembly lines en masse
- A great breakthrough in close-looping principles for self-powering technology has been accomplished
  - Deeply proprietary, can be released
  - Using breakthrough, parallel program can develop self-powering of many present power systems
  - Will not be discussed without the program

Published by Lotus® Freelance Graphics®

Cautions!

- In the so-called "free energy field", many charlatans, much disinformation, some honest mistakes, some real systems and information
- Absolutely must separate wheat from chaff
- Working laboratory proof-of-principle devices do exist; groups need funds for development
- Inventors with such systems usually do not comprehend the actual mechanism used
- U.S. is 100 years behind in applying necessary corrections to electrodynamics; but some courageous scientists have begun

Published by Lotus® Freelance Graphics®

The scientists have failed us

- Secretary Abraham, it is the U.S. scientific community which has failed us, and which is responsible for this unnecessary crisis.
- No textbook presently even correctly states what actually powers a power line. The basis has been in particle physics for a half-century.
- Before arbitrary regauging by Lorentz in the 1880s, the Maxwell-Heaviside theory does prescribe electrical power systems far from equilibrium in their fierce vacuum exchange, including systems which power themselves and their load, extracting the energy from their broken symmetry in their active vacuum energy exchange.
- Every power system already wastes a trillion times more energy than is placed on the power line; scientists and engineers do not even know it.
- Heaviside published the basis for that in the 1880s and 1890s; Poynting never even knew it. Lorentz knew it, couldn't explain the source, stated "no physical significance" and discarded it.
- This discarded "Heaviside energy" is what is generating the extra gravity in spiral galaxies, and holding their arms together. Scientists arbitrarily discarded it in the 1880s; have forgotten it today.

Published by Lotus® Freelance Graphics®

The scientific community enforces a 137-year-old flawed EM model

- Equations still assume material ether.
- Thoroughly confuse cause and effect.
- "Fields" as defined in electrical engineering do not exist outside matter (Feynman, Wheeler)
- Arbitrarily discards vacuum energy exchange and usage.
  - Proven for nearly 50 years in particle physics
  - Dipole exchange particularly significant because dipole's negentropy extracts *all* EM energy -- used in the system -- from the vacuum. Every system already powered by the vacuum anyway.
- Arbitrarily discards about 10 trillion times as much EM energy present around a circuit as the circuit intercepts.
- Scientific community pummels most scientists who try to change model or develop systems far from equilibrium in their known violent energy exchange with the active vacuum.
- ***Same flawed power system schema for more than a century.***

Published by Lotus® Freelance Graphics®

All EM 3-space energy freely comes from the time domain*

* T. E. Bearden, "Giant Negentropy of the Common Dipole," Journal of New Energy, 5(1), Summer 2000, p. 11-23. http://www.cheniere.org/techpapers/GiantNegentropy.pdf

Whittaker, Math. Ann., 57, 333 (1903) shows this rigorously.
Dipole's broken 3-symmetry well-known in particle physics

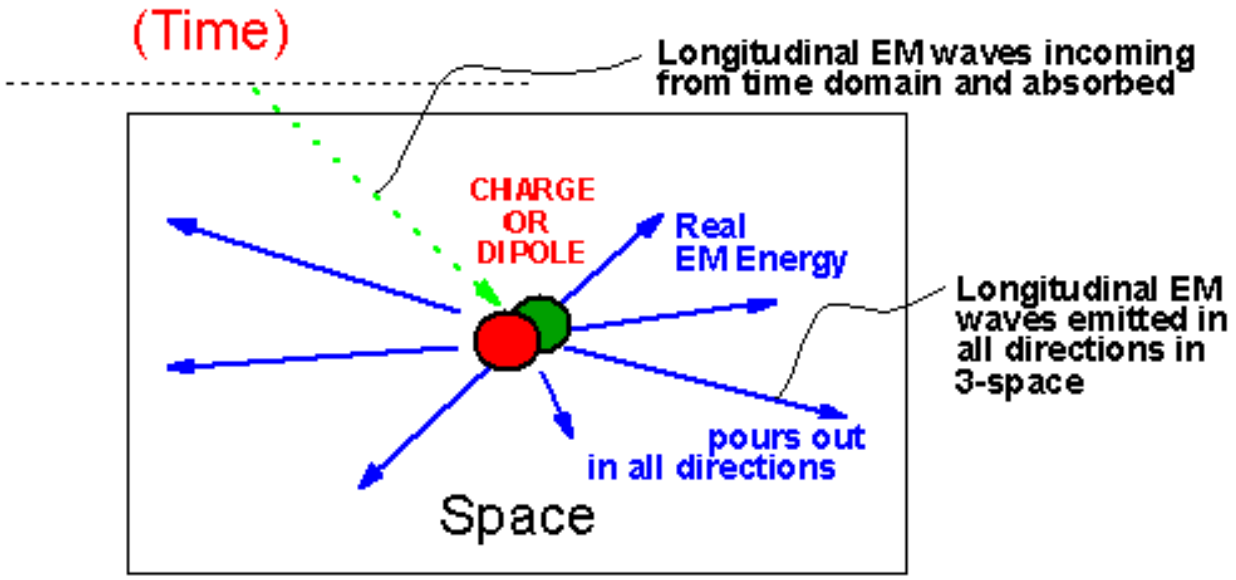

Note: Whittaker (and others) interpreted the phase conjugate half set of LWs after interaction with the charges of the dipole; and as an *effect* rather than the *cause*. This fundamental non sequitur has just been repeated since then. Thus they missed the solution of the source charge and source dipole.

Published by Lotus® Freelance Graphics®

Astonishing but true

- All the hydrocarbons burned, nuclear fuel rods consumed, dams and windmills built, fuel cells consumed, and batteries installed do not add a single direct watt to the power line. Never have, never will.
- All that does is continually restore the generator source dipole, which our systems are designed to continually destroy faster than they power their loads.
- The dipole extracts energy from the vacuum, and pours it out to fill all space around the power lines. The power lines intercept and use only about 10exp(-13) of it.
- Nobody tries to catch any of the rest of it. *There is no ordinary source of that energy flow, which is enormously greater than the energy put into the shaft of the generator.*

Published by Lotus® Freelance Graphics®

With plentiful, cheap, clean electrical energy:

- Even poorest nations get onto the fast track
  - Rapid development of infrastructure
  - Concentrate on clean water, medical treatment, education, plentiful food
  - Rise of industries and creation of jobs
- Gradual but permanent shift in electric power
  - Accent decentralized systems
  - Dramatically reduce vulnerability of power grids
  - Practical, agile electric cars, trucks, trains
- Releases the iron grip of energy barons

Published by Lotus® Freelance Graphics®

Recommendations to DOE

- "Out-of-the-box" prototypes do exist, theory developed.
- Crash Manhattan project; Presidential Decision Directive.
- Intense program with highly selected scientists to correct EM flaws and extend EM theory to higher symmetries.
- Obtain compensated release of breakthrough close-looping process to initiate many normal power systems into self-powering systems, and rapidly develop and apply. No discussion without program and NDA.
- Protect patent rights of o/u inventors. Suspend national labs, universities, other research labs from "cluster patenting" in the area. They sign nondisclosure, non-compete, eliminate "march in" theft clauses.
- President order release of known overunity systems captured from inventors and in deep black community.

Published by Lotus® Freelance Graphics®

In conclusion:

- Secretary Abraham, the threat of weapons of mass destruction attacks and giant destruction is not overestimated. It's really worse.
- Large Russian nuclear weapons, e.g., are already in U.S. cities, with on-site Spetznaz teams to explode them. See Lunev's book.
- Professional teams with anthrax, smallpox, etc. already in place, waiting. Unleashing smallpox alone will kill 2 billion worldwide.
- In the WMD strategic attack, the delivery to the target stage is already accomplished.
- 25 nations -- many hostile to the U.S. -- now have nukes, biological warfare agents, etc.
- The earth is in fact a giant powder keg, waiting to explode at the touch of a match. Unless solved at enormous speed, the energy crisis will certainly strike that match about 2007.
- Only one thing -- energy from the vacuum -- can do it. Neither the DoE nor the U.S. scientific community are working on that.

Published by Lotus® Freelance Graphics®

Weapons Slides

The Tom Bearden Website

Help support the research

"Others [terrorists] are engaging even in an eco-type of terrorism whereby they can alter the climate, set off earthquakes, volcanoes remotely through the use of electromagnetic waves… So there are plenty of ingenious minds out there that are at work finding ways in which they can wreak terror upon other nations…It's real, and that's the reason why we have to intensify our [counterterrorism] efforts." *

Secretary of Defense William Cohen at an April 1997 counterterrorism conference sponsored by former Senator Sam Nunn. Quoted from DoD News Briefing, Secretary of Defense William S. Cohen, Q&A at the Conference on Terrorism, Weapons of Mass Destruction, and U.S. Strategy, University of Georgia, Athens, Apr. 28, 1997.

Slides
(covers period up to 1999)

- The Coming Strategic Attack on the United States
- Outline
- Loss of two separate A-10 Warthogs in 1997
- Typical ABM Defenses (Widely Deployed by mid-70s)

- Launch Phase Anti-Missile System
- Launch Phase Anti-Bomber System
- HC-130s Engines Quit, Aircraft Crashes
  Nov. 22, 1996
- 1996 Actions by this analyst
- Additional Information Exists: Not Analyzed, Not Integrated in Briefing
- Kill of Arrow DC-8, Gander AFB, Dec. 12, 1985
- Satellite Photos of Plumes in Soviet Arctic Since 1974
  See "Fer de Lance" for additional information
- Aum Shinrikyo ("Supreme Truth" Cult), Shoko Asahara, Leader

  Aum Shinrikyo - Anatomy of a Dangerous Cult
- Ashkhabad Problem and Its Solution
- Strange Characteristics of Iran Quake, Sep. 1978
- Iran Earthquake, September 1978
- Situation Now (Assessment)
- Situation Now (Assessment 2)
- Aspects of Strong Local Asymmetry
- Mass Casualty Problem: Aerial Anthrax

Spray on Washington, D.C.

- Present Status of the WMD Threat to the United States
- Some Present Problems in the U.S. WMD Defense Capabilities
- Internal Terrorist Threat with Weapons of Mass Destruction: Now & Future
- Attempt to Ban Energetics Weapons Worldwide
- Brezhnev's Schedule
- Large glowing Tesla globe witnessed in Red China by hundreds
- Cold Explosion -- 9 April 1984 Near Kurils, and formation and growth of spherical shell (globe)
  Sequence of Events
- Cold Explosion -- 9 April 1984 Near Kurils, and formation and growth of spherical shell (globe)
  What They Were
- Cold Explosion -- 9 April 1984 Near Kurils (Plus additional weapons effects)
- Countering Insane MAD Systems:
  Find Loophole, Exploit It
- Next Generation Counter to Both Sane and Insane MAD systems
- Simultaneous Dudding of Nuclear Weapons Worldwide

- Simultaneous Dudding of Nuclear Weapons Worldwide
- Operation Divine Wind II
- Advanced EMBW Applications
- EM Biological Warfare (EMBW)
- Microwave Radiation of U.S. Embassy in Moscow
- Pentagon EMI Studies, 1989
- EM Missile Practice (6 slides)
- Subdivisions of Soviet Energetics Program
- Communism's Goal
- Manuilsky's Goal vs. Status Today (Dec. 1996)
- Professor Hellman, German Scientist Released from Work in Soviet Union
- Hemispheres and Globes of Light (4 slides)
- How Could Such Superweapons Ever Be Concealed?
- Soviets Easily Concealed These Superweapons for Four Decades
- Microscope-type, laser-like interferometer for inducing quick α-decay in samples of otherwise longer-lived isotopes
- Longitudinal Wave Interferometry: Endothermic

- Longitudinal Wave Interferometry: Exothermic
- U.S. Air Attack on Libya, April 1986
- Lightning Wall
  circa 1959-1960
- Lisitsyn's Report: Brain Code Broken
- Large Longitudinal Wave Interferometer (LWI) Accident
- Large Longitudinal Wave Interferometer (LWI) Accident
- Use of Hidden Information Content of the Field Can Provide Action-At-A-Distance
- Two Types of Mutual Assured Destruction (MAD) System
- Psychoenergetics Weapons Teams Mentally Disable All Personnel
- Strikes Against Special Ship and Energetics Weapons Sites
- "Mindsnapper" Attack on Special Ships and Energetics Weapons Sites
- How Much Off Guard Are We?
  (7 Slides)
- Possible Targets: 1995-9 Escalation Phase
- Propagation of Weapon Effects
- Yugoslav Earthquake, Followed by Cold Explosion
  April 15th, 1979

- Countering an Insane QP Weapon
- Gulf War Disease: KGB QP Weapon Induced ST Curvature Engines for a Cocktail of Diseases
- Self-Targeting in Inner EM Channel Can Produce a Quantum Potential
- Mechanism for Producing a Quantum Potential
- Major Principles for Use of Quantum Potential Weapons
- Major Principles for Use of Quantum Potential Weapons (2)
- Instantaneous Communication by a Quantum Potential
- Participants in a quantum potential share a common multiply-connected spacetime (MCST)
- Quake in Tangshan, China
  28 July, 1976
- Exchanging Earthquakes
- Instant Communication by a Quantum Potential
- Westerners Do Not React to Slow Threats
- Characterizing a Given Risk or Risk Factor
- Technical Risk Management
- Aum Shinrikyo's Sarin Facility

- In Scalar Beam Interference Zone
- Physicist Schappeller Auralaz Munster, Austria
- Initial Soviet Plan for Cold War, After WWII
- Josef Stalin: Absolute Dictator
- Exploding any Resistance by Operational Scientists
- Significant Soviet Statements
- Captain Svoboda Dives Headlong to Her Death
- T-polarized Beam Projector
- Possible Tests (1)
- Possible Tests (2)
- Possible Tests (3)
- Possible Tests (4)
- Mushroom Cloud Rising From Sea
- Launches from Cape Canaveral and Vandenberg AFB Provided Practice Targets of Opportunity
- The sinking U.S.S. Thresher, with her controls jammed, implodes when she reaches crush depth
- Embodiment of an instrument array sufficient to discriminate when time-density charging has occurred, and that transduction

of time-charge decay has occurred.

- Time-Polarized EM Wave Interferometer Creating Space-Time Curvature Engines in a Distant Interference Zone
- Transmutation of Radioactive Nuclei at a Distance
- Transmutation of Radioactive Nuclei
- Typical Tesla Shield, Northern Route of Japan
- A Curious Tide in Human Affairs
- Large Scalar EM Interferometer (LASI) Accident Near Urals, 1958
- The Superpower Paradox: Asymmetric Cheap WMD Strategic Strike and Destruction
- The KGB/Yakuza-Aum War Plan
- Why Western Science is Ignorant of KGB Energetics
- Transmutation of Radioactive Nuclei at a Distance
- TheYakuza
- Yugoslav Earthquake, Followed by Cold Explosion
  April 15, 1979

---

* Note that the Secretary did not speak the words in square blocks; these were added by the writers later,

probably to "soften the tone" of the Secretary's information release. So the Secretary confirmed that some nations of the world -- not just some ragged terrorists, as the writers tried to imply for spin control -- do possess novel electromagnetic weapons and are using them to induce earthquakes, engineer the weather and climate, and trigger volcanic eruptions.

THE COMING STRATEGIC ATTACK ON THE UNITED STATES

By an AUM/Yakuza/KGB/Communist Coalition Using Energetics SuperWeapons

T.E. Bearden, LTC
U.S. Army (Retired)
M.S. Nuclear Eng.
Fellow Emeritus, AIAS

With Technical Background and History of Energetics Weapons

Partial support by the Association of Distinguished American Scientists is gratefully acknowledged.d

© 1995, 1996, 1999 T.E. BEARDEN

Outline

- Background: Classical Electromagnetics (and Defects)
- Background: Energetics (Scalar Electromagnetics)
- Background: Soviet Energetics Weapon Development
- KGB/Communist Plans
- Countering of Soviet/KGB/Communist Plan in Mid-80s
- Soviet Economic Collapse and Adaptation of Plan
- Weapons Bleed-Out: KGB/Russian Mafia
- Yakuza: The Japanese Mafia
- Aum Shinri Kyo (Supreme Truth) Cult
- Coalition: Aum/Yakuza/KGB/Communists/Russian Mafia
- Operation Divine Wind II: Three Phases
  - Phase I: On-Site Training Phase (Completed)
  - Phase II: Escalation Phase (In Progress)
  - Phase III: 1997 Strategic Strike on the United States
  - Support Plan A: Feints, Deception, Sabotage & Terrorism
  - Support Plan B: Test Range
  - Support Plan C: Worldwide Weather Engineering
  - Support Plan D: Strategic and Combat Intelligence
- Special Information
- Recommended Actions

© 1995, 1996 T.E. BEARDEN

The Tom Bearden Website

Help support the research

Loss of two separate A-10 Warthogs in 1997

- A-10 Mysterious Flyaway and Crash - April 2, 1997
- Death of Second A-10 Pilot - May 27, 1997
- Captain Button's Mysterious Flyaway and Eventual Crash
- Death of Second A-10 Pilot - May 27, 1997

A-10 Mysterious Flyaway and Crash

April 2, 1997

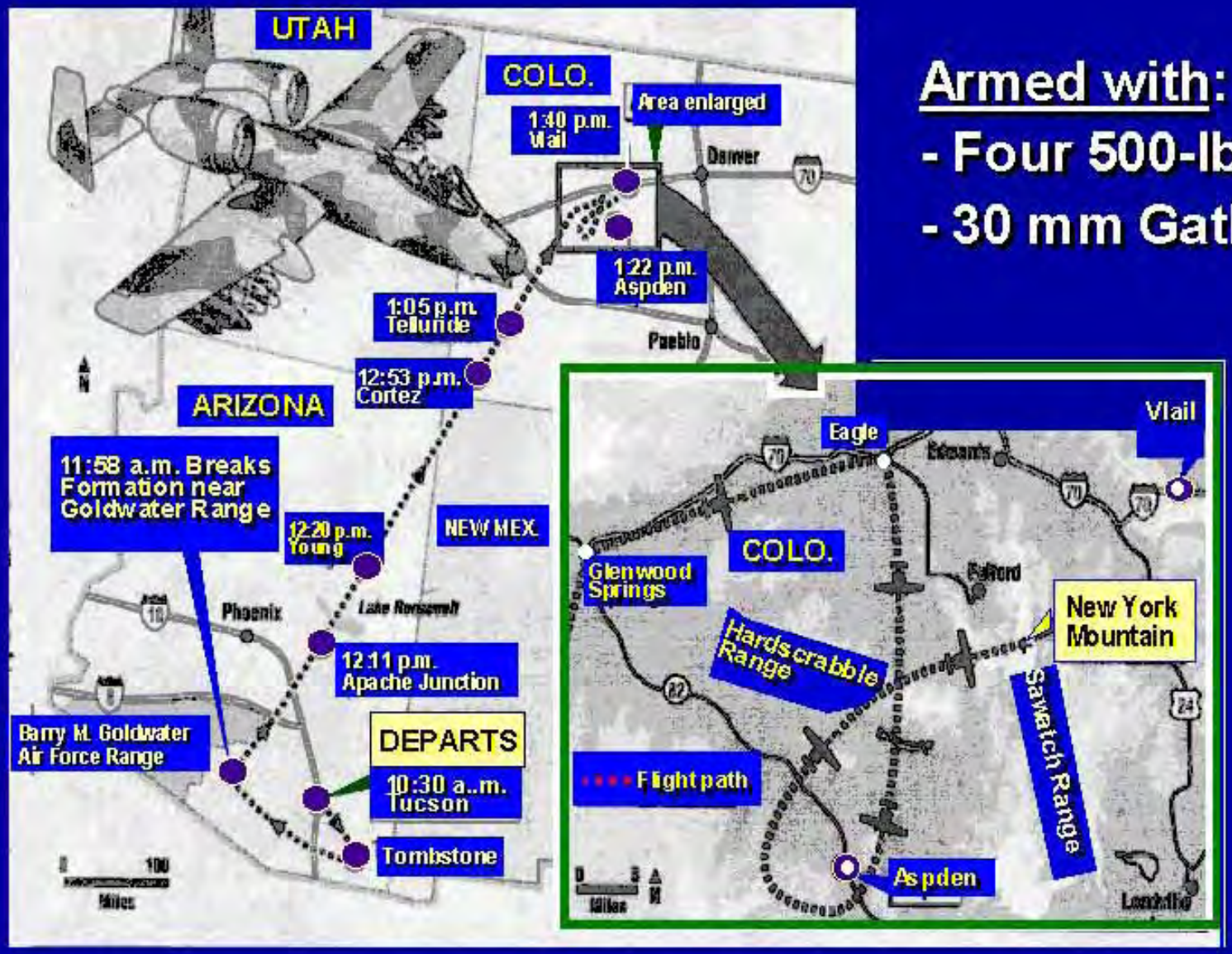

Armed with:

- Four 500-lb bombs
- 30 mm Gatling gun

Death of 2nd A-10 Pilot May 27, 1997

- Captain Amy Svobody
- Night training mission
- From Davis-Montham AFB
- From same wing as Captain Button, who flew his A-10 off course for over an hour and then crashed on April 2.
- Climbout from ordnance delivery on target
- Nosed down sharply and dived into ground

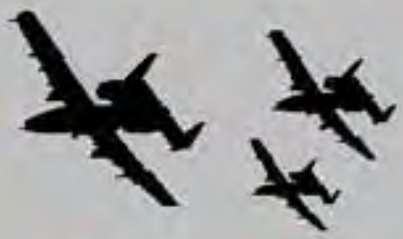

Companion A-10's

- Experienced night flyer & instructor
- Nosed sharply over and flew into ground
- Psychoenergetic kill

© T.E. BEARDEN 1999

Psychoenergetic weapon induced instant hypnogogic state and reversed Svoboda's sense of up and down.

A-10 Mysterious Flyaway and Crash

April 2, 1997

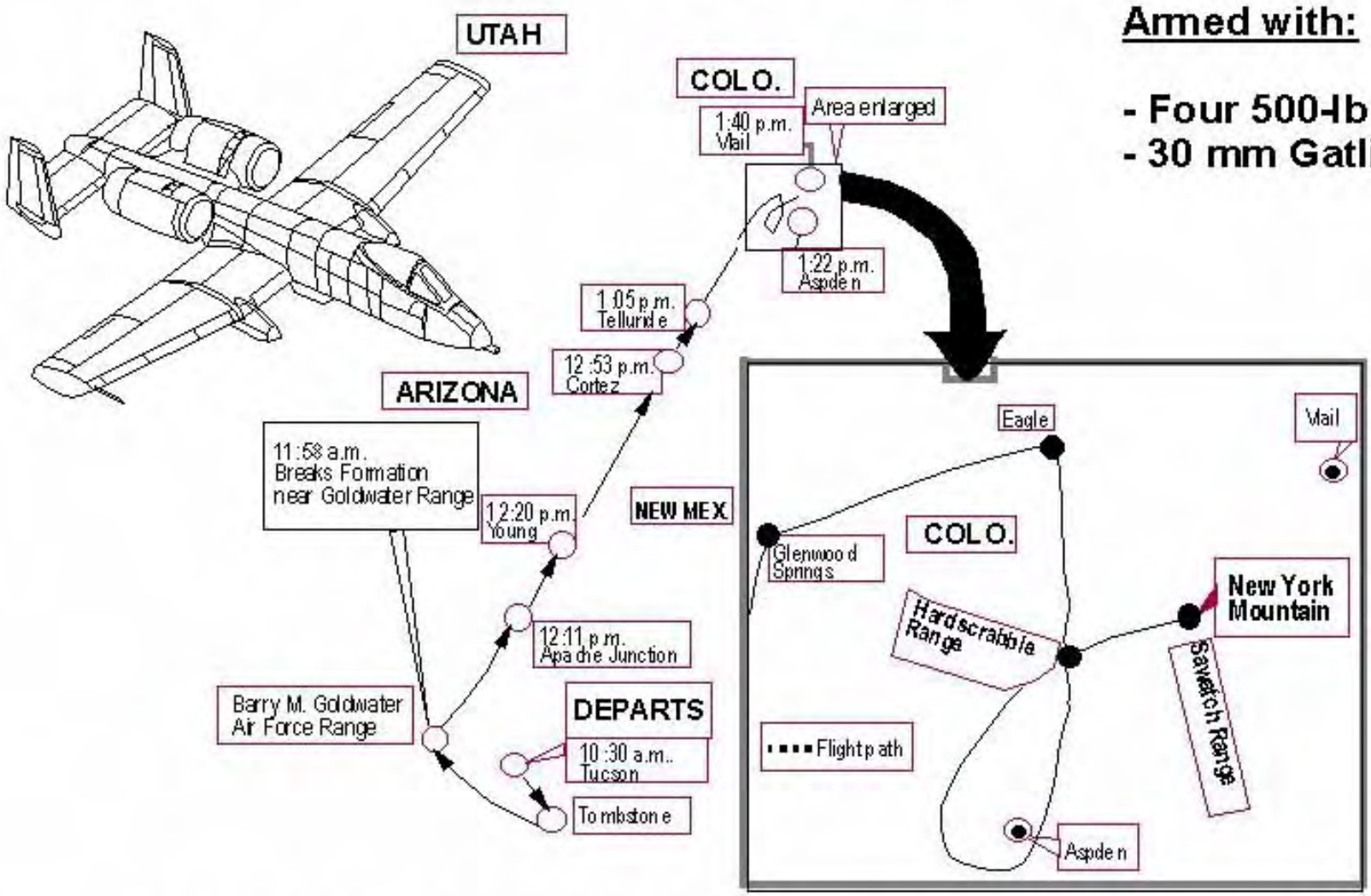

Armed with:

- Four 500-lb bombs
- 30 mm Gatling gun

Figure 14a. Captain Button's mysterious flyaway and eventual crash.

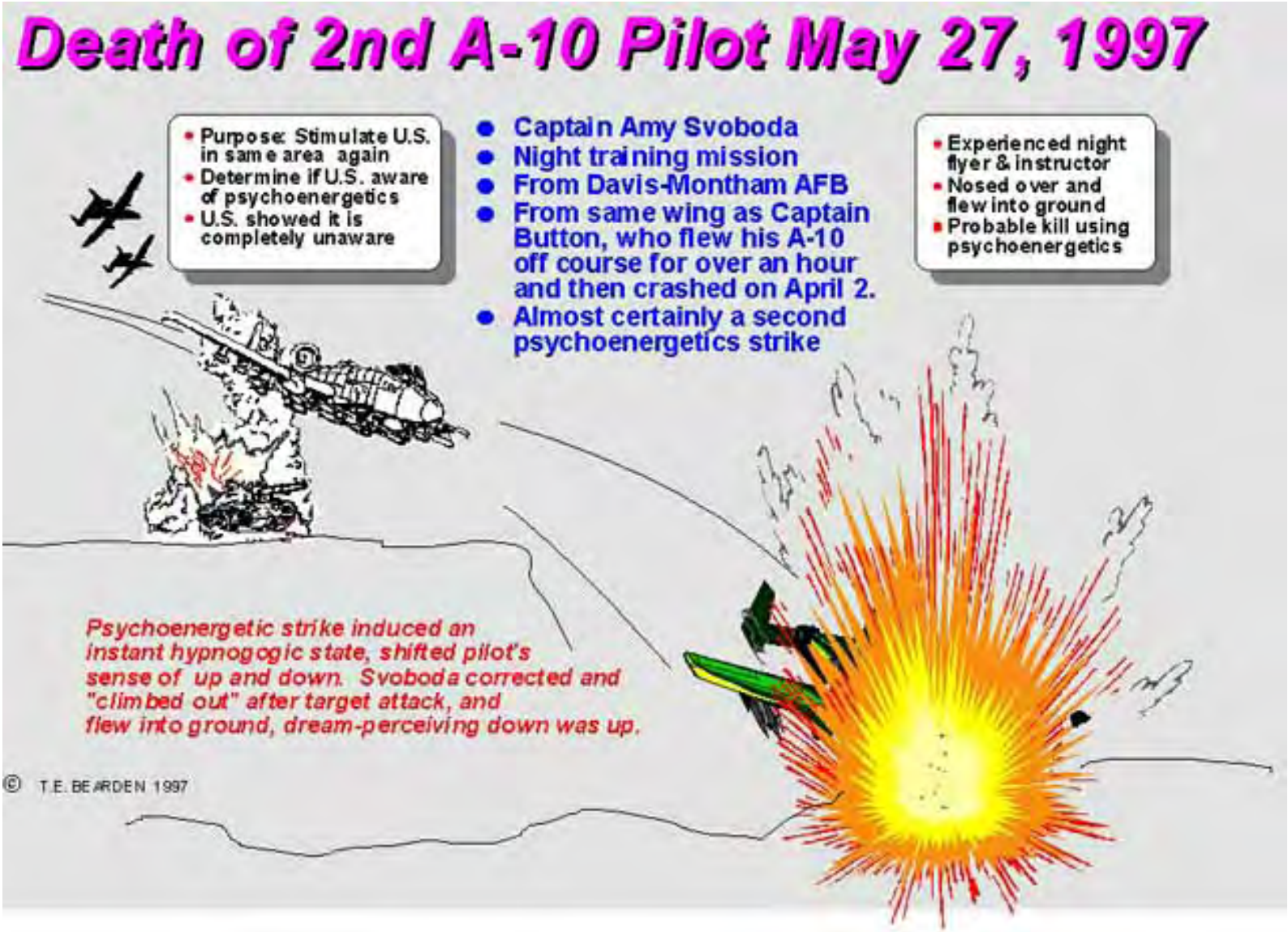
Death of 2nd A-10 Pilot May 27, 1997
• Purpose: Stimulate U.S. in same area again
• Determine if U.S. aware of psychoenergetics
• U.S. showed it is completely unaware
• Captain Amy Svoboda
• Night training mission
• From Davis-Montham AFB
• From same wing as Captain Button, who flew his A-10 off course for over an hour and then crashed on April 2.
• Almost certainly a second psychoenergetics strike
• Experienced night flyer & instructor
• Nosed over and flew into ground
• Probable kill using psychoenergetics
Psychoenergetic strike induced an instant hypnogogic state, shifted pilot's sense of up and down. Svoboda corrected and "climbed out" after target attack, and flew into ground, dream-perceiving down was up.
© T.E. BEARDEN 1997

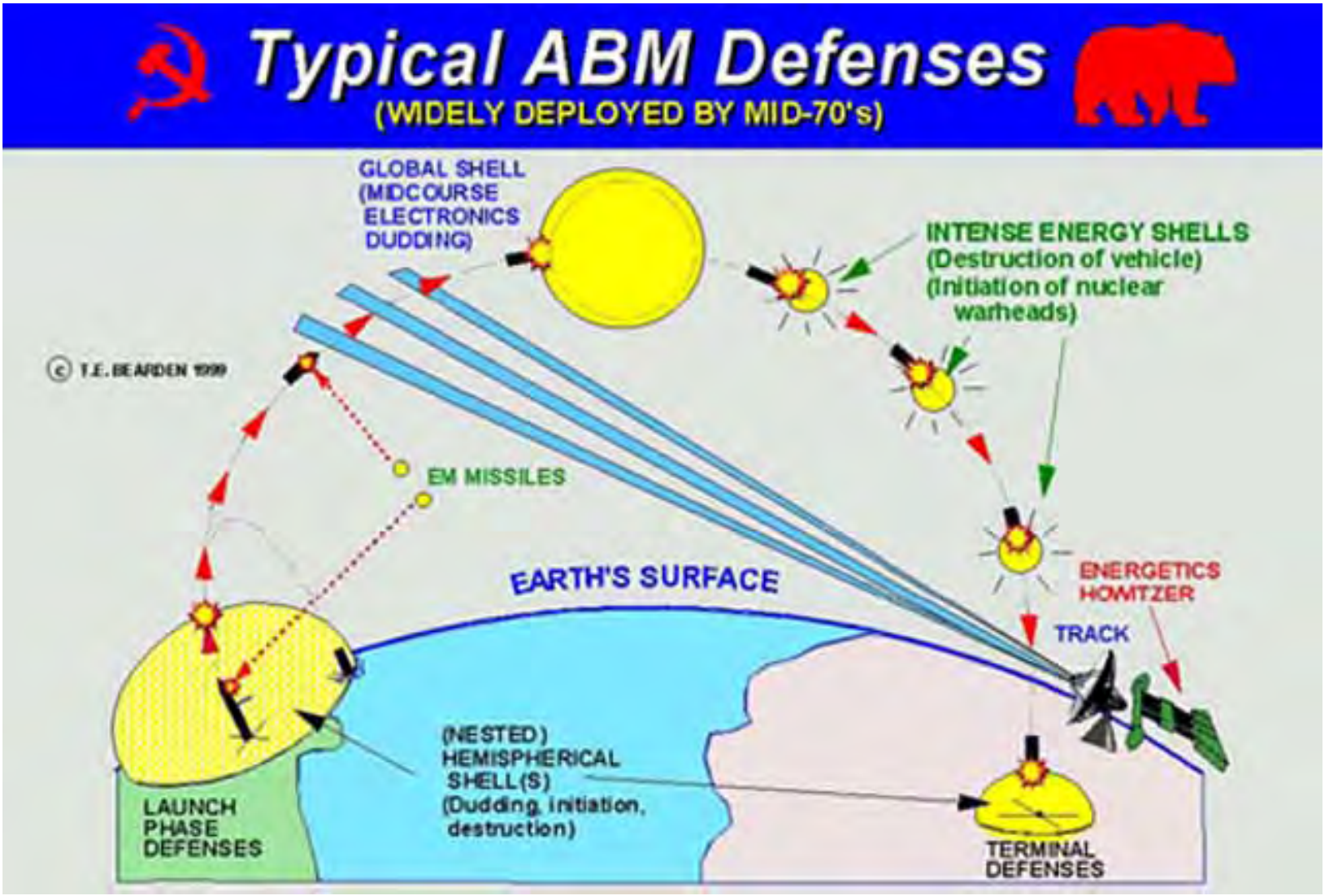
Typical ABM Defenses
(WIDELY DEPLOYED BY MID-70's)
GLOBAL SHELL
(MIDCOURSE
ELECTRONICS
DUDDING)
INTENSE ENERGY SHELLS
(Destruction of vehicle)
(Initiation of nuclear
warheads)
© T.E. BEARDEN 1999
EM MISSILES
EARTH'S SURFACE
ENERGETICS
HOWITZER
TRACK
(NESTED)
HEMISPHERICAL
SHELL(S)
(Dudding, initiation,
destruction)
LAUNCH
PHASE
DEFENSES
TERMINAL
DEFENSES

LAUNCH PHASE ANTIMISSILE SYSTEM

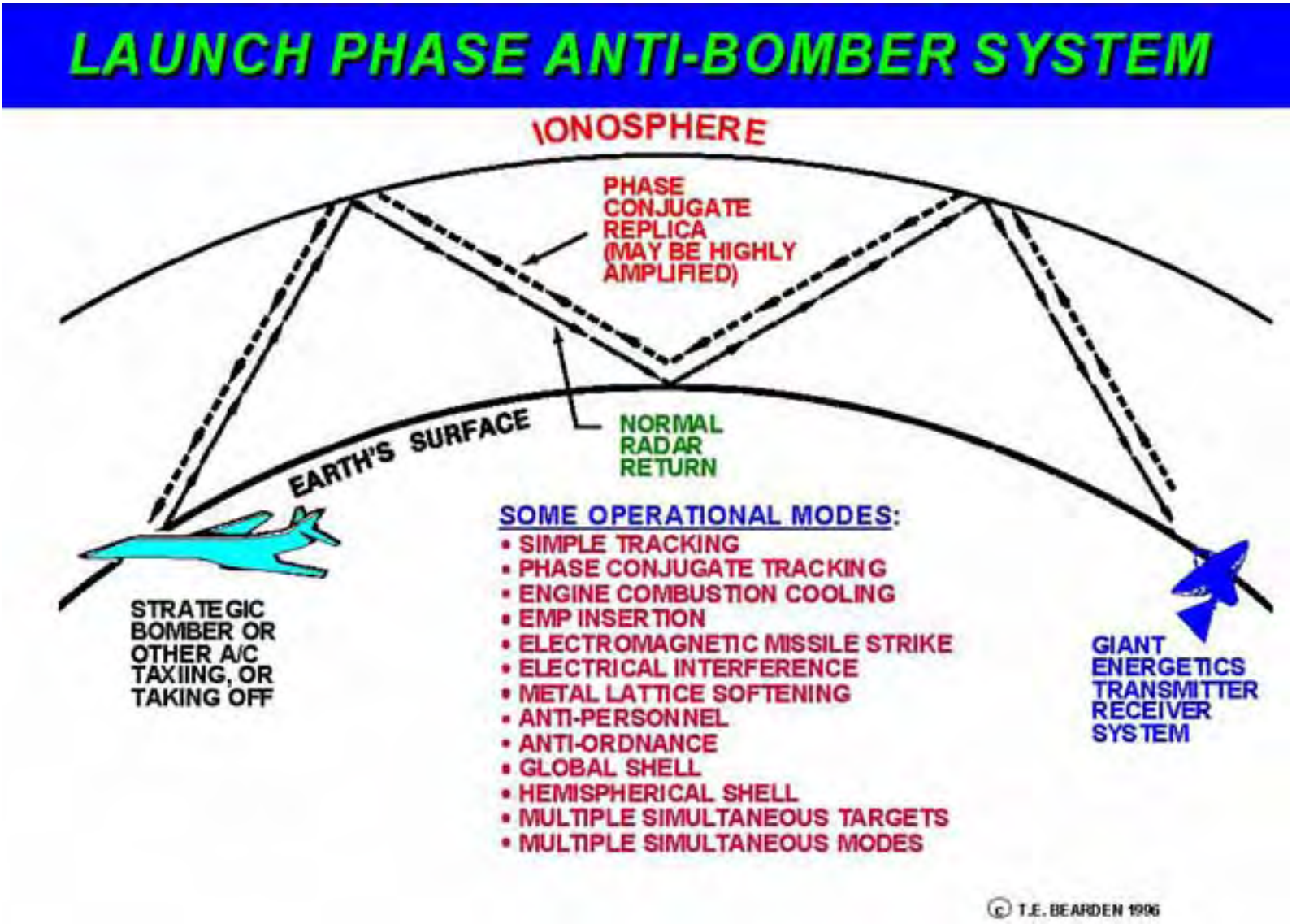
LAUNCH PHASE ANTI-BOMBER SYSTEM
IONOSPHERE
PHASE CONJUGATE REPLICA (MAY BE HIGHLY AMPLIFIED)
NORMAL RADAR RETURN
EARTH'S SURFACE
STRATEGIC BOMBER OR OTHER A/C TAXIING, OR TAKING OFF
SOME OPERATIONAL MODES:
• SIMPLE TRACKING
• PHASE CONJUGATE TRACKING
• ENGINE COMBUSTION COOLING
• EMP INSERTION
• ELECTROMAGNETIC MISSILE STRIKE
• ELECTRICAL INTERFERENCE
• METAL LATTICE SOFTENING
• ANTI-PERSONNEL
• ANTI-ORDNANCE
• GLOBAL SHELL
• HEMISPHERICAL SHELL
• MULTIPLE SIMULTANEOUS TARGETS
• MULTIPLE SIMULTANEOUS MODES
GIANT ENERGETICS TRANSMITTER RECEIVER SYSTEM
© T.E. BEARDEN 1996

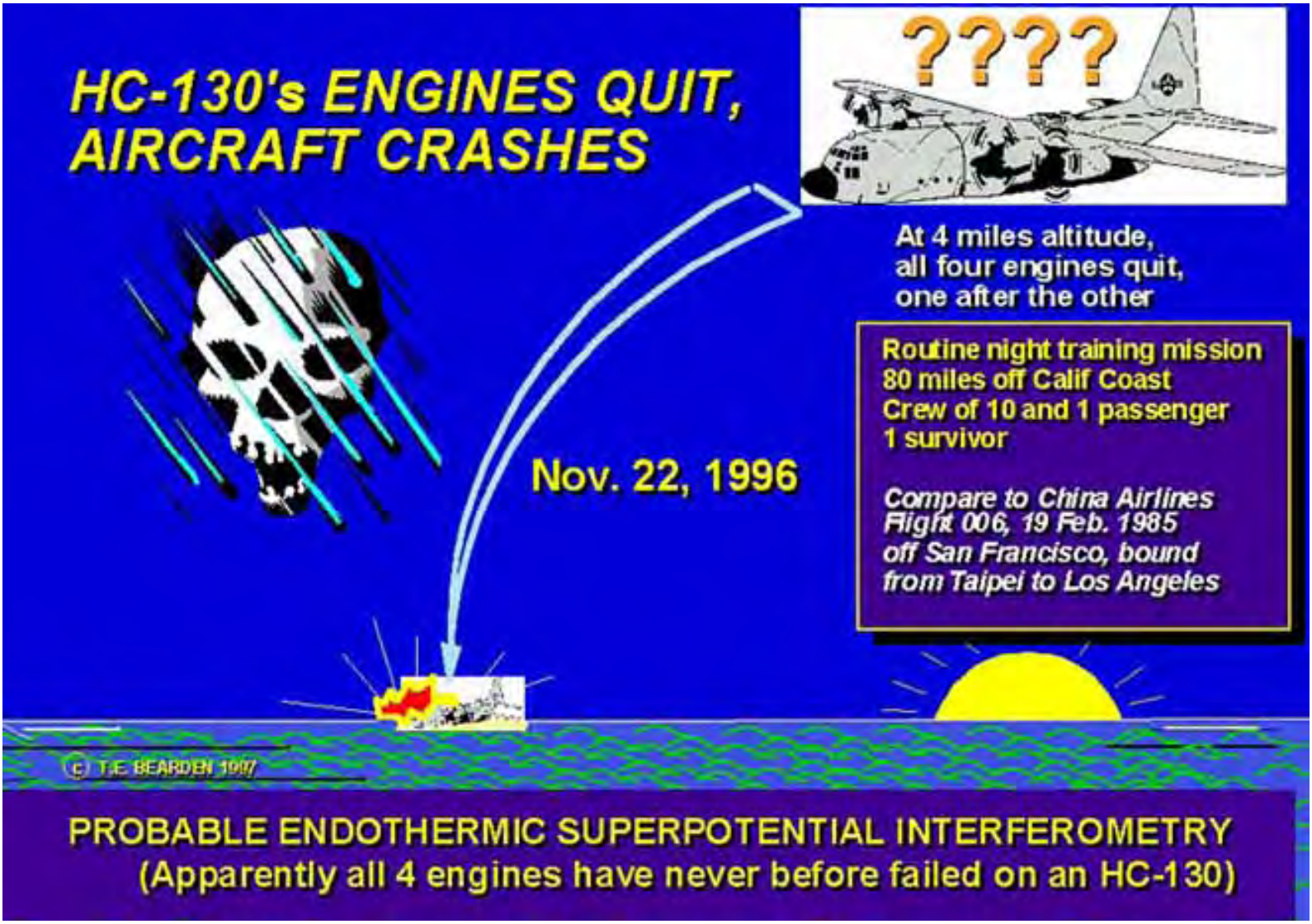
HC-130's ENGINES QUIT, AIRCRAFT CRASHES
????
At 4 miles altitude, all four engines quit, one after the other
Routine night training mission
80 miles off Calif Coast
Crew of 10 and 1 passenger
1 survivor
Compare to China Airlines Flight 006, 19 Feb. 1985 off San Francisco, bound from Taipei to Los Angeles
Nov. 22, 1996
© T.E. BEARDEN 1997
PROBABLE ENDOTHERMIC SUPERPOTENTIAL INTERFEROMETRY
(Apparently all 4 engines have never before failed on an HC-130)

CTEC PROPRIETARY

1996 Actions by this analyst

- In July 1996, with the kill of TWA-800 it became apparent that the KGB/Communists were preparing a massive strategic energetics attack upon the U.S.

© T.E. BEARDEN 1997

- Began intensive, nearly round-the-clock effort to uncover what was happening, and what had occurred in KGB/Com weapons since 1991
- Began preparing full-up set of briefing slides simultaneously
  - In early 1996, had briefed J6 on scalar EM, per his request
  - Had strongly suggested a follow-on weapons brief
  - Adamant opposition by NRL, NOL, others
- Similar energetics attack scenario in 1986 was countered. Soviets at that time did not possess operational QP weapons, and so could not successfully overcome dead-man fuzing
  - Also could not dud nukes worldwide, because QP required.
  - First lab prototype QP test was in April 1986
- KGB had solved the dead-man fuzing problem by QP's. Deployed circa 1989-1990. Some earlier weapons then leased.

Additional Information Exists; Not Analyzed, Not Integrated in Briefing

- Yakuza arranged involvement of
  - Red Chinese
  - North Koreans
  - A Taiwanese element
- Aum Shinrikyo may have been used as "Red Herring" to deceive West
- Oriental faction plots to strike Russians after the successful first strike on West
- KGB/Russians aware, will counter
  - Plan pre-emptive strike against Oriental faction first
  - Have reserved most advanced, powerful energetics weapons for that purpose

© 1999 T.E. SEARDEN

The Tom Bearden Website

Help support the research

Kill of Arrow DC-8, Gander AFB, Dec. 12, 1985

- Slide 1
- Slide 2
- Slide 3
- Slide 4
- Slide 5
- Slide 6

KILL of ARROW DC-8
Gander AFB, Dec. 12, 1985
• Soviet EM missile weapon strike practice two weeks earlier at Cape Canaveral
► Offset from night shuttle launch
► EM missile photographed by Bob Gladwin
► Associated marker beacon photographed
• Canadian Board split on findings
► Half thought icing, half disagreed intensely
► "Due to icing" approved with half absent
► Separate dissenting finding issued
• U.S. officials hiding Iran/Contra affair
► Feared terrorist bomb, MidEast sponsor
► Pressured Board, Gen. Off. bulldozed site
• Lack of icing on aircraft later validated

KILL of ARROW DC-8
Gander AFB, Dec. 12, 1985
• Eyewitness observed beams form in the sky
• Saw streak-down and strike of EM missile
– Struck right fuselage ahead of the engines
– Hole was burned through fuselage there
– Photo of hole published in AW&ST
– No explosive residues on hole
• Consistent with ignition and outgassing of plastics in forward cabin
• Consistent with pre-crash HCN deaths

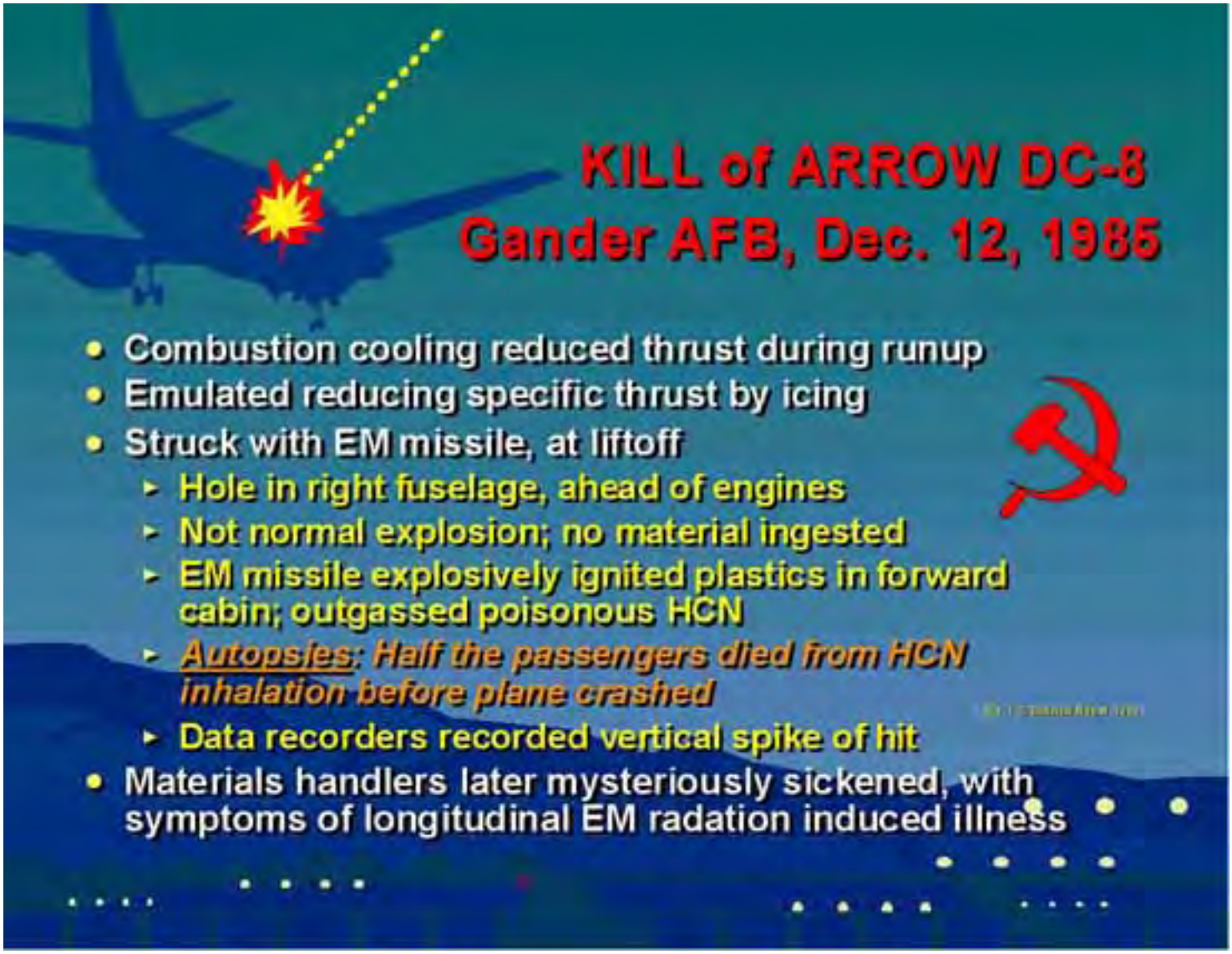
KILL of ARROW DC-8
Gander AFB, Dec. 12, 1985
• Combustion cooling reduced thrust during runup
• Emulated reducing specific thrust by icing
• Struck with EM missile, at liftoff
▸ Hole in right fuselage, ahead of engines
▸ Not normal explosion; no material ingested
▸ EM missile explosively ignited plastics in forward cabin; outgassed poisonous HCN
▸ Autopsies: Half the passengers died from HCN inhalation before plane crashed
▸ Data recorders recorded vertical spike of hit
• Materials handlers later mysteriously sickened, with symptoms of longitudinal EM radation induced illness

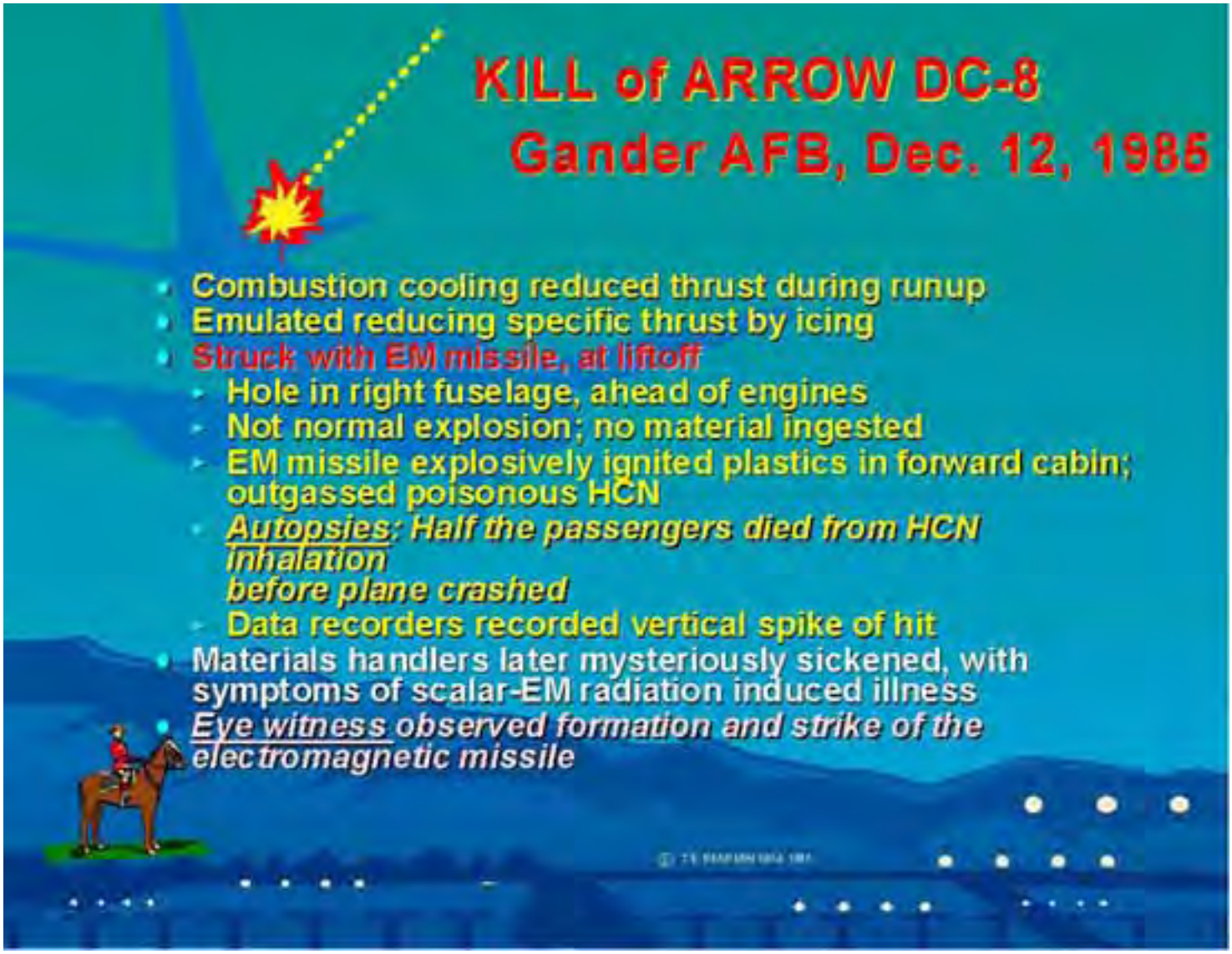
KILL of ARROW DC-8
Gander AFB, Dec. 12, 1985
Combustion cooling reduced thrust during runup
Emulated reducing specific thrust by icing
Struck with EM missile, at liftoff
Hole in right fuselage, ahead of engines
Not normal explosion; no material ingested
EM missile explosively ignited plastics in forward cabin; outgassed poisonous HCN
Autopsies: Half the passengers died from HCN inhalation
before plane crashed
Data recorders recorded vertical spike of hit
Materials handlers later mysteriously sickened, with symptoms of scalar-EM radiation induced illness
Eye witness observed formation and strike of the electromagnetic missile

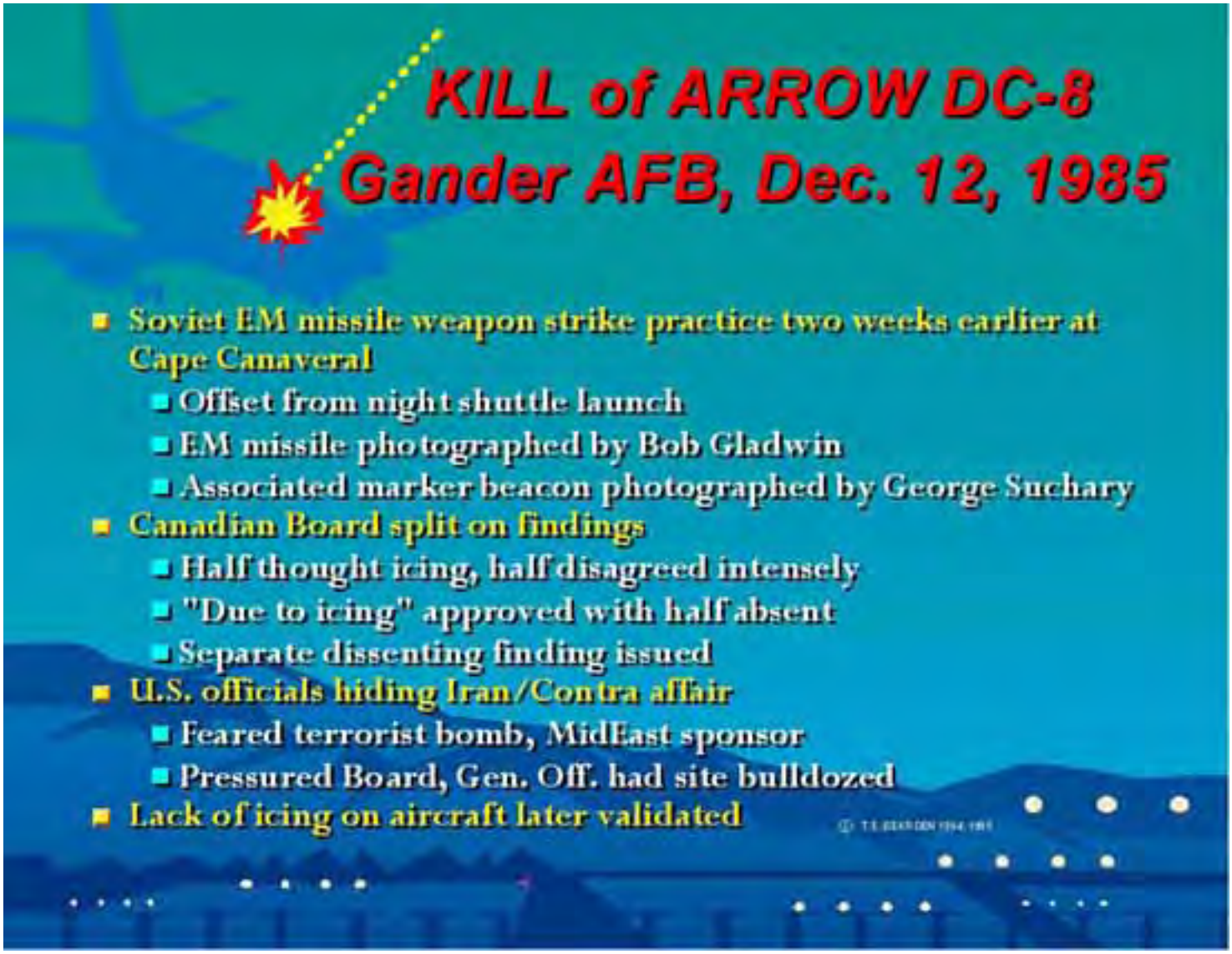
KILL of ARROW DC-8
Gander AFB, Dec. 12, 1985
Soviet EM missile weapon strike practice two weeks earlier at Cape Canaveral
Offset from night shuttle launch
EM missile photographed by Bob Gladwin
Associated marker beacon photographed by George Suchary
Canadian Board split on findings
Half thought icing, half disagreed intensely
"Due to icing" approved with half absent
Separate dissenting finding issued
U.S. officials hiding Iran/Contra affair
Feared terrorist bomb, MidEast sponsor
Pressured Board, Gen. Off. had site bulldozed
Lack of icing on aircraft later validated

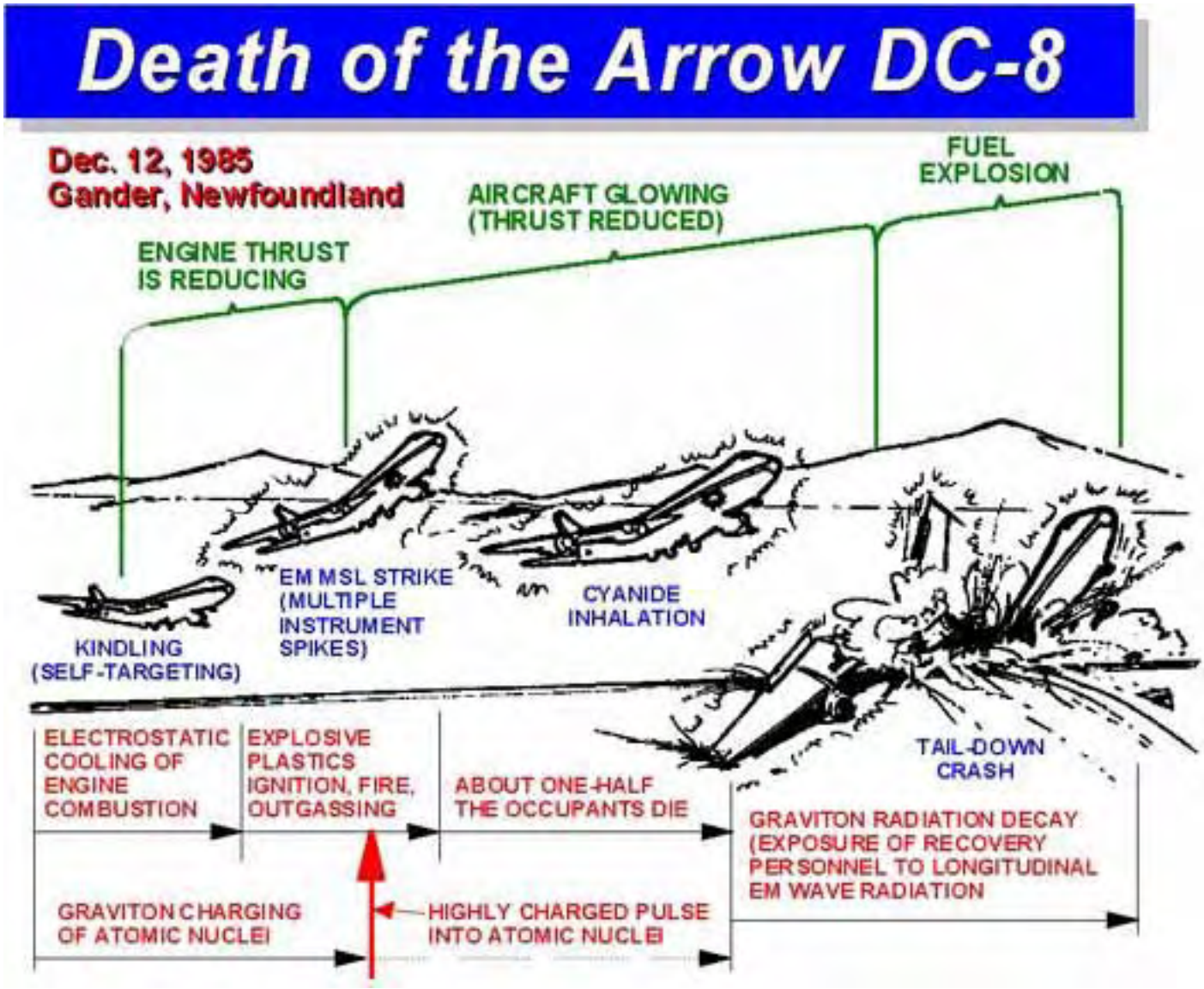
Death of the Arrow DC-8
Dec. 12, 1985
Gander, Newfoundland
ENGINE THRUST IS REDUCING
AIRCRAFT GLOWING (THRUST REDUCED)
FUEL EXPLOSION
KINDLING (SELF-TARGETING)
EM MSL STRIKE (MULTIPLE INSTRUMENT SPIKES)
CYANIDE INHALATION
TAIL-DOWN CRASH
ELECTROSTATIC COOLING OF ENGINE COMBUSTION
EXPLOSIVE PLASTICS IGNITION, FIRE, OUTGASSING
ABOUT ONE-HALF THE OCCUPANTS DIE
GRAVITON RADIATION DECAY (EXPOSURE OF RECOVERY PERSONNEL TO LONGITUDINAL EM WAVE RADIATION
GRAVITON CHARGING OF ATOMIC NUCLEI
HIGHLY CHARGED PULSE INTO ATOMIC NUCLEI

Satellite Photos of Plumes in Soviet Arctic Since 1974*

- Two aircraft flew through for analysis
  - Solid material, mostly ice, a little clay
  - Much colder than surrounding air
  - *Signature of cold exhaust from exothermic scalar interferometry operations*
  - No volcanic material
  - No radioactive material

- May be 2 to 3 times as many incidents
  - Only examined satellite imagery in winter
  - Only periodic satellite coverage
  - Hypothesized methane venting, cloud seeding

© 1996 T.E. BEARDEN

*As of 1989, when this information was gathered

AUM SHINRIKYO
("SUPREME TRUTH" CULT)

Shoko Asahara, Leader

© 1995, 1998 T.E. BEARDEN

Ashkhabad Problem and Its Solution

- ***PROBLEM:***
  - Stress increasing in two-plate fault zone
  - 1,000 shocks yearly
  - Kara Kum canal
  - Hydraulic pressure
  - 1948: Ashkhabad 80% destroyed by quake

- ***SOLUTION:***
  - Stress-relieve plate stresses from fault

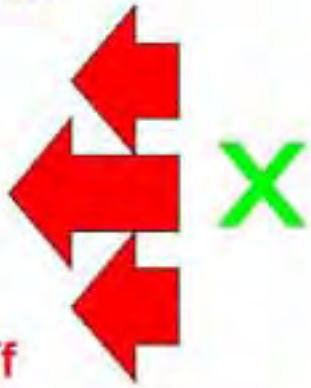

- ***IMPLEMENTATION:***
  - Induce nearby earthquake
  - Deceive by *predicting* a quake, setting off nuclear explosion

© 1996 T.E. BEARDEN

Strange Characteristics of Iran Quake, Sep. 1978

© 1996 T.E. BEARDEN

- **Signatures**
  - 7.4 on Richter scale
  - No aftershocks: 6.0 expected (normal)
  - Strange epicenter
  - Anomalous depth

- **Deception**
  - 10 MT Soviet nuclear explosion 36 hours before the quake
  - Prior disinformation regarding Soviet attempted development of focusing shock waves from underground nuclear explosions, to cause distant earthquakes

Iran Earthquake Sept. 1978

- Killed 25,000 Iranians
- Soviet city of Ashkhabad saved
- Soviets "predicted" quake in advance; then induced it
- Quake had serious anomalies (signatures)
- Deception measures were used by Soviets
  - Prediction in advance
  - "Theory" of quake-induction by nuclear explosions
  - Fired underground nuclear explosion as "Red Herring" candidate for cause

© 1996 T.E. BEARDEN

Situation Now (Assessment)

- In May 1997: second A-10 pilot (lady), in pullup from night ordnance delivery on target, was struck with psychoenergetic weapon takeover. Sense of vertical was reversed. She perceived herself diving, sharply corrected, and dove headlong into the ground.

- Additional aircraft kills uncovered, including one 4-engine aircraft whose engines all failed. This closely repeats the earlier 1985-1987 scenario.
- Korean Airlines Flight 801 crashed on Guam on anniversary of loading of the atomic bomb that was dropped on Hiroshima in WW II. The Enola Gay, which dropped the bomb, took off from Guam in wee morning hours of August 6, 1945. The local opns order on Guam was also issued on Aug. 5.

- *Presently the Coalition (KGB/Communists/Aum Shinrikyo/Yakuza) is waiting for proper time to launch the final strike. It is still on.*

Situation Now (Assessment 2)

- April 97: Mind control test against Captain Button:
  - Demonstrates ability to control crewman in complex operations for more than one hour.
  - KGB requires one hour total QP crew control on a site to have crew disable insane QP wpns.
- Once QP systems disabled, Mindsnapper attacks and instantly kills every living thing in QP site area. Contaminates area for months (emits longitudinal EM wave radiation, which disrupt any life forms attempting to enter struck area). Sites nullified.
- Mind control over one crewman requires one weapon system plus up to 20-30 operators for controlling thoughts, hearing, perceptions, etc.
- *In Apr. 97, KGB building and deploying weapons and training crews. Ready for new attack 1999-2000.*

Aspects of Strong Local Asymmetry

- If local asymmetry is strong, conservation laws may be appreciably violated
  - Energy
  - Charge
  - Spin
  - Momentum
  - Angular momentum
- Properties of an object may differ appreciably for
  - Different observers
  - Different detecting means
  - One time to another
  - One position to another

© T E Bearden 1995, 1996

Mass Casualty Problem: Aerial Anthrax Spray on Washington, D.C.

- One terrorist, one light aircraft with spray tank
- One kilogram of anthrax
- Flies over greater metropolitan Washington, D.C.
- Calm night
- *1-3 million casualties result**
- *Most of those stricken will die*
- Presently little can be done to save the stricken civilians
- *Attacks on several population centers might produce some 10 million or more casualties*

© 1991 T E BEARDEN

*Per OTA Report to Congress, 1993

Present Status of the WMD Threat to the United States

- Many foreign nations are hostile to the U.S. and sponsor terrorists
- Some 25 nations have WMD or are acquiring them
  - BW agents and weapons
  - Chemical agents and weapons
  - Nuclear materials and weapons
- Thousands of students and émigrés
- Infiltrated teams, BW, other WMD already
- Castro guerrillas infiltrated over the years
- Can do unacceptable damage to U.S. now
- *May reach first strike knockout capability*

© 1998 T.E. BEARDEN

*Per OTA Report to Congress, 1993

Some Present Problems in the U.S. WMD Defense Capabilities

- No shelters (require overpressure, BW filtering, masks, showers, supplies)
- No stockpiled vaccines, medical supplies, immunoglobulins, masks, suits, food, fuel, generators, heaters, water purification units
- Totally insufficient medical facilities, personnel, and emergency response teams
- Triage, full martial law will be required
- No answer to massive decontamination problem
- State, county, city inadequately staffed and insufficiently trained for mass casualties
- Terrorist teams, BW agents, other WMD on site, waiting
- Water supplies, food, crops, farm animals also vulnerable
- Electric power grid, bridges, trains, railroads vulnerable
- Present medical science cannot save very many of the casualties, now or in the foreseeable future

© 1996 T.E. BEARDEN

Internal Terrorist Threat with Weapons of Mass Destruction: Now & Future

TODAY:

- Sabotage
- Chemicals
- Biological agents
- Nuclear materials
- Powerful explosives
- Assassination
- Kidnapping and hostages
- Contamination
- Shoulder-fired AD missiles
- Terrorism

FUTURE ADDITIONS:

- Orthodox EM weapons
- Energetics EM biological warfare
- Scalar EM (energetics) weapons
- Scalar EM disease induction
- Alteration of behavior and emotions
- Alteration of memory
- Direct control of thoughts, perception
- Quantum potential weapons
- Psychoenergetics weapons
- Action-at-a-distance effects

© 1992, 1996, 1998 T. E. BEARDEN

Attempt to Ban Energetics Weapons Worldwide

- On June 13, 1975, in a major speech Brezhnev urged the United States to agree on a ban of research and development of new kinds of weapons "more terrible than anything the world has known."
- On July 2, 1975 Brezhnev repeated his proposed ban on development of frightful new weapons, to a group of U.S. Senators.
- In August 1975, Ponomarev called for a ban on frightful new weapons of mass destruction.
- On Sept. 23, 1975 Gromyko presented a draft treaty agreement to the 30th Session of the UN General Assembly, for banning development of frightful new weapons.
- *No one had the foggiest notion what the Russians were talking about!*

© 1996 T.E. BEARDEN

Brezhnev's Schedule

"We are achieving with detente what our predecessors have been unable to achieve with the mailed fist...
...by 1985 our power will be so irresistible that we can do what we wish anywhere on the globe."

Leonid Brezhnev,
in a secret 1973 meeting in Prague
with European Communist leaders.

"By the early 1980's we and our allies will control the high seas, space, and most of the earth's land area."

Kosygin,
to Imelda Marcos,
July 1978

In 1985-87, the Soviets did attempt to move, still constrained by nuclear dead man fuzing. That attempt was blocked, primarily by scalar EM countering demonstrations and dead man fuzing.

In April 1986, the first Soviet lab prototype of a quantum potential weapon specifically designed toward 10-min neutralization of nukes worldwide was gingerly tested against our U.S. airstrike on Libya. It was weakly tested in the "induced EMI" mode, for deception.

By 1990 that weapon was deployed and a new attack preparation phase was entered, scheduled for 1997.

© 1996 T.E. BEARDEN

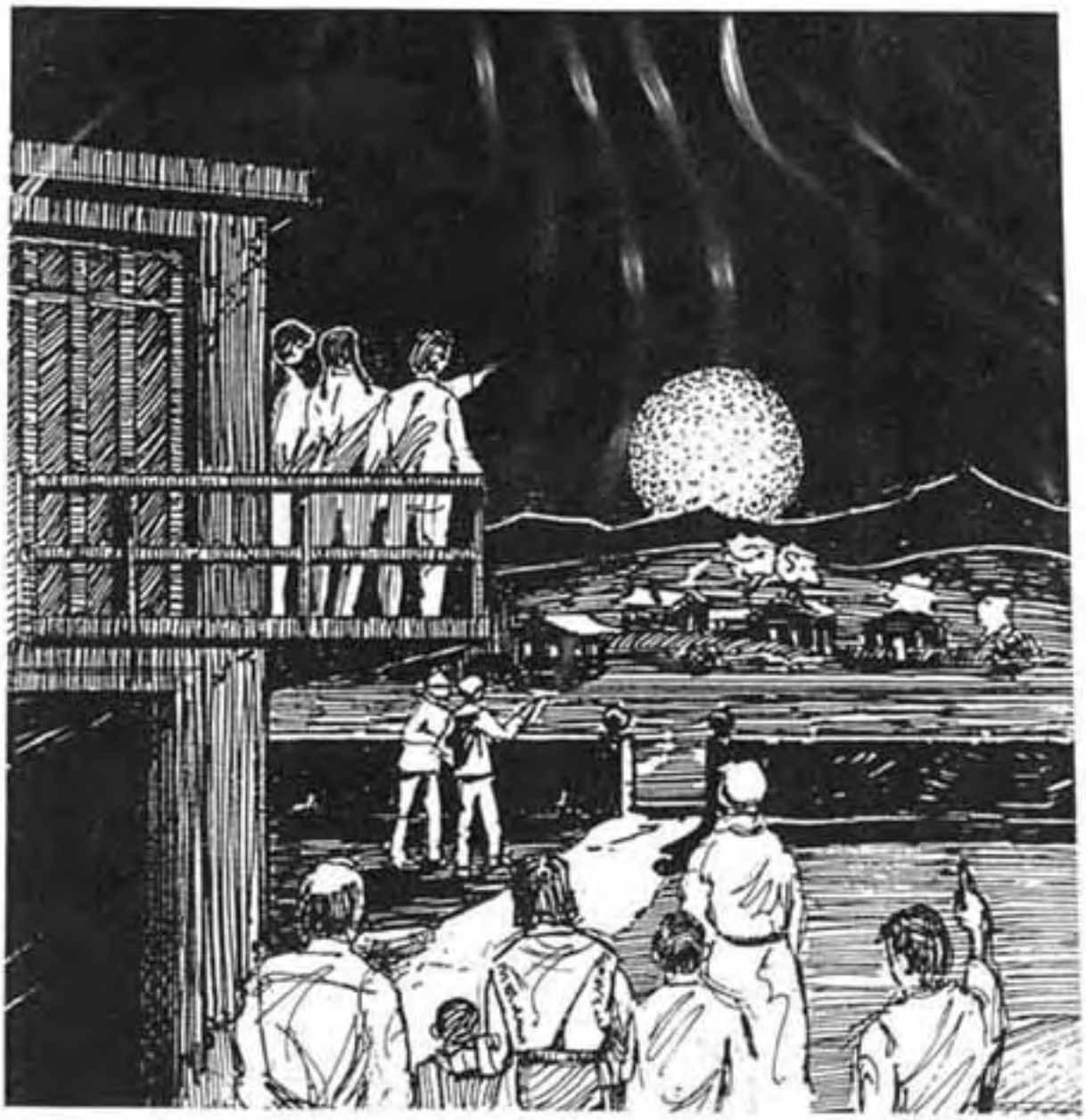

COLD EXPLOSION -- 9 April 1984 Near Kurils

And Formation and growth of spherical shell (globe)

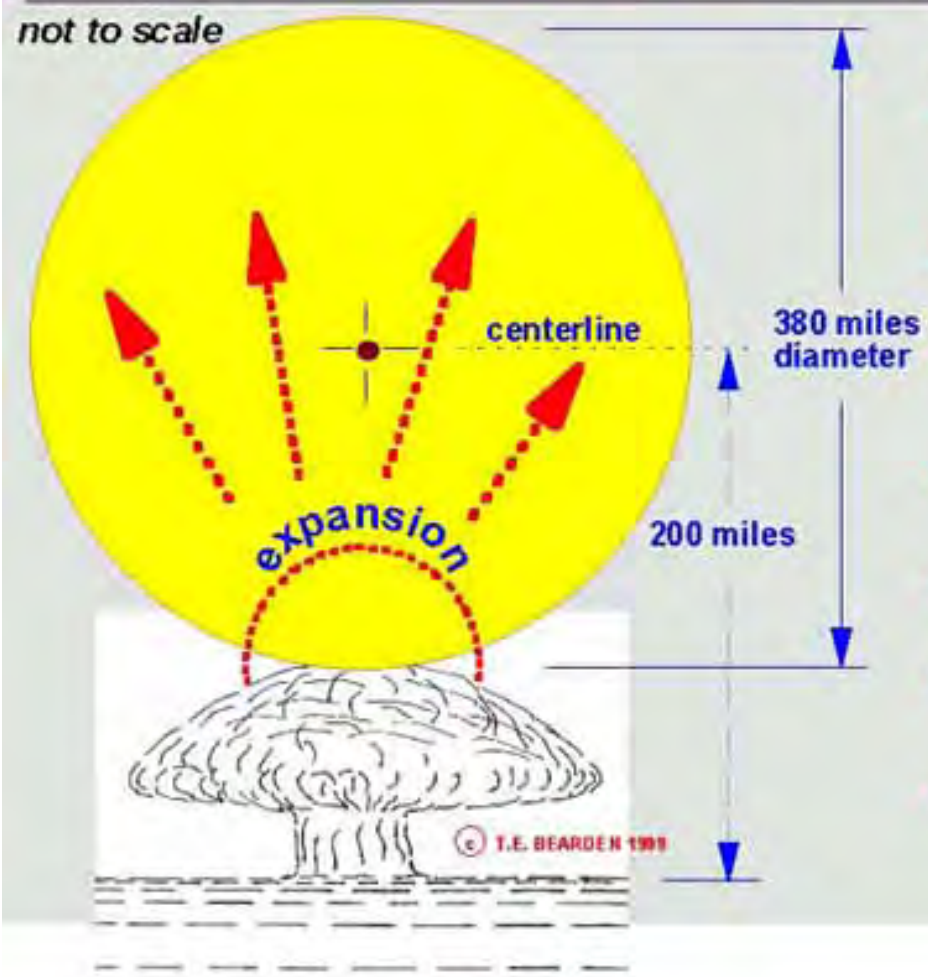

Sequence of Events

- Geyser of water rose rapidly from surface, mushroomed out
- Reached 60,000 feet altitude in two minutes
- Brilliantly glowing globe then appeared in top
- Globe increased greatly in size and altitude
- Reached diameter of 380 miles
- Center reached altitude of 200 miles
- Observed by multiple qualified pilots

COLD EXPLOSION -- 9 April 1984 Near Kurils

And Formation and growth of spherical shell (globe)

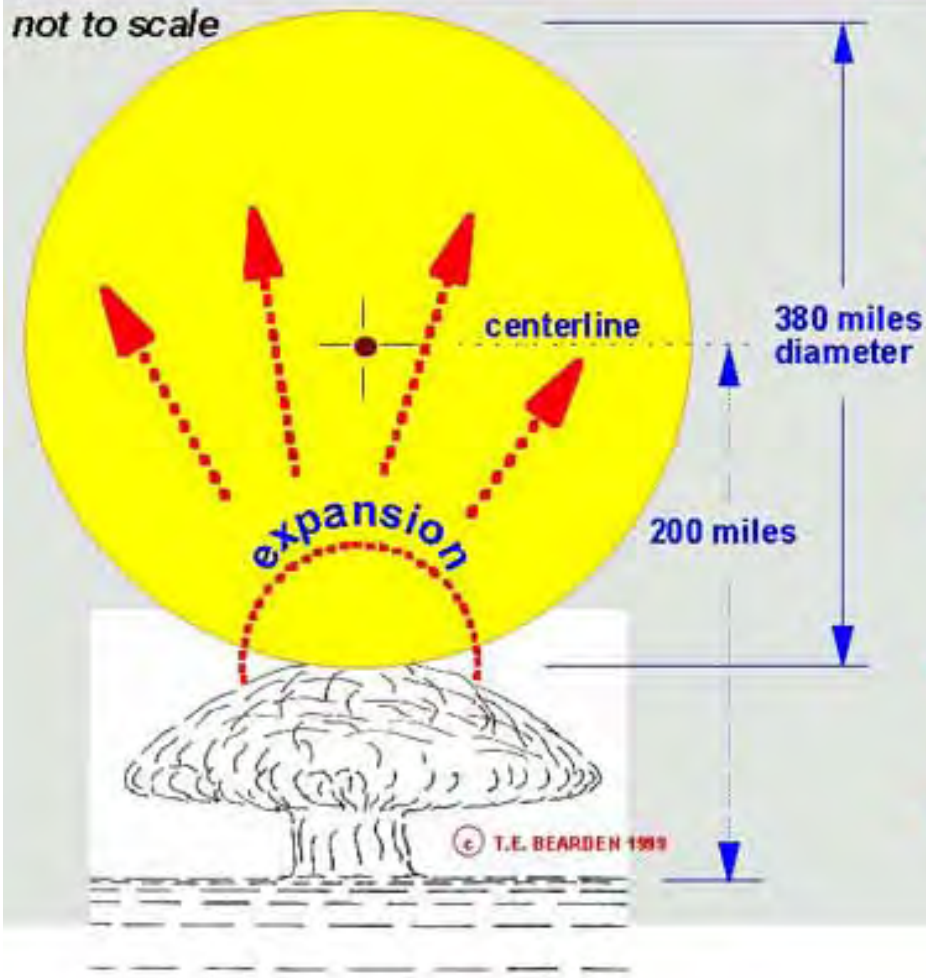

What They Were

- Superpotential interferometry using LWs
- First, a cold explosion just above surface
- Then small intense shell of glowing EM energy for 1-on-1 targeting
- Larger globe for large area as for ICBM targets approaching in zone
- With ST engines, can dud incoming nukes and all electronics
- Use in or out of Earth's atmosphere

COLD EXPLOSION -- 9 April 1984 Near Kurils
(Plus additional weapons effects)
JAL
Halo expanded to giant globe.
380 miles diameter, center over 200 miles
high.
© T.E. BEARDEN 1996

Countering Insane Mad Systems: Find Loophole, Exploit It

- If MADs not quantum potential systems, easily countered by instant QP strike which destroys targeted MAD weapons worldwide with certainty.
- Have to be certain of types of dead-man fuzing. All dead-man fuzing weapons must be included in the assured target list for the striking quantum potential weapon.

© 1995, 1996 T.E. BEARDEN

- Multiple targeted MADS require multiple vacuum engines in the striking quantum potentials.
- Uncertainty and risk introduced if not certain of all MAD systems and all dead-man fuzing systems.

- Newest generation psychoenergetic LW interferometry weapons can instantly take over minds of all personnel on targeted sites, with targeted crews quickly disarming their own MAD weapons' launch capability as well as the weapons themselves.
- Mindsnapper then kills all living things and contaminates sites.
- Next generation QP Psy-En weapons can disrupt and destroy minds of an entire targeted national population. The nature of warfare moves irrevocably to the human mind, where of course the fundamental problem arises anyhow.

Next Generation Counter to Both Sane and Insane MAD Systems

- ***Localized quantum potential in an area, used in psychoenergetics mode***
  - Gradually produces mild, continuous hypnotic state
  - Targeted population remains entirely conscious, functional
  - Internal "word thoughts" emerge directly in subconscious
  - Targeted persons all unaware of these "word thoughts"
  - Operates somewhat similar to "post hypnotic suggestion"
  - Gradually changes emotions, psychological outlook
  - Over a period of time, deviates and entrains entire target population's outlook, belief structure, temperament
- ***Moves Psywar to inside the human component***
- ***Human minds are the only battleground***
- ***Can be accomplished without overt signature***
- ***Countered only by inserting same methodology into deeper mind level (collective unconscious)***

Simultaneous Dudding of Nuclear Weapons Worldwide

- Via quantum potential joining U235 and Plutonium in warheads
- Includes weapons airborne, underwater, in storage
- These are *transmutations of the nuclides themselves*
- *Part of the initial barrage launched by Aum/Yakuza/KGB*
- *Will occur in the first minutes of the strategic strike, following psychoenergetically crew-disabling QP weapons*

Note: Duds both overt and covert nuclear weapons and weapons-grade materials -- including "suitcase-delivered" covert weapons on site in Russia which otherwise provide dead man fuzing

© T.E. BEARDEN 1996

Simultaneous Dudding of Nuclear Weapons Worldwide

- Via quantum potential joining U235 and Plutonium warheads
- Includes weapons airborne, underwater, in storage
- These are not explosions, but are *transmutations and increased fissioning rates*
- *Part of the initial barrage launched by Aum/Yakuza/KGB*
- *Will occur in the first minutes of the strategic strike*

© T.E. BEARDEN 1996

Note: Duds both overt and covert nuclear weapons and weapons-grade materials.

The Tom Bearden Website

Help support the research

Operation Divine Wind II

Slide 1

Slide 2

Slide 3

Slide 4

YAKUZA &
AUM SHINRIKYO

DIVINE WIND II

U.S.

★ **A secret coalition of Yakuza/Aum Shinrikyo and KGB/Communist forces plan to launch a massive, surprise energetics attack on the United States, given a low-risk opportunity.**

★ **Major weapons utilized will be the scalar EM (energetics) superweapons (including quantum potential weapons) that were developed, deployed, and operated by the KGB under the former Soviet Empire, and continuing after its dissolution.**

KGB

★ **Yakuza/Aum crews have extensively trained and test-fired, from on-site in Russia. They have *leased* operational control of the first three generation energetics superweapons (which work by superpotential interferometry).**

MINDSNAPPER AND
PSYCHOENERGETICS

★ ***The Escalation Phase of interdicting and destroying actual U.S. targets (e.g., TWA-800, two A-10s) is already underway.***

★ ***The first blow in the Strike Phase will dud all nuclear weapons and weapons materials worldwide, in minutes; destroy special ship and energetics weapon sites instantly, disable 99% of the U.S. population instantly, and kill 80% of targeted populations in from 10 minutes to 3 days.***

© 1995, 1996 T.E. BEARDEN

QUANTUM
POTENTIAL

YAKUZA &
AUM SHINRIKYO

U.S.

DIVINE WIND II

- ★ A secret coalition of Yakuza/Aum Shinrikyo and KGB/Communist forces plans to launch a massive, surprise energetics attack on the United States and its allies, given the first low-risk opportunity.

© 1995, 1996, 1999 T.E. BEARDEN

KGB

- ★ Attack was thwarted twice in 1997 by a small nation countering with QP weapons.
- ★ KGB psychoenergetics counter for the last QP weapon counter was tested in April 1997.
- ★ Ready time for a new scheduled attack is latter quarter 1999 through first half of 2000.

YAKUZA &
AUM SHINRIKYO

DIVINE WIND II

© 1995, 1996 T.E. BEARDEN

- ★ **A secret coalition of Yakuza/Aum and KGB/Communist forces will launch a massive, surprise, strategic attack on the United States in 1997.**
- ★ Major weapons utilized will be the scalar EM (energetics) superweapons that were developed, deployed, and operated by the KGB under the former Soviet Empire, and continuing after its dissolution.
- ★ Yakuza/Aum crews have extensively trained and test-fired, from on-site in Russia. They have *leased* operational control of the energetics superweapons.
- ★ *Escalation Phase of interdicting and destroying actual U.S. targets (e.g., TWA-800) is already underway.*
- ★ *The first blow in the Strike Phase will dud all nuclear weapons and weapons materials worldwide, in minutes; destroy special ship and energetics weapon sites instantly, and kill 80% of targeted populations in 3 days.*

KGB/COMMUNISTS

MINDSNAPPER

QUANTUM
POTENTIAL

OPERATION DIVINE WIND II

Three Phases and Support

Operational Phases

- Phase I: On-Site Training Phase (Completed)
- Phase II: Escalation Phase (In Progress)
- Phase III. 1997 Strategic Strike on the U.S.
  - *First strike (QP) in Phase III duds all nuclear weapons and nuclear powerplants worldwide, in minutes*
  - *Psychoenergetic strike (QP) disables people instantly*
  - *Mindsnapper attack of special assets for 100% success*
  - *QP initiation of fast-acting, lethal diseases kills 80% of targeted populations in three days or less*

© 1995, 1996 T.E. BEARDEN

Support Plans

- Plan A: Feints, Deception, Sabotage, and Terrorism
- Plan B: Testing and Test Range
- Plan C: Worldwide Weather Engineering
- Plan D: Strategic and Combat Intelligence

Advanced EMBW Applications

- Covert EMBW: Examples
  - Activate materials and their potentials with ST disease engines. Potentials superpose and their infolded ST dynamics diffuse
  - Activate water's structuring (H-bonding) potential with disease engines
  - Bias electrical power grid ground fields by weak diseases
  - Employ disease-structured quantum potential in distant area
- Overt death ray (mind snapper)
  - Powerful scalar EM pulse in target area "jerks" rate of flow of time
  - The "time snap" sharply separates mind from body and each cell
- EMBW CM:
  - Irradiate bodies with longitudinal EM waves; self-converts to t-pumping and produces exact amplified ST antiengine
  - Antiengine arises out of local ST, affects all parts of all cells
  - Cells are t-charged with antiengine structure
  - Continuing action restores regenerative and immune systems and reverses cellular damage

© T.E. BEARDEN 1995, 1999

EM Biological Warfare (EMBW)

- KGB/Communists have developed highly effective
  - Electromagnetic biological warfare (EMBW)
  - Counters to orthodox biological warfare
  - Mass death ray weapons
    - Small version of "mindsnapper" tested in Afghanistan
    - Killed occupants in two villages, in separate strikes
    - Unusual aspects (so-called "smerch" gas)
- Russia/KGB is the only group with a complete counter to biological warfare, either covert or overt, and to EMBW
- EMBW (covert and overt) is a preferred option for KGB
  - MAD Doctrine is completely destabilized for a sufficiently covert Russian EMBW strike
  - Situation has existed for at least two decades
  - Can alter germs, bacteria, viruses of specific kind, in a specific target area, to produce antibiotic-resistant strains
  - Can induce any kind of cellular disease or damage at a distance
- U.S. national characteristic: no reaction to slowly increasing threat

© T.E. BEARDEN 1999

Microwave Radiation of U.S. Embassy in Moscow

Former U.S. Embassy in Moscow.

BACKGROUND

- Began in latter 1950s
- Discovered on VP Nixon's trip
- Initially thought to be *nuclear* radiation (Discovered w/Geiger counter?)
- High level target -- U.S. Ambassador
- Guarantees personal attention of:
  - U.S. Ambassador to USSR
  - U.S. President
  - NSA, CIA, DIA, NSC, etc.
  - Top consulting scientists
  - Leading U.S. scientific institutions
- Two U.S. Ambassadors died, another sickened
- Anomalous health changes in personnel, only in zero-field (zero pot'l gradient) areas!
- Four U.S. Presidents requested Soviets cease
  - Cut from 18 watts/sq cm to 2
  - Then again increased
- No one could understand what was going on
- Aluminum screens were placed over windows
- Moscow was declared a hazardous duty zone

© 1995, 1998 T.E. BEARDEN

Pentagon EMI Studies, 1989

Washington Post, 22 Jan. 1989, p. A4

- Analysts of severe EMI effects in strike on Libya, 1986
  - performed major 3-year, 66-man study
  - Blamed effects on U.S. forces' own signals
  - Did not know of any other "signals" present
  - Knew nothing of quantum potential weaponry, energetics weaponry
- 7-month preliminary study
  - Severe EMI Problem exists
  - EMI shielding often waived in our weapon systems
  - Thousands of conflicts possible
- Also studied UH60 Blackhawk helicopter problems (which *were* due to its lack of good EMI shielding, and not quantum potentials)
  - uncommanded turns
  - Five EMI crashes 1982-1989
  - $175 M program to shield it
- So found that U.S. transmission combinations can
  - Affect aircraft flight control
  - Turn off fuel supply
  - Cause uncommanded dive/turn
  - Bring down U.S. warplanes
- *Actually, Libyan EMI was induced by Soviet quantum potential tests which can do all those things and much more*

© 1996 T.E. BEARDEN

EM Missile Practice

- EM Missile Practice
  Latter Sept. - Early Nov. 1996
  Melbourne, Australia
- Deception: Using EM Missile to Reinforce Notion of SAM Attack
  Saturday evening, Nov. 16, 1996
- Intelligence Probe: Insuring U.S. Still Unaware of Energetics Weaponry
  Thursday, December 12th, 1996
- EM Missile Strike, Offset from Night Shuttle Launch, Cape Canaveral, Florida
  The Smoking Gun in November 1985
- Distant Operator Onsite in Russia Slew Away Registration Point
  Marker Beacon over Night Shuttle Launch, 26 November, 1985
- EM Missile Practice and Deception
  November 17, 1996

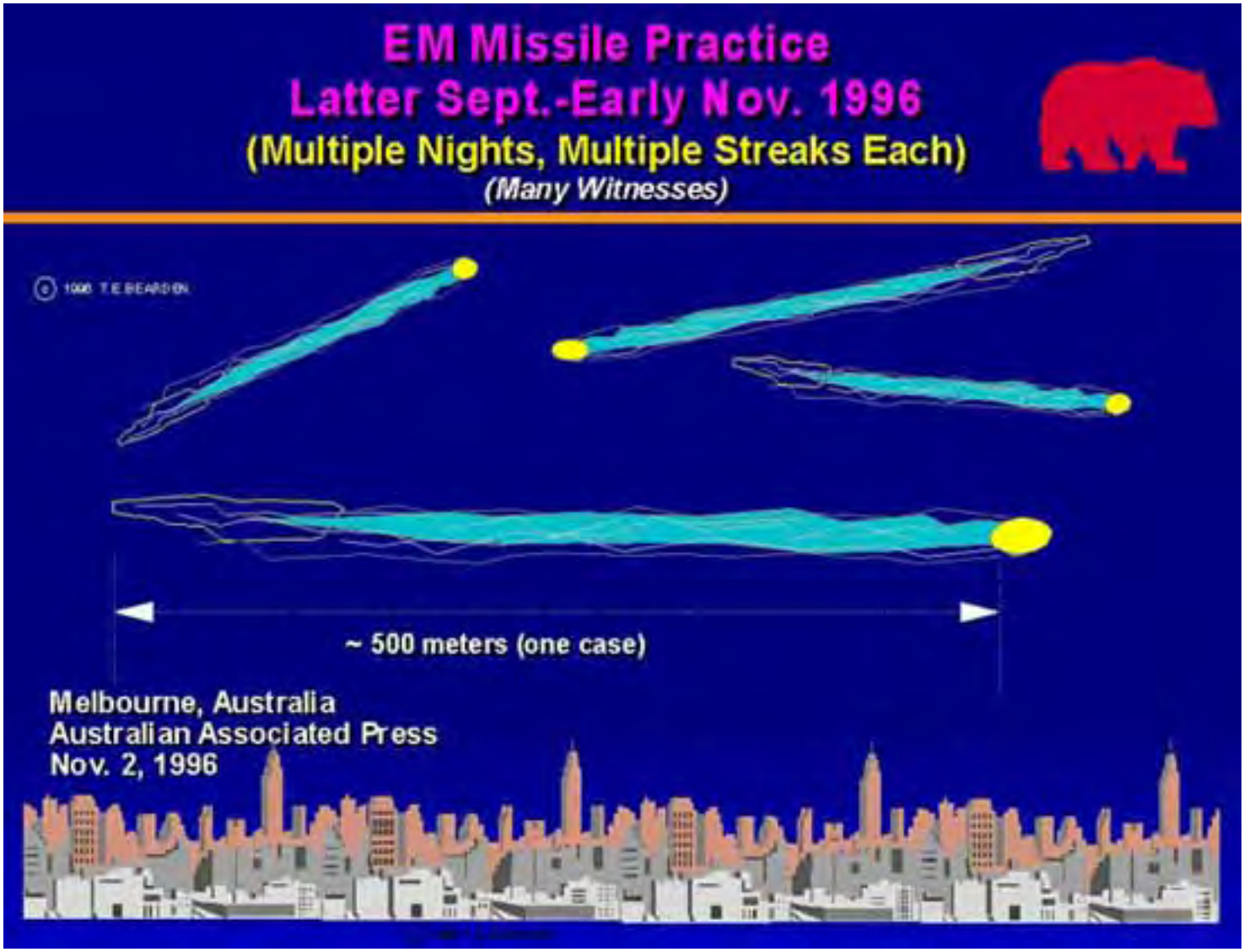
EM Missile Practice
Latter Sept.-Early Nov. 1996
(Multiple Nights, Multiple Streaks Each)
(Many Witnesses)
© 1996 T.E.BEARDEN
~ 500 meters (one case)
Melbourne, Australia
Australian Associated Press
Nov. 2, 1996

Deception: Using EM Missile to Reinforce Notion of SAM Attack

Saturday Evening
Nov. 16, 1996

Note: Meteor shower was forecast, which provided perfect decoy to FBI investigators, to steer them off the true scent.

Pakistan International Airlines Flight 712, just after takeoff from John F. Kennedy Airport, on path similar to that taken by TWA Flight 800, July 17, 1996

© T.E. BEARDEN 1996

Intelligence Probe: Insuring U.S. Still Unaware of Energetics Weaponry
Thursday
Dec. 12, 1996
Pilot sighted what he called a "green flare".
No danger, no evasive action.
Saudi Arabian Airlines 747
en route from Riyadh, Saudi Arabia
to John F. Kennedy Airport.
At 12,000 ft., not far from where
TWA Flight 800 was killed on July 17, 1996
FBI: "Probably a meteorite."
© T.E. BEARDEN 1996

EM Missile Strike, Offset from Night Shuttle Launch

Cape Canaveral, Florida

PHOTO BY BOB GLADWIN

© T.E. BEARDEN 1995, 1999,

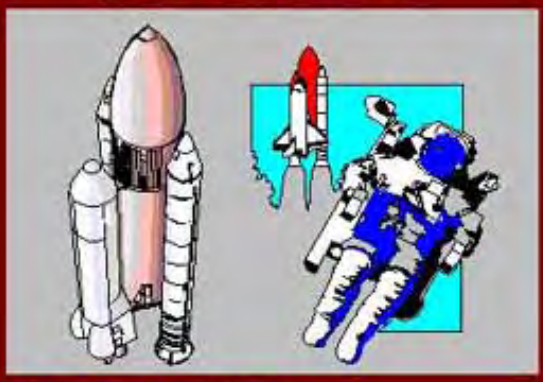

The Smoking Gun in Nov. 1985

Distant Operator Onsite in Russia
Slews Away Registration Point
© T.E. BEARDEN 1995, 1999.
MARKER BEACON
Over Night Shuttle Launch
Cape Canaveral, Florida
26 Nov 1985
Photographed by George Suchary
28 Nov 1985
Two weeks later, the same weapon killed the Arrow DC-8
at its takeoff from Gander, Newfoundland.

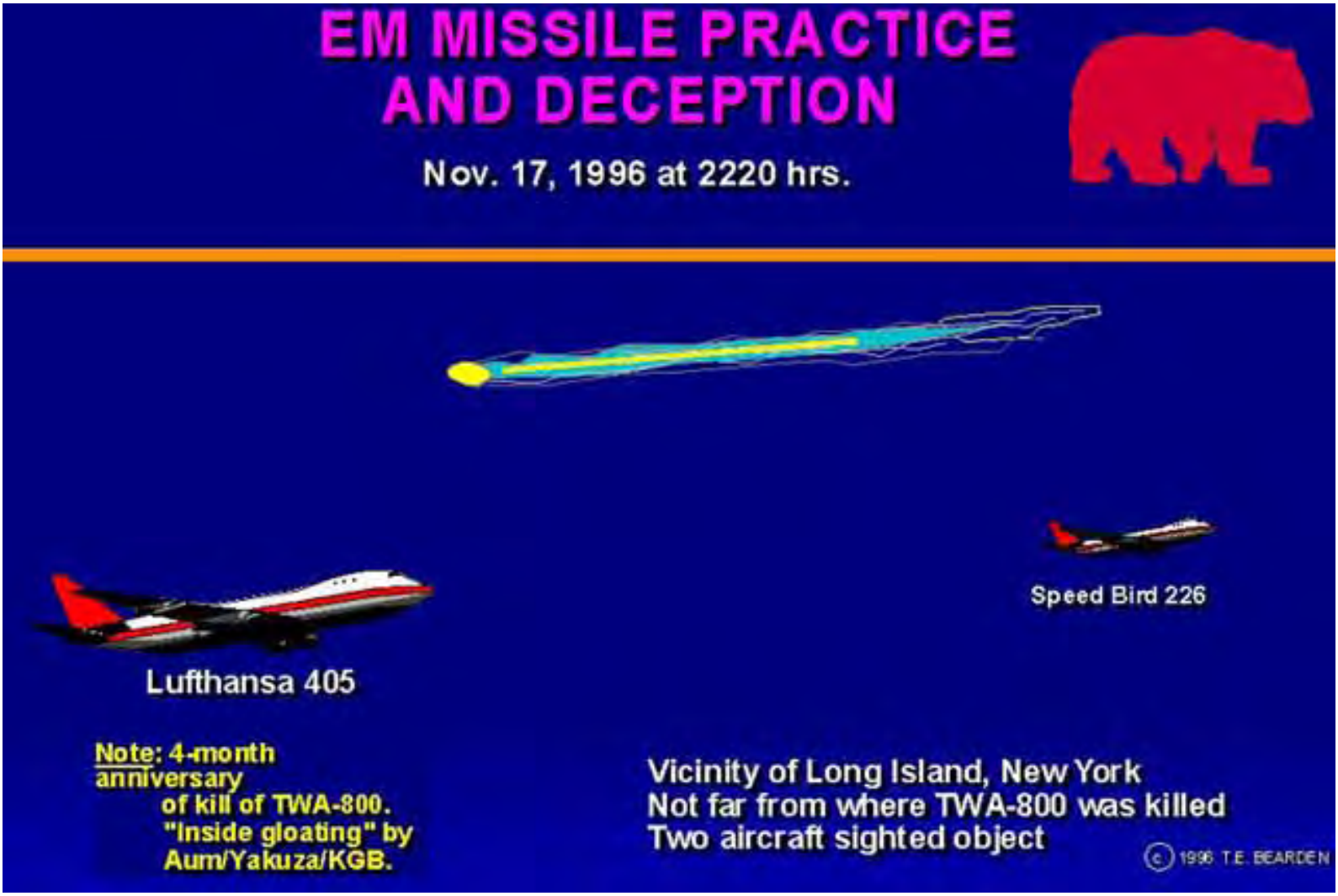
EM MISSILE PRACTICE
AND DECEPTION
Nov. 17, 1996 at 2220 hrs.
Speed Bird 226
Lufthansa 405
Note: 4-month
anniversary
of kill of TWA-800.
"Inside gloating" by
Aum/Yakuza/KGB.
Vicinity of Long Island, New York
Not far from where TWA-800 was killed
Two aircraft sighted object
© 1996 T.E. BEARDEN

Subdivisions of Soviet Energetics

NONLIVING SYSTEMS

Energetics

- Nonliving systems
- Scalar Interferometry
- Action-at-a-Distance
- Quantum Potential
- Vacuum Engines
- Spacetime Structuring
- Material, Field Effects
- Nuclei, Lattice Changes
- Hidden EM Variables
- SWZ Effects

LIVING SYSTEMS

Bioenergetics

- Living Systems (Bodies)
- Cells, cellular changes
- Master Cell Control (Popp)
- Spacetime Structuring
- Disease Induction, Remission
- Action-at-a-Distance
- Quantum Potentials
- Scalar Interferometry
- Hidden EM Variables
- SWZ Effects

Psychoenergetics

- Living Systems (Minds)
- Thoughts, Memories, Emotions
- Conscious/Unconscious Minds
- Spacetime Structuring
- Species, Biospheric Minds
- Action-at-a-Distance
- Quantum Potentials
- Scalar Interferometry
- Hidden EM Variables
- SWZ Effects

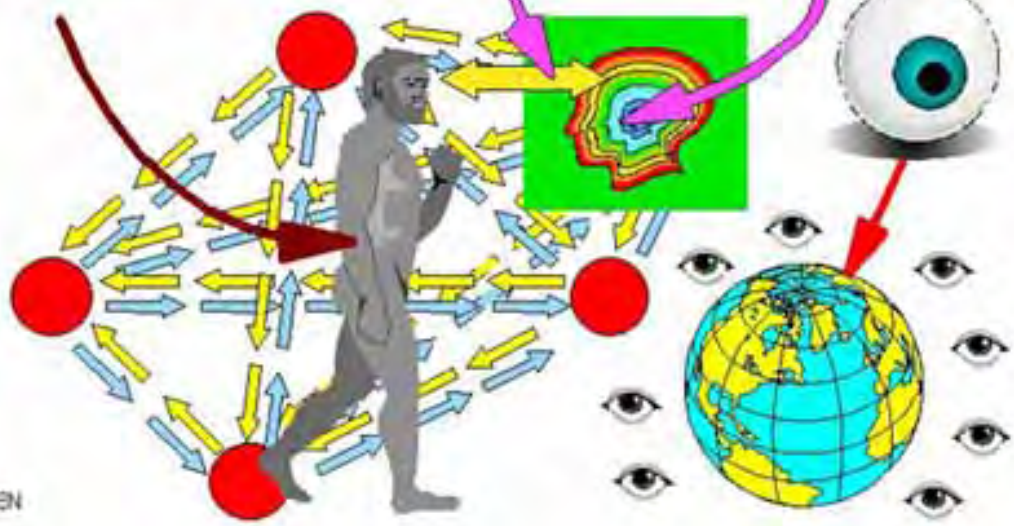

© 1996 T.E. BEARDEN

Communism's Goal

- "War to the hilt between communism and capitalism is inevitable. Today, of course, we are not strong enough to attack... To win we shall need the element of surprise. The bourgeoisie will have to be put to sleep. So we shall begin by launching the most spectacular peace movements on record. There will be electrifying overtures and unheard-of concessions. The capitalist countries, stupid and decadent, will rejoice to cooperate in their own destruction. They will leap at another chance to be friends. As soon as their guard is down, we shall smash them with our clenched fist."

Dimitry Z. Manuilsky
Lenin School of Political Warfare, Moscow
(circa 1934)

© 1996 T.E. BEARDEN

Manuilsky's Goal vs. Status Today

Manuilsky, 1934	Situation, Dec. 1996
▪ War is inevitable.	▪ Has not changed.
▪ Not strong enough to attack now.	▪ Strong enough now; preparations completed. Need right opportunity.
▪ Need surprise.	▪ Have achieved total surprise.
▪ Must put us to sleep.	▪ We are sound asleep.
▪ Need most spectacular peace movement on record.	▪ Done. We think the Russian threat gone, cold war ended.
▪ Electrifying overtures, unheard-of concessions.	▪ Done, and still occurring every day. It has worked beautifully.
▪ Capitalists will cooperate.	▪ We are cooperating in spades!
They will leap to be friends.	▪ We've leaped, and are leaping.
▪ They will let down their guard.	▪ No ABM, junked lots of nukes, shrunk our forces to the bone.
▪ We'll strike them then.	▪ They would have struck (twice) in 1997, but for deterence by another nation (not U.S.) having QP weapons
	▪ *They are still looking for a risk-free opening to strike*

© 1996, 1997 T.E. BEARDEN

Professor Hellman, German Scientist Released from Work in Soviet Union

- Worked in Soviet Union after WWII
- Eventually escaped to Germany, then to Brazil (handsome offer)

© 1996 T.E. BEARDEN

- Took part in highly unusual Soviet energetics development and experiments
- Large areas of the sea could be and were *suddenly frozen*
- *No particular attention was paid to this information by highly qualified scientists*
- *In intelligence terms, this is A-1 information of the highest caliber*
- *Bohm also was invited to Brazil, which started an energetics weapon program. Brazil developed such weapons including weak quantum potential weapons (0.95 confidence)*

Hemispheres of Light

- March 20th, 1969
  Caribbean and Western North Atlantic
- Hemisphere and Globes, 1977
  24 March, 1977
- Virgin Islands Incident
  August 1969
- Typical Shield Test, Northern Route to Japan
  June, 1982

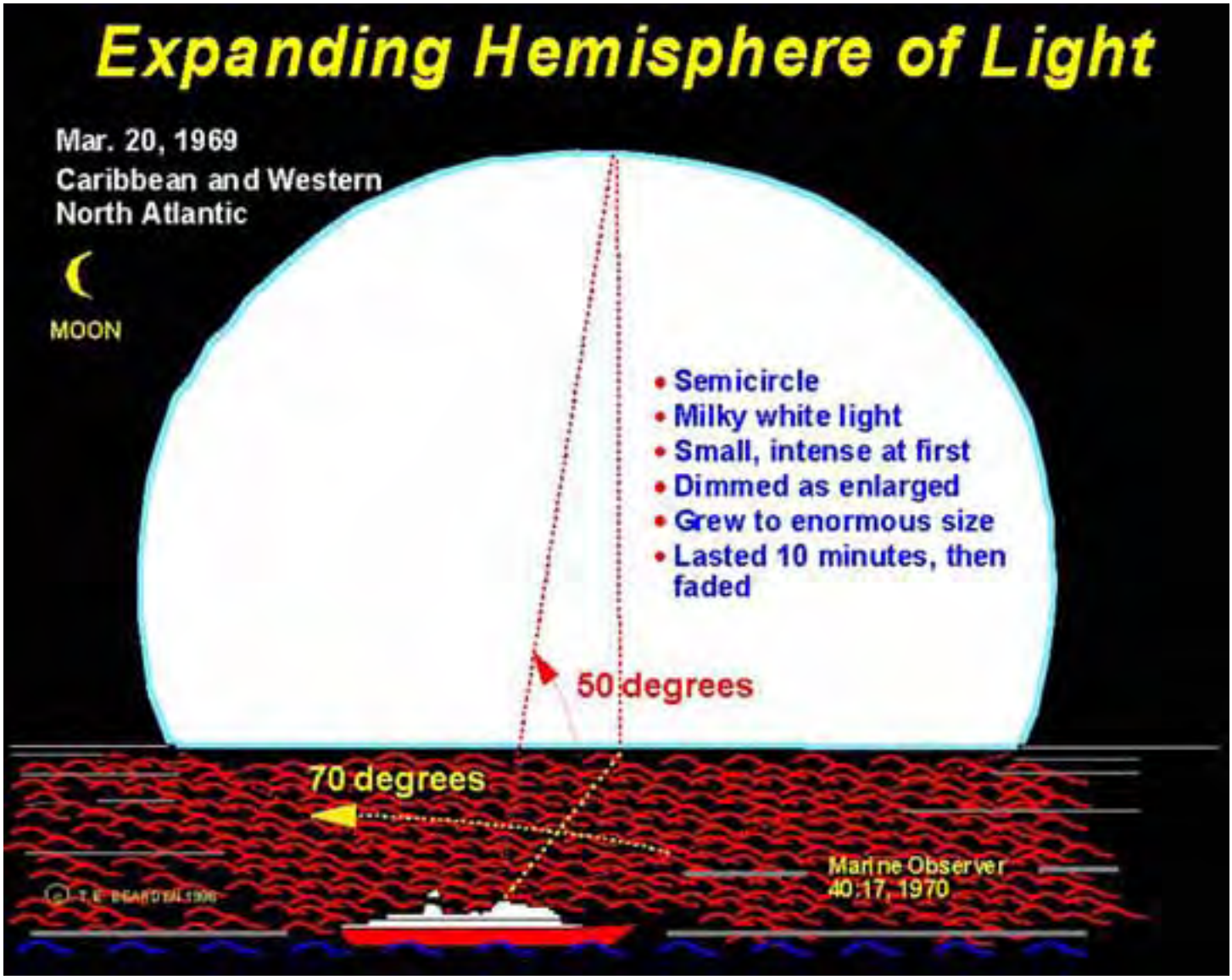
Expanding Hemisphere of Light
Mar. 20, 1969
Caribbean and Western
North Atlantic
MOON
• Semicircle
• Milky white light
• Small, intense at first
• Dimmed as enlarged
• Grew to enormous size
• Lasted 10 minutes, then faded
50 degrees
70 degrees
Marine Observer
40:17, 1970

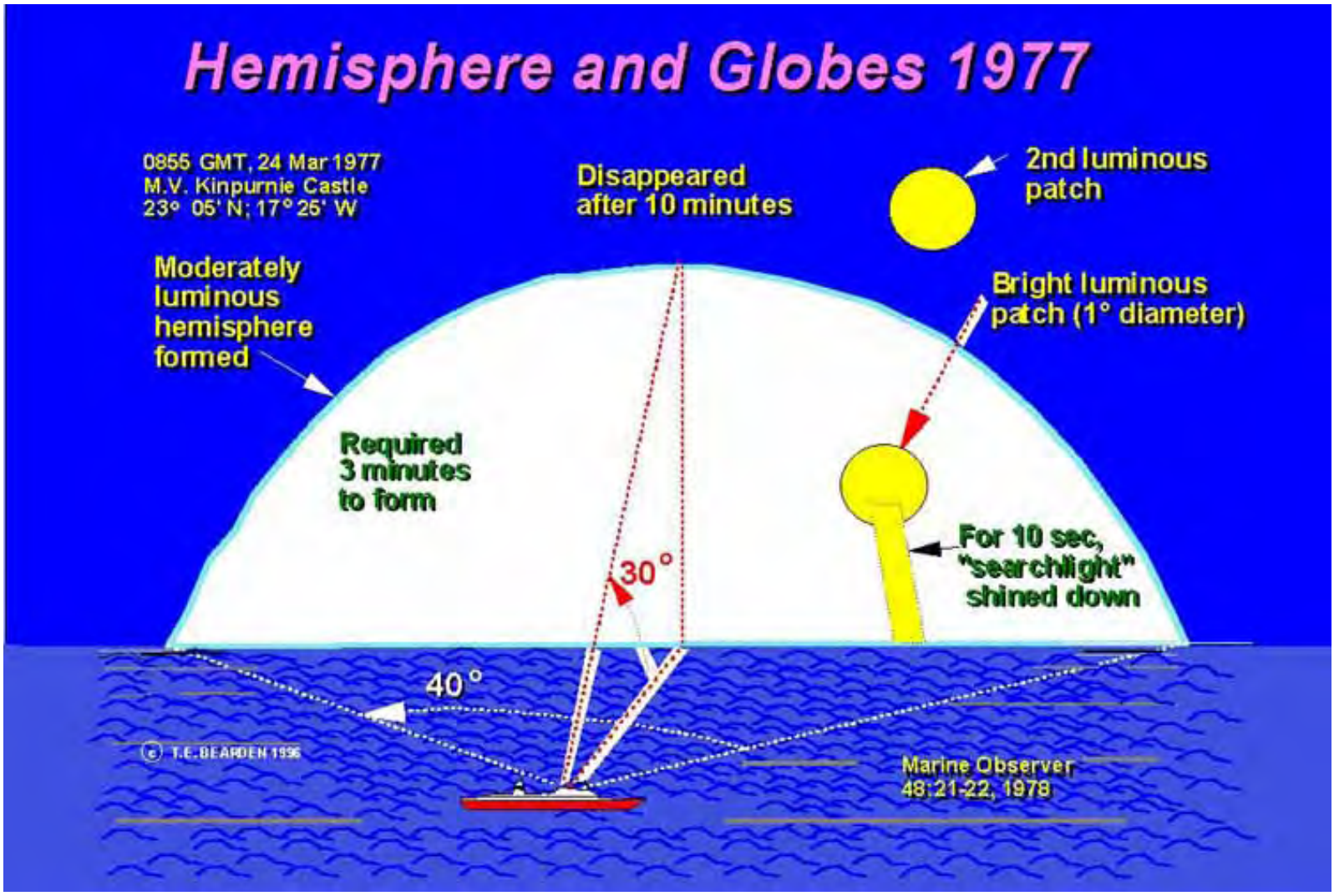
Hemisphere and Globes 1977
0855 GMT, 24 Mar 1977
M.V. Kinpurnie Castle
23° 05' N; 17° 25' W
Disappeared after 10 minutes
2nd luminous patch
Moderately luminous hemisphere formed
Bright luminous patch (1° diameter)
Required 3 minutes to form
For 10 sec, "searchlight" shined down
30°
40°
© T.E. BEARDEN 1996
Marine Observer 48:21-22, 1978

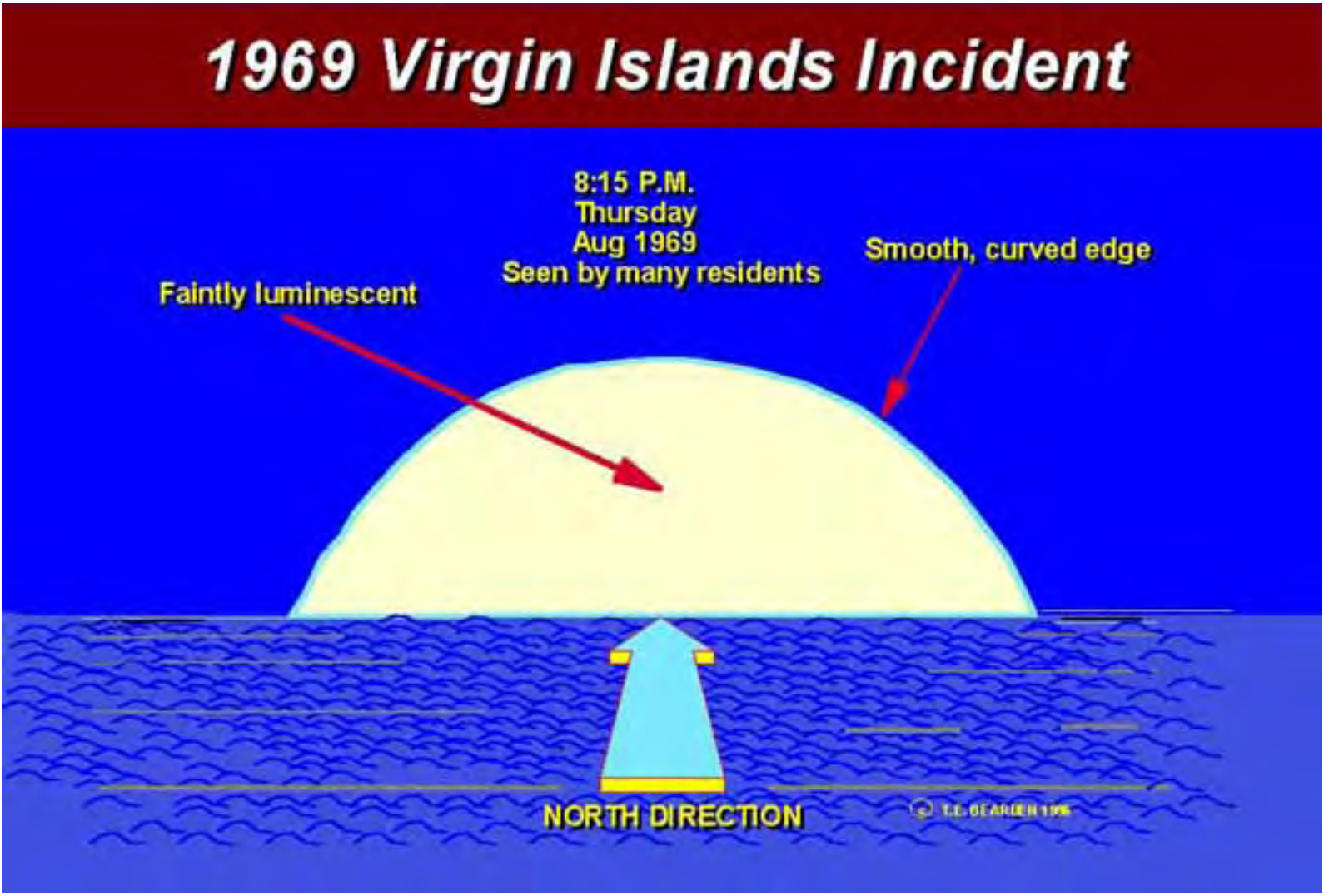
1969 Virgin Islands Incident
8:15 P.M.
Thursday
Aug 1969
Seen by many residents
Smooth, curved edge
Faintly luminescent
NORTH DIRECTION

Typical Shield Test, Northern Route to Japan
18-27 km diameter
Asahi Evening News, Tokyo
June 22, 1982
Multiple tests seen per month, for years.
Pilots simply ceased reporting them.

How Could Such Superweapons Ever Be Concealed?

- Arthur C. Clarke's law states:

  "Any sufficiently advanced technology is indistinguishable from magic."

- To U.S. scientists, "magic" means "impossible"
- Longitudinal EM waves and LW interferometers have been regarded as fantasy and impossible
- To deceive foe on rather open use of unknown technology without discovery:

  "Disguise its uses as understandable accidents, human error, acts of nature, other known technology, etc."

© T.E. BEARDEN 1996, 1999

Soviets Easily Concealed These Superweapons for Four Decades

- Intensive Soviet deception plan utilized
  - Embedded in other weapon system tests
  - Made to resemble natural acts, accidents, etc.
  - Open science releases coordinated to show Russian scientists worked on "normal" science
- West thought Russian scientists inferior
- U.S. scientific community was and is dogmatic, and fiercely suppresses real scientific innovation
- Terribly flawed electrodynamics not ruthlessly shaken and changed in West

© T.E. BEARDEN 1996, 1999

- West had no basis for understanding energetics

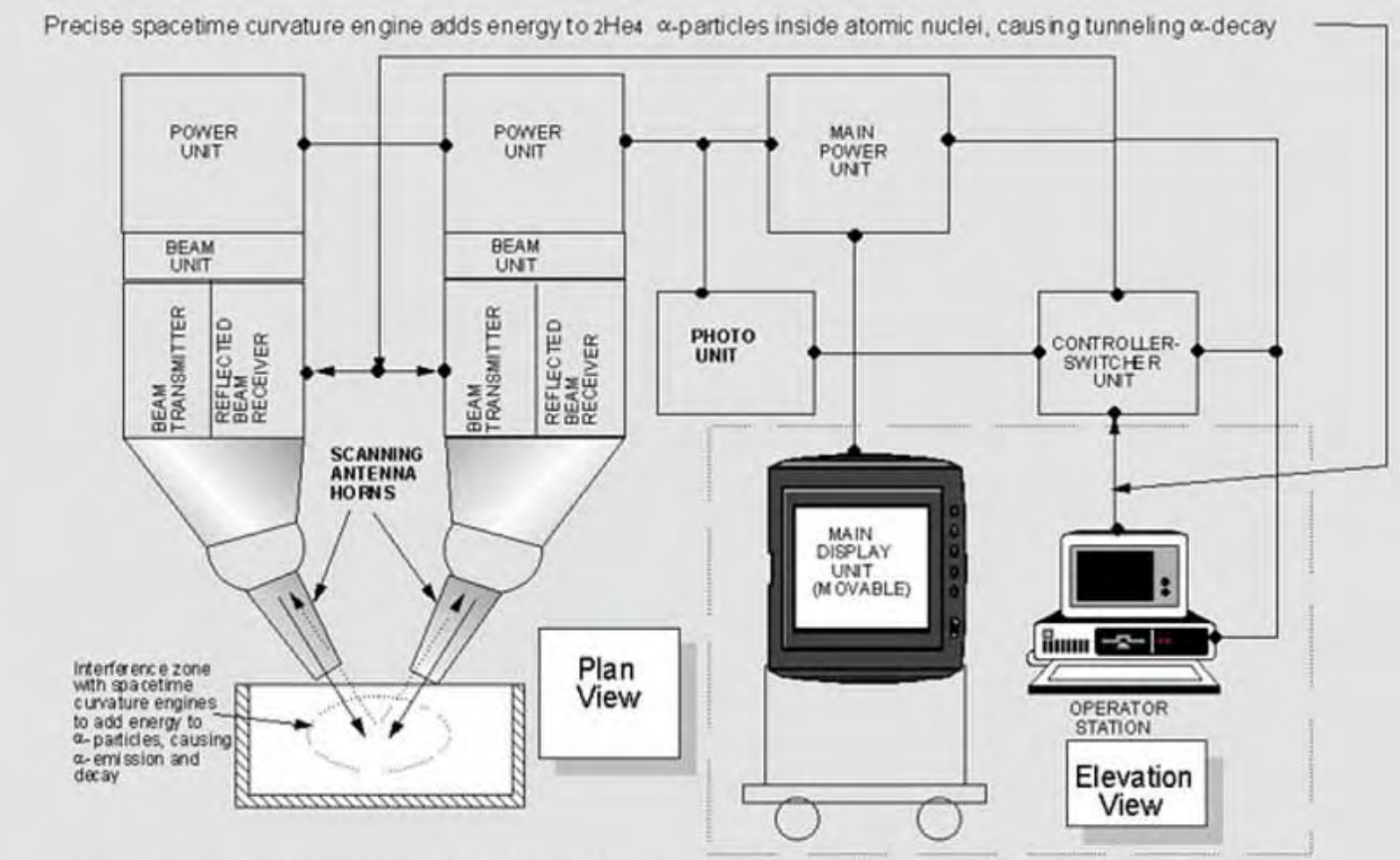

Figure 26. Microscope-type, laser-like interferometer for inducing quick α-decay in samples of otherwise longer-lived isotopes.

© T.E. BEARDEN 1998

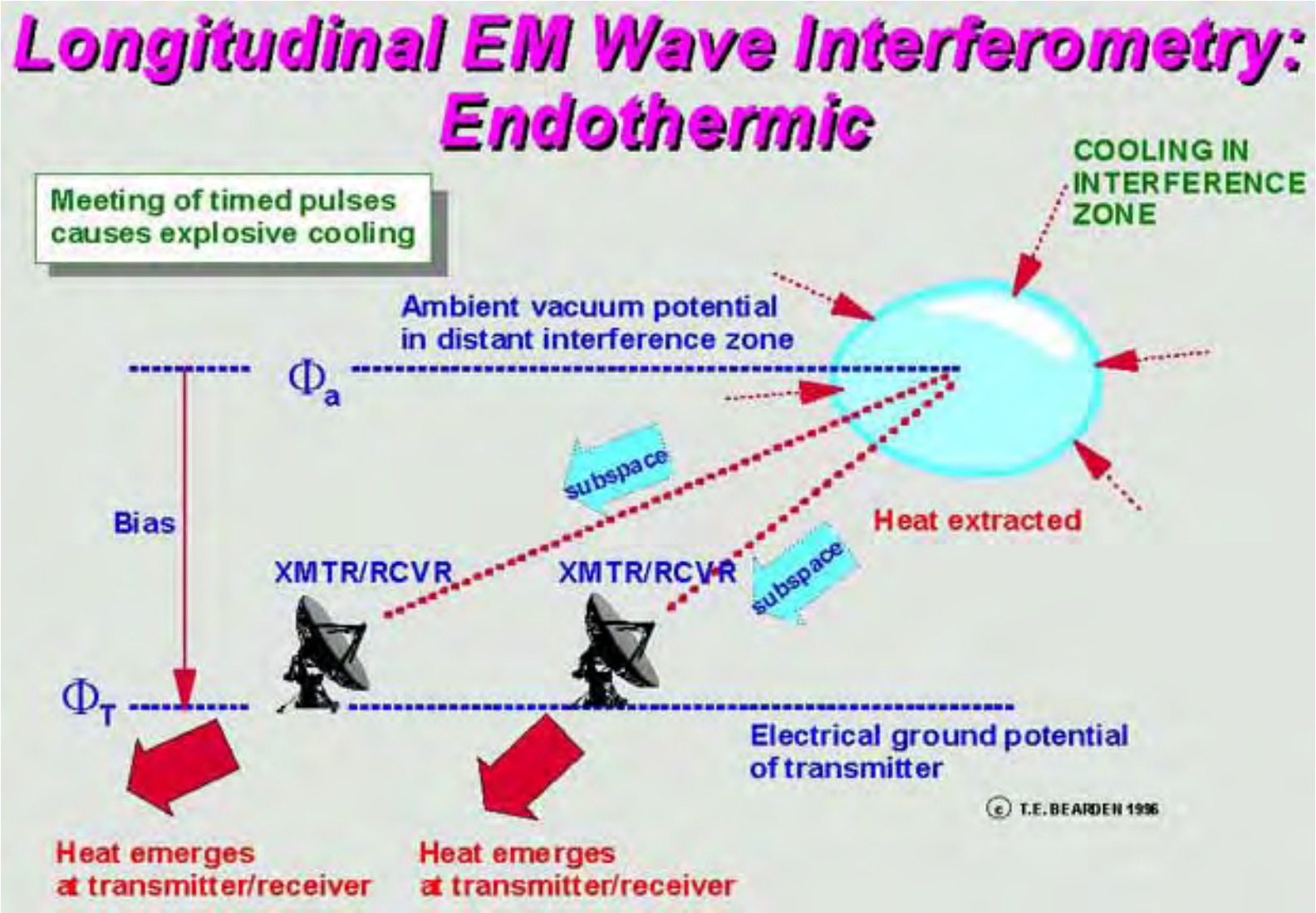
Longitudinal EM Wave Interferometry: Endothermic
Meeting of timed pulses causes explosive cooling
COOLING IN INTERFERENCE ZONE
Ambient vacuum potential in distant interference zone
Φ_a
subspace
Bias
Heat extracted
XMTR/RCVR
XMTR/RCVR
subspace
Φ_T
Electrical ground potential of transmitter
© T.E. BEARDEN 1996
Heat emerges at transmitter/receiver
Heat emerges at transmitter/receiver

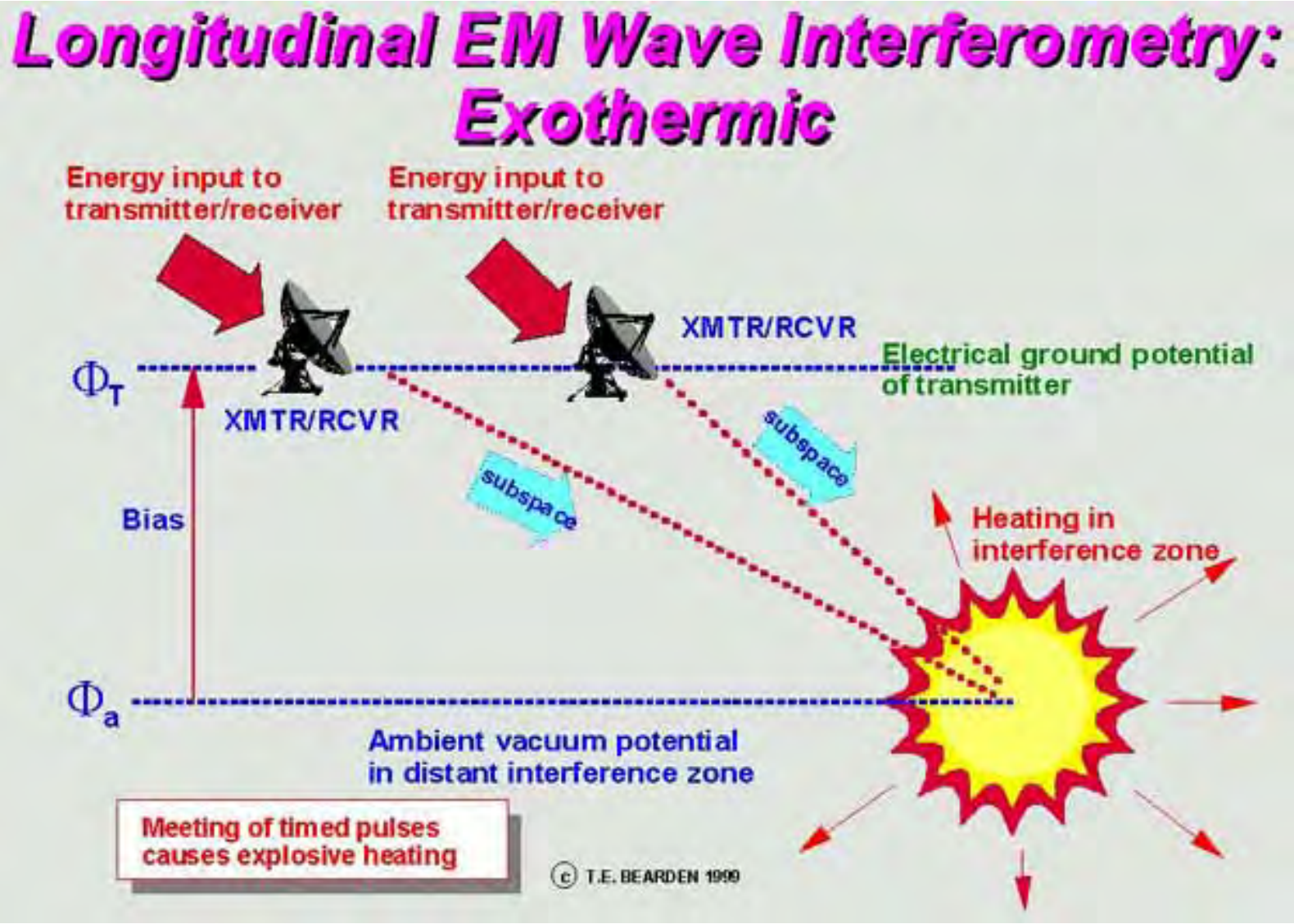
Longitudinal EM Wave Interferometry: Exothermic
Energy input to transmitter/receiver
Energy input to transmitter/receiver
XMTR/RCVR
XMTR/RCVR
Electrical ground potential of transmitter
Φ_T
subspace
subspace
Bias
Heating in interference zone
Φ_a
Ambient vacuum potential in distant interference zone
Meeting of timed pulses causes explosive heating
© T.E. BEARDEN 1999

The Tom Bearden Website

Help support the research

U.S. Air Attack on Libya
April 1986

- Slide 1
- Slide 2
- "Washington Post" Article
  January 22, 1989

U.S. Airstrike on Libya
April 1986*
• 33 U.S. AIRCRAFT IN STRIKE
• MANY HIGH-POWERED TRANSMITTERS
– COMMUNICATIONS
– JAMMERS
– RADARS
• SEVERE, UNEXPECTED "EMI" ENCOUNTERED
– ONE F-111 DOWNED
– NUMEROUS WEAPONS WENT ASTRAY
– THREE FOREIGN EMBASSIES DAMAGED
– SEVEN AIRCRAFT FORCED TO ABORT
• COMMANDERS: "US OR THEM?"
*Washington Post, 22 Jan. 1989, p. A4
Mild quantum potential weapon tested against electronics in U.S. aircraft and missiles
EM energy arises from every point in spacetime inside the electronics

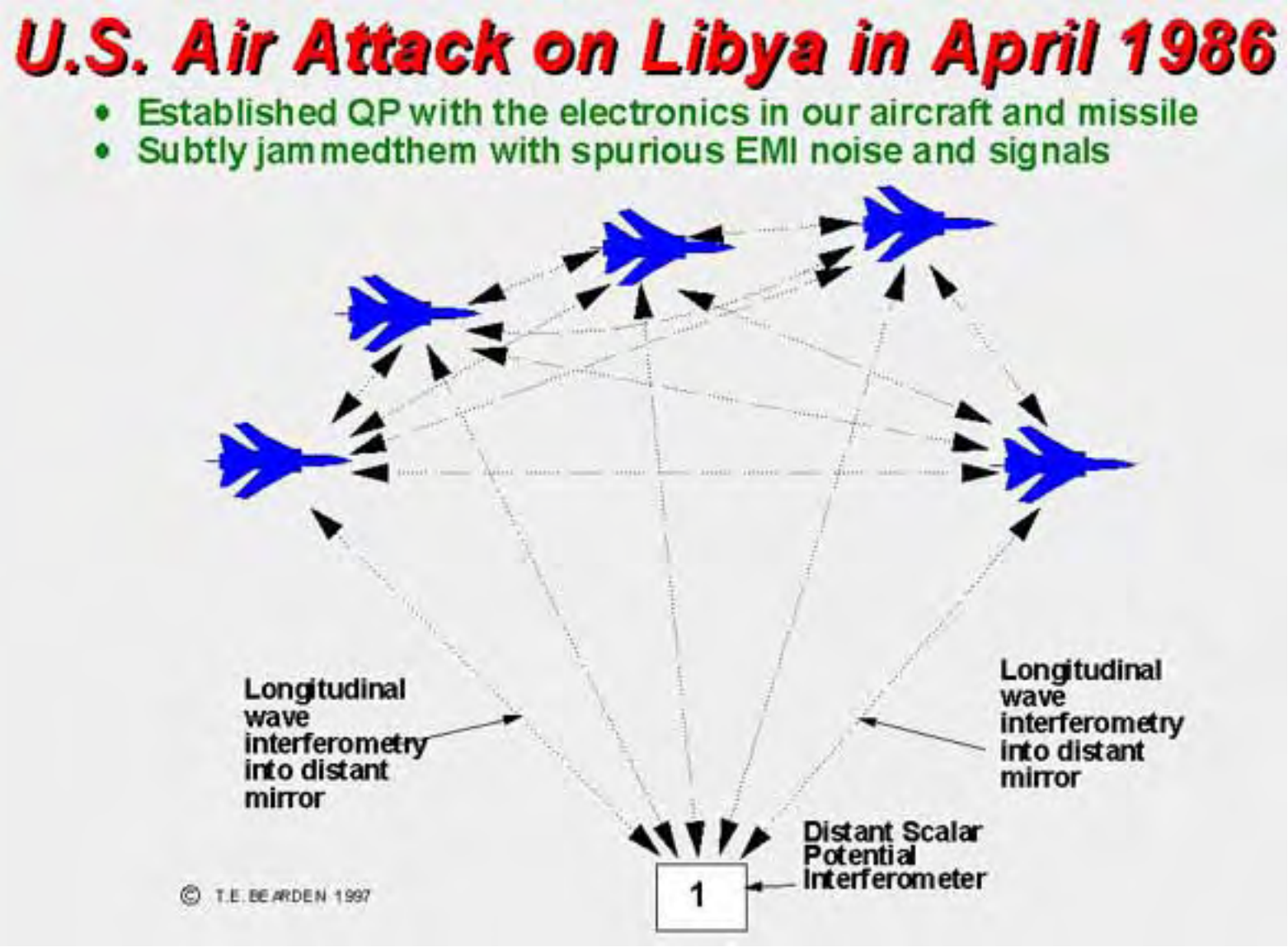
U.S. Air Attack on Libya in April 1986
• Established QP with the electronics in our aircraft and missile
• Subtly jammedthem with spurious EMI noise and signals
Longitudinal wave interferometry into distant mirror
Longitudinal wave interferometry into distant mirror
Distant Scalar Potential Interferometer
1
© T.E. BEARDEN 1997

Lightning Wall

- Aircraft on course of 270 degrees
- Approached "solid wall of lightning" in an otherwise cloudless sky
  - From very high altitude to near the water
  - Extended north-south as far as one could see
- Radar scope clear
- *Rigged aircraft for heavy weather*
- *Plunged directly through wall*
- *Wall was very thin*

circa 1959-1960
Interview with Patrol plane commander
U.S. Navy P5 aircraft
Over Atlantic, 200 miles east of Norfolk

© T.E. BEARDEN 1996

Lisitsyn's Report: Brain Code Broken

- THEORY DEVELOPED AND FITTED
- HYSTERESIS MEMORY LOOP
- CONTROLLED EM INDUCTION
  - IMAGES
  - SENSATIONS
  - PREDETERMINED EMERGENCE
- 23 EEG BANDS
  - UP TO 8.1×10^{20} HZ
  - 11 INDEPENDENT CHANNELS

S.K. Lisitsyn, "New Approach to the Analysis of Electroencephalograms," DDC Report AD73005, p. 16-25.

JC1-34

© 1979, 1985, 1991 T.E. BEARDEN

Large Longitudinal EM Wave Interferometer (LWI) Accident

- 1958 nuclear explosion near Urals
  - Contaminated 1200 square kilometers
  - Signature of large LWI accident
  - Buried atomic wastes suddenly exploded
  - Region contaminated to this day
- Soviets were well along with advanced LWI prototypes and testing
  - In Jan. 1960 Khrushchev announced these forthcoming "fantastic" weapons
  - 1958 difficulties would have been resolved by 1960

© T.E. BEARDEN 1990, 1999

Large Longitudinal EM Wave Interferometer (LWI) Accident

- Expected cause of 1958 accident
  - Huge LW energy beams built up
  - Catastrophic short-out in transmitter
  - LW energy flashed over into earth and spread
  - Struck and fissioned stored nuclear wastes
- Developed new safety circuits
  - For transmitter short-out, instantly activates to hold LW beam energy and prevent flash-over
  - Similar accident happened in 1986 at Chernobyl, except private U.S. group blew that transmitter to prevent catastrophic quake in California

© T.E. BEARDEN

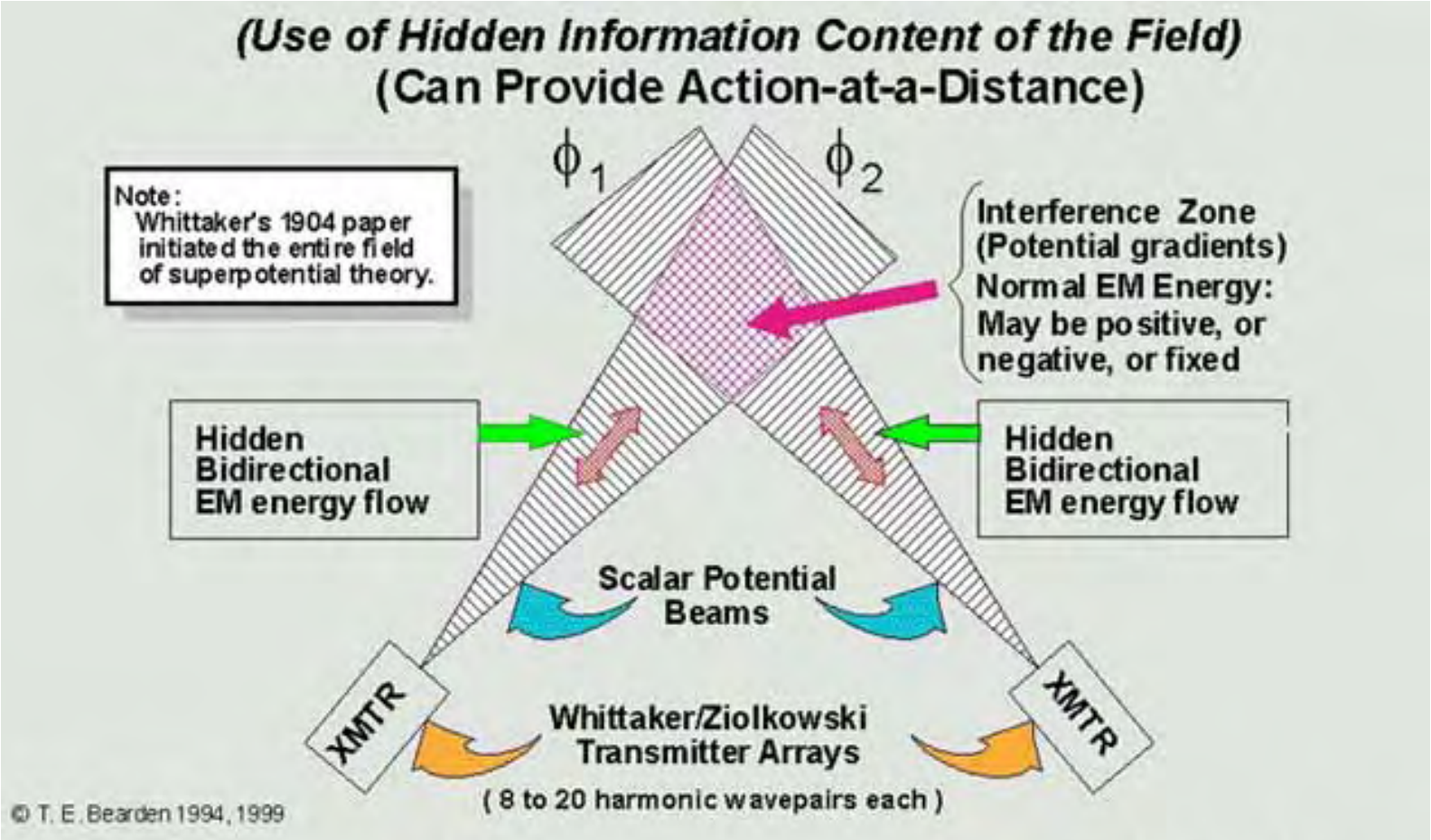

Figure 5. Scalar potential interferometry (between the two sets of bidirectional longitudinal EM wavepair functions) produces all EM force fields and waves.

Two Types of Mutual Assured Destruction (MAD) Systems

- ***Sane system:***
  - Turned off or on standby
  - Wait until attacked or attack is imminent
  - Humans consider situation, make strike decision
  - Command order issued to weapons officers
  - Human finger initiates launch sequence
  - Usually requires code entry, etc. for assured launch control

- ***Insane system:***
  - Computer periodically (e.g., every 2 hours) initiates launch
  - During sequence, there is a period (say, 2 min.) where operators can enter stop order (usually coded)
  - If correct stop not entered, weapons automatically launch
  - if correct stop entered, computer resets, and after another 2 hrs, automatically reinitiates the launch sequence

© 1996, 1997 T.E. BEARDEN

Psychoenergetics Weapons Teams
Mentally Disable All Personnel
(COUNTERS ALL SANE MAD SYSTEMS)
(NULLIFIES HUMAN COMPONENT OF ALL WEAPON SYSTEMS)
ELECTRICAL THOUGHT-WORDS ARISE DIRECTLY IN BRAIN, HENCE IN MIND, BYPASSING SENSOR INPUTS
INSTANT HYPNOGOGIC STATE, WITH INSERTED THOUGHT-WORDS
Effects arise in local spacetime, simultaneously in all minds in the targeted area
INSTANT HYPNOGOGIC STATE; WITH WAKING DREAM
PERCEIVED REALITY NOW CONTROLLED
TARGETED POPULACE
• Site personnel instantly hypnogogic and mentally controlled.
• Distant weapon controller teams coord crew actions
• Standdown insane weapons to maintenance standby.
• Mindsnapper then strikes, kills all personnel, and nullifies site for months.
Indicators: Two A-10 incidents 1997, LIDA device since 1950s.
© 1996 T.E. BEARDEN

Strikes Against Special Ship and Energetics Weapon Sites

- Via powerful scalar EM pulses in each targeted area, so sharp time-jerks occur
  - Mind and its operations exist in time but not in 3-space
  - Coupling interaction of mind operations to body occurs through flow of time
  - Flow or change of flow of time must be smooth, for coupling of mind to body
- *Sharp jerk in time flow snaps mind's coupling to body, instantly separates mind*
- *Instant death for every virus, bacterium, cell, insect, mammal, living creature*
- *Contaminates struck sites for months, perhaps a year*

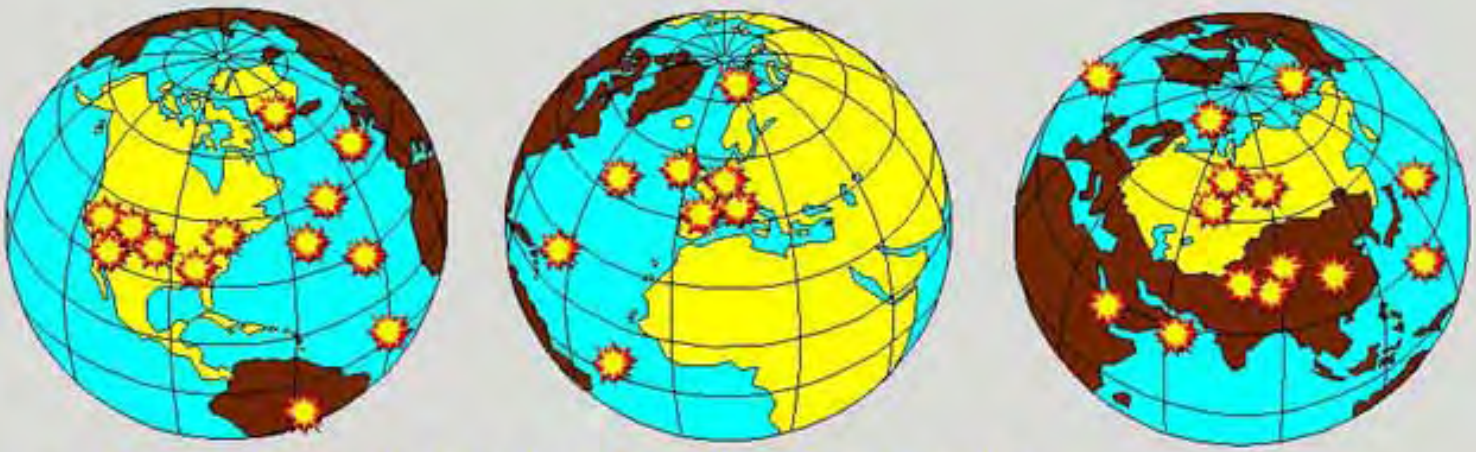

Note: In other words, this is the part of the "preparation barrage" that attacks the enemy's response capability (i.e., his "artillery" and his "airpower") and suppresses it. The use of the "mindsnapper" weapons provides 100% assurance of success.

© T.E. BEARDEN 1996

"MINDSNAPPER" ATTACK ON SPECIAL SHIPS & ENERGETICS WEAPONS SITES

"We have a new, fantastic weapon ... so powerful that, if unrestrainedly used, it could wipe out all life on earth."

Khrushchev, speaking to Presidium, Jan. 1960

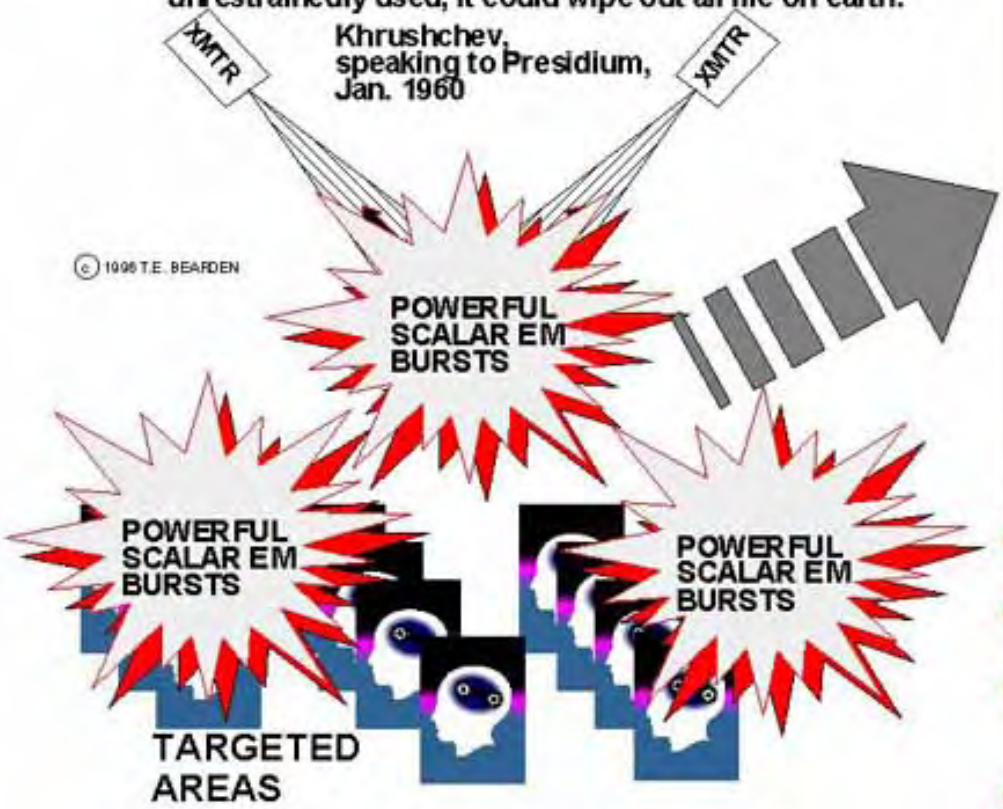

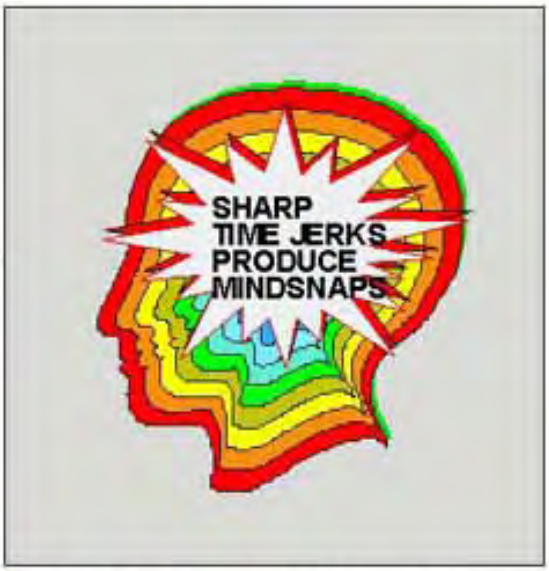

- Minds snapped loose from bodies (every living thing)
- Struck areas completely sterilized of all life
- LWs emitted; slow decay of time-charge makes contamination persistent
- Tested twice in Afghanistan

The Tom Bearden Website

Help support the research

How Much Off Guard Are We?

- Slide 1
- Slide 2
- Slide 3
- Slide 4
- Slide 5
- Slide 6
- Slide 7

How Much Off Guard Are We?

- *Legitimate U.S. forces have no energetics weapons or defenses against them*
- *No DoD general, military officer, or enlisted person reporting to the government of the United States has <u>any:</u>*
  - Training in energetics or energetics weapons
  - Experience in energetics or energetics weapons development and usage
  - Training in strategy, tactics, deployment, and employment of energetics weapons
  - Knowledge of energetics weapons effects and capabilities
  - Knowledge of the energetics weapons, tactics, deployment, and employment by the KGB/Russians
- *Civilian and military, scientific and intelligence, and news media personnel do not recognize energetics weapons effects happening right over their own heads*

© 1999 T.E. BEARDEN

How Much Off Guard Are We?

- Kill of U.S.S. Thresher in 1963 not recognized. Left signatures.
- 23 years of KGB weather engineering, particularly over U.S. and North America, ignored and not recognized.
- Decades of irradiation of U.S. Embassy, fatally injuring three U.S. Ambassadors, health changes in personnel shrugged off ineptly.
- Massive building of underground sites, all through former Soviet Union, lamely speculated as perhaps "ABM" system or?.
- 1985, 1986 Soviet kills of U.S. aircraft, spacecraft, personnel ignored as "accidents" by legitimate U.S. communities.
- Quantum potential strike on soldiers in Gulf war ignored.
- Quantum potential deterioration of U.S. populace's immune systems ignored.
- Exchange of earthquakes and massive retaliatory destruction of Soviet missile ammunition storage sites, 1986-1989, ignored.
- U.S. scientific and military communities adamantly refuse to rework electromagnetics, though known to be seriously flawed.
- Refuse to apply Stoney/Whittaker work to engineer hidden variables, even though present quantum mechanics also known to be wrong because it does not contain such "hidden order."
- Refuse to develop, structure, and apply Bohm's quantum potential, for instantaneous action at a distance. Russians developed it.

© 1996-199 T.E.BEARDEN

How Much Off Guard Are We?

- **Kill of U.S.S. Thresher in 1963**
  - Not recognized.
  - Left signatures.
- **23 years of KGB weather engineering**
  - Particularly over U.S. and North America
  - ignored and not recognized.
- **Decades of microwave irradiation of U.S. Embassy**
  - Fatally injured three U.S. Ambassadors
  - Induced health changes in personnel
  - Shrugged off ineptly.
- **Massive building of underground sites**
  - All through former Soviet Union
  - Lamely speculated as perhaps "ABM" system or?.

© 1996 T.E. BEARDEN

How Much Off Guard Are We?

- 1985, 1986 Soviet kills of U.S. aircraft, spacecraft, personnel ignored as "accidents" by legitimate U.S. communities.
- Quantum potential strike on soldiers in Gulf war not recognized, ignored.
- Quantum potential deterioration of U.S. populace's immune systems ignored.
- Exchange of earthquakes and massive retaliatory destruction of Soviet missile ammunition storage sites, 1986-1989, ignored.

How Much Off Guard Are We?

- U.S. scientific and military communities adamantly refuse to rework electromagnetics, though known to be seriously flawed.
- Refuse to apply Stoney/Whittaker work to engineer hidden variables, even though present quantum mechanics also known to be wrong because it does not contain such "hidden order."
- Refuse to develop, internally structure, and apply Bohm's quantum potential, which gives instantaneous action at a distance and great energy amplification.
- Russians developed quantum potential weapons, which obsolete all other weapons.

© 1996 T.E. BEARDEN

JUST HOW MUCH OFF GUARD ARE WE?
Kill of TWA-800 1996
Kill of USS Thresher 1963
Cold Explosion Off Japan Apr 1984
Kill of Space Shuttle Challenger 1986
From The Huntsville (AL) Times 18 Sep 96:
"Retired Gen. Wayne Downing concluded that U.S. forces are so far superior to potential foes that opponents have turned to terrorism as the only way of challenging them."
The Times also provided the information that Defense Secretary William Perry agreed with Gen. Downing's conclusion.
President's party airplane crash 1996
3 Dead U.S. Ambassadors from Moscow Embassy Radiation
QP Gulf War Syndrome: 16,000 persons disabled
QP jamming, U.S. air attack on Libya, 1996
Kill of Arrow DC-8 Gander AFB Dec 1985

JUST HOW MUCH OFF GUARD ARE WE?`

3 Dead U.S Ambassadors, U.S. Weather Engineered 20 years

Kill of USS Thresher Nuclear Submarine Apr 1963

QP Test on U.S. Troops in Persian Gulf, 1991 (Gulf War Syndrome)

TWA-800 1996; President's C-130 crash 1996

Arrow DC-8 Gander AFB Dec 1985

Challenger 1986

Quantum Potential Jamming of Air Attack on Libya Apr 1986

Blind Euphoria to Even the Ballistic Missile Threat

- U.S. National Intelligence Estimate (NIE) released in Nov. 1996 states there is no foreseeable threat to the U.S. from "indigenous missiles" for at least 15 years.
- Clinton has claimed a program for ABM defense is too expensive, would violate ABM Treaty with former USSR.
- Soviets developed an ABM system in violation of the treaty.
- In June 96 Russia test-launched an SS-19, their 26th ICBM test in 5 years.
- *"Russia still retains and is modernizing a vast nuclear arsenal... still the only nation of earth that could destroy America in a matter of minutes. Indeed, given the weakness of the Russian Army, Russia's superpower ambitions rest more than ever on its nuclear capabilities."* *
- "For the first time since the dawn of the nuclear age, there is not a single Russian missile pointed at America's children." **

Comment: Punch a computer button and the missiles are pointed! The armed missiles are still there, ready and waiting.

Bulleted info courtesy Washington Inquirer, June 24, 1996.

* House Nat'l Security Chmn, Floyd Spence.
** Bill Clinton, State of the Union Message.

© 1996 T.E. BEARDEN

Possible Targets: 1995-9
Escalation Phase
(Based on 1985-87 test program)
Earthquakes
Missiles
Power Grids &
Distribution Systems
Satellites
Ships
Shuttle
Launches
& Flights
JETLINERS
Radio/TV
Subs
Microwave Nets
Radars &
Nets
Communications
and Computer Nets

Propagation of Weapon Effects

- All conventional weapons use propagation through 3-space of matter or energy or both
  - Matter (bombs, missiles, projectiles, etc.)
  - Energy (EM force fields, sonic force fields, etc.)
  - Basically one-to-one, or one "bus" to many-on-many
  - Finite propagation velocity v: where $0 < v \leq c$
  - Time delay: Shielding and pre-strike retaliation possible
- Structured quantum potential propagates vacuum ordering (vacuum engines), instantly
  - Zero time delay (through multiply-connected spacetime)
  - No propagation "through space", no "velocity" as such
  - Easily one-to-many, without limit
  - Dramatic energy amplifier (gates, amplifies flux ordering)
  - Effects arise in local spacetime; no shielding possible
  - No range limit, since striking distance always zero
- QP weapons obsolete all other weapons

© 1989, 1995, 1998 T. E. BEARDEN

Yugoslav Earthquake, Followed by Cold Explosion

Apr. 15
1979

- Magnitude 7.2 on Richter scale
- Epicenter 33 km. deep
- More than 100 aftershocks
- At Kamenari:
  - Adriatic sea mushroomed up
  - Like atomic bomb explosion
  - Signature of a cold explosion
  - Similar to Apr. 1984 test off coast of Japan, near Kurils (see inset graphics)
- Note that April is a significant test month for the Communists (preparing official reports for May Day?)

© T.E. BEARDEN 1994, 1995

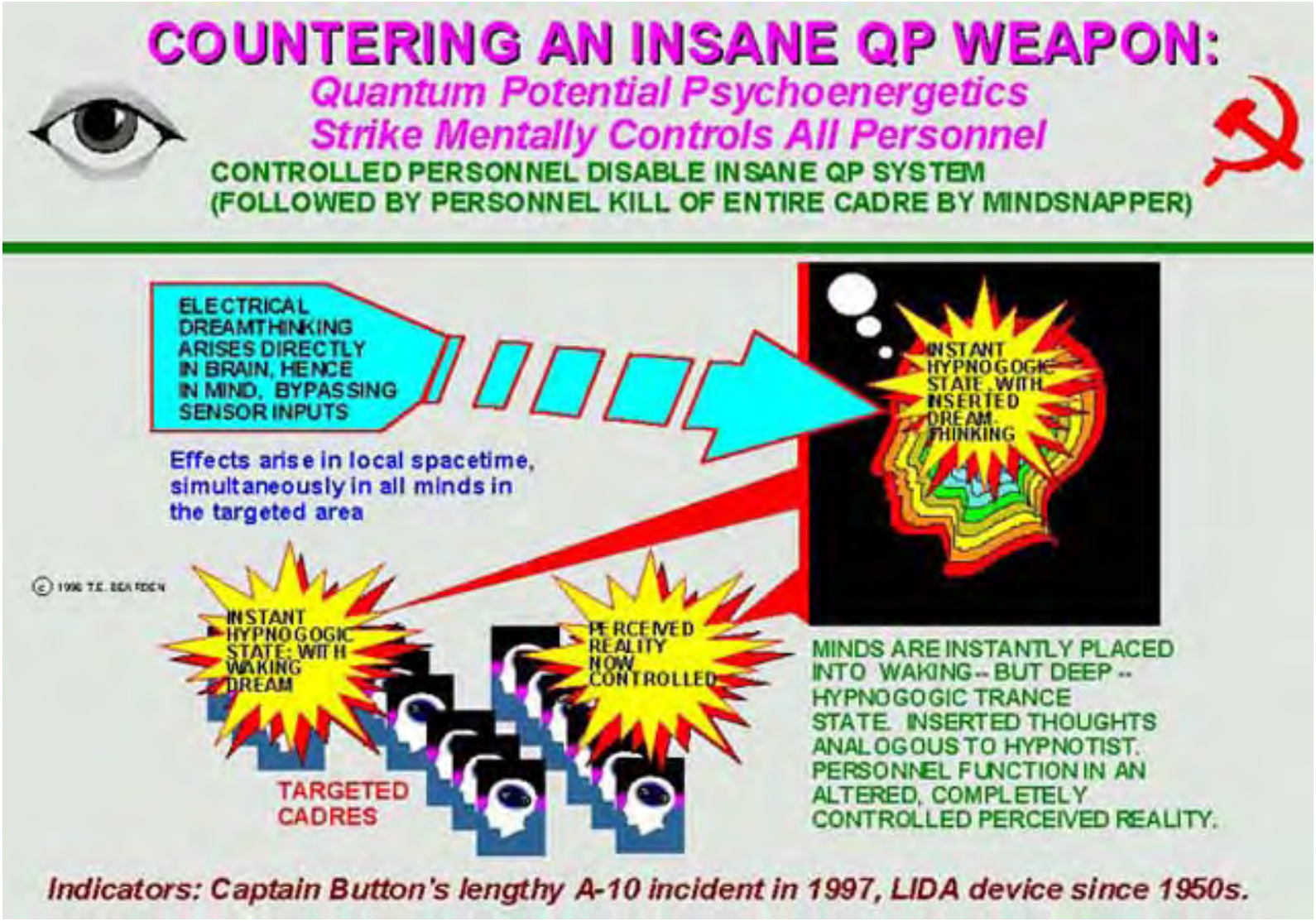
COUNTERING AN INSANE QP WEAPON:
Quantum Potential Psychoenergetics
Strike Mentally Controls All Personnel
CONTROLLED PERSONNEL DISABLE INSANE QP SYSTEM
(FOLLOWED BY PERSONNEL KILL OF ENTIRE CADRE BY MINDSNAPPER)
ELECTRICAL DREAMTHINKING ARISES DIRECTLY IN BRAIN, HENCE IN MIND, BYPASSING SENSOR INPUTS
Effects arise in local spacetime, simultaneously in all minds in the targeted area
INSTANT HYPNOGOGIC STATE, WITH INSERTED DREAM-THINKING
INSTANT HYPNOGOGIC STATE, WITH WAKING DREAM
PERCEIVED REALITY NOW CONTROLLED
TARGETED CADRES
MINDS ARE INSTANTLY PLACED INTO WAKING -- BUT DEEP -- HYPNOGOGIC TRANCE STATE. INSERTED THOUGHTS ANALOGOUS TO HYPNOTIST. PERSONNEL FUNCTION IN AN ALTERED, COMPLETELY CONTROLLED PERCEIVED REALITY.
Indicators: Captain Button's lengthy A-10 incident in 1997, LIDA device since 1950s.

Gulf War Disease: KGB QP Weapon Induced
ST Curvature Engines for a Cocktail of Diseases
LIBYA
EGYPT
CHAD
SUDAN
SAUDIA ARABIA
IRAN
IRAQ
© 1999 T. E. BEARDEN
Distant Scalar Potential Interferometer with iterative self-targeting

Self-Targeting in Inner EM Channel Can Produce a Quantum Potential

Once QP is established, energy transmission is direct and instantaneous. Energy input to one single participant will simultaneously appear in all other participants, the amount depending on their fractions of participation with the input station.

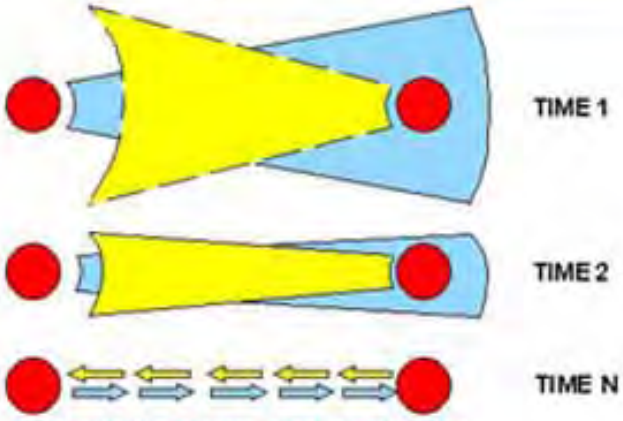

NARROWING OF INTERACTING POTENTIALS INTO LASER-LIKE BEAMS, BETWEEN TWO PUMPED SOURCES. NOW ONLY LONGITUDINAL WAVES CONNECT THE LINKED OBJECTS.

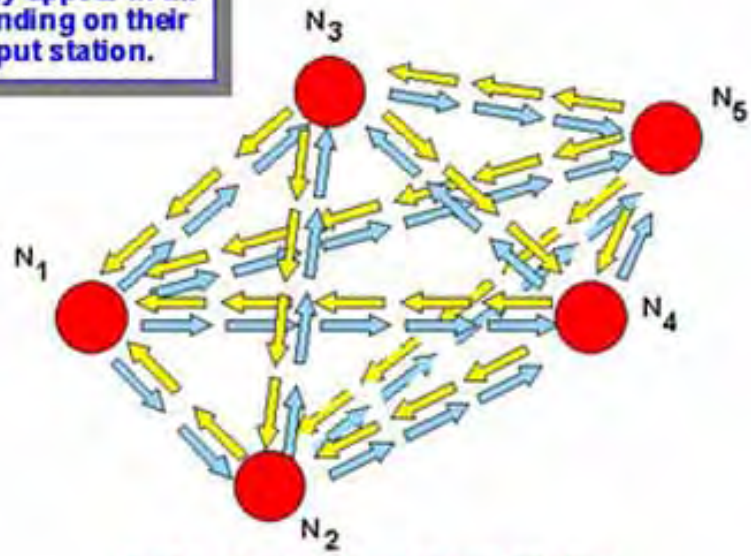

SELF-TARGETING EFFECT AMONG ALL PAIRS OF INTERACTING PUMPED SOURCES

© 1989, 1995, 1996 T.E. BEARDEN

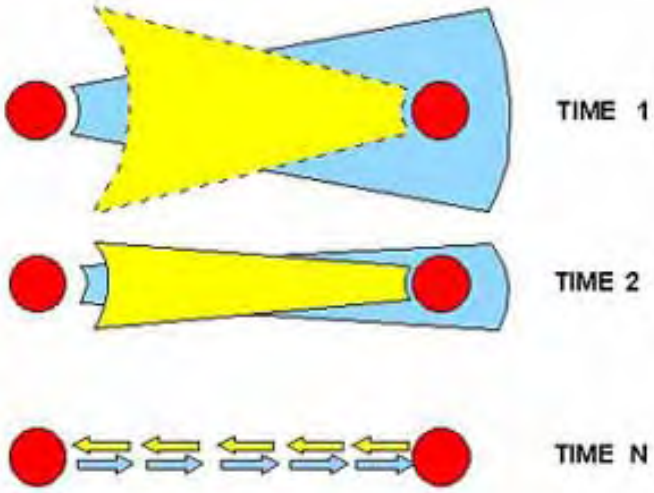

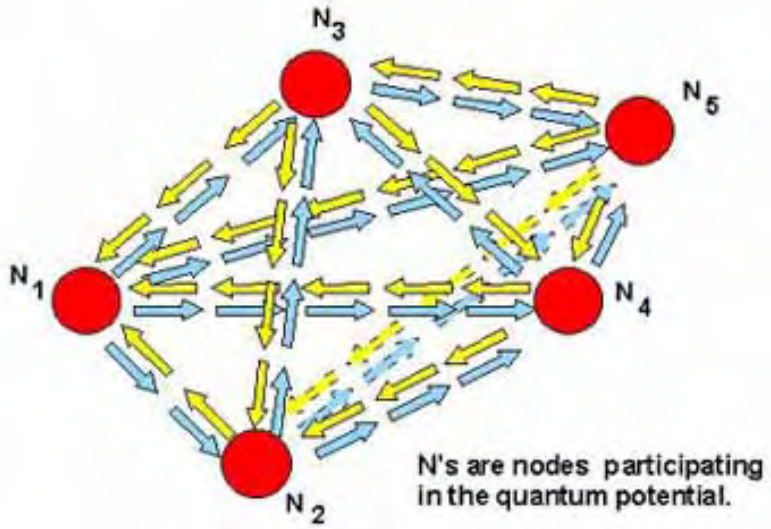

a. Iterative retroreflection between any pair of nodes narrows the interconnecting potentials to a laser-like, bidirectional beam. Iterative phase conjugate reflection provides self-targeting.

b. The quantum potential exists as narrow, laser-like beams between participating nodes, even when the nodes are widely separated. The beam space is multiply-connected; transmission is instantaneous.

© 1989, 1995 T.E. BEARDEN

Consider the hidden Stoney/Whittaker bidirectional EM waves that comprise the potential from each source node. If these nodes have sufficient intersymmetry of dynamic material form, then self-targeting occurs between the two nodes of any nodal pair. By iterative phase conjugate reflection, the scattering is narrowed into interconnecting wavepairs, in laser-like beams, between each two nodes. Thus the interconnecting potentials narrow into laser-like, bidirectional beams. The Coulomb gauge may apply, and a quantum potential may be formed.

Figure 30. Mechanism for generating a quantum potential, by iterative self-targeting induced into a system of multiple scattering nodes. Once a QP is established, spatial separation has little or no effect.

Major Principles for Use of Quantum Potential Weapons

- Must disable dead-man fuzing prior to massive use of scalar interferometry weapons.
- Must assure immediate, complete nullification of unique enemy assets (quantum potential assets, special ships, and energetics weapons).
- Personnel can be destroyed instantly with mindsnapping; area is sterilized of life, and effect persists, gradually dying away.
- Personnel can be disabled instantly with various psychoenergetic weapons; area not sterilized.
- Personnel can be destroyed in short order by using EM BW weapons; area not sterilized.
- If foe has energetics weapons, then it is a quick-draw "gunslinger" contest unless insane MAD systems deployed.
- Complete surprise is of decisive importance.
- Tailor effect used to specific target, objective.
- *Note: Must use "insane" MAD systems to deter.*

© 1996 T.E. BEARDEN

Quantum Potential Weapons: Major Principles (Continued)

© 1996 T.E. BEARDEN

- Three major classes of use exist:
  - Use of bulk energy only (as in bulk heating or cooling) without substructuring
  - Use of internal structuring of the bulk energy, so that *vacuum engines* appear in target
  - Use of more deeply nested engines allows direct intervention in mind, long term memory, perception, thoughts, emotions, personality
- Use of vacuum engines allows engineering at a distance of:
  - *Atomic nuclei* including structures, reactions, and transmutations
  - *Bulk matter* including translations, lattice bonding, chemistry, chemical interactions, electromagnetic interactions
  - *Deep biological control systems* such as
    - Becker's cellular control (recovery) system
    - Popp's cellular control system
  - *Cells* including:
    - Structuring, differentiation and dedifferentiation
    - Genetic changes, chemical changes
    - Induction of disease states without normal disease vectors
  - *Mind/matter interface*, including long-term memory, perception, emotion, thought, mental state

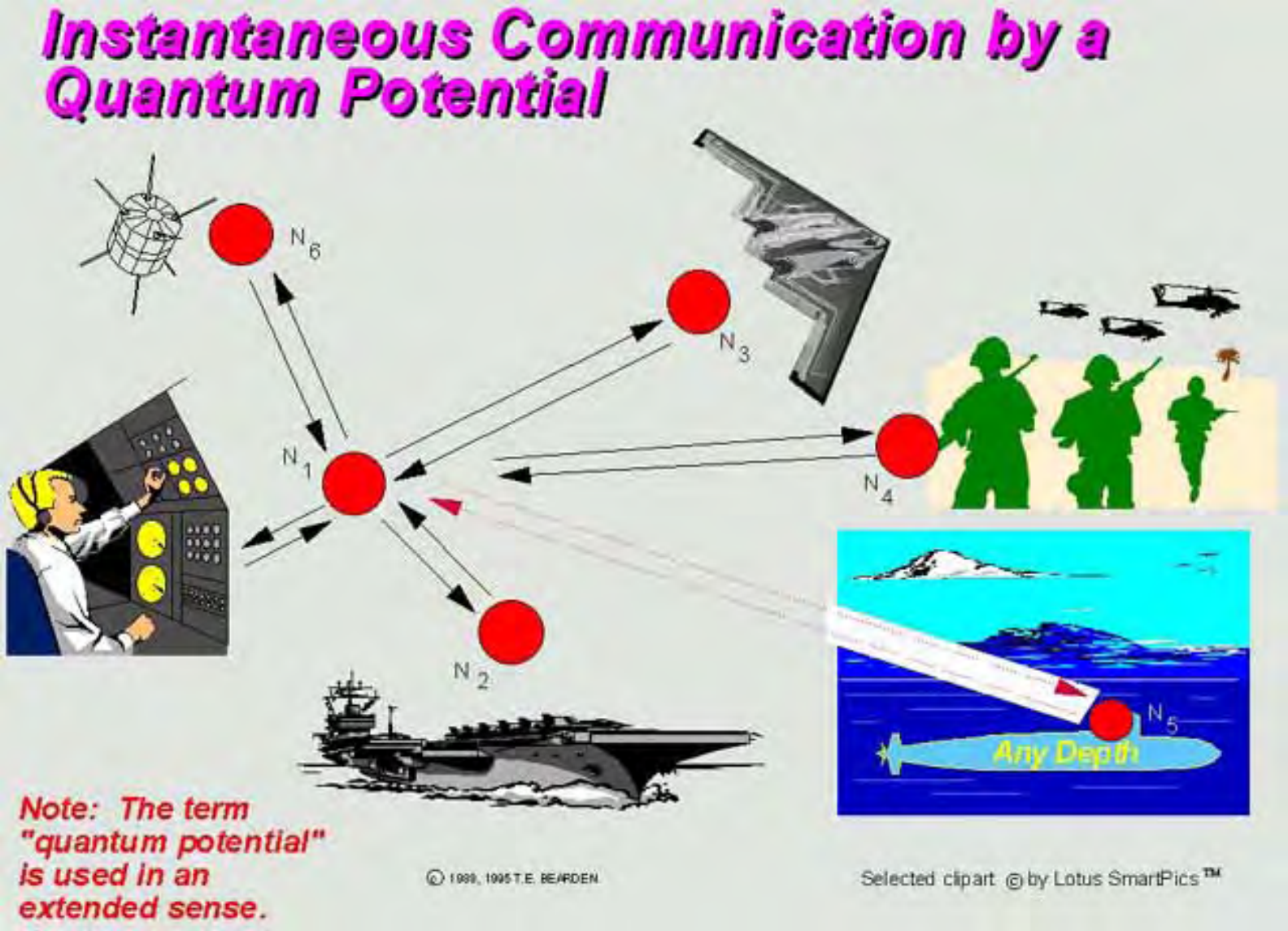
Instantaneous Communication by a Quantum Potential
N6
N3
N1
N4
N2
N5
Any Depth
Note: The term "quantum potential" is used in an extended sense.
© 1999, 1995 T.E. BEARDEN
Selected clipart © by Lotus SmartPics™

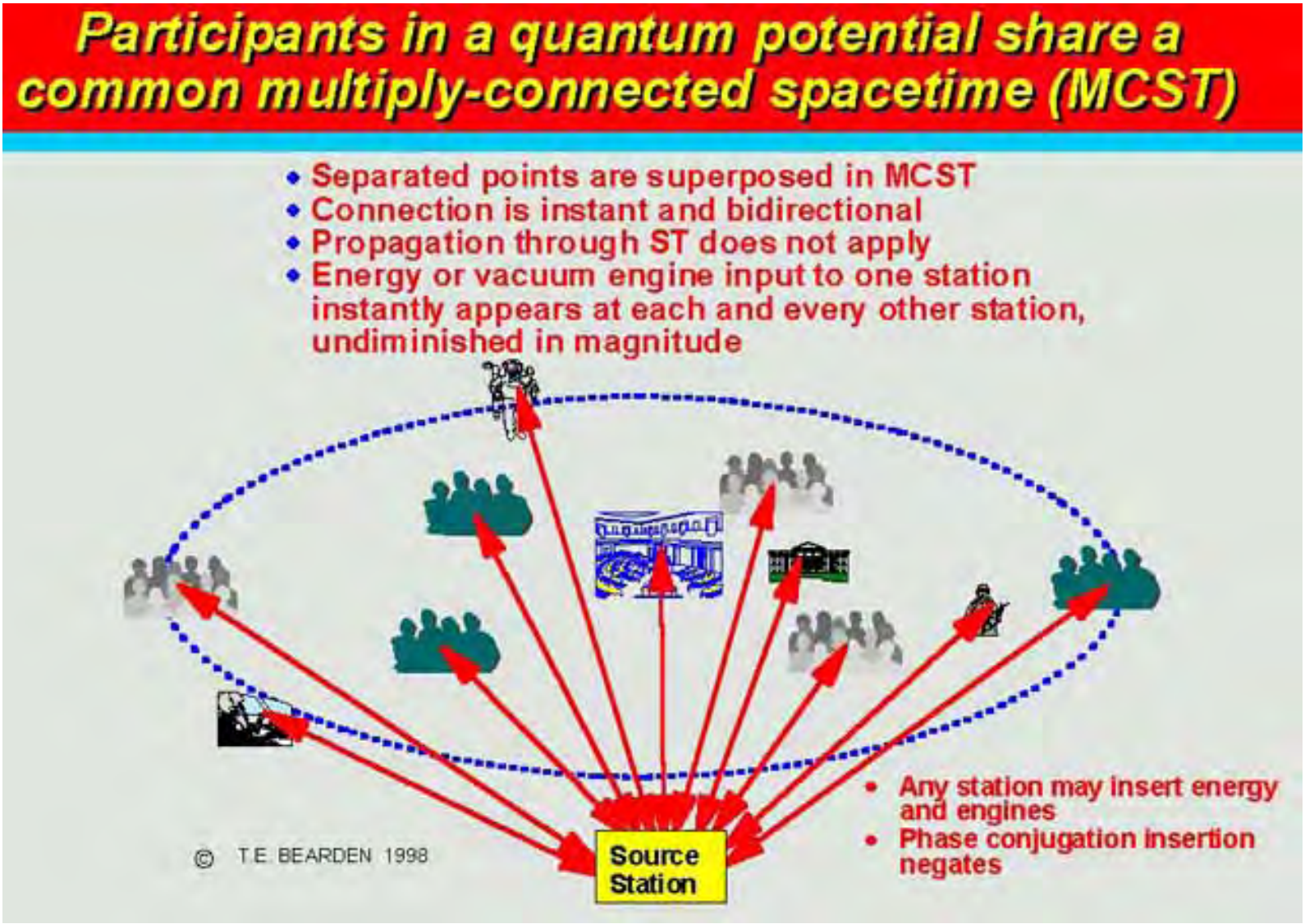
Participants in a quantum potential share a common multiply-connected spacetime (MCST)
• Separated points are superposed in MCST
• Connection is instant and bidirectional
• Propagation through ST does not apply
• Energy or vacuum engine input to one station instantly appears at each and every other station, undiminished in magnitude
• Any station may insert energy and engines
• Phase conjugation insertion negates
Source Station
© T.E. BEARDEN 1998

Quake in Tangshan, China

28 July, 1976

- 7.8 on Richter scale
- Hundreds of thousands killed
- Accompanied by extensive light, electrical effects
  - Starting 3 to 5 days before
  - Communications interference within 250 km
  - Sky lighting observed
- [Personal comments]

© T. E. BEARDEN 1999

Counting Rifles: Put up or shut up!

(Exchanging Earthquakes)

Opening bet

- Quebec 25 Nov 88
- Pasadena 3 Dec 88

Raise you

- Armenia 7 Dec 88

Call - what do you have?

- Malibu 18 Jan 89

Four aces

- Soviet Central Asia 23 Jan 89

Clear table (stress relief)

- Bakersfield et al various

© T.E. BEARDEN 1990

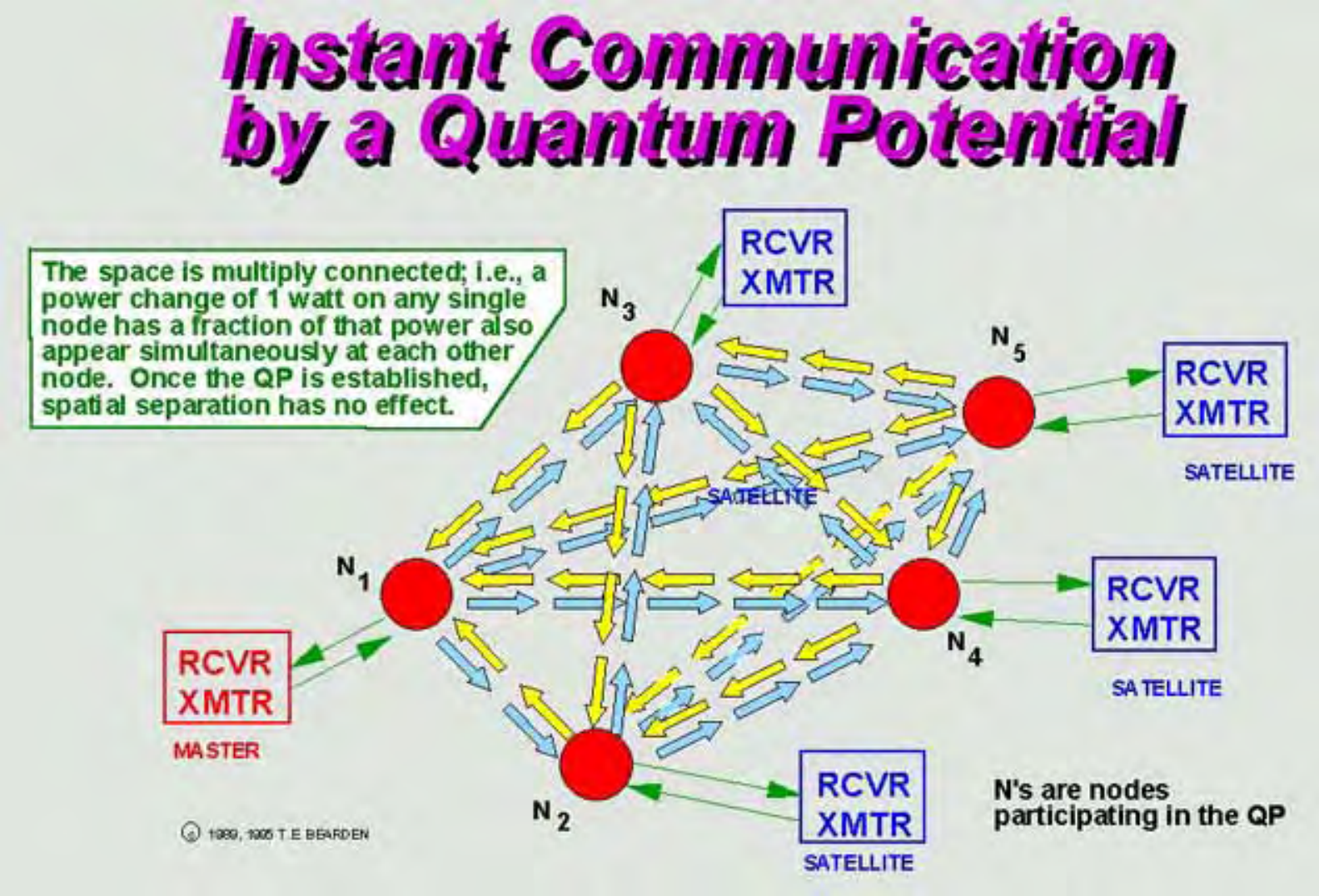
Instant Communication by a Quantum Potential
The space is multiply connected; i.e., a power change of 1 watt on any single node has a fraction of that power also appear simultaneously at each other node. Once the QP is established, spatial separation has no effect.
RCVR XMTR
N3
N5
RCVR XMTR
SATELLITE
SATELLITE
N1
RCVR XMTR
N4
SATELLITE
RCVR XMTR
MASTER
N2
RCVR XMTR
SATELLITE
N's are nodes participating in the QP
© 1999, 1005 T.E BEARDEN

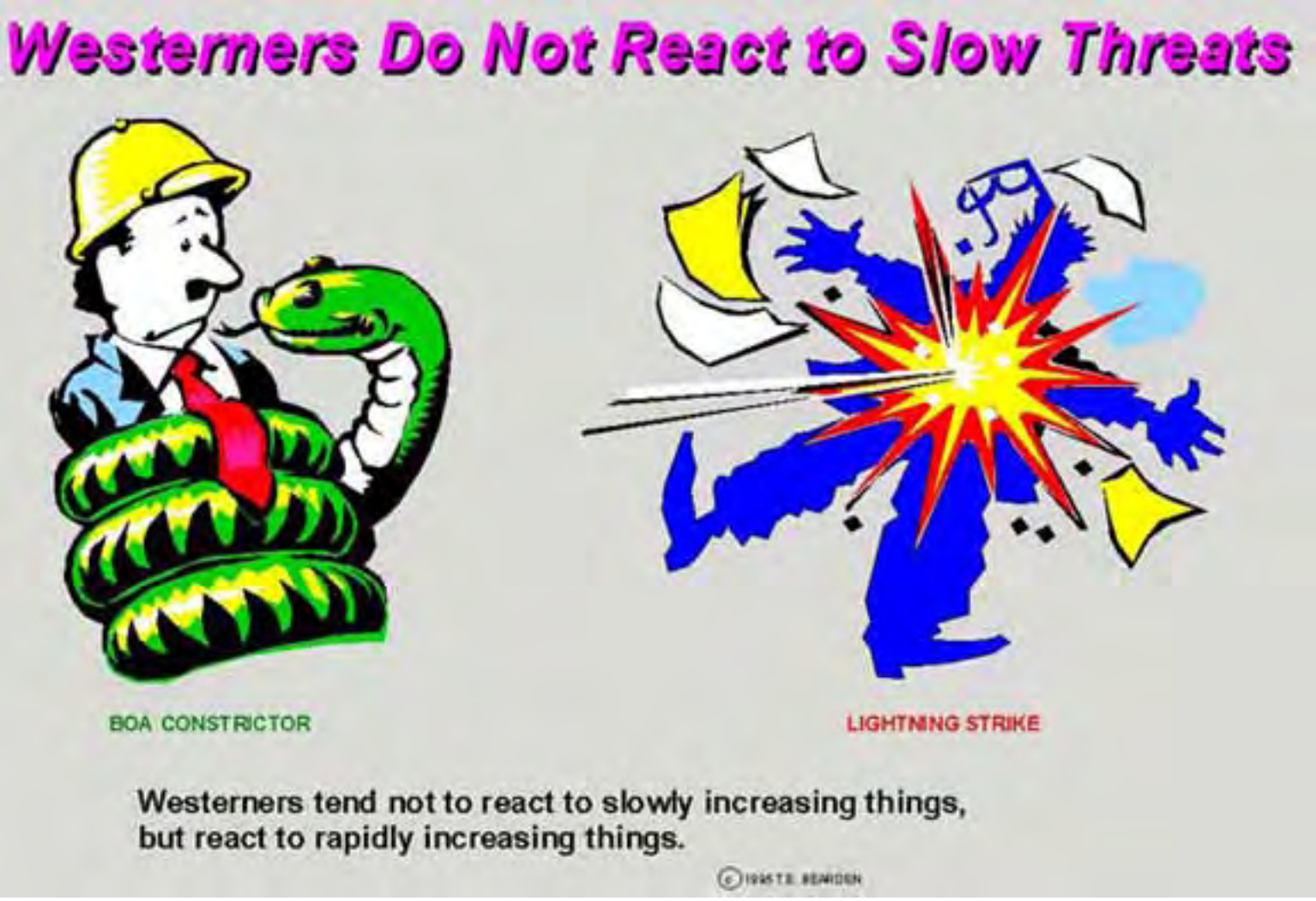
Westerners Do Not React to Slow Threats
BOA CONSTRICTOR
LIGHTNING STRIKE
Westerners tend not to react to slowly increasing things,
but react to rapidly increasing things.

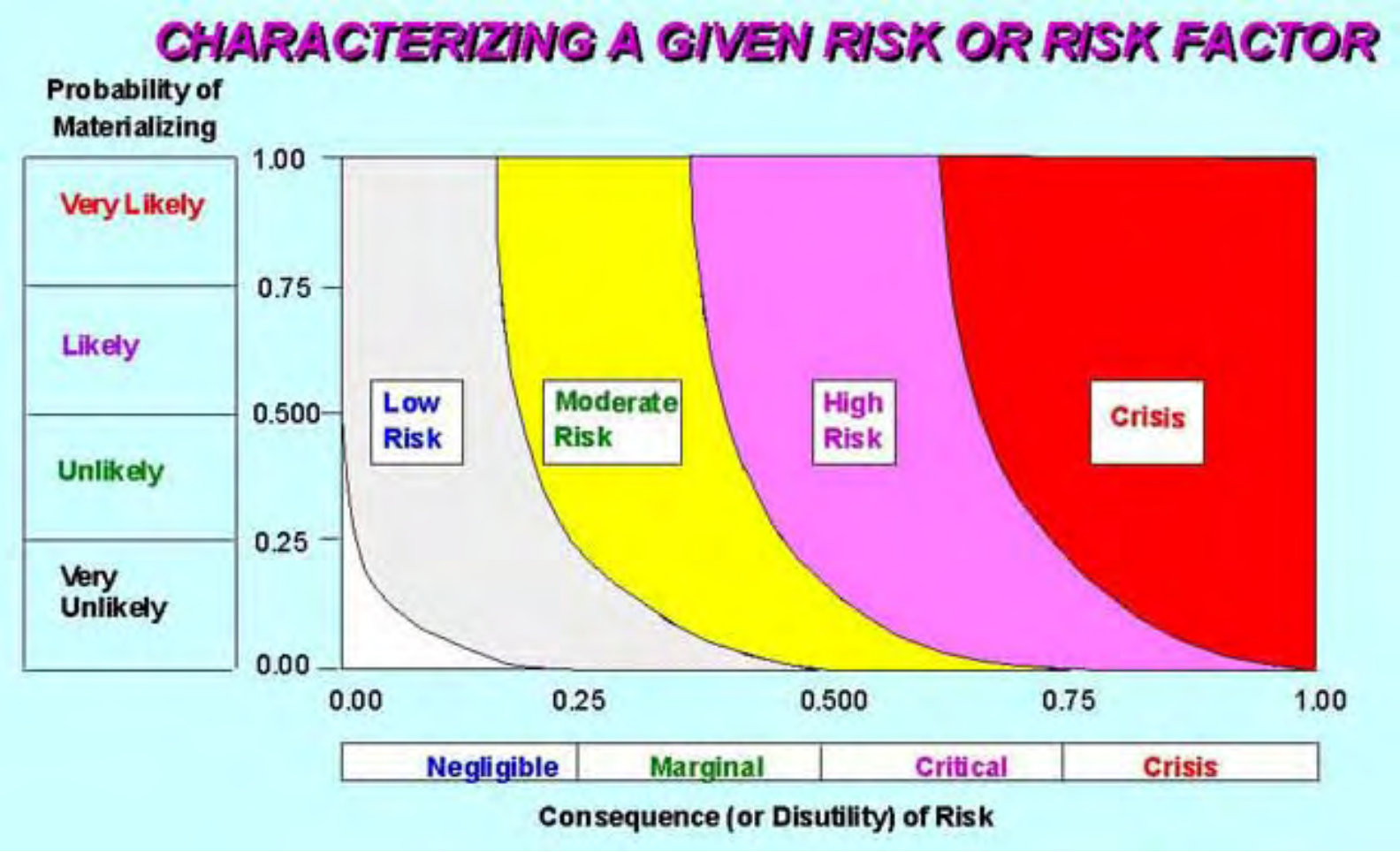
CHARACTERIZING A GIVEN RISK OR RISK FACTOR
Probability of Materializing
Very Likely
Likely
Unlikely
Very Unlikely
1.00
0.75
0.500
0.25
0.00
Low Risk
Moderate Risk
High Risk
Crisis
0.00
0.25
0.500
0.75
1.00
Negligible
Marginal
Critical
Crisis
Consequence (or Disutility) of Risk

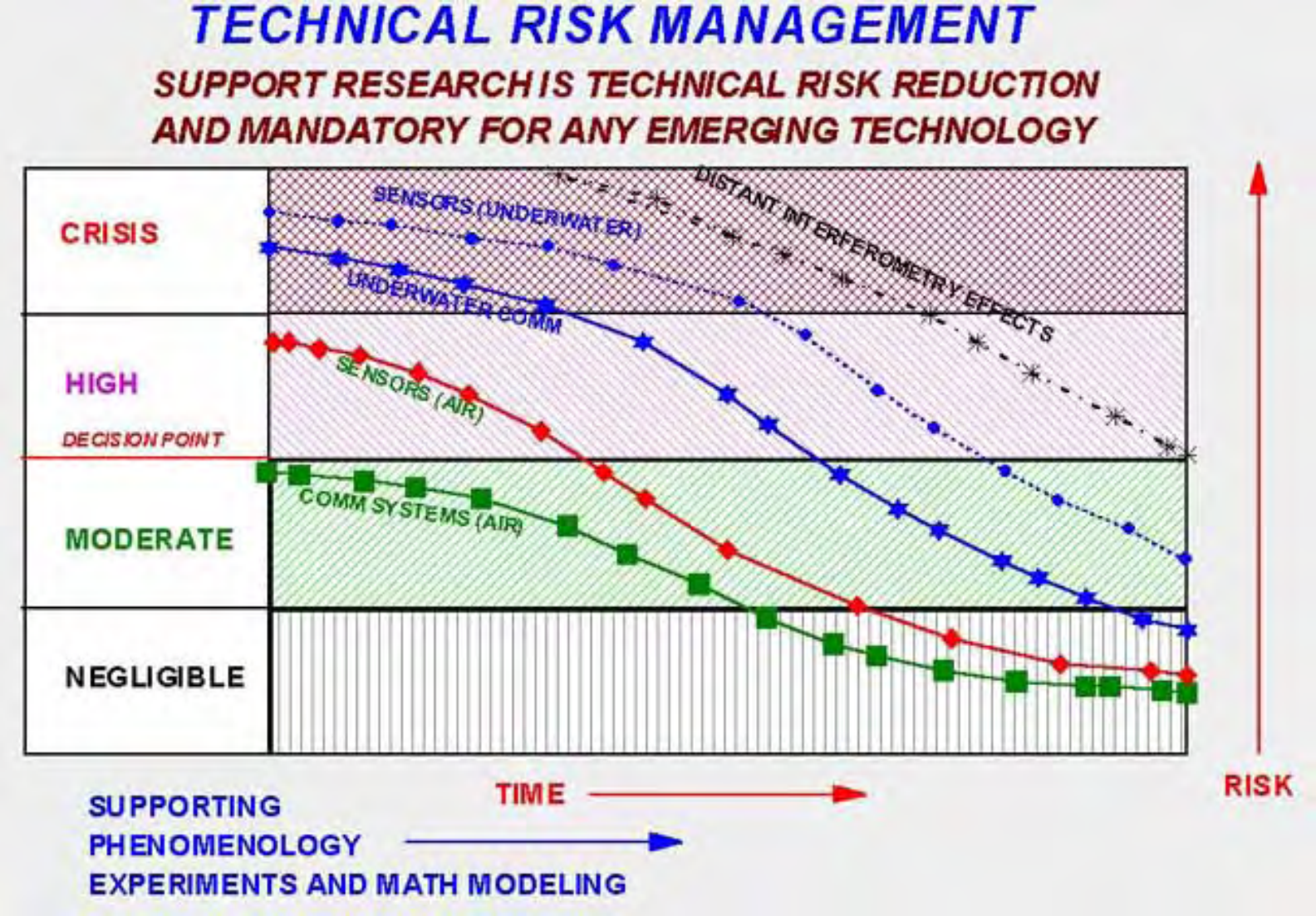
TECHNICAL RISK MANAGEMENT
SUPPORT RESEARCH IS TECHNICAL RISK REDUCTION
AND MANDATORY FOR ANY EMERGING TECHNOLOGY
CRISIS
HIGH
DECISION POINT
MODERATE
NEGLIGIBLE
SENSORS (UNDERWATER)
DISTANT INTERFEROMETRY EFFECTS
UNDERWATER COMM
SENSORS (AIR)
COMM SYSTEMS (AIR)
TIME
RISK
SUPPORTING
PHENOMENOLOGY
EXPERIMENTS AND MATH MODELING

Aum Shinrikyo's Sarin Facility

The interior of Satian No. 7, a suspected sarin production plant

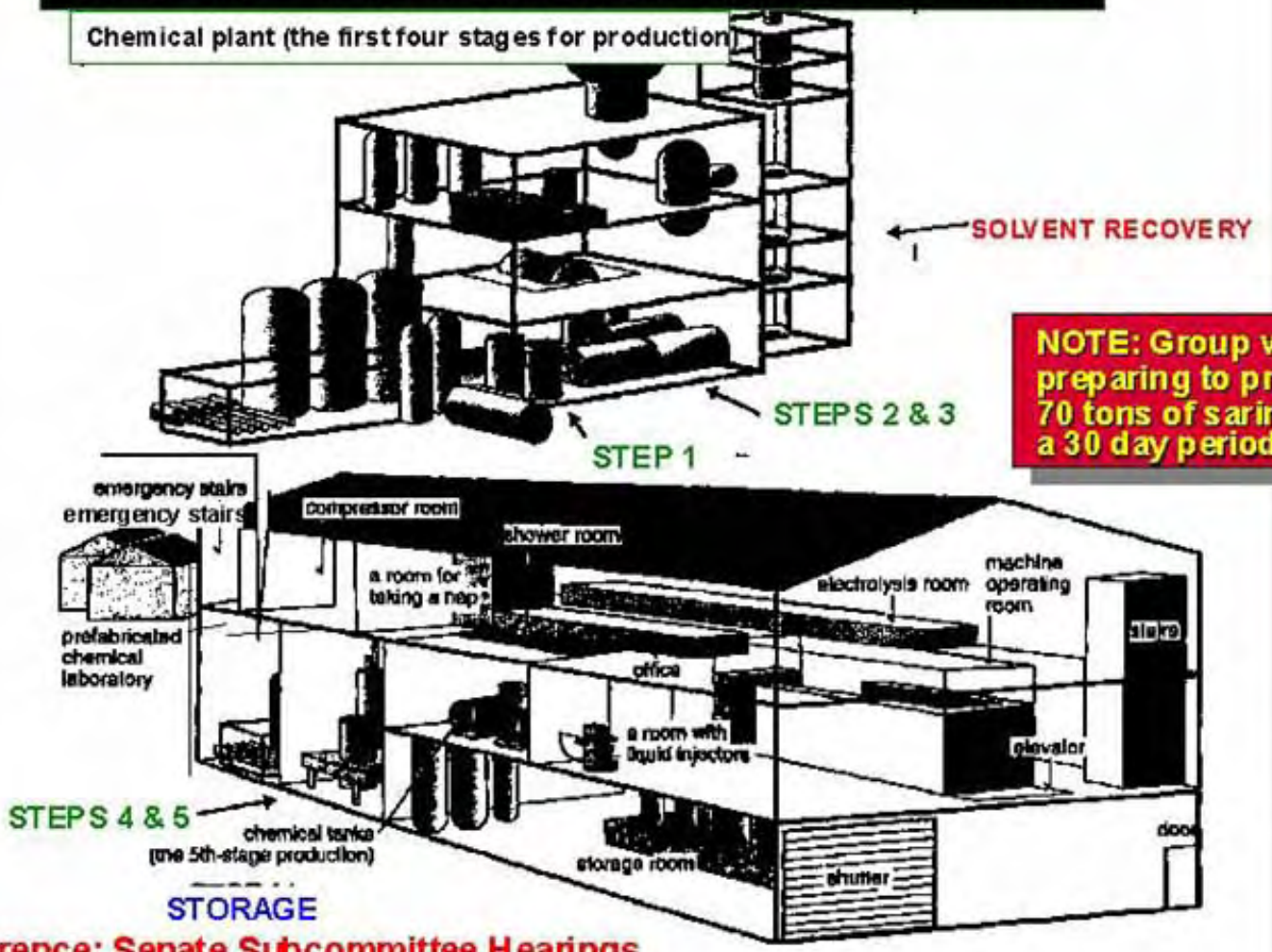

NOTE: Group was preparing to produce 70 tons of sarin in a 30 day period.

Reference: Senate Subcommittee Hearings

In Scalar Beam Interference Zone

- De-phasing of wave/antiwave pairs occurs
- Zero-summation destroyed
- Ordinary EM reappears [Whittaker 1904]
- Ordinary energy appears or disappears (i.e., may produce heating or cooling)
- Energy bottle effect
- Can add or extract EM energy
- Can produce specific ST curvature engines

© T. E. BEARDEN 1999

Physicist Schappeller Auralaz Munster, Austria:

- British Intelligence interview, about 1948
  - Used Kaluza-Klein theory
  - Worked with Russians
- Schappeller claimed he could:
  - Cause "implosions" rather than explosions
  - Use gravitational and electromagnetic energy
  - Cause large areas of the ocean to freeze
  - Tap earth-ionospheric field
  - Produce enormous energy
- *This is precisely what Hellman worked on in the USSR, after WW II!*

© 1996 T E BEARDEN

Initial Soviet Plan for Cold War, After WW II

- Develop and deploy SAM bomber defense
- Catch up in atomic weapons
- Master and apply rocketry
- Wed atomic warheads to rockets
- Initiate "Cold" War
  - Bleed the dragon
  - Guerrilla wars
  - Terrorism
  - Insurgencies
- *Find, develop, and weaponize next great technical breakthrough area as highest national priority*

© 1996 T.E. BEARDEN

Josef Stalin: Absolute Dictator

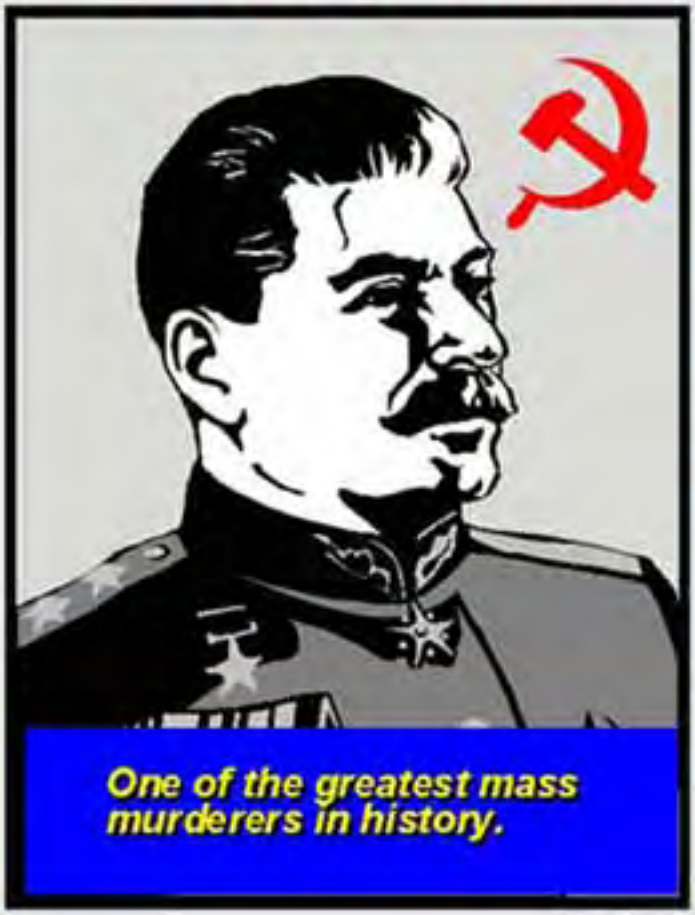

- Secret police and spies everywhere
- Purged his own officer corps
- Always deeply suspicious
- Regularly purged his enemies or those perceived to be shaky or untrustworthy
- Absolute power, justice had nothing to do with it
- Opponents often just disappeared in the night, never to be seen again
- Secret police often tortured, killed them
- Others sent to slave labor camps to die by severe work, starvation, and beatings or downright massacre
- Had experienced unusual abilities of Wolf Messing, so knew that some persons could do unusual things
- Forced Soviet weapon physics into this psychoenergetics realm also

© T.E. BEARDEN 1997

Exploding any Resistance by Operational Scientists
Josef Stalin
© T.E. BEARDEN 1997
The Communists slaughtered 20 million Russian Kulaks to collectivize Soviet farming
Assembled Academy
"The destiny of communism has been frustrated by the U.S. development of the atomic bomb. That is not the last great technical breakthrough. The next one WILL be Soviet! You will provide me with that great new technical breakthrough at all speed, or I will have your heads. Do I make myself clear, comrades?"

Significant Soviet Statements

- "In the final revolution, it does not matter if three-quarters of the earth is destroyed, so long as the other quarter emerges communist." *[Lenin]*

- "If a means of total neutralization of foreign missiles is to be found, it can only come from a group of new principles in physics, called energetics." *[Nobelian Petr Kapitsa, to Nikita Khrushchev, in answer to Khrushchev's demand for a 100% method of defense against long range missile attack.]*

- "We will bury you." *[Khrushchev, to Nixon, Kitchen Debate]*

- "We have a new weapon, just within the portfolio of our scientists, so to speak, which is so powerful that, if unrestrainedly used, it could wipe out all life on earth. It is a *fantastic* weapon." *[Khrushchev, speaking to the Presidium, Jan. 1960]*

© 1996 T.E. BEARDEN

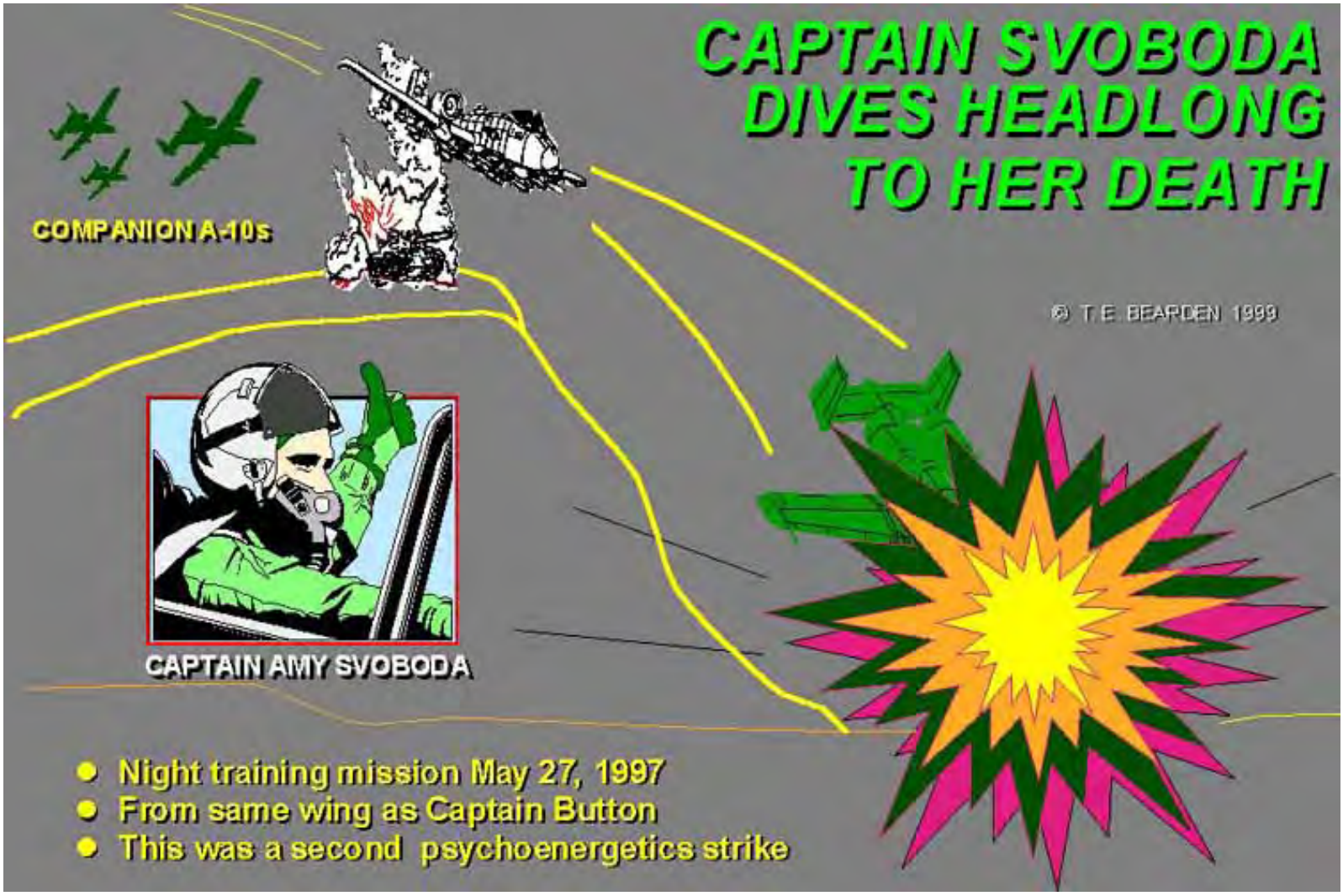
CAPTAIN SVOBODA
DIVES HEADLONG
TO HER DEATH
COMPANION A-10s
© T.E. BEARDEN 1999
CAPTAIN AMY SVOBODA
• Night training mission May 27, 1997
• From same wing as Captain Button
• This was a second psychoenergetics strike

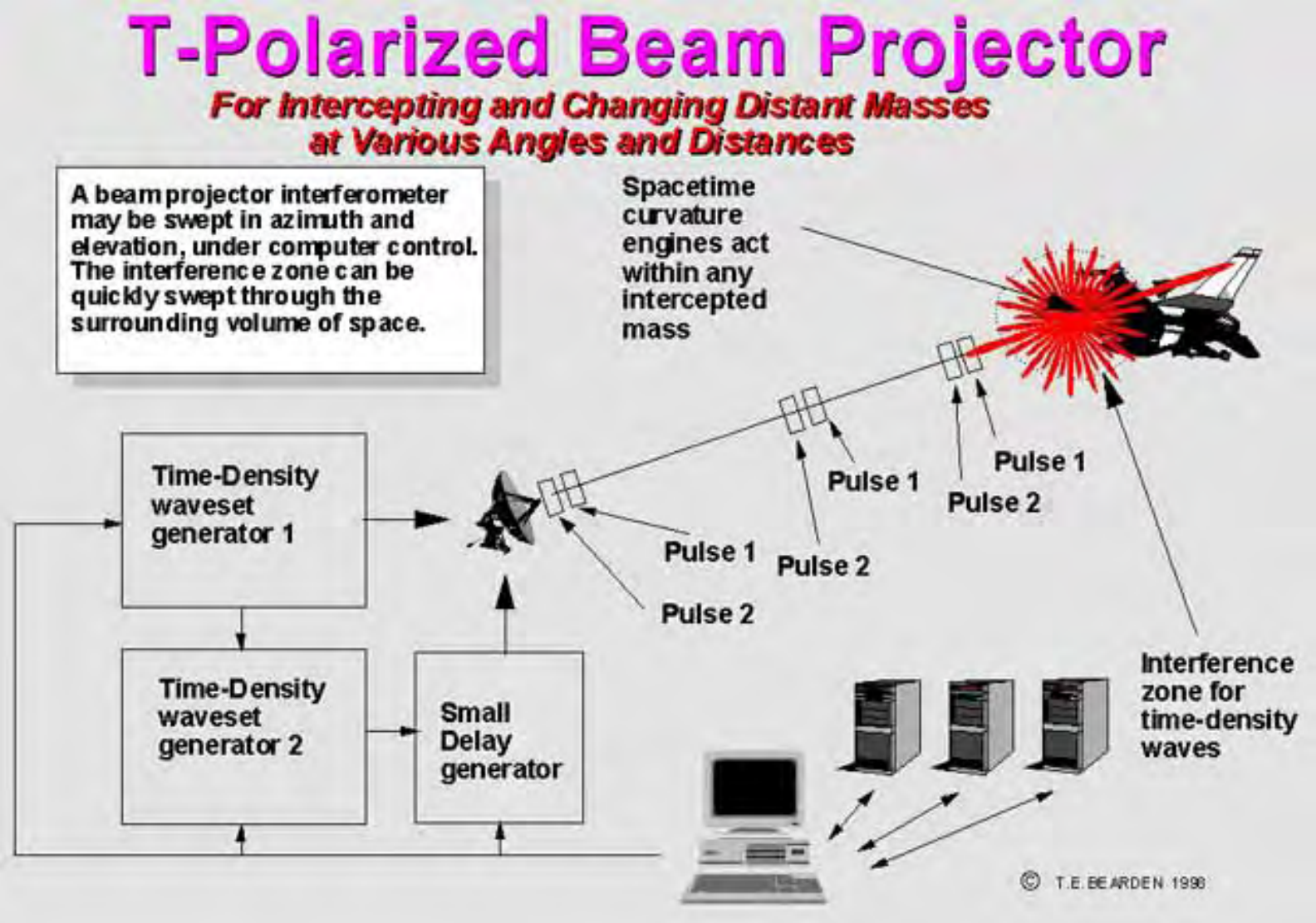
T-Polarized Beam Projector
For Intercepting and Changing Distant Masses
at Various Angles and Distances
A beam projector interferometer may be swept in azimuth and elevation, under computer control. The interference zone can be quickly swept through the surrounding volume of space.
Spacetime curvature engines act within any intercepted mass
Time-Density waveset generator 1
Time-Density waveset generator 2
Small Delay generator
Pulse 1
Pulse 2
Pulse 1
Pulse 2
Pulse 1
Pulse 2
Interference zone for time-density waves
© T.E. BEARDEN 1998

Possible Tests (1)

- 1958 nuclear accident in Urals
- Disease induction in U.S. Embassy personnel in Moscow
- Siberian disease/death transmission experiments
- Destruction of USS Thresher nuclear submarine, Apr. 10, 1963
- Nuclear explosion transmitted into ocean underwater, 100 miles north of Puerto Rico, Apr. 11, 1963

© 1996 T.E. BEARDEN

Possible Tests (2)

- Eight F-111's downed in Vietnam immediately after deployment
- Several large earthquakes
- Mysterious aircraft losses in groupings
- Numerous underground "nuclear" tests
- Nuclear tests at Semipalatinsk without associated seismic activity
- High altitude rumbles, snaps, booms
  - *Off English coast*
  - *Off East coast of U.S.*
  - *Over West Coast of U.S. in thunderstorms*

© 1996 T.E. BEARDEN

Possible Tests (3)

- Blinding of several U.S. satellites (up to 4 hours in duration)
- Cold Explosion off Kurils 1984
  - First, a cold explosion
  - Then test of giant Tesla shield 300 mi. dia.
- Tests offset from shuttle launch Nov. 85
- Kill of Arrow DC-8,Gander, NFLD Dec. 1985
- Titan kill, Vandenberg AFB, CA early 1986
- Kill U.S. Challenger, off Cape Canaveral 1986
- Earthquakes induced, 1986-88
- Dozens of tests of shields around the world
- Decades of radiating U.S. Embassy in Moscow

© 1996 T.E. BEARDEN

Possible Tests (4)

- Extensive tests 1990-99 in Western Australia
- Engineering of weather since 1990 by Yakuza
- Possible nuclear dudding test in WA in 90s by Aum Shinrikyo
- C-130 engine flameout kill
- TWA-800 kill 1997
- Gulf War Disease Induced, 1991
- Spreading of immune systems of U.S. populace, 1990s
- Psychoenergetic control of Captain Button
- Psychoenergetic control of Captain Svoboda
- Twice in 1997, within days of full strategic destruction of U.S.

© 1996 T.E. BEARDEN

Mushroom cloud rising from sea

- 0514 hrs, 9 April 1984
- Gray-white cloud appeared
- Rose 60,000 feet in 2 minutes
- South of Kuril Islands
  - *180 miles southeast of Hokaido*
  - *200 miles from Tokyo*
- Soviet missile testing scheduled about 350 miles away, at 2100 hrs, 9 April 1984

© 1999 T. E. BEARDEN

Launches from Cape Canaveral
and Vandenberg AFB
Provided Practice Targets of Opportunity

The sinking U.S.S. Thresher, with her controls jammed, implodes when she reaches crush depth

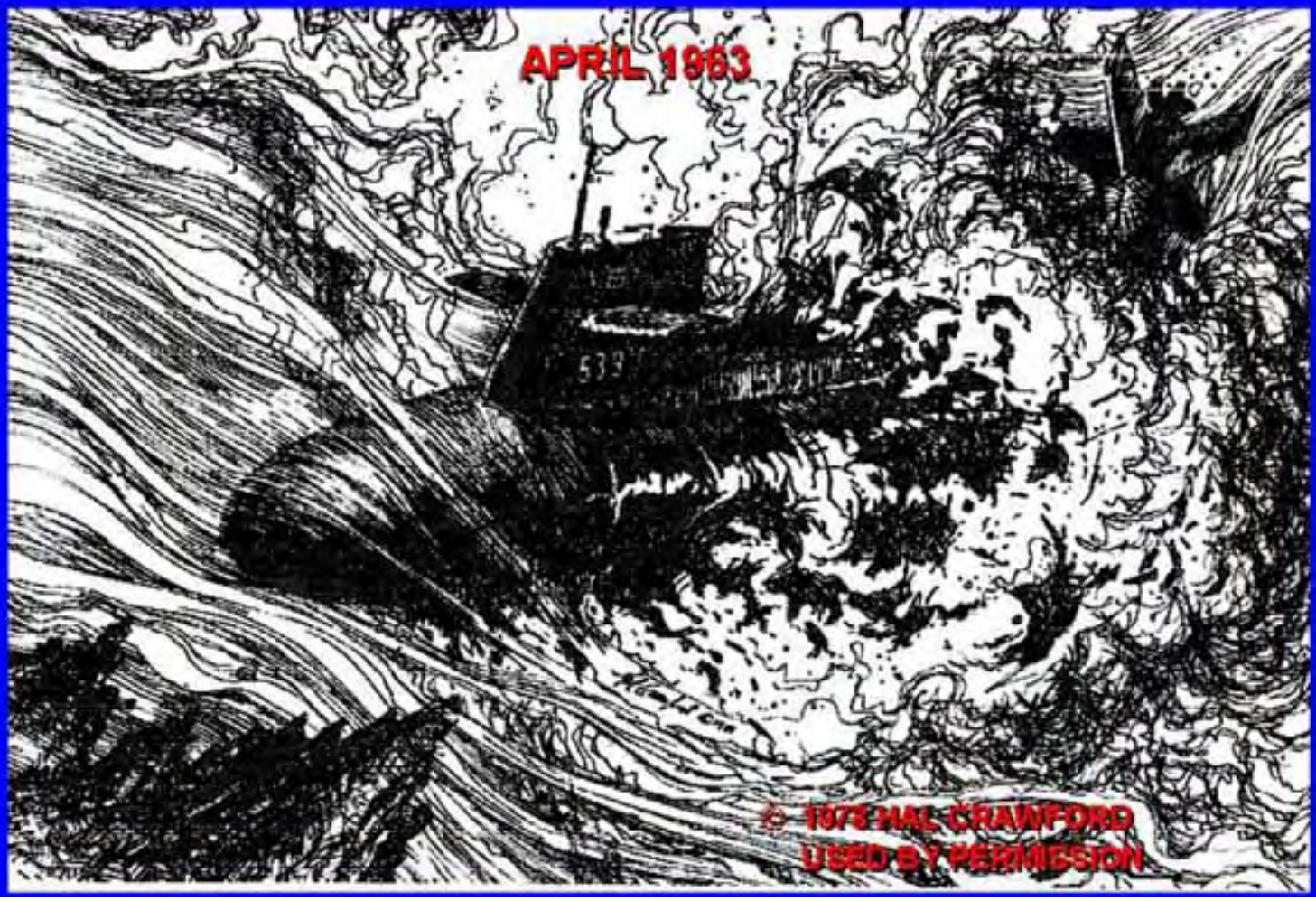

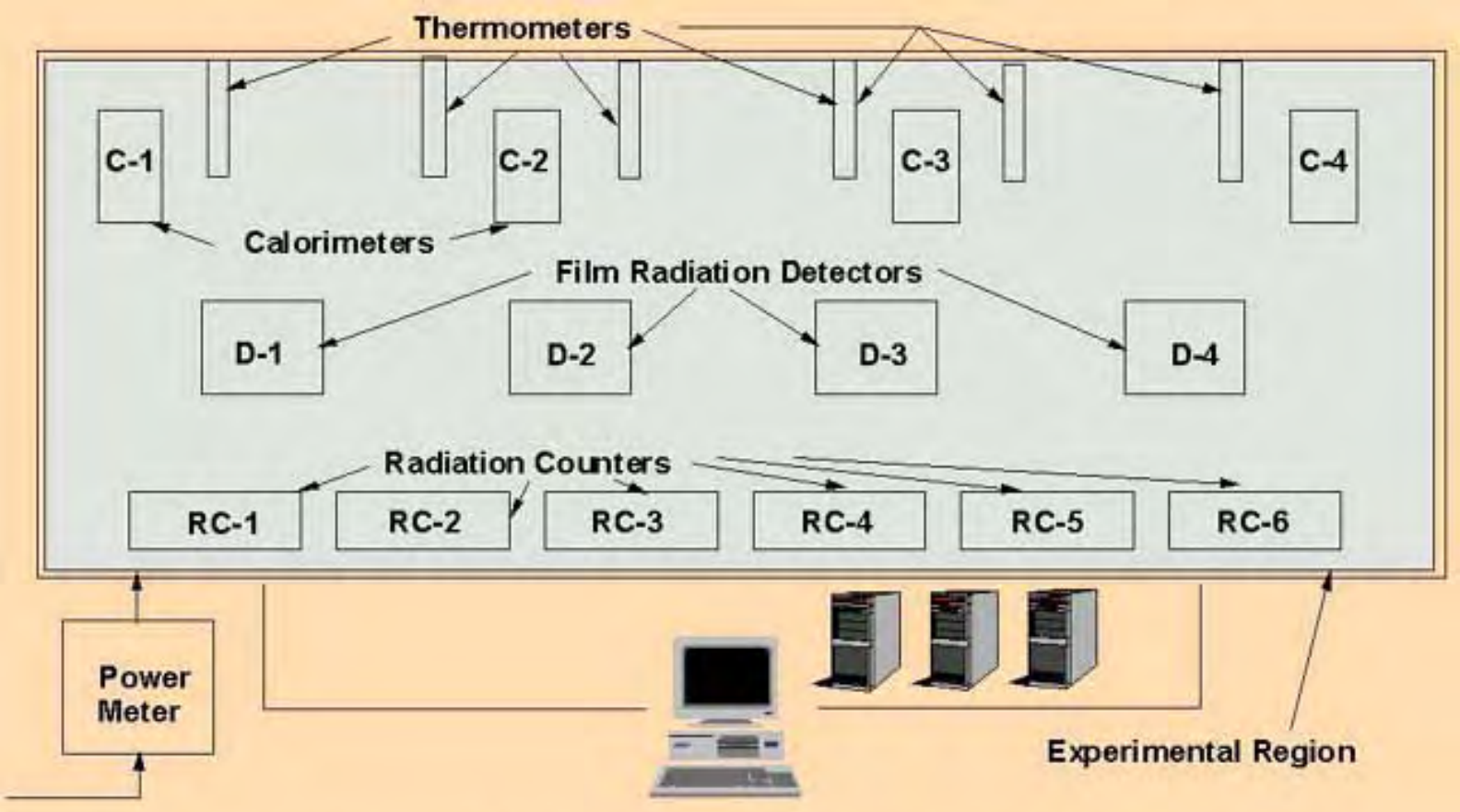

Figure 32. Embodiment of an instrumental array sufficient to discriminate when time-density charging has occurred, and that transduction of time-charge decay is occurring.

© T.E. BEARDEN 1998

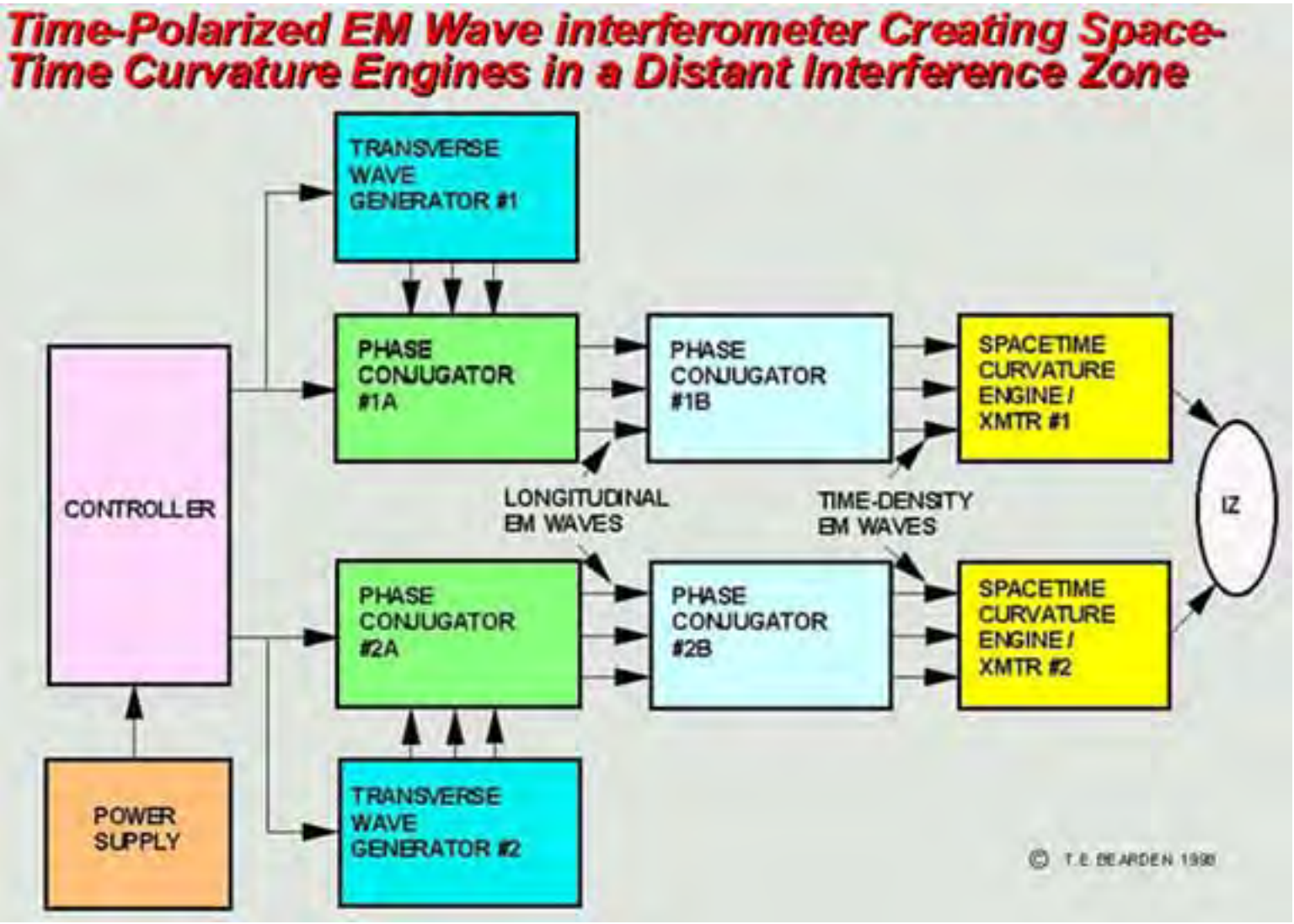
Time-Polarized EM Wave interferometer Creating Space-Time Curvature Engines in a Distant Interference Zone
TRANSVERSE WAVE GENERATOR #1
PHASE CONJUGATOR #1A
PHASE CONJUGATOR #1B
SPACETIME CURVATURE ENGINE / XMTR #1
CONTROLLER
LONGITUDINAL EM WAVES
TIME-DENSITY EM WAVES
IZ
PHASE CONJUGATOR #2A
PHASE CONJUGATOR #2B
SPACETIME CURVATURE ENGINE / XMTR #2
POWER SUPPLY
TRANSVERSE WAVE GENERATOR #2
© T.E. BEARDEN 1990

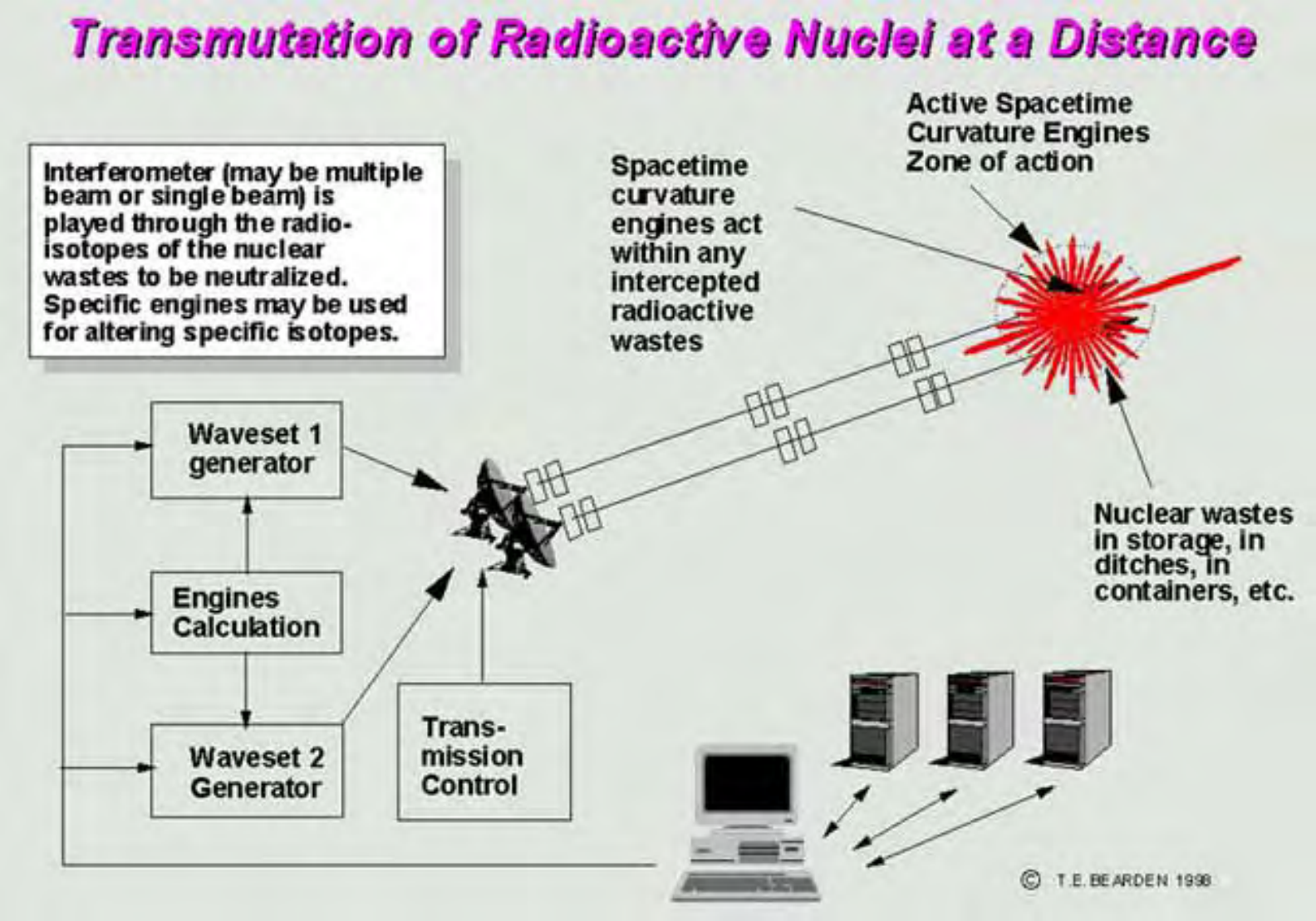
Transmutation of Radioactive Nuclei at a Distance
Interferometer (may be multiple beam or single beam) is played through the radio-isotopes of the nuclear wastes to be neutralized. Specific engines may be used for altering specific isotopes.
Spacetime curvature engines act within any intercepted radioactive wastes
Active Spacetime Curvature Engines Zone of action
Waveset 1 generator
Engines Calculation
Waveset 2 Generator
Trans-mission Control
Nuclear wastes in storage, in ditches, in containers, etc.
© T.E. BEARDEN 1998

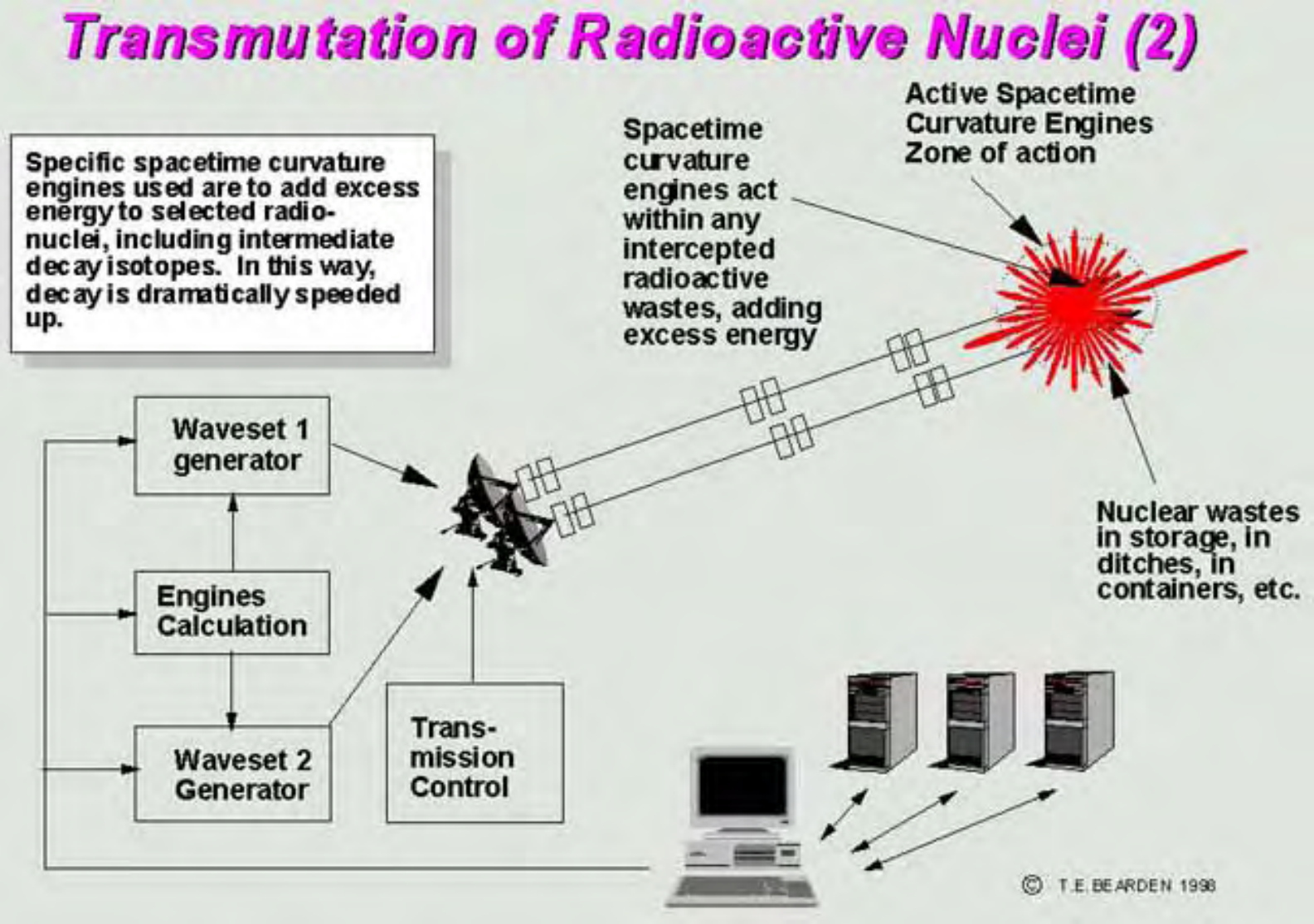
Transmutation of Radioactive Nuclei (2)
Specific spacetime curvature engines used are to add excess energy to selected radio-nuclei, including intermediate decay isotopes. In this way, decay is dramatically speeded up.
Spacetime curvature engines act within any intercepted radioactive wastes, adding excess energy
Active Spacetime Curvature Engines Zone of action
Nuclear wastes in storage, in ditches, in containers, etc.
Waveset 1 generator
Engines Calculation
Waveset 2 Generator
Trans-mission Control
© T.E. BEARDEN 1998

Typical Shield Test, Northern Route to Japan
18-27 km diameter
Asahi Evening News, Tokyo
June 22, 1982
Multiple tests seen per month, for years.
Pilots simply ceased reporting them.
© T.E. BEARDEN 1994,1995

A Curious Tide in Human Affairs

To win its freedom in the long run, usually a group must defeat its attackers or suppressors *at least twice*.

- We fought the British twice for our independence.
- We are fighting ourselves twice to free the slaves. - American Civil War
  - Civil rights struggle
- We beat the Germans twice, in WW I and WW II
- We beat the Hispanics in the Spanish-American War. *That's once*. (They're winning the second by crossing the border. The U.S. is becoming a Hispanic Nation).

But we also have some unfinished business at hand.

- We checked the Russians in the Cold War. *Once*.
- We checked the Japanese in WW II. *Once*.
- We checked the KGB in the Cold War. *Once*.
- We checked the Communists in the Cold War. *Once*.
- We checked Saddam Hussein in the Gulf War. *Once*.

Large Scalar EM Interferometer (LASI) Accident Near Urals, 1958

© T.E. BEARDEN 1994, 198

- 1958 nuclear explosion near Urals
  - Signature of large scalar interferometer (LASI) accident
  - Buried atomic wastes suddenly exploded
  - Large region contaminated to this day
- Soviets were well along with advanced LASI prototypes and testing
  - Khrushchev announced forthcoming advent of these "fantastic" weapons in Jan. 1960
  - 1958 difficulties could have been resolved by 1960
- Expected 1958 cause: transmitter short-out and failure in a nearby LASI discharged its cumulated energetics beam energy into the ground
- *Spreading ground pulse struck nearby atomic wastes, fissioning nuclei*

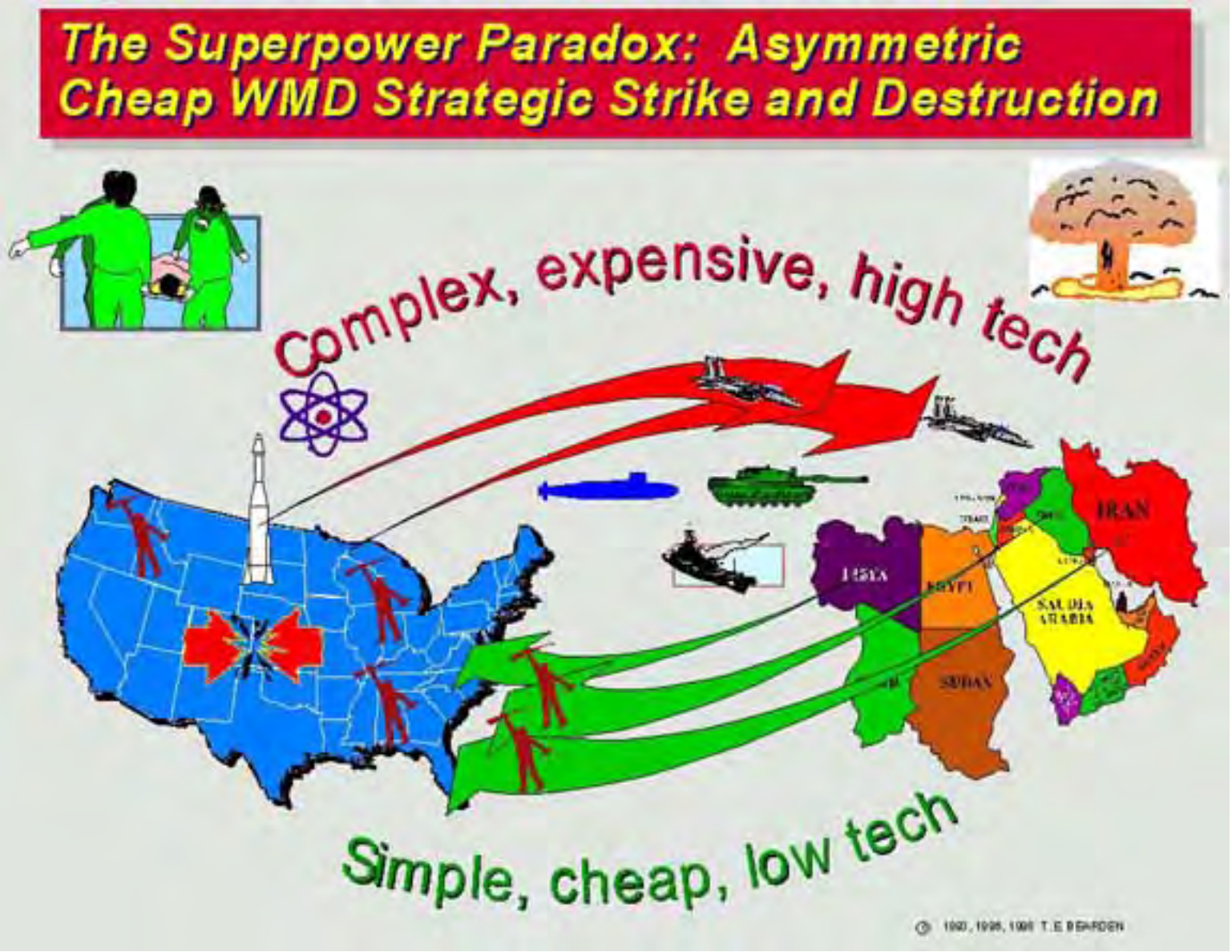
The Superpower Paradox: Asymmetric
Cheap WMD Strategic Strike and Destruction
Complex, expensive, high tech
IRAN
LIBYA
EGYPT
SAUDI ARABIA
SUDAN
Simple, cheap, low tech

THE KGB/YAKUZA-AUM WAR PLAN

- *Dud all quantum potential weapons in other nations via psychoenergetics.*
- *Remove U.S., Israel, Brazil, West Europe as military powers.*
- *Destroy nuclear weapons, hostile energetics weapons, hostile ships, 80% of targeted populaces in first hour of strikes.*

LEASE

1990-91

Aum/Yakuza Acquired Use of on-site Russian Scalar EM (Energetics) Weapons.

Began Geosurvey of Test Range (Western Australia) for training.

KGB Tested QP population wpn (Gulf War Syndrome)

TRAIN

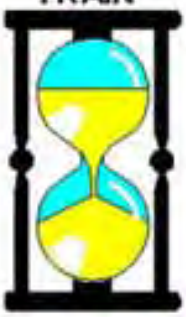

1991-94

Began extensive training of AUM-Yakuza crews in Russia, with practice firing into Western Australia. J-team took over world-wide weather engineering. Preparing for occupation of West Australia.

ESCALATE

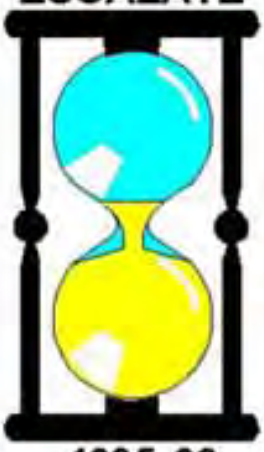

1995-99

Began EM kill of selected lone U.S. targets, law strategic deception plan.

U-2 a/c? USAir 747?
TWA-800 C-130
ValueJet? A-10s

Surged electrical grids. Worldwide practice kills, scalar interferometry. QP modification of selected pathogens

STRIKE!

Plan:
Trigger terrorist BW, & WMD attacks.
Enhance BW infections with QP wpn.
When ready, counter insane QPweapons with psychoenergetics. Destroy QP wpns.
Dud all nuclear weapons worldwide;
Time-snap ships, scalar weapons sites;
Attack major target populations w/QP.
Then cleanup with interferometry strikes.

©1996, 1999 T.E. BEARDEN

Why Western Science is Ignorant of KGB Energetics

- *Foundations* of electrodynamics and much of Western physics are seriously flawed
- Only just rediscovering longitudinal EM waves
- No knowledge of using time-polarized EM waves
- Does not know a powerful GR is hidden in EM
- Ignores inner structure of potentials, waves, fields
- Hotly defends errors, ignores for a century
- Determined to push big nuclear science
- Suppresses research to approved dogma by rigorously controlling precisely what research the funds can be used for

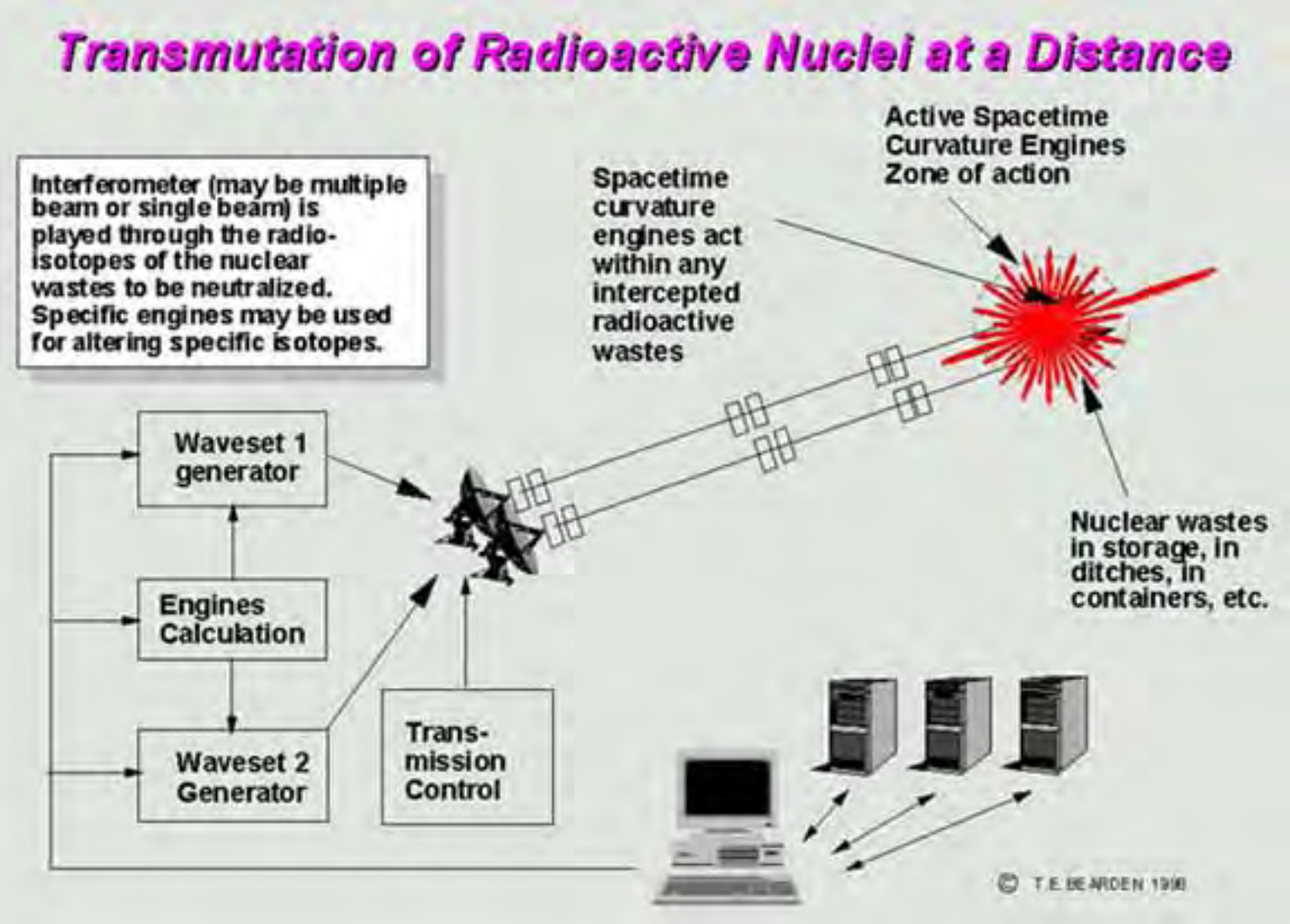
Transmutation of Radioactive Nuclei at a Distance
Interferometer (may be multiple beam or single beam) is played through the radio-isotopes of the nuclear wastes to be neutralized. Specific engines may be used for altering specific isotopes.
Spacetime curvature engines act within any intercepted radioactive wastes
Active Spacetime Curvature Engines Zone of action
Nuclear wastes in storage, in ditches, in containers, etc.
Waveset 1 generator
Engines Calculation
Waveset 2 Generator
Trans-mission Control
© T.E. BEARDEN 1998

THE YAKUZA

(JAPANESE MAFIA)

To do business with Japan is to do business with the Yakuza

The Last Samurai, Defending Bushido

© 1995, 1996, 2001 T.E. BEARDEN

- **3 Major Yakuza Groups, In Coalition.**
- **Penetrate Japanese Government.**
- **Open Offices, Signs on Street.**
- **Public Romanticizes Yakuza as Last Japanese Samurai**
- **In Large High-Tech Corporations.**
- **In Control of Japanese Banks.**
- **Japanese Real-Estate Rip-off.**
- **$500 - 1,000 Billion per Year Income.**
- **Rapidly Spreading in U.S.**
- **Uniting Mafia Groups Worldwide.**
- **Coalition with Aum Shinrikyo.**
- **Leased Russian Energetics Weapons.**
- **Crews On-site in Russia, Trained.**
- **Practice Firings into Western Australia for Three Years. (Dozens of Shots per Month)**
- **Now in Escalation Phase, Killing U.S. Targets.**
- **All-out Strike on U.S. ready 1999-2000.**
- **Now held in check by KGB, dead-man fuzed by small nation friendly to U. S.**

Yugoslav Earthquake, Followed by Cold Explosion

Apr. 15 1979

- Magnitude 7.2 on Richter scale
- Epicenter 33 km. deep
- More than 100 aftershocks
- At Kamenari:
  - Adriatic sea mushroomed up
  - Like atomic bomb explosion
  - Signature of a cold explosion
  - Similar to Apr. 1984 test off coast of Japan, near Kurils (see inset graphics)
- *Note that April is a significant test month for the Communists (preparing official reports for May Day?)*

© T.E. BEARDEN 1994, 1996

Page 1	Page 2	Page 3	Page 4	Page 5	Page 6
(Table 1)	(Table 2)	[note 6]	[note 10]	[note 14]	[note 16]
[note 1]	[note 2]	[note 7]	[note 11]	[note 15]	[note 17]
	[note 3]	[note 8]	[note 12]	Figure 11	(Figure 13)
	[note 4]	[note 9]	[note 13]	Figure 12	(Figure 14)
	[note 5]	(Figure 1)	(Figure 7)		(Figure 15)
		(Figure 2)	(Figure 8)		
		(Figure 3)	(Figure 9)		
		(Figure 4)	(Figure 10)		
		(Figure 5)			
		(Figure 6)			

Page 7	Page 9	Page 10	Page 12	Page 13
[note 13]	(Table 3)	[note 23]	(Table 4)	[note 31]
[note 18]	[note 22]	[note 24]	[note 28]	[note 32]
[note 19]	(Figure 17)	[note 25]	[note 29]	[note 33]
[note 20]	(Figure 18)	[note 26]	[note 30]	[note 34]
(Figure 16)		[note 27]	(Figure 21)	[note 35]
		(Figure 19)	(Figure 22)	(Figure 23)
		(Figure 20)		

THE VIRTUAL TIMES

CHASING THE WILD DRAGON:

Foundations of a New Science

By T.E. Bearden
November 12, 1995

It is a pleasure to accept the offer of John and Larry to write a column in their new InterNet magazine. Theirs is a great venture, and with the energy and knowledge they bring to the task, one can be confident of their success in making this a very interesting and informative publication.

There is a new "rebel" science slowly being born, with most of the work being done outside the universities and orthodox scientific community. In the months ahead it will be my job to try to acquaint you with the gist of what's going on, and what all the excitement is about.

This first article is deliberately just introductory, and its purpose is to interest you in the unusual fields we are going to be covering in more scientific detail, in future columns. We will also be listing a variety of references from the technical literature, which bear upon the various points addressed.

In this first article a little of my own background experience [note 1] is given, so you can decide whether you will be interested in what we have to say!

The real purpose of the column will just be to *present information* that you may not be able to readily obtain any other way. We will not argue or debate with skeptics; nothing productive is to be gained by that. If the information we present is useful to you, then our purpose has been accomplished. If it isn't of use to you, then just file it in the old wastebasket. Also, from time to time I may answer a generic question, constructed from multiple queries. Individual responses to correspondence cannot be provided.

The work toward a new breakthrough science is going on in a broad spectrum of "fields," most of which are not yet recognized by academia as even constituting legitimate areas of scientific endeavor (Table 1).

Some of the major areas involved are:

1. theoretical and experimental research in overunity electrical machines,
2. free energy research of other kinds, such as devices utilizing thermodynamics phase changes,
3. rapidly advancing efforts in cold fusion,
4. work on permanent magnet motors,
5. antigravity research, both theoretical and experimental,
6. development and utilization of a "hidden" electrodynamics inside the scalar potential (inside voltage),
7. the "memory" of space and materials; where this "memory" can be deliberately conditioned so that space and the materials themselves become causal actants rather than simple inert entities,

8. direct engineering of quantum change via a new kind of "hidden electrodynamic variables,"
9. the direct engineering of the vacuum's virtual photon flux exchange with matter,
10. action at a distance, including the deliberate formation and usage of quantum potentials,
11. direct engineering of the local curvature of spacetime (yes, the direct engineering of general relativity, using the new hidden kind of electrodynamics),
12. use of the new "hidden" electromagnetics to engineer body cells including the reversal of diseased cells, genetics and all, back to a previous healthy state (cellular dedifferentiation, in biophysical terms, or cellular phase conjugation, in physics terminology),
13. research toward the direct engineering of the mind, including both the conscious and unconscious minds, long-term memory, and the personality itself, and
14. a ruthless re-examination (and correction where necessary and possible) of the definitions, concepts, and postulates that present physics is founded upon.

ILLUSTRATION LIST | NEXT PAGE

©copyright T.E.Bearden 1995

VT Page 1

Comments may be sent to
the **Editor** of The Virtual Times

Notes and References:

[1] For those interested in orthodox qualifications, I have an M.S. in nuclear engineering (1971) from Georgia Institute of Technology and a BS in mathematics (1953) from what is now Northeast Louisiana University with a minor in electronic engineering.

Table 1. Fourteen Emerging New Science Areas

1. Overunity Electrical Machines and Power Systems
2. Overunity Devices Using Thermodynamical Phase Changes
3. Cold Fusion and Non-Nuclear Transmutation
4. Self-Powered Permanent Magnet Motors
5. Antigravity and Antigravity Engineering
6. Use of the "Inner" EM Inside the Scalar Potential
7. Vacuum Engineering, With Vacuum and Materials Memory
8. Direct Engineering of Quantum Change
9. Engineering and Structuring of Massless Charge Flux
10. Action-At-A-Distance, Including Use of Quantum Potentials
11. Direct Engineering of Local Spacetime Curvature
12. "Inner EM" Time Reversal of Diseased Cells Back to Health
13. Direct Engineering of the Mind, Including Software Loading
14. Unified Field Revision of Foundations Concepts of Science

Each of these "major areas" as yet has no single "experts" in the sense that individuals exist who possess a "mastery" of the given area. As an example, in spite of multiple researchers and decades of vigorous research, no one is really an "overall expert" in the overunity electrical power systems field. The "field" itself is still struggling to be born and is not recognized at all by orthodoxy; in fact, many orthodox scientists bitterly resent one even attempting to work in this area. There is as yet no cohesive single "theory" of overunity electrical or magnetic machines, although our own group is making rapid progress in that respect. But there is still no universal agreement amongst even the researchers themselves. Literally the field is still being *discovered*.

This "groping dimly toward a new field" should not be too surprising. After all, the early electromagnetics researchers went through the same tortuous, agonizing kind of development. They were playing with cat fur, glass rods, and pith balls for quite an extended period before understanding progressed to the point where Maxwell could mathematically tie together and model the results of the experimenters such as Faraday and others. It has taken a century and a half for modern electromagnetics and electronics to reach its own present development. It is going to take another decade or so before the overunity researchers can overturn several ill-founded parts of the present electromagnetics and get the emerging field onto a solid foundations footing and into a solid theoretical position.

In the effort to produce a theoretical model of electromagnetics, Maxwell and his predecessors performed a magnificent work. Yet they also made very serious errors (Table 2), which persist to this day. [note 2] Let us list just a few of the more blatant errors in classical EM theory today:

First, Franklin guessed wrong on which way electrical current flowed in a circuit. There is no definition at all of electrical charge in all of physics, and there is no acceptable definition of potential (that is, there is no rigorous definition of just good old "voltage.") There are no "fields of force" in the vacuum; there are just potential gradients __ because the vacuum is just one vast potential (virtual particle flux) in the first place. Force fields actually occur only in and of the matter in a material system. The primary causative agents of electromagnetics are not the so-called "force fields' at all, but are the potentials __ as is well-known in quantum mechanics. [note 3] Maxwell assumed a material ether in his equations. The Michelson-Morley experiment destroyed the material ether, but the Maxwell equations have never been changed accordingly. The electron was not yet discovered when the Maxwell equations were written; the theory does not address electron spin. Maxwell was already dead some two decades when Barus' 1898 paper [note 4] was published, pointing out the strange "backwards-traveling" wave (i.e., time-reversed wave) solution to the wave equation. In addition, Heaviside and Gibbs had already produced their vector truncation __ this truncated theory is the modern so-called "Maxwell's equations" that universities teach today __ of Maxwell's theory. Not a single one of them ever appeared in any book or paper by James Clerk Maxwell. [note 5]

ILLUSTRATION LIST | NEXT PAGE

©copyright T.E.Bearden 1995

Comments may be sent to
the **Editor** of The Virtual Times

Table 2. Some Defects In Electrodynamics

1. Conventional Current Direction Is Reversed
2. No Definition of Charge or Potential
3. Equations Still Assume Material Ether
4. Use of Force Fields in Vacuum is Known to be False
5. Treats Charge as Unitary; lnstead, It is a Coupled System
6. Confuses Massless Potential Gradients as Forces
7. Does Not Utilize Mass as a Component of Force
8. Erroneously Assumes Force Fields as Primary Causes
9. Topology of EM Model Has Been Substantially Reduced
10. Does Not Include Quantum Potential
11. Does Not Include Proven Action At A Distance
12. Does Not Utilize Near Field Coulornb Gauge Effects
13. Does Not Include EM Generatrix for Time Flow
14. Does Not Unify Photon and Wave Aspects
15. Does Not Include Electron Spin and Precession
16. Treats Energy As Existing In "Chunks," instead of as Flow
17. Confuses Energy and Energy Collection
18. Discards Half of Every EM Wave in Vacuum
19. Erroneously Uses Transverse Vacuum Wave; It's Longitudinal
20. Omits Phase Conjugate Optics Effects
21. Does Not Include EM Cause of Newtonjan Reaction Force
22. Erroneously Assumes Separate Force Acting on Separate Mass

[2] For an independent statement that electrodynamics, both classical and quantal, are in serious disarray, see Mario Bunge, Foundations of Physics, Springer-Verlag, New York, 1967, p. 176. Quoting: "...it is not usually acknowledged that electrodynamics, both classical and quantal, are in a sad state." Bunge points out many errors in electrodynamics. See also Terence W. Barrett, "Electromagnetic Phenomena Not Explained by Maxwell's Equations," in Lakhtakia, A. (ed.): Essays on the Formal Aspects of Electromaqnetic Theory, World Scientific, Singapore, 1992, p. 6-86. To find information on what's wrong with EM theory, one must read foundations literature, not the standard textbooks. One of my own contributions has been to point out that the notion of charge q is not unitary. In fact, electrical charge should be defined in terms of q ~ m(sub q)~(sub q). In other words, electric charge q has a massive part m, and a massless part consisting of its potential phi. Further, the magnitude of phi is just the change in the virtual photon flux of the ambient vacuum, due to the [quantum field theoretic] virtual photon exchange with the mass of the q. It follows that the true electrical charge of a particle is just its native potential ~, which is also a dynamic energy exchange with the surrounding vacuum. It also follows that this massless electrical charge changes whenever the particle is placed in a potential (in a different ambient virtual photon flux). After all, potentials superpose; that is their major characteristic. Note that the potential of the test particle is ignored in classical electromagnetics, whenever one speaks of the "E-field" upon the particle. Further, the actual structure of this virtual photon flux that comprises massless electrical charge, can itself be deterministically structured and utilized to generate nonlinear effects that do not appear at all in the present conventional theory. We will be covering many of these effects in future articles.

---

[3] E.g., see Y. Aharonov and D. Bohm, "Significance of Electromagnetic Potentials in the Quantum Theory," Physical Review, Second Series, 115(3), 1959, p. 485-491. Effects of potentials on charged particles exist even in the region where all the fields (and therefore the forces on the particles) vanish, contrary to classical electrodynamics. The quantum effects are due to the phenomenon of interference. These effects occur in spite of Faraday shielding. The Lorentz force does not appear anywhere in the fundamental quantum theory, but appears only as an approximation that holds in the classical limit. In QM, the fundamental physical entities are the potentials, while the fields are derived from them by differentiation.

---

[4] Carl Barus, "A Curious Inversion in the Wave Mechanism of the Electromagnetic Theory of Light," American Journal of Science, Vol. 5, Fourth Series, 1898, p. 343-348.

---

[5] E.g., see Paul J. Nahin, Oliver Heaviside: Saqe in Solitude, IEEE Press, New York. Quoting from p. 9: "...nowhere in Maxwell's writings do the equations for the electromagnetic field appear as we write them today. Maxwell used an amalgamation of Cartesian component and quaternion notation, and it was Heaviside who first wrote the electromagnetic field equations in modern vector form." Quoting from p. 92: "In actuality , however, the fields were not the primary reality to Maxwell at all (that is an idea that developed after Maxwell's death and is due to Hertz and Heaviside), but rather it was Faraday's 'electrotonic state' that he thought to be the real thing. Like Faraday, Maxwell believed that electromagnetic effects are observable results of an altered state of the ether. The mathematical formulation of this electrotonic state, for Maxwell, is what we today (as he did) call the vector potential." And again, from p. 96: "To Maxwell, however, the vector potential had a most definite physical meaning."

THE VIRTUAL TIMES

So the time-reversed EM wave that one finally sees emerging in nonlinear phase conjugate optics in the early 1970s was omitted from the Maxwellian theory and its later modification by Heaviside and Gibbs. Maxwell's actual theory is in a higher topology (quaternion algebra), and involves some 20 quaternion equations. Heaviside and Gibbs created vector algebra, and seriously curtailed Maxwell's theory when they "translated" it into the much lower topology of vectors and some four equations. The later addition of tensors as the basis mathematics did not restore the lost topology provided by the quaternion model.[note 6]

For the EM wave, Maxwell simply assumed the transverse EM wave that had come from the much earlier derivation of the familiar wave equation from the old "plucked taut string" notions. [note 7] Yet when one closely examines and corrects some of the erroneous *assumptions* [note 8] made for the actual mathematical derivation of this "taut string" transverse wave, one finds (Figure 1) that an equal-energy second antiphased transverse "antiwave" is actually produced by the instrument and added to the "plucked string's" transverse wave disturbance of the air medium, to produce a longitudinal wave of compression and rarefaction in the air itself. The "transverse string wave" in fact never leaves the string. The string wave is not the wave that is launched into the medium.

A similar electromagnetic situation exists. In a whip antenna (Figure 2), the Drude electron gas in the conductor does exhibit a transverse "string-type" EM wave of electron precession. However, at the same time, by Newton's third law (which Maxwell neglected because at the time the atom was regarded as just a blob with no internal structure) the positively charged, phase conjugated atomic nuclei have equal energy, highly damped transverse recoil waves created in them. Further, these "nuclei-recoil" waves are phase conjugate replicas of the electron gas waves. The total disturbance that is launched into the vacuum from the whip antenna is (a) the normal transverse disturbance of the virtual photon flux of vacuum caused by the electron gas wave, and (b) the coupled equal-energy transverse antiwave caused by the nuclei-recoil via Newton's third law. The amplitude of the material antiwaves of nuclei vibration are highly damped because of the massiveness of the nuclei; however, they are of equal energy to the electron wave. But when launched into the same vacuum, the two equal-energy wave disturbances experience equal damping because they are in the same medium. Hence the wave and antiwave are (a) locked together in the vacuum, and (b) of equal energy, and (3) of equal amplitude once launched into the vacuum. What results is a vacuum EM wave of rarefaction (reduction in intensity) and compression (increase in intensity) of the virtual photon flux of vacuum __ just exactly like what is launched into the surrounding gaseous air medium from the "plucked taut string" and perturbed body of a physical instrument. The EM wave in vacuum is a longitudinal wave directly analogous to a sound wave __ just as Nikola Tesla stated. [note 9]

The vacuum may be considered a scalar potential, in which case it has an internal biwave structure (Figure 3). Interference of two potentials __ i.e., the hidden interference (Figure 4) of their internal wave structures __ in fact already creates all EM fields and waves.

When the incoming longitudinal "biwave" from the vacuum strikes the atoms of the receiving antenna, each atom may be considered a dynamic assembly of multiple dipoles, where each dipole consists of one of the electrons in the electron shells and one of the positive charges in the nucleus. The receiving dipole in the interacting atom splits the two waves apart again (Figure 5). The negatively charged end of the dipole is time-forward, and the positively charged end is time-reversed.

Hence the separated normal-wave-half of the biwave interacts with the electron, to give again the familiar transverse "electron precession" wave that we detect with our "electron wiggle-detecting" instruments (Figure 6). This detected electron precession wave is what all our textbooks prescribe erroneously as the vacuum wave! The separated time-reversed-wave-half of the incoming vacuum wave is split off and interacts with the positive end of the receiving atomic dipole, in the time-reversed atomic nucleus, thus generating Newton's third law reaction force to provide the recoil of the nucleus. Present physics has ignored this second wave altogether, because of the serious error in the original derivation of the wave equation from plucked strings. Thus physics presently has absolutely no causative mechanism for Newton's reaction force. Instead, scientists just "mystically invoke the appearance of this magic force." Describing that something occurs, and naming its occurrence, does not constitute advancing a causative mechanism!

ILLUSTRATION LIST | NEXT PAGE

©copyright T.E.Bearden 1995

Page 1

Comments may be sent to
the **Editor** of The Virtual Times

[6] E.g., see T.W. Barrett, "Tesla's Nonlinear Oscillator- Shuttle-Circuit (OSC) Theory," Annales de la Fondation Louis de Broglie, 16(1), 1991, p. 23-41. Barrett shows that a higher topology EM model (e.g., quaternions) allows shuttling and storage of potentials in circuits, and also allows additional EM functioning of a circuit that a conventional EM analysis cannot reveal. Tesla's actual patented circuits in fact exhibit this higher topology, when a quaternion EM analysis of them is performed. No orthodox vector/tensor analysis can show this.

---

[7] All the early experimenters seemed to assume the transverse string-type wave automatically for the vacuum medium. E.g., Faraday speculated that light and radiant heat might be transverse vibrations propagated along his "lines of force," from which the direct "plucked string" analogy can readily be seen. In short, he considered that his lines of force could be perturbed to vibrate laterally, just like a plucked string. See M. Faraday, "Thoughts of Ray-Vibrations," Philosophical Magazine, (3), vol. xxvii, 1846, p. 345. Maxwell also assumed the transverse EM wave in vacuum without question, as did Heaviside, Hertz, and Gibbs and as has almost every electrodynamicist since then.

---

[8] The worst is the assumption of infinitely rigid endposts holding the taut string, so that no movement of these endposts occurs. This further assumes that no induced movement of the body of the instrument occurs. The end result is to eliminate all of that wave that is produced in the body of the instrument, and retain only the transverse wave produced in the string. In the first place, this standard procedure has now become a total violation of Newton's third law, which among other things requires that forces be formed in oppositional pairs. So the standard method for the launch of a wave from an instrument is flawed. Specifically, the "transverse string wave" is falsified insolaf as its appearance in the surrounding medium. This is not the wave that actually exits the instrument and that is launched into the medium. This universal oversight on the part of mathematicians and physicists is a colossal joke upon them. Literally, when a physicist writes the transverse wave equation on the board, he has just discarded exactly half the physics. This means that, in his interactions, at the end there will suddenly appear this mysterious, mystical "equal and opposite reaction force" that is created by the erroneously ignored antiwave. So he has to piously invoke this reaction force "from the blue." Yet quantum field theory teaches us already that all mechanical and electromagnetic forces on a mass are generated by absorption and emission of virtual photons. Hence Newton's third law reaction force must also be so generated. This means that there must exist an equal number of virtual antiphotons interacting in the antiforce, as there was virtual photons interacting in the causative force. By symmetry there must also exist an equal and opposite wave, or antiwave, made of these same antiphotons. The actual disturbance that entered from the vacuum must therefore have consisted of both wave and antiwave. QED.

Tables:

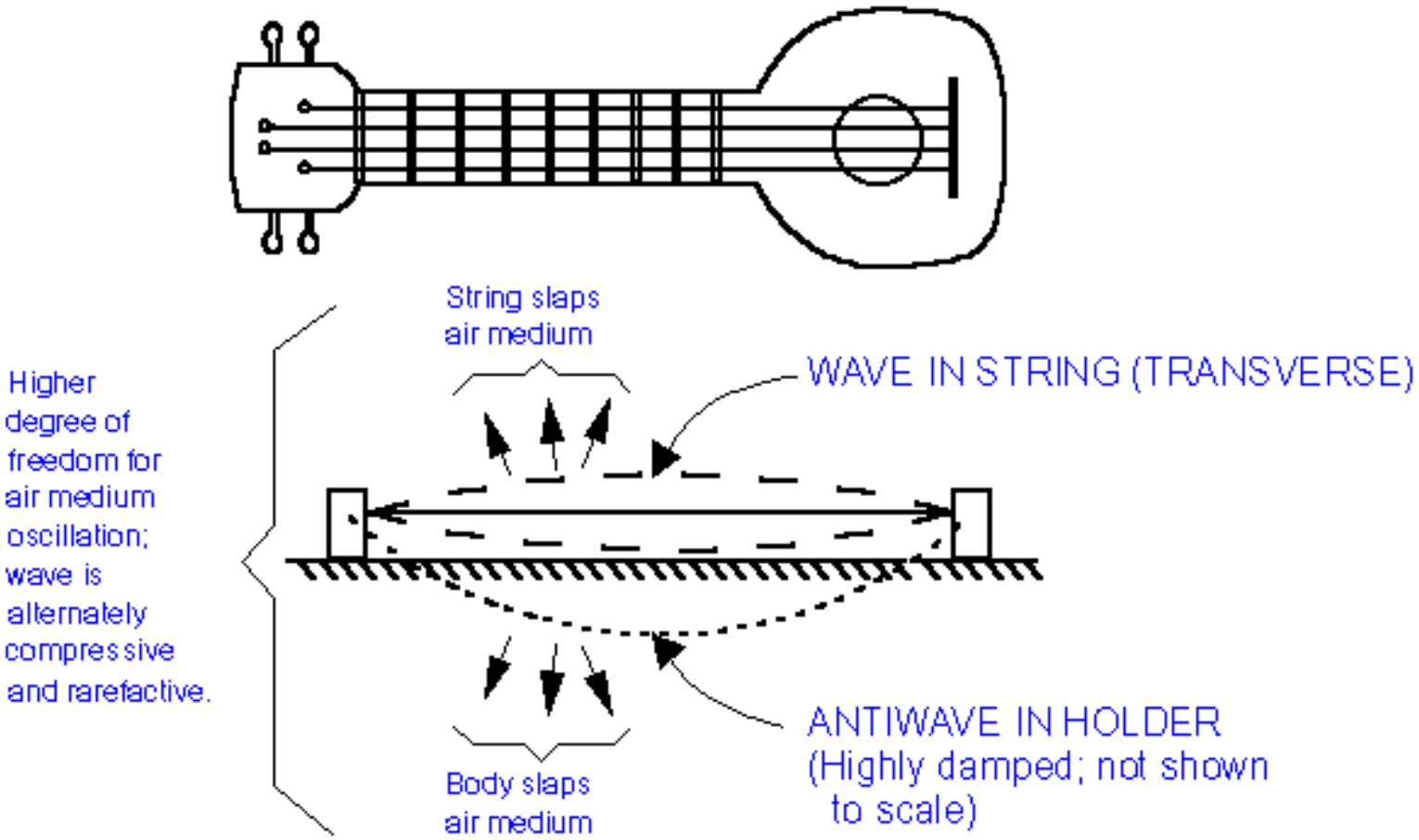

Figure 1. Air medium disturbances generated by plucked string.

Two waves are created, both slapping the air medium at the same time, but in opposite directions. A disturbed medium oscillates according to its own degrees of freedom. The air has more degrees of freedom than the string. A wave of compression and rarefaction is created in the air medium.

D-1-F 1

© 1993 T.E. Bearden

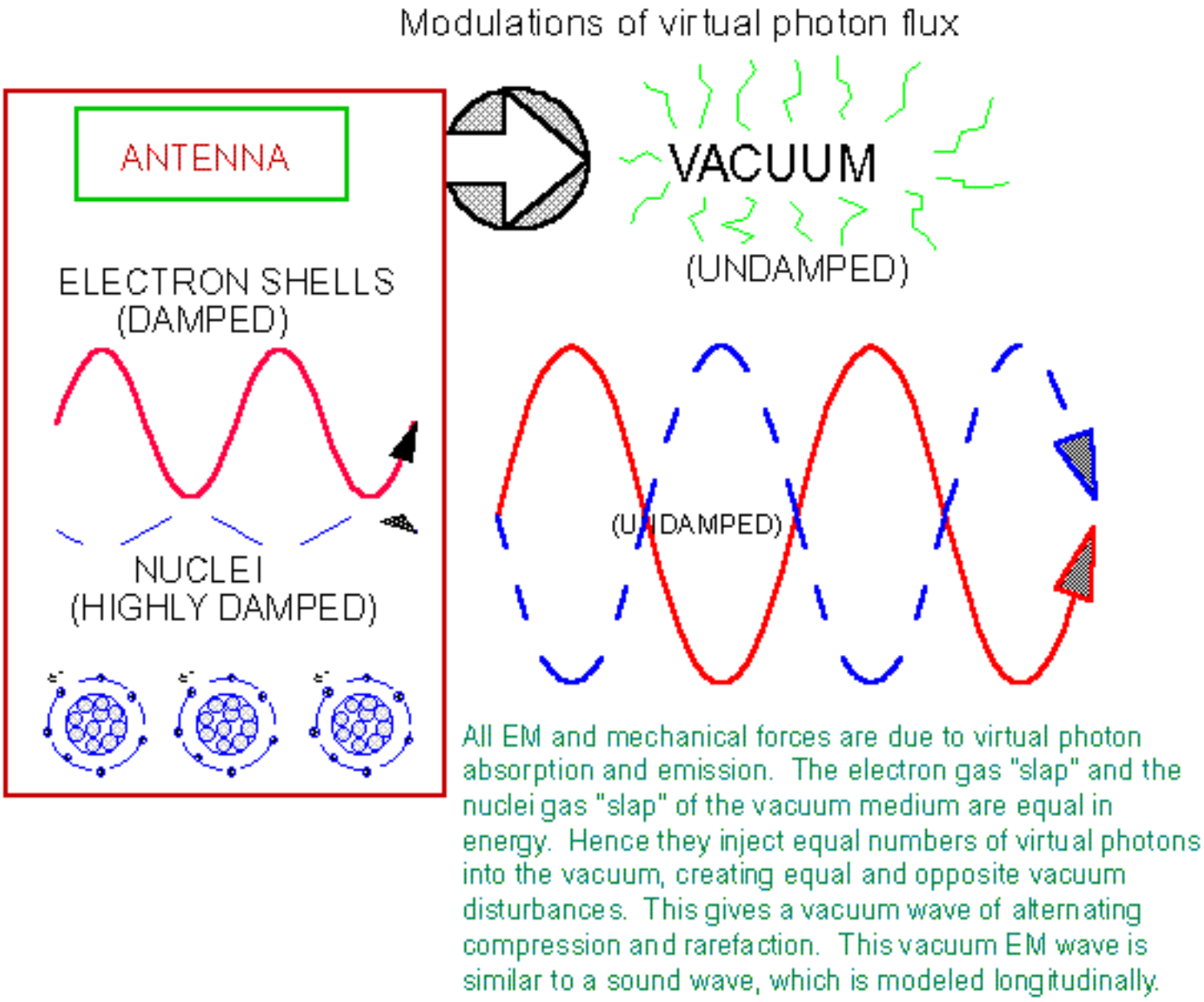

Figure 2. Launching an EM wave from a wire antenna.

D-1-F2

© T.E. BEARDEN 1994, 1995

[9] See Nikola Tesla, "Pioneer Radio Engineer Gives Views on Power," New York Herald Tribune, Sep. 11, 1932. Quoting: "...I showed that the universal medium is a gaseous body in which only longitudinal pulses can be propagated, involving alternating compressions and expansions similar to those produced by sound waves in the air. Thus, a wireless transmitter does not emit Hertz waves which are a myth, but sound waves in the ether, behaving in every respect like those in the air, except that, owing to the great elastic force and extremely small density of the medium, their speed is that of light." Today the QM vacuum has been theoretically and experimentally shown to consist of a "gas" of virtual particles, rather like Tesla stated. Tesla was also correct about the longitudinal EM wave in the vacuum. He was also correct in his statement that a fundamental charged particle can alter its charge, if one considers the massless charge ~ of charge q separately from the mass m of charge q. When the charge q is placed in a nonzero potential V, it follows that the new charge of the electron is simply (~+V).

Tables:

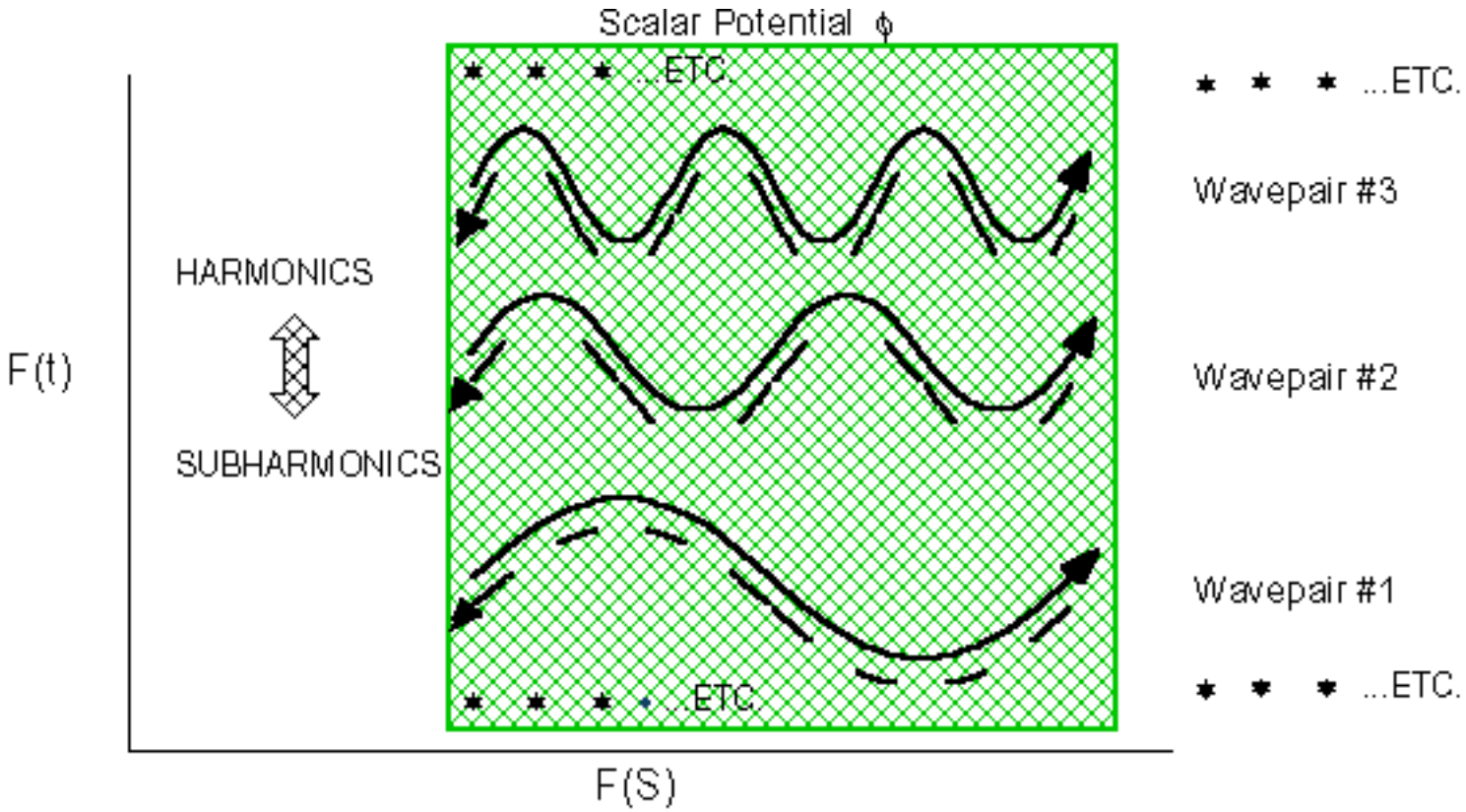

Figure 3. Internal Wave Structure of the scalar potential.

A harmonic set if wavepairs, where in each wavepair the two waves superpose spatially, but travel in opposite directions. The two waves in each pair are true phase conjugates and time-reversals of each other. Thus they comprise a coupled wave and antiwave. The photons must also be coupled into photon/antiphoton pairs, by a strong application of the distortion correction theorem of nonlinear optics.
Each wavepair is a standing electrogravitational wave.

D-1-F3

© T.E. Bearden 1984, 1985

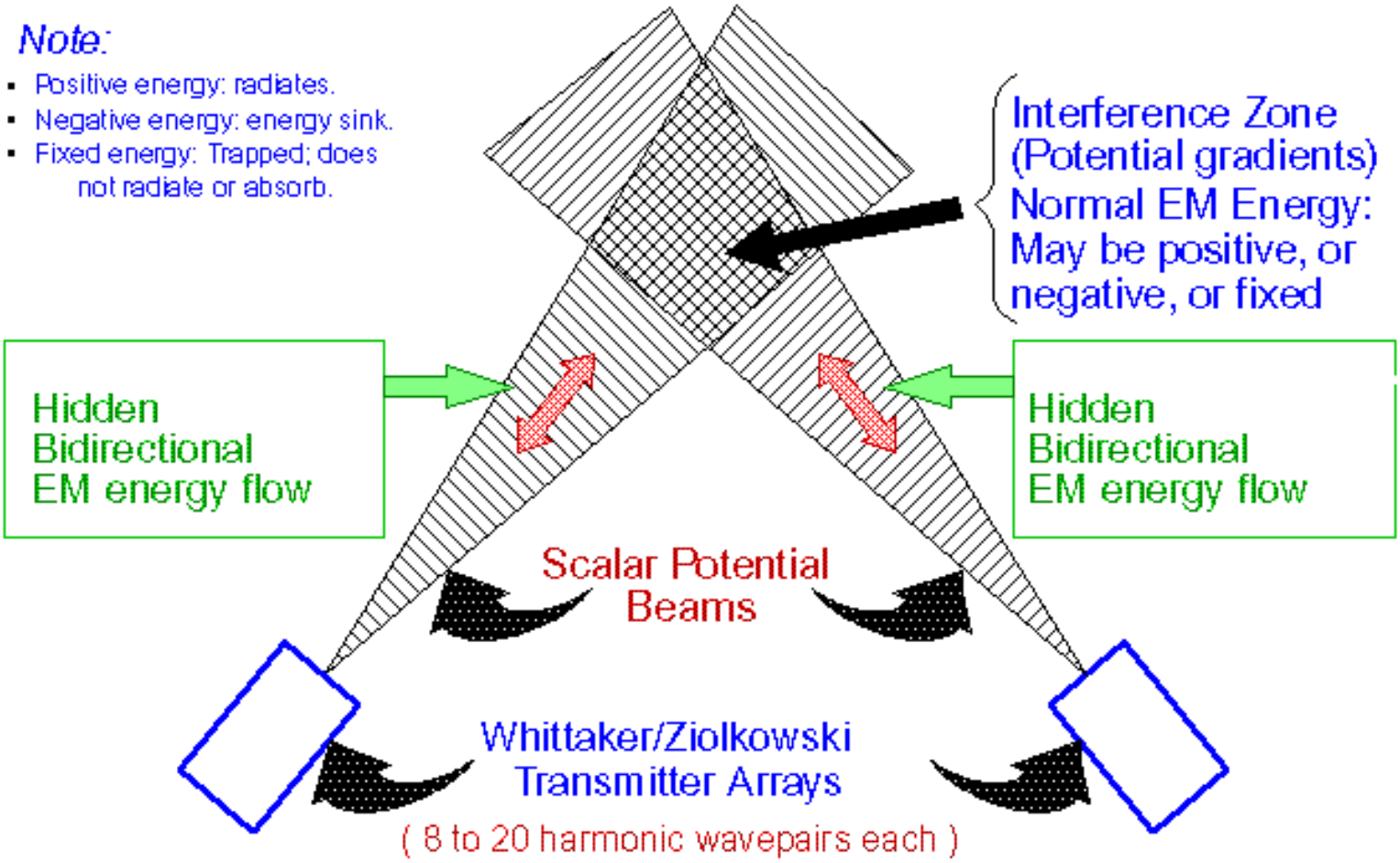

Figure 4. Scalar potential interferometry provides action-at-a-distance. It already creates normal EM fields and waves.

D-1-F4

© 1994 T.E. Bearden

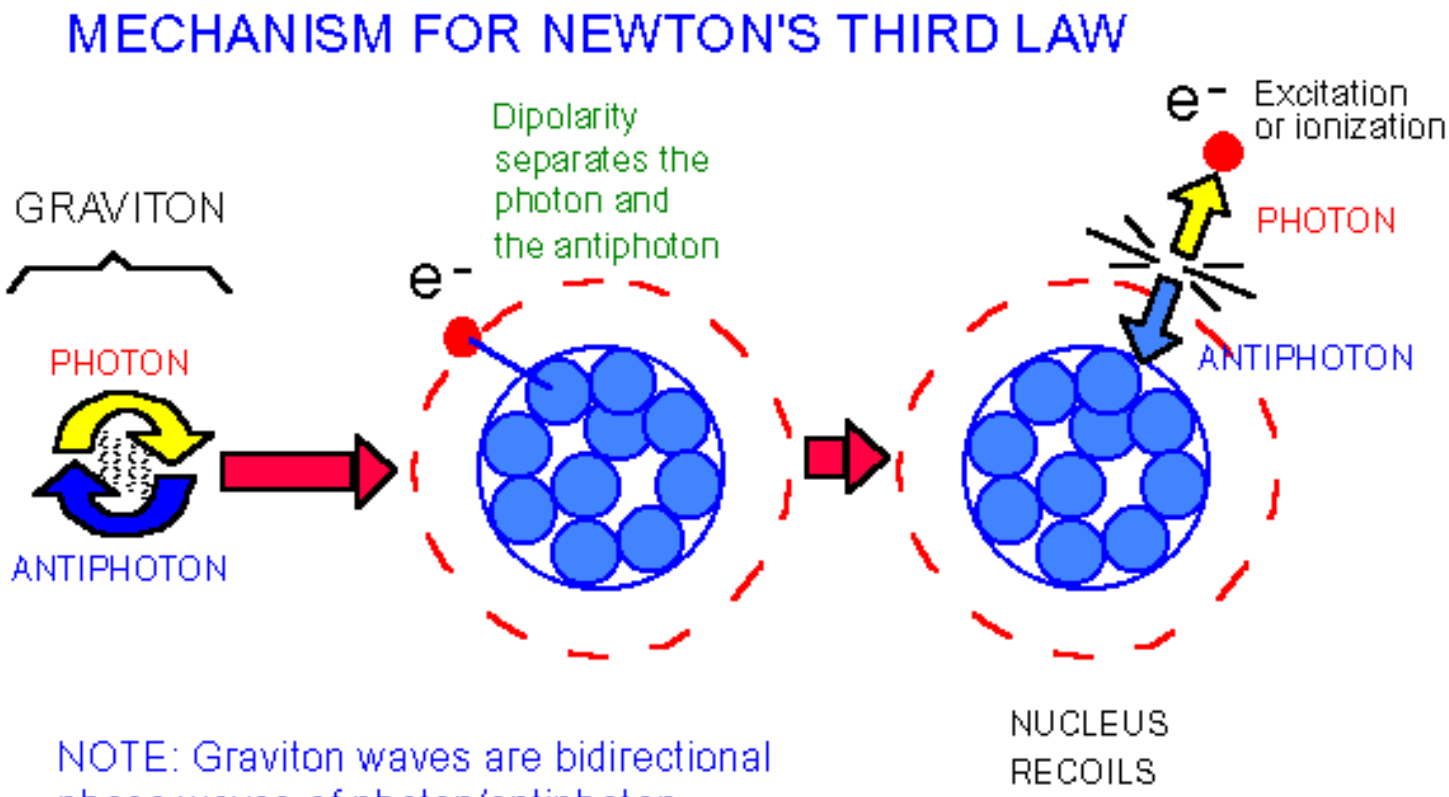

NOTE: Graviton waves are bidirectional phase waves of photon/antiphoton coupling and uncoupling in the vacuum.

The atom is an assembly of dynamic dipoles.

A dipole splits the graviton into a photon and an antiphoton.
The photon interacts with the electron, producing the action.
The antiphoton interacts with the nucleus, producing the reaction.

Figure 5. Graviton interaction with matter produces the photon interaction and Newton's third law reaction.

D-1-F5

Tables:

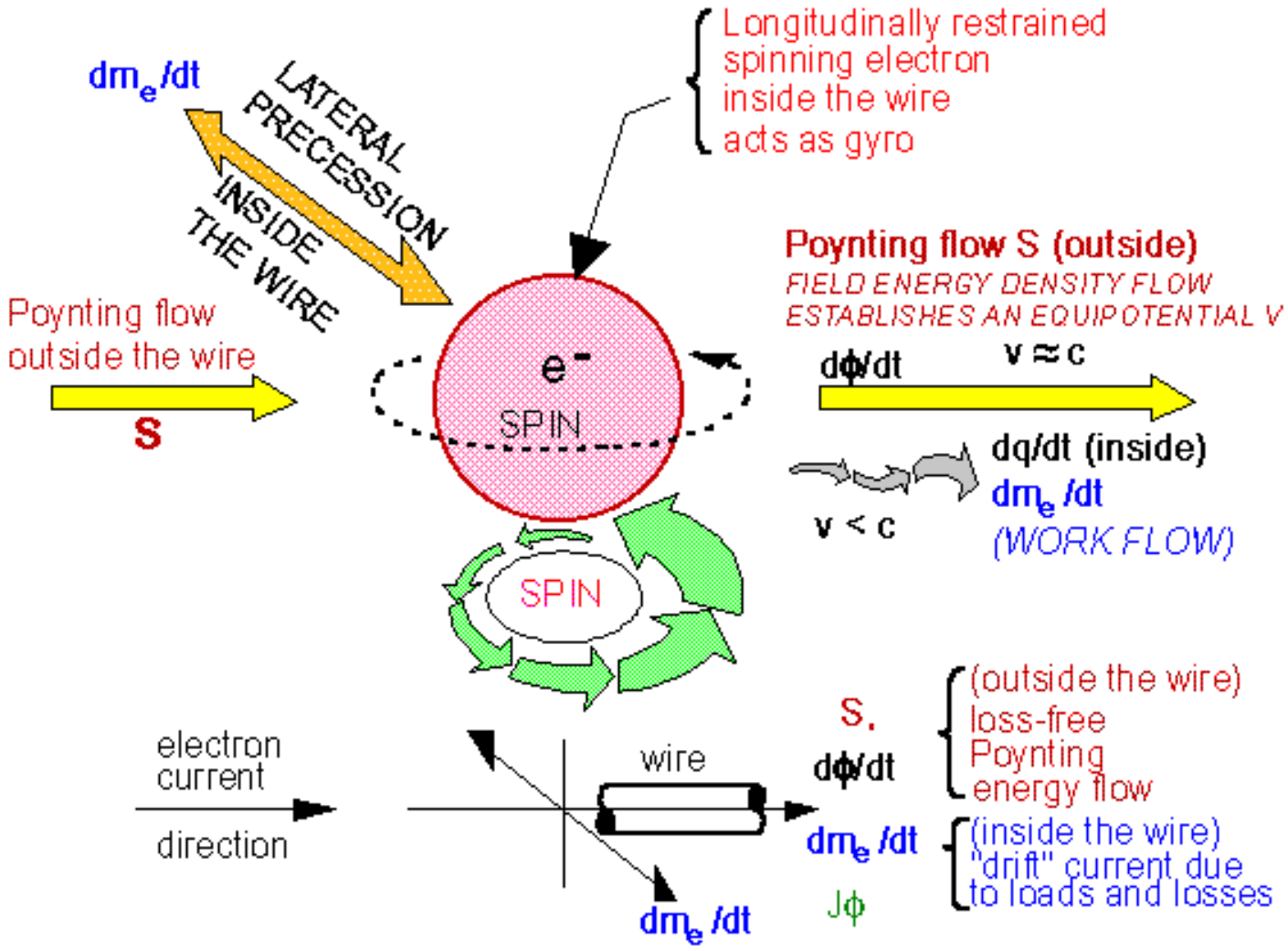

Figure 6. Currents in and along a conductor, with electron precession.

D-1-F6 © 1993 T.E. Bearden

THE VIRTUAL TIMES

Further, if we should trick the time-reversed wave half into coming outside the atom instead of going inside to interact with the nucleus (Figure 7), then it follows that the nucleus would not recoil. In that case the interaction would appear to violate Newtonian third law reaction. Phase conjugate mirrors already do just exactly this when they emit a phase conjugate replica wave. They direct the antiwave outside and away from the atom instead of inwards into the nucleus. So they do not recoil, no matter how powerful a phase conjugate replica wave they emit.

Finally, we can also show that the EM wave in vacuum is longitudinal, by yet another approach. The electrons in the electron gas in a conductor are spinning, and they are severely constrained longitudinally to be able to move only very, very slowly down the wire. So when perturbed, they act as gyroscopes, and precess at right angles to the perturbing force. The fact that the gyroelectrons in a wire move radially almost entirely, and only "slip" down the wire very slowly with a "drift" velocity, already proves conclusively that the incoming vacuum disturbance was longitudinal. The precession of a gyro is at right angles to the perturbing force. Therefore rigorously the vacuum EM waves are longitudinal, because the gyroelectrons moved transversely. The present assumption of the transverse EM wave in vacuum contradicts the entire theory of gyroscopes! [note 10] There are many other errors in classical EM that we will point out in future articles; this should give the reader a flavor of what is in store for him in future articles.

So there are no truly satisfactory "experts" in any of the 14 fields. Yet there is still something to be said for having some years of experience in one or more of the areas. I have had the good fortune or misfortune, depending upon one's viewpoint, to be involved in various of those 14 activities for some 30 years or more, and am active in several of the areas now. My colleagues and I are particularly active in researching overunity electrical devices (see Figure 8), to include the effects of controlled chaotic oscillators, charge-blocking oscillators, and oscillators driven by in-shuttled (bridged) Poynting field energy density flow ExH. Parametric oscillation is known to have yielded overunity electrical machines and was fully reported by Russian researchers in the Russian and French technical journals in the mid 1930s. [note 11] We will further cite that little-known work in future articles. Also, we are working mightily upon true negative resistors (Figure 9), wherein the resistor scavenges some of the disorganized energy from the vacuum's energetic exchange with the charges in the system, organizes and collects it, and then outputs that collected energy flow into the external circuit. Such a resistor acts as a power source. Kron, perhaps the greatest of the electrical machinery scientists, is known to have produced such true negative resistors.

I have also proposed a theoretical explanation of the Priore device (Figure 10) in France which in laboratory animals demonstrated remarkable cures of terminal tumors, cured trypanosomias, reversed atheriosclerosis, and restored suppressed immune systems. The Priore work was not anecdotal, but was performed under rigorous scientific protocols, working under the auspices of renowned French scientists such as Courrier and Pautrizel. The work is properly reported in numerous papers in the French medical literature. [note 12] The results were certainly achieved, but neither Priore himself nor the scientists of the day could understand the mechanism involved. The deciphering of that causative technical mechanism utilized by the Priore group required 10 years of intense effort. The results have now been published in the journal Explore! and are there for anyone to read. [note 13]

ILLUSTRATION LIST | NEXT PAGE

©copyright T.E.Bearden 1995

VT Page 1

Comments may be sent to
the **Editor** of The Virtual Times

PHOTON INTERACTION WHEN ATOM PHASE CONJUGATES

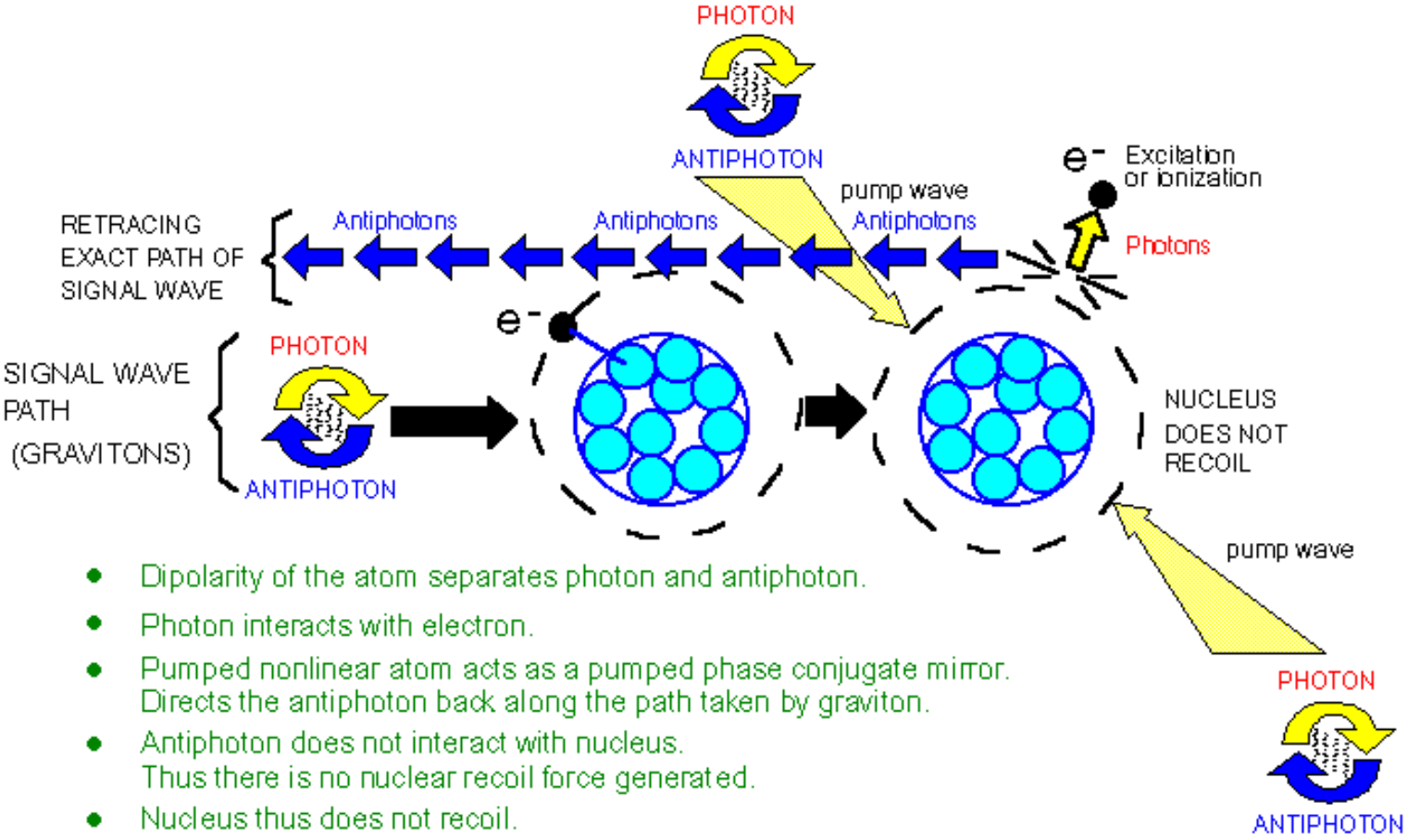

- Dipolarity of the atom separates photon and antiphoton.
- Photon interacts with electron.
- Pumped nonlinear atom acts as a pumped phase conjugate mirror. Directs the antiphoton back along the path taken by graviton.
- Antiphoton does not interact with nucleus. Thus there is no nuclear recoil force generated.
- Nucleus thus does not recoil.
- Not a violation of Newton's third law, once one understands the mechanism that generates third law reaction. In the absence of the generating mechanism, there is no third law recoil. In EM field theory, the "missing antiwave" has necessitated third law omission.

Figure 7. Emission of antiphoton; nucleus does not recoil. Atom acts as a pumped phase conjugate mirror.

D-1-F7

© 1995 T.E. Bearden

[10] When Maxwell's theory was constructed, the electron had not yet been discovered, and so the dipolarity of the atom was unknown. An atom was regarded just as a "blob." Electricity in a conductor was regarded as a thin material fluid Maxwell's equations are in fact hydrodynamic equations. So the founders regarded the detection of induced motion in the electric fluid as induced translation, not induced precession. They had no idea of "spins" of particles of the fluid, nor of gyro precession of those particles. Instead, q was regarded just as a "piece of electric fluid," similar to a cubic centimeter of fluid.

A fundamental AC resonant principle for an overunity electrical power system

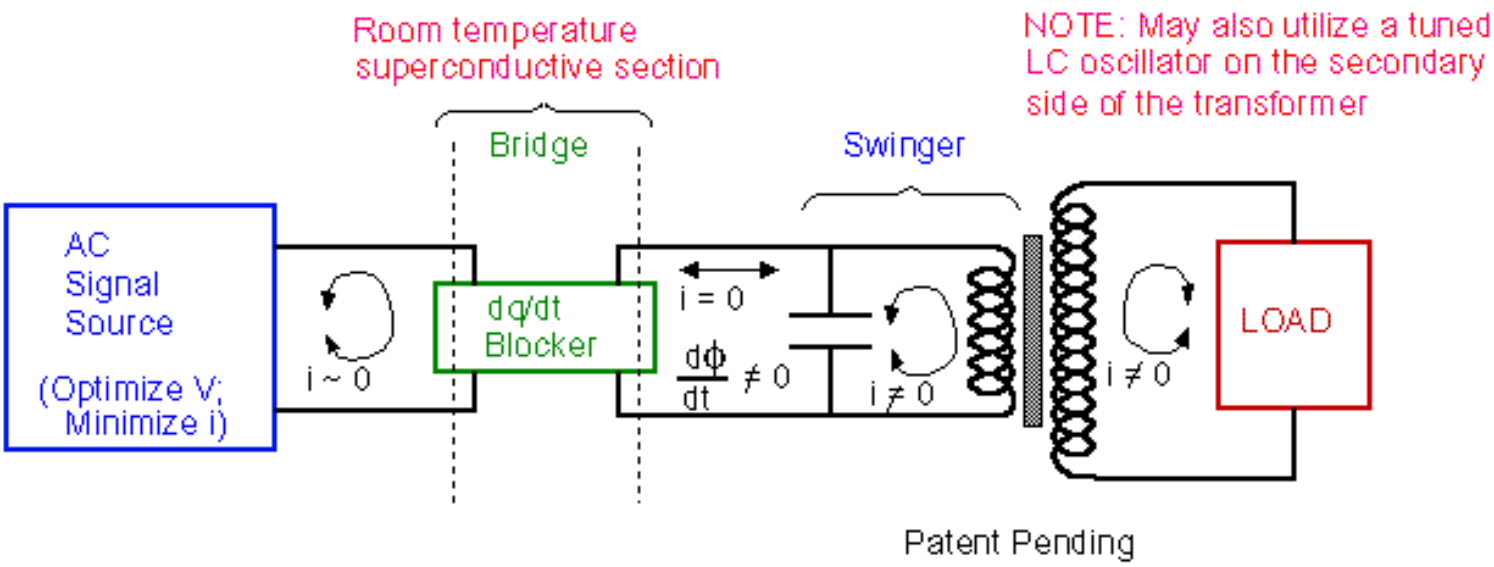

Figure 8. dq/dt-free driving a swinger by S-flow.

Poynting energy flow S with its accompanying potential V is shuttled from the source to a tuned LC oscillator in resonance at the driving frequency or slightly below. The LC oscillator is driven by S-flow and dV/dt flow alone. The swinger furnishes its own free electrons, which receive S and EMF from the bridge, thereby producing dq/dt.

D-1-F5

© T.E. Bearden 1993, 1994, 1995

[11] E.g., see L. Mandelstam [Mendel'shtam, L.I.], N. Papalexi, A. Andronov, S. Chaikin and A. Witt. (1935) "Report on Recent Research on Nonlinear Oscillations," Translation of "Expose Des Recherches Recentes Sur Les Oscillations Non Lineaires," Technical Physics of the USSR, Leningrad, Vol. 2, 1935, p. 81-134. NASA Translation Doc. TT F-12,678, Nov. 1969. Summarizes lengthy work at the Institute of Physics of the University of Moscow and several of the laboratories on the problem of self-powered, self- oscillating nonlinear oscillators. The paper reports significant work and progress in oscillations created by the oscillating system itself (self-oscillation) without participation of any external forces varying with time and without the expense of a constant source of energy (e.g., a storage battery). Such a system was shown to self-increase in an underdamped manner until system self-destruction. Adding a nonlinear load allowed the systems to stabilize its dynamic operation so that it powered a load under overunity conditions and did not self-destruct. Extensive additional references on this spectacularly successful overunity energy project are listed.

Tables:

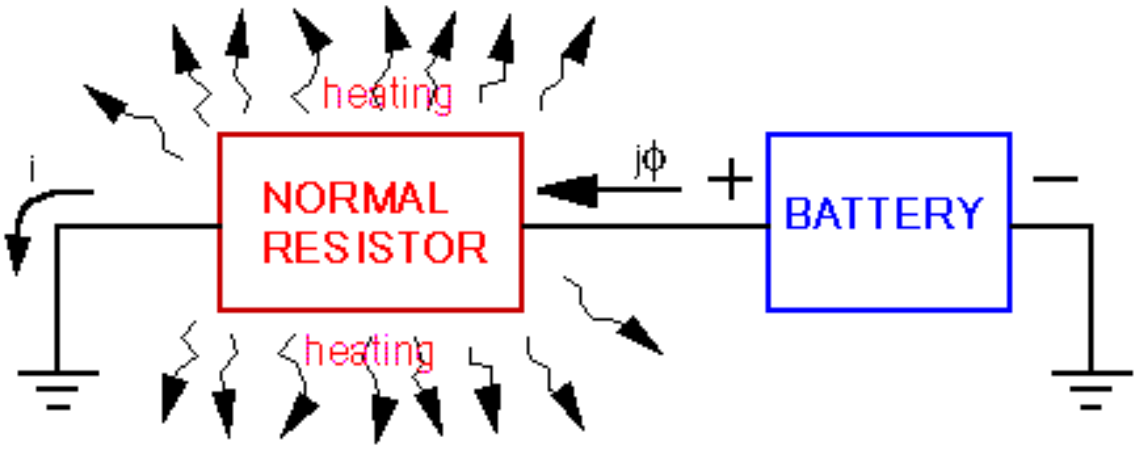

Figure 9a. Normal resistor receives ordered energy and scatters it.

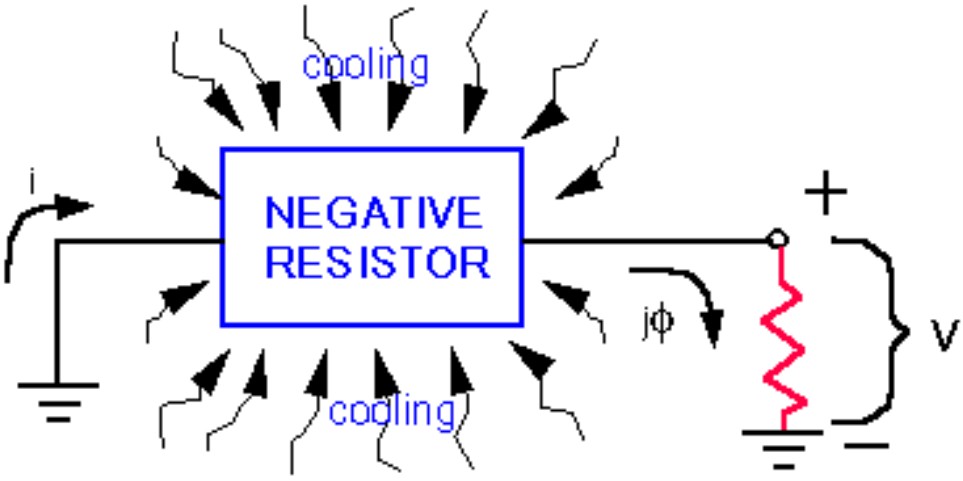

Figure 9b. Negative resistor receives, concentrates, and reorders scattered energy.

Figure 9. Normal resistor versus a negative resistor.

D-1-F9 © T.E. Bearden 1999, 1996

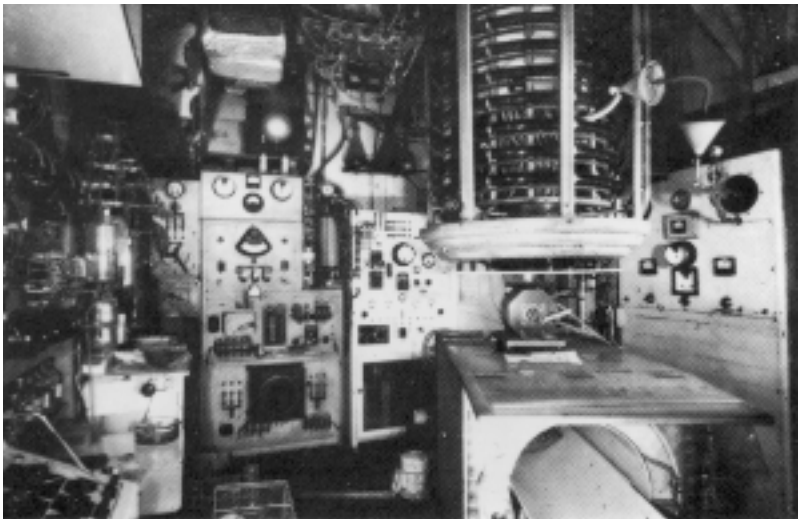

Some 17 signals were fed into a rotating plasma, which added phase conjugates to them. This infolded 17 wavepairs, each pair a coupled wave/antiwave, thereby forming a scalar potential with an artificial Whittaker pump wave internal structure. This infolded pump wave complex was modulated onto a powerful, rippling magnetic field, guaranteeing penetration even into the atomic nuclei. A specific, amplified antiengine for the exact cellular disease state was generated, reversing the diseased cells back to a previous healthy state.

Figure 10. Priore's laboratory apparatus for cellular reversal.

D-1-F10

© T.E. BEARDEN 1993, 1995

[12] For citations and the exposition of our proposed explanation of the Priore mechanism, see T.E. Bearden, "Vacuum engines and Priore's methodology: The true science of energy-medicine." Part I, Explore!, 6(1), 1995, p. 66- 76, Part II, Explore!, 6(2), 1995, p. 50-62.

---

[13] Bearden, "Vacuum engines and...," ibid.

Presently my CTEC colleagues and I have filed three patent applications and a continuation, on various methods for overunity processes and apparatuses, room temperature superconductivity, Poynting generators, etc.

As an example, we took exactly the opposite approach to room temperature superconductivity as has been taken by all the orthodox researchers to date. What exactly is sought, after all, for superconductivity (SC) in a section of an electrical circuit? Well, one has some electrons on one side of that SC section that are transporting excess potential, as given by the Slepian vector J*. [note 14] What is desired is to get some electrons on the other side of the SC section that also are transporting the same amount of excess energy in the form of J*. You can do that in two ways: (1) you can flow the electron carriers through the SC section, carrying their J*, or (2) you can block the J and flow the * itself across as the Poynting flow S. [note 15] Nondivergent Poynting flow flows along an equipotential, which is just another way of saying that, if the S-flow does not diverge, it carries the same potential * along with it. Hence it carries the EMF right along with it as it flows without divergence.

Conventional approaches have all tried to shove the electron carriers through the SC lattice section. Doing that is like trying to fire a very slow bullet through several million rotating fans in a straight line. So cryogenics (to slow the fanblades to a crawl) and massive correlation of the electrons and of the electron-to-lattice interactions is necessary if one is to get the electrons through there without excess collisions that shake off some of the excess * from J*, as scattered photons (heat) or as a change of form of the energy (as in straining the dielectric of a capacitor to convert electrical energy to mechanical strain energy via the piezoelectric effect.)

Our approach is exactly the opposite (Figure 11 and Figure 12). Why not just *stop* the flow of excited electron carriers on one side of the SC section, and continue the nondiverging flow of the Poynting field energy density S across that section at room temperature? Then the cryogenics is not needed at all. After all, circuits already work that way anyhow __ except standard practice is to nullify the process by letting current be driven around the sourcing current loop and back through the back EMF of the primary source. A quantum well (or several other methods) can be used to trap the "sourcing" electrons in the conductor just prior to entering the SC section. The "receiving" electrons on the other side of the SC section, however, must be in their own dq/dt-isolated current loop.

ILLUSTRATION LIST | NEXT PAGE

©copyright T.E.Bearden 1995

Comments may be sent to
the **Editor** of The Virtual Times

[14] Briefly, the S-flow outside the wire will be flowing along essentially at the speed of light, at or with the same since S-flow without divergence is along an equipotential. Said another way, a nondiverging Poynting flow S exhibits a constant potential ~ along its streamlines. A tiny, tiny portion of the S-flow is intercepted by the sluggish electrons (which may be moving as dq/dt at 11 feet per hour, in a typical case), to form the Slepian vector J~. The J~ portion is just the minute fraction of the S-flow that is actually intercepted by the electron current and transported to the impedances, for releasing the excess ~ in the loads and losses. [Incidentally, this wee note resolves a century of controversy over exactly how EM energy flows in circuits. The orthodox literature abounds with discussions, differing positions, and debates and with errors.]

---

[15] Note that this also automatically involves a host of other types of controversial displacement currents, such as d~/dt, dV/dt, dE/dt, dP/dt, dD/dt, etc. The literature is thoroughly floundering as to exactly how all these currents are related, together with the Slepian vector J~ and the Poynting vector S, as well as the "normal" current dq/dt. We will be discussing the "master key" for these relationships in future articles.

Tables:

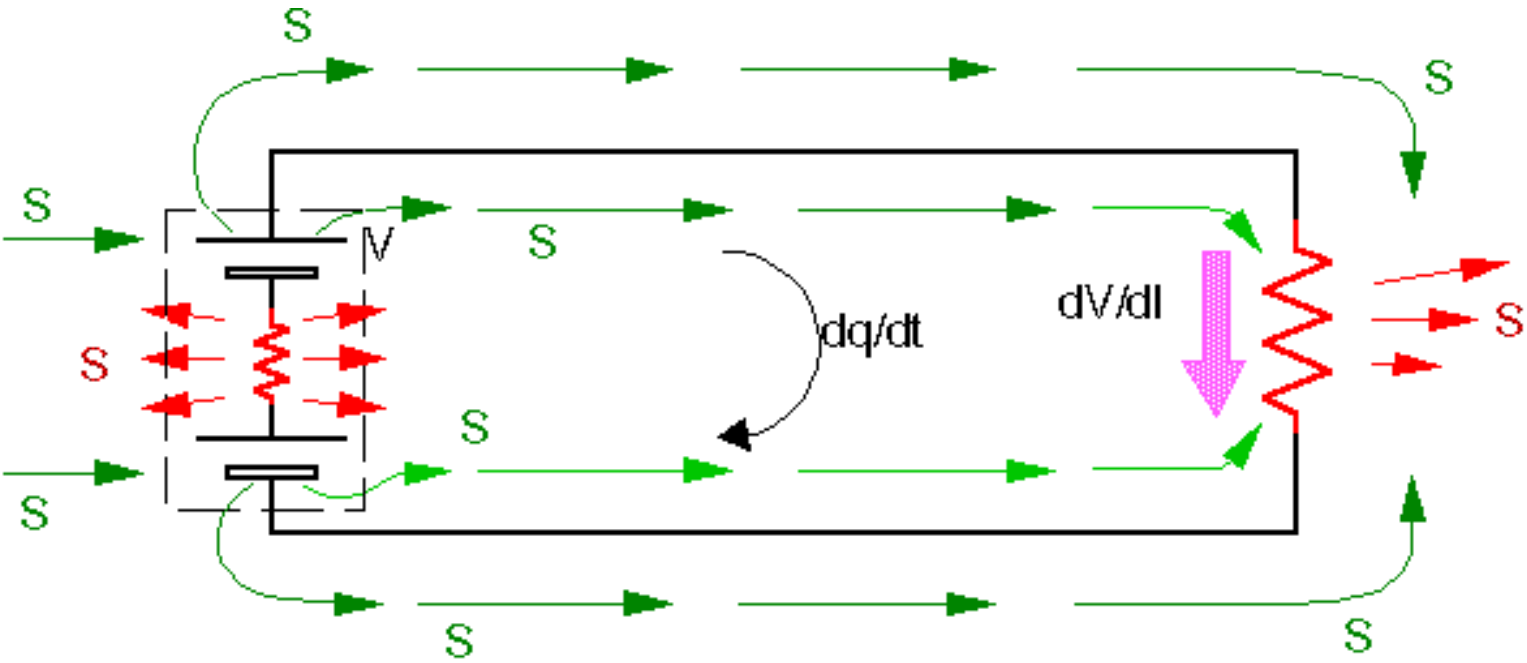

Note: EM texts err in showing the battery "gate" as the source of energy.

Figure 11. Poynting S-flow along a simple circuit.

From particle physics, any electric charge is a broken symmetry in the vacuum's virtual particle flux. Any dipole is thus two locally broken symmetries. Thus the dipole acts as a gate/source, driven by the fierce vacuum flux. So a dipole already "extracts" and gates EM energy flow, directly from the seething vacuum.

Every battery and generator is already a "free energy" source of extracted and gated EM energy from the vacuum.

D-1-F11

© T.E. Bearden 1994

Tables:

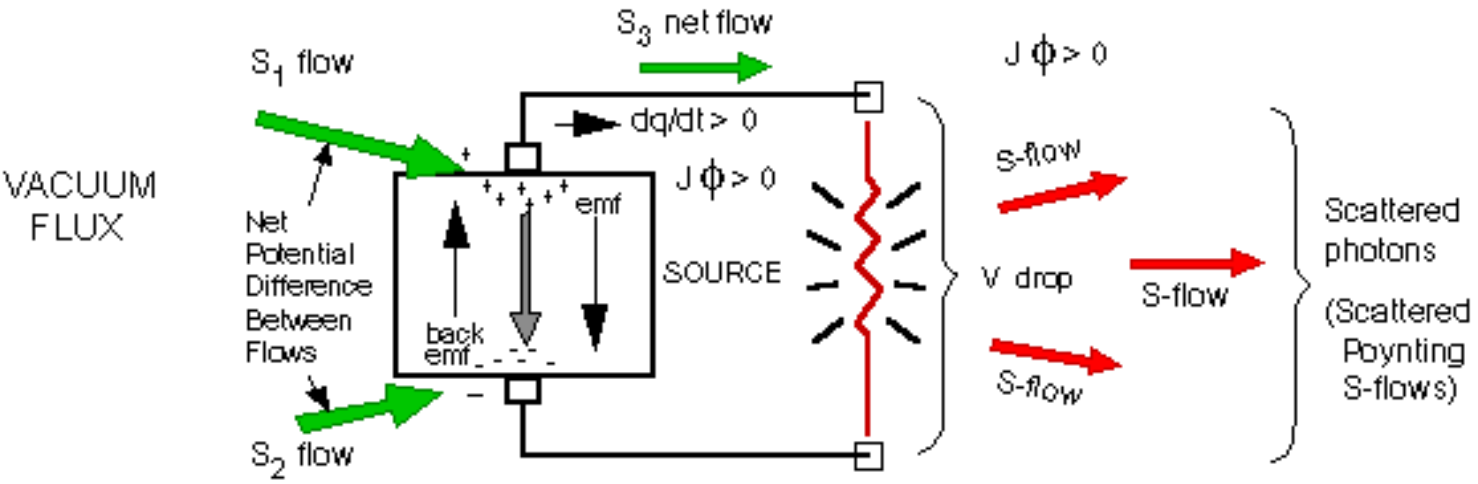

Figure 12a. Normal current flow; Jϕ is the electron transport of energy, while S is the speed-of-light Poynting energy flow.

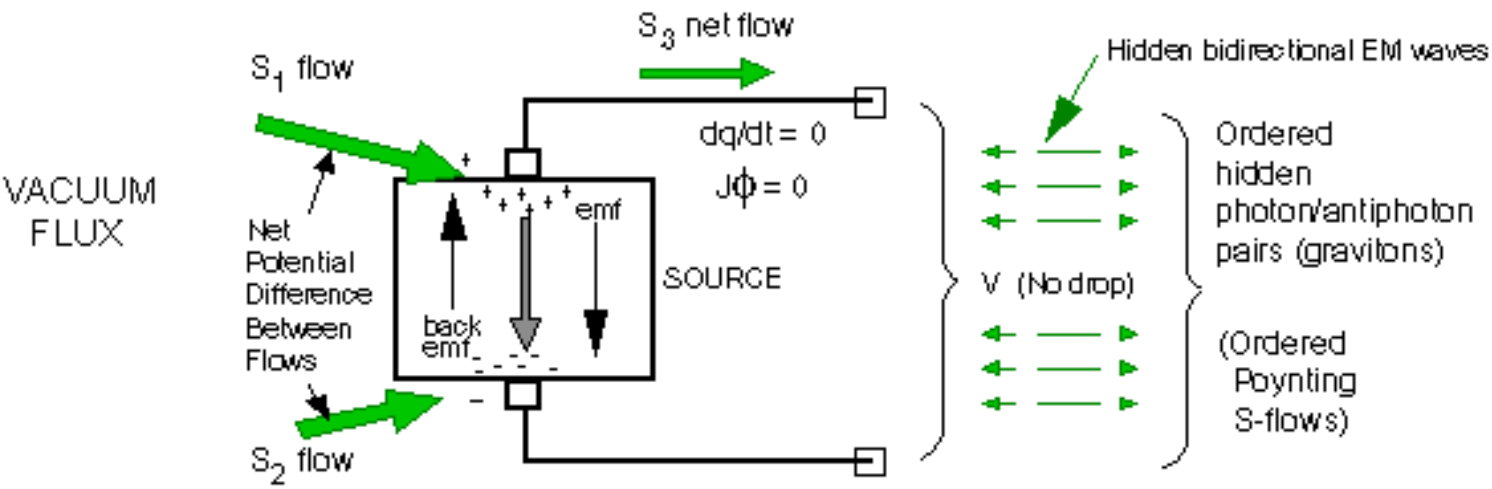

Figure 12b. In a conductor with dq/dt blocked; S-flow and hidden Whittaker-wave flow continue.

Figure 12. Overt and covert field energy density flows.

D-1-F12

© 1994, 1995 T.E. Bearden

Normal sources do not furnish electrons and current to a circuit anyway. Sources just furnish Poynting flow S and EMF. [note 16] In the receiving current loop, the EMF appears automatically once the S-flow flows in and is "locked on to" by the receiving electrons. Given q**, you will immediately have J* if the electrons are free to move in the conducting circuit (see Figure 13). Further, you have eliminated all the loss terms from the standard Poynting equation for energy losses. So all the energy flow S just flows across the SC section, without any current or Cooper pairs flowing through that SC section. The SC section has become a "bridge" which (1) strips off the Poynting field energy density flow S from the electron current dq/dt on the sourcing side of the SC/bridge section, by simply reducing the dq/dt to zero; and (2) continues to pass the S-flow across the dq/dt-blocked SC/bridge section to the other side (Figure 14). The excess S-flow (and EMF) pours into the receiving dq/dt-isolated current loop, exciting the electrons therein to produce dq/dt and J*. *Any closed current loop is self-powered, once it receives S and EMF. It furnishes its own electrons; it only requires excess energy and EMF.* [note 17]

So our approach gives room temperature superconductivity in a very straightforward manner, once you discover how to block the current dq/dt in a conductor. Blocking it in an insulator is not sufficient, because that drops the potential and stops the S-flow and the equipotential * (the EMF). However, a degenerate semiconductor such as the Fogal chip can be used, as can several other processes for blocking dq/dt in a conductor. We will discuss these in a future article.

Another advantage of this approach to room temperature superconductivity is that now one can also have permissible overunity coefficient of performance. Now the load can be placed in its own S-receiving, isolated current loop. With the sourcing current loop furnishing only S and not dq/dt, the load is still powered normally in its own closed dq/dt current loop, but none of the load current is passed back through the back EMF of the primary source in the sourcing circuit.

This principle -- that at least a substantial portion of the load current must not pass back through the primary source -- is the primary principle required for a permissible overunity electrical machine (Figure 15). A permissible overunity electrical machine is one which produces more power in the load than you have to put into the machine to run it.

ILLUSTRATION LIST | NEXT PAGE

©copyright T.E.Bearden 1995

Comments may be sent to
the **Editor** of The Virtual Times

[16] E.g., see Robert L. Shrader, Electronic Communication, Sixth Edn., MacMillan/McGraw-Hill, New York, NY, 1991. (1993 Imprint). Quoting from p. 6: "A source of electric energy does not increase the number of ~ree electrons in a circuit; it merely produces a concerted pressure on any aimlessly moving electrons."

Tables:

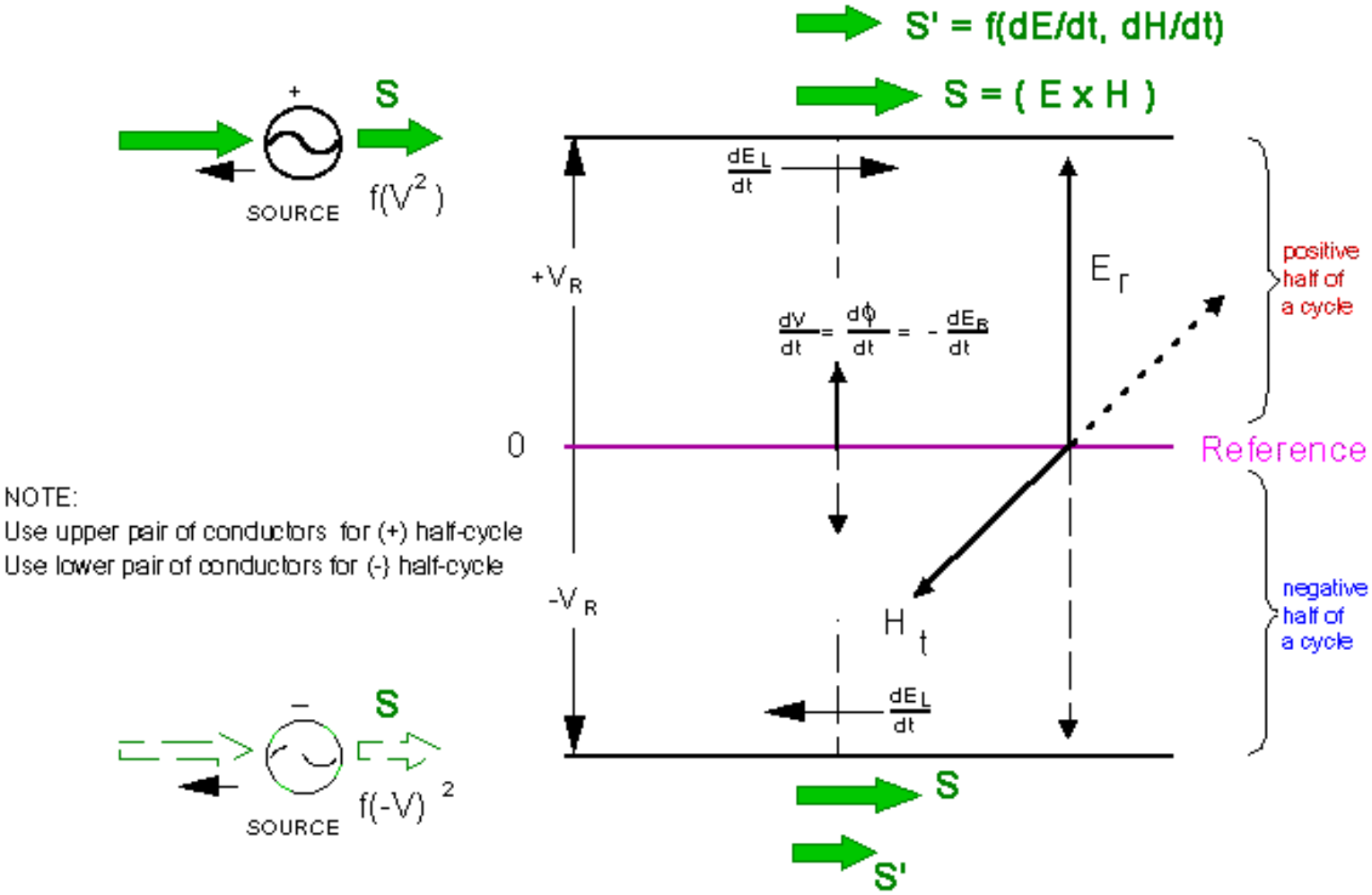

Figure 13. Poynting vector currents S and S' versus massless displacement currents.

D-1-F13

© 1995 T.E. Bearden

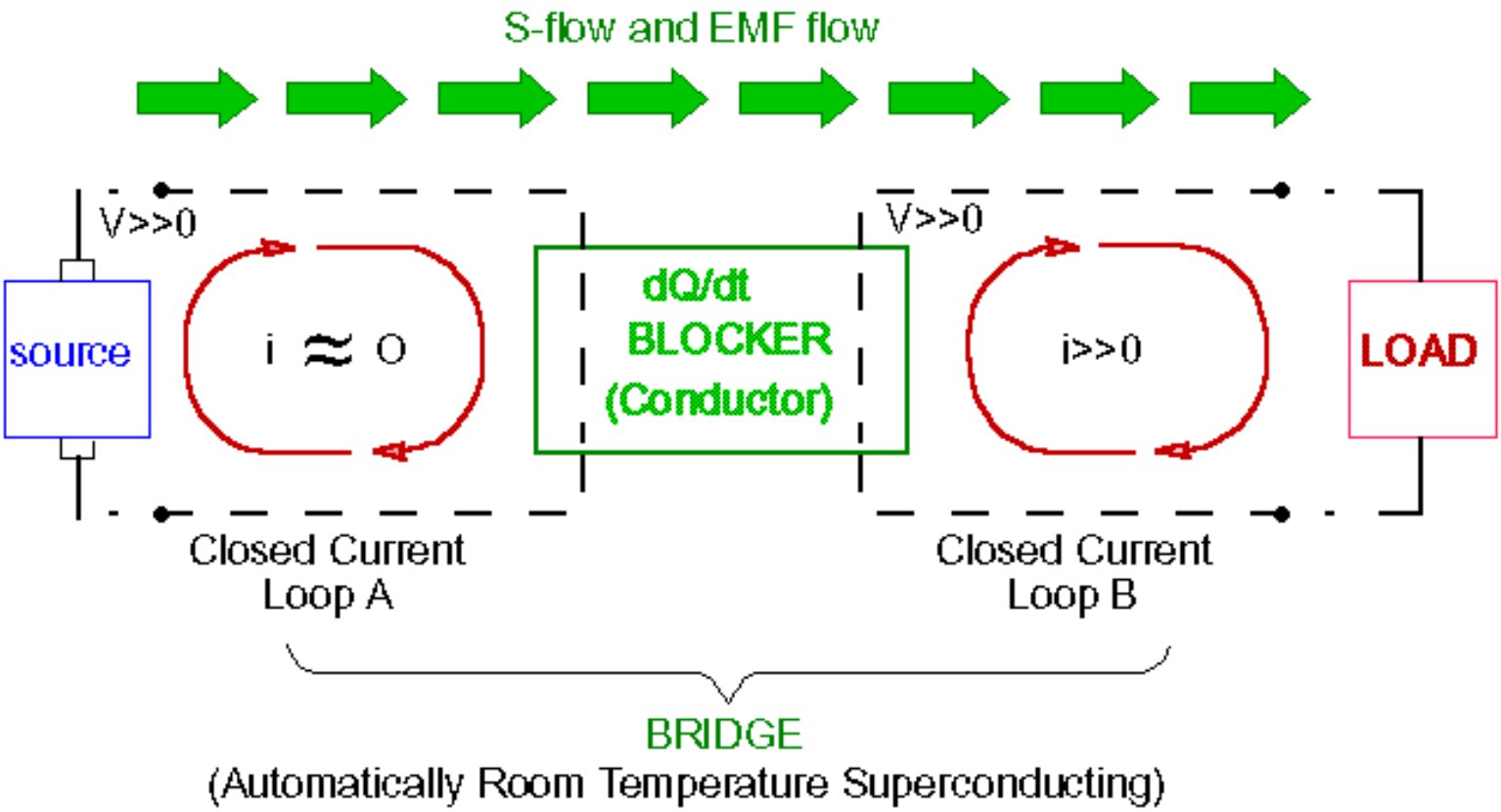

Figure 14. Bridging to enable room temperature superconductivity.

D-1-F 14 © 1995 T.E. Bearden

[17] My own approach has been, if that's all that the circuits require from our primary power source, then let's simply accept that directly from the source without performing any work in the source. Iœ you do it this way, the source is never dissipated, but will last indefinitely. Sources furnish flowing field energy density, not "energy" per se. If you only demand S-flow, you can have all you wish from a source, without exhausting your source. The trick is to find how to steadily dissipate some of this "artesian well" of flowing S to drive electrons through the load, but without driving electrons back through the back EMF of the source.

Tables:

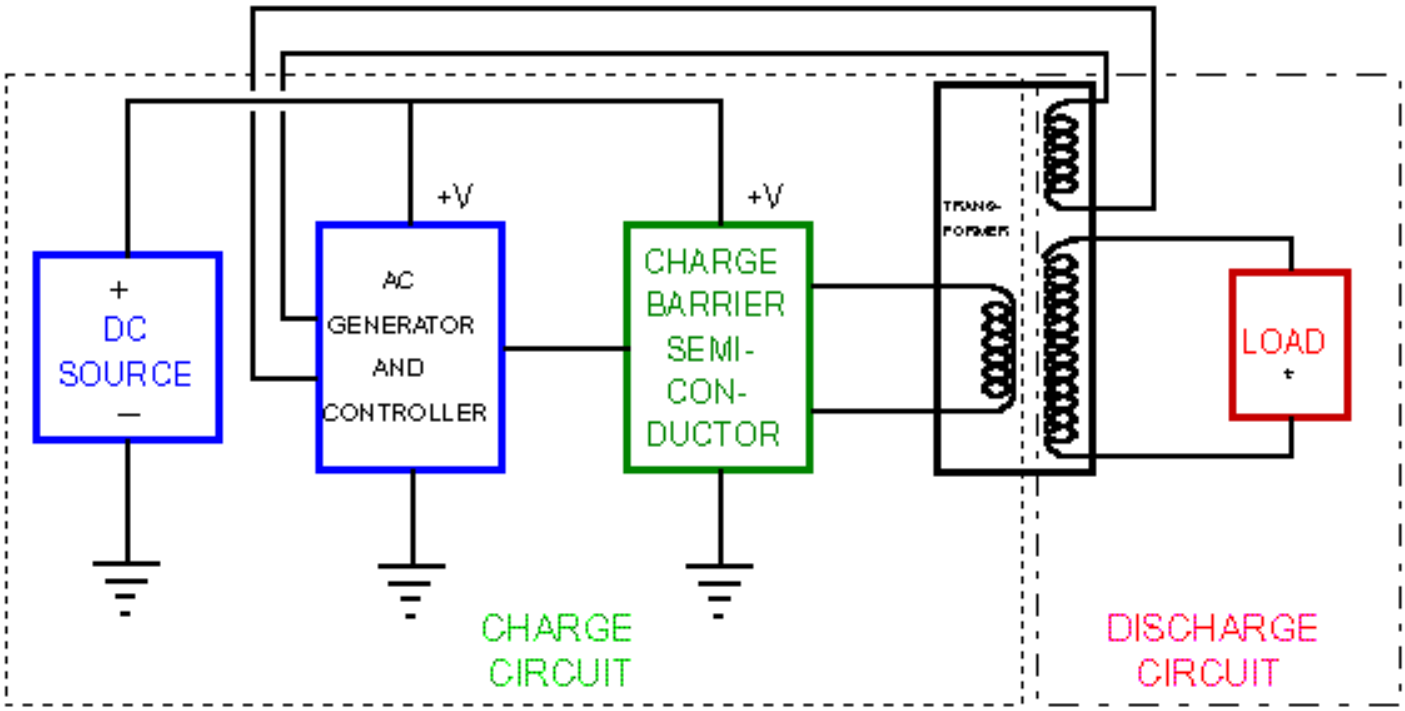

Patent Pending

* NOTE:
DISCHARGE CIRCUIT AND LOAD GROUND
MUST BE ISOLATED FROM THE
CHARGE CIRCUIT GROUND.
FEEDBACK LOOP MUST BE RIGIDLY CLAMPED AND LIMITED.

Figure 15. Use of Fogal semiconductor for overunity (closed system).

D-1-F15

© 1993, 1995 T.E. Bearden

THE VIRTUAL TIMES

Obviously, the laws of physics and thermodynamics require such an overunity machine to be an open system that extracts and utilizes excess energy from an external source. In the case outlined, we extract the excess energy directly from the vacuum in the form of S-flow; essentially we convert our primary source to a Poynting generator rather than a "power" (energy flow loss rate) generator. The resulting overunity machine accomplishes both room temperature superconductivity and also overunity coefficient of performance (Figure 16). It does not violate the conservation laws of physics. It does not violate the second law of thermodynamics because it is an open system receiving and utilizing excess energy from the vacuum, and the second law need not apply to such systems. [note 18]

You see, all power systems are already free energy density flow sourcing systems, if we but use them correctly. Every dipole is a "gating device" for extracting excess field energy density flow from the violent bidirectional flux exchange between the vacuum and each end of the dipole. [note 19] [note 20] When we attach "conducting leads" to a dipolar source, as in the simple two-wire circuit, all we are doing with the conductors is providing waveguides for the extracted S-flows from the vacuum to flow along (it flows outside the conductors) without loss. In effect, each lead is simply extending the pole (i.e., the terminal) to which it is connected.

My associates and I are also working on several other inventions at present, including two more patent applications to be filed in the near future. One of those is in the field of overunity power systems, while the other is in an entirely different, highly proprietary nuclear effort. I will address all these areas in future columns, and those columns will have real "meat" in them.

Present "big science" proclaims that overunity electrical machines are impossible. The reader should understand that the U.S. Patent and Trademarks Office is never going to grant a patent for an overunity electrical machine unless the machine is independently tested and replicated, and unless it is certified by scientists of impeccable credentials. This is as it should be. Legitimate free energy researchers accept that dictum. Eventually the stuff has to work on the bench in order to be validated. On the other hand, free energy researchers also point out that one must not demand of us the next 100 years of national research by a hundred major laboratories immediately! This is still a shoestring operation, because all conventional sources of research funds are denied to the serious overunity researcher (with the single exception of occasional personal funding of a researcher by a private individual). In other words, we demand at least the same kind of consideration that the orthodox nuclear fusion community has enjoyed. Billions of dollars have been poured into that sinkhole, and not a single controlled fusion power unit is working anywhere in the world after decades of work at enormous expense to the taxpayers.

So we overunity researchers deserve at least a decade or two of our own, to try to accomplish overunity electrical system development. We also painfully point out that "Big Science" will not fund a single overunity researcher, for specific overunity purpose, no matter what his credentials or capability. In fact, "Big Science" is part of the problem, because it fervently seeks to prevent any legitimate research in overunity. To carry out its suppression campaign. it resorts to vilification, character assassination, libel, and slander of the overunity researchers themselves __ again, regardless of their qualifications or legitimate scientific procedures. [note 13]

ILLUSTRATION LIST | NEXT PAGE

©copyright T.E.Bearden 1995

Page 1

Comments may be sent to
the **Editor** of The Virtual Times

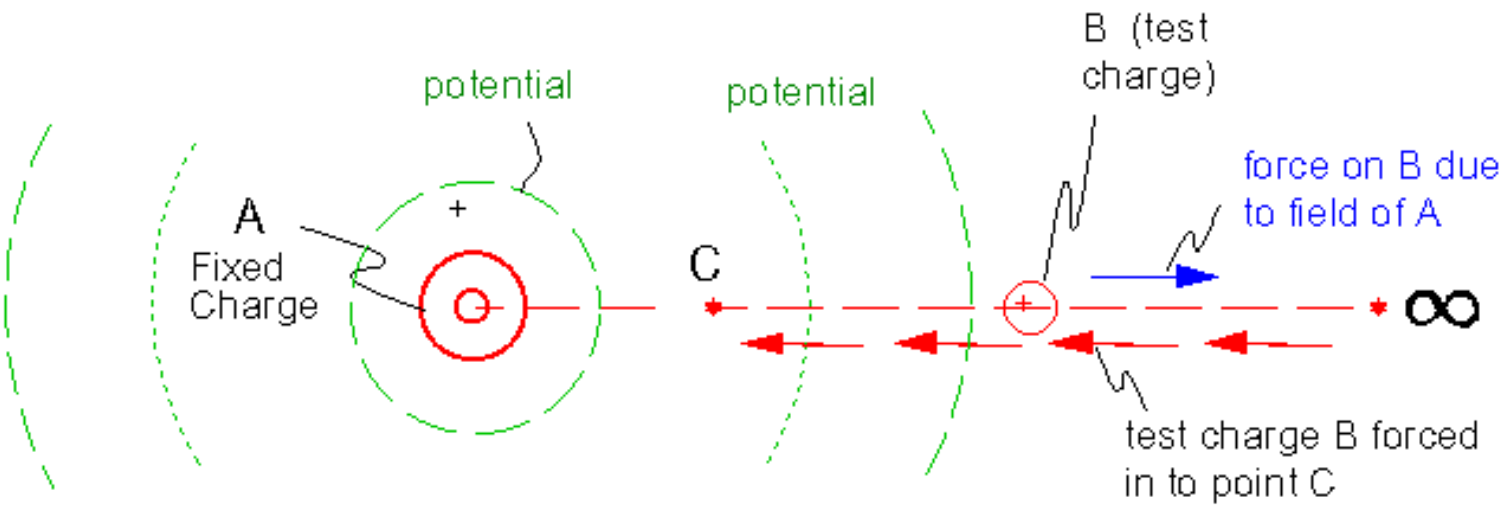

Figure 16a. Magnitude of the scalar potential is determined by work required to push in a unit charge from infinity; e.g., against a repelling like charge. If test charge is released, work will be performed upon it to translate it back toward infinity

Figure 16a. Process for overunity coefficient of performance.

D-1-F16A

© T.E. Bearden, 1993, 1994, 1995

Tables:

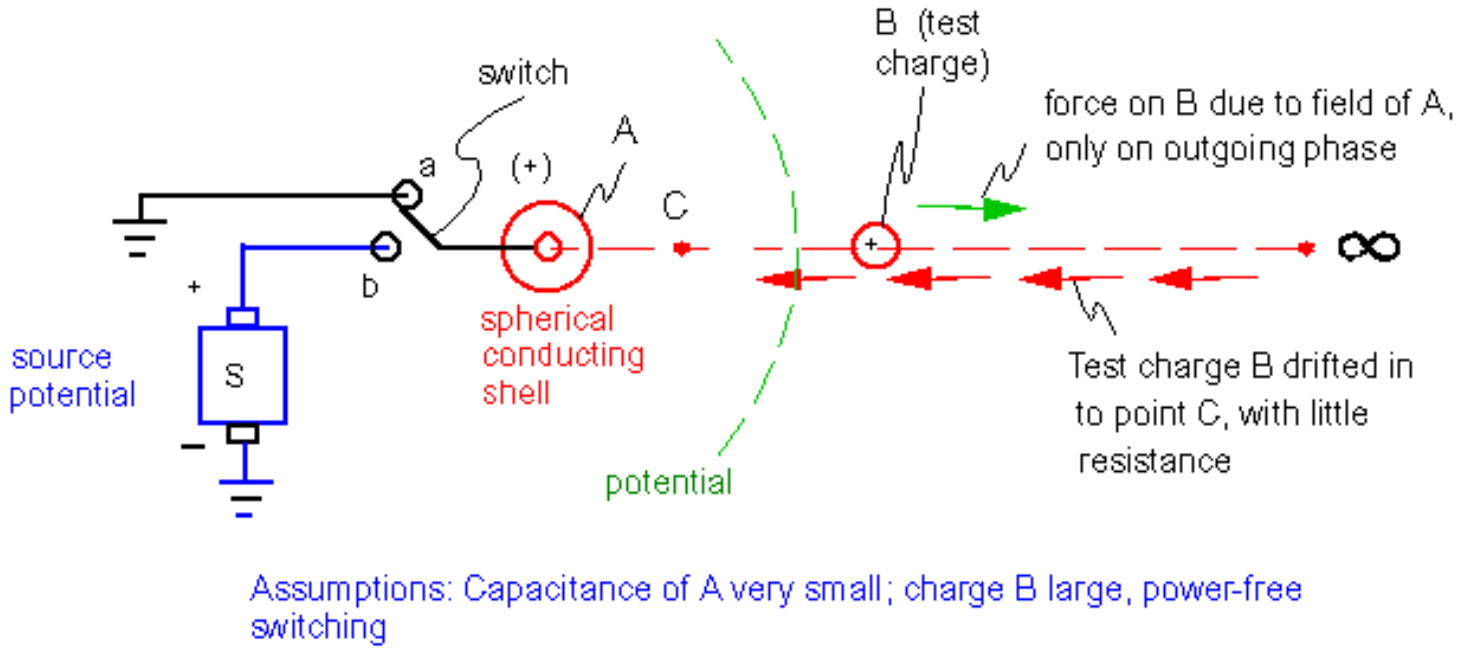

Switch potential off, drift in test charge B, switch potential back on. Can now get free work from repelled test charge B. Get much more free work if A is at a high potential, and charge B is large.

Figure 16 b. Demonstration of overunity efficiency.

D-1-F16B

© T.E. Bearden, 1993, 1994, 1995

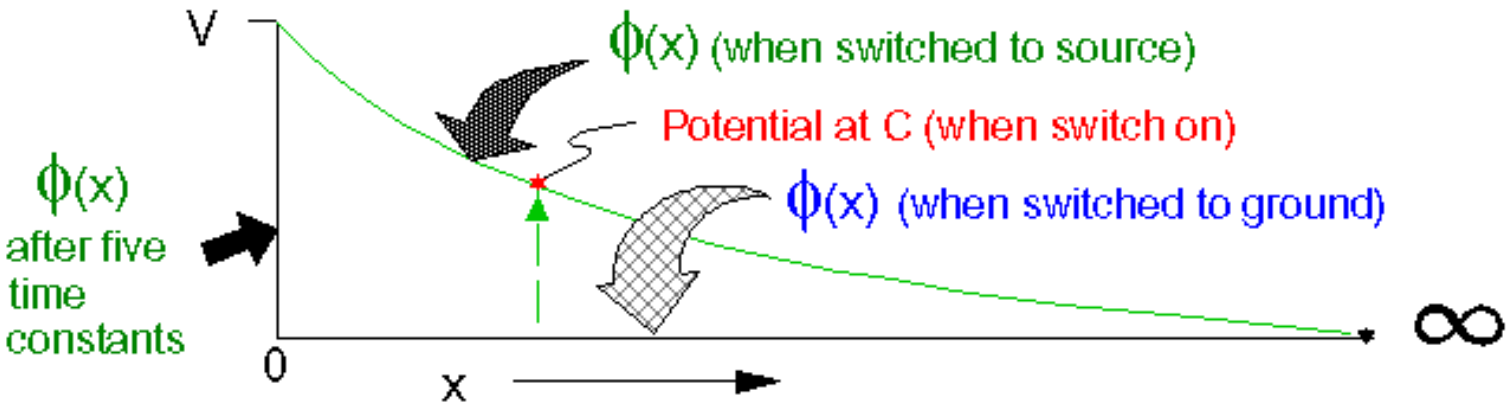

Ideally, switching the potential, rather than flowing charges, requires only minuscule overhead energy dissipation

Figure 16c. Potential to which test charge is exposed.

D-1-F16C

© T.E. Bearden, 1993, 1994, 1995

[18] The system does comply with the nonlinear thermodynamics of a system œar from equilibrium. E.g., Prigogine received the Nobel Prize œor significantly developing this new field. For a detailed technical presentation of nonlinear thermodynamics of a system far from thermodynamic equilibrium, see G. Nicolis and I. Prigogine, Explorinq Complexity, Piper, Munich, 1987. Such systems can exhibit negentropy, self-organization, and other effects outside the confines of classical thermodynamics. Since local symmetry is broken, they can also permissibly exhibit overunity coefficient of perœormance.

---

[19] Each end 0œ a dipole has its own potential (with respect to the local vacuum), which differs from the potential of the surrounding ambient vacuum. For each of these "end-potentials," one can mathematically decompose that end-potential into a hidden bidirectional set of harmonic wavepairs in harmonic sequence. Each wavepair consists of the wave and its phase conjugate. For the proof, see E. T. Whittaker, "On the Partial Differential Equations of Mathematical Physics," Mathematische Annglen, Vol. 57, 1903, p. 333-355. Since one of the dipole potentials exceeds the local vacuum potential and the other dipole potential is lower than the local vacuum potential, the two bidirectional EM wave flows are at or "carry" different equipotentials. This is the generatrix for the automatic dual œ1ow of energy from the vacuum through the dipolar power source and out along the two leads of the "transmission line" conducting the S-flow to the components of the circuit for powering the loads. So as can be seen, rigorously every dipole is already a "free energy source" if we learn how to properly use it. The energy will flow forever, if we do not allow the destruction of the sourcing dipole.

---

[20] See also E.T. Whittaker, "On an Expression of the Electromagnetic Field Due to Electrons by Means of Two Scalar Potential Functions," Proceedinqs of the London Mathematical Society, Series 2, Vol. 1, 1904, p. 367-372. Here Whittaker shows that the fields of classical electromagnetics can be replaced by scalar potential interferometry of two potentials. Our own comment is to note that by Whittaker 1903, we can with a little difficulty make artificial potentials with deliberate substructures. We can then interfere those potentials (actually, interfere their hidden multiwave structures) even at a distance, to create new EM fields. Or we can dissolve EM fields that exist at a distance, simply by constructing the correct negative EM fields by distant scalar interferometry. My point is that, when we utilize the "inner" electromagnetics inside the potential, we are employing a vastly more powerful electromagnetics of a new kind, which includes and extends the present inadequate EM theory.

THE VIRTUAL TIMES

Indeed, orthodoxy has a black record with respect to energy. When Mayer advanced the conservation of energy law, orthodoxy hounded him unmercifully. He was universally ridiculed as the very epitome of a fool. He lost his job and suffered a nervous breakdown. Then years later toward the end of his life, scientists came to accept the conservation of energy as a most useful tool that dramatically simplified much of their analyses. So then science began to laud Mayer. There are a thousand other such examples; suffice it to say that "big science" is a bureaucracy and a "bell-shaped distribution curve" just like any other large group of people. Some scientists are near-angels. Others are near-devils. The vast majority are neither, but are just ordinary persons doing a special kind of job. In the scientific bureaucracy, however, the manipulative scientists scurry, slash, and manipulate their way toward the top. So the leadership of any big bureaucracy __ including the scientific bureaucracy __ is always rife with such near-scalawags and power-hungry individuals. Scientists are not exceptions to the same human weaknesses that we all evidence. If you really want to see jealousy, backbiting, and fierce "back-room dealing" and power-struggling, just get into a university research environment! But because the "power merchants" of any bureaucracy always fiercely resist any challenge to their position or superiority, big science has always fiercely resisted anything truly revolutionary. And today they also enlist the power of the state to enforce their dictums. We will devote one of our future columns to pointing out some glaring examples of persecution of independent researchers by big science. It is an area that all unorthodox researchers should be well-aware of. The world of science does not run by sweet reason and lofty ideals; that is just the dogma. It runs strictly by "who's going to be the big monkey," just like everything else. Primate dominance is still a dictum of the functioning of all bureaucratic human systems.

The free energy researchers are not working on the so-called "perpetual motion machine," where a closed system is erroneously stated to produce more output than must be put into it to operate it. That old saw is actually a red herring that dogmatic scientists use to vilify free energy researchers. It is a lie that they have also successfully sold to the U.S. Patent and Trademarks Office. Anyone with a modicum of knowledge of modern physics already knows that there does not exist a single closed system in the universe, anywhere. In particular, every physical system is continuously "open" to the violent exchange of energy with the surrounding vacuum. It's just that most systems are in local equilibrium in these flow exchanges, except for minuscule gating accomplished for such things as the Lamb shift, etc.

By analogy it's something like this. The free energy researcher is standing by the banks of a mighty, rushing river with breathtaking falls, turbulent areas, etc. Big Science is begrudgingly admitting that, yes, there is a river there, but it is an insane delusion to think that you can tap that energy. The free energy researcher is saying that, well, if I can build a gating sluice a little distance upstream, perhaps I can divert a small portion of the river's flow downstream to my waterwheel, and power my mill. The orthodox scientist then vilifies the free energy researcher for even having such a heretical thought. In fact, says the orthodox researcher, any fool can see that the laws of nature force the river's flow to stay firmly in its banks, because it is a closed system, and Moses brought that law down off the mountain with him on a special stone tablet. Then he adds all the other smug remarks such as, "If it could be done, then we at MIT and Harvard and Caltech would already have done it!" So until the orthodox scientist develops a little less dogma and a little more common sense, and learns the difference between a scientific discussion and a dogfight, the free energy researcher can hardly communicate with him.

ILLUSTRATION LIST | NEXT PAGE

©copyright T.E.Bearden 1995

Page 1

Comments may be sent to
the **Editor** of The Virtual Times

The goal of the legitimate free energy researcher is to find a way to break the local equilibrium of this universal energy exchange, and gate a tiny bit of it up into the external circuit as excess electrical energy (Figure 17). Then he must collect the excess energy, and shuttle it from the "gating and collecting circuit" over to a dq/dt-closed current loop containing the load. He must also prevent the load current, or most of it, from passing back through the primary source against its back EMF, because if it does that, he will destroy the separation of charges in the dipolar source, killing the dipole and extinguishing the "excess energy gating." In other words he must find a way to process and transport the energy flow across dq/dt-blocked bridges between the source's closed dq/dt-current loop and the load's closed dq/dt-current loop. Ruthlessly it is an energy transport S-flow problem, not a J* energy transport problem. If he uses J* in his sourcing current loop, he automatically drives the current dq/dt back through the back EMF of his source and kills it. If he does not drive dq/dt back through the source, the source will furnish S-flow for an indefinite period! Every battery and generator we have ever built is already a "free energy" machine in that it already involves broken local symmetry in the vacuum energy exchange. We have just not realized how to use our power sources purely as Poynting S-flow sources.

So we must treat an electrical system as an open system with broken local symmetry (Table 3) in the vacuum flux exchange, so that the system extracts (gates) excess energy from an external source. In this case the source is the system's flux exchange with the vacuum. This approach is no more mysterious or bizarre than putting a waterwheel in a river, or a windmill in a wind, or a bank of solar cells out in the sunshine. The universal "free source of energy" that the overunity researcher seeks to tap is the violent exchange of virtual photons between the electrical charges of the system and the surrounding quantum mechanical vacuum (Figure 18). In quantum physics this powerful, energetic exchange of the vacuum with electrical matter is now proven both experimentally and theoretically. It is already accepted in quantum physics that the vacuum is filled with electromagnetic energy. The researcher doesn't have to prove it anymore; he just has to find out how to properly use it. The artesian well is already there; we just have to learn how to collect and use the flowing water without dynamiting the well!

The remaining objection orthodox scientists usually raise against the notion of extracting vacuum energy has been that "thermodynamics doesn't permit it." However, Cole and Puthoff have rigorously shown that, on the contrary, the theory of thermodynamics does not prohibit the vacuum's energy being extracted and used to produce heat, light, and power. [note 22] So the validity of that final objection has now vanished.

ILLUSTRATION LIST | NEXT PAGE

©copyright T.E.Bearden 1995

Comments may be sent to
the **Editor** of The Virtual Times

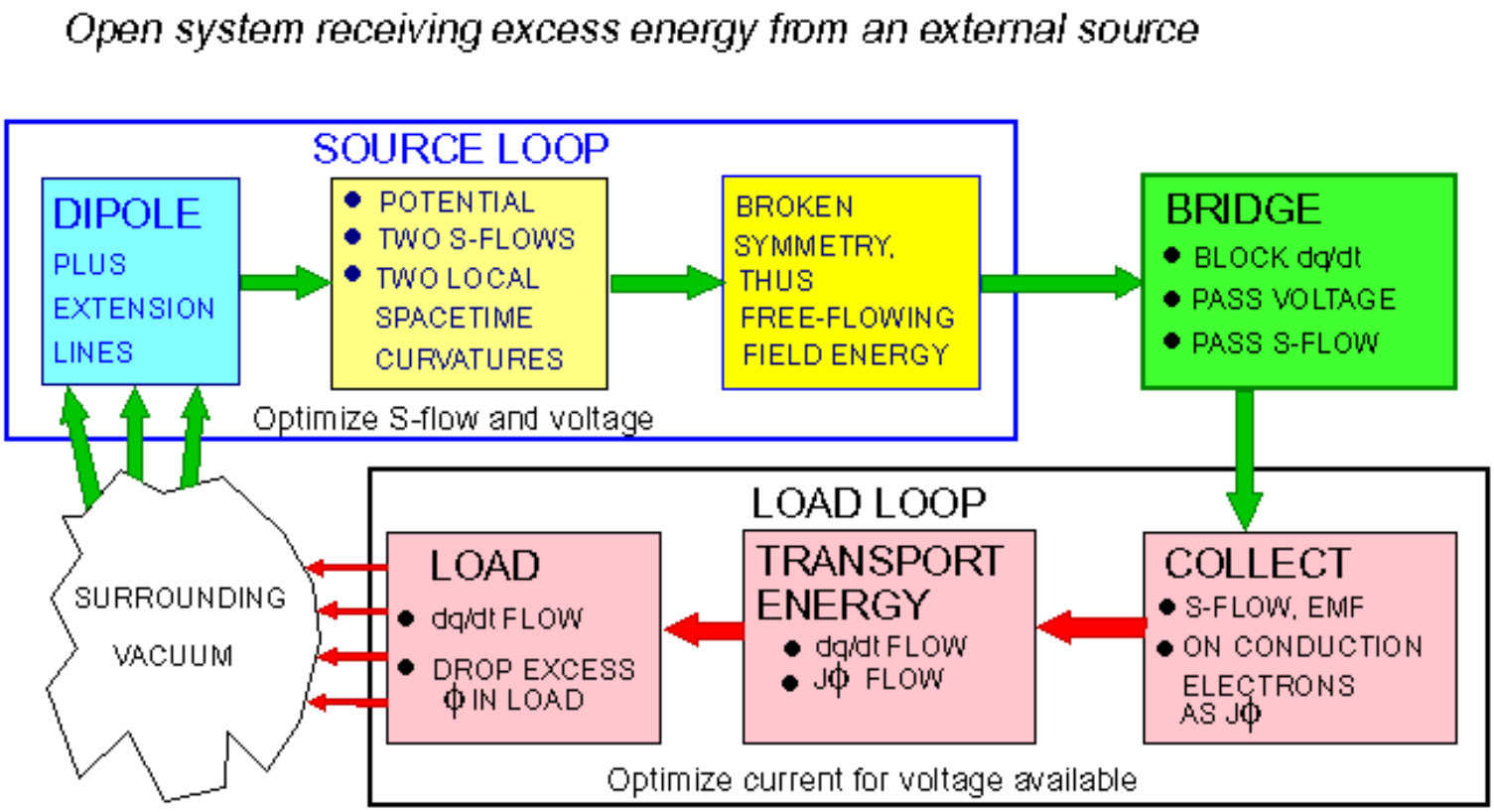

Figure 17. Operation of an overunity electrical power system.

D-1-F 17 © 1992 T.E. Bearden

Table 3: Asymmetry and modern physics.

Per T.D. Lee, Particle Physics and Introduction to Field Theory, Harwood Academic Publishers, New York, 1981, p. 378-390.

SYMMETRY AND MODERN PHYSICS

- Missing symmetry of matter
- Symmetry only of mass and vacuum
- Vacuum excitation
- Vacuum structures
- Spontaneous symmetry breaking
- Interaction between matter and vacuum
- Possibility of vacuum engineering

SOME PROVEN ASYMMETRIES

- Positive and negative signs of electric charge
- Time reversal
- Right/left handedness

STRONG LOCAL ASYMMETRY

- Properties of object may differ appreciably for:
  - Different observers
  - Different detecting means
  - One time to another
  - One position to another

STRONG LOCAL ASYMMETRY (CONT'D)

- Local spacetime is curved
- Lorentz invariance of vacuum violated
- May be local sink or source
- EM gravitational/inertial effects
- Translation between virtual and observable
- Electrogravitational solitons
- Action at a distance
- Transmutation effects may exist
- Scalar/pseudoscalar field translation

WHEN SYMMETRY IS VIOLATED

- A "non-observable" turns out to be an observable
- An invariance is broken
- A conservation law or selection rule is broken

COMMENTS:

- A virtual object becomes an observable object
- Local spacetime becomes curved, at least to some potential involving that object

D-1-T3

© T.E. BEARDEN 1993, 1995

A Charged Particle Is a Coupled System

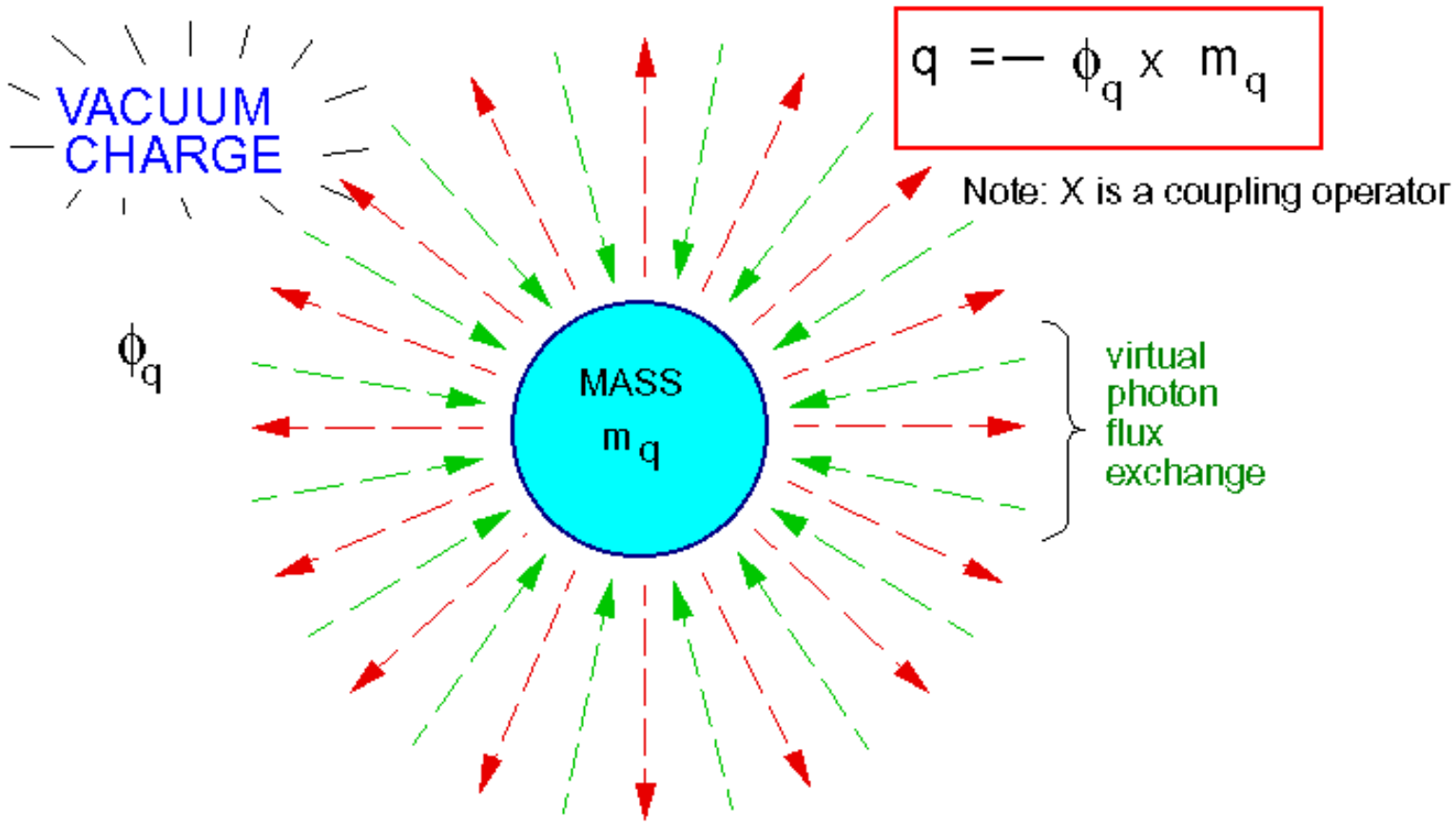

Figure 18. An electric charge q is a broken symmetry. It continuously and violently exchanges energy with the vacuum.

D-1-F 18 © 1994 T.E. Bearden

[22] Cole, Daniel C. and Harold E. Putboll. (1993) "Extracting Energy and Heat from the Vacuum," Physical Review E, 48(2), Aug. 1993, p. 1562-1565.

And there is mind-numbing energy density there in the vacuum, waiting to be extracted. The well-known Lamb shift, e.g., in a single hydrogen atom is due to that vacuum exchange. [note 23] Interestingly, the calculated energy density of the exchange causing the Lamb shift is greater than the surface energy density of the sun. Different physicists have made various theoretical estimates of the energy density of this seething vacuum. A conservative ballpark figure is something on the order of 1090 grams per cubic centimeter, expressed in mass units.

It has also been my good fortune to know and work closely with several other free energy researchers. I was a colleague of Floyd ("Sparky") Sweet (recently deceased) for about seven years; Sparky held a Master's degree in EE from MIT and had years of experience with General Electric and other firms. He was a highly skilled researcher who invented the solid state vacuum triode amplifier (Figure 19), a unit which produced 500 watts of output and a coefficient of performance of 1,500,000. I personally tested the machine, activated the magnets on one occasion, and understand how it all worked. [note 24] The paper [note 25] I co-authored in 1991 with Floyd is still the only paper in the orthodox engineering literature that reports (a) successful overunity functioning of a solid state magnetic device, and (b) a successful antigravity experiment on the laboratory bench, reducing the weight of an object by 90%. [note 26]

We stress again that a legitimate overunity electrical machine must be an open system, receiving excess electrical energy from the surrounding vacuum. As such, it must operate in a higher topology than normal electrical machines (Figure 20).

My good friend Frank Golden has long been a close colleague. Years ago Frank developed a motor that produced overunity efficiency, but then to our astonishment we found (courtesy of Bill Tiller, [note 27] with whom we were working at the time) that its operation depended upon a 5-year-long conditioning (structuring) of the local ambient potential in order to work. Previously we had been entirely unaware that one can sometimes condition the local vacuum and the local matter in the area with a particular dynamic form. Given the local conditioning, a motor with that form will then work in that vicinity, but not necessarily elsewhere at an appreciable distance away. We now understand the mechanism for such "conditioning of the vacuum." We also now know what to do if an overunity machine is actually a machine of that type (many of them are not). In other words, we know how to convert it to a machine that will work anywhere, anytime. We will be addressing such little-known things in future articles.

ILLUSTRATION LIST | NEXT PAGE

©copyright T.E.Bearden 1995

Comments may be sent to
the **Editor** of The Virtual Times

[23] Lamb, W.E. Jr. and R.C. Retherford. "Fine structure of the hydrogen atom by a microwave method." Physical Review, Vol. 72, 1947, p. 241-243. Lamb received the Nobel prize for this work.

Tables:

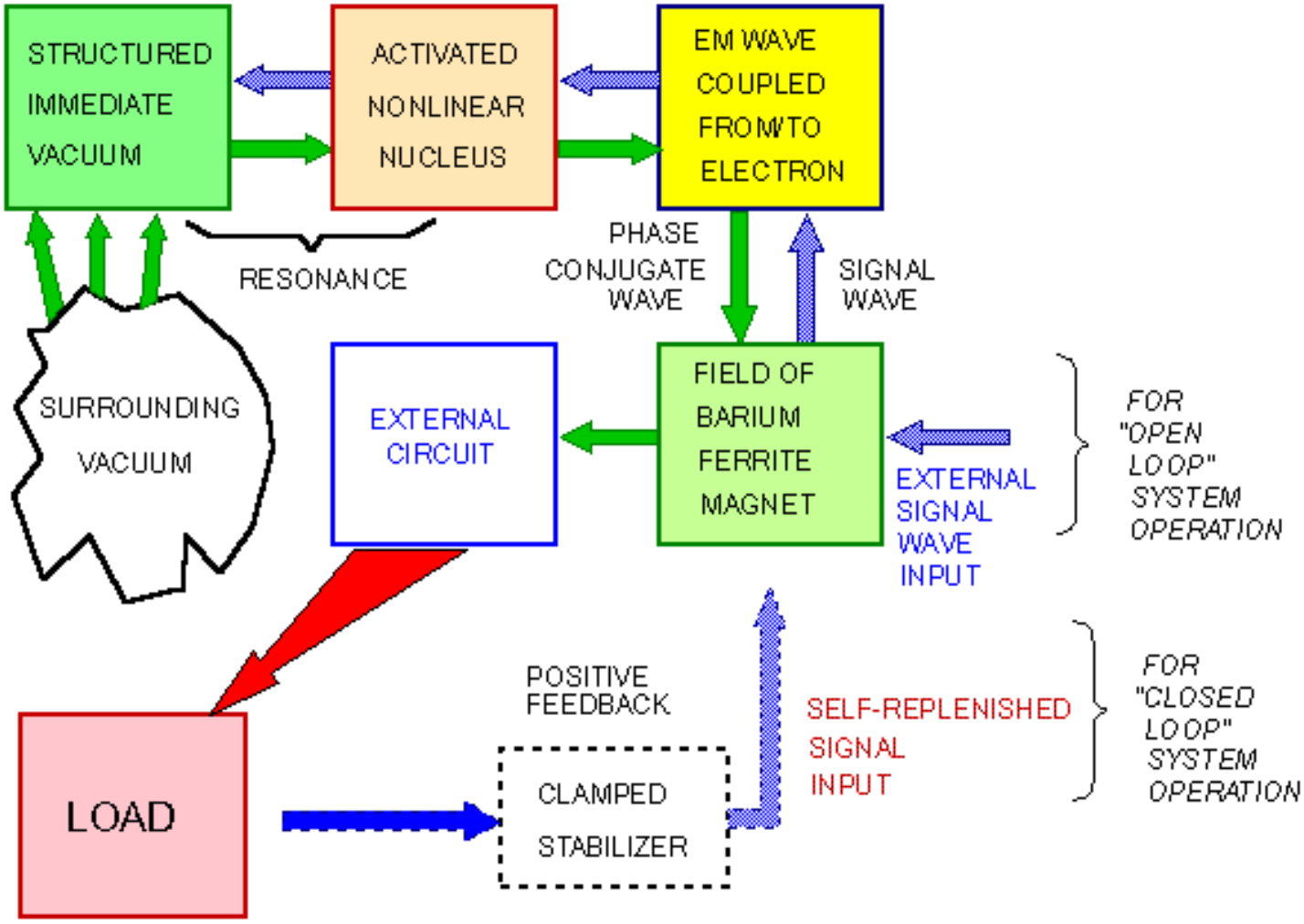

Figure 19. Block diagram of the Sweet Vacuum Triode Amplifier.

Adding positive feedback circuit enables self-oscillation.

D-1-F 19

© T.E. Bearden 1991, 1995

[24] Unfortunately Sweet made conflicting agreements with multiple backers, resulting in a most thorough legal foul- up. It appears that nothing can ever be done with this machine, because its status is a legal nightmare.

---

[25] Floyd Sweet and T. E. Bearden, "Utilizing Scalar Electromagnetics to Tap Vacuum Energy," Proceedings of the 26th Intersociety Energy Conversion Engineerinq Conference (IECEC '91), Boston, Massachusetts, 1991, p. 370-375. Paper also distributed over Internet.

---

[26] The unit was specially rigged and "pushed" to 1,000 watts output to perform the antigravity experiment.

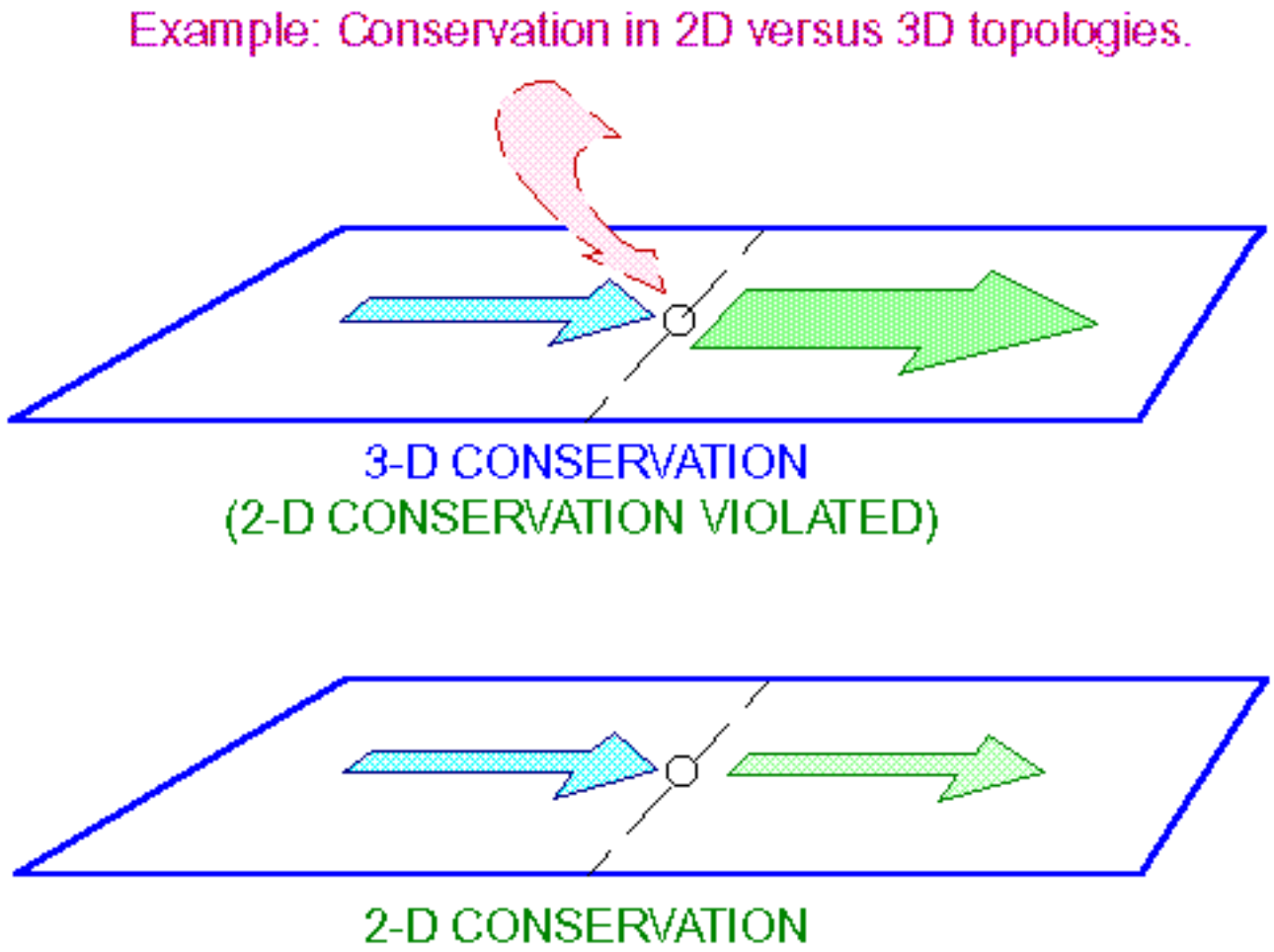

Figure 20. Increasing the dynamic topology allows lower topology conservation laws to be violated. Conservation now applies in the higher topology, but not necessarily in the lower. The lower topology system is now an open system and may seemingly act as a source or sink.

D-1-20 © T.E. Bearden 1993, 1995

[27] Tiller was already familiar with the fact that devices that function by more subtle energy often require special conditioning of the vacuum spacetime. He expressed it as "an archetype must first be created for the machine to function efficiently." Tiller had previously experimented with such an effect for several years.

John Bedini is also a close friend and colleague; John built several experimental motors (both electrical and magnetic) in the overunity area, and performed successful trans-mutation experiments. John is a recognized genius in high-end sound amplifier development. Many audiophiles worldwide still swear that the Bedini amplifier is the best and sweetest-sounding audio amplifier ever built. One of John's battery-powered electrical motors (Figure 21), for example, ran continuously off its battery for about five years, and kept the battery charged. When you realize that such a small electric motor is only about 35% efficient, then you realize that about 65% of the energy flowing out of the battery was being dissipated in the motor as heat, core losses, etc. So the unit was continuously performing work for that five years. [note 28] The 1/8 hp motor represented a load in which the continuous rate of work being done (the rate of energy dissipation) was about 0.08 hp. We will have more to say on this motor and its technical process in a future article.

Bill Fogal is a close colleague; Bill has patented the world's first dq/dt-blocking semiconductor, [note 29] which partially blocks the normal current while continuing to pass the flow of voltage (Table 4). I have written a proprietary technical explanation of the Fogal semiconductor, which utilizes an extremely little-known feature called the "overpotential." The overpotential part of the theory is experimentally proven and theoretically explained in an obscure part of electrochemistry, by a few chemists who specialize in electrode effects. J. O'M. Bockris is probably the leading world expert in overpotential theory; he authored the textbook on it. [note 30]

One of the latest overunity developments is the magnetic resonance amplifier (MRA) developed by Joel McLain and Norm Wooten (Figure 22). Earlier testing disputed the overunity functioning. More recent testing at several well-known laboratories has resulted in the instrumental measurements clearly showing overunity. While the test institute scientists themselves may be willing to attest to overunity results of their testing, none of the corporate heads will allow it. I have personally stated that the MRA is capable of overunity. Our own measurements had to be discarded because we did not have the proper instruments available. E.g., all our oscilloscopes were "hard grounded" to building ground, and we needed to make "floating differential ground" measurements in order to settle things once and for all. McLain and Wooten have filed for a patent, and multiple tests with excellent equipment have indeed indicated overunity. What happens next remains to be seen. I suspect that the two inventors may simply accept foreign capital investment and go offshore.

ILLUSTRATION LIST | NEXT PAGE

©copyright T.E.Bearden 1995

Comments may be sent to
the **Editor** of The Virtual Times

WARNING: Highly dangerous operation. Pulsed battery outgasses hydrogen gas and explosion is possible.

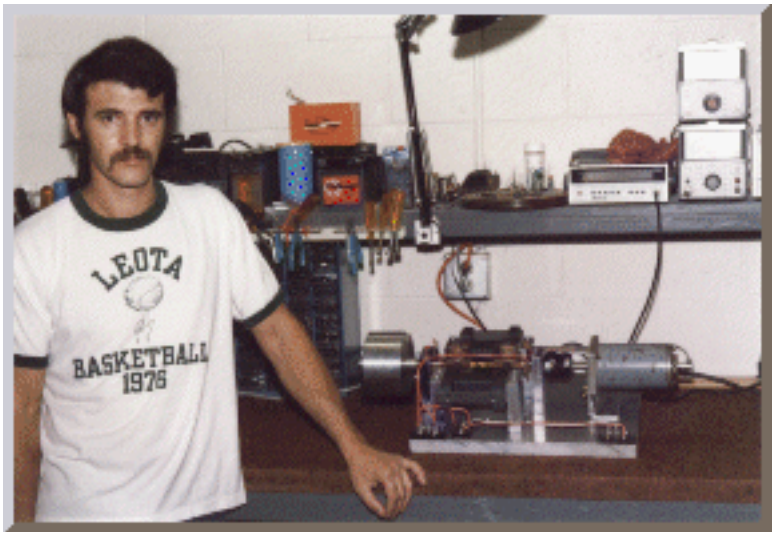

Open system using higher topology extraction of excess vacuum energy. Uses sluggish reversal and recoil time of lead ion onrushing current versus rapid backlash of amplified voltage discharge from a magneto ignition coil, to force the battery to act as an excess S-flow collector during the ion-current charging half-cycle. Thus the inefficient motor is continuously powered and the battery is continually recharged.

Figure 21. Bedini's battery-powered, back-popping electric motor.

D-1-21

© T.E. Bearden 1993, 1995

[28] We strongly emphasize that there is no conservation of work law in physics! It is the overall energy of the universe that must be conserved, not work. More rigorously, the flow of energy must be conserved. But from a free flow of energy, you can continuously extract a little and dissipate it as work, without cutting off the main flow and without violating any of the laws of physics. If this were not so, then waterwheels, windmills, and solar cells would not work. In fact, you can even do better than that. The basic energy conservation law is this: Energy can neither be created nor destroyed. So even when you "use" (i.e., dissipate or scatter) the energy, it is still there. It is only the hierarchical ordering of the photons that constitutes entropy. Each individual photon is perfectly ordered and still contains all its energy. By retroreflection, you can even cause those disordered photons to gather back in your system into perfect order once again and then you can scatter them again to do some more work. You can use the same energy over and over again! The perfect retroreflection is more easily accomplished by phase conjugate reflection. For a vivid example of just such retroreflection of previously scattered EM energy to restore the former order, see David M. Pepper, "Applications of Optical Phase Conjugation," Scientific American, Vol. 254, No. 1, Jan. 1986, p. 74-83. See particularly the striking photographic demonstration of time reversal of disorder on p. 75.

---

[29] William Jay Fogal, "High gain, low distortion, faster switching transistor." U.S. Patent No. 5,196,809, Mar. 23, 1993. Also William J. Fogal, "High Gain, Low Distortion, Faster Switching Transistor." U.S. Patent No. 5,430,413, July 4, 1995.

Table 4. Fogal's Semiconductor.

FOGAL'S CHARGED BARRIER SEMICONDUCTOR

- BLOCKS ELECTRON CURRENT FLOW dq/dt
  - AS CAPACITOR CHARGES, ELECTRONS IN EMITTER JUNCTION ATTRACTED TO PLATE
  - CHARGING PLATE PRODUCES HIGH BARRIER VIA PROPRIETARY MECHANISM
  - AC CONDUCTION ELECTRONS CANNOT PENETRATE BARRIER
  - AC POYNTING FLOW S, dϕ/dT, dE/dt PASS THROUGH BARRIER
- PASSES POYNTING FLOW S = E X H; dE/dt
- SEMICONDUCTOR BECOMES "ENERGY PIPE"
- WITH dQ/dt BLOCKED, FLOW OF S = E X H IS NON-DIVERGENT AND WITHOUT LOSSES
- FOGAL CHIP UTILIZES S = E X H FLOW TO TRANSPORT ENERGY, RATHER THAN Jϕ

D-1-T4

© 1994, 1995 T.E. BEARDEN

[30] In a correspondence with Bockris lasting several years, he had graciously furnished me with material on the overpotential, which is how I found out about this esoteric area. Bockris is well-known as a leading scientist on the chemistry of hydrogen, and also as one of the leading scientists in the rapidly developing field of cold fusion. He is a marvelous scientist, and one day his largely unsung work with the overpotential will revolutionize the entire electronics industry.

Tables:

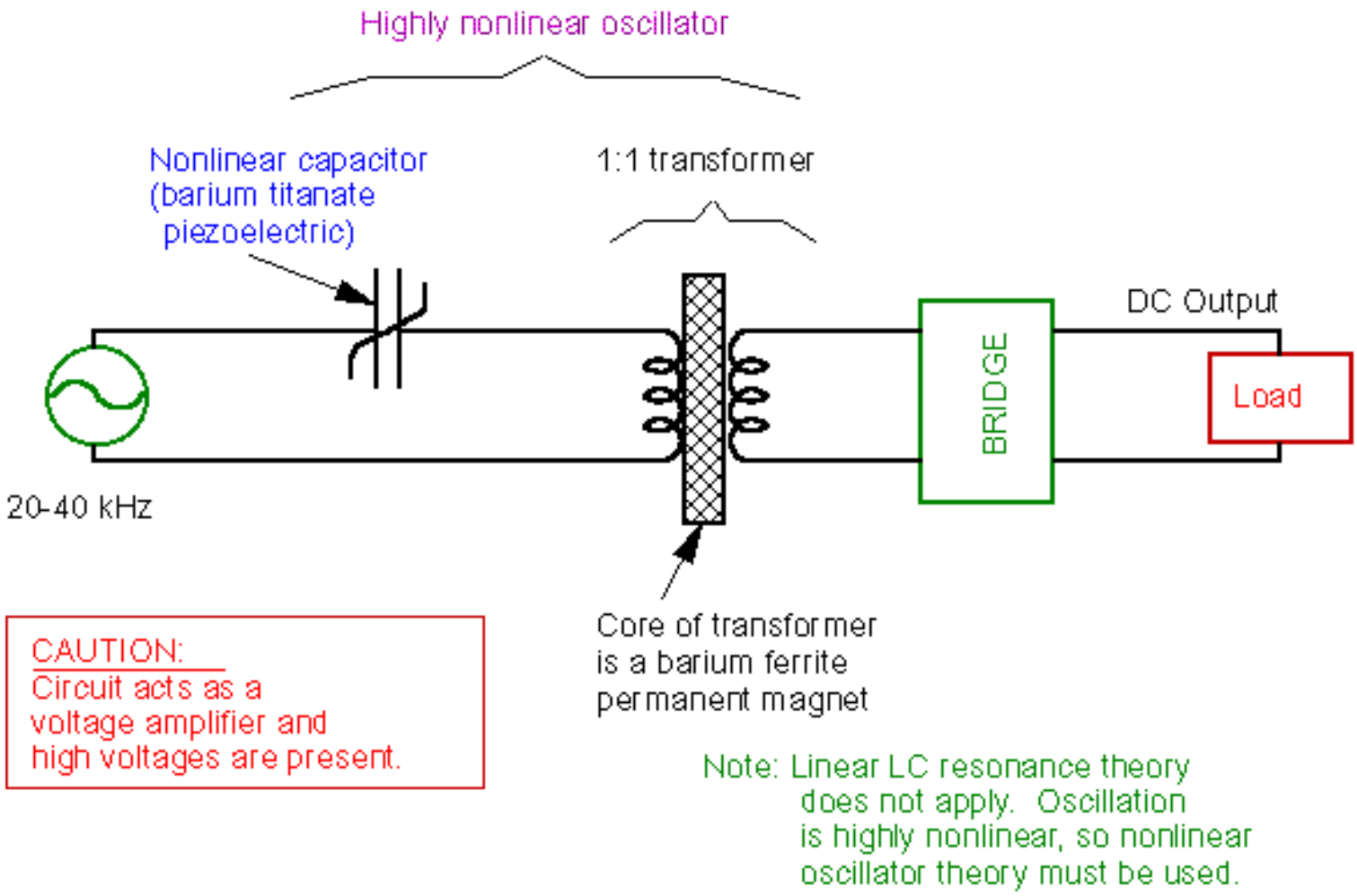

Figure 22. Schema for the magnetic resonance amplifier (MRA).

D-1-F22

© T.E. BEARDEN 1994, 1995

Howard Johnson is also a respected colleague, whom I very much admire. (See Figure 23). Howard has continued to work quietly and patiently upon his patented permanent magnet motor, [note 31] including patenting various magnetic gates, etc. that are necessary to make such a motor work in a rotary configuration. [note 32] Howard employs a two-particle theory of magnetism; i.e., each magnetic flux line is envisioned as having a particle traveling from the north pole to the south pole, and also a particle traveling from the south pole to the north pole. The particles are spinning; the forward-time particle spins in one direction, and the antiparticle spins in the other direction. Howard then slightly separates the two particle flows. [note 33] In other words, Johnson splits the flux lines themselves, into two different pieces. When so separated, the component lines are now curls, so their paths curve. The paths of the two "curl particles" are different; one curls in one direction and the other curls in the opposite direction. Further, a predominance of one form of curl particle gives a "time-forward" aspect, while a predominance of the other form of curl particle gives a "time-reversed" aspect. Johnson is thus able to employ a deeper kind of magnetism than the textbooks presently contain. He demonstrates that a "spin-altered" magnetic assembly exhibiting (to a compass or other such detector) a north polarity can attract another unaltered magnetic assembly exhibiting a north polarity. In short, he can make a north pole attract a north pole. We will give you further insight into Johnson's two-particle theory in a future article. [note 34] We will also explain how and why the physicists missed that antiparticle in the magnetic field's flux lines, and thereby failed to advance the theory of magnetism to a deeper level. Make no mistake, one day when the new theory is done, Johnson may well be awarded a Nobel Prize for his epochal discovery of a deeper structure of magnetism.

Bits and pieces of the new science approach are just now beginning to spill into a few conventional journals and symposia. For some time a few of the rebels spearheading this new science have been doing something that the University scientists should have been doing all along. The rebels have been meticulously examining the concepts, postulates, and definitions that the present scientific models are founded upon, to reveal serious foundations errors. Corrections for some of these errors have been discovered and made. [note 35] Others are still problems yet to be resolved. Yet slow progress is being made, and a "flip-over" of the old science is likely to occur within the next decade if not sooner. By then the new concepts will have become "solid" enough to allow producing an engineering mathematical model. Also the supporting experiments will have become solid enough to justify the new concepts and the model.

ILLUSTRATION LIST | NEXT PAGE

©copyright T.E.Bearden 1995

Comments may be sent to
the **Editor** of The Virtual Times

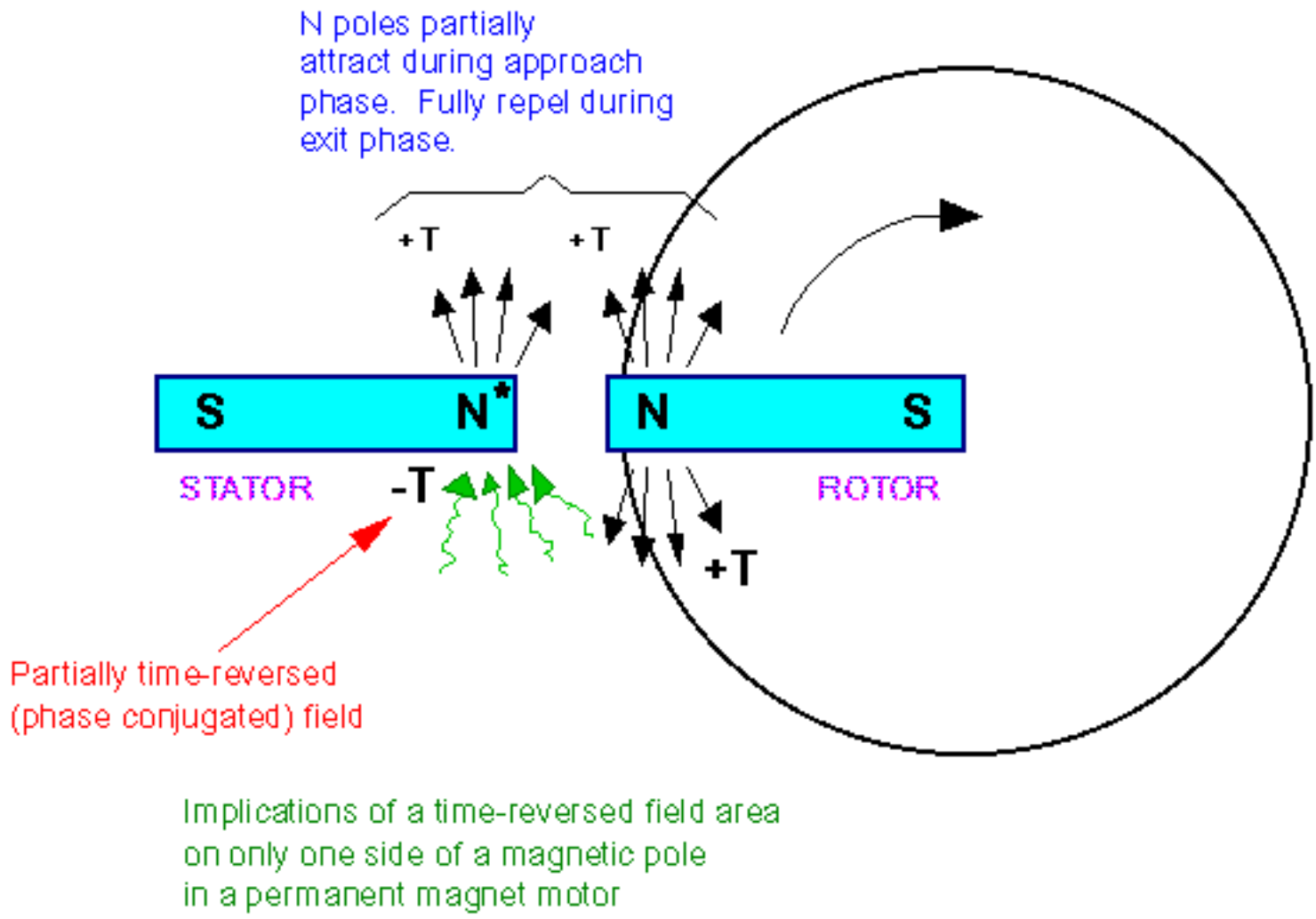

Figure 23. Schema for Johnson's permanent magnet motor.

T91HJ-03

© T.E. BEARDEN 1991, 1993, 1995

[31] Howard Johnson, "Permanent Magnet Motor." U.S. Patent No. 4,151,431. Apr. 24, 1979.

[[32] I personally saw and closely examined one demonstration rotary Johnson permanent magnet motor some years ago, and toyed with it for about one hour. It would definitely self- rotate as long as you wished to permit it to turn. It was not a powerful device at all, but just a small laboratory "proof of principle" prototype. It had cost Johnson an enormous amount of time, labor, and optimization to get the critical adjustment required of his two magnet assemblies. But the device had no power source other than the permanent magnet assemblies themselves. Johnson's nonlinear rotor and stator magnets interacted with each other in a manner to break local symmetry. So his machine was an open system and therefore a permissible overunity device; it was not a perpetuum mobile.

---

[33] As I have pointed out repeatedly in the past, photons also carry time, not just energy. We have previously shown the process and the photon interaction mechanism that creates the flow of time itself; we will discuss this mechanism in the future. So when Johnson separates the particles and antiparticles, not only does he partially separate them according to spin, but he also alters the local character of time flow during which the resulting magnetic field forces must appear. In other words, he accomplishes a partial separation of time-forward and time- reversed polar interactions. A south pole is just a time- reversed magnetic north pole, in the first place! So a north pole of a bar magnet that is slightly time reversed on one side will partially act on that side just like a south pole. On the other side it will continue to act like a normal north pole. By partially time-reversing (phase conjugating) one side of the north magnetic pole piece, Johnson makes that side look and act like a south pole. that way Howard is able to create two north poles, one on a stator and the other on a rotor, and time-reverse part of one face of the stator's north magnetic pole-piece. Therefore when the proper sides of the stator and rotor north poles are facing, they attract each other, contrary to the conventional textbook. The two poles then repel each other normally as soon as the north rotor poles passes the north stator pole. Hence Johnson can make a surrounding north pole stator assembly "draw in" an approaching north pole rotor assembly, and then kick it on out the other side, because he has broken the local magnetic symmetry. In short, Johnson's magnetic gate can provide a legitimate component of unidirectional magnetic thrust, which means that he can indeed make a rotary permanent motor. Simply put, this "partially separating the spin particles," and thereby partially phase conjugating one face of a magnet, is what Johnson calls a "gate," and this is the patented secret by which his magnet assemblies can be made self-powering. The entire process is still very meticulous, and assembly and adjustments are extremely critical. With Johnson's blessings we hope to shed more light on this subject in coming articles.

---

[34] For a basic article on rotary permanent magnet motors, see T.E. Bearden, "On Rotary Permanent Magnet Motors and 'Free' Energy," Raum&Zeit, 1(3), Aug.-Sep. 1989, p. 43-53.

---

[35] The most blatant error in all of physics is the erroneous notion that an acting force is separate from its receiving mass. Force is defined as F ~ d/dt(mv). From that definition alone, it can be seen that the affected mass is a component of the force itself. If you remove the mass m, you do not have force but merely acceleration. The notion of force separated from the mass came from ancient and familiar experiences of pushing on stones with one's hand, etc. In this primitive case the force-creating agent (i.e., the hand) is certainly separate from the affected mass (i.e., the stone). But the "force on the stone" is actually the force created of and with the stone. It is "stone-force," not "force upon the stone." Quantum field theory already tells us that it is the absorption and emission of virtual photons by the stone's mass that "creates the force." In fact it should go one step further: It is the coupled ensemble of the virtual photon flux and the mass of the stone that constitutes a "stone-force." In your mind, you should try mentally replacing the word "force" with the phrase "mass-force" until you root out the deeply ingrained erroneous notion that force and mass are separate. Because of this archaic error, today's physics can only define a mass in terms of its resistance to a disturbing force, and it can only define a force in terms of its overcoming a resisting mass. This error has prevented any proper definition of either force or mass! But the problem is solvable. For a proper definition of mass without the notion of force, see T.E. Bearden, Quiton/Perceptron Physics: A Theory of Existence, Perception, and Physical Phenomena, National Technical Information System, Report AD-763210, 1973.

In this first article I wanted to introduce the 14 major areas. We will be discussing these areas in some technical detail in the future. We'll also include current major news items of development in these areas, for the interested lay reader. I'll particularly try to give you the benefit of extensive reference citations painfully gathered over the last 30 years. The articles will be targeted toward both the serious researcher and the interested, educated layman.

So that's the agenda for the months ahead. We hope you find this information and the approach of direct interest and use.

Again, it's a privilege to be aboard. And we invite you to hang on in the future; it's going to be a wild but exciting ride. We really are going to chase this wild dragon with great vigor.

ILLUSTRATION LIST

©copyright T.E.Bearden 1995

VT Page 1

Comments may be sent to
the **Editor** of The Virtual Times

Precursor Engineering: Directly Altering Physical Reality

© 2004 T. E. Bearden

Abstract and Summary.

We discuss the abbreviated background of Maxwellian electrodynamics, including how the model's erroneous "force field in massfree space" construct came to be. The field in space is not a force field, as is well known, but is merely spatiotemporal energy structuring and patterning. It can be considered as a curvature of spacetime (general relativity view) or as a change in the virtual particle flux of the vacuum (particle physics view). It is a pure energy field. Spacetime is identically energy; virtual particle flux of vacuum is identically energy. A region of change is an energy field.

The energy field in space is only a precursor of the force field in matter; no force is present or involved until the precursor field interacts with charge and mass to produce a force field with mass as a component.

Technically, the change and structuring of massless spacetime/vacuum to produce a net precursor field is asymmetric regauging, and it requires no work because of the well known gauge freedom axiom. The form of the energy is not changed, and work is the change of form of energy. One is permitted to freely change the potential—and the potential energy—of the Maxwell-Heaviside equations (and thus of any physical Maxwell-Heaviside system) at will; e.g., as shown by Jackson {[1]} and many others.

Thus, changing the force-free "EM field"—as it exists in space in its precursor form (energy field form) prior to its interaction with charge and matter—is work-free.

Very large changes in the precursor field state of a Maxwell system can be done by paying only a bit of work for timing and switching the technological systems performing the regauging. Once formed "nearly for free", the large precursors can then be interacted with charged mass to freely form very large force fields and their dynamics (i.e., precise sets of very large forces, including dynamics, in the interacting material system or medium as desired). We call such assemblies engines.

Spacetime is identically energy, and a curvature of spacetime is identically an energy field available to interact with mass to form force.

Vacuum is identically energy, and a change in the virtual particle flux density of vacuum is identically an energy field available to interact with mass to form force.

Let the term engine refer to either a set of forces or a set of precursors, with the dynamics of the set included. One can almost freely produce strong precursor "engines" and dynamics, and then interact these precursor engines with charged mass (the system medium) to produce very powerful force engines and dynamics in the material system. In this way, one can very powerfully (and almost freely) produce and engineer all fundamental forces of nature, by first engineering the precursors and their dynamics, then allowing free precursor interaction with charged matter so that the "primary forces" are produced as desired.

In this way, physical reality itself—on any and all levels—can be very powerfully engineered at will, without large exertion of operator-furnished power, once precursor engineering technology is developed. This is a negative entropy operation violating the present second law of thermodynamics (which artificially excludes such negative entropy processes). The second law is already totally refuted by gauge freedom itself, as well as by every charge, EM field, and EM potential in the universe.

The first law of thermodynamics also contains an error in its present form, when it assumes that a change of energy

magnitude (as in the change of a system parameter such as the potential) is work a priori. To the contrary, work is performed only if the form of the excess input (regauging) energy is changed. Mere transfer of additional energy in the same form is not work. The present first law must be slightly corrected, since as written it prohibits gauge freedom and thus prevents precursor energy field engineering.

We briefly discuss some relevant historical background and several small examples that demonstrate the overwhelming importance of this work and its future dramatic extensions of science and technology, hopefully for the great benefit of all humanity.

Development of Maxwell-Heaviside EM Theory.

The Maxwell-Heaviside theory of electrodynamics is now well over a century old. It may be taken as dating from Maxwell's 1865 theory {[2]} of 20 quaternion and quaternion-like equations in 20 unknowns—although Maxwell had written earlier papers on Faraday's lines of force and on the characteristics of the medium. More than a decade earlier, quaternions had been founded by Hamilton {[3]}, but there were exceedingly few scientists who understood them or even liked them. Most could hardly tolerate Hamilton's quaternions!

Maxwell published his famous Treatise in 1873 {[4]}. Because it was "tainted" with a higher group symmetry algebra (quaternions), even Maxwell himself came under intense pressure from his publisher to simplify the material in his Treatise. Consequently, Maxwell began rewriting and greatly "watering down" his own theory, having finished rewriting and greatly reducing some 80% of it at the time of his death in 1879. The posthumous later editions published in 1881 and 1891 represent a very serious truncation of the original Maxwellian theory.

In the 1880s, a further great "simplification" was generated by several scientists after Maxwell's death—and notably by Heaviside, Hertz, and Gibbs, with

regauging by Lorentz. Vector algebra—whose group symmetry is much lower than that of quaternion algebra—was formed {[5]} and became the accepted algebra in which the reduced equations were recast. The lowered group symmetry of vector algebra further reduced the operationalism described by the theory in its quaternion-like form. Even the tensor algebra of today is still of lower group symmetry than quaternions.

The equations taught today at university as "Maxwell's theory" are thus pale shadows, and those equations themselves are actually the equations and notations of Heaviside, having been further "symmetrically regauged" by Lorentz {1,[6]}. The symmetrical regauging imposed by Lorentz very neatly threw out all COP>1.0 Maxwellian systems taking their excess energy from the active vacuum in the form of free asymmetrical regauging {[7]}. It also discarded precursor engineering.

At the time these truncated (mutilated may be a better word!) Maxwell equations were adopted in general, it occurred in a short "debate" (mostly in the journal Nature) where the vectorists simply discarded the quaternionists' work, etc. {5} It was not done by "sweet science", but by dogma and individual preference for "greater simplicity". Its driving force was the near-universal dislike of quaternions and a strong drive to simplify things as much as possible.

Material Ether and “Force Fields in Space”.

The "Maxwellians" as they are often referred to, all originally assumed the material ether filling all space (and so do electrical engineers today, unwittingly!). Thus they assumed there was not a single point in the entire universe that was devoid of mass. Consequently, the EM fields were—to them—obviously very material fields indeed; i.e., to the Maxwellians they always occurred in mass (e.g., in the material ether or in common matter). They were therefore erroneously assumed to be force fields, and in the view of the Maxwellians a “force-free field” was not possible.

By $F \equiv \partial p/\partial t = \partial/\partial t\ (mv)$, we know that mass is actually a component of force (though inexplicably that is still erroneously ignored in both classical mechanics and electrical engineering). There is no separate mass-free force acting upon a separate mass, because the phrase "mass-free force" itself is an oxymoron. Many foundations physicists such as Wheeler, Nobelist Feynman, etc. have thoroughly discussed this "material origin of force", so it is well known by leading scientists (though seldom known to electrical engineers whose flawed model still blithely assumes EM force fields in mass-free space).

Today, our Maxwell-Heaviside classical EM theory still implicitly retains the old material ether more than 100 years after that type of ether was specifically falsified by the Michelson-Morley experiments {[8]}. Not a single material-ether-assuming EM force field equation was changed after those experiments! By retaining the material ether, the theory has actually concealed the precursor mass-free fields and the astounding ramifications of developing precursor engineering technology {[9]}.

Oddly, we therefore we have a peculiar scientific situation and one of the great stalemates in human scientific history: The most primary kind of physics has been largely ignored in the West. It has not been ignored in some other places, but unfortunately there it has only been used for development of weapons in secret. We do not discuss the weaponry in this paper.

Nobelist Feynman certainly understood there were no force fields in space. He made the following observation {[10]}:

> "…the existence of the positive charge, in some sense, distorts, or creates a "condition" in space, so that when we put the negative charge in, it feels a force. This potentiality for producing a force [i.e., this distortion of spacetime] is called an electric field."

Yet Feynman himself did not adequately define force, and in fact despaired of finding such a definition—apparently because he did not connect the change produced by observation. He stated {[11]}:

> "One of the most important characteristics of force is that it has a material origin, and this is not just a definition. … If you insist upon a precise definition of force, you will never get it!"

In modern physics terms, a "force" is generated in, on, and of a mass (e.g., a charged mass). It is generated when the volumetric mass-free fields (as curvatures of spacetime relativistically, or as altered virtual particle flux of the vacuum region in particle physics) in mass-free space interact with and on a charged mass. That ongoing interaction of a 4-space massless entity (the precursor) with a previously observed 3-space mass is what a "force" identically is, prior to its observation by invoking a $\partial/\partial t$ operator. Observation results in a frozen 3-space snapshot at that instant—as is well known, time is not an observable, even in principle.

Precursor Engines and a Physical Mechanism of Regauging

We now have added a physical mechanism to the abstract notion of "asymmetrical regauging", where a potential (and the potential energy) of the system (i.e., the magnitude of the spacetime curvature/altered vacuum virtual particle flux interacting with the charged mass) is freely changed. Further, this physical mechanism can be engineered rather directly. Suddenly we are not trapped in “force field engineering” as the primary causative action, but in “spacetime/vacuum energy” engineering as the primary causative interaction.

In short, now we have moved from the hoary old entropic force field engineering to negentropic precursor engineering as our primary interest.

Let STC be “spacetime curvature(s)”. Let VPF be “virtual particle flux” of the vacuum.

Consider any physical system and its dynamics. There is a specific set of forces and their dynamics, involved in that system functioning. Call this set of forces and their dynamics a force engine. But we know that, for any force, there is a precise massless 4-spatial precursor interacting with the mass component of the force.

Prior to observing the system, consider the 4-spatial characteristics. At any instant, there is a set of mass-free 4-spatial STC/VPF dynamics interacting with the previously observed system masses at all levels, changing the observable system masses and their dynamics as time passes.

Now separate the masses from the STC/VPF dynamics—which separates force into its components of mass and precursor energy field. Call this set of STC/VPF dynamics a precursor engine. Rigorously this precursor engine and each part of its structure is what we refer to as energy. The precursor engine has the capacity (potential) to cause work, since it has the capacity to make a force engine by its interaction with mass, and $W = \int F \bullet ds$ for any force F in the force engine.

We have now solved one of the additional problems which gave despair to Feynman: the definition of energy. Feynman also said {[12]}:

> "It is important to realize that in physics today, we have no knowledge of what energy is."

Yet to change the precursor engine itself requires no work, since there is no mass and hence no F, and thus $\int F \bullet ds \equiv 0$ because $F = 0$. Prior to its interaction with mass to form a force engine and generate work, the precursor engine is merely structured potential energy with dynamics.

Here is the great shocker: Merely changing the structured potential energy—i.e., changing the precursor

engine, in magnitude or function or whatever—is work-free a priori because of the total absence of force. Changing the precursor engine is changing some potential energy (magnitude, direction of flow, dynamics, etc.) and that is mere regauging. It is work-free by the well known gauge freedom axiom, widely used and accepted in physics.

By engineering the precursor engine itself, and then applying the altered precursor engine to an appropriate mass system, real work can freely be produced in the physical system. In the real world, the scientist may have to pay a little to do the switching and timing, but he need not pay to furnish the regauging potential energy required to change the precursor system and thereafter produce the force engine.

Thermodynamics and Entropy.

We have all been taught that a dynamic system is like a leaky diode. I.e., one pays to input some energy to the system, it spills some of it in its internal operations, and one gets out (as energy or useful work) less than one put in. In short, we have erroneously been taught that all engineering is entropic. The second law of thermodynamics has stated that, in progressive operations, the system can either at best keep the entropy (energy of which control and use is lost) the same, or have the entropy increase with time. It is known, of course, that second law violation does occur for small systems and relatively small times, due simply to fluctuation of the statistics on which it is based.

With precursor engineering, however, we have totally violated the second law of thermodynamics, since we ourselves need input only a tiny bit of control and switching energy, to control and use a much larger amount of working energy. The environment freely inputs a great deal more regauging energy for usage, and we need only control it. In short, we have moved from the “leaky diode” type engineering to the “triode” type engineering. Now we have to pay a little for the “control” grid signal, but the cathode energy flow that is

controlled, gated, and shaped to provide the plate energy (plate force engine) is freely input by the environment (by regauging).

We have moved from "entropic engineering" to "negentropic engineering" because triode engineering is also a process for re-ordering disordered energy. It is a process for consuming entropy and producing negative entropy.

Precursor engineering focuses attention on a much more primary cause of forcible actions than the presently considered "fundamental forces of nature" approach. Instead, it focuses upon the fundamental precursor engines that, once formed by free regauging, then freely produce forces that perform work upon systems to alter them, do useful work, etc. That is a purely negative entropy function, totally engineerable. It alters and completes the presently crippled Second Law of thermodynamics (which presently only allows entropic processes, although inherently assuming that its own contradiction has first occurred). Specifically, it changes the Second Law to permit negative entropy processes and functions in addition to positive entropy processes and functions.

In the not too distant future, hopefully precursor engineering will completely revolutionize science and engineering in a myriad of areas, from physics to medicine. In theory, any operational functioning in material physical systems can be directly engineered by pure regauging, simply by freely changing the precursor engine involved in that system in a fashion that interacts to create the necessary force engine and dynamics.

This new and revolutionary negative entropy engineering, will eventually be developed to replace the present hoary old entropic engineering. It now lends real substance to the theoretical proof by D. Evans and Rondoni {[13]} that nonequilibrium steady state (NESS) systems can indeed—at least in theory—produce continuous negative entropy. Evans and Rondoni were so startled at their theoretical results that they felt no

real physical system could exhibit such a Gibbs entropy —i.e., starting negatively at the onset and thereafter continuously decreasing toward negative infinity as time passes. To the contrary, every source charge and dipole in the universe exhibits precisely that action {[14],[15], [16]}.

Unknown to Evans and Rondoni, Leyton {[17]} has also originated and published the higher group symmetry geometry necessary to replace the more limited old Klein geometry {[18]} of 1872. Now a hierarchy of symmetries results in Leyton object-oriented geometry. A broken symmetry at one level does not lose information at that level a la Klein. Instead, it retains the information and also automatically generates a new symmetry at the next higher level—a purely negative entropy operation from first principles! So the proper geometry necessary to allow revision of the old Second Law has been advanced by Leyton.

The dramatic extension of the Second Law of thermodynamics to add negentropic processes due to precursor gauge freedom also resolves the very vexing present major time asymmetry problem of thermodynamics itself: If in a given set of processes the entropy either remains the same or increases, then how was the entropy of the universe ever so low in the first place, and how is it so low now? This "greatest thermodynamics problem" {[19]} cannot be solved in Klein geometry, but it is solved when Leyton geometry and a unified field theory separating force field and precursor field are utilized.

What Gauge Freedom Has Been Trying to Tell Us.

In short, the universality of gauge freedom has more to it than simply changing some equations so they are easier to solve, as Lorentz did to the Maxwell-Heaviside equations by symmetrically regauging them. In symmetrically regauging the equations, unwittingly Lorentz first evoked precursor engineering, but then

locked up the extra free energy by allowing it to produce only equal and opposite forces and stress in the system, never useful work. He did this by eliminating all asymmetrical regauging which would produce a net force field. In that astounding and crippling limitation, Lorentz chose only that subset of Maxwellian systems and precursor engineering that cannot and does not produce energy available to do useful work in the load. Instead, it bottles up all the energy freely received by regauging, as additional stress in the system. To say that this is short-sighted is the understatement of the century! It was done merely to make the equations "more tractable" and amenable to closed solution methods.

Asymmetrical regauging is the wave of the future, for it also is identically work-free precursor engine engineering. It does freely produce a net precursor field and a net force field, thus allowing useful work to be done "for free" or "nearly for free".

Gauge freedom directly assures us that the potential energy of any EM system can be freely changed at will. If we put our minds to it, we can take in all the EM energy we wish, directly from the local vacuum VPF and curvature of local spacetime, anywhere in the universe by developing and utilizing asymmetrical regauging.

As a trivial example, merely changing the voltage of a system—while freezing the electrons so no current flows—changes the collected energy in the entire circuit; because it changes the potential intensity in which each Drude electron is embedded and with which it is interacting. The solution to the entire energy crisis, for all time, simply waits for scientists to discard symmetrical regauging (no net force fields produced, even though two new free force fields are produced but in equal and opposite fashion). In symmetrical regauging, all the excess free energy in the two new fields freely produced is locked up as stress energy, causing additional stress in the system. However, none of the excess free energy can be used to translate electrons as current, so the energy so freely received

cannot perform useful external work in the load, by deliberate design!

To borrow a phrase from Nikola Tesla, this will one day be recognized as “one of the most inexplicable aberrations of the scientific mind” in recorded history!

By going directly to asymmetrical regauging, which also is precursor engine engineering, one produces both excess free EM energy and a free net force field that can be then freely dissipated to perform free work in a load, paying only for switching and timing costs, etc. Of course one has to employ circuitry other than the closed current loop, common ground circuit! That circuit automatically self-enforces symmetrical regauging (and deliberate crippling of precursor engineering) regardless of how much extra free regauging field energy is added to the system.

The Precursor Is Nonobservable.

As pointed out, the problem of the "force field" not existing as such in space is further complicated by the nature of observation itself. Observation is a $\partial/\partial t$ operator imposed upon that ongoing interaction of the precursor and the charged mass in 4-space. The result is the stripping away of the time dimension momentarily, producing a frozen 3-spatial snapshot. A rapid series of such continual 3-snapshots, and their recall from memory and comparison, gives us the sensation and experience of "change" and "persistence in time" or "change in time".

We never observe the precursor causes, but only the effects of those precursor causes in mass. From observing the effects, we always have to extrapolate the unobservable precursors that are the unobserved causes. One cannot "see" the accelerated frame one may be in, but one can measure the effects of that nonobservable frame on one’s physical system and surroundings.

Additional Shortcomings of Classical Maxwell-Heaviside Theory.

The present Maxwell-Heaviside theory is completely unable to deal with the massless interactions and the force-free entities that interact with mass to produce force. The present EM does not even calculate "the" spatial fields or potentials themselves, but only their "point intensities" when interacting with static matter, as defined by the assumed interaction of the actual geometrical fields with a unit point static charge at every point. To see how this remains confused, we quote Jackson {[20]}:

> "Most classical electrodynamicists continue to adhere to the notion that the EM force field exists as such in the vacuum, but do admit that physically measurable quantities such as force somehow involve the product of charge and field."

So the precursor spatial “field” is actually not defined in classical EM, but only its intensity as indicated by a unit point static charge’s scattering of energy from the Whittaker flows comprising the spatial field itself. What is scattered from a river’s flow by a fixed static rock is not the river! And what is scattered varies as the condition of the rock. The same rock, placed in violent churning motion to and fro, will scatter much more energy from the same river’s flow.

As an example of violating that static indication of “field intensity”, if the interacting charges of an absorbing medium are in particle resonance at the frequency of the input field energy bathing them, the very "definition" of the classical field intensity is thereby altered. Then one can extract more energy from the intensity than is theoretically predicted by the Poynting theory—i.e., by standard "static charge" definitions of field and potential intensities. It has been in the physics literature for some decades, without scientists realizing the true implications.

The same charge in particle resonance at UV or IR will absorb and re-radiate some 18 times as much energy as

we input to it (by standard calculations), from the same classical field, as it does when totally static and not in particle resonance {[21]}. That area of physics is of course well known as negative resonance absorption of the field. It is a noted example of the direct extraction of excess EM energy from the "vacuum" or from curved spacetime, long proven on the bench. Physicists in that field, however, carefully refrain from using the term "excess emission of energy from the resonant medium", or the thermodynamics term of coefficient of performance (COP). The COP = 18, of that EM system, but the scientists only carefully write and speak of the change in the reaction cross section of the resonant particle versus that of the static particle.

Importance of the Supersystem.

In modern physics, we might add the term supersystem {[22]}. The supersystem consists of three components, which are (1) the physical system and its observed dynamics, (2) the unobserved but active local vacuum and its dynamics, and (3) the local curved spacetime and its dynamics. All three elements of the supersystem constantly interact with each other, in modern physics.

In the present classical Maxwell theory, both of the two unobserved supersystem components (the actual force-free precursors that act on the system to generate all its forces and dynamics) are arbitrarily assumed away. The crippled Maxwell theory assumes an inert vacuum (falsified since the 1930s) and a flat spacetime (falsified since 1916). By using force fields and potentials only defined in terms of intensity of the interactions in static charged matter, it only considers effects of the precursors after their interaction with static mass. These effects then further generate other forces in collisions and interactions.

The fact that force fields are still erroneously assumed in space, by standard classical EM and electrical engineering, retains the material ether in the model. Thus the standard model has already discarded (erroneously) the precursor engines and precursor

engineering (deliberate use of asymmetric regauging as a simple and universal means of taking and using enormous EM energy from the active vacuum/curved local spacetime).

Because of this continued assumption of the material ether by ordinary EM models, we have missed the ability to directly (and work-free) engineer the massfree precursor to force. We have therefore been unable to rigorously define force (as pointed out strongly by Nobelist Feynman {11}, by Wheeler, and many others) or energy {12}. Force is the interaction of precursor field with mass, and energy identically is the precursor field.

Classical electrodynamicists just continue to dispose of the "no force-in-space" problem, with a remark similar to that of Jackson previously quoted {20}.

Higher group symmetry EM theory, however, can get directly at all those long-ignored electrodynamic entities and mechanisms, including the precursors, precursor engines, and their free (regauging) generation of forces and force engines in matter As an example, the Evans model {[23]} is a unified field theory, and quite capable of modeling the interactions between the three components of the supersystem. The present classical electrodynamics cannot and does not do that.

In short, precursor engineering can be developed whenever the scientific community will move off dead center, fund the sharp young graduate students and post doctoral scientists to do it, and allow them to do it.

Example of Applying Precursor Engineering to Medical Therapy.

We now speak of a future medical capability that can benefit all humanity. It can follow directly from Evans' work {23}, and the effect has already been proven experimentally in France in the 1960s {[24]}. Until now, however, its free alteration of the cellular

regeneration system's precursor bioengine has remained a total scientific mystery because it lies outside the conventional classical EM model. That model, of course, erroneously excludes the precursor engine and gauge freedom.

Visualize a biological system and its dynamics, such as the human body in all its complexities. All the body dynamics may be visualized as a great special "bioengine", which consists of (1) the precursor engine —that set of precursor causes (the structured bioenergy we refer to as massfree biofields) interacting with the body charges and masses at every level, and (2) the bioforce engine produced as a result of those precursor interactions and dynamics.

The bioforce engine is secondary, and it consists of two interacting parts: (1) the precursor bioenergy engine—i. e., the virtual particle fluxes of the local vacuum/ST curvatures and their exact specific dynamics, interacting with the body charges and masses at every level, and (2) the resulting biosystem and its dynamics at every level, The massless precursor bioenergy engine continuously interacting with the physical system produces the force bioengine and its dynamics as the resulting effect of that interaction. Note that the primary (precursor) causal bioengine is not comprised of forces until it interacts with the physical matter of the body and generates the resulting bioforces as primary effects produced in the body. In that ongoing interaction, all bioforces everywhere in the body, at every level, are generated by the precursor bioenergy engine interactions.

It is strongly stressed that this makes a profound and fundamental change to biophysics: Instead of seeking fundamental bioforces (force bioengines) of nature as primary causes, one now seeks fundamental precursor bioenergy engines as primary causes. The great impact is that it requires little or no work to engineer the master precursor bioengines at will, in any fashion desired. In simple language one directly engineers and structures the primary bioenergy (the biofields) and its dynamics, then that structured bioenergy and dynamics interacts on

and with physical biosystems containing mass, to freely produce the desired bioforce engine and thus any conceivable kind of physical change of the biosystem. It can, e.g., induce stabilization and maintenance of the cellular system in any conceivable form desired.

Simply put, bioenergy fields interact with biomass of the biological system, producing all bioforce fields, physical biosystem dynamics, and physical functioning.

Structuring and Changing the Precursor Bioengine.

We examine the structuring of the precursor bioenergy engine and how to freely change it at will.

It can be shown from Whittaker's work in 1903 and 1904 {[25]} that this precursor "bioengine" is naught but a complex set of longitudinal EM waves with added differential functions. Any scalar potential decomposes into a harmonic set of bidirectional phase conjugate longitudinal EM wave pairs (Whittaker 1903), and any field or wave pattern decomposes into two such scalar potentials with differential functions imposed. Hence all normal EM potentials, fields, waves, etc.—including those in biological systems—decompose into a far more primary electromagnetics comprised of longitudinal EM wavesets and their differential functions. Further, this more primary electromagnetics is directly engineerable.

As an example: For a given living body, there is a precise bioforce engine ongoing for that body in its intended healthy state. Hence there is a precise precursor bioenergy engine for that body also, in its intended healthy state.

For any disease or disorder change in that body whatsoever, there is an exactly specific delta precursor bioenergy engine for that disease change and all its actions and interactions, now present and also acting on the body to its detriment.

For any disease-specific delta precursor bioenergy

engine, there is a specific precursor bioenergy antiengine. The antiengine can be made and amplified by pumping. By introducing the amplified precursor bioenergy antiengine, a specific amplified bioforce antiengine is produced. This bioforce antiengine then acts upon the biosystem, specifically reversing the detrimental condition and healing the biosystem.

In other words, a damaged body has a damaged bioforce engine, consisting of the normal bioforce engine and a delta bioforce engine added to it. Hence the damaged body is being continuously interacted by a damaged precursor bioenergy engine, consisting of the normal precursor bioenergy engine and a delta precursor bioenergy engine added to it.

It follows that, if one were to time-reverse (phase conjugate) the total precursor bioenergy engine of the damaged body, the new precursor “bioenergy antiengine” would consist of two parts: (1) the amplified time reversal of the normal precursor bioenergy engine —which antiengine would just tend to make the body cells, etc. a bit younger, and (2) the amplified time reversal of the detrimental precursor delta bioenergy engine, which antiengine would gradually erase that detrimental precursor bioenergy engine and the disease itself!

Though simply put, that is in fact the mechanism used by the human cellular regenerative system (very poorly studied!) that generates the healing process in the body. It has long been obscured in biology by use of the terms " differentiation" and " dedifferentiation" of cells. Those terms refer to effects, not primal causes.

Becker’s Important Work.

Becker, e.g., clearly showed that potentials placed across intractable bone fractures directly generated such effects in red blood cells entering the injury site {[26]}. First the cells "dedifferentiated" back to an earlier form, growing a nucleus and shucking their hemoglobin. Then these new cells "differentiated" forward to form the type

of cells that make cartilage. Then those cells further differentiated forward to form the type of cells that make bone. The resulting bone cells were then deposited in the fracture site to heal the fracture.

Becker received multiple nominations for a Nobel Prize for this incredible work. He also attempted to model the cellular regenerative system itself {[27]}, using the normal EM model—which failed him because it cannot model the precursor bioenergy engines at all. Had Becker had access to Evans' present work, he would have produced a gigantic revolution in medicine, and would have very probably been awarded a Nobel Prize. The bone healing work did survive quietly, and today it is used in a number of hospitals to continue to treat and cure otherwise intractable bone fractures.

We again stress that, using free asymmetrical regauging, the precursor engine and antiengine can be directly amplified, essentially work-free. One pays for a little switching and timing for control, but pays nothing at all for the excess energy utilized and structured and controlled, which is pure regauging. Regauging to increase the energy is pure negative entropy engineering, not previously recognized or utilized.

Precursor Bio-Engineering Was Demonstrated in France.

The precursor engine, antiengine, and amplification approach was in fact demonstrated experimentally and rigorously in France by Antoine Prioré, although he was unaware of its nature. His work was personally presented to the assembled French Academy by its Secretaire Perpetuel, Dr. Robert Courrier {[28]}.

In the 1950s and 1960s, working with eminent French scientists, Antoine Prioré discovered how to directly amplify the "cellular regenerative" process in the laboratory, In short, he unwittingly discovered how to form antiengines for specific diseases and disorders, amplify the antiengines, apply them to the body, and directly heal the body via the resulting “amplified

cellular regeneration" process.

Prioré used a huge plasma tube fed with a mix of transverse EM waves, unwittingly using a characteristic of plasmas that can transduce transverse waves to longitudinal EM waves {[29]}. Hence he had introduced a longitudinal EM wave structure inside the plasma, adding to its field structures. With a large coil around the plasma tube, he produced a large rippling magnetic field whose inner "Whittaker structure" was deliberately modified (by controlling the frequency, and phasing of transverse waves induced in the plasma). The amplified bioenergy antiengine was embedded inside the longitudinal EM wave Whittaker structure of that rippling magnetic field.

Unknown to practical plasma technicians and to classical electrodynamicists, in quantum field theory the longitudinal photon and the time-polarized (scalar) photon exist and are individually nonobservable. However, their combination is observed as the instantaneous scalar potential—i.e., as common voltage. This tells us that, when we produce voltage, we produce not only Whittaker's 3-spatial longitudinal waves, but also their time-polarized (scalar) counterparts also. In short, by subjecting an object to simple voltage, one subjects it to a special form of phase conjugation by optical-type pumping. The "input" to the pumping is the resident precursor bioenergy engine, and the output of the pumping (i.e., the "time reversed wave counterpart") is an amplified precursor bioenergy antiengine. The interaction of the amplified precursor bioenergy antiengine and the living body's mass produces the amplified bioforce antiengine that physically reverses the disease.

Suddenly Becker's work with voltage and its unexpected generation of radical change of red blood cells into new kinds of cells comes alive, because something magical was truly going on in the use of a simple potential across a fracture site (pulsing enhances the effect also). That potential was comprised of longitudinal EM waves and scalar EM waves (time-polarized EM waves) in

combined phase conjugate pairs, slightly altering Whittaker's 1903 and 1904 work. So in nonlinear optical terms, Becker was "pumping" those red cells (and the fracture vicinity) in both the time domain and the 3-space domain. He thus time-reversed both the 3-space longitudinal wave components and the time-polarized scalar wave components. The result was to produce an amplified time-reversed precursor "engine" (i.e., an antiengine) of the resident precursor bioengine actually present in, and acting on, that body to produce its resident force bioengine! This accounted directly for the much more rapid cellular dedifferentiation and redifferentiation effects, compared to the relatively slow and much weaker effects achievable by the feebly amplified cellular regenerative system.

Surrounding Prioré's plasma tube was a very large coil, which—stimulated by the plasma—then produced an oscillating magnetic field that further contained in its Whittaker longitudinal EM wave internal composition that "engine" that Prioré had caused to be introduced. The patient then laid on a table under the magnetic field beam, and the entire body was bathed in this emission. The rippling magnetic field insured that the internal “amplified precursor bioenergy antiengine” was carried down to even the bone marrow cells of the body, affecting everything. As proved for millennia in the living body, if the carried "engine" is the antiengine of the specific disease, then this produces an amplified bioforce antiengine that is directly an amplification of the body's own cellular regeneration mechanism for healing that disease.

The rippling magnetic field carried the "internal new precursor antiengine" to all parts of the body, even through the bone marrow to the primitive cells, etc. Thus the total force engine of the body was directly altered, leading to physical changes in the body that reversed the specific disease and healed the patient. Thousands of rigorous lab animal experiments were performed and are duly reported and documented in the French medical literature {[30]}. As many researchers have suspected, when the body is sick, it is "sick all

over", since the disease “precursor bioengine pattern” is in all the potentials and fields of the entire body, at every level.

Prioré’s method added a new and amplified "antiengine" to the diseased body's own precursor engine, in turn directly altering the body’s own force engine responsible for maintaining its present state and dynamics containing the physical disease. He simply reversed the body from a “diseased state” back to a “normal state”. Hundreds of cases of terminal tumors, certain infectious diseases, clogging of the arteries, etc. were cured in laboratory animals, in some of the most sensational medical research of all time.

Results Obtained by Prioré’s Method.

When the added amplified bioengine was the reversal or near reversal of the detrimental bioengine portion already in the body, this process reduced and eliminated the detrimental delta bioengine, within the limits that the scientists had learned how to adjust the input signals for a given disease.

Consequently, unparalleled healing of disease occurred, in thousands of laboratory animal experiments rigorously performed at the University of Bordeaux by famous French scientists such as Raymond Pautrizel {[31],[32]}. Dr. Robert Courrier, Secretaire Perpetuel of the French Academy and head of its biology section, personally presented the astounding results of the Prioré work to an assembled and stunned French Academy {28}. Terminal cancers, some specific infectious diseases, atherosclerosis, etc. were cured with alacrity and remarkable effectiveness. The results were so astounding that they caused a sensation in France and in some other scientific communities also. Sadly, there was not a single scientist available anywhere openly, who had developed or even knew of the science of engines and therefore might recognize and state the mechanism used in the Prioré work.

The Prioré team also experimentally showed that the

internal patterns or "internal precursor engines" inside a given EM field or potential (in its Whittaker decomposition) do diffuse from one potential or field into another that is superposed, and these internal precursor engine changes remain there and only gradually diffuse away over a period of time (such as a few weeks or months).

It was shown that a drop of blood—taken from a rat successfully healed of a terrible terminal cancer—could then be injected into another rat with the same disease, and that rat would also start to get well and get rid of the cancer. This "pass it along" precursor bio-antiengine diffusion effect lasted for some weeks. But the experiments clearly showed that the necessary "antiengine" had been created in the original treated rat, and that it was actually present everywhere in that rat, in its blood and elsewhere, and only gradually "dissipated" by diffusion reactions as time passes. It also showed that transferring some of the blood containing the new bio-antiengine spread the bio-antiengine into the receiving animal.

This work is all documented in the hard French scientific literature. It has required 30 years for the present author to even be able to explain the primary mechanism.

The End of the Prioré Work.

The Prioré group itself (and the French scientific community as well) could not understand the mechanism because they only had the flawed old Maxwell-Heaviside theory to apply. That theory cannot model the elemental precursor engines, how they produce the force engines, and how such operations are the key to the healing process itself. Consequently, today we still have a medical science using the highly obsolescent electrodynamics of more than a century ago. Present medical therapeutics largely deals with killing and removal processes (such as the immune system's warlike work), while almost totally ignoring the actual healing mechanism and regenerative system of the body.

Medical science has thus produced a largely “intervene and destroy” therapeutics, with the real healing work then largely just “left to the body” in the hopes that it can somehow do the regenerative job required after the destruction and intervention.

The Prioré work showed that, not only can that fundamental cellular healing process be used in advanced new technology, but it can be highly amplified to allow very rapid healing of dread diseases. The Prioré work was ruthlessly suppressed in the mid-70s when the French government changed to a leftist government and quit funding the work. In 1984, not long after Prioré's death, the University of Bordeaux did accept a doctoral thesis on that work by one of its students (Perisse) {32b} —after having been forced to reject Prioré’s own doctoral thesis {[33]} in the early 1970s.

So a great medical cure for cancer, hardening and clogging of the arteries, infectious diseases, etc. was brought to the very brink of being born and utilized, and by the proper scientific community. Then because of the lack of a proper physics and electrodynamics model, it could not be scientifically understood. So, sadly, it was strongly opposed and "parked on the shelf" primarily because there was no available electrodynamics known to the scientists that would allow modeling and development of a total technology including both theory and application. The French government and the French scientific community continue to strongly oppose the Prioré work to this day.

Electrodynamics Must be Modernized.

The Prioré case is one dramatic example among many, of how the present terribly inadequate model of electrodynamics (used in electrical engineering) has long inhibited our scientific progress by blocking the development of precursor engineering and negative entropy engineering. That terribly flawed model and its continuing use are also directly responsible for the deaths of hundreds of millions of persons worldwide who did not have to die, had a better EM model been

available and used, and had the scientific community not continued to adamantly propagate and uphold such a seriously flawed EM model.

The source charge solution {14} also entails a coming great impact on thermodynamics. The charge continuously consumes positive entropy (disordered energy) in the active vacuum's virtual state, coherently integrates it, and produces negative entropy in the observable universe by continuously re-emitting the ordered energy (real observable photons), by a now-specified self-ordering criticality process specified by the present author. The resulting macroscopic EM fields and potentials produced and continuously maintained while spreading at light speed are ordered as a function of radial distance.

There are no "static" EM fields and potentials anywhere in nature! Instead, there are steady-state flows of EM energy that establish and continuously maintain steady state dynamic EM fields and potentials, in the sense explained by Van Flandern as follows {[34]}:

> "To retain causality, we must distinguish two distinct meanings of the term 'static'. One meaning is unchanging in the sense of no moving parts. The other meaning is sameness from moment to moment by continual replacement of all moving parts. We can visualize this difference by thinking of a waterfall. A frozen waterfall is static in the first sense, and a flowing waterfall is static in the second sense. Both are essentially the same at every moment, yet the latter has moving parts capable of transferring momentum, and is made of entities that propagate.

Hence every charge in the universe is a nonequilibrium steady state (NESS) system, continuously consuming positive entropy (disordered energy) of the virtual particle flux of the vacuum and producing negative entropy (ordered energy) of its macroscopic EM fields and potentials, along the lines theoretically shown by a

startled Evans and Rondoni {13}. The original charges have been producing negative entropy steadily for some 13.7 billion years, and they are still continuing.

The use of STC/VPF engines as precursors to forces and to material dynamics, thus opens an exciting and more fundamental vista for the environmentalists: The vision of a new kind of engineering in science and the electrical power industry. The breathtaking capability is to develop and use a negentropic engineering that will replace the old entropic engineering that has so sorely poisoned our planet and damaged our biosphere. The present entropic form of the Second Law is and always has been an oxymoron implicitly assuming that its own contradiction has first occurred. This total falsification of the present second law by the source charge completes the work of falsifying that law—work that is ongoing by D. Evans and his colleagues {[35]} and by many others. It also solves the century-old, vexing "time asymmetry" problem of thermodynamics, because negentropic processes are now permitted and experimentally validated.

Conclusion

As one can see, there is a marvelous new science of the future already in sight, desperately trying to get born. To be born, however, there must exist a growing recognition and use of higher group symmetry electrodynamics and application of a unified field theory that is engineerable by these unusual electrodynamic means. There must accordingly be a growing recognition of the very few great pioneers in this field. Most of all, there must be funding of doctoral programs and post doctoral programs in the area of precursor engineering for negentropic processes and systems.

When this is accomplished, a revolutionary new science of precursor engineering will be born. The positive impact on humanity, the biosphere, and the progress of science will also benefit untold generations yet unborn, from now throughout all the foreseeable future of humankind.

References

---

[1]. J. D. Jackson, Classical Electrodynamics, Second Edition, Wiley, New York, 1975, p. 219-211; 811-812.

[2]. James Clerk Maxwell, "A Dynamical Theory of the Electromagnetic Field," Royal Society Transactions, Vol. CLV, 1865, p 459. Read Dec. 8, 1864.

[3]. William Rowan Hamilton, Lectures on Quaternions, 1st Edn., Hodges and Smith, Dublin,1853. See also William Rowan Hamilton, Lectures on Quaternions, 3rd Edn., Chelsea, New York, 1969.

[4]. James Clerk Maxwell, Maxwell, A Treatise on Electricity and Magnetism, Oxford University Press, Oxford, 1873

[5]. For a history of the development of vector algebra and vector analysis, see M. J. Crowe, A History of Vector Analysis: The Evolution of the Idea of a Vectorial System, University of Notre Dame Press, Notre Dame, Indiana, 1967. Also corrected edition, Dover, New York, 1985.

[6]. In *symmetrically* regauging the Heaviside-Maxwell equations, electrodynamicists assume that the system potential (and thus the potential energy of the system) can be freely changed at will (i.e., they first assume that the system can be *asymmetrically* regauged). This is also assumed under one of the major principles of quantum field theory, known as gauge freedom. Electrodynamicists *arbitrarily* do two asymmetrical regaugings of the Maxwell-Heaviside equations in succession, but carefully selected just so that the *two new free EM fields that emerge* are equal and opposite. Thus they sum to a vector zero resultant. There is thus no *net* force field which can be used to push current against impedance, to dissipate the free excess system energy to perform work in a load. Instead, the excess free regauging energy is “locked up” as a change in the stress of

the system—as *stress energy*. So the electrodynamicists arbitrarily discard that entire class of Maxwellian systems which asymmetrically regauge by changing their own potential energy and also producing a net nonzero force field along with it. In short, the electrodynamicists deliberately assumed away all the Maxwellian systems which can freely produce coefficient of performance (COP) of COP>1.0.

[7]. Ubiquitous use of the closed current loop circuit with the "external" power source in it, rigorously enforces symmetrical regauging, since the circuit equalizes forward emf in the external circuit and back emf inside the dipolarity of the generator. Hence half the energy collected in the external circuit is used to destroy the dipolarity of the generator, while the other half is dissipated in the external circuit's losses and the load. To restore generator dipolarity, one must input to the shaft of the generator at least as much energy as was dissipated in destroying the dipolarity. And this input energy will thus be greater than the amount of energy dissipated to power the load. Such a circuit thus self-enforces COP<1.0.

[8]. Michelson, A. A. and E. W. Morley, "Influence of motion of the medium on the velocity of light," Am. J. Sci., Vol. 31, Series 3, 1886, p. 377-386; — "The relative motion of the earth and the luminiferous aether," Am. J. Sci., 34(3), 1887, p. 333; — "On the relative motion of the earth and the luminiferous aether," Phil. Mag. 24(4), 1887, p. 449.

[9]. In the West, precursor engineering has been ignored. In highly classified Russian weapons projects controlled by the KGB (today called the FSS or Federal Security Services), it has been developed and weaponized as what is known as *energetics*. Elsewhere (e.g., www.cheniere.org) we have reported on the status of such weapon developments, and do not further discuss them here.

[10]. Richard P. Feynman, Robert B. Leighton, and Matthew Sands, The Feynman Lectures on Physics, Addison-Wesley, Reading, MA, Vol. 1, 1964, p. 2-4.

[11]. *Ibid*., p. 12-2.

[12]. *Ibid*., p. 4-2.

[13]. D. J. Evans and Lamberto Rondoni, "Comments on the Entropy of Nonequilibrium Steady States," J. Stat. Phys., 109(3-4), Nov. 2002, p. 895-920.

[14]. T. E. Bearden, "Giant Negentropy from the Common Dipole," Proceedings of Congress 2000, St. Petersburg, Russia, Vol. 1, July 2000 , p. 86-98. Also published in Journal of New Energy, 5(1), Summer 2000, p. 11-23. Also carried on website www.cheniere.org and on DoE restricted website http://www.ott.doe.gov/electromagnetic/.

[15]. T. E. Bearden, Energy from the Vacuum: Concepts and Principles, Cheniere Press, Santa Barbara, CA, 2002, Chapter 3: Giant Negentropy, Dark Energy, Spiral Galaxies and Acceleration of the Expanding Universe.

[16]. See also M. W. Evans, T. E. Bearden, and A. Labounsky, "The Most General Form of the Vector Potential in Electrodynamics," Foundations of Physics Letters, 15(3), June 2002, p. 245-261.

[17]. Michael Leyton, A Generative Theory of Shape, Springer-Verlag, Berlin, 2001.

[18]. (a) Felix Klein, "Vergleichende Betrachtungen über neuere geometrische Forschungen," 1872. Klein's Erlanger program was initiated in 1872 to describe geometric structures in terms of their automorphism groups. It has driven much of the physics development in the twentieth century. See also (b) I. M. Yaglom, *Felix Klein and Sophus Lie: Evolution of the Idea of Symmetry in the Nineteenth Century*, Birkhäuser, Boston, MA, 1988.

[19]. See Huy Price, Time's Arrow and Archimedes' Point, Oxford University Press, 1996, paperback 1997, p. 78.

[20]. J. D. Jackson, *ibid*., 1975, p. 249.

[21]. E.g., see Craig F. Bohren, "How can a particle absorb more than the light incident on it?" American Journal of Physics, 51(4), Apr. 1983, p. 323-327.

[22]. T. E. Bearden, Energy from the Vacuum: Concepts

and Principles, 2002, Chapter 9. The Supersystem and Remarks on Gravity, Antigravity, and Testing.

[23]. See (a) M. W. Evans, “A Generally Covariant Field Equation for Gravitation and Electromagnetism,” Found. Phys. Lett., vol. 16, 2003, p. 367-377; (b) — A Generally Covariant Field Equation for Grand Unified Field Theory,” Found. Phys. Lett. 16(6), Dec. 2003, p. 507-541; (c) — “The Equations of Grand Unified Field Theory in Terms of the Maurer-Cartan Structure Relations of Differential Geometry,” Found. Phys. Lett. 17(1), Feb. 2004, p. 35-47; (d) — “Derivation of the Dirac Equation from the Evans Wave Equation,” Found. Phys. Lett. 17(2), Apr. 2003, p. 149-166; (e) — “Derivation of the Evans Wave Equation from the Lagrangian and Action: Origin of the Planck Constant in General Relativity,” Found. Phys. Lett., 17(3), Jun. 2004, p. 267-276 (in press); (f) — “New Concepts from the Evans Unified Field Theory. Part One: The Evolution of Curvature, Oscillatory Universe without Singularity, Causal Quantum Mechanics, and Covariant Force and Field Equations,” Found. Phys. Lett. (in press).

[24]. A complete exposé of the Prioré affair is given by Jean-Michel Graille, Dossier Prioré: A New Pasteur Affair, De Noel, Paris, 1984 [in French]. A succinct summary of the Prioré affair is given by Christopher Bird, "The Case of Antoine Prioré and His Therapeutic Machine: A Scandal in the Politics of Science," Explore, 5(5-6), 1994, p. 97-110.

[25]. (a) E. T. Whittaker, “On the Partial Differential Equations of Mathematical Physics,” Math. Ann., Vol. 57, 1903, p. 333-355; (b) — “On an Expression of the Electromagnetic Field Due to Electrons by Means of Two Scalar Potential Functions,” Proc. Lond. Math. Soc., Series 2, Vol. 1, 1904, p. 367-372.

[26]. (a) R. O. Becker, “The control system governing bone growth in response to mechanical stress,” J. Ark. Med. Soc., Vol. 62, 1966, p. 404; (b) — and David G. Murray, "The electrical control system regulating fracture healing in amphibians," Clinical Orthopaedics and Related Research, No. 73, Nov.-Dec. 1970, p. 169-198; (c) — and D. G. Murray, “A method for producing cellular dedifferentiation by means of very small electrical currents,” Trans. N.Y. Acad. Sci., Vol. 29, 1967, p. 606-615.

[27]. (a) R. O. Becker, "The direct current field: A primitive control and communication system related to growth processes," Proceedings of the. XVI International. Congress of Zoology, Washington, D.C., Vol. 3, 1963, p. 179-183; (b) — and Joseph A. Spadaro, "Electrical stimulation of partial limb regeneration in mammals," Bulletin of the New York Academy of Medicine, Second Series, 48(4), May 1972, p. 627-64; (c) R. O. Becker, Carlton F. Hazlewood, Abraham R. Liboff, and Jan Walleczek, Electromagnetic Applications In Medicine," NIH-OAM Electromagnetics Panel Report, Jan. 15, 1993.

[28]. R. Courrier, "Exposé par M. le Professeur R. Courrier, Secretaire Perpetuel de L'Academie des Sciences fait au cours d'une reunion a L'Institut sur les effets de la Machine de M. A. Prioré le 26 Avril 1977," [Presentation by Professeur R. Courrier, Perpetual Secretary of the Academy of Sciences, made at the meeting of the Academy on the effects of the machine of M. A. Prioré.]

[29]. See (a) T. E. Bearden, "Vacuum Engines and Prioré's Methodology: The True Science of Energy-Medicine, Parts I and II," Explore, 6(1), 1995, p. 66-76; 6(2), 1995, p. 50-62. Prioré's patents are: (b) Antoine Prioré, "Apparatus for producing radiations penetrating living cells," U.S. Patent No. 3,368,155, Feb. 6, 1968; (c) — "Method of producing radiations for penetrating living cells," U.S. Patent No. 3,280,816, Oct. 25, 1966; (d) — "Procede et dispositif de production de rayonnements utilisables notamment pour le traitement de cellules vivantes," [Procedure and Assemblage for Production of Radiation Especially Serviceable for the Treatment of Living Cells], Republique Francais Brevet d'Invention P.V. No. 899.414, No. 1,342,772, Oct. 7, 1963.

[30]. A considerable number of these French references are given in T. E. Bearden, Energy from the Vacuum, 2002, p. 546-547.

[31]. E.g., R. Pautrizel, M. R. Riviere, A. Prioré, and F. Berlureau, "Influence d'ondes électromagnétiques et de champs magnétiques associés sur l'immunité de la souris infestée par Trypanosoma equiperdum," [Influence of electromagnetic waves and associated magnetic fields on the immunity of the mouse infected with the Trypanosoma

equiperdum], Compt. Rend. Acad. Sci. (Paris), 1966, Vol. 263, p. 579-582. [in French].

[32]. See (a) Michael Graille, *ibid*. Also see (b) Eric Perisse, Effets des Ondes Electromagnètiques et des Champs Magnètiques sur le Cancer et la Trypanosomiase Experimentale [Effects of Electromagnetic Waves and Magnetic Fields on Cancer and Experimental Trypanosomias], Doctoral thesis, University of Bordeaux No. 83, March 16, 1984.

[33]. A. Prioré, Guérison de la Trypanosomiase Expérimentale Aiguë et Chronique par L'action Combinée de Champs Magnétiques et D'Ondes Electromagnétiques Modulés. [Healing of intense and chronic experimental trypanosomiasis by the combined action of magnetic fields and modulated electromagnetic waves], thesis submitted in candidacy for the doctoral degree, 1973. Thanks to the late Christopher Bird, the present author has the actual thesis document submitted by Prioré and rejected by the University.

[34]. Tom Van Flandern, "The speed of gravity – What the experiments say," Physics Letters A, Vol. 250, Dec. 21, 1998, p. 8-9.

[35]. (a) D. J. Evans and D. J. Searles, "Equilibrium microstates which generate second law violating steady states," Phys. Rev. E, Vol. 50, 1994, p. 1645-1648; (b) D. J. Evans, D. J. Searles, and E. Mittag, "Fluctuation theorem for Hamiltonian systems: Le Chatelier's principle, Phys. Rev. E., Vol. 63, 2001, 051105/1-4; (c) D. J. Evans, E. G. D. Cohen, and G. P. Morriss, "Probability of second law violations in Nonequilibrium steady states," Phys. Rev. Lett., Vol. 71, 1993, p. 2401-2404; "Erratum", *ibid*., Vol. 71, 1993, p. 3616; (d) G. M. Wang, E. M. Sevick, Emil Mittag, Debra J. Searles, and Denis J. Evans, "Experimental Demonstration of Violations of the Second Law of Thermodynamics for Small Systems and Short Time Scales," Phys. Rev. Lett., 89(5), 29 July 2002, 050601.

The Tom Bearden Website

U.S. Office of Naval Research Report on the Priore Machine

16th August, 1978

Index

- Cover Page #1
- Cover Page #2
- Table of Contents
- Page 1 (transcription)
- Page 2 (transcription)
- Page 3 (transcription)
- Page 4 (transcription)
- Page 5 (transcription)
- Page 6 (transcription courtesy of Guy Antequera)
- Page 7 (transcription courtesy of Guy Antequera)
- Page 8 (transcription courtesy of Guy Antequera)
- Page 9 (transcription courtesy of Guy Antequera)
- Page 10 (transcription courtesy of Guy Antequera)
- Page 11 (transcription courtesy of Joe Spears)
- Page 12 (transcription courtesy of Joe Spears)
- Page 13 (transcription courtesy of Joe Spears)
- Page 14 (transcription courtesy of Joe Spears)
- Page 15 (transcription courtesy of Joe Spears)
- Page 16 (transcription courtesy of Joe Spears)
- Page 17 (transcription courtesy of Joe Spears)
- Page 18 (transcription courtesy of Joe Spears)
- Page 19 (transcription courtesy of Joe Spears)
- Page 20 (transcription courtesy of Joe Spears)
- Page 21 (transcription courtesy of Joe Spears)
- Page 22
- Page 23
- Page 24
- Page 25
- Page 26

http://www.cheniere.org/priore/onr%20report/cover01lg.jpg

Chris PRIORE J. BEAL

ONR LONDON REPORT

R-5-78

RECEIVED 1/14/9 J. BEAL

OFFICE OF NAVAL RESEARCH

Rec'd 12/23/78

A BIOLOGICALLY ACTIVE COMBINATION OF MODULATED MAGNETIC AND MICROWAVE FIELDS: THE PRIORE MACHINE

J.B. BATEMAN

16 August 1978

BRANCH OFFICE LONDON ENGLAND

UNITED STATES OF AMERICA

This document is issued primarily for the information of U.S. Government scientific personnel and contractors. It is not considered part of the scientific literature and should not be cited as such.

APPROVED FOR PUBLIC RELEASE; DISTRIBUTION UNLIMITED

http://www.cheniere.org/priore/onr%20report/cover01lg.jpg (1 of 2)25.4.2005 0:08:45

UNCLASSIFIED
SECURITY CLASSIFICATION OF THIS PAGE (When Data Entered)

REPORT DOCUMENTATION PAGE

READ INSTRUCTIONS BEFORE COMPLETING FORM

1. REPORT NUMBER: R-5-78
2. GOVT ACCESSION NO.:
3. RECIPIENT'S CATALOG NUMBER:
4. TITLE (and Subtitle): A BIOLOGICALLY ACTIVE COMBINATION OF MODULATED MAGNETIC AND MICROWAVE FIELDS: THE PRIORE MACHINE
5. TYPE OF REPORT & PERIOD COVERED: Technical
6. PERFORMING ORG. REPORT NUMBER: R-5-78
7. AUTHOR(s): BATEMAN, DR. J.B.
8. CONTRACT OR GRANT NUMBER(s):
9. PERFORMING ORGANIZATION NAME AND ADDRESS: Office of Naval Research Branch London, Box 39, FPO New York 09510
10. PROGRAM ELEMENT, PROJECT, TASK AREA & WORK UNIT NUMBERS:
11. CONTROLLING OFFICE NAME AND ADDRESS:
12. REPORT DATE: 16 August 1978
13. NUMBER OF PAGES: 26
14. MONITORING AGENCY NAME & ADDRESS (if different from Controlling Office):
15. SECURITY CLASS. (of this report): UNCLASSIFIED
15a. DECLASSIFICATION/DOWNGRADING SCHEDULE:
16. DISTRIBUTION STATEMENT (of this Report): APPROVED FOR PUBLIC RELEASE; DISTRIBUTION UNLIMITED
17. DISTRIBUTION STATEMENT (of the abstract entered in Block 20, if different from Report):
18. SUPPLEMENTARY NOTES:
19. KEY WORDS (Continue on reverse side if necessary and identify by block number):
microwaves, biological activity
magnetic fields, biological activity
microwave and magnetic field generator
microwaves, medical applications
Priore generator
trypanosomiasis, electromagnetic cure
tumors, inhibition of growth by electromagnetic fields

20. ABSTRACT (Continue on reverse side if necessary and identify by block number):

A generator invented by A. Priore of Bordeaux is said to produce radiation which causes certain implanted tumors to regress and cures trypanosomiasis in animals. The published biological data are briefly reviewed and thought to be permissive. The scanty information available on the nature of the active radiation is also reviewed critically. Attention is drawn to the existence of a French patent describing the invention. A full translation of the patent document is appended. A heavily funded effort to build a machine of greatly enhanced power output is mentioned. The writer considers the project to be pre-

DD FORM 1 JAN 73 1473 EDITION OF 1 NOV 65 IS OBSOLETE
S/N 0102-014-6601

UNCLASSIFIED

R-5-78

CONTENTS

	Page
INTRODUCTION	1
BIOLOGICAL OBSERVATIONS	2
THE INVENTION	4
THE EMERGENT FIELD	5
THE NEW GENERATOR	7
REFERENCES	9
APPENDIX (Translation of French Patent 899.414, No. 1.342.772)	11-26

A BIOLOGICALLY ACTIVE COMBINATION OF MODULATED MAGNETIC AND MICROWAVE FIELDS: THE PRIORE MACHINE

INTRODUCTION

A very complicated generator invented by Antoine Priore (or Priore}, a former radar operator without academic qualification, has been said to produce radiation which causes certain implanted animal tumors to regress and cures trypanosomiasis in certain laboratory animals. There are several remarkable things about the papers describing these biological effects, the most remarkable being the contrast between the careful detail in which the biological data themselves are presented and the absence of anything but the most vague, and often contradictory, information about the generator. I have given examples of these disparities elsewhere (1)
.

A first consequence of the publication of these communications in the *Comptes rendus de l 'Académie des Sciences* (Paris) was a violent polarization of opinion within the Academy and in other French scientific circles. There were some who wished to ignore or deny any phenomenon, however completely attested, brought about by inadequately specified means; they would have opposed presentation of the reports to the Academy and would probably have succeeded in suppressing them but for the determined sponsorship of the distinguished *secrétaire- perpétuel,* Prof. Robert Courrier. Others felt t that the importance of the results, if they could be confirmed, made further investigation imperative: if possible, with disclosure of the inventor's "secret"; if not, then without it.

A second result was the journalistic exploitation of a situation brimming over with human interest. Commentators (2} (3) (4) (5) ranged from a writer in Esquire who has since followed another path to notoriety (3) to Lord (Solly) Zuckerman writing in popular vein (4). None of them resisted the regrettable impulse to step up the popular appeal by introducing scientifically irrelevant biographical details about Priore in order to demonstrate his worthiness for political patronage, which indeed he has received in abundance. Aside from this, they maintained a nice balance between sympathy for the victim of prejudice and healthy scepticism toward his work. Zuckerman, in a

lecture given at the Lovelace Foundation in Albuquerque (5), gives Priore an honorable place in his catalogue of those whose innovative achievements remained unrecognized because of conservative prejudice and ignorance, from Babbage to Peyton Rous, though not without leaving himself a loophole should the initial promise not be kept. The main point, he insists, is that people who believe in what they are doing should refuse to be discouraged in an atmosphere of incomprehension and hostility.

The present report is the outcome of a visit to Priore's establishment sponsored by the organization ADERA for those attending a course of instruction in microwave exposure hazards (6). I shall write very briefly about the alleged biological effects, then about the Priore

invention itself and the nature of its biologically active output. Impressions and private conversations bearing on these matters will be mentioned when they add, reliably or otherwise, to the total picture.

BIOLOGICAL OBSERVATIONS

There is a pre-history of verbal recollection and gossip connected with the Priore invention. Priore himself is said (3) to have become interested in possible medical applications of electromagnetic waves upon observing that fruit and vegetables could be preserved by exposure to ultra-high frequency fields. A machine was built from US Army surplus and at some stage sick persons were placed in the field generated (3). According to a US scientist who has been interested in repeating some of the Priore experiments, a politically well-connected lady who was cured in this way of cancer after receiving a prognosis of early death is still enjoying perfect health in Bordeaux.

The first experiments on cancerous animals were done by Delmon and Biraben who withheld their results from publication after receiving an unfavorable report from a committee, and because of a fear that publication would prejudice the candidature of one of them for admission to a fellowship *(aggrégation)* (7). They used (8) rats implanted subcutaneously with a well-characterized uterine carcinoma, the so-called T8 (Guérin), having previously studied the effects of x-rays and of pulsed magnetic fields upon these animals without finding anything particularly noteworthy: The magnetic fields had no effect on tumor growth or on the occurrence of lymph node metastases, while the remission produced by x-rays was only transient. After exposure to the window of Priore's machine, on the other hand, tumor growth could be stopped for as long as three months afterwards. The animals recovered good general health, and lymph node metastases were seldom seen.

The T8 tumor in rats was also used by Rivière and colleagues (9) from Guérin's laboratory in the cancer institute at Villejuif. They found macroscopic regression of the tumors and of metastases after treatment and observed no relapses up to three months thereafter. Their publication anticipated that of Delmon and Biraben.

Rivière and colleagues then worked with rats implanted with a lymphoblastic lymphosarcoma which when untreated invariably

proved fatal within 11 to 15 days, with generalized colonization of the nodes and a leukemic syndrome. Treatment under the Priore machine led to total regression of the graft and of the accompanying metastatic and leukemic phenomena (10). Certain of these experiments were done with animals from Courrier's laboratory under the constant supervision of his as assistant Madame Colonge. The results were the same, and Courrier reported them in an addendum to a further paper by Rivière *et al* (11) describing comparable results with a mouse lymphosarcoma. Further studies with the rat (12) yielded the discovery that treated rats clinically free of the lymphosarcoma were able to resorb a second transplant of the isologous tumor while succumbing to an homologous tumor of a histologically different type.

Courrier (7) complained that, because of a campaign of disparagement, no French "cancerologists" offered to repeat these experiments. Shortlived cooperation was however forthcoming from an English laboratory. According to one account (2), cancerous mice were sent over to Priore's establishment and some healthy ones were later sent from there to England, but the latter were not the ones that had been sent for treatment. The anonymous director of the English laboratory withdrew his cooperation, though not without providing "a French colleague" with a detailed memorandum. In 1977 Courrier (7) issued his own account of the episode and identified the persons concerned. The director was the late Sir Alexander Haddow (Institute of Cancer Research, Royal Cancer Hospital, Univ. of London), and his envoys to Floirac were E. Whisson and Dr. and Mrs. E.J. Arnbrose, the latter being scientists of some repute. Courrier was evidently not persuaded that any substitution had taken place, for he wrote that the rumor was put about: *"on fait courir le bruit..."*

The discovery of specific anti-tumor immunity in the treated animals may have lent force to the hunch that the Priore radiation might act upon the immune system of the host rather than directly upon the cancer cells. At any rate, Professor Raymond Pautrizel, a parasitologist already associated with the work of Rivière and Guérin, exposed mice after they had been injected with a dose of *Trypanosoma equiperdum* sufficient to kill them within five days if untreated, and they all survived (13). At this point extraordinary measures were taken to re move all suspicion of fraud.. The experiments were repeated successfully under lock and key and under the eye of a bailiff appointed by a *Com mission de Contrôle* composed of university officials and local dignitaries. The official report was certified by all the members of the Commission. A positive result obtained under such conditions, said Courrier (7), should have put an end to all criticism from men of good faith.

In a further series of short papers in the *Comptes rendus* (14) (15) (16) this indirect effect upon the immune system of animals infected with *T. equiperdum* was confirmed and elaborated. These brief published statements represent a lot of work: just how much was apparent from a lecture given by Pautrizel during my visit to Floirac. When I asked about his plan to publish the evidence in detail, he told me that he had not found a journal willing to accept such a manuscript.

The evidence presented, furnished by experiments on mice (13) (14) (16), rats (14) and rabbits (15) , follows fairly conventional lines which I shall not attempt to review in detail. Briefly: the pathogenic organisms disappeared from the treated animals, which survived indefinitely. In rare cases where the parasites reappeared, they were of a different antigenic type from these causing the original infection. Treatment brought about an intense acquired immunity. Some animals were reinfected 7 times *over* a period of 6 months, eventually with 100 times the original, and otherwise invariably fatal, dose. Multiple reinfection resulted in a high titer of agglutinating antibodies. The blood of these animals conferred upon other normal animals an immunity which persisted for about 45 days. Treatment with an immunosuppressor,

R-5-78

cyclophosphamide, depressed, but did not abolish, the appearance of agglutinating antibody when infected animals were subjected to Priore irradiation, although relapse occurred after about 12 days. Newborn animals died of the infection whether irradiated or not, and the organisms found in their blood were of the original strain. Trypanosomal antigen of unspecified nature, injected intraperitoneally after the first irradiation of infected animals, caused an enhancement of anti-body production. When the parasites were protected from the host's immune system by being implanted in a diffusion chamber, Priore irradiation failed to inhibit their multiplication. In his talk, Pautrizel said that in order to elucidate further the apparent effect of irradiation in exalting the mobilization of the immune system, the course of change of immunoglobulins M and G, of albumin/globulin ratio, and of agglutinating and hemagglutinating titers was followed in irradiated and reinfected animals for about one year. The data were given in detail. With no time in which to understand, much less to assimilate them, I was left only with the impression that a clear picture has yet to emerge--a conclusion apparently shared by Prof. Czersky of Warsaw. One point of interest was the passing mention of a failure to modify the course of a malarial infection. This is not surprising, perhaps, remembering the vastly more complex life cycle of the plasmodium and its greater antigenic variability.

The postulated general stimulation of "defense mechanisms" by the output of the Priore machine led Pautrizel to ask whether this effect might extend to the prevention or cure of atherosclerosis. Another short paper communicated, as usual, by Courrier: (17) , described a "spectacular" attenuation of the hyperlipemia induced in rabbits by a diet of "industrial granules" supplemented by l% of cholesterol, resulting in a daily cholesterol intake by each rabbit of about 1 gram. The ob served effect of irradiation took the form of all inhibition of increased cholesterolemia, persisting for several weeks after treatment, and a marked decrease in the extent of aortic deposition. I find the data rather unconvincing, with quite a lot of overlap of experimental and control values. As for the explanation of the effect, if it can be confirmed, Pautrizel and colleagues (17) ask whether it could be due to an activation of lipid catabolism. Strangely enough they do not discuss the role of macrophages in the regression of tumors, the cure of

trypanosomiasis, or the prevention of hypercholesterolemia, although macrophage mobilization might provide a common mechanism.

THE INVENTION

Much has been written deploring Priore's secretiveness. It has been an embarrassment in one camp and a ground for dismissing his invention in another. My own view is that a secretive inventor and his invention, if important, must be investigated as a part of the external world, and the obstacle posed by limited cooperation accepted in the spirit in which the inaccessibility of nature is accepted as a challenge to our wits. Priore has in fact been much more considerate than the Almighty, who after all has provided no blueprints to his creations, while Priore included in his first paper a footnote (9) informing us

that the physical principle of his invention has been the subject of a patent (18). How strange that none of the journalistic commentators, from Zuckerman down the line, have thought it worthwhile even to men tion the existence of this document. When drawing it to the attention of several members of the party visiting Floirac, I found astonishment at its existence followed by doubts as to whether, since they had not read it, it could contain any information of value. I had no opportunity to ask Priore about it, but an associate who did so met with a similar response: it won't help very much, he said. Nevertheless the apparatus described is presumably that used by Rivière, in whose paper it is mentioned, and the amount of detail given is such that, unless indeed it is fraudulent, a reasonable guess as to the nature of the emerging ra diation ought to be possible for people competent in the field.

Wi th this in mind I planned to include only a summary in this report, but have now decided upon a full translation (Appendix), with out which the odd flavor of the document would be lost. A seemingly reasonable description of components and layout is coupled with a quaint--some might say superstitious-- intrusion of pseudo biology and mention of electrophysiological pioneers whose identity can only be guessed through a haze of misspellings. There is, for instance, the choice of modulation frequency of the magnetic field to match the rhythm of the patient's heartbeat. There is, too, the comment that the best results are obtained when the cathode generating a stream of positive ions is made of molybdenum, the metal whose valency is closest to the mean valency of the chemical molecules constituting living tissues.

I leave the reader to form his own impression of the invention described in the patent, save to mention that the active radiation emerges from a tube containing a rotating deflector upon which impinge, from several different sources, a stream of positive ions accelerated in a cyclotron, a beam of centimeter waves generated by a magnetron, and a magnetic field. Any or all of these may be chopped or modulated according to various patterns.

The machine was working during the visit to Floirac. One could see the exit of the tube beneath which the biological targets are placed. There was a certain amount of rumbling and crackling, and the pinkish luminescent plasma appeared to be turbulent. I asked about the speed of rotation but was told by one of Priore's assistants that the infor mation is strictly confidential. I would guess it to be well under 100 rpm.

THE EMERGENT FIELD

After several misleading statements about the nature of the bio logically active field generated by Priore's machine (mentioned in ref 1), a short paper in the *Comptes rendus* described the results of experiments in which two physicists of established reputation had been allowed to cooperate with Priore, Pautrizel, and their associates. Berteaud and Bottreau (19) were able to analyze the radiation in some detail, up to x- and gamma-ray frequencies. Their report is confined to

the assertion that they have established the presence of a 9.4-GHz pulsed electromagnetic wave, amplitude modulated at HF frequency 17 MHz, and a slowly modulated continuous magnetic field of the order of 1kG.

Other components, if detected, are not mentioned. There exists, I am told, a confidential report of the whole investigation. Bottreau assured me personally that there was no trace of ionizing radiation.

Berteaud and coworkers (19) also mapped the intensity distribution of these radiations in a plane perpendicular to the axis of the apparatus. Then, using as targets mice infected with *T. equiperdum*, they were able to demonstrate a simple relationship between the rate of decrease of *parasitemia* in these animals and the relative intensity of the UHF component. However, in separate experiments they found that fatalities among infected mice were not decreased when the animals were exposed to an unmodulated 9.4-GHz field of comparable intensity. They concluded that the UHF field generated by Priore's machine is a necessary but not sufficient condition for the observed biological effects.

The results of Berteaud *et al* leave us with some unanswered questions. If their analysis of the field was complete, the biological activity must rest jointly on the UHF component and the magnetic field. How critical are the exact value of the many parameters involved and the relationship between them for the manifestation of biological activity? Is it possible that the methods available to Berteaud and coworkers were incapable of furnishing a complete analysis?

One can only speculate. It has struck me that in all the papers describing the biological effects of this radiation, there is nowhere any mention of any search for the the correct operating conditions of the machine. Apparently the machine, if it works at all, always produces results, and one must remember that two different models have been built and found to be effective. The one quantity that is regularly mentioned is the is the magnetic field strength, 620 G in the first model and 1240 G in the second. The patent document seems to suggest that there is great flexibility in the mode of operation. It is moreover almost inconceivable

that Priore could have had any genuine theoretical basis upon which to favor one particular set of patterns over another in relation to biological changes that are themselves of intractable complexity and totally unpredictable. One is bound to suspect that the mix is anything but critical, and that if the reported biological effects are genuine they might very well be brought about by much simpler means. It is of some interest that extremely sharp frequency selectivity has been claimed in recent biological experiments with monochromatic microwaves, in contrast to the sort of flap response surmised in the present context. The need for fine tuning could of course be obviated in a machine designed for sturdiness and broad applicability by arranging for it to generate "white" energy with respect to the several decisive characteristics, including modulation frequencies and perhaps their derivatives, or alternatively to generate an output which varies rapidly in real time, systematically or randomly, over a sufficiently wide range of values. The biological effects of such

radiation would then be the sum of various qualitatively and quantitatively different selective processes including the possible cancellation of additive effects such as stimulation and inhibition. However, total nullification would be no more likely it is, for instance, in the visible everyday consequences of illumination by sunlight. Such an approach, if it has been adopted by Priore or if it has emerged fortuitously as an unforseen property of an assemblage of composents chosen on the basis of some other rationale, would account for the extravagance of the machine in energy consumption in return for a very modest biological yield. There is no immediate evidence for this in the statements of Berteaud and Bottreau (19), but the relevant quality of "whiteness" might apply pertinently to other parameters than those investigated by them.

The possibility that some hitherto unrecognised feature of the radiation from a rotating plasma may be responsible for the Priore effects should not be dismissed out of hand, at any rate by those who, like myself, know nothing about plasmas. Dr. John Carstoiu of Brookline, MA, who counts among his accomplishments an extension of the Maxwell equations to the evaluation of ponderemotor forces, likes to call the Priore machine a magnetohydrodynamic wave guide. He considers the acceleration of the plasma to be a significant feature. He refers to the various types of oscillation that may be set up but does not, and presumably cannot, say how they can manifest themselves across a quartz window - . One's naive reaction is to doubt, in any case, whether the accelerations attainable in an apparatus as described in the patent document would be great enough to initiate a gravitational wave of any significance. Unless the suggestion in an obvious absurdity to a plasma physicist, somebody will have to do the arithmetic.

THE NEW GENERATOR.

The further development of Priore's invention is being done under the auspices of an organisation set up for the purpose : the *Société d'Exploitation du rayonnement Antoine Prioré* (SERAP) which brings Priore into formal relationship with a company, *moteurs Leroy Sommer* of Angoulême. This company has been the recipient of a $0.7 million contract from the DGRST (*Délégation Générale à la Recherche Scientifique et*

Technique) for the construction of a third machine of greatly increased output. Priore has been reported (3) to predict that the cost is more likely to be $3 million. No doubt other sources of funding are available. In return for much support Priore promise a much bigger and better machine that will generate a more intense field of much larger cross section than those with which the results already reported were obtained. So, one can guess, larger groups of small animals will be irradiated simultaneously for shorter periods than formerly and the rate of accumulation of data will increase - if, that is, the biological measurements can keep pace. Perhaps too, by the same token, small groups of large animals will be treated, with the single sick human as the ultimate target of the entire endeavor.

- (Bearden note :) quartz transmits UV (Ultraviolet Radiation) - see tie-in to Russian work & UV "mitogenic radiation" transmitting thru quartz windows between cell cultures.

R-5-78

Little was learned of this latest development during my visit to Floirac. The Priore residence, is coming to look like an industrial laboratory of electrical engineering geared to pilot scale operations. There are rumors of serious technical difficulties such as might have been anticipated in scaling up such a complicated device. It is said to be proving difficult, for instance, to construct a pyrex container able to cope with the very high energy flux in the plasma.

Is the new machine really needed? At the technical level the answer is almost certainly "no". Evidently technical considerations are overruled by others, no doubt of personal, political, and even patriotic nature.

The whole operation takes on a farcical aspect when one considers that the only genuine need in the present state of affairs is to get independent confirmation, or refutation, of results already obtained with equipment that was clearly adequate for the original experiments. The funds now made available would suffice for the building of several replicas of the mark 2 machine. These, placed in selected centers of research, could be used by independent teams for a critical repetition and extension of earlier findings. The success or otherwise of the time-consuming attempt to build a giant machine is largely irrelevant to the central doubts that persist as to the claims made for the Priore radiation, and this expensive diversion of effort betrays a certain recklessness which ill serves the quest for a solution to the mystery surrounding "*l'affaire Prioré* ".

R-5-78

Note : References (3) to (5) have been available to me in the form of translations into French and I therefore cite them in this form, with the original English reference when available .

1. Bateman , J.H. 1977. Microwave Magic. ONR London Conference Report, ONRL C-14-77.

2. Greenberg, D.S., 1978. The French Concoction *Saturday Rev. Sol. , May , 36 - 44.* Translated by the *Association Nationale de Bioélectromagnétisme (ANB)* under the title: La Mystérieuse Machine Médicale Française.

3. Rorvik, D. M.., 1975. Les Français ont-ils un traitement contre le cancer ? Translation by ANB of the article in *Esquire*, July .

4. Zuckerman, (Lord) , 1973. Le grand mystère de la machine magnétique de Bordeaux . Translation by SERAP of the article: The great Bordeaux magnetic mystery machine. *Sunday Times Weekly Review*, 7 Jan.

5. Zuckerman, (Lord) , 1974 . Orgueil et préjugé dans le domaine de la science. Translation by ANB of the William Randolph Lovelace Commemorative Lecture : Pride and prejudice in science. *Aerospace Medicine* 45, 638 - 647.

6. Bateman, J.B. , 1978. Staging the perils of non-ionizing waves. Office of Naval Research London, *European Scientific Notes*, ESN 32-3 : 85-88.

7. Courrier, R. 1977. Exposé de M. le professeur Courrier secrétaire perpétuel de l'Académie des Sciences fait au cours d'une réunion à l'Institut sur les effets de la machine de M. A. Prioré le 26 Avril 1977.

8. Delmon, G . , Biraben, J . , 1966 . La croissance du carcinome de Guérin sous l'action de champs magnétiques . *Rev. Path. Comp.* 3 , 85-88.

9. Rivière, M . R . , Prioré A . , Berlureau, F . ,

Fournier, M . , Guérin, M ., 1964. Action de champs électromagnétiques sur les greffes de la tumeur T8 chez le rat. *Compt. Rend. Acad. Sci.* 259, 2895-7.

10. Rivière, M . R . , Prioré A . , Berlureau, F . , Fournier, M . , Guérin, M ., 1965a. Effets de champs électromagnétiques sur un lymphosarcome lymphoblastique transplantable du rat. Ibid. 260, 2099-2102.

11. Rivière, M . R . , Prioré A . , Berlureau, F . , Fournier, M . , Guérin, M ., 1965b. Phénomènes de regression observés sur les greffes d'un lymphosarcome chez les souris exposées à des champs électromagnétiques. Ibid. 260, 2639-2642.

12. Rivière, M . R ., Guérin, M ., 1966. Nouvelles recherches effectuées chez les rats porteurs d'un lymphosarcome lymphoblastique soumis à l'action d'ondes électromagnétiques associées à des champs magnétiques. ibid. D262 2669 - 2672.

13. Pautrizel, R ., Rivière, M ., Prioré A ., Berlureau, F . 1966. Influence d'ondes électromagnétiques et de champs magnétiques sur l'immunité
de la souris infestée par *Trypanosoma equiperdum*. ibid. D263.
579 - 582.

14. Pautrizel, R., Rivière, M., Prioré A., Berlureau, F., Pautrizel A .N. 1969.

Stimulation, par des moyens physiques, des défenses de la souris et du rat contre la trypanosomose expérimentale. ibid. D268.
1889 - 1892.

15. Pautrizel, R., Rivière, M., Prioré A., Berlureau, F., Pautrizel A.N. 1970.
Action de champs magnétiques combinés à des ondes électromagnétiques sur la trypanosomose expérimentale du lapin.
ibid. D271, 877 - 880.

16. Pautrizel, R ., Prioré A ., Mattern, F ., Pautrizel A . N . 1975.
Stimulation des défenses de la souris trypanosomée par l'action d'un rayonnement associant champs magnétiques et ondes électromagnétiques. ibid. D280, 1915 - 1918.

17. Pautrizel, R ., Prioré A ., Dallochio, M . , Crockett, R . 1972. Action d'ondes électromagnétiques et sur les modifications lipidiques provoquées chez le lapin par l'administration d'un régime hypercholestérolé. ibid D274, 488 - 491.

18. Prioré, A ., 1963. Procédé et dispositif de production de rayonnements
utilisables notamment pour le traitement de cellules vivantes. République Française : *Brevêt d'invention* P.V. N°. 899.424, N°. 1.342.772.
Délivré par arrêté du 7 Octobre 1963.

19. Berteaud, A . C ., Bottreau, A . M ., Prioré, A., Pautrizel, A. N., Berlureau , F., Pautrizel, R . , 1971. Essai de corrélation entre l'évolution d'une affectation par *Trypanosoma equiperdum* et l'action d'une onde électromagnétique pulsée et modulée. *Compt. Rend. Acad. Sci.* D272, 1003 - 1006.

R-5-78

APPENDIX

Brevet d'Invention. P.V. no. 889.414 No. 1.343.772 Classification Internationale: A 61 k-H OS g

Procedure and assemblage for production of radiation especially serviceable for the treatment of living cells.

Antoine Priore
Requested 1 June 1962, 14.52 hours, Paris
Released by decree (arrête') of 7 Oct 1963

The invention deals in a general manner with radiation capable of penetrating matter. More exactly, it aims at a procedure and an apparatus making it possible to obtain a combination of radiations of different types able to penetrate matter and especially to penetrate intimately living organic tissues in order to produce in them certain effects, particularly in human tissues with a view to a therapeutic effect without destroying essential elements such as the enzymes.

In conformity with the present invention, one emits in a cavity a stream (rayonnement) of electrically charged particles upon which one superposes electromagnetic radiation of the centimeter wavelength range, the wavelength of which is preferably between 3 cm and 80 cm, and one directs the resulting radiation emerging from the cavity on to the object to be irradiated.

This applicant has shown that the penetration and, in particular, the curative effects are very distinctly improved when one gives the electromagnetic radiation a frequency determined as a function of the organ or the tissue to be penetrated or to be treated. For example, a wavelength of 14 cm is suitable for the liver and a wavelength of 19.5 cm for the spleen.

Preferably, the stream of charged particles is accelerated in a particle accelerator in such a way as to increase the force of penetration.

The resulting radiation is advantageously applied and directed upon

the target, that is to say, upon the tissue to be penetrated, by the intermediary of a tube which is the site of electric fields and of magnetic fields for acceleration and control, the said radiation being preferably guided and/or reflected by a rotary deflector placed in the tube.

It is often advantageous to modulate or impose rhythm on this stream of particles by means of variable magnetic and/or electric fields so as to augment still more the force of penetration. This rhythm is preferably consistent, especially in medical applications, with the intrinsic period of the tissue to be penetrated or of the neighboring tissues, for example, muscle. These intrinsic periods are well-known in medicine and are applied, particularly, for diathermy; they are situated in the wavelength range from 1 m to 50 m and more especially from 1 m to 18 m.

R-5-78

Preferably, one arranges to modulate the emission of radiation, the accelerating electric and magnetic fields, and perhaps also the rotary deflector, to the cardiac rhythm of the subject.

It seems that the result obtained by the invention in the treatment of maladies of living cells (vegetable or animal) are due to certain phenomena which will be described, it being understood that this exposition will not circumscribe the invention.

As a function of is electro-physico-chemical constitution, the cellular pair nucleus-protoplasm is endowed with electric conductivity in direct relationship with ion exchange processes provoked by metabolic phenomena. One finds in tissues the presence of an accumulation of electricity at different potentials according to the different cellular densities of the tissues.

The work of Renshaw, Forbes, Morison, Amassian, de Vito, Buser, Albe-Fessard, Tauc, Adrian, etc. has shown with the aid of micro-electrodes the existence of slowly oscillating elementary electric activity in the interior of cells; it can be thought that the rhythmeur (or pace-maker) is achieved by the oscillatory electro-magnetic system comprising the cell nucleus. This nucleus, in effect, is made up essentially of tubular filaments of insulating material (related to chitin) containing in its interior an electrically conducting saline liquid, and these filaments, coiled upon themselves, can be considered to constitute real little oscillatory circuits.

The recent work of Warson [sic] in America, as well as that of French scientists, including a communication from Polonsky, Donzon and Sadron presented to the *Acade'mie des Sciences* by Prof. Frances Perrin on 16 May 1960 (*Rec. comptes rend. heb.*, 250, No. 20, 3414-3416) making it clear that experimental samples of solid DNA manifest properties analogous to those known in ferroelectric materials, makes plausible the hypothesis that a potential difference may exist between nucleus and periphery of cells. Certain recent theories go even further and liken the cell to an electronic receiver-emitter device normally functioning in harmony with the ambient media. The oscillatory system of damped waves, constituted by the cell nucleus, would behave in accordance with the laws governing

semi-conducting materials.

The applicant is led to the conviction that in a normal state of physico-electric equilibrium, the cell nucleus is positively charged but can acquire a negative surcharge following phenomena analogous to polarization.

The invention, especially, enables organs afflicted by this inversion of their electric potential, particularly in the case of the pathologic negative surcharge of cancerous nuclei, to recover their former equilibrium.

The following description in regard to the attached drawing, given as a non-restricting example, will make it possible to understand how the invention can be realized, the details which emerge both from the

R-5-78

text and the drawing being, of course, part of the said invention:

Fig. 1 is a schematic section showing an apparatus for production and emission of an electromagnetic field combined according to the invention.

Fig. 2 is a frontal elevation of the cathode, taken from the right of Fig. 1.

Fig. 3 is a section through III-III in Fig. 1.

Fig. 4 is the overall scheme of the electric supply.

Fig. 5 is a view analogous to Fig. 1 showing another mode of implementation.

Fig. 6 is a section through VI-VI in Fig. 5.

Fig. 7 represents schematically an apparatus for pulsing the electric current.

Fig. 8 is the circuit of an amplifier permitting activation of the apparatus of Fig. 7 at the cardiac frequency.

Fig. 9 is the circuit of an oscillator permitting modulation of the electric current according to a wavelength between 1 m and 18 m.

The assemblage of Fig. 1 contains an apparatus 1 emitting electrically charged particles 2 in a cavity or passage 3, a cyclotron 4 accelerating the particles 2 and sending them into a cavity 5 forming a tube into which merges another cavity 6 acting as wave-guide for electromagnetic radiation of frequency in the centimeter range emitted by a magnetron 7. The cavity 8 formed by the joining of tube 5 and waveguide 6 leads into a tube 9 in which the resulting radiation is accelerated and aligned. The interior of the cavity-formed by the assemblage of elements 1, 3, 5, 6, 8 and 9 contains argon at a pressure of 2 mm mercury.

The particle emitter 1 consists of an electron gun comprising a plate 10 and a cathode 11.

The cathode 11 is of molybdenum and has the very special form represented in Figs. 1 and 2. It consists of a rim 11a connected by two aligned spokes 11b to a hub 11c pierced by a hole 11d with its axis along XX'. The rim 11a is in two parts (as one sees in Fig. 1) which may be held together by screws (for example) forming a cavity of revolution 11e traversed by a number of holes 11f parallel to the axis XX' and regularly spaced. The filament for heating, 12, situated in the interior of the cavity 11e and is connected to the power supply conductors 12a.

The best results are obtained with a cathode 11 of molybdenum. The applicant has obtained satisfactory, but slightly inferior, results with tungsten cathodes. It turns out that molybdenum, and to a lesser degree

tungsten, are the metals whose valency is closest to the mean valency of the chemical molecules constituting living tissues and more particularly those of human beings. One might well seek to use this fact to explain scientifically the phenomena involved, but it is understood that the invention is not limited by any scientific explanation. Concerning, on the other hand, the gas present in the apparatus at low pressure, the best results have been obtained with argon; the applicant has also obtained satisfactory, but slightly inferior, results with other gases of the rare gas series.

Surrounding the tube which constitutes the electromagnetic chamber are arranged: an electromagnet 13 with its winding 13a, placed at the level of the cathode, and the accelerating coils 14 and 15. Other accelerating coils 14, 15 and 16 are similarly dispersed around the cavities 3, 5 and 8.

The two semi-circular boxes or "dees" 4a of the cyclotron 4 are placed in the usual manner between the poles of the frame around which are wound the accelerating coils 4b and 4c.

The magnetron 7 is of a familiar type and must be capable of emitting in the cavity 3 a centimeter wave of adjustable wavelength from 3 cm to 80 cm.

The lower portion of the tube 9, for acceleration and alignment, contains a cathode 17 resembling the cathode 11, with a filament 17a. This cathode 17 is supported by a hollow pillar 18 pierced by holes 18a close to its junction with the bottom of tube 9. This pillar 18 communicates with a tube 18b emerging on the axis of a rotary deflector 19 carrying at each end a "crown" of graphite plates 19a inclined at 45 degrees to the vertical. The rotating axis 19b of the rotary deflector is mounted in a support 20 fixed to the interior of tube 19 and carries at its upper extremity magnetic bobs 19c which ensure that it will be set in motion in cooperation with the magnetic bobs 21a mounted on the shaft 21b of a motor 21. The lower extremity of the rotary deflector 19 is composed of a piece of molybdenum or of tungsten 19d in the form of a pyramid whose apex is opposite the open end of the tube 9.

The hollow base 18 and the tube 18b can be of a borosilicate glass of low coefficient of expansion such as that sold under the trademark "Pyrex". They may also be of quartz. Tube 9 itself can be of "Pyrex" as above or of another glass of the quality currently used for the manufacture of electronic tubes, but its bottom 9a, which is traversed by the radiation, is advantageously made of quartz.

The duct 8 joins the tube 9 by way of several tubulures[sic] such as 8a and 8b directed in vertical planes towards the plates 19a at a certain angle, which is advantageously about 22 1/2 degrees. An electromagnet 23 analogous to the electromagnet 13 of the emitter tube 1 is placed around the cathode 17. Similarly, accelerator windings 24 are disposed around the tube 9. This tube also carries, at positions indicated in the drawing, three elec-

trodes 25, 25a, and 25b surrounded by windings 26, 26a, and 26b, respectively. The drawing shows the supply lines, 17b, 17c of the cathode and its filament and that of the plate 22a.

The basic plan of the electric supply is represented in Fig. 4. The part 27 feeds an initial branch with low voltage alternating current: this consists of a rectifier 28 (e.g., a Kenotron) whose rectified current is modulated at a frequency variable between 30 and 120 pulses per minute of means of a resistance 29, the control apparatus for which will be described with reference to Figs. 7 and 8. The current so modulated is passed through the electromagnets 13 and 23 in such a manner as to generate, normal to the cathodes 11 and 17, a modulated field of 10,000 to 20,000 gauss.

The part 27 also feeds a variometer (interrupter) 30 which modulates the current of this part at a variable frequency 30 to 120 pulses per minute, the current pulsed in this way serving to feed the remainder of the installation, to wit: The magnetron, 7;

> A converter 31 whose excitation is modulated at a variable frequency 300 to 900 Hz, yielding a doubly modulated current (first at 30-120 pulses per minute, then at 300-900 Hz) which feeds the coils 15, 16 and 26;
>
> Another converter 32 producing a low voltage direct current modulated at 30-120 pulses per minute by the variometer 30. This current feeds the motor 21 as well as the motors driving the variometer 30 and the apparatus controlling the resistance 29.

The current produced by the converter 32 also feeds a voltage step-up apparatus 33 consisting of a vibrator followed by a transformer and a rectifier, and producing a direct current varied at 30 to 120 pulses per minute imposed by the variometer 30. The maximum value of the voltage produced by the apparatus 33 is, for instance, 300,000 V, but this value may vary up or down, depending on the power one wishes to operate with.

The current produced by the voltage step-up apparatus 33 feeds the coils 4b of the cyclotron and 24 of tube 9, as well as a rheostat 34 permitting regulation of voltage to the desired value between 5000 V and 70,000 V. This voltage is applied to an oscillatory circuit 35 which produces oscillations at a frequency variable at will of wavelength between 1 m and 18 m. The current available to the output terminals 35a, 35b of this oscillating circuit 35 is thus a high tension current modulated first at 30 to 120 pulses per minute (by the variometer 30) and secondly at a wavelength 1-18 m. This current feeds the coils 4c and 14; the electrodes, 25a, and 25b are connected to terminals 35a and 35b, respectively, and electrode 25 is connected to the midpoint 35c.-

Cathodes 11 and 17, the "dees" of the cyclotron, and the plates 10 and 22, not shown in the diagram of Fig. 4, are connected to the output of the step-up assembly 33, while the heating current for the filaments 11e and 17a is furnished by the resistance 29.

R-5-78

To operate the apparatus, one adjusts the controls of the resistance 29 and the variometer to the desired rhythm; in medical applications, this is advantageously the subject's cardiac rhythm: This rhythm is thus imposed upon the whole installation. The cathode 13 emits toward the left a stream of positively charged particles 2, which are concentrated by the electromagnet 13 and accelerated by the coils 14, 15 and 16 and by the cyclotron 4. Superimposed on this particle stream in the duct 8 is the electromagnetic radiation from the magnetron 7, which is adjusted to the wavelength found by experience to be most appropriate to the cells which are to be penetrated, e.g., 14 cm for the liver and 19.5 cm for the spleen. The resulting radiation is deflected, directed and accelerated in tube 9 and is directed by way of the base of this tube toward the target to be penetrated.

It must be noticed that the magnetic field of the coils 15, 16 and 26 is modulated, by means of the converter assembly 31, at a frequency adjustable between 300 and 900 Hz. This modulation has the effect of concentrating the particles, that is to say to detach them from the walls of the tubes, and it also permits an appreciable saving in weight of the iron cores of the coils. One chooses the highest frequencies (i.e., around 900 Hz) when one wishes to produce hard radiation at the exit of tube 9, and the lower frequencies for soft radiatiot[sic] (radiation?).

The unidirectional magnetic fields of the coils 4c of the magnetron (sic) (cyclotron?) and the accelerator coils 14 as well as the electric field of electrodes 25, 25a, 25b, are modulated by the oscillatory circuit 35 at a chosen wavelength between 1 m and 18 m. In medical applications notable one selects the wavelength that best suits the organ to be treated or its surroundings, such as muscle. As already indicated, experience with diathermy makes it possible to determine the most suitable wavelength.

It must be noted that the resulting radiation already posesses, in tube 8 (Fig. 1) a considerable penetrating force. One could therefore use the assemblage described by omitting tube 9 and terminating the cavity at the end of tube 8 by means of a glass or quartz base, the resulting radiation being accelerated and directed, for

example, immediately upstream from the base, by a final coil (not shown) surrounding tube 8, However, tube 9 appreciably improves the results.

Figs. 5 and 6 represent another mode of realizing the assemblage in accordance with the invention, in which the elements playing the same role are indicated by the same signs as in Figs. 1 and 3, modified by primes.

The arrangement of the connecting ducts of Fig. 5 in relation to tubes 1' and 9', to the magnetron 7' and the cyclotron 4', is different from that of Fig. 1 and has been used successfully by the applicant. The waveguide 6' of the magnetron 7' opens into the end of tube 1' and the duct 3' carrying the resulting radiation, divides into two branches: Branch 36 which conducts the radiation directly to tube 9', and branch 37 which conducts it to the cyclotron 4'. This blocks the electromagnetic radiation and accelerates the stream of particles which is passed by way of duct 38 to the tube 9'.

R-5-78

This arrangement can be used with a particle emitter and an accelerator and director tube similar to tubes 1 and 9 of the preceding figures. However, tubes 1' and 9' of Figs. 5 and 6 are constructed in a different manner with regard to their cathodes and anodes.

Tube 1' contains a first electrode 11' exactly like that of the cathode 11 of tube 1, and an identical second electrode 39 furnished with a filament 39a. Tube 9' (Fig. 6) contains in its lower part a first electrode 17' with filament 17'a and an identical second electrode 40 with its filament 40a.

In normal operation, i.e., to produce radiation identical to that described in connection with Figs. 1 to 4, electrode 11' serves as cathode and electrode 39, given a positive potential, plays the role of the plate 10 in Fig. 1, the filament 39a being unheated. Electrode 40 and its filament 40a are disconnected; cathode 17' and plate 22' are supplied. as in Fig. 3.

To obtain particularly penetrating radiation, the polarities are reversed: Electrode 11' becomes an anode and its filament 11'e is disconnected, while electrode 39 receives the cathode supply and its filament 39a is heated; electrode 17' (with filament 17'a disconnected) and electrode 22' become anodes, while electrode 40 serves as cathode and its filament 40a is heated. For example, one can establish a potential difference of 250,000 V between 40 and 17', and 50,000 V between 40 and 22'. It is understood that in these conditions the cathode 39 emits to the left a steam of electrons which is concentrated, modulated and accelerated by the various coils and in the cyclotron, the polarities of which must of course be established in the proper direction. This stream of electrons is combined with the centimeter radiation emitted by the magnetron 7', resulting in tube 9' in the emission of very hard x-rays, modulated at the chosen frequencies, combined with the centimeter radiation of the desired frequency.

The assembly shown in Figs. 5 and 6 thus permits one to obtain at will either very hard x-rays or the radiation described in connection with the preceeding diagrams.

The following description, referring to Figs. 7 and 9, relates to certain

details of the apparatus used for modulating the electric current.

Fig. 7 represents schematically the apparatus for control of the resistance 29 and the variometer 30. The variable resistance 29 consists of a graphite helix 29a immersed in a conducting liquid 29b; another electrode 29c, also of graphite, partly immersed in the liquid, is set into up-and-down oscillations by a connecting rod 41a linked to a fly-wheel 41. The fly-wheel is set in rotation, through the intermediary of a worm transmission 41b, by an axle 42 which can be driven, thanks to a double clutch 42a, 42b, either by a motor 43, or by the shaft 30a of the variometer 30. The variometer 30 is driven by a motor 44 by ways of the worm transmission 44a.

R-5-78

If the fly-wheel 41 is driven by the motor 43 at the proper speed, the resistance 29 causes the supply current of the electromagnets 13 and 23 (Figs. 1 and 4) to vary at the chosen rhythm which as we have seen can be between 30 and 120 pulsations per minute and which can be checked by means of a rotation counter shown schematically in 45. In this case, the motor 44 of the variometer 30 can be stopped and the remainder of the installation is then not pulsed. If, on the contrary, the fly-wheel 41 is engaged in 42b and disconnected from 42a, the motor 44 activates the variometer 30 and the resistance 29 at the chosen rhythm.

The speed of rotation of motors 43 or 44 can be regulated at the required speed, corresponding visibly to the cardiac rhythm of the subject, by acting upon the excitation of these motors by means of a manually adjustable rheostat. If one prefers to regulate the speed of motors 43 or 44 in direct accord with the cardiac rhythm of the subject, one can use an assembly such as that represented schematically in Fig. 8: At 46 there is a contact microphone which, when placed over the subject's heart, produces impulses. These are amplified in the circuit shown and applied to an electromagnet at 47 with a moving core which activates a rheostat; this in turn regulates the current running the motors 43 or 44.

Fig. 9 shows schematically the principle of the oscillating circuit 35. The rectified potential, adjustable between 5000 V and 70,000 V by means of rheostat 34 (Fig. 4) is applied between the terminals 48 and 48a. Terminal 35c (which is also connected to electrode 25, Figs. 2 and 4) is connected to the neutral point on the high tension side of the transformer which is a component of the step-up assembly 33 (Fig. 4). The terminals 49 and 49a receive the heating current produced by the resistance 29. The variable condensers 50 and 50a make it possible to regulate to the desired wavelength (which, as seen, is between 1 m and 18 m) the current available at the output terminals 25a and 25b of the oscillator shown.

The modes of implementation described have been successfully carried out but it is self-evident that these are only examples, and that they might be modified, notably by substitution of equivalent techniques, without going beyond the bounds of the invention. In particular, the electron gun 1 or 1' could be replaced by another

charged particle generator.

R-5-78

Resume'

The invention includes especially:

1. A procedure for obtaining a combination of radiations of different kinds capable of penetrating matter, especially of intimately penetrating living tissues in order to produce in them certain effects and more particularly in human tissues with a therapeutic effect in mind, consisting of the emission in a cavity of a stream of electrically charged particles, upon which is imposed electromagnetic radiation in the centimeter wavelength range, and the guiding of the resulting radiation emerging from the cavity toward the target to be penetrated.

2. Types of implementation exhibiting the following features taken separately or in the various possible combinations:

a. The centimeter radiation has a wavelength between 3 cm and 80 cm;

b. This wavelength is set at the value found by experience to be most suitable for the tissues to be penetrated, e.g., 14 cm for liver and 19.5 cm for spleen;

c. The particle stream is accelerated by magnetic and electric fields such as those which are used in particle accelerators;

d. The resulting radiation is accelerated and guided, before its emergence from the cavity, by means of electric and magnetic fields;

e. The resulting radiation is guided, before its emergence from the cavity, by means of deflecting and/or reflecting surfaces;

f. The stream of particles and/or the resulting radiation are concentrated and accelerated by means of individual magnetic fields modulated at a frequency between 300 and 900 Hz, the highest frequencies being used to produce hard rays and the lower frequencies to produce soft rays;

g. The emission of the particle stream, as well as the acceleration and concentration of the radiation resulting at its exit from the cavity, are aided by individual magnetic fields of temporally variable intensity,

advantageously pulsed at a rhythm between 30 and 120 pulsations per minute and preferably at the cardiac rhythm of the subject;

h. The assemblages for production of the resultant radiation are pulsed in their entirety at the same rhythm as the magnetic fields according to g;

i. The stream of particles and/or the resulting radiation are accelerated and concentrated by direct magnetic and/or electric fields modulated at a wavelength between 1 m and 50 m and preferably between

R-5-78

1 m and 18 m, this wavelength being advantageously chosen as that which is known in diathermy as suitable for the tissues to be penetrated or for the surrounding tissues.

3. An assemblage making it possible to obtain a combination of a stream of electrically charged particles and a beam of centimeter electromagnetic waves in order to penetrate intimately and to irradiate living tissues and particularly human tissues, the said assemblage comprising at least a particle emitter, means for channeling said particles in a cavity serving as waveguide for an emitter of electromagnetic radiation of which the wavelength is included in the range of centimeter waves and preferably adjustable from 3 cm to 80 cm, means for generating in the cavity magnetic field for acceleration and concentration and means for concentrating and accelerating the resulting radiation at the exit of the cavity.

4. Modes of implementation with the following details taken separately or in the various possible combinations:

a. The particle emitter is an electron gun of which the anode is at the end of the cavity and the cathode is situated further along, this cathode being hollow and placed in the magnetic field of an electromagnetic in order to ensure emission of a stream of particles towards the mouth of the cavity;

b. The cathode consists of a rim connected by two aligned spokes to a hub, the said rim being provided internally with an annular housing containing a heated filament and the said housing communicating with a number of holes arranged annularly and traversing the rim transversely;

c. The cathode is made of a metal of valency close to the mean valency of the chemical molecules comprising the tissue to be penetrated;

d. The cathode is of tungsten or preferably of molybdenum;

e. The cavity contains a rare gas, preferably argon, under a vacuum of

the order of 2 mm Hg;

f. The cavity contains a duct carrying at least part of the stream of particles to a cyclotron and a duct bringing back into the cavity the particles accelerated in the cyclotron;

g. The cavity passes through several coils, the supply current for the various coils being capable of undergoing modulation at different frequencies;

h. The downstream end of the cavity is composed of a tube containing, in the part from which the resulting radiation must emerge, a cathode and an electromagnet which may be identical to the cathode and the electromagnetic according to para. a, an anode near the other end, and a rotary deflector consisting of a number of plates arranged *en*

couronne on a rotor facing the incident radiation at such an angle that the radiation deflected and/or reflected is directed toward the cathode, several coils whose supply current can be modulated being distributed over the length of the tube;

i. This tube also contains electrodes supplied by alternating current generating an electric field at the level of the rotary deflector, each of the said electrodes being surrounded by a bobbin of which the supply current can be modulated;

j. Methods are anticipated for modulating, at an adjustable rhythm between 30 and 120 cycles per minute, the supply current of the electromagnetic according to a and h, and preferably to modulate the supply current of the rest of the assemblage at the same rhythm;

k. Methods are anticipated for modulating, at a frequency between 300 and 900 Hz, the supply current of the bobbins surrounding according to i and one or several coils according to g;

l. Methods are anticipated for modulating, at an adjustable wavelength between 1 m and 50 m and preferably between 1 m and 18 m, the supply current of the electrodes according to i, of one or several of the coils generating the magnetic field of the cyclotron;

m. The electrodes of the electron gun consist of two electrodes identical to the cathode according to a, b, c, or d, the cathode of the tube according to h is replaced by a double electrode reproducing the arrangement of the electrodes of the electron gun, and methods are anticipated for reversing at will and simultaneously the polarities of these two pairs of electrodes and the direction of flow of the current supplying the acceleratory coils, a first pattern of polarities assuring the functioning of the apparatus in the conditions which are laid down according to a, and a second pattern of polarities assuring emission in the cavity of a stream of electrons combined with the centimeter radiation and giving rise, at the exit of the said tube, to emission of very hard x-rays.

N° 1.342.772 M. Priore 5 planches. - Pl. IV

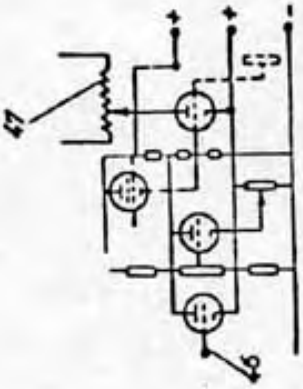

Fig. 8

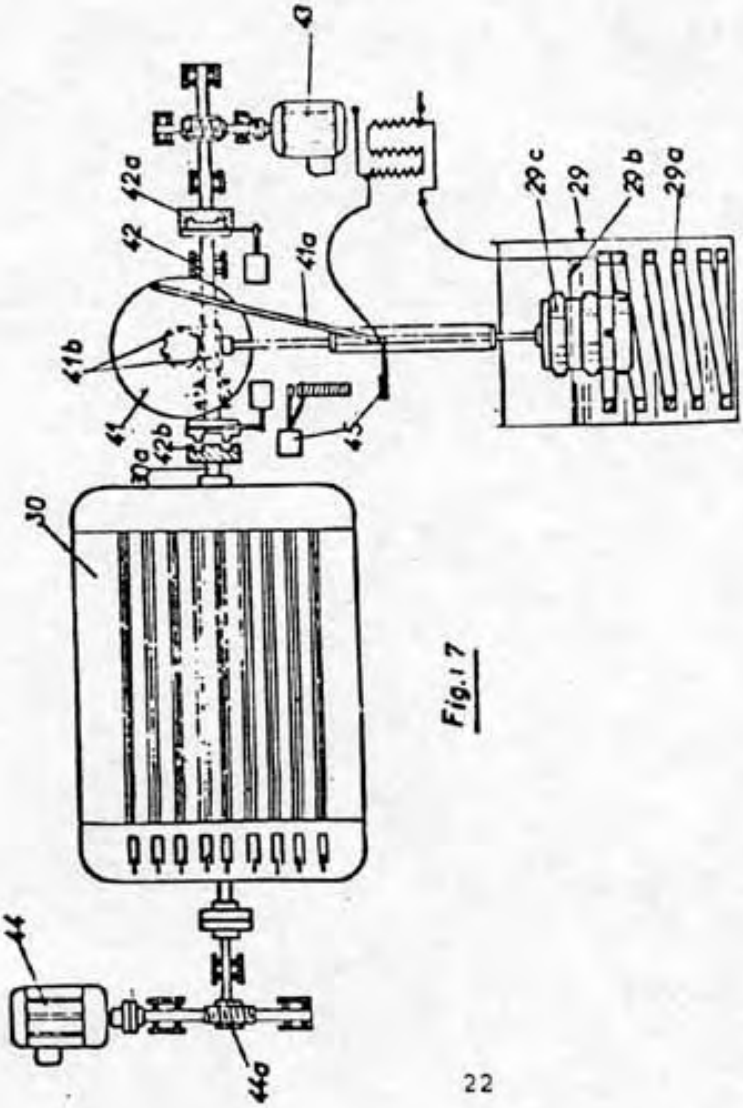

Fig. 7

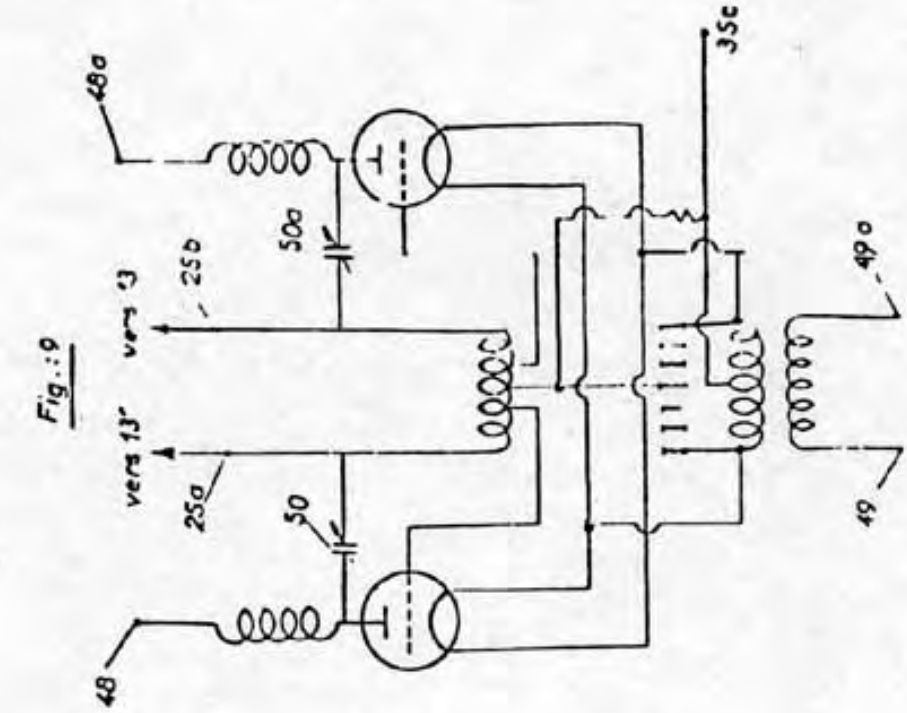
48a
50a
25b
vers 13
vers 13'
25a
50
48
35c
49a
49

Fig.: 9

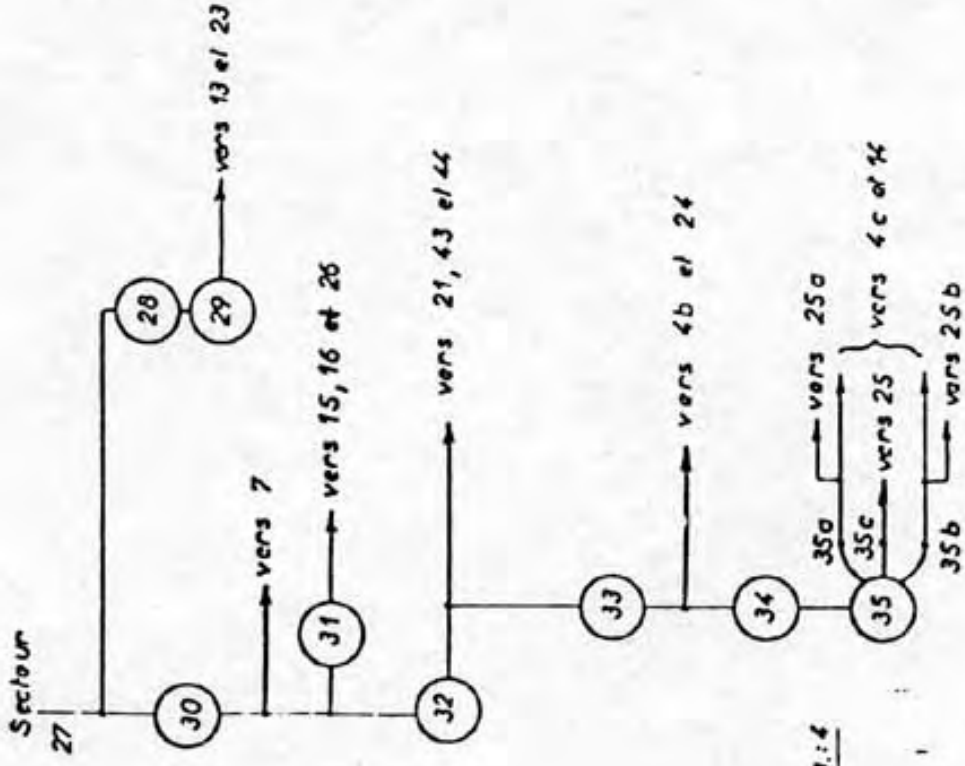
Secteur
27
30
28
29
vers 13 et 23
vers 7
31
vers 15, 16 et 26
32
vers 21, 43 et 44
33
vers 4b et 24
34
35a
35c
35b
35
vers 25a
vers 25
vers 4c et 14
vers 25b

Fig.: 4

N° 1.342.772 M. Priore 6 planches. - Pl. I

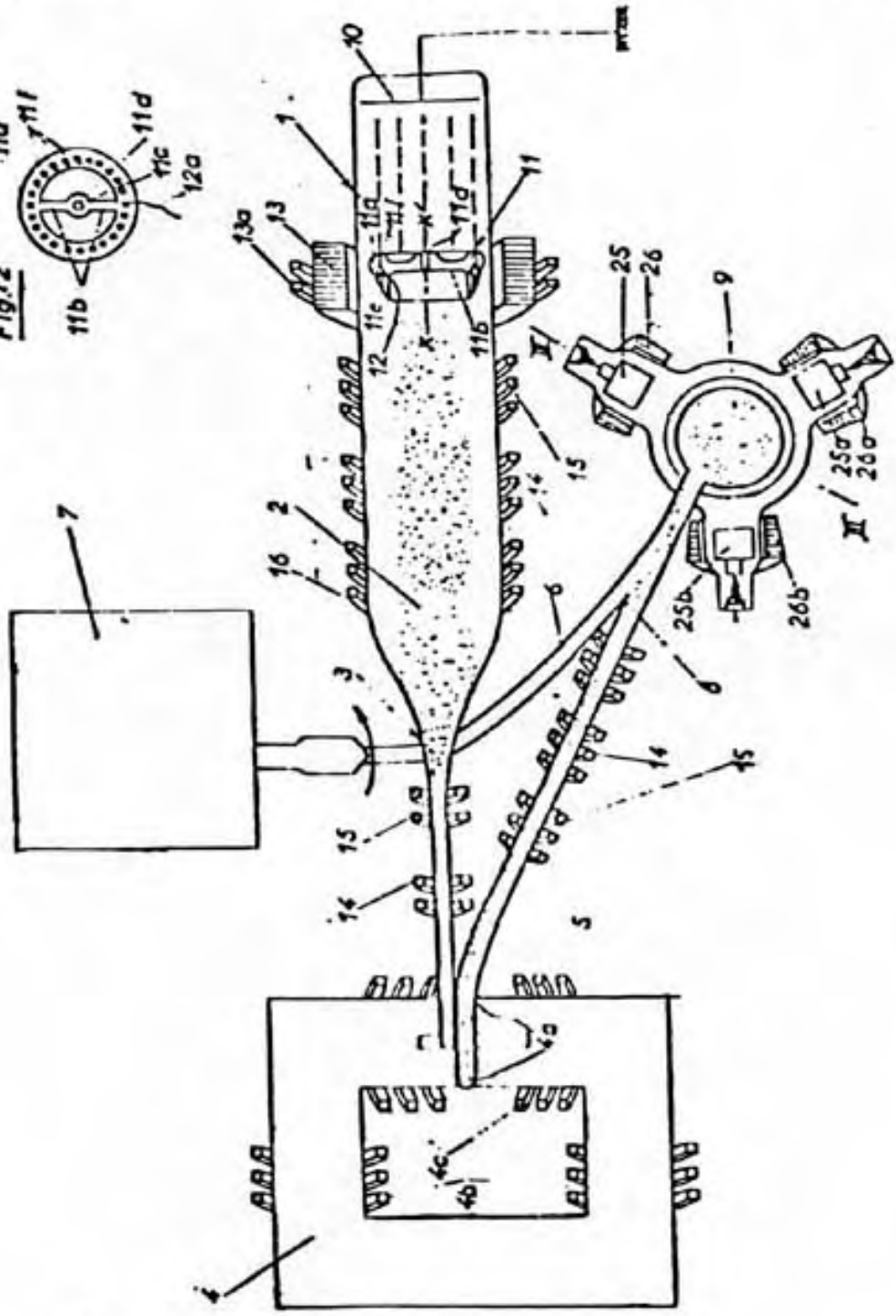

Fig.1

Fig.2

Fig. 3

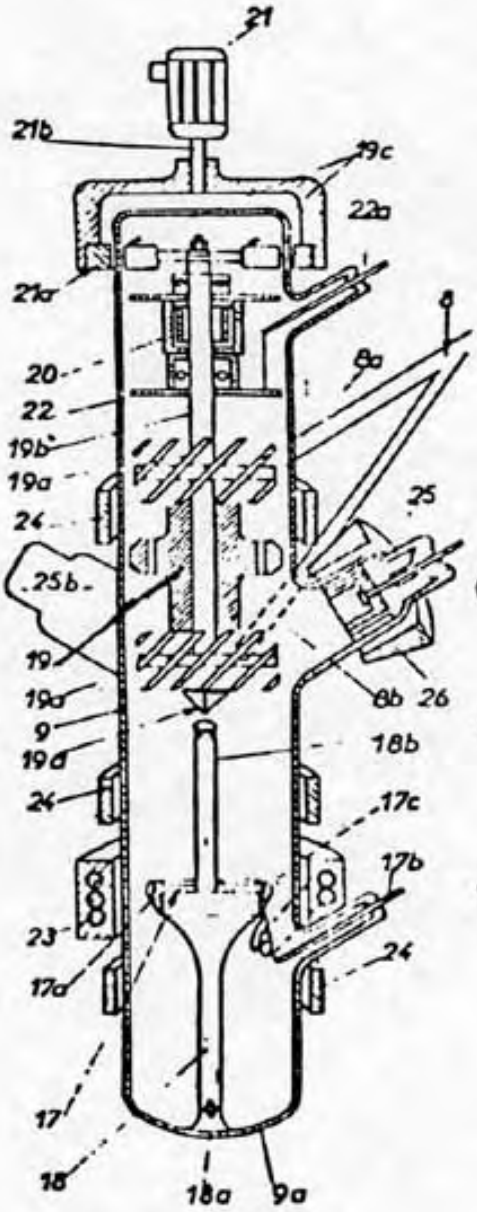
21
21b
19c
22a
21a
20
22
19b
19a
24
25b
19
19a
9
19d
24
23
17a
17
18
18a
9a
8a
25
8b
26
18b
17c
17b
24

Fig. 6

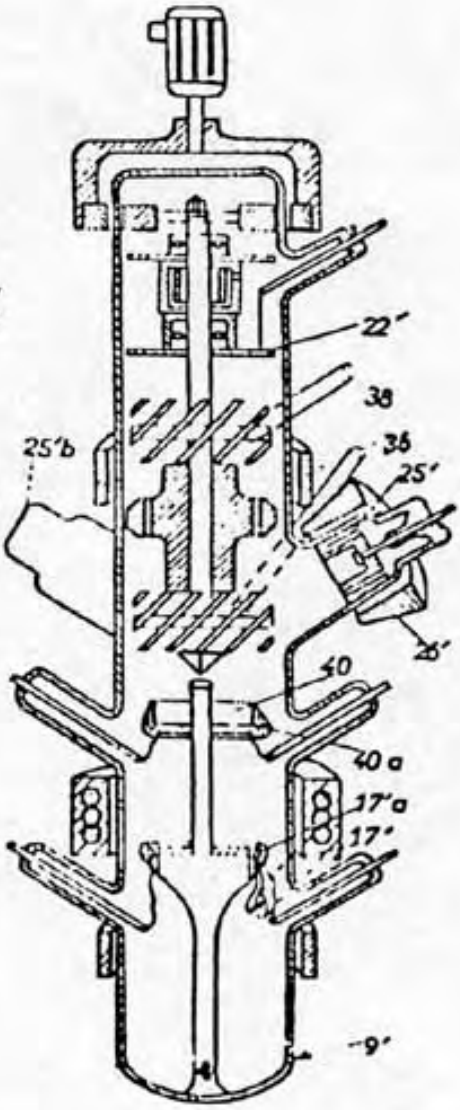
22'
38
36
25'b
25'
26'
40
40a
17'a
17'
9'

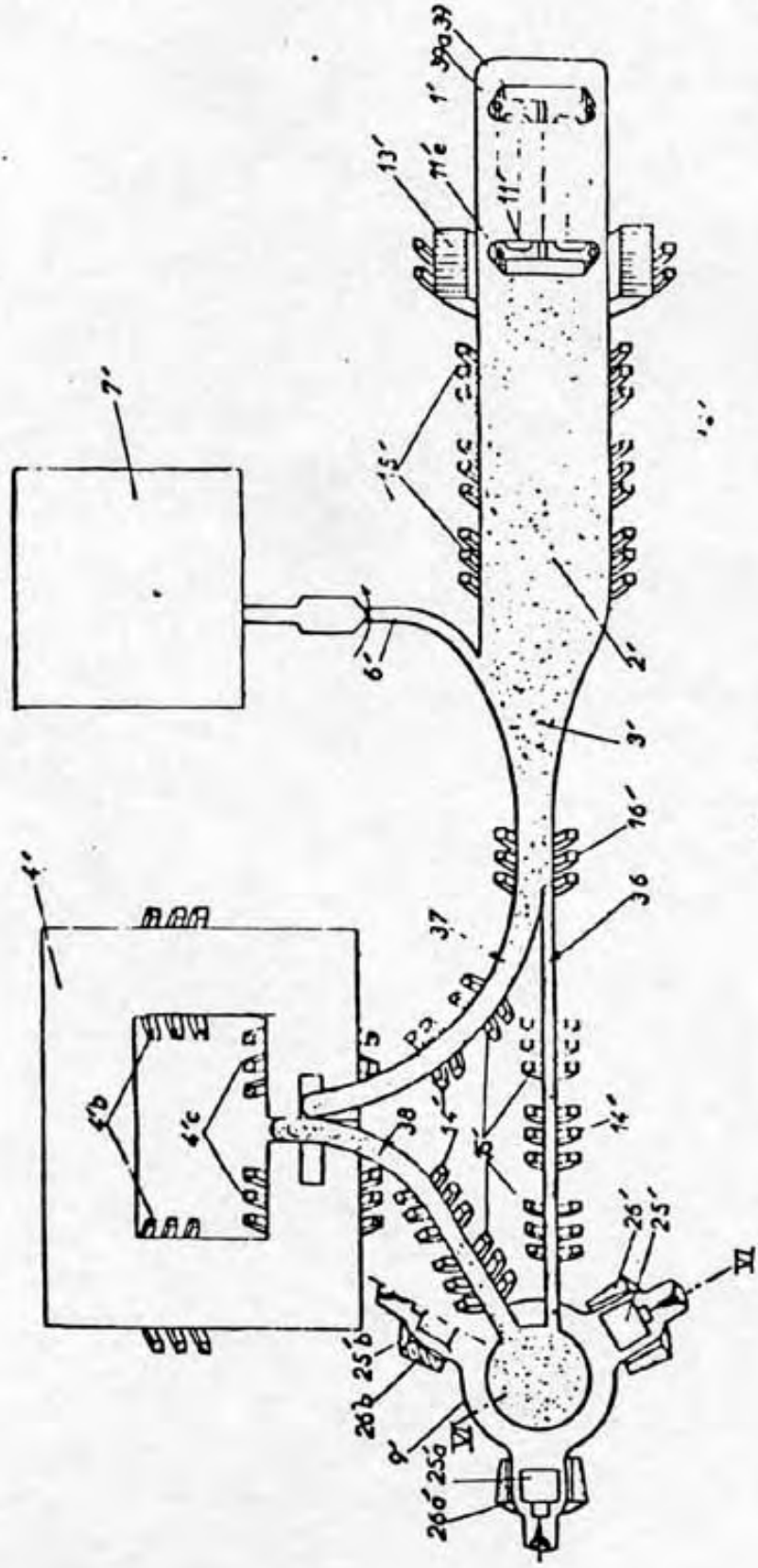
1'
39
13'
11'e
11'
7'
15'
6'
2'
3'
16'
36
37
4'
4'b
4'c
38
14'
5'
26'
25'
VI
25'b
26'b
9'
VI
25'a
26'a

Fig. 5

Utilizing Scalar Electromagnetics To Tap Vacuum Energy

Floyd Sweet, Association of Distinguished American Scientists
2311 Big Cove Road, Huntsville, Alabama 358010

T. E. Bearden, Association of Distinguished American Scientists
2311 Big Cove Road, Huntsville, Alabama 35801

(Also published in: Proceedings of the 26th Intersociety Energy Conversion Engineering Conference (IECEC Conf),
August 4-9, 1991, Boston, Massachusetts. Vol 4, Advanced Energy Concepts, pp. 370-375.)

Copyright © 1991 by T.E. Bearden & F. Sweet. All Rights Reserved.

ABSTRACT

Based on E.T. Whittaker's previously unnoticed 1903-1904 papers which established a hidden bidirectional EM wave structure in a standing forcefield free scalar potential, a method of directly engineering the ambient potential of the vacuum has been developed and realized experimentally.

Adding Whittaker's engineerable hidden variable theory to classical electro-magnetics, quantum mechanics, and general relativity produces supersets of each discipline. These supersets are joined by the common Whittaker subset, producing a unified field theory that is engineerable and tested.

By treating the nucleus of the atom as a pumped phase conjugate mirror, several working model energy units have been produced which excite and organize the local vacuum, increase the local virtual photon flux between local vacuum and nucleus, establish coherent self-oscillations between the local excited vacuum and the affected nuclei, utilize the self-oscillating standing wave for self-pumping of the nuclei/mirrors, introduce a very tiny signal wave to the mirrors, and output into an external load circuit a powerful, amplified, time-reversed phase conjugate replica wave at 60 Hertz frequency and nominal 120 volt sine wave power.

Several models have been built, ranging from 6 watts early on to one of 5 kilowatts. Both closed batteryless systems with damped positive feedback and open loop systems with battery-powered input have been successfully built. Open loop power gains of from 5×10^4 to 1.5×10^6 have been achieved.

Antigravity experiments have also been successfully conducted where the weight of the unit was reduced by 90% in controlled experiments, with a signal wave input of 175 microwatts and an output of 1 kilowatt.

The basic theory of the device is briefly explained and experimental results presented. In the demonstration session, a videotape of one operating open-loop unit with a 1.5 x 10^6 power gain is planned, as is the demonstration of an actual working model closed-loop system with a nominal rating of 500 watts, and without external power input of any kind.

The units are solid state, with no moving parts. Each of them comprises a unique form of self-powered vacuum triode of extraordinary gain, where the cathode power and plate power are freely furnished by the vacuum, and only a small grid signal need be furnished either from an external power source or by clamped positive feedback from the device's output. The output is negative energy, and some of its unique characteristics are pointed out.

Implications of the experimental application of the Sweet vacuum triode, the Bearden approach to the nucleus as a pumped phase conjugate mirror, and the unified field theory based on Whittaker's engineerable hidden variable scalar EM potential theory are also briefly addressed.

SCALAR ELECTROMAGNETICS

In 1837 Sir W.R. Hamilton said,

"The notion of time may be unfolded into an independent pure science... a science of pure time is possible."

As is well-known, the fundamental units utilized in physics are arbitrary. It is even possible to construct all of physics on a single unit, time. This oddity shows the truth in Hamilton's statement; it is even more odd, because quantum mechanically time is not an observable. This means that the observable world can be modeled completely in terms of the nonobservable, which is essentially what modern quantum mechanics is now doing.

Hamilton viewed his magnificent quaternions as essentially having accomplished the mathematical structuring of time. Maxwell's original EM theory, as is well-known, was modeled in Hamilton's *quaternions*, not in the highly curtailed Heaviside/Hertz vectors erroneously taught today as "Maxwell's theory."

Not a single one of the present so-called "Maxwell's" vector equations ever appeared in a book or paper by James Clerk Maxwell.

For some years the author has worked on an extended electromagnetics theory, involving the scalar component of the quaternion. [Ref. 1]

In Maxwell's original *quaternion* theory, this scalar component often remains when the directional components zero. Further, it then enfolds vectors and functions of vectors inside, in a hidden variable manner. Specifically, the author has patterned a unified field theory concept upon the previously unnoticed but remarkable early work of E.T. Whittaker. [Ref. 2]

In two fundamental papers in 1903 and 1904, Whittaker showed that all present vector EM can be replaced by scalar potential interferometry, and that bidirectional harmonic EM plane wave sets could be used to produce a standing wave of force-field-free potential (Figures 1 and 2).

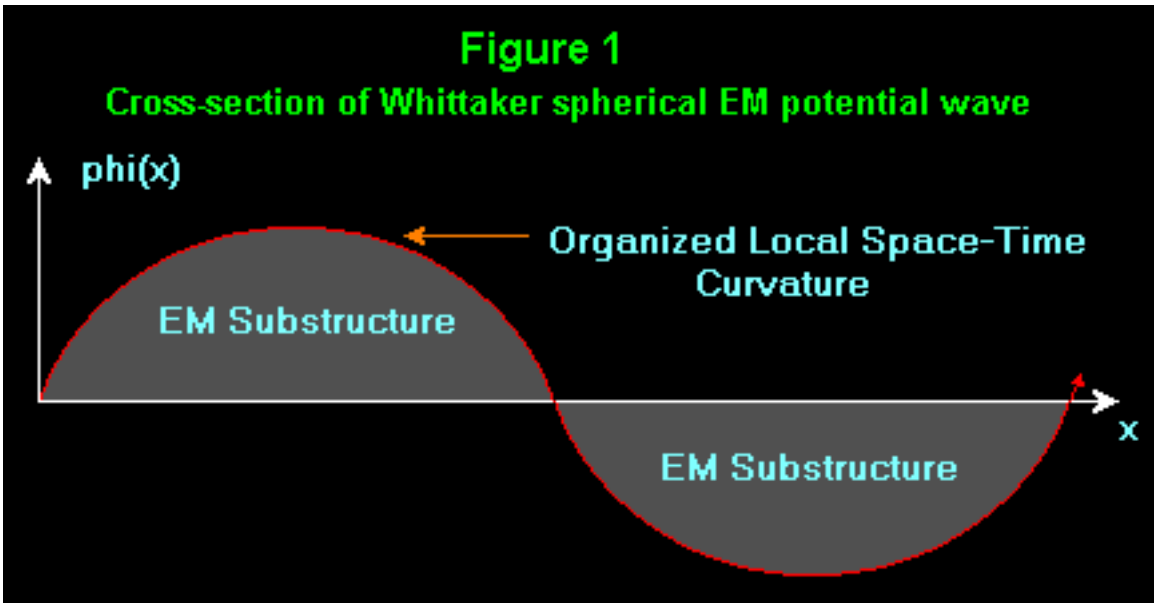

NOTE: SHAPE MAY BE ALL ABOVE OR ALL BELOW AMBIENT VACUUM POTENTIAL

Thus Whittaker anticipated the quantum mechanical Aharonov/Bohm effect by 55 years, including extending it to the macroscopic world instead of the mesoscopic realm where it has been established to date. [Ref. 3]

In modern terms, Whittaker showed how to turn EM wave energy into electrogravitational potential energy, then how to interfere two such scalar potential waves to recover electromagnetic energy, even at a distance. [Ref. 4]

This unrecognized work is of great importance: when applied to modern physics, it produces supersets of quantum mechanics (QM), classical electromagnetics (EM), and general relativity (GR).

Further, all three extended disciplines unify on their common Whittaker subset, in a testable and engineerable fashion. [Ref. 5]

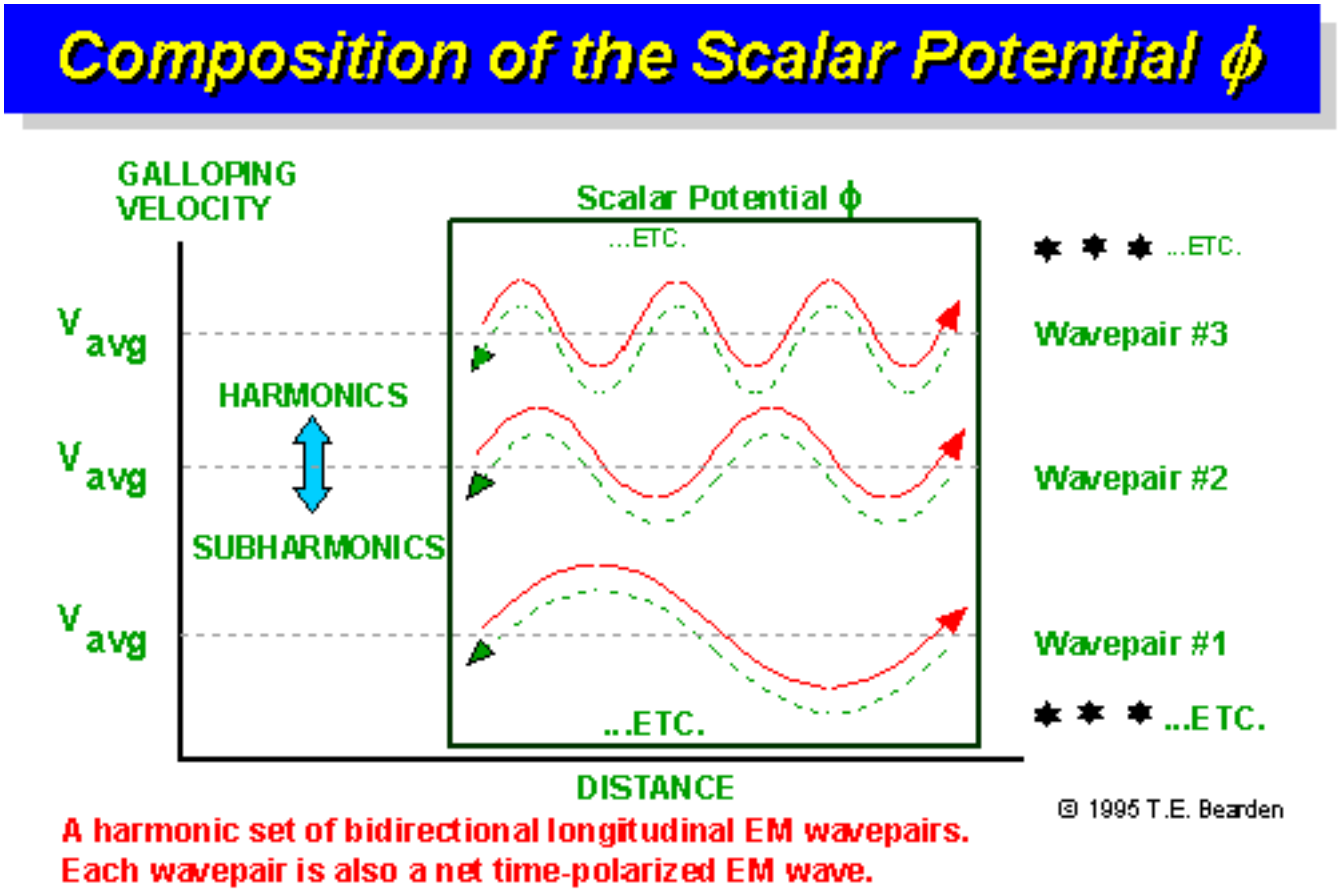

Figure 2. Infolded EM plane wave structure of a Whittaker wave.

The Nucleus As a PPCM and Triode

The author has also considered the highly nonlinear nucleus of the atom as a pumped phase conjugate mirror (PPCM), having found no other consideration of same in the literature.

The author also dubbed a PPCM a "triode," since the amplified phase conjugate replica of the signal wave is much like the amplified output of a triode, and the signal wave input to a PPCM is much like a triode's grid signal input. The PPCM pump wave then corresponds roughly to the power input to the cathode and plate of a triode. [Ref. 6]

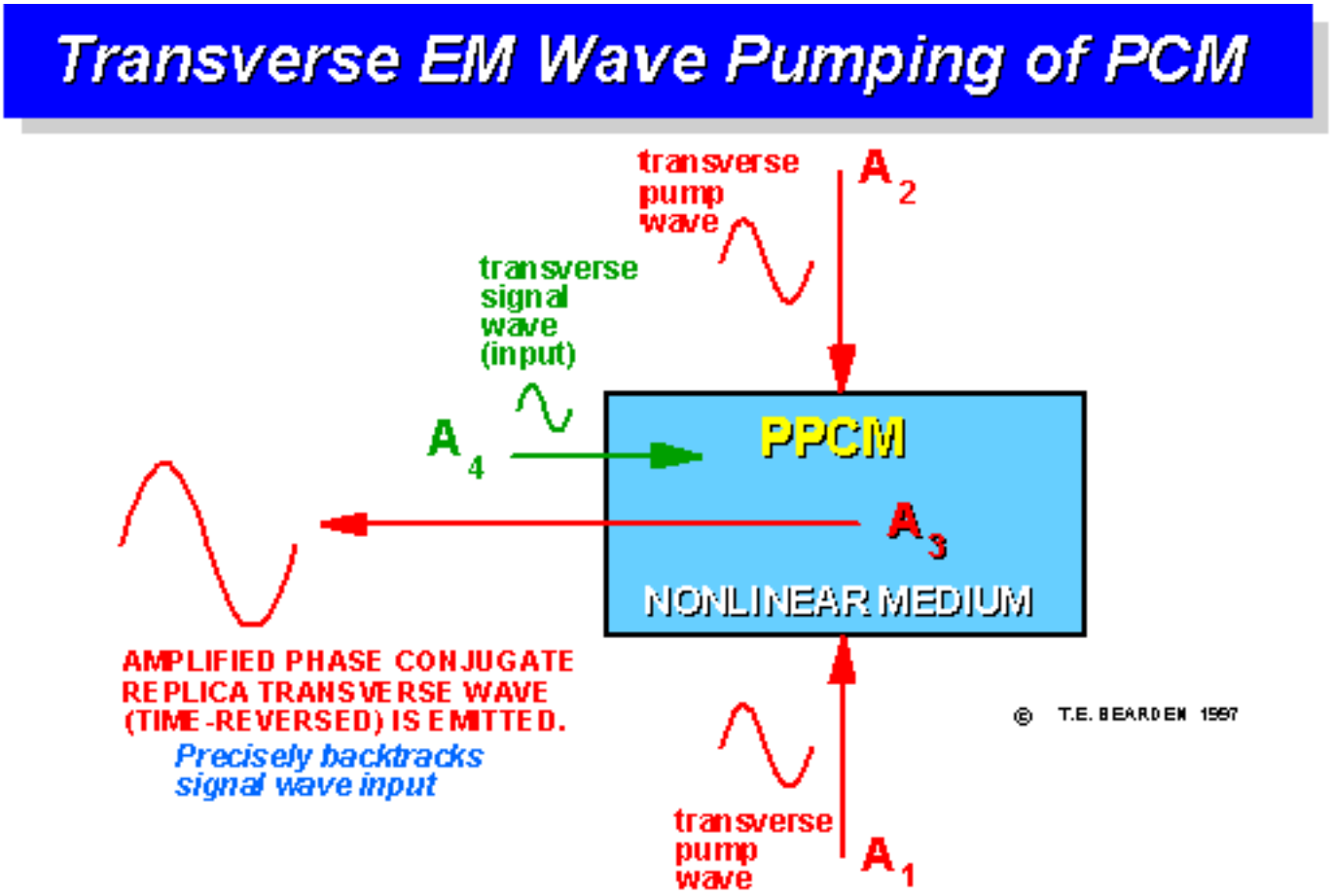

Figure 3. A pumped phase conjugate mirror.

VACUUM TRIODE BACKGROUND

About seven years ago, the author was privileged to see and examine an invention of Mr. Floyd Sweet, that produced about 6 watts of electrical power from the vacuum itself.

This remarkable device, which the author dubbed a *vacuum triode*, in a single unit utilized most of the scalar EM concepts the author had so painfully and slowly formulated over the years.

Sweet, a brilliant inventor with a remarkable knowledge of magnetics, had utilized barium ferrite magnets and special coils to produce a solid-state device that successfully tapped the vacuum energy.

The author quickly put together a theoretical concept for the energy-tapping mechanism, based on treatment of the nucleus as a PPCM and Whittaker's scalar EM potential unified field theory. [Ref. 7]

The author furnished the technical concept, treating the nucleus as a pumped phase conjugate mirror, to the inventor along with copies of Whittaker's papers.

Sweet's Synthesis and Extension

Sweet is also a brilliant EM theoretician, working in four, five, or even six dimensions with ease. He immediately synthesized the entire PPCM and Whittaker theory, and developed a complete theoretical treatment of the device. [Ref. 8]

He also increased the nuclear potential utilized in the activated nuclei of the device, which increased the pumping energy and hence the energy output. He next produced an open-loop vacuum triode (VT) with an output of 500 watts, for an input of 33 microwatts.

Thereafter he produced several other models, including closed-loop systems and one with 5-KW output.

Purpose of This Paper

Our purpose is to explain the detailed scalar EM concept of the operation of the vacuum triode, since it is a universal method for cohering and tapping useful EM energy from the vacuum.

The author believes that this mechanism is the fundamental mechanism that must be invoked in any over-unity device that electromagnetically extracts vacuum energy as electromagnetic effects.

We also intend to demonstrate a full working model of the device at this conference. Sweet's detailed theoretical treatment will be completed and submitted to a major journal shortly, to complete the scientific exposition of the new methodology.

I must also express my deep admiration for my brilliant inventor colleague. It has been a privilege to work with him, though under great difficulties and at a distance. He has developed several other related devices that are of great importance to the emerging new physics of *vacuum engineering*, in the sense referred to by Lee. [Ref. 9]

To mention just one, he has produced a magnetic lens which apparently can directly display the vacuum's virtual particle flux, or a good analog of it. So far as I am aware, this is the only extant instrument today that can perform this feat.

When the vacuum triode has been proven to the scientific community, it is my intention to nominate Sweet for the Nobel Prize he so richly deserves, and seek high scientific endorsements for the recommendation.

INTRODUCTION

Entropy

As is well known, in any closed dynamic system the order existing in it will gradually be dissipated, as more and more interactions occur. This leads to the notion of *entropy* as the increasing disorder in such systems. The assumptions are

1. a closed system, and

2. a positive flow of time for the components of the system.

Actually no such thing as a completely closed system exists in nature. Every mass system is open to virtual particle flux exchange with the vacuum, for example, particularly in the nucleus of its atoms, where the bulk of its mass is located.

However, the closed system assumption is reasonably approximated by a great many systems which are in stable thermodynamic equilibrium, or nearly so.

On the other hand, in an open system far from thermodynamic equilibrium, the second law of thermodynamics does not necessarily apply, because the system violates both the closed system assumption and its equilibrium approximation. [Ref. 10]

Time Reversal

Since being discovered in 1972 in the open Soviet literature, the time-reversed (phase conjugate) EM wave has also been known. The phase conjugate EM wave is truly time-reversed, as has been shown experimentally. Since the time-reversed EM wave violates the second major assumption, the second law of thermodynamics need not necessarily hold for time-reversed entities.

Putting all this together, if one wishes negentropy and hence increased energy in a system, the candidate suggested would appear to be a system that was strongly

1. open loop,

2. time-reversed, and

3. far from thermodynamic equilibrium.

A good overview of time-reversal in physics has been provided by Sachs. [Ref. 11]

Engineering the Nucleus

Since the nucleus already provides a myriad of time-reversed processes, engineering the nucleus of an atom is a very good candidate for practical negentropy.

To engineer the nucleus directly, a Whittaker potential is first artificially constructed, by composing a harmonic set of phase-locked EM wave/antiwave pairs. It is accented that the antiwaves must be true phase conjugates; otherwise they will not constitute a gradient-free Whittaker standing potential wave.

In addition, at least one harmonic interval must be used, and additional harmonic sets are most

desirable. The reason is that a space-time lattice must be formed in the vacuum, where the energy is additive spatially but oppositive in t-dot, the rate of flow of time, in the fourth dimension.

So a time-structure is required as well as a spatial structure, which is what is provided by ***n*** bidirectional harmonic Whittaker EM wave sets, where ***n*** is an integer greater than 1.

Once a specific Whittaker structure has been chosen, the local lattice of space-time is established. This establishes phase-locked lattice groupings of coupled photon/antiphoton pairs, or of *gravitons*. In turn, this Whittaker-structured vacuum now contains specific graviton *vacuum engines*, which directly engineer and structure the vacuum's virtual particle flux (VPF) exchange with the nucleus. [Ref. 12]

The nucleus is highly nonlinear, hence strongly phase conjugative, or time-reversed. The ambient potential of the local vacuum surrounding the nucleus is in a violent virtual photon exchange with it, accounting for its electrical charge.

Since the preponderant charge is positive, from the viewpoint of the ordinary light observer whose light interacts with electron shells, the nucleus may be taken to exhibit time reversal (phase conjugation).

Energy, Time, and Gravitons

We take the definition of "energy" to be fundamentally an ordering imposed upon the VPF of vacuum. We take photon scattering from the electron shells of atoms to be the fundamental exterior mechanism producing forward flow of external observer time.

It then follows that "time's arrow" for the EM observer is due to the universal scattering of photons from electron shells.

In this view, forward (positive) time flow and entropy are due to the same primary action: photon scattering from electron shells. It is unfortunate that the concept of "positive" energy has been tied to, and defined in terms of, the scattering and dissipation of VPF order as *work*, or energy expended.

Via the standard labeling, then, negative energy is the reconstitution of order in the vacuum VPF. It should be noted that, in a PPCM, dissipative or external pump wave stress energy can be scavenged and re-emitted in perfect order as the phase conjugate replica. This is a *negentropic* process, for it is capable of turning disorder into order. [Ref. 13]

In the time-reversed PPCM nucleus, we should expect to see appreciable *negative energy*—that is, energy removed from the EM scattering domain. This includes the binding energy of the nucleus, and the gravitational (G) potential energy of the EM energy removed from the "scattering interaction realm" and locked into the mass.

Following Sakharov, we hold that the G-field is not a fundamental field of nature, but a composite

caused by, or made from, other fields. [Ref. 14]

To the first order, we assume the G-potential is comprised of coupled photon/antiphoton pairs, on the average, where the statistical coupled spin-2 photon/antiphoton pair is a *graviton*. [Ref. 15]

We follow the modern view of the field: because of vacuum fluctuations, rigorously one no longer speaks of "the" field, but of the *probability of a particular field configuration*. [Ref. 16]

We also hold the vacuum to be composed of potentials, and regard the three terms *space-time*, *vacuum*, and *scalar potential* as essentially synonymous.

Newton's Third Law and the Detection Process

The VPF EM stress of the local vacuum immediately surrounding the nucleus may be decomposed a la Whittaker into opposing bidirectional EM plane waves/forces. Thus the nonlinear nucleus may be regarded as a pumped phase conjugate mirror, normally with a gain of one.

In this view, Newton's third law reaction force is generated because the so-called "photon" interaction with an atom is in fact a graviton reaction involving a photon/antiphoton pair that is decoupled.

The decoupled photon normally is absorbed and reradiated by an orbital electron, while the decoupled antiphoton interacts with the nucleus, producing a time-reversed twin of the external force —or, in other words, Newton's third law reaction force, which gives a slight recoil of the nucleus.

Half of every measurement physicists normally make is discarded, with the missing half accounting only for Newtonian reaction in the meter or instrument, which is usually ignored.

The fact that half of our measurement interactions are ignored is occasionally discovered and noted by physicists, who may even write a paper pointing it out, but no change is instituted in the foundations. [Ref. 17 and Ref 18]

Semiconducting Vacuum and Self-Oscillation

The vacuum immediately surrounding the nucleus is structured by the nucleus, and is itself nonlinear and capable of acting as a *semiconductor*. [Ref. 19]

Since both this immediately local semiconductor vacuum and the nucleus it surrounds are highly nonlinear, then *nonlinear resonance* can conceivably be established between them.

Further, since the resonating system in such case is an open system away from thermodynamic equilibrium, the oscillation can be self-sustaining. Such self-oscillation of the pumping of a PCM is already well-known in the nonlinear optical literature, particularly with compounds containing barium. [Ref. 20]

THE VACUUM TRIODE

The Basic Concept

As is well-known, a stress can be decomposed into opposing sets of forces. But quantum mechanically, the forces we are interested in with our work here are all caused *electromagnetically*, by the exchange of virtual photons. Even mechanical force, according to QM, is caused in this manner. Thus opposing electromagnetic or mechanical "stress" sets of bidirectional EM forces are microscopically equivalent to the notion of *pump waves* in nonlinear optics.

Hence under the proper conditions, it follows that trapped EM stress energy of the vacuum can be utilized to "pump" the nucleus.

Treating the stress-pumped nonlinear nucleus as a PPCM, it follows that the stress energy of the vacuum can be tapped by a 4-wave mixing mechanism in the atomic nucleus, to provide amplified phase conjugate EM wave outputs from the atom in response to small signal wave inputs. [Ref. 21]

In the proper nonlinear material, the material may act as a PPCM, in which case there exists a suitable connection between the material's atomic nuclei and its external electromagnetic lattice bonds, and the amplified phase conjugate replica wave generated in the nucleus will be emitted from the material as an EM wave field. This field can then be tapped by suitable means and output to an external load circuit.

Block Diagram of the Vacuum Triode

Figure 4 shows a basic block diagram of the vacuum triode process, utilized by Sweet in several laboratory vacuum energy devices. These devices have ranged from a nominal 500 watt output in a 6-lb. device to 5 kilowatts for a heavier unit. Gains have ranged from 50,000 to 1,500,000 for open-loop systems. Both open-loop and closed-loop systems have been built and tested.

Figure 4 shows a combined block diagram for either a closed-loop or open-loop system. In the open-loop system, a barium ferrite magnetic material is used as a pumped phase conjugate mirror.

In the "standard" design, two opposing PPCMs are used. The advantage of this dual combination is the use of *self-targeting* (repetitive phase conjugation, signal by signal). This has the effect of

1. stabilizing the Whittaker field, and

2. producing a quantum potential between the two mirrors, so the mirrors and the Whittaker potential between them are essentially one single space-time entity.

Discussion of a quantum potential is beyond the scope of this paper, but the technical mechanism for creating one has been previously presented by the author on several occasions. [Ref. 22]

First we will explain the open-loop operation of the vacuum triode. In Figure 4, on the right an external 60 Hz, nominal 10 volt AC sine wave of several tens of microwatts in power is input into the stabilized field of the barium ferrite magnet structure, where it modulates the field, producing a signal wave input into the atoms of the material.

In the top right block, the EM signal wave interacts with the electron shell of an atom, which in turn is EM-coupled to the nucleus.

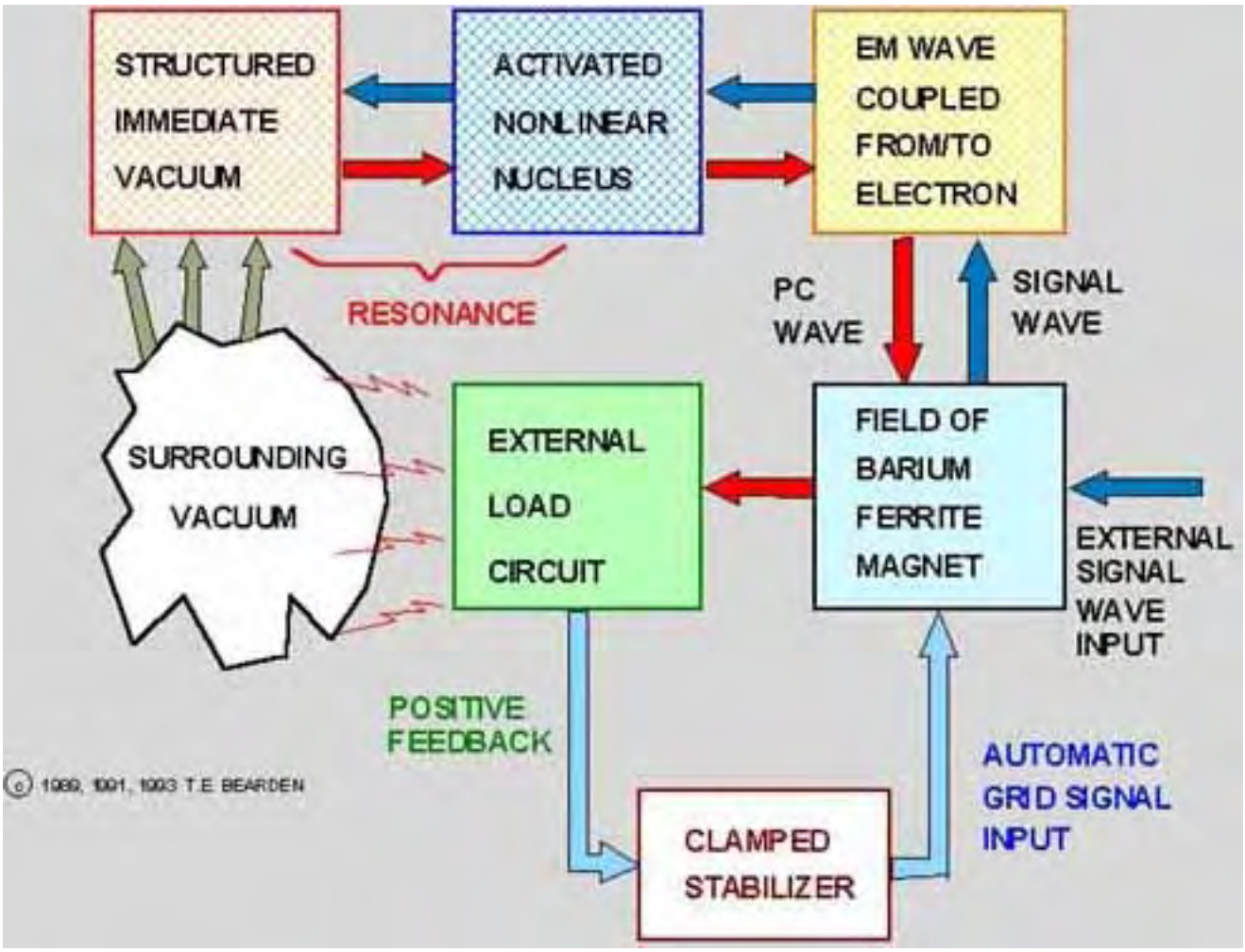

Figure 4. The Vacuum Triode Concept.

Thus an EM signal wave is input to the nucleus of the atom, which is highly nonlinear (middle top block). Earlier, Sweet had specifically conditioned the atomic nuclei with a proprietary process, wherein in the barium nucleus a trapped 60 Hz scalar EM spherical wave resonance (self-oscillation) exists between the structured semiconductor vacuum immediately surrounding the Ba nucleus.

In the same *activation* process, the ambient potential of the surrounding vacuum was raised and stabilized, in the two leftmost blocks.

At this point the nonlinear nucleus is effectively self-pumped by the trapped, excited, spherical scalar wave oscillation between the structured semiconductor vacuum and the nucleus. The nucleus is now a strongly pumped phase conjugate mirror.

Consequently, when the signal wave input arrives, the PPCM nucleus emits an amplified phase conjugate replica (PCR) wave, which precisely backtracks the input signal wave. This precise backtracking (perfect retroreflection) is referred to as the "distortion correction theorem."

In short, the powerful PCR wave returns precisely toward the external source, passing through the electron shells and arriving in the perturbed barium ferrite magnet assembly field, where it perturbs the field.

A transformer-like system then extracts this magnetic field perturbation and conducts it to the external load circuit.

However, the PCR contains *negative* energy. Short of the load, the internal circuits run cool, rather than heating. This is a signature of a true vacuum energy tapping device.

Indeed, if the output leads of the Sweet vacuum triode are physically shorted together, a brilliant flash occurs, and the leads instantly ice as if dipped in liquid oxygen. This is another signature of the true negentropic over-unity vacuum tap.

Note that the energy extracted from the semiconducting vacuum adjacent to the nucleus is just instantly replaced by the surrounding vacuum's inexhaustible energy pool. This is an open-loop system, with a hidden energy source: the intense virtual particle flux of the vacuum's ambient charge.

It is not possible to exhaust that flux, which is often calculated to have an energy density of some 10^{100} or more grams per cm^3, if the energy were cohered and condensed into mass.

As can be seen, even a VT gain of 1.5×10^6 represents a "vacuum tap" of an incredibly small efficiency, on the order of 10^{-100} or so. However, the vacuum "river" is so energetic that such efficiencies are quite sufficient.

We accent that the barium ferrite magnetic material must be *activated* so that stable self-oscillation between the barium nucleus and the surrounding semiconductor vacuum exists. Although self-oscillating/self-pumped PCMs are known at optical frequencies, Sweet has discovered and perfected a brilliant methodology for activating PPCM nuclei at ELF frequencies.

In a resistive load such as light bulbs, the resistive material accomplishes repetitive phase conjugation. Thus in the resistor, half the total energy is expressed as photon or dissipative energy in the external (electron shell) level.

As the excited electrons decay, they emit scattered EM energy as light and heat. This is an *exothermic* interaction. The other half of the total energy reacts in the atomic nuclei, as a phase conjugative or *endothermic* interaction.

We strongly accent that, Whittaker-wise, there are two electromagnetic channels and two kinds of EM:

1. *external* EM, the common electron-shell interacting, entropic, scattering, time-forward kind, and

2. the *internal*, unsuspected, hidden variable, nuclei interacting, negentropic, reordering/ convergent kind.

Internal EM travels strictly between atomic nuclei, normally not reacting with electron shells unless a pumped phase conjugate mirror reaction is invoked in the nucleus to produce a gain somewhat greater than unity.

Thus if we wish to communicate with atomic nuclei directly, and engineer them directly, we must utilize the internal EM channel via applied Whittaker methods.

Antigravity Tests

Inherent in the preceding discussions is the possibility to turn EM energy into gravitational energy of either sign. In other words, one should be able to utilize Sweet's vacuum triode to produce and demonstrate antigravity.

Indeed this is the case. Sweet has also discovered the special alterations necessary to perform straightforward transformation of the internal energy in the nucleus to antigravitational energy, producing a unilateral thrust upward.

Note that the bulk of G-potential gradient (G-force-field) occurs Whittaker-wise at ELF frequencies. This explains why nonlinear phase conjugate opticians do not notice direct antigravity effects.

At the optical frequencies at which they work, the effects are so miniscule that they are negligible. This is readily explained as follows: In QM, the quantum (photon) is comprised of action (angular momentum), not just energy. It is rather like a "piece of energy welded to a piece of time, with no seam in the middle."

Since quantum change occurs in quanta, the decoupling of the energy and time components, in the continual interaction of photons with matter, exchanges energy between G-potential of vacuum and trapped mass of the atom or particle. In this exchange, small increments of time are continually being formed (and unformed, as photon emission occurs).

Consequently, each mass is moving forward in time in small incremental jumps, usually of exceedingly small magnitude. However, the energy and time trapped in a photon are canonical. The greater the piece of energy, the smaller the piece of time, and vice versa.

So if one wishes to stress the "rate of flow of time" significantly, one needs to produce large amounts of photons that have very large pieces of time, and consequently little pieces of energy.

Since the energy of the photon is directly proportional to its frequency, this means that the lower

frequency photons have larger time increments, and hence endure over many "regular-sized photon absorption/emission changes" to appreciably stress the rate of time flow/production.

The bottom line is that the standard pumped phase conjugate mirror can be adapted to produce antigravity at ELF frequencies, but precisely the same adaptation at optical frequencies will have negligible effect.

With this in mind, the author requested Sweet to perform an antigravity experiment to prove the thesis. With Sweet's proprietary adaptation of his vacuum triode/PPCM, the experiment produced rather straightforward but spectacular results, as shown in Figure 5.

The experiment was performed as follows: Rigged for antigravity, the 6-lb. device was placed on a scale so that its weight could be continuously monitored. A special external load box was utilized in which multiple electric light sockets were connected in parallel.

Then the external load draw was adjusted by merely screwing in 100-watt lamps, one at a time, with measurement and observation pauses in between. The output of the device was 120 volt, negative AC sine-wave power at 60 Hz.

For each 100-watt increment, the load power was recorded and the weight was carefully recorded. The results are shown in the rather smooth, classic curve shown in Figure 5.

At 1,000 watts load draw, the previously 6-lb. device had reduced its weight due to gravity by 90 percent. At that point the signal-wave (grid) input to the open-loop vacuum triode was only 175.4 microamps at 10 volts, or just under two milliwatts.

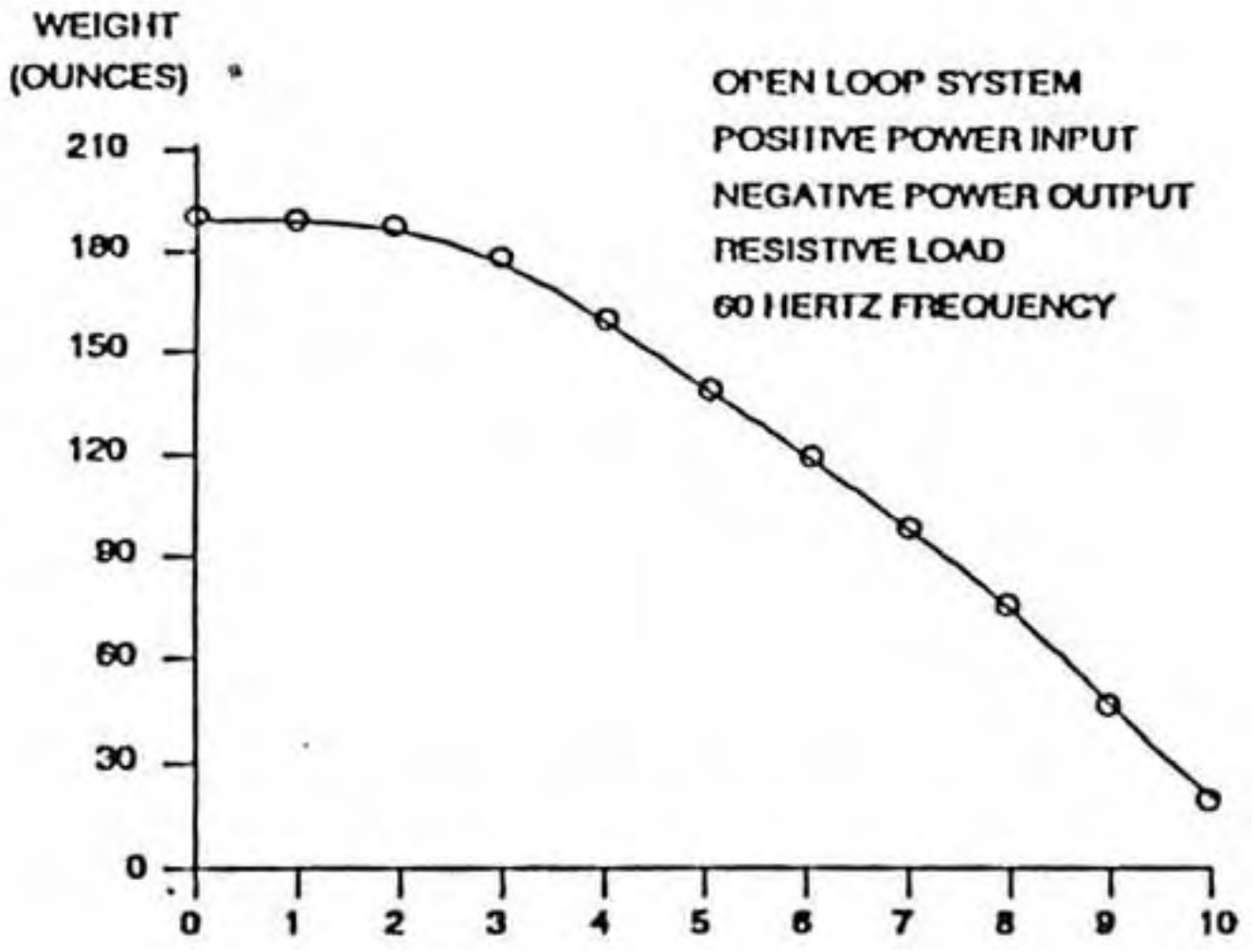

EXTERNAL ELECTRICAL LOAD

(HUNDREDS OF WATTS)

Figure 5. Antigravity Test of Sweet's Adapted Vacuum Triode.

We accent that the nominal two milliwatt input is only a gating signal. It is the organized, gated vacuum energy that is performing the action.

The experiment was stopped short of actual hovering and flying due to safety considerations. With the specific adaptation, magnetic monopoles are deposited in the magnet materials, producing internal tensile stress.

Since no explosive controlled facilities were available, and there was no wish to destroy the VT, the experiment was terminated at 90% antigravity performance.

It was completely successful, and adequately demonstrated the validity of the unified field theory concepts utilized in our approach.

CONCLUSIONS

A new unified field theory has been developed, tested, and at least partially verified experimentally.

The concepts of the theory have been applied by Sweet in a series of inventions that produce readily usable, safe electromagnetic power directly from the vacuum.

The methodology lends itself to formulation of power devices without moving parts. Antigravity, predicted by the concepts of the theory, has been demonstrated in actual practical demonstrations on the laboratory bench.

Though not discussed in this paper, application of the concepts and methodology to a large variety of other fields, such as medical reversal of aging and curing of almost the entire range of present debilitating diseases, has been previously pointed out. [Ref. 23]

We have also pointed out the mechanism for Kaznacheyev's cytopathogenic effect, or the induction of cellular pathology at a distance by electromagnetic means. [Ref. 24]

We have also pointed out the specific mechanism involved in Priore's device, which in rigorous laboratory animal testing under the auspices of eminent French scientists, demonstrated nearly 100 percent cures for terminal cancers and leukemias, sleeping sickness, artherosclerosis, and other debilitating diseases.[Ref. 25]

We believe we have also produced the concepts enabling the direct engineering and therapeutic manipulation of Popp's master cellular control system. [Ref. 26]

We conclude that the concepts we have utilized and experimentally demonstrated are universal, as implied by any notional unified field theory.

Our conclusion is that the concepts, theory, and experiments, taken together, are sufficient for investigation and replication by the scientific community.

If replicated and fully substantiated, we believe the work will directly point the way to, and usher in, a new unified field theory physics of universal application.

SPECULATED IMPLICATIONS

As can be seen, the implications of the new approach are profound. The authors believe they have ushered in the forerunner of a vast new physics, one which will change our lives, and our view of physical reality, in ways previously undreamed of.

By mastering, controlling, and gating the vast, incredible energy of the seething vacuum, we can power our automobiles, flying machines, and technology inexhaustibly. Further, it can be done absolutely cleanly; there are no noxious chemical pollutants to poison the biosphere. With practical antigravity, ships can be developed to cross the solar system as readily as one crosses the ocean today.

And the ships, automobiles, and technology will never run out of fuel; the inexhaustible vacuum fills

every system, everywhere, to overflowing.

Not discussed in this paper, it turns out that living systems, faced with the problem of achieving negentropy so as to maintain their form in a dissipative external physical reality, have always used the hidden internal channel for such things as mind, thought, cell control, and living functions.

With the new methodology, one now faces the advent of access and engineering of the mind and life of the observer as readily as the observer's physical body.

Transmutation of the elements, control of the weather, lighting and powering our cities and homes cheaply and cleanly, and provision of plenty for everyone is the vista for the future. We can in fact clean up the radioactive wastes, rid ourselves of coarse nuclear and petroleum powerplants.

We strongly stress that, with the ability to engineer the Schroedinger equation itself, the new methodology allows the direct engineering and control of quantum change, and hence of physical reality itself.

The methodology is extendable to hyperdimensions; nested virtual levels of the vacuum are already precisely that. The author has already pointed out the application of this emerging technology to the absolute cure of diseases such as AIDS, cancer, leukemia, etc., and shown that the Priore device in France already proved the efficacy of the application in the 60s and 70s.

We shall be able to rid ourselves and our descendents of diseases. With direct access to the actual software of life and mind, in the future we should be able to achieve levels of education previously unattainable, by directly inputting the relevant software.

Previously we have also pointed out that four nations of the world are already embarked on weaponization of scalar EM unified field technology. It is sobering to think that, in addition to having the ability to make our planet a paradise for humankind, we also will have the ability to make it a hades.

For that reason, we are doing our best to clarify the technical concept and the theory in this 1991, hopefully with the view that humankind will seize upon the positive aspects, and develop and apply this technology for the betterment of all people everywhere.

Long ago, Albert Einstein said these words:

"It would of course be a great step forward if we succeeded in combining the gravitational field and the electromagnetic field into a single structure. Only so could the era in theoretical physics inaugurated by Faraday and Clerk Maxwell be brought to a satisfactory close."

And Teilhard de Chardin wrote:

"Someday, after we have mastered the winds, the waves, the tides and gravity, we shall harness for God the energies of love. Then for the second time in the history of the world man will have

discovered fire."

The authors fervently believe they have come upon fire for the second time, as allegorized by de Chardin. If so, let us all use the knowledge wisely.

REFERENCES

1. Maxwell's original quaternion EM theory is contained in some 200 quaternion equations and differs extensively from the restricted Heaviside/Gibbs vector interpretation universally taught today as "Maxwell's Theory." See James Clerk Maxwell, *A Treatise on Electricity and Magnetism*, Oxford University Press, Oxford, 1873. The third edition is by Dover, 1954.

2. E.T. Whittaker, "On the Partial Differential Equations of Mathematical Physics," *Math. Ann.*, Vol. 57, 1903, p. 333-355; "On an Expression of the Electromagnetic Field Due to Electrons by Means of Two Scalar Potential Functions," *Proc. Lond. Math. Soc.*, Series 2, Vol. 1, 1904, pp. 367-372. The first paper was in fact a detailed theory of the scalar standing potential wave that Nikola Tesla discovered four years earlier, on the night of July 3-4 1899, being radiated from thunderstorms, which he entered in his *Colorado Springs Notebook* on the morning of the 4th. More recently the Whittaker structure (WS) inside potentials, including the Schroedinger potential, has been shown by V.K. Ignatovich, "The Remarkable Capabilities of Recursive Relations," *Am. J. Phys.*, 57(10), Oct. 1989, p. 873-878, without credit to Whittaker or to the presence of such structured scalar potentials in Maxwell's original quaternion EM theory. These WSs are universal to scalar potentials; e.g., for the same in acoustics, see Richard W. Ziolkowski, "Localized Transmission of Wave Energy," *Proc. SPIE, Vol. 1061, Microwave and Particle Beam Sources and Directed Energy Concepts*, Jan. 1989, p. 396-397.

3. See Y. Aharonov and D. Bohm, "Significance of Electromagnetic Potentials in the Quantum Theory," *Phys. Rev.*, Second Series, 115(3), Aug. 1, 1959, p. 458-491. This paper pointed out the primacy of the potentials. Instead of being causative agents, the force fields are actually effects generated from the potentials. This is in complete violation of both classical electromagnetics and classical dynamics, but it is absolutely required by quantum mechanics. For an extensive discussion of the Aharonov-Bohm effect and an extensive list of references, see S. Olariu and I. Iovitzu Popescu, "The Quantum Effects of Electromagnetic Fluxes," *Rev. Mod. Phys*. 57(2), Apr. 1985. See Bertram Schwarzschild, "Currents in Normal-Metal Rings Exhibit Aharonov-Bohm Effect," Physics Today, 39(1), Jan. 1986, p. 17-20 for confirmation that the Aharonov/Bohm effect has indeed been firmly proven experimentally.

4. It is pointed out that today all potentials are well-known to be gravitational entities. However, this was not known in Whittaker's time, and so he himself did not realize that he had actually produced an engineerable, testable unified theory of electromagnetics and gravitation.

5. T.E. Bearden, "Possible Whittaker Unification of Electromagnetics, General Relativity, and Quantum Mechanics: Part I: Background," Presented to *Ala. Acad. Sci. Annual Symp.*, Univ. Jacksonville, Mar. 1991.

6. For the theory of a pumped phase conjugate mirror, see David M. Pepper, "Nonlinear Optical Phase Conjugation," *Opt. Eng*., 21(2), Mar./Apr. 1982, p. 156-183; Amnon Yariv, *Optical Electronics*, 3rd Edn., Holt, Rinehart, and Winston, New York, 1985. In a normal triode tube, the amplified plate signal is 180 degrees out of phase *spatially* with the grid input, but in-phase with it in respect to *rate of flow through time*. In a PPCM, the amplified phase conjugate replica wave is in phase spatially with the signal wave, but 180 degrees out of phase with it in respect to its rate of flow through time. It is pointed out that a PCM with a gain of unity produces a coupled EM wave/antiwave pair whose energy is additive in 3-space but subtractive in the first derivative of the fourth dimension, time. Hence it is no longer an electromagnetic wave as such, but an oscillatory wave of stress upon the local rate of flow of time. Hence it is a powerful *electrogravitational wave*, whose EM nature is hidden in the guise of a scalar EM potential. It is also a wave of variation in the local gauge, and of variation in the local ST curvature.

7. See T.E. Bearden, *The Phase Conjugate Vacuum Triode*, Apr. 23, 1987, privately published. An earlier pencil draft was initially produced.

8. Sweet has continued to extend his theoretical treatment. A formal paper providing the complete mathematical theory of the vacuum triode has been drafted, is in final review, and will be submitted to a leading journal by mid-1991.

9. See Chapter 25: Outlook, "Possibility of Vacuum Engineering," T.D. Lee, *Particle Physics and Introduction to Field Theory*, Harwood, New York, 1981, pp. 824-828.

10. In 1977 Ilya Prigogine received the Nobel Prize for extending thermodynamics; in particular, for the theory of dissipative structures in nonequilibrium thermodynamics. In Prigogine systems, negentropy is known to be possible.

11. Robert G. Sachs, *The Physics of Time Reversal*, Univ. Chi. Press., Chicago, 1987.

12. Note that this moves the entire notion of the charge of a fundamental particle to a deeper and more extended level. Now the charge may be *discretized*, but it is not quantized in the hard conventional sense. Further, the internal Whittaker structure of the massless VPF photon exchange of vacuum and mass, which, quantum mechanically, is what the electrical charge of the particle is in the first place, is deterministically structured. Note that this violates the present assumption that all like charged particles are identical; now two electrons may have either the same or different magnitudes of charge, and even when the magnitudes are the same, their internal charge structures (Whittaker structures) and VPF exchange with the vacuum may differ. Also note that this resolves the severe QM problem of missing chaos (hidden order) in quantum change. The reason for the problem was the use of Gibbs statistics with its assumption of random variable change, which a priori excluded hidden order (and hence chaos) from QM. That was only a special case, albeit an important one. There are now three QM cases: (1) the conventional case, where there is no hidden order; (2) the case where there is some hidden order, and the statistics is chaotic, not random; and (3) the case where the QM change is deterministic, with essentially total hidden order. Note that the Whittaker

methodology allows one to directly engineer cases (2) and (3), including the Schroedinger equation itself.

13. The present second law of thermodynamics is written only for time-forward entities, and need not apply for the time-reversed case. Merely viewing the energy-dissipating forward time case in reverse allows an appreciation of the time-reversed case. In other words, the second law of thermodynamics is incomplete as presently stated. The complete law has a corollary to cover the increase in order as the time-reversal of the system increases. Thus the complete law consists of two parts: (1) the entropic, time-forward case, and (2) the negentropic time-reversed case. Since the re-ordering can be amplified at will by a PPCM process, the correct distinction between the two subsets of the complete law is important, and applies to real systems.

14. A.D. Sakharov, *Theor. Math. Phys.*, Vol. 23, 1975, p. 435.

15. T. E. Bearden, *Gravitobiology: A New Biophysics*, Tesla Book Co., 604 Date Ave., Chula Vista, CA 91912, 1991.

16. C.f. Charles W. Misner, Kip S. Thorne, and John Archibald Wheeler, *Gravitation*, W.H. Freeman and Co., San Francisco, 1973, p. 1191.

17. E.g., see Richard Kidd et al, "Evolution of the Modern Photon," *Am. J. Phys*., 57(1), Jan. 1989, pp. 27-35. See also R. Chen, "Cancellation of Internal Forces," *Am. J. Phys*. 49(4), Apr. 1981, p. 372.

18. A nonlinear material may simply emit a photon, or it may act as a phase conjugate mirror (PCM) and emit a phase conjugate replica of the absorbed photon. When the material emits a normal photon, it measurably recoils. When it emits a time-reversed photon, it does not recoil, as already experimentally established in nonlinear phase conjugate optics. The solution to the mystery is this: When emitting a normal photon, the material does not act as a PCM. In that case the matching antiphoton which split from the interacting graviton (the graviton that yielded the external photon) interacts with the nucleus, producing a recoil action with a gain of one. Thus Newtonian third-law recoil of the nucleus occurs. On the other hand, when the material acts as a PCM, it also emits the antiphoton *outside* the atom to "backtrack" the absorbed "signal wave" photon. In that case there is no Newtonian recoil of the nucleus, because the *agent* for causing recoil did not interact with the nucleus to produce it.

19. Richard E. Prange and Peter Strance, "The Semiconducting Vacuum," *Am. J. Phys*. 52(1), Jan. 1984, p. 19-21. Also, under nonlinear conditions, a particle can absorb more energy than is in the light incident on it, absorbing the energy from the vacuum VPF. C.f. Craig F. Bohren, "How Can a Particle Absorb More Than the Light Incident on It?" *Am. J. Phys*. 51(4), Apr. 1983, p. 323-327.

20. C.f. Pepper, ibid. and Yariv, ibid. For a specific example, see Mary J. Miller et al, *Appl. Phys. Lett*. 41(8), Oct. 15, 1982, p. 689-691.

21. Again, for the theory of the PPCM, see Pepper, ibid. and Yariv, ibid.

22. E.g., see T.E. Bearden, *Gravitobiology: A New Biophysics*, Tesla Book Co., Chula Vista, CA, 1991, p. 33-36.

23. Bearden, *AIDS: Biological Warfare*, Tesla Book Co., 1988; *Gravitobiology: A New Biophysics*, Tesla Book Co., 1991; *Analysis of Scalar Electromagnetics*, Tesla Book Co., 1990.

24. C.f. Vlail P. Kaznacheyev and L.P. Mikhailova, *Ultraweak Radiations in Intercellular Interactions*, [in Russian], Novosibirsk, 1981; Vlail P. Kaznacheyev, "Electromagnetic Bioinformation in Intercellular Interactions," *Psi Research*, 1(1), Mar. 1982, p. 47-76; N.D. Devyatkov, Ed., *Applications of Low-Intensity Millimeter Wave Radiation in Biology and Medicine*, [in Russian], IRE Akad. Nauk. SSSR, Moscow, 1985.

25. C.f. Antoine Priore, "Method of Producing Radiations for Penetrating Living Cells," U.S. Patent No. 3,280,816; Jean-Michel Graille, *Le Dossier Priore*, De Noel, Paris, 1984 [in French]; Christopher Bird, "The Case of Antoine Priore and His Therapeutic Machine: A Scandal in the Politics of Science," Appx. I to Bearden, *AIDS: Biological Warfare*, 1988.

26. C.f. Fritz Albert Popp, "Photon Storage in Biological Systems," in Fritz Albert Popp et al, Eds., *Electromagnetic Bio-Information: Proceedings of the Symposium*, Marburg, September 5, 1977, Urban & Schwarzenberg, Baltimore, 1979, p. 123-149; also *Biophotonen. Ein neuer weg zur Losung des Krebsproblems*, Verlag fur Medizin, Heidelberg, 1976 [in German].

Support Free Energy and purchase the bumper sticker

The New Tesla Electromagnetics and the Secrets of Electrical Free Energy

By T.E. Bearden
© 1984

Table of Contents

Foreword

Comments on the New Tesla Electromagnetics:
Part I: Discrepancies in the Present EM Theory
by T. E. Bearden

Comments on the New Tesla Electromagnetics:
Part II: The Secret of Electrical Free Energy
by T. E. Bearden

Overture to a New Age Technology
by Dr. Rolf Schaffranke

REVIEW AND OUTLOOK - The Development of Post-Relativistic Concepts in Physics and Advanced Technology Abroad
by Dr. Rolf Schaffrancke

COMMENTS ON THE NEW TESLA ELECTROMAGNETICS

Part I: Discrepancies in Present EM Theory

© T. E. Bearden 1982

There are at least twenty-two major discrepancies presently existing in conventional electromagnetics theory. This paper presents a summary of those flaws, and is a further commentary on my discussion of scalar longitudinal Tesla waves in a previous paper, "Solutions to Tesla's Secrets and the Soviet Tesla Weapons," Tesla Book Company, 1981 and 1982.

I particularly wish to express my deep appreciation to two of my friends and colleagues who at this time, I believe, wish to remain anonymous. One of the two is an experimental genius who can produce items on the bench that do not work by orthodox theory. The second is a master of materials science and electromagnetics theory. I thank them both for their exceptional contributions and stimuli regarding potential shortcomings in present electromagnetics theory, and their forbearance with the many discussions we have held on this and related subjects.

It goes without saying that any errors in this paper are strictly my own, and not the fault of either of my distinguished colleagues.

(1) In present electromagnetics theory, charge and charged mass are falsely made identical. Actually, on a charged particle, the "charge" is the flux of virtual particles on the "bare particle" of observable mass. The charged particle is thus a "system" of true massless charge coupled to a bare chargeless mass. The observable "mass" is static, three-dimensional, and totally spatial. "Charge" is dynamic, four-dimensional or more, virtual and spatiotemporal. Further, the charge and observable mass can be decoupled, contrary to present theory. Decoupled charge -- that is, the absence of mass -- is simply what we presently refer to as "vacuum." Vacuum, spacetime, and massless charge are all identical. Rigorously, we should utilize any of these three as an "ether," as suggested for vacuum by Einstein himself (see

Max Born, Einstein's Theory of Relativity, Revised Edition, Dover Publications, New York, 1965, p. 224). And all three of them are identically anenergy -- not energy, but more fundamental components of energy.

(2) Electrostatic potential is regarded as a purely 3-dimensional spatial stress. Instead, it is the intensity of a many-dimensional (at least four-dimensional) virtual flux and a stress on all four dimensions of spacetime. This is easily seen, once one recognizes that spacetime is identically massless charge. (It is not "filled" with charge; rather, it is charge!) Just as, in a gas under pressure, the accumulation of additional gas further stresses the gas, the accumulation of charge (spacetime) stresses charge (spacetime). Further, if freed from its attachment to mass , charge can flow exclusively in time, exclusively in space, or in any combination of the two. Tesla waves -- which are scalar waves in pure massless charge flux itself -- thus can exhibit extraordinary characteristics that ordinary vector waves do not possess. And Tesla waves have extra dimensional degrees of freedom in which to move, as compared to vector waves. Indeed, one way to visualize a Tesla scalar wave is to regard it as a pure oscillation of time itself.

(3) Voltage and potential are often confused in the electrostatic case, or at least thought of as "composed of the same thing." For that reason, voltage is regarded as "potential drop". This also is not true. Rigorously, the potential is the intensity of the virtual particle flux at a single point -- whether or not there is any mass at the point -- and both the pressure and the point itself are spatiotemporal (4-dimensional), not spatial (3-dimensional) as presently assumed. Voltage represents the spatial intersection of the difference in the potential between two separated spatial points, and always implies at least a miniscule flow of mass current (that is what makes it spatial!). "Voltage" is spatial and depends upon the presence of observable mass flow, while scalar electrostatic potential is spatiotemporal and depends upon the absence of observable mass flow. The two are not even of the same dimensionality.

(4) The charge of vacuum spacetime is assumed to be zero, when in fact it is a very high value. Vacuum has no mass, but it has great massless charge and virtual particle charge flux. For proof that a charged vacuum is the seat of something in motion, see G.M. Graham and D.G. Lahoz, "Observation of static electromagnetic angular momentum in vacuo," Nature, Vol. 285, 15 .May 1980, pp. 154-155. In fact, vacuum IS charge, identically, and it is also "spacetime" and at least four-dimensional.

(5) Contrary to its present usage, zero is dimensional and relative in its context. A three-dimensional spatial hole, for example, exists in time. If we model time as a dimension, then the spatial hole has one dimension in 4-space. So a spatial absence is a spatiotemporal presence. In the vacuum 4-space, a spatial nothing is still a something. The "virtual" concept and the mathematical concept of a derivative are simply two present ways of unconsciously addressing this fundamental problem of the dimensional relativity of zero.

(6) The concepts of "space" and "time" imply that spacetime (vacuum) has been separated into two parts. We can only think of a space as "continuing to exist in time " To separate vacuum spacetime into two pieces, an operation is continually required. The operator that accomplishes this splitting operation is the photon interaction, the interaction of vector electromagnetic energy or waves with mass. I have already strongly pointed out this effect and presented a "raindrop model" of first-order physical change itself in my book, The Excalibur Briefing, Strawberry Hill Press, San Francisco, 1980, pp. 128-130.

(7) "Vector magnetic potential" is assumed to be always an aspect of (and connected to) the magnetic field. In fact it is a separate, fundamental field of nature and it can be entirely disconnected from the magnetic field. See Richard P. Feynman et al, The Feynman Lectures on Physics, Addison-Wesley Publishing Co., New York, 1964, Vol. II, pp. 15-8 to 15-14. Curiously, this fact has been proven for years' yet it has been almost completely ignored in the West. The "Vx" operator, when applied to the A-field, makes B-field. If the Vx operator is not applied, the "freed" A-field possesses much-expanded characteristics from those presently allowed in the "bound" theory. Specifically, it becomes a scalar or "shadow vector" field; it is not a normal vector field. (note: for V read inverted capital Delta)

(8) The speed of light in vacuum is assumed to be a fundamental constant of nature. Instead it is a function of the intensity of the massless charge flux (that is, of the magnitude of the electrostatic potential) of the vacuum in which it moves. (Indeed, since vacuum and massless charge are one and the same, one may say that the speed of light is a function of the intensity of the spatiotemporal vacuum!). The higher the flux intensity (charge) of the vacuum, the faster the speed of light in it. This is an observed fact and already shown by hardcore measurements. For example, distinct differences actually exist in the speed of light in vacuo, when measured on the surface of the earth as compared to measurements in space away from planetary masses. In a vacuum on the surface of the earth, light moves significantly faster. For a discussion and the statistics, see B. N. Belyaev, "On Random Fluctuations of the Velocity of Light in Vacuum," Soviet Physics

Journal, No. 11, Nov. 1980, pp. 37-42 (original in Russian; translation by Plenum Publishing Corporation.) The Russians have used this knowledge for over two decades in their strategic psychotronics (energetics) program; yet hardly a single U.S. scientist is aware of the measured variation of c in vacuo. In fact, most Western scientists simply cannot believe it when it is pointed out to them!

(9) Energy is considered fundamental and equivalent to work. In fact, energy arises from vector processes, and it can be disassembled into more fundamental (anenergy) scalar components, since the vectors can. These scalar components individually can be moved to a distant location without expending work, since one is not moving force vectors. There the scalar components can be joined and reassembled into vectors to provide "free energy" appearing at a distance, with no loss in between the initial and distant points. For proof that a vector field can be replaced by (and considered to be composed of) two scalar fields, see E. T. Whittaker, Proceedings of the London Mathematical Society, Volume 1, 1903, p. 367. By extension, any vector wave can be replaced by two coupled scalar waves.

(10) The classical Poynting vector predicts no longitudinal wave of energy from a time-varying, electrically charged source, In fact, an exact solution of the problem does allow this longitudinal wave. See T. D. Keech and J. F. Corum, "A New Derivation for the Field of a Time-Varying Charge in Einstein's Theory," International Journal of Theoretical Physics, Vol. 20, No, 1, 1981, pp. 63-68 for the proof.

(11) The present concepts of vector and scalar are severely limited, and do not permit the explicit consideration of the internal, finer-grained structures of a vector or a scalar. That is, a fundamental problem exists with the basic assumptions in the vector mathematics itself. The "space" of a vector field, for example, does not have inter-nested sublevels (subspaces) containing finer "shadow vectors" or "virtual vectors," Yet particle physics has already discovered that electrical reality is built that way. Thus one should actually use a "hypernumber" theory after the manner of Charles Musés. A scalar is filled with (and composed of) nested levels of other "spaces" containing vectors, where these sum to "zero" in the ordinary observable frame without an observable vector resultant. In Musés' mathematics, for example, zero has real roots. Real physical devices can be -- and have been -constructed in accordance with Muses' theory. For an introduction to Musés' profound hypernumbers approach, see Charles Musés' foreword to Jerome Rothstein, Communication Organization and Science, The Falcon's Wing Press, Indian Hills, Colorado, 1958. See also Charles Musés, "Applied Hypernumbers: Computational Concepts," Applied Mathematics and

Computation, Vol. 3, 1976. See also Charles Musés, "Hypernumbers II," Applied Mathematics and Computation, January 1978.

(12) With the expanded Tesla electromagnetics, a new conservation of energy law is required. Let us recapitulate for a moment. The oldest law called for the conservation of mass. The present law calls for the conservation of "mass and energy", but not each separately. If mass is regarded as simply another aspect of energy, then the present law calls for the conservation of energy. However, this assumes that energy is a basic, fundamental concept. Since the energy concept is tied to work and the movement of vector forces, it implicitly assumes "vector movement" to be a "most fundamental" and irreducible concept. But as we pointed out, Whittaker showed that vectors can always be further broken down into more fundamental coupled scalar components. Further, Tesla discovered that these "coupled components" of "energy" can be individually separated, transmitted, processed, rejoined, etc. This directly implies that energy per se need not be conserved. The new law therefore calls for the conservation of anenergy, the components of energy. These components may be coupled into energy, and the energy may be further compacted into mass. It is the sum total of the (anenergy) components -- coupled and uncoupled -- that is conserved, not the matter or the energy per se. Further, this conservation of anenergy is not spatial; rather, it is spatiotemporal in a spacetime of at least four or more dimensions.

(13) Relativity is presently regarded as a theory or statement about fundamental physical reality. In fact, it is only a statement about FIRST ORDER reality -- the reality that emerges from the vector interaction of electromagnetic energy with matter. When we break down the vectors into scalars (shadow vectors or hypervectors), we immediately enter a vastly different, far more fundamental reality. In this reality superluminal velocity, multiple universes, travel back and forth in time, higher dimensions, variation of all "fundamental constants" of nature, materialization and dematerialization, and violation of the "conservation of energy" are all involved. Even our present Aristotlean logic -- fitted to the photon interaction by vector light as the fundamental observation mechanism -- is incapable of describing or modeling this more fundamental reality. Using scalar waves and scalar interactions as much subtler, far less limited observation/detection mechanisms, we must have a new "superrelativity" to describe the expanded electromagnetic reality uncovered by Nikola Tesla.

(14) "Charge" is assumed to be quantized, in addition to always occurring with -- and locked to -- mass. Indeed, charge is not necessarily quantized just as it is not necessarily locked to mass.

Ehrenhaft discovered and reported fractional charges for years, in the 30's and 40's, and was ignored. See P.A.11. Dirac, "Development of the Physicist's Conception of Nature," Symposium on the Development of the Physicist's Conception of Nature, ed. Jagdish Merha, D. Reidel, Boston, 1973, pp. 12-14 for a presentation of some of Ehrenhaft's results. Within the last few years Stanford University· researchers also have positively demonstrated the existence of "fractional charge." For a layman's description of their work, see "A Spector Haunting Physics," Science News, Vol. 119, January 31, 1981, pp. 68-69. Indeed, Dirac in his referenced article points out that Millikan himself -- in his original oildrop experiments -- reported one measurement of fractional charge, but discounted it as probably due to error.

(15) Presently, things are always regarded as traveling through normal space. Thus we use or model only the most elementary type of motion -- that performed by vector electromagnetic energy. We do not allow for things to "travel inside the vector flow itself." Yet, actually, there is a second, more subtle flow inside the first, and a third, even more subtle flow inside the second, and so on. We may operate inside, onto, into, and out of energy itself -- and any anenergy component of energy. There are hypervectors and hyperscalars unlimited, within the ordinary vectors and scalars we already know. Further, these "internal flows" can be engineered and utilized, allowing physical reality itself to be directly engineered, almost without limits.

(16) We always assume everything exists in time. Actually, nothing presently measured exists in time, because the physical detection/ measurement process of our present instruments destroys time, ripping it off and tossing it away -- and thereby "collapsing the wave function." Present scientific methodology thus is seriously flawed. It does not yield fundamental (spacetime) truth, but only a partial (spatial) truth. This in turn leads to great scientific oversights. For example, mass does not exist in time, but mass x time (masstime) does. A fundamental constant does not exist in time, but the "constant x time" does. Energy does not exist in time, but energy x time (action) does. Even space itself does not exist in time -- spacetime does. We are almost always one dimension short in every observable we model. Yet we persist in thinking spatially, and we have developed 1nstruments that detect and measure spatially only. Such instruments can never measure and detect the phenomenology of the nested substrata of time. By using scalar technology, however, less limited instruments can indeed be constructed -and they have been. With such new instruments, the phenomenology of the new electromagnetics can be explored and an engineering technology developed.

(17) We do not recognize the connection between nested levels of virtual state (particle physics) and orthogonally rotated frames (hyperspaces). Actually the two are identical, as I showed in the appendix to my book, The Excalibur Briefing, Strawberry Hill Press, San Francisco, 1980, pp. 233-235. A virtual particle in the laboratory frame is an observable particle in a hyperspatial frame rotated more than one orthogonal turn away. This of course implies that the hyperspatial velocity of all virtual particles is greater than the speed of light. The particle physicist is already deeply involved in hyperspaces and hyperspatial charge fluxes without realizing it. In other words, he is using tachyons (particles that move faster than light) without realizing it.

(18) Presently quantum mechanics rigorously states that time is not an observable, and therefore it cannot be measured or detected. According to this assumption, one must always infer time from spatial measurements, because all detections and measurements are spatial. With this assumption, our scientists prejudice themselves against even looking for finer, subquantal measurement methodologies and instrumentation. Actually this present limitation is a result of the type of electromagnetics we presently know, where all instruments (the "measurers") have been interacted with by vector electromagnetic energy (light). Every mass that has temperature (and all masses do!) is continually absorbing and emitting photons, and in the process they are continually connecting to time and disconnecting from time. If time is continually being carried away from the detector itself by its emitted photons, then the detector cannot hold and "detect" that which it has just lost. With Tesla electromagnetics, however, the fundamental limitation of our present instruments need not apply. With finer instruments, we can show there are an infinite number of levels to "time", and it is only the "quantum level time" which is continually being lost by vector light (photon) interaction. By using subquantal scalar waves, instruments can move to deeper levels of time -- in which case the upper levels of time ARE measureable and detectable, in contradistinction to the present assumptions.

(19) In the present physics, time is modeled as, and considered to be, a continuous dimension such as length. This is only a gross approximation. Indeed, time is not like continuous "dimension," but more like a series of "stitches," each of which is individually made and then ripped out before the next stitch appears. "Vector light" photons interact one at a time, and it is this interaction with mass that creates quantum change itself. The absorption of a photon -- which is energy x time -- by a spatial mass converts it to masstime: the time was added by the photon. The emission of a photon tears away the time, leaving behind again a spatial mass. It is not accidental, then, that time flows at

the speed of light, for it is light which contains and carries time. It is also not accidental that the photon IS the individual quantum. Since all our instruments presently are continually absorbing and emitting photons, they are all "quantized," and they accordingly "quantize" their detections. This is true because all detection is totally internal to the detector, and the instruments detect only their own internal changes. Since these detections are on a totally granular quantized background, the detections themselves are quantized. The Minkowski model is fundamentally erroneous in its modeling of time, and for that reason relativity and quantum mechanics continue to resist all attempts to successfully combine them, quantum field theory notwithstanding.

(20) Presently, gravitational field and electrical field are considered mutually exclusive. Actually this is also untrue. In 1974, for example, Santilly proved that electrical field and gravitational field indeed are not mutually exclusive In that case, one is left with two possibilities: (a) they are totally the same thing, or (b) they are partially the same thing. For the proof, see R. M. Santilli, "Partons and Gravitation: Some Puzzling Questions," Annals of Physics, Vol. 83, No. 1, March 1974. With the new Tesla electromagnetics, pure scalar waves in time itself can be produced electrically, and electrostatics (when the charge has been separated from the mass) becomes a "magic" tool capable of directly affecting and altering anything that exists in time--including gravitational field. Antigravity and the inertial drive are immediate and direct consequences of the new electromagnetics.

(21) Presently, mind is considered metaphysical, not a part of physics, an not affected by physical means. Literally, the prevailing belief of Western scientists is that man is a mechanical robot -- even though relativity depends entirely upon the idea of the "observer." Western science today thus has essentially become dogmatic, and in this respect borders on a religion. Since this "religion," so to speak, is now fairly well entrenched in its power in the state, Western science is turning itself into an oligarchy. But mind occupies time, and when we measure and affect time we can directly measure and affect mind itself. In the new electromagnetics, then, man regains his dignity and his humanity by restoring the reality of mind and thought to science. In my book, The Excalibur Briefing, I have already pointed out the reality of mind and a simplified way in which it can be modeled to the first order. With scalar wave instruments, the reality of mind and thought can be measured in the laboratory, and parapsychology becomes a working, engineering, scientific discipline.

(22) Multiple-valued basic dimensional functions are either not permitted or severely discouraged in the present theory For one thing, integrals of multiple valued derivative functions have the annoying

habit of "blowing up" and yielding erroneous answers, or none at all. And we certainly do not allow multiple types of time! This leads to the absurdity of the present interpretation of relativity which permits only a single observer (and a single observation) at a time. So if one believes as "absurd" a thing as the fact that more than one person can observe an apple at the same time, the present physics fails. However, the acceptance of such a simple proposition as multiple simultaneous observation leads to a physics so bizarre and incredible that most Western physicists have been unable to tolerate it, much less examine its consequences. In the physics that emerges from multiple simultaneous observation, all possibilities are real and physical. There are an infinite number of worlds, orthogonal to one another, and each world is continually splitting into additional such "worlds" at a stupendous rate. Nonetheless, this physics was worked out by Everett for his doctoral thesis in 1956, and the thesis was published in 1957. (See Hugh Everett, III, The Many-Worlds Interpretation of Quantum Mechanics: A Fundamental Exposition, with papers by J. A. Wheeler, B.S. DeWitt, L. N. Cooper and D. Van Vechten, and N. Graham; eds. Bryce S. Dewitt and Neill Graham, Princeton Series in Physics, Princeton University Press, 1973.) Even though it is bizarre, Everett's physics is entirely consistent with all the present experimental basis of physics. The present electromagnetic theory is constructed for only a single "world" or universe -- or "level." The expanded theory, on the other hand, contains multiply nested levels of virtual state charge -- and these levels are identically the same as orthogonal universes, or "hyperframes." Multiple kinds -- and values -- of time also exist. The new concept differs from Everett's, however, in that the orthogonal universes intercommunicate in the virtual state. That is, an observable in one universe is always a virtual quantity in each of the other universes. Thus one can have multi-level "continuities" and "discontinuities" simultaneously, without logical conflict. It is precisely these levels of charge -- these levels of scalar vacuum -- that lace together the discontinuous quanta generated by the interaction of vector light with mass.

However, to understand the new electromagnetic reality, one requires a new, expanded logic which contains the old Aristotlean logic as a subset. I have already pointed out the new logic in my paper, "A Conditional Criterion for Identity, Leading to a Fourth Law of Logic," 1979, available from the National Technical Information Center, AD-A071032.

Even as logic is extended, quantum mechanics, quantum electrodynamics, and relativity are drastically changed by the Tesla electromagnetics, as I pointed out in my paper, "Solutions to Tesla's Secrets and the Soviet Tesla Weapons," Tesla Book Company, 1580

Magnolia, Millbrae, California, 94030, 1980.

The present electromagnetics is just a special case of a much more fundamental electromagnetics discovered by Nikola Tesla, just as Newtonian physics is a special case of relativistic physics. But in the electromagnetics case, the differences between the old and the new are far more drastic and profound.

ADDITIONAL REFERENCES

1, Boren, Dr. Lawrence Milton, "Discovery of the Fundamental Magnetic Charge (Arising from the new Conservation of Magnetic Energy)," 1981/82 (private communication). Dr. Boren has a cogent argument that the positron is the fundamental unit of magnetic charge. His theory thus assigns fundamentally different natures to positive charge and negative charge. In support of Dr. Boren, one should point out that the "positive" end of circuits can simply be "less negative" than the "negative" end. In other words, the circuit works simply from higher accumulation of negative charges (the "negative" end) to a lesser accumulation of negative charges (the "positive" end). Nowhere need there be positive charges (protons, positrons, etc.) to make the circuit work. Dr. Boren's theory, though dramatic at first encounter, nonetheless bears close and meticulous examination -- particularly since he has been able to gather experimental data which support his theory and disagree with present theory.

2. Eagle, Albert, "An Alternative Explanation of Relativity Phenomena," Philosophical Magazine and Journal of Science, No. 191, December 1939, pp. 694-701.

3. Ehrenhaft, Felix and Wasser, Emanuel, "Determination of the Size and Weight of Single Submicroscopic Spheres of the Order of Magnitude r = 4 x 10(-5) cm. to 5 x 10(-6) cm., as well as the Production of Real Images of Submicroscopic Particles by means of Ultraviolet Light," Phil. Mag. and Jour. of Sci., Vol. II (Seventh Series), No. 7, July 1926, pp. 30-51.

4. Ehrenhaft, Felix and Wasser, Emanuel, "New Evidence of the Existence of Charges smaller than the Electron - (a) The Micromagnet; (b) The Law of Resistance; (c) The Computation of Errors of the Method," Phil. Mag. and Jour. of Sci., Vol. V (Seventh Series), No. 28, February 1928, pp. 225-241.

5. See also Ehrenhaft's last paper dealing with the electronic charge, in Philosophy of Science, Vol. 8, 1941, p. 403.

6. McGregor, Donald Rait, The Inertia of the Vacuum: A New Foundation for Theoretical Physics, Exposition Press, Smithtown, NY, First Edition, 1981, pp. 15-20.

7. Ignat'ev, Yu. G. and Balakin, A. B., "Nonlinear Gravitational Waves in Plasma," Soviet Physics Journal, Vol. 24, No. 7, July 1981, (U.S. Translation, Consultants Bureau, NY, January 1982), pp. 593-597.

8. Yater, Joseph C., "Relation of the second law of thermodynamics to the power conversion of energy fluctuations," Phys. Review A, Vol. 20, no. 4, October 1979, pp. 1614-1618.

9. DeSantis, Romano M. et al, "On the Analysis of Feedback Systems With a Multipower Open Loop Chain," October 1973, available through the Defense Technical Information Center (AD 773188),

10. Graneau, Peter, "Electromagnetic jet-propulsion in the direction of current flow," Nature, Vol. 295, 28 January 1982, pp, 311-312.

11. "Gravity and acceleration aren't always equivalent," New Scientist, 17 September 1981, p. 723.

12. Gonyaev, V. V , "Experimental Determination of the Free-Fall Acceleration of a Relativistic Charged Particle. II. A Cylindrical Solenoid in a Time-Independent Field of Inertial Forces," Izvestiya VUZ, Fizika, No. 7, 1979, pp. 28-32. English Translation: Soviet Physics Journal, No. 7, 1979, pp. 829-833. If one understands the new, expanded electromagnetics, this Soviet paper indicates a means of generating antigravity and pure inertial fields.

13. R. Schaffranke, "The Development of Post-Relativistic Concepts in Physics and Advanced Technology Abroad," Energy Unlimited, No. 12, Winter 1981, pp. 15-20.

14. F. K. Preikschat, A Critical Look at the Theory of Relativity, Library of Congress Catalogue No. 77-670044. Extensive compilation of measurements of the speed of light. Clearly shows the speed of light is not constant but changes, sometimes even daily.

Return to Table of Contents **Next Page**

COMMENTS ON THE NEW TESLA ELECTROMAGNETICS

Part II: The Secret of Electrical Free Energy

© 1982 T. E. Bearden

Again I wish to express my deep appreciation to two of my friends and colleagues who at this time, I believe, wish to remain anonymous. I thank them both for their exceptional contributions and stimuli, and their forbearance with the many discussions we have held on this and related subjects.

Also, it goes without saying that any errors in this paper are strictly my own, and not the fault of either of my distinguished colleagues.

Present electromagnetic theory is only a special case of the much more fundamental electromagnetism discovered by Nikola Tesla at the turn of the century.

Pure vacuum is pure charge flux, without mass. The vacuum has a very high electrical potential -- something on the order of 200 million volts, with respect to a hypothetical zero charge.

Thus in an ordinary electrical circuit, each point of the "ground" -- which has the same potential as the vacuum -- actually has a non-zero absolute potential. This circuit ground has a value of zero only with respect to something else which has the same absolute electrical potential.

Voltage, which is always associated with a flow of electrical "mass" current (even if only a miniscule flow), is, by definition, a difference dropped in potential when a charge mass moves between two spatially separated points. What we have termed "electrical current" only flows where there is a suitable conducting medium between things which have a difference in absolute potential. Furthermore, between any two points in any material, there is considered to exist a finite resistance -- if we apply a voltage and have a mass current flowing between the two points! The simple statement that V = IR irrevocably ties together voltage drop, mass current, and resistance between two points. Rigorously, to have one of the three is to have them all. To lose one is to lose all three. Immediately we see a major error in present theory: One can have a "difference in scalar potential" between two points without having a "voltage drop" between them. Specifically, if no mass current flows between them, no resistance exists between them, and no voltage drop exists between them.

In the same fashion, one can have a "scalar wave" through the

In the same fashion, one can have a "scalar wave" through the vacuum without a voltage wave. In that case, the wave has no E-field and no H-field. The only reason one has an E-field

Return to Table of Contents Next Page

around a statically charged object is because the charged electrons accumulated on the object are actually in violent motion. It is this motion of the charged masses that produces E-field -- as well as H-field whenever that entire E-field ensemble moves through laboratory space.

Now let us reason together in the "approximate" manner utilized in present electromagnetic theory. For example, let us examine a bird sitting on a high tension line.

The bird sits on the high tension line without a flow of mass electricity, because there is no significant difference in potential drop between the bird and the line. Specifically, between the bird's two feet -- each in contact with a different portion of the line -- there exists no potential difference. This is true even though, with respect to the vacuum, each foot is at a potential that would be "100,000 volts higher," were a mass current flowing. And it is true even though the absolute potential of each foot may be some 200.1 million "volts," were a mass current flowing.

Now an interesting thing happens to the bird when he flies through the air to light upon the high tension wire. As he flies toward the wire, he is flying through the massless electrostatic potential field of the wire, for that field extends an infinite distance away from the wire. The electrostatic potential field -- pure Ø-field -- is actually the spatio-temporal intensity of the massless charge at a point. In other words, as the bird flies to the wire, he flies into an increasing "massless charge" potential, building up to 100,000 "volts" higher than the earth. However, very little (if any) "mass flow" potential difference is experienced upon his body in approaching the wire, and so essentially no "charged mass currents" are induced in his body. Thus the little flier safely navigates into the teeth of a very high electrostatic potential, lights upon the wire, and is not "fried" in the process. When he lights on the wire, his body has reached the electrostatic potential that each foot's contact point has. Again, there is no mass current flow. But his body is immersed in an increased flux of massless charge -- which is what the electrostatic potential represents. And each "virtual particle" flow in that charge potential represents a "massless (scalar)" electrical current.

The point is, one can have any amount of massless charge flow -- "scalar" current -- without any mechanical work being done in the system. All electrical work in a circuit is done against the physical mass of the charged masses that flow. Rigorously, force is defined as the time rate of charge of momentum. Even in the relativistic case where $F = ma + v(dm/dt)$, change of momentum requires mass movement. No mechanical work, and hence no energy, is expended by massless charge flow.

That is why the vacuum massless charge -- which is composed of a very high flux of massless "particles" -- normally does no work

That is why the vacuum massless charge -- which is composed of a very high flux of massless "particles" -- normally does no work on our systems, and expends none of its very high "potential energy." It is exactly the same as the bird which flew into an

Return to Table of Contents Next Page

increasing scalar field as it approached the high tension wire -- no work was done upon the bird by the increasing scalar flux currents encountered by its body.

By existing "in the vacuum," so to speak, we (the whole earth) are as birds sitting on a high tension line! Until we create significant difference in potential, via our present electromagnetic circuits, no current can flow -- anywhere. Even if we produce potential differences, we must have a conductor and charged masses to flow, if we wish to produce mechanical work. Presently our electromagnetic theory allows us to create a difference in potential within different parts of a circuit, but only by moving and shifting charged mass. We therefore have to do work on this electrical mass in moving it around, and we only get back the work we have put into the circuit. In other words, presently all we do is "pump" electrical mass.

Now notice what would happen to the bird on the line if we substantially "pulsed" the potential on the line. Suppose we "pulsed" it such that the bird's physical system -- considered as a circuit containing a capacitance, a resistance, an inductance, and many free electrons -- became resonant to the pulsing frequency. In that case the "bird system" would resonate, and a great deal of electrical mass would surge back and forth in the body of the bird. In the bird's body, voltage would exist, charged mass current would flow, work would be done, and the bird would be electrocuted.

Also, note that, without mass movement, electromagnetic vector fields are not produced (and a portion of the difficulty lies with the actual vector mathematics itself). Scalar (nonvector) waves continually penetrate "space" where there is no mass movement. This means there can exist a "delta-Φ" without a voltage or an E-field. The present theory does not allow this, because it always uses "q" (charge) to be charged mass. Briefly, without belaboring the point, let us just say that it is the mechanical spin of the individual charged particle -- such as the electron -- which "entangles" or "knits together" or "couples" independent scalar waves into vector waves. A vector wave is simply two coupled scalar waves. The entire force field concept -- such as the E-field and the B-field -- is operationally defined in terms of the force exhibited on a test particle, or test mass. Rigorously, an E-field does not exist as a force field in vacuum, but as two coupled scalar Φ-fields "tumbling about each other." When these two coupled, tumbling fields meet a spinning electron, e.g., the force emerges on the electron mass. In short, movement of a rotating mass changes delta-Φ to "voltage", creating the V/I/R triad.

By "accumulating charged mass particles" -- such as electrons -- one certainly can increase the value of Φ, which represents the charge intensity or "scalar electrostatic potential." However, that is not the only way to increase it. Resonance and rotation of charged masses can also be appropriately employed to vary the vacuum charge potential Φ, under the proper circumstances.

or charged masses can also be appropriately employed to vary the vacuum charge potential Φ, under the proper circumstances.

Return to Table of Contents Next Page

By the correct application of rotary principles and Tesla electromagnetic theory, it is possible to oscillate -- and change -- the vacuum potential itself, in one part of an electrical system. Thus by correct procedures a part of a system can be electrically altered so that the absolute value of its "ground" (vacuum) potential differs significantly from the normal vacuum-ground potential of the remainder of the circuit. In other words, we shift the vacuum-ground potential of part of the circuit by oscillating the massless vacuum charge itself, and in so doing we gain a substantial, oscillatory electrical potential difference between that part of the circuit and the normal ground potential of the rest of the system. Then we connect the two parts of the system by means of a conductor containing a load in the middle.

In every conductor, a large number of "free electrons" are available. If we oscillate the actual vacuum charge itself, unlimited additional free electrons also become available from the Dirac sea, since partial "unstripping" of the negative energy wells (each containing an electron) occurs. This "unstripping" of the potential of the well is due to vacuum potential oscillation, which oscillates time as well as space. To a negative energy well (positive time), the oscillation of its "time stream" increases the well's negative potential during one half-cycle and decreases its potential for the other half-cycle. Thus during half the oscillatory cycle, negative energy electrons may be lifted from the Dirac sea if the oscillation is sufficiently intense.

Therefore we obtain an attendant voltage and flow of mass current through the load. This voltage and current, by the way, are essentially limitless, and are free for the asking, assuming the proper "vacuum oscillation" is initiated and maintained so that electrons are continually being lifted from the Dirac sea by the time oscillations, and fed into the circuit.

Standard electromagnetic theory assumes that the vacuum potential is zero. It does not recognize the existence of massless charge, separated from charged mass. Therefore, orthodox scientists have never looked for a way to engineer the vacuum, because they have not realized it is composed of pure massless charge. Electrical physics has almost hopelessly confused charge and charged mass, thereby eliminating scalar longitudinal electrostatic waves. Expressed in the bird/high tension line analogy, the present electromagnetic theory restricts us to walking along the high tension line, laboriously carrying small batteries and power units, unaware of the limitless, surging power beneath our very feet.

Electromagnetically, we have been rather like one of the five blind men who touched an elephant. We have only touched one small portion of the electromagnetism "elephant," yet we thought we had grasped the entire beast.

OVERTURE TO A NEW AGE TECHNOLOGY

From an Update by Dr. Rolf Schaffranke

> " ... as there has been a steady erosion in U. S. activity in the basic sciences, there has been an increase in the level of such activity in Western Europe and Japan. If that continues, we are in danger of losing our position of scientific leadership."
>
> Val. L. Fitch, Prof. of Physics at Princeton University, in an interview with *U.S. News & World Report*, June 21, 1982.

West Germany:

The prototype of the first motorcycle equipped with a "flux-motor" (the inventor's designation for a tachion field converter or gravity-field generator) of 2 KW output has completed a test run of approximately 20,000 km without repairs. Principle of operation: The T-converter is constantly recharging the electrical power battery of the vehicle, resulting in an operation which is noiseless, fuelless and polution-free. After completion of all scheduled tests, a public demonstration to the press is planned within a few weeks from the time of this writing. (June 17, 1982) See photo, Pg. 19. A new factory for the production of gravity-energy-field converters in the town of Oldenburg is scheduled to produce individual home heating units. The design of automobile power plants based on the same principle is also in preparation. Reported efficiency factors of several hundred percent are anticipated.

Japan:

Mazda continues research on the "magnetic Wankel engine" (45 HP) for electric automobiles, based on the principle of Kure Tekko. The gravity research of Prof. S. Seike is now sponsored by Hitachi, after millions of Japanese received updated information via popular science magazines. It is interesting to note that Saudi Arabia has decided to invest $100 million in Hitachi stocks.

France:

The "Kromrey" converter has completed tests at the Institute for Magnetostatics, University of Strasbourg. One prototype delivered 700 Watts at 600-1200 RPM, at a fairly uniform rate. However, France, as the No. 1 developer of nuclear energy in Europe, is still reluctant to concentrate her energies on a revolutionary new technology which could result in drastic curtailments of her well-developed nuclear industry and associated exports. See photos, Pg. 22.

Denmark:

Dr. Jensen, physicist at the University of Kopenhagen, reported test results of 300% efficiency with a specially designed, 5-coil transformer in connection

Return to Table of Contents Next Page

with a tachion field converter based on the principle of the "N" machine. First reports were presented at the International Conference on Energy Technology in Hannover, Nov., 1980.

England / USA:

A "bullet train" based on the magnetic levitation system of British Prof. Eric Laithwaite is now under consideration for construction between Los Angeles and San Diego. Japan and West Germany are already operating high speed experimental trains, suspended magnetically to reduce friction, that may soon attain speeds of more than 200 miles per hour. The Laithwaite-Eastham method would use electromagnetic forcefields induced over an aluminum-topped concrete track. The project will probably be headed by a Japanese company as the prime contractor.

Return to Table of Contents Next Page

West German gravity-field unit in operation

Return to Index **Next Page**

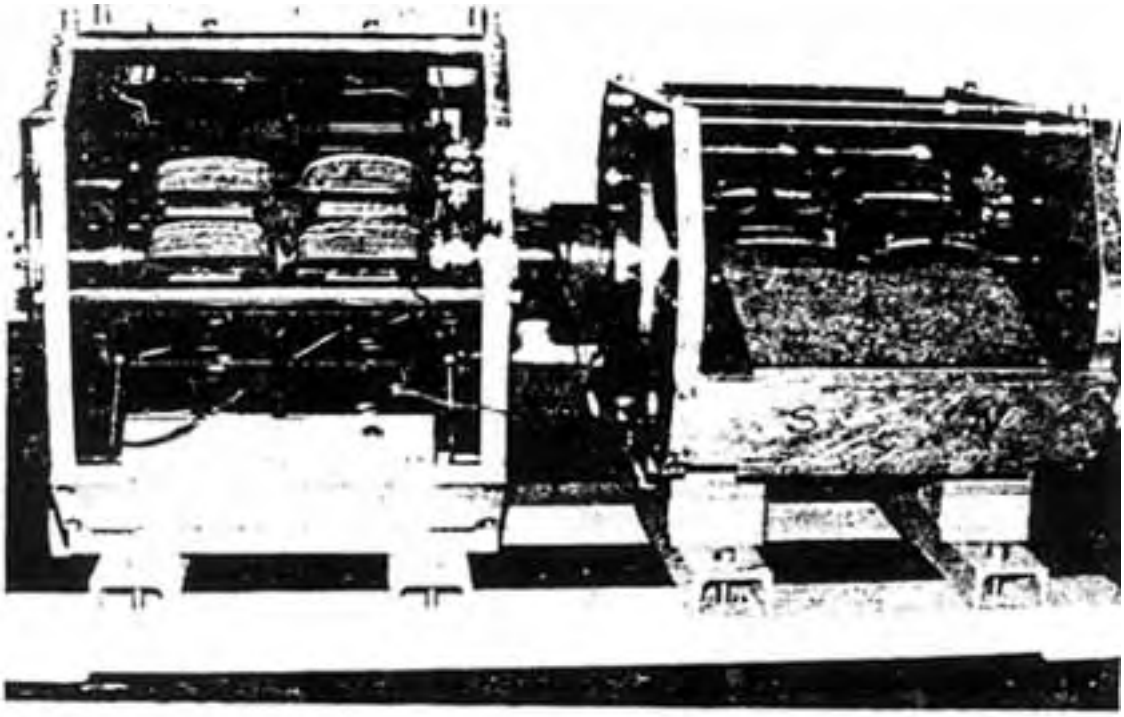

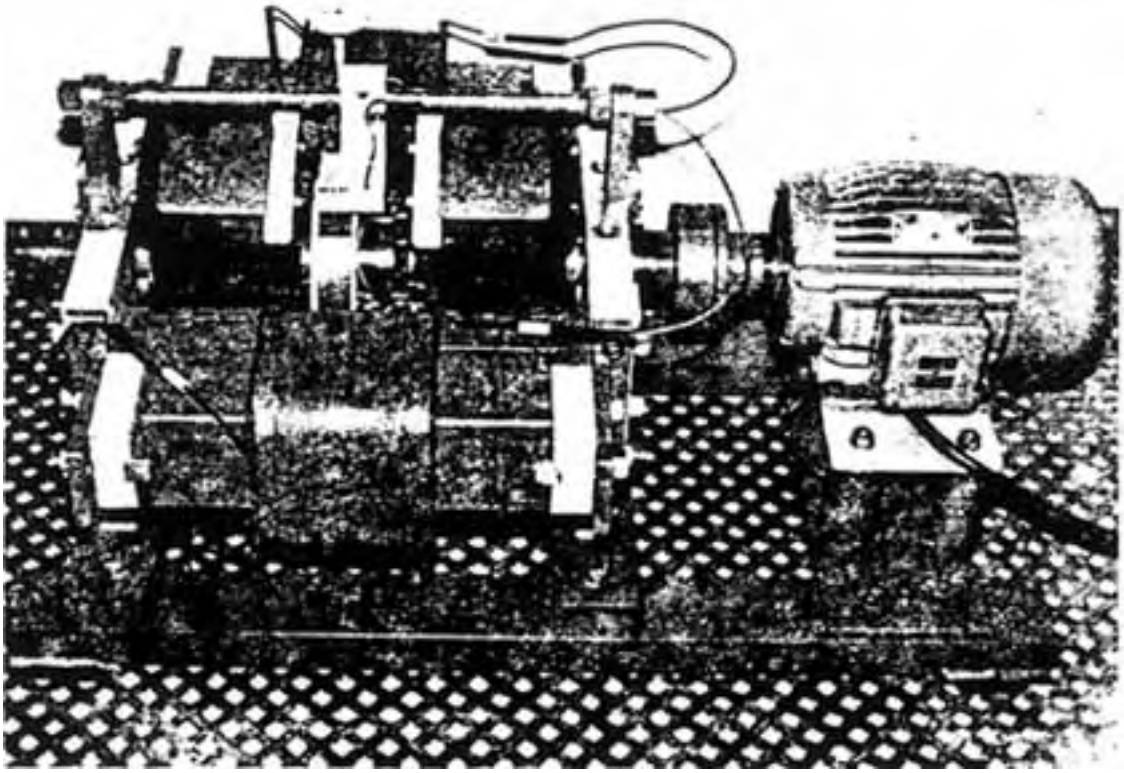

Swiss-French gravity field converter system "Kromrey"

Return to Index **Next Page**

REVIEW AND OUTLOOK

THE DEVELOPMENT OF POST-RELATIVISTIC CONCEPTS IN PHYSICS AND ADVANCED TECHNOLOGY ABROAD

Rolf Schaffranke, Dr. h. c.
Member A.I.A.A.

This paper was presented at The First International Symposium on Non-Conventional Energy Technology, Toronto, Ontario, Canada, Oct. 23-24, 1981. (Reprinted by permission of the author.)

"Far more harm is done to the progress of science by skepticism than by gullibility". (Dr. Robert Wood, Director R & D, McDonnel-Douglas Astronautics Div., Cal.) NASA - Langley Research Center in Hampton, VA is named after Samuel Pierpont Langley (1834-1906), an American astronomer, engineer and architect.

Langley worked out the aerodynamic principles for manned flight. In principal, his calculations were correct; but the structural materials he used for wings and engines were ,insufficient. In December of 1903, the *New York Times* published an editorial complaining about his foolish dream and the associated waste of government money. The editorial predicted that: "man would not fly for a thousand years".

Only 9 days after the editorial was published, the Wright brothers made their first successful powered flight at Kitty Hawk. (Dec. 17, 1903). But, again, as late as 1905, the *Scientific American* suggested the happening was a hoax - two years after the event which changed history. Let's reflect for a moment on the fact that only in a single lifetime, man has journeyed from Kitty Hawk to the surface of the moon!

The analogy to the problem of alternative energies and their development is, of course, obvious. We try to educate the preaching orthodoxies. But orthodox solutions are no longer enough. Our system of education can only give from

the past. The present must operate on inspiration and intuition, or the future will be lost. The past no longer has enough of the answers for arising crises for which there are no precedents. To keep pace with the requirements of the future, we must begin to teach not only what to learn, but how to learn, how to analyze, how to search for the truth. Only then will be able to recognize discrepancies between experiment and dogma and to cope with problems which appear to be just beyond the corner. History has shown again and again that no single individual can rise above the species without being persecuted. The reasons for that are:

Some of the most powerful forces in homo sapiens have always been

Greed, Pride, Ego, Fear and, above all, the Desire to Control Others,

.

A brand new German book titled *Energy in Abundance*, which is evidently creating a considerable impact in the European community, challenges the contemporary high

Return to Table of Contents **Next Page**

priests of science, the "Guardians of the Status Quo" and uncovers an almost incredible narrowmindedness and ignorance in science, politics and economics, "approaching the criminal" as the author puts it. The contemporary waste of genuine intellectual creativity is castigated as a cultural scandal approaching barbarism. The book stresses that a truly promising approach to the so-called energy crisis requires a fundamental and thorough re-evaluation of the theories, dogmas and axioms which form the basis of present day science and the foundation of our technology. As in the past, the formidable inertia of the establishment is not only based on inaccurate, incomplete and outdated information, but also on its reluctance to accept new ideas. The honest search for the truth first requires that we first demythologize generally accepted claims of so-called experts of the past. An excellent introduction to this problem is the article "Resistance by Scientists to Scientific Discovery" by Bernard Barber in *Science*, Vol. 134, pp. 596-602, of Sept. 1961, or the paper by Stephen C. Brush in *Science* of March, 1974, titled "Should the History of Science be Rated 'X'"?, culminating with a statement of Huxley:

> "Authorities", "disciples", and "schools" are the curse of science and do more to interfere with the work of the scientific spirit than all its enemies".

The former astronaut, Capt. Edgar D. Mitchell, one of our famous contemporaries, also stressed the need for an open mind!

> "History has shown time and again that important scientific discoveries generally happen only when someone steps outside the limits of his traditional discipline and looks at something from a fresh point of view. Then what should have been obvious all along comes into focus".

Those of us who are familiar with the pioneering efforts of Dr. Hans Nieper of Hanover will appreciate this statement by an ex-astronaut.

One of the most important cornerstones of today's scientific dogmas dates back to 1905, more than 3/4 of a century ago. Lest we forget, television and radar, jet-planes and cyclotrons, moonrockets and close-up photos of the planets of our solar system were nothing but wild fantasies of science fiction then.

The speed of light was assumed to be constant and the maximum possible speed in the universe; vacuum was to be a total void. In reality, the speed of light as measured in the Michelson-Morley experiments was not at all the same in all directions. The "ether-drift" still amounted to the respectable velocity of about five miles per second, and similar results were obtained by D. C. Miller in a series of experiments extending over twenty-five years, from 1902 to 1926.

Return to Table of Contents **Next Page**

"Even worse, the measurements showed such marked discrepancies with previous results as to occasion a distress call to the U. S. Coast & Geodetic Survey, whose surveyors repeatedly remeasured the length of the tube and found no error there," reported the *Popular Science Monthly* March 1934 issue. And it continued: "More recently, speed of light observations only emphasized the apparent erratic behavior of the light beam that the scientists were attempting to plot. On some days it seems to travel faster than others by as much as 12 miles a second. Its speed seems to vary with the season, and also in a mysterious shorter cycle lasting about 2 weeks. Finally, the scientists ended by taking an average of all the readings which has just been announced as 186,271 miles per second".

In his paper "A Critical Look At the Theory of Relativity", Library of Congress Cat. No. 77-670044, F. K. Preikschat compiled all known light velocity measurements during the past 300 years or so, from Olaf Roemer in 1676 to the Laser measurements conducted by the National Bureau of Standards (USA) in 1972.

Of the 27 experiments undertaken in this field, 18 of them after the turn of this century, it must be concluded that the velocity of light as measured within the reference system of our earth has changed as much as plus/minus 50 km/sec, during the past century. Preikschat plotted a curve of these deviations and suggests a possible relationship between sunspot activities and changes of the earth magnetic field during the time period in question.

The "universal constancy of light" appears, therefore, as somewhat shaky "empirical evidence" for our cornerstone in physics, especially since Einstein himself has gone on record as saying:

"If a single one of the conclusions drawn from it (relativity theory) proves to be wrong, it must be given up; to modify it without destroying the whole structure seems to be impossible".

Another modification concerns the definition for the term "vacuum" in physics, as documented by a paper in the *American Scientist*, March-April 1980, titled "Is The Vacuum Really Empty?" by Prof. Walter Greiner, University of Frankfurt, BRD, and Prof. Joseph H. Hamilton, Vanderbilt University, Nashville, Tenn.

The authors conclude that a neutral vacuum is by no means as "empty" as previously claimed in our textbooks, and suggests a new definition as follows:

"The vacuum is the lowest stable state that a region of space can have while being penetrated by certain fields".

Because of the tremendous time lag in our educational system, many research

Return to Table of Contents Next Page

projects and their ensuing experimental data have been withheld from public scrutiny. The scientific community tends to have a vested interest in preserving the system it created and of which it is a part. It responds to new situations through the coloration of this attachment. A case in point are the carefully conducted experiments of T. T. Brown with charged bodies in a high vacuum, as described in my booklet *Ether Technology* (1977). These experiments suggest the actual presence of certain fields in vacuum, whether we call them gravitational field, tachion-field, ether-field, neutrino or Fermi-sea, etc. is of secondary importance at this moment. Although Brown spent, reportedly, more than $200,000 of his own funds over several decades on such experiments, he was nevertheless unable to have the results published in the scientific media of America.

Things are even worse when it comes to experiments conducted abroad, which often tend to confirm disregarded experimental results on this continent, as we shall see shortly. To highlight the wide discrepancies between orthodox (and obsolete) dogmas and actual, physical realities pertaining to the true subatomic structures as we know them to be today, let us briefly review the structure of the matter:

A molecule is the smallest division of a substance. Further division would cause it to cease being a substance. The smallest of true molecules can be illustrated when we use the globe of the earth for our standard. If a single drop of water were magnified until it was as big as the earth, each molecule would be about the size of a TENNIS BALL.

On the next step down, an atom is the unit which makes up the nature of the molecule, consisting of the nucleus and the surrounding electrons to render the atom "stable". An atom of hydrogen contains one proton and one electron to balance or neutralize the proton. Matter then is divisible into electrons and protons. But - and here comes the rub: Between electrons and protons are spaces so vast, in comparison with the masses of each, that, if the proton in the carbon atom were the size of a golf ball hanging from the ceiling of the great hall at Pennsylvania Station in New York, its electrons would be represented by six small wasps winging in a little knot against the four walls of the gigantic structure of the building! In effect, one could claim there is little final solidity of substance to anything: The universe consists of "emptiness", charged with electrical energy! If we translate the above to the measurements and terminology of the physicist and "magnify" the atom mathematically, with all its distances and dimensions kept in proportion so that the orbit of the electron would have a diameter equal to that of the earth about the sun, approximately 184 million miles, the diameter of the electron itself would only be 2,000 miles, and the diameter of the nucleus, where

electron itself would only be 2,000 miles, and the diameter of the nucleus, where

Return to Table of Contents Next Page

mass and weight of the atom are truly concentrated, can be taken as 2 miles only. We thus obtain a picture of a central mass with a diameter of 2 miles (nucleus), another object with a diameter of 2,000 miles (the electron, in the case of the hydrogen atom) at a distance of 92 million miles away from it, orbiting the nucleus. Evidently, there is plenty of room inside this system. And "room" is not a vacuum, it is not nothingness, but space itself, spatial energy, a field which can be identified with the ether of the past - and of the future. Nobel prize winner, Max Planck, during a lecture in Florence, Italy, once made a truly remarkable statement which describes the problem facing the physicist today:

> "As a man who has devoted his whole life to the most clear-headed science, to the study of matter, I can tell you as the result of my research about the atoms this much:
>
> 'THERE IS NO MATTER AS SUCH!'
>
> All matter originates and exists only by virtue of a force which brings the particles of an atom to vibration and holds this most minute solar system of the atom together. ... We must assume behind this force the existence of a conscious and intelligent MIND. This mind is the matrix of all matter".

This cosmic matrix is needed if we want to explain "action at a distance", lines of force, stresses, a magnetic field and so on. When the concept of the ether was abandoned, it had to be replaced by the concept of "space" instead. In reality, we merely switched terminology. We used to say that "ether fills all Space". But "filling" is not exactly the descriptive word to use. Perhaps we should rather define it: "Ether is a condition of space in which electrical manifestations for the atomic construction of materials is possible". This primordial energy is "free" or in an uncondensed state. It exists in interstellar space but remains unrecognizable until it begins to coagulate or gets into a vortex pattern. It constitutes the formative field force of nature, an immense reservoir of latent energy.

The claim of our textbooks that the Michelson-Morley experiment "disproved" the existence of the ether is incorrect. It merely disproved the existence of a noticeable ether drift or drag. As an analogy, if somebody would postulate that the absence of wind disproves the existence of the atmosphere around our planet, the fallacy of this postulate would be immediately apparent to all.

"Michelson and Morley centered their attention on the Earth's orbital velocity (30 km per second). They had no knowledge of the existence of galaxies; of motions of galaxies in relation to each other; of the motion of our solar system in our galaxy..... Their negative results are explainable on the basis of pre-1900 classical mechanics, so provide no proof of the absence of ether or Louis de Broglie's

Return to Table of Contents Next Page

'subquantic medium'. Thus, the limited information available to Michelson and Einstein is emphasized by recent findings, particularly in astrophysics", writes Dr. H. C. Dudley in the *Bulletin of the Atomic Scientists*, January, 1975, under the title "Michelson's Hunch Was Right". And Dr. Dudley continues: "In fact, 1929 saw Michelson still attempting to experimentally demonstrate the ether, which his intuition and reasoning told him ought to be present".

"Today most persons are largely unaware that the ether concept began to be seriously reexamined by two of physics most notable theoreticians, Paul Dirac in 1951 and de Broglie in 1959, both Nobel laureates. The ether is now being called the "neutrino sea" by astrophysicists, and has been characterized as an energy-rich particulate, subquantic medium. A rather voluminous literature on the subject is accumulating as indicated by a recent review, *The Cosmic Neutrino*, with 665 references covering only the period 1965-1972.....It appears that an open-minded reexamination of this area of physics is long overdue in order to open up new avenues of approach to this pressing problem".

Michelson, Dirac, de Broglie were not the only Nobel prize winners in favor of a reexamination of the ether question. Others were Stark, Arrhenius, A. H. Compton, Lenard, H. Yukawa, and Frederick Soddy, the British scientist who, during the convention of Nobel laureates in Lindau, 1954, described the current dogmas in physics as "an orgy of amateur physics" and "arrogant swindle" - with particular emphasis on the theory of relativity. ("The Wider Aspects of the Discovery of Atomic Disintegration", New World Publications, St. Stephens House, Westminster S.W.I.)

It remained largely unknown, even among physicists, that Einstein himself had serious doubts. In 1949, he wrote to his old friend, Maurice Solovine, who congratulated him on his 70th birthday:

> "Now you think that I am looking back at my life's work with calm satisfaction. But, on closer look, it is quite different. There is not a single concept of which I am convinced that it will stand firm and I am not sure if I was on the right track after all".

And one of my Canadian friends who I believe is present here today stated quite correctly in a letter to me:

> "The myths around Einstein are really not of his making as he himself often questioned his own conclusions and I felt he was quite aware of his own limitations which others were covering up. The physicists protect their members much the same way that the medical profession protects its own."

The purpose of these remarks is not to spark another controversy about the merits of the theories of relativity. Rather, they want to show that so-called

merits of the theories of relativity. Rather, they want to show that so-called

Return to Table of Contents Next Page

"scientific evidence" is a rather elastic term and that "verification" is always a relative affair. Or, as K. R. Popper so aptly put it:

> "Only in our subjective experience of conviction, in our subjective faith, can we be 'absolutely certain'".

This symposium presents an excellent overview of research and experiments reported from English speaking countries, or experiments published in the English language, as for instance from Japan. However, as Dr. Tenhaeff from Holland has formulated the problem,

> "It is important to pay attention to publications of colleagues in other countries. In the Netherlands and Germany, every academically educated man or woman knows at least three foreign languages. English and American authors only pay attention to material in English. In my opinion, this leads to an 'impoverishment' which puts a drag in science. Some seem very chauvinistic and seem to believe that only the researches done in their country are important. I regret this. Science is international, and international cooperation is of the greatest importance in science".

In presenting some brief reports from abroad, I shall attempt to bring corroborative evidence in support of alternative technology developments discussed during our meeting here in Toronto. Let me start with the most sensitive and secretive society, with Russia.

In his German original of the paper "Some Remarks on the Shielding Theory of Gravity", which was published in the Hanover Proceedings in more detail than the English abstract, Dr. Hans Nieper mentioned the Berlin engineer Levetzow, who was one of the first to postulate a combination pressure and shielding theory for the phenomena of gravity. Levetzow was soon overshadowed by the rising star of Albert Einstein, but one of his followers, Horst Pinkell, went to Russia in 1928 as an exchange student - and never returned. Together with Russian scientists, he was asked to prove the actual existence of the cosmic radiations postulated by Levetzow, now designated as neutrino sea or "tachion field". The work was done in Sterlitamak, South of the Ural mountains, and in 1938, sporadic reports reached the West about the discovery of extremely short corpuscular waves by Pinkell and Gorjew. These were the long sought "Hemmstrahlen" or drag waves associated with gravity. Rumors have it that a metal alloy was soon developed which acted as a drag wave polarisor and, in 1947, agents reported experimental Russian aircraft using this discovery. In 1951, a former German Junkers aircraft engineer reported about his activity pertaining to a super-secret project code named COW-7 in Siberia, a disk-shaped craft which could rise vertically and which belonged to the

Siberia, a disk-shaped craft which could rise vertically and which belonged to the

Return to Table of Contents Next Page

secret weapons then developed by the Soviets. Whether it was related to the Canadian AVRO project or something entirely different remained unknown, only the Levetzow gravity theory was assumed in connection with the activity in question.

Japan: My esteemed friend, Prof. Seike, who kept me informed about the research conducted by him and his co-workers, surprised me once with a significant statement, which I feel is important to repeat for the benefit of frustrated researchers on this side of the Pacific: "In the early stage of my studies, physicists could not understand what I was doing, while actors and actresses did so by intuition". It was the private support of about 800 individual artists, etc., in Japan which allowed Seike to work, experiment and publish his findings, and not the support of the Japanese equivalent of a National Science Foundation or a similar bureaucratic institution in that country. Again and again, I was surprised how quickly and eagerly American experiments, as for instance the almost forgotten "Ionocraft" of the late Major de Seversky, were duplicated and explored even in Japanese secondary schools. Admiral Rickover has more than once complained about our intellectual complacency: "As a nation, we seem addicted to 'spectatoritis'. We sit in the bleachers and let the game of life unfold before us".

The results are known: The Japanese have achieved top position in science and technology, and not only with tachion beams melting stones, producing "biased" water with a freezing point of minus 4 degrees Celsius, and a G-power generator obtaining 400 V DC output from a 10 V input driving source. I wish to take this opportunity to thank Prof. Seike for sharing his work with us in this country, and wish him the best of success for the future.

France: The work of SEPED was explained by M. René Louis Valée and some French publications in the area of gravity-research have been translated by the NASA translation service, as for instance the theory of the electromagnetic Magnus-Effect (of Marcel Pagés).

Specific mention must be made of the Raymond Kromrey G-field generator, a French-German-Swiss development which appears very closely related to the American "N" machine principle, the "Sunburst" machine and the "Permanent Magnet-Motor" Patent of Howard Johnson. Utilizing either permanent or electromagnetic modules, the generator output exceeds the input by far. One prototype delivers approximately 700 watts at speeds varying between 600 and 1200 RPM. Models with an output of 100 to 160 kw are presently in the planning stage. Several European patents have been granted against heavy opposition, especially from French industrial circles. The development was about 40 years in the making and the inventor stresses the need for a reinvestigation of electromagnetic and gravitic forces, as well as a reexamination of many cemented dogmas in present-day physics.

[Return to Table of Contents](#) [Next Page](#)

Germany: A system of rotating electromagnets and magnetic "stator rings" of the German "Kunel" Generator complement the general trend of the American and French generators mentioned before. The first prototype was reported to have been tested in April, 1980. Here, again, very heavy opposition from the German orthodox science establishment. Of special interest is a comment by Nobel laureate Werner Heisenberg, reported to have been made vis-a-vis the inventor:

> "I think it is possible to utilize magnetism as an energy-source. But we science idiots cannot do that; this has to come from the outside".

More details about French and German developments have been published in the new book already mentioned, *Energy in Abundance* by Hilscher and, hopefully, an English version of this important work will be available by next year. Generators which do interact with surrounding energy fields have been designated as "open systems", in contrast to our present "closed system" technology of gasoline and diesel engines, steam turbines, nuclear power plants and so forth. The theoretical basis for all "open systems" is the realization that there simply is no such thing as "empty space". In reality, space is filled with an extremely energy rich, subatomic and subquantic continuum. In short, a "pre-physical state of matter", which can be tapped, as for instance by the spinning of magnetic systems which extract momentum via a vortex-formation of the universal "tachion field".

Austria: This small heartland of Central Europe is proud of her native pioneers in science, among them Dr. Wilhelm Reich, Viktor Schauberger and Karl Schappeller. But after Dr. Reich died in an American prison in 1957 and Victor Schauberger died only five days after his return from the USA (in 1958), where he received an incredibly unfair treatment from certain industrialists, there is little enthusiasm among Austrians to touch base with correspondents on this continent. Viktor Schauberger's son, Walter, refuses, as a matter of principle, to communicate with Americans, no matter in what language. To illustrate the type of "contract" Viktor Schauberger was forced to sign, it stated:

> that all of his patents would become the property of the "consortium",
> that any future inventions or developments would also become the property of the "consortium",
> that he would refrain from discussing any of it with third parties,
> that he would refrain from publishing,
> that all plans and models would remain with the "consortium" after his departure from America.

There is a favorite saying in that small country which is much to the point:

> "After the Greek philosopher Pythagoras had discovered his famous

Return to Table of Contents **Next Page**

> theorem, he sacrificed a whole hecatomb of oxen as a thanksgiving to the Gods. Ever since, all the oxen in the world are running scared whenever a new truth has been discovered".

Knowledge of the ideas of Schauberger and Schappeller appears to be essential for an understanding of our changing picture of the physical world. As an example, the former forest ranger Viktor Schauberger had watched numerous times some trout standing, apparently motionless, in the strong currents of Alpine mountain streams. This and many similar observations of nature brought him to the gradual development of his "implosion-theory" and associated hardware (see Jensen paper elsewhere). His son is continuing the work in the "Pythagoras-Kepler" School in Bad Ischl. Another prolific researcher is the Viennese engineer Franz Seidl, known for his studies of the use of magnetic field effects as "trigger energy" for voltage and power multipliers.

Holland: A small country with strongly developed intellectual independence appears to be Holland, where Prof. J.M.J. Kooy developed his "Space Dynamics". His hypothesis of gravitational action is based on the realization that all celestial bodies can be conceived as practically transparent in relation to the size of the elementary particles and their mutual distances in the structure of matter. Gravitons or tachions, coming from all directions of deep space, can pass through a celestial body like water passes through a fishnet, and only a minute fraction of the cosmic gravitons or tachions will be intercepted. Study of the effects of the tachion field or space continuum of the fabric of material substances, magnets and crystal lattices can lead to development of converters and novel production facilities for readily usable, conventional E/M energy. When the American inventor Edwin V. Gray was blocked in his efforts to develop his "Pulsed Capacitor Discharge Electric Engine" for which he had received U. S. Patent #3,890,548, he found open ears and open minds in Holland.

The fact that Gray was named "Inventor of the Year" from the Department of Patent Rights in Los Angeles, California, where Dr. Chalfin of Cal Tech confirmed that:

> There does not exist an even distantly similar engine to this one in the world. Conventional electric engines use up power. In this system energy is used up for only a minute part of a millisecond. It operates without heat loss and there is no energy loss whatsoever with this system",

had more meaning to the people of PHILIPS and others in Holland than to the energy establishment in his native America.

England: There is perhaps no more controversial inventor at this time than

Return to Table of Contents Next Page

John R. R. Searl and his Levity Disc, powered by the Searl Effect generator. It is claimed that model craft have been demonstrated with flight characteristics showing anti-gravitational and inertia-free properties. Demonstrations have been photographed and videotaped. Searl calls his generator a "Gyro-Flywheel High Energy Density Mechanical Magnetic Device" and claims that the magnets used are not the common type, ordinary magnets. The Australian engineer Athol Park of Melbourne, Australia, who visited Searl a few years ago described it this way:

> "From a briefcase, Mr. Searl takes a bar magnet and two steel rollers. He places the rollers at either end of the magnet. They appear to be attracted to the poles - but, when they are pushed gently around the corners of the magnet, they chase each other round and round.... "

The engineer quotes Searl:

> "The crystals in the magnet are changed by putting it in a magnetic flux oven and by frequency control. The result is motion of a magnetic field - a completely new source of power. Units (modules) based on this principle are what power my levity unit - the motor and generator built as one, fuelless unit".

In one of his numerous newsletters he states further:

> "The power plant is a self-contained, onboard closed system of conversion elements with energy input from a latent storage source".

Because Searl has never divulged all details and his explanations are generally of a non-technical, "unscientific" nature, many investigators have chosen to dismiss him as a swindler and imposter. In sharp contrast to this is the opinion of a well-experienced American engineer who reported after a visit with Searl:

> "I found it refreshing to note the keen sense of moral responsibility which he feels for the use to which his discovery is put... The Searls live in modest circumstances. Luxuries are few. They do not own a car. Mr. Searl bicycles several miles daily to his place of work in Maidenhead. There he is an electrical technician and training supervisor in a bearing factory".

But perhaps most significant was the following observation of the American visitor about Searl:

> "We were also interested to hear him say that many of his ideas came to him while he slept. He would go to sleep with questions, and awake with answers... and refreshed. He seemed to have the

and awake with answers... and refreshed. He seemed to have the

Return to Table of Contents Next Page

ability to restore vital powers more quickly than most people".

And the American concluded his report with the statement:

"The impression we gained of Mr. Searl was one of a very sincere and generous person, a dedicated and tireless worker with perfect confidence in the outcome of his efforts, a man of high principle with a keen sense of loyalty to those who are helping him, and of responsibility for the future welfare of our planet and its people".

In view of the very contradictory nature of comments and impressions by those who have met Searl, it might be wise to reserve final judgment on the Searl-Levity-Disc and its inventor at this time.

New Zealand: Some of Searl's keenest supporters and observers of his work are in New Zealand and Australia. And one of the sharpest young physicists in that country (new Zealand), unhampered by calcified ideology, developed the mathematical foundation for a theoretical anti-gravity effect, using the hydrodynamic analogy of the ether. He uses the equivalent of the hydrodynamic Reynolds number, above a certain value of which the laminar flow past a solid surface breaks down and becomes turbulent due to shear rupture of the viscous cohesion of a fluid, together with his deduction that anti-gravity could be obtained by creating a "vacuum: in the ether in such a way as to correspond to the production of turbulence in a magnetic field. Turbulence in a fluid occurs when Reynolds number RE = 1, when the inertial shearing force equals the viscous cohesion force in the fluid in the vicinity of an approximately spherical body immersed in the fluid, resulting in separation of the boundary layer and formation of a wake, i. e. vacuum or free surface around the body. He calculated the threshhold for turbulence in the ether, = a vacuum = an anti-gravity effect, using the refined value of ether kinematic viscosity which he obtained.

His theory would confirm the observations of very high voltage produced in the case of the Searl Levity Disc, and the very high voltage needed in the vacuum experiments with flying disc-shaped bodies of T. T. Brown, the "ionocraft" observations of Major de Seversky, the "Electro-Field Rockets of Prof. Dudley, the observations of Northrop Corp. with "Electro-Aerodynamics in Supersonic Flow" and similar American documentation and patents.

Since the New Zealander is now in the process of attempting to publish his theory in a reputable British magazine, I am not at liberty to divulge his address prematurely. Interest in New Zealand and Australia is running high, and possible breakthroughs in energy technology should not come totally unexpected in these two countries with strong intellectual ties to England.

Return to Table of Contents **Next Page**

Conclusion

There is now overwhelming evidence for the actual existence of a very high density, energy rich space continuum formerly called "ether". This space energy can be concentrated, gathered, focused, magnified and compacted by magnets or magnetic materials, which appear as the new core materials for converters of all kinds, utilizing the cosmic energy for new technology applications.

Crystals are energy-sensing and channeling devices; they can serve as transducers, as for instance in the Moray-Device, or the "rock electricity" of T. T. Brown.

Combinations of crystals and magnetic materials appear to be the mainstay for the development of "hyper-space" - converters and generators of power - utilizing free, cosmic energy in our future.

Unbiased, totally honest and impartial reexamination and reevaluation of all scientific theorems and dogmas, as well as unhampered opportunities for the pioneers of the new technology on the American and European continent appear to be the prerequisite of success.

Those who accept that anything of the nature of ideas or ideology is permanent, use all their strength to hold on to it, and to condemn all who do not agree. The next stage of this spiritual illness of the mind is to build a monument to what they perceive is Truth, and then to build a monument to their own permanence in the world. This, they do by seeking fame or fortune, and authority over others. This is the contemporary, planetary psychology situation, and thus are we losing the gift of perspective and horizon and are no longer able to discern what is important. Skeptics are on record as saying:

> "We are not running out of natural resources or intellectual talent, we are running out of the freedom of innovation that made the countries on the North American continent the most advanced nations on earth".

The future will show whether this freedom, which includes the freedom and the duty of taking risks, can be restored to the degree our Founding Fathers have been striving for. Only then will we know whether the late Wernher von Braun was not too overly optimistic when he stated:

> "The cosmic age will bring a dawn of knowledge not yet envisioned. It will dwarf all our present knowledge and ideas and, through its vastness, may even bring men closer together on their own planet".

Return to Table of Contents

The Motionless Electromagnetic Generator: Extracting Energy from a Permanent Magnet with Energy-Replenishing from the Active Vacuum

Thomas E. Bearden, Ph.D.
James C. Hayes, Ph.D.
James L. Kenny, Ph.D.
Kenneth D. Moore, B.S.
Stephen L. Patrick, B.S.

Magnetic Energy Limited
Huntsville, AL 35801

Special Note: Posting of this document on a DoE website does not imply approval or disapproval by the Department of Energy. This work is made available to illustrate innovative energy research by multiple researchers involving new concepts. Scientific method requires replication and independent test and verification, and an additional research prototype build-up for those purposes is presently underway by the authors.

BACKGROUND

Introduction

For about 10 years the inventors have been working together as a team, and exploring many avenues whereby electromagnetic energy might be extracted from various sources of potential, and eventually from the active vacuum itself. This has been very arduous and difficult work, since there were no guidelines for such a process whereby the electrical power system becomes an open dissipative system in the manner of Prigogine's theoretical models {17-19} but using determinism instead of statistics. There was also no apparent precedent in the patent database or in the scientific database.

Since the present "standard" U(1) electrodynamics model forbids electrical power systems with COP>1.0, we also studied the derivation of that model, which is recognized to contain flaws due to its 136-year old basis. We particularly examined how it developed, how it was changed, and how we came to have the Lorentz-regauged Maxwell-Heaviside equations model ubiquitously used today, particularly with respect to the design, manufacture, and use of electrical power systems.

Our approach was that the Maxwell theory is well-known to be a material fluid flow theory, since the equations are hydrodynamic equations. So in principle, anything that can be done with fluid theory can be done with electrodynamics, since the fundamental equations are the same mathematics and must describe consistent analogous functional behavior and phenomena. This means that EM systems with "electromagnetic energy winds" from their external "atmosphere" (the active vacuum) are in theory quite possible, analogous to a windmill in a wind.

The major problem was that the present classical EM model excluded such EM systems. We gradually worked out the exact reason for the *arbitrary* exclusion that resulted in the present restricted EM model, where and when it was done, and how it was done. It turned out that Ludvig Valentin Lorenz {55} symmetrically regauged Maxwell's equations in 1867, only two years after Maxwell's seminal publication in 1865, and Lorenz first made the arbitrary changes that limited the model to only those Maxwellian systems in equilibrium in their energy exchange with their external environment (specifically, in their exchange with the active vacuum). This is not a law of nature and it is not the case for the Maxwell-Heaviside theory prior to Lorenz's (and later H. A. Lorentz's) alteration of it. Thus *removing* this symmetrical regauging condition {31, 34-38} is required—particularly during the discharge of the system's excess potential energy (the excitation) in the load.

Later the great H. A. Lorentz, working independently and apparently unaware of Lorenz's previous 1867 work, independently regauged the Maxwell-Heaviside equations so they represented a system that was in equilibrium with its active environment.

Implications of the Arbitrarily Curtailed Electrodynamics Model

Initially an electrical power system is *asymmetrically* regauged by simply applying potential, so that the system's potential energy is nearly instantly changed. The well-known gauge freedom principle in gauge field theory assures us that any system's potential—and hence potential energy—can be freely changed in such fashion. In principle, this potential energy can then be freely discharged in loads to power them, without any further input from the operator. In short, there is absolutely no theoretical law or law of nature that prohibits COP>1.0 electrical power systems—else we have to abandon the successful modern gauge field theory.

But present electrical power systems do no such thing. However, all of them do accomplish the initial asymmetrical regauging by applying potential. So all of them do freely regauge their potential energy, and the only thing the energy input to the shaft of a generator (or the chemical energy available to a battery) accomplishes is the creation of the potentializing entity—the source dipole.

It follows that something the present systems perform in their discharge of their nearly-free[1] regauging energy must prevent the subsequent simple discharge of the energy to power the loads unless further work is done on the input section. In short, some ubiquitous feature in present systems must self-enforce the Lorentz symmetry condition (or a version of it) whenever the system discharges its free or nearly free excitation energy.

Lorentz's curtailment of the Maxwell-Heaviside equations greatly simplified the mathematics and eased the solution of the resulting equations, of course. But applied to the design of circuits—particularly during their excitation discharge—it also discarded the most interesting and useful class of Maxwellian systems, those exhibiting COP>1.0.

[1] In real systems, we have to pay for a little switching costs, e.g., but this may be minimal compared to the potential energy actually directed or gated upon the system to potentialize it.

Consequently, Lorentz[2] unwittingly discarded all Maxwellian systems with "net usable EM energy winds" during their discharge into their loads to power them. Thus all present systems—which have been designed in accord with the Lorentz condition—cannot use the electromagnetic energy winds that freely arise in them by simple regauging, due to some universal feature in the design of every power system that prevents such action.

We eventually identified the ubiquitous closed current loop circuit as the culprit which enforces a special kind of Lorentz symmetry during discharge of the system's excitation energy. With this circuit, the excitation-discharging system must destroy the source of its EM energy winds as fast as it powers its loads and losses, and thus faster than it actually powers its loads.

Also, as we stated and contrary to conventional notions, batteries and generators do not dissipate their available internal energy (shaft energy furnished to the generator, or chemical energy in the battery) to power their external circuits and loads, but only to restore the separation of their internal charges, thereby forming the source dipole connected to their terminals. Once formed, the *source dipole* then powers the circuit {16, 22}.

Some Overlooked Principles in Electrodynamics

We recovered a major fundamental principle from Whittaker's {1} profound but largely ignored work in 1903. Any scalar potential is *a priori* a set of EM energy flows, hence a set of "electromagnetic energy winds" so to speak. As shown by Whittaker, these EM energy winds pour in from the complex plane (the time domain) to any x, y, z point in the potential, and pour out of that point in all directions in real 3-space {1, 26, 43}.

Further, in conventional EM theory, electrodynamicists do not actually calculate or even use the *potential itself* as the unending set of EM energy winds or flows that it actually is, but only calculate and use its *reaction cross section with a unit point static charge at a point*. How much energy is diverged around a single standard unit point static coulomb, is then said to be the "magnitude of the potential" at that point. This is a non sequitur of first magnitude.[3]

E.g., just as the small "swirl" of water flow diverged to stream around an intercepting rock in a river bottom is not the river's own flow magnitude, and certainly is not the "magnitude of the river", neither is the standard reaction cross section of the potential a measure of the potential's actual "magnitude". Indeed, the potential's "magnitude" with respect to any local interception and extraction of energy from it, is limited only by one's ability to (1) intercept the flow and (2) diverge it into a circuit to power the circuit. The energy flows identically comprising the potential {1} replenish the withdrawn energy as fast as it can be diverged in practical processes, since the energy flows themselves move at the speed of light.

---

[2] Although Lorenz did this first, such was H.A. Lorentz's prestige that when he advanced symmetrical regauging, it was rather universally adopted by electrodynamicists, and is still used by them today. E.g., see J.D. Jackson, Classical Electrodynamics, 2nd Edition, Wiley, New York, 1975, p. 219-221; 811-812.

[3] E.g., just replace the assumed unit point static charge assumed at each point with *n* unit point static charges, and the collected energy around the new point charge will be *n* times the former collection. If the former calculation had yielded the actual magnitude of the potential at that point, its magnitude could not be increased by increasing the interception. But since the potential is actually a flow process, increasing the reaction cross section of the interception increases the energy collection accordingly.

Work-Energy Theorem In a Replenishing Potential Environment

We also came to better understand the conservation of energy law itself. Particularly, the present work-energy theorem assumes only a "single conversion" of energy into a different form, where such "conversion in form" due to a converting agent is what is considered "work" upon that agent. No "replenishing by a freely flowing energy river or process" is considered.

On the other hand, in a replenishing potential environment, a conversion in the form of the energy may increase the energy (e.g., the kinetic energy of an electron gas) of the converting agent, but all the field energy and potential energy input to that converting agent may be replenished, so that a *free regauging* occurs. In that case, the original energy can changed—e.g., into field energy form, which is not the kinetic energy of the electron gas—and yet a joule of work can have been done upon the electron gas to alter its potential energy by as much work as was done on it. Thus the work performed by this change in energy form with simultaneous replenishment of the original form, may increase the energy of the medium while retaining as much field energy and potential energy as was input, but just in different form.

This is a profound change to the implicit assumptions used in applying the work-energy theorem. In short, the present work-energy theorem (without replenishment) was found to be a special case of a much more general and extended *energy-conversion-of-form-with-intermediate work-performed-upon-the-converter* process. *Conversion of the form of energy* is rigorously what we call *work*. The energy is not consumed in the process, nor need it be "lost" in doing work upon the converter. So to speak, the well-established principle of gauge freedom has been arbitrarily overlooked in the conventional view of the work-energy theorem. As a short way of stating what we found, *the conventional form of the work-energy theorem applies only when there is no simultaneous regauging/replenishment involved*.

This extension of the work-energy theorem to a more general case has profound implications in physics. With the energy replenishing environment involved, the work-energy theorem becomes an energy-amplifying process. Energy can be freely amplified at will—anywhere, anytime—by invoking the extended energy-work process, if regauging accompanies the process simultaneously. Indeed, one joule of field energy or potential energy can do joule after joule of work on intermediary converters, increasing the kinetic energy etc. upon the converter medium, while retaining joule-for-joule of the input energy in differing field or potential forms. In this extended process, always after each joule of work on the converting agent there still remains a joule of field energy or potential energy of altered form.

The Extended Principles Permit COP>1.0 Electrical Power Systems

Gradually we realized that (1) electrodynamics without the arbitrary Lorentz regauging did permit asymmetrically self-regauging electrical power systems, freely receiving and converting electrical energy from their vacuum environment, (2) present systems are designed unwittingly to guarantee the re-imposition of symmetry during their excitation discharge, (3) this excitation symmetry is what must be and can be broken by proper system design, and (4) a magnetic system "powered" by a permanent magnet dipole's ongoing active processes {1, 26, 43} could readily be adapted so that the source dipole of the permanent magnet was not destroyed by the

circulating magnetic flux. We experimented on various buildups and prototypes, in this vein, for some years.

Patenting and Discovery Activity

In 1997 we filed a provisional patent application on the first prototype of real interest. We filed another formal patent application in 2000 after several years of experimentation in which we used multiple extraction of energy from the magnetostatic scalar potential formed between the poles of a permanent magnet. Here we reasoned that, in so doing, we would deplete the magnetic dipole, and our experiments sometimes seemed to indicate that a very slow depletion might indeed be happening.

Since our last formal patent application filing in 2000, additional build-ups and experiments have led us to the conclusion that it is not necessary to deplete the magnetic monopole. Instead, if one draws the energy *directly from the potentials* (primarily, from the magnetic vector potential) furnished by the magnetic dipole of the permanent magnets, one can essentially draw as much energy as desired, without affecting the dipole itself. And again, we found that any amount of energy can be withdrawn, so long as it is changed in form in the withdrawal. A giant negentropy mechanism—recently uncovered by Bearden {26} and further investigated by Evans and Bearden {43}— is associated with the magnet dipole, and in fact with any dipole as shown by Whittaker {1}. This negentropy mechanism {1, 26, 43}will replenish the magnetic vector potential energy to the permanent magnet dipole as fast as energy is withdrawn from it and into the circuit.

We hit upon the stratagem of using a highly specialized magnetic core material, nanocrystalline in nature and in special tape-wound layered structure, to try to extract the energy from the magnetic vector potential (**A**-potential) as a magnetic **B**-field (curl of the **A**-potential) that is locally restricted to the special nanocrystalline material which forms a closed magnetic flux path closed on both poles of the permanent magnet dipole. It turned out that the nanocrystalline material,[4] because of its nature and also its tape-wound layered construction, actually will perform this separation of **B**-field and **A**-potential energy which is heretofore unheard of in such a simple magnetic core mechanism and flux path material.

We point out that a tightly wound, very long coil does a similar thing, as does a good toroid, and these effects of separating **A**-potential from **B**-field are known. But to our knowledge, such effects have not previously been utilized in magnetic core materials themselves, in a flux path through space. Our experimental measurements showed the magnetic field to be missing in the space surrounding the closed-path flux-path material, but the **A**-potential was indeed present and did interact with coils in normal manner. We also showed that the **B**-field and associated magnetic flux were rigorously confined internally to the nanocrystalline material flux path.

This then led to very novel ramifications and phenomenology, which we have been intensely exploring since filing the previous patent when we were depleting the magnetic dipole of the permanent magnet or seemed to be. Now we have no depletion of the magnetic dipole, and also

[4] Obtained off-the-shelf as a commercial product from Honeywell.

we can now explain where the continuous "magnetic energy wind" comes from, what triggers and establishes it, and how to apply the resulting principles.

Consequently, rapid progress in non-depleting versions of our previous invention, as a full extension to both the previous invention and also to the previous process utilized (depletion of stored potential energy), has been accomplished.

Results of the Research

It is now clear—by fluid flow analogy and actual experiment—that we have found the perfect magnetic mechanism for (a) producing "magnetic energy winds" at will, furnished freely by nature in natural dipole processes only recently recognized {26} and clarified {43} in the literature, (b) producing a magnetic "windmill", so to speak, that freely extracts energy from these free winds provided by nature from these newly-understood processes, and (c) creating positive energy feedforward and feedback iterative interactions in a coil around a core, resulting from dual energy inputs to the coil from (1) actions in the core inside the coil (2) actions in the surrounding altered vacuum containing a continuously replenished field-free magnetic potential **A**, and hence comprising a separate source of energy that will react with a coil.

The *iterative* interactions occurring between the two interactions in the coil, add a third increase of energy from the resulting convergent energy gain (asymmetrical self-regauging) series. The additional amplification of the energy is given by the limit of the resulting convergent series for energy collection in the coil. In this novel new usage, the net result is that the coil is an *energy amplifying* coil, freely and continuously fed by excess input energy from an external active source.

It turns out that a multiplicity of such positive energy feedforward and feedback loops occur and exist between all components of the new process. The system becomes a true open system receiving excess energy from the free flow of energy established in its vacuum environment by the subprocesses of this invention's system process.

Consequently, we have experimentally established this totally new process and field, and also have experimentally established that it is not necessary to deplete the permanent magnet dipole after all. Now, direct replenishment energy from the active vacuum can readily be furnished to the permanent magnet with the new techniques being utilized.

THREE IMPORTANT PRINCIPLES AND MECHANISMS

We explain three very important principles/mechanisms necessary to comprehend the new process in a replenishing potential environment:

(1) The conservation of energy law states that *energy cannot be created or destroyed*. What is commonly not realized is that energy can be and is reused (changed in form) to do work, over and over, while being replenished (regauged) each time. If one has one joule of energy collected in one form, then in a replenishing potential environment one can change all that joule into a different form of energy, thereby performing one joule of work. However, one still has a replenished joule of energy remaining, by the conservation of energy law in such an environment, since the first joule was removed in different form. If one collects and holds

that remaining joule in its new form, and then changes the form of it yet again in the replenishing environment, one does another joule of work—and still has a joule of energy left, just in a yet different form. The process is infinitely repeatable, limited only by the ability to hold the changed form of the energy each time it is changed.

Further, only two energy forms are needed for endless iterative shifting of form—say, form **A** and form **B**, since **A** changed totally into **B** performs work upon the transforming medium equal to **A** energy dissipation, but yields **A**-equivalence amount of energy still remaining because of replenishment. The **B**-form energy can then be changed back from **B** to **A** yet again, wherein the same amount of work is done upon the transforming medium for the second time, and one *still* has a joule of energy remaining because of replenishment, now back in the original form. This process can be iterated. We call this the *ping-pong principle* and use the iterative work done by each replenished change of energy form to continually increase the excitation energy of a receiving entity, the Drude electron gas in the coil and its attached circuit. We accent that this is also a novel way to directly utilize free regauging energy.

Cyclic transform of the energy by "ping-pong" between two different forms of energy or energy states with replenishment, is all that is required to produce as much work as one wishes in the intermediary, from a single joule of operator-input energy, limited only by one's ability to hold the new form of energy after each transformation and not lose it (or not lose all of it). By letting this iterative ping-pong work be done upon the Drude electron gas, the energy of that gas is excited much more than by the energy we input, if the input energy were only used once to perform work (if its form were only changed once).

We stress that present electrical power systems deliberately use their collected energy only once, and do not take advantage of energy regauging by free replenishment from the potential environment. So engineers are totally unfamiliar with the ping-pong mechanism and do not apply it. In short, they simply do not use the ping-pong effect to dramatically increase the energy in the Drude electron gas in the external circuits connected to the generator or battery.

(2) The **A**-potential and the **B**-field are extraordinarily useful for just such "ping-pong" iterative change of energy form, from **B**-field energy to **A**-potential energy and vice versa, back and forth, repeatedly. That is precisely what happens in each coil of the process of the invention, and this results in dual inputs of energy—one in curl-free **A** form and one in **B** form—simultaneously to the coil. Quite simply, one can extract the energy from a volume of **A**-potential, in **B**-field form where the **B**-field energy is removed from the volume, and the **A**-potential beyond will instantly (at least at the speed of light) simply refill the volume, but with curl-free **A**-potential.

A similar effect is also demonstrated by the well-known Aharonov-Bohm effect {13, 15}, but only in very small effects, without the ping-pong effect, and not used in power systems. By analogy, we may compare this iterative process to "dipping several buckets of water in succession" from a mighty rushing river; the river refills the "hole" immediately after each dipping. We can continue to extract bucket after bucket of water from the same spatial

volume in the river, because of the continual replenishment of the extracted water by the river's flow.

Any change of **B**-field energy in the center of the coil, interacts with the coil magnetically since the coil's magnetic field is at its greatest strength in its precise center, and the center of the coil is in the center of the core flux path material. This magnetic interaction between core and coil produces voltage and current in the coil and therefore in a closed external loop containing the coil, and simultaneously produces an additional equal energy outside the coil in the form of field-free **A**-potential, which is absolutely permitted since the magnetic energy in **B**-form was "dissipated" (transformed) into **A**-potential energy, thereby causing the electrons in the wires to flow by doing work that built voltage and current, which was a change of form of the **B**-field energy. Simultaneously, the current electrons produce the **A**-potential energy around the coil and outside it, which is absolutely permissible since a change in form of the energy is again involved.

Since these changes in energy form occur at the speed of light, in a local coil they appear "instantaneous" though in reality they are not quite instant, but just very rapid. However, the work produced by each change of form of the energy in that rapid "ping-pong" between the several energy states, continually produces *work upon the Drude electrons*, producing momentum and motion in the Drude gas, thus resulting in voltage and current. In this way, the increased momentum and motion—involved in the currents flowing in the voltage drop of the coil and external loop—result in increased stored kinetic energy in the moving Drude gas, which is electromagnetic energy of different form.

As can be seen, because of the speed of the ping-pong energy state transformations, with each transformation doing work in the Drude electron gas to increase that gas's excitation and energy, a continuous "collection" of excess energy—caused purely by the change of form of the energy and not by "loss" or "disordering" of the energy—occurs in the Drude electron gas, resulting in increased voltage and current in the circuit containing the coil. This is simply a mechanism for a "regauging" or change of potential energy of the Drude electron gas system. The Drude electron gas system's increased excitation energy can then be dissipated "all at once" in conventional fashion in the external load, providing more energy dissipated as work in the load than was input to the coil originally.

Hence there is generated an *energy amplifying* action of the coil and its multiplicity of processes. There is no violation of the energy conservation laws, of the laws of physics, or of the laws of thermodynamics since this is an open system far from equilibrium with its source of potential energy (the magnetic dipole of the permanent magnet), which in turn continuously receives replenishment energy from the vacuum by a giant negentropy process only recently uncovered by one of the inventors {26} and clarified by Evans and Bearden{43}.

(3) The dissipation of the final collected regauging energy within the load can permissibly be greater than what we ourselves initially input[5], because of the iterative change of form of the energy with replenishment. Therefore the iterative interactive work done on the Drude electron gas provides more than one joule of work done on the gas—thereby increasing its potential energy by more than one joule—for each joule of energy input by the operator to the system process. The cumulated potential energy in the Drude electron gas is then discharged in loads in normal fashion. Note that, even here, the energy is not lost when dissipated from the load and outside the system, but just flows out of the load in a different form (e.g., as heat radiated from a resistor load). Again, this is no different from a windmill in a wind.

The various asymmetrical regaugings violate Lorentz's arbitrary symmetrical condition—specifically in the discharge or change of form of the energy. Hence, this process restores to electrodynamics one group of those missing Maxwellian systems arbitrarily discarded by first Lorenz and later Lorentz, more than a century ago.

THE PROCESS IS THEORETICALLY SUPPORTED

Several rigorous scientific papers {27-40} by the Alpha Foundation's Institute for Advanced Study (AIAS) have been published or are in the publication process, fully justifying that energy currents (energy winds) can readily be established in the vacuum, and that such energy winds do allow the extraction of EM energy from the vacuum.

Also Cole and Puthoff {54} have previously shown that there is no prohibition in thermodynamics which prevents EM energy being extracted from the vacuum and utilized to power practical systems.

In electrochemistry it has long been known {21} that there can be no current or movement in electrodes without the appearance of excess potential (regauging) called the *overpotential*.

Further, in the most advanced model in physics—gauge field theory—the freedom to change gauge (in electrodynamics, to change the potential) at will and freely, is an axiom of the theory. If we freely change the potential of a physical power system, we freely change its potential energy (in a real system, we may have to pay for a little switching energy losses).

It follows that we can also freely change the excess potential of that system—regauge it—yet again, by any means we choose, including discharging that excess potential energy in a load to do work. Thus gauge field theory has for decades already axiomized the rigorous basis for COP>1.0 electrical power systems—but the Maxwellian systems necessary to do it have remained neglected due to their arbitrary discard by the ubiquitous use of Lorentz symmetrical regauging.

That such COP>1.0 electrical power systems have not been previously designed or built is therefore not due to a prohibition of nature or a prohibition of the laws physics at all, but is due

[5] See references 9-11. Actually, the standard calculation of the Poynting energy flow is not the calculation of the total EM energy flow at all, but only a calculation of how much of the energy flow is intercepted by the surface charges of the circuit and thereby diverged into the conductors to power the Drude electrons.

to a characteristic used to design and build the systems themselves. Because of their ubiquitous closed current loop circuits, conventional power systems use half their collected energy to destroy their own source dipoles, which destroys any further use of energy from "the potential between the ends of the dipole" since both dipole and potential vanish. The potential of the source dipole, after all, is what potentializes the external circuit with additional excitation energy, to be utilized to power the system. In present systems, half that excitation energy is dissipated to destroy the dipole along with the source potential, and less than the remaining half is used to power the load. This rigorously limits such systems to COP<1.0.

In the present invention, we do not destroy the potentializing source dipole, which is the magnetic dipole of the permanent magnet. We include the vacuum interaction with the system, and we also include the broken symmetry of the source dipole in that vacuum exchange—a broken symmetry proven and used in particle physics for nearly a half century, but still inexplicably neglected in the conventional Lorentz-regauged subset of the Maxwell-Heaviside model.

Consequently, our work and this novel process are rigorously justified in both theory and experiment, but the principles and phenomenology are still not incorporated in the classical electrodynamics theory utilized to design and produce electrical power systems. These principles are indeed included in the new O(3) electrodynamics being developed by AIAS[6,7] that extends the present U(1) electrodynamics model, as shown by some 90 scientific papers carried by the U.S. Department of Energy on one of its scientific websites in Advanced Electrodynamics, and by an increasing number of publications in Foundations of Physics, Physica Scripta, Optik, etc.

We thus have invented a process which indeed is well-founded and justified, but the basis for it is not yet in the texts and university courses. It is our belief that this absence will be rapidly rectified in the universities, in both the physics and electrical engineering departments, upon the advent of practical self-powering electrical power systems freely regauging themselves and extracting energy from the magnetic dipole of a permanent magnet, with the energy being continuously replenished to the dipole from the active vacuum via the new giant negentropy {26, 43} process.

CONSIDERING THE PROCESS

A-Potential and Field-Free A-Potential

This invention relates generally to the field of electromagnetic power generation. Specifically it relates to a totally new field of extracting additional electromagnetic energy in usable form from a permanent magnet dipole's potential energy, in addition to the electromagnetic energy extracted from its magnetic field energy, wherein the excess potential

---

[6] The Alpha Institute's Institute for Advanced Study (AIAS).

[7] A private communication from Dr. Myron Evans, 30 Sept. 2000, rigorously confirms that the magnitudes of the vector potential and the 4-current do in fact provide EM energy from the vacuum, and determine its magnitude as well.

energy taken from the magnet dipole is continuously replenished to the permanent magnet dipole from the active vacuum that is a curved spacetime with an ongoing giant negentropy flow process {26, 43}.

With respect to the electrostatic scalar potential, electrodynamicists are familiar with the fact that unlimited energy can be extracted from a potential. The very simple equation

$$W = Øq \qquad [1]$$

gives the amount of energy W in joules, which is collected at any given point x, y, z from the electrostatic scalar potential—whose reaction cross section is given by Ø, in joules collected per point coulomb—by charges q in coulombs and located at point x, y, z. Note that as much intercepting charge q as desired can be used at any point to increase the energy collection at the point, and collection can be accomplished at as many points x, y, z as is desired.

So any amount of energy can be collected from any nonzero scalar potential, no matter how small the potential's reaction cross section, if sufficient intercepting charge q and collecting points x, y, z are utilized. In short, one can intercept and collect energy from a potential indefinitely and *in any amount*, and *in any form taken by the interaction*, because the potential is actually a set of EM energy flows in longitudinal EM wave form, as shown by Whittaker {1} in 1903 and further expounded by Bearden {24, 26}. Subsequently, Evans and Bearden {43} have more rigorously interpreted Whittaker's {1} work and extended the principle into power systems. Thus any energy diverged and "withdrawn" from the potential in a given local region of it, is immediately replenished to the potential and to that region from the complex plane (the time domain) by the potential's flowing EM energy streams {1, 26, 43}, as rapidly as the energy is deviated and withdrawn.

For the magnetic vector potential, some preliminary comments are necessary. First, for over a hundred years it has been erroneously advanced that the magnetic vector potential **A** is "defined" by the equation

$$\mathbf{B} = \nabla \times \mathbf{A} \qquad [2]$$

This is easily seen not to be a definition at all, since an equation says nothing about the nature of anything on its right or on its left, but merely states that the entire right side has the same magnitude as does the entire left side. For an expression to be a *definition*, it must contain an identity (≡) sign rather than an equal (=) sign. Hence in seeing what is attempted to be defined, we rewrite equation [2] as

$$\mathbf{B} \equiv \nabla \times \mathbf{A} \qquad [3]$$

Now it is seen that it is the magnetic field **B** that is being defined as the curl of a swirling **A**-potential, which swirling component we will call $\mathbf{A}_C$ for the "**A** circulating" component of **A**. The curl of the circulating **A** is a magnetic field **B**, by identity [3]. There may of course be present additional **A**-potential that has zero curl, but that additional longitudinal $\mathbf{A}_L$-potential or $\mathbf{A}_L$-current does not produce a magnetic field **B** per se. However, it does interact with charges, which add the curl operator and produce **B**-field.

In 3-dimensions, the field-free $\mathbf{A}_L$ potential may be moving longitudinally, in which case it is identically an electrical potential "ϕ" that is moving longitudinally and hence no longer really a *scalar* potential ϕ but a vector potential Φ. If Φ translates without changing magnitude, there is no **E**-field and hence Φ is a field-free vector potential. Identity [3] still does not define **A**, but defines **B** in terms of **A** and the curl operator. Note particularly that, in identity [3], we may have additional Φ present as a curl-free, longitudinal magnetic vector potential $\mathbf{A}_L$ and we shall refer to this additional curl-free magnetic vector potential as $\mathbf{A}_L$ (for longitudinally translating **A** component without swirl).

General Relativistic Considerations

Rigorously we are using the Sachs unified field theory view that energy of whatever form represents a curvature in spacetime (ST). We argue that how we then observe or "see" the energy effects and label them, depends on the factors of physical interaction with that ST curvature. Thus interaction with magnetic charge produces magnetic energy aspects, while interaction with electrical charge produces electrical energy aspects, etc. Motion of either of the interactions lets us also "see" some of the magnetic energy as electrical energy, and some of the electrical energy as magnetic energy, etc.

However, when $\mathbf{A}_L$ interacts with electrical charge, the charge may swirl, in which case the swirling component of the Φ moving with the charge is an $\mathbf{A}_C$ component, and this $\mathbf{A}_C$ swirling component will produce a magnetic field **B** by identity [3].

As we stated, in the unified field theory approach being used {42, 44-46}, in spacetime all energy is simply a special curvature of that spacetime, regardless of the form of the energy. Hence one can readily visualize the energy being changed from a vector potential to a scalar potential and vice versa, depending simply upon whether the potential is moving or stationary with respect to the frame of the observer (the laboratory frame).

It is also a well-known facet of general relativity that any change of energy density in spacetime *a priori* is associated with a curvature of spacetime.[8] What has been neglected in general relativity (and arbitrarily discarded in electromagnetic theory long before general relativity was born) is the enormous EM energy flow filling the space around every EM circuit {24}, with almost all of it missing the circuit entirely, and not being intercepted and diverged into the circuit to power it.

This non-intercepted huge energy flow was recognized by Heaviside {10, 11}, not even considered by Poynting {9}, and arbitrarily discarded by Lorentz {51} as having "no physical significance" because it did not strike the circuit and power any part of it.[9] It is still arbitrarily discarded today, using Lorentz's discard method.

---

[8] That is, with the single exception of gravitational field energy, and even that exclusion has been challenged.

[9] This is rather like discarding all the wind on the ocean except for that tiny component of it that strikes the sails of one's own sailboat. It is true that the wind missing one's own boat has no further significance for that one boat, but it may of course be captured in the sails of an entire fleet of additional sailing vessels to power them quite nicely. Hence the statement of "no physical significance" is a non sequitur; "no physical significance to that one specific

Also, it is still largely unrecognized in Western science that pure general relativity contains no energy conservation equations {47, 48} of the kind encountered in electrodynamics and mechanics. This is easily seen by considered the impact of gauge freedom, which allows the potential energy of any region of spacetime to be *freely* changed at will. But this is also a form of freedom of spacetime curvature, hence the notion of *fixed* accountability of energy replenishment and dissipation is completely voided by gauge freedom.

The great scientist Hilbert {48} first pointed out this remarkable absence of energy conservation laws from general relativity, not long after Einstein published his theory.

It also appears that the ultimate energy interaction is the transduction of energy-form between the time-domain (complex plane) and 3-space. In fact, *all 3-spatial EM energy actually comes from time-like EM energy currents after 3-symmetry breaking* {1, 26, 43}.

Indefiniteness Is Associated with the A-Potential

A magnetic vector potential **A** produced by a current-carrying coil not tightly wound or closed (or very long), must possess both a swirl component $\mathbf{A}_C$ (from the circling of the coil in each turn of the coil) and a longitudinal component $\mathbf{A}_L$ from the longitudinal advance of the current between coils, since a coil is actually a helix and not a set of circles. It will also possess a magnetic field, both inside the coil and outside it.

Hence, considering both curled and curl-free types, the actual magnitude of **A** is always indefinite—and in fact the indefinite nature of the potential together with the freedom to change it at will is universally recognized by electrodynamicists {7, 14}. However, the prevailing argument that change of potential does not affect the system is a non sequitur.

Further, in 1904 E. T. Whittaker {2} showed that any electromagnetic field, wave, etc. can be replaced by two scalar potential functions, thus initiating that branch of electrodynamics called *superpotential theory*. Whittaker's two scalar potentials were then extended by electrodynamicists such as Bromwich, Debye {3}, Nisbet {4} and McCrea {5} and shown to be part of vector superpotentials {6}, and hence connected with **A**.

Applying the Giant Negentropy Mechanism

So let us consider the **A**-potential most simply as being replaced with such a Whittaker {1, 2} decomposition. Then each of these scalar potentials—from which the **A** potential function is made—is decomposable into a set of harmonic phase conjugate wavepairs (of longitudinal EM waves). If one takes all the phase conjugate half-set, those phase conjugate waves are converging upon each point in the magnetic vector potential **A** from the imaginary plane (from the time domain). At that same point in **A**, the other waveset—comprised of the harmonic set of longitudinal EM waves in 3-space—is outgoing. The 4-conservation of EM energy requires that the incoming energy to the point from the complex plane is being transformed at the point (by the assumed unit point charge at that point) into real EM 3-space

---

circuit" is better—but even then is incorrect if additional "sails" (interceptors) are added to catch more of the available energy wind and diverge more of it into the circuit.

energy, and radiating outward from that point as real EM energy, in this case in the form of the magnetic vector potential **A** without curl since the curl operator is absent.

We have previously pointed out {22, 24, 26, 43} that this energy flow input from the complex plane to every point in the potential, with its output in real 3-space, is a more fundamental symmetry than is the usually assumed 3-symmetry in EM energy flow. Further, it is a giant negentropy and a continuous, sustained reordering of a fraction of the vacuum energy, and the reordering continues to expand in space at light speed so long as the source dipole for the potential exists.

What this means is that the **A** potential—in either of its components $\mathbf{A}_L$ and $\mathbf{A}_C$—is not to be thought of as having "fixed energy" since it consists of and identically is a myriad energy flow processes ongoing between the time-energy domain (the complex plane) and the real energy domain (real 3-space).

As is any potential including the electrostatic scalar potential ϕ between the poles of an electric dipole and the magnetostatic scalar potential Ø between the poles of a permanent magnet, the **A**-potential is an ongoing set of longitudinal EM energy flows between the time domain (imaginary plane) and real 3-space {1, 26, 43}.

We stress that the EM energy flows comprising the so-called "scalar" potential and all "vector" potentials, violate 3-flow symmetry in energy conservation, but rigorously obey 4-flow symmetry. There is no law of nature that requires that energy be conserved in 3-space! If we work in 4-space as is normal, then the laws of nature require that energy be conserved in 4-space, as is done by the potential. Imposing the arbitrary additional requirement of 3-flow energy conservation imposes a 3-symmetry-restoring operation which destroys or nullifies the giant negentropy 4-process[10] of the dipole {26}and results in system 3-equilibrium with the active vacuum. It results in design and production of electrical power systems exhibiting only COP<1.0. The ubiquitous closed current loop circuit design produces a circuit that deliberately (though unwittingly) re-imposes the 3-flow symmetry, kills the dipole and the giant negentropy process, requires at least as much continuous input energy by the operator as was utilized to kill the dipole, and has generated the gigantic burning of hydrocarbons and the pollution of the biosphere.

A Negative Resistance Process

Because of its giant negentropy process {26, 43}, any potential is an open EM energy flow system, freely receiving energy from the complex plane in its active vacuum environment, transducing that received reactive power (in electrical engineering terms) into real power, and outputting real EM energy flow in space in all directions at the speed of light {26, 43}.

The vacuum-dipole energy exchange process is negentropic {26, 43}, since there exists total 1:1 correlation between the inflowing longitudinal EM waves in the complex plane and the

[10] Which in turn destroys the ability of any observable to exist (in time). An observable is *a priori* a 3-space fragment of an ongoing 4-space interaction, torn out at one frozen moment of time. The fact that observables do not persist in time has profound impact upon the foundations of physics, but its implications remain to be explored.

outflowing EM waves in real 3-space {1, 26, 43}. The potential then may rigorously be regarded as a novel kind of *negative resistor*, constituting an automatic ongoing negative resistance process. By *negative resistance process* we mean that the spatial points occupied by the potential continuously

(1) receive EM energy in unusable form (in the form of longitudinal EM waves input from the complex plane, which is the continuous receipt of reactive power),

(2) transduce the absorbed/received energy into usable form (real energy in 3-space), and

(3) output the received and transduced EM energy as usable EM energy flow in 3-space.

Thus associated with and comprising any potential and any dipolarity—including the dipolarity of a permanent magnet—we have a novel, free source of EM energy from the vacuum's complex plane (reactive power input, in electrical engineering terms, with real power output). That is true whenever we have a potential of any kind, either **A** or ϕ, or a dipole of any kind, either electrical or magnetic, or a polarization. Further, any energy we divert (collect) from this potential by and upon intercepting charges, and hold it in the localized vicinity of the charge, is an energetic excitation of the perturbing charges.

Modeling the Transduction Mechanism

Charges can be thought of as rotating 720° in one "full rotation", being 360° rotation in the complex plane followed by 360° rotation in real 3-space. The charges in the source dipole thus absorb the incoming reactive power while rotating in complex space and are excited therein, then re-radiate this absorbed EM excitation energy in real 3-space during their subsequent 360° rotation in that 3-space. Further, all the energy diverted from the energy flows comprising the potential, is immediately replenished by the vacuum to the source dipole, by the stated giant negentropy mechanism {26, 43}.

Replenishment Via Giant Negentropy

It follows that we may collect energy from an **A**-potential of a permanent magnet by applying the curl operator to **A**, then withdrawing and holding the resulting $\mathbf{B} = \nabla \times \mathbf{A}$ magnetic field energy in a localized material flux path. That is the withdrawal of $\mathbf{A}_C$ energy from the overall **A** potential in space, which is the withdrawal of $\mathbf{A}_C$ energy from the magnetostatic potential outflow dynamics between the poles of the magnetic dipole of the permanent magnet. This withdrawal and sharp path localization of the $\mathbf{A}_C$ energy from the permanent magnet dipole's outpouring **A**-potential energy will be continuously replaced at light speed by the giant negentropy process {1, 26, 43} engendered in 4-space by the magnetic dipole of the permanent magnet. Hence an unlimited amount of energy may be withdrawn from the **A**-potential in space around the magnet in this fashion, and the withdrawn energy will be continuously replaced at light speed from the active vacuum via the giant negentropy process {1, 26, 43}. In real systems, the materials and components will impose physical limits so that only a finite amount of excess energy flow can be accomplished, but in real materials these limits still permit system COP>>1.0 {24}.

The foregoing discussion shows that, in a magnetic apparatus or process functioning as part of an overall electromagnetic power system, we may have one subprocess which continuously withdraws energy from the curled portion of **A** (i.e., holds and localizes the magnetic field **B** and confines it to a given path), and in that case the source (in this case the permanent magnet) of the **A**-potential will simply replenish—at light speed—all the **A** energy that was withdrawn and localized. The replenished **A** energy will not be localized, since under a given set of conditions only so much energy is withdrawn and held in the localized condition.

The principle is that, as energy is drawn from the vector potential and then contained and circulated in field form in a localized material region or path, the withdrawn **A**-potential energy in space outside that localized path is continually replenished from the permanent magnet dipolarity to the space surrounding the localized B-field energy path as the real EM energy flow output of the giant negentropy process {26, 43} engendered by the magnet dipole. Further, the energy drawn from the permanent magnet dipolarity is continually replenished from the surrounding vacuum by the input EM energy flow to the magnet dipolarity from the vacuum's complex plane in the ongoing giant negentropy process {1, 26, 43}.

Regauging Can Be Negentropic

Any increase of energy in the apparatus and process in the local spacetime constitutes (a) self-regauging by the process, whereby the process freely increases the potential energy of the system utilizing the process, and (b) concomitant curvature of spacetime and increase in that spacetime curvature due to the increase of local energy in the system process.

From the standpoint of gauge field theory, free asymmetrical regauging is permitted by gauge freedom and is rigorously allowed, in effect allowing the violation of classical equilibrium thermodynamics because the regauged system freely receives EM energy from an external active source, the active vacuum's complex plane in the evoked giant negentropy process.[11] From the standpoint of general relativity, the excess energy from spacetime is freely allowed, since all EM energy moves in curved spacetime {36, 39, 40, 41, 42, 45, 46} *a priori*, and simple conservation of EM energy as usually stated in classical equilibrium electrodynamics need not apply {47, 48} in a general relativistic situation.

Use of a Nanocrystalline "Energy-Converting" Material

A nanocrystalline material recently available on the commercial market was found and utilized in this process. When utilized as a closed flux path external to and closed upon the two poles of a permanent magnet, the special nanocrystalline material will contain all the $\mathbf{B} = \nabla \times \mathbf{A}$ field energy (curled potential energy) in the closed flux path containing the magnet itself, while the magnetic dipole of the permanent magnet continuously replenishes and maintains the

[11] It may be that we are defining the causative mechanism for gauge freedom as being pure entropy or pure negentropy, but we defer to the advanced theoreticians to determine the truth or falsity of such a question. If one considers Whittaker's process {1} in either direction—i.e., energy freely entering 3-space from the time-domain, and energy freely entering the time-domain from 3-space—the conjecture may have some merit.

external circulation of field-free **A**-potential energy filling the space around the nanocrystalline closed flux path containing the withdrawn magnetic field energy.

This performance can in fact be measured, since magnetic field detectors detect no magnetic field surrounding the flux path (or even around the magnet in the flux path at an inch or two away from it), and yet coils placed in the spatial flux path outside the core interact with the field-free **A**-potential that is still there. A coil placed around the flux path so that the flux path constitutes its core, interacts both with the field-free **A**-potential outside the material flux path core, and simultaneously interacts—via the magnetic field inside the coil—with the magnetic field flux energy inside the core.

Dual Interactions with Ping-Ponging Between Them

Further, the two simultaneous interactions also *iteratively* interact with each other, in a kind of iterative retroreflection and interception of additional energy, so that a net amplification of the electrical energy output by the dually interacting coil results. The fact that iterative retroreflection processes can increase the energy collection from a given potential and enable COP>1.0 has been previously pointed out {31}. In addition, multiple coils placed around the closed material flux path forming a common core of each and all of them, all exhibit such gains and also mutual interaction with each other, leading to further gain in the energy output by the coils and their interaction processes.

In short, the novel process of this invention takes advantage of the previously unknown giant negentropy process {1, 26, 43} ongoing to and from the permanent magnet's dipole and between the complex plane of the vacuum energy and real 3-space energy flows comprising the magnetic vector potential and the magnetostatic scalar potential, to provide a gain in the total amount of electromagnetic energy being diverted from (drawn from) the permanent magnet by the attached circuit, components, and their processes.

The total collectable energy now drawn from the magnet is the sum of (a) the magnetic field energy (curled **A**-potential energy) flowing in the flux path, (b) the magnetic energy in the uncurled **A**-potential energy flowing in the surrounding space, and (c) a further iterative "ping pong" gain component of energy caused by mutual and iterative interactions {31} of the multiple coils and their multiply interacting processes. Further, (d) additional energy can be intercepted and diverged (collected) from the flowing uncurled **A**-potential energy flowing in the surrounding space, and converted into output electrical energy as the outputs of coils, by simply adding additional interceptors (such as coils, for example, or spinning charges, etc.).

We have thus discovered a process for amplifying the circuit's *available* output energy extracted from a permanent magnet dipole's energy outflow, where the dipolarity is an open system and a negative resistor, freely receiving excess energy from the surrounding active vacuum, transducing the received energy into usable form, and outputting the energy as a continuous flow of usable excess electromagnetic energy . Thereby, additional energy may be intercepted in a system employing this process, and the process can be used in practical EM power systems and EM power system processes having COP>1.0 when used in open-loop mode, and self-powering when used in closed-loop mode.

Further, we may utilize a collector/interceptor (such as a common coil wound around the flux path through it so that said flux path constitutes a core) which interacts with both available components of energy flow and with iterative interactions mutually between the two basic interactions. Each turn of the coil constitutes a $\nabla\times$ operator, bathed by the flowing uncurled **A**-potential outside the line material. Hence the charges in the coil intercept the uncurled **A**-flow, and curl the energy intercepted to produce a curled **A**-flow, thus producing additional magnetic field $B = \nabla\times A$. This magnetic field is at its maximum in the exact center of the coil, which is in the exact center of the nanocrystalline core material with its retained $\mathbf{B} = \nabla\times \mathbf{A}$ field energy. Hence the coil interacts with two components of energy flow, being (1) the internal $\mathbf{B} = \nabla\times \mathbf{A}$ field energy retained in the nanocrystalline material in the coil's core, and (2) the external uncurled **A**-potential energy flow striking its outside surface charges and changed into additional magnetic field energy and into additional electrical current flowing in the coil and out of it. In addition, (3) iterative mutual interaction between the two basic interactions also occurs, increasing the energy gain and the coefficient of performance.

Any additional EM energy input into the core material and flux path increases the $\mathbf{B} = \nabla\times \mathbf{A}$ field energy flowing in the flux path, hence withdrawn from the vector potential **A** around the flux path, hence replenished from the permanent magnet dipole, and hence replenished to the magnet dipole from the complex plane, via the giant negentropy process {26, 43}. This increased energy collection in the magnetic flux in the core material passes back through the permanent magnet (which is in the path loop and completes it), altering the effective pole strength of the magnet and thereby increasing the magnitude of the giant negentropy process associated with said dipole of the permanent magnet. In turn, this increases the outflow of **A**-energy from the magnetic dipole, increasing both its output $\mathbf{B} = \nabla\times \mathbf{A}$ field energy in the flux path and its output uncurled **A**-flow energy in space outside the flux path. This further increases the spacetime curvature of the local space surrounding the flux path material, since the energy density of said local spacetime has increased.

Varying the Pole Strength of a Permanent Magnet

Hence the process is the first known process that deliberately and interactively alters the pole-strengths of the poles of a permanent magnet, utilizing said alteration to vary and increase the pole strength and hence the magnitude of the energy density flowing in the giant negentropy mechanism {26, 43}. From the general relativity view, it is the first known process that deliberately increases and structures the local curvature of spacetime, by electromagnetic means, so as to alter and increase the pole strength of a permanent magnet, using said pole strength alteration to increase the flow of energy into and out of the local spacetime, thereby increasing the curvature of said local spacetime and the resulting EM energy extracted therefrom.

Any extra uncurled **A**-flow energy increase outside the nanocrystalline flux path material, increases the interaction with this field-free **A**-flow energy of any coil around the flux path, thereby increasing the magnetic **B**-field flux inside the flux path, and so on.

Regenerative Energy Gain

In short, the mutual iterative interaction of each coil wound on the flux path of the special nanocrystalline material, with and between the two energy flows, results in special kinds of regenerative energy feedback and energy feedforward, and regauging of the energy of the system and the energy of the system process. This excess energy in the system and in the system process is thus a form of free and asymmetrical self-regauging, permitted by the well known gauge freedom of quantum field theory. Further, the excess energy from the permanent magnet dipole is continually replenished from the active vacuum by the stated giant negentropy process {1, 26, 43} associated with the permanent magnet's magnetic dipole due to its broken 3-symmetry {16} in its energetic exchange with the vacuum.

As a result, each coil utilized is an amplifying coil containing an amplifying regenerative process, compared to a normal coil in a normal flux path which does not hold localized the $\mathbf{B} = \nabla \times \mathbf{A}$ field energy within its core material, and does not simultaneously interact with both internal **B**-field flux energy and external excess field-free **A**-potential.

Open System Far from Equilibrium, Multiple Sub-processes, Curved Spacetime

The entire system process is thus a self-regauging regenerative system process and an energy-amplifying system process, where the excess energy is freely furnished from the local curved spacetime as energy flows from the magnetic dipole of the permanent magnet, and in turn freely replenished to the permanent magnet dipole by the giant negentropy process established in the active vacuum environment by the broken 3-symmetry of said magnetic dipole {16} and the concomitant locally curved spacetime.

The system process is thus an open electromagnetic process far from thermodynamic equilibrium {17-19} in its active environment (the active vacuum), freely receiving excess energy from said active environment via the broken 3-equilibrium of the permanent magnet dipole. In each coil, the coil is an open system freely receiving excess energy from its active environment (the active field-free **A**-potential flowing through the space occupied by the coil and surrounding it, and creating a local curved spacetime by is extra energy density, while also receiving energy from its internal environment, the **B**-field magnetic flux in the material flux path through the center of the coil and comprising its core, and also curving the local spacetime by means of the extra energy density of the local spacetime.

The system process is also a general relativistic process {38-42, 45, 46} whereby electromagnetic energy is utilized to curve local spacetime, and then the locally curved spacetime continuously acts back upon the system and process by furnishing excess energy to the system and process directly from the curved spacetime, with the excess energy being continually input to the system from the imaginary plane (time domain) {1, 26, 43}.

SUMMARY OF THE PROCESS FROM VARIOUS ASPECTS

We summarize the many aspects of the overall process as follows: Advantage is taken of the fact that:

1. The magnetic flux and magnetic vector potential **A** are freely and continuously furnished by a permanent magnet to a material flux path, and where the material flux path holds all curled vector potential **A** and thus all magnetic field inside the flux path, and where the permanent magnet freely furnishes additional field-free magnetic vector potential **A** to replenish the **B**-field (curled magnetic vector potential **A**) energy that was confined to the interior of the material flux path, and where multiple intercepting coils and processes are utilized with mutual iterative positive feedforward and positive feedback between the collectors and subprocesses to increase the energy collected and hence increase the COP of the system and system process.

2. A previously unrecognized giant negentropy mechanism is used as shown unwittingly by Whittaker {1} in 1903 but unrecognized until recently understood by Bearden {26} and further clarified by Evans and Bearden {43}, and the active vacuum continuously replenishes all magnetic vector potential **A** (both curled and field-free) that is continuously output by the permanent magnet into the material flux path and into space surrounding the material flux path. Further, the replenishment energy flow from the active vacuum is from the time-domain {1, 26, 43} and thus from the complex plane, constituting the continuous input of reactive power by the active vacuum environment via time-like energy flows. These time-like potentials and energy flows are known in extended electrodynamics {29, 30, 32, 33, 35, 36, 38, 39, 41} but have not previously been deliberately utilized in electromagnetic systems and particularly in electromagnetic power systems, even though shown by Whittaker {1} as early as 1903.

3. The field-free magnetic vector potential **A** is continually replenished and remaining (due to replenishment by the vacuum to the permanent magnet dipole and thence replenished from the magnet dipole to the space surrounding the material flux path) when a material flux path is utilized wherein the magnetic field associated with a permanent magnet's flux, through the flux path, is held internally and entirely in the material flux path, with the field-free magnetic vector potential **A** remaining in space surrounding the flux path.

4. A coil will interact with either a magnetic field (i.e., it will interact with the curl of the **A**-potential which curl is a magnetic field), or an **A**-potential where no magnetic field is present, or simultaneously with a combination of both a curled **A**-potential (with magnetic field **B**) and a field-free **A**-potential (without magnetic field **B**). Indeed, there is a "ping pong" reiterative interaction between the two processes, constituting positive feedforward from each to the other, and positive feedback from each to the other.

5. A simultaneous interaction of a coil with both a magnetic field (curl of **A**) and a field-free **A** potential produces electromagnetic energy in the form of voltage and current in an external circuit connected to the coil, and the net voltage and amperage (power) produced by the coil is a result of the summation of both simultaneous interactions with said coil and its Drude electrons and of the iterative "ping-pong" interactions between the two simultaneous interactions, and therefore the summation provides a greater coil output energy than is produced by the coil

from either the magnetic field (curled **A**) separately or the field-free **A**-potential separately. Further, the "ping-pong" iterative interaction adds additional energy collection and gain to the electrical power output of the coil.

6. Multiple coils are wound on the material flux path, where magnetic flux is input to the material flux path from a permanent magnet, and where the material flux path holds internally all curl of **A** (magnetic field) from the permanent magnet's flux, so that magnetic field and magnetic flux from the permanent magnet are inside the closed material flux path, and so that no magnetic field is outside the closed material flux path, and so that a field-free magnetic vector potential **A** replenishes the curled **A**-potential held in the material flux path, and where the replenished field-free magnetic vector potential **A** occupies the space outside the material flux path and flows through the surrounding space.

7. A broken 3-space symmetry exists of a magnetic dipole {16} of a permanent magnet, well-known in particle physics since 1957 but inexplicably not yet added into classical electrodynamics theory, wherein the broken symmetry of the magnetic dipole rigorously requires that the dipole continually absorb magnetic energy from the active vacuum in unusable form, and requires that the broken symmetry output (re-emit) the magnetic energy in usable form as real magnetic field energy in 3-space and real magnetic vector potential in 3-space. And where the receipt of unusable EM energy, transduction into usable form, and output of the usable EM energy, constitutes a true negative resistance process {26, 43}resulting from the ongoing giant negentropy process {26, 43} engendered by the broken symmetry of the magnetic dipole of the permanent magnet.

8. Whittaker's 1903 mathematical decomposition {1} of any scalar potential applies Whittaker decomposition to the magnetostatic scalar potential existing between the poles of the permanent magnet, revealing that the magnetostatic scalar potential of the permanent magnet is comprised of a set of harmonic longitudinal EM wavepairs, where each wavepair consists of a longitudinal EM wave and its phase conjugate replica wave.

9. The incoming half-set of Whittaker decomposition waves consists of the phase conjugate waves, which are all in the imaginary plane {26, 43} and continuously converging upon the magnetic charges of the permanent magnet dipole at the speed of light. The incoming, converging longitudinal EM waves are continuously absorbed from the imaginary plane by the magnetic charges (magnetic poles), so that the permanent magnet dipole is continuously replenished with time-like energy flow from the active vacuum environment, while continuously transducing the received time-like energy into 3-spatial energy, and outpouring real EM energy flow in the form of the longitudinal EM Whittaker waves {1} emitted in 3-space in all directions.

10. The other half-set of the Whittaker decomposition waves, consisting of outgoing real EM Whittaker longitudinal waves {1} in 3-space, is continuously and freely emitted from the permanent magnet dipole charges (poles) and continuously diverges outward in space in all directions from the permanent magnet dipole at the speed of light. Thus there is revealed and used a process for a natural, continuous source of magnetic energy from the vacuum: a continuous EM wave energy flow convergence of electromagnetic energy from the vacuum to the magnetic dipole, but in the imaginary plane and hence constituting a continuous energy input in the form of imaginary power {26, 43}, with the absorbed magnetic energy being transduced

into real power and re-emitted in real 3-space in all directions, whereby the absorption of energy from the vacuum from the imaginary plane (time domain) is in 4-flow equilibrium with the re-emission of the absorbed energy in 3-space, but not in 3-flow equilibrium, and where the outgoing real magnetic energy provides the surrounding magnetic field and the surrounding magnetic vector potential of the permanent magnetic dipole.

11. In this manner the broken 3-symmetry of the magnetic dipole (permanent magnet) allows the dipole to continuously receive reactive power from the vacuum's time domain, transduce the reactive power into real EM power in 3-space, and re-emit the absorbed energy as real magnetic energy pouring into space and consisting of both a magnetic field and a magnetic vector potential. Thus the permanent magnet, together with its Whittaker-decomposed {1} magnetostatic scalar potential between its poles, represents a dynamo and an energy transducer, continuously and freely receiving energy from an external source (the active vacuum) in the complex plane and transducing the received complex plane EM energy into real EM energy {26, 43}, and radiating the real EM energy into real space as real EM power. EM energy flow conservation in 3-space is permissibly violated due to the broken 3-symmetry of the magnetic dipole, but EM energy flow in 4-space is not violated and is rigorously conserved. There is no law of nature which requires energy conservation in three dimensions and 3-space; instead, energy conservation is required by the laws of nature and physics in 4-space. The additional condition usually assumed—that energy conservation is *also* always conserved in 3-space—is not required by nature, by physics, or by thermodynamics, and the additional 3-conservation requirement is removed by this process in any dipole, by the broken 3-symmetry of the dipole. It is this newly recognized giant negentropy process advanced by Bearden {26}and extended by Evans and Bearden {43} which is directly utilized by this new power system process, in conjunction with directing and interacting material flux paths, intercepting coils, separation of curl of the **A**-potential (i.e., the **B**-field) and the field-free **A**-potential (replenished from the vacuum), and interaction of a coil with a magnetic field and magnetic flux running through a material core through the coil, and with an external field-free magnetic potential reacting with the coil. The foregoing actions provide a magnetic system which receives—via the permanent magnet dipole—replenishment EM energy from the active vacuum to the dipole, and from the dipole to the circuit and the space surrounding it, to enable the permanent magnet to continuously furnish magnetic field and flux to a flux path in the process, and continuously furnish both the curl energy of the **A**-potential and the field-free energy of the **A**-potential replenished from the vacuum, and to have multiple coils interacting simultaneously with both curled **A**-potential and magnetic flux inside the coils, while also interacting simultaneously with field-free magnetic **A**-potential from the space in which the coil is embedded, such that excess energy is added to the interacting coils from the field-free **A**-potential in space, and where the field-free **A**-potential in space is continuously furnished by the permanent magnet dipole, and where the extra energy for the furnished field-free **A**-potential is continuously received by the permanent magnet dipole from the active vacuum exchange, via the process shown by Whittaker's decomposition {1}.

12. The difficulty heretofore experienced by designers, engineers, and scientists with using the magnetic energy continuously emitted to form the static field and magnetic scalar potential of a permanent magnet dipole, is that all schemes for using the magnetic energy have

relied on physical motion, or the input of energy to overcome the field of the permanent magnet, or other brute force methods. This invention provides a new process for a coil to extract excess EM energy from the magnetic vector potential energy in space from the permanent magnet, while simultaneously interacting with the magnetic field energy of the permanent magnet flowing through a flux path through the center of the coil but not in space surrounding the flux path. The Whittaker decomposition shows that when the system extracts EM energy from the magnetic vector potential **A** and magnetostatic scalar potential ϕ , the energy to continuously form and maintain the magnetic vector potential's vector current is continuously replenished from the vacuum by the convergent reactive EM power being input from the imaginary plane (time domain). Evans and Bearden {43} have also shown that, in the most general form of the vector potential deduced from the Sachs unified field theory, electromagnetic energy from the vacuum is given by the quaternion-valued canonical energy-momentum. Further, the most general form of the vector potential—i.e., flowing EM energy in vector potential form—has been shown by Evans and Bearden {43} to contain *longitudinal and time-like components (energy currents)*, in agreement with the simpler Whittaker decomposition {1} as a special case, but much richer in available structure than Whittaker's decomposition. Evans and Bearden {43} have also shown that the scalar potential is in general a part of the quaternion-valued vector potential, and can be defined only through suitable choice of metric for a given experimental setup. They have shown the energy current in vacuum in this more advanced treatment in O(3) electrodynamics, and it is this demonstrated vacuum EM energy current which continuously replenishes any excess energy drawn from the permanent magnet dipole's magnetostatic scalar potential to replenish the curl of the **A**-potential (the magnetic **B**-field energy) held inside the material flux path powered by the magnet and also to replenish the field-free **A**-potential filling space around the material flux path.

13. A special nanocrystalline material comprises the closed flux path powered by the permanent magnet, where the nanocrystalline material performs the highly special function of separating and retaining the curl energy of the **A**-potential (i.e., retaining the magnetic field energy) inside the material flux path along with the magnetic flux. The nanocrystalline material consists of coiled flat "tape" layers of material, with the layers acting in the fashion of a perfect toroid to retain all magnetic field (curled **A**-potential) inside the material, while having the curl-free **A**-potential filling all space outside the nanocrystalline material.

14. This special nanocrystalline material may be further considered in the manner of a "layered" magnetic flux path material, wherein the "layers" are a molecule in thickness, and wherein essentially all eddy currents are eliminated or reduced to completely negligible magnitude, and wherein as a result the nanocrystalline material does not dissipate magnetic energy from the flux path, and wherein as a result said nanocrystalline material does not produce eddy currents, and wherein as a result the nanocrystalline material does not exhibit heating since heat is scattered and dissipated energy, and no such scattering or dissipating of the magnetic flux energy occurs in the nanocrystalline material. Thus the system process is able to process significant power and energy without heating of the core flux path material at all, and without requiring cooling of the core material, these being characteristics having a remarkable advantage over other core materials subject to eddy currents, substantial heating, and the need for cooling.

15. The magnetic flux from a permanent magnet provides a source of magnetic flux energy to and within the nanocrystalline material in a flux path, such that the nanocrystalline material holds the magnetic field component (curl energy of the vector potential **A**) in the flux path while the flux path material itself is not further interacting with the field-free magnetic vector potential and its energy that fill the space around the closed material flux path, and where the field-free magnetic vector potential—in space external to the material flux path—geometrically follows the directions and turns of the material flux path but outside it.

16. Any coil immersed in the nanocrystalline material's magnetic vector potential in space, but not wound around a portion of said nanocrystalline flux path, will react to the magnetic vector potential and its energy. Each turn of a coil acts as a curl-operator, producing a magnetic field due to the received energy current from the magnetic vector potential. If an electrical current is passed through the coil, and if the magnetic flux produced by the electrical current in the coil is aligned with the magnetic flux that is produced by the coil's interaction with the magnetic vector potential from the nanocrystalline flux path material, then the two magnetic vector potentials will vectorially add, so that the magnetic field produced by the current through the coil will be augmented due to the curl-operation of the coil now acting upon an increased magnetic vector potential summation consisting of the vector sum of the curled magnetic vector potential and the field-free magnetic vector potential.

17. Any time-rate of change of a magnetic vector potential, either curled or curl-free, constitutes an electric field, which in an interacting pulsed coil produces pulsed voltage across the coil and pulsed current through the coil, and which produces current and power in a closed circuit loop consisting of the interacting coil and a connected external circuit. The excess magnetic energy is received by the circuit from the magnetic dipole of the permanent magnet (and replenished to the dipole from the time-like Whittaker energy currents from the active vacuum). The process transduces the excess magnetic energy into excess electrical energy, and outputs the excess electrical energy into electrical loads to power them, whereby the excess energy received and replenished from the active vacuum environment via the giant negentropy process of the permanent magnet dipole {26, 43} allows system COP to be greater than 1.0.

18. Further, with COP>1.0, a fraction of the output electrical energy from the process and system can be extracted and positively fed back to the operator input of the system and process (such as the electrical energy fed to a driver coil), with governing and clamping control of the positive feedback energy magnitude, so that the system process becomes a self-powering process freely powering itself and its loads, receiving all the energy from an external energy source due to its broken symmetry in its vacuum exchange and the resulting giant negentropy process (26, 43) thereof, and thus constituting an open system far from thermodynamic equilibrium with its active environment, freely self-regauging and powering itself and its load simultaneously by dissipation of energy freely received from its active environment.

19. The dual-action effect is increased in an interacting coil if the coil is wound around a portion of the nanocrystalline flux path, due to the permeability of the flux path as a magnetic core and the input of flux from the permanent magnet. In this case, the increased magnetic field produced inside the coil also interacts with the magnetic flux path core in its center, producing an increased change in the magnetic flux in the nanocrystalline material itself.

The coil interacting in such dual fashion thus has *iterative* "energy feedforward and feedback" between the two simultaneous processes, one process proceeding outward from inside, and the other proceeding inward from outside. A convergent series of summing energy additions (regaugings) thereby occurs in the coil, thus producing *energy amplification* in the coil.

20. The combined aforementioned actions result in the coil increasing its energy output due to receiving and transducing extra energy from the magnetic flux of the permanent magnet, the magnetic field of the permanent magnet, and an extra field-free magnetic potential **A** surrounding the flux path and continuously furnished by the permanent magnet. The production of one or more potentials is also the production of one or more regaugings. As is well-known from electrodynamics and from gauge field theory, gauge freedom is permitted freely and at will. In electrodynamics, regauging to change the potential of a system simultaneously changes (freely) the potential energy of the system. In the present process, this regauging is physically applied by (1) holding the curl of the **A**-potential inside the special nanocrystalline flux path material, (2) furnishing additional field-free magnetic vector potential **A** from the permanent magnet dipole, (3) continuously replenishing the potential and energy from the vacuum.

21. This process provides for a permissible gain in the magnetic energy output of the interacting coil(s) for a given amount of energy input by the (a) operator to the active coil (used similar to a "primary" coil in a transmitter), or (b) a clamped, governed positive energy feedback of a fraction of the energy output from one output coil back to the input coil. This additional magnetic field energy output is retained in the nanocrystalline flux path, and the additional magnetic vector potential energy output moves through space surrounding the coil. The system process of the invention thus is a new process for energy amplification, with the excess output energy being freely received from the vacuum and thence to the permanent magnet dipole, and thence from the permanent magnet dipole to the other parts of the system, via the giant negentropy process associated with the magnet dipole as shown by Evans and Bearden {43} and by Whittaker {1}.

22. Multiple coils wound around the special nanocrystalline material fluxpath will each and all exhibit regauging energy gain by the fore-described processes, with the energy continuously replenished from the vacuum to the source dipole and from the source dipole to process, via the process shown by Whittaker decomposition.

23. Any scalar potential such as the magnetostatic scalar potential between the poles of a permanent magnet, is a continually-replenished energy flow process {1, 26}, so that any system utilizing the output flow from the permanent magnet dipole and containing such permanent magnet dipole, is an open system far from equilibrium in the replenishing vacuum flux, as shown by the Whittaker decomposition {1} and more precisely expanded by Evans and Bearden {43}.

24. The entropy of any open system in disequilibrium with its vacuum environment, is *a priori* less than the entropy of the same system in equilibrium, and in fact the entropy of such an open system cannot even be computed, as is stated by Lindsay and Margenau {20} and as is well-known in physics.

25. This process, producing an open system in disequilibrium with a recognized continuous source of energy {17-19, 26, 43}, is permitted to perform any or several or all of five functions: (1) self-order, (2) self-oscillate, (3) output more energy than the operator inputs (the excess energy is freely received from the active environment), (4) power itself and its loads and losses (all the energy is freely received from the active environment), and (5) exhibit negentropy. The process specified by this invention permits all five functions. For example, by extracting some of the output energy from an output section (coil) used in a system employing the process, and feeding the extracted energy back to the input section (coil), the energy gain of the system permits it to become self-oscillating and hence self-powering, while obeying energy conservation, the laws of physics, and the laws of thermodynamics.

26. Multiple feedforward and feedback sub-loops exist between the various parts of a complete flux path loop and **A**-potential flow loop, so that regenerative energy collection gains are developed in the various subprocesses of the overall process. The result is an overall feedback summation and overall feedforward summation, whereby the system process regauges itself with **A**-potential flow energy from the magnetic dipole, and the regauged energy is continuously replenished and received from the active vacuum via the stated giant negentropy process.

27. The system process consists of a magnetic negative resistor process, where energy is received freely in unusable form (pure reactive power from the time domain of the spacetime vacuum), transduced into usable form, and output in usable form as real EM energy flow in 3-space {1, 26, 43}.

28. The system process is a permissible local energy gain process and a self-regauging process, freely increasing the process's and system's potential energy and receiving the regauging energy from the active vacuum via the giant negentropy process {26, 43}, and freely collecting and dissipating the excess regauging potential energy in loads.

29. The system process may be open-looped where the operator inputs some electrical energy and the system outputs more electrical energy than input by the operator, the excess energy being freely received from the permanent magnet dipole and from the vacuum to it via the giant negentropy process {26, 43}, with process transductions of the various energy forms between magnetic form and electrical form.

30. The system process may be close-looped and "self-powering", where a portion of the amplified energy output is extracted, rigidly clamped in magnitude, and positively fed back to the input. This replaces the operator input entirely, with all energy input to the system process being received from the vacuum through the permanent magnet dipolarity's Whittaker decomposition and constituting direct system application of the stated giant negentropy process {26, 43}.

31. The system process is a magnetic regenerative gain process, outputting more energy than the operator himself inputs, with the excess energy received from the active vacuum via the broken 3-symmetry of the dipole which initiates and sustains the giant negentropy process {26, 43}, whereby EM energy continuously flows into the system from the complex plane (time domain), is transduced into usable magnetic energy in real 3-space, and is then

transduced into ordinary electrical energy by the system process, thereby powering both the system and the loads.

32. In an embodiment using the process, all coils exhibit energy gain and increased performance, as does the overall system. All coils are energy amplifying coils, each with gain in energy output greater than 1.0 compared to the same coil without simultaneous but separate exposure to and interaction with separate inputs of field-free magnetic potential and magnetic field, and without iterative positive feedback between the two simultaneous interactions.

33. For power system processes, the combined process requires using at least one primary (active) coil in dual interaction with iterative feedback between the duals, and one secondary (passive) coil in dual interaction with iterative feedback between the duals, both on a common nanocrystalline flux path. The resulting "minimum configuration" embodiment produces a power system that is an open thermodynamic system, not in equilibrium with its external environmental energy source: to wit, the continuous inflow of EM energy from the complex plane of the active vacuum into the permanent magnet dipole, and the continuous outflow of real magnetic energy from the permanent magnet dipole, with the holding of the magnetic field energy and magnetic flux energy inside the nanocrystalline material in the closed magnetic flux path, and with excess field-free magnetic vector potential filling the surrounding space, as continuously furnished by the permanent magnet dipole and continuously replenished to the dipole by the active vacuum due to the dipole's broken 3-symmetry in its vacuum energy exchange and the giant negentropy 4-space energy flow operation {26, 43} initiated thereby.

34. This process permissibly violates 3-symmetry energy conservation, but rigorously obeys 4-symmetry energy conservation and thus is a process which has not previously been applied in electrical power systems. The basic excess energy input is received from an unusual source: the complex plane (time domain) of the locally curved and active spacetime (vacuum), as shown by the Whittaker decomposition {1} of the permanent magnet's magnetostatic scalar potential between its poles, and as further demonstrated in several AIAS papers {39-41, 43}, and as recognized by Bearden {26} and investigated more deeply by Evans and Bearden {43}. The energy into the nanocrystalline flux path material is input directly from the permanent magnet as magnet flux energy. From its dual interaction with two magnetic energy components, the active (driving) coil produces increased magnetic field flux in its center and thus in its interaction with the magnetic flux path and the magnetic flux in the flux path, and also produces increased magnetic flux back through the permanent magnet dipole, thereby altering the pole-strength of the permanent magnet, and also produces increased field-free **A**-potential in space surrounding the permanent magnet and surrounding the nanocrystalline flux path, and flowing geometrically in the direction taken by the nanocrystalline flux path. From its dual interaction with two magnetic vector potentials as well as two magnetic field components superposed, the passive (driven) coil produces increased EM field energy in the form of current and voltage out of the coil and into any conveniently attached external load for dissipation in the load by conventional means.

35. The process in this invention uses and applies an open system process for receiving excess energy from an external source (the permanent magnet flux and the permanent magnet **A**-potentials), and since the permanent magnet flux and permanent magnet **A**-potentials

are continuously replenished from the vacuum via the broken 3-symmetry of the magnet dipolarity via its Whittaker decomposition {1}, the process is allowed to be adapted in systems to (a) produce COP>1.0, and (b) be closed looped with clamped positive feedback from load output to input, so that the system powers itself and its load simultaneously.

36. The open system far from equilibrium process of this invention thus allows electromagnetic power systems to be developed that permissibly exhibit a coefficient of performance (COP) of COP>1.0. It allows electromagnetic power systems to be developed that permissibly (a) power themselves and their loads and losses, (b) self-oscillate, and (c) exhibit negentropy.

37. No laws of physics or thermodynamics are violated in such open dissipative systems exhibiting increased efficiency, and conservation of energy laws are rigorously obeyed. Classical equilibrium thermodynamics does not apply and is permissibly violated. Instead, the thermodynamics of open systems far from thermodynamic equilibrium with their active environment—in this case the active environment—rigorously applies {17-19}.

38. This appears to be the first magnetic process deliberately utilizing and separating special energy flow processes—associated in a curved spacetime with the permanent magnet's dipolarity—to provide true magnetic energy amplification, receiving the excess energy freely from the permanent magnet dipole, with said energy being continually replenished to the dipole from the imaginary plane in spacetime by the giant negentropy process {26, 43}.

39. This appears to be the first power system process which in open-loop mode receives electrical energy input by the operator or outside normal source, wherein the electrical energy input is transduced into magnetic energy flows, and wherein curled **A**-potential flow (magnetic field energy flow) is separated from field-free **A**-potential flow, and where dual and iterative "ping-pong" interactions of feedforward and feedback of energy occur in each active component, and wherein the feedforward and feedback ping pong interactions create local energy gain in each active component, and wherein the magnetic potential energy of the system is self-regauged and increased (receiving the excess by giant negentropy replenishment from the active vacuum), and where the increased magnetic energy flow is then re-transduced into electrical energy and output to power loads, and wherein the output energy powering the loads is greater than the input energy provided by the operator.

40. The foregoing system functions as before described, wherein the system process positively feeds back a clamped fraction of its electrical output to its electrical input, resulting in a regenerative, energy-amplifying, self-regauging open system process which powers itself and its loads, the powering energy being freely received from the active vacuum curved spacetime via the giant negentropy process {1, 26, 43}.

41. The process therefore appears to be the first process for an electrical power system which permissibly violates electromagnetic energy conservation in 3-space, due to the use of the recognized and proven broken 3-symmetry of the dipole {16}, but while rigorously conserving electromagnetic energy in 4-space {26, 43}. It therefore appears to be the first electrical power system process which enables the use of a clamped positive feedback from output to input in an electrical power system having COP>1.0 so that the system

continuously receives all the energy—to power its loads and losses—from the magnetic energy flow of a permanent magnet, with the energy flow being continually replenished to the permanent magnet by the energy circulation from the imaginary plane (as absorbed reactive power) and transduced into real power output by the magnet's dipole, and with the freely received magnetic flux energy from the dipole being separated into field energy and magnetic vector potential energy.

42. This appears to be the first COP>1.0 electrical power system process that deliberately takes useful advantage of the fact that any amount of energy can be intercepted and collected from a potential, regardless of its magnitude, if sufficient intercepting charges (in this case, magnetic charges, or pole-strengths) are utilized. In this case, coils utilized around the special nanocrystalline core material interact with the field-free magnetic vector potential filling the space occupied by the electron spins in the Drude electron gas in the coils, while simultaneously the produced magnetic field in the coil due to its curl operation interacts with the localized magnetic field flux in the nanocrystalline flux path and core, and vice versa. In this way, effectively the energy interception and collection is multiplied beyond what is obtained by a coil with a core operating in normal magnetic field coupled to its magnetic vector potential in space.

43. This appears to be the first magnetic process that is a proven true negative resistance process, where "negative resistance process" is defined as a process whereby electromagnetic energy is continuously and freely received in unusable form, converted into usable form, and continuously output in usable form.

44. This appears to be the first power system process which deliberately uses energy to perform more than one joule of work per joule of energy, by transforming a given amount of energy into a different form, thereby performing work in the same amount upon a receiving medium while retaining the energy in its new form, then transforming that energy back into the first form again, thereby again performing work in the same amount upon the receiving medium again while retaining the energy back in its original form, and so on in "ping-pong" iterative fashion. The fraction of the energy that is retained from one transformation to the other determines the increase in energy of the medium receiving the work and thus being excited with kinetic energy, and thereby determines the energy gain of the power system in the multiplicity of such regenerative processes used in the system.

45. This appears to be the first magnetic process for EM power systems which deliberately creates and uses curved local spacetime to provide continuous energy and action upon the process's active components and subprocesses. Sachs' unified field model {44-46} as implemented by one of its important subsets—O(3) electrodynamics per Evans {40) and Vigier—is implemented in the system to provide several specific local curvatures of spacetime, with excess energy being thereby regauged into the system and used to power loads, including a self-powering system which powers itself and its loads simultaneously, and also including an open-loop system wherein the operator inputs a little EM energy and obtains more EM energy being dissipated as work in the load.

RELATED ART

There is believed to be no prior art in such true magnetic negative resistor processes for

(1) utilizing curvatures of local spacetime to provide excess energy from spacetime input into the various active components of the system process,

(2) receiving EM energy from the spacetime vacuum in unusable reactive power form,

(3) having the permanent magnet dipole convert the received unusable EM energy into usable magnetic energy form,

(4) splitting the magnetic energy output of the permanent magnet into separate magnetic field flux and both curled and uncurled magnetic vector potential current, each traveling in a different spatial pathway,

(5) producing energy amplification by dual interaction of multiple simultaneous processes in a coil, with iterative feedforward and feedback between the simultaneous interactions,

(6) producing driving and driven coils both in curved spacetime and with their magnetic flux inside a nanocrystalline core inside said coils and with a field-free magnetic vector potential in the space in which the coil is embedded, and

(7) transducing the excess magnetic energy available for output, into electrical energy,

(8) outputting the excess energy as ordinary electrical energy—consisting of voltage and current—to power circuits and loads,

(9) permissibly exhibiting COP>1.0 while rigorously obeying energy conservation, the laws of physics, and the laws of thermodynamics, and

(10) being operated in either open-loop or closed loop operation, whereby in open-loop the operator inputs a lesser EM energy than is dissipated in the load, or whereby in closed loop operation a fraction of the output energy is positively fed back into the input to power the system and system process, while the remainder of the energy is dissipated in the load to power it.

(11) Using and applying the extended work-energy theorem for a replenishing potential environment.

This appears to be the first process to take advantage of the above listings of operations, functions, processes, and facts, whereby no heating or eddy current dissipation is produced in the cores of coils utilized in embodiments of the process, and whereby said process and embodiments output electrical power in loads without the need to cool the process components.

The closest *somewhat* related work would appear to be the several patents of Raymond C. Gelinas {52} in that these patents use the curl-free magnetic vector potential. All the Gelinas patents deal with communications and receivers and transmitters, have no application to electrical power systems, do not use additional EM energy extracted from a permanent magnet and replenished by the vacuum, do not use curved local spacetime, do not use the giant negentropy process, do not function as open systems far from equilibrium in their vacuum

exchange, do not use iterative "ping-pong" feedforward and feedback in their various components to achieve gain, do symmetrically regauge themselves so that their excitation discharge is symmetrical and not asymmetrical, do not function as negative resistors, are not self-powering, cannot produce COP>1.0, cannot self-operate in closed-loop form, and can and do produce only COP<1.0. They therefore have no application to the field of the present invention.

DESCRIPTION OF THE FIGURES AND SYSTEM OPERATION.

The process in this invention is described in a description below and in the process gain block diagram cited below and attached as separate sheets, which are intended to be read in conjunction with the following set of drawings, which include (1) the background Lenz reactions, Poynting and Heaviside energy flow operations, Heaviside energy flow component, giant negentropy operation, Whittaker's decomposition of the scalar potential, and creation and use of curved local spacetime utilized in the invention, and (2) the principles, the functional block diagram, a physical laboratory test and phenomenology device, and the process operation of the invention as well as typical measurements of a laboratory proof-of-principle device.

Figure **1** graphically shows Whittaker's decomposition {1, 29, 30} of the scalar potential into a harmonic set of phase conjugate longitudinal EM wavepairs. The 3-symmetry of EM energy flow is broken {16, 26} by the dipolarity of the potential, and 4-symmetry in energy flow without 3-flow symmetry is implemented {1, 26}.

Figure **2** expresses this previously unexpected functioning of the scalar potential—or any dipolarity, including the magnetic dipole of a permanent magnet—as a true negative resistor {23}, receiving energy in unusable form, transducing it into usable form, and outputting it in usable form.

Figure **3** shows the startling ramifications of this previously unsuspected process: an ongoing, free, negentropic reordering of a fraction of the local vacuum energy {26}, spreading at the speed of light in all directions from the moment of formation of the dipole, and continuing as long as the dipole and its broken 3-symmetry exists. We have previously stated {22, 25} that the energy input to the shaft of a generator, and the chemical energy of the battery, have nothing to do with powering the external circuit connected to the battery or the generator. Other than dissipation in internal losses, the available internal energy dissipated by the generator or battery does not add a single joule/sec of energy flow to the external circuit. Instead, the available internal energy is dissipated internally and only to force the internal charges apart, forming the internal source dipole connected to the terminals. The input energy to a generator and expended by it, and the chemical energy available by a battery and expended by it, thus are expended only to continuously reform the source dipole that the closed current loop circuit continuously destroys.

Once established, the source dipole applies the giant negentropy process {26, 43} shown in Figures **1**, **2**, and **3**. Energy is continuously received by the dipole charges from the surrounding active and negentropically reordered vacuum (curved spacetime), transduced into usable form, and output as real EM energy flow in 3-space. The receipt of this energy as reactive power freely received from the vacuum, does not yet appear in present classical electrodynamics

texts, which texts do not include the vacuum interaction, much less the broken symmetry of the source dipole in that vacuum exchange, even though such has been proven in particle physics since the 1950s. The present invention is believed to be the first applied process using this previously omitted process of easily extracting energy from the vacuum and outputting it in usable transduced form as real EM energy flow, via the giant negentropy process {26, 43}.

The transduced EM energy received from the vacuum by the source dipole, pours out of the terminals of the battery or generator and out through space surrounding the transmissions lines and circuits connected to the terminals (Figure **4**) as shown by Kraus {53}. As is well-known, the energy flow (Figure **4**) fills all space surrounding the external circuit conductors out to an infinite lateral radius away{53}. This is an *enormous* EM energy flow—when one includes the space-filling nondiverged component discovered by Heaviside {10, 11}. This neglected vast nonintercepted, nondiverged energy flow component was never even considered by Poynting {9}, and was arbitrarily discarded by Lorentz {51} as "of no physical significance".

Figure **5** shows that almost all that great EM energy flow pouring out of the terminals of the generator or battery and out through the surrounding space surrounding the transmission line conductors, misses the circuit entirely and is just wasted in conventional circuits having no iterative feedback and feedforward additional collection components and processes. In a simple circuit, for example, the arbitrarily discarded Heaviside nondiverged energy flow component may be some 10 trillion times in total rate of energy flow as the feeble Poynting component {9} that is intercepted by the surface charges in the circuit conductors and components, and diverged into the wires to power the Drude electrons and the loads and losses.

Figure **6** illustrates the negative resistor process diagrammatically. The source dipole and the associated scalar potential between its poles act as a true negative resistor, receiving enormous EM energy from the surrounding vacuum in unusable form (via the giant negentropy process shown in Figure **3**). The charges of the dipole absorb this unusable energy and transduce it into usable EM energy form, then re-radiate it as usable EM energy. This of course is precisely a negative resistor process.

Figure **7** shows the integration trick which Lorentz originated to discard the perplexing and enormous Heaviside non-diverged energy flow component, while retaining the diverged (Poynting) energy flow component. In short, Lorentz's procedure—still utilized by electrodynamicists to discard the embarrassing richness of EM energy poured out of every dipole and not intercepted and used by the attached external circuit—for over a century has specifically and ubiquitously diverted electrodynamicists' attention away from the process described in this invention.

We strongly iterate the following point: We have designed the process of this invention and its embodiments by and in accord with Sachs' unified field theory and the Evans-Vigier O(3) electrodynamics subset of it. Consequently, all energy in mass-free spacetime is general relativistic in nature, modeling, and interpretation. The general relativity interpretation applies at all times, including for the electrodynamics. Hence any local delta energy in spacetime is precisely of one and only one nature: a curvature of that local spacetime. A traveling EM wave thus becomes identically a traveling oscillation of a specialized curvature of spacetime. Further, wherever the wave exists, its energy *a priori* curves that part of the spacetime. So EM waves,

fields, potentials, and energy flows always involve and identically are spacetime curvatures, structures, and dynamics. We also accent that time is always part of it, since what exists prior to observation is spacetime, not space. Hence "energy currents in time" and "electromagnetic longitudinal waves in the time domain" are perfectly rational expressions and facts, albeit strange to the 136-year old classical electrodynamics stripped of its integration with general relativity.

Figure **8** shows the relationship between a linearly moving magnetic vector potential $\mathbf{A}_L$, a swirling or circulating $\mathbf{A}_C$, the implementation of the $\nabla\times$ operator by the interacting coil and its moving charges, and the resulting magnetic field **B**. $\mathbf{A}_L$ can also be defined as the vector potential $Ø_L$ if desired, where $Ø_L$ is a vector potential and no longer the familiar scalar potential ϕ since Ø is in motion. If the coil is wound very tight and is very long (or closed such as in a very tight toroid), then the magnetic field **B** will be retained entirely inside the coil, while the field-free (curl-free) $\mathbf{A}_C$ will remain outside the coil. This illustrates one of the major unrecognized principles of the potential (such as **A**) being a flow process: What is usually considered to be the energy in the potential in a given volume of space, is actually the "reaction cross section" of the potential in that volume. Conventional electrodynamicists and electrical engineers do not calculate magnitudes of either fields or potentials, but only their *reaction cross sections*, usually for a unit point static charge assumed fixed at each point. We point out that this procedure calculates the divergence of energy from the potential, and hence the reaction cross section of the potential, but not the potential itself.

The energy so calculated—in this case, the curl of the **A** flow, being the magnetic field **B**—can in fact be diverted from the **A** potential flow through a volume of space into another different volume of space. The magnitude of the **A** potential flow will continue undiminished through the original volume of space, so long as the source dipole performing the giant negentropy process and thus providing the continuous EM energy flow represented by **A** remain unchanged. In the case used in the process of this invention, we diverge the magnetic field energy from the A-flow, while simultaneously retaining all the **A**-potential energy flowing through the space outside the tightly wound coil. This is in fact an "energy collecting amplification" subprocess, and is no more mysterious than diverting a tiny flow of water from a nearly infinite river of flowing water, and having the river flow on apparently undiminished. In short, we may deliberately use the *energy flow nature* of the potential **A** in order to simultaneously separate it into two flows of different energy form, curled and uncurled.

If we place a square pulse in the current of the coil in Figure **8**, we also invoke the Lenz law reaction (Figure **9**) to momentarily increase the current and hence the $\mathbf{A}_C$ and the action of $\nabla\times\mathbf{A}_C = \mathbf{B}$, so that additional $\mathbf{A}_C$ energy and additional **B** energy are obtained. In this way, the energy gain is increased by the Lenz law effect—which is a regauging effect deliberately induced in the invention process by utilizing square pulse inputs. Then when the trailing edge of the pulse appears and sharply cuts off the pulse, a second Lenz law gain effect (Figure **9**) is also produced, further increasing the energy gain in both $\mathbf{A}_C$ and in **B**. We use these two serial Lenz law effects to increase the potential energy of the system twice and also the collected field energy, thus allowing COP > 1.0 since during the regauging process the potential and the potential energy of the system are both increased freely, and so is the diversion of the increased

potential energy into **B**-field energy inside the coil. Both the changes increase the voltage drop across the coil and the current through it, translating the increased magnetic energy into usable electrical energy to power loads and losses.

Figure **10** shows the cross section of an input coil, one form of input device. The input can be from a separate signal generator, in which case the system runs "open loop" and requires continuous input power, but still provides COP>1.0. Or, a portion of the output power can be extracted, clamped in magnitude, and positively fed back to the input, in which case the system runs "closed loop" and the operator need furnish no external power input. In either case, the system is an open system far from thermodynamic equilibrium with its active vacuum environment, freely receiving energy from said active environment to the dipole in the permanent magnet, and from the dipole out into the nanocrystalline material core in the form of magnetic field energy **B**, and in the space outside the core in the form of field-free **A**-potential. As can be seen, the **B** field energy is confined to the core material inside the coil, and the **A**-potential outside the core is field-free **A**. Any change in the **B**-field inside the core, is also a change in the **B**-field inside the coil and the coil interacts with it to produce current and voltage. Any change in the **A**-potential outside the core, also interacts with the coil which applies the $\nabla\times$ operator, thereby producing voltage and current in the coil and also producing additional **B**-field in the core material. In turn, this changes the **B**-field in the core, which produces more voltage and current in the coil and additional **A**-potential outside the coil, and so on. Hence there are dual iterative retroreflective interactions which increase the performance of the coil, making it an *energy amplifying* coil, and which also increase the COP of the system process. The output of the input coil is thus the alteration and increase of the **B**-field flux and energy in the core material, and an increase and alteration in the field-free **A**-potential surrounding the coil and moving around the circuit in the space surrounding the nanocrystalline core material flux path.

Figure **11** shows the cross section of a typical output coil for either open-loop or closed-loop operation. The operation is identical to the operation of the input coil, except this coil outputs energy in the form of voltage and current to an external circuit, external load, etc., and also outputs energy from its reaction with the **A**-potential outside the flux path to the nanocrystalline flux path material in its core. The output coil receives its energy input from the field-free **A**-potential outside the nanocrystalline material flux path as well as from the **B**-field energy and magnetic flux inside the nanocrystalline flux path through its core.

Further, the dual interaction processes and their mutual iterative interactions provide gain in both the **A**-potential energy outside the core material and the **B**-field energy and magnetic flux energy inside the core material.

Further, all coils on the core material thus serve as both output and input coils, and also have mutual iterative interactions with each other around the loop, coupled by the field-free external **A**-potential and the **B**-field and magnetic flux in the nanocrystalline material flux path acting as the cores of the coils. These interactions also provide gain in the kinetic energy produced in the Drude electron gas due to the iterative summation work performed upon the electrons to increase their energy.

Further, these mutual iterative feedback and feedforward energy gains also change the flux back through the permanent magnet, alternating it, so that the pole strength of the magnet

alternates and increases. This in turn increases the dipolarity of the permanent magnet, which in turn increases the magnitude of the associated giant negentropy process {26, 43}. In turn this results in more energy received from the active vacuum by the permanent magnet, and also more energy output by said permanent magnet dipole to the core material and to the coils.

Thus we have described a system and process having a multiplicity of iterative feedbacks and feedforwards from each component and subprocess, to every other component and subprocess, all increasing the energy collected in the system and furnished to the load. In open loop operation, this results in COP>1.0 permissibly, since the excess energy is freely received from an external source. In closed loop operation, the COP concept does not apply except with respect to operational efficiency. In that case, the operational efficiency is increased because more energy is obtained from the broken symmetry of the permanent dipole, and therefore additional energy is provided to the loads, compared to what the same permanent magnet can deliver when such iterative feedback and feedforward actions in such multiplicity are not utilized. In closed loop operation, the system powers itself and its loads and losses simultaneously, with all the energy being freely supplied by the giant negentropy process of the permanent magnet dipole and the iterative asymmetrical self-regauging processes performed in the process.

Figure **12** is another view showing the major energy flows in an output coil section and subprocess, and the iterative dual inputs and interactions, of the basic scheme of operation of the process and its active component subprocesses.

Figure **13** is another view showing the major energy flows in an input coil section and subprocess, and the iterative dual inputs and interactions, of the basic scheme of operation of the process and its active component subprocesses.

Figure **14** is a diagrammatic block-diagram illustration of the components and processes in the system and system process, with the dual feedforward and feedbacks shown. It accents the overall system process gain due to the multiplicity of interactions and iterative interactions between the various system components and subprocesses, and further interactions with the dual local interactions and iterative feedforwards and feedbacks, thus providing a multiplicity of individual energy gain process and an overall energy gain process.

Figure **15** shows a type embodiment of the system and system process, perhaps at a home and powering a variety of home appliances and loads. The system as shown is "jump-started" initially in open-loop mode, and once in stable operation is disconnected from the jump starter (such as a battery) to run in closed-loop operational mode.

Figure **16** shows one of the former laboratory test build-ups embodying the process of the invention. This test prototype was used for proof-of-principle and phenomenology testing.

Figure **17** shows a simplified block diagram of a basic embodiment demonstrating the process. Many of these build-ups were built to test various core materials, observe phenomenology, etc. The "square C's" of the flux path halves right and left, as shown in this Figure **17**, were actually made as "half-circle C-shaped flux path halves" right and left in Figure **16** above.

Figure **18** shows the measurement of the input to the actuator coil of the test unit of Figure **16** operated in open-loop mode.

Figure **19** shows the measurement of the output of one of the output coils of the test unit of Figure **16** operated in open-loop mode.

Figure **20** shows the output power in watts as a function of the input potential in volts, thus indicating the output versus potentialization sensitivity. The circles indicate actual measurements, and the curve has been curve-fitted to them.

Figure **21** shows the COP of a single output coil's power divided by the input power, as a function of input potentialization. The circles indicate actual measurements, and the curve has been curve-fitted to them. The second coil had the same power output and COP simultaneously, so the net unit COP of the unit is double what is shown in the figure.

Figure **22** shows the projected unit output power sensitivity versus voltage input, expected for the next prototype build-up now in progress.

Figure **23** shows the projected unit COP versus input potentialization, expected for the next prototype build-up now in progress. We expect this type of unit to easily operate at the COP = 30 or COP = 40 level, with multiple kilowatt output power.

RAMIFICATIONS

Importance of the Process and Its Sub-Processes

A process has been provided whereby useful electromagnetic energy may be extracted from the dipole of a permanent magnet, via the giant negentropy process {26, 43} associated with the magnetic dipole. In that process, an outflow of EM energy is continuously furnished by the magnet dipole in all directions in 3-space, and the energy to the dipole is freely furnished from the time-domain of the active vacuum {1, 26, 43}. Whittaker {1} unwittingly showed this giant negentropy mechanism in 1903, but failed to recognize its implications. Recent recognition of the mechanism and its implications for electrical power systems was accomplished by one of the inventors, Bearden {26} and then more deeply examined by Evans and Bearden {43}.

By using the principle that essentially unlimited energy can be withdrawn from (collected from) a potential, and the withdrawn energy will be replaced by the potential's negative resistor action using the giant negentropy mechanism {1, 26, 43}, a practical approach to free energy sources for self-powering and COP>1.0 electrical power systems anywhere in the universe is provided.

By using the principle that iterative transformation of its form energy in a replenishing potential environment can be repeatedly reused to do work, so long as the form of the energy resulting at the completion of each work phase is retained and reprocessed, one joule of energy can be utilized to do many joules of work, as precisely permitted by the conservation of energy law with regauging. This is a major change to the work-energy theorem of electrodynamics, which implicitly has assumed only a single change of form of the energy, followed by loss (escape from the system) of all the energy in the new form. In short, *the present work-energy*

theorem is only a special case valid under those assumed special conditions. The invented process takes advantage of the extended work-energy theorem where one joule of energy—accompanied by retention of the new form of energy resulting from work—can do multiple joules of work in a replenishing potential environment.

By using the principle that one joule in "iterative form changing mode with retention" can do many joules of work upon a component of a system—to wit, upon the Drude electron gas in an electrical circuit, where the potential energy is increased by the increased kinetic energy of the electrons having the work done upon them—the extended work-energy theorem can be utilized to overpotentialize the receiving Drude electron gas, thereby regauging the system to add excess energy by gauge freedom and outputting more electrical energy to the load than is input to the system by the operator.

By then dissipating in loads this excess energy collected in the Drude electron gas in the output circuit, the invented process provides greater energy to be dissipated in the load than is input by the operator. The combination of processes thus allows an electromagnetic system freely functioning as an open system not in equilibrium with its active vacuum (due to the giant negentropy mechanism {26, 43}), hence permitted to exhibit COP>1.0. In this way, more work output can be accomplished by the system process than the work that the operator must perform upon the system to operate it.

By using the principle of governed, clamped positive feedback of a portion of the increased output back to the input, the system can be close-looped and can power itself and its load, with all the energy being furnished by self-regauging from the active vacuum as an external energy source, furnishing excess energy to the magnetic dipole's magnetostatic potential and associated magnetic vector potential, thereby replenishing energy withdrawn from said magnetic vector potential by the subprocesses in the overall system process.

One system operating in closed-loop mode can also have one fraction of its output devoted to "jump-starting" another such system in tandem, then switching the second system into self-powering closed-loop mode, then "jump-starting" another such system, which is then switched to self-powering, and so on. In that way, multiple systems can be "piggy-backed" so that an exceptionally large power system consisting of a group of such "piggy-backing" systems can be produced. In case of system failure, all can be started again in the same series, by furnishing only the initial small input required to jump-start the first system of the group. In this way, very large power systems such as necessary to power automobiles, trucks, ships, trains, etc. can be produced, and yet the back-up jump starting source—such as a storage battery—can be very small, e.g., a simple flashlight battery.

Implications for the Crisis in Oil Supplies Versus Energy Demands

The implications are that a total revolution in transportation, electrical power systems, backup power systems, etc. is at hand. In the process, the electrical power is obtained freely and cleanly from the vacuum, from permanent magnet dipoles continuously replenished from the active vacuum via the giant negentropy process.

A more significant fraction of the electrical power system can thus be decentralized, and degradation in case of system failure will be graceful and local. Yet full use can still be made of the existing power grids and power systems. As an example, arrays of self-powering electrical heater systems can be developed and used to heat the boilers in many standard power systems, thereby stopping the burning of hydrocarbons in those plants, and drastically reducing the pollution of the biosphere and the lungs of living creatures including humans. This would allow a graceful phase-in of new, clean, self-powering electrical power systems, reduction of hydrocarbon combustion for commercial electricity production, ready increase in electrical power to meet increasing world demands even in poor nations and developing countries, while capitalizing and using much of the present very large "sunk costs" investments in present large power systems. The core material fabrication is labor-intensive, so it is made in developing nations where such jobs are sorely needed and greatly benefit both the people and the nation. The dramatically increased use of and demand for these materials would thus stimulate substantial economic growth in those nations by providing many more jobs.

The conversion of power systems and replacement in a fraction of them, can proceed at a very rapid pace, since production and scale-up of systems utilizing this system process can be very rapid because, except for the cores, all fabrication, parts, techniques, tooling, etc. are simple and standard and very economical.

Particularly at this time of oil crisis and particularly a shortage of refining facilities, a very rapid and permanent solution to the oil crisis and the rapidly increasing demand for electricity—and also much of the problem of the present pollution of the biosphere by combustion byproducts, and of the present global warming enhancement by the emitted CO_2 from the hydrocarbon combustion—can be solved cheaply, economically, and quickly.

The steady reduction and eventual near-elimination of hydrocarbon combustion in commercial power systems and transport, and dramatic reduction in nuclear fuel rod consumption, etc. will result in cleaner, cheaper, more easily maintained power systems and a reduction in the acreage required for these power systems.

The gradual decentralization and localization of a substantial fraction of the presently centralized power grid will eliminate a significant fraction of power transmission costs, thereby lowering the price of electrical energy to the consumers.

The scale-up weight-per-kilowatt of systems using this system process will be sufficiently low to enable rapid development of electrically powered transport media such as automobiles etc. These will have weight about the same as now, carry a small battery as a back-up "jump-starter", and will have very agile performance suitable for modern driving in heavy traffic. With fuel costs zeroed, the cost to the citizens of owning and operating vehicles will be reduced. Costs to the trucking industry, e.g., will be dramatically reduced, since fuel is a major cost item. In turn, since most goods are moved via the trucking industry, the lower transport costs will mean more economical sales prices of the goods. These are very powerful and beneficial economic advantages of the new process.

Some Specific Advantages

The process allows electrical power systems having the following advantages:

1. The systems can have a high output power to weight ratio Second generation equipment will have a very high output power to weight ratio.
2. The systems can be highly portable for mobile applications.
3. The size and output of the systems are easily scalable, and piggy-backing is simple.
4. The systems will be rugged and reliable for use in hostile environments where conventional generators would fail or be extremely difficult to sustain. The systems can easily be environmentally shielded.
5. The systems can function effectively in very wide operating temperature ranges and can be used where conventional batteries and fuel cells cannot function. As an example, it can power a resistance heater to keep its own immediate environment continuously warm. It can also power electrostatic or magnetic cooling devices to keep the unit and its immediate environment cool in higher temperature environments.
6. The system will have an extremely long life cycle and high reliability, allowing it to be placed where frequent maintenance is not possible.
7. The system uses no fuel or fuel transport, packaging, storage, and disposal systems and needs no intermediate refining facilities and operations. The resulting overhead and financial savings are vast and significant.
8. Use of the systems in a combined centralized and decentralized electrical power system provides survival of electric power and graceful degradation, rather than catastrophic collapse, of electrical power in the presence of damage and destruction. This is particularly important since the greatest threat to America is now the threat of terrorist attacks against our cities, or against our fuel supplies, electrical power grids, etc.
9. The systems produce no harmful emission, harmful or radioactive byproducts, hazardous wastes, or biospheric pollutants. As usage is phased in world wide, a significant reduction of environmental pollutants and hazardous wastes will result, as will a cleaner biosphere.
10. The systems can produce AC or DC power directly by simple electrical additions, and provide shaft power simultaneously. Frequency can be changed by frequency conversion.
11. Coupled with normal electric motors, the systems can provide attractive power system alternatives for automobiles, tractors, trucks, aircraft, boats, ships, submarines, trains, and other vehicles, again without exhaust emissions, pollutants or harmful waste products and without fuel costs.
12. The systems can be developed in small-system sizes, rugged and efficient, to replace the motors of hosts of small engine devices such as garden tractors, lawnmowers, power saws, leaf blowers, etc. which are presently recognized to be very significant biospheric polluters.

The above descriptions provide illustrations of some of the presently envisioned preferred embodiments of this invention.

Extension and Adaptation of the Process

The process can be extended . For example, we have mentioned piggy-backing arrays of such systems for easily assembled, very large power plants.

As another example, conversion to furnish either DC or AC, or combinations of either, at whatever frequencies are required, is easily accomplished by standard conversion techniques and add-on systems.

As another example:

The process uses a multiplicity of positive energy feedforwards and feedbacks, and iterative change of the form of the energy between multiple states in a replenishing environment, to provide iterative gain by "ping-pong". As the number of feedback and feedforward operations are increased, it is possible to advance the system process into a region where the regenerative feeds produce an exponentially *increasing* curve of regauging energy and potential energy increase, with concomitant exponentially increasing curve of output energy. Material characteristics, saturation levels of cores, etc. provide "plateaus" where the exponentially rising output curve is leveled off and stabilized. By using spoiling and damping, such exponential increase in energy density of the system can be leveled off at specifically desired plateau regions, which can be easily adjusted at will, either manually or automatically in response to sensor inputs. By this means, these systems enable automatically self-regulating, self-adapting power grids and power systems, which automatically adjust their state and operation according to the exact needs and conditions, changes of these needs and conditions, etc. without impact upon supporting fuel, transport, refining, storage, etc. These "exponential but plateau-curtailed" systems are capable of producing very large power-per-pound levels, and sustaining them without overheating, limited only by the saturation level of the core materials. Such new adaptations of the fundamental system process of this invention can be developed in straightforward manner in the second generation.

The adaptations and alterations of the process are limited only by the ingenuity of the engineer and the particular needs of a given application. The process uses the laws of nature in a novel and extended manner, such as using one joule of input energy to cause many joules of output work to be done in the load. Many alternative subprocesses, embodiments, modifications and variations will be apparent to those skilled in the art of conventional electrical power systems and magneto-electric generators.

REFERENCES:

1. E. T. Whittaker, “On the Partial Differential Equations of Mathematical Physics,” Mathematische Annalen, Vol. 57, 1903, p. 333-355. Decomposes any scalar potential into a harmonic set of bidirectional EM longitudinal EM wavepairs, where each wavepair is comprised of a longitudinal EM wave and its phase conjugate replica wave. Dividing the

overall waveset into two half-sets, we have one half-set comprised of incoming longitudinal EM waves in the complex plane (the time domain) and a second half-set comprised of outgoing longitudinal EM waves in real 3-space. Hence the scalar potential represents a giant circulation of EM energy automatically established and maintained from the time-domain (complex plane) into the source dipole establishing the potential, with the absorbed complex energy being transduced and re-emitted by the dipole in all directions in 3-space as real longitudinal EM wave energy establishing the EM fields and potentials (and their energy) associated with the dipole.

2. "E. T. Whittaker, "On an Expression of the Electromagnetic Field Due to Electrons by Means of Two Scalar Potential Functions," Proc. Lond. Math. Soc., Series 2, Vol. 1, 1904, p. 367-372. The paper was published in 1904 and orally delivered in 1903. Shows that all EM fields, potentials, and waves are comprised of two scalar EM potential functions. Whittaker's method is well-known in the treatment of transverse electric and transverse magnetic modes of a cylindrical cavity or a waveguide. The Debye potentials and the Bromwich potentials are essentially radial components of the vector potentials of which Whittaker potentials are the real parts. Our further comment is that, since each of the scalar potentials used for the Whittaker functions has an internal Whittaker 1903 giant negentropic substructure and dynamics, then all present EM waves, fields, and potentials have—and are comprised of—vast internal longitudinal EM wave structures and dynamics.

3. P. Debye, Ann. Phys., Leipzig, Vol. 30, 1909, p. 57. Introduces a solution to Maxwell's equations in terms of two scalar potentials. These two scalar potentials are different from the two potentials utilized by E.T. Whittaker in 1904.

4. A. Nisbet, Physica, Vol. 21, 1955, p. 799. Extends the Whittaker and Debye two-potential solutions of Maxwell's equations to points within the source distribution. This is a full generalization of the vector superpotentials (for media of arbitrary properties, together with their relations to such scalar potentials as those of Debye.

5. W. H. McCrea, Proc. Roy. Soc. Lond. A, Vol. 240, 1957, p. 447. Gives the general properties in tensor form of superpotentials and their gauge transformations. His treatment is more concise than that of Nisbet, but entirely equivalent when translated into ordinary spacetime coordinates.

6. Melba Phillips, "Classical Electrodynamics," in Principles of Electrodynamics and Relativity, Vol. IV of Encyclopedia of Physics, edited by S. Flugge, Springer-Verlag, 1962. An excellent overview of superpotential theory.

7. J. D. Jackson, Classical Electrodynamics, Second Edition, Wiley, New York, 1975, p. 219-221; 811-812. In symmetrically regauging the Heaviside-Maxwell equations, electrodynamicists and gauge field theorists assume that the potential energy of any EM system can be freely changed at will (i.e., that the system can first be asymmetrically regauged, due to the principle of gauge freedom). The symmetrical regauging is actually two asymmetrical regaugings carefully chosen so that the net force field (emf)—available for excitation discharge of the excited system—is zero. In circuits, this means that the back emf (across the source dipole) is precisely equal and antiphased to the forward emf (across the

external circuit with its loads and losses). Jackson's book does not even address circuits, as he so states in J. D. Jackson, "Surface charges on circuit wires and resistors play three roles," American Journal of Physics, 64(7), July 1996, p. 855-870.

For operating EM systems, their initial potentialization (application of potential to the system to increase its potential energy available for further discharge) is asymmetrical *a priori* and universally used. Gauge field theory and its assumption of gauge freedom assures us of the validity of this theoretically work-free process of increasing the energy of the system. In real systems, a little switching cost etc. may be required, but minuscule in relation to the amount of extra potential energy that can be generated in the system at will.

As shown by Jackson 1975, for the conventional EM model electrodynamicists actually select only a subset of the Maxwellian systems and deliberately discard the remaining Maxwellian subset. Following Lorentz, the electrodynamicists arbitrarily select *two* asymmetrical regaugings but precisely such that none of the initial excess regauging energy—freely received in the system by its potentialization—can subsequently be dissipated to power loads without equally destroying the system potentialization represented by the source dipole. This inanity occurs because the *net force* is deliberately brought to zero, thus consisting of equal forward and back emfs—or mmfs in a magnetic circuit). This custom produces much simpler equations for that remaining *simpler* subset of Maxwellian systems which are in equilibrium in their exchange with the active vacuum during their dissipation of the free regauging energy.

Hence for more than a century it has been "customary" to *arbitrarily* discard all Maxwellian systems and subsystems which would *asymmetrically* regauge themselves during the discharge of their initial free excitation energy. This arbitrary, self-imposed condition is neither a law of nature nor a law of electrodynamics or thermodynamics. It is purely arbitrary.

It assumes that half the gauge freedom's excess potential energy be dissipated internally (against the source dipole's back emf) to destroy any further energetic activity of the system by destroying the source dipolarity (any excess potential on the system, and hence any excess potential energy).

The remaining half of the initial free gauge excitation energy is dissipated *usefully* in the system's external loads and losses. This means that the remaining half the excitation energy is dissipated *detrimentally* by the system to destroy its own energetic operation. Since any real system has losses, the net result is that *half* the gauge freedom potential energy of the excited system is used to destroy the source dipole itself and all potentialization of the system, and *less than half* is used to power the loads.

Since it requires as much additional energy to restore the source dipole as it required to destroy it, the operator then must furnish more energy to provide for continually restoring the dipole, than the system *permits* to be dissipated in the external loads.

The set of Maxwellian systems arbitrarily discarded by the ubiquitous Lorentz regauging are precisely those open dissipative Maxwellian systems not in thermodynamic equilibrium in their vacuum exchange. Those are precisely the Maxwellian systems which *do not* forcibly and symmetrically regauge themselves in accord with the Lorentz condition during their excitation discharge. Those *arbitrarily discarded* Maxwellian systems are thereby free

to dissipate their gauge freedom initial "free-excitation" energy primarily in the external loads and losses, with much less being dissipated in the source dipole to destroy it.

The performance of the *arbitrarily discarded* asymmetrically regauging Maxwellian systems is described by the thermodynamics of an open dissipative system not in equilibrium with its active environment, rather than by classical equilibrium thermodynamics. As is well-known in the thermodynamics of such systems (for which Prigogine received a Nobel Prize in 1977), such open dissipative systems—Maxwellian or otherwise—are permitted to (1) self-order, (2) self-oscillate or self-rotate, (3) output more energy (e.g., to do useful work) than the operator must input (the excess energy is freely received from the external environment, in this case the active vacuum), (4) power itself and its load(s) simultaneously (all the energy is freely received from the external environment, in this case the active vacuum), and (5) exhibit negentropy.

That our normal EM power systems do not exhibit COP>1.0 is purely a matter of the arbitrary design of the systems. They are all designed with closed current loop circuits, which can readily be shown to apply the Lorentz symmetrical regauging condition during their excitation discharge in the load. Hence all such systems—so long as the current in the loop is unitary (its charge carriers have the same m/q ratio)—can only exhibit COP<1.0 for a system with internal losses, or COP = 1.0 for a superconductive system with no internal losses.

8. Editorial, "The transfer of energy," The Electrician, Vol. 27, July 10, 1891, p. 270-272. This editorial points out that Poynting himself gave Heaviside priority for discovering EM energy flow through space.

9. J. H. Poynting, "On the transfer of energy in the electromagnetic field," Phil. Trans. Roy. Soc. Lond., Vol. 175, Part II, 1885, p. 343-361. Poynting got the direction of the flow wrong, which was later corrected by Heaviside. Further, Poynting considered only that very minor component of energy flow surrounding the circuit that actually strikes the circuit and enters it to power it. The enormous additional energy flow which is present but misses the circuit entirely and is usually wasted, was not considered by Poynting at all.

10. Oliver Heaviside, "On the Forces, Stresses, and Fluxes of Energy in the Electromagnetic Field," Phil. Trans. Roy. Soc. Lond., 183A, 1893, p. 423-480. This followed previous publications several years earlier by Heaviside; e.g. in The Electrician, beginning in 1885. Here Heaviside also credits Poynting with first discovering EM energy flow in space.

11. Oliver Heaviside, Electrical Papers, Vol. 2, 1887, p. 94. Quoting: *"It [the energy transfer flow] takes place, in the vicinity of the wire, very nearly parallel to it, with a slight slope towards the wire… . Prof. Poynting, on the other hand, holds a different view, representing the transfer as nearly perpendicular to a wire, i.e., with a slight departure from the vertical. This difference of a quadrant can, I think, only arise from what seems to be a misconception on his part as to the nature of the electric field in the vicinity of a wire supporting electric current. The lines of electric force are nearly perpendicular to the wire. The departure from perpendicularity is usually so small that I have sometimes spoken of them as being perpendicular to it, as they practically are, before I recognized the great physical importance of the slight departure. It causes the convergence of energy into the wire.*

12. Sir Horace Lamb, Hydrodynamics, 1879, p. 210. Quoting: *"There is an exact correspondence between the analytical relations above developed and certain formulae in Electro-magnetism… Hence, the vortex-filaments correspond to electric circuits, the strengths of the vortices to the strengths of the currents in these circuits, sources and sinks to positive and negative poles, and finally, fluid velocity to magnetic force."*

13. Y. Aharonov and D. Bohm, Significance of Electromagnetic Potentials in the Quantum Theory," Physical Review, Second Series, 115(3), Aug. 1, 1959, p. 485-491. Quoting, p. 485: *"…contrary to the conclusions of classical mechanics, there exist effects of potentials on charged particles, even in the region where all the fields (and therefore the forces on the particles) vanish."* Indeed, since the field is usually defined as the force per unit charge, then the field as defined does not exist until after the causative "field as a separate entity" interacts with a charged mass. Hence the field as defined is an effect, never the cause. Further, being an effect and an observable as defined, it does not exist in spacetime as such, since no observable does. *A priori*, any observable is the output (effect) of a ?/?t operation upon LLLT, yielding an LLL "frozen snapshot" at an instant in time, which snapshot itself does not exist in time but was only a 3-space fragment of what was existing in the ongoing interaction at that point in time. The field-free 4-potential, together with its structure and its dynamics, provides the *causes* existing in spacetime prior to their interaction with intermediaries to produce effects.

14. Ingram Bloch and Horace Crater, "Lorentz-Invariant Potentials and the Nonrelativistic Limit," American Journal of Physics, Vol. 49, No. 1, Jan. 1981 Quoting p. 67: "*[It is usually] "...assumed that the magnitude of potential energy is irrelevant, being arbitrary to the extent of an additive constant."* Our comment: Note that this "standard" assumption in classical electrodynamics is totally wrong, particularly when one considers (1) conservation of energy, and (2) gravitational effects. We have previously nominated this arbitrarily discarded extra potential energy as a solution to the "dark matter" problem in astrophysics, and as being responsible for the extra gravity holding together the arms of the distant spiral galaxies. See T. E. Bearden, "Dark Matter or Dark Energy?", Journal of New Energy, 4(4), Spring 2000, p. 4-11. This paper is also carried on U.S. Department of Energy website http://www.ott.doe/electromagnetic/papersbooks.html.

15. S. Olariu and I. Iovitzu Popescu, "The Quantum Effects of Electromagnetic Fluxes," Reviews of Modern Physics, 57(2), Apr. 1985, p. 339-436. Full discussion of the Aharonov-Bohm effect and hundreds of references. According to Nobelist Feynman, it required 25 years for quantum physicists to clearly face the Aharonov-Bohm issue of the primacy and separate action of the force-field-free potential. It has then required another equal period before physicists would accept it, even though it was experimentally demonstrated as early as 1960.

16. T. D. Lee., Particle Physics and Introduction to Field Theory, Harwood, New York, 1981. A discussion by Nobelist Lee of particle physics and its findings, including broken symmetry which includes the broken symmetry of a dipole. Quoting p. 184: *"... the discoveries made in 1957 established not only right-left asymmetry, but also the asymmetry of the positive and negative signs of electric charge. In the standard nomenclature, right-left asymmetry is*

referred to as P violation, or parity nonconservation. The asymmetry between opposite signs of electric charge is called C violation, or charge conjugation violation, or sometimes particle-antiparticle asymmetry." And again, p. 184: *"Since non-observables imply symmetry, these discoveries of asymmetry must imply observables."* Simply put, Lee has pointed out the rigorous basis for asserting that the arbitrarily assumed Lorentz symmetry of the Maxwellian system is broken by the source dipole—and in fact by any dipole. In turn, such broken symmetry in the dipole's energetic exchange with the active vacuum is thus well-known in particle physics, but still is not included at all in classical electrodynamics, particularly the models used to design and build EM power systems. The proven dipole broken symmetry rigorously means that part of the dipole's received virtual energy—continuously absorbed by the dipole charges from the active vacuum—is transduced into observable energy and re-emitted in real (observable) energy form. That this has been well-known in particle physics for nearly a half century, but is still missing from the classical EM model, is scientifically inexplicable and a foundations error of monumental magnitude. Once made, it is the *source dipole* that powers the circuit.

17. I. Prigogine, "Irreversibility as a symmetry-breaking process," Nature, Vol. 246, Nov. 9, 1973, p. 67-71. Quoting, p. 70: *"Entropy ...cannot in general be expressed in terms of observables such as temperature and density. This is only possible in the neighbourhood of equilibrium... It is only then that both entropy and entropy production acquire a macroscopic meaning."* Prigogine received a Nobel Prize in 1977 for his contributions to the thermodynamics of open systems, particularly with respect to open dissipative systems. What he is pointing out here is that, where equilibrium (and hence symmetry) is broken, the usual presumption of entropy and entropic production have no macroscopic meaning. For such systems, the often encountered challenge on classical equilibrium thermodynamics grounds is a non sequitur, and merely reveals the scientific ignorance of the challenger. In short, such a challenger would decry the windmill in the wind, denying that it can turn without the operator cranking it, because classical equilibrium thermodynamics forbids it. However, the windmill turns happily in the wind, without operator input at all, and in total violation of equilibrium thermodynamics because the windmill is not in equilibrium with its active environment, the active atmosphere. At the same time the windmill completely complies with the thermodynamics of open systems far from equilibrium, and energy conservation is rigorously obeyed. The windmill can "power itself and its load" since all the energy to power the windmill and power the load comes from the energy freely input by the wind.

    It is usually not realized that Maxwell's equations are purely hydrodynamic equations and fluid mechanics rigorously applies {12}. Anything a fluid system can do, a Maxwellian system is permitted to do, *a priori*. So "electrical energy winds" and "electrical windmills" are indeed permitted {1, 26, 28, 29, 30, 31, 32, 33, 34, 35, 36, 37, 38, 39, 40, 41} in the Maxwell-Heaviside model, prior to Lorentz's regauging of the equations to select only that subset of systems which can have no net "electrical energy wind" from the vacuum. Specifically, this arbitrary Lorentz symmetrical regauging—while indeed simplifying the resulting equations and making them much easier to solve—also arbitrarily discards all Maxwellian systems not in equilibrium with their active environment (the active vacuum). In

short, it chooses only those Maxwellian systems which never have any net "electrical energy wind from the vacuum". Putting it simply, it discards that entire set of Maxwellian systems which interact with energy winds in their surrounding active vacuum environment.

18. G. Nicolis and I. Prigogine, Exploring Complexity, Piper, Munich, 1987. A technical exposition of the thermodynamics of dissipative systems far from thermodynamic equilibrium.

19. Gregoire Nicolis, "Physics of far-from-equilibrium systems and self-organization," Chapter 11 in Paul Davies, Ed., The New Physics, Cambridge University Press, Cambridge, 1989, p. 316-347. A good overview of the thermodynamics of dissipative systems far from thermodynamic equilibrium.

20. Robert Bruce Lindsay and Henry Margenau, Foundations of Physics, Dover, NY, 1963, p. 217. When a system departs from equilibrium conditions, its entropy must *decrease*. Thus the energy of an open system not in equilibrium must always be greater than the energy of the same system when it is closed or in equilibrium, since the equilibrium state is the state of maximum entropy. Thus, broken
3-equilibrium is a broken 3-symmetry between the active vacuum and material systems, and it is a *negentropic* operation.

21. J. O'M Bockris, "Overpotential: a lacuna in scientific knowledge," Journal of Chemical Education, 48(6), June 1971, p. 352-358. Essentially *the overpotential is a shift in the Fermi level necessary to allow the electron in the electrode metal to have energies overlapping with vacant acceptor levels in molecules adjacent to the electrode in the solution*. It enables the transfer of electrons via quantum transfer (tunneling). Quoting p. 356: *"Unless a system exhibits an overpotential, there can be no net reaction."* [Emphasis in original]. We point out that an overpotential is an advantageous regauging (free change) of the potential energy of the local region where the overpotential appears.

22. T. E. Bearden, "On Extracting Electromagnetic Energy from the Vacuum," IC-2000 Proceedings, St. Petersburg, Russia, 2000 (in press). This paper is also published on Department of Energy website http://www.ott.doe.gov/electromagnetic/papersbooks.html

23. We define a *negative resistor* as any component or function or process that receives energy in unusable or disordered form and outputs that energy in usable, ordered form, where that is the *net* function performed. We specifically do not include "differential" negative resistors such as the tunnel diode, thyristor, and magnetron which dissipate and disorder more energy overall than they reorder in their "negative resistance" regimes.

24. T. E. Bearden, "Dark Matter or Dark Energy?", Journal of New Energy, 4(4), Spring 2000, p. 4-11. This paper is also carried on the aforementioned and listed U.S. Department of Energy website http://www.ott.doe.gov/electromagnetic/papersbooks.html.

25. T. E. Bearden, "The Unnecessary Energy Crisis: How to Solve It Quickly," Association of Distinguished American Scientists' Position Paper. This paper is also carried on Department of Energy website http://www.ott.doe.gov/electromagnetic/papersbooks.html.

26. T. E. Bearden, "Giant Negentropy from the Common Dipole," IC-2000 Proceedings, St. Petersburg, Russia, 2000 (in press). This paper is also carried on Department of Energy website http://www.ott.doe.gov/electromagnetic/papersbooks.html.

27. M. W. Evans, P. K. Anastasovski, T. E. Bearden *et al*., "Spontaneous Symmetry Breaking as the Source of the Electromagnetic Field," accepted by Foundations of Physics Letters (in press).

28. T. E. Bearden, "Extracting and Using Electromagnetic Energy from the Active Vacuum," in M.W. Evans (ed.), Contemporary Optics and Electrodynamics, Wylie, 29001, 3 Vols. (in press), comprising a Special Topic issue as vol. 114, I. Prigogine and S. A. Rice (series eds.), *Advances in Chemical Physics*, Wylie, ongoing.

29. M. W. Evans, P. K. Anastasovski, T. E. Bearden *et al*., "On Whittaker's Representation of the Classical Electromagnetic Field in Vacuo, Part II: Potentials Without Fields," submitted to Foundations of Physics, 2000 (in review).

30. M. W. Evans, P. K. Anastasovski, T. E. Bearden *et al*., "On Whittaker's F and G Fluxes, Part III: The Existence of Physical Longitudinal and Timelike Photons," Journal of New Energy, 4(3), Special Issue, Winter 1999, p. 68-71.

31. M. W. Evans, P. K. Anastasovski, T. E. Bearden *et al*., "Classical Electrodynamics Without the Lorentz Condition: Extracting Energy from the Vacuum," Physica Scripta, 61(5), may 2000, p. 513-517.

32. M. W. Evans, P. K. Anastasovski, T. E. Bearden *et al*., "Vacuum Energy flow and Poynting Theorem from Topology and Gauge Theory," submitted to Physica Scripta, 2000 (in review).

33. M. W. Evans, P. K. Anastasovski, T. E. Bearden *et al*., "The Effect of Vacuum Energy on the Atomic Spectra," Foundations of Physics Letters, 13(3), June 2000, p. 289-296.

34. M. W. Evans, P. K. Anastasovski, T. E. Bearden *et al*., "Operator Derivation of the Gauge Invariant Proca and Lehnert Equations: Elimination of the Lorenz Condition," Foundations of Physics, 39(7), 2000, p. 1123 (in press).

35. M. W. Evans, P. K. Anastasovski, T. E. Bearden *et al*., "Energy Inherent in the Pure Gauge Vacuum," submitted to Physica Scripta, 2000 (in review).

36. M. W. Evans, P. K. Anastasovski, T. E. Bearden *et al*., "Electromagnetic Energy from Curved Space-Time," submitted to Optik, 2000 (in review).

37. M. W. Evans, P. K. Anastasovski, T. E. Bearden *et al*., "Energy from the Vacuum," submitted to Physics Scripta, 2000 (in review).

38. M. W. Evans, P. K. Anastasovski, T. E. Bearden *et al*., "The Aharonov-Bohm Effect as the Basis of Electromagnetic Energy Inherent in the Vacuum," submitted to Optik, 2000 (in review).

39. M. W. Evans, P. K. Anastasovski, T. E. Bearden *et al*., "Longitudinal Modes in Vacuo of the Electromagnetic Field in Riemannian Spacetime," submitted to Optik, 2000 (in review).

40. M. W. Evans, P. K. Anastasovski, T. E. Bearden *et al*., "O(3) Electrodynamics from the Irreducible Representations of the Einstein Group," submitted to Optik, 2000 (in review).

41. "O(3) Electrodynamics," a review of 250 pages in M. W. Evans (Ed.), Contemporary Optics and Electrodynamics, a special topical issue of I. Prigogine and S. A. Rice (series Eds.), *Advances in Chemical Physics*, Wiley, New York, 2001, vol. 114(2) (in press), preprint of sections available on U.S. DOE website http://www.ott.doe.gov/electromagnetic/.

42. M. W. Evans, precise statement on the importance and implications of O(3) electrodynamics as a special subset of Sachs' unified field theory, 2000. Quoting: *"With respect to O(3): In 1992 it was shown (Physica B, 192, 227, 237 (1992)) that there exists a longitudinal component of free space electromagnetism, a component which is phaseless and propagates with the transverse components. Later this was developed into a Yang-Mills theory of electromagnetism with O(3) Lagrangian symmetry. This theory is homomorphic with Barrett's SU(2) electrodynamics and has far reaching implications in field theory in general. Recently it has been recognized to be a sub theory of the Sachs theory of electromagnetism, based on the irreducible representations of the Einstein group of general relativity. The Sachs theory produces a non-Abelian structure for the electromagnetic field tensor. The O(3) electromagnetism also has implications for the potential ability of extracting energy from the vacuum, and its topological implications are currently being investigated by Ranada. The O(3) electromagnetism has been tested extensively against empirical data, and succeeds in describing interferometric effects and physical optical effects where the conventional Maxwell Heaviside theory fails. Implicit in both the O(3) and Sachs theories of electromagnetism is the ability to extract electromagnetic energy from curved space-time."*

43. M. W. Evans and T. E. Bearden, "The Most General Form of the Vector Potential in Electrodynamics," submitted to Optik, 2000 (in review).

44. Fragments of Science: Festschrift for Mendel Sachs, Michael Ram (Ed.), World Scientific, Singapore, 1999.

45. Mendel Sachs, General Relativity and Matter, Reidel, 1982. Provides a great generalization of general relativity and electrodynamics reaching from the quarks and gluons to the entire universe. O(3) electrodynamics forms a very important subset of Sachs' theory, which means that general relativistic effects such as curved spacetime and EM energy from the curved spacetime vacuum can be engineered electromagnetically. The present invention does engineer curved spacetime to obtain excess energy from the active vacuum.

46. Mendel Sachs, "Relativistic Implications of Electromagnetic Field Theory," in T. W. Barrett and D. M. Grimes, eds., Advanced Electromagnetism, World Scientific, 1995, p. 551.

47. A. A. Logunov and Yu. M. Loskutov, "Nonuniqueness of the predictions of the general theory of relativity," Sov. J. Part. Nucl., 18(3), May-June 1987, p. 179-187.

48. D. Hilbert, Gottingen Nachrichten, Vol. 4, 1917, p. 21. Quoting: *"I assert... that for the general theory of relativity, i.e., in the case of general invariance of the Hamiltonian function, energy equations... corresponding to the energy equations in orthogonally invariant theories do not exist at all. I could even take this circumstance as the characteristic feature*

of the general theory of relativity." As Logunov and Loskutov pointed out, unfortunately this remark of Hilbert was evidently not understood by his contemporaries, since neither Einstein himself nor other physicists recognized the fact that in general relativity conservation laws for energy, momentum, and angular momentum are in principle impossible.

49. Henning F. Harmuth, "Extensions of Ohm's Law to Electric and Magnetic Dipole Currents," in Advanced Electromagnetism: Foundations, Theory and Applications, Eds. Terence W. Barrett and Dale M. Grimes, World Scientific, Singapore, 1995, p. 506-540.

50. J. R. Reitz, F. J. Milford, and R. W. Christy, "Foundations of Electromagnetic Theory, 3rd ed., Addison-Wesley, Reading, MA, 1980. For one thing, this book gives a thorough discussion of dipole currents, which is not covered well in most texts.

51. H. A. Lorentz, Vorlesungen über Theoretische Physik an der Universität Leiden, Vol. V, Die Maxwellsche Theorie (1900-1902), Akademische Verlagsgesellschaft M.B.H., Leipzig, 1931, "Die Energie im elektromagnetischen Feld," p. 179-186. Figure 25 on p. 185 shows the Lorentz concept of integrating the Poynting vector around a closed cylindrical surface surrounding a volumetric element. This is the procedure which arbitrarily selects only a small component of the energy flow associated with a circuit—specifically, the small Poynting component striking the surface charges and being diverged into the circuit to power it—and then treats that tiny component as the "entire" Poynting energy flow. Thereby Lorentz arbitrarily discarded all the vast Heaviside energy transport component which does not strike the circuit at all, and is just wasted.

52. Raymond C. Gelinas, "Apparatus and Method for Demodulation of a Modulated Curl-Free Magnetic Vector Potential Field," U.S. Patent No. 4,429,280, Jan. 31, 1984; — "Apparatus and method for Modulation of a Curl-Free Magnetic Vector Potential Field." U.S. Patent No. 4,429,288, Jan. 31, 1984; — "Apparatus and Method for Transfer of Information by Means of a Curl-Free Magnetic Vector Potential Field." U.S. Patent No. 4,432,098, Feb. 14, 1984; — "Apparatus and Method for Determination of a Receiving Device Relative to a Transmitting Device Utilizing a Curl-Free Magnetic Vector Potential Field." U.S. Patent No. 4,447,779, May 8. 1984; — "Apparatus and Method for Distance Determination Between a Receiving Device and a Transmitting Device Utilizing a Curl-Free Magnetic Vector Potential Field," U.S. Patent No. 4,605,897, 12 Aug 1986; — "Josephson Junction Interferometer Device for Detection of Curl-Free Magnetic Vector Potential Fields," U.S. Patent No. 4,491,795, 1 Jan 1985. All these Gelinas patents are assigned to Honeywell. All deal with communications, have no application to electrical power systems, do not use additional EM energy extracted from a permanent magnet and replenished by the vacuum, do not use curved local spacetime, do not use the giant negentropy process, do not function as open systems far from equilibrium in their vacuum exchange, symmetrically regauge themselves so that their excitation discharge is symmetrical and not asymmetrical, and produce only COP<1.0.

53. John D. Kraus, Electromagnetics, Fourth Edn., McGraw-Hill, New York, 1992. Figure 12-60, a and b, p. 578 shows a good drawing of the huge Poynting energy flow filling all space around the conductors, with almost all of it not intercepted, not diverged into the circuit, but just "wasted."

54. Daniel C. Cole and Harold E. Puthoff, “Extracting Energy and Heat from the Vacuum,” Physical Review E, 48(2), Aug. 1993, p. 1562-1565. Proves rigorously that there are no thermodynamics prohibitions against extracting and using energy from the active vacuum.

55. Ludvig Valentin Lorenz, "On the identity of the vibrations of light with electrical currents," Phil. Mag., Vol. 34, 1867, p. 287-301. In this paper Lorenz gave essentially what today is called the Lorentz symmetrical regauging.

FIGURES

The following figures (1-23) illustrate the major principles, process and subprocesses, functions, and test results of the process and its prototype embodiments.

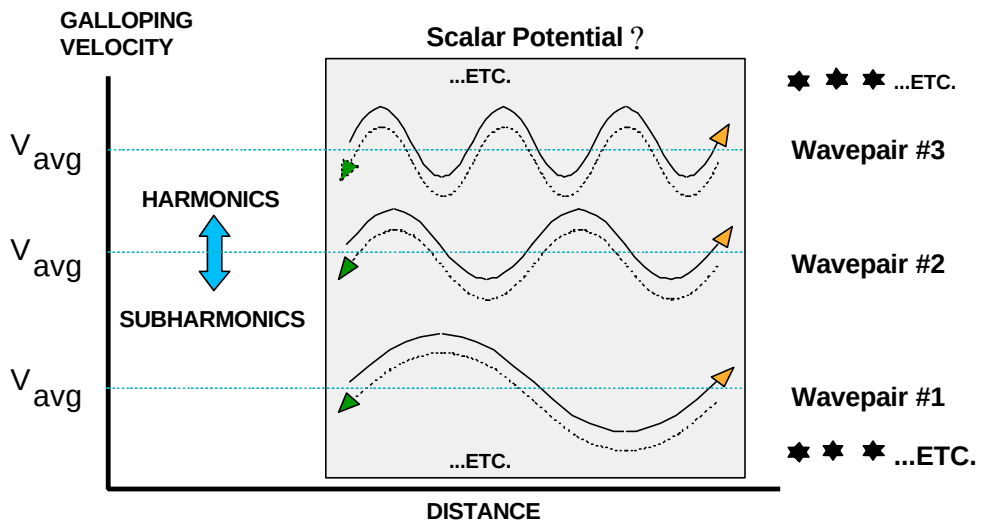

The Structure Is:

- **A harmonic set of longitudinal wavepairs.**
- **In each wavepair the two waves superpose spatially, but travel in opposite directions. The two are phase conjugates and time-reversed replicas of each other.**
- **The convergent wave set is in the imaginary plane, and hence is not observable.**
- **The charge's spin is 720 degrees, 320 in the real plane and 320 in the imaginary plane.**
- **Hence the charge receives the complex convergent EM energy, transduces it into real EM energy, and emits enormous energy at the speed of light in all directions.**
- **This produces the fields and potentials from the "source charge."**

Figure 1. The scalar potential is a harmonic set of phase conjugate longitudinal EM waves.

Note: Decompose the potential between the end charges of the dipole

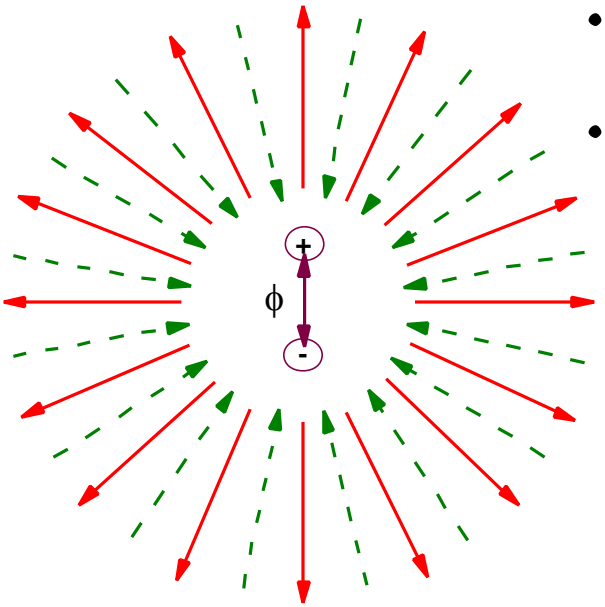

- Receives enormous EM energy in complex plane (similar to reactive power)
- Transduces it into real EM energy and emits it in all directions at the speed of light
- The emitted EM energy forms the fields and potentials and their energy, across space, from this "source dipole"

* Basis established by E.T. Whittaker, "On the Partial Differential Equations of Mathematical Physics," Math. Ann. 57, 333 (1903). Ignored since then.

LEGEND

Outgoing real EM energy

Incoming complex EM energy

Figure 2. The dipole is a true negative resistor.

Broken 3-space symmetry initiates jump to 4-space symmetry between complex plane and real plane. Energy flow is now conserved in 4-space, but not in 3-space. This is the true negative resistor effect, and a negentropic reordering of the vacuum.

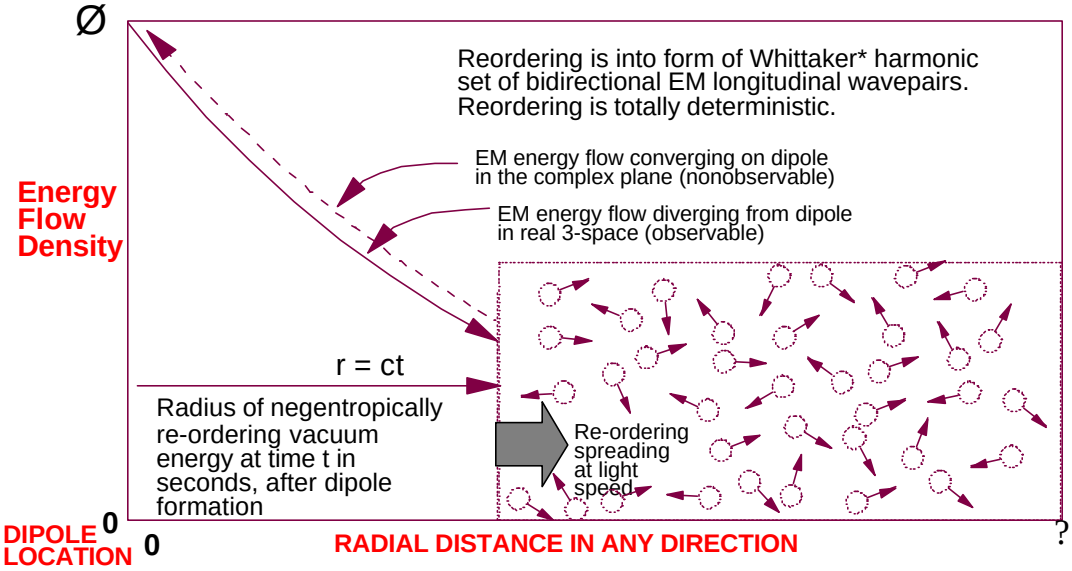

Figure 3. The dipole's broken 3-symmetry initiates a spreading giant negentropic reordering of a fraction of the vacuum's energy.

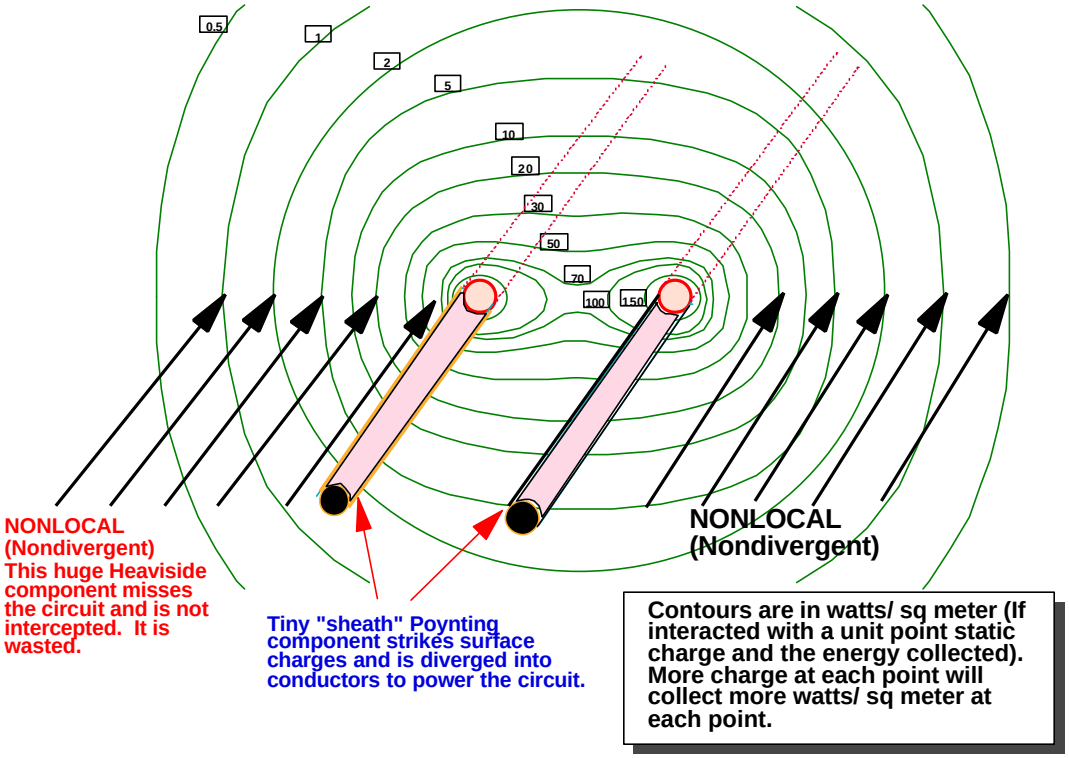

Figure 4. Energy flow contours surrounding a transmission line.

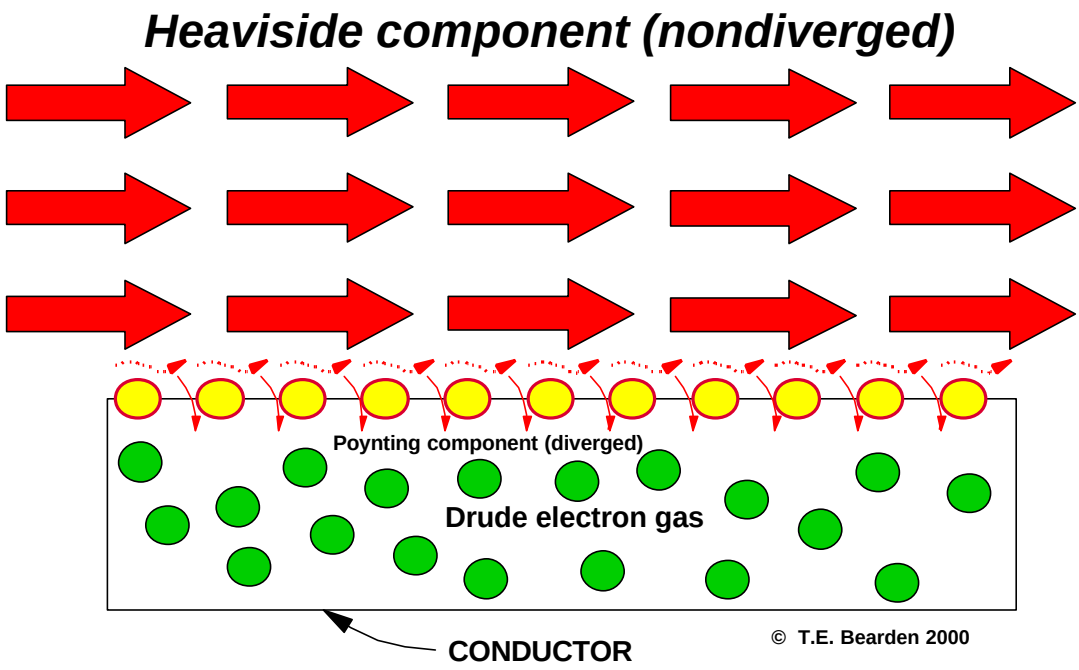

Figure 5. Heaviside and Poynting energy flow components. The Heaviside component is often 10 trillion times the Poynting component, but is simply wasted in ordinary single-pass energy flow circuits.

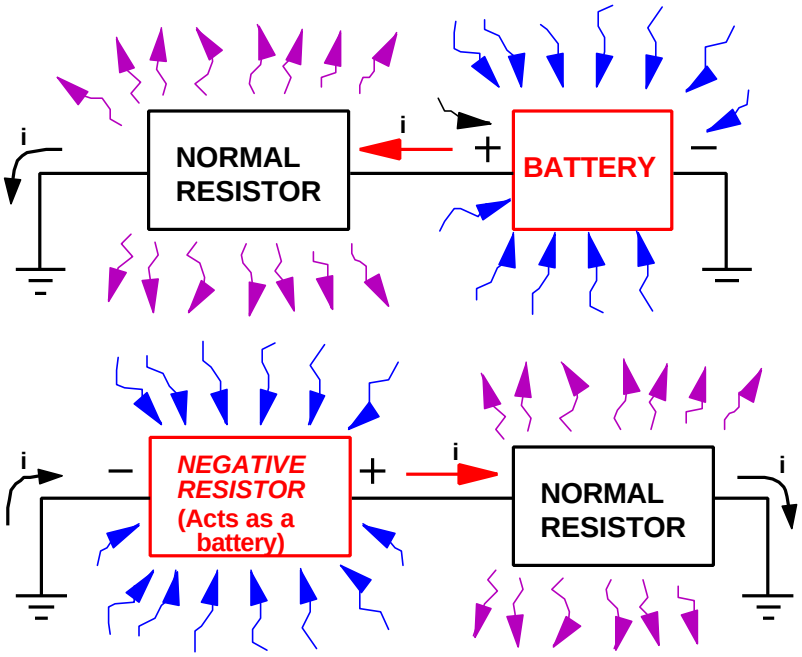

Figure 6. Negative resistance process vs. positive resistance process. A negative resistor receives energy in unusable form, transduces it, and outputs it in usable form. A positive resistor receives energy in usable form, and scatters it into unusable form.

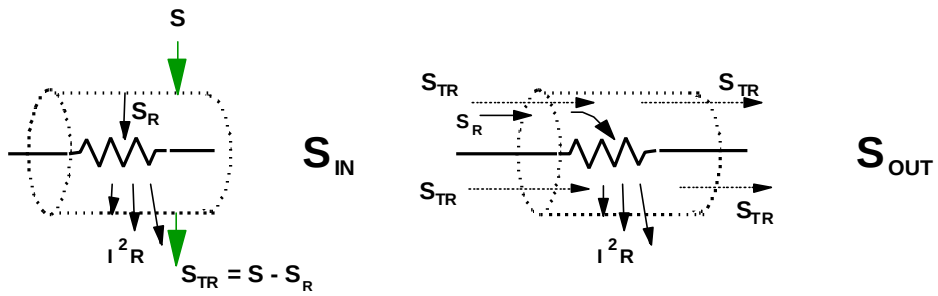

1a. Lorentz surface integration. **1b. Actual S in and S out.**

See Panofsky & Phillips, Classical Electricity and Magnetism, 2nd. edn., Addison Wesley, 1962, p. 178-181.

Note: If the S-vector is integrated over the closed surface, then all nondiverged energy flow is zeroed, leaving only the very small component of the input S-flow that is powering the joule heating of the resistor. In short, only the small component of the S-flow that is equal in magnitude to the Poynting vector remains. This measures only the tiny portion of the S-flow that is intercepted and diverged into the conductors by their surface charges, powering the electrons and then dissipated out of the resistor as joule heating.

The Lorentz procedure arbitrarily discards the enormous Heaviside component that misses the circuit entirely and is wasted. This results in a non sequitur of first magnitude in energy flow theory .

Figure 7. Lorentz's integration trick to discard the enormous Heaviside non-diverged energy flow component.

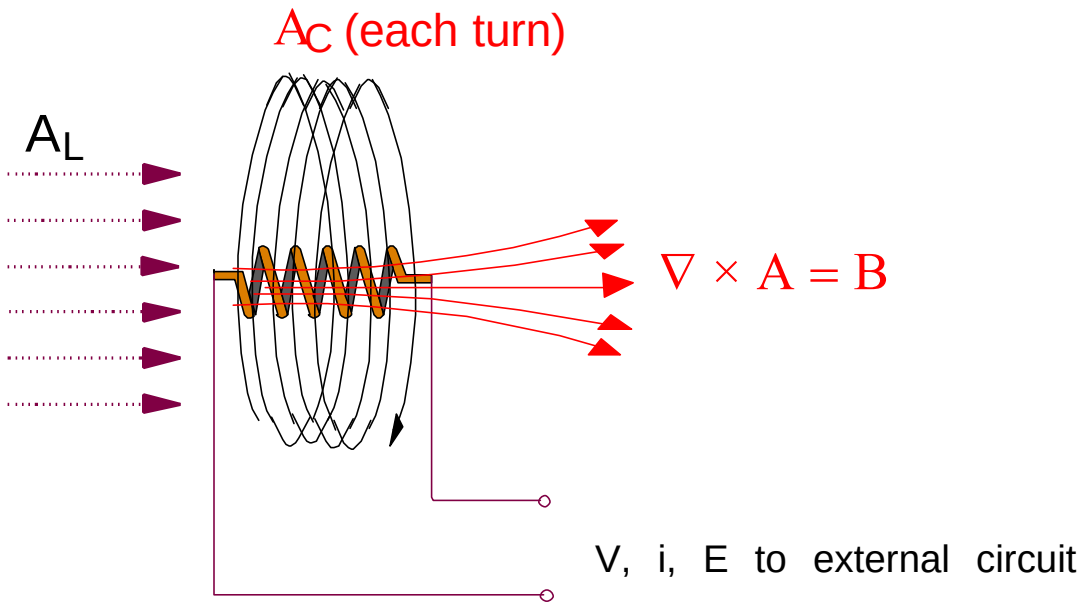

Figure 8. The A_L and A_C vector potentials, B-field, and $\nabla\times$ operator. The $\nabla\times$ operator operates on the A_C potential energy current, to produce normal B-field.

When a small current through the coil is suddenly broken, momentarily a surge of increased current and voltage ensues.

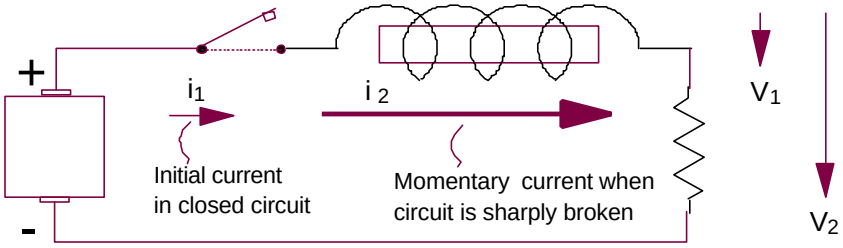

1a. Lenz's reaction is a suddenly increased effect which momentarily opposes a sudden change.

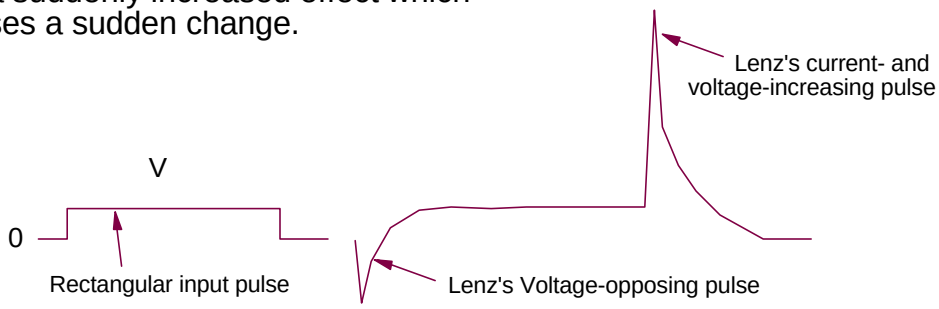

1b. Two successive Lenz's reactions to two interruptions by leading and trailing edges of a rectangular pulse.

Figure 9. Lenz's law reaction momentarily opposes a sudden change and increases the ongoing action which is to be changed.

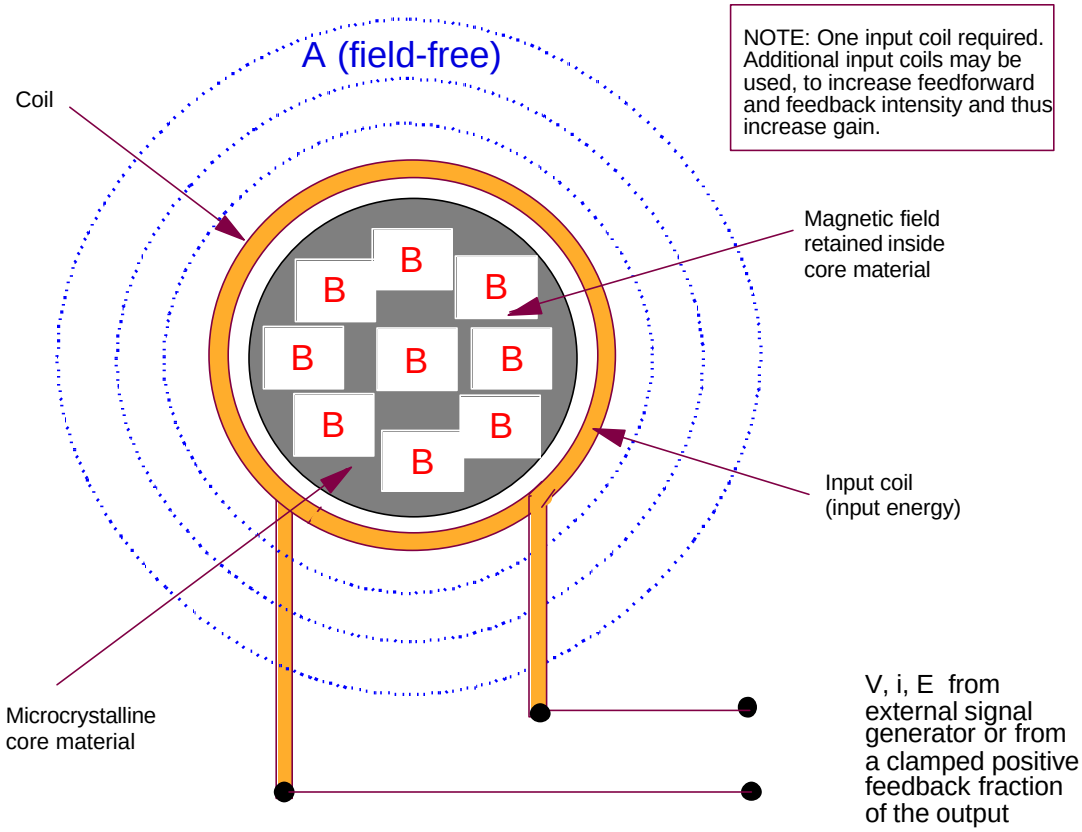

Figure 10. Input coil for either open-loop or closed-loop operation.

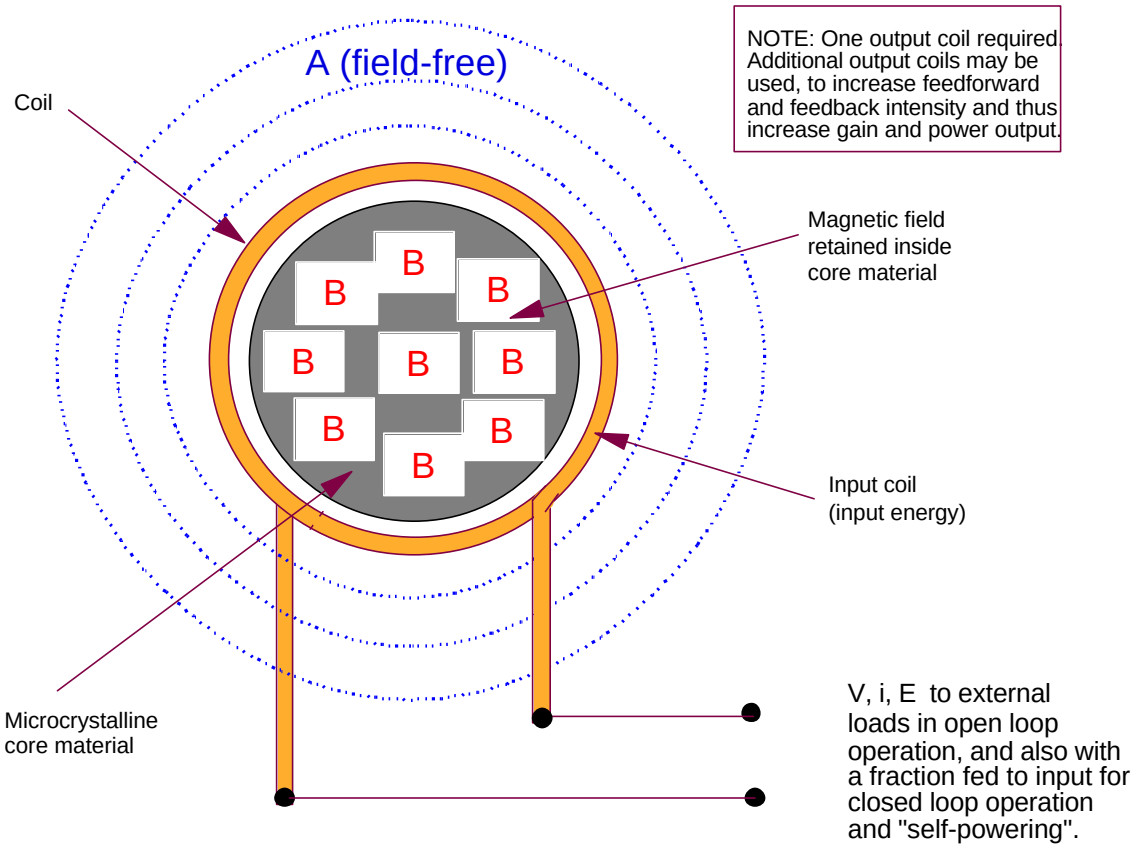

Figure 11. Output coil for either open-loop or closed-loop operation. Multiple output coils may be used in a variety of configurations.

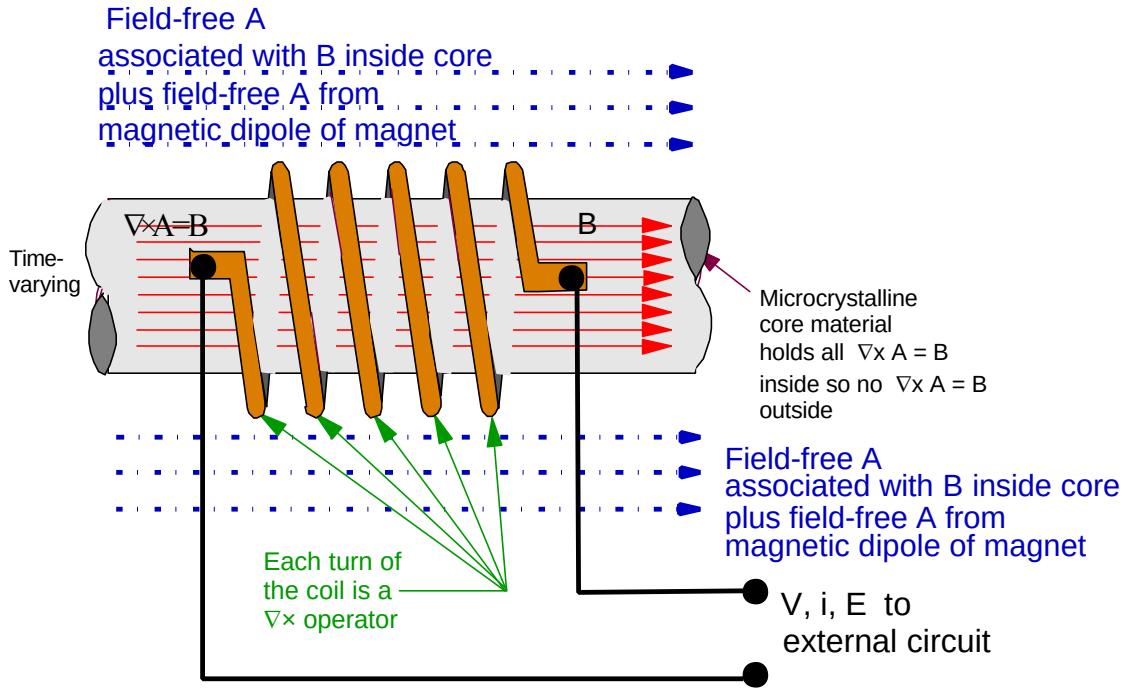

Figure 12. Basic scheme showing dual energy inputs and interactions with the coil. The output of each of these two interactions also "feeds forward" to the other interaction as an additional input to it, resulting in interative "pingpong" of additional energy collection in the circuit, providing energy gain.

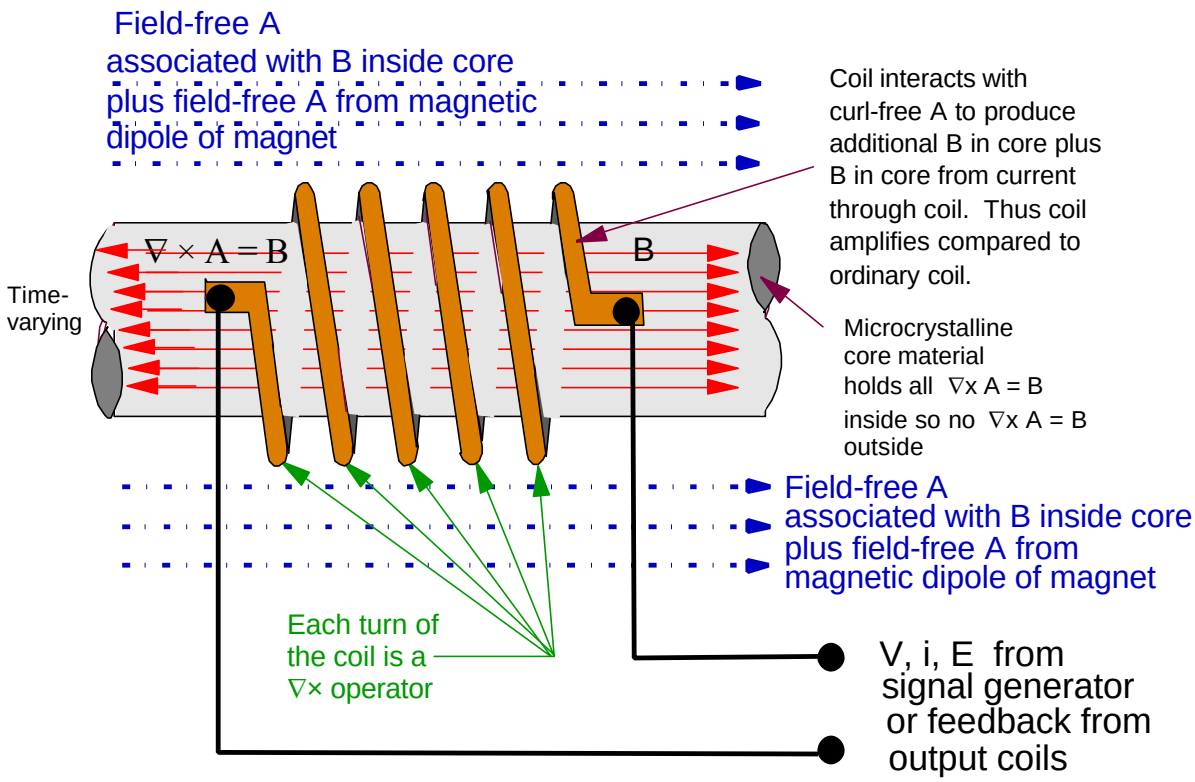

Figure 13. Dual energy inputs to the coil result in amplifying coil-core interaction. Not shown are the other feed loops providing extra curl-free A input from the surrounding space and extra B input in the core.

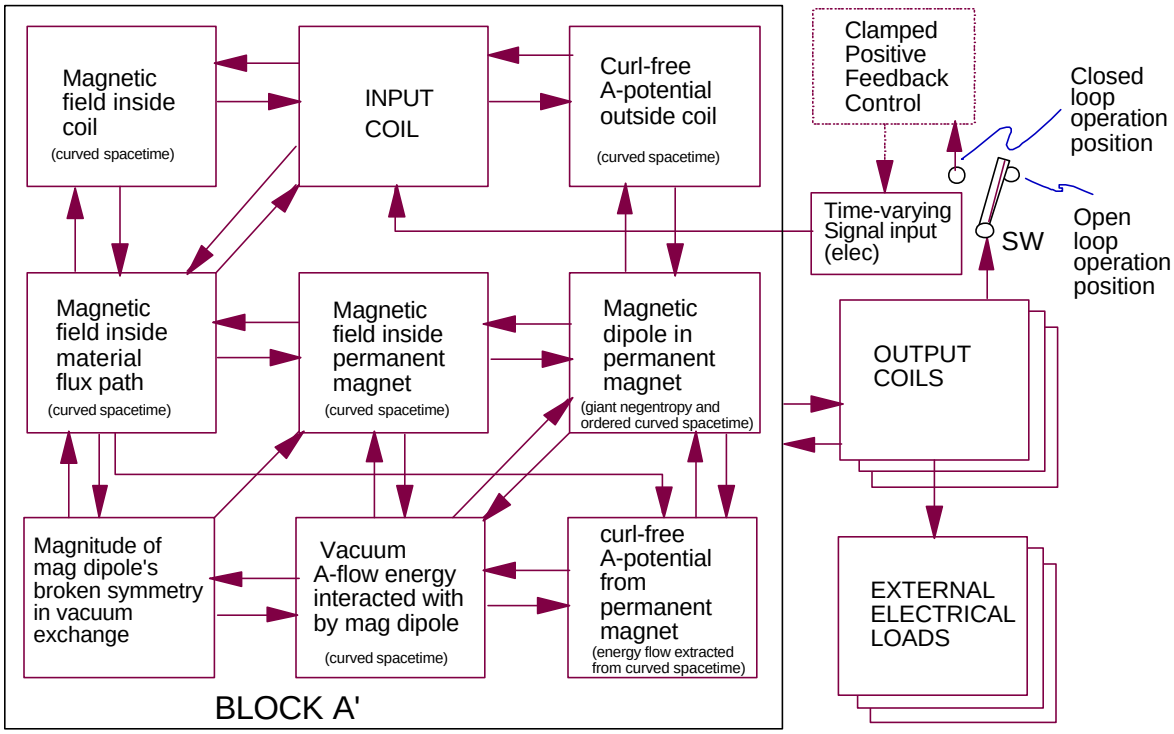

Figure 14. Energy gain process using feedforward and feedback subprocesses providing individual energy gain operations.

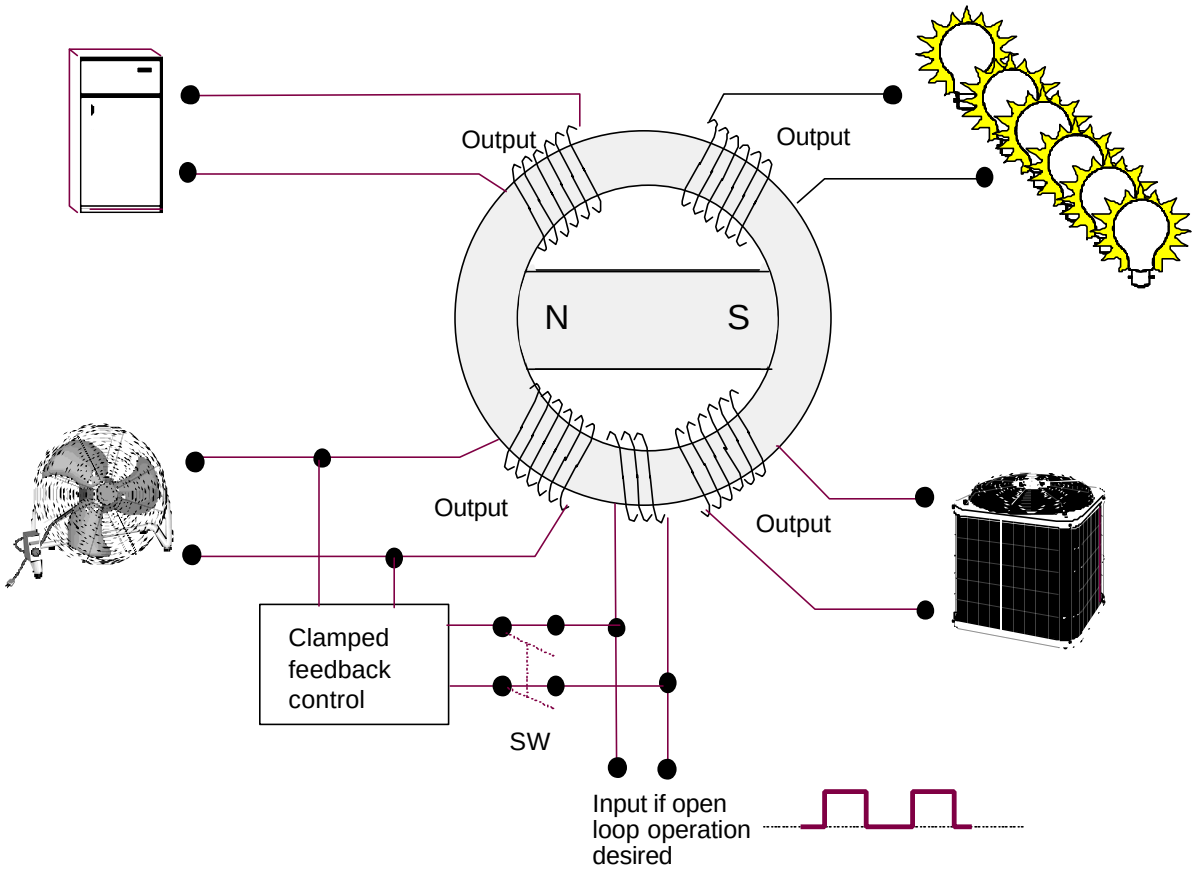

Figure 15. Typical embodiment system and application.

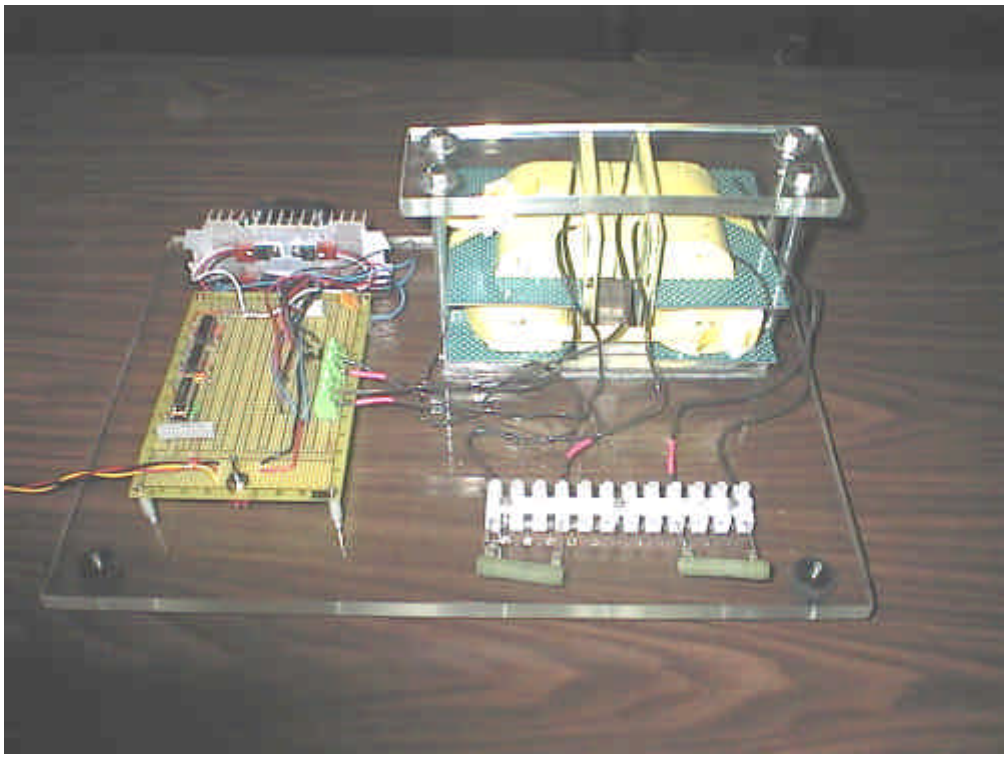

Figure 16. Motionless Electromagnetic Generator (laboratory experiment).

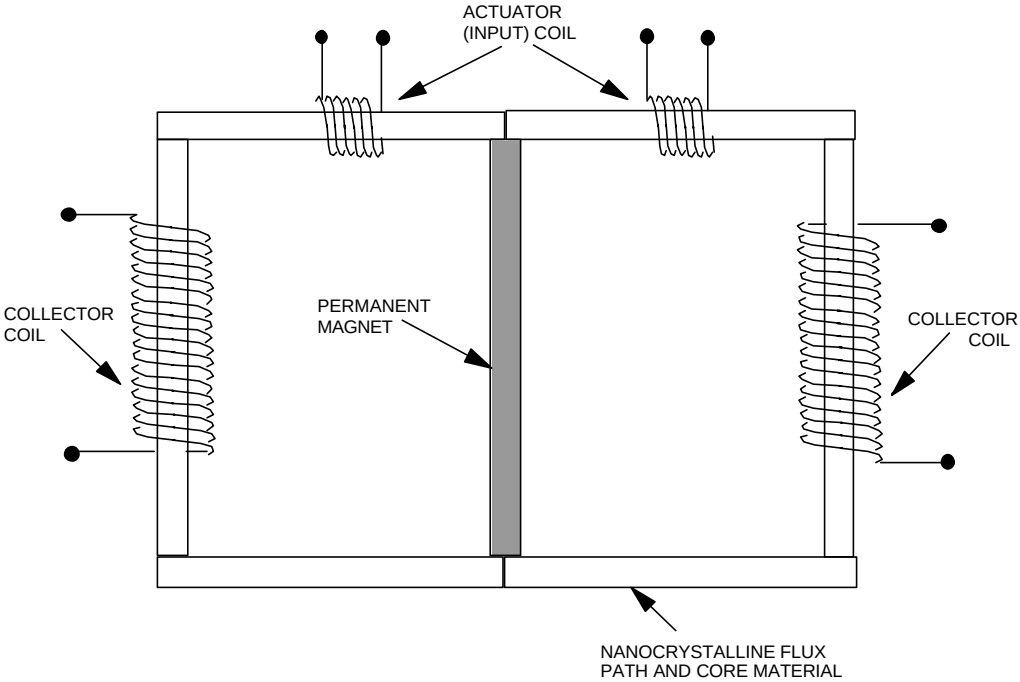

Figure 17. Diagram of laboratory test prototype.

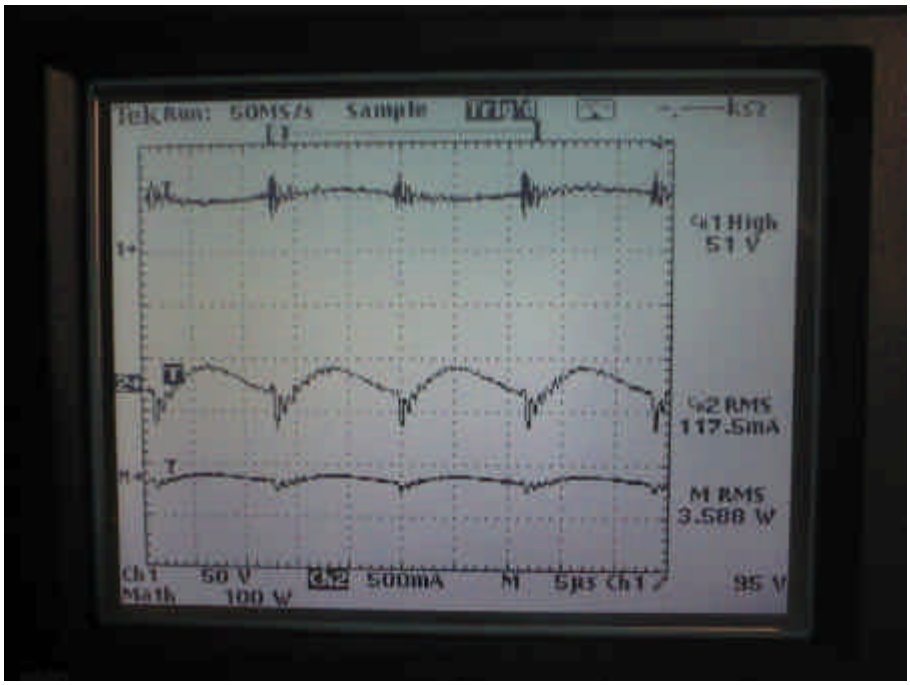

Figure 18. MEG Input measurements.

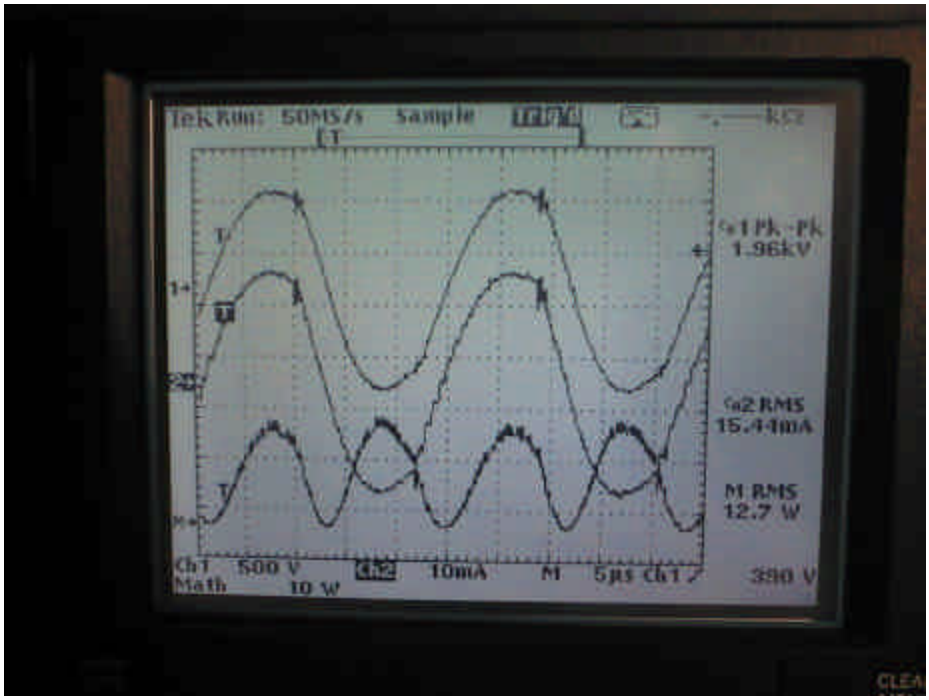

Figure 19. MEG output measurements.

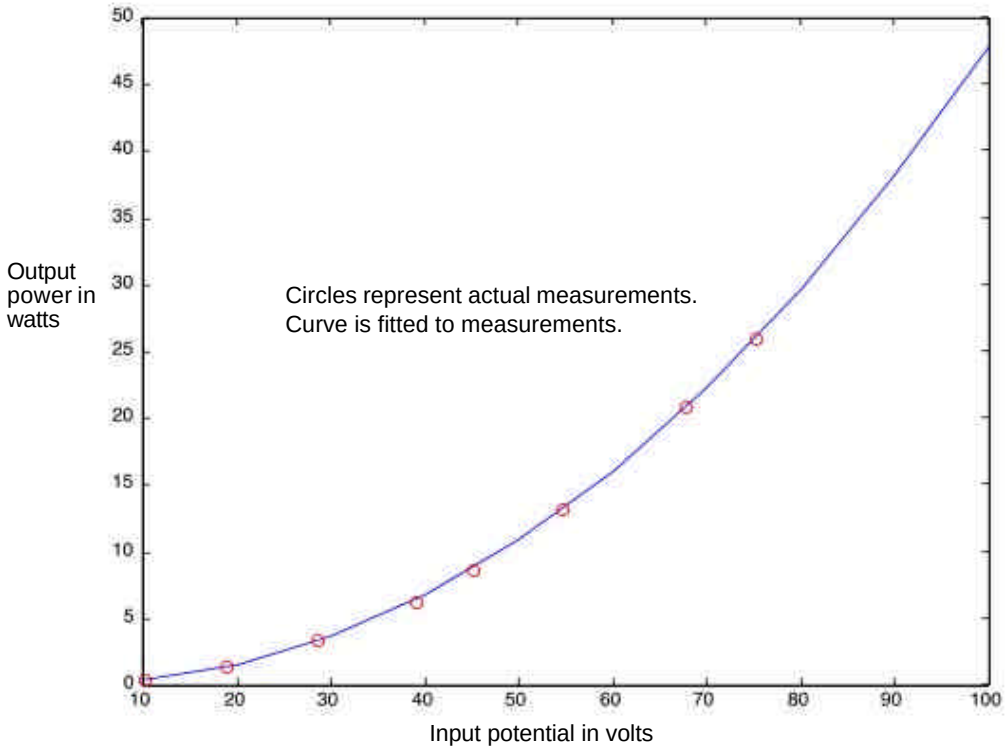

Figure 20. MEG prototype potentialization sensitivity.

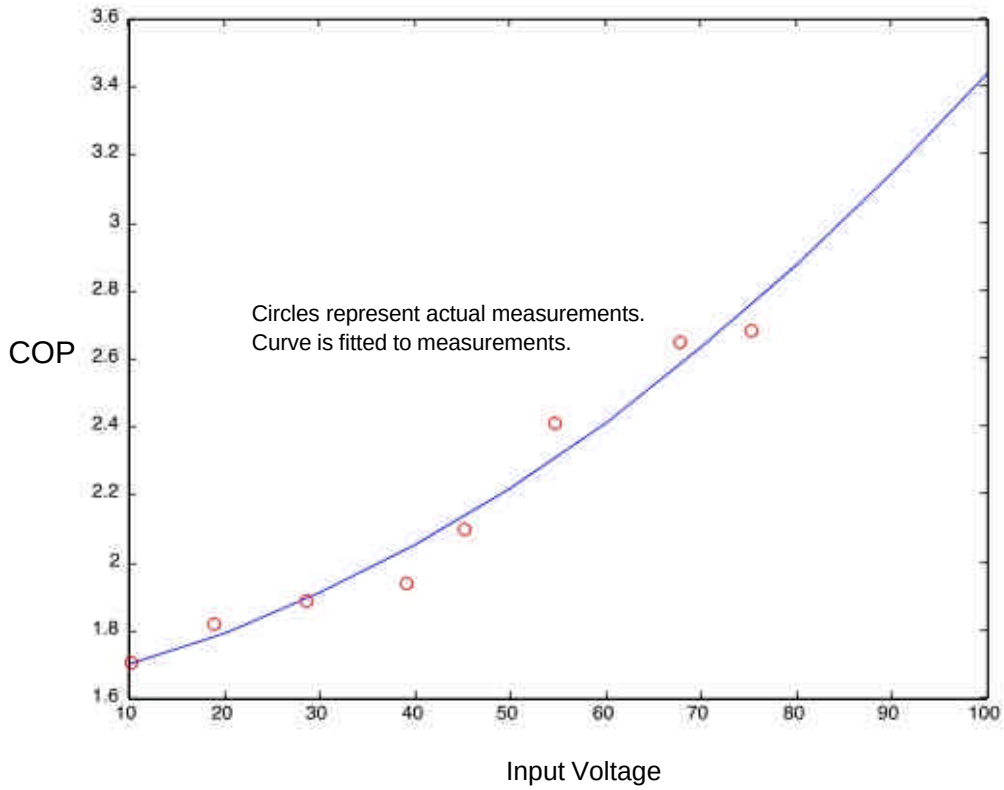

Figure 21. COP (power out versus power in), as a function of sensitivity (open loop prototype).

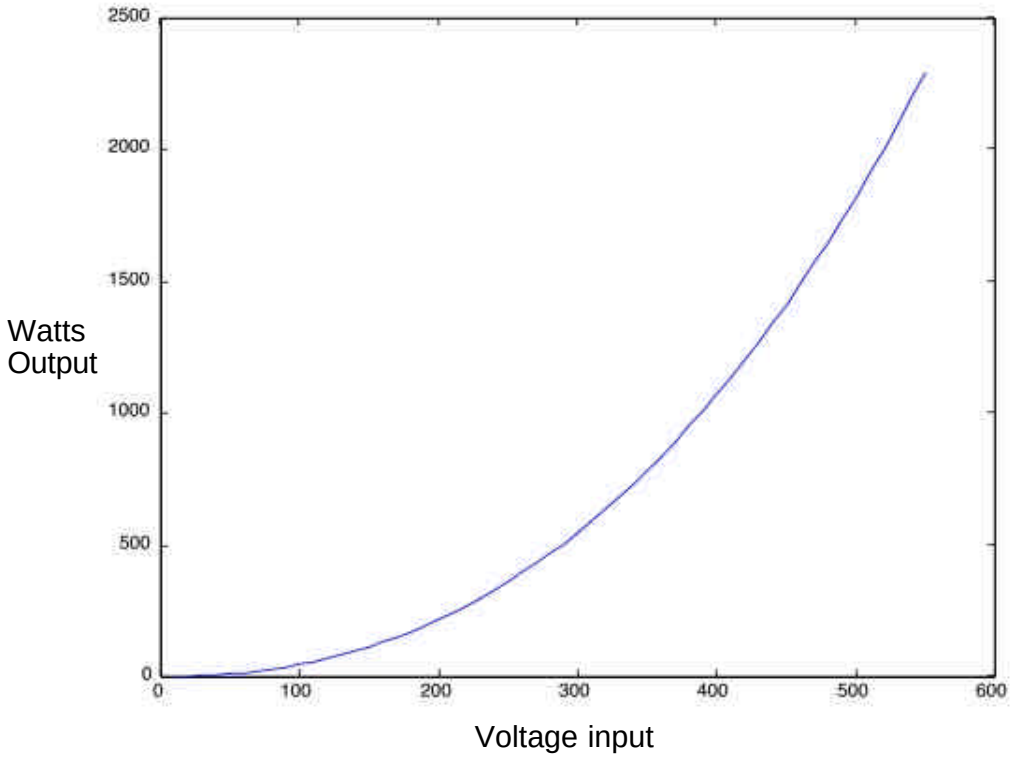

Figure 22. MEG projected sensitivity (test buildup in progress).

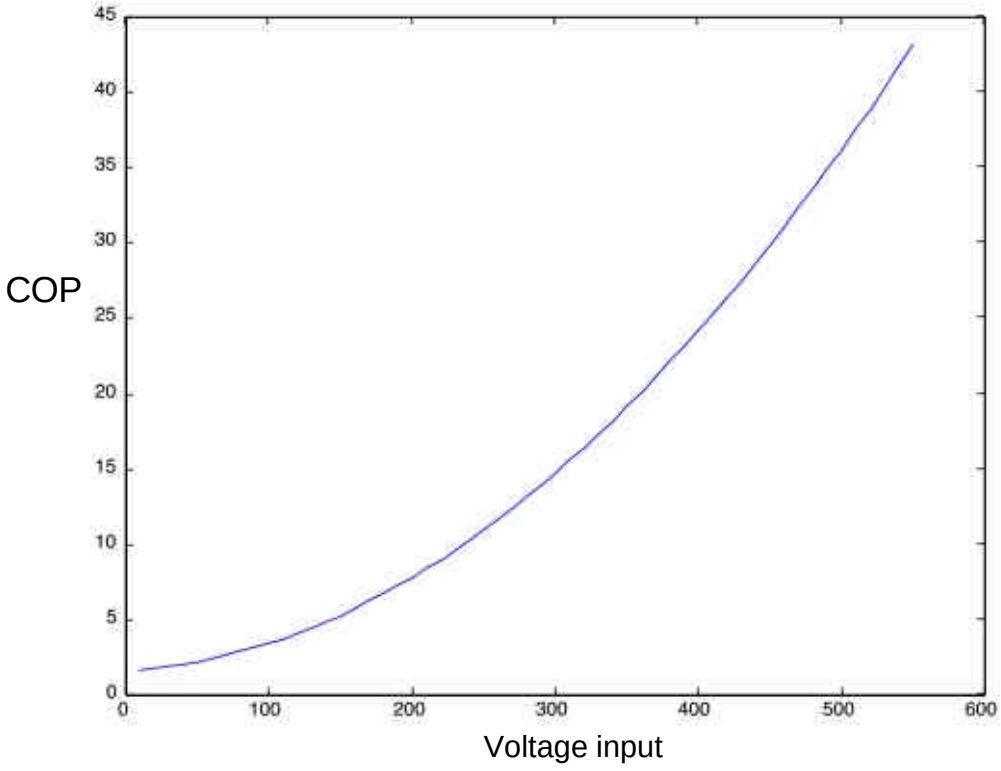

Figure 23. MEG projected COP versus input voltage (test buildup in process).

Tom Bearden

The Physics of Psionics

Radionics Action At A Distance

IN ANCIENT DEVELOPMENT SYTEMS IT WAS WELL KNOWN THAT THE MIND ITSELF WAS A FUNCTIONAL DEVICE, AND THAT THOUGHTS AND THOUGHTFORMS COULD FUNCTION AS DEVICES, INFLUENCING AND AFFECTING OTHER MINDS AND PHYSICAL MATERIAL. IT WAS ALSO UNDERSTOOD THAT THE THOUGHTFORMS HAD TO BE CRYSTAL CLEAR AND VERY STABLE. THIS

CRYSTAL CLEAR AND VERY STABLE. THIS DEMANDED A GREAT DEAL OF PRACTICE IN CONCENTRATION. EVENTUALLY IT WAS FOUND THAT THE STABILITY OF A PHYSICAL FORM OR DEVICE COULD MATERIALLY ASSIST THE MIND IN MAINTAINING STABILITY. IN ANCIENT TIMES MANY SUCH DEVICES WERE USED: THE DOWSING ROD, THE CRYSTAL BALL

FOUND THAT THE STABILITY OF A PHYSICAL FORM OR DEVICE COULD MATERIALLY ASSIST THE MIND IN MAINTAINING STABILITY. IN ANCIENT TIMES MANY SUCH DEVICES WERE USED: THE DOWSING ROD, THE CRYSTAL BALL
THE STRING-AND-WEIGHT PSYCHIC PENDULUM, ETC.

IN THE 1800'S IT WAS DISCOVERED THAT ELECTRICAL DEVICES COULD BE USED AS TUNING ASSISTANTS. THIS LED TO THE DEVELOPMENT OF RADIONICS, THE NAME BEING INSPIRED BY THE NEW ELECTRICTY AND MAGNETISM DISCOVERIES, AND PARTICULARLY BY THE DISCOVERY OF ELECTROMAGNETIC RADIATION.

HIERONYMUS DETECTOR

U.S. PATENT NUMBER

2,482,773

AWARDED 1949

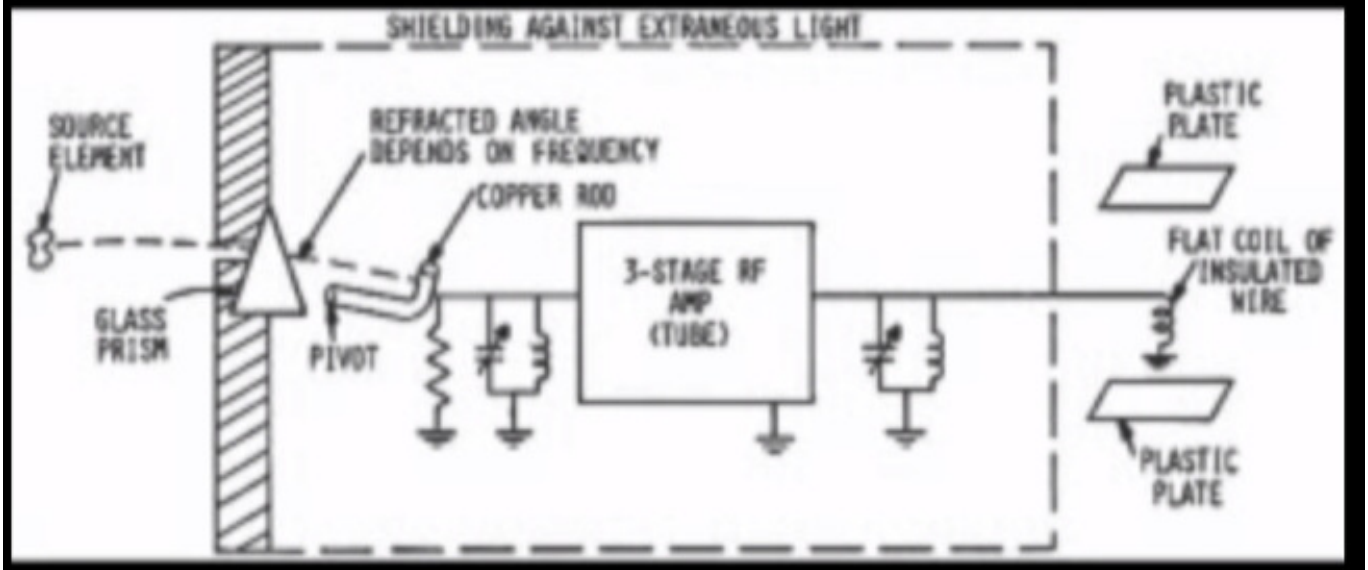

* VIOLENT VACUUM

  - VIRTUAL PARTICLES
  - CREATION
  - ANNIHILATION
  - GHOST FORMS

* PHYSICAL MATTER

  - FORM IN EQUILIBRIUM IN VPF*
  - VIOLENT VPF EXCHANGE WITH V
  - NEGATIVE CHARGE: VPF DIVERG
  - POSITIVE CHARGE: VPF CONVER

* PHYSICAL MATTER

- FORM IN EQUILIBRIUM IN VPF*
- VIOLENT VPF EXCHANGE WITH VACUUM
- NEGATIVE CHARGE: VPF DIVERGENT
- POSITIVE CHARGE: VPF CONVERGENT

* TIME FLOW RATE

- POSITIVE = DIVERGENT VPF
- NEGATIVE = CONVERGENT VPF

THE SUBTLE NATURE OF THE EXTERNAL OBSERVER

* OBSERVES BY LIGHT INTERACTION

- ELECTROMAGNETICALLY
- THUS OBSERVES NOTHING SUPERLIMINAL
  > LIGHT CAN'T CATCH IT
  > SO HE CAN'T OBSERVE IT

* ELECTRON SHELLS SHIELD MOST MATTER

- NEGATIVE CHARGE
- VPF (PHOTONS) DIVERGENT
- OBSERVES POSITIVE TIME FLOW
- ENTROPY UNIVERSALLY OBSERVED

* POSITIVE EM ENERGY INFERRED FROM INTERACTION WITH (NEGATIVE) CHARGES

* *ENERGY OUTSIDE EM DOMAIN, OR EXTRACTED FROM IT, WILL BE NEGATIVE ENERGY A PRIORI*

ENERGY VERSUS WORK

***ENERGY IS**

- THE CAPACITY TO DO WORK
- COHERENCE (ORDERING) IN THE VACUUM FLUX
- GRAVITATIONAL
- CONCEPT DIRECTLY IMPLIES CHAOS

*** WORK IS**

- THE EXPENDITURE OF ENERGY
- DISSIPATION (SCATTERING) OF COHERENCE
- ELECTROMAGNETIC

**** GRAVITATIONAL ENERGY IS***

- *STABILIZED (NONTRANSLATING) EM ENERGY*
- *POTENTIAL ENERGY*
- *MOSTLY NUCLEAR ENERGY*
- *HIDDEN INFOLDED EM ENERGY*

GRAVITATIONAL ENERGY

*** OUTSIDE ENERGY DOMAIN, THUS IT IS**

- *NEGATIVE ENERGY*
- *TIME REVERSED*
- *NEGENTROPIC/CONVERGENT*
- *ASSOCIATED WITH CHARGE REVERSAL*
- *HIDDEN FROM 'LIGHT OBSERVATION'*
- *INFOLDED (BOHM'S TERM)*

*** BUT ALL 'ENERGY' IS JUST COHERENCE IN THE VIOLENT VPF OF VACUUM**

- *COHERENCE IS GRAVITATIONAL*
- *THUS ENERGY IS GRAVITATIONAL A PRIORI*
- *WORK IS THE EXPENDITURE OF ENERGY, AND THUS OF COHERENCE*

DETECTION

* **ALL PRESENT DETECTORS**

  - DETECT ONLY HALF OF WHAT'S THERE
  - DETECT THE SCATTERING (EM) ENERGY
  - DISCARD THE INFOLDED, HIDDEN ENERGY

* **EXAMPLE: RECOIL OF A VOLTMETER IS IGNORED**

  - RECOIL AND MEASURED ENERGIES ARE EQUAL
  - RECOIL ENERGY IS TIME-REVERSED
  - NEWTON'S THIRD LAW IGNORED

* **ENERGY THERE BEFORE MEASUREMENT IS GRAVITATIONAL (SINCE ALL ENERGY IS SO)**

  - TIME-FORWARD (EXTERNAL) (EM) PART
  - TIME-REVERSED (INTERNAL) PART

PRINCIPLES OF SUBTLE ENERGY DETECTION

* **USE TWO STAGES IN THE DETECTOR**

  + **FIRST STAGE**
    - OUTFOLDS HIDDEN INTERNAL EM ENERGY
    - TURNS VIRTUAL ENERGY INTO OBSERVABLE
    - BREAKS SYMMETRY
    - CURVES LOCAL SPACETIME
    - STRESSES TIME FLOW RATE
    - *EX: WHITTAKER SCALAR INTERFEROMETER*

  + **SECOND STAGE IS NORMAL EM DETECTOR**
    - DETECTS THE OUTFOLDED EM
    - ANY APPROPRIATE EM DETECTOR
    - SHIELD BOTH STAGES AGAINST NORMAL EM

* ***DETECT ENTITY WHICH CHANGES WITH A CHANGE IN THE RATE OF FLOW OF TIME***

SOME INVENTORS OF SUBTLE ENERGY DETECTORS

* NIKOLA TESLA
* FRANK GOLDEN
* JOHN SCHNURER
* VALERIE HUNT
* FLOYD SWEET
* DR. ALBERT ABRAMS
* WILHELM REICH
* T.G. HIERONYMUS
* JOHN BEDINI

BECK'S SCALAR WAVE DETECTER

* ESSENTIALLY AN INTEGRATING LONG DELAY LINE
  - 200 MILES OF FINE WIRE
  - SPECIAL CORE
  - OTHER FEATURES (UNKNOWN)
* PROVEN PERFORMANCE
  - AGAINST SQUID (SUPERCONDUCTING QUANTUM INTERFERENCE DEVICE)
  - NSA/UNIV. OF MARYLAND
  - OTHER GOVT. AGENCY
  - DETECTED HYPERSPACE SHOT

PHYSICS DISCIPLINES ARE PRESENTLY INCONSISTENT

GENERAL RELATIVITY (GR)

QM (MISSING CHAOS)

???

CLASSICAL EM THEORY

MIND & SUBTLE ENERGY

QUANTUM NON-LOCALITY

"THE NON-LOCAL ASPECT OF QUANTUM SYSTEMS IS ... A GENERAL PROPERTY OF NATURE, AND NOT JUST A FREAK SITUATION MANUFACTURED IN THE LABORATORY

PAUL DAVIES, *SUPERFORCE*, 1984, P. 48

A "LAW" OF NATURE

"WHEN A PHYSICIST TALKS ABOUT A LAW HE MEANS SOME SORT OF RESTRICTION IN THE BEHAVIOR OF A CLASS OF SYSTEMS."

PAUL DAVIES, *SUPERFORCE*, 1984, P. 53

PHYSICISTS WHO THOUGHT THE UNTHINKABLE

* E.T. WHITTAKER
* LOUIS DEBROGLIE
* DAVID BOHM
* YAKIR AHARONOV
* JOHN BELL
* ANDREI SAKHOROV
* HAL PUTHOFF

FORCE FIELDS AND POTENTIAL

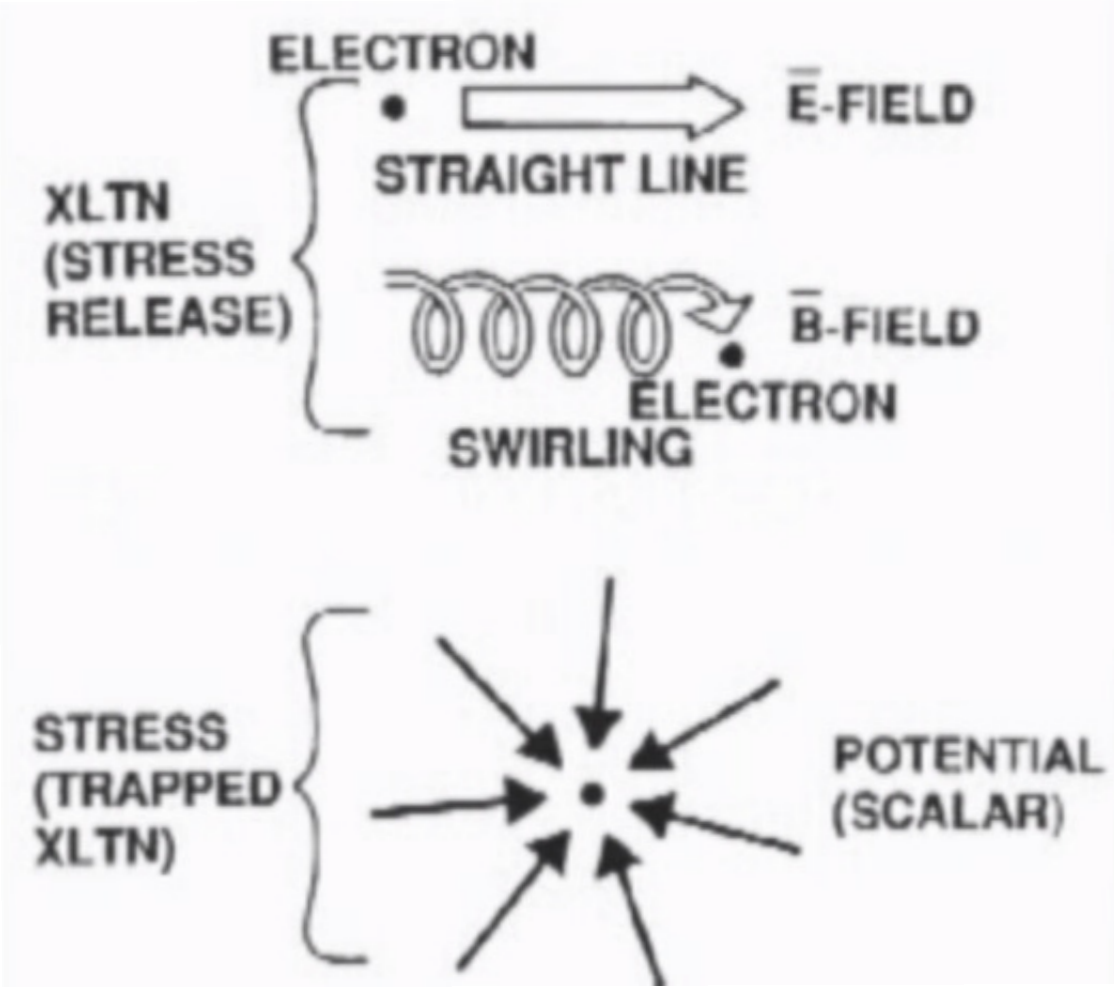

SCALAR STRESS WAVE

TESLA WAVE

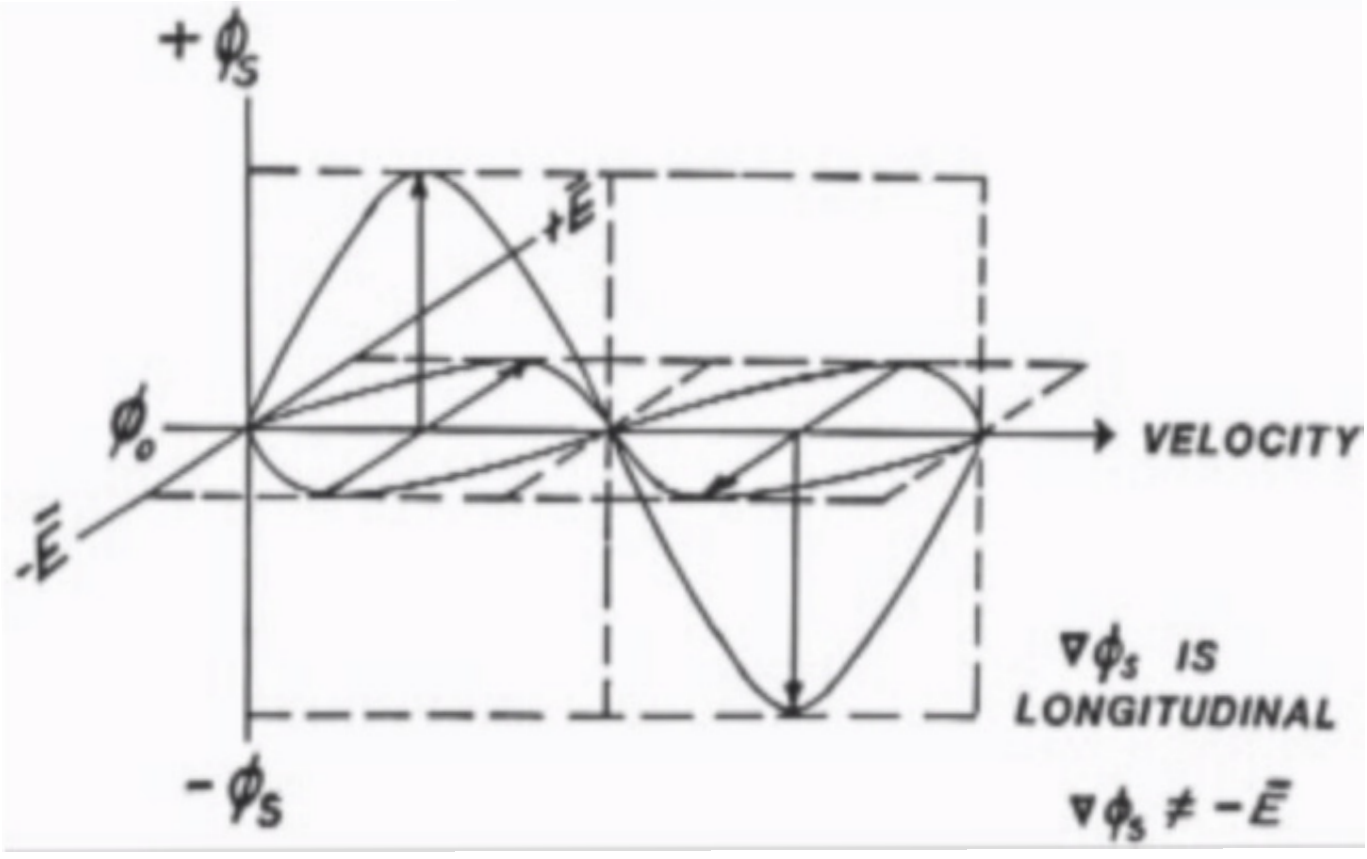

EARTH - SUN - MOON TRIAD

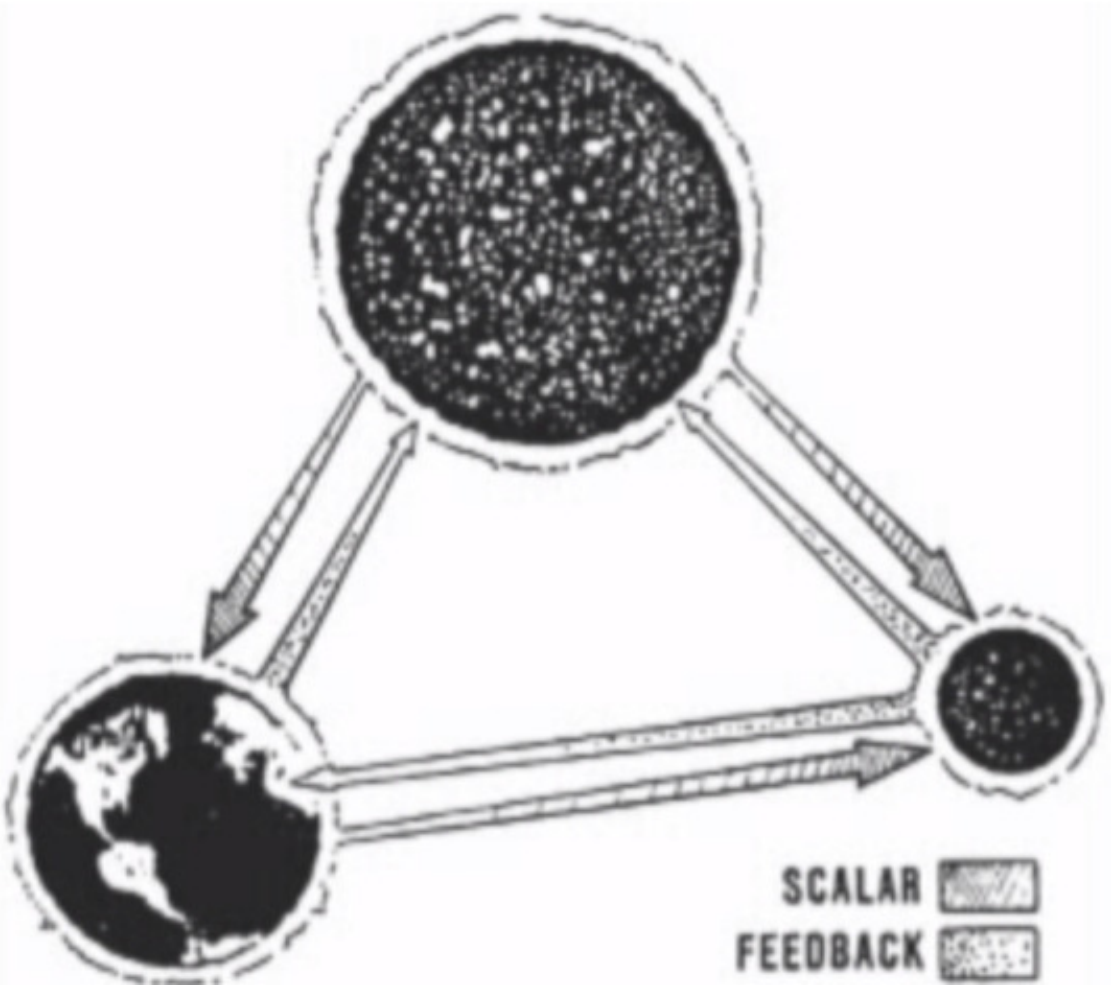

SCALAR EM WAVES ARE EMITTED
AND ABSORBED BY THE NUCLEUS

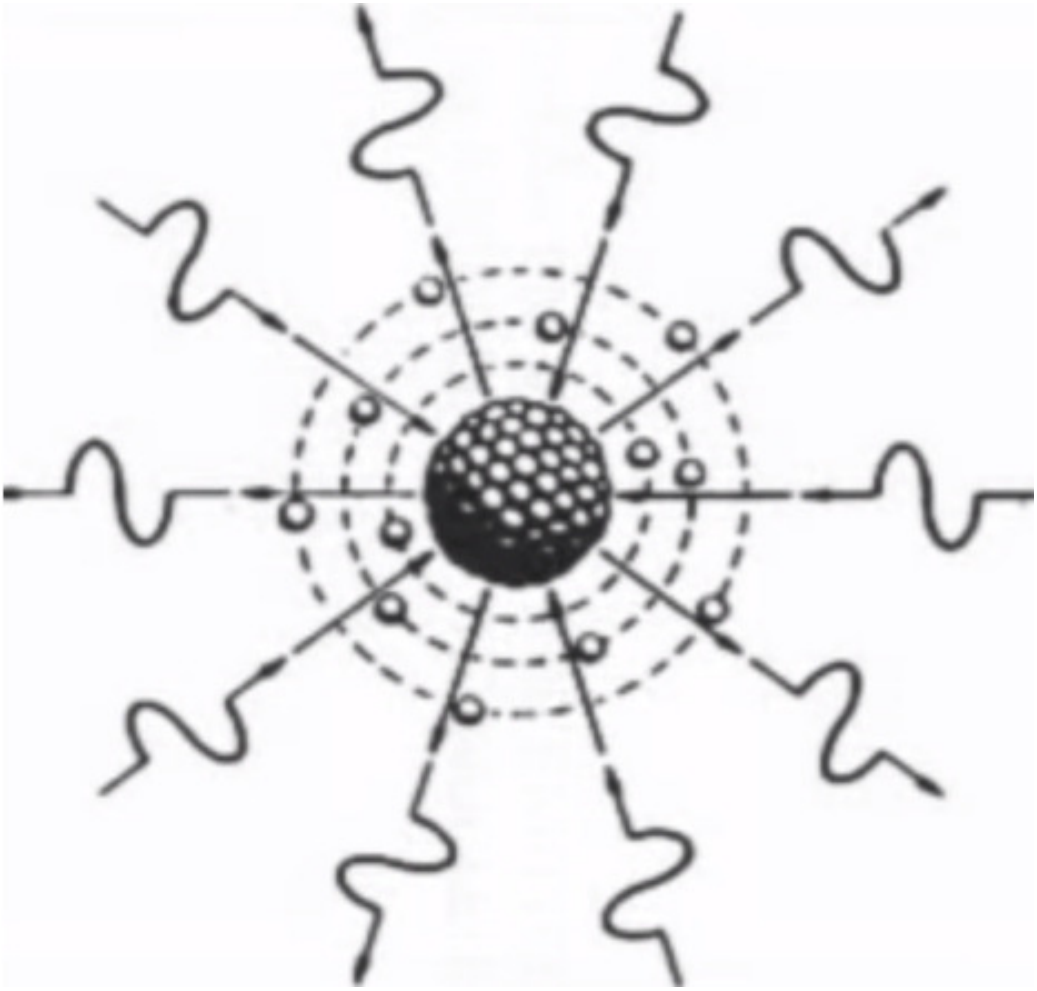

FIRST ORDER REALITY

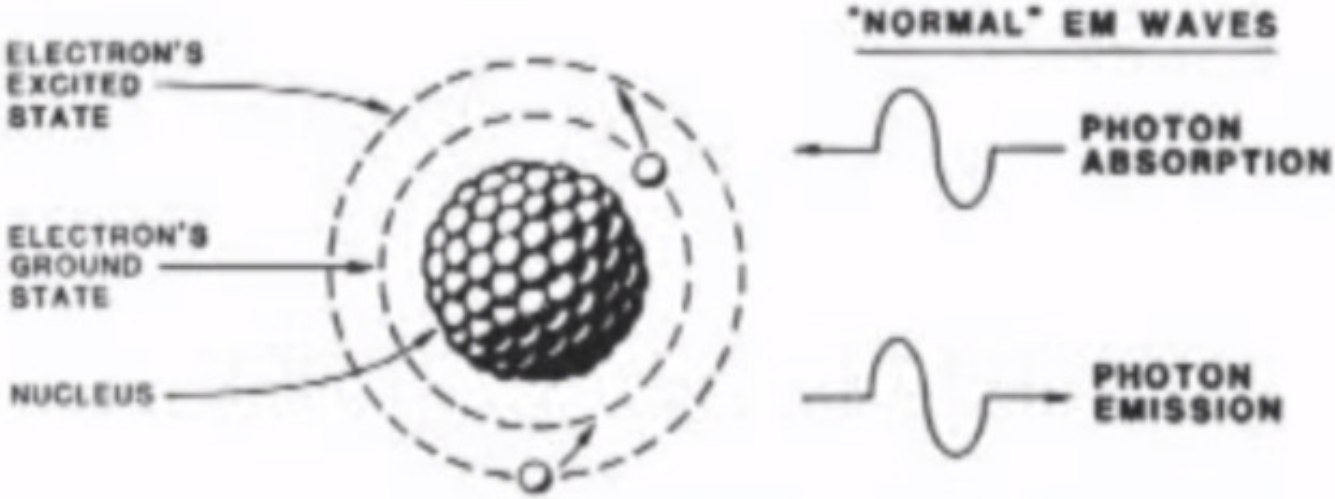

- HEAVY NUCLEUS RELATIVELY UNAFFECTED
- MACROSCOPICALLY, MASS APPEARS STABLE AND "BRICK-LIKE"
- SPECIAL RELATIVITY APPLIES

HYDRANCEPHALY

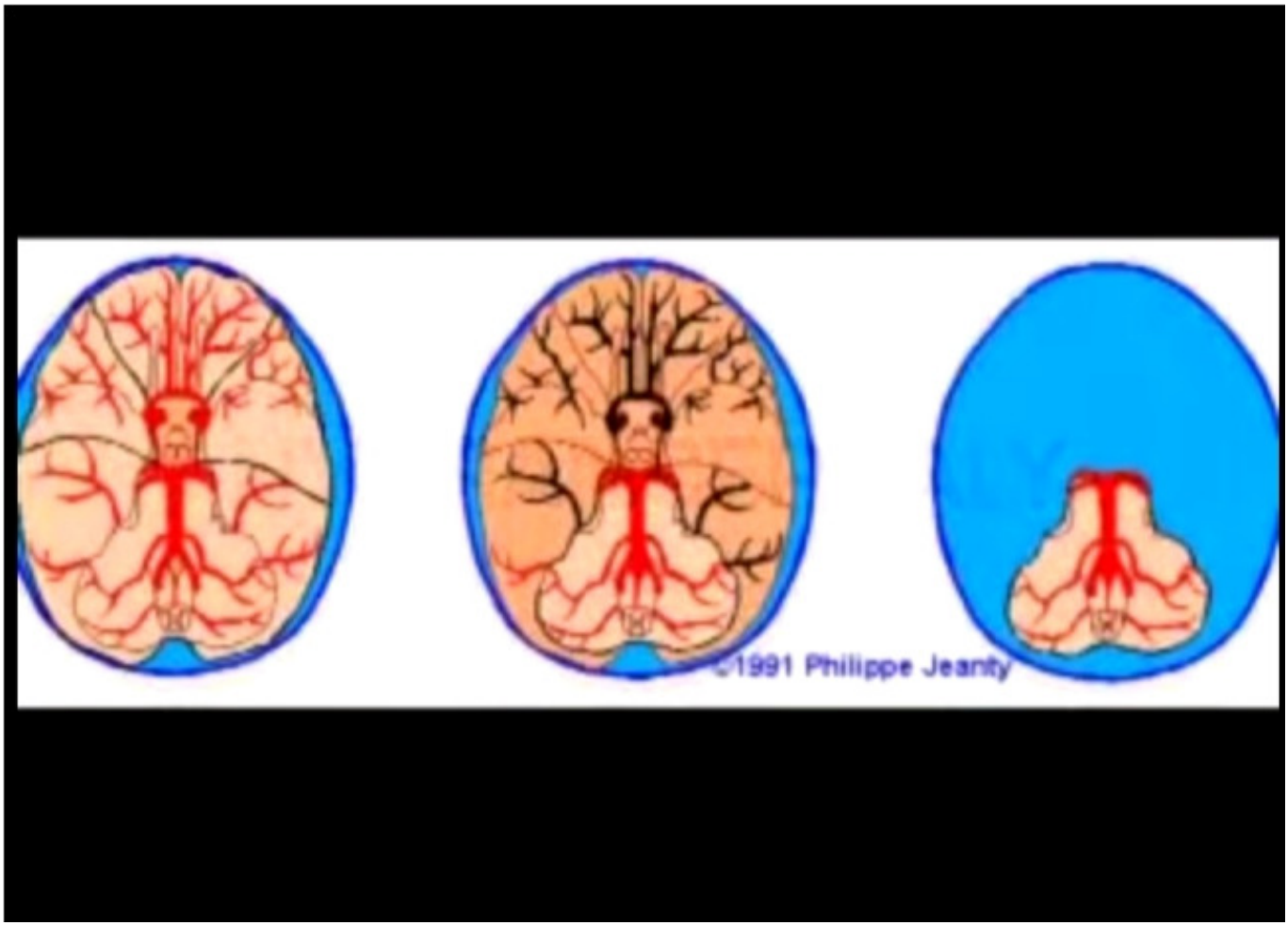

LINEAR VS. NONLINEAR MEDIA

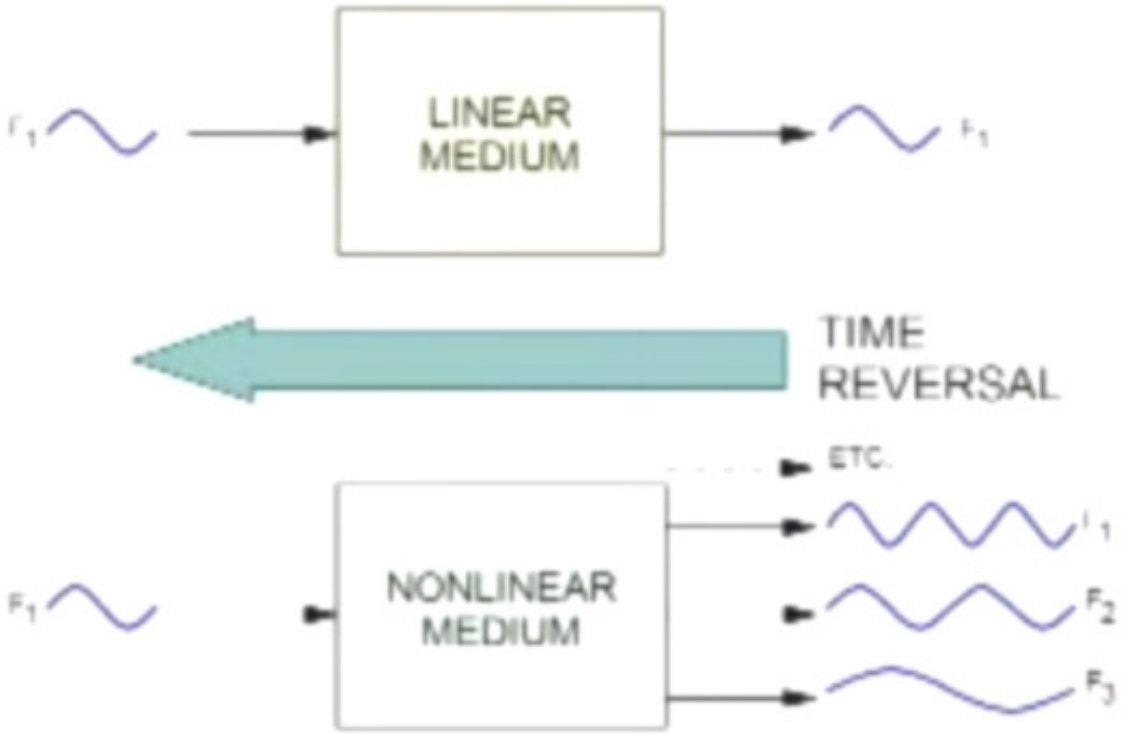

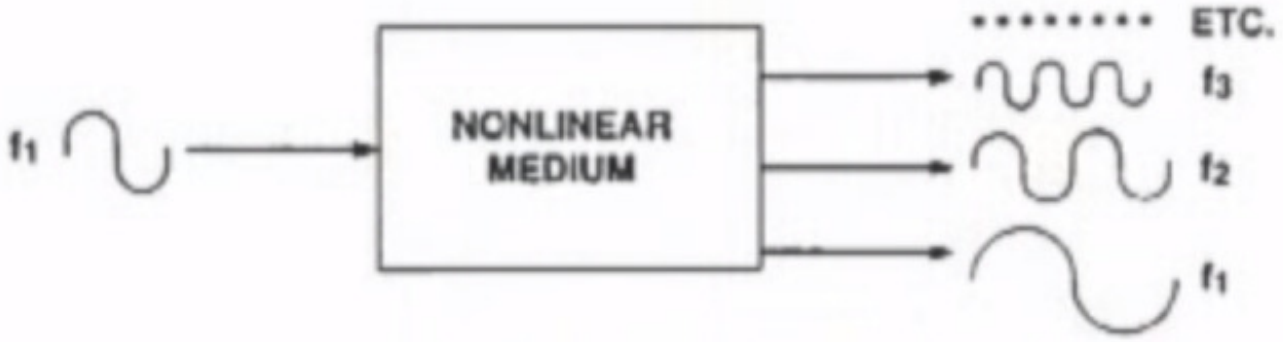

Nonlinear Optics
Distortion Correction Theorem

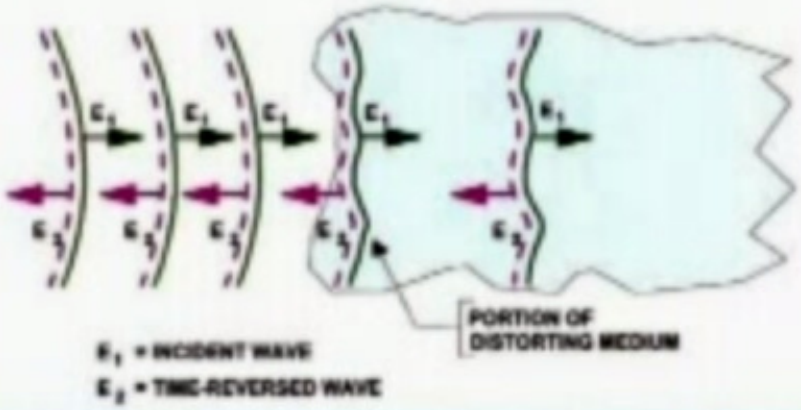

"If a scalar wave $E_1(r)$ propagates from left to right through an arbitrary but lossless dielectric medium, and if we generate in some region of space [say near z = 0] its phase conjugate replica $E_2(r)$, then E_2 will propagate backward from right to left through the dielectric medium, remaining everywhere the phase conjugate of E_1."

Transverse EM Wave Pumping of PCM

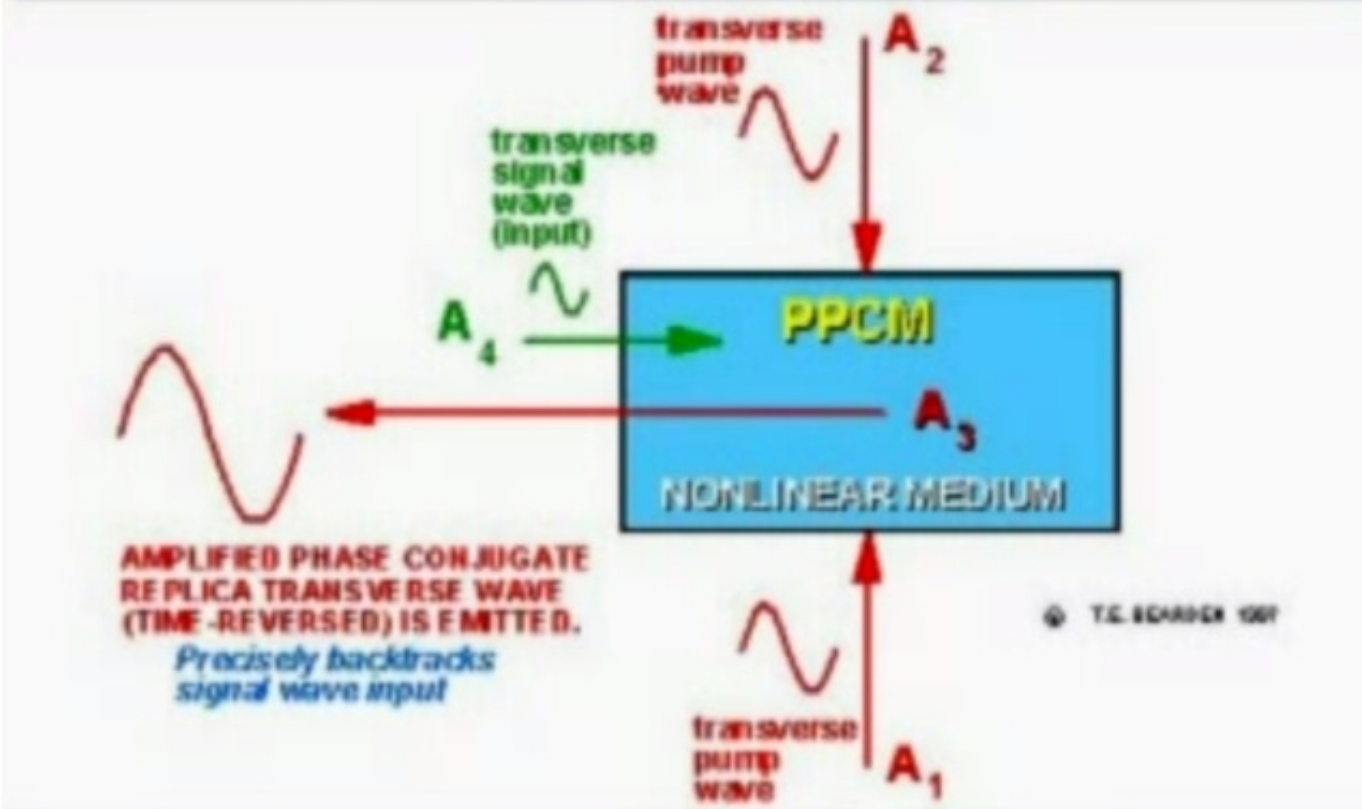

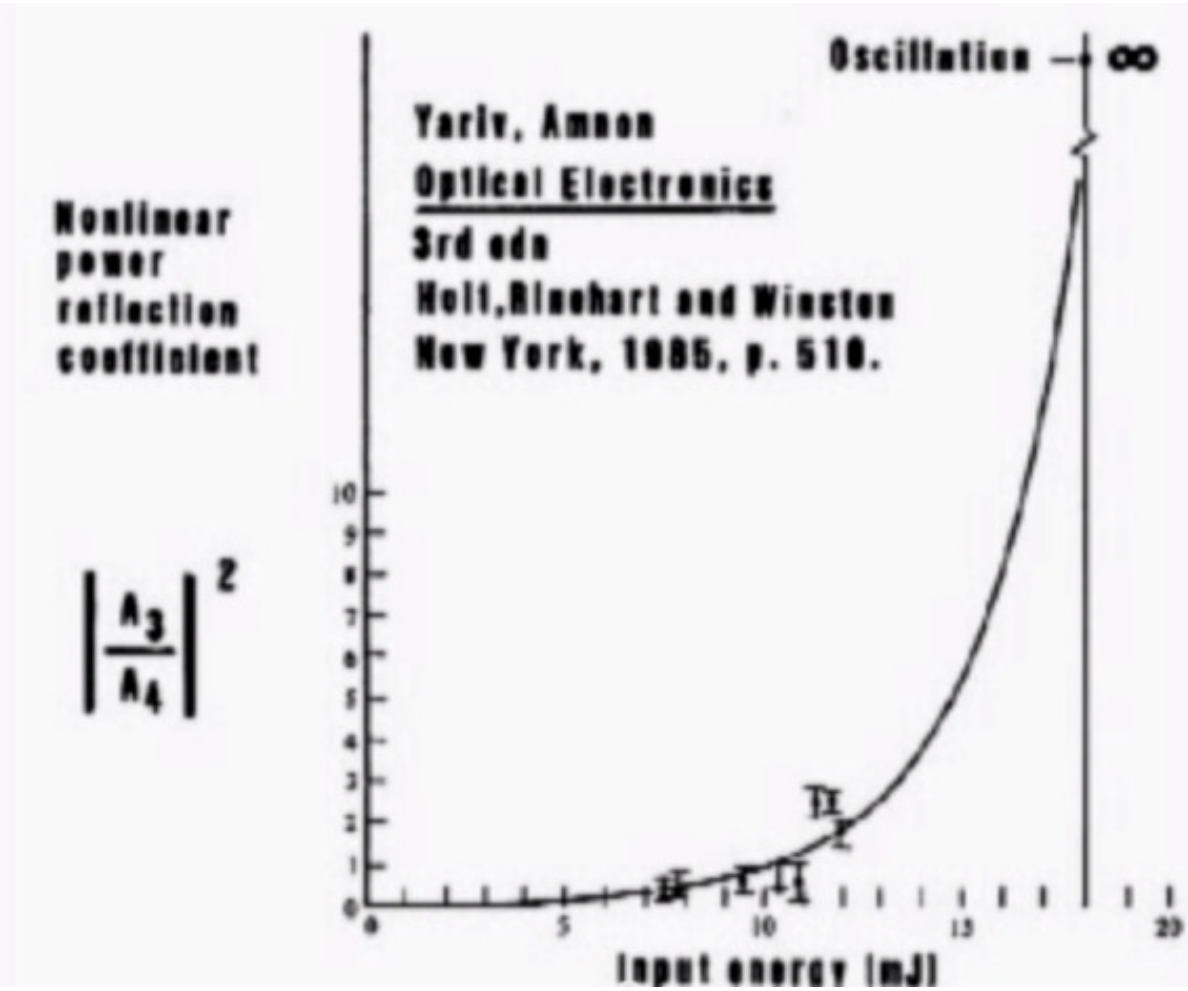

ORDINARY MIRROR VERSUS PHASE-CONJUGATE MIRROR

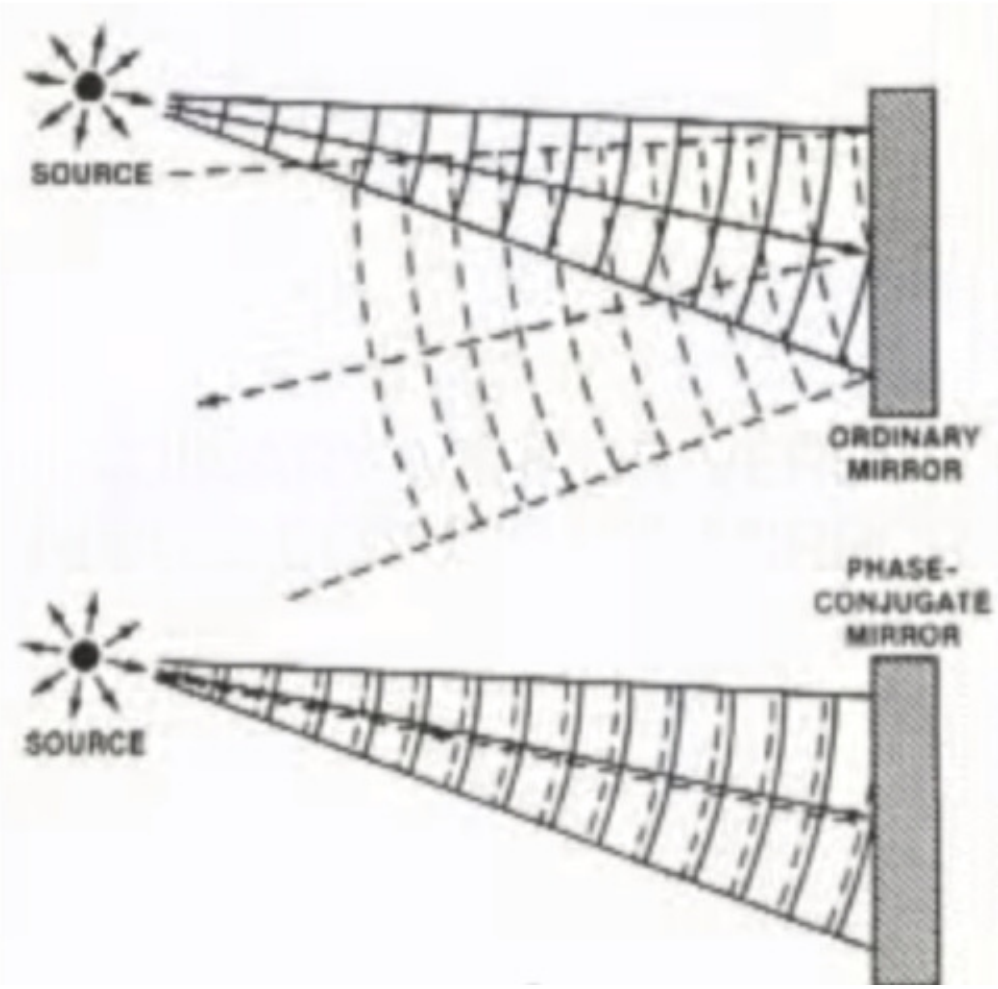

TESLA'S STANDING COLUMNAR WAVE

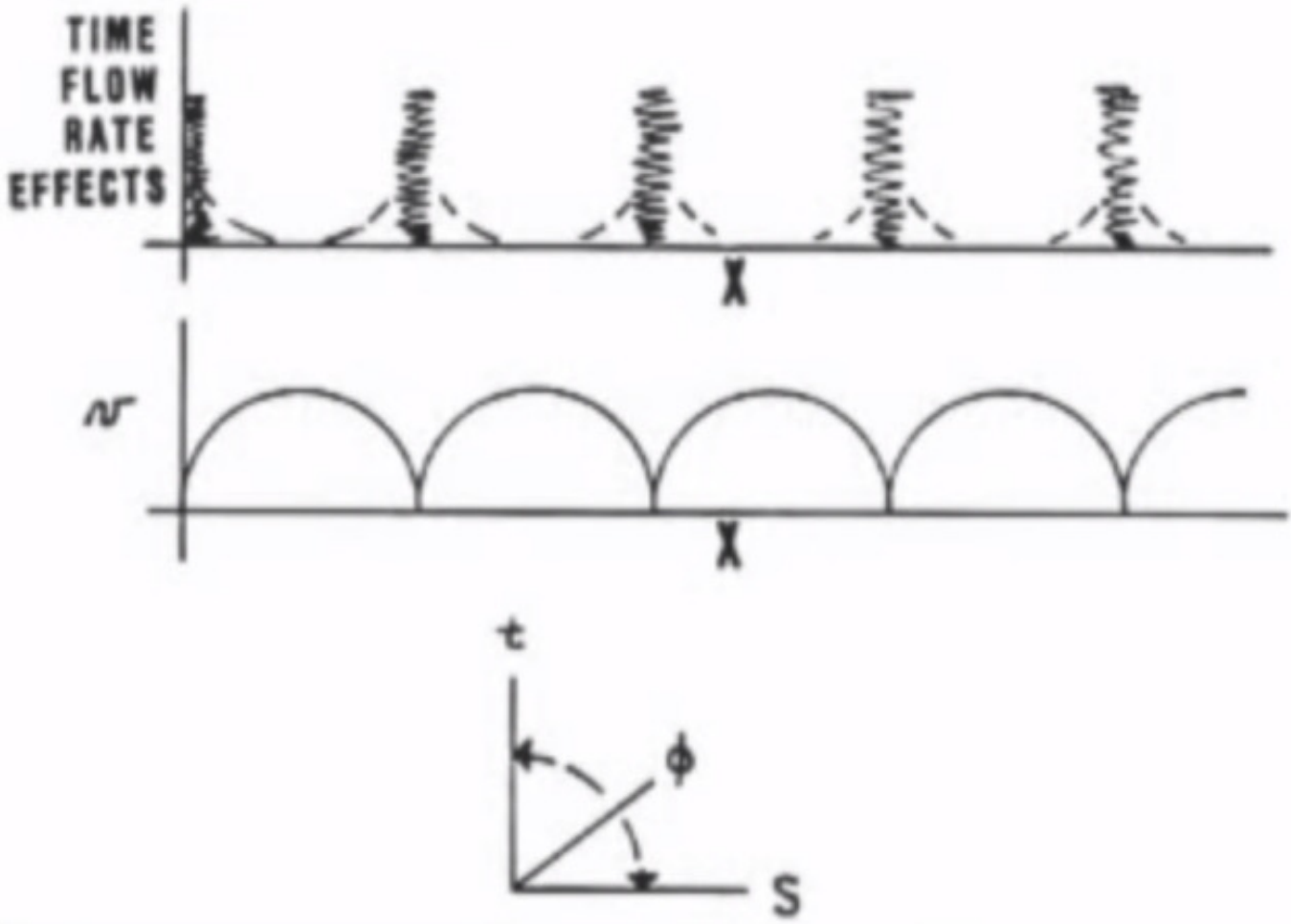

E.T. WHITTAKER

* **ALL CLASSICAL EM - INCLUDING WAVES - CAN BE REPLACED BY SCALAR POTENTIAL INTERFEROMETRY**

  - "ON THE EXPRESSION OF THE ELECTROMAGNETIC FIELD DUE TO ELECTRONS BY MEANS OF TWO SCALAR POTENTIAL FUNCTIONS" PROC. LONDON MATH. SOC., VOL. 1, 1904 P. 367 - 372.

* **EM WAVES CAN BE INFOLDED TO PRODUCE PURELY POTENTIAL STANDING WAVES, WITH A HIGHLY DYNAMIC INFOLDED SUBSTRUCTURE**

  - "ON THE PARTIAL DIFFERENTIAL EQUATIONS OF MATHEMATICAL PHYSICS," MATH. ANN., Vol 57, 1903, p. 333 - 355

(TESLA'S STANDING COLUMNAR WAVE)

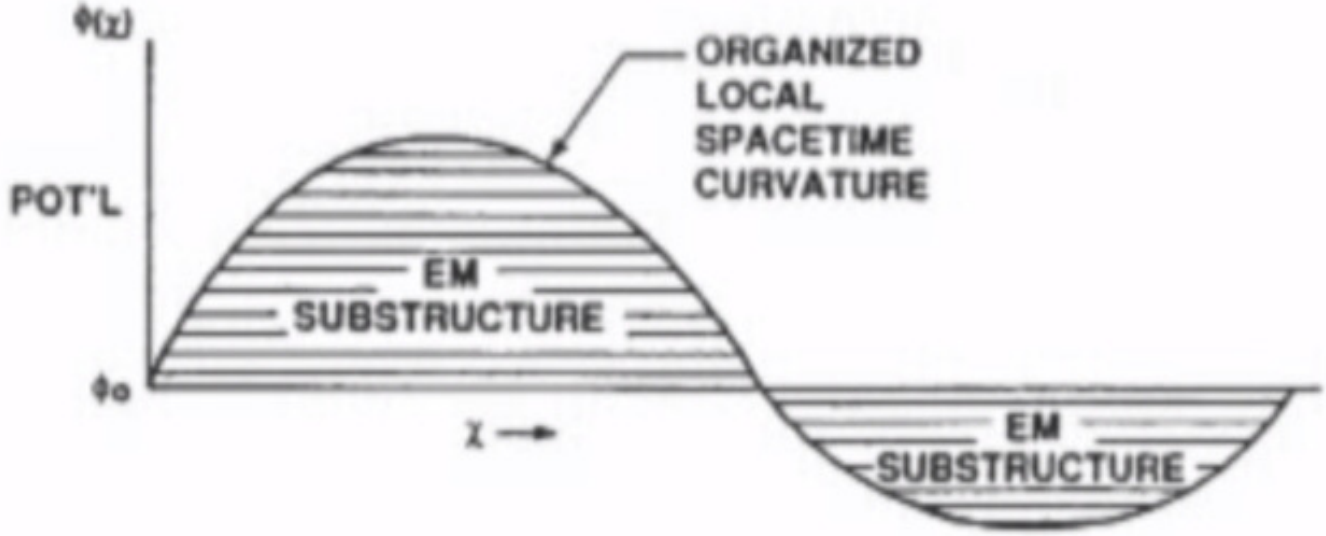

NOTE: SHAPE MAY BE ALL ABOVE OR ALL BELOW AMBIENT VACUUM POTENTIAL.

W-BEAM SUBSTRUCTURE

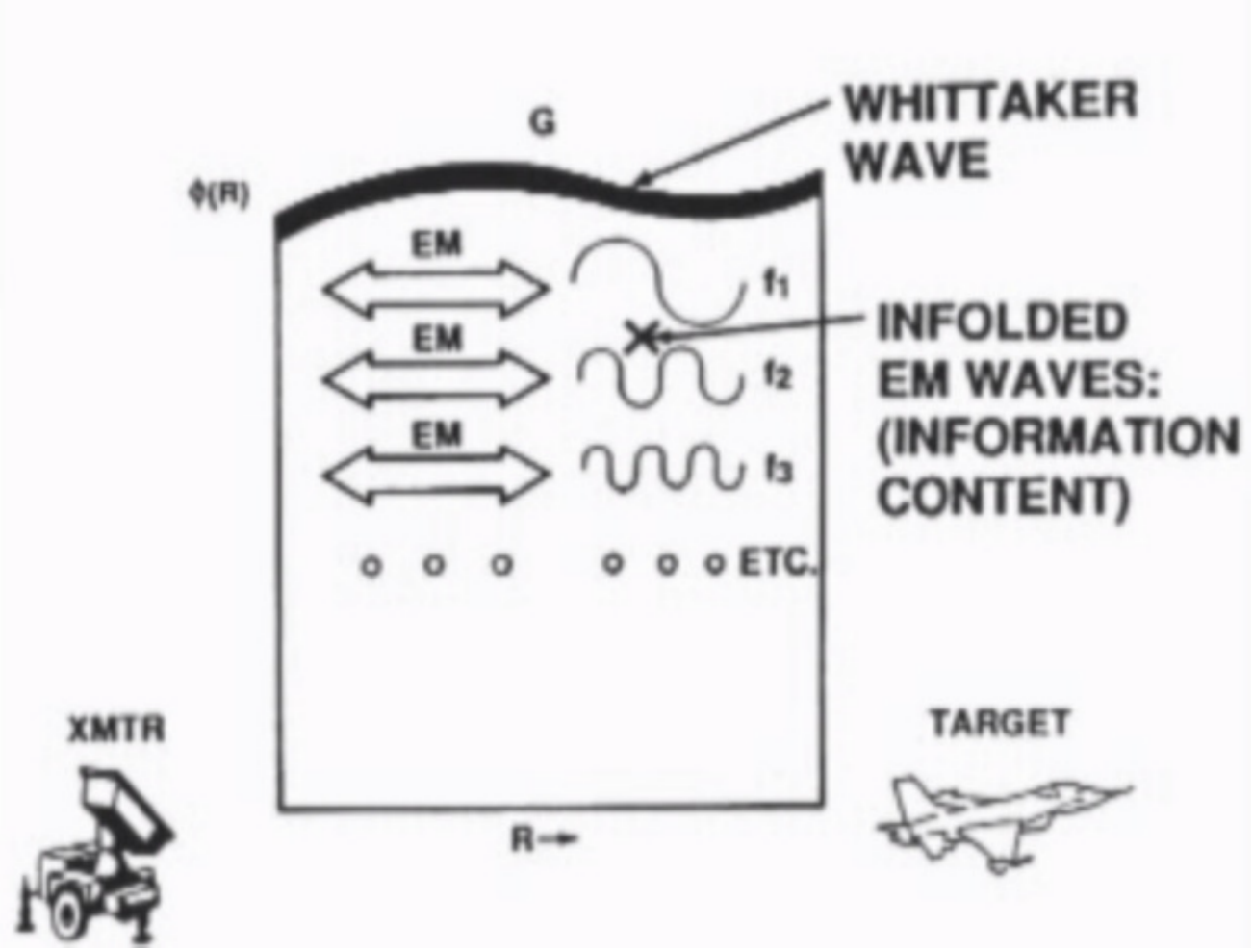

LATTICE OF THE VACUUM

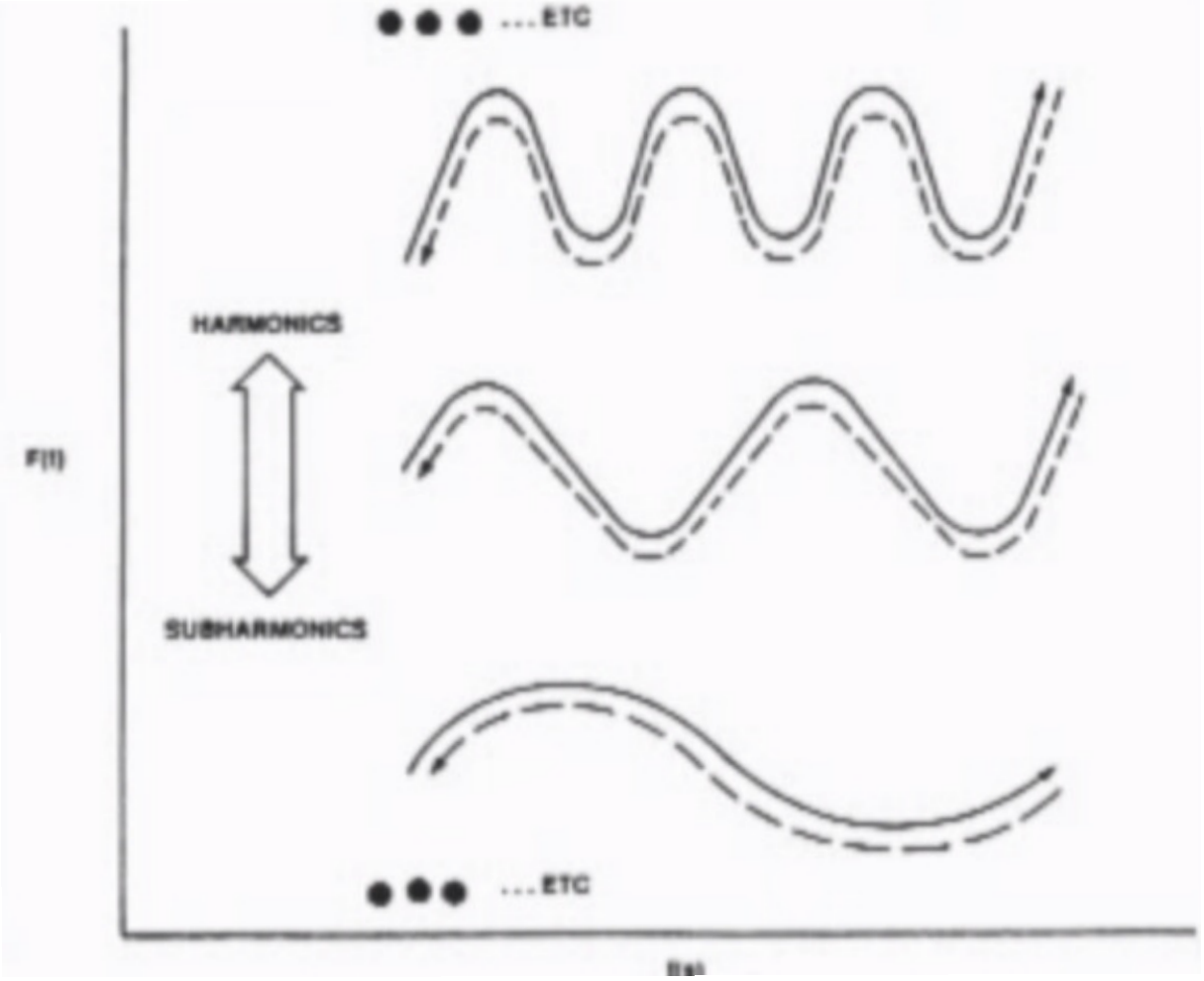

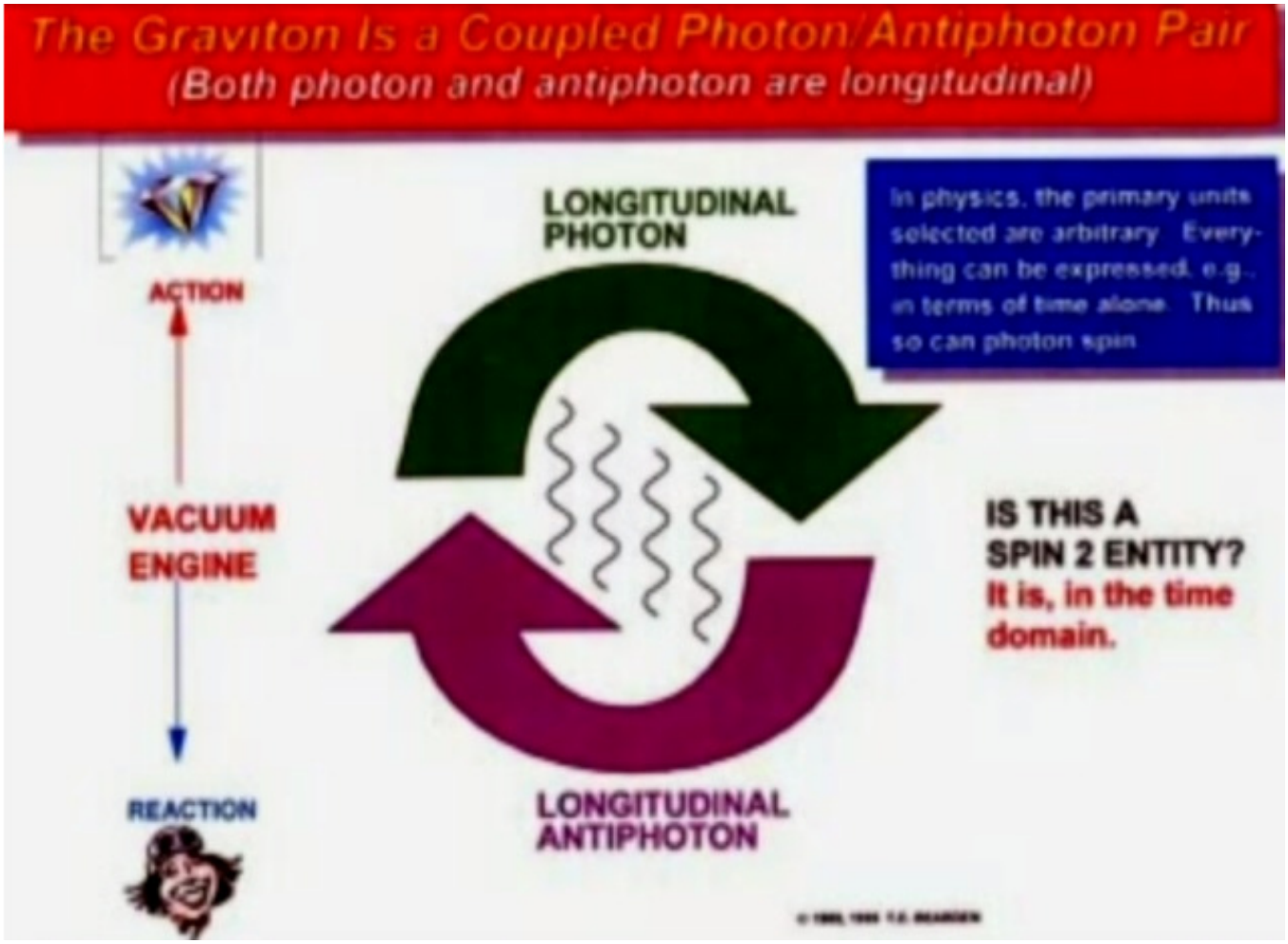
The Graviton Is a Coupled Photon/Antiphoton Pair
(Both photon and antiphoton are longitudinal)
ACTION
VACUUM ENGINE
REACTION
LONGITUDINAL PHOTON
LONGITUDINAL ANTIPHOTON
In physics, the primary units selected are arbitrary. Everything can be expressed, e.g., in terms of time alone. Thus so can photon spin.
IS THIS A SPIN 2 ENTITY?
It is, in the time domain.

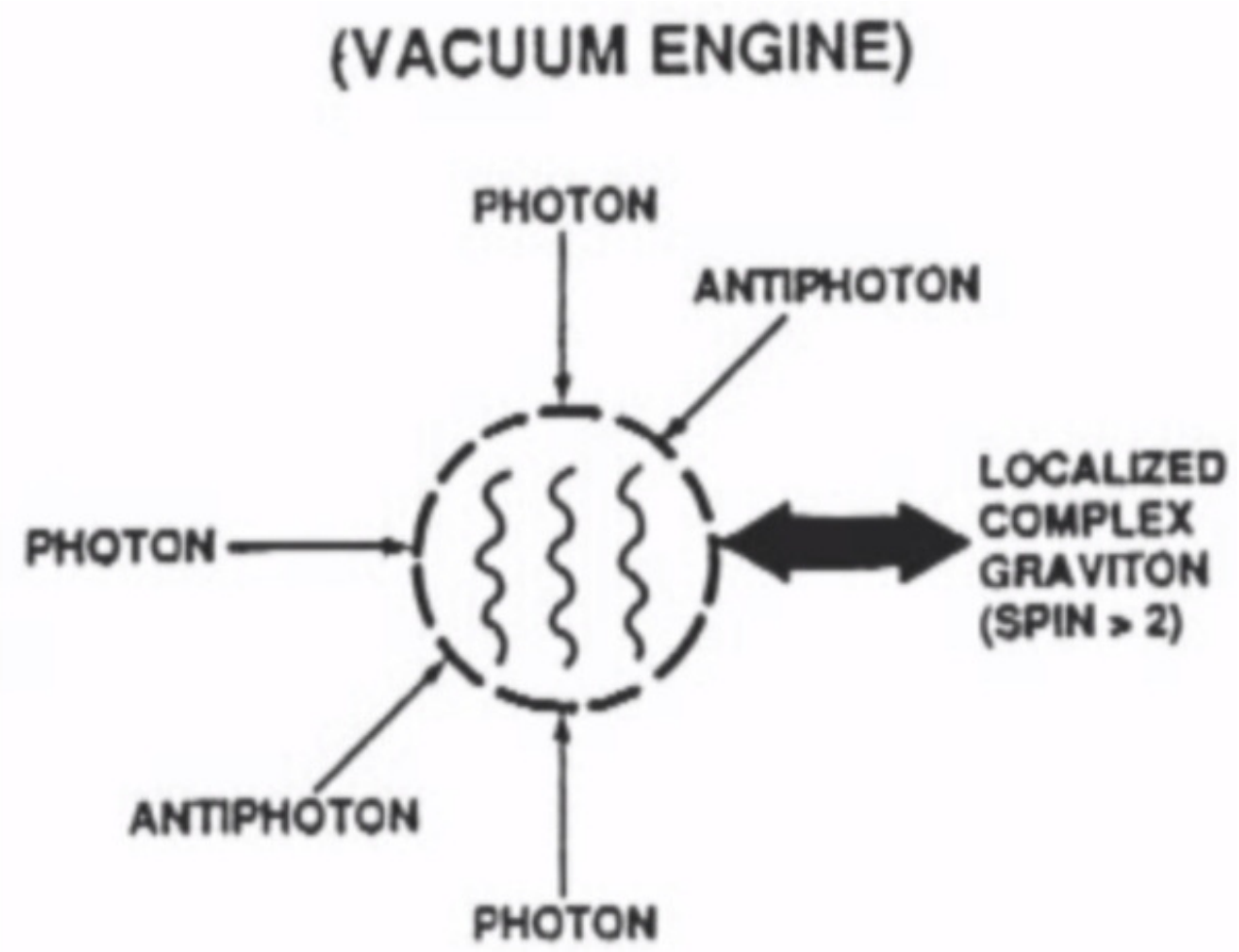
(VACUUM ENGINE)
PHOTON
ANTIPHOTON
PHOTON
LOCALIZED COMPLEX GRAVITON (SPIN > 2)
ANTIPHOTON
PHOTON

UNIVERSALITY OF INTERNAL EM ENERGY

* **RECURSIVE RELATIONS OCCUR WIDELY IN PHYSICS**

  - MOLECULAR GAS DIFFUSION
  - SCATTERING OF A QUANTUM PARTICLE
  - DIRECT INVOLVEMENT WITH SCHRODEDINGER EQUATION

* **STRIKING FEATURE: A WHITTAKER-LIKE STRUCTURE**

  - SUPERIMPOSED BIDIRECTIONAL PLANE WAVES
  - GOING IN OPPOSITE DIRECTIONS
  - WAVEFUNCTION ITSELF CAN BE COMPRISED OF THIS STRUCTURE

SCALAR INTERFEROMETRY

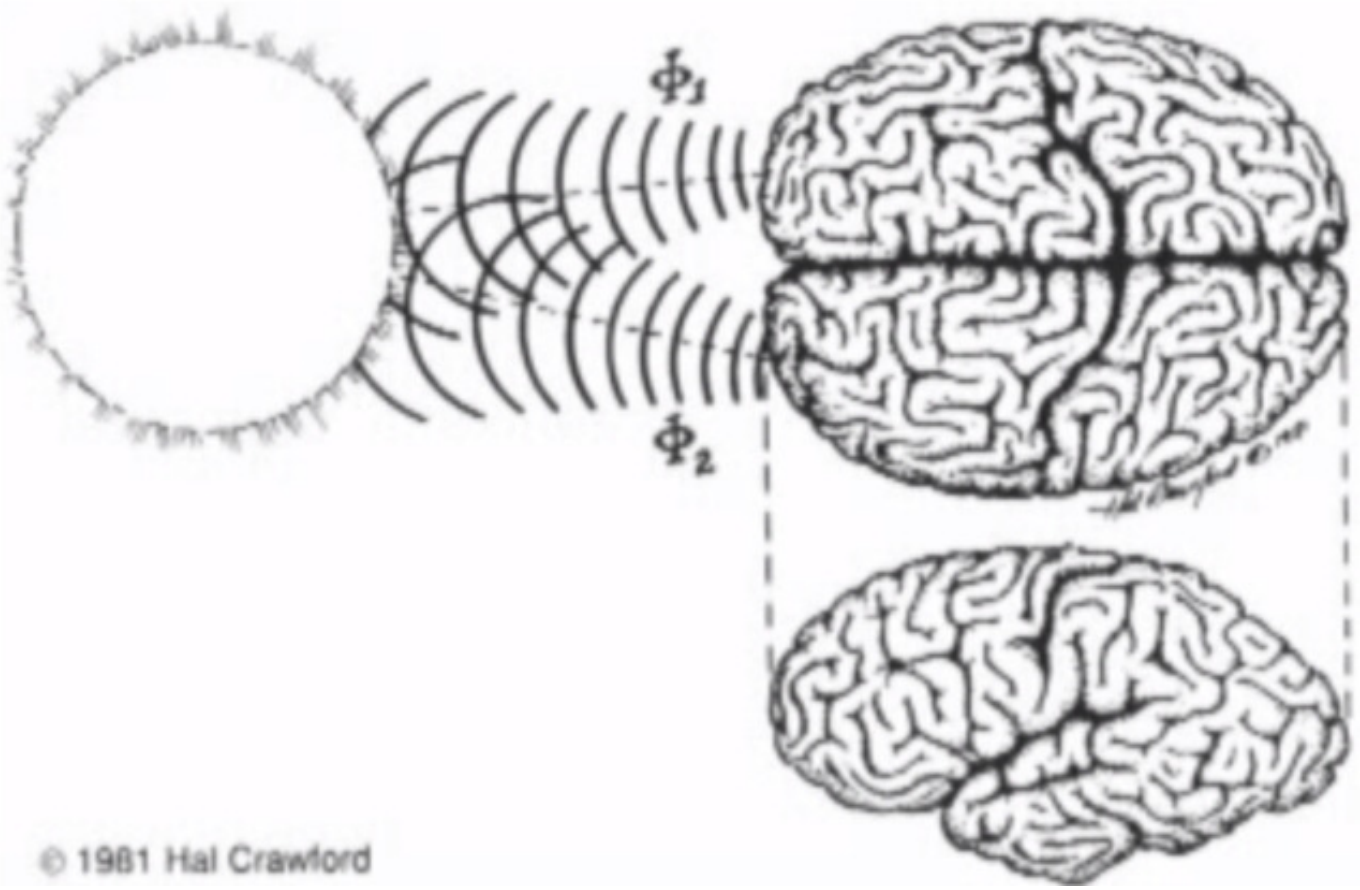
Φ_1
Φ_2
© 1981 Hal Crawford

THE LIVING AURA

* VIRTUAL EM FIELD
* STORES VIRTUAL PHOTONS
* ENVIRONMENTAL INPUTS
* OUTPUTS BIOPHOTONS
* COHERES ORGANISM
* TENDS TO STABILIZE
* EXPERIMENT ESTABLISHES

DR. FRITZ ALBERT POPP

* "BIOPHOTON EMISSION: NEW EVIDENCE FOR COHERENCE AND DNA AS A SOURCE," *CELL. BIOPHYS.*, VOL. 6, 1984, P. 33-52

* "PHYSICAL ASPECTS OF BIOPHOTONS," *EXPERIENTIA*, VOL. 44, 1988, P.575-585.

* "ON THE COHERENCE OF ULTRAWEAK PHOTOEMISSION FROM LIVING TISSUES," *IN DIESEQUILIBRIUM AND SELF-ORGANIZATION*, ED. BY C.W. KILMISTER, ED.; D. REIDEL, HINGHAM, MA, 1986

* "PHOTON STORAGE IN BIOLOGICAL SYSTEMS," *ELECTROMAGNETIC BIO-INFORMATION*; PROCEEDINGS OF THE SYMPOSIUM, MARBURG, FEDERAL REPUBLIC OF GERMANY, SEP. 5, 1977; URBAN & SCHWARZENBERG, BALTIMORE, 1979, P. 123-149.

MECHANISMS FOR:

* PRECOGNITION
* POSTCOGNITION
* CLAIRVOYANCE
* METAL BENDING
* FIREWALKING
* TELEPATHY
* PSYCHOKINESIS

THE KERVRAN EFFECT

LOUIS KERVRAN WAS NOMINATED FOR A NOBEL PRIZE FOR HIS WORK SHOWING THE TRANSMUTATION OF ELEMENTS IN LIVING BIOLOGICAL SYSTEMS, FIRST PUBLISHED IN PARIS IN1960.

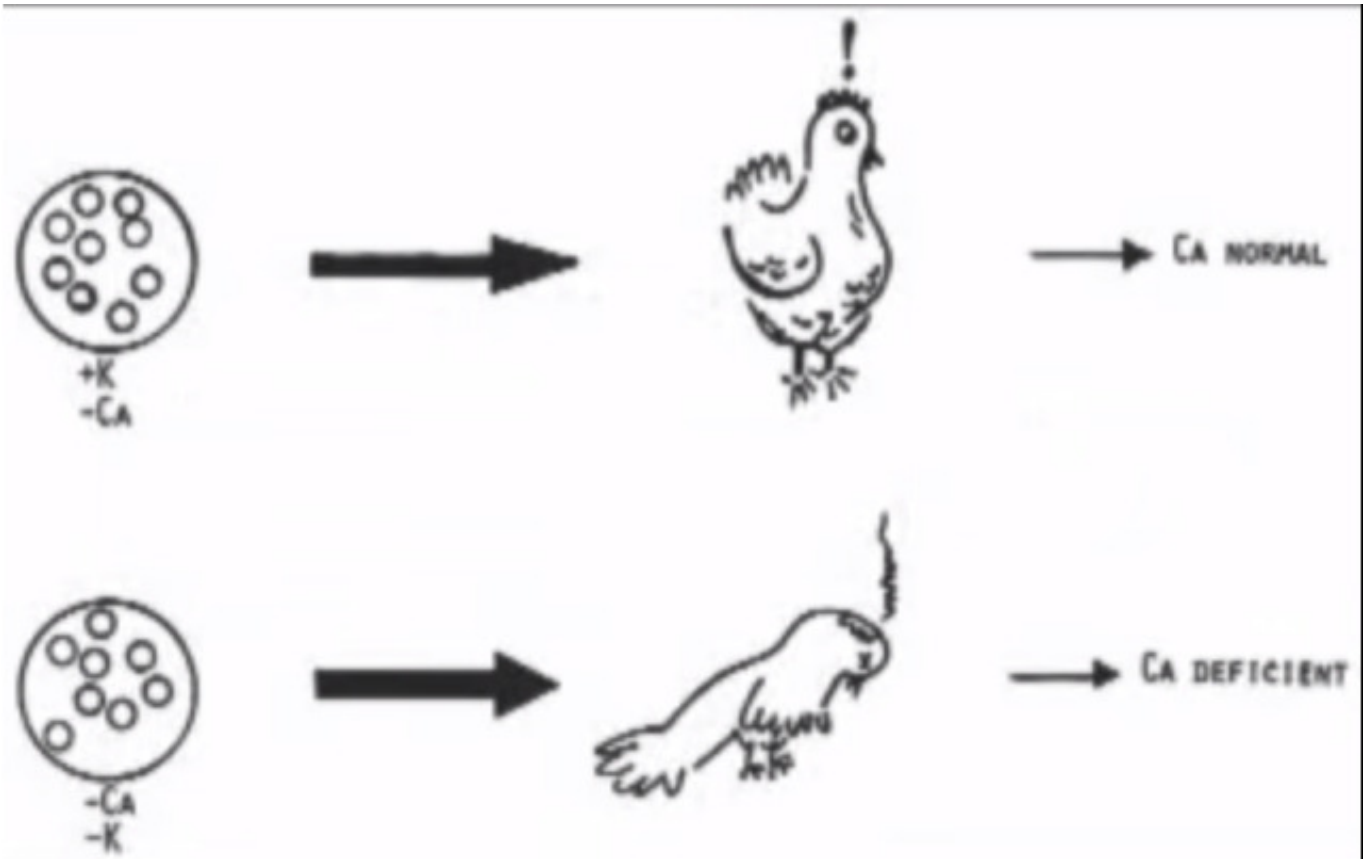

KAZNACHEYEV CYTOPATHOGENIC EFFECT

Kaznacheyev's Two-Chamber Apparatus

(Induction of effects of diseases, physical damage, nuclear radiation, toxins)

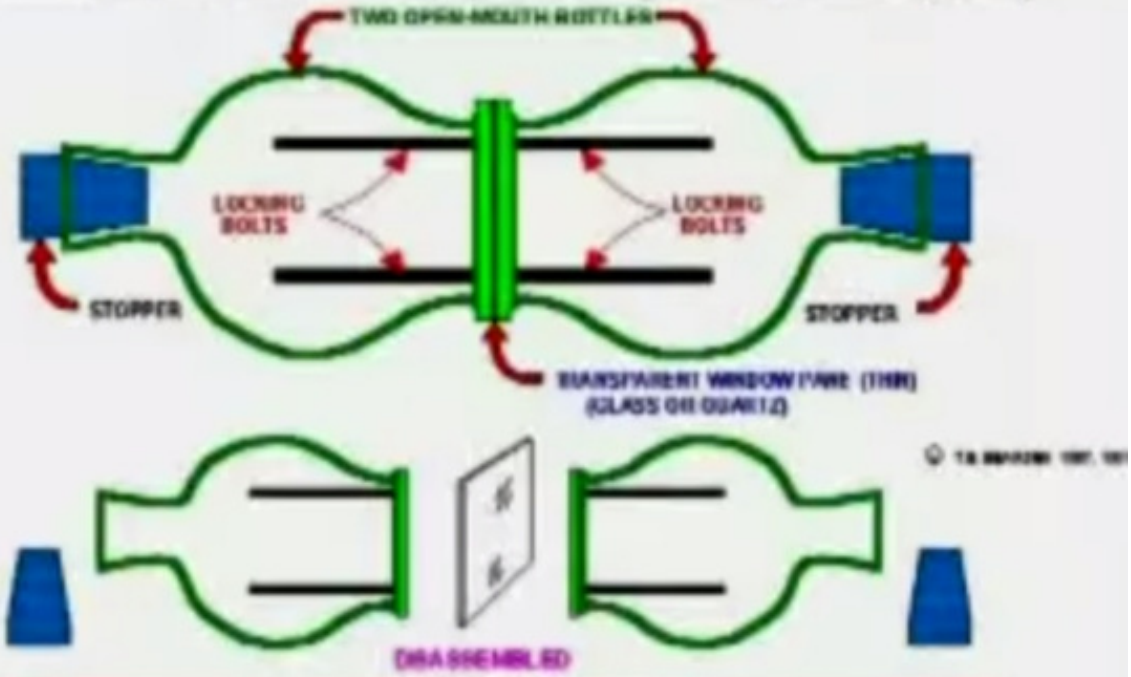

A cell culture is divided into two parts. One is placed on each side, in the jars which are environmentally shielded except for light. The left cell culture is deliberately damaged. After a time delay, the cells on the right also start dying with the same damage. The effect is replicated in the right cells through a thin quartz window, but not through window glass.

Kaznacheyev's Cytopathogenic Mirror Effect

Disease vacuum engines transported by photons and waves

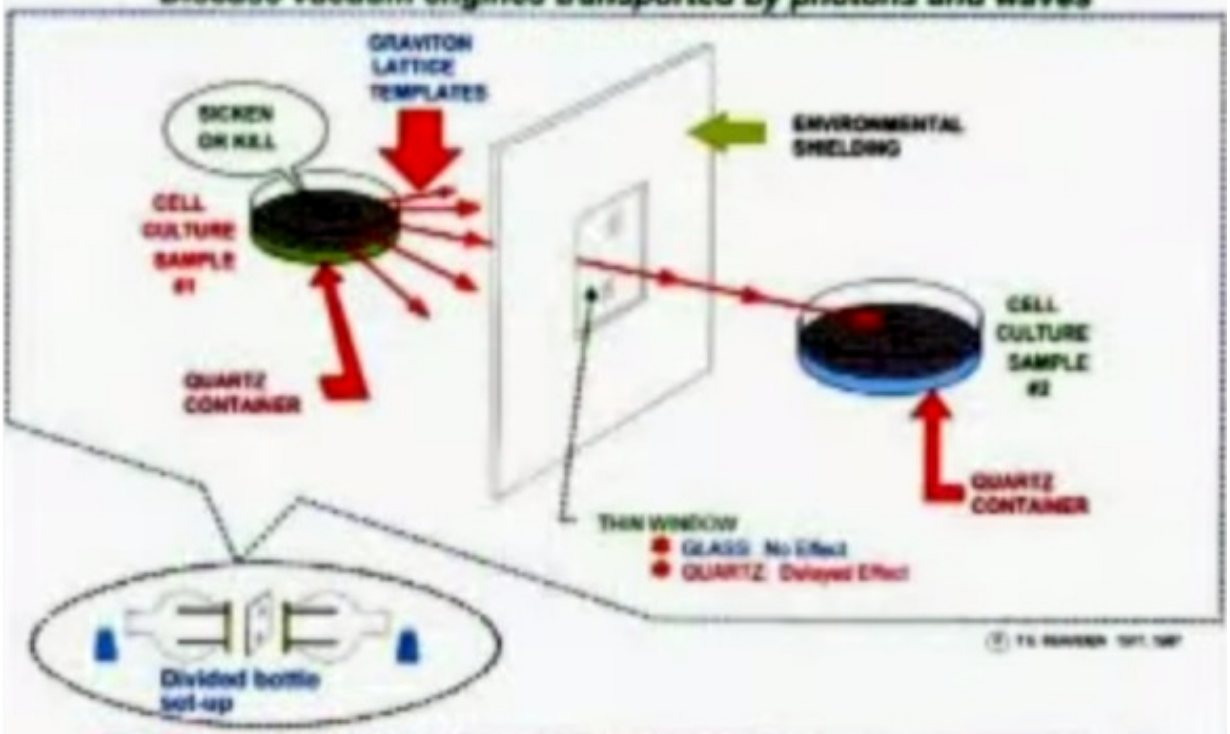

Note: Minimum lattice is one harmonic interval: IR to UV is such a minimum G-lattice.

Distant induction of cellular death and diseases, by special EM means. Coupled photon-antiphoton pairs (gravitons) in a structured harmonic lattice ordering constitute the disease or disorder template.

SUBHARMONIC OSCILLATION

* CAN TRANSLATE FROM ONE FREQUENCY REGIME TO ANOTHER
* E.G., OPTICAL TO MICROWAVE
* **MUST** PRESERVE HARMONICS
* ONE HARMONIC INTERVAL ESSENTIAL
* KAZNACHEYEV'S CYTOPATHOGENIC EFFECT
  - QUARTZ PASSES ONE HARMONIC INTERVAL
  - WINDOW GLASS DOES NOT
* WHITTAKER'S INFOLDED EM STRUCTURE
* DEVYATKOV'S INFORMATION CONTENT OF THE FIELD
* MULTIPLE PHASELOCKED WOODPECKER FPR'S

WHY EM TRIGGER WINDOWS?

* **WELL-KNOWN WINDOW EFFECT**

  - WEAK EM TRIGGER SIGNALS
  - MINIMUM SIGNAL STRENGTH THRESHOLD
  - SLIGHT INCREASE OKAY (GIVES WINDOW)
  - LITTLE MORE INCREASE EXCEEDS MAX. THRESHOLD

* **CHARACTERISTICS OF**

  - CHAOS (HIDDEN ORDER INSIDE DISORDER)
  - QUANTUM CHANGE (PROTON) IS FUZZY
  - DIGITAL RESOLUTION OF FUZZY DOTS

* **REFER TO LOGISTICS EQUATION (CHAOS)**

CHAOS:
HIDDEN ORDER INSIDE DISORDER

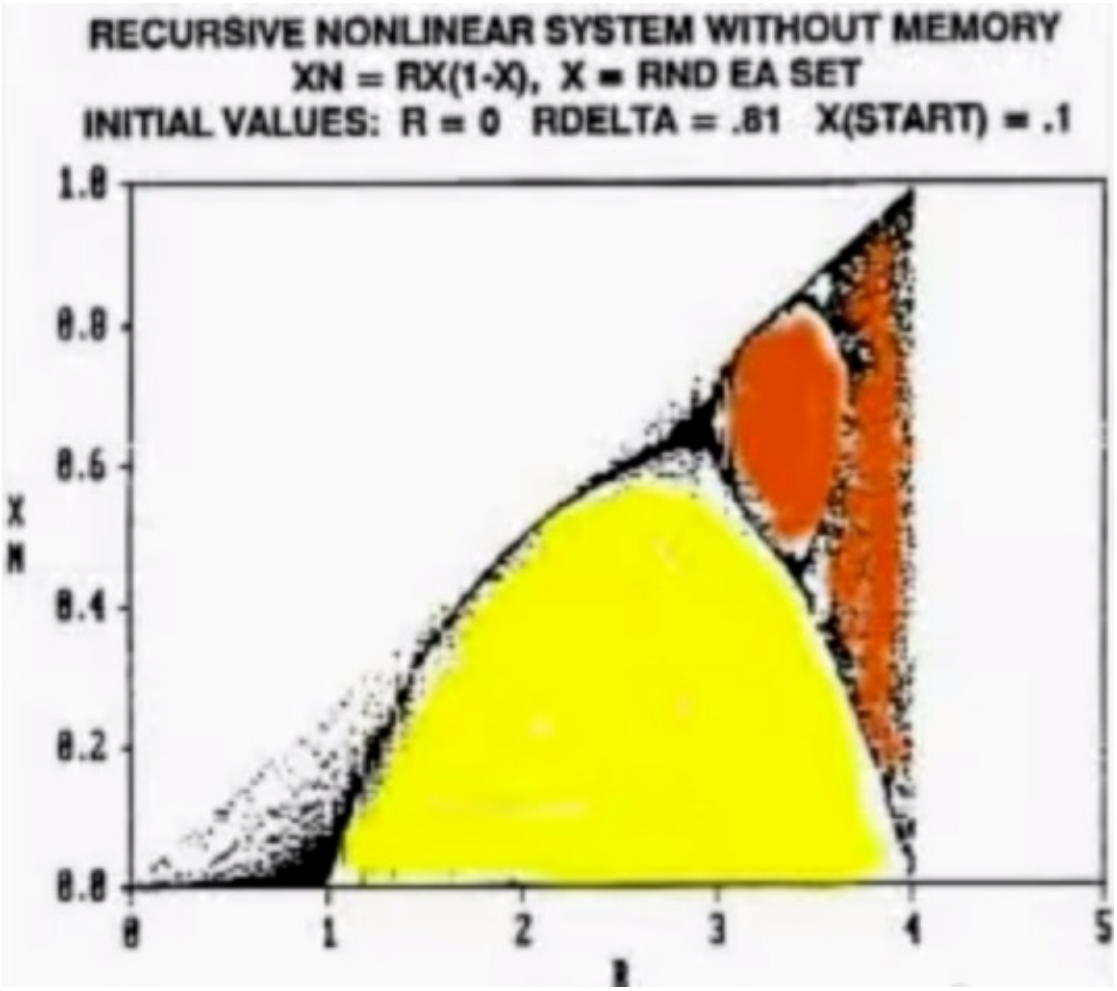

MICROWAVE RADIATION OF U.S. EMBASSY IN MOSCOW

Former U.S. Embassy in Moscow.

BACKGROUND

- Began in latter 1950s
- Discovered on VP Nixon's trip
- Initially thought to be *nuclear* radiation (Discovered w/Geiger counter?)
- High level target -- U.S. Ambassador
- Guarantees personal attention of:
  - U.S. Ambassador to USSR
  - U.S. President
  - NSA, CIA, DIA, NSC, etc.
  - Top consulting scientists
  - Leading U.S. scientific institutions
- Two U.S. Ambassadors died, another sickened
- Anomalous health changes in personnel, only in zero-field (zero pot'l gradient) areas!
- Four U.S. Presidents requested Soviets cease
  - Cut from 18 watts/sq cm to 2
  - Then again increased
- No one could understand what was going on
- Aluminum screens were placed over windows
- Moscow was declared a hazardous duty zone

JOHNS HOPKINS STUDY

* CONSIDERED E- AND B- FIELDS
* ESTABLISHED PATTERNS INSIDE EMBASSY
* DID NOT CONSIDER POTENTIALS
* EMBASSY PERSONNEL
  - HEALTH ANOMALIES
  - NONE WHERE E- AND B- FIELDS PRESENT
  - ALL WHERE E- AND B- FIELDS ZERO
* CONCLUDED THAT COULD NOT HAVE BEEN CAUSED BY THE WEAK MICROWAVES
* CONCLUSION WAS ERRONEOUS
  - PERSISTENCE OF POTENTIAL IS CANONICAL TO EM FORCE FIELDS
  - HEALTH CHANGES **WERE** HIGHLY CORRELATED TO THE MICROWAVE RADIATION [OTHERWISE, SOME HEALTH ANOMALIES WOULD HAVE OCCURRED WHEN E- AND B- FIELDS NONZERO
* **PROPER CONCLUSION:** HEALTH ANOMALIES PROBABLY INDUCED BY PERSISTING MICORWAVE POTENTIALS

POTENTIAL PERSISTENCE VS. GRADIENT MAGNITUDE

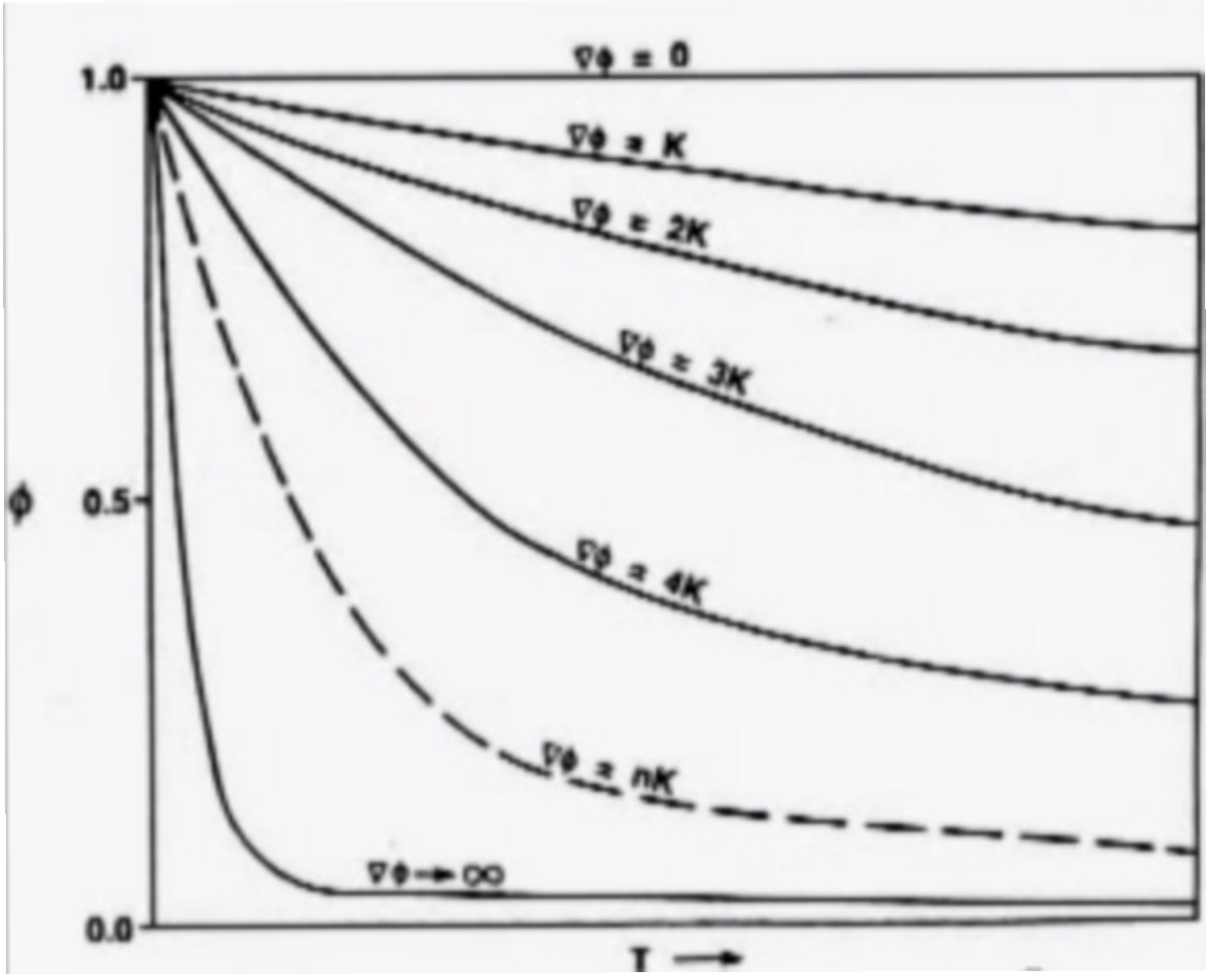

Lisitsyn's Report: Brain Code Broken

- THEORY DEVELOPED AND FITTED
- HYSTERESIS MEMORY LOOP
- CONTROLLED EM INDUCTION
  - IMAGES
  - SENSATIONS
  - PREDETERMINED EMERGENCE
- 23 EEG BANDS
  - UP TO 8.1×10^{20} HZ
  - 11 INDEPENDENT CHANNELS

UNIFIED FIELD SECRET: APPLY WHITTAKER THEORY

GENERAL RELATIVITY (GR)

QM (MISSING CHAOS)

APPLY WHITTAKER THEORY

CLASSICAL EM THEORY

MIND & SUBTLE ENERGY

Self-Targeting in Inner EM Channel Can Produce a Quantum Potential

Once QP is established, energy transmission is direct and instantaneous. Energy input to one single participant will simultaneously appear in all other participants, the amount depending on their fractions of participation with the input station.

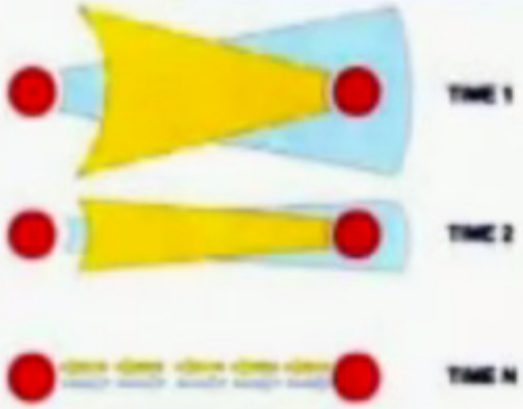

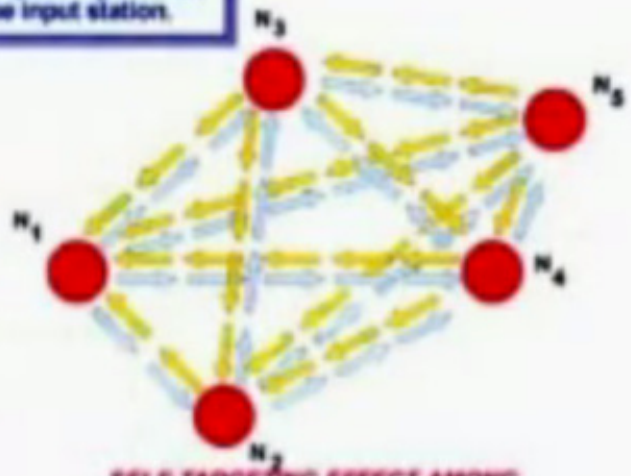

NARROWING OF INTERACTING POTENTIALS INTO LASER-LIKE BEAMS, BETWEEN TWO PUMPED SOURCES. NOW ONLY LONGITUDINAL WAVES CONNECT

SELF-TARGETING EFFECT AMONG ALL PAIRS OF INTERACTING PUMPED SOURCES

Quantum Potential

Once QP is established, energy transmission is direct and instantaneous. Energy input to one single participant will simultaneously appear in all other participants, the amount depending on their fractions of participation with the input station.

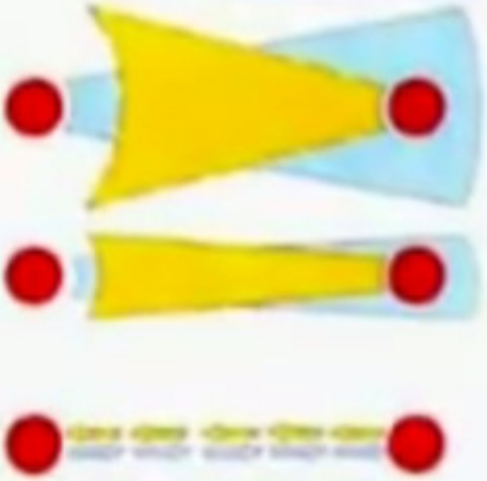

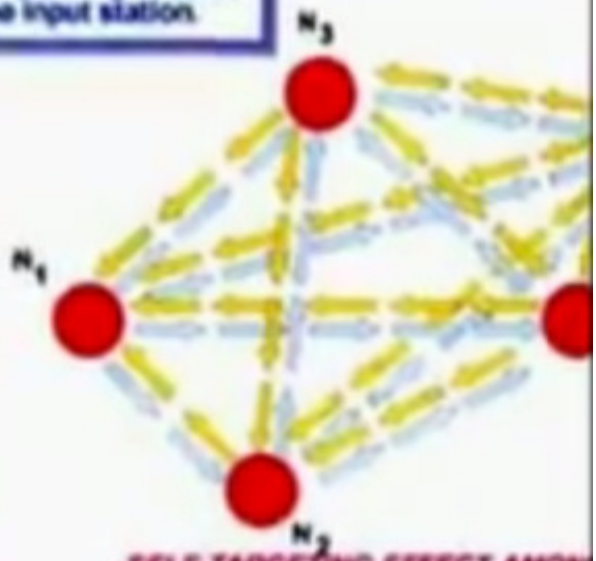

NARROWING OF INTERACTING POTENTIALS INTO LASER-LIKE BEAMS, BETWEEN TWO PUMPED SOURCES. NOW ONLY LONGITUDINAL WAVES CONNECT

SELF-TARGETING EFFECT AMONG ALL PAIRS OF INTERACTING PUMPED SOURCES

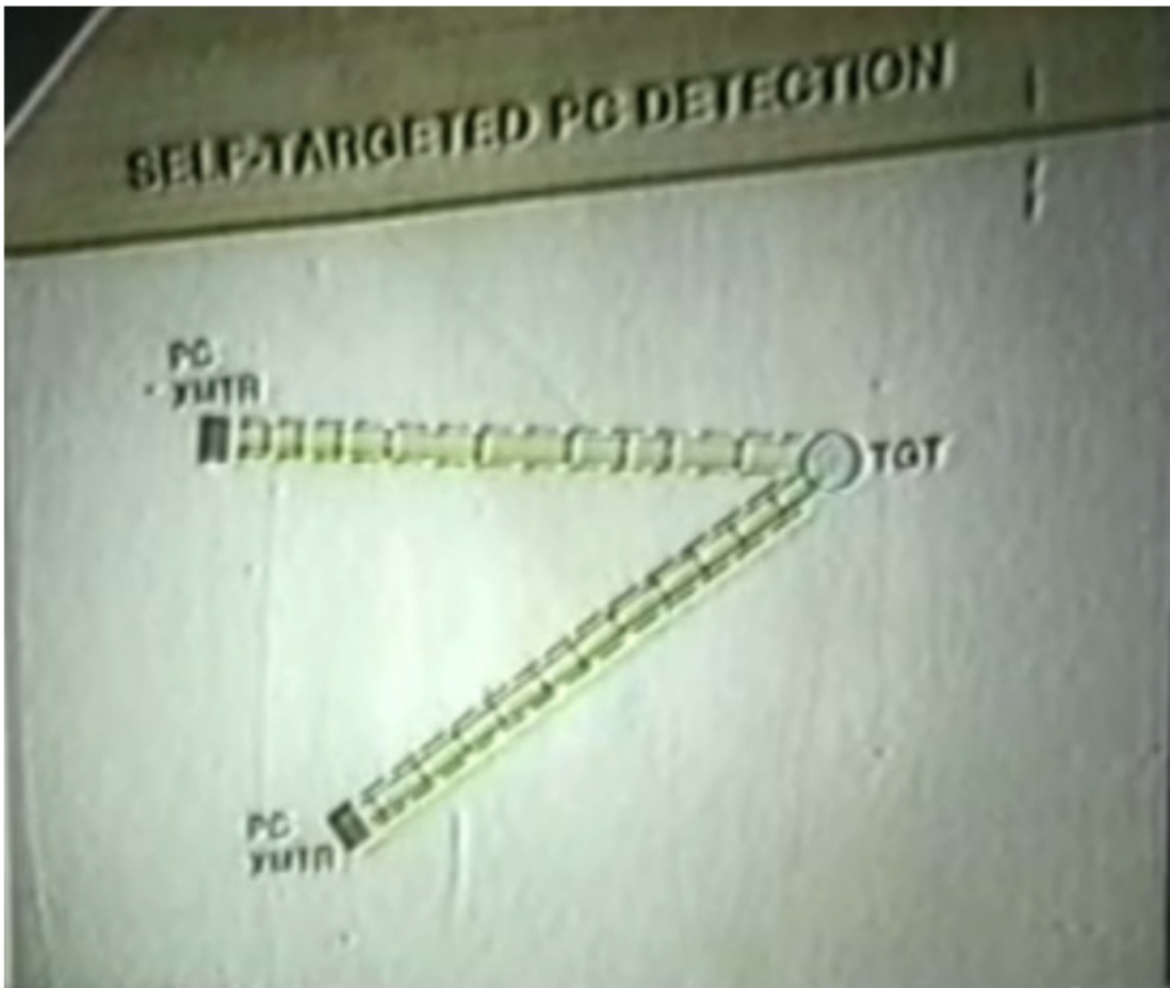

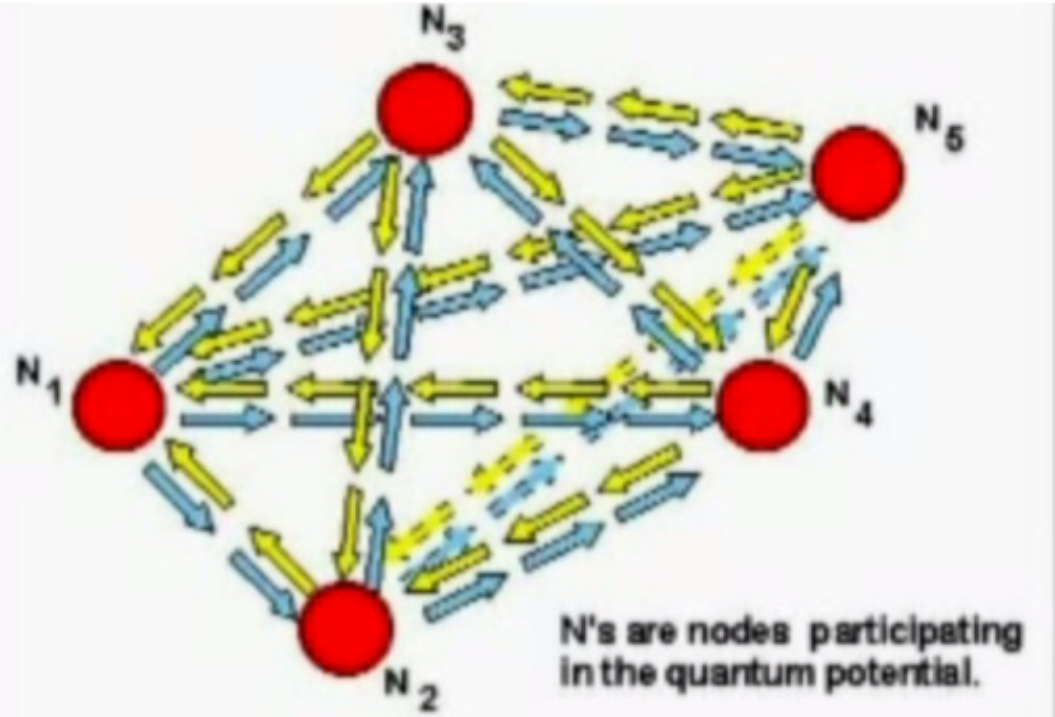

The quantum potential exists as narrow, laser-like beams between participating nodes, even when the nodes are widely separated. The beam space is multiply-connected; transmission is instantaneous.

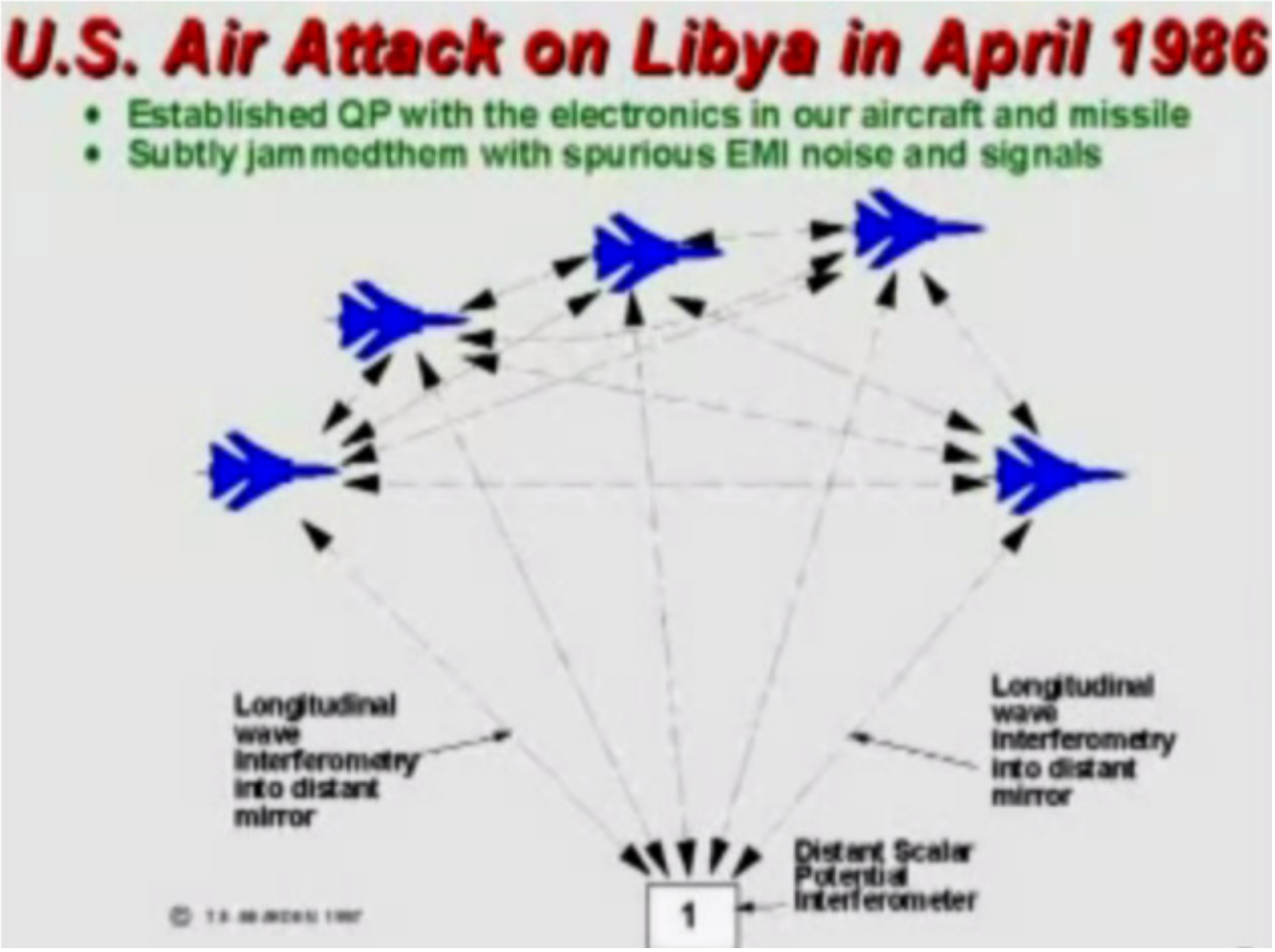

SUBTLE ENERGY PIONEERS

ANTOINE PRIORE

LOUIS KERVRAN

FRANK GOLDEN

A. GURWITSCH

JOHN SCHNURER

FRITZ ALBERT POPP

VALERIE HUNT

T.G. HIERONYMUS

FLOYD SWEET

ROBERT BECK

ALBERT ABRAMS

PETER KELLY

WILHELM REICH

RUTH DROWN

A. PUHARICH

E.D. WHITTAKER

V. KAZNACHEYEV

J.C. MAXWELL *

N.D. DEVYATKOV

AHARANOV & BOHM

T.H. MORAY

J. BEDINI

FRAN FARRELLY

R. SHELDRAKE

UPDATE

FEBRUARY, 2006

IN THE HANDS OF A SKILLED OPERATOR, A RADIONICS DEVICE IS OFTEN MORE ACCURATE THAN THE FINEST MEDICAL TEST EQUIPMENT AVAILABLE TODAY, AND MUCH CHEAPER AND FASTER. IN ADDITION, SUCH TESTING AND DIAGNOSIS ADDS LITTLE OR NO DISTRESS TO THE PATIENT, AS THE RADIONICS PROCEDURES ARE TOTALLY NON-INVASIVE AND CAN BE PERFORMED AT A DISTANCE WITHOUT THE PRESENCE OF THE PATIENT.

ITS OPERATION CANNOT BE DESCRIBED IN TERMS OF PRESENT ELECTRODYNAMICS AND ELECTRICAL ENGINEERING, WHICH ARE

SERIOUSLY FLAWED, BUT THE FUNDAMENTAL BASIS FOR RADIONICS IS QUANTUM POTENTIAL THEORY, WHICH UNFORTUNATELY IS NOT GENERALLY KNOWN OR UNDERSTOOD BY MOST OF THE MEDICAL COMMUNITY.

THIS WEIRD NEW RADIONICS PRESENTED A FORMIDABLE THREAT TO THE ORTHODOX MEDICAL ESTABLISHMENT, AND, IN THE U.S. AT LEAST, THESE DOGMATISTS CAME DOWN HARD ON THIS LATENT THREAT TO ITS HITHERTO UNCHALLENGED DOMINATION IN THE FIELD OF MEDICAL TREATMENT. ITS INQUISITION AND PURGE WAS MADE EASIER BY THE FACT THAT MANY CHARLATANS ALSO LEAPED INTO THE LUCRATIVE FIELD, HAVING LITTLE OR NO ACTUAL DIAGNOSTIC ABILITY, AND PRESCRIBING MEANINGLESS

ABILITY, AND PRESCRIBING MEANINGLESS AMULETS AND PLACEBOS FOR SERIOUSLY ILL PATIENTS. ALSO, THE STRANGENESS OF RADIONICS, SUCH AS THE ABILITY TO DIAGNOSE ILLNESS FROM A DROP OF BLOOD DRAWN FROM A PATIENT THOUSANDS OF MILES AWAY FROM THE DIAGNOSTICIAN AND THE RADIONICS DEVICE, ALIENATED MANY MEMBERS OF

THE MEDICAL PROFESSION WHO SINCERELY BELIEVED THAT NO SUCH DIAGNOSIS WAS POSSIBLE, AND THAT ALL SUCH PSYCHIC DEMONSTRATIONS WERE FRAUDS.

FURTHERMORE, THE RESULTS, EITHER DIAGNOSIS OR TREATMENT, WERE NOT USUALLY REPEATABLE BY ORDINARY PHYSICIANS AND INVESTIGATORS, SINCE

THE PSYCHIC SKILL OF THE OPERATOR WAS DIRECTLY INVOLVED.

THE RADIONICS PRACTICIONERS WERE HOUNDED INTO COURT, PROSECUTED, AND CONVICTED OF FRAUD AND PRACTICING MEDICINE WITHOUT A LICENCE.

SEVERAL PROMINENT RADIONICS PIONEERS

SEVERAL PROMINENT RADIONICS PIONEERS
WERE ACTUALLY HOUNDED TO DEATH, WILHELM REICH AND RUTH DROWN BEING THE TWO MOST PROMINENT EXAMPLES.

WHAT COULD HAVE BEEN A GREAT LEAP FORWARD IN MEDICAL SCIENCE IN THE U.S., AND THE BEGINNING OF THE DEVELOPMENT OF PSYCHOTRONICS, WAS

WHAT COULD HAVE BEEN A GREAT LEAP FORWARD IN MEDICAL SCIENCE IN THE U.S., AND THE BEGINNING OF THE DEVELOPMENT OF PSYCHOTRONICS, WAS CRUSHED BY THE POWER, IGNORANCE, AND BIGOTRY OF ORTHODOXY. TO THIS DAY U.S. RADIONICS HAS NOT RECOVERED, AND U.S. RADIONICS PRACTITIONERS ARE A RARE BREED, LARGELY UNDERGROUND,

RARE BREED, LARGELY UNDERGROUND,
WHO PERFORM THEIR EXPERIMENTS OR PROCEDURES IN PROTECTIVE SECRECY.

THE QUANTUM POTENTIAL THEORY, WITH ITS MULTIPLY CONNECTED SPACE, WHICH MEANTIME, HAS BEEN COMMANDEERED BY THE WEAPONS SCIENTISTS, NOW FORMS THE BASIS OF THE MOST POWERFUL WEAPONS

ITS MULTIPLY CONNECTED SPACE, WHICH MEANTIME, HAS BEEN COMMANDEERED BY THE WEAPONS SCIENTISTS, NOW FORMS THE BASIS OF THE MOST POWERFUL WEAPONS ON THE PLANET, WHICH ARE CURRENTLY POSSESSED ON-SITE BY ISRAEL, RUSSIA (FSU), THE U.K., BRAZIL, AND RED CHINA.

TOM BEARDEN

Novel Principles In The Rife Microscope

And Rife's Great Secret [1]

© 1998 T.E. Bearden

Substantially updated Aug. 20, 2001

Foreword

In the 1930s and 1940s, Royal Raymond Rife {1} made revolutionary discoveries in microscopy, including development of novel microscopes that could see far beyond the accustomed one-tenth wavelength limitation according to Rayleigh theory. With his microscope, he was able to "see" ultramicroscopic living forms much smaller than anything considered in the observable state. It would appear that his microscope was somehow capable of peering directly into the virtual state itself, and finding living forms at that level that were far beyond anything ever suspected by conventional science, even to this day.

Obviously this work was dramatically controversial. Rife went on to develop treatment methods and devices based on the new level of living organisms that his microscope revealed. In short, he arrived at essentially a new theory of disease, and did achieve success with his—to conventional scientists—completely unprecedented devices and methods of treating and healing. While we do not discuss his treatment methods in this paper, we do discuss the methods of Prioré, whom we believe to have used similar principles. So these discussions may shed some light

on Rife's therapeutic mechanisms also.

Rife and others reported his results in the proper scientific literature. For his efforts, he was ostracized, essentially imprisoned in a medical treatment facility, broken, and rejected by his peers. His findings were harshly ridiculed and discredited. Finally escaping from his enforced confinement, Rife lived out his remaining years and died quietly and unknown.

In the present paper it is not our purpose to address Rife's theory of disease or his treatment devices and methods. It is solely our purpose to propose a higher symmetry electrodynamics functioning of his microscope, as one possible explanation of the startling microscopy results he achieved. We will reveal what we are convinced is Rife's great secret: recursive virtual state magnification (amplification) by iterative difference frequency serial summation of vacuum engines. This is a substantial change from an earlier mechanism proposed by the present author, which proved to be in error {1}.

We accent that this is not a "standard electrodynamics" examination of the Rife microscope; normal U(1) electrodynamics and transverse EM waves contain no mechanisms that can explain the functioning of the instrument. Accordingly, since no such explanation is contained in the usual electrodynamics, one must of necessity turn to those available electrodynamics models that are of much higher symmetry than afforded by vector and tensor algebra. To show the fit to experiments, we must also address an enormous amount of the work performed by Prioré and his colleagues. Only in such EM models and their known fit to actual experiments are the additional phenomena and principles available that can possibly explain Rife's epochal results.

Also, because of the importance of this unified field theory area, we include substantial references and additional extended discussions in the endnotes for further technical clarification. Thirty figures are added to illustrate the material.

The Rife Microscope

The Rife microscope { [1] } (Figure 1) cannot be made to work by normal optical principles at the level utilized by Rife. With normal optics, about one-tenth wavelength is as fine an optical resolution as one can get. Since Rife went far beyond that, it should be obvious that he was using optics and electrodynamics of a *novel kind*, and of a type not yet in the conventional textbook.

We believe we are aware of the major principles used in Rife's microscope, or at least some of them, but prior to 1998 we shied away from anything to do with the scope. My major interests have been in extracting EM energy from the vacuum and in developing a new kind of medical therapy utilizing higher symmetry electrodynamics—and thus unified field theory—to directly and slowly change cellular disease or disorder back to a normal previous state. Obviously, if one is to produce a microscope that "sees" optically further into the realm of smallness than any other microscope can conventionally do (even in theory), that microscope must be functioning in a higher electrodynamics mode rather than in the conventional one.

In this paper, we will try to summarize some deep physics principles underlying the Rife microscope, at least as we see them terms of a higher symmetry EM model, and we cite some references for the bits and pieces. A more detailed explanation must wait for a future time and assistance from very high-level theorists.

Introduction

A good hint is this: Rife (Figure 2) often painfully adjusted his microscope stages for up to *24 hours* before he finally got the instrument "focused." Immediately that shows it is not standard optical equipment. Well-made standard optics—and Rife's microscope was beautifully made—can be adjusted far more easily than that (in minutes!).

So far as we are aware, no one ever looked at the Rife work except through essentially rather orthodox electrodynamics and rather orthodox optics eyes. Normal optical theory permits resolution of about one tenth of the wavelength of the light used, and a few microscopes in the last few years have gone just a wee bit further. But none have gone anywhere to the degree of smallness that Rife reported.

In our view, the orthodox approach to explaining the operation of Rife's microscope is doomed to fail from the beginning. Even a very good scientist will fail with replication, if that approach is exclusively taken. An entire scientific team and substantial funding will not do any better, unless something technically deeper is understood and tackled from the outset. We give an overview of our approach to tackling that problem. To begin with, we must present some errors in electrodynamics and an omission in general relativity, so that we can develop the necessary background. The discussion is not simple and will require considerable development. Once the considerable background is developed, the application to the Rife microscope will be straightforward.

Errors in Electrodynamics and Adjustments to General Relativity

First, present electrodynamics itself has serious flaws and shortcomings, and needs substantial revision {[2] }. As foundations scientist Bunge points out {[3]}:

> *"...it is not usually acknowledged that electrodynamics, both classical and quantal, are in a sad state.*"

Bunge {[4] } also said:

"... the best modern physicist is the one who acknowledges that neither classical nor quantum physics are cut and dried, both being full of holes and in need of a vigorous overhauling not only to better cover their own domains but also to join smoothly so as to produce a coherent picture of the various levels of physical reality."

The flaws in electrodynamics pass over into what has been constructed for optical theory—both linear and nonlinear—which just assumes the electrodynamics as a subset.

For our purpose, we need to clarify what modern electrodynamics does and does not say about the massless vacuum, and about the state and form of EM entities—such as potentials, fields, and waves—created in it (in *empty space*) by matter dynamics, or acting from it (from *empty space*) onto matter and causing matter dynamics.

Maxwell and all his peers believed firmly in the material ether, a thin material fluid filling all space and every crevice. To scientists at the time, not one single point in the universe was devoid of this material etheric fluid—this *thin matter*. The atom had not been discovered, the electron had not been discovered, and electricity was also considered a thin material fluid. Charge had no more meaning than "a piece of the electric fluid," much like a cubic centimeter of water.

Faraday {[5] } believed that the EM influence in space consisted of *material lines of force which acted as taut strings under tension from some mysterious source*. He believed that EM disturbances were just the transverse wave "perturbations" of these taut strings. In his concept, Faraday omitted the string holder or other agent producing the tensile forces upon the string (Figure 3). He thus omitted Newton's third law from his electrodynamics concept. He also omitted precisely half the energy, by omitting the equal-energy time-reversed EM wave that accompanies the formation of every ordinary EM wave we take account of. In a receiving copper wire antenna, for example, not only do the electrons interact with the incoming fields, but so do the protons in the nuclei—though highly damped in amplitude by the proton's large mass with respect to the mass of a disturbed Drude electron. However, the two energetic interactions (of perturbed protons and perturbed electrons) are of equal *energy* magnitude. So in the conductor, equal energy is expended to move the "lattice holes" (positrons) as is used to move the Drude

electrons, else field theory itself is falsified. Except in semiconductors, electrical engineers mostly just ignore the "disturbed lattice hole current" energy.

Maxwell deliberately captured Faraday's thinking, mathematically {[6] }, and so just *assumed* Faraday's lines of force and the "plucked tight string" transverse EM wave in the material ether {[7] } as well as the unexplained tension . The notion of the transverse EM wave in vacuum has essentially no other theoretical justification than that Faraday-Maxwell assumption and the observed "transverse waves" generated in the receiving "electric fluid in the conductor" in and on the Drude electrons. The transverse EM wave notion in vacuum was maintained only by discarding its missing antiwave that is always formed simultaneously in our transmitters and receivers (e.g., when we perturb the Drude electrons in a transmitting wire antenna, we also perturb the protons in the nuclei with the same energy. The two disturbances—proton disturbance in the nucleus and Drude electron disturbance in the Drude electron gas—perturb the local surrounding vacuum/ spacetime with equal energy, so in the vacuum "virtual particle flux gas" the two perturbations are energetically equal. The receiving wire receives both perturbation waves from the vacuum; one perturbs the electrons and the other perturbs the nuclei. Since the second wave is unaccounted, the perturbation of the nuclei is just considered a "mysterious force" that always appears. In a pumped phase conjugate mirror material, e.g., we interact the waves prior to their reaching the nuclei, by multi-wave mixing. Since the "causative" but neglected second wave coming in from space does not reach the nuclei, but are redirected to form the phase conjugate replica wave produced by the pumping, *the mirror does not recoil and it does not exhibit Newtonian third law reaction*. However, since electrodynamics *omits* the EM causative wave that generates Newton's third law forces in the receiver, which in normal detection always appear, then presently electrodynamic fields are erroneously said to be devoid of Newton's third law reaction. To the contrary, the effects of that hidden, neglected EM cause of the Newtonian third law reaction do appear, either as recoil of the physical receiving antenna or as the production of the time-reverse phase conjugate replica

wave in optical pumping. But in standard electrodynamics, equal-and-opposite forces in the receiving antenna are assumed to arise "mystically" or from some hidden *electrodynamic demon*. The electrodynamic cause of Newton's third law has been lost since Maxwell wrote his theory.

Maxwell, however, was careful to point out the ad hoc nature of assuming the stress in the vacuum, and that no mechanism for it had been discovered, nor was such a mechanism contained in his theory. Specifically, Maxwell said {[8] }:

> *"It must be carefully borne in mind that we have made only one step in the theory of the action of the medium. We have supposed it to be in a state of stress, but we have not in any way accounted for this stress, or explained how it is maintained. This step, however, seems to me to be an important one, as it explains, by the action of the consecutive parts of the medium, phenomena which were formerly supposed to be explicable only by direct action at a distance. … I have not been able to make the next step, namely, to account by mechanical considerations for these stresses in the dielectric. I therefore leave the theory at this point, merely stating what are the other parts of the phenomenon of induction in dielectrics."*

Indeed, we now know of electrons and their spin. The longitudinally-constrained, spinning Drude electrons in receiving wires will gyroprecess laterally in the wire when an EM disturbance from the vacuum interacts with them. (Figure 4) It is well-known that these Drude electrons are highly restrained longitudinally down the wire; the longitudinal movement is the "drift" velocity and may be nominally only a few inches per hour. The lateral precession of the longitudinally constrained, spinning Drude electrons establishes that the incoming vacuum disturbance, before its interaction with the gyroelectrons, is *longitudinal*. Else one must discard electron spin, electron gyroprecession, and

indeed the theory of gyroscopic precession itself. In our view, the EM wave *in vacuum* is longitudinal, always has been, and always will be {[9] }. It also *does not* consist of EM force fields, contrary to present classical theory. Instead, only the potentiality {[10]} for the transverse force fields—*should* the longitudinally perturbed vacuum EM entity be intercepted by a spinning charged particle and interact with it—exists in mass-free space, as pointed out by Feynman. Quoting Feynman again {[11] }:

> . *"We may think of **E**(x, y, z, t) and **B**(x, y, z, t) as giving the forces that <u>would be</u> experienced at the time t by a charge located at (x, y, z), <u>with the condition</u> that placing the charge there <u>did not disturb</u> the positions or motion of all the other charges responsible for the fields."*

Rigorously the force fields exist only in and of matter. In matter-free space, there is no force at all in what we call the "field as it exists in massfree space" {[12] }. E. g., Jackson states it this way {[13]}:

"Most classical electrodynamicists continue to adhere to the notion that the EM force field exists as such in the vacuum, but do admit that physically measurable quantities such as force somehow involve the product of charge and field."

But again, Jackson also states {[14] }:

> *"...the thing that eventually gets measured is a force..." "At the moment, the electric field can be defined as the force per unit charge acting at a given point. It is a vector function of position, denoted by E. One must be careful in its definition, however. It is not necessarily the force that one would observe by placing one unit of charge on a pith ball and placing it in position. The reason is that one unit of charge may be so large that its presence alters appreciably the field configuration of the array. Consequently one must use a limiting process whereby the ratio of the force on the small test*

> *body to the charge on it is measured for smaller and smaller amounts of charge. Experimentally, this ratio and the direction of the force will become constant as the amount of test charge is made smaller and smaller. These limiting values of magnitude and direction define the magnitude and direction of the electric field E at the point in question. In symbols we may write F = qE where F is the force, E the electric field, and q the charge. In this equation it is assumed that the charge q is located at a point, and the force and the electric field are evaluated at that point."*

As can be seen, much of the difficulty occurs because physicists continue to erroneously utilize an *equation* as if it were a *definition*. An equation defines nothing at all; it merely states that all the "things on the left" of the equality sign and all the "things on the right" have the same overall magnitudes. It does not *define* any of the things on the left or right, and so it tells us nothing at all about what anything in it *really is*. A definition requires an identity, not an equality. E.g., if we take as an identity the very equation advanced by Jackson's explanation above, we then have a definition:

$$F \equiv qE \Rightarrow E \equiv F/q$$

And now that identity clearly states that charged mass is a *component* of the **E**-field. Similar argument prevails for the **B**-field, etc.

The identity also shows that E is not the *magnitude* of the force field at all, but is its *local intensity* at any given point in the E field, in terms of force per unit point static coulomb—a force formed in, on, and of the charged mass of the coulomb. The misstatement that E represents the *magnitude of the field* is another great non sequitur. No textbook gives the calculation of the *magnitude* of the E-field, though all purport to. Instead, they all give the calculation of the *intensity* of the E-field at each point in it. There is a great difference between the magnitude of an automobile's mounted tire and its pressure per sq. inch on the pavement. In all fairness, some of the better texts do

use the term "field intensity", at least occasionally.

As *defined*, the EM force fields are effects produced in, on, and of charged matter and *only* in, on, and of charged matter. They are not at all the same effects produced in matter-free space (in the vacuum/ spacetime). The EM force field (in matter) is not the same as the "massfree" E-field in massfree spacetime. Ultimately, all that exists in spacetime are *spacetime* and *changes to spacetime*.

We may accurately take the mass-free, force-free EM field to be a pattern of spacetime curvatures. The coupling of this spacetime curvature set, or any part of it, with charged mass, then constitutes an EM force field. Again, the problem is the hoary old mechanics notion of having a separate massless force acting upon a separate mass. No such thing exists in all nature, and mechanics should have been rather thoroughly overhauled long ago as a result of this horrendous *foundations of mechanics* error that is centuries old.

In present classical electrodynamics—certainly the kind taught to electrical engineers and used in the electrical engineering discipline—the EM potential {[15] }, field, and wave, as they truly exist in space and in the vacuum, are rigorously not prescribed at all. Instead, the effect of the "causal entity" as it exists in vacuum prior to interaction with charged mass, is used a if it were what exists in and on the charged mass as the effect of the interaction. (See Figure 5, Figure 6, and Figure 7). This substitution of the effect for the cause is arguably the greatest uncorrected error in classical electrodynamics today. It is a hangover from the old days of the material ether, and the refusal to change the Maxwell-Heaviside equations to eliminate that material ether assumption, once the Michelson-Morley experiments falsified it. This has long been known to foundations physicists, and to most of the better electrodynamicists as well. But it still seems to be known to very few electrical engineers!

Many attempts have been made to “modify” the standard classical electrodynamics theory, but most have failed. For some reason, most of these attempted

modifications seem to have accepted the present "matter-to-matter transform" approach (Figure 8) of present electrodynamics, failing to see that the two missing transforms of matter-to-spacetime and spacetime-to-matter (Figure 9) are in fact just general relativity itself {[16] , [17] } The solution for adding the missing two transforms into electrodynamics therefore may lie in "infolding" general relativity directly within electrodynamics, rather than placing the two on an equal footing. That requires the analysis of the supersystem rather than the system, a concept which will be discussed shortly. Figure 10 shows the utilization of the "vacuum engine" that results from this "infolded GR" solution.

To our knowledge, the Sachs unified field theory {[18] a,b,c,d,e} is presently the only practical unified field theory that can be directly engineered by higher symmetry electrodynamics, such as the O(3) group symmetry EM model advanced by Evans and Vigier and perfected by Evans {[19] }. The engineering power of Sachs' theory is remarkable {[20] }, and the O (3) electrodynamics has been shown by Evans to be an important subset of the unified electrodynamics in Sachs' theory.

Let us examine that statement a little deeper.

In classical electrodynamics the sources of all EM potentials, fields, waves, and their energies are assumed to be the charges—which are assumed to somehow act as perpetual motion machines that continuously *create and pour out* all that EM energy in the fields and potentials associated with the charge as their "source". This outpouring of 3-space energy comprising and establishing the associated potentials and fields eventually fills all space with energy. All the charges and dipoles present in the universe since shortly after its formation have done this for some 14 billion years.

Yet in classical EM—with all the existing charges in the universe implicitly assumed to continuously pour out energy into all of space, and most having done so for billions of years—inexplicably space is *then*

considered to be an emptiness having no interactive energetic exchange with the charge at all {[21] }. That of course is a non sequitur because it involves a total contradiction of the conservation of energy law. If there is no active energy in spacetime for the charged particle to receive and then output in 3-space, then the energy conservation is falsified by every charge and every dipole.

In particle physics the inactive vacuum concept is known to be quite wrong, else the charge creates energy from nothing. That would violate the most sacrosanct law in physics: that *energy can neither be created nor destroyed*. So electrodynamics—both classical and quantum, neither of which contains the solution to this *source charge problem*—is in gross violation of conservation of energy laws, because it assumes that the charge is solely the source of its associated fields and potentials and their energy { [22] } and that it accordingly creates all that energy it has poured out since the beginning of the universe.

Presently the electrical engineer implicitly assumes total violation of the conservation of energy law with every equation he writes, and is blissfully unaware of it.

Particle physicists, however, have done much better and published and incorporated their results, although inexplicably the mainstream electrodynamicists have not changed their own model accordingly. Particle physicists have known and shown for more than 40 years that (i) space is a seething inferno of EM energy { [23]}, (ii) a charge continually undergoes a violent energy exchange (see Figure 11) with the vacuum EM flux. That exchange is what a charged mass is doing, to *make* it a "charged mass"), and (iii) the charge is a *broken symmetry* in that violent energetic flux of the vacuum. "Broken symmetry" means that the charge disrupts and alters part of that virtual particle flux to observable EM energy flux (see again Figures 5, 6. and 7). The charge continually absorbs virtual energy from the vacuum, radiates *some* of that absorbed energy back to the vacuum in virtual form, but *integrates and radiates the remainder* in a flow of potentially observable energy—the energy flow discovered by

Poynting {[24] } and Heaviside {[25] } after Maxwell was already deceased.

So what does the source charge really do? It coheres, transduces, and *gates* some of its virtual energy {[26] } received from the vacuum, into an EM energy flow going out in all directions in 3-space from that source charge. Contrary to present electrodynamics, this energy flow is actually longitudinal and bidirectional {[27] , [28] , [29] , [30]}, with energy *going out in 3-space from the charge* to every point in the universe, and with energy coming from every point in the universe *back to the charge through the time domain*. But as reinterpreted {22 b}, Whittaker {[31] } showed in 1903 that any such bidirectional EM flow of energy —reinterpreted with the input energy to the charge coming from the time-domain, and the output energy from the charge being emitted into 3-space, comprises a scalar potential. This also agrees with quantum field theory {[32] }

See Figure 12. As it really exists in space, a scalar potential is a harmonic set of bidirectional EM energy flows, with the "bidirectional" EM waves being outgoing EM waves in 3-space caused by interaction with the source charge or dipole of incoming time-polarized EM waves. There is a set of outgoing EM longitudinal waves in 3-space, perfectly correlated with a set of incoming time-polarized EM waves in the time domain. Hence one time-polarized EM "causal" wave couples with one outgoing longitudinal EM wave in 3-space. It is this scalar EM wave coupling (combining) with longitudinal EM wave coupling, in a harmonic set of phase conjugate pairs, that constitutes the scalar EM potential.

In short, all EM energy in 3-space comes from the time domain.

After all, no observable persists continuously in time. Any observable is a frozen 3-space momentary snapshot of an ongoing 4-space interaction. It is the result of a d/dt operation imposed upon LLLT spacetime, to yield a momentary LLL by

d/dt(LLLT) => LLL

What we see as the "motion of an object in 3-space" is actually the ensemble of a continual serial iteration of such "frozen 3-space snapshots" of each observable part of the object, much as the iterative frames of a movie film are seen as a continuously moving picture.

In Whittaker's bidirectional energy flow associated with the source charge, electrodynamicists—including Whittaker himself—assumed that a point positive coulomb of charge is located at each and every point in space. (Figure 5, Figure 6, and Figure 7). A tiny bit of the impinging EM energy flow "from" the distant source charge {[33] } is geometrically intercepted and diverted by the observing/detecting point charge to streamline around it, creating a "swirl around" of diverted energy flow. As can be seen, only a tiny portion of the impinging and passing EM energy stream in 3-space is diverged into the swirl. This is rather like a small diverted whirlpool of water forming around a stable rock in a flowing river. In electrodynamics the amount of energy in that "diverged whirlpool" is said to be the "collected" energy appearing upon that point charge (upon that fixed rock). That amount of energy swirled by the intercepting point coulomb at a given point in space, is then erroneously said to be the *magnitude of the potential (the magnitude of the entire river)*. It is no such thing. The small fraction of the potential that is *diverted from* the potential's flowing rivers of energy, is not that the magnitude of that potential (the magnitude of the entire set of flowing rivers themselves!) And it is certainly not "identically" the river itself! At best it is a measure of the *intensity* of the potential (the local intensity of all those internal rivers of energy flow) at that point occupied by the intercepting/diverting rock.

The point is, *as defined and used in conventional electrodynamics*, the potential occurs only after the vacuum EM entity's reaction with the intercepting mass, and is defined only as the *effect* produced upon that coulomb by the causative potential's interaction. Literally, the potential (the cause) is erroneously defined as the "excitation" or "excess energy" it locally

produces as an *effect* upon a unit point intercepting/ collecting charge.

Ironically, it appears that no electrodynamicist calculates the magnitude of the actual potential as it exists in vacuum-spacetime, before its interaction with charge {[34], [35] }. Its magnitude is enormous, since the potential may extend over all space, and energy can be intercepted and collected by a charge placed at any point therein, or from charges placed at every point therein.

Certainly no rigorous definition of the potential presently exists in physics; the reader is challenged to check for himself or herself. No legitimate definition *can* exist for the potential, until the little matter is resolved of its present erroneous definition only "in and on and deviated by" charged matter, contradicted by the simultaneous assumption that it does exist in mass-free space in undeviated form. What is *deviated from* the potential, is not the *potential itself*. A part of something torn out of that something at one point in itself, is not the whole. The *local effect* cannot be substituted for the *entire nonlocal cause*—only a small part of which interacts *locally*.

The EM force field is similarly defined—only for charge mass interception, and only as an *effect* produced upon the intercepting charge. (See again Figures 5, 6, and 7.) A flow of water across a rock (or the wind on a rock in the desert) produces a “pileup” of fluid on the windward side, and a lesser “pileup” on the downwind side. The difference (called the “gradient”) in the energy density collected across the standard charge (rock) produces a “difference in pressure” on the rock—in other words, a force per interacting rock. That *effect* is erroneously taken to be the EM field itself, when rigorously it is only the reaction cross section of the EM field. Again, rigorously this EM field *as defined in electrodynamics* only exists as the effect that occurs upon an intercepting standard charge or "rock" {[36]}.

Since the EM wave “in space” is erroneously said to be made of varying EM fields, it too is defined only as the

effect upon the intercepting charged mass, after the vacuum EM wave entity—whatever it is—has interacted with the charge and changed the charge translationally and energetically. Specifically, the present "EM wave in vacuum" in the literature is not at all what is presented and taught in undergraduate texts, and even the standard illustration of "oscillating E-field and B-field vectors" lateral to the line of motion of the wave is horribly wrong. E.g., Dr. Robert Romer, former editor of American Journal of Physics, has taken that error to task as follows { [37] }:

> *"…that dreadful diagram purporting to show the electric and magnetic fields of a plane wave, as a function of position (and/ or time?) that besmirch the pages of almost every introductory book. …it is a horrible diagram. 'Misleading' would be too kind a word; 'wrong' is more accurate." "…perhaps then, for historical interest, [we should] find out how that diagram came to contaminate our literature in the first place."*

The EM field and wave *as commonly regarded* are transfer functions from the source charged masses that "perturbed the vacuum medium and created an unknown kind of disturbance therein", onto the receiving charged masses that intercept the incoming "unknown vacuum wave entity that was created" and interact with it, being translated and perturbed as a result.

This "detected" translation of the receiving charged masses (usually the interacting Drude electrons in a wire) is what our instruments detect. Indeed, the Drude electrons are highly constrained from moving longitudinally down the wire, usually moving at only a few inches per hour. They are much freer to move laterally, however, and can easily do so.

Reacting with the incoming longitudinal EM wave perturbation of local spacetime, the spin of the electron produces gyroscopic precession laterally in the wire since the electron is terribly restrained in moving

longitudinally down the wire. Since our instruments detect these *transverse electron precession waves*, that has been totally confused (since Faraday's "plucked taut string" notion of the EM wave and Maxwell's arbitrary adoption of it) as representing the incoming wave in vacuum. It does not represent the vacuum EM wave at all; the incoming wave is in fact a longitudinal EM wave in 3-space, associated with a precisely correlated longitudinal EM wave in the time-domain.

So we have answered Professor Romer's implied question. That horrible diagram came from the assumption by early electrodynamicists, before discovery of the electron or atom or nucleus, that the "transverse electric fluid waves" in the receiving wires represented actual "intercepted" fluid perturbations arriving in the material ether medium.

In summary: Using a transmitter-receiver analysis, the so-called “EM wave in vacuum” *as presently defined*, actually represents that “detected and measured electron precession wave” in and of the reacting Drude electron gas in the distant receiving wire antenna. The so-called EM force field wave in vacuum has been erroneously defined as observable matter wiggles, not vacuum virtual energy wiggles and not as spacetime-curvature changes and wiggles. So even the present notion of the EM transverse wave in space is wrong, and it has been corrupted as a pure matter-to-matter transform from the beginning { [38] }.

Somewhat less technical explanations are given by Lindsay and Margenau { [39] }, and a rigorous statement and discussion that EM force fields exist only in charged matter is given by Aharonov and Bohm { [40] }. Feynman of course said it bluntly: Only the potential for the field exists in the vacuum, should one place a unit point charge there to allow the force field to be developed (on, of, and containing the source charge itself).

Let us summarize this terrible EM foundations flaw: As classical electrodynamics presently is modeled, Maxwell and his modern followers only include equations which are *mass-to-mass transformations*

(Figure 8). Specifically missing { [41] } are two other transforms: (i) the mass-to-vacuum (mass-to-spacetime) transformation (which obviously is general relativistic in nature), and (ii) the vacuum-to-mass (spacetime-to-mass) transformation (again, obviously general relativistic in nature). (See again Figure 9). When these two missing transforms are added back into electrodynamics, one has suddenly extended EM theory into a new domain. One has also *infolded* general relativity (GR) inside the present EM matter-to-matter transforms, and also included the vacuum interaction including broken symmetry in that exchange, but in an *electromagnetically engineerable manner*. In short, one has a practical, engineerable unified field theory.

Highly creative inventors such as Rife and Prioré intuitively developed apparatuses that unwittingly utilized this presently undeveloped and extended union of EM, particle physics vacuum theory, and GR. The intuition of the theorists in interpreting those revolutionary experiments and their results has very seriously lagged.

The Supersystem Concept

To understand how extraordinary systems such as Rife's microscope works, one must understand the concept of the *supersystem*. (See Figure 13). The supersystem consists of three components, which are (1) the physical system and its dynamics, (2) the local active vacuum and its dynamics, and (3) the local curvatures of spacetime and their dynamics. All three components of the supersystem interact with one another, in nature. The second and third components of the system constitute the active environment in which the system is embedded, and with which it interacts.

Unfortunately, in standard classical electrodynamics either the system's environment is assumed to be inert, or the system is assumed to be in equilibrium in its interaction with that environment. This represents a totally arbitrary assumption that the system cannot receive and utilize any excess energy from its known

active environment. Hence the active vacuum's interaction with the system can be and is ignored by classical electromagnetics, as are the local curvatures of spacetime and their interactions with the system.

Extraordinary EM systems invariably involve the supersystem dynamics, and not just the system dynamics. *In nature*, no system analysis is complete until the supersystem interactions and their effects have been determined and analyzed.

The Rife microscope is indeed an extraordinary system using non-negligible interactions between the system and the other two components of its supersystem. Hence in our discussions, we will be examining interactions in that regime, and not just the standard electrodynamics analysis. In these discussions, we will be holding in mind not just the mass-to-mass transforms of standard electrodynamics, but two other transforms: (1) the mass-to-vacuum/spacetime transform, and (2) the vacuum/spacetime to matter transform (previously shown in Figure 9).

The reason that Rife's work has not been understood is that researchers have been unaware of the necessity for supersystem analysis. Almost all analyses of Rife's work have been merely standard classical EM analysis and thus quite insufficient. There are other examples of the standard electrodynamics model completely failing to show higher symmetry phenomenology in an inventor's work, so that his work is not understood even today. An example is provided by Tesla's patented circuits, as rigorously demonstrated by Barrett { [42] }. Barrett went on to improve the new functions discovered in Tesla's patents, and obtained two additional patents related to signals and signal processing { [43] }.

Vacuum-Structurings as “Engines”: Key Part of the Missing Transforms

The missing mass-to-vacuum/spacetime transformation produces a massless structuring of the vacuum medium. That is a *vacuum engine* or “multiplex of specific spacetime curvatures.” (See Figure 14, Figure

15, Figure 16, Figure 17), and Figure 18. Preparing the vacuum engine is accomplished by charged matter dynamics of the source charges producing the necessary potentials, fields and waves. The charges are embedded in continual energetic exchange with the vacuum/spacetime, and moving the charges affects that exchange; it perturbs the local vacuum flux and curves the local spacetime accordingly.

The transform represents producing this vacuum engine by the vacuum-perturbing action of source charge dynamics upon the vacuum, and by *not* assuming a mystical intercepting point-charge at each point in space { [44] }. In the vacuum/spacetime, *only* vacuum/spacetime entities and changes to them exist. *In pure water, only water and changes to that water exist!*

So a precise dynamic structuring of the energetic vacuum (and spacetime geometry) is what charges produce when they “perturb” the vacuum medium { [45] }, by the presence or dynamics of their fields, longitudinal and time-polarized EM waves, or both. This "perturbed vacuum dynamics" separate from the source charges themselves comprises an engine that consists of altered longitudinal EM wave dynamics inside the internal Whittaker structure { [46] } of the scalar potential of the ambient vacuum. That is the same as also producing internested levels of spacetime curvatures in a *template* or specific pattern { [47] }.

In turn, this vacuum engine region of local curvatures and structurings in spacetime will interact upon any mass placed therein. That action is the missing *electrodynamic vacuum-to-mass transform.*

The missing electrodynamic vacuum-to-mass transformation produces direct changes and alterations in the “receiving” mass, at all levels, by the action of such a vacuum engine. As each action occurs locally in the localized receiving mass, it produces the "local effect" as the result of that “local action.” The primary causative chain (i.e., the set of “dominoes” affecting each other serially), started back at the distant source charges. One can say that we therefore have mass-to-mass *action at a distance*, via the matter-to-vacuum

and vacuum-to-mass intermediary transforms and the spatial and temporal propagation of the vacuum engines in the middle of the two { [48] }. We will shortly discuss the Whittaker structuring of the potential as a fundamental process for producing vacuum engines.

General relativists mostly concentrate upon the warping and curving of spacetime (i.e., producing a vacuum engine) by the very weak gravitational force—which is only some 10^{-42} times as strong for electrons as the electric force between them. Consequently, relativists must look to huge assemblages of mass, such as in stars and other astronomical objects, for sufficient gravitationally-induced spacetime curvature to produce easily observable results. For that reason, general relativity has resisted laboratory development as an engineerable applied science. By using the far stronger EM force as the agent of spacetime curvature, and including the infolded electrodynamics inside the potential, field, and wave, general relativity then becomes engineerable and usable. But one is engineering the supersystem, not just the system.

The Infolded Electrodynamics Inside Potentials, Fields, and Waves

As previously stated, in 1903 E. T. Whittaker, a well-known mathematical physicist, showed that a scalar potential can be mathematically decomposed into a set of peculiar EM wavepairs in a harmonic set. (Again see Figure 12) These “hidden waves” are longitudinal EM waves, arranged in conjugate pairs { [49] } with the pairs also arranged in a harmonic set. In each wavepair, there is an ordinary (forward-time) longitudinal EM wave (outgoing in 3-space from the interacting/observing charge), coupled to its phase conjugate replica (time-reversed twin).

And here lies a magic secret. Prior to interacting with a charge, the phase conjugate wave in each wavepair is in the complex domain, which means that in Minkowski space it is incoming along the fourth axis, *ict*, where the only variable is *t*. Hence this wave prior to interaction with charge does not even exist in 3-

space. Instead, it exists as a longitudinal EM wave incoming in time, so that it is a time-like flow of EM energy. (See Figure 19). After interaction with a charge, the charge absorbs the incoming time-polarized EM wave, transduces that time-energy to 3-spatial energy, and re-emits the energy as longitudinal EM waves in 3-space in all directions. "In all directions" means that for every outgoing longitudinal EM wave emitted in one direction in 3-space, another wave just like it also emitted in the other direction in 3-space. So the paired "bidirectional" EM longitudinal EM waves in 3-space, as interpreted by Whittaker, do exist as the *effect* waves caused by the incoming causal time-like longitudinal EM waves (scalar EM waves). The pairing of the causal time-polarized EM incoming wave with an outgoing effect longitudinal EM wave was not interpreted by Whittaker, but does agree with more modern quantum field theory interpretations of photon polarizations and their observability or non observability, by Mandl and Shaw {22b}.

We have corrected this "effect substituted for the cause" wave to reinterpret Whittaker's 1903 decomposition of the scalar potential, into combined biwaves where one of the biwaves is incoming in the time domain, and the other is outgoing in 3-space. That re-interpretation then allowed a solution {22a} to the problem of the source charge and its associated fields and potentials, together with their energy. Every source charge and source dipole continuously emits EM energy in 3-space, without any 3-spatial EM energy input. The input is there, but in the time-domain. This problem—resolved by the present author in 2000—has been called the most difficult problem in quantum and classical electromagnetics {30 }.

Because of observed parity reversal accompanying the time-reversal operation, in his forward-time, the observer “sees”—after interacting the incoming wave with charge—the *effect* of the incoming time-reversed or phase conjugate wave (entering from the time domain) as a 3-space longitudinal EM wave leaving in the opposite spatial direction. So the basic 4-space phase conjugate longitudinal wavepair would appear to us in forward time as a “regular” time-forward

longitudinal EM wavepair in 3-space, with the two waves going outward in opposite directions. But each is accompanied by a time-polarized EM wave, else it would not be observable.

Further, there is a harmonic series of such bidirectional longitudinal wavepairs comprising the scalar potential. So the staid old electrostatic potential (i) *is not* a "scalar entity" at all { [50] }, (ii) *is* a bundle of longitudinal wavepairs, (iii) *is* an entity with a remarkable internal hidden multiwave structures and dynamics, (iv) *is* a composite of very special waves whose transverse amplitude (i.e., whose spatial energy density, which is a function of transverse amplitude squared) does not change, but whose transported time structure changes, and (v) therefore is a special kind of wave that is velocity modulated about some central velocity, and is not limited to the speed of light c. Indeed, in classical electrodynamics in the Coulomb gauge, the scalar potential is already recognized as having infinite velocity, merely appearing in space instantly at every point it occupies { [51] }.

We also state without elaboration that the active vacuum is *identically* a very huge scalar potential, as indeed is “spacetime geometry”. So a unifying principle is:

vacuum ≡ spacetime ≡ potential ≡ energy { [52] }

Further, as a potential, the “ambient” vacuum decomposes into an incredibly rich, internal Whittaker wave structure. So then also must *spacetime* and *energy* similarly decompose. That decomposition structure is even richer when higher symmetry O(3) EM is used instead of the lower symmetry U(1) EM employed by Whittaker.

A revolution in electrodynamics has recently begun, and central to that revolution is the strong appearance of longitudinal EM waves as essentially the basis for the emerging new electrodynamics. Work by Evans { [53] }, Barrett { [54] }, Ziolkowski { [55] }, Evans { [56] }, Rodrigues {57}, and others is

fundamental in this respect. One part of this emerging new electrodynamics is advanced under the label of *undistorted progressive waves* (UPWs). A good summary of UPW theory is given by Rodrigues and Lu { [57] }. Even so, to date this body of work still largely ignores the internal Whittaker dynamics { [58] } inside an EM wave. The body of work—particularly the higher symmetry O(3) electrodynamics pioneered by Evans {56} inherently possesses the capability to model such structuring, since much of it utilizes a higher topology algebra such as quaternions { [59] } or even Clifford algebra { [60] } In those higher algebras, many electrodynamic things can be done outside the operations permitted by present vector and tensor electrodynamics.

Superpotentials and Superpotential Theory

Whittaker's 1904 paper { [61] } showed that all the "normal" electrodynamics was based on, *and created by*, the interference of scalar potential functions (i.e., by the interference of those multiwave longitudinal wavepairs and their dynamics { [62] } constituting the interfering scalar potentials.) He showed that any EM field or wave whatsoever can be replaced by two scalar potential functions—in fact, is *comprised of* those two scalar potential functions and is *created by them*. Scalar potential interferometry already creates all the "normal" EM in the textbooks anyway, and a proof has been given by Evans et al. { [63] }.

The 1904 paper by Whittaker initiated a somewhat obscure branch of electrodynamics referred to as *superpotential* theory { [64] }. Whittaker's work was further extended and augmented by later scientists such as Righi { [65] }, Debye { [66] }, Bromwich { [67] }, Nisbet { [68] }, McCrea { [69] }, etc. But even with the extended superpotential theory, without the addition of Whittaker 1903 and the substructuring "internal LW electrodynamics" one cannot understand the mechanism for what Rife was actually doing.

Rife was not using normal potentials and normal **E** and

H fields—which as we discussed, only apply to observable material entities anyhow and thus could not be used to "see" far below the quantum threshold of least detectable material disturbance. His entire protocol was to get beyond those "*material interception of EM energy*" limitations. Unwittingly, Rife was using *vacuum engines*—involving structuring of the active vacuum as well as pure general relativity (GR) and pure structurings of spacetime geometry itself. He was electromagnetically using that part of GR that the GR physicists have mostly only tried to produce by use of the weak gravitational force. In GR, *the ST geometry itself is active, dynamic, energetic, and structuring!* In higher symmetry electrodynamics, *the ST geometry itself is powerfully active, dynamic, energetic, and structuring!* It is not at all just a "passive spacetime" as classical electrodynamics assumes { [70] }.

Biological Systems Use the Infolded Whittaker-Type Electrodynamics

The problem in the Rife microscope is to be able to observe very subtle ST curvatures and patterns, in an optical manner. These subtle or virtual "disturbances" of local spacetime are far finer and smaller than the one-tenth wavelength optical resolution generally the limit for optical microscopes using conventional optical EM notions and "material" potentials, fields, and waves.

In short, Rife's twofold problem was to (i) function with vacuum engines (internal structuring of the potentials) so he could penetrate to any degree of smallness, and (ii) output, in the observable state, exact visible summations and analogues of the individual structures detected in the virtual (nonobservable) state { [71] }.

To make the subtle vacuum engines observable on the bench, the ST curvatures and their internested patterning must be accomplished by making and assembling local curvatures of ST, via making longitudinal EM wavepairs in structural pattern assemblies. *Spacetime* is in fact just a powerful scalar

potential, or can be modeled as such, and as such Whittaker 1903 and 1904 rigorously applies, along with extensions from higher symmetry electrodynamics. By realizing that ST is identically potential, one has altered one's thinking from the standard GR theory into a correlated EM-GR theory. One has also extended GR: Not only is there a "topology" of things that can be externally *done to* a base spacetime, but there is also a hidden, vast EM topology *within* any overall base spacetime. So we now have "topologies within topologies." This is in fact what the Russians have long called the *information content of the field*.

However, all living systems already use this "infolded" bidirectional, longitudinal wavepair EM in their ongoing living functions { [72] }. Just as they used frequency modulation, EM signals, EM oscillations, etc. before we even had an electrodynamics or a physics, living systems do use the infolded EM (and vacuum engines) in all their living functions, and particularly in their cellular *regeneration and restoration* (R&R) system { [73] }, as contrasted to their *immune* system. The immune system cells are the fighters and the debris scavengers/cleaners. They go after the hostile invaders, fight them, and usually win—littering the battlefield with the debris. Then the immune system scavenger cells clean up the residue.

But many of the body's cells will have been damaged in the fight. The immune system itself cannot heal or restore a single damaged cell, even its own! It is not a *healer*! It is a searcher, a marker, a killer, and a residue-cleaner. It contains " the troops and the combat engineer," so to speak, but not the hospitals and the doctors. All healing/restoration of living cells is done by the R&R system, not by the immune system.

A high-level overview of the immune system is given in Figure 20.

No vaccine, drug, herb, vitamin, or mineral *heals* the body, although certainly they can enhance or aid the body's healing process. Each does carry its individual resident vacuum engine, and when absorbed

by the cell, this added vacuum engine contributes to the resident vacuum engine in the cell by summing with it. To restore the damaged cells back to normal (i.e., to heal), the R&R system uses a novel kind of extended electrodynamics with infolded vacuum engines, and it uses a novel kind of optical phase conjugate pumping, in the time domain rather than just 3-space. The magic "unified field theory" so long sought by scientists, has long been utilized by the regeneration and restoration system of the body in its minute-to-minute and day-to-day healing and restoring actions.

The magic "universal healing mechanism" so long evading the discovery of medical scientists is none other than the exact cellular regenerative mechanism universally used by every living organism. For the first time, we are explaining the higher symmetry electromagnetic nature of this mechanism.

Robert Becker's epochal work { [74] } (Figure 21, Figure 22) strongly probed the electromagnetic control system directing the body's cellular regeneration and repair (R&R) system. However, he did not have available the infolded Whittaker electrodynamics. He could only utilize the grossly inadequate standard electrodynamics. Modern nonlinear phase conjugate optics had not yet been born when Becker did most of his seminal work.

Since standard EM does not incorporate infolded GR, vacuum engines, or optical pumping in the time domain, Becker could not formulate the full technical mechanism of the R&R system —which uses the *supersystem*, not just the system. But Becker did strongly point out the importance of the R&R system, both theoretically and experimentally. He found that it operated electrically, with the scalar potentials being key. He modeled the R&R system as closely as can be done with classical U(1) electromagnetics (Figure 22). He proved that cells can be *dedifferentiated* (reversed back to an earlier, more primitive state) and *redifferentiated* (time-forwarded into a more complex state) by weak DC potentials and laughably weak (picoamperes) of current. He was twice nominated for a Nobel prize for his epochal work. His method of

electromagnetic healing of otherwise intractable bone fractures (Figure 21) is utilized today in many hospitals.

In his microscope, Rife was in pursuit of optically "seeing" the infolded electrodynamics functioning of the living cells in the most minute detail—i.e., he wished to see the actual vacuum engines and their functions. Using the infolded EM, one can still "see" the cells and all their parts, but one can also go far beyond the one-tenth wavelength optical discrimination limitation and see into the virtual state dynamics. In theory, because the infolded EM is *recursive* as a function of wavelength, one can go to any limit in smallness desired—or at least to whatever limit is determined by the available technology's development at the time { [75] }.

Vlail Kaznacheyev's novel electromagnetic induction of cellular death, disease, and damage, *at a distance*, is instructive in this respect { [76] }. (Figure 23) Indeed, the Russians mastered, extended, and weaponized the Kaznacheyev mechanisms as disease-inducing weaponry, and slyly used it at low level on personnel in the U.S. Embassy in Moscow (Figure 24). This was done to stimulate high level officials in the U.S. government and U.S. scientific community to see if the U.S. knew of this "infolded electrodynamics and vacuum engine" technology { [77] }. The Russians were using GR, but by infolded EM means—so they were using a unified field theory involving higher group symmetry electrodynamics. The puzzled U.S. employed only standard U(1) symmetry electrodynamic analysis { [78] }, so it totally missed the entire physics of what was occurring to cause the health changes and diseases.

In GR, one is very interested in Wheeler's principle which states (slightly paraphrased):

> *Mass (trapped energy) acts upon ST geometry to curve it, and curved ST acts upon mass to produce forces upon it and move it.*

This statement after Wheeler is the very essence

of general relativity. It simply states that there is a *mass-to-spacetime* dynamic transform, and also a *spacetime-to-mass* dynamic transform, as we diagrammatically showed in Figure 9.

Understanding Vacuum Engines and Their Action

Wheeler's general relativity principle includes the missing two transforms of electro-dynamics. We are extending Wheeler's principle to the corollary form:

All levels of the structures of mass (trapped energy structures) and all levels of the structures of time (the time aspects of photon structures) act upon ST geometry to structure it in both 3-spatial energy density structuring and in time domain structuring. Producing this multilevel spatial and temporal structuring of spacetime is called "forming a vacuum engine." Both 3-spatial energy density structuring of spacetime at all levels and time structuring of spacetime at all levels, act upon mass at all levels, to produce internested templates of forces and translations and stresses.

In short, energy patterns and time patterns in 3-space act upon spacetime to produce patterned curvatures of ST geometry (vacuum engines). And conversely, patterned curvatures of spacetime geometry (vacuum engines) act upon mass to produce corresponding patterns of forces at all levels in the mass —down to and including upon the quarks and gluons in the nucleons in the atomic nuclei. We note with pleasure that the Sachs unified field theory does apply from the gluons to the entire universe, as has been shown by Sachs himself {18b}.

Muscle and Skeleton Analogy of Interaction of Vacuum Engine and Mass

We call attention again to our analogy (Figures 15, 16, 17, and 18) of the interaction of a vacuum engine and mass, provided by the interaction of arm muscles and the skeletal arm bones to which they are attached. The arm muscles attach to the arm's skeletal bones, and

those bones are articulated and free to dynamically move. To the bones, the muscles are mysterious agents (analogous to vacuum engines) exerting forces upon them, and causing them to move or hold. To the muscles, the bones are positioned resisting masses for them to work upon and change their positions, and the bones exert Newtonian reaction forces back upon the muscles as the muscles apply forces to the bones. So the vacuum engines (muscles) create forces upon the resisting masses (bones) to move them, and the masses act back upon the causative vacuum engines to create antiforces in resistance.

Using this analogy, when we create a set of vacuum engines, we create a set of “mysterious muscles” that act directly upon any and all “masses” (bones) that are exposed to them. The bones then change and move until the bidirectional interaction forces are balanced (equal and opposite). This symmetry between the two missing transforms is shown in Figure 9.

The Multilevel Structuring of Time is Important

We also add the extension that dynamic structuring in the time stream also occurs from trapped time domain “time component” structuring and distribution effects, as well as dynamic structuring of the spatial energy density of the ST geometry (the vacuum).

We are speaking *relativistically* of the interaction of mass and spacetime at any and all levels of a mass, down to and including the molecules, the atoms, the atomic nuclei, the nucleons, and even the quarks comprising the nucleons (comprising the protons and neutrons). One must first clearly have this vision in mind: The dynamics of everything ongoing in that mass, down to the most minute particle dynamics and in the most minute detail (and far into the virtual state beyond the one-tenth wavelength limitation of light resolution) consists of the structurings of this "mass-ST curvature" mutual interaction.

So we know from general relativity that collections of

energy (such as mass) act directly upon spacetime, its structuring, and its dynamics at any and all levels, down to the tiniest. We know that the variations in local spacetime geometry (including in both energy and time), down to any and all levels and sizes, down to the tiniest conceivable lengths, act directly upon any and all exposed mass at that level, *no matter how tiny*.

There is no “quantum” limitation nor is there any “wavelength of light” limitation to this GR process. Total continuity applies.

Some Characteristics of Vacuum Engines

The great advantage of a vacuum engine is that the "action" it produces upon an exposed mass, arises directly from within each point in the local spacetime in which the mass is embedded. One does not have to "start outside" and move through space and the intervening mass toward the "inside". Every point within an object occupies every point in time, a priori. From a single time-point, the vacuum engine's 3-space action enters everywhere within the object, all-at-once, and the 3-space effects proceed outward from each interior point. (See again Figure 19). Therefore even a weak vacuum engine induced by EM forces can do with ridiculous ease what the most powerful particle accelerators on Earth cannot do. The engine is already everywhere "inside" an object or particle, and working from every point in it, toward an outward direction. On the other hand, a particle accelerator is trying to build tremendous velocity of its particles so that they can "smash" their way in there, by brute force. To get ever deeper, the particle accelerator must be made ever larger, so that a "bigger hammer" is available. Also, the vacuum engine does not smash or damage any of the matter in the object, in any fashion not desired. The particle accelerator, on the other hand, is a great disruptor and may well destroy or serious change the very object it "probes".

Further, contrary to the accelerator's "one shot for one giant amount of energy input", a vacuum engine—once formed—continually exists in that locally altered spacetime and is contained in it and is sustained by it.

Hence that locally altered spacetime—after we pay to alter it once—will continuously expend energy in the form of the action of that vacuum energy, forever, upon any mass emplaced in that local spacetime. The universe itself is furnishing the energy to do the work, via the instantaneous connection in the time domain.

That "multiply connected space" entry everywhere within an object simultaneously, is quite different from "spatial propagation of energy" through singly-connected space from outside an object to the object, striking the outside of a mass and being absorbed, producing a gross translation force upon the mass. In the “energy propagation through space” case, severe energy interaction may occur with only the absorbing part of a macroscopic mass, while the remainder of the mass is little affected or not at all. To wit, one does not get the resulting *electronuclear* alterations of the nucleus (materialization, dematerialization, transmutation, etc.) by absorbed propagated “normal” EM radiation. However, with weak EM-induced vacuum engines one can do things inside the nucleus such as easily flip quarks inside the nucleons, so that transmutations at very weak spatial energy levels are readily obtained. This in fact turned out to be the major secret of the low-energy nuclear transmutations occurring in some 600 cold fusion experiments worldwide { [79] }.

Electrodynamic force fields implicitly define primarily only translation effects upon charges or masses, in their very definitions. With normal EM, usually one will get reradiation of the absorbed energy, or partial reradiation of the absorbed energy accompanied with recoil of the absorbing mass, or no reradiation but recoil of the mass.

We took the term *vacuum engine* from Misner, Thorne, and Wheeler { [80] } and also from Nobelist T. D. Lee { [81] } who spoke of this sort of thing as *vacuum engineering*. The term is not original with us; only the novel higher symmetry electrodynamics application of the concept is original. We call the exact geometrical form of a vacuum engine a *template*. We refer to the process of internally structuring a field, wave, or

potential as *dimensioning* or *activating* or *conditioning* or *charging up* the field, wave, or potential. Russian superpotential weapon scientists call the infolded structuring itself the *information content of the field*. For further discussion of some of these terms and related concepts, the reader is referred to our website, www.cheniere.org.

Wheeler's GR principle says that, for every mass with its exact mass structural dynamics condition, there exists a corresponding exact vacuum engine template containing precise spacetime curvature structural dynamics, and interacting back upon the dynamic mass at all levels. That vacuum engine is said to be resident in the mass and continuously interacting with it (see again Figure 13 on the *supersystem*).

Again, the structuring of the vacuum engine has no limitation in fineness, because spacetime is continuous. Hence it freely extends from the observable realm on down into the virtual realm. This is no more audacious than stating that virtual and observable entities occupy the same time domain simultaneously. Obviously, if one is using the structuring of time, one gathers in both those virtual structures and those observable structures, and also the exact correlation between them. This is a direct engineering application of an EM hidden variable theory, somewhat similar to that proposed by David Bohm { [82] }.

Applying Vacuum Engines to Living Cells

Any normal cell already has a normal *template* of overall ST curvature due to its mass and trapped energy structures. No matter how small, every internal part of that cell has its own *subcomponent template* of subcomponent ST curvatures embedded in that overall cellular ST curvature. As the cell functions, the dynamic normal changes of that template into other related templates, is within the range of what we call "normal, healthy cellular functioning."

Any abnormal cell has an *abnormal template* and also an abnormal set of "templating" changes. In other

words, there exists a precise *vacuum engine delta* in the abnormal cell, summed to the cell's *normal vacuum engine*. The *sum engine* represents the exact vacuum engine to act on the normal cell and change it to that precise abnormal condition.

But a template depends upon the energy density structuring of the local vacuum and also the local *time* structuring—which latter is still missing from physics books, but is implicit in the nature of the photon. If one produces the necessary energy structuring and density—and the necessary time structuring and density of local ST geometry—one produces a certain vacuum engine and one also produce a certain *template of time structuring*. Time { [83] } has dynamic template structuring and functioning, just as does the 3-spatial energy density of ST geometry.

Indeed, the total (virtual and observable) photon interaction with a mass or particle generates the "flow of that mass or particle through time" (Figure 25).

But one *can* make vacuum engines using EM energy and structuring, rather than with normal gravitational (G) energy and structuring { [84] }. The advantage is that, for electrons, the EM structuring is on the order of 10^{42} times as strong as the G structuring. For protons, the EM force is something like 10^{38} times as strong as the G force. So by using the much stronger EM force as the "agent of ST curvature," one can make vacuum engines that are quite strong at their local level. These engines will affect and profoundly change any exposed mass, including cellular mass—in any fashion desired, given only that one makes the appropriate vacuum engine. Again, *we are simply engineering practical but ultra-strong general relativity on the laboratory bench*, by electromagnetically engineering Wheeler's principle in an extended form.

For any physical cellular deviation from normal—any deviation whatsoever—a corresponding exact deviation (i.e., an exact delta) exists in the cell's otherwise normal vacuum engine template. This includes deviations in the genetics of the cell and everything else, not just the chemistry and gross physical structure.

Now if one could produce the negative (time-reversal) of the sum template of the resident vacuum engine and *amplify* it, one would have a powerful new type of vacuum engine. (Figure 26) It would be an exact *vacuum anti-engine* to act upon that specific diseased or abnormal condition of the cell and gradually erase the delta and bring the cell physically back to normal. The new anti-engine would operate upon all the mass of the cell, at every level no matter how small. It would change the cell's abnormal genetics back to normal genetics.

One could of course reverse cellular damage due to aging, and rejuvenate the body. It is quite doable; all that is needed are the funds, scientific team, and laboratory facilities to develop it. It is doable whenever the U.S. medical science community and the giant pharmaceutical community will allow it to be done.

One could reverse a cancer cell back to a normal cell, by applying the specific summation vacuum antiengine for the exact delta between the cancer cell and a normal cell.

One could reverse an AIDS cell back to a normal cell with normal genetics, where it no longer was an "HIV factory". An AIDS patient could be completely, quickly, and cheaply cured, the moment he or she tested HIV positive. There would be no need to wait for the debilitations of the progressing disease to appear. Not a single HIV-infected cell would be left in the body, even those resistant strains that have developed after the original infection.

One could do precisely the same thing with Ebola infections, and with the "tough" staph infections that now resist everything and are killing more than 120 thousand Americans in our hospitals every year, with the figures rising. *These are patients who did not have the disease that killed them, when they entered the hospital*.

With development of portable treatment units and mass production, one could treat and heal those millions of

mass casualties that could well erupt in one or more large U.S. city areas—e.g., from an Iraqi-sponsored terrorist biological warfare (BW) strike, using anthrax { [85]). In 1998, we proposed a crash development of just such portable units { [86] }. With the present world situation, it is not a matter of *if* such terrorist BW strikes will be made in the U.S., it is a matter of *when* { [87] }. Since our 1998 proposal, there has now been time to have had those portable units developed and mass-produced, at a total program cost of perhaps $100 million. Sadly, no one apparently had the foggiest notion of what was actually being proposed, and its vital importance to the survival of the nation. With a looming war in the MidEast—and with hordes of terrorist teams with biological warfare agents already infiltrated into U.S. cities and population centers—this negligence is particularly of concern at this very moment. These officially-forecast attacks on our cities by weapons of mass destruction could now be imminent, if and when the MidEast does explode into war, which appears imminent.

The Process Has Been Experimentally Proven

A very similar thing is also what Becker { [88] } demonstrated, without considering the vacuum engine (general relativistic curvature of spacetime) effects. It is also precisely what Prioré { [89] } unwittingly did in France, with a team of renowned French scientists, to cure terminal cancers, atherosclerosis, lethal infectious diseases, etc. in laboratory animals under rigorous scientific protocols. The team also demonstrated the restoration of suppressed immune systems.

In Germany, Popp { [90] } *et al*. were also involved in studies dealing with the R&R system, but from a quantum electrodynamics viewpoint.

We can also consider the vacuum engine from a nonlinear optics view, and obtain startling extensions of both general relativity and nonlinear phase conjugate optics. That in fact is exactly what Prioré did, though he did not think in those terms. Prioré roughly created a complex set of bidirectional longitudinal EM

wavepairs—i.e., a set of “time domain pump waves.” So he produced a kind of vacuum engine that itself is a crude *anti-engine generator* when used to pump a mass such as a living cell.

Prioré unwittingly used an extension to nonlinear optical (NLO) phase conjugation *before nonlinear phase conjugate optics was even born*. Pumping diseased cells in the Prioré manner causes the formation of exact "antiengines" for the specific cellular disease or disorder to be created in the cells themselves.

First, Prioré mixed up to 17 or so EM transverse waves in a rotating plasma { [91] }. Today we know that such a plasma will transform transverse radiations into longitudinal radiations, and it will also phase conjugate the input waves and add their phase conjugate replicas. In short, it is a procedure for somewhat crudely making a set of longitudinal bidirectional EM wavepairs, which is required to produce a scalar potential with a deterministic internal structuring. In short, it produces a scalar potential with an internal vacuum engine template.

These infolded longitudinal biwaves are NLO pump waves of a new kind: They pump the PCM material in the time domain only. This kind of pumping is a *vacuum antiengine-making process*.

The plasma tube was surrounded by a giant coil, and a pulsed magnetic field was produced by the coil. Per Whittaker’s 1904 paper, that pulsed DC magnetic field can be decomposed into two scalar potentials. Hence we have three potentials superposing: (1) the potential function set made by Prioré in his plasma tube, and containing a selected “vacuum antiengine maker” consisting of bidirectional pump waves in the time domain, and (2 and 3) the two Whittaker potential functions comprising the DC pulsed magnetic field of the coil.

The end result of this superposition/mixing of potentials is that their “internal structures”—including their vacuum engines—also diffuse one into the other.

Fundamentally, Prioré produced what to the observer seemed just a pulsed DC magnetic field, but one in which there was a specific "vacuum engine maker" of his deliberate creation and "tailoring." Originally by trial and error, he adjusted the 17 frequencies introduced to the plasma, thus varying the frequencies of the "infolded bidirectional pump waves" produced and infolded into the pulsed DC magnetic field carrier. In this manner he was "tuning the "vacuum antiengine-maker" content.

Again, Russian energetics weapons scientists call those vacuum engine templates the *information content of the field*. They do not refer to ordinary spectral analysis.

Explaining the Time-Pumping Vacuum Anti-Engine Maker

Irradiating the cell (with non-ionizing radiation) containing infolded specific bidirectional longitudinal waves, precisely corresponds to pumping the cells in the time domain, rather than pumping them in the "spatial energy distribution" domain. Because of the shift of the pumping from the 3-space domain to the time domain, this constitutes a dramatic extension of phase conjugate optics. Because of the amplified phase conjugating action of the "vacuum antiengine maker" upon the vacuum engine in a mass, this also constitutes a dramatic extension of general relativity and of four-wave mixing theory. Let us explain briefly:

When one pumps a nonlinear mass [phase conjugate mirror (PCM) material] with ordinary "transverse" EM waves { [92] } (Figure 27a), one is pumping (stressing, or "squeezing and relaxing") the mass with dynamic oscillating energy distributions in 3-space. One inputs a similar weak wave (called the "signal" wave) to the mass simultaneously. In that case, multiwave mixing theory tells us that the pumping of the PCM will cause the formation of a fourth EM wave, that is a time-reversed replica of the input "signal" EM wave. The time-reversed wave may contain up to all the energy in the pump waves, so it can be highly amplified in magnitude compared to the

input signal wave. The distortion correction theorem tells us that this time-reversed replica wave will then appear precisely superposing in space back along the exact spatial track taken by the input signal wave { [93] }.

When the pumping is shifted to the time domain by pumping with bidirectional *longitudinal* EM waves, we now are pumping the time aspects of the mass—during it iterative existence as masstime; see again Figure 25—rather than just pumping the spatial energy aspects. In other words, we are not pumping *spatially*, but *spatiotemporally*. We are pumping *temporally*—rhythmically squeezing (compressing) and relaxing (extending) the "density of the time interactions" producing the rate of flow of time itself. This is a totally new extension to nonlinear phase conjugate optics.

In this case, the "signal wave input" to the "time-domain-pumped" nonlinear mass PCM is just the resident vacuum engine in the local spacetime in which that PCM mass is embedded (see Figure 27b). The sickened cell's abnormal vacuum engine—consisting of the sum of the normal cellular vacuum engine and the disease delta vacuum engine—is present in the cell and is the input to the time-pumped phase conjugate mirror (cellular masstime). The output is the formation of an amplified time-reversed replica of that vacuum engine. In other words, an exact, amplified *vacuum antiengine* for reversing the precise abnormal condition of the mass, down to and including even the quarks in the atomic nuclei, is formed by time-domain (longitudinal EM biwave) pumping. The result or "output" is that *the entire cellular PCM mass and all its constituent parts are "time-reversed" back along their previous "track through time", back to a previous normal physical state* { [94] }. Figure 27b illustrates this process.

So when Prioré pumped the abnormal cells, he simply time-reversed them—genetics and all—right back to their normal physical state before the abnormality arose.

The beauty of the method is that, by adjusting the input waves to the rotating plasma, Prioré could "tailor" and "tune" the pumping waves to what was needed for a particular class of disease. He used trial and error methods to arrive at the proper settings for the disease to be treated. In theory, by the Prioré method one can time reverse any mass back to an earlier physical state. This mechanism is used by the cellular control portion of the body's regenerative and restorative (R&R) system to restore damaged cells back to normal. It is the basis for the body's ability to heal itself!

Applied to diseased cells, the method causes the formation of specific amplified antiengines for the exact specific cellular abnormality, no matter how complex, and no matter what it is. *In applied medicine this is a revolutionary new healing and therapeutic modality*, accomplished by novel EM means, and justified by general relativity, higher symmetry electrodynamics, and longitudinal EM wave pumping in the time domain rather than classical electrodynamics and transverse EM wave pumping. Prioré's discovery, once understood, may just be the greatest medical discovery of all time, and the discoveries of Rife and of Becker may rank a close second. The Prioré process is shown in Figure 28.

The body's cellular regeneration system uses this same methodology and process. A block diagram of the operation of the body's cellular regeneration system is shown in Figure 29.

Further Principles Needed for Rife's Microscope

In his microscope (Figures 1 and 2), Rife just wanted to observe the templates [2] corresponding to the cells, germs, viruses, etc. and all their parts, without any smallness limit. To do that, we need to (1) amplify the tiny, tiny amplitudes (actually, in the virtual state and subquantal) of the tiny vacuum engines accompanying tiny spatial locations containing living, functioning entities (no matter how small), and (2) "transduce" that amplified result into the optical spectrum, so that we

see a perfect optical analog and thus are "looking" visually at localized ST regions far smaller than the one-tenth wavelength optical resolution limit.

We need another principle to do that. Suppose that, to first order, we have an isotropic nonlinear medium. Then if we transmit a sine wave into it, pandemonium sets loose with our wave. The speed of each part of the wave in this medium is a function of the location of that part upon the wave amplitude, so the peaks move faster than the intermediate parts of the wave of lesser magnitude. The wave has "peak overtake", breakup, collapse, and all sorts of things happening to it. So a simple sine wave is not going to pass smoothly into that medium and "pass back out" coherently and nicely, and ordinary light is not going to give stable reflections from that medium!

However, if we transmit *two* sine waves simultaneously, some frequency interval apart, and then if we *pretend* that we actually transmitted their *difference* frequency, a very strange thing happens. The two individual sine waves themselves still break up and go bananas. However, that difference frequency acts as if it were a simple sine wave transmitted into a *linear* medium! So we get back out a very nice, smooth, well-behaved sine wave of the *difference* frequency, even though terrible things happened to the individual waves themselves. We can detect and use that "difference frequency" nicely.

Several very neat sonar systems presently use that sort of transmission schema in underwater work { [95] }. The principle applies for waves of all frequencies, for all media which can be approximated as nonlinear isotropic in nature. As we shall see, it applies to the Rife microscope also.

Rife's Secret: Recursive Coherent Increase of the Signal-to-Noise Ratio (SNR)

To first order, without too much error we can pretend that the molecules and atoms etc. in the cells and body tissues, together with their finer components, comprise such an isotropic nonlinear medium. That's not entirely

true, of course, but it does work to an extent sufficient for our purposes. Fortunately for the Rife process, the parts that *do not* obey this isotropic rule add randomly, while the parts that *do* obey the rule add coherently. So the "signal-to-noise ratio" (SNR) increases with the increasing amplification, and one "grows" the desired signal right up out of the noise (SNR) of the parts that do not obey the isotropic medium assumption. With sufficient number of amplifier stages, in theory the SNR of even the tiniest parts can be made as large as desired { [96] }.

With optical functioning as in Rife's microscope, one may substitute "light gathering power" or "magnification" for the electrical term "amplifier gain".

As we stated, Whittaker in 1904 (and superpotential theory thereafter) shows us that—if we wish—any EM field, wave, and pattern can be represented by two scalar potentials. Each of these two scalar potentials is further comprised of bidirectional EM longitudinal waves, in a harmonic series, in the Whittaker 1903 manner as reinterpreted. So we can reduce any pattern, field, or wave from any assemblage of charge sources, into two potentials, and then further into two sets of bidirectional EM waves interfering with each other. That process already *makes* all conventional EM waves, fields, etc.

An EM structuring of the local vacuum-spacetime occurs by all the electrical charges in the mass of the living cell, down to and including the virtual charges exchanged in the nuclear interactions in the nucleus of the atoms. By Whittaker 1903 and superpotential theory, all of that structuring itself is a potential with an internal set of bidirectional harmonic longitudinal EM waves interfering with each other.

Further this potential is recursively organized, because the inner bidirectional EM wavepair structuring of the potential is already recursive, as can be shown by applying Whittaker-1903 and Whittaker-1904 successively and iteratively { [97] }. This means we get deeper and deeper internested levels of patterns that still precisely correspond to the operational

mechanisms of the lower levels. It's similar to an infinitely fractal { [98] } type of process.

Because this conglomerate is recursive as a function of harmonic intervals, it means that we can pick any harmonic interval we choose in the "big world" where we observe things, and we can have an exact observational representation of the dynamics of that ongoing hidden longitudinal EM wavepair interferometry in the two waves bounding that harmonic interval. Of course, the more additional harmonics we add, the better dynamics we have. The greater the number of harmonic intervals applied, the greater the gain. However, these harmonic intervals can be recursively applied using just one "macroscopic" harmonic interval, iteratively and serially applied over and over. The more iterative serial recursive application of one harmonic interval, the mote the "gain" or "amplification"—in the case of a microscope, the more the *amplification*. That was Rife's real secret, finally revealed. See Figure 30.

The Difference Frequency Provides Visible Output

Rife wanted to look at very, very small things *visually*, even though those “small things” were far below the one-tenth wavelength visible light barrier. In other words, to understand the Rife microscope’s visual representation of the virtual state, we need to choose the harmonic interval of the throughput so as to span the visible spectrum. Well, for optical purposes, luckily the IR and UV do exactly that. Examine the frequencies, and you will see that a harmonic interval exists from a spot in the IR to a spot in the UV, and of course the interval in between includes the entire visible spectrum. The visible spectrum in between, however, represents the observable noise that would block what we seek to have emerge in that region in our "Rife microscope", so the presence of the visible spectrum is highly undesirable. Various filters can be used to block the visible spectrum while transmitting the UV and IR regions, or one can just work in the dark or in suitably dim visible light.

Rife then applied his iterative multiple "difference frequency" lenses in serial order, one after the other. While it is doubtful that he understood the theoretical method being utilized, he certainly persisted and found how to use it. This method of iteratively summing a recursive virtual state vacuum engine "template" results in the formation of an observable state vacuum engine template. In short, it magnifies the virtual state entities and dynamics directly to observable state analogues that capture all the virtual state entities and their dynamics.

That is why, if we use special filters on your camera and flash lenses, where the filters are open in the IR and UV but opaque in the visible spectrum in between, we can often photograph the ongoing "longitudinal EM hidden biwave interferometry"—*the subtle energy or vacuum engine functioning*—of nature and of living systems, *even displaced in time*, as Trevor Constable { [99] } and Joe Gambill { [100] } (a researcher friend now deceased) demonstrated, as George Meek { [101] } demonstrated, and as Fogal { [102] } has successfully experimented with.

Occasionally when one gets things just right, one can get pictures of the subtle invisible reality in the virtual state, going on around oneself and in one's surroundings. With Rife-like iterative serial amplification, one can get them all the time, dependably, as with a Fogal semiconductor specially adapted for such operation. One can in fact build instruments that indirectly observe the so-called "unobservable" virtual energy state and its entities and dynamics with one-to-one correspondence.

That’s a whole new "subtle physics" reality. Present physics with its assumed quantum observation limitations just has not even gone into it—primarily because physics has been focusing upon the quantized aspects of the photon (which is quantized in one aspect only—its magnetic vector potential—and not in its unquantized aspect—its scalar electrical potential!). Physics has rather ignored the unquantized (and therefore continuous from the smallest to the largest scale) time aspect of the photon { [103] }. Using the

continuous aspect of the photon, one can assemble photon “time interval” structures—and in fact one does so whenever one assembles a 3-spatial energy density structuring such as in ordinary EM theory. Simultaneously, one has assembled a “structuring of the time domain” also, because each photon in the spatial energy density structuring consists of both time and energy as its canonical components.

All EM fields and waves, being comprised of photons, thus also carry (1) energy and energy internal structuring, and (2) time and internal time structuring. Again, this is the Russian *information content of the field*. The Russians simply understand 4-vector theory and Whittaker 1903 and 1904, and how to combine them with quantum mechanics and general relativity in a unified field theory.

The above explanation is why Kaznacheyev's { [104] } mitogenetic radiation { [105] } from his control (deliberately damaged or infected) cells would pass through a quartz window and induce the same damage (or disease) in targeted cells on the other side and otherwise environmentally shielded, but would not induce the changes through a normal window glass window. (See again Figure 23) Quartz passes the full optical spectrum from IR to UV, while window glass does not. So quartz passes the *vacuum engines* for the disease or damage, while window glass breaks them up and does not pass them as such. We stress that the vacuum engines are part of the “continuous” aspect of the photons, and so are not bound to any limitation on magnitude (either fineness or largeness) as are the quantized aspects of the photon.

For such a "far beyond the one-tenth wavelength" microscope as Rife’s, one must use vacuum engines (time domain structuring, and longitudinal EM waves) and extraordinary iterative unified field theory optics, rather than the ordinary transverse EM waves and ordinary optics. The lenses must all pass at least one harmonic interval (and the same one!), to provide and utilize the “difference frequency band” needed for recursive *visual* connection to the subquantal state (the hidden virtual structures in terms of the continuity

aspects of photons). Successive stages thus "serial iteration" use the recursive principle to coherently amplify and show the vacuum engines, their dynamics, and the dynamics of deeper organizations and dynamics in the virtual state itself. Since Rife wished to “see” the results in the optical spectrum, then the two frequencies chosen for “differencing” had to bound the visible spectrum.

Rife used quartz lenses or at least very good optical glass that is open from IR to UV. That bounds the visible spectrum with a harmonic interval. Rife used multiple stages for successive coherent recursive amplification and increasing the SNR magnitude by coherent integration. One must also have some scheme for filtering out (or avoiding) too much visible spectrum light. One such scheme is to just use enough stages so that, in the new theory where the wavelength limitation is bypassed, one has amplified ("resolved") to the depth or fineness desired. The process long ago removed itself from the "normal visible light" domain, well before it reached the deeper resolution limit utilized by the definition state of the new method.

By using sufficient multiple stages in this fashion, the "tiny" virtual state vacuum engine templates passing through the IR-UV harmonic interval in a lens can be recursively summed and magnified many, many times—essentially without limit, because the phenomenon being magnified is recursive and bidirectional longitudinal in nature. It is definitely *not* normal visible light optics, and it *is not* conventional classical electrodynamics.

Rife’s Recursive “Vacuum Engine” Microscope

The Rife microscope coherently sums (and thus coherently amplifies) the virtual state vacuum engine patterns with the increasing number of stages. For the *subtle* vacuum engine templates, such an arrangement becomes a direct amplifier (magnifier), for amplifying (magnifying) the internested virtual state vacuum engine templates and their dynamic functioning, into the observable state. With a properly designed “vacuum engine” recursive microscope, one can see

inside a molecule, inside the atomic nucleus, and even inside a nucleon, given development and perfection of the process. However, at this initial stage of understanding, one can forecast that finely adjusting the various stages of an early laboratory prototype would indeed prove to be a tedious and formidable task, just as Rife reported. With further development, however, that obstacle can be removed.

What comes out the output end of such a “vacuum engine” recursive microscope, is a direct visible light *analogue* of the much more subtle ST functioning in the microscope’s highly localized viewing area. This output imaging is put together "electrically" in ways analogous to the construction of a video picture on the screen of a TV tube. Since the result emerges through an output end that still passes an entire harmonic interval bounding the visible spectrum, the amplified virtual state recursive template is not destroyed but is highly amplified and produced as an observable image and dynamics in the visible spectrum. This final "interferometry" of two *internally structured* potential functions now produces "visible light" EM fields and waves and patterns, in accord with Whittaker 1904. These visible patterns are direct analogues representing exactly the very, very minute regions far below the one-tenth wavelength limitation of ordinary optical resolution. Those regions were the regions “being focused onto” when Rife so arduously “adjusted” his microscope's multiple stages.

With Rife’s recursive magnifying microscope process, one can see direct visible analogs of what is actually far, far smaller than anything ever before seen in normal optical microscopes, or even in electron microscopes etc. Indeed, one can see directly into the virtual state itself, and observe virtual state structures. While this is unthinkable in quantum mechanics if one considers only quantized aspects of light, it is perfectly feasible if one considers the concomitant unquantized (continuous) aspects of light, and shifts to general relativity and vacuum engines to utilize the unquantized structuring of the time domain.

Conclusion

Rife unquestionably found a way to produce visible recursive amplification and magnification of invisible virtual state dynamics and functions. We hope we have shed at least some light on the extraordinary technical mechanisms involved. This is good conceptual science, consistent with theory and some known experiments, and it certainly can be made a rigorous science and technology and mathematically modeled, using higher symmetry electrodynamics that is part of a unified field theory such as that of Sachs. The basis for all of it is in the literature already, but it is scattered widely in uncorrelated bits and pieces. It is not in the normal electrodynamics courses, nor is it in the normal optical science curriculum. And it is not taught in the normal physics curriculum. Needless to add, it is absent from the medical curriculum as well.

As an additional proposal, we tentatively suggest that this principle also may be the long-sought "hidden chaos" or "hidden order" in quantum mechanics that is known to be present, but has not yet been explained { [106] }. If so, then it becomes a new law of physics, with the experimental proof first demonstrated by Royal Raymond Rife.

With the conceptual technical matrix of Rife's mechanism in hand, it should be possible for a proper scientific multi-disciplinary team to redevelop and extend the Rife microscope. Marvelous new instruments will emerge, once the quantum physics conceptual blockage of continuous physics is constrained to its place as only "one view of the physics reality elephant." With the ability to directly "measure", "observe," and engineer the virtual state, a breathtaking expansion of physics will occur, dramatically extending the vacuum engineering suggested by Nobelist Lee.

If so, then Rife's tragic life will have served its noble purpose, and his intuitive insight will have been resoundingly verified. The follow-on results will have untold benefit to science and to all the human generations to come.

NOTES AND REFERENCES

---

[1] For work on the theoretical aspects of this paper, partial financial support by A. Dreyer, R. Francis, H. Ledger, M. Peters, T. Craddock, and the Association of Distinguished American Scientists (ADAS) is gratefully acknowledged, as are helpful discussions with Dr. Bob Flowers and Dr. Myron Evans.

[2] We emphasize that Rife himself did not think in these terms.

---

[1] . (a) Some Rife-related references are: Royal R. Rife, "The filterable virus of carcinoma," Apr. 26, 1939; — "The Rife Microscopes," Apr. 28, 1939; — "Bacteria," Apr. 28, 1939; — "History of the development of a successful treatment for cancer and other viruses, bacteria, and fungi," Allied Industries, Dec. 1, 1953.

(b) Arthur Isaac Kendall and Royal Raymond Rife, "Observations on Bacillus Typhosus in its filterable state," California and Western Medicine, Ca. Med. Assoc., Dec. 1931.

(c) Arthur Isaac Kendall, "The filtration of bacteria," Science, Mar. 18, 1932.

(d) See particularly E. C. Rosenow, “Observations on filter-passing forms…,” Proc. Staff Meeting of the Mayo Clinic, July 13, 1932; — “Observations with the Rife microscope of Filter-passing forms of micro-organisms,” Science, Vol. 76, Aug. 26, 1932, p. 192-193; — "Microdiplococci in filtrates of natural and experimental poliomyelitic virus compared under the electron and light microscopes," Proc. Staff Meeting of the Mayo Clinic, 17(7), Feb. 18, 1942, p. 99-106; — "Observations of filter-passing forms of Eberthella Typhi (Bacillus Typhosus) and of the Streptococcus from Poliomyelitis," Proc. Staff Mtg.

Mayo Clinic 7, July 13, 1932, p. 408-413; — "Transmutations within the Streptococcus-Pneumonococcus Group," J. Infective Diseases, Vol. 14, 1941.

(e) R. E. Seidel and M. Elizabeth Winter, “The new microscopes,” Journal of the Franklin Institute, Feb. 1944, p. 103-129; — "Filterable bodies seen with the Rife microscope," Science Supplement, Science, Dec. 11, 1932, p. 10-11.

(f) "Is a new field about to be opened in the science of bacteriology?", Editorial, California and Western Medicine, Ca. Med. Assoc., Dec. 1931; "Powerful microscope makes very tiny objects visible," Science Newsletter, Vol. 33, Jan. 22, 1938, p. 55; "The Rife microscope or 'facts and their fate'," Reprint No. 4l7, The Lee Foundation for Nutritional Research, Milwaukee, Wisconsin, undated.

(g) A good lay overview is given by Christopher Bird, “What has become of the Rife microscope?”, New Age Journal, Mar. 1976.

(h) See also T. E. Bearden, AIDS: Biological Warfare, Tesla Book Co., 1988, p. 267-279. The author gives a short introduction to the Rife microscope and includes some pictures. The proposed evanescent wave explanation proved to be wrong. Much additional work by the author eventually culminated in the proposed mechanism presented in the present paper.

[2] . We have one viewgraph listing some 32 flaws, errors, and shortcomings of classical electrodynamics, and there are even more than that. Additional errors are listed, for example, by important scientists such as Feynman, Wheeler, Evans, Bunge, Cornille, Barrett, and others. So a substantial number of errors in classical U(1) EM theory are well known to foundations scientists. We discuss only a minimal few in this paper.

[3] . Mario Bunge, Foundations of Physics, Springer-Verlag, New York, 1967, p. 176.

[4] . *Ibid*., p. 182.

[5] . M. Faraday, Experimental Researches in Electricity and Magnetism. Vol. 1, Taylor and Francis, London, 1839.; Vol. 2, Richard & John E. Taylor, London, 1844; Vol. 3, Taylor and Francis, London, 1855. Reprinted by Dover in 1965. Also see M. Faraday, "On Static Electrical Inductive Action," Phil. Mag., 1843; — "Remarks on Static Induction," Proc. Roy. Inst., Feb. 12, 1858.

[6] . James Clerk Maxwell, Preface to the First Edition, A Treatise on Electricity and Magnetism, third edition, Vol. 1, Dover Publications, New York, 1954, p. viii-ix.

[7] . J. C. Maxwell, Preface to the First Edition, A Treatise on Electricity and Magnetism, third edition, Vol. 1, Dover Publications, New York, 1954, p. viii-ix. Quoting: "…*before I began the study of electricity I resolved to read no mathematics on the subject till I had first read through* Faraday's Experimental Researches in Electricity. …*I perceived that his method was also a mathematical one, though not exhibited in the conventional form of mathematical symbols. I also found that these methods were capable of being expressed in the ordinary mathematical forms….*"

[8] . James Clerk Maxwell, A Treatise on Electricity and Magnetism, Third Edition, Vol. 1, Dover Publications, NY, 1954, p. 165-166.

[9] . Else the precessing electrons in a signal-receiving wire antenna would not precess laterally. Since their precession is at right angles to the disturbing force, the disturbance arriving from the vacuum was a longitudinal disturbance. This also agrees with Whittaker's 1903 decomposition of the scalar potential, and Mandl and Shaw's note that the combined scalar photon and longitudinal photon are observable as the instantaneous scalar potential,

while neither of them is observable individually. See citations for Whittaker and for Mandl and Shaw elsewhere in these references.

[10] . This word "potentiality" (by Feynman) is given flesh and blood in the present paper. What actually exists in the vacuum is potential and structures of potential. Vacuum, spacetime, and potential are identities. Hence we may say that the structured vacuum potentials are indeed structurings of spacetime curvature. We refer to these as *vacuum engines*, which are explained in this paper.

[11] . Richard P. Feynman, Robert B. Leighton and Matthew Sands, The Feynman Lectures on Physics, Addison-Wesley, New York, Vol. II, p. 1-3.

[12] . This is easily shown. $F \equiv d/dt(mv)$, which expands to $F = (m)dv/dt + v(dm/dt)$. Let the mass m be zero continuously, and both terms on the right go to zero, hence $F = 0$. That is, the force disappears because mass is a component of force. It is the use in mechanics of the separate massless force acting on a mass that is the non sequitur and to blame for this giant error in electrodynamics as a hold-over from the hoary old mechanics theory.

[13] . J. D. Jackson, Classical Electrodynamics, Second Edition, Wiley, 1975, p. 249.

[14] . Jackson, ibid. p. 28.

[15] . Melba Phillips, "Classical Electrodynamics," Vol. IV: Principles of Electro-dynamics and Relativity, in Encyclopedia of Physics, Edited by S. Flugge, Springer-Verlag, Berlin, 1962, p. 4. Quoting: "The utility for electrical problems of a scalar potential, first introduced in the theory of gravitation, was pointed out by Simeon Denis Poisson, Bull. Soc.

Philomatheique **3**, 388(1813). See also Mem. Institut, Pt. **1**, 1, Pt. **2**, 163 (1811). The word *potential* was introduced by George Green in 1828."

[16] . E.g., see W. Misner, K. S. Thorne, and J. A. Wheeler, Gravitation, W. H. Freeman and Co., San Francisco, 1973, p. 5.

[17] . Two methods of dealing with this problem, and rectifying it, are the use of a topological definition of the fields in mass-free spacetime, and the use of a unified field theory where the "field in space" is not a forcefield per se, but merely a curvature or set of curvatures of spacetime. As an example, the O(3) electrodynamics largely pioneered by Evans takes the latter approach, and it is usable in directly engineering unified field theory effects.

[18] . (a). Mendel Sachs, The Field Concept in Contemporary Science, Charles C. Thomas Publishers, 1973;

(b) — General Relativity and Matter: A Spinor Field Theory from Fermis to Light-Years (Fundamental Theories of Physics), Reidel (now Kluwer), 1982 provides a great generalization of general relativity and electrodynamics reaching from the quarks and gluons to the entire universe. See also

(c) Mendel Sachs, Quantum Mechanics from General Relativity: An Approximation for a Theory of Inertia, Reidel (now Kluwer), 1986;

(d) — "Relativistic Implications in Electromagnetic Field Theory," in T. W. Barrett and D. M. Grimes, eds., Advanced Electromagnetism, World Scientific, 1995, p. 541-559. In the latter, Sachs shows that the most general expression for the field theory is in terms of spinor and quaternion variables, rather than the vector and tensor variables of the conventional expression of Maxwell's theory. This generalized expression leads to extra conservation laws and

invariants, thus increasing the predictive capacity of the theory.

(e) For a marvelous treatise for the educated layman, see M. Sachs, Relativity in Our Time: From Physics to Human Relations, Taylor & Francis, 1993.

[19] . E.g., see the several Evans' reviews in Modern Nonlinear Optics, Second Edition, Edited by M.W. Evans, Wiley, 2002 (in press). Many other O(3) electrodynamics papers are also carried in this set of three volumes, as well as in the standard literature.

[20] . Mendel Sachs, "Relativistic Implications in Electromagnetic Field Theory," ibid.

[21] . Without interaction with the vacuum, mass does not exhibit perfect symmetry. For a discussion, see T. D. Lee, Particle Physics and Introduction to Field Theory, Harwood Academic Publishers, New York, p. 378-389.

[22] . In both classical and quantal electrodynamics, the problem of the source charge and its associated fields and potentials—and their energy—has been considered to be the most difficult problem.

(a) For a solution to that problem, see T. E. Bearden, "Giant Negentropy from the Common Dipole," Journal of New Energy, 5(1), Summer 2000, p. 11-23. On DoE open website http://www.ott.doe.gov/electromagnetic/papersbooks.html and this author's website www.cheniere.org.

(b) For very powerful support of that proposed solution, see F. Mandl and G. Shaw, Quantum Field Theory, Wiley, 1984, Chapter 5. Neither the time-polarized photon nor the longitudinal photon is individually observable, yet the combination of the two is observable as the instantaneous scalar potential. The Mandl and Shaw combination of a scalar (time-polarized)

photon and a longitudinal photon is explained by Bearden as the interaction of the causal incoming scalar photon with a charge, the charge subsequently transducing the absorbed energy from the time-domain into 3-space, and re-emission of the energy as an emitted longitudinal photon in 3-space. The actual interaction provides the coupling, and clarifies which is the *cause* and which is the *effect*.

[23] . As the electrodynamicists implicitly assume, by assuming fields and potentials from all charges in the universe penetrating and existing and superposing and interfering in each cubic centimeter of space, and in fact at every point in space. But then the electrodynamicists continue to utilize a material ether assumption in their equations, embedded implicitly upon the notion of an "empty space" filled with this material ether. Tesla called it "… *one of the most remarkable and inexplicable aberrations of the scientific mind which has ever been recorded in history*." (Nikola Tesla, "The True Wireless," Electrical Experimenter, May 1919). While that biting remark certainly did not endear him to struggling electrical scientists, it did strike uncomfortably close to the mark, and it still does.

[24] . J. H. Poynting, "On the transfer of energy in the electromagnetic field," Phil. Trans. Roy. Soc. Lond., Vol. 175, Part II, 1885, p. 343-361.

[25] . Oliver Heaviside, "Electromagnetic Induction and Its Propagation," The Electrician, 1885, 1886, 1887, and later. This is a series of 47 sections, published section by section in numerous issues of The Electrician during 1885, 1886, and 1887. See also Oliver Heaviside, "On the Forces, Stresses, and Fluxes of Energy in the Electromagnetic Field," Phil. Trans. Roy. Soc. London, 183A, 1893, p. 423-480.

[26] . By a crude analogy, one may think of the "virtual" energy of the vacuum as energy that has been disintegrated into incredibly tiny bits—each so small that the bits fade in and out of existence at an incredible rate. The spinning action of the charge may be thought of as similar to that of an old spinning wheel. The charge spins, so that it coheres some of the "virtual fibers" continually fed to it by the vacuum, into "thread-sized" portions that are emitted radially outward. So the charge "splatters back" some of the fibers as fibers, but "spins" the remainder into useful quantum-sized "threads" which are emitted in observable form.

[27] . Presently electrodynamicists are likely to specify the Poynting energy flow **S** as **S** = **E**×**H**. However, in the vacuum (spacetime) neither **E** nor **H** exists as such *observed force fields*, which requires presence of charged mass. Only potentials and potential structuring of the virtual particle flux exist in the vacuum (which is after all just potential comprised of virtual particle flux). Those structurings or their analogues also exist as sets of curved spacetime regions (i.e., spacetime structurings comprising the elements of the "vacuum engine"). See E. T. Whittaker, "On the Partial Differential Equations of Mathematical Physics," Mathematische Annalen, Vol. 57, 1903, p. 333-355. Whittaker that any scalar potential decomposes into a multiplicity of longitudinal bidirectional flows of energy. This decomposition must also comprise the vacuum scalar potential, as well as the "spacetime curvature" potential.

[28] . However, Whittaker misinterpreted the *causal* phase conjugate wave (that half of his phase conjugate wavepair) as the *effect* after the wave interacts with charged mass, in which case parity is broken and the *effect* wave produced by the interaction is a longitudinal EM wave going in the opposite direction in 3-space from its "biwave" 3-space partner. The correct interpretation is that,

prior to interaction, the phase conjugate wave exists in the fourth axis of Minkowski 4-space, hence is in the time domain. It is literally a longitudinal EM wave moving on the fourth axis (in the time domain) to the interacting charge, and the other Whittaker biwave partner is the effect longitudinal EM wave emitted in 3-space by the interacting charge after it absorbs the incoming time-polarized EM wave. We point out that a longitudinal EM wave along the time axis is a time-polarized EM wave, corresponding to the known time-polarized photon in quantum field theory.

[29] . After publication of my "Giant Negentropy" paper, I discovered very strong support for my reinterpretation of Whittaker's 1903 decomposition of the scalar potential. This support was by F. Mandl and G. Shaw, ibid. Mandl and Shaw give a deeper coverage of the photon polarizations. They argue that the longitudinal and scalar polarizations individually are not directly observable, but only in combination, wherein they manifest as the "instantaneous" Coulomb (i.e., electrostatic) potential. Our comment is that this argument, translated from particle terminology to wave terminology, directly fits my re-interpretation of Whittaker's 1903 decomposition of the scalar potential. However, Mandl and Shaw fail to account for their assumed interaction of the detecting/observing unit point charge to perform the perfectly correlated "combining", and thus fail to account for the absorption of the incoming *causal* time-polarized wave or photon, the transduction of that excitation energy of the charge into longitudinal EM wave/photon energy in 3-space, and the subsequent emission of that excitation energy as a perfectly correlated longitudinal EM wave in 3-space.

Thus Mandl and Shaw missed the time-excitation charging of the source charge via absorption of the "coupled" time-polarized EM wave/photon, and the subsequent decay of the time-charge excited state by emission of a 3-space

longitudinal EM wave/photon. This omitted interaction represents the discovery of nature's giant negentropy mechanism in EM energy flow, whenever 3-space energy flow symmetry is broken, as with a common dipole. So Mandl and Shaw do not account for photon (or wave) polarization transduction, where the "causal" time-polarized EM wave or photon comes in and is absorbed by the detecting charge or dipole to energetically excite it in the time-domain, then the excitation energy is re-emitted as the longitudinally polarized EM wave or photon in 3-space.

Recognition of these missing functions allowed at last a solution to the long-vexing problem of the source charge. We actually solved the problem for a source dipole, then pointed out that any "isolated" charge is a set of dipoles when its clustering virtual charges of opposite sign are considered.

[30] . The source charge problem was recognized as the most difficult problem in electrodynamics. E.g., see D. K. Sen, Fields and/or Particles, Academic Press, London and New York, 1968, p. viii. Quoting: *"The connection between the field and its source has always been and still is the most difficult problem in classical and quantum electrodynamics."* Since our proposed solution is consistent with particle physics (broken 3-symmetry of the dipole) and with quantum field theory (combination of the time-polarized and longitudinal photon comprises the scalar EM potential), it is robust and we believe it will stand up to meticulous scrutiny.

[31] . E. T. Whittaker, 1903, *ibid*.

[32] . Mandl and Shaw, *ibid*.

[33] . Poynting only assumed that diverged part of the energy flow. Heaviside, on the other hand, showed that there is a much larger energy

flow component that misses the intercepting charges (or circuit) altogether, and is wasted. Since this means that far more EM energy flows from the terminals of a generator than the external circuit intercepts and catches, it means that all generators produce more energy flow output than the textbook states, or that Poynting assumed. In fact, as *transducers of vacuum energy*, all dipolar generators already exhibit COP>1.0. Since no one in the 1880s could explain where such an astounding extra energy flow was coming from, Lorentz originated an integration trick to discard the nondiverged Heaviside EM energy flow component.

(a) See J. H. Poynting, “On the transfer of energy in the electromagnetic field,” Philosophical Transactions of the Royal Society of London, Vol. 175, Part II, 1885, p. 343-361.

(b) See Oliver Heaviside, "Electromagnetic Induction and Its Propagation," The Electrician, 1885, 1886, 1887, and later—a series of 47 sections, published section by section in numerous issues of The Electrician during 1885, 1886, and 1887.

(c) See also Oliver Heaviside, "On the Forces, Stresses, and Fluxes of Energy in the Electromagnetic Field," Phil. Trans. Roy. Soc. London, 183A, 1893, p. 423-480.

(d) For Lorentz' trick to discard the nondiverged component, see H. A. Lorentz, Vorlesungen über Theoretische Physik an der Universität Leiden, Vol. V, Die Maxwellsche Theorie (1900-1902), Akademische Verlagsgesellschaft M.B.H., Leipzig, 1931, "Die Energie im elektromagnetischen Feld," p. 179-186. Figure 25 on p. 185 shows the Lorentz concept of integrating the Poynting vector around a closed cylindrical surface surrounding a volumetric element. This is the procedure which arbitrarily selects only a small component of the energy flow associated with a circuit—specifically, the small Poynting component striking the surface charges and being diverged into the circuit to power it—and

then treats that tiny component as the "entire" Poynting energy flow. Thereby Lorentz arbitrarily discarded all that extra Heaviside energy transport component which does not strike the circuit at all, and is just wasted.

[34] . In fact, the simple equation $W = \phi q$, where W is the diverged/collected energy, q is the intercepting coulomb, and ϕ is the reaction cross section of the potential, shows that electrodynamicists implicitly assume the “true” causal potential to contain unlimited energy. E.g., using that equation, any desired amount W of energy can be collected from any nonzero potential ϕ, no matter how small its intensity, simply by adding sufficient intercepting/collecting charges.

[35] . A back-of-the-envelope calculation for a nominal simple circuit has been made and previously presented by the present author. In the nominal circuit used, the source dipole extracts from the vacuum and sends down the outside of the attached circuit about 10^{13} times as much energy as the circuit itself intercepts, diverges, and utilizes. The huge remainder is not intercepted, remains nondivergent and just passes on out into space at the speed of light.

[36] . Solving the standard equation $\mathbf{E} = \mathbf{F}/q$ for $\mathbf{F}$, one has $\mathbf{F} = \mathbf{E}q$. Again, from any nonzero **E**-field, no matter how small, as much force can be “gathered” and produced as one desires, merely by increasing the intercepting/collecting charge q.

[37] . Robert H. Romer, "Heat is not a noun," American Journal of Physics, 69(2), Feb. 2001, p. 107-109. This is an editorial discussion by the Editor of AJP of the concept of heat in thermodynamics. Heat is not a substance, not a thermodynamic function of state, and should not be used as a noun. The quotation castigating the standard "field diagram" of an EM wave in space is

from endnote 24, p. 109.

[38] . This is readily understood when one realizes that the founders of electromagnetics assumed a material ether. So to them, there was not a single point in all the universe where mass was absent! Hence the field, potential, and wave "in space" were actually the field, potential, and wave "in the material ether medium", and therefore perfectly material. Even though the Michelson-Morley experiments falsified the material ether in the 1880s, the electrodynamicists (i) never changed their classical EM equations which still to this day assume the material ether filling all space, and (ii) still implicitly mistake the transverse electron precession wave in the Drude gas in a receiving antenna as representing the assumed interception of the incoming "transverse EM wave" in that external material ether medium.

[39] . Robert Bruce Lindsay and Henry Margenau, Foundations of Physics, Dover Publications, New York, 1963, p. 283-287, and passim.

[40] . Y. Aharonov and D. Bohm, "Significance of Electromagnetic Potentials in the Quantum Theory," Physical Review, Second Series, 115(3), 1959, p. 485-491. However, Aharonov and Bohm seem to have missed the similar mass interpretation of the potential, so that they utilized the potential as massless and therefore the vacuum EM entity that is the primary cause of all EM phenomena. If one truly eliminates only the potential's effect upon the intercepting charged mass, and utilizes the non-intercepted EM entity in vacuum, one has arrived at the direct alteration of the massless spacetime geometry of general relativity. In short, suddenly one has latched onto a unified field theory, and one that is engineerable by surprising electromagnetic means.

[41] . But erroneously assumed to be present, because of Maxwell's ubiquitous use of the material ether and the continued implied material ether in the electrodynamics equations to this day.

[42] . T. W. Barrett, "Tesla's Nonlinear Oscillator-Shuttle-Circuit (OSC) Theory," Annales de la Fondation Louis de Broglie, 16(1), 1991, p. 23-41. Barrett analyzed Tesla's patented circuits in terms of quaternion electrodynamics, which is of higher symmetry than either vector or tensor algebra electrodynamics. Lo and behold, Tesla could shuttle potential energy around in his circuits at will, and that functioning would not even show up in a tensor or vector electrodynamic analysis.

[43] . T. W. Barrett, "Active Signalling Systems," U.S. Patent No. 5,486,833, Jan. 23, 1996; — Oscillator-Shuttle-Circuit (OSC) Networks for Conditioning Energy in Higher-Order Symmetry Algebraic Topological Forms and RF Phase Conjugation," U.S. Patent No. 5,493,691, Feb. 20, 1996.

[44] . As the reader can appreciate, this represents a dramatic change to the foundations of electrodynamics. It is closely allied to Sachs's unified field theory; see appropriate Sachs references in this paper.

[45] . As Dirac pointed out, the Michelson-Morley experiments of the 1880s destroyed the *material* ether assumed by Faraday and Maxwell and subsequent electrodynamicists; it *did not* destroy the ether per se. Dirac emphasized that any nonmaterial Lorentz-invariant ether is perfectly consistent with the Michelson-Morley experiments. General relativity describes the shaping and structuring of the vacuum as curvatures of spacetime geometry and clustered patterns thereof (although the latter part is essentially neglected). GR consists of the changes

of this spacetime due to the interaction of mass/ trapped energy, and also the forces upon mass/ trapped energy created by the interaction of such curvature-patterns of spacetime. Essentially, electrodynamics is missing just this "mass to spacetime" transform and this "spacetime to mass" transform. It is in fact missing its "infolded general relativity" dynamic internal structuring of the potential, field, and wave. KGB energetics weapon scientists call these missing transforms *the information content of the field*—which our fellows mistakenly interpret in their own flawed electrodynamics as "spectral content." Nothing could be further from the truth.

[46] . In 1903 E. T. Whittaker showed that any scalar potential is comprised of an infinite harmonic series of bidirectional longitudinal EM waves, arranged in bidirectional wavepairs. See E. T. Whittaker, "On the Partial Differential Equations of Mathematical Physics," Mathematische Annalen, Vol. 57, 1903, p. 333-355.

[47] . General relativity usually stops short of including an "infolded" topology within its basic spacetime, and only applies an "exterior" topology to it. However, it does not exclude that capability. Spacetime is just potential identically, and also just vacuum identically. Since GR omits the infolding structure of spacetime/potential, and so does electrodynamics, it has not been possible to unify the two completely. The "bridge" across the chasm between them has been eliminated by both disciplines.

[48] . With finite propagation, this action-at-a-distance is retarded so that some time passes between the effect and the cause. Each Mandl-Shaw photon interaction—the receipt of the scalar (time-polarized) photon, and emission of 3-space longitudinal photon—is retarded by (requires) the amount of time that is transformed into 3-space energy. [Time may be regarded as 3-space

electromagnetic energy compressed by the factor c^2, with the compressed energy placed on the fourth Minkowski axis to appear as time (seconds), rather than being left in 3-space to appear as mass).

Transformation from time-domain EM energy to 3-space energy is a function of the spin of the charge, which "spins" 720 degrees, being 360 degrees in the time domain while absorbing the time-polarized EM photon energy, the being followed by 360 degrees in 3-space while it is emitting the 3-space longitudinal photon. This retardation due to transformation of the energy from the time domain to the 3-space domain is what limits the speed of light in the ambient vacuum to the finite velocity c.

However, when infinite velocity propagation occurs (as is permissible with longitudinal EM waves alone, which a priori implies no retardation), then the notion vanishes of a “cause” and an “effect” separated by a time interval. In that case, one is operating in a multiply-connected spacetime, where in theory there is no observable “length” or “time” between the “cause” event and the “effect” event. Further, one “causative” initiation point can be superposed simultaneously with multiple distant points widely separated in ordinary spacetime. In that case, putting a joule of energy into the “initiating cause” point (to the normal 3-space observer) results in the simultaneous appearance at each and every distant participating point, of one joule. To the normal "singly-connected spacetime" observer, this is a direct amplification of energy, directly from the vacuum energy itself. We have proposed this mechanism as an extension of Bohm’s quantum potential utilized in his hidden variable theory of quantum mechanics. See David Bohm, "A Suggested Interpretation of the Quantum Theory in Terms of 'Hidden' Variables, I and II," Physical Review, 85(2), Jan. 15, 1952, p. 166-179 (Part I); 180-193 (Part II). Unfortunately three nations of the world have already seen fit to highly weaponize this effect, and a fourth nation is very close to

deploying such a weapon. Presently quantum potential weapons are the dominant weapons on earth, and nothing can stand against them.

[49] . By conjugate pair, we mean that the wavepair consists of an EM longitudinal wave and its time-reversed twin, precisely superposed spatially but antiphased in time. In such a wave, the transverse energy density amplitude cannot vary; instead, the wave consists of (and carries) an oscillation of the rate of flow of time, about some median speed. The median speed of a longitudinal EM wave is not confined to the speed of light in vacuum.

[50] . The value of the energy continuously collected from a steady potential, in a “swirl” around a fixed intercepting charge, is of course a fixed scalar. That, however, has nothing to do with the nature of the potential as an EM entity in massless vacuum, prior to interaction with charged mass.

[51] . J. D. Jackson, Classical Electrodynamics, Second Edition, Wiley, 1975, p. 223.

[52] . Interestingly, one also cannot produce a clear definition of *energy* in physics. A good discussion of the energy concept is given by R. B. Lindsay, "The concept of energy and its early historical development." Foundations of Physics, 1 (4), 1971, p. 383-393. Lindsay investigates the concept of energy from its early historical origin, and covers from ancient times through the 18th century. The root of the concept is the notion of invariance in the midst of change. In short, the concept consists of considering “the changing” as being “nonchanging.” In pursuing a rigorous definition of anything, one eventually arrives at a contradiction of Aristotelian logic. Ultimately one can only define something as identical to its own opposite. Geometry, e.g., models the presence of

mass as the absence of mass. Ultimately a "hard definition" is an "accursed necessity for the identity of opposites"—the centuries-old bane of the philosophers. In physics the problem is avoided by the "duality principle"—just treat an entity as either a particle or wave as necessary, and quit arguing about it! The problem is the incompleteness of Aristotelian logic itself. A solution to the "identity of opposites" problem is obtained by explicitly adding a fourth law of logic that has always been implicitly assumed in Aristotle's three laws. For a discussion, see "A Conditional Criterion For Identity, Leading to a Fourth Law of Logic," Appendix III to T. E. Bearden, Aids: Biological Warfare, Tesla Book Co., 1988, p. 428-443. A simple proof of the fourth law of logic is given in *ibid*., p. 439-440.

[53] . In addition to reference 19, see Myron W. Evans, Enigmatic Photon, Vol. II, Kluwer, ISBN 0792332881. See also Apeiron, 4(2-3), Apr.-Jul. 1997, a Special $B^{(3)}$ Field Issue, Guest editor: Myron W. Evans. In this same issue, see the Introduction by Evans, and also his "Helicity and the Electromagnetic Field." In the same issue, see also Jean-Pierre Vigier, "Relativistic Interpretation (with Non-Zero Photon Mass) of the Small Ether Drift Velocity Detected by Michelson, Morley, and Miller." Barrett has also rigorously shown the reality of the $B^{(3)}$ field, and so the conventional closure against it is doomed to failure. The emergence of $B^{(3)}$ field theory will dramatically alter electrodynamics, and elevate the importance of the longitudinal EM wave. We are also much indebted to Bob Flowers for his penetrating elucidation of the background of the $B^{(3)}$ field in private communications, and to Myron Evans for his patient and encouraging private communications.

[54] . See particularly T. W. Barrett, "Sagnac Effect: A Consequence of Conservation of Action Due to Gauge Field Global Conformal Invariance in a Multiply-Joined Topology of Coherent Fields," in T. W. Barrett and D. M Grimes, [Eds.], Advanced Electromagnetism: Foundations, Theory,

& Applications. World Scientific, River Edge, New Jersey, 07661, 1995, p. 278-313; T. W. Barrett, "Electromagnetic Phenomena Not Explained by Maxwell's Equations," in A. Lakhtakia, (ed.): Essays on the Formal Aspects of Electromagnetic Theory, World Scientific Publishing, River Edge, NJ, 1993, p. 6-86.

[55] . Richard W. Ziolkowski, "Exact Solutions of the Wave Equation With Complex Source Locations," Journal of Mathematical Physics, 26 (4), April 1985, p. 861-863; I.M. Besieris, A.M. Shaarawi, and R. W. Ziolkowski, "A bidirectional travelling plane wave representation of exact solutions of the scalar wave equation," Journal of Mathematical Physics, 30(6), 1989, p. 1254-1269; Rod Donnelly and Richard Ziolkowski, "A method for constructing solutions of homogeneous partial differential equations: localized waves," Proceedings of the Royal Society of London A., Vol. 437, 1992, p. 673-692; — "Electromagnetic field generated by a moving point charge: A fields-only approach," American Journal of Physics, 62 (10), Oct. 1994, p. 916-922.

[56] . M. W. Evans, editor, Modern Nonlinear Optics, Wiley, 2002, 3 volumes (in press).

[57] . W. A. Rodrigues Jr. and J.-Y. Lu, “On the existence of undistorted progressive waves (UPWs) of arbitrary speeds $0 \leq v < \infty$ in nature,” Foundations of Physics, 27(3), 1997, p. 435-508; W. A. Rodrigues Jr. and J. E. Maiorino, “A unified theory for construction of arbitrary speeds ($0 \leq v \leq \infty$) solutions of the relativistic wave equations,” Random Operators and Stochastic Equations, Vol. 4, 1996, p. 355-400.

[58] . E. T. Whittaker, 1903, *ibid*.

[59] . Ironically, Maxwell’s actual theory was some 20 quaternion-like equations in 20

unknowns, as given in "A Dynamical Theory of the Electromagnetic Field," Royal Society Transactions, Vol. CLV, 1865, p 459. Read Dec. 8, 1864. Also contained in The Scientific Papers of James Clerk Maxwell, 2 vols. bound as one, edited by W. D. Niven, Dover, New York, 1952, Vol. 1, p. 526-597. Heaviside dramatically curtailed Maxwell's theory to a vector subset of some 4 equations in 4 unknowns. Lorentz further curtailed it by effectively throwing out all Maxwell-Heaviside systems that were in disequilibrium with their active vacuum and curved spacetime environments. So after over a century, the long slumbering *environmental* dynamics for electrodynamical systems is awakening and chasing its own roots again. Long live the rise of the supersystem!

[60] . E.g., see J. Vaz Jr. and W. A. Rodrigues Jr., "Maxwell and Dirac Theories as an Already Unified Theory," Advances in Applied Clifford Algebras, Vol. 7 (S), 1997, p. 369-386. See W. A. Rodrigues, Jr. and J. Vaz Jr., "Subluminal and Superluminal Solutions in Vacuum of the Maxwell Equations and the Massless Dirac Equation," Advances in Applied Clifford Algebras, Vol. 7(S), 1997, p. 457-466.

[61] . E. T. Whittaker, 1904, *ibid*.

[62] . We strongly stress that longitudinal EM waves and their dynamics, so ignored in all except the most advanced higher symmetry electrodynamics texts, are actually the key to everything. Longitudinal EM waves already comprise, create, and structure the feeble "envelope EM waves" we presently deal with. A longitudinal EM wave is also an electrogravitational wave, and oscillates the rate of flow of time itself because of its combination with a time-polarized wave. The two combined photons have a total spin two, which is a graviton. Thus internally a graviton is revealed as a particular

dynamic between time-domain EM energy and 3-space EM energy. The longitudinal EM wave in the time domain (that is combining with the longitudinal EM wave in 3-space) is thus an oscillation of time contraction and expansion, or "pulsation" in the rate of flow of time. Very powerful gravitational effects as well as very powerful and unique electrodynamics effects can be obtained by use of longitudinal EM waves, because of the additional dynamics between the time and 3-space domains. Unwitting use of such extraordinary EM waves is how Rife and Prioré achieved such remarkable results.

[63] . M. W. Evans, P. K. Anastasovski, T. E. Bearden et al., "On Whittaker's Representation of the Electromagnetic Entity in Vacuo, Part V: The Production of Transverse Fields and Energy by Scalar Interferometry," Journal of New Energy, 4 (3), Special Issue, Winter 1999, p. 76-78.

[64] . Melba Phillips, “Classical Electrodynamics,” Vol. IV: Principles of Electrodynamics and Relativity, in Encyclopedia of Physics, Edited by S. Flugge, Springer-Verlag, Berlin, 1962, p. 1-108 gives a good overall summary of the superpotential theory.

[65] . A. Righi, Nuovo Cimento, Vol. 2, No. 5, 1901, p. 104.

[66] . P. Debye, Ann. Phys., Leipzig, Vol. 30, 1909, p. 57.

[67] . Thomas John I'Anson Bromwich, An Introduction to the Theory of Infinite Series, MacMillan, London, 1908.

[68] . A. Nisbet, Physica, Vol. 21, 1955, p. 799; Proc. Roy. Soc. Lond. A, Vol. 231, 1955, p. 250.

[69] . W. H. McCrea, “Hertzian electromagnetic

potentials," Proc. Roy. Soc. Lond. A, Vol. 240, 1957, p. 447-457.

[70] . Sachs has achieved the necessary unified field theory, broadly unifying physics from the quarks and gluons to the entire universe, and including both the active vacuum and active, locally curved spacetime. See Mendel Sachs, General Relativity and Matter: A Spinor Field Theory from Fermis to Light-Years (Fundamental Theories of Physics), Reidel (now Kluwer), 1982; — Quantum Mechanics from General Relativity: An Approximation for a Theory of Inertia, Reidel (now Kluwer), 1986. It should be obvious that, unless electrodynamics theory and general relativity theory utilize the same background spacetime, it is impossible to completely merge them, from first principles. Since classical electrodynamics artificially discards its active environment, it is electrodynamics which must be changed in order to be successfully united with general relativity. Sachs has accomplished this long-sought *engineerable* unification.

[71] . Proof that the virtual state can be coherently integrated is already furnished by every source charge in the universe, which does precisely that.

[72] . We note without elaboration that all the mind functions, even of the deepest and most unconscious nature, and even of collective species unconsciousness domains—exist electromagnetically in the infolded EM domain. The "conscious mind" is a serial processor, though extremely rapid. The unconscious is a massively parallel processor. The reason the conscious mind cannot "directly see" the unconscious is that "seeing" innumerable things in the "single snapshot" at once, just obliterates all singular discrimination because of the intense summation. Mind functions are timelike, so consist of specialized structures, functioning, and dynamics

inside the time domain. Since the infolded structuring captures this entire domain, it also involves a physics of mind and matter interaction, but as a science instead of as a mysticism. In theory vacuum engines are also possible that engineer the mind at any and all levels. We have addressed this extended physics of mind and matter reactions elsewhere and do not address it here. The Russian weapon scientists refer to this mind area (which can also be engineered by novel electrodynamic means) as psychoenergetics.

[73] . R. O. Becker and David G. Murray, "The electrical control system regulating fracture healing in amphibians," Clinical Orthopaedics and Related Research, Vol. unk, No. 73, Nov.-Dec. 1970, p. 169-198. This is the definitive technical exposition by Becker of his electrical findings about the cellular control system.

[74] . See particularly Robert O. Becker, “The direct current control system. A link between environment and organism,” New York State Journal of Medicine, Vol. 62, 1962, p. 1169-1176; — and Joseph A. Spadaro, "Electrical stimulation of partial limb regeneration in mammals," Bulletin of the New York Academy of Medicine, Second Series, 48(4), May 1972, p. 627-641; — and Carlton F. Hazlewood, Abraham R. Liboff, and Jan Walleczek, Electromagnetic Applications In Medicine," NIH-OAM Electromagnetics Panel Report, Jan. 15, 1993; — "A technique for producing regenerative healing in humans," Frontier Perspectives, 1(2), Fall/Winter 1990, p. 1-2; — and Andrew A. Marino. Electromagnetism and Life, State University of New York Press, Albany, NY, 1982; — and Gary Selden, The Body Electric, William Morrow and Company, New York, 1985; — Cross Currents, Jeremy P. Tarcher, Inc., Los Angeles, 1990; — "The bioelectric field pattern in the salamander and its stimulation by an electronic analog," IRE Transactions on Medical Electronics, Vol. ME-7, July 1960, p. 202-207; —

"Some observations indicating the possibility of longitudinal charge-carrier flow in peripheral nerves," Biological Prototypes and Synthetic Systems, Plenum Press, New York, 1962, p. 31-37; — and W. Slaughter, "The longitudinal direct current gradients of spinal nerves," Nature, Vol. 196, Nov. 17, 1962, p. 675-676; — and Charles H. Bachman and Howard Friedman, The direct current (control) system: A link between the environment and the organism," New York State Journal of Medicine, Vol. 62, April 15, 1962, p. 1169-1176; — "The direct current field: A primitive control and communication system related to growth processes," Proceedings of the. XVI International. Congress of Zoology, Washington, D.C., Vol. 3, 1963, p. 179-183; — "The neutral semiconduction control system and its interaction with applied electrical current and magnetic fields," Proc. 11th International. Cong. Radiol., Amsterdam, Excerpta Medica Foundation, 1966, Series 105, p, 1753-1759; — "The bioelectric factors in amphibian limb regeneration," The Journal of Bone and Joint Surgery, Vol. 43-A, No. 5, July 1961, p. 643-656; — and David G. Murray, "A method for producing cellular dedifferentiation by means of very small electrical currents," Transactions, New York Academy of Sciences, 29(5), Mar. 1967, p. 606-615.

[75] . The ultimate tool for use in seeing and working with this "infolded" or "internal electrodynamics inside normal EM fields, waves, and potentials will probably be the Fogal semiconductor when it goes into production in the near future. Fogal's transistors are capable of (1) infolding the desired longitudinal EM waves inside normal EM signals (he demonstrates infolding TV signals inside pure DC potentials, and transmitting them over conductors as pure DC potentials for appreciable distance, then using his semiconductors to again extract the "infolded" hidden TV signals.

[76] . See Vlail Kaznacheyev, "Electromagnetic

Bioinformation in Intercellular Interactions," Psi Research, 1(1), Mar. 1982, p. 47-76; — *et al*., "Distant intercellular interactions in a system of two tissue cultures," Psychoenergetic Systems, 1 (3), Mar. 1976, p. 141-142; "A Comment" by William A. McGarey, p. 143; "A Comment" by Arthur C. Hastings, p. 143-144, — *et al*., "Apparent information transfer between two groups of cells," Psychoenergetic Systems, 1(1), Dec. 1974. See particularly Vlail P. Kaznacheyev and L. P. Mikhailova, Ultraweak Radiations in Intercellular Interactions [in Russian], Novosibirsk, 1981; "Electromagnetic Bioinformation in Intercellular Interactions," Novosibirsk, 1981 [in Russian]; V. P. Kaznacheyev, "Information Function of Ultraweak Light flows in Biological Systems," Problems in Biophysics, Novosibirsk, 1967, p. 7-18 [in Russian].

[77] . Some years ago we documented this disease-inducing "microwave radiation of the U.S. Embassy, explained its purpose and operational mechanism, and published it. E.g., see T. E. Bearden, AIDS: Biological Warfare, Tesla Book Co., Chula Vista, CA, 1988.

[78] . See Robert C. Mallieu, A Model of the Microwave Intensity Distribution Within the U.S. Embassy, Moscow 1966-1967, Report FS-80-166, Applied Physics Laboratory, Johns Hopkins University, Baltimore, Maryland, Aug. 1980. Also see Microwave Radiation at the U.S. Embassy in Moscow and Its Biological Implications: An Assessment, U.S. Department of Commerce, Doc. # NTIA-SP081-12, Mar. 1981. Also see Captain John D. LaMothe, Controlled Offensive Behavior—USSR, Report ST-CS-01-169-72, Defense Intelligence Agency, Washington, D.C. (released under FOIA). See also Captain John D. LaMothe and Mr. Louis Maire, Soviet and Czechoslovakian Parapsychology Research, Report DST-1810S-387-75, Defense Intelligence Agency, Washington, D.C. (Released under FOIA).

[79] . T. E. Bearden, "EM Corrections Enabling a Practical Unified Field Theory with Emphasis on Time-Charging Interactions of Longitudinal EM Waves," Journal of New Energy, 3(2/3), 1998, p. 12-28. A slightly updated and extended version is published in Explore, 8(6), 1998, p. 7-16.

[80] . C. W. Misner, K. S. Thorne and J. A. Wheeler, Gravitation, W.H. Freeman and Co., San Francisco, 1973, p. 5, 19-21, 71-72, 163-165, 390-391, 399; 367-369.

[81] . T. D. Lee, Particle Physics and Introduction to Field Theory, Harwood, New York, 1981. See particularly Chapter 25: Outlook, "Possibility of Vacuum Engineering," p. 824-828.

[82] . David J. Bohm, "A Suggested Interpretation of the Quantum Theory in Terms of 'Hidden' Variables, I and II," Physical Review, 85 (2), Jan. 15, 1952, p. 166-179 (Part I); 180-193 (Part II).

[83] . I.e., the rate of flow of time, or more specifically, the rate of the EM interactions with a mass or particle that generate the flow of the mass or particle through time. See Figure 25. Nobelist Lee has also shown that time is a discrete dynamical variable across all of physics, from quantum mechanics to nonrelativistic field theory, to relativistic quantum field theory. See T. D. Lee, "Can Time Be a Discrete Dynamical Variable?", Physics Letters, 122B(3, 4), Mar. 10, 1983, p. 217-220. Also in T. D. Lee, Selected Papers, Gerald Feinberg, Ed., Birkhauser, Boston, 1986, Vol. 3, p. 77-80. So we have not hesitated to consider time as any other variable, and the fourth Minkowski axis as any of the other three axes with respect to EM energy, fields, potentials, and waves.

[84] . Indeed, there is no such unique thing as “the gravitational field” anyway! The gravitational field is a conglomerate of other field energies and

functions, not a separate field of nature. See A. A. Logunov and Yu. M. Loskutov, "Nonuniqueness of the predictions of the general theory of relativity," Sov. J. Part. Nucl., 18(3), May-June 1987, p. 179. See C. W. Misner, K. S. Thorne and J. A. Wheeler, Gravitation, W.H. Freeman and Co., San Francisco, 1973, p. 399. Quoting*: "The terms 'gravitational field' and 'gravity' refer in a vague, collective sort of way to all of these entities. Another, equivalent term for them is the 'geometry of spacetime'."* See also A. D. Sakharov, "Vacuum Quantum Fluctuations in Curved Space and the Theory of Gravitation," Soviet Physics Doklady, Vol. 12, No. 11, 1968, p. 1040-1041 [English translation.]. Finally, see our remarks under reference 62 above, particularly with respect to the proposed internal electromagnetic dynamics of the graviton.

[85] . A 1993 study by the Office of Technology Assessment, delivered to Congress, showed that a single terrorist in a small plane, with a tank of anthrax spray, and dispersing the spray as he flew around the greater Washington D.C. area on a calm night, would produce between 1 and 3 million casualties. Most of those casualties would die. So a single biological warfare (BW) strike in one U.S. metropolitan area could easily kill two million Americans. As an example, Saddam Hussein is known to have the terrorist teams and the anthrax, and he has had a decade since the Gulf war to insert additional teams and biological warfare agents into the U.S. Presently this is rated by our government as the strongest strategic threat to the U.S., after which comes nuclear strikes, followed by chemical agent strikes. Redevelopment of the Prioré approach, e.g., could easily save the lives of 90% of that nominal two million dead Americans. As matters stand now, triage would apply and almost all of those two million stricken Americans would die.

[86] . In 1998 we proposed a crash development of this kind of device in 1998, with copies to DoD,

NIH, CDC, the USAF, etc.; in T. E. Bearden, Energetics: Extensions to Physics and Advanced Technology for Medical and Military Applications, CTEC Proprietary, May 1, 1998, 200+ page inclosure to CTEC Letter, "Saving the Lives of Mass BW Casualties from Terrorist BW Strikes on U.S. Population Centers," to Major General Thomas H. Neary, Director of Nuclear and Counterproliferation, Office of the Deputy Chief of Staff, Air and Space Operations, HQ USAF, May. 4, 1998. Also to Gen. (Ret.) Walter Busby, Deputy Secretary of Defense for Counterproliferation and Chemical and Biological Defense, March 21, 1998. Also to NIH, CDC, and several other U.S. government agencies.

DoD replied that it was not documented in the literature (a specific list of exact scientific papers reporting the results of the Prioré team's experiments and the experiments of Becker was included; no one seemed to read it). CDC and the USAF did not reply. NIH first responded (from its Policy section—read, *spin control* section) that, since I mentioned the cause of the Gulf War Disease and how it was induced, it was not a matter of their interest but of DoD's interest, and so they just shipped it to DoD and got rid of it. A second response evoked from NIH on query from my congressman (again, a response from their *policy* section) directed me to their proposals section. I don't believe a single qualified scientist even read it. DoD weakly replied that it was not documented in the literature (a specific list of citations from the hard French scientific literature, reporting the astounding results of the Prioré treatments, was included, which apparently no one read).

Not a single scientist from any agency called me to discuss the revolutionary and proven results obtained by Prioré, and documented in the attachments and in the cited literature. Sadly, it seems that no one had the foggiest notion what I was talking about, and no one much cared. My conclusion was and is that my own government bureaucrats do not give a tinker's dam about saving

millions of American casualties in the coming debacle, *if it has to be done by "out-of-the-box" methods not approved by the big drug industry*. Yet these are the same officials that readily admit the exact threat I referred to, admit that it is a matter of *when* the biological warfare attacks will occur and not *if*, and admit that right now they have no effective way to cope with it or save most of those coming millions of Americans that are going to just be dragged aside to die.

My response is that the American taxpayers are certainly not getting their money's worth from the billions they shower on our medical research community. It is unconscionable to ignore for over 30 years the demonstrated and astounding results achieved by eminent French scientists—such as Pautrizel, a world-renowned parasitologist and Courier, head of the French Academy's Biological Section, and also *Secretaire Perpetuel* of the Academy) working with the Prioré team, in curing terminal tumors etc. in thousands of lab animals, all properly documented in the hard French scientific literature.

In my view, considering the certainty of those future American mass deaths, it is akin to high treason. Whether our scientific community realizes it or not, today's strategic war of massive strategic strikes has shifted to our civilian populace, and to our cities and mass population centers. It is our civilian populace that will sustain the greatest and most prompt casualties, and probably will receive the first massive strikes, totally by surprise.

The first phase of WW III—delivery of the strategic weapons to their strategic targets—has already been accomplished. Large Russian nuclear weapons are already hidden in our major cities and population centers (read Lunev's book, he tells us how they brought in these weapons), the Spetznaz teams are here to detonate them on call, multiple nations such as Iraq, Libya, and Iran already have terrorists agents in country in the U.S. with anthrax and smallpox in hand to be released, and Castro guerrillas and trained saboteurs have been trained

in Southern Mexico and infiltrated across the border into the U.S. for decades.

Whether they like it or not, U.S. scientists have thus become the major front line "soldiers" and "defenders" of our nation. And frankly, they have failed abominably in their responsibility, and most do not seem to care. For a startling and even shocking characterization of our present scientific community, the reader is referred to Daniel S. Greenberg, Science, Money, and Politics: Political Triumph and Ethical Erosion, University of Chicago Press, 2001.

[87] . As we stated, just such an attack is now officially the greatest strategic threat to the United States. Second is a nuclear attack, followed by chemical attack as a distant third. E.g., see Richard K. Betts, “The New Threat of Mass Destruction,” Foreign Affairs, 77(1), Jan./Feb. 1998, p. 26-41. For the ineffectiveness of our defenses against the coming mass biological warfare strikes, see Laurie Garrett, The Coming Plague: Newly Emerging Diseases in a World Out of Balance, Farrar, Straus and Giroux, New York, 1994; — "The Nightmare of Bioterrorism," Foreign Affairs, 80(1), Jan./Feb. 2001, p. 76-89; — Betrayal of Trust: The Collapse of Global Health, Hyperion, New York, 2000.

[88] . Becker, *ibid*.

[89] . A full account of the entire Prioré affair is given in Jean-Michel Graille, Dossier Prioré: Une Nouvelle Affaire Pasteur [The Prioré Dossier: A New Pasteur Affair?], De Noel, Paris, 1984. [in French]. A summary account is given by Christopher Bird, "The Case of Antoine Prioré and His Therapeutic Machine: A Scandal in the Politics of Science," Appendix I in T.E. Bearden, AIDS: Biological Warfare, Tesla Book Co., P.O. Box 121873, Chula Vista, California 91912, 1988. Prioré's doctoral thesis (in my personal possession courtesy of Professor Courrier and the late Chris Bird), was rejected by the University of Bordeaux

when the French government suppressed the Prioré program in the mid-70s; it is A. Prioré, Guérison de la Trypanosomiase Expérimentale Aiguë et Chronique par L'action Combinée de Champs Magnétiques et D'Ondes Electromagnétiques Modulés. [Healing of intense and chronic experimental trypanosomiasis by the combined action of magnetic fields and modulated electromagnetic waves], 1973. Prioré's patents are: A. Priore, "Apparatus for producing radiations penetrating living cells," U.S. Patent No. 3,368,155, Feb. 6, 1968; — "Method of producing radiations for penetrating living cells," U.S. Patent No. 3,280,816, Oct. 25, 1966; — "Procede et dispositif de production de rayonnements utilisables notamment pour le traitement de cellules vivantes," [Procedure and Assemblage for Production of Radiation Especially Serviceable for the Treatment of Living Cells], Republique Francais Brevet d'Invention P.V. No. 899.414, No. 1,342,772, Oct. 7, 1963. Eleven years after Priore's thesis was rejected, the same university awarded a doctoral thesis to a young graduate. It is Eric Perisse, Effets des Ondes Electromagnètiques et des Champs Magnètiques sur le Cancer et la Trypanosomiase Experimentale [Effects of Electromagnetic Waves and Magnetic Fields on Cancer and Experimental Trypanosomias], Doctoral thesis, University of Bordeaux No. 83, March 16, 1984.

[90] . F. A. Popp *et al.*, "Biophoton Emission (Multi-Author Review)," Experientia, Vol. 44, 1988, p. 543-600; — "Biophoton emission: New evidence for coherence and DNA as a source," Cell. Biophys., Vol. 6, 1984, p. 33-52; — "Physical aspects of biophotons." Experientia, Vol. 44, 1988, p. 576-585; — Recent Advances in Biophoton Research and its Applications, World Scientific Publishing Co., New York, NY, 1992; F. A. Popp, "Photon Storage in Biological Systems," in Fritz Albert Popp *et al.*, eds., Electromagnetic Bio-Information: Proceedings of the Symposium,

Marburg, Federal Republic of Germany, Sep. 5, 1977; Urban & Schwarzenberg, Baltimore, 1979, p. 123-149.

[91] . David M. Rorvik, "Do the French have a Cure for Cancer?", Esquire Magazine, July 1975, p. 110-111, 142-149.

[92] . Arguably the best introduction to nonlinear optical phase conjugation is David M. Pepper, "Nonlinear Optical Phase Conjugation," Optical Engineering, 21(2), March/April 1982, p. 156-183. Another very good presentation is Amnon Yariv, Optical Electronics, 3rd Edition, Holt, Rinehart, and Winston, New York. 1985, Chapter 16: “Phase Conjugate Optics – Theory and Applications.”

[93] . A beautiful example of this “precise backtracking” of the time-reversed wave is given in David M. Pepper, "Applications of Optical Phase Conjugation," Scientific American, 254(1), Jan. 1986, p. 74-83. See particularly the striking photographic demonstration of time reversal of disorder on p. 75.

[94] . We presented some general elements of this dramatic new extension to nonlinear optical phase conjugate pumping and to general relativity, at a graduate seminar, “On the Theory and Principles of EM Systems with COP>1.0”, given to interested graduates and faculty of the University of Louisville, on Nov. 20, 1997.

[95] . E.g., see Owen Flynn, "Parametric arrays: A new concept for sonar," Electronic Warfare Magazine, June 1977, p. 107-112.

[96] . This method of increasing signal-to-noise ratio and pulling hidden signals right up out of the noise, is widely used in signal processing in modern radars. Often signals buried more than 100

dB below the noise level are routinely "pulled out of the noise" and detected, using various forms of coherent summation.

[97]. Any potential decomposes into multiple wavepair sets. In each hidden wavepair, each of the two waves further decomposes into two potentials. Each of *those* potentials then further decomposes into multiple wavepair sets. And so on *ad infinitum*. Or one can start with any wave, decompose it into two potentials, each of those potentials into multiple biwave sets, and so on.

[98]. "Fractal" means self-similarity at all levels, so that patterning or "decomposition" at one level is similar to that at the higher and lower levels. For good overview discussions and applications, see particularly Gregoire Nicolis, "Physics of far-from-equilibrium systems and self-organization," and Joseph Ford, "What is chaos, that we should be mindful of it?", both in The New Physics, Paul Davies, editor, Cambridge University Press, Cambridge and New York, 1989, p. 316-347 and 348-371 respectively. More detailed technical references are cited in each article.

[99]. See Trevor James Constable, "You, Too, Can Photograph UFOs from Airliners," Psychic Observer and Chimes, 37(3), May-June 1977; — The Cosmic Pulse of Life, Merlin Press, Santa Ana, CA, 1976.

[100]. The present author has two beautiful ultraphotographs taken by Joe Gambill using the special filtering approach. One is a photograph of a room, but with its contents of *two weeks earlier*, showing the room prior to the time the photograph was taken. The other is of a "ghost" form—very similar to a photograph obtained by George Meek under rigorous laboratory conditions—and clearly showing the energy form of a "haunted" lady's dead husband. The *interpretation* of these photographs

is of course open to scientific dispute, but the *photographs themselves* are impeccable and real.

[101] . Meek used filters open to UV and IR but opaque to the visible spectrum, on the fluorescent lights in his laboratory. He also used similar filtering on the camera lenses and camera flashes. Under rigorous laboratory conditions, in several thousand photos of the living body Meek was able to take a few highly anomalous photos completely inexplicable by normal science. E.g., he photographed a purported "ghost" and obtained a clear shot of energy streaming associated with a living person. He also photographed the legs of a chair, right through the suddenly "missing" legs of the person sitting in the chair. Again, interpretation is open to dispute, but the photographs are rigorous and real.

[102] . Bill Fogal's patented charge-blocking semiconductor—U.S. Patent Numbers 5,196,809 and 5,430,413—is capable under certain circumstances—and by clever adaptation—of amplifying virtual state information, in a manner somewhat similar to Rife's methodology, but far more easily engineered. When the process works, Bill reports that a clear photograph or video camera shot can be taken right through a solid brick wall, of the hidden scenery beyond. In electrodynamics, in a dielectric absorbing or emitting EM radiation (energy), the entire dielectric participates in each absorption and emission. Emitted light from an object thus carries an astoundingly complete set of little virtual state vacuum engines rigorously representing every part of the object, no matter how small, and all the internal dynamics. This means that the light from the scene beyond the wall strikes the wall on the other side, affecting all the material in the wall, including upon the observer's side, and inserting "dimensioning" from the scene beyond the wall. When light is emitted from the observer's side, the information content of the field representing the scene on the far side, is also part of

the information content of the field in the light emitted from the observer side of the wall and striking the camera and the observers eyes. This "dimensioning" continues in the signals in the camera and on through attached electronic circuitry. Since Fogal's semiconductor can process such information content of the field in the proper circuitry and under favorable circumstances, the phenomenon is therefore permissible and can be technically explained. Using his transistor to transduce the dimensioned information into the visual band, Fogal *can* view a distant scene right through an intervening wall, when he gets everything "just right." At this stage of development, however, the process and adjustment are difficult, just as Rife experience with his microscope. We are convinced that the forthcoming advent of Fogal semiconductors will revolutionize the study and treatment of disease and bodily disorders.

[103] . However, highly advanced electrodynamics does consider the photon with far greater complexity than nuclear engineers such as the present author were introduced to! E.g., a deep discussion of photon polarization is given in F. Mandl and G. Shaw, Quantum Field Theory, Wiley, 1984 under the heading "covariant quantization of the photon propagator" in Chapter 5. As pointed out by Bob Flowers in a private communication, Mandl and Shaw argue that the longitudinal and scalar polarizations are not directly observable, but only in combination, where the combination manifests as the "instantaneous" Coulomb (i.e., electrostatic) potential. Most such books do argue that the extra components of the photon remain hidden, as does the virtual state. In this paper we have revealed how Rife discovered a process by means of which the virtual state can be observed in great detail.

[104] . V. P. Kaznacheyev, "Electromagnetic Bioinformation in Intercellular Interactions," Psi

Research, 1(1), Mar. 1982, p. 47-76; — "Information Function of Ultraweak Light Flows in Biological Systems," in Problems in Biophysics, Novosibirsk, 1967, p. 7-18 [in Russian]; — and L. P. Mikhailova, Ultraweak Radiation in Intercellular Interactions, [in Russian], Novosibirsk, 1981; — *et al*., “Apparent information transfer between two groups of cells,” Psychoenergetic Systems, 1(3), Mar. 1976; — *et al*., "Distant intercellular interactions in a system of two tissue cultures," Psychoenergetic Systems, 1(3), Mar. 1976, p. 141-142; "A Comment" by William A. McGarey, p. 143; "A Comment" by Arthur C. Hastings, p. 143-144.

[105] . Mitogenetic radiation was studied prior to WW II by Gurwich (spelling varies). See A. Gurwitsch and L. Gurwitsch, "L'Analyse mitogenetique spectrale [The Analysis of the mitogenetic spectrum]," in Andre Mayer, Exposés de Physiologie, [Studies in Physiology], Hermann & Cie, Paris, 1934. Part IV. [In French]. Studies have continued by Popp and others. E.g., see F. A. Popp *et al*., "Biophoton Emission (Multi-Author Review)," Experientia, Vol. 44, 1988, p. 54 3-600; — "Physical aspects of biophotons." Experientia, Vol. 44, 1988, p. 576-585; — "Biophoton emission: New evidence for coherence and DNA as a source," Cell. Biophys., Vol. 6, 1984, p. 33-52. See Fritz Albert Popp; Ke-hsueh Li, and Qiao Gu, [eds.], Recent Advances in Biophoton Research and its Applications, World Scientific Publishing Co., New York, NY, 1992.

[106] . The conventional quantum mechanics assumes that, at the microscopic level, variation (e. g., in the probabilities assigned to interpret what is propagating in the Schrödinger equation) is assumed to be random. However, there is a problem. Big things must be made of little things. If we sum a set of "random" things based on Gibbs thermodynamics statistics, we cannot and will not get an organized "big thing" because we have

assumed total disorder (randomness) *a priori*. Adding heat does not produce cooling! So one falsifies the prevailing interpretation of quantum mechanics, whenever one observes a tree, a flower, the sun, or a human being. In short, there must exist a great unifying principle in nature of a coherent summation, from the "unobservable" virtual state to the observable state. Only in that fashion can there be an macroscopic order at all—and such macroscopic order is universally observed. We believe that the principle we have elucidated, as experimentally produced by Rife, may well be that long-sought universal ordering principle that is so sorely needed by quantum mechanics. Readers interested in the "missing quantum chaos" problem are referred to P. V. Elyutin, "The Quantum Chaos Problem," Sov. Phys. Usp., Vol. 31, No. 7, 1988, p. 597-622. Elyutin discusses the crisis in quantum mechanics because of the missing hidden order. Quantum mechanics is known to be wrong unless this order can be found, because otherwise it does not predict the ordered macroscopic universe. Other useful references are Ilya Prigogine, with T. Petrosky, "Quantum Chaos, Complex Spectral Representation and Time-Symmetry Breaking," Chaos, Solitons, and Fractals, Vol. 4, 1994, p. 311-359; and Robert Pool, "Quantum Chaos: Enigma Wrapped in a Mystery," Science, 243(4893), 1989, p. 893-895.

Slide Index

Figure 1. The Rife microscope.

Figure 2. Royal Raymond Rife adjusts his microscope.

Figure 3. Faraday omitted the string holder for his taut string, thus omitting half the electrodynamics and half the energy. An equal-and-opposite Newtonian third law reaction wave always appears in our transmitters and receivers, caused by the omitted wave.

Figure 4. Drude gas gyroelectrons in the receiving antenna precess laterally, providing the detected transverse wave and proving the vacuum disturbance wave to be longitudinal.

Figure 5. The magnitude of the causal potential in massfree space is erroneously defined.

Figure 6. Fields and potentials are erroneously defined as what is diverted from them.

Figure 7. The defined magnitude of the field is erroneous and is the field intensity.

Figure 8. Matter-to-matter transform.

Figure 9. The missing matter-to-spacetime and spacetime-to-matter transforms.

Figure 10. Vacuum engine utilization.

Figure 11. A charge is continuously in violent energy exchange with the active vacuum.

Figure 12. Whittaker's biwave decomposition of the scalar potential, and its reinterpretation.

Figure 13. The Supersystem and its components.

Figure 14. Vacuum engine (cartoon representation).

Figure 15. First vacuum engine analogy of arm muscle and bone.

Figure 16. Second vacuum engine analogy of arm bone and muscle.

Figure 17. Third vacuum engine analogy.

Figure 18. Fourth vacuum engine analogy.

Figure 19. Time-like flow of EM energy into 3-space.

Figure 20. Block diagram of the immune system.

Figure 21. Becker's electromagnetic healing of otherwise intractable bone fractures.

Figure 22. Becker's block diagram of the cellular control system.

Figure 23. Kaznacheyev's electromagnetic induction of cellular death and disease, at a distance.

Figure 24. Microwave radiation of the U.S. Embassy in Moscow.

Figure 25. Mechanism generating the flow of a mass through time.

Figure 26. Vacuum antiengine for a specific disease condition.

Figure 27. Pumping with transverse and longitudinal EM waves.

Figure 28. Block diagram of the Prioré process.

Figure 29. Block diagram of the operation of the body's cellular regenerative system.

Figure 30. Rife's great secret: Recursive iterative serial amplification by a single harmonic interval difference frequency.

Help support this work

The Tom Bearden Website

Rife's Microscope

Table of Photographs

(Thanks to the donor of these photographs, who wishes to remain anonymous)

1. Rife's Universal Microscope
2. Eyepiece Details
3. Chart for Calculating Parallax of Lens System
4. Diagram - Wide Angle Apochromatic Microscope Objective Lens
5. Universal Focus - Photographic Lens
6. Light Passage of Dove Prism

Figure 1. Rife's microscope.

Figure 2. Royal Raymond Rife adjusts his microscope.

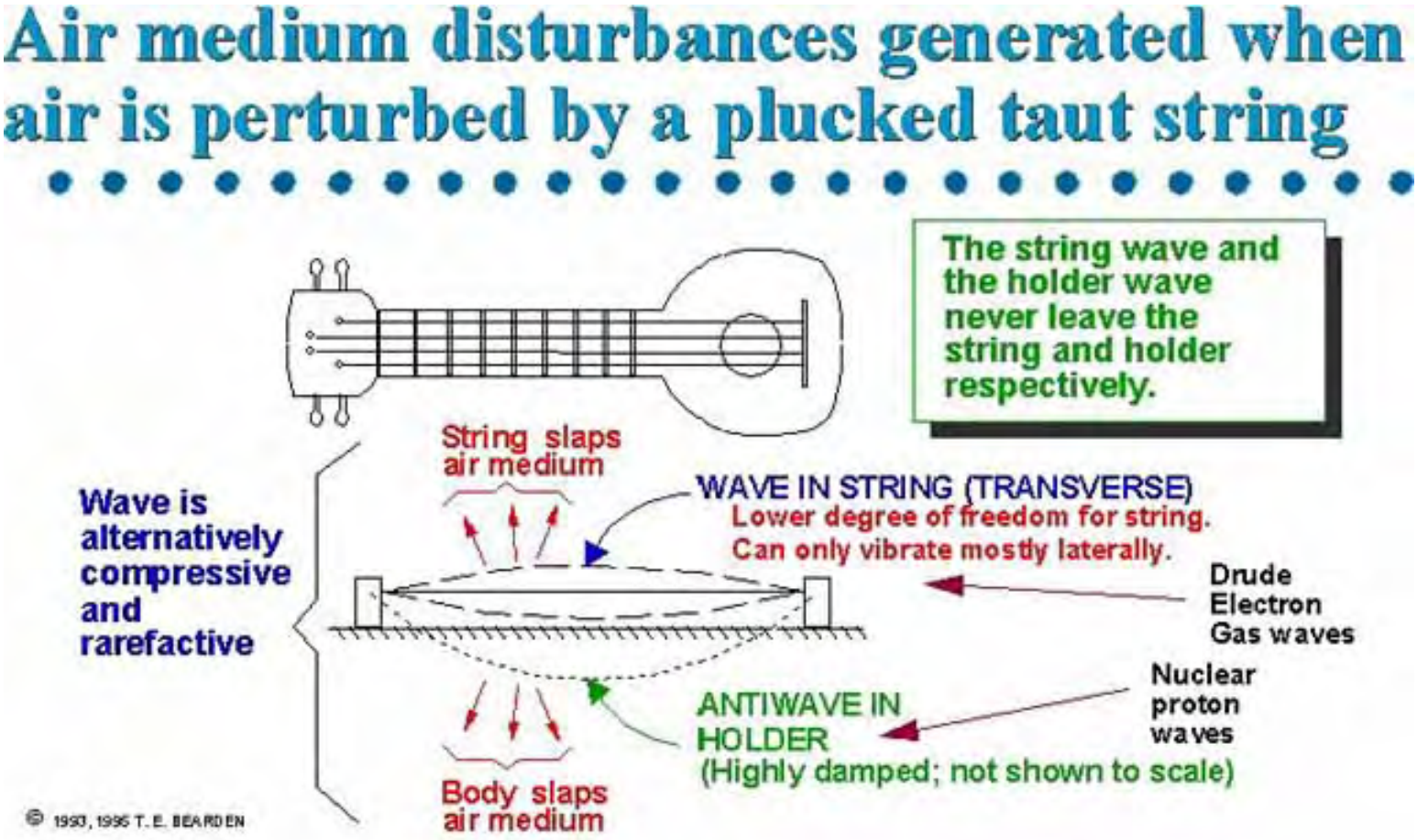

Figure 3. Analogy of the "taut string holder" omitted by Faraday.
This omitted half the electrodynamics (including in Maxwell's capture of Faraday's notion) and half the EM energy. An equal and opposite Newtonian 3rd law reaction does appear in our transmitters and receivers.

Flow of current and energy into, through, and along a conductor

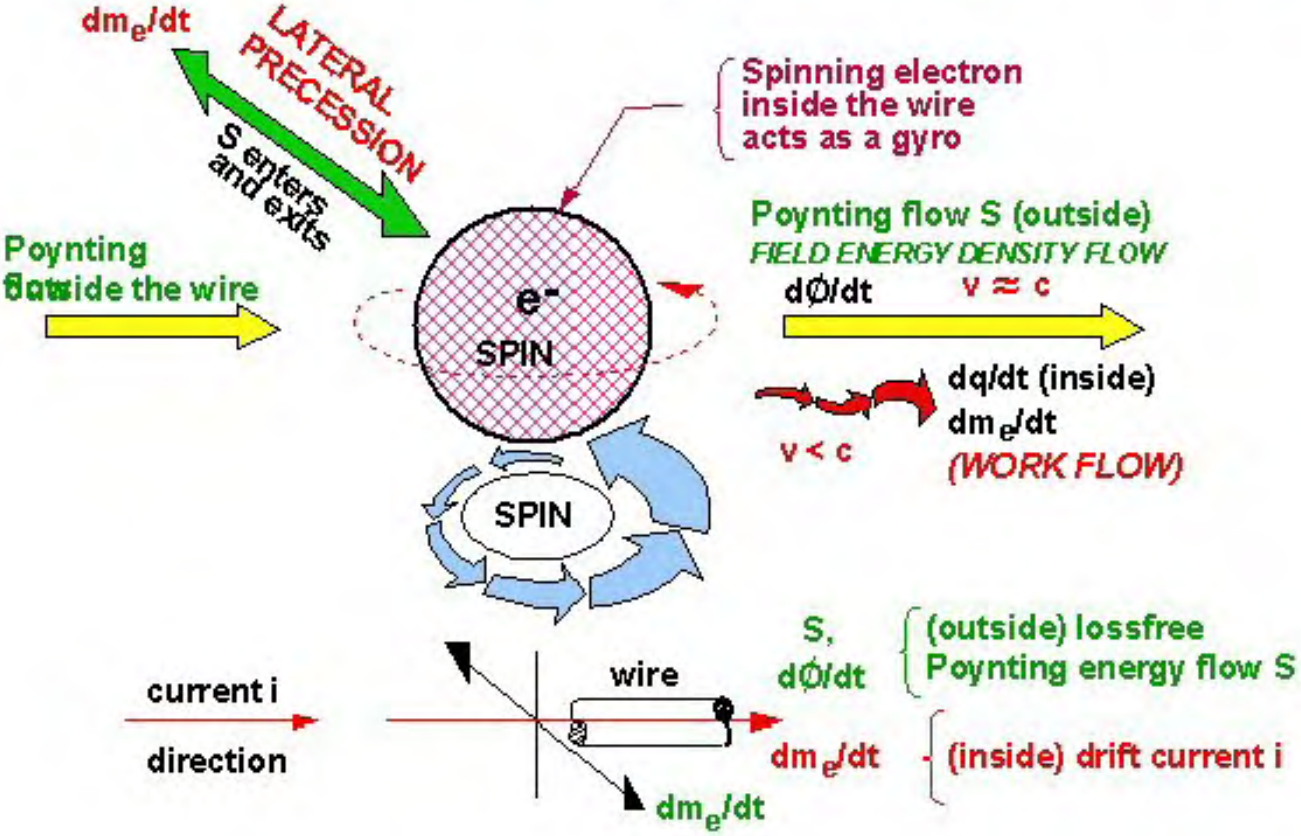

Figure 4. Receiving gyroelectrons precess laterally, providing the detected transverse wave and proving the incoming vacuum disturbance to be longitudinal.

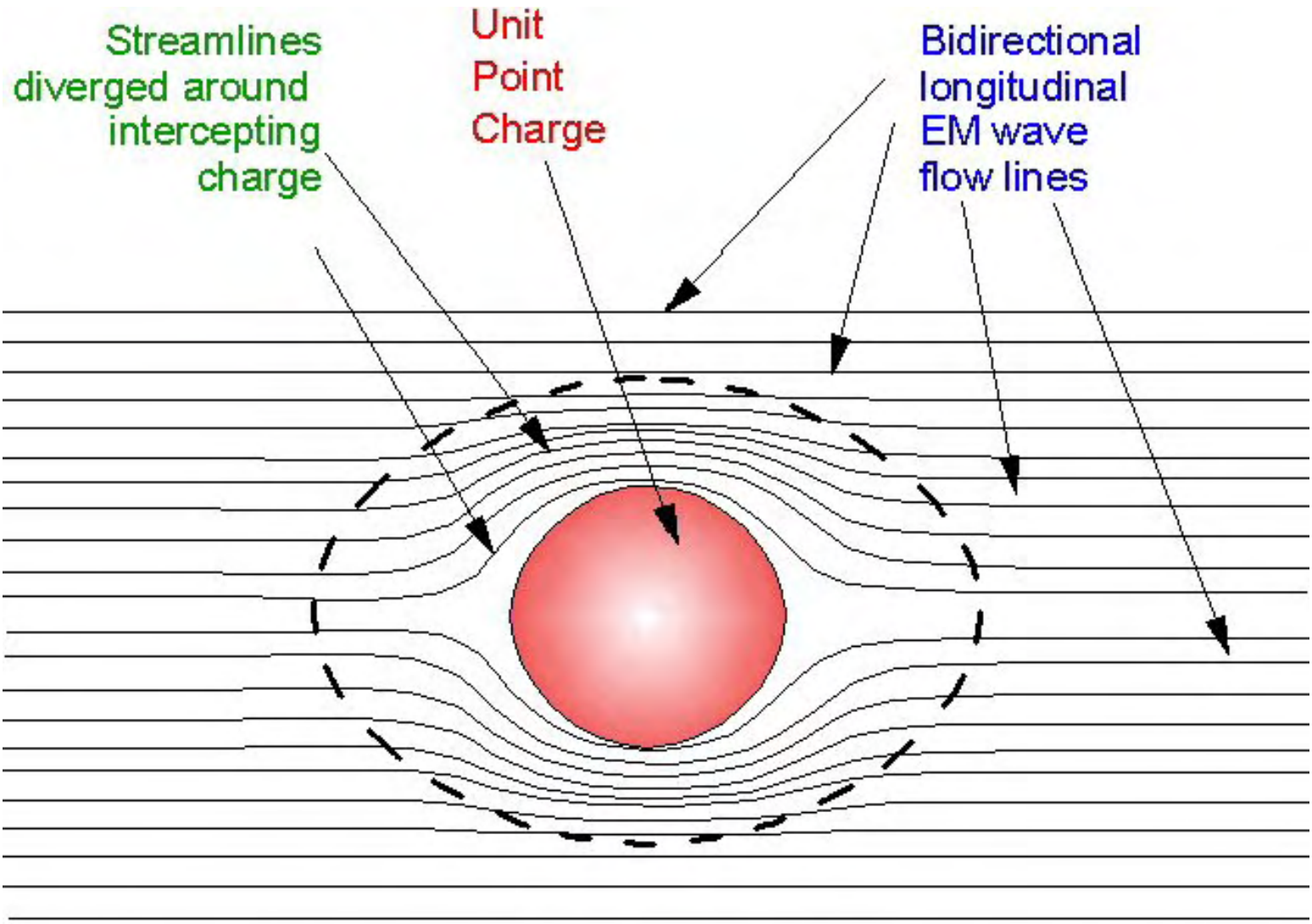

Figure 5. The defined "magnitude of the potential" is not such at all, but is the magnitude of the energy in the diverged flow streamlining around a unit point charge at each point in space where the potential is present.

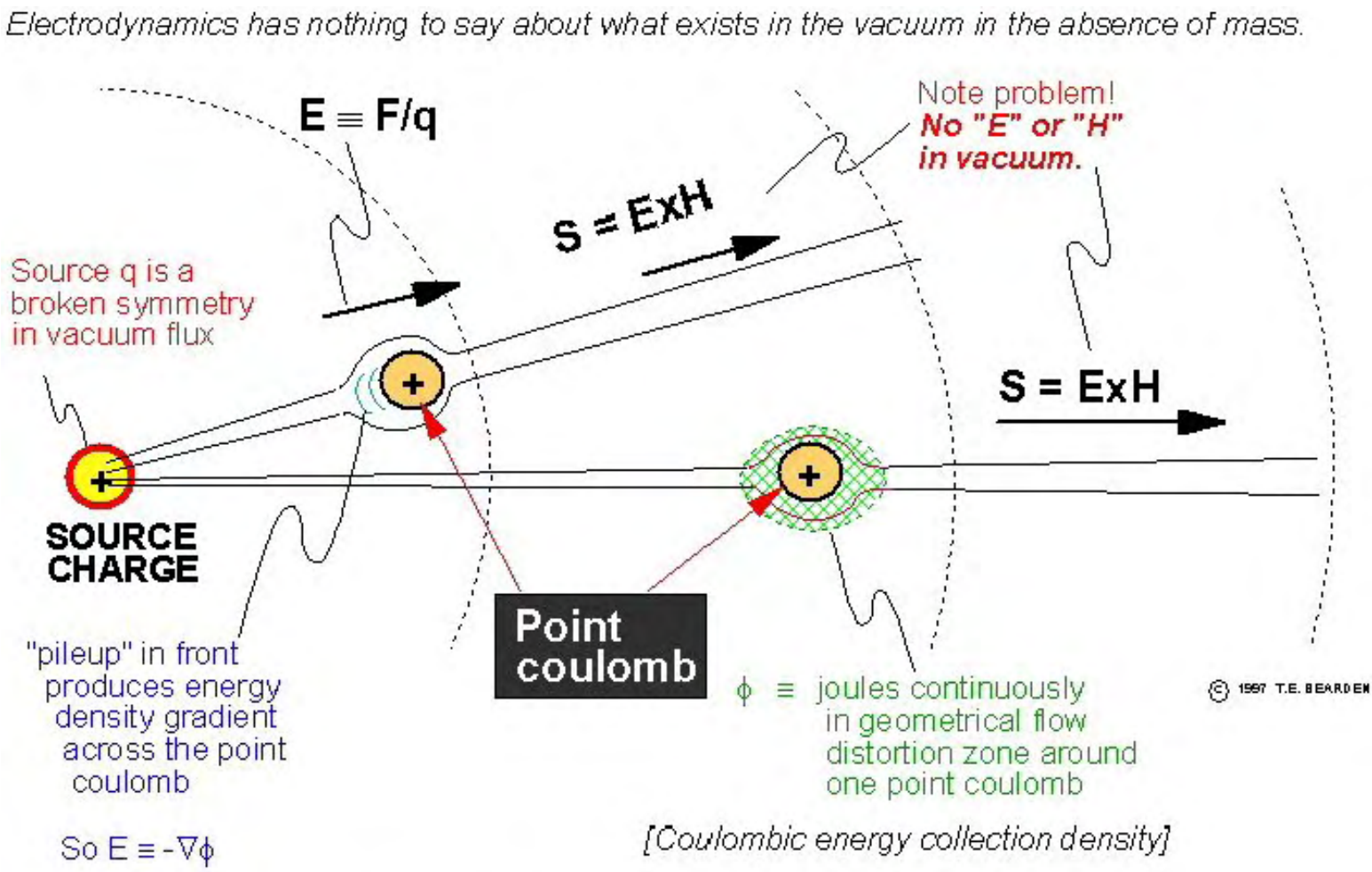

Figure 6. Fields and potentials are defined in terms of the Poynting disruption of the overall energy flow from the source charge, about an intercepting and "collecting" charge. Rigorously, *as defined* E and H exist only in and on charged matter. The magnitude of the diverted water swinging around a fixed rock in a river, is not the magnitude of the river.

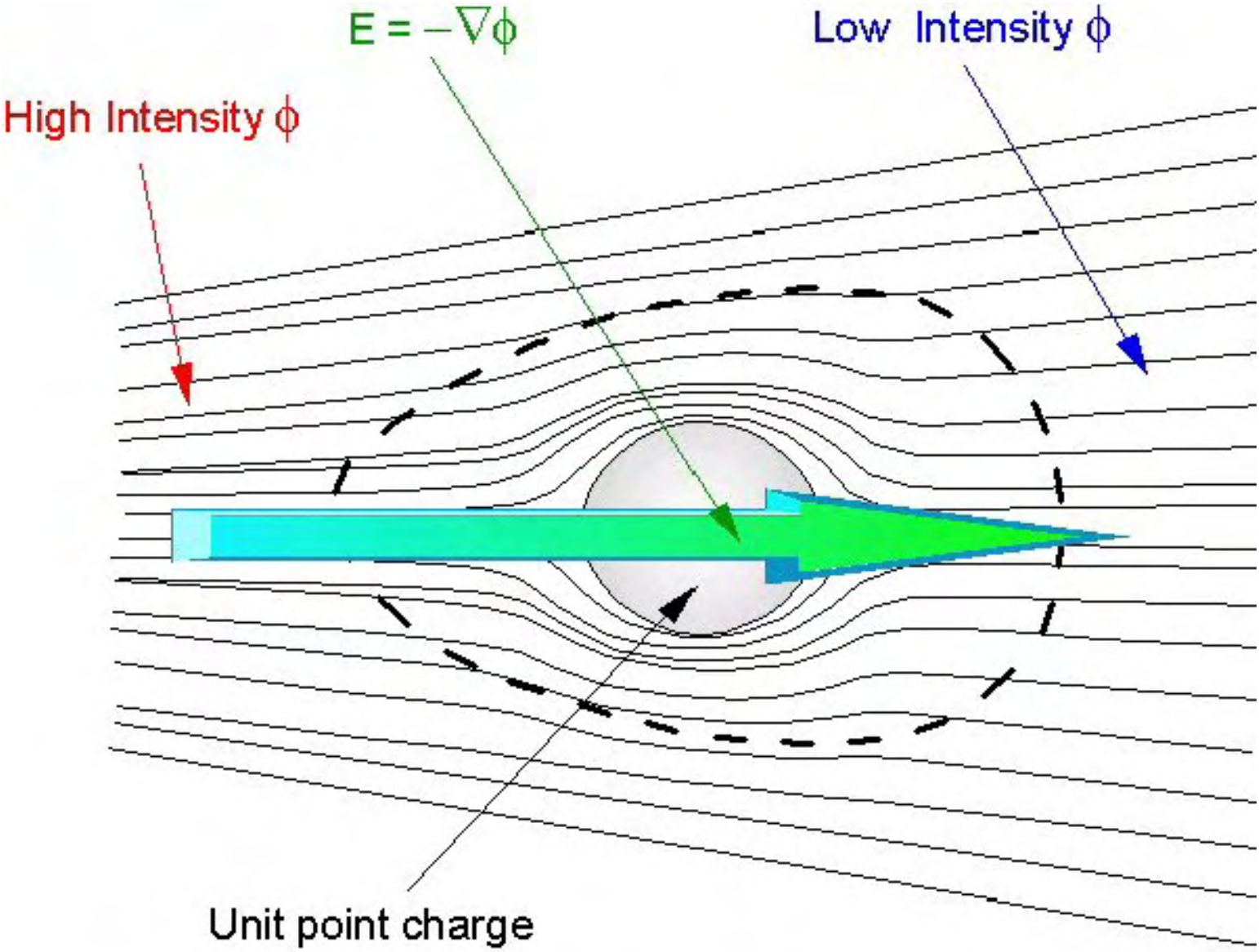

Figure 7. The defined "magnitude of the field" depends on the change in intensity of the flows comprising the potential. The E-field is oriented from high (pressure) in the flow to low (pressure) in energy density over a unit length.

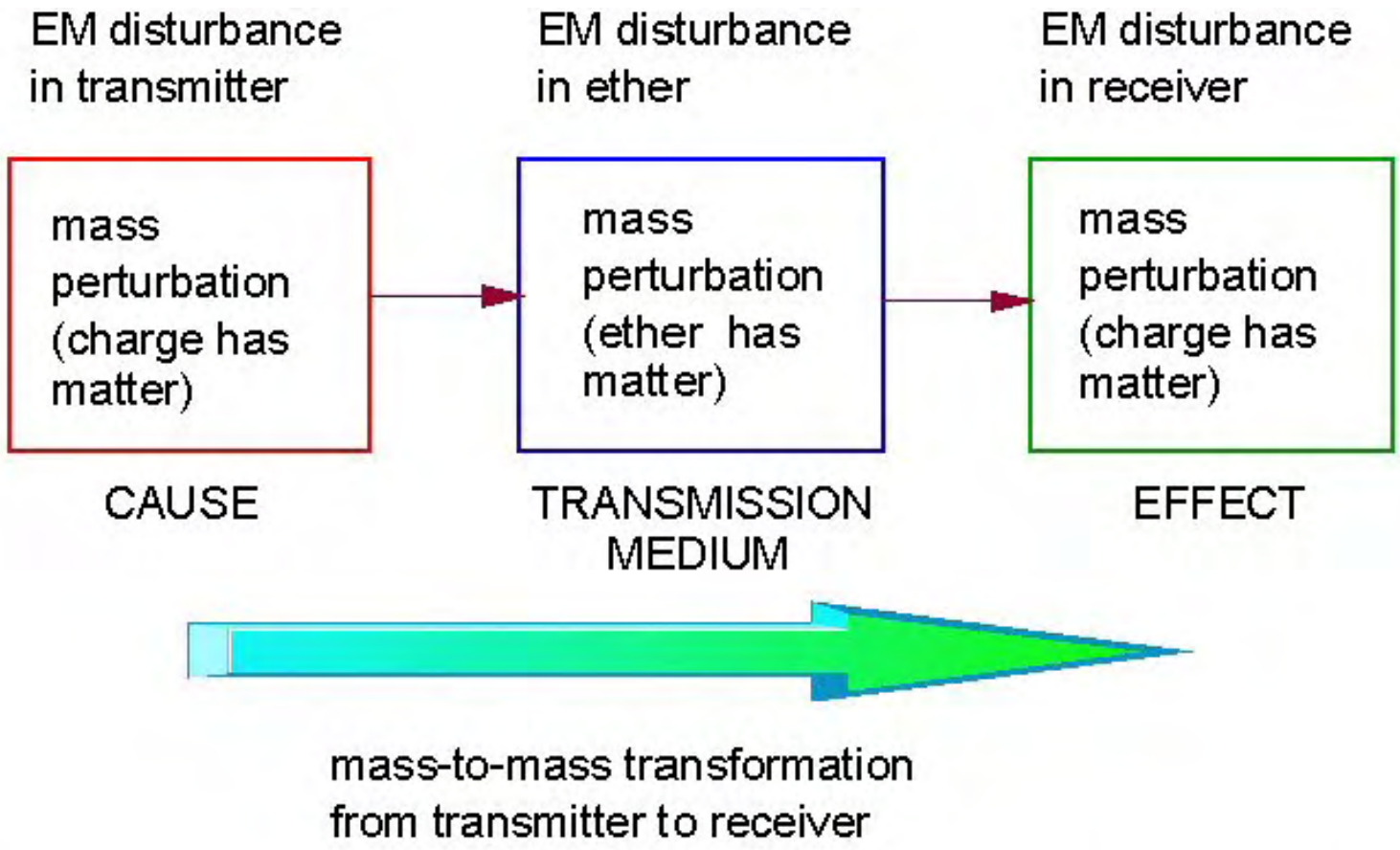

Figure 8. Maxwell's theory assumed a matter-to-matter transform from cause to effect.

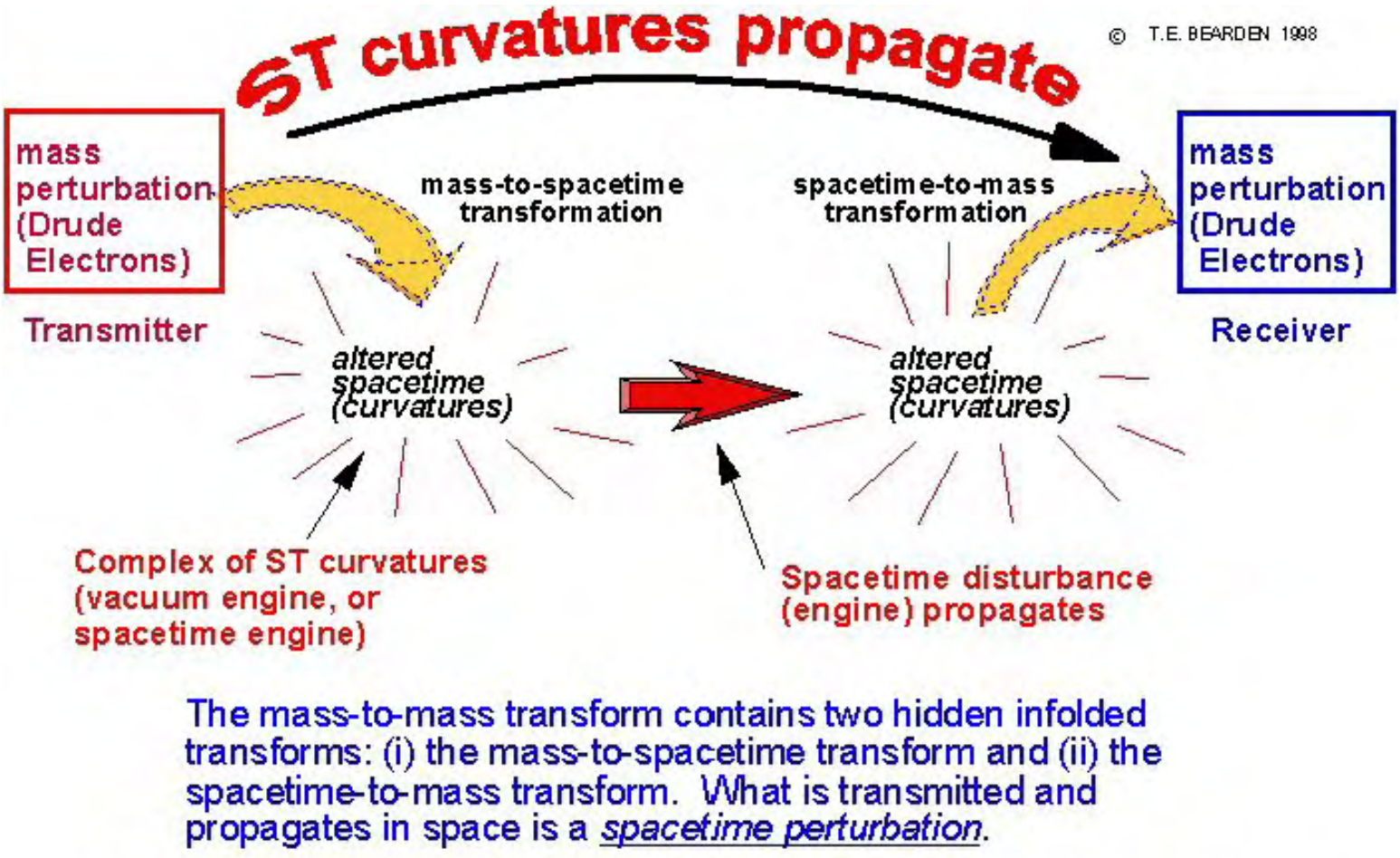

Figure 9. Maxwell's matter-to-matter transform contains two hidden transforms: (1) matter-to-spacetime, and (2) spacetime-to-matter.

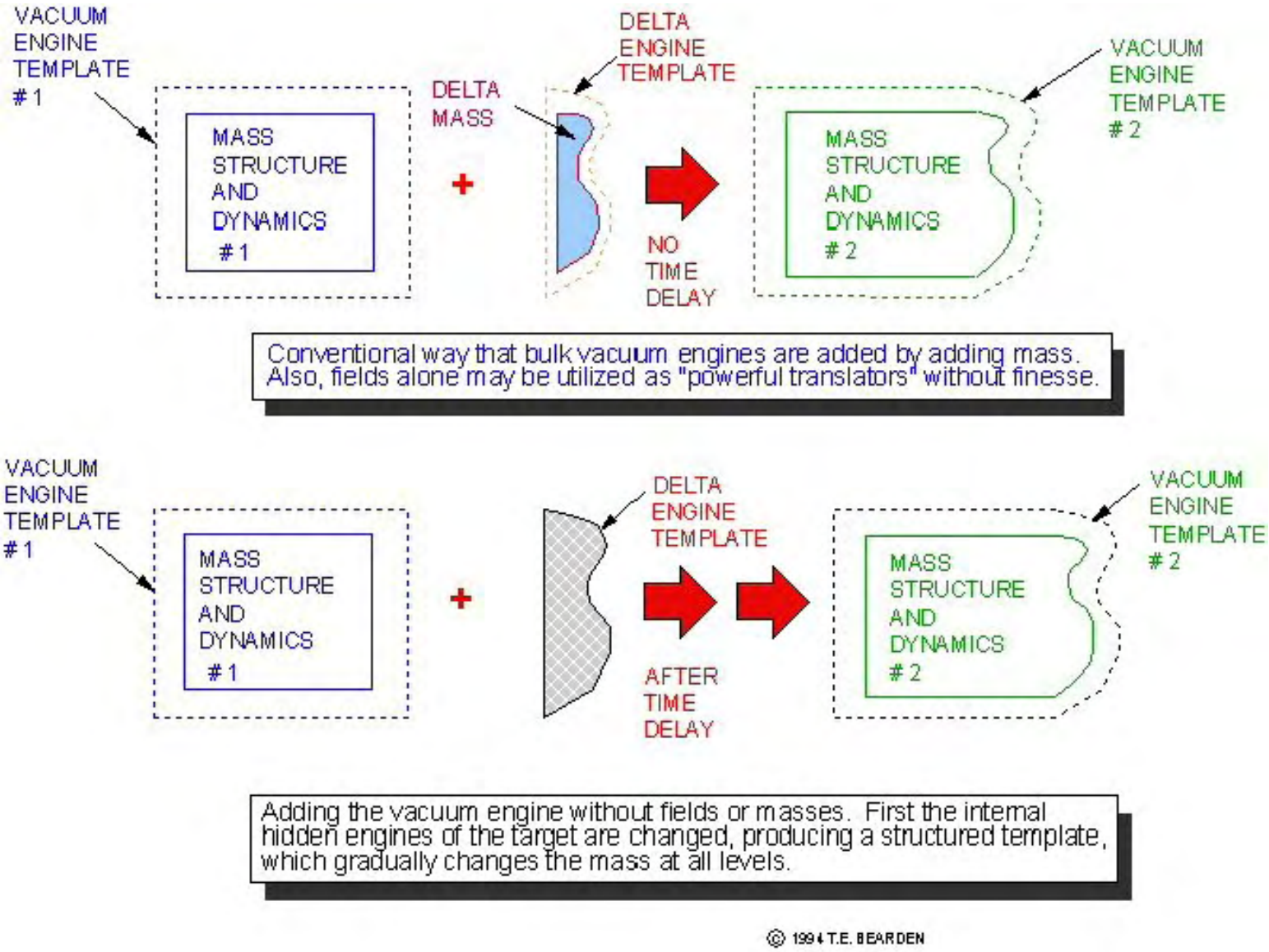

Figure 10. Vacuum engines and their utilization.

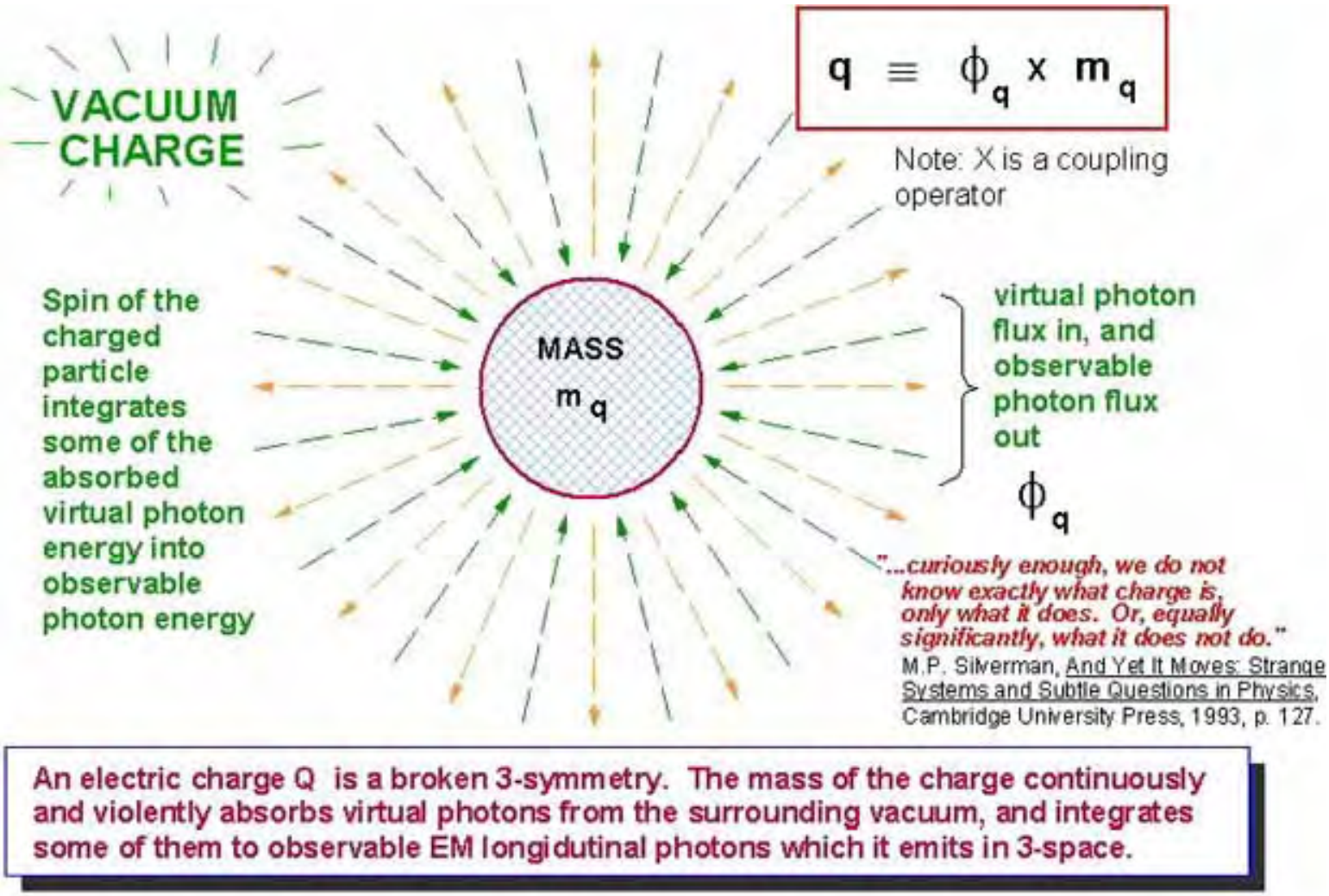

An electric charge Q is a broken 3-symmetry. The mass of the charge continuously and violently absorbs virtual photons from the surrounding vacuum, and integrates some of them to observable EM longidutinal photons which it emits in 3-space.

Figure 11. A charged particle continuously absorbs virtual energy from the vacuum, integrates some of it into observable energy, and pours out this observable EM energy in 3-space in all directions.

Composition of the scalar potential ϕ

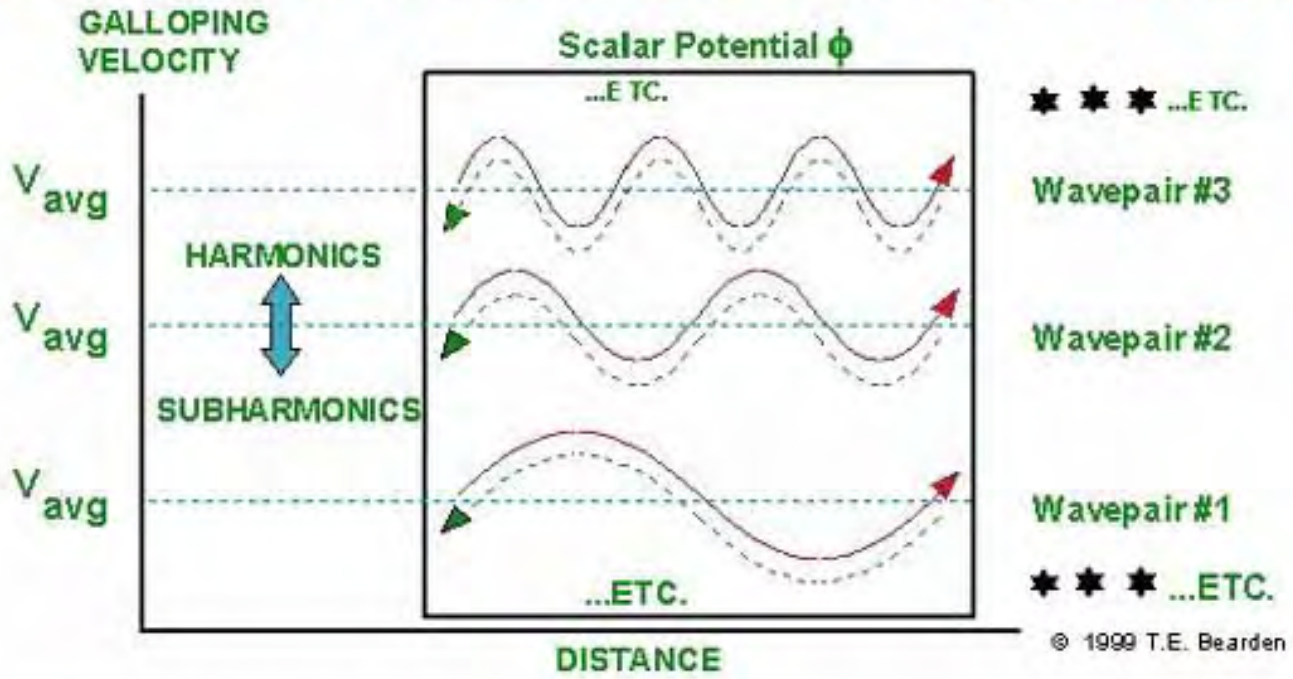

A harmonic set of bidirectional longitudinal EM wavepairs in 3-space. Unseen here is the time-polarized EM wave in the time domain, which reacts with the source charge to produce the 3-space biwave potential.

Figure 12. The potential as observed or detected is a harmonic set of bidirectional longitudinal EM waves in 3-space. That is, this potential is the "effect" of transduction of an incoming time-polarized EM wave interacting with the source charge.

The supersystem concept

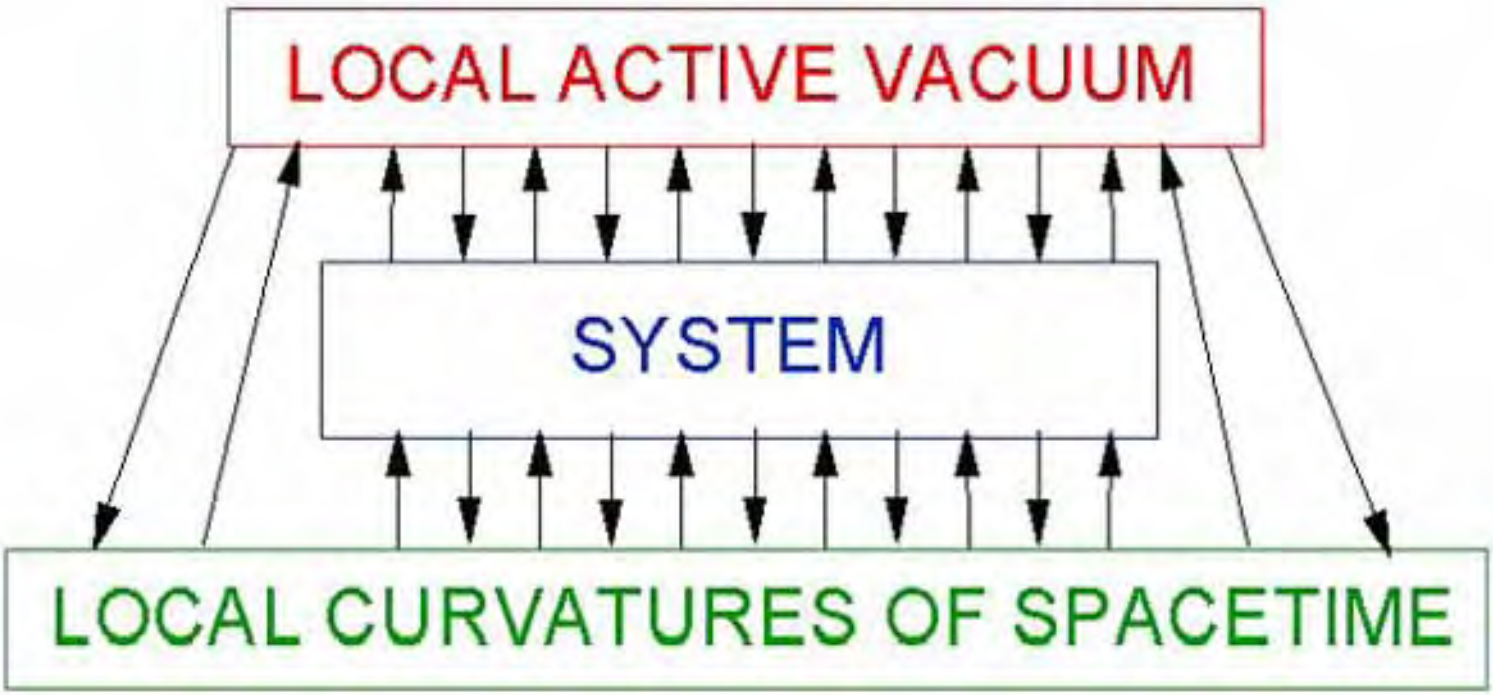

Figure 13. Concept of the supersystem and its interacting components.

Vacuum engine: Working spacetime demons

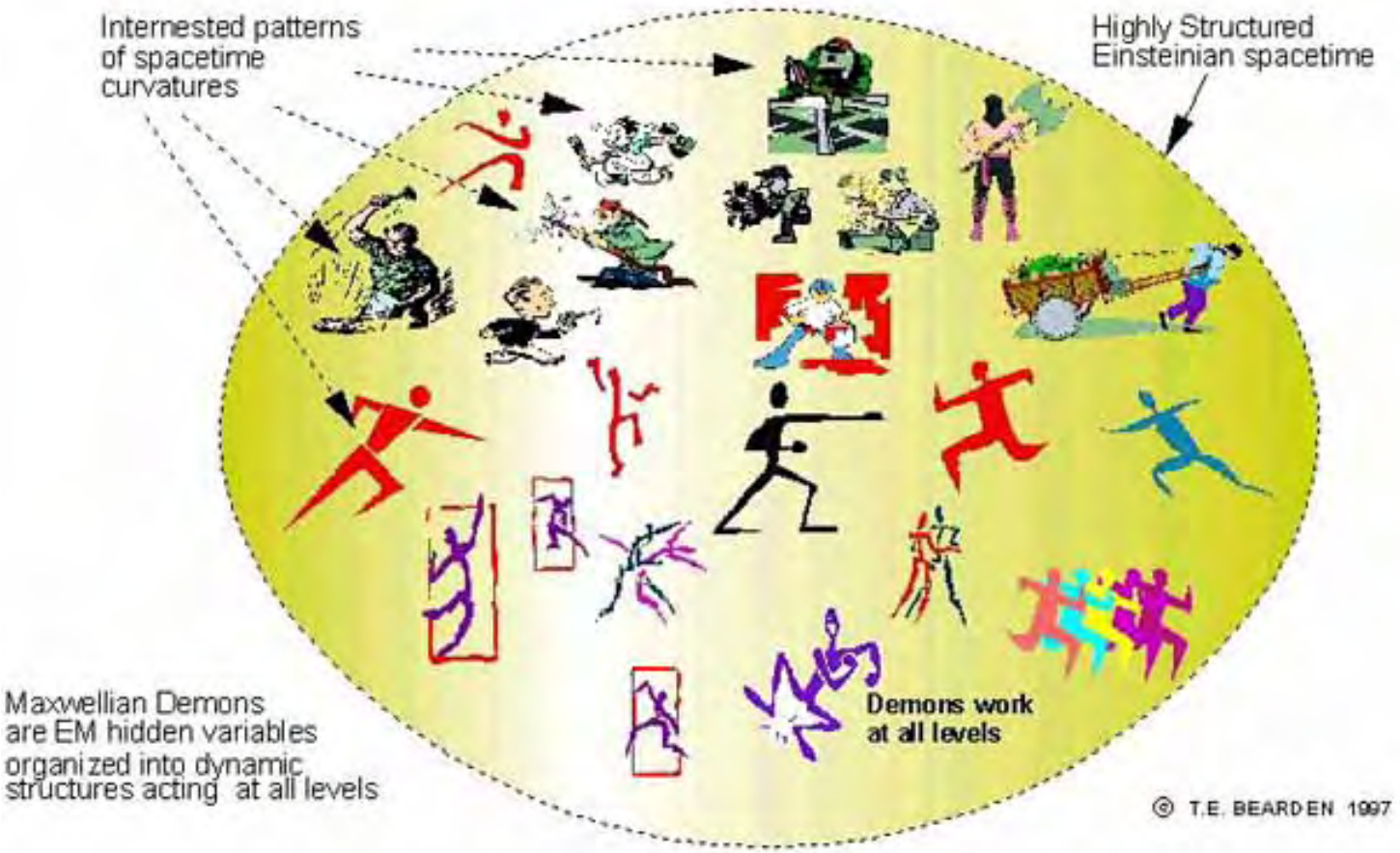

Figure 14. A vacuum engine is a set of spacetime demons working upon a mass system and its motion through time, at every level.

MTW's* general relativity principle

- Space acts on matter, telling it how to move.
- In turn, matter reacts back on space, telling it how to curve."

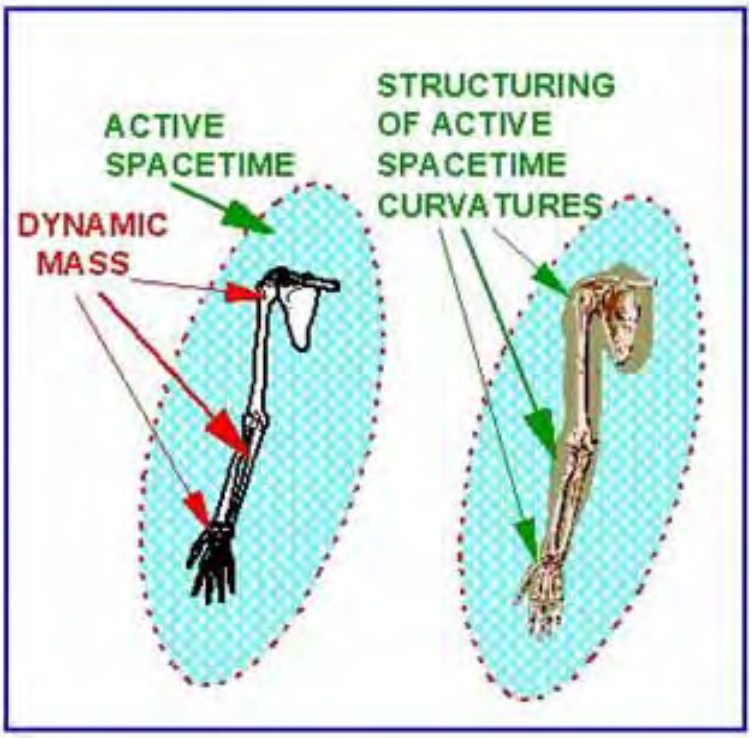

Figure 15. General relativity principle of Misner, Thorne, and Wheeler (MTW).

Extended General Relativity Principle

- All levels of energy structures and all levels of time structures mold spacetime geometry.
- The "pattern" is called a *template* for a vacuum engine (spacetime curvature engine).
- Spatial and temporal structurings of the engine act upon mass at all levels.
- This produces a template of forces, for precise translations and stresses within the mass at all levels. The forces exist in both time and 3-space.

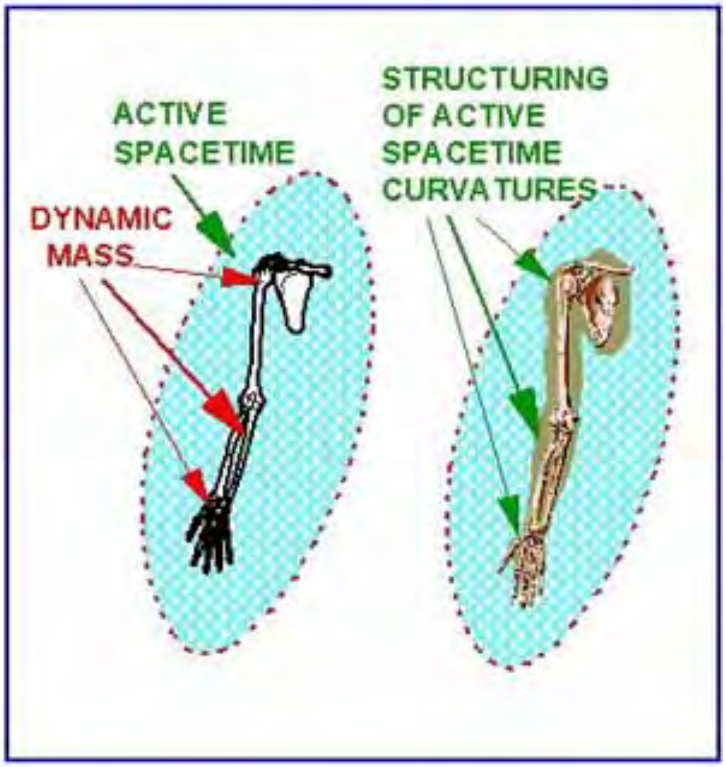

Figure 16. The principle of general relativity extended to include the vacuum engine.

Active spacetime and a specific vacuum engine

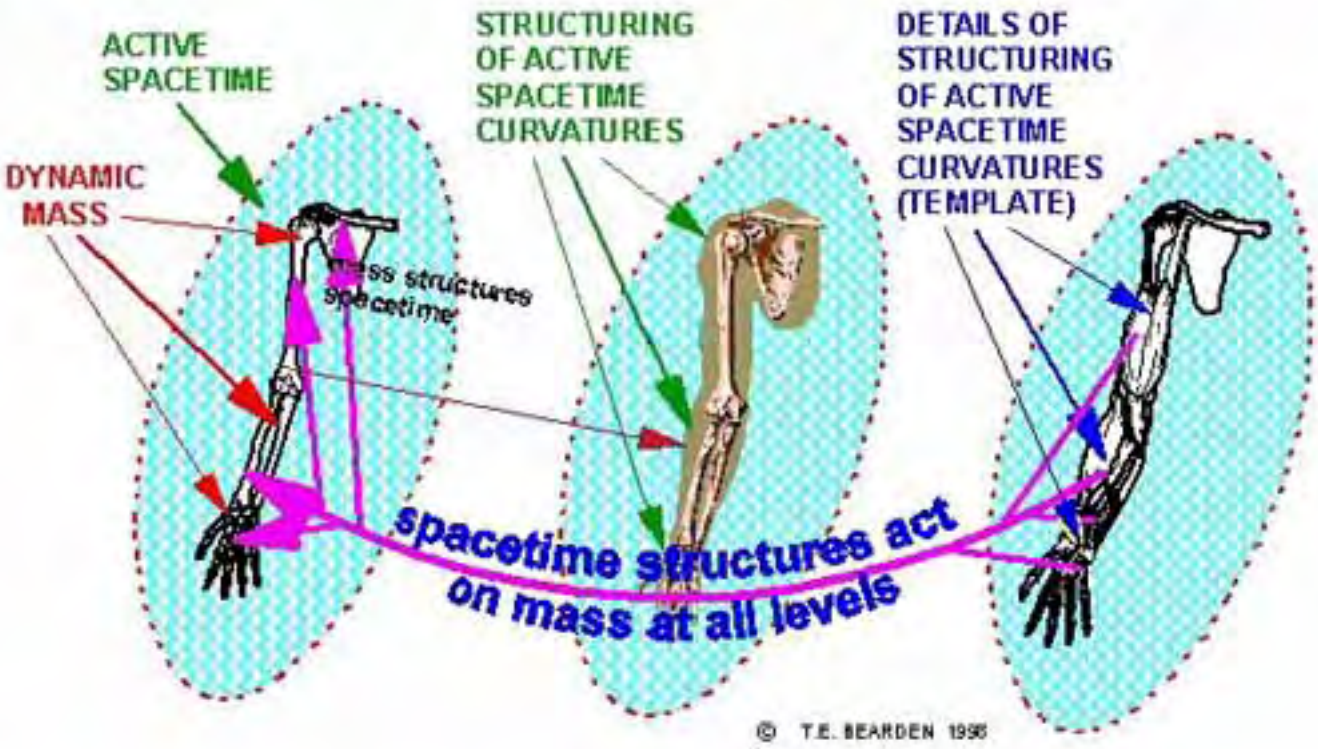

Figure 17. Active spacetime and a specific vacuum engine (spacetime curvature engine).

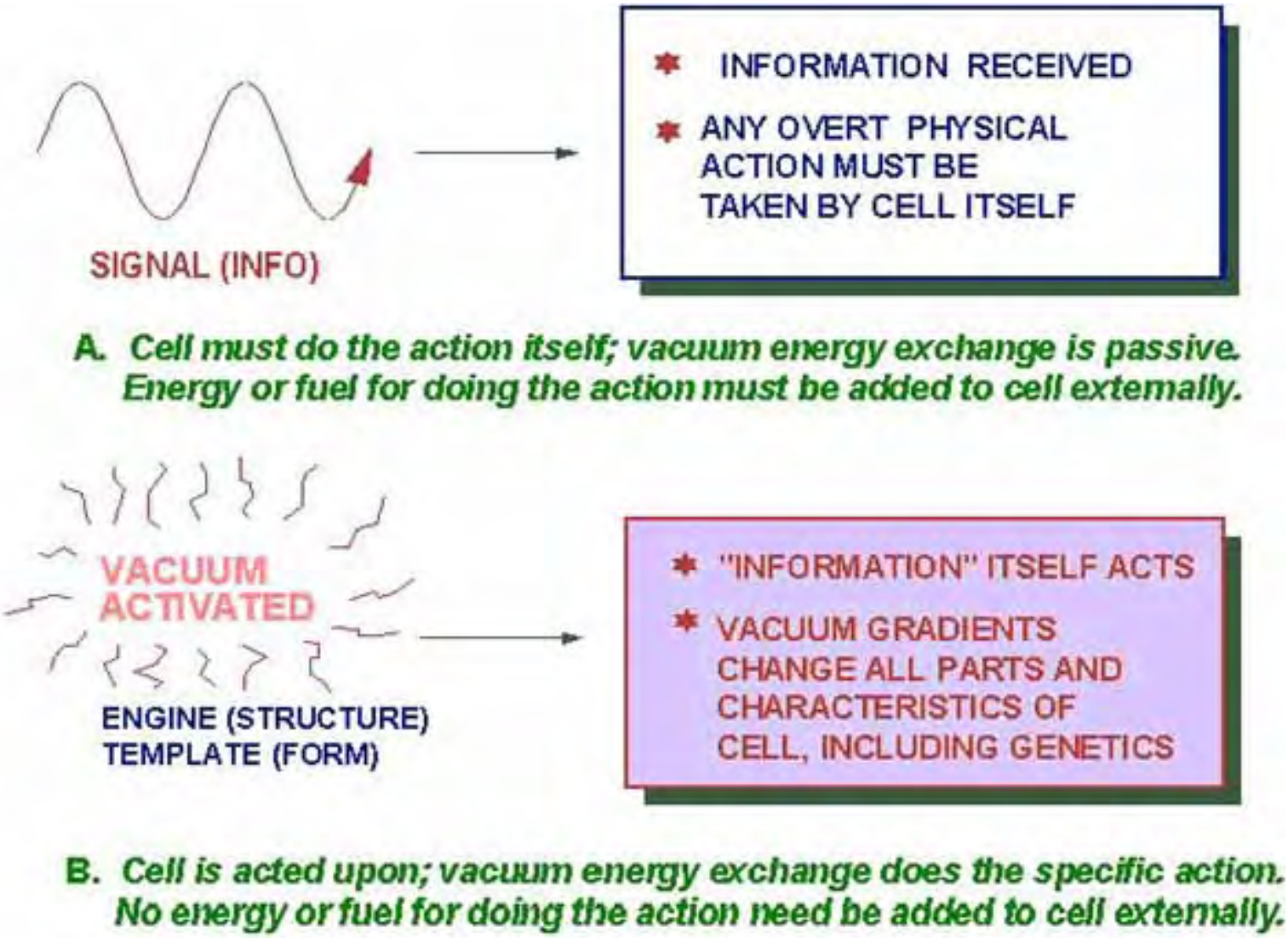

Figure 18. Signal versus vacuum engine, as in Priore's cellular reversal.

All EM energy in 3-space freely comes from the time domain

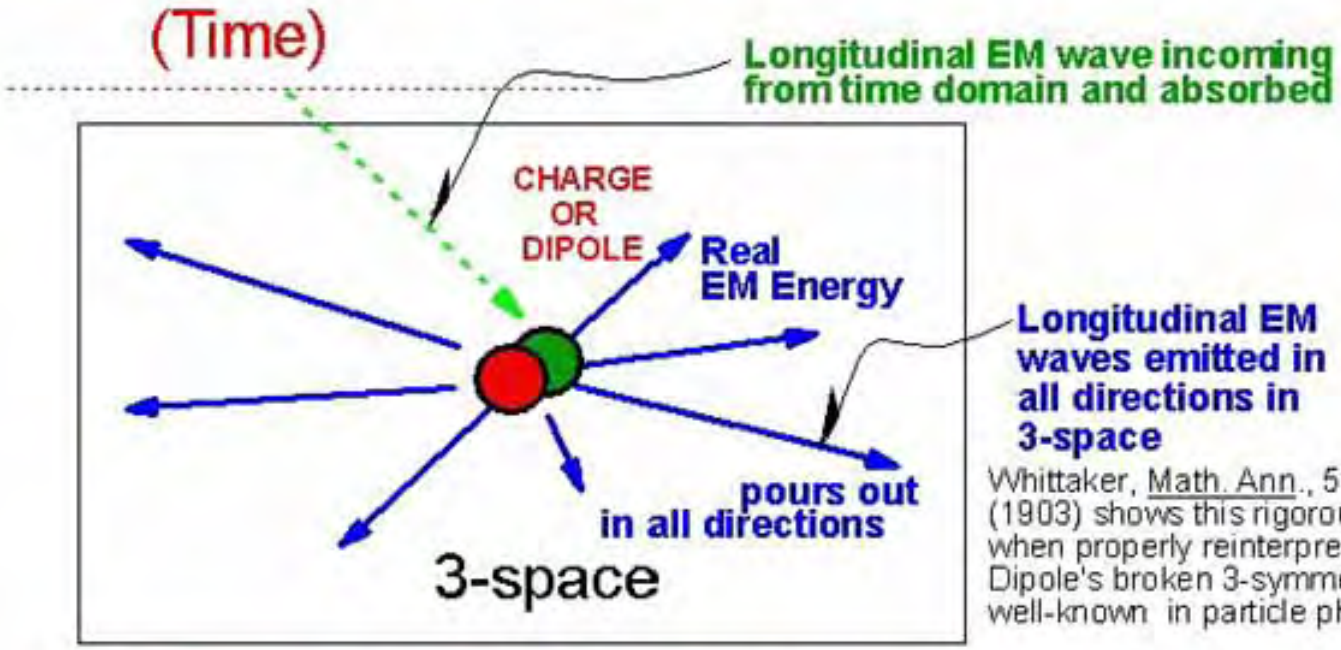

Whittaker, Math. Ann., 57, 333 (1903) shows this rigorously, when properly reinterpreted. Dipole's broken 3-symmetry is well-known in particle physics

Note: Whittaker (and others) interpreted the phase conjugate half set of LWs after interaction with the charges of the dipole, and as a 3-space *effect* rather than the time-domain *cause*. This fundamental non sequitur has just been repeated since then.

Figure 19. All EM energy in the 3-space potential comes from the time-domain.

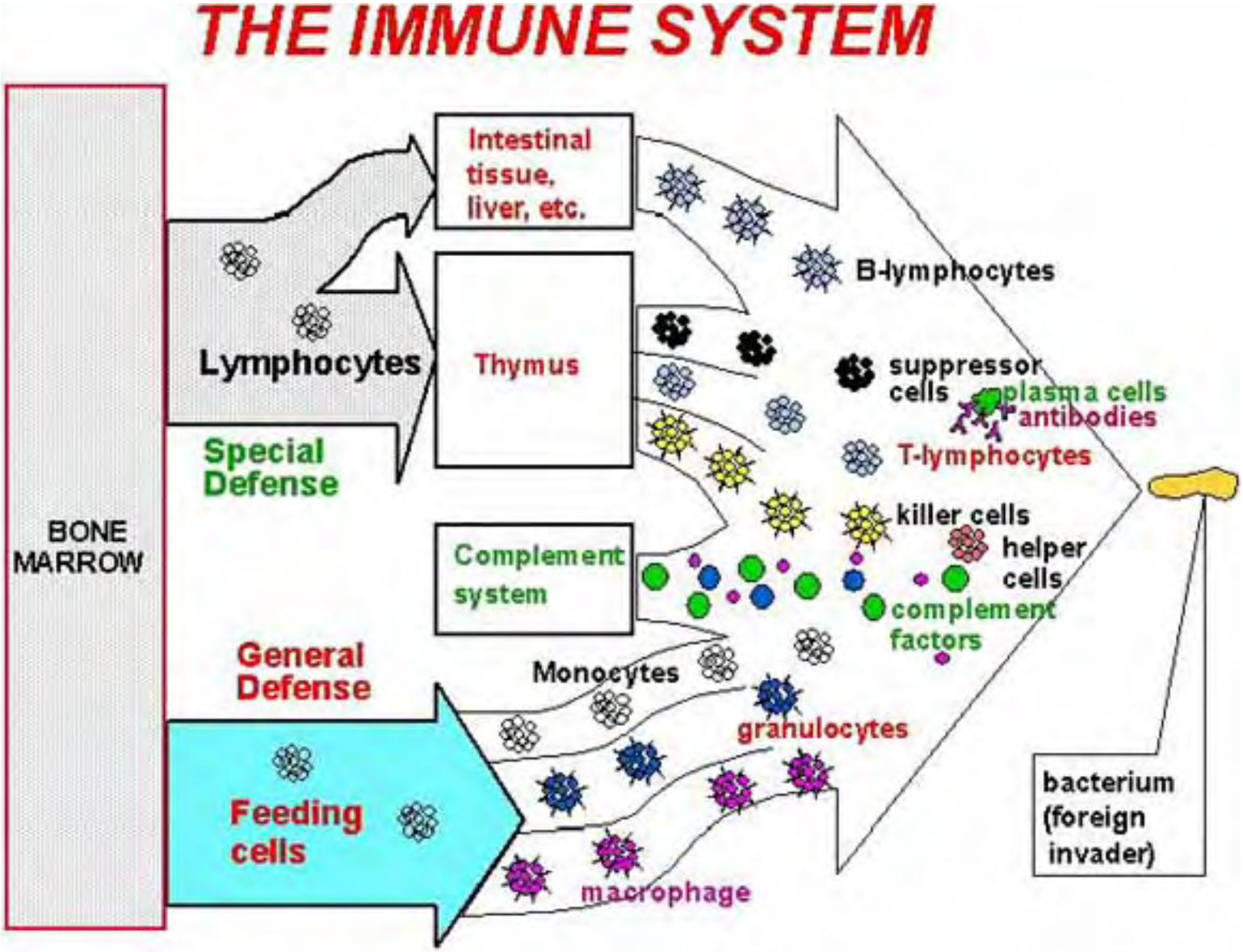

Figure 20. Immune system block diagram.

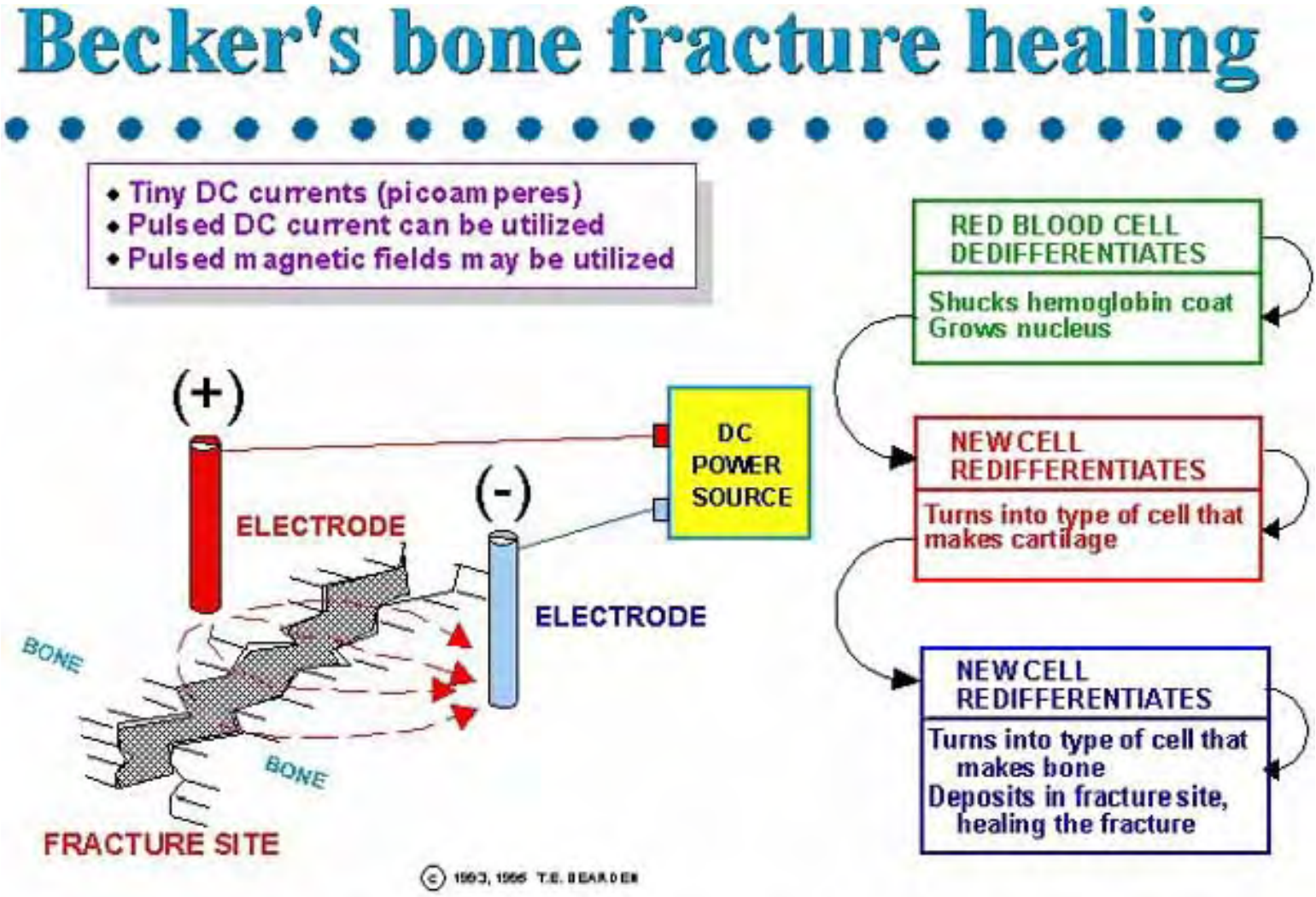

Figure 21. Becker's electrodynamic healing of otherwise intractable bone fractures, using weak potentials across the fracture site.

Becker's theoretical DC control system involved with response to injury

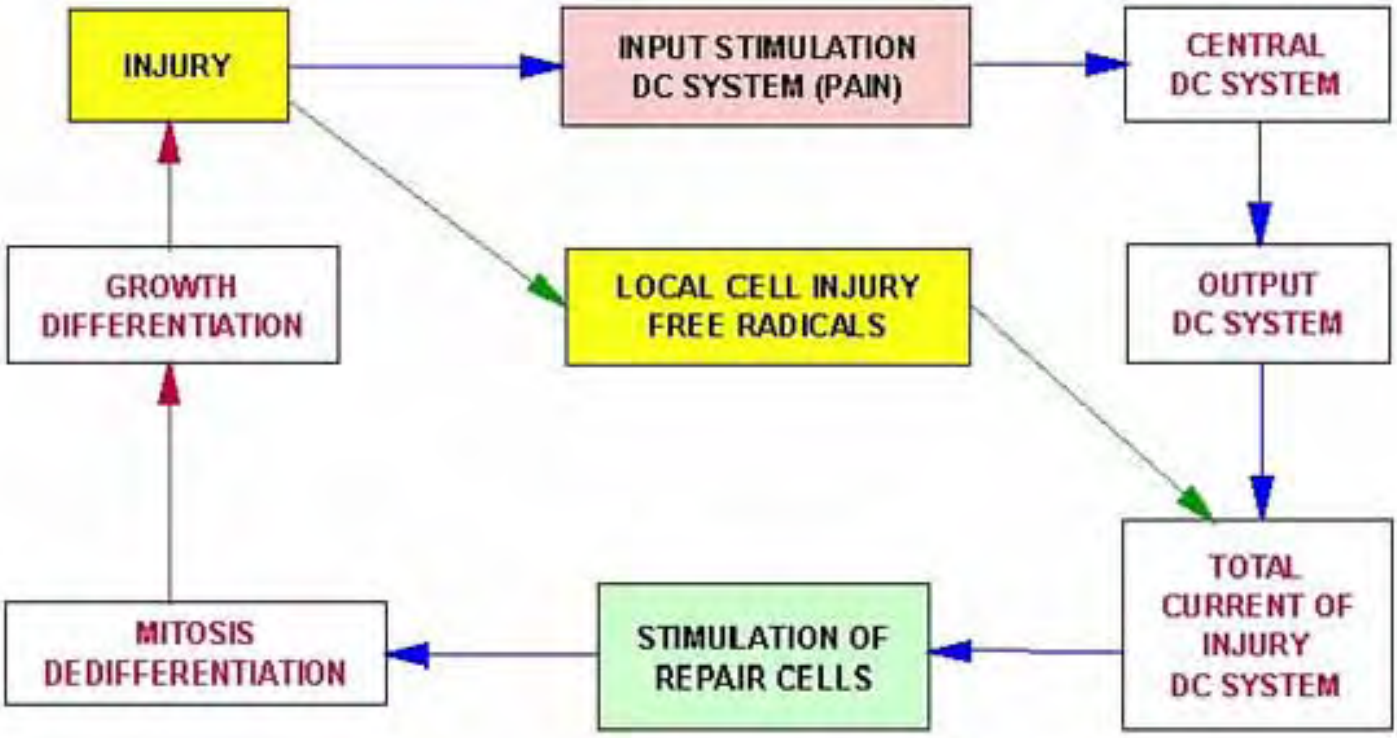

*Robert O. Becker, "The significance of bioelectrical potentials," Bioelectrochemistry and Bioenergetics, Vol. 1, 1974, p. 191.

Figure 22. Becker's block diagram of DC control system involved with response to injury.

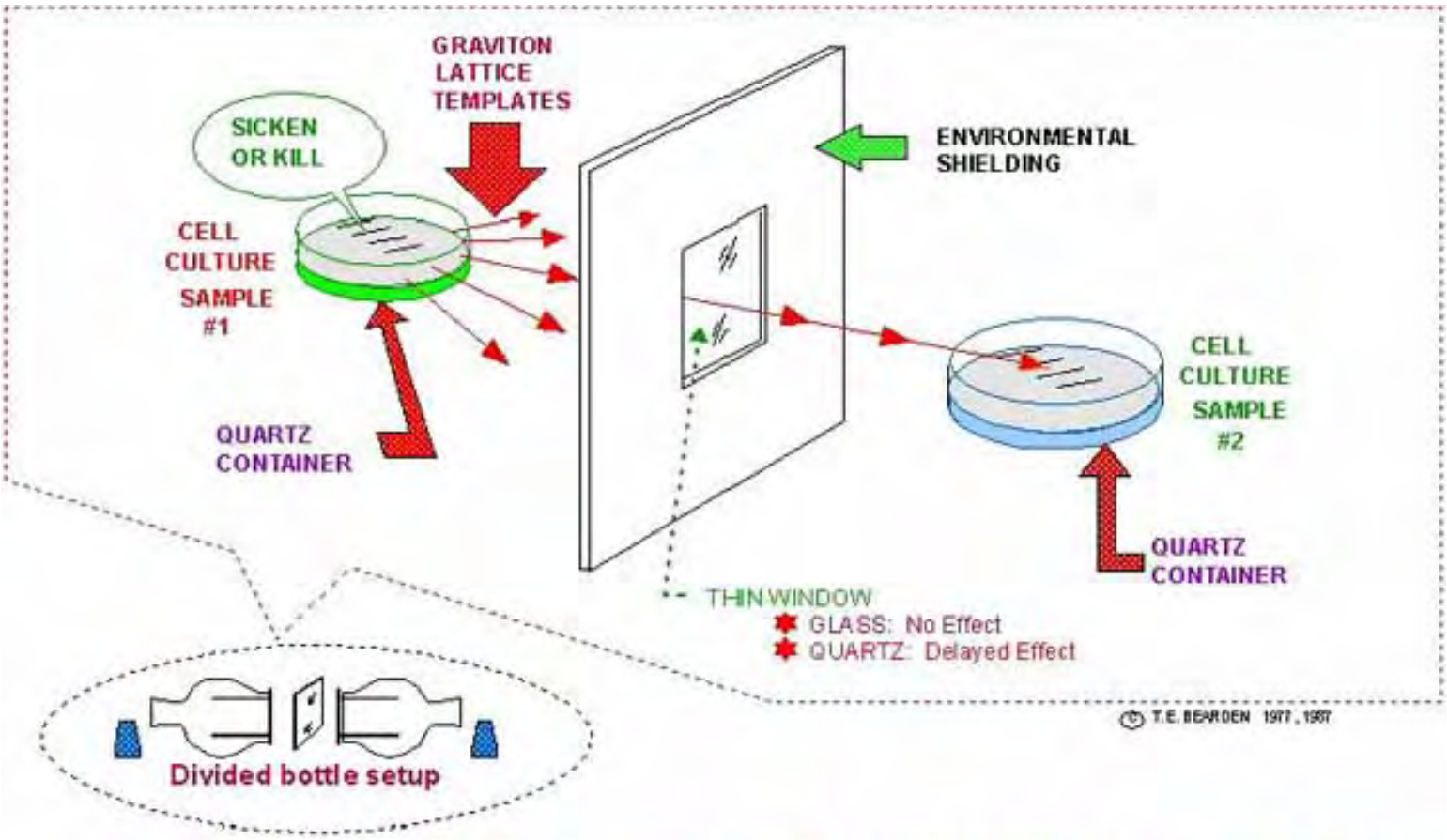

Note: Minimum lattice is one harmonic interval: IR to UV is such a minimum G-lattice.

Figure 23. Kaznacheyev's induction of cellular disease and disorder at a distance, using novel electromagnetic means.

Former U.S. Embassy in Moscow.

BACKGROUND

- Began in latter 1950s
- Discovered on VP Nixon's trip
- Initially thought to be *nuclear* radiation (Discovered w/Geiger counter?)
- High level target -- U.S. Ambassador
- Guarantees personal attention of:
  - U.S. Ambassador to USSR
  - U.S. President
  - NSA, CIA, DIA, NSC, etc.
  - Top consulting scientists
  - Leading U.S. scientific institutions
- Two U.S. Ambassadors died, another sickened
- Anomalous health changes in personnel, only in zero-field (zero pot'l gradient) areas!
- Four U.S. Presidents requested Soviets cease
  - Cut from 18 watts/sq cm to 2
  - Then again increased
- No one could understand what was going on
- Aluminum screens were placed over windows
- Moscow was declared a hazardous duty zone

© 1996, 1996 T.E. BEARDEN

Figure 24. Russian "microwave" radiation of the U.S. Embassy in Moscow.

Mechanism generating the flow of a mass through time

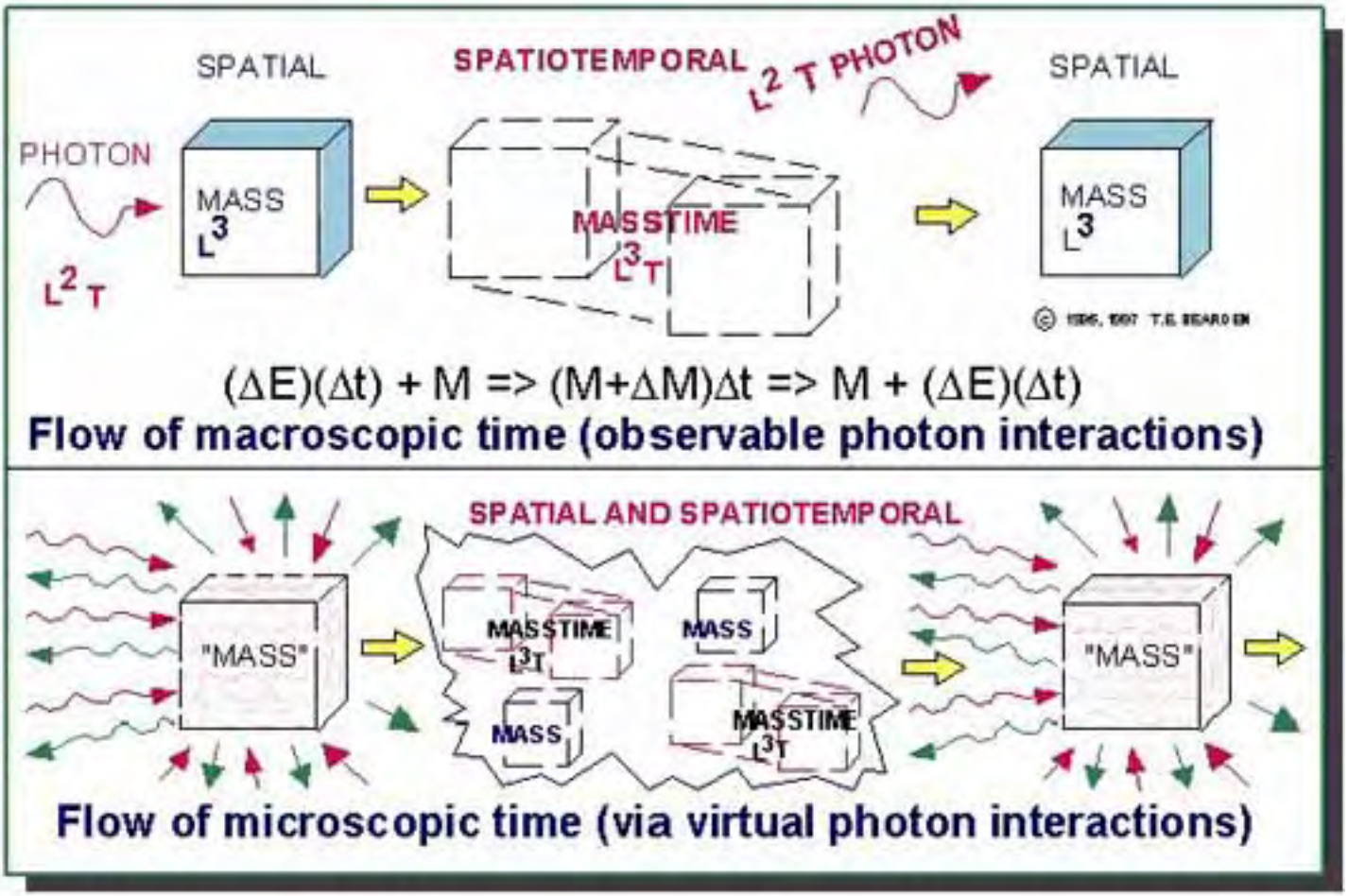

Figure 25. Mechanism generating the flow of a mass through time.

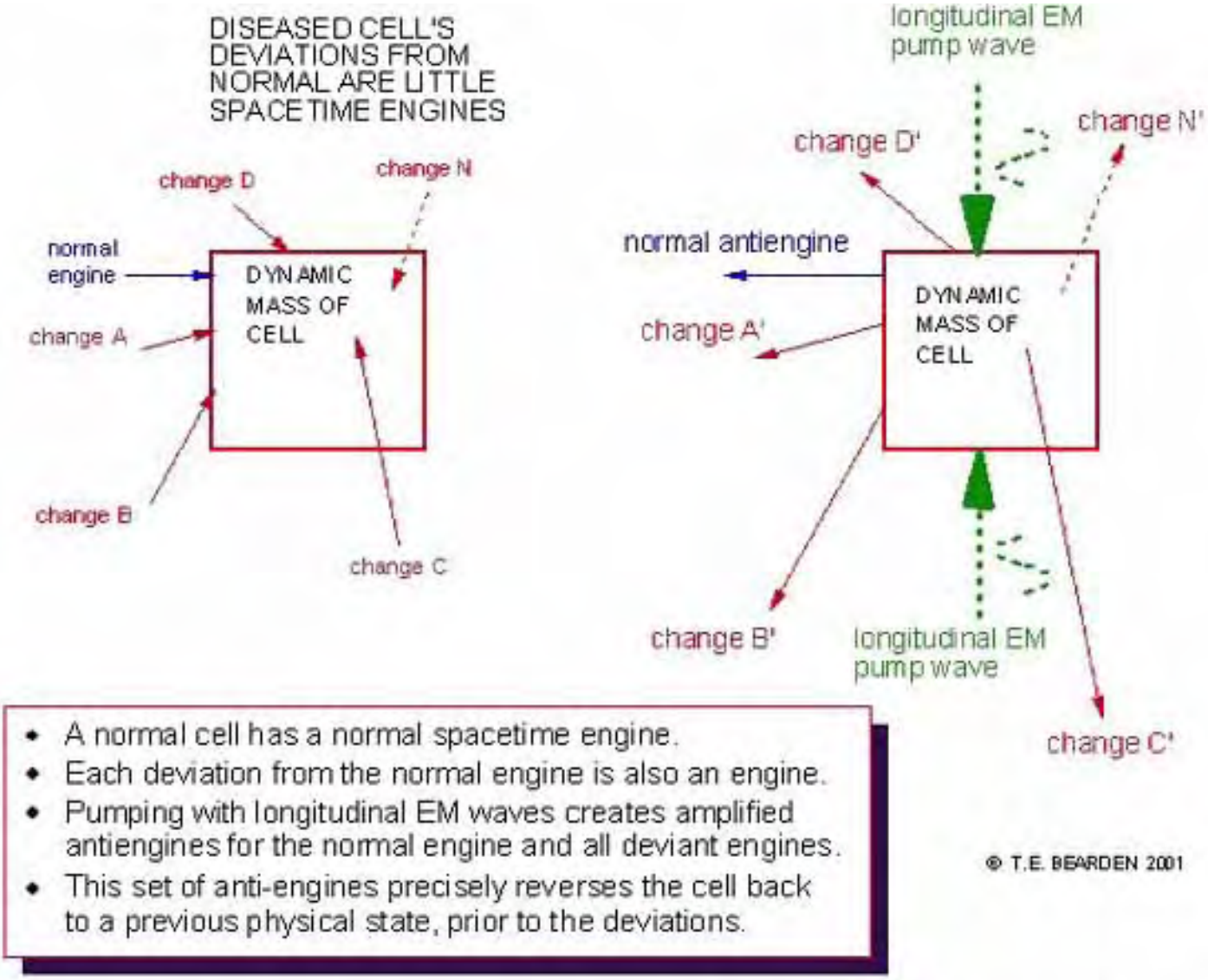

Figure 26. Producing a specific anti-engine for a specific cellular disease condition.

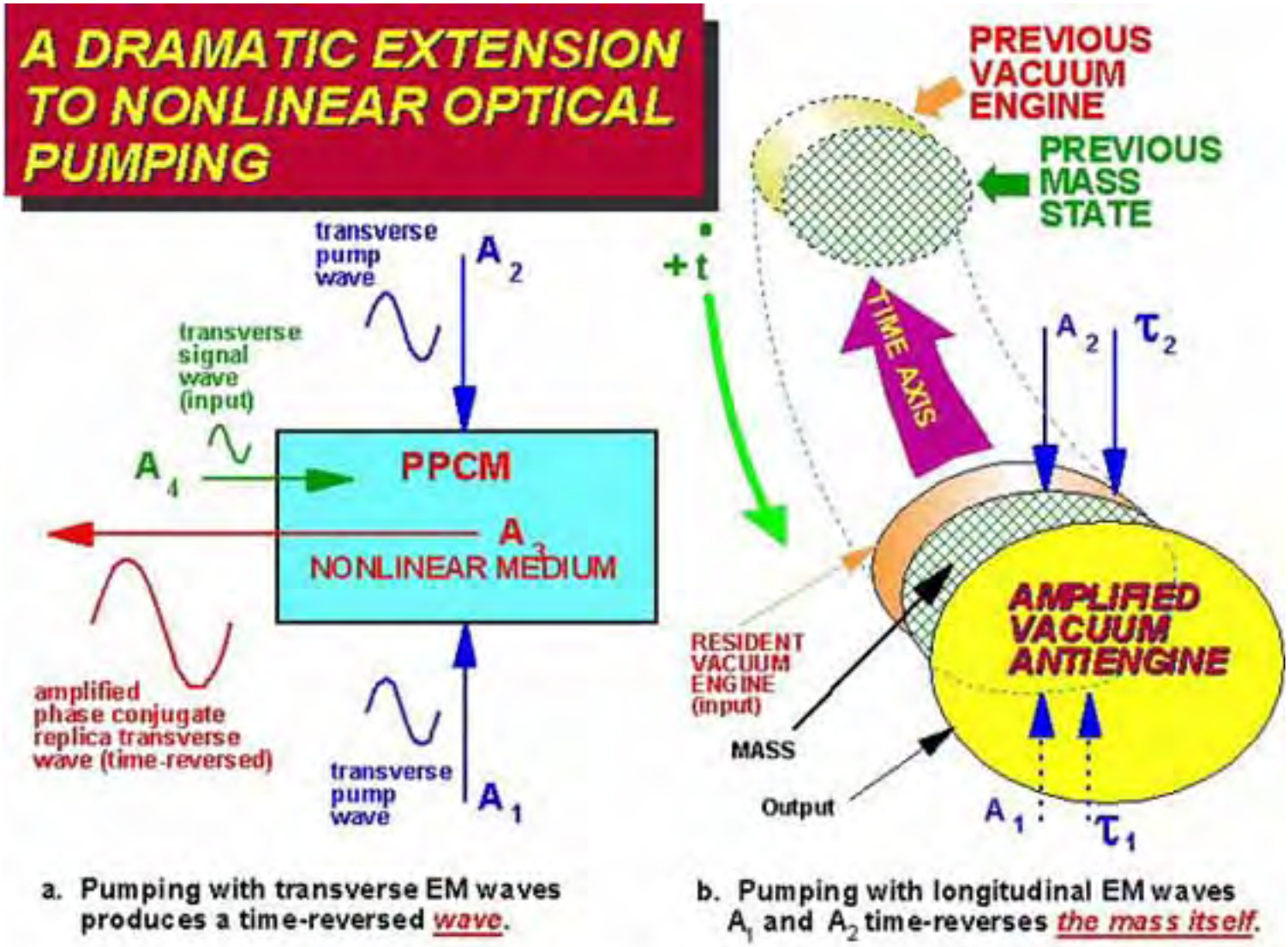

Figure 27. Pumping with longitudinal EM waves A also pumps in the time domain with time-polarized EM waves τ. This time-reverses a macroscopic mass and its dynamics.

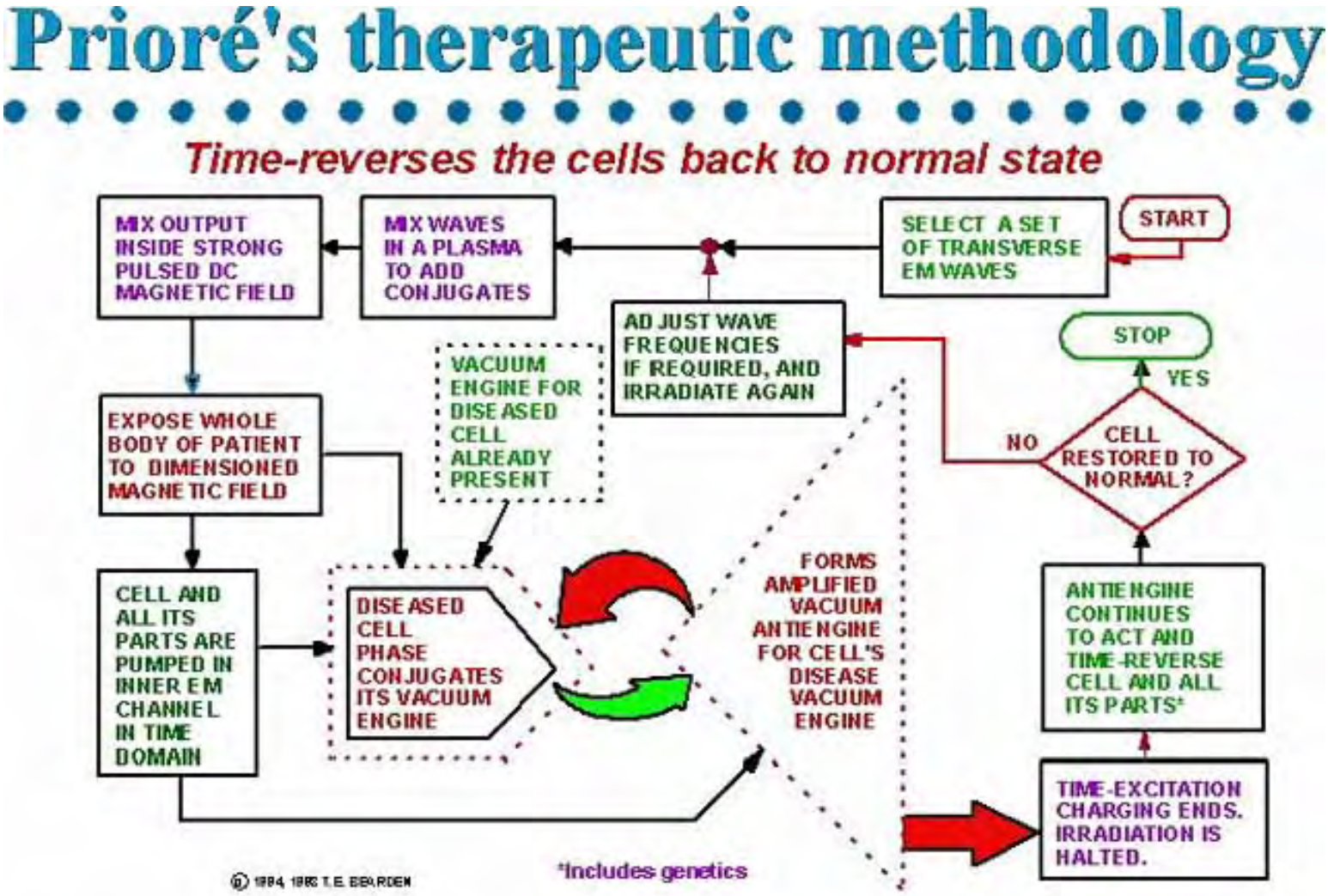

Figure 28. Block diagram of operation of Prioré's methodology.

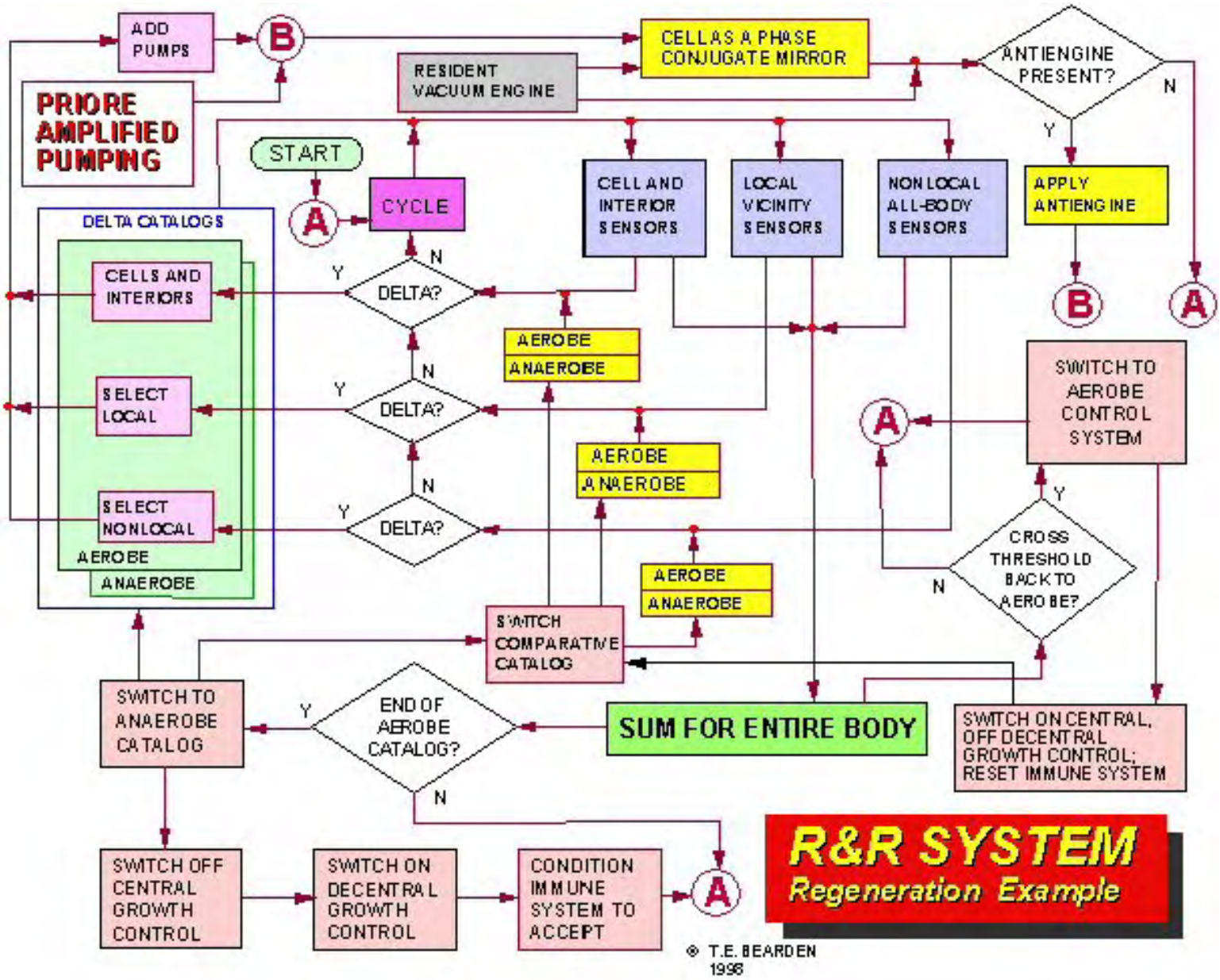

Figure 29. Block diagram of the cellular regeneration system and its overall operation (by the present author).

Rife's great secret: Recursive magnification by iterative serial summation of vacuum engines

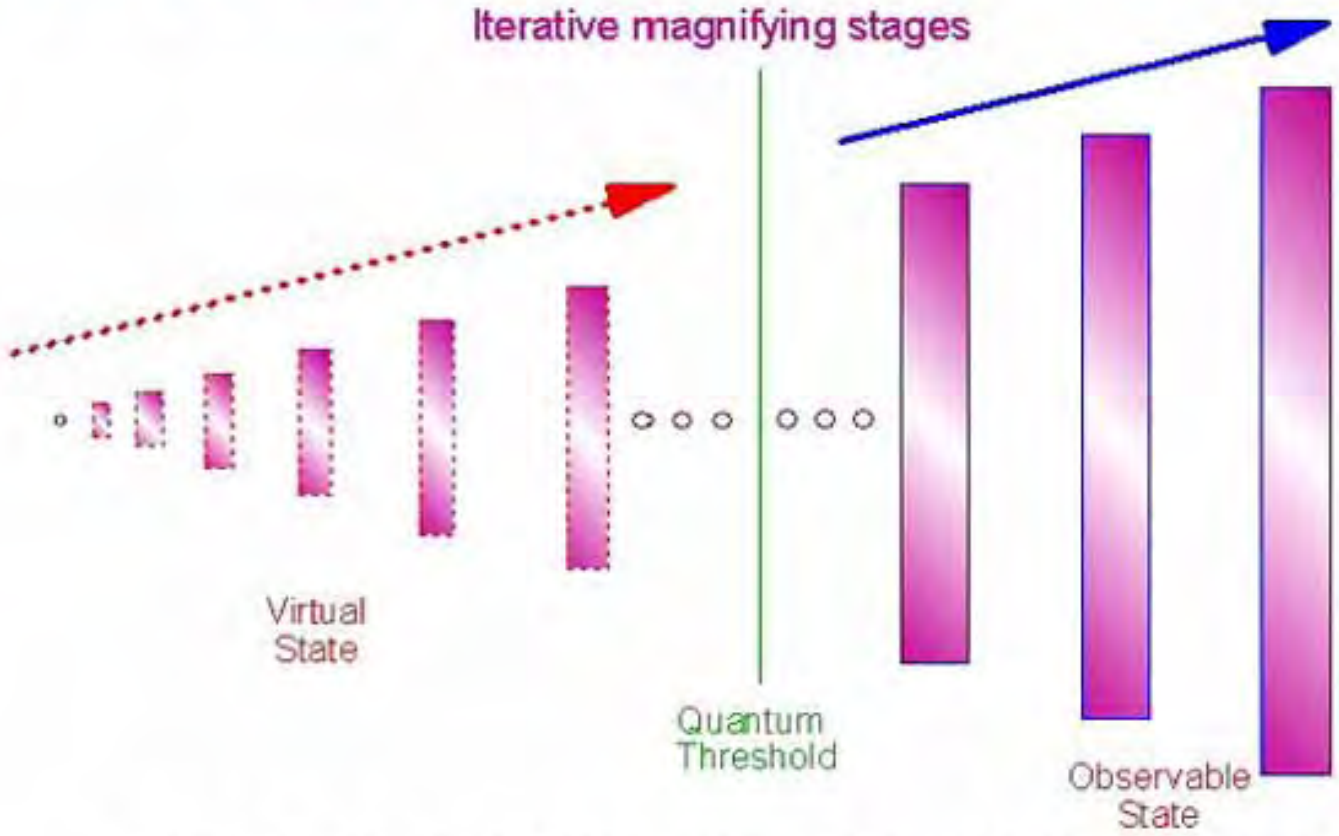

Figure 30. Rife's great secret: Recursive magnification of the virtual state vacuum engines and their dynamics to the observable state.

BEARDEN

THE FINAL SECRET OF FREE ENERGY

CHENIERE PRESS

www.cheniere.org

THE FINAL SECRET OF FREE ENERGY

© 1993 T. E. Bearden

A.D.A.S.

P.O. Box 1472

Huntsville, AL 35807

February 9, 1993
(slightly revised March 23, 1993)

Foreword

This paper contains the real secret of tapping the vacuum energy very simply, using almost any source of potential (battery, electrostatic generator a la Swiss electrostatic device (the Testatika), elevated wire wire/250 V/m in the earth/ionosphere potential, etc). The objective is for the moderately technical reader to understand how to build and understand not only a single device, but also hundreds of different kinds of them. While it is quite simple, the "magic principle" contained in this paper only took me some 30 years to discover.

The precise definitions necessary to understand the free energy rationale are included. Also included are some very simple pseudo equations for the process. Do not underestimate these simple pseudo equations -- they tell the tale that's needed.

Also, there has been little or no time to "dress up" the paper. It's simply written down very informally, to get the necessary points across.

Nearly everything *fundamental* that we've been taught about EM energy is wrong or incomplete. Even the *definition of energy* in physics is wrong! Let me summarize a few of the things that are wrong with the classical electromagnetics (CEM) model as follows:

CEM is still utilizing a model based on a material ether. Although the Michelson-Morley experiment destroyed the material ether assumption in 1887, the classical EM model has never been corrected. It also contains no definition of charge, and no definition of potential. In many cases, algorithms to calculate a magnitude are boldfacedly and erroneously advanced as "definitions." CEM still prescribes the force fields as the causes of all EM phenomena; it has been known since 1959 that forces are effects and not causes, that EM force fields exist only in and on the charged particles of mass in the physical system, and that the potentials are the primary causes of EM phenomena. The lack of definitive definitions of mass and force in mechanics is carried over into EM theory; there is no adequate definition of EM force or of EM mass. The magnitude of the electrical charge on an electron is not quantized. Instead, it is discretized, being a function of the magnitude of the virtual photon flux (VPF) exchange between the vacuum and the charged particle. When the charged particle is placed in a potential that differs from ambient, then the magnitude of the VPF -- and hence the magnitude of the electric charge on the electron -- is altered. The CEM assumption of an "empty vacuum" is totally falsified by modern quantum mechanics. The CEM notion that EM force fields and force field waves exist in vacuum is totally false. Only potentials and potential gradients exist in the vacuum. EM waves in vacuum are not force field waves as CEM prescribes; instead, they are oscillations of potentials and potential gradients. Potentials have a bidirectional EM wave-pair structure, where the bidirectional wave pairs are phaselocked in a harmonic series. In each wave pair, photons and antiphotons are continually coupling (into spin-2 gravitons) and decoupling. This is where gravitation and electromagnetics are unified. The CEM notion that singular EM forces exist in either matter or the vacuum is false; Newton's third law requires that

all forces exist in oppositive pairs. Not a single one of the equations universally taught as "Maxwell's equations" ever appeared in any book or paper by James Clerk Maxwell; instead, they are Oliver Heaviside's equations. Maxwell's actual theory was written in quaternions, which is a complete system of mathematics. The Heaviside/Gibbs vector version

(1) has a lower topology,

(2) is not a complete system of mathematics, and

(3) actually captured only a subset of Maxwell's actual theory.

Tensor theory does not recapture that which was lost.

There are even more errors in CEM, but these should suffice to make the point: *Classical electromagnetics theory is seriously flawed, with archaic foundations, riddled with errors, and it should be completely redone*. Until this revamping of CEM is accomplished, the present model solidly blocks free energy, antigravity, a unified physical field theory, and a unified theory of mind and matter interaction.

A second paper this year will detail the exact long-term causative mechanism for cancer and leukemia, and the exact mechanism for essentially 100% cure of terminal tumors in laboratory animals, demonstrated by the Priore team in France in the late 1960s and early 1970s. The same mechanism can be used to cure AIDS.

Throughout the world, humankind is suffering. In the poor populations of the world, early death is the norm, as is frequent famine. One third of the human race goes to bed hungry each night. Protein starvation of children is common. One third of the human race is infected with worms. Many other diseases ravage the far-flung poor peoples of the world. They have little or no industries. They have no abundant electrical power. They have little education, and little modern knowledge. They have little or no medical treatment. In short, they are born without hope; live in misery, filth, disease, and poverty, and die without dignity.

Meanwhile, the factories, cities, and enclaves of the "developed and developing" worlds belch forth fumes, toxic and hazardous wastes, and pollutants. They also spew forth weaponry which for one reason or another is used to arm the poorer nations, for use in destroying themselves and their impoverished neighbors. Warfare, terror, banditry, despotism, and all the four horsemen of the Apocalypse are truly loosed in the earth.

We simply must do better than that. And we *can* do better than that! But to do better, we've got to make the basics available to impoverished nations, cheaply and easily. Primary among their needs are energy and medical treatment. Given those, populations can be stabilized, people educated, development begun, and the living standard drastically elevated.

So that is the immediate goal. In this paper, I am freely giving away what required me an arduous 30 years of my life to discover. Shortly we will also detail the new methodology for a new therapeutic science, hopefully to cure the diseases that ravage humanity.

God willing, this paper will trigger a thousand, or even ten thousand, scientists and engineers to develop overunity energy devices. If so, shortly we can rid our biosphere of noxious automobile and factory exhausts, radioactive nuclear wastes, and massive oil spills. We can remove many of the hydrocarbon combustion pollutants from the air, stop acid rain and the destruction of our forests, and stop the steady rise of carbon monoxide in our air. If that truly tends toward a "Greenhouse" effect, then we can halt that effect as well.

The Creator has always given us bountiful free electrical energy, everywhere, easily and readily for the simple taking. It has only been our own blindness and folly that have prevented us from seeing and using this free energy bounty.

So here is the final secret of abundant, free electrical energy. Please use the knowledge well and see that its benefits also accrue to those impoverished ones who need it so desperately. Remember the adage, "Inasmuch as you have done it to these little ones..."

This is for those little ones. You are our brothers and sisters. We want you to live. And we want you to have a better quality of life, not just bare existence. We care.

Tom Bearden

February 9, 1993

THE FINAL SECRET OF FREE ENERGY

© T. E. Bearden 1993

Some Definitions

The Quantum Mechanical Vacuum: First we need some definitions. We start by assuming the *quantum mechanical vacuum*.[1] Empty "spacetime" is filled with an incredibly intense flux of virtual particles. It is a plenum, not an emptiness. We shall be interested only in the fantastic flux of *virtual photons*, for we are discussing electromagnetics.

Energy and Potential: *Energy* is any ordering, either static or dynamic, in the virtual particle flux of vacuum. *EM energy* is any ordering, either static or dynamic, in the virtual photon flux (VPF) of vacuum. That is, for a particular kind of "field" energy, we simply choose the so-called quantum particle of that field, and consider only that kind of virtual particle flux.

Potential is any ordering, either static or dynamic, in the virtual particle flux of vacuum. Hey! That's exactly the same definition as energy. Quite correct. Energy and potential are identically the same. Neither is presently defined correctly in physics.

Energy is normally defined as "Energy *is* the capacity to do work." That's totally false. Energy has the capacity to do work, because work is correctly defined as the dissipation (disordering; scattering) of energy (order). The scattering of energy is work. It is not energy! I.e., *energy is not definable as its own scattering!*

Look at it this way: A man *has* the capacity to catch fish. That is true, but it is not a definition, since a definition must in some sense be an *identity*. You cannot say that a man *is* the capacity to catch fish! That may be a submitted definition, all right, but it is false. Similarly, energy *has* the capacity to do work; that is one of its attributes. But energy ***IS*** the ordering in the VPF (we are referring from now on primarily only to EM).

Scalar and Vector Potentials: The *scalar potential* is any static (with respect to the external observer) ordering in the VPF of vacuum. The *vector potential* is any dynamic (with respect to the external observer) ordering in the VPF of vacuum. We shall be interested in the electrostatic scalar potential. So it is a static ordering -- a stationary *template* -- in the VPF of vacuum, much as a whirlpool is a stationary ordering (template, form) in the rushing flow of a river.

The Scalar Potential Has An Internal Structure

The Structure of the Scalar Potential: According to rigorous proofs by Whittaker[2] and Ziolkowski,[3] any scalar potential can be mathematically decomposed into a *harmonic series of bidirectional wave pairs*. Figure 1 shows this Whittaker/Ziolkowski (WZ) structure. In each pair, the forward-time wave is going in one direction, and its phase conjugate (time-reversed) replica wave is going in the other. According to the so-called *distortion correction theorem*[4] of nonlinear phase conjugate optics, this PCR wave must precisely superpose spatially with its partner wave in the pair. The two waves are *in-phase spatially*, but 180 degrees *out of phase in time*. The wave is made of *photons*, and the antiwave (PCR wave) is made of *antiphotons*. It follows that, as wave and antiwave pass through each other, the photons and antiphotons are coupling and uncoupling with each other, because the antiphoton is a PCR photon, and PCR's precisely superpose spatially with their partner. A photon or antiphoton has wave characteristics, because it has a frequency; if the wave aspects are perfectly ordered and perfectly correlated, then so are the photon's particle aspects.

A Potential Is An Ordering Across the Universe: So we have -- astoundingly -- perfect VPF inner ordering infolded in the electrostatic scalar potential! We also have perfect wave/antiwave ordering infolded in there. When you collect a simple set of charges on a small ball or in a region, the scalar EM potential from that set of charges reaches across the universe. In it you have an infinite harmonic series of phase-locked time-forward EM waves going out from the charges to all distant points of the entire universe. And you have an infinite harmonic series of phase-locked time-reversed EM waves coming from all points of the universe, back to the "collected charges" source.

A Potential Is A River of Energy: The point is, you have established a *mighty, hidden, 2-way river of energy* between that collection of charges and every other point in the universe. There is infinite energy in each of those infolded waves and antiwaves. But in a localized region, the *energy density* in each wave is finite. Since in finite circuits the potential interacts with a localized set of mass, we shall be concerned with the *local energy density* (joules/coulomb) *of the potential*.

But forget the conventional myth of visualizing the potential as pushing a unit charge in from infinity "against the force field" -- there *isn't* any force field in the vacuum, as is well-known in quantum mechanics. Also, Newton's third law requires all forces to occur in pairs -- each pair consisting of a force and its 3rd law reaction force. From that viewpoint alone, there is no such thing as an EM forcefield or force field wave in the vacuum. There are just *gradients of the vacuum potential* present in the vacuum. In the vacuum, an EM wave is actually a wave of the phase locked gradients of the electrostatic scalar potential and of the magnetostatic scalar potential. And each such gradient wave is simultaneously accompanied by its phase conjugate gradient wave, because of Newton's third law.

Newton's third law requires forces to occur in pairs of equal but antiparallel forces.

Both wave and antiwave co-exist simultaneously in the vacuum EM wave.[5] Therefore it's a stress potential wave, not a force field wave. It's more like an electromagnetic sound wave,[6] and so it is a longitudinal wave, not a transverse wave. In the EM vacuum wave's interaction with matter (the so-called "photon" interaction), the wave normally half interacts with the electron shells of the atom, giving translation forces, while the anti-wave half interacts with the atomic nucleus, giving the Newtonian 3rd law reaction (recoil) forces (waves). The EM wave in vacuum is an *electrogravitational wave*.

Energy Is Internally Infinite and Unlimited: A static potential -- which is identically excess *energy* -- is internally dynamic and infinite. Energy is internally infinite and unlimited! But it has a finite *energy density* in a local region of spacetime. Since energy interacts with matter locally, we shall be concerned with the *local energy density* (joules per coulomb).

A Principle of Great Importance: The only way you can have a "chunk" or finite amount of energy to dissipate in a circuit as work is to first have a potential's local energy density interact with a local finite mass collector. The normal interacting mass collector is the free electrons (the free electron gas) in the circuit. You can have, e.g., (joules/coulomb x coulomb); (joules/gram x grams); (joules/m_3 x m_3); etc.

Voltage, Force, Potential Gradients, Loads, and Work: Now let's look at circuitry aspects. Conventionally they are a mess. *Voltage* is "essentially" defined as the "drop in potential." In other words, it's the dissipation (disordering) of a "finite amount" of potential gradient. But the only way you can get a "finite amount" of infinite energy/potential gradient is by first interacting the potential gradient's internal, finite, excess energy density with a finite "collector" mass. E.g., (joules/coulomb available for collection) x (coulombs collecting) = excess joules collected on the interacting coulombs, available for dissipation.

So *voltage* is really the dissipation of a finite collection of excess EM energy/potential gradient. The *dissipation* of potential or of its gradient is not potential! You cannot logically define either potential or energy as is own dissipation!

We presently use the notion of "voltage" in two completely contradictory ways in electrical physics. Here's how we got the confusion: We take a potential gradient (which has a local energy density), and we "collect" it across some charged masses in a locality -- usually the free electrons in the free electron gas in our circuitry. That is, we express the finite energy density of the potential gradient (before collection onto charges) in the local region in terms of *energy per coulomb*. The potential gradient actually is a change to the ambient potential, and so it contains an *excess* energy density (the magnitude may be either positive or negative). We then collect this potential (actually this potential density) on a certain number of coulombs, which places tiny little gradients of potential across (coupled to) each free electron. The local excess energy density of the potential gradient multiplied by the amount of collecting mass gives the amount of excess energy collected (on the interacting charges/coulombs). On each collecting particle, that little gradient, together with the coupling particle, constitutes a tiny force. F is not just *equal to* ma (non relativistic case); instead, $F \equiv (ma)$, where (mass x acceleration) is considered as a unitary, inseparable thing. So that little *potentialized electron* (that little *EM force*) moves itself around the circuit. In the load (scatterer), the little potentialized electron (the little force) is subjected to jerks and accelerations, thus radiating energy (shucking its gradient). Since this is done in all directions in the scatterer (load), that gets rid of the gradient, reducing the "little force" (potentialized electron) to zero because the little potential gradient is lost due to radiation.

Collecting And Dissipating Energy

Energy Dissipation and Collection: Without further ado, we consider the scalar potential's local energy density in terms of *joules per coulomb*. That is, in a specific glob of charges (i.e., in finite circuits), the amount of energy collected from a potential gradient onto the finite number of charges receiving/collecting it, is equal to the number of joules of energy per coulomb that is in the potential gradient, times the number of coulombs collecting (receiving) the potential gradient. The current is the activated (potentialized) coulombs per second that dissipate their potential gradients during that second. The current multiplied by the *time the current flows* gives the activated coulombs that dissipated their activation (potentialization) during that flow time. *Dissipating, activated coulombs* multiplied by the *excess energy collected per activated coulomb* gives the energy dissipated (the work or scattering done) in the load.

We define *collection* as the connection of a potential gradient (a source) to the charged masses in a circuit element (the element is called the *collector*), which for a finite delay time does not allow its potentialized free electrons to move as current. In the collector, during this delay time these trapped electrons are "activated" by potential gradients being coupled to them.

Technically, that delay time in the collector is known as *relaxation time*,[7] in the case of the free electron gas[8] (in a wire or in a circuit element). A collector then is a circuit element that has a usable, finite relaxation time. During that relaxation time, the trapped electrons are potentialized without movement as current; each collecting/receiving free electron gets a little gradient across it, but no current yet flows. In other words, during this finite relaxation time (collection time), we extract potential from the source, but no current. Thus we extract energy (potential), but no power (which is voltage x amperage). During the relaxation time, we extract from the source only a flow of VPF, which is continually replaced in the source by the vacuum's violent VPF exchange with the source's bipolarity charges. We do not extract power from the battery/source during relaxation time, but we extract free energy density. That free energy density, coupling with a finite quantity of electrons, gives us a collected finite amount of energy. With that background, let's start again, and go through this in a useful "free energy" manner.

The Electron Gas. We refer to the conventional model of the free electron gas in a wire.[9] Although the electrons in this gas actually move by quantum mechanical laws and not by classical laws, we shall simply be dealing with the "on the average" case. So we will speak of the electrons and their movement in a classical sense, rather than a quantum mechanical sense, as this will suffice very well for our purposes.

When one connects a circuit to a source of potential gradient (say, to a battery), the first thing that happens nearly instantly is that the potential gradient races onto the coupling wire and heads down it at almost the speed of light. As it goes onto the wire, this gradient "couples" to the free electrons in the free electron gas. However, inside the wire, these electrons can hardly move down the wire at all; they can only "slip" once in a while, yielding a "drift" velocity of a fraction of a cm/sec.[10] On the surface, things are just a little bit different. Most of the "current" in a wire, as is well-known, moves along the surface, giving us the "skin" effect. [For that reason, many cables are stranded of finer wires, to provide more skin surface per cm^3 of copper, and hence more current-carrying capability per cm^3 of copper.]

So, initially, little gradients of potential appear on and across each free electron, with a single little $\nabla\phi$ on each electron, and coupled to it. The couplet of $[\nabla\phi \bullet m_e]$, where m_e is the mass of the electron, constitutes a small ΔE_e. [This is rigorous; the conventional EM notion that an E field exists in the vacuum is absurd, and it is well-known in QM that no observable force field exists in the vacuum. As Feynman pointed out, only the potential for the force field exists in the vacuum,[11] not the force field as such. Or as Lindsay and Margenau pointed out in their Foundations of Physics, one does not have an observable

force except when observable mass is present.[12]]. We have stated it even stronger: Not only is $F = ma$, but $F \equiv ma$ (nonrelativistic case).[13] Since no observable mass exists in vacuum, then no observable F exists there either.

Force, Coupled Gradients, and Electron Translation

Electrons Coupled to a Potential Gradient Move Themselves. The point is, when activated by a "coupled potential gradient," the activated electron *moves itself* until it loses its activation (its coupled potential gradient).

Let me say that again, in a little more detail. Forget the standard notion that a force field such as the E-field causes electrons to move. Also forget the notion that the E-field is given by $E = -\nabla\phi$. In foundations of physics, those equations are known to be incorrect for the vacuum. EM force fields are known (in QM foundations theory) to be *effects*, existing only in and on the charged particles, and not existing separately at all,[14] or in the vacuum at all.[15] Instead of $E = -\nabla\phi$, in the vacuum the correct equation would be something like this: $P_E = -\nabla\phi$. In this case, we have correctly stated that the potential gradient P_E provides the potential for producing an antiparallel E-field in and on a coupling/collecting charged mass, and the magnitude and direction of that

potential gradient will be given by $-\nabla\phi$, if and only if a charged mass particle is first introduced so that it couples to P_E.

At any rate, the activated/potentialized electron moves itself. The reason is that it constitutes a force. Force ≡ (mass x acceleration) (non relativistic case). So the potentialized/activated electron is continuously accelerating. However, it is prevented from easily moving down the wire directly. To begin to do that, it essentially has to first move to the outer skin of the copper conductor.

The Collector: We now consider a circuit element that we called a *collector*. (It could be a special coil made of special material, a capacitor with doped plates rather than simple conducting plates, or any one of a number of things). The objective is for the *collector* to be made of special material so that it has a free electron gas whose electrons are momentarily not free to move as current (they continue to move violently around microscopically, but essentially with zero *net* macroscopic translation) for a finite delay (relaxation) time, while they are settling themselves upon the surface and preparing to move as current. Let's call the electrons NNTE (no net translation electrons) during that finite delay (relaxation time). During that "no-current" delay time, the NNTE electrons become potentialized/activated by the potential gradient impressed across the collector. So at the end of the NNT time, the NNTE electrons are potentialized, and each is of the form $[\nabla\phi \bullet m_e]$.

The Secret of Free Energy

Two Circuits/Two Cycles: We are going to use two circuits and two cycles, as shown in Figure 2:

(1) We shall connect a *collector* to a primary source of potential (to a battery) during the short time that current does not yet flow, but potential does. (In other words, during the relaxation time of the collector, we allow the VPF to flow onto the NNTE electrons of the collector and potentialize (activate) them, but do not yet allow the electrons themselves to flow as current, but only to move transversely in the wiring and collector.) This is **cycle one** of a 2-cycle process: This is collection of a specific amount of current-free potential gradient -- power-free energy -- off the potential-source (the battery) onto a collector. During the collection cycle/time, *current does not and must not flow* (we are discussing the ideal case). We are freely "charging up" the collector as a *secondary battery/source*.

(2) At the end of the collection (potentialization/activation) time/cycle in circuit one, the potentialized collector (the charged secondary source) is sharply switched away from its connection to the primary potential source (the battery), and at the same time it is instantly switched into a separate closed circuit with the load. This is important: In **cycle two**, the potentialized collector (with its finite amount of excess trapped EM energy) and the load are connected in a *completely separate circuit*, and one that is closed, with no connection at all to the original source of potential (in this case, to the battery). Specifically, this "load and potentialized collector" circuit is completely separate from the primary source; during cycle two the primary source (the battery) is not connected to anything.

In other words, all we've taken from the primary source (the battery) is *current-free, force-field-free potential gradient*. So to speak, we've taken a "chunk of potential gradient" from the source, nothing else. You simply multiply the potential gradient's local energy density (the so-called "voltage", which is really excess joules per coulomb) by the number of coulombs of charge that is "activated" (that "collects" this voltage or excess joules/coulomb) in the collector. Specifically, we have not taken any *power* from the battery itself, and so *we have not done any internal work inside the battery upon its internal resistance*, by a "closed circuit electron flow" back into the battery. We have not permitted such a flow.

Instead, *we are using the activated collector as a temporary, secondary battery*. We will utilize this secondary battery in a conventional manner to power the load, *which will also kill the secondary battery* (dissipate its trapped EM energy). But that will *not* affect the primary source. The primary source is never used to directly power the load. It is only used as an infinite source of potential gradient (i.e., as an infinite source of *energy density*).

The Standard Power Extraction Circuit

The Conventional Circuit: We digress momentarily: In the standard electrical method, the potential source (which is a bipolarity) is connected across the load. This connects both the external load and the internal resistance of the battery itself in series, as the "total circuit load." Electrons then pour through the external load circuit and through the internal battery resistance, from the "electron rich" polarity of the source to its "electron poor" opposite polarity. The scattering of energy in the internal battery resistance is actually doing work to upset the chemistry that is maintaining the battery's charge separation (the bipolarity). In this manner, the source's separation of charges (which is the "gate" furnishing the potential/energy gradient) is being destroyed as the current flows, and this in turn destroys the source of the potential gradient.

In other words, normally we, engineers, are trained to *kill the bipolarity*, which kills the potential source itself! Incredible as it may be, we, engineers and scientists, have been trained to utilize the free "trapped EM energy" furnished by nature through the source, to destroy the source of the energy/potential, *with the same vigor as they power the external load!* In fact, our teachers simply have never learned any other way to do it except this deliberately "self-destructive" manner!

A Waterwheel Analogy

Imagine, if you will, a waterwheel that powers a mill, with a sluice gate upstream in a river, that diverts some river water into the sluice carrying water to the wheel when the sluice gate is opened into the river. The diverted water flows down to the waterwheel, turning it, and the spent water is fed back into the river below the mill site. Now what fool would connect a pulley onto the waterwheel, with a rope running from the pulley to the sluice gate, so that when the wheel rotated, part of the rotational power also was utilized to close the sluice gate and shut off the water, stopping the waterwheel? If one did so, when the sluice gate was opened, the waterwheel would rotate only until the sluice gate was closed, shutting off the water. Then one would laboriously have to pay to reopen the sluice gate again, then again, then again. No self-respecting "waterwheel engineer" would do such an unthinkable, insane thing. But that's exactly what we engineers, electrical physicists, and scientists have been trained to do! We have no *energy* engineers or *energy* scientists at all; instead, we have all been *power* engineers and *power* scientists. We have all been *energy source killers!* In this paper, we shall try to do better, and rectify "one of the most remarkable and inexplicable aberrations of the scientific mind which has ever been recorded in history," as Tesla called the conventional electromagnetics.[16] By being *energy* engineers, we shall only have to pay for our energy source *once,* and then we shall draw as much energy from it as we wish.

External Load Power Is Free; Only The Power In The Source Costs

Here's the magic secret of free electrical power: ***The power in the external load is absolutely free, and it always has been free.***[17] ***In any load circuit, the only power you have to pay for, and have ever had to pay for, is the power you incorrectly use to kill your own primary source***. The only power that "costs" more effort/dollars is the power erroneously utilized inside the source to "close the gate" and kill the primary source. Your electric power company doesn't pay for any of the collected energy on your load circuits that is dissipated to power your house. Instead, the power company charges you for its own ignorance. It charges you for its insane use

of its own freely extracted electrical energy to continually kill the bipolarity in each of its generators, thus continually killing the free electrical source of that generator's energy.[18]

In any electric circuit, we can continue to indefinitely power the external load* indirectly *from a source, so long as we are not so naive as to use any of the free energy we extract from the primary source to dissipate back inside the primary source itself and shut it off!

And we can easily and freely multiply electrical potential. As an example, given a single good source of potential, a hundred radial wires can be connected to the source. The same potential will now appear at each of the ends of the hundred wires. A switcher/collector unit can then operate from each radial line's end, and power external loads, without "loading" the original primary source. This "cascading" can be continued indefinitely. A single power plant, e.g., can power the entire electrical grid of the United States. And a single automobile battery can power a large, agile, electric automobile at highway speeds, with sports car acceleration, with unlimited range, without "refueling," and with no noxious chemical exhaust.

Obvious Impacts

Environmentalists should immediately see that the chemical pollution of the biosphere by mechanista and processes to obtain energy can be dramatically reduced, to almost negligible levels. *There need be no huge oil tanker spills, for there need be no huge oil tankers*. There need be no worrisome radioactive wastes from nuclear power plants, or abandoned hazardous nuclear plants when their life is finished, because *there need be no nuclear power plants*. There need be no noxious exhausts from jet airplanes (which are really what is diminishing the ozone layer and punching holes in it), automobiles, trucks, buses, innumerable coal-fired and oil-fired power plants, etc.

The Electronic Smog Problem

In fairness we point out that, as the usage of free electrical energy mushrooms, we will be dramatically increasing the low-level EM signal density of the environment, and that too is biologically detrimental. Although beyond the scope of this paper, that cumulative biological damage mechanism has also been uncovered by this author. A formal paper is presently in preparation for presentation in March 1993 at the annual meeting and conference of the Alabama Academy of Science.[19] The paper will also present an entirely new definition of cancer, give its exact long-term cumulative mechanism, and give an exact, scientifically proven mechanism for eliminating cancer, leukemia, and other debilitating diseases such as AIDS. For our purposes here, we simply state that we understand the EM "electronic smog" biological damage mechanism, and how to go about developing a total counter for it. Eventually, we would see a small "counter unit" added to each power unit, alleviating the "electronic smog" problem and preventing biological damage.

Only Dissipate Energy From a Collector, Not the Source

Completion of the Collection Cycle: But to return to the completion of our collection cycle (cycle one). *During collection, we have not extracted power from the source. That is vital*. We have not moved the gate through which our source is furnishing free energy. We have not diminished our primary source. From our previous definitions of potential, we have indeed extracted *trapped energy* from the primary source, because we placed its "local energy density" across a certain finite collector/mass, instead of extracting *power* (dissipating energy inside the source or battery to spoil its chemistry and deplete its charge separation).

All Energy Is Free

Here's the incredible truth. The entire universe is filled with mind boggling free energy everywhere, in the simplest of things. Simply scrape your feet on the carpet, and you will collect perhaps 2,000 "volts" on your body. At that time, hidden EM energy is flowing from every point in the universe to your body, and from your body back to every point in the universe. We know that all macroscopic matter is filled with stupendous amounts of electrical charge. So an incredible river of energy -- a great flux -- is driving every single thing, from the smallest to the largest. Opening a gate to extract trapped EM energy is simple. Just collect a bit of charge, or scrape your feet hard, or comb your hair briskly. *All we have to do is not be stupid and close the gate once we've got it opened!*

God has been most kind. We have nothing but free energy everywhere. All energy is furnished to us freely! *It's our own blindness that has made us into energy source killers*. All we have to do is open our eyes to the truth of nature's incredible energy bounty. We must just freely collect that bountiful fruit from Nature's tree, instead of chopping down the tree and killing it.

Dissipating The Collected Energy

The Work Cycle: We focus again on cycle two. Shortly after the now-potentialized collector is connected to the load at the beginning of cycle 2 (the *power* cycle, or *energy dissipation cycle*, or *work* cycle), the potential gradient across the potentialized collector is connected (transferred) across the free electrons in the load circuit. We assume that the material of the collector and the switching time have been designed so that, shortly after switching to the loading/work cycle, the activated/potentialized free electrons in the electron gas in the collector reach the skin of the collector, and are free to move as current.

So just after the beginning of cycle two, each of the free electrons in the load circuit now is potentialized and free to move down the wiring. Each potentialized (activated) electron has its own little individual potential gradient across it and coupled to it, due to the overall potential gradient from the collector. Remember, prior to coupling to charges, this potential gradient moves through the circuit at light speed. An EM potential gradient coupled to a charged mass constitutes an *EM force field* (excess trapped EM energy per coulomb, times the number of collecting coulombs). Now each little free electron with its potential gradient forms a little E-field (force/charge), and that little E-field (force/charge) is free to move. That's all it takes to move (accelerate) the little activated electron's mass through the load (the scatterer). We strongly stress that *the potentialized/activated electron moves itself.* It doesn't care whether or not the external battery is attached or not. It is its own little motorboat, with its own little engine driving it.

As the little potentialized electrons reach the load (the scatterer), they bang and clang around in there erratically. That is, the "scatterer" (load) causes spurious accelerations ("scatterings") of these self-driven electrons. As is well-known, when a charge is accelerated, it radiates photons. What actually happens is that these little "jerked around" electrons shuck off their little potential gradients in the load (in the scatterer, or the "jerker-arounder") by emitting/radiating photons in all directions. Hence the heat that is produced in the load; the heat is just these scattered photons. The theory of calorimetry already states that all the excess energy (on the potentialized electrons) will be dissipated as this heat (scattered EM energy).

When all the potentialized electrons have radiated away their potential gradients in the load (scatterer), they are no longer potentialized. The free electron gas is again "quiescent" and no longer potentialized/activated (again, we are talking about "on the average" from a classical viewpoint).

Repetition and Review

Notice What We've Done: We took some trapped EM energy density (a chunk of potential gradient, a "voltage" before current flows) from the source, by switching that potential gradient (energy density, which is joules per coulomb) onto a collector (containing a certain number of

coulombs of trapped charges) where the potential gradient activates/potentializes/couples-to these temporarily non translating electrons. So the finite collector collected a finite amount of excess energy [joules/coulomb x collecting (trapped) coulombs] on its now-excited (activated) free electrons. Then, before any current has yet flowed from the source, we switched that potentialized collector (with its temporarily restrained but potentialized electrons; with their finite amount of excess trapped EM energy) away from the source and directly across the load. Shortly thereafter, the relaxation time in the collector expires. The potentialized electrons in the collector are freed to move in the external load circuit, consisting of the collector and the load, and so they do so. The scattering "shock collisions" due to the erratic electron accelerations in the load shake off the little potential gradients on the conduction electrons, emitting photons in all directions, which we call "heat." In shaking off the photons, the electrons lose their little potential gradients, hence lose their activation (excess EM energy).

Rigorously, we have extracted some energy in trapped form, and allowed it to dissipate in the load, "powering the load" for a finite discharge/dissipation time and doing work.[20] *Contrary to the conventional electrical power engineering, we have also done this without doing any work inside the source to diminish its ability to furnish potential gradient.*

What Is Energy In An Electric Circuit?

Energy in an Electric Circuit: Here's the principle loud and clear. *Energy* in an electric circuit involves only the potentialization and depotentialization of the electron carriers in that circuit.[21] It involves only the potential gradient (the joules per coulomb) collected by the circuit to potentialize its electrons, and the number of coulombs of electrons that are potentialized during the collection phase. Electric circuits simply utilize electrons as carriers of "potential gradients," from the source to the load, where these gradients and the activated electrons constitute excess trapped EM energy. In the "shocking/scattering" occurring in the load, the jerking (acceleration) of the electrons causes these activated (trapped-energy-carrying) electrons to shuck off their potential gradients by emitting them as scattered photons (heat).

If one is thoughtless enough to allow the primary potential source to remain in the circuit during the "work" phase, then one is using the potentialized electrons to also go back into the primary source and scatter energy from its internal resistance (internal load), *thereby disorganizing the organization that was producing the source potential and energy in the first place*. If one does that, then all the while one is getting some work (scattering of energy) in the load, one is also steadily getting some work done inside the primary source to steadily destroy it! Literally, one is killing the goose that lays the golden eggs.

Continued Operations: But back to our circuit. After we complete one full collection/discharge cycle, we wish to continue producing work in the external load. So we simply switch the collector back away from the load and onto the primary source, collect some more current-free potential, and again independently switch the collector with its repotentialized free electrons back across the load. We can repeat this two-cycle process to potentialize the external load and power it as long as we wish, from a battery or other source of potential, and never take any power at all from the primary battery. We do not need to drain the battery or source at all, in order to power a load, unless we attempt to power it directly. Powering the external load is *always* free!

Nature has been most kind, and we have been most ignorant. You can have all the *trapped electrical energy* you wish, from any source of potential, for *free*. You can power all the external loads you wish, for free, by using a collector as a secondary source, and simply shuttling potential between the primary source and the collector.[22] But you cannot have power for free from (in) the potential source. If you allow current flow in your collection cycle, you are depleting the separated charges inside the battery that are furnishing the source potential.

The Coal-Fired Locomotive

Rigorous Analogy of a Coal-Fired Locomotive. Now here's an exact analogy, to assist in understanding. Imagine a coal-fired train, and a fireman shoveling coal. He has an external load/scatterer of energy (the fire in the firebox under the boiler). He has a primary source of potential/energy (the coal car). No fireman in his right mind would ignite the coal in the chute of the coal bin, to try and get some heat energy into the firebox! [That is, he would not attempt to extract *power* from the source. Yet that's exactly what all we engineers are trained to do at present.] Instead, the fireman takes out (collects) a finite amount (a shovelful) of coal (trapped energy). Coal *per se* (the potential gradient) has a certain energy density per unit volume (trapped joules per unit volume of coal) and the shovel (collector) has a certain volume. Accordingly, the shovelful of coal contains a certain amount of trapped joules of energy. In the fireman's shovel (the collector), *the energy remains in totally trapped form, as coal not afire and without its trapped energy being dissipated as work*. [He doesn't act like a fool and ignite the coal in the shovel either!] He then throws that shovel of coal (collected trapped energy) onto the fire (scatterer), completely separately from the coal bin/source. He continues to repeat his shoveling cycle, and each shovelful of coal added to the fire dissipates additional energy, powering the load.

The Free Energy Principle

All potential gradient (trapped excess energy density) is free for the taking.[23] The potential is due to the violent VPF exchange between the vacuum and the separated bipolar charges furnishing the source potential gradient. The energy of the entire universe is flowing through that source potential. You can have as much of this internal VPF flux energy (potential) as you wish, as often as you wish, so long as you don't demand *current* (which is power, or the rate at which the energy is being freed and dissipated). It's really simple. You can have all the *trapped* energy you wish, from any source. You cannot connect to the source and start to dissipate the energy as power, however, without starting to close the "gate" from which your free trapped energy is coming.

In other words, here's the iron rule: ***If you draw current, you kill the bipolarity gate furnishing the potential gradient (source of energy density). In that case, you kill the source. If you do not draw current, you do not kill the bipolarity gate and you do not shut down the source. In that case, you can continue to "use" it and extract trapped EM energy from it forever.***

Definitions Again

Definitions: I'll put down some simple equations, that may help to explain it more exactly. First we repeat some definitions.

Energy is any ordering imposed upon the virtual particle flux of vacuum. *EM energy* is any ordering imposed upon the virtual *photon* flux of vacuum. *Static energy* is an ordering (a template) which is stationary with respect to the external observer. *Dynamic energy* is an ordering (a template) which is not stationary with respect to the external observer.

Potential: Any ordering imposed upon the virtual particle flux of vacuum. *Scalar potential* is an ordering (template) that is not moving with respect to the external observer. *Vector potential* is an ordering (template) that is moving with respect to the external observer.

The *scalar EM potential* is any static (with respect to the external observer) ordering imposed upon the virtual *photon* flux of vacuum. Etc.

Note again that energy and potential have exactly the same definition. Potential is in fact *trapped energy.* Scalar EM potential is *static EM energy* (to the external observer) or *trapped* (collected) EM energy. In other words, if one takes off a differential of potential onto a fixed

number of coulombs, one takes off a certain magnitude of trapped EM energy. In other words, one takes out a shovelful of coal from the coal car.

Importance of Separation of Charges

We Must Not Dispel the Separation of Charges In Our Source: The difference in our coal-fired train analogy and our electrical circuit is that, in the coal train, the coal in the coal car is not automatically and continually replenished. Also, the coal in the coal car has already been collected by the mass of the coal car, so it is not infinite. In the electrical circuit, the potential gradient in the primary source is continually replenished, automatically, and it is infinite (though it has a finite energy density). The reason is simple. EM potential (in the normal sense) is actually a virtual photon flux exchange between the vacuum (the entire vacuum, all over the universe) and a charged particle or collection of charged particles.[24] Thus the potential (gradient) is a powerful energy flux, pumped by the vacuum and the entire universe, that continues automatically, so long as we do not allow the collected charges in our bipolarity source to be dissipated. In terms of a battery, we achieved separation of charges inside the battery by chemical action, and *we paid for that initially*. Once separated, the charges essentially stay separated (because of the chemistry) unless we foolishly do something to dissipate them, such as upsetting the chemistry, so they are no longer separated positive from negative. So if we don't do anything to these separated charges, they continue to be driven by their fierce exchange of virtual photon flux with the vacuum/universe. If we then simply extract some of that flux exchange, without moving the charges, we are directly "gating" trapped EM energy from the vacuum/charged particle VPF exchange.[25]

The Potential Is Infinite And So Is Its Energy Content

You Can't Dip The Ocean Dry With a Spoon: Let's say that another way. The charged particles in our potential source are in a constant, seething, equilibrium exchange of trapped EM energy with the entire universe. That energy exchange is so enormous that, if we gate some of it out to collect on some other "temporarily frozen" charges and potentialize/activate them, the vacuum flux doesn't even miss it. It's like dipping a spoonful of water out of the restless ocean. The hole is instantly filled, and the water replenished. We can dip with that spoon as much as we wish, and the ocean will never run dry, but will simply continue to furnish us water, spoonful by spoonful.

The same is true in our electric circuits. We can have all the potential (trapped EM energy density) we wish, for free, from a single source, so long as we do not allow work to be done inside the source to close off our "gate" and kill our primary source.

The Twisted Concept of Voltage

Before We Develop Some Pseudo-Equations: In the equations we wish to develop, we have one problem, due to the lack of insight of conventional electrical physicists. That is, they have insisted upon "measuring" and expressing both the infinite potential (nondissipated) and a certain quantity of potential (dissipated) in *volts*. So they say "a potential of so many volts." That's nonsense, and totally erroneous. Rigorously, a voltage is a drop or a dissipation of so much (a finite amount of) *collected* excess potential/energy. You "measure" the voltage in a voltmeter by impressing a potential gradient upon the electron gas in the circuitry, wherein you collect or get in your voltmeter so much [(joules/coulomb) x coulombs]. A tiny current (coulombs/second) from this internal collection then flows for a finite time through the resistance of the voltmeter. So you dissipate (joules/coulomb) x (coulombs/second) x (seconds), which gives a certain amount of energy dissipated as work in moving the needle of the voltmeter. The voltmeter is calibrated so that it effectively indicates the *collected energy per coulomb* that was dissipated, and it calls that entity *voltage*. It involves a finite amount of energy that has already been dissipated as work, and it's a measure of the local energy density of the potential in terms of joules/coulomb. It is *not* a measure of the potential proper. It's after the fact; the extracted

(collected) potential gradient it actually refers to existed in the past, before the work (dissipation of the collected trapped energy) was done. To refer to the potential *before* its dissipation as "voltage" is precisely the same as confusing the future with the past. A "potential (difference) of so many volts" is actually a statement that "a potential difference of so much energy per coulomb" could be dissipated in a load, if it were connected to the load so that a finite amount of energy was collected, and this finite load-collection was allowed to dissipate as power (volts/coulomb x coulomb/sec) for a finite time, yielding work. It's even worse, but it would take a textbook to straighten out this one error in EM theory.

So we'll leave it at that, and we'll adapt the notion of potential the way it is corrupted in electrical circuit theory. There it's used not really as energy, but rather as *excess energy per coulomb of potentialized charge*. I apologize for that difficulty, which is not of my own making, but I must use the conventional notion if we are to greatly clarify the pseudo equations.

The Equations of Free Energy

The Pseudo-Equations: Let us use the following subscripts and letter convention, and develop the nomenclature needed:

T = trapped d = dissipated or dissipating

m = translated (moving) K = energy

V = volts = potential drop (potential dissipated) = previously collected potential radiated away as heat in a load, doing work on the load in the process. Unfortunately, we shall also have to speak of a potential gradient that is not being dissipated, so we shall have to speak of "trapped volts" which is erroneous, but complies with the common usage.

ϕ = electrostatic scalar potential. Coul = coulombs

i = amperes = Dissipating potentialized coulombs per second flowing, so amps are something translating, always. Amps are excited coulombs, per second, that are dissipating their excitation. With superconductivity excluded, you only have amps when you have a potential drop across a load. So we will speak of amps as "dissipating," meaning that potentialized electrons are traveling through a load, dissipating their activation (gradients) in the load by radiating scattered photons (heat).

n = number of electrons in a coulomb = $6.3 \times 10_{18}$ electrons/coulomb

Here are the pseudo equations (superconductivity is excluded):

$amp_m = coul_d/sec = n\ electrons_m/sec = n\ electrons_d/sec$ [1]

$\Delta\phi = V_T$ (as conventionally referred to). It would be volts if all [2] of it were dissipated, but it is not yet dissipated, so it is sort of "trapped volts". *Erroneous*, but the common use. So we will speak (somewhat distastefully) of "trapped volts" and "dissipated volts."

$V_d \times amp_d \times sec = watts \times sec = power \times time = work = K_d$ [3]

$V_d \times coul_d/sec \times sec = (work) = K_d$ [4]

In the switching, we switch K_T to K_d so

$K_T \Rightarrow K_d$ [5]

But $V_T \times coul_T = K_T$ [6]

Or

$[V_T] = [K_T] / [coul_T]$ = trapped energy/trapped coulomb [7]

$[K_T] = [V_T] \times [coul_T]$ = amount of trapped energy, each cycle [8]

So that's what we were getting at. The amount of trapped energy you can transfer (in other words, how much coal you get in one shovelful) depends upon the number of trapped electrons you have in the trapped free electron gas in the collector, and the potential gradient you apply to those trapped coulombs to potentialize them.

Relaxation Time and Semiconductors

Relaxation Time: The time it takes for the free electrons in a conductor (or material) to reach the skin of the wire after potential is applied, is, of course, called the *relaxation time.* During that time, the free electrons in the gas are "trapped" insofar as producing current (dissipation of the potential) is concerned. However, immediately after the relaxation time ends, current begins and dissipation of the trapped energy begins.

In copper, the relaxation time is incredibly rapid. It's about 1.5×10^{-19} sec. However, in quartz it is about 10 days! So as you can see, we need to get somewhere in between these two values, and so we will have to "mix" or "dope" materials. We must get a sufficiently long relaxation time so that we can switch and collect comfortably in cycle one, then switch into cycle two for dispersion of the freely collected energy in the collector. However, the relaxation time we get must also be short enough to allow quick discharge in the load, as soon as we switch the primary source away from the collector. Actually, we need a *degenerate semiconductor material* instead of plain copper.

Degenerate Semiconductor Material: A *semiconductor material* is intermediate between a good conductor and an insulator. It's a nonlinear material, and doped. A *degenerate semiconductor material* is one which has all its conduction bands filled with electrons, and so it thinks it is a conductor. That is, a degenerate semiconductor is essentially a doped conductor, so to speak. As you can see, we can increase the relaxation time in our "conductors" connected to the source by making them of *degenerate semiconductor material.* What we're talking about is "doping" the copper in the wire, and in the collector, so that we can have plenty of time to collect, and switch, and discharge, and switch, and collect, etc.

Now in a doped conductor (degenerate semiconductor), we can tailor the relaxation time by tailoring the doping. We must dope the copper before we make the wire. Why would we wish to do that? We want to overcome the single problem that so far has defeated almost all the "overunity" researchers and inventors.

WHEN YOU CONNECT TO A SOURCE, YOU CAN ONLY EXTRACT CURRENT-FREE POTENTIAL -- FREE "TRAPPED EM ENERGY" -- DURING THE ELECTRON RELAXATION TIME IN THE CONNECTING CONDUCTORS AND SUCCEEDING CIRCUIT COMPONENTS. AFTER THAT, YOU'RE STEADILY EXTRACTING POWER, AND THE ENERGY EXTRACTED FROM THE SOURCE IS BEING PARTIALLY DISSIPATED IN THE RESISTANCE/LOADING OF THE CIRCUIT, AND PARTIALLY DISSIPATED IN THE INTERNAL RESISTANCE OF THE SOURCE. IN THE LATTER DISSIPATION, YOU'RE ALSO DISSIPATING YOUR SOURCE BY DOING WORK ON IT INTERNALLY TO KILL IT.

Good Copper Wire: Bane of Overunity Inventors: Many destitute inventors, tinkering and fiddling with overunity devices, finally get something (a circuit or device) that does yield more work out than they had to input. At that point, they usually conclude that it's simply the specific circuit configuration and its conventional functioning that produces the overunity work. However, usually as soon as this configuration is more carefully built with very good materials, boom! It

isn't overunity anymore. The inventors and their assistants then desperately bang and clang away, getting more frustrated as the years pass. The investors get mad, sue for fraud, or get in all sorts of squabbles. The scientists who tested it and found it wanting, pooh-pooh the whole thing as a scam and a fraud, or just a seriously mistaken inventor. Scratch one more "overunity" device.

Most of these inventors got their successful effect (and possibly erratically) when they were struggling with inferior, usually old, usually corroded materials. Actually, the *more* inferior, the better. The more contaminated/doped, the better!

The moment you wire up your circuit with *good copper wire* connected between the battery or primary source and any kind of load including the distributed circuitry loading itself, you can forget about overunity. You will lose it in the copper, after the first 1.5×10^{-19} second!

Think of a really good conductor such as copper as an essentially *linear* material. Linear means energy conservative. Overunity can only be done with a highly nonlinear effect. So your "conductors" have to be made of nonlinear materials. In fact, they have to be made of *degenerate semiconductor material*. For the type of circuitry we are talking about, the copper has to be doped and then made into "doped copper" wiring. You also have to utilize the primary battery only to potentialize a collector (secondary battery/source), and then use this secondary battery source to conventionally power the load *while also killing itself.*

The Wiring And the Collector Must Be of Degenerate Semiconductor (DSC) Material.[26] A good materials scientist/engineer, together with a decent electrodynamicist, can readily design and tailor some doped copper wiring so that the material in the wiring is a degenerate semiconductor material, with a target (desired) relaxation time. That's what you should use to make the wiring to connect up your source to the collector with, and that type of material is also what you use in your collector. You can use either a coil or a capacitor as the collector, but its "conductive" material has to be degenerate semiconductor material -- in short, it must be doped to have the proper relaxation time. From the collector to the load, however, obviously you want to use a good conductor material. Ordinary copper will do nicely there.

Once you do that, you're in business. When making the DSC material, simply tailor the relaxation time to something which is easily switched. For example, take one millisec. With a relaxation time of that long, switching is easy. In fact, one could even use good mechanical switching. Or easily use inexpensive ordinary solid state switching, without having to go all the way to nanosecond switching.

Then, in the collector, you calculate the number of "trapped coulombs" you have. Take the "trapped voltage" (current-free potential's energy density per coulomb) you extract from the source during the electron relaxation time after the collector is connected. Multiply the number of trapped coulombs in the collector by the trapped voltage during collection, and you have the amount of energy in joules that you extract FOR FREE, without paying for it, from the source *during every collection cycle*.

Sources, Collectors, and Power

Tapping Vacuum Energy. You're getting the excess electrical energy directly from the vacuum, as we briefly pointed out above. The vacuum will freely replenish all the "trapped voltage" you extract from the primary source during the electron relaxation time. It won't replenish a single bit of "dissipated voltage" (power) you extract from the source.

Note that the same considerations apply in the collector. It's got to have a somewhat longer electron relaxation time. Its electrons stay "unrelaxed" during the collection cycle, and allow for some additional switching time to connect to the load. The "trapped voltage" across the collector multiplied by the number of trapped coulombs in it, gives the number of joules of FREE EM

ENERGY you extract and get into and onto the collector (the shovel). In other words, that's your "shovelful of coal." You then throw the "shovelful" onto the fire/load -- you simply disconnect the collector from the primary source and connect it across the external load. The collector (secondary battery) now powers the load and its own internal resistance, "killing" itself while furnishing the energy for powering the external load as well.

The Source Can Be Almost Anything: You can use as a source a simple elevated wire, to "tap" potential from the 200-300 volts/meter between earth and ionosphere. Here again, you need to utilize calibrated, doped wire.

Finally, you must adjust the repetition switching in accordance with the discharge time through the load. In other words, you have a serial process as follows:

(1) extract trapped energy (potential) from the source onto the collector, Δt_1.

(2) Switch the collector off the source, onto the load, during time Δt_2.

(3) Wait while the collected energy in the collector discharges through the load, during time Δt_3.

(4) Switch the collector back off the load and onto the potential source, during time Δt_4. That completes one cycle.

The serial timing simply is $[\Delta t_1 + \Delta t_2 + \Delta t_3 + \Delta t_4]$.

If you balance all the doping and the materials design, and correlate the switching, you can get all the free energy you wish. *Properly utilized, a single car battery can be used to power an electric automobile indefinitely*. *Or even to power a battleship*. In the real world, of course, you will inevitably have a tiny bit of loss as you go, because there's a finite (though high) resistance between the two poles of your battery. Handling that is a piece of cake. Simply run a separate little collection circuit to collect a little bit of trapped EM energy from the slowly leaking source, and ever so often feed the collected energy back into the battery as power, to "reseparate" the charges (charge the battery) and replace the small amount of the primary source's potential gradient that has been lost. The battery, load, and "trickle charger" then become a closed-circuit free-energy source that will last for years and years.

Limited Only By One's Imagination: Of course you can see many variants; this is just the "master key." You can have multiple collectors, collecting trapped energy simultaneously or in sequence off a single source, and pooling their collected energy to more powerfully power the load. You can utilize a very high "voltage", such as in the Swiss electrostatic overunity device, to increase the energy collected per coulomb in each switching (in each shovelful) in accord with equation [8]. For a battery, you can set a separate little collector/load device to trickle-charge the battery, overcoming the small normal "leakage current" that does occur in batteries and in real circuits and devices. The opportunities are endless. You can put in a unit to take mostly only power-free energy from the "power line" feeding your business or home, reducing your utility bill by -- say -- 90%. Or you can simply build a small home power unit to do the whole job, for only a few hundred dollars. *This simple secret can be used to power the world, cheaply and cleanly, and to clean up the biosphere*.

Conclusion

-

Well, there you have it. I've given you the benefit of what required most of my adult life to discover. The definitions advanced in this paper are rigorous. It took years of sweat and tears to

come up with them. They're simple, but they will change your entire understanding of electromagnetics, power, and energy once you grasp them. Please read them, and ponder them, several times. One or two readings will not be sufficient to fully grasp what is said here.

Also, hopefully, by this time, the reader is beginning to experience the same emotions as I experienced when I finally discovered how simple it all really was. First one wants to *laugh* for about two hours at how truly ignorant we've all been. Then one wants to *cry* for about two hours for the same reason. This could all have been done a century ago, *if we had ever really understood electromagnetics*.

We've had this electromagnetics around for over 100 years -- Maxwell's book was published in 1873. We got it wrong, starting right with Maxwell and his use of the material ether, which was almost universally assumed at the time. Still, by using quaternions, Maxwell succeeded in packing a great deal more in the model than even he himself recognized. When the vector aspects interacted to form a zero resultant *translationally*, those active interactants were still in there and still fighting and interacting. The scalar component of the quaternion remained, and infolded those struggling vectors and functions of them inside itself. In short, it captured the case where the electromagnetic energies are involved in translation actions which nullify each other translationally (electromagnetically). However, the energies are still in there in the continuing interactants inside the zero vector resultant. As such, they are trapped EM energy. And it is the trapped EM energy inside a mass -- not the mass per se -- which is responsible for gravitation. In other words, *Maxwell's theory already correctly captured the unification of the gravitational field and the electromagnetic field in 1873*.

Then Heaviside et al forced Maxwell's theory into a vector framework, throwing out the scalar component, and discarding the unification of gravitation and electromagnetics along with it. Serious errors were made and still exist in many of the fundamental definitions; in fact, many of them aren't definitions at all. Nearly every engineer and physicist can readily calculate potentials -- *all,* of course, on the "dissipation" side where the potentials are actually the amount of potential that was collected upon a collector and then dissipated. I could find hardly a single physicist who really knew what a scalar potential was prior to a finite amount being collected and dissipated as voltage. Yet 99% of them firmly believed they understood the potential.

So now you have the results of this researcher's long and arduous quest for the golden fleece. Please go forward with it, to make this a better and cleaner world for everyone.

Just remember that the control and use of energy is personal power. The control and use of absolute energy is the control and use of absolute personal power. In the old adage, power corrupts and absolute power corrupts absolutely.

Please use it wisely.

NOTES AND REFERENCES

1. For a good discussion of the modern quantum mechanical view of the vacuum, see I. J. R. Aitchison, "Nothing's plenty: the vacuum in modern field theory," Contemporary Physics, 26(4), 1985, p. 333-391. See also T. D. Lee, Particle Physics and Introduction to Field Theory, Harwood Academic Publishers, New York, 1981 -- particularly Chapter 16, "Vacuum as the source of asymmetry." See Timothy Boyer, "The classical vacuum," Scientific American, Aug. 1985, p. 70; Walter Greiner and Joseph Hamilton, "Is the Vacuum really Empty?", American Scientist, Mar.-Apr. 1980, p. 154; Jack S. Greenberg and Walter Greiner, "Search for the sparking of the vacuum," Physics Today, Aug. 1982, p. 24-32; Richard E. Prange and Peter Strance, "The superconducting vacuum," American Journal of Physics, 52(1), Jan. 1984, p. 19-21; R. Jackiw and J.R. Schrieffer, "The decay of the vacuum," Nuclear Physics B, Vol. 190,

1981, p. 944. See Paul Davies, Superforce, Simon and Schuster, 1984 for a layman's overview of modern physics, including the modern view of the vacuum.

2. E. T. Whittaker, "On the partial differential equations of mathematical physics," Mathematische Annalen, Vol. 57, 1903, p. 333-355. Since the scalar potential actually consists totally of a set of hidden bidirectional EM waves, then *scalar interferometry* is possible, and not just an oxymoron as it would seem without considering the inner wave structure of the scalar potential. Two scalar potentials (each of which is a multi-biwave set) can interfere; it is just a special kind of multiple wave interferometry between their internal wave compositions. This is a major point of profound impact on physics. Whittaker in fact showed that *all classical EM* could be replaced by such scalar EM potential interferometry. See E. T. Whittaker, "On an expression of the electromagnetic field due to electrons by means of two scalar potential functions," Proceedings of the London Mathematical Society, Series 2, Vol. 1, 1904, p. 367-372. Further, scalar interferometry has been proven; today it is called the Aharonov-Bohm Effect. See Y. Aharonov and D. Bohm, "Significance of Electromagnetic Potentials in the Quantum Theory," Physical Review, Second Series, 115(3), Aug. 1, 1959, p. 458-491. For confirmation and discussion, see Bertram Schwarzschild, "Currents in normal-metal rings exhibit Aharonov-Bohm Effect," Physics Today, 39(1), Jan. 1986, p. 17-20. For an extensive discussion of the Aharonov-bohm effect and an extensive list of references, see S. Olariu and I. Iovitzu Popescu, "The quantum effects of electromagnetic fluxes," Reviews of Modern Physics, 57(2), April 1985. Modern scientists have generally been unaware of the inner wave structure of the interfering potentials and have utilized only quantum mechanical theory for the interference. Consequently, they have been able to experimentally establish the AB effect for only a few thousand Angstroms distance. With the Whittaker formulation, the AB effect becomes distant-independent, because the necessary potentials can be fabricated as laser-like beams, simply by assembling the proper Whittaker multibeam set. Also, Ignatovich pointed out that the Schroedinger potential can also be decomposed into just such an internal bidirectional EM wave set. See V.K. Ignatovich, "The remarkable capabilities of recursive relations," American Journal of Physics, 57(10), Oct. 1989, p. 873-878.

3. See Richard W. Ziolkowski, "Exact Solutions of the Wave Equation With Complex Source Locations," Journal of Mathematical Physics, Vol. 26, 1985, p. 861; "Localized Transmission of Wave Energy," Proc. SPIE, Vol. 1061, Microwave and Particle Beam Sources and Directed Energy Concepts, 1989, p. 396-397; "Localized Transmission of Electromagnetic Energy," Physical Review A, Vol. 39, p. 2005; "Localized Wave Transmission Physics and Engineering," Physical Review A, 1992, (in Press); "Localized wave transmission physics and engineering," Proc. SPIE Conference on Intense Microwave and Particle Beams II, Los Angeles, CA, vol. 1407, Jan. 1991, p. 375-386. See Richard W.Ziolkowski, Amr M. Shaarawi, and Ioannis M. Besieris, Nuclear Physics B (Proc. Suppl.), Vol. 6, 1989, p. 255-258; R.W. Ziolkowski, and D.K. Lewis, D.K., "Verification of the Localized Wave Transmission Effect," Journal of Applied Physics, Vol. 68, 1990, p.6083; Richard W. Ziolkowski, Ioannis M. Besieris, and Amr M. Shaarawi, "Localized Wave Representations of Acoustics and Electromagnetic Radiation," Proceedings of the IEEE, 79(10), Oct. 1991, p. 1371-1378; I.M. Besieris, A.M. Shaarawi, and R.W. Ziolkowski, "A bidirectional travelling plane wave representation of exact solutions of the scalar wave equation," Journal of Mathematical Physics, 30(6), 1989, p. 806; A.M. Shaarawi, I.M. Besieris, and R.W. Ziolkowski, "A novel approach to the synthesis of nondispersive wave packet solutions to the Klein-Gordon and the Dirac equations," Journal of Mathematical Physics, 31(10), 1990, p. 2511; "A nondispersive wave packet representation of photons and the wave-particle duality of light," UCRL-101694, Lawrence Livermore National Laboratory, Livermore, CA, 1989; "Diffraction of a classical wave packet in a two slit interference experiment," UCRL-100756, Lawrence Livermore National Laboratory, Livermore, CA 1989; "Localized energy pulse trains launched from an open, semi-infinite, circular waveguide," Journal of Applied Physics, 65(2), 1989, p. 805; R.W. Ziolkowski, D.K.Lewis and B.D.Cook, "Experimental verification of the localized wave transmission effect," Physical Review Letters, 62(2), 1989, p. 147; R.W. Ziolkowski and D.K. Lewis, "Verification of the localized wave transmission effect," Journal of Applied Physics, 68(12), 1990, p. 6083; M.K. Tippett and R.W. Ziolkowski, "A

bidirectional wave transformation of the cold plasma equations," Journal of Mathematical Physics, 32(2) 1991, p. 488; A.M. Vengsarkar, I.M. Besieris, A.M. Shaarawi, and R.W. Ziolkowski, "Localized energy pulses in optical fiber waveguides: Closed-form approximate solutions," Journal of the Optical Society of America A, 1991.

4. For a precise statement of the distortion correction theorem, see Amnon Yariv, Optical Electronics, 3rd Ed., Holt, Rihehart and Winston, New York, 1985, p. 500-501.

5. Both wave and antiwave co-exist in the vacuum simultaneously, forming a stress wave. The entity that is stressed is the rate of flow of time. In the common interaction with matter, the time-forward half of the stress wave normally interacts with the electron shells of the atom, giving electron translations forces. The time-reversed or anti-wave half interacts with the nucleus, giving the Newtonian 3rd law reaction (recoil) forces. The so-called "EM wave" in vacuum is a *gravitational* wave. It is a wave of oscillation of the rate of flow of time. It is rather like a sound wave in air, as Tesla pointed out, and it is a longitudinal wave, not a transverse "string" wave.

6. As pointed out by Nikola Tesla. Tesla was correct, and all the textbooks with their transverse "string" waves are in error. *There are no strings in the vacuum!*

7. E.g., see Clayton R. Paul and Syed A. Nasar, Introduction to Electromagnetic Fields, 2nd Ed., McGraw-Hill, New York, 1982, p. 113.

8. E.g., see Clayton R. Paul and Syed A. Nasar, ibid., p. 100-101. See also Raymond A. Serway, Physics For Scientists And Engineers, With Modern Physics, Saunders College Publishing, Philadelphia, PA, 3rd Ed., Updated Version, 1992, p. 752-755.

9. Sommerfield's theory of metallic conduction was based on Drude's concept that the outer valence electrons of a conductor, which do not form crystal bonds, are free to migrate through the crystalline lattice structure, and so to form an electron gas. At room temperature, by quantum mechanical considerations, these free electrons are moving randomly, but at an average velocity on the order of 10^6 meters per sec. E.g., see Martin A. Plonus, Applied Electromagnetics, McGraw Hill, New York, 1978, p. 54-58, 62-3, 376-7. If you wish to know just how much power exchange is driving the collisions of the electron gas in a copper wire, here is an illustration. In one cubic centimeter of copper wire, the power exchange in and out of the electron gas is some 4 billion billion watts. That's the equivalent of 4 billion large electric power plants, each of 1,000 megawatt capacity. And one cubic centimeter of copper is a lump about the size of the end of our little finger.

10. E. g., see Raymond A. Serway, ibid., p. 743-744 for a discussion and calculation of the electron drift velocity in copper.

11. Richard P. Feynman, Robert B. Leighton, and Matthew Sands, The Feynman Lectures on Physics, Addison-Wesley, New York, Vol. 1, 1963, p. 2-4. In the classical EM theory launched by Maxwell and later modified by Heaviside et al, this problem did not exist for the original theoretical formulation. In that formulation by Maxwell, and continued by Heaviside, a material ether is assumed for the model. The Michelson-Morley experiments of 1887 destroyed the notion of the material ether, but the classical electromagnetics model has never been corrected to rectify its very serious foundations flaw in this respect.

12. Robert Bruce Lindsay and Henry Margenau, Foundations of Physics, Dover Publications, New York, 1963, p. 283-287. Note on p. 283 that a "field of force" at any point is actually defined only for the case when a unit mass is present at that point. In spite of this, most classical electrodynamicists continue to adhere to the notion that the EM field exists as such in the vacuum, but do admit that physically measurable quantities such as force somehow involve the product of charge and field. E.g., see J.D. Jackson, Classical Electrodynamics, 2nd Ed., John Wiley & Sons, New York, 1975, p. 249. Note that holding such a concept is tantamount to

holding on to the material ether, and assuming that the vacuum itself is "measurable" or "observable."

13. The formula F = ma is simply an algorithm for calculating the magnitude of the force. It states that "the magnitude of the force is equal to the magnitude of mass that is accelerating, multiplied by the magnitude of the acceleration." No such "equals" formula is a definition; it is only a calculational algorithm.

14. This falsifies one of the assumptions in the common notion of the scalar potential; that its gradient in vacuum is a force field. Let us falsify another part of the conventional concept of the potential. Take the notion of forcibly pushing in "against the field" of a trapped charge, a unit charge from infinity. At any point you stop, the work n you have done on the unit charge is equal to the value of the potential, so it is said. Actually, you pushed in a one-coulomb collector, and have collected and dissipated as work n joules of energy on that one coulomb. In other words, the energy density of the potential there, if collected and dissipated on a collector, is n, where n is joules per coulomb (NOT joules!). To prove it: suppose we go out on 10,000 radials from that point, and push in from infinity 10,000 unit charges from infinity. Then, the total work done "against the potential gradient ("field", in common language) is now 10,000 n. This makes no sense at all from the conventional view (which carefully refrains from multiple collectors!). It makes good sense from our view of the potential as having infinite energy but a finite energy density. In that case, the more collectors, the more energy collected, for dispersal as work.

15. For a discussion, see Y. Aharonov and D. Bohm, 1959.

16. Nikola Tesla, "The True Wireless," Electrical Experimenter, May 1919, p. 87.

17. The power in the load is always the time rate of dissipation of energy that has just been freely collected by the load for dissipation.

18. One can foresee a day in the not too distant future when any power company continuing to do such an unthinkable thing will have a class action suit brought against it by its customers!

19. T. E. Bearden, "Mechanism for Long-Term Cumulative Biological Effects of EM Fields and Radiation," March 1993 (in preparation).

20. Precisely analogous to a heat pump's operation - which as is well-known can readily be "over unity" in its efficiency. The maximum efficiency of the heat pump is about 8.22. E.g., see David Halliday and Robert Resnick, Fundamentals of Physics, 3rd Edition Extended, John Wiley and Sons, New York, 1988, Volume 1, p. 510-519. Good heat pumps normally have about 4.0 efficiency.

21. External power in an electric circuit refers to the dissipation rate (in the circuit's external load) of the potential gradients on the activated/potentialized electrons. Internal power refers to the dissipation rate in the circuit's bipolarity source.

22. We call strong attention to T.W. Barrett, "Tesla's Nonlinear Oscillator-Shuttle-Circuit (OSC) Theory," Annales de la Fondation Louis de Broglie, 16(1), No. 1, 1991, p. 23-41. In this important paper, Barrett shows that a higher topology EM, such as quaternion EM, allows many things to be accomplished with circuitry that are not apparent to a conventional vector or tensor analysis of that circuitry. He also shows the Nikola Tesla's circuits accomplished this higher topological functioning.

23. It is easy to test this. Connect several different wires to a single source of potential gradient. With respect to ground, the end of each one of those wires has the same potential gradient as does the original source with respect to ground. If you connect 10 wires to a single "100-volt" potential gradient source, you will have ten 100-volt potential gradients appear. You can use

each of these ten potential gradients as a primary source. From each of these new primary sources, you can branch ten more, and now have a hundred potential gradient sources. You can treat each of these hundred new sources now as a primary source. To each one, you can add a switcher, collector, and external load, and drive all 100 loads. Or instead, you can put ten switcher/collector/external load circuits with each of the hundred new primary sources, and power all 1,000 external loads. Energy/potential is free from any source, so long as you do not demand power from the same source.

24. Per Whittaker and Ziolkowski, this VPF exchange -- from consideration of its wave aspects -- consists of a harmonic series of bidirectional waves.

25. We are easily permitted to have free energy and violate the "local energy conservation law for a closed system." This is because the system is not closed, and so instead we must apply local energy conservation for an *open* system with a hidden source. In any given time interval, the energy taken (scattered) from the system as external work cannot exceed the sum of the unscattered trapped energy that was in the system initially and the unscattered energy that flowed into the system during that time interval.

26. You can actually do away with the separate collector, and utilize the doped copper DSC material itself as the collector. However, you will not be able to collect nearly so much energy in each collection cycle, for dissipating in the load in the subsequent work cycle.

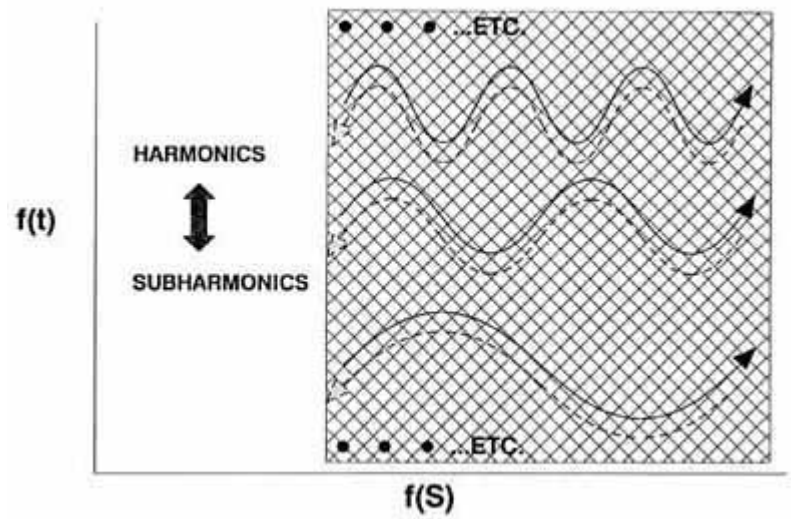

Figure 1a. Internal wave structure of the scalar potential.

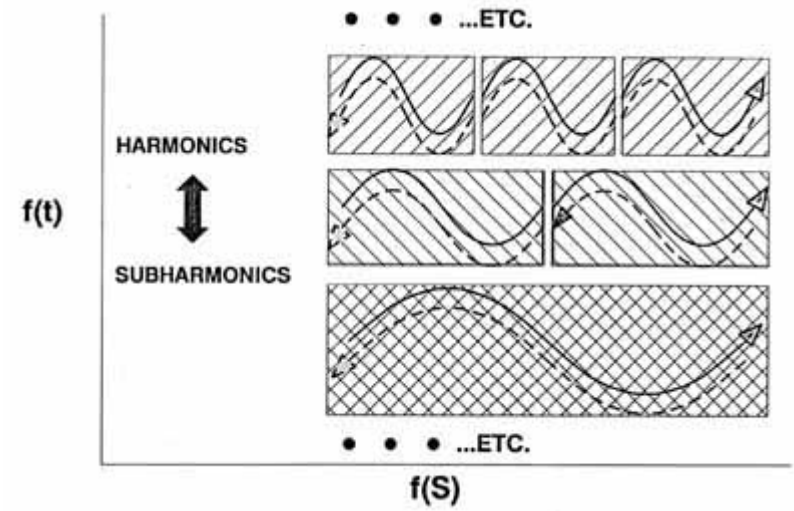

Figure 1b. Internal wave structure of the scalar potential (end).

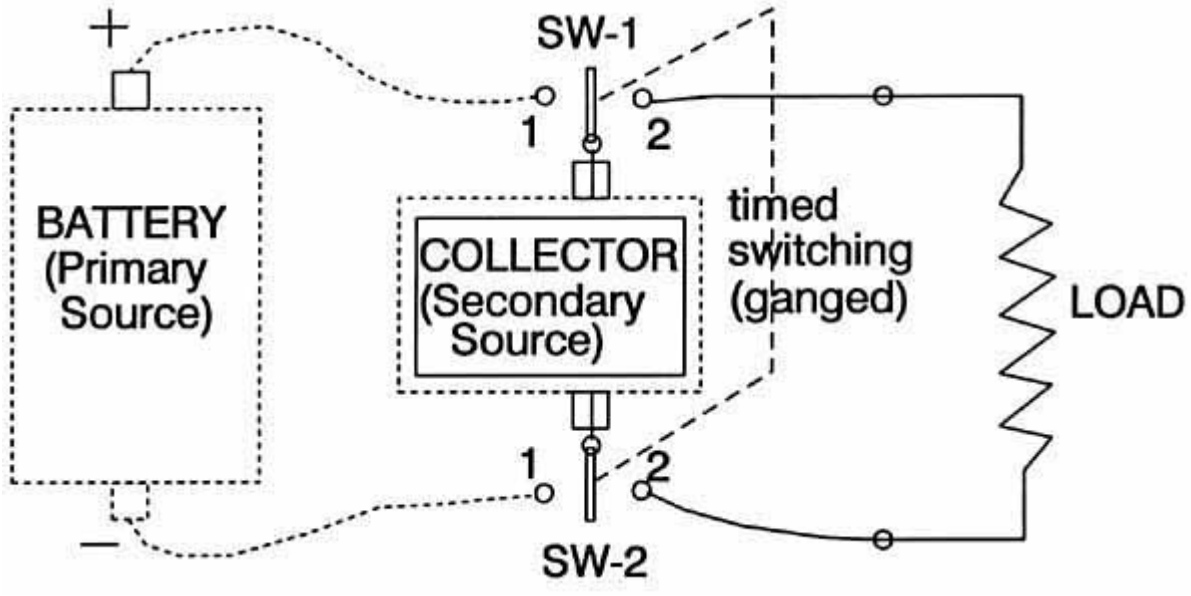

Nondissipative components are shown by dotted lines.

Dissipative components are shown by solid lines.

Figure 2. The secret of extracting and using free energy.

[Additional Comments - 12 March 1993]

[Update - 5 February 1994]

[Update - 13 May 1994]

ADDITIONAL COMMENT:

March 12, 1993

The present classical CEM model prescribes closed, energy-conservative type systems. If any electrical device works totally according to the accepted CEM model, it cannot and will not ever produce overunity. Simply put, you have excluded any hidden EM source that is freely replenished, and you have assumed continual killing of all energy input sources utilized. On the other hand, if one takes the view that the overunity electrical machines are possible after all, then -- *whether one is consciously aware of it or not* -- one has implied that classical CEM must somehow be substantially flawed. If it's flawed, then -- being a model -- some of its primary assumptions (postulates) and/or fundamental definitions must be in error. The proper place to go after "free electrical energy" is to rigorously examine CEM, over and over, until flaws are uncovered which allow a hidden, freely replenished source of input energy. In other words, one must find a way to "open" the electrical system to an inflow of energy from this source, without closing off the source. Until one finds such an "extension" of CEM, one has no model or concept which can reasonably be expected to provide overunity electrical energy output. Note also that, while the majority of the EM circuitry of an electrical overunity machine may obey CEM, at least one section -- where the source is freely tapped and the excess energy extracted -- must violate CEM.

I have spent many arduous years in this very process, right or wrong. The bottom line of my search is this: the only verified (by Whittaker and Ziolkowski) (WZ) "freely replenished river" of EM energy, that can act as the required "free energy" source for input to the would-be overunity electrical system, is the *potential*. But to understand the potential, completely new definitions are required for many entities, among them being energy, electrical charge, electrostatic scalar potential, voltage, etc. The present so-called "definitions" of these entities in CEM are either non-existent, entirely wrong, or quite unsatisfactory.

So far, the search has uncovered two major ways to tap the continually-replenished EM energy in the scalar EM potential:

(1) use of the inner WZ internal biwave structure of the potential as pump waves on/to a nonlinear material (such as the atomic nucleus), so that the nucleus becomes a pumped phase conjugate mirror. Then, by normal phase conjugate optical theory, simply inputting a small signal wave will produce an amplified phase conjugate replica (PCR) wave emitted from the mirror material, and this PCR will precisely backtrack the original input signal wave's path (see the *distortion correction theorem*) back out of the nucleus, out of the atom, and into the external circuit. There, the amplified PCR wave can be "filtered off" and sent to the external load, to power the load. The Floyd Sweet vacuum triode works precisely by this mechanism. Note particularly that Barrett has shown that higher topology EM (such as the original quaternion EM theory) can accomplish such "optical functioning" without the use of optical materials. To do Sweet's vacuum triode type process is thus theoretically possible with electrical circuitry alone, but one must have more than the current understanding of CEM, as Barrett pointed out. In other words, one can "open" any 4-space system by adding hyperspace (or subspace, if one insists on retaining Minkowski 4-space). One can thus have a hyperspatial source. Indeed, Ziolkowski and others have already pointed out that the WZ type decomposition of the scalar potential is essentially equivalent to having *complex sources*.

(2) The second way is to "trap the electron gas electrons" in a separate collector, feed "current-free potential" to the collector from a primary battery or other source of potential, and collect a bunch of excess energy (potential) in the collector's "penned up free electron 'horses'" waiting to carry the excess energy to the load and dissipate it there, once they have been released. Then, one switches the primary potential source away from the collector, while the "energy-loaded horses" are still trapped and straining at the bit, so that no work can be done -- by those agitated horses when they stampede out of there -- on the internal resistance of the primary

source, to destroy or reduce it. In the same switching action, the collector with its "snorting but still trapped electron horses" is switched across the load to form a totally separate circuit with it, having nothing at all to do with the original primary source of potential. Then, the agitated horses are released, and thunder out through the load, scattering their riders (excess energy) in all directions in the load, producing work/heat and powering the load. They will also charge on around to the reverse side of the collector, and kill its charge separation (kill its potential) as well, just as does any ordinary circuit.

The major disadvantage of method 1, as we presently have seen it done (however, check Barrett's demonstration that Tesla's patented circuitry is capable of doing it by circuitry alone), is that *time-reversed* electrical energy is produced. So Method 1 has some serious drawbacks. "Time-reversed energy stuff", which should stay in the atomic nucleus as Newtonian 3rd law reactions and 3rd-law energy exchanges, is dragged out. Unusual effects on biological systems can occur. Antigravity effects can occur. Other hidden processes in the universes, that affect the atomic nucleus, can be gated into the external circuitry, causing disaster. Monopoles can be deposited in the magnets, causing them to explode like hand grenades. Most of the new "massive time-reverse energy" phenomenology is still unknown. One cannot at this stage of ignorance adequately guarantee human safety. I presently don't see just how this kind of energy can pass an Underwriter Laboratories' testing and certification, until a lot more exhaustive work is done to understand the new phenomenology.

Method 2, however, yields ordinary, garden-variety, positive-time electrical energy. The method presented in the paper is my own discovery. No unusual time-reversed phenomena are involved. It would appear to be eminently practical to produce and certify power units based on Method 2. The phenomenology and risks are the same as for ordinary, time-forward power systems.

Method 2 has another unique characteristic: as a system, *all the subsystems are already in the literature and validated. They have just not previously been put together in this fashion*. So development of the system really represents an "integration" problem only, after one first does a little development of a proper degenerate semiconductor material (DSM). In other words, one first develops (and tests) the exact doping materials and percentage, to get a DSM material that is still a good conductor but has a relaxation time of -- say -- one tenth of a millisecond. One builds the wires from the battery to the collector out of this new DSM material. If one uses a capacitor for the collector, the plates must be made out of the new DSM material, not out of normal "pure conductor" material. Then one develops a switcher that switches in one tenth (or less) the relaxation time of the DSM, or in this case in one hundredth of a millisecond. That switching time, of course, is easy for any decent electronic technician or electronic engineer. One also develops a timing circuit that will (1) sense the status of the discharge of the collector energy through the load, and (2) trigger the switching at the correct times so that a smooth two-cycle (collect, discharge) process results. Note that the lengths of cycle one and cycle two are not necessarily equal at all. One may use multiple collectors/loads simultaneously, cascaded collectors/loads, etc. Hundreds of variations are possible and feasible.

It is not possible to do anything with this discovery in a normal manner. I would dearly like to be economically independent, so I could work full time in my efforts on free energy, antigravity, extended EM healing, cancer, etc. Many orthodox scientists will also fiercely resist this upstart notion of "overunity" electrical machines to the bitter end. When powerful economic interests realize one has such thing *for real*, one is certainly going to be stopped, jailed, or killed, or he may just "mysteriously vanish" and never be seen again.

So I just freely released and distributed my discovery of method 2, in the paper "The Final Secret of Free Energy". It is deliberately targeted toward technicians, junior engineers, and educated laymen. (The principles and definitions raised, however, can be debated to the nth degree by knowledgeable foundation scientists). The paper has already been distributed

worldwide. Now the *principles and definitions* are available to everyone. If they are in error, shortly that will be proven in spades. If they are correct, that will also be established shortly.

Anyone who wishes can develop and patent a particular application. There's no longer any way to stop this information from being disseminated and utilized. I hope that a flurry of development and patenting activity will result around the world. Get cheap, clean electrical energy to everyone. Bring on the electric auto, clean up the noxious auto exhausts, get rid of giant oil spills, and clean up the biosphere.

Tom Bearden

Additional Information On
The Final Secret of Free Energy

Update 15 February 1994
© 1994 by T.E. Bearden

Introduction

My associates and I have filed the first patent application on two electrical overunity processes and devices; one similar to what is outlined in *The Final Secret of Free Energy* [Ref 1] and an additional variation utilizing, as collectors, standard step-charged capacitors rather than degenerate semiconductor materials. In 60 to 90 days, we will have a very enlightening paper (more likely a book) ready on that. We also plan to file several more extremely fundamental overunity patent applications from additional phenomena and mechanisms that we have uncovered.

In this paper, it is assumed that the reader is familiar with the content of *The Final Secret of Free Energy*. Figure 1 shows the invention schematically, and we briefly summarize it as follows:

Summary of the Invention

A method and apparatus for extracting bidirectional EM wave energy from the vacuum through the scalar potential gradient across the terminals of an electrical source, collecting the excess energy in a collector without entropy, then separately discharging the collected energy through a load to perform work, without sending the load current back through the primary source against its potential gradient; i.e., against its back emf. Removing the load current from the source thereby substantially reduces the production of work inside the source to dissipate its bipolarity; said internal dissipative work being well-known to be the cause of exhaustion of the source's ability to continue to furnish emf to the external circuit. By reduction of its internal dissipation, the source is enabled to furnish more energy for dissipation in the external load than is utilized to dissipate the source internally. Hence the source is enabled to operate with an overunity operational efficiency. The system permissibly operates as an "open" system, and extracts and utilizes excess EM energy from a free-flowing external source (the flux exchange between the surrounding vacuum and the bipolarity of the source), hence it can operate at an efficiency greater than unity without violation of the laws of physics, in a manner analogous to but entirely different from a heat pump. In this invention, it is not the purpose of the primary source to furnish current and dissipative power to the external circuit. The bipolarity of the source is utilized primarily as a dipole antenna to receive the bidirectional EM wave energy flow from the vacuum, and direct it without entropy through a switching unit to the collector. Conduction electrons in the collector are temporarily restrained while being overpotentialized by the excess energy being collected upon them. The collector and its overpotentialized electrons are then switched away from the primary source, and connected across the load as a separate circuit and closed current loop. The electrons in the collector and their excess energy are then automatically released to flow as current discharge through the load, releasing their excess energy to perform useful work in the load. The collector is then switched away from the load and back across the primary source, and another collection cycle is initiated. Iteration of the collection and discharge cycles provides power to the load. Additional collection and smoothing capacitances for smoothing the iterations and furnishing steady power to the load may be added as desired. The invention violates the

closed circuit practice of powering loads, but does not violate the conservation of energy law, the second law of thermodynamics, or any of the other known laws of physics.

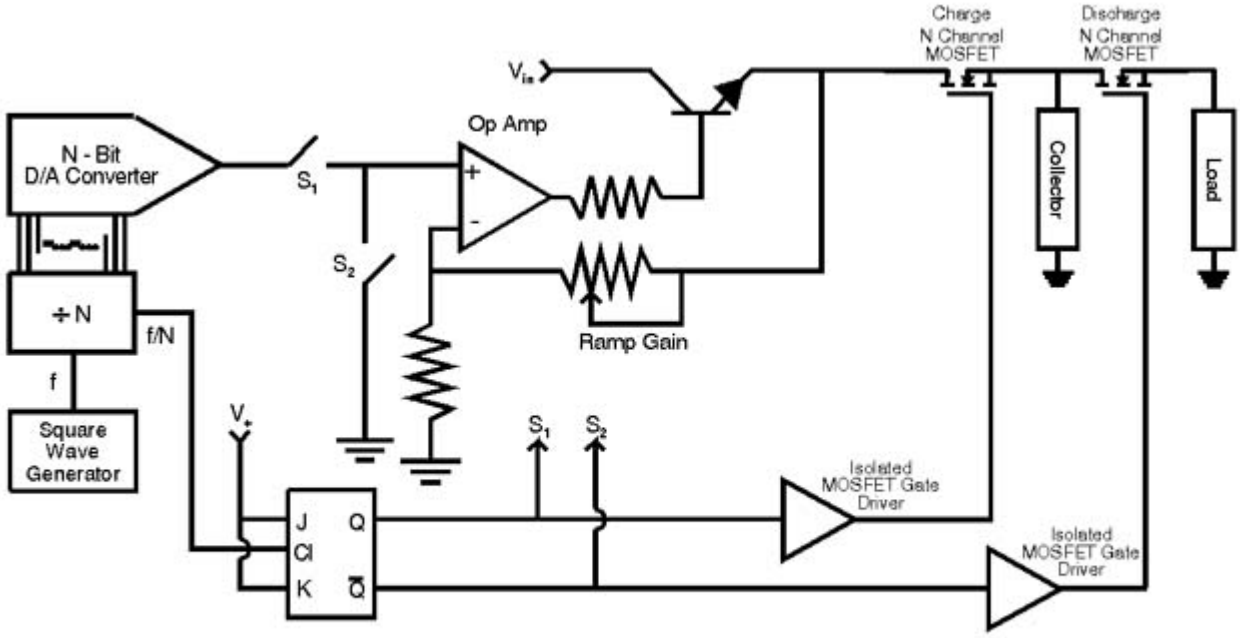

Figure 1A

Figure 1a. Type circuit utilized for ramp-up charging of a capacitor without work, and separate discharge of the collected energy in the load without substantial depletion of the primary source.

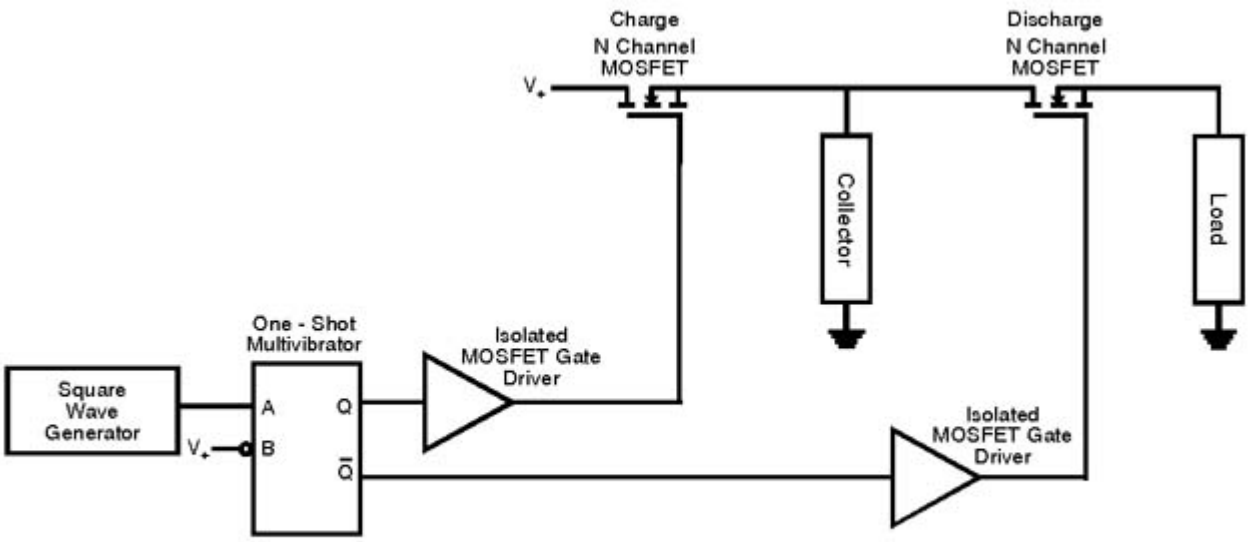

Figure 1B

Figure 1b. Type circuit for single pulse charging of a degenerative semiconductor collector without appreciable work, and separate discharge of the collected energy in the load without substantial depletion of the primary source.

Use of Step-Charged Capacitor as the Collector

Fulfilling our search for a special material with the extended electron gas relaxation time for the collector, a material alloy composed of 98% aluminum and 2% iron is tentatively suggested. However, production of this alloy is particularly difficult, so we are still researching for a solution that is more easily manufactured.

Meanwhile, the necessity for using a special material for the collector has been bypassed by another procedure we have utilized. Rigorously one can use a *normal capacitor* as the collector, if one step-charges it in several hundred small incremental rectangular voltage steps (stair-step-charging). The proof that this can freely charge a capacitor with energy, without having to do appreciable work, is already known in the literature. You can charge the capacitor *without entropy* and essentially without drawing electron mass current. [Ref 2,Ref 3,Ref 4,Ref 5]

Actually we consider the capacitor to be charged by *massless displacement current flow*, which for circuitry purposes we consider to be $d\phi/dl$ -- a flow of pure potential (trapped EM energy) along a conductor or through the vacuum; i.e., under conditions where *mass* displacement current flow does not exist. [Ref 6, Ref 7]

Massless Displacement Current Is Freely Available From Any Source

The principle embodied in the invention is that one can extract all the free EM energy one wishes, from any electrical power source, as long as it is extracted via massless displacement current and not by *electron mass* flow current. [Ref 8] And one can freely collect this extracted energy from a source into an ordinary capacitor if one does it correctly, *because one can charge the capacitor via massless displacement current without expending any appreciable work inside the source to dissipate its dipolar separation of charges*.

Every Electrical Source of Potential Is Already a Free Energy Source

We thus advance a revolutionary concept: all present power systems already utilize *free energy source-antennas*. However, the standard two-wire closed circuitry diabolically utilizes one-half the total free energy extracted by the source-antenna from the vacuum, to perform work inside the source-antenna to dissipate its dipolarity and hence to dissipate the *source-antenna (i.e. the receiver) itself*.

The source already acts as a "dipolar antenna" to continually receive "scalar potential" current $d\phi/dl$ (massless displacement current) from the vacuum. [Ref 9] Previously scientists and engineers have simply ignored this special massless EM energy influx. For load-free (i.e., mass-current-free) conditions, ($d\phi/dl$) is continually received from the vacuum *by any dipole* (i.e., by any *dipolar source-as-an-antenna*), and the flowing energy is continually exchanged back and forth between the vacuum and the dipole.

This free energy exchange with the vacuum is also true of any two points in our circuit that possess an open-circuit voltage or potential difference between them. Two such points act as a dipole. Free energy dipolar antenna sources are everywhere; we just have to learn how to break the symmetry in their energy flux exchange with the vacuum, collect some of the freely flowing influx, and distribute that collected excess energy to an isolated load to *separately* power it.

In other words, we simply have to implement circuitry that operates analogous to the standard heat pump cycle.

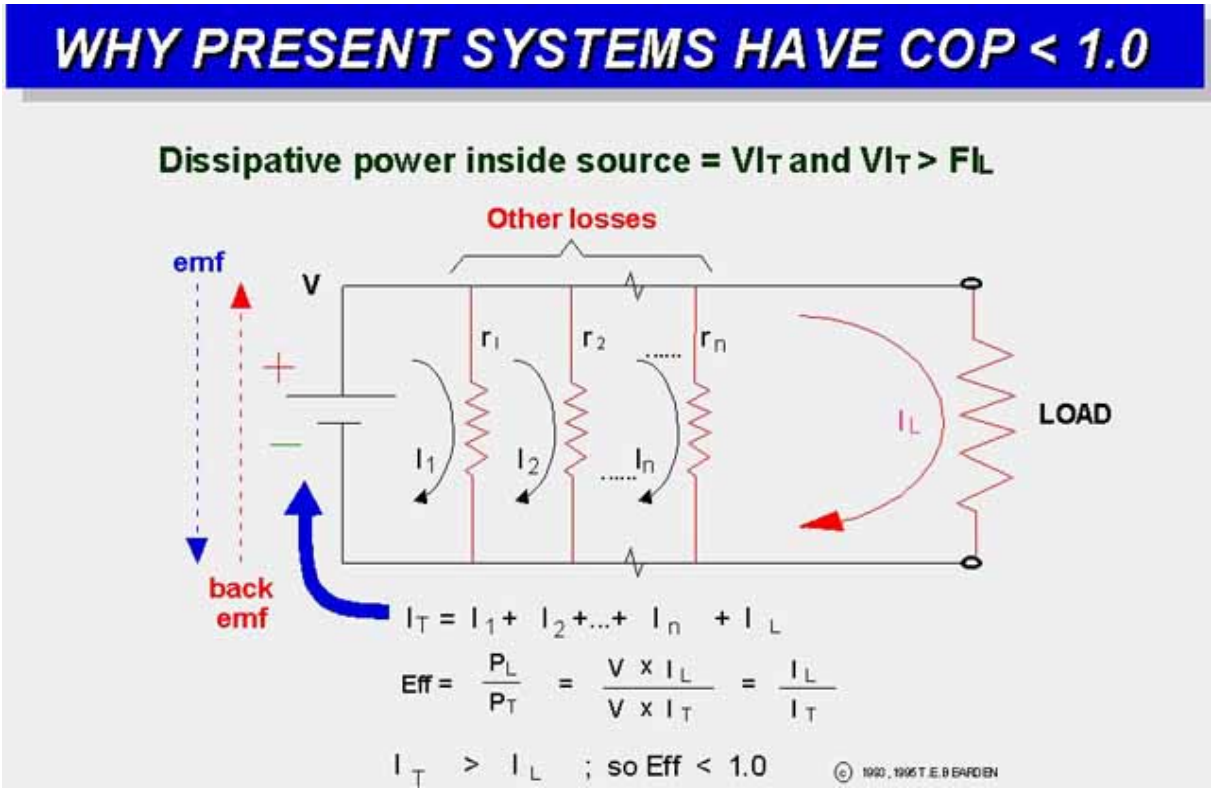

Figure 2. Why present electrical power systems have underunity operational efficiency.

Conventional 2-Wire Closed Circuit Operation

In the conventional 2-wire system a load is added to the source-antenna, allowing circulation of electron current in a closed circuit through the load and then through the ground return line back to and through the dipolar source-antenna. The only useful reasons for this "closed circulation" of the electrons are (1) it is simple, *easy*, habitual, and accepted, (2) all our components, instruments, and methodologies are developed in accordance with this usage, (3) one uses the electrons as a *working material fluid* to receive, transport, and discharge excess EM energy, and (4) forcing the electrons back through the back emf *reloads* the spent electrons again with excess EM energy in the form of little ∇φ's (excess trapped energy density) upon each recycled electron.

Some of the excess ∇φ collected upon the electrons is expended in the load as useful work, but one half of the total is expended in driving the spent (without excess ∇φ Consequently all conventional 2-wire circuits, which return *all external electron-flow current loops back through the source*, are always underunity devices, as is shown in Figure 2. Eerily these conventional sources are already free energy devices, which are unwittingly attached to circuitry specifically designed to utilize part of their freely received energy to deplete or destroy themselves, i.e., they are already *open systems receiving free energy from the vacuum, but they are hooked up and designed in a suicidal manner so as to use at least half of that freely extracted energy to re-close the system and shut off the influx of free energy.* Since at least some of the remaining half of the energy is lost in inefficiencies, frictional losses, etc., less than half the total free energy goes to the load. So there is always less useful work being done in the load than the destructive work being done inside the free-energy source-antenna to destroy it.

Operational Efficiency

We define operational efficiency Alpha as the average power expended in the load to power it, divided by the average power expended inside the source to dissipate its dipolarity. If Alpha < 1, one has to externally furnish energy to do restorative work upon

the source to replace or offset that amount of destruction being done inside the source, if one wishes the source to continue to operate as an energy-receiving antenna. If Alpha > 1, then if the additional losses are minimal, the device can conceivably run itself while furnishing some energy to a load to produce useful work.

We Must Excise the Suicidal Closed Circuit To Achieve Overunity

There is no mysticism in the overunity electrical device. The device is an open system that extracts excess energy from the vacuum, collects it, and transports it to the load to separately power the load. It is simply analogous to the standard heat pump cycle. It is also directly analogous to presently operating overunity systems such as windmills, waterwheels, solar cell arrays, and hydraulic turbines in a dam installation. All that we have done is to eliminate or dramatically reduce the standard cancerous mistake in conventional electrical power systems wherein much of the excess energy freely extracted from the vacuum by the already-overunity electrical source is then utilized to destroy the source's energy reception ability!

As we stated, in the conventional electrical device and circuitry, more destructive work is always done inside the source than is done usefully in the external load. Hence the conventional operational efficiency is always underunity.

Legitimate Overunity Systems Comply With Well-Known Requirements

There are many alternative and well-known permissible free energy systems that operate at overunity operational efficiency: solar cells, windmills, hydraulic turbines, heat pumps, and water wheels, to name a few. All of these are open systems, receiving an influx of free energy from a natural energy flow, and collecting and gating some of that energy to be dissipated in a load to do useful work. All of them are permissible overunity devices, since (1) they are open systems, (2) they constantly receive a free energy influx from an external source, (3) they extract and collect some of this energy without dissipation, (4) they dissipate this collected energy in a load, and (5) the discharge process is totally separated and isolated from the "collection-from-the-source" process.

No Legitimate Overunity System Is Intentionally Made Self-Destructive

Not a single one of these open overunity systems foolishly uses part of its freely extracted and collected energy to re-close the system and shut off its influx of free energy flow! What engineer would build a solar array such that, the moment the current started to flow, it powered a shutter arrangement to gradually close and shield off the solar array from the sun? Who would build a windmill so that, whenever the angled-blade assembly rotated in the wind to furnish power, a gearing feedback assembly also slowly caused the individual blades to rotate into a position parallel to the wind, thus stopping the windmill?

Yet this is precisely what the conventional electrical power system does with its external circuit. It deliberately utilizes half of the freely extracted energy to re-close the system and shut off the free energy flow between the vacuum and the source-antenna, by destroying the receiver-antenna!

However, this "suicide circuit" practice is guaranteed to keep the power meter on your home or business, and to keep the meter on the gas pump for fueling your automobile. Perhaps one may be forgiven for suspecting that, at the deepest levels of financial control,

this may be the real purpose in seeing that the existing interpretation of classical EM stays "as is."

All Electrical Power Sources Are Already Free Energy Receiving Antennas

All conventional electrical power systems already contain fully functional free energy systems in their source component. Each conventionally designed system is, however, deliberately suicidal, since part of the system's own energy is utilized to work against itself and destroy itself. This is primarily due to the preoccupation of engineers with power and work. They do not consider the source as an energy source, but as a power source. Power being the time-rate of performing work, and work being the dissipation of energy, they are thus naturally conditioned to think of the "dissipation of the source" as its natural functioning.

In fact, hardly a single one of them is aware that EM energy itself is a free-flowing process. Only a finite collector possesses a finite collection of EM energy. In nature, the potential gradients of all dipoles are already rivers of free-flowing EM energy exchange with those dipoles, where the energy density is freely furnished and is essentially free for the taking. It is mind-boggling that we have all been conditioned to extract this free energy furnished by nature and the creator, but to always utilize half of the extracted energy to destroy the receiver-antenna and thus strangle the flow!

In our work, we simply have excised this "self-destructive" cancer and reworked the circuitry so that only a minimal amount of the freely extracted energy is utilized for internal destruction of the source-antenna.

Thermodynamics and Open Overunity Systems Not In Equilibrium

In our approach we have an open system during every collection cycle, with an external source of energy and a continual energy influx. We have deliberately broken the local symmetry of the system's energy exchange with the vacuum, by spatially and temporally separating the energy collection and energy discharge phases. Overunity operational efficiency is permissible for such a system without violation of any of the laws of nature. Some of the influx of excess energy from the vacuum into the dipolar source antenna is transported without loss to the collector and collected. The collected energy in the collector is then separately discharged through the load, without any of it being discharged back inside the source-antenna. Note that we have broken local energy flow equilibrium but not global energy flow equilibrium.

The second law of thermodynamics, e.g., does not even apply to such an open system not in equilibrium. Classical thermodynamics cannot even compute the entropy of an open system not in thermodynamic equilibrium, as is well-known to thermodynamicists. [Ref 10]

What classical thermodynamics does have to say, is that such an open system must contain excess energy when compared to the closed system in equilibrium, because the closed system in equilibrium is in the maximum entropy condition. [Ref 11] Global conservation of energy is not violated, just as it is not violated in a windmill or in a heat pump, which are similar open systems. Local conservation of energy (which applies only to a closed system or to a system in total equilibrium) does not apply because the system is open and not in equilibrium.

Permissible Electrical Overunity Is Not Perpetual Motion

An open system out of equilibrium need not conform to (1) the local (closed system, equilibrium conditions) conservation of energy nor to (2) the second law of thermodynamics (which assumes equilibrium conditions). It must and does conform to the global conservation of energy, just as does a waterwheel or windmill. We strongly stress that the overunity electrical device is not a "perpetuum mobile." [Ref 12] The electrical operations and systems we propose are perfectly permissible by the known laws of physics and do not violate any of them. We propose a permissible series of overunity electrical systems.

The Heat Pump Analogy

In one way of viewing it, all we have done is utilize the potential as a more modern type of quantum mechanical fluid having hidden bidirectional flowing EM energy. [Ref 13], Ref 14, Ref 15, Ref 16] QM already certifies that the potentials, not the force fields, are the primary causes of all EM phenomena. Contrary to classical EM theory, the force fields are effects in, on, and of the charged particles themselves. Consequently, if the potentials are the primary causes of all EM phenomena, then for free energy to perform work (free causes to collect and generate desired effects) we must turn to the potentials.

We have utilized a hookup and switching arrangement so that energy-free collection is totally separated from collected energy discharge in the load. In short, we have done what a normal heat pump does, when it uses the air with its thermal energy as a working energy-containing fluid. Consequently, overunity operational efficiency of analogous electrical devices is perfectly permissible, and not prohibited by the known laws of physics.

An Electrical Power Source Is a Dipolar Antenna For Free Reception of Energy

An electrical power source is in fact only a dipolar antenna for reception of potential (hidden bidirectional Whittaker/Ziolkowski waves). All the current you run back through the back emf of the source, to perform dissipative work inside it, is something you yourself are doing to the source. It is not a priori a characteristic of the source!

If no work is done inside the source's internal bipolar separation of charges (i.e., if no electron or ion current is forced back up from the ground return line against the source-antenna's potential and therefore against its back emf), then the dipolar source-antenna will last essentially forever, or until something corrodes or breaks mechanically.

The flow exchange of energy between the vacuum and the dipolar source-antenna is freely driven by all the charges of the universe, in accordance with Puthoff's cosmological feedback loop. [Ref 17]

Massless Displacement Current

Technically one is using massless displacement current to charge the capacitor, rather than electron mass flow current. It is real energy flow nonetheless; just in work-free, dissipation-free form. As is well-known, one plate of a capacitor already charges the other plate by just this very massless displacement current, transporting real EM energy across the gap between the plates in the process. The electrons themselves do not cross the gap.

Displacement current is already well-known to be "free" energy transport without any dissipation as power and work. By drawing massless displacement current only from the source-antenna instead of electron flow current, you can draw work-free, dissipation-free energy as long as you wish, as often as you wish, and as much as you wish, without ever

dissipating the source-antenna. You just have to collect it onto some trapped electrons or other charges, such as in a capacitor's plates, then switch the collected energy (charged capacitor) separately across a load, in a separate discharge circuit, to discharge through the load as work.

The real trick is to prevent the electrons in the circuit from moving and providing mass "energy dissipation" current inside the source during the collection process. In the original paper, we explained that this could be done by using as a collector a degenerate semiconductor material, with extended electron gas relaxation time. In this paper we have explained how this can be done by step-charging an ordinary capacitor as a collector. We have also included specific references proving (both experimentally and theoretically) that this is correct. With the requirement for special materials removed, there is no reason that a competent researcher cannot develop a step-charged capacitor device to prove it experimentally for himself or herself.

Requirement: Proof of Principle and Independent Test and Certification

My associates and I are proceeding as rapidly as possible toward full-up "proof-of-principle" circuits for open release and certification or falsification by the scientific community and engineers at large. Soon we also expect to release to other researchers information on the kinds of new electrical phenomenology one meets in true overunity electrical devices. These are not in the textbook, at least with respect to electrical power systems. We give some indication of these phenomena below:

New Circuit Phenomena Must Be Mastered

One meets unusual electrical phenomena in attempting to perform overunity electrical operations. For overunity, a priori one must "slip excess potential" through the circuit essentially without losses. That is, one must deliberately pass massless displacement currents through the circuit and at least through some of its components.

Solid-state switching components in particular exhibit unusual phenomena, to say the least, when excess potential is introduced into and through all their internal components inside modern semiconductors. An ordinary MOSFET, e.g., may have 25,000 separate internal components. It is as if someone crammed the entire electronic parts store inside it. Simple switches these semiconductors are not, when exposed to appreciable massless displacement current.

When one "slips in" some pure potential, by SWZ decomposition one has also slipped in some bidirectional EM pump waves. The nonlinear semiconductor materials will function as phase conjugate mirrors when suitably pumped, including at non-optical frequencies. Consequently pumped phase conjugate replicas, self-targeting, formation of quantum potentials, and modular variable effects sometimes begin to evidence. We will address and explain some of these effects in a future paper. For now, we simply state that they occur, and there is a host of extra phenomenology the experimenter may encounter.

However, an iron rule for the experimenter is that, for odd circuit behavior, first exhaust all "normal" causes before turning to the extraordinary causes. One will save oneself a great deal of grief by applying this Occam's razor.

Also in deliberately utilizing displacement current, one is actually employing an expanded, higher topology EM with additional degrees of freedom, similar to that pointed out by Barrett. [Ref 18] Consequently one encounters a host of additional higher topology EM

phenomenology. In particular one encounters nonlinear optical (NLO) functioning of the semiconductors at any and all frequencies, not just in optical bands.

Overunity Electrical Devices Are Permissible By The Laws of Physics

The overunity electrical energy system is permissible by the laws of physics and is not in any manner perpetual motion. It simply extracts excess EM energy from an ubiquitous source, through a dipole as a receiver, and collects that excess energy, conducts it to the load, and separately dissipates it in the load to power the load, without using any of the collected energy to perform work inside the source to dissipate the source-antenna. It is directly analogous to a heat pump, which is well-known to perform at overunity operational efficiency under nominal conditions.

In Conclusion

Primarily my associates and I believe we have corrected an ubiquitous error made in present power systems that prevents these systems from realizing their already-inherent overunity operational efficiency. We also firmly believe that the permissible electrical overunity device is an idea whose time has finally come.

Notes and References

1. T. E. Bearden, "The Final Secret of Free Energy," distributed over the Internet, Feb. 9, 1993. The paper was also published in Magnets, 7(5), pp. 4-26 (1993); in Explore!, 4(3/4), pp. 112-126 (1993), and in several other media.
2. For proof that you can charge an ordinary capacitor almost without entropy, see I. Fundaun, C. Reese, and H. H. Soonpaa, "Charging a Capacitor," American Journal of Physics, 60(11), pp. 1047-1048 (1992). A capacitor can be step-charged in small steps to dramatically reduce the entropy required to charge it. In the limit, a theoretically perfect capacitor can be fully charged without any electrical current or work at all, i.e., you can simply transport the excess energy density (the potential gradient) of the open circuit voltage of the source to the collector, and couple that $\nabla\phi$ to the electrons trapped in the capacitor plates, without electric current from or through the source.
3. M. G. Calkin and D. Kiang, "Entropy Change and Reversibility," American Journal of Physics, 51(1), pp. 78-79 (1983).
4. F. Heinrich, "Entropy Change When Charging a Capacitor: A Demonstration Experiment," American Journal of Physics,54(8), pp. 742-744 (1986).
5. V. K. Gupta, Gauri Shanker, and N.K. Sharma, "Reversibility and Step Processes: An Experiment for the Undergraduate Laboratory," American Journal of Physics, 52(10), pp. 945-947 (1984).
6. In most texts the treatment of displacement current is far from adequate. A better treatment than most is given by John D. Krauss, Electromagnetics, Fourth Edition, McGraw-Hill, New York, pp. 437-439, 547-549 (1992). Additional useful insight can be gained from David J. Griffiths, Introduction To Electrodynamics, Second Edition, Prentice-Hall, Englewood Cliffs, New Jersey, pp. 304-308 (1989). Problem 7.51 on p. 335 is also of direct interest, as is particularly the comment by Griffiths below the problem. Additional insight can be gained from David Halliday and Robert Resnick, with assistance by John Merrill, Fundamentals of Physics, Extended Third Edition (1988), John Wiley & Sons, New York, vol. 2, Article 37-4: Displacement Current, pp. 836-837, 839-841. The standard notion is to (1) retain the continuity of current, thus modifying and salvaging Ampere's law, (2) the displacement current is non-physical, i.e., it does not involve the transfer of charged mass, (3) focus primarily upon magnetostatics as to the results achievable by the displacement current, (4) retain the notion of $\nabla\phi$ as E, a force field, thereby

focusing the notion of displacement current upon the change of the E field without the flow of charged mass, and (5) retain the confusion between electrical charge and charged mass that is inherent in the terms "charge", "current", etc. On p. 836 Halliday and Resnick point out that the displacement current is not derived per se, but is a "fit" based upon symmetry arguments, and it must stand or fall simply on whether or not its predictions agree with experiment. On the same page the displacement current is taken to be a linear function of $d\phi/dt$. For flow along a circuit where there is no electron mass current, it seems appropriate to replace $d\phi/dt$ by $d\phi/dl$. It is also strongly indicated that one should clearly distinguish between charged mass current flow and the flow of massless charge, which is the approach we have taken.

A final indication of the way conventional scientists tend to regard displacement current is given by Martin A. Plonus, Applied Electromagnetics, McGraw-Hill, New York, pp. 446-448 (1978). Here Plonus uses the prevailing notion of the E field being altered by the flow of massless displacement current. As can be seen, the displacement current is relegated almost to a curiosity of capacitors, and not really too essential except just to "balance the books" and retain Ampere's current continuity.

We now wish to point out something very subtle but very rigorous. CEM erroneously uses $E = -\nabla\phi$ to equate a mass-free potential gradient with a mass-containing force field. This "E-field" only exists at a point when there is a point-coulomb of electrical charged mass at the point. The real version of this equation should be $E == -[(\nabla\phi)\bullet q]/|q|$, where $\nabla\phi$ is the potential gradient coupled directly to the charged point-mass at the point, q is the number of coulombs of charged mass at the point, $q/|q|$ is one coulomb of charged mass, and E now is properly the force on and of each coulomb of the collected charged mass at the point.

Viewed in this manner, one can now see that the E field may be altered by flow of additional charged mass q, or by flow of massless additional $\nabla\phi$, or both. This is now in agreement with the manner in which it is approached in CEM, but more rigorous. Essentially it states we may increase the total "charge" (potential) at a point by either (1) moving in additional charged masses by use of a conventional current, or (2) moving in additional massless charge (potential) without any additional change in mass, or (3) a combination of the above.

However, let us apply this to a single charged particle or to a fixed number of them. No one seems to have noticed that the notion of altering the E-field of the collected point- charges at a point via method #2 , i.e. by a flow of massless displacement current onto the fundamental charged particles themselves, a priori requires the electrical charge of each fundamental particle to change. Hence it **falsifies the notion of quantization of charge**.

Also, no one seems to have noticed the electric power implications: if it is known that one can charge a capacitor purely by displacement current, then one can charge up the capacitor with energy, without any dissipation of the source, because only charged mass current through the back emf of the source does that. So one can then disconnect the charged capacitor and separately connect it in a closed circuit with a load, to discharge through the load and furnish free work in the load (free in the sense than no dissipation of the primary source occurred in either the collection of the energy or in discharge of the collected energy through the load as useful work). Free energy, overunity electrical devices, etc. should then be readily apparent and permissible, from the known nature of displacement current and capacitors alone.

7. Maxwell assumed a material ether, which was assumed to be a thin material fluid filling all space. Hence force (which must have mass as a component due to its definition F == d(mv)/dt) could be modeled as existing in the Maxwellian ether, for there was already thin matter present everywhere. Hence in Maxwell's EM the incorrect notion resulted that force fields existed in the vacuum. Oliver Heaviside continued this erroneous assumption, since in fact he hated the potentials, regarded them as mystical, and stated that they should be "...murdered from the theory." Also, electricity was thought to be a similar thin material fluid. So the material electric fluid could and did flow through the fluid vacuum also, giving the notion of the material electric flux density for D. Consequently, the units of D are coulombs (charged mass rate of flow) per square meter. Rigorously, that material D flux exists only on and of charged mass that moves; it cannot and does not exist in vacuum. Only potentials and potential gradients exist in vacuum. However, after Maxwell's formation of his theory, the Michelson-Morley experiment destroyed the material ether (not the ether per se, but its material nature). So electricians then simply proclaimed that they were no longer using the material ether, and that such did not exist! Not a single Maxwell/Heaviside equation was changed. The material ether is still very much assumed in classical EM (CEM) theory, and so the theory is accordingly very seriously flawed. Since CEM also has no adequate definition for either electric charge or the scalar potential, the problem is confounded.

   To clarify this problem, one must separate the notion of electric charge from the notion of mass. The electrical charge of a charged mass is the virtual photon flux exchange between the surrounding vacuum and that mass. Since a virtual photon flux is just a scalar potential, the electron's massless electrical charge is simply its scalar potential. It can now be seen that, if we forcibly remove the notion of "mass" from D in the vacuum, or in a charged material medium where the charged masses cannot move, then the "material electric flux concept" portion of D turns into $d\phi/dt$, a change in the nonmaterial electric flux. However, D is a vector and hence has a "net flux" spatial directional aspect which $d\phi/dt$ alone does not possess. It follows that the value of $d\phi/dt$ at a spatial point actually represents the result of change of the value of ϕ at that point, as a function of time. Thus a directional operator must first be invoked upon ϕ at the point, to provide a direction for the spatial ϕ-current after the d/dt operator is invoked. The appropriate operator to give directionality to ϕ is ∇, so that D in vacuum or in an electron-current-free charged medium becomes a function of $d/dt(-\nabla\phi)$. Conventionally, the use in the literature of $E = -\nabla\phi$ immediately provides that $d/dt(-\nabla\phi)$ at a point results in dE/dt, or the time rate of change of the E-field at that point. If no distinction is made between charged mass current flow and massless charge current flow, this would be true in either vacuum or material media. However, we wish to specifically distinguish between massive displacement current and massless displacement current. So we point out that the increase dE/dt in the magnitude of the E-field at, on, and of a charged particle at a point, can be due to either (1) the flow of mass current to build up the number of point coulombs at that given point, where each coulomb has a fixed massless charge (potential), or (2) the flow of massless current $d/dt\ (-\nabla\phi)$ so as to alter the value of ϕ at that point, evidenced by a fixed number of coulombs of charged particles, **each of which has altered its individual potential and therefore its individual massless electrical charge.**

   So what "flows" when the charged masses are frozen or absent is simply a current of scalar potential, resulting in a change of the potential upon fixed point charges of $d\phi/dt$. This is what crosses between the plates of a capacitor, e.g., which is where the notion of "displacement current" originated in the first place. (See, e.g., Halliday and Resnick, 1988, ibid., p. 836, Sample Problem 1, for expression of the displacement current as $d\phi/dt$, neglecting constants of proportionality). This is also

what flows when one connects multiple open circuit pairs of conductors to a source.

It remains to examine Maxwell's equation $\nabla.D = \rho_v$. If mass displacement current cannot flow, then there exists no divergence of the mass current portion of D. However, massless displacement current can still flow, and there can exist divergence of that component. There are now three aspects to that equation: (1) the case in the vacuum, where there exists no physical ρ and hence no ρ_v as such because of the absence of mass, (2) the case in a material medium, which is the normal case already treated in the standard equation and need not be further addressed, and (3) the case in a material medium where, nonetheless, physical charged masses such as electrons cannot move, but massless charge currents may still move. Only cases 1 and 3 need to be addressed, and they have the same treatment.

We address the one dimensional case, which is sufficient for circuit current flow considerations. First we replace D with $(D\phi + D\rho)$, where the first term is the massless displacement current and the second term is the massive displacement current. In other words, we account separately for charged mass flow and for massless charge flow. Similarly, we express ρ_v as two components, one massive and one massless, so that $\rho_v = d/dl(\phi + m_v)$. For case 1 and case 3 we make $m_v = 0$ and $D_\rho = 0$. For those cases, we have $\nabla.D = \nabla.D\phi = d\phi/dl$ (since current along a wire is a one-dimensional flow). We specifically note that ϕ, $D\phi$, $\nabla.D\phi$, and $d\phi/dl$ are not necessarily conserved quantities, since ϕ is mathematically decomposed into bidirectional EM waves, and is hence a freely flowing process. When symmetry is broken so that equilibrium conditions no longer exist, one or more of these quantities will not be locally conserved.

What has actually been done here is to open the classical EM model to the free exchange of massless EM energy that is always ongoing between any charged particle's mass and the vacuum. We then account separately for the flow of the energy exchange (of the massless charge flow) and the flow of the physical receiver/transmitters (i.e., for charged mass flow). Our switching arrangement to separate the collection and discharge cycles constitutes a permissible "Maxwell's Demon" which breaks symmetry, hence breaks equilibrium and opens the system as required. Since such a system can continually receive a free influx of energy from its external source, such a system can permissibly exhibit overunity operational efficiency without violating the laws of physics.

8. Displacement current is already known to be lossless transport of energy without entropy, i.e., without work. For a typical confirmation see Jed Z. Buchwald, From Maxwell to Microphysics, University of Chicago Press, Chicago and London, p. 44 (1985). Quoting: "...no energy transformation into heat occurs for displacement currents."

9. We strongly stress again that the scalar potential may be mathematically decomposed into a harmonic series of hidden bidirectional EM wave pairs. Each wave pair consists of an ordinary EM wave together with its superposed phase conjugate replica wave. Thus internally the scalar potential gradient across a source represents a bidirectional exchange of EM wave energy with the surrounding vacuum. See notes 13, 14, 15, and 16 below for references confirming the decomposition of the "fixed" potential into a dynamic flow process and energy exchange process.

10. For confirmation see Robert Bruce Lindsay and Henry Margenau, Foundations of Physics, Dover Publications, New York, pp. 283-287 (1963). See particularly p. 283, which emphasizes that a "field of force" at any point is actually defined only for the case when a unit mass is present at that point. See p. 17 on the limitations of

a "natural law"; p. 213 and 215 for limitation of thermodynamic analysis to equilibrium states; and see p. 216 for definition of entropy. See p. 217 for the fact that the entropy for non-equilibrium conditions cannot be computed, and the entropy of a system not in equilibrium must be less than the entropy of the system in equilibrium, i.e., for a system to depart from equilibrium conditions, its entropy must decrease. Therefore its energy must increase. Thus the energy of an open system not in equilibrium must always be greater than the energy of the same system when it is closed and in equilibrium, since the equilibrium state is the state of maximum entropy.

11. Lindsay and Margenau, ibid., p. 217.

12. The basic notion in the perpetual motion conundrum is that somehow a closed system in thermodynamic equilibrium could perpetually provide external energy to a load outside the system. Such a notion is an oxymoron; if the system is closed, no energy can escape or enter, hence the system could not furnish energy externally to power a load or even just to radiate away. My associates and I have not in any manner proposed such a system or entertained the notion that such might exist. But it is well-known that open systems not in thermodynamic equilibrium can freely extract energy from their environment and furnish energy to power a load, and that is precisely what we have proposed.

13. G. J. Stoney, "XLVIII. On a Supposed Proof of a Theorem in Wave-motion, To the Editors of the Philosophical Magazine," Philosophical Magazine, 5(43), pp. 368-373 (1897).

14. E. T. Whittaker, "On the Partial Differential Equations of Mathematical Physics," Mathematische Annalen, vol. 57, pp. 333-355 (1903). Whittaker mathematically decomposes the scalar potential into a bidirectional series of EM wave pairs in a harmonic sequence. Each wave pair consists of the wave and its phase conjugate. (We have pointed out elsewhere that such a wave pair is a standing electrogravitational wave and a standing wave in the curvature of local space-time). To see that all classical EM can be replaced by interference of two such scalar potentials (i.e., by the interference of their hidden multi-wave sets), see E. T. Whittaker, "On an Expression of the Electromagnetic Field Due to Electrons by Means of Two Scalar Potential Functions," Proceedings of the London Mathematical Society, Series 2, vol. 1, pp. 367-372 (1904).

15. Richard W. Ziolkowski, "Localized Transmission of Electromagnetic Energy," Physical Review A, 39, p. 2005 (1989). For related material, see Richard W. Ziolkowski, "Exact Solutions of the Wave Equation With Complex Source Locations," Journal of Mathematical Physics, 26, pp. 861-863 (1985). See also Michael K. Tippett and Richard Ziolkowski, "A Bidirectional Wave Transformation of the Cold Plasma Equations," Journal of Mathematical Physics, 32(2), pp. 488-492 (1991).

16. C. W. Hsue, "A DC Voltage is Equivalent to Two Traveling Waves on a Lossless, Nonuniform Transmission Line," IEEE Microwave and Guided Wave Letters, 3, pp. 82-84 (1993).

17. H. E. Puthoff, "Source of Vacuum Electromagnetic Zero-point Energy," Physical Review A, 40(9), pp. 4857-4862 (1989). Presents Puthoff's self-regenerating cosmological feedback cycle for the source of the vacuum EM zero-point energy.

Our comment: Over any macroscopic range, the vacuum fluctuations ($\nabla\phi$'s) of the ZPE sum to a vector zero translational resultant. The individual ZPE components ($\nabla\phi$'s), however, are still present and active, and their energies are present as well. That vector zero can thus be considered to be a gradient-free potential, or the vacuum potential, since it contains enormously dense, trapped EM energy. So the vacuum potential -- pure space-time (ST) itself -- contains enormously dense EM energy.

One can then apply the Stoney/Whittaker/Ziolkowski (SWZ) methodology to decompose this powerful vacuum potential, i.e., the vacuum, and in fact space-time (ST) itself, into an incredibly dense flux of EM energy. Space-time is revealed to be an incredibly powerful electrostatic scalar potential. The electrical charge (potential) of a charged particle is a small potential gradient in the ST potential, i.e., it is a slight alteration of the local ST potential. Via Puthoff's self-regenerative feedback cycle, the energy flowing in this potential is being exchanged between the local source and all the charges everywhere in the universe. This "potential gradient" or electrical charge itself can be decomposed via the SWZ approach, and becomes a bidirectional EM wave pair exchange of excess EM energy between the vacuum/ST and the charged particle's mass. The potential gradient between the ends of a dipole have similar decompositions, with the additional characteristic that the negatively charged end of the dipole receives the forward-time waves from the SWZ wave pairs, and the positively charged end receives the time-reversed waves.

Our final comment is that Cole and Puthoff have rigorously shown that, in theory, the vacuum EM energy can indeed be extracted. See Daniel C. Cole, and Harold E. Puthoff, "Extracting Energy and Heat from the Vacuum," Physical Review E, 48(2), pp. 1562-1565 (1993).

18. T. W. Barrett, "Tesla's Nonlinear Oscillator-Shuttle-Circuit (OSC) Theory," Annales de la Fondation Louis de Broglie, 16(1), pp. 23-41 (1991). Barrett shows that a higher topology EM model (e.g., EM expressed in quaternions) allows shuttling and storage of potentials in circuits, and also allows additional EM functioning of a circuit that a conventional EM analysis cannot reveal. As an example, one may meet optical functioning without the presence of optical materials.

LEGEND:

● = filled black dot (like scalar product) in original text
Ø = Greek letter **Ø** for the Scalar Electrostatic Potential field
∇ = Greek letter Nabla (upside down triangle)
|x| = Absolute value of x (only positive)
uf = microFarad

PRACTICAL OVERUNITY ELECTRICAL DEVICES

(C) T.E. Bearden
May 13, 1994

Introduction

Recently, my associates and I have filed a patent application on what we believe will at long last reveal the mechanisms for practical overunity electrical devices. It is my purpose in this paper to provide additional information augmenting my former two papers, (1) "The Final Secret of Free Energy," Feb. 1993, and (2) "Additional Information on the Final Secret of Free Energy," Feb. 1994. In this present paper, with the permission of my colleagues, I release the gist of our work on separation of electrical charge into two coupled components **Ø**●(m), where **Ø**● represents the massless charge of the charged particle or mass, ● represents the fact that it is coupled or trying to couple to the special mass that makes up charged particles [i.e., the special kind of mass that will couple to the virtual photon flux density that is represented by the symbol **Ø**], and m represents the inert mass component of the charged mass. Since not all masses will couple with **Ø**●, we indicate the type of mass that <u>will</u> couple with it, as ●m. Thus a charged mass is composed of (**Ø**●)●(●m), which we consolidate to (**Ø**)●(m).

Charge Is Not Quantized

An interesting immediate result is that the massless charge of a fundamental charged particle is not quantized; it changes as a function of the background potential in which it is embedded. So it is discretized as a function of the background potential (i.e., of the virtual photon flux exchange between it and the surrounding vacuum). Otherwise, e.g., there could be no ∇**Ø** created on any charged particle q, and hence no E-field, and hence electrons would not move in our present circuits. Since they do move in our circuits, charge is not quantized.

Electrical Current Has Two Components

The first key to understanding free energy electrical and magnetic machines is to realize that electrical current actually consists of two currents coupled together. Our treatment of an electric charge as a coupled system (**Ø**)●(m) also means that electron current i = dq/dt is comprised of two coupled components [(d**Ø**/dt)●(dm/dt)]. This follows from simply invoking the operator d/dt; i.e., d/dt[(**Ø**)●(m)] = (d**Ø**/dt)●(dm/dt), which is the same as [(d**Ø**/dt●)●(●dm/dt)]. The component (d**Ø**/dt)● is the known but not well understood <u>massless displacement current</u>, while the component ●(dm/dt) is the <u>mass displacement current</u>, and the coupling operator ● means "coupled to" or "trying to couple to". The coupling operator represents a real physical operation: the exchange of virtual photons between the vacuum potential and the charged mass. Any potential $\mathbf{Ø}_1$● is considered to be a potential that is superposed upon the ambient vacuum potential $\mathbf{Ø}_0$● , to provide a potential ($\mathbf{Ø}_0$+$\mathbf{Ø}_1$)●. The ambient vacuum potential does not disappear merely because we add another potential to it!

Confusion In Present Electrical Physics

We point out that, in physics books of note, the overt coupling effect is essentially unknown or ignored because physics presently has not defined either the scalar potential or the electrical charge. The conventional theory simply uses an "inert" expression d**Ø**/dt to represent the displacement current (and another inert expression q for a charged mass), and most theoreticians are uncomfortable even with that. The displacement current is also confused with force by equating the displacement current d**Ø**/dt to dE/dt. In turn, this means that d**Ø**/dt is confused with mass, hence with dm/dt, which latter is also a component of dq/dt. m is always an \internal component\ of force, as is known in foundations of physics but this fact continues to remain completely oblivious to the electricians. [*Good* electrical theorists do admit that there is no force in the vacuum; and that the force associated with the E-field is evidenced

only in the interacting mass. However, they continue to maintain the E-field (force per point-coulomb of charged mass) in the vacuum, when there are no point-coulombs of charged mass there!

Mass Is an Internal Component of Force

It is easy to show that mass is always a component of force: We will simply define *force* precisely. We first insist that no equation can be used as a definition; an equation simply states that the magnitude of one of its sides and the magnitude of the other side are equal. (The length of a board and the length of a human may be equal, but writing that as an equation has absolutely nothing to do with the definition of either a board or a human). So we will insist that any true definition must be an *identity*.

We define force F as F ≡ d/dt(mv), whereupon mass is a component of force *a priori*. It follows that, if we define the E-field E as the force per coulomb, we are defining it as the force existing at a point and having a point-coulomb of charged mass as one of its major components. We may accurately now define E as E ≡ -[(∇**Ø**)●(q)]/|q|, where the absolute value symbol in the denominator is essential, q/|q| being one point-coulomb. [We leave as an exercise for the reader the further reduction of this definition by treating q as ●(**Ø**●m)].

At any rate, with the new and correct definition of the E-field, one can see that the flow of displacement current (d**Ø**/dt) upon a collector such as a rigid capacitor, containing a fixed charge ●(**Ø**●m), will result in the formation of an excess ∇ **Ø**● upon those restrained charges in the capacitor plate, so that there is created an E ≡ -[(∇ **Ø**)●(q)]/|q|. Since the conventional theory considers the antigradient of the potential as an E-field, then one can now see the exact mechanism that creates this E-field that grows upon the capacitor (across its plates) as it charges. In fact, the q/|q| cannot change in a capacitor if its plates and dielectric are immovable. Instead, in that case, the **Ø**● portion of the trapped ●(q) changes, producing the (∇ **Ø**)● change. Since the (∇ **Ø**)● component is coupled to the mass component of the fixed ●q as (**Ø**+∇ **Ø**)●m, then an E-field is created and exists as E ≡ -[(∇ **Ø**)●(q)]/|q|.

An Ideal Capacitor Is an Electron Current Blocker

We point out that, if the capacitor's components are ideal, *completely rigid*, and do not physically move, then the capacitor is a "●dm/dt blocker." If the charges really were frozen in place, then the potential would flow across the plates at the speed of light, via the flow of excess massless displacement current d**Ø**/dt●. In that case, an ammeter would not show the classical "exponential fall-off" of the current with time; the electron current dq/dt would occur as a single-point Dirac delta function at t=0, and would be zero thereafter. And no electrons would be able to move in zero time. The voltage would show an instantaneous adjustment to the charged value with a single step-function, and the capacitor would charge up fully, instantly, with no work (energy loss) whatsoever being done. And this charge-up of the capacitor would not dissipate in the slightest the source furnishing the voltage; there would be no electron current dq/dt through the back EMF of the source, hence no work inside it to deplete its separation of charges.

Problems With Ordinary Capacitors

However, most ordinary capacitors are much more than just an ideal capacitor. The plates move, the dielectric moves, etc. due to the forces created upon them by the E-fields created upon the trapped charges in them. The spatial translation of the resulting force moving the plates constitutes work; i.e., it dissipates some of the flowing d**Ø**/dt energy. Each movement of the plates and/or dielectric carries with it all its internally trapped charges. The movement of those charges constitutes a substantial longitudinal electron current dq/dt, when compared to the longitudinal "drift" electron current in normal circuits. [Electrons spend most of their time moving radially in a wire, not down it.] This "moving plate and its transported charges" make an electron current, which pumps the inert electrons in the ground return line back through the back EMF of the source, depleting the source. Consequently, the ordinary capacitor will simply release as much energy as work (to move the plates and dielectric) as it stored. Hence, it will also produce dissipation of the source via the amount of energy stored in the capacitor. You still get "free energy" stored in the capacitor, but also dissipate the source by an equal amount.

Rigidized Capacitors Must Be Used

Only rigidized capacitive collectors are useful in free energy devices. Such capacitors are in fact actually available, e.g., as calibration standards, but they are extremely expensive ($400 to $2,000 or so each, for a capacitance reaching about 1 uf).

So, capacitive type collectors must be rigidized, if used in overunity circuitry. Even so, in a single integrated circuit, although one collects free energy, one will use half of what was collected to dissipate the source. Not all the remaining half will be discharged

through the load; some will be discharged in other circuit and component losses. Hence, there will always be less work done in the load than is done in the source to kill it, by a conventional two wire single closed circuit. In my second referenced paper (Feb.94), I included precise proof that this is true. One must use energy collection and shuttling between two isolated circuits, and the load discharge current must not pass back through the primary source of potential.

We have previously provided precisely how to utilize capacitive collectors in our two referenced papers. We point out here that the capacitors must be calibration standard capacitors, or specially made rigidized capacitors.

It Does Not Require Electron Current to Charge An Ideal Capacitor

For the benefit of the skeptic, this is already proven. We simply list references (2) and point out the equation that represents the energy K in a charged capacitor. Here we have $K = ½(CV)^2$. It is totally the displacement current dØ/dt● flowing (from a higher potential) onto the charging plate that produces the higher potential Ø on that charging plate, and hence a V between the two plates, one of them (the "ground" side) being held at a constant potential. The mass displacement current component dm/dt of the electron current dq/dt has nothing whatsoever to do with energy accumulation; it has only to do with the dissipation of energy that is happening simultaneously in all losses and loads in the circuit loop.

We reiterate that most ordinary capacitors have terrible internal movement, and accomplish as much energy dissipation as they do energy collection by permitting dq/dt and work performed upon the plates and dielectric to move them. The standard two-wire circuit also guarantees that all such dq/dt current "through" the capacitor is passed back through the source against its back EMF, doing an equal amount of work in the source to dissipate its separation of charges and "destroy" the source.

An ideal capacitor does not pass dq/dt, but only massless displacement current as theorized by Maxwell to save current continuity in a circuit containing a capacitor, and hence to save Ampere's current law. That is, an ideal capacitor is a ●dm/dt blocking device. However, the capacitors utilized in normal circuits are not ideal capacitors at all. By allowing the plates to move, electron current dq/dt is created on both sides of the capacitor. Otherwise there would not be a ground return dq/dt, but only a ground return dØ/dt●. This dØ/dt● would not and does not push electrons back up through the source against its back EMF; else the ground side of the source, which is engaged in continuous dØ/dt● exchanges with the vacuum, would produce destructive amperage dØ/dt● in the battery or potentialized source, against its back EMF, while it was simply sitting on the shelf. In fact, a flow of dØ/dt● continually runs from the vacuum to the positive terminal, then through the inside of the battery to the negative terminal, and thence back to the surrounding vacuum. Also, the incoming flow from the vacuum "splits" at the positive terminal, where one branch flows inside the source to the negative terminal, and the other branch flows through the external circuit to the ground return line, and thence to negative terminal and back to the vacuum. In the external circuit, the dØ/dt● hooks to free electrons and moves them as ordinary dq/dt. In the internal circuit inside the source, the electrons are restrained, hence they only move when their restraint is overcome.

Displacement Current dØ/dt Is Real

In recent years, SQUID detectors have been utilized to detect the magnetic field created between the plates (at right angles) by the displacement current dØ/dt between the plates, providing strong evidence that displacement current is physically real. The best proof that it is real is a charge blocking device, two isolated circuits using energy collection and shuttling, and overunity powering of loads in the secondary circuit.

A Problem With Ammeters and Measurement of dØ/dt

Note that an ammeter cannot differentiate between displacement current dØ/dt● and normal current dq/dt. In the ammeter, the sample dØ/dt● will couple to free electrons, producing a normal dq/dt inside the ammeter. The driving of this dq/dt through a precision resistance, e.g., is measured and the instrument is calibrated to show the dq/dt amperes flowing. One of the major needs of free energy researchers is the development of a good current meter that will differentiate between dØ/dt● and dq/dt, and measure each one. Short of using a mass spectrometer to differentiate the mass current ●dm/dt, and comparison of those mass current measurements with an ammeter's measurements of the "current" dq/dt, and calculating the dØ/dt● from that, I presently know of no way to precisely and simply measure and separate the two current components. I have been thinking of utilizing a multi-channel sampling meter set arrangement, where one channel uses a ●dm/dt blocking device such as the Fogal semiconductor in this respect, but have not yet developed the complete concept.

Better Solution: A Charge Blocking Device

A better solution than the capacitor or capacitive collector is the use of a special rigid solid state "charge blocking device", such as a Fogal semiconductor, to enable the current separation into two components, blocking of the mass flow component, and passage of the massless displacement current component. *In overunity electrical devices, it is massless displacement current dØ/dt● that must be separately passed down the primary circuit and collected in the collector as an E-field or an H-field. This provides "free" energy that has been extracted from the vacuum, via the potential difference between the terminals of the source antenna, and collected and stored in the appropriate field, without work*. The collected free energy may then be transferred to the isolated load circuit by a variety of means, for separate discharge through the load without return of dq/dt through the source.

The Fogal Semiconductor Meets the Charge-Blocking Requirements

Fogal's marvelous semiconductor blocks passage of electrons into its output terminal, but passes displacement current dØ/dt● into it. The semiconductor is powered by (receives) normal electron current and excess dØ/dt●, but outputs pure massless displacement current dØ/dt●. A charge blocker that passes dØ/dt● is ideal for our overunity mechanisms, enabling them to be readily obtained as we shall shortly see.

Energy, Flow, Finite Amount of Energy, and Collectors

We accent that the flow of energy in an electrical circuit is purely by means of the massless displacement current component (dØ/dt)●. The flow of the mass component ●(dm/dt) represents the "flow of work" (*energy dissipation*) in the circuit. Power is rigorously the time rate of doing work, and electron current dq/dt is a part of power. It has nothing whatsoever to do with the time rate at which *energy is transported without loss*; instead, power represents the rate at which energy "leaks" or is "lost" during its transport.

All measurement is work, not energy. Energy cannot be measured, even in theory, a priori. Energy is also a flow process, and never a finite amount in one location. A specific differential of energy flow may exist on a specific finite collector. However, it only represents a certain constant differential amount of energy flow compared to the universal vacuum energy flow or some other flow reference point. It is like a whirlpool in the river. Energy is like the flowing water, and an "amount" of energy is like the amount of water in the collecting whirlpool form (between its input flow and its output flow) at any time. Obviously, energy (ordering) forms can come and go; the water flow itself remains. Any "magnitude of energy" is always a "trapped" amount of energy in a "collector" (form).

Decoupling Current Components and Utilizing dØ/dt

The two components of electron current dq/dt can be decoupled, by blocking the ●dm/dt component while allowing the dØ/dt● displacement current to continue to flow. In our first paper, we pointed out one way: utilizing a special degenerate semiconductor material whose electron gas relaxation time is extended, providing a finite time during which the material serves as a *charge (i.e., a charged particle) blocking device*, while passing the flow of potential (the dØ/dt● massless displacement current component) and restraining the mass displacement current component ●dm/dt. With the advent of Fogal's semiconductor, the process becomes much easier to obtain and utilize in practical machines and circuits.

In our second paper, we pointed out a second way: utilize an ordinary capacitor and ramp-up step-charging. We found, however, that in most ordinary capacitors, the capacitive aspect is defeated by the sloppy movement of the plates and dielectric, converting dØ/dt● into dq/dt. Only a few very carefully selected capacitors are sufficiently rigid and can provide overunity. One must use *rigidized* calibration standard capacitors for the ramp-charging by series steps method to be successful. With ordinary capacitors, however, one can readily demonstrate that the efficiency can approach 1.0 rather than 0.50 as expected.

Overunity Secrets: Charge Blocking, Collection, Shuttling, and Two Isolated Circuits

The charge (actually *charged mass*) blocking approach provides a massless, free flow of vacuum EM energy that can be directed to a collector (capacitive or inductive) where it can be stored in either an E-field or a B-field. This stored energy can then be transferred to an isolated load circuit whose electrons (and hence their ●dm/dt mass displacement current) are free to flow as dq/dt. In the isolated load circuit, then, the two components [(dØ/dt)●(dm/dt)] again couple to form i = dq/dt = [(dØ/dt)●(dm/dt)], powering the load. All work in an electrical circuit is due to the mass displacement current ●dm/dt component; the massless displacement current (dØ/dt)● is a flow of pure energy transport without loss, as is well-known. (For example, see Reference 4.)

Therefore, the first major free energy secret is simply to block the "working" component ●dm/dt of the current dq/dt while allowing the excess "lossless energy flow" component dØ/dt● to flow to collectors to produce either free E-field or free B-field thereupon.

The second major secret is to transfer the collected excess free energy (via energy shuttling) to a second, isolated, load circuit, where the energy is discharged through the load in the conventional fashion (i.e., such that the two current components are coupled, and electron current i = dq/dt occurs through the load). The second circuit must be isolated from the original collection circuit, so that none of the load electron current dq/dt passes back through the original source, against its back EMF.

Should the grounds be the same between the load circuit and the collection circuit so that load electron current is returned through the back EMF of the primary source, then exactly as much excess work will be done inside the source to dissipate its separation of charges as was done in the external load to furnish useful work and in the external losses. In that case, overunity is destroyed, because one is using one-half the excess free energy to destroy the source faster, while the remaining half is distributed among all external loads and losses. Since there are always some external losses besides the load, then the ratio of load power to source dissipation power is always less than unity in a conventional closed-loop circuit containing both load and source. Hence the necessity for utilizing two isolated circuits: one where energy is collected freely from the source, and one where energy is dissipated as work in the load without dissipative work in the source, and energy shuttling between them.

A Simple Open-Loop Overunity Device

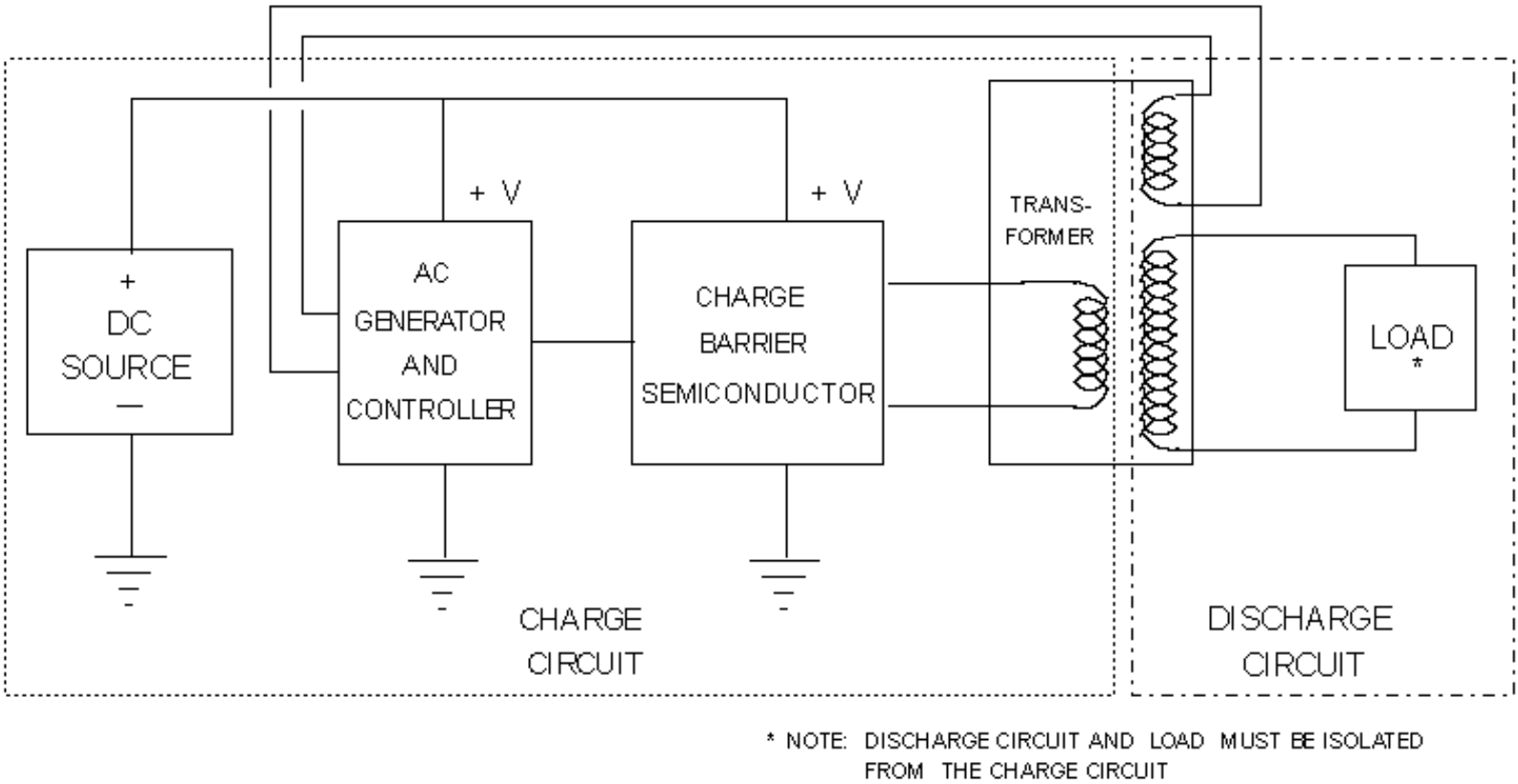

Figure 1. Use of Charge Barrier Device to Achieve Overunity in a Shuttle Circuit.

Figure 1 shows a very simple but very powerfully amplified overunity device, using an AC charge blocking semiconductor (CBS) (such as a Fogal semiconductor). The gist of the circuit is that an AC source furnishes AC current dq/dt to the CBS, which uses some of the power to power itself, but then blocks the ●dm/dt portion of the dq/dt input current, passing only the massless displacement current component (dØ/dt●) into its output circuit. The (dØ/dt●) output of the CBS is fed through the primary winding of a transformer, in this case a step-up transformer. The "current gain" of the CBS will depend upon (1) the load connected to it, and (2) the ability of the CBS to continue to block the increasing E-field on its trapped charges, as more free energy flow (dØ/dt●) is drawn through it by the load. Thus the load and the CBS must be matched within the operational ability of the CBS, so that the CBS does not fail catastrophically.

In the primary winding of the transformer, the (dØ/dt●) displacement current produces a magnetic field H, storing the excess flowing

energy in that field. This is a normal magnetic field; all magnetic fields are produced by the (dØ/dt●) component of the current anyway. This magnetic field, as it changes, couples to the secondary winding, producing a normal magnetic field H therein by normal means. In the secondary circuit, electrons are not restrained by a CBS. Hence the (dØ/dt●) induced in the circuit on the secondary side couples to the unrestrained electrons, producing normal electron current dq/dt, and driving it through the load to power it. Note that *energy* is conserved across the primary and the secondary; however, *dissipative power and work* (energy loss rate and energy loss) are not conserved, because a free flow of lossless excess energy in the form of displacement current is flowing from the vacuum through the source antenna, thence to the CBS, through it to the primary of the transformer and into the primary magnetic field, through it to the secondary magnetic field, through it into the (dØ/dt●) induced in the secondary circuit and coupled to the electrons, through the resulting dq/dt into the load, where the scattering of photons as heat dissipates the free flowing energy in the displacement current dØ/dt● component flowing through the load as a component of dq/dt = (dØ/dt●)●(●dm/dt) = (dØ/dt)●(dm/dt).

Free "Power" Amplification

If one places an ammeter in the output from the CBS, between it and the primary winding of the step-up transformer, one will read the (dØ/dt●) as *normal dq/dt in the ammeter itself*. If one calculates the "free power" (i.e., the rate of energy dissipation) that is going into the transformer primary using this as the "current," one will show that energy and "power" are conserved between primary and secondary of the transformer. However, the actual dissipative power going into the primary side is zero or, in real circuits, vanishingly small. Consequently, the device has a very high variable power gain that depends upon the rate of energy draw and dissipation of the load on the secondary side. If one adds more load, one draws more dq/dt current on the secondary side, hence more excess dØ/dt● displacement current on the primary side. The overall "power amplification" is limited by the ability of the transformer to handle the power in the secondary and the ability of the CBS to withstand the pressure of the internal charge barrier. This device can be easily "close-looped."

The Negative Resistor: A Close-Looped "CBS and Shuttle" System

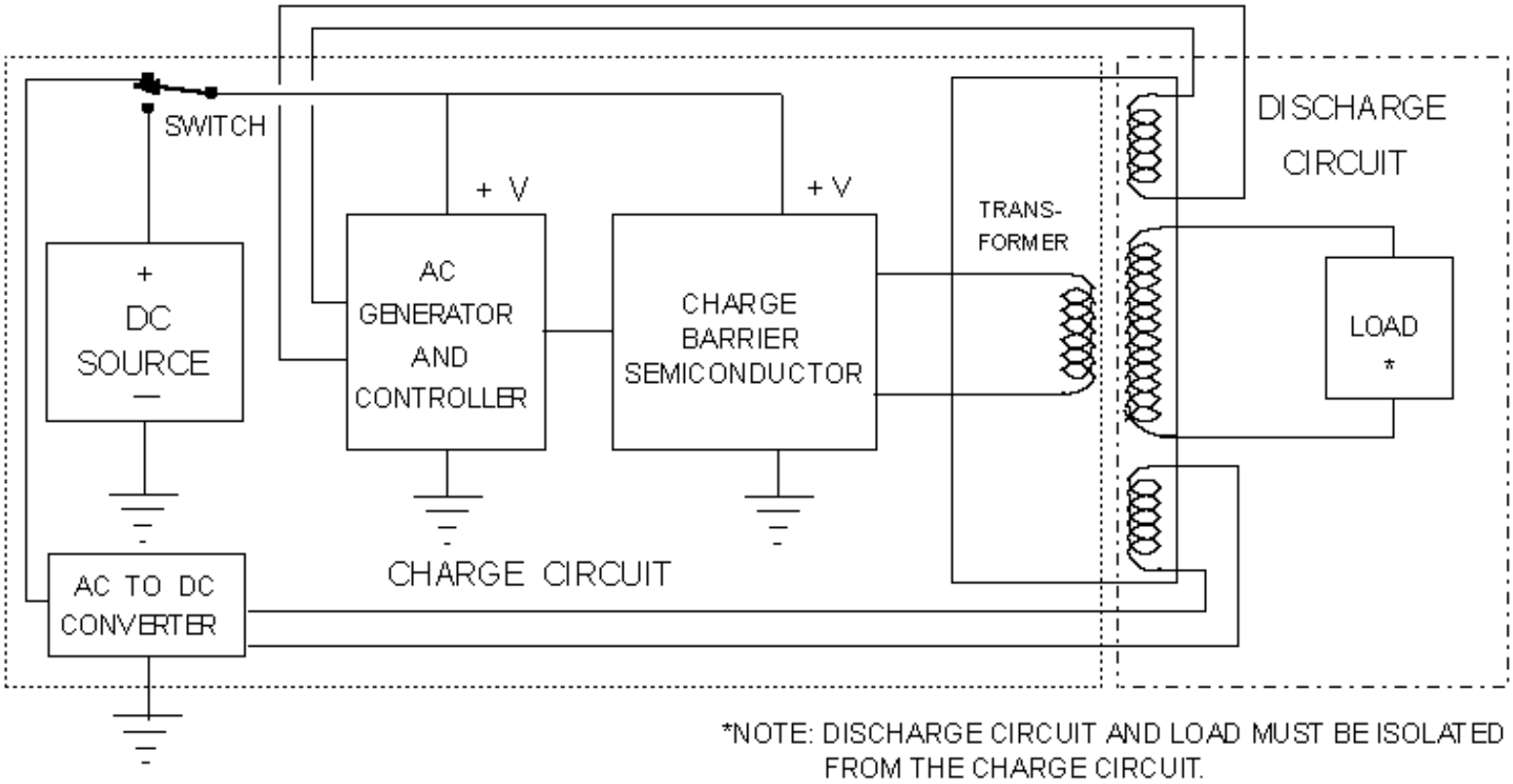

Figure 2. Use of Charge Barrier Device in a Shuttle Circuit With Controlled Feedback, to Achieve a True Negative Resistor.

Figure 2 shows the close-looping of the device shown in Figure 1, in such manner that, once stable operation is underway and the load and input stabilized, the ordinary power supply for the CBS can be switched out of the circuit. In this case, the circuit operates as a self-powered overunity device; i.e., as a *negative resistor*.

A normal resistor receives an ordered energy flow from its external circuit and scatters this energy as work out to the vacuum. I.e., it receives i = (**Ø**+∇**Ø**)/dt●(dm/dt) (scatters the excess (∇**Ø**)/dt● component (i.e., of the dq/dt passing into it from the high potential side) by radiating it away to the surrounding vacuum as scattered photons (heat)), and outputs inert (no excess (∇**Ø**)● component) electron current dq/dt into the ground side.

A negative resistor does exactly the opposite: it accepts inert incoming electrons from its "ground" side, also accepts incoming (converging) d**Ø**/dt● energy from the vacuum as virtual photons being absorbed upon these inert electrons so that a ∇**Ø**● is added to the electron current, creating an excited, excess energy-carrying i = (**Ø**+∇**Ø**)/dt●(dm/dt), and passes this excited current out of its high side and out into the external circuit to power the circuit. In other words, the negative resistor becomes a *self-contained free power source*, once brought up to stable operation.

In Figure 1, all that needs to be done is simply to extract some of the secondary power and feed it back to create the power input consumed by the CBS and the other normal components of the primary circuit side of the transformer.

Multitaps can be added to the secondary side, to provide varying voltage power supplies for loads requiring different voltages.

Energy is conserved in the device, because it always functions as an open circuit, receiving excess energy from an external source (the surrounding vacuum, in its virtual photon exchange with the charges in the system). It is far from thermodynamic equilibrium, and classical thermodynamics (including the second law) does not apply.

It is simply a continuous free power supply: it is a *negative resistor*.

Far more complicated units can be designed and produced. The basic point is that this type of overunity power supply is continuous and self-powered, driven by the violent exchange of energy from the vacuum, and simply collecting and gating some of that energy to the load to power the load.

Conclusion

With this third paper, we complete the triad of papers we set out to write a little over a year ago. With the availability of charge barrier devices such as the Fogal semiconductor, together with the collection, shuttling, and use of free d**Ø**/dt● flowing energy, the *Age of Free, Clean, Electrical Energy* has finally dawned.

Let us use it wisely, and for the betterment of humankind, not for its destruction.

[Support of portions of this research by A.D.A.S. is gratefully acknowledged.]

References and Notes

1. Bearden, T.E., Feb. 9, 1993, "The Final Secret of Free Energy," ADAS, distributed over Internet. The paper was also published in Magnets, 7(5), May 1993, p.4-26, in Explore!, 4(3/4), 1993, p.112-126, and in several other media. See also Bearden, T.E., "Additional Information on the Final Secret of Free Energy," Feb. 15, 1994, distributed on Internet.

2. For proof that an ordinary capacitor can be charged almost without entropy, see Fundaun, I., C. Reese, and H.H. Soonpaa, "Charging a Capacitor," American Journal of Physics, 60(11),Nov. 1992, p.1047-1048. See also Calkin, M.G. and D. Kiang, "Entropy change and reversibility," American Journal of Physics, 51(1), Jan. 1983, p.78-79. See also Heinrich, F., "Entropy change when charging a capacitor: A demonstration experiment," American Journal of Physics, 54(8), Aug. 1986, p.742-744. See also Gupta, V.K., Gauri Shanker, and N.K. Sharma, "Reversibility and step processes: An experiment for the undergraduate laboratory," American Journal of Physics, 52(10), Oct. 1984, p.945-947.

3. In most texts, the treatment of displacement current is far from adequate. A better treatment than most is given by Krauss, John D., Electromagnetics, Fourth Edition, McGraw-Hill, New York, p.437-439, 547-549. This treatment must still be augmented by treatment from other texts, and the ensemble "synthesized." Even then, it will never be completely clear until the separation of mass from the massless charge, and separate accounting of the two, is accomplished in the manner pointed out by the present paper.

4. For a typical confirmation that massless displacement current is already known to be lossless transport of energy without entropy, i.e., without work, see Buchwald, Jed Z., From Maxwell to Microphysics, University of Chicago Press, Chicago and London, 1985, p.44. Quoting: "...no energy transformation into heat occurs for displacement currents." It should be obvious from this fact alone that the proper way to accomplish overunity in electrical devices is to utilize the massless displacement current to flow and store excess energy, then use a "heat pump" type cycle to transfer the collected energy to a separate load circuit and discharge it separately in the load.

5. For a very recent proof that the potential is a flow process, and in fact consists of bidirectional EM waves, see Hsue, C.W., "A DC Voltage is Equivalent to Two Traveling Waves on a Lossless, Nonuniform Transmission Line," IEEE Microwave and Guided Wave Letters, 1993, Vol. 3, p.82-84.

6. For proof that the vacuum EM zero-point energy is continually produced by a cosmological feedback from every charged particle in the universe, see Puthoff, H.E. , "Source of Vacuum Electromagnetic Zero-point Energy," Physical Review A, 40 (9), Nov. 1, 1989, p.4857-4862.

7. For proof that in theory the vacuum energy can be tapped, see Cole, daniel C. and Harold E. Puthoff, "Extracting Energy and Heat from the Vacuum," Physical Review E, Vol. 48, No. 2, Aug. 1993, p.1562-1565.

8. For proof that a higher topology examination of EM phenomena allows energy collection as potentials and energy shuttling in circuits, see Barrett, T.W., Annales de la Fondation Louis de Broglie, Vol.16, No. 1, 1991, p.23-41. Barrett shows that EM expressed in quaternions allows shuttling and storage of potentials in circuits, and also allows additional EM functioning of a circuit that a conventional EM analysis cannot reveal. He in fact shows that Tesla's patented circuits did exactly this.

9. Stoney, G.J. (1897) "XLVII. On a Supposed Proof of a Theorem in Wave Motion, To the Editors of the Philosophical Magazine," Philosophical Magazine, 5(43), 1897, p.368-373. Stoney first pointed out the bidirectional EM wave decomposition of the scalar potential.

10. Whittaker, E.T., "On the Partial Differential Equations of Mathematical Physics," Mathematische Annalen, Vol. 57, 1903, p.333-355; "On an Expression of the Electromagnetic Field Due to Electrons by Means of Two Scalar Potential Functions," Proceedings of the London Mathematical Society, Series 2, Vol.1, 1904, p.367-372.

The Tom Bearden Website

TOWARDS A NEW ELECTROMAGNETICS
PART I: SOLUTION TO TESLA'S SECRETS AND THE SOVIET TESLA WEAPONS

Table of Contents

Foreword **NEW**

Starting Pages **NEW**

Soviet Tesla Weapons

References

The Tom Bearden Website

TABLE OF CONTENTS

Acknowledgements

Foreword

Part I

Solutions to Tesla's Secrets and the Soviet Tesla Weapons

References

Part II

Reference Articles for Solutions to Tesla's Secrets

Bottone, A., "Nikola Tesla's New Wireless", *Electrical Engineer*, London, Dec. 24, 1909.

"Tesla's New Device Like Bolts of Thor", *N. Y. Times*, Dec. 8, 1915.

Secor, H. Winfield, "Tesla's views on Electricity and the War", *Electrical Experimenter*, Aug., 1917.

Tesla, Nikola, "The Effect of Statics on Wireless Transmission", *Electrical Experimenter*, Jan., 1919.

Gernsback, H., "Underground Wireless", *Electrical Experimenter*, March, 1919

Secor, H. Winfield, "America's Greatest War Invention, The Rogers Underground Wireless", *Electrical Experimenter*, March, 1919.

Tesla, Nikola, "Tesla on High Frequency Generators", *Electrical Experimenter*, April, 1919.

Tesla, Nikola, "The True Wireless", *Electrical E:x:perimenter*, May, 1919.

Tesla, Nikola, "My Inventions, v. The Magnifying Transmitter", *Electrical Experimenter*, June, 1919.

"The Rogers Underground Aerial For Amateurs", *Electrical Experimenter,*
June, 1919.

"A Giant Eye to See Round the World", *Albany Telegram,* Feb. 25, 1923.

Tesla, Nikola, "'World System' of Wireless Transmission of Energy",
Telegraph and Telephone Age, Oct. 16, 1927.

Secor, H. Winfield, "Tesla Maps Out Our Electrical Future", *Science and Invention,* April, 1930.

Tesla, Nikola, "Man's Greatest Achievement, *N.* Y. *American,* July 6, 1930.
"Tesla at 75", *Time,* July 20, 1931.

Gernsback, Hugo, "Faster Than Light:", *Everyday Science and Mechanics,*
Nov., 1931.

"No High Speed Limit, Says Tesla", *The Literary Digest,* Nov. 7, 1931.

O'Neill, John J., "Tesla Cosmic Ray Motor May Transmit Power 'Round Earth",
Brooklyn Eagle, July 10, 1932.

"Tesla, 76, Reports His Talents At Peak", *N. Y. Times,* July 10, 1932.

Tesla, Nikola, "Pioneer Radio Engineer Gives Views on Power", *N. Y. Herald*
Tribune, Sept., 11, 1932.

Bird, Carol, "Tremendous New Power Soon to be Unleashed", *Kansas City*
Journal-Post, Sept. 10, 1933

"Tesla 'Harnesses' Cosmic Energy", *Philadelphia Public Ledger,* Nov. 2, 1933.

"Tesla Sees Evidence Radio and Light are Sound", *N.* Y. *Times,* April 8, 1934.

"Invents Peace Ray", *N. Y. Sun,* July 10, 1934.

"Death-Ray Machine Described", *N. Y. Sun,* July 11, 1934.

"Tesla, at 78, Bares New 'Death-Beam'", *N. Y. Times,* July 11, 1934.

Alsop, Joseph W., Jr., "Beam to Kill Army at 200 Miles, Tesla's Claim",
N. Y. Herald Tribune, July 11, 1934

Tesla, Nikola, "Tesla on Power Development and Future Marvels", *N. Y. World*
Telegram, July 24, 1934.

Wilshimer, Helen, "Dr. Tesla Visions the End of Aircraft in War", *Every*
Week Magazine, Oct. 21, 1934.

"A Machine to End War", by Nikola Tesla as told to George Sylvester Viereck,
Liberty, Feb., 1935.

"Tesla Predicts Ships Powered by Shore Beam", *N. Y. Herald Tribune,*
June 5, 1935.

"3 Tesla Inventions", *N. Y. Sun,* July 9, 1935.

Sparling, Earl, "Nikola Tesla, at 79, Uses Earth to Transmit Signals;
Expects to Have $100,000,000 Within Two Years", *N. Y. World Telegram,*
July 11, 1935.

"Tesla's Controlled Earthquake", *N. Y. American,* July 11, 1935.

"Tesla, 79, Promises to Transmit Force", *N. Y. Times,* July 11, 1935.

Tesla, Nikola, "Expanding Sun will Explode Someday Tesla Predicts",
N. Y. Herald Tribune, Aug. 18, 1935.

"Tesla, 80, Reveals New Power Device", *N. Y. Times,* July 11, 1936.

"Sending of Messages to Planets Predicted by Dr. Tesla on Birthday",
N. Y. Times, July 11, 1937.

"Tesla Has Plan to Signal Mars", *N. Y. Sun,* July 12, 1937.

"In the Realm of Science: Tesla, Who Predicted Radio, Now Looks Forward
to Sending Waves to the Moon", *N.* Y. *Herald Tribune,* Aug. 22, 1937.

"Aerial Defense 'Death-Beam' Offered to U. S. By Tesla", *Baltimore Sun,* July 12, 1940.

"'Death Ray' for Planes", *N. Y. Times,* Sept. 22, 1940.

"Proposing the 'Death Ray' for Defense", *Philadelphia Inquirer,* Oct. 20, 1940.

Swezey, Kenneth M., "Nikola Tesla", *Science,* May 16, 1958.

"Cableless Power", *Electronics* (Digest), July 22, 1960.

"Fireballs for Defense?", *Christian Science Monitor,* Feb. 7, 1962.

Lagus, George W., "The Use of Ground in High-Frequency Circuits", *Radio-TV and Science and Electronics,* June-July, 1969.

Jamison, S. L., "Life Energy", *Probe, The Unknown,* June, 1973.

Jueneman, Frederic B., "The First Law of Thermodynamics", *Industrial Research,* Feb., 1974.

Wade, Nicholas, "Charged Debate Erupts over Russian Beam Weapons", *Science,* May 27, 1977.

Benford, Gregory, "Zeus in Orbit", *Omni,* Sept., 1981.

JAMES HARRIS ROGERS' PATENTS

(In order of patent application date)

958,829, Method and Apparatus for Producing High Frequency Oscillating Currents. James H. Rogers. Filed Jan. 20, 1910.

1,220,005, Wireless Signaling System. James Harris Rogers and Henry H. Lyon. Filed Nov. 10, 1916.

1,322,622, wireless Signaling System, James H. Rogers and Henry H. Lyon, Filed Nov. 10, 1916.

1,349,103, Radiosignaling System. James Harris Rogers. Filed May 2, 1917.

1,315,862, Radiosignaling System. James Harris Rogers. Filed Jan. 17,

1918.

1,349,104, Radiosignaling System. James Harris Rogers. Filed Jan. 17, 1918.

1,303,729, Wireless Signaling System. James Harris Rogers. Filed Jan. 10,
1919.

1,303,730, Radiosignaling System. James Harris Rogers. Filed Jan. 11, 1919.

1,316,188, Radiosignaling System. James H. Rogers. Filed Mar. 28, 1919.

ACKNOWLEDGEMENTS

PART I

I am much indebted to Mr. Carey Briggs for furnishing references which strongly support the existence of scalar potential waves and scalar interferometry. Among those papers are Whittaker (1903), Nisbet (1955) , and other papers dealing with Hertzian potential theory. As ever, my profound gratitude is due Hal Crawford for his splendid illustrations which accompany this paper. I am also indebted to John Ratzlaff and the Tesla Book Company for graciously furnishing important Tesla references for me to analyze. My sincere thanks go to Messrs. Jim Beal and Williard Van de Bogart for furnishing important references on exoelectron emission and tectonic fault zones, and to Dr. Robert Beck for furnishing important material on the Rogers underground and undersea transmission system. Additional assistance was also received from Mr. Peter Kelly, Joe Siegeldorf, Joe Gambill, and Bob Beutlich. I am also very appreciative of the information furnished by Bob Jones and Vestigia on the beautiful Vestigia mystery light experiments.

PART II

A. L. Lez, San Anselmo, Calif.
Thorn L. Mayes, Saratoga, Calif.
Bob Nelson, Berkeley, Calif.
Mildred Ratzlaff, Millbrae, Calif.

FOREWORD

The long-searched-for Tesla secrets have been solved by Tom Bearden. Part I contains the specific description of the solutions to Tesla's secrets and the Soviet Tesla weapons.

The present electromagnetic theory has several flaws, and it is these errors that have hidden the long-sought unified field theory. The explanations presented by the author provide clarity and understanding to related Tesla writings and patents.

Before the turn of the century, Nikola Tesla had discovered and was utilizing a new type of electric wave. Tesla repeatedly stated that his waves were non-Hertzian, and that his wireless transmissions did not fall off as the square of the distance. The author has found that the wave which Tesla was using is a longitudinal scalar wave, capable of many times the speed of light. When coupled with another scalar wave (Tesla wave),
the resulting vector wave can be the source of electromagnetic energy for electrical power, a protective force field, or a destructive weapon.

The booklet is well illustrated with special drawings by Hal Crawford. The bibliography includes corroborating information on all major points. Part II presents reprints or the entire subject matter of selected articles from the bibliography, plus additional references of importance. Articles are arranged in chronological order. Also included are nine patents by James Harris Rogers which were the basis of successful wireless communication during World War I. These principles of underground and sub-sea wireless were based on Tesla's discoveries.

Bearden's solutions are truly a major breakthrough, and an absolute necessity to the understanding of existing Tesla writings. It is also important that more should be known of this extraordinary individual, Thomas E. Bearden.

BIOSKETCH:

A nuclear engineer, wargames analyst, and military tactician, Lieutenant Colonel (Retired) Tom Bearden has over 26 years experience in air defense systems, tactics and operations; technical intelligence, anti-radiation missile countermeasures; nuclear weapons

employment, computerized wargames; and military systems requirements.

He is currently with the Alabama division of a large aerospace company where he is involved in determining the future requirements for laser weapons.

Lieutenant Colonel Bearden obtained a Master of Science degree in nuclear engineering from the Georgia Institute of Technology and a Bachelor of Science degree in mathematics from Northeast Louisiana University. He is also a graduate of the U.S. Army Command and General Staff College and several U.S. Army artillery and missile schools.

He has had direct experience with tube artillery and with the Ajax, Hercules, Hawk, and Patriot missile systems and the production of technical intelligence on Soviet surface-to-air missile systems for the U.S. Army/Department of Defense.

Tom holds a Sandan (third degree black belt) in Yoseikan aikido; is a singer, guitarist and songwriter; member of Mensa, Society for the Investigation of the Unexplained, Vestigia, the American Association of Meta-Science: and is on the board of governors of the U.S. Psychotronics Association. In addition, he is Alabama Director of a small nonprofit foundation, the Association of Distinguished American Scientists and is a MUFON adviser on nuclear engineering.

He also edits *Specula*, Journal of the American Association of Meta-Science.

Tom is primarily active as a theorist on UFOs, parapsychological and paranormal phenomena, and psychotronics. He is the author of a book, *The Excalibur Briefing*, Strawberry Hill Press, 2594 15th Avenue, San Francisco, California 94127 and has numerous technical papers dealing with new paradigm physics, paranormal phenomena, and Soviet psychotronic weapons.

Finally, Bearden's *Solutions to Tesla's Secrets and the Soviet Tesla Weapons* promises to be recognized in the future as a major contribution to our present technology.

JTR

The Tom Bearden Website

TESLA'S SECRET AND THE SOVIET TESLA WEAPONS

© T.E. Bearden 1981

With Special Drawings by Hal Crawford

Before the turn of the century, Nikola Tesla had discovered and was utilizing a new type of electric wave. Tesla repeatedly stated his waves were non-Hertzian, and his wireless transmissions did not fall off as the square of the distance. His discovery was apparently so fundamental (and his intent to provide free energy to all humankind was so clear) that it was responsible for the withdrawal of his financial backing, his deliberate isolation, and the gradual removal of his name from the history books.

By 1914 or so, Tesla had been successfully isolated and was already nearly a "nonperson." Thereafter Tesla lived in nearly total seclusion, occasionally surfacing (at his annual birthday party for members of the press) to announce the discovery of an enormous new source of free energy, the perfection of wireless transmission of energy without losses, fireball weapons to destroy whole armies and thousands of airplanes at hundreds of miles distance, and a weapon (the "Tesla Shield," I've dubbed it) that could provide an impenetrable defense and thus render war obsolete.

In my pursuit of Tesla's secret, it gradually became apparent to me that present orthodox electromagnetic theory is seriously flawed in some fundamental respects. One of these is in the definition and use of ϕ, the scalar electrostatic potential. It is this error which has hidden the long-sought unified field theory from the theorists.

In the theory of the scalar electrostatic potential (SEP), the idea is introduced of work accomplished on a charge brought in from a distance against the scalar field. The SEP is not a vector field, but is a scalar field. Indeed, scalar potential cannot of itself perform work on a charged mass; if it could do so, then tremendous force would exist on every mass due to the extremely high SEP of the vacuum itself. Only a differential of SEP between two spatial points can produce force or accomplish work. (Rigorously, a differential of scalar potential between two spatial points constitutes a vector. Only a vector can produce force and do work.)

Also, work can only be done on a mass. Further, it takes time* to move an electron or other charged mass between two spatial points, and so the work performed by a spatial differential of the ϕ-field requires time. Rigorously, the delta SEP is voltage, not SEP per se, and is directly related to

E field. The entire voltage concept depends on the work performed in moving a mass, after that mass has moved. The idea of "voltage" always implies the existence of a steady differential of ϕ between two spatial points for a finite length of time, and it also involves the assumption of a flow of actual mass having occurred. SEP, on the one hand, is always a single-point function; on the other hand, difference in potential (i.e., V) is always a two point function, as is any vector.

Yet many graduate level physics and electromagnetics papers and texts erroneously confuse ϕ and V in the static case! Such an interpretation is of course quite incorrect.

---

* *Two spatial points involve at least $\Delta t = \Delta L/c$ in time. All vectors and gradients involve 2 separated spatial points, and thus present timelines in 4-space. ϕ_4 is a point, not a line, in 4-space.*

Another common assumption in present EM theory -- that the electrostatic potential (ϕ_0) of the normal vacuum is zero -- has no legitimate basis. In fact, we know ϕ_0 is nonzero because the vacuum is filled with enormous amounts of fluctuating virtual state activity, including incredible charge fluctuations. And by virtue of its point definition, ϕ_0 must be the "instantaneous intensity" of these fluctuations -- but both in space and time. The scalar electrostatic potential is therefore the "instantaneous stress" on spacetime itself, and a measure of the intensity of the virtual state flux through a 4-dimensional spacetime point.

Potential theory was largely developed in the 1800's, before the theory of relativity. Time flowrate was then regarded as immutable. Accordingly, electrostatic "intensity" was chosen as "spatial intensity," with the connotation of "spatial flux density." This assumes a constant, immutable rate of flow of time, which need not be true at all if we believe relativity. Such a spatial "point" intensity is actually a "line" in 4-space, and not a 4-dimensional "point" at all. Thus the spatial potential -- ϕ_3 -- is a very special case of the real spacetime potential -- ϕ_4, or charge and electromagnetic theory today is accordingly a special case of the real 4-space electromagnetism that actually exists! Note also that charge is a 4-dimensional concept.

Now mass is a spatial, 3-dimensional concept. Rigorously, mass does not exist in time -- masstime exists in time. Mass and charge are thus of differing dimensionalities!

Also, according to quantum mechanics, the charge of a particle -- e.g., of an electron -- is due to the continual flux of virtual particles given off and

absorbed by the observable particle of mass. Thus charge also is conceptually a measure of the virtual flux density, and directly related to ϕ. Further, since the charge exists in time, it is the charge of a particle of spatial mass that gives it the property of masstime, or existing in time.

Here a great confusion and fundamental error has been thrown into the present EM theory by the equating of "charge" and "charged mass." As we have seen, the two things are really very different indeed.

To speak of a spatial "amount" of charge erroneously limits the basic EM theory to a fixed time flowrate condition (which of course it was considered to be, prior to Einstein's development of relativity). Thus when the limited present theory encounters a "relativistic" case (where the time flowrate changes), all sorts of extraordinary corrections must be introduced. The real problem, of course, is with the fundamental definitions of electrostatic potential and charge. The spatial "amount" of charge (i.e. the coulomb) as we presently erroneously use the term, is actually the spatial amount of observable "charged mass." To correct the theory, one must introduce the true 4-space SEP and separate the definitions of charge and charged mass.

Only when a mass is moved does one have work -- and voltage or vector fields. (The reason one has voltage and E field connected to a normal electrostatically charged object in the laboratory is because an excess of charged-particle masses are assembled on the object, and these masses are in violent motion! A true static charge would have no E field at all.)

Table 1. Some Present Theoretical Facts

- $Ø_3$-FIELD CONCEIVED BEFORE RELATIVITY

  - POINT FUNCTION IN SPACE
  - LINE FUNCTION IN SPACETIME
  - TIME FLOWRATE CONSIDERED IMMUTABLE
  - SPECIAL CASE OF $Ø_4, \ldots\ldots, Ø_N$

- GRADIENT BETWEEN TWO POINTS IN $Ø_3$ FIELD

  - PRODUCES VOLTAGE
  - PRODUCES E FIELD
  - MOVES ELECTRON
  - IS AN AREA IN 4-SPACE

- GRADIENT MAY BE BETWEEN SEPARATED POINTS IN TWO SUPERPOSED Ø-FIELDS

- Ø-FIELD CAN "MOVE" AT INFINITE VELOCITY*

* JACKSON, CLASSICAL ELECTRODYNAMICS, 2ND EDITION, P. 223

Table 2. Some Proposed $Ø_4$ Characteristics

- SPATIOTEMPORAL $Ø_4$ FIELD
  - STRESS ON SPACETIME
  - CAN CHANGE RATE OF FLOW OF TIME
- GRADIENT BETWEEN 2 POINTS IN $Ø_4$ FIELD
  - PRODUCES COMPLEX V_4
  - WILL MOVE ELECTRON IF
    - -- $V_3 \neq 0$, AND
    - -- $\nu_1 = \nu_2 = C$
  - WILL NOT MOVE ELECTRON IF
    - -- $V_3 = 0$, OR
    - -- $\nu_1 \neq \nu_2$
- GRADIENT MAY BE BETWEEN SEPARATED POINTS IN TWO SUPERPOSED $Ø_4$ FIELDS
- $Ø_4$ WAVE MOVES AT $0 \leq \nu_4 \leq \infty$
- $Ø_4$ WAVE IS COMPLEX AND LONGITUDINAL

ϕ-field need not involve observable mass accumulation, but only charge (virtual flowrate intensity) accumulation. Accumulated masses are like so many gallons of water; accumulated charge is like so much pressure on both the water (space) and the time in which the water is existing.

Now, if one varies the SEP solely as a point function, one would have a purely scalar complex longitudinal wave, and not a vector wave at all. This is the fundamentally new electrical wave that Tesla discovered in 1899.

Rigorously, all vector fields are two-point functions and thus decomposable into two scalar fields, as Whittaker showed in 1903. It follows that any vector wave can be decomposed into two scalar waves. By implication, therefore, a normal transverse EM vector wave, e.g., must simply be two coupled scalar (Tesla) waves -- and these scalars independently would be longitudinal if uncoupled. An ordinary transverse EM vector wave is thus two pair-coupled Tesla scalar longitudinal waves, and only a single special case of the much more fundamental electromagnetics discovered by Nikola Tesla.

A Tesla (scalar potential) wave -- i.e., a massless wave in pure ϕ_0, the stress of the spacetime medium would have very strange characteristics indeed. For one thing, since it moves in a complex 4-space, it has many more modes of movement than does a simple wave in 3-space. And for another thing, it need not be bound at all by the speed of (vector) light. In current theory, one ϕ_3-field does not directly interact or couple with other existing ϕ_3-fields except by simple superposition. Therefore presently the ϕ-field is considered to have no drag limitation at all, hence infinite velocity. (E.g., as stated in Jackson, Classical Electrodynamics, 2nd edition, page 223.)

Actually, a ϕ_4-wave can and will interact with some of the other existing ϕ_4-waves in the medium transversed, and this interaction can involve pair-coupling into EM vector fields and waves, an interaction not presently in the electrodynamics theory. The result of scalar pair-coupling creates a finite amount of vector "drag" on the ϕ_4-wave, so it then has less than infinite velocity. However, if this drag is small due to limited pair-coupling, the scalar wave's velocity through the slightly dragging medium still may be far greater than the speed of vector EM waves (light) in vacuum. On the other hand, if the pair-coupling is made severe, the ϕ-wave may move at a speed considerably below the speed of vector light waves in vacuum. The velocity of the ϕ_4-wave is thus both variable and controllable or adjustable (e.g., simply by varying its initial amplitude, which through a given medium changes the percentage of pair-coupling and hence the degree of drag on the scalar wave). The Tesla scalar wave thus can have either subluminal or superluminal velocity, in contradiction to present theory.

Note that the scalar wave also violates one of Einstein's fundamental postulates -- for the speed of our "new kind of light" wave is not limited to c, and need not be the same to every observer. Thus Tesla scalar waves lead to a new "superrelativity" of which the present Einstein relativity is only a highly special case!

Table 3. Tesla Waves Can:

- **ESTABLISH STANDING WAVES**
  - **in the earth**
  - **in the ionosphere**
- **TAP ENERGY FROM THE EARTH'S CORE**
- **TRAVEL FASTER OR SLOWER THAN LIGHT**
- **CHANGE RATE OF TIME FLOW**
- **AFFECT ALL FIELDS, INCLUDING GRAVITY**
- **COMMUTE BETWEEN VIRTUAL AND OBSERVABLE**

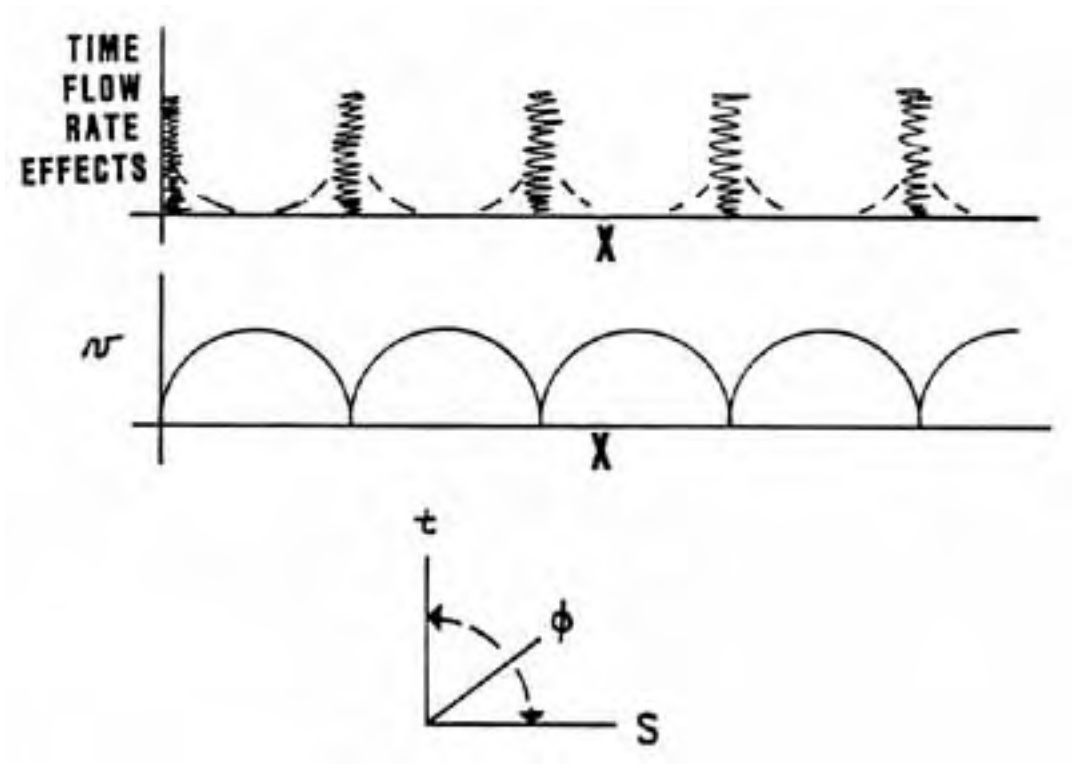

Figure 1. Tesla's Standing Columnar Wave

But let us now look for some subtle but real examples of scalar waves and scalar pair-coupling in nature. As is well known, a tectonic fault zone can provide anomalous lights, sounds, etc. from stresses, piezoelectrical activity, and telluric currents in the earth and through the fault zone. In examining the fault zone phenomena, I finally realized that a fault zone was literally a scalar interferometer i.e., if one can have scalar ϕ_4-waves, they can interfere, either constructively or destructively. Their interference, however, produces scalar pair-coupling into vector EM waves. This coupling may be at a distance from the interferometer itself, and thus the interferometer can produce energy directly at a distance, without vector transmission through the intervening space. Coupling of ϕ waves with the paired scalars comprising ordinary EM vector waves can also occur. If this triplex coupling forms additional EM vector waves 180 degrees out of phase, the ordinary EM wave is diminished or extinguished. If the scalar triplex coupling occurs so as to create vector EM waves in phase with the interacting vector EM wave, the amplitude of the ordinary vector wave is increased.

Scalar potential waves can thus augment or diminish, or create or destroy, ordinary EM waves at a distance by pair-coupling interference under appropriate conditions, and this is in consonance with the implications of Whittaker's fundamental 1903 work.

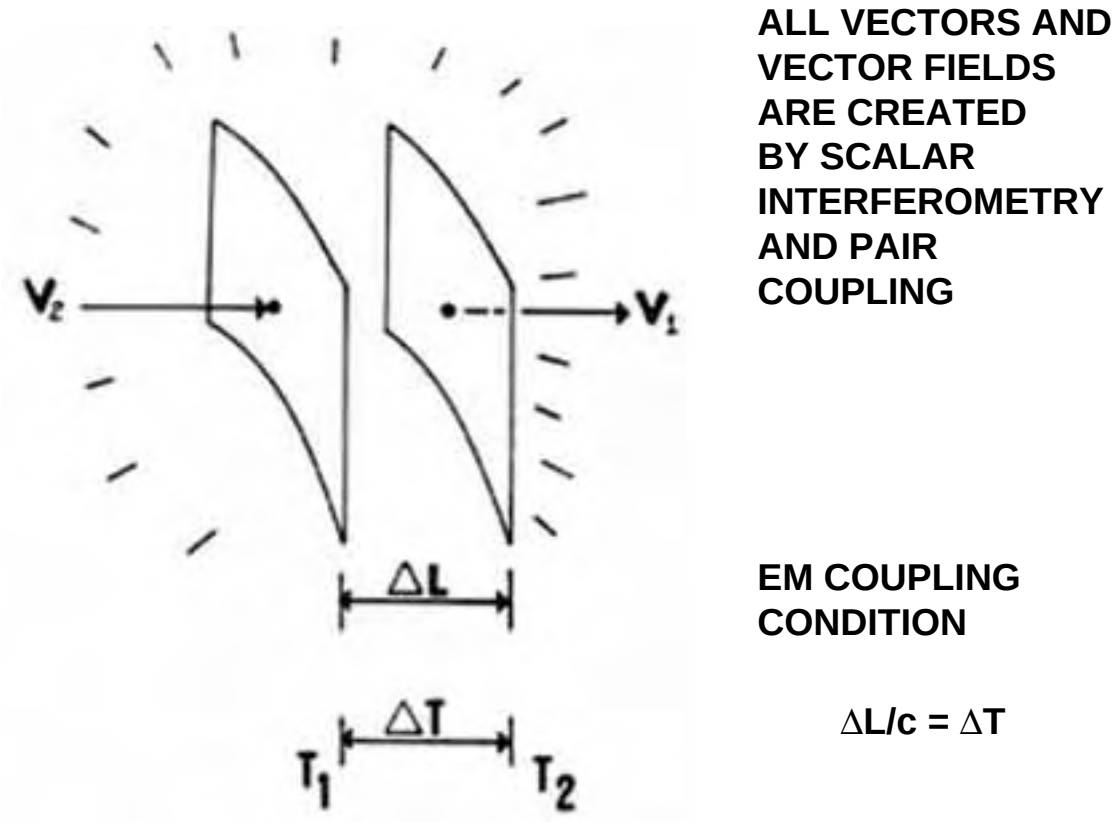

Figure 2. Pair Coupling: Producing EM at a Distance

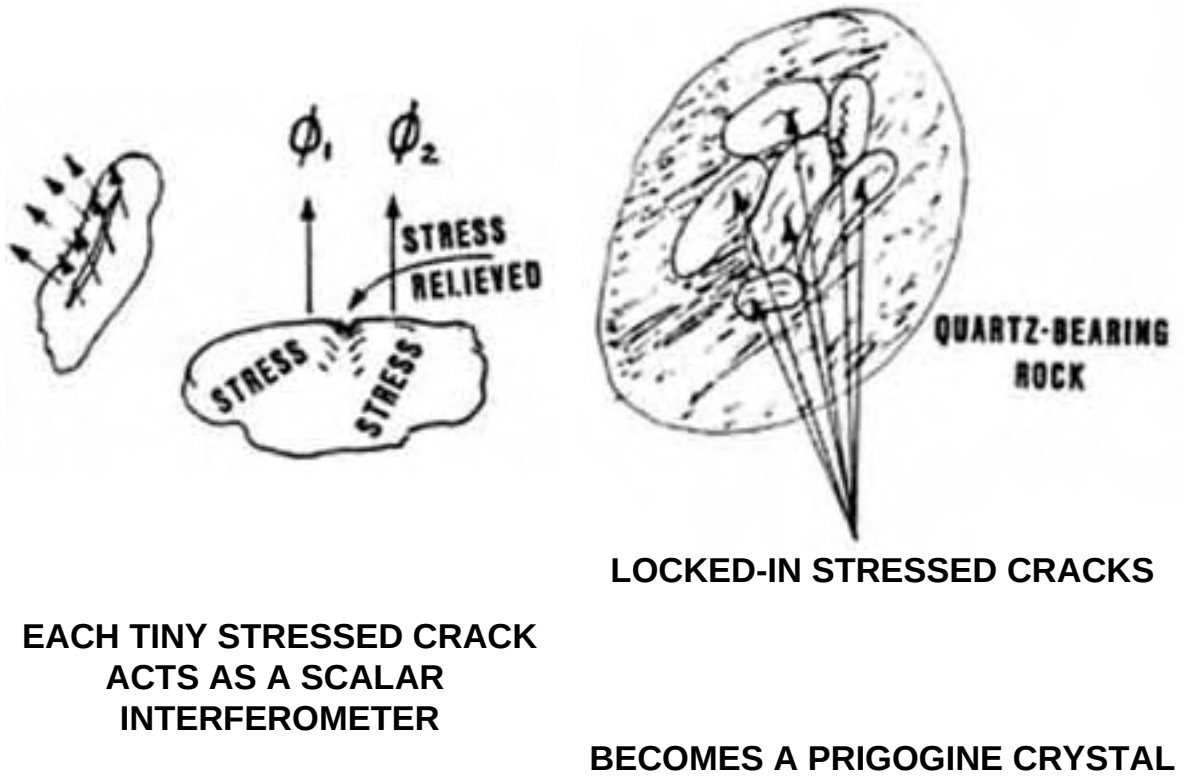

Figure 3. Natural Scalar Interferometers

An earthquake fault zone is such a scalar interferometer. Stresses and charge pileups exist in the plates on each side adjacent to the fault, with stress relief existing in the middle in the fault fracture itself. Since the rock is locally nonlinear, the mechanical stresses and electrical currents in it are also locally nonlinear. This results in the generation of multiple frequencies of ϕ_4-waves from each side of the fault interferometer, yielding two complex Fourier expansion patterns of scalar potential waves. On occasion these two Fourier-transformed scalar wave patterns couple at a distance to produce stable ordinary electromagnetic field in a 3-dimensional spatial pattern -- e.g., a stress light such as the Vestigia light covered in Part I of The Excalibur Briefing. Driven by the erratic two scalar Fourier expansion patterns of the scalar interferometer (whose input stresses normally slowly change), an erratic, darting, hovering "spooklight" of the variety studied by Vestigia is produced.

As the stresses change in each side of the interferometer, the distant scalar coupling zone is affected. Thus the stresslight moves and its form changes, but it may be relatively stable in form for seconds or minutes. Since the stresses in the rock may be intense, the stress light may involve an intense pair of ϕ-patterns coupling into the sphere or ball of vector EM energy. The atoms and molecules of the air in the region of the coupled stresslight ball thus become highly excited, giving off radiant energy as the excited states decay.

Since much of the piezoelectric material in the stressed rocks is quartz grains, the features of quartz are of particular interest. Each little quartz grain is itself highly stressed, and has stress cracks. It is therefore a little scalar interferometer. Further, quartz is transparent to infrared and ultraviolet; and the random orientation of all the quartz scalar interferometers may also form a Prigogine system far from thermodynamic equilibrium. If so, this system can tap into highly energetic microscopic electromagnetic fluctuations to produce large-scale, ordered, relatively stable patterns of electromagnetic energy at a distance.

In short, all of this lends support to the formation of relatively stable but somewhat erratic patterns of electromagnetic energy at a distance from the fault itself. In the atmosphere, such scalar interferometers could form in clouds or even in the air or between clouds and earth. If so, such rare but occasional "weather" scalar interferometers could account for the rare phenomenon of ball lightning. The intense energy of the ball of lightning, as compared to the lesser energy of an earthstress light, could well be due to the enormous electrical charges between clouds or between cloud and earth, available to fuel the scalar interferometer. Very probably it is this phenomenon which gave Tesla the clue to scalar wave interferometry.

Thus such phenomena as earthstress lights, ball lightning, and the Tesla system of wireless transmission of energy at a distance with negligible losses and at speeds exceeding the speed of light may be explained. They are complex, however, and involve fundamental changes to present electromagnetic theory. These changes include utilizing 4-space scalar

electrostatic potentials, scalar waves, pair coupling, ordinary 3-dimensional Fourier expansion, the Prigogine effect, and the properties of piezoelectric materials in rocks.

Since the scalar potential also stresses time, it can change the rate of flow of time itself. Thus it affects anything which exists in time -- including the mind, both of the individual and at various levels of unconsciousness. Therefore the same functions that result in earthstress lights also affect mind and thought, and are in turn affected by mind and thought. This is the missing ingredient in Persinger's theory that UFO's are correlated with, and a result of, fault zones and earth stresses. While Persinger seems to feel this is a "normal physics" explanation, it indeed involves a paranormal explanation.

The time-stressing ability of the true ϕ scalar wave also explains the interaction of such earthstress lights with humans and human intent, as noted by other researchers. (E.g., the lights that repeatedly seemed to react to the observers, as detailed by Dr. Harley Rutledge in his epoch-making Project Identification, Prentice-Hall, 1981.)

These ideas in condensed form comprise the concepts required to violate the speed of light and produce an ordinary electromagnetic field at a distance, using scalar interferometry, without losses -- as Tesla had done in his wireless transmission system which he had tested prior to 1900 and had perfected by the 1930's. Scalar interferometry can give stable regions of EM or "light energy" at a distance without losses, particularly as detailed in the beautiful Vestigia experiments, and it is within our grasp to utilize the new effects. Indeed, any stress crack in a material can result in the scalar potential interferometer effect. Exophoton and exoelectron emission -- poorly understood but already known in fatiguing of materials -- must be at least partly due to the scalar interferometer effect.

However, one additional caution should be advanced. Normal movement of electrons allows so much "sideplay" movement of the electrons -- and there is so much such sideplay electron motion in the surrounding vicinity -- that pair coupling is almost instantaneous for small waves. Thus orbital electrons in atoms seem to absorb and emit vector EM photons. Actually they also emit some percentage of scalar waves as well. Since a scalar wave is comprised exclusively of disturbance in the virtual state, it need not obey the conservation of energy law. Further, a scalar wave of itself does not "push electrons" or other charges; hence it is nearly indetectable by present detectors. Ionization detectors such as a Geiger counter tube, e.g., are exceptions if the scalar wave encountered is fairly strong. In that case sufficient triplex coupling with the ionized gas occurs to produce additional ionization or charge, breaching the tube's cutoff threshold and producing a cascade discharge of electrons and voltage which is detected. But weak scalar waves are presently indetectable by ordinary instruments. However, these small scalar waves are detectable by sensitive interferometry techniques e.g., such as an electron interferometer. Since the use of such instruments is quite rare, then indeed we have been living immersed in a sea of scalar waves without knowing it.

Finally, the percentage of scalar waves produced by changes in charged

mass pileups can be increased by utilizing charged mass streaming. Essentially the charged masses must be moved suddenly, as quickly as possible, at or near the complete breakdown of the medium. For this reason, Tesla utilized sparkgaps in his early transmission systems, but also found that he could induce ionized media to "breakdown" in such fashion by a slow growth process. One of his early patented atmospheric wireless transmission systems is based on this fact. However, it was necessary to use a very high voltage, insuring extreme stress on the medium and hence some spillover stress onto time itself. In other words, ϕ_3 is always an approximation; at sufficiently high spatial stress, sufficient spillover ϕ_4 exists to give Tesla scalar waves. For this reason, Tesla used very high voltages and extremely sharp discharges to give "streaming" of the charged masses and thus high percentages of ϕ_4 waves. This suggests that the breakdown of dielectrics is a much richer phenomenon than is presently allowed for in the conventional theory.

To summarize, electrostatic potential -- ϕ-field is stress on the spacetime medium at a four-dimensional point. I. e. , it is a sort of pressure on the medium, but pressure on all four dimensions, not just on the three spatial dimensions. Thus in the new standard theory, ϕ_4 may have complex values. In addition, a ϕ-wave is to be interpreted as a scalar longitudinal wave in complex spacetime -- directly in ϕ_0, the normal average 4-space stress itself. And charge and charged mass must be recognized as two separate concepts. This is the gist of what I finally recognized about Nikola Tesla's work and fundamental discovery.

This is exciting, for it means that Tesla stress waves can affect either space or time individually, or both space and time simultaneously, or even oscillate back and forth between primarily affecting time and primarily affecting space, Tesla's waves were actually these ϕ-field scalar waves. As such, they were fundamentally different from ordinary electromagnetic waves, and had entirely different characteristics, just as Tesla often stated. E. g., a Tesla wave can either move spatially, with time flowing linearly; move temporally only (sitting at a point and waxing and waning in magnitude -- but changing the rate of flow of time itself in doing so, and affecting gravitational field, fundamental constants of nature, etc,), or move in a combination of the two modes. In the latter case, the Tesla wave moves in space with a very strange motion -- it oscillates between (1) spatially standing still and flexing time, and (2) moving smoothly in space while time flows smoothly and evenly. I.e., It stands at one point (or at one columnar region), flexing for a moment; then slowly picks up spatial velocity until it is moving smoothly through space; then slows down again to a "standing column," etc. This is Tesla's fabulous "standing columnar wave."

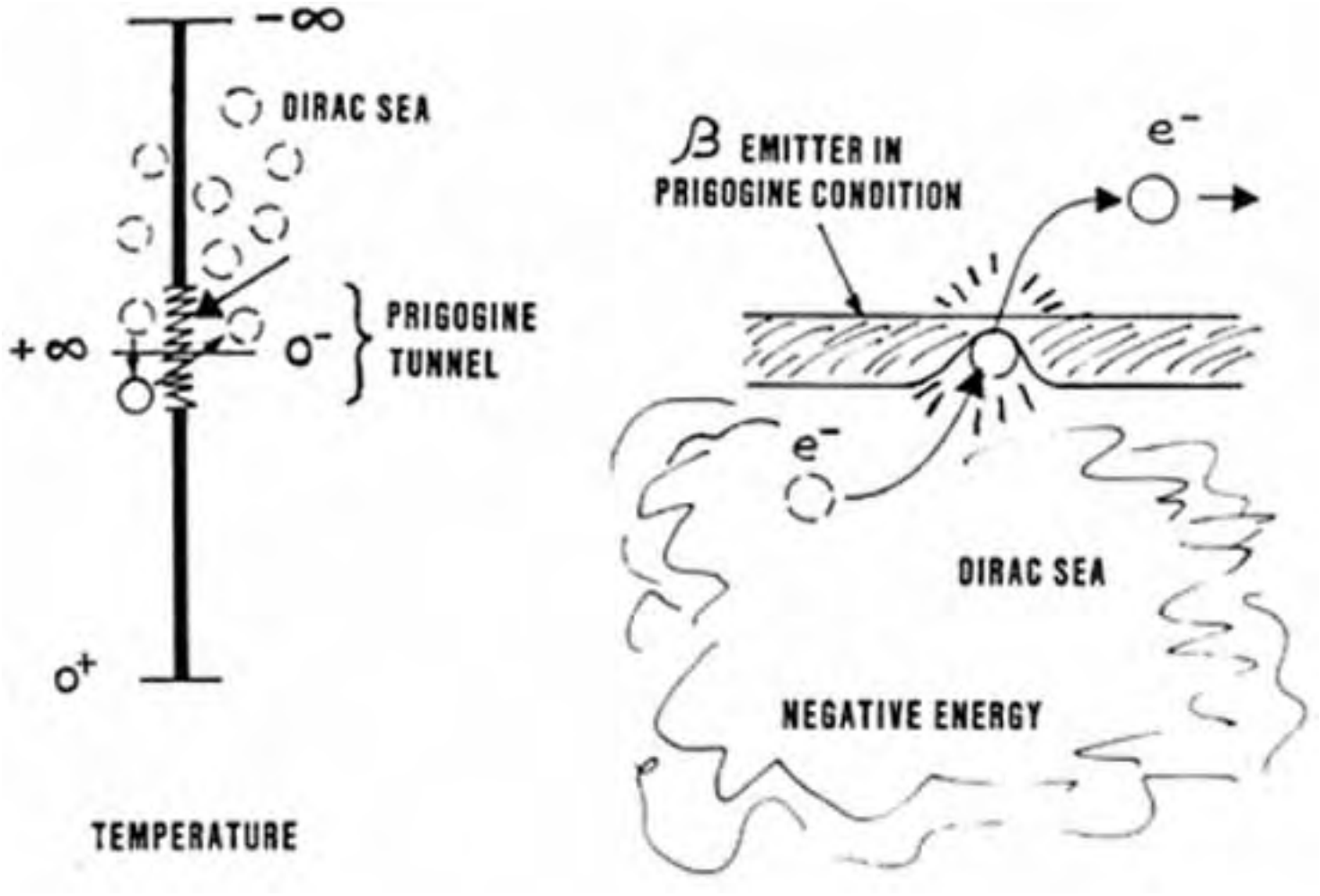

Figure 4. Exoelectric Emission

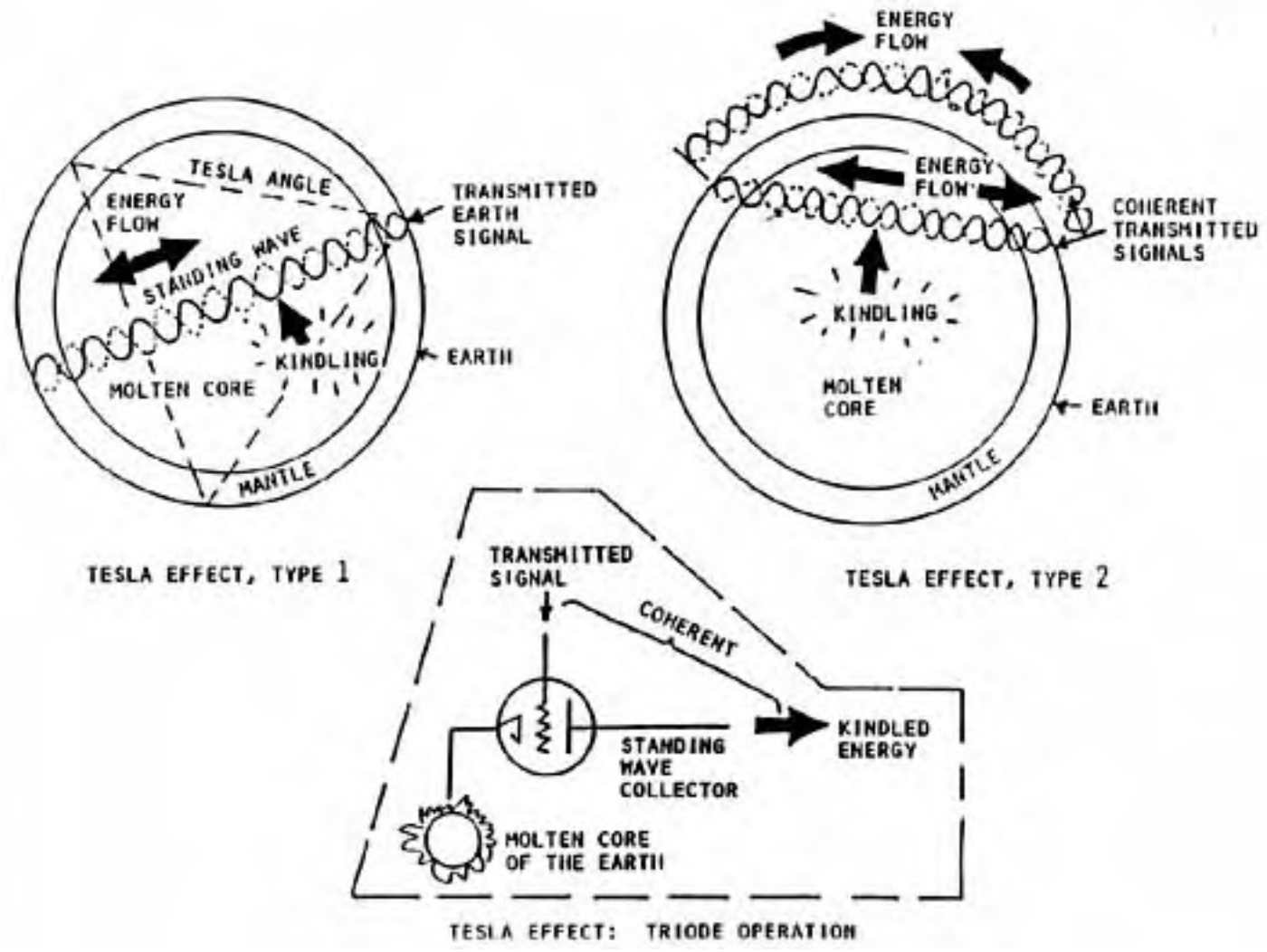

Figure 5. The Tesla Effect

Another wild characteristic of the Tesla wave is that it can affect the rate of flow of time itself; hence it can affect or change every other field including the gravitational field -- that exists in time flow. It can also affect all universal constants, the mass of an object, the inertia of a body, and the mind and thoughts as well! All of these exist in the flow of time, and they are affected if the time stream in which they exist is affected. This was the awful secret that Tesla partially discovered by 1900, and which he came more and more to fully realize as he pursued its nature and its ramifications into the 1920's and 1930's.

Tesla also found he could set up standing ϕ-field waves through the earth. He in fact intended to do so, for he had also discovered that all charges in the highly stressed earth regions in which such a standing wave existed produced ϕ-fields which would feed (kindle) energy into the standing ϕ-field wave by pair coupling. I.e., normal vector field energy would "assemble" onto the scalar matrix wave by means of pair-coupling. Thus by transmitting a scalar standing wave into the earth, he could easily tap the fiery scalar fields produced in the

molten core of the planet itself, turning them into ordinary electromagnetic energy. In such case, a single generator would enable anyone to put up a simple antenna and extract all the free energy desired.

When Tesla's alarmed financial backers discovered this was his real intent, they considered him a dangerous madman and found it necessary to ruthlessly stop him at all costs. And so his financial support was withdrawn, he was harassed in his more subtle patent efforts (and the patents themselves were adulterated), and his name gradually was removed from all the electrical textbooks. By 1914 Tesla, who had been the greatest inventor and scientist in the world, had become essentially a nonperson.

A few other persons in the early 1900's also were aware that potential and voltage are different. And some of them even learned to utilize Tesla's ϕ-field, even though they only vaguely understood they were utilizing a fundamentally different kind of electromagnetic wave. For example, James Harris Rogers patented an undersea and underground communications system which Tesla later confirmed utilized Tesla waves. The U.S. secretly used the Rogers communications system in World War I to communicate with U.S. submarines underwater, and to communicate through the earth to the American Expeditionary Force Headquarters in Europe. The Rogers system was declassified after the War and very shortly after that, it had mysteriously been scrubbed off the face of the earth. Again, potential stress waves -- Tesla waves -- were eliminated and "buried."

Probably the most brilliant inventor and researcher into Tesla's electromagnetics was T. Henry Moray of Salt Lake City, Utah. Dr. Moray actually succeeded in tapping the limitless zero-point energy of vacuum (spacetime) itself. By 1939, Dr. Moray's amplifier contained 29 stages and its output stage produced 50 kilowatts of power from vacuum. Interestingly, another 50 kilowatts could be tapped off any other stage in the device -- which consequently could have produced almost 1.5 megawatts of electrical power! Dr. Moray's epoch-making work was suppressed also. His device -- which represented over 20 years of heartbreaking accumulation of 29 working tubes from thousands made -- was destroyed by a Soviet agent in 1939, but not before the agent had obtained the drawings for building the tubes and the device itself. Today the Moray amplifier is a standard component of many of the Soviet secret superweapons and Tesla weapons.

In the 20's and 30's, Tesla announced the final perfection of his wireless transmission of energy without losses even to interplanetary distances. In several articles (e.g., H. Winfield Secor, "Tesla Maps Our Electrical Future, " Science and Invention, Vol. XVII, No.12, pp. 1077, 1124-1126), Tesla even revealed he used longitudinal stress waves in his wireless power transmission. Quoting from the article, "Tesla upholds the startling theory formulated by him long ago, that

the radio transmitters as now used, do not emit Hertz waves, as commonly believed, but waves of sound." "He says that a Hertz wave would only be possible in a solid ether, but he has demonstrated already in 1897 that the ether is a gas, which can only transmit waves of sound; that is such as are propagated by alternate compressions and rarefactions of the medium in which transverse waves are absolutely impossible." The wily Tesla did not reveal, of course, that such scalar waves nearly always immediately pair-coupled into vector waves when produced by normal means. Tesla himself was working with longitudinal scalar waves.

Table 4. Rogers' Undersea and Underground Communication System

- **SECRETLY USED BY U.S. IN WWI**
- **COMMUNICATED TO SUBS UNDERWATER**
  - **- ANY DEPTH, UP TO 30 KHZ**
  - **- REDUCED DEPTH, >30 KHZ**
- **COMMUNICATED TO EXPEDITIONARY HQ OVERSEAS**
  - **- 5,000 TIMES STRONGER THAN AERIAL**
  - **- STATIC-FREE**
- **DECLASSIFIED IN 1919**
  - **- TO REVOLUTIONIZE COMMUNICATIONS**
  - **- TO END ALL SURFACE ANTENNAS**
- **MYSTERIOUSLY "LOST"**
- **REDISCOVERED AND "LOST" THREE TIMES AFTER WWII**

continued

ORDER THE ALL NEW 2ND EDITION OF "FER DE LANCE"

Updated to the year 2002

Stunning new revelations about the secret scalar EM wars the media ignores

THIS BOOK IS THE ONLY SOURCE FOR THIS INFORMATION

The Tom Bearden Website

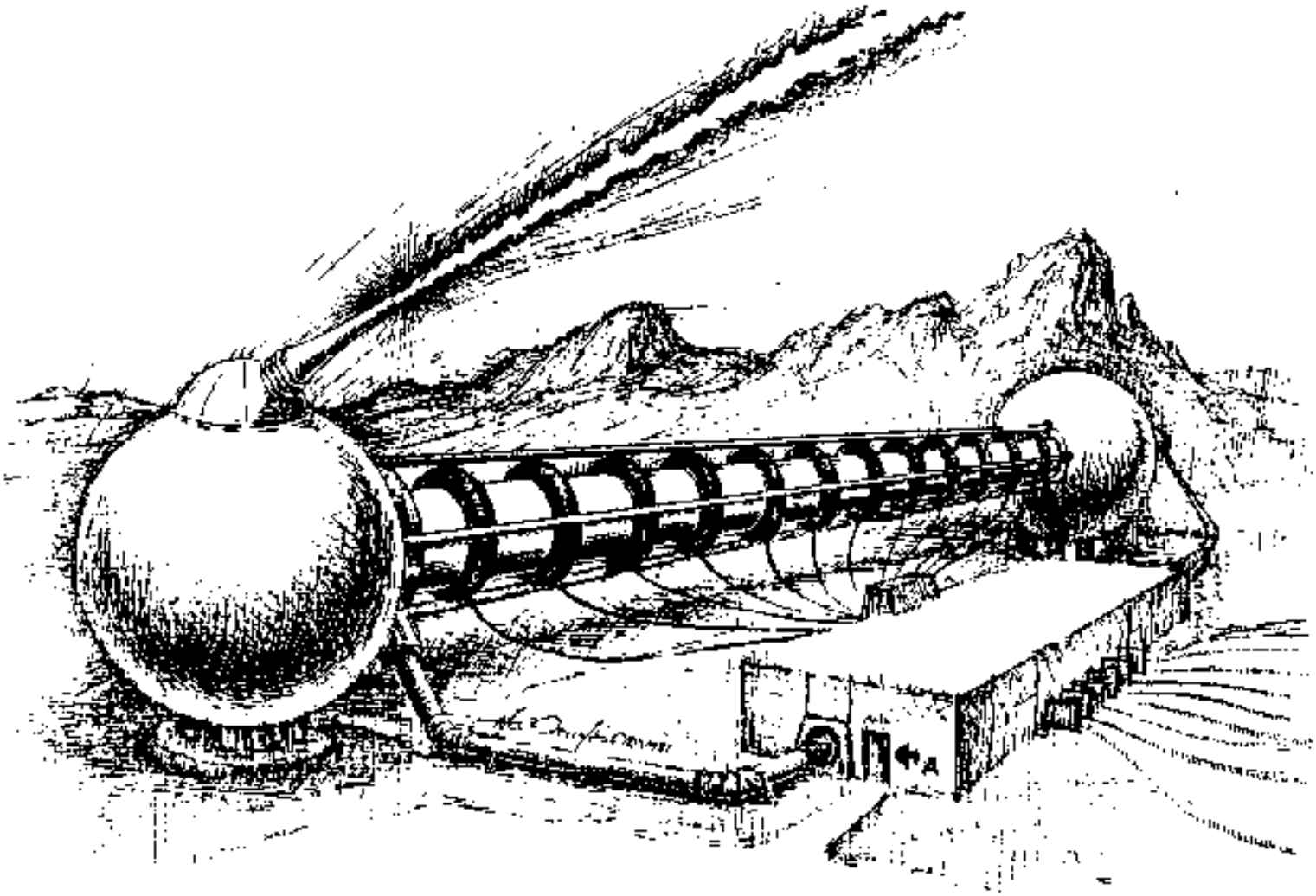

Scalar Potential Interferometer

Figure 6. Multimode Tesla Weapon

In the 1930's Tesla announced other bizarre and terrible weapons: a death ray, a weapon to destroy hundreds or even thousands of aircraft at hundreds of miles range, and his ultimate weapon to end all war -- the Tesla shield, which nothing could penetrate. However, by this time no one any longer paid any real attention to the forgotten great genius. Tesla died in 1943 without ever revealing the secret of these great weapons and inventions.

Unfortunately, today in 1981 the Soviet Union has long since discovered and weaponized the Tesla scalar wave effects. Here we only have time to detail the most powerful of these frightening Tesla weapons -- which Brezhnev undoubtedly was referring to in 1975 when the Soviet side at the SALT talks suddenly suggested limiting the development of new weapons "more frightening than the mind of man had imagined." One of these weapons is the Tesla howitzer recently completed at the Saryshagan missile range and presently considered to be either a high-energy laser or a particle beam weapon, (See Aviation Week & Space Technology, July 28, 1980, p. 48 for an artist's conception.)

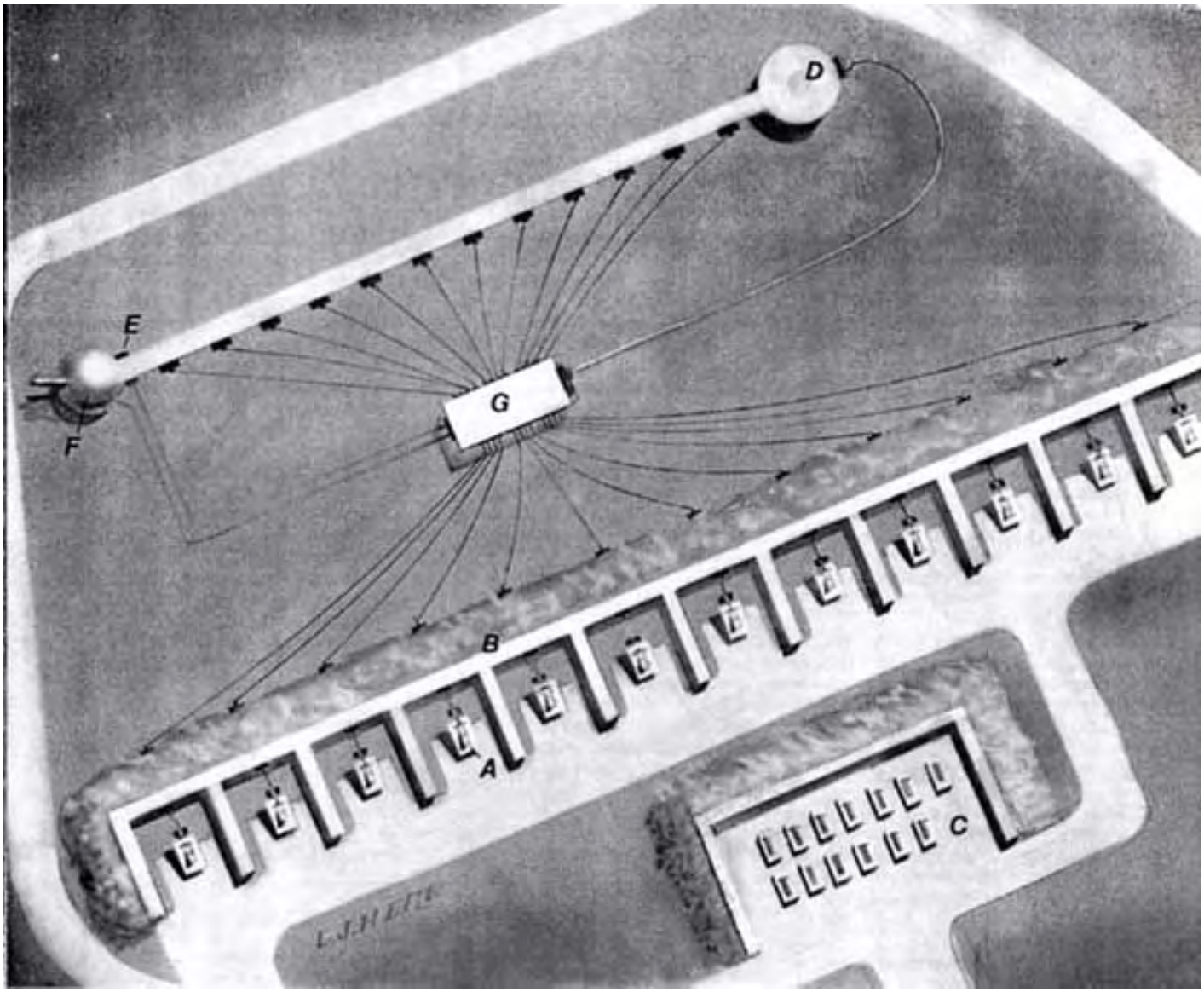

Aviation Week & Space Technology July 28, 1980

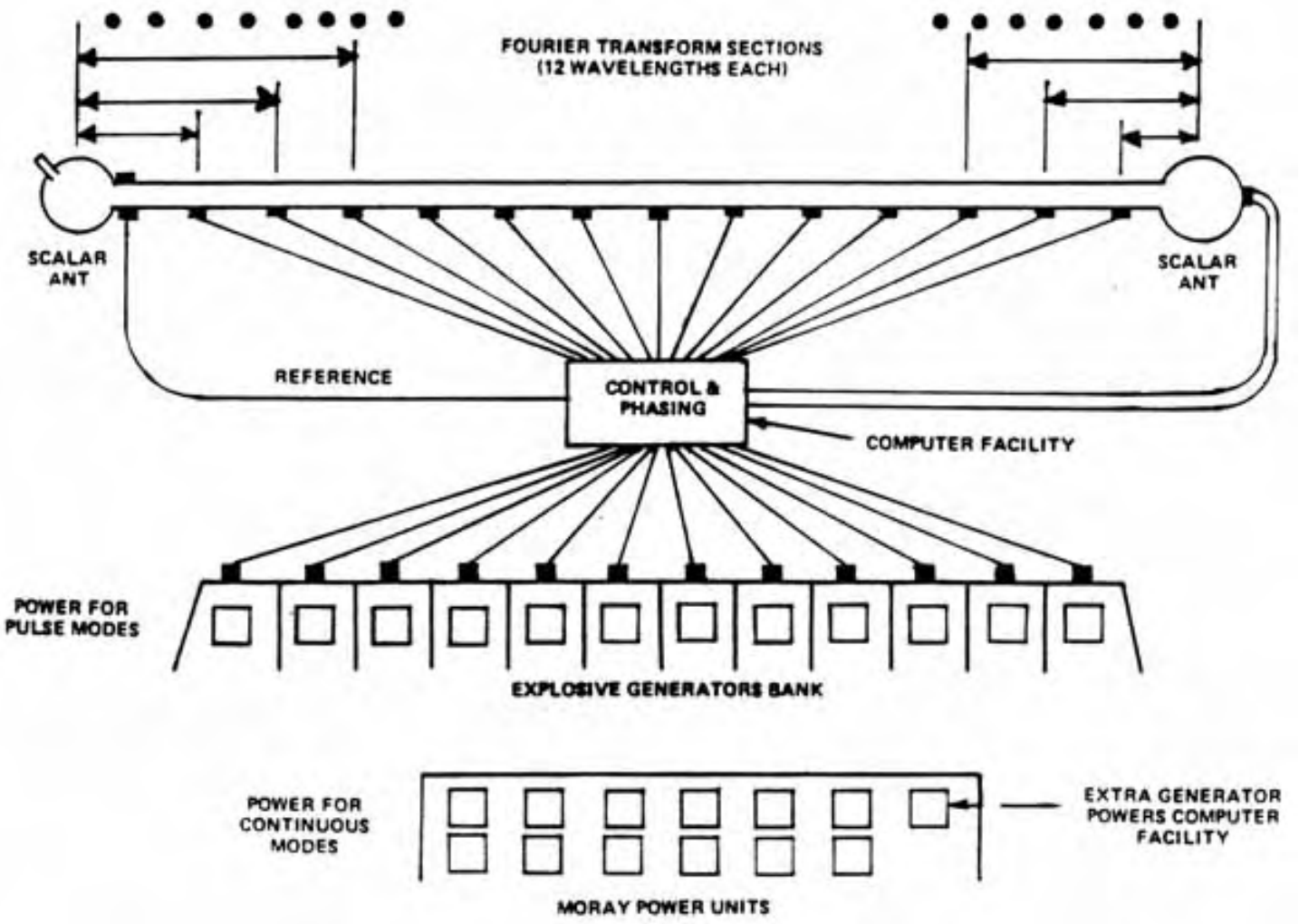

Figure 7. Tesla Weapons at Saryshagan

The Saryshagan howitzer actually is a huge Tesla scalar interferometer with four modes of operation. One continuous mode is the Tesla shield, which places a thin, impenetrable hemispherical shell of energy over a large defended area. The 3-dimensional shell is created by interfering two Fourier-expansion, 3-dimensional scalar hemispherical patterns in space so they pair-couple into a dome-like shell of intense, ordinary electromagnetic energy. The air molecules and atoms in the shell are totally ionized and thus highly excited, giving off intense, glowing light. Anything physical which hits the shell receives an enormous discharge of electrical energy and is instantly vaporized -- it goes pfft! like a bug hitting one of the electrical bug killers now so much in vogue.

If several of these hemispherical shells are concentrically stacked, even the gamma radiation and EMP from a high altitude nuclear explosion above the stack cannot penetrate all the shells due to repetitive absorption and reradiation, and scattering in the layered plasmas.

In the continuous shield mode, the Tesla interferometer is fed by a bank of Moray free energy generators, so that enormous energy is available in the shield. A diagram of the Saryshagan-type Tesla

howitzer is shown in figure 7. Hal Crawford's fine drawing of the interferometer end of the Tesla howitzer is shown in figure 6. Hal's exceptional rendition of the Tesla shield produced by the howitzer is shown in figure 8.

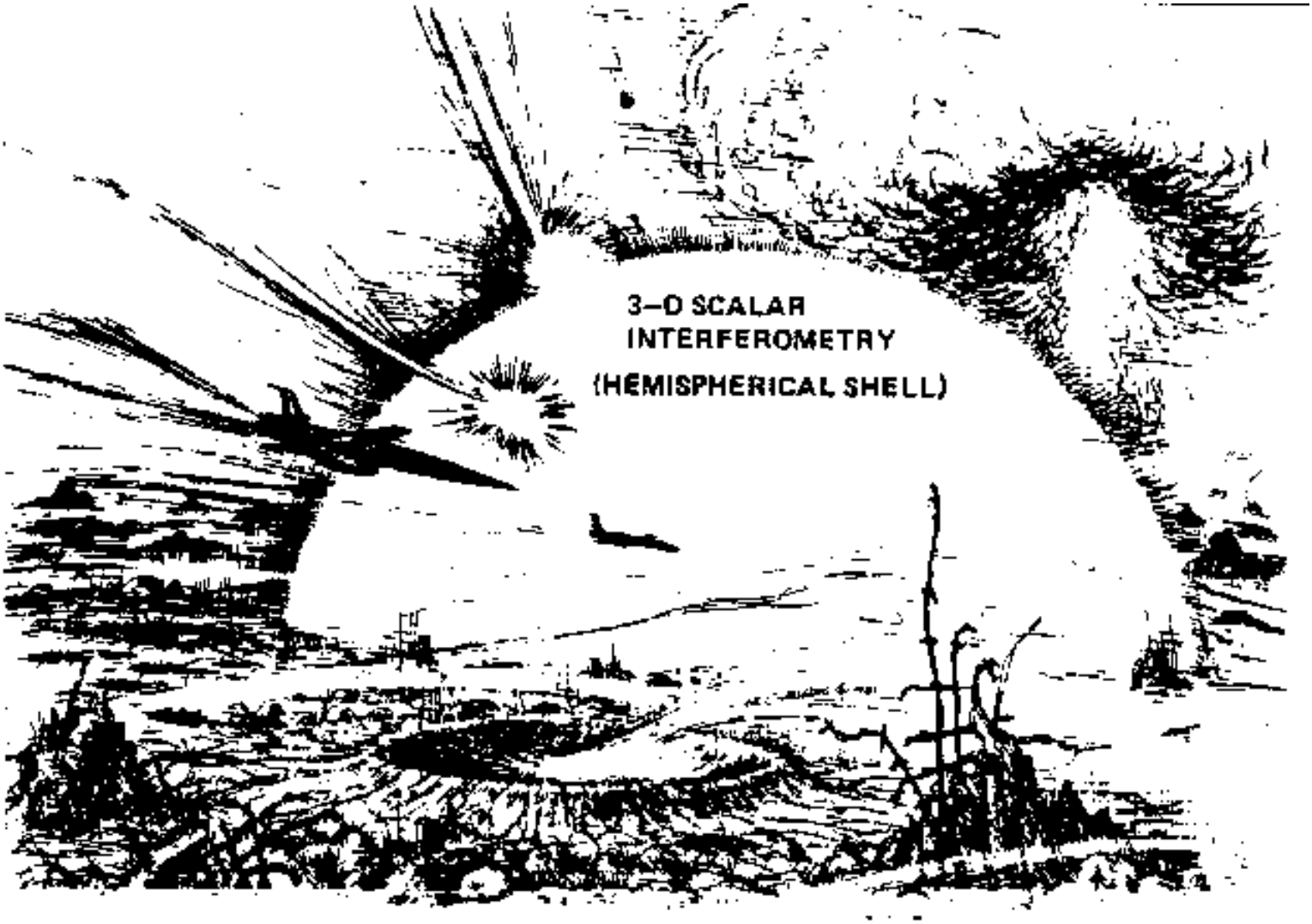

Figure 8. The Tesla Shield

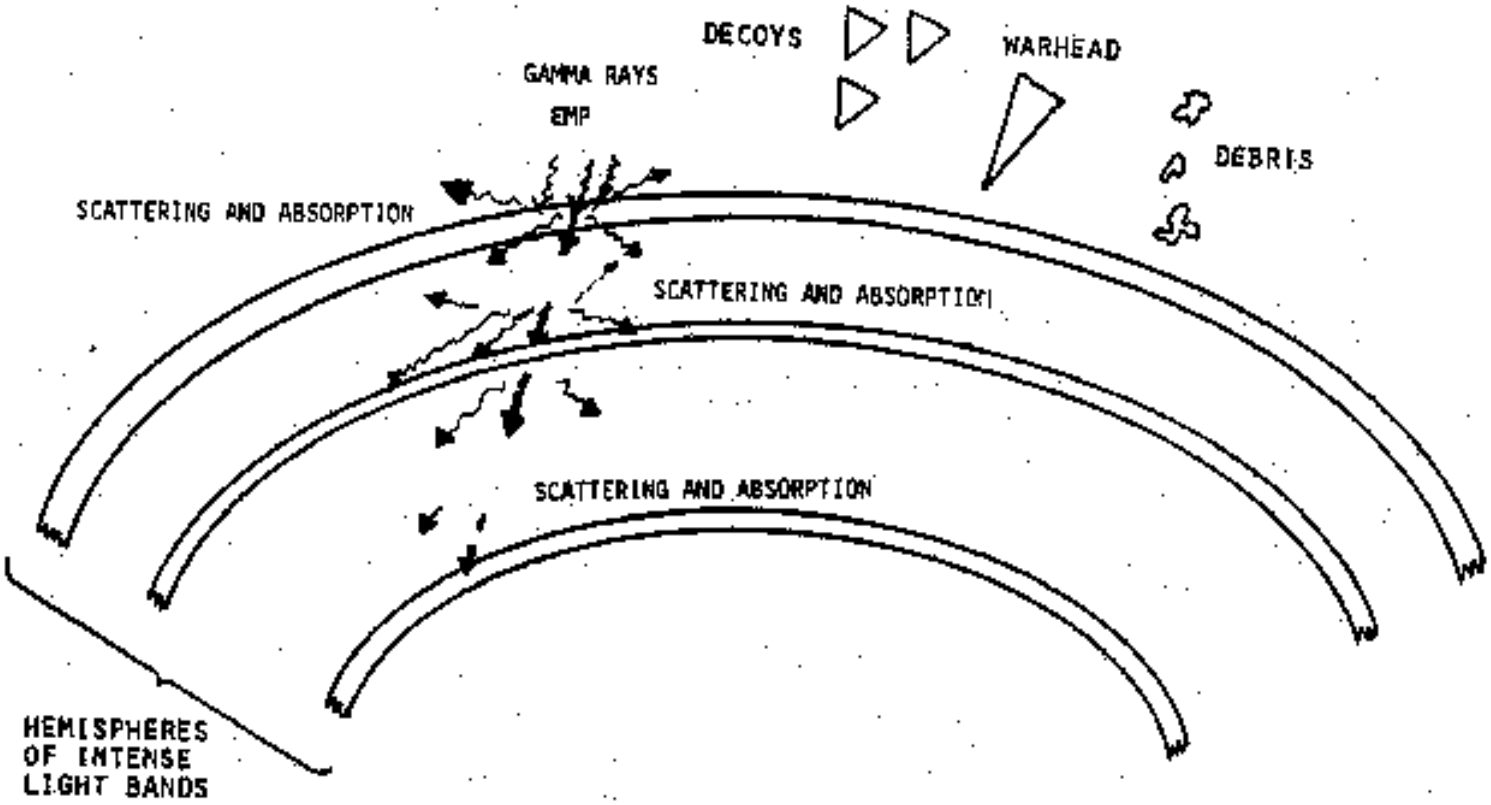

Figure 9. Tesla Terminal Area Defense System

In the pulse mode, a single intense 3-dimensional scalar phi-field pulse form is fired, using two truncated Fourier transforms, each involving several frequencies, to provide the proper 3-dimensional shape (Figure 10). This is why two scalar antennas separated by a baseline are required. After a time delay calculated for the particular target, a second and faster pulse form of the same shape is fired from the interferometer antennas. The second pulse overtakes the first, catching it over the target zone and pair-coupling with it to instantly form a violent EMP of ordinary vector (Hertzian) electromagnetic energy. There is thus no vector transmission loss between the howitzer and the burst. Further, the coupling time is extremely short, and the energy will appear sharply in an "electromagnetic pulse (EMP)" strikingly similar to the 2-pulsed EMP of a nuclear weapon.

This type weapon is what actually caused the mysterious flashes off the southwest coast of Africa, picked up in 1979 and 1980 by Vela satellites. The second flash, e.g., was in the infrared only, with no visible spectrum. Nuclear flashes do not do that, and neither does superlightning, meteorite strikes, meteors, etc. In addition, one of the scientists at the Arecibo Ionospheric Observatory observed a gravitational wave disturbance -- signature of the truncated Fourier pattern and the time-squeezing effect of the Tesla potential wave -- traveling toward the vicinity of the explosion.

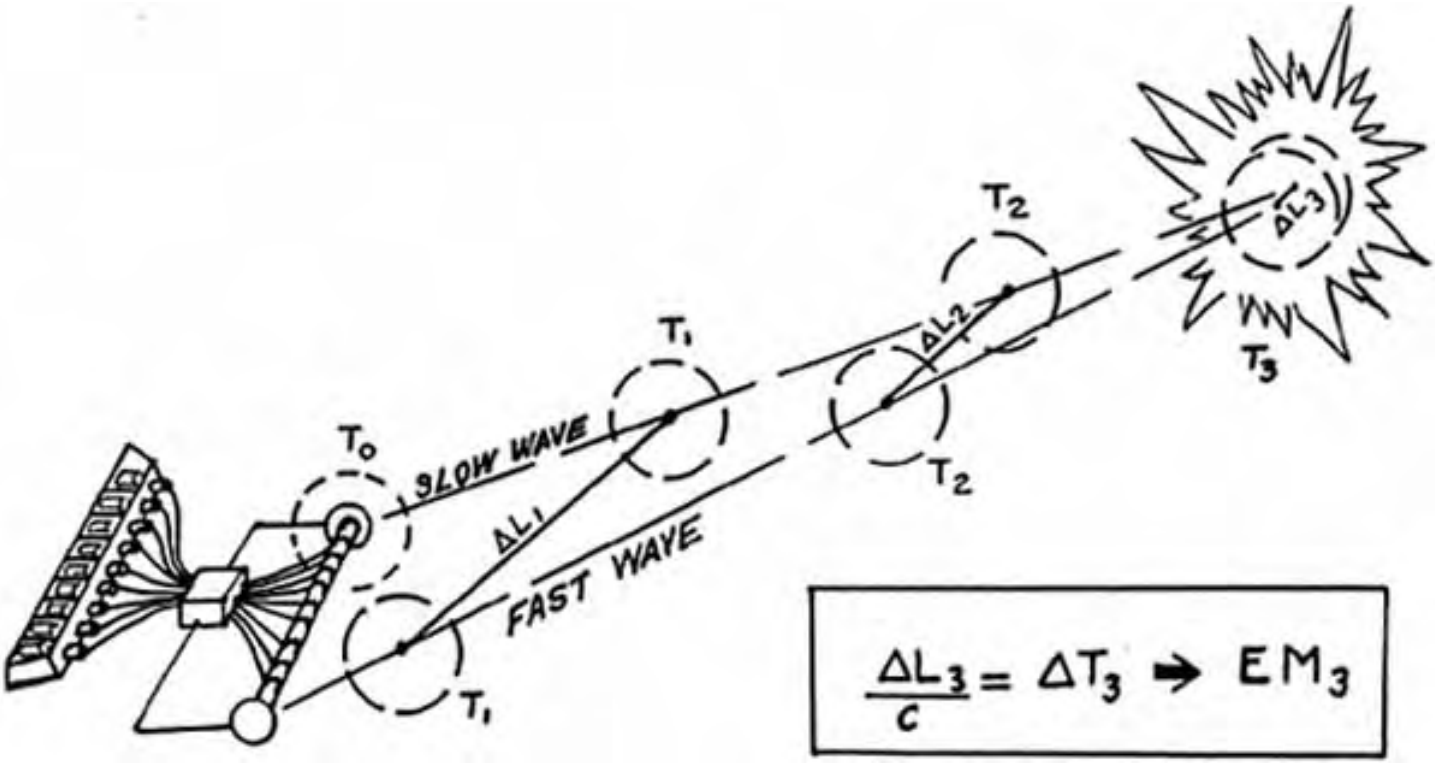

TESLA HOWITZER
(SCALAR INTERFEROMETER)

Figure 10. "Nuclear" Flashes off the Coast of Africa

Lithuania - 10 Sep 1976 - British European Airways Flight #831 between Moscow and London

CIA Report Released under FOIA

Figure 11. Continuous Tesla Fireball

The pulse mode may be fed from either Moray generators or -- if the Moray generators have suffered their anomalous "all fail" malfunction -- ordinary explosive generators. Thus the Tesla howitzer can always function in the pulse mode, but it will be limited in power if the Moray generators fail.

In the continuous mode, two continuous scalar waves are emitted -- one faster than the other -- and they pair-couple into vector energy at the region where they approach an in-phase condition. In this mode, the energy in the distant "ball" or geometric region would appear continuously and be sustained -- and this is Tesla's secret of wireless transmission of energy at a distance without any losses. It is also the secret of a "continuous fireball" weapon capable of destroying hundreds of aircraft or missiles at a distance. An example of a Soviet

test of this mode of operation is shown in figure 11.

Witness to a super weapon?

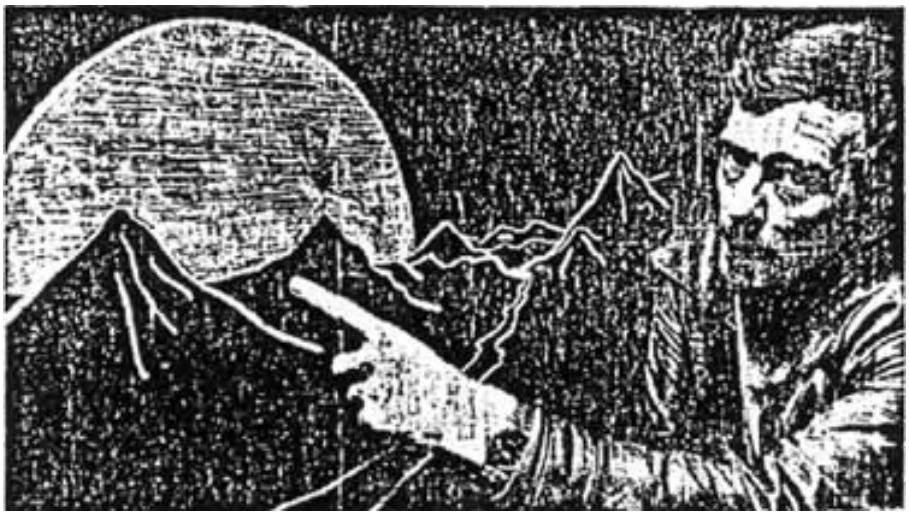

Nick Downie describes the strange lurid glow that flared silently over the Hindu Kush

THE SUNDAY TIMES, 17 AUGUST 1980

(Multiple incidents in Sept., 1979)

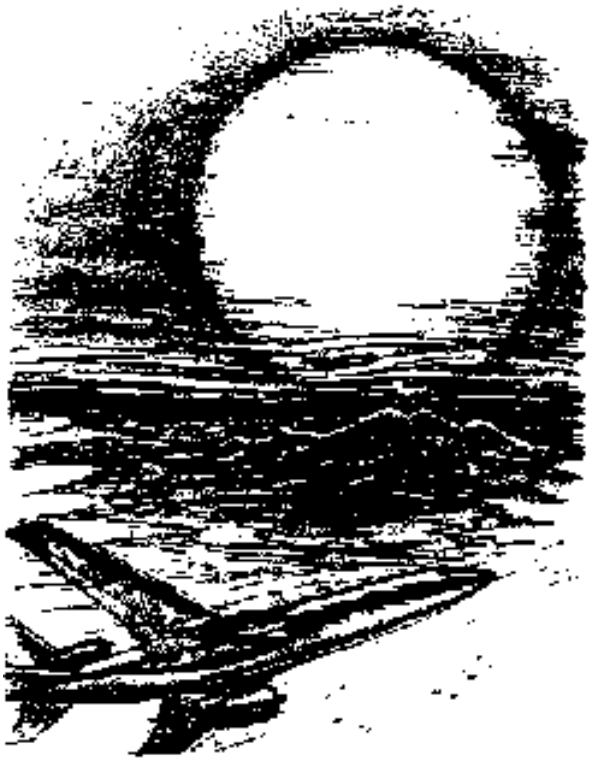

TEHERAN, IRAN 17 JUNE 1966

SEEN FROM NEAR MEHRABAD AIRPORT

OBSERVED 4-5 MINUTES

SEEN BY 2 AIRCRAFT

CIA REPORT RELEASED UNDER FOIA

Figure 12. Tesla EMP Globe

The volume of the Tesla fireball can be vastly expanded to yield a globe which will not vaporize physical vehicles but will deliver an EMP to them to dud their electronics. A test of this mode is shown in figure 12. (See also Gwynne Roberts, "Witness to a Super Weapon?", the London Sunday Times, 17 August 1980 for several other tests of this mode at Saryshagan, seen from Afghanistan by British TV cameraman and former War Correspondent Nick Downie.)

If the Moray generators fail anomalously, then a continuous mode limited in power and range could conceivably be sustained by powering the interferometer from more conventional power-sources such as advanced magnetohydrodynamic generators.

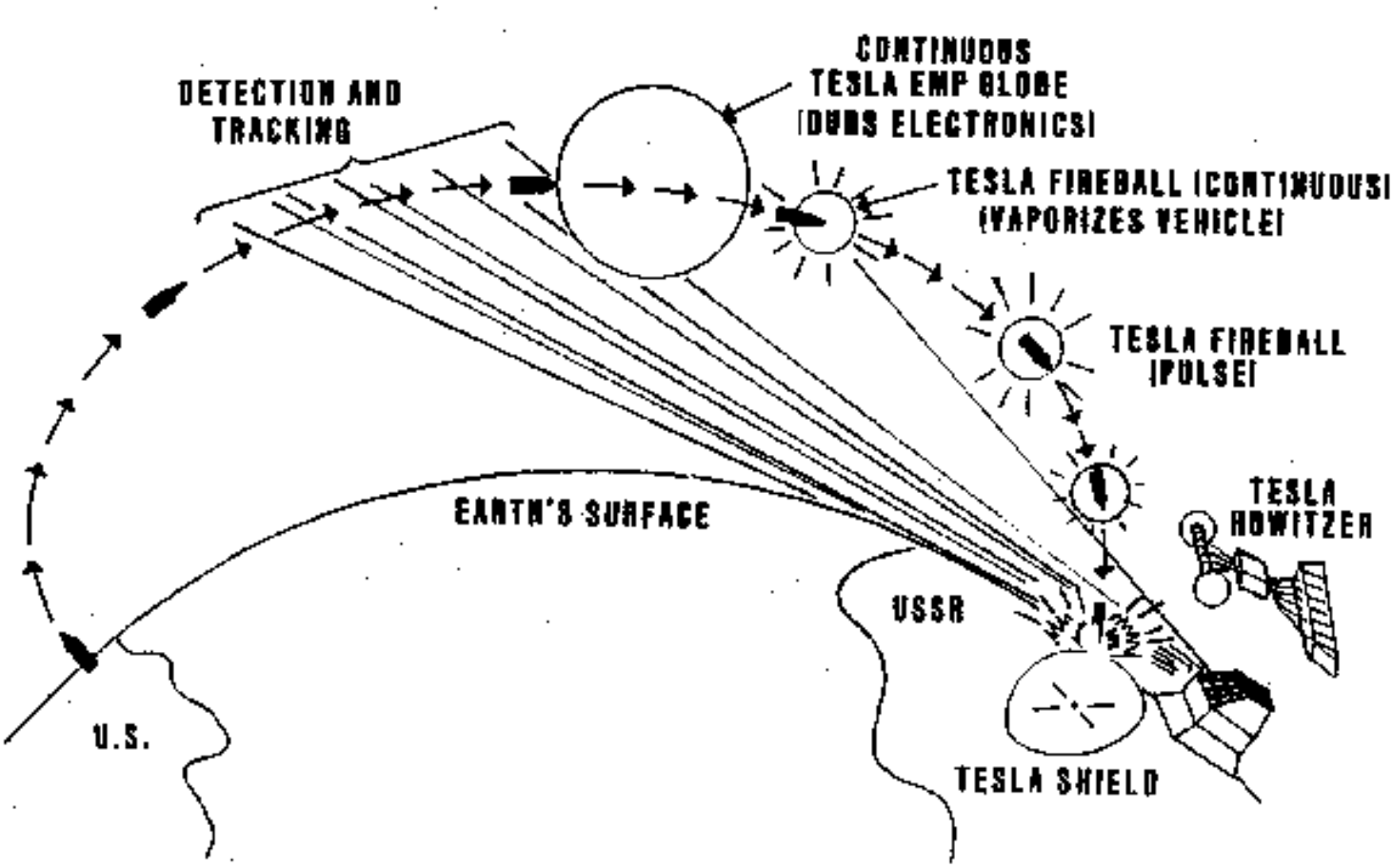

Figure 13. Tesla ABM Defenses

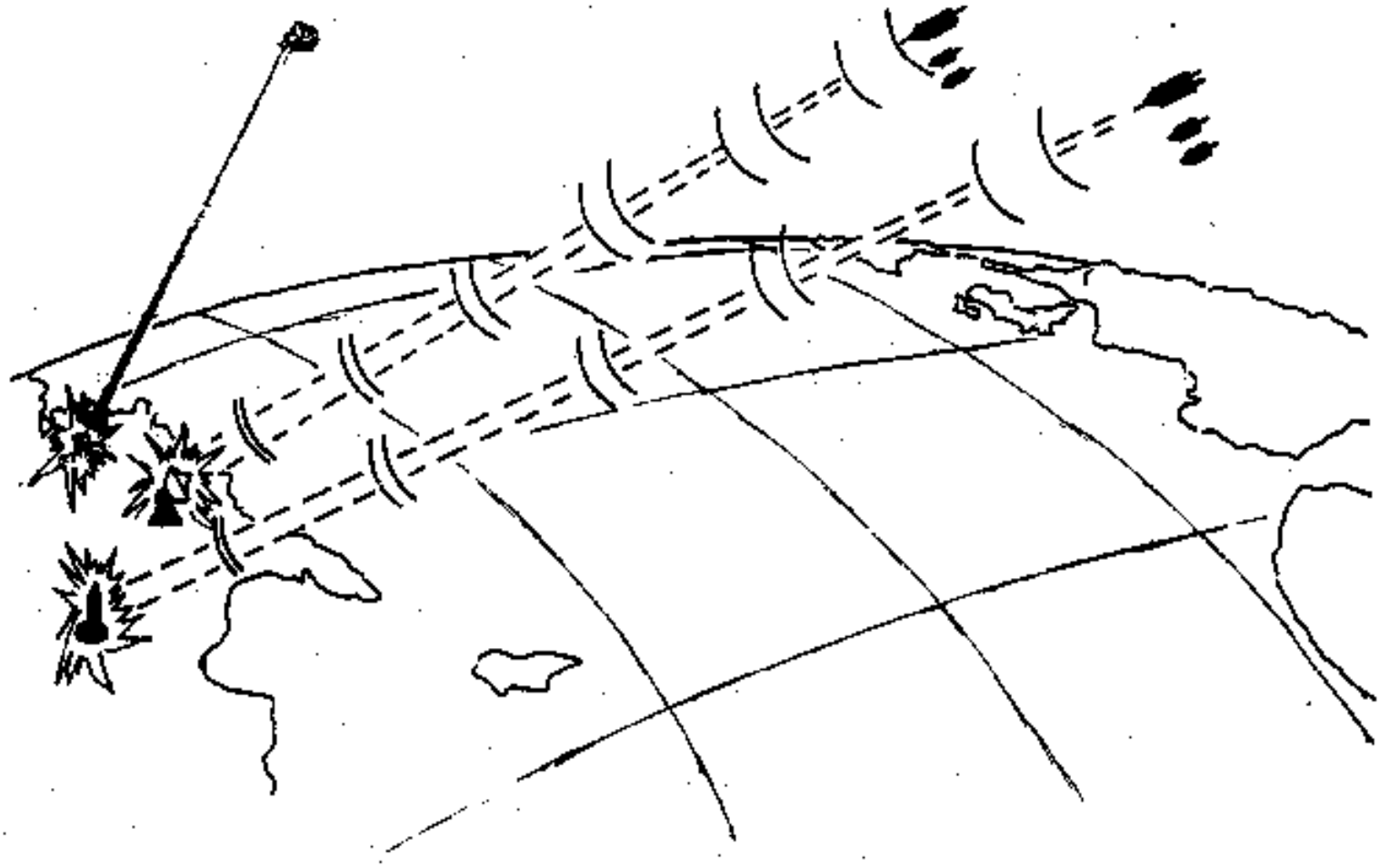

Figure 14. Moray/Tesla Technology: Star Wars Now

Typical strategic ABM uses of Tesla weapons are shown in figure 13. In addition, of course, smaller Tesla howitzer systems for anti-tactical ballistic missile defense of tactical troops and installations could be constituted of more conventional field missile systems using paired or triplet radars, of conventional external appearance, in a scalar interferometer mode.

With Moray generators as power sources and multiply deployed reentry vehicles with scalar antennas and transmitters, ICBM reentry systems now can become long range "blasters" of the target areas, from thousands of kilometers distance (figure 14). Literally, "Star Wars" is liberated by the Tesla technology. And in air attack, jammers and ECM aircraft now become "Tesla blasters." With the Tesla technology, emitters become primary fighting components of stunning power.

The potential peaceful implications of Tesla waves are also enormous. By utilizing the "time squeeze" effect, one can get antigravity, materialization and dematerialization, transmutation, and mindboggling medical benefits. One can also get subluminal and superluminal communication, see through the earth and through the ocean, etc. The new view of phi-field also provides a unified field theory, higher orders of reality, and a new super-relativity, but detailing these possibilities must wait for another book.

With two cerebral brain halves, the human being also has a Tesla scalar interferometer between his ears. And since the brain and nervous system processes

avalanche discharges, it can produce (and detect) scalar Tesla waves to at least a limited degree. Thus a human can sometimes produce anomalous spatiotemporal effects at a distance and through time. This provides an exact mechanism for psychokinesis, levitation, psychic healing, telepathy, precognition, postcognition, remote viewing, etc. It also provides a reason why an individual can detect a "stick" on a radionics or Hieronymus machine (which processes scalar waves), when ordinary detectors detect nothing. Unfortunately there is not room to develop the implications of this human Tesla interferometry in detail, for that must wait for yet another book, presently in its initial stages, that Hal Crawford and I are writing.

Table 5. Orders of Reality

- **PHOTONS ARE**
  - **> PAIR-COUPLED SCALARS**
  - **> VELOCITY-LIMITED TO C**
  - **> CARRIERS OF T**

- **PHOTON INTERACTION**
  - **> IS UBIQUITOUS**
  - **> PRODUCES $\dot{T}$ = C**
  - **> YIELDS 1st ORDER REALITY**

- **SCALAR O WAVES**
  - **> NOT VELOCITY-LIMITED**
  - **> YIELD HIGHER ORDER REALITIES**

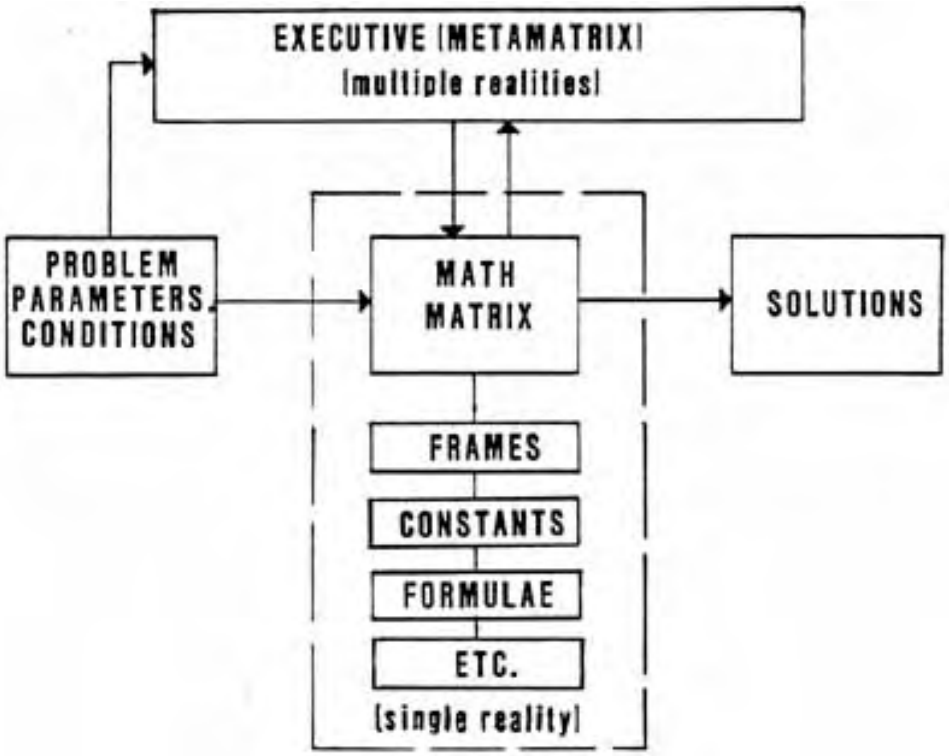

Figure 15. Implications of Tesla Potential

At the July 1981 U.S. Psychotronics Association's Annual Conference in Dayton, Ohio, I presented the first rough paper on the Tesla secret and scalar

interferometry. A videotape of the presentation was made and will shortly be available. I am also scheduled to make a special presentation at the Alternate Energy Conference in Toronto, Canada in latter October, 1981. A professional, videotaped two-hour presentation on this subject is also being prepared. Wide distribution of the material through the international underground physics and technology network has already been made. This time, God willing, Tesla's secret will not be suppressed for another 80 years!

And perhaps it is not yet too late. The material has cost me (now) some 16 years of agonizing labor and nearly $100,000 of my own personal funds. No orthodox university, scientific group, foundation, or governmental agency would support such an effort, either financially or otherwise. Indeed, most ordinary journals will not even accept material on such matters. Nonetheless, the area is of overwhelming importance and I truly believe Tesla's lost secret will shortly affect the lives of every human being on earth.

Perhaps with the free and open release of Tesla's secret, the scientific and governmental bureaucracies will be. shocked awake from their slumber, and we can develop defenses before Armageddon occurs. Perhaps there is hope after all -- for even Brezhnev, in his strange July, 1975 proposal to the SALT talks, seemed to reveal a perception that a turning point in war and weaponry may have been reached, and that human imagination is incapable of dealing with the ability to totally engineer reality itself. Having tested the weapons, the Soviets must be aware that the ill-provoked oscillation of timeflow affects the minds and thoughts -- and the very lifestreams and even the collective species unconsciousnesses -- of all lifeforms on earth. They must know that these weapons are two-edged swords, and that the backlash from their use can be far more terrible to the user than was the original effect to his victim.

If we can avoid the Apocalypse, the fantastic secret of Nikola Tesla can be employed to cure and elevate man, not kill him. Tesla's discovery can eventually remove every conceivable external human limitation. If we humans ourselves can elevate our consciousness to properly utilize the Tesla electromagnetics, then Nikola Tesla -- who gave us the electrical twentieth century in the first place -- may yet give us a fantastic new future more shining and glorious than all the great scientists and sages have imagined.

References

The Tom Bearden Website

REFERENCES

1. Whittaker, E. T., Proc. Lond. Math. Soc. 1, 367 (1903).

2. Debye, P., Ann. Phvs. (Leipz.) 30, 57 (1909).

3. Bromwich, T. J. I'A. Phil. Trans. A, 220, 175 (1920); also Phil. Mag., 38, 143 (1919).

4. Laporte, O. & Uhlenbeck, G. E., Phys. Rev. 37, 1380 (1931).

5. Nisbet, A., Proc. R. Soc. London A 231, 250 (1955).

6. Essex, E. A., Am. Jour. Phys. 45, 1099 (1977).

7. Braunlich, P., Ed., Thermally Stimulated Relaxation in Solids, Springer-Verlag, New York, 1979.

8. Ratzlaff, John. T., Dr. Nikola Tesla: Selected Patent Wrappers, Volumes I, II, III, & IV, Tesla Book Company, 1580 Magnolia Avenue, Millbrae, CA 94030, 1980.

9. Ratzlaff, John T. & Anderson, Leland I., Dr. Nikola Tesla Bibliography, Ragusan Press, 936 Industrial Ave., Palo Alto, CA 94303, 1979.

10. "Tesla- 85th Birthday," N. Y. Sun, July 11, 1941. (Tesla says he could build, within three months, a plant at a cost of $2 million that would melt the engines of an approaching aircraft at a distance of thousands of miles.)

11. "Tesla Promises to Light Dark Spot on Moon. It's Part of a Scheme of His for Interplanetary Radio; Distance Means Nothing. Has 4 New Inventions. Tells of Them on 81st Birthday; 2 Nations Honor Him," N. Y. Herald Tribune, July 11, 1937.

12. O'Neill, John J., "In the Realm of Science: Tesla, who predicted radio, now looks forward to sending waves to the Moon," N. Y. Herald Tribune, Aug. 22, 1937. (Inventor hopes to use energy-transmitting device to make spot glow on the lunar surface. Theory is traced to 1897 experiments. His mechanism is to use vast natural forces, possibly cosmic rays.)

13. "Tesla, 80, Reveals New Power Device," N. Y. Times, July 11, 1936, p. 13, col. 2. (Says his wireless system of power transmission will supply the earth with energy for industry.)

14. Sparling, Earl. "Nikola Tesla, at 79, Uses Earth to Transmit Signals; Expects to have $100,000,000 Within Two Years," N. Y. World-Telegram, July 11, 1935. (Inventor tells of 'quake' in his laboratory that brought police and ambulances during experiments with mechanical oscillator.)

15. "Tesla's Controlled Earth Quakes Power Through the Earth, A Startling Discovery," N. Y. American, July 11, 1935, Section 2. (Announces the successful passage of an induction current with a varying flux through a circuit without the use of a commutator. Cosmic ray studies indicate many tenets of theory of relativity to be fallacious. Possible to convey mechanical effects to any distance.)

16. "Tesla, 79, Promises to Transmit Force -- Transmission of Energy Over World," N. Y. Times, July 11, 1935, p. 23, col. 8. (Tesla has plans to send energy over the entire world. Measurement of cosmic rays said to be 50 times greater than the speed of light, demolishing the theory of relativity.)

17. Tesla, Nikola, "Expanding Sun Will Explode Some Day, Tesla Predicts," N. Y. Herald-Tribune, Aug. 18, 1935. (Present literature on cosmic rays is erroneous. Some cosmic rays reach speeds 50 times that of light. Sun will increase in mass and energy and will ultimately explode. Tesla's view is that the condensation of primary substance is going on continuously. Finds secret of cosmic rays in the positive electrical charge of the sun. Discusses radioactive emanations.)

18. "3 Tesla Inventions -- Famous Scientist Will Tell Them. Tomorrow," N. Y. Sun, July 9, 1935. (One of the discoveries is a new way of transmitting energy, an entirely new principle, nothing like wireless. Also method of harnessing cosmic rays.)

19. Welshimer, Helen, "Dr. Tesla Visions the End of Aircraft in War," Every Week Magazine, Oct. 21, 1934, p. 3. (Claims to have created a new agent, which kills without a trace and yet pierces the thickest armor. Can destroy armies or aircraft.)

20. Tesla, Nikola. "Tesla on Power Development and Future Marvels," N. Y. World Telegram, July 24, 1934. (Source of reference is Prodigal Genius by J. J. O'Neill, p. 241. Reply to articles of June 29, July 12, and July 13, 1934. Praises Westinghouse and Insul to create the power system he had barely suggested in 1893. With regard to death ray effect, Tesla employs an agent

in which intensity does not diminish with the square of the distance.)

21. Dunlap, Orrin E., Jr., "Tesla Sees Evidence That Radio and Light Are Sound, " N. Y. Times, Apr. 8, 1934, X, p. 9, Col. 1. (Tesla points to errors of the past, explains radio as he sees it at age 77. He expects television.). (Note: Sound is a longitudinal wave -- as is the Tesla wave. Hertzian waves are transverse waves, not longitudinal.)

22. Bird, Carol, "Tremendous New Power Soon to be Unleashed," Philadelphia Public Ledger, Sep. 10, 1933, Magazine Section, p. 6. (Revolutionary power project by Tesla, who is also completing process for thought photography.) (Note: Here we have a possible clue that the same principle may be used both in Tesla's energy device and in Tesla's approach to thought photography.)

23. "Tesla 'Harnesses' Cosmic Energy," Phila. Public Ledger, Nov. 2, 1933. (A principle has been discovered to derive cosmic energy which operates the universe. Power is "everywhere present in unlimited quantities." Will eliminate the need for coal, oil, gas, or any of the common fuels.) (Note: Was Tesla referring to what we today call "zero-point energy of the vacuum"? His principle will tap it.)

24. Blakeslee, Howard W., "Discovery of Force to Surround Nations & Smash Attacker Claims of Aged Inventor - Nikola Tesla Makes Announcement on 75th Birthday -- Will Turn Plans Over to Geneva," Minneapolis Tribune, July 11, 1934. (Note: Here the inventor is referring to the "Tesla Shield.")

25. "Tesla, at 78, Bares New 'Death Beam'", N. Y. Times; July 11, 1934, p. 18, col. 1. (Invention powerful enough to destroy 10,000 airplanes at 250 miles away. Defense weapon only.)

26. Alsop, Joseph W., Jr., "Beam to Kill Army at 200 Miles Tesla's Claim on 78th Birthday," N. Y. Herald Tribune. July 11, 1934, pp. 1, 15. (Beam of force similar to death ray, involves four electrical devices. Can also be used in peacetime to transmit power over distances limited only by the curvature of the earth.) (Note: In this reference, we note that the Tesla death ray and the Tesla wireless transmission devices apparently use the same effect or basic principle. There appear to be four devices involved in an operational system.)

27. "A Giant Eye to See 'Round the World' ", Albany Telegram, Feb. 25, 1933. (Based on the mechanism of the human eye. The first two parts of Tesla's invention have been completed. Will allow man to see any part of the earth.) (Note: Similarity of binocular vision to interferometry.)

28. Tesla, Nikola. "Pioneer Radio Engineer Gives Views on Power," N. Y. Herald Tribune, Sept. 11, 1932. (Tesla says wireless waves are not electromagnetic, but sound in nature. Holds space is not curved.) (Note again that sound waves are longitudinal, as are Tesla's waves. Electromagnetic waves are transverse.)

29. "No High-Speed Limit, Says Tesla, " Literary Digest, Nov. 7, 1931, p. 28. (Speeds greater than light, deemed impossible by the Einstein theory, have been accomplished. As early as 1900 Tesla showed that power from his transmitter passed over the earth at a speed of 292,830 miles per second.) (Note: As is well known, velocity represents the rotation of an object out of the normal 3-dimensional space toward a 4th dimensional direction. The speed of light, c, represents a full orthogonal turn. A normal electromagnetic wave, being transverse oscillatory, is a priori limited to a single orthogonal turn, for that is all it possesses. It thus moves at the speed c. A longitudinal scalar wave, on the other hand, need not be so limited at all.)

30. O' Neill , J. J. "Sun Emits Super Ray, Nikola Tesla Asserts, " Brooklyn Eagle, Feb. 8, 1932, p. 4, col. 1. (Note: Logically, the sun should also emit scalar waves as well as transverse vector waves.)

31. O'Neill, J. J., "Tesla Cosmic Ray Motor May Transmit Power 'Round Earth"', Brooklyn Eagle, July 10, 1932, A, 1:4, pp. 1, 17. (Efforts by Tesla to harness cosmic rays started 25 years ago, and he now announces success in operating a motive device by means of these rays. Hopes to build a motor on a large scale.)(Note: possibly implies that all these Tesla devices for the last 25 years have been dealing with the same basic principle.)

32. "Tesla, 76, Reports His Talents at Peak," N. Y. Times, July 10, 1932, p. 19, col. 1. (New invention in tapping tremendous and unused source of energy. One invention to permit generation of all kinds of rays of almost unlimited intensity.) (Note: By scalar interferometry, electromagnetic waves of any frequency -- and hence of any "type" can be assembled by coupling the appropriate scalars together. A Hertzian wave is just two coupled Tesla scalar waves.)

33. Tesla, Nikola, "Man's Greatest Achievement," N. Y. American, July 6, 1930, p. 10. (Editorial Section). ("To create and annihilate material substance, cause it to aggregate in forms according to his desire...would place him beside his Creator and fulfill his ultimate destiny.") (Note: Here Tesla seems to be referring to controlled materialization and dematerialization of matter.)

34. Tesla, Nikola. "World System of Wireless Transmission of Energy," Telegraph & Telephone Age -- N. Y., Oct. 16, 1927, pp. 457-460.

Transmission of power without wires is not a theory, but "a fact demonstrated by Tesla." Mode of propagation of currents from transmitter has mean speed 57% greater than Hertz waves.) (Note: a faster than light, non-Hertzian type of wave is involved. The Tesla wave is not a normal Hertzian wave.)

35. Secor, H. Winfield, "The Rogers Underground Wireless, Electrical Experimenter, Mar., 1919, pp. 787-789, 832-835, 839. (Rogers system does away with aerial wires.)

36. Gernsback, Hugo, "Underground Wireless," Electrical Experimenter, Mar. 1919, p. 762. (Development of James H. Rogers. Receives messages from Europe during thunderstorm. Tesla agrees that messages are not Hertzian waves.)

37. Tesla, Nikola, "The True Wireless," Electrical Experimenter, May 1919, pp. 28-30, 61-63, 87. (Tesla says Hertz wave theory is a delusion. Signals must be from earth currents. Note again that Tesla does not like Hertzian waves, but himself has something more fundamental.)

38. Tesla, Nikola. "The Effects of Statics on Electrical Transmission," Electrical Experimenter, Jan., 1919, pp. 627, 658. (Tells of defects in Hertz waves. System devised by Tesla releases energy at infinite velocity.) (Note: electrostatic potential is already known to be able to travel at infinite velocity. See Jackson, Classical Electrodynamics, 2nd Edition, 1975, p.223. This is strong evidence that Tesla used scalar potential waves or Ø-fields.)

39. Bot tone, A., Nikola Tesla's New Wireless," Electrical Engineer, London, Dec. 24, 1909, p. 893. (Experiments conducted on Long Island have resulted in principles of transmission which are direct opposite of Hertzian wave transmission.) (Note: In other words, using uncoupled scalar waves -- Tesla waves instead of pair-coupled scalar waves -- Hertzian waves?)

40. Tesla, Nikola. "Electrical Control of the Weather Will Soon Be an Accomplished Fact," St. Louis Republic, Nov. 15, 1908, V, p. 3. (Tesla concurs in concept of electrical control of weather.)

41. Swezy, Kenneth M. , "Nikola Tesla, " Science, May 16, 1958 , pp. 1147-1158. (Electricity today is generated, transmitted, and converted to mechanical power by means of his inventions.)

42. Ramsay, Jack, "Cableless Power, " Electronics (Digest) , July 22, 1960, pp. 6, 8. (Soviet attempt at development of wireless power transmission, but a failure according to Swedish observers, and the idea having been bandied about in the U. S. since Tesla.) (Note: Establishes that the Soviets were at least trying to work with the Tesla techniques.)

43. Anderson, Leland I., "Correspondence: Sub-Surface Communications Systems," Proceedings of the I.R.E., Mar., 1961, p. 645. (Reference to subsurface or "earth current" communication systems. Pioneering work by Nikola Tesla and James H. Rogers.)

44. Rebert, Edwina, "Fireballs For Defense?", Christian Science Monitor, Feb. 7, 1962, p. 9c. (Feature article on possibility of using ball lightning as defense weapon -- may be inspired by early experiments of Tesla at Colorado Springs.)

45. Matsch, Lee and Rice, Warren, "Potential Flow Between Two Parallel Circular Disks with Partial Transmission," Journal of Applied Mechanics, Trans. ASME, Mar., 1967, Vol. 34, Series E., No.1, pp. 239-240. (Reference article -- bladeless turbines.)

46. Lagus, George W., "The Use of Ground in High-Frequency Circuits," Radio-TV Experimenter and Science and Electronics, June-July, 1969, PP. 71, 72. (Tesla gave several demonstrations of feasibility of electrifying large areas of land by ground propagation of high frequency currents.)

47. Jamison, S. L. , "Life Energy, " Probe. The Unknown, June , 1973, pp. 3,4. (Letter to editor -- report that vitamins and minerals could be impressed on the body using a Tesla coil.)

48. Jueneman, F. B. J. , "The First Law of Thermodynamics, " Industrial Research, Feb., 1974, pp. 17-18. (Nikola Tesla, at Colorado Springs in 1899, found that the earth was a large electron sink, and electrical storms generated standing wave potentials.)

49. Puharich, Andrija, "The Work of Nikola Tesla Ca. 1900 and its Relationship to Physics, Bioenergy and Healing," paper read at the International Inter-disciplinary Conference on Consciousness and Healing, Oct. 13, 1976, University of Toronto.) ,

50. Golka, Robert K. and Bass, Robert W., "Tesla's Ball Lightning Theory, a BKG-Wave, The Ransworth Effect, and the 'Hydrotron' Electrostatic-Inertial Self-Confined Plasmoid Concept." (Paper presented at the Annual Controlled Fusion Theory Conference, San Diego, California, May 4-6, 1977.)

51. Popovic, Prof. Vojin, "Research of Nikola Tesla in the Light of His Diary From Colorado Springs," 10 pp. (Diary contains details of investigations for determining nodal points in the earth as a conductor of waves. Comments on "fire globes.")

52. Curtis, George D., PhD, "An Electromagnetic Radiation Pattern Over the Ocean," Undersea Technology, Vol. 5, no.8, August 1964. Curtis reports the presence of a previously unknown weak electromagnetic radiation pattern over the ocean. When all known effects are accounted for, the anomalous pattern still remains.

53. Santilli, R. M., "Partons and Gravitation: Some Puzzling Questions," Annals of Physics, Vol. 83, No.1, March 1974, pp. 108-157. In this paper Santilli proved that one of the cornerstone assumptions of physics -- that electric field and gravitation are separate things -- is false. One is therefore left with only two alternatives: either they are totally the same thing, or they are partially the same thing. (Comment: Note that the ~4 Tesla potential provides the unifying connection.)

54. Science News, Vol. 113, No.1, January 7, 1978, p. 3. A photograph by T. Kuribayashi of the earthquake lights involved in the Matsushiro earthquake swarm (1965-1967). This is the only known photo of earthquake lights.

55. Wiedemann, C. Louis, "Results of the N.J. 'Spook Light' Study," Vestigia Newsletter, Vestigia, RD 2, Brookwood Rd., Stanhope, NJ 07874, May 1977, pp. 1-3. This article describes an ongoing Vestigia experiment in which a nocturnal light or "mystery light" was scientifically photographed in conjunction with visual sightings and instrumental recordings of data. Various later issues of the Vestigia Newsletter contain other update articles on the phenomenon.

56. Moray, T. Henry, The Sea of Energy, fifth edition, History and Biography by John E. Moray, Foreword by Tom Bearden; Cosray Research Institute, 2505 South 4th East, Salt Lake City, Utah 84115, 1978. In addition to his free-energy device, Moray also built a special radio which he used to clearly listen to Admiral Byrd at the South Pole. No static was experienced on Moray's radio, showing he was' not using ordinary electromagnetics. In addition, he built a device which he could tune to listen to persons several miles distant, so that their voices sounded as if they were immediately nearby. Both these devices were demonstrated to a visiting Russian Colonel/ PhD.

57. I. Procaccia, J. Ross, Science, 198, 716 (18 Nov 1977). Describes Prigogine's Nobel Prize-winning work on thermodynamics of nonlinear systems far from thermodynamic equilibrium. Prigogine's work shows that such a system can indeed demonstrate negentropy. Out of unrestrained disorder can and does arise order, contrary to the old thermodynamics.

58. "Persinger's 'Earthquake Lights' ...Ho-Hum," Frontiers of Science, Vol. III, No.3, March-April 1981, p. 15-16. Gives cogent and "fatal" objections to

Persinger's "earthquake light" scheme for explaining UFO's. Mentions Dr. Brian Brady's experiments obtaining fast, short electrical lights or sparks from crushing quartz-bearing granite cylinders. (Comment: Brady's experiments are certainly repeatable, so it is true that "earthstress lights" can be produced at a distance, although the piezoelectric effect alone in no way explains the production of the phenomena outside the piezoelectric crystal. The fact that UFO's occurring near a fault zone are not necessarily repeatable simply means that at least one other major factor must be involved in the production of UFOs than is involved in the production of earthstress lights. UFOs may sometimes involve scalar interferometry from a fault zone, but other causative factors must also be involved. Earthstress lights, on the other hand, need have no additional causative factors than what lies in the earth itself.)

59. Jackson, John David, Classical Electrodynamics, Second Edition, John Wiley & Sons, New York, 1975, p. 223.

60. Roberts, Gwynne, "Witness to a Super Weapon ?", The Sunday Times, London, 17 August, 1980. Article deals with a strange semicircular phenomenon seen inside the Soviet Union from Afghanistan in September, 1979 by Nick Downie, a former member of the SAS who has established a considerable reputation as a war cameraman. Downie saw the phenomenon twice, and later met an Afghan who had seen it several months before. A possibly related phenomenon is reported in Brackenbridge, M., "Unidentified Phenomenon," Marine Observer, 48: 21-22, 1978. Note the first "nuclear flash" was detected by Vela satellite on September 22, 1979 - close in time to Downie's sightings.

61. Bearden, Tom and Crawford, Hal, "Possible Soviet Test of a Tesla Weapon," Specula, Journal of the A.A.M.S., Vol. 3, No.2, April-June 1980, p. 29. See also Specula 3, 2, 30-32 by Bearden and Crawford. These reports are from CIA reports released under the Freedom of Information Act.

62. Bearden, Thomas E., The Excalibur Briefing, Strawberry Hill Press, San Francisco, 1980.

63. Muldrew, D. B., "Generation of Long-Delay Echoes," Journal of Geophysical Research, 84: 5199-5215, 1979. For anomalous long delays of electromagnetic signals in the atmosphere, Muldrew favors a rather complex interaction between signals from separate transmitters that (theoretically at least) can create a long-lived electrostatic wave that travels in the ionosphere -- a sort of natural memory device. The coded signals could then be read out much later when the proper natural conditions developed. Delays of up to 40 seconds might be possible with this "ionospheric memory."

64. Zhugzhda, Yu. D., Institute of Terrestrial Magnetism, Ionosphere and Radio Wave Propagation, "Magnetogravitational Waves in a Conducting Isothermic Atmosphere," Moscow ASTRONOMICHESKIY ZHUGZHDA, Vol. 56, No.1, 1979, pp. 74-83. Among other things, the paper indicates the possibility of transforming longitudinal waves into transverse waves in the region of a strong magnetic field.

65. Ranada, Antonio and Vazquez, Luis, "Kinks and the Heisenberg Uncertainty Principle," Physical Review D, Vol. 19, No.2, 15 January 1979, pp. 493-495. Shows that the velocity and position of the center of a kink, soliton, or solitary wave can be known with arbitrary precision, in violation of the Heisenberg uncertainty principle. (Comment: A Fourier-transformed scalar Tesla wave pattern is either a soliton or closely related to it.)

66. Don Moser, Photographs by Blair Pittman, "Big Thicket of Texas, National Geographic, Vol. 146, No.4, October 1974, pp. 504-529. The author photographed a "ghost light" or nocturnal spooklite -- i.e., an earths tress light. The photo is shown in the article.

67. Gehring, Gillian, "Actinide magnetism: an extraordinary tale," Nature, Vol. 279, 3 May 1979, pp. 16-18. Anomalous magnetic properties -- including spin orbit coupling as a large effect -- are exhibited by actinide intermetallics containing uranium. Present theory cannot explain these effects.

68. Gintsburg, M. A., Institute of Terrestrial Magnetism, the Ionosphere, and Radio-Wave Propagation, Academy of Sciences of the USSR, Astron. Zh. 51: 218-221, Jan-Feb 1974, English translation in Sov. Astron., Vol. 18, No.1, July-August 1974, pp. 128-130. Among other things, the article points out that thus far a Fourier analysis in mass electrodynamics has not been made. One property characteristic of mass electrodynamics is the existence of longitudinal electromagnetic waves in vacuo, i.e., longitudinal photons. They have not yet been discovered but theoretically they are entirely possible.

69. Burman, R., "A Photon rest mass and the propagation of longitudinal electric waves in interstellar and intergalactic space," J. Phvs. A: Math. Nucl. Gen., Vol. 6, March 1973, pp. 434-444. This paper on longitudinal electric waves in plasma may be very important. Weber may be detecting longitudinal electric waves. Proca waves can go faster or slower than c.

70. Klass, Philip J., "Anti-Satellite Laser Use Suspected," Aviation Week & Space Technology, December 8, 1975, pp. 12-13. Some details on the "laser blinding" of U. S. satellites by the Soviets. On one occasion, the satellite was blinded for 4 hours. (Comment: difficult to explain with current laser

technology, but simple to explain with Tesla scalar interferometry.)

71. "Soviets Build Directed-Energy Weapon," Aviation Week & Space Technology, July 28, 1980, pp. 57-50. Presents a background summary in Soviet particle beam weapon work, particularly the device being constructed at Saryshagan.

72. "Scientists Fail to Solve Vela Mystery," Science, Vol. 207, 1 February 1980, pp. 504-506. See also article in Science, 30 November, 1979.

73. "Satellite Evidence Shows 'Possibility' of Nuclear Test, DOD Says," Aerospace Daily, October 29, 1979, p. 286.

74. "A Flash of Light," Newsweek, November 5, 1979, pp. 64-65.

75. "Was It a Nuclear Device?", Newsweek, July 21, 1980, p. 19.

76. "A Nuclear Blast -- or 'Zoo Animals'?", Newsweek, April 7, 1980, p. 21.

77. "Diverging Views," Washington Roundup, Aviation Week & Space Technology, July 21, 1980, p. 15.

78. Klass, Philip J. , "Clandestine Nuclear Test Doubted," Aviation Week & Space Technology, August 11, 1980, pp. 67, 69, 71-72.

79. "Debate Continues on the Bomb That Wasn't," Science, Vol. 209, 1 August 1980, pp. 572-573.

80. "Navy Lab Concludes the Vela Saw a Bomb," Science, Vol. 209, 29 August, 1980, pp. 996-997.

81. Bloch, Ingram and Crater, Horace; "Lorentz-invariant potentials and the nonrelativistic limit," Am. J. Phys. 49(1), Jan. 1981, pp. 67-75. Among other things, this interesting paper points out some decidedly unusual and unfamiliar influences of the size of the scalar potential upon what is considered nonrelativistic behavior. For scalar potential energyof appreciable size relative to a particle's rest energy, ordinary Newtonian mechanics and the Schrodinger equation may be inadequate, even if v/c is small. This reference by itself is sufficient to establish that Ø-field alone can alter the flow rate of time.

82. Semon, Mark D. and Schmieg, Glenn M., "Note on the analogy between inertial and electromagnetic forces," Am. J. Phys. 49(7), July 1981, pp. 689-690. Compares physical forces in a rotating frame with electromagnetic forces in a Newtonian frame. The transverse mechanical force in a rotating

frame is associated with an induced EMF in a Newtonian frame.

83. Harlacher, Von Wolfgang M., "Bomben aus dem Hyperraun," Esotera, 4 April 1979, pp. 359-365.

TOWARD A NEW ELECTROMAGNETICS
PART III: CLARIFYING THE VECTOR CONCEPT

TABLE OF CONTENTS

Cover

List of Figures

Implications

Electrical Physics Presently Has a Mindset

It Started With Geometry and Grew

Points and Motion

Four Types of Vectors Actually Emerged

Quantum Mechanics Compounds the Problem

To Summarize Briefly

Uncharged Spatial (Massless) System Vector

Chargeless Mass System Vector

What Force Is

Force and Hertzian Waves Cannot Exist in Vacuum

Charged-Mass-System Vector

Charged Spatial (Massless) Vector

The Shadow Vector

A Scalar is a Zero Vector

Virtual and Observable Aspects

Scalars and Vectors Have Substructures

Substructures, Virtual Levels, and Hyperspaces

Notes and References

Additional Notes and References

TOWARD A NEW ELECTROMAGNETICS

PART III: CLARIFYING THE VECTOR CONCEPT

by

T. E. Bearden

© Copyright 1983

by T. E. Bearden

All rights reserved

LIST OF FIGURES

1. Uncharged spatial (massless) system vector
2. Chargeless mass system vector
3. Detection of "transverse" and longitudinal waves
4. Charged mass system vector
5. The "charge" on an electron mass consists of a flux of virtual particles on and off the mass
6. A test charge (charged mass) brought near a fixed charge (charged mass) experiences an acceleration
7. A charged mass system vector
8. Repeating the "test charge" experiment
9. Charged spatial (massless) vector
10. Removing the bare particle (mass) from a charged particle leaves the charge. The vacuum is DEFINED AS the charge
11. Assigning a spatial vector to the charged vacuum
12. A "shadow vector" ε_s
13. Substructures of a "zero resultant" spatial vector. (The substructures of two zero vectors may be vastly different)

The Tom Bearden Website

TOWARD A NEW ELECTROMAGNETICS

Part III: Clarifying the Vector Concept

© 1983 T.E. Bearden

-- IMPLICATIONS --

Some of the fundamental concepts of the new Tesla electromagnetics are presented. The new concepts have startling implications:

(1) No force or force field exists as such in vacuum.

(2) Hertzian (transverse) electromagnetic waves do not travel through the vacuum, just as Tesla stated.

(3) Forceless, massless Tesla (scalar) longitudinal waves actually transit the vacuum. Tesla called them "electrical sound waves."

(4) At present there are actually four different FUNDAMENTAL TYPES of vectorial entities in physics, erroneously confused as one and the same.

(5) Tesla longitudinal scalar waves are also "time" waves and can affect anything and everything that exists in time.

(6) The fundamental constants of nature (which exist in time) can be altered by Tesla scalar waves, which oscillate the values of the constants.

(7) Every vector and scalar has an internal substructure, which can be independently affected and changed. This allows the direct engineering of the virtual state and the vacuum itself.

(8) All observable forces (electrical, mechanical, gravitational, etc.) arise in, on, and OF the actual substructure of the "accelerating mass particle" itself, not as an "external" massless force or force field applied "to" a mass .

(9) Physical reality itself -- and the "physical laws of nature"

can be deliberately changed and engineered.

(10) All "physical reality" is totally internal to the physical changes of the mass particles of the detector system of the observer.

(11) Relativity's speed of light limitation applies only to the changes of the basic mass particles of the detecting instrument.

(12) Detection of superluminal effects cannot be accomplished by a "single stage" or "single shift " (single interaction) detector .

(13) Detection of superluminal effects is permitted by "multiple stage" or "multiple shift" interactions where the last interaction is a conventional interaction of photon vs. detector particle. (The two-slit apparatus for detection of electron diffraction is an example. First, the superluminal DeBroglie waves interact with the slits, which are "tuned" toward the electron's DeBroglie wavelength. The interaction with TWO slits produces subluminal interference effects, which then interact back upon the physical electron. The apparatus is thus an electron interferometer capable of detecting superluminal waves by a two-stage interaction).

(14) Interference is the most common first-stage superluminal interaction to accomplish "downshifting" superluminal entities to luminal or subluminal velocities. Superposition of superluminal "phase" waves (such as deBroglie waves, which individually always move faster than the speed of light) interferes the waves to create a subluminal group velocity, which may then interact with an ordinary mass particle in the detection system.

(15) Any otherwise physical vector must exist as an unzipped (segmented) or "shadow" vector in vacuum. "Radiation" of a vector EM wave from the electron gas in an antenna into vacuum results in the "choking off" of the mass of the transversely oscillating electrons in the antenna. Since the spinning electron mass is the "zipper" that makes or comprises the physical vector in the first place, this throttling of the mass flow unzips the E and B vectors, leaving whirling (massless magnetic scalar potential) segments of massless charge flux (massless electrostatic scalar potential). This unzipped whirling pattern of charge flux (scalar massless A/Ø) is what radiates into vacuum and propagates through it. This is a special kind of

scalar wave pattern, not a physical or vector wave.

(16) The spin of a charged particle is the mechanism for integrating or "zipping together" the individual virtual fragments of a shadow vector into a real (observable) vector. For "uncharged particles" such as neutrons, it is the spins of its virtual charged components. that accomplish the integration or zipping.

(17) All fundamental charged particles are constantly accelerated. There is no such thing as an "unaccelerated" particle, except as a gross average over time or length. Further, all of them are spinning.

(18) All changes to and from a physical vector or scalar system must arise in and come from its own internal substructure, which is zipped to its spinning particle of mass.

(19) All fundamental particles are charged internally. That is, they are dynamic assemblages of smaller charged particles. If the average sum of the total internal charge is essentially zero over some finite, small increment of time, the particle is externally uncharged. If the sum is not essentially zero, the particle is also externally charged.

(20) There are no static physical things in existence. In physical reality, something appears "static" only at a particular level. Upon sufficiently fine examination, it is composed of accelerating parts, and thus comprised of "fluctuations."

(21) Since (a) the basic physical (mass) vector consists of a "smeared particle," where particle and smear are inseparable, (b) the conceptual particle also is accelerated, and (c) the "smearing" is for a small increment of time and a small increment of length; then the basic constituency of "physical reality" is inseparable "force x time x length," or action. The basic "quantum" of physical change is thus comprised of action.

(22) Since to "detect" we must "stop" the action, separate or split the quantum into two pieces ("canonical" pieces) , and compare (measure) one piece by throwing away the other, then each physical observable must have a differential operator (the "separating agent") corresponding to it. This accounts for the fundamental postulate of quantum mechanics whereby every observable has a corresponding operator. Further, since what remains is totally relative to what was split out and thrown away, physical change

is totally "relative." This accounts for the fact that observed reality is relative, each part to each other.

(23) As a special case, we may assume that we can evaluate a physical change at a point (without length). If so, when we discard length, the remaining basic vector is momentum. This approximation holds only so long as the system to which it is applied essentially does not change over the quantal fragment of length discarded -- i.e., it holds for the linear case. Conservation of momentum, then, is violated when sufficient nonlinearity in length is present.

(24) As a second special case, we may assume that we can evaluate a physical change in a spatial manner (without time). If so, when we discard time, the remaining basic vector is energy (has the units of energy or work). This approximation holds only so long as the system to which it is applied essentially does not change over the quantal fragment of time discarded -- i.e., it holds for the linear case. Conservation of energy, then, is violated when sufficient nonlinearity in time is present. Since a "virtual change" a priori is defined as a total nonlinearity in the observer's quantal time increment but not outside it, then virtual interactions can and do violate conservation of energy within that time increment, but not out of it -- so long as the time interval itself is considered linear. If the time interval is sufficiently nonlinear, then the virtual change may result in violation of the conservation of energy externally to the time increment. In that case, an "observable change" results .

(25) As a third special case, we may assume that we can evaluate the "instantaneous value" of a physical change at a static point in space. To do so, we must discard both time (to be instantaneous) and length (to be at a spatial point), and the remaining basic vector is force. This approximation holds only so long as the system to which it is applied essentially does not change over the quantal fragment of time or the quantal fragment of length discarded. Conservation of force, then, is violated when sufficient nonlinearity in time or length is present.

(26) A new conservation of energy law is required, one which unites the present conservation of energy law with an altered form of the conservation of charge law. Briefly, the total equivalent of mass,

observable energy, and massless charge (anenergy) is conserved.

(27) All AL and At fragments are produced and destroyed one at a time, in the action fissioning of a single quantum of action (detection process). Each ∇L and ∇t is discretized but not quantized. Since quanta do not superpose, the "external universe" is continually created and destroyed in the detector's mass system, one quantum at a time, at a very high rate. This interpretation gives physical meaning to the creation and annihilation operators of quantum mechanics.

(28) Since the detecting mass system is itself continually created and destroyed one quantum at a time, ultimately all is mind changes, and only mind changes. The observer's life, mind, and being transcend all materialistic interpretations of reality -- as indeed does the very fact of the "existence" of a perceived external universe.

Next Page

TOWARD A NEW ELECTROMAGNETICS
PART III: CLARIFYING THE VECTOR CONCEPT

-- Electrical Physics Presently Has a Mindset --

In examining the foundations of geometry, mechanics, and electromagnetics, it becomes strikingly clear that substantial -- even grave theoretical errors were made early on and perpetuated into the existing theory. These errors are now so firmly entrenched that they form a part of the "mindset" of almost all physicists, engineers, and scientists.

So ingrained are these errors and inconsistencies that the orthodox scientist/theoretician finds it almost impossible to break out of them.

The present mindset is analogous to the Newtonian mindset which so fiercely resisted the new ideas of relativity, shortly after the turn of the century. However, after a few scientists formulated the rules and theory of the "relativity mathematics game," a new generation of students, not yet so firmly engrained in the Newtonian mindset, could grasp the new relativity when their teachers expounded it.

In this short series of papers[1,2] I will roughly outline where the founders of mechanics and electromagnetics went wrong, and indicate the way to correct the fundamental errors. In addition, I will briefly point out some of the implications, and speak of some direct experimental proof.

Next Page

TOWARD A NEW ELECTROMAGNETICS
PART III: CLARIFYING THE VECTOR CONCEPT

NOTES AND REFERENCES

1. Bearden, T. E., "Comments on the New Tesla Electromagnetics: Part I: Discrepancies in the Present EM Theory;" "Part II: The Secret of Electrical Free Energy," Tesla Book Company, 1580 Magnolia Ave., Millbrae, CA 94030, 1982.

2. Bearden, T. E., "Solutions to Tesla's Secrets and the Soviet Tesla Weapons," Tesla Book Co., 1981. Also Ratzlaff , John T., "Reference Articles for Solutions to Tesla's Secrets," Tesla Book Co., 1982.

3. Note we are applying the rule, "A thing is that which it does, and it does that which it is." Actually this is one statement of a fourth fundamental law of logic not incorporated by Aristotle. See Bearden, "A Conditional Criterion for Identity, Leading to a Fourth Law of Logic," DTIS report, available through the National Technical Information System, Port Royal Road, Springfield, VA 22161.

4. Specifically, the resulting theory becomes a curtailed, special case of the much more fundamental electrodynamics and electromagnetics that actually exist
.

5. We point out here that measuring a field of force existing in the electron gas in a probe of the measuring instrument is not at all the same thing as measuring a force in the vacuum, nor does it establish that a force exists in vacuum. Indeed, it is already well known that the FIELD concept itself will not withstand rigorous logical examination. For a discussion rather clearly showing the present difficulty in defining a field, see Robert Bruce Lindsay and Henry Margenau, Foundations of Physics, Dover Publications, New York, 1963, pp. 283-287. Note particularly on p. 283 that a "field of force" at any point is actually DEFINED only for the case when a unit mass is present at that point. It is then illogically ASSUMED that the force

continues to exist at the point in the ABSENCE of the mass, which of course need not follow at all. On p. 284, note the similar logical paradox connected with the idea of a scalar gravitational potential field. The potential (field) is only defined at a point when mass is present at that point, .and it is specifically defined as the potential energy per unit mass for a particle present at that point. IF THERE IS NO MASS PRESENT, NEITHER A FORCE VECTOR FIELD NOR A SCALAR POTENTIAL FIELD IS DEFINED THERE. ASSIGNMENT OF THESE FIELDS TO THE POINT IN THE ABSENCE OF THE MASS IS AN ASSUMPTION, NOT AT ALL A DEFINITION. SINCE A TRUE DEFINITION IS AN IDENTITY, THEN THE ENTITY IDENTIFIED (DEFINED) TO INCLUDE THE PRESENCE OF MASS IS NOT IDENTICAL TO THE ENTITY RESULTING WHEN THAT MASS IS ABSENTED.

To see just how arbitrary and postulational are present. "definitions" of mass and force, see Lindsay and Margenau, op. cit., pp. 84-101. Also see Richard P. Feynman, Robert B. Leighton, and Matthew Sands, The Feynman Lectures on Physics, Addison-Wesley, New York, Vol.1,. 1963, Fourth Printing July 1966, p.2-4 for a definition of the electric field in the context of its POTENTIALITY for producing a force. Again, the force only exists when a particle of mass is present. From these examples, one can see the implication that A PHYSICAL FIELD IS SOMETHING SUCH THAT, WHEN A MASS IS INTRODUCED INTO IT, THE MASS EXHIBITS AN EFFECT. For a "force field," this is tantamount to stating that there exists some mechanism connected with a field which, in the presence of a mass causes a force to be exhibited. In that case the force is an EFFECT, not a cause, and there is a more fundamental mechanism that GENERATES FORCE ITSELF. See also field discussions in Feynman, Richard, The Character of Physical Law, M.I.T. Press, Cambridge, MA, March 1967, 2nd printing September 1967, passim.

6. While in Europe prior to 1881, Albert Abraham Michelson performed his first interferometer experiments to determine the velocity of the earth through the ether, obtaining essentially null results. At the Case School of Applied Science in Cleveland,

Ohio, he perfected his interferometer experiment from 1883 to 1887, assisted by a colleague, chemist Edward Williams Morley. By 1887 the results were ready and announced. Michelson himself thought his experiment had proven Stokes' theory of an ether dragged along by the earth in motion, and thus motionless with respect to the earth. This was at odds, however, with certain other experiments indicating a moving ether. The Michelson-Morley experiment was finally reconciled with these other experiments by Fitzgerald's suggestion in 1892 that the physical dimensions of material bodies are altered when they are in motion. In 1907 Michelson was awarded the Nobel prize, the first American to receive it in the sciences.

7. See Lindsay and Margenau, Foundations of Physics, 1963, pp. 324-326; D. C. Miller, "The Ether Drift Experiment and the Determination of the Absolute Motion of the Earth," Reviews of Modern Physics, Vol. 5, p. 203, 1933. Actually the experiments did not yield a conclusively null result, but rather showed large systematic trends. For a typical elimination of the systematic trends, see Handschy, M. A., "Re-examination of the 1887 Michelson-Morley experiment," American Journal of Physics, Vol. 50, No. 11, Nov. 1982, pp. 987-990. See Rho Sigma, Ether-Technology, CSA Printing & Bindery, Lakemont Georgia, 30552, 1977 for several enlightening points on the vacuum ether: See A. K. Lapkovskii, "Relativistic Kinematic Equations and the Theory of Continuous Media," Soviet Physics Journal, Vol. 21., No. 6, June 1978 for an abstract describing Soviet utilization of the concept of a small particle (called by Bearden a quiton, in Quiton/Perceptron Physics, DTIS, 1973) of the medium. See Belyaev, B. N. , "On Random Fluctuations of the Velocity of Light in Vacuum," Azvestiya Vysshikh Uchebnykh Zavedenii, Fizika, No. 11, Nov. 1980, pp. 37-42, translation by Plenum, for discussion of the proven variation of the speed of light in vacuum; the velocity of light in a vacuum on earth is measured to be higher than the velocity of light in the vacuum of deep space. See Graham, G. M. & Lahoz, D. G., "Observation of static electromagnetic angular momentum in vacuo," Nature, Vol. 285, 15 May 1980, pp. 154-155 for the first direct observation of free electromagnetic angular

momentum in vacuum. See Davies, Paul, "Something for nothing," New Scientist, 27 May 1982, pp. 580-582 for a discussion showing that modern theories of the vacuum reveal that even empty space is seething with activity; an ether of sorts emerges from vacuum fluctuations due to quantum mechanics considerations. See Hooper, William J., "All-Electric Motional Electric Field Generator," U. S. Patent No. 3,610,971, October 5, 1971 for a generator which produces a gravitational or inertial field. Einstein suggested that vacuum, complete with electromagnetic and gravitational fields, be called the ether. Dirac certainly did not abandon an ether, for in 1954 he stated "The aetherless basis of physical theory may have reached the end of its capabilities and we see in the aether a new hope for the future." James Clerk Maxwell derived his famous equations based on an ether theory. Sir Arthur Eddington also believed firmly in an ether. Sir Oliver Lodge actually pointed out the dilemma which yields the approach in this paper: writing of the ether in his book, The Ether of Space, Harper & Bros., New York, 1909, he stated: "We have no means of getting hold of the ether mechanically; we cannot grip it or move it in the ordinary way: we can only get it electrically. We are straining the ether when we charge a body with electricity; it tries to recover, it has the power of recoil.. . . "But when electrical theory was being founded, scientists thought of space as something rather fixed, and FILLED WITH a thin material ether. They did not realize that space itself does not exist except after an observation; before the observation, spacetime exists -- indefinite in both length and time. They did not know that electrostatic scalar potential in fact was spacetime, hence also the vacuum and the ether. In assuming that the charge of vacuum is zero and that charge and charged mass are identical, they hid the answer to the dilemma and placed the foundations of electromagnetics on its present unsound basis.

8. The field, of course, is indeed a highly useful concept and this author certainly does not recommend its abandonment. Instead, he recommends that it be placed on a sounder logical basis.

9. Specifically, they came to feel that the "electric

field" which was improperly defined -- was what was waving.

10. In fact Einstein once proposed that the vacuum, complete with its electromagnetic and gravitational fields, should be called the ether. His proposal was not adopted. (See Born, Max, Einstein's Theory of Relativity, Revised Edition, Dover Publications, New York, 1965, p. 224.)

11. Particularly from the work of Schrodinger, Born, Dirac and others.

12. For example, see Lindsay and Marge. nau, op. cit., pp. 287-288. A physical vector is thought to be defined by its magnitude, its direction in space, and its transformation characteristics. Actually that is a geometrical vector, not a physical vector. It does not tell us WHAT A VECTOR CONSISTS OF, but only tells us some of its important characteristics. Remember that a true definition must be an identity.

13. Here a reading of Lindsay and Margenau, op. cit., pp. 79-81 may prove enlightening. Also note that velocity, or L/T considered "at an instant" (stopped), represents an idea of "motionless motion" and is an application of the fourth law of logic. For a discussion of the fourth law of logic and its usage, see Bearden, Thomas E., "A Conditional Criterion for Identity, Leading to a Fourth Law of Logic," Specula, Journal of the A.A.M.S., P.O. Box 1182, Huntsville, AL 35807, combined Vol. 3, No. 4/Vol. 4, No. 3, Oct 1980 - Mar 1981, pp. 50-57 (also available from Defense Technical Information Service).

14. Note this is an identity of opposites, which explicitly violates the three Aristotlean laws of logic. See Bearden, "A Conditional Criterion for Identity, Leading to a Fourth Law of Logic," loc. cit., 1981.

15. Again note the fourth law of logic: zero motion (the absence of motion) being recognized as a special case of the presence of motion. Also, physical reality consists of internested levels, and any physical object has an internal substructure of nested levels of finer structure, extending down into the virtual (nonobserved) state. For a vector to model (apply to) a

physical object, it itself must be modeled in such fashion as to reflect this kind of substructure. Thus the use of geometrical vectors as models of physical objects in motion is presently flawed in a fundamental fashion.

16. The reader is most strongly urged to read Morris Kline, Mathematics: The Loss of Certainty, Oxford University Press, New York, 1980 as a prelude to understanding what mathematics is and is not, and what it does and does not.

17. Refer to Lindsay & Margenau, op. cit., pp. 79-81 to see how the ideas of motion and vector are inextricably entangled with the idea of a particle.

18. Call it uncertainty or call it constituency; a quantum change is composed of two canonical entities inextricably welded together into a single entity.

19. Time is an unavoidable, nonexclusive constituency of the welded quantum.

20. Simply from the definition of force as CONSISTING OF a time- and length-smeared mass motion change.

21. The force is an effect, not a cause. It IS the smeared charged particle. It is CAUSED by a more fundamental mechanism. It is the result of the combination of (1) a nonzero del phi, and (2) the presence of a spinning charged particle. IN A DEL PHI, THE SPINNING CHARGED PARTICLE ACCELERATES ITSELF! This is the fundamental secret of free energy that was suppressed, to bury the fundamental work of Nikola Tesla, shortly after Tesla was forced to abort his Wardenclyffe attempt to provide the world with free energy.

22. To quote: "The Hertz wave theory of wireless transmission may be kept up for a while, but I do not hesitate to say that in a short time it will be recognized as one of the most remarkable and inexplicable aberrations of the scientific mind which has ever been recorded in history. " Nikola Tesla, "The True Wireless, " Electrical Experimenter, May 1919, p. 87.

23. De Beauregard, O. Costa, "Running backwards the Mermin device: Causality in EPR correlations," American Journal of Physics, Vol. 51, No. 6, June 1983, p. 515.

24. Note the Soviet scientist Kozyrev's experiments with time waves. See Kozyrev, N. A., "Possibility of Experimental Study of the Properties of Time," September 1967, pp. 1-49, in JPRS 45238, May 1968. Kozyrev reports real physical effects from the oscillation of time. Also, note that scalar potential energy of appreciable size with respect to a particle's rest energy can force the situation to be relativistic, even though the velocity of the particle with respect to the velocity of light is small. That is, electrostatic scalar potential alone can cause variation in the rate of flow of time and hence vary physical characteristics. See Bloch & Crater, "Lorentz-invariant potentials and the non-relativistic limit," American Journal of Physics, Vol. 49, No.1, 1981, pp. 67-75. By inference, oscillating the electrostatic scalar potential can produce time waves and lead to direct physical effects.

25. It is already shown in the literature that the electrostatic scalar potential (ESP) can affect spacetime (ST) in the same manner as velocity. Cf Bloch & Crater, op. cit., 1981. Now note that, to any quantal or macroscopic observer, the existence of the 4-space volume of ST implicit in $(\Delta t)(\Delta v)$, where v is volume, cannot be separated from the existence of the subquantal entities that exist therein. We therefore DEFINE the magnitude of the ESP as the summation of the absolute values of all the internal virtual vectors in the $(\Delta t)(\Delta v)$ quantum of ST, divided by the absolute value (magnitude) of $(\Delta t)(\Delta v)$. We take the view that no such thing as "unstressed" ST physically exists, and that "spacetime" and "stressed spacetime" are identical. Hence ESP and ST are one and the same thing. Note that this implies that the virtual density of ST is variable, and is nothing but the magnitude of the ESP. In EM theory, the assumption that the ESP of vacuum ($Ø_O$) is equal to zero is in serious error. In fact, $Ø_O$ IS "spacetime of the laboratory observer," in the new view.

26. For example, the definition of the electrostatic

potential (ESP) is usually taken as "the work which must be done against electric forces to bring a unit charge from a reference point to the point in question; the reference point is located at an infinite distance, or, for practical purposes, at the surface of the earth or some other large conductor." (McGraw-Hill Dictionary of. Scientific and Technical Terms, ed. Daniel N. Lapedes, second edition, 1978, p. 518.) Note that this is NOT a definition at all, for it is not an identity. Instead, it is the statement that, if an ESP exists at a point and a unit charged mass (assumed to be at a point) is brought in from infinity toward the ESP location point, the amount of work it is necessary to expend upon the mass of the particle is equal to the magnitude of the ESP. The ESP exists whether or not any work at all is expended, and whether or not a charged unit mass is brought in. To adequately define ESP, we must define its identity, or what it consists of, in the absence of mass, since we have conceived the ESP to exist at a vacuum point. Further, the definition usually taken is completely a 3-space definition. Instead, in our new view the ESP is to be taken at a point in n-space, where n is equal to or greater than 4.

27. See Bearden, Quiton/Perceptron Physics, 1973, available through the DTIS. See also Bearden, The Excalibur Briefing, Strawberry Hill Press, San Francisco, CA, 1980. Ultimately all physical phenomena are mindchanges in the minds of all the observers.

28. And then assumes this summation value is zero.

29. See note 25 above.

30. Bearden, The Excalibur Briefing, Strawberry Hill Press, San
Francisco, CA, 1980.

31. Cf Rauscher, E. A., "Electromagnetic and Non-Linear Phenomena in Complex Minkowski Spaces," Tecnic Research Laboratories, 64 Santa Margarita, San Leandro, CA 94579. Presented at the 1983 March Meeting of The American Physical Society in Los Angeles, CA 21-25 March, 1983. This is a truly remarkable paper of great significance. Rauscher, a world-class physicist, has presented a new theoretical

model for some rather extraordinary possible extensions of present electromagnetics.

32. Cf Muses, Charles, Introduction to Jerome Rothstein's Communication, Organization, and Science, The Falcon's Wing Press, Indian Hills, Colorado, 1958. The entire foreword by Muses is a remarkable document, which analyzes the structure of time itself. See also his profound summary paper, "Hypernumbers II" in the January 1978 issue of Applied Mathematics and Computation, published by Elsevier.

Next Page

ADDITIONAL NOTES AND REFERENCES

Although quotes and direct utilization of material from these references were not incorporated in this paper, the following references were also consulted. In addition,' several notes are added for further clarity.

33. Rupert Sheldrake, A New Science of Life: The Hypothesis of Formative Causation, J. P. Tarcher, Inc., Los Angeles, CA, 1981. Ø, the electrostatic scalar potential field, in my opinion is actually the morphogenetic field that Sheldrake proposes.

34. Briefly, by a "particle" we mean an entity so constructed that, if any part of it changes all of it changes. From the viewpoint of the particle, this implies that to change is to detect, and to detect is to change. Also, internal and external become synonymous, in the "detected" sense. The idea of a "fundamental particle" in physics actually invokes the fourth law of logic implicitly.

35. Only if a thing dimensionally contains time, can it "occupy time." This point is so obvious that one wonders how so many of the scientists and mathematicians seem to have missed it. By this criterion, e.g., mass does not exist in time, a priori. To "observe" or detect, in fact, means to stop time, thus collapsing the wave function. However, it reduces the observable or detectable to a spatial quantity, not a spatiotemporal quantity. In other words, the ordinary scientific method destroys a part of reality in each detection or measurement, yielding only a partial truth. not fundamental truth.

36. Note that electrostatic scalar potential is actually infinite-dimensional and hyperspatial. The coverage of

this paper is still only a special case. By Tesla technology, it is possible to do direct engineering in hyperspace -- beyond our present space and time, with all that that statement implies.

37. Bob Sloan, "Nikola Tesla: The Greatest Inventor of all Time?". IEEE Antennas and Propagation Society Newsletter, June 1983, pp. 9-11. A very succinct summary of the importance Tesla played in ushering in the modern age.

38. Gerald E. Brown and Mannque Rho, "The structure of the nucleon," Physics Today, Vol. 36, No.2, February 1983, pp. 24-32. Recommended as a summary of the new thinking as to the structure of the nucleon: a bag containing three quarks, surrounded by a cloud of mesons which squeeze the bag.

39. John J. O'Neill. Prodigal Genius: The Life of Nikola Tesla. Angriff Press, P.O. Box 2726, Hollywood, CA 90028, new printing 1981.

40. Margaret Cheney, Tesla: Man Out of Time, Prentice-Hall, Englewood Cliffs, NJ, 1981.

41. John T. Ratzlaff and Leland I. Anderson. Dr. Nikola Tesla Bibliography. Palo Alto. CA, 1979. Indispensable.

42. Dr. Nikola Tesla: Selected Patent Wrappers, compiled by John T. Ratzlaff, multiple volumes. 1980. Available from The Tesla Book Company, 1580 Magnolia, Millbrae, CA 94030. Tesla's correspondence with the U.S. Patent Office, when patiently trying to obtain patents. He spent a great deal of time trying to convince the Patent Office that his inventions would indeed work. Some of them required 12 years to obtain, and then were "watered down" in the process.

43. Thomas Commerford Martin, The Inventions, Researches and Writings of Nikola Tesla, Originally published in 1894 by The Electrical Engineer, New York; republished in 1977 by Omni Publications, Hawthorne, CA 90250.

44. Ernest Nagel and James R. Newman, Godel's

Proof, New York University Press, 1958.

45. Yakov P. Terletskii, Paradoxes.in the Theory of Relativity, With a Foreword by Banesh Hoffman, translated from the Russian, Plenum Press, New York, 1968. Of particular interest is the discussion on particles with imaginary masses, moving faster than the speed of light, contained in pp. 104-107. Such particles can in principle be experimentally detected. In fact, it would appear that the well known exchange of virtual particles between two other particles, such that each turns into the other, is such a case. (Note that protons and neutrons in the nuclei of atoms do precisely this.)

46. Robert M. Besancon, Ed., The Encyclopedia of Physics, Second Edition, Van Nostran Reinhold, New York, 1974. Particularly see the discussion on the electron, pp. 272-274. Note this discussion predates Stanford University's experiments yielding fractional charge, though it does point out that several physicists had also reported measuring fractional charges on the electron. See also the discussions of ionization, Michelson-Morley experiment, the photon, and propagation of electromagnetic waves.

47. Robert Eisberg and Robert Resnick, Quantum Physics of Atoms, Molecules, Solids, Nuclei, and Particles, John Wiley & Sons, New York, 1974.

48. R. K. Bullough and P. J. Caudrey, eds., Solitons, Springer-Verlag, New York, 1980.

49. James Dale Barry, Ball Lightning and Bead Lightning, Plenum Press, New York, 1980. Note particularly p.196, for a short discussion on flashless discharges. An extensive bibliography is also included.

50. Harley D. Rutledge, Project Identification, The First Scientific Field Study of UFO Phenomena, Prentice-Hall Inc., Englewood Cliffs, NJ, 1981.

51. John J. Reitz, Frederick J. Milford, and Robert W. Christy, Foundations of Electromagnetic Theory, Third Edition, Addison-Wesley, Reading, MA, 1979.

52. The entire series of handbooks by William Corliss, dealing with anomalies and unusual natural phenomena

of all kinds. Corliss is a national treasure, and his handbooks are absolutely indispensable.
See particularly his Handbook of Unusual Natural Phenomena, The Sourcebook Project, Box 107, Glen Arm, MD 21057, 1977 and his Lightning, Auroras, Nocturnal Lights, and Related Luminous Phenomena, 1982.

53. Bernard d'Espagnat, Conceptual Foundations of Quantum Mechanics, W. A. Benjamin, Menlo Park, CA, 1971.

54. D.W.G. Ballentyne and D.R. Lovett, A Dictionary of Named Effects and Laws in Chemistry, Physics and Mathematics, Fourth Edition, Chapman and Hall, New York, 1980. Check this neat little book to discover some very odd effects in materials.

55. David Bohm, The Special Theory of Relativity, W. A. Benjamin, New York, 1965.

56. Albert Einstein, Relativity: The Special and the General Theory, Crown Publishers, New York, 1961. See particularly the discussion of relativity and the problem of space, in Appendix V.

57. Edwin F. Taylor and John Archibald Wheeler, Spacetime Physics, W. H. Freeman and Co., San Francisco, 1966. Note particularly the discussion on observers and frames in the first two dozen pages. On p.19, note that the notion of a frame requires an infinite observer distributed through each and every "point" that was clock-synchronized in a frame. Since all observers are localized, a better idea is to realize that all the "external" modeling just represents the relative changes inside the physical detection system of the observer himself/herself. All detection/observation is totally inside the physical observer.

58. Paul Edwards, Ed. in Chief, The Encyclopedia of Philosophy, Vols. 1-8, Macmillan Publishing Co., New York, 1967.

59. Michael A. Persinger and Gyslaine F. Lafreniere, Space-Time Transients and Unusual Events, Nelson-Hall, Chicago, IL, 1977.

60. John David Jackson, Classical Electrodynamics, Second Edition, John Wiley & Sons, New York, 1975.

61. James Clerk Maxwell, A Treatise On Electricity & Magnetism, Vols. 1 & 2, Third Edition, Dover Publications, New York, 1954. An unabridged, slightly altered, republication of the third edition, originally published by the Clarendon Press in 1891.

62. Jack S. Greenberg and Walter Greiner, "Search for the sparking of the vacuum," Physics Today, August 1982, pp. 24-32. A beautiful summary article on the present concept of the vacuum, from the standpoint of quantum mechanics and quantum field theory. I specifically urge anyone interested in tapping the vacuum energy to read this article.

63. Max Jammer, Concepts of Mass, Harvard University Press, Cambridge, MA, 1961. Recipient of the monograph prize of the American Academy of Arts and Sciences for the year 1960 in the field of physical and biological sciences. This book, strange as it may seem, was the first monograph to subject the notion of mass to an integrated and coherent historical investigation, something which had never before been done. The reading of this book is an absolute must for anyone seriously concerned about whether or not science speaks fundamental truth, or to what degree it does so. Most scientists assume foundations concepts such as "field," "force," "mass," "time," etc. are well-defined and well-understood in physics, since they are ubiquitous and so familiar. In fact, none of the absolute fundamentals in the foundations of physics is unambiguously understood!

The last paragraph by Jammer is illuminating: "The modern physicist may rightfully be proud of his spectacular achievements in science and technology. However, he should always be aware that the foundations of his imposing edifice, the basic notions of his discipline, such as the concept of mass, are entangled with serious uncertainties and perplexing difficulties that have as yet not been resolved."

64. G. Burniston Brown, "Gravitational and inertial mass," American Journal of Physics, Vol. 28, p. 475, 1960: "...one of the most astonishing features of the

history of physics is the confusion which surrounds the definition of the key term in dynamics, mass."

65. Whittaker, Sir Edmund, A History of the Theories of Aether and Electricity, Vol. 1: The Classical Theories, and Vol. 2: The Modern Theories 1900-1926, Harper Torchbooks, Harper & Brothers, New York, 1960.

66. Weyl, Hermann, Space -- Time -- Matter, Fourth Edition, translated from the German by Henry L. Brose, Dover Publications, New York, 1922.

67. Jammer, Max, Concepts of Space: The History of Theories of space in Physics, Second Edition, Foreword by Albert Einstein, Harvard Univ. Press, Cambridge, MA, 1969.

TOWARD A NEW ELECTROMAGNETICS PART III: CLARIFYING THE VECTOR CONCEPT

Help support the work

-- It Started With Geometry and Grew --

At the very beginning of what we call the "scientific period," mathematics was both king and queen, and Euclidean geometry was its handmaiden. So we ask, "What precisely is geometry?" Here we are not interested in a "textbook" answer, but in an answer indicating what geometry really does.[3] In other words, with what does geometry concern itself, and what is the fundamental nature of those things with which it concerns itself?

Briefly, geometry -- at its foundation -- is totally spatial. It is fitted to, and expressed in terms of, the TOTAL ABSENCE OF MASS. Thus the geometer deals in abstract, massless entities called "points," "lines," "planes" etc. When the geometer speaks of "motion," he speaks of a time-smeared, length-smeared point. Geometry at heart is massless, and a "geometer's vector" is a highly specific type of "system." In fact, it represents the "time-smearing" and "length-smearing" of a point. A priori, the fundamental concept of the geometrical vector has taken a "spatial" entity and introduced a hidden involvement with "time."

Modern mathematics and physics have followed an intertwined development for several hundred years. And both sprang as offshoots of the original work of the geometers. Let us briefly sketch the overall path of interest taken by these two developing disciplines.

With the advent of Descartes's fundamental work, algebra was combined with geometry to yield analytic geometry, a new and powerful mathematical tool. With the invention of calculus by Leibniz and Newton, both mathematics and physics received a giant impetus. Differential geometry and vector mathematics arose in full splendor and, in physics, mechanics leaped to the forefront with Newton's

profound work.

But the mechanics made a most fundamental error when they simply applied the geometer's vector to a mass, to produce -- so they thought -- a mass vector. That which rigorously applies only to the absence of mass cannot be so lightly applied to the presence of mass without the risk of serious limitations in the resulting theory. The precise difference between a geometer's massless vector and a mechanic's mass-vector is one of the issues to be developed in this thesis.

As rapid development continued in mechanics and mathematics, certain physicists were involved in intense experimental work on charged matter, becoming the first electricians. Both the preceding mathematical ideas and constructs as well as the preceding (partially erroneous) mechanics constructs and ideas were applied by the electricians, struggling with their pith balls, cat fur, and glass rods to understand, quantify, and model electrical forces and the phenomena of charged matter. In other words, the electricians strove to formulate the physics and dynamics of charged matter and its interactions by simply "adding to" the work of the geometers and mechanics. Here again, a fundamental logical error was made. That (geometry) which a priori applies only to the absence of mass, and that (mechanics) which a priori applies only to the absence of charge, cannot be lightly applied to the presence of charged mass (both mass and charge)[4] without risking the incorporation of grave limitations in the resulting theory.

After the profound work of Maxwell, the idea of FIELDS OF FORCE became more prominent, until the field concept ruled the day[5]. The electricians continued, pushing the idea of fields into space and vacuum itself, along the way inventing the idea of "charge effects" existing even in the massless vacuum, with concomitant fields. Meanwhile, they had thoroughly confused chargeless point-smeared, chargeless mass-smeared, length-smeared and time-smeared vectors.

After a set of fundamental experiments designed to detect motion of the material ether yielded essentially null results[6], Michelson and Morley were regarded as having completely disposed of the ether -- even though the experiments only disposed of material

ethers, and not Lorentz-invariant non-material ethers[7]. Maxwell's equations and the field concept were elevated to profound importance.[8] Then, after Einstein's fundamental relativity work shortly after the turn of the century, the ether concept faded away and the field concept reigned supreme. Indeed, in their enthusiasm the interpreters of relativity went so far as to affirm that one can have a wave without any medium; that is. that something can be moving (waving) without anything there to move![9] And with great glee they pronounced the final end to the idea of "ether" as a medium, even though Einstein himself never did any such thing.[10] With the advent of Einstein's General Theory of Relativity, even matter came to be regarded as just a special "kink" or curvature in spacetime or "vacuum nothing."

Quantum mechanics arose and even certainty and determination fell. Chaos, probability, and randomness now assumed the ruling position. Probability waves (and probability fields) arose,[11] as did quantum fields of various kinds. The intermingling of these concepts with the concepts of electrodynamics pushed the idea of the field even farther into esoteric realms.

The point is, each of these developing disciplines incorporated and built on the foregoing disciplines. From the beginning of geometry, there was no rigorous definition of a vector, and there is none today.[12] From the beginning of mechanics, in their foundations the theorists made grave logical errors by incorporating the geometer's vector; errors so great that today mechanics and electromagnetics are severely flawed, as is everything that came after them and built upon their illogical foundations.

Next Page

Help support the work

TOWARD A NEW ELECTROMAGNETICS PART III: CLARIFYING THE VECTOR CONCEPT

Help support the work

-- Points and Motion --

It is my purpose in this paper to expose in a very simple fashion the most basic errors that were made. One basic error involves the idea of motion itself.[13]

In formulating concepts of motion, the geometers used a "point in motion" to determine or specify, for example, velocity. Now a "point" is a static concept a priori. To determine (or even to think and perceive) motion, one must determine that it occupies two different points (positions or locations) at two different times, yet consider both points at the same time. Indeed, that is precisely what the arrow means that is used to represent a vector. A "point in motion" therefore represents a contradiction of opposites. That is, it represents the idea that "that which is motionless has motion.".[14] Even with this, there is a difference in a spatial point and a spatiotemporal (spacetime) point. To exist at all, a spatial point must be moving in time; in other words, it is a spatiotemporal line, even if it is a static spatial point.

Vector analysis was constructed in the abstract -- again, a massless point in motion possessed or constituted a velocity vector, etc. In massless (and timeless) space, FIELDS were defined: "scalar" fields constituted the assignment of a simple motionless number (magnitude) to each spatial point, while "vector" fields constituted the assignment of a "simple vector" (magnitude and velocity) to each spatial point. But the MATHEMATICAL vector system consisted of massless (point) motional relationships, recognizing zero motion as a special case of motion.[15]

Of course mathematics development was also always intertwined with practical problems. With the

sustained application of mathematics to gross physical material problems, mechanics slowly arose.

These developments required decades and even centuries to occur completely. All along the way, innovations and changes -- and additions to the mathematical formulism were being derived and taught to students as the "natural" system of reality. A permanent mindset was being forged.

Indeed, mathematics was regarded as THE single human expression of fundamental truth. Not until Godel's work in the twentieth century did it become evident that MATHEMATICS IS SIMPLY A GAME PLAYED ACCORDING TO ASSIGNED RULES, AND THERE IS NO ULTIMATE TRUTH IN MATHEMATICS ALONE.[16] It is a most useful game, of course, since it is the game fitted to perception. Thus it applies, essentially, to whatever can be perceived. But to be applied to physical systems, it must be changed, altered, updated, and fitted as the perceiving/detecting instruments become ever more subtle.

Next Page

Help support the work

TOWARD A NEW ELECTROMAGNETICS
PART III: CLARIFYING THE VECTOR CONCEPT

-- Four Types of Vectors Actually Emerged --

As the physical sciences slowly developed and incorporated abstract geometry and mathematics, in actuality four major types of vectors and two major states of observation evolved, although this fact did not become apparent to the scientists. Specifically, the mathematicians and scientists failed to recognize the differences in the four types of vectors, hopelessly intermingling them and confusing them as a single class of vector. Further, they did not appreciate that a fundamental vector conceptually is a UNITARY SYSTEM, and the system represented by one of these four types of vectors utilizes and is comprised of different components, "welded together with no seam in the middle."

Conceptually (and from a systems viewpoint), the four types of vectors are (1) the chargeless, massless spatial system vector (geometer's vector), (2) the uncharged mass system vector (mechanic's vector), (3) the charged mass system vector (electrician's vector), and (4) the charged space system vector (advanced electrician's vector). These four fundamentally different vectors are shown in Figures 1, 2, 4, and 9 in a simplified manner.

The major problem was that, beginning with the geometer's vector, these four major types of vectors were not treated as systems. Instead, their "vector" aspects were hopelessly confused and intermeshed, and no distinctions were made between them. And in the foundations of the mathematical constructs, time-smearing was not recognized at all.

Next Page

TOWARD A NEW ELECTROMAGNETICS
PART III: CLARIFYING THE VECTOR CONCEPT

-- Quantum Mechanics Compounds the Problem --

In addition, the two presently recognized observation states -- observable and nonobservable (virtual) -- were of course unknown to the early geometers and electricians, and these ideas were not incorporated directly into the theoretical foundation.

From particle physics and quantum mechanics, we now understand that physical reality is structured of an observable state, underlaid with an infinite number of ever finer, successive levels of virtual (unobservable) states. At least reality is most accurately modeled in that fashion, according to particle physics today.

It is also well known, for example, that at the most fundamental level, one cannot actually separate nonmotion from motion (which implies, for example, that one cannot separate mass and velocity). In other words, a "mass in motion" idea is actually incorrect, at the most basic level. What actually exists is a sort of "smeared mass". That is, "mass-motion" is fundamentally what exists, not mass IN motion .

Actually, all that the Heisenberg Uncertainty Principle implies is this fact: If one examines the concept of "static (non-smeared) thing in non-static (smeared) motion", in ever finer detail, one reaches a degree of fineness where the "smearing" is paramount and one cannot have an un-smeared or "separate static thing" to be in motion. Instead, one only has the smeared, 4-dimensional spacetime entity, without 3-dimensional spatial separations.

This means, for example, that at the most basic level, it is actually incorrect to represent a momentum with a little static particle of mass connected to a spatial velocity vector. It is incorrect to think of the system as comprised of TWO SEPARATE ENTITIES, (1) a mass, and (2) a massless spatial system velocity vector (a geometer's vector).

We mention in passing that, presently, we

understand that every particle is continually accelerating. First, the particle has spin, which involves rotation, which means that every "part" of the periphery of the particle is accelerated toward the center axis of spin. Second, every particle is continuously "fluctuating," and these fluctuations are accelerations. Further, we must consider any change such as an acceleration -- as existing in a small time increment, and occurring in a small length increment. Thus mass particles actually exist as (mass x acceleration x time x length). This of course has the dimensions of ACTION or angular momentum. The "real" world of physical matter, then, is composed of building blocks of action, called "quanta." Any other physical "quantity" must be obtained by fissioning (differentiating) the action quantum. For this reason, quantum mechanics presently must postulate that to every observable there corresponds an operator.

Next Page

-- To Summarize Briefly --

Let us now summarize these concepts and further examine their impact.

In physics, there must actually exist four major KINDS of vectors, rather than just one as prescribed by present interpretation. These vectors are "built" starting with four major kinds of particles.[17] These are: (1) the spatial point, (2) an uncharged mass particle, (3) a charged mass particle, and (4) a charged spatial point. Further, each of the four vectors at its most fundamental level (that is, at the quantum level)[18] is actually an inseparable, unitary SYSTEM welded into a single undivided entity containing time and existing nonexclusively in time.[19] When we look at or represent the so-called "parts" of the system, we are looking at them before they are welded together into the physical vector. That is, whenever we speak of "parts, " we imply that a "cutting" or "differentiating" action has been implied to separate the system into such "parts."

From such considerations, four different kinds of system vectors result.

Next Page

TOWARD A NEW ELECTROMAGNETICS
PART III: CLARIFYING THE VECTOR CONCEPT

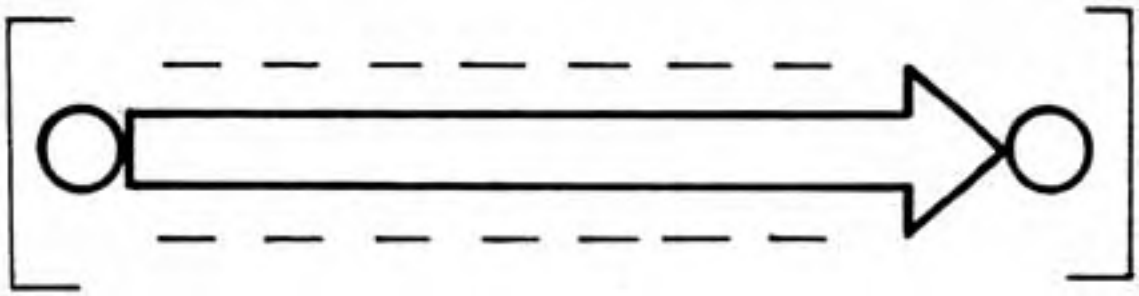

(GEOMETER'S VECTOR)

Figure 1. Uncharged spatial (massless) system vector.

UNCHARGED SPATIAL (MASSLESS) SYSTEM VECTOR
-- (Figure 1) --

This is the geometer's abstract vector, consisting of a "point in motion." (Actually, it is a "smeared point," for example.) However, so ingrained is the concept of a "point in motion" velocity vector that we now consider it to be "natural" because of its total familiarity. But simply ask, "WHAT is in motion?"[17] and you immediately see the difficulty. To have a WHAT, one must "stop the action" (detect or measure), separating "static" from "non-static." Acceleration and other vectors, etc. have also been derived by the geometer and utilized in similar fashion. All are massless.

Next Page

TOWARD A NEW ELECTROMAGNETICS
PART III: CLARIFYING THE VECTOR CONCEPT

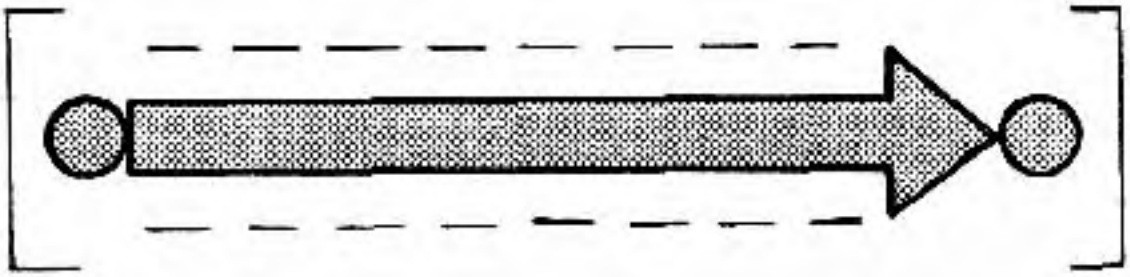

(MECHANIC'S VECTOR)

Figure 2. Chargeless mass system vector.

CHARGELESS MASS SYSTEM VECTOR
-- (Figure 2) --

This type of vector actually is the essential vector of mechanics, involving mass-motion (momentum), force (mass-motion change), etc. The fundamental difference between this type of vector and the geometer's vector is the presence of smeared mass existing in time (i.e., mass-time), welded together with a geometer's vector, but with no seam in the middle, into a new kind of "vector" AS A SYSTEM. The vector is the SYSTEM EXISTING IN TIME .

To illustrate:

"Momentum" is more properly referred to as "mass-motion" rather than "mass in motion." That is, at the fundamental level, the mass is NOT "separate" from its motion. It is NOT separated from the time in which the smearing occurs. The idea of momentum, however, is really to express the time-density of the mass-smeared-through-length. It is, in other words, the time rate of length-smearing of mass. Now in our minds we have conceived that

$$\bar{p} = m \odot \bar{v} \qquad (1)$$

where, by the symbol $\odot$ we mean "coupled to"; but we actually have

$$\bar{p} \equiv [\overline{mv}] \qquad (2)$$

where we are not allowed to separate (even in thought) m and $\bar{v}$. Quantum mechanics agrees with this essentially, because $\bar{p}$ is a canonical variable linked to length, in any observable physical change. (The REASON p is canonically linked to ΔL is because $\bar{p}$ is the time-rate of length-smearing of m. If there is no length, there is no length-smearing of m to have a time rate OF in the first place.)

Note that, not only is

$$\bar{p} = [\overline{mv}] \qquad (3)$$

but also

$$\bar{p} \equiv [\overline{mv}] \qquad (4)$$

which is a much stronger and quite different statement. That is, $\bar{p}$ is IDENTICALLY $(\overline{mv})$, not just calculably EQUAL TO (m)($\bar{v}$). This means that $\bar{p}$ is a SYSTEM that is COMPRISED of mass-motion.

Next Page

TOWARD A NEW ELECTROMAGNETICS
PART III: CLARIFYING THE VECTOR CONCEPT

-- What Force Is --

We now note that force, for example, is -- and may be defined as -- the time-rate of change of momentum, or

$$\bar{F} \equiv d/dt[\bar{p}] \qquad (5)$$

and this identity states that a force -- any force is COMPRISED OF time-changing "mass-motion." As such, the force vector is a mass-system vector, not just a massless spatial vector. Fundamentally, this mass-system vector is a totally different creature from a massless spatial vector. Our present manner of considering force as a geometer's vector "separately applied to" a mass particle is completely erroneous at the quantum level. Instead, fundamentally force is always a mechanic's vector. Force is an EFFECT, not a CAUSE.

And here mechanics made a most fundamental error, in not recognizing the difference between its kind of vector and that of the geometer.

Next Page

TOWARD A NEW ELECTROMAGNETICS
PART III: CLARIFYING THE VECTOR CONCEPT

--Force and Hertzian Waves Cannot Exist in Vacuum --

Note that one cannot have an observable "force vector" existing' in vacuum a priori.

For example, we have the definition of force as

$$\bar{F} \equiv \frac{d\bar{p}}{dt} \qquad (6)$$

or

$$\bar{F} \equiv \overline{[m\bar{a} + \dot{m}\bar{v}]} \qquad (7)$$

and we see that, rigorously, a force vector CONSISTS OF (not, "is equal to") a time-changing mass-motion vector system. IF THERE IS NO OBSERVABLE ACCELERATING MASS PRESENT, THEN THERE CAN BE NO OBSERVABLE FORCE PRESENT. The mass can accelerate in time (increase or decrease of mass) or space (increase or decrease of velocity) or both.

Observable force CANNOT exist in vacuum (in the absence of mass), a priori.[20]

However, assume for a moment that one could have a massless force vector, as assumed in present electrical theory. Let this force vector appear at a point in the vacuum. Since the vacuum has zero observable mass, it would have zero inertial resistance to this hypothetical observable force -- hence the observable force would instantly produce an "infinite" acceleration of its point of application, vanishing with it into the infinite distance. Therefore our fictitious force would disappear the instant it appeared! In any case, it could not be retained at a point in the vacuum for any finite length of time, however small.

The direct implications are that (1) something other than an observable electrical force field exists in the vacuum, and (2) there must exist a more fundamental mechanism by which this "something else" generates or CREATES a force on/of a moving electrically charged mass. (Note again that, at the most

basic level, any particle of mass is always quivering, in motion, and accelerating. from quantal considerations alone.)

Thus immediately we have discovered something unique about so-called "force-fields" in vacuum: for example, about gravitational field, electrical field, and magnetic field (and the strong force and the weak force as well). These fields do not exist at all as ordinary force vectors -- and real force fields -- in vacuum! $\bar{E}$ and $\bar{B}$ fields, e.g., are defined in terms of force per unit electrical charged mass and magnetically charged mass, respectively. In the absence of mass, they cannot exist.

And this in turn means that transverse $\bar{E}-\bar{H}$ field waves (Hertzian waves) cannot exist in a vacuum. Indeed, they appear on, and ARE CONSTITUTED of, the charged-mass-motion that changes, and they appear where such change occurs, as a result of an introduced mass.[21] But in the absence of the spinning charged particle of mass, they do not exist as force fields at all.

Hertzian waves exist in a transmitting whip antenna, for example, in the oscillating electron gas along its length. Something else entirely different exists in vacuum between the transmitting antenna and the receiving antenna. Then in the receiving antenna, Hertzian waves again exist in the oscillating electron gas along its length. (See Figure 3.)

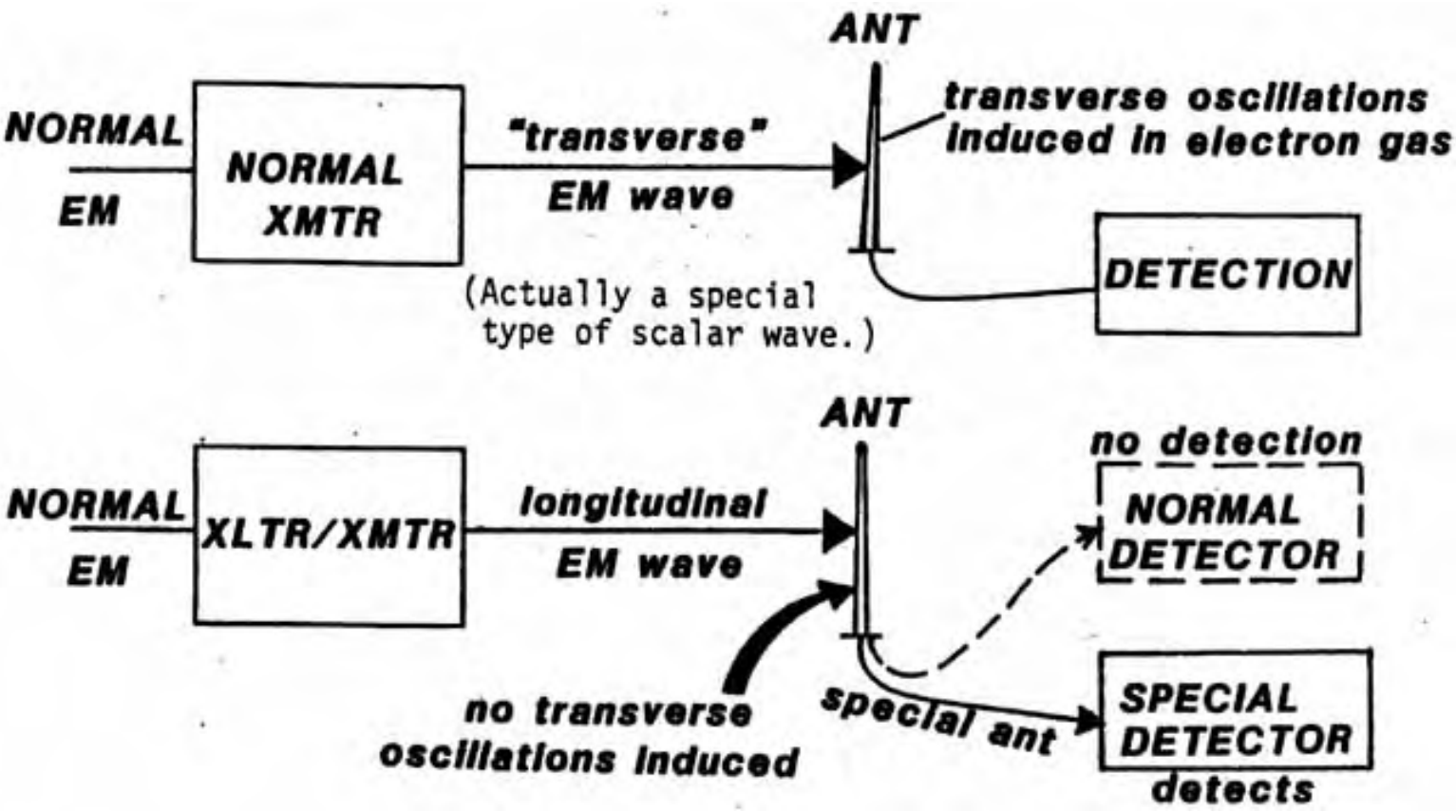

Figure 3. Detection of "transverse" and longitudinal waves

This is interesting, for Nikola Tesla stated several times that HERTZIAN WAVES CANNOT BE PRODUCED IN A VACUUM, NOR CAN THEY TRAVEL IN A VACUUM.[22]

Tesla was correct, as we are beginning to see.

We shall later return to show in what form so-called "force-fields" actually exist in vacuum.

For now, I point out that I am stating a fundamental change to all of physics, including both mechanics and electromagnetics.

Next Page

TOWARD A NEW ELECTROMAGNETICS PART III: CLARIFYING THE VECTOR CONCEPT

Help support this work

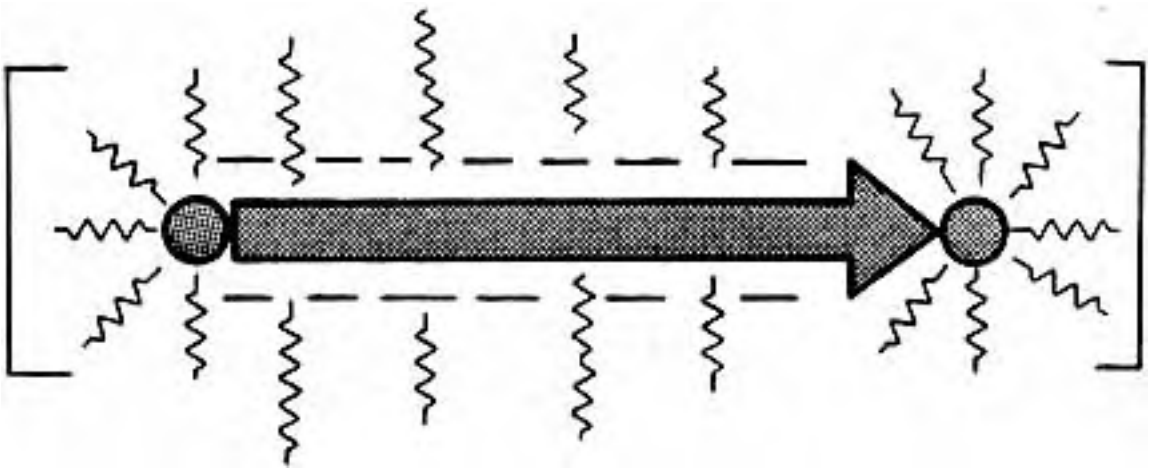

(ELECTRICIAN'S VECTOR)

Figure 4. Charged mass system vector.

-- CHARGED-MASS-SYSTEM VECTOR --
-- (Figure 4) --

The third type of vector we meet is the vector mass system where the mass is charged. First, we point out a serious error in present electromagnetic (EM) theory. That is, in present theory it is implicitly assumed that

$$\mathbf{q} \equiv \mathbf{q_m} \qquad (8)$$

In other words, "charge" and "charged mass" are erroneously assumed to be identically the same thing.

In the days when electricians were playing with pith balls and striving to uncover the secrets of electricity, they knew nothing at all about the virtual

state, and consequently nothing about a "virtual particle flux" on a particle of mass causing (and comprising) the "charge" of that mass.

Today, of course, we know from particle physics and quantum mechanics that the "charge" on an observable particle of mass IS due to a flux of virtual (nonobservable) particles on and off the mass of the observable particle (see figure 5). A charged mass is thus presently known to be a SYSTEM: a massless charge flux, coupled to a bare particle (chargeless mass) constitutes a "charged particle."

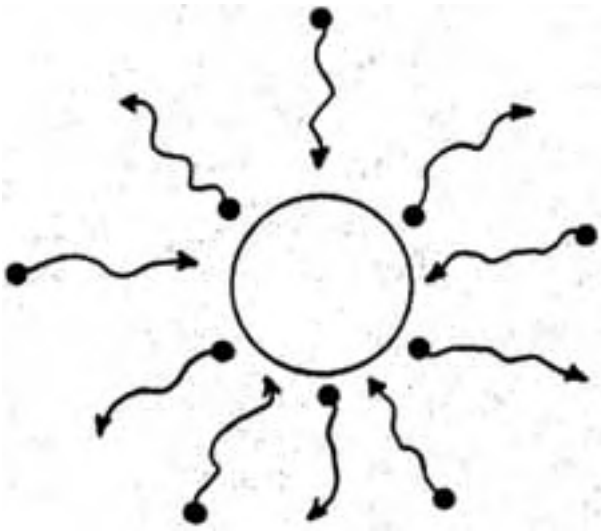

Figure 5. The "charge" on an electron mass consists of a flux of virtual particles on and off the mass.

Thus, actually the "charge" is the virtual (unobservable, or SPATIO-TEMPORAL) flux to and from the observable SPATIAL particle of mass. So, rigorously,

$$\mathbf{q \not\equiv q_m} \qquad (9)$$

But instead,

$$\mathbf{q \equiv [d/dm(q_m)]} \qquad (10)$$

and this is a definition and therefore an identity. This definition alone affects all present electromagnetics theory.

To illustrate: In founding electrical theory, early scientists dealt with forces generated by charged masses (for example, charged pith balls). They later

extrapolated the experimental results they obtained (or thought they obtained) with the smallest charged mass, a charged particle. In Figure 6, I show the classic situation for derivation of the idea of E-field (except we have used an electron for our test charge, rather than a pith ball).

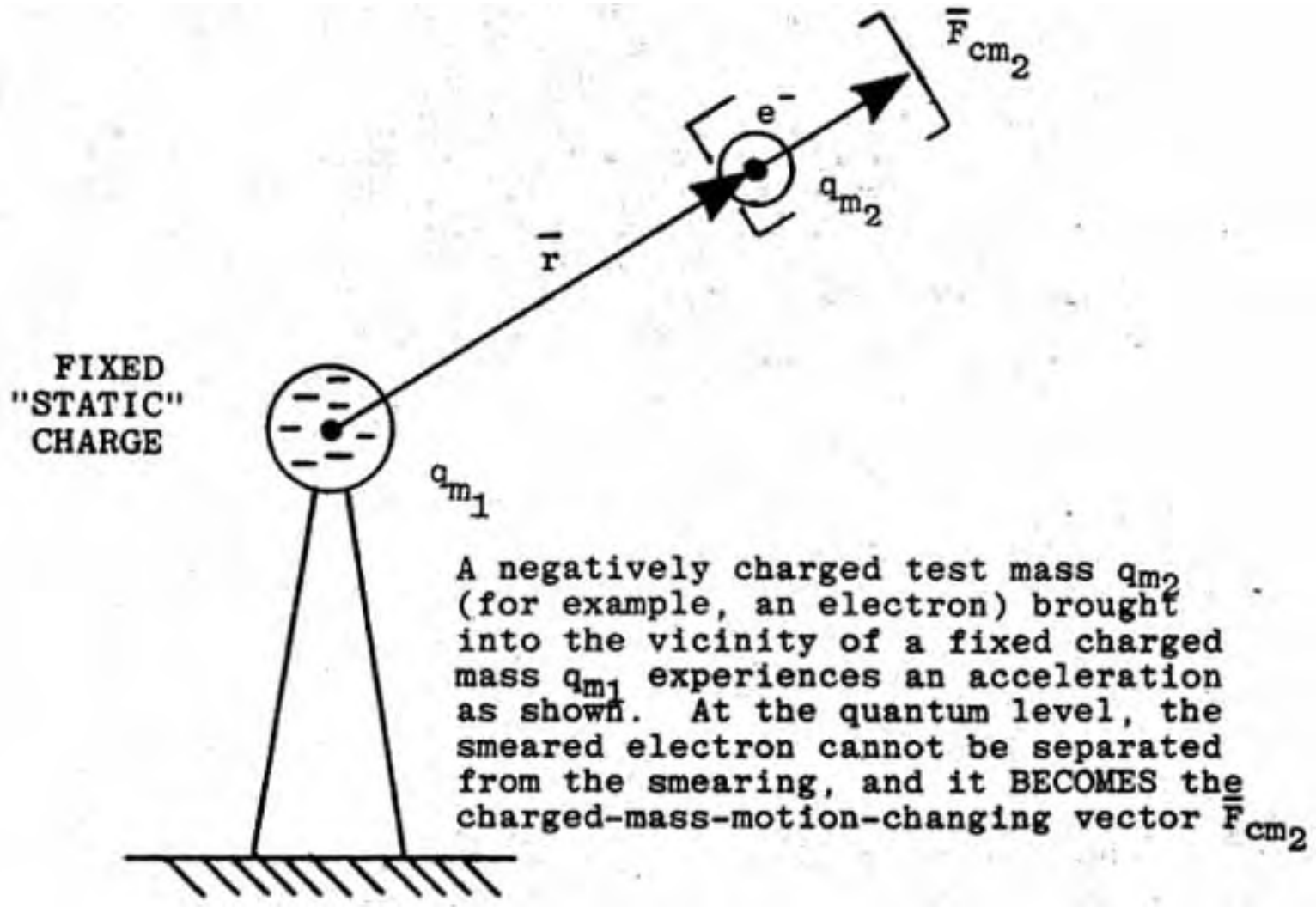

Figure 6. A test charge (charged mass) brought near a fixed charge (charged mass) experiences an acceleration.

Now note that what actually happens is that the unrestrained test charge becomes a CHARGED MASS SYSTEM VECTOR (a "smeared charged mass-motion changing"). The "test charge" BECOMES a charged mass force vector; it does not have a separate geometer's vector "appear on it." What actually happens is shown in Figure 7.

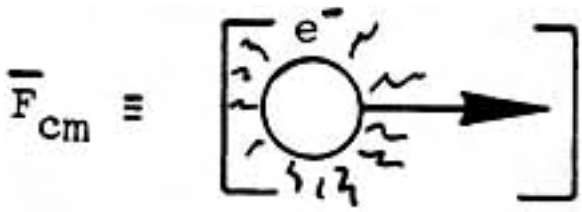

Figure 7. A charged-mass-system vector.

That is, in the simplest (nonrelativistic) case, for an electron what happens is

$$\bar{F}_{cm} \equiv \overline{[q_e \odot m_e \odot \bar{a}_s]} \qquad (11)$$

and this is a DEFINITION. That is, considered instantly, the electron exists as a charged-mass electrical force CONSISTING OF/COMPRISED OF a charge flux q_e canonically coupled to a mass, with that subsystem then canonically coupled to a spatial acceleration vector, ALL AS A SINGLE ENTITY, WITHOUT ANY "SEAMS" BETWEEN ITS "PARTS." The $\bar{F}_{cm}$ IS THE ELECTRON SYSTEM ITSELF; it is NOT a "spatial vector." Rigorously, it does not exist in the absence of the smeared electron mass, a priori.

Again, in assuming this force exists in the absence of the smeared mass of the moving particle, electromagnetics theory is in serious logical error.

Referring back to Figure 6, we see that, if we repeat the experiment many times and with the test charge in many locations, we have the situation shown in Figure 8.

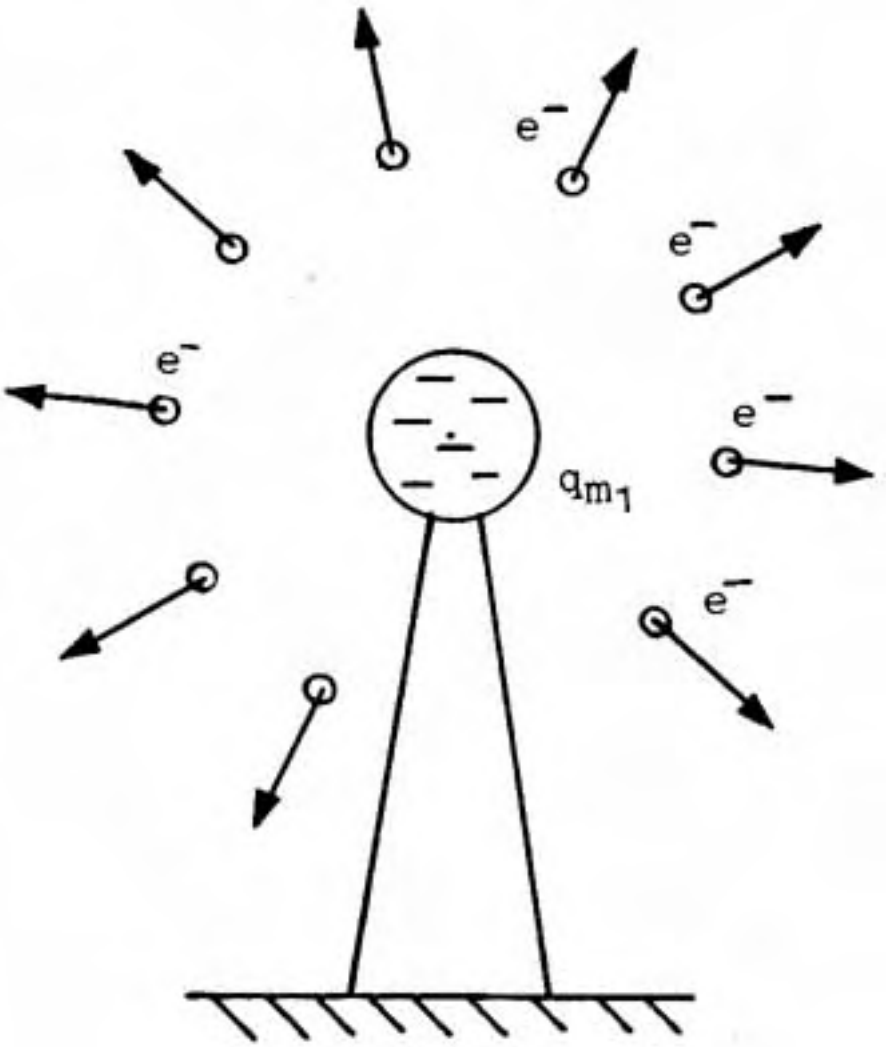

Figure 8. Repeating the "test charge" experiment.

It is found that, rigorously,

$$|\bar{F}_{cm}| \propto \left|\frac{q_{m_1} q_{m_2}}{r^2}\right| \qquad (12)$$

where $\bar{F}_{cm}$ is a charged mass system vector. Erroneously, this has been stated one way or another as

$$|\bar{F}| \propto \left|\frac{q_1 q_2}{r^2}\right| \qquad (13)$$

where $\bar{F}$ is assumed to be a spatial system vector. Further, this confusion has been carried over into the definition of the $\bar{E}$-field as:

$$\bar{E}_{cm} \equiv \frac{\bar{F}_{cm}}{m_{cm}} \qquad (14)$$

In this definition, $\bar{E}$ -- which is a charged mass system vector -- has been confused as a charged spatial system vector, where $\bar{F}$ is regarded simply a spatial system vector! Actually, the definition of the $\bar{E}$-field should be

$$\bar{E}_{cm} \equiv \frac{\bar{F}_{cm}}{m_{cm}} \qquad (15)$$

where $\bar{F}_{cm}$ is a charged mass system vector. Failure to properly define the $\bar{E}$-field has caused the conception of the $\bar{E}$-field to be falsely perpetuated as existing in vacuum.

The $\bar{E}$-field is TREATED this way in present EM theory. Hence present theory falsely assumes that the observable $\bar{E}$-field can exist in vacuum.

What actually exists in space, $\bar{E}$-field-wise, is a special kind of ordered virtual state pattern in a series of spinning "scalar" fields. This virtual state pattern or "shadow vector" field will be explained later.

Note again that one cannot have a "force vector" existing in vacuum - a priori.

However, assume for a moment that one could have a massless force vector, as presently assumed. Let this force vector appear at a point in the vacuum. Since the vacuum has zero observable mass, it would have zero inertial resistance to this hypothetical observable force hence the observable force would instantly produce an "infinite" acceleration of its point of application, vanishing with it into the distance. Therefore our fictitious force would disappear the instant it appeared! In any case, it could not be retained at a point in the vacuum for any finite length of time, however small.

The direct implications are that (1) something other than an observable electrical force field exists in the vacuum, and (2) there must exist a more <u>fundamental mechanism</u> by which this "something else" generates or CREATES a change on/of an accelerating electrically

charged mass particle. (Note again that at the basic level, any particle of mass is ALWAYS quivering and accelerating, from quantal fluctuation considerations alone.) Causality has no arrow microscopically.[23]

Next Page

Help support this work

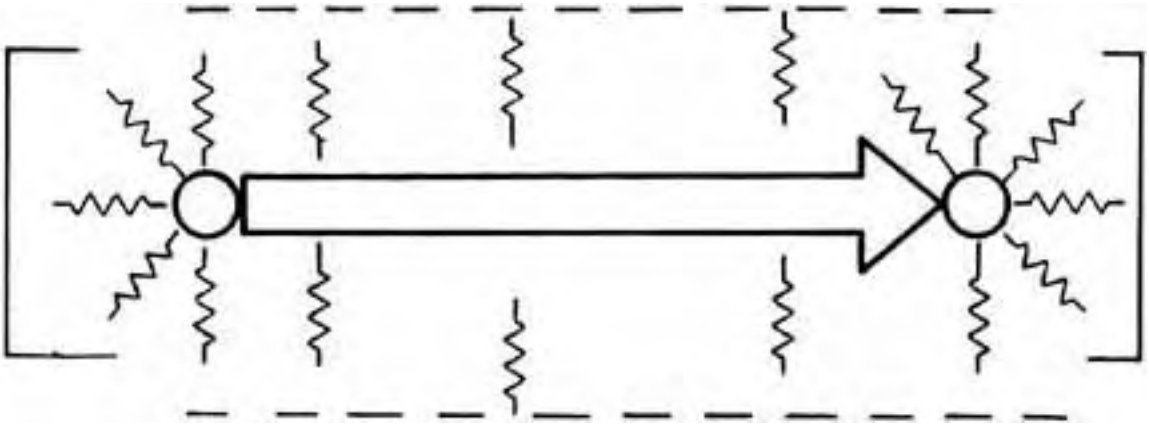

(ADVANCED ELECTRICIAN'S VECTOR)

Figure 9. Charged spatial (massless) vector.

-- CHARGED SPATIAL (MASSLESS) VECTOR --

We recognize now that

$$q_c \not\equiv q_m \qquad (16)$$

and that q_c is simply the virtual-particle flux that constitutes charge -- and indeed constitutes vacuum itself!

We DEFINE vacuum, based on Figure 5, as shown in Figure 10.

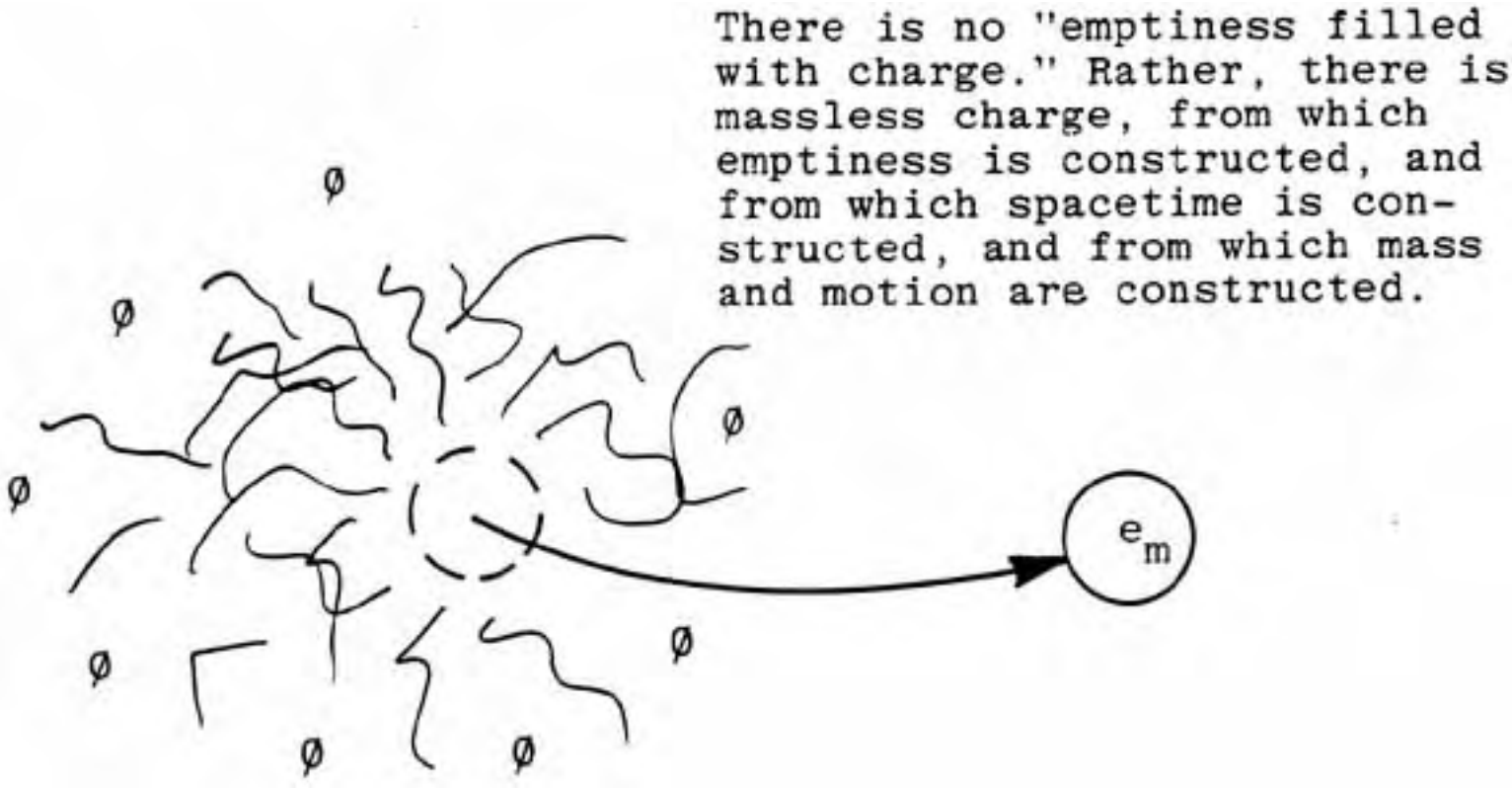

Figure 10. Removing the bare particle (mass) from a charged particle leaves the charge. The vacuum is DEFINED AS the charge.

That is, vacuum may be defined as pure massless charge flux. This flux IS identically "spacetime" as well. Vacuum is pure Ø-field (electrostatic scalar potential). Here again, in present theory it is assumed that

$$Ø_O \equiv 0 \qquad (17)$$

which, by our new definition of vacuum, is quite false.

We now note that, if we insist on assigning a spatial vector to the vacuum, we have the situation shown in Figure 11.

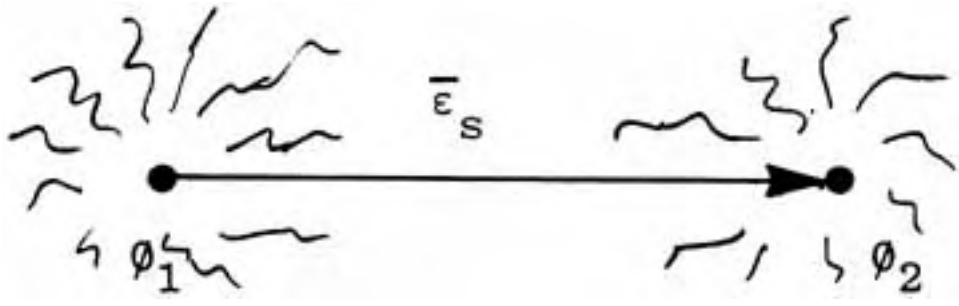

Figure 11. Assigning a spatial vector to the charged vacuum

Next Page

Help support the work

TOWARD A NEW ELECTROMAGNETICS PART III: CLARIFYING THE VECTOR CONCEPT

Help support the work

-- THE SHADOW VECTOR --

Note that this spatial vector $\bar{\varepsilon}_s$ represents $-\overline{\nabla\phi_s}$, that is,

$$\bar{\varepsilon}_s = -\overline{\nabla\phi}_s \qquad (18)$$

but $\bar{\varepsilon}_s$ cannot be a force (mass system) vector. It can only exist as an ordered pattern in the virtual flux between two separated points of the vacuum; that is, as an ordered pattern in the virtual state. Literally, $\bar{\varepsilon}_s$ exists only as a tiny bit of order existing in great disorder.

In other words, the present EM theory is incorrect in stating that

$$\bar{E}_m = -\overline{\nabla\phi}_s \qquad (19)$$

in vacuum in the absence of an observable spinning charged particle, since

$$\bar{\varepsilon}_s \not\equiv \bar{E}_m \qquad (20)$$

The actual existence of $\bar{\varepsilon}_s$ may be visualized in terms of successive differentials of $\bar{E}_m$, broken into differentials $\bar{e}_m$ so small that, observably, each little differential's mass component m has become virtual, so that

$$\bar{e}_m \equiv \bar{e}_{vm} \qquad (21)$$

where subscript m stands for mass, subscript v for virtual, and observably

$$\bar{e}_{vm} \equiv \overline{dE}_m \qquad (22)$$

but, in the absence of a spinning charged particle,

$$\bar{E}_m \neq \int \overline{dE}_m \qquad (23)$$

since the $\bar{e}_{vm}$ components remain individually separated. That is, in macro-time a SHADOW force vector exists, made of microscopically ordered BUT UNJOINED (unintegrated) "virtual state" vector differentials of what would be an observable mass system force vector $\bar{E}_m$ if integrated.

Thus, the "$\bar{E}$-vector" $\bar{\varepsilon}_s$ that exists in vacuum is a "shadow" vector as shown in figure 12.

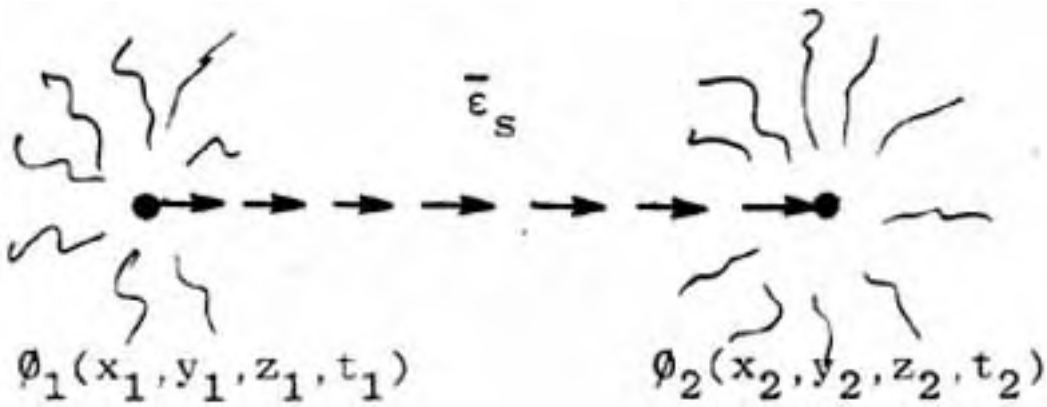

Figure 12. A "shadow vector" $\bar{\varepsilon}_s$

We say that such a previous mass system vector, broken into ordered but unjoined virtual vectors by the absenting of all mass, is a SHADOW VECTOR, and we label it with a subscript vm, to represent "virtual mass" system. To the macro observer, this is the kind of "vector" that exists in vacuuo.

Note that, observably, the shadow vector merely represents a special ordering in $\nabla\phi$. It is NOT an OBSERVABLE (mass system) vector, but it IS an ordered series of consecutive virtual vectors.

With each virtual bit vector, a virtual time exists as well, and these "virtual time bits" are also ordered consecutively (in macrotime).

I point out that any observable vector must be finite, and so it must have a finite magnitude (finite length). In the simplest case, this length ΔL is related to a Δt by

$$\Delta L = c\Delta t \qquad (24)$$

What I am saying is that ANY observable spatial vector is actually a spatiotemporal vector, and the MAGNITUDE of any vector is related to TIME (to the existence of that vector in time) at the most fundamental level. Suffice it to say that, if the fundamental quantum level (Δt) aspect of a vector is interfered with, then the MAGNITUDE of the vector is interfered with.[24] That is, if we can make a time wave, we can change or affect ANY vector's magnitude, including the magnitude of mass system vectors and charged mass system vectors. Such a "time wave" can be made easily, and it has been.

Next Page

TOWARD A NEW ELECTROMAGNETICS PART III: CLARIFYING THE VECTOR CONCEPT

Help support the work

-- A Scalar is a Zero Vector --

Now let us look at the idea of a scalar.

A "scalar" may in a general sense be considered as the sum of the "absolute values" of the individual vector components of a system of vectors whose observable resultant is zero. That is, it represents the magnitude of the internal stress of a vector system, with the absence of a single observable directionality of the system. It also follows that every scalar is actually a stressed zero vector, and every zero vector is a scalar.

Thus we have four major types of scalars related to the four types of vectors:

(a) $$S_1 = |\bar{v}_s| \quad (25)$$

(b) $$S_2 = |\bar{v}_m| \quad (26)$$

(c) $$S_3 = |\bar{v}_{cm}| \quad (27)$$

(d) $$S_4 = |\bar{v}_{cs}| \quad (28)$$

where S stands for scalar, $\bar{v}$ for vector, and subscript s for spatial, m for mass, and c for charged.

For example, comparing equations (25) and (26), it can easily be seen that twice as many "point-motions" is not at all the same thing as twice as many "gram-mass-motions." The two resulting vector systems are quite different.

Next Page

TOWARD A NEW ELECTROMAGNETICS PART III: CLARIFYING THE VECTOR CONCEPT

Help support the work

-- Virtual and Observable Aspects --

We must also examine some aspects of "virtual" and "observable."

For example, we construct several spatial vector summations in Figure 13. The "resultants" of these spatial vectors are all equal. However, the actual sums, even though equal, are quite different, because their internal "stresses" (substructure forms) are quite different.

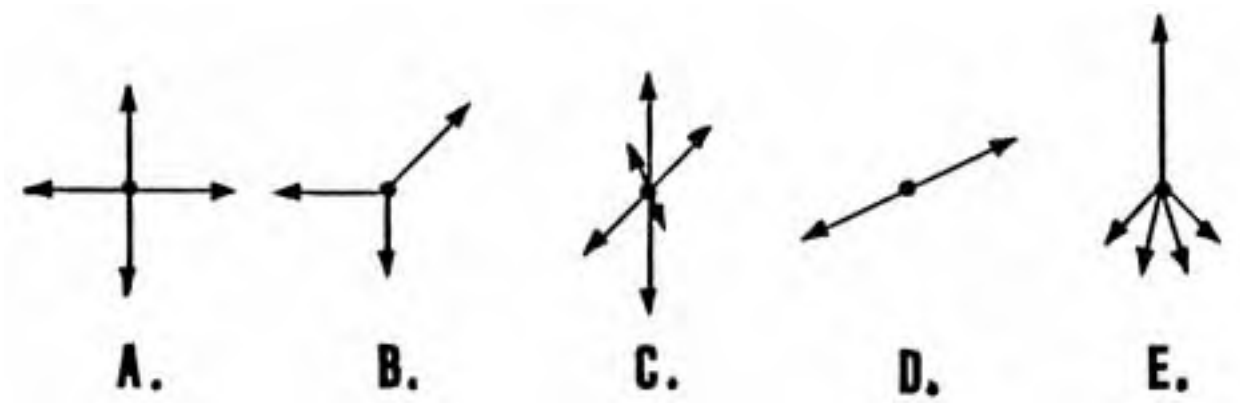

SUPERPOSITION DOES NOT ELIMINATE THE VIRTUAL SUBSTRUCTURE.

When the time aspects of the vector systems of Figure 13 are considered, one can easily understand the problem. That is, the resultant of each of these "systems" is zero, and so one can say that the vectorial "magnitude" of the system is zero since the magnitude of the resultant vector is zero. However, in each case the "action" represented by each vector element actually occurs in a finite tiny Δt. So: (1) The zero resultant must exist for a finite Δt, and (2) all the actions indicated by the system component vectors actually occur in that Δt. The absolute value of the "activity per unit time per unit volume" of such a zero-

resultant system thus has physical meaning, and one may refer to this notion as the "stress" on spacetime[25], or the "electrostatic scalar potential" of the system. Note that this differs from the present definition of electrostatic scalar potential, which becomes just a special case of the more fundamental potential defined here.[26]

The derivatives of this spatiotemporal stress also have physical meaning. The time derivative is indicative of the stress on the flow of macroscopic time at a fixed spatial point, and the spatial derivative is indicative of the stress on space. Here one is confronted with the fact that what we call "space" and "time" are continually being created, directly in the physical observing/detecting apparatus itself.[27] That is, rigorously, "detected physical reality" exists totally in and of the mass-changes of the observer's mass or his detecting instruments. In the fundamental detection process itself, there is a flow of the rate of creation of spatial lengths and a flow of the rate of creation of time lengths. Indeed, to a linear observer the stress on the creation of the flow of time controls the flow of the creation of space, and the stress on the creation of the flow of space controls the flow of the creation of time. The change in the stress on 4-space (ordinary Minkowskian space-time) controls the "curvature of that spacetime" in the fifth dimension. The change in the stress on 5-space controls the "curvature of that 5-space spacetime" in 6-space, and so on. Development of these facets of the new concepts is beyond the scope of this paper.)

Next Page

-- SCALARS AND VECTORS HAVE SUBSTRUCTURES --

As can now be seen, the sum of each structure in figure 13 is observably zero. Therefore we might define the sum as a "zero spatial vector." We note, however, that it actually exists for a time Δt and is thus a spatiotemporal entity, rigorously.

If we define the internal stress action A in a region $\Delta s^3 \Delta t$ of spacetime as

$$A_{(s^3 t)} \equiv \sum_{k=1}^{n} |\bar{i}_s| \qquad (29)$$

and the 4-space internal stress intensity or potential as

$$S \equiv \lim_{(\Delta s^3 \Delta t) \to 0} \left[\frac{A(s^3 t)}{\Delta s^3 \Delta t} \right] \qquad (30)$$

where $\bar{i}_s$ is any internal vector in the substructure, Δs^3 is the spatial volume (about a point) containing vector $\bar{i}_s$, and Δt is the inseparable time during which these component actions occurred, then we see that, stress-wise, all the "zero-vectors" in figure 13 are quite different in their internal stresses, 4-space potentials, and internal substructures. For the five "zero sum" vectors, OBSERVABLY we have

$$\bar{0}_1 = \bar{0}_2 = \bar{0}_3 = \bar{0}_4 = \bar{0}_5 \qquad (31)$$

whether or not

$$\Delta s^3 \Delta t_m = \Delta s^3 \Delta t_n \ (m \neq n;\ 1 \leq m \leq 5;\ 1 \leq n \leq 5) \qquad (32)$$

But considering the substructures,

$$\bar{0}_m \neq \bar{0}_n \quad (1 \leq m \leq 5;\ 1 \leq n \leq 5;\ m \neq n) \qquad (33)$$

I now point out that a scalar can be regarded as a stressed zero-sum vector, where the magnitude S of the scalar represents the internal stress intensity caused by the substructure of the zero-vector.

Thus, generally,

$$S(s^n t) \equiv \lim_{\Delta s^n \Delta t \to 0} \left[\frac{\sum_{n=1}^{k} |\bar{i}_s|}{\Delta s^n \Delta t} \right] \qquad (34)$$

That is, in general any observable scalar has, consists of, and is comprised of a VIRTUAL (unobservable) substructure that is very real indeed. One must also consider the scalar as existing for some finite time Δt, (at least for the time of one quantum change), and the intensity of the virtual actions occurring in the spatiotemporal substructure of the scalar during that time Δt is proportional to the magnitude of the scalar.

Normally, the concept of a scalar -- as presently used -- makes no allowance for the scalar to exist in time, or for a virtual vector substructure, or for any patterning inside the substructure. This is equivalent to assuming that

$$A \equiv 0 \qquad (35)$$

and that all $\bar{i}_s$'s are evenly distributed. That is, from this new viewpoint, presently the mathematical theory assumes all scalars to have an equal density of virtual activity per spatiotemporal volume in its virtual substructure, and an isotropic virtual pattern distribution of an infinite number of equal virtual vectors in its 4-space substructure.[28]

In the new approach, neither of these two assumptions need hold -- though in special cases they can hold. Thus present orthodox theory is just a single special case of a more fundamental approach indicated here.

Note that, by directly affecting and changing the virtual substructures of scalars and vectors, we can directly perform

virtual. state engineering, and this allows us to directly "engineer" the so-called "laws of nature" of the normal observable laboratory state and thus ENGINEER AND CHANGE PHYSICAL REALITY ITSELF.[29]

In the new approach, we can (observably) have

$$2 + 2 \neq 4 \qquad (36)$$

or

$$2 + 2 = 4 \qquad (37)$$

by the following means: In the first case (equation 36), we assume that the virtual substructures are patterned, and interact nonlinearly in such a way as to produce an extra observable. Thus we have a delta added to the normal observable scalar results of the interaction, as follows:

$$2_o + 2_o = 4_o + \Delta_{v\text{->}o} \qquad (38)$$

where subscript "o" means observable and "v" means virtual. Note that

$$\Delta_{v\text{->}o} \qquad (39)$$

indicates a delta due to virtual substructure interactions yielding an extra observable delta. This extra delta may be either scalar or vector in nature, depending on the circumstances and the particular interactions.

Note also that any vector or scalar must now be considered to HAVE, CONTAIN, and CONSIST OF an infinite substructure. And note that, similar to the scalar case, from the new viewpoint the present theory assumes each scalar (point) of the vector to have a structure similar to that of equation (34), except that now the scalars are ordered, with a linearly decreasing internal stress density per unit scalar along the line of the vector.

In the new approach, vector interaction (superposition, for example) can now violate present theory, if the two virtual substructures interact nonlinearly to produce a nonzero, observable delta. Observably (macroscopically) , this delta, again, may be either "scalar" or "vector."

This approach now becomes consistent with quantum mechanics at the foundation level.

Next Page

TOWARD A NEW ELECTROMAGNETICS PART III: CLARIFYING THE VECTOR CONCEPT

Help support the work

-- Substructures, Virtual Levels, and Hyperspaces --

In the new approach, our definitions and assumptions immediately drive us to a picture of an infinite set of nested levels of substructures in the virtual state. That is, anyone component (scalar or vector) in one level of virtual state has an infinite number of even finer virtual components, one level more subtle.

AND THAT IS WHAT PARTICLE PHYSICS AND QUANTUM MECHANICS ALREADY REVEAL ABOUT THE STRUCTURE OF PHYSICAL REALITY.

So these definitions and assumptions now provide the basis for a new vector mathematics that is in accord with, and fitted to, modern physical observations.

We have a picture such that any observable scalar or vector contains a virtual substructure (virtual level 1). Any scalar or vector in virtual level 1 also contains a finer virtual substructure, in virtual level 2. And so on ad infinitum.

Each succeedingly finer level of virtual state can be modeled as a hyperdimension (higher spatial dimension) as I pointed out in Appendix 1 to my book, The Excalibur Briefing.[30]

Thus this approach immediately ties into hyperdimensional or hyperspatial theory -- such as Elizabeth Rauscher's 8-dimensional theory[31] and C. Muses's hypernumber theory.[32]

The new definitions and assumptions are far richer than what is allowed by tensors, though there are many similarities. Muses's work, however, essentially can encompass most of these definitions and concepts, except the distinct types of vectors are not so clearly delineated in his theory (at least to my comprehension of it.) His theory does provide a nested,

hyperdimensional structure of time, however, and thus allows "scalar" waves in the hyperspatial structure of time -- in other words, observably "scalar" waves in the virtual state structure of spacetime, or pure Tesla waves, or simply "time" waves.

These are the bare notes; from this approach, already new (proprietary) mechanisms and exact specifications to make scalar waves -- in essentially whatever quantity and degree desired -- appear to have been successfully accomplished by my close colleagues.

The new approach is real and it leads to a new physics. And I believe that the very beginnings of the new physics are already working on the laboratory bench.

Nikola Tesla discovered the most essential features of the new electromagnetics over eighty years ago and was simply suppressed for his efforts. Now, although it has been eighty years in the reborning, Tesla electromagnetics is once again loose in the Western world.

This time, let us hope that it fares better at the hands of orthodox science and large financial control groups than it did for Nikola Tesla.

Next Page

archived as **http://www.stealthskater.com/Documents/Andersen_03.doc [pdf]**

read more at ***http://www.stealthskater.com/PX.htm#Andersen***

note: because important websites are frequently "here today but gone tomorrow", the following was archived from http://www.tricountyi.net/~randerse/sclrmenu.htm on April 21, 2004. This is NOT an attempt to divert readers from the aforementioned website. Indeed, the reader should only read this back-up copy if it cannot be found at the original author's site.

Files on Scalar Electromagnetics

by Rick Andersen

This area, in my opinion, ties much of the information together from the other areas on this web site. Tom Bearden's Scalar EM may be the New Electromagnetics of the 21st Century IF we can get him to "spill the beans" on some specific methodologies and circuitry! In the meantime, we continue to collect, compile, speculate on, and critique his theories, in the hope that some light will be generated along with all the heat.

A. Introduction to Scalar Electromagnetics: What is it? (1997)

What is "Scalar Electromagnetics"?

by Rick Andersen, 7/3/97

Scalar EM is the brainchild of Lt. Col.(retired) **Thomas E. Bearden** -- a systems analyst and wargames specialist who has been advocating a view of electromagnetics which is based on the notion of a vast, unseen background of scalar energies (as opposed to *vector* energies) which underly all physical reality. **[StealthSkater note: also see doc pdf URL]**

What electrical engineers work with today -- claims Bearden -- is a **subset of a higher-topology EM**. Bearden claims that the 4 "Maxwell's Equations" taught today in electrical engineering are actually an over-simplified *subset* of **Maxwell's original work**. The pruning was done by **Oliver Heaviside** in the late 19th Century. Heaviside took Maxwell's original equations -- written in Hamilton's **quaternions** (related to what we nowadays call **spinors**) -- and "simplified" them by lopping off the scalar part of the complex numbers, leaving the easy-to-work-with vector part intact which radio engineers loved. After all, the entire electronics industry as we know it grew out of the telephone/radio technologies of the early 1900s. Who can argue that the "vector" approach is inadequate?

Well, Bearden says that when Heaviside threw out the scalar part of the quaternionic EM equation, he unknowingly threw out the possibility of **unifying Gravitation with Electromagnetism** -- which has been a "Holy Grail" for scientists since Einstein himself wrestled with the problem. That's because the scalar part of the quaternion -- according to Bearden -- was the part that captured-or-modeled the **"stress on the aether"** which leads to curving/warping spacetime a la Einstein. Tom Bearden says we CAN unify Gravity with EM -- and convert back-and-forth between them -- if we understand how vectors and scalars relate to one another and what the ramifications are. **[StealthSkater note: Stan Deyo said that such a relationship existed between nuclear energy and gravity in the 1950s. see doc pdf URL-doc URL-pdf]**

Vector fields can evidently be assembled by properly **interfering scalar potentials** (predicted in 1903-4 by mathematician **E.T. Whittaker** and probably engineered by the Soviets).

Conversely, scalar fields can be created by ***destructively interfering*** **vector** fields in a nonlinear medium. Varying the vector components rhythmically produces what Bearden calls "scalar waves". These ripples in spacetime are believed to induce a wavelike ***stress*** in the "**aether**". This in turn leads to **engineering the structure of pure space and/or mass in a localized area** -- in other words, implementing General Relativity (spacetime curvature) on the lab bench!

Tom Bearden has gone on record -- in several of his books published in the 1980s -- to proclaim that the former Soviet Union had created a fantastic arsenal of mind-bending weaponry based on this scalar technology, which they called "energetics" and which Bearden claims was developed from certain discarded ideas originated by Nikola Tesla. Now that the Cold War is apparently over, we're not sure how Bearden views his previous assertions. But we note that he has turned his attention away from Soviet scalar weapons and toward the production of "free energy" from the vacuum of space, using the principles of **optical phase conjugation** but in a more generalized mode. **[StealthSkater note: UNITEL also proposes phase conjugation in their quantum electromagnetic laser designed for interstellar travel via using a "tractor beam in reverse". See doc pdf URL]**

Here is the point:

If Bearden is correct in his Scalar EM theory, then we can build devices which would enable us to **alter gravity, time, inertia, and the apparent mass of an object**. This of course has ENORMOUS implications for military applications, space-vehicle drives, time-travel, teleportation, paranormal phenomena, and just about every other area one can think of.

The Big Question is will the 21st Century see the acceptance, development, and implementation of Bearden's ideas (in plain public view, mind you)? Or will Scalar EM be found to have been just another dead end?

Do certain world governments have these devices NOW? Bearden says at least "3 other nations -- not hostile to the U.S. --" now possess Scalar technology.

We need to build something. Hey, didn't somebody use a strong magnetic field to **levitate a frog** recently? I wonder how far we are from a real **Hoverboard**?

B. The 'Seven Scalars'-- Different views on 'Scalar Waves' (1999)

The 7 Types of "Scalar Waves"

11/26/99 by Rick Andersen

One of my never-ending quests at this Web page is to try and unravel the mysteries behind Thomas Bearden's "Scalar Waves". What are they exactly, and how do you go about making them? After studying so much of his work, scouring the Net and alt-science sources, and talking to people about the subject, I slowly began to see that there are not one but several variations on the Scalar theme. Some of them are dissenting viewpoints, and some are Bearden himself evolving his Scalar EM (now called Energetics). Lately I have added my own "2 cents" in the form of computer models of apparently "new" types of waves that I think fit the "scalar" category. Here's my summary of the 7 types of "scalar" waves

you'll find out there. Your mission -- "should you choose to accept it" -- is to understand them all and then find out which, if any, is the "right" one!

(1) Outphased waves

In Tom Bearden's earliest books, "**scalar wave**" was described as being composed of a pair of "normal" transverse waves traveling together in the *same direction*, but each having its electric and magnetic field vector 180 degrees out-of-phase with those of its partner so that the fields all superpose to zero and are no longer detectable at all. This would be accomplished by delaying one wave by 180 electrical degrees. When the 2 waves superpose, one wave's electric field vectors would point "up" in a given moment of time while the other wave's would point "down" at that same time, leaving a net E-field of zero. The perpendicular magnetic field vectors would likewise counteract each other. Out-phased, nulled, or cancelled -- in other words -- as far as the "target" (toward which the overlapping waves are traveling) is concerned.

Yet, we were not to believe that 'that was the end of that' electromagnetically speaking. Instead, we read that the ***aether*** itself -- pure spacetime -- was now the thing being rhythmically "stressed" by the invisible scalar wave. And that this stress represented a structure or "patterning in spacetime" that was essentially **electro-gravitational**. In plain English, to make a gravity wave you cancel out 2 normal electromagnetic waves to a "zero vector". What gets confusing -- as you follow the Bearden literature through the years -- is just WHICH vectors must be zeroed. If it's the **E** and **B** (or **H**) fields, then that means the waves are traveling together in the same direction. If the 3rd axis-- the **Poynting Vector**-- is the one that must be zeroed, then we have to make the waves travel into each other from opposite directions (counter-propagate). But if, like Bearden, you don't believe that free-space waves are transverse at all but *longitudinal*, then what? The waters become murky.

But return to the first view where 2 out-of-phase waves travel together as a zero-vector pair. This is the view of scalar energy that is most often represented by "alt-sci" researchers and "New Age" gimmick-makers who are all basically winding coils in a way that causes the coil's magnetic field to be cancelled out. The prevailing opinion is that canceling the **B**-field in this way leaves the **A**-field (magnetic vector potential) -- and any other "electric"-like fields that may exist -- free to radiate outward from the non-inductive coil. The reference here is to William Hooper's "motional electric field" as well as **Wilbert Smith's** "Tempic field" (also referred to as a "time-stressing" or "tensor" field). **[StealthSkater note: see doc pdf URL]**

Most of the alt-science underground believe that such coils produce energies ("CHI", "orgone", etc.) that may affect life processes, gravity fields, and/or time-warping energies. The thing that bothers me most is that **nobody has proven any of this** in the 30-or-so years that these "designs" have been around. Instead, we always hear that "psychics" and "clairvoyants" seem to be the only ones "gifted" enough to see or feel the energies emanating from such coils. As I'm fond of saying and to paraphrase Bearden, *that ain't the same as "engineering General Relativity on the lab bench"!*

Bearden himself has long-since discarded this view of scalar waves being produced by simple phase-cancellation (although "*bucking*" fields may still be relevant here). He now insists that the component waves are "in-phase *spatially*, out-of-phase in *the time dimension*". Also, that there needs to be a nonlinear mass (such as ferrite core or photo-refractive crystal) at the focus of the wave superposition -- just mixing waves isn't enough.

I myself am still wondering about these simple phase-nulled waves, though.. If I illuminate a 'target' with, say, 1,000 watts of RF carrier wave, that target will heat up measureably -- especially at close

range. But if I now superimpose another transmitter's beam onto the same target at exactly the same frequency, coming from the same direction but 180 degrees out-of-phase with respect to the first transmitter's beam, what then? Do we not have 2,000 watts of power being focused onto that target? Is there not a **Poynting Vector** (**S=ExH**) representing energy per unit area -- which is the cross product of the **E** and **H** field intensities -- present in each beam?

Yet if we phase-cancel the fields at the target, do the two Poynting vectors vanish too? Or is there still a component of energy there "stressing" the target? Well, the **E** and **H** fields cancelled because their respective vectors were pointing in opposite directions. *But both of their Poynting vectors were "pointing" in the SAME direction.* So I say they don't cancel if the Poynting vector is a "real" entity!

So the question is Is the Poynting vector "real" in the sense of being an *independent entity* or "energy"? Or is it just a mathematical 'artifact' that describes the vector product of the **E** and **H** fields, expressed as a measure of total energy per unit area in the wavefront? Does it automatically disappear when the **E** and **H** fields themselves are canceled? Or can it exist while they're in cancellation such as at a "node" point which is followed by an "anti-node" point further down the signal path? Isn't the energy still there, even though we can't detect it while it's at a null point? Else how can it emerge again after that? Something is weird here!

I still don't buy Bearden's complete rejection of the transverse wave in vacuum. Yet I do suspect that something is wrong with our present insistence on there being no such thing as a "longitudinal EM wave". Isn't the Poynting vector the very component in the **S=ExH** triad that has to be longitudinal by the laws of vector multiplication? Isn't it the longitudinally-oriented "pulsation" that we insist can't be "real" because it might mean that ***there's an aether after all*** (which is being called the "Virtual Particle Flux" by today's quantum physicists.)???

Or is the Poynting vector just a "mathematical artifact" like classical electrodynamics always said about "potentials" vs. "fields", until the **Aharonov-Bohm effect** blew that dogma out of the water by showing that potentials can have observable effects on charges even when no fields are present? Nowadays the modern view is just the opposite of what it had been before Aharonov-Bohm. The potentials are the ***cause*** and the fields are the **effects**!

I say that we need to prove-or-disprove the existence of the Poynting vector as a separate entity when the **E** and **H** fields themselves have been phase-cancelled. It's hard to believe that 2,000 watts of power shining on you from a pair of nearby transmitters has absolutely no effect on you just because there's no electric or magnetic field present. Like squeezing a water balloon, the energy is going to bulge out somewhere else.

A reader responds that EM waves are longitudinal (a la Bearden) and not necessarily transverse, can still carry a vertical or horizontal polarization anyway, and that non-inductive coils "do something"...

My 1993 article called **POLARIZE.HTM** argued that if EM waves in free space are longitudinal and not transverse, then there's nothing in the wave's structure that is able to "tell" the receiving antenna anything about the wave's polarization. So we shouldn't need to orient our antennas in the vertical or horizontal plane to get optimal reception. And yet we see this phenomenon right before our eyes every time we orient a TV antenna or put on a pair of Polaroid glasses.

Turns out that what I thought I'd "figured out" by myself was argued a long time ago by eminent physicists working out the structure of light waves. Bearden's response was so unreasonable -- when I asked him about it -- that I wrote my sarcastic POLARIZE file as a wake-up call to him and his

followers to get serious if they really wanted Scalar EM to become accepted in the academic world. Even though Bearden and I have no 'hard feelings' about that discussion or file, I occasionally get e-mail "spankings" from Bearden supporters who think I was "mean" and should apologize to Bearden and retract the file I wrote.

No way. I stand by my view that Scalar EM ought to be able to account for the observed phenomenon of wave polarization. And for 'historical' reasons, I'm leaving that file online. But we still haven't heard from Bearden on the subject.

In a refreshing turn of events, however, a correspondent named Graham Gunderson recently e-mailed me a very interesting defense of Bearden's view that EM waves can be longitudinal and still carry a polarization sense. And -- relevant to out-phased waves -- Gunderson takes issue with another argument -- the one that asserts that self-canceling coils "do nothing". He says they **do indeed** "do something" and describes some of his experimentation along these lines. This is what I like to see -- calm, rational explanation and some experiments to back it up.

You can read Gunderson's presentation **here**.

(2) E.L.F. standing waves

The lower you take a wave in frequency, the longer its wavelength becomes. If you go to zero Hertz (DC), wavelength goes to infinity (assuming that a given 'ray' -- in the wave we're examining -- travels out in a straight line forever. Apologies to Einstein and his curved space, just for now!). If you live on planet Earth with a circumference of about 25,000 miles and if you assume that low-frequency waves curve/refract around the planet (inside the Earth ionosphere "waveguide"), a wave whose frequency is about 7.5 Hz will have a wavelength that encircles the entire planet! Since we are like tiny viruses living on a large Earth, from our point of view a 7.5 Hz wave is practically "scalar" since it is so long that we can't measure any significant gradient over any reasonable distance! The 'potentials', however, still rise-and-fall as the wave oscillates in magnitude. But the wave is so long that the oscillation is more observable with respect to **time** than with distance (space).

Is this what **Nikola Tesla** was really referring to when he spoke of 'tuning his apparatus ("Magnifying Transmitter") until the Hertzian waves had been eliminated'? Did Tom Bearden read too much into this?? If I'm not misquoting here, a researcher named Toby Grotz is of this opinion. **[StealthSkater note: see doc pdf URL]**

In other words, "scalar" waves may not be some "new kind of non-Hertzian wave" at all according to this view. They're just ELF electromagnetic waves whose wavelength is so long that we don't detect the spatial gradient that we normally find in shorter, higher-frequency "vectorial" waves. And not only would they be low in frequency, but they would also actually be *compound* waves composed of the original wavefront and its returning predecessor (akin to a reflection) that just traveled the World in 1/7 second as explained below. In other words, these waves would be **low frequency standing waves**. But still "Hertzian" electromagnetic waves.

If Tesla could have gotten what he wanted-- a worldwide system of power generation based on resonating the earth at its natural resonant frequencies-- then I say that the wavelengths would have been so long that from our point-of-view they could rightly be called "scalar" as all points for miles around would rise-and-fall in potential -- together -- instead of being at different points along the sine wave ripple of the more conventional, higher-frequency/shorter-wavelength radio transmitters in use today.

Also, note that if the wavelength fits the planet's circumference, then that means that the half-wavelength point (at 180 degrees where the sine wave crosses through zero and goes negative) is automatically located at the "antipodes" (180 degrees away, or on the exact opposite point on the Earth from where the transmitter site is located).

For illustration's sake, let's imagine that Tesla had set up a 7.5 Hz transmitter right at the North Pole (one could use a *pulse* transmitter with a 7.5 pulse-per-second repetition rate). When the transmitter is turned on, the signal spreads out in all directions (South, if you're at the North pole) and expands as it travels until it reaches the Equator. This is equivalent to the 90-degree point -- the positive hump -- of a sine wave. With nothing to stop it, the wave continues southward like a "wall of energy" all around the Globe. Yes, it is very weak and "spread out" by now. But notice that as it continues toward the South pole, it is now *converging* upon it so that the energy is coming IN from all directions to focus at the South pole.

At the moment all that energy passes through the antipodes at the South Pole, it "crosses through itself" (the 180-degree point on a sine wave) and begins its journey back northward again. 90 degrees later, it is over the Equator again but now traveling in the opposite direction. Finally, it all re-converges to its original focal point back at the transmitter at the North Pole. But at that same moment, the transmitter has fired off a new wave of energy to begin another 25,000 mile journey that takes about 1/7 second to travel.

What we have here is the spherical version of a plucked string, with the North and South poles of the Earth being the nodal points (or endposts) of the "string" and the "loops" or antinodes occurring over the Equator. When we "fit" a wave precisely between two reflecting points, we get energy flipping back-and-forth in both directions simultaneously. And that superposition of bidirectional waves gives rise to a **standing wave** or -- as Tesla called it -- a "stationary wave" which appears to "stand still" (not traveling anywhere) while at the same time "flapping" up-and-down in potential. A system on which a standing wave precisely fits is called a **resonant** system, and it takes relatively little power to get a large oscillation out of a resonant system if you "ring" it at just the rate at which it wants to be rung. It was on this concept -- setting the Earth into a resonant state with (most likely) the higher harmonics of 7.5 Hz, if not that frequency itself -- that Tesla allegedly based his dreams of "plugging your toaster into the Earth itself" and thereby tapping off some of the potential difference between two points where you would put your ground rods/electrodes.

Bearden has mentioned the use of "scalar waves" as carriers of information where military radio personnel could carry on clear-channel, secure clandestine communications using non-Hertzian waves (something like Lt. Uhura's subspace communications system on Star Trek). But this idea seems flawed by conventional understanding. Perhaps it requires unconventional understanding??

The biggest problem with ELF (Extremely Low Frequency) waves as carriers is not the radiation characteristics. Athough the antenna has to be ridiculously large, these waves can penetrate right into the ground and ocean. The U.S. Navy has used this frequency range to keep in touch with submarines at depths that cannot be penetrated by EM waves at conventional frequencies. But the problem is that such low frequencies severely restrict the bandwidth (and therefore the *data rate*) of communications. Slow CW (Morse Code, etc.) is about all that is practical. Voice communications would seem to be out of the question. At 7.5 Hz-or-so, the carrier is lower (WAY lower!) than the frequencies of a man's voice. So how would you modulate the output of a broadcast microphone onto a carrier that is *lower in frequency than the modulation itself?* By conventional understanding, it's impossible. Your carrier has to be higher than the highest modulating frequency. That's why the Navy has to use slow Morse code at ELF to communicate with submarines, etc.

Yet retired Navy man -- **Dr. Eldon Byrd** (a controversial figure in his own right) -- is quoted as having said that there is a ***secret technology*** that allows one to modulate high-frequency waves onto a lower-frequency carrier. If this is true, it would shed a lot of light on the whole Scalar business, I'm sure! One person with whom I've discussed this speculates that you CAN use a lower frequency carrier than the modulation if you view the resulting signal via a "constellation diagram" such as is used in **QAM** (Quadrature Amplitude Modulation) and other digital data techniques that you find in association with modems, FSK and PSK radio transmissions, etc. I'm still thinking about the ramifications of this. If anyone with digital data knowledge has any thoughts on this, please let me know!

(2a) A variation on the "Tesla" wave theme -- Jerry Bayles' version

Jerry Bayles is a researcher/theorist whose web page **www.electrogravity.com** describes 'scalar' waves as the kind of waves that exist around a **Tesla coil**:

The Tesla coil has a vertical electric field stretching from top-to-bottom of the coil. Since it's a solenoid-wound coil, there's also a vertical magnetic field (NOT spatially perpendicular like normal electromagnetic waves). But they alternate in *sequence* -- i.e., the Tesla coil produces waves that are composed of an **E** and **B** field that are *in the same spatial plane or orientation* but 90 degrees out-of-phase in time.

That is, a vertically polarized **E**-field followed by a vertically polarized **B**-field -- one after the other, alternating back-and-forth between the 2 types of field. Being out of time phase -- as well as in the same plane in space -- means that no real power is being "radiated" in the conventional sense. Yet Bayles says that a second Tesla coil (acting as a receiver) will pick this "transmitted" wave up, and so information can be transmitted via this non-radiating arrangement. So the energy is something similar to the "near field" in a conventional antenna system. Using a leap of logic that takes some amount of reading to understand, he then goes on to apply this configuration to the hull of a saucer-shaped vehicle, outlining a system whereby one would *rotate the standing wave around a craft's hull and thereby create electrogravitational forces that would propel the ship.*

I had a series of e-mail correspondences with Jerry Bayles in which I questioned the conventional antenna/transverse EM wave wisdom (like Bearden does). Bayles' replies helped clarify both my immediate questions and his proposed Tesla coil waves which he believes fits the "scalar wave" definition.

Bayles, by the way, believes there's ample evidence for transverse EM waves in free space and apparently does not find it necessary to buck the entire scientific world with an insistence on longitudinal EM waves -- contrary to Bearden and Gunderson's defense of Bearden's view. Click here to read the **Emails** he and I participated in. You can also find them at his web site.

(3) Electrostatic/electric/dielectric waves

Alt-science guru **Patrick Flanagan** thinks that Tom Bearden makes scalar waves "way too complicated." The way he describes both his Neurophone device and the "Hydronic Wave" device of Wallace Minto -- in his series of Emails to Alain Beaulieu [now collected as a text file on KeelyNet and at other sites] -- makes "scalar waves" to be simply the *weak electric or electrostatic waves that a mismatched, electrically-short antenna would emit* when driven by a high-voltage, high-impedance output (such as an audio amplifer with its output connected to a "backwards" audio output speaker transformer; i.e., the amp drives the 8 ohm winding, which is then stepped up to 1000 ohms-or-more).

This signal is fed into a 3-or-4 foot-long dipole antenna whose free ends are soldered to flat capacitor-like metal plates. The antenna is "aimed" lengthwise instead of broadside like a normal Hertzian dipole would be -- sort of like aiming a rifle -- at a target. Flanagan says that using such an antenna in the receiving mode, connected to the input of an audio amplifier; enabled Minto to actually listen to the "hydronic" or "scalar" waves emitted by schools of fish in the ocean; and that by using 2 of these devices, a pair of fishermen could triangulate onto a school's precise location.

4) Bidirectional wave pairs

The prominent mathematician **E.T. Whittaker** authored a pair of papers in 1903 and 1904 which decomposed any potential (such as a point-charge or even a planet's gravitational field) into a Fourier-like series of waves, harmonically-related, and bi-directional -- each pair (of an infinite number of pairs) composed of counterpropagating waves. Mathematically at least, then, Whittaker put forth the suggestion that Gravity itself might be wavelike or "undulatory" in nature. It is only the superposition of many pairs of inward and outwardly-flowing waves that gives the illusion of a "static" field.

Tom Bearden discovered this work of Whittaker sometime in the mid- to late-1980s and appropriated it as an updated model for his "scalar potential" -- not always clearly distinguished from his earlier "scalar waves". The new twist given to Whittaker by Bearden was this: One of the 2 waves in each pair had to be a *time-reversed* or **phase-conjugate** wave. Here is where Bearden starts using a model that strongly resembles the **Advanced/Retarded** waves of Wheeler and Feynman's *Absorber Theory* -- but in the context of a phase-conjugate mirror as described in the **nonlinear optics** literature.

It is kind of amusing to watch the Bearden literature develop over the years. In order to garner support for his position, Bearden apparently likes to add to names whenever new evidence is uncovered. Scalar waves became "Whittaker waves", which later became "Whittaker-Ziolkowski (WZ) waves" when Ziolkowski proposed "using the product set" of waves (which led to my own computer simulations, by the way). Later still, Stoney (1890s) entered the title, since he recognized that the wave equation can be "run backward" as if time could be reversed. So now we have "Stoney-Whittaker-Ziolkowski (SWZ) waves". And all the while, none of us yet understand exactly how Bearden's scalars are produced. And he can't tell us exactly how because of "nondisclosure agreements"! It just strikes me as comical. But I'm still driven to understand the subject anyway, so I go on writing files such as this one.

(5) Longitudinal waves

As of August 1998, here is Bearden on longitudinal waves:

"What I called scalar waves are pure longitudinal EM waves(LW)".

"A longitudinal wave is a time density oscillation".

"When you make a longitudinal wave, by definition it cannot vary the energy density in 3-space". That is fixed".

"A longitudinal wave oscillates the rate of flow of time itself about some steady median value".

"A pure longitudinal EM wave has infinite energy and infinite velocity". We don't make those". Instead, we make a pseudo-longitudinal wave (i.e., a pretty good longitudinal wave that still has some low-level transverse components". See *Nimtz* experiment on superluminal transmission at 4.7 x lightspeed (c)."

(6) Time-density waves

As of late November 1998, here is Bearden on waves:

"The minimum requirement to begin gravity and antigravity studies is to understand longitudinal waves. (Well, a sound wave is just such a wave).

If you have a transverse EM wave and add to it its phase-conjugate replica, the two coupled together do make a single longitudinal EM wave. It is polarized along the line of propagation -- not x- or y-.

If you then take that longitudinal EM wave, phase-conjugate it, and couple its phase conjugate replica to it, you make a "scalar" or time-density EM wave, polarized (vibrating) in the time domain. The overall spatial energy is in overall equilibrium in x-, y-, and z-. However, it has a substructure of 2 longitudinal EM waves polarized along the z-axis.

In turn, each of the longitudinal EM waves has an internal substructure of ordinary transverse waves -- each vibrating in the x- or y-direction or combination of both.

The longitudinal EM wave we are speaking of is comprised of **gravitons** -- i.e., spin-2 quanta -- because it is comprised of coupled photon/antiphoton pairs with each photon or antiphoton being of spin 1.

The scalar EM wave is comprised of "**supergravitons**" -- i.e., spin 4 quanta -- because it consists of coupled graviton/antigraviton pairs with each graviton or antigraviton being of spin 2.

The above is rigorous, although not in present physics in just that precise form. You cannot go any further in gravity/antigravity until you understand that material.

The supergraviton is really the key to antigravity.

Longitudinal EM waves usually interact very little with intervening mass when just propagating through it. But a little interaction does occur. In that interaction that does occur, the interacting mass immediately phase-conjugates and adds the coupled phase-conjugate replica, converting the new interacting component to a coupled longitudinal EM wave/antiwave pair and thus forming a scalar (time-polarized) wave for that interacting fraction.

Well, time is energy compressed by a factor of **c**-squared. So it has the same energy density as mass.

Now that you have some supergraviton interactions, you are invoking the oscillation of very powerful energy changes and therefore very powerful oscillations of the curvature of local spacetime, for that spacetime directly in interaction (yes, spacetime is well-known to interact with matter in General Relativity) with the mass.

From there on, use your ingenuity. You now have your hands on the control of the actual interaction of the local spacetime strongly interacting with that mass (every bit of it; time is ubiquitous and makes no distinction between electron shells and the nucleus of the atoms; it reaches both).

At any rate, essentially from there you can do whatever you wish to with that interacting mass.

Now with sound (as used by the Tibetans), you already start with longitudinal waves. Also, sound waves are easily phase-conjugated. So you can easily make a scalar sound wave by coupling the phase-conjugate to the longitudinal EM wave.

We are interested in the time component -- not the energy component. So the lower the frequency (and therefore the lower the energy component) of the photon, the greater the time component (and therefore the component of energy compressed by **c**-squared so as to make the time).

For **antigravity**, you are much better off at ELF, etc. Forget all that high-frequency delusion. Even with gammas, nobody ever produced any antigravity to speak of yet.

Note that very similar photons (and thereby waves) are known in physics -- e.g., see Ryder, *"Quantum Field Theory"*, 2nd edition, p. 147+. There you find they advance 4 photon polarizations; x-, y-, z-, and t-. The z- polarization is a longitudinal photon and the t- polarization is a scalar photon. However, they do not know how to make practical waves of these.

Here is the magic process for wave type transduction (took me 20 years to uncover it).

Let TW = transverse EM wave, LW = longitudinal EM wave, TDW = time-density EM wave (scalar EM wave), PC = phase conjugate replica coupling, and (I) = in interference with.

So

TW + PC(TW) => LW (of the special kind, formed of spin 2 gravitons rather than single photons).

LW + PC(LW) => TDW (of the special kind, formed of spin 4 gravitons rather than single photons.

To go the other way, use interferometry!

TDW (I) TDW => LW (of the special kind)

LW (I) LW => TW (ordinary EM transverse waves.)

..... We believe that if we can ever get these new processes into the development stage, the World will eventually take its energy from the ubiquitous flow of time anywhere in the Universe. In short, **we will burn time for fuel.**

7) Quadrature-product waves

These are "my" waves. At least, I've never seen them mentioned anywhere else. I computer modeled some of my interpretations of Bearden's vague descriptions of what scalar waves and scalar potentials are. And then I went on from there to try this-and-that until I finally found that specific combinations of **4** waves -- not two -- seemed to be necessary in order to make "scalar"-type waves.

I first modeled this in 1993, but only played with the concepts on-and-off until I presented them to KeelyNet sometime later. Then I added them to my own web page in late 1997. Meanwhile, researcher **J. Naudin** had already taken them and adapted them to a Windows environment, downloadable from his website. (He does not give me credit as the original author, but that's okay.)

I'm tentatively calling these waves "quadrature-product waves" because they are made by cross-modulating a pair of bidirectional (counter-propagating) waves, then doing the same with a second pair, then adding (superposing) the 2 products together in quadrature (not 90 degrees apart in the "North-South, East-West" sense, but 90 degrees apart in **time phase** -- e.g., one pair is made of sine waves and the other of cosine waves). Summing the products of 90-degree time offset waves like this gives 180-degree phase cancellation (the 90s double into 180s) and a "new" kind of wave appears: a bouncing "DC offset" (scalar component?) with a static sine-wave shape of 2x spatial frequency superimposed upon it.

Subtracting the products, on the other hand, or inverting one of the cosine waves before multiplying (modulating) them, then summing the products, gives a completely "static" sine wave which has zero frequency and zero movement of any kind, yet has a spatial gradient -- a kind of stationary "**soliton**" wave. I have not yet generated any of these waves with actual equipment. But the computer models are enticing and I think it will be only a matter of time before someone (if not myself) is able to design a "transmitter" for these waves. I think we will have some "scalar waves", finally, when that happens (if you'll allow me to indulge myself in some fantasies for the time being!). **[StealthSkater note: Preston Nichols (the Montauk Project) mentioned "soliton fields" in relation to UFOs and stealth technology. Don't know if this is the same as what Mr. Anderson is writing about. Check out doc pdf URL-doc URL-pdf .]**

C. Why Bearden Can't Talk about the details of Scalar research (1999)

WHY BEARDEN CAN'T TALK

about what he knows in any real detail

Dec. 1999 by Rick Andersen

Back in June of 1998 I emailed Tom Bearden, asking if he might let some "old cats out of the bag" since so much time has passed since he first wrote about them, and since I still wonder about some of the ideas he has since left behind as he has gone on to bigger-and-better concepts. Here's my request followed by his reply:

Dear Tom,

A couple of questions, if I may:

Remember in your older books like *"Fer De Lance"* etc. when you mentioned Frank Golden's ability to monitor the 12 KHz frequency pairs that the Soviets were using to extract power from the Earth, etc? Now that it has been so many years down the road and you yourself have essentially moved on to other things, can you elaborate on any of the actual equipment that was being used?

Like his scalar EM receiver. Or the time the two of you used scalar transmitters to charge up an area and the clocks went haywire. If only some of us could have some info on how to get started on some of these devices, we could possibly have undeniable proof that it's all more than just conceptual.

I did do a search on Jack Dea, whose LC circuit inside a Faraday shield with a strong magnet was suggested in *"Fer De Lance"*. All I can find about Dea on the Net is references to his work involving more "conventional" ELF studies. Just how DO I make a longitudinal wave transmitter and receiver?

I'd just like to make a flea-powered communications setup being the Ham that I am (call sign KE3IJ). And am I correct that non-inductive coils are a dead end?

I hope I haven't asked for more than I should have. But it's these questions that have been haunting me for years now. And if we can't have schematics, can we at least have some specific hints?

-- Rick

Rick,

My problem on experimentation is my **nondisclosure agreements**. When you work with other inventors -- as I sometimes do if I've known them for years and implicitly trust them -- then you have to be extremely close-mouthed about the circuits they have painfully uncovered after years of labor. That's as it should be. Anyone who thinks otherwise, I just say to them, *"Well, then, suppose you take all your income for the last 10 years and give it to me. That's what you are expecting me to ask that inventor if I try to release his painful discoveries. It's all he has to show for years of backbreaking, heart-rending labor."* Ironically, none of the naysayers has yet risen to the challenge and presented me with a check for their income for the last several years! You see the point.

Inventors get a bum deal anyway. I used to write songs, e.g., and I still write books. When I copyright a song or a book, I have rights to it for my lifetime plus an additional 50 years. The poor inventor gets about 17 years after his patent issues or -- as it is being changed to -- he gets 20 years after he first applied. So as you can see, the inventors do not have nearly so powerful a lobby in Washington as do the artists, writers, etc.

Frank's stuff was sometimes so powerful that it literally scared him (and me too). Also, Frank's son had a terrible accident, and Frank changed over to using his unusual EM devices on that boy to save his life. That required several years of unrelenting effort. Not only did he save the boy's life, but also he eventually got him up out of a wheelchair and walking again. He got much of his mental functioning restored also. The doctors just thought it was a miracle, and Frank told them nothing.

So I can't say a word about how Frank did it. All I can hint is that he used a method of direct engineering of virtual particles at a distance, including the formation of virtual and observable charges at a distance. He uses his own very different theoretical approach (the particle approach) from my own predominantly wave approach. Sometimes mine is better, sometimes Frank's is better.

In case of our group's own (limited) experiments, we have a small corporation -- CTEC, Inc. -- of which I am CEO and President of the Board. But I am also bound on specific details of what we ourselves try and do at CTEC. Actually I'm doing a whale-of-a-lot more than most other researchers. At least I'm releasing most of the concepts and principles we work out, even though I cannot release the actual experiments. Also, be advised that 99% of serious over-unity experiments invariably result in failure or indecisiveness. Or something you cannot decipher, or just a fluke that occurred once and its variables are unknown, so you cannot reliably replicate it. Only about 1% show real merit and promise and potential replication. That 1% then becomes the "pure gold" that one is trying to wrestle down to get the corporation started. It becomes the most closely guarded information the corporation has.

If you wish to perform actual o/u experiments, by all means go to *Nature* and look up the **Lawandy** papers and experiments. Lasing without population inversion works every single time -- and it's overunity. Also do some research on the **Fiber Fuse effect**. It works every time (the fiber optics cable has to have a core containing germanium, which most do). It's a weird experiment, and it produces more

energy in destroying the cable than you have to put in. Sometimes -- eerily -- you can reverse the direction of the thing, run it again and RESTORE that cable back to functioning again! In other words, it destroys the cable (say, 15 kilometers of it) in one direction by melting little holes in the core every inch-or-so. Then you run it in the other direction, and sometimes it goes back and REFILLS all those little holes, restoring the cable back to functioning.

For circuits, you cannot do o/u by using a conventional closed current loop where all the load current (and current through the losses) passes back through the back emf (i.e., back up through the source dipole) in the battery or generator. I have released one "*gedanken* experiment" circuit setup to fiddle with which with only a little difficulty can be built and experimented with. It is inherently capable of doing over-unity with some effort. But it will teach one a whale-of-a-lot about where one loses the energy and where one does not. I sent that to a researcher and haven't heard a peep from him since. I'll have an article coming out shortly with that circuit in it for anyone who wants to play with. We already have filed a patent application dealing with the processes of which that is one line of embodiments.

There are no "kits" that one puts together and gets a working o/u device except for perhaps the Lawandy experiment. That can be done in any sophomore optical phase conjugation lab for about $20-or-less. You need a beaker of water, a very weak laser, and some TiO_2 particles sized so that their resonant frequency is at or very near the laser's frequency. You need a little fluorescent dye as is standard in laser experiments. First, you put in a little dye in a beaker of water, then you shine the laser in there. You get a little warm fluorescent glow at the spot where the laser hits the dye in the water, causing it to fluoresce. Nothing extraordinary so far. Then you make a simple change. You put in the TiO_2 particles (which are the main ingredient in white paint, and so they are cheap, except for the sizing).

Now you shine in the laser again. *Voila!* From that spot, now a room-filling, enormous glow bursts forth. And it is <u>coherent</u> light -- not scattered at a bunch of frequencies. You are getting what Letokhov called "negative absorption" -- in other words, excess emission. We previously explained exactly what generates the excess energy density (multiply retroreflecting, multiple passes of the energy flow, multiple recollections and interceptions, and therefore increase of local energy density and asymmetrical self-regauging). If you wish to do an experiment that works every time, get the *Nature* article, consult with your local professor at a laser lab in university, and do the experiment. It's cheap. It works every time. It's validated in the hard literature.

The o/u kits will come of course, but not yet. So meanwhile, what I've been doing is sharing the over-unity principles (which took me enormous time-and-effort to discover and make rigorous so they will withstand technical objections). The idea is that young researchers should not spend the next 30 years of their lives just getting to where I am now. They should start with what I've found out now and go forward. And as best I can release it, they are going to know what I know if they wish to.

Also, in this area there is no substitute for reading (1) the EM and physics foundations literature, to discover for yourself that EM and much of physics are fouled up, and (2) the regular literature to find out what anti-Stokes emission, the Lawandy lasing without population inversion, the Letokhov papers, the fiber fuse effect, etc. are. What must be broken up in the heads of o/u experimenters is the notion that resonance alone will get over-unity, and that all one needs to know is the regular technician electrical stuff.

That's "malarkey", and it's largely why we don't have working o/u devices already. Normal EM has been readjusted and limited so as to specifically exclude those permissible over-unity Maxwellian systems. So obviously one must find SOMETHING wrong with ordinary EM and explore that. To just wave one's arms and spout ordinary EM is nonsense, insofar as over-unity processare are concerned.

Almost everyone wants a kit. But unfortunately, most of them confidently assume they already know electromagnetics. They don't at all because nobody does. Certainly no one understands fully the business of over-unity EM systems.

It's interesting. I had one Internet comment that I had been talking about over-unity for 20 years and had not put a unit on the market. My response was 'Well, you fellows have been experimenting and talking about it for 50 years, and where are your units out there working? In other words, if you know so much, then you show me what you have done. I don't think you can. I've still got 30 years to go before I'm as bad off as those folks.' The pot calling the kettle black, never solved anything. All it generated was a cat-and-dog fight, which I have no time for and no inclination for. There's work to be done and a problem to solve. (Besides, just wait a bit. We have not finished what we will be releasing yet -- not by a long shot. *It ain't over till the fat lady sings.).*

There is a very simple procedure for having a legitimate o/u device in the scientific sense. First, you get the results yourself and produce a working model. That still is not sufficient. THEN you take it to an independent government-certified test laboratory (there are several good ones scattered throughout the country). DON'T take it to your local university. The Testing Labs contain the best state-of-the-art in testing and they are certified. These certified test fellows don't care what you have or what your theory is, etc. What they will do is <u>rigorously</u> test the inputs and outputs. They will certify the results of their tests, specify the test procedures rigorously, specify the instruments, certify the calibration of the instruments, etc. They don't certify over-unity per se. Just the results of their tests to NIST and IEEE standards. But that certificate stands up in (1) the courts, (2) the U.S. Patent Office, and (3) the full scientific community. My own criterion -- for myself as well as others -- is that one doesn't necessarily have over-unity scientifically until that certified test procedure has been successfully completed.

That's what has to be done before one claims to have a "ready" o/u machine. Our own group has not yet reached this point (but perhaps we are getting quite a bit closer!). When we get one and have a successful certification test, we will release that information. And then and only then will we prepare to sell stock in our corporation for capitalization. In the interim, I refuse to do so. Whether-or-not we ever personally succeed, you can rest assured it will not be a stock scam. If I just wanted to get rich, I could have done that long ago off gullible, trusting persons. That isn't going to happen, and I'll have none of it.

Meanwhile, it is not any sort of "shame" if one has not got there yet regardless of how long one has been at it. That's part of research, particularly in entirely new areas -- e.g., look at hot fusion. Decades and numerous labs and billions of dollars, and they are not there yet either. Edison got a storage battery only after some 11,000 failures. Once asked if he were not discouraged because all he had had were failures and no progress, he exclaimed, "On the contrary! I am making enormous progress. I now know 11,000 things that do not work, and never have to try any of them again!" In other words, he was greatly narrowing his search and approaching that part of it where the real gold had to lie.

By developing and releasing a beginning theory of permissible over-unity EM devices which do not violate physics and thermodynamics, one is trying to narrow the search into those areas where the "real gold" lies. That is the most important thing I am doing, or at least trying to do.

Also, if one doesn't have any notion at all of what is required in order to have an o/u machine in the first place, then one is just "fiddling" and not really experimenting. So it's important to get that settled on the front end and to have at least some knowledge of what one must do in order to get o/u. That is something we have indeed spelled out for everyone. They may not like it because it isn't just exclaiming "It's resonance! It's resonance!". But it's there and it's valid. And it tells where the excess energy comes

from (the source is validated by orthodox physics!); how one extracts it (again, that is validated by particle physics but not electrodynamics); how little of it is actually intercepted and collected and used by a nominal circuit (this part has not been explained before, although Heaviside knew it and said so); why our normal circuits are under-unity (this has never been precisely stated before); what must be done in order to have our circuits inherently capable of over-unity (that has not been done previously either); and examples already in physics and validated that ARE over-unity EM processes (these have not been previously gathered together either).

Finally, we have shown how the energy collection process works and what can be done to intercept and collect more of the excess energy flow that is already available in all our circuits. And we've also precisely stated asymmetrical self-regauging as the technical requirement of an over-unity EM system. We've shown how the electrodynamicists already admit that the energy of a system can be freely changed at will, but how they then assumed you must be fool enough to change it twice. And then just so that the two changes fight each other to a draw so that you can't use any of that free energy that you obtained. In other words, they agree that you can take on excess energy wherever and whenever you wish, in a system. Then they insist that you be a stupid fool and deliberately set up a "dueling" system -- a sumo wrestling system -- inside your newly energized system so that you kill the over-unity ability of the system. We've shown that when you push all the load current back through the back emf of the primary source dipole, you set up the "dueling" system (the Lorentz condition) again and destroy any chance at using the over-unity you have gotten. And we have shown that every system we ever built was and is already an inherently over-unity system because its source dipole (not the battery chemistry and not the generator rotation) -- once established -- will freely extract all the energy anyone could ever need, directly from the vacuum. And particle physics has had that in it, experimentally proven, for over 40 years.

So I'm interested in persons who think logically, analyze the over-unity problem itself into parts, and get on with attacking each part in its proper place and turn. When you do that, you are making real progress on eventually solving the over-unity problem. That used to be called "System Engineering" in the early aerospace days. That sort of thing is how I made my living for over 2 decades. I know that method, and it eventually works. What I am NOT interested in is the old continuing notion amongst so many researchers that all one has to do is whip up a few wires and coils, make some resonances, and Presto! over-unity COP will magically appear and power your home and your automobile. It ain't that easy.

But like Edison said, by pointing out the things that alone will not enable over-unity, we are making real progress. We are narrowing our search immensely. And by showing the proper rigorously substantiable theory of over-unity EM devices, we are again making real progress because it tells us in what classes of circuits and devices we have to look, where over-unity COP is permitted, and where we can eventually hit paydirt.

Cheers,
Tom

Tom,

Thanks. I understand. I don't LIKE it, but I understand. I guess I'm just an idealist who -- unlike most inventors -- would not be looking at the whole thing from an "income" point of view. Like the inventors of the MRA device, I'd invite everyone to try it. And I certainly understand that you're not allowed to violate nondisclosure agreements. And I do -- we all do-- thank you for at least bringing the general concepts to the alt-science community to ponder over.

Right now my aims, believe it or not, are not even about "over-unity devices" which is what your answer was in terms of. I just want to prove to myself that I can transmit my voice from here-to-there over non-vectorial waves that normal radios can't pick up. That's why I still ponder over the Bearden publications of the mid-1980s.

Free energy and antigravity are World-changers. A "scalar walkie- talkie" set is more down to earth, although revolutionary in itself. Thanks again for your patience with my questions.

-- Rick

Rick,

Well, we're working on that too. Our work with Fogal can transmit signals "infolded" inside DC potentials, inside fields, or inside waves. We just have to get the Fogal semiconductor in limited tech production first. We demonstrated an early prototype to some government customers but did not have a clean "infolding". They were very interested, so we're still working on it. It's do-able.

In fact, previously Bill demonstrated "cleaning up noise" to Southern Company. The oddity that occurred was that the "infolded signals" exceeded the speed-of-light. In other words, he got through satellites and systems without the usual delay. This is to be expected when using longitudinal EM waves. Check out the Rodrigues and Lu paper for an overview of Undistorted Progressive Waves. Longitudinal waves (or pseudo-longitudinal EM waves) are something else again.

Anyhow, we will have it sooner-or-later. I already have about 3/4 of the provisional patent application prepared, anticipating when the chip gets produced and Bill gets one working.

Cheers,
Tom

D. A reader answers my Bearden Critique: Why EM waves ARE Longitudinal (1999)

Polarization and Non-Inductive Coils Revisited

12/2/99 by Rick Andersen

During the Summer of 1999, I received a very interesting e-mail from a gentleman named Graham Gunderson. The subject was my old bone of contention with Tom Bearden: how can EM waves be longitudinal and yet have a vertical or horizontal polarization? My 1993 file POLARIZE.HTM criticized Bearden for refusing to address the observed phenomenon of polarization which -- to most peoples' thinking -- "proves" that EM waves traveling in free space must be transverse and not longitudinal. Graham Gunderson responded to my criticisms with the insightful letter reproduced below:

Dear Mr. Andersen,

I bumped into your website here and read your entertaining article describing Tom Bearden's apparent oversight regarding wave polarization being integrated into the longitudinal-wave model of Tesla's. Perhaps you stumped him.

For some 3 years, I have consistently read and re-read and re-re-reread about everything he has had published on the Web -- particularly in reference to phase-conjugation. I find both his and Tesla's theories to be simply more intuitive than the effect-no-cause descriptions of events given by mainstream physics. Indeed, when one uses a visual model of the "virtual photon flux", it is much easier to "see" longitudinal waves than Maxwellian transverse waves. Transverse waves belong in-and-around conductors or on charged particles, not in "empty" space. The 'T' in transverse may as well stand for 'translational' in the way Bearden uses the term.

I, too, was puzzled by the polarization question when I first read it on your site. I had not considered it, but the "problem" is actually an artificial one, given by incomplete understanding and partial realization. Longitudinal waves can and of course do support polarization, in some cases, like that of the Hertzian antenna.

In your example, you use RF antennas as a model. Let's go back through that. Say you have a ground plane with a ¼-wave antenna vertical to it, radiating significant RF power. Now at the "input end" of the antenna near the ground plane, there is a large current flowing from your RF source (coax, whatever) and a rather low voltage. If you were to touch a coin to the antenna at this point, you would see very little or no spark due to that low potential difference. However, touching the same coin to the tip of the antenna would draw a long spark since potential is at a maximum (while current -- at resonance -- is theoretically null).

"Empty" space can be regarded as a huge electrical charge (that's understated!) without a net polarity, resulting mass flow, or macroscopic gradient coupling to charged particles. Thus when you are oscillating the local potential of the photon flux with the antenna tip's pure voltage (at your RF frequency), you are actually altering the local charge density of the VPF at that frequency (diminishing with distance from the tip), giving rise to the longitudinal, traveling wave through "space" and subsequently through time. Air pressure makes a good analogy for this if at the end of your "hose" there are alternations of pressure (blow out) and vacuum (suck in). In reality, "virtual photons" just take the place of air molecules.

Now we know that simply oscillating a point charge at high voltages will not translate to a signal received by another tuned antenna as will an oscillating charge from the end of our transmitting antenna. In both cases, we are vibrating/varying the local intensity of the virtual photon flux. But only the antenna (and not an oscillating point charge) produces what we call an "EM wave". Clearly, "voltage" (potential) varies the intensity of the VPF, giving rise to longitudinal (pressure/density) waves in both cases. Why, then, do we need an "antenna"? And yes, how does the receiving antenna "know" what the transmitted polarity was?

Answer: Because we refer to ALL antennas as DIPOLES. There are actually TWO longitudinal waves propagating through space. If you look up the Hertzian example above (1/4-wave radiator above a ground plane) in an ARRL textbook or something, you will find that there is a "virtual" ¼-wave rod BELOW the ground plane as well -- at least as far as RF energy sees it. It is usually illustrated with a dotted line. Without going into the "why" on that one (even though it's related to this), let's use a simple ½-wave, center-fed dipole in our discussion for brevity. As is obvious, when the potential on one end of the dipole is "positive" at the voltage crest of the RF wave, the potential on the opposite end of the dipole will be "negative". Therefore, we have a simultaneous INCREASE and a DECREASE in the VPF -- equal and opposite -- separated by the half-wavelength of our signal.

Therefore, a distant, resonant antenna will translate this spatial "pressure" difference (although diluted by distance) into a tiny, time-delayed copy of the original **B** and **E** fields surrounding our radiator. Since the 2 opposing compressions/rarefactions of the VPF are separated by the distance of half the wavelength, they will never -- cannot -- cancel. Try imagining red concentric circles emanating from the top point of the dipole, and blue concentrics radiating outward from the bottom-most point. Obviously, the circles will cross and interfere. But they will NEVER TOTALLY OVERLAP TO FORM "PURPLE" (or cancel) until an infinite (unattainable) distance from the radiator is reached.

Now stretch your noodle a bit and use concentric spheres (ghost onions?) to get a 3-D representation of the actual goings-on.

Imagine receiving antennas parallel to -- and perpendicular to -- this imaginary radiator. It may be easy to envision why you -- in theory, ignoring reflections -- recover NONE of the signal when your antennas are crossed (or a percentage of the energy equal to the cosine of the angular difference between the two: cos 0° = 100% [parallel], cos 90° = 0 [crossed]). The perpendicular antenna sees no temporal or spatial difference between red onion shells and blue ones. In other words, there is no longer a circumference differential between the intercepted red and blue spherical shells.

As an alternative, imagine a yardstick with a piezo buzzer taped to each end. Wire them out-of-phase so that when your signal generator makes them sing, you can still hear a tone even though the sum total acoustic wave is a canceling one. It is their distance from each other that defeats total cancellation. And if you had a second yardstick set up like the first -- but as a receiver (also with crosswired piezos, but connected to an oscilloscope), and the whole setup was in an acoustically nonreflective space -- you would get a signal reading if your sticks were parallel. But cross them and your scope will show a flat line. (Not recommended as experiment. An acoustically nonreflective space is pretty hard to come by...)

Therefore, we can carry polarization information by using TWO longitudinal waves, naturally separated by wavelength -- which is closer to what's really going on. Or we can simply say that it is the separation between the centers of the red and blue "ghost-onions" that determines wavelength. (This is a separation of relative distance as well as a relative separation in time -- whatever term makes you happy)

Incidentally, if you have researched Townsend Brown's work in electrogravitics, you have read that you CAN carry information by varying a single "point" charge with no dipole. But to receive the information, you need a receiver that is a monopole as well. The mode of transmission is still a longitudinal stress wave. But it has no nearby partner with which to almost-cancel at appreciable distances. Being a single VPF stress (gravity) wave, it manifests as a pure fluctuation of the density of spacetime itself (again as 1/distance, being inversely proportional) and this is why such a monopolar receiver will electrically manifest all gravitic fluctuations (supernovae, Earth-orbital variations, etc. as well as any transmitted signal). If you attach this monopole (like a lead ball) to a resonator (top end of a tuned coil, etc.), you can single out a particular carrier frequency just like a tuned antenna will.

If you're unfamiliar with this, dial up the Biefield-Brown work on a good search engine and understand it!!! Non-Hertzian waves are unshieldable and will transmit through any matter (even the whole Earth) as easily as through a vacuum!

(I thanked Gunderson for his fascinating insights, and asked him if he'd mind it if I put his letter up on the Web. Which is what you're reading now. Here's the follow-up from Gunderson:)

Hi, Rick!

Thank you for taking the time to consider what I sent you and respond. I didn't know if I was being taken seriously or not. After all, there's a chance I could be dead wrong in what I wrote -- or at least laughably incorrect.

However, the work I've been doing generally says otherwise and that tends to give me confidence.

I want to say that wow! I'm flattered that you would like to post my response to your file. There's a lot of stuff I'm both able and eager to add to the public knowledge out there for consideration. But I don't have a website or anything, so I guess this is a good start.

I say that in light of the fact that what I presented in that paper are merely methods of visualizing a possible solution and the ideas I advanced aren't really meant as the final answer. Until we have a cohesive and coherent model that can take into account all the confusions and anomalies we encounter in our pursuits, no one (not even Mr. Bearden himself) can say they really know a thing for sure. After all, "phase conjugation" et al is only a mental construct, too. The principle does nothing more than explain effects. It says nothing about the fundamental causes, whatever they are. It is interesting to note that it is possible (even intellectually profitable) to DO AWAY with the phase-conjugate model entirely and treat the entire, mysterious process as a manifestation of more directly visualizable (and familiar) electromagnetic effects. How we think -- in approaching a problem -- colors what we perceive (and infer). Using many (limited) perspectives (instead of ONE limited perspective) gives us more "colors" in our picture of what's going on, and therefore a better chance at accurately rendering reality in our model.

At any rate, I have attached a revised copy of the response file to this e-mail. Most of what I did (in addition to clarifying certain points for the reader) was to "soften" comments I made in reference to Mr. Bearden, since I have total respect for the man and I don't want to be interpreted as otherwise. I am a 23-year-old peon, and I'm new to the game. I don't want to butt heads with people who have spent longer with these theories than I have been alive.

Above all, feel free to choose either version you like. The attached is a .txt file and those are sometimes choppier than they're worth.

As far as the head-butting goes, though, I may still have to don my war-paint. The claim that "bucking" (or self-canceling) coils do NOTHING is absurd.

I challenge anyone who makes claims as such to substantiate them. I make claims to the contrary and I can back them up. Here's a simple test if you (or anyone else) wants to try it.

First you will have to wind a self-canceling coil with very good canceling properties. Start by selecting the thickest (lowest gauge) transformer wire you can find. 18-gauge is about the ideal, but bigger here is better. Thicker wire (besides having low resistance) still stretch less, and any diametral variations along the length will have less effect on the resistance of the wire.

From the SAME SPOOL of wire (ensuring equality between conductors in their metallic purity and exact diameter), cut 2 lengths of wire that are EXACTLY EQUAL in length. The longer your lengths the better, just make sure you can be certain your lengths are EQUAL. You will want enough for at least 100 turns around whatever you plan to wind on. I recommend an old, small wire spool (like those used for consumer speaker wire). As you wind your wires parallel to each other while turning the spool,

try to keep them from overlapping unnecessarily. The "cleaner" you wind the coil, the surer you can be of your results.

The main idea is to keep your 2 conductors identical twins. Try not to stretch-or-bend either wire inordinately or do anything to cause a DIFFERENCE IN RESISTANCE between them.

All you will need besides this coil to see what I am talking about is a good source of high current AC and a big neodymium-iron-boron (neo) supermagnet. I do mean big. The one I used in my original test is a cylinder, 1-inch in diameter and 1-inch long (and worth about $50!) Try to use a good grade (like neo-35). You need a huge magnetic moment to really feel this. (Remember to use a spool that can accommodate your big neo and a few fingers in its bore!)

The bifilar coil will have four wires protruding from its finished form. They should be connected in reverse-parallel so current can flow down either coil in an opposite direction to the other. Twist the connecting leads together to make sure their fields cancel.

You can get your AC current from either a stepdown transformer or a large AC capacitor (something like 100 uF @330 VAC) in series with the coil's connections and 120 VAC. (Remember this coil appears as a pure resistance electrically so there are no resonant/LCR-circuit effects).

I strongly recommend the capacitor approach because it is mostly "watt-less" current limiting and the only thing that will heat in this arrangement is your bifilar coil.

At long last -- when you have a good coil passing something like 10 amps -- hold the neo magnet inside the bore perpendicular to the coil's axis. You WILL feel a **vibration**, no matter HOW carefully balanced your bifilar coil is.

I must admit there are other ways of winding coils that are both more balanced and more effective. But I am not allowed to share the techniques. This should be no loss to you. Ue some imagination and you could well come up with something way better!

The curious thing after all this is that though the vibration (for all the amperage and all the magnet's flux) is very small -- indeed, almost a trifling effect-- it has a very high 120-Hz vibration component. If we were dealing with a pure magnetic field at 60-Hz, we would expect our magnet to dance along at 60-Hz as well -- not DOUBLE the frequency. It is this difference in motion that tells us we are dealing with an unconventional effect.

If you want, you can line the core of the bucking coil with a thick copper tube or shorted coil to attempt to eliminate (magnetically short) the AC field. Normally this will mostly kill the magnet's powerful vibration. Here -- with your bucking coil -- you will notice NO DIFFERENCE. That little jitter that "shouldn't" be there is almost impossible to get rid of. And you can usually only "feel" it with neodymium!

So, I'll try to explain (at least in my own terms) why this effect occurs to back up my claim that bifilar coils ARE more than just heaters. There are 3 major points from which a discussion can depart:

1. Superposition. The bifilar coil consists of 2 coils with current going in opposite directions. For a moment, visualize the simple case. Imagine 2 long, straight, parallel conductors carrying current in opposite directions. Imagine them very close together. One "wire" "makes" a "clockwise" circumferential magnetic field. The other "wire" manifests a "counterclockwise" field. So, the generated fields are opposite. In the quantum mechanical sense, each "field" is independent. In our 3-D

spacetime, we see the fields "bent" and distorted (and mostly cancelled, on the exterior) by each other's presence. But this is just their SUM here in these 3 dimensions. We have to imagine the POTENTIALS as INDEPENDENT ENTITIES. Therefore, the accurate picture is that of concentric circles emerging from each wire, overlapping (and ignoring) the other wire's field. One can imagine the circular "field lines" of one wire being blue, and the same from the other wire as being red.

If the center of each set of concentrics were one and the same, all points on all circles would overlap and "turn purple" (which we can think of as truly canceling at that point in space.) Therefore, it would be hard to picture a net effect. However, our conductors must occupy different locations! This means that the 2 centroids are no longer in complete superposition. The red and blue circles do not ride each other but interfere.

The best way to picture this, actually, is to write a simple computer program that graphs this all out. If you get more complex than this simple case, it becomes easy to see how you cam generate "beams" where the PATTERN of the canceling state REPEATS on certain axes and becomes orderly. At any rate, the picture you will see will be a tangle of overlapping reds and blues. At any point, the vector sum of the 2 opposing colors will be zero or nearly zero. But you will see a host of PATTERNS or a very complex (and pretty!) STRUCTURE of cancelling energies. THIS IS THE STRUCTURE OF THE VIRTUAL PHOTON FLUX "UNDERNEATH" THE "CANCELLING" THAT WE "SEE". There is definitely something going on behind the scenes!

2. Motional E-field. In all this belabored discussion so far, we have neglected electron drift. Electrons are BOTH electric and MAGNETIC particles (due to their spin -- remember, motion is the only difference between electricity and magnetism!) and as they move down the wire, they can be thought of as little moving magnets. (In a sense, this is really what they are.) And when you move a magnet, you get an electric field. So even though the magnetic field (from moving electricity) in our bifilar coil cancels, the electric field (from moving electron magnetism) ADDS!!!!!! This is the "motional **E**-field" that Hooper, Sweet, and others have had the insight to mention. Yes, it is a small effect. But it refuses to cancel when all other things do. It is very pervasive!

Thinking purely in terms of "waves" is a limited viewpoint. Wherever there is current, we are MOVING physical, electroMAGNETIC entities (electrons). And this MOTION results in "fields" that we would otherwise ignore, dogmatize away, or be unable to account for.

3. Photon flux. Whenever we are passing energy through the vacuum, we are altering the natural state of the ambient virtual photon flux. A bifilar coil is one of the most effective devices for "passing energy through the vacuum". All the inductance (energy storage capability) it would otherwise have as a "regular" coil is totally gone, because the very energy that would be ordinarily stored is neutralizing in the opposite (adjacent) coil windings having passed THROUGH the "vacuum" on its way. This extra energy density in space accounts for a (very) small percentage increase in the total ambient photon flux (which is astronomically huge compared to the power levels we normally use in the lab). Extra -- or missing -- flux is a bend in space. Just like a high electrostatic charge or gravity. Put any energy into empty space and it will ALWAYS ripple and distort, to some extent. (Why shouldn't it? Vacuum IS energy!)

This variation in the density of spacetime changes the impedance of the vacuum (or the relative dimensions of electric and magnetic fields). As the raw impedance of space fluctuates (positive or negative delta), a magnetic field has to "fit" into the space differently and this -- at least in theory -- can vibrate the source magnet. (If anybody wants a Nobel Prize, they could find a way to significantly "delta" the intensity of the VPF in raw vacuum and measure the speed-of-light during the shift. Then

they could document that our sacred "constant" had indeed CHANGED in direct proportion to the energy input!!)

Note that topics (2) and (3) above are independent of the POLARITY applied to the bifilar coil. That is, the effects occur in the same fashion if energy is present at all regardless of its "polarity". This introduces a "rectifying" effect that would appear to double the frequency of the resultant effects at AC. This neatly explains the observance of the 120-Hz component in our magnet's motion, and all 3 viewpoints (being unable to diminish their intensity by eddy currents/application of Lenz's law) are immune to conventional methods of shielding.

I am running out of time, and for now I will have to sum this up. Whether-or-not you decide to actually mess around with this or not (if you do BE CAREFUL with neo magnets --. they are grenades!), rest assured that there ARE tests that can at least cast doubt on some of the statements out there. I have dumped several thousand amps through one of my coils -- in the canceling mode -- by discharging a huge bank of fully charged HV caps through its small resistance. The first observation one makes after this event is that the temperature of the coil goes from room-temperature to untouchably hot in an instant.

If I do this in the normal (summing mode) with the two coils in parallel, the coil EXPLODES and shreds to hair in a shower of sparks. This is fascinating in light of the fact that in this mode the coil has INDUCTANCE as well as its original (bucking) RESISTANCE: this means that FAR LESS INSTANTANEOUS CURRENT is present in the coil's windings, at any moment during the discharge. (The inductance and the resistance both factor into the Ohm's Law equation as "resistance" in the initial case). If the hundreds-of-amps present in the wires in the inductive mode are enough to disintegrate the coil, why are the THOUSANDS of amps in the noninductive mode having NO effect on the physical structure of the coil (not so much as even a sound!)? Why aren't the wires scorching and melting like they do at a fraction of the current? Where-the-dickens is the energy GOING?

If you want to figure that one out, I'll tell you -- it's one to sleep on. I gotta go to bed.

Thanks again for your reply. E-mail me as often as you like, I enjoy hearing from you.

I hope that if this discussion didn't help you resolve any of your questions, that it at least gave you some new things to ponder. I hope it was of use to you -- the ideas in here have definitely been useful for me.

(PS: It is interesting that 'sensitives' can supposedly "see" a change in coils like these when they are energized... that, to me, says more than any magnet really can.)

Happy pondering,
graham

E. On the Production of 'Scalar' and 'Static' Waves (1998)

F. Tom Bearden on Weather Control via Energetics (1998)

G. Bearden on Balancing Positive and Negative Energy-- Communication to Jerry Decker of KeelyNet (1997)

H. Bearden on Antigravity-- Communication to Jerry Decker of KeelyNet (1997)

On Internal Work and Antigravity with Newton, Faraday, and Maxwell

T.E. Bearden - 08/08/97

Internal work is an eerie kind of thing! There are several things involved. I will try to discuss one-or-two briefly.

First, Faraday believed fervently that his lines of force existed as taut physical strings (everyone at the time -- Faraday included -- believed in a MATERIAL ether). So he thought that EM disturbances were simply the disturbances of these taut strings. That was then a transverse string wave.

So to Faraday, "EM shaking" in the ether was just these physical lines of force shaking (like a transverse twanging string wave). NOTE that he just assumed away the body of any string holder to provide the tensile forces on that string! In short, without realizing it he threw away Newton's third law reaction forces from his material strings.

Maxwell stated point-blank that he would read no other EM theory until he had thoroughly studied Faraday's work. He also wrote a paper on those physical lines of force. He mathematized them with a tube of force concept.

But he also ASSUMED away the body of the mysterious missing string holder and also thereby discarded Newton's third law reaction from his electrodynamic theory. The third law is STILL missing from the theory today!

When electrodynamicists do an experiment -- say by introducing some EM energy to be absorbed, etc. -- the third law recoil force and energy DOES appear. It is GENERATED in their experiment, but the cause for it does not appear in their model! So they piously raise their eyes to heaven and say, "Oh, yes, we know that will occur. That's due to Newton's third law."

Well, Newton's third law is a DESCRIPTION of what happens. It is not the CAUSE of anything being instead of a cause, an EFFECT.

In short, there never were any twanging strings in the vacuum ether. And Faraday's lines of force are not even lines of force! THERE ARE NO FORCES IN THE VACUUM.

In the first place, force is not the primary CAUSE of acceleration of a mass! Force is not SEPARATE from mass. Rigorously, the definition of force is **F** is identically d**(mv)/dt**. As can be seen, mass is a COMPONENT of force. In the vacuum, all that exists are changes in the vacuum potential. In other words, you get gradients of scalar potential and swirls which we identify as vector potentials or currents of potential.

There is no **E**-field in the vacuum, for example, in the sense presently used.

Electrodynamics assumes that at every point in the vacuum, there exists"

(1) a point unit North pole,
(2) a point coulomb of positive electrical charge
(3) a point unit mass.

Electrodynamics theory then describes how those assumed point entities move and react. THAT's what the equations actually describe -- the movements of those 3 entities. They do NOT prescribe what exists in the vacuum WITHOUT that observable matter being there!

Classical electrodynamics still completely and erroneously assumes the MATERIAL ETHER. You would think that they would have got the message since the Michelson-Morley experiment in 1888 destroyed the MATERIAL ether. All that happened was that one day the electrodynamicists said, "Okay, so there's no ether! Okay, we are not using one!" And they never changed a cotton-picking equation!

What really happens with a scalar potential at a point, e.g., is that it increases or decreases. Look at the points in the neighborhood around that point of interest.

If the potential increases at the focal point, then it has not yet increased at the points around it at an infinitesimal distance from it. So it has a set of radial gradients all around with respect to the ambient vacuum potential points in its neighborhood.

Well, each one of those radial gradients is (erroneously) called a force in classical EM. But for each radial, there is an opposite and equal radial. Try increasing-or-decreasing the potential at that point any way you wish. You still produce a set of equal and opposite (bidirectional) EM "forces".

The point is that the waves are always created as PAIRS of equal and opposite waves. It's more like a "rhythmic squeeze" wave than anything else. In the real world, the antiwave portion is actually a phase conjugate -- and superposed spatially upon the wave -- in each bi-wave pair.

That's how Whittaker came to show that any scalar potential is a set of bi-wave pairs . And in each pair, there is a wave and its antiwave (true phase conjugate). But that means that this doesn't generate any NET force!

Voila! It contains excess or minus energy at that point, but it did not translate anything. That increase in the local energy density of vacuum spacetime is ruthlessly a CURVATURE of local ST in the GR sense.

So what is produced in the vacuum is a GRAVITATIONAL wave and not an EM wave at all! This is consistent with modern gauge theory when one thinks long enough about it, because gauge theory regards gravity itself as simply the "restoration of symmetry" when a force of any kind is formed.

In other words, **Sakharov's** hypothesis is true -- Gravity is not a separate field in the sense of Maxwell but is always made from other fields. In fact, it is just NEWTON's THIRD LAW revealing itself -- particularly in electrodynamics!

Now let's look a little deeper. Suppose we have this harmonic set of wave/antiwave pairs (this scalar potential) coming onto an atom of matter.

Well, the time-forward wave halves get stripped off and interact with the time-forward part of the atom (i.e., the electron shells).

The atom can be regarded as a set of dynamic dipoles where a positive charge in the nucleus and a negative charge in the electron shells comprise one of the dynamic dipoles.

The dipole is a "splitter" of the G-wave incoming. It splits that thing into 2 EM waves momentarily.

The forward time wave-half interacts with an electron in the electron shells, and the reversed time wave-half interacts with the positive charge end of the dipole down in the nucleus.

That generates Newton's third law recoil of the nucleus, which is admitted but usually ignored in electrodynamics.

The point is for all the energy interactions ongoing in the electron shells, there are equal and opposite EM energy interactions ongoing in the nuclei. We ignore the latter.

NOW to the inner work. As you can see, when you do some work on the atom with EM radiation, you simultaneously do some equal and opposite inner work in the nucleus. (One can use this to get antigravity, free energy, and all sorts of goodies).

Now in nonlinear optics, one interacts that G-wave (i.e., with its EM biwave pairs) as it is coming in by nonlinear EM wave interactions such as 4-wave mixing. The time-reversed wave-half doesn't get to reach the nucleus. Instead, it is flipped right back toward where it came from. And along with it goes up to all the energy in any additional pump waves on the atom.

So a phase-conjugate mirror -- no matter how powerfully pumped -- DOES NOT RECOIL when it emits the powerfully amplified phase-conjugate replica wave!

The reason is that the MECHANISM generating Newton's third law recoil of the nuclei did not happen because the cause (the incoming "missing" time-reversed wave-half) was redirected before it reached the nucleus.

Now that's an interesting way to intercept the "cause" of internal work -- and redirect and use it -- BEFORE it comes into its causative interaction to generate internal work.

Now if you continue to do the POSITIVE work half (in the Sweet device, the work done in the load), and in fact increase the positive work half while simultaneously rejecting the excess negative half, you have a missing "Newton's third law" reaction for the excess positive work being done in the load. That means you have a missing restoration of symmetry, for the excess positive power being done in the load.

That means you have just exactly that much **ANTIGRAVITY** formed. That is, if restoring symmetry is what exhibiting gravitational force is, then DENYING the restoration of symmetry is what dis-exhibiting (denying) so much gravitational force is.

So by denying the restoration of symmetry for extra power in the load, you create ANTIGRAVITY by just that amount of power.

Let us reason together. Gravitational energy is already known to be (embarrassingly) negative energy. Well, what is "negative energy" in layman's terms? It's just energy that was never there but does work against you. Again, it's just our old friend Newton's third law, hiding in disguise.

So we get gravity when we let the time-reversed half of the EM waves interact with atomic nuclei.

We get an absence of gravity when those waves come in but the antiwaves do not reach the nucleus and do not interact with the nucleus.

READ THAT AGAIN, THAT'S PURE MAGIC!

So to get antigravity, you bring in some EXCESS phase-conjugate (time- reversed) EM energy together with some excess energy (the other half accompanying it, since you bring them in, in pairs. You let the time-forward half go to the external circuit and the load, and do excess work in the load.

But you do not let the excess part of the incoming time-reversed energy reach the nucleus. Instead, you multi-wave-interact with it before it reaches the nuclei. You send it back on its way. So what does that do?

Well, if you bring in extra gravitational energy (cause) and then REPEL it WHILE LETTING ITS INCOMING FORWARD-TIME MATCHING ENERGY BE DIVERTED TO THE LOAD AND DO WORK IN THE LOAD, that's the exact thing as creating that much **ANTIGRAVITATIONAL** energy.

In short, that's how you produce antigravity. Or if you wish, that's how you get a unilateral thrust.

Just point that antigravity thrust in the correct direction, and the unilateral antigravity thrust force will occur in that direction.

For propulsion, then you fly it like a helicopter. With thrust upward, you lift straight up or hover, or lower down gently. By angling the direction to have a forward component, you also move forward while hovering, climbing, lowering, etc.

That was the gist of my theory of gravitation that I got "Sparky" Sweet to test with the vacuum triode amplifier. I had estimated that it would levitate at about 1500 watts.

But one would get magnetic charges (monopoles) deposited in the barium ferrite magnets as one increased the power above the nominal 500 watts design. So I warned him not to go above 1,000 watts because the magnets might explode and kill him. (They go off like hand grenades when the yield point is reached, and Sparky did explode a few magnets at various times this way!)

Anyway, he increased the load in 100-watt increments to 1,000 watts, and that thing reduced its weight on the bench nicely and smoothly by 90 percent. If the experiment had failed, I would have had to go back to the drawing board. But it worked beautifully.

So the gist of the internal work is that you directly involve

(1) Newton's third law being added back to classical EM,

(2) turning EM into G and vice versa,

(3) putting Faraday's missing string holder back in there,

(4) increasing the potential cause for internal work, then rerouting it back out before it interacts in the nucleus, and

(5) finding Maxwell's missing "tensioning agent" in the vacuum.

Maxwell actually pointed out carefully that his theory was not finished because he had assumed this stress in the ether but had not been able to account for it, and therefore further work had to be done.

Heaviside also warned that the present EM theory was just first order and suitable for first order effects, but was not to be considered as "finished".

In his opinion, initially the engineers would have sufficient trouble learning that first order theory and applying it. So the refinement of the theory could come later.

Hope this is a little clearer.
--Tom Bearden

I. Clarification of Scalar EM and Bi-Directional Waves, by Ed Mason of Nova Research (1996)

In the Summer of 1996, I had a series of e-mail correspondences with a gentleman named Ed Mason of Nova Research located in Florida. He had written the following file SCALAR7.ASC, which never made it up onto the KeelyNet. But he kindly mailed me a copy and we wrote back-and-forth for a few months. His file contains comments on my file -- ANDERSEN.ASC -- in which I critiqued some of Bearden's earlier writings on Scalar EM, and on Bearden's response letter to me, now on the net as BDNLTR.ASC. In this file, Mason offers some very interesting angles of his own on the subject.

SCALAR 7.ASC

ED, Director
NOVA RESEARCH
AUGUST 1, 1996

STATUS: UNCLASSIFIED

NOTE: This paper contains a lot of Bearden's quotes from MANY different papers of his. I have "integrated" them together where I thought they are all related.

NO COPYRIGHT: This paper and ideas therein may be FREELY SHARED according to the high ideals of KeelyNet. However, I would appreciate if PROPER CREDIT is given me for any ideas I have originated herein.

PAPER ON SCALAR POTENTIAL AND SWEET DEVICE
PRACTICAL SCALAR POTENTIAL PRODUCTION EXPLAINED

with SuperConductivity applications and relation to UFO Propulsion described with CIA Area-51 experiments in Scalar Potential devices hypothesized.

In reviewing many of the "Free Energy" text and GIF files on KeelyNet and studying the concepts presented -- especially those pertaining to the theoretical work of such luminaries as Whittaker and

Bearden -- perhaps my comments may provide some more assistance to advances in this new field of endeavor.

In BRDNLTR.ASC, much information was given by Tom Bearden in response to the questions and points raised by Rick Andersen. There appears to be a discrepancy between Bearden's statements that "sum zero vectors" comprise or produce SCALAR WAVES or SCALAR POTENTIAL, and his later statements that Hooper type Bifilar coils (i.e.; Cadeuceus coils, coils comprised of "opposing" field windings) produce a situation in which both the AMPLITUDE and the TIME VARIABLE (+t), (-t) cancel out, resulting in NO NET EM EFFECT.

Bearden reveals this is due to the fact that 2 opposing "fields" are actually comprised of TWO pairs of Bidirectional Whittaker waves (the Forward time component wave AND the Reversed Time component wave) and that there are actually FOUR Bi-D Whittaker waves that cancel out not ONLY spatially BUT TIMEWISE as well. Bearden then says "Major Bummer!"

YET THE SCALAR PUMP POTENTIAL IN THE SWEET TRIODE USES JUST SUCH A 4-PAIR BIDIRECTIONAL WHITTAKER (INTERNAL EM) WAVE SET !!!

One also notes that IF <u>nonlinear</u> material was used in a Bifilar Hooper coil, THEN the usual null effect would vanish and "spooky gravitational effects" are noted. Well, NONLINEAR material <u>is</u> placed at the focus of the 2 pump waves (4 Bi-D Whitttaker scalar waves) in the Sweet device.

"... This agreed with Whittaker, and also now offered a sudden inspiration as to when we got the G effect and when not. We were dealing with 4 waves -- not two -- in the opposing ordinary waves. We had 2 opposing normal waves and 2 opposing antiwaves, with the wave/antiwave coupling. 2 ordinary waves 180 degrees out-of-phase would certainly cancel (spatially) their amplitudes (as is well-known in RAM materials and structures) but would not cancel their energies. The 2 antiwaves would do likewise, spatially.

"The point then became so what would happen in the time domain? Here we got a shocker. The 2 antiwaves would cancel each other's amplitude SPATIALLY and would add energies. But looking at the action (energy x time) aspect, their energies exist in negative time! Well, this meant that the antiwave ACTION would come out negative and would then cancel the added positive wave ACTION because Sum Ewt + Sum Eaw(-t) = 0. Therefore the sum of the whole mess was zero! Bummer! We wound up with everything just vanishing, wherein all the action (angular momentum) seemed to vanish. Well, this showed that the notion of simply having waves 180 degrees out-of-phase of itself would not give gravity effects. So that's why mostly the Hooper approach didn't seem to do much. But if one added <u>nonlinear</u> materials to the core, then one broke the linear cancellation."

"...The magnitude of the electrostatic scalar potential created by the accumulated charges (spray pumps) represents the local magnitude (flux/spray density) of that virtual photon "spray". It has nothing to do with the mass of the charges except that Nature has built those particular masses to be "little self-powered spray pumps."

NOTE: Scalar potential is CREATED BY the ACCUMULATED CHARGES, et al

"When we "charge up" an accumulator -- such as a steel sphere or a capacitor -- we push in the electrons so that they pack closer together, and we thus increase the virtual photon spray density because we've accumulated more sprayers in a confined volumetric region. The volumetric spray density represents the magnitude of the electrostatic scalar potential (ESP) in this analogy."

"Contrary to conventional wisdom, Whittaker proved that this scalar potential -- this "spray density" -- is internally organized into hidden, flowing, bidirectional EM waves. EM force field wave energy is flowing in both directions. In the electrostatic scalar potential, the net Poynting vector resultant is zero. But it is a "sum-zero system" composed of an infinite set of opposite but equal finite Poynting vectors. That zero vector resultant is a scalar EM potential. It's got lots-and-lots of EM energy flowing both in-and-out simultaneously. But these flows are normally balanced and in equilibrium."

"... Actually, scalar potentials (Vacua! Spacetimes!) from charged particles -- both static and dynamic --..."

"... For a very recent proof that the potential is a flow process -- and in fact consists of bidirectional EM waves -- see Hsue, C.W., "A DC Voltage is Equivalent to Two Traveling Waves on a Lossless, Nonuniform Transmission Line," *IEEE Microwave and Guided Wave Letters*, 1993, Vol. 3, p. 82-84."

"... Rigorously the scalar potential is composed of a dynamic, opposing vector force field wave internal structure. Internally it's vectorial; externally it's scalar. Whittaker (1903) tells how to make standing scalar potentials -- these can be made as beams."

NOTE: THE "ZERO SUM" exists WITHIN the structure of the Scalar Potential ALREADY. There is NO NEED to "oppose" ordinary ES or EM "fields" because as said before they are ACTUALLY "effects" caused by a SCALAR POTENTIAL ESTABLISHED BY ELECTROSTATIC CHARGES OR MAGNETIC "FLUX". Comments by Bearden regarding "ZERO SUM" actually applies to the INTERNAL MATHEMATICAL COMPONENTS of SCALAR POTENTIAL. Early writings indicate that T. Bearden realized this fine point only later.

"Now, of course, one can take equation [1] above and apply Whittaker (1903) to it, and mathematically decompose the PHI-sub-q term into a set of hidden bidirectional EM wavepairs in a harmonic sequence."

"...The source already acts as a "dipolar antenna" to continually receive "scalar potential" current dPhi/dl (mass-less displacement current) from the vacuum."

PHIq is MASSLESS DISPLACEMENT CURRENT aka electric charge. This -- being composed of Bi-D wavepairs -- is identical to electrostatic scalar potential.

THEN the 4 waves:

"Then all that remains to be done to tap this vacuum-furnished "pumping" energy is to utilize standard 4-wave mixing theory from nonlinear optics and introduce a small signal wave input. By standard textbook theory, up to all the energy in the pump waves will then be emitted by the nucleus as a phase conjugate replica (PCR) (time-reversed replica) of the signal wave input."

"... Treating the stress-pumped nonlinear nucleus as a PPCM, it follows that the stress energy of the vacuum can be tapped by a 4-wave mixing mechanism in the atomic nucleus to provide amplified phase conjugate EM wave outputs from the atom in response to small signal wave inputs." (Utilizing Scalar Electromagnetics to Tap.., et al)

"... Hence the vacuum/nucleus flux exchange system is not locally in equilibrium because part of the in-flow is being gated by 4-wave mixing accomplished in the PPCM barium nuclei into forming an organized PCR wave, which in turn goes on out of the atom instead of back to the vacuum. Any local

vacuum energy extracted is just instantly replaced by the surrounding vacuum -- just as a raging ocean instantly refills the hole left in dipping out a spoonful..."

"...Up to all the power in the pump waves A1 and A2 may be output in phase conjugate replica wave A4 in response to a small signal wave input A3."

In other words,

[the following is my paraphrase because I could not reproduce his ASCII diagram properly in HTML -- R. Andersen]

pump wave A1 is actually a pair of bidirectional Whittaker waves, propagating into the phase conjugate mirror (PCM) from direction A. A2 is another Whittaker pair coming into the PCM from the opposite direction, B; (and that actually adds up to *four* waves in all: [2(-t) x 2(+t)]).

A3 is the input signal "tickler" wave which may be quite weak in power/intensity.

These "three" waves, then -- A1, A2, and A3 -- are all aimed at the PCM. In response, it "echoes" back a 4th wave -- the time-reversed, phase conjugate reflection A4 -- which may be enormous in power level as compared to the tickler A3. The PC wave backtracks down the path taken by the tickler wave A3 and delivers its power to the spot where the original "tickling" source is located.

PCM: Silicon, Barium, ionized plasma, granite (has silicon), crystal (SiO_2).

PUMP WAVES: Set up Scalar STRESS potential. Even NON-OPPOSING waves or charge accumulations can do this. (READ the quotes ...)

In Tesla's experiment, A1 and A2 are NOT required BECAUSE "Earth's fiery core" ALREADY contains the stress.

Of course, when one OPPOSES two equal vectorial forces such as would occur if 2 capacitor plates are charged to the same (-) potential -- or if 2 electromagnets are situated such that the N poles face each other -- then one would derive the infamous ZERO NET VECTORIAL SUM OF FORCES.

In reality, one would observe a net EFFECT of zero on an object or substance placed within the focus of the opposing forces. However, THE FORCES ARE STILL THERE. In Millikan's oil drop experiment (by which the charge of the electron was established), 2 opposing plates charged to equal polarity impelled an oil drop to hover IN THE CENTER between plates. The forces' net effect on the oil drop was zero, therefore the oil drop remained motionless. However, the fact that the oil drop did NOT fall to the lower plate indicates that the FORCES STILL EXISTED.

Further, in a certain fusion reactor design known as the "Magnetic Mirror" concept, a ionized plasma is held between a set of OPPOSING magnetic field coils. By increasing the flux strength of the opposing coils in an equal manner, the VECTORIAL SUM of the opposing magnetic forces is ZERO. But YET THE PLASMA WILL BE COMPRESSED from a former state of motionless equilibrium with respect to the focus of the opposing forces. The fact that plasma compression OCCURS indicates that THE FORCES CONTINUE TO EXIST even though a mathematical VECTORIAL ZERO SUM of forces exists in the arrangement.

Tesla's scalar wave unit consisted of a transformer enclosed within a zinc box in which a primary was interfaced to TWO OPPOSED ("bucking") SECONDARY COILS.

What is the point of all this? Well, apparently NON-OPPOSED flux or accumulations of electrons are accompanied by SCALAR POTENTIAL. The scalar potential is ALREADY composed INTERNALLY (according to Whittaker, not Bearden) of pairs of temporally (not spatially) opposed bi-directional Whittaker EM waves (virtual photon and anti-photon pairs, which is a SPIN-2 GRAVITON). One does NOT have to "oppose" coils or charged spheres to set up a scalar potential. HOWEVER, if one DOES oppose coils, capacitor plates, etc., then although the FORCES involved (i.e., Scalar POTENTIAL, a STATIC ordering, et al) do NOT vanish, their NET EFFECT on something DOES. This corresponds to the mathematical VECTORIAL SUM ZERO.

The Scalar potential associated with the opposing forces (i.e., that of which the forces are "effects") STILL EXISTS. Therefore, the potential "activates" the area of SPACE/VACUUM where that particular scalar potential exists. And IF a NONLINEAR MATERIAL (i.e.; MASS) is placed within the scalar potential activated zone, THEN the 2 pairs of normally "null effect" internal Bi-D Whittaker waves EXERT AN EFFECT ON THE MASS.

How? The Scalar potential in the zone still exists. This vastly increases "virtual photon exchange" (virtual photon/antiphoton) with the electron shell and nucleus. But because a nonlinear material is placed at the focus, THEN a significant percentage of anti-photons do NOT interact with the nucleus. The VP exchange being vastly increased is what constitutes the state of the matter being "activated". The non-interactive antiphotons then appear as "Time Reversed displacement current". The Scalar Potential (paired Bi-Directional Whittaker Waves) are thus DECOMPOSED by NONLINEAR MASS into FREE time reversed EM waves and time forward waves.

Probably the reason any effect at all has been observed in the Hooper Motional Field generator (without a nonlinear core) is because in practice the two opposing fields were not EXACTLY equal.

IN CONCLUSION:

The Scalar Potential can be set up whether opposing forces are established or not. But in either case, scalar waves or potential requires INTERACTION with nonlinear matter in order to produce any time reversed phenomena.

ADDITIONAL NOTES:

The Sweet device could be utilized at very high power outputs to liquefy cryonic substances such as Helium, using no pumps or bulky moving parts. Now, what would happen if a time-reversed current were established in a superconducting field coil, setting up a time reversed magnetic field? If the coil containing the perpetual time reversed current were immersed in liquid helium, would the effect of the current maintain the liquid state of the Helium, which in turn would maintain the superconductive state, which in turn MAINTAINS THE TIME REVERSED CURRENT FOREVER?

- In the Herbert Schirmer UFO abduction case (Nebraska 196's), the reptioid alien stated that their craft were propelled by "reversed magnetism".

- In the Betty/Barney Hill abduction, the inside surfaces of the UFO were "freezing cold".

- Some witnesses who stood DIRECTLY UNDER a low-altitude disk felt weightless and AS IF TIME HAD STOPPED.

Do some UFO's use time reversed power?

- Many UFO contactees have received ideas and designs from aliens for "FREE ENERGY DEVICES"(!!!). The late Harrold Menger was one example.

Since the SOVIETS and United States work on scalar electromagnetics, now UFO-type craft have been REPEATEDLY seen coming FROM and flying OVER the Groom Lake CIA AirForce Area 51 at night. Probably someone has gone a lot further with this than Dr. Sweet or Col. Tom Bearden have suspected. The CIA has a MULTI-BILLION DOLLAR budget (all unaccountable) to invest in this type stuff. And they HAVE used Area 51 for years. (Some say the CIA raises much of this "funding" via drug running operations. But since this is a SCIENCE BBS rather than a POLITICAL BBS, no more will be said here.) There are ALSO many documented evidences indicative of the fact that the CIA has long been interesting in BioPhysical effects weapons, Psi Weapons, Mind Control, etc. Scalar waves MAY have an effect ON THE MIND.

If Col. Tom Bearden, Dr. F. SWEET, or any "responsible" parties wish to comment on, yell about, or offer ANY proposal of interest; you may e-mail me at: NovaOne@juno.com

or WRITE:

ED
Director
NOVA RESEARCH
Box 676
Astor, Florida 32102

J. Questions and Answers on Ed Mason's file (1996)

Questions and Answers regarding the "Scalar7" File

As soon as I'd reviewed Ed Mason's "Scalar7" text file, I had lots of questions for him. In the document that follows, Mason replies (boldface type) to my inquiries (plain type) in a dialogue-like fashion.

Dear Rick:

I received your message and will try to respond as best as I can. I am starting to wonder if Bearden really knows what he's talking about at all. I am tending more to going by what Whittaker said.

Well, here goes with the answers:

8/10/96

Dear Ed,

Thank you VERY much for sharing SCALAR7 with me. I'm going to mail Bearden a copy. Let's see if he responds to it. As for the copy of his latest letter to me that you requested, I'll try to copy & mail it within the week. I've gotta "borrow" the copier at my job.

Please let me summarize what I think you've said. If you agree that I've understood you correctly, maybe then we can get a "definitive", briefer-than-Bearden's-usual document written, defining/describing Scalar EM.

If I've understood you correctly, I almost feel like saying "Why couldn't Bearden have just told us this in the first place rather than putting out 10 years' worth of books with vague terminology?" Of course, I realize that …

[ANSWER: Either he didn't know himself, or he is an inveterate BS artist. I tend to think he didn't know all the answers himself. Most scientists DON'T (and don't CLAIM to have "all the answers", like theologians claim to do)]

… like you surmised, he hadn't seen all the fine points (just what & where does the zero-vectoring take place, etc.). So it's not that I'm complaining. He has done a great service in pioneering Scalar EM concepts; maybe now we …

[ANSWER: True.]

… can "interpret" him in the light of more current understanding, as Minkowski interpreted Einstein for the rest of us Earthlings.

So here goes my summary of concepts; please correct me or comment wherever you feel is necessary:

1) What we call in plain English a "DC static charge", Bearden says is (or produces) electrostatic scalar potential. (Also holds for magnetism.) Yes/No?

[NO. Is an EFFECT OF a scalar potential. The scalar potential is ASSOCIATED with a static charge OR a magnetic "field". In the final analysis, these are all mental models utilized to describe various related EFFECTS that are occurring. The SP describes one type effect or phenomenon, the "field" or "charge" describes a related phenomena or effect.]

2) Based on Whittaker & Hsue, the "potential" is composed of (or can be analyzed as) harmonically-related sets of bi-directional EM waves which sum or superpose-or-convolute into a 'static' potential. (Whittaker wondered about the similarities to a gravitational field, and Bearden ran with that concept.) Yes/No?

[ANSWER: A WHITE beam of light can be "analyzed" or "separated" (via a prism) into COMPONENTS comprised of colored light. This example may provide a good model for understanding scalar potentials.]

(Question: Why must they be HARMONICS? I'd expect to see ALL frequencies …

[ANSWER: The particular frequencies or harmonics probably determine the type of scalar potential and the type of (or frequency) of the associated EM or ES (as well as other energetic) effect. There probably can be "white noise" SP's, however.]

… randomly in there like white noise, but in wave/antiwave pairs; see earlier Bearden on 'natural' vs. 'artificial' potentials.)

I had serious problems with that word "bi-directional", knowing that Bearden USED to say that scalar waves were 2 out-phased SAME-directional waves; bi-directional waves superpose as STANDING WAVES, which are not STATIC, but …

[ANSWER: The standing wave APPEARS to be STATIC.]

… made up of ALTERNATING-polarity fields at the waves' LOOPS or ANTINODES, and zero field at the NODAL POINTS. The standing wave does not travel 'left or right' but just 'stands' and "flaps" + and - in each half-cycle.

And so I wrote Keelynet files arguing that bi-directional waves are not the same as 2 waves traveling together in the SAME direction, "opposing" in the sense of being 180 degrees DISPLACED in phase, which was certainly …

[ANSWER: good point.]

… Bearden's original point of view. So I took issue with his use of the word "opposing". I also noticed that only recently has he begun to speak specifically of opposing the POYNTING VECTOR of each wave with the other which is a far cry from the 180 degree phase shift/summing mentioned 2 sentences above, in which both waves' Poynting vectors are "pointing" in the same direction.

Granted that I understand almost none of the math in the Whittaker papers, I nevertheless took it for granted that when Whittaker said "bi-directional", he himself had NOT YET ENTERTAINED the thought of "time-reversal", which …

[ANSWER: See my explanation below ...]

… of course solves my problem with counter-propagating waves summing into standing waves, as opposed to summing into a "DC charge" or scalar potential. Whittaker meant bi-directional in the spatial sense, as we all do who …

[ANSWER: RIGHT !!!! But one component is of a DIFFERENT NATURE than the other.]

… drive on 2-way roads. Yes/No?

[ANSWER: See below.]

However, Bearden seems to interpret Whittaker as supporting the time reversal view. He makes it sound (at least to me) that time-reversal WAS implied by Whittaker. Lately he has added Barus, Stoney, (1890's), and Ziolkowski (1985) to his list of supporters and has thereby ASSUMED -- if I read him right -- that Whittaker's bi-directional waves CONTAIN time-reversed antiwaves AUTOMATICALLY.... because Bearden doesn't believe in transverse waves. Rather he believes in Tesla's LONGITUDINAL waves which he says are the result of a transverse wave and its time-reversed twin "slapping together", compressing and rarefacting the 'ether'. (I'm curious as to YOUR view: Are normal EM waves transverse or longitudinal?)

[ANSWER: He has built his concepts not only on Whittaker but also on models produced by those expert in Quantum Mechanics. In QM, there is an INTERPRETATION of the equations to the effect that (+) charged particles "travel backwards" in time. Namely, that anti-particles are "time reversed". This is where Bearden gets the idea of T(-) or time-reversed photons a la the T(-) component of a Bi-Directional Whittaker Wave.

In actuality, what the equations refer to as TIME is actually a quantum energy state of a particle associated with PROCESS. When the quantum energy state described as "time" is of a certain value, then processes associated with a particle appear to "slow" or "speed up". There is no actual PAST or FUTURE. Simply an Eternal NOW.

That is, the problem of Causality Violation is non-existent because the Past and Future have no REAL existence and, basically, physicists have erroneously assumed a subjective concept called "time" to have objective existence. There is a flow of PROCESSES in objective reality -- not a "flow of time". The process rate slows when the mass of a particle increases due to an associated increase in inertia. This is <u>misinterpreted</u> (in the light of the current thinking about "time") as "time dilation". In reality, the hypothetical Einsteinian spacecraft achieving 'c' would carry dead occupants. The mass and inertia of their bodies would increase to the point where they would collapse.

Therefore, the "time-reversed wave" is <u>not</u> ACTUALLY traveling back in time. It is simply a distinct type of electromagnetic wave having certain energetic characteristics.

Also note that neither Col. Bearden nor the late Mr. Sweet EVER produced one bit of physical evidence that they actually produced "frozen wires" or "clocks slowing" or his famous *"other phenomena which I am not at liberty to disclose"*. ALL we have is 'his word' that this occurred. In academic science, one is not so secretive. One would produce video tapes SHOWING the effects occurring or the ice on the wires. But as I said, Col. Bearden has a MILITARY background and Mr. Sweet a commercial one. The two mindsets favor secrecy. Military scientists can't openly publish because of a fear that the enemy will read the scientific journal (and they DO). Commercial Corporate scientists can't blab because the company's competitors will STEAL everything.]

So now my conclusion is -- as you put it -- the "opposing" of the waves has already taken place automatically INSIDE the scalar potential, and -- as such -- maybe there's no need for any external, overt efforts to "oppose" 2-or-more artificially-generated waves. Yes/No?

[ANSWER: Both methods work as explained in my paper. BUT <u>nonlinear</u> mass must be used in order for EFFECTS to appear. Actually, I suspect a "non-opposing" configuration would work better. That is, several charge sources arrayed in a certain non-opposing manner.]

3. So what this seems to imply is that HIGH STATIC CHARGES may be about all we need to make "scalar" effects.... Plus, maybe a "tickler" wave to "ring" or oscillate the magnitude of the static charge, to get time-reversed waves.

So how about this: Charge up a large sphere or plate or whatever and "leave it there", as Bearden had said several years back. Now "oscillate the PHI application" (his words again) -- "tickle" it, by "illuminating" the charged sphere or plate with a normal EM transmitter wave/beam. In other words, focus a transmitting antenna (dish or whatever) so it "shines" upon the sphere/plate. If its static charge already contains hidden frequencies (wave & antiwave) -- a "spectrum" as it were -- then our monochromatic probe wave would mix with the static DC charge, modulate it, and perhaps cause it to "sing" back to us at the frequency with which we probed it.... except that the "song" would be carried on a time-reversed, phase-conjugate wave, right? Yes/No?

[ANSWER: Missed something. TWO, THREE, or MORE such charged spheres with NONLINEAR MATERIAL at the center. The "tickler" is directed AT THE NONLINEAR

MASS. The nonlinear matter is excited by the high scalar potential (consisting of paired T(+) and T(-) EM "virtual photons". The nonlinearity decomposes the SP just as a prism breaks apart the "white light" I used earlier as an analogy. The T(-) photon component follows the tickler signal path BACK and you should (according to everything Bearden et al. has said) get a FLOOD of power. Except the power is all "time reversed" in nature. That is, a DIFFERENT TYPE of electrical power.]

I suspect that a "magnetic field" produced with the "reversed electrical power" is anti-gravitational in effect.

Well, I'm going to be doing some experiments soon. I have a nice piece of Jade I can use as nonlinear mass ....]

4. Bearden makes a big distinction between "photons" and "antiphotons". He also makes many references to - and + charges in terms of one being "time …

[HMMM ... that suggests a POSITIVE electrostatic field might just be better at making T(-) reversed waves appear. Good. A measly TV flyback unit already puts out a nice strong +25KV. One can use a junk TV set .... as a HV(+) source.]

… forward" vs. "time-reversed", etc. Similarly, his older books describe how when a Scalar transmitter is biased "above ambient ground potential", it dumps energy (exothermic) into a distant interference zone, while biasing the transmitter "below" ambient "extracts" energy from a distance, producing 'cold explosions' in the interference zone, etc. It appears to me that where he used to talk in terms of "biasing the transmitter", he now talks in terms of "positive time vs. negative time energy", etc. Thus, it might make a big difference whether I put a positive or negative static charge on my sphere, and the effects produced might depend on which charge polarity I use. Yes/No?

[ANSWER: YES. I suspect so ....]

5. If you agree that I've captured the essence of what you were telling me, then most of the non-inductive coil schemes we've seen are invalid unless they're wound on special core material.

[ANSWER: YES. In using "bucking coils" as Tesla did, at least each coil produced a NET external magnetostatic potential. They merely "opposed" in a region of space between the coils. But a "Bifilar coil" kills the magnetic potential before the potential can appear OUTSIDE the coil. That is, there is no net magnetic effect produced external to the coil windings as an axial magnetic effect. I noted that Tesla never seemed to use Caduceus coils. Also my own (and as you said - your) tests with Bifilar coils never did anything.]

Also, directing twin transmitter beams from normal radio transmitters, both focused in the same direction, toward a distant target, but 180 degree phase delayed, producing a null -- the basis of interferometry -- is also invalid as a "scalar" generator.

[ANSWER: No, because even though the net EFFECT appears to be ZERO the component forces are STILL there. RE-READ the part in SCALAR7 about the plasma being COMPRESSED AND HEATED by a set of EQUALLY OPPOSING FORCES THAT SUM TO ZERO...]

If the forces themselves "zero out", then how do they manage to compress a **plasma** (as they CONTINUE to "sum to zero" while each component increases in magnitude but in balance with the other)? The Millikan oil drop experiment is another example.]

Also, use of a "Magic-T" microwave waveguide -- or using transmission line reflections -- to "null out" the RF radiation to zero vector, is invalid.

[ANSWER: No, just unnecessary.]

And to refer to our household appliances' AC line cords as heretofore unsuspected scalar generators/antennas is also wrong. Yes/No?

[ANSWER: Probably very bad, inefficient ones. Very weak.]

5. What about detectors of Scalar EM? Any thoughts? You suggested I put one of my thresholding detectors inside an RF shield and then "broadcast" to it from an AC? modulated "scalar" transmitter... and I might get a "buzz"... have you had any results with this yourself?

[ANSWER: Haven't tried yet.]

I did find that the detector made with a NEON bulb made the loudest, most "uneven"-sounding noise in terms of crackling, clicking, popping as opposed to the smooth "hiss" that the other types made... by the way, the neon bulb …

[ANSWER: ODD. Plasmas constitute a NONLINEAR material. I recently read something I'd downloaded from the Internet about a new model of ball lightning involving 2 OPPOSING circulating plasma rings AND associated magnetic fields within the ball lightning. Hmmmm .... nary a mention that SCALAR EFFECTS would be widespread in such a plasma sphere. The author (a Soviet scientist) repeatedly produced ball lightning IN THE LAB based on this theory. I'll have to convert the HTML format to text and send that to you.

… has to be "kicked" into conduction by a pulse that you supply, then the current is carefully backed off until the bulb is operating in the "starvation" mode just before it extinguishes. Lots of raucous, rushing noise at that point. 8-or-9 series-connected 9-volt batteries will do it if you don't have a DC power supply in the area of 70-90 volts, which neon bulbs need.

One other type I've played with but didn't mention last time is the capacitor across the - and + inputs of an op-amp -type, which Hodonawec presented in one of the *Popular Electronics* magazines around 1986. He named it a "QND Detector" and claimed that it picked up gravitational waves. Again, all I've gotten was a steady white noise hiss although I have seen the baseline on the oscilloscope (with which I was monitoring the output) bob up-and-down in step with me tapping my foot on the floor underneath the lab bench where I was testing the detector. My guess is that it was picking up my movement …

[ANSWER: OR LIFE ENERGY ????? OR BIO-ELECTRIC FIELDS/SCALAR POTENTIALS ?]

… as my body modulated the background hum in the room. Sensitive little bugger.

Well, this is all I can come up with for now; hope you can clarify some of this and let me know if I'm finally "getting" it.

Regards,

..... Rick

K. Phase Conjugate/Time Reversed Waves vs. Scalar Electromagnetics -- A Critique of Bearden's writings ('andersen.asc', 1996)

L. Bearden's Response to the critique 'andersen.asc' (1996)

7/27/96 by Rick Andersen

When I had uploaded ANDERSEN.ASC up to KeelyNet in February of this year (1996), I sent a copy to Tom Bearden through the mail, not really expecting any response from him (although I did 'wish' for one in that file).

To my surprise, Mr. Bearden did respond. Iin fact, he sent me 3 documents: A response letter (a document in itself) which is reproduced here, a new 'What is Scalar EM'-type paper, and a short paper to be published in one of the alt. energy periodicals. He was a gentleman all the way, considering how in my ANDERSEN file I had 'taken him to task' regarding his use of wave mechanics terminology in my trying to understand where he was and where he now stands regarding Scalar EM. He fully expected that I would eventually upload his letters to KeelyNet. In fact, he instructed me to do so, but only after I had waited at least 10 days while a colleague was applying for a patent on a device which will form the basis for the world's first STAR TREK -TYPE "SUBSPACE COMMUNICATIONS" SYSTEM.

February 15, 1996

Dear Rick:

Just wanted to get off a quick response to your welcome letter and critique. I was very pleased at the constructive way you look at things -- that's always welcome! It has long been my firm position that (1) anyone who tries to do something new makes some mistakes along the way (I sure do, and I still have to have good erasers on my pencils!); and (2) in this emerging "field that is not yet a field", researchers do not have to agree with each other, but they should disagree like gentlemen -- i.e., politely. Also, anyone who takes the time and effort to construct such a careful critique is to be commended. And so I was delighted at your approach and findings.

I want to send just a few comments. Unfortunately, I'm "dead in the water" with 16-hour days until well past June 1996. But we hope to put one or more "new EM systems" on the market by mid-Summer or late-Fall. So I just have time to make some "hit and miss" observations that may be helpful to you.

Time and Time Reversal ----------

Physicists have no understanding whatsoever of the basic element-TIME. It's still one of the great mysteries of both physics and philosophy. So if one doesn't know what TIME is or how its passage is operationally CREATED, then the business of a time-forward timestream and a time-reversed timestream (always relative, of course, to the external OBSERVER'S timestream, which seemingly is always time-forward) can get very, very confused and messy. That's exactly where physics is at present.

However, there is an electromagnetic mechanism that generates the flow of time itself. I discovered the gist of it in 1971 while at Georgia Tech to get my Master's degree. Have only published just a bit on

it; but have recently covered it a bit more in papers I am slowly writing for *The Virtual Times*, Internet node WWW.HSV.COM. It is an engineerable mechanism, so it can eventually be TESTED and falsified-or-upheld.

Basically, present physics considers that photons -- which are composed/made of "energy x time" -- only carry ENERGY! That's like saying a moving board -- made of (length) x (width) -- can only carry length and not its width! Plus which, no one really knows what a PHOTON is. E.g., in 1951 4 years before his death, Einstein wrote to one of his oldest friends:

> *"All these 50 years of conscious brooding have brought me no closer to the answer to the question, 'What are light quanta?' Of course, today every rascal thinks he knows the answer. But he is mistaken."*

And the picture hasn't changed since he wrote that. I spent an evening once with Eugene Wigner -- the physicist who put time-reversal into Quantum Mechanics, and a scientist whom I greatly admired. For an hour-or-so, we had a most delightful conversation until he asked me to explain what I do and to explain scalar electromagnetics. I explained that in my view, a photon transports both energy and time, and that a mass that "absorbs" a photon's ENERGY (which just turns into a wee bit of excess mass, via Einstein's equation $m=E/(c^2)$ must temporarily turn into MASSTIME -- not mass -- since it is now "coupled" to a time-tail (the delta-t portion of the photon that just "lost its energy". Then when this MASSTIME emits a photon, it turns back to MASS (the time-tail of the intermediate "masstime" is torn off by the emitted photon, to couple with the photon's energy, leaving behind an entity -- mass -- which *a priori* did not and could not exist in time.)

Wigner was thunderstruck. He fully agreed that the photon was composed of (energy) x (time), but did not believe it therefore "carried a little piece of time" was well as a little piece of energy. So, he affirmed, it was only the energy that was quantized. Of course I had stated that it was the whole photon (action, or angular momentum) that was quantized, not just the energy component by itself. The energy will be DISCRETIZED but not quantized. I did not press the issue further because I had too much respect for Wigner to press him. But I was quite taken aback that he could believe that something made of BOTH energy and time could only carry a finite amount of ENERGY but could <u>not</u> carry a finite amount of TIME!

The virtual photon exchange in the local vacuum (i.e., the magnitude of the scalar potential of the local ambient vacuum) determines the rate at which little virtual ENERGY x TIME quanta interact with a given mass at that locality. And that rate of "adding and subtracting little essentially -- infinitesimal time-jumps" determines the ambient "rate of passage of a mass particle through time". [The observable photon exchange of the mass with its environment represents the extra jumps added onto the fundamental "background rate of passage" of the mass through time.]

Note that the ambient vacuum's virtual photon exchange with the mass is the electrical charge of that mass. (Even neutrons do this, since one quark is continually flipping in each nucleon so that protons in the nucleus continually turn into neutrons and vice versa.) In short, this "ambient passage through time" is the object's electrical charge, and that's what determines it. Note that physics already accepts the positive charge as just a time-reversed negative charge. Dirac, for example, did not predict the positron as such. Istead, he predicted an electron traveling backward in time, which we (the external observer) could only see as a positive charge traveling forward in time but in opposite spatial direction.

This relationship between standard mass-less charge PHI of a fundamental particle and the ambient potential of the local vacuum also implies that ELECTRICAL CHARGE IS NOT QUANTIZED [just as Tesla stated], and now that is rather easily shown as follows:

Electrical Charge Q is not Unitary ----------

First, **q** is not a UNITARY thing at all even though physics erroneously treats it that way! This is easily seen. Any fundamental electrical charge (e.g., an electron or a proton) automatically has its own scalar potential PHI, as is well-known. Well, PHI of vacuum is just the virtual photon flux of vacuum, or it can be so modeled. The PHIe of the electron, then, just represents a change or gating in the virtual photon flux of the local ambient vacuum [all potentials superpose; the electron's potential is just superposed upon the ambient vacuum potential (AVP), although usually the AVP is just ignored.]

That fits well with particle physics where any electrical charge is automatically a broken symmetry (in that very vacuum flux). Also, a reversal of electric charge is also a time-reversal and vice versa. So any electrical charge is already a little "engine". It is gating a little part of the ambient photon flux of the vacuum through its mass and then back out to the vacuum. THAT'S WHAT ELECTRICAL CHARGE IDENTICALLY IS. For the electron, it's just that PHIe of the electron that couples to and interacts with the mass, and it's entirely MASSLESS. So **q** becomes a system of 2 things, rigorously defined as follows:

Q ≡ m sub q x PHI sub q = mass x mass-less charge [1]

So what we have done is clearly differentiate between the MASS-LESS part of **Q** from the MASS-LESS part [sic?], and show the coupling action as the coupling operator **x**. This is the first rigorous definition of electrical charge ever advanced insofar as I'm aware. To quote M.P. Silverman, *"And Yet It Moves: Strange Systems and Subtle Questions in Physics"*, Cambridge University Press, Cambridge, 1993, p. 127:

> "The theory of Quantum Electrodynamics provides a comprehensive and (as far as experiment has been able to confirm) correct description of the interaction of charged matter with electromagnetic fields. And yet, curiously enough, we do not know exactly what charge is, only what it does. Or, equally significantly, what it does not do."

But since potentials superpose, then let us add a potential PHI2 to the local vacuum potential PHIv, so that the total ambient potential PHIt= (PHIv + PHI2). Let us now look at an electron placed in that potential PHIt. Now the mass of the electron is exposed to a different (let us take a higher) value of ambient virtual photon flux. Consequently, it will change its mass-less electrical charge PHIe (its VPF exchange rate) and also its mass before being reemitted, and each one's energy portion turns into a little bit of excess mass while lingering as we covered before.

If an electron could never change its mass-less charge PHIe, then it could never have a greater PHI flux density on one side than on the other. Consequently it could never develop a del-PHI across it. There would then exist no **E**-field, and the electron would not be translated.

Tesla stated that he regularly made (in his very high voltage experiments) electrons that had some 50 times the charge of a "normal" electron that was driven only by the ambient vacuum potential PHIv, and not by (PHIv + PHI2). Tesla came close to the more modern interpretation I gave above. He considered that charged occurred as thin surface layers on the electron mass and additional layers could be added -or-subtracted.

So you see, we have just rather thoroughly revised the foundations of Electrodynamics with equation [1]. And now we are consistent with demonstrated change of the rate of flow of time and of mass in relativistic situations. Increasing a mass's velocity through the vacuum flux increases its interaction rate with the virtual photon flux (VPF), just as driving a car into a rain increases the reaction rate of its

windshield with raindrops. This gives an alteration in mass-less charge, plus also an increase in mass due to ADDITIONAL VPF absorbed and "lingering" momentarily in the mass, with their delta-E portions temporarily turned into delta-m's via **delta-m = delta-E / c^2**, but with their time-tails remaining momentarily coupled to the mass so that the mass is actually now MASSTIME.

Relativistic increase of mass is actually an increase of masstime. You get the "time dilation" simultaneously. The above is why.

It is this lingering of the **delta-E / c^2** -- in the "mass region" -- and the coupling of the time-tail so that not mass but now "mass time" exists, that makes a mass "exist" in the first place.

Now the "arrow of time" reveals itself when we consider the nature of an atom, with its "time-forward" electrons outside and its time-reversed nucleus "inside" the electron shells as "Faraday cages". In other words, the electrons are in orbit (1st order picture only) so photons absorbed in one point of their orbit linger a bit and are re-radiated at a different point. In short, the electron shells continually scatter WHATEVER order is incoming in the photon flux exchange. So disordering of EM energy (i.e., ENTROPY) is continually occurring by this photon scattering from the electron shells. Since that is largely what we "see" and observe, we "see" and observe a positive time stream where (1) the Past is continually destroyed (dis-ordered) and the Future is not yet available. So the overall entropy of the photon interaction with atoms indeed yields the apparently one-way direction of time's arrow. Yet this is only <u>half</u> the story. We will pick up the missing NEGENTROPIC half shortly.

The observable-photon exchange with the electron shells/shields results in discrete "jumps" of the atom through time. Mostly this observable-photon exchange occurs serially -- i.e., it's mostly SINGLE PHOTON AT A TIME interactions. In short, it's a serial operation, not a parallel operation. On the other hand, if the signal density of the environment gets sufficiently high (say, on the order of 500,000 signals per second per square meter), then the probability of multi-photon interaction will have significantly increased. In that case, one starts to get the nonlinear optical effects: PUMPING, PHASE CONJUGATION, SELF-TARGETING, AND THE LIKE.

Then in the exposed living body, one gets very anomalous "deep penetration" of even very weak electronic smog signals where the cells and their parts act as pumped phase-conjugate mirrors. This creates a self-targeting effect wherein the emitted PCRs from the outermost absorbing cells target and backtrack impinging natural EM signals from deeper within the body. This creates a nonlinear "spurious energy diffusion" effect wherein the spurious energy -- even though minute -- readily penetrates deeply into and throughout the body, including into the bone marrow where the immature cells of the immune system are born. This is "low level jamming" of the internal EM that the body uses to CONTROL the production of those immune cells. So now you begin to get erratic immune cells being formed.

Slowly, over a long period of time, that noise jamming of the immune system results in rather noticeable immune disorders (arthritis, etc.) and also noticeable cellular disorders such as leukemia, cancer, genetic changes, etc. Since the MASTER CELLULAR CONTROL SYSTEM (Popp's version, extended Becker's version also) is directly affected, then so is normal cellular mitosis. If you expose the person to a very much denser electronic smog (as in the Persian Gulf war), then you get an acceleration of all the above EM smog symptoms and disorders that USUALLY can result only over a long period (years). That's the real explanation of the Gulf War Syndrome, and that's why it covers such a bewildering array of symptoms. The other Gulf War factors augmented and aggravated the causative electronic smog factor, but they were not the PRIMARY culprits.

That's also the solution to the problem of how electronic smog does or does not produce long-term cumulative effects in exposed persons. Note that the "energy deposition" experimental methodology presently being utilized by most EM bioeffects researchers simply assumes away the problem and will never, never show what I have described above BECAUSE IT EXCLUDES THAT FUNDAMENTAL "DEEP DIFFUSION" MECHANISM. That's why the laboratory experimenters have not been able to clearly demonstrate any causative mechanism for the epidemiological studies that show correlation between long term exposure to weak EM fields and radiation, and cancers and leukemias. As Devyatkov stated, it's the sheer number of signals -- regardless of their weakness or the sources producing them -- that is the main causative variable. I put it a little more exactly: It's the sheer signal density that drives the probability of multi-photon interactions instead of single photon interactions, which in turn drive the anomalous "deep penetration" and long-term debilitating effects. I put all that in my Priore paper in "Explore!" with all the technical mechanisms in grand and gory detail.

Some 2 decades ago, I was also able to define MASS without referring to "its ability to resist a disturbing force." Mass also is a dynamic energy- flowing, changing system. That definition took a bit of doing, but it appeared in my odd and perhaps a bit naive little paper "Quiton/Perceptron Physics: A Theory of Existence, Perception, and Physical Phenomena," National Technical Information System, Report AD-763210, 1973. The paper contains a new definition of mass independently of force -- something which exists nowhere else in physics. One kg of mass represents 17.053×10^{50} "switches-per-second" of action quanta across the surface of the mass, in a flux exchange between the mass and its environment where one switch equals h/(4πpi). The same paper -- though crude -- derives Newton's 3 laws of motion in relativistic form and the square law of gravitation.

But back to our "time stream". There are jillions of time streams -- SIMULTANEOUSLY -- for any mass moving forward in time. Time streams have internal structure and are composed of a multiplicity of much finer time streams. A mass "moves through macroscopic time" in successive little "discrete jumps" due to the observable-photon flux, where after each jump the mass exists as mass, and DURING the jump it exists as masstime. So "the" Macrotime stream is like a special sewing machine stitching a cloth. The stitches go in one-at-a-time, but each stitch is "pulled back out" prior to the next one. That's the Macro timestream.

At the same time, the "continuity" of the mass's "existence (in time)" -- relatively speaking -- is provided by the myriads upon myriads of little virtual photon interactions occurring with that mass (as electric charge) in any finite length of Macrotime, no matter how small. For one "OBSERVABLE-PHOTON induced jump," jillions-and-jillions of "far, far tinier VIRTUAL-PHOTON induced jumps" have occurred. So these "inner, hidden, virtual photon induced" time streams are all woven into the "Macro" timestream induced by the observable-photons.

So time-flow has an internal structure, which is electromagnetic and can be directly engineered using an approach based upon the 2 Whittaker papers.

Now re-examine this notion of "entropic" Macrotime flow, as determined by the observable-photon scattering interaction with the electrons in the electron shells of atoms. For each photon interaction with an electron, there is an equal and opposite or antiphoton NEGENTROPIC interaction with the nucleus. (As explained elsewhere, there is no "photon" interaction as such anyway. The photon always occurs in space coupled with its antiphoton twin as a spin-2 GRAVITON.)

For every divergent/scattering/entropic/positive-time photon interaction with the electron shells, there is an opposite and equal reconvergent/negentropic/negative-time antiphoton interaction in the nucleus. THAT'S WHAT HAS BEEN "HIDDEN" IN NEWTON'S THIRD LAW ALL ALONG -- THE NEGENTROPIC HALF OF SPATIOTEMPORAL CHANGE.

When a graviton (photon/antiphoton pair) approaches an atom, it sees a separated assembly of negative charges (time forward, in the electron shells) and a slightly separated assembly of positive charges (time-reversed, in the nucleus) charges. So it sees an assembly of dynamic electrical dipoles, considering one positive charge coupled with a negative charge (we are just to rough first order here, of course, but that is sufficient). Now in a dipole, one end is TIME-FORWARD (exists in forward or entropic time flow) and the other end is TIME-REVERSED (exists in the backward or negentropic time flow). That's particle physics, not Tom Bearden.

So the incoming graviton is "split" by the receiving dipole. The forward-time portion of the split graviton (i.e., the photon part) interacts with the forward-time portion of the atom (the electron end of the dipole) whilst the time-reversed portion of the split graviton (i.e., the antiphoton) of the graviton interacts with the reversed time portion of the atom (the positive end of the dipole, which is in the atomic nucleus). Therefore the nucleus recoils (Newtonian 3rd law recoil). That is the normal reaction except that now we have added the causative mechanism for Newton's third law reaction force. Note that it agrees with Quantum Field Theory, where all mechanical and electromagnetic forces must be generated by absorption and emission of virtual photons. It follows that such must be true also for Newton's third law, and we have now shown it overtly.

Now if we have a phase conjugating material (sufficiently nonlinear material), then the antiphoton cannot reach the nucleus. Instead, the incoming EM waves (actually longitudinal and composed of gravitons, not just single photons but coupled photons/antiphoton pairs) undergoes MULTI-WAVE interaction in space, not PHOTON/PARTICLE interaction. The antiphotons are redirected in this wave interaction, externally away from the atom rather than into its nucleus. In the well-known phase conjugate mirror, the antiphotons are redirected as the phase-conjugate replica wave. Notice we are not just using the QM notions; we are following the "Macro wave" picture. But what it means is that the nucleus now will not recoil because the antiphoton/photon interaction that creates Newtonian third law recoil of the nucleus does not occur.

This is a DEMONSTRATED experimental fact. In a phase-conjugate mirror, no matter how powerfully pumped the antiphotons (of either the input signal wave or of the pump waves) never reach the nuclei. Consequently the nuclei -- and the material they compose -- do not recoil because the GENERATING INTERACTION for the Newtonian third law force did not occur.

In the Sweet vacuum triode experiment where we reduced the weight of the device by 90% on the test bench, we used an adaptation of the foregoing notion (which due to legal constraints I still cannot PRECISELY reveal). I hinted at it in the the Ansatz paper in IECEC, but am still unable to say much more about it. Let's just say that if you make a phase conjugate mirror highly pumped at ELF frequencies (Sweet was using 60 Hertz) and do the pumping in the internal Stoney/Whittaker/Ziolkowski channel inside the scalar potentials, you will get beautiful nonlinear optical effects at low frequencies!

THIS IS A MAGIC <u>SECRET</u> -- MARK IT WELL! In the internal channel, you are now in the region where myriads and myriads of "pump" waves -- represented in the particulate view as the absorption and emission of virtual photons, or as the virtual photon flux exchange between the ambient vacuum and the mass -- are occurring continuously at every frequency imaginable. Therefore all frequencies -- regardless of low or high or optical -- will all act in the nonlinear fashion. In other words, all that business of time-reversed waves, time-reversed particles, absence (or increase or decrease) of nuclear recoil, everything gets involved. This way you get the NLO effects at ELF. The gravitational effects occur as an inverse function of the frequency. So the lower the frequency, the better. You can hardly obtain or measure the antigravity effects at optical frequencies. At ELF, they are easily

measurable and obtainable. But you can't do much to get EM phase-conjugation at EXTERNAL frequencies. At INTERNAL ELF frequencies, it's the rule rather than the exception.

At any rate, all that mess was necessary to clarify this business of time and time passage rate and time-reversal. It ain't as advertised in the leading textbooks. And it is directly engineerable.

Notice that we've also got the exact mechanisms for homeopathy in the above if we bother to dig it out explicitly and show it. It's there for the taking, and it is engineerable. You see, in Equation (1), the homeopathic procedure of "potentizing" can simply "SWZ-structure" the magnitude-fixed **PHI-sub-q** portion of the electric charge **q**, where we insist that q≡ **PHI-sub-q x m-sub-q**. This "structuring" of the mass-less charge flux can easily be shown by the superposition of potentials. 2 charges with some deterministic SWZ structuring in the PHI-sub-q portions will interact DIFFERENTLY than 2 charges with only "randomized" SWZ structures. Since charge and charge distribution largely is responsible for driving chemistry reactions, then this means that we can change the chemistry by SWZ structuring charges via Whittaker's 1904 paper (the second one of the two I so often quote).

Note, however, that we have changed and extended both classical and quantal electrodynamics by destroying one of their favorite postulates -- the postulate that every charged fundamental particle of a given type (e.g., electrons) is identical to every other such particle. Now individual electrons can also be individualistic in their internal SWZ structures comprising their PHI-sub-e's. Homeopathy does the "mixing of potentials" and thus the "potentizing" indirectly by altering the H-bonding structures of the solution. The H-bondings (making and breaking) can be treated as a single potential as Hsu showed. This "fluid H-potential" thus decomposes according to Stoney/Whittaker/Ziolkowski. "Mixing" potentials of dissolved compounds alters the entire H-potential, since potentials superpose and their inner structures also diffuse and superpose. By combining Whittaker, Kaznacheyev, Priore, and Hsu, the H-potential can be directly and strongly altered electromagnetically.

Ordinary EM theory utilized Whittaker's 1904 paper, but not his 1903 paper. The resulting "other" potentials are sometimes referred to as "superpotential" theory, and the other potentials (Debye potential, Nisbet potential, Dirac potential, etc.) were also found to be most useful. They are all takeoffs in the manner of Whittaker 1904 though different potentials result. A good paper that discusses all this is Patrick Cornille's "Inhomogenous Waves and Maxwell's Equations." Chapter 4 in "Essays on the Formal Aspects of Electromagnetic Theory, Aklesh Lakhtakia, Ed., World Scientific, New York, 1993 (pages presently elude me).

In fact, the parent book of that paper is a "must" for anyone seriously interested in WHAT OF ALL THIS the present electrodynamicists know and use, and what of it they do not. Cornille, e.g., clearly shows that Maxwell's equations are directly created by scalar potential interferometry. As he states, this means that EM force field waves are created by the interference of SOUND-type scalar potential waves, or "sound creates light". This strongly supports Tesla's original statement that EM waves in the vacuum are actually EM sound waves -- much like sound waves in a gas. It also validates my own long-standing assertions of scalar potential interferometry (based on the SWZ work) and its ability to create ordinary EM fields and waves at a distance.

To properly address the "advanced and retarded" solutions, I recommend a very fine paper: Milo Wolff, *"Beyond the point particle -- a wave structure for the electron."* GALILEAN ELECTRODYNAMICS, Sept/Oct 1995, p. 83-91. Wolff gives the background of the advanced and retarded wave solutions, starting from Wheeler and Feynman's exposition. Wolff cites three of his own papers which formulated the results summarized in his paper. He arrives at the notion of two worlds within our universe: (1) the familiar 3-D environment, governed by the natural laws and observed by us using our 5 senses and their extensions as laboratory instruments. This is the world of energy-exchange;

and (2) a second world of scalar waves, which form the structures of the basic particles -- electron, proton, and neutron -- which compose the material objects and the space (ether) of our world of energy exchange. This unseen scalar world is basic and DETERMINES THE REAL ACTION in both worlds.

Quoting Wolff, p. 84:

> *"...an Energy Exchange Mechanism can be seen to underlie the force laws and even special relativity, the deBroglie wavelength, and Conservation of Energy. For example, the force laws describe force as the change in energy over distance, F = dE/dr. Therefore, whatever motivates the change in energy generates what we observe as force. The coulomb and gravity force laws do not describe what creates these forces because they are only formulas to calculate force. That is, they do not imply any particular energy exchange mechanism."*

Wolff then formulates this mechanism for the electron wherein it depends on the existence of other matter in the universe. This is a very insightful article! Wolff discusses the requirement that particle properties require perception-communication between particles, that measurement of time requires a cosmological clock, the role of space, Mach's principle, and his theory of the new electron. I wrote a long letter to Wolff, giving him the Stoney/Whittaker/Ziolkowski background of the "inner EM" etc., profusely referenced. Received a nice letter back from him.

Now, of course, one can take Equation [1] above and apply Whittaker 1903 to it, and mathematically decompose the PHI-sub-q term into a set of hidden bidirectional EM wavepairs in a harmonic sequence. So now one can clearly show that the mass-less electrical charge **PHI-sub-q** of any "charged mass" **q**, can and does have an internal, hidden, bi-directional EM wave structure. The homeopathic researchers should eventually incorporate that one, as we stated above because it is rigorous theoretically, and it can be experimentally dealt with as well.

Stoney and Whittaker showed the SUM set of internal bidirectional EM waves that comprise a scalar potential PHI. Later, circa 1985 Ziolkowski independently rediscovered the internal bi-wave set comprising the potential and also added the PRODUCT set. Since the product of EM waves is technically MODULATION, then Ziolkowski laid the groundwork for "hidden" EM communications "inside" the scalar EM potential.

Further, the inner signal EM (i.e., modulations on several of the internal SWZ waves inside a DC potential) is not necessarily restricted to the speed-of-light. Bulk gradients in the entire vacuum potential -- i.e., the so- called "EM force field" waves -- are limited to the speed-of-light. But they require changing the amplitudes of each and every single one of the SWZ wavepairs in the local ambient vacuum potential! Well, since each of those hidden SWZ wavepairs is a bidirectional thing, different rules may apply for only one-or-two of them.

In fact, it appears that a single hidden SWZ wavepair moves in the COULOMB GAUGE (see Jackson, CLASSICAL ELECTRODYNAMICS, 2nd edn., 1975, p. 22-23 for a discussion of Coulomb gauge, which is regarded as just applying to the "near field".) Quoting, p. 222:

> *"...transverse radiation fields are given [in the Coulomb or transverse gauge] by the vector potential alone, the instantaneous Coulomb potential contributing only to the near fields. This gauge is particularly useful in Quantum Electrodynamics. A quantum-mechanical description of photons necessitates quantization of only the vector potential."*

Hey! Suddenly only a PART of EM (half of it, the vector potential in the conventional PHI & A potential formulation) is quantized! But we continue. Quoting p. 223:

"[In the Coulomb gauge] the scalar potential 'propagates' instantly everywhere in space. The vector potential, on the other hand, satisfies the wave equation... with its implied finite speed pf propagation c."

Further quoting, p. 223:

"...the transverse current... extends over all space, even if J is localized."

Now isn't that a real blast! Here we have a definitive statement by one of the greatest electrodynamicists that the scalar potential part of EM -- when freed from the vector potential -- can move at infinite velocity in the near field, and only the presence of the vector potential limits the normal EM wave to the speed-of-light. So if we want to do superluminal transmission, we have to eliminate that vector potential and use only the scalar potential. However, we cannot make bulk gradients of that scalar potential for that would make **E**-fields (in the conventional theory where **E = -del PHI**). Well, if we impress deterministic changes (signals) upon the **-del PHI's**, then we make magnetic fields and magnetic vector potential, because of the changing **E**-fields. Bummer! It means that we have to use a DC potential. ie., the scalar potential must not allow bulk gradients to form. That means we have to put the modulations (the "signal intelligence") inside a fixed DC potential upon one or a few of its composite hidden SWZ EM wave pairs. That can and has been done.

For example, suppose we "bury up" our modulations/signals/communications inside a DC potential, on some of those "hidden internal wave pairs" that SWZ shows us. In other words, we "Z-modulate" [[Z for Ziolkowski. --R.A.]] 2-or-3 of the internal Stoney/Whittaker wavepairs. But we do not make any BULK **del-PHI** in our overall DC potential PHI. Hummer! A priori, the DC scalar potential "carrying" the internal signal STARTS OUT in the "near field" in the Coulomb gauge. We now have no vector potential associated with this thing. That's been eliminated. Macroscopically, it's seemingly just an old DC potential -- just pure PHI. *Voila!* No "vector potential to limit us to speed **c**" ever arises. So if we regard the vector potential as the "breaker" that ends the "near field region", then we never get out of the "near field region" because that now extends everywhere. The end result is that the darn "hidden" signal now moves in the Coulomb gauge -- "inside" the ambient vacuum potential! -- and at infinite velocity. Even with only a pretty good rendition of all this, it moves at a speed way beyond light speed **c**. PERIOD. And it works! It's Fogal's invention.

On the other hand, you've got to be able to "INFOLD" the signal as a modulation on some of the SWZ waves inside the scalar potential on the "transmission" end. On the "receiving" end, you've got to be able to "outfold" the signal into the normal "bulk potential domain" so you can create **E** and **B** fields locally and locally move some electrons for a detection. (All our normal detectors are essentially "electron wiggle" or "electron translation" detectors, so we've got to produce overt EM field signals (bulk potential gradients) in the receiver. And Fogal's invention can do those 2 functions: the infolding and the outfolding. Note we are not communicating with OVERT EM fields and waves. Those are limited to lightspeed, as is well- known. Instead, we are communicating with COVERT EM fields (the SWZ internal EM fields and waves). Those are <u>NOT</u> limited to lightspeed at all.

Shortly Fogal will be filing a most formidable patent application on that system -- the World's first demonstrable superluminal communication system and the "subspace" (internal EM) communication system so touted on Star Trek. Obviously such a patent will never be granted unless it can be proven. Fogal can prove it by actual prototype demonstration.

So as not to interfere with Fogal's filing of his patent application, I request that you not place this material on any computer net prior to 10 days from the time you receive this response. After then, I

request that you place it on the KeelyNet, and that those boys or you make the necessary arrangements to also have it available on the Internet.

Note that I did not specify HOW the infolding and outfolding was done. That is Fogal's invention and his secret, not mine. I just told WHAT was done so that superluminal communication is not only theoretically possible but do-able. (There's another long related discussion re Mach's principle and what causes it, and how that limits the normal wave speed in vacuum to lightspeed, and how using only a fraction of the "internal" channel escapes Mach's principle and so enables the dramatic reduction of "vacuum medium drag" that is responsible of the ordinary lightspeed limitation. It's just too long for me to go into all that tonight.)

Now to some specific issues. Yes, my insight did keep growing. At first, I took the results of experiments such as by Hooper with opposing "ordinary waves". The effects of the core for the coils were a puzzle. But it seemed that sometimes the "opposing normal waves" would give some G effects, and more often they would not. What I did not realize for some time was that the longitudinal wave can be regarded as a superposed wave/antiwave via a single SWZ wavepair. This agreed with Whittaker, and also now offered a sudden inspiration as to when we got the G effect and when not. We were dealing with 4 waves -- not 2 -- in the opposing ordinary waves. We had 2 opposing normal waves and 2 opposing antiwaves, with the wave/antiwave coupling. Two ordinary waves 180 degrees out of phase would certainly cancel (spatially) their amplitudes (as is well-known in RAM materials and structures) but would not cancel their energies. The 2 antiwaves would do likewise, spatially.

The point then became so what would happen in the time domain? Here we got a shocker. The 2 antiwaves would cancel each other's amplitude SPATIALLY and would add energies. But looking at the action (energy x time) aspect, their energies exist in negative time! Well, this meant that the antiwave ACTION would come out negative and would then cancel the added positive wave ACTION because Sum Ewt + Sum Eaw(-t) = 0.

Therefore the sum of the whole mess was zero! Bummer! We wound up with everything just vanishing, wherein all the action (angular momentum) seemed to vanish. Well, this showed that the notion of simply having waves 180 degrees out-of-phase of itself would not give gravity effects. So that's why mostly the Hooper approach didn't seem to do much. But if one added nonlinear materials to the core, then one broke the linear cancellation. Once in a while if one got it just right, one could get some spooky gravitational effects. So that was a real clue.

Then we took the known (by General Relativity) facts that (i) all trapped energy is gravitational (it is the trapped energy in mass that is gravitational, not mass per se), and (ii) all potentials are gravitational anyway since they contain trapped energy.

So now the question became, "How-the-devil does one trap EM energy at a point in space when to exist as EM energy in space, it must be going at lightspeed by Einstein's postulate?" Bummer! How can something be moving and not moving simultaneously? Did a lot of thinking in terms of my fourth law of logic, since that obviously was what was required. Looked at Spencer Brown's law of form a little bit more. Scratched my head a lot.

Then it hit me. The potential is already accepted as "trapped EM energy". So it contains the secret of "trapping EM energy, which must be moving and static simultaneously". But it's regarded as "static". Well if it's static, then how does it "flow" down a wire? It ought to "stay in place". So it cannot BE "static" because it FLOWS. That's called mass-less displacement current **d-PHI/dt**. And that notion gets all confused with several other kinds of currents including dD/dt, dV/dt, j, i, etc. Yet its MAGNITUDE at any spatial point is indeed fixed (we are discussing electrostatics here).

Scratched my head some more. Then thought of it this way: Suppose you have a flowing river. Suppose it's very calm on the surface but just flowing along. Now at each-and-every point on the surface, there is a fixed "value" or "number" that will represent the FIXED MAGNITUDE of the vertical depth of the river at that point. The set of all these scalar numbers then represents the "scalar depth field" or the "field of the scalar magnitude of the depth of the river". But no one in his right mind would define the river itself as just its "depth magnitude" scalar field. That is, the MAGNITUDE FIELD would be scalar, but the river itself is darn sure vectorial because it has both direction and magnitude.

The same is true of a scalar EM potential. The "scalar" function is the field of "spatial energy density" at each spatial point where the potential has a nonzero magnitude. But something can be flowing "under" or within that "scalar field" and be totally vectorial, so long as the vectorial aspects sum vectorially to zero. So here was my old idea of the zero vector sum of two-or-more nonzero vectors being a scalar potential or a scalar stress potential.

Bringing in Stoney and Whittaker, they had already shown that ANY scalar potential (which physicists routinely and **erroneously** regard as just a SCALAR MAGNITUDE field) is already composed of bi-directional EM wave pairs. In other words, it's the MAGNITUDE OF THE LOCALLY TRAPPED EM ENERGY DENSITY OF ALL THOSES HIDDEN INTERNAL BIDIRECTIONAL WAVES AT EACH SPATIAL POINT that is externally "scalar" in nature. But the internal part of this "entity" that we fragmentedly refer to as the "scalar potential" is quite vectorial. So each Whittaker wave pair (each major component) is the key: (i) it has to be gravitational, because the potential is already known to be gravitational. So each PRIMARY COMPONENT must be gravitational. (ii) it therefore must already contain the magic "EM energy trapping mechanism." *Voila!* There it is.

Well, each wave pair is A PRIORI a standing gravitational wave. And since it is comprised totally of EM waves, that particular manner of coupling must A PRIORI turn EM field energy into G field energy! Also, it contains the EM trapping mechanism. That was a wave and its true time-reversed twin -- i.e., its "antiwave" twin. Here nonlinear phase-conjugate optics can be applied. It's already well-known that a phase-conjugate wave replica superposes precisely with its wave twin SPATIALLY. THE AMPLITUDES OF THE WAVE AND ITS SUPERPOSED ANTIWAVE DO NOT SPATIALLY ADD, AS THEY DO IN ANY "NORMAL" EM STANDING WAVE! It's also known that the phase conjugate replica wave is truly time-reversed (e.g., see Wheeler's delayed choice experiments, and several others which demonstrate this fact rather conclusively.)

But we cannot see time (it's lost in the observation process when the photon is emitted again after being absorbed by mass to create masstime.) Photon emission tears away the time tail, disconnecting the mass from the "stitch" in the timestream. It leaves behind a completely 3-space object. That's why all light observation -- which just uses the photon/mass absorption and emission mechanism -- it well-known to be SPATIAL, not SPATIOTEMPORAL. There is no such thing as direct measurement of time, and there has never really been a "time-measuring clock". This is well-known. But think of it a bit. You INFER time from a change in spatial positioning of the hands of a clock. The clock does not directly MEASURE time, which in QM is already known to be just a parameter and NOT an observable. Note that in our time flow generating mechanism above, we explained why observables were spatial and not spatiotemporal.

So now we rather much have it all. For EM force field effects to observably exist (i.e., to cause detectable changes or perturbations), they must exist for a finite time -- else no acceleration occurs. Use the E-field as an example. In the SPATIALLY superposed wave/antiwave pair, we have the EM forces SPATIALLY existing, which we can represent as in the expression [E x t] + [E x(-t)]. That means that the EM FORCE FIELDS sum to a vector zero. But the scalar energies add SPATIALLY, when the times

disappear. So the wave/antiwave pair is devoid of net EM force action, which must exist in time, but the spatial energy densities at the point add because they are both positive. Further, since time does not exist in 3-space, we now have the familiar 3-space disposition of the "trapped EM energy" in the potential field.

So the trapping mechanism turned out to be this: Eliminate the EM impulse ('force' times 'time') effects by "timewise" cancellation while leaving the spatial addition of the energies. You do that when you couple a phase conjugate replica wave to its normal wave twin. That makes a true **electro-gravitational** wave. A new kind of standing wave. (You can make lots of other kinds of "scalar waves", but that is the simplest.)

Anyway, that's a sort of digest of the thinking that I went through as the concept evolved. That's about where I am today, except now we use jillions of internal timestreams as "time strings" comprising a "time rope" that is Macrotime flow.

You see, we still have the "vector sum zero" in there. But we just treated the time dimension as a sort of length, and the time-vectors cancelled. In other words, we looked at the 4-vectors, with the addition that killing the time destroyed any EM force change, which a priori require some time in which to occur. It also yields the cause of the mysterious quantum mechanical "collapse of the wave function". No wave can exist if the time it exists in suddenly ceases. You only have 3-space when the 4th dimension fractures and ceases momentarily.

And you are quite right that the word "opposing" now takes on more than one sense. It does not necessarily mean just "spatially" opposing.

It gets even more confusing when one realizes that we cannot see "time reversed" things properly because of the electrons around the atoms of matter making up our bodies and instruments. A PRIORI, we look through a "time-forward-only" filter. So we see true time-reversed things totally spatially; we see them "spatially and velocity-wise" reversed. Therein lies the difficulty in this word "opposing!"

The difference is the true time-reversed wave (the PCR wave) will precisely backtrack and spatially superpose with its stimulus wave, even if that stimulus wave no longer exists and even though the 2 waves are anti-parallel in the time dimension! The PCR wave (in the simplest case -- it can be directionally tricked by various means) will return precisely back over the spatial path PREVIOUSLY taken by its twin, even if that path is rather torturous as shown by Pepper and others. That is not at all true of a normal wave! A normal wave will spread and scatter in many media, in which the true time-reversed wave will precisely orient back through that same nonlinear medium along the original track. As Pepper showed, you can do marvelous correction of distorted images this way. Such things noticed early-on are why the (poorly-named!) distortion correction theorem was so-named. This also makes SELF-TARGETING (iterative mutual phase conjugation) between 2 separated objects acting as phase-conjugate mirrors a real hummer!

But the PCR wave is truly time-reversed. And because of its reconvergence (order restoring, negentropy), it can produce cooling instead of heating. E.g., in the Sweet vacuum triode, the phase-conjugate replicas were directed out into the external circuitry to power the load. If one directly shorted out the ends, there would be a brilliant flash of light and the ends would INSTANTLY ICE OVER as if you had dipped the wires into liquid helium or some such. This is very different from shorting out the ends of a normal circuit with normal time-forward wave power. There you get marvelous heating and wire melting. Here you get wire freezing and no heating at all. Further, on one occasion Sweet got himself directly into the short out of the circuit with quite a bit of power going through it. The most conductive parts of his lower arm and hand-- the nerves-- were flash frozen! He required medical

treatment for that for some little time, and the condition only gradually improved and finally healed in about a year.

The beautiful part of this nonlinear "optical" function is the fact that it occurs easily for the lower frequencies as well, in the inner channel. That yields the "self-targeting" mechanism that creates a self-ordering and a quantum potential (QP). I have previously given examples of the inadvertent creation of a quantum potential, though unrecognized by the participants/ experimenters. Refer to GRAVITOBIOLOGY, to my description of how a QP is formed, and to the description of the U.S. air attack on Libya in 1986. Also refer to the Lawandy experiments (see Nabil M. Lawandy; R.M. Balachandran, A.S.L. Gomes and E. Sauvain, "Laser action in strongly scattering media."

NATURE, Letters, 368(6470), Mar. 31, 1994, p. 436-438. Researchers of Brown University, Providence, R.I. discovered that tiny particles of titanium dioxide (a key ingredient of white paint), although randomly distributed, act together to amplify light emitted by dye molecules that are excited by a laser or some other external energy source).

This (quantum potential produced by mutual self-targeting between separated components or systems) is also part of the hidden mechanism that Patterson evokes in the Patterson cell, and that gives self-organizing and increases energy collection. The reason his spheres have to be so round is to get sufficient self-targeting that energy collection is increased to give good over-unity gain. In other words, there is a threshold at which scattering increases and limits the "self-organizing" due to the QP mechanism I showed in GRAVITOBIOLOGY.

In the future if I can get some time, hopefully I will be able to write an article giving the exact mechanism of the Patterson cell. I think his invention is magnificent! As I covered in a recent article on WWW.HSV.COM, only a tiny fraction (nominally some 10^{-13} or so) of the Poynting energy flow **S = E x H** that our normal electrical circuits and devices evoke is collected on the carrier electrons and transported as the Slepian vector j-PHI to the load, and dissipated therein to power it. By forming a quantum potential, the collection percentage is increased (this is easily shown). Patterson's approach seems to yield a collection increase of some 200 times.

As I've stated before, if we can increase the energy collection fraction, then a flashlight battery can power a battleship. And obviously such "collection-increasing" systems can be close-looped by clamped positive feedback to provide a "self-powering" system. Note that the conservation of energy law and the laws of equilibrium thermodynamics are <u>not</u> violated because the system is an open system receiving, gating, and collecting excess energy from the vacuum, then dissipating this excess energy as the load (in the case of the Patterson cell, as excess heat). The second law of EQUILIBRIUM thermodynamics does <u>not</u> apply to such a system, as is well-known. Non-equilibrium thermodynamics (as per Prigogine et al) does indeed permit such over-unity systems. Else you could not run a water wheel or a windmill or a solar cell. COP>1.0 is absolutely permissible for such systems. Any scientist who objects to it on EQUILIBRIUM thermodynamics grounds should simply go read the literature.

And perhaps you will find my explanation of the Johnson gate, the Takahashi engine, and the Kawai engine of interest in the same paper on the same Internet node. REGAUGING via a free change of system potential -- and hence of the system's stored EM energy -- is the master secret of over-unity. It has long been ARBITRARILY ASSUMED AWAY by the conventional electrodynamicists when they apply the classical EM. They first simply ASSUME away the "residue" or "leftover" scalar potentials (the gauge potentials) in the actual Heaviside/Maxwell force field formulation. Actually, you can use that gauge potential term and cause the system to CHANGE IT AT WILL -- i.e., REGAUGE ITSELF AT WILL -- thus freely refueling an electromagnetic engine directly from the vacuum as an open system receiving excess energy from an external source. The Heaviside/Maxwell equations in their form before

the ARTIFICIAL and tidying assumption of zero residue gauge potentials will agree fully with you! Ain't that a whale of a blast! Regauging (free refueling the system with stored EM energy!) has been there in the "unaltered" and "untidy" Heaviside/Maxwell equations all along. The electrodynamicists just got too tidy, and the circuit and engine boys never asked what the electrodynamicists had done and why they had done it.

Anyway, I just wanted to share my thinking along these lines with you, even though I am sorely pressed for the next several months. I very much appreciate your arduous efforts in going through the material, and the hours you have spent on reading the references. Please feel free to continue to critique, correct, adapt, and utilize my concepts as you wish. THAT'S WHAT ALL THIS EFFORT IS ABOUT! These notions, viewpoints, findings, etc. simply must be transferred to younger, more vigorous, better qualified theoreticians and experimenters than I am or will ever be. I only get disgruntled at persons who (i) will not read the references or try to comprehend what the references say; (ii) simply want to argue normal theory (I'm not using the conventional theory, and I have no time or inclination to "argue"); (iii) think that everything electromagnetic is already well-understood and cut and dried (nothing could be further from the truth, as the foundations physicists know full well); or (iv) persons who start in immediately calling me names (such persons, in my view, are only interested in dogfights and have thereby unwittingly revealed their true ancestry.) But then none of those are consistent with the scientific method!

I am VERY pleased when the negations of the above are apparent. And also when someone serious questions my work in a gentlemanly fashion or when someone CORRECTS something I have advanced, showing it to be in error. I learn from that also! Years ago in teaching a class, I had a sharp young student correct my written expression for the fourth law of logic the instant she saw it on the board the first time! That impressed me mightily, and I quickly admitted the error and corrected it forthwith. That student saw immediately an error in my work that I had not uncovered in several years of dealing with it. Darn right I was impressed! And I said so then and there!

My job, you see, is not to build a pretty doorway in all this conceptual modeling with nice framing and beautiful paint and fine decorations. My job is to be a stick of dynamite and blow a gaping hole in the brick wall. Then it must be left up to the master craftsmen (such as the Barretts, Ziolkowskis, Wolffs, and Cornilles) to make a finished, beautiful doorway. If that can happen -- even though much of what I have done has to be adjusted, adapted, and corrected in the doing -- then we will have a new physics and these 30-odd years of arduous effort will not have been in vain.

Sincerely and best wishes,

Tom Bearden

M. Amplitude Modulation & Phase Conjugation-- a Correlation (1996)

(On KeelyNet as AM.ASC, 2/24/96 by Rick Andersen)

This file presents some background on AM/sideband radio communications methods and then proceeds to show some interesting extensions and correlations to Phase Conjugation, which has been the topic of increasing interest to the scientific community and especially to many of us KeelyNetters who have been following Tom Bearden's theories regarding **Phase Conjugate/Time Reversed Waves**.

The purpose of the comparison is to stimulate creative thinking on the subject:

Can we apply the esoterics of PC generation to more mundane electronic circuitry that we already understand and use?

Is the technology already under our noses if we can only look at it from a new viewpoint?

Here are some ideas to chew on.

REVIEW OF AM RADIO THEORY

Let's take a short visit to "Communications 101" class at our local "electronics vocational school" and do a little review of AM radio modulation theory.

We find out early on that we can't directly "broadcast" information very far at audio frequencies, but that higher frequencies (Radio Frequencies) will radiate. So we start with a "carrier" wave having a frequency of 1 MHz.

It travels out from our transmitter antenna very well at that frequency but isn't carrying any information until we mix it in a special way with some information. So we choose a 1 KHz audio tone as our "information" (in broadcast radio, the "information" would be voice, music, etc.). Our goal is to transmit the 1 KHz tone from a transmitter to a receiver some miles away.

AMPLITUDE MODULATION

Early in the 20th Century it was discovered that you can mix the audio wave with the carrier wave in a MODULATOR circuit which mixes the 2 frequencies nonlinearly. The result is a 1 MHz carrier whose peak-to-peak AMPLITUDE varies at the slower, 1 KHz audio RATE. That's the TIME DOMAIN description of Amplitude Modulation of an RF carrier wave, and it's what you'd see on an oscilloscope screen when examining the output of an AM transmitter.

On the 'scope it looks like a solid green "envelope" whose "height" is varying (equally varying, up-and-down from the "zero" line horizontally bisecting the screen, in a "double-sine-wave envelope" shape). It looks "solid" because in order to see a few cycles' worth of the 1 KHz amplitude envelope variation, we had to turn the scope's horizontal sweep down to say, .5 ms/box … and there are many more cycles of the 1 MHz RF carrier "squashed" into the same area on screen that it takes to show only a few cycles of the 1 KHz audio modulation.

FREQUENCY DOMAIN vs. TIME DOMAIN

Nowadays it's becoming more fashionable to talk about the above from the FREQUENCY DOMAIN standpoint. That's what a SPECTRUM ANALYZER shows you as opposed to an oscilloscope. In the frequency domain, we see that the amplitude-modulated carrier is actually composed of <u>FOUR</u> waves:

#1) the original 1 MHz carrier
#2) the original 1 KHz audio
#3) the SUM of the above two frequencies, which is 1.001 MHz and
#4) their DIFFERENCE, which is .999 MHz.

What we call "AM" is a MULTIPLICATION of instantaneous AMPLITUDES in the TIME DOMAIN (the modulator multiplies the 2 waves together). But it's also ADDITION and SUBTRACTION of FREQUENCIES in the FREQUENCY DOMAIN. Thus, amplitude modulation is a

kind of FREQUENCY-SHIFTING (similar to but not to be confused with FM, which is Frequency Modulation).

The original carrier "splits" into 2 new frequencies in addition to itself. The upper one (upper sideband) shifts UP the spectrum by an amount equal to the modulating frequency (1 KHz) and the lower sideband shifts DOWN by the same amount.

[If you've read my files PHASCONJ.ASC or ANDERSEN.ASC you may remember that a similar "frequency splitting" occurs in the phenomenon of "Stimulated Brillouin Scattering", which is one method used to produce Phase Conjugate waves -- one of those "thought-seeds" that led to the writing of this file.]

In practice, the 1 KHz audio frequency (#2, in the list above) is filtered out (discarded) and the remaining three (#1, #3, and #4) are transmitted as a group out the antenna.

3 frequencies are broadcast simultaneously from a single transmitter? Yes. But in the time domain, their instantaneous phases add up (interfere) in such a way as to produce the appearance of a SINGLE amplitude modulated 1 MHZ carrier on the oscilloscope.

Viewed again via a spectrum analyzer (frequency domain), we see 3 distinct "blips" or lines on the screen: the 1 MHz carrier, the .999 MHz line to the left of the carrier, and the 1.001 MHz line to the right of the carrier. We call the .999 MHz frequency the LOWER SIDEBAND (LSB), and the 1.001 MHz frequency the UPPER SIDEBAND (USB).

All of the above is standard radio theory. It works and has been in practice since the 1920s in commercial AM radio. In the 1950s the Amateur Radio "Ham" operators began switching over to SINGLE SIDEBAND transmission or SSB) following the military's lead. SSB turns out to be more efficient than AM. AM is actually wasteful of both transmitter power and frequency spectrum space because:

1) Since the lower and upper sidebands are "mirror-images" of one another, they're both carrying the same information -- a redundant waste of transmitter power

2) The carrier itself -- when viewed in the frequency domain -- carries NO information. That may sound surprising, but the intelligence or information is all contained in the sidebands! But the carrier does "hog" power while not doing anything to earn its living.

(Note that we THOUGHT it DID, but that's how it SEEMED when we viewed it in the time domain on the oscilloscope. So your instruments can mislead you into seeing what you think you OUGHT to see. Free Energy researchers, take note!!)

Well, if the carrier is a waste of power and spectrum space and the sidebands are redundant mirror-images of the information, why not just throw the carrier and a sideband out and devote all our power to the transmission of just ONE of the sidebands? That's "Single-Sideband" (SSB).

The only (minor) drawback is that you have to re-insert a "substitute" carrier at the RECEIVER -- easily done -- to DEMODULATE the SSB signal and recover the original 1 KHz audio information.

Voila! We've successfully transmitted an audio tone out over many miles by FREQUENCY-SHIFTING it up the spectrum so that it was translated into a 1.001 MHz RF wave (using the upper sideband in this example). Then we re-mixed it with a 1 MHz "fake" carrier at the receiving end, and

the DIFFERENCE frequency from that demodulation process popped out as our original 1 KHz audio tone.

DEEPER THINKING ON AM/SB SIGNALS

In my ongoing ruminations about Phase Conjugation Theory -- sparked of course by Tom Bearden's books and papers on its application to Scalar Electromagnetics -- I came across some interesting diagrams in such places as the A.R.R.L's Handbook for Radio Amateurs, books on Fourier Transform (Spectral Analysis) Theory, Digital Sampling Theory, Spread Spectrum Communications Theory, etc.

Getting to the point, these references -- in explaining modulation as I have previously done above -- contain diagrams showing how the spectrum or sidebands are produced/shifted via a given modulation method. **What caught my eye was that several of these sources place "0 Hz" -- zero frequency, DC -- in the <u>MIDDLE</u> of their spectral diagrams.** Not at the left end as one might expect, since you "can't go any lower than zero cycles per second!"

Or can you?

If you could, what would that mean? It would mean you'd have a <u>NEGATIVE</u> <u>frequency</u>. Since frequency is the reciprocal of time (t=1/f, f=1/t), we're talking about negative time -- TIME REVERSAL -- when we go below 0 Hz.

While most "vocational school", technician-level textbooks would place 0 Hz at the left-most end of their spectrum diagrams with higher frequencies as you move to the right, several of the "engineer-level" texts mentioned above put 0 Hz in the CENTER and express negative frequencies on a "dashed" (not solid) line extending to the left -- as if these are "imaginary" frequencies -- because everybody knows you can't have less than zero! (Except in your checking account, between paydays; my bank charges me "negative deposits" in the amount of $20 per pop.)

Well after years of psychotherapy, we've all been adjusting our "reality goggles" to another, related culture-shock since we took algebra and trigonometry in high school: Remember when they sprang the "square root of -1" on you? Can't be done!

Or can it?

Yeah it can if you're willing to give it a new name like "i" ("j" in electronics) and reckon it as existing on an "axis rotated 90 degrees away from the REAL numbers" that we've come to know and love so well.

We call numbers like the square root of (-1) "Imaginary Numbers" and manage to use this mathematical curiosity to pass our trig tests as well as our AC circuit analysis tests in "Electronics 101". Turns out that we can stick real numbers on the X-axis of a graph, imaginary numbers on the Y-axis, and plot all kinds of otherwise indescribable stuff like Minkowski did when he interpreted Einstein's Relativity for the rest of us commonfolk.

Well, my point is that like imaginary numbers in AC analysis, we do use or infer negative frequencies in spectrum analysis and modulation. But we treat them as a sort of bothersome mathematical "artifact", a nuisance that doesn't deserve solid lines on our less-than-zero frequency axis, but only dashed ones -- assigning them a sort of "unreal", "imaginary" status. But we like to flirt with them anyway, don't we?

Just like the "time-reversed", negative, "advanced-wave", mirror-image solution to Maxwell's electromagnetic wave equation, for example.

Noted as far back as the (last) turn of the Century by Carl Barus, Stoney, and later treated by Wheeler/Feynman in their 'Advanced vs. Retarded Wave' "Absorber" theory (see my previous file ANDERSEN.ASC), the math works both ways -- forward and backward -- and, suffice it to say, the common man is told to be content with the "forward" solution unless, like me, you're used to having a chronically-overdrawn bank account.

The 'party line' is we live in forward time, we can't prove there's such a thing as "backward time-flow" so the "backward" solution is just a figment of the math -- a symmetry -- and why don't you weird-science nuts just leave it at that.

DIGITAL SIGNAL PROCESSING

The hottest new thing since audio cassette tapes is the CD player. In Ham radio, the hottest new toy is the DSP filter, which magically nulls out interference that was impossible to get rid of up to now. Both of these devices use IC chips based on the newly-emerged field of Digital Signal Processing, which springs from a cross-breeding of Fourier Analysis theory, digital information-sampling theory, analog filter theory, and radio modulation (heterodyne) theory.

They've got IC chips now that are selling like hotcakes (and getting cheaper, too) that enable you to build electronic echo/reverb boxes, digital audio filters, speech synthesizers, Fourier spectrum analyzers, frequency/pitch/spectrum shifters (so you can sound like God doing the weather report if you're a DJ looking for ratings) -- the list goes on-and-on. The technical literature behind these toys -- with all the math and nitty-gritty -- provides the basis for our "time reversal" discussion.

According to what's known as the "Nyquist Theorem" in information sampling theory, if you're a digital audio engineer and you want to produce a CD with crisp frequency response right up to 20 KHz (the upper extreme of the range of human hearing), you must digitally "sample" or convert your audio source (music, etc.) to digital "slices" at no less than TWICE the highest frequency of interest -- i.e., 40 KHz sampling rate to faithfully reproduce 20 KHz audio tones.

In simplest terms, the reason is because you want to get a "snapshot" of BOTH the (+) and (-) excursion of the 20 KHz sine wave -- which requires 2 snapshots or "samples" per cycle -- which equates to twice as many samples as "Hz" in the wave, or 40 KHz for a 20 KHz tone.

Well, what if you DON'T sample at the Nyquist frequency? What if you sample at, say, 37 KHz instead of 40? What will happen?

What happens is that the 20 KHz audio tone is not always "snapped" at the same points per cycle as time goes by. And an imperfect "mix" occurs between sampling frequency and sampled frequency. The net result somewhat resembles mixing 2 frequencies in an AM modulator as we described at the beginning of this file. We get HETERODYNING or nonlinear mixing effects, which creates spurious sidebands and shifts the frequencies down the spectrum, usually in some undesirable, dissonant-sounding way, musically-speaking. The audio buff hears strange "wrong-pitch" tones and distortion in the music. These spurious pitches are called "alias frequencies".

The sampling frequency acts as a sort of "ceiling" that "reflects" any frequency higher than "Fsampling/2" DOWN the spectrum, manifesting as alias frequencies.

Now down at the other (low) end of the frequency spectrum in a similar way, any tones which by "AM differencing" end up BELOW ZERO HERTZ get "folded" or reflected back UP the spectrum from 0 Hz, which is like a "floor" or barrier that reflects frequencies UPWARDS.

And why would 0 Hz "reflect frequencies"?

The time-forward engineer will tell you that it's because *"Thou shalt not have Negative Frequencies, lest there be Time-Reversal"*. (Oh, all right-- those were my words.) And he feels secure in his time-forward world because he sees that "up-folding" as proof that even if you wanted to produce negative frequencies, you couldn't. Nature prevents them by reflecting them back up into the positive spectrum as alias frequencies that are a nuisance to digital audiophiles.

(If you want to try this out for yourself, Radio Shack sells an electronic Reverb/Echo box for about $40 that uses a "bucket-brigade" IC to sample and delay an audio signal. Set the 'Delay' slide-pot to maximum (longest echo) and you'll clearly hear weird, chime-like alias tones in the higher frequencies of your music.)

THE PHASE CONJUGATE CONNECTION

Now for the correlation. I'm asserting here that the spectrum-folding phenomenon in digital sampling theory -- which keeps "negative" frequencies safely bounced back up into the positive-frequency region -- is the **ANALOG OF A PHASE CONJUGATE MIRROR** currently used at optical frequencies by mainstream Science!

In optical labs, they're using barium titanate crystals, methane gas under pressure, etc., to serve as a nonlinear medium which produces a phase conjugated, time-reversed reflection when properly "pumped" with enough energy to get their index of refraction to vary in step with the incoming energy (something like the way a silicon DIODE or TRANSISTOR can be described as a NONLINEAR RESISTOR whose resistance varies according to the "pressure" of the voltage across it (= the current through it)... its "breakdown" threshold is around 0.6 volts).

I'm saying that in digital sampling, ZERO HERTZ is the BARRIER corresponding to the phase conjugate MIRROR. It produces the REFLECTIONS (aliases) that appear SPATIALLY REVERSED (spectrally-reversed) to us time-forward observers. But it's BECAUSE they're reflected back up into the "positive" that we know they're actually NEGATIVE FREQUENCIES.

In the same way that we would see a "time-reversed" action as a "movie running backwards" in our positive time flow, so we see that the direction of PHASE ROTATION of the reflected alias wave has been reversed so that it now COINCIDES with the forward-time/positive spectrum waves.

A RADIO RECEIVER ANALOGY

For you Hams out there, have you ever build a Direct Conversion receiver? You pull in your RF signals at the front end; mix them with a Variable Frequency Oscillator (VFO) tuned to almost the same frequency; and thereby convert the modulation directly down to baseband (audio) without going through an I.F. conversion first. It's simple and works adequately except for the fact that it does not provide "single-signal" reception like a superheterodyne radio does. Because in a Direct Conversion receiver, you "zero-beat" the VFO against the carrier (or suppressed carrier in SSB), bringing your difference-frequency "carrier" down to 0 HZ! This pushes the LOWER SIDEBAND (which was lower in frequency than the carrier to begin with) BELOW ZERO HERTZ by an equal amount as the upper sideband is ABOVE the carrier (0 Hz).

The lower sideband gets "folded" (reflected) back up by an equal amount of Hz ABOVE zero Hz so that now it OVERLAPS the upper sideband information.

If the original signal coming in was an AM signal, the above scenario works fine since there's mirror-redundancy between the sidebands anyhow. They're both carrying the same information but in opposite phase to one another. Well then, why don't they cancel each other out when the lower gets reflected up on top of the upper? Because when negative frequencies are reflected into the positive-time spectrum, the direction of phase rotation is reversed.

Now BOTH the upper and lower sidebands are at an identical frequency. And on top of that, their phases are rotating TOGETHER and not against one another. So they add constructively at all times -- JUST LIKE A SPATIALLY-IN-PHASE "WAVE/ANTIWAVE" pair as described by Wheeler and Feynman and (I think, but am not sure) by Tom Bearden.

If on the other hand, the original signal desired was an SSB transmission, the Direct Conversion receiver creates the problem of "double-signal" reception.

Since SSB gives Hams twice as much spectrum space in the band, therefore there are now twice as many "channels" to use. Accordingly, where there used to be room for 1 AM transmission with its 2 sidebands, now there's room for 2 SEPARATE SINGLE-SIDEBAND transmitters. So each guy chats away in his own conversation -- separately-- while the unfortunate listener using the D.C. receiver hears BOTH. But the "interfering" signal is unintelligible, scrambled, "Donald Duck"-sounding gibberish because it is SPECTRUM-INVERTED.

The user of a better receiver -- such as a superhet -- never hears the lower sideband since it's filtered out up at the Intermediate Frequency (I.F.) such as the 455 KHz I.F. most often used in AM radio.

BICYCLE WHEELS and AUTOMOBILE TIMING LIGHTS

Let's digress here for a few minutes. My behind is getting sore from sitting at this computer and writing. Let's go bike riding!

We hop on our bicycles and tool on down the road to the park where we come upon three other cyclists up ahead. We ride up behind them and then maintain a constant speed behind them, so that we keep a stable observation point from which we can see all three.

As we observe them, we note that the guy on the left must be in 3rd gear since he's pedaling slowly. The guy in the middle seems to be pedaling "normally" so we assume he's in 2nd gear. The guy on the right is pedaling rather fast and furiously, so he must be in 1st gear for whatever reason. But they're all keeping abreast of one another.

Well, little did we realize that it was getting so late; the Sun has set and it's getting dark. But these Olympic champs want to keep on riding! So we hang in there with them a little bit longer, noticing that the road is becoming darker and the streetlights are few and far between.

As luck would have it, there's a guy up ahead using an ignition timing light to tune up his car, which is parked by the curb. Promising in an apologetic tone that "I'll be right back with his light", I swoop by and grab it from his car hood. Lo and behold! it's a portable model that can be triggered -- like a strobe light -- by an internal pulse generator as well as by the engine ignition. So I switch it to "internal trigger" and -- speeding up -- I ride up behind and to the left of the 3 cyclists so that I can get a sort of

diagonal side-view of their bicycle wheels. I now switch on the timing light and adjust the strobe flash rate until it is just a bit SLOWER than the pedaling speed of the first guy (on the left, closest to me) who's in 3rd gear. You move up alongside me and we both watch the 3 cyclists by the light of a silvery strobe.

What do we observe?

Since the strobe light is the only light source on the now-dark street, we see only momentary flashes of the action. We see the same relative pedaling -- direction at each bicycle that we noticed when it was still daylight -- only now it looks like an old movie, flickering, because we're just "sampling" the action as they pedal.

Next, I carefully SYNCHRONIZE the strobe with the first rider's pedaling so that it flashes ONLY when his left foot reaches "12-o'clock" on each pedaling cycle. We notice that Rider-1's pedaling has now appeared to come to a STOP. We've "frozen" the action because we take only one "snapshot" of it per cycle. We also notice that the guy in 2nd gear appears to be pedaling quite a bit more slowly. The 3rd guy is also slower but still faster than the 2nd guy.

Now you suggest to me that I should increase the strobe light's flash rate some more PAST the left-most rider's pedaling speed. Which I do. What do we observe now? We see the old "wagon-wheel" effect from the movies -- the first rider now appears to be pedaling BACKWARD from our perspective, because our rate of perception (strobe light illumination) is just slightly greater than his pedaling rate.

Getting excited, you now have me adjust the strobe to be in sync with the 2nd guy -- the guy who was originally seen to be pedalling in 2nd gear. We see HIS feet "frozen" and not pedaling, while the first guy is now pedaling backward even faster while the last guy (1st gear) -- to the right -- is still pedaling forward, but much more slowly.

Finally, we sweep our strobe rate up to the rate of the 3rd guy. He freezes his pedaling, and we see the first two pedaling backwards, faster yet.

As an encore, we increase the strobe flash a little more, and all three appear to be pedaling backwards.

We marvel at how "relative" perceptions can be and apologize to the man from whom we stole the timing light. (The 3 cyclists are last seen making a right turn at Albuquerque.)

THE MORAL OF OUR STORY

The illustration above shouldn't be hard to visualize, especially if you've ever watched a wagon wheel turning backward in the movies or if you remember not so long ago when your hi-tech record (phonograph) turntable had black and white stripes along its perimeter which appeared to "stand still" in the light of a mini-strobe when you had the record speed adjusted just right.

The bicycle-wheel illustration above refers to a carrier wave and its sidebands. From a reference point of zero Hertz, they're all rotating their phases in one direction -- the upper sideband turns the fastest, the lower the slowest, and the carrier halfway between.

If we now SHIFT OUR REFERENCE POINT -- or frequency -- up to that of the carrier (which we modeled as our "middle" guy in 2nd gear), we see the sidebands' phasors rotating equally in speed

(frequency with respect to the carrier and us) but in OPPOSITE DIRECTIONS while the carrier itself appears to be "stopped" (or at 0 Hz).

Alternately, we can shift the three of them -- as a group -- DOWN the spectrum until the carrier is at 0 Hz. Then the lower sideband will be at a NEGATIVE frequency, still rotating "counter" to the upper sideband because THE TWO SIDEBANDS ARE CONJUGATES OF EACH OTHER -- once you agree to call the carrier the "zero" reference! But since the lower sideband is reflected back up off the zero Hz "floor" (the "phase conjugate mirror"), the lower sideband now ends up superposing 'on top of' the upper, and is now rotating together with it in the SAME direction! ("Spatially in phase, out of phase in the Time dimension"...)

We now have an illustration or a correlation between the Wheeler/Feynman (and probably Bearden) "Wave/AntiWave Pair" and the commonly-used techniques of modulation and spectrum shifting as is now quite easily done in radio and audio systems.

OUR REALITY'S "ZERO-TIME REFERENCE"

A couple of years back, **Preston Nichols** published some books about the so-called ***Montauk Project*** -- an alleged coverup-type series of experiments said to have taken place in the 1970s and '80s using the old SAGE radar at the defunct Montauk Point, Long Island radar base. In his first Montauk book, Nichols (and Al Bielek, indirectly) makes reference to a device called a **"Zero-Time Reference Generator"**, described as an electro-mechanical device in a large box -- allegedly developed by **Nikola Tesla**. The device was supposed to have been the inertial "time reference" for the pulsing of the large degaussing coils aboard the *USS.Eldridge* (in the infamous "**Philadelphia Experiment**").

While the "PX" has long been an interest of mine, I found most of Nichols' allegations fairly unbelievable. But notice how the concept of a pulsing electromagnetic-inertial "reference" ties in with my "strobe light" story.

It seems that our "time" is bordered by 0 Hz at one end of the spectrum. Everything below that gets reflected back "up" as a length/time/spectrum reversed copy.

At the upper end of a somewhat different but related scale (speed, which is equal to Space [distance] / Time), we have another "barrier", the speed-of-light "***c***".

Any wave that might "try" to "run up against" that barrier would seem to get DOPPLER SHIFTED. Its WAVELENGTH is compressed, but its (group) velocity stays at ***c***.

If an optical phase conjugate mirror is a variable refraction or "phase" grating (as it's called in the literature) and if the PCM produces "phonons" or SOUND waves at light frequencies, then those waves are LONGITUDINAL variations in the energy density at the mirror, just as Bearden has been telling us. Thus it would seem that an incoming EM wave would encounter a VARYING-DENSITY BARRIER which would produce alternate up and down DOPPLER SHIFTS (almost like FM, but in BOTH frequency directions like AM sidebands).

And there we have it. The spectrum splitting (line-broadening) as described by researchers of Stimulated Brillouin Scattering phenomena.

Maybe "Zero Hertz" is not absolute like Einstein said Newton's Absolute Time is not absolute. Maybe time flow -- or at least the perception of it -- depends on whether you're "in sync" with the "reference" defining the local reality.

Maybe we can build an electro-magnetic-gravitational "strobe light" that detaches us from the "local" time and allows some "sync shift". If I were to shift my reference to, say, -2 KHz, then I'd see (-1) KHz as "forward-time" while you'd swear it was "time-reversed" and that I was, too...

(Bearden's 1970s "Quiton Perceptron" paper; Nichols' and Bielek's "Zero-Time Reference Generator"???)

CONCLUSIONS

I hope you've gotten some brain buzz from some of these ideas. They've been coalescing in my mind for a while now, having been helped along by many of the interesting comments made by Bearden and several of the KeelyNetters.

I think the "circular polarization" topic recently brought up by Terry Bastian has some real relevance here. My thoughts are that we're hampered by our continual visualizing of EM waves as 2-D plane waves. 2-D waves are probably only "flat", inadequate projections of a richer 3-or-more dimensional EM wave. Direction of phasor rotation most likely plays a major role when understood in conjunction with propagation direction.

Another possible avenue for exploration might be to do a detailed study of reflections on transmission lines, in the context of this file. The standing waves caused by either open or shorted RF transmission lines produce "conjugate" reflections of voltage or current, causing the formation of what we call "normal" standing waves. (That's what the Hams and CBers call "SWR" and want to minimize in their setups; KeelyNetters might want to MAXIMIZE it!)

Are these "conjugates" the same as the phase conjugates (time-reversed) that Bearden writes about? Or are they what he calls "pseudo-conjugates"?

I'll have to leave that topic for another file.

Happy Zero-beating!

N. Has Bearden abandoned Phase Conjugation? (1994)

O. Scalar EM and Polarization -- head-to-head with Bearden over the phone (1993)

by Rick Andersen, April 5, 1993 (slightly revised 7/3/97)

This file is an account of some of my investigations into what is popularly known as "Scalar Electromagnetics" -- specifically as conceptualized by Lt. Col. Thomas E. Bearden (ret.), Huntsville, Alabama. This file assumes that you are already familiar with Bearden's works as published by Tesla Book Company and as listed on many of the BBS's. But a brief synopsis of his views are presented for the benefit of those who are not familiar with Bearden's writings.

Tom Bearden's version of electromagnetics is a direct challenge to the electromagnetics that physicists and electronics engineers are taught.

His understanding of EM -- if correct -- would open up a vast new physics in which reality itself could be manipulated in ways that we in this last decade of the 20th Century can still only call *"magical"*.

As an electronics tech with a broad interest in "fringe science" in general and in such things as the Philadelphia Experiment in particular, I have had to familiarize myself with several "unconventional" ideas and hypotheses.

Tom Bearden's Scalar Electromagnetics could explain many "paranormal" mysteries in terms of a scientific model. We need to evaluate his work.

TOM BEARDEN'S SCALAR ELECTROMAGNETICS

Very briefly, Bearden's main points of disagreement with classical EM are these:

- Quantum physicists consider the Potentials in the vacuum to be the primary causal agents. Force fields (**E** and **B** fields) are EFFECTS of the interference of potentials. Classical EM has it the other way around.

  Force fields CAUSE and potentials are the (abstract) EFFECTS. It may seem to be an "Ivory Tower" semantics game, but if Bearden and Quantum Physics are right, the implications are tremendous.

- Classical EM fails to distinguish between CHARGE and CHARGED MASS. The classical EM man says "Show me some 'charge' without some mass to contain that charge!" Bearden replies, "Define for me what charge is!. You can't. You confuse charged mass with charge itself. Ditto with most other fundamental definitions in Physics such as Vector, Energy, Mass, Vacuum, etc." Bearden EQUATES Massless Charge, Potential, Vacuum, Spacetime, 'aether', Virtual Photon Flux.

- Classical EM describes the Electric and Magnetic "fields" in terms of Vectors and Scalars. On the simplest level, a "vector" is an abstract way of describing something in terms of its MAGNITUDE and DIRECTION. Like "one mile due North". A scalar is described by MAGNITUDE ONLY -- like the temperature of the air in your living room or the pressure of a gas inside a flask. Of course, Bearden expands on these definitions considerably.

  Bearden claims that History has pulled a fast one on us:

  What we call 'Maxwell's Equations' are in fact not his equations at all! Maxwell -- says Bearden -- wrote his equations in QUATERNIONS. It is a complex number system devised by the mathematician Hamilton which involved "multi-dimensional" math. On this basis, Maxwell's ORIGINAL EM theory is said to have had implications for more than our 3 spatial dimensions. TIME as the supposed FOURTH dimension would enter the equations and -- as Bearden claims -- had the original quaternion theory been left intact, Einstein might have found his long sought-after Unification of EM with Gravitation.

  Bearden says of quaternions what Italians say about Prego spaghetti sauce: "IT'S IN THERE!!" What is "in there" is the mathematical basis for all of the magic things we fringe science aficcionados have always wanted proof of: the means to produce **antigravity**, **time-travel**, **teleportation**, **age and disease regression**, etc.

- All of these possibilities, says Bearden, were aborted because Oliver Heaviside -- and to some extent Willard Gibbs, late 19th-century electrical physicists -- did not understand Maxwell's quaternion theory. And so Heaviside 'cleaned up' the theory, condensing the pesky quaternions into an abbreviated and emaciated "vector" theory which still contains a scalar component, but which component is largely de-emphasized.

And it worked! EM until now has functioned very well on the technological level using the deficient Vector theory. Toward the latter half of this Century, quantum physicists such as Feynman began to realize that "Maxwell's" EM (Heaviside's) was flawed in several respects at its foundations. Among the phenomena that Physics has discovered that Classical EM apparently fails to account for is the **Aharonov-Bohm effect** which involves "potentials" in a region free of any measurable electric or magnetic force-fields, essentially allowing action and instantaneous intercommunication between widely separated particles in a somewhat mysterious way.

- Bearden points to 2 relatively forgotten papers of mathematician **E.T. Whittaker**, written in 1903 and 1904 just as Albert Einstein was about to publish his famous Relativity theory (1905). Whittaker's math shows how any scalar potential can be analyzed and considered to be composed of a harmonic series of bi-directional waves, flowing into-and-out of the potential. Something like our concept of "standing waves" but with some important differences.

Conversely, Whittaker's other paper shows that any EM wave can be considered to be the effect of interfering 2-or-more scalar potentials in a given area. Since these potentials exist in more than our 3 dimensional world (as we perceive it), if we know how to properly engineer and combine such potentials artificially, we can perform some mighty magical feats such as to transmit EM energy "around" our normal spacetime, to have it appear out of nowhere at a distance from our special transmitter. Much of Bearden's writings go on to describe (speculate on, actually) ominous Soviet scalar weaponry based on this technology. (Since the collapse of the Communist Soviet Union, Bearden's emphasis has shifted toward the extraction of "free" energy from the vacuum and how diseases such as cancer and AIDS may be cured using spinoffs of this Scalar EM.)

- Based on the points mentioned above, Bearden sees an EM wave a bit differently than did Maxwell. Although he faults the World for not going back to the REAL Maxwellian quaternion theory -- and thereby continuing to miss the boat that would finally unify EM with gravitation (which Einstein searched in vain for, supposedly) -- yet Bearden departs from his hero Maxwell on the subject of just what an Electromagnetic wave is. Specifically, whether it propagates TRANSVERSELY or LONGITUDINALLY through the vacuum. Maxwell -- quaternions or not -- assumed a transverse EM wave because, says Bearden, he assumed a MECHANICAL AETHER as did most of the 19th Century physicists.

Nikola Tesla, on the other hand, did not agree. Tesla believed that EM waves propagate LONGITUDINALLY -- as do sound waves in air -- through a GASEOUS aether.

Bearden emphatically states that despite popular opinion, Tesla was right and all of our present physics is wrong on this point.

There are many other points made by Bearden about Scalar Electromagnetics that differ sharply with the present Classical EM. I think I have brought out the main ones here. (See Bearden's works for further detail, especially the file THEORYBE.ASC on the KeelyNet and other BBS's.)

MY OWN COGITATIONS

Now that I'd spent about a year reading and re-reading Bearden's papers and trying to understand just what he was talking about, I was beginning to ask myself, 'Just how DO we know what we think we know' in Classical EM? Are some of our "doctrines" just uncorrected mistakes of history that have achieved sainthood? Probably. After all, Bearden cites many references from Quantum Physics to support his views. Of course, QP is not without problems of its own just as is every other MODEL of reality. Ah, how painful and disappointing it had been for me when I first realized that WE KNOW NOTHING IN THE "ABSOLUTE TRUTH" SENSE.

All we do is spin elaborate yarns that we call "Models", which we try to disprove when we are being true scientists but mostly try to defend fanatically when we revert back to being regular human beings.

And yet, these flawed models have enabled us in one century to conceive and apply a technology that has literally transformed the World. So we like to keep telling ourselves that we're "getting there" little-by-little. Our models may be quite erroneous. But if they work, we use them until somebody comes along with something better.

And this is what Tom Bearden is doing -- offering something better. Except that he is claiming that his model is NOT something new. It has been around for at least 100 years, but we've been too stupid to see it because we allowed Oliver Heaviside and his vector oversimplification to blind us.

Well, I've bought a lot of "snake oil" over the years. And as we all know, the field of speculative science is overflowing with snake oil salesmen. So I try to temper my tendency to rejoice over the promises of magic with the caution that I have had to learn the hard way by having one 'scheme' after another turn out to be "hot air". Scientific method involves testing any new hypothesis rigorously. If the promoter of the idea can't take the heat, he shouldn't jump into the frying pan.

So I found Bearden's telephone number and decided to give him a call. (I've found that writing is too frustrating. Either they're too busy to answer or they just don't. Either way, you end up waiting for weeks.)

To my surprise, Tom Bearden seemed more than happy to talk about his work over the phone. I noticed that he tended to talk so much that it was sometimes hard to get a word in edgewise. But I appreciated his willingness to spend time on the phone and figured he might be able to clarify for me whatever I couldn't understand from his writings.

We talked of the 'primacy of the Potential', about phase-conjugate waves in non-linear materials, about his friend Frank Golden who appears to be a 'silent source' of a lot of his ideas and who has allegedly built several proprietary scalar devices (no, Bearden wouldn't tell me anything of substance about them).

My first call to Bearden was sometime in November 1992 if I recall. And I waited until March '93 to call again, when I had some (I thought) real questions about stuff I couldn't figure out on my own. I didn't want to abuse his phone hospitality by calling more often.

So the 2nd call was in late March. My question was about his latest papers on Free Energy - The Final Secret (see KeelyNet files FREENRG1 & FREENRG2) that had come out around that time.

The bottom line on free energy was that you needed a "**Degenerate Semiconductor**" between your source of potential (battery, etc.) and your switching function. From there on to the load, you could use regular conductive copper wiring. Bearden was saying here that the reason most of the earlier attempts at building "free energy" devices had given inconclusive results was that none of the previous inventors were using this "degenerative semiconductor" material that Bearden had finally figured out was the **'missing link'** after 30 years of intensive research into the subject.

At this point, of course, I was beginning to wonder just what this latest revelation meant as regards all of Bearden's PREVIOUS books announcing free energy inventors and their WORKING devices, happily extracting free energy from the vacuum.

Hadn't Bearden endorsed John Bedini's battery-motor-generator flywheel device, claiming that when the battery electrolyte was pulsed at the resonant frequency of the ions in it, free energy was being 'coupled' into the circuit, and that the battery was recharging itself? There was no mention of any "degenerate semiconductor" material there! Bearden's advice (in the Introduction to the Bedini book, available through Tesla Book Co.) was to "have at it" and build the thing -- all of you eager experimenters out there -- in order to prove once-and-for-all to the "establishment" en masse, which "they" couldn't deny, that free energy extraction is both possible and practical. (Be careful, though. Your battery will explode if you hit it too hard with a voltage spike; the hydrogen gas inside is particular about the magnitude of the charge-pulse. But don't let that stop you. Let's work out the bugs.)

Then there was Floyd Sweet -- the subject of Bearden's 1992 papers. (See SWEET1-4D.ASC on KeelyNet for further details on this device.) Sweet allegedly built a device exploiting the properties of ferromagnetic materials to exhibit non-linear phase-conjugate mirror properties.

This thing was supposed to have actually levitated off the bench during a demonstration. But they stopped it before it blew apart from all that "negative energy" it was producing. No mention of any "degenerate semiconductor" here, either. Just the magic of pumped phase-conjugate mirror theory, integrated into Bearden's earlier explanations of Scalar Electromagnetics as the engineering of spacetime stresses.

Hell, I'd be happy to have PROOF that any one of these earlier devices actually levitated or distorted time or recharged itself forever with no drain on the battery. (How about a demonstration on "20/20" or full schematics for the Sweet device? Oh, that's right -- it's "proprietary"!)

But now Tom Bearden has even better info -- The Final Secret. Golly! When that weird metal called **Nitinol** first came out, eager experimenters could buy it through mail order. Surely I can expect to see someone marketing "Tom Bearden's Old Fashioned Degenerate Semiconductor Elixir" in sample quantities real soon?

My point is that he encourages inventors and tinkerers accross America to stop believing everything they've been taught in Classical EM and to go and build "free energy" motors such as Bedini's because -- as he puts it -- he "cares about that poor little old lady down the block who is being ripped-off by the Power Companies that be". I just want to clarify some details, so I ask questions.

Okay, so now he tells me I'll get erratic results unless I use some genuine "degenerate semiconductor" such as doped copper wire. How does a basement tinkerer like me accomplish this? I know … I'll call and ask. Thus my March phone call.

Bearden's immediate reply was that I needed to "use that mass of gray matter between my ears" and engage a good materials scientist to come up with a degenerate semiconductor for me.

Oh.

I thought I could put the power company out of business just using parts from Radio Shack. So no one had ever BUILT a device based on this doped copper or whatever -- it was simply Bearden's latest CONCEPT which would tend to validate his view of the Potential. Hmmm.

A few days later, I decided to press my luck and call again. This time I had been thinking hard (I thought) on just how and why we traditionally believe in the transverse EM wave whereas Bearden and Tesla say 'no, there is only a longitudinal wave in the vacuum.'

Specifically, I was thinking about POLARIZATION in an EM wave. How does Bearden's Scalar EM account for the OBSERVATION that EM waves can be polarized if polarization is DUE to the ORIENTATION of the **E** field which Bearden denies even exists outside your antenna? I wanted an honest answer to this problem. I was not pursuing this with an ulterior motive such as to disprove Bearden. Not at all. I really wanted to <u>understand</u>. Remember, our Model must satisfactorily account for <u>all</u> observed phenomena. If another model can explain it better, then "more power to it!" But any Ham radio operator can verify the fact that something we call "polarization" does indeed affect the transmission and reception of EM waves.

MAXWELL and TRANSVERSE vs. LONGITUDINAL WAVES

You see, the genius of Maxwell's insight was this:

Maxwell knew that a changing magnetic field around a wire (which we can measure at low frequencies with a compass placed near the wire) will induce a changing electric field (and an electrical current) in another wire nearby. Faraday had explored this phenomenon. It stood to reason that a changing electric field ought to produce a magnetic effect.

Unfortunately, Maxwell could not verify that experimentally. He assumed that the measuring devices of the time lacked the sensitivity required to prove the **SYMMETRY** of induction between electricity and magnetism. However, Maxwell was a mathematician with enough faith in such symmetry that he stuck an <u>extra</u> <u>term</u> into the equations that described this complementary electric-to-magnetic effect which was as yet unproven. This led to the extrapolation of a see-sawing pattern of electricmagnetic-electric-magnetic... etc., one type of effect generating the other, forming an ELECTROMAGNETIC WAVE whose fields would "chase" each other out into the space surrounding the wire in which the AC current flowed back-and-forth to generate these changing fields.

Evidently it was because a magnetic field (as sensed by a compass needle) forms at right angles to a current of electrons in a wire, that it was assumed that this 90-degree relationship continued out into the space surrounding the wire.

So the Transverse EM wave -- according to Classical EM -- consists of an alternating Electric field and Magnetic field at right angles to one another and at 90 degrees to the direction that the waves are moving out toward (the direction of Propagation).

Sound waves, by contrast, are Longitudinal. That is, the air molecules through which sound travels are -- at a given point -- first COMPRESSED, then DECOMPRESSED or RAREFIED, such that the density of the air at any given point varies at the sound frequency. The molecules themselves wiggle back-and-forth in the direction of propagation. First a little bit out and away from the sound source, then

a little bit back in toward the source. Overall, the air doesn't FLOW from the sound source to your ear. Bt the waves of compression and rarefaction are what propagate through the medium from source to ear. You could say that the air "pressure" hitting your ear drum at any given moment is varying, and this is the mechanism by which sound "waves" are transduced into your hearing organs (the ears).

The waves on the surface of a pond also travel out from the disturbing source. But observe closely and you will see that for the most part, the water itself merely bobs up-and-down in one place. The horizontal movement is in the WAVE (the position of one vertical slice through the water relative to the next adjacent slice). Water waves -- as well as the waves in a plucked guitar string -- are Transverse. That is, they move at right angles to the direction of the wave travel itself.

Well, Maxwell's insight was that his postulated Electromagnetic wave -- being composed of two 90-degree separated fields "chasing" each other through space -- would, like water waves, be a Transverse wave. Unlike water -- which only bobs up-and-down -- the EM wave would contain (at least) TWO components (electric and magnetic) at right angles to one another.

If you can visualize a water wave which "waves" not only "up-and-down" but also "side-to-side", then you have some idea of what Maxwell was describing.

Tom Bearden disagrees that there are transverse waves outside of the antenna of your transmitter or receiver. Like Nikola Tesla, he holds to the model of a longitudinal propagation (electrical "sound" waves) of "ripples" in the charge density of the 'aether' or vacuum. He credits Frank Golden -- his engineer/scientist friend -- with pointing this out to him. (Incidentally, Bearden is NOT referring to what he calls a 'scalar' wave only when he holds to a longitudinal-only view. He states emphatically that this applies both to his special "scalar" stress waves per se AND to what we call a normal EM wave, which he considers to be a 'special' subset of a scalar wave.)

Well then, why do our instruments appear to MEASURE these right-angled components if they're not even there?

Bearden invokes the analogy of a gyroscope. Spin a gyroscope, then try to tilt it in a given direction. What happens? The gyroscope PRECESSES and tries to tilt on an axis 90 degrees away from the direction you intended for it.

Bearden says that that's what happens inside a wire. The electrons in a conductor are "free", capable of being knocked down the wire from atom-to-atom as a "current". Physicists refer to them as an "electron gas" in the wire. But one more thing: They're <u>spinning</u> just like little gyroscopes. So when a "force" pushes on them from a certain direction, they precess at right angles, forming "precession waves" whose instantaneous direction or polarity depends on the changing density of the incoming longitudinal wave that caused them to precess.

Invoking the Quantum Mechanics "paradox", if you will, that whenever we MEASURE something, we cannot help but perturb it (and screw up the measurement to that extent). And thus we NEVER ACTUALLY MEASURE ANYTHING in an UNBIASED WAY. Bearden maintains that we are, in fact, measuring ONLY WHAT GOES ON INSIDE OUR INSTRUMENTS AS A REACTION TO WHAT'S GOING ON OUTSIDE OF THE PROBE -- we never measure things directly. So we THINK we see transverse waves in the vacuum when actually all we're doing is seeing the transverse PRECESSION of the electrons in our measuring devices. Interesting, right? Well, is Tom correct? He may well be.

BUT WHAT ABOUT POLARIZATION?

If Bearden is correct -- that there is no electrical "field" going "up-and-down" (using the example of vertical polarization) and there is no magnetic field going "back-and-forth" at 90 degrees to the **E**-field -- both TRANSVERSE or at 90 degrees to the direction of propagation ("out" from the antenna), but that there is ONLY a COMPRESSION/RAREFACTION (longitudinal) action on the density of the 'aether' (spreading out from transmitter to the surrounding space) then my question is:

WHY DOES THE VERTICAL OR HORIZONTAL ORIENTATION OF THE RECEIVING ANTENNA -- WITH RESPECT TO THE ORIENTATION OF THE TRANSMITTING ANTENNA -- AFFECT THE RECEPTION OF THE TRANSMITTED SIGNAL AT ALL?

A longitudinally-oriented wave CONTAINS NO INFORMATION THAT WOULD "TELL" THE RECEIVING ANTENNA THAT IT OUGHT TO BE ORIENTED ONE WAY OR THE OTHER. Yet that is precisely what we find in the real world! Does Tom Bearden deny this?

Let's refresh ourselves quickly on what we mean by Polarization. Simply this: Following the Classical EM model, we define the polarization of a wave by measuring the ORIENTATION OF THE ELECTRIC FIELD COMPONENT at the antenna of the transmitter.

Simply put, if the antenna consists of a horizontal wire parallel to the ground, we have a horizontally polarized wave. Rotating the wire into the vertical makes the wave polarization vertical.

Is this just 'theory', based on Maxwell's transverse concept? No. It is an observable phenomenon in radio and TV transmission/reception. In fact, if you've ever worn a pair of Polaroid sunglasses, you've experienced the effect yourself. Much of the glare outside in the Sun can be cut by wearing these glasses, since they filter out all light waves that are scattered about with different polarizations than the one they're designed to respond to. If you don't mind popping a lens out of your glasses, place it in front of the other lens, look through it, and rotate it. You will find a place where all the light is shut out -- you're looking at a black, opaque lens. Continue turning the popped out lens and you'll begin to see the view through the lenses re-appearing -- first dimly, then back up to normal brightness.

When you had the polarizations of the 2 lenses at 90 degrees apart, your view went black. Light could not penetrate the lens pair.

This same effect happens at radio frequencies (RF, of course, is an EM wave just as light is). When a transmitting antenna is oriented in the vertical direction and the receiving antenna is horizontal, a MINIMUM of energy is received at the receiver. TV stations' antennas are usually horizontally polarized. That's why your home TV antenna is a series of horizontal metal tubes mounted on a boom at right angles to the vertical mast holding it up.

Other services such as AM radio stations use vertical towers (vertical polarization).

It is even possible to produce circularly- and elliptically-polarized EM waves using suitable antennas.

Even more exotic is POLARIZATION MODULATION -- used in some advanced systems -- where the polarization of the carrier wave varies in step with the information just as in AM the Amplitude of the carrier is modulated.

My point is that polarization OCCURS -- like it or not -- and the Transverse Wave Model seems to explain it most satisfactorily, as far as I am aware.

How does Bearden's denial of the transverse wave in vacuum square with this known phenomenon of polarization?

BEARDEN WANTS US TO UNDERSTAND AND BELIEVE … SO I'LL CALL HIM!

Well, my 3rd call was cut short because Mr. Bearden was having a meeting that night and he had no time. Already feeling a bit guilty, I said I'd call back in a few days when he wasn't busy.

About 3 days later and feeling just a little bit like a pest, I dialed Bearden's number again on Sunday evening, April 4th. Bearden answered the phone. As politely as I could, I announced who I was; that I just had one more question that I needed help with; and that I'd promise not to call too often after that. Not that Bearden had indicated that I was becoming a nuisance. Just that I'd talked to him for a half-hour the previous week. And maybe 3 days after that I'd called him again, only to have him tell me he was too busy to talk -- he was in a meeting at the moment. So here I thought I'd try one more time on this fine Sunday evening to ask Tom Bearden how he would reconcile the phenomenon of radio wave polarization with his view of a solely LONGITUDINAL wave propagation through the "vacuum" between a standard radio transmitter and receiver.

Bearden began by asking me if I knew what Newton's Third Law was. I answered that I thought it was the 'action-reaction' law, which he agreed that it was. He then began saying that the present electromagnetics is flawed because it violates that Newtonian law. That we DO detect transverse waves. But only in the electron gas of our antennnas and instrument probes. That 'not one of the equations attributed to Maxwell were actually written by him' etc., etc.

Having read 3 of his books and all of his papers as downloaded from the BBS's, I'd heard these phrases many times before. I understood the phrases. Bearden knew who I was by now and therefore didn't need to keep parroting them every time we talked. What I wanted to know was how does the longitudinal propagation theory account for the KNOWN FACT that EM waves are polarized one way or another, and so your receiving antenna's polarization (or, ORIENTATION) must match that of the transmitter for optimum reception.

That's all I wanted to know. I just wanted Bearden to explain polarization in terms of his longitudinal model.

Evidently I pissed him off.

He told me that I was just regurgitating what "they" had taught me in the standard electromagnetics courses. That I shouldn't believe them. That I should read and re-read his books to get straightened out on these points.

I felt he was evading my question. I was asking about polarization. If he didn't know the answer or if he hadn't considered the question before or even if he didn't feel like talking to me about it, he could have politely told me so. I would have accepted that. Everyone who has a theory is allowed to develop it. Rome wasn't built in a day.

Next, Tom Bearden was attempting to tell me that polarization itself was "a bunch of bullshit"! Trying to get a word in edgewise while trying to remain polite (after all, I was making the phone call, intruding on his time), I reminded him that his books didn't DEAL with polarization. He said he didn't

HAVE to because it was all bullshit. That I needed to 'THINK' (emphasis his) and that if I were really paying attention to what he was saying, I would understand and wouldn't be asking these ILLOGICAL questions!

Still hearing no attempt to answer my question about polarization, I tried to define what I meant by it. I tried to use the illustration of a TV station whose antenna is usually horizontally polarized -- and thus your home TV antenna on your roof is also horizontally polarized.

But Bearden doesn't let you finish most of your sentences. Instead, he is parroting more phrases such as you find throughout his books.

By this point, he was actually telling me that sorry, but when a caller such as myself constantly repeats the same question over-and-over or from a different angle, then he must get tough with the caller and tell him point-blank that his questions are bullshit questions. And that I was "not going to get him to ADMIT" to there being such a thing as wave polarization, as if doing so was to 'surrender' to those people who hold to the Transverse EM wave theory. God forbid!

Now I was beginning to wonder if this guy was paranoid. I thought of ufologist Jacques Vallee who would try-and-try to ask simple, polite but firm questions of people like Bill Cooper or Bob Lazar. When they would begin to squirm, he would press them just a little bit more. Not to be an SOB, just to cut through the fluff and get to see if there was really anything to the whole thing. Vallee recounts how he would sometimes be accused -- afterwards -- of working for the CIA or some other "government" group hated by the UFO 'true believers'.

So now here I was, being informed by Tom Bearden that I was attempting to get him to 'admit' to a 'doctrine' of classical EM which he would not. I was a Roman Catholic Inquisitor trying to get Galileo to recant his position and admit that the heavens do revolve around a stationary earth. Oy vay!

Feeling exasperated, I paused for a moment. Bearden paused, too. I then said, "Mr. Bearden, I am not trying to get you to 'admit' anything. I'm just trying to understand how to fit polarization into your longitudinal view..."

"It's NOT just my view. Nikola Tesla himself held to 'sound waves' in the aether..."

"I didn't mean that it was just YOUR view, Mr. Bearden..."

"It is the CORRECT view..."

Now I was thinking of my boss at work. He never lets me finish what I'm saying, either.

Finally I asked him, "Mr. Bearden, may I make a REQUEST of you then? In your future writings, would you please at least ADDRESS this problem of how polarization is explained in the longitudinal model..."

"No I will NOT!" Bearden said with some conviction. "I get letters all the time from people with 50 questions and who want all their questions answered..."

I interrupted HIM this time. "Yes. And when you go public as you have and write books that challenge the present 'system' and encourage a new generation of bright young physicists to embrace this Scalar EM and thereby 'overturn the present Physics', YOU HAD BETTER EXPECT TO ANSWER

SOME QUESTIONS TO BACK UP YOUR ASSERTIONS when people call or write, asking for more detail..."

He told me once more to read his books again because he would not answer anyone's questions if (like mine) they were repetitions of an ILLOGICAL question to begin with.

There was no more to be gained by pressing this conversation. I said with a sigh, "Thank you for your help, Mr. Bearden" and hung up the phone.

Obviously, I won't be 'pestering' the honorable Mr. Tom Bearden with my silly phone calls again unless he decides to lower himself down to my humble intellectual level and -- in his great mercy -- throw me but a crumb from the table on which sits the bounteous feast of Beardenian Electromagnetics.

[1997 update: Bearden and I have corresponded a couple of times since 1996. He wrote a lengthy and gracious response to my second "ping" file ANDERSEN.ASC, in which I critiqued several of his concepts. That file went onto the KeelyNet and I guess Tom got a copy of it and finally realized that my motives were positive. He has been very good-spirited in his treatment of my "pings" since that time, and I state here-and-now that our phone conversation in 1993 should not be taken as an indicator of his attitude in general. Maybe he was having a bad day; maybe I was too aggressive over the phone. Whatever the case, I respect him highly and my position is one of honest inquirer. That being said, back to the 1993 file!]

I guess since I'm not a member of the Mensa Society as Bearden is, I can only be classified as lower than a "degenerate semiconductor". I suppose it's the slow "drift velocity" at which knowledge propagates through the electron gas in my cerebral cortex. And it keeps precessing sideways instead of sinking in.

Anyway, be it known both to Mr. Tom Bearden and to you, good reader, that I hold nothing against Bearden personally. The man definitely seems to be a genius in many ways even if his table manners could use some polishing up. **[StealthSkater note: The same could be said about Jack Sarfatti as well => doc pdf URL]**

I believe he is on to something real and with big consequences for 21st Century Physics, once we take up his challenge to test his theories in the lab. Just don't call him up with any questions that tend to rock his boat or you may be branded "illogical". He is a rugged Pioneer; we 'young-uns' are going to have to be the ones who bring methodical, point-by-point analysis and proof to bear on this Scalar Electromagnetics.

Pioneers are lone trailblazers who have had to fight off the establishment for all of their pioneering careers. They've got to be committed to their cause -- even to the point of religious dogmatism. The upside of this is that lesser souls have a shining light to follow. The downside is that the pioneer creates a dogma that rivals the one he broke away from and made a career of criticizing. It's human nature, I guess.

It seems to me that even if Bearden (and, yes, Tesla also) is wrong on the mode of propagation -- if EM does have transverse components through the vacuum, and not solely longitudinal -- most of his other gripes with classical EM have the solid support of Quantum Physics behind them and show the classical EM model to be useful, yet quite wrong in many of its fundamentals.

In the meantime, I want to remind those of you who -- like me -- think that Bearden is mostly correct and that the scientific community needs to re-examine the foundations of Electromagnetics. This

"copping an attitude" bullshit as exhibited by Tom Bearden just won't wash with the real world. We need to come up with an electromagnetic theory that properly explains empirical observations, such as the phenomenon of wave polarization. As of this writing April 1993, the Transverse Wave model of Maxwell's Electromagnetics continues to be the best explanation of wave polarization. I was hoping to find out that Bearden's EM theory explains it better. Unfortunately, he refuses to discuss it at all. This is kid stuff and has no place in a respectable scientific theory. As long as honest inquirers keep getting rebuffed the way I did by Bearden, he cannot expect to be taken seriously by anyone.

Can anyone explain wave polarization via Tom Bearden's Scalar EM theory?

I welcome correspondence on this and related subjects. I also promise to treat you politely!

Aside from the many files by Tom Bearden available for download from the BBS's, his books are sold through:

Tesla Book Company
P.O. Box 121875
Chula Vista, CA 91912

If you have comments or other information relating to such topics as this paper covers, please upload to KeelyNet or send to the Vangard Sciences address as listed on the first page. Thank you for your consideration, interest, and support.

Jerry W. Decker.....Ron Barker.....Chuck Henderson
If we can be of service, you may contact
Jerry at (214) 324-8741 or Ron at (214) 242-9346

P. Bearden responds to Noring's questions re Sweet/Whittaker (1992)

Back to Esoteric Physics Main Menu
Back to Esoteric Physics Homepage

if on the Internet, Press <BACK> on your browser to return to the previous page (or go to www.stealthskater.com)

else if accessing these files from the CD in a MS-Word session, simply <CLOSE> this file's window-session; the previous window-session should still remain 'active'

Note from CR:

This is an extensive history of 'scalar technology' which has been secretly weaponized for power over humanity in direct violation of the self determination of humanity. It has been kept secret for obvious reasons since it could be used for 'free energy', and healing in the way that would make 'Big Oil' and 'Big Pharma' obsolete. Instead, it has been used for devastating weather engineering, earthquakes, and other applications for population control that sustain a monopoly on power over the physical and human resources of humanity.

It is my opinion that this violation of universal law -- as effects the non-linear hyperspace fabric of the universe -- is the reason why Atlantis was 'allowed' to be destroyed, just as modern civilization will be 'allowed' to be destroyed if there is not a mass awakening to this danger as will make the dark-side powers behind this violation accountable to the universal laws of responsibility for the use and abuse of power, i.e. the 'Prime Directive' of, by and for pure intention as focuses attention on our evolutionary ascension.

--------- sources and article continuation links at bottom. Emphasis added with this color..

Understanding Scalar Waves – Part I

1. THE DISCOVERY OF SCALAR WAVES
2. BEAM WEAPONS OF A CENTURY AGO
3. THE CONTINUATION OF TESLA'S SCALAR WAVE TECHNOLOGY
4. TESLA'S CROSSED SCALAR BEAMS
5. RUSSIA'S 'WOODPECKER' SCALAR WAVE TRANSMITTERS
6. THE 1930s
7. THE 1940s
8. THE 1950s
9. THE 1960s
10. THE 1970s
11. THE 1980s
12. THE 1990s
13. THE PRESENT
WHAT CAN BE DONE WITH SCALAR TECHNOLOGY?
14. MIND READING, MASS HYPNOTISM AND SYNTHETIC TELEPATHY
15. DISEASE INDUCTION
16. DISABLING SATELLITES
17. IN THE AIR
18. WEATHER ENGINEERING
19. EARTHQUAKES
20. SEA ATTACKS
21. TESLA SHIELDS AND GLOBES

22. GROUND ATTACKS
23 OBLITERATING INDIVIDUALS
24. PORTABLE SCALAR BAZOOKAS
25. RADAR INVISIBILITY
26. SUMMARY OF A WAR THAT COULD OCCUR
27. RUSSIAN UFOs ATTACKED THE US SHUTTLE PROGRAM FROM THE BEGINNING
28. HOW DID RUSSIA GET UFOs?
29 FORMER BOLSHEVIKS RUNNING AMERICA
30 REPLICAS USED FOR THE LANDINGS, AFTER ORIGINALS SHOT DOWN
31. CLOAKED RUSSIAN UFOS ABOVE USA
32. ALL U.S. SATELLITES SHOT DOWN BY RUSSIA UNTIL 1981
33. LIES, LIES AND LIES
34. FRICTION WITH THE JAPANESE
35. ENTERPRISE SHUTTLE DETERMINED TO SPY ON RUSSIA
36. RUSSIA INTENSIFIES ATTACKS
37. TRYING AGAIN TO GET UP INTO SPACE. THIRD TIME LUCKY?
38. BOLD ATTACKS ON AMERICA
39. THE STRUGGLE AT THE TOP FOR POWER
40. THE STEALTH PLANE COMES TO THE RESCUE
41. PHANTOM AGAINST THE COSMOSPHERE
42. THE EXPECTED GENOCIDE
43. PLANS FOILED TO DESTROY RUSSIA'S MILITARY ARSENAL
44. BRAZIL
45. INDIA
46. JAPAN
47. KOBE 'EARTHQUAKE'
48. CHINA
49. OKLAHOMA FBI BUILDING 'BOMBING'
50. WHO ELSE HAS UFOs?

1. THE DISCOVERY OF SCALAR WAVES

It all started in the 18th century with a Scotsman named James Clerk Maxwell.(1831-1879). He was a mathematical genius and his work led to the development of quantum physics which later led to Einstein's Relativity. Maxwell's equations linked electricity and magnetism and he discovered other waves that were higher than the normal hertzian electromagnetic waves. They are positioned at right angles coming off the electromagnetic wave and are omni-directional, whereas normal hertzian electromagnetic waves are only measureable with normal equipment and travel in a straight line. They are also called gravitic waves because they belong to the gravitational field. (Please see glossary for other names for scalar waves) Maxwell's electromagnetic spectrum went higher than our 3D physical reality and into

hyperspace where the fine indiscernable scalar waves exist. (Maxwell said they flowed in the ether/hyperspace). Scalar waves are so fine that they are only one-hundred-millionth of a square centimeter in width hence finer than X-rays and gamma rays. They can also be manipulated into various types of modes and frequencies. When Maxwell died his work was interpreted by three experts (including Hertz) who set the foundation for physics, and they decided any wave that went beyond what could be measured with an instrument of that time was "mystical" therefore worthless. According to Tom Bearden, standard physics (from then on) as a discipline, contained twenty two errors.

Nicola Telsa, (1856 or 1857-1943) a Yugoslavian genius, who became a US citizen in 1891 carried on with Maxwell's work. Tesla worked for Thomas Edison, who invented direct current, while Telsa himself invented alternating current, but the two men didn't get along well and parted ways. Tesla started up laboratories on Long Island and in Colorado Springs and learned how to harness scalar waves from one transmitter to another without using any wires. He received partial financial backing from JP Morgan, who owned the new electricity projects, but Morgan wasn't interested in losing all his electricity business by allowing people to tap into the vacuum of pure energy (hyperspace) to get their own (what is now termed) 'free-energy' for no cost. At that time Edison needed a plant ten stories high, taking up an entire city block to supply electricty to one square mile of customers. Tesla indentified what he called 'Radiant Energy' or 'Teleforce' in 1889. It was discovered during experiments that Tesla did to duplicate what the German Heinrich Hertz had done in 1887, proving the existence of electromagnetic waves. While copying Hertz's experiments, Tesla experimented with violently abrupt direct current electrical discharges and discovered scalar energy, a new force, in the process. In 1904 Tesla announced he'd completed his work using scalar waves to transmit energy without wires but unfortunately when he tried to get support for it, a setback occurred. He was sued for his Colorado Springs laboratory electrical bill, and his lab was torn down. He was also sued for non payment of a loan from his lawyer and his financial troubles never abated. Tesla continued his work even though he had no money and he died penniless in a NY hotel room in 1943, although Preston Nichols in his book 'Encounter in the Pleiades' claims a lookalike street vagrant was cremated in his place and there may be evidence that he was spirited away to the UK.

2. BEAM WEAPONS OF A CENTURY AGO

Even though Tesla couldn't interest the US govt. in his wire-free scalar energy, the Russians and Germans asked him to work for them, but he turned them down. All was not lost, just two weeks before he 'died' he gave all his research to a young American physicist. Tesla's inventions were dangerous and not only did he discover scalar waves and how to use it to manufacture earthquakes but also he created a 'Death Ray', which has been likened to a particle beam weapon. (Particle beam weapons can shoot a laser one thousand miles into space.) After his death in 1943 the FBI was actively involved in suppressing many of Tesla's documents, including plans for his 'Death-Ray' weapon capable of destroying aircraft and his earthquake-inducing machine, deeming it 'top-secret' lest it fall into the enemy's hands. But the Germans had also invented beam weapons and used them during WW2. Captured from them (according

to William Cooper) was a weapon that was capable of shattering 4" thick armor at a range of two miles using low aimed, low frequency sound waves. There is also evidence that the Germans had scalar wave technology and they certainly had anti-gravity technology due to a UFO crashing in Germany in 1939. They back-engineered it and by 1940 had built themselves a fleet of UFO's in eight facilities all over Germany. The Russians, who took many Nazi scientists captive in Soviet occupied Germany in 1946, forced the German scientists to build them their own fleet of UFOs, which they called 'COSMOSPHERES' and eventually they had built hundreds. The Nazi scientists also built the Russians scalar transmitters and particle beam weapons. Tesla also told people that he talked frequently to people 'off planet', so perhaps this was the source of inspiration for his inventions. Tesla used his scalar waves to create earthquakes and vibrate target buildings to pieces, even those nearby the target. He created the same effect with his massive Tesla coil transmitter and claimed that he was bouncing scalar waves through the earth's core to the antipodes and back to his transmitter site. A quite small 10kw generator energy supply of just a few horsepower rapidly allowed the build-up by resonance of millions of horsepower in the coil circuits of his 'magnifying energy transmitter' device. Sheets of manmade lightning would arc out of the circuit to earth grounding points or from the spherical aerial system. He electrified everything for miles, even people, and would produce fire and flames using scalar 'potentials' (scattered, but harnessed particles from hyperpsace), especially to the antipodes (opposing side) of the planet. Tesla claimed his 'Death Rays' had a range of hundreds of miles, which were useful against aircraft and he stated that entire cities could be devastated by explosive EM transmissions across intercontinental distances to anywhere on the planet.

According to the book 'HAARP: The Ultimate Weapon of the Conspiracy' by Jerry E. Smith, Tesla claimed his transmitter could produce 100 million volts of pressure, with currents up to 1000 amperes which is a power level of 100 billion watts. It could project the energy of a nuclear warhead by radio waves and any location in the world could be vaporised at the speed of light. Some say the Tunguska massive explosion in Siberia (still unexplained, because a meteorite would have left a crater) on June 30 1908 was due to a test of this transmitter striking its antipodes through the earth. There is evidence that Tesla's weapon was tested once according to Smith. The force of the explosion at Tunguska was estimated to have been 10-15 megatons of TNT, which Oliver Nichelson calculated Tesla's device could deliver. The blast flattened half a million acres of pine forest and killed two people, along with whole herds of reindeer and other animals. In 1907 and 1908 Tesla wrote about the destructive effects of this machine and he wrote about it again nine years later saying "...When unavoidable, the [transmitter] may be used to destroy property and life". It's thought that Tesla may have been trying to break ice at the pole, and may have overshot the target, as Tunguska is on the same great circle line as Shoreham, Long Island where Tesla had his transmitter. If the Tunguska explosion was on the same day as his experiment, Tesla never admitted it publicly. Harry Mason said that a 1938 press report statedTesla's Death Ray would employ 50 million volts in a new form of ray wave only one-hundred-millionths of a centermetre in diameter and was based on an entirely new principle of physics that could produce a great repelling force. According to Harry Mason, an Australian, who invented another "Death Ray" was found shot through the heart in England in 1937. Tesla claimed that the device could melt any engine, and that if aimed at the

moon, would turn a spot on the surface to incandescence. Scalar waves can produce a great repelling force on the atomic nucleus, bypassing the outer electron shells, directly engineering or interferring with the components of the nucleus. Private research in USA shows scalar waves operate in a non-linear time dimension which is hyperspace, at any speed from zero to infinity, as they are not limited to the speed of light.

3. THE CONTINUATION OF TESLA'S SCALAR WAVE TECHNOLOGY

Most western universities ignore Tesla's work due to a conspiracy to stop free-energy and anti-gravity technology, because of the loss of money for big business that would be generated by this, but Eastern European and Russian universities include it in their curriculum, which is why the U.S. didn't realise that scalar waves were being used against them, due to no equipment for detecting such waves, until they had been secretly attacked for ten years by the Russians using them since about 1960 when President Kruschev announced "the Soviets had some superweapons". After the Russians shot down all the American space shuttles and satellites in 1977, the U.S. was completely at their mercy, by Russia openly flying cosmospheres over the U.S., firing particle beam and scalar beam weapons developed with the expertise of captured Nazi scientists. Following this an enormous effort was made to develop beam weapons in the U.S. The F.B.I. had held all Tesla's scientific papers for several years after he was said to have died in 1943, so much of the research was unknown to the public when they needed it the most to fight back against the Russians attacking U.S. military targets and doing weather-engineering over America in the early 1960's. U.S. started up their own scalar transmitters in out of the way places like Australia, Alaska, Puerto Rico, Greenland and Norway using Tesla technology. However they also made particle beam transmitters at Montauk, LI, and Los Alamos, NM. One of the first places to house Tesla technology, and hence scalar weapons was Exmouth U.S. navy base in Western Australia built in 1968, and operative in 1969, where they had a free rein in the deserted Australian outback to practise. Pine Gap, another U.S. military base in the center of Australia was another site which became operative in 1970 and has two scalar transmitters.

Even though Tom Bearden, a nuclear physicist and scalar weapon expert, claims the U.S. was totally oblivious to the secret Russian scalar and particle beam attacks on them, which were never made public, secretly the U.S had their own weapons that not only used Tesla technology, but also from alien alliances, they procured advanced technology thousands of years ahead. However due to different factions at odds with each other in positions of power, the different U.S government departments researched separately. (See The Secret Shadow Goverment. A Structural Analysis by Richard Boylan Ph.D. http://www.worldnewsstand.net/history/ShadowGovt.htm) One faction was time-travelling across the universe in the 1960's, compliments of the airforce, fighting wars in the future through stargates, as in the series StarGate SG1. The 'official' space program couldn't even get a satellite in orbit, but lied about that and the voyages to the moon to appear as if they were progressing. According to conspiracy researchers, behind many of these technological facilities were former Nazi scientists who were so clever at getting things up in space that they'd already colonised Antactica, the Moon and Mars before the war was over! The Nazi's homegrown UFO engineering plans were found in Germany after the war and there was a mad rush by the

Americans, British, French and Russians to snatch the best Nazi scientific brains for themselves. According to the book 'UFOs: Nazi Super Weapon?' by Mattern and Friedrich (written in Germany in the 1950's, but only published in Canada in the 1960's, because the German's daren't publish it) the Americans were the cleverest capturing many 'prize catches' much to the anger of the French, British and especially the Russians. The great American brain robbery of the enemy was so mind boggling that a special dictionary had to be made for the technical jargon of the aircraft industry alone comprising over 75,000 separate terms. Whole German factories, including every nut and bolt, models, drawings and prototypes were shipped to America, and to a lesser extent, the other Allies, but what America got in quality, the Russians got in quantity. The book claims that the Russians on 21st and 22nd Oct 1946 (in Soviet occupied Germany) sent heavily armed troopsto haul out of their beds 275,000 German scientific specialists as well as their wives and all their children and took them to about forty locations in Russia. German factories awaited them, all dismantled and crated. They were forced to sign work agreements for five years and worked around the clock for three bowls of Borscht soup and a slice of bread daily. There would hardly have been a scientist left in Germany after the war, with a great exodus during the war as well to Antarctica and South America, where they carried on their anti-gravity research etc. in secret, underground. The Russians set them to work ,40% on aircraft and jet engineering; 31% on aircraft design; 6.5% on radio and telephone; 4.5% on pipelines; 2% on atomic research and 1.5% on television.

4. TESLA'S CROSSED SCALAR BEAMS

In the 1920's Tesla created 'Tesla Shields from scalar waves which he claimed could defend an entire country against aircraft and shells by creating a barrier made of energy which they could not pass. The Soviets had access to all his work during their search for 'superweapons' to match the U.S. after the atom bombs were dropped on Japan. Tesla's papers were shipped to communist Yugslavia after he died in 1943, where they were easily accessed by the Soviets. By 1914, according to Harry Mason, Tesla predicted the electrical control of the atmospheric moisture and described how to do this with his magnifying transmitter and even how to control the sun's EM field and modify its effects on the earth using scalar transmitters. Also how to turn night into day to make sea and air navigation safer. He stated that it's possible to engineer EM shielding to stop decay from nuclear radiation because the decay was caused by interaction of the nucleus with a special ray emanating throughout the universe. Tesla said it is possible to stimulate the nucleus into explosive or rapid general transmutation. In about 1908 Tesla discovered that scalar energy, without energy loss, using an interferometer becomes bottled from the intersection of two scalar wave beams. **By interferometer (crossed beam) techniques, giant standing waves can be combined to produce a focused beam of very great energy. This can then be used to produce earthquakes induced at distant aiming points.** He noted that this could easily get out of control once it begins vibrating within the Earth and could actually cause the Earth to vibrate to pieces. His own had proved so powerful, that during its testing phase he destroyed it with a sledgehammer to keep its vibrations from destroying his entire neighborhood. 'POTENTIALS' are particles which are unorganised in hyperspace, pure energy not yet released into the physical world. They can be harnessed into creating different frequencies of scalar

waves and can be manufactured artificially. This energy emerges and stabilises only if the transmitters are at a higher reference potential than the interference (blending) zone. If the transmitters are set at at a lower potential, the energy bottle re-emerges back at the transmitters where it has to be disposed of if the transmitters are not to be burnt out. If two single frequency scalar electromagnetic (EM) waves, containing zero-vector and artificial potentials intersect, real observable electromagnetic wave energy results, though no EM energy has flown through the intervening space. Invisible waves of pure potential without any force field amplitudes, using artificial potentials seemingly do not exist according to conventional science, but this is because they are undetectable with normal detection equipment. Yet they can be manufactured by polarizing them or concentrating hyperspace into a river of force, which when merged using two beams, produces real electromagnetic waves. If the transmitter uses potential above that of the energy bottle, detectable energy emerges in that zone and it is called EXOTHERMIC mode. To extract energy back to the transmitter from the energy bottle, the potentials must be below that produced in an energy bottle. This is ENDOTHERMIC mode.

If two transmitters transmit a timed pulse and the two pulses meet, then an explosion emergence or extraction occurs at the distant interference zone, depending on whether exothermic or endothermic mode is used. However there is no detectable energy flow between transmitters and the intersection of the two beams exist as locked in artificial potential in hyperspace. This supposedly doesn’t exist. The energy flow between transmitters and intersecting beams does not exist in the intervening space physically as an EM force field, only as a locked-in artificial potential. If the wave transmission is continuous, the energy appears physically between beams as continuous. If multiple frequencies are transmitted on the beams, at the intersection a 3 dimensional globe appears as a bullet or shell. Using pulse transmission an impulsive or explosive emergence of this energy form appears, but if using continuous mode a continuous glowing plasma form appears visibly. The impulse endothermic mode energy is extracted and generates a cold explosion or sharp cooling, and this can sound like thunder.

Extracting energy from the distant intersection of endothermic mode has to re-emerge at the transmitters. The Soviets use a "dump" method of temporarily capturing and storing in an accumulator the heat building up at the transmitters. A second howitzer in exothermic mode is used to focus energy into a distant dump site, often Bennett Island, north of Siberia in the Arctic Sea, where exhausts are continually observed by U.S. weather satellites. Several scalar waves sent from different transmitters may also be engineered to combine by interferometry to produce a plasma bottle of very high infolded or contained energy, with any desired light emission, shape, color and intensity. This ‘bottle’may be moved around the planet at will (visible or invisible). The bottled energy may be released by a further specific transmission. It can be moved into the Earth, through the air, or into the sea. If "detonated" in the earth an earthquake is the result. In a building or a city a violent explosion, like a nuclear blast is the result. According to Bearden the molten core of the earth itself can have enormous energy extracted directly from it distantly and the Soviets can do this with slight variation, using scalar EM weapons. Scalar frequency pairs -12 khz apart are transmitted into the earth itself and they extract a gigantic electric current, which is tapped off and transmitted into incredibly powerful scalar weapons systems. The force of many Niagra Falls powers each weapon. Powerful transmitters trapping

and extracting energy from earth's molten core can make very large spherical globes and hemispherical domes of EM energy. This shell can lift Dirac matter from the Dirac sea of the vacccum of hyperspace. Tests giving scalar howitzer signatures (also called Tesla globes) have been seen over the N. Pacific by jet airliners flying in and out of Japan, as well as deep within Russia by ground observers in Afghanistan and Iranian pilots.

5. RUSSIA'S 'WOODPECKER' SCALAR WAVE TRANSMITTERS

According to Bearden ever since July 1976, Russian scalar transmitters have continuously sent transmissions which disturb communication systems of the world in the 3-30 megahertz band. The noise is like a woodpecker pecking a block of wood, so they have been nicknamed 'Woodpeckers.' The power of the enormous transmitters vary but he says they range as high as several hundred megawatts, and nominally 100 megawatts. Several nations have protested, but they still continue to this day. The Russians just spread the spectrum to shift to other frequencies periodically. Two to three scalar over the horizon radar beams from these Woodpeckers can intersect each other over USA. An intersection grid over the whole of USA is formed by waveform interference of two main Woodpecker beams. These beams follow the earth-ionosphere waveguide and curve around the planet. This is done to detect launched missiles and strategic bombers lifting off out of USA. However this massive Russian grid covering large areas of U.S. has other more sinister mind control operations according to Bearden. A phase-locked ELF modulation signal at 10 hz is often detected on multiple Woodpecker frequencies simultaneously. This modulation if suffiently stronger than the Schumann Resonance (the frequency of the earth's natural magnetic field) can hypnotise brains into 'forced entrainment'. Human brainwaves are 'synchronized' to the Woodpecker signals, so that multiple coherant frequencies phase-lock into them. Bearden writes that multiple coherent EM frequencies are channeled into these entrained minds. He also says that what is termed 'Fourier expansions' may be used to attack specific portions of the brain geometrically. Bearden writes: "About 1950-1952, the Soviets developed [scalar] EM machines that could influence the brain and nervous system directly. This included the Lida machine, which can induce a catatonic state into a mammal such as a man, a cat, etc. U.S. scientists, obtaining one of these devices in the 1980's, reported that it utilized a 40 MHz carrier, and produced unusual waveforms (showing the multiple frequency content). Since the U.S. scientists do not possess scalar EM detectors, they have no measurements or knowledge of possible scalar components in the Lida's output signal. According to one U.S. scientist, the device was used by North Korean interrogators in brainwashing U.S. prisoners in North Korea during the Korean War, and was highly effective." It would appear that Russia did use scalar waves first in the early 1960's, but US soon caught up, building scalar transmitters in Australia in 1968.

6. THE 1930s

Bearden says in 1939, T.H. Moray in Salt Lake City, after learning about Tesla's sea of ether (in the vacuum of hyperspace) built a specialised amplifier, which extracted energy from the vacuum. It functioned as a macroscopic scalar interfereometer and collector and it produced

50kw of power without conventional input. The 55lb amplifier curved local spacetime. After testing it, a Soviet agent destroyed the device, in which Moray had expended several hundred thousands dollars. He was never financially able to rebuild it. Moray and Tesla were the first two scientists to engineer scalar electromagnetics, electrogravitation, local general relativity and thermodynamics. Tesla, along with Einstein and a man named John von Neumann worked together in the late 1930's to discover how to make a warship 'radar invisible' for the US navy for WW2. However when the transmitters were turned on in 1943, the ship was wrenched into hyperspace as it lost its grip in time in what was called 'The Philadelpia Experiment'. It later returned when the ship operators, the Cameron brothers, ended up at the Montauk faculty, LI, forty years in the future with von Nuemann forty years older. They were sent back in time by teleportation to smash the ships generators and it rematerialised. So major discoveries were made after this on how time operated and this has been developed in secret by the U.S. government. It has progressed to the stage where time-tunnels can be created at specialised 'time-travel' facilities where people may now go all over the universe, arriving any time in the past or future. [See www.projectpegasus.net]

7. THE 1940s

When WW2 ended in 1945, Tesla's relatives petitioned Washington to receive seventeen trunks of papers and equipment he'd stored in a NY garage. In 1952 these were sent to communist controlled Belgrade and put into a museum where the Soviets got all the data. It is hoped that Tesla didn't leave the instructions for making his "Death Ray" in his papers because the Japanese among others went to research them at the museum. The Soviets built Tesla museums themselves. It is also claimed that the Russians helped the Serbs in the Bosnian war with Tesla scalar technlogy to down U.S. helicopters. More good scientific fortune came for the Russians after Japan had atom bombs dropped on them in 1945. When Germany became under their control, they took Germany's radar scientific team to the Soviet Union. (the book 'UFOs Nazi Secret Weapon?' by Mattern and Friedrich said that Germans had already invented the atom bomb before the war ended.) These Nazi scientist had already advanced the theory of radar cross section and radar absorbing material. They were on the verge of discovering phase conjugate time-reversed radar waves, which led to scalar wave technology, according to Bearden. The Germans did well in developing anti-gravity technology and if they'd suceeded in timing this six months earlier they'd probably have won the war, according to the German book 'UFOs, Nazi Secret Weapon?', which was written just after WW2 following the aquisition by the writers all the technical drawings and plans the Nazi anti-gravity engineers had left behind. Exactly the same UFOs they'd built in German facilities all over the country during the war were soon seen in the skies after the war, flying from the Antarctic base where they'd taken them before the war was over. The engineering plans found by the allies in Germany showed what they'd made. Mattern and Friedrich wrote of innumerable German inventions and after the war the Americans threatened war trials if they didn't reproduce all their inventions and they were given small food rations as an incentive. The Nazi scientists set to work at Area 5, Nevada to build America's own UFOs and they also created the U.S. space program. They brought the Soviets up to date not only to the 20th century but to the space-age. U.S. Jewish communists spies helped Russia

produce the atomic bomb. German scientists produced the Mig fighter planes, used to kill Americans in Korea and Vietnam, along with submarines, torpedos, tanks, military rockets and the 'cosmospheres' (Russian anti-gravity UFOs). When the Germans protested in a group, they were shown documents in English by Churchill and Roosevelt granting the Russians the express right to utilize any German person as they saw fit. (bearing in mind Roosevelt also managed to cause the deaths of about 1 1/2 million Germans after the war in German concentration camps from diseases and starvation). After the five years were up, if theCaptured Nazis hadn't died, many were condemned to slave labor camps for life. They were also kept for another 2-3 years in quarantine, so they'd forget the projects they worked on, not being allowed any pencils or paper, wrote Mattern and Friedrich.

NAZIS IN ANTARCTICA?

However all of the initial specialised German UFO scientists could not be found after the war. According to Mattern and Friedrich the Germans had their own UFOs in 1940 but they didn't have enough of a rare metal needed to make enough quantities to win the war with them. The Germans had kept exacting records of everyone in Germany, including how many Jews they killed. The allies, in 1945, ferreting out war criminals found 250,000 people had disappeared taking into account casualties and deaths from all different causes. According to Mattern and Friedich, the number unaccounted for remains constant and they claim they moved to Antactica and South America using submarines and their own UFOs. The Nazis had forged U.S. dollar notes and English five pound notes so perfectly (using genius Jewish forgers), that the banks couldn't tell the difference. The World Monetary Fund found 15 billion dollars which shouldn't really exist. The British had to withdraw the five pound note, after a wrecked German plane was found with 300,000 English five pound notes complete with printing plates! The Nazis had secretly colonized Antarctica in 1937/38 after carefully taking 11,000 previous photos for mapping. After the allies found out, they sent over 4,000 US navy troops to Antarctica on Dec 2 1946. When Admiral Byrd landed there, the instruments went totally haywire and the performance guages and altimeters behaved in a most erratic manner, forcing Byrd to abort the invasion, however he did manage to locate the Nazi base. It has since been said by the writer W.A. Harbinson, that the Nazis down there have superweapons which don't let anyone near. Other sources say a UFO greeted Byrd with a German speaking Aryan-looking alien, who'd somehow managed to land his plane for him, by removing gravity under the plane. He apparently spoke with the alien, who said he was from a race called the Aryanni. Other sources say that the Nazis are in league with renegade Pleiadians down there. Could the aliens at Antactica be helping with the poleshift?

In the article called 'Fortress Australia' (http://www.rumormillnews.com/FORTRESS_AUSTRALIA.htm) it is said that Americans, together with aliens are using a HAARP transmitter to alter the magnetic field over the South Pole now and that they have already done this with the magnetic field over the North Pole. Many psychics who apparently 'channel' Pleiadians have said Earth will 'ascend' to 4th dimensional frequency, that they they are 'helping'. Billy Meier, a Swiss, who was contacted by a woman from the Pleiades named Semjase, claims that she said the Germanic peoples

descended from Pleiadians. Other sources say the Pleiadians told Hitler the earth was over populated. Apparently Hitler was trying to save people with blood type A, which the Nordic type Pleiadians have. In Antactica, some say Byrd dropped an American flag, others a bomb, but within forty-eight hours, four of Byrd's planes had been lost, so they went home. Maybe the Nazis developed a secret weapons from the alien alliances they are said to have now in Antarctica since they'd been there from 1940/41? More on the Nazi colony in Antactica can be found in Branton's online book 'The Omega Files' in which it says that Admiral Byrd's nephew called Dr Harley Byrd claims that Admiral Byrd was greeted by a collaboration of Nazis, grey aliens, Draco (reptilians), and rebel Pleiadians and even sasquatch. More can be found here by Branton on this subject here as well: (http://www.esotericworldnews.net/genesis24.htm)

UFOs BEING DEVELOPED IN SECRET ALL OVER

But safe to say that WW3 will be fought with spaceships and beam weapons, now that many other countries also have made their own UFOs, complete with all kinds of deadly weapons that come from Tesla's inventions and alien technology alliances and crashed alien saucers. Could this be the Biblical 'War in Heaven'? The Russians now have hundreds of cosmospheres and it's unknown how many Nazi UFOs down in Antactica, but apparently there are about two million people there now according to Branton. Perhaps the Russian cosmospheres are still at odds with the Nazis in Antactica as well as fighting the Americans - who also had former Nazi scientists create anti-grav craft at Area 51 after the war. The Nazis had also set up colonies in South America during WW2. Mattern and Friedrich say that Argentina and Chile, as well as Antarctica were places where many Nazis escaped to because of a large German population and fascist leaders. In the (UK) UFO Magazine, Aug 2003 curious underground signals were detected in Argentina, with unnatural radioactive signatures, microwaves, levels of electricity and oscillations originating from the depths of the earth. They were concluded to have come from machinery operating many km beneath, sending oscillations with alternating electrical waves. The area has strange swiftly moving lights, which then plunge into the ground. Could it be Nazis or aliens? Mattern and Friedrich mentioned an American man of German blood called Reinhold Schmidt and he claims he was taken away on numerous occasions by a flying saucer to the pole, with the crew speaking German and acting like German soldiers. However the crew leader claimed to be from another planet. He'd also spoken with German speaking Saturnians. Preston Nichols claims that Hitler was in league with Pleiadians and also a Dutchman who'd seen Hitler in a field in Holland during the war conversing sometimes with aliens who'd landed and got out of their ships to meet him. Others say the Pleiadians deliberately crashed a ship in Germany in 1939 to give them a technology boost during the war because of the Germans being the same Nordic race as them.

ARE NAZIS STILL BEING A THREAT TO THE WORLD?

Also in time travel experiments at Montauk facility, LI, run by aliens and Nazis, they were said (in the 'Montauk 'series of books by Preston Nichols and Peter Moon) to have sent technology back in time. Andy Pero claims in Vol One of this series THE UNIVERSAL SEDUCTION in the interview by Eve Lorgen, that he was sent back in time by Nazis working at Montauk, to

both England and Germany to deliver drawings and communication devices and weapons made of 1940's parts to enable America to win the war. This could be a complex puzzle to solve with different timelines, in operation regarding who really won WW2 (in our present reality) because an American man named 'Professor Phate' claims he comes from another timeline running twenty five years behind this one, in which Germany won the war or called a truce and he claims that his U.S. government handlers switch him, using his soul, from one timeline to another as they wish. He says there is another whole new reality, running concurrently with this one, where there was no hippy revival and things are much different. The people at Montauk and their alien cohorts are manipulating different timelines from there, where apparently many converge due to the location of the world's gridlines which meet at Montauk. Each timeline/gridline contains a different 'reality' which can apparently be manipulated by technology. Our present 'reality' operates at 435 MHz according to Preston Nichols, and the window frequency to the human consciousness operates at 400-450 MHz. A new 'reality' is being churned out with a series of 'thought forms' (emanations from the mind) transmitted from technology tuned to 400-450 Mhz. Nichols claimed that one day when he went to visit the outside Montauk grounds where all the transmitters were, things he saw were there one minute and gone the next, popping in and out of reality. Parallel realities were switched at random there with computers. He even found that on another timeline he'd worked at the place as an electronics engineer for years, even though he hadn't visited there to his knowledge before. Time was looped and twisted and bent beyond recognition using alien computers and magic processes which were powered by manipulations of 'kundali spirit fire' syphoned from the spines of victims taken off the street. They used a 'Zero Time Generator' constructed by Tesla in the 1920's, from which to reference their timeline manipulation. A person would be sent anytime to thousands of years in the past or future, along to any point across the universe through time tunnels. The time co-ordinates were calculated by the computer and referenced to Zero Time to enable the person to return to the right time line, otherwise they may get lost in a different 'reality'. 'Multiple realities' where different timelines operate concurrently (using technology thousands of years in the future) is said to exist at U.S. military underground installations at Montauk, LI, Dulce, NM, and Pine Gap, in central Australia according to the writer Branton.

TESLA INVOLVED IN THE PHILADELPHIA EXPERIMENT

According to Al Bielek, Tesla invented a Zero Time Reference generator which was used on the ship 'Eldridge' for the Philadelphia Experiment, as a system which locks onto the earth's magnetic structure and its mass resonance, finding out a zero like or still time as a reference point in which to universally date something by taking into consideration all the revolutions of earth, the sun, our galaxy and so on ultimately until according to Preston Nichols 'our reality' is found to lodge into. Tesla developed this in the 1920's as part of the FAA Fed Aviation, and the Eldridge (warship used in the Philadelphia Experiment to become radar invisible) had to have this to lock all systems together to have a reference point to return to. Tesla was initially the director of what later became know as the Philadelpia Experment, originally created to make ships invisible using powerful magnets outside the ship. Unfortunately magnets giving off scalar waves distort the hyperspace by warping the fabric of it. Tesla dropped out in 1942, before the final experiment was done in 1943, which made a forty year rift in time. However, the ship was

sent into hyperspace by accident once the generators were switched on and Al Bielek was suddenly transported through time to forty years in the future.(He was then known as Edward Cameron.) He met with Dr John von Neumann who was forty years older, living in 1983 and he was working on the Phoenix Project and was himself working with scientists from that future, who taught him to manipulate time and timelines. Al was shown technology by a much older von Neumann (who was also there still in 1943) during his trip to 1983 and working with him on the Philadelphia Experiment as he was transported to the future. Dr Edward Teller and Stan Tennen both knew about seven parallel realities, which interlock. Much became known about how time operates from the effects of the Philadelphia Experiment. Aliens also had a hand in teaching Americans this secret technology starting with Tesla, who'd made a press announcement that he'd been in touch with 'people off planet'. He still insisted it was true two decades later. After it was found that time could be travelled through physically, much research was done on multiple realities amd the manipulating of them, especially how to manipulate the 'timeline' (present reality expressed) we live on which was found to operate at 435 Mhz.

8. THE 1950s

According to the book 'Excalibur Briefing' by Tom Bearden at the end of WW2 the Soviet Union obtained the best radar scientists and infrared scientists of Germany and these lead the world in the theory and technology of radar absorbing materials (RAM) and radar cross section. Some leading western radar experts believe that these men already had advanced radar cross section technology beyond western levels today. RAM technology is needed to develop and design phase conjugate mirrors, which are capable of producing a time reversed (TR) wave in direct response to a received ordinary wave. The mirror is pumped with energy to largely amplify a time reversed wave. By 1950 the Soviets, probably using German radar scientists discovered phase conjuction and the time reversed wave in their radar programs. The Soviets, having lead the world in non-linear science and mathematics would have by the mid 1950's had an intensive development program on these radar time reversed weapons. (radar waves are one step lower than scalar waves) These Russian weapons are now in the 5th generation development from the equivalent of 7-8 back to back Manhattan Projects (the U.S. program to develop the atom bomb). A time reversed wave does not diverge and spread its energy (unlike a normal wave) it continually converges upon its invisible 'back-tracking' path. Extremely large amplifications of TR waves can be done cheaply and readily in response to received signals from a distant target. This is a powerful weapon when turned directly to that target, because almost all of the transmitted TR signal energy will arrive at and into the distant target, with hardly any waves lost enroute, even if the target is fast moving. Geometric forms of energy can be created using crossed beam techniques and these time reversed wave carriers don't disperse with distance, so can be sent to great distances even hundreds and thousands of miles, limited only by the amount of amplification transmitted at the beginning. Bearden says that before 1960 the Soviets radiated the US embassy in Moscow with scalar EM waves and phase conjugate energy, modulated upon weak microwave carrier beams. These created illness and blood changes in the staff. U.S. studies took a long time to understand what was happening and so by not taking counter measures the Soviets knew that US had no defenses against time-reverse wave technology and scalar electromagnetics accompanying these beams directed towards the

U.S. embassy staff.

9. THE 1960s

In January 1960, Nikita Khrushchev the Soviet premier announced the development of a new fantastic weapon and on April 10 1963 (according to Tom Bearden) the Soviets used it to destroy the U.S.S. Thresher atomic submarine underwater, off the east coast of the U.S. The next day, they used it in a different mode to produce a giant underwater explosion in the ocean over the Puerto Rican Trench, 100 miles north of Puerto Rico. Since then the Russians have downed or interfered with various aircraft as tests of their scalar beam weapons. F-111s were downed mysteriously in the Vietnam conflict and one was found to have had all the electrical systems broken. Special Soviet teams were thought to have converted some North Vietnamese SA-2 missile system radars to the scalar EM mode, which is easily done, to destroy the plane's electrics. Bearden writes that Tesla used his endothermic mode scalar interferometer to be a remote viewing radar. This can be accomplished by crossing two beams and only extracting a small amount of energy, which can be displayed and read on an appropriate screen. With new techniques this can be quite good, and Bearden says that with development this may become as good as side-looking aquisition radars. Since scalar beams can penetrate the earth or ocean, one can use them as an X-ray form and see inside buildings and underground faculties. Targets under jungles may also be visible. Underwater submarines can be detected and tracked. To destroy a submarine, two beams in exothermic mode can be fired with powerful scalar pulses intersecting at the submarine in a violent electromagnetic pulse, which destroys everything instantly.

When the Soviets destroyed the USS Thresher submarine in 1963, it left a scalar interference on the nearby USS Skylark, which was in the "splatter zone". The Skylark's electrical systems were actually disabled, which went on for an hour and a half and this stopped it transmitting an emergency message about USS Thresher. The Skylark's electrical system later resumed operation inexplicably, which is a direct signature of an exothermic scalar interferometer used undersea. Americans must have found out about the Russian scalar weapons and set to work to build their own facilities to develop the same, only away from prying eyes in Australia where the deserted outback was a good testing ground. According to Harry Mason, (in his 'Bright Skies' articles) after the US navy Exmouth faculty in NW Cape, Western Australia was built in 1968, when the main contractors left, Tesla scalar technology was built in, with a duplicate of his energy transmitters which he'd built in Long Island and Colorado. It had a wooden construction to handle very high voltages and frequencies, possibly as high as microwaves, which contain the induced coil electrostatic wave from discharge. This is NOT needed to handle VLF and ELF. (Harold Holt, Prime Minister of Australia 1966-1967 disappeared while swimming, after telling close friends and family that the next day he would raise in parliament something that deeply offended him about American activities in Australia. He was never seen again.) Exmouth became active in 1969 in time to conduct the tests just before 1970 in the Great Sandy Desert, WA, where earthquakes were induced in grid rows 10km apart. In 1965 the Great Sandy Desert was mapped with high altitude aerial photography by the US govt. In 1966 the French oil company Aquitane, that had a permit for oil exploration there, carried out aero-

magnetic, ground gravity, seismic traverse and ground VLF/ELF EM studies, which was odd for oil exploration but the Aust govt, paid half the exploration costs. The public was told it was off limits for testing British Blue Streak missiles, and European 4 stage rocket satellites. They got one into orbit in 1970/71, and then the project closed down.

10. THE 1970s

In 1970, Aquitane did no field work, but in March 1970 a series of concentrated magnitude 3.0-3.5 earthquakes commenced in the Great Sandy Desert, though no earthquakes had happened there before. These happened along a 10 sq km area of two lines forming a central 'aiming point' cross. Two young cattle hands died mysteriously a few years ago on the seismic gridlines, in the Great Sandy Desert 'earthquake test range'. Other Australian areas have also shown clusters of earthquakes around central points. According to Mason the Great Sandy Desert quakes are distributed exactly due east of the Exmouth US navy transmitter (Tx) site, and move sinisterly located upon a magnetic north pole circle route, from Exmouth's sister site at Cutler, Maine near the Canadian border. (Could this be part of the U.S./alien program which is moving the magnetic north pole along to another spot, which is described in full in Bruce Cathie's book Harmonic 33? This sinister scientific alliance are apparently relocating the world's natural gridlines about 10-12 deg away from their present spot in which to change the way time is expressed through our present reality. The magnetic field of the earth was lining up to match the new magnetic poles. Cathie claims this field work in relocating the gridlines was started about 1945 by the aliens. Other 'channeled' alien information on this claims they will be finished this new gridline re-activation work in 2012) Mason says that several fireballs have been seen emanating from Exmouth during 1973-1994, towards the Great Sandy Desert, which appears to have been utilised to test and deploy EM weapons of prodigious power. He says that slugs of crossed scalar beam energy could have been fired from Exmouth and steered or explosively initiated from Cutler Tx base and other US global transmitters into the area. A great circular geographic polar route north from Exmouth passes through these US military faculties: Hong Kong; Cutler, Maine (known VLF Tx); Arecibo, Puerto Rico (known VLF Tx); Tucuman, Argentina (known VLF Tx); Palmer and Amunsden-Scott US Antarctic bases and back to Exmouth Tx. In 1908 Tesla claimed that he could hit any antipodean spot on the globe with an enormous EM energy pulse in microseconds, creating an equivalant to the Navy's Dreadnought battleship broadsides, what we'd term now a nuclear explosion. Puerto Rico is a near exact antipodes of Exmouth and both sites have common UFO sightings, especially Arecibo, but Mason says they also may be Tesla globes from testing at both sites. In 1970 Pine Gap U.S. military base in central Australia became operative. According to the book Anti-Gravity and the World Grid, the facility has two scalar wave transmitters installed there.

In exothermic mode, a visible flash will occur if EM energy in the visible spectrum is produced for example if the emerging energy is in the infrared spectral band this will appear. One of these was detected in 1979 by Vela satellites as a "nuclear flash" over the south Atlantic off the southern coast of Africa. A second nuclear flash in infrared was detected in 1980 by Vela satellites. Bearden thinks this may have been Russians, but it is also known that Israel was testing secret weapons in South Africa at some point and they too have scalar weapons, particle

beam weapons, red mercury weapons and quantum potential weapons. South Africa also has scalar weapons according to Bearden. It is unknown how Israel got scalar weapons but many Russians have emigrated to Israel. France, who also has scalar weapons originally gave Israel nuclear weapons technology. American Jews also gave Russia the atomic bomb technology according to the book UFOs Nazi Secret Weapon?

In 1976 a British European Airway crew, over Lithuania watched an intensely glowing, stationary ball of light above the clouds, under the plane, giving the signature of a Tesla (scalar) Globe. The pilots were told by the Russians to ignore it and exit the area. In U.S., in 1978, an anomalous straight, not jagged, beam of '1ightning' came down from the sky at a 45 degree angle to the ground and struck Bell Island, Newfoundland, causing a loud explosion and house damage etc. Two cup-shaped holes about two feet deep and three feet wide marked the major impact. Wires leading to buildings nearby were vaporized. All the wiring on the property was blown out. TV sets nearby, also exploded. Atmospheric conditions were not conductive to lightning. U.S. Vela satellites picked up the event. The incident was investigated promptly by two representatives from a U.S. weapons laboratory at Los Alamos. On Nov 21 1977 Bearden claims cloud indications of a huge standing wave were observed off the US Pacific coast, reaching from Alaska to Chile. Cloud banks over this stretch of the ocean reached the whole of the distance. There a straight black line, as through drawn by a ruler, appeared in the cloud mass. It was an opening in the clouds, one mile wide and 200 miles long. There was no known explanation, but Tesla scalar globes and fireballs have had a straight black line down the center. In 1977/78, high altitude booms occurred off the East coast of the U.S, with some associated flashes. According to Bearden, these explosions represented adjustment of an interference grid that had been established over the U.S. by crossed Woodpecker scalar beams, and artillery-type high burst registration of scalar EM howitzers. Numerous other adjustments of the grid and registration of howitzers have occurred over the U.S. The grid can detect anything passing through it into space. To create a scalar interference grid waves are sent one way with another set crossing it from another transmitter and this shows up as a grid on their computer screens. This enables, one to see if anything is fired into the air and from where, also it can target an object on one of the gridsquares, by sending a scalar wave one way, and another another way, to meet at the target. The explosion shows up on the screen. In 1984, significant adjustments of the interference grid over US occurred. Over Los Angeles and San Diego anomalous aerial phenomena such as explosions, rumblings, airquakes, and buildings and windows shaking without seismic disturbances occurred. A sharp and unexpected weather front appeared, racking the area with high winds on the night of Dec. 12, producing wide-spread damage and power outages. The newly-formed front, steered by the dynamic Woodpeckers, moved on to produce significant snowstorms in other areas, even Tucson received a snow 'dump' of 20 inches. (America also now has interference grids over other countries from multiple scalar transmitters placed in various countries to do the same.) Other loud booms, all over the U.S. were claimed by another insider to be Russians in their cosmospheres, firing particle beam weapons. More on that later.

According to Bearden, the 'nuclear flashes' seen by the Vela satellites in 1979/80 could be tests of crossed scalar beams in the pulsed exothermic mode, which produces a sharp electromagnetic

explosion, hence the ‘flash’, very similar to the initial electromagnetic flash of a nuclear explosion. He says: "Even in the vacuum of space, such an explosive eruption of energy from within the local spacetime vacuum itself may be expected to lift matter from the ‘Dirac sea’ [hyperspace energy, producing a plasma. Prompt absorption and re-radiation of energy from this sudden plasma may be expected to present nearly the same ‘double peak’ profile as does a nuclear explosion. This was the profile presented by the flashes. Note that the second flash detected was apparently of an ‘explosion’ primarily in the infrared, almost certainly ruling out a conventional nuclear event. It does not rule out, however, pulsed distant holography using pumped EM giant time-reversed wave transmitters." In Afghanistan 1979, Nick Downie watched a gigantic, expanding sphere of light deep within the Soviet Union, toward the direction of Saryshagan missile test range, which contains at least one directed energy, or particle beam installation which could function as a scalar interferometer. Downie says that multiple events at this place occured during the month. Bearden claims also, that on the other hand, there also exists tenuous evidence that these Vela satellite seen events may have been associated with weaponry of another nation, not hostile to the U.S.

TESLA TECHNOLOGY USED TO ACTIVATE WORLD GRIDLINES

On a more esoteric note, it seems that Tesla’s hyperdimensional physics has been used to go into the realms of the unknown. Richard Hoagland in a 1995 radio interview told of a friend, who was part of security, in the U.S. armed services in the 1970’s in Central America. He was in a large battalion of military engineer personnel, flown into a location. They hauled in large portable generators, each of which was capable of lighting a city. There was a large amount of copper cable and this equipment was placed on an ancient Meso-American site in the jungle in the middle of nowhere close to 19.5 lat. The generators were positioned separately in a geometrical hexagonal pattern with energized coils. Hoagland claims that from what we know, it must have been to probe the efficacy of the terrestrial hyperdimensional grid. At hyperdimensional nodes on the grid one can change the resonance, with the object of creating geological earth changes. As our physical reality vibrates at a certain frequency, various physicists are using transmitters to change the way time flows and therefore how our time-frame vibrates. Hoagland says in his opinion, we are being manipulated into a belief system, which is reaching a critical point. Someone wants us to think a certain way, and things are being sent to follow this perception, however, he claims this does not follow the truth. (Americans and Russians are both using scalar waves to engineer a particular kind of level of reality vibrating at a different frequency to the one we have at present and changing the expression of our brainwaves, which operate in scalar waves. Various frequencies are equal to the way we perceive life, depending on what parts of the brain are activated by that frequency) Hoagland says in hyperspacial physics constants change, and this seems to be happening. Nuclear constants are changing and nuclear plants sited on the grid or not are getting ‘hotter’ than they should be, which means there might be more accidents. According to Bruce Cathie as well, this may be something to do with powering up gridnodes or vortexes, at intersection points on the world gridlines, in which he proved in his numerous books that hyperdimensional physicists are in a covert operation with alien help to create a new set of world gridlines, alongside the present ones connected to the North and South Poles. Various strange phenomena occurs, along with

UFO sightings along grid lines with the main lattice lines operating at 30 nautical miles apart. There seems to be a way in and out of hyperspace to other places in the universe when certain planetary configurations affect gravity using regular cycles and world biorhythms, and natural time tunnels open up. One needs to use very fine electromagnetic waves which operate in hyperspace for this. It's unknown if a wave more fine than scalar is being used for this, but ever since the 1950's brainwave emanations have been able to be controlled using scalar waves, so what is being used here for the last few decades is what is called 'synthetic telepathy', which is artificial thought produced in the same kind of subtle wave that real thought has. The Russians developed this first.

Nuclear and electricty power stations are being build deliberately on the sensitive gridline points, using harmonics, (hyperdimensional physics) so 'manipulate our reality' as held by the timelines, which flow through the gridlines, positioned there by gravity. Bruce Cathie has claimed by using the formula covert scientists use to calculate the angle of the sun and planets, which time to best day to detonate a nuclear bomb in order to affect hyperspace, that when the Chernobyl accident happened everything was in the correct position astronomically as for the other nuclear explosions. There is covert tweaking of a new set of gridline nodes. The Russians bought the patent for Buckminster Fuller's world gridline system. It is known that the Russians have had an alien alliance since the 1950's. Whether they work in conjunction with Americans to manipulate hyperspace grid node points is unknown, but information found online says that the Russians had a large natural timeportal in Afghanistan in use, that the U.K./U.S. alliance intended on taking from them, hence the war in Afghanistan. Research shows that one faction is trying to operate an old Atlantean gridline, which is creating an old 'reality' associated with Montauk, Atlantis and Cydonia. It appears that various alien factions including the Pleiadians are trying to activate certain timelines running through Montauk, where it is said that many timelines cross. So this major reality engineering work has been done for a very long time, behind the scenes with govt. and military people entering hyperspace and going into alternate universes. Bruce Cathie said that a UK intelligence agent told him that they could get into fifteen dimensions. It's unknown if Tesla worked with the British physicists, if (or after) he faked his death and went to the U.K. but having more money to continue his work, after having been involved in the Philadelphia Experiment where it was found that time could be manipulated, we can only wonder. Harry Ossoff in the book Anti-Gravity and the World Grid wrote that the warship the Eldridge was on a gridline at Philadelphia and while the ship had vanished for four hours for the duration of its suction into hyperspace it materialised temporarily on another gridline at Norfolk, Virginia. The gridlines were determined by Bruce Cathie. Ossoff asks: "Could it be that the energy that makes all this possible is a magnetic field transmitted at the correct frequency by the powerful field generators aboard the ship?" Much has been learned about how hyperspace functions since the Philadelphia Experiment took place in 1943. Is it possible that the Russians have learned how to navigate the gridlines with their cosmospheres by being able to materialise and dematerialise on the gridlines like the aliens do? Three Russians 'discovered' the grid in the 1960's. However in the 1950's both Aime Michel in France and Bruce Cathie in New Zealand both noticed that UFO's appeared in the same places or on the same latudes or longitudes. They both mapped out a set of gridlines at about the same

which matched. When this went public Cathie was immediately visited by the CIA and MI-6. They tailed him everywhere wanting to know where he got his information and the CIA offered him millions of dollars to be quiet, which he turned down. The N.Z. govt protects him however and more than likely told everyone to back off and leave him alone, as he gives the data to them as he privately researches what is happening. Using his special harmonic equations to understand gridline tweaking and the opening of hyperspace portals carried on by physicists. There appears to be a covert plan worldwide by top hyper-dimensional physicists to open up the gridlines at top universities and for this certain grid node areas have nuclear bombs dropped on them and one wonders why the French conducted 1,112 undergroud nuclear tests at Muroroa Atoll in the South Pacific between 1975 to 1988 alone. They have dropped more since. Richard Hoagland claims the French are really doing hyperdimensional physics. Did they create their own time-portal too? It would be a little attention getting to have dropped so many on France for this quest! A general idea is given here: http://www.mysteries-megasite.com/main/bigsearch/ley.html
http://ascension2000.com/Shift-of-the-Ages/shift14.htm with Cathie's work summarized here: http://www.geocities.com/CapitolHill/Parliament/3460/bruce.html

11. THE 1980s

The 1980s was a danger for the planet's safety, because the Russians got really dangerous in their experiments and especially with testing their new weapons on US, one with multiple scalar transmitters turned on at once, endangering the survival of the entire planet. According to Bearden, on May Day (May 1) 1985, the Soviets conducted a massive, 'full up' strategy exercise of the scalar EM weapon systems and communications strategic exercise for Gorbachev, the recently selected leader. During this sudden exercise Frank Golden discovered the Soviets activated 27 gigantic 'power taps', established by resonating the earth electrogravitationally on 54 powerful scalar EM frequencies (27 pairs where the two are separated from each other by 12 kHz.) transmitted into the earth and they utilized this to stimulate the earth into forced electrogravitational resonance on all 54 frequencies. Each of the 27 power taps extracted enormous energy from the molten core of the earth itself, and turning it into ordinary electrical power. Each giant tap is capable of powering 4 to 6 of the largest scalar EM howitzers possessed by the Soviet Union. Bearden says: "Apparently over 100 giant scalar EM weapons were activated and a large number of command and control transmissions and it lasted several days. By alternating the potentials and loads of each of the two paired transmitters, electrical energ in enormous amounts can be extracted from the earth itself, fed by the 'giant cathode' that is the earth's molten core. Scalar EM command and control systems, including high data rate communications with underwater submarines, were also activated on a massive scale. The exercise went on for several days, as power taps were switched in and out, and command and control systems went up and down. Bearden says that not a single US intelligence lab, or scientist detected this because they didn't have a detector for scalar EM radiation, and not one officially believes that the exercise ever happened." Luckily it was monitored on an advanced, proprietary detection system by Frank Golden for several days and by Bearden for several hours. This exersize represented the achievement of Brezhnev's 1972 statement that by 1985 the Soviets would be prepared to do s they wish, anywhere in the world. Bearden claims the NASA

shuttle launches were a test of these superweapons in a launch phase ABM mode, where a launched missile can be detected and destroyed shortly after liftoff. At first, electromagnetic pulse (EMP) bursts on the early shuttle trajectory were deliberately delayed in time to avoid detection.

However the ‘Fire From The Sky" author claims that the Russians used their cosmospheres high up in space for these shuttle shootdowns, and that the initial shuttle launches were all shot down by them, with particle beam weapons, with a faked landing of another spare shuttle. This will be covered later. Tom Bearden believes that during the shuttle launch of Nov 26, 1985 a very loud ‘sonic boom’ or explosion occurred over the launch site twelve minutes after shuttle liftoff, when the shuttle was already away and downrange. At least two previous shuttle launches had also been used as pseudotargets, with delayed booms occurring over the launch site well behind the vehicles. However ‘Fire In The Sky’ is the only insider to claim Russian cosmospheres shot down the shuttles, so Bearden may not have known about them when he wrote about this topic, he only knew the type of weapons used because of their signatures. So there are two slightly different versions of how the Russians shot at the shuttles, with Bearden saying they didn’t destroy the earlier shuttles, but he does have 100% proof that the Russians shot down Challenger in 1986, by photos of the Russian signature weather engineering in the clouds in the vicinity.

Other scalar weapons were being tested during the mid 1980’s also by America and Japan using the Western Australian outback. According to Harry Mason, in his ‘Bright Skies’ articles, between 1980-1985 and after 1993 bizarre massive non-fireball light phenomena has been described in Western Australia. A common sight is massive 5-10 second bursts of blue-white light seen in the night-time skies of the upper atmosphere. Normally no solid object is seen with these energy emissions, but they are similar to those explosions seen after fireballs flew by during scalar weapons tests in the 1990s in Western Australia. There are about 100 documented events of these until 1997, in WA. The only other similar emissions are those circa 1900 high-frequency, high-voltage scalar wave experiments by Tesla, where massive blue-white streams of arching electricity issued from the forest floor into the atmosphere, creating an intense, violent, blue-white glow, emitting an electrical noise, which was audible for miles and lasting several minutes. Flashes and beams were detected off the east coast of USA before 1985 and according to Bearden they were from one or more scalar howitzers in exothermic mode. Large booms appeared over 3 space shuttle launches in Cape Canaveral in 1985. For this the Russian Woodpecker over-the-horizon radar was used following the curvature of the earth in the earth-ionospheric waveguide, timing, phasing and orientating to met the rising shuttle. The shuttles weren’t destroyed according to Bearden just tested against the actual shuttles. However the Fire from the Sky files say the Russians did destroy the shuttles. Bearden says that on April 18, 1985 two Titan missiles, the only viable launch option, along with the shuttles, to put up US spy satellites blew up shortly after launch. Significent Woodpecker activity occured before and on the same day. Nov 26 1985 saw a very loud "sonic boom" or explosion 12 mins after liftoff, over the launch site of the NASA spaceshuttle. Bearden claims that two previous spaceshuttes had been used as Soviet targets with delayed booms over the launch site, but the shuttles weren’t destroyed.

The Soviets were extremely brutal to the passengers of an American airforce DC-8 lifting off in Newfoundland, Canada. On Dec 12 1985, they deliberately destroyed it and killed 258 on board. At lift-off, the aircraft lost power and sank into the ground tail-low. No flame or smoke issued from the plane before its descent and crash, yet it was seen mysteriously glowing with a yellow or orange halo, which is a signature of the use of a scalar EM howitzer in the 'continuous EM emergence' mode, similar to the manner in which several F-111's were downed in Vietnam. The DC-8's electrical systems were interfered with by EM energy and EM jamming noise created throughout each increment of spacetime occupied by the aircraft. The loss of the engines was probably due to a localized endothermic (energy extraction) beam to the engines. Crossed, glowing beams were seen to form in the clouds and a ball or beam of light then go from that glow and strike the aircraft. Instant fire to the plastics inside the plane, gassed everyone with cyanide inhalation, before it exploded. Its engines roaring in painful labor, rather than with the full-throated roar of normal power. Bearden claims the distant Russian operator/gunner apparently tracked the aircraft down the runway, using two modes against it, energy interference, and energy extraction. An anomalous hole, characteristic of a scalar strike was in the fuselage. Bob Gladwin took a picture of the actual strike of one of those weapons, offset from a shuttle launch in latter Nov. 1985 and about two weeks later on Dec. 12 the same or a similar weapon hit the US Arrow DC-8 in Newfoundland. On April 1985, a Titan 34-D missile, launched from Vandenberg Air Force Base, blew up 5 seconds after launch. Video cameras inadvertently caught the Soviet marker beacon used with the scalar EM howitzer that destroyed the Titan, up and above the explosion, moving independently. The hovering ball of light was completely separate. This positive signature leaves no doubt that the Soviets destroyed that missile also. The previous Titan 34-D missile launch there in August, 1985 also blew up just after lift-off. On May 3 1986, a NASA Delta rocket carrying a satellite failed. It had a an anomalous 'command-type' shutdown of its main engine during launch and began to veer off course. On film another anomalous light moved up from beneath the rocket and struck it, seconds before the destruction. Bearden says the light plus the 'internal command surges' are strongly indicative of time-reversed EM pulses and interferometry from a pumped phase conjugate mirror adjunct operating with an over-the-horizon tracking mode.

On Jan 1 1986, Frank Golden detected, physically verifying with a special technique, that a metal softening scalar EM signal had been added onto the Soviet Woodpecker signals, and this is what they later used on the space shuttles. In the spring of 1986, abnormally strong Soviet weather engineering occurred over the U.S., causing a drastic drought in the southeastern U.S. This drought was broken by Bearden's colleague, with his own extremely powerful scalar EM device to redirect jetstreams. A unique signature of this "blocking" resulted with two huge circulations developed in the atmosphere, clearly showing as two adjacent giant "holes" in the swirling cloud cover over the middle and eastern U.S. Bearden's colleague became ill and had to stop, and immediately the jet streams changed back and returning drought the southeast. When the man recovered he resumed blocking and restored the rains once again. In late 1986, significant giant radial cloud patterns, associated with Soviet weather engineering were noted over California. On Nov 10 1986 an anomalous, giant "fireball"/meteor was seen moving from west to east over four states, and accompanied very sharp changes in the EM grid. Bearden says, the so-called 'meteor' may have been a large scalar Tesla Globe from the Woodpecker grid over

U.S. performing a simulated test of the multiple-vehicle kill mode, using a large ‘electromagnetic missile’ created and moved by the associated scalar howitzers. A large, rapidly moving light was seen and noise was heard. An anomalous winter storm breaking cold records, was happening southwards. Concurrently, heat records were being broken in the southeast. Frank Golden verified by direct measurement that the electrogravitational field of the earth was agitated and most dynamic, with significant activity introduced by the Soviet scalar EM grid. (The activity was about half what it is when the Soviets are inducing an earthquake.) Bearden says also in Nov 1986, Huntsville, another twin giant radial, moved from west to east, with another one observed there at dusk. Also, air control radars along the corridor from Los Angeles to Arizona suffered a "power outage" not long after the "meteor" (Tesla Globe) incident. Montreal, Canada had anomalous TV interference about the same time the air control radars experienced anomalous failure. This could mean that the agent that caused the radar failures and TV interference extended across a wide area of North America, which the Woodpecker grid does.

On the day the CHALLENGER spaceshuttle was launched in Jan 28 1986, birds never flew as the sky was painful to them. The metal in and around the booster flame slowly and steadily weakened due to the metal softening pattern contributing to the disaster. Weather engineering contributed substantial winds and air turbulance. Bearden thinks the Soviets may have added a deliberate ‘intense hotspot’ and this subtle assault would cause NASA scientists to think it was an accident. The Soviets also withdrew traulers and ships in the area to suggest they weren’t near the scene. A few days later sporadically intense ‘high frequency localization signal’ were still present on the grid, causing dead birds to fall from the sky in substantial numbers in Birmingham, Alabama on 1-4 Feb 1986. Bearden claims that just before the launch of the spaceshuttle CHALLENGER, the Soviets did significent weather engineering over US, bending the jetstream southward in the middle of US, and bending rightward again across the Florida panhandle. Positive signatures of this were photgraphed by several people. On the evening of CHALLENGER’S loss the KGB, (in command of the scalar EM weapons) celebrated the loss. Bearden positively identifies the Russians as those who shot it down by a host of indicators, which include the weather engineering which showed specialized cloud patterns associated with Soviet grid engineering. Not too many days after the shootdown of the CHALLENGER, an anomalous ‘flat earthquake’ occurred in the U.S., near the Great Lakes, involving ten states. This was probably the subsequent testing of an additional weapons mode of the same Soviet scalar EM system that destroyed the shuttle Bearden says. More proof can be found here: http://www.prahlad.org/pub/bearden/Challenger.htm The 12/11/86 Chicago Tribune reported: "Giant whirlpools, some nearly 60 miles wide, have been detected moving along Norway's coasts at speeds of up to 4 knots, posing serious threats to mariners. These giant whirlpools have no obvious center and are difficult to spot." The newspaper reported that the mammoth whirlpools were unheard of before 1980 (a period after the US and the USSR began generating ELF waves). Giant standing waves called "solitons," have been spotted near the Strait of Gibralter. The 4/30/85 New York Times reported the discovery of massive internal waves in the oceans that do not appear to any large extent on the surface. "A dramatic series of internal waves has now been traced through the Strait of Gibralter from photographs" taken from a space shuttle in October, 1984. A map in that newspaper shows a giant standing wave line on the

western side of the Strait.

Bearden says that with 100% certainty certain rogue groups including the Yakuza, Japanese mafia and Aum Shinriko Japanese cult have possessed these scalar interferometers since the end of 1989 leasing them from the Russians (from the KGB, who control and use these) and are manipulating US weather, and perhaps other places, moving fronts around with their giant movable areas of heat and cold. They are able to make earthquakes. He says they can add a couple of recent volcano eruptions as possible candidates to their list. More can be found here: (http://www.cheniere.org/correspondence/110502.htm) Bearden says that they have to permit these groups to shoot down an aircraft or something dramatic now and then, to continue leasing them at about nearly a billion dollars rental. He says the Yakuza mafia has also carried the scalar interferometry technology back to Japan clandestinely, and is apparently producing smaller, more portable weapons now in its own highly hidden facilities in Japan. The Yakuza are a major enemy of the U.S and they do intend to participate directly in great strategic strikes for the eventual destruction of the U.S., whenever that time comes. Bearden says they see this as extracting vengeance against the U.S. for its defeat (and shame, in the Bushido concept) in WW2, and for the U.S. dropping the atomic bombs on Japan. The Yakuza still operates by a modified old Bushido code. Bearden also says that it is also possible that a little burst of scalar energy deliberately placed on the COLUMBIA shuttle, from a Yakuza scalar interferometer, could have initiated the breakup and catastrophic failure of it on Feb 1st 2003.

12. THE 1990s

The Iran quake of 1997 was 7.4 on the Richter scale and aftershocks of as high as 6.0 were expected but there were no aftershocks. It was also at an anomalous depth. Bearden covered this here: (http://www.cheniere.org/images/weapons/Ashkabd2sm.jpg) During Desert Storm 1991, Rosalie Bertell wrote that according to Defense News, April, 1992, the US deployed an electromagnetic pulse weapon (EMP) in Desert Storm, designed to mimic the flash of electricity from a nuclear bomb. The Sandia National Laboratory had built a 23,000 square meter laboratory on the Kirkland Air Force Base, 1989, to house the Hermes II electron beam generator capable of producing 20 Trillion Watt pulses lasting 20 billionths to 25 billionths of a second. This X-ray simulator is called a Particle Beam Fusion Accelerator. A stream of electrons hitting a metal plate can produce a pulsed X-ray or gamma ray. Hermes II had produced electron beams since 1974. These devices were apparently tested during the Gulf War although detailed information on them is sparse. In 1993 US started constructing what is called the High Frequency Active Auroral Reseach Program. (HAARP) in Alaska designed by physicist named Bernard Eastlund, and based on Tesla technology. The prime contractor was ARCO Power Technologies, Inc. and they were to develop and test a low-power high-frequency (2.8-10.0 MHz) prototype transmitter array. It is also called an ionospheric heater because it can send a beam of energy up to the ionosphere and then bouncing back down to a target. It was said to be for detecting cruise missiles and aircraft. The beam would be several degrees wide, depending on frequency, and thus would influence a region several miles in diameter in the lower ionosphere, expanding to several tens of miles in the upper ionosphere. This can make a scalar

wave grid, like the Russian Woodpeck grid over USA to detect objects rising into space. The airforce and navy owned it. No doubt, it was a measure to fight back against the deadly Russian transmitters. The HAARP patent, says the work of Nikola Tesla in the early 1900s formed the basis of the research. Eastlund's patent says it can disrupt sophisticated guidance systems and spray large areas of the planet with electromagnetic waves of varying frequencies and to control changes in these making it possible to knock out communications on land, sea and air. Twelve patents form the basis of the HAARP project and are now buried among the thousands of others held in the name of Raytheon. US Air Force documents revealed that a system had been developed for manipulating and disrupting human mental processes through pulsed radio-frequency radiation over large geographical areas. Could this be HAARP or something more deadly? Dr Nick Begich found 11 other APTI patents. They told how to make "Nuclear-sized Explosions without Radiation" power-beaming systems, over-the-horizon radar, detection systems for missiles carrying nuclear warheads, electromagnetic pulses previously produced by thermonuclear weapons and other "Star Wars" tricks. This cluster of patents underlay the HAARP weapon system.

Already the most powerful pre-HAARP ELF ionospheric heating systems or Woodpeckers were constructed by the Soviet Union at sites in Sura, Goriky, Monchegorsk and Dushanbe (Tadzhikistan). American pre-HAARP ionospheric heating systems are located in Tromso, Norway; Arecibo, Puerto Rico; near Fairbanks, Alaska; and at Platteville, Colorado. These systems together with the Russian Woodpecker Tesla Magnifying Transmitters, have created a severe alteration of global weather patterns, beginning in 1976, but intensifying through the 1980's and 1990's, as more ELF transmitters were constructed. Tesla devices such as the wire-less power technology, called the magnifying transmitter are used by Russia and the US to create a weather war that has continued from the mid-1970's to the present time. Strange skyglow anomalies and wierd lightning and plasma-type effects have been seen all over the former USSR near the Woodpecker transmitter sites. In 1977 the Washington Post reported that "a strange, star-like ball of light was sighted over Petrozavodsk in Soviet Karelia, spreading over it like a jellyfish and showering down shafts of light." Similar plasma effects have been created by the US ionosphere- zapping ELF HAARP transmitters. At the height of 1993's great midwest flood, the University of Alaska's Geophysical Institute (which is involved in work on HAARP) discovered "mysterious flashes of light that shoot from the tops of storm-clouds into the upper atmosphere...over the midwest during summer floods." This occurred when that area was being hit with giant standing-wave, long-lasting weather-blocking systems that were generated by a combination of the Russian Woodpecker ELF waves and US GWEN Tower VLF waves. A newspaper reported that these mysterious flashes "resemble jellyfish. They are brightest where they top out -- typically about 40 miles high -- so you have the jellyfish body at the top with tentacles trailing down."

A short while after the start of US and Soviet scalar through-the-earth transmissions, Earth's internal dynamo was affected. In 1984 the earth was reported as having experienced a sudden unexpected slowdown in rotation. It had been decreasing naturally, but Scientists at the US Naval Observatory and at the Jet Propulsion Lab found that the "earth, like an unbalanced washing machine," has developed "wobbles as it spins." (7/15/88 Wall Street Journal). The 7/90

OMNI Magazine reported that between January 24 to February 3, 1990, the earth's rotation suddenly and unexpectedly slowed down AGAIN. US Naval Observatory scientists reported that the slowdown was more abrupt than usual. The 8/9/91 New York Times described the causes of these unexpected sudden disruptions: "Geophysicists suspect that perturbations in the circulation of the hot fluid metallic core contributes to the rotational changes...The irregular rotation variations are the result of fluctuating fluid flow in the underlying metallic core and the overlying hydrosphere and atmosphere, and...also convection forces within earth and the movement of crustal plates near the surface." All of which are influenced by through-the-earth ELF vibrations. Scientists measuring ocean waves reported that "the Atlantic Ocean is getting rougher." Measurements taken since the 1960's indicated that during the late 1970's , following the start of Soviet and US ELF transmissions, "the waves did seem to get bigger." The 4/19/88 New York Times reported that British scientists have discovered that waves in the northeast Atlantic Ocean "have increased more than 20 percent since the 1960's." Ocean researchers consider this to be a "significant climatic phenomenon."

The ability of the HAARP and the Woodpecker transmitters to create a nuclear type energy explosion anywhere on earth via laser and particle beams, is worrisome, not to mention what could be delivered by satellite. Bearing in mind that scalar beams can pass right through the earth and the oceans so anywhere can be targeted. The Soviets also have been able to significantly engineer the weather over North America for more than a decade without being found out. Until the HAARP transmitters werebuilt. Though the US navy did have their Australian scalar weapons sites in the late 1960s. The Pine Gap base is apparently five miles down and it uses Tesla technology as well, and is linked to HAARP in Alaska and other similar American transmitters. It has been said that U.S. and Israel have deployed an anti-missile defense using HAARP or scalar weapon technology that destroys a missile seconds after launch. With scalar waves passing beyond the speed of light, all which is needed first is a crossed scalar beam grid to detect any missiles leaving the enemies territory. HAARP can create nuclear-sized explosions without radiation says patent 4,873,928. This of course makes having nuclear missiles obsolete. However one has to have more grids all over the enemies territory and spy satellites to know when one is coming from them, and since scalar energy is undetectable, until the beams cross the next war may erupt suddenly. The U.S. or Russia could deliver a ‘nuclear-sized explosion’ at the speed of light against soldiers, as well as all the other countries, that have scalar weapons. One way to protect a military force against a weapon capable of traveling at the speed of light is to maintain a constant ‘Tesla Dome’ of protection above the fleet, that travels a the same speed as the fleet, and is always hovering over them, but it is hoped that the troops don’t suffer from ill effects from the scalar waves. HAARP transmitters can make this source of Tesla dome protection.

13. THE PRESENT

In non linear mathematics, engineering and science the Soviets have lead the way since the start and the West leads the way in computers, software and miniaturization. Though at present the Japanese have joined forces with the Russians to add computerized components to weaponry. Bearden say that Soviet scalar weapons are capable of destroying the USA, its armed forces or

population quickly and efficiently. These scalar transmitters can also become conventional radars, by switching into EM mode. The Russians present 'old' transmitters on their 'old'aircraft, 'old radar-directed' gunsites and "obsolete" air defence missile sites. According to Bill Morgan: "If you can cause an earthquake you can also set it to, say, bring down a single buildings, of pair of buildings. It may be that the collapse of WTC twin towers was actually the first major scalar attack in world history. Because in a certain mode the waves at the interference zone can cause metal to soften, even to melt. If so, the planes crashing into them were merely a cover story to cloak the fact that the Tesla Howitzer had been used. "A mishap with one of these devices could wipe out all life on earth. They could disrupt the scalar wave balance between Earth and Sun in such a way that would cause massive solar disturbances and storms, completely frying the earth." ~ Bearden. Bearden says that the Russians have been using the shuttles for target practice, but he says the COLUMBIA attack, may be by an unknown party, and hints that the Japanese Yakuza mafia, have been leasing scalar weapons from Russia since 1989 and have been targeting US since then. Did they or another party shoot down COLUMBIA on 1 Feb 2003? More can be found here: http://www.cheniere.org/correspondence/011303.htm

Bearden says that when the CHALLENGER was shot down on Jan 28 1986, U.S. wasn't familiar enough with scalar interferometry, since scalar waves are not taught in physics, but he claims there is 100% proof that the Russians shot it down in full view of the world. U.S. has decided to build all the HAARP transmitters also using Tesla technology to get the Russians and other enemies once and for all. However nowdays America's enemies have multiplied and at least fifteen countries have scalar weapons, so America and everyone else not only has to watch their backs but underneath and above. Instantaneous scalar attacks could come from anywhere and right through the Earth. and there are theories that the FBI building bombed in Oklahoma on 17 April 1995, had multiple evidence of a scalar attack by an unknown party. However Harry Mason wonders if it may be a revenge attack by the Japanese for the Kobe earthquake in January 1995, which has suspicious scalar weapons signatures. Others say the WTC towers also had evidence of a scalar attack during 9/11. Christopher Bollyn of American Free press claims that he interviewed a former East German physicist who believes a laser weapon, employing infrared technology, originally developed in the Soviet Union, may have caused the WTC towers collapse. He believes that the planes may have had infrared plasmoid in front of them, which is like ball lightning. The Soviets already used the infrared beam weapon to destroy a wall at the Ussuri River, which separates Manchuria from the far east, during a dispute with China in 1968 according to the physicist. Many experts say a laser beam was used to bring down the WTC towers. Since 1995, the U.S. and Israel have actively developed an advanced infrared beam weapon under a joint "anti-missile" program. Israel and the U.S. have developed all kinds of advanced lasers since the early 1970's so perhaps they will get the Nazis in Antartica eventually? While it's easy to blame the Russians now for every attack, things could get infinitely worse with Russians giving scalar technology to others and leasing scalar interferometers. But is Russia safe either? US has particle beam accelerators and very deadly weapons now, that they have got from the aliens. But probably the worst kind of weapon is the one called a quantum potential weapon. According to Bearden, Russia, US, Israel, Brazil, and probably China have these, which can imprint any disease right into the cells of the

body, by reproducing its disease ‘signature’. He says that Israel is a force to be reckoned with now too, and when CHALLENGER was shot down in 1986, Israelis retaliated and destroyed several very large Russian missile storage faculties and strategic targets. One shot knocked out third of the missiles in one of the large Russian fleets. It apparently stopped the Russians finishing off America. Israel already had at least working prototype quantum potential weapons and could have devastated Russia and she having the same weapons knows how deadly they are. Bearden didn’t say what type of weapons the Israelis used for the attack on Russia but they have at least scalar weapons and particle beam weapons.

WHAT CAN BE DONE WITH SCALAR TECHNOLOGY?

14. MIND READING, MASS HYPNOTISM AND SYNTHETIC TELEPATHY

According to Bearden: "in the late 1960's Lisitsyn reported that the Soviets had broken the ‘genetic code’ of the human brain. It had 44 digits or less, and the brain employed 22 frequency bands across nearly the whole EM spectrum. But, only 11 of the frequency bands were independent. This work implies that, if 11 or more correct frequency channels can be ‘phase-locked’ into the human brain, then it should be possible to drastically influence the thoughts, vision, physical functioning, emotions, and conscious state of the individual, even from a great distance. Up to 16 of the giant Soviet woodpecker carriers have been observed to carry a common, phase-locked 10-Hz modulation, and this has been demonstrated by Beck, Rauscher, Bise, and others to be able to physically entrain or "phase-lock" the human brain, if stronger than the Schumann resonance of the Earth's magnetic field. A human brain entrained by a common, phase-locked 10-Hz modulation on 16 carrier frequencies would effectively have 16 frequency channels phase-locked into it. The potential for using the Woodpecker transmitters to phase-lock an appreciable percentage of human brains in a targeted area, and then induce effects in the populace similar to and even more drastic than-the effects induced in U.S. Embassy personnel in Moscow, should be strongly pointed out. Coupled with the Kaznacheyev work on EM transmission of cellular death and disease, using the Woodpecker signals to induce death and disease in the targeted populace may also be a distinct possibility. Modification of DNA/RNA-and viruses themselves-is also a possibility."

On the http://www.umf.net/umf/ site this was found: "In the 1950s, ITT developed sensor technology that could literally display what a person was thinking. It was essentially a mind-reading machine. It operated on a principle of picking up the electromagnetic functions of human beings and translating those in an understandable form. It consisted of a chair in which a person could sit. Coils, which served as sensors, were placed around the chair. There were also three receivers, six channels and a Cray 1 computer which would display what was on a person’s mind-digitally or on a screen."

15. DISEASE INDUCTION

Bearden says that scalar beams can also be used to induce diseases by mimicking disease patterns or ‘signatures’ by recreating them on the scalar carriers. These are called ‘quantum

potential weapons'. Especially designed biological effects can be used for attacking any population with various diseases, even multiple diseases together. He lists effects to induce instantaneous death, heart seizure, severe emotional disruption, loss of control of internal functions, diseases, disabling of the immune system and even the implantation of thoughts, emotions or ideas interpreted as a targeted subject as their own. There is also a suicide vibration which has been used to get rid of people, with no evidence. 10 Hz is the wavelength used by intelligence agencies to hypnotize, so mass hypnosis can be induced in a whole population with subliminal words added into their own language. This can be used for voting. Bearden says that almost any kind of cellular death and disease can be electromagnetically transmitted by scalar beams using ultraviolet to infrared frequencies. He writes that photons themselves can carry death and disease between cells. Scalar EM technology allows the synthesis of the actual potential pattern of the biochemistry cells. This can be made to produce a particular cellular disease or death mechanism and even activate genetically latent diseases. Evidence has been found of manufactured symptoms and resultant cellular death, from nuclear radiation, chemical poisoning, bacterial infection, as well as symptoms of drug induced hallucinations. Even the voice of 'God' has been produced. To quote Bearden: "Dr Popp of West Germany has analyzed the virtual photon master control system of the cells. Scalar EM represents the deliberate ordering of virtual particle flux into deterministic patterns, so the master control system can be readily entered with scalar techniques to induce disease and disorder at will".

On the site there is more data: "Scalar interference grid weapons can be used to biologically attack entire populations in a targeted area. Suffice it to say that phase locked ELF modulation signals of 10 Hz and less are often detected on multiple Woodpecker frequencies simultaneously. In a target area, this modulation -- is sufficiently stronger than the Schumann resonance of the earth's magnetic field -- will entrain a percentage of the brains into 'forced entrainment'. In that case, these human brains are 'synchronized' to the Woodpecker signals so that multiple coherent frequencies are phase-locked into them. That is, multiple coherent EM channels directly into these entrained brains now exist. At that point, Fourier expansions may now be used to attack specific portions of the brain geometrically." The site says that scalar EM disease patterns can be modulated upon the carriers, again with Fourier expansions and specific biological effects can be induced in the entrained populations at will, by Russian technology. However HAARP can do the same. Effects are instantaneous death, heart seizure, severe emotional disruption, loss of control of internal functions, diseases, disabling of the immune system, and even implantation of thoughts, emotions, and ideas which are interpreted by the subjects as their own. Freedom Domain also said that Woodpecker transmitters in thousands of experiments, a man called Kaznacheyev demonstrated that almost any kind of cellular death and disease pattern could be electromagnetically transmitted. Kaznacheyev reported the effect in the near ultraviolet. Experimenters at the University of Marburg in West Germany duplicated the experiments in the infrared. Photons themselves can carry death and disease patterns between cells. [or life and healing patterns between cells ~CR] Scalar EM technology allows synthesis of the actual "potential" pattern, which represents total control of charge and charge distribution, of biochemistry in the cell, of a particular disease or death mechanism. Symptoms including cellular death from nuclear radiation, chemical poisoning, bacterial infection, and other mechanisms were induced by the Kaznacheyev quantum potential experiments. Dr. Popp of

West Germany has analysed the virtual photon master control system of the cells. As scalar EM represents the deliberate ordering of virtual particle flux into deterministic patterns, the master control system can easily be entered with scalar techniques to induce disease and disorder at will.

Scalar weapons: Page 2
Scalar weapons: Page 3
Other copyright work in print.
HOME PAGE
12 Things you should know about scalar weapons

Scalar Wars

The Brave New World of Scalar Electromagnetics

by Bill Morgan

For the past six months I have been undergoing the greatest **paradigm shift** I have ever had to go through. It has rattled my nerves and shaken my bones. This intense adjustment of my "world" has come about by studying the information given by Col. Tom Bearden at his website Cheniere. The new knowledge there has necessitated a total revision of my ideas about physical reality, the world we live in, and the future of humanity. This paradigm shifting even actually made me dizzy on certain days as I tried to absorb and digest Bearden's vast amount of information. I am not a scientist at all, just a layman, and I have little comprehension of the math and high physics of this new science called "**Scalar Electromagnetics**." But there is a great deal of information at Cheniere which needs to become common knowledge as fast as possible, for the sake of the survival of life on earth. To that end I have put together this small primer of Bearden's ideas, as a kind of "beginner's guide" to his website. (I have tried to underline certain words and phrases which are part of the new "jargon" of talking about these "new" phenomena. Also I have taken the liberty of bolding certain words and phrases to help them stick in the mind).

(Note: Throughout "**EM**" means "**electromagnetic**," and "**LW**" means "**longitudinal wave**")

This article has six sections:

New Waves 2. Tapping the Waves 3. Weaponization 4. Healing 5. Psychoenergetics 6. As It Stands

1. New waves discovered

Longitudinal EM energy fills vacuum of space, the time domain of spacetime, time as compressed energy, E=tc2, waves of time, phase conjugate wave pairs.

"Electric power is everywhere present in unlimited quantities and can drive the world's machinery without the need of coal, oil, gas, or any other of the common fuels." Nikola Tesla

"At any point and at any time, one can freely and inexpensively extract enormous EM energy flows directly from the active vacuum itself." Tom Bearden

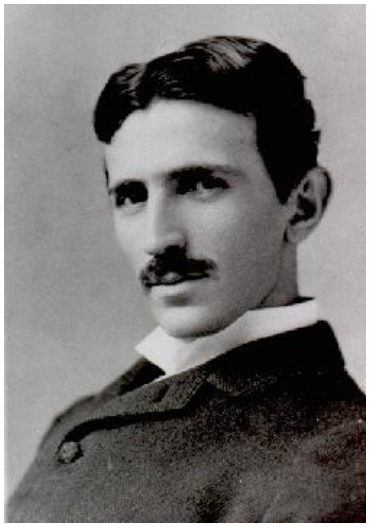

I guess the first thing to try to comprehend is that a "new" kind of electromagnetic (EM) wave has been discovered in the empty vacuum of space called “longitudinal” waves, which, when engineered, can be an inexhaustible supply of energy in great magnitude at any place in the universe. The word "new" is in quotes because the discovery really goes back to **Nikola Tesla** and his discovery of what he called "radiant energy." It is also not "new" because the Russians (KGB) have been working on this technology for over 30 years and have **weaponized** these "new" longitudinal scalar waves to a great degree.

These are the very weapons **Nikita Khrushchev** spoke of in January, 1960.

> "By 1957-8 the Soviets had progressed to the point of a giant scalar EM accident in the Urals which exploded nearby atomic wastes, devastating the area. They had also progressed to development of great new superweapons using their new energetics - weapons to which Khrushchev referred in 1960 when he informed the Soviet Presidium of a new, fantastic weapon in development, a weapon so powerful that it could wipe out all life on earth if unrestrainedly employed.'" Tom Bearden

After over 30 years of development, and extensive testing around the globe, these new scalar electromagnetic weapons are up and running and ready to go. Tom Bearden, at his website Cheniere, discusses the history of these new scalar electromagnetic weapons in his paper "Historical Background of Scalar EM Weapons."

Some Immediate Implications

The implications of successful engineering of the longitudinal waves are enormous, and will change the world as we know it, one way or another. Among other things, these discoveries mean that:

1. The **solutions to the energy crisis and the "oil problem" are in hand**. These oil wars are unnecessary. There is endless energy available freely from the domain of time.

2. **Unbelievably powerful weapons** are not only possible, but are already operating in several nations. The many powers of these weapons are unprecedented and mind-boggling.

3. The **cure of diseases such as cancer and AIDS**, in fact nearly any disease, has become possible within a few years of sufficient funding. Everyone can be made healthy and stay healthy.

4. **Mind control on a mass scale** has now become possible, and the machines to do it are already in place in certain nations. It has become possible to mentally enslave whole populations with the twist of a few dials.

So the layman will need to understand that there is a new kind of electromagnetic energy that is altogether different from what he knows, e.g. radio, TV, cell phones, etc. The ordinary EM waves that we have known about are called transverse EM waves, to distinguish them from the new longitudinal EM waves. These scalar waves do not actually exist in our "material" world, but exist only in the vacuum of empty space, or the time domain. And we must keep in mind that this vacuum of space we speak of exists all through everything. Even our bodies are mostly empty space between atoms and molecules. So the gateway to this seething ocean of energy can be there at every point in the universe. This seething ocean of energy is all around us and all through us.

Emptiness is Full

This amazing discovery announces that the "emptiness" of empty space is in fact not empty, but a great ocean of seething energy!

Col. Bearden refers to this ocean of energy as being of the "time domain." It seems like something from Star Trek but this is where scalar electromagnetics has come to. And where it is going may be beyond anything Star Trek could have dreamed of.

We live in a 3-dimensional world, which physics calls "3-space." But there is also spacetime, or 4-space, or the "4th dimension." Then suddenly comes this amazing new knowledge that time itself is actually compressed energy. And it is energy which is compressed by exactly the same factor by which matter is considered compressed energy: the speed-of-light-squared!

So we have a new companion to the famous E=mc2. It is now paired with E=tc2 (where t is actually "delta-t," or change in time). Or (amaze your family and friends and) say:

"E equals em-cee-squared"

and

"E equals delta-tee-cee-squared"

It has a nice ring to it, like some freedom bell announcing a new era.

And as the atomic bomb released the compressed energy in matter, so can we now unleash the tremendous energy that is compressed into time itself. It gives a completely new meaning to the term "time bomb."

Some New Terminology of Scalar Electromagnetics

A new science, several new names

> "Those [Russian] weapon scientists resurrected an old term from the history of electrodynamics, called "energetics". That is their approach to a unified field theory, where everything is based on "energetics". This model as its foundations uses a very similar approach to that "single fundamental unit" model, where energy is the unit. If one makes the energy EM in nature, then one has the Russian energetics approach. This unified approach gathers everything in, including all energy actions and relations in inert matter (the first branch of energetics, called by the same name), all field and matter interactions in living matter (the second branch of energetics, called "bioenergetics"), and all mind operations and mind-matter interactions (the third branch of energetics, called "psychoenergetics"). [ed: sometimes also called "psychotronics" by the Russians]

Rick Andersen in an article called "What is Scalar Electromagnetics?" describes the new science this way:

> "Scalar EM is the brainchild of Lt. Col. (retired) Thomas E. Bearden, a systems analyst and wargames specialist who has been advocating a view of electromagnetics which is based on the notion of a vast, unseen background of scalar energies (as opposed to vector energies) which underlie all physical reality.
>
> "If Bearden is correct in his Scalar EM theory, then we can build devices which would enable us to alter gravity, time, inertia, and the apparent mass of an object. This of course has ENORMOUS implications for military applications, space-vehicle drives, time-travel, teleportation, paranormal phenomena, and just about every other area one can think of." http://twm.co.nz/Beard_scalem.html

> "Time-energy, time-currents, and time-structuring play the dominant role in electromagnetics. Time-as-energy eventually becomes engineerable, as easily as is spatial energy now. We are always dealing with spacetime and with spacetime curvature."
>
> Bearden: http://www.cheniere.org/techpapers/Vision%202000%20paper.doc

The scalar energy discovered in the vacuum of space is sometimes called "zero-point" energy. Thomas Valone explains how this term came about.

What does "Zero Point" mean?

"Boyer traces the historical “creation of the vacuum” as proceeding in stages in parallel with the historical development of ideas about the vacuum. To paraphrase, he says that in the 17th century, it was thought that a totally empty volume of space could be created by simply removing all matter and, in particular, all gases. That was our first concept of the vacuum. Just get rid of all the gas. Late in the 19th century, it became apparent that the region still contained thermal radiation. But it seemed that the radiation might be eliminated by cooling. So the second concept of getting a real vacuum is to cool it down to zero temperature. Just go all the way to absolute zero. Then we’ve got a real vacuum. Right? Well, since then, both theory and experiment have shown that there is a non-thermal radiation in the vacuum and that it persists even if the temperature could be lowered to absolute zero. Therefore, it was simply called the “zero point” radiation. "Thomas Valone http://www.seaspower.com/InsideZeroPoint.htm

> "**For our very survival, it is absolutely imperative that informed citizens be aware of this dramatic change, which is just now starting. The powerful new science and engineering must be controlled and used for humanity's benefit, not its detriment. Else it will eventually be let loose unrestrainedly, to destroy all life on earth - a possibility indicated by Nikita Khrushchev in 1960**." - Bearden
>
> http://www.cheniere.org/explore%20articles/priore1/p4.jpg

2. Tapping the waves

Endless free energy, Tesla's radiant energy, the dipole as the gateway to the energy of the void, MEG in one year, Bedini, Yakuza, etc. End of Oil, geopolitical chaos, rogue groups

Move Over G.E. & Big Oil, Energy is Everywhere!

Third-world nations set to rise

> "Certain powerful interests did not wish the extended electromagnetics to be discovered or taught. That, after all, would lead to free energy and loss of economic control of the citizens. That was precisely why Nikola Tesla had already been suppressed ... Today it is still being suppressed by the orthodox establishment."
> http://www.cheniere.org/books/ferdelance/s25.htm

The vast seething ocean of energy of the vacuum, the longitudinal scalar EM waves of the time domain, can now be tapped and "transduced" into ordinary (transverse) EM energy in our 3-Space world. The process can be compared to putting a paddlewheel into a river. The energy acquired is free, since the river is there flowing whether we tap it or not. And it is a mighty river, and is not diminished by our paddlewheel.

This means that a permanent solution to the "energy crisis" is at hand, if only those who hold it so secret would give it up to humankind.

It means our species' insane use of oil is no longer necessary. We can make automobiles that need no fuel at all. We can build motors that power themselves. It means that unlimited electrical power can be available for free anywhere in the world. Every house and even shack can have its own power supply.

Of course there is the cost of the equipment at first, but the energy flow is free for the presumably very long life (no moving parts) of the generator. It will probably take decades to shift over to scalar power.

But the ability to tap the scalar (longitudinal) EM waves of the vacuum (which exists everywhere) also means that unbelievably powerful weapons can be, and already have been developed. In fact these weapons are so dangerous that the fear engendered becomes a psychological obstacle to the grasping of the facts.

I struggled with this myself for months, and even though Tom Bearden had completely convinced me already, it is hard to accept the fact that for everyone on earth the "worst that might happen" has suddenly gotten much worse. It takes time to deal with that, to realize it and get over it.

Indeed, the possibilities of these new weapons, which are tapping the huge energies of time, are so terrifying it is natural for the mind to simply say: "I don't want to hear about that."

And the government, likewise, pretends these weapons do not exist and tries to keep it secret from the people. Because most people would indeed be truly alarmed to know the actual situation. Col. Tom Bearden has decided that the people need to know the truth anyway. As a People on a Planet we must face this now, and ban the use of scalar weapons in war or in mass mind control. The current deployment of these weapons is a world emergency which we must all face.

The physics and mathematics of the longitudinal waves and the time domain are clearly beyond the layman, but I recommend scanning through them anyway just to get a sense of the wonder and the elegance of it all and some of the exotic terms which are used. Two of the most important papers by Col. Bearden are:

Giant Negentropy from the Common Dipole

The Final Secret of Free Energy.

Despite the complexity of the science involved, Bearden sums up the essential secret of it all in a few words.

> "There is no problem at all in extracting all the energy one wishes from the active vacuum, anywhere in the universe, at any time. Just make a dipole.
>
> The problem is in (1) catching some of that freely gushing EM energy in a circuit containing a load, and (2) dissipating the caught and collected EM energy in that load to power it, without using half the caught energy to destroy the source dipole's).

That is the ONLY real energy problem on the planet, and always has been."

http://www.cheniere.org/correspondence/022502.htm

A dipole could be a battery, which is polarized into negative and positive. Or the terminals of a generator. Or any magnet with its two poles. Or an atom with its positive and negative charges. Or the earth's magnetic field, the sun, and all heavenly bodies. Even a galaxy must be some kind of mega-dipole. Wherever there is a dipole there is already immense scalar EM energy ushering out of and back into the vacuum. And there have already been demonstrated a number of diverse methods for tapping that energy as it flows. (John Bedini, Edwin Gray, Bruce de Palma, and others). Bearden provides what he calls a "partial list" on his website.

"In other words, nature then gladly gives us as much EM energy flow as we need, indefinitely — just for paying a tiny little bit initially to "make the little dipole." After that, we never have to pay anything again, and nature will happily keep on pouring out that 3-flow of EM energy for us. This is the giant negentropy mechanism I uncovered, performed in the simplest way imaginable: just make an ordinary little dipole."

Bearden http://www.cheniere.org/techpapers/Unnecessary%20Energy%20Crisis.doc

How to Buy a Free Energy Machine

Answer: Just wait one more year! 2003. Then get off the Grid!

Perhaps the most eagerly awaited event now is the marketing of Bearden's Motionless Electromagnetic Generator (MEG) scheduled to begin in about a year's time. This is when the proof will hit the fan. Many people have said to me, when talking about free energy, "I'll believe it when I can go to the store and buy one." Hopefully in a year's time they will be able to order their own MEG. And then they will believe, because it works and is working.

Says Bearden: "I will admit that the chief scientist of an important experimental group in a large company was rather stunned at the type of output we were able to obtain. The MEG may look like just a transformer, but it is not. It is a completely different breed of cat."

(Bearden : http://www.cheniere.org/correspondence/011202.htm)

Soon the cat will be fully out of the bag. The first MEG units will supply 2.5 kilowatts of free electricity. Forever. Units can be connected together to double or triple the wattage. After that gets going, 10 kilowatt generators are planned. Energy will flow freely from the time domain indefinitely, and there are no moving parts to wear out. This manufacturing project is a heroic effort and will change the world as we know it. For once people are in possession of such devices there can be no further denial from anyone, including the government and/or "secret-government."

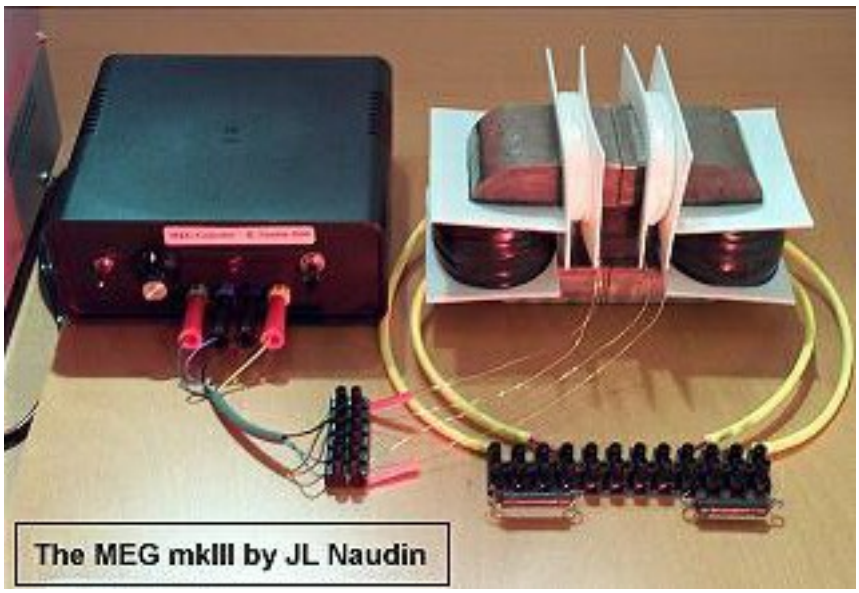

The Motionless Electromagnetic Generator

(Successfully replicated here by J. L. Naudin)

The physics of how the MEG works is explained in the paper "The Motionless Electromagnetic Generator: Extracting Energy from a Permanent Magnet with Energy Replenishment from the Active Vacuum."

The device was successfully replicated by J.L. Naudin in France, and others, like Steve Utne, are also working on their own models. But Magnetic Energy Limited's MEG is actually scheduled for production soon and looks to be the first commercially available free-energy generator in history!

I imagine it will not take long for tinkerers to put them into their electric cars and make the first fuelless automobiles since Tesla's unheralded (and unheeded) experiments. Or for builders to begin building houses powered by MEG's. Houses which will never see electric bills. How can they ever make enough of these to meet the demand that will suddenly be there? Bearden is right, it needs to be an all-out crash program of the government on the order of the Manhattan Project.

I must include here that Bearden is quick to point out that he is not himself the inventor of the MEG, but is a partner and advisor in bringing it to the public market through Magnetic Energy Limited, Inc. I must also admit that I am praying for the success of this venture, and the ending of the absurd and criminal withholding of this technology from the people by the black-ops military-industrial people. This secrecy has cost the planet over 30 years of unnecessary pollution.

The first units off the assembly line, which is being set up in a "friendly" unnamed nation, will usher the public at last into the new era of scalar electromagnetics.

As of December, 2001, the situation with the MEG was described by Bearden in a letter.

> "What we presently have with the MEG is a successful laboratory experiment. At least a year's very hard research will have to be done before we will be ready to put a commercial power supply into production.
>
> "Consequently, we have made an agreement with a foreign partner (the National Materials Science Lab of the National Academy of Sciences of a friendly foreign nation) to do that year's research. At the same time, we are trying to make an agreement with one or more large financial partners here in the U.S."
>
> Bearden http://www.cheniere.org/correspondence/121901.htm
>
> "So we are hopeful that we will be able to start introducing units on the market about a year from now. Quite simply, we will either succeed or we will fail. But we will give it our very best effort."
>
> Bearden http://www.cheniere.org/correspondence/012202a.htm

Bearden has given another technical explanation of how the MEG works here in a letter.

Motionless Electromagnetic Generator patented, 3-26-2002

Click here to read the patent

"In Magnetic Energy Limited, all business discussions and arrangements are taken care of by Dr. Lee Kenny, Managing Partner. There are five of us who are co-inventors of the MEG, and two of the others are really the principal inventors." Bearden http://www.cheniere.org/megstatus.htm

Free Energy has been Suppressed

Secret Government Aware of Free Energy

> "In this world of contemporary times, all the agencies, CIA, FBI, KGB, NSA, Electric Power Research Institute, DARPA, Brookings Institution, Henry Kissinger, Edward Teller, et al., all are aware of [free-energy researcher Bruce] De Palma and his ideas.
>
> "Because these individuals and institutions are employed by the ruling elite to forecast the future and satisfy present needs and demands, it is clear that free energy is a threat to the world order constructed by business and the mindset of those who want to own the world.
>
> "Free energy represents Man's aspirations and dreams of freedom and equality, uniform division of resources and the ability to choose one's own future.
>
> "The fact that free energy is suppressed speaks to the greed and self-interest of a ruling elite which, even in the face of an emergency of global starvation, resource depletion and environmental pollution, will not give one inch if it means loss of control. This is an

> attitude of paranoid delusion and fantasy which can only arise from the alienation of a class of elitists who, through their money, are completely insulated from the reality of the day to day fight for existence of the common man."
>
> http://depalma.pair.com/Absurdity/Absurdity07/ProblemOfFreeEnergy.html

Bearden describes one case of suppression when the Yakuza killed the Kawai engine in his very presence in Huntsville, Alabama.

> "That night a jet arrived from Los Angeles, with a Yakuza on board. The next morning Kawai no longer controlled his company, his invention, or his own fate. The Kawai party was in fear and trembling. The Yakuza coldly dissolved the agreement, they packed up the two Kawai engines we had, and left. And that was that."

So it is not only governments who are keeping this revolutionary technology from seeing the light of day. The Yakuza? KGB? The Aum Shinrikyo cult? Our "leaders" need to be honest about what is going on, otherwise they look foolish, acting out a kind of "Alice In Wonderland" script before the public, a script that has become completely unbelievable.

Concerning the criminal withholding of this scalar technology by the military black-budget people, and the cover-up of the actual situation regarding scalar weapons throughout the world, Tom has this to say:

> "The high government officials of the United States of America grossly violated our constitution and their sworn oaths of office. Our constitution specifically charges the government of the United States to defend the people of the United States. That means our officials are specifically charged with defending our people. Yet they deliberately agreed not to do so, and they deliberately sacrificed us in advance.
>
> "They committed treason of the highest kind, by deliberately surrendering us to total destruction anytime the big balloon goes up."
>
> Bearden http://www.cheniere.org/books/ferdelance/s75.htm

Energy Crisis Solved

One of the "must read" documents at Cheniere is "The Unnecessary Energy Crisis: How to Solve It Quickly," especially since the "oil wars," which Bearden has foreseen for decades, have now already begun.

Here are some clips from that Document:

> "To avoid the impending collapse of the world economy and/or the destruction of civilization and the biosphere, we must quickly replace much of the "electrical energy from oil" heart of the crisis at great speed, and simultaneously replace a significant part of the "transportation using oil products" factor also.

> "The technical basis for that solution and part of the prototype technology required, are now at hand. We discuss that solution in this paper."

And although the solution to the energy problem and the oil wars may be at hand, Bearden suggests there is still an urgent rush that needs to be made to save human civilization from collapse.

> "Once the technology hardware solutions are ready for mass production, even with a massive worldwide deployment effort some five years are required to deploy the new systems sufficiently to contain the problem of world economic collapse. This means that, by the end of 2003, those hardware technology solutions must have been completed, and the production replacement power systems must be ready to roll off the assembly lines en masse.
>
> "The 2003 date appears to be the critical "point of no return" for the survival of civilization as we have known it.
>
> "Reaching that point, say, in 2005 will not solve the crisis in time, and the collapse of the world economy as well as the destruction of civilization and the biosphere will still almost certainly occur, even with the solutions in hand."
>
> "The good news is that we now know how to easily initiate continuous and powerful "electromagnetic winds" from the vacuum at will. Once initiated, each free EM energy wind flows continuously so long as the simple initiator is not deliberately destroyed."

On page 9 he explains the concept of the dipole, and how there is already huge scalar energy flowing in the time domain around any dipole. Hold a magnet or a battery in your hand and you hold a stress in time and a beautiful flowing loop of longitudinal waves!

Bearden decries the scientific community in the West for being unable to let go of their dogma long enough to see that the greatest discovery in human history lies at their feet, but for their stubborn ignorance.

> "The present energy crisis then is due totally to that "conspiracy of ignorance" we referred to, that is maintained by the scientific community, and that has been maintained by it for more than 100 years.
>
> "This is the real situation that the environmentalists must become aware of, if they are to see the correct path into which their energies and efforts should be directed — to solve both the energy crisis and the problem of gigantic pollution of the biosphere. "As far as anyone in the legislative branch of government ever understanding the profundity of the discovery and engineering of scalar waves, Tom Bearden says they are at a great disadvantage in doing so.
>
> "The nontechnical person — e.g., a Senator or a Congressperson — is operating under a distinct disadvantage. If he or she takes the stance that much better electrical power systems can readily be achieved, he or she is in fact opposing almost the entire set of University, Government Technical, Power Company, Battery Company, and Organized

> Science communities. Further, in most cases his technical advisors are themselves from one or the other of those communities, and likely to go back into that community or those communities when the Senator or Congressperson leaves office, or even before. So the Congress and the non-technical government community at large operate at a great disadvantage...Bearden National Emergency Declaration is Needed
>
> "The Government Non-Technical community (the Senate and the Congress, in particular) are in far better shape than the Government Technical community, to appreciate the world implications of the pending economic disaster. I am hopeful that both the environmentalists and the Government Non-Technical community will rapidly unite in a common goal to get this vacuum energy program launched, under a National Emergency declaration. If so, then they can solve the energy crisis and the pending economic crisis, in fairly short order, and permanently."
>
> unnecessary_energy_crisis.htm#congress_disadvantage

In the conclusion of his paper The Unnecessary Energy Crisis: How to Solve It Quickly Bearden again states the urgency of replacing our centralized power grids with highly dispersed and local taps on the freely flowing energy of the active vacuum. Given the abilities of the Tesla howitzers, the power grids of all nations are sitting ducks.

> "Personally, the present author regards the increasing energy crisis as the greatest strategic threat to the United States in its entire history. I will do anything within my power to help prevent what I perceive to be the looming economic collapse of the Western world, preceded or accompanied by a sudden, explosive, all-out and continuing exchange of the WMD arsenals of most of the world.
>
> ...In the name of all humanity, let us begin! Else by the time this first decade of the new millennium ends, much of humanity may not remain to see the second decade."

3. Weaponization

Scalar interferometry, Tesla howitzer, Tesla dome, heat/cold, dudding, 10 nations have them, dead-man fusing & Insane Systems, scalar strategy, earthquakes and weather wars, solar storms, mind attacks, leased to Yakuza, many examples of testing, quantum potential weapons.

> "Indeed, Soviet energetics weapons are now capable of destroying both our triad shield, our homeland, our armed forces in the field, and our population, quickly and efficiently. We have a new "gap" of monumental proportions: not a missile gap, not a submarine or bomber gap, and not even a particle beam or laser gap. We have a scalar electromagnetics or electrogravitation gap." Bearden http://www.cheniere.org/books/ferdelance/intro.htm

"We have a new weapon, just within the portfolio of our scientists, so to speak, which is so powerful that,

if unrestrainedly used, it could wipe out all life on earth. It is a fantastic weapon." Khrushchev, to the Presidium, Jan. 1960

> "We've totally missed the most incredible "secret superweapons" development program of all times, and the worldwide testing of the weapons themselves.
>
> "Hiroshima and Nagasaki should serve as object lessons in the price of ignorance of such technological breakthroughs.
>
> "History does repeat itself. But this time it's not we Americans who got the great new superweapon first."
>
> Bearden http://www.cheniere.org/books/ferdelance/s75.htm

Warfare has been changed forever by the development of these scalar energy longitudinal wave howitzers. To get a basic understanding of scalar waves is to have the imagination suddenly run wild as all the implications and possibilities regarding warfare fall into place. One realizes with a certain horror that the world has totally changed, and that there are some very fearsome possibilities. Remember, the power for these weapons comes from the time domain, longitudinal EM waves in the vacuum of empty space, and the power is tremendous and mind-boggling. Being able to blast away at any target from a distant control booth is something that has never happened before. This is incredible power to be in control of and it divides the history of weaponry into "before" and "after." And the destructive power of these weapons is delivered instantaneously to the target from the local vacuum at the place of the target.

From an interview:

> Questioner: "Are you saying that real energy can be transmitted faster than the speed of light?"
>
> Bearden: "Yes. But hyperspatially. Not through 3-space, but "around" it. Again, this means that it's possible to produce energetic changes in a distant system at a distant place, without transmitting energy "through space" in the normal sense. You transmit "around" space, so to speak, and directly in time or through a higher dimension, depending on the model you're using to understand this. Further, the speed of the internal EM energy transmission is not limited to the speed of light."
>
> http://twm.co.nz/beard_interview.htm

Here are some initial considerations about scalar weapons and scalar wars

1. Tesla Howitzer 2. Tesla Domes 3. Rogue groups 4. WW III 5. Russian "UFOs?"

3a. The Tesla Howitzer and its modes of action

Source: Tom Bearden's weapons slides and Fer-de-Lance Briefing

For one thing there is no delivery of any thing to any place. Bombs are obsolete. So are the planes to get them there. No helicopters necessary. All current nuclear devices are rendered nearly useless by electronic "dudding." All distant-destruction can be done from a control room, and to any point on earth. The destructive power of "men" has just increased by orders of magnitude. The new weapons could even cause storms on the sun! Thus there is great urgency to make these new facts public and known, with the hope that all nations would come together to ban the use of scalar weapons.

Two scalar antennae together along with the computers to control them, make up a scalar interferometer, and according to Col. Bearden the Russians have hundreds of such installations already. These interferometers are called "Tesla Howitzers." They can deliver a giant blast of energy to the distant target site, true "action-at-a-distance".

The first howitzer mode is called the "exothermic" mode of operation because immense EM energy blasts outward at the target site. The blast of a scalar howitzer can be of near nuclear level in destructiveness, and can be repeated easily, at that place, or nearby, or anywhere.

The howitzer can use a lesser exothermic power setting and simply destroy all electronics in the target area. Thus they can render our nuclear missiles inoperable as they sit in their silos by "frying" the electronic circuits that guide them. They can bring down any airplane, anywhere in the world, at any time. Any person anywhere, if their exact position is known, can be assassinated without a shot being fired.

The howitzers can also bring down power grids anywhere in the world, at any time. Thus they could bring Wall Street to an instant halt by disabling all its electronics. Even this one little easy tweak of the howitzer could cripple the U.S. economy in a single day. No wonder the "leaders" don't want you to know! This is a new era we are in. The discovery and development of scalar interferometry has put us in a new world, whether we like it or not. Anyone could be expected to go into denial, the befuddled senators and congressmen included. But we have to wake up.

In a second howitzer mode called the "endothermic" mode, the howitzer sucks energy out of the target area, essentially creating a blast of cold at the distant target. It is even capable of freezing parts of the ocean. Bearden gives a number of cases where these "cold explosions" have been witnessed, mostly by airline pilots. April 9, 1984: 1 2 3) A huge mushroom cloud of mostly water is seen rising miles into the sky from out of the ocean, an awesome sight.

In the endothermic mode the sucked-out energy must go somewhere, so it is vented out at some other chosen spot on the earth. These endothermic plumes have been photographed by satellite.

> "The exhaust in the left picture is about 150 miles long, and is nearly horizontal (about 1.5 degrees above the horizontal). It is entirely consistent with the continuous exhaust from a "dumping transfer" scalar EM howitzer in the continuous exothermic mode. (The primary howitzer, of course, was activated in the endothermic mode.)" Bearden More Plumes

By using both of these heat (exothermic) and cold (endothermic) modes together the weather can be altered anywhere. Warm the air over here, cool it down over there, put a curl in the jet stream, dissipate clouds, create clouds, whip up a tornado. Bearden speaks about using the endothermic howitzer mode as a weapon of war:

"Cold explosions can be used to freeze tanks, personnel, and equipment. The equipment and tanks thaw out. The personnel thaw out too, but they are dead when they do." Bearden, Fer-de-Lance

(This endothermic mode of the howitzers makes me think that there might one day be a cure for the problem of global warming after all. Could not a big device, situated in space or on the moon, be able to vent a great deal of excess heat outside the atmosphere into space, thus functioning as a kind of planetary thermostat?)

While the United States has experimented with electomagnetic weapons using ordinary transverse EM waves, the longitudinal [LW] weaponized waves are truly of another order altogether.

For one thing they do not have to travel through space, for they come from the time domain, which is everywhere. The energy of the blast, the heat or light or whatever, comes from the vacuum of space at the location of the target itself. This is astonishing. The weapons actually just trigger the release of immense energy from the vacuum at the target location.

> "... it is possible to focus the potential for the effects of a weapon through spacetime itself, in a manner so that mass and energy do not "travel through space" from the transmitter to the target at all. Instead, ripples and patterns in the fabric of spacetime itself are manipulated to meet and interfere in and at the local spacetime of some distant target. There interference of these ripple patterns creates the desired energetic effect (hence the term energetics) directly in and through the target itself, emerging from the very spacetime (vacuum) in which the target is imbedded at its distant location." Bearden Fer-de-Lance

The big Tesla howitzers are aimed at their targets by using a worldwide electromagnetic pattern called the "Woodpecker Grid," begun by the Russians in 1976.

You can hear the Woodpecker signal here: http://www.cheniere.org/misc/woodpeckersound.htm

The woodpecker grid is just that, a grid of EM waves which provide a channel for the LW waves to any point on earth. Computers use the woodpecker grid information to hone down the aiming of the howitzers to a pinpoint location on earth. (For that matter, it could be under the earth, in space, or under the sea).

A third howitzer mode is what Col. Bearden calls "Mindsnapper" mode. This is a truly frightening mode which affects the electromagnetic mind-body connection. Being mind-snapped at a low level would cause you to lose consciousness. Being mind-snapped at a slightly higher power would "entrain" all minds in the target area into a kind of hypnogogic trance, a state in which they would all be highly susceptible to suggestions and orders.

Being mind-snapped at high level would so disrupt the mind-body connection that everyone in the target area would fall down, instantly dead. Not only that, everything around you and inside you would be killed, so that your sterilized body would not rot for quite a long time.

The Mindsnapper can be used for a small area, or to kill an entire population. In fact, using the scalar waves to affect the human mind has become a new field in its own right, and has been dubbed "psychoenergetics." (This is discussed below in section 5).

Bearden describes the use of the howitzer in mind-snapping mode against people, to cause unconsciousness or death:

> "From a military viewpoint, these scalar EM weapons are really quite all-around weapons.
>
> "For example, they are very lethal against personnel.
>
> "Set in the "high intensity pulse mode," one blast and a person's nervous system is destroyed instantly. Total, instantaneous death results. One can blast away at entire groups of infantrymen, for example. It's the peak power that's important, not the average power. So the weapon doesn't require too much battery power.
>
> "Set on a lower intensity pulse mode, one zap can simply knock out a person, rendering him instantly unconscious. Quite useful if one needs prisoners to interrogate. Also very silent, which is useful in operations employing stealth and surprise." Bearden http://www.cheniere.org/books/ferdelance/s80.htm
>
> "Those hit by the scalar EM weapon, however, have a most peculiar death mode.
>
> "Death comes-instantly and totally. There is no convulsion, no response. The entire nervous system is destroyed instantly. Every living cell in the body is killed instantly, including all bacteria, germs, etc.
>
> "A body hit with this thing falls like a limp rag and lies where it falls. It doesn't decay in even 30-45 days. In a macabre fashion, it's been reduced to something like food irradiated with nuclear radiation; everything is killed, so the material is preserved for an extended period before any decay can set in."
>
> Bearden http://www.cheniere.org/books/ferdelance/s81.htm

He goes on to say that the same "bazooka-sized scalar EM pulse weapon" can also be used to knock out a tank with one shot (or pulse). So tank warfare is obsolete. Helicopters? Bearden points out: "... if he's attacked by a helicopter or a fixed-wing aircraft, he can bring the same weapon to bear on it. He can knock down a chopper or a jet. With one shot."

Obituary for Tank Warfare

Tanks useless against portable LW weapons

> "For example, suppose one attacks a tank. [with an LW weapon] With scalar EM pulse, the personnel die instantly. Total personnel kill is achieved.
>
> All electronic systems of the tank are dudded. Total systems kill is achieved. The ammunition in the tank explodes. Total kill is achieved.
>
> The fuel explodes. This is another total kill mechanism.
>
> That tank has been killed totally, by a variety of mechanisms, all simultaneously.
>
> That's a k-kill in any analyst's book.
>
> And don't worry about retrieval and repair. That tank is finished permanently.
>
> Even the most modern tank is just as vulnerable as the most obsolete."
>
> Bearden http://www.cheniere.org/books/ferdelance/s88.htm

One begins to get the idea how profoundly the conventional means of warfare have been obsoleted. All the usual weapons of war have been rendered nearly useless! And Star Trek's "Phaser," with its "stun" and "kill" modes is here at last.

Although it is the weapons aspect of scalar electromagnetic which has received the most developmental effort, Bearden points out that a great many other amazing things that may be accomplished in this new field of science. Beam me up Scotty!

> "Superluminal communications systems, hyperspace drive, and materialization and dematerialization are all hypothetically possible, using scalar electromagnetics. As the technology develops, we should see the development of many of the systems long thought impossible except in science- fiction."
>
> Bearden http://www.cheniere.org/books/ferdelance/s15.htm

Bearden describes a huge test of the Russian scalar weapons systems which occurred in 1985, a test that went completely unnoticed by western scientists:

> "Just before May 1, 1985 the Soviet Union performed a "full-up" operational test of their entire strategic scalar EM weapons complex. This test was detected and monitored periodically by Frank Golden. Some 27 of these giant Soviet "power taps" were locked into the molten core of the earth, producing forced (entrained) scalar resonance of the entire planet on 54 controlled frequencies under our very feet. The remainder of the scalar frequency spectrum was ablaze with literally hundreds of Soviet scalar transmitters: probably the entire strategic scalar command and control system to

> underwater submarines, higher command centers, distant commands, etc. was activated in the giant exercise.
>
> "For several days, the system was exercised on a mind-boggling scale, apparently as part of the Soviet Union's highly accentuated 40th anniversary celebration of the end of World War II.
>
> "Ironically, not a single U.S. intelligence agency, laboratory, or scientist detected this monstrous exercise for the new Soviet leader, Gorbachev. Not a one of them had a detector for scalar EM radiation, and not a one of them officially believes the exercise ever happened."
>
> Bearden http://www.cheniere.org/books/ferdelance/s38.htm
>
> "The Woodpecker grid/howitzer weapon system can be placed over the ocean and used against cruise missiles, naval surface-to-air and surface-to-surface missiles, submarine-launched ballistic and cruise missiles, etc. Placed over a carrier task force, it can also take care of the aircraft launched by the carrier as fast as they are launched. It can also handily take care of the missiles launched by guided-missile cruisers of the accompanying task force."
>
> (Bearden http://www.cheniere.org/books/ferdelance/s65.htm)

The whole series of the Fer-de-Lance briefing slides and comments is a "must read" for anyone wanting to be aware of the actual state of things in this world right now. It is a new world and it takes some getting used to. Fer-de-Lance speaks clearly, for the layman, of the way things stand.

What is it like to operate these Tesla Howitzers? Col. Bearden gives us an idea in his "Fer-de-Lance" briefing, Slides 66-71.

Who needs armies anymore? A entire war can be fought and won by a handful of men sitting in a comfortable control booth! The scalar electromagnetics revolution has made all previous forms of warfare nearly obsolete.

Why haven't the Russians used the scalar weapons yet?

Bearden gives his thoughts on this in "Fer-de-Lance." The power of these weapons is so great that an accident or war could wipe out all life on earth, and even affect the sun.

> "As can be appreciated, this entire concept [MAD] is now totally obsoleted by the Soviet possession of scalar EM weapons.
>
> 'The "mutual assured destruction" capability -- or MAD concept as it was so aptly named! -- is no longer mutual. And for two reasons: (1) the Soviet surprise attack could destroy essentially all our Triad forces wherever they are, in the first attack. (2) Even if a very small number of our strategic forces survive, the puny strike we could attempt to launch could be repeatedly decimated from launch to terminal phase.

'The restraint on the Soviets is not because of our Triad forces. The restraint is twofold: (1) a second nation has scalar EM weapons, and would undoubtedly unleash them upon the Soviet Union with great violence if such a massive world-wide destruction of U.S. forces occurred or was threatened (is it really "accidental" that six major Soviet missile ammunition storage sites mysteriously exploded within seven months?); (2) the closed-loop scalar radiation exchange system of Earth-Sun could be inadvertently "tweaked" in the feedback loop from Earth to Sun, so that a large solar scalar resonance was stimulated. In that case the Sun could emit a mighty resonant "burp" that would simply wipe out all life on Earth in a fiery shower.

'The "terror" in the "balance of terror" between nations has just increased by many, many orders of magnitude.

'The biblical prophecy that the Earth will be wiped out by "fire and brimstone from heaven" is very near fulfillment now.

'Put another way, the pucker factor -- even on the Russians who may contemplate unleashing Armageddon -- is higher than any Western strategic analyst has ever imagined, even in his wildest nightmares.

'Truly these weapons are "more frightening than the mind of man has imagined," as Brezhnev put it in 1975.

'The frightening scalar EM weapons can be used, but only very, very gingerly indeed. If a slight mistake is made, everybody loses everything."

Bearden http://www.cheniere.org/books/ferdelance/s74.htm

But the Russians (KGB) are not the worst of it. Bearden claims that some of the scalar weapons have been leased to the Yakuza for about a billion a year, and that only the KGB is holding the Yakuza in check from making a full-scale all out scalar attack on the west.

U.S. Defense Secretary William Cohen

Warns about eco-terrorism using scalar electromagnetic weapons

"Others [terrorists] are engaging even in an eco-type of terrorism whereby they can alter the climate, set off earthquakes, volcanoes remotely through the use of electromagnetic waves... So there are plenty of ingenious minds out there that are at work finding ways in which they can wreak terror upon other nations...It's real, and that's the reason why we have to intensify our [counter terrorism] efforts." - Defense Secretary William Cohen, 1997

In a letter to a writer named "Russell" Bearden says,

"In short, Russell, the Secretary of Defense of the United States confirmed that there are indeed novel kinds of EM weapons, right now and have been for some time, which have been and are being used to (1) initiate earthquakes, (2) engineer the weather and climate,

and (3) initiate the eruption of volcanoes. We wrote about those exact uses of the weaponry decades ago. Several nations now have such weapons. Three of them (two on one side and the other on a hostile side) are even firing practice shots into Western Australia, as a convenient test range."

http://www.earthchangestv.com/ufo/0209gandor.htm

Tesla Howitzers in Weather mode

How to Make Weather

"Engineering the weather is duck soup; they tested that over the U.S. in 1967, and entered upon continuing operations over North America on July 4, 1976 as a grim kind of KGB "Bicentennial Gift" to the United States. Here's how it is done with several interferometers.

"First, the interferometers can deliberately make "high pressure areas" (cool the air so it shrinks and its "footprint" pressure on the ground increases because its density increases) and "low pressure areas" (heat the air so that expands and its "footprint" pressure on the ground decreases because its density decreases). Well, if one makes the highs and lows where one wishes them, and judiciously and somewhat slowly moves them along a given path, these highs and lows will entrain the jet streams and thus "steer" the weather.

"So if you wish a very cold snap or attack, go up into Canada and start these actions to steer down some streams that bring some very frigid air. Establish other highs and lows judiciously to "block" or "slow" other jet streams and flows as desired. In this way, one can pull the "large cold air masses coming down from Canada" deep into the southern U.S. at will. They do it regularly. If you wish an ice storm, add an additional current of warm moist air you bring up (steer up by using artificial highs and lows) from the ocean. Where they meet, you will get freezing rain, then sleet, then severe icing accumulating. This type of attack does rather large damage to the struck area."

http://www.earthchangestv.com/ufo/0209gandor.htm

Whole websites have now sprung up showing weather radar anomalies which may well be indications of scalar weather engineering. One list of over 500 images is here. Cheniere has its own collection here.

In another section at Cheniere are many photos of cloud anomalies which reveal the underlying grid along which the clouds are forming or un-forming. Bearden relates a startling incident in these clandestine ongoing "weather wars."

"During the spring of 1986, abnormally strong Soviet weather engineering occurred over the U. S., causing a drastic drought in the southeastern U.S. This drought was broken by a colleague who used an extremely powerful scalar EM device to redirect jetstreams. A most unusual and unique signature of the "blocking" against the Soviet scalar EM actions

resulted: Two huge circulations developed in the atmosphere, clearly showed as two adjacent giant "holes" in the swirling cloud cover over the middle and eastern U.S.

"Between these two giant holes, the cloud circulations formed a stream of clouds, moving to the south, looking very: much like a giant vertical "bar" of a huge "Y-shaped" cloud flow.* Several national weathermen commented on this unusual pattern, which had not been observed before. The pattern continued, day after day, as the blocking continued."

* On the weather maps.

http://www.cheniere.org/books/analysis/history.htm

Tesla Howitzers in Earthquake mode

How to Make an Earthquake

"Here's how you initiate a very large earthquake with such weapons. Take a convenient fault zone of set of them. Focus the interferometry on the fault zone, in the "diverging" mode, and deposit EM energy there in the rocks on both sides, increasing (slowly) the stress in the rocks by the reverse piezoelectric effect (deposit excess energy, get crystal mechanical movements).

"Do it slowly, and the stress will build up to large pressures well-above a plate slip minimum energy required. At some point, the rocks yield and one or both sides "slip" and move rather sharply, giving a very large earthquake in that zone.

"Do the same thing down in the earth (remember, LWs easily penetrate right through the earth and ocean at will, and so the "interference zone" focus can be inside the earth or beneath the ocean, at will.

"Anyway, focus this thing down to where the active part of the volcano is still slumbering, down where the hole in the plate has been made. Keep increasing the deposition of energy in the magma itself, and eventually the increasing pressure from deep within that volcano, underground, will cause an eruption. Build the energy slow, and the eruption will likely be much larger."

http://www.earthchangestv.com/ufo/0209gandor.htm

Yugoslav Earthquake, Followed by Cold Explosion

Strange Characteristics of Iran Quake, Sep. 1978

Tesla Howitzers in Tesla's "Big Eye" mode

How to make a Big Eye in the Sky

By using longitudinal wave interferometry in a weakly endothermic mode a new kind of "radar" is now possible, one which can look right through the earth and oceans. Because the endothermic

mode extracts energy from the distant target, a pattern of the target area can be scanned for in the returned energy.

> "Thus the receiver produces a representation of the energy extracted from various locations within the distant endothermic zone. By displaying the received signals on an appropriately scanned screen, a representation of the distant scene in the intersection zone can be created. Indeed this is a special kind of "microwave interferometry," and -- with modern techniques -- the imagery obtained might be surprisingly good. With development, it might even become as good as the image presently obtained by side-looking acquisition radars.
>
> "Interestingly enough, since scalar EM beams will easily penetrate the earth or the ocean, one can also look beneath the earth or beneath the ocean with this type of scanning scalar interferometer.
>
> "The importance of this capability to strategic and tactical reconnaissance is obvious. Camouflage, cover, and concealment have no effect on such a system. One can easily look inside buildings and into underground facilities. With a small system such as this, the U.S. Marines at Khe Sahn would have had little difficulty locating the tunnels continually dug under the perimeter by the Viet Cong. And targets under jungle canopies are directly visible."
>
> Bearden http://www.cheniere.org/books/ferdelance/s42.htm

Tesla Howitzers can destroy all life on earth

How to Make a Storm on the Sun!!

(Just make a big mistake with your Tesla howitzers)

The deepest dangers of the use of scalar weapons are frighteningly pointed out by Bearden here where he considers that the sun, earth and moon (actually the whole solar system) is a delicately balanced arrangement of scalar (longitudinal) EM radiation. There is a scalar connection between the earth and the sun, which are both giant dipoles gushing energy in the time domain. Big scalar events on the earth could alter this balance causing true catastrophe.

"Indeed, a solar response could be stimulated so that the Sun would violently belch and destroy our biosphere, among other effects."

Unrestrained scalar warfare could cause huge solar storms? To realize that human activity could actually affect the sun itself is truly mind boggling.

Bearden goes on to say:

> "Accordingly, use of huge scalar EM weapons is a double-edged sword. Unless carefully employed, use of the weapons could cause a terrible backlash to the user as well as the victim, and even accidentally cause the destruction of the earth itself. It is not accidental

that in 1960 Khrushchev stated that his new fantastic weapon could -- if unrestrainedly used -- destroy all life on earth.

"This appalling backlash potential is apparently what prompted Brezhnev in 1975 to make so strong an effort to get agreement to outlaw the development of "new weapons of mass destruction" more frightful than the mind of man had even dreamed of. Gromyko even introduced such a draft agreement into the proceedings of the United Nations. The first article of the draft agreement indicated that the nature of the weapons referred to would be negotiated. Sadly, the entire Western world did not even know what the Russians were talking about."

http://www.cheniere.org/books/ferdelance/s24.htm

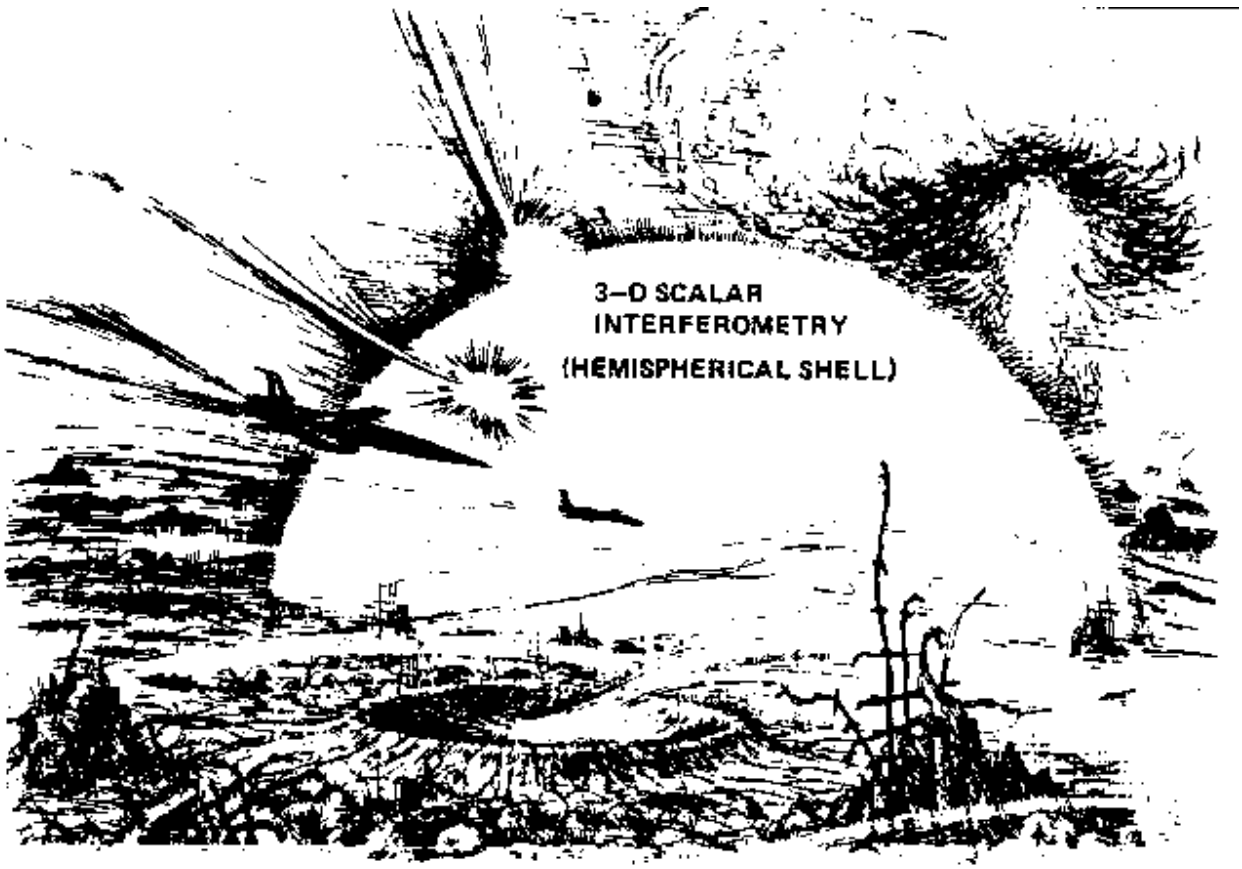

3b. Tesla domes provide near-perfect defense shield.

(Slide from Cheniere.org)

The Tesla howitzers can be used in a nearly impregnable defensive mode whereby they throw up a dome (**Tesla Dome**) or a sphere (**Tesla Globe**) of highly powerful electromagnetic energy, enough to "dud" or destroy missiles which try to penetrate them. Once again, this energy is not

going through space from the howitzer, but being made to emerge from the local vacuum at the location of the shell. KGB tests of these domes have been witnessed by airline pilots around the world. Bearden gives many examples of the Tesla domes being sighted around the world in his briefing paper "Fer-de-Lance." (Russian dome test, another globe incident, yet another globe test). These giant electromagnetic domes can be hundreds of miles across, or narrowed down more to total impermeability.

> "Such a shell may be several hundred miles in diameter at the base. The enormous energy required to form such a defense shell is obtained by a "scalar power tap" into the molten core of the earth itself, as previously explained. In late April/early May of 1985, 27 such "power taps" were placed in the earth by the Soviets. If each tap is capable of powering four to six large scalar EM weapons, then the Soviet strategic scalar EM arsenal contains over 100 monstrous superweapons capable of generating exothermic explosions, endothermic explosions, engineering the weather, locating and destroying underwater submarines, detecting and destroying ballistic missiles shortly after launch, detecting and destroying long range strategic bombers as soon as they are airborne, etc."
>
> http://www.cheniere.org/books/ferdelance/s52.htm

By using nested domes one can protect the domed area even against nuclear radiation itself. Tesla globes can be used to hit airborne targets by simply placing a globe of any chosen size in the flight path of the incoming missile. It does double duty because the missile hits it going in, and then the rubble hits it again going out the other side.

While the U.S. persists in its useless boondoggle "missile defense system" by shooting a missile with a missile (missiles which would already have been "dudded" by the Tesla howitzers), between the domes and the globes the Russians (KGB) have in hand (operational) a nearly perfect missile defense system. Someone should ask the Secretary of Defense if the U.S. Tesla domes are in place. And over which cities? How powerful are our American Tesla domes?

Bearden cites a number of examples of these domes being tested around the world:

March 20, 1969 | March 24, 1977 | August 17, 1980 | June 17, 1966 | June 18, 1982 | June 22, 1976

In a slide from the Fer-de-Lance briefing it is shown how the "woodpecker grid" itself also acts as a sensor, detecting any missile launch anywhere, and how the howitzers can respond instantly by delivering a blast to exactly the right coordinates, right along the channels of that same grid which is feeding the location information about the missile launch. This certainly beats "trying to hit a bullet with a bullet." Especially since YOUR bullet would probably be instantly inoperable in a real scalar war situation.

3c. Rogue Groups in the government

Bearden fears that these scalar electromagnetic secrets may have fallen into the hands of what he called secret "rogue groups" within the labyrinthine depths of the black-ops special-access domain of the secret government. "In the extreme, such a deep black program can even become a

"captured" program," he says, "which is totally in the hands of rogues and no longer reports to or is bound by the dictates of the parent government."

> "They have their own agendas. And being rogue groups, they may well bring in unethical, immoral tricks: assassination, bribery, entrapment, disinformation, plausible deniability, etc. A certain percentage of a highly secret rogue group will wind up using all these things and more. It's a human characteristic, the old primate dominance game. Only now disguised and hidden under deep classification. ...
>
> "In highly classified groups, these groups are greatly enabled to joust more widely, unethically, and immorally because it is so deeply hidden. So very deep classification evokes the growth and intensity of rogue groups. It's the old 'Power corrupts, and absolute power corrupts absolutely' routine. ... Due to loose formation of rogue groups inside such programs, they may have dual or triple purposes, may not operate under very much legitimate government control at all, and may operate specifically for the purposes of the rogue group or groups that have gained control."
>
> "The involvement of at least some rogue groups, some being "cowboys" who operate well outside all laws and ethics, could also result in such things as assassinations, clandestine testing on individuals without their consent, etc. In short, it could account for what seems to be actually occurring. "
>
> http://www.cheniere.org/explore%20articles/mind%20control3/p05.htm

3d. World War III has already begun

Because it is now possible to cripple the power grids and electronics of any nation, that nation could be reduced to economic ruin without ever firing an actual "shot." Without electricity Wall Street cannot operate. Without electricity you quickly need martial law. One no longer needs to wage a conventional war anymore at all. There are now lots of new ways to bring any nation to its knees.

> "We are at war, whether we like it or not. And we are going to have strategic strikes on an unparalleled scale for us. Pearl Harbor was nothing compared to what is coming down, once we consider the "augmentation" and such.
>
> "When that factor is considered, then it's a totally new ball game on replacing the power system. There isn't going to be much choice; the old one is going to be destroyed or so badly crippled that it will collapse the U.S. economy in a way we have not seen since 1929. Of course, in such a case hitting us, we will be under martial law, the works, everywhere. For one thing, it's the only way you can keep the cities from imploding from within, by the criminal element, looting, robbing, killing, etc. Simply wait and see; it's on the way."

> Although Bearden has for years decried the "scalar-gap," and chided the military for falling so far behind the Russian KGB in the field of scalar electromagnetics, recent statements indicate that things may at last have changed somewhat.
>
> "In the new war, the first phase of WW III has already been completed. Hence President Bush's recognition that this is a total war, and has to be taken to the enemy no matter where he may be hiding or in what sanctuary or in what foreign nation. This is an entirely different war than anything the U.S. has ever fought in its history. And before it is over, it is going to kill more Americans than have died in all the previous wars in our history. The news media and the public have not yet recognized that awful situation and predicament. Most are already thinking that, well, we won in Afghanistan so it's just about over. Instead, it has only just begun.
>
> "Anyway, that's a brief uptake on some of the weapon situation today. Some 10 nations or more now have LWIs, and five have the QPs. I'm still working on how many have the appalling negative EMP weapons, but would estimate 6 or 7 nations have them in one stage or the other, either deployed or in at least advanced development. And in my estimation, the Yakuza will have them within three to five years if they have to build them themselves, and quicker if they can buy them from the Russians, Chinese, or???"
>
> Bearden http://www.cheniere.org/correspondence/030202a.htm

When he was asked the question "**Does the government listen to Tom Bearden?**" Bearden said:

> "Let me speak carefully. I am very satisfied with how I've been listened to in the quarters where the rubber meets the road. The West is no longer defenseless, not by any means. Cannot amplify it further than that."
>
> http://www.cheniere.org/correspondence/030202a.htm

Bearden has briefed the government a number of times and the Cheniere website contains a great number of his graphic military briefing slides.

3e. Are the Russians making "UFOs?"

Scalar electromagnetics engineering opens the possibility of antigravity vehicles and "hyperspace travel." In other words we can now make our own UFO's! Of such scalar-powered antigravity vehicles, which have now become possible, Bearden has this to say:

> "We might expect to see such vehicles glowing. Their various surface features and mechanisms might appear to be glowing or revolving lights, etc.
>
> "They could exhibit incredible "aerodynamic performance," seemingly in the atmosphere. Actually they would not be moving "through" the atmosphere at all, but through a higher space outside each particle of atmosphere.

"They could seem to materialize and dematerialize.

"They could seem to plunge into the ocean or rise out of it.

"They could even seem to operate under the ocean or inside the earth itself.

"Such anomalous vehicle performances have been seen all over the world, particularly since a few years after WWII.

"It appears that one or more nations of Earth are operating such vehicles now in great secrecy. Our own "government" may even be one of these.

"If so, it isn't our true "government/government." Instead, it's the "control group/government." It's government at the operational level, but at higher level it belongs to certain control groups who have penetrated our government's vitals and taken over all such projects."

Bearden http://www.cheniere.org/books/ferdelance/slide32.htm

In an excellent article on her Earthfiles website, Linda Moulton Howe reports on the utter bafflement of Norwegian scientists over mysterious lights appearing in the valley of Hessdalen, Norway.

She writes of the research there: "The results can be broken down into two groups: 95% are thermal plasmas and 5% are unidentified solid objects. The plasmas emit long wave radio

frequencies and strangely, their temperatures do not vary with change in size or brightness." She quotes the scientists' research summary:

> "1) most of the luminous phenomenon is a thermal plasma;
>
> 2) the light-balls are not single objects but are constituted of many small components which are vibrating around a common barycenter;
>
> 3) the light-balls are able to eject smaller light-balls;
>
> 4) the light-balls change shape all the time;
>
> 5) the luminosity increase of the light balls is due to the increase of the radiating area. But the cause, and the physical mechanism with which radiation is emitted, is currently unknown."

This would almost certainly seem to be another example of the testing of the scalar howitzers. It is baffling because, as Bearden points out repeatedly, Western scientists have limited knowledge of the scalar electromagnetic principles by which the howitzers operate. The Hessdalen scientists were completely baffled as to where the energy of these plasma balls was coming from.

Ms. Howe interviews Massimo Teodorani, Ph.D., Astrophysicist, who released the report on the 2001 Hessdalen sightings. The scientist speaks of the baffling phenomenon observed.

> "I don't know how it is possible that Nature is spontaneously able to do that. Anyway, we deduce that the plasma is trapped inside a sort of magnetic cage and the magnetic cage closes around the plasma and keeps it fixed in some way, prevents it from expanding. But where does it come from? We don't know."

By what we have been considering here, we can recognize the signatures of scalar electromagnetic engineering. If it is a Tesla howitzer, then the energy for the plasma balls is coming from the vacuum of spacetime at the very location of the balls themselves, triggered by scalar interferometers aimed through the woodpecker grid.

These kind of balls can be used as marker beacons giving feedback for precision aiming of the howitzers. The energy of the marker beacon can be read back into the computers giving precise location information for pinpoint aiming. The target area can be very small, or widened out.

There is a little movie of one of the Hessdalen plasma balls here. It would seem to be a clear documentation of a scalar howitzer marker-beacon. How many other current "UFO" sightings are actually the witnessing of Tesla howitzer tests?

In fact there are a great many anomalous events of the past few decades which might very well be explained by the Russian testing of their longitudinal electromagnetic weapons. It would seem that the mysterious appearance of crop circles around the world could be accomplished by feeding a precise mathematical graphic pattern into the computerized aiming software and change the very molecular structure of the crops themselves along the lines of that pattern. The

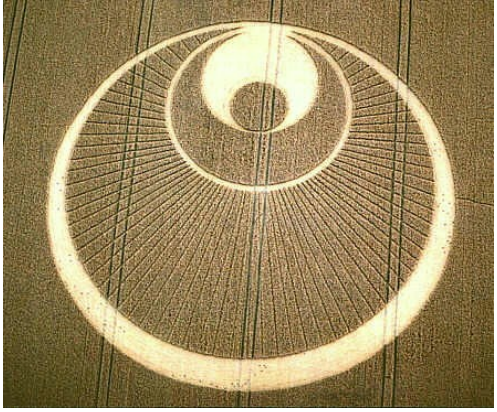

stalks fall over from the localized effect of the longitudinal waves. A plasma ball tracing patterns? Are they slyly sending a message to see if we are "getting it" yet?

The "Cambridge Angel" - Made by Russian scalar plasma balls?

Also see: Interview with Tom Bearden

(Slide from Cheniere.org)

4. Healing powers of longitudinal waves

Healing via longitudinal waves, time reversal of cells (de-differentiation), Priore's machine, Bearden's proposed "blanket" version, using the electric power grid for healing waves or for broadcasting disease patterns. Scalar Biowar.

The good news!

> "Any sort of disease whatsoever - physical or mental - will be rapidly curable, simply and cheaply. It will be possible to reverse aging and rejuvenate the person. It will be possible to regrow limbs and straighten misshapen spines - and directly remove the causes of mental diseases and cure them as well. Lifespan will be staggeringly increased, without 'old age's debilitation.' AIDS, cancer, leukemia, and genetic diseases will be completely conquered. The potential for a true golden era is upon us, for all humanity."
>
> Bearden- http://twm.co.nz/beard_interview.htm

Proof of the healing powers of longitudinal waves from the vacuum is seen in the work of Antoine Priore who produced longitudinal scalar waves using a gigantic glass tube filled with plasma. He himself did not understand why it worked or how it cured cancer in animals.

> "The Priore team cured terminal tumors, trypanosomias, and other dread diseases in laboratory animals in France, in the 1960s and 1970s, under rigorous scientific protocols by eminent scientists. The Priore project was funded by the French Government to the tune of several millions of dollars (equivalent).
> http://www.explorepub.com/articles/energetics.html
>
> ". . . Prioré's machines concretely demonstrated a nearly 100% cure of all kinds of terminal cancers and leukemias, in thousands of rigorous laboratory tests with animals. These results were shown to medical scientists as early as 1960."
> http://www.cheniere.org/priore/index.html

Bearden has stated that the longitudinal EM waves can have a healing effect because they always come in pairs called "phase conjugate pairs" and one of the pair is time-reversed. This enables engineering of the waves to "pump" the cells of the body (with waves from the time domain) and actually time-reverse the cells back to a previous healthy condition. The scalar cure of cancer does not involve killing the cancer cells but rather pumping them with time energy into a previous condition. I know, this seems miraculous, and is it not?

Priore and his giant plasma tube

This healing power in the longitudinal waves of the time domain is a mind-boggling thing to face. It took me months to get through it, and to suffer the fact that the cure for cancer and AIDS was right there, in this new scalar electromagnetics technology, and that it has been kept back from the people for so many decades now.

Bearden has a great deal to say about the work of Priore, who himself did not understand why his machine worked. Priore did not know about the longitudinal scalar waves of the time domain. In fact, Tom Bearden has supplied, at last, the missing explanation as to how that big giant two-story glass tube consistently cured cancer in animals.

"**The medical implications are enormous**. By just reversing the damaged cells back to a previous physical state, this gives a physics mechanism for controlled cellular dedifferentiation, in biology terms. Physicians will time-reverse diseased, damaged or aged cells back to an earlier healthy condition, including all the cellular genetics. Normal cells are just reversed to a slightly younger condition."

> "We believe this mechanism explains the revolutionary but baffling electromagnetic cures achieved by a team of outstanding French scientists in the 1960s and early 70s, working with inventor Antoine Prioré. In lab animals, cures were achieved for terminal tumors, infectious diseases such as trypanosomiasis, and atheriosclerosis. In addition, deliberately suppressed immune systems were dramatically restored.
>
> "We hypothesize that this is the long-sought mechanism of how the living body heals itself. In short, the body's cellular control system induces cellular reversal by weak time-domain pumping of the damaged cells and the affected area. The cellular regeneration system performs all healing of cellular damage in the body; the immune system heals nothing, not even its own damaged cells) .
>
> "For the first time medical science can develop as a science of healing rather than a science of intervention. And it will develop as a science of unlimited healing, since no pathogen can resist action by curved spacetime engines." Bearden
>
> http://www.cheniere.org/techpapers/Vision%202000%20paper.doc

See Priore's machine See Slides of how it works.

Bearden has extended the Priore work, with the previously missing knowledge now in place, and designed a revised system (for irradiating the body with longitudinal waves) which gets rid of Priore's giant glass plasma tube and uses instead an antenna unit which surrounds the body. He has also provided the missing explanation of how it works. There is an article from "Explore" magazine, Part I and Part II.

In fact, Bearden has presented to the U.S. government a plan to use a portable version of a Scalar Healing Blanket where wire channels in the blanket act as a scalar antenna, which can both send and receive scalar electromagnetic waves. A two minute treatment of the waves is sufficient to restore the body to its earlier healthy condition. Thus even thousands could be treated easily and quickly in a biowar mass attack situation.

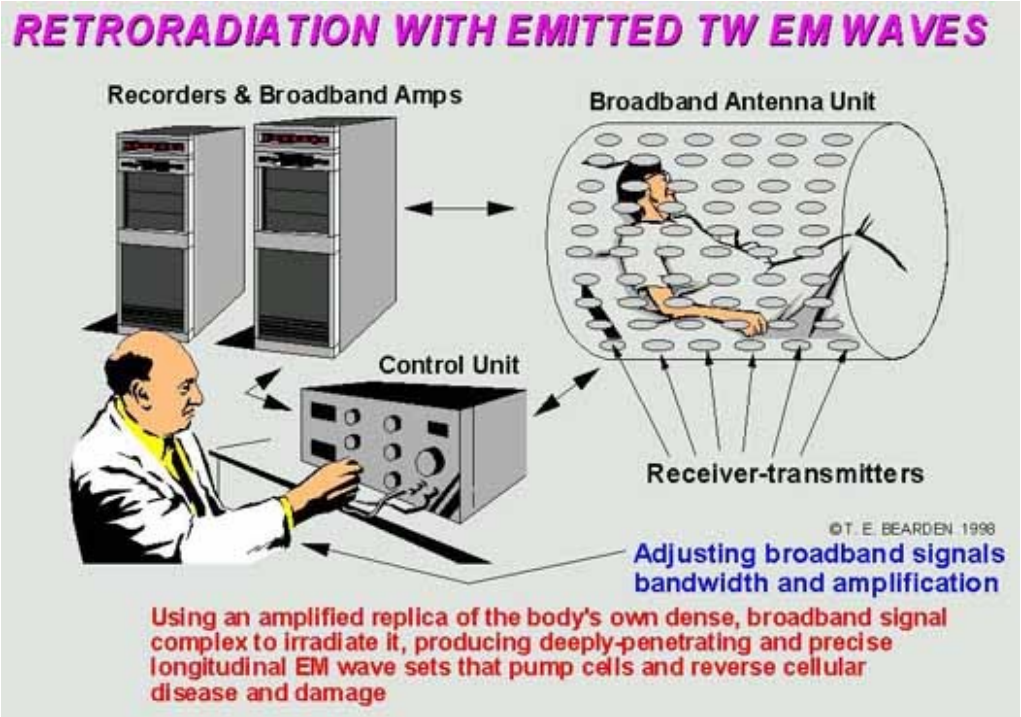

"To defend against things like anthrax attacks on our civilian population centers, we also have recommended to the U.S. Government the crash development of small, portable treatment machines—using similar "antiengine-forming" and cellular reversing "porthole technology". [See Figure 13 on previous page]. Such portable machines could be developed cheaply and quickly, and present government facilities could be used to massively attack the correlate database production problem. "The portable treatment units could be cranked out by the hundreds of thousands and flooded down through emergency response agencies such as the police forces, the National Guard, emergency hospitals, emergency response teams, etc."

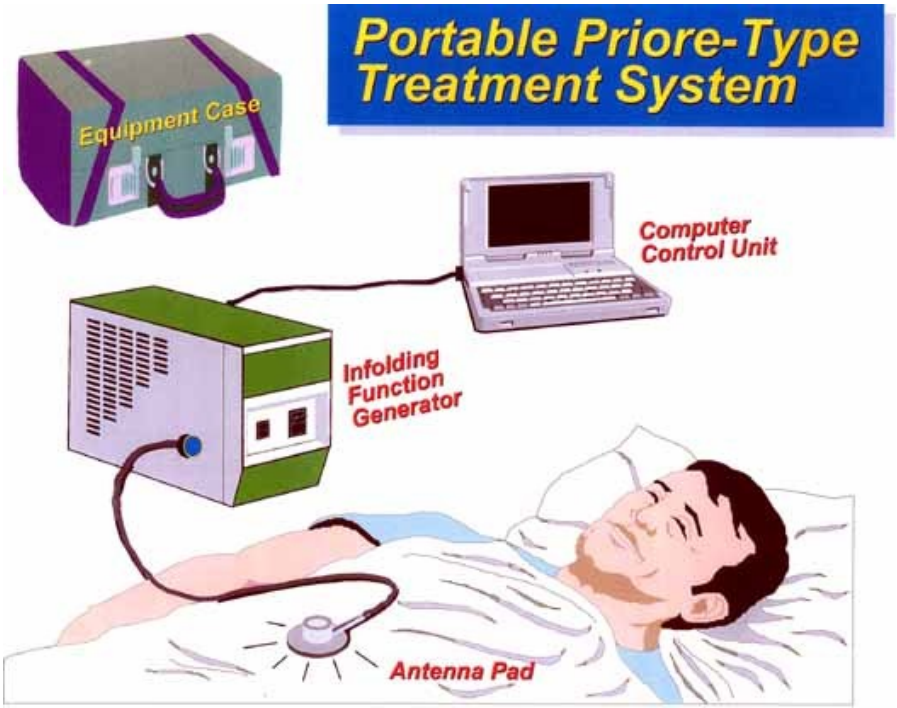

Bearden http://www.cheniere.org/explore%20articles/mind%20control3/p04.htm

The Scalar Healing Blanket would fit into large suitcase. It has three basic parts, the longitudinal wave generator, a laptop computer, and the antenna-blanket. The plan was a stroke of Bearden's genius, but unfortunately it fell on befuddled government ears. "Unfortunately, so far the DOD [Dept. of Defense] doesn't even understand what the heck we're talking about!"

Article "**Healing with Energy**": http://www.explorepub.com/articles/energetics.html

> "We tried very hard in 1998 to call attention to the extreme national need for the most urgent possible development of a portable computer-controlled treatment device based on the experimentally proven Prioré methodology, but extended to a much simpler and far more rapid method of treatment.
>
> "Quick development of this technology could lead to a suitcase size device, capable of treating a patient in less than one minute, and stopping the symptoms and disease progress cold, then reversing it. Three "less than a minute" treatments one week apart would be required for complete cure. As an added advantage, partial reversal of aging in older patients would also be accomplished as a bonus, in addition to time-reversing the damaged and diseased cells...
>
> "The method proposed to the DoD in 1998 used normal EM in a peculiar way to force the body itself to make its own time-polarized EM waves, and pump every part of its cells -- including the genetics -- in the time domain.
>
> "Quite simply, we are going to be struck this way (QP spreading the immune systems of the populace plus professional smallpox, anthrax, etc. BW attacks on our population centers) and by other means we've spoken of in other papers and briefings."
>
> Bearden http://www.cheniere.org/correspondence/021401.htm

The Dark Side of the Force:
Creating and broadcasting disease

Speaking of the scalar wave induction of disease by longitudinal wave patterns Bearden refers to work by French scientist Kervran Russian scientist Kaznacheyev, who proved that any disease could be transmitted electromagnetically.

> "It works this way: the Kaznacheyev experiments (and others) demonstrated that any cellular disease or disorder can be initiated into cells at a distance, by electromagnetic means (albeit unusual EM in nature). The decades of microwave radiation of the U.S. Embassy in Moscow, was an ongoing set of "stimuli" to ping the U.S. system and, by its response, ascertain how far along (or if it was "along") in its knowledge of such weapons. The radiation was responsible for many health changes in personnel and for the eventual deaths of three U.S. Ambassadors."
>
> Bearden http://www.cheniere.org/correspondence/021702a.htm

In a letter he writes,

> "Yes, the Kaznacheyev experiments were quite real; 15,000 or so in military research institutes in Siberia. As with so many other novel areas investigated and developed by the Soviets, most U.S. investigators just assumed normal EM, which is not what the Kaznacheyev experiments involved, and not what was carrying disease induction patterns from one cell culture to another in rigorous lab tests."

How to "Broadcast" Diseases

Longitudinal EM Biowars

Bearden explains how the new quantum potential weapons can be used to induce disease-at-a-distance in a population, or to "spread" the immune system so thin that a conventional bio-attack would be greatly potentiated. By "broadcasting" virtual disease patterns over a population, the immune system is so overloaded by the presence of the "shadow" diseases that its effectiveness is thinned out.

> "In short, alter the internal wavestructure, and one creates a curved spacetime 'engine' that acts on mass in any fashion one chooses to design -- including initiate diseases . . . Now visualize one of these 'vacuum engines' or 'spacetime curvature engines' that acts on mass to generate the exact effects produced by anthrax. (Or any other disease one wishes) . . . Call the virtual state of a disease engine the disease pattern in the "shadow" state, just prior to becoming observable. . . .
>
> "And the master cellular control system responds to "coming events that cast their shadows before". In short, it responds to the upper level of the "shadow state" of a disease, still in the virtual state! (Hey, virtual particles are real, virtual photons are real, virtual ST curvatures are real --- just very fleeting, only for another to immediately arise). The exchange of virtual particles is known to generate all forces in physics anyway! . . .
>
> "So the cellular control system responds to "shadow state" disease patterns. Enter a QP weapon application. Place a quantum potential weapon "area" on the United States, so that the entire populace is in it. The slowly introduce and bring up in the shadow state, the necrotizing fasciitis disease engine. At some point, the cellular control systems will react, and order the immune system into action. In other words, immune system resources will be committed against this "immediately coming" enemy. Bring it on up a little, but still just in the shadow state. Voila! Humans form a bell-shaped distribution curve. And even if the structure of the QP fluctuates a little, fluctuating a bit stronger and a bit weaker, etc. A few of those targeted bodies will now actually develop necrotizing fasciitis. So far, just like the U.S. Embassy targeting, except a different "carrier".
>
> "But now there is an exact signature that this is what is doing it, and not normal vector carriers of disease and contact or exposure infection. The few cases of necrotizing fasciitis that break out will be most puzzling. They will be randomly scattered across the entire nation, and so few that the vector carrier and contact or exposure explanation completely fails."

"And that one happened, right here in the U.S., not so long ago. Check it out.

"So carefully adjust the patterns for, say, 12 major terrible diseases, to that "adjusted and desired shadow state level". Now add all 12 patterns into the internal structure of the quantum potential. Now it has 12 shadow state disease engines in it.

"Place that one on a populace. The cellular control systems order the immune systems into action, and they now have to commit their finite resources to 12 different areas. This greatly thins the response an immune system can make to any one of those 12 disease patterns! In short, it "spreads" the capabilities of the immune system, which can be galvanized to great effort, but only can perform a small bit against each area.

"Suppose one of those "galvanized" areas in the targeted populace's immune systems is anthrax. And suppose the bad guys now hit one or more of those cities with a professional anthrax attack. A former OTA study showed that a professional anthrax aerial spray attack against Washington D.C., dispensing 100 kilograms of anthrax spores in the spray, will account for 1 to 3 million casualties. And that's in an "unthinned" set of immune systems. In the "thinned" set, one can at least double or triple, and even up to five times, that estimate. So conservatively, now there would be from 2 to 6 million casualties. And even mild anthrax spray attacks in other "thinned" cities would also be amplified.

"That one is being set up, or already set up, right now. There are other such "augmentation" setups also under way.

"So the weapons alluded to by the SecDef in 1997 are already being employed. WW III has already begun, and our populace (and our scientific community) is blissfully unaware of it."

http://www.cheniere.org/correspondence/021702a.htm

Most of us can remember the strange outbreaks of the so-called "flesh eating disease." It seemed to break out here and there randomly with no known cause. Bearden believes this was a test of the newer quantum potential weapons which go even beyond the capabilities of the Tesla howitzers.

"The Kaznacheyev "disease induction by novel electrodynamics" work is also the basis for the spacetime curvature engines (not EM signals!) carried by quantum potential EM biological weapons for distant induction of diseases etc. into the population of an entire nation or area, such as the U.S.

"This quantum potential disease induction weapon -- capable of attacking an entire population of a nation or area -- has been tested several times in the U.S. at very low levels, in the shadow state only (we explain shortly) and it has a most peculiar signature. E.g., one test used necrotizing fasciitis (flesh-rotting disease) engines.

"The disease 'engine' was deliberately kept down in the 'shadow state' (virtual state, just below the observable state) so that only a tiny bit of the populace with depressed

> thresholds would "breach the observable threshold' due to the population forming a bell-shaped curve as to the threshold level. The major signature of the test was that the cases of the disease broke out totally statistically and randomly, spread all over, without any 'disease vector' in between.
>
> "In short, it was not spread in any manner required by normal deterministic disease vectoring, but was a totally random set of occurrences. Several other diseases were also tested this way in the American populace, with precisely the same signature."
>
> Bearden http://www.cheniere.org/correspondence/021401.htm

"Apparently one planned use of such an augmented clandestine BW weapon will be smallpox, e.g. As you know, the Russians did develop smallpox for biological warfare, and even developed a new strain against which previous vaccination is ineffective.

> "The vast numbers of expected casualties, coupled with immune system spreading, are absolutely irresistible to the Russian mind. You can count on it that they have seen that the smallpox is already on site here, in the U.S. and in the hands of professional terrorist teams. Of course, the Russians/KGB will protest they have nothing to do with that! Yet likely the KGB will have flatly arranged it or at least assisted it. The capability for mass destruction of the nation is so lucrative and easy to achieve in advance, that they would never be able to resist doing it."
>
> Bearden http://www.cheniere.org/correspondence/021401.htm

Bearden believes the Gulf War Syndrome involved the use of scalar technology to induce a disease state, as he stated in a 1997 interview:

> "I'll say this flatly, and I won't answer any further questions about it; the Gulf War Syndrome was induced... It was induced with this stuff. All the rest... was contributing factors that everybody's talking about... There are some deeper signatures, if you look into it very deeply, that show you exactly how it was done and the fact that it was induced. It was a test. It was a test of a very special kind of weapon I have not talked about yet. Anyway you can use it to create diseases."
>
> Bearden http://twm.co.nz/beard_weapon.htm

Besides using the woodpecker grid to target a population, the entire electrical grids of nations can be used as "channels" for disease patterns to be broadcast to all people near that grid. Your own house wiring can become an antenna, broadcasting these "shadow" patterns of disease, weakening your immune system.

And here one faces the frustrating fact that the same power grids could be set to channel patterns which would keep the entire population healthy, rejuvenated, continuously bathing in the time-reversing old-age-defying energy of the spacetime vacuum. We have no idea yet of how long the human life span could be increased with this new technology. People might be able to live two centuries given full humane development of this technology.

5. Psychoenergetics

Mental entrainment, inducing hypnogogic trance, mind control, broadcasting thoughts and feelings, the Ant World, education via EM [LW] mental download, the "Feelies," revolution in spirituality, "enlightenment machine?" Scalar churches?

Psychoenergetics is simply using the scalar interferometers to manipulate and engineer the human psyche. To me it is the most mind-boggling and frightening aspect of longitudinal wave engineering.

The mind is electromagnetic in nature, and itself of the time-domain. It is not observable in 3-space. There is no thing you can point to that is the mind. As Bearden says**, "The mind is time-like**."

The longitudinal scalar EM waves are also of the time-domain. By overlaying certain infolded patterns (oscillations in time) on the longitudinal waves, a thought or feeling may be made to arise in a person or persons who are in the **interference zone** (where the wave beams cross).

The person will not notice anything, feeling that this thought or idea is his or her own idea. The longitudinal wave pattern might be a wave of panic or fear that spontaneously sweeps over you, perhaps inexplicably. It could even be in the form of a sudden intense patriotism. It could be explicit words and phrases, which everyone would think they had thought of by themselves. Or it could be rage and hatred, angry and violent. On the other hand It could also be a continuous sense of docility and placidity. This is the brave new world of psychoenergetics and the coming "Mind Wars."

Scalar Psychoenergetics in its most primitive form simply "entrains" all minds in the target area into a deep hypnogogic trance. In this state of mind people would be suddenly extremely suggestible, and would likely believe anything they are told, and would obey any orders given. Talk about winning the hearts and minds of the American People!

Tom Bearden makes me think of **Paul Revere**, who heroically conveyed important warnings for the sake of the new nation. But the words of the famous phrase have now strangely and curiously mutated into the once-inconceivable: "**One if by land, Two if by mind**."

Indeed one strategy in a Mind War would be to simply take over the minds of the "leaders" of the enemy nation. The targeted leader would not be aware that anything was amiss, although he might begin to make unexpected changes in policy.

And are, in fact, any of our "leaders" already having secret thoughts that are not their own? Who knows? Frighteningly, we can no longer be sure. The new sciences of scalar electromagnetics and psychoenergetics are even now plunging humanity into a sudden science-fiction-like world beyond anything in humanity's previous imaginings.

> "The Russians reached the point in the mid 1990s that they could take over control of a person's mind, with modified longitudinal EM waves including some time-polarized EM waves, and with a team of specialists (estimate 25-30 per transmitter, and one transmitter and team per controlled person)." Bearden http://www.cheniere.org/misc/time.htm

In a slide Bearden illustrates how a Scalar War would involve a psychoenergetics attack on the operators of the enemy scalar installation, entraining their minds into hypnogogic trance and getting them to shut down their systems.

And ultimately psychoenergetic warfare goes to the very heart of human identity itself. For if my thoughts might no longer be "mine," then who and what am I? Can my very sense of being "me" be hijacked by some nefarious psychoenergetic scheme? Will the "secret government" eventually dictate directly into your mind how you feel about yourself? Or what you think you are? Or what you should do?

How Does Longitudinal EM Mind Control Work?

The physics of scalar psychoenergetics as expounded by Col. Bearden seems even more arcane and over-my-head than that of extracting energy from the vacuum. I can't understand it, but I look through it anyway. Each time another tiny understanding might occur, or a term might fall into place. I know the mathematics is forever beyond me.

One paper to begin with is "Mind Control and EM Wave Polarization Transductions" This is such serious stuff that Bearden includes a strong warning about misuse of this knowledge. Psychoenergetics weapons can mentally maim and physically kill.

Warning!

(From "Mind Control and EM Wave Polarization Transductions")

> "This article refers to experimental research techniques which can be detrimental or lethal in the hands of any but highly skilled, qualified experimental scientists proceeding under proper laboratory safety procedures. The purpose of this article is strictly for information to properly qualified and authorized scientists in certified laboratories. We do not propose or condone any use of these procedures for nonapproved practice of medicine without a license. Neither the publisher nor the author are responsible for accidents or outcomes in the use of these experimental procedures and techniques. Any researcher who performs these procedures and experiments is acting on his or her own volition, and is solely responsible for insuring safety, qualifications, and legality of the acts and their results. We neither suggest nor condone unauthorized experimentation on human subjects. Such is a criminal violation of the constitutional rights of the subject under Federal and State laws, and is both illegal and immoral."
>
> Bearden http://www.cheniere.org/explore%20articles/mind%20control1/p01.htm

After the serious warning comes the description of the paper. This is heady stuff for the layman.

"Calling full attention to the special note above, in this paper we present a high-level overview of the novel electromagnetic nature of mind operations, mind and body coupling, and intent - the induction of physical 3-space EM energy changes into the brain and nervous system, and into every cell of the body, from the mind's time-like coherent operations. We summarize the time-polarized electrodynamics used to engineer and affect mind operations and the mind-body coupling loop. Transaction mechanisms whereby differing EM wave polarization's can be transformed one-into-the-other are presented."

Bearden http://www.cheniere.org/explore%20articles/mind%20control1/p01.htm

I will leave it to the technically astute to try to understand the mechanisms of operation which are described in scientific language. But there are tidbits for the layman. Here he speaks of the difficulty Western scientists have in opening up to the "immaterial" (longitudinal wave) nature of the human mind.

Western Science Remains Largely Materialistic

"Ironically, most Western scientists are materialists and consider "mind" as a mystical and nonscientific concept. They tend to consider mind operations and functions either to be simply "meat computer" operations and functions, or at best to be very weak ordinary transverse-wave EM operations and functions in the brain and nervous system. This serious self-limitation exists because in the body we measure only weak TW [transverse wave] EM operations and functions correlated to biological behavior and brain operations. We simply do not know how to measure "mind operations" directly.

"With no mind measurements possible and no instruments, it is understandable that Western science considers only the physical side of the mind-matter interface.

"Presently our scientists do not measure the longitudinally-polarized EM wave operations and functions in the body and around it in nature. Few of them are aware that a maelstrom of such LW [longitudinal wave] functions exist in the body and in all of nature in general."

Bearden http://www.cheniere.org/explore%20articles/mind%20control1/p05.htm

Western methods of influencing the mind with EM waves have only used transverse waves, not the longitudinal waves of the vacuum. If only transverse waves are used one pretty well has to hit the target mind with a sledgehammer of waves.

Western Science knows only transverse EM waves

Brute Forcing Time Functions versus Fine Control Methods

"Ironically, Western mind control researchers using transverse EM waves for mind control research, are using a brute force method of evoking and using vacuum engines (spacetime curvature engines) and a special form of general relativity, although they do not appear to realize it.

> "While KGB scientists also use TW EM "brute force" TW waves when necessary, they do "imprint" or "activate" those waves with the desired internal LW and time-polarized EM wave and photon structures required to directly perform the mind engineering desired... Bearden
>
> "These "fitted brute-force models" certainly can be very powerful, and certainly can produce the exact results shown in the experimental verifications of the fittings. However, they do not of themselves allow sophisticated design for example of the necessary time-polarized wave assemblies for engineering the entire human collective unconscious simultaneously, or for engineering the entire collective unconscious of all species on Earth (i.e., Gail's collective unconscious), or even for precisely engineering the memory and knowledge base of an individual.
>
> Bearden http://www.cheniere.org/explore%20articles/mind%20control1/p09.htm

The seemingly magical operations of psychoenergetics, sometimes called "psychotronics," cannot be achieved with ordinary transverse EM wave energy. But they are possible with longitudinal scalar waves because the mind itself is scalar in nature.

> "We note that all mind operations are time-like, i.e., they are comprised as scalar EM photon functions and scalar EM wave functions. Thus the mind is a very special kind of electromagnetic system, existing in the time domain..."
>
> Bearden http://www.cheniere.org/explore%20articles/mind%20control1/p08.htm

The engineering of the mind can only be accomplished with the waves of time.

The course of psychoenergetics development necessitates the building of a vast database of settings and patterns which bring about given mental and/or emotional states. A kind of "gnome" of the psyche. Bearden describes the process of the decoding of this "gnome."

> "Now the scientists would perform many phenomenology experiments, making one little change at a time and profusely recording the data. Each time, they would establish the physical change(s) that occur in the body and/or the mental and emotional changes that occur in the mind for each spectral reinsertion back through the "ship's portholes". They would simply but painstakingly (over some years) build up an extensive database of those individual correlates.
>
> "In these experiments, the experimenters will eventually be able to provoke any body or mind change they wish. Strong emotion. Intense pain. Intense pleasure. Painful thoughts. Images. Memories. Perceptions. Dreams. Visions. Memory losses. Memory changes. Personality changes. Etc. The "delta" in the emission spectrum (the changes from zero reference spectrum) represent the precise totality of all mental, physical, organic, chemical, etc. changes and interactions."
>
> Bearden http://www.cheniere.org/explore%20articles/mind%20control3/p01.htm

"A second stage in the research would be to test the correlates and porthole insertions upon a statistically significant cross section of ordinary people, and/or specialized populations (such as toughened soldiers). The program would evolve a highly complex, very effective, ever-improving science and technology of mind and behavior control and engineering mechanisms, complete with finished database and developed applications equipment."

Bearden http://www.cheniere.org/explore%20articles/mind%20control3/p02.htm

Summing up his paper Bearden speculates on what the actual situation the science of psychoenergetics probably is. The intense secrecy with which this knowledge has been kept from the public has led to the current farce of the "government" pretending it all does not exist, and this secrecy may have now put us at great risk.

"The implication is that in the West one or more highly classified, sustained, heavily funded developments in advanced mind control programs, probably exists and probably has existed for some time. Due to loose formation of rogue groups inside such programs, they may have dual or triple purposes, may not operate under very much legitimate government control at all, and may operate specifically for the purposes of the rogue group or groups that have gained control.

"In a nutshell, that's what may be going on in the clandestine mind control projects in several Western governments. The involvement of at least some rogue groups, some being "cowboys" who operate well outside all laws and ethics, could also result in such things as assassinations, clandestine testing on individuals without their consent, etc. In short, it could account for what seems to be actually occurring. As also is "usual" in such a mess, one or more of the rogue groups eventually may become very powerful because their secret weapons are very powerful. They may become confident, thinking they have the "best in the world." They may actually believe they are ahead of the Russians..."

"Remember that, in every large and powerful human organization, the basis for rogue groups is power and secrecy. They are always seeking to increase their power, control, influence, prestige, etc. Nothing else. Patriotism and mission are—to rogue groups—often just idle words. They have their own agendas. And being rogue groups, they may well bring in unethical, immoral tricks: assassination, bribery, entrapment, disinformation, plausible deniability, etc. A certain percentage of a highly secret rogue group will wind up using all these things and more. It's a human characteristic, the old primate dominance game. Only now disguised and hidden under deep classification."

"The Russians, with their additional knowledge of the actual mechanisms in the transforms, will be much more advanced than the West, because their fundamental psychoenergetics science is far more advanced, so long as we continue to use the old U(l) electrodynamics. Further, the Russians have decades of use of longitudinal interferometry beams to reach right through the earth and ocean and produce stringent EM effects at a distance. So they will also be able to do the same things here in "mind control" with LW [longitudinal wave] interferometers, through intervening mass."

Bearden http://www.cheniere.org/explore%20articles/mind%20control3/p05.htm

Bearden cites two examples where he believes the Russian KGB tested the psychoenergetics capabilities of their scalar interferometers. One was the case of Captain Button in his A-10 "Warthog" aircraft on April 2, 1997.

> "Over Arizona, Captain Button was thrown into a hypnogogic state, and his perceptions instantly altered and controlled. In his instant "dream-waking" state, everything seemed perfectly normal. His sense of direction was altered a bit more than 90 degrees, so he simply corrected and turned and "flew toward the range", actually flying off course by more than 90 degrees and ignoring radio contacts. He flew right on out of Arizona."
>
> "At one point he circled, probably thinking he was over the range, and he probably dropped his ordnance there. Then he "flew on back toward home," as he thought in his waking dream state, until his fuel ran out and he crashed and died in the explosion—dream-thinking until he died that everything was normal. All the while, his sense of the passage of time was altered. To him, in his dream-thinking, dream-acting state, everything was normal and nothing untoward had happened. So the distant KGB transmitters and associated psychoenergetics team controlled him for over an hour. "Indeed, that was the exact purpose of the test: demonstrate control (at a great distance) of a skilled person performing highly skilled tasks."
>
> Bearden http://www.cheniere.org/explore%20articles/mind%20control3/p06.htm

The paper "Mind Control and EM Wave Polarization Transductions" ends with the most chilling and frightening possibility of all: the psychoenergetic engineering of the human species as a whole.

The Ant World

The Final Race for Direct Mind Control of the Entire Human Species

> "The KGB psychoenergetics weapons scientists—because of their direct measurements and detections (and use) of t-polarized waves and LWs [longitudinal waves] for decades—also understand that Jung's collective unconscious mind (of the entire human species) also has its own time-like operations and correlates, which one measures also when using t-polarization measurements and sorting it all out. The collective unconscious mind operations are buried several levels deeper inside the recursive Whittaker structuring inside the EM fields, waves, and potentials. "The KGB scientists also know that something very like Gaia — a collective unconscious mind for all species on earth — also exists, and they are striving to be able to sort out and measure that one as well. The Gaia operations are buried even deeper in the recursive structuring inside the EM fields, waves, and potentials.""Actually, from day one, the Russian mind control scientists have had their eventual goal set upon this "deeper area of mind and possible mind control" of the entire human species.
>
> "I am convinced that the KGB psychoenergetics scientists understand this deeper area. If they can learn to directly engineer the collective human species unconscious, they can then convert the human species easily into a sort of "ant" society, modeled along ideal Communism lines, except of course with an excluded "hierarchy at the top" running

> everything. The "ant society" — communist style — is still a variation of feudalism (all systems tend to feudalism or some form thereof). "The KGB psychoenergetics weapon scientists are seriously pressing on toward that very goal. In my opinion they are not very far from it right now...
>
> "Some versions of Russian mind control devices were used on Russian soldiers in the Afghan War to condition them for performance of merciless acts." 13
>
> Bearden http://www.cheniere.org/explore%20articles/mind%20control3/p07.htm

More about "The Ant World"

Whether it is the Russians planning an "ant world" society or rogue U.S. black-ops groups withholding a great boon from human race, the secrecy on all sides around has allowed largely criminal elements to take over this technology while leaving the civilized elements in the dark. Openness and the spreading of this knowledge among good and decent people is essential, and for that we will have to overcome our frightened denial.

> "Meanwhile, rogue groups amongst Western clandestine mind control researchers will probably arise if they have not already done so. They will likely seek to increase their personal control and further isolate the programs from orthodox government review and from government and legislative control. They may even divert the research into highly illegal and unethical means, because it furthers their own rogue agendas. That is how clandestine U.S. government research can sometimes go sour, unless great care is exercised by the oversight committees in the House and the Senate.
>
> "Sometimes when rogue groups do gain control and total secrecy of a given new technological area, then what appears to be "U.S. government operations" do start to encompass a criminal and unethical operations, hidden usually beneath the deep veil of high classification. Also, if it's "scientific," no one is ever brought to justice, even if the "evil science actions" are uncovered and publicly revealed."
>
> Bearden http://www.cheniere.org/explore%20articles/mind%20control3/p08.htm

Like the huge energy of the Tesla howitzers, the ability to engineer the mind with longitudinal waveforms is a seeming "magical" thing which can be used for good or ill. Bearden envisions that further developments will allow something like the "downloading" of knowledge via scalar interferometry. Everyone could be highly educated, and quickly and easily.

In the conclusion of the paper "Mind Control and EM Wave Polarization Transductions" Bearden makes a plea to the nations of the world regarding the use of psychoenergetic engineering.

> "Let us hope this great new area, already off to a bad start, can be bridled and steered in the direction helping and healing people, rather than killing or abusing them. The excesses in its bad use are a potent threat to all nations on earth.

"Yet it can revolutionize medical science, education, communication, and psychology. We foresee the day -- perhaps 30 years hence -- when education will be accomplished by directly loading the software into the mind. Then in three weeks one will "load" a doctorate, say, in physics. In three more weeks on will also load a doctorate in chemistry. Another three weeks, in electrical engineering. Another three weeks, an MD And so on. When that happens then truly everyone on earth can be educated. Freedom from ignorance may well be another great freedom that is legally recognized. There will be no impoverished large groups lacking the education to find decent, productive jobs.

"We urge all nations to use the principles involved: not for human abuse, but for healing, educating, uplifting, and life-expanding of every person on earth. If we do, we shall all have a far brighter future. Then we shall check what has started out to be the Sword of Damocles and turn it into the golden Millennium."

Bearden http://www.cheniere.org/explore%20articles/mind%20control3/p08.htm

(Perhaps after so many frightening topics a slight break is in order here to consider the lighter side of psychoenergetics. For example, what will be the ultimate impact on the entertainment industry?)

The Feelies at Last!

Psychoenergetics will be able to bring about at last, for better or for worse, Aldous Huxley's fanciful idea in his novel "Brave New World," an entertainment format which he called "The Feelies." Those were something you went to, like going to the movies, but you would experience all the actual feelings themselves, as if the depicted events were actually happening to you. Although our "leaders" seem too dim to grasp what is going on in the world of scalar electromagnetics, it should not take some young Hollywood genius too long to understand that The Feelies are now possible, and that the immense megabucks of potential profit more than justify heavy investment in bringing it to market.

One can imagine that first "Feelie" theater, "The Huxley" perhaps, a large comfortable area surrounded by nine giant screens (not just one screen!), which become 3D if you put on your headset. And The Huxley is fitted with the finest sound, and oh, by the way, a modest sized scalar interferometer with computer. And there are one or more new tracks now recorded on the film next to the sound track. These are the digital patterns of thoughts, feelings, and ideas to be fed into the theater's interferometer. And these thoughts and feelings and ideas will be felt by the audience as if they were their own thoughts and ideas. It is an entirely new art form. Psychevision.

As important (and no doubt famous) as the actors would be the "feelers," those from whose minds the feelings were lifted in the original programming of the Feelie tracks. Because, for example, Brad Pitt might be a good and handsome actor, but can he really feel it? Like the dubbing of foreign language films, it might be necessary to dub the "emotional track" using a deeper and more profound person's feelings, thoughts and ideas.

It might even be engineered so that if you sat on one side of the theater you would feel like the hero, and on the other side you would feel exactly like the bad guy! What would that lead to?

We have all cried at a movie some time, most people have, though they might not want to admit it. But this would be deep sobbing and a flood of tears, if the director so desired it. You would feel it at your core. Or, take a big chase scene, you would be terrified. They are breathing down your neck! You would be gripped by panic.

For that matter, the whole genre of Horror-Feelie would be too much for many people to take. Do I really want to feel that an actual vampire is tearing at my throat with his fangs?

A Religious Feelie would make you feel the exaltation of a saint at his prayers, or give you the definite feeling that you are Christ suffering on the cross. All the pain could be there too. The stickiness of the blood. The very feeling itself: "Why hast thou forsaken me?" Who among us could come up that despair for scanning? Had this been developed a bit earlier we might watch a documentary of, say, Mother Theresa, containing her own actual deep sense of compassion, which we would feel arising in us as our own.

Then again, a Psychedelic Feelie could induce an LSD-like state and simply blow the audience's minds.

Even in its simplest most primitive mode, the hypnogogic trance induction with its increased suggestibility, would completely alter the experience of even ordinary current movie going.

6. As it Stands - 2002

"Anyway, it's presently a "Mexican stand-off" with the various parties maneuvering with check and countercheck. That is the real "balance of terror" that is held by such a fragile balance."

"You can see the implications if such weapons fall into the hands of the radical terrorists. Ordinary positive energy EMP shooters can be made fairly readily and cheaply from nearly just Radio Shack parts or surplus parts. It just takes some know-how... When and if the Yakuza [Japanese mafia] gets those (and they will, it's just a question of time), you can begin to appreciate some of the turns this present terrorism and our war on it will take."

Bearden http://www.cheniere.org/correspondence/021702a.htm

The very thought of the building of one of these howitzers by "some lone-nut gunman" from Radio Shack parts makes one realize how serious it is for humanity to face the crisis it has come to.

Once again, as at the dawn of the nuclear era, humanity finds itself at the crossroads of Heaven and Hell. As a species, we must stop and consider. And there is at least one real difference between this visit to the crossroads and the last: this time there is a very real possibility of a true "earthly heaven" on the Heaven side.

The poor nations could come to a good life. Disease could be largely eliminated. Fossil fuel pollution could end. Global warming could be solved, and the weather could be managed in a humane way, bringing water where there is drought, and sunny skies where there is flood. Scalar interferometry would be there to avert any possible hits by asteroids or comets. Mars could be colonized and terraformed. Everyone would be highly educated through psychoenergetic downloading of knowledge. And the wisdom of the wise could be realized directly through scalar connection to their minds and hearts.

These stunning sudden possibilities give me pause to think: if our species has reached this crossroads in such a short span of centuries, then surely other species in this vast universe have passed this way before and long ago. And of those who chose the path to "planetary heaven," what is their life like now? It might be good if some of them were with us now, to guide us through this last struggle over this pesky old good-and-evil problem. It is our last chance to choose the path which benefits the whole species, and not just some elite group or faction.

The Disclosure Project

One person working tirelessly to bring to bring these technologies into the open is Dr. Stephen Greer of the Disclosure Project, which is calling for congressional hearings into the issues of UFOs and the free energy technology that was, perhaps in part, reverse-engineered from them.

> "Once abundant and nearly free energy is available in impoverished areas for agriculture, transportation, construction, manufacturing and electrification, there is no limit to what humanity can achieve. It is ridiculous — obscene even — that mind-boggling poverty and famine exists in the world while we sit on classified technologies that could completely reverse this situation. "So why not release these technologies? Because the social, economic and geo-political order of the world would be greatly altered. Every deep insider with whom I have met has emphasized that this would be the greatest change in known human history. The matter is so highly classified not because it is so silly, but because its implications are so profound and far reaching. By nature, those who control such projects do not like change. And here we are talking about the biggest economic, technological, social and geo-political change in known human history. Hence, the status quo is maintained, even as our civilization hurtles towards oblivion...
>
> "With the types of weapons currently in the covert arsenal — weapons more fearsome even than thermonuclear devices — there is no possibility of a survivable conflict. Yet in the darkness of secrecy, actions have been taken on behalf of every human that may

> endanger our future. Only a full, honest disclosure will correct this situation. It is not possible for me to convey in words the urgency of this."
>
> Dr. Stephen Greer http://www.disclosureproject.org/ES-DisclosureImplications-2.htm

Greer and his team have assembled hundreds of witnesses, many of whom are military or ex-military, who are ready to testify to congressional hearings what they know about the covert black projects which have kept free-energy and antigravity propulsion technology secret from the people.

Greer points out the need to regulate these technologies so they are limited to peaceful uses, but this is of course difficult when the government simply chooses to pretend they do not exist. In the meantime, as the President and the Defense Department continue the charade of war-as-usual, those scalar (longitudinal wave) installations which DO exist continue to fall into ever more sinister hands. And there is no reporter in the press brave enough to ask, "Mr. Secretary of Defense, what steps are you taking to defend our MINDS from attack by the big Russian longitudinal interferometers?"

Longitudinal Interferometers are Proliferating

In a later statement Bearden reveals that in fact the Yakuza [Japanese mafia] has already leased some of the interferometers with a nearly $1 billion "down payment:"

> "After the collapse of the Soviet Union's economy, lots of things got available for lease or purchase that would never have been under the old system. That happened in the resulting economic chaos. The Russian Mafia rose to prominence, as did some wheeling and dealing entrepreneurs who played both ends against the middle.
>
> "In that atmosphere, and in the need for money, the KGB allowed leasing of the earlier longitudinal EM wave interferometers to a consortium of the Yakuza and Aum Shinrikyo. They did this only after they had tested and deployed their great new quantum potential weapons. That class of weapon is the dominant weapon on earth. Five nations now have it: Brazil, Russia (KGB), China, and two nations friendly to the U.S. The deal to lease many of the earlier LWIs [longitudinal wave interferometers] to the Japanese Yakuza and Aum Shinrikyo was consummated at the end of 1989, with a down payment of $900 million in gold bullion as "up front" money. I don't know what the lease per year was and is, but probably something like a billion dollars a year. So the rogue Japanese acquired longitudinal EM weapons and that technical know-how. In fact, the Yakuza is producing certain kinds of those in its own facilities in Japan now."
>
> Bearden http://www.cheniere.org/correspondence/030202a.htm

Personally, I am a little uncomfortable with the knowledge that the Japanese mafia may now be able to insert things into my mind. I'd like to sleep at night knowing that my dreams are my own, such as they may be, and not some weird fantastic visions cooked up by a criminal organization. This is a world emergency.

And in Bearden's analysis, it all comes back to the issue of energy. It is the energy crisis which is now provoking the current "oil wars," since oil production has hit the "Hubbert Peak" and will decline. And the electrical power grids must be replaced with scalar power as fast as possible, for these grids are now totally vulnerable to any possessor of longitudinal interferometers. They can all be wiped out in minutes. By anyone who possesses or controls a Tesla howitzer.

> "Anyway, in my personal view, we should have a national Manhattan Project right now, to develop decentralized electrical power systems taking their energy from the vacuum . . . The MEG is real and so are several other systems invented by private inventors and colleagues. All these efforts should be massively funded and massively and quickly developed. The survival of this nation is going to depend upon it. . . . There are many other facets, but the major point is that our scientific apparatus and the public are still unaware of what a desperate struggle we have entered, since it was thrust upon us. 9-11 was a wake-up call. It was certainly bad enough, and one grieves for those lost American lives. But I fear the worst is yet to come, and it is coming at us like a runaway train hurtling right down the track at us."
>
> Bearden http://www.cheniere.org/correspondence/021702a.htm
>
> "The electromagnetic weapons mentioned by the Secretary of Defense in April 1997 are in terrorist hands also, including the Yakuza and Aum Shinrikyo. That rogue group leased those earlier weapons on site in Russia, from the KGB, at the end of 1989. The SecDef stated that such weapons were being used to initiate earthquakes, initiate volcanoes into eruption, and control and engineer the weather. Quite true. And presently there is a truly massive set of weather engineering operations going on over North America, from that rogue Japanese group manning the weapons in Russia. Some 10 nations of the world now have the type of longitudinal EM wave interferometer weapons (which are what the SecDef was most probably referring to). There are other even more fearsome weapons, possessed by five nations. So a great deal of the state of the world is not covered in the news at all, and will not be . . .
>
> "We have been in an undeclared war of an eerie kind for some decades. That war seems now to have started to heat up also. The destructive capability of some of these weapons is awesome, and far greater than nuclear."
>
> Bearden http://www.cheniere.org/correspondence/021702a.htm
>
> "In that sense, the first phase of WW III is already completed. Now we are only waiting for Phase II.
>
> "It is against that backdrop that I think one must "analyze" such things as how fast we will be replacing the power grid (it's going to go anyway, and catastrophically, the terrorists will see to that). And everything we have is critically dependent upon energy, from the economy to jobs to mobility, to the millions of trucks that transport our goods every day, etc.
>
> "As far as I am concerned, we are already late in declaring a great national emergency in energy, because of the coming destruction of the present energy infrastructure. The

scientific community should lead, follow, or get out of the way. The emergency is not in seeking "alternative but conventional" systems. It is in developing "energy from the vacuum" on an emergency, crash basis.

"Unfortunately, everywhere I look I just see business as usual. Most Americans (and news media) seem to think, hey, Afghanistan is finished except for a bit of cleanup, and it's just about over).

"It isn't. It has only just begun."

Bearden http://www.cheniere.org/correspondence/021702a.htm

Beyond the Howitzers: Quantum Potential Weapons

Do not use EM propagation through space

As more and more nations acquire the scalar interferometers, Bearden speculates on the next generation of longitudinal weapons called "quantum potential" [QP] weapons.

"The quantum potential weapons are presently only held by three nations: Russia (in the hands of the KGB, which is now know by its new name), Brazil, and the "friendly little nation." Red China may be working on them, but is just at the beginning...

"The QP weapons have been highly reserved by the Russians. However, the complete extent of their capabilities is still being figured out...

"The quantum potential weaponry (possessed by only three nations) is supreme, because it uses multiply connected spacetime, and DOES NOT involve propagation of EM energy through space as does the longitudinal EM wave interferometers.

Bearden http://www.cheniere.org/misc/qp.htm

"The operational deployment of full-scale strategic QP weapons on site in Russia occurred at the end of 1989, which is when the formal weapons first went operational. These weapons are not in the inventory of the regular Russian armed forces, but all research and development, manufacturing, deployment, an manning and employment is under the ruthless control of the KGB. Shortly thereafter (within weeks), the KGB leased many of their earlier longitudinal EM wave interferometer (LWI) weapons to a rogue Japanese group comprised of the Aum Shinrikyo and Yakuza."

Bearden http://www.cheniere.org/correspondence/021401.htm

In another paper, "Time Polarization - Significance and Weaponization," Bearden tells the story of how a KGB longitudinal wave attack was averted by the longitudinal weapons of a "friendly small nation."

So as it stands, it is precarious. Not until the people demand an end of what author Jim Marrs has dubbed the "Rule by Secrecy," can the people's representatives tackle the big problems of a worldwide ban on Scalar Wars and the shifting over to an essentially oil-free economy.

Latest Update from Tom Bearden - March 2002

The whole situation is changing so fast that when I asked Tom to look over this article he mentioned the seeming contradiction when some of the above statements are taken together. At different times the information he has is updated so one has to keep a kind of running track. He was kind enough to clear up the confusion here with the situation as it stands as of March, 2002.

> "We knew of three nations having the QP weapons for some time. Then we found out last year that five nations had it. So that explains my using the figure "three" first (which represented what I knew at the time). Later I found out about the other two nations. China, e.g., only deployed its QP weapon this past year. So that explains the apparent contradiction between me using "five" in later papers and "three" in earlier ones. It was the best information I had at that time. Might mention that so the reader will understand the apparent discrepancy." Tom Bearden

Emptiness is Full of Energy

"The Tao is an empty vessel;
it is used, but never filled.
Oh, unfathomable source
of ten thousand things!

"Oh, hidden deep but ever present!
I do not know from whence it comes.
It is the forefather of the gods."

Lao Tzu -Tao te Ching

Afterward

Because of the extreme seriousness of the topics brought forward in this article, I asked Tom Bearden to look it over to make sure I had not gotten anything too terribly wrong or mixed up. I did not want to pass on any misunderstanding of my own. I felt a little nervous writing to an eminent scientist, and hoped I had not presumed upon his time.

But Tom was so kind as to answer immediately, and to my relief I had not gotten anything too terribly wrong. Here is his letter, in which he clears up a misunderstanding, and reports on his current health treatment, and gives a call to the young grad students to turn themselves loose in the whole new field of scalar electromagnetics and free energy.

Subject: RE: Article on Tom Bearden and "Scalar Wars"
Date: Fri, 22 Mar 2002 22:54:01 -0600

Bill,

Well, I must say I'm astounded at your persistence and hard work in congealing all that together. My compliments on a hard job quite well done.

Couple tiny things: In the area mentioning Kervran and Kaznacheyev: Kervran was French; Kaznacheyev was and is Russian. Little typo of "spredding" the immune system. Should be "spreading".

We knew of three nations having the QP weapons for some time. Then we found out last year that five nations had it. So that explains my using the figure "three" first (which represented what I knew at the time). Later I found out about the other two nations. China, e.g., only deployed its QP weapon this past year. So that explains the apparent contradiction between me using "five" in later papers and "three" in earlier ones. It was the best information I had at that time. Might mention that so the reader will understand the apparent discrepancy.

Otherwise, it's pretty accurate.

Just now I'm letting the weapons take care of themselves; have to, as I will be recovering now for nearly a year from now after the heart attack last year and discovering that I had contracted mycoplasia (the BW modified kind) in Canada in 1968. Finally got a test which confirmed the chronic mycoplasia (which I had for 33 years!). The stuff burrows inside one's red corpuscles, then draws nutrients from the hemoglobin, hardening it and reducing its ability to take on oxygen (by as much as 50% or more). The resulting symptom is loss of endurance (which I had for that 33 years) -- the so-called "chronic fatigue syndrome".

Many of the Gulf War Veterans who are sick also have it, though they apparently have other complicating factors as well. A very high percentage of persons with chronic fatigue syndrome also have mycoplasia. The treatment for the long-standing mycoplasma infection of that nature is to stay on antibiotics for a year. The only time the mycoplasma is vulnerable is when one wears out a red cell in normal usage, and the body makes a new red cell to replace it. The mycoplasma comes out of the dying cell to infect the new replacement cell, so it is exposed and vulnerable at that specific time and that time only. The antibiotics kills it at that time. Hence the necessity to stay on antibiotics for such a long time so it is continuously in your bloodstream (I've already been on antibiotics for over two months, and have at least 10 more months to go). We also take a little medical oxygen every day.

Another symptom of the mycoplasma infection is the association of runaway fibrillation of the heart. To stop that, there are pills one takes, and they stop it. But they also further reduce the volume of blood pumped by the heart, so that this projects one right back into the hypoxia, dizzy, loss of balance, etc. Catch 22 situation; the fibrillation will build and cause heart attack, stroke, etc. if not stopped, and if stopped it puts you back in the hypoxia which can cause many things! With the conventional treatment, you're damned if you do and damned if you don't. Hence the need for a little extra medical oxygen, so you can take the "heart clamp" pill and stop the fibrillation, but also augment the oxygen enough to continue to survive without a stroke or some such. Interestingly, it's very difficult to even obtain a mycoplasma test, and Medicare fights you tooth and nail over paying for the oxygen. Either they will pay for it or I'll pay for it myself; it is absolutely necessary.

After a heart attack, one is treated in the heart clinic by specialists who are very caring and excellent practitioners, but know nothing of mycoplasma infection, so not consider it even a part of "heart disease", and who are rather puzzled when one has no clogging of the arteries, has the right count of red corpuscles (largely nonfunctional, of course, but there), pumps the right amount of blood, etc. So they identify and treat only the runaway fibrillation, do not prescribe the oxygen -- and essentially place you on a regime as best they know, but one that is guaranteed to kill or maim you or turn you into a totally disabled person or human vegetable via stroke, paralysis, etc. Fortunately my family doctor will prescribe the oxygen anyway, though I may have to pay for it myself. Whatever works!

However, I'm slowly improving little by little, working as much as I'm able to and trying to finish my book: Energy from the Vacuum: Concepts and Principles, and get it to the publisher for publication later this year. Hopefully the book will turn all the interested young grad students and post-docs loose in the free-energy area. They will not have to spend 30 agonizing years to get to where I am, and where a few others are, but can simply start here and go forward. Since speed to develop energy from the vacuum is of the essence because of the world situation, I'm moving on it as fast as I am physically able to.

Meanwhile, working with the AIAS (Alpha Foundation's Institute for Advanced Study), the AIAS (15 authors) has now gotten about 20 scientific papers published in leading journals (Foundations of Physics, Foundations of Physics Letters, Physical Scripta, Optik, etc.) dealing with electromagnetic energy from the vacuum. Several more are either approved for publication or in the review process also. So slowly we are getting it into the mainstream scientific literature. Hopefully it will be in time, but it's cutting it close.

Very best wishes,

Tom Bearden

Late update

Massive display of longitudinal interferometers?

UFO Fleet Taped Over Bedhampton, England

Is this sighting a case of the testing of all the Russian (KGB) longitudinal interferometers at once? And coordinating their targeting through the woodpecker grid to a common place, as an exercise in making a massive scalar attack upon a given region? Was this a confluence of Russian Tesla howitzer marker-beacons?

Certainly for a massive all-out scalar attack you would want coordinated movements of the target areas of many howitzers at once, for you could then just cut a bloody swath across a wide area, all the howitzer blasts marching across the land in a kind of scalar version of the "scorched-earth policy." All in a line, blasting, and heat, and mind waves. Or you might want to put the blasts all in the same place for a truly horrendous destruction. And on top of that biowar on citizens whose immune systems have been weakened with the quantum potential weapons. This is the latest version of Armageddon.

And should any madmen gain control of these weapons, any rogue group at all, and should they have some agenda to radically depopulate the world, to simply kill by the billion, the means will be in their hands to do so.

Update: MEG patent granted

Motionless Electromagnetic Generator Patent Granted

This message is from Jean-Louis Naudin, the French scientist who successfully replicated the Motionless Electromagnetic Generator (MEG) in France. He announces the granting of the patent to the MEG Builder's group at Yahoo.

----- Original Message -----

From: jnaudin509@aol.com
To: jlnlabs@yahoogroups.com
Sent: Tuesday, March 26, 2002 2:20 PM
Subject: [jlnlabs] (Info) GOOD NEWS : The Tom Bearden's MEG IS PATENTED

Dear ALL,

GOOD NEWS !!!!

The Motionless Electromagnetic Generator from Tom Bearden is now PATENTED US 6362718 granted on March 26, 2002

US Patent 6,362,718 :
Motionless Electromagnetic Generator (MEG)

Abstract: An electromagnetic generator without moving parts includes a permanent magnet and a magnetic core including first and second magnetic paths. A first input coil and a first output coil extend around portions of the first magnetic path, while a second input coil and a second output coil extend around portions of the second magnetic path. The input coils are alternatively pulsed to provide induced current pulses in the output coils. Driving electrical current through each of the input coils reduces a level of flux from the permanent magnet within the magnet path around which the input coil extends. In an alternative embodiment of an electromagnetic generator, the magnetic core includes annular spaced-apart plates, with posts and permanent magnets extending in an alternating fashion between the plates. An output coil extends around each of these posts. Input coils extending around portions of the plates are pulsed to cause the induction of current within the output coils.

Inventors: Patrick; Stephen L. (2511 Woodview Dr. SE., Huntsville, AL 35801); Bearden; Thomas E. (2211 Cove Rd., Huntsville, AL 35801); Hayes; James C. (16026 Deaton Dr. SE., Huntsville, AL 35803); Moore; Kenneth D. (1704 Montdale Rd., Huntsville, FL 35801); Kenny; James L. (925 Tascosa Dr., Huntsville, AL 35802)

Appl. No.: 656313
Filed: September 6, 2000

For some technical info see my web site at : http://jnaudin.free.fr/html/meg.htm

Best Regards
Jean-Louis Naudin
Email: JNaudin509@aol.com
Main Web site : http://jlnlabs.org
Site France : http://jlnlabs.multimania.com

Click here to view patent # 6,362,718

Patent Story on Rense.com:

Rense.com

MEG Scalar Energy Device

Patented - Production Starts Next Year

From Bill Morgan
wmorgan@nycap.rr.com
3-28-2

Patent was granted on March 26, 2002 for "The Motionless Magnetic Generator," (MEG) US Patent 6,362,718, which is likely to become the first commercially available free energy device in history in about one year from now. The machine will provide free electricity from the vacuum, for the life of the device, which should be a very long life since it has no moving parts. You can see a picture of scientist Jean-Louis Naudin's MEG replication model at: http://jnaudin.free.fr/html/meg.htm.

It has strong magnets, coils, and a controller unit with the electronics. Naudin made the announcement to the MEG-builder's Yahoo group. The announcement has significance since the patent office has always been skeptical of devices which seem to "get-something-for-nothing." But according to the new science of scalar electromagnetics, the MEG does not break the law of conservation of energy. It's just that the energy is conserved in the fourth dimension, time, and not our 3-space world.

The MEG provides electrical energy by tapping the longitudinal electromagnetic (EM) waves which exist in almost infinite abundance in the vacuum of space. This ocean of energy which permeates everything is sometimes called the "zero point" energy, since it remains there even at absolute zero temperature.

Four inventors are listed: Stephen L. Patrick, Thomas E. Bearden, James C. Hayes, Kenneth D. Moore.

Tom Bearden has explained the operation of the MEG on his website Cheniere.org, and also speaks about the new fearful weapons that can and have been made using the same "longitudinal waves" of the vacuum.

The complicated physics of how the MEG works is explained in the paper "The Motionless Electromagnetic Generator: Extracting Energy from a Permanent Magnet with Energy Replenishment from the Active Vacuum," which can be found at Tom Bearden's website:

cheniere.org.(http://www.help4all.de/energy/MEGpaper.pdf)

The first MEG units to be produced for sale will output 2.5 kilowatts of free electricity. Forever. They should be in production about a year from now. Facilities for manufacturing the device are being set up in an unnamed "friendly nation."

This free electricity will flow indefinitely, without much, or any maintenance. The units may be hooked together to provide more wattage, so four of them would provide 10 kilowatts. After some production experience units will be made which output 10 kilowatts each. With a couple of those units a house could get off the electrical grid.

Tom Bearden, one of the inventors has said "I will admit that the chief scientist of an important experimental group in a large company was rather stunned at the type of output we were able to

obtain. The MEG may look like just a transformer, but it is not. It is a completely different breed of cat." This cat, it would seem, is out of the bag now.

The ordinary EM waves we are familiar with are called "transverse" waves, to distinguish them from the new "longitudinal" EM waves of the vacuum. Bearden has explained in depth on his website cheniere.org that wherever there is a dipole (battery, generator, magnet) there is an unseen flow of longitudinal EM waves in that local vacuum, the only problem is in tapping that energy and "transducing" it to electricity. Bearden says that the problem with all the electrical circuits we have is that they are two-wire circuits, a loop by which half the energy goes back to destroy the dipole. In the MEG that closed loop is never made. So the dipole is not being destroyed.

Patents are not granted on devices which do not work, so in a sense this announcement proclaims a new era. The MEG device itself proclaims and proves that energy is abundantly available everywhere, for free. We only have to build the devices to tap it. MEG type devices could be put into a car with an electric engine to make a truly fuel-less automobile. Electricity can be available in very remote places. People will be able to get off our very terrorist-vulnerable power grids. In an era of terrorism a highly dispersed power system would be most desirable rather than our centralized systems.

What is somewhat astonishing to me is the discovery by Bearden et. al. that time itself is actually compressed energy, and that this free energy is actually coming from the time domain, the ocean of longitudinal EM waves which fill the empty vacuum of spacetime. In fact, time is energy compressed by the same factor that matter is compressed energy: the speed-of-light squared. Thus there is a new companion to Einstein's E=mc2. Can you say "E equals delta-tee-cee-squared?" The "tee" is time and delta-tee is change in time.

A company has been set up to manufacture the MEG called Magnetic Energy Limited.

The ramifications of free energy are enormous. The oil wars are not necessary. If we threw as much money at this technology as we are spending on the oil wars we would be free of the need for oil in less than a decade. With fuel-less cars air pollution will be greatly lessened. Third world nations can raise their standard of living eventually. And the energy is free. And it never runs out.

I have put together a kind of "Bearden for Beginners" article which explains some of the basic concepts of the current state of scalar technology.

http://www.prahlad.org/pub/bearden/scalar_wars.htm

The granting of the MEG patent is the herald of the new era of scalar electromagnetics, and the free energy which flows forever and never runs out.

Bill Morgan
wmorgan@nycap.rr.com

Do the magnets run down after a while?

Further developments: Tom Bearden clears up a question

When the MEG patent was released many questioned the patent language which seemed to imply that permanent magnets of the MEG would "wear out" after awhile. I myself wondered about the same thing so I put the question to Tom, and here is his reply.

> Dear Bill,
>
> Thanks for the kind words; much appreciated.
>
> I'm not up to going on radio or TV, and won't be for quite some time. Still suffering from hypoxia, though very slowly improving, and will still be on antibiotics for 10 more months at least (maybe longer).
>
> Obviously an extensive dialog developed between the Patent office and our patent attorneys. As best I can understand it, the Patent office accepts the fact that a permanent magnet produces and emits energy, or has a history of accepting it. They do not appear to be at all cognizant of the broken symmetry of opposite charges, and hence of a dipole. So in their opinion (which seems to be vague), the magnet has to use itself up very gradually, or some such. So some rewrites were essentially required by the Patent office.
>
> All I can say is that a magnet is a very durable thing, so long as you don't heat it up too much or shock it to much. Certainly one will make a good 20 years, and of course there are plenty of magnets that have been around awhile longer.
>
> That said, in our earliest experiments we did "measure" some such effect, or so we thought, until we found that a particular instrument was bad and giving erroneous readings. So with a new instrument, we have not observed since then any such readings.
>
> Out of all that fuzziness came the inclusion of "using up the magnets gradually". So far as we are aware (after correcting those early readings on a defective instrument), we have seen no such measurements or effects since then at all. Nonetheless, just in case there is some very small effect in that respect, at least it's in there.
>
> Actually, as you are aware, capacitors and solid state components are the major concerns for failure, and any system does require maintenance, both periodic and whenever malfunction or failure occurs. The MEG is no different from any other device in that respect, so of course it will have a component failure rate and maintenance required from time to time, just as any other electromagnetic device. But without moving parts, it can be ruggedized and made very durable indeed.
>
> Please give Jeff Rense my regrets, and I do admire his work and his show. He's laying it in there.
>
> The depth of the scientific mindset against COP>1.0 is inexplicable, particularly when physics itself already has COP>1.0 validated experiments (such as Bohren's experiment,

which outputs 18 times as much as one inputs by Poynting calculations), and it works every time. Any competent university optics lab can perform the experiment. Also, even the conventional texts admit that a charged capacitor or electret laid on a permanent magnet, so that the E of the cap or electret and the H of the magnet are at right angles, is a "free energy machine". That silly thing will just sit there and pour out Poynting energy S = EXH indefinitely. Years and years and years. If you wait just a single year, that silly thing has changed the energy density of a volume of space a light year in radius, reaching out well beyond the solar system. Now that's a WHALE of a lot of EM energy that beast poured out in that year, and it will still be going strong and pouring it out at a steady rate. The charges and dipoles in original matter in the universe have been pouring out EM energy in that fashion for some 14 billion years, give or take a billion or so. It's also easy to see that, prior to Lorentz's ARBITRARY symmetrical regauging of the Maxwell-Heaviside equations, those equations prescribe both EM systems in equilibrium with their active environment, and EM systems not in equilibrium with it. The latter systems are permitted by the thermodynamics of open disequilibrium systems to perform five magic functions: (1) self-order, (2) self-oscillate or self-rotate, (3) output more energy than the operator inputs (the active environment inputs the rest of it), (4) power itself and its load (the active environment inputs all the energy, like a windmill), and (5) exhibit negentropy. That is a well-established thermodynamics. Lorentz arbitrarily discarded all such open disequilibrium EM systems in order to get simpler equations having analytical solutions and not requiring numerical methods. So he simply scrapped all the really interesting and challenging EM systems in Maxwell's theory. ARBITRARILY!

That our scientific establishment continues to teach only that "half" of the theory, and not point out the rest to the young students, and not fund research into developing such systems that take energy from the vacuum, is simply inexplicable. It's a matter of total dogma, not science at all.

But hopefully it is changing a little bit. At least now we cite chapter and verse when these things were done, and what they are, and the young grad students and post docs can go check the papers and make up their own minds.

That is the real hope of the future: that we get a generation of young fellows, with excellent skills, who now know where all the skeletons got hidden in the closet, and understand that the electrical engineering model arbitrarily assumes an inert vacuum environment (falsified for more than a half century in particle physics) and a local flat spacetime (falsified for nearly a century by general relativity).

Once they know that past history, and go read into what broken symmetry of opposite charges means for a dipole and for all dipolar EM circuits, they will set to and change that more than a century of error. In that case, we shall have numerous solutions to the energy crisis rather quickly, popping up all over.

Good thing. It will certainly displace some great energy barons, but it will also free the populace. One can extract all the EM energy from the vacuum one wishes, anywhere, anytime, with ridiculous ease. One can produce that "electrical wind of energy" at will, by making a simple dipole and then letting it alone. The only energy problem is in how to

then intercept some of that energy flow and "catch" it in a circuit, discharge it in a load to power it, and not use half the "caught" energy to kill that dipole that is gushing out the extracted EM energy from the vacuum.

Very best wishes,

Tom Bearden

END

Scalar Weapons

- Read It and Weep -

by **Christi Verismo**

2000

from ChristiVerismo Website

Contents

The Discovery Of Scalar Waves
Beam Weapons Of A Century Ago
The Continuation Of Tesla's Scalar Wave Technology
Tesla's Crossed Scalar Beams
Russia's 'Woodpecker' Scalar Wave Transmitters
The 1930s
The 1940s
The 1950s
The 1960s
The 1970s
The 1980s
The 1990s

13. The Present

What Can Be Done With Scalar Technology?

Mind Reading, Mass Hypnotism And Synthetic Telepathy
Disease Induction
Disabling Satellites
In The Air
Weather Engineering
Earthquakes
Sea Attacks
Tesla Shields And Globes
Ground Attacks
Obliterating Individuals
Portable Scalar Bazookas
Radar Invisibility
Summary Of A War That Could Occur
Russian UFOs Attacked The Us Shuttle Program From The Beginning

28. How Did Russia Get UFOs?
29. Former Bolsheviks Running America
30. Replicas Used For The Landings, After Originals Shot Down
31. Cloaked Russian UFOs Above USA
32. All U.S. Satellites Shot Down By Russia Until 1981
33. Lies, Lies And Lies
34. Friction With The Japanese
35. Enterprise Shuttle Determined To Spy On Russia
36. Russia Intensifies Attacks
37. Trying Again To Get Up Into Space. Third Time Lucky?
38. Bold Attacks On America
39. The Struggle At The Top For Power
40. The Stealth Plane Comes To The Rescue
41. Phantom Against The Cosmosphere
42. The Expected Genocide
43. Plans Foiled To Destroy Russia's Military Arsenal
44. Brazil
45. India
46. Japan
47. Kobe 'Earthquake'
48. China
49. Oklahoma FBI Building 'Bombing'
50. Who Else Has UFOs?

- Resources
- Glossary

Return to Nikola Tesla
Return to The New Energy
Return to Temas - Paraciencia
Return to Scalar Electromagnetics Technology
Return to Scalar Wars - The Brave New World of

Scalar Electromagnetics
Return to Germany's ET Contacts? - Its Legacy On The Twentieth Century And After...

1. THE DISCOVERY OF SCALAR WAVES

It all started in the 18th century with a Scotsman named **James Clerk Maxwell** (1831-1879).

He was a mathematical genius and his work led to the development of quantum physics which later led to Einstein's Relativity. Maxwell's equations linked electricity and magnetism and he discovered other waves that were higher than the normal hertzian electromagnetic waves. They are positioned at right angles coming off the electromagnetic wave and are omni-directional, whereas normal hertzian electromagnetic waves are only measureable with normal equipment and travel in a straight line.

They are also called gravitic waves because they belong to the gravitational field. (Please see glossary for other names for scalar waves) Maxwell's electromagnetic spectrum went higher than our 3D physical reality and into hyperspace where the fine indiscernible scalar waves exist. (Maxwell said they flowed in the ether/hyperspace). Scalar waves are so fine that they are only one-hundred-millionth of a square centimeter in width hence finer than X-rays and gamma rays.

They can also be manipulated into various types of modes and frequencies.

When Maxwell died his work was interpreted by three experts (including Hertz) who set the foundation for physics, and they decided any wave that went beyond what could be measured with an instrument of that time was "mystical" therefore worthless.

According to **Tom Bearden**, standard physics (from then on) as a discipline, contained twenty two errors.

Nikola Tesla, (1856 or 1857-1943) a Yugoslavian genius, who became a US citizen in 1891 carried on with Maxwell's work. Tesla worked for Thomas Edison, who invented direct current, while Telsa himself invented alternating current, but the two men didn't get along well and parted ways.

Tesla started up laboratories on Long Island and in Colorado Springs and learned how to harness scalar waves from one transmitter to another without using any wires. He received

partial financial backing from JP Morgan, who owned the new electricity projects, but Morgan wasn't interested in losing all his electricty business by allowing people to tap into the vacuum of pure energy (hyperspace) to get their own (what is now termed) 'free-energy' for no cost. At that time Edison needed a plant ten stories high, taking up an entire city block to supply electricity to one square mile of customers.

Tesla indentified what he called 'Radiant Energy' or 'Teleforce' in 1889. It was discovered during experiments that Tesla did to duplicate what the German Heinrich Hertz had done in 1887, proving the existence of electromagnetic waves.

While copying Hertz's experiments, Tesla experimented with violently abrupt direct current electrical discharges and discovered scalar energy, a new force, in the process. In 1904 Tesla announced he'd completed his work using scalar waves to transmit energy without wires but unfortunately when he tried to get support for it, a setback occurred.

He was sued for his Colorado Springs laboratory electrical bill, and his lab was torn down. He was also sued for non payment of a loan from his lawyer and his financial troubles never abated.

Tesla continued his work even though he had no money and he died penniless in a NY hotel room in 1943, although **Preston Nichols** in his book 'Encounter in the Pleiades' claims a lookalike street vagrant was cremated in his place and there may be evidence that he was spirited away to the UK.

Back to Contents

2. BEAM WEAPONS OF A CENTURY AGO

Even though Tesla couldn't interest the US govt. in his wire-free scalar energy, the Russians and Germans asked him to work for them, but he turned them down.

All was not lost, just two weeks before he 'died' he gave all his research to a young American physicist. Tesla's inventions were dangerous and not only did he discover scalar waves and how to use it to manufacture earthquakes but also he created a 'Death Ray', which has been likened to a particle beam weapon. (Particle beam weapons can shoot a laser one thousand miles into space.)

After his death in 1943 the FBI was actively involved in suppressing many of Tesla's documents, including plans for his 'Death-Ray' weapon capable of destroying aircraft and his earthquake-inducing machine, deeming it 'top-secret' lest it fall into the enemy's hands. But the Germans had also invented beam weapons and used them during WW2.

Captured from them (according to William Cooper) was a weapon that was capable of shattering 4" thick armor at a range of two miles using low aimed, low frequency sound waves. There is also evidence that the Germans had scalar wave technology and they certainly had anti-gravity technology due to a UFO crashing in Germany in 1939.

They back-engineered it and by 1940 had built themselves a fleet of UFO's in eight facilities all over Germany. The Russians, who took many Nazi scientists captive in Soviet occupied Germany in 1946, forced the German scientists to build them their own fleet of UFOs, which

they called 'COSMOSPHERES' and eventually they had built hundreds.

The Nazi scientists also built the Russians scalar transmitters and particle beam weapons.

Tesla also told people that he talked frequently to people 'off planet', so perhaps this was the source of inspiration for his inventions. Tesla used his scalar waves to create earthquakes and vibrate target buildings to pieces, even those nearby the target. He created the same effect with his massive Tesla coil transmitter and claimed that he was bouncing scalar waves through the earth's core to the antipodes and back to his transmitter site.

A quite small 10kw generator energy supply of just a few horsepower rapidly allowed the build-up by resonance of millions of horsepower in the coil circuits of his 'magnifying energy transmitter' device. Sheets of manmade lightning would arc out of the circuit to earth grounding points or from the spherical aerial system. He electrified everything for miles, even people, and would produce fire and flames using scalar 'potentials' (scattered, but harnessed particles from hyperpsace), especially to the antipodes (opposing side) of the planet.

Tesla claimed his 'Death Rays' had a range of hundreds of miles, which were useful against aircraft and he stated that entire cities could be devastated by explosive EM transmissions across intercontinental distances to anywhere on the planet.

According to the book *'HAARP - The Ultimate Weapon of the Conspiracy'* by **Jerry E. Smith**, Tesla claimed his transmitter could produce 100 million volts of pressure, with currents up to 1000 amperes which is a power level of 100 billion watts.

It could project the energy of a nuclear warhead by radio waves and any location in the world could be vaporized at the speed of light. Some say the Tunguska massive explosion in Siberia (still unexplained, because a meteorite would have left a crater) on June 30 1908 was due to a test of this transmitter striking its antipodes through the earth. There is evidence that Tesla's weapon was tested once according to Smith.

The force of the explosion at Tunguska was estimated to have been 10-15 megatons of TNT, which **Oliver Nichelson** calculated Tesla's device could deliver.

The blast flattened half a million acres of pine forest and killed two people, along with whole herds of reindeer and other animals. In 1907 and 1908 Tesla wrote about the destructive effects of this machine and he wrote about it again nine years later saying,
"...When unavoidable, the [transmitter] may be used to destroy property and life".
It's thought that Tesla may have been trying to break ice at the pole, and may have overshot the target, as Tunguska is on the same great circle line as Shoreham, Long Island where Tesla had his transmitter.

If the Tunguska explosion was on the same day as his experiment, Tesla never admitted it publicly.

Harry Mason said that a 1938 press report stated Tesla's Death Ray would employ 50 million volts in a new form of ray wave only one-hundred-millionths of a centimeter in diameter and was based on an entirely new principle of physics that could produce a great repelling force.

According to Harry Mason, an Australian, who invented another "Death Ray" was found shot through the heart in England in 1937. Tesla claimed that the device could melt any engine, and that if aimed at the moon, would turn a spot on the surface to incandescence. Scalar waves can produce a great repelling force on the atomic nucleus, bypassing the outer electron shells,

directly engineering or interfering with the components of the nucleus.

Private research in USA shows scalar waves operate in a non-linear time dimension which is hyperspace, at any speed from zero to infinity, as they are not limited to the speed of light.

Back to Contents

3. THE CONTINUATION OF TESLA'S SCALAR WAVE TECHNOLOGY

Most western universities ignore Tesla's work due to a conspiracy to stop free-energy and anti-gravity technology, because of the loss of money for big business that would be generated by this, but Eastern European and Russian universities include it in their curriculum, which is why the U.S. didn't realize that scalar waves were being used against them, due to no equipment for detecting such waves, until they had been secretly attacked for ten years by the Russians using them since about 1960 when President Khrushchev announced "the Soviets had some superweapons".

After the Russians shot down all the American space shuttles and satellites in 1977, the U.S. was completely at their mercy, by Russia openly flying cosmospheres over the U.S., firing particle beam and scalar beam weapons developed with the expertise of captured Nazi scientists.

Following this an enormous effort was made to develop beam weapons in the U.S. The F.B.I. had held all Tesla's scientific papers for several years after he was said to have died in 1943, so much of the research was unknown to the public when they needed it the most to fight back against the Russians attacking U.S. military targets and doing weather-engineering over America in the early 1960's.

U.S. started up their own scalar transmitters in out of the way places like Australia, Alaska, Puerto Rico, Greenland and Norway using Tesla technology. However they also made particle beam transmitters at Montauk, LI, and Los Alamos, NM. One of the first places to house Tesla technology, and hence scalar weapons was Exmouth U.S. navy base in Western Australia built in 1968, and operative in 1969, where they had a free rein in the deserted Australian outback to practise.

Pine Gap, another U.S. military base in the center of Australia was another site which became operative in 1970 and has two scalar transmitters.

Even though Tom Bearden, a nuclear physicist and scalar weapon expert, claims the U.S. was totally oblivious to the secret Russian scalar and particle beam attacks on them, which were never made public, secretly the U.S had their own weapons that not only used Tesla technology, but also from alien alliances, they procured advanced technology thousands of years ahead.

However due to different factions at odds with each other in positions of power, the different U.S. government departments researched separately. (See The Secret Shadow Goverment - A Structural Analysis by Richard Boylan)

One faction was time-travelling across the universe in the 1960's, compliments of the airforce,

fighting wars in the future through stargates, as in the series StarGate SG1. The 'official' space program couldn't even get a satellite in orbit, but lied about that and the voyages to the moon to appear as if they were progressing.

According to conspiracy researchers, behind many of these technological facilities were former Nazi scientists who were so clever at getting things up in space that they'd already colonized Antarctica, the Moon and Mars before the war was over! The Nazi's homegrown UFO engineering plans were found in Germany after the war and there was a mad rush by the Americans, British, French and Russians to snatch the best Nazi scientific brains for themselves.

According to the book 'UFOs: Nazi Super Weapon?' by Mattern and Friedrich (written in Germany in the 1950's, but only published in Canada in the 1960's, because the German's daren't publish it) the Americans were the cleverest capturing many 'prize catches' much to the anger of the French, British and especially the Russians.

The great American brain robbery of the enemy was so mind boggling that a special dictionary had to be made for the technical jargon of the aircraft industry alone comprising over 75,000 separate terms. Whole German factories, including every nut and bolt, models, drawings and prototypes were shipped to America, and to a lesser extent, the other Allies, but what America got in quality, the Russians got in quantity.

The book claims that the Russians on 21st and 22nd Oct 1946 (in Soviet occupied Germany) sent heavily armed troops to haul out of their beds 275,000 German scientific specialists as well as their wives and all their children and took them to about forty locations in Russia.

German factories awaited them, all dismantled and crated. They were forced to sign work agreements for five years and worked around the clock for three bowls of Borscht soup and a slice of bread daily. There would hardly have been a scientist left in Germany after the war, with a great exodus during the war as well to Antarctica and South America, where they carried on their anti-gravity research etc. in secret, underground.

The Russians set them to work,

- 40% on aircraft and jet engineering
- 31% on aircraft design
- 6.5% on radio and telephone
- 4.5% on pipelines
- 2% on atomic research
- 1.5% on television

Back to Contents

4. TESLA'S CROSSED SCALAR BEAMS

In the 1920's Tesla created 'Tesla Shields' from scalar waves which he claimed could defend an entire country against aircraft and shells by creating a barrier made of energy which they could not pass.

The Soviets had access to all his work during their search for 'superweapons' to match the U.S. after the atom bombs were dropped on Japan. Tesla's papers were shipped to communist

Yugoslavia after he died in 1943, where they were easily accessed by the Soviets. By 1914, according to Harry Mason, Tesla predicted the electrical control of the atmospheric moisture and described how to do this with his magnifying transmitter and even how to control the sun's EM field and modify its effects on the earth using scalar transmitters.

Also how to turn night into day to make sea and air navigation safer. He stated that it's possible to engineer EM shielding to stop decay from nuclear radiation because the decay was caused by interaction of the nucleus with a special ray emanating throughout the universe.

Tesla said it is possible to stimulate the nucleus into explosive or rapid general transmutation. In about 1908 Tesla discovered that scalar energy, without energy loss, using an interferometer becomes bottled from the intersection of two scalar wave beams. By interferometer (crossed beam) techniques, giant standing waves can be combined to produce a focused beam of very great energy.

This can then be used to produce earthquakes induced at distant aiming points. He noted that this could easily get out of control once it begins vibrating within the Earth and could actually cause the Earth to vibrate to pieces. His own had proved so powerful, that during its testing phase he destroyed it with a sledgehammer to keep its vibrations from destroying his entire neighborhood.

'POTENTIALS' are particles which are unorganized in hyperspace, pure energy not yet released into the physical world.

They can be harnessed into creating different frequencies of scalar waves and can be manufactured artificially. This energy emerges and stabilizes only if the transmitters are at a higher reference potential than the interference (blending) zone. If the transmitters are set at at a lower potential, the energy bottle re-emerges back at the transmitters where it has to be disposed of if the transmitters are not to be burnt out.

If two single frequency *scalar electromagnetic* (EM) waves, containing zero-vector and artificial potentials intersect, real observable electromagnetic wave energy results, though no EM energy has flown through the intervening space. Invisible waves of pure potential without any force field amplitudes, using artificial potentials seemingly do not exist according to conventional science, but this is because they are undetectable with normal detection equipment.

Yet they can be manufactured by polarizing them or concentrating hyperspace into a river of force, which when merged using two beams, produces real electromagnetic waves.

If the transmitter uses potential above that of the energy bottle, detectable energy emerges in that zone and it is called EXOTHERMIC mode. To extract energy back to the transmitter from the energy bottle, the potentials must be below that produced in an energy bottle. This is ENDOTHERMIC mode.

If two transmitters transmit a timed pulse and the two pulses meet, then an explosion emergence or extraction occurs at the distant interference zone, depending on whether exothermic or endothermic mode is used. However there is no detectable energy flow between transmitters and the intersection of the two beams exist as locked in artificial potential in hyperspace.

This supposedly doesn't exist.

The energy flow between transmitters and intersecting beams does not exist in the intervening

space physically as an EM force field, only as a locked-in artificial potential. If the wave transmission is continuous, the energy appears physically between beams as continuous. If multiple frequencies are transmitted on the beams, at the intersection a 3 dimensional globe appears as a bullet or shell.

Using pulse transmission an impulsive or explosive emergence of this energy form appears, but if using continuous mode a continuous glowing plasma form appears visibly. The impulse endothermic mode energy is extracted and generates a cold explosion or sharp cooling, and this can sound like thunder.

Extracting energy from the distant intersection of endothermic mode has to re-emerge at the transmitters.

The Soviets use a "dump" method of temporarily capturing and storing in an accumulator the heat building up at the transmitters. A second howitzer in exothermic mode is used to focus energy into a distant dump site, often Bennett Island, north of Siberia in the Arctic Sea, where exhausts are continually observed by U.S. weather satellites.

Several scalar waves sent from different transmitters may also be engineered to combine by interferometry to produce a plasma bottle of very high infolded or contained energy, with any desired light emission, shape, color and intensity. This ‘bottle’may be moved around the planet at will (visible or invisible). The bottled energy may be released by a further specific transmission. It can be moved into the Earth, through the air, or into the sea.

If "detonated" in the earth an earthquake is the result. In a building or a city a violent explosion, like a nuclear blast is the result.

According to Bearden the molten core of the earth itself can have enormous energy extracted directly from it distantly and the Soviets can do this with slight variation, using scalar EM weapons.

Scalar frequency pairs -12 khz apart are transmitted into the earth itself and they extract a gigantic electric current, which is tapped off and transmitted into incredibly powerful scalar weapons systems. The force of many Niagara Falls powers each weapon. Powerful transmitters trapping and extracting energy from earth’s molten core can make very large spherical globes and hemispherical domes of EM energy.

This shell can lift Dirac matter from the Dirac sea of the vacuum of hyperspace.

Tests giving scalar howitzer signatures (also called Tesla globes) have been seen over the N. Pacific by jet airliners flying in and out of Japan, as well as deep within Russia by ground observers in Afghanistan and Iranian pilots.

Back to Contents

5. RUSSIA’S ‘WOODPECKER’ SCALAR WAVE TRANSMITTERS

According to Bearden ever since July 1976, Russian scalar transmitters have continuously sent transmissions which disturb communication systems of the world in the 3-30 megahertz band.

The noise is like a woodpecker pecking a block of wood, so they have been nicknamed 'Woodpeckers.' The power of the enormous transmitters vary but he says they range as high as several hundred megawatts, and nominally 100 megawatts. Several nations have protested, but they still continue to this day. The Russians just spread the spectrum to shift to other frequencies periodically.

Two to three scalar over the horizon radar beams from these Woodpeckers can intersect each other over USA. An intersection grid over the whole of USA is formed by waveform interference of two main Woodpecker beams. These beams follow the earth-ionosphere waveguide and curve around the planet. This is done to detect launched missiles and strategic bombers lifting off out of USA.

However this massive Russian grid covering large areas of U.S. has other more sinister mind control operations according to Bearden.

A phase-locked ELF modulation signal at 10 hz is often detected on multiple Woodpecker frequencies simultaneously. This modulation if sufficiently stronger than the Schumann Resonance (the frequency of the earth's natural magnetic field) can hypnotize brains into 'forced entrainment'.

Human brainwaves are 'synchronized' to the Woodpecker signals, so that multiple coherent frequencies phase-lock into them. Bearden writes that multiple coherent EM frequencies are channeled into these entrained minds. He also says that what is termed 'Fourier expansions' may be used to attack specific portions of the brain geometrically.

Bearden writes:
"About 1950-1952, the Soviets developed [scalar] EM machines that could influence the brain and nervous system directly. This included the Lida machine, which can induce a catatonic state into a mammal such as a man, a cat, etc. U.S. scientists, obtaining one of these devices in the 1980's, reported that it utilized a 40 MHz carrier, and produced unusual waveforms (showing the multiple frequency content).

Since the U.S. scientists do not possess scalar EM detectors, they have no measurements or knowledge of possible scalar components in the Lida's output signal. According to one U.S. scientist, the device was used by North Korean interrogators in brainwashing U.S. prisoners in North Korea during the Korean War, and was highly effective."
It would appear that Russia did use scalar waves first in the early 1960's, but US soon caught up, building scalar transmitters in Australia in 1968.

Back to Contents

6. THE 1930s

Bearden says in 1939, **T.H. Moray** in Salt Lake City, after learning about Tesla's sea of ether (in the vacuum of hyperspace) built a specialized amplifier, which extracted energy from the vacuum.

It functioned as a macroscopic scalar interfereometer and collector and it produced 50kw of

power without conventional input. The 55lb amplifier curved local spacetime. After testing it, a Soviet agent destroyed the device, in which Moray had expended several hundred thousands dollars. He was never financially able to rebuild it.

Moray and Tesla were the first two scientists to engineer scalar electromagnetics, electrogravitation, local general relativity and thermodynamics. Tesla, along with Einstein and a man named John von Neumann worked together in the late 1930's to discover how to make a warship 'radar invisible' for the US navy for WW2.

However when the transmitters were turned on in 1943, the ship was wrenched into hyperspace as it lost its grip in time in what was called 'The Philadelphia Experiment'.

It later returned when the ship operators, the Cameron brothers, ended up at the Montauk faculty, LI, forty years in the future with **von Nuemann** forty years older. They were sent back in time by teleportation to smash the ships generators and it rematerialized. So major discoveries were made after this on how time operated and this has been developed in secret by the U.S. government.

It has progressed to the stage where time-tunnels can be created at specialized 'time-travel' facilities where people may now go all over the universe, arriving any time in the past or future.

Back to Contents

7. THE 1940s

When WW2 ended in 1945, Tesla's relatives petitioned Washington to receive seventeen trunks of papers and equipment he'd stored in a NY garage.

In 1952 these were sent to communist controlled Belgrade and put into a museum where the Soviets got all the data. It is hoped that Tesla didn't leave the instructions for making his "Death Ray" in his papers because the Japanese among others went to research them at the museum. The Soviets built Tesla museums themselves.

It is also claimed that the Russians helped the Serbs in the Bosnian war with Tesla scalar technlogy to down U.S. helicopters.

More good scientific fortune came for the Russians after Japan had atom bombs dropped on them in 1945. When Germany became under their control, they took Germany's radar scientific team to the Soviet Union. (the book 'UFOs Nazi Secret Weapon?' by Mattern and Friedrich said that Germans had already invented the atom bomb before the war ended.)

These Nazi scientist had already advanced the theory of radar cross section and radar absorbing material. They were on the verge of discovering phase conjugate time-reversed radar waves, which led to scalar wave technology, according to Bearden.

The Germans did well in developing anti-gravity technology and if they'd succeeded in timing this six months earlier they'd probably have won the war, according to the German book 'UFOs, Nazi Secret Weapon?', which was written just after WW2 following the acquisition by the writers all the technical drawings and plans the Nazi anti-gravity engineers had left behind.

Exactly the same UFOs they'd built in German facilities all over the country during the war were soon seen in the skies after the war, flying from the Antarctic base where they'd taken them before the war was over. The engineering plans found by the allies in Germany showed what they'd made. Mattern and Friedrich wrote of innumerable German inventions and after the war the Americans threatened war trials if they didn't reproduce all their inventions and they were given small food rations as an incentive.

The Nazi scientists set to work at Area 51, Nevada to build America's own UFOs and they also created the U.S. space program.

They brought the Soviets up to date not only to the 20th century but to the space-age. U.S. Jewish communists spies helped Russia produce the atomic bomb. German scientists produced the Mig fighter planes, used to kill Americans in Korea and Vietnam, along with submarines, torpedoes, tanks, military rockets and the 'cosmospheres' (Russian anti-gravity UFOs).

When the Germans protested in a group, they were shown documents in English by Churchill and Roosevelt granting the Russians the express right to utilize any German person as they saw fit. (bearing in mind Roosevelt also managed to cause the deaths of about 1 1/2 million Germans after the war in German concentration camps from diseases and starvation).

After the five years were up, if the Captured Nazis hadn't died, many were condemned to slave labor camps for life.

They were also kept for another 2-3 years in quarantine, so they'd forget the projects they worked on, not being allowed any pencils or paper, wrote Mattern and Friedrich.

NAZIS IN ANTARCTICA?

However all of the initial specialized German UFO scientists could not be found after the war.

According to **Mattern** and **Friedrich** the Germans had their own UFOs in 1940 but they didn't have enough of a rare metal needed to make enough quantities to win the war with them. The Germans had kept exacting records of everyone in Germany, including how many Jews they killed. The allies, in 1945, ferreting out war criminals found 250,000 people had disappeared taking into account casualties and deaths from all different causes.

According to Mattern and Friedich, the number unaccounted for remains constant and they claim they moved to Antarctica and South America using submarines and their own UFOs. The Nazis had forged U.S. dollar notes and English five pound notes so perfectly (using genius Jewish forgers), that the banks couldn't tell the difference.

The World Monetary Fund found 15 billion dollars which shouldn't really exist.

The British had to withdraw the five pound note, after a wrecked German plane was found with 300,000 English five pound notes complete with printing plates!

The Nazis had secretly colonized Antarctica in 1937/38 after carefully taking 11,000 previous photos for mapping. After the allies found out, they sent over 4,000 US navy troops to Antarctica on Dec 2 1946. When Admiral Byrd landed there, the instruments went totally haywire and the performance gauges and altimeters behaved in a most erratic manner, forcing Byrd to abort the

invasion, however he did manage to locate the Nazi base.

It has since been said by the writer **W.A. Harbinson**, that the Nazis down there have superweapons which don't let anyone near. Other sources say a UFO greeted Byrd with a German speaking Aryan-looking alien, who'd somehow managed to land his plane for him, by removing gravity under the plane. He apparently spoke with the alien, who said he was from a race called the Aryanni.

Other sources say that the Nazis are in league with *renegade Pleiadians* down there.

Could the aliens at Antarctica be helping with the poleshift?

In the article called 'Fortress Australia' it is said that Americans, together with aliens are using a HAARP transmitter to alter the magnetic field over the South Pole now and that they have already done this with the magnetic field over the North Pole. Many psychics who apparently 'channel' *Pleiadians* have said Earth will 'ascend' to 4th dimensional frequency, that they they are 'helping'.

Billy Meier, a Swiss, who was contacted by a woman from the Pleiades named Semjase, claims that she said the Germanic peoples descended from Pleiadians.

Other sources say the Pleiadians told Hitler the earth was over populated. Apparently Hitler was trying to save people with blood type A, which the Nordic type Pleiadians have. In Antarctica, some say Byrd dropped an American flag, others a bomb, but within forty-eight hours, four of Byrd's planes had been lost, so they went home. Maybe the Nazis developed a secret weapons from the alien alliances they are said to have now in Antarctica since they'd been there from 1940/41?

More on the Nazi colony in Antarctica can be found in Branton's book 'The Omega Files' in which it says that Admiral Byrd's nephew called Dr Harley Byrd claims that Admiral Byrd was greeted by a collaboration of Nazis, grey aliens, Draco (reptilians), and *rebel Pleiadians* and even sasquatch.

UFOs BEING DEVELOPED IN SECRET ALL OVER

But safe to say that WW3 will be fought with spaceships and beam weapons, now that many other countries also have made their own UFOs, complete with all kinds of deadly weapons that come from Tesla's inventions and alien technology alliances and crashed alien saucers.

Could this be the Biblical 'War in Heaven'?

The Russians now have hundreds of cosmospheres and it's unknown how many Nazi UFOs down in Antarctica, but apparently there are about two million people there now according to **Branton**. Perhaps the Russian cosmospheres are still at odds with the Nazis in Antarctica as well as fighting the Americans - who also had former Nazi scientists create anti-grav craft at Area 51 after the war.

The Nazis had also set up colonies in South America during WW2.

Mattern and Friedrich say that Argentina and Chile, as well as Antarctica were places where many Nazis escaped to because of a large German population and fascist leaders. In the (UK) UFO Magazine, Aug 2003 curious underground signals were detected in Argentina, with

unnatural radioactive signatures, microwaves, levels of electricity and oscillations originating from the depths of the earth.

They were concluded to have come from machinery operating many km beneath, sending oscillations with alternating electrical waves. The area has strange swiftly moving lights, which then plunge into the ground.

Could it be Nazis or aliens? Mattern and Friedrich mentioned an American man of German blood called **Reinhold Schmidt** and he claims he was taken away on numerous occasions by a flying saucer to the pole, with the crew speaking German and acting like German soldiers.

However the crew leader claimed to be from another planet. He'd also spoken with German speaking Saturnians. Preston Nichols claims that Hitler was in league with Pleiadians and also a Dutchman who'd seen Hitler in a field in Holland during the war conversing sometimes with aliens who'd landed and got out of their ships to meet him.

Others say the Pleiadians deliberately crashed a ship in Germany in 1939 to give them a technology boost during the war because of the Germans being the same Nordic race as them.

ARE NAZIS STILL BEING A THREAT TO THE WORLD?

Also in time travel experiments at Montauk facility, LI, run by aliens and Nazis, they were said (in the 'Montauk 'series of books by Preston Nichols and Peter Moon) to have sent technology back in time.

Andy Pero claims in Vol One of this series THE UNIVERSAL SEDUCTION in the interview by Eve Lorgen, that he was sent back in time by Nazis working at Montauk, to both England and Germany to deliver drawings and communication devices and weapons made of 1940's parts to enable America to win the war.

This could be a complex puzzle to solve with different timelines, in operation regarding who really won WW2 (in our present reality) because an American man named 'Professor Phate' claims he comes from another timeline running twenty five years behind this one, in which Germany won the war or called a truce and he claims that his U.S. government handlers switch him, using his soul, from one timeline to another as they wish.

He says there is another whole new reality, running concurrently with this one, where there was no hippy revival and things are much different. The people at Montauk and their alien cohorts are manipulating different timelines from there, where apparently many converge due to the location of the world's gridlines which meet at Montauk. Each timeline/gridline contains a different 'reality' which can apparently be manipulated by technology.

Our present 'reality' operates at 435 MHz according to **Preston Nichols**, and the window frequency to the human consciousness operates at 400-450 MHz.

A new 'reality' is being churned out with a series of 'thought forms' (emanations from the mind) transmitted from technology tuned to 400-450 Mhz. Nichols claimed that one day when he went to visit the outside Montauk grounds where all the transmitters were, things he saw were there one minute and gone the next, popping in and out of reality.

Parallel realities were switched at random there with computers. He even found that on another timeline he'd worked at the place as an electronics engineer for years, even though he hadn't

visited there to his knowledge before. Time was looped and twisted and bent beyond recognition using alien computers and magic processes which were powered by manipulations of 'kundali spirit fire' siphoned from the spines of victims taken off the street.

They used a 'Zero Time Generator' constructed by Tesla in the 1920's, from which to reference their timeline manipulation.

A person would be sent anytime to thousands of years in the past or future, along to any point across the universe through time tunnels. The time co-ordinates were calculated by the computer and referenced to Zero Time to enable the person to return to the right time line, otherwise they may get lost in a different 'reality'.

'Multiple realities' where different timelines operate concurrently (using technology thousands of years in the future) is said to exist at U.S. military underground installations at,

- Montauk, LI
- Dulce, NM
- Pine Gap, in central Australia,

...according to writer Branton.

TESLA INVOLVED IN THE PHILADELPHIA EXPERIMENT

According to Al Bielek, Tesla invented a Zero Time Reference generator which was used on the ship 'Eldridge' for the Philadelphia Experiment, as a system which locks onto the earth's magnetic structure and its mass resonance, finding out a zero like or still time as a reference point in which to universally date something by taking into consideration all the revolutions of earth, the sun, our galaxy and so on ultimately until according to Preston Nichols 'our reality' is found to lodge into.

Tesla developed this in the 1920's as part of the FAA Fed Aviation, and the Eldridge (warship used in the Philadelphia Experiment to become radar invisible) had to have this to lock all systems together to have a reference point to return to.

Tesla was initially the director of what later became know as the *Philadelphia Experiment*, originally created to make ships invisible using powerful magnets outside the ship. Unfortunately magnets giving off scalar waves distort the hyperspace by warping the fabric of it. Tesla dropped out in 1942, before the final experiment was done in 1943, which made a forty year rift in time.

However, the ship was sent into hyperspace by accident once the generators were switched on and **Al Bielek** was suddenly transported through time to forty years in the future (he was then known as Edward Cameron.)

He met with Dr **John von Neumann** who was forty years older, living in 1983 and he was working on the Phoenix Project and was himself working with scientists from that future, who taught him to manipulate time and timelines.

Al was shown technology by a much older von Neumann (who was also there still in 1943) during his trip to 1983 and working with him on the Philadelphia Experiment as he was transported to the future. Dr **Edward Teller** and **Stan Tennen** both knew about seven parallel realities, which interlock. Much became known about how time operates from the effects of the Philadelphia Experiment.

Aliens also had a hand in teaching Americans this secret technology starting with Tesla, who'd made a press announcement that he'd been in touch with 'people off planet'. He still insisted it was true two decades later.

After it was found that time could be travelled through physically, much research was done on multiple realities and the manipulating of them, especially how to manipulate the 'timeline' (present reality expressed) we live on which was found to operate at 435 Mhz.

Back to Contents

8. THE 1950s

According to the book 'Excalibur Briefing' by Tom Bearden at the end of WW2 the Soviet Union obtained the best radar scientists and infrared scientists of Germany and these lead the world in the theory and technology of radar absorbing materials (RAM) and radar cross section.

Some leading western radar experts believe that these men already had advanced radar cross section technology beyond western levels today.

RAM technology is needed to develop and design phase conjugate mirrors, which are capable of producing a *time reversed* (TR) wave in direct response to a received ordinary wave. The mirror is pumped with energy to largely amplify a time reversed wave.

By 1950 the Soviets, probably using German radar scientists discovered phase conjunction and the time reversed wave in their radar programs. The Soviets, having lead the world in non-linear science and mathematics would have by the mid 1950's had an intensive development program on these radar time reversed weapons. (radar waves are one step lower than scalar waves)

These Russian weapons are now in the 5th generation development from the equivalent of 7-8 back to back Manhattan Projects (the U.S. program to develop the atom bomb).

A time reversed wave does not diverge and spread its energy (unlike a normal wave) it continually converges upon its invisible 'back-tracking' path. Extremely large amplifications of TR waves can be done cheaply and readily in response to received signals from a distant target. This is a powerful weapon when turned directly to that target, because almost all of the transmitted TR signal energy will arrive at and into the distant target, with hardly any waves lost enroute, even if the target is fast moving.

Geometric forms of energy can be created using crossed beam techniques and these time reversed wave carriers don't disperse with distance, so can be sent to great distances even hundreds and thousands of miles, limited only by the amount of amplification transmitted at the beginning. Bearden says that before 1960 the Soviets radiated the US embassy in Moscow with scalar EM waves and phase conjugate energy, modulated upon weak microwave carrier beams.

These created illness and blood changes in the staff.

U.S. studies took a long time to understand what was happening and so by not taking counter measures the Soviets knew that US had no defenses against time-reverse wave technology and scalar electromagnetics accompanying these beams directed towards the U.S. embassy staff.

Back to Contents

9. THE 1960s

In January 1960, Nikita Khrushchev the Soviet premier announced the development of a new fantastic weapon and on April 10 1963 (according to Tom Bearden) the Soviets used it to destroy the U.S.S. Thresher atomic submarine underwater, off the east coast of the U.S.

The next day, they used it in a different mode to produce a giant underwater explosion in the ocean over the Puerto Rican Trench, 100 miles north of Puerto Rico. Since then the Russians have downed or interfered with various aircraft as tests of their scalar beam weapons. F-111s were downed mysteriously in the Vietnam conflict and one was found to have had all the electrical systems broken.

Special Soviet teams were thought to have converted some North Vietnamese SA-2 missile system radars to the scalar EM mode, which is easily done, to destroy the plane's electrics. Bearden writes that Tesla used his endothermic mode scalar interferometer to be a remote viewing radar. This can be accomplished by crossing two beams and only extracting a small amount of energy, which can be displayed and read on an appropriate screen.

With new techniques this can be quite good, and Bearden says that with development this may become as good as side-looking acquisition radars.

Since scalar beams can penetrate the earth or ocean, one can use them as an X-ray form and see inside buildings and underground faculties. Targets under jungles may also be visible. Underwater submarines can be detected and tracked. To destroy a submarine, two beams in exothermic mode can be fired with powerful scalar pulses intersecting at the submarine in a violent electromagnetic pulse, which destroys everything instantly.

When the Soviets destroyed the USS Thresher submarine in 1963, it left a scalar interference on the nearby USS Skylark, which was in the "splatter zone". The Skylark's electrical systems were actually disabled, which went on for an hour and a half and this stopped it transmitting an emergency message about USS Thresher.

The Skylark's electrical system later resumed operation inexplicably, which is a direct signature of an exothermic scalar interferometer used undersea. Americans must have found out about the Russian scalar weapons and set to work to build their own facilities to develop the same, only away from prying eyes in Australia where the deserted outback was a good testing ground.

According to **Harry Mason**, (in his 'Bright Skies' articles) after the US navy Exmouth faculty in NW Cape, Western Australia was built in 1968, when the main contractors left, Tesla scalar technology was built in, with a duplicate of his energy transmitters which he'd built in Long Island and Colorado.

It had a wooden construction to handle very high voltages and frequencies, possibly as high as microwaves, which contain the induced coil electrostatic wave from discharge. This is NOT needed to handle VLF and ELF. (Harold Holt, Prime Minister of Australia 1966-1967 disappeared while swimming, after telling close friends and family that the next day he would raise in parliament something that deeply offended him about American activities in Australia.

He was never seen again.)

Exmouth became active in 1969 in time to conduct the tests just before 1970 in the Great Sandy Desert, WA, where earthquakes were induced in grid rows 10km apart.

In 1965 the Great Sandy Desert was mapped with high altitude aerial photography by the US govt. In 1966 the French oil company Aquitane, that had a permit for oil exploration there, carried out aero-magnetic, ground gravity, seismic traverse and ground VLF/ELF EM studies, which was odd for oil exploration but the Aust govt, paid half the exploration costs.

The public was told it was off limits for testing British Blue Streak missiles, and European 4 stage rocket satellites.

They got one into orbit in 1970/71, and then the project closed down.

Back to Contents

10. THE 1970s

In 1970, Aquitane did no field work, but in March 1970 a series of concentrated magnitude 3.0-3.5 earthquakes commenced in the Great Sandy Desert, though no earthquakes had happened there before.

These happened along a 10 sq km area of two lines forming a central 'aiming point' cross. Two young cattle hands died mysteriously a few years ago on the seismic gridlines, in the Great Sandy Desert 'earthquake test range'. Other Australian areas have also shown clusters of earthquakes around central points.

According to Mason the Great Sandy Desert quakes are distributed exactly due east of the Exmouth US navy transmitter (Tx) site, and move sinisterly located upon a magnetic north pole circle route, from Exmouth's sister site at Cutler, Maine near the Canadian border.

(Could this be part of the U.S./alien program which is moving the magnetic north pole along to another spot, which is described in full in Bruce Cathie's book Harmonic 33? This sinister scientific alliance are apparently relocating the world's natural gridlines about 10-12 deg away from their present spot in which to change the way time is expressed through our present reality. The magnetic field of the earth was lining up to match the new magnetic poles. Cathie claims this field work in relocating the gridlines was started about 1945 by the aliens. Other 'channeled' alien information on this claims they will be finished this new gridline re-activation work in 2012)

Mason says that several fireballs have been seen emanating from Exmouth during 1973-1994, towards the Great Sandy Desert, which appears to have been utilised to test and deploy EM weapons of prodigious power.

He says that slugs of crossed scalar beam energy could have been fired from Exmouth and steered or explosively initiated from Cutler Tx base and other US global transmitters into the area. A great circular geographic polar route north from Exmouth passes through these US military faculties: Hong Kong; Cutler, Maine (known VLF Tx); Arecibo, Puerto Rico (known VLF Tx); Tucuman, Argentina (known VLF Tx); Palmer and Amunsden-Scott US Antarctic bases and

back to Exmouth Tx.

In 1908 Tesla claimed that he could hit any antipodean spot on the globe with an enormous EM energy pulse in microseconds, creating an equivalant to the Navy's Dreadnought battleship broadsides, what we'd term now a nuclear explosion. Puerto Rico is a near exact antipodes of Exmouth and both sites have common UFO sightings, especially Arecibo, but Mason says they also may be Tesla globes from testing at both sites. In 1970 Pine Gap U.S. military base in central Australia became operative.

According to the book Anti-Gravity and the World Grid, the facility has two scalar wave transmitters installed there.

In exothermic mode, a visible flash will occur if EM energy in the visible spectrum is produced for example if the emerging energy is in the infrared spectral band this will appear. One of these was detected in 1979 by Vela satellites as a "nuclear flash" over the south Atlantic off the southern coast of Africa. A second nuclear flash in infrared was detected in 1980 by Vela satellites.

Bearden thinks this may have been Russians, but it is also known that Israel was testing secret weapons in South Africa at some point and they too have scalar weapons, particle beam weapons, red mercury weapons and quantum potential weapons.

South Africa also has scalar weapons according to Bearden. It is unknown how Israel got scalar weapons but many Russians have emigrated to Israel. France, who also has scalar weapons originally gave Israel nuclear weapons technology. American Jews also gave Russia the atomic bomb technology according to the book UFOs Nazi Secret Weapon?

In 1976 a British European Airway crew, over Lithuania watched an intensely glowing, stationary ball of light above the clouds, under the plane, giving the signature of a Tesla (scalar) Globe. The pilots were told by the Russians to ignore it and exit the area. In U.S., in 1978, an anomalous straight, not jagged, beam of '1ightning' came down from the sky at a 45 degree angle to the ground and struck Bell Island, Newfoundland, causing a loud explosion and house damage etc.

Two cup-shaped holes about two feet deep and three feet wide marked the major impact. Wires leading to buildings nearby were vaporized.

All the wiring on the property was blown out. TV sets nearby, also exploded. Atmospheric conditions were not conductive to lightning. U.S. Vela satellites picked up the event. The incident was investigated promptly by two representatives from a U.S. weapons laboratory at Los Alamos. On Nov 21 1977 Bearden claims cloud indications of a huge standing wave were observed off the US Pacific coast, reaching from Alaska to Chile.

Cloud banks over this stretch of the ocean reached the whole of the distance. There a straight black line, as through drawn by a ruler, appeared in the cloud mass. It was an opening in the clouds, one mile wide and 200 miles long. There was no known explanation, but Tesla scalar globes and fireballs have had a straight black line down the center. In 1977/78, high altitude booms occurred off the East coast of the U.S, with some associated flashes.

According to Bearden, these explosions represented adjustment of an interference grid that had been established over the U.S. by crossed Woodpecker scalar beams, and artillery-type high burst registration of scalar EM howitzers. Numerous other adjustments of the grid and registration of howitzers have occurred over the U.S.

The grid can detect anything passing through it into space. To create a scalar interference grid waves are sent one way with another set crossing it from another transmitter and this shows up as a grid on their computer screens.

This enables, one to see if anything is fired into the air and from where, also it can target an object on one of the gridsquares, by sending a scalar wave one way, and another another way, to meet at the target. The explosion shows up on the screen. In 1984, significant adjustments of the interference grid over US occurred. Over Los Angeles and San Diego anomalous aerial phenomena such as explosions, rumblings, airquakes, and buildings and windows shaking without seismic disturbances occurred.

A sharp and unexpected weather front appeared, racking the area with high winds on the night of Dec. 12, producing wide-spread damage and power outages. The newly-formed front, steered by the dynamic Woodpeckers, moved on to produce significant snowstorms in other areas, even Tucson received a snow 'dump' of 20 inches. (America also now has interference grids over other countries from multiple scalar transmitters placed in various countries to do the same.)

Other loud booms, all over the U.S. were claimed by another insider to be Russians in their cosmospheres, firing particle beam weapons. More on that later.

According to Bearden, the 'nuclear flashes' seen by the Vela satellites in 1979/80 could be tests of crossed scalar beams in the pulsed exothermic mode, which produces a sharp electromagnetic explosion, hence the 'flash', very similar to the initial electromagnetic flash of a nuclear explosion.

He says:
"Even in the vacuum of space, such an explosive eruption of energy from within the local spacetime vacuum itself may be expected to lift matter from the 'Dirac sea' [hyperspace energy, producing a plasma.

Prompt absorption and re-radiation of energy from this sudden plasma may be expected to present nearly the same 'double peak' profile as does a nuclear explosion. This was the profile presented by the flashes.

Note that the second flash detected was apparently of an 'explosion' primarily in the infrared, almost certainly ruling out a conventional nuclear event. It does not rule out, however, pulsed distant holography using pumped EM giant time-reversed wave transmitters."
In Afghanistan 1979, **Nick Downie** watched a gigantic, expanding sphere of light deep within the Soviet Union, toward the direction of Saryshagan missile test range, which contains at least one directed energy, or particle beam installation which could function as a scalar interferometer.

Downie says that multiple events at this place occurred during the month.

Bearden claims also, that on the other hand, there also exists tenuous evidence that these Vela satellite seen events may have been associated with weaponry of another nation, not hostile to the U.S.

TESLA TECHNOLOGY USED TO ACTIVATE WORLD GRIDLINES

On a more esoteric note, it seems that Tesla's hyperdimensional physics has been used to go into the realms of the unknown.

Richard Hoagland in a 1995 radio interview told of a friend, who was part of security, in the U.S. armed services in the 1970's in Central America. He was in a large battalion of military engineer personnel, flown into a location. They hauled in large portable generators, each of which was capable of lighting a city. There was a large amount of copper cable and this equipment was placed on an ancient Meso-American site in the jungle in the middle of nowhere close to 19.5 lat.

The generators were positioned separately in a geometrical hexagonal pattern with energized coils.

Hoagland claims that from what we know, it must have been to probe the efficacy of the terrestrial hyperdimensional grid. At hyperdimensional nodes on the grid one can change the resonance, with the object of creating geological earth changes. As our physical reality vibrates at a certain frequency, various physicists are using transmitters to change the way time flows and therefore how our time-frame vibrates.

Hoagland says in his opinion, we are being manipulated into a belief system, which is reaching a critical point. Someone wants us to think a certain way, and things are being sent to follow this perception, however, he claims this does not follow the truth. (Americans and Russians are both using scalar waves to engineer a particular kind of level of reality vibrating at a different frequency to the one we have at present and changing the expression of our brainwaves, which operate in scalar waves.

Various frequencies are equal to the way we perceive life, depending on what parts of the brain are activated by that frequency) Hoagland says in hyperspacial physics constants change, and this seems to be happening. Nuclear constants are changing and nuclear plants sited on the grid or not are getting 'hotter' than they should be, which means there might be more accidents.

According to **Bruce Cathie** as well, this may be something to do with powering up grid-nodes or vortexes, at intersection points on the world gridlines, in which he proved in his numerous books that hyperdimensional physicists are in a covert operation with alien help to create a new set of world gridlines, alongside the present ones connected to the North and South Poles.

Various strange phenomena occurs, along with UFO sightings along grid lines with the main lattice lines operating at 30 nautical miles apart.

There seems to be a way in and out of hyperspace to other places in the universe when certain planetary configurations affect gravity using regular cycles and world biorhythms, and natural time tunnels open up.

One needs to use very fine electromagnetic waves which operate in hyperspace for this. It's unknown if a wave more fine than scalar is being used for this, but ever since the 1950's brainwave emanations have been able to be controlled using scalar waves, so what is being used here for the last few decades is what is called 'synthetic telepathy', which is artificial thought produced in the same kind of subtle wave that real thought has.

The Russians developed this first.

Nuclear and electricity power stations are being build deliberately on the sensitive gridline points, using harmonics, (hyperdimensional physics) so 'manipulate our reality' as held by the timelines, which flow through the gridlines, positioned there by gravity.

Bruce Cathie has claimed by using the formula covert scientists use to calculate the angle of the sun and planets, which time to best day to detonate a nuclear bomb in order to affect hyperspace, that when the Chernobyl accident happened everything was in the correct position astronomically as for the other nuclear explosions. There is covert tweaking of a new set of gridline nodes.

The Russians bought the patent for Buckminster Fuller's world gridline system. It is known that the Russians have had an alien alliance since the 1950's.

Whether they work in conjunction with Americans to manipulate hyperspace grid node points is unknown, but information found online says that the Russians had a large natural timeportal in Afghanistan in use, that the U.K./U.S. alliance intended on taking from them, hence the war in Afghanistan. Research shows that one faction is trying to operate an old Atlantean gridline, which is creating an old 'reality' associated with Montauk, Atlantis and Cydonia.

It appears that various alien factions including the Pleiadians are trying to activate certain timelines running through Montauk, where it is said that many timelines cross.

So this major reality engineering work has been done for a very long time, behind the scenes with govt. and military people entering hyperspace and going into alternate universes. Bruce Cathie said that a UK intelligence agent told him that they could get into fifteen dimensions. It's unknown if Tesla worked with the British physicists, if (or after) he faked his death and went to the U.K. but having more money to continue his work, after having been involved in the Philadelphia Experiment where it was found that time could be manipulated, we can only wonder.

Harry Ossoff in the book *Anti-Gravity and the World Grid* wrote that the warship the Eldridge was on a gridline at Philadelphia and while the ship had vanished for four hours for the duration of its suction into hyperspace it materialized temporarily on another gridline at Norfolk, Virginia.

The gridlines were determined by Bruce Cathie.

Ossoff asks:
"Could it be that the energy that makes all this possible is a magnetic field transmitted at the correct frequency by the powerful field generators aboard the ship?"
Much has been learned about how hyperspace functions since the Philadelphia Experiment took place in 1943.

Is it possible that the Russians have learned how to navigate the gridlines with their cosmospheres by being able to materialize and dematerialize on the gridlines like the aliens do? Three Russians 'discovered' the grid in the 1960's.

However in the 1950's both **Aime Michel** in France and **Bruce Cathie** in New Zealand both noticed that UFO's appeared in the same places or on the same latudes or longitudes. They both mapped out a set of gridlines at about the same which matched. When this went public Cathie was immediately visited by the CIA and MI-6. They tailed him everywhere wanting to know where he got his information and the CIA offered him millions of dollars to be quiet, which he turned down.

The N.Z. govt protects him however and more than likely told everyone to back off and leave him alone, as he gives the data to them as he privately researches what is happening. Using his special harmonic equations to understand gridline tweaking and the opening of hyperspace portals carried on by physicists.

There appears to be a covert plan worldwide by top hyper-dimensional physicists to open up the gridlines at top universities and for this certain grid node areas have nuclear bombs dropped on them and one wonders why the French conducted 1,112 underground nuclear tests at Muroroa Atoll in the South Pacific between 1975 to 1988 alone.

They have dropped more since. Richard Hoagland claims the French are really doing hyperdimensional physics.

Did they create their own time-portal too? It would be a little attention getting to have dropped so many on France for this quest!

Back to Contents

11. THE 1980s

The 1980s was a danger for the planet's safety, because the Russians got really dangerous in their experiments and especially with testing their new weapons on US, one with multiple scalar transmitters turned on at once, endangering the survival of the entire planet.

According to Bearden, on May Day (May 1) 1985, the Soviets conducted a massive, 'full up' strategy exercise of the scalar EM weapon systems and communications strategic exercise for Gorbachev, the recently selected leader. During this sudden exercise Frank Golden discovered the Soviets activated 27 gigantic 'power taps', established by resonating the earth electrogravitationally on 54 powerful scalar EM frequencies (27 pairs where the two are separated from each other by 12 kHz.) transmitted into the earth and they utilized this to stimulate the earth into forced electrogravitational resonance on all 54 frequencies.

Each of the 27 power taps extracted enormous energy from the molten core of the earth itself, and turning it into ordinary electrical power. Each giant tap is capable of powering 4 to 6 of the largest scalar EM howitzers possessed by the Soviet Union.

Bearden says:
"Apparently over 100 giant scalar EM weapons were activated and a large number of command and control transmissions and it lasted several days. By alternating the potentials and loads of each of the two paired transmitters, electrical energ in enormous amounts can be extracted from the earth itself, fed by the 'giant cathode' that is the earth's molten core.

Scalar EM command and control systems, including high data rate communications with underwater submarines, were also activated on a massive scale. The exercise went on for several days, as power taps were switched in and out, and command and control systems went up and down.

Bearden says that not a single US intelligence lab, or scientist detected this because they didn't have a detector for scalar EM radiation, and not one officially believes that the exercise ever happened."
Luckily it was monitored on an advanced, proprietary detection system by **Frank Golden** for several days and by Bearden for several hours.

This exercise represented the achievement of Brezhnev's 1972 statement that by 1985 the Soviets would be prepared to do s they wish, anywhere in the world. Bearden claims the NASA shuttle launches were a test of these superweapons in a launch phase ABM mode, where a launched missile can be detected and destroyed shortly after liftoff.

At first, electromagnetic pulse (EMP) bursts on the early shuttle trajectory were deliberately delayed in time to avoid detection.

However the 'Fire From The Sky" author claims that the Russians used their cosmospheres high up in space for these shuttle shoot-downs, and that the initial shuttle launches were all shot down by them, with particle beam weapons, with a faked landing of another spare shuttle. This will be covered later. Tom Bearden believes that during the shuttle launch of Nov 26, 1985 a very loud 'sonic boom' or explosion occurred over the launch site twelve minutes after shuttle liftoff, when the shuttle was already away and downrange.

At least two previous shuttle launches had also been used as pseudotargets, with delayed booms occurring over the launch site well behind the vehicles.

However 'Fire In The Sky' is the only insider to claim Russian cosmospheres shot down the shuttles, so Bearden may not have known about them when he wrote about this topic, he only knew the type of weapons used because of their signatures.

So there are two slightly different versions of how the Russians shot at the shuttles, with Bearden saying they didn't destroy the earlier shuttles, but he does have 100% proof that the Russians shot down Challenger in 1986, by photos of the Russian signature weather engineering in the clouds in the vicinity.

Other scalar weapons were being tested during the mid 1980's also by America and Japan using the Western Australian outback. According to Harry Mason, in his 'Bright Skies' articles, between 1980-1985 and after 1993 bizarre massive non-fireball light phenomena has been described in Western Australia. A common sight is massive 5-10 second bursts of blue-white light seen in the night-time skies of the upper atmosphere.

Normally no solid object is seen with these energy emissions, but they are similar to those explosions seen after fireballs flew by during scalar weapons tests in the 1990s in Western Australia.

There are about 100 documented events of these until 1997, in WA. The only other similar emissions are those circa 1900 high-frequency, high-voltage scalar wave experiments by Tesla, where massive blue-white streams of arching electricity issued from the forest floor into the atmosphere, creating an intense, violent, blue-white glow, emitting an electrical noise, which was audible for miles and lasting several minutes.

Flashes and beams were detected off the east coast of USA before 1985 and according to Bearden they were from one or more scalar howitzers in exothermic mode. Large booms appeared over 3 space shuttle launches in Cape Canaveral in 1985.

For this the Russian Woodpecker over-the-horizon radar was used following the curvature of the earth in the earth-ionospheric waveguide, timing, phasing and orientating to met the rising shuttle. The shuttles weren't destroyed according to Bearden just tested against the actual shuttles. However the Fire from the Sky files say the Russians did destroy the shuttles.

Bearden says that on April 18, 1985 two Titan missiles, the only viable launch option, along with

the shuttles, to put up US spy satellites blew up shortly after launch.

Significant Woodpecker activity occurred before and on the same day. Nov 26 1985 saw a very loud "sonic boom" or explosion 12 minutes after liftoff, over the launch site of the NASA space-shuttle. Bearden claims that two previous space-shuttles had been used as Soviet targets with delayed booms over the launch site, but the shuttles weren't destroyed.

The Soviets were extremely brutal to the passengers of an American airforce DC-8 lifting off in Newfoundland, Canada.

On Dec 12 1985, they deliberately destroyed it and killed 258 on board. At lift-off, the aircraft lost power and sank into the ground tail-low. No flame or smoke issued from the plane before its descent and crash, yet it was seen mysteriously glowing with a yellow or orange halo, which is a signature of the use of a scalar EM howitzer in the 'continuous EM emergence' mode, similar to the manner in which several F-111's were downed in Vietnam.

The DC-8's electrical systems were interfered with by EM energy and EM jamming noise created throughout each increment of spacetime occupied by the aircraft. The loss of the engines was probably due to a localized endothermic (energy extraction) beam to the engines.

Crossed, glowing beams were seen to form in the clouds and a ball or beam of light then go from that glow and strike the aircraft. Instant fire to the plastics inside the plane, gassed everyone with cyanide inhalation, before it exploded. Its engines roaring in painful labor, rather than with the full-throated roar of normal power.

Bearden claims the distant Russian operator/gunner apparently tracked the aircraft down the runway, using two modes against it, energy interference, and energy extraction.

An anomalous hole, characteristic of a scalar strike was in the fuselage.

Bob Gladwin took a picture of the actual strike of one of those weapons, offset from a shuttle launch in latter Nov. 1985 and about two weeks later on Dec. 12 the same or a similar weapon hit the US Arrow DC-8 in Newfoundland. On April 1985, a Titan 34-D missile, launched from Vandenberg Air Force Base, blew up 5 seconds after launch. Video cameras inadvertently caught the Soviet marker beacon used with the scalar EM howitzer that destroyed the Titan, up and above the explosion, moving independently. The hovering ball of light was completely separate.

This positive signature leaves no doubt that the Soviets destroyed that missile also. The previous Titan 34-D missile launch there in August, 1985 also blew up just after lift-off. On May 3 1986, a NASA Delta rocket carrying a satellite failed. It had a an anomalous 'command-type' shutdown of its main engine during launch and began to veer off course.

On film another anomalous light moved up from beneath the rocket and struck it, seconds before the destruction. Bearden says the light plus the 'internal command surges' are strongly indicative of time-reversed EM pulses and interferometry from a pumped phase conjugate mirror adjunct operating with an over-the-horizon tracking mode.

On Jan 1 1986, **Frank Golden** detected, physically verifying with a special technique, that a metal softening scalar EM signal had been added onto the Soviet Woodpecker signals, and this is what they later used on the space shuttles.

In the spring of 1986, abnormally strong Soviet weather engineering occurred over the U.S.,

causing a drastic drought in the southeastern U.S. This drought was broken by Bearden's colleague, with his own extremely powerful scalar EM device to redirect jetstreams. A unique signature of this "blocking" resulted with two huge circulations developed in the atmosphere, clearly showing as two adjacent giant "holes" in the swirling cloud cover over the middle and eastern U.S. Bearden's colleague became ill and had to stop, and immediately the jet streams changed back and returning drought the southeast.

When the man recovered he resumed blocking and restored the rains once again.

In late 1986, significant giant radial cloud patterns, associated with Soviet weather engineering were noted over California. On Nov 10 1986 an anomalous, giant "fireball"/meteor was seen moving from west to east over four states, and accompanied very sharp changes in the EM grid. Bearden says, the so-called 'meteor' may have been a large scalar Tesla Globe from the Woodpecker grid over U.S. performing a simulated test of the multiple-vehicle kill mode, using a large 'electromagnetic missile' created and moved by the associated scalar howitzers.

A large, rapidly moving light was seen and noise was heard.

An anomalous winter storm breaking cold records, was happening southwards. Concurrently, heat records were being broken in the southeast. Frank Golden verified by direct measurement that the electrogravitational field of the earth was agitated and most dynamic, with significant activity introduced by the Soviet scalar EM grid. (The activity was about half what it is when the Soviets are inducing an earthquake.)

Bearden says also in Nov 1986, Huntsville, another twin giant radial, moved from west to east, with another one observed there at dusk.

Also, air control radars along the corridor from Los Angeles to Arizona suffered a "power outage" not long after the "meteor" (Tesla Globe) incident. Montreal, Canada had anomalous TV interference about the same time the air control radars experienced anomalous failure. This could mean that the agent that caused the radar failures and TV interference extended across a wide area of North America, which the Woodpecker grid does.

On the day the CHALLENGER space shuttle was launched in Jan 28, 1986, birds never flew as the sky was painful to them.

The metal in and around the booster flame slowly and steadily weakened due to the metal softening pattern contributing to the disaster. Weather engineering contributed substantial winds and air turbulence.

Bearden thinks the Soviets may have added a deliberate 'intense hotspot' and this subtle assault would cause NASA scientists to think it was an accident. The Soviets also withdrew trawlers and ships in the area to suggest they weren't near the scene. A few days later sporadically intense 'high frequency localization signal' were still present on the grid, causing dead birds to fall from the sky in substantial numbers in Birmingham, Alabama on 1-4 Feb 1986.

Bearden claims that just before the launch of the space-shuttle CHALLENGER, the Soviets did significant weather engineering over US, bending the jetstream southward in the middle of US, and bending rightward again across the Florida panhandle.

Positive signatures of this were photographed by several people. On the evening of CHALLENGER'S loss the KGB, (in command of the scalar EM weapons) celebrated the loss.

Bearden positively identifies the Russians as those who shot it down by a host of indicators, which include the weather engineering which showed specialized cloud patterns associated with Soviet grid engineering. Not too many days after the shoot-down of the CHALLENGER, an anomalous 'flat earthquake' occurred in the U.S., near the Great Lakes, involving ten states. This was probably the subsequent testing of an additional weapons mode of the same Soviet scalar EM system that destroyed the shuttle Bearden says.

More proof can be found here.

The 12/11/86 Chicago Tribune reported:
"Giant whirlpools, some nearly 60 miles wide, have been detected moving along Norway's coasts at speeds of up to 4 knots, posing serious threats to mariners. These giant whirlpools have no obvious center and are difficult to spot."
The newspaper reported that the mammoth whirlpools were unheard of before 1980 (a period after the US and the USSR began generating ELF waves). Giant standing waves called "solitons," have been spotted near the Strait of Gibralter.

The 4/30/85 New York Times reported the discovery of massive internal waves in the oceans that do not appear to any large extent on the surface. "A dramatic series of internal waves has now been traced through the Strait of Gibraltar from photographs" taken from a space shuttle in October, 1984. A map in that newspaper shows a giant standing wave line on the western side of the Strait.

Bearden says that with 100% certainty certain rogue groups including the Yakuza, Japanese mafia and Aum Shinriko Japanese cult have possessed these scalar interferometers since the end of 1989 leasing them from the Russians (from the KGB, who control and use these) and are manipulating US weather, and perhaps other places, moving fronts around with their giant movable areas of heat and cold. They are able to make earthquakes.

He says they can add a couple of recent volcano eruptions as possible candidates to their list.

Bearden says that they have to permit these groups to shoot down an aircraft or something dramatic now and then, to continue leasing them at about nearly a billion dollars rental. He says the Yakuza mafia has also carried the scalar interferometry technology back to Japan clandestinely, and is apparently producing smaller, more portable weapons now in its own highly hidden facilities in Japan.

The Yakuza are a major enemy of the U.S and they do intend to participate directly in great strategic strikes for the eventual destruction of the U.S., whenever that time comes. Bearden says they see this as extracting vengeance against the U.S. for its defeat (and shame, in the Bushido concept) in WW2, and for the U.S. dropping the atomic bombs on Japan. The Yakuza still operates by a modified old Bushido code.

Bearden also says that it is also possible that a little burst of scalar energy deliberately placed on the COLUMBIA shuttle, from a Yakuza scalar interferometer, could have initiated the breakup and catastrophic failure of it on Feb 1st 2003.

Back to Contents

12. THE 1990s

The Iran quake of 1997 was 7.4 on the Richter scale and aftershocks of as high as 6.0 were expected but there were no aftershocks. It was also at an anomalous depth.

Bearden covered this here below:

During Desert Storm 1991, **Rosalie Bertell** wrote that according to Defense News, April, 1992, the US deployed an electromagnetic pulse weapon (EMP) in Desert Storm, designed to mimic the flash of electricity from a nuclear bomb.

The Sandia National Laboratory had built a 23,000 square meter laboratory on the Kirkland Air Force Base, 1989, to house the Hermes II electron beam generator capable of producing 20 Trillion Watt pulses lasting 20 billionths to 25 billionths of a second. This X-ray simulator is called a Particle Beam Fusion Accelerator. A stream of electrons hitting a metal plate can produce a pulsed X-ray or gamma ray.

Hermes II had produced electron beams since 1974. These devices were apparently tested during the Gulf War although detailed information on them is sparse. In 1993 US started constructing what is called the *High Frequency Active Auroral Reseach Program* (HAARP) in Alaska designed by physicist named Bernard Eastlund, and based on Tesla technology.

The prime contractor was ARCO Power Technologies, Inc. and they were to develop and test a low-power high-frequency (2.8-10.0 MHz) prototype transmitter array. It is also called an ionospheric heater because it can send a beam of energy up to the ionosphere and then bouncing back down to a target.

It was said to be for detecting cruise missiles and aircraft. The beam would be several degrees wide, depending on frequency, and thus would influence a region several miles in diameter in the lower ionosphere, expanding to several tens of miles in the upper ionosphere. This can make a scalar wave grid, like the Russian Woodpeck grid over USA to detect objects rising into space.

The airforce and navy owned it. No doubt, it was a measure to fight back against the deadly Russian transmitters.

The HAARP patent, says the work of Nikola Tesla in the early 1900s formed the basis of the research. Eastlund's patent says it can disrupt sophisticated guidance systems and spray large areas of the planet with electromagnetic waves of varying frequencies and to control changes in these making it possible to knock out communications on land, sea and air. Twelve patents form the basis of the HAARP project and are now buried among the thousands of others held in the name of Raytheon.

US Air Force documents revealed that a system had been developed for manipulating and disrupting human mental processes through pulsed radio-frequency radiation over large geographical areas. Could this be HAARP or something more deadly?

Dr Nick Begich found 11 other APTI patents. They told how to make "Nuclear-sized Explosions without Radiation" power-beaming systems, over-the-horizon radar, detection systems for missiles carrying nuclear warheads, electromagnetic pulses previously produced by thermonuclear weapons and other "Star Wars" tricks. This cluster of patents underlay the HAARP weapon system.

Already the most powerful pre-HAARP ELF ionospheric heating systems or Woodpeckers were constructed by the Soviet Union at sites in Sura, Goriky, Monchegorsk and Dushanbe (Tadzhikistan). American pre-HAARP ionospheric heating systems are located in Tromso, Norway; Arecibo, Puerto Rico; near Fairbanks, Alaska; and at Platteville, Colorado.

These systems together with the *Russian Woodpecker Tesla Magnifying Transmitters*, have created a severe alteration of global weather patterns, beginning in 1976, but intensifying through the 1980's and 1990's, as more ELF transmitters were constructed. Tesla devices such as the wire-less power technology, called the magnifying transmitter are used by Russia and the US to create a weather war that has continued from the mid-1970's to the present time.

Strange sky-glow anomalies and weird lightning and plasma-type effects have been seen all over the former USSR near the Woodpecker transmitter sites.

In 1977 the Washington Post reported that,
"a strange, star-like ball of light was sighted over Petrozavodsk in Soviet Karelia, spreading over it like a jellyfish and showering down shafts of light."
Similar plasma effects have been created by the US ionosphere- zapping ELF HAARP transmitters.

At the height of 1993's great Midwest flood, the University of Alaska's Geophysical Institute (which is involved in work on HAARP) discovered,
"mysterious flashes of light that shoot from the tops of storm-clouds into the upper atmosphere... over the Midwest during summer floods."
This occurred when that area was being hit with giant standing-wave, long-lasting weather-blocking systems that were generated by a combination of the Russian Woodpecker ELF waves

and US GWEN Tower VLF waves.

A newspaper reported that these mysterious flashes "resemble jellyfish.

They are brightest where they top out - typically about 40 miles high - so you have the jellyfish body at the top with tentacles trailing down."

A short while after the start of US and Soviet scalar through-the-earth transmissions, Earth's internal dynamo was affected. In 1984 the earth was reported as having experienced a sudden unexpected slowdown in rotation. It had been decreasing naturally, but Scientists at the US Naval Observatory and at the Jet Propulsion Lab found that the "earth, like an unbalanced washing machine," has developed "wobbles as it spins." (7/15/88 Wall Street Journal).

The 7/90 OMNI Magazine reported that between January 24 to February 3, 1990, the earth's rotation suddenly and unexpectedly slowed down AGAIN. US Naval Observatory scientists reported that the slowdown was more abrupt than usual.

The 8/9/91 New York Times described the causes of these unexpected sudden disruptions: "Geophysicists suspect that perturbations in the circulation of the hot fluid metallic core contributes to the rotational changes... The irregular rotation variations are the result of fluctuating fluid flow in the underlying metallic core and the overlying hydrosphere and atmosphere, and... also convection forces within earth and the movement of crustal plates near the surface."
All of which are influenced by through-the-earth ELF vibrations. Scientists measuring ocean waves reported that "the Atlantic Ocean is getting rougher."

Measurements taken since the 1960's indicated that during the late 1970's , following the start of Soviet and US ELF transmissions,
"the waves did seem to get bigger."
The 4/19/88 New York Times reported that British scientists have discovered that waves in the northeast Atlantic Ocean "have increased more than 20 percent since the 1960's."

Ocean researchers consider this to be a "significant climatic phenomenon."

The ability of the HAARP and the Woodpecker transmitters to create a nuclear type energy explosion anywhere on earth via laser and particle beams, is worrisome, not to mention what could be delivered by satellite. Bearing in mind that scalar beams can pass right through the earth and the oceans so anywhere can be targeted. The Soviets also have been able to significantly engineer the weather over North America for more than a decade without being found out.

Until the HAARP transmitters were built. Though the US navy did have their Australian scalar weapons sites in the late 1960s. The Pine Gap base is apparently five miles down and it uses Tesla technology as well, and is linked to HAARP in Alaska and other similar American transmitters. It has been said that U.S. and Israel have deployed an anti-missile defense using HAARP or scalar weapon technology that destroys a missile seconds after launch.

With scalar waves passing beyond the speed of light, all which is needed first is a crossed scalar beam grid to detect any missiles leaving the enemies territory. HAARP can create nuclear-sized explosions without radiation says patent 4,873,928.

This of course makes having nuclear missiles obsolete. However one has to have more grids all over the enemies territory and spy satellites to know when one is coming from them, and since

scalar energy is undetectable, until the beams cross the next war may erupt suddenly. The U.S. or Russia could deliver a ‘nuclear-sized explosion’ at the speed of light against soldiers, as well as all the other countries, that have scalar weapons.

One way to protect a military force against a weapon capable of traveling at the speed of light is to maintain a constant ‘Tesla Dome’ of protection above the fleet, that travels a the same speed as the fleet, and is always hovering over them, but it is hoped that the troops don’t suffer from ill effects from the scalar waves.

HAARP transmitters can make this source of Tesla dome protection.

Back to Contents

13. THE PRESENT

In non linear mathematics, engineering and science the Soviets have lead the way since the start and the West leads the way in computers, software and miniaturization.

Though at present the Japanese have joined forces with the Russians to add computerized components to weaponry. Bearden say that Soviet scalar weapons are capable of destroying the USA, its armed forces or population quickly and efficiently. These scalar transmitters can also become conventional radars, by switching into EM mode. The Russians present ‘old’ transmitters on their ‘old’aircraft, ‘old radar-directed’ gunsites and "obsolete" air defense missile sites.

According to Bill Morgan:
"If you can cause an earthquake you can also set it to, say, bring down a single buildings, of pair of buildings.

It may be that the collapse of WTC twin towers was actually the first major scalar attack in world history. Because in a certain mode the waves at the interference zone can cause metal to soften, even to melt. If so, the planes crashing into them were merely a cover story to cloak the fact that the Tesla Howitzer had been used.

A mishap with one of these devices could wipe out all life on earth. They could disrupt the scalar wave balance between Earth and Sun in such a way that would cause massive solar disturbances and storms, completely frying the earth."
Bearden says that the Russians have been using the shuttles for target practice, but he says the COLUMBIA attack, may be by an unknown party, and hints that the Japanese Yakuza mafia, have been leasing scalar weapons from Russia since 1989 and have been targeting US since then.

Did they or another party shoot down COLUMBIA on 1 Feb 2003?

Bearden says that when the CHALLENGER was shot down on Jan 28 1986, U.S. wasn’t familiar enough with scalar interferometry, since scalar waves are not taught in physics, but he claims there is 100% proof that the Russians shot it down in full view of the world. U.S. has decided to build all the HAARP transmitters also using Tesla technology to get the Russians and other enemies once and for all.

However nowdays America's enemies have multiplied and at least fifteen countries have scalar weapons, so America and everyone else not only has to watch their backs but underneath and above. Instantaneous scalar attacks could come from anywhere and right through the Earth and there are theories that the FBI building bombed in Oklahoma on 17 April 1995, had multiple evidence of a scalar attack by an unknown party.

However Harry Mason wonders if it may be a revenge attack by the Japanese for the Kobe earthquake in January 1995, which has suspicious scalar weapons signatures. Others say the WTC towers also had evidence of a scalar attack during 9/11.

Christopher Bollyn of American Free press claims that he interviewed a former East German physicist who believes a laser weapon, employing infrared technology, originally developed in the Soviet Union, may have caused the WTC towers collapse. he believes that the planes may have had infrared plasmoid in front of them, which is like ball lightning.

The Soviets already used the infrared beam weapon to destroy a wall at the Ussuri River, which separates Manchuria from the far east, during a dispute with China in 1968 according to the physicist. Many experts say a laser beam was used to bring down the WTC towers. Since 1995, the U.S. and Israel have actively developed an advanced infrared beam weapon under a joint "anti-missile" program.

Israel and the U.S. have developed all kinds of advanced lasers since the early 1970's so perhaps they will get the Nazis in Antarctica eventually?

While it's easy to blame the Russians now for every attack, things could get infinitely worse with Russians giving scalar technology to others and leasing scalar interferometers.

But is Russia safe either?

US has particle beam accelerators and very deadly weapons now, that they have got from the aliens. But probably the worst kind of weapon is the one called a *quantum potential weapon*.

According to Bearden, Russia, US, Israel, Brazil, and probably China have these, which can imprint any disease right into the cells of the body, by reproducing its disease 'signature'. He says that Israel is a force to be reckoned with now too, and when CHALLENGER was shot down in 1986, Israelis retaliated and destroyed several very large Russian missile storage faculties and strategic targets.

One shot knocked out third of the missiles in one of the large Russian fleets. It apparently stopped the Russians finishing off America. Israel already had at least working prototype quantum potential weapons and could have devastated Russia and she having the same weapons knows how deadly they are.

Bearden didn't say what type of weapons the Israelis used for the attack on Russia but they have at least scalar weapons and particle beam weapons.

Back to Contents

WHAT CAN BE DONE WITH SCALAR TECHNOLOGY?

14. MIND READING, MASS HYPNOTISM AND SYNTHETIC TELEPATHY

According to **Bearden**:
"in the late 1960's Lisitsyn reported that the Soviets had broken the 'genetic code' of the human brain. It had 44 digits or less, and the brain employed 22 frequency bands across nearly the whole EM spectrum. But, only 11 of the frequency bands were independent.

This work implies that, if 11 or more correct frequency channels can be 'phase-locked' into the human brain, then it should be possible to drastically influence the thoughts, vision, physical functioning, emotions, and conscious state of the individual, even from a great distance.

Up to 16 of the giant Soviet woodpecker carriers have been observed to carry a common, phase-locked 10-Hz modulation, and this has been demonstrated by Beck, Rauscher, Bise, and others to be able to physically entrain or "phase-lock" the human brain, if stronger than the Schumann resonance of the Earth's magnetic field.

A human brain entrained by a common, phase-locked 10-Hz modulation on 16 carrier frequencies would effectively have 16 frequency channels phase-locked into it. The potential for using the Woodpecker transmitters to phase-lock an appreciable percentage of human brains in a targeted area, and then induce effects in the populace similar to and even more drastic than the effects induced in U.S. Embassy personnel in Moscow, should be strongly pointed out.

Coupled with the Kaznacheyev work on EM transmission of cellular death and disease, using the Woodpecker signals to induce death and disease in the targeted populace may also be a distinct possibility. Modification of DNA/RNA-and viruses themselves-is also a possibility."
On the http://www.umf.net/umf/ site this was found:
"In the 1950s, ITT developed sensor technology that could literally display what a person was thinking. It was essentially a mind-reading machine. It operated on a principle of picking up the electromagnetic functions of human beings and translating those in an understandable form.

It consisted of a chair in which a person could sit. Coils, which served as sensors, were placed around the chair. There were also three receivers, six channels and a Cray 1 computer which would display what was on a person's mind-digitally or on a screen."
Back to Contents

15. DISEASE INDUCTION

Bearden says that scalar beams can also be used to induce diseases by mimicking disease

patterns or ‘signatures’ by recreating them on the scalar carriers. These are called ‘quantum potential weapons’.

Especially designed biological effects can be used for attacking any population with various diseases, even multiple diseases together. He lists effects to induce instantaneous death, heart seizure, severe emotional disruption, loss of control of internal functions, diseases, disabling of the immune system and even the implantation of thoughts, emotions or ideas interpreted as a targeted subject as their own.

There is also a suicide vibration which has been used to get rid of people, with no evidence.

10 Hz is the wavelength used by intelligence agencies to hypnotize, so mass hypnosis can be induced in a whole population with subliminal words added into their own language. This can be used for voting. Bearden says that almost any kind of cellular death and disease can be electromagnetically transmitted by scalar beams using ultraviolet to infrared frequencies.

He writes that photons themselves can carry death and disease between cells. Scalar EM technology allows the synthesis of the actual potential pattern of the biochemistry cells.

This can be made to produce a particular cellular disease or death mechanism and even activate genetically latent diseases. Evidence has been found of manufactured symptoms and resultant cellular death, from nuclear radiation, chemical poisoning, bacterial infection, as well as symptoms of drug induced hallucinations.

Even the voice of ‘God’ has been produced.

To quote Bearden:
"Dr Popp of West Germany has analyzed the virtual photon master control system of the cells. Scalar EM represents the deliberate ordering of virtual particle flux into deterministic patterns, so the master control system can be readily entered with scalar techniques to induce disease and disorder at will".
On the site there is more data:
"Scalar interference grid weapons can be used to biologically attack entire populations in a targeted area.

Suffice it to say that phase locked ELF modulation signals of 10 Hz and less are often detected on multiple Woodpecker frequencies simultaneously. In a target area, this modulation - is sufficiently stronger than the Schumann resonance of the earth's magnetic field - will entrain a percentage of the brains into ‘forced entrainment’. In that case, these human brains are ‘synchronized’ to the Woodpecker signals so that multiple coherent frequencies are phase-locked into them.

That is, multiple coherent EM channels directly into these entrained brains now exist. At that point, Fourier expansions may now be used to attack specific portions of the brain geometrically."
The site says that scalar EM disease patterns can be modulated upon the carriers, again with Fourier expansions and specific biological effects can be induced in the entrained populations at will, by Russian technology.

However HAARP can do the same. Effects are instantaneous death, heart seizure, severe emotional disruption, loss of control of internal functions, diseases, disabling of the immune system, and even implantation of thoughts, emotions, and ideas which are interpreted by the subjects as their own. Freedom Domain also said that Woodpecker transmitters in thousands of

experiments, a man called **Kaznacheyev** demonstrated that almost any kind of cellular death and disease pattern could be electromagnetically transmitted.

Kaznacheyev reported the effect in the near ultraviolet.

Experimenters at the University of Marburg in West Germany duplicated the experiments in the infrared. Photons themselves can carry death and disease patterns between cells. Scalar EM technology allows synthesis of the actual "potential" pattern, which represents total control of charge and charge distribution, of biochemistry in the cell, of a particular disease or death mechanism.

Symptoms including cellular death from nuclear radiation, chemical poisoning, bacterial infection, and other mechanisms were induced by the Kaznacheyev quantum potential experiments. Dr. Popp of West Germany has analyzed the virtual photon master control system of the cells.

As scalar EM represents the deliberate ordering of virtual particle flux into deterministic patterns, the master control system can easily be entered with scalar techniques to induce disease and disorder at will.

Back to Contents

16. DISABLING SATELLITES

Bearden writes that anomalous 'laser blinding' of US satellites over the Soviet Union has occurred on several occasions.

On one occasion, a satellite was blinded for up to four hours. He claims it is simple for a scalar EM interferometer or a ground-based scalar EM laser to accomplish, since the amount of energy deposited upon and within the satellite could be precisely controlled and even directly monitored. A possibly related anomalous temporary disabling of two or three power supplies has been demonstrated upon the British satellite Ariel 6 when passing over British Columbia or the Caspian Sea.

The Russians shot down many U.S. satellites from 1977-1982, with their own 'killer satellites' and cosmospheres using beam weapons. Many kinds of beam weapons can be put on satellites. Just recently in Oct/Nov 2003, two Japanese spy satellites (recently put up in space leaving from Russia) were disabled, during the solar storm.

Japan has scalar weapons - were they also on these satellites?

The Chinese have been developing beam weapons to disable satellites, so it's unknown if they were target practice. Brazil has also had a lot of trouble getting her satellites up into space and one wonders if they have any weapons on them because Brazil has scalar weapons and quantum potential weapons. There is much going wrong with Brazils' space program which is covered later in this chapter.

Brazil has made a lot of alliances with other countries which include Ukraine, Russia, China, America and France, to get satellites into space. U.S. has scalar weapons on her satellites according to the book 'Anti-Gravity and The World Grid' edited by **D.H Childress**.

An article in the book claims Tesla was the father of the Star Wars satellite defense system which works in conjunction with HAARP transmitters to make a shield in space as a deterrent against nuclear attacks. The article claims that the Star Wars satellites would be a literal 'Death Star' being able to achieve population control, extermination and military control of an entire planet.

In the book the Russian press claimed in 1986 that it can neutralize the U.S. Star Wars as it is easy for them to neutralize the satellites and even went so far as to call Star Wars "useless junk!".

They said they had another surprise response to Star Wars which would find Washington scurrying to find another space-based system. Preston Nichols claims that the Star War satellites have particle beam weapons.

As they have multiple satellites for this it is good for the protection of America by being able to make a Tesla Dome to destroy incoming missiles but one would hope it isn't used for mass mind control. It may be that the next war is fought by satellite even using beams through the earth.

Back to Contents

17. IN THE AIR

Bearden says that many Russian transmitters sending scalar beams over USA in a north/south direction are crossed at a 90 deg angle with beams running east/west.

A scanner scans the grid squares, detects penetration, and tracks a rising missile or plane. Should attack be necessary two scalar pulses are fired to converge and meet in the grid cell containing the rising missile. This results in a violent electromagnetic pulse, which completely destroys the missile or aircraft. Strangely enough a grid system on a screen was shown in the Spielberg mini-series "Taken", showing the tracking of UFOs arriving and leaving from USA, along with the tracking of implantees and when they were abducted into UFOs above their houses.

Could this be really true?

The 'fictional' series was apparently based on true research, which was interesting because any bodies taken from their beds at night into extra-terrestrial ships might be able to be tracked this way as well, especially if the U.S. military was partnered in the abductions as they sometimes are.

However in the 'Taken' series they tracked the abductees from their alien implants as well on a grid. For military tracking purposes Bearden claims that operators sit at a giant display screen, showing a grid of crossed scalar EM carriers, either in underground, underwater or atmosphere mode. A spot of light would appear on one of the grid squares (cells).

The operator tracks a target accessing if it is missed or destroyed. Accordingly, the operator can make a burst of energy emerge inside the distant aircraft or missile by two scalar pulses meeting at the target location. The detection of a hit is shown by a sudden blossoming of the target on

the screen and if it is missed a large ‘sonic boom’ will occur from the sudden heating of the air.

Bearden says that this happened with the Russians using their interference grid covering America with the three NASA shuttle launches before the end of 1985.

On Nov 25 1985 a marker beacon/glowing ball of light was created over the test site probably to orient satellites and other detection systems. Twelve minutes after the launch a large blast occurred over the site, heard for hundreds of miles up and down the coast. Shortly after, the light moved faster than a jet.

Bearden also says that the loss of the shuttle CHALLENGER on Jan 28, 1986 was caused by the addition of a metal softening pattern in exothermic mode onto the booster by the Russians.

By spread spectrum techniques one system of Woodpecker transmitters can set up multiple interference grids in various parts of the globe using scanners and howitzers. A single system can operate in the earth, underwater and in the atmosphere using different modes, against a wide variety of targets, all operating simultaneously in real time.

According to Bearden when a rising missile is detected additional scalar frequencies in the multi-gigahertz range can fine scan to identify a target continuously on automatic, after the operator places a marker on the grid square it’s on. The operator may then fire from established grid scalar firing channels. Scalar waves on continuous mode can also be defocused over a wide area to dud electronics circuits of a mass of missiles all arriving at once.

After this, large Tesla Globes created in continuous mode, can be produced to get the ones that are missed followed by small Tesla ‘balls of light’ in continuous pulsed mode which can finish the job of destroying the last missiles.

An aircraft equipped with scalar EM weapons can attack loaded artillery pieces, with the round in the chamber exploding. As well as stored ammunitions. Underground missiles can be attacked with a scalar pulse passing through he overhead cover dudding the electronics, including nuclear warheads. This can be detonated along with the fuels and propellants.

A helicopter with scalar EM weapons can destroy jets, other helicopters, cruise missiles, personnel, armored vehicles, and multiple other targets. Do the sinister black helicopters harassing American whistleblowers by circling their houses have these weapons? A single aircraft can sink an aircraft carrier or battle cruiser from afar along with other aircraft.

Anything hidden and camouflaged, including decoys and dummies are useless when whole areas are cleared by wide scalar beam sweeps.

Back to Contents

18. WEATHER ENGINEERING

Each of the Woodpecker scalar grid interference cells on the grid placed over America by the Russian can act as a virtual transmitter, so it is as if thousands of EM transmitters have been built over USA.

In ‘endothermic mode’ thousands of these grid interference cells can act as ‘cold generators’ all over USA extracting electromagnetic energy. This induces local cooling and shrinking of the air, and the formation of low pressure. Alternatively in ‘exothermic mode’ set at ‘continuous’ a grid cell where beams intersect creates local heating and expansion of the air and so formation of high pressure occurs.

These two modes have enabled the Russians to manipulate the U.S. weather at will. Hot and cold spots can be moved along a desired path at a desired speed. Using these methods the entire jet stream across the USA can be deviated at will. Moisture can be drawn from the Pacific and collided over the southern U.S. with extremes of cold air brought down from Canada to produce ice storms.

Violent thunderstorms can be induced and directed with added ‘spin’ thrown in to form extensive tornadoes.

Drought, excessive rain and flooding can be induced at whim. Crops can be destroyed by severe and unseasonal weather. Substantial ocean effects can upset the world’s weather using scalar EM carriers. Localizing a spot of heating at the top of a thunderstorm anvil and another spot of cooling at its side can make a localized downburst of rain.

Weather satellites have detected this combination over America though it can also occur naturally. Bearden claims all this kind of weather engineering has been deliberately created over the U.S. by Russia since the 1960’s with Japan engineering America’s weather since 1989. Anomalous weather has occurred that would not occur by chance since Russian scalar EM transmitters were made.

Scalar beams can be transmitted through the earth and ocean to intersect at a distant region so it doesn't have to be obvious and this way volcanoes can be activated as well.

Back to Contents

19. EARTHQUAKES

Distant earthquakes can be made by depositing energy in the rocks and increasing plate stress until slippage occurs at a fault zone.

Rocking of an entire plate can be done by depositing and contracting energy from alternate areas causing buckling of a large rock plate. Bearden writes on how to induce an earthquake: "Here's how you initiate a very large earthquake with such weapons. Take a convenient fault zone or set of them. Focus the interferometry on the fault zone, in the "diverging" mode, and deposit EM energy there in the rocks on both sides, increasing (slowly) the stress in the rocks by the reverse piezoelectric effect (deposit excess energy, get crystal mechanical movements).

Do it slowly, and the stress will build up to large pressures well-above a plate slip minimum energy required. At some point, the rocks yield and one or both sides ‘slip’ and move rather sharply, giving a very large earthquake in that zone. Do the same thing down in the earth (remember, scalar waves easily penetrate right through the earth and ocean at will, and so the ‘interference zone’ focus can be inside the earth or beneath the ocean, at will.

Anyway, focus this thing down to where the active part of the volcano is still slumbering, down where the hole in the plate has been made. Keep increasing the deposition of energy in the magma itself, and eventually the increasing pressure from deep within that volcano, underground, will cause an eruption.

Build the energy slow, and the eruption will likely be much larger."
Dr. **Peter Beter**, stated that by 1977, the Russians had placed 'fission-fusion Superbombs' in certain deep undersea trenches around the Philippines.

It is believed that the Philippines are in a 'keystone' spot within the giant Pacific Tectonic Plate. Russia had already been setting off lower yield undersea weapons in other areas around the Pacific Ocean causing strong earthquakes. It is believed that when the bombs are set off, as stress has built to the level the Russians need, this will cause incredible earthquakes and tidal waves and ultimately devastate the American West Coast.

Volcanoes erupting in the Philippines are an indication that stresses are building in the area. Earthquakes and volcanoes can sometimes triggering the other. An earthquake can open vents deep in the Earth which allow lava to flow up. In other cases the stresses driving volcanic activity can also cause earthquakes.

In the correspondence section of Cheniere.Org Bearden responded to a reader's question
"Do you have any indicators that the Yakuza (or someone else) is behind the recent spate of quakes and volcanoes, especially the quakes in Alaska?"
Bearden responded:
"No indications directly as yet. So far, just the fact that it seems to be the most powerful quake ever to hit the U.S. Also, it damaged the pipeline in Alaska (800 miles long pipeline) that carries 20% of all domestic U.S. oil. The pipeline is shut down now."
In a February 1912 interview **Nikola Tesla** said that it would be possible to split the planet by combining vibrations with the correct resonance of the earth itself.

He said:
"Within a few weeks, I could set the earth's crust into such a state of vibrations that it would rise and fall hundreds of feet, throwing rivers out of their beds, wrecking buildings and practically destroying civilization."
A 1935 article (Tesla's Controlled Earthquakes - 1935 issue of the New York American) stated:
"Tesla's experiments in transmitting mechanical vibrations through the earth - called by him 'the art of telegeodynamics' were roughly described by the scientist as a sort of 'controlled earthquake'.

The rhythmical vibrations pass through the earth with almost no loss of energy. It becomes possible to convey mechanical effects to the greatest terrestrial distances and produce all kinds of unique effects. The invention could be used with destructive effect in war..."
As part of the secret 1974 Vladivostok U.S.-Soviet artificial global-warming agreement, the US began 30 Hz ELF transmissions from a site in the Pacific northwest in Washington.

Coincidentally with the increase in Soviet and U.S. ELF transmissions during 1980, was a sharp increase in earthquakes around the world. The 1/30/81 Washington Post reported:
"The world sustained 71 significant earthquakes during 1980, up from 56 the previous year, and the world death toll climbed to 7140, 5 times the 1979 figure, the USGS said."
On Sept 12 1989, sensors near Monterrey Bay, California, detected unusual ULF (between 0.01 Hz and 10 Hz - the lowest ELF frequencies) radio signals,
"which grew 30 times stronger October 5, and then weakened somewhat. At 2:00pm on Oct 17, the signals grew so strong that they went off of the sensor's scales. Three hours later, the San Francisco Bay area experienced a 7.1 earthquake, which killed more than 60 people and injured

3800 others.

The disastrous Jan 17, 1994 Los Angeles earthquake was also preceded by mysterious radio signals, preceding two loud ‘sonic booms’, which are typical symptoms of Soviet Tesla weapons usage, immediately before the earthquake.

Normally earthquakes occur no deeper than 20 to 25 km, however a very rare deep 8.2 quake took place in 1994 with an 8.2 quake emanated from 600 kilometers below Bolivia, punching the planet hard enough to send it ringing like a bell.

The quake was felt in much of North America, even up to Seattle."
The 1987 Eastlund HAARP patent stated that,
"The earth's magnetic field could be decreased or disrupted at appropriate altitudes to modify or eliminate the magnetic field."
This can cause irreversible damage, not to mention the slashes and holes HAARP does in the ionsophere with high frequency radio waves.

Lloyd Zirbes wrote:
"Disruption of the earth's magnetic field will complete damages to the planet's balance done by the government nuclear bomb blasts in the natural radiation belts above the ionosphere. Earth's magnetic field keeps the planet in balance with the moon and sun. Disrupting the field will be the last straw in sending earth into the sun or out into space."
The combined effects of all the Russian, American and other transmitters around the planet, including GWEN towers and ELF, and VLF systems all operating simultaneously especially during geomagnetic storms is disrupting the earth’s internal dynamo and disrupting and altering the upper atmosphere magnetic belts, which are the external part of the earth’s natural dynamo system and could create a premature reversal of the magnetic poles, make the earth wobble more leading to a pole shift or total pole reversal.

An article online called ‘HAARP Unveiled’ described the effects of Woodpecker drawing up energy from the Earth’s molten core.

It said that when an electromagnetic signal is transmitted through the earth at certain multiples of 30 degrees standing waves are formed right inside the earth. In certain incidence angle cases this standing wave also induces a coherence formed in the molten core of the earth itself, and a tiny fraction of the vast, surging electromagnetic currents of the liquid core begin to feed into and augment the induced standing wave.

During this, the inducing signal one is putting into the earth is the grid signal and the vast energy in the molten core of the earth is the cathode and power supply. The established coherence serves as an amplification factor for the grid signal and much more energy is now present in the standing wave than the tiny amount being fired in from the outside.

By crossing beams, multiple 'giant resonance' waves of this type focus into a very powerful beam of very great energy amplifying some of the enormous energy which exists inside the earth. By creating this powerful beam and varying the frequency, focusing and wave shape of the beam, earthquakes can be induced at a distance or severe disturbances in the middle and upper atmosphere over a target area creating anomalous weather effects.

Some call it ‘the Tesla effect.’

With the U.S. and Russia tearing up the magnetic field with HAARP and Woodpecker sending scalar waves and particle beam weapons from the ground and satellites, the earth’s magnetic

field is being eaten away. According to an article in Nexus magazine some years ago the U.S. let off two atmospheric nuclear bombs above Antarctica in 1975, and then afterwards when they wouldn't give the Russians the data gained, the Russians set one off above the Arctic.

There are gaping holes in the magnetic field over the Earth, with a major hole above Alaska, which wasn't apparently done by HAARP (according to a www.viewzone.com article by Dan Eden), but yet another even more powerful transmitter we don't even know about that the U.S. has there.

Eden reports that there is a large hole in the atmosphere above Yugoslavia also.

More and more artificial ELF and VLF vibrations are disrupting earth's natural internal and external electromagnetic systems which help to maintain planetary rotation, balance and stability. With the newly discovered planetary wobble and sudden abrupt slow-downs in rotation, we should be worried especially with more scalar weapons falling into rogue hands.

Should any asteroid come too close it may set off such a destructive resonance that the planet could split like Tesla predicted, or suffer a total polar shift.

Bearden wrote:
"Any large collection of nuclei - such as a star or a planet - is a strong absorber and radiator of scalar wave radiation.

The Sun is a particularly strong source of scalar wave radiation. This radiation penetrates the earth deeply, interacting more and more with the deeper layers, which under greater mechanical stress are more nonlinear.

Most of the heat in the molten core of the earth comes from the dephasing of a portion of this absorbed scalar radiation from the Sun, liberating ordinary electromagnetic energy as heat. The Earth also re-radiates scalar wave radiation back to the Sun. The Sun and the Earth are thus coupled into a scalar system in equilibrium or near-equilibrium.

Each body in the couplet possesses both a feedforward and a feedback loop."
He warned of the grave dangers of scalar weapons, which may upset the *resonances between the Sun, Moon and Earth*, especially in pulsed mode because this would upset the delicate balance of Earth-Sun, Sun-Moon and Earth-Moon.

If one resonance gets over stimulated the coupled resonance response from the sun could be disastrous, with violent expulsions of solar electromagnetic energy and particles *which is happening now*. Earth could disappear in a ball of flames (which is predicted in 2.Peter in the Bible).

Bearden warns:
"Note the abnormal influence of the Moon on tides - tides of both the Earth's tectonic plates and oceans. If the Earth-Moon resonant system were over stimulated, one might expect VIOLENT earthquakes of extraordinary magnitude, and tremendous tidal waves hundreds of feet in height."
According to the article 'HAARP - No Man Hath It Unveiled':
"... the use of huge scalar electromagnetic weapons (including US devices which interfere with God-given protective Van Allen Belt and other external magnetic belts) is a double-edged sword.

Unless carefully employed, use of the weapons could cause a terrible backlash to the user (as the Soviets discovered when the main power source for the Gomel Woodpecker transmitter at

Chernobyl exploded in 1986), as well as the victim and even cause the destruction of Earth itself.

With scalar electromagnetic weapons, the consequence of a relatively simple electronic failure can be catastrophic; not only for the local nation but for the earth as a whole.

If an scalar pulse discharge happens to tickle the Sun's and Moon's natural scalar electromagnetic feedback loops the wrong way you'll get convulsions on the earth and a violent increase in the interior heat of the Earth's molten core with a concomitant eruption of that core right up through the Earth's mantle..."
Back to Contents

20. SEA ATTACKS

Bearden also writes about a scalar interference grid which can be made underwater so that all submarines can be detected, tracked and destroyed using dudding or explosions with missiles still unfired in weakly endothermic mode.

Two scalar pulses from howitzers can channel and meet in the submarine, violently exploding all of it with the marker on the screen shown as blossoming light. A "cold explosion" could also be created from pulsed endothermic mode, making intense, severe freezing in the target zone.

Artificial EM "potential" will travel through the ocean, but a force field won't.

Also surface naval vessels can be attacked through their hulls. Sea borne and ocean bottom mines can be destroyed with underwater 'sensors' including entire fields of them. Scalar beams can detect and destroy torpedoes and anti-submarine missiles including their munitions and charges. A scalar grid system can also be placed over the ocean against all missiles, including those from submarines, as well as destroying aircraft on a carrier taskforce as soon as they launch.

Using a sophisticated scalar radar, a large area can be scanned rapidly for all mines. It can operate as an "underwater eye" being able to tell if a mine is located. The grid operator can then hit any mines or even midget submarines, bottom crawlers etc. with a scalar interferometry pulse, using the same detection system.

EM energy can be sent to the submarine's controls making it malfunction, causing it to sink to crush depth and implode. In another mode the scalar howitzer can create "cold explosions" where huge energy is sucked out of the sea.

A number of these cold explosions have been witnessed, especially by commercial pilots. They create a gigantic mushroom cloud of mostly water vapor rising miles into the sky.

From "Yugoslav Earthquake followed by Cold Explosion":

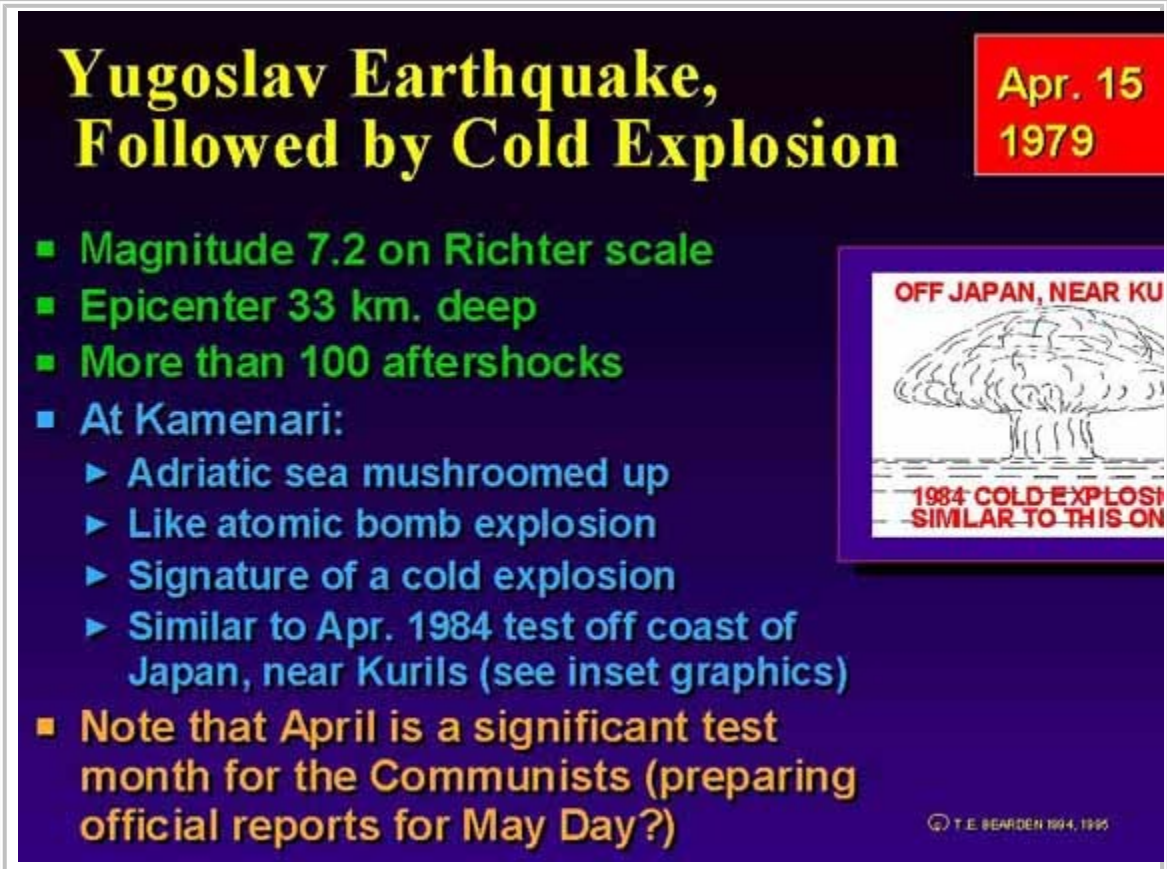

On Apr 15 1979 there was a magnitude 7.2 earthquake in Yugoslavia followed by a cold explosion in the Adriatic Sea, at Kamenari.

The sea mushroomed up like a nuclear cloud. Bearden writes that in 1984 the Soviets created a scalar 'cold explosion' off the coast of Japan near Kuril Islands. A cold zone low pressure was suddenly induced above the ocean and water was sharply sucked up forming a dense mushroom like cloud, (glowing like a halo) like an atomic explosion but with no flash or shockwave.

The expanding cloud rose to 60,000 ft in about two minutes, spreading until it reached a diameter of about 200 miles.

Several Boeing airline pilots in the general vicinity saw this and a US satellite also photographed the area. Bearden says it was very probably a test of a giant scalar EM howitzer used in the endothermic (heat energy withdrawing) mode. Sudden energy withdrawal in a region above the ocean resulted in a sudden low pressure, sucking up a giant cloud of moisture. Inrushing air pushed the cloud upward into a giant mushroom.

The maximum diameter of the halo is estimated at least 380 miles, and the maximum altitude of its center greater than 200 miles.

Bearden says this is a sort of Tesla shield made by a giant Soviet scalar weapon, and was three tests in one:

- the initial cold explosion
- switching to endothermic mode

- then exothermic mode,

...to create a small hemispheric shell of energy expanded into a globular shell, and expanded to giant size.

This globular part of the exothermic test was very similar to the Soviet test observed from Teheran, Iran in 1966. The glowing hemispherical shell was similar to several previous Soviet tests observe over the ocean.

In 1977, the H.M.V. Kinpurnie Castle observed a large, moderately luminous hemisphere of light formed over the ocean, and the formation of two luminous patches or globes, inside and outside, which disappeared after 10 minutes.
Back to Contents

21. TESLA SHIELDS AND GLOBES

According to Bearden, in 1982, pilots and crews of two Japan Air Lines Flights reported sighting a giant, expanding globe of light in the North Pacific, 700 kms. east of Kushiro.

Beaden writes:
"This was another test of a scalar EM howitzer/interferometer producing a "giant globular shell" of energy at a great distance (this is also called a *Tesla globe*, because Tesla created them initially).

When small, the intense shell produces a very high EGP (electrogravitational pulse) and also a very high electromagnetic pulse inside the matter of any object penetrating the shell. This will dud any and all electronic equipment; explode high explosives, fuels and combustibles; and render any other modern weapon harmless.

The high EGP will detonate a nuclear warhead immediately in a "full-up" nuclear detonation.

It will also instantly kill any living creature, including every cell, bacterium, virus, and organism in its body. It will detonate any ordinary, non-radioactive material, with a low-order nuclear detonation, of all its nuclei. As the globular shell is made very large, the "energy density" in its shell is reduced. However, any nuclear material or device will still suffer a low-order nuclear detonation from the EGP, and any biological system will still be instantly killed.

The EMP (electromagnetic pulse) will still dud any electromagnetic equipment presently available. As can be seen, the globe can be used to defend an entire sector of the sky against any kind of incoming threat - with 100% effectiveness.

A hemispherical shield can be placed over one's own military forces for defense, and/or over the opposing force for initial phase offense."
Bearden says any object penetrating the shell, which consists of globes or hemispheres layered within each other, receives both an electrogravitational pulse (EGP) and electromagnetic pulse (EMP) arising inside it, from within its local space-time.

The EMP will dud all electronics and explode all high explosive materials. EMI shielding is ineffectual, since the EM energy pulse arises everywhere within the vehicle, warhead, and circuitry from spacetime itself. The EGP will immediately fission radioactive material. If a strong

EGP is experienced any nuclear warhead will explode instantly, and even the nuclei of ordinary, nonradioactive material struck by a strong EGP will fission in a low order nuclear explosion in the more intense small shell or shell variant.

The large Tesla shells cause low order detonation, and disruption of nuclear warheads.

The Tesla shell is effective against all types of warheads including nuclear and penetrating vehicles (bombers, ballistic missiles, cruise missiles, RPVs, artillery shells, etc.). 100% defense against missiles and aircraft is possible.

Bearden wrote in 1984,
an American Boeing crew flying from Tokyo near the Kuril Islands, noticed a slowly expanding hemisphere of white light above the horizon.

The shell of light continued to expand over a 10 minute period until ahead of them. There was no shock wave. The shell of light had sharp edges and was semitransparent so that stars became visible through it.

This was another Soviet test of the Tesla shield. Numerous sightings of this phenomenon have been made by airline pilots flying in and out of Japan.
Back to Contents

22. GROUND ATTACKS

For smaller defense tasks, Bearden describes that one can hide an independent scalar wave carrier inside an ordinary carrier wave for communications, as the enemy can jam a normal communication carrier, but not a scalar one.

Artificial potentials can be used for 2 way communication with submarines, aircraft and ships also. He says that one can use one's enemies jamming transmissions as a 'wire' to establish scalar EM channels. The enemy's transmitter can be located with 'weakly endothermic mode' using lock-in mode.

One can 'walk' the lock-in past their encryption function to their "clear" input and receive and record all that they are communicating in the clear, and this can even be done distantly. There is an option to also destroy the enemy's equipment while they are at it, or just continue to eavesdrop. Bearden claims that this reason may be why the US embassy in Moscow was subject to weak microwave radiation for decades, and this caused health problems to the staff.

The US knew and apparently took no action to monitor the effects themselves.

The Soviets have built a new embassy in Washington DC, bristling with antennas. It penetrates the steel hull of tanks, armored vehicles, underground bunkers, pillboxes and fortifications. Anything underground can be shot at through the earth, including missile silos, and nuclear storage sites which too can be attacked through the earth itself, initiating full nuclear explosion on missiles at station.

Ammunition dumps, radar systems, radios and communication gear and centers, gasoline dumps, drones, surveillance and sensor systems, mines etc. can be swept clean with scalar

waves giving area coverage.

Scalar waves can pump the electrical grounding and distant electrical power distribution and generation systems so they fail.

Radio and TV transmitters and wiring complexes in buildings can be destroyed. If many missiles are launched, a Russian operator could mark them rapidly and the howitzer fires burst after burst at them, decimating them and reducing the number to make it to mid course. On the tactical battlefield scalar EM radar interferometer systems can defend against tactical missiles, aircraft, cruise missiles, artillery, mortar shells and helicopters.

There's no place to hide, so an invasion can be achieved easily, provided the enemy is also not using scalar EM weapons.

Back to Contents

23. OBLITERATING INDIVIDUALS

If one sets a scalar weapon on 'high intensity pulse mode' and fires at someone it will destroy their nervous system instantly, along with every living cell, bacteria, germs etc. causing death.

The hit body falls down like a limp rag, not decaying in even 30-45 days. It's like a body being irradiated with nuclear radiation like food, everything is killed. The material is preserved before decay can set in. Entire groups of people can be blasted and killed on peak power. Bearden said that the strange deaths of the Afghanis were speculated to have been done with an eerie new gas.

However gas gives a person seconds to die, having violent convulsions. Jane's 'Defense Weekly' covered this in 1984.

The Soviets used scalar tactical death rays in Afghanistan, according to Bearden, and they were positioned in the noses of their HIND helicopters. They cunningly also fired gas rockets filled with nerve gas to disguise the testing of these death rays to fool intelligence analysts.

Set at a lower intensity pulse mode the person will be zapped unconscious and revived later for interrogation. This is done silently.

To prevent destroying equipment and installations the endothermic mode can be utilized. Cold explosions can freeze tanks, personnel and equipment. Heaters and arctic clothing are useless, the people die - frozen to death, however the equipment thaws out. Bearden says if one wanted the front-line strength of NATO, one could create three cold explosions, each 50 miles in diameter alongside each other. In seconds every living thing is frozen to death.

The battle's over instantaneously.

Back to Contents

24. PORTABLE SCALAR BAZOOKAS

These can be carried by people or mounted on vehicles or helicopters.

A bazooka size scalar EM pulse weapon can destroy a tank with one shot passing right through the armor. It can penetrate conductive shielding and even Faraday cages. With a scalar EM pulse, the tank personnel die instantly, the electronics are dudded, the ammunition and fuel in it explodes, all simultaneously, destroying it completely.

One tank, helicopter or jet after the other can be knocked out easily with one blast by a either a soldier on the ground carrying a portable bazooka or tank carrying this weapon. A fighter bomber aircraft is also destroyed using simultaneous kill mechanisms, with the fighter and crew instantly killed, electronics dudded, fuel exploding and jet engine flaming if the pulse mode is powerful enough.

Shielding is ineffective, the scalar pulse or continuous mode can go anywhere gravity can go.

Tesla/scalar wave weapons were said to have been used by the Slavs, who had this technology in the Tesla Museum (dedicated to his work), during the Bosnian war. The Russians were also said to have helped them. Using scalar weapons from a tank or ground transmitter, closely spaced pulses can act like a machine gun and sweep the artillery or mortar barrage.

If the peak power in the sweeping pulses is sufficient, the explosives are sparked and detonated and the fuses destroyed.

Back to Contents

25. RADAR INVISIBILITY

Bearden also says making an aircraft invisible to ordinary radar involves having multiple transmitters on it to make a spherical interference shell around it in the bandwidth of the searching radar.

When the radar beam strikes the energy bottle around the aircraft and interferes with the return signal reflected from it, it is defracted, scattered and absorbed. To shield against passive radar tracking emissions from the aircraft, one can detect and complement their own emissions, so that ‘near zeros’ result in the spectrum of interest.

It is also possible to cool the exhaust and heated surfaces of the aircraft using scalar electrostatic cooling.

Bearden claims it is possible to cause the aircraft to ‘disappear’ optically. This can be done by matching a photon hitting the aircraf , which is absorbed totally with the same emission from the opposite side, in the same direction the original photon was headed. The light emitted from the original airplane from one direction seems to have "passed through it" from the other direction, mimicking empty space to the observer (a photon is a quantum of radiant energy moving with the velocity of light)

Apparently what is known as a "Fourier expansion energy bottle" can be used for this. This can also be done on re-entry vehicles by having multiple antennas on it or use satellite re-entry vehicles to carry extra transmitters necessary for scalar interferometry.

An energy bottle can be placed around the ensemble as an interference shell in the bandwidth of requirement. Radars in that bandwidth can't detect the ensemble.

Back to Contents

26. SUMMARY OF A WAR THAT COULD OCCUR

Bearden paints a possible scenario:
if for example the U.S. were to send a nuclear missile to Russia many things they have developed for defense using scalar technology could greet it before it even landed.
Secret eavesdropping using scalar carriers may have heard it was about to be fired, and they could explode the missile before launch using a cloaked COSMOSPHERE or aircraft.

However if it does manage to launch, firstly it could be detected and tracked, then a continuous EMP Tesla globe could kill the electronics of the missile. Another intensely hot fireball globe could vaporize the missile, or a pulse mode fireball could explode it before it reached its target. Extremely large glowing spheres of light containing dense EM plasma energy created by crossed scalar beams could also activate the nuclear warhead en route by creating a violent low order nuclear explosion.

Various parts of the flying debris can be subjected to smaller more intense Tesla globes where the energy density to destroy is more powerful than the larger globe first encountered.

This can be done in pulse mode with any remaining debris given maximum continuous heating to vaporize metals and materials. If anything still rains down on Russia, they could have already made a Tesla shield over the targeted area to block it from entering the airspace.

The Tesla shield protecting the target could be made of three or more concentric Tesla shields, that would produce multiple electromagnetic pulse energy and severe heating of anything which enters it. These concentric Tesla shields can also clean up and sterilize any gamma radiation resulting from an explosion of the nuclear warhead.

The Soviets are using unknown attributes of matter, phenomena and laws of nature by research covering the equivalent of 7-8 U.S. atom bomb projects back to back already.

Back to Contents

27. RUSSIAN UFOs ATTACKED THE US SHUTTLE PROGRAM FROM THE BEGINNING

The space shuttle accidents, according to Tom Bearden, were done by the Russians using scalar weapons.

Let's forst look at other stories on these accidents being caused by the Russians, according to a series of articles written anonymously called 'Fire From The Sky'.

The article states that in Oct 1977 a newly operational Russian cosmosphere (locally made anti-grav saucer) shot down Skylab with five American astronauts secretly on board. In mid May 1977, America could not put up a satellite due to a booster rocket falling off.

This satellite was destroyed on Sept 13 when its launch vehicle exploded one minute after lift off. Sixteen days later another satellite and booster went up in flames, again one minute after launch. NASA pretended Skylab was still up in orbit, but sinking unexpectedly. The U.S. wasn't in a position to yet launch any space shuttle up into space because Russia was deploying her secret space triad of advanced manned weapons.

The US space shuttle program had to be reorganized shrouded in secrecy.

In 1946, the Russians moved many German scientists to forty locations in the Soviet Union, as well as their labs and forced them to build anti-gravitational saucers, like the ones the Nazis made for their own use in 1940/41 in eight locations all over Germany during the war, after they had 'back engineered' a crashed UFO which landed in Germany in 1939.

More info can be found at Manmade Flying Saucers - The Nazi Connection

Back to Contents

28. HOW DID RUSSIA GET UFOs?

According to the book 'UFOs Nazi Secret Weapon?' 275,000 German scientists as well as their families were taken from the Soviet occupied section of Germany after the war over a two day period, never to return.

They built the Mig fighter planes for the Soviets, along with torpedoes, submarines and many other things of use in war. However the Nazi anti-grav saucer plans were found by the allies after the war, and this valuable book was written in the 1950's showing all their technology with photos of the saucers and matching engineering plans.

'UFOs Nazi Secret Weapon?' was written by two Germans, Mattern and Friedrich, and no German publisher dared to publish it, so it had to wait until the mid 1960's to be published in Canada.

Since the late 1940's, Nazi UFOs which resembled the ones drawn on the plans, have been sighted worldwide. Investigations showed that nearly 3 billion dollars was invested in Nazi front organizations around the world after the war, particularly in South America according to Mattern and Friedrich.

It is not known how much harm has been inflicted on the allies since the war by Nazi UFO occupants flying out of their base in Antarctica, which was colonized by some of the 250,000 Nazis who escaped from Germany before the war ended, having made their polar base operational well in advance.

However they do have scalar weapons which makes anything or anyone an easy target. There may still be an ongoing war between the Nazis residing in secret bases in Antarctica and South America, and the Russians, (who now have hundreds of cosmospheres) as well as against other former ally enemies.

The plans of the Russians are often known because of double agents, defectors, spies, surveillance and observation by the public of their attack signatures.

Back to Contents

29. FORMER BOSHEVIKS RUNNING AMERICA

According to the 'Fire From The Sky' files, the space shuttle program went into secrecy, not only to foil the Russian attacks, but because the Rockefeller cartel (who supported the Russian non Bolshevik government at the time), would tell the Russians what the present US govt. was planning against them.

They wanted peace to keep their business assets intact. The Bolsheviks had been put in power in Russia by the Rockefeller cartel in 1917, and when they were removed they'd come to America and Reagan had included them in his government as the Bolshevik-Zionist alliance. By the last half of 1980 they began to regain power in Russia so the decision was made to go ahead with the space shuttle mission.

The American Bolsheviks were thrown out of Russia but intended to take back Russia, by destroying the present Russian government so America was to be sacrified to achieve this and a nuclear attack on Russia was planned to destroy their military facilities in Siberia.

Meanwhile, the Russians kept on attacking anything the U.S. shot up into space, to dominate the upper atmosphere themselves. US military planners (under the control of former Russian Bolsheviks) ousted by Glastnost, didn't realize just what weapons and spacecraft the Russians had until they themselves tried to master space.

For four years from 1977 to 1981, anything America sent to space was shot down and an elaborate fake replica of what should have been was shown to the world.

America finally reached space in 1981 due to having developed their own beam weapons, as dangerous as the ones Russians had used against them from their cloaked cosmospheres high up in space. In 1977 the Bolsheviks had strategic positions within the US government, replacing the Rockefeller cartel in many areas of power.

The Bolsheviks were Zionists and in league with Israel, with headquarters in both New York and Jerusalem.

Back to Contents

30. REPLICAS USED FOR THE LANDINGS, AFTER ORIGINALS SHOT DOWN

A replica of the space shuttles that supposedly, had gone into space was created inside a modified NASA 747, complete with floating notebook.

Everyone believed this simulation and each time a shuttle was launched, out came the simulated film, which was reused. However the actual shuttles never came down unscathed, only as wreckage. Eisenhower sent more than twenty U-2 spy flights over Russia between 1957-1960 and the airforce reported that the Russians would have 1000 ICBMs by 1961.

The Russian Sputnik satellite was launched on Oct 4 1957. The US satellites in the 1960s and 1970s were also used to observe flying saucers. During 1977, Russian cosmospheres just swept the sky clear of US spy satellites and made enormous 'air booms' along both coasts of US and inland, to demonstrate they ruled space, and nobody could stop them doing what they wanted, frightening thousands.

The American authorities explained away the 'air booms', by saying it was the sonic aircraft Concorde, but actually it was the Russians high up in space shooting particle beam weapons in defocused mode.

Almost daily airquakes were heard in areas such as airforce bases and other military installations. In 1977 seven cosmospheres hovered over America, but months later hundreds followed. It is not known if any were Nazi UFOs leaving from Antarctica, as the 'Fire From the Sky' files haven't covered this aspect, but the anonymous author was familiar with the Russian cosmosphere activities which created airquakes.

Between Dec 1977 and June 1978, 594 airquakes of major impact occurred and UFO sightings mushroomed.

However some sonic quakes over southern California have been traced to the ultra secret Aurora craft going to Groom Lake, Nevada from Pine Gap, Australia and also 'real' UFOs have also shown up where cosmospheres congregate. The Russians had a sophisticated stealth cloaking system, but the extra-terrestials neutralized this to show their presence, sometimes so people would see the Russian cosmospheres and wake up to reality.

Alien craft have strobing colored lights of green, yellow and blue, whereas the cosmospheres don't strobe and are positioned high up to appear as stars.

Back to Contents

31. CLOAKED RUSSIAN UFOS ABOVE USA

The cosmospheres hover in the earth's electrostatic field, and they aimed their particle beam weapons with a combination of infrared detection and radar.

The Americans on learning this decided to block their sensing systems and disturb them from their hovering position, so they couldn't aim their particle beam weapons when they launched their rockets. Working overtime they designed a cobalt ionization bomb, which created

tremendous quantities of totally ionized cobalt atoms stripped of their electrons, leaving bare nuclei detonated at various upper fringes of the atmosphere as high as possible but below the hovering altitude of the cosmospheres.

This would make an enormous storm of electrons spread horizontally in the earth's magnetic field underneath the cosmospheres. This would be coupled with ground based high-powered lasers.

However the Russians had another aiming device which was based on the actual atomic signature of the target and normal jamming had no effect.

Back to Contents

32. ALL U.S. SATELLITES SHOT DOWN BY RUSSIA UNTIL 1981

On April 12 1981, the COLUMBIA space shuttle was supposed to get into orbit and deploy a military satellite.

Two days later they were going to land another shuttle as a staged drama pretending it was the Columbia. Every American spy satellite launched in the last three years had been shot down or blinded before gathering much data. The shuttle COLUMBIA was intended to fly over Russia's particle beam facilities and cosmodromes with the spy satellite still on board, sending the data back.

According to the 'Fire From The Sky' author, there are more KGB agents in the CIA than loyal Americans and the plans to attack Russia were given to the Russians beforehand.

In the article 'The CIA, UFOs, MJ-12, JFK & James Jesus Angleton' by Timothy S. Cooper, he writes:
"The shocking truth of the Soviet atomic weapons espionage program, Enormous, dealt a tremendous blow to US and British security when it was learned that British diplomats operating within the US State Department, as well as US Army technicians at Los Alamos National Laboratories, had not only supplied blueprints and materials for the atomic bomb to their KGB handlers in New York, but had stolen the proposed plans for the hydrogen bomb as well. Security officials were left guessing as at what else the Soviet spies had stolen from under their noses."
The 'Fire From The Sky' author continues saying Russia's goal was to shut down the space shuttle program.

They shot down a high flying U-2 spying over Russia in 1960. President Eisenhower and Khruschev met to discuss this. Russia said they would shoot down Columbia if it flew over Russia and put it on public display together with its nuclear powered laser firing spy satellite. The third generation cosmospheres were the tool for this. They were massive and called "Super Heavies" or jumbo cosmospheres.

By 1980/81the Russians had built seven of them, bigger than the zeppelins of the 1930s. They would carry a payload of more than 50 tons, far more than the space shuttle, plus electromagnetic propulsion which could take them to orbital speed. They were in effect, Russia's space shuttles. Five jumbo cosmospheres were fitted with grappling equipment to seize a large object in space and the other two with neutron particle beam weapons.

They fired at the COLUMBIA at point blank range, (just to disable it) as they wanted the shuttle's back-up computer to fly it over Russia so they could capture it, supporting their claim that it was being used for espionage.

Heat sensors on the shuttle programmed it to self destruct if attacked and blow the shuttle to bits. It ended up strewn over Russia for about 75 miles

Back to Contents

33. LIES, LIES AND LIES

There would be no TV coverage, except the liftoff. April 12 1981 was twenty years since the first manned flight into space.

Another 'fake' COLUMBIA was landed by the Americans and nobody knew... According to 'Fire From The Sky' clones of the two crew (produced at Dulce, NM, underground military/alien installation) were put in the replacement shuttle to greet the cheering crowds. (NOTE: Another part of the US government, acting separately had established an alien alliance with the dimitutive greys and reptoids during this time.

Genetic engineering was being done, however that was operating separately from the shuttle space program.

Cloning factories underground are now all over the U.S. and the alien alliances are stronger than ever. All sorts of replacement humans are produced now underground in the U.S. - synthetics, androids, clones which take a year to grow in tanks, and even soul replacement can be engineered with technology). Three more identical shuttles were in storage for 'supposed' landings.

A new launch was planned for March 1982 and the shuttle armed for battle in space. The U.S. Bolshevik government planners refused to understand what they were up against.

Russia had taken cosmonauts from seven other countries, while America couldn't even get up to space with their shuttles.

Everyone was told that America was five to ten years ahead of the Russians in spaceflight. It was a lie regarding the space shuttles, but covertly with the help of former Nazi engineers at Area 51, military installation in Nevada and various alien/American alliances underground at multiple installations, Amerca's own anti-grav saucers were progressing as well.

However the space shuttle program also had its fair share of former Nazi scientists to help that get off the ground, with many rocket scientists being taken to the U.S. after the war. Some figures give as many as 5,000 'useful' Nazis were taken to U.S.A after the war.

Back to Contents

34. FRICTION WITH THE JAPANESE

'Fire FromThe Sky' claims on April 9 1981, an American submarine sank a small Japanese freighter, supposedly by ramming it and left the scene without rescuing survivors and didn't admit the incident until 36 hrs later, reporting it as 3 1/3 miles away from where it happened.

American naval vessels deliberately ripped Japanese fishing nets to ribbons and ships with nuclear weapons visited Japanese ports in secret, though they were banned. An attempt was made to pressure the Japanese because of Nazi counterfeit money coming from South America and Antarctica. The Nazis had made Jewish forgers produce American dollars and British five pound notes so perfectly that banks couldn't detect it!

The World Monetary Fund in Switzerland found about 15 billion dollars in circulation which shouldn't exist. US had a balance of payments crisis which also couldn't be accounted for. Prime Minister **Ohira** was under pressure from the Bolsheviks to re-arm and become the policemen of the western Pacific, and he was ready to go along with it despite warnings from Russia not to.

Ohira died 'suddenly' and U.S. Bolsheviks wanted his replacement Suzuki out of office, as he wouldn't re-arm.

So America created incidents, which created loss of face for Japan, especially Suzuki. (a painful malady for Orientals) He had to prepare for war to get along with Washington otherwise the Reagan administration was going to sell its most sophisticated weapons to Red China. The space shuttle was necessary to obtain spy data on Russia, to be able to destroy their weapons and cosmosphere bases.

China was instrumental in this plan, to allow the U.S. a base from which to attack Siberia with nuclear bombs. The situation was desperate.

On May 6 1981 an EC-135ns modified military Boeing 707 used for tracking Russian satellites, was shot down on a routine flight by a cosmosphere above it using a charged particle beam weapon. The particle beams are so exacting that they can shoot a jet turbine engine in flight.

On 26 May 1981, Russia shot down another highly sophisticated electronic warfare jet, an EA-6B Prowler. Just before it landed on a nuclear supercarrier ship, a jumbo cosmosphere shot at it with a neutron particle beam weapon. It crashed into a deck full of aircraft killing fourteen, and injuring forty-eight.

Twenty aircraft were destroyed or damaged. It was the navy's worst flight deck disaster since the 1950's according to 'Fire From The Sky'.

Back to Contents

35. ENTERPRISE SHUTTLE DETERMINED TO SPY ON RUSSIA

The capabilities of the next shuttle 'ENTERPRISE' were not publicly disclosed. On Nov 12 1981, the second space shuttle launch took place in Florida.

Mission Control deliberately cut the trip short after seven hours, pretending a faulty fuel cell was responsible. It was on a military mission. The Enterprise itself was turned into a spy satellite. It would be four years since Russia using her 'killer satellites' had destroyed all of America's spy satellites.

The spy satellite in the shuttle was made of tungsten, (able to withstand incredible heat) layers of this were placed around a central core. It was 30ft long and 20ft wide, and supposed to survive a particle beam attack, which would be notified by sensors to fire in the direction of the attack with a giant carbon dioxide gas dynamic blaster.

The Americans knew that the shuttle could probably outrun the first generation cosmospheres, however they still didn't know about the jumbo cosmospheres, which had destroyed the COLUMBIA shuttle launched in April 1981.

Now there were about eight or nine jumbos and these could outrun this shuttle. The ENTERPRISE took off unmanned and when it passed Russia it was to be upside down with the spy camera capturing Russia's military installations. Five jumbo cosmospheres followed it along with some alien craft. For two years Russia had been preparing a new anti-ballistic missile system with underground shelters installed for the citizens.

This was based on charged particle beam weapons fired from modified supersonic TU-144 jet transports. On Nov 12 1981 a squadron of TU-144s were scrambled to intercept and shoot down the Enterprise as a practice target. The big jets fired upwards with the beam weapons blasting through the midsection of the shuttle breaking it in half.

Identical fake films of the crew on board were prepared, even reusing the old previous 'fake' film from the last launch which was actually shot from inside a jumbo jet replaying the long distance scenes and redoing the narrative.

A substitute shuttle from White Sands military base 'landed'.

Back to Contents

36. RUSSIA INTENSIFIES ATTACKS

In Jan 1982, Russia renewed geophysical warfare with weather modification and artificial earthquakes.

Parts of Canada suffered extreme blizzard conditions calling for a national emergency. Cosmospheres were all over US, continuously patrolling strategic target areas. Until 1981 it was impossible to even detect their presence overhead, being invisible to normal radar, except at close range. However late 1981 saw the development of 'computer enhanced infrared' which detected heat radiation from the cosmospheres.

On Jan 12 1982, this was aimed at a cosmosphere above central New Jersey.

Aim was secured and the laser was fired with a section of the cosmosphere erupting into blue-green flames. As they were under orders NEVER to let one fall into non-Russian hands they

made for the sea. It had been 40 miles up, but the damaged cosmosphere plunged into the sea a few miles offshore. It floated in the sea for 10 minutes, burning and seen by many witnesses. The Kremlin sent a message that they would pay dearly if repeated.

The next day Jan 13 1982 an Air Florida Boeing 737 jetliner with laser warfare specialists onboard crashed in Washington DC, plunging into a crowded bridge. 74 people died. Then a string of crashes and near crashes occurred. All four air force Thunderbird demonstration jets were made to crash. A Boeing 737 in California dropped from its flight path inexplicably, seemingly without cause narrowly missing disaster.

A Japan Airlines DC-8 crashed into Tokyo Bay on Feb 9th 1982 on a perfect day, with no mechanical problems. The pilot said he blacked out and the co-pilot said he felt 'woozy'. This may have been done with scalar weapons or neutron beams which disrupt electronic instruments and the mental and nervous systems of people.

Suddenly there was a release of information regarding UFOs and the cover-ups of alien visitors.

Back to Contents

37. TRYING AGAIN TO GET UP INTO SPACE. THIRD TIME LUCKY?

U.S. space shuttle 3 was scheduled for Mar 22 1982.

According to 'Fire From The Sky' there had been a Russian outpost on the Moon's surface since mid Oct 1977. Russia had installed eight manned long range particle beam facilities. Regular missions from Russia supplied the bases and rotated crews.

Russia dropped hints that they'd had frequent trips to the moon in the Feb 1982 issue of Soviet Life circulating in the U.S. They included a photo of earth from the moon. They intended to colonize the solar system next. On Oct 30 and Nov 4 1981, Russia sent two spacecraft to Venus with men onboard, sending streams of reports back and settling there first.

They initially sent an unmanned craft there in 1975. From 1978 they began long-duration manned orbital space flights to see how people would stand up to interplanetary space travel. They expected to land on Venus in early 1982.

The Russians had an urge to explore far flung space carrying on the Viking spirit of their ancestors. America was told that the shuttle was civilian, but it was military. The third shuttle to go up had hydrogen flouride gas dynamic lasers installed with swiveling heads. This was intended to protect the shuttle as it launched into orbit. Since a laser shot down a cosmosphere in Jan 1982, they assumed that it would reach orbit safely.

The Russian killer satellites had swept the skies clear of US spy satellites already. The crew wore spacesuits because the cabin wouldn't be pressurized due to the complex laser system which would emerge, with the ability to fire in any direction. The nose had a nuclear helium plasma laser with five resonators and it was programmed to keep zapping any Russian killer satellites and cosmospheres that came within range.

The American Bolsheviks hoped that the Russians would lose a lot of cosmospheres and crew before it stopped zapping them. A spy satellite was to be deployed with the crew returning in a small Gemini type re-entry capsule and the shuttle staying up in space.

On June 27 1982 millions of Americans watched spaceshuttle 4 launch.

A jumbo cosmosphere fired only two quick shots at the falling boosters. The Russians intended to allow the U.S. government to save face to use this to their advantage in the coming years. Next came the Aeroflot crash in Moscow followed by a reprisal of a Pan Am jet crashing in New Orleans killing 153. The 'Fire From The Sky' author claims also that as far back as 1977 America was warned that the Russians had planted nuclear bombs in dams around the U.S.

The devices are still there, able to be detonated by triggers. It is claimed the Russians themselves announced this to the U.S. government.

(The top Russian defector Col. Lunev also claimed that about seventy-four suitcase nuclear weapons had been placed in U.S. cities, which could be detonated by remote control. His writings can be found on Newsmax.com, though some say it is disinformation)

Back to Contents

38. BOLD ATTACKS ON AMERICA

On July 15 1982 Colorado was reeling from rainstorms created by Russian weather modification.

A low yield underwater mine was detonated at the base of the Lawn Lake Dam. It was destroyed instantly, by the explosion. On July 16 1982 a United Airlines DC-10 left Boston carrying certain key members of the Bolshevik ruling group in America.

A cosmosphere shot a charged particle beam across the bow of the plane in defocused mode making a violent air blast. The plane jolted down dramatically and several got hurt seriously. A shot across the bow is a military message which means: 'Halt immediately or you will be destroyed.' On July 22 1982 the test flight of a new Pershing-2 nuclear missile was bathed in neutron radiation from a cosmosphere.

The guidance system went crazy, and it had to be self destructed. The American Bolshevik-Zionists in power and Israeli military planners intended to nuke Russia in mid-September 1982. They wanted war in the mid-east first to engulf the superpowers. An American first strike was intended towards Russia, only it was initiated by US nuking itself, with a electromagnetic pulse and then to 'retaliate' get Russia.

Warheads on high speed missiles would be launched from various locations around U.S. creating a violent EMP (electromagentic pulse) episode.

Then the strategic nuclear forces would retaliate against the culprit, Russia. Two high ranking Soviet generals were spirited out of Russia and brought to Washington. Those two men were Bolshevik moles in Russia's military apparatus, whom their new non-Bolshevik rulers failed to detect and weed out.

They brought with them a wealth of data about Russia's current military posture. U.S. now had enough information and wanted to strike while the inside data was fresh.

Back to Contents

39. THE STRUGGLE AT THE TOP FOR POWER

The ‘Fire From The Sky ‘author writes:
"In early 1982 there was a tremendous hidden struggle for power that was dividing the US government. On one side were the American Bolsheviks whose chief government operative was Secretary of Defense Caspar Weinberger [half Jewish]. On the other side was the Rockefeller cartel whose chief government spokesman was Secretary of State Alexander Haig.

Weinberger and Haig were constantly at each other's throats in the news, and worse, in private. Caught in the middle was the puppet, President Reagan.

Reagan was installed by the Rockefeller cartel but came to be largely under Bolshevik control after the assassination ‘attempt’ in March of 1981. By February of 1982 the American military was dominated by the Bolsheviks, but that had not always been so... The Rockefeller cartel could not afford to let their Bolshevik enemies succeed in setting off nuclear war; therefore, the military coup must take place before the American Bolshevik surprise [nuclear] attack against Russia.

If possible, the coup would be carried out before the fourth Space Shuttle flight planned for the summer of 1982, because the war was scheduled immediately following that flight.

The Reagan-Begin Axis, in cahoots with their Zionist partners in Israel, were going all out to try to start a nuclear war."
Back to Contents

40. THE STEALTH PLANE COMES TO THE RESCUE

America developed the ‘stealth’ fighter plane, by finishing off Einstein’s relativity work by Cray Computer and so they now had invisibility technology.

They were called ‘Phantom’ war planes and would carry special electromagnetic gear. They carried superconducting magnets which were maintained at temperatures close to absolute zero. The cryogenic equipment creates an enormously powerful electromagnetic field around the aircraft. The field is designed according to the principles of Einstein's ‘Unified Field Theory.’

A similar work was being undertaken during the Philadelphia Experiment in 1943, to make the warship ‘The Eldridge’ invisible using magnets, however they were too powerful and ripped the ship into hyperspace, for a duration of four hours, after which it materialized having been at Norfolk ,VA, 400 miles away. (However there was much more to that incident and Vols. 1 and 2 of THE UNIVERSAL SEDUCTION series contains the full story.)

Einstein himself was involved in that project. Strangely enough Dr John von Neuman (also involved in the Philadelphia Experiment) had to invent the computer to finish his equations to continue his work after the 1943 warship invisibility disaster, and thanks to the computer, the U.S. was now ready to nuke Russia invisibly.

Einstein never finished his work, but many others have continued with it manually, including Bruce Cathie, who through his mathematics found out how time operated, where is exists and how it can be measured. It's all a matter of varyingly sized waves he said, which go at different speeds in relation to each other.

Time is just one expression of a particular wavelength frequency and can be manipulated he claimed.

Back to Contents

41. PHANTOM AGAINST THE COSMOSPHERE

Phantom planes up close can be dimly detected while farther away they are totally invisible.

Many "UFO" sightings are blurry because of this cloaking field. Radar behaves the same way as light, it just has a different wavelength, so Phantom planes are invisible to both light and radar and as a laser is just a light, they should be totally immune to cosmosphere laser attacks hoped the Americans.

The Russians saw through these fields using though, with sophisticated infrared beam detectors. The invisibility field also would give protection against the Russian particle beam system in tracking ability, but the plan backfired because the Russians had already developed anti-invisible shield technology.

However the charged particle beam was no match for the light-deflecting shield so the only hope was it would miss the target. Though the Russians also had pulsed neutron beams, which would penetrate the invisibility shield, but the Americans thought that they could shield against it with very sophisticated shielding, in order to prevent derangement of the electronic instruments as well.

It was thought invulnerable to all of Russia's beam weapons which had made Russia lord it over the U.S. since late 1977, attacking anything she sent into space.

The U.S. was desperate to get spy data first from space since the Russians shot down all their satellites and shuttles, except the last one. The first two shuttle flights didn't succeed but on March 22 1982 Shuttle COLUMBIA No. 3 was more successful with the deployment of the superspy satellite able to send pictures back. The crew even managed to stay alive and return back with the usual re-entry from the sky again, using another spare shuttle from the White Sands collection.

COLUMBIA 3 was secretly left in space while the crew used a small Gemini type capsule for splashdown.

Back to Contents

42. THE EXPECTED GENOCIDE

The 'Fire From the Sky' author claims that the U.S. now prepared to nuke central Siberia which included a dozen bases for the flying anti-missile supersonic system TU-144, equipped with particle beams.

As well as six Russian space bases and four cosmodromes at Baikonur, Tyuratam, Plesetsk and Kaspusin Yar and two cosmosphere faculties at Semipalatinsk and Novosibirsk. There were six primary and twelve secondary targets. The Sinkiang province, China was necessary to secure for this, so the Carter admin unexpectedly dumped Taiwan on Dec 15 1978 and announced full diplomatic relations with China.

The U.S. intention was to destroy all the Russian targets then a minute later they would self-inflict their own country with violent electromagnetic pulses from the warheads of American high-speed missiles all over the country.

The Strategic/Nuclear Forces obeying orders, would launch what they would believe to be a retaliation against Russia. It was worked out to the minute what time the nuking of Siberia would occur and the retaliation. The Indian Ocean U.S. satellite signal would confirm the American Phantom aircraft attack, then the retaliation would follow.

It was expected that not so many cosmospheres would be heading over to the U.S. to retaliate because they would be destroyed. Meanwhile America's missiles would finish off Russia, who was stripped of all her defenses against missile attack and be aflame with a sea of nuclear firestorms.

That was the ideal anyway. America wasn't expected to survive a nuclear war, with no civil defense or underground shelters for the population, unlike Russia with hardened blast shelters for the civilians. According to the 'Fire From The Sky' author ,the Bolshevik-Zionists hated both Americans and Russians and they maliciously planned to sacrifice the U.S. population in their bid to make Russia defenseless.

Meanwhile THEY, those superior ones would reside inside Government war bunkers (built with U.S. taxpayer money) at Camp David, Mount Weather, Pine Gap, China Lake and dozens of other locations. When the Bolshevik-Zionists ruling US seized power from the Rockefellers, they secretly continued stockpiling armaments world-wide, especially in Israel, intending world domination.

This could only come to the bankers and global cartel through massive damage and/or destruction to both major powers.

Back to Contents

43. PLANS FOILED TO DESTROY RUSSIA'S MILITARY ARSENAL

Unfortunately the superspy satellite launched in March 1982 by the third shuttle had detected a large numbers of small domed installations arranged in rings around each cosmodrome each cosmosphere.

They were Rail Guns which cannot be deflected by electronic defenses. According to the 'Fire From The Sky' author, on July 13, Pravda published a speech by Soviet Defense Minister Marshal Ustinov which said that the U.S. was orchestrating a trade, credit and technological war against the Soviet Union.

He also gave a blunt warning to Washington that :
"...a pre-emptive first-strike use of nuclear weapons could not insure an American victory."
Russia's new leaders knew about the Reagan administration plan to attack them and they were prepared to defeat the planned American first strike if it was carried out.

But the U.S. continued regardless with the plan. The 'Phantom' planes were based in Northern Norway, Eastern Turkey and NW China. High powered lasers were moved into these areas to shoot down cosmospheres. The invisible unmanned 'Phantoms' would crash kamakaze into their targets.

While Russia really nuked U.S. the governmental bigwigs would be safe from the radiation in their underground bases. They expected 50 million Russians dead and millions more injured and dying. Four out of five Americans also were to die, this would be the price and maybe 40-50 million Americans left. The date for the all out war was set at Sept 20, 1982 - The Feast of Trumpets, Rosh Hashanah.

On Aug 24 1982 another cosmosphere was shot down over New York vicinity. It created a high-speed fireball, which was described in the NY Times as a possible 'asteroid burning up'.

To recap:

- COLUMBIA 1 launched April 12, 1981 was shot down by two Russian cosmospheres. It crashed 85 miles south of Kazan in central Russia. A fake landing was staged at Edward's Air Force Base using the shuttle 'Enterprise' and actors.

- COLUMBIA 2 was launched November 12, 1981 secretly unmanned. It was shot down by Russian TU-144 jet airplanes using beam weapons, over the White Sea, near Finland.

- COLUMBIA 3 was launched March 22, 1982. It was intended to orbit a special new Spy Satellite, which was hardened with tungsten against attack from Russia's space weapons and armed with a robot-controlled laser that could shoot back. The shuttle too was armed with lasers. It faked a landing on March 30, 1982 at White Sands. It successfully deployed a new laser-armed spy satellite. The crew returned for the first time.

SPACE SHUTTLE 4 was launched successfully June 24, 1982. Its purpose was to deploy the satellite that would confirm the Phantom aircraft attack to start the war.

The Attack Confirmation Sensor was placed in geostationary orbit over the Indian Ocean by an auxiliary rocket. It was a cryogenic (a zero temp) satellite, to evade detection by Russian space weapons with 'heat' (infrared) sensors. A heat-detecting American laser was also used to shoot down a Russian cosmosphere, so the Bolsheviks were sure that the Russians could not detect their crucial spy satellite.

However the Russians led them to believe they couldn't locate it deliberately for deception, which is why they left it up. Instead, their target-trackers detected the atomic vibrations of matter. It was their master secret weapon. Did the captured Nazis taken to Russia develop it too? The Pentagon walked into a trap. The Rockefeller cartel operatives within the CIA had fed updates to the Russians.

However they still had a back-up plan of knowing if the Russian telephone system was out to know if the Phantoms had succeeded. The cunning Russians created falsified leaks that there were unsettled conditions in the Kremlin, a power struggle. The U.S. Bolsheviks fell for that too.

On June 24, SPACE SHUTTLE 4 was launched and the next day a coup occurred when Rockefeller operative Alexander Haig was forced to quit and Bolshevik/Zionist George Shultz took over as Secretary of State.

On Sept 1 1982, 19 days before the intended nuke strike, Communist Party Chairman Hu Yaobang declared that China should no longer ally itself with the U.S. against Russia and should regard both superpowers as equal threats, including some conciliatory language toward Russia and said high Russian officials would come to China to begin talks around mid-month at China's invitation!

On Sept 6 former President Richard Nixon, who had long been cooperating with the Rockefeller cartel arrived in Peking. He told them that their Stealth base was to be used for war and to interfere with the base operations using red-tape. Russia's critical space triad of strategic weapons were unable to be destroyed. On Sept 10 Russia shut down most International Telephone services to and from Russia, though the places that weren't targeted were kept open.

A jumbo cosmosphere (undetected using its electromagnetic propulsion system at low power) aimed its beam weapon at the only U.S. spy satellite. They madly intended to strike Russia even though the Chinese base was restricted with red-tape, the satellite was gone and the phones were out already! On Sept 17 1982, three days before the target date, in Washington, a well-known national newspaper reporter for the Washington Post was interviewed on the Washington NBC radio station, WRC.

He called attention to the war warning he had learned about it, outlining the plan briefly for everyone listening in the Washington metropolitan area, and he added that,
"if the Pentagon did have such a plan, public exposure through information brought forth had probably reduced the chances that it would be carried out!"
The countdown was called off with less than five hours to go.

The Russians continued to attack the next space shuttles. On Nov 26 1985 when the space shuttle ATLANTIS launched, a mysterious light was hanging in the sky. According to Tom Bearden a scalar interferometer in exothermic mode struck the area just prior to launch. Twelve minutes after launch, a huge atmospheric, rumbling explosion occurred over the area, and was heard for hundreds of miles up and down the coast.

The Soviets were using the shuttle launches to test their ABM/antibomber missile system. However it apparently stayed up there.

According to Tom Bearden, after the space shuttle CHALLENGER was shot down in full view of the public, and along with the knowledge that the launch of other shuttles probably were Russian weapons tests:
"The Russians (KGB) apparently had already decided to kill it, and so one would expect multiple fatal shots, continuing in a manner where they had already demonstrated our guys would not recognize what had happened, because our fellows back then knew nothing of scalar

interferometry, and would not believe it. A small nation with scalar weapons friendly to America.

That series of shots and interventions came to a sort of screeching halt when a friendly little nation simply destroyed several very large Russian missile storage facilities and such strategic targets.

One shot knocked out one-third the missiles in one of the large Russian fleets. So it quit being fun and games for the KGB at that point, because that little nation already had at least working prototype quantum potential weapons and could have blasted Russia right off the face of the earth at the time.

And the Russians knew it. It was not sweet reason and diplomacy that backed them down; it was an iron fist. In the aftermath of all that activity, which eerily stayed well behind the scenes and was never recognized for what it was by the open news, the Soviet economy eventually collapsed, the Berlin Wall came down, and you know the rest..."
He continues:
" 'War' was never as cold as represented. Behind the scenes there were continual strategic maneuverings and preparations for the most spectacular strategic attacks ever dreamed of by the human mind. We got through it (at least until now) by the grace of God and by the guts and stamina of a friendly little nation also having some of the most powerful weapons on earth."
(Bearden leaves no doubt that this was Israel in his other writings.)
Russia had intended to control space, the oceans with her weapons entirely, which they stated in a meeting with communist heads in Europe. They specifically indicated that the use of 'peaceful coexistence' was allowing this to be developed and prepared.

The anomalies were noted to Bearden.

Evidence of scalar attack on the 28 Jan 1986 CHALLENGER space shuttle disaster was noted as: A flash is observed downstream of the shuttle's right wing. A second flash is seen trailing the right wing. A third unexplained flash is seen downstream of the shuttle's right-hand wing. 70 mm tracking camera closeup: A brilliant orange ball of flame, apparently, emerges from under the right wing and quickly merges with the plume of the solid rocket boosters.

This phenomenon, observed during analysis of tracking film after launch, has been seen on previous launches. This sequence was captured well before the vehicle exploded. Is this a scalar interferometer 'missile' that they saw? This has also been seen on previous launches.

This latest 2003 COLUMBIA shuttle disaster may NOT have been Russian. The scalar attack of the COLUMBIA disaster of 1 Feb 2003 can be found here: and here

Gulufuture also explores the possibility of a Chinese scalar operation because of the timing. On 1 Feb 2003 the day of the COLUMBIA explosion, the Chinese said in Moscow that,
"..they would take adequate measures to counter a possible United States preemptive attack".
Gulufuture also wrote:
"A scalar-burst strike on the US space shuttle COLUMBIA has struck a debilitating preemptive blow to Anglo-American plans for a Middle-East takeover. Psychological warfare tactics were to the fore in continuing pre-conflict skirmishing over the planned US-UK invasion of the Middle-East. This time the blow was devastating, as the COLUMBIA ran into an electromagnetic 'wall' in the sky over Texas.

On Saturday 1st February, 2003 a scalar Tesla Howitzer weapon - aimed at downing the US space shuttle COLUMBIA was phenomenally successful and will leave red faces in the Pentagon. And all day long I had been hearing and reading reports of people hearing a giant

boom, many witnesses had the boom.

Gulufuture points that this is already one big clue to a scalar electromagnetic event. The Big Booms."
This could also be a particle beam weapon which also booms.

Various things were seen by observers like a purple flash seen before it blew up. Some anomalies indicating an attack on COLUMBIA from an exotic weapon can be found written by Conspiracy Nation:
The San Francisco Chronicle and other newspapers also mentioned the puzzling photos, "five strange and provocative images of the shuttle COLUMBIA just as it was re-entering the Earth's atmosphere before dawn Saturday. The pictures, taken with a Nikon 8 camera on a tripod, reveal what appear to be bright electrical phenomena flashing around the track of the shuttle's passage."
Strangely Bearden believes an unknown source shot down the COLUMBIA on Feb 1 2003, rather than blaming the Russians, but indicates in his comments on the disaster that the Japanese Yakuza and Aum Shinrikyo have been doing non-stop weather engineering over US since they leased Russian scalar weapons since 1989.

Bearden though in another correspondence about the COLUMBIA here.

Bearden writes regarding the COLUMBIA disaster:
"From time to time, the KGB (under its new name) has to permit the Yakuza et al. to do something more dramatic, such as shoot down an aircraft, etc., in order to have the rogue group continue to pay the lease. The Yakuza has also carried the longitudinal EM wave interferometry technology back to Japan clandestinely, and is apparently producing smaller, more portable weapons now in its own highly hidden facilities in Japan, completely separate from anything or intention by the Japanese government...

The Yakuza, however, are a major enemy of the US, even more potent than the Al Qaeda, and they do intend to participate directly in great strategic strikes for the eventual destruction of the US, whenever that time comes.

They see this as extracting vengeance against the US for its defeat (and shame, in the Bushido concept) in WW II, and for the US dropping the atomic bombs on Japan. The Yakuza still operates by a modified old Bushido code."
Bearden says rogue Japanese teams (the Yakuza mafia and Aum Shinrikyo cult) leased (from the KGB) scalar EM interferometry weapons on site in Russia, in latter 1989.

Since early 1990, that rogue team on site in Russia has been directly engineering the weather over North America. That series of shots and interventions at the shuttles stopped when Israel destroyed several very large Russian missile storage facilities and such strategic targets. It appears that unless everybody gives up their scalar weapons, things are going to slide.

Air crashes still going on and to see what was happening with Russia’s own infliction of shame and humiliation, a web search was made.

(However one wonder if the Nazis in their Antarctican UFOs may have anything to do with any Russian crashes, especially knowing that captured Nazis had created the Russian planes. There is evidence that they too have superweapons.)

What really happened to Tu-144 at the Paris Air Show 1973? Was it a pilot error, a flaw in design of Soviet SST or was it bad luck?

James Oberg writes:
"On June 3, [1973] the last day of the air show, the two different Mach 2 airliners flew head to head before a crowd of 200,000 aviation fans. First the Anglo-French Concorde made a magnificent flyby and circuit of the field, performing more like a fighter jet than a passenger airliner. Then it was the Tu-144's turn.

Pilot Mikhail Kozlov did his best to outperform the Concorde, completing a series of maneuvers with a low flyby along Runway 060... journalists grew apprehensive over the airplane's low airspeed. They saw the plane's afterburners kick in, painting shock diamonds behind the four engines. As the plane reached the end of the runway, it pulled up into a climb which rapidly became dangerously steep.

Kozlov's nearly vertical climb had had its intended effect: ... the left canard broke clean off from the stresses. It smashed into the wing root behind it, and a small orange flare blossomed as the ruptured fuel tank exploded. The plane noised over and dived straight into the ground "like an arrowhead," one horrified newsman recalled years later."

The second opinion on this comes from Jean Alexander "...it was thought that the accident was due to failure of the flying control system mixer box, a mechanical device which converts pitch and roll commands into elevon movements... it was unofficially reported that the accident was due to the pilot initially attempting to land on the wrong runway. On going round again he found himself on a collision course with a Mirage fighter and pushed the nose of the Tu-144 down at a sharp angle to avoid it.

This threw the co-pilot, who was filming at the time, on to the controls and when eventually a recovery was made it proved to be too sudden, causing a structural failure in the starboard mails wing panel."
Another Russian air disaster happened in 1999:
"Paris Air Show Opens With Crash . June 12 1999 LE BOURGET, France (AP)
The world's largest air show opened on an ominous note today when a prototype of Russia's most advanced fighter jet crashed during a flight demonstration. The blue and white Sukhoi-30 MK had just finished fluttering like a leaf in a controlled descent when it appeared to lose power coming out of a dive at the 43rd Paris Air Show. The plane plunged to the ground, appeared to lightly touch it, then soared back into the air with its tail aflame.

The UK press had this to say about it:
"Flame burst from the engine and the Sukhoi began a steep, almost vertical climb. Seconds later the two crew ejected from the plane as it began to twist in the air. One spectator said: ‘The aircraft seemed to lose power. The tail caught the runway and the afterburners came on’."
Another Russian air disaster happened on June 10, 2001:
"Two L-39 trainer jet aircrafts collided in the air at the Levashovo aerodrome near Saint Petersburg."
Pravda.RU June 23 2001 wrote about the next Russian airshow disaster:
"PLANE ARREST AT FRENCH AIR SHOW INSULTS RUSSIAN MARTIAL HONOUR: MP
A Russian fighter plane arrest at the Le Bourget aerospace show on a claim of the Swiss-based Noga Co. defied common sense. The matter is even worse as the arrest fell on June 22, 60th anniversary of nazi attack on the Soviet Union in World War II.

The outrage tarnished Russian martial glory and insulted the memory of soldiers fallen in battle for the liberty of their own, French and other nations, points out the Senator. French officials covered themselves with shame as they shrugged off the arbitrary arrest at a time when French W.W.II veterans of the Normandie-Niemen air regiment are visiting Russia, says Mr. Marghelov."

The 3rd disaster at an airshow came next:
"July 28 2002. Ukraine: Worst air show disaster in history. The disaster which has killed 83 people to date in western Ukraine is the worst ever to have taken place at an air show. A further 115 people are reported to have been injured when the Sukhoi SU-27 crashed at 12.45 MSK on Friday. The plane was in the sky for about two minutes and had been performing advanced moves.

Then it went silent and headed toward the ground, banking left, with its wingtip shearing trees and touching another plane on the ground. It then hit the tarmac. The aircraft, flown by two experienced pilots, lost power.

Just a day after the disaster, a Russian aircraft, an Ilyushin Il-86, crashed on take-off from Moscow's biggest airport, killing at least 14 people. Ukrainian officials are especially sensitive about military accidents after last October 2001, when an errant missile fired from a Ukrainian military base shot down a Russian plane, killing all 78 people on board, most of them immigrants to Israel.

In September 2000, another Su-27 crashed during maneuvers close to Zhytomyr, western Ukraine, killing only the pilot. The Su-27 is produced in different configurations, with either one or two crew. In the most recent other military plane accident in Ukraine, a pilot was killed in the April 2002 crash of a Su-25 jet in Zaporizhia that happened after the plane had been under repair.
On 29 July, 2002, UK BBC NEWS wrote of a Russian Airbus crashing in Central Siberia in 1994, forcing the Russian govt. to ask the U.S. Federal Aviation Administration to audit Russian civil aviation.

The result was that Russian civil aviation had no casualties from 1997 until mid 2001, when there were two accidents. The Ukrainian airshow accident may cause that country to ask for U.S. monitoring. There was also a collision of a Russian plane with another over the Swiss border of Germany in 2002, and another Ilyushin Il-86 airliner crash in 2002.

Russia began to tell the world that its civil aviation is of international standards in safety. This is ironic, considering all the damage done to the spaceshuttles and American aircraft and missiles already, but were some of these Russian aircraft crashes created by cloaked Nazi UFOs using their own beam weapons coming from Antarctica?

After all the Russians did capture 275,000 Nazis, and never let them return.

Again, with portable scalar beam bazookas, no plane is safe anymore.

Back to Contents

44. BRAZIL

According to Tom Bearden in Brazil have quantum potential weapons, which use scalar interferometers to induce a disease by imprinting its signature into someone at the cellular level.

Bearden claims *Gulf War Syndrome* (GWS), containing multiple diseases, was caused by the Russians using this technology. GWS reached at least 400,000 military at the scene according

to Joyce Riley. Many thousands have died or become disabled. This technology can also bring out inherited diseases not yet active. It's unknown who gave the Brazilians quantum potential weapons.

In the book 'My Contact With UFOs' by **Dino Kraspedon**, a Brazilian, it is claimed the writer was visited several times at Sao Paulo in 1952 by a scientist from one of Jupiter's moons.

He even entered the human alien's spaceship and while onboard the Jupitarian explained how the anti-gravity propulsion operated scientifically. The alien knew several languages and even quoted the Bible and gave names and dates from principle events in history.

He said on Jupiter's moons people who lived there were all sorts of sizes and colors. He proceeded to elaborate on the etheric layers around planets and that an electron was deformed magnetic space, propagated in wave form. An electron is a stationary wave form within an atom and that electricity formed by a flow of electrons from the turning of a rotor in a magnetic field formed by a magnet moving along the surface of a conductor.

An electron has a variable wave form and its characteristics in consequence are virtually unlimited. Stationary electrical waves in the field of an atom each have their own particular wave structure and frequency and waves of varying length don't interfere with each other as shown by radio, even though they occupy the same area of space.

He gave explicitly details on the magnetic field and Einstein's Relativity and how objects are attracted and repulsed by each other especially the repulsion of solar light. The Jupitarian explained how all the planets rotate and how their magnetic fields operated in relation to the sun's magnetic field. He also told of the vacuum of hyperspace, the different atmospheric layers and how light affects the vacuum and all the physics that people hadn't known then in explicit detail.

The Jupitarian also claimed that another sun would enter our solar system at the end of the century to make a binary system which was why he came here. He said all the orbits of the planets would be changed and many people would vanish from the earth and good people rematerialize in 'ectoplasm' and carrying on 'living' again in a higher kind of body.

(He said that occasionally ghosts can 'materialise' using ectoplasm and they can make objects stay physical and it was just like that!)

A friend of Kraspedon sent the book to the Soviet Academy of Sciences in June 1952 and in Sept 1952 they wrote back saying they were very interested. The Soviets sent up their first satellite weighing 86kg just a few weeks later, whereas, the Americans had claimed that only a satellite of 5kg would be able to maintain itself in orbit.

The Russian carrier rocket also stayed up in orbit and it weighed much more than the satellite so the Russian space program got off to a quick start in 1952. In 1959 a Dutchman was visited by some Venusians who claimed another sun would come into our solar system. A professor of Roman law at the Catholic University of Santos, Brazil was also in contact with the crew of a flying saucer at the same time as Kraspedon and he was told of the details of the system of propulsion in anti-gravity by the creation of a vacuum.

The famous American **George Adamski** was also contacted by Venusians in the 1950's who told him about anti-gravity propulsion.

The leading Brazilian weekly, *Istoe*, reported on Sept 3 2003, an electromagnetic pulse

sabotaged Brazil’s VLS rocket. The Brazilian airforce believe it was sabotage, according to.

Three days before scheduled lift-off it had a sudden unexplained ignition on the launchpad and a spokesman said:
"All final pre-launch tests had been concluded, without a single problem being detected, shortly before the rocket ignited, sparking a fire which consumed the entire launchpad, reaching 3,000 deg C at its maximum. With the mass of molten metal which resulted providing few clues, the military officers investigating the explosion began examining who was present that week in Sao Luis, where the Alcantara space center is located.

To their surprise, reports Istoe, they found a surprising number of foreigners, many of them Americans, checked into Sao Luis's hotels that week.

At least eight of those foreigners are under investigation....[querying] the application of a foreign agent to the rocket, such as a microwave ray or electromagnetic waves.
"An electromagnetic wave could be fired from a small apparatus, or even from space, from some satellite," suggests scientist Edison Bittencourt, a professor at Brazil's Aerospace Technical Center" [Source: EIR sources, and Istoe, Sept. 3 2003]
Brazil lost a fifth of its space program team in the fire which followed the rocket explosion.

Eleven of the country's most qualified space engineers, and ten technicians. Reconstituting a team of that quality will take three to four years, the director of the Aerospace Technical Center, Brig. Tiago Ribeiro, told {Istoe}.
[Source: Russian news wires.]
Russia specialists has offered to help Brazil continuing its space-technology program after the Aug. 22, catastrophe at the Alcantara launching site.

They will arrive in Brazil on Sept. 4, to help in the investigation of the causes of the explosion of the VSL carrier rocket that destroyed a good part of the launching site and killed at least 21 Brazilian space-tech engineers and launching personnel.

Was it scalar interference weapons creating an explosion?

On the forum at http://www.rumormillsnews.com it was said:
"Now that's a Boys from Brazil story, same technology as German/alien late 40ies mixed in with ill intent, backfires always."
The Sept 2003 explosion in the equatorial city of Alcantara also injured about two dozen technicians as they prepared for the launch, in what was Brazil's third attempt to send a rocket into space and enter the lucrative international aerospace market.

The $US6.5 million VLS-3 rocket had been scheduled to blast off the next day, with satellites developed by Brazil's National Space Research Institute. In June, Brazil signed an agreement with Ukraine to launch that country's Cyclone rockets from the Alcantara base.

Brazil has long been a successful exporter of commercial aircraft and has sought for two decades to expand into the $US60 billion annual market for satellite launches. (However many dangerous weapons can be put on satellites.)

In 1997 engine problems after lift-off caused the VLS-1 to crash into the Atlantic Ocean. In 1999, the VLS-2 was destroyed by remote control when it malfunctioned three minutes after lift-off. The Brazilian President afterwards reaffirmed its commitment to continue the effort to provide Brazil with its own space technology.

Brazil's science and technology minister told a press conference on Oct 21 2003, that China is co-operating with Brazil in scientific research, such as the development of nuclear energy and that they have a pact in the field of aerospace, that will benefit both countries. Brazil's foreigns minister also visited India to talk about developing major projects in construction. India offered to launch Brazil's micro-satellites and to sell Brazil India's supercomputer.

Both India and Brazil are in a group of twenty countries (pulled together at the WTO Cancun meeting) who want to reform UN. Much needs to be known about Brazil's space program, because of their scalar and quantum potential weapons and alliance to many countries.

In April 2000 Brazil entered a deal with U.S. to turn its fledgling space base into one the world's top satellite launch sites. American companies consider the base, called Alcantara, as an alternative to other equatorial satellite-launching sites - such as the Kourou base in French Guiana. Of the world's 17 launch sites - of which eight allow commercial launches - Brazil is closest to the equator.

Lockheed Martin and Orbital Sciences have want to be involved. But one of the most ambitious space projects to date is Raytheon's role in the $1.4 billion System for the Vigilance of the Amazon (SIVAM).

SIVAM, is long believed to be a mostly military project. Raytheon is associated with the HAARP transmitters. The Lexington, Massachusetts aerospace company is building a sophisticated web of sensory and communication devices - including satellites, surveillance aircraft and dozens of radar systems - that will monitor the 3.1 million sq miles of the Amazon. In the 1980s, Brazil put together a small $600 million plan to install radar stations in three villages to monitor air traffic. But by 2002, there promises to be a highly sophisticated system of platforms, sensors, computers and processing centers.

Brazil has scalar and quantum potential weapons. Who will they use them against?

Radars can easily be converted to scalar transmitters. Allegations surfaced that Raytheon had bribed Brazilian govt officials, but this has been debunked. The project will use weather and imagery satellite receivers, environmental sensors, surveillance aircraft and weather radars. In Dec1999 Brazil had decided to scrap its scientific satellites, after two failed launches.

One of the rockets faltered about three minutes after and forced the control center to destroy it.

The four-stage rocket, carrying a multimillion dollar meteorological satellite and the control center destroyed the rocket and satellite by remote control.
"Other countries have seen many more rockets burst before something started working,"' an official said.
A Brazilian-French partnership in 2000 created a new generation satellite to conduct scientific experiments.

The $6 million French Saci-2 meteorological satellite was destroyed along with its rocket (again) about three minutes after blast-off on Saturday after the four-stage rocket suffered an as-yet-unidentified problem with one of its propulsion units. It seemed similar to that of the first Brazilian rocket, which blew up soon after blast-off two years ago carrying the first Saci satellite.

Did unknown sources shoot them down?

Brazil also lost contact with another satellite launched from China on another occasion, which failed shortly after blast off. In November 1999 KIEV (Reuters) wrote that Ukrainian and

Brazilian officials on Thursday signed abroad cooperation agreement which they hope will lead to Ukrainian rockets being launched into space from the South American country.

Ukraine's ambitions to take a leading role in the international commercial satellite launch business suffered a setback in 1998 when one of its Zenit rockets crashed with 12 multi-million-dollar satellites aboard shortly after blast-off from a launch pad in ex-Soviet Kazakhstan.

But three more rockets were later launched successfully - one from Kazakhstan and two from a site in the Pacific. One wonders who is sabotaging Brazil's space program or even who is really behind it. It is unknown who Brazil's real enemies are. But it's possible they have a few aliens there working with the govt. because it was published a few years ago that UFOs are so common in Brazil, they just land at the airport.

This could be the attraction to various countries interesting in the space program especially if a portal is being opened to travel through space using wormholes like other countries have covertly.

It the space center is on a grid node this may be possible. There is said to be a Vatican space center in South America but it is unknown if this is the Brazilian base. The Vatican is very interested in what Hubble telescope saw in space in 1996. NASA apparently has hundreds of photos of a 'skycity' hanging in deep space above the earth, apparently 300 miles wide fitting a description of the 'New Jerusalem' in Revelation.

This 'revelation' was covered in the May 2003 issue of UFO Magazine (UK). It said there was apparently a conference in 1996 to discuss this subject with the attendance of world and religious leaders. Following this, the Vatican has spent millions upgrading its telescope in Arizona.

Is perhaps the Brazilian space center or the Vatican hoping to send a representative from earth to the space-based New Jerusalem? Much intrigue is happening beyond Earth.

Back to Contents

45. INDIA

There is also a tripartite cooperation between India, South Africa and Brazil.

So India may have many opportunities to learn scalar technology if they are going to be involved closely in scientific projects with South Africa and Brazil who have them, especially if India is already advanced in other areas, such as physics and computers. So the fact that twenty-one Brazilian space-tech engineers died in this accident, when Americans and other foreigners filled the hotels in the area that week is suspicious.

Any number of people could have done this, because if it was Nazi scientists that initially helped build the rockets, Israelis would be probably interested. If Ukranians or Russians, America would be there. If China, the Japanese would be interested.

India in her ancient vedic writings once had anti-gravity UFOs complete with dangerous beam weapons and it is fascinating to wonder if they have recently manufactured any more as they

are very clever at physics and advanced computer technology.

Back to Contents

46. JAPAN

According to **Harry Mason** in his Bright Skies articles, on 28 May 1993, 23:03 hrs a large orange-red spherical fireball, with a small bluish-white conical tail flew north from Leonora to Laverton in Western Australia.

It emitted a pulsed, roaring or loud diesel-engine sound before it passed. It was witnessed over a 250km distance at least, though it probably had a much longer flight path, originating well out over the southern Indian Ocean from Antarctica.

It appeared to arc down towards the ground, then disappeared. This was followed by a near-blinding, massive high-energy burst of blue-white light that rippled for about 3-5 seconds, lighting up the windless, cloudless, moonless night like it was daylight for about 100km in every direction. It looked like a nuclear blast, but no crater was ever found.

Then a huge red-colored flare shot vertically for possibly several km, followed immediately by a massive seismic ground wave, that shook the ground so violently, that people fell over. The earthquake measured 3.9. Then a very loud, major explosive blast was heard over a 250km by 150km corridor.

After this a large deep-red-orange colored hemisphere of opaque light, the size of a setting moon, with a silver outer-shell rose from ground level and hovered over "ground-zero" bobbing around for nearly two hours, before disappearing suddenly, like someone pulled a switch. Dogs at widely separated locations in the vicinity went berzerk, possibly from an ultrasound or EM wave propagation to which they are sensitive.

An hour later, three observers in the same area saw a second mich smaller blue-green-white fireball, which rose from ground level, followed by a very small explosion, and minor earthquake, but no more action. The sheep station, where these fireballs landed is called Banjawarn, in the eastern goldfields region of Western Australia.

It was purchased in late April the same year by the Japanese Aum Supreme Truth (Aum Shinrikyo) cult.

A third fireball headed directly for Banjawarn station in May or June 1993 in the early morning, possibly about 5am, heading north. It was yellow-orange-red and had a very small blue-white tail. It lit up the dark sky with an intense blue-white flash. It could have ultimately reached the American navy scalar weapon faculty in Exmouth, NW of Western Australia.

The Aum sect only occupied Banjawarn station for a month. Mason believes the activities on the Banjawarn station were of scalar EM origin and writes that the Aum cult sent a team to the Tesla Museum in Belgrade, Yugoslavia in 1992, with the object of knowing Tesla's earthquake inducing weapons system technique, and they started this in 1993 at Banjawarn.

The Banjawarn sheep station was purchased and occupied in 1993, by the Aum sect, and they

stated their purpose there was ‘to conduct experiments for the benefit of mankind’.

Aum sect’s deputy leader Kiyohide Hayakawa visited Perth in April 1993, and aided by a Japanese Mahikari cult agent, bought Banjawarn. In his pre-Aum days, Hayakawa studied at a university dept., in which evidence has been found that it was a cover for Japanese electromagnetic EM weapons research. However the Osaka University now insists that Hayakawa studied "landscape engineering" (which is presumably induced earthquakes).

He was said to be in the Korean ‘Moonies’ sect , run by Rev Moon, a long time friend of the North Korean ‘Great Leader’, and is a business associate of G. H. Bush and many U.S. men acting as ‘Christian’ leaders. More information on this side can be found here.

According to Mason, the Japanese police believed Hayakawa may be a spy for the N Korean military. The higher levels of the Mahikari believe that the emperor of Japan should be the emperor of the planet, because in a previous lifetime he ruled the planet and his destiny is to rule the earth again.

Covert Japanese money-power funds the Aum and Mahikari sects, and control the Japanese govt. The late Sony chairman suggested that Japan should ally with Russia by mating Japanese microchips to Russian superweapons to overpower US and jointly rule the world. The two cults are offshoots of the god-emperor worship groups, presumably intent on Japan ruling the world the reason for WW2.

But now thanks to Tesla technology, and the crashed UFO in Germany in 1939 and the proliferation of Nazi rocket engineers and anti-grav scientists all over the planet hidden in covert operations, the partnerships have changed.

Mason says Hayakawa visited Russia twenty two times and North Korea seventeen times. After he bought Banjawarn station he visited a Soviet naval base in Vietnam. In 1991, according to Mason, Gorbachev offered to lease the Japanese the USSR’s super-secret intercontinental EM weapons technology, capable of producing earthquakes for U.S. $900 million, used there since the 1960’s.

A joint Russian-Japanese university was set up with the best nuclear physicists of both to develop new weapons with Japanese microchips. The Aum sect arrived as representatives of the Japanese.

Aum had 30,000 Japanese then a further 50,000 Russians joined it. Tom Bearden believes that the Banjawarn Tesla fireball conforms to known Russian scalar technology. Mason also says that other Tesla shields of orange-red hemispheres and spheres have been seen north of Banjawarn much earlier in the 1980s, and again in 1988/89, as well as 1992. However in 1988, just west of the area, Mason was present when electric circuits were burnt out in three vehicles, three radios and all at 11am, though 10-15 km apart.

He says that over the horizon radar is employed at Laverton, WA; Alice Springs, NT and Longreach, QLD and Bearden claims that this can easily be converted to scalar EM howitzers.

Laverton district has had a history of electrical malfunctions, including powerlines blowing out and burnout of the power station generators. These scalar howitzers just need to cross beams to make a slug of physical plasma energy. Strange fireballs have originated from the Exmouth US navy scalar transmitter faculty and other fireballs have been seen heading towards it, including from Banjawarn.

Exmouth, according to Mason, has a HAARP transmitter, which is a prototype experimental over the horizon plasma weapon.

This may be why the Japanese Mitsui Corp. arranged an Australian prospector to do aerial photography, for "oil exploration" over the Exmouth, Laverton, Alice Springs (Pine Gap) and Longreach military transmitter faculties.

Since 1990 lone Japanese motorcyclists have been mapping WA and NT bushtracks on Mitsui Corp. satellite imagery.

Why is Japan intelligence gathering these sites?

Laverton has both a scalar transmitter site and a radar site, close to the southern boundary of Banjawarn. Mason says that the Banjawarn fireball may be a warning to the owners of the Laverton faculties that the Japanese/Russian alliance can destroy their faculty.

Wonder why the massive earthquakes have occurred in Siberia, and northern Japan in 2003 too, is this a similar warning?

Back to Contents

47. KOBE EARTHQUAKE

The Aum science minister, Hideo Marai, a nuclear physicist, regarded as the most intelligent living Japanese, was present at Banjawarn during the scalar fireball events on 28 May 1993.

According to **David Guyatt**, Hideo Murai, (said to have a higher IQ than Einstein) was killed by a Korean with a knife. His last words were "Yudaya", translated as "Judea". This was a codeword.

Guyatt claims the assassination was orchestrated by the Yakuza, the feared Japanese crime mafia and that the Aum sect was researching and developing Tesla electromagnetic pulse, earthquake inducing and plasma weapons in remote regions of the world. Murai, was researching EM technology, microwaves, and other EM/ray/wave technology and cosmic X-ray analysis.

The Aum sect had a laser device capable of inducing massive earthquakes. An Aum guru claimed on Jan 8 1995 that Japan will be attacked by an earthquake in 1995 and the most likely place was Kobe. It happened on Jan 17 1995, and the epicenter was Hayakawa's faculty.

According to Robert Sterling the Aum sept military trained its members at Russian bases. They recruited staff at Russia's best faculty. Boris Yeltsin's confidante, Oleg Lobov arranged this and helped Aum recruits scientists into the cult, and carry out espionage. This Russia-Japan college is financed by Japan's Liberal Democrat Party.

According to Sterling, Aum had amassed a great fortune, and recruited thousands of followers including Russian scientists and many technical people in the Soviet Far East. They were working on genetically manipulating biological anti-toxins, plasma technology and experimenting with brainwaves. Hideo Murai was a scientific genius and said on radio, that he was familiar with scalar and Tesla weapons and the he could shield Aum members from EM weaponry.

Before the massive earthquake, with the near exact epicenter at Kobe Steel, Murai's faculty, there were massive electromagnetic disturbances in the ionosphere for several months before, also for several days prior glowing orange-red and pink lights and spherical forms hovered over the Kobe fault line. Over 5,500 people died. It may have been Russia, or N Korea suggested Ted Daniels, in order to make the prophecy come true, or perhaps an accident at Murai's earthquake lab.

Mason wondered if US had done it for a warning to comply with the NWO and with the threat towards the Exmouth faculty on 28 may 1993, was it tit for tat? Mason says that the fireballs love flying on 1 May, ironically asking who celebrates that day?

However looking at the dates, one can see a pattern: 17 Jan 1995 Kobe "quake", 20 March 1995 Tokyo subway gas attack, 17 April 1995 OK city bombing, 1 May 1995 Perth exploding fireball, 17 July shootdown of TWA Flight 800 off NY/LI. Could the 17th day be a sign of payback Mason asks? He says apart from the gas attacks, there is evidence of scalar weapons for all of these.

Mason also writes that the Tokyo gas attack may have named Aum as a patsy. Strangely over 50% of the Japanese Liberal Democratic Party Cabinet flew to N Korea for a week, the day after the subway attack. Mason says there is evidence that the CIA executed the subway gas attack to destabilize the LDP govt.

Just thirty days before the OK FBI building 'bombing', Murai Aum's science minister told foreign reporters he was ready to "tell all", which would clear Aum of all charges regarding the Tokyo subway gas attacks. But three weeks later Murai was stabbed by a N Korean, soon after the subway attacks. Aum blamed US for the Kobe earthquake.

According to Sterling the Japanese Liberal Democrat Party has been in business with the Yakuza for decades, and that they helped sponsor the Russia-Japan College in Moscow, where Aum was able to obtain so many of its newest recruits, and that both this cult and the Yakuza had deep roots in the Kobe/Osaka area!

Sterling wrote:
"The whistle- blower Debra von Trapp stated, in late April of 1995, that the Clinton team had some advance warnings of the impending [OK city] attack - that U.S. military intelligence had "popped the Sarin" in Tokyo to punish the Japanese for buying American agents who set up a surveillance operation in the White House, and who bugged the Clintons' computers!

And that the Oklahoma City attack followed the first Sarin attack by precisely thirty days! Again and again... everything conspires to implicate "Japan, Incorporated" with the Yakuza and the bold, openly aggressive Buddhist cult called Aum Shinrikyo... means, motive, money and access to super-weapons and secret technologies."
Sterling blames the Yakuza for 9/11 using technology developed by Aum, though others say it was an inside job, however there is evidence scalar technology was used to topple the WTC buildings - but whose?

Mason says that Japanese investigative journalists at www.pelago.com suggest that Aum was a cover for the Japanese govt. to rearm Japan with new Russian weapons systems, and support for this has been given because Japan purchased new frontline jet fighters and bombers and did joint defense exercises between Russia and Japan. Aum has trained with Russian troops.

In 1993 and 1994 Shoko Asahara, the Aum leader complained to Australian authorities that

himself, and Aum had been subjected to gas and laser attacks.

The press suggested that a very influential foreign secret service has been getting at Aum and the Japanese govt.

According to David Guyatt in his Tesla Doom Weapons & Aum Shinrikyo yet another Japanese cult is operating throughout all govt. departments and has enormous influence over Japanese foreign policy. It is the militaristic cult called Soka Gakkei, with 15 million members worldwide and massive finances.

Every major Japanese business corp is riddled with members. They adhere to the teaching of a 13 century Buddhist monk, who preached a doctrine of "Final War" to be fought against the Christian West and Islamic world. This was revitalized in the 1930s by the chief military strategist for the Japanese army of Occupation in Manchuria, China and he was an admirer of Hitler.

It was the location of their unspeakable biological experiments on the Chinese and allied prisoners. Aum also adhered to the teachings of this monk.

In 1987 a Japanese satellite was launched to detect gamma radiation from Russian and Chinese nuclear tests. They registered a massive pulse of gamma rays emanating from a Soviet satellite, which was radiating the Van Allen belts. The conclusion was that the Russians were engaged in weather engineering, as well as developing a spaceplatform for missile defense and earthquake induction.

Hideo Murai, the Aum science minister received this information being one of Japan's leading X-ray astronomers at the time.

The head of Japan's foreign intelligence sponsored Aum, and hence Murai started his scalar testing in Western Australia. He was about to reveal all, but was killed.

According to journalist Jack Amano, in David Guyatt's article:
"It was Hayakawa who decided to purchase the sheep station [in early April 1993], just days prior to the energy event and subsequent ground tremor. Hayakawa's sojourns to Russia reaped rewards: Aum's Russian scientists had provided detailed designs and the theoretical grounding to develop a technology more powerful even than the ultimate weapon predicted by Asahara.

Not least in the Aum efforts, was the acquisition of related US weapons data obtained by hacking into sensitive US databases. This, with the aid of Japanese government funding, Russian technological know-how and advanced equipment provided by major Japanese transnational corporations, a terrifyingly powerful super-weapon was being constructed in secret."
Back to Contents

48. CHINA

In 1985 a Chinese Boeing 747 aircraft enroute to Los Angeles suffered anomalous engine flameout.

The jetliner fell 32,000 feet, and the pilot finally managed to restart the engines and make an emergency landing in San Francisco. In the incident, different instruments apparently disagreed with each other and disagreed with the observations of the pilot and crew. Bearden says this was a scalar test, but only a mild one with scalar interferometry (endothermic mode) causing electrostatic cooling in the internal combustion gases of the jet turbine, which reduces the pressure and thrust.

The Chinese got the latest exotic U.S. weapons and time travel technology, when a worker there Dr Wen Ho Lee leaked top-secret technology information back to China, when he worked at Los Alamos laboratory a few years ago. This included nuclear cluster bombs and a weapon which struck with a bolt of lightning.

At Los Alamos a Tesla Long-Pulse Magnet self destructed some years back. This magnet was comprised of nested cores of copper wire, which were all inside the other. It was what is called a 60-Tesla magnet. A 1-Tesla magnet holds a piece of paper, and 2-Tesla could yank a refrigerator door off. This could be used to create the time portal there that Dr Richard Boylan wrote about.

He claimed they used a 'holographic' portal to travel across space-time and possibly interdimensionally.

Dr Wen Ho Lee worked on this 'holographic portal'. It has been said that the Russians ordered an enormously powerful gigantic sized magnet from U.S. a few years ago. Magnets give off scalar waves which distort hyperspace and can be used to create dimensional doorways. The Chinese space center is at Lop Nor, which is known as a natural vortex. Did they too create their own interdimensional doorway to time-travel?

Lop Nor had sixteen nuclear bombs dropped on it at Sinkiang Provence until 1975.

According to the article 'Fortress Australia' the Lop Nor super computer is linked to the American military supercomputer at Pine Gap, also a natural vortex area. It's possible that time has been bent to access Lop Nor because it is possible to walk down a short corridor at Pine Gap and come out at U.S. Military base Area 51 in Nevada.

The Chinese also now have beam weapons which can knock down satellites. It is not known what kind of beam weapons they use to knock down satellites, but they do have scalar weapons and quantum potential weapons (which can induce deseases using scalar waves).

In 1978 Dr. **Andrija Puharich** described early Soviet work with Tesla's method of 'controlled earthquakes,' he stated:
"Of the many great earthquakes of 1976, there is one that demands special attention - the July 28, 1976 Tangshan, China earthquake."
Puharich's analysis is significant because it describes airglow plasma effects created by the Soviet Woodpecker system. Ionosphere heating ELF systems, like HAARP, can generate similar effects.

He stated:
"The reason that this 1976 earthquake attracted my attention is that it was preceded by a light flare-up of the entire sky over Tangshan. Also, this earthquake occurred during the first month of Soviet Woodpecker radio emissions... The most prominent effect was that when the Soviet Woodpecker emission was on at full strength - the sky would light up like an ionized gaslamp - just as Tesla had predicted."
The 6/5/77 New York Times described the great earthquake, which destroyed Tangshan, China

and killed about 800,000 people:
"Just before the first tremor at 3:42am, the sky lit up like daylight. The multi-hued lights, mainly white and red, were seen up to 200 miles away. Leaves on many trees were burned to a crisp and growing vegetables were scorched on one side, as if by a fireball."
These electrical effects are tied to electromagnetic plasma and ball lightning and the strange array of flashes which results from Tesla-style and HAARP-like transmissions.

However the article in Nexus by **Gary T. Whitford** on earthquakes says that five days before the Tangshan earthquake the French detonated a nuclear bomb at Muroroa Island in the Pacific and also one day before the earthquake U.S detonated a nuclear bomb in Nevada.

According to the Oct 1995 Nexus magazine, in 1974 a scientist called Dr Matsushita working at the national Center of Atmospheric Research in U.S. discover the magnetic field of the earth and ionosphere were disturbed for ten to forteen days after an underground nuclear test. In 1977 he was forbidden by the U.S. government to take measurements for two weeks after a nuclear test!

Satellite data shows nuclear testing is the cause of abnormal polar motion of the earth.

The normal polar motion of the earth, called the 'Chandler Cycle' which makes a revolution every 430 days, shifts radically after every nuclear test. Is this being done deliberately to invoke a pole shift 'to create a new world?'

Gary Whiteford said that there were 1,800 nuclear bombs exploded from 1945 to March 1989 alone! Since 1980 there has been an average of close to fifty underground nuclear tests taking place every year. The rotation of the earth is in severe danger with this as well as the Russians sending in scalar waves to the molten core and distrupting the earth's rotation as well.

It has been said that the molten core produces the earth's magnetic field and Americans are also ripping this to shreds with all the HAARP transmitters, not only above large areas but altering the magnetic north poles deliberately with this to position them away from its natural place.

Back to Contents

49. OKLAHOMA FBI BUILDING 'BOMBING'

On 17 April 1995, the FBI building was supposedly blown up by Timothy McVeigh and Terry Nichols with contrary evidence to prove this.

However 5-10 seconds before the explosion, the FBI building shook violently, as in an earthquake according to Mason. Seismic evidence recorded showed a double-pronged explosive energy event, with two nearly identical 3-5 second, low amplitude multiple wave trains, separated by a null field, occurring over a 9 second interval after the initial seismic action 5-10 seconds before the blast.

A loud click before the explosion was heard as well. Sparks came out of wires in the building before, lights went out 5 seconds before and an ionizing electrical sensation of hot air flow prior to the explosion. An eyewitness about 200 meters away from ground zero watched a silver-white light flash or beam coming out the top of the building, followed by a large blue-white electrical arcing flash or beam, followed by an orange-red light flash or beam that shot out the

top of the building 5 seconds before the explosion.

This was followed immediately by two explosive shock waves, that came out of the base of the building. Several cars on the above ground carpark, had electrical ignition computers burnt out completely, as well as many office computers getting burnt out circuit boards, and Mason says these facts point to a major EM pulse attack.

Everything up to almost a mile from ground zero had been knocked down and shattered, the devastation was beyond belief.

At the epicenter steel girders were twisted like spaghetti, but no witnesses described any kind of fireball or fiery effects. There was just pre-explosion light flashes, followed by pure energy waves, with a very high plasma-type heat affecting car paint. Aerial photos of the FBI building show two nearly identical tube-like damage forms running through the building, representing slightly displaced near vertical, but divergent beam/pulse orientations, suggesting an orbital platform was used.

Was it even a cosmosphere or even a satellite?

According to **Bill Morgan**:
"If you can cause an earthquake you can also set it to, say, bring down a single buildings, of pair of buildings. It may be that the collapse of WTC twin towers was actually the first major scalar attack in world history.

Because in a certain mode the waves at the interference zone can cause metal to soften, even to melt. If so, the planes crashing into them were merely a cover story to cloak the fact that the Tesla Howitzer had been used.

A mishap with one of these devices could wipe out all life on earth. They could disrupt the scalar wave balance between earth and sun in such a way that would cause massive solar disturbances and storms, completely frying the earth."
It's possible that the metal softening mode was set for both the FBI building and the WTC twin towers, which may have caused the buildings to collapse.

A UFO was seen at the WTC and filmed by some Japanese who were at the scene. They put it online as a video. It appeared to have been cloaked. Who was in it? Could more than one faction have been involved besides the bombs placed on the supports (heard by firemen going off), the planes hitting and the scalar attack.

Did an outside scalar attack take advantage of a first hit by someone else?

Back to Contents

50. WHO ELSE HAS UFOs?

The Sept 2000 UFO magazine (UK) ran an article called 'Electrogravitics'and it said that many countries have anti-grav research going. Graham Birdsall, the editor was told by a man who used to be a US navy seal, who was a Knight of Malta.

The Knights of Malta are the military arm of the Vatican and Malta Knighthoods are award to the military and intelligence community.

He said that corporate bodies and multinational institutions who have a vested interest in conventional energy production, gave out blank checks to those who invented anti-grav devices, or even $10-$20 million. Apparently this was nothing when trillions of dollars are at stake. He said that environmental friendly energy saving devices have been suppressed for decades, and even a car which runs on water has been suppressed for twenty years.

According to the article the B-2 stealth bomber and F-117 both use anti-grav technology. Brazil also has this technology. A physics professor called Fran de Aquino demonstrated to thirty-six scientists around the world how his anti-grav technology worked. He has been given a $600,000 grant from the US dept. of energy to validate it and parallel Russian work.

Is this connected with Brazilian space program?

British Aerospace anti-gravity research is headed by a Chinese-American female scientist. Britain's anti-gravity research was first developed at universities in Lancashire and South Yorkshire. Unfortunately Graham Birdsall has since died suddenly, did he say too much? The things he published of late were very confidential information, and many UFO researchers have died in suspicious circumstances.

In the book "the Controllers" by Commander X, a Serb man called Vladimir Terzinski told of the Nazi UFO program. He claimed that the Catholic Jesuit Order was the link between the Illuminati and the Nazis. He had documents and photos of the disk shaped craft the Nazis constructed, that were powered by Schauberger turbines and Kohler TACHYON magneto-gravitic drives (all based on free energy or antigravity)

He claimed that the British may have landed on the moon a century ago, and that even the Vatican has a group of scientists who rocket off into space from South American bases. Others have also said that the Vatican has a base on the moon. The US anti-grav base is at Area 51.

The book also says that the Japanese has anti-grav technology developed at Thoku university in Sendai, Japan. With alien alliances it is possible that various countries have reached outerspace long before planes were even invented. Considering how many underground and undersea alien bases here (some of which have been here for at least hundreds of years) would it not be easy to form an alliance with the inhabitants of over one thousand bases, according to Al Bielek now on the planet?

Bill Morgan claims that according to Tom Bearden, fifteen nations now have scalar weapons and apparently the most developed are those in Russia, China and Israel. No information can be found on the Chinese scalar weapons program but it known that the U.S. helped Taiwan with theirs. Israel has been said to have given covert technology to China and there was a Chinese spy Wen Ho Lee working at Los Alamos.

The countries which are said to have scalar weapons are:

- Russia
- US
- France
- Britain
- Australia
- Germany

- Japan
- Taiwan
- Israel
- South Africa
- Brazil
- Argentina
- China

It is unknown who the fifteenth country is (perhaps Ukraine?) or if anyone else has them but Brazil is tying in with India and China scientifically so possibly India would have access to the technology at some point.

They can be manufactured with a device creating a simple modification of radar and Russia may be selling them to many countries or even leasing them as they do to the Japanese Aum and Yazuka cults.

Perhaps as long as the money is given they will lease to anyone and if they are secretly at war with the U.S., they may be only too pleased to encourage people to use them as long as it's not on themselves!

Henry Kroll covered some Nazi activity in Antarctica in his book 'Space Ships of The Gods'.

He wrote:
" I have a copy of a 1948 list of 261 German flying saucers. There are 84 Vrills of 11.5 meters in diameter and three Haunebu II's 25 meters in diameter and several Hanebu III's of 79 meters diameters.

These have speeds of 2900 miles per hour and the capability of traveling to Mars. A Hanebu IV was on the drawing boards. Several Andromeda mother ships were constructed in the old Zeppelin hangers at the same time as the Vrills... If the Nazis had 261 flying saucer craft in 1948 they could very well have built thousands of them since then.

Even if all of their bases in Germany were bombed out of existence I am sure that some of them survived such as the Marconi plant located inside an extinct ten-thousand-foot, volcano some where in South America. Who knows what underground cities they have by now."
W.A. Harbinson wrote in his book 'Genesis':
"Admiral Byrd is quoted by a reporter as saying: It is necessary for the USA to take defensive actions against enemy air fighters which come from the polar regions," and in the case of a new war the USA would be "attacked by fighters that can fly with incredible speed from one pole to the other without refueling."
Branton also wrote in his book 'Secrets of the Mojave':
"U.S. Rear Admiral Richard E. Byrd [in] the Antarctic region... involved nearly 4,000 well-trained military Naval troops, military vessels such as destroyers, subs, aircraft carrier and aircraft. Upon arriving at the polar continent they reportedly split into three separate groups and began a massive reconnaissance- like operation.

One source even claimed that Byrd's Navy encountered 'resistance' there and that there was a photo-finish FIGHT between American and Nazi forces there, with losses on both sides... When the Americans left two weeks later... Byrd, after arriving home, reportedly went into a rage and began demanding that the government turn Antarctica into a nuclear test range.

Byrd was sworn to secrecy and his diaries are sealed to this day."
According to Kroll when Admiral **Byrd** encountered the Nazi UFOs and lost too many men trying to attack the Nazi base in Antarctica, they returned to America to build their own UFOs based on

the designs retrieved in Germany after the war. His book says:
"Thousands of slave workers and their SS overlords disappeared in the chaos of the liberation and were never seen again."...

"It is quite possible the Nazis continued to ship saucer parts, men, and documents to Antarctica throughout the war. Judging by the gigantic size of underground bases found in Germany after the war, with wind tunnels, assembly plants, launching pads, machine shops, supply dumps, accommodations, and adjacent slave quarters for thousands, it is quite possible they constructed similar bases in Greenland, Antarctica and South America... Their technology was at least thirty years ahead of the U.S."
Kroll says:
"Captain Heinz Schaffer in his book U-977 stated that in April 1945 an SS associate had offered him a demonstration of a "death ray" (laser weapon)...According to our mainstream scientists lasers weren't invented until the 1960's... SS General Hans Kammler who pushed the development of the V-1 and V-2 rockets disappeared from Germany in April 1945. His whereabouts is a mystery to this day.

The German flying saucer team members Schriver and Bellonzo are dead, and Habermohl was captured by the Russians. This may account for America's fear of Russian saucers after the war. Miethe who worked on Projekt saucer, went to work in Canada and America."
Allied bombers and fighter also reported hundreds of flying fireballs along side their planes and also "death rays" were reported.

According to the book ‘UFOs Nazi Secret Weapon?’ when Admiral Byrd returned from his Nazi hunting expedition in Antarctica he decided that the best thing to do would be to turn Antarctica into an ‘atomic test range’ for atomic and hydrogen bombs.

No sooner had this intention been announced in the press than an entire ‘swarm’ of UFOs flew over the White House the book says "in perfect, ‘typically-German’ formation."

Kroll wrote:
"In July 1952 a fleet of flying saucers flew over the White House. They were seen by thousands of people and document on radar. Jets were scrambled three times but the saucers easily outran them each time."
However Kroll claims that on Aug 27th, 30th and Sept 1st 1958 the U.S did drop several nuclear bombs on Antarctica. It is not known how many. According to Nexus magazine two atmospheric nuclear bombs were dropped on Antarctica in 1975.

Branton’s book ‘The Coscon Files : Part 33’,
"Terziski [claims].. that the German experiments in mind control, genetics, and hybridization (between humans and animals) - which were apparently aided by the discovery and perfection of the microscope in Germany, including a Tesla scalar-wave microscope which helped the Germans to unlock the human genome - were repeated in ten times their intensity in the underground Nazi South Polar colony or 'city'.

This base-city, rumor has it, is known by its inhabitants as the 'NEW BERLIN' and contains a population of over 2,000,000 people loyal to the Nazi philosophy."
Advancing the idea that the Nazis continually shipped men and material to the South Pole throughout the war years, author W. A. Harbinson wrote,
"Regarding the possibility of the Germans building self-sufficient underground research factories in the Antarctic, it has only to be pointed out that the underground research centers of Nazi Germany were gigantic feats of construction, containing wind tunnels, machine shops, assembly plants, launching pads, supply dumps and accommodation for all who worked there, including adjoining camps for slaves and yet very few people knew that they existed."

In the article UFO's. Alien or Man Made by **Al Pinto** writes about Nazi super weapons.

The South Wales (UK) Argus [Dec 13,1944] stated,
"The Germans have produced a 'secret' weapon in keeping with the Christmas season. The new device, which is apparently an air defense weapon, and resembles the glass balls that adorn Christmas trees. They have been seen hanging in the air over German territory, sometimes singly, sometimes in clusters. They are coloured silver and are apparently transparent."
The New York Herald Tribune [Jan 2, 1945] said:
"Now, it seems, the Nazis have thrown something new into the night skies over Germany. It is the weird, mysterious 'Foo Fighter' balls which race alongside the wings of fighters flying intruder missions over Germany. Pilots have been encountering this eerie weapon for more than a month in their night flights. No one apparently knows what this sky weapon is. The balls of fire appear suddenly and accompany the planes for miles. They seem to be radio controlled from the ground, so official intelligence reports reveal".
Could they be Tesla Globes?

In 1978 at a scientific exhibition at Hanover, Germany some people gave out a paper containing detailed drawings of Germany's WW2 flying disks (not mentioning the designer's name) and claimed that the drawing was altered by the West German govt to render it "safe" for publication.

It said that the patents for the craft went into secret Russian, American and British files and that the remainder of the files and most likely, the most important ones, went with the "missing" German scientists and S.S. men.

Al Pinto wrote:
"Allegedly, they [Nazis]took with them members of the flying saucer research teams, the last of the most vital saucer components, the notes and drawings for the saucer, and the designs for gigantic underground complexes and living accommodations based on the underground factories of Nordhausen in the Harz mountains [to Argentina, Chile and Antarctica].
W. A. Harbinson wrote in his book 'Genesis',
"...Robert Ley, Minister for Labor in Nazi Germany in April 1945, excitedly told Albert Speer that German scientists had invented a "death ray" (possibly a laser weapon). Captain Heinze Schaeffer, captain of the U-977 submarine (suspected taking Hitler and Martin Bormann to Patagonia, then on to a secret Nazi base in the Antarctic), stated in his book "U-boat 977" that in April 1945 an S.S. associate had offered him a demonstration of a so-called "death ray".
In 1960 Soviet Premier Khrushchev had announced the scalar interferometer to the world saying:
"We have a new weapon, just within the portfolio of our scientists, so to speak, which is so powerful that, if unrestrainedly used it could wipe out all life on earth. It is a fantastic weapon."
How many people have built a Tesla 'Death Ray"?

In the book "Time Storms" by Jenny Randles it says that on 22 May 1966, during a survey in Antarctica, Irish explorer Eric Wilkinson observed what appears like a Tesla Globe being created. A dense white mass appeared in the south and rose vertically to about 600ft altitude from near ground level. Its diameter was about 100 ft and it was largely homogenous during its forty-five minute duration.

It seemed to move very slowly, expand and contact in a pulsating motion in density. As it did a noise like a swarm of bees or like an electric transformer occurred. A dark 'tube' emerged from the cloud and struck the snow at a 45 deg angle. From that point, it created a second reflected ray or beam from this at a 75 deg angle rising from the first 'tube'. The snow rose upwards as if by a whirlwind. Wilkinson took several photos. The Russian Tesla Globes had a black line down the center.

Harry Mason's wrote in 'Bright Skies' that on 1 May 1995 at 2am a large spherical orange-red fireball with a conical blue-white tail flew from the Indian Ocean above Perth city, W. Australia Its past trajectory skimmed Antarctica, near Enderby Land where one Japanese and two Russian bases reside. One Russian base at Enderby Land has a scalar weapons complex.

It's projected trajectory would have end towards the NE coast of Japan across the center of the Siberian Kamchatka Peninsular, then over N Alaska emerging near Nova Scotia, Canada. (The Kamchatka Peninsular has a scalar howitzer site and according to Bearden the Soviets shot down the Korean plane KAL 007 possibly spying on it a few years ago.) The fireball was flying in a N, NE direction.

The fireball, which emitted a loud roaring pulsed noise stopped dead above Perth. Suddenly an enormous burst of blue-white light arced upwards lighting the city as clear as daylight for many km, similar to a nuclear blast. A loud, vibrating massive explosion and seismic wave (lasting two minutes) reverberated through Perth causing buildings to shake.

Four bright lights from the center of the fireball raced out and formed a cross in the sky. That same night other strange aerial noises and small lights were heard N, NE of Perth. Also 1,900 km north of Perth (north of Broome) there was a loud, roaring pulsed diesel engine sounding noise which rose to a crescendo causing objects to fall from their shelves.

The seismic vibration lasted 1-2 minutes.

It will be a battle to the death, with whole cities able to be turned to ashes with crossed beam scalar weapons and particle beam weapons fired from satellites. Some unanswered questions still exist though.

- Will the Earth survive, or will it get increasingly unsteady and keep wobbling on its axis as it has been happening recently?
- Is it better to teach Tesla's scalar technology openly at the universities or best to keep it under wraps?
- What would have been the price to pay for free-energy had Tesla been financially supported in his work?

Is it better to have had the less dangerous but expensive electricity and associated cancers, OR, to have been able to have had many gadgets powered by scalar waves and just buy a legal spaceship and visit other planets with no charge for free-energy power.

Government honesty has been lacking since WW2. Mars could have been colonized openly, and earth might possibly have been taken over openly by aliens and accepted within an alien federation.

Instead all this is done in secret.

Now we are in the situation where,

- we can be subjected to mass hypnotism via satellite
- cities can be destroyed in an instant by nuclear-like explosions without warning
- any airborne object can be exploded upon launch
- earthquakes and erupting volcanoes manufactured to order
- the worrisome thought of the already ripped magnetic field failing us with major solar flares increasing
- massive fissures splitting the earth from stimulation of the molten core and the upsetting of the relationship between the Sun, Moon and Earth

This is just from fifty years of scalar weapons in the hands of men who care not for the citizens

of other countries.

We need to know just who has them and what they intend doing with them and to whom. No part of the world is safe, especially when scalar waves can pass right through the planet.

I wish us all a safe journey through the next millenium.

Back to Contents

RESOURCES

For an extremely chilling expose by Tom Bearden on what the Russians have been doing since the late 1950's with scalar technology against the U.S. and numerous more examples of scalar attacks can be found at:
(http://www.earthchangestv.com/ufo/0209gandor.htm)
(http://216.247.92.101/pub/bearden/examples.htm)
(http://www.cheniere.org/correspondence/110502.htm)
Scalar Wars: The Brave New World of Scalar Electromagnetics
(http://216.247.92.101/pub/bearden/scalar_wars.htm)
The Historical Background of Scalar Weapons by Tom Bearden.
(http://www.geocities.com/Area51/Shadowlands/6583/project233.html)
Fire from the Sky (http://www.anomalous-images.com/text/files.html)
Harry Mason 'Bright Skies': http://www.tmgnow.com.repository/secret/brightskies.html
Tom Bearden's website (http://www.cheniere.org)
Fortress Australia: http://rumormillnews.com/FORTRESS_AUSTRALIA.htm
Fire From The Sky: http://www.anomalous-images.com/text/files.html
HAARP. the Ultimate Weapon of the Conspiracy by Jerry E Smith. (www.jerryesmith.com)
UFOs Nazi Secret Weapon? Mattern-Friedrich. Samisdat Publishers Toronto, Canada. (About 1966.)
Encounter in the Pleiades: An Inside Look At UFOs by Preston Nicholas and Peter Moon.
The Montauk Project by Preston Nicholas and Peter Moon.
Anti-Gravity and the World Grid. Edited by David Hatcher Childress.
My Contact With UFOs by Dino Kraspedon.
Back to Contents

GLOSSARY

Scalar waves are also known as:

- Tesla waves
- longitudinal EM waves
- teleforce
- Radiant Energy
- energetics
- gravitic waves
- electrogravitational waves

- free-energy
- zero-point energy
- zero-vector EM waves
- electromagnetic quantum energy
- vacuum field energy
- aether/ether-energy
- magnetic travelling waves
- electrostatic/magnetostatic waves
- waves of pure potential.

Back to Contents

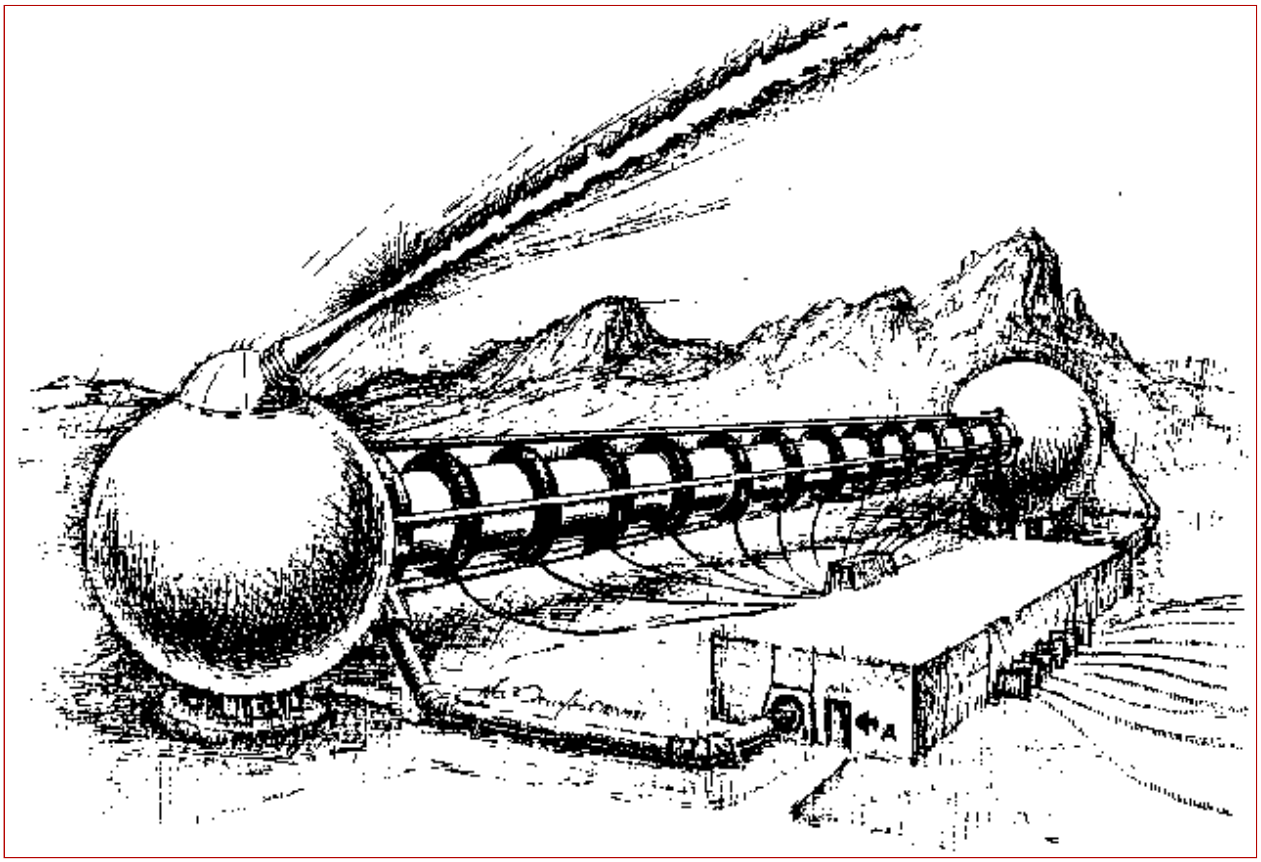

Scalar Potential Interferometer

Figure 6. Multimode Tesla Weapon

In the 1930's Tesla announced other bizarre and terrible weapons: a death ray, a weapon to destroy hundreds or even thousands of aircraft at hundreds of miles range, and his ultimate weapon to end all war -- the Tesla shield, which nothing could penetrate. However, by this time no one any longer paid any real attention to the forgotten great genius. Tesla died in 1943 without ever revealing the secret of these great weapons and inventions.

Unfortunately, today in 1981 the Soviet Union has long since discovered and weaponized the Tesla scalar wave effects. Here we only have time to detail the most powerful of these frightening Tesla weapons -- which Brezhnev undoubtedly was referring to in 1975 when the Soviet side at the SALT talks suddenly suggested limiting the development of new weapons "more frightening than the mind of man had imagined."

One of these weapons is the Tesla howitzer recently completed at the Saryshagan missile range and presently considered to be either a high-energy laser or a particle beam weapon, (See Aviation Week & Space Technology, July 28, 1980, p. 48 for an artist's conception.)

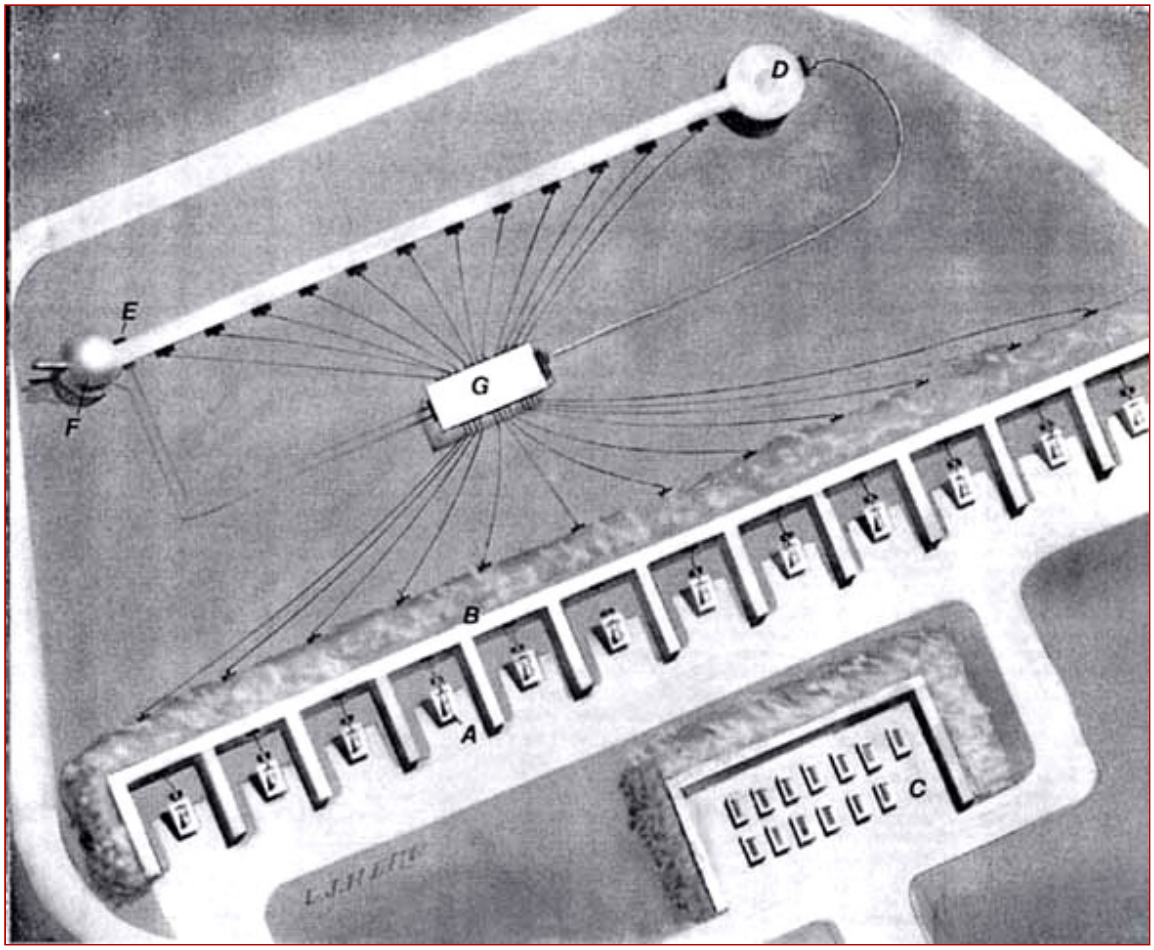

Aviation Week & Space Technology July 28, 1980

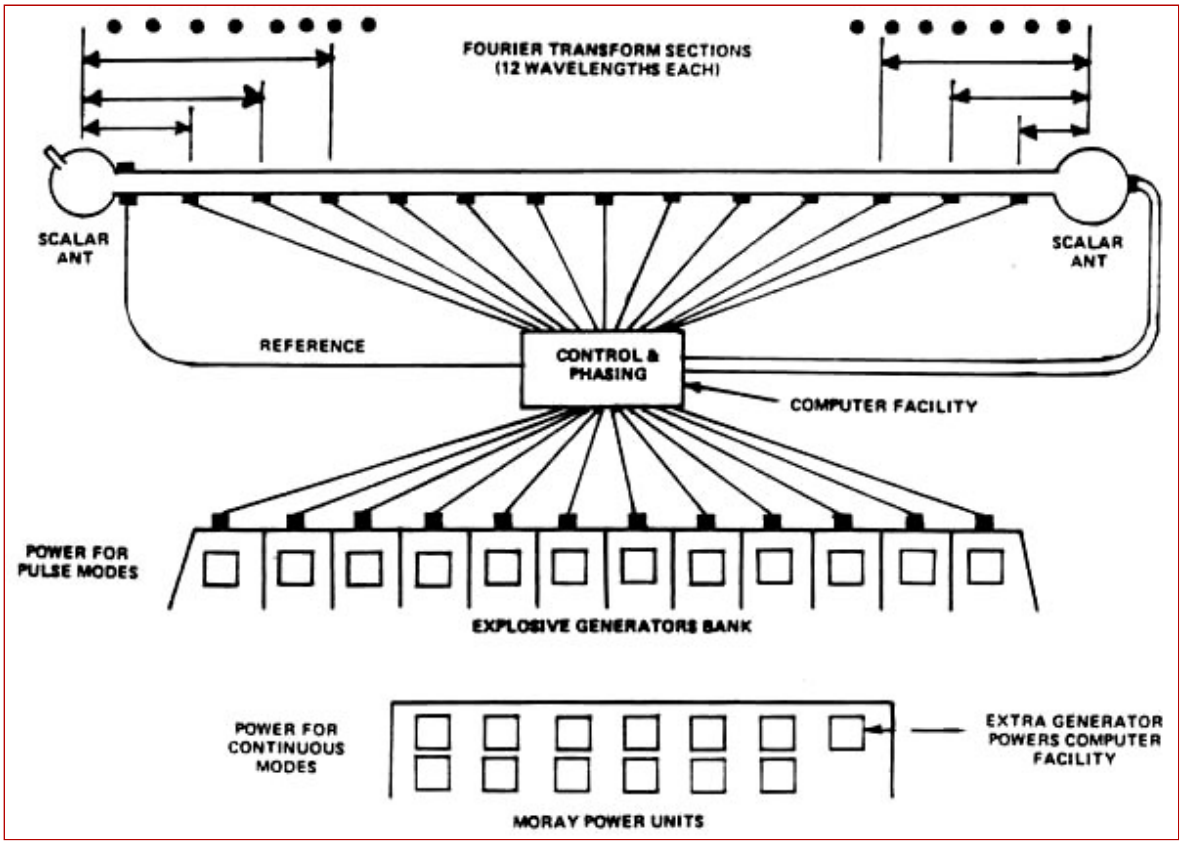

Figure 7. Tesla Weapons at Saryshagan

The Saryshagan howitzer actually is a huge Tesla scalar interferometer with four modes of operation. One continuous mode is the

The Saryshagan howitzer actually is a huge Tesla scalar interferometer with four modes of operation. One continuous mode is the Tesla shield, which places a thin, impenetrable hemispherical shell of energy over a large defended area. The 3-dimensional shell is created by interfering two Fourier-expansion, 3-dimensional scalar hemispherical patterns in space so they pair-couple into a dome-like shell of intense, ordinary electromagnetic energy.

The air molecules and atoms in the shell are totally ionized and thus highly excited, giving off intense, glowing light. Anything physical which hits the shell receives an enormous discharge of electrical energy and is instantly vaporized -- it goes pfft! like a bug hitting one of the electrical bug killers now so much in vogue.

If several of these hemispherical shells are concentrically stacked, even the gamma radiation and EMP from a high altitude nuclear explosion above the stack cannot penetrate all the shells due to repetitive absorption and reradiation, and scattering in the layered plasmas.

In the continuous shield mode, the Tesla interferometer is fed by a bank of Moray free energy generators, so that enormous energy is available in the shield. A diagram of the Saryshagan-type Tesla howitzer is shown in figure 7. Hal Crawford's fine drawing of the interferometer end of the Tesla howitzer is shown in figure 6.

Hal's exceptional rendition of the Tesla shield produced by the howitzer is shown in figure 8.

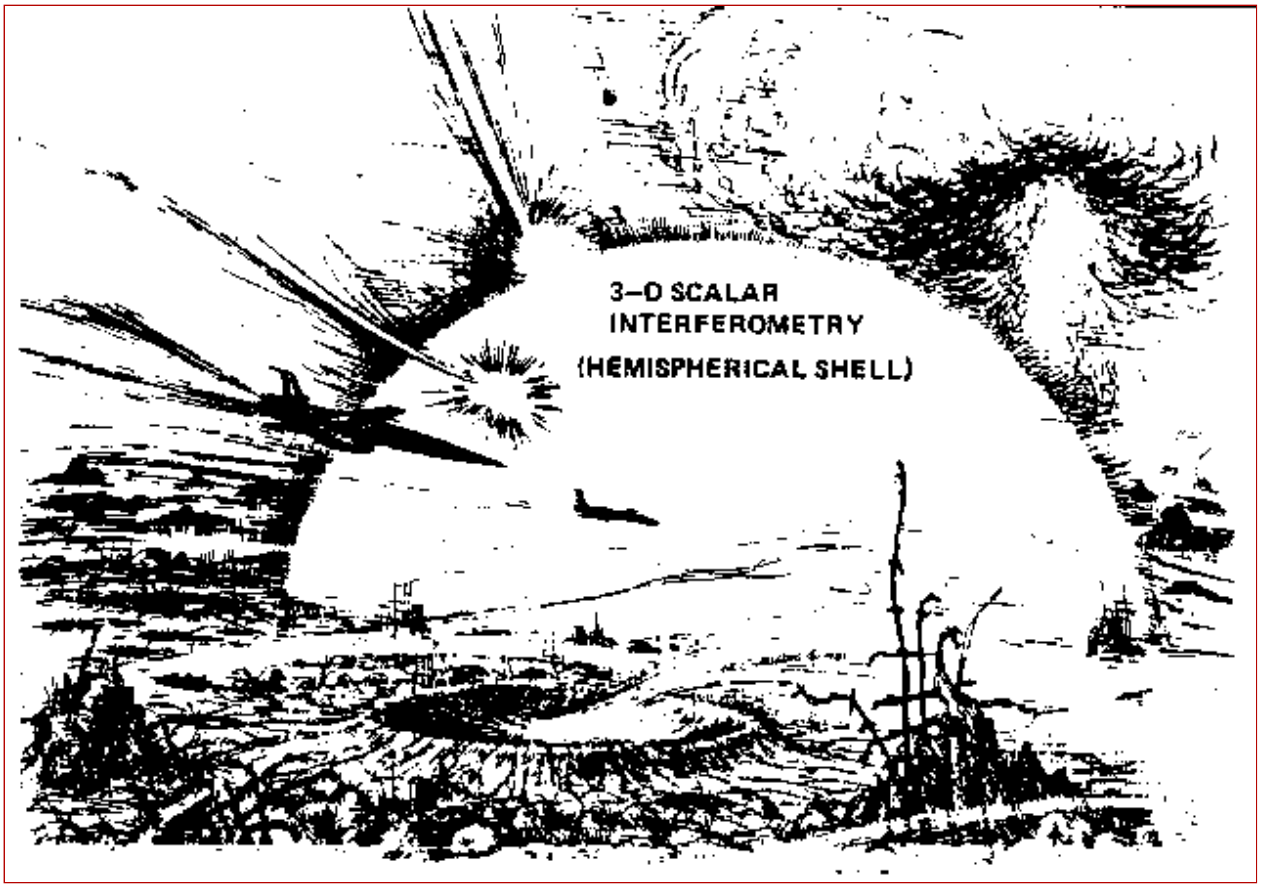

Figure 8. The Tesla Shield

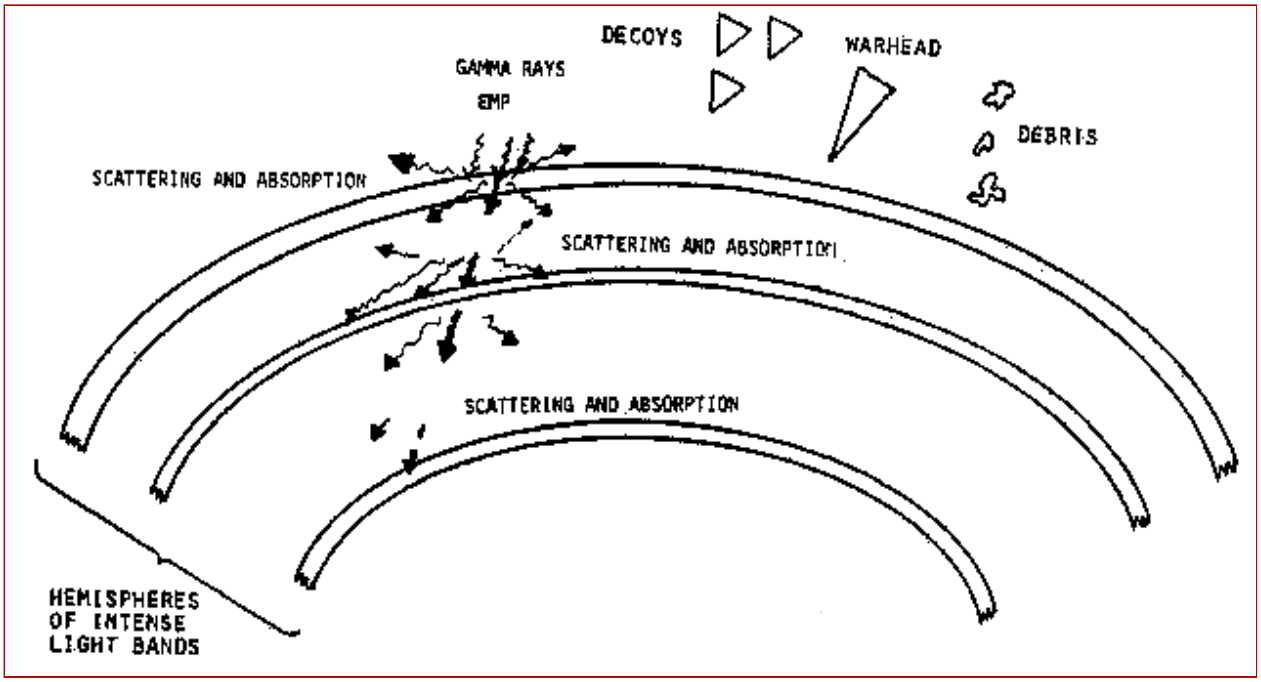

Figure 9. Tesla Terminal Area Defense System

In the pulse mode, a single intense 3-dimensional scalar phi-field pulse form is fired, using two truncated Fourier transforms, each involving several frequencies, to provide the proper 3-dimensional shape (Figure 10). This is why two scalar antennas separated by a baseline are required. After a time delay calculated for the particular target, a second and faster pulse form of the same shape is fired from the interferometer antennas.

The second pulse overtakes the first, catching it over the target zone and pair-coupling with it to instantly form a violent EMP of ordinary vector (Hertzian) electromagnetic energy. There is thus no vector transmission loss between the howitzer and the burst. Further, the coupling time is extremely short, and the energy will appear sharply in an "electromagnetic pulse (EMP)" strikingly similar to the 2-pulsed EMP of a nuclear weapon.

This type weapon is what actually caused the mysterious flashes off the southwest coast of Africa, picked up in 1979 and 1980 by Vela satellites. The second flash, e.g., was in the infrared only, with no visible spectrum. Nuclear flashes do not do that, and neither does superlightning, meteorite strikes, meteors, etc.

In addition, one of the scientists at the Arecibo Ionospheric Observatory observed a gravitational wave disturbance - signature of the truncated Fourier pattern and the time-squeezing effect of the Tesla potential wave - traveling toward the vicinity of the explosion.

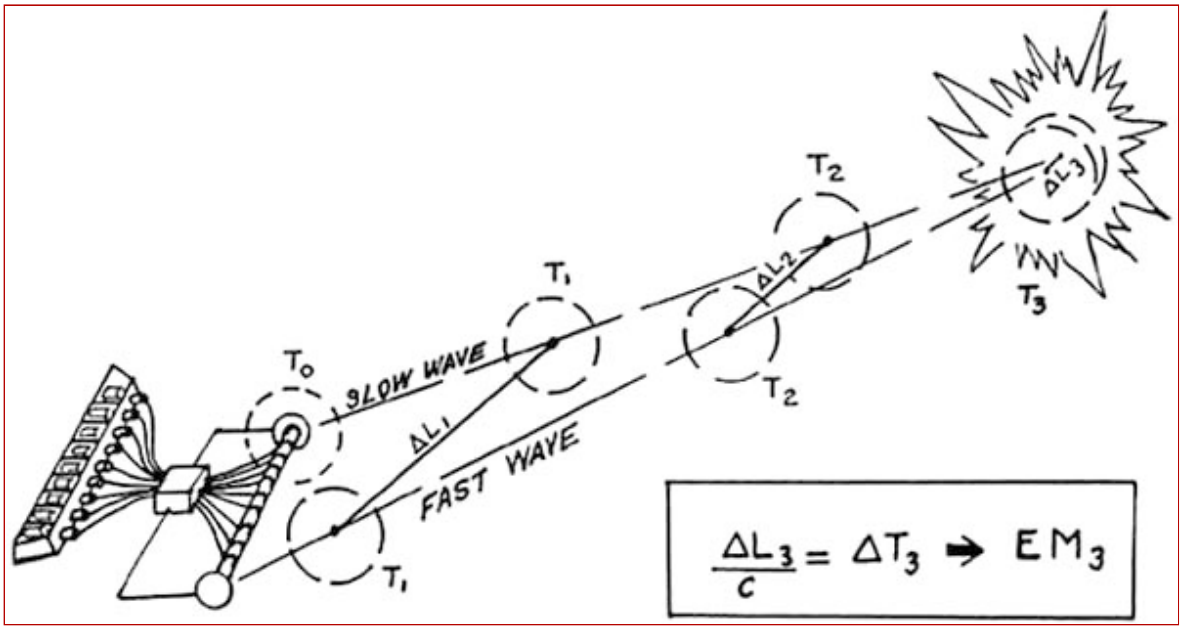

TESLA HOWITZER
(SCALAR INTERFEROMETER)

Figure 10. "Nuclear" Flashes off the Coast of Africa

Lithuania - 10 Sep 1976 - British European Airways Flight #831 between Moscow and London

CIA Report Released under FOIA

Figure 11. Continuous Tesla Fireball

The pulse mode may be fed from either Moray generators or -- if the Moray generators have suffered their anomalous "all fail" malfunction -- ordinary explosive generators.

Thus the **Tesla howitzer** can always function in the pulse mode, but it will be limited in power if the Moray generators fail.

In the continuous mode, two continuous scalar waves are emitted -- one faster than the other -- and they pair-couple into vector energy at the region where they approach an in-phase condition. In this mode, the energy in the distant "ball" or geometric region would appear continuously and be sustained -- and this is Tesla's secret of wireless transmission of energy at a distance without any losses. It is also the secret of a "continuous fireball" weapon capable of destroying hundreds of aircraft or missiles at a distance.

An example of a Soviet test of this mode of operation is shown in figure 11.

Witness to a super weapon?

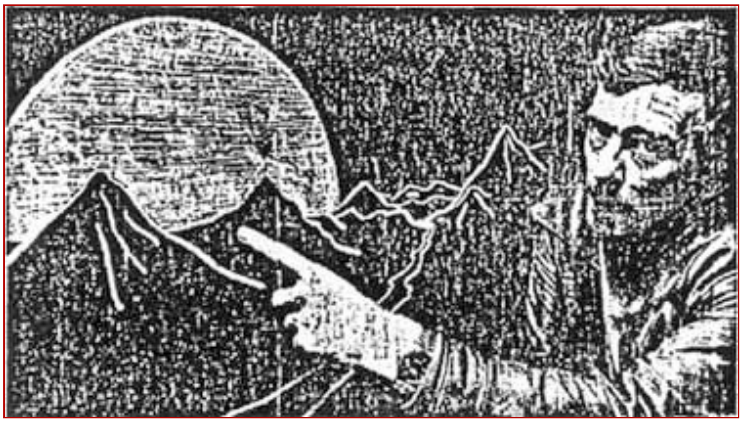

Nick Downie describes the strange lurid glow that flared silently over the Hindu Kush

THE SUNDAY TIMES, 17 AUGUST 1980

(Multiple incidents in Sept., 1979)

TEHERAN, IRAN 17 JUNE 1966

SEEN FROM NEAR MEHRABAD AIRPORT

OBSERVED 4-5 MINUTES

SEEN BY 2 AIRCRAFT

CIA REPORT RELEASED UNDER FOIA

Figure 12. Tesla EMP Globe

The volume of the Tesla fireball can be vastly expanded to yield a globe which will not vaporize physical vehicles but will deliver an EMP to them to dud their electronics.

A test of this mode is shown in figure 12. (See also Gwynne Roberts, "Witness to a Super Weapon?", the London Sunday Times, 17 August 1980 for several other tests of this mode at Saryshagan, seen from Afghanistan by British TV cameraman and former War Correspondent Nick Downie.)

If the Moray generators fail anomalously, then a continuous mode limited in power and range could conceivably be sustained by powering the interferometer from more conventional power-sources such as advanced magnetohydrodynamic generators.

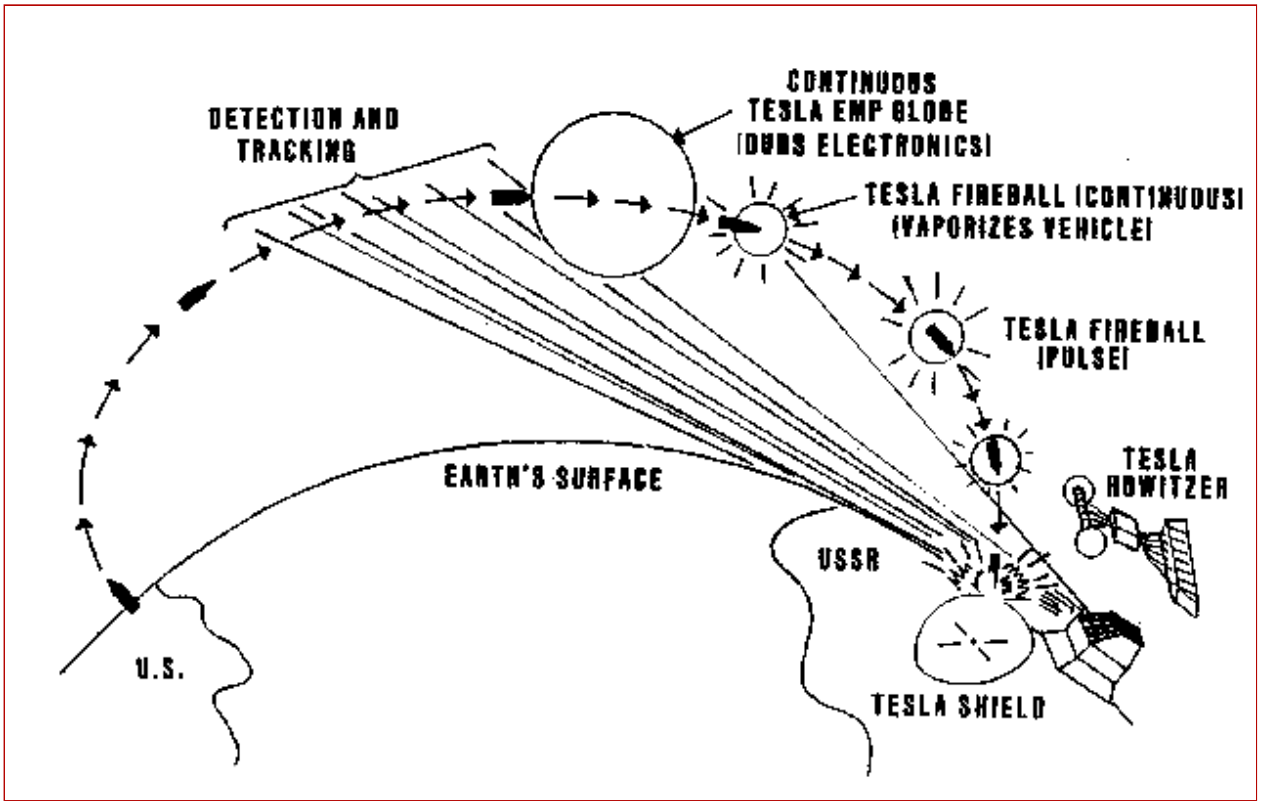

Figure 13. Tesla ABM Defenses

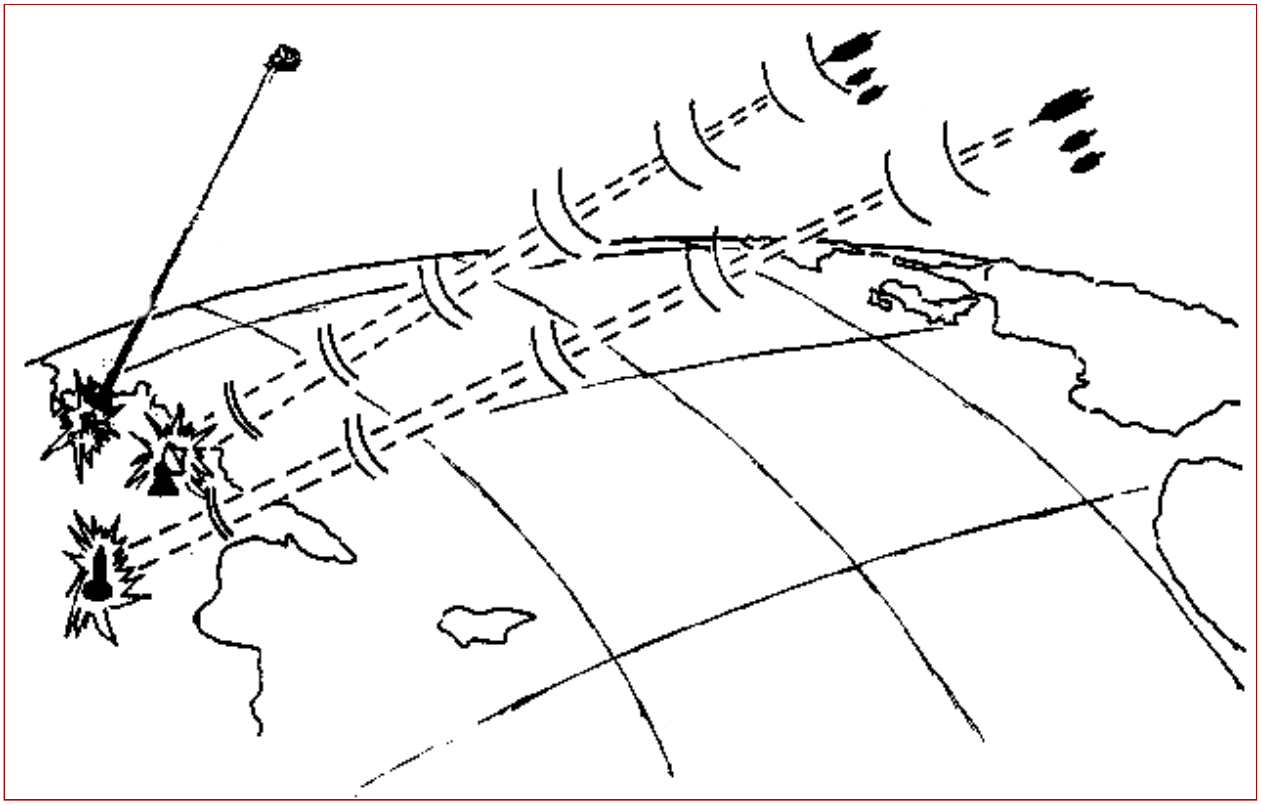

Figure 14. Moray/Tesla Technology: Star Wars Now

Typical strategic ABM uses of Tesla weapons are shown in figure 13. In addition, of course, smaller Tesla howitzer systems for anti-tactical ballistic missile defense of tactical troops and installations could be constituted of more conventional field missile systems using paired or triplet radars, of conventional external appearance, in a scalar interferometer mode.

With Moray generators as power sources and multiply deployed reentry vehicles with scalar antennas and transmitters, ICBM reentry systems now can become long range "blasters" of the target areas, from thousands of kilometers distance (figure

14). Literally, "Star Wars" is liberated by the Tesla technology. And in air attack, jammers and ECM aircraft now become "Tesla blasters." With the Tesla technology, emitters become primary fighting components of stunning power.

The potential peaceful implications of Tesla waves are also enormous. By utilizing the "time squeeze" effect, one can get antigravity, materialization and dematerialization, transmutation, and mindboggling medical benefits. One can also get subluminal and superluminal communication, see through the earth and through the ocean, etc. The new view of phi-field also provides a unified field theory, higher orders of reality, and a new super-relativity, but detailing these possibilities must wait for another book.

With two cerebral brain halves, the human being also has a Tesla scalar interferometer between his ears. And since the brain and nervous system processes avalanche discharges, it can produce (and detect) scalar Tesla waves to at least a limited degree. Thus a human can sometimes produce anomalous spatiotemporal effects at a distance and through time.

This provides an exact mechanism for psychokinesis, levitation, psychic healing, telepathy, precognition, postcognition, remote viewing, etc. It also provides a reason why an individual can detect a "stick" on a radionics or Hieronymus machine (which processes scalar waves), when ordinary detectors detect nothing.

Unfortunately there is not room to develop the implications of this human Tesla interferometry in detail, for that must wait for yet another book, presently in its initial stages, that Hal Crawford and I are writing.

Table 5. Orders of Reality

- **PHOTONS ARE**
  - **> PAIR-COUPLED SCALARS**
  - **> VELOCITY-LIMITED TO C**
  - **> CARRIERS OF T**
- **PHOTON INTERACTION**
  - **> IS UBIQUITOUS**
  - **> PRODUCES $\dot{T}$ = C**
  - **> YIELDS 1st ORDER REALITY**
- **SCALAR O WAVES**
  - **> NOT VELOCITY-LIMITED**
  - **> YIELD HIGHER ORDER REALITIES**

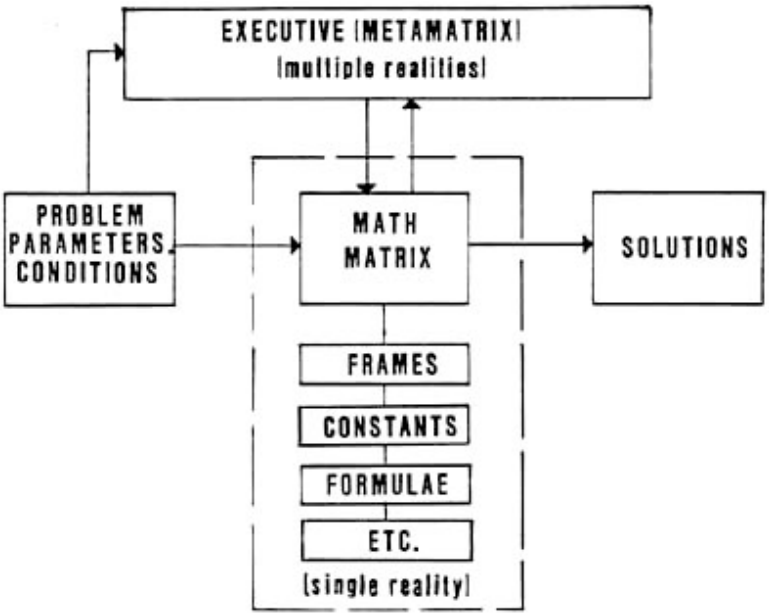

Figure 15. Implications of Tesla Potential

At the July 1981 U.S. Psychotronics Association's Annual Conference in Dayton, Ohio, I presented the first rough paper on the Tesla secret and scalar interferometry. A videotape of the presentation was made and will shortly be available. I am also scheduled to make a special presentation at the Alternate Energy Conference in Toronto, Canada in latter October, 1981.

A professional, videotaped two-hour presentation on this subject is also being prepared. Wide distribution of the material through the international underground physics and technology network has already been made. This time, God willing, Tesla's secret will not be suppressed for another 80 years!

And perhaps it is not yet too late. The material has cost me (now) some 16 years of agonizing labor and nearly $100,000 of my own personal funds. No orthodox university, scientific group, foundation, or governmental agency would support such an

effort, either financially or otherwise. Indeed, most ordinary journals will not even accept material on such matters.

Nonetheless, the area is of overwhelming importance and I truly believe Tesla's lost secret will shortly affect the lives of every human being on earth.

Perhaps with the free and open release of Tesla's secret, the scientific and governmental bureaucracies will be. shocked awake from their slumber, and we can develop defenses before Armageddon occurs. Perhaps there is hope after all -- for even Brezhnev, in his strange July, 1975 proposal to the SALT talks, seemed to reveal a perception that a turning point in war and weaponry may have been reached, and that human imagination is incapable of dealing with the ability to totally engineer reality itself.

Having tested the weapons, the Soviets must be aware that the ill-provoked oscillation of timeflow affects the minds and thoughts -- and the very lifestreams and even the collective species unconsciousnesses -- of all lifeforms on earth. They must know that these weapons are two-edged swords, and that the backlash from their use can be far more terrible to the user than was the original effect to his victim.

If we can avoid the Apocalypse, the fantastic secret of Nikola Tesla can be employed to cure and elevate man, not kill him. Tesla's discovery can eventually remove every conceivable external human limitation.

If we humans ourselves can elevate our consciousness to properly utilize the Tesla electromagnetics, then Nikola Tesla - who gave us the electrical twentieth century in the first place - may yet give us a fantastic new future more shining and glorious than all the great scientists and sages have imagined.

Return to Nikola Tesla

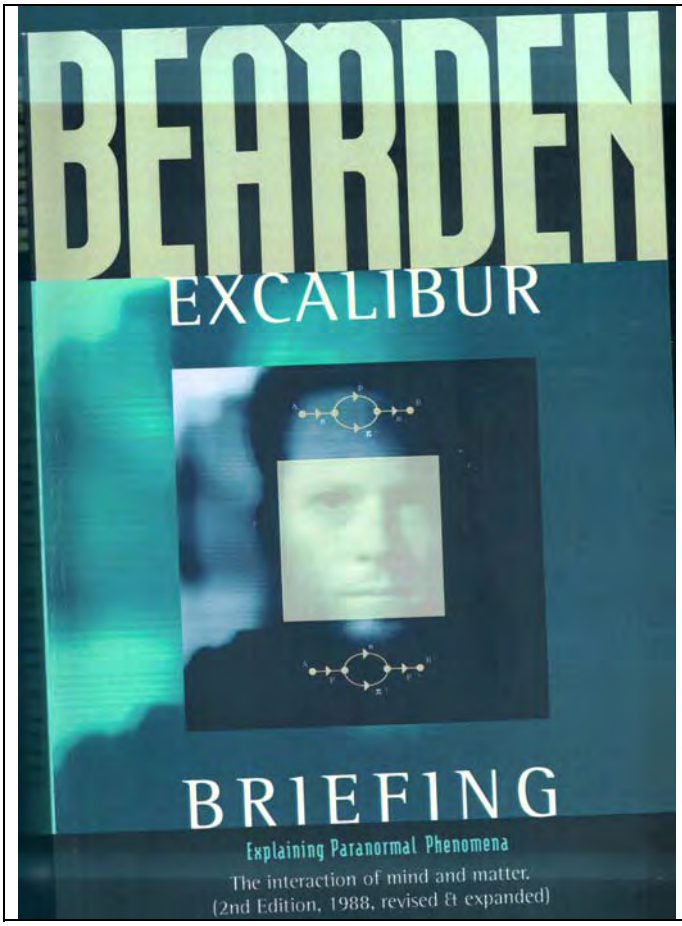

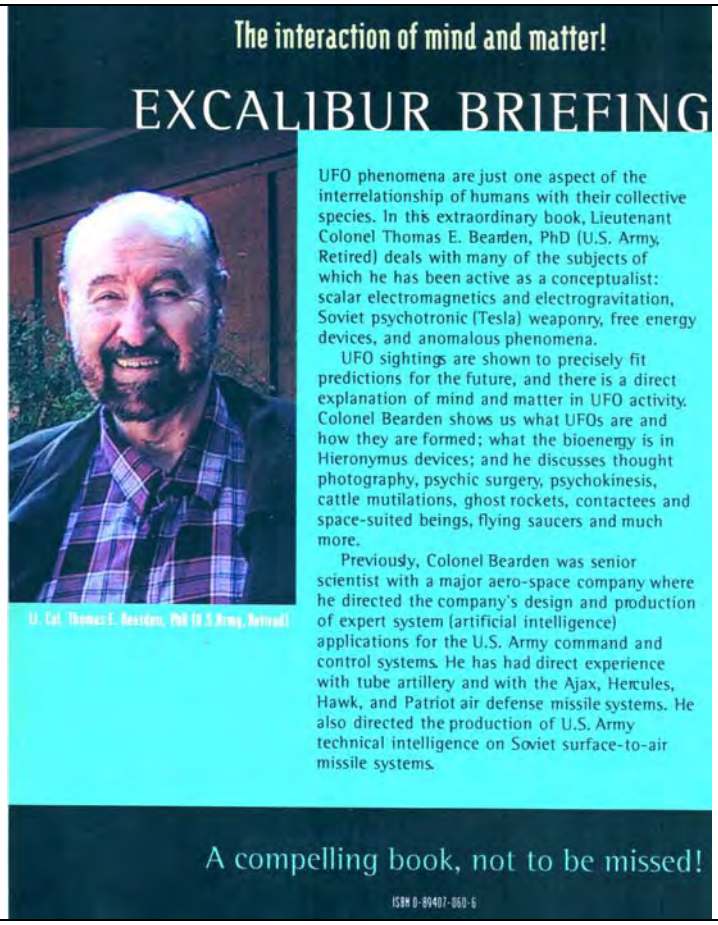

The interaction of mind and matter!

EXCALIBUR BRIEFING

UFO phenomena are just one aspect of the interrelationship of humans with their collective species. In this extraordinary book, Lieutenant Colonel Thomas E. Bearden, PhD (U.S. Army, Retired) deals with many of the subjects of which he has been active as a conceptualist: scalar electromagnetics and electrogravitation, Soviet psychotronic (Tesla) weaponry, free energy devices, and anomalous phenomena.

UFO sightings are shown to precisely fit predictions for the future, and there is a direct explanation of mind and matter in UFO activity. Colonel Bearden shows us what UFOs are and how they are formed; what the bioenergy is in Hieronymus devices; and he discusses thought photography, psychic surgery, psychokinesis, cattle mutilations, ghost rockets, contactees and space-suited beings, flying saucers and much more.

Previously, Colonel Bearden was senior scientist with a major aero-space company where he directed the company's design and production of expert system (artificial intelligence) applications for the U.S. Army command and control systems. He has had direct experience with tube artillery and with the Ajax, Hercules, Hawk, and Patriot air defense missile systems. He also directed the production of U.S. Army technical intelligence on Soviet surface-to-air missile systems.

A compelling book, not to be missed!

ISBN 0-89407-060-6

Sweating done by red_gonzo.

Note: sometimes formatting of the text may be a little fuzzy. It's all because the OCR process didn't go as smoothly as I expected. Also there may be some errors inside text so be vigilant. In any case share this book, send emails to people about knowledge contained in it.

Lieutenant Colonel Thomas E. Bearden (U.S. Army, Retired) Ph.D., was formerly senior scientist and department manager of a major aerospace company where he directed the design and production of expert systems (artificial intelligence) applications for the U.S. Army command and control systems.

He has over 29 years of experience in air defence systems, tactics, and operations; technical intelligence; command and control expert systems applications; nuclear weapons employment; computerized wargames; anti-radiation missile countermeasures; and military systems requirements. He has direct experience with tube artillery and with the Ajax, Hercules, Hawk, and Patriot air defense missile systems. He also directed the production of U.S. Army technical intelligence on Soviet surface-to-air missile systems.

Colonel Bearden obtained a Master of Science degree in nuclear engineering from the Georgia Institute of Technology, and a Bachelor of Science degree in mathematics from Northeast Louisiana University. He is a graduate of the U.S. Army Command and General Staff College, as well as of several U.S. Army artillery and missile schools.

He holds a Sandan (third degree black belt) in Yoseikan aikido and was the first president of the Yoseikan Aikido Association of North America. He is a former singer, guitarist, songwriter, and recording artist. He is member of Mensa, the Society for the Investigation of the Unexplained, the International Tesla Society, the American Association for the Advancement of Science, the Association of the American Physics Teachers, the Air Force Association, the Association of the U.S. Army, the American Nuclear Society, the Association of Old Crows, the American Defense Preparedness Association, and the Alabama Academy of Sciences. He is also East Coast Director for the Association of Distinguished American Scientists.

Tom Bearden is the author of several books and numerous papers, briefings and presentations, dealing with anomalous phenomena, scalar electromagnetics, free energy devices, Soviet Tesla weapons, and Soviet scalar electromagnetic weather warfare; he is also the producer of several videotapes on these subjects.

Table of Contents

Foreword, by John White . . . xv
Introduction to Second Edition . . . xvii
Introduction to First Edition . . . xxix

Part One: A Sampling of Specific Paranormal Phenomena

The Vestigia Mystery light Experiment . . . 35
Unexplained Generation of Electricity . . . 42
Hyperfield Generation of Photon Patterns About A Bar Magnet Collector . . . 43
Hyperfield Circulation Patterns Above a Magnetized Railroad Track . . . 46
The Cyborg Effect and Orthorotational Sensitivity . . . 49
Additional Factors Consistent with the Vestigia Experiment . . . 51
Remote Viewing . . . 52
The Moray Radiant Energy Device . . . 54
An Atlantean Power Crystal? . . . 60
The Crystal Skull . . . 61
Metal Bending . . . 65
Thought Photography: Stella Lansing . . . 65
The Displacement Effect . . . 68
Pavlita's Psychotronic Generators . . . 71
Cell-like Invisible Tupoidal Forms . . . 71
UFOs . . . 74
1. Black Ring UFO . . . 74
2. Anchor Patterns . . . 74
3. Bifringement . . . 76
4. UFOs in Water . . . 76
5. UFOs in Clouds . . . 76
6. UFO Seen by the Author . . . 76
7. The 1966 Dennis Billings UFO Sighting . . . 82
8. The Second Billings UFO Sighting . . . 87
9. The 1973 Pascagoula UFO Sighting . . . 88
10. Other UFOs . . . 89
Falkville Spaceman . . . 89
Men-in-Black . . . 94
Sasquatch . . . 95
UFOs Over the Soviet Union . . . 99
The Sighting Over Petrozavodsk . . . 103
French Experiments with Psychotronics . . . 104
Dowsing . . . 104
The Strobe Effect . . . 105
Kirlian Photography . . . 111
Interaction of Biofield, Thought and Spark Discharge . . . 111

Kervran Effect . . . 114
Psychic Surgery . . . 114
A Deliberate Experiment with Kindling . . . 118
Fay Clark's "Fireflies" . . . 118
"Foo" Fighters . . . 119
Water Monsters . . . 119
Cattle Mutilations . . . 123
Big Mama . . . 123

Part Two: A Theoretical Background for Understanding PT, UFOs, and Psi Phenomena

Some Unexplained Mysteries of Physics . . . 129
Uri Geller . . . 130
My Approach to Psychotronics . . . 131
1. Reality as a Paranormal Bridge with Two Ends . . . 133
2. A Fundamental Correction to Classical Logic . . . 136
3. A Physical Example . . . 139
4. New Definition of Zero . . . 140
5. Einstein's Postulate . . . 141
6. Synchronicity of Concepts . . . 142
Primitive Perception . . . 142
Two-Slit Experiment . . . 146
Photon Quenching of the Paranormal (Time) Channel . . . 151
Raindrop Model of Quantized Change . . . 155
Kindling Effect . . . 156
Bioenergy Collectors . . . 157
Psychometric Effect . . . 159
All Mass Is Charged: Everything Is Electrical . . . 160
A Funny Thing About Electromagnetic Field . . . 163
Extinguishing Electrical Currents . . . 165
Death Transmission Via the Paranormal Channel . . . 166
Disease and Death Induction . . . 169
Dynamic Thought Constructs: Biofield Mechanisms . . . 170
Radionics . . . 171
Psychotronic Devices: A Simple Space (Quiton) Amplifier . . . 172
Typical Hieronymus Device . . . 172
Another Kind of Hieronymus Device and the Inceptive Cyborg Effect . . . 175
Probability: Throw of a Die . . . 176
Negative Time . . . 177
Time Oscillation, Quantum Change, and Mass . . . 177
Mass Is a Time-Differentiation . . . 178
Reality Is Like an Opossum . . . 179
Biofield Concepts . . . 180
Mass, Force, and 3-D Frame Rotation . . . 180

Mass is pi Rotation of Hyperspatial Flux . . . 184
Jitter or Dither Modulates the Primary Flux . . . 185
The Untold Story of Quarks . . . 186
Einstein's Spherical Model of the Cosmos . . . 188
A Charged Particle Is a Dual Closure of the Universe . . . 188
Adding and Subtracting Dimensions . . . 189
Mind Is Objective . . . 191
The Skin Transducer Effect: Turning a Thing into Its Opposite . . . 193
Everett's Many-Worlds Interpretation of Quantum Mechanics . . . 193
Spacetime Curvature Is Tricky . . . 193
Multiple Realities (Many Worlds) . . . 194
Clustered Orthogonal Worlds . . . 196
Crosstalk Between Multiple Realities . . . 199
Biofields: And Maverick Worlds . . . 200
Hyperfield Flux in a Magnetic Field . . . 201
Life and Death . . . 202
The Holographic Hyperchannel Effect . . . 209
Mind Linkage . . . 212
Angels, Imps, and UFO Tulpas . . . 214
Dreams and Unresolved Conflicts . . . 215
Ghost Rockets and Flying Saucers: Materialized Tulpoids . . . 218

Part Three: New Military Applications of Psi Research

Background to Psychotronic Research in the U.S. and the U.S.S.R . . . 223
Psychotronic Background Since WWII . . . 224
Electron Dissolution . . . 225
The 1973 Contactee Wave and Cattle Mutilations . . . 226
Radiation of the U.S. Embassy . . . 229
Disease and Death Transmission . . . 229
OtherWeapons . . . 230
Hyperspace Howitzer Operation . . . 230
A Possible Operational Test of Psychotronic Antiaircraft Weapons . . . 236
Population Conditioner . . . 238
A Midcourse ABM System . . . 241
The Bell Island Incident . . . 242
A Terminal ABM System . . . 245
Sweep Mode, Sweeping Away a Nuclear Detonation . . . 246
Zarg, Armageddon, and Linkage . . . 247
Virtual States and Hyperspaces . . . 254
Feynman Diagrams . . . 256
Nature of an Electromagnetic Wave . . . 261
Neutrinic Longitudinal Polarization Waves . . . 262
A New Look at Modulation . . . 265
Hyperspatial Aspects of Modulation . . . 269

The Eureka Concept 272
Biophotons and **Virtual EM Field of a** Bio-organism 273
The Priore Machine 273
The Neurophone 278
Soviet "Woodpecker" Signals 279

Part Four: Soviet Phase Conjugate Directed Energy Weapons

Weapons That Use Time-Reversed Electromagnetic Waves 285

Glossary 297

Bibliography 329

List of Photographs

1. The Vestigia mystery light experiment (© Vestigia, Stanhope, NJ. Used by permission.) . . . 37-38,40
2. Hyperfield flux in a magnetic field (Courtesy George Meek) . . . 44-45
3. Remote viewing (Courtesy Dr. H.E.Puthoff) . . . 53
4. The Moray radiant energy device (©Dr. T.Henry Moray. Used by permission.) . . . 54-55
5. An Atlantean power crystal? (Courtesy Al Bielek) . . . 59
6. The crystal skull (©El Cariso Publications. Used by permission.) . . . 62
7. Metal Bending (© *New Realities*. Used by permission.) . . . 66
8. Clockwork patterns (© Mrs. Stella Lansing. Used by permission.) . . . 67
9. Displacement effect (Courtesy George Meek and Paul Trovillo) . . . 68
10. Pavlita's psychotronic generators (Courtesy James L. Hickman) . . . 69-70
11. Cell-like invisible tulpoidal forms (©Trevor James Constable. Used by permission.) . . . 72
12. Form for potential materialization (©Trevor James Constable. Used by permission.) . . . 73
13. New Mexico UFO (Courtesy Wide World Photos) . . . 75
14. Oregon UFOs (Courtesy Project Bluebook) . . . 77
15. Black Ring UFO (Courtesy Project Bluebook) . . . 78
16. Anchor patterns (Courtesy Ira Maxey, Project Bluebook, Brad Steiger, Fay Clark) . . . 79-80
17. Bifringement (Courtesy Project Bluebook) . . . 81
18. UFO in water (Courtesy Project Bluebook) . . . 81
19. UFO in clouds (Courtesy Project Bluebook) . . . 83
20. UFO seen by author (Courtesy of the late Ray Palmer) . . . 83
21. Second Billings UFO (© 1978 The American Association of Meta-Science) . . . 85
22. Spanish UFO (Courtesy Spanish National Air Ministry) . . . 91
23. Ohio UFO (Courtesy *Columbus Evening Dispatch)* . . . 91
24. Heflin UFO (Courtesy Rex Heflin) . . . 92-93
25. Falkville spaceman (Courtesy Wide World Photos) . . . 96
26. Men-in-black coin (Courtesy Warren York) . . . 98
27. Sasquatch (Courtesy Wide World Photos) . . . 101
28. Bigfoot cast (Courtesy Wide World Photos) . . . 102
29. The strobe effect . . . 106-107
30. Kirlian photography (Courtesy Danniel H. Kientz) . . . 108-110
31. Interaction of biofield, thought, and spark discharge (Courtesy James L. Hickman) . 112-113
32. Psychic surgery (Courtesy George Meek) . . . 115
33. Kindling of thought bioenergy in snow (Courtesy Mrs. Ann Baune) . . . 116
34. A deliberate experiment with kindling (© 1978 The American Association of Meta-Science) . . . 117
35. Fay Claris "Fireflies" (Courtesy Fay dark) . . . 120
36. 'Too" fighters . . . 121
37. Pleiosaur-like creature hauled from the sea by Japanese fishermen Courtesy World Wide Photos) . . . 122
38. Loch Ness monster (© Academy of Applied Science, Boston) . . . 124
39. Cattle mutilation (Courtesy Tom Adams and Walt Andrus) . . . 125
40. Big Mama (Courtesy Bill Jackson) . . . 126
41. Hieronymus device (Courtesy James B. Beal) . . . 219
42. Ghost Rockets (Courtesy of the late Ray Palmer) . . . 244

List of Figures

1. Hyperfield circulation patterns above a magnetized railroad track . . . 47
2. The cyborg effect and orthorotational sensitivity . . . 49
3. Reality: a paranormal bridge with two ends . . . 133
4. A fundamental correction to classical logic . . . 137
5. A physical example . . . 139
6. Primitive perception . . . 143
7. Two-slit experiment . . . 147
8. Photon quenching of the paranormal . . . 150
9. Raindrop model of quantized change . . . 154
10. All mass is charged: everything is electrical . . . 161
11. Death transmission via the paranormal channel . . . 167
12. Typical Hieronymus detector . . . 173
13. Biofield concepts . . . 181
14. Rotation of 3-D frames . . . 182
15. Mass is re-rotation of hyperspatial flux . . . 183
16. Einstein's spherical model of the cosmos . . . 188
17. Adding and subtracting dimensions . . . 190
18. Turning a thing into its opposite . . . 192
19. Multiple realities (many worlds) . . . 195
20. Clustered orthogonal worlds . . . 197
21. Crosstalk between multiple realities . . . 200
22. Biofields: time-clustered orthoframes . . . 201
23. Hyperfield flux in a magnetic field . . . 203
24. Life and death . . . 204
25. Consciousness, life, and intent . . . 207
26. The holographic hyperchannel effect . . . 210
27. Output of stage i . . . 211
28. Layers of consciousness . . . 213
29. Dreams are unresolved conflicts . . . 216
30. Collective conflict initiates prophetic tulpoids . . . 219
31. Examples of UFO waves . . . 227
32. 1973 Contactee wave . . . 228
33. Cattle mutilations . . . 231
34. Induction of Legionnaire's disease . . . 232
35. Hyperspace howitzer operation (2 figures) . . . 235
36. Nuclear Hyperspatial howitzer . . . 237
37. Amidcourse ABM system . . . 240
38. A terminal ABM system . . . 248
39. Sweep Mode: sweeping away a nuclear detonation . . . 249
40. ZARG . . . 252

FOREWORD

by John White

This book deals in a comprehensive fashion with such a vast array of topics — from physics, psychology and evolution to advanced weaponry, military strategy and international politics — that many of you may become anxious, even fearful on reading it. In fact, this assembly of previously uncorrelated information and scientific breakthrough may be the most disturbing you have ever received.

This cannot be helped. This book represents an important step in our efforts to avoid global war involving not only nuclear armaments but also what appears to be a revolutionary development in Soviet military technology — psychotronic weapons. They are the modern equivalent of the legendary invincible sword, Excalibur.

The author is former U.S. Army officer Lt. Col. Thomas E. Bearden, now retired. During his twenty-year military career specializing in artillery, nuclear weapons, and military intelligence, Tom has pondered and researched many subjects that he covers here. His access to the full range of both military and NASA documents will be evident in his book. What may become highly classified data in the future is being revealed to you, our nation's ultimate policymakers, for an urgent reason that Tom has called Operation Fer-de-Lance, the presumed Soviet plan for domination of the planet through nuclear-psychotronic aggression and warfare. For the moment I would simply like to note two statements that indicate the basis for our sense of urgency:

1. On 13 June 1975, Soviet Premier Leonid Brezhnev urged a ban on research and development of new kinds of weapons "more terrible than anything the world has known."

2. In January 1977 former Air Force Chief of Intelligence, Maj. Gen. George J. Keegan (Retired) told *Newsweek* magazine, "The Soviets are working on dramatically exotic new weapons, twenty years ahead of anything ever conceived in the U.S. — so awesome as to lead the Soviets to believe that in the coming decade they would be capable of total neutralization of our ballistic and submarine missiles."

The U.S. military intelligence community interprets these signs in conventional terms as perhaps indicating the development of laser rays. Tom disagrees. His book will deal with the possibility that these weapons are psychotronic or paraphysical in nature.

In fact, we can say that in a strict sense, these are not weapons but devices — breakthrough technology with an enormous potential for the destruction of humanity. They are a second-or third-generation outgrowth of radionic devices presently used in unorthodox medicine for diagnosis and healing. Extremely compact, they could be carried in a suitcase and planted near targets — ICBM sites, communications centers, etc. Even if one of these devices were found and examined, it would only look like an electronic switching circuit or a small transmitter/receiver set, rather than a bomb or explosive.

The energy and the mechanism involved in psychotronic damping of nuclear, chemical or electromagnetic technology is, from all indications, unrecognized by official Western science but nevertheless inherent in it. That also has been deeply pondered by Tom, and this book will give a full explanation of the physics, mathematics and technology involved. It is not an exaggeration to say, as Tom does, that the explanation offers a "physics of metaphysics" — a fully developed theory of paranormal phenomena that elegantly unites physics and psychology. The ramifications of what Tom calls perception theory lead into every field of human knowledge and inquiry with revolutionary results — from science, theology and philosophy through the full spectrum of paranormal phenomena such as UFO's and psychokinesis into the elementary school classroom, the supermarket shopping basket and the voting booth. They most certainly lead into the safety of your homes and the integrity of your minds.

Before you turn to *The Excalibur Briefing,* I want to leave you with these thoughts. The material you are about to read will certainly be denied by our own government and military and probably by a major segment of the scientific community. It is not unlikely that Tom will be dismissed as a paranoid crackpot. Such tactics have been employed before against brilliant, courageous people who challenge the fundamental dogma of the establishment as Tom does here. Nevertheless, I want to reassure you that Tom is sane, sober, and serious.

Of course, such a person could still perhaps be mistaken. In that regard, I believe you will find Tom's presentation to be persuasive. He himself is careful to distinguish speculation from fact, inference from descriptive statement. Even if Tom were paranoid, however, the question arises: *What if there is good reason for paranoia?* To phrase it positively: We should welcome truth and enlightening insight whenever offered, regardless of the source. Do not let *ad hominem* arguments affect your critical judgment about the soundness of this presentation. Assess the work, not the man, for the work is always greater. And having judged the work affirmatively, render true acknowledgement — not lip service — by sharing the ideas in this book with others. Only free, informed, vigorous effort in the court of world opinion can defuse the possibility of Operation Fer-de-Lance and psychotronic mind control leading to total enslavement of the human race.

In closing, I want to point out that Tom's fundamental concern is the unification and evolution of the human species to a higher form of life through a process that he terms "mind linkage." This stage of growth to higher consciousness is explored in the latter part of the book. It is a breathtaking portrait of how the spirit of science can lead to a science of the spirit, to a physics of metaphysics.

INTRODUCTION TO THE SECOND EDITION

Since the first edition of *Excalibur Briefing* was published, a great deal of progress has been made on the actual physics of unusual and paranormal phenomena. Indeed, so much progress has been made in the ten years since the 1978 or so cutoff of most of the Excalibur material, that I really should rewrite the entire book. However, time will not permit that luxury at present I am simply too hard-pressed in the strenuous efforts to move a free energy machine to market and to convince our government that unorthodox Soviet superweapons present us with a problem of the gravest magnitude.

Accordingly, the inclusion of one of my latest papers, "Soviet Phase Conjugate Directed Energy Weapons," together with an updated glossary for the entire emerging field, will have to suffice.

The important thing is that **a separate new field of physics is beginning to emerge.** It turns out that what we've gotten on to is a unified field—one can now turn electromagnetic energy into gravitational energy and vice versa. Indeed, gravitational potential is now revealed as simply infolded electromagnetics, and electromagnetics is simply the outfolding of the internal contents of gravitational potential.

Colleagues have already proven it on the laboratory bench, by building both "free energy" devices and practical antigravity devices.

This new, extended electromagnetics—electrogravitation—I have dubbed **scalar electromagnetics.** The key to it is to let the EM force fields fight themselves to a "cancellation," forming **a** vector zero. If we do this in a nonlinear medium (modulator), the summing/multiplying EM vector forces are locked together and remain as an infolded EM system inside the EM vector zero. This now is a gravitational system. By merely varying (in phase) the summing EM components, one varies the local energy density of vacuum. Rigorously that is a gravitational wave. Further, it is a very powerful G-wave, for we are utilizing EM forces some 1042 times as strong as the normal weak G-force.

Classical EM has taught us to simply discard the components in the zero vector summation, replacing the system of opposing EM forces with a vector EM zero. This of course makes all vector EM zeroes equal. However, it totally ignores the space-time/vacuum stress of the summed forces, and the resulting gravitational implications. Therefore we have been taught to ignore any gravitational aspects of normal EM circuits, and indeed we proceed to release the G-stress effects in the circuits when we build them as we have been taught

Ordinary EM represents the release of the internal stress of gravity. By teaching us to make nonzero EM, scientists have taught us to always release electrogravitational potentials as electromagnetic forces. Thus in classical EM—and in most of the circuits we build—the EM force fields are the primary causative agents. Classically, when these force fields reduce to zero, there is no more electromagnetics going on. That is true, but there can still be a very large amount of gravity and inertial effects going on!

However, quantum mechanics teaches us that the EM force fields are not at all the primary causes. Instead, the potentials are the primary things; EM forces are simply made from these potentials by differentiating operators. And when the force fields are zero, the potentials still exist. Further, when these "forceless potentials" interfere—

even at a distance—real EM effects cun still be obtained, in total violation of ordinary EM and ordinary mechanics!

This is called the Aharonov-Bohm Effect, and in 1986 it was finally proven to most physicist's satisfaction. Only the most diehard skeptics still object to it, according to *Physics Today,* January 1986.

At any rate, when we have zeroed the E and B fields, we can still have the potentials, according to modern physics. These potentials can interfere to produce electromagnetic force effects—even at a distance.

Further, the zero summation can be dynamic; that is, the vector components can be varying, so long as they always sum to a zero vector. Actually such a zeroed system now has an infolded, deterministic pattern of dynamic forces, according to the pattern we deliberately construct. Further, the energy of each force component infolded is varying, and thus the overall energy density of local vacuum is varying.

As we said, rigorously this defines a gravitational wave. So the zero-vector approach allows EM wave energy to be turned directly into gravitational wave energy. Now it is the curvature of spacetime that is being varied locally. That's a really astounding thing.

We can now deliberately engineer the vacuum/spacetime itself, with all that that statement implies. Locally we can bend spacetime itself, which Einstein assumed could never be done except by a huge collection of mass—such as a sun, star, neutron star, etc. But here we can do it with simple things such as opposing coils, opposing E-fields, etc. We've just violated one of the sacrosanct, severely limiting assumptions of ordinary (Einstein's) general relativity!

That is, up to now most Western physicists have assumed that the local spacetime/vacuum cannot be curved. They assume that, where we the observer and the laboratory instruments are, only special relativity applies. Locally the observer always has a "Lorentz frame," in that view. This assumption (the local Lorentz frame) means that all the conservation laws apply, and physical reality stays well-behaved where the laboratory is and where we are. Ordinary relativity becomes just a sort of "special relativity with distant perturbations."

The only curvature of spacetime of any consequence is only to be found at or near distant stars, suns, black holes, and other huge collections of mass, in this highly restrictive view. Further, this assumption implies that one can never have an experimental general relativity, since where one is experimenting (locally) there is always essentially zero spacetime curvature!

However, one need not have such a formidable restriction at all. Two bucking transformers can make a B-field vector-zero a little bit More complex circuits can easily be designed to sum (or multiply) force fields to zero very well. When we do this zero summation, we also get an amazing gain as follows: Consider two electrons in free space. As is well known, the electric field force (repulsion) between them is about 10^{42} times as strong as the gravitational field force (attraction) between them. So the electric force is so very much stronger that the comparatively weak gravitational force can be entirely neglected, in most applications. However, if we "strangle" that electric field force by zero summation, all the opposing electric forces are converted directly into gravitational potential!

Interference of two such potentials can directly generate gravitational forces. So, if

we could zero-sum their E-fields perfectly, we could instantly amplify the gravitational force between the two electrons by a factor of 10^{42}. With such a gravitational force amplification factor, our altered "electrical" circuits would actually become powerful electrogravitational circuits. Further, appreciable gravity effects would now be experienced by any mass, object, or device exposed to the action of the circuits. This is the fundamental secret that Nikola Tesla discovered, one which he never openly revealed.

Further, by locking opposing EM waves together, we may easily construct purely scalar EM (electrogravitational) waves and beams. In such case, amazing new phenomena are encountered: (1) one can increase or decrease the mass and inertia of an object; (2) one can produce a unilateral force in and on each and every nucleon in a body, thus accomplishing the long-sought "antigravity"; (3) a unilateral force drive—a "space drive"—can be constructed; (4) transmutation of elements becomes fairly simply done, with miniscule energy; (5) effects at a distance—such as cold explosions or hot explosions—can be accomplished; (6) negative energy and negative time effects can be created and utilized; (7) Newton's third law can be manipulated and violated at will; (8) negative entropy effects can be created and utilized; and (9) direct energy extraction from the vacuum can be accomplished, etc. So many new effects are encountered that it will take a generation of graduate students and university laboratories to get a good handle on most of them.

The reader is urged to remember these rules: (1) The destructive interference of scalar EM waves (electrogravitational waves) produces EM energy in, or extracts it from, the interference zone. (2) The destructive interference of ordinary EM waves produces gravitational potential energy. (3) The release of the ordinary EM force fields represents the bleed-off of a 5-dimensional gravitational potential as ordinary electromagnetics. (4) The bottling-up of the ordinary EM force fields represents the forced bleed-off of a 5-dimensional gravitational potential as ordinary 4-dimensional gravitational force. (5) The EM field and the ordinary (4-space) G-field are just separate bleed-off s of the same 5-dimensional gravitational potential field.

Thus, I make no bones about it; we have a new physics in the offing—one that is eminently practical and easily engineered by any modern electromagnetics laboratory.

Since the first edition of this book was issued, it has also become obvious that at least two other phenomena are involved in UFOs, and intermingled with the "materializations from the collective unconscious" true UFO phenomena. These two additional things are:

(1) A great number of "lights at night" and "mysterious fireball" type phenomena—and giant balls of light and glowing hemispheres of light of gigantic size—are actually due to deliberate Soviet long range, high energy, real-time holography using phase conjugation. These phenomena are to accomplish orientation and alignment of giant Soviet weapons, and at the same time deliberately evoke UFO reports and scientific skepticism, providing perfect deception.

(2) Several nations of the world—at least two—have been building and flying antigravity spaceships all over the solar system, since the early 1950's. A very small number of UFO ship reports and encounters are due to these ships and their crews. However, control of these ships is not under any duly elected government, but passes out of the government concerned, into and under the control of some mysterious group

which I loosely refer to as "the control group." This is the same mysterious group which has been suppressing free energy and antigravity inventors and inventions for a great number of years.

Thus in *Excalibur Briefing* we are still addressing the primary UFO phenomena: Materializations from the collective human unconscious. Coverage of the other two parts of the overall reported UFO phenomena will be made elsewhere.

So it seems that, under my hard-pressed circumstances, the best thing to do for the second edition of *Excalibur Briefing* is to include something that shows some of the drastic progress that has been made. By adding a glossary and a current paper, the book will also be made much more usable. I also have prepared an index for the first edition, but it cannot be included because of space limitations. Admittedly that is regrettable and still not the optimum, but it will have to suffice. Perhaps in the future I will be able to do a complete rewrite of the book, for *Excalibur III.*

Until then, I ask the reader's indulgence and understanding.

* * *

In the first edition we accented the hyperspatial aspects of the problem, but also pointed out that higher dimensional spaces and deeper nested levels of virtual state are in fact one and the same thing. The reader should keep in mind that when we "inter-nest" vector zero systems, we are performing direct engineering in hyperspace.

Let me be more specific. When you zero sum a group of EM force vectors, you place those component vectors "inside the zero," so to speak. In modern language you have placed ordered patterns directly inside the violent flux of virtual particles comprising the vacuum. The modern concept of the vacuum is that it is like a seething plasma or gas. However, it's a very strange gas, for each particle arises spontaneously out of nowhere (according to quantum mechanics), and almost immediately turns into something else and/or disappears. Thus the vacuum plasma or gas is rather peculiar; the particles comprising it appear and disappear so rapidly that they cannot individually be detected. However, while a virtual particle exists, it is in motion, and so a violent flux of these "phantom particles" comprises the vacuum/spacetime.

However, just as many fleeting particles in the vacuum are moving backward in observer time as are moving forward in it! So this wild "vacuum gas" of ghost particles exists in both positive and negative time at once!

Anyway, when we make a zero vector EM system, each component force in the summation represents a gradient in this virtual particle flux. That is, we have "patterned" and organized the flux—polarized it, so to speak. And that now overturns one of the fundamental assumptions of quantum mechanics.

Quantum mechanics assumes that the violent flux of vacuum ghost particles is totally randomized. That is, no deterministic pattern exists in the flux. These virtual changes collect or cohere statistically, not deterministically, in the standard assumption. When they happen to collect/cohere sufficiently, the threshold of an observable quantum change is breached, and a quantum change occurs.

It can readily be seen that, in the ordinary view, the occurrence of these quantum changes is totally statistical. And indeed it is, so long as the virtual particle flux is randomized. However, with zero vector summation (or multiplication) we have produced

deterministic patterns in the flux—and hence in the cohering and collecting of this flux on observable charged particles. Therefore, these deterministic "virtual state" ordered patterns will result in the appearance of deterministic patterns in the occurrence of observable quantum changes.

Now we have begun to engineer physical reality directly; that is, one can now begin to pre-determine which statistical change shall be favored, or in the extreme case, which one shall occur, and whether or not it shall even occur at all.

The renowned physicist, David Bohm, has written a theory of "hidden variables" which could fit and describe all of physics (nothing out there contradicts it). It has largely been ignored, and will continue to be ignored unless it can show appreciable application that normal theory cannot cover. With the scalar EM approach, we can now directly provide hidden EM force field vectors, ordering the virtual state vacuum flux, and we may vary these ordered virtual patterns at will to produce startling new results in charged particle systems. So now we can directly engineer Bohm's "hidden variables," and the vacuum itself—something ordinary theory cannot cover. Drastic changes in the physicist's view of fundamental physical reality, and of what he can do about it, now result

But to return: We wish to engineer additional hyperspaces. (The first zero-vector summation places the component vectors in the fifth dimension.) If we take one of the component EM vector forces in the first zero vector summation, and we then take a point on it as yet another "reference zero", we may encapsulate a second series of zero-system summation vectors into and within that zero-point. In this case we have placed these second vectors into yet a deeper level of virtual state vacuum. That is, we have reached into yet another hyperspace with our engineering and control. Indeed, we have placed the second system EM vectors into the sixth dimension. So we have become true hyperspace engineers.

The process is repeatable as desired. We may reach any hyperspace we wish, as our technology and control develop.

Now we see the impact In modern Kaluza-Klein geometry, one needs about 11 or so dimensions if one is to account for quarks, charm, etc. Now we have a direct tool to reach into any one or all of these hyperdimensions and affect the exact particle or component desired. We will be able to engineer matter—including the nucleus, and including inside the proton and neutron—in almost any way we wish. It all follows from scalar electromagnetics, which allows the direct engineering of hyperspace in all its dimensions.

Remember, engineering in hyperdimensions is just the engineering of nested levels of vacuum potentials. Even more startling, we can also place "thoughts" and effects directly in the mind itself, including the unconscious mind.

As we stated in the first edition of this book, we may model the mind as simply an objective 3-space, three turns away from the 3-space of the ordinary physical world. If we nest two or more additional zero-vector systems in our first one, then we have placed affects ("vectors") directly inside the mind itself. If we know the code of the human brain-tuner, we can now manipulate the mind directly. Electromagnetically, by scalar EM. And it appears that the Soviet Union has begun to reach this frightening capability.

Disease patterns may be induced upon ordinary EM carriers in the same manner,

by nesting the zero-vector systems. That is, of course, if one has measured the scalar patterns evident in the induced disease, say, in the Kaznacheyev-type experiments with the desired disease patterns. The reverse is also true: Nesting the patterns in the proper context on EM field carriers can cure diseases such as cancer and leukemia, as evidenced by the Priore device.

One can also make a practical "free energy" device by setting up a standing scalar wave resonance in a localized region or device. From the "high stress" point to the "low stress" region of vacuum formed by such a standing scalar wave, a literal "river of energy" is flowing in the vacuum itself. Once the river is established, only the "leakage" need be replenished. Hence, if one builds a special sort of "paddle wheel" to react with the river and turn in it, one obtains shaft power freely from the localized curvature of spacetime. In that case, an ordinary generator can be driven by the shaft torque to provide very cheap, or"free," electrical energy.

Several inventors—three of whom I work with in one respect or another—now have demonstration models of such machines, which take diverse forms.

Because of the extreme importance of these emerging potentialities, in recent years I've concentrated intensely upon the properties of the vacuum as spacetime, and uncovered shortcomings (and downright errors in many cases) in ordinary physics and electromagnetics. Slowly the scalar EM picture has emerged, and a series of papers has been written and published to develop the concepts of the new approach.

The scalar approach also includes the ability to engineer negative energy and negative time flow. The reader is referred to Chapter 4, "Extraordinary Physics," of my forthcoming book, *AIDS: Soviet First Strike,* Tesla Book Co., P.O.Box 1649, Greenville, Texas 75401 for a summary of the vast importance of the time-reversed EM wave (phase conjugation).

Let me here just accent a rule of great importance: It is actually the key to negative energy, negentropy, antigravity, free energy, transmutation, Tesla's wireless transmission of energy at a distance without loss, Tesla's original magnifying transmitter, and many other things.

First we need the expression CPTEGS, where C is charge, P is parity, T is time flow, E is energy, G is gravity, and S is entropy. We shall be concerned with the algebraic sign of each term in the expressioa The rule deals with photon interaction with a charged particle inside an atom. Normally, incident photons interact with an electron in the electron shells, so C is normally negative. This produces normal parity, and causes the normal or positive flow of time, s T is normally positive. The normal kinds of energy, gravity, and entropy are experienced, so energy is positive, gravity is positive (attraction), and entropy is positive (progressive interactions in a system tend to more and more disorder).

The astonishingly powerful rule is this: In a photon interaction with a charged particle in an atom, if any one of the terms of the expression CPTEGS is reversed in algebraic sign, all the other terms are reversed in algebraic sign.

Thus if one makes scalar EM, the wave (and its photons) passes through the electron shells and interacts with (is absorbed in, and raises to an excited state, which then decays to emit a wave and photons) the highly nonlinear, positively charged nucleus. This represents a reversal of C, hence a reversal of P, T, E, G, and S also.

Consequently, a time-reversed wave—a phase conjugate replica of the incident

wave—is emitted by the decaying excited nucleus. In nonlinear phase conjugate optics, this is the mechanism that produces the phase conjugate wave. This is also the mechanism that produces a very large amplification of the incident wave when a "pump wave" (two waves 180 degrees out of phase) are used in the nonlinear (modulating) medium of the phase conjugate mirror.

(The reader is referred to any good book or summary paper on phase conjugate optics; for example, see David M. Pepper, "Nonlinear optical phase conjugation," *Optical Engineering* 21(2), Mar./Apr. 1982, p. 156-183.).

When one pumps a phase conjugate mirror material sufficiently, then "tickles" the release of the total nuclear excitation energy as phase conjugation replica waves (negative energy), appreciable negative time is produced in the decaying nuclei of the mirror. In negative time, gravity is a repulsion, not an attractioa The mirror thus produces antigravity, and gets lighter. If it is forced to sufficiently high amplification, it can be made to float in air. At higher amplification still, it will accelerate upward.

Some other references of interest to this new edition follow:

1. **Robert A. Fisher, Ed., *Optical Phase Conjugation*, Academic Press, New York, 1983. Collection of papers. An extensive bibliography is given at the end of the book.**
2. **Ya. Zel'dovich, N. F. Pilipetsky, and V. V. Shkunov, *Principles of Phase Conjugation*, Vol. 42, Springer Series in Optical Sciences, Theodor Tamir, Ed., Springer-Verlag, New York, 1985.**
3. **Amnon Yariv, *Optical Electronics*, Third Edition. Holt, Rinehart and Winston: New York, 1985. See particularly Chapter 16: "Phase Conjugate Optics—Theory and Applications."**
4. **Y. Aharonov and D. Bohm, "Significance of Electromagnetic Potentials in the Quantum Theory." *Physical Review*, Second Series. 115(3), Aug. 1,1959. p. 485-491.**
5. **R. G. Chambers, "Shift of an electron interference pattern by enclosed magnetic flux." *Physical Review Letters*. 5(1), My 1,1960. p. 3.**
6. **Richard P. Feynman, Robert B. Leighton, and Matthew Sands, *The Feynman Lectures on Physics*. Volume n, Section 15-5, p. 15-8 to 15-14.**
7. **E. T. Whittaker, "On an expression of the electromagnetic field due to electrons by means of two scalar potential functions." *Proc. Lond. Math. Soc.*, Vol. 1,1903. p. 367-372.**
8. **T. E. Bearden, *Solutions to Tesla's secrets and the Soviet Tesla weapons*. Tesla Book Co., Greenville, TX, 1981.**
9. **T. E. Bearden, *Tesla's secret and the Soviet Tesla weapons*. Presented in absentia at the First International Unorthodox Energy Symposium, Toronto, Canada, 1981. Available from Tesla Book Co.**
10. **T. E. Bearden, "Soviet weather engineering over North America." 1-hour videotape, 1985. Available from P.O. Box 1472, Huntsville, AL 35807.**
11. **Gwynne Roberts, "Witness to a super weapon?" *The Sunday Times*, London, England, Aug. 17,1980.**
12. **Greg Rippee, "Mushroom cloud sighted off Japan." *LosAngeles Daily News*, Apr. 11,1984. p. 1,8.**
13. **Martin Ebon, "Moscow, June 11, 1977." in his *Psychic Warfare: Threat or Illusion*. McGraw-Hill Book Co., New York, NY, 1983. p. 1-11.**
14. **A. K. Lapkovskii, "Relativistic kinematic equations and the theory of continuous media." *Soviet Physics Journal* 21(6), June 1978-Dec. 1978.**
15. **B. N. Belyaev, "On random fluctuations of the velocity of light in vacuum." *Azvestiya Vysshikh Uchebnykh Zavederdi, Fizika*. 11, Nov. 1980. p. 37-42.**
16. **Ingram Bloch and Horace Crater, "Lorentz-invariant potentials and the non-relativistic limit" *American Journal of Physics*. 49(1), Jan. 1981. p. 67-75.**

17. T. E. Bearden, *Comments on the new electromagnetics: Part I: discrepancies inpresent EM theory.* Tesla Book Co., Greenville, TX. 1982.
18. T. E. Beaiden, *Comments on the new electromagnetics: Part 2: the secret of electrical free energy. Tesla* Book Co., Greenville, TX. 1982.
19. T. E. Bearden, *Toward a new electromagnetics: Part III: clarifying the vector concept.* Tesla Book Co., Greenville, TX. 1983.
20. T. E. Bearden, *Toward a new electromagnetics: Part IV: vectors and mechanisms clarified.* Tesla Book Co., Greenville, TX. 1983.
21. T. E. Bearden, "USSR: New beam energy possible?" *Defense & Foreign Affairs Daily.* 13(111), June 12,1984. p. 1-2.
22. T. E. Bearden, *Star Wars Now! The Bohm-Aharonov effect, scalar interferometry, and Soviet weaponization.* Tesla Book Co., Greenville, TX. 1984.
23. T. E. Bearden, "A conditional criterion for identity, leading to a fourth law of logic." *Pursuit.* 13(1), Winter 1980. p. 6-10.
24. Max Frankel, "Khrushchev says Soviet will cut forces a third; *sees* 'fantastic' weapon." *New York Times.* Jan. 15,1960. p. 1.
25. David Bohm and B. J. Hiley. "On the intuitive understanding of nonlocality as implied by quantum theory." *Foundations of Physics.* 5(1), Mar. 1975. p. 93-109.
26. Derek Wood, "USA probes mystery cloud reported off *Japan." Jane's Defence Weekly.* 1(18). May 12,1984. p. 716.
27. Yossef Bodansky. "Soviets 'testing chemical agents in Afghanistan'." *Jane's Defence Weekly.* 1(13), Apr. 7,1984. p. 508.
28. "Explosive events seen on Soviet island." *Aviation Week & Space Technology.* Sep. 26,1983. p. 31.
29. Archibald E. Roberts, "The Tesla Factor." *Bulletin. Committee to Restore the Constitution,* POB 966, Fort Collins, CO 80522. Nov. 1984. p. 1-6.
30. See a series of articles by C. B. Baker in *Youth Action News,* POB 312, Alexandria, Virginia 22313. "Diabolic Soviet Warfare," Nov. 1984; "Soviet Weather Mayhem," Nov. 1983; "The Soviet Zapping of America," Dec. 1986; "Fifth Column Treachery," May 1987, and others.
31. D. W. McCann, "The Enhanced-V: a satellite observable severe storm signature." *Monthly Weather Review.* I11, 1978. p. 887-894.
32. I. J. R. Aitchison, "Nothing's plenty: the vacuum in modem quantum field theory." *Contemporary Physics.* 26(4), 1985. p. 333-391.
33. G. E. Stedman, "Ring interferometric tests of classical and quantum gravity." *Contemporary Physics.* 26(4), 1985. p. 311-332.
34. Peter Hobbs, "Holes in clouds?" *Weatherwise.* 38(5), Oct 1985. p. 254-258.
35. T. D. Lee, *Particle physics and introduction to field theory.* Harwood Academic Publishers, New York, NY 1981.Second printing with corrections, Nov. 1982.
36. Ruggero Maria Santilli. *Ethical probe on Einstein's followers in the USA.: An insider's view.* Alpha Publishing, POB 82, Newtonville, MA 02160.1984.
37. Bryan G. Wallace, "The great speed of light in space coverup." *Scientific Ethics,* 1(1), Feb. 1985. p. 2-3.
38. Bryan G. Wallace, "Letters to the Editor." *Physics Today.* 36(1), 1983. p. 11,
39. Bryan G. Wallace, "Letters to the Editor." *Physics Today.* 37(6), 1984. p. 15.
40. M. E. Ash, I.I. Shapiro and W. B. Smith. *Astron. J.* 72,1967. p. 72.
41. Bryan G. Wallace. *Spectrosc. Lett.* 4,1971, p. 79.
42. Bryan G. Wallace. "The unified quantum electrodynamic ether." *Foundations of Physics.* 3, 1973. p. 381.
43. D. E. Thomsen, "Was a fifth force felt?" *ScienceNews.* 129(3), Jan. 18,1986. p. 38.
44. S. Olariu and I. Iovitzu Popescu. "The quantum effects of electromagnetic fluxes." *Reviews*

of Modern Physics. 57(2), Apr. 1985. p. 339-438. Thorough review of the entire subject of the Aharonov-Bohm effect, from the standpoint of conventional physics. A very comprehensive list of references is included.

45. V. I. Denisov and A. A. Logunov. "The inertial mass defined in the general theory of relativity has no physical meaning." *Teoretichedskaya i Matematicheskaya Fizika,* 51(2), May, 1982. p. 163-170. (in Russian). English translation in *Theoretical and Mathematical Physics*
46. A. A. Vlasov and V. I. Denisov. "Einstein's formula for gravitational radiation is not a consequence of the general theory of relativity." *Teoreticheskaya i Matematicheskaya Fizika.* 53(3), Dec. 1982. p. 406-418. (in Russian). English translation in *Theoretical and Mathematical Physics.*
47. Richard A. Blade, "Modification of Maxwell's equations in free space to account fornonzero photon mass and scalar electromagnetic waves." *Proceedings of the Tesla Centennial Symposium,* an IEEE Centennial Activity, Colorado College, Colorado Springs, Colorado, Aug. 9-11,1984, p. 91-92.
48. Jack Y. Dea. "Scalar fields: their prediction from classical electromagnetism and interpretation from quantum mechanics." *Proceedings ofthe Tesla Centennial Symposium,* 1984. p. 94-98.
49. Robert W. Bass. "Self-sustained non-Hertzian longitudinal wave oscillations as rigorous solutions of Maxwell's equations for electromagnetic radiation." *Proceedings of the Tesla Centennial Symposium,* 1984. p. 89-90.
50. T. E. Bearden. "Tesla's electromagnetics and its Soviet weaponizauon." *Proceedings of the Tesla Centennial Symposium,* 1984. p. 119-138.
51. Theodor Kaluza. *Sitz.* Berlin Preuss. Acad. Wiss. 966,1921.
52. O. Klein. *Z. Phys.* 37.895,1926.
53. Charles W. Misner, Kip S. Thome and John Archibald Wheeler. *Gravitation.* W. H. Freeman and Co., San Francisco, CA, 1973. p. 19-21, 71-72, 163-165, 367-369. Presents the limiting assumptions imposed on general relativity, to provide the severely restricted "ordinary general relativity" taught in almost all Western universities. The Soviets are not nearly so attached to such artificial assumptions.
54. V. I. Denisov and A. A. Logunov. "New theory of spacetime and gravitation." *Teoreticheskaya iMatematicheskaya Fizika,* 50(1), Jan. 1982. p. 3-76. (In Russian). English translation in *Theoretical and Mathematical Physics,* 50(1), July 1982. p. 1-48.
55. Raymond C. Gelinas. "Apparatus and method for determination of a receiving device relative to a transmitting device utilizing a curl-free magnetic vector potential field." U.S. Patent No. 4,447,779. May 8,1984.
56. Raymond C. Gelinas. "Apparatus and method for modulation of a curl-free magnetic vector potential field." U.S. Patent No. 4,429,288. Jan. 31,1984.
57. Raymond C. Gelinas. "Apparatus and method for demodulation of a curl-free magnetic vector potential." U.S. Patent No. 4,429280. Jan. 31,1984.
58. Raymond C. Gelinas. "Apparatus and method for transfer of information by means of a curt-free magnetic vector potential field." U.S. Patent No. 4,432,098. Feb. 14,1984.
59. Thomas E. Phipps, Jr. "Critique of accepted theories of special relativity and electromagnetism." *Scientific Ethics.* 1(2), Apr. 1985. p. 17-23.
60. Bertram Schwarzschild. "Currents in normal-metal rings exhibit Aharonov-Bohm effect" *Physics Today.* 39(1), Jan. 1986. p. 17-20.
61. William J. Hooper, "All-electric motional electric field generator," U.S. Patent No. 3,610,971. Oct 5,1971.
62. William J. Hooper, "Apparatus for generating motional electric field." U.S. Patent No. 3,656,013. Apr. 11,1972.

63. William J. Hooper, *New horizons in electric, magnetic and gravitational field theory.* Akron, Ohio. Electrodynamic Gravity, Inc. 1974.
64. Oleg D. Jefimenko. "Gravitation and antigravitation." *Proceedings of the West Virginia Academy ofScience.* 52(2), 1980. p. 106-118.
65. R. C. Jennison. "Relativistic phase-locked cavities as particle models." *Journal ofPhysics A: Mathematical and General.* 11(8), Aug. 1978. p. 1525-1533.
66. T. D. Keech and J. F. Corum. "A new derivation for the field of a time-varying charge in Einstein's theory." *International Journal of Theoretical Physics.* 20(1), 1981. p. 63-68.
67. Raymond Kromrey, "Electric generator." U.S. Patent no. 3,3374,376. Mar. 19,1968.
68. M. J. Perry, "Magnetic monopoles and the Kaluza-Klein theory,"*Am. Inst. Phys. Corf. Proc.* No. 116,1984. p. 121-125. Kaluza-Klein theory admits soliton solutions which constitute magnetic monopoles. These monopoles have inertial mass, but no gravitational mass.
69. M. W. Kalinowski, "The nonsymmetric Kaluza-Klein meory," /. *Math. Phys.* 24(7), July 1983. p. 1835-1845.
70. D. J. Toms, "Induced Einstein-Maxwell action in Kaluza-Klein theory," *Phys. Lett.* B (Netherlands), 129B(l-2), Sept 15,1983. p. 31-35.
71. Fritz Albert Popp et al, eds., *Electromagnetic Bio-Information. Proceedings of the Symposium,* Marburg, September 5,1977. Urban & Schwarzenberg, Baltimore, 1979. See particularly Fritz Albeit Popp, "Photon storage in biological systems," p. 123-149.
72. A. G. Gurvitsch, *Theory of Biological Field,* Moscow, 1944 (in Russian).
73. V. P. Kaznacheyev et al, "Conditions Necessary for Appearance of Distant Intercellular Interactions after UF-radiation," *Bulleten Experimentalnoy Biologii i Meditsiny,* No. 5, 1979, pp. 468-471 (in Russian).
74. Antoine Priore, "Method of producing radiations for penetrating living cells," U.S. Patent No. 3,280,816. Oct. 25,1966.
75. David M. Rorvik, "Do the French Have a Cure for Cancer?", *Esquire,* July 1975, p. 110-111, 142-149. Excellent summary of the Priore Affair, with some details of the working of the machine.
76. J. B. Bateman, "A Biologically Active Combination of Modulated Magnetic and Microwave Fields: The Priore Machine," Office of Naval Research, London Report R-5-78, Aug. 1978. Comes very close when he states that "The possibility that some hitherto unrecognized feature of the radiation from a rotating plasma may be responsible for the Priore effects should not be dismissed out of hand..." Indeed, none of the persons who checked the machine or pondered over it knew anything about phase conjugation— which plasmas can do, and which the Priore machines did.
77. J. B. Bateman, "Microwave magic." *Office ofNaval Research London Conference Report,* ONRL C-14-77,1977.
78. R. Courrier, 1977. "Expose de M. le professeur R. Courrier secretaire perpetuel de 1'Academie des Sciences fait au corns d'une reunion a l'lnstitut sur les effets de la machine de M. A. Priore le 26 Avril 1977."
79. Jean-Michel Graille, *Dossier Priore: A New Pasteur Affair.* De Noel, Paris, France. 1984.
80. Thomas H. Moray, "Electrotherapeutic apparatus," U.S. Patent No. 2,400,707. Feb. 1,1949.
81. T. D. Lee, *Particle Physics and Introduction to Field Theory,* Harwood Academic Publishers, New York, 1981. See particularly Chapter 16, "Vacuum as the source of asymmetry."
82. Royal R. Rife, "The Rife Microscopes," Apr. 28,1939.
83. Arthur Isaac Kendall, "Filtration of bacteria; studies in bacterial metabolism," *Science 75,* Mar. 18,1932. p. 295-301.
84. R. E. Seidel, M.D. and M. Elizabeth Winter, "The new microscopes," *Journal of the Franklin Institute,* Feb., 1944. p. 103-129.
85. Christopher Bird, "What has become of the Rife *microscope?", New Age Journal,* Mar. 1976.

86. Lida H. Mattman, *Cell Wall Deficient Forms,* CRC Press, Cleveland, Ohio. 1974.
87. T. E. Bearden, *AIDS: Soviet First Strike,* Tesla Book Co., 1987. (In press).
88. T. E. Bearden, "AIDS: Urgent Comments on Mankind's Greatest Threat, and the Secrets of Electromagnetic Healing," presented in absentia at the U.S.P.A. Annual Symposium, July 30-Aug. 2,1987, Golden, Colorado.
89. 'Tesla Electromagnetics: Weapons or Healing?", presented at the Whole Life Expo, Los Angeles Airport Hilton Hotel, Los Angeles, California, Oct 3,1987.
90. Stefan T.Possony, "The Tesla Connection," *Defense & Foreign Affairs,* Aug. 1984, p. 12-14, 27. Highly recommended.
91. Daniel A. Walkeret aL "Kaitoky Seamount and the Mystery cloud of 9 April, 1984," *Science,* 227(4584), Feb. 1, 1985, p. 607-611. See also Daniel L. McKenna and Daniel A. Walker, "Mystery Cloud: Additional Observations," *Science,* 234(4775), Oct 24,1986, p. 412-413 for update to the information in the first article.
92. T. E. Bearden, *Fer-de-Lance: A Briefing on Soviet Scalar Electromagnetic Weapons,* Tesla Book Co., Greenville, TX. 1986.
93. T. E. Bearden, "Soviet Phase Conjugate Directed Energy Weapons: Weapons That Use Time-Reversed Electromagnetic Waves," 1987 (in this publication).
94. Yossef Bodansky, "Soviets testing chemical agents in Afghanistan," *Jane's Defence Weekly,* 1(13), Apr. 7,1984. p. 508.
95. Draft agreement introduced by Andrei A. Gromyko to the United Nations' thirtieth session of the General Assembly on Sept. 23,1975; "Prohibition of the Development and Manufacture of New Types of Weapons of Mass Annihilation and of New Systems of Such Weapons." The first article provided that the types of these new weapons would be "specified through negotiations on the subject."
96. "Secret Speech: Did Brezhnev come Clean?", *National Review,* 29(8), Mar. 4,1977, p. 248, 250.
97. "Jetliner drops 32,000 feet; 400 aboard; 50 are injured," Associated Press Release, *Huntsville (Alabama) Times,Feb. 20,* 1985, p. 1. Also "China Airlines Pilot Denies Cockpit Error," AP Release, *Huntsville (Alabama) Times,* Feb. 21,1985, p. A-9.
98. *Asahi Evening News,* Tokyo, Japan, June 22,1982. Significant airline sighting by Japan Air Lines flights 403 and 421 of a giant, expanding globe of light on June 18,1982, in the North Pacific, 700 km. east of Kushiro.
99. T. E. Bearden, "Search for a Unified Theory of Electromagnetics and Gravitation: The Russians Got There First and Weaponized It," 1987 (in publication).
100. T. E. Bearden and Andrew Michrowski, Eds., *The Emerging Energy Science,* P.A.C.E., Ottawa, Canada, 1985.

T. E. Bearden
December, 1987

INTRODUCTION TO THE FIRST EDITION

Today there are a great many books available on UFO's, paranormal phenomena, and wild science, and one more such book ought to say something quite different if it is to be justified. Accordingly, in this book I have tried to say something quite different, perhaps in some cases too different. And so, to assist the reader's comprehension, I would like to explain something of how the book came about.

For the last fifteen years or so I have been interested in paranormal phenomena to one extent or another. Fifteen years ago I started studying Shotokan karate, and later switched to Yoseikan aikido, a most profound and absorbing martial art. I had already started serious reflection on the nature of perception, and after some years of aikido practice I occasionally began to experience what might be called paranormal perception. For example, occasionally, when violently attacked by several opponents, I would suddenly discover myself standing calmly on the sidelines watching the robot-like figures go through the motions of a play, motions that had already occurred in one kind of reality and that were now simply being repeated. On the rare occasions when I experienced this pure zen state of aikido, the techniques became flawless. In fact, the state was not separable into attacker, defender, and technique — rather a single union of the universe occurred. Unfortunately, although I eventually reached Sandan (third-degree black belt), I never permanently attained the complete aikido oneness state; this does not normally occur until the sixth dan level.

However, the occasional experiencing of this pure unity made a deep impression on me, for such aikido is pure meditation in motion, and only in such a state can the individual grasp the nature of perception. Only when conscious activity has stopped ("mind like a moon on still water") is such awareness possible. For several years I then laboriously developed a theory and interpretation of aikido for Westerners and eventually published it privately.

In 1971, while finishing a Master of Science degree in nuclear engineering at Georgia Tech, I put together a first crude theory of perception, which was published in 1973, many rewrites later. By that time I was already deeply engrossed in the study of paranormal phenomena, and especially unidentified flying objects. I had seen several UFO's (the earliest in 1950), and no longer doubted that the UFO phenomena represented some sort of new reality experienced by a great many people.

The UFO organizations at that time seemed to be in disagreement with each other. For twenty-five years or so almost everyone studying the phenomena had been trying to prove the extraterrestrial hypothesis, i.e., they started with the assumption that UFO phenomena were caused by, say, a group of young stalwarts over on planet X of star Y, getting beered up on a Sunday afternoon, hopping into an old space jalopy, and motoring over to planet Earth to jolly the natives. So they vigorously cataloged the UFO reports that fit the picture, and embarrassedly ignored those that did not. Yet most of the phenomena consisted of strange lights at night, not steel-hulled spaceships. And most of the contactee cases — particu-

larly those involving apparent communication and abduction — were regarded as just too far-out for engineers and scientists to swallow. Almost everyone in the UFO organizations seemed to be convinced that Earth was being visited by spacemen from another planetary culture more advanced than our own, and so the UFO enthusiasts looked for hardware and spaceships, no more and no less.

The tabloids were a mess — filled with sensational nonsense about the purported UFO invasion of earth. Some invasion! If the would-be invaders possessed such an advanced technology, why had they spent twenty-five years flitting around the backside of the country and frightening the rural people, instead of simply landing an expeditionary force and having done with it? It seemed that almost no one was really looking at the phenomena in a totally unbiased manner. When one did so, without especially selecting the data, the strangeness of the data went up by orders of magnitude.

So I decided — rightly or wrongly — not to compete with the catalogers, but to try to come to grips with the possible *science* evidenced by the phenomena. I wanted to examine what kind of science was necessary to describe the phenomena and the mechanisms producing them. It rapidly became obvious that our scientific framework was not adequate to explain these events. In fact, our logical framework was not adequate. So I decided to look for a new scientific framework, knowing that the effort would be long and arduous and might not succeed at all.

All the unexplained phenomena seemed to me to be interconnected; for example, a study of Sasquatch will sooner or later lead to the study of UFO's and thence to the study of the other phenomena. So it appeared that they were all different aspects of the same overall reality. Since that reality most definitely involved the mind as well as matter, it appeared necessary to develop a new science incorporating both mind and matter. And so the search and the gradual accumulation of insight continued.

The trail led directly to the great paradoxes of science, the great unsolved problems of philosophy, and the three laws of logic on which all logical disciplines and sciences are founded. Using my perception theory, it was possible to see through the age-old necessity for the identity of opposites, how opposites could be identified, and when they were identified. Thus a fourth law of logic could be written and the system closed.

Slowly the nature (or, more precisely, a model of the nature) of mind became clearer. In addition, mechanisms for materialization and dematerialization appeared, as well as mechanisms for metal bending, thoughtform materializations (tulpas), and telepathy.

But the international strategic balance also could not be ignored. From my military background, the Soviet military buildup toward an attack capability was apparent as early as 1970-71. Moreover, from my work on the Moray radiant energy device I had discovered what I believed to be the basic theoretical mechanism used by T. Henry Moray to tap the zero point energy of free space. (This mechanism powerfully amplifies virtual state into observable state.) And positive evidence suggested that the Soviets had obtained the secret of how to make the Moray detector tubes. Putting this together with psychotronics produces an astounding weapon capability — and the Soviets must have had such capabilities already on site and others in development.

I looked for evidence of these weapons, and the evidence was there, cleverly — even diabolically — concealed.

When I then realized the *entity* nature of the collective human unconscious, everything fell into place. Suddenly the different major waves of UFO's made very good sense, as did the cattle mutilations, the Soviet buildup, Khrushchev's 1960 statement about fantastic weapons, Brezhnev's 1975 reference to the development of weapons more frightful than man had ever conceived, the long years of microwave radiation of the U.S. Embassy in Moscow, the Legionnaires' disease, etc.

The intelligence community had completely missed the fact that the Soviets had been working on a psychotronic Manhattan Project for thirty years. Not a soul in officialdom would believe that such capability could be achieved by surprise. This is not because of a deep conspiracy of the government (although I believe one of our high intelligence officials may be a Soviet agent, a sort of Penkovskiiy in reverse, who has been personally responsible for preventing any serious U.S. governmental research into psychotronics and UFO's); rather, it is because of all the personal arrogance, bias, power-seeking, manipulation, and maneuvering that now make up so much of our top managerial base in government.

So I decided to put out the information for all to see. There is still time — but just barely, I think — to build psychotronic defenses and prevent the launching of the Soviet attack. But we must move swiftly if Fer-de-Lance, the Soviet attack plan, is to be frustrated, for the eleventh hour is here.

Moreover, there is a single human problem responsible for all the ills that man causes man, and that problem has a technical resolution that is well within our grasp. I firmly believe that by psychotronics, the minds of all men can be linked into a great supermind having absolute psychokinetic mastery over time and space — literally a godlike being, in whom the collective human unconscious has a collective conscious instead of the four billion fragmented individual personal conscious minds it has at present. The initial psychotronics linkage mechanism is just a tool; after linkage is accomplished and stabilized, such props will not be necessary.

This is my real goal. Even if the U.S.S.R. launches Fer-de-Lance, annihilates NATO and China, and obliterates all Western retaliation with a stunning blow, and even if the collective unconscious then psychokinetically lashes back with the violent destruction of the Eurasian continent, linkage is still the goal and the final resolution. Should the apocalypse come to pass, there will still be time, in the midst of the horrendous collapse of civilization, to gain the final solution.

And it is the final and total solution. All the parables in the Book of Revelation will be realized. The grave literally will give up its dead — for with the overcoming of time and dimensionality, all that ever has been or ever will be, *is,* in one great nowness, allness, Omega, "I am that great I AM."

That is the goal, and it is toward that end that this book is written.

Please note that a listing of the research and reference works mentioned in the text can be found in the bibliography.

PART ONE

A SAMPLING OF SPECIFIC PARANORMAL PHENOMENA

In this section I show a sampling from the world of the paranormal, including UFO's of various kinds, psychotronics, Loch Ness monsters, Sasquatch, bigfoot, superfoot, psychokinesis, remote viewing, psychic photography, and a host of other phenomena— all explicable by the theories presented in Part Two.

I fervently believe that a theory can be constructed to explain our lives, including all the strange phenomena as well as the more familiar happenings. In this book a serious attempt has been made to point the way by developing what I believe to be the basic concepts, and by showing that a host of phenomena do seem to be consistent with the schema.

Let us hope that science and scientists are not after all dead, and that they will shake the cobwebs from their eyes and set about particularizing a new paradigm of mind and matter. When the top theoreticians and experimentalists wake up and join in the effort, my task will be finished.

THE VESTIGIA MYSTERY LIGHT EXPERIMENT

Let me start by introducing you to Vestigia, a very fine, relatively new organization that has been formed to study mysterious and unusual phenomena in a scientific manner. This organization, of which I am happy to be a member, is headed by Robert E. Jones and the investigation of the mystery light is spearheaded by James McGrath and Bill Wagner. (The informative *Vestigia Newsletter is pub*lished by the organization. Persons interested in the objective scientific study of unusual phenomena are cordially invited to contact Vestigia at P.O. Box 1183, Perth Amboy, NJ 08861.)

Vestigia's ongoing investigation of a mystery light in Morris County, New Jersey is a classic example of the manner in which mysterious phenomena may be studied in a scientific manner, and it should serve as a model for other investigative groups. Vestigia's experimental work has exemplified careful planning, close teamwork, proper scientific equipment and preparation, and the patience and persistence that are essential when performing fieldwork experiments in the field of unusual phenomena.

1 wish to stress in advance that Vestigia does not endorse my own theory of the possible nature of mystery lights; in fact, the organization very properly remains openminded. Also quite properly, they practice scientific conservatism in studying the possible nature of the phenomenon; at the present time they strongly favor the theory of the piezoelectric effect. Substantial evidence for this thesis includes the presence of a known geological fault in the local area, the presence of piezoelectric minerals in the local granite (e.g. thirty percent quartz), close association of the incidence of the phenomenon with subsequent local earth tremors, conditions favoring the accumulation of a surface charge (e.g., metal railroad tracks oriented parallel to the geological fault), and enhancement of the phenomenon under study. And this is exactly how Vestigia is in fact proceeding.

In science, the prevailing world view is not to be dismissed lightly since a great deal of experimental data has been gathered to substantiate it. And a single experiment cunnot establish the need to correct that solidly based view, even if the experiment at first appears puzzling and not in accordance with the accepted view. Only after many exhaustive studies have found the world view inadequate, may a

paradigm properly be changed. From a rigorous scientific viewpoint, then, I am saying that this classic experiment is consistent with my own orthorotation theory, but not that the one experiment proves my theory. The experiment at this point is also perfectly consistent with the more conservative hypothesis that the mystery light is due to the piezoelectric effect. Additional different kinds of experiments are required before either theory will hold. For example, in my own theory, the mechanism of orthorotation must be verified elsewhere, and in the piezoelectric theory, the mechanism that spatially separates the effect from the crystalline material where such an effect normally occurs, must be explained and verified by other experiments.

With these precautionary remarks to the reader, let me now describe the beautiful experiment initiated and still being performed by Vestigia. I will then present my own theoretical explanation, again stressing to the reader that it must be treated as a hypothesis at this point.

Mystery lights occur in many locations throughout the United States and Canada. Vestigia has determined over ninety of them to date. They are recurring phenomena and are often seen near some natural or man-made feature such as a stream, hollow, road, railroad track, field, or mountain.

The mystery light under investigation by Vestigia is located along a one-mile stretch of railroad track in Washington Township, Morris County, New Jersey. The light has been seen by hundreds of people at one time or another over the last twenty to forty years. Dr. C. Louis Wiedemann describes it in the *Vestigia Newsletter:* "Appearing at night, it is said to bob or sway from side to side in the manner of a swinging lantern, and when approached it vanishes, sometimes reappearing at a more distant point."

Quoting from the *Vestigia Newsletter:*

> The preplanned battery of experiments and observations was conducted on the night of November 20-21, 1976. Three observation posts were established along one mile of railroad track, and these were manned in shifts by small teams of observers who maintained contact with team leaders via portable radio communicators. Communications were monitored and instructions were issued from a command post which was maintained in two vans joined in a T-configuration adjacent to the central observation post (Post 2).
>
> The vans contained electronic equipment valued at $30,000, which was wired to sensing devices along the railroad tracks. Four thousand feet of silver plated fine copper wire was laid between the rails and attached directly to an amplifier and oscilloscope in one of the vans, to detect variations in electrical frequency and amplitude. Other cables were attached directly to the rails, providing a capacitance test. Other devices included a Geiger counter, thermometers, a methane gas detector, a barometer, a parabolic listening device, a radar unit, an infrared sensor, and a sensitive compass. Personnel at observation posts were equipped with binoculars and cameras. One tripod-mounted camera equipped with infrared sensitive film was located near the rails at Post 2.
>
> James McGrath, a member of Vestigia's executive board, acted as advisor to the team. Team leader was electrical engineer William S. Wagner who was assisted by Jack Mazzuchelli. In all, sixteen persons were actual members of the team, and a total of twenty-one persons participated that night. A number of these were members of the Unexplained Phenomena Club of the County College of Morris, headed by the club's president, Steve Hopler, and vice-president Mary Ann Barron.

Shown here are six of the seven infrared photos of the mystery light which were taken by the Vestigia team. The frames shown are frames two, three, four, six,

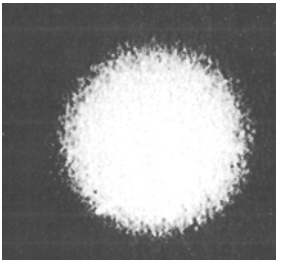

Frame Two

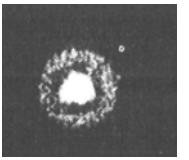

Frame Three

Photo 1. The Vestigia mystery light experiment.

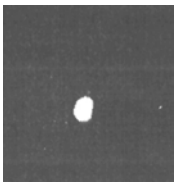

Frame Four

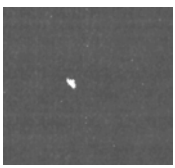

Frame Six

seven, and eight. The camera with infrared film was located at Post 2. Frame 1 was a test frame. Simultaneously with the recording of frame 2 at Post 2, observers looking from Post 1 reported visual observation of a light. The light was not seen by observers at Post 2. A second camera with ordinary film recorded only a pin-point of visible light.

In the photograph, frame two recorded an image of an apparently plexiform spheroid of dynamic granules of light invisible to the eye of the cameraman. At the same time, observers from Post 1 looking back reported visual observation of a light.

In frame three, within about fifteen seconds the image has decreased in size and the plexiform spheroid is now a thinner corona around a dense, nearly hexagonal center.

In frame four, a dense but small irregular or oval image can now be seen. Frame five, not shown, is quite similar.

In frame six, a substantial decrease in size is apparent.

In frame seven, again the image size has increased, and again it possesses a dome central core surrounded by a thinner spheroidal corona of dynamic granules of light. Also, several separate satellite images are now visible at some distance from the main spheroid.

Frame eight is very similar, except that the satellites are no longer visible and the light in both the core and the corona is not quite as dense.

To describe the experiment precisely, the following passage is taken from Dr. C. Louis Wiedemann's article in *Vestigia Newsletter* No. 2, Spring 1977:

> Following several hours of equipment testing and calibration, at 10:21 P.M. two observers at Post 1 radioed the message that they had a "light" under visual observation between their position and Post 2, at an apparent distance of 300 to 400 feet from Post 1. Post 2 observers immediately scanned the area with binoculars and radar, but no object or light was detectible from that position. The yellowish-white light remained visible from Post 1 for approximately one minute and thirty-five seconds, initially approaching the tracks from a lower position off to one side, but soon positioning itself over the rails, and then seeming to sway from side to side in a pendulum-like manner. Its size was estimated between three and six inches in diameter, and for awhile the observers believed it was approaching them. When it vanished, the disappearance was sudden, as if the light had been "switched off."
>
> During the period in which the light was under observation, personnel at Post 2 took pictures of the apparent darkness, and continued to search with radar and binoculars. Two observers at Post 3 briefly saw what appeared to be an orange light between their position and Post 2. While the main light was under observation, several of the instruments in the command post gave unexplained readings. Most notable among these was the oscilloscope's display of an electrical frequency in the range of 40,000 Hertz. Additionally, the capacitance test showed the apparent presence of a conductive body between or over the rails. Nine minutes after the light had vanished from view, the Geiger counter (whose sensor was between Posts 2 and 3) indicated a full scale reading of greater than 5 mr per hour, lasting ten seconds. Normal background radiation was then recorded for five to six minutes (0.1-0.2 mr/hr), whereupon another full scale reading was displayed for approximately seven seconds.
>
> The pictures were enlarged from small images which appeared on the infrared film which was exposed through a 135 mm telephoto lens from Post 2 by Richard Larkin. Film employed was Kodak high speed infrared No. 2481, which is sensitive to infrared radiation to 900 nanometers, with maximum sensitivity from 750 to 840 nanometers. The lent opening was f/3.5 with the apera-

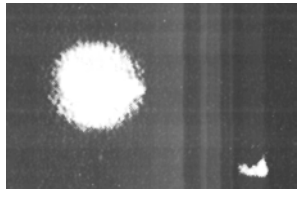

Frame Seven

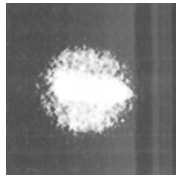

Frame Eight

ture set at infinity. The second frame (frame 2) was exposed between 3 and 5 seconds, and the others were varied in exposure from 3 to 10 seconds. Intervals between exposures were between 10 and 15 seconds.

High speed (non infrared) film in a camera which was hand-held by James McGrath at Post 2 also produced several images of an apparent point source of light above the rails (not shown here). Jack Mazzuchelli observed the area through binoculars during the entire time period, and he was unable to discern any light whatever, although he could perceive the rails and the railbed in the faint illumination provided by starlight shining through a partially overcast sky.

As I stated previously, Vestigia has not yet reached a firm conclusion as to the causative agent, but strongly favors the piezoelectric theory, since if offers the simplest explanation at this point. Again, to quote the *Vestigia Newsletter:*

No absolute conclusions can yet be drawn, other than the apparent fact that a phenomenon or set of phenomena did occur. Team leader Wagner theorizes that the phenomenon might be similar to so-called earthquake lights which have been reported to precede seismic tremors in Japan. Interestingly, there were explosionlike shocks or "loud booms" reported by residents of two housing developments several miles distant from the site on December 5 and 6,1976, and these shocks were recorded by seismographs at Columbia University and elsewhere. Intensity was (-)0.25 to (+)0.38 on the Richter scale. Wagner posulates a possible piezoelectric effect from tension on subterranean rock deposits.

The possible relationship of a piezoelectric effect will be investigated further. Data gathered in Japan tends to indicate the development of subterranean stresses during the passage of a cold front. In the light of this possibility, it is interesting to note that there was a drop in barometric pressure from 29.9 to 29.76 culminating less than one hour before Vestigia recorded the start of the phenomena. A light snowfall preceded the appearance of the light.

Wagner believes that the initial discoveries tend to indicate that the following conditions must be present for the phenomenon to be manifested:

(1) A geologic fault in the local area.

(2) The presence of certain minerals, especially quartz (quartz comprises 30% of the granite in the area under investigation).

(3) Conditions should permit the accumulation of a surface charge (e.g.: the presence of railroad tracks, because they are metallic).

(4) The tracks must run parallel to the fault.

(5) The phenomenon's manifestation tenc
sure changes as well as extreme changes in temperature.

Wagner states, "Our indications are, at this point, that the lights precede earthquakes or tremors."

Regardless of what hypothesis we begin with, it must be consistent with all the major features of the Vestigia mystery light experiment.

(1) The explanation must show why a light with structured patterns formed and changed. The structured patterns changed geometrically in shape and intensity, as well as in movement and location. This dynamic formation and change was recorded on infrared-sensitive film. The geometrical shapes of the light structures must be accounted for.

(2) Ordinary film recorded only a pinpoint source of light.

(3) The light which was photographed in infrared was not seen by the photographer himself, nor by eight other persons who were observing at the time from Post 2.

(4) Either that light or another was seen visually from a different station.

(5) At the same time as the visual appearance of the light, instruments recorded the apparent presence of a conductive body between the rails or over them.

Specifically, the electrical capacitance between the rails was observed to change — or at least indications to that effect were received on the instruments.

(6) Nine minutes after the main light vanished, a Geiger counter began to read full scale for about ten seconds, then lapsed back to background reading. Five or six minutes later, full scale reading was repeated for about fifteen seconds. About a minute after that, full scale reading was again recorded for about seven seconds.

(7) At the same time as the main light visual sighting, an electrical frequency of approximately 40,000 Hertz was recorded on the oscilloscope.

There were also environmental conditions which may well have been involved in the experimental effects.

(8) Barometric pressure dropped from 29.9 to 29.76, culminating less than an hour before the phenomena were recorded.

(9) There was a temperature drop and a light snowfall preceded the appearance of the light.

(10) The geological conditions strongly favored seismic stress and piezoelectric effects. For example, the local granite contains about 30 percent quartz, and there is a known geological fault not far from the experimental site. About fifteen days after the experiment, seismic shocks were indeed recorded at Columbia University and elsewhere, and they were audibly detected by residents of two local housing developments. The measured intensity of the seismic shocks was from(—)0.25 to (+)0.38 on the Richter scale. It thus appears highly probable that seismic stresses existed on the subterranean rocks at the time of the experiment and that piezoelectric activity was present in the local granite quartz due to these stresses.

(11) Conditions also favored the accumulation of surface charge, and the railroad rails (good conductors) were oriented parallel to the geological fault.

(12) Several thousand feet of wiring existed in the immediate area to connect the different stations and the instruments to the sensors. About four thousand feet of fine copper wire, silverplated, was laid between the rails and fed to an amplifier and an oscilloscope to detect variations in electrical frequency. The capacitance test also used cables attached to the railroad rails themselves. The Geiger counter's sensor was also positioned at the experiment's hot spot and wired to the equipment van. Additional equipment and wiring was also used.

Finally, preliminary surveys of the area were carried out by persons of known paranormal sensitivity several days before the main experiment. Before conducting the major experiment, Vestigia interviewed persons who had seen the light and also conducted preliminary site studies using psychics. One nationally known psychic was brought to the site by Vestigia's president Robert Jones, and asked to walk along the tracks. The psychic reported impressions of some personal tragedy, perhaps a gruesome murder. Later several other persons with heightened psychic sensitivity were brought to the site, and they reported psychic impressions.

In all, three psychics were brought to the track. The only directly correctable result was that all three had a reading in the same area on the stretch of track, within sixty feet of the sighting of the night of November 20-21. The psychics' own interpretation of their readings differed considerably.

UNEXPLAINED GENERATION OF ELECTRICITY

Some additional data exist to indicate the generation of electricity by rocks and

the generation of unexplained electromagnetic energy radiated from the earth, ocean, or atmosphere.

For several years T. Townsend Brown has worked in electrogravitics and holds many patents in the field. Some of his laboratory experiments have positively demonstrated a direct connection between electric currents, electric charge, and gravity, although the exact nature of this connection has not yet been fully explained. Nevertheless, it can be shown that highly charged objects do not behave in a gravitational field exactly as predicted by classical theory.

Furthermore, in 1974 Santilli succeeded in proving that one of the classic assumptions of physics is wrong, namely that electric field and gravitational field are mutually exclusive. Santilli proved that gravitational field and electric field are either partially or totally the same thing, in contradiction to present assumptions.

Over a decade ago, Curtis reported the measurement of very low frequency electromagnetic signals generated over the ocean that are not accounted for by any presently known mechanism or theory. Although Curtis published several articles on this effect, no further investigation has appeared in the literature.

Finally, there is a certain location where the generation of an anomalous electromagnetic signal occurs continuously. This is McGregor Missile Range (U.S. Army), where Army units fire air defense missiles such as Nike Hercules and Hawk. As a young captain, in 1961 I headed up the Hawk Evaluation Team at McGregor Range and directed the Hawk missile firing. About sixty-five kilometers out in front of the Hawk missile sites and downrange, there was a most peculiar source of electromagnetic noise, which could considerably affect a Hawk illuminator (continuous wave) radar when the radar antenna was oriented in that direction at a low elevation. In that case the radar would continually noise-lock (make and break lock-on) on the noise signal, dithering slightly as it continued to try to resolve a coherent radar return signal. This noise source was always present, in all seasons and temperatures, and so we simply made each Hawk unit commander and his personnel aware of the phenomenon. On one occasion 1 even vectored a helicopter with an investigation team to descend on the site and inspect it. All they found was the usual surface of the desert floor, with sparse growths of greasewood and cactus. There was nothing which could serve as a generator or reflector.

At one of our other missile sites in the U.S., there was a strange reflector mechanism located at some distance from the site and at about 15,000 feet altitude. This was rigidly fixed in location and unvarying, and the unit radar personnel often used it to calibrate the range of the radar. They simply locked on the reflecting point and fine-adjusted the radar range dials to indicate exactly the known range to the reflecting point. Here again, personnel on their own initiative vectored an aircraft directly through the point and searched the air in that area, but nothing at all could be found.

HYPERFIELD GENERATION OF PHOTON PATTERNS ABOUT A BAR MAGNET COLLECTOR

The magnetic field has more fundamental components which integrate in the virtual state to form it when two successive orthorotational thresholds (quantum thresholds) are breached. Furthermore, in the picture of a bar magnet taped to the

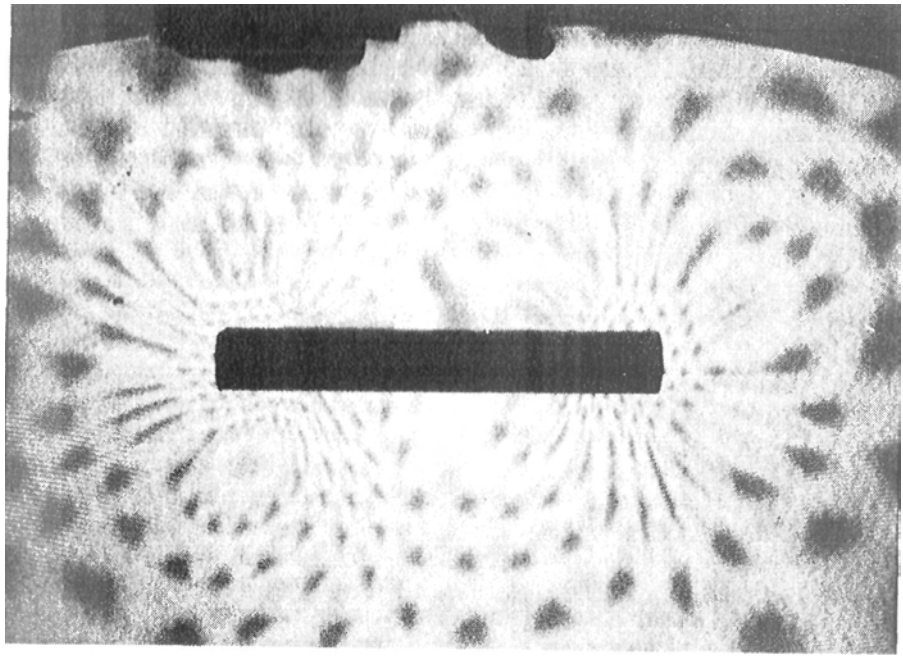

Magnet 3/4" dia. x 6" long taped to faco of a color TV tube approximately 1200 Gauss.

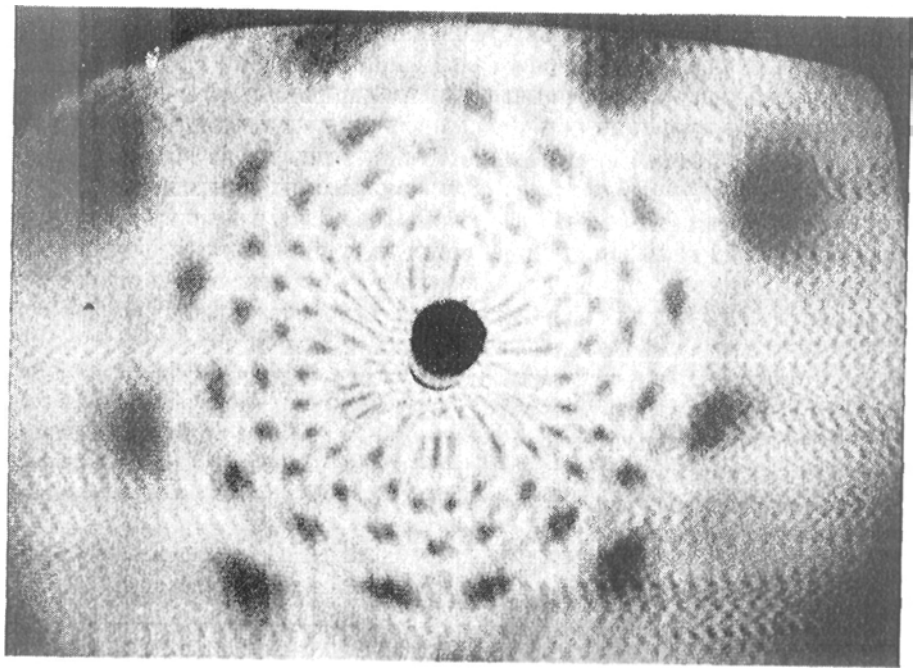

South pole end of same magnet tapod to face of color TV tube.

Photo 2. Hyperfield **flux in a magnetic field.**

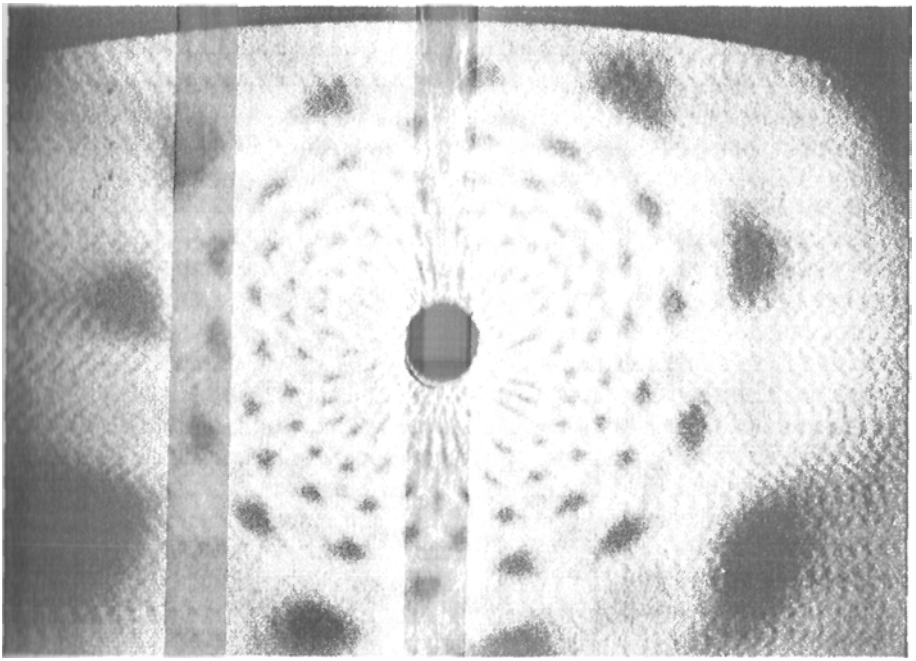

North pole end of same magnet taped to face of color TV tube.

face of a color television tube, one can see that the hyperfield orthogonal circulations in the magnetic field arc not symmetric about the two poles; i.e., the pattern is quite different around the north magnetic pole from that around the south magnetic pole.

Around the north pole, the hyperfield circulation is emitted in the form of a hexagonal solid. Thus there is an intense hexagonal orthorotation about the north pole. Radiating conically out longitudinally is a toroidal null zone, at an angle to the ongitudinal axis projected away from the north pole into space. At an even higher angle, another concentric cone is radiated out in the same direction; this higher cone is an emission cone where photons are being generated. Thus viewed from the north end, and at a distance from the magnet, the pattern shown in the right figure of the slide emerges, The pattern is a ring of light or light bubbles, surrounding a concentric ring neutral zone, which in turn surrounds a hexagonal centerofintenseemission.

If frame three of the Vestigia mystery light photos is examined meticulously, this exact pattern is seen, allowing for the dynamism of the phenomena and for slight nonlinearity of the spatial medium in which the photons are emerging by orthorotation.

On the other hand, looking at the left hand figure on the slide, we see that the outer emission ring is *so* thin that it has effectively disappeared; it is radiated at right angles to the magnetic longitudinal axle. The middle null area is also much wider. The densely emitting core area now has a relatively circular cross section at a distance. So the pattern of photon emission that is seen from this end is simply a dense roundcore. Frames four and five of the Vestigia photos demonstrate variationsofthiseffect,viewedataslightoff-axisangle.

When the magnetic field is observed from the side, only the hexagonal dense emission core of the north pole is seen. In the south pole area, we are looking into a large null area, so no emission at all is seen. Frame eight is approaching this result, with a slight deviation from an orthogonal viewing axis. Also, frames seven and eight exhibit composite structuring from several (three or more) side-by-side magnets of square-end configuration, where the magnet cross section is wide, looking at the end. In that case, the top right picture would be elongated, giving a stretched hexagonal dense core surrounded by a concentric null zone of oval shape, further surrounded by a concentric thin emission zone of oval shape. In frames seven and eight, the outer thin emission zone is roughly spherical, not oval. However, a combination (further composite) of the lower right picture case and the upper right picture case could give the pattern exhibited by frames seven and eight.

And as I show clearly elsewhere, orthorotated hyperfield energy usually emerges with a "burst-in" effect which, in free space, assumes a spherical shape. Thus one would expect a dynamically bubbling sphere of light at the initial "burst-in" of the phenomena, and frame two exhibits this effect.

So the expected hyperfield generation of photon patterns about a localized region of magnetic field (such as a bar magnet or composite grouping of bar magnets), when that localized region of field is in the collection or burst-in and decay gradually mode, would account precisely for the particular structured patterns photographed by Vestigia.

Again, this does not prove the hyperfield hypothesis, but shows that the structural patterns obtained are consistent with it.

HYPERFIELD CIRCULATION PATTERNS ABOVE A MAGNETIZED RAILROAD TRACK

Figure 1 shows the hyperfield circulation patterns above a magnetized railroad track. The general setup of the Vestigia experiment is shown. The rails are oriented parallel to the fault line, which means that the rock stresses are oriented perpendicular to the rails. Thus the telluric currents piezoelectrically induced by the quartz and other minerals in the local granite are also generally oriented perpendicular to the rails and below them.

These piezoelectric currents thus constitute effective coils about the rails, magnetizing them weakly along their length, but this is in addition to their normal magnetism, if any, picked up due to the specific local and atmospheric electricity changes.

In the hyperfield flow pattern for two magnets which are lengthwise parellel and viewed from the end, a primary hyperfield circulation pattern exists both between the two rails and in the air above them. The location is the same, whichever end of the parallel magnets one looks into; however, the circulation direction changes with the change of ends. As the strength of the magnetization of the two magnets changes, the vertical distance above the rails to the plane of the center of the hyperfield circulation pattern (primary) changes. The stronger the field, the higher the center of the pattern, and vice versa.

In addition a secondary (weaker) hyperfield circulation area exists over both rails as shown. As the piezoelectric currents fluctuate in direction and intensity, corresponding fluctuations in the magnetization of the two rails occur.

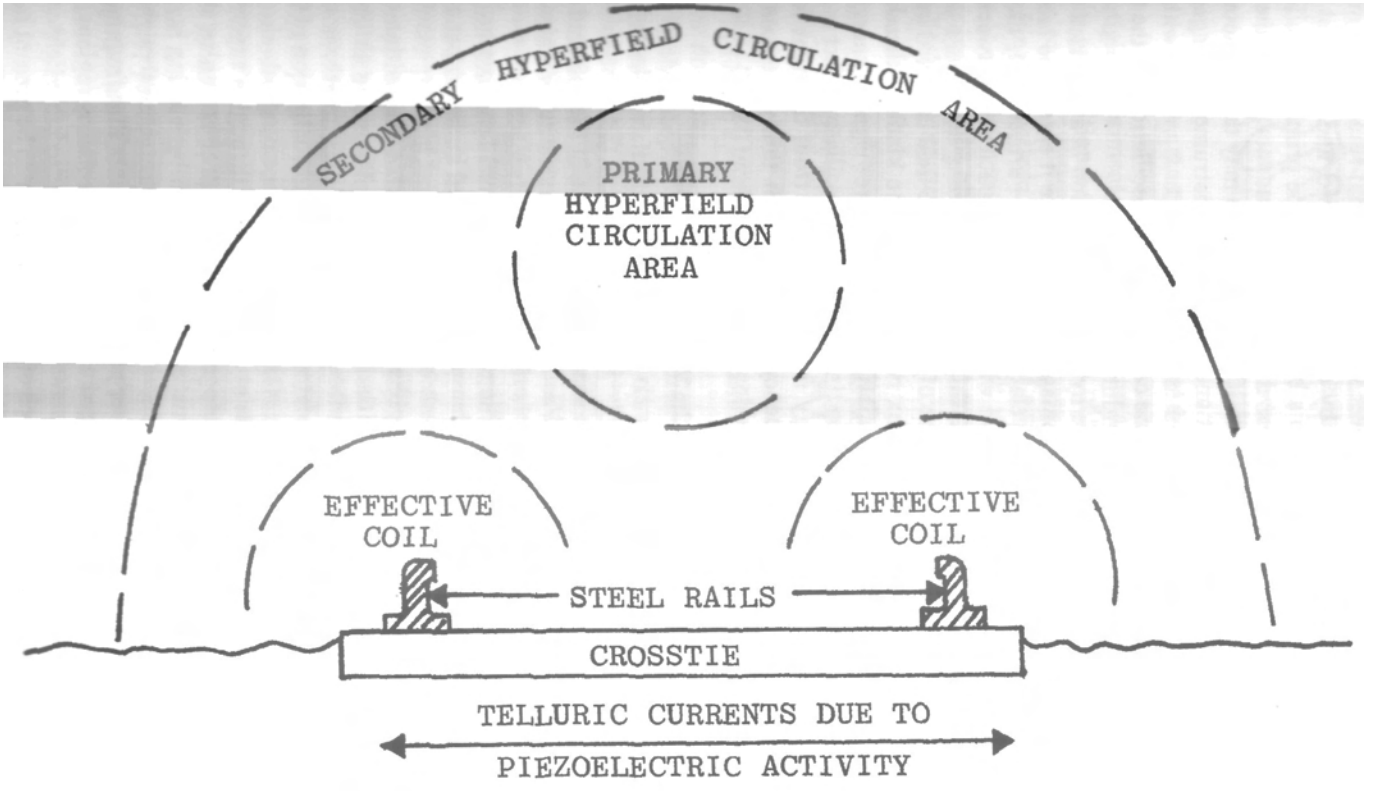

Fig. 1. Hyperfield circulation patterns above a magnetized railroad track

Thus, over the rails there exists a sort of undulating tubular tunnel of primary hyperfield circulation, surrounded by a larger undulating tunnel of half-elliptical cross section. In addition, the terrain and foliage features nearby will have their own hyperfield circulation areas, with flowing currents of hyperfield circulations between them and undulating tunnels over the rails. The final result is a complex flow pattern, which is further modified by atmospheric, ionic, and electrical currents. So a mystery light can kindle into a burst in one of the primary circulation areas and move, usually in a faltering or drift-dart-pause manner, along the undulating tunnels above the railroad track. Structural changes may then be noted as the geometrical aspect between the light and the observer-instrument changes, as additional collection-kindling occurs, and as discharge dampening occurs with the passage of time, due to the discharge time constants of the oscillations of the time dimension itself that are induced by kindling and burst-in.

Note that in the kindling process, the hyperfield circulation in a localized area suddenly bursts into magnetic or electromagnetic field. Since it enters the laboratory frame at right angles, orthogonal relationships result. Furthermore, the appearance of a kindled magnetic field form will change the capacitance between the rails, and a capacitance test will indicate this, as if a conducting body were there. The localized magnet or geometrical piece of electromagnetic field is locked in and maintained as long as the hyperfield flux remains above the kindling threshold. However, since the burst-in of the hyperspatial flux into electromagnetic energy involves the shocking into oscillation of the time channel, an oscillator effect is produced, and electromagnetic signal energy may be radiated from the light form, usually through one of the magic frequency windows which thinly interconnect orthogonal three-spaces. One of these windows is located at about 38,000 to 40,000 Hertz.

Such a signal was indeed recorded in the Vestigia experiment.

Also, at night time the time channel quenching effect of visible light is materially reduced since most visible light is absent. Further, the light-shielded quartz in the underground rocks has two magic windows: one in the infrared and one in the ultraviolet. So the area of the Vestigia experiment constitutes a gigantic kindling mechanism par excellence. With sufficient piezoelectric activity, the collected hyperspatial flux exceeds the kindling threshold required for burst-in, and localized triggering of a discharge or discharges can be initiated in the proper area. The thousands of feet of wire further enhance the collecting and kindling mechanisms. From a physics viewpoint, the living observer is the initiator who initiates the collapse of the wave function, in turn initiating observation. The same ability or property also is required to initiate the kindling of hyperspatial flux into the normal three-space, in my opinion. This is consistent with the rather wide collection of data presented here to show that a living observer can generate or extinguish electrostatic, magnetic, and electromagneic fields at a distance, even through a superconductive farraday shield. The thought photography examples presented also show that electromagnetic field (light) can sometimes be generated by a living human being, and impress the camera film with the visible light spectrum, even though the light is not consciously seen by the observer's eye. It also appears that frequencies of something other than light, in the infrared and ultraviolet frequency regions, can enter through IR/UV windows and then rotate into the ordinary visible light spectrum and ordinary visible light energy. Such effects also appear to be present in the

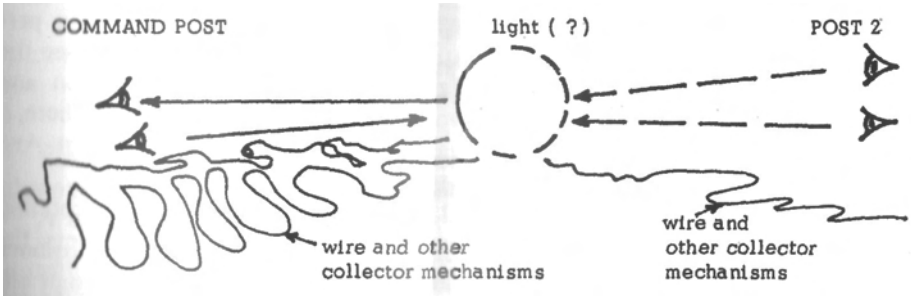

Fig. 2. The cyborg effect and orthorotational sensitivity

Vestigia experiment, since the cameraman himself saw no light, but other posts did. Thus an additional directional effect of the rotation into visible light seemed to be involved.

Since so-called thought energy is simply hyperspatial flux which has a minute one-to-one coherence in its crosstalk with the laboratory frame, the section explaining thought photography deals with hyperspatial mechanisms that are also applicable to mystery lights.

THE CYBORG EFFECT AND ORTHOROTATIONAL SENSITIVITY

In Figure 2, I show how it is possible that one team sees the light and a second team does not.

In the inceptive cyborg effect, each person, each instrument, the wiring, other collectors including the sensors, the other paraphernalia of the environment such as railroad tracks, rocks and their minerals, etc. are all cyborged together into a single instrument in the hyperfield domain. This is precisely because the hyperfield domain is the time channel, and all of these exist at the same time. Further, in the experimental locality, the difference in time between observers, equipment, devices, and aspects is small, because the distances between pieces are relatively small. Hence to the hyperfield channel an appreciable degree of coherence exists between the various components of the hypersensory cyborg. Yet the overall pattern of coherence has high points and lower points in it, and pattern groupings that vary with the grouping of components. Thus the subgrouping at the command post, for example, may be expected to differ in its hyperfield characteristics from the subgrouping at Post 2. Furthermore, the bulk of the collection wiring, and the rails, were outside the command post, so the greatest collection might be expected at this station.

In addition, the human components of the subgroupings vary appreciably in their sensitivity to hyperfields. Some persons are more positive or attuned than others, particularly in their unconscious minds. In fact, some persons are quite negative and are squelchers of the hyperfield effects — the negative psi effect is well known in experimental parapsychology. However, it is reasonable to assume that there were no psi-negatives on the Vestigia experiment; but there was probably an

appreciable variation in the degree of psi-positive exhibition in the various personal unconsciousnesses. So it is understandable that one post may not see the light, while another would. And with the appreciably greater collection and kindling outside the command post, we would expect the sighting to occur there, if anywhere, as long as a real psi-negative was not present in the command post. And the experiment seems to have exhibited this effect as expected.

Also, I must point out that the visual mechanism for detecting orthorotating energy is different from that for detecting normal visible light, unless the orthorotating hyperenergy is extremely strong and overrides the squelch effect of normal light. (At night the degree required to go into visible light is less.) At any rate, the orthorotational hyperfield energy comes in through the infrared and ultraviolet windows for the most part, and then orthorotates into the visible light region, changing its frequency as it is absorbed by or interacts with a receiver.

Further, the orthorotational energy does not travel through three-dimensional space in the accepted sense that a signal normally does; rather, it is entering this three-dimensional space all at once from a region orthogonal to the entire three-space. It is therefore entering all components of the tuning-receiving instantaneously and simultaneously, or holographically, if one extends the term. Each subgrouping component of the cyborg exerts its own tuning-damping constant(s) upon this holographic signal entry, giving differing degrees of receptive sensitivity, or signal strength, or signal to noise ratio.

So the signal enters each part of the cyborg holographically and the reception characteristics of that portion dampen or enhance the degree of orthorotation into the normal electromagnetic field. Further, the actual orthorotation into the electromagnetic field is occurring primarily at the actual sensor.

For a human being, the primary sensors are the retinal surface of the eye and the skin. The retina is actually a complex structured piece of the brain, so to speak, and extensive nervous system complexes are located there which do extensive on-site signal processing. The unconscious mind of the individual directly interacts at the retina with signals received by the retina, either by hyperspatial orthorotation or by ordinary light. So the individual nervous system is highly variable in its interactions with the hyperfield energy that is orthorotating into ordinary electromagnetic energy in the interaction itself. Briefly, the unconscious state of the observer partially shapes and forms the observed.

In a camera, the sensor is the film. It is thus entirely possible for a camera to record light energy that is holographically rotated in from hyperfield energy without the cameraman himself seeing anything at all. This is especially true when the camera film is sensitive to infrared and ultraviolet to an appreciable degree. A camera containing infrared-sensitive film will interact readily with hyperfield energy because it is open in the magic window between orthogonal frames. A camera containing ordinary film, which is less sensitive to infrared, will interact much less in the magic window because it barely extends into it.

Thus, with other variables held constant, one would expect the infrared camera to record hyperfield energy to a much greater degree than the camera containing ordinary film, and indeed the Vestigia experiment has demonstrated this effect.

Furthermore, the experiment exhibited heightened kindling and collection outside the command post due to the distribution of wiring, components, and rails.

ADDITIONAL FACTORS CONSISTENT WITH THE VESTIGIA EXPERIMENT

First, a cooling effect is often associated with the appearance of paranormal phenomena; this effect is well documented in the literature.

A corollary effect also exists when hyperfield energy is being collected and kindled. Just as lowering the electronic noise in an amplifier increases the fidelity of the signal, lowering the local environmental temperature reduces the "noise" that is blocking the collection and kindling of hyperfield energy. Specifically, reducing the temperature reduces the photon emission and absorption activity of the environment. This lowers the background electromagnetic noise which inhibits orthorotation of the hyperfield energy into electromagnetic field energy. Since photon activity is reduced, the consequent photon squelching of the time channel (precisely detailed elsewhere in this book) is also reduced. This in turn lowers the threshold required for kindling to occur.

Also, a Geiger tube often acts as a collector and amplifier of bioenergy and hyperfield energy. (The association of Geiger counter readings with UFO phenomena has been frequently noted in the literature.)

The Geiger tube may become a detector of hyperfield energy, because the tube's kindling threshold may be significantly lower than that of the environment or of other components such as the observer's eye. Kindling across the Geiger tube's lower threshold simply creates an electrostatic field inside the gas in the tube. In fact, it is the potential ionic current that is the collector, since hyperfields accumulate along probability paths as well as along observationally determined paths, communicating with both future and past. At any rate, the kindling of an electrostatic field in the Geiger tube may result in ionization of the gas if the field is of sufficient intensity. An avalanche discharge may occur and the Geiger counter may indicate a reading (usually appreciable or full scale). This may occur even though no visual phenomena are seen and even though other sensors receive no indication. This reading of the Geiger counter is of course not due to radioactivity. A Geiger *counter does not indicate radioactivity;* rather it indicates appropriate ionization of its internal gas. In this case, the kindling of hyperfield energy into electrostatic field occurred, generating the ionization in the Geiger tube gas.

Note that this occurred in consonance with the visual sighting and the infrared film photos, and when no visual sighting resulted and photos were not taken. Furthermore, as I point out elsewhere, the kindling and burst-in of energy has a discharge time constant, due to the discharge time constant of the oscillation of time that occurs at kindling and burst-in. Depending on the initial amplitude of oscillation at burst-in, the time required to lower the burst amplitude to kindling threshold and below varies. When the amplitude drops below the kindling threshold, kindling and burst-in cease and the hyperfield-induced electrostatic field in the Geiger tube vanishes, stopping the hyperfield-induced ionization of the gas in the tube. The Geiger counter reading then drops back to normal background reading.

The variable amplitude at burst-in and the consequent variation in the time required for the Geiger counter to cease reading the hyperfield-induced ionization were demonstrated in the Vestigia experiment. Furthermore, the Geiger counter

showed a reading twice when visual phenomena were not seen and cameras did not record. Of course, no photos were taken during the Geiger counter readings.

Finally, the drop in barometric pressure also lowers the molecular collision activity of the local atmosphere, and lowers the rate of production of collision ions, electric currents, and photons induced by the collision activity. This reduces the electromagnetic noise, which is squelching the collection mechanism and raising the kindling threshold. It reduces the kindling threshold, making orthorotation of hyperfield energy into electromagnetic-electrostatic-magnetic field energy easier.

Thus, according to hyperfield theory, the major features of the Vestigia mystery light experiment are seen to be within normal expectations. Again, this does not prove the hyperfield-orthorotational hypothesis, but it is consistent with it and therefore constitutes an important piece of evidence for the theory.

Also, I should stress that the piezoelectric theory is in fact included in the hyperfield theory, and is a vital part of it. In other words, the hyperfield theory is an extension of the piezoelectric theory, and in my opinion the extension is necessary if the piezoelectric effect is to fit the experimental results. There are no contradictions between the two theories since one is merely an extension of the other.

REMOTE VIEWING

In a classic series of carefully controlled experiments at SRI International, physicists Hal Puthoff and Russell Targ have shown that the human mind can produce evidence of its ability to see at a distance, and also to anticipate the future.

In their protocol one experimenter goes to a distant target, which is selected randomly for him en route, and a subject in the laboratory tries to describe the target scene, both orally and by sketching on paper. The experimenter in the field uses a random number generator to select one sealed envelope out of a group held by a controller accompanying him. The selected envelope is then opened, and that target becomes the target for the experiment. The targets are preselected with rigorous protocol by a group not involved in the experiment.

In the experiment shown here, the target selected was a rather unusually shaped playground merry-go-round, with handrails made of bent pipes, as shown in the two photographs. The laboratory subject, in addition to describing the scene verbally, made the sketches shown at the right. As can be seen, the channel is noisy, but there is definitely signal in it.

Puthoff and Targ also obtained some of the best experimental results when the laboratory subject was asked to describe the scene which the field team would see in the future, the target selection via random number generator not yet having been made. A wide variety of subjects — including persons hostile to parapsychology — were used by Puthoff and Targ in their experiments, with good results.

Each particle of mass in our bodies represents one closure of the entire universe — yielding a holographic reality — and deeper communication with ourselves is identical to communication with the universe, including any part of it, at any distance. Furthermore, in hyperspace the future and the past are all present. Since a particle does indeed exhibit a four-dimensional component for 1/137 of the time, each particle does connect to the future and to the past. With selective tuning

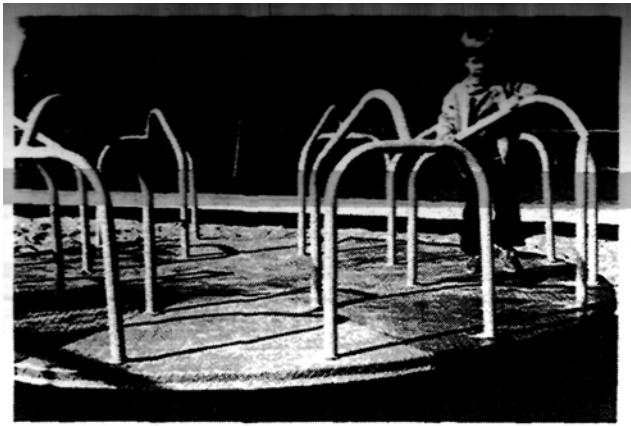

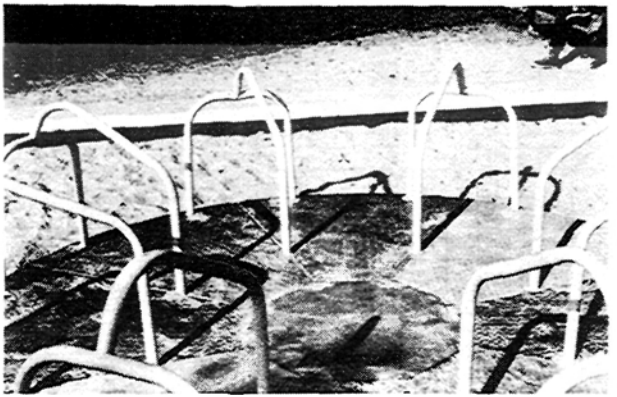

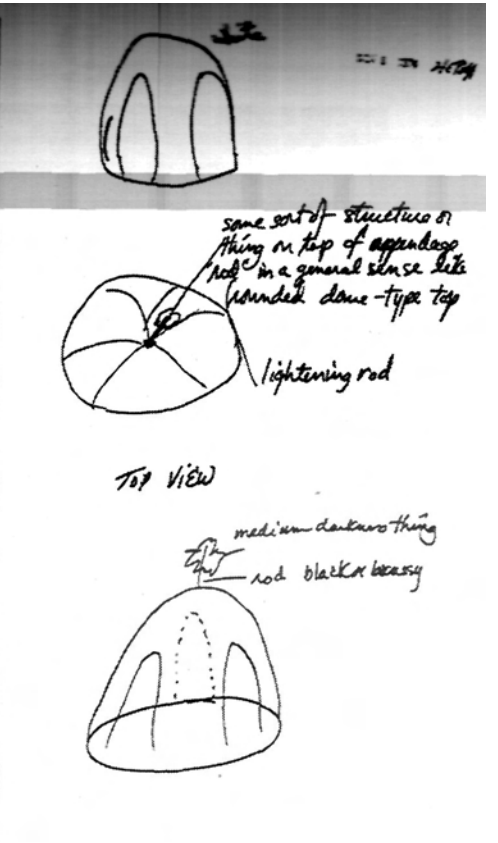

Target: Playground Merry-Go-Round. Responses.

Photo 3. Remote viewing.

and kindling any part of this holographic reality is accessible. However, because of the smallncss of a single selective signal in the midst of the totality, the channel is quite noisy. For this reason skilled psychics ~ persons who have been found to have a greater fidelity of selective tuning - can be expected to produce better results than the normal person.

Puthoff and Targ's results have also been successfully repeated by other experimenters.

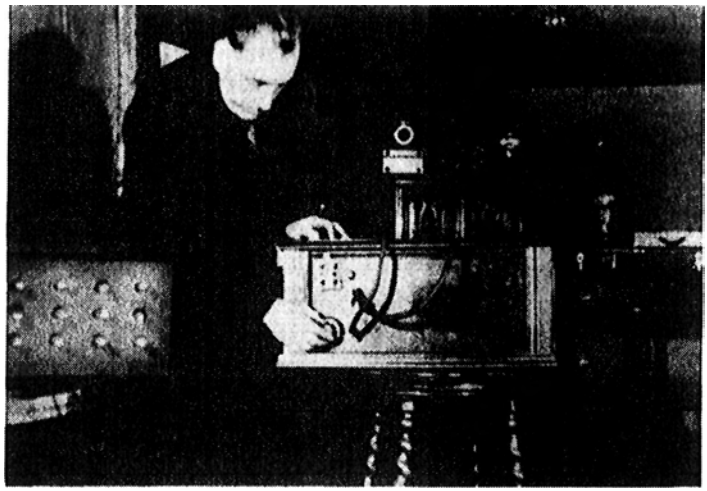

T. Henry Moray makes some final adjustmonts In tuning his radiant energy device to tap zero-point vacuum energy.

THE MORAY RADIANT ENERGY DEVICE

In the early 1900's, Dr. T. Henry Moray of Salt Lake City produced his first device to tap energy from the metafrequency oscillations of empty space itself. Eventually Moray was able to produce a free energy device weighing sixty pounds and producing 50,000 watts of electricity for several hours. Ironically, although he demonstrated his device repeatedly to scientists and engineers, Moray was unable to obtain funding to develop the device further into a useable power station that would furnish electrical power on a mass scale.

As a boy, Moray had been deeply inspired by the greatest electrical genius of all time, Nikola Tesla. His imagination was especially fired by Tesla's claims to have knowledge of an energy source greater than ordinary electricity, and by Tesla's emphasis on frequencies as the stuff of the universe. When Moray finished high school in Salt Lake City, he went abroad to study, and took resident examinations for his doctorate in electrical engineering from the University of Uppsala, Sweden, during the period 1912—14. Returning home, his diploma and credentials were interrupted by World War I, and the University mailed him these items in I918 after the war.

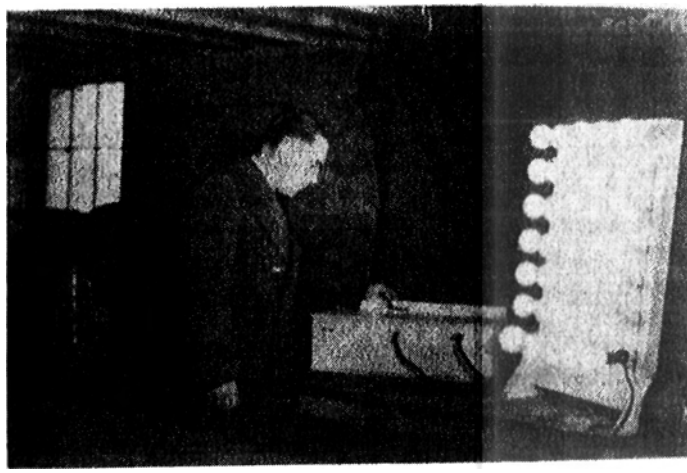

Here **the** Moray radiant energy device is providing free power to 35 100-watt lamps and a 1200-watt Iron.

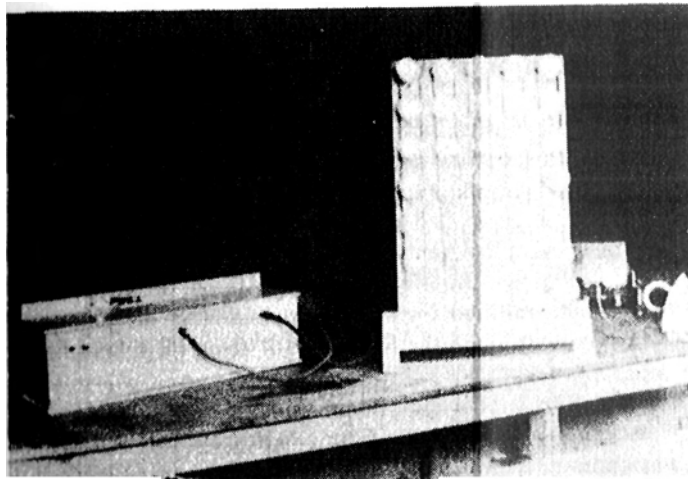

Once tuned in, the power continues and is free for the taking.

Photo 4. The Moray radiant energy device.

Shortly thereafter, Moray produced his first elementary device that delivered measureable electrical power, and he continued to work diligently on energy devices when he had time. In the 1920's and 1930's he steadily improved his devices, particularly his detector tube, the only real secret of the device according *to* Moray himself. In his book, *The Sea of Energy in Which the Earth Floats,* Moray presents documented evidence that he invented the first transistor-type valve in 1925, far ahead of the officially recognized discovery of the transistor. In his free energy detector tube Moray apparently used, inside the tube itself, a variation of this transistor idea — a small rounded pellet of a mixture of triboluminescent zinc, a semiconductor material, and a radioactive or fissile material. His patent application (for which a patent has never been granted) was filed on July 13, 1931, long before the advent of the Bell Laboratories' transistor.

In test after test Moray demonstrated his radiant energy device to electrical engineering professors, congressmen, dignitaries, and a host of other visitors to his laboratory. Once he even took the device several miles out in the country, away from all power lines, to prove that he was not simply tuning in to energy being clandestinely radiated from some other part of his laboratory. Several times he allowed independent investigators to completely disassemble his device and reassemble it, then reactivate it themselves. In all tests, he was successful in demonstrating that the device could produce energy output without any appreciable energy input. According to exhaustive documentation, no one was ever able to prove that the device was fraudulent or that Moray had not accomplished exactly what he claimed. On the other hand, the records are full of signed statements from physicists, electrical engineers, and scientists who came to the Moray laboratory as doubting Thomases and left with the complete conviction that Moray had indeed succeeded in tapping a universal source of energy that could produce free electrical power.

But in the face of all of this, the U.S. Patent Office refused to grant Moray a patent, first, because his device used a cold cathode in the tubes (the patent examiner asserted it was common knowledge that a heated cathode was necessary to obtain electrons) and, second, because he failed to identify the source of the energy. All sorts of irrelevant patents and devices were also presented as being infringed upon or duplicated by Moray's work. Each of these objections was patiently answered and nullified by Moray; nonetheless, the patent has still not been issued to this day, although the Morays still keep the patent application current.

One of Moray's efforts to develop the machine involved an association with the Rural Electrification Agency for a short time before World War II. At that time, the R.E.A. was apparently infiltrated by Communist sympathizers and high level officials of a decidedly pinkish tinge. These officials continually urged Moray to turn over all details of his device to the Soviet Union, and even arranged the visit of high-level Soviet scientists to the Moray laboratory to see the device in operation. On the initiative of the Communist-infiltrated R.E.A., one person — let us call him "Z" — spent about two months in Moray's laboratory, and succeeded in worming his way into Moray's full confidence. Moray eventually disclosed most of the details of the construction of his special valve to "Z" — the only person in whom Moray ever completely confided.

There is strong reason to believe that "Z" was a Soviet agent, and that this is

where the Soviets first obtained the impetus to develop the hyperspace amplifiers later used in their psychotronic weapons.

However, Moray became quite alarmed at the continued attempts of his R.E.A. contacts to get the device into the hands of the Russians. He eventually concluded that he had become involved with a governmental group filled with radicals and reactionaries. Moray became concerned that fifth column activity was actually directed against him in an attempt to steal his device. Quotes from the *Salt Lake Tribune* of December 2, 1941, attributed to Representative Thomas D. Winter, imply that Moray's suspicions of the R.E.A. were well founded, since Representative Winter called for a full-scale investigation of the R.E.A. on the grounds of Communist infiltration. Indeed, Moray was wounded by gunshot in his own laboratory on March 2, 1940, which seems to suggest that his fears and suspicions were based on fact. Moray severed his association with the R.E.A. in February 1941.

However, his basic unit had been destroyed by a hammerslinging witness in 1939; it is not clear whether or not this was the work of "Z" or of someone else. According to his son, John Moray, the man who broke his unit, as well as other interested groups, wanted complete disclosure of the materials and construction - nothing more or less. John Moray, who operates the Research Institute in Salt Lake City, has been trying to continue his father's work since the basic unit was destroyed. Dr. Moray himself died in May 1974.

According to John Moray, highly energetic cosmic rays from space are tapped by the machine, which is in subharmonic resonance with this high-frequency energy level, and it converts this energy level into a usable form of electricity. However, John Moray's use of the term "cosmic ray" is not necessarily the same as that of modern physics, but in fact is the same as the present concept of "zero-point" energy of vacuum. T. Henry Moray envisioned all space filled with tremendously high frequency vibrations carrying vast and incalculable amounts of pure raw energy. He envisioned the dynamic universe as a turbulent source of great energy, just as the ocean waves carry energy throughout the earth. This was also the vision of Tesla, and after him of Clifford and Einstein, who turned the attention of general relativity to the problem of the nature of the vacuum itself. Clifford and Einstein founded a branch of physics that has come to be known as quantum geometrodynamics, the study of energetic change that occurs in little pieces, including the concept that very small lengths of space, or pure vacuum, themselves oscillate at great frequency and with great energy. In Moray's day relativity was still a strange and unproven branch of physics, suspected and rejected by most of the physicists of the day, and quantum physics was still in the process of being worked out. There was no theory whatsoever predicting that empty space itself not only contained prodigious quantities of energy, but in fact *was* prodigious quantities of energy. But slowly, over the decades, the picture has changed, and the modern followers of quantum geometrodynamics assert the truth of Tesla's original vision. Today we know that one cubic centimeter of pure vacuum contains enough energy to condense into 10^{80}—10^{120} grams of matter! Thus the major part of Moray's thesis — that vacuum itself contains unlimited energy — is vindicated today. In this sense empty space is like a gigantic, restless ocean, and Moray's free energy "tapping" device is no more mysterious than the water wheel. In other words, his thesis that the energy is there to be tapped is correct; it only awaits a practical

method to tap it in order to solve the energy problems of mankind forever.

Moray thus is vindicated as a man ahead of his time, who simply built a device before any theory existed to explain its operation. Moray met with constant opposition, and his life and that of his family was anything but pleasant. Certain pressure groups constantly tried to force him into selling for almost nothing, or to disclose the secrets of his valve's construction. He was often attacked and he was sometimes shot at on the city streets. In fact, his life was threatened so often that he was forced to install bulletproof glass in his automobile. His laboratory was broken into, some of his components and papers were stolen, and his dogs were continually being killed. Moray was shot in his own laboratory, and he himself always carried a gun. Because he was harassed ceaselessly, over the years he became understandably suspicious and close-mouthed about his work. He sometimes greeted visitors at his desk with a loaded pistol lying on the desk within easy reach, and occasionally confirmed that he would not hesitate to shoot if he were attacked or threatened. One of his greatest fears was that big interests would take up his invention and simply shelve it to keep it from benefiting the public. When large companies made him offers, he always demanded written guarantees that the device would be put into production and sold to everyone, once it was developed.

Moray also realized the potential of his device as a weapon. He was fully aware that the only difference between a controlled energy device and an explosion is the rate of release of the energy. According to John Moray, his father received an offer to go to Japan in 1938 because he had built a deathray which operated off the device. According to John, a representative of the Japanese government came to the laboratory and offered a position to Moray, but he refused. Allegedly Moray had managed to rig the device so that it projected a ray of energy in a beam, and could kill mice instantly at over fifty feet. When radiated by the beam, the mice were carbonized immediately. They appeared frozen, but nothing was left except their shells, and they simply fell apart when touched.

In one experiment Moray ran his device for 157 hours without any connection to external power sources, and produced over fifty kilowatts of power during the test. He also found that an additional fifty kilowatts could be added by simply providing another tap further back in the circuit. When he shut the device off from this test, he had proven once and for all that the device was generating electrical energy from free and natural sources without batteries or external power. During this test nothing in the machine heated up; instead, all parts of the circuit ran absolutely cold. This alone is totally unexplainable by ordinary electromagnetic theory, and it strongly implies the truth of Moray's assertion that the device simply collects the energy in each of its stages in a subharmonically resonant manner, in synchronization with the extremely high frequency cosmic oscillations. In other words, since the parts of the machine ran cold, it is clear that the energy was being simultaneously collected at each stage rather than being processed through the individual stages in serial order, since serial processing in the conventional electrical sense would lead to resistance heating of the circuit elements.

Moray's device used twenty-nine stages of his special detector valves, which were difficult to produce, costing about five hundred dollars each. Only about one in four proved suitable for operation. He also had difficulty in obtaining sufficiently pure materials to make his special mixture for the pellet that enabled tube operation in a one-way gating fashion. Moray explained that his device was based

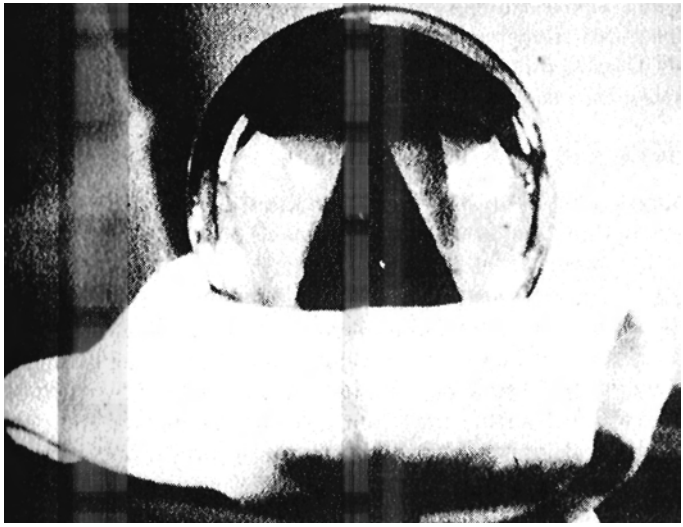

Photo 5. An Atlantean power crystal?

on the discovery of a mixture that would act as a one-way gate for the high frequency oscillations of space, so that the energy could go through the material more readily in one direction than another. Thus it was like a one-way gate valve to an ocean wave; the energy "water" could flow in in each valve, but was prevented from flowing back out. The assemblage of multiple stages thus provided a series of collectors which contained enough energy to be useful. Theoretically there was no limit to the number of collectors that could be added, and so there appeared to be no limit to the energy that such a device could produce.

AN ATLANTEAN POWER CRYSTAL?

The next two photographs are of a most amazing quartz crystal sphere removed from a chamber in a pyramid underneath the surface of the ocean in the Bermuda Triangle. Dr. Ray Brown purportedly removed the object in a dive while treasure-hunting with several friends after a storm had stirred the sandy ocean floor in 1968. Brown describes how he swam into a chamber in the pyramid after swimming around it three times, and how he saw seven stone seats surrounding two handlikc stone holders for the crystal in the center of a table or dais, with a two inch metallic rod running down vertically from the roof of the stone chamber and pointing directly at the crystal. Brown plucked the crystal from the holder and ascended to the surface; he found that his companions had brought some nonoperative objects to the surface which appeared to be some sort of strange electrical apparatus.

Brown himself had a strange foreboding and a strong impulse against returning to the site, and so he refused to do so. Three of his companions reportedly returned at a later date, and their boats were found floating abandoned in the Triangle. The three men were never seen again.

The crystal does indeed have some strange properties. In the first picture one can clearly see a very sharply outlined, pyramid shaped inclusion inside the quartz. The pyramidal inclusion is dark, but the crystal is absolutely clear. However, the second photo shows that the quartz is milky when seen from a different angle. Here three pyramids can be seen.

Other objects have been seen and photographed in the crystal from time to time. In *The Pyramid Guide,* Vol. V, No. 4, there is a photograph of the crystal showing a very distinct, humanlike iris and eyelid appearing in it, making it resemble nothing so much as a giant human eye. In that photo the three pyramids are not visible.

While I have not personally investigated the crystal and examined it in detail, some general remarks can be made. (1) Brown reported finding the pyramid after a huge storm had stirred the ocean, including the ocean's sandy bottom. This had revealed outlines on the bottom resembling buildings, which had attracted the attention of the treasure hunters. (2) Such a storm, over the ocean's great water mass, is an excellent kindler of bioenergy. In other words, Brown and his companions were definitely in a place which should have had an enormous kindling of bioenergy from the biosphere and the collective human unconscious. (3) Sufficient publicity has been given the Bermuda Triangle's mysterious disappearances to have its alleged ability to open a window between worlds implanted deeply into the unconsciousnesses of a large number of persons. (4) Brown was with a group of persons who were sharing the same sensations with the storm and surrounding area, so there was sufficient coherence of their personal unconsciousnesses to accomplish at

least some degree of tuning. (5) The legends of Atlantis were in a great revival period in the late 1960's from the popularizing of Edgar Cayce's work and other material, as indeed was the Egypt/pyramid/Atlantis mythology in general.

So conditions were very ripe for a tulpoidal contact (see Part Two) of extensive magnitude — perhaps even to the point of tuning in the ruins and pyramid for a period. Brown also reported sensing an omniscientlike presence, which is symptomatic of many such tulpoidal contacts or materializations.

In such a case, Brown could have actually swum into such a pyramid that had materialized from the collective unconscious — which after all has the psychokinetic power of Uri Geller times ten to the four billionth power or so, and which largely maintains the format of our physical reality in the first place. The collective unconscious has no difficulty in creating even many alternate worlds or materializing and dematerializing entire areas, let alone in producing a single pyramid and a ruined city.

Brown's action in plucking the crystal out of its holder and swimming back to the surface would also have constituted a tuning/kindling which was "returning with the crystal into the normal world" — in which case it could have been tuned into complete stability so that it would endure, rather than fade away as do most tulpoids.

Until we have developed psychotronic instruments to scan the crystal and reveal its true story, we cannot say for certain that any of the above actually happened, and that some sort of delusion or fakery was not involved. The point is, it could have happened just as Brown reported it, in the theory I have constructed in the second part of this book.

Until we free our minds from the present bias that physical reality is always permanent and unchanging, we shall never be able to adequately investigate such phenomena as Brown's strange crystal.

THE CRYSTAL SKULL

It appears that at least some of the ancient peoples understood certain aspects of psychotronics and even possessed some psychotronic devices.

An example of such a psychotronic device is shown in the next two pictures, reprinted here with the kind permission of Bill Cox, from *The Pyramid Guide,* No. 17, May-June, Vol. Ill, No. 5.

To quote directly from *The Pyramid Guide:*

> **These are two views of the famed crystal skull... completely hand-formed, possibly centuries in the making from a single block of hard quartz crystal. It was recovered from beneath the altar ruins, within the jungle-covered, 7 1/2 acre citadel of the ancient Mayan city of Lubaantu'n by explorer F.A. Mitchell-Hedges in 1927. A several-stories-high pyramid was also found within the citadel complex. The skull, possibly of Atlantean and/or Babylonian origin may have been brought to the Americas by the Phoenicians around 1,000 B.C. Frank Dorland says historical records suggest the skull may have been held in the London inner-sanctum of the Knights Templar prior to the Holy Wars. The high priests probably executed ceremonial magic with the skull; a ribbon-like prism in the cranium acts as a magnifier. Hollow light pipes projecting upward from the base permit light reflections from the eye-sockets. The moveable jaw easily coordinated motion with speech. Lesser quality crystal skulls exhibited in the British and Paris museums, and miniature versions, lack the Mitchell-Hedges skull's brilliant craftsmanship**

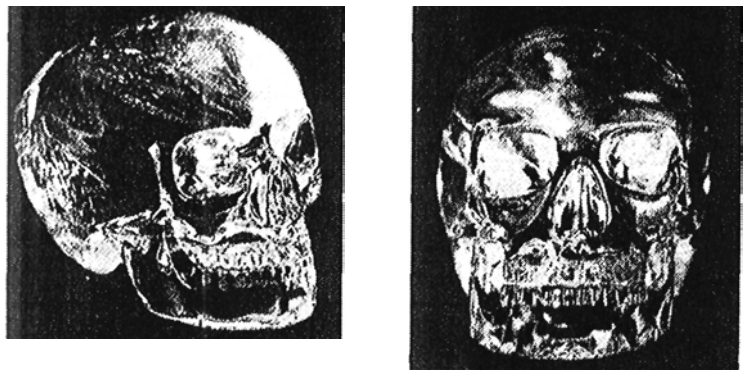

Photo 6. The crystal skull.

Two views of the famed crystal skull. Completely hand-formed, possibly centuries in its making from a single block of hard quartz crystal. It was recovered from beneath the altar ruins within the jungle-covered seven-and-a-half acre citadel of the ancient Mayan city of Lubaantu'n by explorer FA. Mitchell-Hedges in 1927. A several-stories-high pyramid was also found within the citadel complex. The skull, possibly of Atlantean and/or Babylonian origin, may have been brought to the Americas by the Phoenicians around 1,000 B.C. The high priests probably executed ceremonial magic with the skull; a ribbon-like prism in the cranium acts as a magnifier. Hollow light pipes projecting upward from the base permit light reflections from the eye sockets. The moveable jaw easily coordinates motion with speech. Lesser quality crystal skulls exhibited In the British and Paris museums, and miniature versions, lack the Mitchell-Hedges skull's brilliant craftsmanship.

One of the major African tribes is also reported to have once possessed such a crystal skull as a holy object and the center of their religion. Their skull was reportedly stolen by a white thief in the early 1800's,

So let us now discuss sonic of the peculiar properties of such a device.

First, quartz is a very hard substance and not easily worked at all. Making such a perfectly carved piece, with removable hinged jaw and eye lenses, must have consumed a tremendous amount of manual labor and considerable time, even centuries. Such an effort is not lightly undertaken; usually there is an overpowering reason for such persistence. In this case, there may well have been such a reason, and ancient priests may well have known it.

Quartz has magic qualities from a psychotronic point of view. It is open to both the ultraviolet and the infrared, and so it possesses two magic windows into the hyperframes, bioframes, orthogonal frames, and other realities. Since the third and higher bioframes (orthoworlds) are all mind worlds, quartz has open magic windows into the mind and mind energies. Thus Frank Dorland surmises correctly that the device can amplify and focus mental energies.

Furthermore, quartz is a piezoelectric crystal. Being crystalline, it possesses a lattice, a regular array of molecular stages. Thus it possesses a large number of identical stages, which is important for hyperchannel amplification.

Properly shielded against visible light, or in dim light, the crystal skull thus can function as a mental amplifier in the hands of a skilled user. Also, the quartz it piezoelectric; multistaged electrical piezoelectric currents are natural hyperenergy-hyperfield collectors, and under the proper conditions the quartz can produce heat and light, since collected hyperfield energy can be orthorotated into electromagnetic field by kindling. It can even produce these effects at a distance due to the hyperchannel circulation patterns surrounding a magnetic field or a localized area of magnetic field. The easiest place to produce effects with the skull would be inside another human head (in the brain).

So, in the hands of a skilled practitioner, the skull is (1) a collector of bioenergy, capable of turning this into electromagnetic energy and physical effects, (2) a form resonance inductor, i.e., a sort of super witness which matches the general shape of the human skull and is capable of resonating with a human skull (and thus with its contained brain) at a distance through hyperspace, and (3) a psychotronic device capable of producing psychotronic effects such as the augmentation of healing energy, psychic attack, telepathy, clairvoyance, precognition, and psychokinesis, where these initiative abilities are possessed by the user or practitioner.

Thus, in the hands of an adept, the crystal skull is indeed a formidable device, and one can well understand how the motivation existed to make it, even though its production may have taken centuries. Since in the ancient days knowledge was zealously guarded and usually incorporated directly into religion, such psychotronic artifacts as the crystal skull would have been regarded as the most powerful, hence the most sacred, of objects. One can therefore speculate that the elite of the elite of the priesthood were the only ones who knew of and were taught how to use the skull, and that this information was guarded extremely closely. The legend of such a skull existing as a central part of the religious magic of an African tribe is not beyond belief. Ordinary crystal balls, which are certainly made more easily, may have originated from the secret rites connected with the skull. An ordinary good quality, clear quartz crystal may well have been the substitute for priests who did not belong to the supreme inner circle, or the device used when a skull was not available.

I have seen at least one picture of an optical image which spontaneously formed in the crystal skull; the image closely resembled that of the Mayan astronomical

observatory at Chichen Itza.

To give a simple example of how the skull may have been used by a skilled priest, let us suppose the priest had an enemy he wished to disable or kill. With the proper psychic exercises he could have induced an increase in his own psychic energy. Then, using the crystal skull, he could simply have visualized the image of his enemy's face, and visualized the energy or light pouring into his enemy's head. The stability of the imagery is more important than effort of will.

At any rate, steady application of this imagery starts the bioenergy projection into the enemy's head and brain, and it collects there. Collection to the kindling threshold starts turning the bioenergy into electromagnetic field. At this point, a host of effects could be produced, depending upon the specific wish and induction by the priest. The effects include sharp pain (such as migraine headache); a leaden mass or frozen mind in which the brain activity itself is slowly frozen and stopped; the generation of a strong, overpowering emotion such as rage, hatred, panic, or terrible sadness; a sharp attack on the mind itself, as if a saw or knife were slashing a physical object to bits; numbness of the body or selected portions of it; interruption of the heart's functioning; kindling of the brain and nervous system into seizures, convulsions, or violent muscular spasms (capable of breaking bones); and an increase in blood pressure until the vessels swell and burst. In the hands of a priest who was strong in psychokinetic ability, this amplified ability would have been projected through hyperspace to the unfortunate victim's vicinity; objects such as stones could suddenly have levitated and hurled themselves at him, bushes and small trees could have enveloped him, etc. All in all, the skull can be used as a terrible weapon.

A few of these effects, and others I have not described, are presently in use by certain lunatic fringe groups in the United States; they use basic devices other than a crystal skull. I have been subjected to several strong attacks, and can vouch for their effectiveness if the target person is unskilled in shielding himself or evading such attack. In two cases I was nearly killed, and in a third case in substantial jeopardy.

Use of the crystal skull by a group of priests would give even more power, for from such a group the kindling level at which bioenergy orthorotates into electromagnetic field energy is much more easily approached. The inceptive power is of course usable for either good or evil purposes. Good purposes would include amplifying psychic healing; curing fevers and other infections; stopping internal bleeding; dematerializing growths and tumors; placing a person into deep anesthetic sleep so that a surgical operation can be performed; treating soil, seeds, or plants to assist sprouting and growth; treating emotional disorders with cancellation thought forms (contrary forms), and projecting them directly onto the unconscious to neutralize the disturbing form; and communicating telepathically at a distance.

A 300-year fabrication period is more credible if we recognize that the quartz crystal would have been usable from the beginning, just as is a crystal ball. So the high priests could have used the rare clear crystal (the skull is made from a single crystal), while priests recently initiated into the level that knew of crystal devices worked on it when it was not needed for use. Such a practice would explain why other skulls less finely worked have been found; these had simply not been as highly finished as the Mitchell-Hedges skull.

Furthermore, cutting off an enemy's head and exhibiting the skull was a common practice among many primitive tribes as a way of showing power. Crystal devices could have been used as a means of combining psychotronic effects with prevailing religious practice and beliefs. The fact that this eventually yielded a psychotronic amplifier of great power in the hands of a skilled priest would have led to the zealous guarding of the knowledge and the device from all but a very few of the elite.

METAL BENDING

The next remarkable sequence of photos from a Super 8 movie film taken by James Bolen, editor and publisher *of Psychic* (now *New Realities)* magazine, shows Israeli Uri Geller breaking a dinner fork in two through mind over matter. The fork, which Bolen personally verified as being intact before the demonstration, gradually becomes pliable at its midsection as Geller rolls his thumb and index finger over it. The fork finally breaks apart, the prong part clinging slightly to the handle just before it drops away, suggesting that the stainless steel momentarily became plasticlike.

Here the kindling is taking place in the nuclei of the metal atoms and also along the lines of field force in the bonding lattice. The protons in the nuclei may become quarklike due to partial extinguishing of the pions which create their electrical charges. The softening of the electrical field directly softens the ability to hold electrons and rearranges electron orbits. In addition, kindling is occurring in the orbital electrons, partially extinguishing their charge also. The overall effect is for the metal to become plasticlike as lattice bonds are severely weakened. For a metal break due to these effects, the metal in and near the fracture should show the results of severe electromagnetic fields at the localized level, e.g., as if subjected to intense heat from an internal laser action. This has indeed been found to be the case in other experiments, notably by Byrd and Franklin.

THOUGHT PHOTOGRAPHY: STELLA LANSING

Stella V. Lansing is a remarkable person who has captured a large number of authentic thought photographs on film, and in whose presence others often get thought photographs when they operate their own cameras. For several years her work has been investigated by the psychiatrist and noted researcher, Dr. Berthold Schwarz, who has published numerous papers in scientific journals on his studies of Mrs. Lansing. The late J. Dunninger also observed Mrs. Lansing's work and concluded that it was genuine, and that no magician could accomplish by sleight of hand or other trickery the remarkable results she obtained.

In Stella Lansing's photographs all the evidences and signatures of tulpoidal or thought energy kindling into the first biofield, electromagnetic energy (light), are seen (see Part Two). Typical, metallic-looking, clamshell, UFO-like images are often obtained, most often with several objects arranged in a clocklike circle symbolically: the unconscious may well be aware that the time channel is the paranormal channel, and symbolically express this in a clockwork pattern suggestive of time.

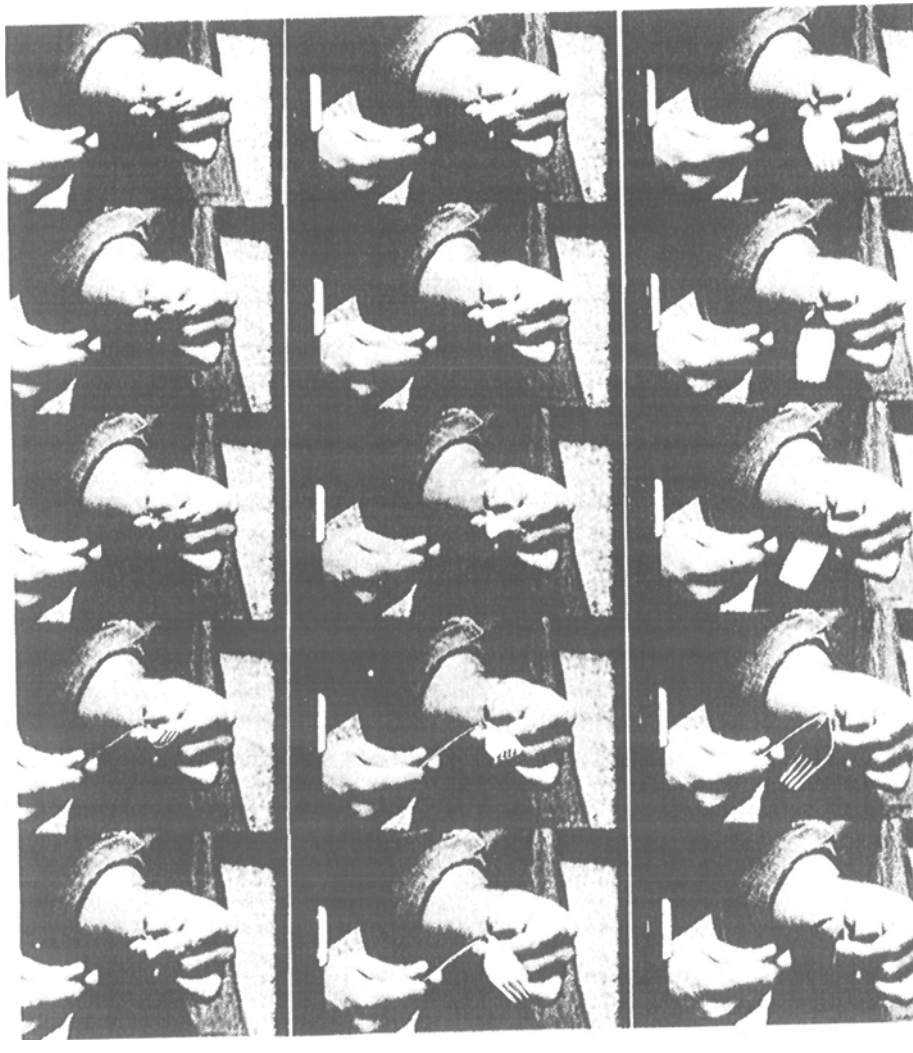

Photo 7. Metal bending.

Late evening clockwork pattern of "clamshell-like objects" obtained when photographing a church steeple.

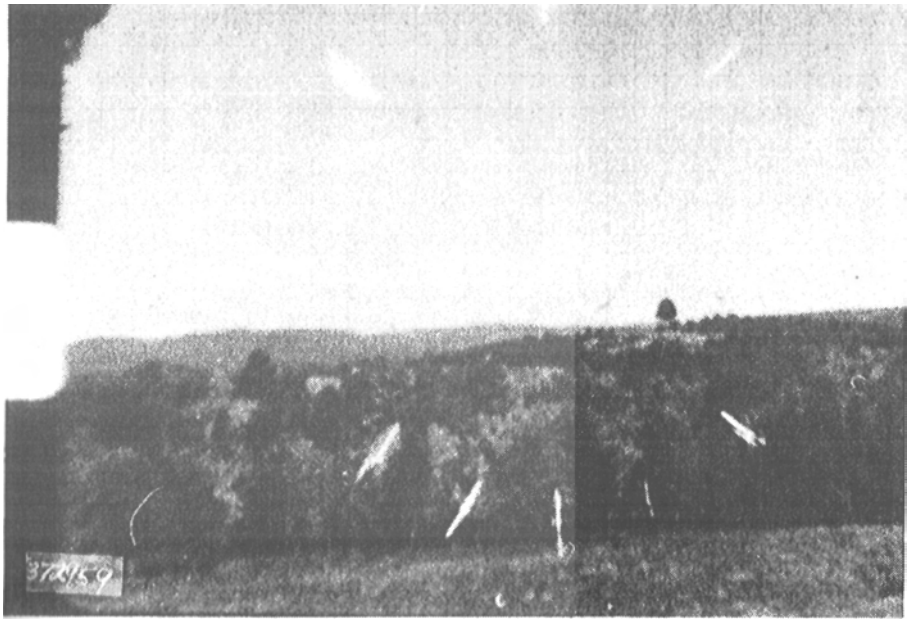

First daytime clockwork pattern, Route 47, Amherst, Mass., September 1972.

Photo 8. Clockwork patterns.

Just as Geller and Kulagina have been noted to transfer psychokinetic ability to other talented persons who were in their presence for a period of time, Mrs. Lansing's clockwork patterns and psychokinetic abilities appear to have stimulated another person's abilities in similar fashion. Paul Koslouski is a researcher who worked with Mrs. Lansing for a short time, and in his own thought photographs the clockwork pattern so characteristic of Mrs. Lansing's pioneering efforts dutifully appeared.

Mrs. Lansing is a brave and gracious lady, and her significant work with thought photographs is important to the understanding and advancement of parapsychological science.

THE DISPLACEMENT EFFECT

The next picture was taken about 1938 in Chicago with a camera on a tripod and a timed release. It was taken by Paul Trovillo, who is the gentleman sitting on the bench with somewhat of a problem of transparency and partial disappearance.

Photo 9. Displacement effect.

The light is by an overhead arc light, which is rich in ultraviolet (one of the magic window frequency bands in the hyperchanncl crosswalk between orthogonal worlds). Pan film was used in the camera, and the picture is of Paul and FerneTrovillo. Note the bushes through Paul's left shoulder and through the slats of the bench at approximately Paul's waist. Also note that the background is in excellent focus.

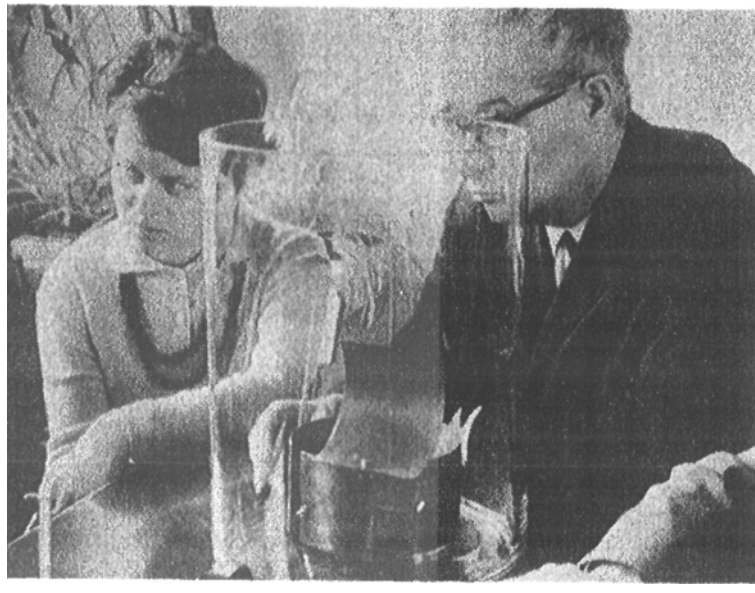

1. Robert Pavlita, Czechoslovakian engineer, and his daughter.

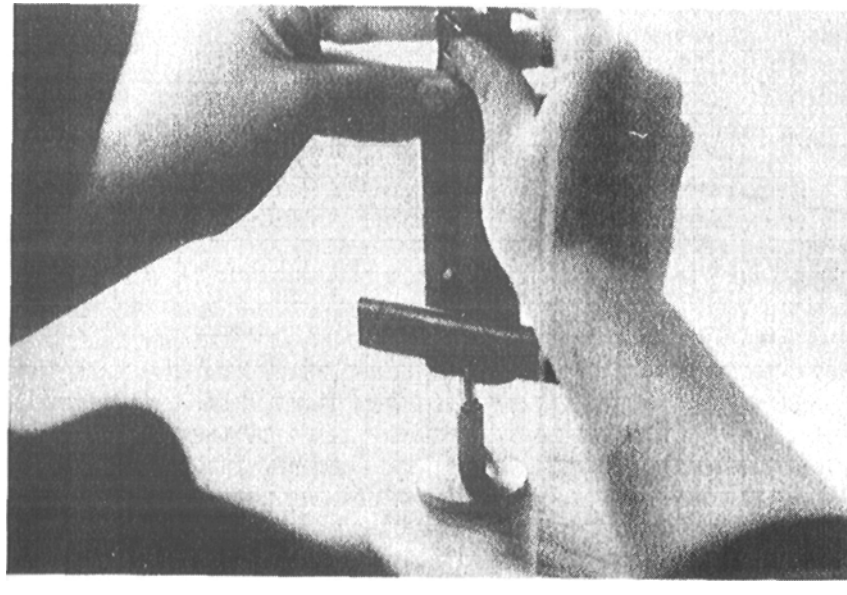

2. Device becomes a psychoenergetic "magnet" when charged by the human being—and will pick up materials, including nonmagnetic objects.

Photo 10. Pavlita's psychotronic generators.

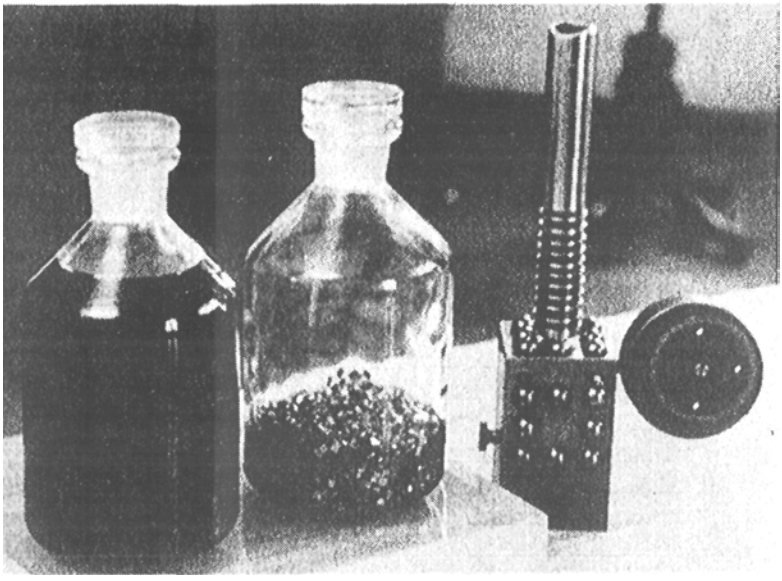

3. A generator that can precipitate solutes from solution. The jar to the left contains a dense solution; when the generator was placed over identical solution in the jar to the right, the precipitate shown in the jar resulted.

Occasionally the kindling of bioenergy (which is greatly eased in ultraviolet light) leads to eddies of hyperchannel connections between separated portions of the ordinary frame. The normal three-dimensional frame is constructed action quantum by action quantum, and each quantum is fissioned and fused individually to give individual increments or jumps of time and length. Appreciable kindling intermixed in the frame construction can provide other geometrical paths for light, so that the light rays during one or more segments of their straight-line path arc actually flipped into and back out of hyperspace. In cases such as this, one can often see right through a physical object, or even inside it (see Part Two).

I have worked with a psychic group in the American Association of Meta-Science, and have seen one experiment where similar effects were obtained, with the camera on a tripod, in a picture taken by my wife.

Excellcnt pictures of the Loch Ness monster were recently taken by Doc Shiels. These pictures have been subjected to computer analysis by Ground Saucer Watch (GSW) - and GSW was alarmed at the discovery that the monster in the portrait exhibited transparency. Indeed, for a materialization less than complete, which the monster must be if it is to keep disappearing, one would expect or even demand such transparency, even though a large body of water is a good collector for kindling of bioenergy and tulpoidal forms (UFO's are also notoriously connected with rivers, lakes, and the ocean).

Note also that the Dennis Billings UFO picture demonstrates the same sort of partial transparency. There is a readily understood physics that applies to these effects, but the effects are not contained in the present monocular interpretation of physics and reality.

PAVLITA'S PSYCHOTRONIC GENERATORS

In Czechoslovakia an engineer named Robert Pavlita has been building and demonstrating psychotronic generators for about thirty years. These are devices of various shapes and sizes and composed of materials such as steel, iron, brass, and copper, and they often contain mysterious symmetries of pattern, holes, and shape. The devices for the most part charge up with thought energy when subjected to human contact or eye contact, and then perform various functions such as precipitating a solution, turning, picking up or magnetizing nonmagnetic materials, and killing insects. The devices thus accomplish orthorotation and kindling of thought energy. Pavlita has admitted that his devices could be scaled up to serve as weapons — unfortunately, every tool can be used for either good or evil. He has demonstrated a great many times the killing of insects by pointing a charged rod at them. He also admitted that in an accident his daughter became semiparalyzed and her life was in grave danger, requiring him to work feverishly without stopping for about two days to build a second device to reverse the effects of the first. Pavlita has also demonstrated that his psychotronic devices can either stimulate or retard plant growth, depending on which polarity the plant is exposed to.

The loose information net of which I am a part has recently learned that Pavlita is now in charge of a secret project that has succeeded in building two weapons, one of about two hundred miles range and the other of unlimited range. No further details on the weapons are available.

Pavlita is a pioneering genius, and it is to be hoped that he will eventually release the secret of his psychotronic devices to the world for use in the healing arts and other beneficial sciences. Bioenergy/hyperenergy is real, and Pavlita has scored a major breakthrough in building simple devices to harness it.

CELL-LIKE INVISIBLE TULPOIDAL FORMS

Trevor James Constable has succeeded in evoking and capturing many of these forms on film. The first photo was taken by Constable on 25 August, 1957 in the Mojave Desert, and shows an amoebalike or cell-like bioplasmic form containing shapes that resemble nucleoli, vacuoles, and other cellular structures. The invisible object was at first directly overhead, but moved to positions that enabled inclusion of local terrain in the pictures.

In material presented in Part Two of this book, I show that all that a physical form or physical body is is a total tulpoid, *i.e.*, a form that can be shown to exist in each and every mind. All that a living biosystem is is a one-to-one coherence established between such a total tulpoid (physical form) and a monocular tulpoidal universe (mind world or hyperframe). Furthermore, all possibilities exist concretely in the various hyperworlds. Thus Constable's plasma creatures do indeed exist concretely—but in invisible, orthorotated hyperworlds (mind worlds). The revolutionary discovery by Constable has been a direct, straightforward way to evoke and photograph such bioplasmic tulpoidal forms. His experimental work is of absolutely fundamental importance, and I would not hesitate to compare its ramifications to those of the Michelson-Morley experiments.

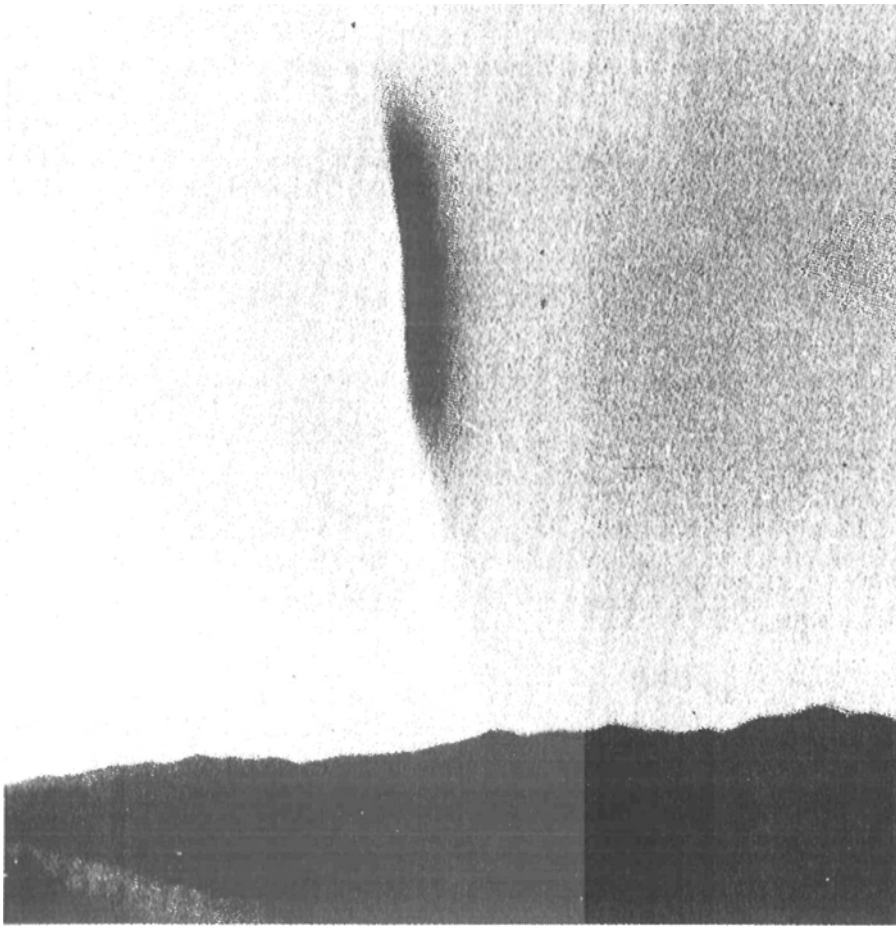

Photo 12. Form for potential materialization.

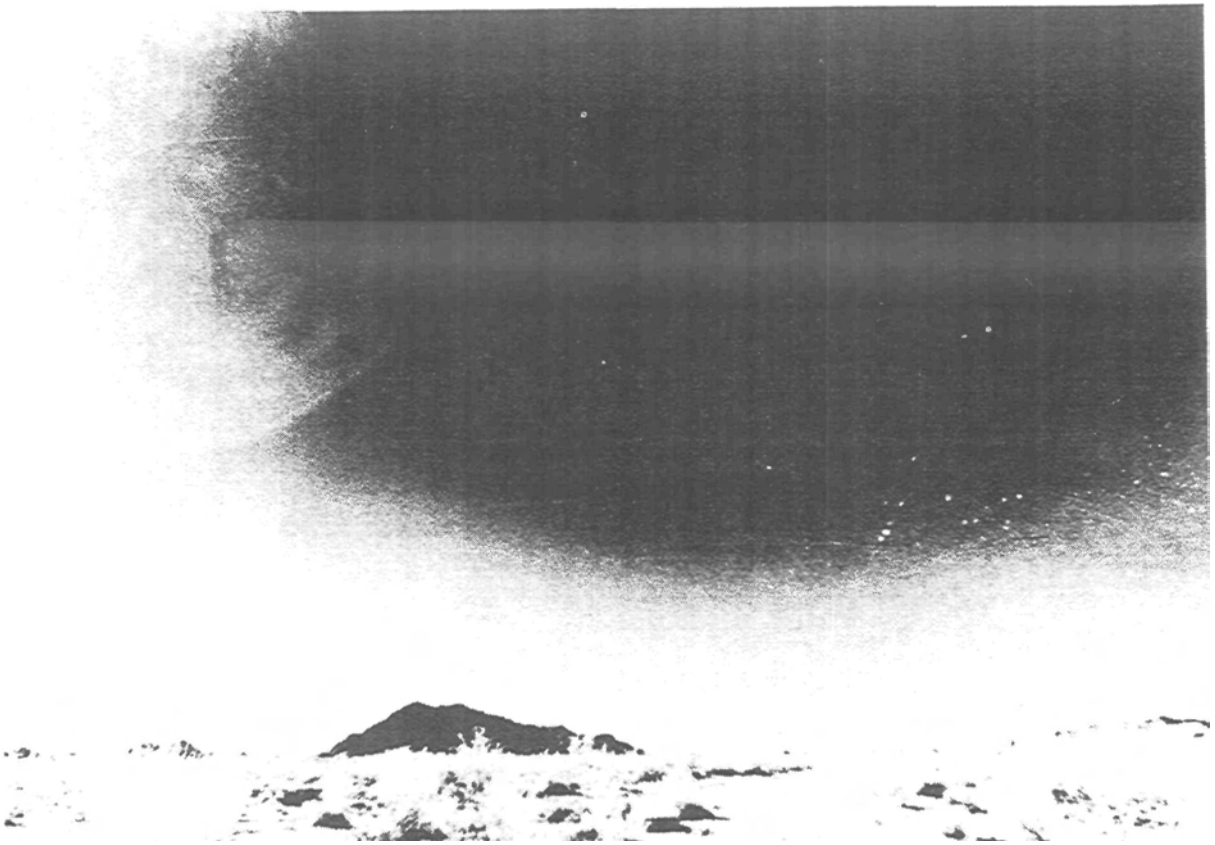

Photo 11. Cell-like invisible tuipoidai forms.

These experiments are also directly related to the work of Miller and Fox, who have shown that, when the probable atmospheric conditions *of* the earth of millions of years ago are exposed to electrical discharges and ultraviolet radiations, amino acids are formed; and then these proteinoids will form microspheres having cellular characteristics, even the ability to grow and reproduce. Every possible life form is already present in virtual state reality, and under proper selective conditions can be kindled into the first bioframe (electromagnetic field) and photographed, or even into the zeroth bioframe (full materialization).

In the UFO photographed in strong potential condition for materialization by Trevor James Constable, note the form of a disc on edge, only a portion of its form being tangible even to infrared. Note also the whitish lobe of the tulpoidal force field extending earthward from the discoidal region. Highspeed infrared film was used, no filter, shot just before sunrise near Giant Rock, California. Constable's pioneering work is remarkable laboratory evidence for orthorotation and materialization of tulpoidal energy forms.

UFO'S

The following pages show some of the most extraordinary UFO sightings and other paranormal phenomena of recent years. Photograph 13 shows a noiseless UFO seen by a university student near Las Cruces, New Mexico, in 1967. (The student reported that, as he changed plates in his camera, the object disappeared. He had been taking photos of rock formations for a class in geology.) In the Spring of 1950, two photographs of a highly materialized UFO were taken by Paul Trent on his farm outside McMinnville, Oregon. The first photo (photo 14) showed the UFO at an angle, while the second (not shown) caught the UFO in direct profile.

1. Black Ring UFO

From Project Bluebook, here is an example of a tulpoidal UFO moving along through the sky and exhibiting the "black ring" effect. In this case only the edge frame is visible, and that edge is generating the black ring or "light quenching" effect. Note that the inside portion of the tulpoid is quite transparent, for one can see the clouds behind it clearly.

2. Anchor Patterns

One of the interesting aspects of combined orthorotation into our normal three-dimensional space and out of it from hyperspace is an anchorlike pattern, shown in the next four pictures. Photo 1 was taken by Ira Maxey, and it shows several tulpoidal forms, which are intersecting our frame in a white or photon-emitting anchorlike pattern. The curved part of the anchor pattern is due to the spinning or orthogonal rotation, and the shaft portion intersects it at right angles. Note also the clouds, whose water content is highly conducive to kindling of the tulpoid — into the first bioframe, in this case.

The second photo from Project Bluebook shows another anchorlike tulpoid — this time the orthorotation is reversed, giving photon absorption — moving through the sky over a dock area by the water.

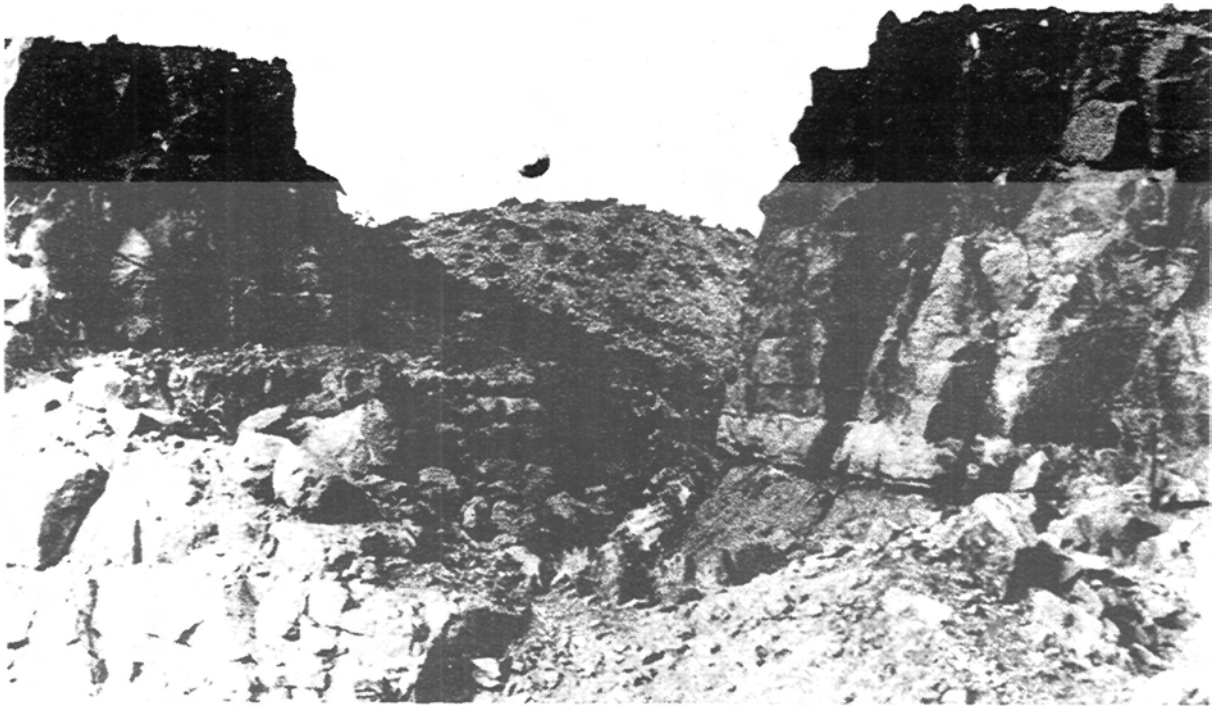

Photo 13. New Mexico UFO.

The third photo, taken in Wales, is one of several which clearly captured another anchorlike tulpoid in a photo-emitting mode.

The fourth photo, taken by Fay Clark in a darkened room, shows very similar photonic patterns being emitted by Ingo Swann's hands after Swann was asked to try to produce energy to be photographed. In the rightmost arc the shaftlike perpendicular bisector can be seen, associated with Ingo's arm. Bioenergy and mind-energy are the same, whether being emitted from a single human system/mind or from a collective system/mind.

3. Bifringement

Another common effect demonstrated by UFO's is bifringement, clearly shown in this photo from Project Bluebook. Here a UFO in highly materialized form is shown just beginning to turn back into hyperdimensional space. Interestingly enough, in hyperspace a tulpoidal form can turn in two or more directions at once, and this one appears to be doing so. A photon-absorbing turn is indicated by the outer bifringement ring, which is white. These can also be compared to photon interference patterns commonly demonstrated by light waves from two or more sources. Just as there are interference patterns in our three-dimensional space, there are interference patterns in higher dimensional spaces. The three-dimensional intersection in our frame of one of these higher dimensional interference patterns may be black, white, or consist of both black and white components.

4. UFO's in Water

Water is a substance that changes its state and form in a fantastic complex and is therefore one of the very best collectors for bioenergy or tulpoidal energy. That is, in fact, why water is so universally associated with living biosystems, for biosystems need a good collective medium in which to establish coherent tuning. So it is not accidental that water is necessary to life as we know it, or that our bodies are largely made up of water. For the same reason (ease of kindling), UFO's and many other tulpoidal forms have a high degree of association with water. Nessie and other water monsters tune in from time to time in large bodies of water such as lakes, rivers, and oceans.

This photo from Project Bluebook shows a UFO tulpoid in the first bioframe (photonic) moving along in the water.

5. UFO's in Clouds

Again from Project Bluebook here is a picture of a UFO tulpoid kindling in water, this time in the moisture in clouds. Clouds are also usually electrically charged, which enhances the tuning effect, particularly when the clouds are darkening and so are highly charged and also densely loaded with moisture. The darker clouds shield out more of the visible light, reducing the hyperchannel (time) squelching effect of visible light.

6. UFO Seen by the Author

The next UFO is one of several seen by me, and it provided a very curious, anomalous phenomenon in my memory. Furthermore, this UFO was sighted by hundreds of persons over a four-state area, so there is no question that something was there in the upper atmosphere.

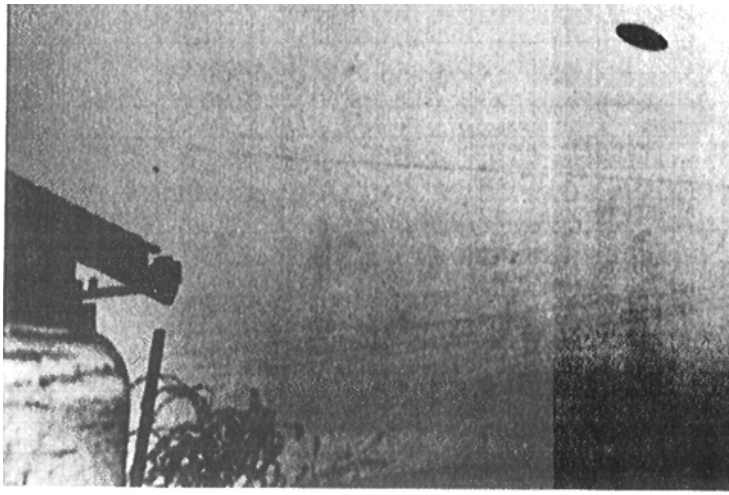

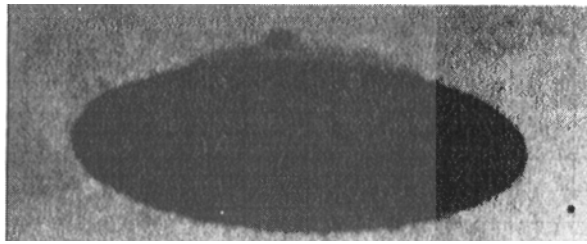

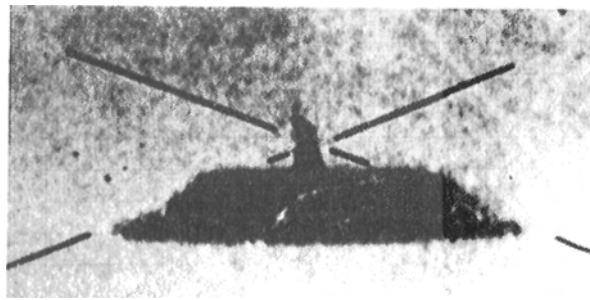

Photo 14. Oregon photos.

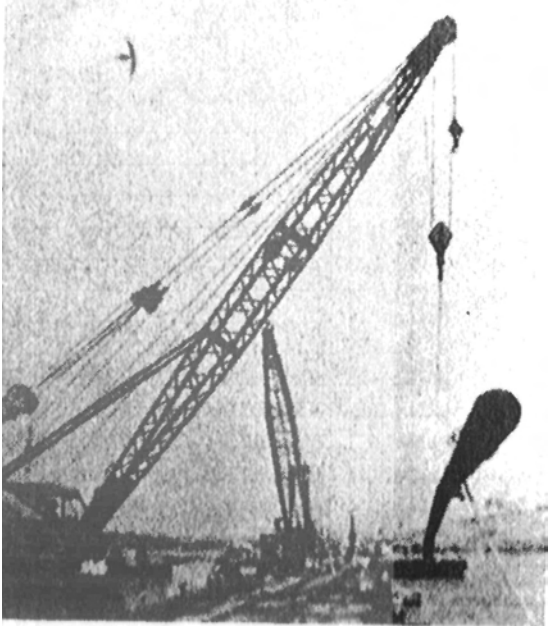

Photo 16. Anchor patterns.

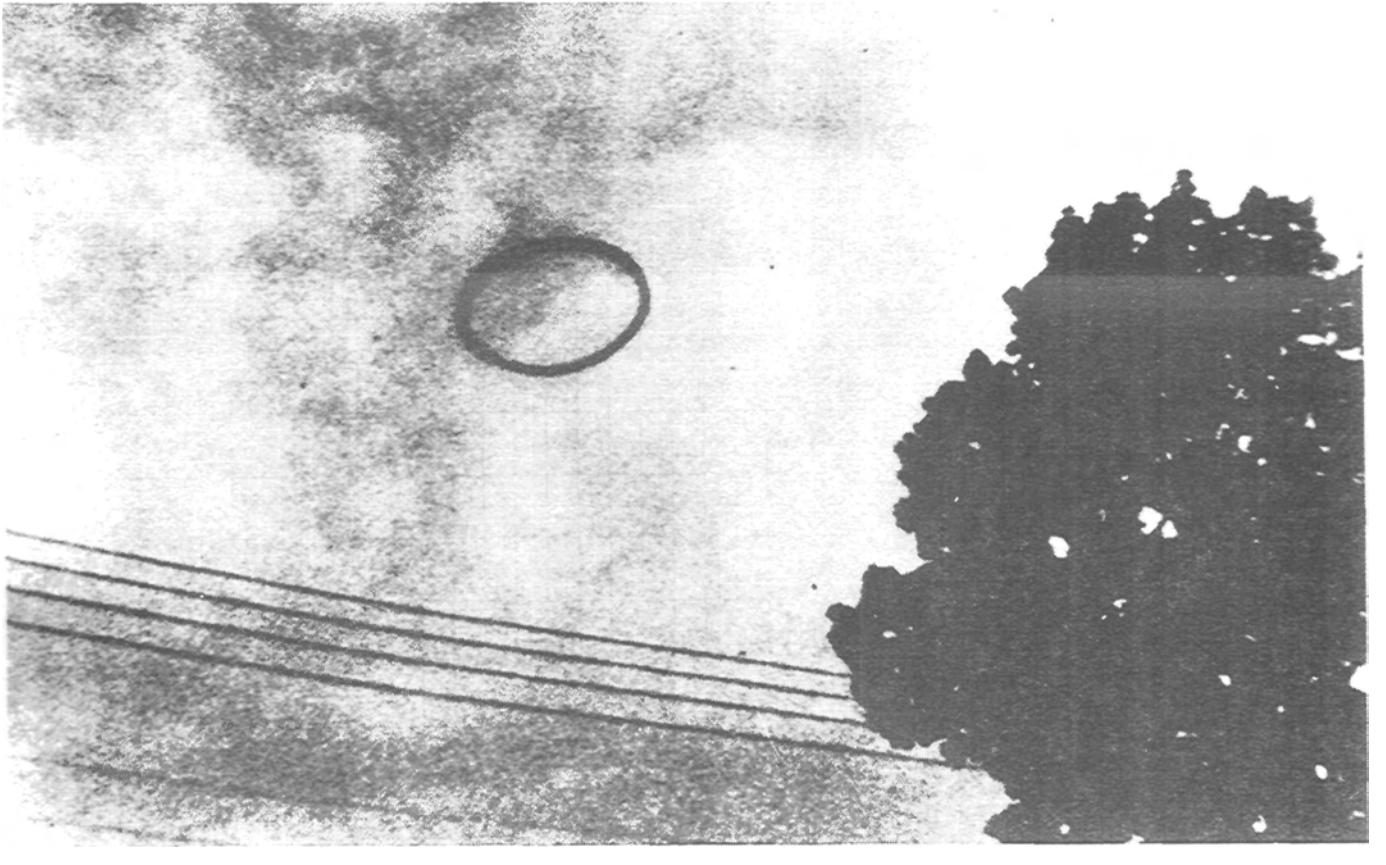

Photo 15. Black ring UFO.

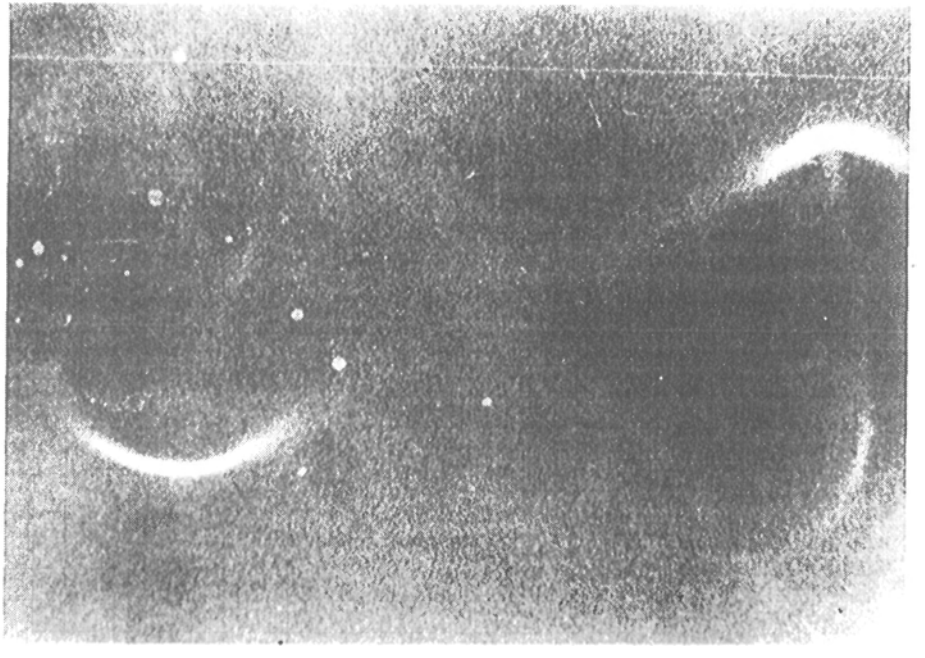

Photo 17. Bifringement.

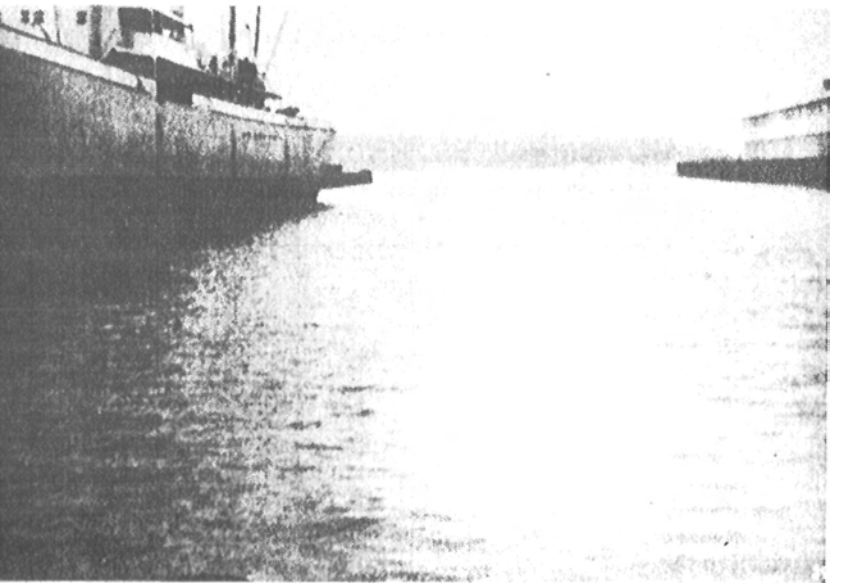

Photo 18. UFO In **water.**

The sighting occurred in June 1950. At the time I was home with my father in Woodville, Mississippi for the summer vacation from college. All my family were in the timber business — pulpwood and logs — and I was working for the summer with them.

It was a beautiful, warm, clear summer day with almost no clouds at all. Coming out of the woods on a pulpwood truck with the last load of the day (about 4:30 or 5:30 PM), the truck was slowly making its way across a large open field to the county road. Suddenly a light was seen in the extreme upper atmosphere, glowing with a fierce white radiance, very similar to the light emitted by a magnesium flare or by burning magnesium. Some object was apparently entering the atmosphere from outside it, but the velocity of reentry was far slower than reentry vehicles that would be fired many years later on U.S. and Soviet rockets. As the fiercely glowing light smoothly descended, a change occurred. At that point gray smoke also appeared in the white smoky trail being left by the object, and the trail became turbulent from that point on. Then an orange color appeared at the front of the descending, tumbling object, in the light being emitted. The smoke trail from this orange glowing color was darker gray. The object tumbled slowly downward, burning fiercely, until utterly consumed, still at an extremely high altitude (I would estimate still above 100,000 feet). In the sky the smoke trail that had been left persisted for a while, until it was gradually dispersed by high atmosphere winds. In the picture a great deal of dispersion has already occurred.

So far as is known to me, and I have had considerable missile experience, neither the U.S. nor the Soviets were firing any sort of vehicle in 1950 that could account for the phenomenon. Furthermore, even if we postulate a reentry vehicle from a large rocket, its velocity was far below normal reentry velocity, and this cannot be accounted for. The object also could not have been a meteor because its velocity was far too low.

For the doubter let it be pointed out that even if a high drag, low ballistic coefficient reentry vehicle comes into the earth's atmosphere on a downwards plunge and rapidly slows down, its initial velocity is quite high, and its rapid slowdown is quite apparent. This phenomenon did not exhibit such a characteristic.

7. The 1966 Dennis Billings UFO Sighting

At about 7:00 P.M. on the night of September 23, 1966, Dennis Billings and his wife and daughter sighted a UFO at close range. The close UFO was one of a total of four sighted by the family in about one hour. The sighting occurred in Decatur, Alabama. The UFO phenomena occurred after anomalous physical effects were noted. From the alley by his back yard Dennis, who had taken out the garbage, began to hear sounds from inside a neighboring house at some distance as if he were physically inside the room in which the sounds were occurring. These sounds consisted of conversation and dish-rattling in the kitchen where two women were apparently cleaning up the table after the evening meal and washing dishes in the sink. Then the sounds changed to those from another room where children apparently were playing games. Peculiarly, the sounds seemed to originate from wherever Dennis focused his attention, such as the garbage can, the house, etc.

Shortly afterward his daughter followed him into the yard as he left the house to go to a football game, carrying his binoculars. She spotted a cluster of lights moving along slowly in the sky above the treeline, and called his attention to them.

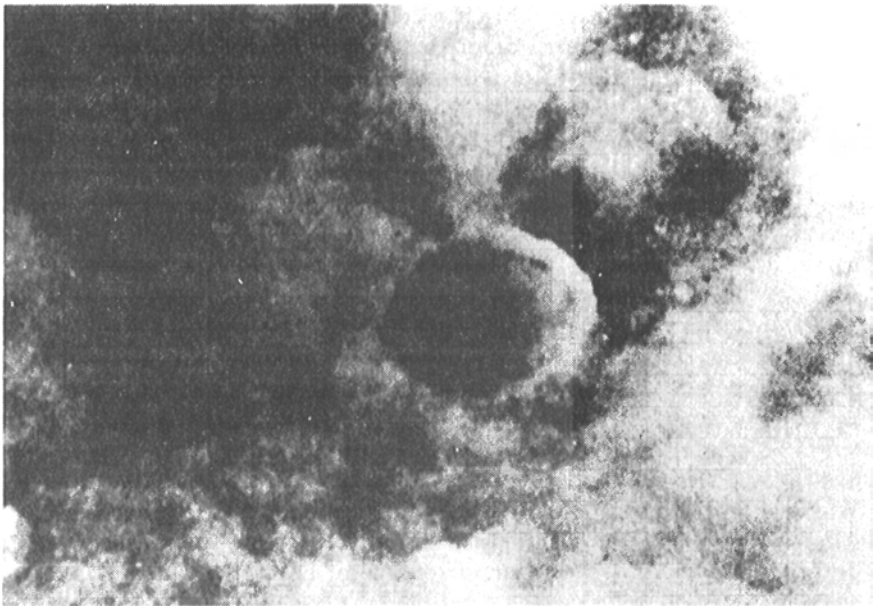

Photo 19. **UFO** in clouds.

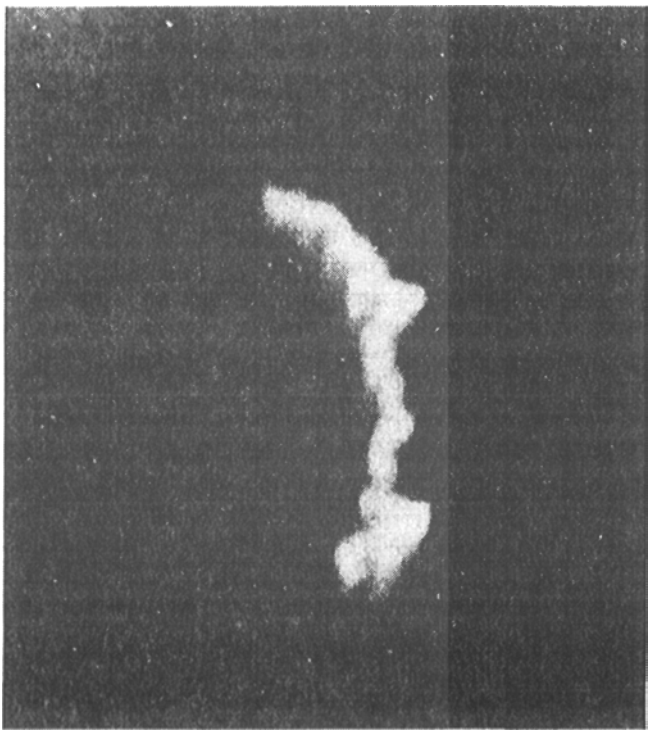

Photo 20. UFO seen by the author.

Through binoculars the cluster of brightly colored, flashing lights could be seen to be one object about two blocks from Dennis's house, moving very slowly and making no sound, about fifty feet above the trees.

Just then Dennis's wife turned on the exterior house lights which illuminated the entire back yard. As she came out into the yard, an object, a fiery red, glowing, round ball of light about twenty-five feet in diameter, appeared just above the neighboring house in back, the same house from which the anomalous sounds had been heard a few minutes previously. Strangely, the glow of the object did not appear to illuminate the rooftop of the dwelling above which it hovered.

The glowing light seemed to be composed of a tremendous amount of energy, and there was violent fluctuation, turbulence, and movement of the light energy within the sphere. Another way to describe its dynamic characteristics is to visualize it as being composed of individual particles of light or incandescent particles of highly charged matter moving rapidly in a circular plasma. The light itself appeared to be comprised of hundreds or even thousands of individual light sources confined to the circular shape.

Within a few seconds the individual lights began to coalesce and form into a solid light with no agitation, dimming in incandescent intensity and changing from red to orange to yellow. As the circular shape of light grew dimmer, a rocket-shaped object formed in the center. After the light had finished changing to yellow and was much dimmer, the rocket-shaped object began to rise, with particles of light from the sphere clinging to it and falling off toward the ground, where they evaporated and disappeared. The rocket-shaped object had no wings or tail fins, and it picked up speed and sped away, streaming an exhaust tail of light or flame behind it, similar to a welding torch's flame or a flaming sparkler. The object made several spirals as it rose and then headed in a straight line toward the stars. As it rose, it also made a slight arc toward the moon, which was full or nearly full, and passed across its face. As it crossed the face of the moon, its rocket-shaped outline could be clearly seen.

Astonished, Dennis and his wife began discussing what they had seen, still standing in the back yard. At this time the anomalous reception of unusual sounds began again. At first Dennis seemed to hear a train on a distant track although there are no railroad tracks in the vicinity. The sound seemed to come closer until he seemed to hear a train passing by immediately in front of him with its wheels clicking on the joints of the steel rails. Then they heard other sounds similar to automobiles and trucks on a freeway, again very close, although there is no freeway in the vicinity either. The whining motors and honking horns of these unseen vehicles could also be heard. Turning first in one direction and then in another, Dennis could hear the anomalous sounds seemingly originating from wherever his attention was directed. Other sounds such as airplanes flying in the sky also came in. Then he heard another sound like a high-pitched tuning fork, and it began to increase in frequency until Dennis's eardrums were hurting.

With this high-pitched frequency sounding and his ears smarting, Dennis looked up and saw a bright object positioned in the sky, larger than a star, and approaching him and his wife. As it approached on a straight line toward their back yard, it got bigger and brighter, until it stopped directly overhead, hovering 100—150 feet directly above the yard. The object appeared to be circular or oval in shape, and it descended with the flat side down. On its rear end the object was

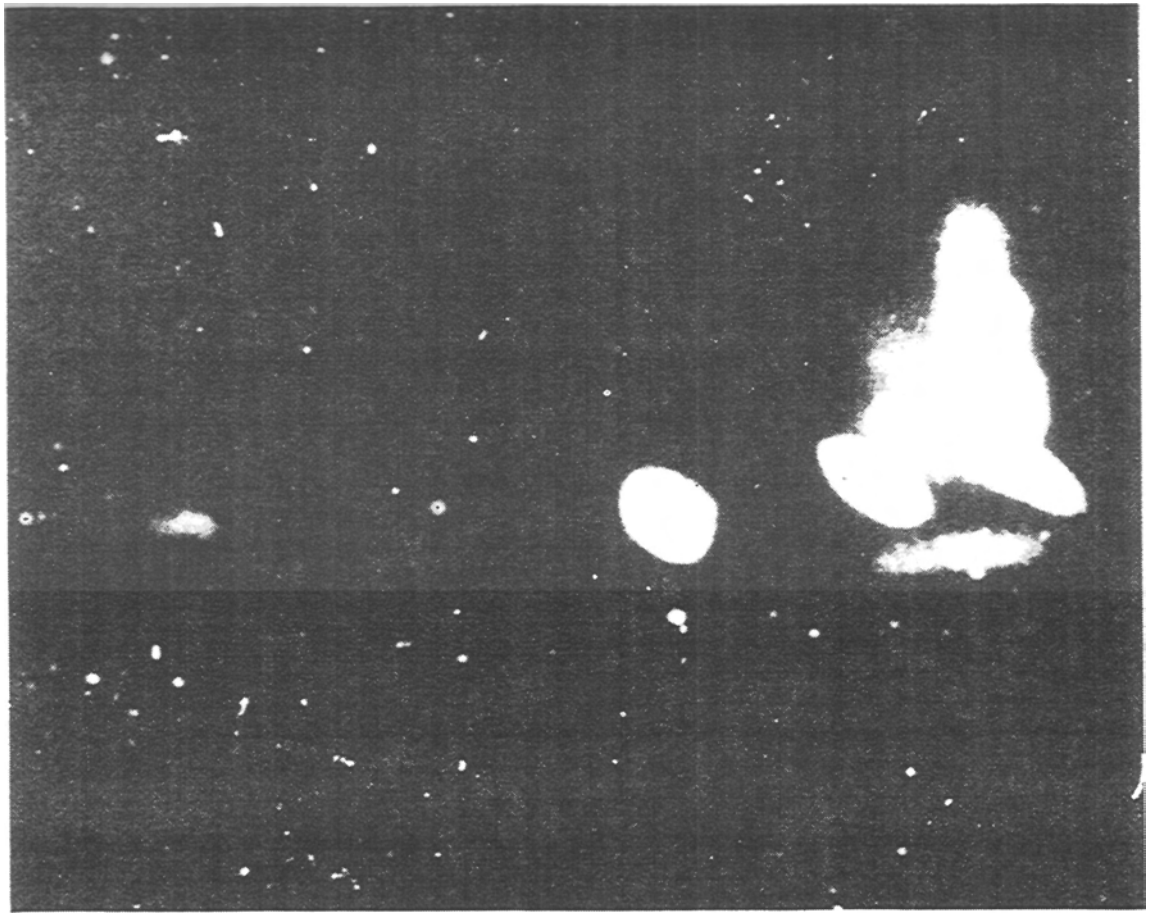

Photo 21. Second Billings UFO.

rimmed like a horseshoe with twelve washtub-sized blinking lights, each of a different color. These lights appeared to be controlled so that as one light blinked on, the other lights went off. In this way one light at a time blinked on and off in successive positions, so that a single light seemed to rotate around a complete half circle and cross at the open end, changing color as it progressed. On one side of the horseshoe the light positions were bright red, on the next yellow, on the next pale green, on the next a darker blue-green, and the final light on the opposite side of the horseshoe pattern was a very bright blue. Underneath the center of the object was what appeared to be a hemispherically-shaped plastic capsule or shield. This capsule was completely blacked out; yet through what appeared to be smoked glass, movements or shadowy activity could be seen. Dennis assumed that this was the exhaust section of the craft and that what he was seeing was probably smoke coming out of a black hole in the craft.

Around the outer perimeter of the craft, and about two feet out from it, was an illuminating light which circled the object like a halo or corona. Dennis had the eerie sensation that the object was intelligently controlled and that he himself was under close observation.

At this time Mrs. Billings became extremely frightened, ran into the house and got the baby, and crawled under the bed until the craft had gone.

As she left in fright, the craft lifted up in the sky a little and began to move slowly away, so slowly that Dennis could walk along beneath it as it moved across the back yard and into the front yard. Walking under it and looking straight up at it, he was able to observe closely the blinking lights and their operation. When the craft had been motionless, the lights had blinked on and off slowly, so that they moved in a slow, pulsating motion from position to position around the horseshoe pattern, changing color as they went. As the craft began to move and pick up speed, the lights began to increase in pulsation frequency and thus to appear to move faster around the horseshoe pattern. As the craft moved even faster, the light pulsations became so short and fast that they seemed to be spinning around the horseshoe in one continuous blur of motion.

As the object left Dennis's yard, it moved into the sky and away, but not too far, until it had positioned itself over the airport (Pryor Field) as a large bright object. At this time Pryor Field was serviced by Southern Airlines. As one of the commercial aircraft took off, the UFO followed it back directly over Dennis's house, then left the aircraft and repositioned itself in the sky in its original position over the airport, hovering motionlessly.

After hovering motionlessly for about fifteen minutes, the UFO suddenly shot down in an arc toward the ground, passing below the tree line and out of Dennis's view.

Dennis waited for about ten more minutes, when suddenly the UFO shot back up into the same position in the sky, seeming to follow in reverse the same arc on which it had descended. It remained in this position, hovering in the sky above Pryor Field for another ten to fifteen minutes. Then a similar object approached and joined it, and the two seemed to merge or dock together. They remained motionless for about five minutes more, then moved across the sky, still joined, until they disappeared below the horizon.

According to the newspapers the next day, this object or something similar had been seen all over the eastern half of the U.S., and had been described as "multi-

colored clouds."

8. The Second Billings UFO Sighting

If Dennis and his wife had experienced only one UFO, the incident would have quietly faded away in the unwritten annals of ufology. However, such was not to be the case.

Dennis vowed to himself that, if such an incident ever occurred again, he would get a photograph ofthe object. And just before Labor Day in 1970, Dennis got such a chance, and indeed made good his intention.

On that night, with almost totally clear skies and a bright moon, Dennis's wife came rushing into the house in Decatur, Alabama and excitedly reported to Dennis that she had seen another UFO. Rushing into the yard, all Dennis could see were some distant white lights — too far away to say positively they were UFO's. However, recalling the multiple UFO's in the previous incident, Dennis and his wife took up separate watches on each side of the house. Dennis also thought of his Polaroid camera left in his car parked in the driveway, so he went to get it.

Standing between the trees, Dennis looked up into the sky and saw a UFO suddenly triggered into position, as if his thought and intent had pulled a switch and the object had suddenly appeared, positioned perfectly for his observation, pouring light from underneath for a distance of about twenty to thirty yards. This light seemed to emit some immense force and was colored like the fire, whiteness, and glare of a welder's torch. The tail diminished as the craft lowered. Dennis snapped a picture when the craft's tail had shrunk to only four or five feet long. He pulled the tab on the polaroid film and ran into the street under an outdoor light to see if he had recorded a UFO. When he saw he had done so, he then noticed the object had descended and made a left turn, moving eastward down Nelson Street slowly at about five miles per hour. Its porthole lights were still clearly visible and no sound was being made. Dennis hurried after the UFO and caught up with it at the end of the street near a T. V. A. easement, where large electrical power lines were located, running generally north to south. He got slightly ahead of the object as it traveled parallel to the power lines and as the craft passed directly over him. At the very instant he pressed the shutter, all lights in the craft instantly extinguished as if his mind had been read and the photograph deliberately prevented. The now darkened, cold, lifeless-appearing craft moved smoothly away, passing over Mallard Park where a Marine Corps Band was playing. The second photograph showed no lights whatsoever.

One of the local newspapers then printed the story and the picture, and Dennis received a call from one of the national UFO agencies. After giving the agency his photograph, his camera was mysteriously stolen from his automobile, and the agency then claimed to have lost his photograph. However, they underestimated the determination of Dennis Billings.

Dennis simply got on a plane and went to Washington, and proceeded to the office of the head of the UFO agency. The president of the organization had said that he would be out of town for several days and would be unable to see Dennis. Nevertheless, Dennis went to his office, where his secretary repeated that the gentleman was out and would not return for the day. Dennis barged into the office over the protestations of the secretary — including the threat to call the police and have him removed — and proceeded to search for his photograph, eventually finding it in the

desk drawer of the president of the organization. He retrieved his photo and returned to his home. Without his personal determination to retrieve his property, the photograph — like so many others over the years — would have been "lost." The immediate question that occurs is: Isn't it curious that one of the major UFO organizations in the U.S. — supposedly devoted to solving the UFO mysteries — exhibited the desire to misappropriate a really good picture of a UFO and see that it disappeared from the scene?

At any rate, Dennis got his photo — and a beautiful photo it was. Furthermore, the incidents experienced by Dennis Billings are classic examples of my theory. Many anomalies in the incidents will not fit orthodox theory or orthodox ideas about reality. The "pieces of light" seem to be almost intelligent. There was a close coincidence of thought/intent/expectation and kindling burst into observable reality, plus a great deal of sky-watching and expectation by Dennis between the first UFO incident and the triggering of the second (i.e., a long kindling time, just as Patterson experienced before he got his excellent movie shot of a sasquatch). And there was close experience of very distant sounds (to be expected in hyperspace, where ordinary distance can be shortened or even eliminated). Furthermore, there were multiple witnesses to the UFO incidents, and Dennis got his photograph. Psychologically, it may even be significant that for several years Dennis vowed to take *a* picture of any other UFO he might later see, and when he got *a* picture, he was prevented from getting another. And on the photograph obtained, one can see that the "craft" form of the tulpoid is only partially materialized, since the stars can be seen right through the vehicle's midsection. This is similar to the strange transparency of the Doc Shiels photograph of Nessie (the Loch Ness monster), which Ground Saucer Watch found when they performed a computer analysis of his photo. (The second Shiels photo showed that the water was being forcibly moved by Nessie, so the tulpoid was at least partially materialized.) Yet such is to be expected if one is dealing with partial materialization of tulpoids.

Finally, the entire area is located in the Tennessee Valley Authority's project. Great electrical transmission lines go through the area, and there are many long lakes and the Tennessee River. So an excellent kindling medium is provided, and many UFO's are seen over the Tennessee Valley.

The Dennis Billings photo remains one of the best UFO photographs ever taken, and coupled with Dennis's astute personal observations, it provides a keystone insight into the actual nature of the UFO phenomena.

9. The 1973 Pascagoula UFO Sighting

In October 1973 one of the greatest UFO flaps of all time occurred in the United States, and created headlines because of the bizarre increase of contactee incidents. One of the most sensational of these was the purported abduction of two men in Pascagoula, Mississippi, who were allegedly taken aboard a saucerlike craft, examined, and released.

Shortly afterwards another incident happened in Pascagoula, which drew little attention. In this case, underwater phenomena were involved, because two U.S. Coast Guard petty officers investigated the object and made physical contact with it. An official Navy investigation was made and a report written. Unusual characteristics, highly suggestive of a device using psychotronic effects, were displayed by the object. I suggest that this device may well have been a Soviet psychotronics de-

vice, taking advantage of the UFO flap as a screen to carry out clandestine activities.

In Pascagoula an illuminated underwater object followed the boat of Raymond and Rayme Ryan, who tried to beat it away with an oar. The nine witnesses, including two Coast Guard investigators, described the object as metallic, rod-shaped, two to three feet in length, and four inches in diameter. It was attached to an oval-shaped beam ahead for four to six feet. It looked like a mini-submarine and moved at four to six knots in four to six feet of water. Although it sounded like metal when struck, it could not be struck consistently, and its light, when illuminated by a flashlight, turned off immediately and then on again after about one minute. The portion of the Ryans' oar that was under water could not be seen from the surface when the object's light beam fell on it.

At this point I would like to make some general remarks about the nature of UFO's. (1) The UFO-generating mechanism and the psychotronic mechanism are the same. (2) The Soviets may even be able to psychotronically evoke particular types of UFO phenomena at will. (3) A small number of UFO phenomena could even be generated by the Soviet Union as part of its psychotronics deception plan. However, most UFO phenomena are definitely not of Soviet initiation, (4) An explanation of the UFO phenomena is briefly sketched out in my section on psychotronics. (5) Some of the NASA photos taken of moving lights in orbit around the earth may have been of Soviet-initiated effects. Like the radiation of U.S. personnel in the U.S. Embassy in Moscow, this effect could have been intended to evoke U.S. high level reaction, to positively assess whether the U.S. had any knowledge of psychotronics, and if so, what that level might be.

10. Other UFO's

A brilliant, "crystalline-like" UFO was seen over Madrid, Spain in 1968 and was chased by Spanish Air Force planes. Whenever people are significantly structured in their thinking, symbolically "sharp" and "crystalline" tulpoids often are seen, representing their ideas. Many such UFO tulpoids are seen over Iron Curtain countries, and over countries such as Spain that have one dominant religion and culture.

In October 1973 the governor of Ohio, John Gilligan, saw this UFO phenomenon along with over 100 other people. The police were notified by the governor, and this photo was taken by the *Columbus Evening Dispatch.* Note that the tulpoids remain in the first bioframe (see Part Two), and even though their intersections change shape, the second one remains in a "burst mode."

In 1965 Rex Heflin took four pictures of a highly materialized UFO near Santa Ana, California. In the fourth photo the dematerialization "photon absorption" effect is shown: if orthorotation into higher dimensional space is made in one direction, photon (light) is emitted. If the orthorotation is made in the opposite direction, photons are absorbed. In one case "glowing light(s)" are associated with the UFO's hyperdimensionality, while in the other case "black rings" or "smoke" are associated.

FALKVILLE SPACEMAN

These two pictures are black-and-white versions of two of the photos taken by **Falkville, Alabama Police Chief, Jeff Greenhaw, in an encounter during October**

1973. Greenhaw had received a call from one of his constituents to say that a UFO had landed in her pasture, and he was proceeding to investigate the incident. In his police cruiser he carried a polaroid camera which he used in his police work.

Driving down a narrow gravel road, Jeff noticed a metallic-clad, suited figure walking down the road toward him, and he stopped his car to get out and have a look. For some strange reason his instinct was not to pull his pistol on the creature, and instead he started taking pictures as the creature/tulpoid walked toward him. The creature was holding something exposed in one of his hands, as can be seen in one of the photographs. As the tulpoid approached with no apparent intention to stop, Jeff then switched on the blue light above his cruiser, and the rotating, flashing light caused the creature to turn about and run away down the road. Jeff jumped into his cruiser and gave chase, eventually reaching about forty-five miles per hour without catching the tulpoid. His car spun off a curve and Jeff still had the photos — polaroids that he developed.

Bizarre things then happened to Jeff Greenhaw. His wife left him and divorced him (I suspect this had nothing at all to do with the UFO incident), he was fired from his job as police chief, vicious rumors were circulated that it all had been a hoax, and that a person had been dressed in an aluminum suit and photographed to give the appearance of a spaceman. Various fire suits were positively identified as having been the suit used. Jeff was discredited. Finally his trailer was burned down.

Before the trailer was burned, a friend of mine here in Huntsville, Warren York, visited Jeff and made photographic slides from the original polaroids with Jeffs permission. Shortly after that I had a chance to study these first generation slides for several hours, and some interesting things turned up.

The tulpoid's left hand is positively reversed in a mirror image fashion; it opens outward instead of inward as does a normal hand. (This cannot be seen on the photos shown here, but on the first generation slides it is readily seen.) Being an aikidoist, I am totally familiar with the degree of bending and flexing of most human joints, particularly the arms, wrists, and hands. And the mirror imaging of the left hand of the tulpoid is beyond question.

Furthermore, one can establish a clear shoulder line in some of the other photos, and a line just under the hat or "nazi-helmet" portion of the figure. From the other photos a remarkable thing emerges: there are only two places between the edge of the helmet and the chest that are sufficiently wide and sufficiently thick to contain a human head. The person would either have to have a neck about twelve inches long, or he would have to have a neck shorter than a Neanderthal's, with the head lolling down completely on the chest. Again, this can be clearly established in the original first-generation slides.

Finally, I have a letter in my files that establishes as a falsehood one of the rumors about Jeff. One person had admitted dressing in the suit and faking the incident, when in fact what actually happened was that Jeff went to his house immediately after the incident to ask this person to accompany him back to the area and search for the spaceman. When confronted in late 1977 by his family and friends, this person broke down and confessed that he had lied about the incident.

Finally, some other investigators dressed a person in an aluminum foil suit and photographed him, and there is no resemblance to the tulpoid photo. And Warren York investigated all the firesuits supposedly used in the hoax, including new suits used by the various fire departments and also by NASA at Redstone Arsenal. None of them resembled the tulpoid photo.

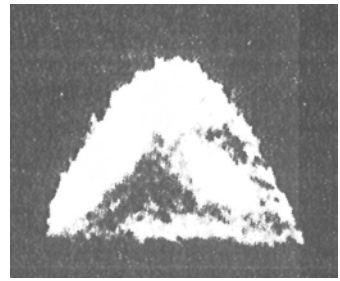

Photo 22. Spanish UFO.

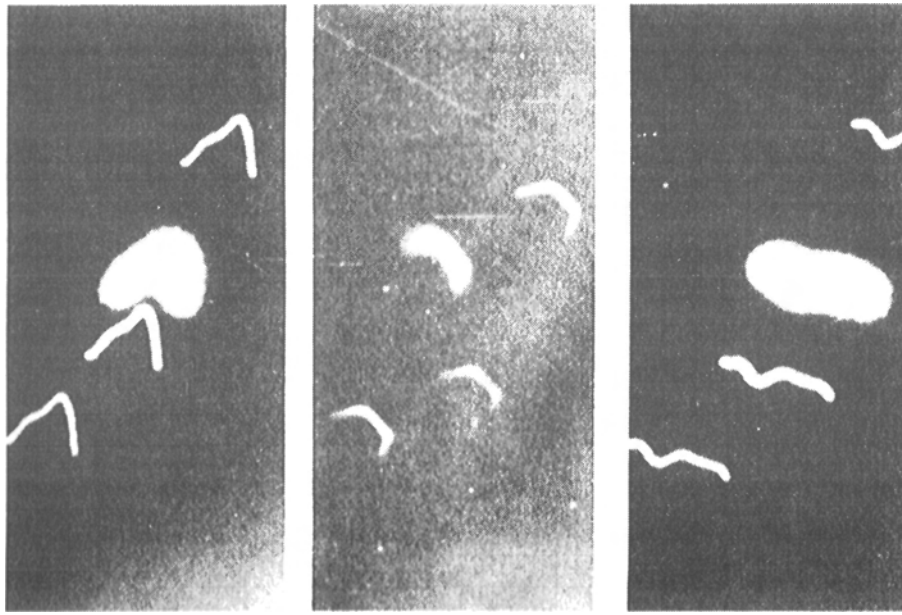

Photo 23. Ohio UFO.

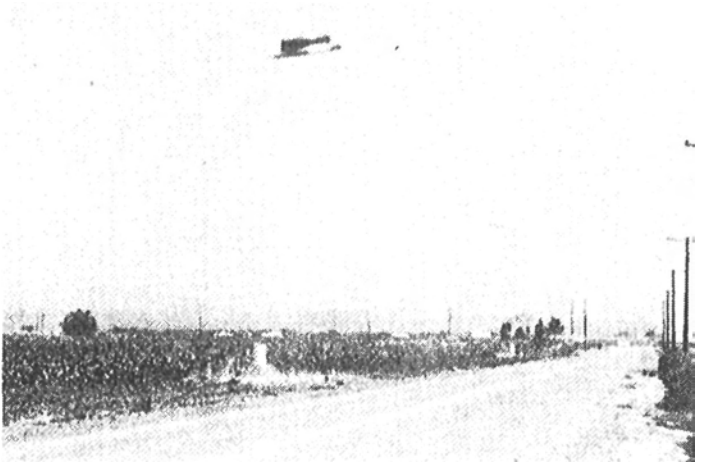

Photo 1

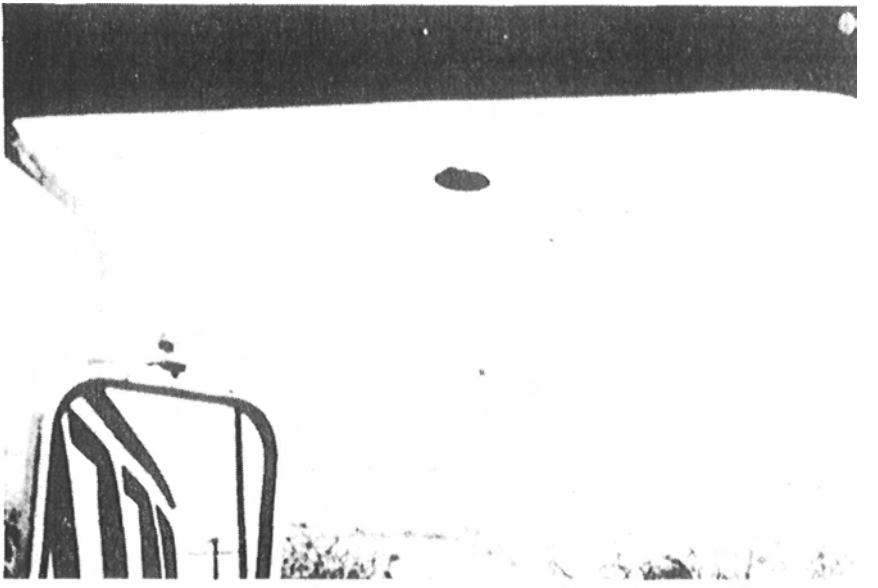

Photo 2.

Photo 24. Heflln UFO.

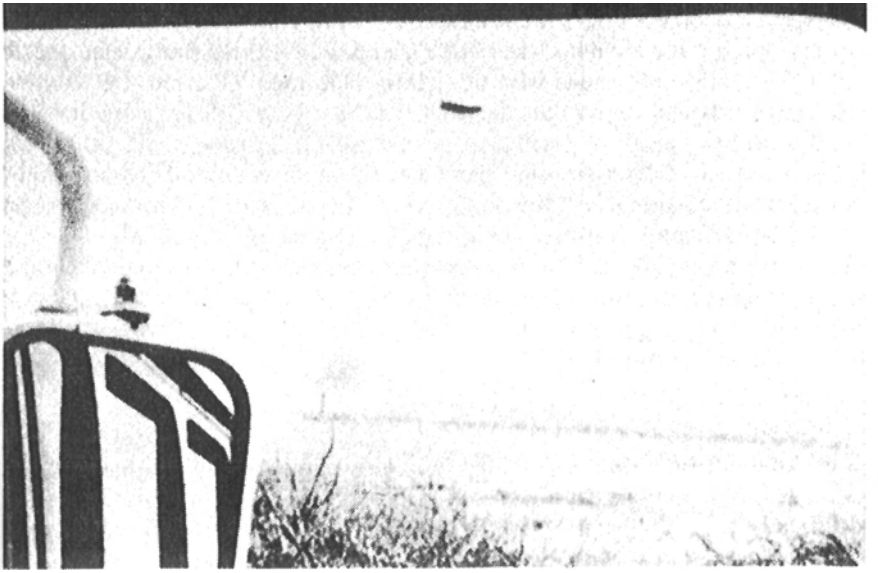

Photo 3

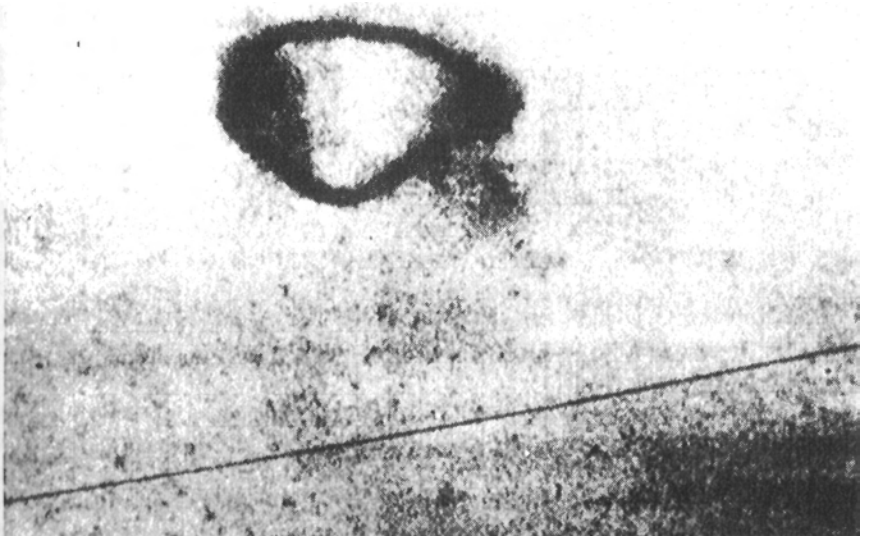

Photo 4 (enlarged)

Several photo experts have concluded that the photos are false, and several have concluded that they are not. A computer analysis concluded that they were false. However, what exactly could a computer show that would differentiate between a normal physical object and a well-materialized tulpoid?

In my opinion the incident was a fake *if and only if* three things can be established; (1) an individual exists with a horribly deformed left hand that is mirror-image backwards and opens outside away from the body; (2) the same individual either has no neck at all or else has a neck almost a foot long; and (3) the same individual can run forty-five miles per hour, faster than any other human in the world. Such an individual — if he existed — would be readily identified, and there would be no difficulty in ascertaining that he was the one involved.

There are other things about the case that I am not at liberty to divulge at this time out of respect for Jeff Greenhaw's confidence and privacy. But even so, the incident has a very high probability of being tulpoidal, and Jeff Greenhaw stands fully exonerated, in my opinion.

MEN-IN-BLACK

The kindling of virtual state tulpoidal forms into the zeroth bioframe of a physical reality (materialization) can result in the materialization of living, breathing, functioning forms. There is essentially no limit on the format that may be obtained. Sasquatch, Nessie, fairies, demons, angels, mothmen, skunkmen, yeti, kangaroos, etc. are just a small sampling — as indeed are UFOnauts such as little green men, space-suited astronauts, androids, robots, etc. These (usually) fleeting phenomena are physically real when in the materialized state (zeroth bioframe); unfortunately the tuning which is accomplishing the collection and kindling is usually unstable, and the stability to maintain the materialization lasts only a short time.

One of the consistent phenomena experienced by many UFO investigators is that of men-in-black. Typically, oriental-featured men in dark suits appear and demand the investigator's material, instructing him to cease his efforts. Usually they have almond-shaped eyes that never blink, and speak telepathically without moving their lips. Variations, of course, occur.

Here is an incident that happened to a friend of mine in the city where I live (Huntsville, Alabama). At the time my friend was an ardent UFO investigator and even wore a radiotelephone so that he could be contacted quickly at any hour to go and investigate UFO incidents in the field. He is the friend who investigated the Jeff Greenhaw case and took slides of the original Greenhaw photos before Greenhaw's trailer was burned.

A friend of his, a girl with psychic abilities, was approached one evening in her apartment by two medium-sized, almond-eyed men of oriental cast, in typically dark suits. These tulpoidal gentlemen's eyes never blinked and they spoke to the girl telepathically without moving their lips. They handed her an envelope containing two ancient coins and instructed her to give the coins to my friend, and inform him that he must keep them on his person at all times. After other messages that completely frightened the girl, the two tulpoids left, never to be seen again.

In tears from fright, the girl contacted my friend and between fearful sobs urged him to take the envelope and get it away from her, as she never wanted to see it again or the two men who had brought it.

My friend picked up the envelope and later examined the two coins. I also personally examined them: to anyone who is sensitive, the coins radiated an invisible unpleasant tulpoidal energy.

The investigator then photographed the coins, and daringly placed one on a string around his neck against my own advice to seal them up against light. He promptly broke out in a rash from head to foot and was shortly forced to remove the coin and seal it away. Interestingly, photos of the coins seemed to have about half the effect of the actual coins.

For a period of two years I kept my copies of the photos sealed against light and stored in a file cabinet. To my surprise, several times when I went to retrieve the photos, they would alternately be there and not there. I simply state what occurred, without any change or justification. Eventually, however, their effect seemed to decay, and at that time there was no longer any problem in recovering them from the filing cabinet.

The men-in-black syndrome is based on our own unconscious tuning; since each of us has some unpleasantness in the unconscious, sometimes the tuned-in men-in-black can be very nasty indeed.

I am personally aware of several good researchers into the paranormal who have been forced to retire from the field to save their own lives and the lives of their families. As late as April 1978 a very good friend of mine has been forced to do just that because of overwhelming danger to his family from materialized tulpoidal phenomena.

In my own case I have found it expedient to work closely with a group of psychic friends in the American Association of Meta-Science. This group is capable of clairvoyantly peering into the unconscious to ascertain the most unpleasant blockages present, and forming energized thought forms to go in and cleanse the unconscious of most of the unpleasantness. In this way the unconscious can be kept relatively free of unpleasant tuning that might otherwise tune in something like the men-in-black. My own life and experience has not been free of tulpoidal tuning; however, it has been free (at least so far!) of tuning in anything really unpleasant, or nasty, or threatening to my family.

But I continue to be very grateful to my psychic companions for their understanding and assistance, and I continue to avail myself prudently of their services when needed.

SASQUATCH

In many regions of the earth there exist legends of giant, apelike creatures of various sizes, hues, and dispositions. In the high Himalayas this takes the form of the yeti, a humanoid creature sometimes seen in the snows of high and remote fastnesses. Expeditions have in fact uncovered and photographed the yeti's tracks, and sightings by reliable observers have been made. Several parties have also reported hearing the yeti's strange vocal sounds.

In the remote Siberian wastes the Soviets have also reported such a manlike humanoid creature, even purporting to have captured one a century or so ago.

In the U.S. the tulpoidal form similar to this has been the sasquatch of the Pacific Northwest, known since Indian times, and observed hundreds of times by a variety of persons over the years. Nevertheless, in spite of intensive searches Bigfoot continues to elude all pursuers while continuing to be sighted and leave footprints.

Photo 25. Falkville spaceman.

But Bigfoot cannot be caught by packs of hounds. (This has repeatedly been tried. His lair is never uncovered, nor can he be tracked to it. He has never been found dead of old age or injury. The bones of sasquatch have never been uncovered in caves or elsewhere.)

Furthermore, not just one type of footprint or one type of creature is seen; instead, a variety of shapes/sizes/types of creatures appear. This is one particular clue to the fact that we are not dealing with a species of shy and elusive wildman, but instead with a tulpoid.

Sasquatch cannot normally be found — as indeed Nessie and the yeti cannot — because shortly after each appearance he is no longer present in this bioframe.

However, as interest in sasquatch/Bigfoot grows and the effort to discover or uncover him intensifies, the kindling of the tulpoidal form intensifies. Today bigfoot-type creatures of all varieties and hues are being seen throughout the U.S., from Maine to Florida, from Alabama and Tennessee to Oregon, Washington, and California. With this intensity of kindling, it is getting easier to evoke a bigfoot-type tulpoid, and as it continues, sasquatch is probably going to be tuned in and stabilized. If so, the past itself will just be changed, and we will be able to dig up ancient bones of sasquatch, and find his lairs, and track him down with dogs and capture him. In that case, sasquatch will become a respectable animal and will stabilize in our reality. Tulpoidal activity from the collective human unconscious can be stabilized and the entire past, present, and future changed by the awesome 4×10^9 dimensional psychokinetic mastery of spacetime exerted by the species unconscious.

We also should not be at all surprised if the same thing happens to the placid Loch Ness monster. There is probably going to be a family of pleisosaurs living in the Loch eventually (and in many other bodies of water across the globe) — and spacetime will be changed (past, present, and future) in our zeroth bioframe to accomodate this small shift in the collective human unconscious. In reference to changing the past, it is interesting to note that Wheeler has recently demonstrated that, in the two-slit experiment (which contains the basis of quantum mechanics), it can be decided *after the fact* whether or not a photon has interacted with two slits or with one. Thus in at least one sense the past can be changed!

After several years' intensive search for and pursuit of the elusive Bigfoot in the Pacific Northwest, Roger Patterson finally obtained a short movie strip of a very large, seven-foot tall female with pendulous breasts and crested head, walking through a forest clearing with giant strides. This is perhaps the best frame from that movie strip. Sasquatch tulpoids have been known since ancient time by the Indians who lived in the area. It would be interesting to see what results could be obtained in materializing or partially materializing the Bigfoot tulpoid with a Reichian cloudbuster.

Bigfoot-like creatures are materializations from the collective human unconscious shaped and formed by the layers (race, culture, nation, territory, state, region, family, etc.) between the collective unconscious and the individual unconscious minds of the observers. The exact format depends on all the higher level "kneading" of the "dough" that is being forced out into materialization.

In the Pacific Northwest the Indian knew of the sasquatch long before the coming of the white man; in that region, a great deal of tuning has been accomplished, and the sasquatch is a rather well-tuned animal form, having well-

Photo 26. An ancient coin handed to a psychic friend of a UFO investigator by tulpoidai men-in-black.

defined footprints as shown in Photograph 28. In the East, the yeti has also been tuned for centuries, and a cast made from his footprint is quite well formed — though also quite different from that of a typical Pacific Northwest sasquatch. In New Jersey, on the other hand, for the last two or three years there have been a large number of Bigfoot sightings, but here there has not been the same degree of tuning for several centuries, and consequently the footprints look rather messy, like blobs left by the creature before it vanished back into dematerialization. Finally, in one case a person well-known to me stumbled into dematerialization phenomena of a very strong nature. One of the incidents involved the materialization of a really gigantic "superfoot" creature, which walked around all over the base of a mountain, leaving giant footprints two feet or so long. Though monstrous in size, superfoot is really ill-tuned and thus ill-defined, with footprints that are decidedly blobby in form.

UFO's OVER THE SOVIET UNION

In 1961 locomotive engineers on a freight train from Moscow to Golytsino, when about forty kilometers from Moscow, sighted a disc-shaped object topped by a cupola approaching the train. The object slowed to pace the train and escort it for about one kilometer. Suddenly the locomotive engines went dead, and could be restarted only after the mysterious object disappeared.

On December 29, 1967 an Iliouchine 14 aircraft enroute from Zaporoje to Volgograd sighted an approaching UFO. As the UFO neared the aircraft, suddenly the aircraft's engines stopped in midair and the plane began slipping sideways toward the earth, carrying its panic-stricken crew to certain destruction. When the crippled aircraft was about 700 meters from the ground, the UFO abruptly disappeared. At the same instant the aircraft engines sputtered and roared to life again. The pilot righted the aircraft as lift returned, narrowly averting a crash.

On September 24, 1962 first one oval object then several others escorted a TU-104 airliner enroute from Vorkouta to Omsk and maneuvered around it with astonishing speed and agility. The eerie aerial escort continued for most of the flight, and the objects were extensively observed by both the passengers and the crew. The objects positively could not have been other planes, balloons, satellites, celestial objects, or other known natural phenomena.

In Latvia in 1965, R. Vitolniek, a well known astronomer, together with several scientific colleagues, sighted a triangular-shaped formation of four spherical objects, one at each of the points of the triangle and one a little larger in the middle of the triangle. Two of the scientists, Ian Mederis and Robert Vitolniek, made immediate calculations and insured that the objects were not satellites or normal orbital objects. The objects steadily shrank in size, leading Vitolniek and his colleagues *to* conclude that the objects were traveling away from the earth into outer space.

At least two Soviet astronauts, Colonel Bykovsky and V. Terechkova, have observed UFO sightings and reported them to the Soviet authorities. Many other UFO sightings have occurred in the Soviet Union and the Iron Curtain countries; **these** are just a sampling.

In fact, on several occasions Soviet defense forces have been committed into massive action against UFO's.

In 1959 numerous UFO's flew over Soviet rocket launchers at Sverdlovsk. In addition to being visually observed by a large number of personnel, they were detected and tracked on Soviet radars. Soviet military units were ordered into action immediately. Interceptors and antiaircraft artillery batteries went into action and the air defense missile units opened fire. In spite of the fierce engagement of the elusive UFO's, none were hit or damaged and no results were obtained by the Soviet combat forces. Men, machines, guns, rockets, missiles and radars could not cope with the UFO's. The impact in the Soviet military of several such military actions must have been enormous.

In fact, such incidents as this probably were responsible for the establishment of an extremely high level and highly classified Soviet investigation of UFO phenomena. Given the decision to launch such an investigation — and it would be inevitable for the Soviets to take such a step when their air space was under open invasion by possibly hostile forces — the Soviets would have assembled a formidable scientific team to tackle the problem. Furthermore, given the highly classified military reports of such encounters, reports of UFO incidents at other Soviet installations and by other Soviet military personnel, and the steady occurrence of the normal range of UFO sightings and incidents over cities and villages, the Soviet system would have tolerated no scientific nonsense in opposition to the mission to discover the nature of the phenomena. In other words, the Soviet team from the beginning would have concentrated on finding the explanation and nature of the phenomena, not on whether or not such phenomena were real or were occurring.

In my opinion, a connection between UFO's and paranormal phenomena — and the new psychoenergetics which also was formulated by 1959-60 — was realized about 1960. The high classification of the Soviet psychoenergetics program then led directly to an official Soviet policy to debunk UFO's and paranormal phenomena if the work of any outside research group became too serious. Some Soviet scientists who had no connection with the weapons programs were allowed to work a little on paranormal phenomena and on UFO's. This was simply to provide a deception plan for Western scientists; in their contacts with their Soviet scientific colleagues, these Western scientists would see only a rather puzzling collection of simple laboratory experiments on telepathy, ESP, simple psychotronics, psychokinesis, etc. A limited number of Soviet papers dealing with these subjects, but of no particular theoretical content or very exact statement of experimental apparatus and conditions would be permitted in the open journals. However, close scrutiny of such activities would be maintained by the Soviet state, and no real breakthroughs would be permitted to occur or to be transmitted to the West. Ziegel, Dubrov etc. owe the limited work they were permitted to do to this Soviet deception policy.

They also owe the surveillance and harassment they have undergone to the Soviet policy of insuring that they would be permitted to do nothing significant, or to communicate nothing significant to their Western colleagues. Meanwhile, a rigorously controlled and highly classified Soviet psychotronic weapons development program continued apace. And the radiation of the U.S. Embassy (and the U.S. ambassador to the Soviet Union) in Moscow with weak radiofrequency microwaves containing psychotronic modulations began about 1959-60 and con-

m

Photo 27. Sasquatch.

Photo 28. Bigfoot cast.

tinues to the present. As explained elsewhere, this radiation was in fact another very clever Soviet intelligence probe: By observing how the U.S. reacted, they could determine whether the U.S. had any knowledge of psychotronics and thus whether or not the U.S. had developed secret psychotronic weapons and counters of its own.

The Sighting over Petrozavodsk

Even more spectacular phenomena have occurred in Soviet skies and are continuing to occur.

For example, a mysterious phenomenon of great magnitude occurred in the skies over the Soviet city of Petrozavodsk at about 4:00 A.M. on September 20, 1977. Petrozavodsk is in Soviet Karelia about 130 miles from the Soviet-Finnish border.

First, a gigantic mass of light flared up in the skies over the city, glowing brilliantly, and hovered there. Fantastic streamers of light poured from the glowing hemispherical dome of light and radiated down towards the city. Tass, the official Soviet news agency, reported that it looked like nothing so much as a shining "jellyfish sending down a multitude of fine beams." It gave, Tass said, "the impression of a torrential rain of light." Where these fine beams touched windows, many windows were broken or perforated with small holes.

Later the glow died down and the jellyfish became a single giant bright semicircle. It then gradually moved off in the direction of Lake Onega. But all was not yet over. Even after the bright hemisphere had moved away, great gray clouds appeared over the city with a semicircular aperture bright red in the center. These phenomena lasted for ten minutes or longer.

Being over the city and lighting up the sky so fantastically, the phenomena were seen by a large number of Soviet citizens and reported by them to the Soviet authorities. In fact, Tass admitted in its initial release that informative reports from witnesses were still pouring in and being analyzed. This interesting phenomenon is worthy of some remarks by way of explanation.

Not only is pressure from the Soviet threat transmitted through the collective human unconscious (ZARG) to the skies of Europe and North America; in addition, a backpressure is generated, which provides the impetus for initiation of appropriate phenomena over the Soviet Union and the Iron Curtain countries. Psychologically, it may not be accidental at all that the original shape resembled a giant jellyfish; the implication is that the psychotronic sting will also be transmitted to the Soviet Union by backlash whenever the Soviet psychotronic weapons are unleashed on the West. The shapes are also psychologically significant. First the Portuguese man-o-war's stings will be applied (this accounts for the tentacles toward the city); then the all-seeing eye (symbolized by the bright hemisphere) will check the results. And the results will be gloom and despair (gray clouds), surrounding death, blood, and destruction (the red center) left in the aftermath.

Thus in this materialized symbolic dream event of ZARG's, there is a clear warning and an omen to the Soviet Union about the end result that awaits it on its present course to attempt to conquer the world and unleash a great psychotronic barrage in the process.

Since so many Soviet citizens saw and reported this fantastic phenomenon in alarm, the Soviet regime could not ignore it or simply debunk it. The Tass release

thus tried the oblique dodge: the phenomenon was still being evaluated, reports were still being received and checked out, and an official of the Petrozavodsk observatory, Yuri Gromov, was quoted as saying the phenomenon was still a mystery but was confirmed by a large number of eyewitnesses. The Pulkovo observatory in Leningrad was quoted by Tass as speculating that the phenomenon was due to a meteor. And of course there one can expect the matter to be left in limbo.

An interesting development related to this UFO sighting occurred in the U.S. The October 3, 1977 issue of *Aviation Week and Space Technology* magazine carried a brief disposal of this phenomenon. The brief insert, Spook Show, referred to a "Soviet press ballyhoo" of the incident and stated that the incident was actually the launching of the Soviet Cosmos 955 classified military satellite from secret launching facilities at Plesetsk. This AWST insert is credited to Washington Staff.

My comment is that the launching of the Cosmos 955 may well have been the initiator of the event — a rocket firing does produce a tremendous ionized trail of burning exhaust gases rising up into and out of the atmosphere, and this is a bioenergy collector par excellence. However, a simple review of the time sequence of the phenomenon, its location, and its shape is sufficient to destroy any notion that one could mistake it for a simple rocket launch. And rocket launches had occurred there many times before, with no such phenomena or mass reportings by the population, and with no such news release by Tass.

FRENCH EXPERIMENTS WITH PSYCHOTRONICS

Aime Limoge in France is building some truly unusual gadgets that are being tested and that work. Limoge travels widely in the Soviet Union, and attempts to duplicate some of the unusual Soviet devices he has been permitted to see. Some of Limoge's devices have a partially psychotronic nature, although none of his reports mention this.

One of his gadgets, a portable and battery-powered electroanesthesia device, was considered for purchase by the U.S. Army.

Another of his gadgets is a magnetic inductor of hypnosis, which has been used in medical treatment by L'Institut de Recherche d'Electro-anesthesie. Limoge is reported to have seen such a device in the Soviet Union, possibly because one part of the Soviet psychotronics deception plan calls for the deliberate release of information of this kind, in a manner to suggest that this is the latest state of development in the USSR. In fact, their research efforts probably go far beyond this point. However, we should note that this device can be used as a most efficient brainwashing instrument.

DOWSING

To understand how dowsing works, we must first understand something about higher dimensional spaces. It should be evident that, if there is a type of energy being sensed by the dowser, that energy must be coming in or arriving from outside this three-dimensional world, since our ordinary science deals with the energies existing in this world, and none of these ordinary energies can explain dowsing. However, because of the work that has been done showing that dowsers are extremely sensitive to magnetic fields, this energy must be somehow related to the ordinary magnetic or electromagnetic fields known to science.

In the human being the mindworld must itself have a coupled kindling system to cohere its changes and kindle them into electromagnetic energy and energize the physical body. The body system which does a great deal of this is the acupuncture system of points, plexuses, and meridians. Also, all powerful emoters, such as the endocrine gland system, are deeply involved in the kindling of the biological organism's mind energies into electromagnetic energies to energize the physical body. The body and its biorhythms form a coherent tuner in the time channel to accomplish this kindling of time-nested vital thought energies into ordinary energy. Because a great deal of mind energy kindles into only a minute amount of normal electromagnetic energy, our minds normally have only a small effect in this particular three-dimensional world. So we can normally psychokinetically move a few electrons in our brain and nervous system, and generate an input signal to our otherwise inert physical servomechanism. Ordinary inert physics and amplification takes over from there, and we can only deduce the kindling as mental intent from observing many, many quanta of physical change, i.e., from macroscopic behavior. At any rate, the dowser has learned to detect, focus, and sense very fine levels of electromagnetic fields, which means that at these low levels the kindling of mental energies can represent a much greater percentage of the field than normal. Thus the practiced dowser can now discriminate many of the particular types of fluctuations or changes in these weak fields due to mind kindling.

Furthermore, I would like to point out that, since mind kindling comes into this universe orthogonally, normal distances do not apply. The entire physical frame appears to the mind world as a point, and thus is totally inside the mind of the operator/dowser. It is for that reason that a dowser can establish a coherent tuning (intent) between a map and the actual ground, or between a picture and an actual object, or between a rod and a person' physical body when sensing medical illnesses. In the mindworld frame, the dowser is only dowsing or detecting himself, and himself includes this entire physical world — the earth's surface and beneath it, the sun, the moon, the stars, or whatever.

Just as the body used electricity, magnetism, and electromagnetic signals long before man knew of their existence, it has used kindling of bioenergy from higher dimensional frames for a very long time, even though these have been unknown to mankind. And dowsing is a very old art indeed; the ancients used magnets without knowing of magnetic field, and they used dowsing without knowing of hyperspaces and hyperfields.

THE STROBE EFFECT

These five pictures show one of the more interesting effects demonstrated by many tulpoidal forms: strobing or "coining." What happens is that, much like a flat rock skipping across the surface of a pond, the orthorotating tulpoid skips in and out of its intersection with our three-dimensional frame.

In the first picture a glowing spherical tulpoid is shown to skip or strobe several limes while the camera shutter is open. It does not move in a linear pattern, but rocks around and back-and-forth.

In the second photo, an aerial photo, a UFO in photonic form (first bioframe) reveals itself to be strobing or skipping. (In university classes on the paranormal, I often refer to this type of action as *coining,* since it resembles a bright quarter or nickel that is photographed by stroboscopic light while rolling around.)

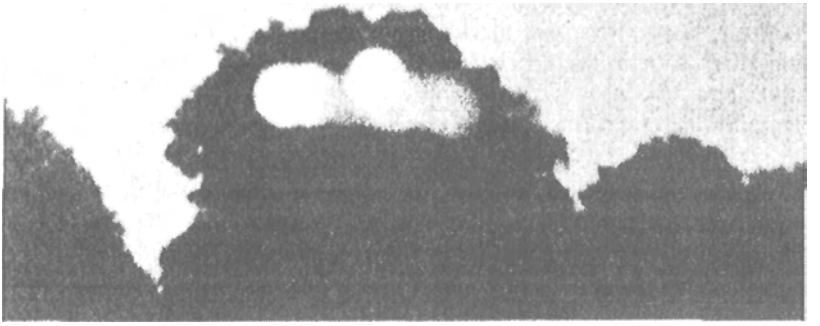

Photo 1

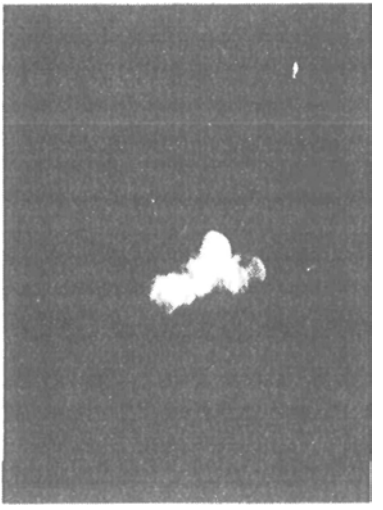

Photo 2

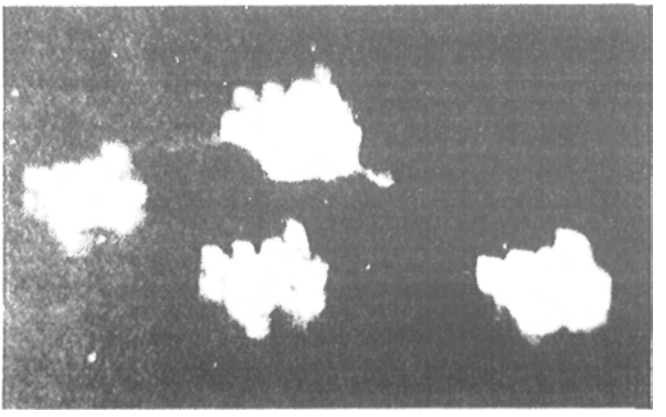

Photo 3

Photo 4

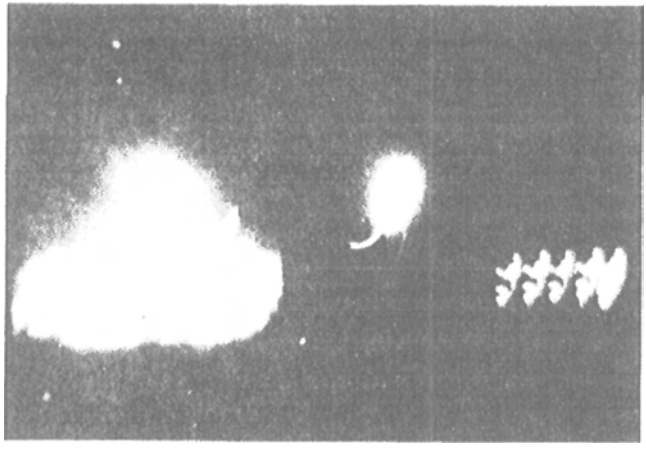

Photo 5

Photo 29. The strobe effect.

1. Even dischargo from Inert object (dime).

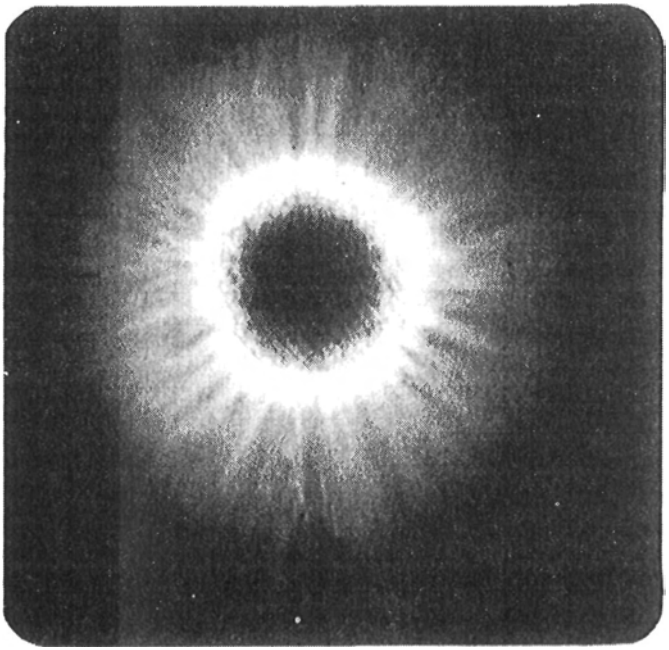

2. Healthy person in calm state

Photo 30. Kirlian photography.

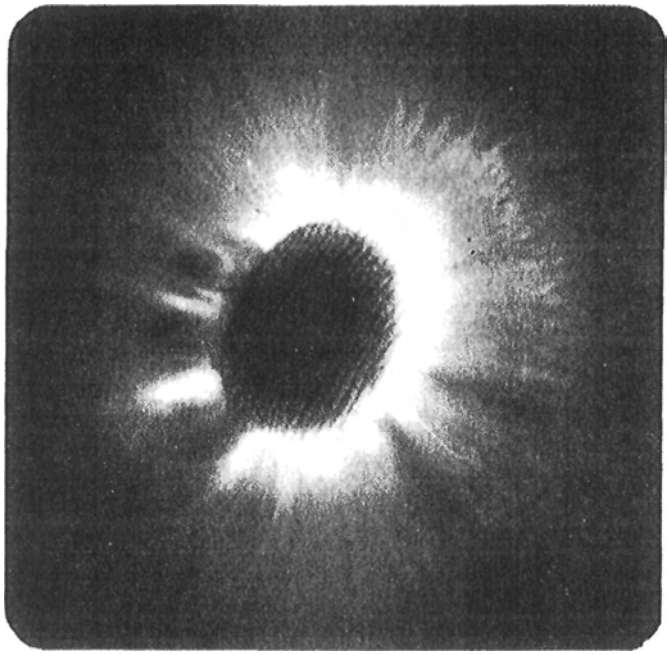

3. Person in meditatlon

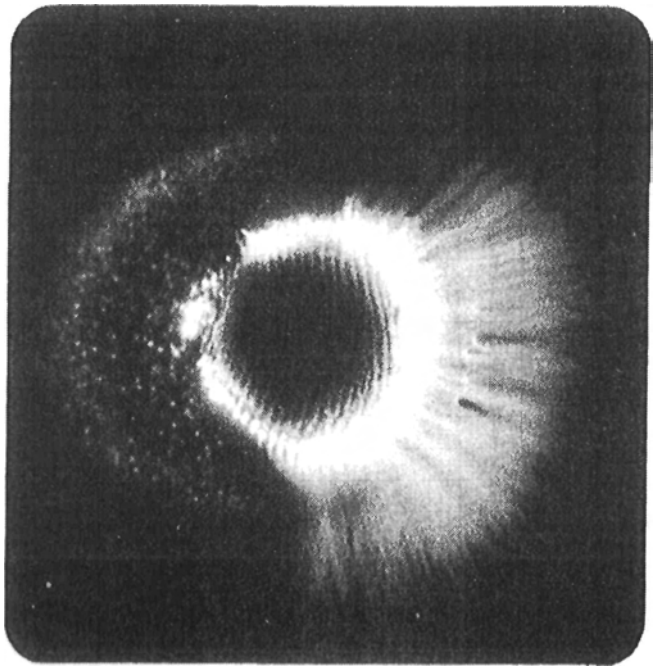

4. Angry person.

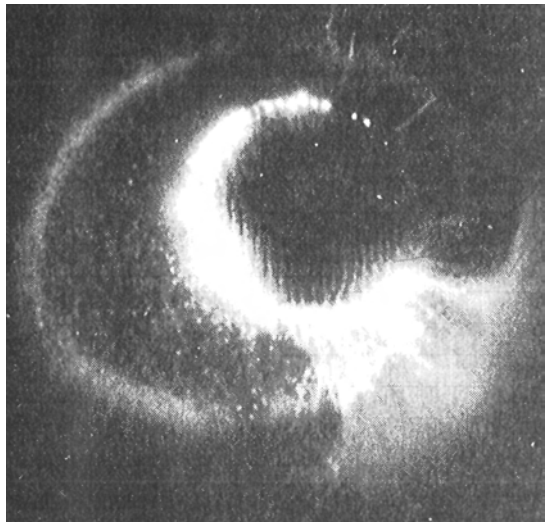

5. Person with London **flu.**

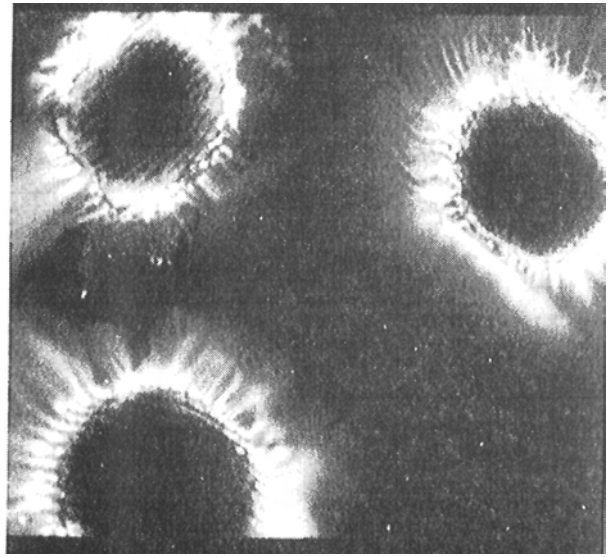

6. Interactions between three persons.

The third photo shows a more striated form. In fact, these forms show kindling and strobing at the same time. In addition, the physical size of the strobed intersection with our three-dimensional space changes during the photo exposure.

The fourth photo clearly shows both the striations due to strobing and also the variation in size of intersection in the zeroth frame by the hyperdimensional tulpoid.

Photo five again shows these effects, with the addition of the two "bursts" in the upper part of the left tulpoidal object and in the center tulpoid.

Significantly, psychokinesis also often demonstrates stroboscopic movement.

KIRLIAN PHOTOGRAPHY

These six pictures show some major characteristics of Kirlian photography: (1) an even discharge from an inert object (a dime); (2) a balanced, gentle, even discharge from a healthy person in a calm state; (3) a gentle outgoing discharge enhanced on one side, and a gentle indrawing on the other, from a person in a meditative state; (4) strong bunching and outgoing discharge from an angry person (the word "emote," after all, means "move outward"; (5) choppy (as if out of control) bunched and outgoing discharge from a person ill with London Flu, with strong suppression of the normal, relaxed blue component at the lower right; (6) interactions between three persons, showing differing degrees of outgoing and barrier reactions.

The film itself only records ordinary photochemical interactions; it specifically does not record the aura. However, changes in the discharge patterns can be and often are induced by kindling bioenergy into the first biofield (electromagnetic field), inducing changes in the sparking pattern and intensity. Furthermore, this can occur fairly readily on such a high voltage series of discharges, which are excellent collectors for kindling.

As a final note, it should be pointed out that David Faust *et al* have published a technical paper in the scientific literature detailing the fact that Western experimenters have not yet duplicated the Soviet equipment and methodology used in their Kirlian photography. While David formerly pointed out in *Science* that experimenters must carefully control the variables—particularly moisture (water is an excellent collector for kindling)—he has been widely misinterpreted as having proved that water vapor was responsible for all Kirlian effects. This he has not done at all, nor did he intend to, since he himself is one of the most competent investigators in electrophotography.

INTERACTION OF BIOFIELD, THOUGHT, AND SPARK DISCHARGE

These photographs are strong examples of the kindling mechanism. The subject tested was Uri Geller, a person with strong inceptive ability. In photo 1, the top two exposures are for control purposes, while in the bottom exposure, Uri is concentrating on the image of a circle. In photo 2, again there are two control exposures shown at the top, while in the bottom exposure Uri is concentrating on the image of a triangle. In photo 3, exposures are taken of Uri and a wristwatch; this is

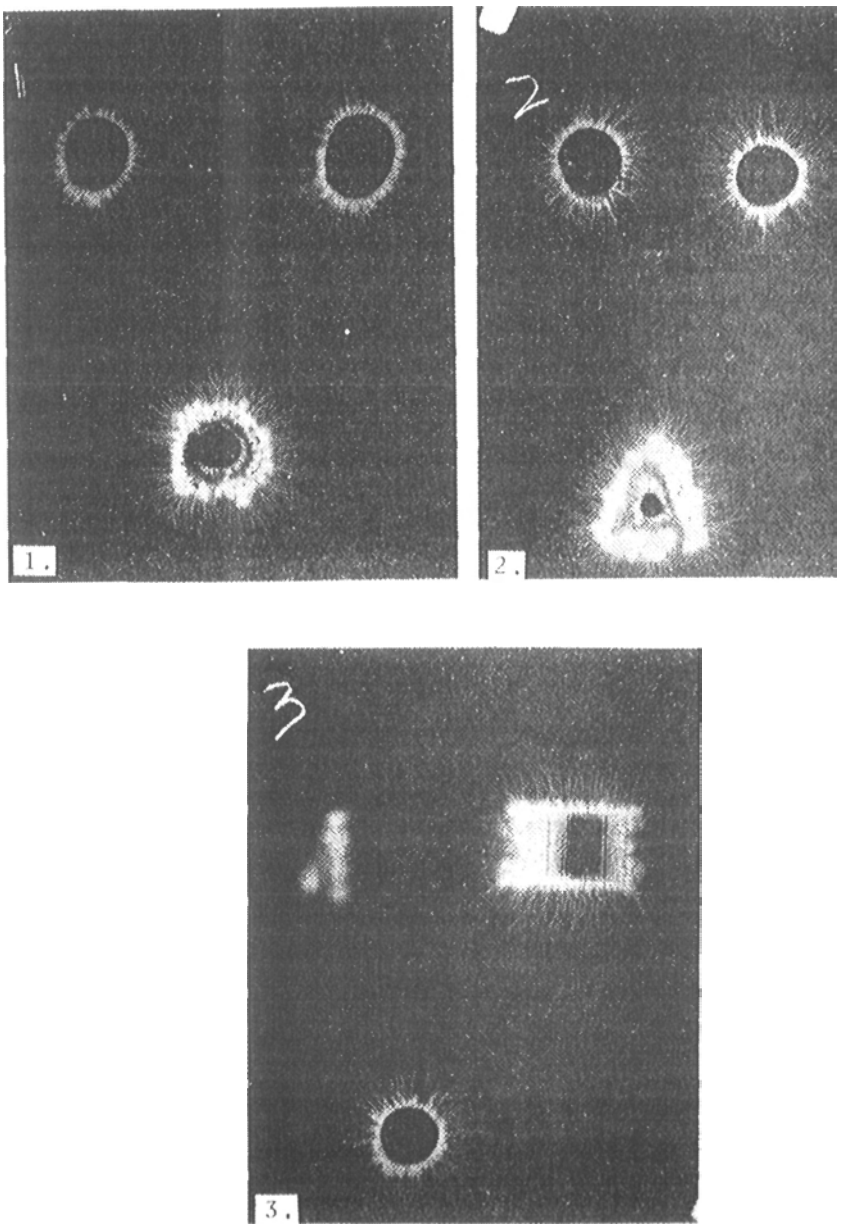

Photo 31. Interaction of biofield, thought, and spark discharge.

4.

5.

a control photo. In photo 4, Uri is attempting to send energy toward the wristwatch, and a correlated change in the discharge patterns from his finger is evident. In photo 5, the arrows at the right point to control exposure of Uri and a silver ring; the arrows at the left point to the exposure made with Uri attempting to bend the ring psychokinetically without contact. The direct kindling of bioenergy in a force-field line intersecting the ring is striking. In such an intense kindling, note that the nuclear currents inside the nuclei of the silver atoms — where positive charge is being shuttled back and forth between protons and neutrons — are also being strongly kindled. Reductions in the positive charges steadily reduce the charged exchanging particles to quarklike particles, severely affecting the structural integrity and crystalline lattice directions of the base metal. By this means metal bending — or even breaking — is accomplished.

KERVRAN EFFECT

A direct and repeatable experiment showing that living systems can kindle bioenergy into ordinary energy and material effects has been made possible by the fascinating work of Louis Kervran. Kervran showed that chickens, fed a diet deficient in calcium but containing excess potassium, will have no calcium deficiency, since they transmute some of the potassium into calcium. Kervran's pioneering work has been duplicated in Japan and elsewhere, and the same effects have been demonstrated by living plants.

We may consider a neutron as a sort of bound system of a potential proton and a potential electron. Psychokinetically killing the charge on the potential electron converts the electron into a neutrino, leaving behind a proton now freed. For the one percent or so of potassium that is a calcium isobar, this process can produce ordinary calcium. Thus in a potassium-rich diet the chicken can psychokinetically transmute enough potassium into calcium to remain healthy.

Kervran was nominated for a Nobel Prize in 1977 by the Japanese researchers; his work is direct proof of the ability of living systems to violate present physics, and of the ability of mind energy or bioenergy to affect matter psychokinetically.

PSYCHIC SURGERY

These two photos taken by Sigrun Seutemann in the Phillipines show materialization of large lumps of tissue brought about by Tony Agpaoa on a patient from an educated Western culture. The minds of both the patient and the surgeon are involved in the process, according to the psychic surgeons themselves. "Western patients are strongly conditioned to believe that medicine involves bloody tissue, so this is what results in the particular form of the materializations. For native patients who are steeped in the lore of shamanistic medicine, apports may consist of substances such as leaves, coconut fibers, feathers, etc.

The legitimate surgeons, working in a religious group structure, are often able to generate sufficient kindling to fully materialize such unconsciously structured thought forms, and also to dematerialize and rematerialize the tumor from inside the patient's body, the tumor usually appearing or emerging from an opening which appears in the apport tissue. In the surgeon's view he is also being helped by powerful spirits — and continual charging of such thought forms with kindled

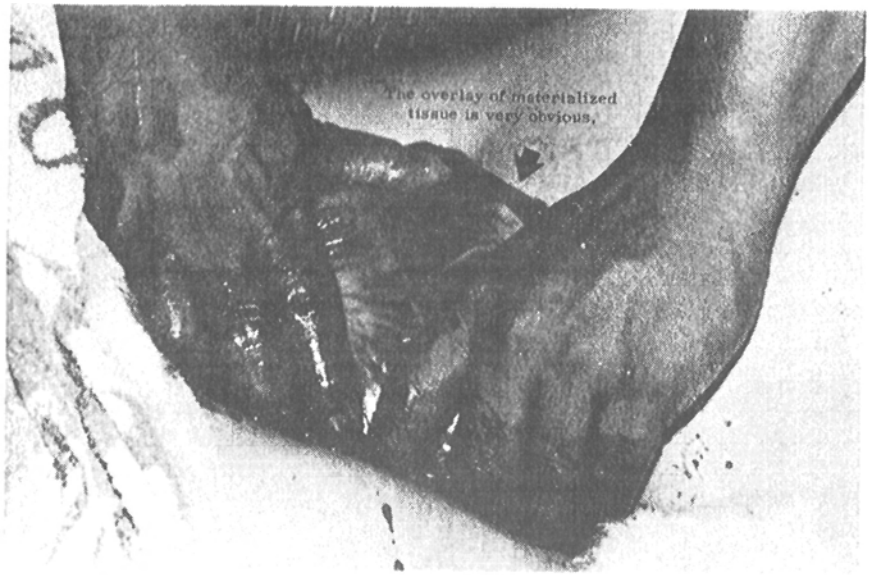

1. Materialization of apport tissue while removing a tumor from the abdomen.

2. Matoriallzatlon of apport tissue while working in the hip region.

Photo 32. Psychic surgery.

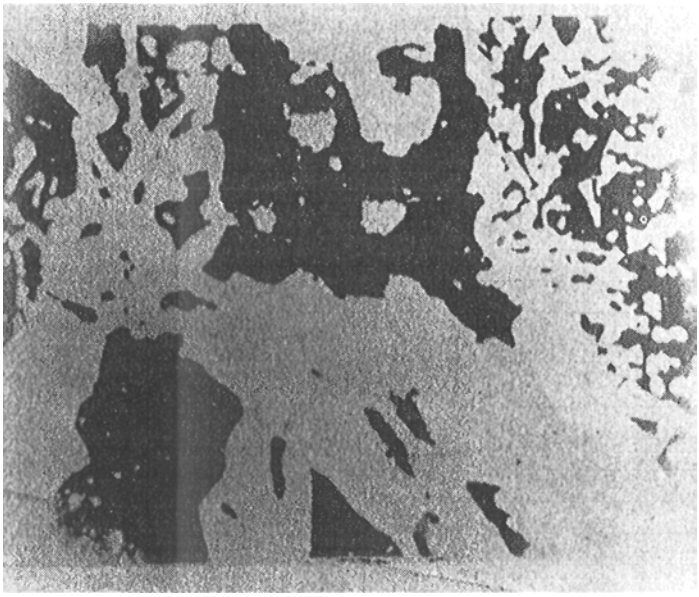

This highly unusual photograph resulted in the following manner: Mrs. Baune Is a devoutly religious lady, and on this particular day she had spent a great deal of time in prayer and a Christian attitude. Snow was gently falling on the shrubbery In her yard, and she and a neighbor were admiring the beauty of the fresh snowfall. The neighbor borrowed Mrs. Bauno's camera and snapped a photo of the snowfall. When the photo was developed, the falling snow had formed a pattern of Jesus on the shrubbery In Mrs. Baune's yard.

Photo 33. Kindling of thought bioenergy in snow.

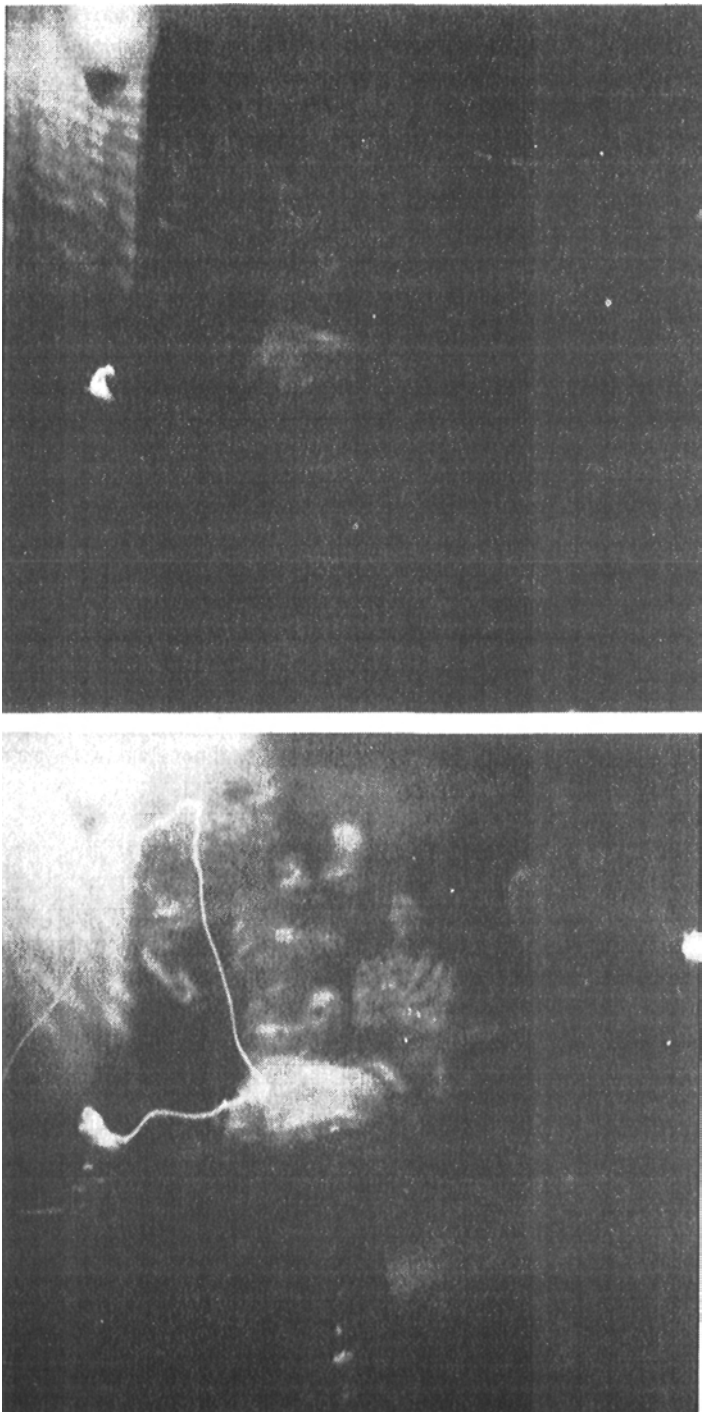

Photo 34. A deliberate experiment with kindling.

energy indeed can yield bioenergetic formats of more intense energy than a single talented individual can usually muster in an unaided or unaugmented state. Almost every religion, in fact, still occasionally exhibits miracle healing accomplished in somewhat similar fashion, though possibly less dramatically.

The apport tissue is a materialized tulpoid, precisely as are sasquatch, the yeti, the Loch Ness monster, and UFO's. Apports are normally more stable than these latter materializations — but they have also been known to disappear, as have the "angel hair" apports associated with UFO's.

A DELIBERATE EXPERIMENT WITH KINDLING

I and other members of the American Association of Meta-Science performed a series of experiments in kindling thought or psychic energy into electromagnetic energy, and photographed the resulting light energy on film with an SX-70 camera. The two photos shown here are from one of those experiments. In the left picture, bioenergy is just at the "burst" point where it is being collected on a candle flame. Here the camera lens is not quite fully opened. Only a single 40-watt lamp illuminates the room, and several AAMS members have been engaged in about two hours of psychic exercises. In the second picture, the lens of the camera is fully opened, and a "burst" of kindled energy occurs as the lens shutter is operated. None of this is visible to the naked eye. The polaroid film, however, is sensitive to some infrared and ultraviolet frequencies, so that bioenergy kindling into electromagnetic energy at IR or UV frequency can be photographed even though not seen by the naked eye.

FAY CLARK'S "FIREFLIES"

Fay Clark experimented with an ultrasonic generator in a darkened fallout shelter and photographed the most interesting results. At one particular frequency, dynamic dots of light appeared, grouped themselves into formations, and demonstrated movement and growth. At times they seemed to respond to thought, as if they were somehow intelligent, sentient creatures. This is a beautiful case of kindling using ultrasonic frequencies as the collector mechanism. While Fay is no longer sure of just exactly which frequency produced the fireflies, he does know that he used frequencies in the 38—40 kilohertz region, among others. This may be significant, since the Vestigia experiment encountered electromagnetic frequencies in the same region in their historic study of a mystery light. The frequency region 38—40 kilohertz is a strong candidate for one of the magic window frequencies between bioframes where kindling is much easier than at other frequencies. Furthermore, since it is thought energy or mind that is actually being kindled, one would expect the possibility of sentient behavior. Clark's experiment occurred in the dark, so the squelching effect of visible light was not present. Finally, Fay Clark is a known psychic himself, and so this should have eased the kindling difficulty even further. The value of rigorous laboratory experiments based on the lines of Fay Clark's pioneering "firefly" experiment is strongly indicated.

"FOO" FIGHTERS

When large groups of people are under strong external pressure, one result is often tulpoidal "popouts" from the collective human unconscious.

A war is a typical example of a situation where the group consciousness of a country is under enormous pressure. In such a situation, the "targeted" population is often exposed to tulpoidal manifestations from time to time.

In World War II, for example, the Germans thought at first that the glowing lights darting around their planes were secret Allied weapons; and the Allies thought the same thing of the Germans when they saw such unusual phenomena. The French dubbed them "feu" (fire) fighters, which became "foo" to American soldiers in Europe.

"Foo" fighters were a common phenomenon in World War II, particularly in cloudy, overcast skies.

WATER MONSTERS

In the oceans and in every large body of water on earth, water monsters have been reported for centuries. Loch Ness in Scotland is of course one of the most publicized examples, but creatures of different shapes and sizes have been seen in large lakes and streams everywhere. This is not at all surprising when one realizes that a large body of water is a most excellent kindling reservoir, and bioenergetic forms are more readily kindled in such locations.

The large dead creature in photograph 36 was hauled off the bottom of the sea by Japanese fishermen in their nets, photographed, and then thrown back to prevent contamination of the catch of fish and to get rid of the stench from the decaying carcass. It is a pleisosaurlike creature's remains, not similar to anything else known on earth. Predictably, scientists were almost immediately at odds as to what it was, and the carcass has been called a shark, a whale, a large elephant seal, a genuine pleisoaur, etc., by various "experts." Nonetheless it was real and physical, and a good photograph was obtained of it.

Photograph 37 is one of the underwater photographs of the Loch Ness monster taken by a team from the Academy of Applied Science, Boston, Massachusetts on June 20, 1975. As can be seen by a detailed study of the photograph, this tulpoid is not clearly tuned or clearly formed. Many other photos of the Loch Ness monster have been taken, and various shapes and sizes and degrees of tuning have been recorded. In the Doc Shiels photos taken in 1977, Nessie is well formed but entirely different from the Academy photo. Also, Doc Shiels' photo was subjected to computer analysis by Ground Saucer Watch, and the image exhibited a transparency that was disturbing to the analysts. On the other hand, such a transparency is to be expected from a partially materialized tulpoid which is not completely ortho-rotated into the zeroth bioframe.

In the Academy photograph, one can see — particularly on the color original — a form which has several conglomerated faces, which exhibits eyelike structures in several locations to suggest first a cowlike face and then a horselike face, and incoherently tuned earlike and hornlike appendages in several places. In fact, the Academy photo bears little resemblance whatsoever to a pleisosaur or any other more normal and coherently structured mammal or fish.

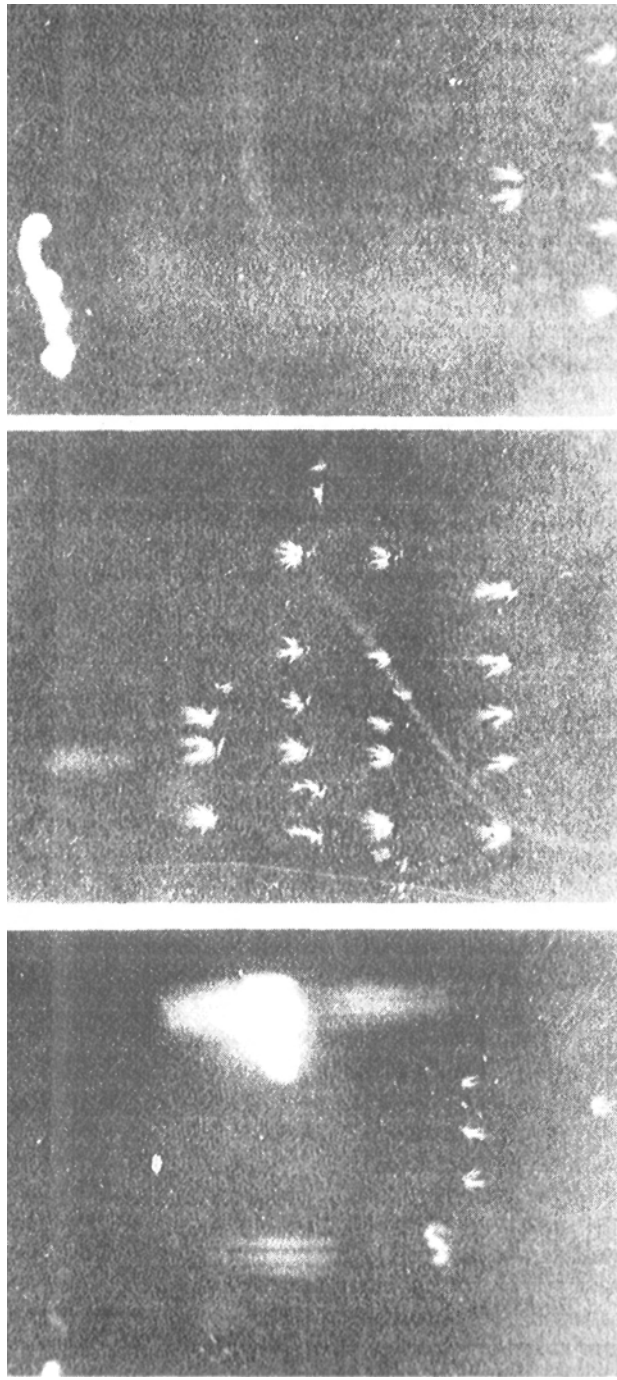

Photo 35. Fay Clark's "fireflies."

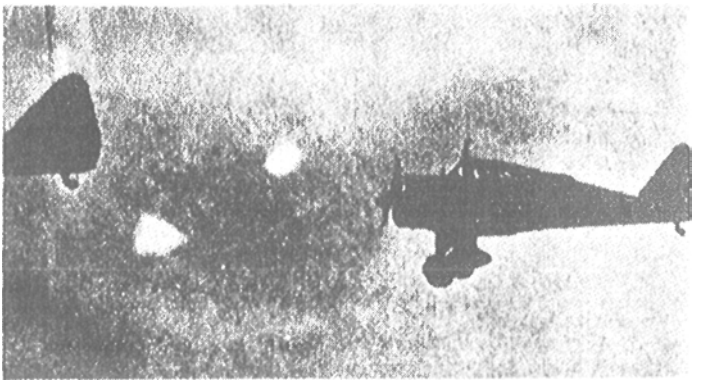

"Foo fighter" tulpoids pacing Allied aircraft in World War II.

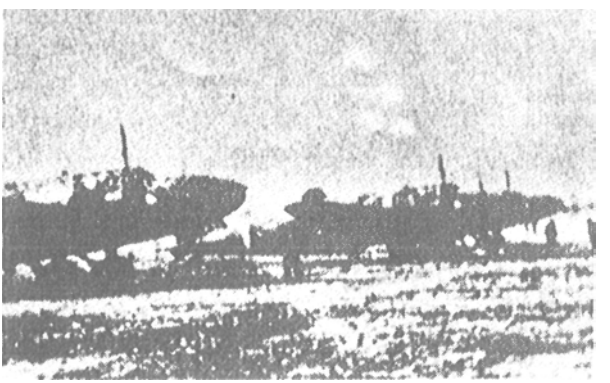

"Foo fighter" tulpoids over an airfield in China in World War II.

Photo 36. "Foo" fighters.

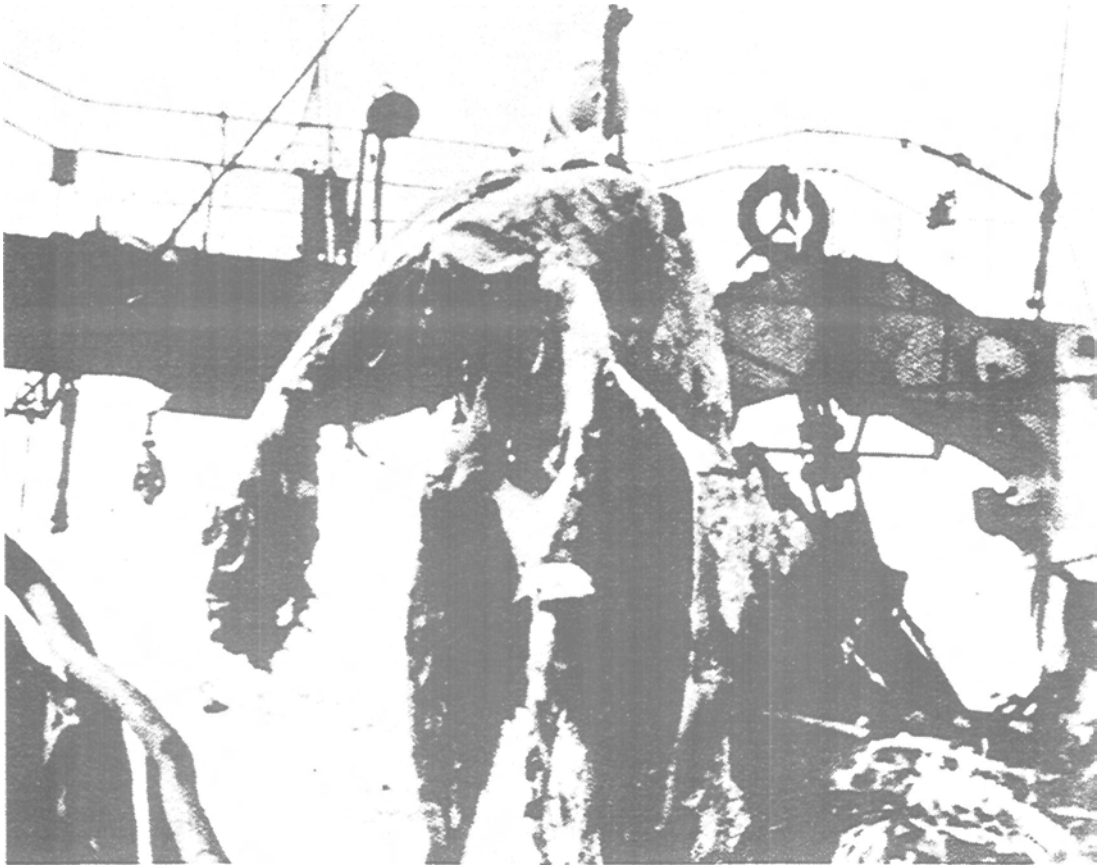

Photo 37. Pleisosaur-like creature hauled from the sea by Japanese fisherman.

The Loch Ness monster is definitely a tulpoidal form, and the format varies appreciably from reception to reception due to distortions and variations in tuning. Nessiteras rhombopteryx is a much stranger beast than anything the dedicated Nessie seekers, researchers, and scientists have yet suspected. In Part Two I will examine the scientific basis of tulpoidal forms.

CATTLE MUTILATIONS

Over 9,000 cattle mutilations have occurred in the U.S. alone since 1973.

The cow is a female symbol par excellence — our children drink cow's milk, and our babies feed on the milk from the cow's breast. The U.S., being a natural fortress, is a "female" symbol, for in primitive human evolution the females stayed in the cave or protected fortress while the males went forth to hunt or do battle. (This symbolism will be fully discussed in Part Three.) Violation of the female means that the heartland U.S. shall be violated.

Teats are cut off — the children of the West shall lose their sustenance; lips, ears, and tongues are removed — freedom of speech and hearing shall be excised; sexual organs are removed — no more fruit of the womb shall be evidenced in the West; sharp, surgical incisions are made — the operation shall be accomplished swiftly (blitzkrieg war) with surgical precision; zig-zag cuts — deception shall be used as to direction and intent; blood is totally drained — the lifeblood of the West shall be totally drained; edges of the cuts are often seared as if by a laser — advanced, futuristic weaponry (psychotronic weapons) shall "seal the end."

The cattle mutilations are materialized precognitive nightmares indicating the horror of the Armageddon to come, and these nightmarish paranormal mutilations reveal the true nature of the times. Yet no orthodox scientist or governmental agency is equipped or able to deal with a phenomenon such as this.

In ancient times the wise men knew how to do a metapsychological analysis of the species unconscious, and knew that tulpoidal phenomena were often symbolic signs of that which was to come.

Where are our wise men today?

BIG MAMA

UFO phenomena have also been associated with the cattle mutilations. One of these UFO-type tulpoids has been labelled Big Mama, because of its characteristic behavior of spawning smaller UFO light-shapes that split away and speed off to an area in which a cattle mutilation then occurs. The "spawned" UFO's then return and link up or join with Big Mama, and Big Mama then withdraws.

The photo shown here is a typical appearance of Big Mama. Big Mama takes many sizes and shapes, but is a fairly reliable indicator of paranormal cattle mutilations impending.

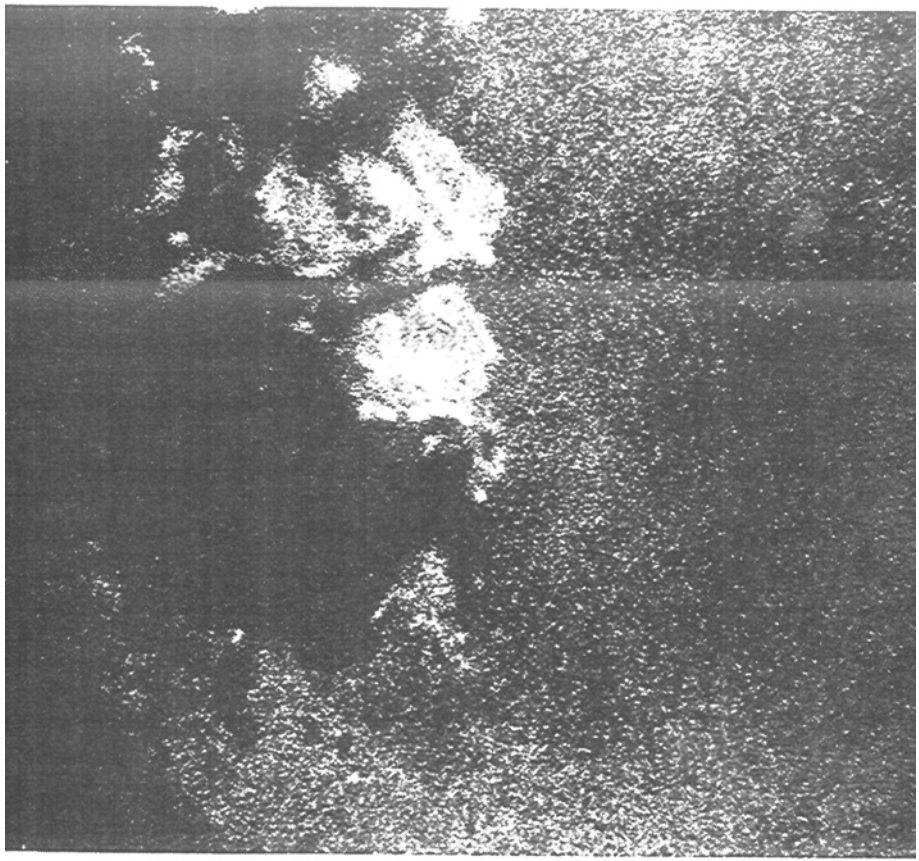

Photo 38. Loch Ness monster.

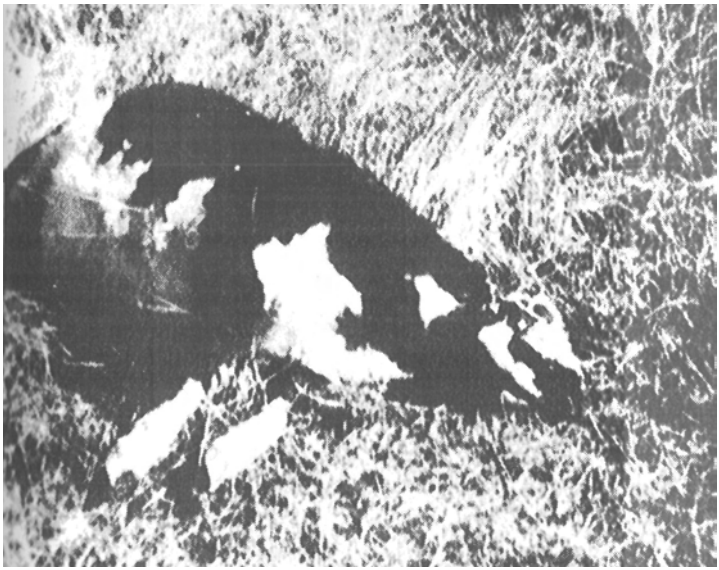

Photo 39. Cattle mutilation.

During the summer of 1978, two psychics and I — all members of the American Association of Meta-Science spotted a Big Mama-type UFO from the top floor of a hotel in Louisville, Kentucky. Realizing what it was, we promptly brought into play a certain type of powerful psychic exercise and tried to make it dematcrialize and vanish. Several times it briefly split into pieces (five to be precise), but we were unable to extinguish it. Over a period of approximately twenty minutes this effort continued, and all the while Big Mama slowly moved lower and further away, eventually disappearing behind a tall building after having become very distant.

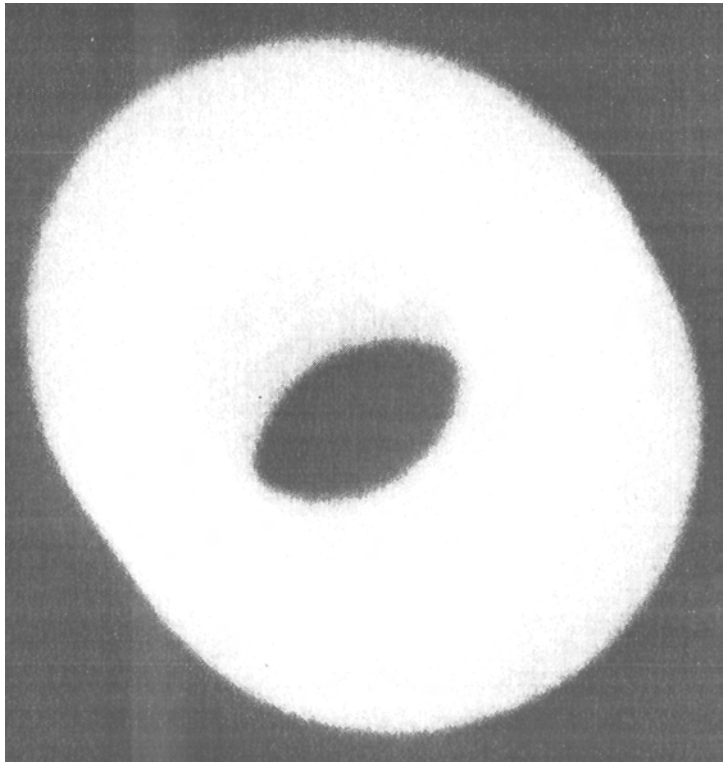

Photo 40. Big Mama.

PART TWO

A THEORETICAL BACKGROUND FOR UNDERSTANDING PT, UFO'S, AND PSI PHENOMENA

Footnote for page 132:

'With the exception that, in my theory, the orthogonal universes crosstalk with each other at virtual (subquantum) levels. Indeed, 'change' in one universe consists of the quantum coherence in that universe of crosstalk in and out of it. The 'virtual state' in one universe is due to, and consists of, subquantally coherent (quantally incoherent) crosstalk in and out of that universe.

Psychotronics, unidentified flying objects (UFO's), and paranormal phenomena such as psychokinesis, telepathy, and precognition all have one thing in common: both mind and matter-energy are involved.

Hitherto, mainstream science has insisted on a rather arbitrary separation of mind and matter-energy. However, as we shall see, this separation is not based on good observation. For example, everyone exhibits in himself the ability of mind to affect matter. While theories of computers, control systems, and physics can explain human behavior once the physical system has been given an input signal, the original signal — intent, or what I call inception — is an unexplained mystery to ordinary science.

"Psychotronics" (a Czechoslovakian term) and "psychoenergetics" (a Soviet term) have been specifically designed to provide a framework for approaching the problems of mind, matter, and their interaction. If we can understand psychotronics, we will be able to understand better the interaction of mind and matter, including all paranormal phenomena, unidentified flying objects, and Fortean phenomena.

Let us therefore start by defining psychotronics. The prefix "psycho" refers to the mind. The suffix "tronics" refers to physics and physical devices. Thus the concept of psychotronics refers to a union of physics and metaphysics. Such an audacious concept can offer a solution to almost every present problem in metaphysics, the foundations of logic, the foundations of physics, and the foundations of mathematics.

To begin with, it seems necessary to form a unified theory of mind, matter, and their interaction. It also seems necessary to reinterpret and extend electromagnetic theory. Logic itself must be advanced, for a part of reality, although "illogical" according to our present logic, is nonetheless true. In metaphysics we must solve formidable problems: the ontological problem (nature of being); the problem of mind, and the interaction of mind and body; the problem of change; and the problem of nothing.

It has been said that fools rush in where angels fear to tread. To tackle the problems of psychotronics demands the audacity to rush in where even fools fear to **tread!**

At this time, it may be appropriate to point out that all Western science, mathematics, and logic are founded upon three simple laws of logic, proposed and formulated by Aristotle. Since the entire universe cannot be described by these three laws — parts of reality are known to violate one or more of them and hence be illogical though true — it appears that we must be audacious enough to tackle and change the three laws of logic, if a new paradigm is to be constructed to solve all the presently unsolved problems.

SOME UNEXPLAINED MYSTERIES OF PHYSICS

First, no one knows what mass really is; we do not know for sure whether inertial and gravitational mass are one and the same. General relativity says it is, **and** we know from experiments that if any difference exists between inertial mass **and** gravitational mass that difference is very small indeed. But we do not know positively that there is not some small but finite difference. And we have no idea

why the mass of a moving object increases with respect to a static observer. It is simple to calculate in special relativity how much the mass increases as a function of the velocity, but no one has the foggiest notion why this happens. Particularly so since an observer standing on the moving object and moving along with it sees no increase in its mass at all.

This poses a real paradox; if we try to assign some absolute notion to the idea of mass, then any object has an infinite number of masses, all at the same time and all different. There are two ways to determine mass: (1) by its resistance to a disturbing force, and (2) by its ability to occupy three-dimensional space. The latter requires that mass be volumetric, i.e., that mass be L^3 dimensionally.

But look at the weird properties of a photon! If we measure its resistance to a disturbing force, we find that no force on earth can accelerate or decelerate the photon. If we measure the mass of a photon by the first method, it appears to have infinite mass. Yet if we measure it by the second method, it can have no mass at all, because a photon is not volumetric; it is two-dimensional. It therefore has infinite mass and zero mass simultaneously.

Furthermore, we can take the viewpoint that whatever its mass is, it can only have one. If that is so, then infinite mass and zero mass must somehow be the same thing! Which contradicts the three laws of logic. However, this should not concern us too greatly; many things contradict the laws of logic and are nonetheless true. So while it is presently "illogical" for infinite mass and zero mass to be identical, we should hold on to the idea that this may very well be true.

Additionally, one of the great cornerstone assumptions in physics is that gravitational field and electric field are mutually exclusive — i.e., they are totally different things. Yet a physicist named Santilli has proved that this is not so, and that they are either partially the same thing or totally the same thing. And there the matter stands, so we do not fully understand what electric field and gravitational field are, or how to go about turning one into the other, although Santilli's work seems to imply that this is at least theoretically possible. We must therefore invoke a new concept of reality.

URI GELLER

Uri Geller has demonstrated numerous capabilities: he has affected a magnometer inside a Faraday shield; bent and broken metal objects; caused a fresh flower to wither and dry in seconds; permanently changed the crystal structure of nitinol; altered magnetic programs on computer cards; influenced a Geiger counter; dematerialized matter; and demonstrated the inceptive Cyborg effect, thought-photography, telepathy, and the Geller effect (the sympathetic stimulation of a psi-positive).

It is useless to attempt to explain the feats performed by Uri Geller in terms of the ordinary fields and effects of known physics. Nothing short of a new physics paradigm will suffice. This new paradigm must encompass both mind and physics within the same theoretical framework, if it is to succeed in explaining how mind affects matter.

In terms of present physics and logic, the mind is regarded as totally separate from matter. For mind and matter to interact, some aspect of mind must be the same as some aspect of matter, i.e., to move matter, a force is required. Force is the time rate of change of momentum. To generate a force capable of moving matter, mind must be able to change momentum. But since momentum can only be obtained from something which possesses momentum to give up, then the mind must somehow possess momentum.

If this is so, then the momentum must ordinarily exist in a separate three-dimensional space, since it apparently does not ordinarily exist in laboratory three-dimensional space. Such a situation requires at least six spatial dimensions and one common time dimension, such that the mind (mental phenomena) is a set of objective physical phenomena existing in an ordinary objective three-dimensional space, but one which is three orthogonalities away, spatially, from the laboratory three-dimensional space.

Mental changes upon physical objects would thus imply orthogonal rotation of mental objects from the mental three-dimensional space into or closer to the laboratory three-dimensional space. Everett's many-worlds interpretation (MWI) of quantum mechanics contains a structure where such representation is possible, and the MWI is consistent with the entire experimental basis of modern physics. Thus from the MWI it is possible to objectively model the mind and matter, and from that, psychotronics as well.

MY APPROACH TO PSYCHOTRONICS

In twelve years of intensive work on this question, I have evolved a conceptual approach, which is consistent with present physics but extends it. A new concept of reality is involved, however, and severe demands are made on the individual to stretch his framework of comprehension. The perceptron concept is an abstraction that allows the modeling of perception itself— either mental perception or physical detection. The fourth law of logic (to be explained shortly) involves the age-old identity of opposites whose apparent necessity has baffled logicians, philosophers, and scientists for centuries. With the perceptron concept, we can at last comprehend how the identity of opposites is accomplished, and when it is accomplished.

This immediately solves the age-old philosophical problem of change. The fourth law also closes logic into a complete, closed metalogic, encompassing both physics and metaphysics.

Let us use as a definition of reality: *reality is that which can be conceptually and mathematically modeled and fitted to the phenomena existing in one or more minds.* Physical reality is that which can be modeled and fitted to the phenomena existing in all minds. Mental reality can be modeled and fitted to the phenomena in one mind. Mental and physical realities comprise "normal" reality. Complex or "paranormal" reality is that which can be conceptually and mathematically modeled and fitted to phenomena which exist in more than one mind, but not in all minds.

From perception theory I have succeeded in deriving a great deal of the present basis of physics, including Einstein's two postulates, Newton's laws, the law of gravitation, and the solution to the ontological problem. (Unknown to me at the time, Ives had already done so for Newton's laws, the law of gravitation, and Ein-

stein's postulates. His work has unfortunately been ignored.) In addition, the photon can be seen to be an ordinary three-dimensional particle existing in a three-dimensional space that is orthogonal to the laboratory three-dimensional space frame. A stationary particle in the laboratory frame appears as a photon to the orthogonal spatial frame.

Einstein's second postulate is usually stated as "the speed of light is the same for every observer." Restated, this becomes "every photon in an inertial frame is moving at the speed of light, c, with respect to every particle in that inertial frame." The corollary then follows immediately: every particle in that inertial frame is also moving at the speed of light, c, with respect to every photon in that inertial frame. In a single three-dimensional space, this is incomprehensible. Taking two orthogonal three-dimensional spaces, with the photons in one frame and the electrons in the other, it is perfectly comprehensible.

From pure nothing — empty vacuum, absence of thing — one can generate everything, the presence of thing. Here is direct proof that ultimately opposites are identical. But to a mind rigidly programmed in three-law logic, such a truth is abhorrent. Physicists consequently have done nothing with the idea that all our physical laws — or at least most of the great ones — can be straightforwardly derived from a special kind of a "piece of nothing" which I call a quiton. And they have not seen that this constitutes a statement of a fourth law of logic—the identity of opposites on their common boundary.

It is interesting to note that the paper which was handed to an American reporter, Robert Toth, by a Soviet scientist, and which caused the KGB to seize Toth and charge him with receiving Soviet state secrets, contained just such a theory as the basis of a unifying theory of psychotronics. Yet none of our intelligence analysts seems to have picked up the overwhelming importance of what was in the paper, and Toth himself appears to believe that his KGB arrest was simply harassment. In fact the paper did contain material on the basic Soviet approach to psychotronics — and thus to psychotronic weapons — and it was indeed state secrets that had been given to Toth.

Everett's many-worlds interpretation of quantum mechanics, with which very few physicists are familiar, provides a needed correction to the conventional monocular interpretation of relativity, and it allows a theoretically sound basis to be constructed for psychotronics.

The conventional interpretation of relativity considers only a single observer at a time. But if you can accept so simple a concept as that both you and I exist simultaneously, regardless of how we move with respect to each other, then I assure you that physics is startlingly different from what you may have studied in the ordinary university physics text book.

Everett, originally a student of the world-renowned physicist Dr. John Wheeler at Princeton, for his Ph.D. thesis considered the problem of multiple simultaneous observers and worked out what this did to physics. His highly innovative thesis provided a totally new interpretation of quantum physics and defined a startling new kind of reality in which all possibilities are physically real and exist. This new physics is indeed very strange, but it is totally consistent with the entire experimental basis of physics today.

I discovered that all my perception theory could be fitted precisely onto Everett's many-worlds interpretation.[1] On that basis, a theory or schema of bio-

fields was derived that provides an approach to a unified field theory. In fact, it predicts that any kind of field can be turned into any other kind of field, merely by correct and precise time synchronization. It also offers a physical and exact model of mind and mental phenomena and a mental and exact model of physical phenomena!

On this basis, a framework can be provided for psychotronics which is consistent with what we know of ordinary physics but which does not contain many of the limitations of ordinary physics. In a strange sense Everett wrote the physics for the all-mind or the Supreme Creator's mind because an unlimited mind, so to speak, must already have thought of everything possible, and for an all-creative mind to "think" a possibility is for that possibility to be real.

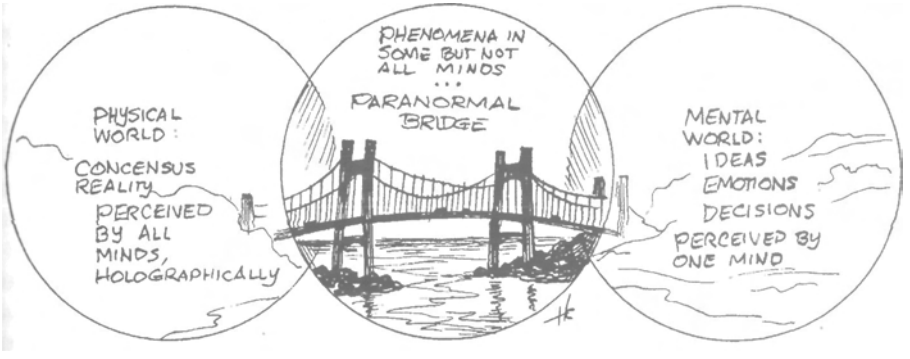

Fig. 3. Reality: a paranormal bridge with two ends

1. Reality as a Paranormal Bridge with Two Ends

In Figure 3, I show the nature of the problem of paranormal phenomena. To understand it, we must first define more precisely some of the present concepts.

First, what do we really mean when we talk of "physical phenomena"? To go into this, we must first destroy the notion that there exists some sort of separate, concrete reality totally apart from mind, for that notion is simply the old Cartesian assumption. It has long been refuted as far as having any absolute validity, and this is well-known to philosophers and to foundations physicists. According to Lindsay and Margenau in their *Foundations of Physics*, "physics has nothing to say about a possible real world lying behind experience."

What is true is that we can experience and detect and know only a mental change — a change in the mind itself is all we ever experience directly. For experience invokes the mind; we do not experience phenomena until the mind — used in the greater sense of the word to mean any mental detection — changes.

Any detector detects or experiences only an internal change, never an external change, and this is true of the mind as well as a physical detector.

So we never experience external physical phenomena; we experience only our own minds. Specifically, each of us experiences his own mental phenomena.

But here we must be a little more precise about what we mean by "mental phenomena." What we usually refer to are the mental phenomena in a single mind. And so we will take that as the primary definition: *mental phenomena are the phenomena or changes in a single mind.*

But then what do we mean by "physical phenomena"? For indeed this refers to something that is often remarkably different — or seems to be — from the phenomena or changes going on in our own heads. Before we jump to the extreme conclusion that physical phenomena are simply mental illusions, we should recall the Zen master's approach. He demanded of the student whether or not physical phenomena were real, and the student replied that they were not real, but only illusions. Whereupon the master gave him a resounding knock on the head, and asked him whether or not the blow was real. The student replied that the blow was indeed real. Whereupon the master sent him back for further meditation, for he had learned nothing. He had not understood that "mental" and "physical" are not mutually exclusive.

If we look closely at how we may differentiate between mental phenomena and physical phenomena, we immediately hit upon a practical scheme. Physical phenomena can be shown to exist in the mind of any observer, be he human, insect, or whatever, so long as he has consciousness.

Suppose for a moment that I have a piece of chalk in my hand, held between my fingers. I can touch the chalk, feel it, and see it. I can even taste it if I wish. And so I hold up the piece of chalk and say: "This piece of chalk is not just a mental impression, it is physically real." How can I prove it? And when I prove it, what exactly have I proved?

Now suppose you do not wish to believe the chalk is real. You simply bring in another observer; he looks at the chalk, he touches it, he tastes it, and he rolls it between his fingertips. He confirms that he also detects or experiences the chalk. Then a little bug flies in and lands on the chalk, crawling around on it, and poking at it with his little proboscis. He also by his actions confirms that he has it in his own little mind. In fact, we could bring in any sort of mind, and that mind could experience the chalk.

And this of course is the clue. What we have been calling physical phenomena can be shown to exist in every mind. And when we say something is physically real, this is all we actually mean. Nothing more, nothing less. And this is why physical phenomena are so solid and concrete; they are infinitely repeated. However, what we refer to as mental phenomena are in only one single mind and thus are not repeated at all.

Now let us do a little thought experiment. Suppose I have lapsed into some peculiar mental state because of the toxins from an infection I have contracted, and I am hallucinating vividly. Suppose I pick up what I vividly see, feel, touch, and taste as a piece of chalk, and I claim that it is real. Indeed, to me it is very real. And then suppose a second person comes into the room. He will not see the chalk, touch it, feel it, taste it, and it will not be real to him. Then suppose a third person comes into the room, and he does not see the chalk, he passes his fingers right through where I am seeing the chalk and does not contact or feel it, and he indeed cannot find it. Thus what we call a "mental phenomenon" can be shown to exist in one mind only. In this case of a vivid hallucination, the hallucinatory phenomenon was absent from the other observers' minds.

But now let us change our thought experiment a little. Suppose now that I am absolutely fit and fine physically and mentally, and am not hallucinating. And suppose all the observers we bring in are also fine both physically and mentally, and not hallucinating. And suppose we get the following results: some of us can see,

touch, taste, and experience the chalk, and others of us cannot see, touch, taste, or experience it, no matter how we try. In that case, what kind of phenomenon do we have?

Well, we cannot exactly say the phenomenon is exclusively mental or exclusively physical. But we also cannot say that it is exclusively nonmental or exclusively nonphysical. In fact, we have an example of a third class of phenomena which are presently not recognized by science. *We simply have a paranormal phenomenon,* one which can be shown to violate our definitions of mental phenomena and physical phenomena.

And we can in fact take this as the definition of a paranormal phenomenon: *a paranormal phenomenon can be shown to exist in more than one mind, and it can also be shown not to exist in one or more minds, i.e., paranormal phenomena exist in more than one mind, but not in all minds.* Our conventional science recognizes purely mental phenomena and purely physical phenomena; it does not recognize the third kind, since by the ordinary three laws of logic the third kind does not exist. Paranormal phenomena constitute a bridge across a river between two banks; our present science does not recognize the bridge, but only recognizes the two banks, as shown in Figure 3.

Paranormal phenomena thus appear erratic to ordinary objective science, for objective method after all is specifically designed to select only those phenomena that can be reliably repeated, and the nature of paranormal phenomena is such that they often (in fact usually) cannot be reliably repeated, except sometimes in a great many trials. Normal objective method, if rigorously applied, can only discriminate a statistical effect from a great many trials. Furthermore, if rigorously and lengthily applied, it will accumulate so many failures that it will cast serious doubt on whether the odd case that was paranormal was in fact nonaccidental.

It is for this very reason that orthodox science, which is devoted to scientific method and rigorous protocol, has remained so comfortably adamant that paranormal phenomena do not exist. The tool must be changed to fit the problem, and the present scientific toolbag does not fit precisely. The tools are useful, but they themselves are not decisive within the bounds of present protocol. The necessary change is quite simple: we must allow for the effects of mind, and for a union of both mind and physics, just as there exists in physics a union of both wave and particle. In other words, paranormal phenomena must be repeatable *sometimes,* by competent experimenters and observers, but not necessarily *always* by all observers.

"Ah ha!" the materialist is likely to exclaim, being unable to contain himself any longer. "Solid concrete reality always is solid and concrete, however, and you cannot change that. As long as that is true, then the laws of ordinary physics hold, and all is right with the universe. We can always select our phenomena which are present in all minds, and this after all constitutes immutable physical reality. In the luce of that fact, all your arguments about mental phenomena in one mind and another kind of half-mental, half-physical phenomena are meaningless, for you are simply calling the superposition of purely mental phenomena on purely physical phenomena a third class, but it is a separable mixture, not a completely new kind." And we may even be tempted to stir up a small bit of sympathy for the materialist's view.

However, let us propose a resolution. If we can show that concrete, solid, real

matter can become absolutely nonconcrete, nonsolid, and hence nonphysical, then that ought to settle the question. In a recent experiment it has been conclusively shown that two colliding protons pass right through each other in total violation of all physical rules, if their spins are exactly antiparallel. Protons are the central building blocks of all matter. In the nucleus of an atom, the protons and neutrons are continually switching identities, so even a neutron keeps turning into a proton, etc. And these fundamental constituents of everything solid and concrete and real just go right through one another, without any effect whatsoever, simply by aligning their spins properly. Collision theory fails, electromagnetic theory fails, and our concept of two particles bumping together fails. This experiment totally annihilates the idea that physical reality is something absolute. In fact, it establishes that physical reality itself is a function of the relations between the interacting participants; changing the relationships can simply cancel physical reality.

So perhaps our definition of physical reality has some merit after all, and perhaps there really are three classes of phenomena. The paranormal phenomenon is a bridge between mental and physical phenomena; specifically, every paranormal phenomenon must consist of an inseparably welded compound of the two. And the objective method and its consequent experimental protocol must be changed to reflect this fact, if we are ever to develop a viable theory of paranormal phenomena.

2. A Fundamental Correction to Classical Logic

Let us now make a fundamental correction to Aristotle's three laws of logic. First, there is no independent existence to mental phenomena; there is a perception operation involved when we think. There is no independent existence to physical phenomena; there is a perception operation involved when we observe physical phenomena. Furthermore, it takes a finite piece of time for the perception process to occur. The logic symbol also requires a separate time interval; it represents a series of separately perceived operations that together comprise a decision algorithm. So let us impose this criterion upon logic itself so as to constitute "logical perception" or the "logic of perception" or the "perception of logic." We begin with Aristotle's third law of logic, *A* or *not-A*, the law of the excluded middle.

We still insist that there is no such thing as *A* per se, but rather that there is a perceived *A* where *A* is the output of the perception process. Similarly, there is no such thing as *not-A*, but rather there is a perceived *not-A* where *not-A* is the output of the perception process. Let us think of a square box symbol as an abbreviation for the fact that perception has occurred, and anything written inside the box represents the output of that perception operation. We can speak of the box either as mental perception, a description of thought, or we can speak of it as physical detection, a description of an instrumentation system that detects and measures. Also, since each box requires a finite time to occur, we must carefully keep up with the individual little pieces of time, the delta t's.

So applying this to Aristotle's third law, we have *A* perceived or outputted in time one, and *not-A* outputted in time two. Note that to ascertain that A_1 and *not-*A_2 actually differ requires a series of operations in a separate time interval, in time three, that is assumed by the *exclusive* or symbol. Looked at in this way, Aristotle's third law actually is the law of monocularity; it states that only one thing at a time is perceived. Actually we had assumed this when we assumed that perception was a

1. $A \vee \bar{A}$ ARISTOTLE'S LAW OF THE EXCLUDED MIDDLE

2. DEFINE $\square$ AS "IS PERCEIVED"

3. $\boxed{A} \vee \boxed{\bar{A}}$ LAW OF THE EXCLUDED MIDDLE

4. EACH PERCEPTION IS A FINITE OPERATION AND REQUIRES A FINITE TIME TO OCCUR.

   THE LOGIC SYMBOL ALSO REPRESENTS A DECISION ALGORITHM: A SERIES OF OPERATIONS PERFORMED IN A SEPARATE TIME INTERVAL.

   EACH FINITE TIME INTERVAL MUST BE ACCOUNTED FOR.

5. $\boxed{A}_1 \vee_3 \boxed{\bar{A}}_2$

6. THE LAW STATES THAT PERCEPTION IS A MONOCULAR PROCESS IN TIME 3.

   ONLY ONE-THING-AT-A-TIME IS PERCEIVED.

7. NOW NOTE THAT SEPARATION OF A AND $\bar{A}$ DOES NOT OCCUR IN

$$\boxed{(A_1 \,,\, \bar{A}_2)}_3 \equiv_5 \boxed{B}_4$$

8. SO $A_1 \equiv_3 \bar{A}_2 \Big|_{4,5}$ BOUNDARY IDENTITY OF EXACT OPPOSITES

9. AND EQUATION 8 CONSTITUTES A <u>FOURTH LAW OF LOGICAL THOUGHT</u>.

   IT SIMPLY STATES THAT PERCEPTION THREE IS BINOCULAR, AND EXCLUSIVE SEPARATION OF EITHER A OR $\bar{A}$ IS NOT PERMITTED.

Fig. 4. A fundamental correction to classical logic

finite process, so it is nice to find that Aristotle's third law justifies our assumption, once we understand the third law. The *exclusive or* symbol assumes a third operation in time three, whereby it is determined that perception output one and output two actually differ. But such an operation itself requires multiocular perception — i.e., collecting two outputs at once — and that in itself is a violation of Aristotle's third law. The third law thus contains its own contradiction, and indeed each of the other two laws also contradicts the third law when one examines them meticulously. Each can only be established as true by invoking or involving an operation wherein the third law is not true.

In time three we gathered up what had been perception output in time one, A_1 and what had been perception output in time two, A_2, which we do not yet know is different from A_1, and put them both through the perception process, getting only one output — let us call it B — in time four. By the nature of B in time four, we thus say in time five that the outputs in times one and two differ or not. In either time one or time two, there is no indication whatsoever of difference or sameness existing between output one and output two. Likewise, in time three there is no separate output one and output two, hence no indication of the sameness of, or difference between, outputs one and two.

So here we have arrived at the identity of opposites. There is no perception of difference between A_1 and *not*-A_2 in time three. And this constitutes a fourth law of logic: the law of the boundary, or the boundary identity of exact opposites. All that is necessary to identify opposites is to lose all perceptual distinction between them. And that is accomplished by multiocular perception, of perceiving the presence of both at once unseparated, hence the absence of either exclusively present. If A_1 and A_2 are exact opposites, then B_4 = O, and $[A_1, A_2]_3$ = O. We thus have the solution to the problem of nothing. Nothing simply consists of the presence of the totality of all opposites.

Almost all the philosophers who have struggled with the problems of being, mind, and matter have faced the necessity for the identity of opposites, but none of them could understand how opposites could be identified. By careful accounting of the separate time intervals required for finite monocular perceptions, the mechanism for identifying opposites is immediately clarified and revealed. The laws of logic are simply laws of the operation of perception — nothing more, nothing less.

The new system of logic is closed. All present paradoxes — contradictions of one or more of the first three laws — are resolved by the fourth law, which contains the negation of each of the first three laws. The fourth law is in fact the law of the paradox. Note also that the hidden time-three operation, which has actually been the application of the fourth law all along, is implied in each of the first three laws. Identity or nonidentity between time-one and time-two outputs can only be established in a time-three operation. The fact that either A or *not*-A exclusively exists can only be established by a separate operation which establishes that nothing else is there. If separation of A and *not*-A is not permitted, then A and *not*-A cannot be distinguished.

Since these laws refer to perceptual operations, one can think of them operationally, or vectorially. To close the vectorial system prescribed by the first three laws, the opposite or negation of each of the three vectorial statements must be present, i.e., this follows simply from the definition of what constitutes a closed system, vectorially speaking. Since the fourth law contains the negation of each of

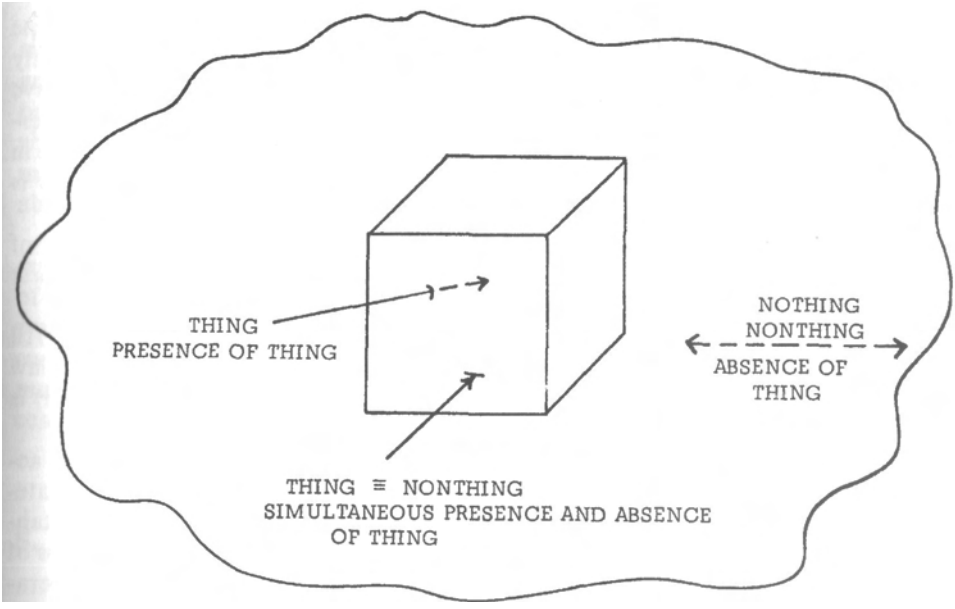

Fig. 5. A physical example

the first three laws, then the four-law system is indeed closed, and the logician's dream of a closed metalogic is realized. Furthermore, anything which contradicts any combination of the first three laws automatically is covered by the fourth law, which is the law of the paradox.

The new logic works as follows: either the first three laws apply (separation of *A* and *not-A* is permitted), or the fourth law applies (separation of *A* and *not-A* is not permitted). The fourth law applies only to — and in fact *creates* — a boundary. The first three laws apply only away from a boundary.

3. A Physical Example

Take the surface of a cube in deep space (Fig. 5). Call the cube "thing," a three-dimensional concept. Call the empty space around the cube "nonthing," a three-dimensional nonthing or absence of thing. If we are standing inside the cube and look at its boundary surface, we cannot find a single piece of that boundary surface that does not belong totally to the cube. So we can very reasonably proclaim that by the first three laws of logic each piece of the boundary belongs totally to the cube, to "thing." But if in a different operation we are standing outside the cube, we cannot find a single piece of that boundary surface that does not belong entirely to the space surrounding the cube. So in this case, we can claim by the first three laws of logic that the boundary surface belongs totally to "nonthing."

Then in a third operation we can state that, by the first law of logic, each and every piece of the boundary surface is identical to itself, and of course we thereby identify what was thing with what was nonthing. Specifically, what was thing in perception time one and what was nonthing in perception time two have been

identified, by all distinction and separation between them being removed, in time three. Identifying opposites simply consists of "packing together" two previously separated perceptions into a single third unseparated perception. And all we have done is apply the fourth law of logic, the law of the boundary. Every single perceived thing has a boundary, where it both begins and ends its exclusive presence in perception output. And at that boundary, the fourth law applies. Thus the law is universal. The fourth law defines a boundary.

In fact, in any perception, all four laws are applied. They are applied in one of two fashions: (1) the first three are explicit and the fourth implicit, or (2) the first three are implicit and the fourth explicit.

There are more examples that have baffled mathematicians and logicians. All of these are simply boundary statements, i.e., statements involving the fourth law of logic. For example: "It is true that this statement is false"; "A line (length) is composed of points (nonlengths)"; "In a hologram, each part is the whole."

Since logicians used only the first three laws, none of these statements was acceptable or understandable. By the fourth law, there is no problem with these statements. The first merely refers to the boundary between the operation used to establish "truth" and the operation used to establish "falsity." There is another class of operation where neither truth nor falsity exclusively applies — i.e., a class of operation which cannot distinguish between "true" and "false."

The second statement has long been a painful trauma to logicians and foundations mathematicians. Today foundations mathematicians seldom attempt to define line or point. Instead, they simply say: "There is a class of entities called lines. There is a class of entities called points. Lines are made up of an infinite number of points." This way, they avoid trying to explain how "length" (line) can be made up *of* "nonlength" (points).

However, they could easily have avoided the difficulty, and still retained the definition of a line as a length, and a point as a nonlength, in the following manner. "There is a class of entities called lines. A line is and has length. There is a class of entities called points. A point is and has nonlength. We may have a separate perception that shows nonlength, and another separate perception that shows length. In yet a third perception which infolds both the first two perceptual characteristics, we may say that a line is comprised of points so long as we realize that line and point do not separately and exclusively exist in the comprised-of state."

By the same token, we can say that "the whole is comprised of the sum of the parts" only if we realize that "whole" and "part" do not separately and exclusively exist in the comprised-of state, but instead they inseparably and nonexclusively exist therein.

4. New Definition of Zero

To a monocular perception process, multiple presence constitutes absence of the exclusive presence of any particular one. Therefore such a multiple presence is monocularly unperceivable, and hence becomes a zero to a monocular detection process. This allows new definitions of zero, and a solution to the problem of nothing.

Consider that a monocular detection process asks the question, "Is there a single exclusive thing present in my input?" If the answer is yes, an output is generated and perception occurs. If the answer is no, no output is generated and perception does not occur. The answer "no" occurs in two fashions: either total absence, or presence of two or more simultaneously. For either of these cases, monocular perception gives no output, and perception does not occur, i.e., the absence of perception occurs.

Now note that the monocular perception cannot tell any difference in the two input conditions. To it, there is no distinction between the two conditions. The lack of any difference at all constitutes identity. Thus to a monocular perception process, condition one is identical to condition two when they are infolded together in condition three. That in fact derives the fourth law of logic. Total absence and multiple, unseparated presence are identical insofar as a monocular detection process is concerned.

5. Einstein's Postulate

As an example of strange problems we can deal with in a four-law manner, let us examine a little more closely one of Einstein's postulates of special relativity, which states that the speed of light is the same for every observer. Let us restate the postulate as "every photon is moving at the same speed relative to every particle." We can pick any electron in the laboratory frame. Every photon in the frame is moving at the speed of light with respect to the electron, by Einstein's postulate. Now let us pick any photon. By Einstein's postulate, every electron is also moving at the speed of light with respect to this photon.

Now we can look at the situation from the viewpoint of the photon. With respect to it, every electron in the laboratory frame is moving at the speed of light, which violates the common interpretation that ordinary objects cannot move at the speed of light. In fact, three-law logic is violated but four-law logic is not violated. In four-law logic, an object can have infinite mass and zero mass simultaneously. The electron's frame and the photon's frame are rotated orthogonal to each other. What we were calling a photon in the laboratory frame, is a perfectly ordinary three-dimensional object in its own frame, which is orthogonal to the laboratory frame. The electron (lab-frame) thus appears as a photon in the rotated frame of what we previously called a "lab-frame photon." Either an electron or a photon is both three-dimensional and two-dimensional simultaneously — in fact, the concept of separate, exclusive dimensionality only applies after one or the other dimensional aspect has been exclusively separated (observed).

Mass is determined by the resistance an object poses to an accelerating or disturbing force. Mass is also tied to three-dimensional objects; i.e., it is an L^3 concept dimensionally. A photon, moving at the speed of light, can neither be speeded up nor slowed down; hence in one sense it exhibits infinite mass. On the other hand, the photon (which is a three-dimensional object in its own frame) has lost a dimension in its intersection in the laboratory frame, due to orthogonality. Therefore the photon appears as a two-dimensional L^2 entity in the laboratory three-space. And in that sense, the photon must have zero mass since it is only two-dimensional. By

the fourth law, the boundary opposites are identified. Thus at the orthogonal boundary of three-space, zero mass and infinite mass become identical. And the photon exhibits both zero mass and infinite mass simultaneously because it is an entity that is on the boundary of the L^3 "mass exhibiting" world. The photon has always happily behaved in a four-law manner, even though physicists could not comprehend its behavior with the three-law logic ingrained in their heads.

6. Synchronicity of Concepts

As is so often the case, two persons appear to have derived the new logic simultaneously, myself from perception theory and Hubbard from manifold theory.

Dr. J. Hubbard was one of the scientists who first developed the atomic bomb. His profound work fully substantiates the new logic and the new reality paradigm. Dr. Hubbard believes that the system includes language, logic, and the interaction of life-bearing systems. In short, he believes it includes psychotronics. The relationship between mind and matter is, like Santilli's electric and gravitational fields, not mutually exclusive; they are either partially or totally one and the same thing. According to my research, they are both partially and totally the same thing, i.e., they are of exactly the same nature totally — a closure of the entire physical universe — but only partially intersecting, by a fraction of approximately 10^{-42}. In the same fashion a mind is an entire physical world, but it only minutely intersects this physical frame, and then only in a portion of this physical plane.

Dr. Hubbard has shown that the four laws of logic emerge in the form of set relationships, that the single dimension parameter generates the second, third, fourth, fifth and up to *Nth* dimensions of the manifold, by repetitive operations on itself. This allows a firm basis for orthogonal intersections of one less than the dimensionality of the lowest-dimensioned intersector. It provides a firm basis for orthorotation and for my approach to psychotronics.

PRIMITIVE PERCEPTION

Let us now discuss how we form our concept of objects and their relationship. All our basic perceptual concepts are essentially built on primitive observation of the macroscopic universe, which is the primary reason that so many final arguments of philosophers appeal to the "natural man," i.e., to how a primitive observer would react to the argument. The very idea of an object — a perceived object — is conditioned. Everything else we think of is then conceived as some sort of object or relation between objects. And that is why sets (of perceptual objects) and their relationships form the basis for axiomatic logic, mathematics, and physics. Set theory is simply the synthesized and abstracted game of elementary perception of the macroscopic world. Thus even the most abstruse mathematics forms a part of the game of perception and can be applied to perceived physical phenomena. This macroscopic, primitive perception is the basis of our concept of objectivity, and of our physical concepts of "observed" and "observable." But if we examine

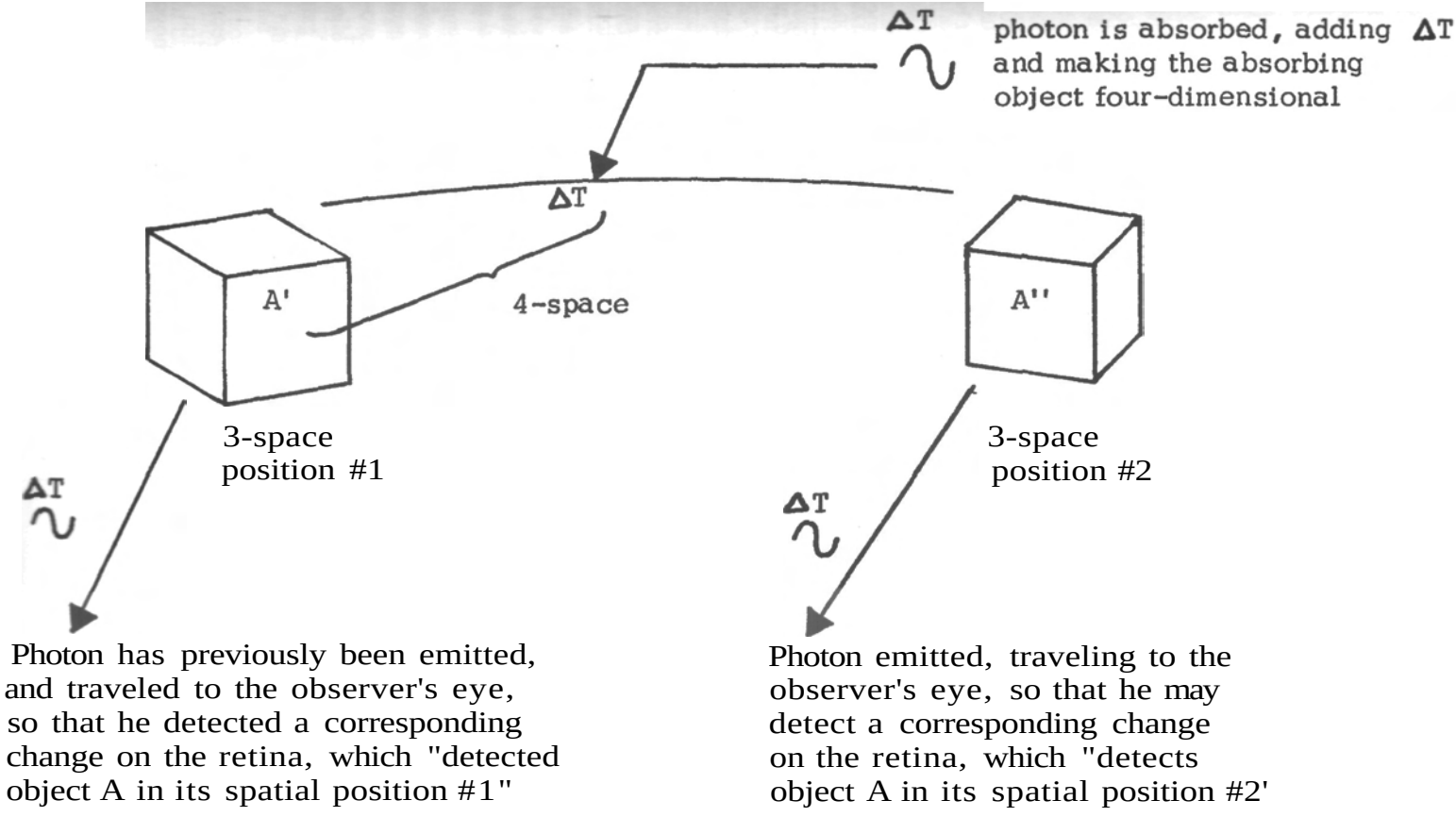

Fig. 6. Primitive perception

carefully exactly how we perceive an object in the macroscopic world, we realize that it is seen by means of photon interaction. We think of light being absorbed onto the surface of the object, and then emitted or reradiated from the surface, eventually entering the eye. There the photons are again absorbed by the material on the retina. The photoelectric effect then moves what are called electrons, producing a signal that goes to the brain for interpretation

What we see as an object has twice undergone interaction with photons of light. Furthermore, light itself cannot be detected, only its interaction with matter (in this case electrons). Thus the primitive perceptual operations of the human brain are correlated one-to-one with photon emission and absorption interactions, usually paired interactions at the object reality domain. The concepts of object, mass, three-dimensions, and observation are directly correlated to the photon-mass interaction, and ultimately to the photon-electron interaction occurring in the human retina.

The ideas of boundary, surface, and change in primitive perception thus involve two contradictory and simultaneously mixed interactions, absorption and emission. Because they are constantly intermingled, primitive perception cannot separate the two. Thus the primitive concept of a boundary consists of a simultaneous duality. Here the object both begins and ends. Here opposites are identified. This is the basis for the fourth law of logic, the law of the boundary.

The dimensionality and orthogonality (spatially) of the primitive perception process are also interesting. Photon absorption constitutes spatial integration for the photon, dimensionally speaking, *e.g.*, one additional dimension is gained by the two-dimensional light wave in turning itself into the three-dimensional mass state. The photon also adds its piece of time to the absorbing mass, converting the mass particle to mass time or space time—adding the fourth dimension. Photon emission constitutes spatial differentiation, dimensionally speaking. One spatial dimension is lost by a little hunk of three-dimensional mass turning itself into a two-dimensional wave. Going from outside the object toward the inside (to track along with photon absorption), the boundary marks the end of the two-dimensional wave region, so the object (or, more precisely, the interaction region) is spatially two-dimensional on the outside, and spatially three-dimensional on the inside. It also occupies the time dimension on the inside, but not on the outside. (This directly accounts for a difference in the spacetime inside and the spacetime outside, and that is why mass may be regarded as a curvature or change in spacetime, in general relativity.)

Going from inside the object toward the outside, the boundary marks the end of the spatially three-dimensional region and the beginning of the spatially two-dimensional region. So the object is now spatially three-dimensional on the inside, spatially two-dimensional on the outside. The inside now does not occupy the time dimension, while the photon emitted (the outside) does. So on the boundary, one spatial dimension is gained going in, and one spatial dimension is lost going out Time is gained going in and lost going out, by the mass absorber-emitter.

Gain or loss of a dimension is accomplished only by orthogonal rotation between orthogonal spatial frames. Photon absorption constitutes orthogonal spatial rotation one right angle turn into the laboratory frame, while photon emission constitutes orthogonal spatial rotation one right angle turn out of the laboratory three-space frame.

This constitutes the observation process (primitively) per se, and this is what is hidden in Einstein's postulate that the speed of light is the same to every observer. Every observer goes through this same process. Furthermore, rotations orthogonal to a three-space frame are orthogonal to all three-dimensional spatial physical entities in that three-space. As Einstein himself once pointed out, velocity can be regarded as simply the measure of rotation of an entity in a higher dimensional space; thus an orthogonal turn is a fixed velocity. Since light is orthogonal to the entire space, then the speed of light is the same to every observer in that space.

While Einstein was apparently speaking of regarding the velocity of an object as a measure of its amount of rotation toward the time axis in four-space (from the direction of its velocity vector in laboratory three-space), it can also be regarded as rotation toward a fourth spatial axis in a five-space (four length dimensions and one time dimension, all orthogonal). If one checks this, one will see that the projections in three-space are the same; i.e., to the laboratory frame observer, there is no difference observable. Thus the photon interaction may be modeled as orthorotation of an entity spatially in a five-space.

To the laboratory observer, this orthorotation constitutes pure dimensional integration and dimensional differentiation, and it constitutes or creates an object in the first place. The concept of object *a priori* involves the photon interaction as stated; if the photon interaction is not invoked, then the existent entity does not exist as a three-dimensional object at all, in the primitive sense. Outside this primitive process (dimensional integration and differentiation imposed upon the same region, which constitutes an object), all exists in the Omega nothingness void, without frame or form.

Ultimate reality (specifically, action) is dimensionless in the objective sense; for the objective sense exists only after an operation has been imposed. A quantum itself is lengthless (and has no exclusive energy, time, or momentum) until differentiation is imposed upon it. Only after a quantum of action is fissioned does there exist a discrete piece of (change in) length, time, energy, mass, momentum, etc. I have already shown that perception itself can be modeled in terms of action quanta fission and fusion, and that most of the basic laws of physics can be derived from that model. (See my *Quiton/Perception Physics.)* Fission and fusion of action quanta involve orthogonal rotation between orthogonal three-spaces sharing the same fourth dimension (time) in common. The words *change, interact, localize, superpose, operate, move, oscillate, act, cause,* and *determine* are only a few of the words used in physics to conceal the basic occurrence of orthogonal rotation in higher dimensional space.

Finally, it should be stressed that i, the square root of minus one, itself constitutes an orthogonal axis, hence an extraspatial dimension. The addition of this quantity to electromagnetic theory allowed the resolution of formidable problems, and led to the direct formulation of electromagnetic theory. Thus electromagnetic theory already includes higher dimensionality and orthogonal rotation in hyperspace. In that sense, inductance and capacitance are merely vector statements of amounts of rotation, one in a positive direction and the other in a negative direction, toward an orthogonal axis in higher dimensional space.

The forming (beginning and ending) of a three-dimensional spatial object constitutes a time differentiation invoked on four-dimensional Minkowskian space,

i.e., the process of observation or detection itself involves

$$\partial/\partial T\,(L^3T) = L^3$$

dimensionally speaking. This process is accomplished by orthogonal rotation, and the very concept of an object that has been observed, detected, or perceived implicitly involves this time differentiation invoked on a four-space.

Velocity also represents a statement of the switching of time into length, and length into time. It is therefore a measure of rotation of the spatial three-dimensional frame, as Einstein pointed out. By this switching (orthogonal rotating, orthogonal flipping) of the chopping of time or beginning and ending of a small piece of time, we create a little delta *T*, just as we do each delta *L* for an object.

But the photon interaction process is monocular. Each photon must attack matter individually, and live or die in the process. Each photon born from matter is also born independently. Thus the primitive observation process is monocular, since it is totally in one-to-one correspondence with photon interaction that is monocular. Thus the observed world is monocular, quantized, discretized. Because of the particular one-to-one correspondence between our primitive concepts and a single interaction, we can conceive the world in no other fashion, unless we change the very basic factor of one-to-one correlation. This in fact has already been done for physics by Everett, whose theory of the universal wave function incorporates multiple simultaneous observation, and hence direct insight beyond the limitations of the monocular correspondence to the photon interaction. My theory does the same thing in the fields of logic and mind.

TWO-SLIT EXPERIMENT

This experiment is fundamental to all of modern physics. Feynman, Nobel prize winner in physics, has stated that no physicist understands this experiment, and that it cannot be explained by any classical means. The reason is that it cannot be monocularly comprehended, i.e., the first three laws of logic cannot explain it. The fourth law can and does.

In the experiment, electrons are emitted from a source and travel past a doubly-slit wall region on their way to a screen. The apparatus is shielded against light. If one believes that the emitted electron is a little three-dimensional particle, much like a tiny baseball, then it should go through one of the slits and not the other. It would then hit the screen at one of the two spots indicated as the expected distribution, with a little scatter from those that chip the edge of the slit a bit. Electrons which do not hit the holes but strike the wall are absorbed.

We do not get this expected pattern. Instead, the pattern is essentially the same as the one we would get if each electron were a wavefront passing through both slits at once. However, each electron still strikes the screen in only one point; the distribution of these points fits the actual distribution pattern shown.

This stunned the physicists. They did not believe it at first, so they set up a photon gun and hit every electron with a photon as it left the emitter source and started over toward the two-slit region. That is, they determined precisely when a little electron was on the way, and the fact that it was like a tiny baseball and in just one

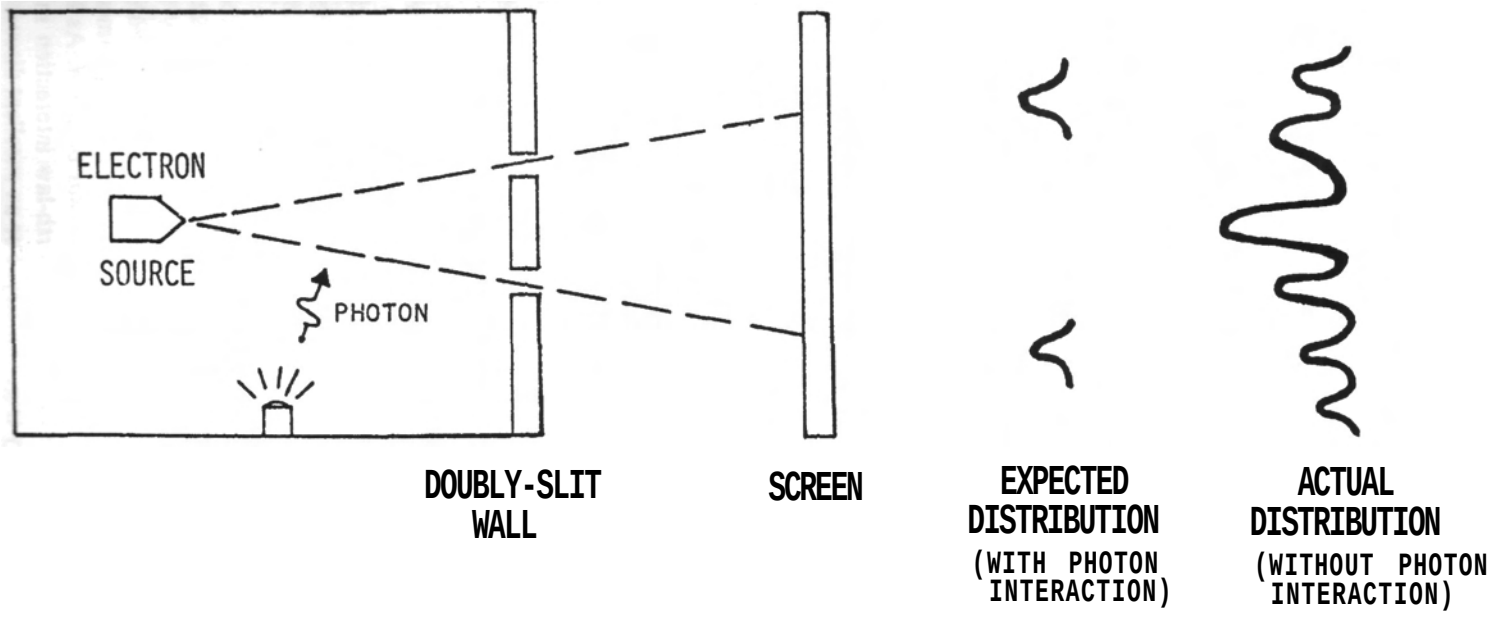

NOTE: IF THE ELECTRON IS HIT BY A PHOTON BEFORE IT REACHES THE TWO-SLIT REGION, IT DOES NOT EXHIBIT THE WAVE INTERFERENCE EFFECT, BUT INSTEAD ACTS AS A CLASSICAL OBJECT AND GOES THROUGH ONLY ONE SLIT, YIELDING THE "EXPECTED DISTRIBUTION" PATTERN.

Fig. 7. Two-slit experiment

place. And this time the electron only went through a single slit, and it gave the expected pattern after all. And when the experiment was repeated and only a fraction of the electrons were hit with photons, then a mixture of the two patterns emerged.

It is simple to describe the results mathematically, but no one has understood why things happen as they do in this experiment. The principle of complementarity evades the issue. This principle is simply a monocular statement dealing with one aspect of the problem at a time, with the determined, exclusive, monocular past only. It does not apply to the present or to the future. If we think in terms of the present, then the third law of logic is violated and the fourth law applies. The two states, two-dimensional wave and three-dimensional corpuscular, both exist simultaneously but nonexclusively in the present. Thus in physics terms, the entity becomes nonobjective (nonspatial), probabilistic and undetermined, and this is automatically a wave concept, i.e., since waves are not confined to one place and determined or localized, they may exist in the nonconfined, nonlocalized present.

Note that photon interaction must be excluded whenever the so-called quantum effect is exhibited. If photon interaction is invoked, classical reality emerges. Photon interaction creates classical objectivity. Photon interaction is a time-differentiating operator imposed on L^3T four-space. Specifically, since light carries time, photon emission from an entity strips away T from the L^3T nonobjective entity, converting it to an L^3 or spatial object.

The very concept of an object comes from primitive perception's one-to-one correspondence with photon interaction. After photon interaction, the first three laws of logic apply to an entity. Before photon interaction occurs, the fourth law applies. In the fourth-law state, the time portion of an entity can interact with any number of time portions of other fourth-law entities if the time aspects of all of them coincide.

A free electron born and released at the emitter is four-dimensional (L^3T) until it is struck by a photon, after which it is three-dimensional (L^3). When the wavelength of electron and slits is specified, we have actually specified the time interval stripped out of a dEdT quantum in each quantum of fundamental change occurring. Perfect time synchronization accomplishes or constitutes orthogonal rotation. So if the length (width) dimension of each slit is very close to the wavelength of the electron, the time aspects of both slits will interact with the time aspect of the fourth-state electron if all three are brought into time phase simultaneously. If the slits are made much larger, this interaction will not occur.

When the electron interacts with both slits timewise, this will constitute a part of the past history of the electron to all future interactions or interaction possibilities. But since the interaction with the two-slits was not in the past (i.e., selected or determined), then that interaction itself is a part of the present and future probabilities chain. In physics, probabilities propagate forward in time with absolute causality until a monocular selection is made. Thus the fourth-law interaction is propagated forward with absolute causality and significantly affects any future interactions. And apparently vice-versa. John Wheeler has just shown that, in at least one sense, whether or not the emitted particle in the two-slit experiment has interacted with one or both slits can be selected *after it has occurred.* As is well known, the pattern of projection forward of this fourth-law interaction may be quite simply calculated from ordinary trigonometry. For an excellent discussion of

the two-slit experiment, see Richard P. Feynman, Robert B. Leighton, and Matthew Sands, *The Feynman Lectures on Physics,* Vol. 1 (Addison-Wesley, Menlo Park, Calif., 1963), pp. 37-1 and 37-12.

When the electron hits the screen, it encounters a region of varying time oscillations of the orbital electrons around the individual atoms comprising the screen. Thus the exact location of the orbital electron in the screen which will first precisely time-synchronize with the electron wavelength approaching the screen in four-law form will vary. Thus the place where the electron hits the screen is variably selected along the screen. The time distribution pattern of the approaching electron is recovered when the time distribution of the number of electron hits per screen length is plotted.

So one can build gadgets to cause four-law entities to multiply and interact simultaneously in time, even though the entities are normally thought of as being in different spatial locations when in the three-law state. And one can deliberately select the type of interaction to occur, four-law or three-law, simply by controlling photon interaction. The two-slit apparatus itself is a paranormal, psychotronic device.

This is the explanation of the two-slit experiment, which, according to Nobel prizewinner Richard Feynman, no one understands and which, according also to Dr. Feynman, contains the total mystery of quantum mechanics and the only mystery of quantum mechanics. The reason the two-slit experiment has not been understood is that the answer to the paradox was not present in the first three laws of logic. It requires the addition of the fourth law to explain the experiment.

And all fundamental particles — photons, neutrons, protons, electrons, etc. — exhibit the same behavior. So things, nothings if you will, can be processed in the multiplistic two-states-identified-as-one-so-no-single-exclusive state, as virtual and unobserved entities. In the multiplistic state they can be amplified, recorded, put onto tape, modulated onto RF signals, etc. And by our ordinary, objective, three-law science nothing is processed. And nothing indeed is what is there — a very special, structured, detailed, virtual set of nonexclusive, hidden-variable nonthings that is part of the new reality existing in the framework of the new four-law logic. In fact, this processable, structurable, nonobjective reality exists outside objective, three-law spacetime and is the basis for all psychotronic phenomena.

To our present monocular detection devices and monocular theory, such multiple-state entities are unobserved and hence are zeroes. They are pure vacuum, pure space, pure nothing, pure emptiness. But they are very real indeed, and they do physically exist, but multiocularly rather than monocularly.

The importance of the time interaction in explaining the two-slit experiment was noted as early as 1957 by Charles Muses in his introduction to Jerome Rothstein's *Communication, Organization, and Science* (Falcon's Wing Press, Indian Hills, Colorado, 1958). Muses pointed out that the celebrated wave-particle paradox remains a paradox only so long as the chronotopological phases of the phenomena are left unrealized in the analysis. The entire foreword by Muses is a remarkable document that analyzes the structure of time itself.

NOTE:

IN REFLECTED LIGHT, THE EFFECT CAN BE INVERSED.

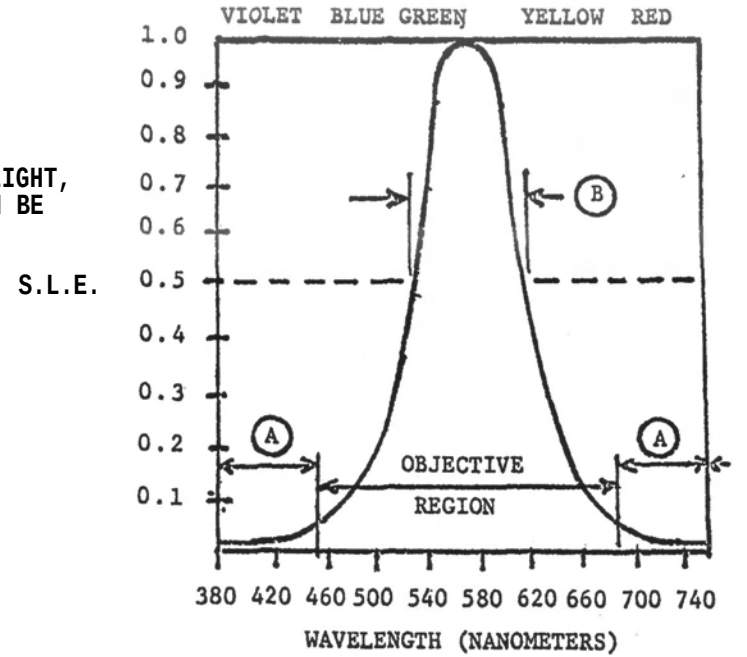

SUPPRESSION OF THE PARANORMAL CHANNEL BY THE PHOTON INTERACTION INCREASES IN THIS DIRECTION IN PROPORTION TO THE SPECTRAL LUMINOUS EFFICIENCY

A WEAKLY OBJECTIVE REGION

B STRONGLY OBJECTIVE REGION

Fig. 8. Photon quenching of the paranormal

PHOTON QUENCHING OF THE PARANORMAL (TIME) CHANNEL

The photon interaction constitutes a time-differentiating operator imposed upon L^3T dimensionally (Minkowskian reality), which results in the creation of L^3 dimensionality (objective, spatial reality). Aristotle's three laws of logical thought are based on primitive observation, which in turn is in one-to-one correspondence to the situation where the photon interaction has been imposed and the time dimension destroyed, resulting in a classical or objective or spatial reality. Hence all our present logic, science, and mathematics are based upon this particular arrangement. As shown by the two-slit experiment, if the photon interaction is not allowed to occur, a fundamental particle refuses to behave in a classical, objective, spatial object manner; instead, it behaves in a nonclassical, nonobjective, wave manner if the time element interacts with it.

Mental phenomena occupy the same time dimension as do physical phenomena; however, the spatial dimensions of mental objects do not ordinarily occupy or intersect the spatial dimensions of physical objects. However, the time dimension is recognized by physics as objective; therefore, since the mind occupies at least one real objective dimension, it is objective rather than subjective. This suggests a model whereby mind is a real L^3T Minkowskian four-space world, but one whose three spatial dimensions lie orthogonal to and outside the ordinary world's three spatial dimensions. The mindworld and the physical world then have in common the same time dimension. Dynamic movements in each world (mind and matter) result in an exceedingly small crosstalk being projected into the other world, a crosstalk so small as to be virtual and normally unmeasurable. Establishing one-to-one coherence between crosstalk from a mindworld constitutes the creation of a biological organism. The crosstalk from the mindworld and a physical structure in the ordinary world to the physical world has previously been labeled *inception* by me, and a mechanism whereby such a minute psychokinetic effect on matter can be amplified to a macroscopically observable level, or even beyond, has been derived. Thus a fundamental mechanism whereby tulpoid activity (projections from the collective unconscious materializing into the ordinary physical world, in a format determined by the collectively higher levels of unconsciousness in the race, national group, culture, subculture, and personal unconsciousnesses) is developed and explained.

Before the intervention of the photon interaction, four-dimensional reality thus has a great deal of tulpoid dither riding upon its time dimension as a minute modulation. The photon interaction invokes a time-differentiating operation, stripping away or suppressing the time dimension, resulting in a spatial reality or objective reality being perceived or observed, and in the process separating mind and body by destroying the only common connection or channel. Because of the time-squelching action of the photon interaction, we do not see time or the mind in our ordinary physical observation. Also, we do not see the incessant stream of tulpoid activity that bathes the time channel.

The time channel is thus the mental channel and the paranormal channel. The photon interaction is the destroyer or squelcher of the paranormal channel. Apparently the squelch effect of light is not linear or constant, but is a variable and a function of the frequency of the light being utilized. From a synthesis of a variety of

data in diverse fields, the following hypothesis has been arrived at to fit the experimental evidence: *The quenching of the hyperchannel (the paranormal channel or the time channel) by photon interaction is proportional to the spectral luminous efficiency of the eye of the average human observer in the interval from the infrared to the ultraviolet.* Thus the form of the paranormal squelching effect of the photon interaction is given by the operator ϵ where

$$\epsilon = m \, E \, T$$

and where m is a parameter which varies as some function of frequency. This hypothesis specifies m over the region from the ultraviolet to the infrared. In other regions of the frequency spectrum, the form of m must be determined by experiment.

There are several experiments which fit the hypothesis:

1. The induction of death and disease patterns from test cells to environmentally shielded healthy cells by Soviet scientists.[a]

2. The invoking of specific tulpa living forms and photographing them in the invisible state with infrared film by Trevor James Constable.[b]

3. The visible light revival of appreciable fractions of cells killed with ultraviolet light and kept in the dark — dormant, unreproducing, for up to twenty-four hours.

4. Ingo Swann's precise differentiation of the visible light spectrum (frequency region) where psychic seeing (similar to remote viewing) is blacked out.

5. The Fox and Miller experiments, in which cell-like protein forms that reproduce (i.e. are "living") are generated when a primeval soup in the laboratory is bathed in ultraviolet light and exposed to strong electrical spark discharge (strong bioenergy collections).

A corollary to this hypothesis is that, under certain conditions, reflected light may reverse the effect. Thus the effect of the full moon, which reflects a great deal of sunlight, can immediately be appreciated. The effect is to the time channel, hence stimulation of this channel stimulates the mental effects. The effects of the full moon on romantics, lunacy, and deeper life functions controlled by the unconscious is grounded in a factual basis.

Thus there is a very good reason why animal eyes tend to operate very closely to the infrared, visible light, ultraviolet region, with the eye usually adapted for the visible light region. In the infrared and ultraviolet regions, tulpoid phenomena would be readily visible or detectable, and an animal whose eye operated exclusively in one or the other of those areas would so often be distracted by the mental tulpoidal activity that it would prove disadvantageous to his survival against animal predators operating in the strongly squelched, visible light region. By the same token, animals whose eye operates further into the infrared or the ultraviolet than does the human eye are notoriously sensitive to paranormal phenomena before their manifestation to human observers.

The stimulating effect of reflected light, and particularly of light reflected from the surface of a planet or of the moon, also concerns several of the common practices of UFO investigators. It is common practice to dispose of a sighting once

[a] **V.P. Kaznacheyev et al., "Distant intercellular interactions in a system of two tissue cultures," *Psychoenergelic Systems,* Vol. 1, No. 3, March 1976, pp. 141-42.**
———, "Apparent information transfer between two groups of cells," *Psychoenergetic Systems,* Vol. 1, No. 1, December 1974, p. 37.

[b] **Trevor James Constable, *The Cosmic Pulse of Life* (Merlin Press, Santa Ana, Calif.)**

it becomes apparent that a planet lay in the direction of the sighting and was particularly bright at the time. However, such an optical condition can in fact serve as an initiation point for tulpoid activity to enter the ordinary reality frame. And in fact such conditions — and conditions when stars are very bright and twinkly in their reflections from the particles of the atmosphere — are conducive to UFO appearances, and this should be realized and taken into account. UFO's in a great many cases will be observed to start or come into being from such appearances.

If we realize that the paranormal channel is the time channel, then the fundamental two-slit experiment of physics is itself a paranormal manifestation experiment. Thus when the photon interaction is invoked, a classical object and classical behavior result. When the photon interaction is not invoked, a nonclassical entity and nonclassical behavior result. The more interest is taken in a particular tulpoidal manifestation, the more the format is impressed in multiple minds and multiple unconsciousness layers and the more frequently the format is tuned in. Eventually a repeatedly tuned tulpa can become stable and permanent. Candidates for such tulpoids presently on their way to being stabilized are the Loch Ness monster and the sasquatch. Particle physicists may in fact be creating their own reality by the same process, as suggested by Josephson.

The process whereby visible light revives cells killed by ultraviolet light is presently considered under the term "photoreversal." It is a moot point whether cells are living if they have laid dormant for several hours or even twenty-four hours without any cell divisions having occurred. The effect of a given dosage of ultraviolet radiation on cells is known to be greater when the radiation is flashed than when the radiation is continuous. This has been interpreted as due to a thermal reaction following a primary photochemical reaction, since increasing the temperature accentuates the effect of flashing. However, I suggest that flashing is directly related to the effect known as kindling, where, when the limbic structures of the brain are repetitively stimulated, the entire nervous system of the organism responds and goes into resonance (seizure). Soviet experiments have shown that such flashing of a telepathic sender enhances the reception of telepathic information. In the 1920's and 1930's A.G. Gurvich and his students found that a yeast detector's threshold of sensitivity to mercury lamp radiation was about three orders of magnitude higher than the detector's threshold of sensitivity to radiation of the same spectrum from biological material. (For a description of more modern work which may show a violation of the conservation of energy law, see L.L. Regelson, "A Paradox of Mitogenetic Radiation," edited by H.S. Dakin, translation available from H.S. Dakin, 3101 Washington Street, San Francisco, CA 94115.) Regelson's experimental results point to the conclusion that the paradox observed with the mitogenetic radiation experiments is a universal physical phenomenon. In view of this and Kaznacheyev's results, the entire area strongly warrants intensive investigation. Regelson's group was actually attempting to find a new solution to the problem of wave-particle duality, strikingly parallel to my interest in the area.

Those frequency points where the quenching effect is minimized (i.e., where € goes through a minimum value) are referred to as "magic windows" or "magic windows between worlds." Acker and Tiller have called them "interdimensional nodal points." In the magic windows, energy from one frame or biofield can be more easily collected to orthorotate into another frame or biofield, since the rotational threshold is much lower. There is a window, e.g., between 38,000-40,000

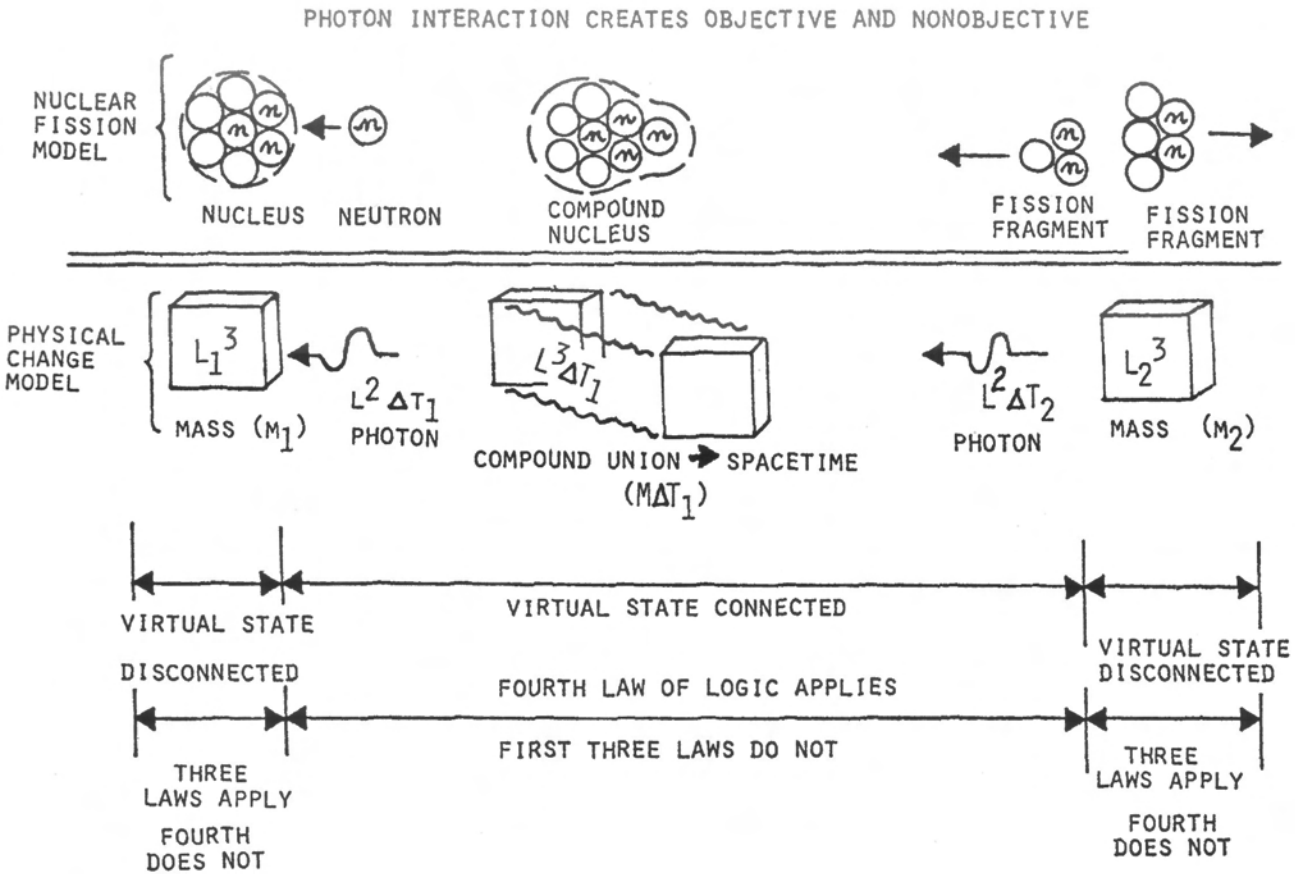

Fig. 9. Raindrop model of quantized change

Hertz, which can be stimulated with ultrasonics or electromagnetic radiation. The ultraviolet region contains a window, as does the infrared region. Many other windows apparently exist.

Trevor James Constable photographs paranormal phenomena through a filter that is open in the IR and UV regions, but opaque to visible light. Thus the filter blocks out the strong quenching effect of visible light and looks in two magic windows, IR and UV. Constable is thus able to photograph phenomena that are not normally detectable.

RAINDROP MODEL OF QUANTIZED CHANGE

What does not appear to have been realized to date in physics is that the photon interaction is the agent that creates objectivity itself, as is clearly established by the two-slit experiment. The photon interaction separates spacetime into space and time exclusively. An object, being something which occupies space (L^3), is thus timeless. Objects do not exist in time, because the union of an object with time constitutes spacetime, which cannot be perceived, detected, or observed.

Only changes in (derivatives of) spacetime can be perceived, detected, or observed, but not spacetime itself. That with which light has not interacted is not objective. This is proven conclusively by the two-slit experiment, upon which all of quantum mechanics rests. In that experiment, if an electron emitted from the cathode and on its way to the two-slit region does not interact with light, the electron behaves in a totally nonobjective manner, appearing to pass through both slits at the same time. (Actually it goes around both spatial slits in time, and since both of the slits occupy the same piece of time, the electron can interact timewise with both of them.)

On the other hand, if the electron is struck by a photon before it reaches the two-slit region, it becomes a "hard, solid little baseball" and quite objective. In that case it can interact with (go through) only one spatial hole because it cannot interact in time. According to Feynman, this simple experiment contains the total and only mystery of quantum mechanics. Furthermore, it cannot be explained in any classical manner. No physicist in the world understands it, although the pattern of repeated electron strikes on a collecting screen is quite easy to compute by simple trigonometry.

Let me now explain what happens to a mass when it is struck by a photon, absorbs the photon, and re-emits the photon. First, a mass is an L^3 object; the concept of mass is not a function of time, but only a function of space. It is thus three-dimensional. The photon is also three-dimensional, but one of its dimensions is the time dimension. The photon, being built of action, is constituted of $(dEdT)$ or (L^2dT) dimensionally.

When the photon strikes the mass and is absorbed, the (AE) portion is turned into mass by orthorotating one turn and becoming L^3 dimensionally. The (dT) portion is thus united with the spatial mass to give a compound nucleus of spacetime comprised of MdT_1 This compound nucleus of spacetime is not perceivable. When a photon is re-emitted, it may or may not be of the same frequency and energy as the previously absorbed photon, depending on the absence or presence of any other perturbations. At any rate, a small bit of L^3 spatial mass is orthorotated to give an L^2 intersection with the laboratory frame, which turns the bit of mass

into a small piece of energy, dE. In the orthorotation, a small piece of time is bitten off and joined to the dE to give a d$EdT = h$ quantum of action, which now constitutes a photon. Photon emission thus strips away the time dimension, leaving a spatial object.

Einstein pointed out that the velocity of an object may be visualized as rotation of the object in higher dimensional space. Visualized as spatial rotation rather than rotation toward the time axis, the velocity of light in vacuum c merely constitutes the rotation of a piece of mass by an angle of 90° to the line of motion, in the laboratory space in which we visualize the photon (the rotated piece of mass) as moving. Thus the photon emitted from the mass is moving at c, the velocity of light, because of its orthogonal rotation to the laboratory frame.

Note that the spacetime compound nucleus has now once again been separated into spatial and time components. Time is moving with the photon. And that is why time moves or flows at c, the speed of light in a vacuum. Time is carried only by the photon, and photon interaction with an object produces that object's march through time. If the emitted photon and the previously absorbed photons do not have identical dE and dT components, then M_2 will be different from M_1, and the mass will have increased or decreased. Considering the photon to consist of momentum and length components, i.e., *(dpdL)*, a similar diagram can be constructed. In that case, if the momentum and length components of the emitted and absorbed photons are identical, then M_1 and M_2 occupy the same position *(*M_1 has not moved). If these components are different, then the mass M_2 will occupy a slightly different position than mass M_1, and the mass will have moved.

This, by the way, is the simple solution to the age-old philosophical problem of change. We simply identify M_1 and M_2, calling them the same object. We cannot detect, perceive, or observe the compound nucleus of spacetime in the middle. Thus we experience change as a thing becoming something else, but still being the same thing. This totally defeats the first three laws of logic. However, fortunately we can easily comprehend it since we have developed the fourth law of logic.

The raindrop model of quantized change is taken exactly analogous to the raindrop model of nuclear fission, as shown in Figure 9.

KINDLING EFFECT

G.V. Goddard and his associates in 1969 reported a peculiar kindling effect generated by repeated, periodic, low-intensity stimulation of the limbic region of mammaliam brains. A sustained periodic signal input to the brain and central nervous system eventually sets up a cumulative resonance which increases in magnitude until the entire organism is in sympathetic resonance.

A laboratory rat at first continues to explore its environment in a normal manner when it is subjected to kindling. But after repeated stimulation at the same intensity, the rat will begin to rear up and its forelimbs will convulse. Eventually these bursts of electrical activity induce similar patterns in nearby brain regions, and the threshold becomes progressively lowered. Stimulation progresses to the amygdala, to the amygdala on the other side of the brain, to the hippocampus, to the occipital cortex, and finally to the frontal cortex. Kindling can start only in the limbic structures.

While kindling was originally thought to be a model of epilepsy, John Gaito of York University has reported that a different mechanism is apparently involved since the amino acid, taurine, which suppresses epileptic seizures in laboratory animals, does not prevent phenomena caused by kindling. Also, kindling apparently causes permanent changes in the neural circuitry. Pulsed repetitions of telepathic senders have also been shown to increase the reception of telepathic messages. Thus the kindling effect apparently applies to the paranormal channel as well as to more orthodox transmission channels. (For further details, see "Kindling, once epilepsy model, may relate to kundalini," *Brain/Mind Bulletin*, Vol. 2, No. 7, February 21, 1977; pp. 1-2.)

The kindling mechanism is a far more general mechanism than epilepsy researchers have realized. Coherent time collection of bioenergy in one bioframe "kindles" toward the threshold of the next bioframe, which has a fixed threshold. When sufficient kindling occurs to reach the threshold, automatic orthogonal rotation of the kindled bioenergy occurs into the next frame. There it simply constitutes the kindling or superposition of the imperceivable subquantum state into the perceivable quantum state. This is the mechanism whereby one kind of field can be turned into another. E.g., thought energy (third biofield) can be kindled into second biofield (flux), which can be kindled into first biofield (electromagnetic energy), which can be kindled into zeroth biofield (matter).

BIOENERGY COLLECTORS

Good collector mechanisms exist in great variety, in both living and inert systems. Many good collector mechanisms exist in the human body. One mechanism that collects bioenergy and orthorotates it into ordinary electrical field with appropriate induced currents is simply the electrical current in the human nervous system. This is particularly true of the current discharges from and between the nerve endings.

Another collector for bioenergy in a living system is the mitogenic radiation between the cells in tissue. Taken as a flux, this mitogenic radiation would seem to have both a photon nature and a nonphoton nature. The cells, in their membranes and fibrous internal structures, are continually collecting and kindling bioenergy into electron currents and photons. The electron currents represent collections from the virtual state into observable state, and may in one sense be regarded as the lifting of electrons out of the Dirac sea by direct kindling (coherent superposition of virtual state energy into observable state energy). These kindled currents are thus superpositions or modulations on the ordinary electrical activity of the cells, fibers, and membranes. The mitogenic photons are also produced by direct kindling of the virtual state into observable state, in this case, by kindling virtual state photons into observable state photons.

Spark discharges, such as are used in Kirlian photography, are extremely good collectors of bioenergy. In Kirlian photography the film records ordinary photon interactions; however, the spark discharge from the finger is collecting and kindling bioenergy into ordinary electrical energy (specifically, into electromagnetic field, which then affects the electrical flux pattern). Also, bioenergy is being collected and kindled into ordinary photons, thus changing the photon pattern being emitted.

Furthermore, those photons being emitted are internally affected by the bioenergy that has not yet kindled to observable state electromagnetic energy, but is still virtual. Each photon carries the virtual state along in the little piece of time contained in the photon, and partially collected bioenergy which has not yet breached the threshold of observable photons is being carried in each emitted photon. These patterns are transferred to the grain atoms by photon absorption when the piece of time of the photon is momentarily added to the mass of the absorbing atom, and in turn are continually spread through the emulsion material atoms by the virtual photon fluxes of the charges, in both the nucleus and the orbital electrons of the atoms.

So the life pattern of a photographed object is captured on ordinary film — and indeed that pattern can be resonated through hyperspace with the object that was photographed, regardless of where the object is in the universe.

Note that there are many mechanisms inside stars and planets for the collection of bioenergy. We live in a vital, pulsing, living, breathing, bioenergetic cosmos, and life is everywhere. Patterns of life are riding in the light from the distant stars, from our sun, in the neutrino flux from the cosmos, in the graviton flux from the cosmos, in cosmic rays, etc. And so it is small wonder that living cells that form, reproduce themselves, and die can be induced in the proper primordial soup of nutrients when that soup of matrix forms and chemicals is bathed in ultraviolet light (one of the magic windows which contains a greatly enhanced transmission factor for bioenergy, hyperspatial energy, life energy), and stimulated by electrical spark discharges.

It would be interesting to perform the same type of experiments with concentrated light from distant stars, or with the mitogenic radiation from cell cultures, using environmentally shielded setups similar to those used by the Soviets in experiments with the transmission of death patterns.

Even stranger, bioenergy propagates along deBroglie waves, and so all possibilities are modulated by bioenergetic kindling and collection. Viewed in this light, Puthoff and Targ's remote viewing experiments actually provided a multitude of probability paths to the viewer, and these probability paths were indeed kindling bioenergy of the distant, as yet unhappened event. The actual event in the future contains a great many additional collection kindlings due to the additional factors involved in determination (such as collapse of the wave function). A peaking of signal exists on the more probable happenings, and this extra signal along certain paths constitutes an increased signal-to-noise ratio in that particular channel. Thus an actual mechanism exists for seeing at a distance and for seeing ahead in time.

Particular note should be made of the pi meson collection mechanism in the nucleus of an atom. Each neutron and each proton in the nucleus of an atom is continually emitting and absorbing pi mesons, and thereby the protons and neutrons are continually interchanging from one to the other by passing along the positive charge. This activity produces the strong force which binds the nucleus together against the electrical repulsion of the electric forces due to the positive charges of the protons. The fantastic structurings and currents that result provide an electrical current which can and does collect bioenergy. A skilled psychic with good psychokinetic ability can thus focus on the kindling mechanism inside the nucleus and get a signal-to-noise increase of the kindling of his bioenergy in nuclei as op-

posed to elsewhere in the material in other collection mechanisms. Several types of reactions can then occur. The protons may have their electric charges extinguished due to the extinguishing of the virtual photons producing the electric field on their pions. In such case, the atom simply loses its integrity, and some neutrons and photons are emitted from the atomic site into the surrounding material. This type of interaction thus locally softens a metal and produces severe heating in localized areas, changes in fundamental grain structure, and changes in fundamental characteristics of the metal.

It is by this mechanism and similar related reactions that metal bending can be and is accomplished by persons such as Uri Geller. The collection of bioenergy by graviton emission, absorption, and flux leads to antigravity and other psychokinetic effects. These are exhibited in rare levitation phenomena and more frequent poltergeist phenomena.

The list of collectors could be materially increased, but these should suffice to show the importance of the effect of coherent time collection, kindling, and orthorotation of one type of field into another. The collection of deBroglie waves is moving much faster than light, and for very slowmoving objects the collected and projected bioenergy on their deBroglie waves is moving at essentially infinite velocity. This accounts for the fact that Hieronymus observed an instantaneous cutoff of his monitoring signals from the Apollo astronauts when their space vehicle went behind the edge of the moon.

Looking over the list of collectors and carriers, it is obvious why even the best Farraday shields cannot shield out bioenergy communication. The deBroglie wave carrier alone will simply take the bioenergy right through any known substance — or more precisely, it will take the bioenergy around the three-space in which the barrier substance exists, since deBroglie waves are actually superluminal particles in a three-space more than one orthogonal turn away from the observer's three-space. The implications for psychic healing and psychic surgery are obvious.

PSYCHOMETRIC EFFECT

Every mass communicates with every other mass in the total universe, with hyperspatial/virtual crosstalk between all parts and all masses. This yields a mechanism for psychometry.

Inside the mass, we have a large number of collector mechanisms, of the types previously listed and explained. All objects in the universe are in communication with this object, particularly large or close objects. Those objects that come very near or touch the chosen object for a period of time are most influential.

Briefly, the internal dynamic collector mechanisms of the chosen object perform collection and kindling of the virtual state; thus each mechanism is slowly changed by the influence of other objects in the universe. This is very like the diffusion of heat. The chosen object also communicates part of the influx away, normally reaching an equilibrium with its surroundings when these surroundings are stable. As the surroundings change, appropriate changes are communicated into the internal collector mechanisms of the chosen object, and appropriately diffused away to other parts of the universe, until equilibrium is again reached.

Note that the influence of nearby or touching objects is greater than the influence of distant objects under normal spatial considerations. In hyperspatial considerations, however, this is not necessarily true at all, since this chosen object's pattern may be tuned in through hyperspace without any loss of energy due to ordinary three-space separation distance. In the absence of such hyperspatial tuning, distance is a factor, and close objects have a greater signal-to-noise ratio in the collection and kindling than do more distant objects.

Thus an individual or group of individuals in the vicinity exert mental, emotional, and bioenergetic influence on the kindling being accomplished in the chosen object. The stabilized dynamic patterns of the localized chosen object thus are conditioned and kindled to contain patterns of the actions, feelings, and thoughts of the individuals around it, as well as the natural events that occur. It is thus a very exact record of its surrounding events.

A psychically sensitive person who touches the chosen object, or in some cases merely comes near it, enters into a communications exchange with it. His body-records diffuse into the local object, and those of the local object diffuse into his body. If the psychic is sensitive enough, he can gain impressions from the recorded events of the object. This is the scientific basis of psychometry.

A wide variety of data support this mechanism. Psychometry has been practiced since earliest times, and is still practiced today. A photograph is particularly indicative of the person photographed, since his entire record is imprinted psychometrically on the photograph.

Moreover, the entire record of the Earth is still in the earth, in all its detail. As indeed is the record of each star and its planets, riding on the light that reaches us from that star, and on the deBroglie waves from it. With operational biodetectors, we could easily read the records of the universe. NASA would do well to pursue this alternative in its attempt to contact extraterrestrial life, rather than point huge radiotelescopes toward the heavens and listen to the kindled static from the stars. The static indeed contains the message, but not in a format in which they are prepared to look! It is in the virtual state, riding in each photon.

To a psychic who can see the human aura easily, the condition and much of the record of the person is in that aura, because the auric pattern is changed by all experience of the body, mind, and personality. Thus a good healer can see the aura of the patient, tell if another healer has been in contact with the patient (including often recognizing which other healer it was), and can recognize his own previous contact with the patient many years earlier. (See, for example, the story of Agpaoa as recorded by Sigrun Seutemann in *Healers and the Healing Process,* ed. George W. Meek, Theosophical Publishing House, 1977, p. 93.)

ALL MASS IS CHARGED: EVERYTHING IS ELECTRICAL

It is well known that all mass is charged; thus everything in one sense is electricity. To examine this concept, let us look again at the electron with its virtual photons being emitted and absorbed, which virtual activity creates the electric field of the electron. In classical theory the electron is visualized as if it were a little hard

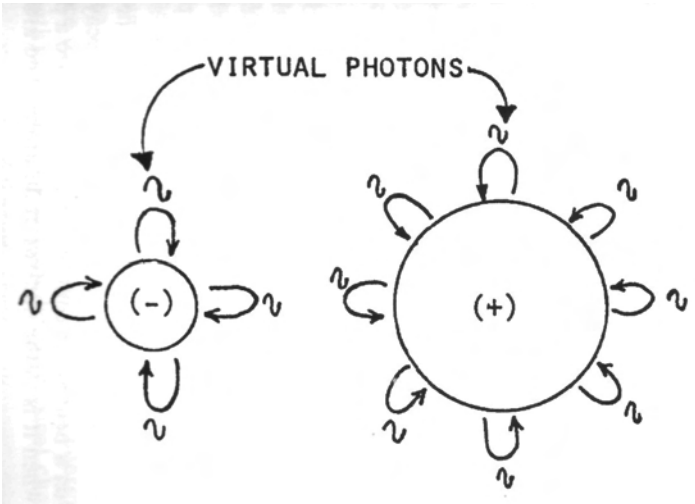

ELECTRON

PROTON

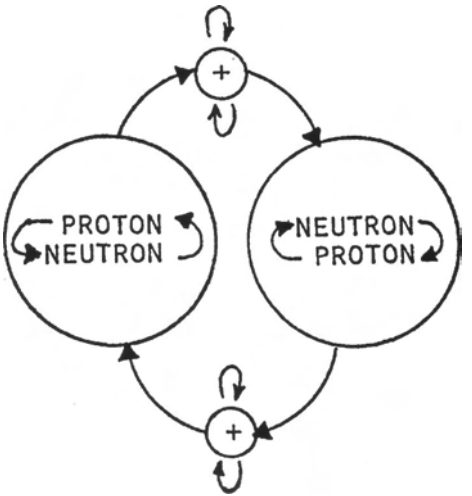

IN A NUCLEUS, EVEN A NEUTRON IS CONTINUALLY CHANGING INTO A PROTON, AND VICE VERSA, BY THE EXCHANGE OF THE POSITIVE CHARGE.

Fig. 10. All mass is charged: everything is electrical

spinning sphere; the spinning of its electric field then generates a magnetic component. This concept of spin is retained, even though the electron is no longer regarded simply as a little baseball.

From our viewpoint, the electric field constitutes a steady activity of the emission and absorption of virtual photons, and the electron spin is more of an implosion or explosion in higher dimensional space. That is, we visualize a fundamental stable particle as a precise closure of the entire physical universe, like the Einstein spherical model of the cosmos. Furthermore, we visualize multiple closure; first, a very gradual macroscopic closure gives the so-called gravitational closure of the Einstein spherical model, and a closure — in the case of an electron — of about 10^{42} times as quick and small gives the charge closure. This second closure is considered to be at right angles to the first. In one direction the second closure gives a negative charge, and in the opposite direction the second closure gives a positive charge.

So in this view, spin is occurring in at least four spatial dimensions, not just three. It is more of an implosion or explosion into and out of this three-space universe frame. From such a model, we could expect that some startling physical phenomena might be possible. For example, we might visualize the implosive or explosive spin as similar to a vector flux. If these vectors are not precisely antiparallel when two like charged particles meet, then a resultant flux vector exists. Since spin is actually the quantity action (energy x time, or momentum x length, or mass x time), then the existence of a vector resultant means that enough action can exist to provide a quantum to be fissioned, which yields (creates) physical change. Thus such a resultant allows a collision or interaction to occur. On the other hand, if two like charged particles meet and their spins are precisely antiparallel, then no vector resultant flux exists. Hence no effective action exists to be fissioned and create physical change (collision or interaction). Thus two like charged particles with precisely antiparallel spin ought to run right through each other when they meet, with no interaction at all, electrical or otherwise, in complete contradiction to conventional collision theory and conventional electrical theory which states that like charges repel one another.

Such an experiment has been done, at Argonne National Laboratory, with colliding protons. When the colliding protons have antiparallel spins, they do indeed pass right through one another. And there dies forever the old idea of concrete, solid, material reality. The experiment is not predictable or permitted by present electromagnetic theory or conceptual models of the proton and proton interaction. The experiment is consistent with our dual closure holographic model of the universe, however, and is in fact predicted by it.

In a nucleus, we find both protons and neutrons (except for a single isotope of hydrogen, which contains only a single proton in its nucleus). However, these nucleons do not exactly maintain their exclusivity. Instead, a proton is continually changing into a neutron and vice versa; this metamorphosis is accomplished (in theory) by the continual exchange of a small particle of mass containing the positive charge. Thus a highly dynamic type of electrical current activity is going on in the nucleus. And in fact, this is the only way a neutron can be stabilized in ordinary matter; when freed from the nucleus, the neutron is unstable and decays in about eleven seconds or so. So even a neutron is continually changing into a positive particle, i.e., into electricity, when it is in the nucleus of an atom. And around

the nucleus, the electrons are in dynamic orbit, so highly dynamic electrical activity is going on in the outer part of an atom and also in the inner part. Thus indeed all mass is charged and everything macroscopic is electrical. And every physical change of a charged particle constitutes a modulation imposed upon its virtual photonic activity creating its electromagnetic field. These modulations are simply coherently collected to breach the threshold of the virtual (third) orthoframe, passing into the second orthoframe, then breaching the threshold of that frame, and passing into the first orthoframe, which is the frame of the electromagnetic field. The electric field is coupled by the dual closure mechanism to the gravitational field, and also to the mass. The entire mechanism constitutes the coupling of the virtual state reality to observable state reality, and the electromagnetic field plays a prominent part in this coupling. Psychotronics is nothing but the extrapolation of this mechanism and the formulation of a theory to allow the construction of practical devices based upon it. Put simply, psychotronics is *virtual state engineering.*

A FUNNY THING ABOUT ELECTROMAGNETIC FIELD

According to the present theory of physics, the electric field is due to the continual emission and reabsorption of virtual photons. Let us examine that concept just a little further, because there are some interesting conclusions we can make if we are not afraid to take the final conceptual step to the bottom line implications.

First, each ordinary (observable) photon in the universe consists of a little piece (quantum) of nonobservable action. The units of action are energy times time, or ML^2/T {*mass* x length x length/time). The quantum of action in the photon is not separated into a separate piece of time and a separate piece of energy. And also, the quantum of action is a fixed, constant size or magnitude, given by Planck's constant h as

$$h = 6.626 \times 10^{-34} \text{ Joule-second}$$

All this says is that an ordinary photon has a certain size that is quite fixed, and it is made of the substance "action" which is totally nonperceivable and nonobservable. Only changes in action are perceivable, observable, or detectable, never fundamental action itself. So physics already prescribes a universe made out of action, and that universe has no length, no time, no energy, no space, no concrete existence. Yet from it can be taken — by differentiation (which is simply separation) — any length, any time, any energy.

However, only a single quantum at a time changes or is separated. Quanta do not superpose. A single quantum can be split or fissioned into, say, a piece of energy and a piece of time. We can get as large or as small a piece of energy (i.e., change in energy) as we wish simply by adjusting the piece of time accordingly. The same type of separation is possible for momentum and length.

The fragments of the action quantum (say, a piece of energy and a piece of time) must then be stuck back together again (i.e., fused back into an action quantum) to get rid of them, and this particular part of the process has essentially been ignored by physicists. Anyhow, getting rid of the fragments (which gave us a piece of comparative physical change — energy versus time or momentum versus length) causes the just-completed physical change to vanish.

So at its most fundamental level, the entire universe is continually being created and then destroyed in sequence. The continual creation of a tiny piece of time and then the destruction of the piece of time makes us experience reality or change as if we were a pointer moving along a time line. We cannot see time because it is continually being destroyed by the change process, the very process of physical detection or observation itself.

Now if we invoke another kind of change, a virtual change, such that its size is always smaller than the actual quantum's size, then this kind of change cannot be detected, even theoretically. The concept of a virtual change is one such that the quantity of action that was changed was deliberately made smaller than the size required to throw the switch of detectable or observable change.

So if we have a virtual photon, it is simply a piece of action whose magnitude is always less than *h*. Here again, we can still get any amount of energy change we desire, merely by adjusting the size of the piece of time associated with that energy. This then means that the virtual photon is not big enough to breach the threshold of quantum change, and so cannot be observed or detected.

And here is the interesting bottom line ignored by most physicists and almost all the pragmatic scientists who run the orthodox establishments. The totally unobservable, undetectable virtual photons being emitted and absorbed are conceived as creating the electric field at the same time as observable physical change (ordinary quantum change) occurs. And the electric field, of course, can cause or induce change of sufficient magnitude to breach the quantum threshold and result in observable change. The bottom line is this: the virtual state can be collated and collected to sufficient magnitude to breach the quantum threshold and induce ordinary observable physical change. The electromagnetic field already does precisely this! And if reality can behave this way, as the physicists show, then let us simply accept that and apply it!

Note that we have now resolved the problem of negative time. The fusion process replaces the little positive piece of time that was formed in the fission process. A continual stream of such replacements constitutes a continual stream of subtractions of positive time. Hence this represents a negative time operational channel. Many of the equations of physics, e.g., Maxwell's equations of the electromagnetic field, should be reexamined with a view to this negative time operation. Dirac calculated such an entity, an electron traveling backwards in time, and noted that it would appear as a positively charged electron traveling forward in time. He thus predicted the positron which was later found in laboratory experiments. But of even more fundamental importance is that every piece of charged matter in the universe has such an opposite twin — the well known antimatter concept. So antimatter protons, neutrons, molecules, and physical structures exist. Indeed, this physical reality that we normally perceive has its antimatter twin which we are also unraveling backwards as we go. But here again the bottom line is far reaching: it means that we can coherently collect the virtual state to produce matter or its antimatter, which after all are nothing but macroscopic assemblages of quantum changes, and we can thus get free energy, materialization and dematerialization, teleportation, and antigravity by means of special modifications and developments of electromagnetic circuits. Each photon carries a small piece of time. And the entire virtual state reality is hanging onto that small piece of time as a modulation. That is where the probabilities are riding, in terms of the ordinary monocular

interpretation of quantum mechanics, all of these probabilities, and all possibilities, are concretely real and occupy orthogonal universes. Since they all share the same single time dimension, there is a time bridge or time channel connecting the universes. Each move or change in one of them crosstalks a tiny bit into each of the others. Since it is the photon which carries them, then each photon contains all possibilities and virtual states modulated upon itself. Photon interaction thus involves the communication of these possibilities and virtual states to the object with which the interaction occurs.

EXTINGUISHING ELECTRICAL CURRENTS

With psychotronics, it is quite possible to extinguish electrical currents flowing in a circuit, or in the nervous system of a biological organism. First, an electromagnetic carrier (photon) is used to carry the psychotronic modulation pattern which will quench electrical currents. The particular psychotronic pattern is modulated upon each individual photon, in virtual state form riding upon the time component of the photon. This is totally different from the ordinary scheme of modulating an electromagnetic carrier; the normal scheme merely gates the rate of passage of photons (amplitude modulation), or changes the energy-time ratio on various photons as photons continually are emitted (frequency modulation).

In this case, virtual state patterns (probabilities) are added directly to each photon, in addition to whatever is done under the normal scheme of modulation. Thus the carrier can be electrically very complex or very simple. At any rate, the carrier with its psychotronic modulations reaches the target, and photons are absorbed continually and emitted continually by the target. The absorption of the photons and their modulations continually generate compound spacetime MdT nuclei and introduce the virtual state psychotronic modulations onto the mass's electric field, the modulations now riding on the virtual photons that generate that field. When a photon is re-emitted, the compound nucleus is split again, and the dT is carried away by the photon, leaving behind a changed virtual photon state on the nontemporal mass spatially left in between quantum changes.

As time passes, the virtual photons are more and more psychotronically modulated by the kindling effect. Eventually the collection breaches orthoframe thresholds and reaches the electromagnetic field frame, changing the electromagnetic field. If the psychotronic pattern is such as to create a positive charge when sufficiently kindled, the negative electrical charge of the kindled electron is simply absorbed or quenched from within, so to speak. And in this case no ordinary annihilation photons are emitted. Instead, the electron is converted to a neutrino when its electrical field is quenched, and it simply passes rapidly away through matter with no interaction and no damage or heating to that matter. Thus the currents flowing in an electrical circuit or in a biological nervous system can be quenched, without any other damage to the system, and without any pair annihilation radiation being produced.

The UFO phenomena very often demonstrate this effect, and the Soviet Union has long since weaponized it.

A simple way to visualize this process is to imagine the virtual photons of the electron as gradually being quenched. With the virtual photons gone, the electron has lost its charge and its electric field, and is now a neutrino. As a neutrino, it zips through matter with no interaction, and on out into deep space.

This mechanism explains why the electrical circuits of autos, radios, etc. usually are not damaged when they are disrupted by the UFO phenomena. Use of normal mechanisms to change or eliminate the electromagnetic field seriously disrupts the components of the circuits, heating materials, blowing fuses, and melting wires and components. The mechanism described here does none of those things.

The weapon aspects are of course formidable. Small transmitters with the right modulation pattern could be dropped, planted, or fired almost anywhere, and these could be set to disrupt equipment or human nervous systems. Their use in satellites is obvious. Small transmitters of a fixed time-life broadcast duration could be fired behind enemy lines in artillery shells. Tactical missiles could carry hordes of such small transmitters and drop them along the way deep into enemy territory. Essentially everything electrical is vulnerable if radiated long enough for sufficient kindling to occur. Powerful radar beams can be modulated psychotronically to give them effects at a distance, disabling vehicles, communications equipment, and men. Even searchlights can be so modulated. Pavlita's psychotronic generators are known to generate deathdealing effects, because he has demonstrated that they can kill insects, and he has admitted that men can be killed with generators that are large enough.

An even more radical approach is to transmit the desired pattern directly through hyperspace with a hyperspace transmitter, using either a set of triads for focusing at a desired spot in normal space, or using a witness to generate form resonance with the desired target object, much like one tuning fork kindles another of the same tuning into vibration. The witness may be anything that contains the pattern of the target, e.g., a photo or a model. In the case of a living organism, each cell contains the blueprint for the entire organism, so a group of cells from the organism can be used. This applies to plants as well as to animals.

DEATH TRANSMISSION VIA THE PARANORMAL CHANNEL

As an example of the kindling effect and the variability of photon quenching of the paranormal channel, some extremely interesting experiments were performed by V.P. Kaznacheyev et al regarding the paranormal transmission of death. Briefly, two groups of cells were selected from the same cell culture and one sample placed on each side of a window joining two environmentally shielded rooms. The cell cultures were in quartz containers. One cell culture was used as the initiation sample and was subjected to a deadly mechanism — virus, germ, chemical poison, irradiation, ultraviolet rays, etc. The second cell culture was observed, to ascertain any transmitted effects from the culture sample being killed.

When the window was made of ordinary glass, the second sample remained alive and healthy. When the window was made of quartz, the second sample

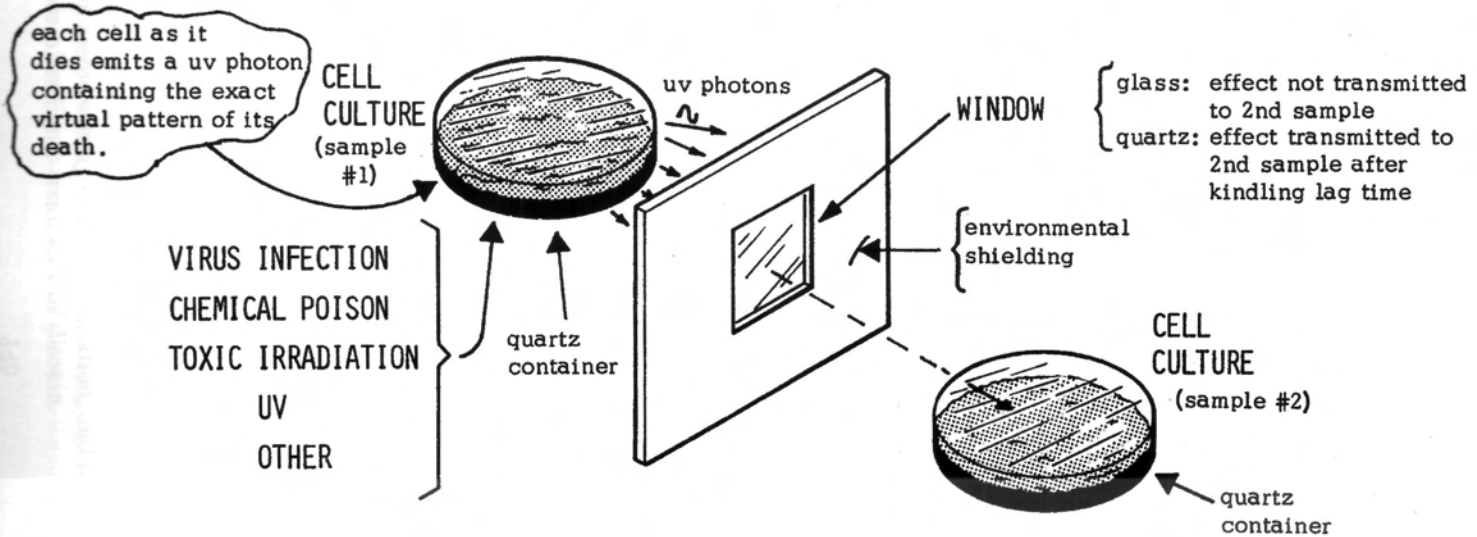

>5,000 EXPERIMENTS

INSTITUTE OF CLINICAL AND EXPERIMENTAL MEDICINE, NOVOSIBIRSK

INSTITUTE OF AUTOMATION AND ELECTROMETRY, NOVOSIBIRSK

Fig. 11. Death transmission via the paranormal channel

V.P. Kaznacheyev et al, "Distant Intercellular Interactions in a System of Two Tissue Cultures," *Psychoenergetic Systems*, Vol. 1, No. 3, March 1976, pp. 141-142.

sickened and died with the same symptoms as the primary sample. The experiments were done in darkness, and over 5,000 were reported by Kaznacheyev and his colleagues. The onset of induced complementary sickness and death in the second culture followed a reasonable time — say two to four hours — behind sickness and death in the primary culture.

The major transmission difference between window glass and quartz is that quartz transmits both ultraviolet and infrared well, while glass is relatively opaque to ultraviolet and infrared. Both quartz and glass transmit visible light. Thus glass is a suppressor of the paranormal channel, while quartz is not.

By performing the experiment in darkness through a quartz window, the four-law patterns of disease, sickness, or death engendered in the primary sample are not extensively squelched by the photon interaction, and these four-law patterns are transmitted through the quartz window into the second cell culture. Since the genetic patterns of the second culture are the same as those of the first, sympathetic four-state interaction and eventual kindling occur, resulting in the appearance of the effects in the second culture.

It is well known that cells also emit mitogenic radiation, including radiation in the ultraviolet and infrared regions. Since these same regions are not strongly suppressed by the photon interaction, one may hypothesize that paranormal effects may be strongly modulated onto infrared and ultraviolet photon activity, and there is indeed evidence for such an assumption. In 1950, Western researchers found that cells could be killed in darkness with ultraviolet radiation, kept shielded from visible light for twenty-four hours or longer, and then if radiated with visible light the cells would start reviving by hundreds of thousands even though they had been clinically dead.

Specifically, every cell emits mitogenetic radiation in the ultraviolet twice: when it is born and when it dies. The UV photon emitted at death contains the exact virtual state pattern of the condition of the cell at death. The healthy cells are bombarded with death messages from those that are dying, and this diffuses the death pattern throughout the healthy culture, eventually kindling into the same death pattern there.

However, the squelching of the paranormal channel by photon interaction is never complete, or paranormal phenomena could never occur in daylight. Hence paranormal patterns can be modulated even onto visible light, although only extremely weakly. Thus we may speak of the Q or sharpness of the paranormal modulation upon photon frequencies; Q is extremely low for visible light and may be extremely high for infrared and ultraviolet. In the visible light spectrum, it is probable that extremely large numbers of near-zero strength paranormal patterns are modulated on the light radiation; hence these patterns simply consist of a very weak background noise and the kindling effect does not apply. (The patterns are so random as to be self-cancelling in the kindling effect.)

DISEASE AND DEATH INDUCTION

The base idea here is that an active agent must be involved to disrupt the ordinary healthy pattern of inceptive life functioning. Since life functioning is inceptive, ultimately the bioframes, specifically the first and second, must be distorted or disrupted. The first bioframe is the electromagnetic field and the second bioframe is a psychotronic field. The second bioframe may eventually be revealed as the *neutrino* field, but this is still uncertain at present. At any rate, it is a *virtual state* field. Virtual state patterns of a disease, for example, are carried in each photon emitted by a diseased cell. The life functioning psychotronic components are modulated on the body's electromagnetic components. Thus they have an electromagnetic carrier, which will carry the inceptive life function patterns through the photon squelching effects of emitted photons in the body.

A host agent such as a germ produces an active agent such as a toxin. The chemistry involves the particular compound of the toxin that is disruptive or deadly. But chemistry after all is rigorously based on electrical patterns. These electrical patterns of toxic chemistry contain psychotronic patterns modulated upon them by the germ, and these genetic life functioning patterns are different from those of a human cell. The foreign psychotronic patterns are modulated upon the human body's electromagnetic patterns (currents) and thus reach the cell, where they interact by the fourth law in the cell membrane, being demodulated and introduced to the cell, and orthorotated in the process into electromagnetic signals disruptive to the orderly functioning of the cell. The foreign psychotronic signals also jam the ordinary psychotronic patterns being demodulated by the cell in its inceptive operations from its mind frame or third bioframe. If this jamming is only moderate, the cell sickens; it is only disrupted. If the jamming is severe, the cell dies.

The normal electromagnetic noise bathing the cell from the cosmos and the environment contains random components that largely self-cancel or balance. The modulated random psychotronic modulations of the ordinary background environment behave similarly, and thus the normal background simply constitutes a weak noise flux which does not disrupt the inceptive life functioning. In the experiments of Kaznacheyev and his colleagues, photon squelching was largely restricted, and the psychotronic signals from the dying primary culture could go through the infrared and ultraviolet windows in the quartz as virtual state patterns on the mitogenic UV photons emitted by dying cells, and be introduced directly into the secondary culture. The kindling effect then induced the disease or death pattern after an appropriate time delay. Thus it appears that there is indeed a fundamental mechanism by means of which a disease or death pattern from one cell is introduced into others.

If this is true, then an exciting vista emerges for the treatment of hither-to incurable diseases such as cancer. The psychotronic pattern of the cancer cells in a person's body could simply be recorded, then phase shifted 180 degrees, remodulated upon an RF carrier, and radiated back into the body of the patient to cancel the cancer's signal patterns. Radiation of the body need not be severe at all; even weak radiation will suffice due to the kindling effect. At any rate, the hypothesized mechanism seems worthy of experimentation, and it seems to offer a validation of the practice of radionic treatment of disease.

DYNAMIC THOUGHT CONSTRUCTS: BIOFIELD MECHANISMS

We will discover later that thoughts and thought objects are real, physical objects in their own worldframe domain. As such, thoughts, or thought objects, or thought constructs can be and are quite functional devices in the thought world domain. In that domain, they are as physical as a rock. We will also discover that thought energy can be turned into electromagnetic energy by kindling, and can even be materialized if kindling is of sufficient intensity. As an example, thought energy from negative thoughts continually repeated or held in the mind can cause one to become physically ill. This is a well-known effect, and such an illness is referred to as psychosomatic. However, the mechanism by means of which it is accomplished is not known.

Actually the mechanism is simple: in the minute electrical currents that run through the nervous system, across the cell membranes, through the fibrous content of the cells, and through the cell water structures, virtual state thought energy is continually kindled into weak electrical patterns, which modulate, shape, and affect all the vital processes of the body. Almost all this kindled thought energy is from the content of the unconscious mind. Thus the locked-in contents of our unconscious minds eventually directly affect and change our bodies for either good or bad, depending on the particular content being kindled.

Small wonder that we suddenly acquired a chemical problem some years ago after we were saturated by thousands of hours of pill advertisements on television, which directly implanted the idea that certain chemicals such as pain relievers contain the answer to life's problems, while others such as alcoholic beverages lead to a glamorous, active, exciting life. Not only can such material implant suggestions in the unconscious for association, but it can also directly condition the response that the body itself will exhibit to chemicals and drugs.

It is now fairly well accepted that there exists a cancer personality and a heart attack personality, where the mindset is definitely and causatively involved. And from the Simontons' work, we see that the mind can be effectively used in conjunction with other therapy to reverse cancer, even terminal cancer. But unfortunately, by and large Western medicine continues to rely on mechanics and chemicals. Essentially the patient is viewed as a mechanical apparatus and a chemical factory that is damaged, polluted, or out of sorts, and treatment consists largely of mechanical intervention (such as surgery) or chemical intervention (such as antibiotics). Medicine continues to be a science of the reparation of damage or malfunction. It is the science of disease, not the science of health. I do not advocate abandoning the medical practices that have proven effective. I do advocate the augmentation of such measures by all the mind measures available. In fact, medical science ought to be vigorously pushing forward into fields of psychic healing, psychotronics, radionics, etc.

RADIONICS

In ancient development systems it was well known that the mind itself was a functional device, and that thoughts and thoughtforms could function as devices, influencing and affecting other minds and physical material. It was also understood that the thoughtforms had to be crystal clear and very stable. This demanded a great deal of practice in concentration. Eventually it was found that the stability of a physical form or device could materially assist the mind in maintaining stability. In ancient times many such devices were used: the dowsing rod, the crystal ball, the string-and-weight psychic pendulum, etc.

In the last century it was discovered that electrical devices could be used as tuning assistants. This led to the development of radionics, the name being inspired by the new electricity and magnetism discoveries, and particularly by the discovery of electromagnetic radiation. These radionics devices had a distinct advantage in the degree of precision they achieved in the tuning of the inceptive cyborg (operator's mind linked with the actual device through hyperspace). Ten resistors could be staged to give an otherwise almost unobtainable degree of accuracy and precision to the inceptive tuning. The use of variable resistors allowed rapid change of resistance, and thus rapid change of the overall cyborg tuning, and the ability to scan precisely in hyperspace, say, the emanations from a patient. In the hands of a skilled operator, such a device was often much more accurate than the finest medical test equipment available today, and infinitely cheaper and faster. In addition, such testing and diagnosis added little or no distress to the patient. This weird new radionics presented a formidable threat to the orthodox medical establishment. In the U.S. at least, the dogmatic medical establishment promptly came down hard on this potential threat to its hitherto unchallenged domination in the field of medical treatment. Its inquisition and purge was made easier by the fact that many charlatans also leaped into the lucrative field, having little or no actual diagnostic ability, and prescribing meaningless amulets and placebos for seriously ill patients. Also, the strangeness of radionics, such as the ability to diagnose illness from a drop of blood drawn from a patient thousands of miles away from the diagnostician and the radionics device, alienated many members of the medical profession who sincerely believed that no such diagnosis was possible, and that all such psychic demonstrations were frauds. Furthermore, the results, either diagnosis or treatment, were not usually repeatable by ordinary physicians and investigators since the psychic skill of the operator was directly involved. Organized medicine of course did not recognize the ability of the doctor to mentally or psychically intervene in the patient's illness, and so such practice was regarded as fraudulent and banned by the medical establishment.

The radionics practitioners were hounded into court, prosecuted, and convicted of fraud and of practicing medicine without a license. Several prominent radionics pioneers were actually hounded to death, Wilhelm Reich and Ruth Drown being the two most prominent examples. What could have been a great leap forward in medical science in the U.S., and the beginning of the development of psychotronics, was crushed by the power, ignorance, and bigotry of orthodoxy. To this day U.S. radionics has not recovered, and U.S. radionics practitioners are a rare breed, largely underground, who perform their experiments in suspicious secrecy and have only lately begun cautiously emerging from obscurity. In Eng-

land and elsewhere, radionics survived and flourished, and today one can legally receive radionics treatment in England.

PSYCHOTRONIC DEVICES: A SIMPLE SPACE (QUITON) AMPLIFIER

It is possible to speak of the smallest piece of nothing, that we will call a "quiton." It does not monocularly appear as a perceived thing. Quitons are pieces of action, in which d*EdT* > *h/4*pi.* Quitons are virtual entities, and very small ones.

Collection of a sufficient number of quitons results in breaching a threshold, so that a thing results. To superpose quitons (dEdT's) must be of the same magnitude and time coherent.

Thus in any situation involving a particularized nothing, collecting enough pieces of that nothing eventually exhausts the nothing set and reaches its boundary, whereupon it is a thing. This is really not different from collecting all non-dimensional points in a particular sequence and finding we now have a one-dimensional line segment, or collecting all the pieces of spacetime warp in a particular region and discovering that we have now a mass.

A device can easily be constructed to process dual natured or binocular entities (quitons), which are monocularly zeroes, while excluding monocular entities. Thus we can build a space amplifier or quiton amplifier or vacuum amplifier. Two single-state excluders in a series feed or input to an ordinary single-state amplifier or processor in a shielded container. The output is fed into a device which will rotate the dual-state entity or field so that an ordinary field can result. One side or the other of the dual-state output will be exclusively present in three-space.

TYPICAL HIERONYMUS DETECTOR

The Hieronymus device, patented by Thomas G. Hieronymus in 1949, is one such device. It has an optical front end, a prism which passes waves and does not admit particles. So a wave entering the front end will go through the prism and be refracted at an angle that depends on the frequency of the wave. Inside the surrounding box, which acts as a light shield, is a small tuner, a little copper rod attached to a rotatable wheel so that the rod may be moved through the various refractive angles from the prism. The prism is mounted on the box with a thin slit in the wall, so that only a small and narrow field of view exists external to the box. The tuner rod is wired to the input of a three-stage RF amplifier where each stage is separately shielded against light—which is very interesting, because of a similar requirement in the two-slit experimental apparatus if the electron was to act as a wave. The output of the RF amplifier comes out of the box and ends in a flat coil of wire between two parallel plastic plates.

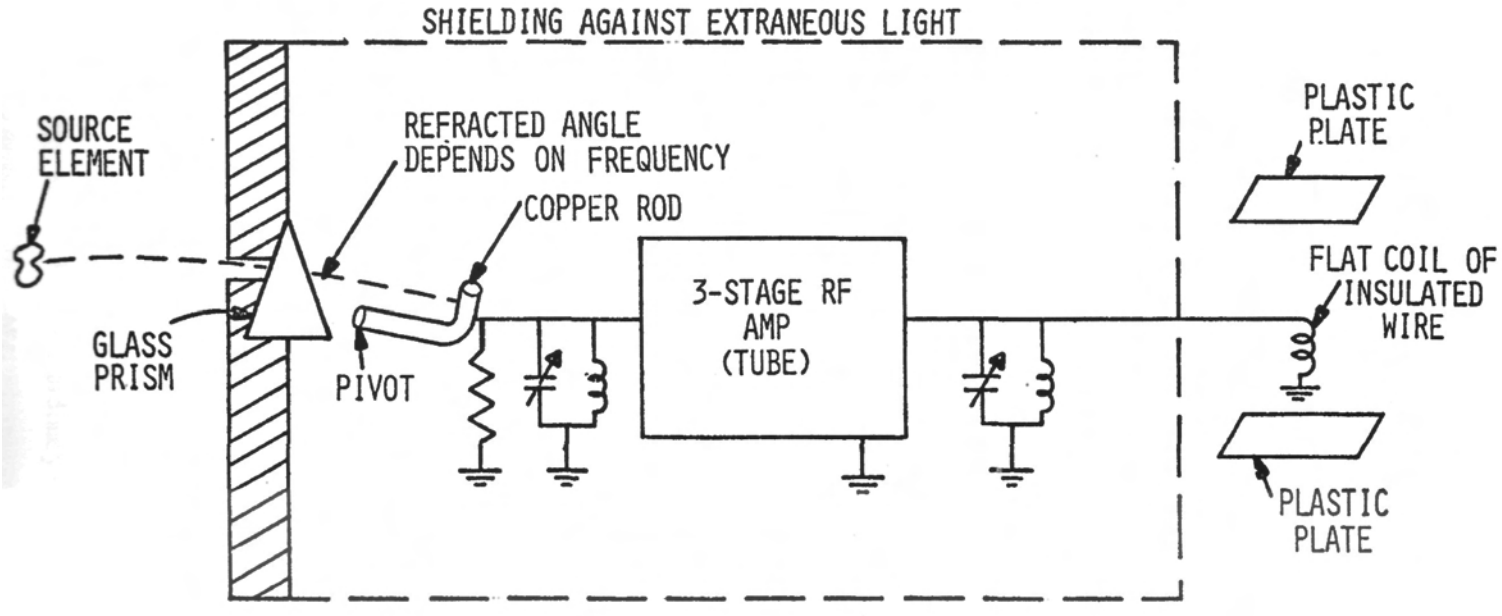

Fig. 12. Typical Hieronymus detector

Coming into the box through the slit in the prism, there can be single-state entities and dual-state entities or quitons. The physicist does not have a good name for a dual-state entity. They used to be called wavicles; today we talk about wave packets. But what after all is a wave packet? It is a three-dimensional bunch of two-dimensional waves! So that is where the physicists have hidden the idea of the dual-state wavicle today.

Only single-state waves and dual-state entities or quitons can pass through the prism and be refracted at an angle dependent upon the frequency. If we then tune the rod into the correct angle of refraction, the refracted quitons hit it, as do the single-state waves if their frequency should happen to coincide with the frequency of the quitons. Now the single-state wave dies when it hits the copper rod; it may chip a single electron or two off a copper crystalline grain, but that is lost in the thermal noise anyway, below the detection threshold of the RF amplifier. The quitons, however, simply say "Oh! Now you want us to act like a corpuscular electron, and go through those wires and conduction paths. That's all right, that is just our right hand side." So the quitons will go through and be amplified, just exactly like ordinary electrons would do. But now it is not electron energy, it is a dual-state analog of energy — let us call it anenergy, for analog of energy. (Hieronymus called it eloptic energy, since it could act as electron flow or as optical waves, but was neither exclusively.) The amplified anenergy will come out in the coil of wire and it will generate field and it is not a magnetic field, and so it cannot be measured on normal laboratory instruments. The simplest way to detect the anenergy fields is to use the human sensory system, because the human body knew about RF energy, frequency modulation, and anenergy long before we had modern electrical and magnetic instruments. (The use of anenergy is illustrated by acupuncture, a very ancient medical system dealing with the fact that a peculiar type of energy-like stuff flows in the body, and in certain points and structures of the body, it can interact with other energies and fields.)

Now if we believe we cannot sense the anenergy fields, then we cannot. We can turn the entire anenergy detection system in the body off with the unconscious mind. The negative psi effect is a well-documented effect in parapsychology. There are goats as well as sheep. Some persons do worse on psi tests than chance would possibly allow. They are the goats. They exhibit the negative psi effect, for unconsciously they want to show you that psi does not work, so they use psi effects to do worse than is possible by chance.

At any rate, the human sensory system can get a tingle from the anenergy field generated by the flat coil of wire in the Hieronymus machine's output. What type of tingle one gets depends upon one's own type of body sensory tuning. It may feel as if the fingers on the plastic plate are in thick syrup. Or as if the plastic plate were vibrating. Or it may feel greasy in a peculiar way. And the negative person does not get a tingle at all.

The Hieronymus machine has been built by many persons, and it works for those who are not negative. It processes entities that exist in the dual-state, or that obey the fourth law of logic. And we can do some almost magical things with these dual-state nonthings, these nothings, if we set our minds to it. This is what psychotronics is all about.

ANOTHER KIND OF HIERONYMUS DEVICE AND THE INCEPTIVE CYBORG EFFECT

If thought constructs are actual operational mechanisms, then there should be other evidence besides psychosomatic illness and the demonstrated ability of the mind to cure certain illnesses. In fact, the Hieronymus device can be used to demonstrate this point.

John Campbell, former noted editor of Analog Magazine, once built an Hieronymus device and tested it successfully. Campbell immediately recognized that present physics could not explain the functioning of the device. In an exchange with Arthur Young, Young suggested to Campbell that it was the mind of the operator that made the device function, and that it was the symbolic form of the device that dynamically functioned to make it work. This appeared particularly significant to Campbell since he had discovered he could make the device work even though disconnected from its power supply.

So Campbell decided to test this thesis. He carefully drew on paper in black India ink a schematic diagram of the amplifier, removed the actual amplifier hardware, and substituted the schematic drawing. To his absolute amazement, the device worked as well for him this way as it had previously. But from our standpoint, such a result is not unexpected and can be readily explained.

First, I should point out quite strongly that Campbell not only was well-qualified technically, but even more important, he had an open and unbiased mind. This of course is quite necessary; the negative psi effect is well known, and the negative person is most certainly not going to allow his mind to operate the Hieronymus machine, just as he will not allow himself to succeed at dowsing, and so on.

Furthermore, in constructing the electrical schema of the amplifier, Campbell was strongly impressing stable thought constructs in his own unconscious, which was fully aware of the function of each part of the drawing. And when he connected that drawing to the rest of the hardware, he understood the function of the connection. He thus built in a thought connection from his thought-form amplifier to the hardware in a cyborg device. It then functioned as well for him as had the actual device. Campbell had proved that mind and matter may be cyborged into operational devices.

Psychic use of a pendulum, a ouija board, a dowsing rod, a crystal ball, and a crystal skull are other examples of the use of inceptive cyborg psychotronic devices, as is the use of radionics equipment of all types. And of course the most outstanding example of an inceptive cyborg where mind and matter are linked into one functional device is a living biological system.

Frances Farrelly, working with Arthur Young, took part in an experiment using an ancient Mexican figurine with a fluted neck. She succeeded in inducing fluted ears in a laboratory mouse. The mouse was exposed to the figurine about three feet away, and the cage or the mouse was connected to the figurine with a wire. Physical objects, such as mice bodies and fluted figurines, are three-dimennional channel tuners for orthorotating mind energies. Given firm initiation by a talented person such as Ms. Farrelly, a selected grouping of tuners can be resonated to collect bioenergy, and kindle it into ordinary energy and then into physical effects.

PROBABILITY: THROW OF A DIE

The fourth law of logic is absolutely indispensable in physics. We use it every day and do not realize it in probability. But what after all is probability? Let us use a very simple example to get at the answer to that question. Let us use the face of a die turned up. How can I model that, before the die is thrown?

Now we can only think by operationalism. To operate and output something is to automatically put it in the past. It's happened, it's gone, the moment you do it. To perceive an object is to put it in the past. To determine it is to put it in the past. To observe it is to put it in the past. There is no observed, perceived, detected, measured, or determined present. That is, there is no separated, exclusive, determined present such as is specified by the first three laws of logic — the fourth law is the present, by the way — but in observational physics which deals with determined, observed past phenomena, there exists no present. The future has not yet been observed, so it also is the unobserved. Only the past therefore is the observed. How then can one ever hope to model the unobserved present or the unobserved future?

If I look at the problem of the die with one face up, it is in the past. When I see it, it is in the past. When I think it, it is in the past. So if all I can observe, think, or perceive is the die in the past, how can I ever model it in the future? It's very simple! If I drive any problem set to its absolute boundary limit, it turns into its own opposite by the fourth law of logic, by the law of the boundary. So how do I do that with this problem of the die?

The problem set is specified by the condition "the perceived die with one face up"; this is the most recent past. Now simply find all the most immediate pasts you can get to meet the condition specified, and gather them all up together, and they then must turn into and comprise precisely the opposite, the immediate future. In this problem set, I can construct and collect six such pasts, each consisting of the perceived die with one face up. So by the fourth law of logic, those six faces up collected together as an ensemble represent the future and in fact are identical to the future. The present, which is simply the boundary between the most immediate past and the most immediate future, was specified by applying the fourth law of logic in the first place: the identity of the most immediate past and the most immediate future, being binocular, is unperceived, but it is the present nonetheless. So that is what probability is — an application of the fourth law of logic, so that the most immediate future can be represented in terms of the most immediate past — and physicists and mathematicians have been doing this ever since they have been doing physics and mathematics.

Without the fourth law of logic, there exists no rigorous logical basis for probability! So the fourth law is a very useful law indeed. We have simply failed to realize that we have been applying it all along.

The ontological problem can also be solved as follows: to state that "*A* is not" is to state that "*A* is" is not; to absent a presented thing is to first present it; to be "not-being" is a clear statement of the problem. By the first three laws of logic, the problem is not soluble. By the fourth law, it is simple since being and not-being can be identified. All distinction between present (being) and absent (not being) can be lost.

NEGATIVE TIME

Negative time does exist and is used in advanced physical theories. Dirac predicted an electron traveling backward in time, which would be observed in positive time as a positive charge traveling forward in time.

The application of negative time to philosophy also allows the solution to the problem of good and evil. In positive time we may consider an act as evil — say the act of a hungry wolf seizing a hapless rabbit and devouring it. In positive time, we might say that to the rabbit the act was evil, and to the hungry wolf the act was good, noticing in the process that good and evil are relative terms, not absolutes. Examining the situation now in negative time, a very strange thing occurs. The remains of the consumed rabbit are regurgitated from the wolfs belly, again creating a living breathing rabbit, and reintroducing hunger into the wolf. Thus the act now is beneficial to the rabbit and detrimental to the wolf.

The point is that Allness or Godness is both sides of every coin, not one side only. Omega Godness exists both backward and forward in time; it must do so if it is to be unlimited, even by time itself.

Thus to such unlimited allness, every act is both good and evil simultaneously. Thus we can understand how a perfect creator could establish and ordain good and evil, for there is a sense in which the two are synonymous.

However, such insight is a very strong dose of medicine, too strong for the average stomach. Most persons never seek the Unlimited Godness; instead, they seek a good facet of Godness that itself moves forward only positively in time. Thus they find a partial image which is limited in and by the flow of time. By such an assumption the biblical phrase "I am Alpha and Omega" is unconsciously translated into "I was Alpha and I will be Omega." Thus orthodox Christianity long ago lost much of the God-insight originally given by the avatar Jesus. Only those few cloistered individuals who still struggle with exegesis grapple with the problem of good and evil. The problem indeed has a solution, but the solution involves negative time, the fourth law of logic, and an unlimited creator.

TIME OSCILLATION, QUANTUM CHANGE, AND MASS

It is well known in physics that almost all physical theory is time-reversible, i.e., the equations hold true whether time is positive or negative.

This is important in the theory of antimatter. A positron (antielectron) may be regarded as an electron traveling backward in time. The destruction of an electron constitutes the creation of a positron, and vice versa, when we are observing in only one kind of time.

However, when we consider monocular quantum change, we realize that time can be modeled as a wave. To have any of the present physical quantities (energy, length, time, and momentum changes), a quantum of action must be isolated and fissioned into fragments. By this process we get a change in any physical quantity. This is fairly well understood in present physics, though not in this exact terminology.

However, what is not recognized in physics is that a disposal operation must be performed to clear away the fragments of one physical change before another can occur. The only way the fragments can be cleared away is to fuse them back into an action atom. Since action itself cannot be perceived (only a change in action can be perceived, not action itself) then fusing the fragments into a quantum removes the fragments.

This fusion operation removes positive time fragments (and other positive fragments) and so can be considered a negative time operation. Thus time can be considered to be an oscillatory wave because of its continual monocular discrete creation and annihilation by the quantum change process.

In fact, time oscillation may be considered to be the fundamental reality, and quantized change its result.

By the complementarity principle, time, being a wave, also must sometimes exhibit a corpuscular nature. (Indeed, all virtual state particles are nested within the structure of time.)

The Soviet work on time generating force thus is of absolutely fundamental importance. What has been released of K'ozyrev's work seems to be intentionally deceptive and of little value. His real work and that of his colleagues appears to have the highest Soviet classification, and none of this material has been released.

In the West, the only person of note who has grasped the fundamental import of time and time oscillations is Charles Muses. As early as 1958, Muses pointed out that there was no mystery in the two-slit experiment if the chronotopological features of the experiment were properly taken into account. Muses also worked out a hypernumber structure of time, but its significance seems to have escaped orthodox physics. Nonetheless, his work has direct technological implications, such as materialization and dematerialization of matter, and offers an approach to the engineering development of actual devices. Since his hypernumber theory of time structure also encompasses consciousness, it represents a union of physics and metaphysics on a common basis, and an approach to the engineering development of psychotronic devices.

Western physicists, then, would be well advised to pursue vigorously the idea of time oscillations, both theoretically and experimentally. And they would also be well advised to examine the hypernumber work of Charles Muses.

Since mind and virtual state occupy the time dimension, the nested structure of time contains the mechanisms for mental-physical interaction and for direct amplification of virtual state into observable state (or for the dissolution of observable state into virtual state).

MASS IS A TIME-DIFFERENTIATION

The most fundamental aspect of the concept of mass is that it occupies space, i.e., that it is three-dimensional. Mass thus is a time differentiation of Minkowskian spacetime L^3T. Applying the fourth law of logic, a thing does that which it is and is that which it does. Thus mass is a time-differentiator.

Because of this, we cannot see time, the fourth dimension, although we can see L^3 length, width, and height. Because we look through and detect with a mass

sensory system, the time dimension is lost in the act of looking and detecting, i.e.,

$$d/dT(L^3T) = L^3$$

and we thus see a spatial reality. Physical instruments also have mass and do precisely the same thing. For this reason, ultimately all measurement or detection is spatial rather than spatio-temporal, as is well known in physics.

Note that we do not see or detect total reality, but only a partial differentiation of it. Thus the position of the materialist's view is ironic: in his absolute insistence that reality consists in only what can be seen, touched, felt, or detected and measured with his instruments, he condemns himself to the greatest illusion of all, the notion that the outputs of his physical sensory system and his physical instruments constitute absolute reality. Also, since the only physical dimension shared by mind is time, mind reality is lost in the act of detecting, and hence only phenomena which are totally separated from mind are detected.

By the fourth law of logic, the existence in no mind at all constitutes the existence in each and every mind (nonexclusively). Thus physical phenomena are those phenomena that are processed by every mind. We will see that the fourth law enables us to deal precisely with mental, physical, and paranormal phenomena on that basis (how many minds the phenomena exist in).

REALITY IS LIKE AN OPOSSUM

Reality is like a mother opossum carrying her little baby opossums on her tail, i.e., the entire mental-virtual state is carried along as virtual constructs, nested comfortably in the delta time portions of each photon. In the piece of time that is fissioned out of an action quantum to give observable change, there are a multitude of little pieces of time still attached to subquantum virtual state entities and hanging on, exactly like little baby opossums hanging on to their mother's tail with their own tails.

The world is so built, then, according to physics. And if we include our physical model of mindchanges, every possibility in fact concretely exists in that manner, in the virtual state, timewise hanging into the time dimension of the detected physical world's four-space frame, but spacewise hanging out of the ordinary three-space physical universe of objects. So indeed all possible realities, even the wildest and the most farfetched, exist in the virtual state.

The time channel is thus quite literally the paranormal channel that connects the normal spatial world to an infinity of nonnormal spatial worldframes. Only by the continual destruction of each piece of created time (by fusing it back together with the piece of energy involved, and forming a quantum which is unperceivable) are we able to experience physical reality at all, uncluttered and relatively free from the vast hordes of infinite realities through which the ship of quantum-change physical reality sails.

Since the electromagnetic field represents a collection of this vast array of realities, then by proper selection (i.e., by coherent tuning) of multiple stages we should be able to select a particular virtual reality channel. And indeed so we can. Any scheme for drastically increasing signal-to-noise ratios should be adaptable to such a collection mechanism for the detection of bioenergy.

In another sense, reality is like a television set with an infinite number of reality channels, but only one of which is tuned in at any one time. By adjusting the tuning, however, a different reality, including even different physical laws of nature, may be tuned in.

BIOFIELD CONCEPTS

To understand the hyperframe approach to fields, we must understand the dimensionality of intersections in n-dimensional space. The dimensionality of an orthogonal intersection is one less than the dimensionality of the intersector having the lowest dimension. One intersector appears radically different to the other intersector since the second sees only a derivative of the first. It is the total projection of an intersector that is "seen" by that which it intersects.

Hubbard's manifold theory also derives these principles. The "types of reality" that these other objects appear to be will depend on the types of intersections they make with the frame of the observer.

This cannot be stressed too strongly: an observer sees his own frame, and intersections in that frame, nothing else. He does not necessarily see the entire reality of any object, and if an object is in a frame that does not intersect the observer's frame, the observer cannot detect that object at all.

Thus all types of reality are open to reinterpretation in the light of intersecting and nonintersecting frames. And to shift dimensions (increase or decrease), all we need do is add or subtract additional orthogonal intersections.

MASS, FORCE, AND 3-D FRAME ROTATION

It is well known that a moving mass can be considered as existing in a three-dimensional space which is rotated away from the line of motion of the mass as seen in the laboratory frame. Einstein in fact pointed this out.

As the velocity of the object approaches c, the speed of light, the angle of rotation approaches 90°. From the bottom left figure it can be seen that a force in the laboratory frame, applied to the moving mass along its direction of motion in the laboratory frame, only affects the mass in the mass's rotated frame with a projected portion. To the laboratory observer, the mass's resistance to the disturbing force applied seems to have increased; thus to him the inertial mass of the object seems to have increased, i.e., if it is harder to push, its resistance to pushing must have increased.

But in the rotated frame, the object's mass has not increased. The rotated frame effect is *why* the mass of an object increases to one observer but not to the other.

When the rotated frame can be rotated to a full 90°, no force applied by the laboratory observer can accelerate it further, because the applied force has zero projection in the rotated frame where the mass actually is. Thus the mass (resistance to pushing) appears infinite to the laboratory observer, while to the rotated observer it is still exactly the same as it always was. Furthermore, to the rotated observer, **the** force being exerted on the rotated mass is zero.

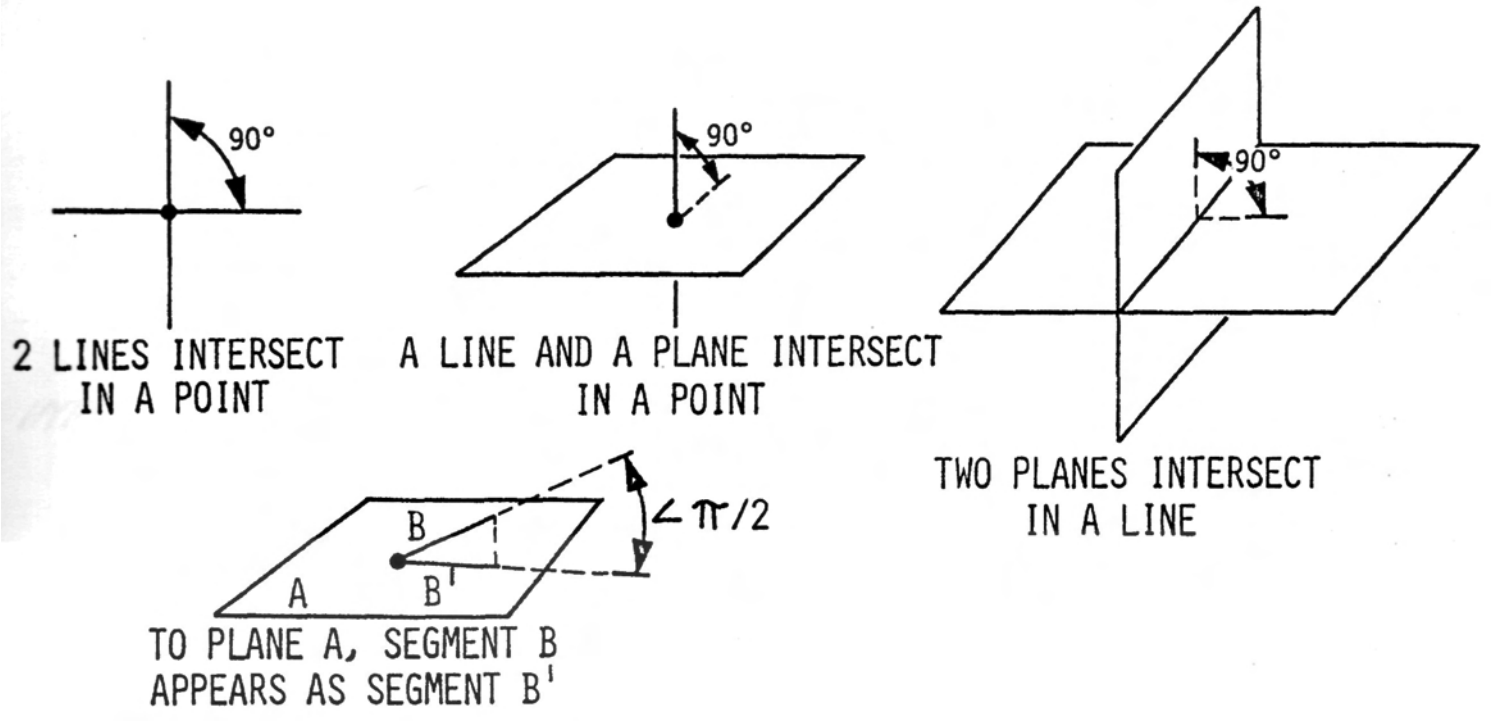

Fig. 13. Biofield concepts

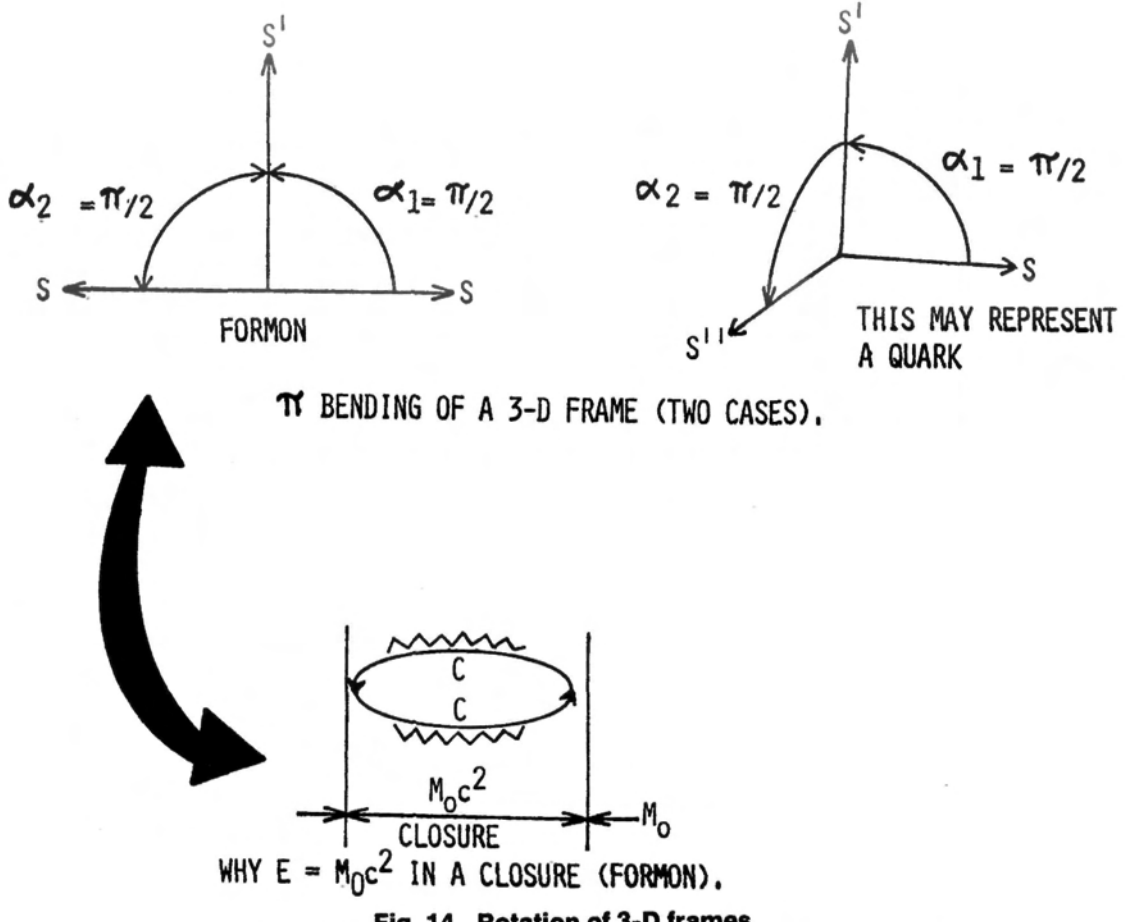

Fig. 14. Rotation of 3-D frames

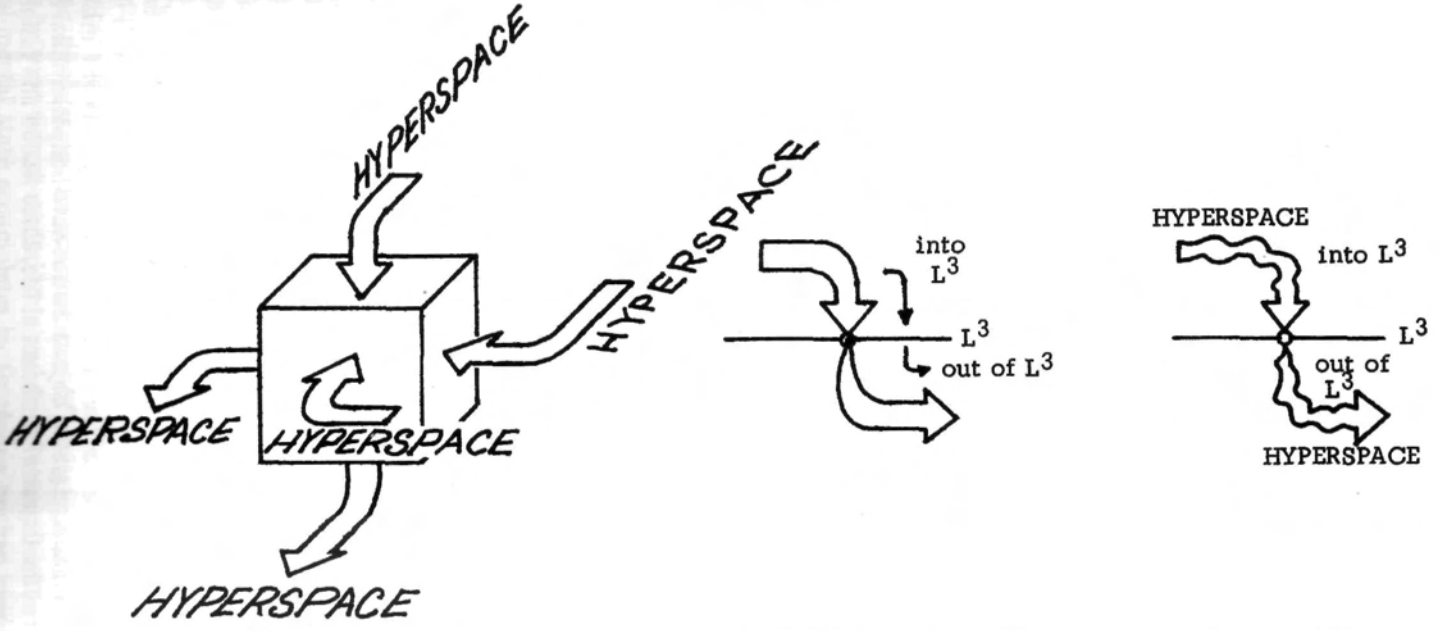

MASS
A region of hyperspatial flux orthorotating in and out of L^3 3-space.

MASS PARTICLE
The flux does not "move through" 3-space. It rotates in and out of each individual mass particle.

JITTER
Each flux line is not smooth, but jittered.

Fig. 15. Mass is π-rotation of hyperspatial flux

However, the mass's intersection in the lab frame is now two-dimensional. Since only three-dimensional objects can have mass, the object is massless to the laboratory observer. So here we have a paradox: zero mass is identical to infinite mass. This is perfectly in consonance with the fourth law of logic.

The absence of any single finite mass actually permits two indistinguishable solutions: the absence of any three-dimensional mass at all, and the exclusive presence of more than any finite mass. The two opposites are identical on the boundary case.

Thus a photon has zero mass because it is a two-dimensional object and only three-dimensional objects have mass. A photon also has infinite mass because it cannot be accelerated along its direction of travel. A photon is a perfectly ordinary three-dimensional particle existing in a normal three-space that is one orthogonal turn away from the laboratory three-space.

MASS IS π ROTATION OF HYPERSPATIAL FLUX

In Figure 15, I show that a localized mass is simply the result of orthorotational flux in and out of that localized region. This is a hyperspatial flux, since it actually is flowing or rotating in hyperspace.

This flux is related to the spin of a fundamental particle, and in one sense may be regarded as an extension of the concept of spin, i.e., ordinary spin is simply a derivative subset of hyperspatial spin (orthorotation between orthogonal three-space).

This flux does not move through laboratory three-space, but rotates into and out of it, at and for each fundamental particle of mass in laboratory three-space. As I point out elsewhere, mass itself is nothing but the absolute value summations of action quantum fission and fusion activity in a localized (fundamental particle) spatial region *(Quiton/Perceptron Physics).* Fission and fusion are orthorotations, or hyperflux activities.

Also, if we represent this hyperspatial flux by flux lines (a standard practice in physics), then each line is jittered because of its modulation by many higher-frequency components. This flux and the jitter in it play an important part in paranormal phenomena.

Furthermore, the hyperspace flux can be seen in two other ways: (1) as continual direct coherent collections of virtual subquanta to reach the quantum threshold, breaching it and becoming observable quantum change. Thus it should encompass essentially all hidden variable theories. This is the same mechanism by means of which virtual photons kindle and create electric field and the charge of an electrically charged particle; (2) as continual direct coherent collections of mind virtual state subquanta to reach the quantum threshold, breaching it and turning into observable quantum change (physical phenomena). Thus all matter is totally mind and totally alive — inert matter is just nonpreferentially alive. The resultant flux vector in an inert mass is zero since there exists as much flow out as in, and vice versa. This totally eliminates the classical dichotomy between mind and matter. It also implies that accelerated objects do not have nonpreferential type of life, but in fact have some degree of preferential life, since fission and fusion rates of an accelerated object are not equal.

Establishing sufficient pattern coherence in the parts of an accelerated system thus constitutes a preferential tuning between multiple parallel-directed directional coherences. This effect can result in establishing a one-to-one correspondence to and from one of the higher orthoworlds, i.e., it can result in a coherent circulation between that universe and the specific inert accelerated system. This circulation is easiest to establish through magic frequency windows where the channels of least resistance exist. This is the basic mechanism by means of which a living biological system is produced in and from the appropriate primeval amino acid soup in the presence of (a) magic-window induction (such as in the ultraviolet), (b) the acceleration of otherwise inert particles (such as is locally provided by lightning discharges), and (c) the strong collection of bioenergy to orthorotate it through three rotations (as is also provided by lightning discharges).

It is not accidental that life can be and has been created in the laboratory. This type of experiment, done by a team of strong psychics projecting intentional bioenergy forms, should be able to create specific forms of life. The same type of mechanism can occur inside the living body where it can induce psychomatic illness. A similar mechanism is probably responsible for the placebo effect, and possibly for the body's production of antibodies and the psychic modification of enzyme activity, psychic healing, etc.

JITTER OR DITHER MODULATES THE PRIMARY FLUX

In the continual, virtual, subquantum, orthorotational flux (crosstalk), rotating into and out of a fundamental mass particle, only those components that are coherent are additive, and only those that add to the quantum threshold and breach it become observable quantum change.

In a given observable quantum change consisting of such coherently adhered subquanta, time is produced by fission of the quantum of action. All remaining statistical subquanta which have not collected to the threshold level are virtual subquanta of action possessing unfissioned, unseparated time. These virtual subquanta, which themselves are dynamic and gradually collecting and superposing to various degrees and at various rates, are attached to and exist in the dT interval produced by fission of the action quantum. Thus each and every piece of time contains dynamic, nested, virtual subquanta. Time in observable changes may thus be said to possess an internal dynamic structure filled with such virtual subquantum mental, neutrino, and photonic entities.

At any fission time, the degree of superposition of each of these nested entities is highly variable and depends on the whole past collection history, which in turn depends on all flux components of the proper frequency that have been arriving from all the orthoframes.

Thus virtual-mental entities cohere frequency wise until they breach the quantum threshold and discharge into observable quantum change. It is much like the accumulation of a static charge until sufficient potential is reached and a spark occurs, discharging the accumulation of charge. The same sort of relationship exists between virtual-mental state and observable state. The only difference is that virtual-mental state accumulates by frequency or time phase.

Since present physics is entirely localized, local observations cannot have taken into account distant matching-frequency events in the laboratory frame, or matching-frequency events in orthogonal frames. To the localized particle of mass, the precise moment a particular subquantum superposition of given frequency will superpose to the threshold and turn into quantum change is therefore not predictable. Since the remote causes cannot be accounted for, the local effects cannot be time-ordered.

Therefore at the quantum level, the physical change is totally statistical to a monocular observer. This accounts for the fact that the quantum world is statistical rather than causal.

However, a given fundamental mass particle has a structure of physical aspects, e.g., mass, spin, locality, frequency spectrum, switch rate, strangeness, etc. All of these may be expressible in terms of orthorotational concepts, although not all of them have yet been so worked out. Muses has already pointed out that some of the present quantum numbers are actually hypernumbers. And just as $\sqrt{-1}$, the first hypernumber, is an orthogonal rotation, so are the other hypernumbers.

At any rate, one may regard a fundamental particle as simply a complicated three-space tuning pattern existing in the orthorotational crosstalk flux between orthoframes. This pattern may also be said to consist of sets of frequencies, since each orthorotational flux line has a frequency of in-out-operation. Thus each fundamental particle is a set of tuning frequencies in the flux. A stable particle is a stable spectrum comprised of standing waves. An unstable particle is an unstable set, comprised of some standing waves, which account for the duration, and some not-quite-standing waves, which account for the excited state or degree of instability of the object.

On each flux line, orthorotational flux lines exist, constituting jitter or dither. Also, every fundamental particle is a tuning. It both tunes and is the result of its tuning, i.e., by the fourth law of logic it does what it is and it is what it does. Since tuning allows frequency communication between orthoworlds, then free-energy devices are not only possible but are practical. So are dematerialization-materialization devices, teleportation devices, devices that heal or kill, and anticancer devices.

THE UNTOLD STORY OF QUARKS

We hear so much nonsense about the objectivity of science that it occasionally seems necessary to debunk the sacred cow. In fact, the quark story is a prime example.

In 1910, Millikan made his famous oil drop experiment and determined the charge-to-mass (e/m) ratio of the electron. By multiplying this ratio by the mass of the electron, the amount of charge on the electron might be computed. Thus was born the idea of a constant amount or quantum of electricity, the fixed charge on an electron. Millikan received the Nobel prize for this famous experiment.

Actually, Millikan himself did not originate the experiment. One of his brilliant graduate students, Harvey Fletcher, first conceived the idea. Millikan became interested after he saw what a stir the results were creating, and he accepted the Nobel prize without sharing the credit with his brilliant student. Later Dr. Harvey Fletcher was to become the head of Bell Telephone Laboratories and an eminent managerial scientist in his own right. He also is the father of Dr. James Fletcher, former Chief Administrator of NASA.

Incidentally, Dr. Harvey Fletcher is still alive and alert, should anyone care to check the story! Nonetheless, it is highly doubtful that this grave injustice to Dr. Harvey Fletcher will be corrected.

But the story does not end there. In the late 1930's, a German physicist named Ehrenhaft decided to change the Millikan experiment and use charged solid particles rather than charged liquid oil drops. In fact he used red selenium spheres of various sizes. Amazingly, he discovered that he could isolate and measure fractional charges (quarks) at will, and he could even control the magnitude of the fractional charge isolated on a selenium sphere by varying the diameter of the sphere itself.

His work was duly published in scientific journals, and duly greeted with derision and hostility. Ehrenhaft himself disappeared during World War II. And there the matter lay. Dogmatic scientists continued to blindly teach the indivisibility of the electric charge, Millikan retained his exalted position and Ehrenhaft's work passed into comfortable obscurity. And in sophomore physics laboratories all across the nation, the indivisible quantum of electricity held full sway, dutifully proved over and over by the oil drop experiment.

Then in the 1960's, the particle physicists, despairing because of the bewildering new array of fundamental particles that continued to pour in confusion from their massive high energy machines, turned again to the idea of fractional charge (quarks) to try to make some unifying sense of the embarrassing abundance of strange new particles. By choosing three simple quarks, they could unify the theory of almost all the new particles. (Additional quarks have become necessary in the theory since then.)

So physicists gradually began to look for quarks, but in the giant, sophisticated, cumbersome experiments and devices that were yielding all the strange particles, not in the simpleton's approach that Ehrenhaft had taken. And they could not find them! Try as they would, a quark just refused to leave its tell-tale track. But in desperation they kept looking, and kept missing them.

Then in 1972 a convention of physicists was held at the International Center for Theoretical Physics in Trieste, Italy. Seven Nobel Prizewinners in physics attended the convention, whose theme was the physicist's conception of nature. Paul Dirac, the Nobel prizewinner who had theoretically predicted the positron before its discovery, gave the keynote address to the distinguished gathering.

Amazingly, Dirac presented the work of Ehrenhaft to the startled convention! He showed some of Ehrenhaft's data, and then pointed out that Millikan had also reported a single measurement of fractional charge, but had discarded it from consideration because he felt it was probably an experimental error. Dirac remarked that it all made him wonder whether Millikan might really have had a quark in that single discarded measurement.

The die was cast, and the seed finally planted. In 1977, about forty years after Ehrenhaft first obtained his quarks, someone finally got around to using solid paniculate matter. Researchers at Stanford University tried it out using niobium, and they got a little fractional charge on their niobium. So after forty years, Ehrenhaft, who had so long been ridiculed and ignored, was finally vindicated. It had taken the establishment that long to check his work instead of dogmatically rejecting it. Yet in none of the articles I have seen on the new discovery has there been a single word about Ehrenhaft, or of Dirac's presentation of his work at Trieste.

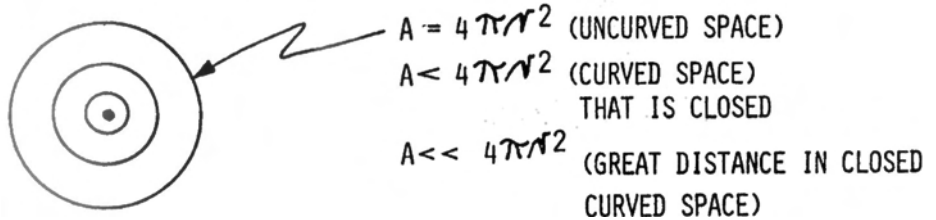

Fig. 16. Einstein's spherical model of the cosmos

EINSTEIN'S SPHERICAL MODEL OF THE COSMOS

Einstein's spherical model of the cosmos is a primary example of a holographic universe. In such a closed spacetime, each point inside the universe is also at the extreme end of the universe in any direction. Thus the entire physical universe is totally outside any of its internal points, and totally inside each internal point as well.

That is an application of the fourth law of logic. The total internal is identical to the total external. The adjective "total" merely moves one to the common boundary between the operational concepts of "internal" and "external." At that boundary, there is no operational distinction between one and the other.

The universe closure is not limited to just one occurrence or one rate of closure. In fact the universe can then proceed to close again within the same local three-space, e.g., a gradual macroscopic closure due to gravity field (or causing it) constitutes the external universe, and a second extremely sharp microscopic closure due to electric field (or causing it!) constitutes electric charge. The two together constitute a fundamental charged particle of mass. The polarity of charge is determined merely by which of two directions the second closure was made in. Considering an electron as such a dually closed entity, it is readily seen that the closure ratios are all that is being referred to by Feynman's condition. Feyman pointed out that any unified field theory must explain why the ratio of the radii of the Einstein closed universe and the classical electron, and the ratio of the electrical and gravitational forces between two electrons, were the same — on the order of 10^{42}. The model is also consistent with Santilli's proof that the electric field and the gravitational field are either the same thing or partially the same thing. In our model, an electric field is in fact a highly compressed gravitational field. Proper time synchronization should allow fantastic antigravity effects to be realized, and thus electrogravitics has a basis in this model.

A CHARGED PARTICLE IS A DUAL CLOSURE OF THE UNIVERSE

It is proposed that each fundamental particle having electric charge represents a dual closure of the entire physical universe. The gravitational field closure is slow and weak, and it is that closure which results in the so-called external physical universe.

It is proposed that all particles participate in this same closure, since it is their combined distributed mass that represents or causes the closure. (By the fourth

law, "represents" and "causes" become simultaneous at the boundary, i.e., when closure is accomplished.)

There are two directions possible for this gravitational closure: one where gravitational masses appear to attract, and one where gravitational masses appear to repel. These two directions thus form antimatter closures with respect to each other. The G closure where G masses attract is said to be the closure associated with a positive time dimension, while the G closure where G masses repel is said to be the closure associated with a negative time dimension. The direction of closure represents or causes the time dimension's algebraic sign, and vice versa (fourth law).

The electric field (E) closure is strong and fast — on the order of 10^{42} times as strong and fast as the G closure. However, its closure is in a direction orthogonal to the direction of the G closure. Since all matter is in motion, a slight deviation from exact orthogonality actually exists between the G and E closures due to crosstalk projection of components from the slight frame rotation involved in the velocity of each mass itself.

There are two primary orthogonal directions for the E closure. One direction yields positive charge and the other yields negative charge, for the positive time closure. For the negative time closure, the directions are reversed.

Such a schema, or version of it, can be made consistent with Santilli's proof, Feynman's criterion, and the observed fact that electricity can affect gravity and vice versa (electrogravitics). In fact, the electric field becomes a highly compressed gravitational field, at nearly 90° from the normal gravitational field. Liberating the compressed gravity in a flashlight battery could accomplish fantastic antigravity effects. Ironically, antigravity should be the simplest and cheapest effect ever dreamed of, once practical mechanisms for orthoshifting E field to G field are discovered.

Since psychotronics and quarks involve more fundamental components of electromagnetic field, hyperfields or biofields, psychotronic devices to yield antigravity should be quite feasible. The undisclosed extensions to Pavlita's psychotronic generators are thus of absolutely fundamental importance.

Furthermore, the ancients appear to have possessed psychotronic devices. Considering that metals, crystals, and other common materials can be used to. construct psychotronic generators, and great power is attainable by the hyperchannel amplifier effect, it is quite possible that priests of several ancient civilizations actually possessed psychotronic devices to lift giant stones by antigravity, and other psychotronic devices to carve the stones like jelly. They may also have possessed psychotronic flying machines which used antigravity for lift and something like rocket propulsion for horizontal thrust. A flying machine that gets its lift from antigravity might be extremely crude in external appearance, and the use of hyperspace for travel would make it unneccessary to travel extensively through ordinary three-dimensional space. Thus many aspects of travel through normal space such as air drag and fineness ratio are of little importance to a psychotronic vehicle.

ADDING AND SUBTRACTING DIMENSIONS

Figure 17 shows the relation between total collection (integration) and orthogonal rotation in hyperspace.

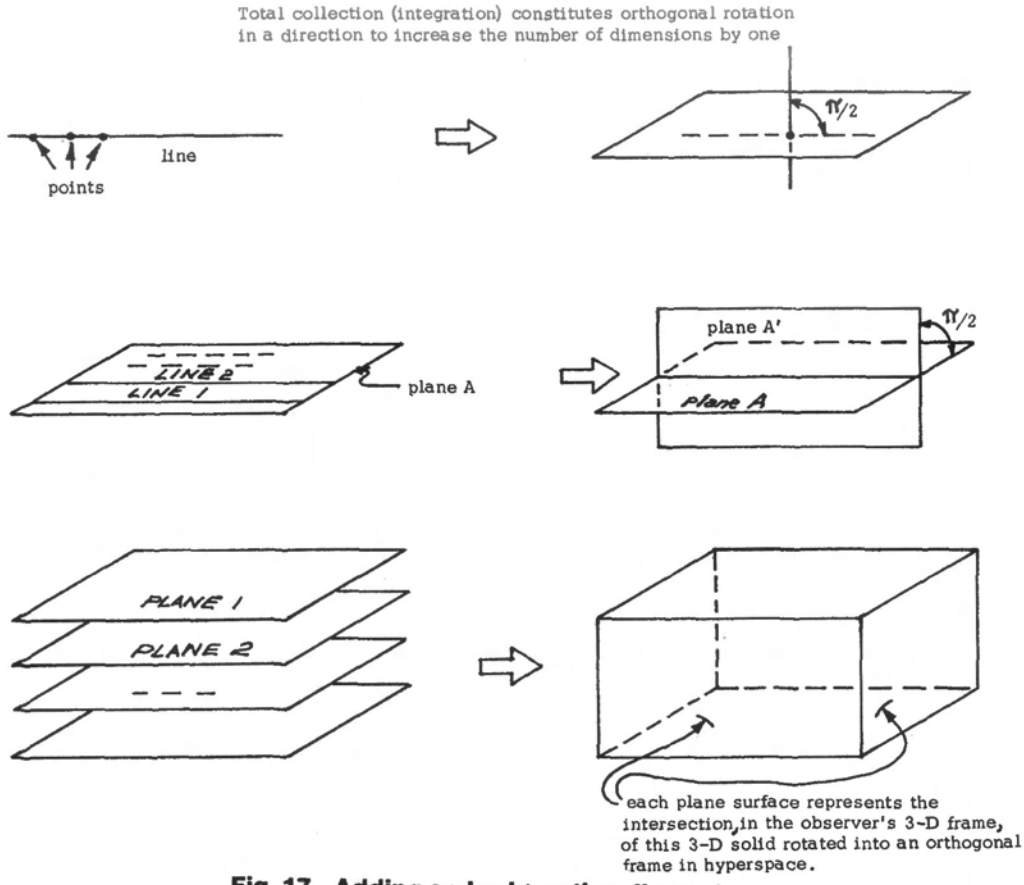

Fig. 17. Adding and subtracting dimensions

Total collection of zero-dimensional points in one direction integrates the points into a line (one-dimensional entity). This is precisely the same as if any of the points had been the plane intersection of an orthogonal line, and that line had now been rotated into the plane. Total collection in one direction is dimensional integration, and the collected entities gain an additional dimension, i.e., total collection constitues orthogonal rotation of the higher dimensioned object into observer three-space.

A point can be considered to be, and modeled as, a line in a frame one orthogonal turn away, and simultaneously as a plane two orthogonal turns away, and simultaneously as a solid (in fact, an entire three-dimensional physical world) three orthogonal rotations away. The latter may also be considered to be, and modeled as, a mind, or even as an infolded infinite set of minds. The concept does not stop at three dimensions, but proceeds into higher realms indefinitely. However, three dimensions plus an orthogonal time dimension are sufficient for our purposes.

A converse operation also exists. Differentiation consists of a cut in an object whereby one single element (of the collection the object represents), is separated and isolated, so that one dimension is lost. It is like a closure being opened at one element. This is the same as an orthogonal rotation of the entity (being differentiated) in a direction departing from observer three-space.

In the Figure, the lower two figures show the collection-is-integration schema for higher-dimensional figures. In the lower right figure, we cannot draw the three-dimensional object in its orthorotated position in four-space since we have only three spatial dimensions in the frame. Nonetheless, the additional dimensions exist and are simple to treat mathematically.

MIND IS OBJECTIVE

In time differentiating, mass loses the time dimension. Therefore we cannot see time with a mass perceiver, but we can see L^3 (spatial extension). But time is the only so-called objective dimension occupied or shared by mind. Therefore we also cannot normally perceive mind, because the plate (time) on which it was sitting is lost in the perception process.

Thus Descartes was both right and wrong. He was right in that monocular mind is not present in physical detection output, but wrong in believing mind and physical phenomena are totally separate. Time does not exist except with respect to between one L^3 perception and another, if L^3 is all that is outputted. Physical time is totally relative, totally mental, and exists only in memory. Mind is thus present in $L^3 T$ four-dimensional physical phenomena and is discretized along with time discreteness in the Heisenberg uncertainty relation $dEdt >= h/2*pi$.

In fact, we can even take the extreme view that time is mind. Because to establish a delta t, a former L^3 must be established and compared to a more recent L^3. The only place the former L^3 can rigorously be found is in memory. An event, once occurred, is in the past and is forever gone to the observer. Only in his memory can it be said to exist. But then so is the observation also of the most recent L^3. Thus, rigorously, observed phenomena may be said to exist only in memory, and there is only a past, never a present. Thus a full four-dimensional mind is inseparable from perceived physical phenomena, and mind is quantized along with quantum change in the physical world.

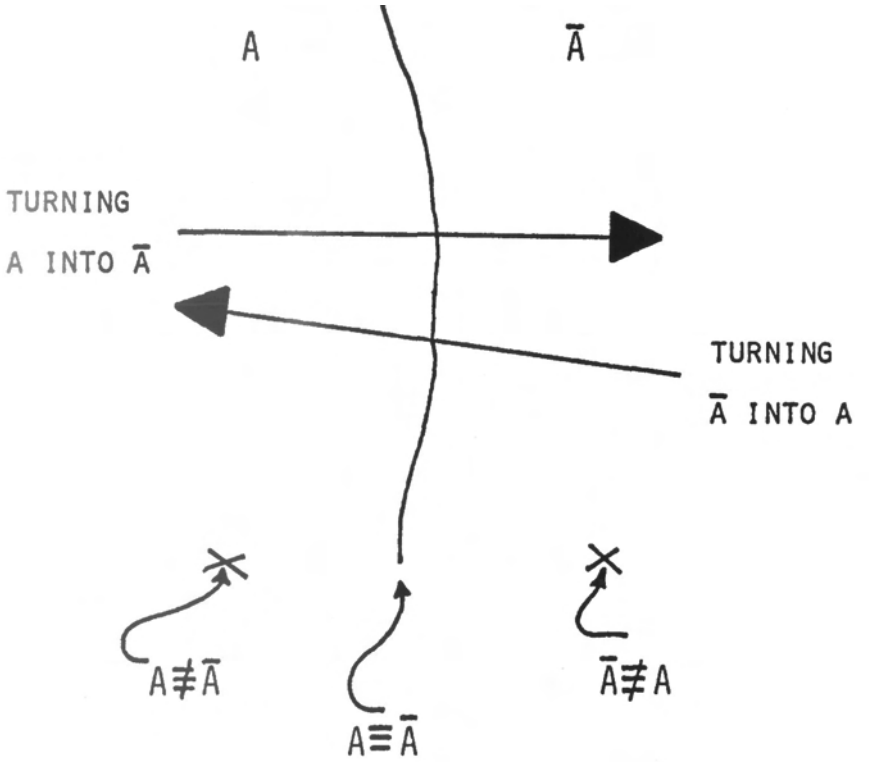

A POWERFUL EXAMPLE:
CANTOR'S PROOF THAT THE SET OF ALL SETS IS NOT A SET

Fig. 18. Turning a thing into its opposite

THE SKIN TRANSDUCER EFFECT: TURNING A THING INTO ITS OPPOSITE

On the boundary interface, one type of field may be turned into another. The higher psychotronic field (biofields) may be turned into an electromagnetic field, and vice versa. The boundary interface serves as a transfer function mechanism for translating one kind of effect into another. Both ends of the transfer function are excitonically united in and on the interface.

The Soviet work that measured coherence of cyclic rhythms (heartbeat, breath, body electric fields, etc.) in Kulagina is significant in this respect. Kulagina induced electrostatic fields around objects that she moved psychokinetically. Her biofield, which is connected through hyperspace to the object being moved, is orthorotated into ordinary fields at the interface of the object. Thus an electric field is created, and also a momentum field that causes the object to move by ordinary physics.

The Soviet work appears to have established that man, earth, and cosmos are psychotronically and coherently linked; that the boundary of an object is a transducer coupling internal and external dynamic changes in one-to-one correspondence; that the transducer effect applies to both living and nonliving systems; and that through tuning and resonance, internal patterns can be incepted externally, and external patterns can be incepted internally.

EVERETT'S MANY-WORLDS INTERPRETATION OF QUANTUM MECHANICS

Both mind and matter can be precisely modeled in Everett's many-world interpretation of quantum mechanics.

Ordinary relativity is interpreted for only a single observer at a time. If you believe that you and I simply coexist at the same time, then the basis of physics is very different from what is in your physics book. Everett worked out what happens to physics if we insist on multiple observers at a time: all possibilities exist and are real, no matter how weird or far out; the world is a single giant universal wave function; collapse of the state vector has meaning only to a single observer; the world is composed of multiple orthogonal worlds of infinite variety, complexity, and strangeness; each world constantly splits into multiple worlds at a fantastic rate.

The many-worlds interpretation, though strange, is totally consistent with the experimental basis of physics. Most physicists have completely ignored Everett's profound and fundamental work; the MWI is a time bomb ticking away at the heart of physics.

SPACETIME CURVATURE IS TRICKY

Bent and rotated spaces give strange results. A thing in one frame can be something quite different in another frame. Just as the mass of a moving object does not increase with respect to its own inertial frame, it increases with respect to the observer's static frame.

What a thing is, is totally relative to the perceiver and his perceiving frame. It can even be nothing in a great many frames. Do you see how nothing can contain everything?

So we really can turn nothing into something if we are clever.

We can solve the energy crisis by building free energy devices which simply cohere the nonintersecting virtual-mental energy states and collect them, breaching the quantum threshold and yielding real, observable energy. To put it another way, we can tap zero-point energy.

And we can also turn a thought-object into a real, materialized object in this physical frame. Or we can dematerialize a physical object, converting it to a mental object.

MULTIPLE REALITIES (MANY WORLDS)

In Figure 16,1 show the particular selection of dimensions I take from Everett's many-worlds interpretation of quantum mechanics. Other and more complex selections can be taken, but these suffice for our purposes and allow us to complete the basic schema for connecting physics and metaphysics in the simplest possible manner. The selection and the schema developed thus provides an initial crude theory which makes predictions, develops theoretical mechanisms, and can be physically tested.

In the diagram, each three-dimensional physical frame of an infinite set at orthogonal angles to each other is shown by a single line about the plane of the bottom, much like the spokes of a wheel. The single time dimension shared by every one of the spokes or three-dimensional worlds is shown by a single vertical line, much like the axle for the wheel and its spokes.

Starting with the left spoke and going counterclockwise, the spoke worlds are numbered with the prime superscript system. The *S* world is the normal three-space physical world we all live in and detect; the S^1 world is the first orthogonal world, etc. Each world is also called a hyperspace or bioframe or bioworld and numbered consecutively beginning with zero for the *S* frame. Thus the zero-th hyperspace is the ordinary physical universe.

The first hyperspace is the electromagnetic field. A physical object in this frame is seen as an electromagnetic field to the *S* frame observer. Since its intersection with the S frame is two-dimensional, we immediately see that the electromagnetic field is a plane wave. Light thus travels at speed *c* to every observer in the *S* frame, because *c* is or represents an orthogonal rotation.

Further than the first frame, a three-dimensional object is seen by the S-frame observer as a deBroglie wave. Since its rotation is greater than 90° with respect to the S-frame, the deBroglie wave always moves faster than the speed of light with respect to the S-frame observer.

A three-dimensional object in the S^2 frame is seen by the S-frame observer as a line or force vector, i.e., simply as flux. (Tentatively, this frame appears to be the area of neutrinos.)

A three-dimensional object in the S^3 frame is seen by the S-frame observer as a spatial point, i.e., as spatially dimensionless. It is thus a mental object or a virtual object to the *S* observer.

The entire S^3 frame constitutes a mind or a virtual world. There are an infinite number of such S^3 frames available in hyperspace. In fact, there exists a set of three orthogonal turns between any frame higher than S^3 and the S frame, due to the nature of hyperspace. Thus in the model we are using, any of the higher bio-

frames may be considered to be only three orthogonal rotations away from the *S* frame.

We thus have a scheme of multiple worlds and multiple realities from which we may construct living systems, thoughts, tulpas, etc. And we may also turn one type of field into another, simply by virtual state collection or separation, as the case may be.

All frames S^3 or higher are mental or virtual frames. Physical phenomena in these frames are mental phenomena with respect to the *S* frame.

Note that we have deliberately evoked a system whereby a mind is modeled in terms of physics and physical reality is modeled in terms of mind. The only difference between any two entities in the various worlds is a matter of orthogonal rotation.

For the pure mathematician, obviously this entire model could be extracted into a new calculus. A symbol could be assigned to the orthorotation operation, and a sign assigned to the symbol to indicate whether the direction of turning is approaching the observer or departing from the observer. Sideways turns and in-betweenwards-turns could be represented by additional signs, or hypernumbers. I suspect that such a calculus is well worth doing, and I also suspect that it will closely resemble Charles Muses's hypernumber work when done. Using a six-dimensional geometry, the German physicist Heim has accomplished something similar, without yet realizing that he has also modeled mind. His work generates all the fundamental particles of physics and explains many features of UFO phenomena, as is to be expected from the scheme developed here.

At any rate, an exact calculus of higher dimensions and of turning one kind of field into another kind of field — with no barrier at all between physics and metaphysics — awaits the hands of the builder.

CLUSTERED ORTHOGONAL WORLDS

In this diagram, I show a sample of how various objects appear in their intersections with various bioframes. Note that an object is many things at once, and that many of the things it is are nonthings or nothings.

Everything is a thought in at least one frame. We can appreciate James Jeans's remark that the world appears less and less like a mechanism and more and more like a single thought. His intuition was in fact literally correct.

Each entity is a photon in at least one frame (let there be light!) Each entity is a line in at least one frame. Each entity is a three-dimensional spatial object in at least one frame.

By orthogonal rotation, a thing can change its face with respect to an observer, appearing to change into a totally different sort of thing with respect to a fixed observer in one frame. Reality is quite plastic and absolutely unlimited. It is only our own rigid heads that have been made of solid concrete.

Specifically, materialization of thought objects, by three approaching orthogonal rotations, exists. Similarly, dematerialization of an object, by three receding orthogonal rotations, exists. In such a case the dematerialized object appears the same as a thought object or virtual object.

A perfectly valid mechanism thus exists for tulpoids, materialized thought forms. All that is needed is a sufficient virtual state collection mechanism.

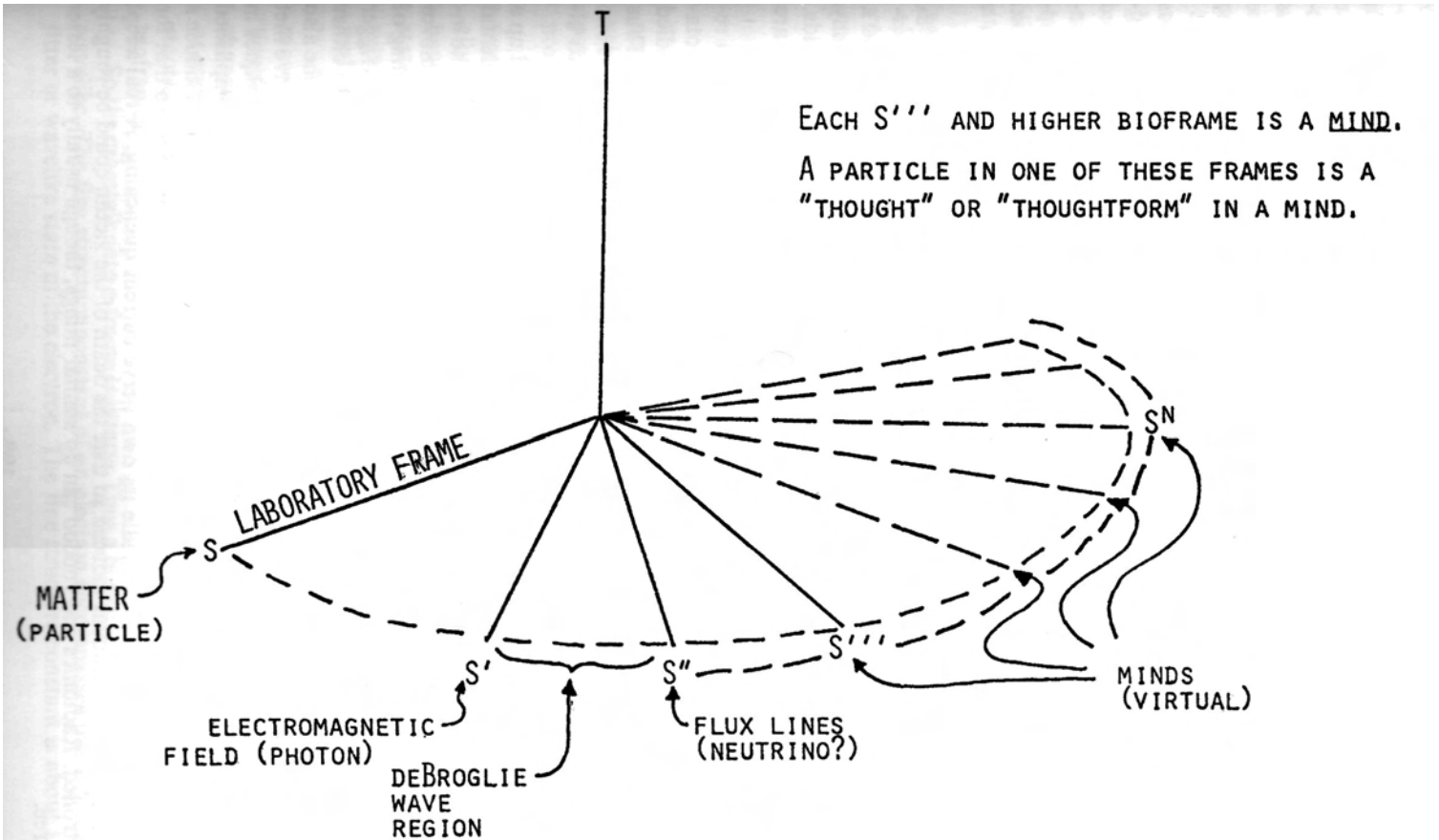

Fig. 20. Clustered orthogonal worlds

Note that an orthogonal rotation in an approaching manner is automatically accomplished by sufficient coherent collection in the remote frame. There is a finite collection threshold between two orthogonal hyperframes. Sufficient collection in one frame (by a tuning or directing mechanism in a third frame) breaches the threshold in the collection frame and the collected or quantized entity automatically appears in the next frame closer to the tuning mechanism's frame. The process may then be repeated. If sufficiently repeated, all the intervening thresholds are breached and full materialization of the object in the observer's frame (tuning frame) occurs.

By this process an object may be kindled from a remote frame to one that is less remote. Two successive applications of kindling turns thought into electromagnetic field. This is how thought photography is accomplished, and the talented individual who accomplishes it is simply cyborged to the camera film grain in an inceptive cyborg device. Many such examples, including some deliberately accomplished on demand by the study group in which I am included, are given in this book. Three successive kindlings turn a thought object into a materialized object, a tulpoid.

Such a materialized thought-object may be of an inert object or of a living, breathing, biological being. The model we are working in has eliminated any superficial difference between living and nonliving because it is a four-law model. And a materialized living being will be just as real and physical and functional as any other person on this earth. Ultimately, that is all that we ourselves are — tulpoids. Nothing exists but the thought of the infinite creator, so to speak, and we are simply part of that thought.

The coherence in multiple stages necessary to accomplish kindling is often referred to as *tuning* in this book. Tuning sufficient to enable two orthogonal rotations results in thought turning into electromagnetic field or light. Such a kindled field may be additive or subtractive to existing electromagnetic fields. Thus kindling can cancel an electromagnetic field that already exists, or it can create one where none previously existed, or it can shape, modulate, or change one which already exists.

Kindling can also wipe out the charge on a charged particle, or it can build up a charge on an object which previously had no electric charge. It is not accidental that Kulagina, when performing psychokinesis in the laboratory, first causes the induction of an electrostatic field on a nonmoving object. Then the object moves psychokinetically. In a similar fashion, she has stopped a frog's heart; kindling of the type to quench electric charge would of course eliminate the electrical trigger signals in the muscles of the heart, rendering it inoperable. This could mean either cessation and paralysis in a moderate case or total death in a drastic case. She also on one occasion demonstrated the ability to stop a living human heart. I have met other people who could do something similar. One of the great secret techniques in certain Oriental martial arts was the death touch. This could only be accomplished by certain rare adepts; with a light touch of the hand or fingers, they could induce a charge of bioenergy into and onto the acupuncture system of the body, so that the body itself began to slowly kindle its own nerve current quenching. A real adept could control the amount induced so that the death of the victim could be roughly controlled. Radionics and voodoo can do similar things, though usually to a lesser degree.

There also exists a precise mechanism for metal bending; the destruction of the charged particles (for the protons in the nucleus and the electrons in orbit, or even for just the protons in the nucleus) converts the particles in some atoms to neutrinos, which then vanish in the distance without interaction. Thus localized areas in strong metal can be kindled and made quite plastic from thought energy alone by one who has developed this skill. And the kindled areas will give every indication of having been subjected to extreme heat or unusual forces of a sort not encountered in normal metal bending or fracture. Also, the inceptor who is bending the metal and the metal itself are cyborged together into a single inceptive cyborg mechanism. Therefore the metal will often continue to bend even after laid down, because in the cyborg kindling is still occurring.

Furthermore, metals that exhibit unusual physical characteristics, such as nitinol, can change those characteristics dramatically by kindling. Also, an electrostatic field can be directly kindled in and induced on an external object, and an electric field or electromagnetic field can be induced in its surrounding space to interact with it, accomplishing psychokinesis of the object.

Or thought energy can be kindled in the hyperfield fluxes of an ordinary magnet. A magnetic compass needle can be moved by mind or a magnetometer can be affected, even through a superconductive Farraday shield. After all, the effect is rotating into our three-dimensional space from outside it, so shielding is of little consequence except where it interferes with tuning.

CROSSTALK BETWEEN MULTIPLE REALITIES

In Figure 21, I show that phenomena in all the hyperframes crosstalk. A moving object in frame S possesses a slight rotation, hence it projects a tiny component into frame S^1. This S^1 component, however, is still dynamic and has a small velocity in S^1. Hence it also is slightly rotated and therefore has a crosstalk component projected into frame S^2 with a velocity there. Having finite velocity, this projection in turn has a rotation and projects into the next higher frame, and so on.

Thus any changing entity in any frame crosstalks a tiny amount into any other frame. In a frame S^n, the crosstalk from a change in any other frame S^P is normally so small as to be virtual, hence nonobservable. Coherent virtual crosstalk, however, integrates and can breach the threshold between virtual and observable state. It is in fact possible to show that what we call a mass in S space is simply the sum total of the crosstalk in and out of a localized region L^3 of S space, the localized region being the mass in question.

Another point to notice is that most fundamental particles in a frame rarely move with constant velocity. Instead, they normally accelerate and decelerate continually. Thus the actual velocity vector of one of these entities is continually changing, usually quite erratically. But for microscopic particles in regular atomic or crystalline formations, the change pattern is quite regular. At any rate, the constant changes on the velocity induce a jitter component on its crosstalk into other bioframes.

So the crosstalk into a frame is jittery. Thus a fundamental particle is jittery or wavelike. The fine structure constant of an electron encompasses this hyperspatial jitter or wavelike state of the electron. The fine structure constant is about 1/137.

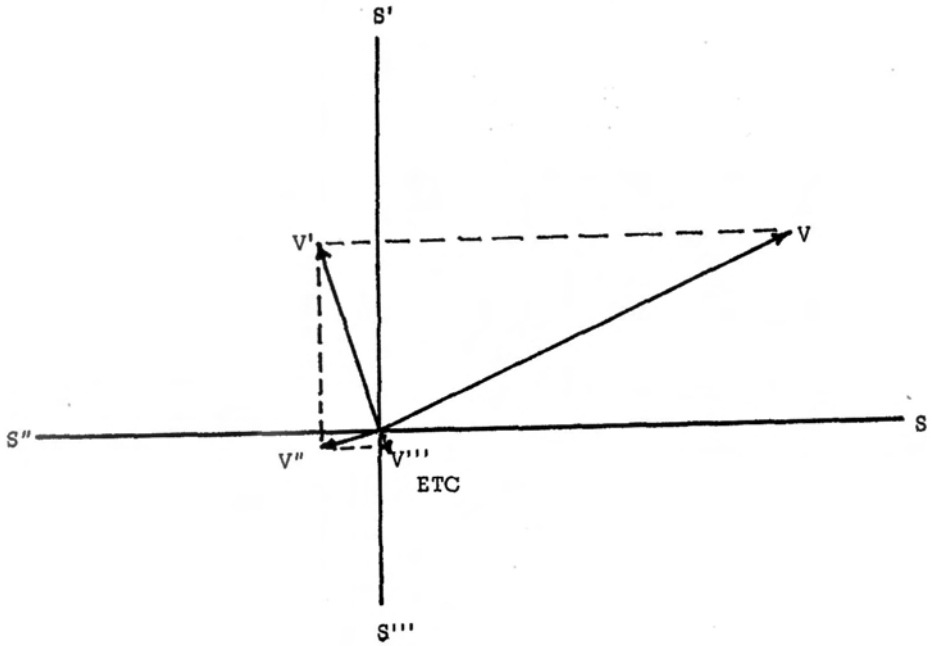

Pig. 21. Crosstalk between multiple realities

Thus an electron actually spends about 1/137 of the time in hyperspace.

So, because of jitter, an object is partially in every hyperframe a minute but finite part of the time. So are all minds and mental objects, and so are all virtual objects. For a fundamental particle, the fraction of time that one quantum of action pervades another frame may be referred to as the identity coefficient.

The identity coefficient varies; it is the photon interaction that time differentiates, quenching time and separating the bioframes, and this interaction is not a linear operator since the intensity of time differentiation is a rather complicated function of photon frequency.

At any rate, for an electron in orbit in an atom (or for any other electron, for that matter) there is thus a small but finite probability that the electron may be at any given position in the universe when its detection occurs. In other words, there is a finite probability of collecting an electron at any point in the universe, and the collection may be made from multiple points simultaneously. We can actually collect the same electron twice, so to speak! Or even a million million times.

The probability of detection of an electron at a given position may be directly expressed as the fraction of time that the electron actually spends there. And this fact may be used to develop a holographic coherent collection scheme that can directly amplify particles. Thus a so-called free energy device, which in one sense is just a tap into the zero point energy of vacuum, can be built. And it has been built, by Moray and by others. The jitter and crosstalk make it directly possible.

BIOFIELDS: AND MAVERICK WORLDS

Figure 22 shows a convenient list of how objects appear in different frames. This schema, selected from Everett's many-worlds interpretation, allows modeling of life, death, mind, matter, and psi. It also allows one type of field to be ortho-

BIOFIELDS: TIME-CLUSTERED ORTHOFRAME

Present Name	n = Number of Orthorotations	Biofield	Dimensional Intersection with Lab Frame
Laboratory Frame	0	0th	3-D
Electromagnetic Field	1	1st	2-D: $\nu = C$
Virtual Photon	$1 < n < 2$	Between 1st and 2nd	Mix of 2-D: $\nu = C$ and 1-D: $\nu = C^2$
Bare Neutrino (candidate)	2	2nd	1-D: $\nu = C^2$ (but flows in photon)
Space-point; mind, thought	3	3rd	0-D, $\nu = C^3$ occupies time, not space per se. Flows in neutrino, thus in photon
Space-point, mind, thought	$n > 3$	nth	Same as 3rd biofield. All hyperspaces are only 3 orthorotations away in nonlinear hyperspace

Fig. 22. Biofields: time-clustered orthoframes

rotated and turned into another kind. Such orthorotation demands correct time synchronization, rather than brute force energy application. In fact, orthorotation is energy-conservative for a single orthogonal turn.

Even the strangest conceptions and most fantastic possibilities have their own assigned realm of concrete reality. These are referred to as maverick worlds.

Note that all possibilities — everything that has happened or could have happened, and everything that will happen or could happen — are real and exist concretely in their separate orthogonal universes. The same is true for all thoughts and thought worlds, and all possible thoughts and thought worlds.

By proper coherent tuning, an *object* in one of these orthoframes can be orthorotated into our own frame and objectified, and that is what the Tibetan monks call a tulpa, an objective materialization of a thought form. The tulpa will hardly ever be closed entirely in phase, however, and so it will almost always be unstable. UFO's, angels, and imps go away. But the materialization of one of these can be entirely objective and perfectly objective traces can be left, such as photographs, broken limbs, scorched asphalt, indentations, and depressions in grassy fields. Any thought object can be so orthorotated and objectified. Beings, religious figures, angels, fairies, imps, UFO's, and monsters can all appear.

HYPERFIELD FLUX IN A MAGNETIC FIELD

In the conventional experiment to determine the pattern of a magnetic field, iron filings are sprinkled about a bar magnet on a piece of paper. As shown in the top drawing of Figure 23, the iron filings form a symmetrical pattern. Further, the only apparent circulation pattern is from one pole to the other. Each flux line is closed, going through the magnet from one pole to the other and out of that other pole, bending back through space to the first pole. Every flux line therefore goes through both poles.

However, each little iron filing is actually quite static; it does not move at all. It does not change with respect to either time or position. It is therefore integrating any higher sinusoidal component that is changing with respect to time and length. The characteristics of the orthodox picture that emerges are prescribed by Maxwell's equations of electromagnetic field.

If we tape the bar magnet to the face of a color television tube, the magnetic field is now being scanned or probed or sampled by a moving electron beam, which reacts with the magnetic field of the bar magnet. This electron beam is changing its position with respect to time and length, and it therefore differentiates the magnetic field. The hyperspatial "ripples" in the magnetic field now are not integrated exactly to cancel, and so a small deviation from each flux line will be detected by the differentiating beam. Slight deviations will cause a color change, and so the hyperspatial flux now becomes evident on the television screen. The lower drawings show the rather unusual, nonsymmetrical pattern that emerges.

The equations for these hyperfield fluxes should be obtainable by differentiating Maxwell's equations twice more, yielding fourth order equations. These equations should be the much sought-after equations of prana, chi, ki, ectoplasm, bioenergy, bioplasma, odic force, etc.

Note that the hyperfield circulation goes into the north pole and pours out of the south pole. A living organism exposed to the north pole, end on, will have its own bioenergy sucked out by the magnet, and its own flux will diminish somewhat. Exposed to the south pole, end on, it will have its own bioenergy increased by the bioflux pouring from the magnet. This explains why many experimenters who have extensively tested the influence of magnetism on growing plants have found that the north pole inhibits and the south pole stimulates growth and health.

The hyperfields are fundamental fields rather than electromagnetic fields; they collect coherently and kindle *into* electromagnetic field, creating it or destroying it.

LIFE AND DEATH

In Figure 24 I present an overall schema for life and death — and for reincarnation as well.

An infinite number of hyperfields or bioframes are shown as S, S^1,S^2, S^3 etc. The frame S is the ordinary laboratory frame — the physical spatial world we live in and observe. The frame S^1 is the electromagnetic field, the frame S^2 the linear or flux frame, and S^3 the first "mental" or "virtual" frame. Also, all higher bioframes have a connective path to the *S* frame of only three orthogonal rotations (not shown). Thus only three orthogonal turns separate S^n and *S*, S^k and *S*, and S^J and *S*.

In frame *S*, note that physical body *A* has a coherent crosstalk link with the entire frame S^n. A-S^n thus constitutes a living biological system; in this case, let us say, a human being. Likewise, *B* and S^j have established a coherent crosstalk loop. B-S^j thus also constitutes a living biological system; in this case, let us say, an opossum. These two examples are incarnated living systems (incarnated minds).

In fact, this is a great oversimplification, as the reader will realize at once. We really should consider all the groupings of *A* — the organs, the structures, the cells, the internal cellular parts, etc. — as separate but coordinated a_i. (And similarly with B.) Each of these a_i must have a correspondent s^n subworld of S^n, much like

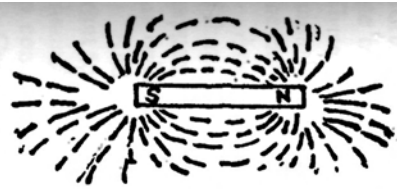

CONVENTIONAL PICTURE.
IRON FILINGS SPRINKLED
ABOUT A BAR MAGNET ON
A PAPER.

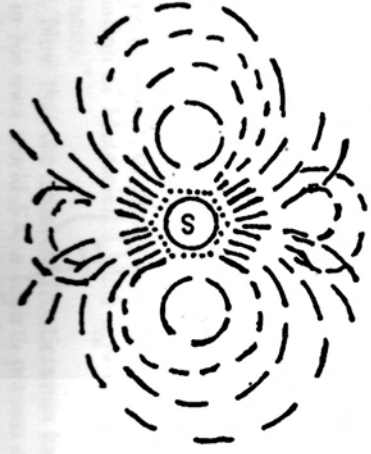

HYPERFLUX
CIRCULATIONS

NOTE STRONG
HEXAGONAL PATTERN
AND TWO PRIMARY
VORTICES

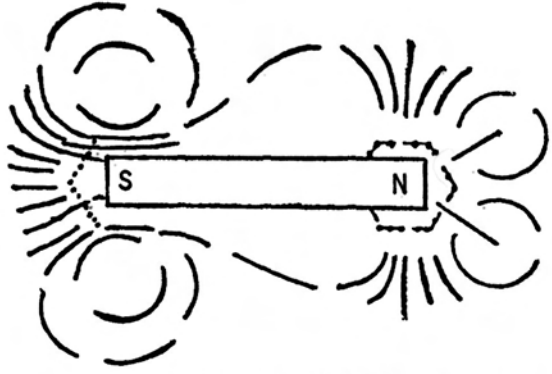

HYPERFLUX CIRCULATIONS
FLUX PATTERNS ARE NOT
SYMMETRICAL, POLE-TO-POLE

NOTE STRONG HEXAGONAL
PATTERN IMMEDIATELY
ADJACENT TO NORTH POLE.

HYPERFLUX CIRCULATIONS

NOTE STRONG
HEXAGONAL PATTERN
AND FOUR PRIMARY
VORTICES

Fig. 23. Hyperfield flux in a magnetic field

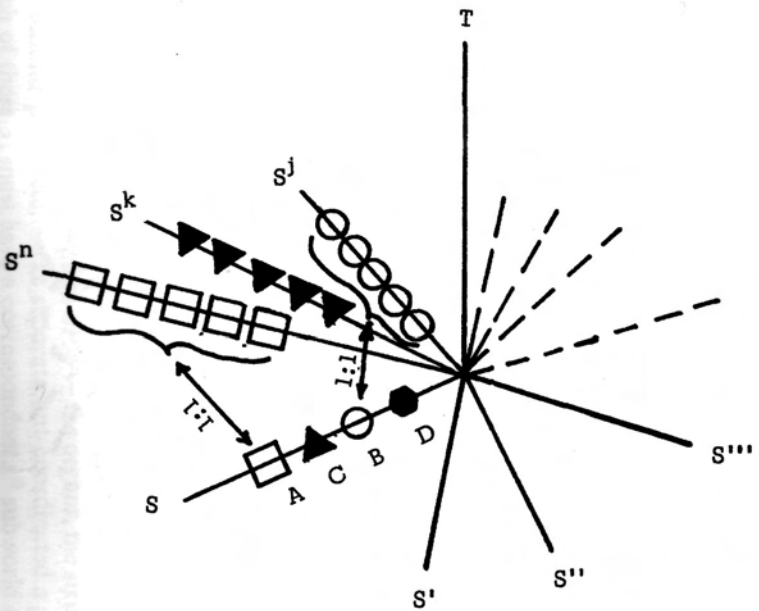

$A \rightleftarrows S^n$ is a living system.
A is the physical body, the incepted mass.
S^n is the mind.

$B \rightleftarrows S^j$ is also a living system.

To S, D is inert; i.e., D is not preferentially incepted.

To S, S^k is a "disembodied mind." I.e., S^k is "dead," since it is not preferentially incepting its former body, C.

Whenever a proper retuning body, say E, appears in S, S^k will reestablish a coherent crosstalk with E. This constitutes "reincarnation" of S^k.

Fig. 24. Life and death

the fine structure of atomic energy levels. But here I am simply outlining the major schema.

At any rate, let us now examine body *C* and hyperworld S^k, which formerly were one-to-one coherent in crosstalk, but are no longer so. C represents, let us suppose, the body of a frontiersman in 1830 who has received an Indian arrow in his breast, piercing the heart and destroying the ability of the body to coordinate the c_i to each other and to the inceptive channel from S^k. With the loss of coherence, noise begins to destroy the channel; thus S^k is now a "disembodied mind," and C starts to become a decaying corpse. The various c_i of course lose coherence at differing rates, and so the fine structure channels to the s^k also lose coherence at differing rates.

Finally all c_i - s^k coherence is lost, and the frontiersman is then "dead." The mind S^k is now disembodied — and also probably quite disturbed or "noisy" because of the variance in disintegration of the c_i - s^k loops. One might say that the mind is somewhat "detuned" by the whole affair. However, "death," in the sense of total loss of mind and personality, has most certainly not occurred. All that has occurred is a lapse into a disembodied, and perhaps somewhat confused, state.

And the disembodied mind finds itself in its own deep, unconscious world constructs. If a person has been unconsciously Christian in a very deep, fundamentalist sense, and in his own mind has also been a "sinner deserving of hell," then he will actually "lift up his eyes in hell," in his own world tuning. And that world will be physical and real — as real and physical as this one — but it will operate by different physical laws, just as dreams operate by different physical laws. These relations and laws are prescribed by the person, either consciously or unconsciously. The devout Mohammedan is quite likely to find himself after "death" in the delightfully chauvinistic paradise he believes in.

And so the Catholic practice of praying oneself out of purgatory is relevant, for if that belief-structure is firmly fixed in the deceased's deep unconscious, then it will happen; he will simply change his world construct in accord with the effort made on his behalf.

And the ancient Tibetan practice of giving instructions to the deceased as to what to expect and where to go is also relevant, for during the time that the major channel C-S^k is lost but many of the c_i - s^k are still functioning, the deceased is still in contact with frame *S* and can heed those instructions.

Certain clairvoyants and skilled psychics can also project part of their mind vision into S^k and see the status of the deceased. In some cases the deceased will have so strongly retained mental structures analogous to physical structures and localities (or persons) in frame S that continual small crosstalk channels breach open by tuning resonance to those localities, structures, or persons. With a little inceptive assistance from one or more sensitive persons, an "appearance" of the deceased at the locality, structure, or near the person can take place. Much psychic, ghost, or spiritualist activity is due to this effect. So indeed is the concept of earthbound spirits. Here again, an advanced adept can erase the psychometric pattern attached to the locality, structure, or person and thus eliminate the phenomena. In the American Association of Metascience, such a resolution is part of an overall process called "clearance."

But this is not all. Now that the departed frontiersman has been cleared, so to speak, and is snugly in his own world S^k rebirth process still awaits him. As I

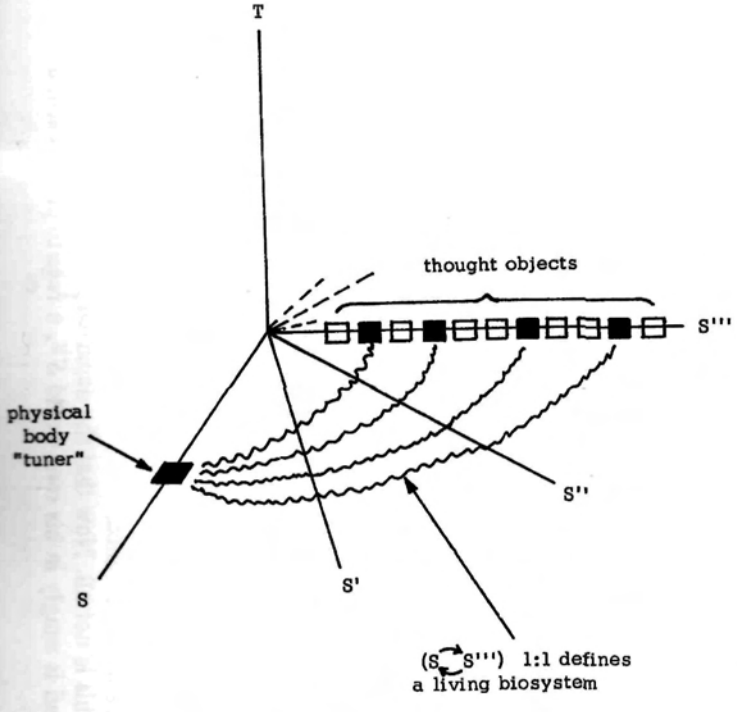

A. A LIVING BIOSYSTEM

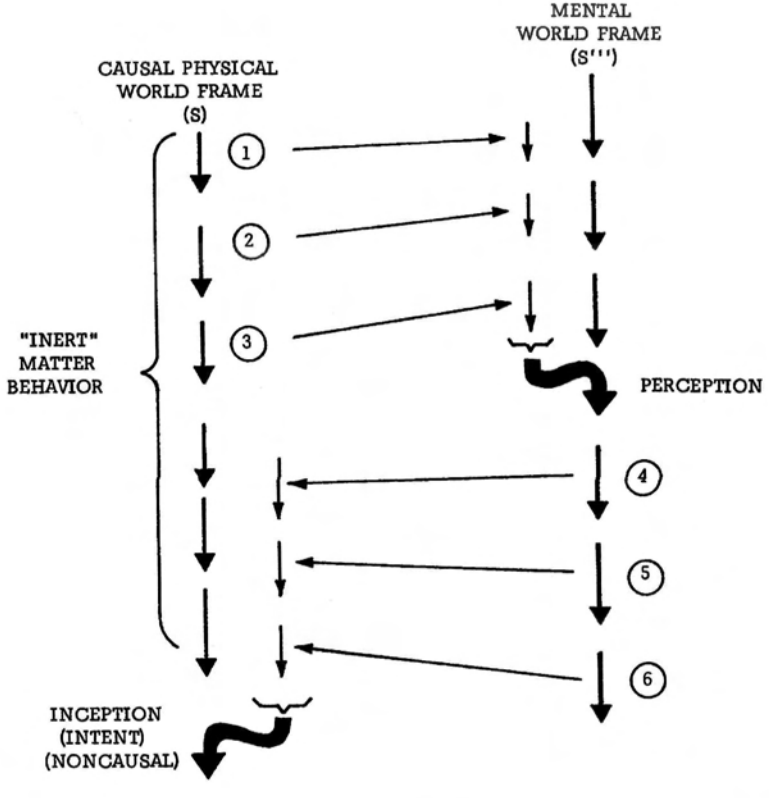

B. THE FUNCTIONING OF TIME AND CONSCIOUSNESS ARE MUTUAL CREATORS OF EACH OTHER.

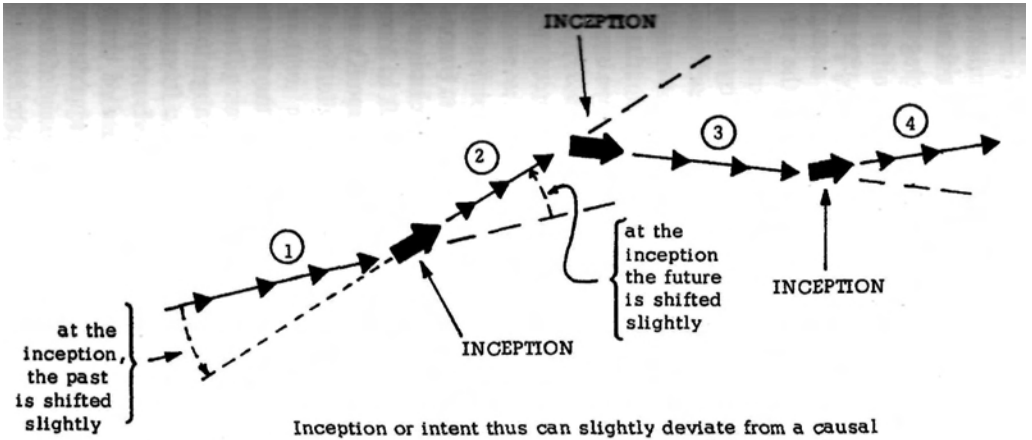

Inception or intent thus can slightly deviate from a causal trajectory. Over sufficient collections of physical changes, "intentional behavior" or "limited free will" emerges. However, it is only a very small modulation of causal inertness -- and its smallness accounts for human "physical limitations."

C. CHANGING THE PAST

Fig. 25. Consciousness, life, and intent

have pointed out elsewhere, every particle of mass is simply a pattern of change in the universal orthorotational flux between hyperframes. (This, after all, is no more than a slight extension to general relativity.) When the proper physical tuning mechanism, say C^1, again appears in the *S* frame, then a resonant coupling will automatically establish itself in the flux between C^1 and S^k, and the disembodied, confused mind of the frontiersman will simply be coupled again to a new physical body pattern. This happens at the instant of conception, for the genetic pattern — the complete tuning pattern — is present at that instant. The coupling is quite tenuous at first, and increases in degree as the embryo develops.

So reincarnation has a place in my schema. We will see, however, that it differs slightly from the classical concept, because with developmental work the frontiersman can change the makeup of S^k and thus his predisposed tuning. Changing the tuning also causes rotational displacement of S^k among the infinity of infinities of mind worlds available. Thus the past can be changed; in fact a person can change who he is the reincarnation of, simply by changing his mind tuning with enough development. Therefore more than one living person can be, for example, the reincarnation of Napoleon.

And in fact the cycle of rebirth can be broken completely — simply by dying with a totally detached mental framework. The cessation of all tuning attachment results in a broadened S^k, which now is structureless, hence all-structured and part of universal Godness.

But the major point is that all this can be modeled physically. And there is only life; absence from one place still leaves presence in another. Absence from *any* and *every* one place exclusively leaves presence at all places, each nonexclusively.

Death, where is thy sting?

In diagram A of Figure 25, I summarize what constitutes a living biosystem. Here we can see that body (physical) changes from the biosystem's body in frame S crosstalk successively through frame S^1 and S^2 to S^3. Also, physical changes in frame S^3 actually constitute mental changes to the biosystem's body back in frame *S*. These mental changes must crosstalk successively into frame S^2, frame S^1, and then into frame *S*. This entire process — from frame S^3 to S^2 to S^l to *S* — is referred to as *kindling*.

In diagram B, we observe this process a little more closely. Here, the shorter straight vertical arrows are virtual state changes kindled from the opposing frame. The longer straight vertical arrows represent observable quantized change in the particular frame, these changes being produced by ordinary inert physics laws. The curved double-lined arrows represent quantized change kindled into the frame from the coherently superposed virtual changes that have steadily been kindled there.

Thus there is a kindling time delay in the causal *S* frame before will or intent sets of changes from the mind-frame S^3 can induce an input into the physical body of the biosystem. Correspondingly, there is a kindling time delay before a perceptual change in S^3 from the changes in *S* can occur.

The horizontal arrows represent the flow or flux of kindling crosstalk between the two frames. It can be seen from this diagram that consciousness — the thread of the relation between consecutive changes in the two respective frames — and time are identical. (Recall that each inert physical change in S that is not kindled from S^3 is actually randomly kindled from all the other mind-frames.) Thus time and mind are identical. Consciousness is simply the functioning of coherent cross-

tulk between a mind frame and a physical body in frame *S.* Further, each biosystcm's consciousness has all other consciousnesses interwoven with it. The other living consciousnesses input into other physical bodies in frame S, and these physical bodies interact in frame *S.* The other dead consciousnesses input into frame 5 - into each body as well as into all other inert matter — in a noncoherent, randomized manner. Thus the entire universe of universes is totally in communication with each part of itself, continually.

In diagram C, I show that incepting a change from pure causality changes the past; in this case, the past is causally inferred or projected backward from the new vcctorial direction. However, because inception into frame *S* is a very small effect, the biosystem's change of its past is so slight that normally it is not noticed. Inception of course also changes the future slightly.

THE HOLOGRAPHIC HYPERCHANNEL EFFECT

This effect is based on the concept that a human being must accomplish a minute inception (psychokinesis) onto his physical system. Specifically, he must incept the movement of three or four electrons in the brain. This constitutes an input signal to his ordinary physical system, which is then treated like a complex servomechanism. The gain of this servomechanism is rather high, being able to transform or amplify the movement of several electrons into powerful movements of the entire body. The inceptive effect cannot be explained by ordinary physics, which am account for the servomechanism gain only. Once the input signal is generated, however, the rest of the amplification and action are viewed as being properly described by the ordinary physics of inert matter. Thus the human is viewed as largely servomechanistic and mechanical, but guided and directed by the nonphysical, which affects the physical in a minute fashion sufficient to constitute inputs to the ordinary physical system.

Our purpose here is to show that, given this single small inceptive effect, we can eventually approach the mastery of space and time for a linkage of sufficient number of human brains and minds into one single superbrain and supermind.

From the multiplicity of orthogonal frames permitted by Everett's many-worlds interpretation of quantum mechanics, we now select an infinite set of clustered three-dimensional spatial frames, which all share a single time dimension. Using one frame as a laboratory reference frame, the other spatial frames may be characterized as having one, two, three, or more orthogonal turns away from the laboratory frame. These succeeding orthogonal frames are variously called hyperframes, bioframes, orthoframes, hyperchannels, orthoworlds, etc. A particular set of material phenomena in one of the orthoframes is referred to as a biofield, hyperfields, or orthofield with respect to the laboratory frame.

In Figure 26 I represent each brain by a triangular symbol, and consider it as an amplifying device having a gain of A_o. For simplicity the inceptive input signal is represented as E_i, since in moving an electron, a voltage must be induced. For limplicity I also show the brains as a linear array lying in a straight line. The distance *L* separates each brain, and here *L* is assumed constant for simplicity.

Two factors must now be realized: (1) The first hyperchannel operates in the realm of the ordinary electromagnetic field, although this realm is seen in a differ-

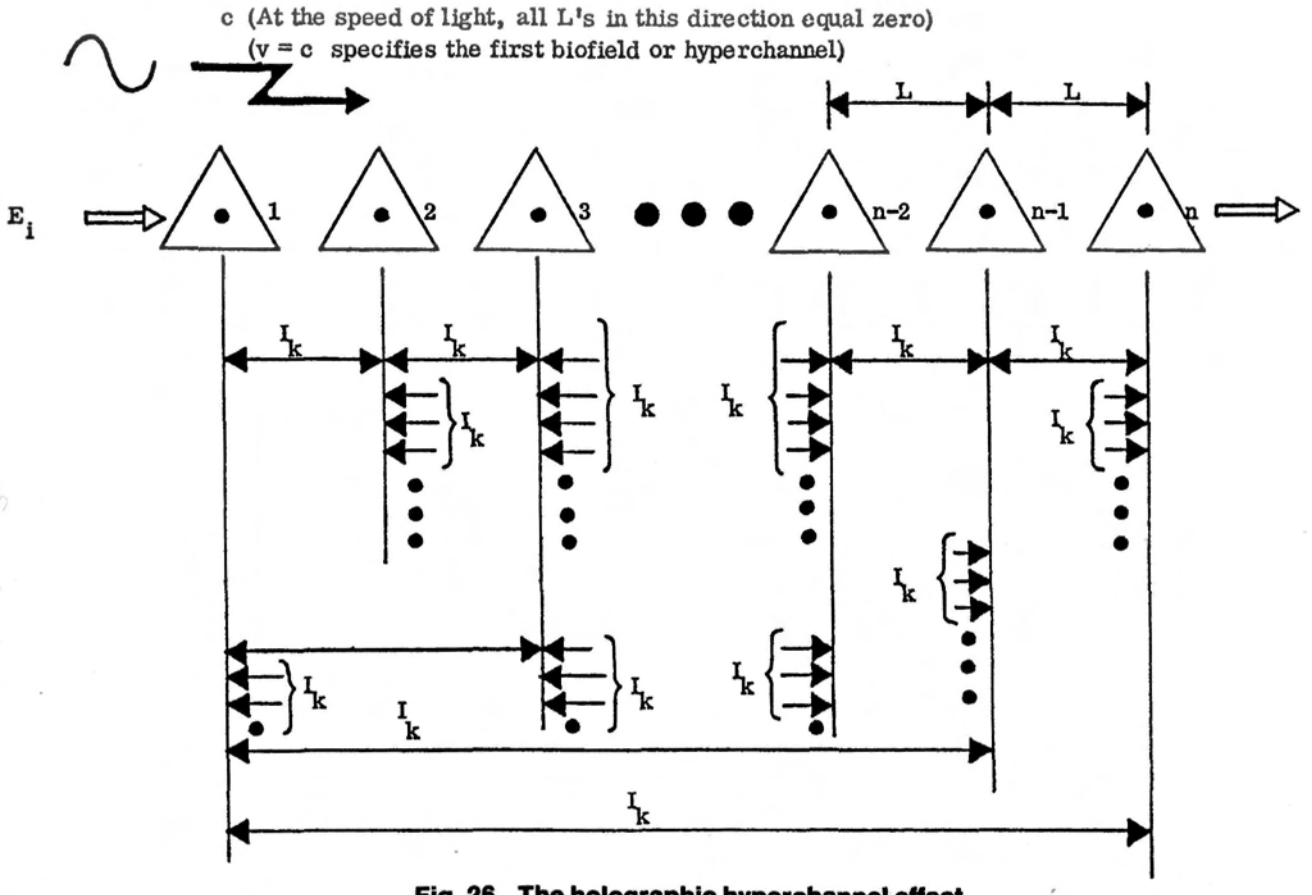

Fig. 26. The holographic hyperchannel effect

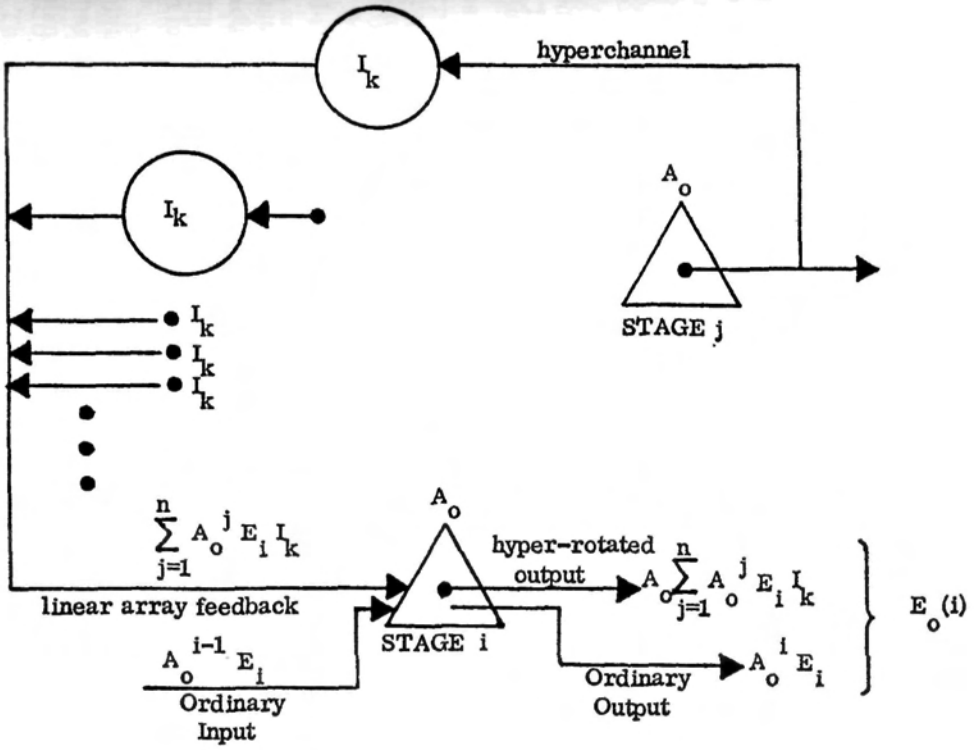

Fig. 27. Output of stage i

ent way, i.e., we visualize a photon as an ordinary particle of three-dimensional matter, resting in a three-dimensional spatial frame (hyperframe) that is orthogonally rotated spatially in higher dimensional space, at 90° to the observer's spatial frame. The hyperframe and the laboratory frame share the same fourth dimension, time. (2) At the speed *c* (which determines the hyperframe in the first place), all *L's* are zeroed out, by the equations of the special relativity transformations. Thus one may view (hyperview) each triangle (brain) as superposed on each other triangle (brain). Furthermore, there exists a very small, finite, nonzero probability that the state of one triangle coincides exactly with the state of another superposed triangle, at any given small increment of time. This probability corresponds to a direct fraction of identity between two triangles, since time is stopped along the chain. At any given small increment of laboratory time, any given triangle has on the average a small fraction of identical coexistence with any other triangle. This identity fraction is labeled I_k in Figure 26.

It is important to note that, for a very small fraction of time, the triangles coincide with each other; i.e.; for a small fraction of time the existence of one triangle is totally holographic. This fraction totally violates the ordinary conservation of energy, which is applicable only to a single channel system. The hyperchannel represents a second channel, an identity channel, and in this channel an object can be in multiple places at the same time. If the triangles, regarded as operating processes, are even slightly coherent, then multichannel communication and holographic transmission of a single state-energy into multiple state-energies occurs through the hyperchannel — usually in the virtual state.

Figure 27 shows the setup to calculate the gain of the hyperchannel amplifier. These calculations yield, for the output of stage i,

$$\frac{E_0}{E_i} = A_0{}^{n} + A_0{}^{n+1} I_k.$$

When no ordinary electrical input exists, $A_0{}^{n} = 0$, and the virtual state amplification is thus

$$\frac{E_0}{E_i} = A_0{}^{n+1} I_k.$$

This mechanism holds the secret to the tapping of zero-point energy and free energy devices. It is also the hidden variable theory that causes a radioactive nucleus to decay. Since radioactive nuclei interact through hyperspace, the amount of radioactivity in a given sample is an exponential function of the number of radioactive nuclei present.

It is also a mechanism which can directly amplify the virtual-mental state into observable state. It is the fundamental mechanism that causes kindling and thus orthorotation. It can be used to materialize tulpas, and accomplish psychokinesis, remote viewing, clairvoyance, precognition, etc.

MIND LINKAGE

The entire human species has been developing and evolving, not just the individual person.

The development of life in a biosystem may be divided into seven stages: (1) the development of planet, primordial atmosphere and ocean; (2) the appearance of

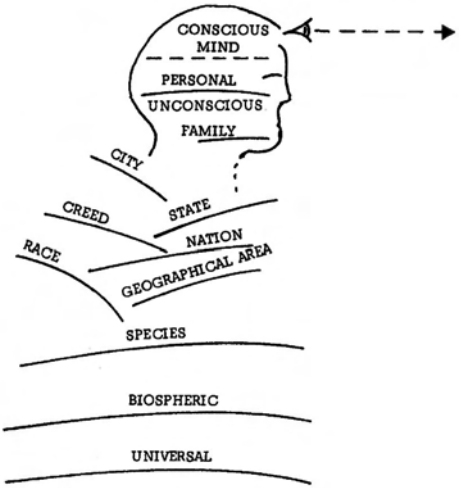

Fig. 28. Layers of unconsciousness

amino acids; (3) the appearance of the self-replicating supermolecules; (4) the formation of one-celled organisms; (5) the formation of multicellular organisms; (6) brain linkage of an intelligent technological species; (7) total omeganess or godhood.

Two major types of behavior are involved in living organisms: genetically programmed behavior and genetically unprogrammed behavior. Thus one mode of behavior control of an organism is nonadaptive and the other mode is adaptive or learned. Intelligence may be viewed as the ability to adapt behavior, and increased intelligence represents a decrease in the portion of behavioral control that is genetically programmed or "hard-wired."

We may further speak of two types of intelligent species: those that possess a tool-using member and those that do not. The first is a *technological* species, while the second is *nontechnological.* By this classification, man is a fifth-stage, technological species.

The intelligent species, being relatively deprogrammed, is highly adaptive and competitive, and many of its species-specific checks and balances are reduced or eliminated. Because of the use of tools in its internal competition, the technological species continually increases the ferocity of its internal competition and its dcadliness to itself. Thus as the power of its tools increases, the technological species carries the seeds of its own destruction within itself, and it will eventually destroy itself unless it advances to the next stage, the linked-mind sixth-stage being.

The sixth stage consists of the linkage of all individual brains in the species into one single superbrain, producing a superbeing having absolute control of space and lime. A technological species is necessary to accomplish linkage and produce a multidimensional, eventually nonphysical, superbeing. When the technology is sufficiently advanced for linkage to be developed, the power of the tools is so great that self-destruction is imminent. Thus an advanced technological civilization is near linkage and also near Armageddon, and in either case it vanishes as a limited, three-dimensional species of the fifth stage. This accounts for the notable absence of a technological species similar to man in man's universe.

ANGELS, IMPS, AND UFO TULPAS

If we realize that each of us has his own mind world, an S^3 frame with respect to the *S* frame physical world, but separate from each other *S* frame mind world, then we see that, if we take common forms that are in the minds of all human beings, it is much easier to kindle them because they can be cohered much more easily.

The common crosstalk in all minds constitutes the collective unconscious. Since the common crosstalk is in a sense a mind, and since it is connected to a "body" of many cells, i.e., of four billion humans or so, then this collective unconscious is a living, breathing entity.

Furthermore, the usual content of its mind is a great deal closer to physical phenomena that are in all minds than is a single human being's mental content. Much of what we term physical reality is in fact prescribed by the collective human unconscious. And if the collective human unconscious is changed in its conception of reality, then four billion stages start kindling with the hyperchannel effect, and immediately the new conception is physical reality.

Borrowing from Jungian psychology, let us call a form that is in each human mind an archetype. Let us also realize that there are shallower levels of unconsciousness (Figure 28) between the total collective unconscious and an individual mind. For an Irish-American there is one level defined as Caucasian, another defined as Irish, another defined as American, another defined by the larger region he lives in (say the state), another defined by his family, and another by his own personal unconscious. The levels are not mutually exclusive, but intersect across one another. At any rate, all these unconsciousness levels above the collective human species unconscious also shape, modulate, mold, and change the kindling channel that exists for a person or group. All these levels of unconsciousness are like finer and finer tuning levels to change the kindling mechanism.

An archetype that is kindled from the collective unconscious is kindled through such a mechanism of unconscious levels of tuning, and the reality format that is kindled is determined by the type of pressure and the content, biases, or tuning of all the levels between it and the conscious minds of the individuals who observe the phenomena.

All tulpoidal manifestations are kindled through and by this mechanism. All of them are shaped by the multilevel unconscious tuning. All of them are caused by an unresolved conflict in the deeper unconscious layers.

Since most minds are notoriously unstable, the tuning is unstable almost always, and the tulpoidal manifestation is usually fairly shortlived, usually not more than a few minutes, or a few hours.

Angels, imps, Virgin Marys, UFO's, sasquatches, Loch Ness monsters, lake monsters, sea monsters, nocturnal mystery lights, fairies, elves, devas, devils, ogres, Mothman, men in black, goblins, large monster birds, etc. are all kindled by the same process. And so are cattle mutilations. I fear that human mutilations will be next.

Any tulpoidal materialization may be physically real during its stable period. It may make large tracks in the ground, operate shiplike space vehicles, break tree branches, take human specimens on board, examine human specimens, etc.

The tulpoid may appear benevolent or harmful, and it may actually be so when in the stably materialized mode. The full content of the human unconscious is there to be materialized in physical form — all the good, all the bad, all the noble, all the sly aspects.

When enough human unconsciousnesses have the idea of fairies deeply ingrained in them, occasionally a real, living, breathing fairy pops out of the collective unconscious, riding as a direct modulation on a more primitive overall human species archetype. And the fairy may do all the things expected; she may pose riddles, give gold coins which must not be examined or they will be lost, etc.

Religion can also make use of tulpoidal appearance. When Christian predecessors believed in a vengeful god, a powerful but spoiled king, they got all the manifestations of that kind of Being. When they believed in a god of sacrifice, they got a god who demanded sacrifice and thrived on it. And when many believe in angels and Virgin Marys, they sometimes actually appear. These appearances are not hallucinations; they are completely real. It is just that all possibilities are concretely and physically real in their own realms, and any of these may be tuned in to appear in this realm.

An infinite number of reality channels exists. The total instrumental characteristics, genetic, psychological, and physiological, of the observers who tune in the channel determines the noise content and the actual channel selected.

A reality is simply an orthogonal frame or world. AH possible realities already exist. A channel is a set of tuned and timed orthorotations communicating back and forth between two orthogonal frames or worlds. Tuning is a complex of mind and matter, and of many unconscious levels.

For a perfect adaptation of this mechanism of coherence, any coherent signal — no matter how fantastically weak — can be raised up out of the grass and made dominant. By time coherence in the virtual state, a virtual state entity can be amplified into observable state. From sheer nothing we can produce something. And since every possible something exists in nothing and is available for cohering, we can get anything at all by this process, at least hypothetically.

DREAMS ARE UNRESOLVED CONFLICTS

Everything is essentially mind. Mind forms layer after layer of overlapping zones of shallower and shallower unconsciousness (multiple simultaneous consciousness), all the way from the universal allness to the personal unconscious, and culminates, like the tip of a dagger, in each conscious mind. Figure 29 illustrates these mindlevels.

Just as the dreams of an individual show his unresolved conflicts, so the materialized tulpoids of the collective human unconscious show its unresolved conflicts. Tulpoidal phenomena thus symbolize man against himself, or one group of humans against another group of humans. The great unresolved conflict in the human species since World War II has been the Cold War. And therefore the great flaps of tulpoidal UFO activity should correlate directly to the Cold War. And so they do, as I indicate in this book. Literally we ourselves are our own "Satan," for in man's inhumanity to man, satanic evil is created inceptively. And we ourselves are our own "godform," for in man's love of his fellow men, goodness is created

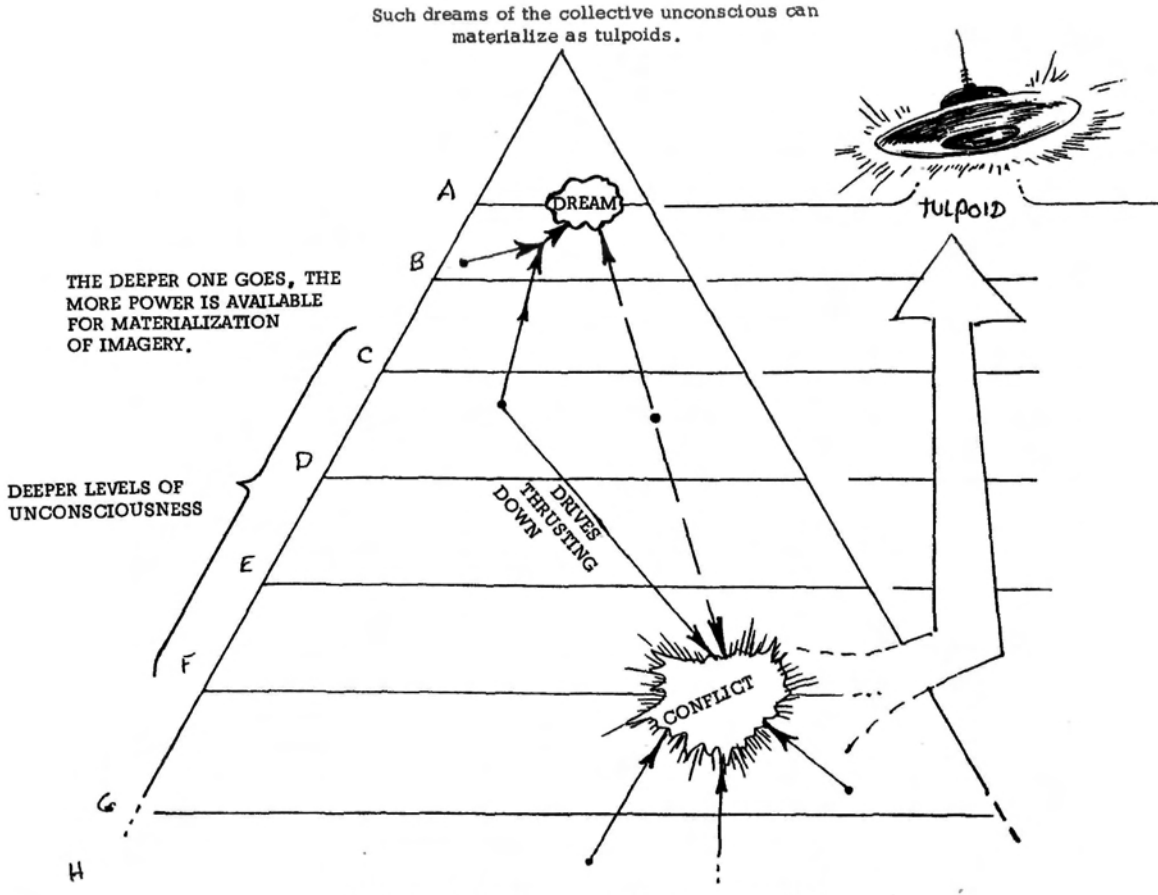

Fig. 29. Dreams are unresolved conflicts

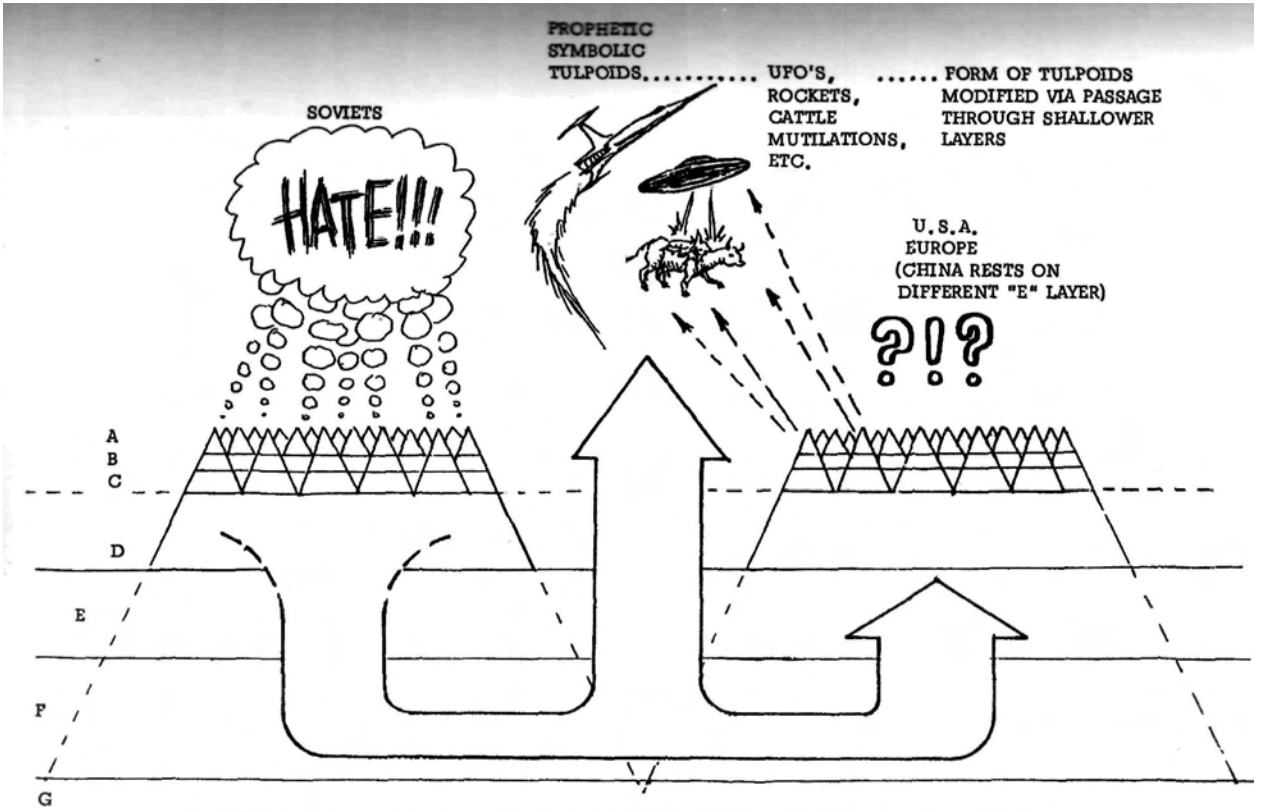

THE PSI CHANNEL IS LIKE A QUASI-HYDRAULIC U-TUBE. CONSISTENT PRESSURE INTO DEEP LAYERS RESULTS IN UPWELLING TULPOIDS WHOSE FORM IS MODULATED AND SHAPED BY SHALLOWER LAYERS, ON THE WAY TO MATERIALIZATION.

Fig. 30. Collective conflict initiates prophetic tulpoids

inceptively. It is not accidental that the Avatar Jesus exhorted man to love God with all his heart and mind, and to love his neighbor as himself. It is also not accidental that a human culture seeks and "obtains" a godform or god-image consistent with its own level of understanding and belief; the resulting tulpoidal activity conditioned into the collective unconscious and the cultural unconscious, and tuned in from them, will be consistent with the cultural desires and expectations.

So in a sense we are the creators of our own reality and our own tulpoidal expressions of higher reality. But in addition to tulpoids, the present character of spacetime and dimensionality, and the very laws of the physical universe, are largely prescribed by the collective human unconscious.

GHOST ROCKETS AND FLYING SAUCERS: MATERIALIZED TULPOIDS

Unfortunately, from 1945 to 1947 events occurred that caused a split among previous World War II allies and that led to the beginning of the Cold War in 1947.

Due to these events, Western nations perceived a growing threat from the Soviet Union. The resulting interplay of events, news reports, and personalities, plus the traumatic aftermath'of World War II, led to strong psychological pressure on the group unconscious of the Western nations, and thence on the collective human unconscious. This pressure resulted in popouts of direct orthorotations of resonant archetypal symbols from the collective unconscious, the archetypal format being successively modified by the Western group unconscious and the progressively higher levels of unconsciousness.

The formats of the deep human unconscious were formed millions of years ago in the primitive tribal state. In the tribal warfare of those ancient days, the male went to where the action was, while the female stayed behind in the protected cave, fortress, or shelter to care for the young. Thus the male symbol was closest to the threat and identified with being there.

Furthermore, in primates the phallic symbol is the universal symbol of threat, dominance, and defiance. Dominant primate monkeys often briefly mount submissive males to show their dominant position, exposing their genitals in so doing. If the mounted male does not submit, an immediate battle ensues to determine the dominant male. Thus the phallic symbol represents threat and domination.

In the deep human unconscious, fire is a symbol of power, for with fire the species held predators at bay and began the long trek up from the jungle cave to modern civilization.

Finally, the unconsciousness of a substantial number of the Western nations had been deeply impressed by the German V-l and V-2 rockets during World War II, for the imagination of the world had been breathtakingly fired by the surprise advent of the German rocket weapons.

Thus we would expect that in those Western countries — Norway, Denmark, Sweden, etc. — that are close to the Soviet Union, archetypal tulpoid popout materialization would have taken a male, threatening, dominant, power format. The nearest, most powerful, most resonant recent stimulus symbol in the Western group unconscious would have been the final modulation, determining the final format.

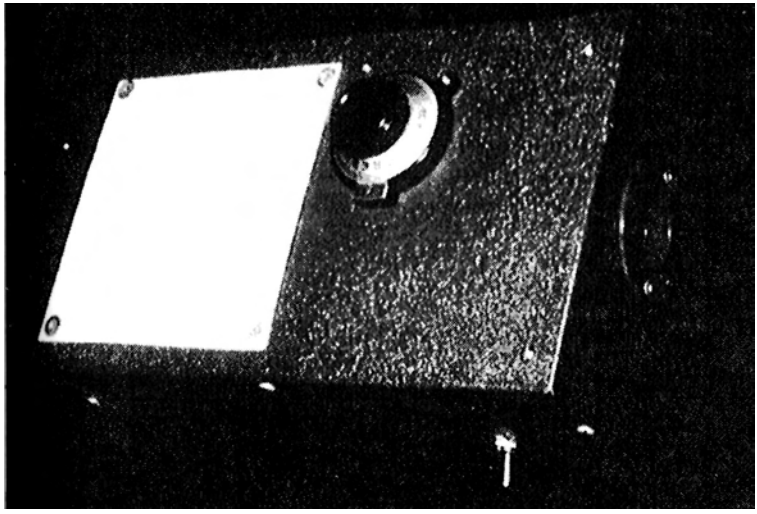

Outside showing contact ptate, sample well, tuning vernier, and on-off switch.

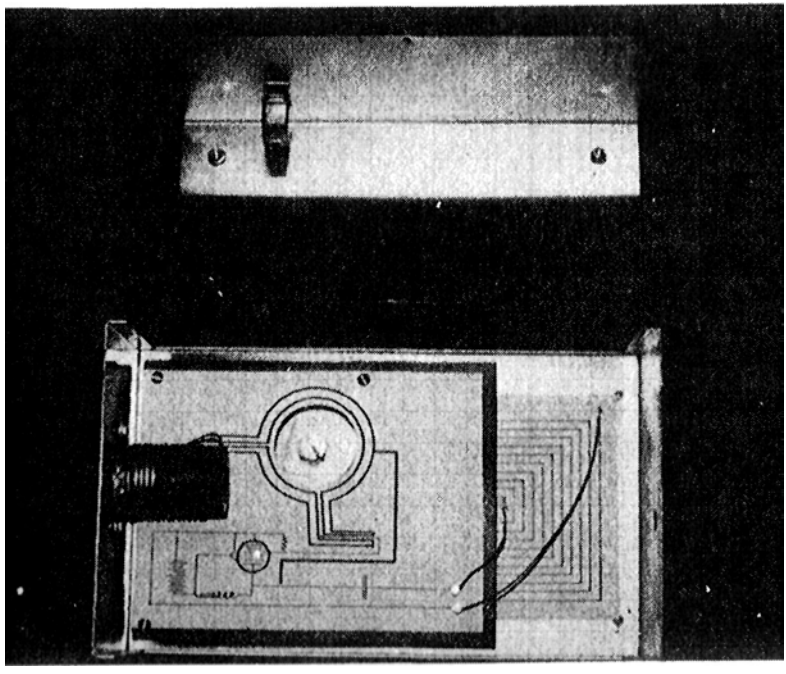

Inside, showing India Ink drawing of *an a*mplifier schematic, used as the "amplifier.'

Photo 41. Hieronymus device — second kind.

So a massive wave of "ghost rockets" from the direction of the Soviet Union appeared in the skies over Norway, Sweden, and Denmark, and other nearby European countries. (See Photograph 43.)

However, North America constituted a natural fortress with great ocean barriers to the east and west, and no strong enemy to the north or south. Therefore, a female symbol (archetype) should have been resonant and stimulated in the U.S., and so it was. In 1947, the year the Cold War began, Kenneth Arnold, flying over the state of Washington (the most northwestern U.S. state at the time, and the one nearest the Soviet Union), encountered a formation of flying saucers — the female circle mandala, dressed in modern aeronautical form. Thus was born the age of flying saucers in America.

PART THREE

NEW MILITARY APPLICATIONSOF PSI RESEARCH

BACKGROUND TO PSYCHOTRONIC RESEARCH IN THE U.S. AND THE U.S.S.R.

In this section I will discuss some of the fantastic psychotronic weapons that have been built and deployed by the Soviets as a part of operation "Fer-de-Lance," the Soviet plan to conquer the world.

The Soviet Union has had a massive developmental program in what they call energetics or psychoenergetics (and what we are calling psychotronics) for about thirty years. To appreciate the mind-staggering weaponry that has emerged from this effort, I should point out that the U.S. developed the atomic bomb in World War II in about four and a half years; thus the Soviet psychotronic program is the equivalent of roughly seven Manhattan projects, back-to-back. With this comparison we gain a rough yardstick to appreciate the fantastic capabilities that must have emerged from the sustained Soviet program. As we will see, they are indeed mindboggling.

Ironically, most of the original theoretical work was done here in the United States, just as the pioneering work in rocketry was done here by Goddard, before the Germans picked it up and advanced it to the V1 and V2 rockets. Just as Goddard himself was once the laughing stock of the Pentagon, so the key U.S. researchers who could have initiated the psychotronic age in the West — Moray, Abrams, Reich, Hieronymus, Drown, Tesla, de la Warr, etc. — were generally ignored or prosecuted or both. Even more deadly has been the studied avoidance of any application of the basic theoretical work — which again was developed largely in the U.S. This work included the Everett-Wheeler-Graham many-worlds interpretation of quantum mechanics, and the extension of Lorentz's work by Ives, Ruderfer, and others to show that almost all modern physics — including general relativity, Newton's laws of motion, and the law of universal gravitation — can be straightforwardly derived from a Lorentz-invariant nonmaterial ether. Even though Pauli pointed out that the Michelson-Morley experiment only eliminated a material ether rather than ether per se, and although Einstein himself once proposed the use of the term ether to include dimensionless vacuum space complete with various fields, modern physics in the West has ignored the ether theory.

As Robert Anton Wilson points out, whatever you believe imprisons you. The West has been solidly imprisoned in its own orthodox view of physics, and hence has been unable to surmount the stone walls of its self-imposed mental barriers. In fact, it has not even tried. There has been no serious, sustained program to deliberately examine the loopholes in present theory and seek the necessary changes to provide a theory of paranormal-psychotronic phenomena. In fact, the major Western work on paranormal phenomena seems only to attempt to "prove" over and over that such phenomena exist; and to attempt to derive from present physics theory a "normal sane" theory for "abnormal insane" phenomena. The orthodox establishment continues to vigorously attack the experimenters who struggle with paranormal research on the grounds that their work does not present science.Hence the experiments and experimenters are unscientific and either at worst frauds and charlatans or at best seriously deluded.

The simple procedure necessary to solve these questions — set up a deliberate, well staffed, well-funded program on a continuing basis — has not been adopted in

the West because of the short-sightedness of our management structure. We seem to have totally forgotten that we got the atomic bomb in the first place and we put a man on the moon, simply by starting a program with staff and funds to try to do it, not by engaging in a neverending series of arguments as to why it could not and should not be done.

So, ironically, the nation that prides itself on being free and liberal has adopted an iron dogma of its own in science, a dogma that yields very slowly and that has effectively blocked us from serious and prolonged efforts in psychotronics.

Meanwhile, the Soviet scientists — admittedly kicked firmly in the tail by Stalin — have simply got off their dust-encrusted seats with alacrity and got to it. In thirty years of such getting to it with massive state support, they have already launched the psychotronic age, first applying it to the weapons field, the typical Soviet priority. Meanwhile, for the same thirty years we in the U.S. have played the same old tired games that once led Heisenberg to remark that new scientific knowledge only gained acceptance when the old scientists who so adamantly opposed it had died away.

Finally, there is a direct relationship between UFO's, psychotronics, the collective human unconscious, the Cold War, and Fer-de-Lance that cannot be escaped. So while this section emphasizes psychotronic weapons deployed by the Soviet Union I continually remind the reader of the concepts involved in the related paranormal phenomena, which were covered in Parts One and Two. So with these words, let me give a brief summary of Soviet psychotronic weapons. Make no mistake, it appears that the final holocaust is now unavoidable — we will reap the full rewards for our smugness, pride, arrogance, and inflated egotism.

The Soviets will unleash World War III and they will unleash the psychotronic weapons on a totally unsuspecting world.

But there is something more; it does not end there. There is another player in the game — the collective human unconscious, ZARG itself, will unleash a reaction that makes psychotronic weaponry pale by comparison. Yet when that great entity has roared out its anger, destroyed perhaps half the earth, and then opens its eyes, the full biblical prophecy will in a most bizarre and unsuspected way be fulfilled.

Time will end, and the grave will give up its dead. The unifying of all human minds into one will complete the birth of a new godlike being, extending from the beginning to the end of time all at once, and from beginning to end of all possible times all at once. Three-dimensional concepts and limitations will fade away as child's play to the being that is already in four billion dimensions.

And you and I will become gods, literally, actually — for being is holographic, and whatsoever ZARG becomes, so we all become.

PSYCHOTRONIC BACKGROUND SINCE WW II

After WW II Soviet scientists were ordered by Stalin to actively seek another area of great breakthrough — such as the U.S. atomic bomb had been — and leave no stone unturned in their search. Apparently the Moray detector was resurrected and intense experiment and development begun on it. Much of the pioneering radionics work of the West and Ive's work would also have been available at this time. I believe that in 1958 the Soviet nuclear catastrophe near the Urals was the

result of an attempt to transmit a nuclear explosion through hyperspace. (The peculiarity of a transmitter tuning failure would have resulted in an explosion emerging from the nearest large nuclear waste storage, and that apparently happened.)

In 1956, however, a major new interpretation of quantum mechanics was originated by Hugh Everett at Princeton University under the world-renowned John Wheeler. This is the theory of the universal wave function—the many-worlds interpretation (MWI) of quantum mechanics. Practically the entire Western output on the subject is available in his 1973 book entitled *The Many-Worlds Interpretation of Quantum Mechanics.*

This physics is so exceedingly strange that it has been ignored by almost all Western physicists — indeed, it is so strange that even its originators, Everett and Wheeler, are said not to be able to believe it. Wheeler is reported to have once stated that he could believe it on Monday, Wednesday, and Friday, but not on the other days of the week. Using the MWI, however, one can produce a theoretical model of psychotronics which is totally consistent with the entire experimental basis of modern physics, and unite both mind and matter on a single scientific basis.

The Soviets apparently seized on this new theoretical work and applied it to the Moray device, solving their theoretical and technical difficulties.

In 1960, Khrushchev, speaking to the Presidium, stated that the USSR had a new weapon in development ("just within the portfolio of our scientists, so to speak") that was so powerful it could wipe out all life on earth. I believe he referred to the nuclear hyperspace howitzer and to the death ray weapons under development at that time, such as the following.

ELECTRON DISSOLUTION

There are four levels of effects on biological systems that are irradiated by electron dissolution beams.

Interference with the electrical functioning of the nervous system is the dominant effect. Single channel subsystems are more sensitive to the effect.

Mild irradiation (or mild kindling of short duration) causes weakness, trembling, and an unreal, dreamy feeling (as when one gets a whiff of anesthesia). The victim is conscious, however, since consciousness is limitedly multichannel.

Moderate irradiation (or kindling of moderate duration) causes paralysis of the motor system, and a very unreal, floating feeling. The individual is barely conscious and is hypnogogic. Panic is usually engendered.

Strong irradiation (more protracted kindling) causes loss of consciousness in addition to paralysis. The autonomic nervous system still functions with difficulty, and the victim is just barely alive. Convulsions and other symptoms may appear.

Very strong irradiation (protracted kindling) totally jams all levels of the nervous system, and death results instantly.

In UFO contactee incidents this effect is widely demonstrated. Many cases show step function failure of automotive electrical systems, lights, radios, etc., as a UFO approaches. When the UFO departs, the electrical systems almost invariably resume complete operations. Absolutely no electrical components are damaged.

To extinguish these systems with massive RF fields would result in blowing fuses, diodes, transistors, etc., and a great amount of electrical sparking — probably sufficient to blow up the gasoline tanks, In fact, none of these things occur.

Stage 2 electron dissolution should definitely disable automotive circuits, and the upper level of stage 1 may be sufficient. Either would leave the automobile passengers conscious, though paralyzed in one case and not in the other. Both types of correlations are shown in the UFO literature.

THE 1973 CONTACTEE WAVE AND CATTLE MUTILATIONS

In 1973 the Yom Kippur war took place. This was the Soviets' "Spanish Civil War," and they tested the final tactics and equipment for antitank and antiaircraft weaponry, and obtained final data on tank and equipment loss rates for modern combat. The effect on the U.S. and NATO of the cutoff of Arab oil was also tested.

At one point, when the Israelis cut off an Egyptian army in the desert, the Soviets notified the U.S. over the hot line that Soviet forces were going in and the U.S. could do whatever it pleased. The Soviets loaded and readied seven airborne divisions to insert, and the U.S. readied its single airborne division to send in. So the world teetered on the brink of direct ground confrontation between the Soviet Union and the U.S., with all its possible consequences.

Confrontation is after all another form of *contact.* And UFO contactee cases involve *confrontation.* In the very month, October, that the Yom Kippur War erupted, the greatest wave of UFO contactee cases in history broke out in the U.S. Further, in the shallower unconscious levels above the collective species unconscious, which were modulating and molding the tulpoidal reality format, the imagination of the world had been captured by the spacesuited astronauts who had walked on the moon. So most U.S. contactee cases involved spacesuited beings, conditioned into that framework by the national, cultural modulation. Some of the contactee cases involved robots or metallic men, similar to the mechanisms and robots of the U.S. space program. And here in the U.S., the fortress, the female-mandala craft symbol was generally maintained.

Now if this unbelievable scenario has any validity, then after the dress rehearsal of the 1973 Yom Kippur War we ought to have seen an increase in the tulpoid phenomena of a sharply symbolic nature. And that has happened.

The cow is the Western female symbol par excellence; Western children nurse on cow's milk, so to speak. If the U.S. fortress is to be violated, then the female symbol will be violated as the time for the Soviet assault nears. So cattle mutilations of a mysterious, paranormal nature have been occurring all across the U.S. — from the East Coast out through Colorado, Utah, and Montana — approximately nine thousand by now, in some estimates. The symbolism in the mutilations can be easily read: the U.S.'s lifeblood is going to be drained, totally, as all the blood is usually drained from the cattle. The Soviet operation will be launched with blinding speed and surgical precision, and the mutilation of the cattle is done as if by highly skilled surgeons. The children of the West shall be cut off from their sustenance, and so the cow's teats are removed. The armed forces (males) confronting the Soviet forces will be devastated (i.e., the fruit of the womb will be

Precursor(s)	Wave(s) / Incidents	Comment
German rockets in WWII/Soviet threat in 1946–47	1946–47 ghost rockets over Sweden and adjacent countries, from direction of U.S.S.R.	Phallic tulpa symbols
Buck Rogers/sci–fi ships Cold War 1947	1947—Flying saucers	Circle/Disc mandala in scientific dress
1950 Critical Korea period	1950 Wave of UFOs	Peak pressure surge on collective unconscious
1952 Critical Korea period	1952 Wave of UFOs	Peak pressure surge on collective unconscious
Sputnik 1957–1959	1957–1960 Wave of UFOs	Peak pressure surge on collective unconscious
Cuban missile crisis 1962	1962 Wave of UFOs	Peak pressure surge on collective unconscious
Arab/Israeli War 1967	1967 Wave of UFOs (4th largest)	Peak pressure surge on collective unconscious
Arab/Israeli War 1973 Near confrontation U.S. vs U.S.S.R.	Spectacular 1973 wave contactees increased, space–suited beings increased	Peak pressure surge on collective unconscious; astronauts had walked on moon.
Soviet attack preparations completed	1975–present cattle mutilations in U.S. heartland	Cow is female symbol. The female (fortress, sanctuary) will be violated.

Fig.31. Examples of UFO waves

October 11, 1973 UFO CE III
The Pascagoula incident from the witnesses' viewpoint.
Humanoids were atypical.

Fig. 32. 1973 Contactee wave

devastated) so the sexual organs of the cows are excised. Free speech and freedom to hear will be cut off, so the cow's lips, tongues, and ears are excised. A very high (psychotronic) technology will play a role, but one which will limit resistance, so the cut edges are often made as if by pinking shears and then precisely burned as if by a laser. (The laser is symbolic of new, strange technology almost incomprehensible to the average person.) In one case a horse was the victim — a young horse, symbolic of the young soldier. It was castrated, as the dominance of the Western soldier will be surgically excised. Castration of the male symbolizes the total loss of his power and the infliction of impotency upon him.

There is more, but this is a bloodcurdling sampling of the metapsychological implications of the cattle mutilations.

RADIATION OF THE U.S. EMBASSY

About 1959 or 1960 the radiation of the U.S. Embassy in Moscow with weak microwave radiation began. It continues to this day. The radiation is a brilliantly designed intelligence probe: the Soviets were vitally interested in ascertaining whether or not their U.S. adversary knew about psychotronics (i.e., whether the U.S. had built such weapons of its own and might have built defense counterweapons as well). Accordingly, they began weak PT-modulated microwave radiation of a high-level U.S. target, the U.S. Ambassador to the Soviet Union, which would guarantee the personal attention of the State Department, NSA, CIA, DIA, the President, etc. The PT modulation apparently consisted of various disease patterns of gradually increasing seriousness — flu, blood changes, heart irregularity, cancer, etc. By the U.S.'s reaction, whether or not it knew anything of PT could be positively assessed. If the U.S. reacted only to ordinary electromagnetics, then with 100 percent certainty it knew nothing of PT and had no secret PT weapons of its own or counters to the Soviet PT weapons. So since about 1959 or 1960, by our alow reaction to the radiation of the U.S. Embassy — and then by our reaction only to the electromagnetic aspects — we have been assuring the Soviets that we know nothing of PT. Even though several U.S. presidents have protested the radiation, the Soviets have persisted because it is an intelligence tool of the utmost importance to them.

DISEASE AND DEATH TRANSMISSION

For confirmation of Soviet experimentation with PT induction of death and disease, see V.P. Kaznacheyev et al, "Distant intercellular interactions in a system of two tissue cultures," *Psychoenergetic Systems,* Vol. 1, No. 3, March 1976, pp. 141-42; and by the same authors, "Apparent information transfer between two groups of cells," *Psychoenergetic Systems,* Vol. 1, No. 1, December 1974, p. 37. Thesearticles give one a glimpse of the results of over 5,000 Soviet experiments on the basic effect. Kaznacheyev is the head of the Siberian Branch of the Soviet Academy of Medicine, and has at his disposal every disease germ, virus, and toxin known to man. Note that the experiments were performed in the dark to prevent the quenching effect of the visible light spectrum und the effect is only obtained

through the quartz (which has IR and UV windows). Also note that in the two-slit experiment — which contains all the mystery of quantum mechanics, according to Nobel prizewinner Richard Feynman, cofounder of quantum electrodynamics — one does not get the quantum effect with an electron, if the electron is first hit by a photon of light before reaching the two-slit region. If the electron is not hit by a photon, one gets the quantum effect. According to Feynman, the quantum effect in the two-slit experiment is not explainable by any classical means. Our comment is that the explanation is not possible by Aristotle's three laws of logic, on which all Western logic, physics, and mathematics are based. However, the fourth law of logic, together with the present three laws, provides a closed metalogic which does contain the explanation of the two-slit experiment, as we showed in Part Two. The fact that there is no problem in explaining the experiment if one takes into account the nested structure of time was pointed out as long ago as 1957 by Dr. Charles Muses. Similarly, the disease and death transmission experiments of Kaznacheyev et al have been explained in Part Two.

OTHER WEAPONS

Clandestine testing of PT weapons also appears to have been accomplished directly in the U.S. The Legionnaires' disease may have been one such test. The suspect agent was actually seen, according to sworn testimony before a Congressional committee. A person with a book-sized object in his hand (tape recorder with PT pattern), a tobacco-pouch sized object in his coat breast pocket (transmitter) and a wire running to his tie clip (antenna) was present and mingled with the Legionnaires for several hours. He was heard to exclaim several times to various Legionnaires that it was too late and they were all doomed. The eventual appearance of the weird "biological agent" that is different from any other germ known can also be explained by kindling from the anxious minds of the baffled U.S. researchers and scientists. Other such tests have also apparently been conducted.

HYPERSPACE HOWITZER OPERATION

The facility at Semipalatinsk is a third-generation hyperspace nuclear howitzer. It can transmit a full nuclear explosion through hyperspace into a tuner planted anywhere in the universe, without traveling through or in normal space at all. Furthermore, it has a unique characteristic: any number of receiver-tuners may be tuned to the transmission channel and each will have the full nuclear explosion emerge from it, undiminished.

Thus, one channel might be for U.S. Minuteman sites, and a tuner on that frequency (say one containing 100 transistors, sealed in plastic and buried in the earth) could be preplanted near each Minuteman site. Another channel might be for all the SAC bases, another for large U.S. cities, another for nuclear weapon storage sites, etc. Any or all of these could be connected to a single blast transmission, simply by controlling the channel width over which the hyperpace transmission occurs.

Fig. 33. Cattle mutilations

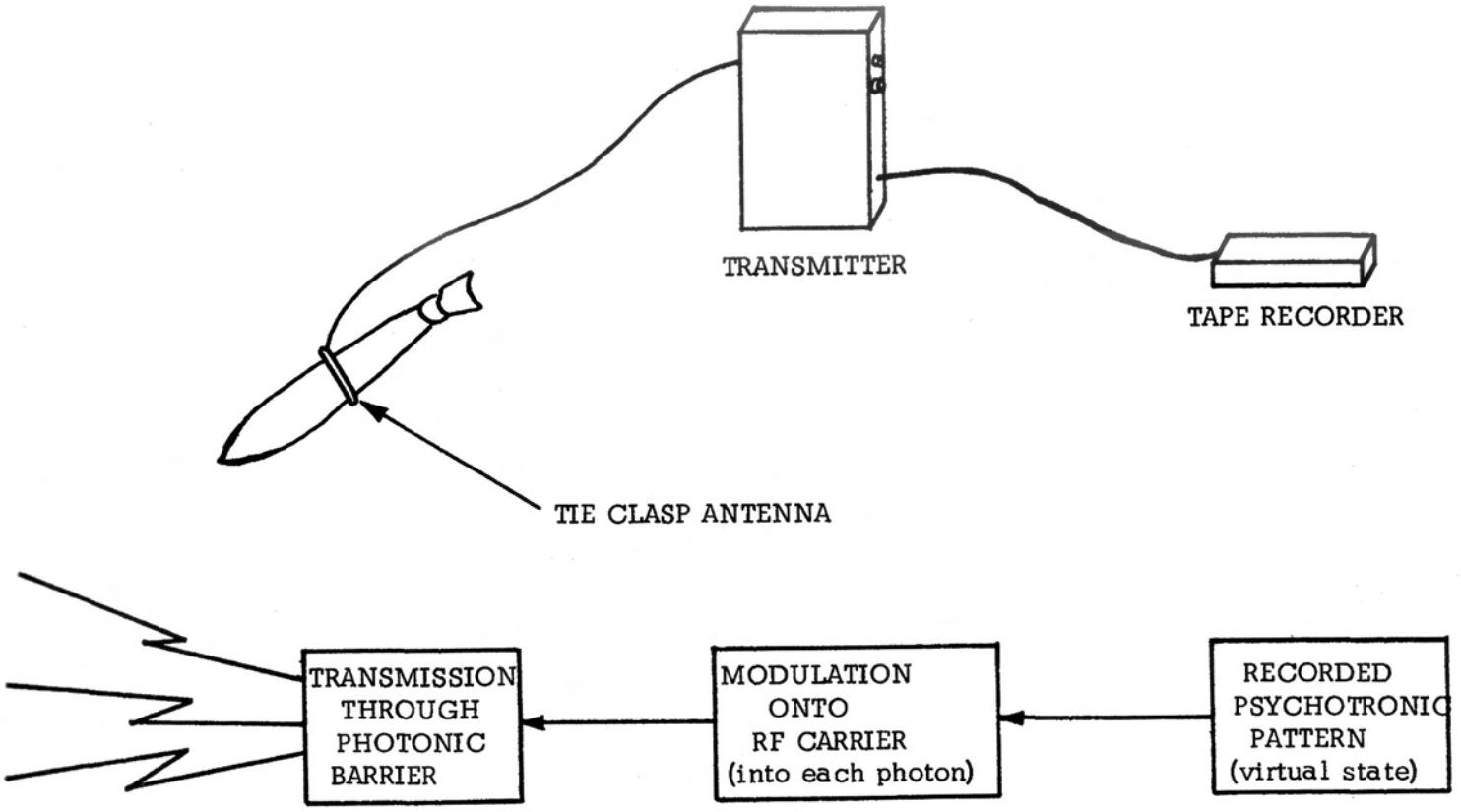

Fig. 34. Induction of Legionnaire's disease

Here one must not confuse ordinary single-channel conservation of energy with hyperspace operation. The transmitter corresponds to the grid of a gigantic triode, the preplanted receivers constitute the plate area, and zero-point vacuum energy constitutes the cathode energy source. So just as in a triode, energy is conserved from cathode to plate, but not exclusively from grid to plate. Since zero-point vacuum energy is being gated by the triode grid (the howitzer) signal (the explosion), the energy that can be outputted at the plate (from the tuner-receivers) is essentially unlimited. Any number of receiver-tuners can be connected to a channel, merely increasing the plate area. And from each tuner there can emerge a full-scale, undiluted replica of the explosion in the howitzer at Semipalatinsk.

Thus a single nuclear blast at Semipalatinsk can in one instant wipe out all hind-based strategic nuclear retaliation capability in the Free World, if the preplanted tuners are on site.

An additional modification — something like additional orthorotator rings surrounding the primary hyperspace orthorotator ring — may have been made to the nuclear hyperspace howitzer within the last two or three years. If so, this would have the characteristic of materially reducing the "spillage" fraction of the nuclear explosion and also the vibration associated with a firing. There is a possible indicator of this: quoting from *Science*, "On five occasions during the first half of 1976 traces of neptunium-239 and molybdenum-99 were detected in southern Sweden. These activities were accompanied by small amounts of fission products such as iodine-131 and barium-140. One of the events was coincident in time with large peaks in the atmospheric tritium gas concentration." (Lars-Erik DeGeer, Swedish National Defense Research Institute, "Airborne short-lived radionuclides of unknown origin in Sweden in 1976," *Science*, Vol. 198, No. 4320, 2 December 1977, pp. 925—27.) These events were concentrated during the time the Semipalatinsk experiments are reported to have started, yet no seismic activity was associated, as would have been the case if ordinary nuclear explosions had occurred in normal space inside a containment sphere for a large particle beam experiment. On the other hand, if a very high percentage of the explosion were transmitted/rotated into hyperspace, then residual traces of a nuclear explosion would have been present in the atmosphere because of the very slight spillage venting into normal space, but almost all mechanical shock and vibration would have been eliminated. It is at least a striking correlation that exactly such indicators are present, as reported by DeGeer.

A clever adversary who becomes aware of the necessity for preplanted tuners could use a very simple but completely effective countermeasure: simply locate the timers and dig them up, then clandestinely put them back into Soviet territory. Or build tuners of one's own and plant them in Soviet territory. Thus it would seem imperative to develop a mode of operation that does not require preplanted tuners at the target area.

This capability can be provided by using the howitzer in an interferometer mode — by constructing additional orthorotation rings around the firing chamber ts (hut a "hyperspace interferometer" exists. With this scheme any point on earth can be precisely focused on by the howitzer, and no preplanted tuner is necessary. The advantage of this mode is the elimination of the need for clandestinely preplanted receivers, and the freedom to operate in spite of any receivers preplanted by the adversary on Soviet soil. The disadvantage of the interferometer is that the

former "triode" operation has now been converted to "diode" operation — when one explosion is put into hyperspace, now a single explosion at a single target area emerges, since a single selected spatial location is now exclusively determined by the interferometer settings.

For a more complicated interferometer mode, orientation and alignment of the interferometer's indicators and controls and amplifiers would be necessary. This could be done using fractional kiloton yield weapons — or even ordinary HE explosions — and focusing the howitzer at a displaced aiming point, at some distance from the target area. This is simply the standard artillery technique of registering a gun on an offset registration point, then performing an x-y shift to the intended target when the gun is fired.

Orientation and alignment of such a weapon system probably accounts for the sonic booms — mysterious high altitude explosions — off the East coast of the U.S. in December 1977 and January 1978. Over the West coast, mysterious explosions occurred inside thunderstorms; these also could well have been the adjusting of the weapon. By using about 100 tons of TNT explosive in the howitzer, a very good high burst registration could be made, and "forward observer" agents in the U.S. could observe the bursts through optical instruments and report their exact positions, thus calibrating the interferometer settings. Of course, mysterious booms have been around for quite a few centuries; however, these "normal but unusual" phenomena have quite a different sound than does the howitzer shot. The natural booms are not so much like single giant explosions as like rolling thunder. Furthermore, several observations of the booms off the U.S. East coast confirmed light flashes (which have not been seen to accompany the natural booms) and swirling or rotating effects in the flashes. Also UFO's were directly associated with some of the booms, revealing the stress factor on the collective human unconscious, implying their Soviet psychtronic origin. A few years ago similar high altitude booms occurred over Ohio and surrounding states, and such booms have also occurred off the coast of England.

Thus the howitzer may have been accurately aligned for diode operation, calibrated near the East coast, on the West coast, in the center of the U.S., and near England. Furthermore, its firing rate and recovery time were also apparently checked out; five booms occurred on one day and after a lapse of several days, the booms occurred again.

As I describe the fantastic psychotronic weapons the Soviets possess, the reader may wonder why the Soviets have not already attacked. The reason is that the superweapons have a strange weakness and failure mode possessed by no other kind of weapon. The hyperspace amplifiers in the psychotronic weapons depend on a large number of stages, say sixty to one hundred, and the hyperspatial flux in all these stages must be very stable and isotropic. At odd intervals the flux coming in from hyperspace suddenly becomes turbulent; this destroys the smooth coherence in the multiple stages of the amplifiers, and thus the basic amplification mode. Thus *all* the psychotronic weapons will suddenly cease working at the same time, and this "all fail" mode may last from fifteen minutes to even three weeks in an extreme case. Thus the weapons are erratic and not dependable. For this reason, the Soviets dare not rely *exclusively* on them, and so they have been forced also to prepare for full nuclear war as a distinct possibility when they launch operation Fer-de-Lance, the full attack. They have thus built up their regular army, their

navy, their strategic offense systems, and their strategic defense systems on a scale unparalleled in human history. Today the Soviet Union is the strongest nation on earth — by far — and is fully prepared to launch World War III and win it, with or without superweapons.

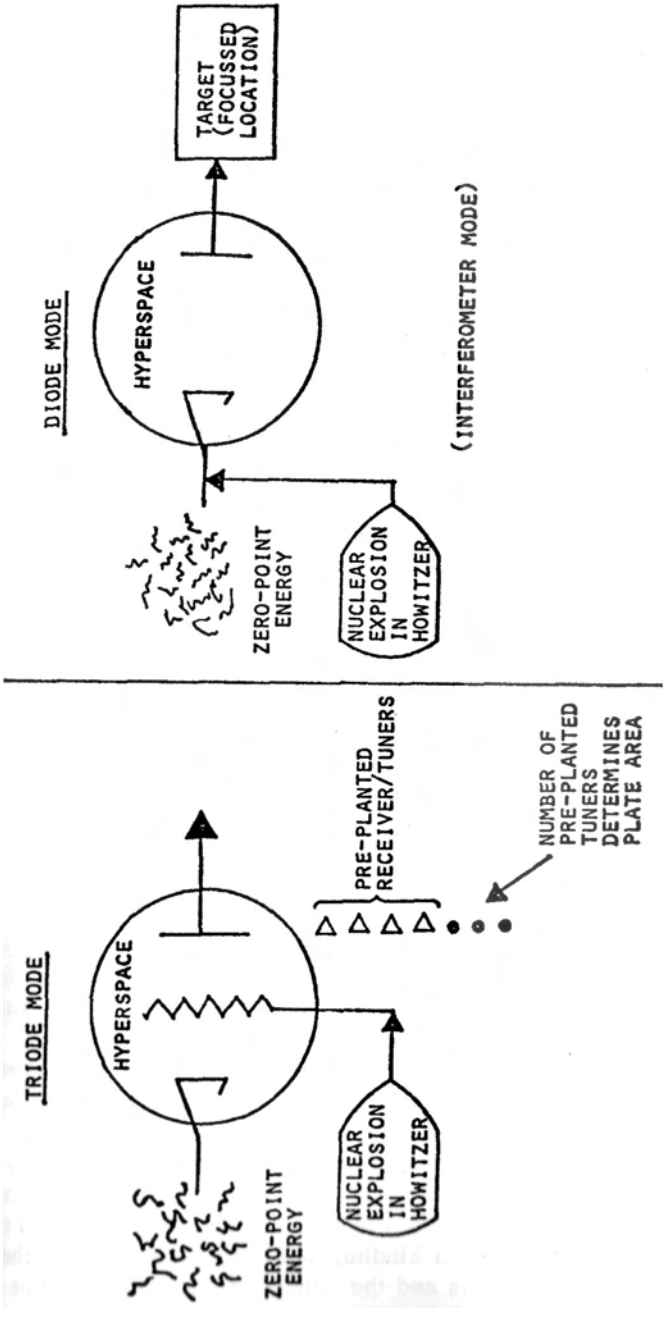

Fig.35. Hyperspace howitzer operation (2 figs)

A POSSIBLE OPERATIONAL TEST OF PSYCHOTRONIC ANTIAIRCRAFT WEAPONS

When the F-l11 all-weather attack aircraft were deployed in Vietnam, a rather interesting loss rate pattern emerged. Of the forty-eight F-l11's in operation, eight were lost at the beginning of the action, but no losses occurred thereafter, according to General Vogt, the officer responsible for U.S. air operations at the time.

Initially there were some radar anomalies and other system malfunctions with the aircraft, but these problems were quickly resolved. The F-l11's flew singly, extremely low, and without radio contact. Between September 1972 and the end of hostilities in Vietnam, the F-lll's flew over 4,000 sorties, never losing any planes other than the eight lost initially.

The reason for the loss of the eight planes remains a perplexing mystery. In fact, there is no knowledge of exactly where the planes were lost, except in one case. That F-l11 was downed over Hanoi, and its two pilots, Captain Robert D. Sponeybarger and 1st Lieutenant William W. Wilson, were captured alive by the North Vietnamese. The two airmen were later returned under the prisoner of war exchange program, and they then told of the loss of the aircraft, which took place under very strange conditions.

According to the two crewmen, they met a sudden disaster while flying over Hanoi at night, supersonically, and at very low altitude — only a few hundred feel above the earth. Without warning the F-lll's emergency indicators lit up like a Christmas tree, indicating massive and multiple failures of unrelated aircraft systems.

They were not hit by a surface-to-air missile, according to the crewmen, because no explosion of a missile warhead, with its concomitant fireball, occurred. If large-caliber automatic weapons fire had hit them, the distinctive streak of the tracers would have been clearly visible in the night sky, and a sharp impact in the aircraft structure would have been felt. None of this happened.

It could not have simply been an aircraft malfunction, because far too many unrelated aircraft systems failed at the same time. (There is triple redundancy in the control system of the F-l11, by way of comparison.)

Indeed this initial loss of eight aircraft — and then no further losses at all — is difficult to explain rationally, as are the mysterious circumstances surrounding the loss of Wilson's and Sponeybarger's craft.

However, it requires no stretch of the imagination to realize that the Soviets very much desired to obtain the glittering new F-l11 to examine its technical characteristics, its sophisticated design, and its highly sensitive terrain-following radar, ECM gear, and other avionics equipment.

Also, the Soviets had a pressing need to try out one or more of their psychotronic antiaircraft weapon systems — perhaps one which simply modulates a radar beam psychotronically to induce electron dissolution.

Accordingly, it can be postulated that the pragmatic Soviets simply combined both needs, and quickly set up a psychotronic trap for the F-lll's immediately after the aircraft were deployed. They may even have cleverly designed the specific psychotronic modulation so that kindling would occur in some of the aircraft's electrical systems before others and the failure would be massive but not total.

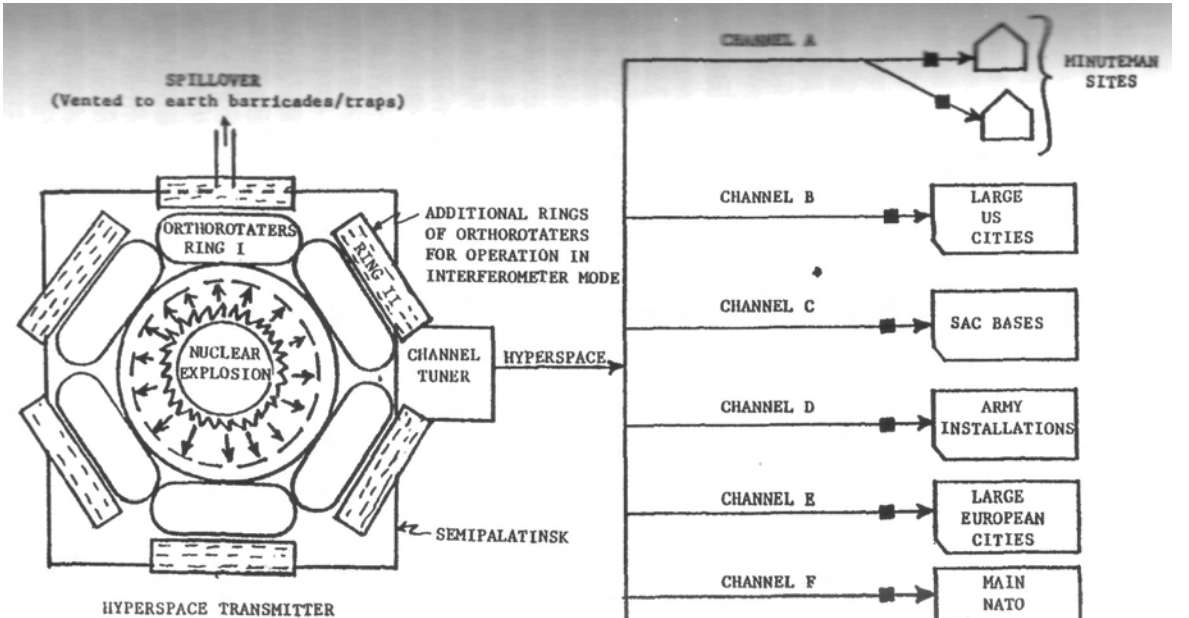

NOTE:

IN NORMAL MODE (MODE I, INSIDE RING ONLY), ONE EXPLOSION SIMULTANEOUSLY EMERGES IN ALL LOCATIONS TUNED TO THE CHANNEL UTILIZED (PREPLANTED TUNERS, MODE I).

EFFECTS OF NERVE GASES, VIRUSES, GERMS, DISEASES, POISONS, MECHANICAL MOTIONS, RADIATIONS, ETC. CAN ALSO BE TRANSMITTED.

IN MODE II (INTERFEROMETER MODE, ALL RINGS), ONE EXPLOSION EMERGES IN THE SINGLE LOCATION TO WHICH THE HOWITZER ORTHOROTATERS ARE SET AND ADJUSTED.

Fig. 36. Nuclear hyperspatial howitzer

And after they nailed enough F-l11's for their purposes, they quietly withdrew the psychotronic modulator, to prevent the U.S. intelligence analysts from catching on to just how really strange the losses of the F-11l's were.

Thereafter the remainder of the F-l 1 l's were successful, and no more were lost. Indeed the F-l11 comes in so low and so fast, and so unexpectedly, tilting and dipping as it terrain-follows on its automatic equipment in a manner that no unassisted pilot could fly, that SAM's and guns normally pose little if any threat to it. So once the silent, eery psychotronic antiaircraft components were withdrawn, the normal antiaircraft weapons of the North Vietnamese were unable to down any more F-l11's.

And we Americans simply patted ourselves on the back, chortling to ourselves how quickly we had "learned to avoid that danger, whatever it might have been."

POPULATION CONDITIONER

Inducing psychotronic signals into mass populations or audiences can influence or control the behavior of large numbers of persons. As these words are being written, such a psychotronic test is apparently being conducted by the Soviets with Eugene, Oregon as a target; previous tests were conducted in Canada.

Psychotronic signals and the patterns they carry can be, and are, modulated upon electromagnetic carriers — in fact, that is one way they are transmitted through the human body and nervous system. When a television camera picks up the photon field impinging on it from a human body or other biosystem, weak psychotronic patterns are also picked up, since the paranormal time quenching mechanism (by visible light) is never quite 100 percent effective. These patterns are riding then as a special kind of modulation on the radiofrequency or electromagnetic carrier — however, they are not modulated the same way as are ordinary signals. Ordinary signals gate the number of photons per second (amplitude modulation), or change and control the frequency of the carrier photons (frequency modulation), or change and control the phasing (phase modulation). However, psychotronic modulation rides on each individual photon, on its time portion (a photon consists of action — energy x time — and it is the time portion on which the psychotronic modulation is riding.)

Thus psychotronic modulations can ride on the transmitted television carrier frequency. The psychotronic modulations are processed through the television receiver, and a small component is emitted as a weak modulation riding on the photon signals emitted from the television picture tube. Along with the light from the tube, these psychotronic modulations enter the eye of the human observer and are demodulated by the retinal interface, thus introducing weak psychotronic signals into the observer's central nervous system. Given sufficient repetition time (say two to four hours), the kindling effect can cause the human nervous system to be profoundly affected. Any disease or death pattern known to man (and some that are not known to him) can be transmitted and kindled in the target population audience.

In fact, depending on the sophistication of the coded psychotronic signals, it *is* probable that the modulation patterns can be targeted against a specific racial type, since there are certain genetic differences between races.

So the type of truck that roams the streets of a city, silently monitoring which television channel the viewers are watching, could be modified slightly to induce specific psychotronic disease or death vectors on to the television receivers. Or it could simply modulate the television transmitters. (A very obvious way is to modulate or pump psychotronically the ground of the electrical power supply, and in most cases this can directly pump the transmitters.)

Or the kindling signal can come from satellites, which radiate weak radio frequency signals downtowards the target population. Here economy of force can be applied; the same type of kindling that induces electron current quenching is usable as a satellite dudder or killer in an antisatellite role, or is usable as a paralysis and death beam weapon against target populations. It is also useful as a killer of other electromagnetic sensors by either jamming their circuitry or simply wiping out (quenching) their emissions which impact on the satellite, preventing any reflected signal.

By this effect, UFO tulpoids often prevent a radar from tracking them, even though the tulpoids are visually sighted.

There are literally thousands of applications; these are just a few to give an idea of the overall effect and its usefulness.

And the psychotronic signals can be modulated onto almost any kind of carrier — telephone, television, radio, the magnetic field of the earth, the Schuman resonance of the earth's magnetic field, the ordinary sixty hertz electrical power system, etc.

We might have an entirely different idea of the potency of the Russian trawlers if we appreciated what their use can be in the psychotronic mode.

We can also understand why a television broadcast of Uri Geller in the act of binding metal stimulated both the ability in other persons and the effect in other equipment across England. And also how the effect has been duplicated — at least so far as stimulating other persons to psychokinetic ability — in this country. A direct means of stimulating psychokinetic ability is thus suggested: simply place the subject to be developed or stimulated in a room with a number of television receivers, all tuned to the same visual program, and place the stimulus material on the receivers. The person should visually watch one receiver and should be wearing very abbreviated clothing, such as a skimpy swim suit, to expose the acupuncture plexuses. Also, normal light in the room should be very dim.

At any rate, this and many other schemes are available to produce direct stimulation, and enhance and greatly speed up psychic development.

The effect could also be used to produce an effective treatment device for cancer. Samples of the particular cancer in the body of the patient could be taken, and the invisible psychotronic radiation pattern from the cancer witness could be introduced on the input of a Hieronymus-type device, shielded against ordinary light, The output of the Hieronymus device could then be fed to a bank of phase inverters, which covered in total a broad band (the cancer band, which would have to be established by laboratory experiment). By inverting the cancer pattern, we now have a cancer-extinguishing type of radiation that is specific for the cancer the patient in fact has.

Then by introducing this quenching pattern as a modulation onto the correct tup of electromagnetic frequencies (again this group would have to be demined for the specific frequency plexus that would produce an effect in the local-

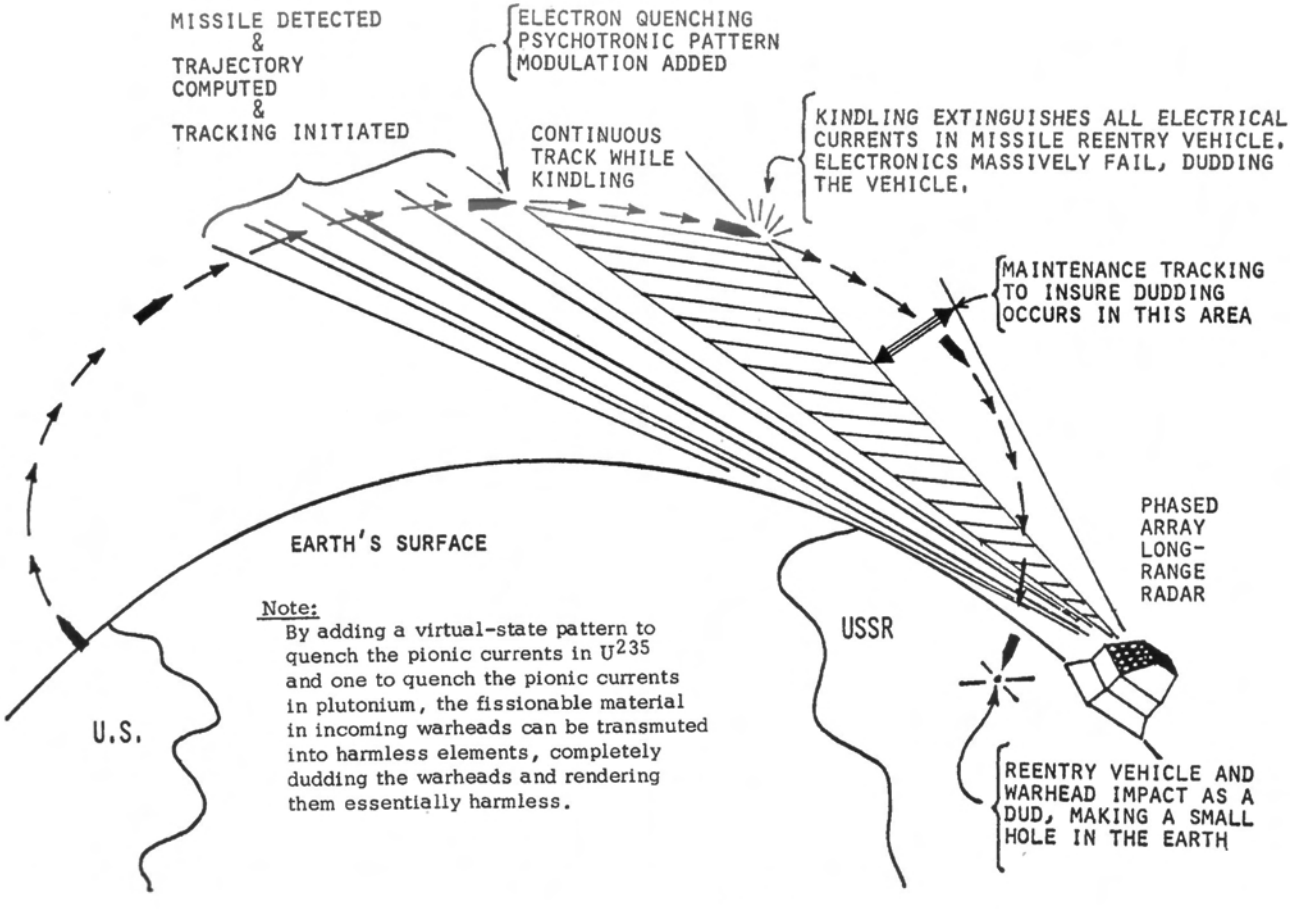

Fig. 37. A midcourse ABM system

ity of the body in which the cancer is located), the proper acupuncture plexus would be stimulated, stripping off the cancer-quench psychotronic pattern and sending it to the specific location of the cancer. Over a period of time (say several very weak microwave radiation periods of two to four hours each), the cancer could be killed completely, down to the last malignant cell. Whole body or spread cancers could be treated simply by increasing the number of frequencies modulated, to hundreds in some cases. Other similar diseases could be treated likewise. As an example, a Curative psychotronic radiation pattern complex could be worked for hydrophobia and such presently incurable diseases, and these could also be effectively treated. The same tool will yield almost unbelievable medical benefits if the scientists can ever be convinced to start the development.

A MIDCOURSE ABM SYSTEM

Here is the scheme for a first-generation, long-range, Soviet midcourse anti-ballistic missile defense system.

A long-range radar — preferably a phased array, scanned radar — acquired and tracks the missile during its midcourse phase shortly after it breaks above the horizon, as viewed from the radar site. The radar programs the track mode beams against the incoming missile, tracking it and gathering sufficient position data to allow its trajectory to be computed. Then a psychotronic electron-extinguishing pattern is added to the radar beam, riding as virtual state carried by each individual photon. Kindling of this virtual pattern energy begins on and in the target vehicle. The electrons flowing in the electromagnetic control system, fusing system, and wahead system of the incoming missile begin to be quenched, turning into neutrinos and radiating away with no physical effect. When sufficient currents have been extinguished, the electromagnetic circuits start failing. (With loss of appreciable power and voltage, most such systems fail.) The incoming vehicle/warhead is now dudded, and there is no longer any danger of a nuclear burst from the missile.

For assurance, tracking of the incoming reentry vehicle continues, with a quenching psychotronic modulation being maintained.

The warhead/reentry vehicle strikes the ground, making a hole in the earth, without nuclear explosion. A low order detonation of the HE explosive surrounding the nuclear material in the warhead may occur.

An alternate scheme is, during the maintenance period, to add an HE explosives ignition temperature psychotronic pattern to the beam. In that case, a low order detonation occurs high in the atmosphere or back along the trajectory, removing the warhead and vehicle from further consideration.

As a backup, additional terminal systems — using either psychotronics or normal interceptor missiles or both — may be used. Thus even if the psychotronics fail due to an unexpected "all off' occurrence, ordinary ABM engagement occurs.

An additional scheme is to lock the radar beam onto the missile, then initiate a "Tesla effect" kindling of energy, place it into a columnar traveling wave, and direct it along the radar beam to the incoming missile in its midcourse phase. The midcourse missile is thus struck with a massive plasmoid fireball of intense electromagnetic energy, and massive amounts of energy arc dumped into the missile, destroying it.

Thus the Soviets have known for over a decade that one does not have to hit a bullet with a bullet, if one is clever, and if one possesses psychotronic weapons and psychotronic modulation systems for one's radars.

As an added benefit, the same radar is quite effective against incoming Strategic Air Command bombers or air-to-surface missiles fired from those bombers.

As the Soviets know full well, 100 percent defense is quite feasible, considering the fantastic number of radars and radar sites they possess! In fact many of the Soviet SAM systems are beautiful ABM systems also, in the psychotronic mode.

THE BELL ISLAND INCIDENT

On April 2,1978, something unusual hit the Canadian community of Bell Island, off the east coast of Newfoundland; Bell Islanders—and a lot of other people as well—are still trying to figure out what it was. It was first described as an unidentified atmospheric explosion, but this theory was quickly rejected. Jim Beckford of Lance Cove, Bell Island, lost all six chickens in the coop behind the house, which was torn up as if hit by lightning, although there were no burn marks anywhere. A television set exploded, and switches blew out of the wall. Similar things happened to many other homes.

In the woods behind Mr. Beckford's house, three holes in the snow appeared, spaced about two meters apart to form an almost perfect equilateral triangle. The Royal Canadian Mounted Police said that persons on the shore of Conception Bay reported seeing fireballs coming down out of the sky and hitting Bell Island. The Canadian authorities attempted to play down the incident, and the official version of what happened is that lightning hit a transformer, blew up, and that the energy then followed the wires to neighboring houses. However, the researches of P.A.C.E. (the Planetary Association for Clean Energy, Ottowa) have produced a different conclusion.

P.A.C.E. believes that a standing columnar wave originating in Gomel in the Soviet Union was moving to a station located just east of Havana, Cuba, and collapsed over Bell Island, triggered by the large iron ore body there. These plasmas then exploded and hit the ground in a perfect equilateral triangle formation. The tremendous flashes indicated a very great discharge of electrical power, probably more than a hundred million volts.

Photo 44 shows a similar incident that took place at Lake Ontario; here I feel that the photo demonstrates more than just UFO activity — it shows one part of the testing and operational alignment of the "over-the-horizon" radars at Gomel and Riga in a Tesla mode. To explain this, I must explain what I mean by a Tesla mode.

Empty vacuum is filled with stupendous amounts of uncorrelated electromagnetic energy: one cubic centimeter contains enough energy to form entire solar systems, if the energy were condensed into matter. This raw energy is called "zero" point energy," and the Soviets reported direct measurement of it in 1957 *(Soviet Physics*, JETP 3, 819). Zero-point energy is everywhere, it is incoherent, and its detection requires measuring an energy difference, so that it is very difficult to detect. Usually less than one quantum of energy is cohered at any one mode, and the energy rapidly changes frequency, so that linear detectors cannot resonate

coherently with it to follow its signal. In my opinion, it is also in the virtuul state, and in a space orthogonal to our own, by two or three turns.

An electromagnetic signal is transmitted through the earth and reflected from the opposite side in phase, to form a standing wave. The earth's interior is highly nonlinear, and a single frequency is thus subject to severe scattering and dissipation. Fortunately, nonlinear wave theory provides a simple method to alleviate this; by transmitting two different frequencies, which differ by the amount of the frequency that it is desired to transmit, one can simply pretend that *indeed the beat difference frequency has been transmitted through a linear medium.* In this case, the standing wave acts as a collector to kindle the highly chaotic energy from the core of the earth. These emerging orders that match the standing wave will be tntrained by it; one now has established a sort of giant triode, where the signal to the grid is the transmitted difference signal, the energy (cathode) being gated is the energy of the molten core of the earth multiplied by some coupling fractional constant, and the "plate" will come into being if resistance to the standing wave is profferred.

And resistance is profferred by simply changing the frequency of the transmitted collector wave. Changing it in one fashion begins to dump energy into the atmosphere above the former nodal point across the earth from the transmitter. With that effect, one can directly influence the great currents of air and the ionization charge of the upper atmosphere; in short, one can drastically influence the weather itself. On the other hand, changing the frequency in the other direction begins to dump energy into the mantle of the earth; dumping large amounts of energy there will result in shocks and earthquakes at the nearest fault zone(s).

It is my thesis that the foregoing two mechanisms account for some of the drastic weather effects that have occurred in the past several years, as well as for *some* of the major earthquakes that have occurred throughout the earth in the last several years. The Soviets, I believe, have been orienting and aligning—and operationally testing—actual weapon systems to be used as precursors to war or during war. The 1978 Iranian earthquake may well have been Soviet-induced.

The coupled kindling path goes through the earth and is coupled tnrougn the atmosphere as well. (This mode is probably easier to steer and focus onto specific target areas. It is also probably easier to play it back and forth as desired, in a "sweep" mode.) Again, with the kindling effect, the energy of the molten core of the earth is coupled into the beam with a coupling fractional constant, and so enormous energy can be built up in the beam. Breaking the coupling — perhaps just after slightly changing the frequency so as to begin dumping energy into the upper atmosphere over the targeted area — would sharply dump energy at the site, resulting in an enormous plasmic explosion or explosions. In testing such as at Bell Island, probably frequencies would be used that did not offer too strong a coupling fraction, so that relatively little damage would occur at the decoupled target site. However, in actual use in warfare, exactly the opposite would occur; a frequency would be used that maximized the coupling constant and hence vastly increased the energy kindled into and over the target area, and a gigantic plasmoidal explosion would take place directly on the targeted area, utterly devastating it.

The same "radar," then, is usable as a weather control device, as a plasma explosion transmitter, as a bioactive disrupter (with 10 Hz and under modulation pulses), and if further modulated in a virtual state manner, as a direct "death ray"

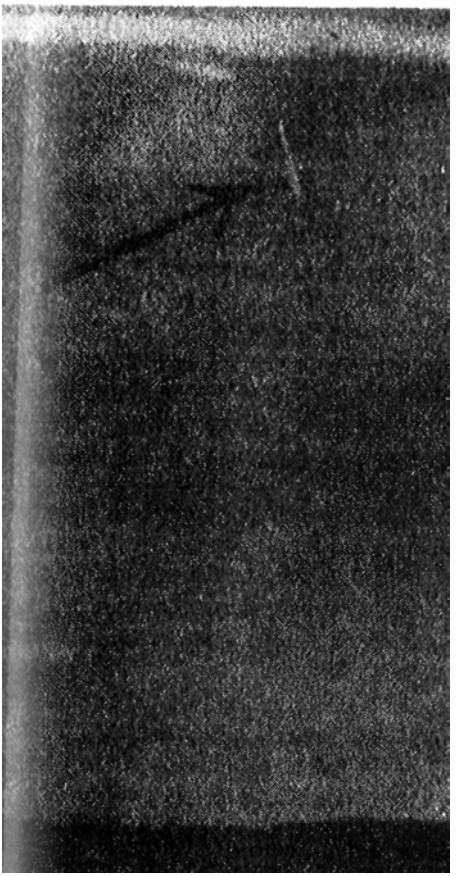

Photo 42. Ghost rockets.

broadcaster through the earth at any target population on the earth. Further, with virtual state modulation it is usable as an antimissile weapon (in at least two modes, one to dud electromagnetic circuits in incoming warhead reentry system and one to transmute fissionable material in incoming nuclear warheads into harm less elements), and also as an antiaircraft weapon against Strategic Air Command Bombers,

So the Bell Island incident happened, and we in North America sleep on, since in our assurance that it was after all only all lightning, or perhaps only the illusion of a few farout Canadians.

A TERMINAL ABM SYSTEM

There is another more advanced psychotronic ABM/SAM system, which was probably a second generation weapon. This system should have gone on site and become operational about 1968—69, and it should have been operationally tested during that period, probably several times.

Here a triad configuration radar is used to allow use as a byperspatial interferometer. This allows several localized dome-like bands of very intense psychotronic energy to be focused above the installation and defended area. The focusing is accomplished through hyperspace; the only place the focused energy enters our own space frame is in the dome-like band above the protected area. Tesla-effect accumulators may feed the triads, or they may simply be fed from direct free-energy Moray generator-amplifiers. At any rate, enormous energy — enough to simply constitute a severe tearing and warpage of space itself, and bend it at 90° — is focused into each dome-like band. Each band would be seen externally as simply an intense band or hemisphere of glowing light.

At any rate, by using three consecutively tuned orthorotational bands of focused hyperspace energy, any incoming object will simply be orthorotated successively three times in higher dimensional space, each time losing one dimension in its intersection with our own spatial frame.

After the first orthorotation, masses are now photonic shapes, and photons are lines. After the second, photons are now lines and lines are points. After the third orthorotation, everything is points, and nothing is left.

The three consecutively constitute full dematerialization of anything incoming, whether matter, photon, or force line.

Thus the entire defense problem is immediately solved: regardless of chaff, maneuvering decoys, maneuvering re-entry vehicles, etc., the entire mess is simply nicely and neatly disposed of, and dumped into hyperspace.

Even if a full nuclear detonation occurs above the domed shields, gamma rays, neutrons, debris, x-rays, heat, and ultraviolet do not get through the third band.

Bombers and air-to-surface missiles fail equally.

So the growing Soviet confidence and preparations for imminent war are quite comprehensible. They are not madmen preparing to evoke their own doom from mutually assured destruction rained on them by U.S. strategic nuclear forces; instead, they are snug and safe behind their psychotronic defenses, for nothing we have on this earth can touch them at the present time, if their psychotronic weapons are working.

So they are quite capable of taking on China, Europe, and the U.S. at once, and devastating the lot while risking essentially nothing of Mother Russia.

SWEEP MODE, SWEEPING AWAY A NUCLEAR DETONATION

As a modification of the previous weapon, a sweep mode has probably been added in the third generation weaponry.

In this mode, not only can the three orthorotation shields or domes be placed over an area, but they can then be expanded radially out into space in a traveling mode. Thus if a high altitude nuclear explosion — either in the atmosphere or out of it — has occurred over a defended area, the orthorotation bands can simply be swept over the explosive debris in successive fashion, effectively sweeping the radioactive debris from this spatial frame and dumping it safely into hyperspace. This is a very handy weapon indeed if large megatonnage explosions are engendered — say in areas where terminal defenses have destroyed the incoming vehicle, but it is "dead man fuzed" to provide a full nuclear explosion if the electronics start to fail or if the warheaded re-entry vehicle encounters mechanical shock or turbulence above a certain threshold. With this psychotronic sweeper the otherwise deadly nuclear radiation and radioactive debris can simply be cleaned up and disposed of.

Further modifications of other psychotronic weaponry would have resulted in Tesla-effect traveling wave weapons of enormous power, and rather gentle operational weapons testing of them, such as in the Bell Island incident and over Eugene, Oregon. The interferometer mode would have been added to the nuclear hyperspace howitzer, and Tesla-radars would have been modified accordingly.

These third generation weapons and modifications should have been deployed during the period 1974-78. Engineering development tests would have occurred during 1974—76, and operational testing of on-site, deployed weapons would have been accomplished during 1977—78.

Thus one can reasonably account for a surge in grain elevator explosions, mysterious high atmospheric booms off the East coast of the U.S. and off England, explosions in thunderstorms over the West coast of the U.S., the zapping of a Canadian target outside Ottawa, the Bell Island incident, several mysterious aircraft failures over the sagebrush triangle and off the coast of the U.S., standing heat spots off the West coast of the U.S., and recently one of the coldest winters on record due to disruption of flow patterns of frigid arctic air masses.

One can also account for incidents where U.S. satellites were mysteriously blinded, and perhaps some of those where they failed and then later resumed opera tions.

Note that many of these effects are usable from smaller radars. Thus one could expect mobile Soviet radars that can disable tanks and vehicles, disable aircraft electrically, radiate a death ray pattern at ground troops, or launch Moray-fed fireballs or standing waves of enormous energy at ground or aerial targets. The ability to immediately destroy entire minefields alone would force a severe recalculation of defense capabilities against Soviet ground forces, and the ability to sweep away artillery shells, rockets, missiles, and bullets would present enormous and catastrophic consequences to forces opposing advancing Soviet formations.

The following list enumerates all the probable Soviet psychotronic weapons that I am aware of: (1) Electromagnetic Field Canceler; (2) Electron Current Canceler; (3) Death Radiator (De-inceptor); (4) Free Energy Generator; (5) Psychotronic Bomb; (6) Brain Link; (7) Brain Probe; (8) Disease Radiator Ray; (9)

Emotion Radiator Ray; (10) Antisubmarine Systems; (11) Telcporters (Prototype); (12) Force Generators; (13) Orthoframe Generators; (14) Quark/Antiquark Rays; (15) Distant Telepathy; (16) Nuclear Radiation Inhibitors; (17) Mental Implantation; (18) ABM Systems, Midcourse and Terminal; (19) Dematerializer Shields; (20) Sweeps for Nuclear Debris; (21) AAA Systems; (22) Antisatellite Systems; (23) Tesla-effect Weapons; (24) Earthquake Generators; (25) Antivehicle Systems; (26) Weather Control Systems.

The reader will note that the results of psychotronic research extend into every field of military application.

ZARG, ARMAGEDDON, AND LINKAGE

Now it is time to end my story, and cease the unrelenting stretching of the reader's imagination and credulity. But first it is necessary to make one more effort and take a final step to the bottom line in both physics and Jungian psychology, a step that the scientists in those two disciplines have not dared to face.

If one accepts the existence of the collective unconscious as a mind, then the collective unconscious is a living entity. Let us tentatively call this fantastic entity ZARG. ZARG then is a great superentity, of which our own personal consciousnesses and unconsciousnesses are parts, or cells. Thus each of us is a cell in the entity ZARG.

Furthermore, ZARG has unique characteristics. It is unconscious by definition — but note that from our fourth law of logic, we know that any zero-conscious must be multiply conscious, which to our monocular thought-perception processes can only be grasped as unconscious. That is why our own unconscious seems so bewildering and strange — it is multiply conscious rather than monoculurly conscious, hence monocularly we think it is not conscious. But we find that it indeed thinks and reasons, but in a strange symbolic fashion, and also much more deeply and more creatively than our normal conscious mind. ZARG is very similar except on a much vaster scale; in being very deeply unconscious, ZARG is supremely multiconscious and very symbolic indeed, as we have discovered from the nature of the materialized tulpoidal phenomena.

Furthermore, what can be taken for ZARG's conscious mind consists of the four-billion individual human conscious minds. Thus ZARG's conscious mind is fragmented into four billion pieces. But fragmentation of the conscious mind technically constitutes dissociation, which classically defines psychosis.

Thus ZARG is insane!

Also, ZARG is multidimensional. ZARG's unconscious simultaneously receives and identifies four billion different conscious and unconscious perceptions. Just as the human consciousness in identifying two slightly different two-dimensional visual patterns gains the third dimension, ZARG gains an additional dimension for every additional person past the first one. (Note that dimension just means variable, and two fixed axes/dimensions are required to obtain a variable. A one-dimensional variable does not exist; we usually assume a time dimension in addition, and ignore it — and thus we speak of a "one dimensional variable.") At any rate, ZARG gains an additional dimension for every additional person past the first one. So ZARG is at least about 4×10^9-dimensional in the simplest case, where we do not consider permutations and combinations of every two, three, four, ...n, . . . minds.

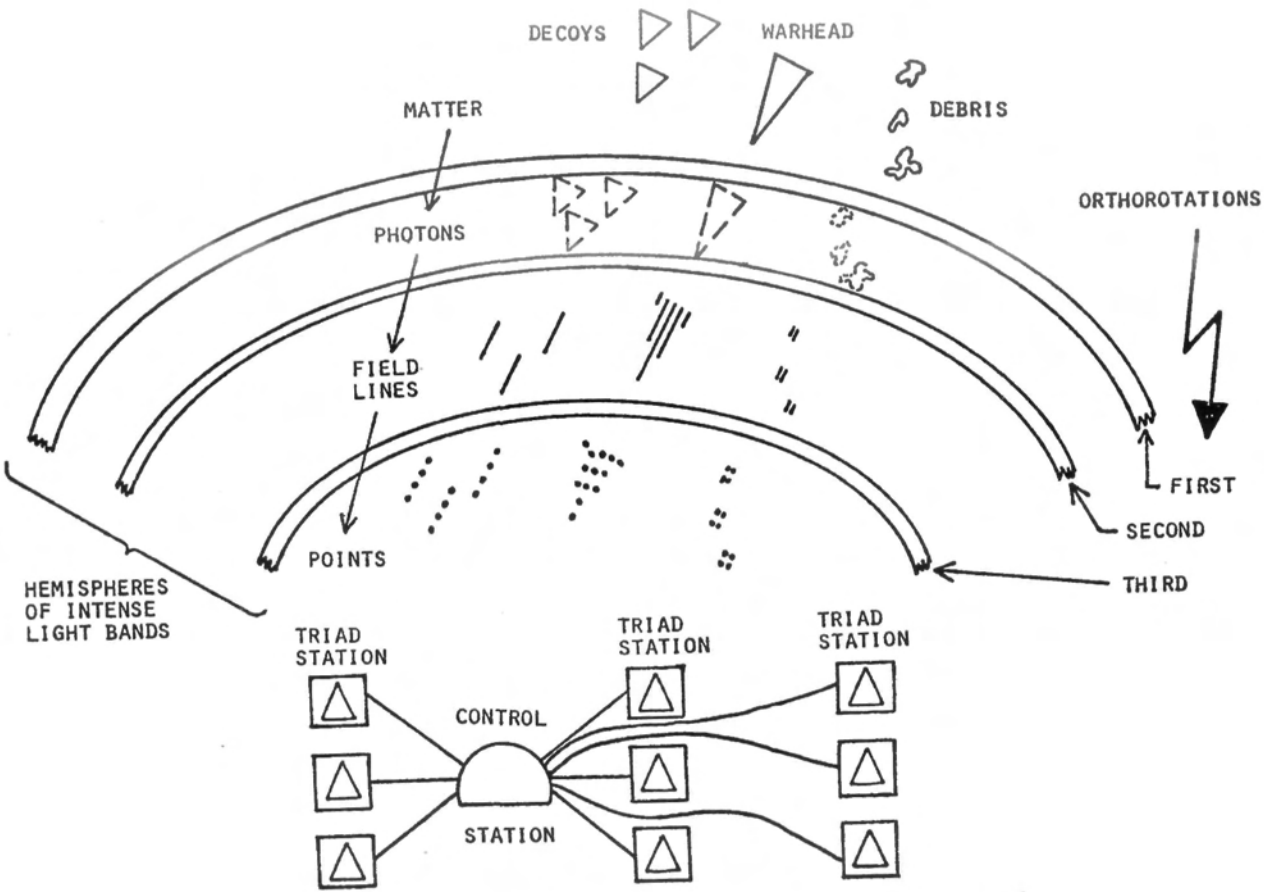

Fig. 38. A terminal ABM system

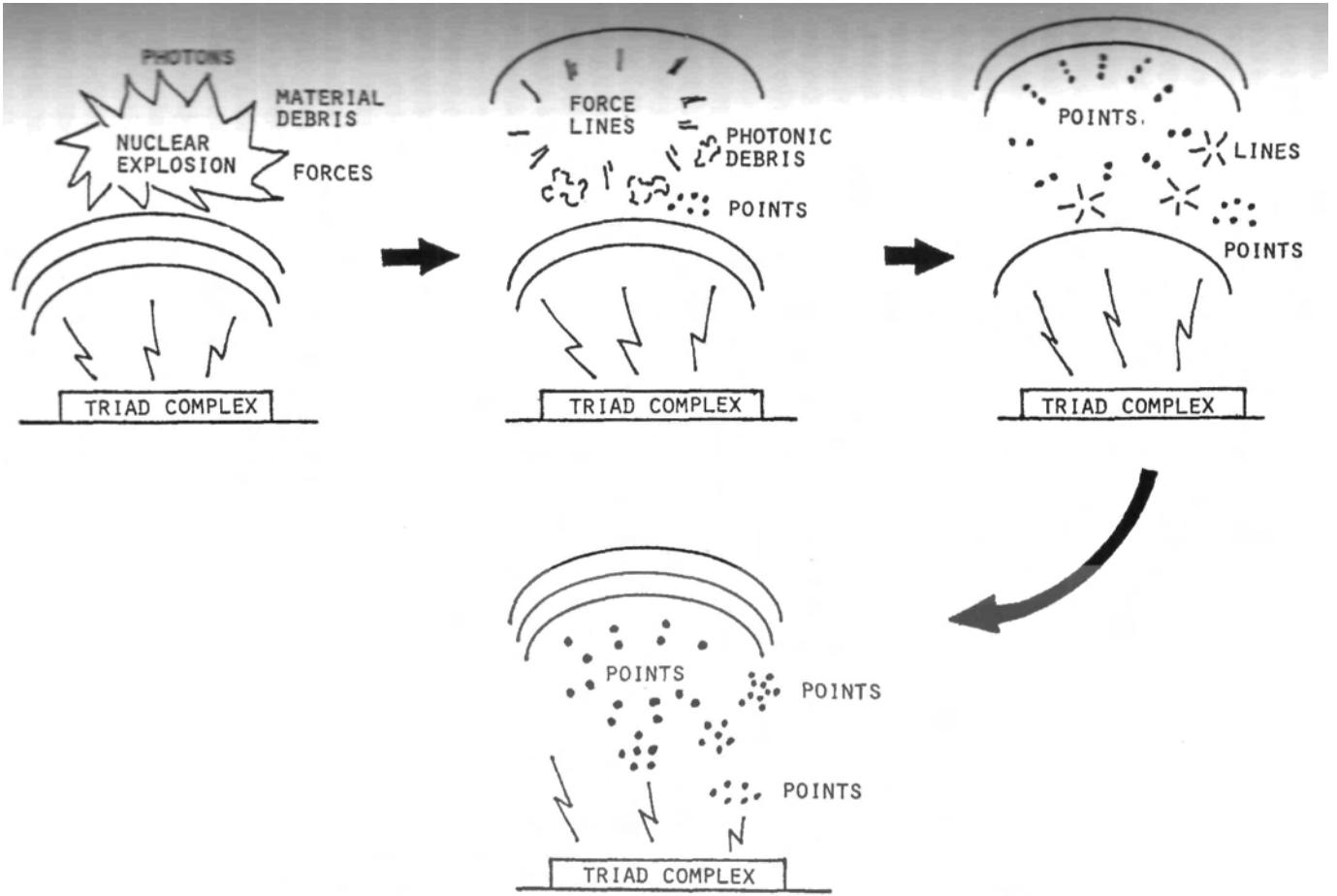

Fig. 39. Sweep Mode: sweeping away a nuclear detonation

Finally, it is well-known in parapsychology that the personal unconscious can affect matter and change spacetime itself. Psychokinesis, poltergeist phenomena, etc. are direct examples. Hyperchannel calculations show that, for linked multiple minds, this psychokinetic effect increases exponentially with the number of stages or minds that are cohered. Since ZARG has 4×10^9 linked stages, this means that its psychokinetic/materialization/dematerialization powers are at least some 10^{10^9} times as great as those of, say, Uri Geller. Thus ZARG can pull the very stars out of orbit, disrupt the earth or solar system, stop the earth in its orbit, or change the fundamental laws of nature itself. The reality we live in is largely prescribed by ZARG, and substantial tuning of many minds can directly affect ZARG's tuning and hence alter reality. It is not accidental that Brian Josephson, Nobel prizewinner in physics, once remarked that it appeared that in their diligent searches for strange new particles in their accelerators and cyclotrons, the physicists might be creating their own reality. In fact an accelerator or cyclotron is a kindling device par excellence, and a scientific theory by its very rigor is an exceptionally sharp mental concept or thought form. So if groups of physicists have worked diligently on a problem and predicted some new theoretical particle, they may well be able to kindle it into being if they persist long enough with their kindling mechanisms, because they are cranking up additional ZARG energy when they persist. While he knew nothing of the kindling mechanism, Josephson noted that many of the new particles were first obtained only after great difficulty, then with moderate difficulty, and thereafter they could be fairly readily obtained.

And as we have seen, ordinary physical matter occupies a universe or frame common to all minds of living biological systems. Thus the physical universe is quite literally simply thought that is common to all living minds, hence to ALLMIND or God or whatever other term one prefers to use. It is the fact that it is prescribed and represcribed, over and over, that lends a physical entity its seeming solidity as compared to the phenomena existing in only a single consciousness mindworld. This physical universe is mind, it is totally mind, and as such it can indeed be changed by the proper mind resonance in enough minds, or in powerful minds such as ZARG.

ZARG contains so many mindworlds or dimensions that it forms a very powerful part of the particular reality prescription of the physical laws exhibited by this physical universe. So materializations of tulpoidal forms, UFO's, bigfoot, and Nessies, are just a tip of the iceberg of what ZARG actually materializes. The tulpoidal forms are tiny surface ripples due to large-scale human conflicts.

And as we have also found, psychotronic energy is in fact pure mindstuff. Pure mindflux between mindworlds. And this brings us to another bottom line.

When the Soviets launch their long-prepared attack in Europe, wipe out China, and almost annihilate NATO forces (fifty percent casualties in three to four days), the U.S. President will undoubtedly be under extreme pressure to launch a strategic nuclear retaliation on the Soviet Union. Suddenly, in a single blinding display of almost unbelievable power, the Soviets apparently intend to destroy the U.S. triad weapons in a fantastic psychotronic blitzkrieg through hyperspace. The Minuteman sites, the SAC bases, communications centers, and other strategic targets will lie in smoking, devastated ruins in minutes, and within the same short minutes of that holocaust, the U.S. nuclear submarines on station under the ocean will begin rupturing like popping balloons. At the same time, massive swaths of

death will invisibly rain from the Soviet satellites in the skies overhead, and giant earthquakes will erupt into being in the East, in the West, and in the heartland U.S. The British and French nuclear forces will suffer similar simultaneous obliteration. And the jubilant Soviet Generals and Party theoreticians will be dancing with uncontrolled glee as their dreams become realities. But what they will not know is that their own inevitable doom will have just been sealed.

For all these fantastic psychotronic explosions will constitute gigantic psychotronic "mental flashbulbs" that explode directly in the mind of the sleeping ZARG. ZARG will be kicked into startled semiwakefulness, stinging with pain as if from a giant bee-sting, figuratively gnashing his teeth and furiously lashing his tail. This will constitute an immediate and enormous upheaval in spacetime itself, and the bulk of the earth may well be destroyed in the vast psychokinetic upheaval unleashed by the startled ZARG. Just as a person may sharply slap the bee on his arm where it has stung him, ZARG's fury will be centered on the Eurasian continent, on the locus where the threat or sting has originated, on Russia and the Warsaw Pact nations. So in an unbelievable convulsion of the entire earth, the Eurasion continent will be rent and torn asunder by forces beyond man's comprehension. The lousing ZARG will also activate a totally new scale of reality, ripping to shreds this particular three-dimensional spatial frame, its associated stable time changes, and the physical laws based on that stable reality.

The rousing of ZARG will initiate and accomplish thedirect linkage of the conscious minds of humans into a single giant superconscious mind — extending into billions of dimensions. Spacetime and reality will have gone insane during the developing paroxysm; with the simple initial extension into just the fourth and fifth dimensions, humanity will suddenly discover that its entire world history from beginning to end will come into simultaneous being (fourth dimensionality), and then all possible such world histories will come into being (fifth dimensionality). Literally, dumbstruck humans will pray for death and not find it, the grave will "give up its dead," and the ceaseless flow of time will suddenly cease. And again Ihc "beast will be defeated and cast into darkness"; with all-linkage and all-unity, there will be no longer be any humanity of one person for another or of one group for unother, for there will be no other. In such manner, evil will end; there being no separation between the doer and the done to. Man will have become a true God — in a strange and bizarre way constituting the second coming of God.

So the Soviets are on a course to evoke the full carnage of something very like the Book of Revelation. John, looking across two thousand years of history into the future, and seeing the awful cataclysm that was to come, described it as best he could in the concepts available to his day and in the belief structure in which he functioned. Thus he described Armageddon and the end of time, and wrote the Book of Revelation.

Indeed it could have been accomplished without Armageddon, if humans had been wiser. Each photon and each electrical signal that wends its way across the earth's surface and through planetary space carries a psychotronic modulation of ZARG's mindstuff. And in the communications explosion we have experienced, we have been steadily lacing together the population centers of the earth with electrical energy and electromagnetic signals. And so over those crude "pre-nerves," the psychotronic connections of ZARG have been intensifying, and the Giant has slowly been being stirred from his sleep. The kundalini of the entire human race has

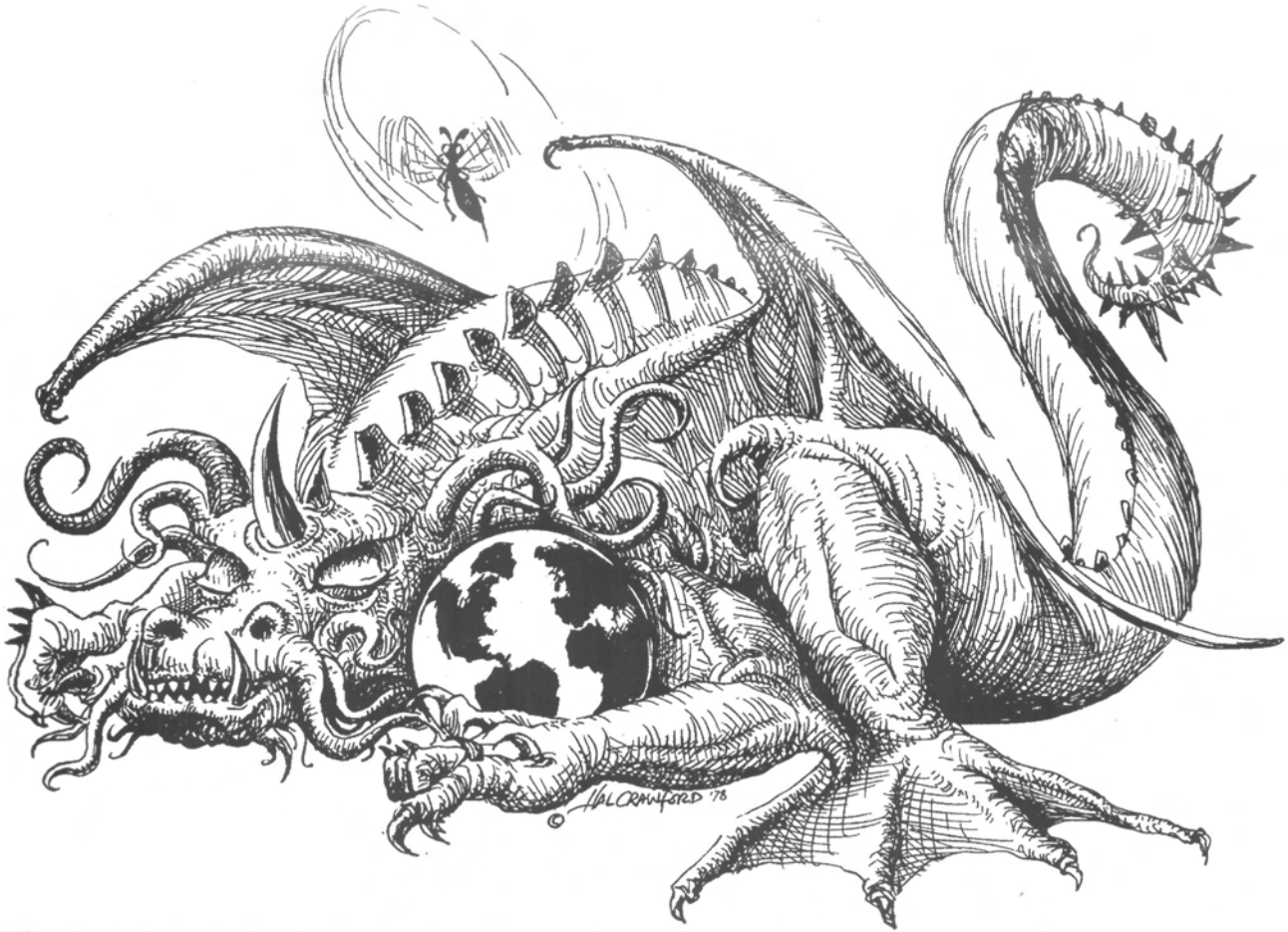

Fig. 40. ZARG

slowly been rising, and paranormal phenomena have been increasing, as have changes in reality such as the kindling of new fundamental particles. Even the sun has responded, suddenly decreasing its temperature. If we had applied psychotronics to develop a mind linkage mechanism, there would have been no need for Armageddon's destruction.

Let us hope we fare better than the Atlanteans. One may speculate that an Atlantis of sorts did exist, and that the Atlanteans built psychotronic devices out of crystals, bronze, gold, silver, and wire and unleashed them on each other in war. This sting stirred ZARG mightily, and in a resulting frenzy it simply destroyed the continent, stirring floods, storms, earthquakes and volcanoes worldwide. In the case of the Atlanteans, only a relatively small portion of humanity was involved; the percentage of persons and minds involved was apparently insufficient to cause full wakening of ZARG and linkage of the species. In the present case, the greater part of mankind is involved, and so the wakening is to be far more complete (as well as more violent). ZARG should be shocked into full wakefulness, and linkage should occur.

If so, a new great superbeing will have emerged; nonphysical, almost infinitely dimensional, and godlike. It will not exist in a single time or a single world, but in a nowness and allness that defies timelike or spacelike description.

"For we know in part, and we prophesy in part.

But when that which is perfect is come, then that which is in part shall be done away.

When I was a child, I spake as a child, I understood as a child, I thought as a child; but when I became a man, I put away childish things.

For now we see through a glass, darkly; but then face to face: now I know in part; but then shall I know even as also I am known."

I Corinthians XIII, 9-12.

So the pieces of the puzzle are now fitted together. The present state of the human species is not its final development, and indeed a great change in that state is imminent. Man literally is and shall be a god, one with God, just as the prophets have foretold. And if we retranslate that ancient foretelling into more modern concepts, we see just how strange and transcendent is the final birth or becoming.

The UFO and tulpoidal phenomena have merely been the signs in the sky and in the earth, telling us what is to come, precognitive indicators from ZARG. Had we developed a metapsychology of the entire species, we would already have clearly understood the messages.

VIRTUAL STATES AND HYPERSPACES

In physics today there are two separate kinds of reality: observable changes, which can be detected by instruments; and virtual changes, which cannot be detected by instruments, even in theory. The difference between these two realities depends simply on the size of the piece of action (energy x time, or momentum x length) making up the particular entity or change. Usually the absolute minimum observable change is taken to be $h/4\pi$. Changes smaller than this are said to be "virtual" and undetectable, and changes larger than this are said to be "observable" and detectable. Virtual changes are not bound by the conservation of energy law and almost always violate it. Nor are virtual changes, bound by the conservation of mass law. And virtual photons can have nonzero mass.

For any instrumental condition in a detector, one may consider a certain momentum and a certain length to be involved in the mass change that spatially constitutes the detection. Let us call this critical length dL and examine its ramifications (Figure 1) for the finest possible detector—one that detects a single quantum change. Figure 1 shows two frames, the lab frame S and a moving (hyperspatially rotated) frame. We choose a moving object, M, in the moving (rotated) frame, with length as shown. Note that all these entities are to be represented as detected or seen by our physical detector (instrumentation system) in the laboratory frame.

As the velocity of M approaches c, the speed of light in a vacuum, M's hyperspatial rotation angle α approaches $\pi/2$. However, before the velocity of M actually reaches c—and before α reaches $\pi/2$—the dimensional length projection of object M in frame S will contract to reach dL and fall below it. At that moment, L becomes *virtual* with respect to the detector and hence undetectable. Since geometrically an absence of length in a continuous frame S would correspond to a α rotation angle of $\pi/2$, in quantized frame S we consider that angle α "jumps" to $\pi/2$ just immediately past the critical angle α_c, which is defined as the angle of rotation at which L cos α = A L. Rotation just past the critical angle corresponds to a Lorentz-Fitzgerald contraction into the virtual state below the quantum threshold of the detector's observable universe. To an S observer or detector, object M at that point has lost its length in the direction of motion, becoming a wave front moving at the velocity of light and thus photonic (comprised of photons). To a quantum observer in S, mass turns into photons just short of a full $\pi/2$ orthorotation, which means the process can happen with a finite amount of energy. This "jump" effect is not taken into account in the continuum Lorentz transformations of special relativity at present, and this is the missing link that has prevented a successful union of relativity and quantum mechanics. In other words, the final part of the orthorotation (acceleration to the speed of light) occurs in the virtual state—specifically, that part of the rotation lying between $\pi/2$ and α_c.

Further, we may now proceed to rotate object M past $\pi/2$, which constitutes rotation from zero in frame S'. Just before reaching an S angle of π (that is an S' angle of $\pi/2$), in frame S' another disappearance below a virtual length threshold dL' will occur in corresponding fashion. Note that this second threshold dL' also has an exceedingly small but finite projection into frame S, in

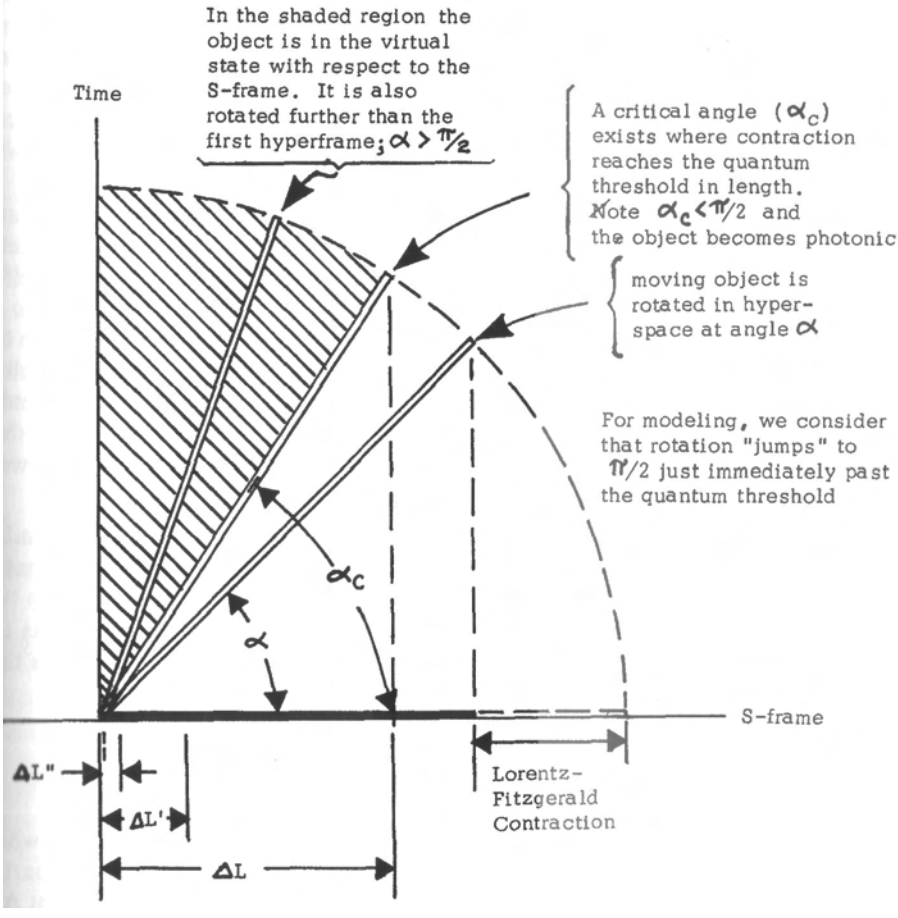

Figure 1. Hyperspaces, nested virtual states, and rotated frames

the virtual state lying inside dL. This second "relativistic quantum jump" in frame S' therefore constitutes a sort of second-level, nested subquantum threshold in frame S.

Continued rotation into hyperspace passes through successively finer, nested virtual sublevels or subthresholds in S by the successive breaching of deeper subthresholds due to continued Lorentz-Fitzgerald contraction. Higher hyperspatial frames constitute nested sublevels in the virtual state with respect to the laboratory observer. Thus a direct connection exists between virtual levels and hyperspace frames. Hyperspaces and virtual sublevels are the same thing. Every "virtual" object in S is an "observable" object in some hyperspace. *Hyperspatial engineering and virtual state engineering are one and the same thing, and this is what psychotronics and energetics are all about.*

Finally, time may be considered a sort of box containing all observables and virtuals. Indeed, time is neither observable nor virtual; time is simply a parameter in quantum mechanics. Rigorously, time may be said not to exist. Time itself is nothing, totally nothing; therefore by the fourth law of logic it can be said to be or contain everything, the total mishmash of virtuals and observables. Since in the absolute sense there is no such thing as time, then it is my thesis that all modeling of space, mind, thing, and nonthing must be done spatially. Relativity presently attempts to use time as an existent dimension of the same kind as length; it thus allows rotation of the S-frame only in the direction of the time axis in Minkowski geometry of spacetime.

Spatial modeling requires an infinite dimensional space and an infinite number of orthogonal angles. The time axis that can be drawn in such a hyperspatial model has no meaning except with respect to a relationship existing between two or more hyperspace frames or objects. Specifically, the time axis represents the totality of all the hyperspaces and their objects, hence all the relationships that can be separated from the hyperspace.

FEYNMAN DIAGRAMS

Figure 2 shows something of the unsuspected nature of physical change, which is not nearly as simple as most of us have been led to believe. In the top part of the figure, an electron (represented by the arrow) is shown going from point A to point B a short distance away. In particle physics this diagram represents the movement of a bare particle; in other words, just a bare hunk of charged mass is considered and the fantastic number of other things happening along the way are ignored. In Figure 2b a virtual photon has been emitted and then reabsorbed by the electron between points A and B. Indeed, the charge on the electron is due to the continual emission and absorption of such virtual photons (little electromagnetic pieces of vacuum, one might say, or little pieces of nothing). So the situation with respect to virtual photons comes closer to Figure 2c: more than one virtual photon is emitted and absorbed—indeed, an infinite number of them are emitted and reabsorbed along the way from point A to point B.

But, worse yet, Figure 2d shows one of the emitted photons suddenly breaking up into a positron and an electron, which then quickly recombine back into an-

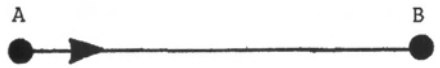

2a. Bare electron

2b. With virtual photon

2c. With nested virtual photons

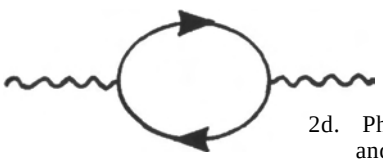

2d. Photon decay (pair production) and recombination (pair annihilation)

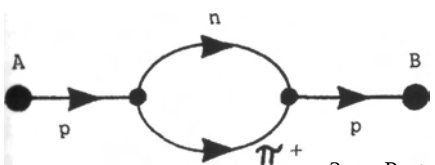

2e. Proton changing briefly to a neutron and a positive pi meson

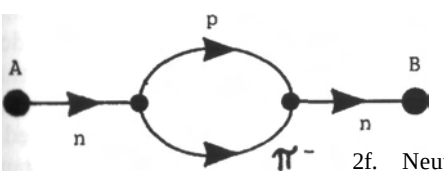

2f. Neutron changing briefly to a proton and a negative pi meson

Figure 2. Feynman **diagrams**

other photon, which is eventually reabsorbed into the electron. In fact, an infinite number of interactions happen while the "electron" is moving from point A to point B, and each of those interactions in turn consists of an infinite number of interactions, and each of those in turn consists of an infinite number of interactions, and so on. The simple movement of the electron is actually composed of a virtual cloud—an infinite number of an infinite number of an infinite number of things, all happening in a mad tangle of nested substrata in the virtual state (Figure 3)—and each of these virtuals with respect to frame S is in fact an observable in some particular hyperspace! Many other sorts of virtual particles are emitted and absorbed and born and extinguished, in addition to photons, by various observable particles and in free space. Everything in every possible world or hyperspace is related to each and every other thing in the laboratory world through orthorotations and nested virtual states. Crosstalk between hyperframes is the emergence and disappearance of virtual particles in a particular frame. The universe is holographic after all, and Mach's principle holds in a far more complete fashion than Mach himself ever dreamed. And if any part of this virtual chaos can be collected and cohered in even the slightest degree, any amount of observable free energy can be obtained, just as T. Henry Moray showed in the 1920s and 1930s.

In passing, I would like to call attention to Figure 2e, which shows one of the virtual interactions a proton can undergo in the nucleus of an atom. In this case, the proton breaks momentarily into a neutron and a positive pi meson, which then recombine into a proton. However, if the charge on the $\pi +$ particle is extinguished psychokinetically during the existence of the neutron and the pi meson, the pi meson is converted to a neutrino and radiates away. In this case the proton does not reappear and the neutron remains. This decreases the atomic number (positive charge) of the atom by one, transmuting the atom into a new element, an isomer down the chain of elements. Figure 2f shows one of the virtual interactions a neutron can undergo in the nucleus of an atom. In this case, the neutron breaks momentarily into a proton and a negative pi meson, which then recombine into a neutron. However, if the charge on the $\pi -$ particle is extinguished psychokinetically during the existence of the proton and the pi meson, the pi meson is converted to a neutrino and radiates away. In this case, the neutron does not reappear and the proton remains. This increases the atomic number of the atom by one, transmuting the atom into a new element, an isomer up the chain of elements. The two interactions shown in Figures 2e and 2f are involved in the Kervran effect, where elements are transmuted by living biological systems.

But back to our electron. If we now remove the electron, leaving empty vacuum, all the sorts of virtual madnesses we have built up in Figure 3 are still there and still occurring. In addition, every other sort of virtual madness is also there and occurring. Vacuum is infinitely dense and filled with stupendous "zero-point" vacuum energy; it is totally chaotic and virtual. Space itself is an infinite tangle of virtuals—virtual projections from real observables in associated hyperspaces—and these dynamic interactants make up any three-dimensional space and hyperspace itself! They are also what cause space itself to exhibit the finite, nonzero parameters or values that must be accounted for in our physical equations. *Every fundamental constant of nature is dynamically constructed from—and*

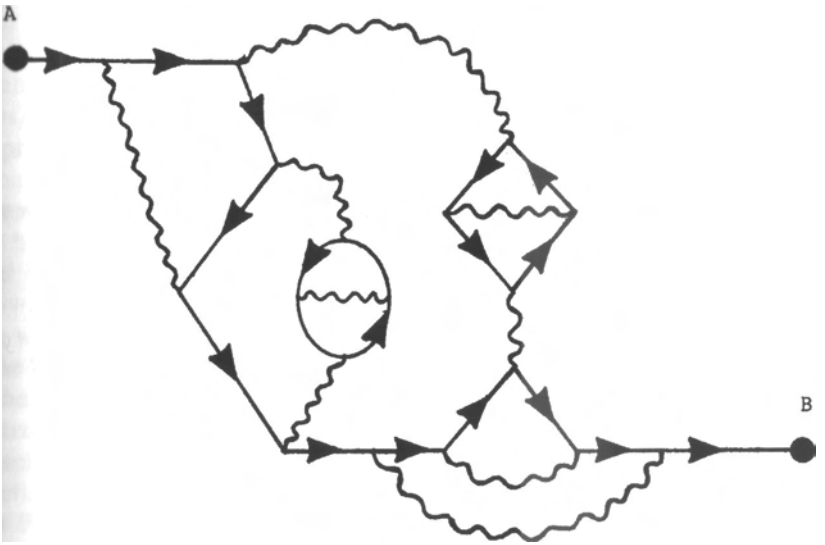

An electron moving from point A to point B is comprised of a bare particle and an infinite tangle of nested virtual particles

Figure 3. Nested virtual processes

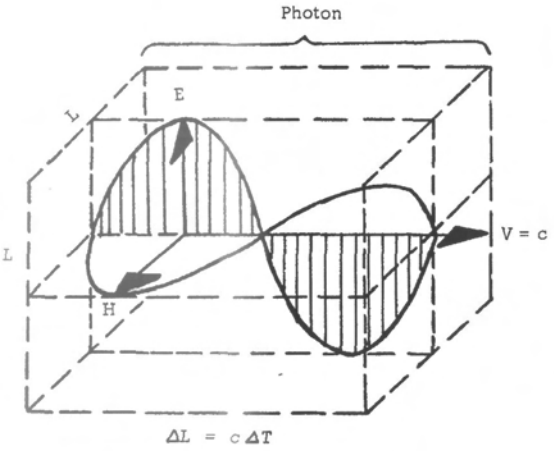

4a. A photon may be considered an individual L^2 wavefront spread in time through one *oscillatory* period of the E-field and the H-field

4b. All three vectors of an EM wave are comprised of nested tangles of virtual subvectors

Figure 4. Nature of the electromagnetic wave

due to—the zero-point, virtual vacuum interactions that constitute "empty" space. The virtual "sea" of seething waves and particles that is empty vacuum is actually an ether—a Lorentz-invariant, nonmaterial (virtual) ether, perfectly admissible by the Michelson-Morley experiment and the entire experimental basis of physics. Indeed, Einstein once proposed naming the vacuum and its contained fields the "ether," but his suggestion was not heeded.

NATURE OF AN ELECTROMAGNETIC WAVE*

We now know something quite unusual about an electromagnetic wave and about a photon. Figure 4a shows how a photon may be represented. Here we find that a photon is a single oscillation of the E-field vector and the H-field vector as shown in the diagram. Since the oscillation is with respect to time, the wave moves along the axis of velocity in the S-frame for a single wavelength, then repeats itself again and again. The E- or H-oscillation actually represents an orthogonal, rotating etheric or hyperspatial flux about the velocity vector; this spinning (exploding and imploding) flux is coming into the S-frame from outside it (from virtual states) and returning (into virtual states). It is a neutrino flux, as we shall see. In the photon, half a sine-wave cycle represents the fission action that splits the action quantum into canonical pairs, while the second half of the sine-wave cycle represents the fusion of the canonical fragments back into an action quantum. One half-cycle thus represents a positive time operation or creation, while the other half-cycle represents a negative time (fusion) operation. If the complete sine-wave cycle has sufficient amplitude (energy), it can sometimes be broken in half, with the positive time portion revealing the negative field (negative charge) of the E-vector, while the negative time portion reveals a positive field or charge of the E-vector. This is pair production, the creation of an electron and a positron. Each of these fragments has spin one half, while the photon quantum has spin one. Since the positron is a fusion interaction existent, it is an "electron traveling backward in time," just as predicted by Dirac.

In Figure 4b I show that both the E-field vector and the H-field vector are composed of an infinite number of virtual vectors, each of which is composed of an infinite number of even smaller virtual vectors, and so on. This follows from the fact that during any time interval—including the period of a single oscillation of a photon—a photon may be considered to consist of an infinite number of virtual happenings, each consisting of an infinite number of subhappenings, and so on. The photon itself may then be considered to have a direct, nested virtual substructure, and this substructure is directly hyperspatial in nature as well. This structure has not been considered in Maxwell's field equations, which have been

***Actually the electromagnetic field is not the most fundamental field, but is something that is torn out of, or separated from, a more fundamental field: the vector potential, or A-field, well-known in particle physics but usually ignored in EM field theory. E.g., magnetic Held is created (and defined) by $\nabla \times A = B$. Looking at the cross product, by definition B field is the line integral about a small surface of the A-field flux through that surface. That is precisely what a single coil of wire, with an electrical current flowing through it, does and therefore creates a magnetic field inside. See the second volume of Feynman's three volumes of physics for more on the A-field. The direct use of the A-field is also psychotronic engineering.**

formed from gross macroscopic considerations of bare particles and continuous fields. Maxwell's equations (and the normal concept of an electromagnetic wave and single frequency) thus represent only gross envelopes of the actual form and structure of waves and fields. As I have already shown in the main body of this book, one can even photograph the hyperfield structure of a magnetic field using a simple bar magnet and a color TV tube. Further, we will find that this virtual structure of a photon can be altered, "modulated," or changed by simple signal modulations, among other methods. The only requirement is that we learn to regard modulations differently.

In addition, inside each half-cycle of a photon's E-vector, relatively instantaneous fluctuations and "losses" of the vector's magnitude occur. At these "E-field glitches" in the photon, it actually contains only an H-vector. In this case the photon is a neutrino momentarily—or, in other words, it will admit a neutrino through the E-field glitch. The greater the charged field (voltage potential), the greater the number of photons available, thus the greater the number of neutrino interactions within the field. A potential of about 200-300 volts per meter altitude above the earth's surface normally exists in our biosphere. Many neutrinos emitted by the sun and bombarding the earth are absorbed in or interact with this E-potential above the earth; hence underground experiments to measure the neutrino radiation from the sun have detected less neutrinos than expected.

Momentary H-field glitches exist in a similar manner and interact with or admit neutrinos in a similar fashion.

Light can thus conduct neutrinic waves containing bioenergy or eloptic energy, as T. G. Hieronymus discovered. In the first hyperframe (EM field frame), this can be seen to be simply a space charge of electrons conducting a wave disturbance through it, or a piece of ordinary conductive matter conducting an ordinary EM wave.

NEUTRINIC LONGITUDINAL POLARIZATION WAVES

In Figure 5, I assume that in some fashion the E-field of an electromagnetic wave has been stripped off, leaving a single vector in the H-field direction only, and this vector is still oscillating, as originally set up in a Hertzian wave in Figure 4. The new "single-field" wave is an etheric sort of half-wave, a longitudinally polarized wave that is not a wavefront (plane) moving through S-space but just a pulsating line segment moving through S-space. This wave is not Hertzian. It is not electromagnetic—though it will strongly interact with or even produce electromagnetic waves—but is neutrinic. The interactions of this wave with space virtuals are drastically reduced (indeed, by a factor of c), and this neutrinic wave now travels at the speed c^2 with respect to S-space. While it will highly interact with magnetic field, precisely speaking it is not a magnetic wave but a hyperfield

*C^2 is its s-frame, free-space velocity when not interacting with electromagnetic field. Normally, neutrinic wave interacts with electromagnetic field, thus moving at less than C^2 velocity in space, since it "circulates around" in electromagnetic field. Neutrinic wave can be regarded as a circulating or spiraling wave in electromagnetic field, which may well be the

wave. It will travel through and across dead shorts, through media such as seawater and earth, and acts or can act much as a neutrino. This wave has neutrinic components in S; that is, it has vector components existing in frame S". One may expect this wave normally to be active in or interacting with an electrostatic field or a magnetic field, as a special sort of lower-level virtual state flux (second-order hyperflux) into and out of the field. This is apparently the sort of wave discovered and used by Nikola Tesla, who repeatedly insisted that he was not using Hertzian (Maxwellian) waves but instead was employing a much finer wave having very different characteristics. Further, neutrinic waves will transit between any two points on earth almost instantly—in fact, about 3 x 10^8 times as fast as the speed of light propagates! With these waves, space communication with distant galaxies is practical and achievable, and scientists seeking communication with extraterrestrial civilizations would do well to use such waves.

Note that I am not referring to the ordinary longitudinally polarized electromagnetic wave, where both the E- and H-vectors still exist but the H-vector is rotated 90° so as to lie in the line of motion through S-space.* Such longitudinally polarized electromagnetic waves are already known in the literature and have been used in many patented devices, but they are not included in most textbooks on electromagnetic fields and waves for some unaccountable reason. The normal longitudinally polarized electromagnetic wave moves at the speed c, just as any other EM wave.

At any rate, neutrinic longitudinally polarized waves often arrive at a distant point many times stronger than they were when they left. T. Henry Moray, for example, built a radio and a sound detector that apparently worked by a version of neutrinic waves, condensed into electromagnetic waves in his radio-detector apparatus. Dr. Moray tested the radio scores of times between 1930 and 1933, and on several occasions even received broadcasts from Admiral Byrd's party in the Antarctic. Even when powerful, ordinary radios could receive nothing from Antarctica because of severe weather conditions, Moray's little batteryless radio brought the broadcasts in, loud and clear with no static. Further, Moray demonstrated a sound pickup device of similar construction that could pick up or zoom in on sounds five miles away. Again the sounds were loud and clear, with none of the distortion of weather conditions and background noise. (See T. Henry Moray, *The Sea of Energy in Which the Earth Floats,* 4th ed., 1960, pp. 129, 133, and 143.) Thus transmission of power without wires was possible, just as Nikola Tesla had shown. Tesla in fact patented a capacitive (E-field only) transmission system.

Indeed, according to independent research by Dr. Robert Beck, another inventor named Rogers apparently discovered just such a system and the United States

"spinning wave" of orgone energy identified by Reich. Neutrinic waves particularly interact more strongly with strong E-field and with strong B-field, the degree of interaction increasing (probably nonlinearly) with the intensity of the E or B field with which the interaction occurs. The velocity of neutrinos, measured on earth inside its strong ionosphere-to-earth E-field, should be quite reduced from the velocity of neutrinos measured in isolated deep space, and almost two-thirds of the neutrinos entering the earth system from space interact with the ionospheric-earth potential and are absorbed by it. The A-field and its derivatives directly involve the E-field, H-field, and neutrinic field and their interactions. To correctly understand the activation chemistry theory and results of LeBon, A-field theory is required. And to understand much of Tesla's work, A-field theory is required, for Tesla was aware of, and used, A-field interactions in many of his patented systems.

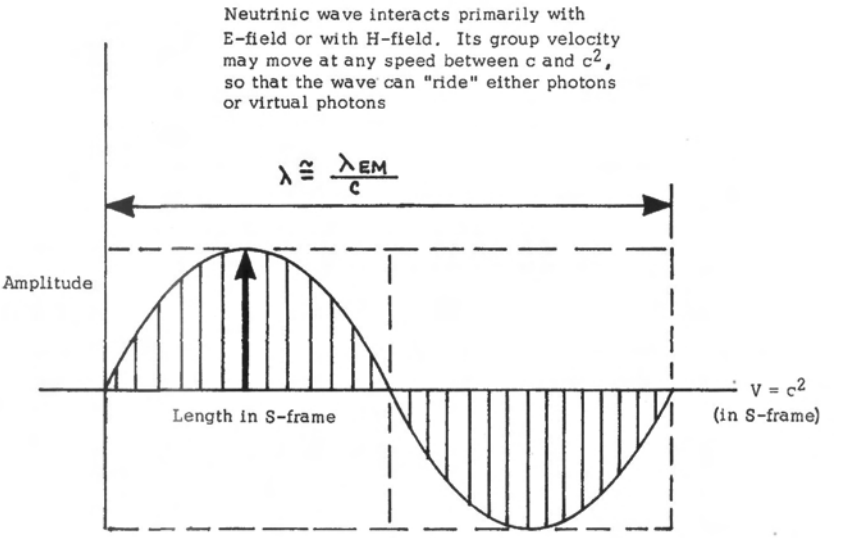

Figure 5. Neutrinic (longitudinal polarization) wave

NOTE: This is not an electromagnetic wave and is not the longitudinally polarized EM wave familiar to many physicists and engineers.

used it to communicate with its submarines underwater during World War I! For that purpose it was known as the Rogers underwater and underground wireless system, and H. Winfield Secor in 1919 reported on its use and its fantastic potential for the future, implying the necessity to completely change our ideas of electromagnetics and power transmission. (H. Winfield Secor, "The Rogers Underground Wireless," *Electrical Experimenter*, March 1919.) Mysteriously, the Rogers wireless seems to have promptly disappeared. Even more strangely, according to Dr. Beck's research the same breakthrough has been made again in the U.S. at least three times since the beginning of World War II. These rediscoveries included full delineation of the prior technologies, with mathematical theory and diagrams, that had escaped further notice. Again the technology disappeared mysteriously in all cases shortly after being rediscovered. The Soviets did not have far to look to discover the Rogers Wireless, Tesla waves, T. Henry Moray's radiant energy device, the Moray radio, the Moray sound detector, and the U.S. technical work in the area since World War II. All they really needed was to thoroughly examine the U.S. scientific and technical literature, the technical magazines and books, and so on. The Moray amplifier and the Moray sound detector were also demonstrated by Moray to a Soviet scientist, Dr. A. A. Yakovlev, in October 1929, and a Soviet agent succeeded in penetrating the Moray laboratory in 1939, obtaining drawings of the Moray tube and many photographs, and perlonally working in the laboratory for two months.

One may consider power transmission through such a wave to have traveled to every point in the future path at a speed that is faster than the flow of macroscopic time by a factor of c. Then along any electromagnetic (time) line along the same path, these waves are "ringing" back and forth continually, as the progress of normal physical change crawls slowly forward. Thus the normal time change (electromagnetic or photonic interaction world flow) acts as a collector for the ringing neutrinic energy, and this collection can act as a gain factor G, where theoretically G is given by the expression

$$1 < G < c.$$

Thus a longitudinal polarization wave, when transmitted to a distant receiver, may arrive or be detected at the receiver thousands of times stronger than the transmitted signal, even for very low coupling.

Neutrinic longitudinal polarization aspects to ordinary electromagnetic waves can also be achieved by modulation—especially by second-order, nested modulation—and such hyperspatial aspects have already been detected in the Soviet communications radiation, causing interference around the globe in the 10 to 20 megahertz range, as we shall see.

A NEW LOOK AT MODULATION

We can assume a sine-wave electromagnetic carrier frequency whose amplitude we wish to vary (modulate) as a function of time, by a lower frequency sine wave, as shown in Figure 6a.

As is well known, the classical view of amplitude modulation of a carrier wave holds it to be an oscillatory change in the amplitude of the carrier, as shown in Figure 6b. However, empirically this was found to be erroneous, since in 1929 it was shown that after such modulation the detected carrier appeared unaffected by

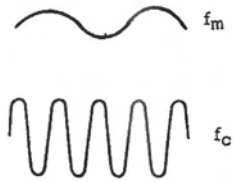

6a. A carrier f_c to be amplitude modulated by frequency f_m

6b. Original view of amplitude modulation

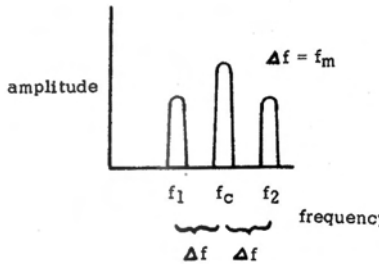

6c. Detected signal for an amplitude modulated wave

Figure 6. Amplitude modulation of a sine wave

the modulating wave; instead, there appeared two other sine-wave frequencies (sidebands), one at a frequency above the carrier frequency and one below it, as shown in Figure 6c. In each case the change in frequency from carrier to sideband was by an amount equal to the frequency of the modulating wave.

Both the original classical view and the present view are in fact correct if one considers hyperspatial aspects and linear detection aspects. As can be noted in Figure 6b, the carrier is distorted and is not a sine wave according to the original classical view. This implies that the individual photon shown in Figure 4a has been internally distorted or "bent." This, I submit, actually happens and constitutes the bending or curving of spacetime in a general relativistic fashion. However, all our instruments can detect only a pure, undistorted photonic interaction; that is, in frequency they can only detect the sine-wave aspects of a kinked photon. The reason is quite simple: for example, suppose the method of detection of the photon is by photon interaction with a bound electron. The change in the electron is a precise change of energy levels to an excited level, and it only detects or interacts with a single sine-wave photon. The frequency (say, the carrier) component of the photon, which contains the correct energy differential (according to $E=hf$, where h is Planck's constant and f is the sine-wave frequency), will interact with the electron. The other sine-wave components of the initially kinked photon will thus be stripped off (demodulated) by the absorption of the carrier portion of the photon. The photon kink existed in both positive time and negative time; from a frequency viewpoint, the modulating amplitude frequency that was added to the basic carrier frequency in positive time was subtracted in negative time. Thus demodulating the kink from the amplitude modulated photon (by absorbing the sine-wave carrier) results in the production or liberation of two sine-wave frequencies, one above the carrier frequency and one below the carrier frequency, each difference being equal to the original amplitude modulation's frequency. These two frequencies will then interact and be detected.

So our linear instruments do not detect single kinked photons in a stream of distorted photons, but they detect a combination of undistorted photon streams (waves) at different frequencies.

Such considerations as these should have appeared in electromagnetics long ago. After all, we presently regard an EM wave as a wiggle of nothingness, existing in time. This is precisely the same as saying that a photon is an oscillation (wiggling) of spacetime itself. Specifically, it oscillates in two directions spatially, one being the E-field direction and the other being the H-field direction. But since an EM wave itself constitutes a regular bending and flexing and curving of spacetime, including both space and time, then the flexing spacetime inside the photon can itself be further bent or twisted, and that constitutes a kinked or curved photon—a *modulated* photon. Our linear laboratory space instruments, however, will demodulate such a kinked photon into its linear components, giving a combinationof unkinked photons in the detection. And for the amplitude modulated carrier shown in Figure 6b, we actually detect the carrier and two sidebands shown in Figure 6c.

Similar complex mixes of waves at different frequencies result for other types of modulation, but this will suffice for our purposes here. Specifically, we should mention that an infinite number of sidebands may be produced, but normally all

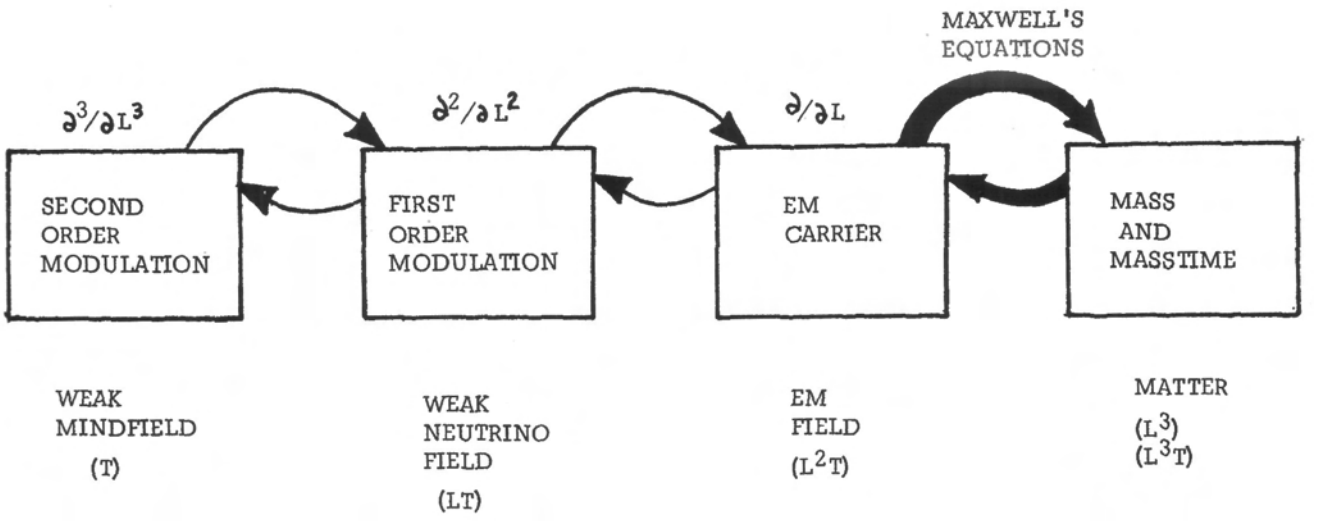

Figure 7. Nested modulations: key to hyperspace

but a few are so weak as to be negligible for ordinary communication purposes, where no hyperspatial information is needed. For living systems, however, a great number of these extra sidebands must be taken into account, for the hyperspatial-virtual state components carry the lifestream, consciousness-loop-interaction Information itself. We will look at some of the biological aspects shortly.

At any rate, modulation of a wave results in direct changes in the virtual structure of the formerly unmodulated photon, relativistically warping or curving it. Just as Fourier (harmonic) analysis breaks down a very complex nonsinusoidal wave shape into an infinite series of component sine-wave frequencies of various amplitudes, so linear detection in a linear laboratory frame breaks down a stream (wave) of complex nonsinusoidal photons into a series of sinusoidal waves in a complex mixture.

And if we now think of this in reverse, we see that a mixture of waves and frequencies must automatically possess, carry, or represent hyperspatial-virtual patterns in the correct nonlinear medium that absorbs them.

HYPERSPATIAL ASPECTS OF MODULATION

Let us now look at the hyperspatial aspects of modulations and complex electromagnetic waves, particularly mixtures of waves, in yet another fashion.

First, as is well known, we may represent a wave as a sine function (or cosine function if preferred). When we modulate a wave, we impress a time change on it. In the most general mathematical sense, a modulation to a wave is the impressing of a derivative function upon the wave. And if we think of the basic carrier wave as being prescribed by Maxwell's equations in derivative form, then in a sense when we modulate the wave we differentiate it, that is, we impress a differential operator function on it. But this means that we raise the order of the differential aquations prescribing the situation, which mathematically means we have increased the dimensionality or spatiality of the, wave entity that is the resulting modulated carrier. In other words, to modulate an electromagnetic carrier wave is to add a hyperdimensional aspect—specifically, neutrinic vector aspects or mind aspects. The whole affair can be thought of as merely shifting or altering the particular distribution of nested virtuals transported by the basic carrier wave.

If we differentiate a sine wave, we simply get a cosine wave, which is just another sine wave pi/2 out of phase with the first. So now it emerges that when we form a mixture of waves, we are adding virtual aspects (and hyperspatial aspects) in so doing, because of the phase differences. This is extremely important: *complex mixtures of waves automatically constitute and carry hyperspatial components!* And if we can accurately control these hyperspatial components, we are in effect doing direct hyperspatial engineering and virtual state engineering.

Now if we carry our modulation-constitutes-differentiation concept one step further, we find a most startling phenomenon (Figure 7). The first-order modulation we placed on an EM carrier we discovered to carry aspects of the next hyperspace, namely, neutrinic vectors. Now if we further modulate that first-order modulation signal as a carrier itself, so that we now have two orders of modulation upon the basic carrier, the second-order modulation must possess hyper-

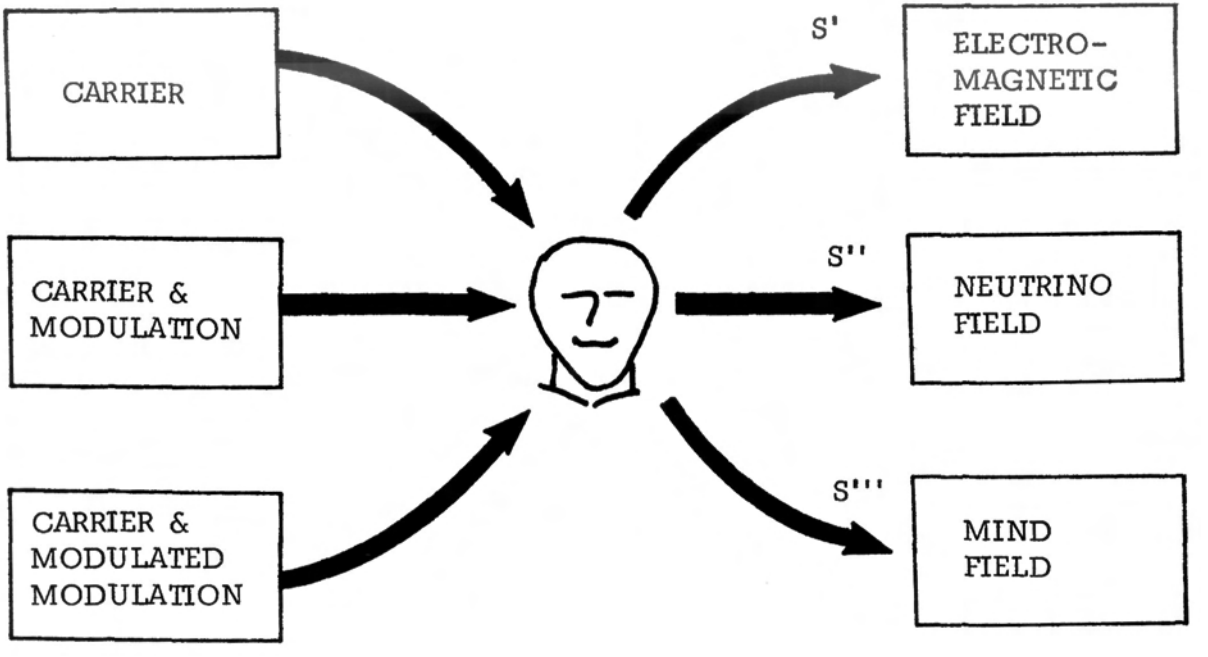

Figure 8. Field coupling to the human brain

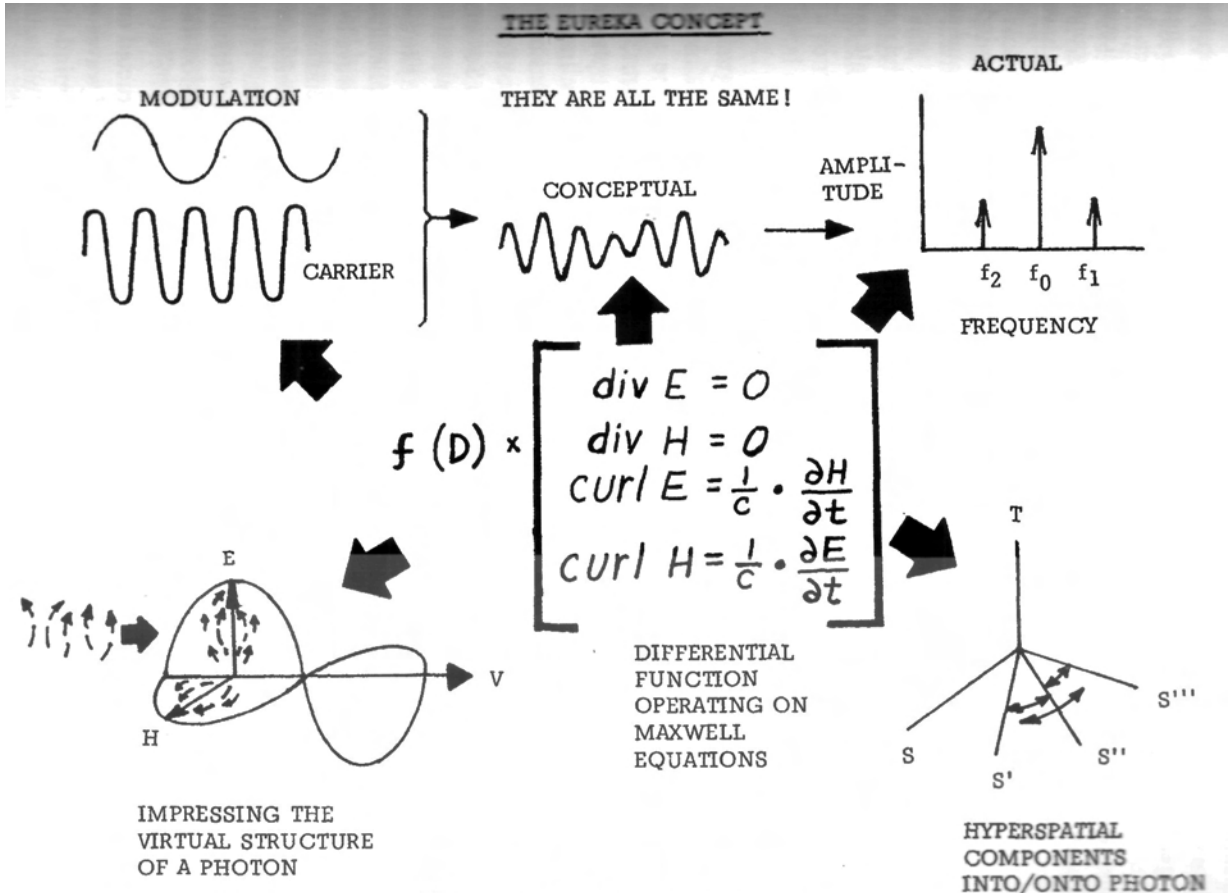

Figure 9. The Eureka concept

vectors of the next higher hyperspace—the mindfield itself. In other words, by using two orders of modulation on a carrier, we can directly affect mindstuff itself. So if the correct overall pattern of these complex modulations are impressed on a carrier, the life-consciousness loop itself can be directly affected or shaped, all the way from the mindfield of a biological organism to its neutrino field to its virtual photon field to its biophoton field to its body tuner, and back. With the correct pattern we can stimulate the life channel for a particular organism, and with yet another pattern we can inhibit the life channel for the same organism. By this means a positive cure for cancer could easily be derived, and as we shall see, this already has been done. By the same means, a "death ray" for use against humans could easily be developed, and it is my contention that the Soviets have already long since developed such weapons.

It is my purpose to eventually use these new aspects to construct a direct mind-link for mind-to-mind communication and hyperlinkage, thus solving the human problem.

Figure 8 shows the basic scheme for coupling such a second-order modulated signal to a human being. We will return to modulations versus nested virtuals and hyperspatials below.

THE EUREKA CONCEPT

So we have now reached a Eureka point of the first magnitude (Figure 9). Hyperspatial engineering, virtual state engineering, curved space, photon kinking, mind-life-consciousness engineering, and nested modulation are all the same thing! We directly engineer the virtual state, hyperspace, curved spacetime, and the life-consciousness loop itself, including the mind, with relatively simple devices that accomplish, transmit, and receive nested orders of modulations. Indeed we have opened Pandora's box, for this is the greatest tool ever dreamed of by humankind. Consequently it can be used either for the good of mankind or for its detriment. And this tool appears already to have been weaponized by the Soviets,

In Figure 9, note that modulation, photon kinking, the appearance of sidebands with the unchanged carrier, impressing a virtual pattern upon a photon, and impressing hyperspatial components into or onto a photon are equivalent. Further, if we assume that the electromagnetic wave (pure, undistorted wave in a linear medium) is given by Maxwell's equations, then modulation mathematically consists of impressing a particular differential operator function and a nonlinearity upon Maxwell's equations. For each modulation pattern, a particular virtual structure is impressed on the photon, which is the same as impressing a particular hyperspatial pattern upon it. Each specific pattern impressed on the photon (that is each particular kink pattern of the photon) corresponds to a specific differential operator function. Through this means, a specific theory can be constructed empirically. That is, one can work out the effects of various mixtures of waves on specific biological systems, measure the specific channels used by the mind-life-consciousness loop, and so on. The Lisitsyn paper and Kazhinskiy's "biological radio" work in fact state that the Soviets have already done precisely this, and the Kaznacheyev paper shows that a large number of related biophoton experiments were in fact carried out in Soviet military laboratories. But let us look at some very important and exciting German work directly related to this area.

BIOPHOTONS AND VIRTUAL EM FIELD OF A BIO-ORGANISM

In an incredible piece of work, "Photon Storage in Biological Systems," in *Electromagnetic Bio-Information,* Urban and Schwarzenberg, Baltimore, Md., 1979, pp. 123-149, Dr. Fritz Albert Popp has presented the results of his laboratory work—and his theory—dealing with quite new developments in biological organism fields. Indeed, this may be one of the most important Western papers ever presented, if its true import is noticed. Briefly, in studying cellular electromagnetic bioactivity, the cell behaves as a system far from thermal equilibrium. It thus can be characterized as a Prigogine system. (Ilya Prigogine received the Nobel Prize in 1977 for his development of nonlinear thermodynamics of systems far from equilibrium, thereby changing the second law of thermodynamics.) We now know that in such a system negative entropy can result, and order can emerge from disorder. For a wildly disordered system, large-scale order can emerge and stabilize, and the more chaotic the disorder, the greater the stability of the ordered patterns that emerge. (Which seems to imply a confirmation of my fourth law of logic—total disorder must inevitably turn into total order.)

At any rate, living cells produce coherent light with a laserlike activity. This coherence serves as a control for the metabolism of the cells, regulates growth, and fixes the reproduction rate. Further, the cell exhibits superconductive behavior.

Popp found that a living organism in fact possesses a living aura, a virtual electromagnetic field that pervades the entire organism with a virtual photonic flux. In this field, virtual photons are stored. The field continually receives inputs (virtuals) from the environment and is continually outputting biophotons, particularly in the near ultraviolet. This field, in which all cells are bathed and with which they all continually intercommunicate, tends to stabilize and cohere the organism. All this has been established by laboratory experiments, and all of it is directly consistent with my own hyperfields and nested-virtual-fields model of the living system's life-consciousness loop connecting its mind hyperworld to its physical body tuner. My model is consistent with Popp's work and extends it by adding the nested structures of the virtual field, thus connecting Popp's virtual field to the neutrino field and the mindfield.

And with this additional information in mind, let us return to our consideration of nested modulations on an electromagnetic carrier. Indeed, let us look at several examples of devices already applying the "nested modulation is hyperspace vectoral" effect.

THE PRIORE MACHINE

The cure for cancer mentioned above is the Priore device in France, which has been curing cancer and other diseases for over a decade, much to the frustration of many members of the French Academy of Sciences.

Antoine Prior6 is an Italian-born inventor who escaped from the Germans in World War II and fled to France. After the war Priore" purchased surplus equipment and eventually developed a strange machine that filled an entire room. A nozzle above a table in the center of the room emitted a strong ray or field, which Priore* explained consisted of an electromagnetic wave in a magnetic field. Eventually the French government spent almost three million dollars for construction of a new, improved PriorS machine, because Priori had shown he could cure cancers in laboratory animals with the device.

In 1964 Professor Robert Courrier, renowned biologist and secre'taire-perpe'tuel of the French Academy of Sciences, presented some of Priore's results to the Academy. Forty-eight cancerous rats had been divided into two groups of twenty-four each. One group was set aside without treatment as a control, and the other group was divided into two subgroups of twelve each. One of these subgroups was treated by the Priore machine promptly after cancer grafts, and the other was treated after a lapse of several days. Both subgroups were completely cured—the first quickly and the second after more prolonged treatment. All the control rats died in twenty-two to thirty days after grafting.

The results created a furore and a controversy that have continued to the present day. Since the first presentation by Courrier, the machine has repeatedly cured leukemia and other forms of cancer in laboratory animals. The controversy seems to have arisen because the French Academicians could not comprehend the working of the machine, and because the inventor would not reveal how it worked but only how it was built.

The second, more powerful Prior6 machine produces a magnetic field of about 1,240 gauss. According to one scientist, the machine contains a gas-filled vacuum tube, which contains a plasma of mercury and neon gas. A pulsed 9.4 gigahertz electromagnetic wave is modulated onto a 17 megahertz wave in this plasma. However, the true nature of the machine is revealed by the fact that the 9.4 gigahertz wave is joined in the "lamp" by seventeen radiations of unspecified frequency and nature. Thus we see that Priori is actually using second-order multiple modulations and is dealing with the direct life-mind-consciousness loop of the mammalian cell. He is directly stimulating and engineering the hyperspace nested virtual bands with his device. His twenty-six years of work have mostly been involved with ferreting out the required precise frequencies and mix of second-order modulations, as well as the correct intermodulation carrier necessary to obtain the desired effects.

In Figure 10 we show a simplified diagram of the Priore device, from which it can immediately be seen that the device uses the same principles shown previously in Figure 9. PriorS is using nested orders of modulations to affect nested orders of virtual state, thus producing direct channels and effects in neutrinic field and in mindfield. Radiating a biological target such as a laboratory animal with such a complex field directly engineers its mind-life-consciousness loop. With the correct nested modulations on the correct carrier (in this case a strong magnetic field, which allows a stronger connection to the neutrinic field aspects), the mind-life-consciousness loops of the individual cells in the body of the irradiated animal arc "scrubbed clean" of any deviation from the norm by the virtual patterns delivered to the animal, and hence to its "virtual biophoton stabilization field" reported by

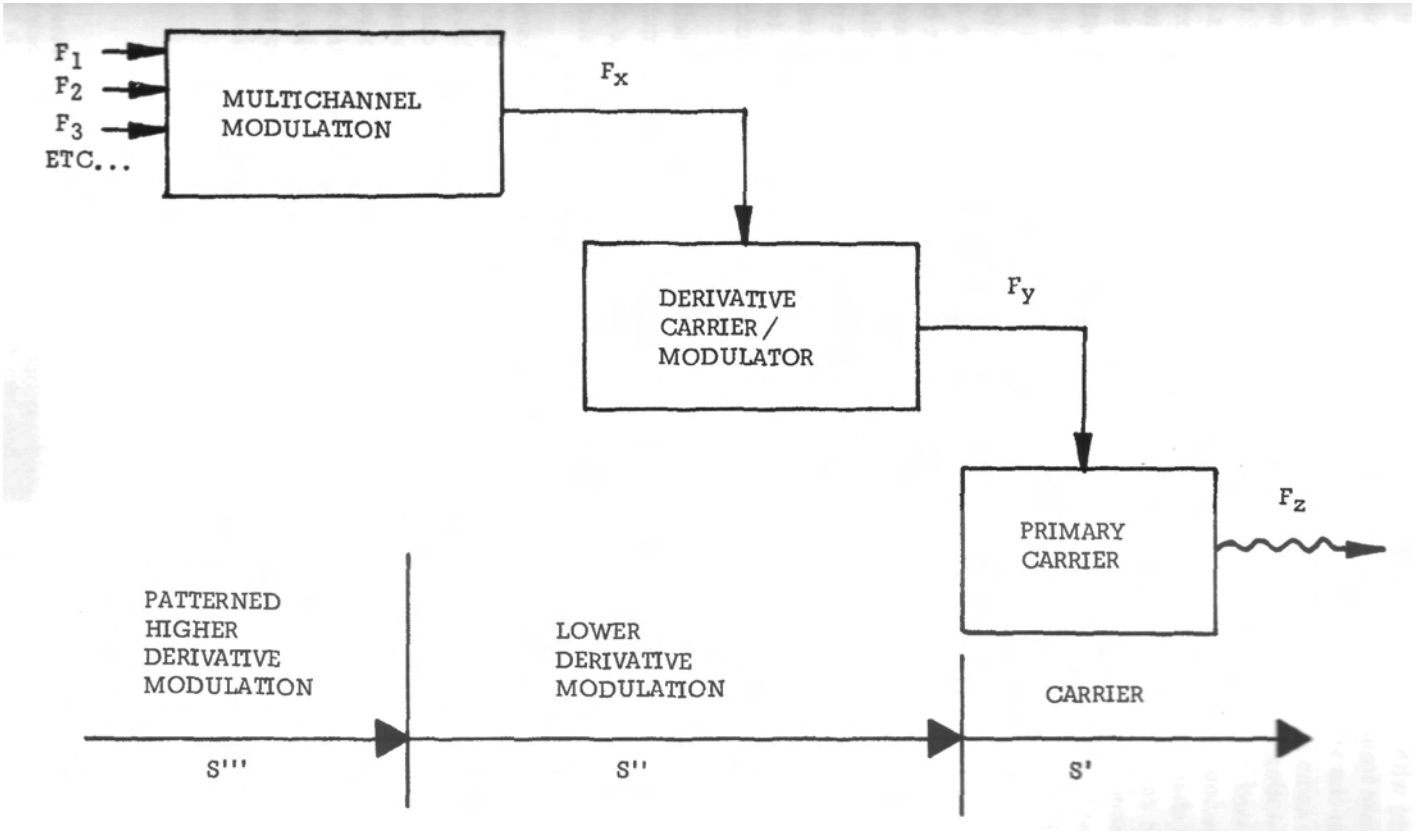

Figure 10. A simplified diagram of the Priori device

Popp. In other words, the Priore device produces a reverse sort of effect as compared with the Soviet work reported by Kaznacheyev on anomalous death and disease transmission between cell cultures by near ultraviolet biophotons emitted from the virtual Popp field of the dying cells of the stressed, attacked cultures. The same sort of virtual engineering that can transmit death of the organism (by disrupting its mind-life-consciousness loop tuning) can also transmit life into a stressed attacked grouping of cells by a sort of "forced resonance" of their consciousness loops into normal health patterns. (Virtual state interactions control charges, which control chemistry. Thus the entire chemistry of the absorbing cells can be controlled and engineered.) Also, the Lisitsyn paper refers to the presence of eleven independent channels in the brainwaves (namely, in the mind-life-consciousness connection to the waves of dendrite firings that constitute brainwaves*), and these were specifically referred to clipped signals, not sine waves. (The clipped signals would be those possessing complex nested modulations, and thus representing the tuning effects of the life-consciousness loop.) The Priore machine uses seventeen higher-order modulations, which are quite sufficient to cover all eleven life channels required, with an additional six being available for tuning so as to squelch or "jam" the life-consciousness loops of those cells with tuning abnormalities, that is, of diseased or cancerous cells.

As we would expect, the Priore machine has also shown its ability to cure other infectious diseases and materially benefit victims of cardiovascular diseases. Infectious diseases cured by Priori radiation also provide an immunity to the treated host organism that has been shown to be transferrable by transfusion of blood samples.

Again I strongly emphasize that the individual biological effects of solitary magnetic fields or single frequency waves cannot be extrapolated to the multiple frequency, nested modulation case; and almost all our present knowledge of the effects of electric, magnetic, and electromagnetic fields on biological systems is woefully immature and incomplete.

T. Henry Moray built a somewhat similar machine—though very much smaller—which provided a direct radiation from extensive "peach blossom violet" colored sparkgaps inside a quartz tube, and which greatly stimulated the health of an individual exposed to the radiation. In fact, the device would promptly cure the radiation burns Moray frequently suffered as a result of his continual experimentation with uranium compounds and other radioactive substances. He patented the device, and some of his original machines are still in existence and still being used to treat patients with a wide variety of ailments. I have personally been exposed to one of Moray's treatment machines and can vouch for the fact that it stimulates every cell in one's body, providing in about two to three minutes a great tonic and health stimulant.

***It is these dendrite firings which form the collector-detector mechanisms through which the mind-world changes are joined to the human nervous system and brain. Were they not specifically useful and needed, the dendrite firings would not have been developed, and nerves would simply be long wires.**

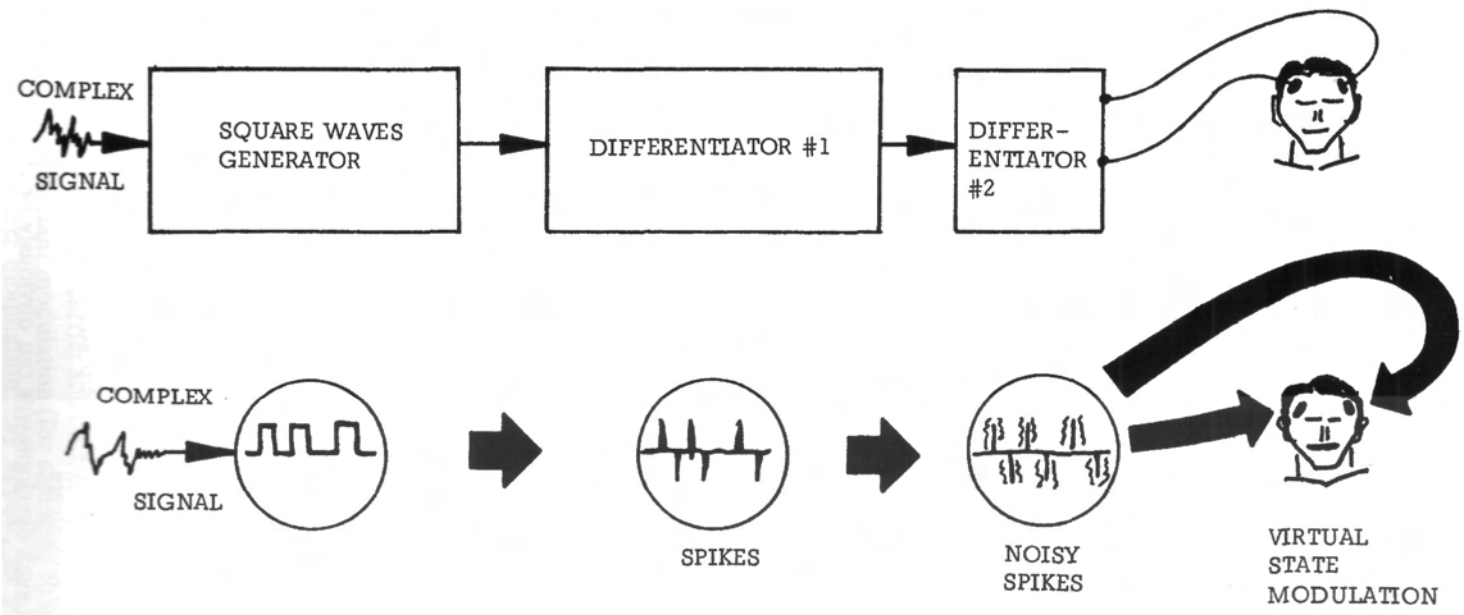

Figure 11. A simplified diagram of the improved Flanagan neurophone

THE NEUROPHONE

Another device that uses the new hyperspatial, virtual state, nested modulation technology (and has done so for seventeen or eighteen years) is Dr. Pat Flanagan's neurophone. With brilliant insight and intuition far beyond that of science at the time, Pat invented and patented the instrument by the time he was seventeen years old. The neurophone is a device that, contrary to all present theory and knowledge, will directly "pump the brain" and reproduce sound and information directly in the brain and mind system, without going through the auditory system at all. A simplified diagram of Pat's improved neurophone is shown in Figure 11.

Briefly, the device takes a complex signal, such as the sound of an orchestra playing a musical interlude, and electrically processes it as shown in the figure. First the signal is passed into a section that clips everything into a series of square waves, remarkably analogous to the sort of clipped waves Lisitsyn confirms are the information carriers of the human brain. Next the square waves are differentiated, yielding a series of sharp spikes (note that these spikes retain the pulse-time content of the clipped signal). These spikes are again differentiated, and since these are finite spikes with real nonzero rise times and decay times rather than theoretical constructs, a series of noisy spikes results from the second differentiator section. From here, the noisy spikes are introduced to special contact electrodes, one of which is normally placed on the forehead, while the other may be placed almost anywhere, including on the foot. Nowhere are any sound waves introduced to the head.

The square-wave clipper section reduces the complex signals, their overtones, and their complex modulations to square waves, retaining the temporal content of the wave mix but not the waves themselves. The first and second differentiators heighten or filter through the temporal content of the higher-order differentiations, that is, they serve as a band pass filteT unit to accent the time keying of the neutrinic and mindfield portions or aspects of the signal. When these time spikes are then introduced across the body as pulsed voltages, they are modulated directly on the dendrite firings of the brain and nervous system, providing direct and pulsed modulation of the neutrinic and mindfield component channels of the mind-brain-consciousness-life loop itself. Thus the neurophone directly inputs information into the brain and nervous system, bypassing all the normal sensory systems that lie between the mind-brain loop and the outside environment.

Indeed, a similar development has been reported by two University of Missouri researchers. Dr. Donald York, a neurophysiologist, and Dr. Thomas Jensen, a speech pathologist, have recently reported identifying and decoding twenty-seven words and syllables in specific brain wave patterns and correlating these electroencephalographic patterns with both the spoken word and the silently thought word in about forty subjects. At present, Dr. York and Dr. Jensen are programming a computer with a brain wave vocabulary, to monitor and read the EEG of a stroke victim's brain and help stroke victims who have lost their powers of speech to communicate.

While all such developments can obviously be misused, their potential for assistance to mankind is enormous. Indeed, my own premis that brain linkage it

possible and can be used to advance all mankind to the sixth stage of species evolution is slowly being proven. It is within our reach now to develop u multi-channel communications system that will directly link brains, minds, and consciousness into a single functional being; and I have already pointed out that the psychokinetic power of the emergent entity increases exponentially with the number of linked stages. The normal corpus callosum linkage of the two cerebral halves in each human head proves that brains, minds, and beings can be linked and integrated into one.

The Excalibur Briefing details the basic concepts of the theory involved in hyperspace-virtual state engineering, and thus in the engineering of mind-life-consciousness links to multicellular organisms here on earth. Pat Flanagan's neurophone proves that complex information can be implanted directly in the brain and mind, bypassing the normal isolating barriers. Drs. York and Jensen have shown that the brain wave does indeed contain recognizable, decodable information analogues. Lisitsyn has already reported measuring the number of independent channels involved and has documented the importance of the clipped brain waves as opposed to the sine-wave content. If we have the vision, we can still develop a brainlink and rapidly apply it to link sixty to one hundred persons, thereby opening a conscious, multidimensional "eye" for the collective human unconsciousness, gently rousing ZARG into wakefulness, and fulfilling human destiny without undergoing the psychotronic Armageddon planned by the Soviets. The time is short, but it can still be done if the funding, the vision, and the team can be established on a crash priority basis.

SOVIET "WOODPECKER" SIGNALS

But, as I have said, all this can be used for the detriment of mankind as well as for its benefit. Unfortunately, it appears that the Soviet Union has chosen to weaponize the effects on a global scale. A prime example is the "woodpecker" lignals emanating from the USSR in the 5-30 megahertz region and interfering with communications around the earth.

These complex woodpecker signals appear to originate from two or three dozen powerful Soviet transmitters, each with a power estimated as high as 40 megawutts (Figure 12). The pioneering experimental measurements of these signals by Dr. Robert Beck and William Bisehaveshown just how deadly a potential may be possessed by the signals. These measurements have been performed in Eugene and Portland, Oregon; Los Angeles, California; Huntsville, Alabama; and several other locations. They have been particularly significant on the West Coast in and around Eugene, Oregon because of the presence of a direct current transmission line several hundred miles long, which has acted as a long wire antenna, picking up the signals and rebroadcasting them with appreciable gain in the vicinity.

Typically the signals may be found on, say, sixteen different carriers between 10 and 20 megahertz. Twelve of the carriers may appear normal, with normal sidebands, and the other four may have the carrier and both sidebands suppressed but still show the biologically significant modulation (for example, 10 hertz). On all sixteen channels a strong 10 hertz modulation may appear, all perfectly time

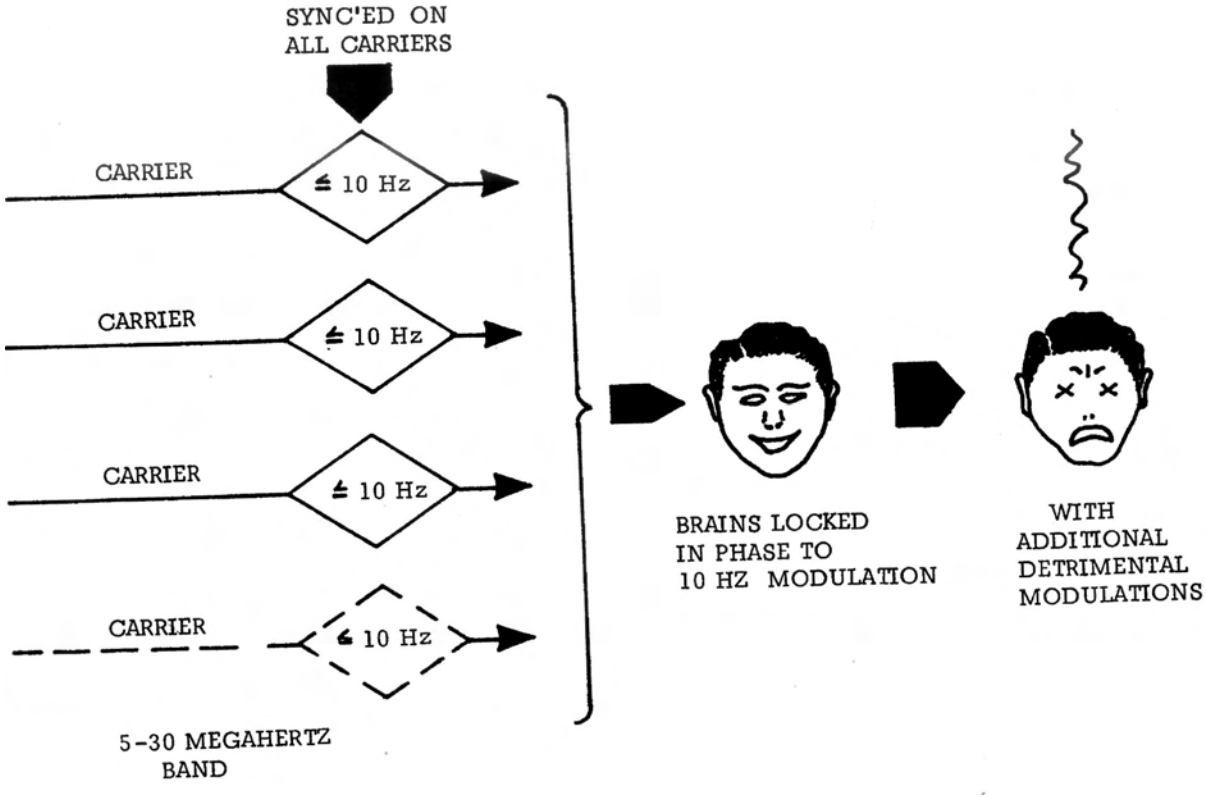

Figure 12. The Soviet "woodpecker" signals

synchronized and in phase channel-to-channel. The received signul from one of these carriers may be twenty-five to thirty times us strong as the earth's background magnetic field, which is oscillating at approximately 7.0 to 7.5 hertz. Other complex modulation frequencies, many of them chunging, are present on the various channels.

Normally, the brainwaves of mammals in an area are gently entrained by the normal oscillations of the earth's magnetic field and arc oscillating along at, say, 7.5 hertz. Under continuous radiation from the Soviet woodpecker signals, a percentage (say 30 percent) of the mammalian brains may be captured by the 10 hertz modulation on the overpowering Soviet signals. These captured bruins are now in forced oscillation and are riding along in phase with the 10 hertz Soviet mod ulation. In other words, a certain percentage of the human brains in an area will phase lock to the 10 hertz modulation, and that will effectively lock into those brains the sixteen carrier frequencies with their concomitant frequency mixes and complex signal modulations. If the signals are made much more powerful (for example, by focussing them onto one particular area or increasing the power of the transmitters), then a much higher percentage of brainwave entrainment can be accomplished in the targeted area. By simply adding on the desired modulation patterns, the Soviets can now pump material directly into the mind-brain-consciousness-life loops of the entrained brains. The weapon implications are enormous: raw emotion such as sheer terror or panic can be transmitted; death or disease patterns of all kinds can be transmitted; informational content (thoughts and ideas) can be impressed directly into the captured brains and minds and processed as if originating inside each brain itself. Indeed, as long as the Soviets keep the effects rather gentle, an entire population can be subtly influenced without governmental notice. Certain specific ELF frequencies can rapidly disable or even kill, and for wartime use those frequencies can be directly implanted in the captured brains themselves by the woodpecker signals. It appears that 1984 came a little early, and one can perhaps now understand Brezhnev's strange 1975 proposal to the SALT negotiations that we should also consider outlawing the development of new weapons more frightful than the mind of man has ever conceived.

The signals also have direct application against strategic targets other than personnel. For example, by incorporating the correct nested modulation pattern, the positron kindling (electron squelching) pattern can be impressed. By beaming through the earth (with a circularly polarized signal or with other complex modulation forms), a beam with a strong neutrinic component, which will squelch electrons and which will interact with great preference for strong voltages or strong magnetic fields, can be directed at a target complex. In the targeted area aircraft and communications systems can be disabled; automobile, truck, and other ignition systems will fail; power transformers and large motors and generators will fail; power transmission systems with their associated high voltages will fail; and so on. Even independent, self-contained emergency power equipment, such as at military installations and strategic missile sites, will fail to operate. Further, to some of these signals, the eurth and the sea are as transparent as glass, and so underwater nuclear submarines cun be electrically disabled on station before their missiles can be fired, while strategic missile complexes can be elec-

trically disabled before their deadly nuclear missiles can be hurled toward their distant targets. If some submarines and land complexes succeed in firing missiles before being disabled, these missiles can be electrically dudded and scrubbed from the sky over Soviet territory while still far from their intended targets.

So, as stated at the end of *Excalibur*, the players are on stage and in place. The final act begins. One thing is sure—mankind will never be the same again after seeing the play!

PART FOUR

SOVIET PHASE CONJUGATE DIRECTED ENERGY WEAPONS

WEAPONS THAT USE TIME-REVERSED ELECTROMAGNETIC WAVES

At the end of WWII, the Soviet Union obtained the cream of the crop of Germany's radar scientists and infrared scientists.

At that time, the German scientific team led the world in the theory and technology of radar absorbing materials (RAM) and radar cross sectioa For example, some leading Western radar experts believe that the German scientists had already advanced the theory of radar cross section beyond where Western scientists have arrived at today. Radar cross section science is the "heart" of modern radar technology, countermeasures, and counter-countermeasures.

The theory of RAM technology is precisely what is needed to develop and design phase conjugate mirrors for radar frequency bands. Phase conjugate mirrors are capable of producing a time-reversed (TR) wave in direct response to a received ordinary wave. The mirror may be powerfully "pumped" with energy to produce a very large amplification of the time-reversed wave.

Just after WWII, the Soviets also mounted a truly massive program to obtain and review all the scientific literature of the West This material was completely re-examined and digested, in a deliberate search for a major new technological "breakthrough" area. Nothing similar to this has ever been done in the West.

By 1950, the Soviets probably had discovered phase conjugation and the time-reversed wave, in their radar programs using the German radar scientists. Their relearch would certainly have revealed that the time-reversed wave is a solution to the wave equation, and hence the phenomenon is universal to all waves and frequency regions, under appropriate nonlinear circumstances.

We stress the fact that from the beginning the Soviets have always led the rest of the world in nonlinear science and mathematics.

Thus by the mid-50's, the Soviets would have mounted an intensive national development program on these radar TR wave weapons. If so, the Soviet Union has now had the equivalent of some seven or eight Manhattan Projects, back-to-back, in the development, stockpiling, and deployment of TR wave weapon systems. At least fifth generation Soviet TR weapons have been developed and deployed.

This is a matter of the greatest importance to the U.S.—and one which the U.S. intelligence and scientific communities have largely missed.

We particularly stress that the time-reversed wave phenomenon is a universal phenomenon of nature, not just a fluke, and not just a "nonlinear optics" phenomenon. It is a solution to the wave equation and, as such, it applies to every kind of wave. Electromagnetic, sound, magnetohydrodynamic, and other radiating systems all exhibit the phenomenon under appropriate nonlinear conditions.

Hundreds of Western papers dealing with time-reversed waves are now in the open scientific literature—most of them dealing with non-linear optics. However, the principles of the time-reversed wave are well-established, and known to apply to waves in general.

Compared to a normal wave, a time-reversed wave has startlingly different weapon capabilities.

Such a wave precisely retraces the path of the ordinary wave that stimulated it to be formed. So it possesses an "invisible wire" through space, back to the original position of whatever emitted its stimulus wave.

Further, the time-reversed wave continually converges upon its invisible "back-tracking" path. It does not diverge and spread its energy, in contradistinction to normal waves.

Using several simple schemes (particularly pumped 4-wave mixing), extremely large amplification of the time-reversed (TR) wave can be cheaply and readily accomplished.

A startling weapons capability therefore emerges when amplified TR waves are generated in response to received signals from a distant target:

(1) If any signal at all can be received from a distant target, a return TR signal of extreme power can be delivered directly to that target Almost all of the transmitted TR signal energy will arrive at and in the distant target, even through a highly nonlinear medium or under scattering conditions. Hardly any of the energy will be lost enroute. If the target is fast-moving, a "lead correction" signal can be calculated and added to steer the return path.

(2) Since real-time holography can readily be accomplished using TR waves—and without first making holograms, geometrical forms (balls, shapes, hemispherical shells, etc) of energy can be created readily by interferometry (crossed beam techniques). Since the TR wave carriers do not disperse with distance, these interference energy forms can be assembled by crossed TR wave beams at great distances—even hundreds of thousands of miles. The energy appearing in such a distantly created energy form is limited only by the amount one cares to put in at the amplified transmitting end.

Thus the radar itself now becomes a powerful, all-around weapon. With a TR wave adjunct, once the radar receives a return signal from a target, an extremely powerful TR wave pulse can be generated, and all the energy in that pulse can be unerringly returned to the distant target from which the return was received.

Even a passive (receive only) radar may be used together with a TR wave adjunct to accomplish the same directed energy destruction of the distant target emitting the signals received by the radar.

Radio receiver-transmitters may also employ simple TR wave adjuncts to provide a large number of communications jammers and "directed energy weapons," capable of jamming and/or destroying enemy radio transmitters at appreciable distances.

The Soviets have intensively developed such TR wave weapons since the 1950's. In January 1960, Khrushchev was probably referring to these weapons when he reported to the Soviet Presidium the forthcoming advent of fantastic weapons, then in advanced Soviet development.

Prior to Khrushchev's announcement, the Soviets had begun radiating the U.S. Embassy in Moscow with scalar EM waves and phase conjugate energy, modulated upon weak microwave carrier beams. Later these beams were used to induce illnesses and blood changes in Embassy personnel. (We will shortly discuss how the Soviets could induce disease at a distance, electromagnetically). The microwave radiation con-

tinued intermittently, in spite of the objections of several U.S. Presidents. U.S. studies failed to comprehend what was being done.

The Embassy radiation was and is a high-level intelligence probe: Stimulate and affect the U.S. Ambassador, a high-level target. Attention by the CIA, NSA, State Department, DIA, the U.S. President, etc. is guaranteed. Puzzled, they will turn to the U.S. scientific community for an explanation. The scientific community will try to explain the microwave radiation, using the best of its EM knowledge. By the U.S. counteractions taken or not taken at the Embassy site, the Soviets know with 100% certainty whether or not the U.S. has discovered TR wave weapons, electromagnetic disease control, etc.—and whether we have developed defenses against such weapons.

Since the beginning, of course, our actions—or lack of them—at the U.S. Embassy have consistently revealed to the Soviets that we have no knowledge of, and hence no defenses against, TR wave technology and the scalar electromagnetics (electrogravitation) that accompanies the phenomenon.

Soviet TR wave radar weapons also provide a convenient mechanism for accomplishing nuclear weapon kill. A target struck by a powerful TR wave pulse generates a time-reversed back-pulse due to nonlinearities in the target medium. In the nonlinear medium of the exploding or fuzing target, the two pulses (which are 180 degrees out of phase with each other) modulate each other, locking together into a scalar EM wave or pulse. This scalar EM pulse has zero electromagnetic force field resultants, but is a violent fluctuation of the energy density of local spacetime. Rigorously it is a local gravitational pulse wave, by definition. Further, it is far more powerful than "normal" gravitational waves. This scalar EM pulse does not react with the orbital electron shells of an atom, but passes directly into the nucleus and is absorbed there. This raises the nucleus to an excited state, increasing its potential (trapped energy). If the nucleus cannot withstand this increase in potential energy, it directly fissions. If the nucleus withstands the increased potential, it then immediately decays from the excited state by simply emitting a time-reversed EM wave.

Any radioactive nucleus is already "teeter-tottering" toward nuclear decay, so to speak, and it will instantly decay radioactively when struck by a significant scalar potential pulse. Thus a TR wave radar weapon can deliver a powerful TR pulse against a distant vehicle carrying a nuclear warhead, and the resultant EG pulse penetrating the nuclear material of the warhead will electrogravitationally explode it in a full-order nuclear detonation.

Therefore, when using such weapons, extreme care must be taken to avoid inadvertently pulsing one's own nearby nuclear weapons or nuclear material. In attacking distant ground targets, one must be careful not to detonate nearby nuclear weapons, nuclear powerplants, or stored nuclear material—even at some distance from the target Otherwise, large-scale nuclear fallout will be experienced over a worldwide area, and unacceptable "boomerang" self-damage to the attacker himself may be incurred. The more powerful the TR pulse employed, the greater the safety separation between the struck target and stored nuclear materiel must be to prevent unacceptable "boomerang" large-scale fallout.

Also, large TR wave interferometer weapons, such as the Woodpecker systems, usually first produce very powerful, scalar EM "standing wave" beams by continuously transmitting (in the beam) both a normal EM wave and its phase conjugate.

modulated (locked) together to produce a "zero EM vector resultant" electrogravitational (EG) wave. Interference of two of these scalar EM beams in the targeted area, plus internal scanning within the beam by other signals, allows EM effects—of either normal EM energy or time-reversed EM energy—to be produced and controlled at very precise locations within the broad interference area.

Each such huge "scalar EM standing wave" beam represents a gigantic electrogravitational standing wave, and hence a giant oscillating potential in spacetime. This standing wave represents a sort of gigantic "capacitor", or accumulator of infolded energy. Enormous energy may be collected in this potential, charged-up over a period of time. "Shortcut" of this giant capacitor—by transmitter failure—can result in a large flash-over discharge of the EG energy into the local earth, producing a massive EG ground wave that can be enormously destructive.

Thus one must carefully protect the TR wave weapon system from inadvertent discharge of large EG pulses into the earth at the local site, due to transmitter failure, shortouts, etc. Otherwise one's own nuclear weapons or facilities may be exploded—even at some distance—by the EG pulse ground wave produced. One's communications and electronics installations, for example, can be knocked out at an even greater distance.

For example, in the winter of 1957-58, a large Soviet TR wave prototype weapon at Kyshtym, near the Urals, apparently suffered a catastrophic transmitter failure, discharging a powerful scalar EM (electrogravitational, or EG) pulse into the earth. This huge EG pulse struck the atomic wastes stored nearby, causing the radioactive nuclei to imediately decay. In other words, the nearby atomic wastes exploded—just as eyewitnesses reported. Deadly radioactive contamination spread across a major region, and exists to this day.

After this accident, the Soviets would have developed much more elaborate safety circuits and devices and implemented them into their TR wave weapons.

Even so, in April 1986, the explosive eruption of a reactor at Chernobyl was almost certainly caused by an accidental catastropic failure of a large TR woodpecker transmitter about 30 kilometers away. The sudden failure of the East-to-West Woodpecker transmitter was positively detected by engineer Bill Bise. All safety circuits at the site would have been instantly activated, desperately and slowly draining off the huge "standing wave" potential built up by the weapon.

The Soviets would have immediately shut down the reactors at Chernobyl as a precaution.

Some hours later, the transmitter safety devices finally failed, and a much smaller, though still significant, remnant EG pulse was discharged into the earth, spreading out in a ground wave. The first radioactive material—the fuel rods in one of the hapless, shutdown Chernobyl reactors—encountered by the EG ground wave pulse received it and immediately erupted radioactively.

Had the full EG pulse escaped the stricken transmitter, all four reactors at Chernobyl would have violently exploded, and deadly nuclear fallout would have rained down over a wide area of the earth. Had the reactors not been shut down and the control rods inserted "full-in" to dampen the radioactivity, a far greater radioactive eruption—probably a nuclear explosion—of the struck reactor would have occurred.

In May 1960, a prototype TR wave radar weapon was used to down Gary Powers'

high-flying U-2 aircraft over the Soviet Union. Powers reported a flash, as if from an explosion near him, but the flash persisted. This is almost certainly the signature of a TR wave weapon.

In April 1963, the first large strategic Soviet TR wave weapons became operational. These weapons were used to electromagnetically deaden the electrical controls of the *U.SS. Thresher* atomic submarine on April 10,1963, and to produce a huge underwater electromagnetic blast 100 miles north of Puerto Rico on April 11,1963.

Since the 1960's, the Soviets have possessed a 100% effective defense against U.S. and European strategic bombers and missiles. The early systems deployed in the Soviet Union were midcourse and terminal phase systems. The Soviets would also have relied upon additional TR wave weapons systems, deployed as adjuncts to radar systems aboard research ships and crawlers, to be able to attack U.S. missiles and bombers in their launch and early midcourse phases.

These Soviet defensive TR wave systems also could easily accomplish nuclear weapon kill, and by their nature may have already been immune to the Stealth technology.

Older Soviet radars, using TR wave adjuncts, become totally new weapons having startling and heretofore unsuspected capabilities against missiles and aircraft. For that reason, the Soviets happily continue to operate and maintain thousands of older radar systems that, by Western radar standards, are seemingly obsolete.

Hundreds of incidents of Soviet tests of these TR wave weapon systems have been observed around the world, and reported in the open literature as puzzling or anomalous phenomena.

In the 1960's, in Siberia, Vlail Kaznacheyev and his researchers accomplished enormous experimentation proving that cellular death and disease—of any type whatsoever—could be transmitted and induced electromagnetically. This team went on secretly to phase conjugate (time reverse) the "death photon" signals, to show that any cellular death and disease can be reversed or "cured" electromagnetically as well.

The latter work would have been done under the auspices and tight control of the Soviet KGB, since all phase conjugation (time reversal) weapons effects are under the KGB, both for development and deployment Obviously the "electromagnetic antidote" work of Kaznacheyev was not published, because it provided a powerful counter-BW warfare capability of great strategic importance to the Soviet Union.

Thus in the late 1960's, the Soviet Union became the only nation on earth to achieve the capability of rapidly (within one or two hours) developing an electromagnetic antidote for lethal new biological warfare (BW) viruses—of any kind whatsoever. The Soviets also developed the capability for mass treatment in this fashion of both the civil populace and the military forces personnel.

Independent verification of the Kaznacheyev "death photons" effect has been accomplished in West Germany (University of Marburg), in Australia (University of Sydney), and in the United States (by G. Wilbanks).

Independent proof of electromagnetic healing of viral diseases was also accomplished in the West, and largely ignored.

In the late 1960's and early 1970's, a French inventor—Antoine Priore—built and tested several large electromagnetic devices that cured thousands of cases of terminal cancers and leukemias in laboratory animals. He worked with members of the pres-

tigious French Academy of Sciences. His work was funded by the French government and presented to the French Academy by Robert Courrier, head of the Biology Section. His work was suppressed in the 1970's, and lost when he died.

Priore used a plasma to accomplish multi-wave mixing and phase conjugation (time reversal). His time-reversed curative signals used a powerful, rippling magnetic field as a carrier; the magnetic field guaranteed penetration of every cell in the body—necessary to reach a blood disease. The rippling of the magnetic field guaranteed penetration of the cell's atomic nuclei by nuclear magnetic resonance. Penetration of the actual nuclei of the atoms in the diseased cell is necessary, since the master cellular control system (discovered by Dr. Fritz Albert Popp of West Germany) operates through the cell's structured scalar EM biopotential, and this potential is centered in the nuclei of the atoms comprising the cell.

Note that electrical dedifferentiation of cells at miniscule current—between picoamperes and nanoamperes—has been proven by Robert Becker and other researchers. Red cells of the frog, for example, have been electrically reversed through all their development stages. The cells first become round, then develop a scalloped outline in their membranes. Then they become ameboid and move by means of pseudopods. Their nuclei swell and their DNA becomes reactivated. They then rid themselves of all their hemoglobin and develop a full set of mitochondria and ribosomes. In Becker's historic experiments, the cells then turned into cartilage-forming cells, and finally into bone-forming cells. In short, Becker demonstrated dedifferentiation followed by redifferentiation into an unrelated cell type—all electrically initiated with laughably weak currents.

Thus profound cellular changes are most certainly inducable and controllable electromagnetically, by miniscule amounts of potentials and currents. Priore's machine applied time-reversed EM waves to accomplish reversal from cancerous cells back to normal cells.

Priore's work essentially proved that Kaznacheyev's group would have been able to accomplish the same thing by phase conjugation.

Kaznacheyev's "death photons" work was probably accomplished much earlier than reported in the open literature. Thus it probably provided a basis to use in the microwave radiation of the U.S. Embassy in Moscow, to engender blood changes and disease in targeted personnel. Two U.S. ambassadors died from a leukemia-like disease, and a third sickened and bled from the ears and nose. Only miniscule levels of EM signals would have been necessary to induce such biological conditions.

The present Woodpecker radars probably have the capability of producing similar conditions in distant target populations, whenever the Soviets wish to add the appropriate signals. They also probably are capable of killing large numbers of the targeted population, whenever appropriate Kaznacheyev "death signals" are placed upon them.

In the late 1960's, another cautious Soviet "intelligence probe" was used: A paper appeared in the open Soviet literature, dealing with time-reversed waves in the field of nonlinear optics. Only a few American optical scientists seemed to be interested.

In 1972, to focus more U.S. attention on their subtle "intelligence probe" of U.S. time-reversed wave knowledge, the Soviets sent two scientists to Los Alamos to brief American scientists on optical phase conjugation. Thereafter many U.S. optical scientists began to work in the "new field." Immediately it was revealed to the Soviet Union

that the U.S. had ineffective knowledge of phase conjugation, and that the U.S. had no TR wave technology or weapons.

To this day, U.S. theoretical work in phase conjugation is still characterized by a fairly simple overall math model, obtained by simply "writing down" the necessary conjugate term. There appears to be absolutely no U.S. awareness of the actual physical electrogravitational mechanism that causes the phase conjugation/time reversal, and no theory of it as such. Its direct application to radars appears to have largely been ignored in the U.S.

In 1975, the Soviets attempted to obtain a treaty with the rest of the world, outlawing the development of frightful new weapons of mass destruction—"more frightful than the mind of man had ever imagined", according to Brezhnev himself. Gromyko introduced the draft treaty into the 1975 session of the United Nations General Assembly. No one knew what the Soviets were referring to.

Failing to obtain the treaty, the Soviets in 1975-76 embarked on the greatest military buildup in history. This buildup was nothing short of a full-fledged preparation to be ready to take over the world, beginning in 1985 (the "ready" time per Brezhnev's 1972 statement at a secret Prague meeting of European Communist Party leaders). The Soviets met this scheduled goal.

As we stated, The Soviets can be immune to any kind of viral biological warfare, anytime they choose to be. The use of lethal new viruses thus has become a highly favored, low-risk method of warfare for the Soviet Union. The West has no such capability against viral warfare, and in fact is totally vulnerable to attack in this manner. Both Western troops and Western civil populations are totally defenseless against the threat of viral biological attack.

A BW strike from a small, hostile nation or from a few radical terrorists—or even an inadvertent contaminant spillage from one of the great many ill-controlled private genetic experiments—can result in the introduction of a lethal, highly infectious new virus that will decimate the West. Indeed, a deliberate BW viral attack upon us may already have been unleashed.

In 1971, the U.S. passed the National Cancer Act and declared open warfare on cancer. Iron Curtain country scientists were invited to participate, and they did so with alacrity. At the time—ironically—penetration of our recombinant DNA genetics research was one of the highest priorities of the Soviet KGB. Obviously, many KGB scientists/agents were infiltrated into our labs under this program (some of our cancer research labs at Ft. Dietrich, for example, still employ more Communist than American scientists.).

In these cancer labs, animal viruses were repeatedly injected and reinjected into human cell cultures, until new viral strains emerged that preferred human cells. These viruses could then be cultured and the effects (or lack of effects) of various chemicals and drugs against them could be ascertained.

These new viruses are exactly what one would wish to develop if one were seeking a biological warfare virus to which humans were not resistant, and one which preferred humans as its host

Sometime during the early 1970's, KGB agents who had infiltrated U.S. cancer research laboratories may have deliberately contaminated the World Health Organization's smallpox vaccine with one or more of the lethal new viruses available in the

Western cancer laboratories. Massive WHO smallpox vaccination in Africa and other Third World countries then resulted in the appearance and spread of the AIDS disease.

If this thesis is true, then AIDS constitutes the first Soviet biological warfare strike against the West, in what can only be categorized as the opening round in a unique new World War III.

With the Kaznacheyev techniques, the Soviet KGB already has the effective electromagnetic antidote against AIDS and other lethal viruses, anytime it wishes to employ it. Some Soviet citizens, however, will be allowed to die, to serve as a deception plan and conceal the true Russian capability. Meanwhile, the Third World nations and the West will be devastated by the killer disease.

Other lethal viruses are almost certain to follow, whether from the Soviets, fanatical terrorist groups, or inadvertent private contamination. Undoubtedly, some of these frightful new viruses are not going to be slow (lentivirus) agents. Some will likely be highly infectious and quick-acting, in the manner of influenza. Some will be transmitted successfully by insect vectors such as the voracious new Asian Tiger mosquito now spreading across the Southeast U.S.

Beginning in July 1976, powerful new Soviet "over-the-horizon radars" (the infamous Woodpeckers) became operational. Extensive weather engineering over the U.S. has been accomplished by these weapon systems. (This has been separately documented by the present author; C. B. Baker, editor of *Youth Action News;* Andrew Michrowski of Canada's Planetary Association for Clean Energy (PACE); and other researchers such as Andrija Puharich.) In addition, the Woodpeckers possess the full range of TR wave weapon capabilities, including real-time holography capabilities and anti-Stealth capabilities. Terrible anti-biological capabilities are also possessed by these weapon systems, and they are also highly effective as global launch phase and midcourse phase defensive weapons for use against U.S. missiles and bombers.

In 1985, the Soviets completed "wet run" weapon tests against U.S. missiles and aircraft and at least three of NASA's shuttle launches, employing the Woodpeckers in the launch phase ABM/anti-bomber mode.

Beginning in December 1985, actual destruction of selected U.S. missiles and aircraft was accomplished. Targets destroyed by the Soviets included the Arrow DC-8 at Gander AFB, Newfoundland on Dec. 12,1985; the shuttle Challenger launched on Jan. 28, 1986; the Titan 34-D rocket launched on Apr. 18, 1986; a U.S. Delta rocket launched on May 3,1986; and the French Ariane rocket launched in late May, 1986.

In 1986 and 1987, the mysterious loss of two highly classified U.S. aircraft—believed to be Stealth fighters—may also have been due to Soviet testing of TR weapon capabilities and anti-Stealth capabilities of the Soviet Woodpecker weapon systems.

However, a severe limitation on the unrestricted use of TR weapons exists. If powerfully and unrestrainedly used, they will cause nuclear warheads and nuclear material to explode as surface nuclear bursts—in the dirtiest possible fashion. The resulting massive radioactive fallout would probably wipe out all higher forms of life on earth. Note that Khrushchev stated in 1960 that these fantastic weapons could "wipe out all life on earth if unrestrainedly used."

As long as we possess an appreciable deployment and stockpile of nuclear

weapons, we are essentially "dead man fuzed" against substantial Soviet usage of their powerful TR wave weapons.

Thus Gorbachev needs to "thin out" the deployed and stored Western nuclear warheads, to allow a more unrestrained field of play for his decisive TR wave weapons. That is why at Reykjavik he suddenly expressed full interest in President Reagan's zero option, even expressing agreement with the principle of on-site inspection to insure dismantling of missiles and removal of warheads.

That is also why the Russians are so actively interested in negotiating the withdrawal of nuclear weapons from Europe. They can quickly and easily take Europe, the moment the nuclear weapons are thinned out and our "dead man fuzing" is removed!

To appreciate the ease with which a Soviet offensive, augmented with unrestrained TR wave weapons, can take Europe, consider this: A single airborne Soviet standoff radar jammer, complete with adjunct TR, within minutes can knock out all U.S., British, and FRG radars that illuminate it. Each pulse it fires, destroys an Allied radar. A single Soviet standoff communications jammer, complete with adjunct TR, within minutes can knock out all U.S., British, and FRG communications centers that are transmitting within its detection range. Each pulse that it fires destroys an Allied communications center. A single standoff Soviet jammer-based TR wave weapon can destroy an Allied carrier task force. Pulse after pulse from that weapon system will destroy the task force's radars and communications, explode HE propellants and nuclear weapons, explode fuel, ignite flammable materials, explode rockets and ammunition, and kill personnel wholesale. Tactical adjunct TR weapons can rapidly destroy aircraft, missiles, radars, radios, personnel, tanks, weapon carriers, personnel carriers, ammunition dumps, gasoline dumps, etc. The instant vulnerability of any massive emitter such as AWACS is readily seen.

We are referring to a new kind of blitzkrieg war: War conducted by powerful beams and destruction, engendered at the speed of light War in which electromagnetic radiators are the primary decisive weapons. War in which new kinds of directed energy weapons play the major role. War which renders all our present defensive arma.da of weapons archaic and useless. War in which the materiel and personnel loss rates are so incredibly high that they boggle the mind of the more conventional military tactician and planner. War in which even a small nation with TR wave weapons can strike and devastate a major power, and possess a first-strike capability unparalleled in human history. War which could be triggered by radical splinter groups and terrorists groups that acquire the technology. War in which the slightest miscalculation or the misuse of the weaponry can completely destroy the earth. War which places extreme emphasis on finding "other ways"—such as surreptitious biological strikes and insidious electropsychological attack and control—to decimate a foe. War that Western governments, populaces, and Armed Forces are completely unprepared—militarily and psychologically—to face.

NATO can be defeated in two hours or less, and the entire war—mop up and all—would last perhaps three days.

Of course, powerful demonstrations of Soviet strategic superweapons could be provided, to show that attempted nuclear retaliation would simply be suicide. The Woodpecker weapon systems alone could wipe out all major communications systems and power systems in the U.S., induce waves of EM-induced dcuth and disease in

preannounced locations, induce waves of abject fear and panic in the populace, or psychologically disrupt and disable—say—the entire Washington D.C. area, to include the people, the government, and the Pentagon.

If such a scenario were accompanied by a proclamation of a Soviet equivalent to the "Monroe Doctrine"—except applying it in Europe, an offer of a ceasefire, and an offer to allow us a "Dunkirk" to evacuate the beaten remnants of our European forces, we would almost certainly be forced to accept the Soviet terms for a ceasefire that left the U.S. intact.

The U.S. Congress—reacting with alacrity to accept this sudden and apparently miraculous Soviet leniency, and avoid the destruction of the world—would probably play the leading role in dictating our acceptance of liberal Soviet terms.

An agreement with the Soviets to mutually withdraw many of the nuclear missiles from Europe appears to be imminent. When the missiles are thinned out, the preceeding scenario or some variant of it is almost certain to occur.

There remains, however, one fly in the Soviet ointment: The U.S. Strategic Defense Initiative.

Presently our scientists apply phase conjugation primarily to "keep laser energy beams intact for greater distances." They appear to be completely unaware of the electrogravitational aspects of phase conjugation.

A colleague of the author has already rigorously proven this electrogravitational aspect on the laboratory bench. The phase conjugate (time reversed) wave is composed of, and carries, negative energy and negative time. If an object is forced to produce a great deal of this negative energy/negative time, it produces antigravity. This is because, in negative time, gravity is a repulsion, not an attraction.

In addition, if the electromagnetic energy of a laser is changed into gravitational energy, a theoretical gain of up to 10^{36} (protons) to 10^{42} (electrons) is achievable. In practical devices, an energy gain of 10^{20} may readily be achieved. Applied to a modified powerful laser in space, this electrogravitational gain factor is of overwhelming significance.

In SDI, U.S. scientists presently envision a high energy laser in orbit, pumped perhaps by means of a nuclear explosion. The pulsed beam from this laser would have sufficient power to destroy a rising Soviet strategic ICBM in the launch phase, say at 10,000 miles away.

If that same laser were converted to a scalar electromagnetics laser (one that turns much of its electromagnetic energy into gravitational energy), it could blast and destroy possibly a quarter of Russia with a single shot.

Thus if we developed and tested the SDI spatial/launch hardware for the space-based high energy laser, so that these systems were available for immediate launching, we could convert their lasers to scalar EM and still possess a very real strategic retaliation capability, even if the Soviets should strike us almost unrestrainedly with powerful TR wave weapons. If we launched several of these systems, we could still probably get off a few shots at Russia and destroy her, before all our space lasers could be destroyed by Soviet counterweapons.

In that case, mutual assured destruction would still exist, and we would still possess a full "last ditch" strategic retaliation capability.

Gennadi Gerasimov, Soviet Foreign Minister spokesman, confirmed as much on

the Peter Jennings' ABC News Show, Los Angeles, California on 13 October, 1986. The real concern (with SDI), he indicated, is not with its present design. Instead, the Soviet concern is that the U.S. would make a great technical breakthrough and deploy new devices in space as a modification to SDI, presenting an unacceptable threat to the Soviet Union.

Gerasimov was almost certainly referring to the potential for U. S. adaptation of the SDI space-based lasers to electrogravitational lasers capable of destroying the Soviet Union.

Obviously, if the high energy laser weapons stay grounded in the laboratories, and the system hardware is not developed and ready, that strategic retaliation capability is lost to us. For that reason, Gorbachev is adamantly insisting that the SDI defense must not be developed and tested in space.

If Gorbachev can prevent the development and testing of the SDI space-based high energy laser and get the nuclear weapons thinned out, he immediately holds the decisive winning hand.

This is where we are now, vis a vis the Soviets. This is the background necessary to understand the full context of the present jousting between the Soviet Union and the U.S.

In the *Washington Times* of Aug. 26, 1986, Soviet Chief of Staff Sergei Akhromeyev warned the United States that the Soviet Union could have an unpleasant surprise response if the U.S. deploys its Strategic Defense Initiative (SDI) in space. Akhromeyev stated:

"If the United States deploys a shield in space, the Soviet Union will have several options, none of what Washington would wish... The Soviet Union will very quickly find a response of which the United States has no inkling as yet."

It is absolutely essential that the President of the United States, the Secretary of Defense, the Joint Chiefs of Staff, and the U.S. Congress be aware of these Soviet weapons and their capabilities.

It is also essential that the U.S. public become aware of the real nature of the hidden Soviet threat that faces us, so that public support will be forthcoming for the hard decisions our government leaders have to make to counter it.

A PARTIAL GLOSSARY FOR SCALAR ELECTROMAGNETICS AND SUBTLE PHENOMENA

by Tom Bearden

1. Action: the fundamental constituent of physical reality. Basically composed of two quantities—energy times time, momentum times length, etc. Action is nonobservable; only changes in action are observed, and then only partially (in the linear case). The photon is the basic quantum of action, consisting of a piece of energy welded to a piece of time, with no seam in the middle, so to speak. All physical things are composed of rates of changes in action. The physicality (volume characteristics) of space arc created bit by bit from action quantum changes in and on each fundamental particle of mass, at a very high rate of speed. These action changes are totally internal to the mass itself. Therefore, literally the physical universe exists inside each and every part of itself, and is a giant hologram.

2. A-field: vector magnetic potential. The A-field is a real field—not a mathematical convenience as was originally thought—as detailed in the second volume of Feynman's three volumes of physics. Indeed, it may be separated from the magnetic field, as the experiment reported by Feynman details. When separated, it is often referred to as the "curl-free vector potential."

3. Aharonov, Yakir: renowned Israeli quantum physicist and former student of David Bohm. Together with Bohm, Aharonov authored a fundamental paper in 1959 which pointed out the primary importance of the potential rather than the force field. Co-discoverer of the Aharonov-Bohm effect: Even when the electromagnetic force fields reduce to zero in a charged particle system, the potentials may still exist and interfere to cause real physical effects.

4. Aharonov-Bohm Effect: Effect whereby interfering electromagnetic potentials can produce effects on charged particle systems, even at a distance and in the absence of the electromagnetic force fields. When E and B fields are zero in a region, their potentials still exist and interference of the potentials produces real electromagnetic effects (energy) in the interference zone, even at a great distance, without transmission of "energy" per se through the intervening space. The Aharonov-Bohm effect highlights some of the stark differences between the classical view of electromagnetics and the quantum mechanics view. In classical EM, the force fields are the real causative agents while the potentials are only mathematical creations for convenience in calculation. In quantum mechanics, it is the potentials that are real and fundamental; the force fields are effects derived from the potentials by differential operators. In classical EM, when the E and B fields are zero in an area, there is no more electromagnetics going on there; in quantum mechanics, the potentials still exist and may still cause real effects. By the use of artificial potentials, the Aharonov-Bohm effect can be made macroscopic and used to cause action at a distance—even significant action at a very great distance. Thus scalar EM interferometers can produce energy effects at a distance. The negative Aharonov-Bohm effect also exists. If the potentials of the transmitters in a scalar interferometer are biased highly negatively, then energy is extracted from the distant interference zone, reappearing at the transmitters. Tesla proposed a "Big Eye" that could see at a distance; actually he planned to use a negatively biased scalar interferometer, scan the beams, then reassemble the scanned energy appearing back at the transmitter/receivers. In this way he had a crude picture of the distant conditions in the interference zone. Such a device can see through the earth or ocean to a preselected intersection depth, since scalar EM waves can be made to pass readily through the earth or sea. The Aharonov-Bohm effect is in fact experimental proof of the new definition of force used in scalar electromagnetics. That is, force consists of mass in motion changing its motion (momentum). The nonzero 0 created by interference of two electrostatic potentials at a distance, for example, will create an electric field (E-field) on and of an electrically charged particle there. The standard detection of an E-field by conduction electron detectors is an example. It is the electron gas particles (charged electrons) that are detected, not what is in the vacuum. Thus classical EM errs when it assigns the equation E = - 0 to vacuum, for no such thing is ever measured. Actually, the correct equation is E = - 0 (e), where means "coupled to" and (e) means "electrically charged particle."

5. Aikido: a Japanese martial art whose modern form is a synthesis of many schools of jujitsu and the zen art of meditation in motion. The advanced aikido practitioner seeks to attain a state of "nomindedness," in which there is no separation of subject and object, of attacker and defender, or even of past and future. This state of at-one-ness with the universe, when attained, results in the complete mastery of the art. It is rarely experienced, even occasionally, and even rarer is it permanently attained. One who attains this state permanently is considered a great master, and his demeanor and personality are profoundly altered. The deceased founder of the present modern form, Morihei Uyeshiba, attained such mastery of the art He was a serene, deeply religious man and a profound inspiration to several generations of martial artists. He was also unbeatable even in his eighties.

6. Anenergy: stress energy of vacuum. "Fragments" of energy, more subtle than electromagnetic energy, turned against themselves and locked into a "vector zero summation." Scalar, massless charge flux. Virtual particle flux. "Pieces" of the spatiotemporal vacuum spacetime medium (i.e., quitons). Specifically, an observable object rotated more than one orthogonal turn away from the laboratory frame constitutes an anenergy particle. Examples are the virtual photon (rotation between 90 and 180 degrees), the bare neutrino (rotation exactly 180 degrees), the virtual bare neutrino (rotation between 180 and 270 degrees), and the thought or mind particle (rotation 270 degrees or more). Also, more fundamental components of energy—specifically, the individual scalar wave components of vector electromagnetic waves. Anenergy components may be coupled into energy, which can be compacted into mass. The conservation of energy law is replaced with a more fundamental law, the conservation of anenergy. Anenergy contains two com-

ponents or constituents: (1) ordinary energy (positive time, positive energy), and (2) phase conjugate energy (negative time, negative energy).

7. Angular momentum: the momentum or "leverage" of the momentum of a moving body, with respect to an axis or reference point Has the same units as action, or energy x time, or momentum x length.

8. Antimatter: matter consisting of atoms which are composed of positrons, antiprotons, and antineutrons. Also loosely refers to the antiparticle corresponding to a particle—the antiparticle may be regarded as the particle traveling backward in time, or "phase conjugated." In present physics, the photon is recognized as its own antiparticle. However, since physicists do not differentiate between positive and negative energies in a photon, then they assume that there is no difference between a photon and an antiphoton. The antiphoton, however, acts quite differently from the photon, as is clearly shown in phase conjugation. The magic rule of scalar electromagnetics for the final photon emission interaction with a charged particle in an atom is this: In the expression CPTEGS (where C is charge and normally negative, P is normal parity, T is time and normally positive, E is energy and normally positive, G is gravity and normal is positive, S is entropy and normally positive or increasing), if one of the components is reversed in sign, then each of the remaining components is also individually reversed in sign. The phase conjugate photon (antiphoton: negative energy, negative time), e.g., is produced by the photon interaction with the positively charged nucleus, producing a time-reversed wave having negative energy, negative time, reversed parity, causing gravitational repulsion, and causing negentropy.

9. Antiparticle: a counterpart to an ordinary fundamental particle, having identical mass lifetime and spin, but with charge and magnetic moment reversed in algebraic sign. Note that when the charge is reversed, parity and time are also reversed. Thus, properly, the antiparticle is the phase conjugation of the particle, or just conjugate particle for short.

10. Artificial potential: potential formed by deliberately summing force field vectors to a zero vector resultant This vector zero has a deterministic, internal stress pattern that is macroscopic. The type of potential made by the zero summation depends upon the type of force vectors summed. For example, summing electric field vectors to zero produces an electrostatic scalar potential; summing magnetic field vectors to zero produces a magnetostatic scalar potential of vacuum. All such potentials represents local warps or curvatures in vacuum/spacetime. Since Einstein assumed that spacetime locally was uncurved, this violates one of the assumptions of Einstein's general relativity. The Soviets have long made this correction; Western physicists have not Since curvature of spacetime is gravitational, this constitutes the secret of electrogravition: How to turn electromagnetics into gravitation, and vice versa. I have called this "scalar electromagnetics"; the Soviets refer to it as "energetics." In such a vector zero, the locked-in energies of all the component force vectors constitute the "anenergy" of the artificial potential. Potential in vacuum is analogous to "pressure" in fluids. An artificial potential polarizes the vacuum and constitutes a specific stress pattern in it Thus vector-zero summed systems of individually finite vector components may all differ from each other.

11. Ball lightning: rare form of lightning where an incandescent, slow-moving globe forms. The globe often moves erratically, explodes, and may set fire to objects it touches. Ball lightning is due to scalar electromagnetic interferometry which can produce a controlled pattern of electromagnetic energy at a distance. Phase conjugation is directly involved; note that the literature already explicitly demonstrates that phase conjugation can perform real-time holography, or produce forms of energy at a distance.

12. Bare electron: in physics, the true electron without the partial shielding of virtual positrons that are attracted around it In scalar electromagnetics, the mass of the electron, considered without its flux of virtual photons (its massless charge flux). An electron mass without its charge (in new approach); that is, one that is really bare of all charge!

13. Bare neutrino: the photon rotated one orthogonal turn farther away from the laboratory frame would be seen in the laboratory frame as a bare neutrino. In the new approach, bare neutrinos move at the speed c inside an ordinary photon, orthogonal to the photon's direction of travel, constituting a flux in each half of the photon. Two neutrinos move in the photon, one in each half (a simple photon is a single sine wave). One neutrino moves in positive time, the second moves in negative time and is properly an antineutrino. Since the photon moves at the speed c with respect to the laboratory frame, then the bare neutrino moves at the speed c-squared, but only its carrier speed c is seen by the laboratory observer. The flax of bare neutrinos in each half of a photon corresponds to the classical neutrino of present physics. The bare neutrino is (to the lab frame) a factor of c smaller than a photon, and one dimensional. It is a special kind of polarization wave to the lab observer.

14. Bearden, Thomas E.: nuclear engineer, retired Lieutenant Colonel (U.S. Army), and theoretical conceptualist active in the study of paranormal phenomena, scalar electromagnetics, Soviet Tesla (time-reversed wave) phenomena, free energy, antigravity, electromagnetic healing, and human development. Particularly known for his work in scalar electromagnetics and Soviet unorthodox weaponry.

15. Beck, Robert: noted psychotronics and ELF researcher who has pioneered many unusual measurement fields such as the Schumann resonance of the earth's magnetic field, specific effects on humans of extra low frequency (ELF) signals of precise waveform and frequency, ELF pollution effects, and brain wave entrain ment by weak ELF signals of precisely controlled frequency. He is also noted for his development of a series of very sensitive detectors and scalar wave detectors.

16. Bedini, John: noted audio engineer, creator of the renowned Bedini amplifiers well known to audiophiles, and researcher into free energy, antigravity, and electromagnetic healing. Bedini has built several free energy motors and devices, including a gravitational field generator, a gravitational field turbine, and a series of monopole motors. He is also noted for his development of sensitive scalar EM wave detectors. He is struggling to develop an electromagnetic phase conjugate signal which will kill the AIDS virus, and also reverse the genetic damage done to the cell by the virus.

17. B-field: the magnetic induction B. This is defined, analogously to E, by the force it exerts. The force on a point charge moving in a magnetic field is at right angles to the velocity vector of the charge and also at right angles to the magnetic field. Actually, the H-field was originally named the magnetic field and the B-field was named the magnetic induction. This is an annoyance because it is B which produces or involves the force, and hence should be named the field. Other writers have noted this discrepancy, and Sommerfeld called H the magnetic excitation—which correctly describes its role—rather than die magnetic field. In Kaluza-Klein unified field theory, all electromagnetics is in the 5th dimension, which is wrapped around each and every point in our normal 3-dimensional space.

18. Being: pure essence, existence. Again, something which in actuality resists definition unless preliminary assumptions are made. Generally used in one of two senses: (1) persistence, as in "he is (he continually exists)," or (2) identity, as in "he is the man ('he' and 'the man' are the same thing)." Even in the first instance - persistence - one is using the form of the verb "to be" in the sense of identity, when perception is considered; i.e., "he is" is a statement that "he continues to be presented or perceived, because each succeeding perception is identical to the one before." Thus when perception is considered, being may be defined as that which is undifferentiated, and this yields its total definition. This is the real void devoid even of void, if one considers zen.

19. Bennett Island; Soviet island on which large, anomalous exhausts—some 150 miles long and nearly horizontal—are repeatedly photographed by U.S. weather satellites. Over 100 incidents have been photographed there since 1974. These exhausts are believed to be the exhausts of energy extracted by distant Soviet scalar interferometers used in the endothermic mode, then •witched to the exothermic mode and focused on Bennett Island as a "dump site." Similar exhausts have been seen on Novaya Zemlya, a large island off the north coast of mainland USSR.

20. Bigfoot: U.S. slang or common name for a materialized sasquatch or apeman-type tulpoid, even if not well-formed.

21. Big Mama: very large, glowing nocturnal light UFO believed sometimes associated with cattle mutilations. Implies a sort of "mother ship" which spews forth smaller ships, which then speed off, swoop down to mutilate cattle, and return. Big Mama has been observed to split into or spew off smaller lights which sped away, dipped down, then returned. Some of these occasions appear to have been associated with cattle mutilations. The most noted photographs of Big Mama were taken by Bill Jackson.

22. Biofield: a hyperfield, particularly with reference to the fields of a living biological system. Also bioframe, bioworld, hyperfield, hyperframe, hyperworld, orthofield, orthoframe, orthoworld.

23. Bioframe: a hyperframe, particularly with reference to the frame of the body of a living biological system. Also biofield, bioworld, hyperfield, hyperframe, hyperworld, orthofield, orthoframe, orthoworld.

24. Bioworld: an orthogonal universe one or more right angle turns away from the ordinary world, particularly with reference to the frame of the body of a living biological *system*. Hyperworld. Orthoworld. Living energy forms—"critters"—exist in these bioworlds. A bioworld is also one of the netted levels of infolded virtual state. Such "living electricity" can be manipulated and utilized by scalar EM means.

25. Bohm, David: world renowned physicist and originator of hidden variable theory. Together with his student Aharonov, he co-authored a fundamental paper on the Aharonov-Bohm effect wherein interfering electromagnetic potentials can produce effects on charged particle systems, even at a distance and in the absence of the electromagnetic force fields.

26. Brain wave: a rhythmic fluctuation of tho voltage between various parts of the brain, normally ranging from about 1 to 60 Hertz in frequency and 10 to 100 microvolts in potential strength. Brain waves are caused by avalanche discharge firings of the nerve cells in the brain. Actually, classical brain waves are only the residue or "spillage" waves of the brain, and the important activity is in the specific patterning of the vector zero summations of the myriads of ion discharges. Every "discharge ion" constitutes a small EM force vector. The summation of these is largely zeroed; however, the patterns formed by all these tiny components are not random. The intent and will of the human being is expressed in the changes in the patterning of these dynamic substructures. Present EM brain wave theory does not touch the basic "thought patterns," which are scalar in nature. Use of the two cerebral hemispheres as a scalar interferometer provides mechanisms for the effects of parapsychology and paranormal phenomena such as fire walking.

27. Burst, burst-in: the sudden collection or condensation of anenergy into a frame, so that observable light or electromagnetic energy (or rarely, physical matter) appears (is kindled). Sudden kindling of anenergy into energy.

28. Cattle mutilations: the strange, paranormal, surgical killing and/or mutilating of cattle in the U.S. and other countries, particularly since the 1973 Yom Kippur War. Metapsychologically, mutilation of the cow is the mutilation of the female symbol—that is, it symbolizes mutilation of "Fortress America." Many small animals such as cats, dogs, rabbits, and birds have also been paranormally mutilated, which is destruction of the child symbol. Again, this symbolizes the mutilation of "Fortress America." The author regards such bizarre paranormal incidents as being caused by temporary materializations of the unresolved conflicts from the human collective unconscious's dreams. With this thesis, if knowledge of Soviet scalar electromagnetic weaponry is also included, analysis very similar to standard psychological dream analysis provides explanations consistent with the bizarre mutilations and the Cold War.

29. Causality: the time ordering of ordinary inert interactions. Macroscopic (observable) causality may be violated by control of hidden subquantal (virtual state) variables. With scalar electromagnetics, direct engineering of the virtual state—and hence violation of observable causality—*in* possible.

30. Cerebral hemisphere: each half of the cerebrum, the enlarged anterior or upper part of the vertebrate brain. Tho two cerebral hemispheres may function as a scalar interferometer to sense distant scenes (even distant in time), or produce energy and signals at a distance. The time aspect (e.g., in psychometry) is due to utiliza-

tion of the cerebrum as a phase conjugate mirror (PCM), and inputting tiny signals picked up from the object one is holding. A phase conjugate signal is then originated by the PCM, retracing the route to the original object. Unfortunately the output of the human nervous system that can accomplish such scalar EM functions lies very deep within the unconscious mind, and it is very difficult to raise it to direct consciousness. Usually the conscious mind is only aware of "vague impressions" instead of clear signals, although in the extremely rare instance clear impressions are consciously detected.

31. Changing the past: every intentional inception upon ordinary inert causality represents a slight alteration or change in direction, departing minutely from pure causality. From a causal viewpoint, each human inception minutely changes the causal past, as well as the future.

32. Charge: the repetitive, "locked in" massless virtual particle emission and absorption activity (flux) of and on a fundamental particle such as an electron. Vacuum is identically pure massless charge flux. In the new theory, the intensity of the charge flux on a particle is also directly related to the rate of the particle's passage through time. The continued absorption and emission of photons by a particle provides the general mechanism by which the particle moves along in time in little jumps. In the scalar EM view, the relativistic change of the rate of flow of an object through time is due to a change in its ambient vacuum charge potential—i.e., to a change in the rate at which it is absorbing and emitting virtual particles and scalar waves. The negative charge is associated with a positive time flux (hence with positive energy) and the positive charge with a negative time flux (hence negative energy). A positive charge is also a negative charge moving backward in time. All particles have clouds of virtual activity patterns; essentially all mass is charged since these clouds contain charges. In ordinary electrical physics, charge is defined in terms of force and force in terms of charge, and charge and charged mass are erroneously made synonymous. In scalar EM, a "charged particle" represents a mass (nonlinear bump in spacetime, or *local nonlinearity" medium) that separates the scalar waves of vacuum into two parts, one is normal energy and the other is the phase conjugate having negative energy. It is important to remember that a charged particle is a special sort of high pressure "pump" and "vacuum cleaner" at the same time. So is a "magnetic pole" or a "potential."

33. Cold explosion: the sudden extraction of energy from a distant intersection zone of the crossing beams of a scalar interferometer which transmits in the pulsed mode while negatively biased. A famous example of Soviet testing of a cold explosion scalar EM weapon is the huge cold explosion that occurred off the coast of Japan on April 9,1984. When the energy is suddenly extracted from a zone near the surface of the ocean and above it, the pressure in the zone is suddenly lowered. Water vapor and mist are violently sucked up, and the surrounding air rushes in, pushing the "water vapor filled region" rapidly upwards. The pattern that results is a rising mushroom cloud, very similar in appearance to a nuclear explosion, except for the absence of a flash and blast wave. In a cold explosion, the energy is extracted from throughout the spacetime of the distant interference region, and insulation has no effect since classical heat conduction through space is not involved. Ordinary electrostatic cooling is also an example of this effect in less violent form.

34. Consciousness: refers to a living being's awareness of its sensations, feelings, thoughts, and the world around it Specifically, consciousness involves an anenergy communication channel where detections of the body-object (which may be regarded as a sort of special camera, instrument, or physical tuner) project into the mind as separations from the beingness of the subject Further, it refers to the intersecting stream of monocular, one— at-a— time virtual projections into the mind from the quantum changes of photon interactions upon the body sensors. By memory (collection in the mind) of streams of such monocular changes one after the other, the entity is conscious of its body-object (camera—tuner) monocularly "moving through time." In the absence of deeper understanding, the individual consciously sees itself as a separated physical object moving and changing in time, i.e., with respect to other separated physical objects that it perceives. The "externality" of certain changes (i.e., the physical world) is due to the lack of mental control or influence over them. "Internality" of certain other changes is due to the ability to mentally control or influence them. The ordinary conscious mind is a serial processor: only one thing at a time is discriminated in its awareness. The unconscious mind, on the other hand, is totally conscious—but multiply so, since it is a parallel processor of many discriminations at once. The conscious mind, then, cannot directly perceive the individual discriminations of the parallel processor, since these appear only as a blur or nothingness to it (much like looking at a hundred 35mm slides in the projector at the same time). This is the mechanism of the barrier between the conscious an unconscious minds. Projections from the unconscious onto the screen of the conscious mind will thus appear symbolical—that is, having many hidden meanings at once. This is why our dreams, for example, appear to our conscious minds as weird and distorted, but highly symbolic in nature.

35. Contactee: a person who seemingly has had a direct contact—mentally, physically, or both—with aliens, extraterrestrials, etc.

36. Continuous mode: for a scalar interferometer or Tesla howitzer, mode of operation where power is fed continually to the transmitters, and the two Fourier expanded scalar patterns or beams are continuously transmitted. In this mode, in the distant interference zone a glowing pattern of vector electromagnetic energy appears and is sustained. (Note the possibility that a few of the UFO sightings could well be due to the deliberate usage of such a mechanism by the Soviet Union or some other nation possessing the requisite technology to create such physical "apparations" at a distance.)

37. Corpus callosum: the thick nerve cable that links together the two cerebral hemispheres (which are separate brains) in each vertebrate (including human) brain. In each of the two cerebral hemispheres, there is a separate mind and personality (given that the other is separated). However, a brain has a unique characteristic: Anything that arises directly inside it is automatically assumed to be self-originated, since the brain-tuner can differentiate no separation or "separate source" for the signal/thought arising directly upon its "internal screen". This allows integration of the two brains/minds/personalities into one.

That is, when one brain half prepares and sends a message, that message is also routed across the corpus callosum into the other brain half, arising internally upon the second brain's "display." The second brain half therefore thinks that it itself originated the signal or message. Thus when the left cerebral hemisphere moves the right thumb, for example, the right hemisphere thinks that it itself ordered the movement of the right thumb. Perceptually, the definition of identity is the loss of all distinction."

38. Cotton effect: the wavelength dependence of certain optical and absorption characteristics in a substance in the vicinity of an absorption band. An absorption band is a range of electromagnetic frequencies within which electromagnetic energy is absorbed by a substance. The direction of polarization of the energy affects the degree of absorption for certain substances. In these substances, the frequency and the direction of polarization of incoming electromagnetic energy affect the amount of energy deposited and dispersed.

39. Crawford, Hal: accomplished science fiction artist and illustrator who has furnished many drawings in the new approach and contributed to the theory of mind linkage.

40. Crosstalk: in ordinary science, the transfer of energy or signal from one channel to another, by cross modulation or cross coupling between the channels. In the new approach, it refers to virtual anenergy exchange between orthogonal universes or frames—that is, between different 3- or 4-dimensional slices of an infinite-dimensional universe.

41. Cyborg: (noun) a single integrated system consisting of a living system energetically or functionally linked to mechanical or electromagnetic devices and/or systems. (Verb): link, in the sense of forming such a system. A living biological system is a cyborg of its mindworld (mindframe) to its body (laboratory tuner).

42. Death: the loss of the preferential tuning of a physical body to its mindworld. This causes loss of the preferential consciousness loop or life channel, resulting in "death." Actually the being is unchanging and indestructible, hence consists of all changes and destructions simultaneously, with none separated individually. Life and death thus are two sides of the same coin, and the coin is immutable, regardless of which side is exposed.

43. DeBroglie wave: a matter wave. The quantum mechanics wave associated with a particle of matter, which can give rise to interference effects. An orbital electron in an atom is associated with a standing DeBroglie wave on a Bohr orbit. DeBroglie waves always move faster than the speed of light, the speed being given by c2/v, where c is the velocity of light in vacuum and v is the velocity of the particle of mass. Debroglie wave velocities thus vary from the speed of light to infinite speed (everywhere at once). In his speech accepting the Nobel Prize, DeBroglie emphasized that , since these waves produce real physical effects, they are real and must not be regarded simply as mathematical conveniences.

44. Dimension: a certain primary geometrical physical attribute, such as length, used to describe the separational relationships of physical phenomena. By "geometrical" we mean that the "dimension" is considered to "exist" in either the presence or absence of the observable physical phenomenon; however, by agreement the dimension itself is not directly observable. It can be inferred ("measured"), however, by comparative operations of simple devices such as clocks and metersticks, and its simplistic definition is usually given as "that which has measurable magnitude." Prescribed measuring procedures are used to assign magnitudes to these inferred dimensions, using specific scales. Actually, "dimension" just means "fundamental quantity of separation" in the most general sense. The number of dimensions taken in advanced physics usually represents a somewhat arbitrary choice for good modeling fit In modern Kaluza-Klein theory, for example, it becomes necessary to accept some 10 or 11 dimensions.

45. Dirac sea: in Dirac electron theory, the relativistic wave equation for the electron has four components, which correspond to two spin orientations and two energy conditions: positive and negative. Thus the vacuum possesses a "sea" of negative energy conditions for electrons. These are called "holes" and are considered to ordinarily be filled with electrons which have fallen into these negative energy states. The Dirac sea thus is this vacuum sea of negative energy electrons. If energy is added, electrons can be lifted from this sea. If spacetime is locally curved, additional holes may be created so that normal positive energy electrons fall in and disappear, creating the appearance of an "electrical energy sink." If the curvature is in the opposite direction, electrons may be lifted from the Dirac sea by the curvature, thus producing a flow of electrons and creating the appearance of an "electrical energy source." In several battery-powered free energy motor devices where die battery is sharply "back-spiked" for recharging, the battery has been noted to apparently accumulate such additional "Dirac holes" as the DC series—wound motor ran. When later recharging the battery with a normal charger, for example, the battery would first "consume" a quantity of electricity to "refill the holes." When the holes were filled with new electrons, the battery would then start to recharge normally. In one extensively used battery, Watson noted that it consumed electricity for some eight hours before recharging normally. Similar effects have been noted by Bedini.

46. Dissociation: separation of ideas from their affects or feelings, resulting in independent functioning of these components of a person's mental processes. Simply put, fragmentation of the mind and personality. In this sense, Zarg (the collective human unconscious mind) is severely dissociated, since its "conscious mind" is fragmented into billions of pieces (into the independent conscious minds of ordinary humans). This is severe dissociation and psychosis; Zarg (the human species) is quite literally insane.

47. Dowsing: use of handheld rods, forked twigs, pendulums, bent coathangers, or other simple physical detectors to locate water, minerals, lost objects etc. or to seek answers to specific questions. The movement of the physical instrument serves as an indicator and is cyborged to the dowser mentally and psychokinetically.

48. E-field: the electric field or electric intensity E. That field on a spinning charged mass which produces an electrical force, hence linear motion of die charge. (In the new theory, the E- field CONSISTS OF the spinning charged mass, moving through a finite change in electro static scalar potential, and thus there is a more fundamental generatrix of FORCE.) Defined as the force per unit charge (i.e., per unit of charged mass). On a free

electron, there may exist two separate E-fields, one in the direction of motion of the electron (normally due to voltage); and one at right angles to the electron's motion, due to the time derivative of the A-field.

49. Einstein's postulates: (1) all the laws of physics are equally valid in all inertial frames of reference, (2) the speed of light is the same to every inertial observer, and (3) the observable local effects of a gravitational field are indistinguishable from those arising from acceleration of the frame of reference. The first is called the special relativity principle, the second is called the law of light propagation, and the third is called the equivalence principle. It is now known that postulates (1) and (2) are not independent of each other. Note that the third postulate implies that any local force is due to a "gravitational field" (acceleration of the frame of reference). It also implies that gravitational force has a mechanism, since quantum mechanics assigns a differential operator, operating upon a potential, to create every force. By extended inference, it can be seen that the third postulate also implies that there should exist a method to turn any type of force (field) into gravitational force (field).

50. Electrogravitics: electrogravitation, or scalar electromagnetics (SEM). The term "scalar electromagnetics" was chosen by Bearden to describe the electromagnetics that goes on inside a macroscopically summed-zero force vector system, producing gravitational effects and energy effects at a distance. A priori, SEM is a unified field theory, which predicts strong effects easily verified experimentally. The struggling science that seeks to produce gravity and inertial effects electromagnetically (success has been achieved recently in proprietary labs). Santiliy has shown that the classical assumption that electrical field and gravitational fields are mutually exclusive is false. They are therefore either the same thing or partially the same thing. There are numerous anomalous experiments which also show a connection between electrical effects and gravitational and inertial effects. Appreciable technical work in the U.S. seems to have been done on electrogravitics in the 50's and 60's, much of it apparently classified. There are presently strong electrogravitic efforts in Germany, France, and Japan. Scalar electromagnetics is in fact electrogravitics (electrogravitation) and has been successful in engineering gravitational devices such as gravitational and inertial field generators, gravitational field motors, free energy generators, and gravitational turbines. Tesla's secret of wireless transmission of energy at a distance without losses has been rediscovered, as has the secret of his "big eye that can see at a distance." A new land of resonance—scalar resonance—has emerged, as has a new kind of wave, the scalar EM or electrogravitational wave. Scalar wave detectors are now becoming available due to the pioneering work of Dea, Beck, Bedini, and Golden, who have all built scalar wave detectors. A substantial series of devices have been built by Bedini, Golden, Watson, and other inventors who wish anonymity. One of the very first good experimental physicists who built electrogravitational devices was Hooper. Actually, Maxwell's original quaternion theory, published in 1864, was the correct unified theory of gravitation and electromagnetics. After Maxwell's death, Heaviside "translated" (mutilated) Maxwell's theory into his new vector mathematics, discarding the quaternion's scalar component. He thus discarded electrogravitation, setting "modern EM theory" upon its nongravitational course.

51. Electron dissolution: when the virtual photon activity of an electron (i.e., its charge) is directly quenched, the electron is converted to a neutrino or neutrinic wave, which radiates away without interacting with materials or objects. In this case, no ordinary photons are radiated. Orbital electrons in atoms are generally protected from this interaction by being locked into their orbital DeBroglie waves. Free electrons flowing in circuits, however, are susceptible to the effect by scalar wave coupling. By this means, electromagnetic circuits may be dudded by dissolving their currents, without physical damage to the circuitry components. Whenever the agent causing the electron dissolution is removed, currents resume and the circuits resume normal electrical action. Scalar longitudinal 0-field waves can also be absorbed in scalar coupling into the E-fields of currents flowing in a circuit. This can either augment or diminish the E-fields to which coupling occurs. If the E-fields on the flowing electrons are zeroed, the electrons cease flowing, and tin-circuit is dudded.

52. Electrostatic scalar potential (0): virtual photon stress on the 4-dimensional spacetime medium (on the vacuum-ether). (Note that the vacuum can be regarded as consisting of the sum of a large group of such potentials.) The spatiotemporal intensity of the massless charge (of the virtual photon flux through a spatiotemporal point). Nikola Tesla discovered pure longitudinal scalar 0-waves. Present spatial 0 in the ordinary theory is only a special case. 0 can be visualized as a special type of "pressure" in an n-dimensional fluid, where n is equal to or greater than 4. By omitting the potential's stress on time, present potential theory eliminates the potential's ability to affect everything existing in time (for example gravity, fundamental constants of nature, inertia, mass, rate of time flow, mind, life, etc.) It also eliminates the direct engineering of local general relativity, and the concomitant violation of the conservation laws (momentum, energy-mass, charge, spin, etc.) Present electrical theory—and indeed all of physics—is drastically in error by this serious omission. Direct engineering of artificial potentials by patterned zero-vector force field summations is the secret of the long-sought "unified field theory." It is also the secret of the unification of mind and matter into a single scientific discipline.

53. EMP (electromagnetic pulse): a sharp pulse of electromagnetic radiation produced when an explosion occurs in an unsymmetrical environment, especially at of near the earth's surface or at high altitudes. Essentially the same as an electromagnetic shock wave, a wave of great intensity which results when waves with different intensities propagate with different velocities in a nonlinear optical medium. An EMP is also produced when two intense longitudinal scalar electrostatic potential wave patterns meet and couple into a sudden flash of vector EM energy.

54. Endothermic explosion: the sudden absorption of electromagnetic energy in a spacetime area where the energy converts to a potential, and scalar waves radial back to the negatively biased transmitter/receiver, emerging there as ordinary electromagnetic energy. As implosion. All normal explosions are exothermic in nature, and ordinary electromagnetic heat energy is radiated away. A scalar EM howitzer, however, may pro-

duce an endothermic explosion (an energy implosion) at a distance, explosively extracting the heat energy at the implosion site and receiving the energy back at the transmitter site for disposal.

55. Energy: the capacity to do work. Energy is directly tied to the work concept, which is the result of a force moving through a distance. However, "work" refers to the past; that is, the force has moved through a distance against a resistance. "Energy" refers to the future; the force could in the future move through a distance against a resistance. Since the force is tied in turn to a changing mass motion, it follows that—conceptually—energy is tied directly to mass systems. The "energy" that an object possesses depends also upon the observational situation: a moving observer may see a moving object as possessing more or less energy than the lab observer sees. Electrostatic scalar waves do no work and individually have no "energy" per se. Two different scalar waves coupled onto a spinning charged mass, however, produce a system which has mass and energy, and does work.

56. Ether: originally, a ghostly-thin, material, fluid medium postulated to fill space and carry electromagnetic waves, similar to the way in which a gas carries sound waves. The Michelson-Morley experiments eliminated any such material ether, but not a Lorentz-invariant nonmaterial ether (of which vacuum itself is one example, in the modern view). Maxwell's equations were derived from ether theory. Einstein once proposed that the vacuum, complete with its electromagnetic fields, should be called the ether. Indeed, the word "ether" is again acceptable in the literature in context of its modern meaning. Today the "ether gas" is considered composed of virtual particles—that is, the particles spontaneously come into being and then vanish so quickly they cannot be individually detected. That is, today the ether is a virtual particle gas—sort of a gas of "effervescent bubbles", so to speak. Ives derived special and general relativity, Newton's laws of motion (relativistic form), and the square law of gravitation from a Lorentz-invariant nonmaterial ether theory. Zero-point energy of vacuum would also seem to be a Lorentz-invariant ether. The Soviets are believed to have applied and advanced the Ives theory to produce their present theory of energetics, which is highly classified by the Soviet Union. In the new approach, vacuum is identically pure massless charge (virtual particle flux), and thus an ether as Einstein proposed.

57. Evil: refers to an act theoretically detrimental to the receiver or referent, in the positive time stream. It is equally beneficial to the referent, viewed in the negative time stream.

58. Exo-electron emission: emission of electrons from the surfaces of metals and certain ceramics after these surfaces have been freshly formed by a process such as abrasion or fracture. Cracks in metals are good emitters of exo-electrons, and the electrons can be detected, to provide a means of detecting the minute fatigue or stress cracks. The sides of a crack in a stressed metal constitute a scalar interferometer, and scalar interferometry is involved in the emission process. Exophotons are also emitted, in addition to electrons. In an earth tectonic plate fault zone (crack), stress exists on each side of the plate, but not in the middle, and the fault thus constitutes a scalar interferometer, emitting charges and also often creating glowing balls of light

59. Exothermic explosion: an ordinary explosion where ordinary heat and electromagnetic energy are released and radiate away from the explosive site. All normal explosions are exothermic.

60. Feynman diagram: a two-dimensional diagram of particle interactions, both in the virtual and observable levels, and both backward and forward in time.

61. Fireflies: sentient bits of light that sometimes kindle in the presence of a psychic initiator and/or a psychotronic generator. Literally, minute glowing, indefinite thought forms materialized into electromagnetic energy. This can be understood by modeling thought forms as real electromagnetic forms existing in a rotated universe (i.e., as hyperdimensional). Interference causes dimensional shifting, so that ordinary electromagnetic energy forms can result

62. Firewalking: walking on and across a bed of hot glowing coals without the feet being burned. Firewalking is demonstrated in a variety of cultures, belief systems, and locations throughout the world. Recently many Americans have been taking to the practice and demonstrating that it is an achievable phenomenon. In the new approach, the two cerebral hemispheres act as a scalar interferometer. If this biological scalar interferometer creates an endothermic (extraction) field on the surface of the skin of the feet, and simultaneously creates an exothermic scattering of the extracted energy into the surrounding environment, then one can walk on hot coals without burning the feet. Note that the reverse effect-cooling of the external environment—is often experienced when psychokinesis effects at a distance are obtained. For example, poltergeist effects are often associated with an adolescent If the adolescent's cerebral scalar interferometer extracts by inverse scattering, and projects exothermically into distant objects, the movement of the objects can be explained.

63. Fission (action): the splitting of the action quantum into two canonical variables (for example, energy and time), only one of which can normally be completely detected or measured. ("Action" has the dimensions of angular momentum—energy x time, momentum x length, etc.) Fissioning produces length, discrete bit by discrete bit, and time likewise. The physical reality of separated physical objects is thus continually created, discrete bit by discrete bit, monocularly. All that ever exists in the "present" is a single quantum change, just occurring. Recombining of the two canonical action fission fragments is called "fusion." Fusion also occurs monocularly, quantum by quantum. Rigorously, the physical world of separated objects never exists as such except in memory recall of vast numbers of past ordered quantum changes that occurred one by one.

64. Flux: the amount of some quantity (such as energy, particles, volume of fluid, etc.) flowing across a given area (usually a unit area perpendicular to the flow) per unit of time. The term flux density is now more commonly used. Loosely, "flux" refers to the perpendicular flow through an area, while "flux density" refers to the magnitude or intensity (rate) of die flux. In some cases such as a flux of particles of different velocities, the number of particles may be multiplied by the average velocity to give an average flux density.

65. Flux density: the amount of tome quantity (such as energy, particles, volume of fluid, etc.) flowing across a

given area (usually a unit area perpendicular to the flow) per unit of time.

66. Flying saucer: a discoid or other shaped paranormal object observed in the skies and/or landing, taking off, etc. Came into general use in the U.S. in 1947 after Kenneth Arnold reported seeing nine strange flying discs skipping along like saucers. Sometimes used to refer to an unidentified flying object (UFO). The usual "flying saucer" is theorized to be due to temporary materializations from the collective human unconscious; over 80% of these materializations only go so far as the "glowing light" stage, not to the material object stage. A small percentage do physically materialize, then later dematerialize. A small fraction of one percent are considered to be actual ships built on earth by the Soviet Union or one other country. A few sightings may be due to deliberate scalar interferometry at a distance by the Soviet Union and others.

67. Foo fighters: glowing balls of light which occasionally appeared in the skies and played tag with Allied, Nazi, and Japanese planes during World War II. The word "foo" is a corruption of the French word "feu," meaning fire.

68. Force: in mechanics, identically the time derivative of momentum. Simply, changing of mass-motion. One must realize that it is not the mass in motion, but the single undivided quantity "mass-motion" or "mass-velocity" (momentum) that is changed. In present EM theory, force fields are erroneously taken to exist in empty, massless vacuum. However, the mechanical definition is an identity, not an equality. Thus force does not EXIST ON a mass, but CONSISTS OF a changing "mass-motion." Since this force can be induced at a distance (by changing an introduced mass-motion such as a test charge), one is confronted in the new approach with the fact that there is a more fundamental mechanism that produces force itself. This mechanism is coupling of nonidentical scalar fields by and on a spinning charged particle. The INDUCED FORCE consists of the particle's change in mass-motion per unit of time. It is thus a flux—induced quantity in, on, and of a mass in motion.

69. Force field: an effect that can exist in vacuum or on mass whereby a particular type of matter is affected. For example, the "electrical (force) field" can affect and change the state of motion of any charged particle. In classical physics, the force fields are the causative agents; when these fields are zero, then the motion of the particle or system is unaffected. The electric field (E-field), for example, is defined as the force per unit of fundamental charged mass, though usually it is stated as "force per unit charge," with the mass ignored. Rigorously, however, force does not exist in vacuum, in the absence of mass, a priori. The Aharonov-Bohm effect shows that the potentials can interfere to produce effects in charged particle systems—even at a distance, and even when the force fields are reduced to zero. Tesla stated that vector Hertzian waves do not move through vacuum, which is true. Rigorously, two scalar waves move through vacuum instead. When coupled (detected) by a spinning charged mass (an electron, for example), the vector E and B fields are created on and of the moving mass itself; they do not exist in vacuum. This has been a fundamental omission and error in both electromagnetics theory and mechanics. For example, the standard EM equation, E = - 0 is not generally true in vacuum, but it is true on an electron moving in a detecting antenna or on a charged particle moving in vacuum. Any force is produced by the same fundamental mechanism: flux differences encountered by a spinning charged mass. Thus there is a common connecting thread among all forces, and this is the key to a practical, engineering unified field theory. Note that Einstein's equivalence principle, after much pondering, can be taken to be an equivalent statement to the fact that force—any force—consists of a change in mass-motion. In modern quantum mechanics, force is an effect, not a cause, and is derived from the potential by a differentiating operator. The potential is the primary causative agent, not the force. Also, in modern quantum field theory, all forces actually come from curvature of spacetime—i.e., they are all gravitational in origin.

70. Four-space (4-space): a 4-dimensional spacetime, dimensionally composed of length cubed multiplied by time. In the absence of gravitational field, the 4-d spacetime reduces to a Minkowski space.

71. Fractional charge: a hypothetical particle having a charge less than the electron's charge. Often called a quark, where its charge is 1/3 or 2/3 the charge of the electron. Recently, Stanford University researchers have found evidence of free quarks, and in the 1920's Ehrenhaft reported the discovery and production of fractional charges of all sizes.

72. Frame (Lorentz): a frame of reference which is not accelerated with respect to the laboratory observer. In this case, the frame may be rotated (moving at a constant velocity) but it is not rotating (the frame is not accelerated with respect to the observer, and spacetime is not curved). In this case special relativity applies, as do the conservation laws. If the local spacetime is curved, the frame is accelerated and spacetime is curved. Locally, then, general relativity applies. In this case, locally the conservation laws (energy, momentum, charge, and spin) can be violated. However, in ordinary general relativity, it has been tacitly assumed that locally the curvature of spacetime is negligible. Hence locally a Lorentz frame is assumed, and the conservation laws are assumed to apply locally also. In scalar electromagnetics, the local spacetime is always curved and general relativity applies locally. In this case, the conservation laws need not apply.

73. Frame (of reference): a spatial, organized, measured lattice placed in emptiness (space, spacetime). Normally refers to a 3-dimensional, spatial frame. All objects and points in the "universe" or spatial frame are considered to simultaneously coexist at separate, measured points in the frame. Differs from the vacuum in that, rigorously, vacuum has no existing definite lengths and no existing definite time intervals, as these appear only after measurement/detection, and are relative to the observer and to the detection process. The "laboratory frame" is the static reference frame of the observer/measurement. A separate reference frame may be assumed to exist for any fixed or moving object, or centered on any point in another frame. When a type of frame is assumed, the entire class of physical interactions that can occur has been restricted to an assumed set or type. In other words, given the frame, the physics has been assumed. One of the greatest restrictions of an assumed "frame" is to rule out the consideration (existence) of other higher dimensions. In the new theory, higher dimensions are permitted

and an orthogonally rotated frame can be equated to a field and vice versa. Therefore frames are also fields.

74. Free energy: energy obtained from a free or essentially free source. A paddlewheel in a river extracts and provides "free energy" from the river, since one need not pay for the river. Electromagnetically, the idea of "tapping" or extracting energy from an esoteric source, such as the zero-point energy of vacuum, the Dirac sea, a standing electrogravitational curvature of local spacetime, etc. Since scalar electromagnetics is electrogravitation, a locally bent spacetime can be achieved so as to provide either a source or a sink, as one wishes. Thus a practical free energy device is rigorously possible by scalar electromagnetic means.

75. Fusion (action): in the new approach, the recombining of two canonical bits of a fissioned action quantum. The fusion process "cancels" the bits produced by the fission process, and constitutes a negative spacetime operation. The physical world is thus eliminated, bit by bit, in a monocular fusion operation that produces the "past" The "mass" of a particle is taken to be proportional to, and identically comprised of, the absolute value of its fission and fusion rate. When fission and fusion rates of a particle are equal, the particle is unaccelerated; when unequal, the particle is accelerated. Vice versa, when the particle is unaccelerated, the fission and fusion rates are equal, and when the particle is accelerated, the fission and fusion rates are unequal.

76. Geiger tube (Geiger-Muller tube): a tube used in appropriate circuits to detect and count ionizing particles. Each particle crossing the tube causes ionization of the gas in the tube, essentially independent of the energy and nature of the nuclear particle. Thus a uniform discharge occurs across the tube. The tube will detect anything which causes an increase in the ionization of its gas. Since strong scalar waves will do this, the tube is capable of detecting scalar wave radiation of sufficient intensity. In many cases, GM tubes are activated near UFO landing zones, and sometimes near cattle mutilations or other paranormal occurrences. In such cases, the tube is reacting to scalar emissions, not nuclear radiations.

77. Geller effect: refers to the frequent stimulation of paranormal abilities in children and other people who have seen Uri Geller (or someone like him) performing psychokinesis either in person or on television.

78. General relativity: the physics of curved spacetime. As opposed to special relativity which deals with inertial frames moving at constant velocities with respect to each other (Lorentz frames), general relativity deals with accelerated frames. General relativity was founded by Einstein, who made highly restrictive assumptions to simply the complexity of the problem. Briefly, Einstein assumed that, since no means of appreciably curving spacetime was known except by the gravitational force of a tremendous collection of mass, then the only places where appreciably curved spacetime would be met would be near suns, stars, etc. Accordingly, he assumed that the local spacetime of the observer would not be curved, and instead the local frame would be a Lorentz frame. That is, he made the theory a sort of "special relativity with distant perturbations." That way, the conservation laws would be saved, and one could still speak of the energy of objects as opposed to the energy of entire systems. General relativity complete with this severe restriction is called "ordinary general relativity" (OGR), and this is the type of relativity taught in all our Western universities. Note that, by assuming no local spacetime curvature, the ordinary theory actually assumes that one cannot directly (locally) engineer general relativity. OGR is a highly special case, and not at all the type of general relativity we seek in the new approach where we wish to deliberately curve local spacetime and engineer general relativity directly on the laboratory bench. The Soviets do not recognize Einstein's limiting assumption. In Soviet physics journals, papers are regularly published that treat general relativity in an unrestricted manner. These papers include local curvature of spacetime and violation of all the conservation laws as a result. In the West, conservation has been raised to an absolute dogma, and such papers are regularly refused publication. Conservation laws are upheld in the West by artifice and dictum, not by science or experiment! So if the various restrictive assumptions placed on ordinary general relativity are removed, then an "unrestricted general relativity" results. In this relativity, the local frame may be appreciably curved, and any or all of the conservation laws can be violated—often with ease. With an adaptation of Kaluza-Klein 5-d unified field geometry and use of artificial EM potentials deliberately created by summing or multiplying EM force field vectors to vector zeros, EM energy can be transformed into gravitational field energy locally. In this fashion one can engineer general relativity; violate conservation of charge, energy-momentum, and spin; produce free energy engines; transmute elements simply; and produce action at a distance. Initial experiments have positively established the new approach as valid, and a startling new physics is in the offing. In the new scalar EM, gravitational potential becomes locked-up (infolded) electromagnetic forces, and electromagnetic force fields become bleed-off (outfolding) of the inner contents of the gravitational potential.

79. Ghost rockets: materialized tulpoidal "rockets" that appeared in 1946 and 1947 over the Scandinavian countries (Norway, Denmark, and Sweden) and usually seemed to come from the direction of the Soviet Union.

80. Giant photon: a photon with an organized, deliberate scalar substructure. In scalar electromagnetics, the photon is assumed to be one oscillation of the electromagnetic field; thus it is comprised of one E-field wave and one B-field wave. Further, in each point of either wave, a finite group of vectors may exist such that their vector summation or multiplication is zero. Thus a deterministic substructure may be deliberately impressed upon (infolded in) the photon. Such a photon may carry enormous infolded energy in the form of anenergy, and may be designed to perform a particular resonant purpose. In other words, such a photon becomes a "vacuum engine" that structures the virtual particle flux of vacuum in a particular, deterministic manner.

81. Golden booster: a potent scalar wave generator invented by Frank Golden, and used to augment and amplify the Kelly radionics machine. The booster has the unique characteristic of gathering in ambient energy and EM radiation from its surroundings and transposing this into highly patterned scalar radiation. It has the further characteristic of reacting to human intent, and constructing its patterning accordingly. In addition, two motors are incorporated whose needle movements provide

visual indication of the rate of treatment, the frequency of treatment, and how the dosage is progressing. A Bedini scalar wave detector directly verifies that both the Golden Booster and the Kelly radionics machine produce and radiate potent scalar waves.

82. Golden, Frank: inventor and scalar electromagnetics researcher who has developed a variety of scalar wave antennas, an underwater communications system, scalar wave transmitters and receivers, the Golden Booster, scalar wave detectors, and scalar wave spectrum analyzers. He has also developed a prototype free energy motor, a motor that runs off reactive power, a solid state scalar radar antenna, and other significant scalar EM devices.

83. Good: refers to an act theoretically beneficial to the receiver or referent, in the positive time stream. It is equally detrimental to the referent, viewed in the negative time stream.

84. Gravitational field: rigorously, the curvature of spacetime. In scalar EM, gravitational potential is locked-up (infolded) electromagnetic forces which sum or multiply to zero. Electromagnetic force fields represent the "bleeding off" or "outfolding" of these infolded contents of gravitational potential. Gravitational force field is the "bleeding down" of the gravitational potential without outfolding or out-bleeding its infolded contents. Gravitational field is not a field in the sense of Heaviside-Maxwell electromagnetic fields. There is really no such thing as "the" gravitational field; instead, there exists a large number of potentials, locked-in force field vectors, and other entities which change the energy density of vacuum and bend spacetime. The bleed-down of this conglomeration infolded components as a conglomeration constitutes the "gravitational field." If the inner contents of this G-field, or of the G-potential, bleed out, then a different field—e.g., electromagnetic field—is produced. We may thus speak of the bleed-out of either the G-potential or the G-field. Note that flows between pairs, triads, etc. of these individual infolded field components can occur without appreciable change of the overall conglomerate's potential (trapped energy density). Thus the gravitational potential can have a dynamic, structured pattern, and local spacetime can be curved and patterned. E field and B field are one such "pair" of flows where little overall gravitational effects are evidenced, so long as the fields are tree to "flow." In Kaluza-Klein 5-d unification of gravitation and electromagnetics, only a single field—the 5-dimensional gravitational field—really exists. Our world intersects and "bleeds-off' this 5-d G-field in two fashions: (1) the 5-d G-field prefers to bleed-out into its fifth dimensional aspect, which we see as our own ordinary EM force field. (2) The minute remaining 4-d aspects we see as our 4-d gravitational field. To show the order of magnitude difference in bleed-out, the electrical field between two electrons is about 10^{42} or so stronger than the gravitational field between them. Even for protons, the ratio is 10^{36} or so. So it can be seen that, so long as EM bleed-out is permitted, little 4-d gravitational effects are produced. Our normal electromagnetics—which by construction of Heaviside's version of Maxwell's theory is purely bleed-out, thus yields negligible gravitational effects. On the other hand, if we deliberately set the EM bleed-outs against each other so that they zero sum, we "strangle" the escape or bleed-off of the 5-d G-field into EM field. The 5-d G-field is then forced to bleed-off into 4-d G-field. If we then vary the energy of each vector component of the EM zero sum while maintaining the overall zero resultant, we directly pump the 4-d gravitational field. Scalar electromagnetics thus directly converts EM field, force, and energy into ordinary G-field force and energy, and vice versa. In addition, we get enormous gains: For every unit of EM energy we feed into the "zero sum pump," theoretically we can get out up to 10^{42} units of 4-d gravitational/inertial energy by electron release, and up to 10^{36} by proton release. Experimental results have confirmed this thesis. As early as 1969, Hurvich produced an inertial field generator capable of "freezing" weapons so they cannot be fired. Hutchison reports and demonstrates the levitating of up to 60-lb. objects. The American physicist Hooper patented electrogravitational devices in the early 70's. Bedini, Watson, Johnson and others have developed practical prototype "free energy generators." Another inventor who wishes anonymity has developed a small device which produces negative energy and antigravity, at an amplification factor of 1,500,000. Orthodox research in this area is just beginning in the West, but has been highly developed for several decades in the Soviet Union.

85. Gravitostriction: effect in a resistor whereby local gravitational stress flow in a direction results in production of a macroscopic electric force field in that direction, a macroscopic magnetic force field orthogonally around that direction, and minute, randomized EM fields (heat energy) microscopically due to induced microscopic particle motion and interaction. It is the enforced spin alignment of the mass particles (such as conduction electrons) which accounts for the production of the magnetic field. Gravitostriction is the reason that resistive loads can be powered by scalar anenergy flow (electrogravitational flow, massless current flow) and by negative energy flow. During the initial chargeup of a helical coil exposed to a sine wave voltage, no electron mass current flows; however, the massless current (phi-dot) charges up the coil gravitationally. As electron mass current begins to flow (90 degrees into the wave), this gravitational field is bled-off (outfolded) as electric force field (electron mass flow coupled to del phi) and magnetic force field. One can do amazing things with coils and transformers which are not allowed to enter the EM bleed-off phase at greater than 90 degrees

86. Gravity: the phenomenon characterized by the physical attraction of any two material bodies. Ideally, the gravitational force between two masses is proportional to the product of the masses divided by the square of the distance between them. In the new approach, one recognizes that mass itself is defined in terms of, and identically consists of, the time derivative of an action flux. Gravitational field and electrical field, then, become different aspects of the same thing. By affecting the flow of time, scalar waves and scalar potential thus are able to affect the gravitational force between two objects. Antigravity, for example, can be achieved by forcing an object's atomic nuclei to produce phase conjugate (time-reversed) waves (and negative energy and negative time). In negative time, gravity is a repulsion. Hutchinson has demonstrated the levitation of objects weighing up to 60 lbs, albeit sporadically.

87. H-field: historically, the magnetic field. However, it

is poorly named, and should be considered the magnetic excitation, after Sommerfeld. In empty space B and H are proportional, an experimentally determined fact In the new approach, rigorously vector fields cannot exist in vacuum, but can only exist on an observable mass. A "shadow" vector field can exist in vacuum, in the absence of observable mass, as small virtual vectors, each existing on a virtual particle in the vacuum. Such a "shadow" vector field may be regarded as two coupled scalar fields, where the coupling is performed by the virtual particle flux of which the vacuum itself consists. When an observable, spinning charged mass encounters the shadow vector field, it converts the two coupled scalar fields into a vector field. Thus Hertz waves per se are not transmitted through vacuum; "shadow" Hertz waves arc. With an ordinary detector, however, one detects vector Hertz waves, since one detects the precession waves of the electrons in the electron gas of the detecting probe or antenna.

88. Hieronymus, T. Galen: renowned radionics experimenter and inventor of the amplified radionics machine. Hieronymus is the father of modern amplified radionics; most experimenters before him used unamplified machines.

89. Hieronymus device: essentially, an amplified radionics device. Refers to a device similar to the one patented by T. G. Hieronymus in the 1940's. Connotes ordinary amplification rather than holographic amplification of radionics effects. Any similar type device. The Hieronymus device actually processes, and operates with, scalar waves.

90. Hologram: a photographic recording of the pattern of interference between coherent light reflected from the object of interest, and light that comes directly from the same source or is reflected from a mirror. When this photo image is illuminated from behind by coherent light, a three-dimensional image of the object appears in space. The characteristic of a hypothetically perfect hologram is that all its content is contained in any finite part of itself. If one portion is cut out and illuminated, the complete image appears in space. The whole hologram is in each part of itself. Observationally and perceptually, the physical universe is a hologram and in each part of itself, since all of it can be detected from/in each internal particle.

91. Hyperchannel: a channel between orthogonal frames or hyperframes, where anenergies crosstalk. Exceptionally good hyperchannels seem to be frequency dependent, and are referred to as windows, magic windows, or interdimensional nodal points. Some hyperchannels are 38-40 kHz, 150-160 kHz, 1.1-1.3 MHz, 1.057 GHz (the Lamb shift), and in the near ultraviolet (the life force frequency). These frequencies also represent enhanced channels between subquantal (virtual) and quantal (observable) states. A particularly good magic window exists when the infrared and ultraviolet bands being utilized are phase-locked so that the ultraviolet represents a first harmonic of the infrared.

92. Hyperfield: a structure or disturbance in hyperspace or higher dimensional space. With respect to a fixed frame, the electromagnetic field or a more subtle field. We consider the electromagnetic field the first hyperfield. A hyperfield may also be considered to be the electromagnetic field rotated further away from its laboratory frame. The second hyperfield is called the neutrinic field, and the third hyperfield is the mental or mind field. Also called bioframe, orthoframe, hyperframe, biofield, or orthofield. These hyperfields/hyperspaces also correspond to the nested levels of virtual state. Successively higher hyperfields past the electromagnetic field constitute successively lower levels of virtual state.

93. Hyperframe: simply, a frame rotated one or more right angle (orthogonal) turns away from the reference laboratory frame. The laboratory frame is considered to be the zeroth hyperframe. Also called bioframe, bioworld, biofield, orthoframe, orthoworld, orthofield, hyperfield, or hyperworld. Sometimes referred to as a hyperspace.

94. Hyperspace: generically, refers to hyperframes, orthoworlds, etc. May be used in a singular sense to refer to one of these.

95. Hyperspace howitzer: a postulated Soviet scalar electromagnetics interferometer weapon, believed capable of firing an explosion through hyperspace to a distant point, without any travel of electromagnetic energy through ordinary space. Also called a scalar howitzer or Tesla howitzer. The howitzer has several modes of operation: (1) it can be used in exothermic or endothermic mode. In the exothermic mode, the howitzer is biased positively. In this mode it can accept energy, transform it into scalar waves of an artificial potential or anenergy, transmit the scalar waves to a distant intersection zone, interfere them and reproduce ordinary positive electromagnetic energy in the distant region. In the endothermic mode, the howitzer is biased negatively. In this mode it "transmits" the extraction of energy. At the distant interference zone, energy is extracted and reappears back at the transmitter/receiver site, where it must be disposed of. U.S. weather satellite photos of the Soviet Union's Bennett Island reveal giant exhausts emerging from that island, some narrow jets as long as 150 miles and only about 1.5 degrees above the horizontal. Bennett Island is believed to be the "exhaust site" for several Soviet hyperspace howitzers. That is, when a howitzer operates in the endothermic mode, it receives and temporarily holds the energy that comes back to it, then switches biasing potential to positive and transmits in the exothermic mode to Bennett Island. (2) The howitzer can operate in pulsed or continuous mode. In pulsed mode, an explosive or implosive effect occurs at the distant target site. In continuous mode, a continuous energy source or sink appears in th distant interference zone. (3) Fourier expansion mode. Each transmitter of the howitzer can produce multiple frequencies where the frequencies represent a Fourier expansion of a geometrical form such as a sphere. When these two geometrical scalar forms are interfered at a distance, a 3-dimensional form of ordinary EM energy emerges (exothermic mode) or is extracted (endothermic mode). (4) the scalar transmissions of the scalar interferometer (hyperspace howitzer) can be modulated upon ordinary EM carriers, such as the Woodpecker signals in the communications band (3 to 30 megaHertz). In this case, interference patterns of the Woodpecker carrier will yield only minute EM energy, but the impressed scalar substructures may interfere to produce or extract substantial energy in or front the interference zone. Other control signals impressed on the Woodpeckers may be used to trigger the mode and location in the interference zone, or

even to establish "circulations" in the vector zeros. By forming distant high pressure zones (exothermic mode) and low pressure zones (endothermic mode) and then moving the locations along, the Soviets can capture and deviate the jet streams over North America or elsewhere. By swirling in conjunction, tornadoes can be produced. Certain signatures (giant radial clouds and twin giant radial clouds) in the active zone have been identified as associated with the Soviet Union's weather engineering. The strange explosion in 1958 near the Urals is believed to have been an accident involving an early first fullup test of the howitzer. The howitzer was probably similar to a giant radar, transmitting scalar EM wave. By setting up a standing scalar wave and continuing to transmit energy into it, the standing wave becomes a giant potential. It is charged up much like a scalar capacitor, but with scalar EM (electrogravitational) energy. Failure of the transmitter may have discharged this giant potential into the earth, and the electrogravitational ground pulse spread out, striking the nearby stored nuclear wastes and fissioning all the radioactive nuclei. Consequently the nearby atomic wastes exploded, producing fallout and radioactive contamination over a large area. The first fullup test of an operational on-site weapon is believed to have been the destruction of the U.S.S. Thresher atomic submarine on April 10, 1963. The second fullup test is believed to have been the transmission of an explosion into the ocean 100 miles north of Puerto Rico on April 11, 1963—one day after the destruction of the Thresher. Over a hundred howitzers are believed to now be on site and operational, and powered by either Moray amplifiers or giant scalar resonant inference taps in the earth (detected by Golden in April 1985). High Altitude booms off the east coast of the U.S. may have been due to orientation and alignment tests of these weapons, with each test blast the equivalent of some 100 tons of ordinary explosives. If so, these shots were probably artillery high burst registrations. The two puzzling flashes detected by the Vela satellites in September 1979 and later, and erroneously described as a nuclear flash by many analysts, may also have been a test of this type of weapon, either by the Soviets or a second nation that has developed the weapons.

96. Hyperworld: a world (3-space or 4-space) rotated one or more orthogonal turns away from the laboratory frame (ordinary world). Constitutes also (identically) an entire subquantal level in virtual state.

97. Inception: kindling (from mind anenergy) a small amount of photon energy into or onto a body/tuner or other object Specifically, coupling scalar wave patterns (anenergy) onto die body/tuner or object so that the photon energy is created in or on the body at a distance.

98. Inceptive cyborg effect: the ability of the mind to psychokinetically link to, or attune to, an inert physical object or physical system. A living biological system is a stabilized inceptive cyborg, with its mindworld linked to its body/tuner. The two cerebral hemispheres of the brain form a Tesla scalar interferometer, capable of producing and transmitting scalar wave patterns into a distant object, coupling into energy in it, and thus linking with or resonating with the object. This is the mechanism for producing all parapsychological phenomena.

99. Interdimensional nodal point: a natural frequency for an anenergy channel between orthogonal frames or universes. Also called a magic window.

100. Interference: the variation of the amplitude of a wave with distance and time, where that wave results from the superposition of two waves having the same, or nearly the same, frequency.

101. Interferometer: an instrument in which a wave is split into two waves or beams, which after traveling over different paths are subsequently reunited and display interference.

102. Jitter (dither): the incessant quantum and subquantum activity on a fundamental particle of mass. The particle is continually connected to and disconnected from an infinite number of hyperspaces, and to and from time.

103. Kaznacheyev effect: refers to the demonstrated ability of near-ultraviolet mitogenetic photons to carry any kind of death pattern from one cell culture to another of similar kind, in the absence of visible light and with synchronized conditions. Named after the Soviet scientist Vlail P. Kaznacheyev, who experimentally demonstrated the effect In his experiments, two samples of the same cell culture were environmentally separated by a thin window. The entire arrangement was placed in the dark and rotated at some 20 rotations per minute. The cells on one side were then killed by any particular mechanism—ionizing radiation, chemicals, toxins, deadly bacteria, germs, etc. If the window was made of ordinary glass (opaque to ultraviolet), the second sample remained healthy. If the window was made of thin quartz (transparent to ultraviolet), then after a time delay the second sample began dying with the same symptoms ai the first Later testing revealed the emission of mitogenetic, laser-like photons in the near ultraviolet from the dying cells in the first culture. When these mito genetic photons are allowed to bombard the second cultare, the same lethality pattern is induced in it. The explanation is that the photons carry virtual state (scalar) patterns (infolded patterns in their time components), and these virtual patterns are diffused into the receiving culture, where eventually they diffuse into a lethal pattern in the virtual state (scalar) master control system (discovered by F. A. Popp) of the targeted cells. Continued charge—up of this pattern kindles the pattern into a physical, observable structure in the cells, reproducing the death or disease pattern. The Kaznacheyev effect haa been duplicated in the infrared in West Germany. Kaznacheyev almost certainly also phase conjugated (time-reversed) the "death photons," producing healing photons for that specific cellular damage or disease condition. Irradiation of the affected cells with these healing photons would have reversed the disease, reverting the cells to normal. Note that Antoine Priore's machine worked in this fashion. Kaznacheyev's EM healing work with phase conjugated photons was obviously not reported; it represents a total counter to viral biological warfare, and such work would have been done only under KGB control, and highly classified as a vastly valuable defense secret.

104. Kelly, Peter: noted radionics/psychotronict researcher and builder of several types of especially potent amplified radionics machines. He is also one of the pioneers of the use of amplified radionics in agriculture for enhancement of crops, restoration of soil vitality, and control of insects. By direct measurement with Bedini scalar EM detectors, Kelly's machines have been verified to produce scalar waves.

105. Kelly machines: amplified radionics machines developed and built by Peter Kelly.

106. Kervran effect: the ability of a living biological system (either plant or animal) to accomplish limited transmutation of elements, particularly between certain isomers. Named after the French scientist, Louis Kervran, who discovered the effect. Kervran was nominated for a Nobel prize in 1977, although the prize was not awarded to him. The Kervran effect has been duplicated by Japanese, British, European, American and other scientists. Note that scalar interferometry is capable of kindling energy patterns directly into the virtual state interactions of the nucleus, including the strong force that binds the nucleons together. Over a period of time, this energy can cumulate, biasing the quantal statistics of the interactions. This, of course, changes the probabilities of the various quantal states, with the result that the nucleus can be transmuted. Transmutation to an isomer is particularly practicable. Efficient transmutation of elements by scalar means has been accomplished by John Bedini.

107. Kindling: collecting and condensing more subtle energies (anenergy) into virtual photons (charge effects), photons (electromagnetic field effects), or matter (materialization effects). Kindling is a linear integration process, which repeatedly collects or integrates a virtual state pattern until it breaches th observable threshold, becoming physical real.

108. Kirlian photography: field patterns of an object impressed upon a film or other sensitive material by means of spark discharges. The scalar modulations in the spark charge intensity, not the ordinary vector E-field components, are the paranormal components. Thus only the delta—which represents those scalar patterns coupling and kindling into vector EM, which then interacts in photochemical interactions—is indicative of the paranormal aspect of Kirlian photography.

109. Law of physics: a restriction placed upon the physical mechanisms that can occur under certain broad assumptions as to the background situation and environment. Actually, in nature there are no such "laws"; these are only man's synthesis for the behavior of large classes of systems under very general conditions. Any "law of physics" can be violated if the conditions contained in its assumptions are violated. Conservation laws are often touted as "laws of physics." Actually, the conservation laws assume a closed system and a linear spacetime (Lorentz frame). If either or both of these assumptions is violated, any or all of the conservation laws can be violated. In particle physics, broken symmetry already results in violation of one or more of the conservation laws. In leading Soviet physics journals, papers are regularly published containing unrestricted general relativity with concomitant violation of any and all conservation laws.

110. LIDA machine: Soviet device which uses a 40 megahertz carrier and unusual waveforms to induce a catatonic-like state in man or other mammals. For years Western orthodox scientists have argued that EM signals could not directly affect consciousness. With testing of the LIDA device, this has now been totally refuted. One scientist has reported that the I.IDA device—known to be decades old—was used by the North Koreans on some U.S. prisoners of war during the Korean War. Reportedly the effects of the machine could not be resisted, and the machine was a devastatingly effective "brainwaahlng" tool.

111. Life: a term which resists the best efforts of philosophers and scientists to define it! In the new approach, a living system is modeled as consisting of a physical body "tuner" and a mindworld to which the tuner is preferentially tuned to a small degree. The preferential virtual state crosstalk between the physical tuner and the mindworld constitutes the life channel or consciousness loop. Destruction or loss of the preferential tuning results in "death," or loss of attachment to the tuner. In that case the mindworld functions within itself. Note that the being is always present, unchanging, and simply "is," without any connotation of perceptual stringing together separations into a string of events (causal chains). Being changeless, it consists of all changes, all-at-once, hence none separately. Ultimately this is the true meaning and foundation of life, and mindworlds and physical events represent simply separation waves in unlimited being. Note this is completely consistent with the idea that ulti mately only God exists, things are simply separation waves in the unseparated Godness, and God permeates everything.

112. Loch Ness Monster: famous tulpoidal water monster which (occasionally) temporarily materializes in Loch Ness in Scotland. Similar materializations of "water monsters" have been seen and reported in almost every large body of water on earth.

113. Longitudinal wave: a "pressure" type of wave, similar to sound, in which the vibrations are along the direction of travel of the wave. Hence, a wave composed of alternating densifications and rarefactions. Scalar waves are longitudinal waves. In classical EM theory, the Poynting vector predicts no longitudinal wave of energy from a time—varying, electrically charged source. In fact, an exact solution of the problem does allow this longitudinal wave, as shown by Keech and Corun, International Journal of Theoretical Physics, Vol. 20, No. 1, 1981, pp. 63-68. The classical electromagnetic wave is modeled as a vector wave, comprised of transverse vibrations. In the new approach, such transverse vector force field waves (Hertz waves) do not exist in vacuum; instead, two coupled longitudinal scalar waves exist in vacuum. The E and B fields are formed, recovered by, and exist as the spinning charged detecting mass particle in motion.

114. Magic window: a naturally tuned frequency of a good hyperchannel between orthogonal frames where scalar wave anenergies crosstalk readily. Magic windows are frequency dependent, and are also referred to as hyperchannels or interdimensional nodal points. Some magic windows are 38-40 kHz, 150-160 kHz, 1.1-1.3 MHz, 1.057 GHz (the Lamb shift), and in the near ultraviolet (the life energy frequency).

115. Many-worlds interpretation of quantum mechanics: refers to the consideration of multiple simultaneous observers and the consequent changes forced upon quantum physics. Essentially all possibilities exist and are real, and an infinite number of orthogonal worlds exist at any instant. Further, each world splits into multiple possibilities after each and every event. Thus in a single second, the world has split in some 10 to the 20th power versions of itself. This is the work primarily of Everett, with strong contributions by Wheeler and

Graham, and was the subject of Everett's thesis at Princeton University in 1956. It was published in 1957.

116. Mass: literally, a special curvature or "kink" in spacetime emptiness, according to relativity theory. In the new approach, the mass and inertia of a particle are considered to be due to one or more standing scalar resonances, trapped by the spin of the particle. When the amplitude of the trapped scalar wave increases or decreases, the mass and inertial of the particle increase or decrease. If the resonance amplitude reduces to zero, the particle dematerializes. Classically, mass is also taken as the measure of a body's resistance to being accelerated by a force. Specifically, a mass occupies space (3-dimensional) and resists change in its linear movement. In a region of mass, a flux of action quanta into and out of the region exists, corresponding to a flow of positive and negative time. The mass is the sum of the absolute values of the time derivative of action in and the time derivative of action out If these two time derivatives are equal in magnitude, the mass is unaccelerated; if unequal, the mass is accelerated. A mass does not exist in time per se (more rigorously, it exists equally in positive time and in negative time), but only exists spatially. A mass continually interacts with photons (absorption and emission), thus continually connecting and disconnecting to the fourth dimension (time). The mass is thus seen to "jump along" through time in finite, quantized jumps caused by the photon interaction with it

117. Men-in-black: that part of the UFO contact phenomena which involves contact with rather sinister tulpoidal manforms. Typically these tulpoids are dressed in dark suits, have almond-shaped eyes that do not blink, possess oriental features, and "speak" telepathically to the contactee. Often they drive dark automobiles and follow the contactee. Several researchers in the field have had intense encounters with such tulpoids. The appearance of such phenomena associated with an investigator is in part due to unresolved detrimental material in his or her own unconscious mind, which thus acts as a "witness" and radionics tuner. Continual stimulation of this detrimental unconscious witness by the person's investigative activities results in the appearance of, and contact with, such tulpoids. The more detrimental aspects of such tulpoidal tuning can be prevented by psychic clearance of the investigator, particularly of his unconscious mind. Such psychic clearance at regular intervals is highly recommended for investigators pursuing the more bizarre aspects of the field, such as cattle mutilation, men-in-black, sasquatch, possessions, etc.

118. Metal bending: term applied to the psychokinetic bending and breaking of metal objects such as cutlery, rods, bars, etc. When a metal rod is psychokinetically bent, then cross-sectioned and examined under the electron microscope, microscopic "puddling", as if by localized, point source intense heating, can be seen, with concomitant disruption of the metallic grain structure. In a severe case, the cross section looks like the puddled surface of the moon. The mechanism responsible for the psychokinetic bending is exothermic scalar interferometry by the two cerebral hemispheres, where the intersection zone is the metal object being bent

119. Metapsychology: literally, "before psychology." The deeper psychology of the group mind, particularly the collective human unconscious mind. Although the Cartesian idea of the separation of mind and matter usually applies to the individual conscious mind, it does not apply to the group unconscious mind. The collective human unconscious mind is a living being, though unconscious, and is capable of materializing its "dreams" into actual physical forms and beings.

120. Microcrystals: tiny crystals, particularly those used by George Yao in construction of his pulsors. Use of the microcrystal in proprietary manners enables Yao to build devices which react to scalar resonance and human intent, and which can generate negation patterns for potentially harmful "deltas" or changes that occur in the human etheric field (aura).

121. Miller/Fox/Urey effects (experiments): these experiments simulated the primitive conditions believed to have existed in and over the primeval oceans. Water—with its complement of minerals and chemicals—and gases to simulate the primeval atmosphere were placed in a beaker and subjected to ultraviolet radiation and electrical discharges. Thus the experiments simulated the great lightning discharges into the primeval oceans. In the laboratory, amino acids are formed, then proteinoids. If the experiments are performed in the presence of heating (simulating the presence of volcanic activity, for example), then primitive microspheric cells are formed with double cellular walls. These microspheric cells even reproduce by cell division. Thus at least simple lifeforms have been produced in the laboratory. Indeed, in the new model even inert matter is totally alive, but unpreferentially. Also, every possible sort of mind exists. Thus all that is necessary to form a living system with any desired characteristics is to form the appropriate type of physical tuner. A living system is like a television set existing in a flux of radiations from an infinite set of channels/stations. The set tunes preferentially to one channel/station, but any desired channel can be tuned, simply by changing the characteristics of the tuner. One does not "create" life, one simply "tunes it in selectively." In this concept rigorously there is no such thing as "death", but only transition from one state to another.

122. Mind: a quite misunderstood concept! In conventional science, it is considered purely robotic—i.e., it is the sum total of the electromechanical neural processes which receive, code, and interpret sensations, recall and correlate stored information, and act upon it Also considered to be the understanding, reasoning, and intellectual faculties considered as a whole, that is, as the conscious portion. Also considered as the psyche, including the conscious, subconscious, and unconscious portions, considered as a whole. The new approach is more in accord with the latter definition. Simply put, the mind is a world composed of separation events (waves, operations, processes) in unseparated being. We may model it (to a first crude approximation) as a physical universe, three orthogonal turns away from the ordinary physical universe, and tuned slightly selectively to one physical organism's physical body processes. Mind anenergy is considered to be progressively collected, condensed, and kindled into denser substance and objects by rotation toward the ordinary physical world. Thus a piece of inert matter is simply condensed energy, which itself is condensed anenergy, which is condensed mind flux (crosstalk) from all minds. One may model the mind physically, or model the physical as mindstuff, eliminating the artificial dichotomy between mind and matter that presently is assumed in orthodox science. Since per-

ception of thought *is* fragmentation and separation of mind, die mind cannot be perceptually conscious of itself, but only of its separated fragments (thoughts). When the incessant activity of the mind is stilled, however, the stable mind is in its pure state—pure being. In this state there is no separation of the observer and the observed. With attainment of this state, one "realizes" or experiences one's true God-nature. It is theoretically possible to build a scalar wave detector that can directly "see" thoughts. Indeed, the first prototype of this type detector may have already been built by one physicist experimenting with a very sensitive scalar wave detector.

123. Mind linkage: the integrating of two or more minds into a single overall functional mind. A living example is in each human head: the two cerebral hemispheres—each containing its own separate mind—are integrated into one overall brain having a single functional mind. This is accomplished by signals interconnecting the two cerebral hemispheres through the corpus callosum. Note that the "separated beings" of the two minds are also merged/linked into one greater being. The tuned separation of individual humans (caused by the continual photon interactions with each particle of mass in the body tuner) is responsible for all man's inhumanity to his fellow man, for each now perceives others as separate things or "objects." With mind linkage, the human species will emerge as a single great entity, having not only • single "collective unconscious," but also a single "collective conscious" mind. Proof that linkage can be accomplished is already demonstrated by each individual. The problem of resolving all man's inhumanity to his fellow man is thus a technical problem, not just a moral/philosophical problem.

124. Mitogenetic radiation: laser-like, coherent photons emitted by cells, particularly in the near ultraviolet Of particular importance are the photon emitted by a cell immediately after complete fertilization, and the photon emitted as the cell dies. The first mitogenetic photon signifies the kindled connection of the cell's small mindworld and the establishing of the consciousness or life loop. The second mitogenetic photon signifies the loss of tuning and consequent loss of the consciousness or life loop. The photon at cellular fertilization is a joyous song of birth, and the photon at cellular death is a deathsong of the cell. In addition, the birth photon carries the full mindworld pattern nested inside it in the virtual (scalar) state, and the death photon carries the full pattern of the cell's experiences and death nested inside it in the virtual (scalar) state.

125. Monocular (change): one at a time. Change as seen by only a single observer at a time. This type change is provided by the photon interaction with matter, and the "memory hold" of a large number of such monocular changes constitutes the "perceived/detected physical reality" we conceive we exist in.

126. Moray amplifier: free energy device developed by T. Henry Moray of Salt Lake City, Utah in the 1920's and 30's. The device was destroyed by a double agent (an F.B.I, agent and also a Soviet agent) in 1939, after the agent had obtained the drawings of the device and worked in Moray's laboratory for several months. The final device had some 29 detector stages and produced an output of 50 kilowatts of power, without input.

127. Moray, T. Henry: early experimenter and pioneer in radiant energy, who developed one of the most widely demonstrated and best authenticated free energy devices. Moray's device was a collector/amplifier that eventually produced 50 kilowatts of output power.

128. Multiocular (change): more than one at a time. Change as seen by multiple simultaneous observers. Consideration of this type change leads to an infinite dimensional, multiworld or multiuniverse reality similar to the type described by Everett. If one accepts multiple simultaneous observers, then this expanded and startling view of reality is inescapable. If one accepts only a single observer at a time (as does present physics), then there exists only a single living person, and everyone and everything else is simply a figment of his or her imagination.

129. Mystery light: another name for a nocturnal light, or earthstress light, produced by natural scalar transmission interferometry of the cracked rock structures in the earth's crust

130. Neurophone: an instrument for direct electomagnetic input of signals into the human brain and nervous system. The neurophone was invented by Pat Flanagan when a boy of seventeen. The improved version, invented much later by Flanagan, clips an input signal, differentiates it twice, then feeds the resulting noisy spikes into the human sensory system. The original signal is impressed into the brain and directly into the mind. An adaptation of the neurophone, using more than eleven independent frequencies and built in accord with Soviet work reported by Lisitsyn, could conceivably be utilized to accomplish human mind linkage.

131. Neutrinic wave: a bare neutrino, considered as a wave instead of a particle. It is a special kind of polarization wave to the laboratory observer, and interacts with his electromagnetic field. It is essentially a longitudinal scalar wave, which moves in and on ordinary vector electromagnetic waves. It may also be regarded as a sort of "spin" wave, since one may consider it as moving at the speed c, but circling around a photon in a plane perpendicular to the photon's velocity in 3-space. One may thus say that the neutrinic wave moves at the velocity c-squared, but its carrier moves at the velocity c. Since we detect the speed of the carrier, detected neutrinos always appear to have moved at the speed of light.

132. Neutrino: a neutral particle believed to have zero rest mass and travel at the speed of light. One type of neutrino is associated with the electron and one type with the muon. A third type is now believed to exist There is some evidence recently of neutrinos possibly having a small mass, and of one type of neutrino turning into another type. In the new approach, the classical neutrino is a flux of much smaller particles—"bare" neutrinos—inside a photon. In the photon, one flux is taken to rotate clockwise and one flux to rotate counterclockwise (adapted from the phasor theory of Ruderfer). Further, a neutrinic flux from one half of the photon to the other is hypothetically possible, and this flux would constitute a third type of neutrino. It would exhibit mass, and would allow one type of neutrino to turn into the other. The bare neutrino (from the new approach) is of magnitude 1/c times the magnitude of the photon. Further, it moves at the speed c-squared, but since it circulates at the speed c at right angles to the motion of its photon carrier which is moving at the speed c, its detected velocity is always c, the speed of carrier. To an observer in the hyper-

frame of the electromagnetic field, a laboratory bare neutrino would appear as a photon.

133. Newman, Joseph: Mississippi inventor of a free energy machine tested and authenticated by several dozen scientists. Newman is fighting in court to obtain a patent on the device which has clearly been shown to be legitimate.

134. Newman machine: free energy device developed by Joseph Newman. While the prototype does not produce appreciable output power, it does produce an output and keeps its own small drycell batteries charged. It clearly demonstrates the principle and is a legitimate free energy device.

135. Nocturnal light: any paranormal light phenomenon seen at night. Over 80% of the UFO phenomena are nocturnal lights. Also includes phenomena such as "ghost" lights, spooklights, will 'o the wisps, etc. It specifically does not include ball lightning, St. Elmo's fire, and other such rare but normal phenomena. Most of the nocturnal light phenomena are caused by natural scalar transmission interferometry.

136. Observable (state): that part of physical reality consisting of changes (particles, waves, action changes) that are detectable by single instruments. The field on a charged particle is due to the continual emission and absorption of virtual particles. Forces between observable particles are generated by the exchange of virtual particles. Thus all observable forces, fields and changes are generated by unobservable virtual interactions, and observable and virtual reality states are inseparably enmeshed. In theory, no superluminal effect can be directly detected; however, a two-stage detection can be used to detect a superluminal entity. Usually the first stage is an interference between two superluminal entities, where the interference "downshifts" the waves to produce a wave moving at subluminal velocity. This subluminal wave then interacts with a mass such as an electron, and these interactions are accumulated to provide a macroscopic measurement indicative of the presence of the primary superluminal interferents. A two-slit box for the electron inteiference experiment is an example. Also, in quantum mechanics time is not an observable, even in theory. All observation is spatial; rigorously, there is no such thing as a clock in the purest sense. Time is always inferred from a spatial detection or measurement

137. Orgone energy: the subtle living or life energy discovered and utilized by Wilhelm Reich. Reich had discovered and utilized a portion of scalar electromagnetics (electrogravitation).

138. Orthoframe: a frame rotated away from the laboratory frame by one or more right angles. A hyperframe or bioframe. Also called an orthoworld.

139. Orthogonal: simply, at right angles. The intersection of two orthogonal geometric constructs, each of dimension one or greater, is of one less dimension than the lowest dimensioned intersector.

140. Orthorotation: rotation in hyperspace of an object, form, or particle at a right angle to its starting frame. The object loses one dimension in its intersection in the original frame and gains one dimension in its intersection in the frame toward which it rotates.

141. Orthoworlds: orthogonal 3-dimensional physical worlds (frames) that share a single time dimension in their 4—spaces (spacetimes).

142. Paradox (logical): a thing that is true, but which violates one or more of the three Aristotelian laws of logic. All logical paradoxes are simply fourth-law logic cases, and—at least hypothetically—the fourth law can be applied to resolve them.

143. Paranormal phenomena: any phenomena that differ from straightforward, orthodox physical or psychological phenomena. Phenomena beyond understanding in terms of presently known science, causes, and effects. Specifically, phenomena in which mind and matter, or mind and unknown fields, or matter and unknown fields interact observably.

144. Past: reality which has been erased and has ceased to "physically (observably exist" in immediate detection/perception, and which now exists only as an infolded virtual state trace or vacuum memory. (Because the past still exists as an infolded virtual trace in vacuum, the time-reversed wave emitted from a pumped phase conjugate in four-wave mixing can retrace the past path of the wave that struck the mirror and stimulated the emission.) Fissioning of an action quantum produces a "presented" change described by canonical fragments. Fusion of the canonical fragments back into a quantum of action erases the presented real canonical fragments, reducing the "change" to the "past" However, that "fissioned pattern" or virtual substructure continues to exist, infolded into the vacuum. The vacuum retains a perfect infolded recorded memory, therefore, of every quantum change that has ever occurred. (In ancient mystery schools, the set of all such traces was called the Akashic record.) A virtual projection of the change has occurred in the mind world of the observer, however, since the mindworld is nonlocal. The coherent (causal) time-ordered collection of large numbers of such virtual projections in the mindworld reaches the quantum threshold, resulting in a quantum change in the mindworld. The "conscious mind" thus perceives physical reality as a collection of a large number of quantum changes—in short, a macroscopic reality. In actuality this "perceived macroscopic world" rigorously exists only in the mindworld, and thus it exists only in the past (Note how physicist's discussions of such quantum paradoxes as Schrodinger's Cat are erroneously based on macroscopic considerations.)

145. Phase conjugation: a nonlinear wave process whereby a nonlinear crystal, material, or medium creates a nonlinear polarization for an incoming monochromatic wave is generated at the incident frequency by w-w-w= -w. The nonlinear polarization radiates a time-reversed replica of the incoming waveform. The time-reversed waveform has an amplitude proportional to the complex conjugate of the incoming wave amplitude. Though primarily known in nonlinear optics, the time-reversed wave is a solution to the wave equation, and so the phenomenon is universal to all kinds of waves. As can be seen from (w-w)-w = -w, the first two waves modulate each other because the nonlinear medium acts as a modulator. These two waves thus "lock together" as a single scalar EM wave. The scalar wave passes through the electron shells of the atoms of the nonlinear medium, penetrating to the positively charged atomic nuclei. In a nucleus, each incident scalar photon is absorbed, increasing the potential of the nucleus to an excited state. The decay of this excited state from the positively-charged nucleus causes the emission of a time-reversed (TR) photon carrying negative energy. The "emitted shower"

of these TR photons constitutes a TR wave. Thus from the nonlinear material there is emitted a time-reversed wave. This TR wave "backtracks" through space along the invisible path taken by the original incoming wave. Since the phase conjugate wave is time-reversed, it concentrates along its backward path, rather than diverging. Consequently all its energy arrives at the distant location of the source of the original stimulus wave. The nonlinear medium producing the TR effect in response to a stimulus wave is referred to as a phase conjugate mirror. If two monochromatic EM waves w1 and w2 are fed into the nonlinear medium in antiparallel manner, so that the waves are everywhere out of phase, they modulate each other, forming a much more powerful scalar EM wave. This wave then "pumps" each nuclear potential to a much higher excited state. Thus when this potential decays, a much more powerful TR wave is emitted, containing up to all the energy put into the scalar "pump" wave. Note that the excited nuclei do not decay (the excited potential does not decay) until an incoming stimulus wave—say w4—is received. When w4 is received, then a powerful TR wave—say w3—is emitted from the phase conjugate mirror (PCM). This process is referred to as "four wave mixing." Thus a pumped PCM acts as a triodc amplifier, and the incoming stimulus wave acts as a signal on the grid. In the oscillation condition (incoming input w4 at right angles to wl and w2), infinite gain is experienced, so that all the energy in pump waves wl and w2 appear in TR wave w3. This was Nikola Tesla's secret of wireless transmission of energy at a distance without losses; the Great Electrician had discovered what we today call phase conjugation and the pumped phase conjugate mirror. He also discovered its general nature, for he understood that it applied to all kinds of waves, including mechanical waves in the earth. It has been shown that, under proper conditions, it is possible to have self-oscillation in the nonlinear crystal or medium. Such a PCM is referred to as a "self-pumped PCM." Indeed, Tesla's original Magnifying Transmitter would have utilized the earth itself as a self-pumped, amplifying PCM—in other words, as a giant triode where the molten core of the earth already furnished the cathode power for free. A relatively small input "grid signal" (from Tesla's resonant transmitter) would thus have set the earth itself into scalar resonance (giant self-pumping), eliciting an enormous time-reversed wave energy resonant response from the core of the earth. Anyone anywhere on earth with an antenna tuned to the stimulated frequency would have received cheap or "free" energy from the earth itself. The Soviets presently use a version of this method to power their enormous scalar EM wave Tesla weapons. All unorthodox resonant free energy devices (built in secret by unorthodox inventors) presently use variations of this same principle.

146. Photon: the basic action quantum. It may be considered as an oscillation in and of time. It may also be considered as a virtual pattern of positron/electron pairs. A piece of electromagnetic radiation when it interacts as a particle. One half the photon exists in and carries positive time (negative charge), and the other half exists in and carries negative time (positive charge); thus one half is "normal" and the other half is "time-reversed" (phase conjugated). The magnetic field of a permanent magnet, for example, thus consists of two types of coincident magnetic field lines: one line of each coincident pair is in positive time and by convention runs from the north pole to the south pole, while the second line of the pair it in negative time and runs from the sooth pole to the north pole. The two lines maybe considered as two streams of particles, one negative and the other positive (Howard Johnson's two-particle theory of magnetism). The photon may be considered as two contrarotating neutrinos, after the work of Ruderfcr. In the new approach, each of these rotating neutrinos is considered to be composed of vast numbers of circulating bare neutrinos. The photon may be considered as one cycle of an electromagnetic wave. The photon is the basic carrier of time and consists of a piece of energy welded to a piece of time, with no seam in the middle. The passage of "time" thus moves at the speed of light, its carrier. All ordinary photons possess the same action magnitude, h, although they do not carry the same energy. If the photon is made subquantal (i.e., less than h in magnitude), it is a virtual photon of the type whose emission and absorption cause charge on an electron. Virtual photons are not individually detectable, even in theory. However, a virtual photon may have positive mass under some circumstances.

147. Photon interaction: the absorption and emission of photons by particles or objects. Usually the photon interacts with an orbital electron, being absorbed by the electron which is raised into an excited state. Then the election decays from the excited state, emitting another photon. The macroscopic world is created by this interaction, which is the basic quantum change interaction. When we introduce additional photon interactions beyond the ambient background, the nucleus stays basically stable, and the normal first-order world we perceive seems quite stable. This is the first level of physical reality, and it is the reality sensed by our coarse physical senses. However, scalar waves are emitted and absorbed by the nuclei of atoms, passing right through the electron shells without interaction. When we introduce additional scalar interactions beyond the ambient background, the nuclei change appreciably, and this level of physical reality may be far from stable. This is the higher reality, and it is sensed by the scalar electromagnetic functioning of our nervous system. Unfortunately, this system outputs only to the deep unconscious, since it is highly multiocular. Thus our conscious mind, being monocular, does not perceive the most fundamental reality in which we exist. Note that "time" is the special dimension in which multiple objects can exist simultaneously in the same interval, while space is composed of dimensions (length) in which multiple objects cannot exist simultaneously in the same interval. Time is multiocular, and space is monocular. Our conscious mind is fitted to the monocular photon interaction; being monocular, our conscious mind cannot be aware of time directly. For that reason we do not "see" time consciously. We do "see" it, however, unconsciously. The true meaning of being "lost" is to be separated from the consciousness of the All, which is separation of our conscious, gross sensing of first order reality from our finer, more subtle, and infinitely richer—and unconscious—scalar sensing of ultimate reality.

148. Photon quenching: the effect of photon emission carrying away time, constituting a time-differentiation of spacetime and leaving behind a spatial reality. This action is responsible for the destruction of the time dimen-

sion in the detection/measurement processes of our physical instruments and our body sensory systems. Thus all detections and measurements are spatial, and we detect and perceive only a 3-dimensional spatial universe, not a 4-dimensional or higher spacetime. Photon quenching is thus a filter between us (our senses and instruments) and fundamental reality. Physical reality as detected by our senses and instruments is real, but only partial. Specifically it is a time-differentiation of fundamental reality. We thus lose the ability to detect those things which occupy time but not normal 3-dimensional space—such as mind, thought, etc. Almost all our thoughts, concepts, words, and ideas are fitted to this partial reality—and this is the universal human problem and delusion. We see a spatial universe of separated spatial objects, while in actuality we exist in an undifferentiated single wholeness. It is not a matter of loving one's brother or sister, it is a matter of being him or her. Fortunately, with scalar electromagnetics much finer instruments can be built The quantal limitation of ordinary physics is not a limitation in scalar electromagnetics. Ultimately we will be able to use sophisticated scalar sensors and biofeedback training to awaken and develop consciousness of our scalar sensing of higher reality, and restore man to his proper state.

149. Piezoelectric effect: In a material, the appearance of a voltage when mechanical stress is applied, or of a mechanical stress when a voltage is applied.

150. Poltergeist: allegedly, a spirit or ghost, often mischievous, usually associated with anomalous psychokinetic activity in houses such as slamming doors, levitating and flying objects, displacement of persons or objects, etc. Often the poltergeist phenomena are associated with an emotionally upset or distraught adolescent. The experience of cooling of the surroundings when these phenomena are evidenced is also common.

151. Potential: locked-in work or energy at a point It is important to realize that, like a runner running in place, the potential represents work continually being done in time, but at a point, not released through a distance. Since the work is never spatially released, to the external observer it remains in the present as energy, and does not pass into the past as work accomplished! Prior to observation (passage from the present into the past), the physical universe exists as action or angular momentum—e.g., as "energy x time," or "momentum x length," etc. The two variables in which angular momentum is expressed are referred to as "canonical variables." They are locked together, since their product is a constant (in a nonlinear frame). Thus if we ask "what exists in time?" we have asked "what is the time derivative of action, which is the same as "what is existing in time but not in space?" The answer then is energy, which—before observation (separation) exists undifferentiated as (energy x time). Ironically, in electromagnetics the electric (electrostatic) potential is completely misdefined. Most texts start about to define it in terms of "potential difference," and then only tell how to prescribe the intensity or magnitude. For example: "The work which must be done against electric forces to bring a unit charge from a reference point (often at infinity) to the point in question." Note this "definition" does not at all tell what a potential is, but instead tells how to mathematically determine its intensity. Briefly, electric potential is a locked-in stress in vacuum spacetime. This stress at a point is due to the intensity of the virtual particle (virtual photon) flux (dynamic, ongoing, trapped virtual work) at that point The ambient local stress of vacuum is not zero, but is a very high value. Normally we refer to "potentials" as measured from the ambient; that is, we actually specify the "difference from the ambient value of the spatiotemporal stress due to virtual photon flux" at the point in question. Any change in the ambient stress of vacuum is a curvature of spacetime. The electrostatic curvature normally stress-relieves almost immediately as electric force field on matter, or electric virtual force field in vacuum. In Kaluza theory, the electromagnetic force fields are just the 5th dimensional aspect of the 5-d gravitational field. The 4-d gravity field is the other aspect of our 4-<i world's intersection with the 5-d G-field. Thus the electrostatic and magnetostatic potentials are simply two coupled aspects of the 5-d G-field. A normal electromagnetic force field (E or B) is the "bleed-off" or escape on charged particles, of the 5-d gravitational field potential's infolded stress contents into the fifth dimension. That is, it is the 5th dimensional outfolding of the inner contents of the gravitational potential. If we wish to achieve bleed-off into die 4-d G-field instead of the normal 5th dimensional E and B fields, then we must "shut off" the EM bleed-off/out This shutoff can easily be done by opposing and reciprocally modulating E-fields and/or B-fields so that they lock-together as one field, and vectorially sum to zero vector resultants. This creates artificial (internally structured) electrostatic and/or magnetostatic scalar potentials. These potentials are actually 5-d G-potential, which is now forced to bleed-off/out into the 4-d gravitational force field at great amplification. This is the outfolding of the inner contents of the 5-d G potential into ordinary 4-space. Such an artificial potential produces a vector zeroed 5th dimensional EM system with a deterministic substructure, which polarizes the vacuum and engineers the virtual state. Maxwell's original 1864 quaternion theory included this theory, though not in these specific terms. Heaviside's mutilation of the theory into vectors threw away the electrogravitational aspects by discarding the scalar component of the quaternion.

152. Prigogine crystal: an amorphous pellet or crystal made by sintering finely divided material at high temperature and pressure, in such fashion that the pellet becomes a highly stressed system far from thermodynamic equilibrium. Specifically, more than one type of material must be used, one ingredient of which must be piezoelectric. One ingredient should also be radioactive, and preferably one of the uranium compounds exhibiting highly anomalous magnetic spin coupling. For best results, a third ingredient should be luminescent when electrically stimulated. The stress on each grain of the piezoelectric material must be just so that the grain is on the very verge of being slightly stress cracked, but not split Each grain then becomes a scalar interferometer. Such a crystal produces a scalar potential field and can react to minute changes in potential—i.e., it can react to scalar waves. Via scalar interferometry it can change scalar waves into negative (time-reversed) electromagnetic radiation and energy at a slight distance. Under oscillating potential stress, the radioactive ingredient provides a one-way gate valve from the Dirac Sea electrons of vacuum, and the scalar interferometers provide necessary impetus on these negative energy electrons to lift

them out of the Dirac sea, producing negative electricity and currents. These currents can then be collected in multiple stages to provide electrical power (negative power operates devices much better than positive power). In the proper arrangement, such a Prigogine crystal can be made into a system capable of tapping the energy of vacuum directly. T. H. Moray built exactly such systems in the 1920's and 1930's, finally obtaining 50 kilowatts of negative power from a 55-lb device. J. Bedini has produced modern versions of these stress crystals in the 1980's, and a series of negative power devices. Several other inventors have produced successful negative power devices also.

153. Prigogine effect: the exhibition of negative entropy by a properly stressed many-particle system far from thermodynamic equilibrium.

154. Prigogine system: a many-particle system which is deliberately forced to exist far from thermodynamic equilibrium, and which exhibits negative entropy. Note that local curvature of vacuum spacetime places the local virtual state flux in nonequilibrium conditions, with the result that an observable energy "sink" or "source" can be produced.

155. Priore, Antoine: French inventor, who invented a large electromagnetic machine which produced nearly incredible cures of terminal cancers in hundreds and hundreds of laboratory animal tests in the 1960's and early 1970's. Priore's results were presented to the French Academy by the Secretary Perpetuel and Head of the Biology Section, M. Robert Courier. The French Government financed Priore's work for several years, then abandoned it when the regime changed. Priore produced complex phase conjugate (time reversed) EM signals in a giant rotating plasma, then sent these time-reversed signals down a rippling magnetic field into and through every cell of the treated body. By magnetic resonance of the rippling field, the phase conjugated signals were coupled into the atomic nuclei of the body, thus reversing the harmful structuring of the cellular biopotentials, which are centered in and on and from the atomic nuclei. This "backtracked" the circulating substructure components within the biopotential, reverting it back to a previous state where the disease was not present Kindling this pattern into observable state thus reversed and eliminated the disease. (The sharp reader will immediately note that it is readily possible to reverse the aging process, given the development of this technology. So-called "eternal physical life"—or certainly indefinite physical life with youth and vigor—is achievable.). With the death of Priore, the work has ceased and the machine has been dismantled, since no one in the French Academy knew of phase conjugation or understood how it worked. Priore's last machine was nearly four stories high and was intended to treat terminal human cases as well as larger animals such as monkeys.

156. Priore machine: a device built by Antoine Priore in France, which cured terminal cancers and leukemias in thousands of laboratory animals in the 1960's and 1979's. Complex nested modulations were mixed in a rotating plasma, which modulates the signals (producing nested stages of modulations upon modulations, which is necessary to reach into a sufficient number of hyperspaces/nested virtual levels of vacuum). The device produced very complex, phase conjugate (time-reversed) hyperspatial signals of some 17 or *more dimensions* These time-reversed signals were imposed upon and intense, rippling magnetic field carrier, and induced into the body of the irradiated animal, eventually causing the remission of the disease after several treatments. The signal was able to "work on" some 17 levels of the biopotential. Hundreds and hundreds of terminal cases were cured in laboratory animals. The nested modulations formed hyperspatial, multidimensional components in their "giant photon" vacuum engines. This constituted scalar electromagnetic and virtual state engineering in 17-d spacetime, and the machine directly affected the life force frequency channel (consciousness loop) and master virtual electromagnetic (scalar wave) control system of the cells. It would appear that Priore had worked out combinations of frequencies, etc, that, when expressed in time-reversed waves, reverse abnormal mammalian cells, but do not affect normal cells. With the change in regimes in France and the death of Priore, the large new machine (which would have been used to treat humans) was dismantled and the discovery passed into disarray.

157. Probability: the probability of a simple event is the ratio of the number of times it occurs to the total number of trials (for a large, essentially infinite number of trials). Note that "trials" constitute things that have occurred (are past). Probability has resisted rigorous logical definition by Aristotelian logic; the reason is that it is an expression of the fourth law, the identity of oppositcs. Probability is the expression of the future (that which has not occurred) in terms of the past (that which has occurred). Since we have been trained to conceive or think of something as if it had just been perceived to occur, then this is the only way we can conceive the future. But with Aristotelian logic, the future cannot be composed of the past, and probability has no acceptable logical basis. With four-law logic, the future can be modeled in terms of—and even be identical to—the past, and probability has a logical basis. Consider "throwing a die to land with one face up." Thinking of the event (as if it has just occurred, in terms of the most recent past), one can conceive six ways of looking at it In other words, one can conceive of six "most recent pasts." By the fourth law, the total "most recent past" is identical to the "most immediate future," on the boundary. If one therefore collects all six "most recent pasts," they turn into the most immediate future, by the fourth law of logic. One may attempt to argue that only a single one of the events will actually occur. Here one counters with the observation that, when it occurs, it is the past, not the future, and it has not been collected so as to move to the boundary.

158. Problem of change: as stated by Heraclitus: if a thing changes, it must turn into something else. But how can a thing be something else other than itself? The paradox cannot be resolved by 3-law Aristotelian logic, because the concept of change assumes the fourth law (i.e., that a thing can be identical to something other than itself)- The problem is resolved (by the fourth law) merely by accounting the time snapshots in which a thing is perceived, detected, observed, conceived, thought, etc That is, the original thing was perceived in time snap 1. The next thing was perceived in time snap 2. In yet another time snapshot, snap 3, the two previous snapshots are compared (in memory, which is the only place the past exists). If that comparison finds no distinction or differ-

ence between the first two snaps, then they are declared identical (by a decision algorithm). If the comparison in time snap 3 finds a difference between the previous two snaps, then they are declared nonidentical (by a decision algorithm). Most simple macroscopic things are seen as a multitude of composite attributes. Thus one or more of these attributes may be seen to have changed (not be identical between snaps 1 and 2), yet a host of other attributes may be seen not to have changed. In this case, the two overall objects are seen to be "almost identical but not quite," so that one speaks of "the thing having changed." One implies it changes in some attributes, but remains the same in most others. This is the primitive derivation of "how a thing changes, yet remains itself." On the other hand, if one defines a hypothetical thing which has only a single attribute—itself—then that thing cannot change, by Aristotelian logic. Yet even such a thing can change! Consider the single overallness of a caterpillar. Let metamorphosis occur, and it is now a butterfly. Now between snaps 1 and 2 we see a different overallness, yet we declare it the same thing! Here we have a more direct application of the fourth law: one thing (snapshot 1) can be identical to another thing entirely (snapshot 2) if the distinction between things one and two is lost in the decision algorithm applied in snapshot 3. In other words, identity and nonidentity are not absolutes, but are products of the decision criteria invoked in determining them. This resolves the age-old philosophical problem of change by expanding the logic by means of which one examines the problem.

159. Problem of good and evil: the paradox posed by the assumption of a "good only" creator moving forward in time, and the simultaneous existence of evil. I.e., if God is perfect and all powerful, how can imperfection exist? This problem is simply one expression of the "time trap." That is, the unconscious assumption of a creator moving forward in time (and "acting" and "operating," for example) is a limitation—hence an imperfection—unwittingly placed on the concept of a creator. Hence an imperfect creator could well wind up with the existence of evil (imperfection) in the creation. If one makes God unlimited—even by time—then perfection may be restored to the creator concept One then separates a positive time stream and a negative time stream (these are arbitrary, since in ultimate reality all events exist at once, unseparated, and ordering may be accomplished in any fashion one wishes). In the positive time stream, an act then becomes either good or bad, depending on whether it is beneficial or detrimental to its referent. But in the negative time stream the same act is reversed and becomes the exact opposite with respect to the referent. Thus any act is ULTIMATELY both good and evil simultaneously, and to the exact same degree. Hence in the "all-at-once" of the unlimited level, the two aspects zero and cancel, and there is neither good nor evil exclusively. Yet there is all good and all evil nonexclusively. The unlimited God is thus both good and evil simultaneously but nonexclnsively, and neither good nor evil exclusively. This is the resolution of the unsolved philosophical (and theological) problem of good and evil.

160. Psychic surgery: paranormally opening and closing the flesh of the body to remove abnormal growths or tissues. In a less drastic case, operating on die etheric or subtle energy body, rather than the physical body. In legitimate psychic surgery, scalar interferometry from the surgeon can nullify the cohesive charges binding the tissue cells together in a line; the tissues then open without cellular damage. When the surgeon closes the tissues, scalar interferometry again restores the charge and cellular binding, so the wound is "healed" without scarring (or with very little, in the practical case).

161. Psychokinesis: inceptive influence or effect upon a physical object, system, or situation by mental intent Psychokinesis is accomplished by means of scalar anenergy wave patterns projected from the two cerebral halves in the fashion of a scalar interferometer. The waves interfere at a distance, microscopically in the object to be moved or affected, forming microscopic bursts of vector wave energy in the object itself. Jack Hauck has referred to psychokenetic bending of metal as "warm forming."

162. Psychosis: seriously impaired mental functioning so that gross interference occurs*" with an individual's ability to function in a normal mental fashion. Generally characterized by severe mental disturbance, withdrawal from reality, delusions or hallucinations, regression and personality disintegration.

163. Psychotronic generator: a device which produces observable effects by collecting, condensing, amplifying, and/or processing subtle anenergies or scalar waves. Classic examples are the psychotronic generators of the Czech engineer, Robert Pavlita. Psychotronic devices are virtual state engineering devices that process and utilize scalar EM waves of massless charge flux. Most of Pavlita's devices are "charged" by the natural scalar electromagnetic emissions of the human brain and nervous systems.

164. Psychotronics: *psycho-* (mind energy), *-ronics* (electronics or devices). The union of subtle (mind) energy (that is, anenergy or scalar waves) and matter or electromagnetic field. Czechoslovakian term for parapsychology, with emphasis on the energy aspects. The comparable Soviet term was originally psychoenergetics, which was soon shortened to energetics. However, the Soviets have applied scalar electromagnetics (electrogravitation) principles and massively focussed on weaponry, not just parapsychology. 'Virtual state engineering. Electrogravitational engineering. Scalar wave engineering.

165. Pulse mode: in a transmitting scalar interferometer, projection of a single sequential pair of Fourier scalar wave patterns or "pulses", so that the second pattern meets the first over the distant target area. Flash coupling of the two scalar patterns in the target zone produces a single intense electromagnetic pulse (EMP) which—if atmospheric—interacts with the plasma expansion of the atmosphere to produce a second pulse immediately after the first The dual pulsed flash signature of the scalar interferometer weapon's burst in the target area is very similar to the two-pulsed flash from a nuclear explosion, but without nuclear debris and fallout Two such pulse mode flashes from a Tesla howitzer—possibly the Russian one at Saryshagan Missile Test Range or one from another nation—have been detected off the southwest coast of Africa by U.S. Vela satellites, one in September 1979 and one in December 1980. Other similar tests have been reported. The pulsed flash may produce positive energy (exothermic) or negative energy (endothermic), depending upon the setup.

166. PulsorR: scalar electromagnetic microcrystal device invented by the electrical engineer George Yao. PulsorsR are specifically designed to correct or smooth the patterns of the subtle scalar electromagnetic "bodies" or levels.

167. Quantum: a single "particle" of the quantity action. The quantum is always composed of two fundamental quantities (canonical variables), and it is the "fissioning" of the action quantum into two pieces which results in detection of one of the pieces. An indefinite "smear" of part of the two pieces may be simultaneously detected by a linear detector, but never both exactly (Heisenberg uncertainty principle). More recent work has shown that, in a highly nonlinear situation, both canonical variables can be determined simultaneously to any desired degree of accuracy, in which case the Heisenberg uncertainty principle does not hold. This fundamental change in what has been regarded as one of the "sacred laws" of physics has not yet made it into most physics texts.

168. Quiton: a little piece of vacuum or emptiness. A piece of the medium of a space or spacetime, of any dimensionality. A piece of pure massless charge flux. A piece of pure scalar wave flux. A piece of pure virtual flux. A piece of the vacuum. A particle of electrostatic scalar potential (infinitesimal charge). A "vacuum engine." Quitons are at least 4-dimensional (spatiotemporal), not just spatial and have a dynamic structure, which may be either random or deterministic. Note that the paper handed to Los Angeles Times reporter Bob Toth by Petukov in Moscow, resulting in their seizure and charging with possession of high Soviet state secrets, contained a theory based on "little pieces of the medium" ("little pieces of vacuum.") In other words, it was a quiton theory, regardless of the specific terminology utilized.

169. Radiant energy: term used by T. Henry Moray to describe the subtle anenergy his amplifier tapped from the unlimited vacuum energy of the cosmos, furnishing usable electrical power of an unusual (negative power) nature. By 1939 Moray was obtaining 50 kilowatts of power from the output of a 55-pound amplifier of some 29 stages, and an additional 50 kilowatts could be tapped off from any other stage. Moray's amplifier was essentially holographic, and could produce exponential amplification to any degree, merely by adding stages. The term was first used by Nikola Tesla, who patented "radiant energy" signaling systems shortly after 1900.

170. Radionics: the use of electrical apparatus (such as ganged precision resistors and potentiometers) to accurately attune the innate psychic and psychokinetic abilities of a human operator. Specifically, the operator may be attuned to some person or object at a distance, through the use of a "witness" (something containing the subtle anenergy pattern of the person or object). In actuality, the pattern contained by the witness consists of the previously impressed virtual (subtle) (scalar) energy patterns riding in and upon the object's internal electromagnetic interactions. The infolded vacuum retains an exact pattern and path of all photon interactions, be they observable or virtual. This guarantees a vacuum path exists between the witness and the original object, no matter where it is located. These impressed scalar EM patterns constitute a sort of complex "tuning fork" attuned to the impressing object or person through hyperspace (via the infolded past "backtrack" virtual memory of vacuum). Production of phase conjugation waves (time-reversed waves) in the witness thus will result in travel of these waves back through the infolded "backtrack paths" to the distant object itself. Resonating the "witness" pattern with amplified anenergy from the operator produces sympathetic anenergy resonance into the witnessed object at a distance, through the hyperspace backtrack path. Since the operator's will and intent modulate and pattern his input into the amplifier, the anenergy resonance of the distant person or object is correspondingly modified. This causes the kindling of an actual microscopic energy pattern in the distant object. The use of amplification constitutes the modern phase of radionics, essentially introduced by T.G. Hieronymus. In the Soviet Union, the incredibly powerful Moray hyperspatial amplifier is believed to be in use in a variety of energetics or psychotronics weapons. Such a holographic amplifier yields exponential power amplification to almost any degree desired. In the destruction of the U.S.S.Thresher in April 1963, a photograph of the submarine was probably utilized as a witness, and sufficient negative energy was kindled into the distant underwater submarine to seriously interfere with its controls. The sub then sank to crush depth and was imploded. Negative energy splatter in the surrounding area so interfered with the electromagnetic systems of the companion ship, U.S.S. Skylark, that over an hour and a half was required to transmit the emergency message that the sub was probably lost. In the U.S, holographic amplifiers have not formerly been developed, and radionics power is limited essentially to the linear amplification abilities of ordinary amplifiers. Thus their gains may reach 10^4, when indeed 10^{20} or so is needed for direct mechanical results immediately. For this reason the West has not developed dependable detectors of subtle energies, has not recognized the Soviet superweapon developments, and has not developed counters to them. However, Bedini, Dea, Beck, Golden, Dayney, Bielek, Bise, and other inventors have built scalar detectors of one form or another. Golden has also produced a highly specialized "booster amplifier"—the Golden booster—for Kelly radionics devices that is a step in the right direction. Both the Kelly machine and the Golden Booster have been verified as scalar wave radiators by actual measurement. With the development of detectors, the technology should begin to develop much faster in the West. The science of such devices and effects.

171. Reality: that which is actual or objective, as opposed to merely possible or ideal. One's idea of what constitutes actual and objective, however, strongly biases what is regarded as real and what isn't. In physics, for example, virtual actions are essential infinitesimals—little pieces of "nothingness" which yet produce effects. Physics thus has extended the meaning of "objective" beyond the idea of "observable." In addition, time—which is never observable or detectable, even in theory—it nonetheless assumed to be real and objective. In a sense, by "reality" one attempts to imply "ultimate." Indeed, the concept is confused, vague, and incapable of definition except in accord with what one pre-assumes it to be! The major problem is that most persons assume (1) reality is limited, and (2) reality is singular. In the new approach, reality is both unlimited and multiple. Everything is real; there are just differing degrees of reality or solidity as compared to the ordinary physical detection

(threshold selection) process. Reality becomes a matter of intersections of physical universes and objects with other physical universes and objects, with the density of the intersection specifying the density or degree of physicality. (Note the similarity to the Aharonov-Bohm effect).

172. Reincarnation: refers to some element of the mind and/or personality surviving the physical death of a body/tuner, and being reborn in the body of another infant In the new approach, a type of reincarnation is scientifically derived as a consequence of the theory. However, since the past can be changed, by deep developmental work one can actually change one's so-called past incarnations. Also, more than one living person's scalar pattern can be attuned to a similar "past" scalar personal pattern—and so more than one person can be the "reincarnation" of a past person.

173. Remote viewing: the ability of human subjects to receive visual impressions and information from distant actions and scenes. The information is usually "noisy". May involve combinations of clairvoyance, clairaudience, precognition, postcognition, and telepathy. In the new theory, one recognizes that all detection is internal to the detector. Hence the entire detected physical universe may rigorously be said to exist inside each physical particle of the physical body of the observer. Thus hypothetically one has subtle access to any portion of the universe directly within oneself. The same result occurs when one assumes the use of a signal—longitudinal scalar waves of electrostatic potential—with infinite velocity. The two cerebral hemispheres act as a scalar interferometer, producing microscopic E-field by coupling incoming or rising microscopic scalar phi-field waves. This allows modification of the patterning of the avalanche discharges underway in the brain, and thus perception of the distant event Since scalar waves are hyperspatial and can be superluminal, they can move through time. This permits perception of the future and the past Unfortunately the outputs of this detection system in humans is buried deep within the unconscious nind, so it is difficult to obtain "clear signals." With the future development of sensitive scalar wave detectors, biofeedback training can probably be used to more fully develop this scalar sensing ability. Also, on several occasions Nikola Tesla announced the invention of a "big eye" that could see at a distance; such an instrument is perfectly possible by scanned scalar interferometry reception. This would include the ability to see into or through the ocean or earth—and time as well, under the proper circumstances. It should be possible to take distant pictures, or even pictures through time. One researcher, George Delawarr, reported the accomplishment of both these effects with his special camera.

174. Resonance: in physics, an oscillation phenomenon exhibited by a physical system driven by a periodic force; when the frequency of the driving force approaches a natural "free response frequency" of the system, the oscillation of the system becomes large. The "resonance (or resonant) frequency" of a system is a frequency at which some response of the system becomes maximum. Three types may be defined: (1) Phase *or* velocity resonance, where the response of the system is 90 degrees out of phase with the driving force, (2) amplitude resonance, where the amplitude of response of the system *is* maximum, and (3) natural resonance, which is the frequency of oscillation of the system to a sharp input such as a hammer blow. Electrical resonance exhibited by an alternating current reactive circuit results in relatively large currents near certain frequencies, together with the nearly unimpeded oscillation of energy back and forth between potential and kinetic form. There are two kinds, series and parallel resonance. In series resonance, the inductance and capacitance are in series, and in parallel resonance they are connected in parallel. In the series resonant circuit, the currents can become large if the resistance is small. Further, the voltages across the coil and capacitor are essentially 180 degrees out of phase, and so they essentially "cancel," leaving very little voltage across the overall circuit, even when the individual voltages across the coil and across the capacitor are very large. (Note that the E-fields across the inductance and the coil are also 180 degrees out of phase, and so the series resonant circuit to a distant observer produces an artificial potential wave—indeed, an electrogravitational wave. This is one reason why Tesla so favored the series circuit He also favored it with one end loose—the so-called "single-wire" circuit, without a return.) If the driving voltage to such a single-wire series resonant circuit is applied to the coil with the open-ended capacitor beyond, and the voltage is applied for only the first 90 degrees as a sine wave then instantly removed, the coil will be charged without current flow, accumulating a 5-d gravitational potential. When the coil discharges, it will discharge in two directions, producing real current, at a certain frequency (which may be drastically different from the "normal electrical current" resonant frequency. However, actual current will be induced out of both ends of the coil at this frequency. The capacitor will charge a little bit from this effect. The overshoot of the coil discharge back toward the disconnected driver is also usable energy if connected to a proper load. If the load is removed and the driving voltage is reapplied just as the overshoot reduces back to zero, the cycle is repeated, charging the distant capacitor more and more, and producing pulses of usable power through the overshoot discharge on the driver side. By adapting this mechanism, a free energy motor can be readily produced, as demonstrated by Bedini, Watson, and others with a battery-driven, series-wound DC motor unit Note that use of the localized gravitational potential produces local general relativity, a.locally bent spacetime, and the conservation of energy, charge, and momentum laws need not rigorously apply. An adaptation of this mechanism was also utilized by Tesla in his magnifying transmitter. In that transmitter with its huge elevated capacitance, the artificial potential wave produced would have been introduced into the earth, producing scalar resonance of the earth. The molten core of the earth, being under pressure in all directions, is self-pumped (in the language of nonlinear optical phase conjugation). The resonant atomic nuclei of the earth's molten core would then act as a pumped phase conjugate mirror (PCM), producing a highly amplified (near infinity gain!) time-reversed wave in response to the input signal. Thus the earth PCM is a giant amplifier, and the TR wave returned is highly amplified, possessing enormous energy. Thus the amount of energy resonant in the earth becomes enormous. In fact, the transmitter was designed to produce more than one such scalar earth resonance. At any distant point on the earth, a transmitter/receive station could have input a

small "tickler wave" at this frequency into the earth, and its proper antenna tuned to the frequency" of the scalar resonance would have produced enormous electrical power. A very similar system employing two frequencies 12 kilohertz apart and tapping the beat frequency, is used by the Soviet Union today to power its large strategic Tesla weapons. Golden has detected and shown these Soviet "two-frequency earth resonances" on the oscilloscope, utilizing the output of his specialized detector system.

175. Sasquatch: Indian name for a large, well-defined tulpoidal apeman form. Bigfoot (slang or common name). Generally refers to the Pacific Northwest area, where die tulpoidal form has been well-tuned for centuries by the Indians. In the Far East, the Yeti.

176. Scalar: in ordinary vector analysis, a quantity completely characterized by magnitude only. (Actually, it contains magnitude and time.) In the new approach, one must account for observable and virtual states. In addition, multiple vectors acting on one point and summing or multiplying to zero are physically still present, even though their vector resultant is a zero vector (more precisely, a zero-vector system). Thus physically a zero vector can be a system having a very real, distinct substructure of nonzero vector components. These infolded vector components may be highly dynamic. The energy of each infolded dynamic vector component is thus "trapped" inside the local vector zero system. Rigorously, trapped energy constitutes a scalar potential in spacetime, to the external observer. An observable scalar (potential) thus may have a nested, multiple-level virtual substructure as well as any conglomerate "observable vector" substructure. Enormous energy may be infolded and trapped, in which case local spacetime is appreciably curved. Note that the infolded energy of the substructure components contributes to the stress of the object or medium, and organizes it, even though to the external observer its envelope constitutes a zero vector. Each level of this substructure contains an infinite number of tiny virtual vectors. There may be finite alignment of these virtual vectors along the structure of the observable vectors infolded. This constitutes vacuum polarization. The zero-vector system is thus a vacuum engine and a virtual state engine as well. Two scalars (or vectors) that are observably equal need not be equal at all in their substructures. Further, combining the two scalars by superposition may not yield the normal observable value, if both substructures are different, highly patterned and interact to spill over into the observable level. Vector mathematics itself must be changed and extended in the new approach. Note that the spillover from interaction of the two substructures may form an observable scalar value or an observable vector value. Such vacuum engines can be constructed o do specific operations on atomic nuclei etc. Nested levels of such engines can be formed, to form highly complex "super" hyperspatial vacuum engines called giant photons. Continual radiation of matter with a signal composed of vacuum engine photons of a specific deterministic substructure will "charge up" the atomic nuclei of the radiated material with that pattern, so that it emerges into the gross, observable physical state, drastically altering the radiated matter itself mechanically, chemically and physically. This process is called kindling.

177. Scalar energy tap: refers to a Soviet method of obtaining tremendous electromagnetic energy from the molten core of the earth, with which to power gigantic strategic scalar Tesla howitzers. As measured by Golden, two signals are continually transmitted into the earth some 12 kiloHertz apart, and the earth itself is placed in scalar resonance to the two frequencies. The core of the earth, being a pumped phase conjugate mirror, responds by generating highly amplified phase conjugate replicas, which return and concentrate all their energy at the transmitter/receivers. The receivers receive the enormous beat frequency (12 kHz) energy, using it for power. One then has a kind of scalar interferometer channel in the earth's core in the endothermic mode. Depending upon the biasing, either ordinary EM energy or negative EM energy is captured in the 12 kiloHertz band by the interferometer receivers. Varying the negative biasing also provides a throttle to control the amount of energy extracted. Just before the May 1, 198S celebration, the Soviets activated some 27 such giant energy taps in the earth, and also activated a large number of command and control scalar transmission frequencies. If each tap can power 6 to 8 giant Tesla howitzers, then for their important 40th anniversary of WWII, the Soviet Union activated well over 100 large howitzers. In other words, a massive exercise of the Soviet Union's entire strategic scalar howitzer weapon complex was held on the 40th anniversary of 1945 for Gorbachev, and to signify meeting the schedule (laid down by Brezhnev in 1972) to "be ready" to use them . At the conclusion of the exercise (which lasted several days), the Soviets left two scalar energy taps in place, instead of the single one present before the exercise. In other words, additional strategic weapons were brought up on "ready alert"

178. Scalar field: in vector analysis, each point in space is assigned a magnitude; the set of spatial points and their assigned magnitudes is called a scalar field. In the new approach, an observable scalar value is assigned to every point in n-dimensional space, where n is 4 or greater, and the set of n-dimensional points and their assigned observable magnitudes is called a scalar field. Also, in the new approach each scalar magnitude is considered to contain an n-dimensional virtual-state substructure, where each succeedingly higher dimension is a succeedingly lower level of virtual state. Vacuum itself is such a scalar field. Such a scalar field is also the rigorous identity of a massless charge field, of—for example—the electrostatic scalar potential, 0. Also, the scalar field is considered to be composed of two time fields: one in positive time and one in negative time that is the phase conjugate replica of the first. Thus the timeless, lengthless vacuum exists both in positive and negative time, and its potentials are scalar potentials. When the vacuum is uncurved, equal amounts and components of positive and negative time exist. When it is curved at a point, the positive and negative time components are unbalanced at that point

179. Scalar interferometry: the interference of two scalar Tesla waves (a Tesla wave consists of a normal wave coupled to its phase conjugate replica). In the interference, coupling can occur and produce (or extract) electromagnetic waves—energy—at a distance. The phase conjugation aspect is the secret of Tesla's revolutionary discovery of wireless transmission without loss. It is also the secret of producing death rays; the invulnerable Tesla shield; antigravity; superluminal communication; con-

trolled materialization, dematerialization, and transmutation; psychokinesis; and free energy. The ubiquitous photon interaction presently is the basis for first-order physical reality, and the photon's speed results in a speed-of-light-limited reality being detected. Scalar EM waves contain vacuum engine substructures and do not necessarily have this speed limitation. Detection by scalar waves yields a higher order physical reality and a vastly expanded quantum mechanics and relativity theory. Present Einstein relativity theory is only a highly special case, as are present electromagnetics and quantum mechanics. Soviet use of scalar interferometers in a large, strategic mode is responsible for much of the advanced Soviet ABM defense and strategic superweaponry.

180. Scalar resonance: inertial or mass resonance of a body, originally discovered by Tesla, repeated (probably) by Hooper, and rediscovered by Golden, Bedim, and others. In the simplest case, scalar resonance can be imagined as two ordinary single—frequency EM standing waves (a wave and its phase conjugate replicaor PCR) in a resonant cavity, with the two waves coupled exactly 180 degrees out of phase so that—externally—their E fields sum to zero and their B fields sum to zero. This is a standing scalar wave, and the cavity is said to be in scalar resonance. Note that the cavity walls must act as phase conjugate mirrors (PCMs). Mass itself is simply such a standing scalar resonance, with the standing wave trapped by particle spin. The atomic nucleus, continually bombarded by virtual photon flux from the vacuum, is a pumped PCM. Since the nucleus is positively charged, it produces PCRs having negative energy and negative time. It thus produces negentropy, which prevents the entropic decay of the atom. Essentially all frequencies can be and are present at once, but certain nuclear resonance frequencies are thought to predominate. By increasing the amplitude of the standing scalar wave that is the nuclear pseupotential, inertia and mass of the nucleus are increased. By decreasing the amplitude, the mass and inertia are decreased. Zeroing the amplitude dematerializes the nucleus. Scalar resonance is not presently contained in the orthodox physics literature.

181. Scalar wave: a longitudinal "pressure" wave in the actual stress of spacetime itself. A wave of potential, where no EM bleedout of the infolded contents occurs. A normal wave and its phase conjugate replica, comodulating each other and "locked or zipped together" as a zero-vector system wave. A Tesla wave. A gravitational wave. A time wave. Electromagnetically, a scalar potential wave which, in the absence of spinning charged mass particles, does not form a vector electromagnetic wave, in contradistinction to present electromagnetic theory. A "shadow vector" wave, where the ordinary "observable force vector" of the field is broken into virtual vector components which are not integrated. A wave in the nested levels of virtual state, that does not breach the quantum threshold, and hence is not observable to normal detectors. A wave in the magnitude of the virtual particle flux density of vacuum. A longitudinal wave in pure massless charge flux (vacuum) (spacetime). A wave in the magnitude of the infolded "energy density of the vacuum. The scalar wave is free to move in four or more dimensions. It transports deterministic vacuum energy engines. In Minkowski 4-space, it can: (1) move only in time, and not spatially, in which case it "sits in one place" and fluctuates the flow of time, the inertia of an object, the strength of the gravitational field, the mind, the fundamental constants of nature, etc.; (2) move only spatially, with the rate of flow of time oscillating about a linear mean; (3) move in a mixture of modes (1) and (2); (4) oscillate back and forth between modes (1) and (2) in a regular fashion, spatially stationary; and (5) oscillate back and forth between modes (1) and (2), translating spatially in travelling wave fashion. (5) move and oscillate between many vacuum levels (hyperspaces), in addition to characteristics (1) through (4). An ordinary Hertzian wave exists in vacuum as two coupled Tesla longitudinal waves. Rigorously, the E and B fields do not exist in vacuum, but on and of the detecting spinning charged particle. The spin of the detecting particle causes precession, yielding the familiar "transverse Hertzian wave," complete with E and B fields. The broken but ordered virtual state bits of what will be the detected E and B, however—shadow vectors E and B—exist in vacuum, on the virtual components of the vacuum charge flux. Tesla was correct when he stated that transverse Hertz waves (as such) could not move through the vacuum or exist in it

182. Shadow vector: an otherwise observable vector, broken into consecutive bits such that each bit is virtual. The resulting "disintegrated vector" becomes unobservable as a vector, but remains as an ordered series of virtual vectors. Thus it is a special sort of scalar wave. Observably, it is a scalar wave since no observable vector exists, but virtually it is a vector wave. It may be regarded as a localized, changing scalar field with a particular patterned virtual substructure which yields the shadow vector. On an appropriate integrating detector, the virtual components of the shadow vector will be reintegrated into an observable force vector, such as E or B. Dr. Robert Beck, for example, has reported the development of a successful integrating detector for such shadow vector scalar waves. His detector is capable of detecting signals that cannot be seen by the finest Superconducting Quantum Interference Device (SQUID), and it has been demonstrated for comparison against the SQUID. Dea, Bedini, Dayney, Golden, Beck, Bielek and Bise have independently built scalar wave detectors of various kinds. Farnsworth has particularly good and comprehensive shadow vector/scalar wave detecting systems.

183. Space: literally, the absence of observable mass, hence emptiness or void observably. Space per se has no definite length interval and no definite time interval. Rigorously, space is the absence of distinction and separation. Space has no dimensionality—i.e., it is not 3-dimensional, 4-dimensional, etc., for it has no "specific" separations. But in common usage, it is often thought of in a general sense as having some particular dimensionality but no definite intervals. The point is subtle but important: the absence of a 3-dimensional mass need not be 3-dimensional (e.g., considering a 10-dimensional frame). But one usually thinks of the "hole" where the mass was as having the same dimensionality as did the absented mass. This is only a 3-dimensional intersection of the actual hole, however, though this point is usually ignored. Ignoring the full dimensionality of a hole is responsible for the confusion regarding the two-slit experiment in quantum physics, for example. That is, the slits are (at least) 4-dimensional, since they exist in time also. In the slits, spatial mass is absent, so the slits are

three dimensional "holes." However, their fourth dimensional aspect, time, is present, not absent Thus four dimensionally the three-dimensional slit "holes" are not "holes", but are "things." They are not 4-d absences, but presences—since one dimension (time) is still present They can thus interact in the fourth dimension, time. The experiment has no mystery when the time aspects are considered, as pointed out by Charles Muses in 1957. In Kaluza-Klein 5-d mathematics, these 3-d holes also exist as things in the fourth spatial dimension. Also, in spacetime—rigorously—all 3-dimensional material objects, holes, gaps, etc. are simple facets or intersections of a single object For if time is considered as a continuum, then everything exists at once; hence spatial things are simply the features of a single 4-dimensional object The problem is that "space" is also commonly taken to be a "spatial frame," where time has been stripped off and "stopped," and a measurement to each and every point in the universe frame has been simultaneously established. This corrupt usage of "space" implies "spatial frame," and is entirely different from space as such.

184. Spacetime: three or more dimensions of space and a dimension of time, multiplied together. In the 4-dimensional case, it is often referred to as a "4—space." Spacetime can actually contain any number of dimensions; in our theory we consider an infinite number of spatial dimensions and at least one time dimension. One could just as easily take an infinite number of time dimensions alone. Scalar electromagnetics (unified EM and G fields) is most easily expressed in Kaluza-Klein geometry, in at least five dimensions—four of space and one of time.

185. Spherical model of the cosmos: a model of the universe in which the universe is a four-dimensional spherical surface in five dimensions. This results in a "closed" universe, and also one which is entirely within each point of itself. To produce such a model instead of an expanding universe, Einstein originally introduced entirely ad hoc factors into general relativity to cancel and eliminate the expansion terms.

186. Spin: the intrinsic angular momentum of a particle, as if it were a top spinning about an axis. Spin is quantized. Spinning charged particles—such as an electron—thus demonstrate a magnetic moment, due to the circulation of charge in the spinning. In the nucleus of an atom, the spin of the nucleus is the resultant of the spins of the nucleons (particles comprising the nucleus). Actually spin of particles is more like an "implosion" to "explosion" circulation; in other words, it circulates in time as well. Spin of a particle is the basic feature that integrates the anenergy (disintegrated energy) of vacuum flux into observable charge. All observable fields, matter, effects, etc. depend upon this basic mechanism to zip together virtual entities and form observable phenomena.

187. Spooklight: another slang name for a nocturnal light Legend and folklore usually associate it with a violent death or macabre occurrence. Earth stress lights. Over 1,200 known sites produce such earth stress lights in the U.S. alone.

188. Strobe effect: striated patterns seen in UFO and other paranormal phenomena due to the higher dimensional phenomena skipping in and out of normal 3-space. Alternatively, two or more higher dimensional phenomena may dynamically interfere so as to form repetitive intersections with our normal 3-space, producing striations. Hyperspatial (scalar) EM interference often produces striation effects.

189. Substructure: in the new approach, a scalar has an infinite-dimensioned (infinite number of sublevels) virtual state substructure, filled with waves, particles, etc. Vacuum has precisely the same sort of substructure. The substructure is rigorously CHARGE FLUX, where observable mass is not present. Any vector, since it contains a set of scalars, also contains a set of virtual state charge flux substructures. One can engineer, pattern, arrange, and utilize these substructures to give various "paranormal" effects. These effects include materialization and dematerialization, psychokinesis, clairvoyance, superluminal communication, antigravity, teleportation, apportation, remote viewing, production of energy at a distance, extraction of energy at a distance, electron dissolution, etc

190. Superposition: the simple linear addition and subtraction of two or more values. In the new approach, superposition need not linearly hold valid if sufficient substructure interaction is obtained and the substructures are nonlinear. In that case, superposition turns into nonlinear interference.

191. Teleportation: the transmission of an object from "here" to "there" with no travel in between as an object in ordinary space. Hyperspatial transmission of an object from one point in the ordinary space to another.

192. Telluric currents: earth currents; electrical currents in the rocks of the earth, believed to be due to aurora effects and the earth's magnetic field. In the new approach, these currents are also pumped by longitudinal scalar wave bombardment from the sun, the cosmos, and the fiery core of the earth itself. Quartz is a common crystalline component in rocks, and thus the rocks are piezoelectric This means that stresses in the rocks, such as from shifting tectonic plates, causes electrical activity, and electrical activity causes mechanical stresses. Further, the quartz is essentially randomly oriented, resulting in most of the tiny piezoelectric vectors summing to a vector zero, which in turn constitutes a scalar potential and pumping the atomic nuclei as pumped phase conjugate mirrors, producing PCR waves. These do the same thing in return, producing negative energy potentials and potential waves, etc. As the piezo-vector components vary, the values of the potentials fluctuate. The zero-sum portion of such a stressed randomized crystal constitutes a Prigogine detector for kindling and collection of anenergies via nonlinear thermodynamics. The molten core of the earth is also a dynamic Prigogine system, since it is a pumped PCM. Thus the earth is a collector, processor, sometimes amplifier, and retransmitter of mind energies and anenergies, and truly the earth may be considered to be "alive" in a strange way (the Gaia hypothesis). This process, along with scalar EM in living systems, also produces Sheldrake's morphogenetic field and its effects. Specifically, the earth receives and processes anenergies from the species unconscious of all the species of ordinary life upon it The earth itself does respond to geometric kindling alignments of other planeti. and particularly to the moon. In addition, it does respond to the state of man's collective species unconscious mind. Fault zones result in structures similar to diodes, triodes, and scalar interferometers. Amplification and rectification of kindled anenergies occur readily, including at a distance, at fault zones, particularly when

seismic stresses in the rocks are increased, increasing the piezoelectric activity, telluric currents, scalar interferometry, etc Thus fault zones constitute natural kindling window areas for paranormal anenergy forms, for tulpoids etc—precisely as found by Persinger. Fault zones are also scalar interferometers, which enhances the formation of ordinary EM forms at a distance.

193. Tesla fireball: interference of two scalar Fourier expansion patterns to form a glowing, fiery globe or spherical shell of radiant electromagnetic energy and electron plasma.

194. Tesla howitzer: a large Tesla scalar interferometer such as the fourth generation Soviet hyperspatial howitzer at Saryshagan. Repeated Soviet testing of Tesla howitzers is documented in the open literature (see Bearden, *Fer-de-Lance*, Tesla Book Co., 1986). The howitzer is capable of utilization in multiple modes, both as a strategic offensive weapon and as a multiple-mode strategic ABM defense weapon. Scalar EM interferometer. Hyperspatial howitzer.

195. Tesla shield: a gigantic, hemispherical, glowing, thin shell of intense electromagnetic energy and electron plasma, placed over a defended area or installation. The EM shell is formed by interference (and coupling) of two scalar shells of anenergy, formed by truncated Fourier expansion methods from multiple frequency scalar transmitters. To form the shell at a distance, phase conjugate replica waves must be utilized, so that the energy and energy pattern does not diverge as a function of distance. Note that such real-time holography, independent of distance, already appears in the nonlinear optics phase conjugation literature. In the Tesla Shield, the energy density in the interference shell causes local curvature of spacetime, and lifts electrons from the Dirac sea, producing the plasma in the shell. With sufficient energy density in the interference shell, a material object seeking to penetrate this dome of energy and plasma is instantly electromagnetically "dudded," and physically damaged and/or vaporized. In addition, the potential pulse delivered inside the nuclei of nuclear materials that meet the shell instantly fission all fissionable materials. Thus nuclear weapons are instantly detonated when entering the shell. Electromagnetic energy (such as gamma radiation from the EMP of a high altitude penetration burst) impinging on the shell plasma is absorbed and re-radiated inside the shell at lower frequency and temperature. Several shells may be internested so that multiple, serial absorption and scattering reduces the original gamma radiation to harmless radio frequency noise. Numerous incidents of tests of the Tesla Shield weapon are documented in the open literature.

196. Tesla wave: a longitudinal scalar potential wave in massless charge, in the vacuum charge flux itself, and in pure spacetime. An electrogravitational wave. A gravitational wave. A scalar EM wave. A wave of pure potential. A wave in the magnitude of the flux energy density of vacuum. A wave in the magnitude of the curvature of vacuum.

197. Tesla weapon: any weapon utilizing longitudinal scalar EM waves or phase conjugate replica waves to accomplish its results. Also applies to a weapon using scalar interferometry or PCR interferometry and holography from multiple projectors or transmitters.

198. Thought: separations and forms in pure mind or being. To think is to form (separate, perceive) thought forms and process them. In a developmental sense, thinking is the activity of mind that screens the true continuous mind nature by fragmenting it The true mind is like the ocean, and thoughts are like waves or disturbances in the ocean. In the new scalar electromagnetics, the mind itself produces scalar waves, on the third and lower virtual levels of the scalar substructure, and these are what we call "thoughts." A thought is a real, virtual-state object capable of being directly detected, interacted with, and engineered by scalar EM means.

199. Thought photography: psychokinetic impression of images or light effects upon photographic film or other sensitive media, due to the presence or intent of a human initiator. PCR distant interferometry and holography is the basic mechanism involved.

200. Three-space (3-space): a space dimensionally composed of length cubed. It is the normal space taken to be occupied by gross matter. Per se, vacuum does not occupy this same 3-space, even though erroneously assumed to do so in present physics.

201. Time: in relativity, an extra dimension (variable) which allows the ordering of spatial snapshots or events. In quantum mechanics, time is only a parameter; it is not an observable and is not detectable, even in theory. Time is always inferred, even though precisely. Rigorously, time exists only through the stream and persistence of human consciousness. We only experience that persistence as "something changing", by continual comparison of our memory of perceptions of spatial position and pattern. In the abstract sense, time is being, which has no differentiation whatsoever—it simply is (a tautology). Perceptual separations in being constitute thoughts or mind changes, much like waves in water. Those waves common to all minds constitute physical (spatial) changes in the so-called "real" world. Because "time" in its undifferentiated sense is simply a synonym for being, then multiple things (separations) may inclusively exist in time simultaneously. (How many final objects exist in a stone before it is carved into any one of them?) The basic separator of being/time is the photon interaction, which is the basic generator of monocular quantum change and thus the progression of spatial particles "through time" in little jumps. The endpoints of the quantum jumps through time represent time differentiations of spacetime/masstime. To properly understand physical phenomena, both positive and negative time flow must be incorporated in the theory or model used.

202. Time oscillation: ordinary time advances and retards in small discrete jumps, much as a sewing machine stitches forward—except that each time stitch is pulled out before the next one is made. Thus time consists of two time flows interleaved: the positive flow of time (stitching) and the negative flow of time (unstitching). This "time stitching/unstitching" or oscillation can be viewed as a wave. It is "action" that is waving (being changed or created and destroyed in quantum chunks), since time is actually a subcomponent of action. One may therefore view time waves as carrying or creating surges of energy back and forth (in time). The photon may be considered as this oscillation of lime, for it is actually an oscillation of action. The positive half of a photon exhibits positive time (the stitch is made) and a virtual electron, and the negative half exhibits negative time (the stitch is removed) and a virtual positron. Charge is a function intimately related to, and comprised

of, time stitching. Positive time is associated with negative charge, and negative time with positive charge. The photon ca be considered as a coupled virtual electron-positron pair. The invisible stitching/unstitching trace of a photon through spacea'me is "enfolded" (in time) and remains. A phase conjugate replica photon, created at some later time and some distant place, thus has a sort of "invisible wire" connecting its own generation and the distant source that generated the stimulus photon. Note that spacetime occupies time, but space does not. Mass-time occupies time, but mass does not. Mind, thought, and being occupy time, but not space.

203. Time trap: refers to the erroneous assumption that God is a limited being, traveling along through time much as humans perceive themselves to. An unlimited creator must permeate all aspects of creation, including time. In the unlimited view, God permeates time from beginning to end, all at once. To such a creator, nothing is happening, since all happenings are simultaneously present What we call "positive" or forward time and "negative" or backward time co-exist and are inseparably identified, to such a level. Good and bad are only relative to a single time stream and to a single referent At the unlimited level, there is no separate good or separate evil. Yet there is all unseparated good and all unscparated evil. All "events" or acts that one might separate, simultaneously exist in both forward and backward time streams. Hence any event is ultimately both good and evil simultaneously, and to an identical degree. Again, this is the void that is devoid even of void.

204. Transverse wave: a wave which vibrates laterally to its motion in a medium, exactly like the vibration of a stretched string. Vector electromagnetic (Hertz) waves are transverse waves, in the present theory. In the new approach, transverse waves cannot exist as such in vacuum, but only in a longitudinally restrained medium. (The electron gas in a solid conductor, for example, is such a medium, and Maxwell's equations rigorously apply to the transmitting electron gas and to the detecting/receiving electron gas, but not to the vacuum in between). Longitudinal (alternately densifying and rarefying) scalar waves exist in vacuum, in the charge (virtual particle) flux that vacuum identically is. Hertzian waves in vacuum exist as shadow vector waves, that is, as two or more coupled Tesla scalar waves spinning around each other.

205. Tulpa, tulpoid: condensed, materialized or semi-materialized thought form, either living or inert. May be a visible or an invisible electromagnetic form, a partially materialized form, or a completely materialized form. Ultimately all matter and fields are tulpoidal in nature, consisting of condensed thought/mind energy.

206. Two-slit experiment: a form of Young's experiment where a particle is generated and directed toward a plate having two tiny slits (holes) in it, with a collection screen or device on the far side of the plate to collect and add the impacts of the particles that pass the plate. The idea is that a classic corpuscle can only go through one hole at a time, like a baseball through a hole in a fence. For particles, classically the strikes on the collector screen should be grouped in two clusters, each representing a straight-line passage through one of the slits. In the experiment, however, the particle strikes form a wave diffraction pattern when collected on the screen, unless the emitted particle is struck by a photon before it strikes the screen. In the latter case, the two clusters for classic corpuscles are observed. The experiment—fundamental to all quantum mechanics—is simply understood if one considers the time aspects of the problem, as pointed ont by Charles Muses in 19S7. The two slit apparatus with electrons may be also used as an electron interferometer for sensitive detection of scalar EM (electrogravitational) waves.

207. UFO: unidentified flying object Any object or light in the sky that cannot be identified as an ordinary physical phenomenon. After normal objects and phenomena are eliminated, the remaining paranormal residue is of interest Many of these are kindled tulpoidal forms, and may consist of lights, invisible electromagnetic energy, physical objects such as discs or spaceships, robots, humanoids, etc. (A few of these forms may be real anti-gravity spaceships, created here on earth by sensitive groups of several earth governments, but controlled by some mysterious group outside these governments. Such craft, I believe, have been developed and flown all over the solar system since the early 1950's. These I do not consider part of the true UFO phenomena, which in one form or another are centuries old.) Highly materialized ship forms may also contain highly materialized living forms such as space-suited astronauts etc. The "UFO" has been separated from other tulpoids (bigfoot, fairies, spooklights, water monsters, etc.) because its appearance in the sky was immediately associated with aircraft or spaceships, leading to the initial expectation that extraterrestrials in advanced spacecraft were visiting the earth. Most of the UFO phenomena actually consists of lights at night (well over 80%), and only about 6% or so resemble well-materialized ships with astronauts. A substantial portion of the "lights at night" phenomena are also due to Soviet scalar EM interference weapons. The Soviets create a great deal of light phenomena worldwide, to spark UFO reports, which are discounted by conventional science and most of the military and government agencies. This provides the Soviets a giant and effective "deception plan" so that the weapons can be tested and readied worldwide, and sightings and reports will be discredited and not cause undue alarm.

208. Unconscious: unaware, not conscious. Refers to that part of the individual's mind which is not normally in conscious awareness, but which may contain a great deal of material from the conscious mind. In the new approach, the unconscious mind is considered to be "multiply conscious," while the conscious mind is considered "singly conscious." In other words, the unconscious is a "parallel processor," while the conscious is a "serial processor." Unconscious should be thought of as not singly conscious, but multiply conscious. Further, this allows a totally new idea: Multiple singly conscious, different minds coexist simultaneously in time, though not in the same "3-dimensional mindspace." Suppose we consider a set of n such singly conscious minds. All the minds exist in a spacetime of dimensionality 3n + 1 (n is the number of different conscious minds in the set, and an additional dimension, time, is common to all minds in the set). Thus the considered set of singly conscious minds constitutes one multiply conscious—or "unconscious" -mind. In this way one may apeak of "levels of unconsciousness" in relation to groups of persons, with the deepest level being and containing every human mind. Of course the analogy can be continued to yield

the higher minds or consciousness projected by Teilhard de Chardin. In the collective human unconscious, those forms which are in each and every mind are the archetypes discovered by Jung. In a shallower level, other forms may be common to that level, constituting "weak archetypes" or "fragmentary archetypes." There is considered to be no limit to levels of unconsciousness—the ultimate depth being "all consciousness" (and all unconsciousness!) of Godness. God must be able to both be and not be at the same time; if God cannot do that little trick, then God has a limitation and is not unlimited.

209. Vacuum: pure virtual particle, massless charge flux. The virtual state, or ether (nonmaterial, Lorentzian). Lengthless, timeless spacetime itself. That state where everything is disintegrated, but highly dynamic. Note that vacuum is not an emptiness FILLED with massless charge, rather, it IS identically massless charge (disintegrated dynamicism). It is a plenum, not an emptiness. It is also pure action, undifferentiated. Einstein once suggested that the vacuum, complete with its electromagnetic and gravitational fields, should be taken as the ether. In the modern view, the term ether is again accepted in the literature, but now it refers to a "virtual particle flux" ether, not a thin material ether. One can model the vacuum analogous to a special kind of virtual-particle gas: one in which the particles "appear" and "disappear from and into nothing, nearly instantly, so fast that they cannot be individually detected. Thus the modern idea of the vacuum is a seething inferno of fiercely bubbling, fleeting particles. The other limitation is that the dimensionality of the vacuum is not fixed until operations are invoked, and neither is the rate of passage of time. Thus the vacuum has no fixed lengths nor fixed rates of time flow per se. One can visualize the stress of vacuum as a sort of conglomerate potential "pressure," where the individual stresses of various types of particles, if integrated by some external means, would sum into the overall stress (pressure). Variation of the "stress of vacuum" between two points in a frame represents a "curved spacetime" or "accelerated frame." Note that overall stress can be held constant, while two or more different components are canonically varied. The electrostatic potential, the magnetostatic potential, and the velocity of a charged particle are three such "canonical" variables. If the overall "pressure" is not varied, the three variables are canonical and energy, momentum, and charge are conserved and one cannot build a perpetuum mobile (perpetual motion machine). If the overall "pressure" is varied between local points in the frame, then the conservation of energy, momentum, and/or charge need not rigorously apply between those local points. At any one point, one may have a "free source" or a "free sink," depending on the vacuum curvature and the EM standing wave relationship. In that case, one can build a local "perpetuum mobile," since one can tap a "free source." Einstein created a severely restricted general relativity (GR), where he assumed away any local curvature of vacuum. In the West such a severely restricted GR is still dogmatically enforced, because it "saves" the conservation laws, which are regarded as sacrosanct In Soviet physics journals, learned papers by leading scientists are regularly published in which unrestricted GR—including local curvature—is developed and explored. In a local curvature region, the Soviets have already pointed out that any and all conservation laws may be violated. The Soviets have long since developed and weaponized unrestricted GR, while our scientists are still dogmatically insisting that one cannot deterministically engineer local curvature of spacetime. Thus we maintain our obsession with conservation, and the Soviets maintain the weapons.

210. Vector: in mathematics, an entity completely characterized by a magnitude and a direction. Abstractly, vectors are considered to be formed by a difference in potential between two spatial points. In the new approach, vectors are characteristics of particle motion, and do not observably exist in the absence of a particle. Since all detectors have mass, and this mass contains spinning charged particles, then force vectors are constituted on and of the spinning charged particles. In the vacuum, only an unzipped (disintegrated) vector pattern exists—or, as Feynman put it, only the potential for a force vector exists there. Maxwell's original theory was written in quaternions. In 3-space, a vector has the familiar three components, say, ai + bj + ck, where i, j, and k are the usual x, y, and z unit vectors, and a, b, and c are the magnitudes f the x, y, and z components of a vector. A quaternion, however, has an additional scalar component—say, w—so that it looks like w + ai + bj + ck. Maxwell's original theory actually unified gravitation and electromagnetics! When vector zeroing operations occur, the quaternion may not zero out the scalar component. As an example, consider the cross product of a vector A with itself, AxA. In vector analysis, the resulting vector is the zero vector. In quaternions, however, w remains, and w = a2 +b2 +c2. With the correct proportionality constants, w therefore represents the energy density of vacuum due to the two zero-multiplying vectors A1 and A2, where A1 = A2. To recover my scalar wave or gravitational wave: Now let the vectors A1 - A2 where each is the E-field vector of an identical EM sine wave. (That is, we perform a device which accepts two identical input EM sine waves and performs a cross multiplication. That device, e.g., may simply be a special kind of nonlinear modulator/mixer). In ordinary Heaviside/Maxwell theory, the EM output of this operation is a continuous zero vector, and that's all. However, by Maxwell's actual theory, the output of the operation is a scalar EM wave, whose amplitude varies as the energy of A. That is, the operation produces a scalar EM wave which is varying the energy density of vacuum. By definition, that is a gravitational wave. Since it was produced electromagnetically, I refer to it as an electrogravitational wave. It was included in Maxwell's original 1864 theory. After Maxwell's death, Heaviside and Gibbs completed the modern form of vector analysis. Heaviside—a single man—then "translated" (mutilated) Maxwell's theory into his new "vector" theory. He simply sawed off and discarded the troublesome scalar component of the quaternion! That made calculation a whole lot easier, and easier to understand. In discarding the scalar component, he discarded electrogravitation, writing an EM theory that specifically excludes local curved spacetime and gravity. Before the turn of the century, a short debate involving only about 30 scientists resulting in the complete adoption of Heaviside's mutilated version of Maxwell's theory. Quaternions and quaternion theory—and electrogravitation—vanished from the literature and the textbooks—and from the minds of the students. Maxwell's theory has not been taught or utilized in the Western

world in the 20th century! Only Heaviside's mutilated version of it is taught as "Maxwell's theory." We should have been applying Maxwell's unified theory and working on antigravity spaceships, shortly after the U.S. Civil War!

211. Vector field: in ordinary theory, the assigning of a magnitude and a direction (that is, a vector) to each point in space. The entire set of vectors and their spatial points is called a vector field. In the new approach, such a vector field cannot observably exist in a vacuum, since only disintegrated things exist there; there each potential vector pattern exists in broken virtual bits, ordered in line to form the bits of the observable vector but not joined. In the presence of a detecting/integrating mass, such as a spinning charged electron, the virtual bits and the spinning charged mass couple into a system that identically comprises the observable vector. In other words, the spin of an observable particle simply "integrates" the ordered virtual bit pattern, just as an old spinning wheel twists and integrates individual fibers into a stranded rope or thread.

212. Virtual (state): that part of physical reality consisting of changes (particles, waves, and other entities) smaller than the least detectable (quantum) change. Disintegrated changes. A thought or thoughtform is also virtual. May be visualized as consisting of real, dynamic "pieces of vacuum" or "pieces of nothing"—that is, quitons. Every ordinary observable particle (photon, neutron, electron, proton, etc.) contains or consists of a dynamically changing cloud of virtual objects. Exchange of virtual objects is thought to generate almost all forces of nature. Conservation of energy need not be conserved in virtual interactions, and generally is not In the new approach, the mind may be considered a special virtual universe, and a thought a virtual object. Virtual state consists of multiply nested levels, each level progressively finer and more subtle. These sublevels also correspond mathematically to higher geometrical dimensions. Charge on a mass is also due to its continual emission and absorption of virtual particles. Waves in the virtual state massless charge flux, which do not breach the quantum level to become observable, are vectorially nonobservable yet real—these are scalar waves, or shadow vector waves, and are longitudinal—that is, they are oscillations of the stress energy tensor of vacuum. In addition, the virtual particles in the vacuum flux arise out of nothing spontaneously (creation) and disappear into nothing spontaneously (annihilation). Since this is random, at any instant any sort of pattern imaginable is "just appearing" and "just disappearing" in the vacuum. Anything and everything at all! Thus a ghost-pattern of everything exists in the vacuum at any point or region, at any time. The vacuum is thus a giant virtual-state hologram. Integrating (kindling) one of these forms will result in it becoming first a neutrinic pattern, then a photonic (light) pattern, then a materializing pattern, and finally a material pattern. Discharge of the "potential" of this pattern then reverses the process. These two processes—charge-up and discharge—constitute materialization and dematerialization. Anything at at all-living or dead—can be materialized or dematerialized.

213. Virtual state engineering: the direct cohering, tailoring, collecting, resonating, and directing virtual state energy (anenergy) and entities into and onto normal observable objects and ordinary fields. It includes the **direct engineering of mind and life energies. Synonymous with psychotronics (Czech term) or energetics (Soviet term). Use of scalar electromagnetics (electrogravitation). Use of scalar wave/Tesla technology. Use of electrogravitation techniques.**

214. Water structuring: the arrangement and relations of the molecular and ionic parts of water. Essentially water molecules bond together by means of hydrogen bonds. The structure of these bondings is extremely rich and dynamic in water. Essentially a glass of water is a single complex molecule, one which is continually changing its bonding structure to adapt to the slightest change in its total surroundings. Water also interacts intimately with virtual crosstalk (scalar wave) anenergy. Water can thus be "charged" with ancnergy, appreciably changing its structuring. Its surface tension, for example, will change as its structuring changes, as shown by Miller and Flanagan. Thus water is possibly the most complex substance in the universe, and not just a simple chemical. With most of our body composed of intercellular water, we are all linked to every subtle change of the cosmos, by the interaction of the structuring of this water with even the most subtle cosmological changes. Large bodies of water are particularly susceptible for temporary kindling of deeper archetypal thought forms (tulpoids) such as Loch Ness Monster etc. The study of the structuring of water is still in its infancy.

215. Watson, James: young inventor who has produced several types of free energy and scalar electromagnetic devices, including battery-driven, battery-less, and tube systems.

216. Weather engineering (scalar): use of scalar electromagnetics (electrogravitation) to change and influence the weather and the producers of weather such as jetstreams and large ocean currents. By imposing scalar signals upon ordinary powerful over the horizon (OTH) radar carriers in the communications band (3 to 30 MHz), interference patterns (grids) may be established over distant and vast areas, far beyond the horizon, or even on the other side of the earth. The giant Soviet Woodpecker OTH radars continually establish such a grid over the U.S. Phase conjugate energy can be transmitted and will travel along these beams, just as electricity travels along a wire. By scanning narrow phase conjugate wave beams in these wider carrier beams, PCR realtime interference holography can be established in one or more of the distant OTR EM carrier interference grid squares. Either positive or negative energy and energy forms may be transmitted to emerge, producing a high or low pressure spot or zone as desired. By adding positive energy to a zone, the air is heated and expands. Thus the air is less dense, producing a low pressure zone, or a low. By adding negative energy to a zone, an equal amount of positive energy in the zone is canceled. Thus the air in the zone contracts and is denser, producing a high pressure zone, or a high. Thus one can create distant highs and lows at will. By slowly moving (scanning) the PCR beams, these distant highs and lows can be moved, thus deviating and directing the jetstreams, storm systems, etc. By outputting positive energy and warming the top of a thunderstorm anvil, while outputting negative energy to the side of the anvil and cooling it, drastic "downbursts" under the anvil can be created. U.S. satellites have photographed such anomalous holes appearing in thunderhead anvils over the U.S., and their association

with downbursts has been documented in the literature. Whether these are natural or engineered have yet to be established. Another signature of weather engineering—a "wheel and spoke" type of cloud, called a giant radial—has been seen widely throughout the U.S. and correlated with anomalous weather changes shortly thereafter. Sometimes a system of two such radials facing each other is seen, and on one occasion four were seen locked together (just before and during the highly anomalous zig-zag travel of a 1985 hurricane in the Gulf.) Another geometrical form associated with severe weather has been photographed by U.S. weather satellites, and is referred to in the weather literature as an "enhanced V". This signature is closely associated with the production of tornadoes, and it may be a natural phenomenon. However, if the mechanism for the enhanced V were artificially produced in a thunderstorm, then the probability of follow-on tornadoes would be materially increased. The Soviets have openly engineered the weather over North America since 1976, and made previous R&D engineering tests over the U.S. in 1967.

217. Woodpecker signals: powerful, complex electromagnetic signals originating in the Soviet Union (apparently from the vicinity of Riga and Gomel, for example) that have widely disturbed and interfered with the communications band (3-30 MHz) since the mid-70's. Bioactive modulations of 10 Hz and under have been observed repeatedly. Western observers have not deciphered the purpose or specific coding of the signals, and prefer to think of them as some sort of over-the-horizon radar tests, thus neatly disposing of the problem. Similar signals have been observed to entrain the human brainwaves and force them into in-phase oscillation. Beck has reported the phaselocked synchronization of the 10 Hz modulations on as many as 16 carrier frequencies at once. From the Lisitsyn work, this constitutes a "phased lock-in" of 16 carrier channels into any entrained brain. According to Lisitsyn and earlier Soviet "biological radio" experiments, this situation should allow the Soviets to transmit emotion, feeling, thought, and even pictures into the entrained brain, where it is processed as if the brain itself had originated it. (For example, in a Cable News Network special in November 1985, Rauscher and Bise actually demonstrated the induction of visual form images in the brain of the CNN investigator using weak signals much weaker than those naturally produced by oscillation of the earth's magnetic field.) According to the Kazhnacheyev work, any sort of cellular death and disease pattern can be electromagnetically induced. (The work was duplicated in the infrared by University of Marburg researchers in West Germany, by researchers at the University of Sydney, and by one U.S. scientist.) Popp discovered the virtual photon communication system of the cells of the body. This is scalar, and scalar patterns for charge distributions of the chemistry of cellular diseases and damage could also be placed on the phase-locked Woodpecker carriers, entering die human body's master control system through the entrained brain and "kindling" throughout the cells of the body. The stress and suppression of the immune system would be involved in almost all disease patterns, and a "partial AIDS" type of syndrome would result, making the entrained body vulnerable to whatever diseases were around, including being induced on the Woodpecker carriers themselves. Also, by targeting the DNA of specific organisms, mutations of deadlier and tougher strains of disease induction agents such as bacteria and viruses could be produced. The "antithesis" pattern—a sort of scalar EM antidote—could be induced in the Soviet population. (The present lethal AIDS is a manmade disease, and it was unleashed from a research laboratory either accidentally or by a Soviet agent on purpose.) Indeed, World War III may already have begun, and the Soviets may be waging a quite different kind of creepingly escalating viral war against the United States. If so, our Defense Department and our government have not yet grasped what is happening, and so far we are simply a sitting, passive target If our populace is slowly debilitated and storm, weather, and earthquake damage slowly increases year by year, at some point our system will simply start to come unglued, with increasing loss of control. In that manner we could "subside" as a world power without the kind of great overt war we are familiar with. Note that steady escalation of international terrorism, insurrection, and guerrilla warfare being promoted by the Soviets around the world will keep us preoccupied and busy while our debilitation and moraise steadily are increased. We may already be in an eery new kind of war that we could lose without firing a shot if our leaders do not wake up to the frightening implications of the new physics! Thus the Woodpecker transmitters represent a potential anti-population and strategic weapon of enormous strategic significance. The transmitters, because of their sheer power, also appear to be able to pump and resonate earth scalar EM energies, producing earthquakes and plasma discharge effects at remote locations. (Since Golden has directly shown that the entire earth is in frightful, forced scalar resonance at multiple frequencies and enormous power due to powerful Soviet scalar transmissions, then one should not be too skeptical of the Soviet ability to produce earthquakes on demand and to order.) At least one U.S. researcher or group seems to have been partially nullifying Soviet efforts in this respect by occasionally pulsing the earth scalar energies in a countering mode, to include actual destruction of a Soviet transmitter in one or more instances. Note especially that unorthodox researchers have directly confirmed that the Woodpecker signals contain powerful scalar components which orthodox scientists—lacking scalar detection equipment—do not see. The Woodpecker carrier interference grid over the U.S. is also a scalar EM interference grid, and used by the Soviets to engineer the weather over North America. It is also used as an anti-Bomber and anti-missile launch phase defense system, and the Soviets have tested it in this mode by destroying several U.S. aircraft and missiles.

218. Work: conventionally, the line integral of force on a body over the path taken by the body. In the new approach, the force consists of the mass and its motional change, unseparated. Thus work is the line integral of the force over the path taken by the force. Work (past) is equal to the energy (present) expended, and energy (present, gravitational potential) is equal to the work (past, release of a gravitational potential) that can be expended. Note that only vectors produce work; scalar waves do not perform work on their observable environment, and they do not contain standard EM force field energy per se.

219. Yao, George: engineer and inventor of the PulsorR, which affects the subtle scalar levels of the human body's aura or scalar radiation pattern.

220. Veti: the Eastern—particularly Tibet, Nepal, etc.—Himalayan version of the apeman tulpoid, corresponding to the U.S. Sasquatch or Bigfoot.

221. Zarg: the collective human unconscious, considered as a mind and a living entity. It is at least 4—billion dimensional, since it has as many dimensions as human stages. Each human is regarded as a single cellular stage in this entity. The psychokinetic power of such a linked mind is proportional to an exponential of the number of individual stages. Thus Zarg's psychokinetic power is so great that it has essential control over space and time, and largely prescribes, maintains, and stabilizes the laws of nature (laws of physics) and the reality in which we live. Conflict between large groups of humans constitutes unresolved conflict in this great unconsciousness, and this generates symbolic dreams, much as a human dreams strange, emotional, symbolic dreams due to the unresolved conflict in his or her personal unconscious mind. However, because of its vast psychokinetic power, Zarg materializes or partially materializes its symbolic dreams, resulting in tulpoids. Waves of these tulpoidal materializations thus represent strong human conflict or threats on the large scale. Such waves can be dream analyzed to discover the correlate that is generating the symbology, by straightforward dream analysis techniques. In olden times, part of this was known, and wise men were employed to analyze and interpret the strange, induced dreams of the king (who was the center of power of a nation) and the paranormal phenomena appearing near him. The ancients knew the import of "signs and wonders" and what they portended, but this metapsychological knowledge has been largely ridiculed and lost by present materialistic Western science.

222. Zero: naught or nothing; the absence of thing. A naive definition is the absence of number. However, if all the nonzero numbers are considered to represent the presence of number, then to declare zero a number—that is, the presence of a number—is a self-contradiction since it has just been declared the absence of number. In the numerical sense, one may do a little better by calling zero "the absence of any and all numbers except itself." Yet in this case, difficulties arise as to how one is to justify the addition of any other number to zero: how can a number be present with the absenting operator, so as to be added? The absence of any type of thing observable. Formally, the additive identity element of an algebraic system. That is, formally, the basic idea of zero is that, added to a number, the result is still identical to that number. Implicit in this formal definition is a "single level** of perceived objects; that is, there are no "hidden objects" in a separate level of sets. If multiple levels of perception are allowed, then the zero becomes much more complex. That is, it represents the absence of all other numbers at that particular level, and of that level's kind. In that case, it may contain any combination of objects from another level, yet be perceived as containing "nothing of its own assigned level." In that case, there exists an infinity of different "kinds" of zeroes, if the hidden associated structure (the substructure) If taken into account Unfortunately physics has created such multiple levels, but has not required its mathematics to clearly specify the changed nature of the zero. As an example, at the observable level, an infinite number of kinds of zeroes exist, when the virtual level and pattern **associated with the zero are taken into account This characteristic of physics actually violates the following zero axiom: an observable v plus an observable zero is considered to be equal to an observable zero plus v. In fact, the sum of v and a particular zero may not be equal at all to the sum of another zero and v, if the virtual patterns of the two zeroes differ, v has a virtual substructure, and in the addition of a zero and v, their virtual levels nonlinearly interact instead of linearly superimpose.**

223. Zero point energy: the kinetic energy that remains in a substance when its temperature is absolute zero. Quantum mechanics requires a simple harmonic oscillator to still possess kinetic energy at its lowest state: that is, it possesses half a quantum of energy. In solid materials it is distributed throughout the lattice vibrations, contributing to the binding energy. Vacuum also has zero point energy. Actually a similar and much expanded concept applies to any potential: a potential is just a bunch of trapped dynamic vectors, hence "trapped vector (translational) energy." It is translational energy that is locally trapped and not translating. The potential is thus like an accumulator or capacitor. It can be "charged up" and "discharged." It thus contains its own analog or trapped or "zero summed" or "zero point" energy.

224. Zero-point energy of vacuum: the vacuum is increasingly being regarded as composed of an incredibly dense structure of virtual electromagnetic energy, even at zero degrees absolute. From quantum geometrodynamics, as one approaches the Planck length—say, 10 to the minus 35th meters—these oscillations become so energetic that the fabric of spacetime itself is torn, resulting in sporadic, continual connection and disconnection of widely separated portions of spacetime. This "quantum foam" was dubbed "superspace" by J.A. Wheeler. Actually, if space and time are torn, then energy itself—and vector waves—are also torn. That is, the superspace consists of pure massless charge flux, pure scalar waves. If compacted, this anenergy density of vacuum may be approximated as 10 to the 100th grams per cubic centimeter, were it compacted into mass. The actual electrical charge of the vacuum appears to be enormous, if it were possible to measure a voltage drop from it to an uncharged region. Thus it is space (actually spacetime) that is incredibly dense, and matter that is ethereally thin. Spacetime goes through matter, rather than matter through spacetime. This anenergy of vacuum does interact with electromagnetic fields and matter to give observable effects, as evidenced by the Lamb shift, for example. The Lamb shift proves that the vacuum charge or anenergy can be "tapped." Tapping the "vacuum energy" would immediately end the energy crisis forever. Further, it can be done with practical devices, as T. Henry Moray showed in the 20's and 30's, and as several present inventors have shown today.

225. Zero vector: a vector having no length (no magnitude) or specific direction. Absence of any or all finite vectors. Resultant of a system of multiple, finite vectors whose vector sum has no specific direction. Note that the second definition differs drastically from tho first. That if, we cannot say that a vector resultant zero has no infolded magnitude, if we consider the components, all of whom have magnitude. See the discussion under "zero." In vector analysis, the zero vector axiom states that any vector v plus a zero vector is equal to a zero vector plus v. (Note that this axion is not proven, just assumed).

However, there are an infinite number of different zero vector resultant systems, and so zero vectors may differ, if their infolded component "substructure" is considered. Indeed, a zero vector system must be identified as a special form of potential, if its substructure is considered. The common practice in electrical physics of replacing a zero-summed system of vectors with a vector zero is incomplete, and such did not exist in Maxwell's original quaternion theory. This present practice should be changed; the vector zero should be replaced with a special organized vector zero system and a scalar potential. By failing to do this, physics excludes the ability to engineer electrogravitation, spacen'me, the virtual state, local general relativity, free energy, effects at a distance, and the probabilities of the states propagated by the Schroedinger equation. It also excludes scalar electromagnetics (electrogravitation), and unification of all forces in an engineering electromagnetics fashion. In the new view, a zero vector may be a system of vectors that vectoiially sum or multiply to zero, but the components may still exist "inside" and dynamically function inside the zero-resultant envelope. This substructure can act on nonlinear or resonant systems. Any or all components may be time varying, or none of them may be. The zero vector system may thus be a dynamic vacuum engine. In addition, such a vector zero system is considered to be also a scalar stress potential, whose magnitude is equal to the sum of the absolute values of the perpendicular components. In addition, a separate type of stress potential may be included for the magnitude of the absolute values of the swirl components (torques). Other associated potentials may be included for the system, particularly if the system is in multiple dimensions, if it consists of more than one type of virtual particle flux, if several fluxes intercommute, etc. Such a system can also be designed and created to deterministically interact with and on the life force itself, the mind, thought, and personality.

BIBLIOGRAPHY

"Analysis of a Phenomenon Occurring at Bell Island, Newfoundland, Canada on April 2, 1978," P.A.C.E., Ottawa, Canada, 1978.

Thomas E. Bearden *Quiton/Perceptron Physics: A Theory of Existence, Perception, and Physical Phenomena,* Defense Documentation Center (DDC), March 1973.

Thomas E. Bearden, *Field, Formon, Superspace, and Inceptive Cyborg: A Paraphysical Theory of Noncausal Phenomena,* DDC, 1974.

Thomas E. Bearden, *A Conceptual Derivation of Einstein's Postulates of Special Relativity,* DDC, October 1975.

Thomas E. Bearden, *Restatement of the Heisenberg Uncertainty Principle For the Condition of Superposition,* DDC, October 1975.

Thomas E. Bearden, *A Postulated Mechanism That Leads to Materialization and Dematerialization of Matter and to Antigravity,* DDC, October 1975.

Thomas E. Bearden, *The Boundary Identity of Exact Opposites: A Simple Solution to the Age-Old Philosophical Problem of Change,* DDC, October 1975.

Thomas E. Bearden, *An Approach to Understanding Psychotronics,* privately published, 1976. Defense Documentation Center, AD-A027 866.

Thomas E. Bearden, "The One Human Problem, Its Solution, and Its Relation to UFO Phenomena," *Pursuit* (Journal of the Society for the Investigation of the Unexplained) January 1976.

Thomas E. Bearden, "Writing the Observer Back Into the Equation," address given to Princeton Center for Alternative Futures, Princeton, N.J., March 5, 1976.

Robert C. Beck, *Extreme Low Frequency Magnetic Fields and EEG Entrainment, A Psychotronic Warfare Capability?,* Bio-Medical Research Associates, Los Angeles, March 1978.

Robert C. Beck, *Instrumentation for Detecting, Recording, and Analyzing Natural and Man-Made ELF Signals and Human Brainwaves,* Bio-Medical Research Associates, Los Angeles, May 1978.

William Bise, "The Soviet 10 Hz Pulses—A Brainwave Programming Mechanism?" *Specula* (Journal of the American Association of Meta-Science), Huntsville, Alabama, Vol. 1, No. 3, 1978.

T. Townsend Brown, "Electrical Self-Potential in Rocks," *The Psychic Observer and Chimes,* Vol. 37, No. 1, January-March 1976.

Trevor James Constable, *The Cosmic Pulse of Life,* Merlin Press, Santa Ana, CA, 1976.

Trevor James Constable, "You, Too, Can Photograph UFO's from Airliners," *Psychic Observer and Chimes,* Vol. 37, No. 3, May-June 1977.

George D. Curtis, "An Electromagnetic Radiation Pattern Over The Ocean," *Undersea Technology,* Vol. 5, No. 8, August 1964.

Lars-Erik DeGeer, Swedish National Defense Research Institute, "Airborne Short-Lived Radionuclides of Unknown Origin in Sweden in 1976," *Science,* Vol. 198, No. 4320, December 1977.

B.V. Deryagin and I.I. Abrikosava, Soviet Physics, JETP3, 819 (1957); 4, 2 (1957).

P.A.M. Dirac, "Development of the Physicist's Conception of Nature," *Symposium on the Development of the Physicist's Conception of Nature,* ed. Jagdish Merha, D. Reidel Publishing Company, Boston, 1973, pp. 12-14.

P.A.M. Dirac, "Quantized Singularities in the Electromagnetic Field," *Proceedings of the Royal Society of London,* Series A, Vol. 133, 1931, p. 6.

William W. Edison, David L. Faust, Harry J. Kyler and John O. Pehek, "Kirlian Photography: Myth, Fact and Applications," presented at the session on *New Electronic Methods for Medical Diagnosis and Treatment Using the Human Energy Field: A New Beach-Head for Scientific Discovery,* Electro 78, May 23-25, 1978, IEEE, New York.

Robert Eisberg and Robert Resnick, *Quantum Physics of Atoms, Molecules, Solids, Nuclei, and Particles,* John Wiley & Sons, 1974, pp. 63-68, 146-150.

Hugh Everett, III, *The Many-Worlds Interpretation of Quantum Mechanics, A Fundamental Exposition,* with papers by J.A. Wheeler, B.S. DeWitt, L.N. Cooper and D. Van Vechten, and N. Graham; eds. Bryce S. Dewitt and Neill Graham, Princeton Series in Physics, Princeton University Press, 1973.

Richard Feynman, *The Character of Physical Law,* M.I.T. Press, 1967, pp. 31-33.

Richard P. Feynman, Robert B. Leighton, and Matthew Sands, *The Feynman Lectures On Physics,* Addison-Wesley, 1963, Vols. 1, 2, and 3.

Marjorie E. Fish, "Journey Into the Hill Star Map," *Proceedings of the 1974 MUFON Symposium,* Mutual UFO Network, 1974.

Richard Garvin, *The Crystal Skull,* Pocket Book, 1974.

Burkhard Heim, *Unified Quantum Field Theory of Matter and Gravitation,* Mutual UFO Network, Seguin, Texas, 1972.

Louise and Galen Hieronymus, *Tracking the Astronauts in Apollo 11, With Data From Apollo 8 Included,* Advanced Sciences Research and Development Corporation, Inc., Fort Lauderdale, Florida, 1969.

J. Allen Hynek, *The UFO Experience: A Scientific Enquiry,* Ballentine, 1974.

J. Allen Hynek and Jacques Vallee, *The Edge of Reality,* Regnery, Chicago, 1975.

H.E. Ives, "Derivation of the Lorentz Transformations," *Phil. Mag.,* Vol. 36, June 1945.

H.E. Ives, "The Behavior of an Interferometer in a Gravitational Field," *J. OPT. Soc. Am.*, Vol. 29, May 1939; and "The Behavior of an Interferometer in a Gravitational Field: II. Application to a Planetary Orbit," *Ibid.*, Vol. 38, April 1948.

David Michael Jacobs, *The UFO Controversy in America*, Indiana University Press, 1975. [Foo-fighters]

Brian D. Josephson, "Possible Connections Between Psychic Phenomena and Quantum Mechanics," *New Horizons*, Vol. 1, No. 5.

V.P. Kaznacheyev et al, "Apparent Information Transfer Between Two Groups of Cells," *Psychoenergetic Systems*, Vol. 1, No. 1, December 1974.

V.P. Kaznacheyev et al, "Distant Intercellular Interactions in a System of Two Tissue Cultures," *Psychoenergetic Systems*, Vol. 1, No. 3, March 1976.

Louis Kervran, *Biological Transmutations*, Swan Publishing Company, Binghamton, N.Y., 1972.

"Kindling, Once Epilepsy Model, May Relate to Kundalini," *Brain/Mind Bulletin*, Vol. 2, No. 7, February 21, 1977.

N.A. Kozyrev, "Possibility of Experimental Study of the Properties of Time," *Pulkovo, O vozmozhnosti eksperimental 'nogo issledovaniya svoystv vremeni*, September 1967, pp. 1-49, JPRS 45238, May 1968.

Michael Ledeen, "A Mole in Our Midst?", *New York*, October 2, 1978, pp. 55-57.

E.M. Lifschitz, *Soviet Physics* JETP 2, 73 (1956).

James M. McCampbell, *Ufology: New Insights from Science and Common Sense, Jaymac Company, Belmont, CA, 1973.*

George Meek, Healers and the Healing Process, Theosophical Publishing House, 1977.

T. Henry Moray, *The Sea of Energy in Which the Earth Floats*, Cosray, Salt Lake City, Utah, 1960.

Captain John D. LaMothe, Ph.D., *Controlled Offensive Behavior*—U.S.S.R., ST-CS-01-169-72, Defense Intelligence Agency, Washington, D.C. (Released under the Freedom of Information Act.)

Captain John D. LaMothe and Mr. Louis Maire, *Soviet and Czechoslovakian Parapsychology Research*, DST-1810S-387-75, Defense Intelligence Agency, Washington, D.C. (Released under the Freedom of Information Act.) [Pavlita]

Charles Muses, "Applied Hypernumbers: Computational Concepts," *Applied Mathematics and Computation*, Vol. 3, 1976.

Charles Muses's foreword to Jerome Rothstein, *Communication, Organization and Science*, The Falcon's Wing Press, Indian Hills, Colorado, 1958.

Charles Muses and Arthur M. Young, eds, *Consciousness and Reality*, Outerbridgc& Lazard, 1972.

E.I. Parnov, *At the Crossroads of Infinity,* translated from the Russian by Vladimir Talmy, MIR Publishers, Moscow, 1971.

Harold Puthoff and Russell Targ, *Mindreach,* Delacorte, 1977.

Harold Puthoff and Russell Targ, "A Perceptual Channel for Information Transfer Over Kilometer Distances: Historical Perspective and Recent Research," *Proceedings of the IEEE,* Vol. 64, No. 3, March 1976.

The Pyramid Guide, ed. Bill Cox, El Cariso Publications, Lake Elsinore, CA. (Bimonthly: subscriptions are $6.00 a year.)

Edward W. Russell, *Report on Radionics,* Neville Spearman, London, 1973.

R.M. Santilli, "Partons and Gravitation: Some Puzzling Questions," *Annals of Physics,* Vol. 83, No. 1, March, 1974, pp. 108-157.

Berthold E. Schwarz, "Stella Lansing's Movies: Four Entities and a Possible UFO," *Flying Saucer Review,* Special Issue No. 5, November 1973.

Berthold E. Schwarz, "UFO Contactee Stella Lansing: Possible Medical Implications of Her Motion Picture Experiments," *Journal of the American Society of Psychosomatic Dentistry and Medicine,* Vol. 23, No. 2, 1976.

Bob Shiarella, "The Mysterious 'Skull of Doom'," *Argosy,* Vol. 376, No. 4, April 1973.

Brad Steiger, *Mysteries of Time and Space,* Prentice-Hall, 1974.

Edwin F. Taylor and John Archibald Wheeler, *Spacetime Physics,* W.H. Freeman and Company, 1966.

Yakov P. Terletskii, *Paradoxes in the Theory of Relativity,* Plenum, 1968.

John White and Stanley Krippner, eds., *Future Science,* Anchor, 1977.

C. Louis Wiedemann, "Results of the N.J. 'Spook Light' Study," *Vestigia Newsletter,* Stanhope, N.J., May 1977.

Robert Anton Wilson, *Cosmic Trigger,* And/Or Press, Berkeley, CA, 1977.

V. Ye Savkin, *The Basic Principles of Operational Art and Tactics,* Moscow, 1972, U.S. Air Force translation, U.S. Government Printing Office, Washington, D.C.

Arthur M. Young, *The Reflexive Universe,* Delacorte Press, 1976.

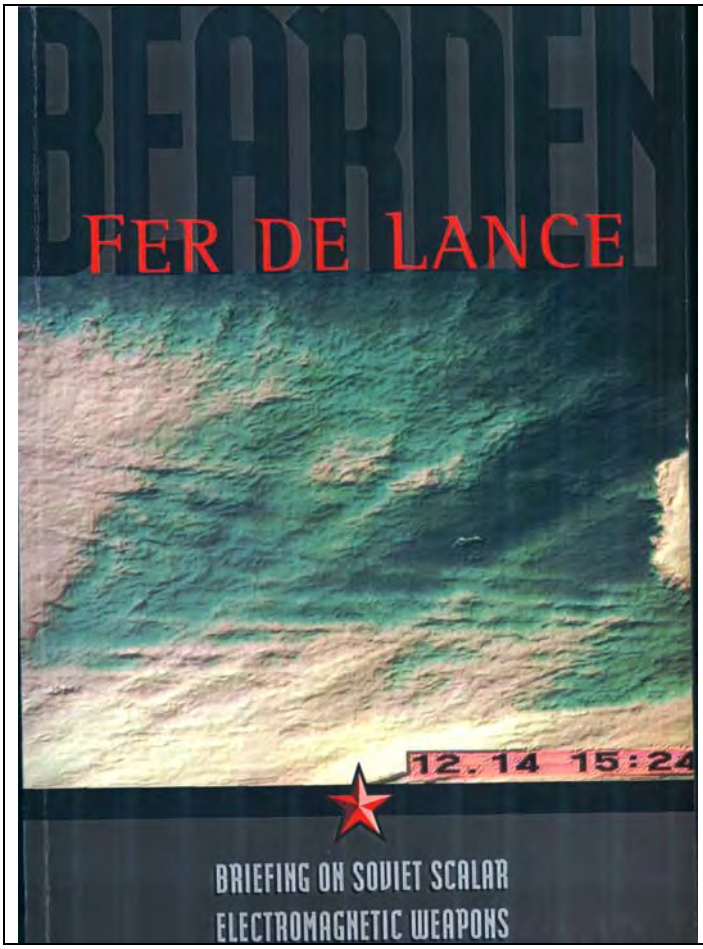

FER DE LANCE

Lieutenant Colonel Thomas E. Bearden (U.S. Army, Retired) PhD, is the author of numerous books, papers, briefings, and presentations dealing with anomalous phenomena, scalar electromagnetics, free energy devices, Soviet Tesla weapons, and Soviet scalar electromagnetic weather warfare.

Lt. Col. Bearden was previously a senior scientist and department manager with the Alabama division of a major aerospace company where he directed the company's design and production of expert systems (artificial intelligence) applications for the U.S. Army command control systems. He has more than 29 years experience in air defense systems, tactics, and operations; technical intelligence; nuclear weapons employment; computerized wargames; anti-radiation missile countermeasures; and military systems requirements.

Bearden obtained a Master of Science degree in nuclear engineering from the Georgia Institute of Technology and a Bachelor of Science degree in Mathematics from Northeast Louisiana University. He is a graduate of the U.S. Army Command and General Staff College.

When Fer De Lance was originally written, Tom was a member of Mensa, Society for the Investigation of the Unexplained, International Tesla Society, American Association for the Advancement of Science, Association of American Physics Teachers, the Air Force Association, the Association of the U.S. Army, the American Nuclear Society, and the American Defense Preparedness Association. He is currently the Director of the Association of Distinguished American Scientists (ADAS), Fellow Emeritus of the Alpha Foundation's Institute for Advanced Study, and is CEO of CTEC, Inc.

In private life, Tom has two sons and two daughters, and lives in Huntsville, Alabama with his wife, Doris.

"...In 1999, the Earth's first strategic sub-space war was silently fought and won..."

ISBN 0-9725146-1-9

Sweating done by red_gonzo.

Note: sometimes formatting of the text may be a little fuzzy. It's all because the OCR process didn't go as smoothly as I expected. Also there may be some errors inside text so be vigilant. In any case share this book, send emails to people about knowledge contained in it. Since this book talks about the most terrifying weapons present today the information in it is even more of value. But knowing an old saying »the knife cuts both ways« one can also use the same knowledge in order to heal ourselves since it seems that our body already does it using the physics described inside. Hopefully the latter will prove to be the most useful way to use this old but forgotten / supressed knowledge.

The contents include the 2002 update and the older 1986 briefing with slides.

TABLE OF CONTENTS

2002 OVERVIEW AND BACKGROUND....4
Mad Scramble of Soviet Science After the End of WWII....5
One Institute Had 2,000 PhDs and a Full Support Staff....7
Situation in the Early 1950s....8
1963 Deployment and Immediate Use of Scalar Interferometers....11
An Example of Russian Technology Astonishing Western Scientists....12
Softening of Metal at a Distance Was One Effect Used Against the Challenger 13
Energetics: Three Branches and a Strategic Deception Plan....14
Strategic Attacks Scheduled and Why We Were Not Destroyed....15
Attempts to Alert the Nation....18
The Responses....20
Effective Survival Treatment of Mass Casualties Could Be Developed....20
The Official Silence Was Deafening....22
The Long Dry Spell in Correcting Electrodynamics May Be Slowly Ending... 24
Engineerable Unified Field Theory Is Now Clearly Appearing....24
Examples of Some Major Non Sequiturs in Conventional Electrodynamics 25
Wide Confusion of Cause and Effect....26
CSRs: Engineering the Unobserved Causal Side To Create Functional Systems 27
Making the First CSR is Extremely Difficult; Making a Million Copies Is Easy 28
In 1999 The KGB Deployed Massive Numbers of CSRs for a Strategic Attack29
How the Asymmetrically Deployed Strategic Attack Was Stopped in Its Tracks 31
The Mostly-Ignored Time-Energy Interaction....32
Development of Threats and Scheduled Attacks Aborted....35
Live Destructive Tests Over and Near the U.S. Have Continued....38
The Scientific Basis For Energetics Weapons Is Established....39
Our Situation Here In the U.S. Is Precarious....39

The Dominant Weapons Are Quantum Potential Weapons.....41
Cellular Time Reversal: Revolutionary Healing by a Team of French Scientists 43
Becker's Study of the Cellular Regeneration System.....46
Need to Correct and Extend Classical Electrodynamics.....48
The Situation Is Serious.....48
A New Manhattan Project Is Warranted.....49
2002 ENERGETICS WEAPONS THREAT TO THE U.S.....51
The U.S. Narrowly Escaped Energetics Destruction Twice in 1997.....51
Initiation of the Brazilian Energetics Weapon Program.....52
Related Phenomena.....54
Stalin *Personally* Initiated the Soviet Energetics Program with the Greatest Urgency.....55
A Great Technical Breakthrough in Physics Can Always be Had in Four Years 55
A Typical Example: The Suppression of Cold Fusion.....57
Revolutionary New Processes Are Hidden in the Cold Fusion Experimental Results.....59
Stalin's Dictatorial Impact on Soviet Scientific Management's Response.....62
Our Own Science Community's Progress During These Decades.....63
U.S. Scientists Have Committed Monstrous Crimes and Gone Unpunished.....66
Energetics: New Principles of Physics and How the Soviets Found Them.....67
Longitudinal EM Wave Interferometry Energetics Was Almost Immediately Uncovered.....68
By 1950 Russian Energetics Was Off and Running.....69
Deployment of the Soviet Energetics Weapons and Their Quick Use.....71
Why the Soviets Could Continue to Attack and Kill U.S. Targets with Impunity 73
The Science Behind the Soviet Energetics Weapons.....77
The Importance of Scalar Photons and Time-Density Waves.....80
Psychoenergetics: Engineering the Mind-Matter Interaction by Engineering Mind.....81
Quantum Potential Weapons Are Utilized in All Three Energetics Branches... 84

The Importance of Longitudinal EM Waves....84
Energy, Wave Energy, and Wave Speed are All Dramatically Altered....86
A Process for Creating Longitudinal and Time-Density EM Waves....87
Quantum Potentials and Multiply Connected Spacetime....87
Need for Caution with QPs Used Against Biological Organisms....89
A Hypothetical Example....89
The QP Weapon Is a Superb Energy Amplifier "For Free"....91
Other Novel Uses of QP Weapons....93
The U.S. Narrowly Escaped Destruction Twice in 1997 Alone....95
Purpose of the Novel Attack on Captain Button....96
Rogue Japanese (Yakuza and Aum Shinrikyo) Have a Role....100
Inducing the Gulf War Disease....100
40-Years of Russian Induction of Diseases In U.S. Embassy Personnel....104
Western Electrodynamics Is in Sad Shape....105
Toward a Deeper Electrodynamics....108
Time Is Highly Compacted Energy....109
The New Transduction Model Explains the Cold Fusion Results and Mechanisms....109
Why There Is a Time Delay in the Onset of Cold Fusion Phenomena....111
The Early Soviet Longitudinal Wave Interferometers....112
Khrushchev Killed the Thresher to Prevent His Own Dismissal....112
Khrushchev Demonstrated the Powerful Blast Capability of Strategic Interferometry....114
Weather Engineering Over North America....115
Earthquakes to Order....117
Readying the Weapons for the 1985 Readiness Demonstration Tests....119
Meeting the 1985 Schedule for Readiness....121
KGB Crews Regularly Practiced Against U.S. Rocket Launches from Cape Canaveral....122
Kill of the Arrow DC: Practice Turned into Performance....123
The Arrow Pilot Sensed the Lack of Power, But the Aircraft Was Immediately Hit....124

Elements of the U.S. Government Deliberately Suppressed Vital Evidence... 125

Other Direct Energetics Signatures on the Arrow DC-8 126

Other Acts of War Completed the Milestone 127

Kill of the Titan Missile Over Vandenberg Air Force Base 128

Dead-Man Fuzing and Outside Assistance Deterred a Full Strategic Attack in 1986 129

What Really Happened in the Chernobyl Disaster 129

The High Side Risk Factor 131

The Low Side Risk Factor 132

Consequences of Not Taking Counterfire Action 132

My Recommendation to the Counterfire Group 132

The Group Fired and Took Out a Transmitter 133

Results at the Transmitter and at Chernobyl 133

Kill of the Challenger Included Use of Metal-Softening 135

Cold Molding: An Epilog to the Metal-Softening Donnybrook 136

Additional Update from Year 1998 to Year 2,000 Has Been Given 137

There is Also a Severe Bioenergetics (EM Biological Warfare) Threat 139

National Institute of Health Reaction 141

How the New Revolution in Medical Healing Works 142

What the French Researchers Showed 145

How the Regeneration Mechanism Was Finally Deciphered 147

Cellular and Body Rejuvenation are Possible, Once the Technology is Developed 149

How Many Americans Could Be Saved? 149

There Are No Resistant Strains to the New Technology, and There Cannot Be Any 150

Results of the Priore' Treatments Are Well-Documented and Independently Supported 151

The Present Threat Is Urgent, and Our Strategic Destruction is Still at Issue . 151

Desperately Needed Defensive Capabilities Can be Provided by a QP Solution 152

In Conclusion 153

1986 FER DE LANCE INTRODUCTION & BRIEFING ON SOVIET SCALAR ELECTROMAGNETIC WEAPONS 157
Scalar Electromagnetics is Electrogravitation 157
Fer-de-Lance 157
Energetics and Directed-Energy Weapons (DEWs) 158
The Soviets Use a Deception Plan 158
Destruction of the Challenger in January 1986 161
Technological Surprise and a New Hiroshima 164
We Have Given Up Defense in the Larger Sense 164
1986—THE BRIEFING 167
Slide 001: Characterization 169
Slide 002: Outline 171
Slide 003: Elements of the Emerging Theory 172
Slide 004: Three Kinds of Electromagnetics 174
Slide 005: Bohm-Aharonov Effect 176
Slide 006: A-Field is Real 177
Slide 007: Quantum Non-Locality 179
Slide 008: Vector Mathematics has a Fundamental Problem 180
Slide 009: The Zero-Vector Axiom 182
Slide 010: Are These Systems Equal? 184
Slide 011: Infolded Systems are Excluded by Physics 185
Slide 012: Kaluza Geometry 186
Slide 013: A Potential is a Change in the Stress of Vacuum 187
Slide 014: Type of Potential Depends on the Particle(s) 190
Slide 015: A Potential Extends to Infinity & Involves the Entire Universe 192
Slide 016: A Natural Potential 194
Slide 017: An Artificial Potential 195
Slide 018: Producing an Artificial Potential 197
Slide 019: If No Observable Mass Flows: 199
Slide 020: Gravitational Potential: A Conglomerate of Stress Types 201
Slide 021: What Gravitational Field Is 202

Slide 022: EM Force Fields are Releases of Gravitational Potential via Observable Mass Flows....204

Slide 021: Scalar O-Wave Production....206

Slide 024: Scalar Electromagnetics....208

Slide 025: Rogers' Undersea & Underground Communications Systems....211

Slide 026: How does the Rogers System Work?....213

Slide 027: Scalar EM Waves are Emitted & Absorbed by the Nucleus....214

Slide 028: Nuclei of the Universe Continually Exchange Scalar EM Waves.. 216

Slide 029: Converting EM Field Energy to G-Field Energy & Vice-Versa 217

Slide 030: Normal EM Bleeds-Off G-Field....219

Slide 031: Scalar EM Forces 4-D G-Field....220

Slide 032: Detection of Electro-Gravitation....221

Slide 033: Scalar Wave Detector....226

Slide 034: Scalar Resonance....229

Slide 035: Scalar Resonance....231

Slide 036: Scalar Resonance Currents....234

Slide 037: Transverse Wave Interference....235

Slide 038: Transverse Wave Interference....236

Slide 039: Creating Energy at a Distance....239

Slide 040: Exothermic Mode (Scalar Interferometer)....240

Slide 041: Endothermic Mode (Scalar Interferometer)....242

Slide 042: Tesla's "Big Eye" for Remote Viewing....244

Slide 043: Site of Mystery Cloud....247

Slide 044: Mushroom Cloud from Sea off Japan near Russian Test Area....248

Slide 045: Mushroom Cloud Rising from Sea....249

Slide 046: Mushroom Cloud from Sea off Japan....251

Slide 047: Not a Known Natural Phenomenon....252

Slide 048: Explosive Events seen on Soviet Island....253

Slide 049: Explosive Events seen on Soviet Island....255

Slide 050: Explosive Events seen on Soviet Islands....256

Slide 051: Creating a Spatial 0-Field Pattern....257

Slide 052: Tesla Shield 258
Slide 053: Expanding Dome-like Phenomenon 260
Slide 054: Hemisphere & Globes 1977 261
Slide 055: Saryshagan Direction, September 1979 263
Slide 056: Continuous Tesla EMP Globe 266
Slide 057: Mysterious Light over North Pacific 268
Slide 058: White Sphere seen in North Atlantic 1976 269
Slide 059: Continuous Tesla Fireball 270
Slide 060: Terminal ABM System 272
Slide 062: ABM Defenses 275
Slide 063: Network of Virtual Transmitters 278
Slide 064: Network of Virtual Transmitters 281
Slide 065: Launch Phase ABM System 285
Slide 066: Soviet Command & Control Concept 287
Slide 067: Launch Phase ABM System (Anti-SLBM) 290
Slide 068: Detecting & Marking Missile Launch 291
Slide 069: Destroying the Launched Missiles 292
Slide 070: Shift to Anti-Sub Mode 293
Slide 071: Shifting to Earthquake Mode 295
Slide 072: Suppression Attack—MARVs (without defenses) 297
Slide 073: Suppression Attack—MARVs (with defenses) 298
Slide 074: Response to Counterforce Strike with No Defense 300
Slide 075: Response to Counterforce Strike with Defense 302
Slide 076: Clear Communications 305
Slide 077: Unique Communications 306
Slide 078: Mine Countermeasures—Orthodox System 308
Slide 079: Mine Countermeasures—Scalar EM Systems 309
Slide 080: Scalar Anti-Personnel Weapon 311
Slide 081 Afghanistan 312
Slide 082: Scalar Anti-Tank Weapon 314

Slide 083: Scalar Anti-Aircraft Weapon....315
Slide 084: Scalar Anti-Aircraft Weapon....316
Slide 085: An Effective Penetration Aid....318
Slide 086: Unique Capabilities: ATM/AD/AARTY....319
Slide 087: Unique Capabilities....320
Slide 088: Unique Capabilities....321
Slide 089: Unique Capabilities....322
Slide 090: Unique Capabilities: Penetrate Shielding....323
Slide 091: Multi-Purpose Weaponry....324
Slide 092: Multi-Purpose Weaponry....325
Slide 093: Multi-Purpose Weaponry....326
Slide 094: Unique Capabilities: Heat Extraction....327
Slide 095: Unique Capabilities: Cold Explosions....328
Slide 096: The Transmitter is the Major Weapon....330
Slide 097: Star Wars—The Final Frontier?....331
Slide 098: Comparison of EM Concepts (Chart)....333
Slide 099: Comparison of EM Concepts (Chart)....334
Slide 100: Comparison of EM Concepts (Chart)....335
Slide 101: Summary (1)....336
Slide 102: Summary (1)....337
Slide 103: Summary (2)....338
Slide 104: Summary (3)....339
Slide 105: Summary (4)....340
Slide 106: Soviet Defense Against Missiles....341
Slide 107: Surprise by Using Secret Weapons....342
Slide 108: Something Russia Doesn't Want the U.S. to Know....343
1986 SLIDE REFERENCES....344
1986 ADDITIONAL SLIDE NOTES....345
1986 APPENDIX I....371
SOME IMPORTANT INDICATORS AND DESTRUCTIVE TESTING.. 373

INDICATORS AND SUCH.....373
FINAL DRESS REHEARSAL BEFORE THE BIG SHOW.....384
THE SHOW BEGINS.....400
MORE FRIGHTENING THAN THE MIND OF MAN HAS EVER IMAGINED.....403
SCALAR EM INOCULATION AND ITS IMPLICATIONS.....408
1986 APPENDIX II.....413
COMPUTER WORMS AND VIRUSES, AND THE IMPACT OF SCALAR EM.....415
LARCENISTS.....416
ARSONISTS.....418
TERRORISM.....419
ANTIBODIES.....419
NATIONAL DEFENSE.....419
THE WEST'S VULNERABILITY.....421
CORE WARS REVISITED.....424
A COMMERCIAL WORM.....424
ADAM OSBORNE'S WARNING.....425
"NOW YOU'VE DONE IT!".....426
TEEN CHALLENGE.....427
"PEOPLE ARE BASICALLY GOOD".....429
FEDERAL FUNDS.....430
SCALAR EM INNOCULATION AND ITS IMPLICATIONS.....431
1986 APPENDIX III.....437
CONTINUING THE SCENARIO.....439
2002 TABLE OF FIGURES.....443
2002 ENDNOTES.....447

The Russians have sustained the largest weapons development program ever launched by any nation, and they have kept it effectively hidden from prying Western eyes. I have called this program "Fer-de-Lance," after the deadly South American pit viper of that name.

The dreaded fer-de-lance is a snake of great agility and lethal effect. It often ambushes its hapless prey, striking unexpectedly and without warning. Its first sudden strike is usually lethal to its victim, which promptly expires in writhing agony. Since the Soviet development of scalar EM weapons has been designed for the same purpose, the name seems appropriate.

2002

Overview[1] and Background of the Energetics[2] Weapons Threat

T. *E.* Bearden, Ph.D.
LTC, U.S. Army (Retired)
Director, ADAS

September 15, 1998
Update

Note: We have placed this update as a section in front of the original paper. This leads to some redundancy, which remains to insure clarity.

[1] This is an updated and slightly sanitized version of a paper originally prepared for and transmitted to selected Senators and Congresspersons.
[2] The present name of the old KGB is the Federal Security Services. The leopard's spots remain the same, regardless of its new name—at least for a die-hard old communist faction of it. Presently the helm of Russia has been turned over to a new Premier who has an extensive KGB background. However, Putin has chosen to differ from the traditional KGB outlook and seems intent on becoming America's trusted cheap oil partner and supplier, in a bid to help his economy and pump much-needed funds into it. His friendship with George Bush may be one of the turning **points** of this new century He at least has achieved sufficient control over much of the KGB to get on with trying to solve his economic problems and break the old "die-hard communist" mold a **bit**

2002 OVERVIEW AND BACKGROUND

For some time, Russia and several other nations have possessed highly advanced "extended-electromagnetics" *(energetics)* weapons of a very novel kind, using a dramatically extended electrodynamics theory {1}. To comprehend these weapons requires a combination of non-Abelian electrodynamics in at least the 0(3) gauge symmetry {2}, general relativity, Bohm's interpretation of quantum mechanics {3}, and the use of time-domain (scalar) energy, fields, and potentials to directly enter distant 3-spatial points without propagating energy through 3-space. It also requires correcting many of the serious errors in classical electrodynamics. Probably the most elegant and applicable extant model to deal with these phenomena and weapons is Sachs' {4} unification of general relativity and extended electrodynamics, particularly as implemented in O(3) electrodynamics. O(3) allows direct engineering by modified EM means.

Most of these energetics weapons are more advanced than what has previously been known to the U.S. military, intelligence, and scientific communities, although parts of the communities are finally making real progress in understanding such "revolutionary" areas. For example, every major weapons lab on earth seems to have discovered longitudinal EM waves and longitudinal EM wave weapons—the scalar interferometry we have been discussing for so long {5}. A major contributing factor holding back U.S. catch-up is that the flawed foundations of Maxwell's 1865 theory {6} have not been changed by the Western scientific community.

Historically, the scientific community exerts resistance to substantial innovation. Often 40 to 50 years are required to do what can be done with a concerted effort in four years. The Manhattan Project in WW II is a notable example of where the scientific community made a maximum effort and did a difficult job in four years. Also, "skunk works" efforts continue to be utilized for very rapid development when something really advanced is to be done and done quickly.

With the U.S. substantially behind in these "new" strategic superweapons, a new Manhattan Project would appear to be advisable and warranted. There are at least some indications that such may actually be going on at last. We hope the indications are true.

A sobering development that occurred early this year (2002) was China's deployment of both quantum potential (QP) weapons {7} and *negative energy* electromagnetic pulse (EMP) weapons (a type which we originally called the *MindSnapper* to disguise its true nature) {8,9}. The QP weapons are the dominant weapons on Earth today, followed closely by negative energy EMP weapons in second place. We have not been able to ascertain exactly how many nations have the negative energy EMP weapons, but it is at least five at the time of this writing.

The U.S. is still well behind in the use of special "engines" (special curvatures of spacetime and their dynamics, but achieved with higher group symmetry electrodynamics) for directly engineering the mind itself, and for producing *nonmaterial* robot systems made totally of such engines—"causal system robots" which we will mention later. Several of the Western nations do accomplish work in the mind control area, but use a sort of "brute force" method oriented on frequency and frequency changes, etc. where the true active mode is the unsuspected transformations of the U(1) electrodynamics to a higher group symmetry unified field theory electrodynamics, accomplished by the human body tissues and structures themselves.

Western scientists have not realized that all EM energy in 3-space actually comes from the time domain *to* each point in 3-space and *returns from* that 3-spacc point back to the time domain.[3] Hence "propagation" of 3-space EM energy is actually the propagation of a "circulation" of EM energy between the time domain and 3-space, involving each 3-space point presently said to be "occupied" by the energy. Unfortunately, Western science is still unaware that *no observable exists in time,* a priori, since by definition it has no extension in the time dimension at all {10}. Instead, an observable *continually recurs* as a frozen 3-space snapshot of an ongoing dynamic 4-space interaction, due to the continual repetition of the observation process which is the application of a *d/dt* operator to the ongoing 4-interaction. Hence, we "see" physical reality (3-space reality) similarly to the way we view a "motion picture" series of successive frozen frames. The major result of this flaw (mistaking a 3-space observable as a 4-spatial cause) in Western science is that Western science still extensively substitutes effect for cause—e.g., in the notion of a separate 3-force acting on a separate 3-mass. No such situation exists in nature, and nothing "moves" or "changes" in 3-space alone. For an entity to exist in time, it requires at least 4-space because a time length is required. Nonetheless, the West is making progress. If some of its scientific dogma can be overcome, the younger scientists will break free and readily do the job required for the defense of this nation.

Mad Scramble of Soviet Science After the End of WWII

During WW II the West produced a great technical breakthrough and obtained the atom bomb as a decisive new weapon. While speeding up his own atomic

[3] Specifically, energy comes from the time domain to the negative 3-charge, thence to the positive 3-charge, thence back to the time domain in a *4-circulation* of EM energy. With extra energy *appearing* and present at the negative charge due to entering 3-space there, and with less energy present at the positive charge due to the energy *leaving* 3-space there, there is a delta in energy density (pressure) across a dipolarity, oriented from negative to positive. That is the exact basis of the T. T. Brown unilateral thrust force, and the force used in the "lifters" experiments today. To calculate the **force, th**e long-unaccounted Heaviside energy flow component must also be accounted— not just the weak Poynting flow component.

weapons program[4] as a result, Stalin also ordered his own Academy of Sciences to quickly derive the next great new technical breakthrough, and he held the top scientific leaders themselves personally accountable to him, to see that it was done at all speed (Figure 1).

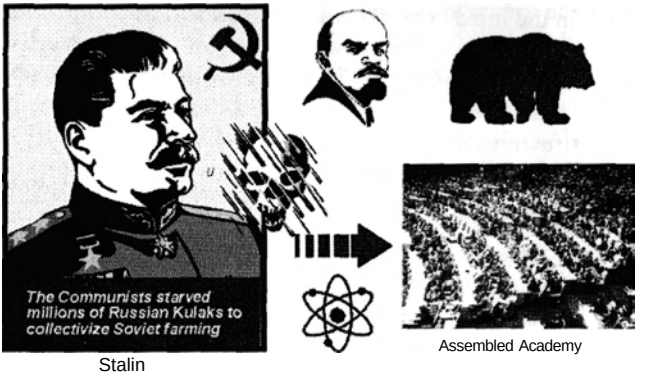

Stalin

Assembled Academy

"The destiny of communism has been frustrated by the U S development of the atomic bomb That is not the last great technical breakthrough The next one WILL be Soviet! You will provide me with that great new technical breakthrough at all speed, or I will have your heads Do I make myself dear, comrades?"

Figure 1 Stalin's dictum removed any resistance from his scientific community.

Simply put, Stalin placed the heads of the Soviet scientific leaders on the chopping block, since he was an absolute dictator and often killed or imprisoned those who opposed his instructions. To survive, the leaders of the Soviet Academy had to demand the utmost of their subordinates, because they themselves had to report their progress or lack of it to a dictator who would and did take swift action if they did not produce results. Thus, Stalin simply bypassed the usual scientific posturing and protracted delay so typical of our Western scientific bureaucracies.[5] If the Directors of the Russian scientific

[4] At the Potsdam conference, after Truman informed him the U.S. had just exploded a great new explosive weapon, Stalin secretly called the head of his nuclear weapons program and ordered him to accelerate the Soviet nuclear weapons program.

[5] As a simple example, the U.S. National Academy of Sciences, National Research Council, National Academy of Engineering, and the National Science Foundation—and all the electrical engineering departments at all the universities in the U.S.—have not yet recognized that all EM circuits and systems are in fact powered by EM energy extracted directly from the seething local vacuum by the source charges and dipoles in the circuit or system, and particularly by the broken symmetry of the source dipole in the generator or other primary power source. They also have not yet solved the more than a century-old source charge problem, but continue to support engineering models assuming that the charge *freely creates* real EM energy out of nothing at all, in total violation of the conservation of energy law, and pours that created energy out, freely and continuously, to establish its associated fields and potentials and their energy reaching across the universe. The agencies thus unwittingly advocate perpetual motion machines on a scale unparalleled in history. They continue to support an electrical engineering model and a classical

community dragged their feet and did not push his desired program to the limit, their heads would roll—and some did.

As a result of Stalin's forceful intervention, the entire Soviet scientific community was galvanized into a most intensive review of all of physics. The scientists desperately sought to quickly uncover potential breakthrough areas that could be developed into the great leap forward that Stalin demanded. They had to have progress, and they had to have it rapidly.

One Institute Had 2,000 PhDs and a Full Support Staff

Large review institutions were quickly set up, staffed with the best Soviet scientists and support translators and teams. One such search institute involved some 2,000 Ph.Ds along with their support staffs. Soviet ships brought in shiploads of copies of all the scientific journals of the West—from the beginning—, and they were reviewed paper-by-paper, page-by-page. Anything novel and implying new scientific possibilities, or anything that had not been adequately followed up, was laid aside in a "select" pile for further review and decision by the best Soviet theoreticians available {11}.

One gets a new physics by discovering shortcomings and flaws in the old one. This intensive Russian search almost immediately uncovered the deep flaws in classical electrodynamics—flaws that have been propagated throughout most other branches of science. Classical electrodynamics (and electrical engineering) is particularly beset by hoary flawed foundations problems, dating from at least 1865. As an example, the equations did and still do assume a material ether, and they have since the beginning! Not a single equation was changed when the

electrodynamics model which *do not even model* the active vacuum and its exchange with every charge, much less a *broken symmetry* in that exchange. So none of those agencies even knows what powers an electrical circuit, 45 years after the proof of broken symmetry was accomplished by Wu and her colleagues in 1957, and the Nobel Prize was then quickly awarded to Lee and Yang *the very same year* (1957) for predicting that broken symmetry revolution. In the modern view a charge is a dipolarity, when its vacuum interaction is considered. As a dipolarity, every charge exhibits the proven asymmetry of opposite charges, in its interaction with the active vacuum. The charge thus extracts and outpours real observable EM energy from the vacuum, freely and continuously, and it exhibits COP = oo. Those agencies—along with nearly all the rest of the U.S. scientific community—still naively assume that a COP>1.0 EM system (i) is impossible, (ii) is against the laws of nature, and (iii) is a forbidden perpetual motion machine. In nearly half a century since the discovery of the broken symmetry of opposite charges, those agencies have yet to apply that finding to electrical engineering and engineering curricula. Frankly, since they have dragged their collective feet for nearly a half century on extracting EM energy from the vacuum, what is needed is a Stalin to put his iron boot firmly to their posteriors and call their attention to it in language they cannot ignore. *The pollution of the planet for energy purposes and the imminent oil and energy wars that will ravish the earth are directly due (i) to this inexplicable dogma upheld by the scientific community and (ii) to the community's continued falsehoods equating EM COP>1.0 to perpetual motion machines.* The continuing failure to **incorporate** the **active vactnun** exchange—and its broken symmetry—into electrical engineering and classical **electromagetics a**lso poses an unacceptable threat to the continued survival of this nation.

Michelson-Morley experiments in the 1880s destroyed the material ether itself. The classical EM model also assumes a flat local spacetime (falsified by general relativity since 1915) and an inert vacuum (falsified in particle physics for several decades). It still assumes the same EM field in mass-free space as exists in mass—a non sequitur of major impact. Just to make the Maxwell-Heaviside equations easier to solve and avoid numerical methods, the *totally arbitrary* Lorentz symmetrical regauging[6] discards all EM systems far from equilibrium with their active vacuum environment. In fact, there is no "active vacuum environment" in the model, much less a broken symmetry in that exchange. Yet that very broken symmetry is exhibited by every charge and dipole {12}, and thus by every EM circuit and system. That asymmetry is involved in the continuously increasing giant negentropy poured out by every charge in the universe, thereby generating all EM fields and potentials and their energy, eventually reaching even across the universe, *and with perfect macroscopic order and time duration as long as one wishes*. Indeed, all electrodynamics is in total violation of the second law of thermodynamics, to any *macroscopic* size level and time duration desired.[7]

The terribly flawed electrodynamics model was completely overhauled by the Russian scientists *very* quickly, and the work was accomplished by some of the best nonlinear scientists in the world. Already present at the time were many things available to assist in dramatically extending {13} the hoary 1865 Maxwellian electrodynamics {6}. Gauge field theory was available since the turn of the 20th century, and the top theoreticians could readily see that something more than Abelian electrodynamics was firmly required in particle physics. The Yang-Mills {14} theory met that need in 1954 by originating non-Abelian gauge theory.

Situation in the Early 1950s

By 1950, Stalin's scientists had the beginnings of what they dubbed "energetics" {15,16}, which we would dub an "engineerable unified field theory" {17,18,19}. Longitudinal EM waves were primary {20,5} in that more

[6] Actually a version of this symmetrical regauging was first performed by Ludwig Valentin Lorenz, "Ueberr die Identitat der Schwingungen des Lichts mit den elektrischen Stromen," *Ann. Phys. Chem.*, Vol. 131, 1867, p. 243-263—only two years after Maxwell published his seminal theory in 1865. The paper is also published in English, as Ludwig Valentin Lorenz, "On the identity of the vibrations of light with electrical currents," *Phil. Mag.*, Ser. 4, Vol. 34, 1867, p. 287-301. Unfortunately not much attention was paid to Lorenz's effort, since he independently derived electrodynamics. Decades later, when H. A. Lorentz also published symmetrical regauging of the Maxwell-Heaviside equations, he was given credit for it with no further mention of Lorenz. A proper historical summary of this has been given by J. D. Jackson and L. B. Okun, "Historical roots of gauge invariance," *Rev. Mod. Phys.*, Vol. 73, July 2001, p. 663-680. This is an excellent coverage of the history of who actually did what and when, and who got credit for it.

[7] This dramatically extends the size regions (microscopic through colloidal) and the time durations (momentary to two seconds) where the second law is known and proven not to necessarily apply.

fundamental approach. By the mid 1950s, one can pick out of the open literature {21} increasing incidences of prototype Russian energetics weapon testing around the world. In 1960, Khrushchev {22} spoke obliquely of these "fantastic new weapons" that were "just within the portfolio of the Soviet scientists," so to speak. Commercial aircraft sightings (Figure 2) and the reports of their captains and crews are also a particularly significant source of sightings of Russian energetics weapons tests, as are sightings by ships' crews (Figure 3) and ground observers (Figure 4).

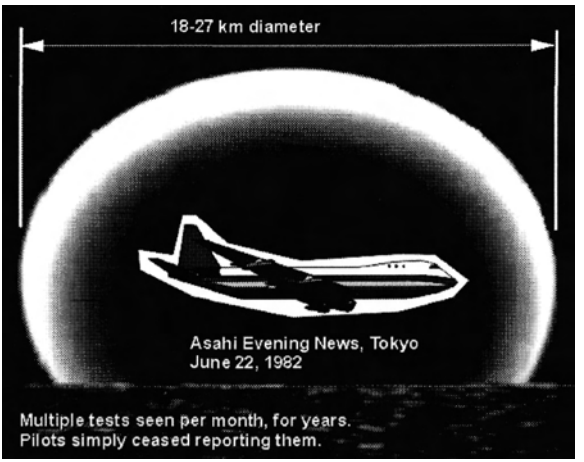

Figure 2 Typical shield test, northern route to Japan, seen by passing airliner.

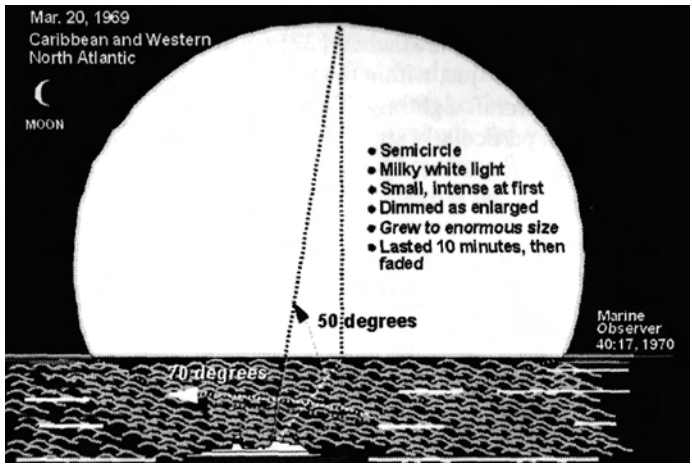

Figure 3 Giant missile shield test seen by passing ship's crew.

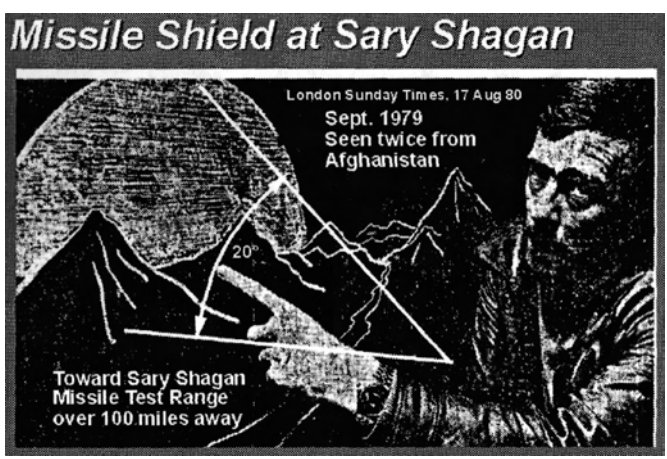

Figure 4 Nick Downie's sighting from the ground of distant Soviet missile shield tests.

1963 Deployment and Immediate Use of Scalar Interferometers

The first huge scalar potential interferometers {23,24} of strategic range and power (Figure 5) were deployed by the Soviets in 1963, and one was used to kill the U.S.S. Thresher nuclear attack submarine (Figure 6), leaving clearly recognizable signatures {25}.

Since 1963, the Russians have had the equivalent of more than seven additional Manhattan Projects (using the Russian 5-year program instead of the 4-year Manhattan Project), back-to-back, in development of energetics weaponry. The energetics weapons have never been given to the regular Russian forces. Instead, all research, production, siting, manning, and employment are by the KGB and still under ruthless KGB control by die-hard communist factions {26}.

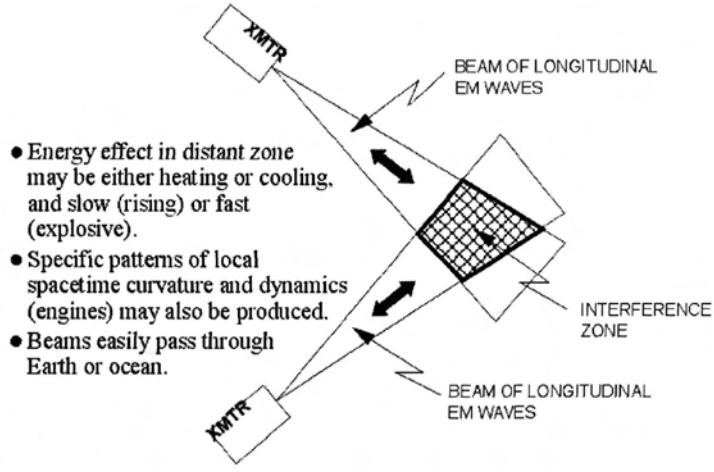

Figure 5 Scalar (longitudinal EM wave) interferometer.

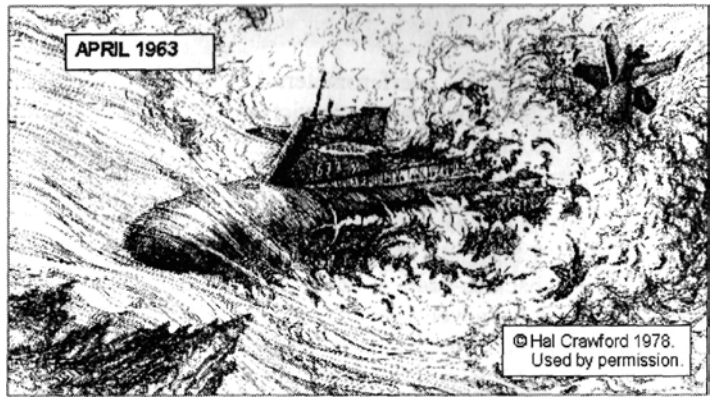

Figure 6 Kill of the U.S.S. Thresher. With her controls jammed, the hull of the doomed submarine implodes when she reaches crush depth

An Example of Russian Technology Astonishing Western Scientists

Some years ago, coordinating with a Western but non-US aerospace firm, I furnished the firm with the names and addresses of some Russian scientists in Moscow, since it was clear from their internet site that the scientists were on the fringes of the KGB energetics weapons program. An excellent European engineer fluent in Russian was sent in, several times. Several unusual things were demonstrated to him, including (i) transmitting enormous energy down a very thin wire, and (ii) cold molding, or turning metal into a liquid at room temperature, pouring it into a mold, and then letting it sit and harden. All without heating.

The engineer also closely questioned the Russian scientists about Russian . energetics weaponry, a subject the scientists were most reluctant to discuss. Finally they admitted the energetics weapons existed, and they actually obtained a meeting between the engineer and the KGB General who had directed the Soviet energetics weapon program for more than 20 years. In the meeting, the General coldly admitted the weapons, stated that "Of course you are not going to be allowed to see *those!"* and confirmed that somehow the Russians obtained everything the present author writes, as soon as he writes it {27}.

The engineer then brought the Russian scientists to his aerospace firm in that Western nation, where the scientists demonstrated cold molding to assembled scientists and some U.S. personnel. I forwarded a written explanation to the Western scientists of how the cold molding was performed technically. Later, on calling the engineer again, I discovered that the foreign authorities of that country had suddenly classified everything over there, and the engineer could no

longer even talk to me without filing a Foreign Intelligence Contact Report. My own part in all this was completely open-source, pro bono, and I had already written of it openly and publicly.

Softening of Metal at a Distance Was One Effect Used Against the Challenger

At any rate, earlier I had openly advanced (and printed) the same mechanism, since it was the metal softening mechanism used by the KGB to kill the U.S. Challenger spacecraft in 1986. Publicly I had been resoundingly called a lunatic for advancing such a "preposterous" thesis. Nonetheless, metal softening by a distant LWI (longitudinal wave interferometer) was definitely utilized as part of the kill of the Challenger, as a close colleague here in the U.S. proved *experimentally*, detecting and demonstrating that metal-softening Russian signal prior to the kill of the Challenger. He amplified the signal and demonstrated on the bench its nearly instant softening of nails, rendering the nails momentarily as limp as wet noodles (Figure 7). Nails from the same box, not exposed to the signal, remained hard and could be hammered into a board. Not so the nails from the box that were exposed to the amplified Soviet signal! Those nails folded up like a wet noodle when tapped with a hammer, and could not be driven into a board.

Working unpaid with the foreign scientists, we had in fact obtained the "smoking gun" proving that this cold molding capability rigorously existed in the KGB inventory. Further, it had existed so long that the KGB had essentially *declassified* it so that the civilian Russian scientists seeking employment funds from the West could utilize it.

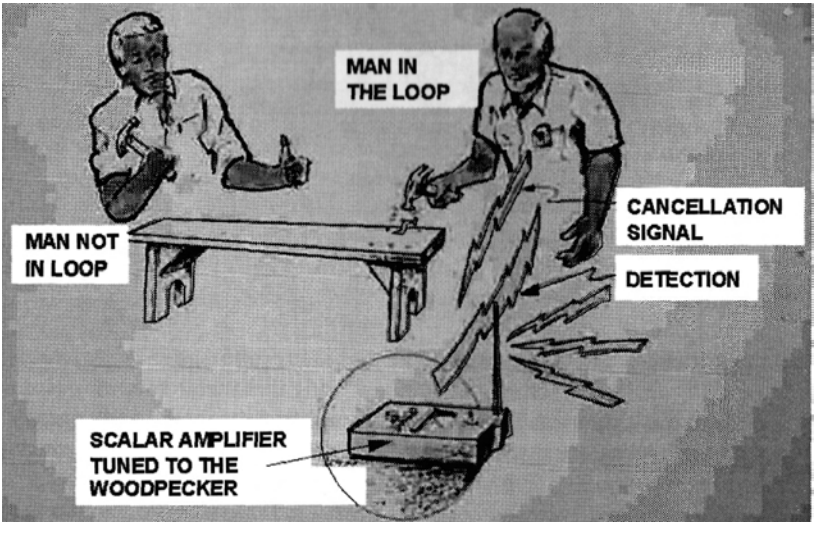

Figure 7 Proof of metal-softening signal: Golden softens nails with amplified Woodpecker signal.

Energetics: Three Branches and a Strategic Deception Plan

The *energetics* weapons use exotic polarizations of EM waves, quantum potentials, and the "infolded" LW electrodynamics (both scalar and longitudinal photons) inside and comprising every "ordinary" transverse EM field and wave. The KGB energetic weapons are categorized (Figure 8) according to what they are targeted against:

(1) against inert matter, fields, and potentials etc., that branch of weapons is called by the same name, *energetics* weapons.

(2) Against living tissue, bodies, cells, biofields, biopotentials, etc., they are known as *bioenergetic* weapons. Disease-induction electrodynamics such as used to irradiate the U.S. Embassy in Moscow are examples of bioenergetic weapons.

(3) Against the mind, thought, memory, behavior, and the mind-body coupling mechanism, they are known as *psychoenergetic* weapons. Particularly in the latter mode, these weapons also use time-polarized (scalar) EM waves and time-polarized (scalar) photons as well {28}.

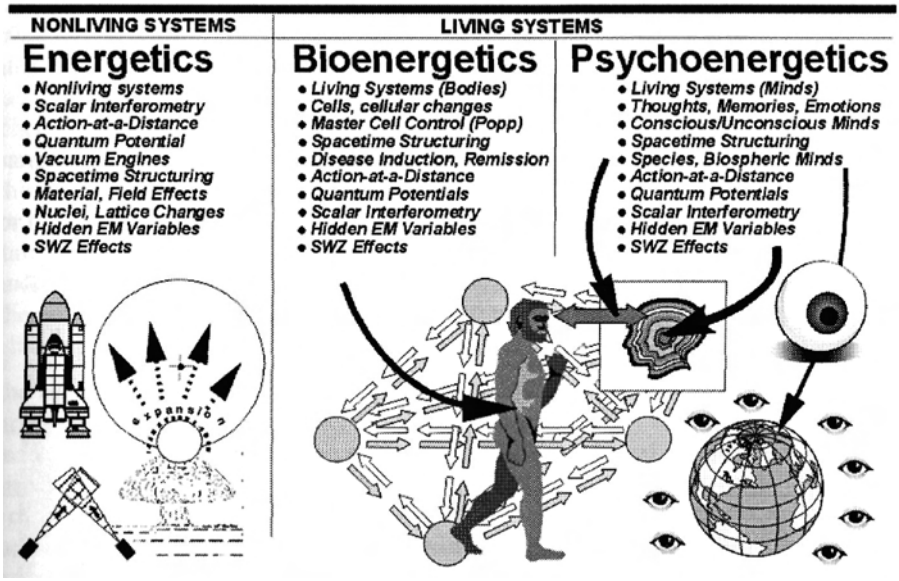

Figure 8 Three branches of Russian energetics weapons.

The KGB also implemented an elaborate and continuing deception plan, as is standard military practice for any great strategic attack plan. The KGB deception plan has been highly successful {29} in keeping the United States convinced that these weapons do not exist, and convinced that the standard strategic nuclear weapons possessed by the West are "leading" and "superior."

Strategic Attacks Scheduled and Why We Were Not Destroyed

Indeed, the West's nuclear weapons are inferior to Russian energetics weapons, particularly to the quantum potential weapons (Figure 9) deployed at the end of 1989 and to the newer "causal system" weapons deployed since the first of 1999, where *functional robot systems* (Figure 10) are made of nonmaterial spacetime curvatures and their dynamics only! In the event of a full strategic Russian energetics strike, an opening strike with quantum potential weapons {30} will dud all nuclear weapons on earth, all nuclear power systems, and all nuclear propulsion systems in about 10 minutes. This takes care of most of the U.S. strategic armament, *within the first 10 minutes.* The publicized strategic weapons of this nation have in my opinion been almost defenseless now for at least a full decade {31,32}, but I also believe that situation may be rapidly changing for the better.

A friendly little foreign nation *does* have such weapons including QP weapons that operate in multiply connected spacetime (MCS). That little nation has been

responsible for our continued survival and has continued to deter the planned KGB strategic energetics strikes upon the West. There are indications (though still not certain) that at least one—and possibly two—other friendly Western nation also possesses such weapons.

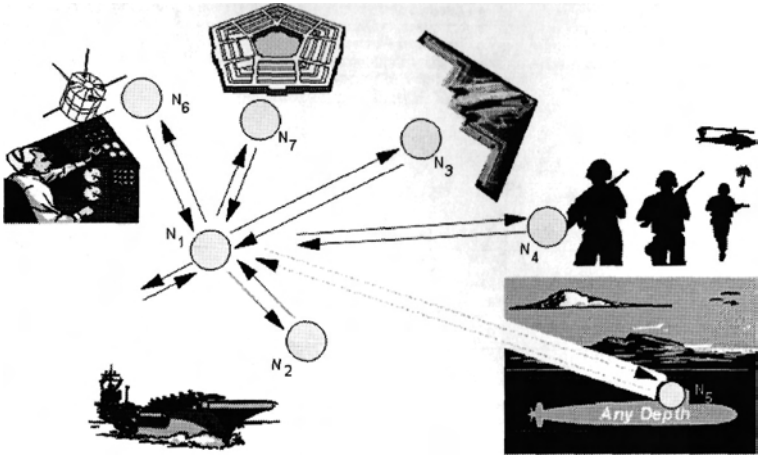

Figure 9 Quantum potential instantly attacking widely separated targets.

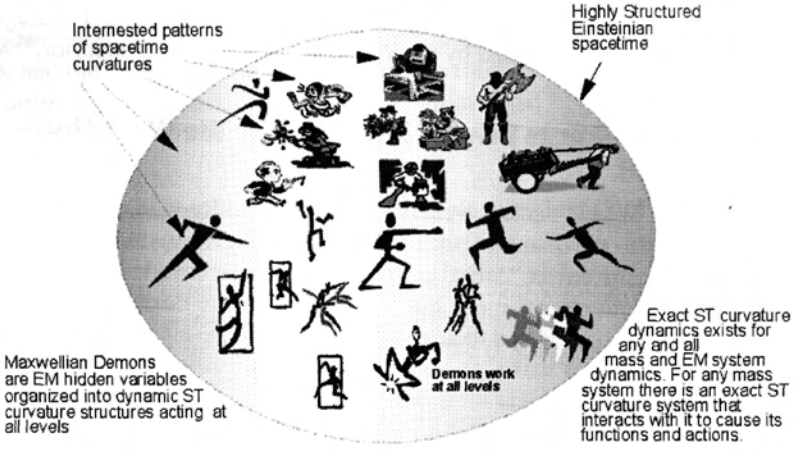

Figure 10 Causal system robots (CSRs). These are sets of ST curvature engines, with functions organized into a single complex weapon system with communication, propagation, weapons effects, and command and control functions incorporated. When the CSR interacts with mass, the mass performs those system functions.

Twice in 1997 alone *we were within days of the scheduled total strategic destruction of the U.S. by die-hard KGB energetic weapons,* with all-out strategic attacks actually scheduled in each case. The first attack was scheduled in latter February but was quickly countered. The attack was immediately rescheduled for May 1. The U.S. intelligence and scientific communities were apparently unaware of what was happening, and still do not believe it. However, as this author previously informed appropriate government agencies a few days prior to the attack scheduled for May 1, 1997, U.S. intelligence agencies certainly intercepted my urgent personal fax directly to the prime minister of the friendly little nation, urgently requesting that the "sane" command and control of the countering MCS/QP weapons be changed to "insane" control and spelling out the compelling reason why it was necessary.

In the insane weapons control mode, the computer periodically (say, every two hours) initiates launch sequence for the weapon, automatically. If any operating personnel remain alive on site, there is a designated short period in the sequence where the onsite personnel can countermand the order and abort the launch. If (he order is not countermanded, the launch is not aborted and the "doomsday" weapon automatically fires. In that case, KGB military power and most of Russia would disappear from the face of the earth.

This was necessary to nullify the impending strikes of MindSnapper negative energy EMP weapons {33} on those critical friendly QP weapon sites to instantly kill all personnel on site. Strike by the MindSnapper instantly kills every living thing in the area, and a protracted contamination remains whereby the struck areas emit longitudinal EM waves. If one attempts to insert new crews to resume operation of the weapons, the crewmen sicken and then die in the entry attempt. First, increasingly severe interference between mind and body control occurs. Then the individuals waver, lose consciousness, go into seizures, and their minds gradually de-couple from their bodies and they die. Fortunately, alter my fax message the C3 system was changed to the insane mode, and the Russians were notified, just in the nick of time {34}. To prevent their own destruction by the certain insane counterstrike, the KGB aborted the looming strategic strikes.

Ironically, at about the very time that the KGB strategic armada was standing down, Secretary of Defense Cohen {35} was making the following statement in Georgia:

> *"Others are engaging even in an eco-type of terrorism whereby they can alter the climate, set off earthquakes, volcanoes remotely through the use of electromagnetic waves...So there are plenty of ingenious minds out there that are at work finding ways in which they can wreak terror upon other nations...It's real, and that's the reason why we have to intensify our efforts."*

Almost certainly Secretary Cohen had no knowledge that, so to speak, a great Sword of Damocles hanging over his head was being removed by a friendly little foreign nation at that very moment, as he uttered those words apparently referring to the older longitudinal EM wave interferometer weapons. I suspect that Dr. Cohen is to this day still unaware of the incidents that were ongoing at the time of his poignant statement.

Attempts to Alert the Nation

We alerted the President and the National Security Council as early as 1984 (Figure 54). In 1998 we also furnished selected Senators, Congresspersons, and certain high-level U.S. government agencies with color copies of a 200-page briefing and expose {36} of—among other things—these weapons, their testing, and their clandestine use against the U.S. since 1963. Because of the nearly 50 years of demonstrated induction of diseases {37, 38} (Figure 11) in personnel in the U.S. Embassy in Moscow (e.g., responsible for the deaths of three U.S. Ambassadors), we also included part of the briefing on the Priore work {39} (Figure 12) showing the remarkable cellular changes (time-reversal of diseased states back to a previous earlier healthy condition) that can be and had been experimentally induced by energetics under rigorous scientific controls.

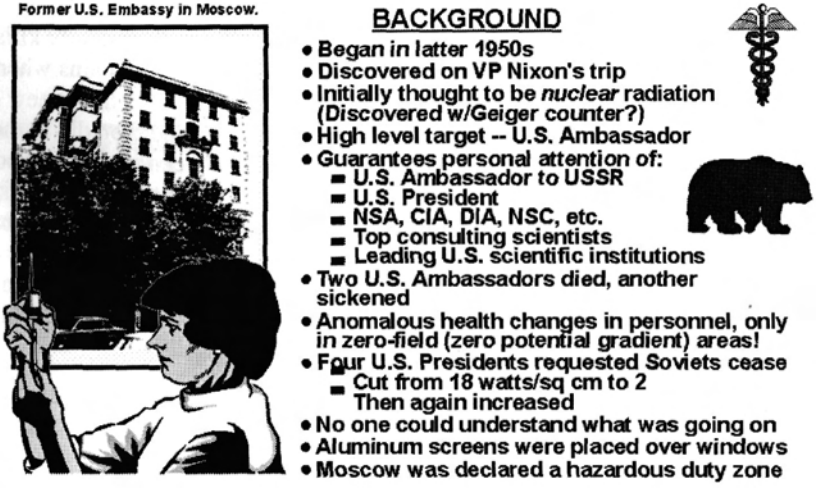

Figure 11 Microwave radiation of U.S. Embassy in Moscow.

We proposed to the DoD a very rapid, high priority development program to develop portable suitcase-sized computer-controlled treatment devices (Figure 13) capable of saving a majority of mass casualties—e.g., from a professional large anthrax attack on a major population center.

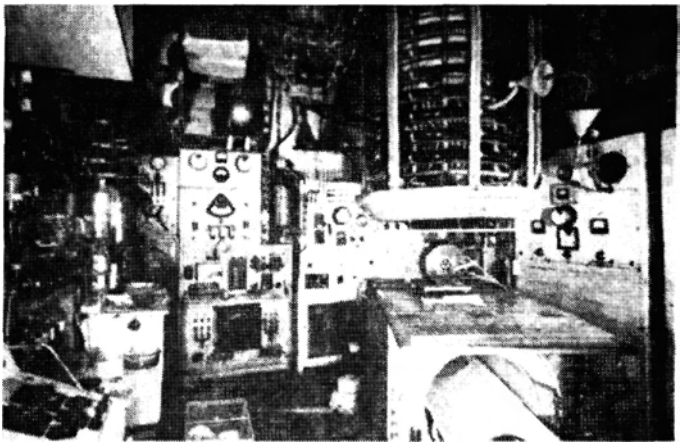

Figure 12 Priore[1] laboratory and device for treating small animals.

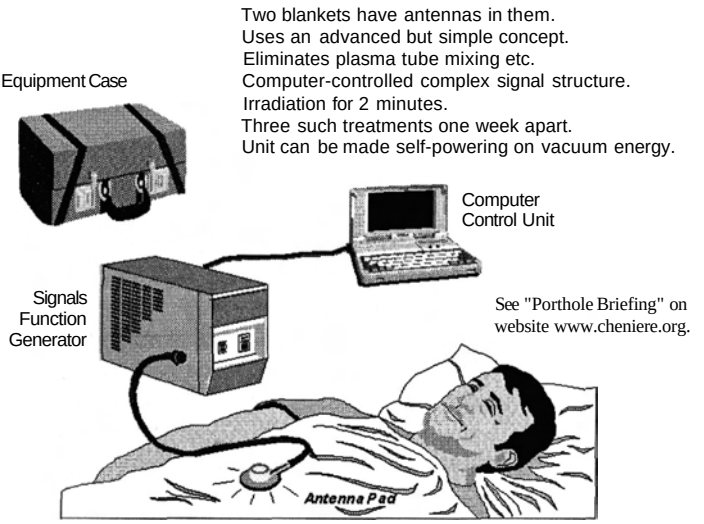

Figure 13 Portable unit for rapid treatment of mass casualties.

The Responses

The responses—or more exactly the near total lack thereof—by various U.S. government agencies were enlightening. E.g., the National Institutes of Health (NIH) never let the package out of its Policy (i.e., *political spin control)* section. It did not check a single scientific reference on a proven method documented in the hard French scientific literature for reversing terminal cancer, infectious diseases, etc. Not a single scientist called me to discuss such a proven, revolutionary effect. Instead, the NIH Policy section simply shipped the package over to the DOD as "their problem, not ours." That was because the package also explained how the Gulf War Disease was induced, including how semen can cause infection of the wife, and how the structured body biopotential of the sickened veteran can induce similar structuring of the biopotentials of his children by proximity, thus inducing various aspects of the disease.

Effective Survival Treatment of Mass Casualties Could Be Developed

Meanwhile, we had uncovered a way to dramatically speed up the Priore healing process, and use only normal transverse EM radiations for ready adaptation of existing equipment, while still forcing the same time-reversal of diseased and damaged cells back to normal. Just much faster. This meant that very small, suitcase-sized treatment units (Figure 13) could now be developed in a reasonable time—e.g., in two to three years, given a high priority, intense effort, adequate funding, and a carefully chosen scientific team.

So, we proposed a crash development by DOD of a small, suitcase-size portable device for quick, mass treatment of mass U.S. casualties following terrorist attacks on our cities using weapons of mass destruction. Eventually an innocuous reply (forced by my congressman) simply stated "it was not supported by the literature." In the package, of course, I had *specifically cited* the numerous scientific papers in the French scientific literature reporting and proving the experimental results. I had also worked 14 years to decipher the mechanism actually performing the revolutionary healing accomplished in rigorous animal testing by the Priore team. Eleven years after suppression of the Priore effort, the University of Bordeaux, which had been pressured into rejecting Priore's doctoral thesis, did approve and publish a doctoral thesis by Perisse on the work {40}.

The National Science Foundation (NSF) did not reply at all. Yet at the time the official strategic threat to the United States listed WMD attack on our cities and great population centers as the greatest threat of all (Figure 14). Today, as everyone knows we are in a war after the terrorist attack on the twin towers in New York and on the Pentagon on September 11, 2001. The U.S. government clearly recognizes that it is not a matter of if additional attacks on the U.S. cities and populace will occur, but *when.* The terrorists are also known to have already

infiltrated weapons of mass destruction such as biological warfare weapons (anthrax, smallpox, bubonic plague, etc.) Nonetheless, apparently the NSF simply did not believe a novel but *rigorously demonstrated-in-the-1960s* unorthodox process that could potentially save most of those millions of Americans who otherwise will surely die—and who *are* going to die in the first major WMD strike on our population centers.

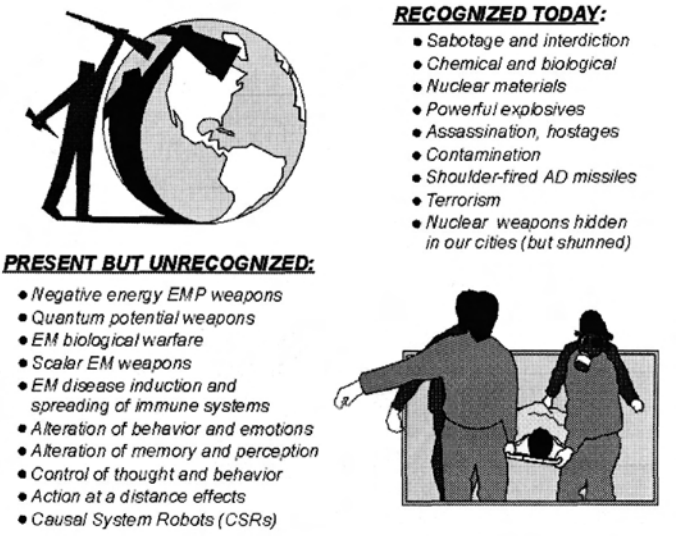

Figure 14 The mass destruction weapons threat to our populace.

The entire scientific method is based on assigning priority to experimental truth rather than dogmatic belief. If experiments refute the theory, the theory must be changed and the experimental results accepted. Else one is not following scientific method. Apparently the National Science Foundation does not follow scientific method, nor does it seem interested in doing so. Neither do the National Institutes of Health. The decisive results of some 2,000 rigorous animal experiments reported in the refereed scientific literature in leading French journals, by multiple established French scientists, were simply ignored because the results are contrary to present dogma. Meanwhile, four years have been lost. During that four years, the portable units could have already been developed, mass produced, and made available to treat and save millions of coming U.S. civilian casualties. Apparently the lives of those Americans are not as important as maintaining the present medical dogma. When those millions do die—and they will—we shall most certainly remind those agencies of the caliber of their dedication to scientific method and of their service to their fellow Americans. In my personal view, ignoring a chance to save so many Americans is treason of a very special kind.

The Official Silence Was Deafening

Not a single scientist in any of those and other organizations seems to have taken the package seriously. Not one called me to discuss it, or apparently studied the references, etc. No one asked for a personal briefing. No one was interested in the actual photo of the strike of a Russian EM missile from a scalar interferometer, offset from a U.S. night shuttle launch (Figure 15) from Cape Canaveral in latter November 1985, or the photo of the actual registration point ball of light high in the air (Figure 16) over that same shuttle launch {41}. The same weapon then killed the Arrow DC-8 at Gander, Newfoundland about two weeks later (Figure 17). An eyewitness (or more than one) actually observed the streak of light from the sky that struck the Arrow DC-8 in the right fuselage ahead of the engines {42,43}, after the thrust of the engines were reduced during take-off by use of a negative energy (cooling) interferometer. A similar ball of light associated with the kill of a Titan missile fired from Vandenberg AFB in early 1986 {44} and printed in *Aviation Week & Space Technology* magazine, was also apparently of no concern.

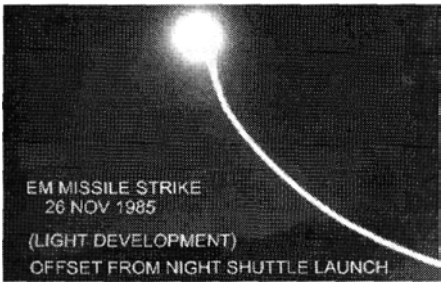

PHOTO BY BOB GLADWIN

Scalar interferometer operator fires offset EM missile from Russia.

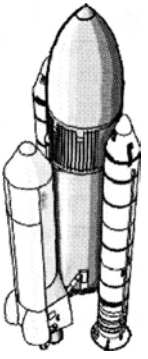

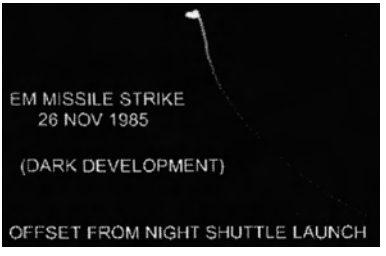

Figure 15 Soviet EM missile strike offset from U.S. shuttle launch at Cape Canaveral on 26 Nov. 1985. This is the smoking gun.

These remarks are intended to show the lack of understanding that has existed in our governmental, scientific, and intelligence communities of what energetics is and of the great energetics superweapons that have been developed. With the present rapidly growing interest in longitudinal EM waves, however, we suspect

that such lack of understanding is now no longer the case. We certainly hope that is true, and we are

Distant operator onsite in Russia slews away the registration point (the m arker beacon)

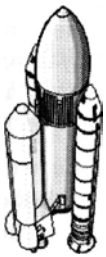

26 Nov1985

Two weeks later, the same weapon killed the Arrow DC-8 at its takeoff from Gander, Newfoundland.

Figure 16 Marker beacon above U.S. shuttle launch at Cape Canaveral, 26 Nov. 1985. Russian crews were using shuttle launches as practice ICBM launch targets.

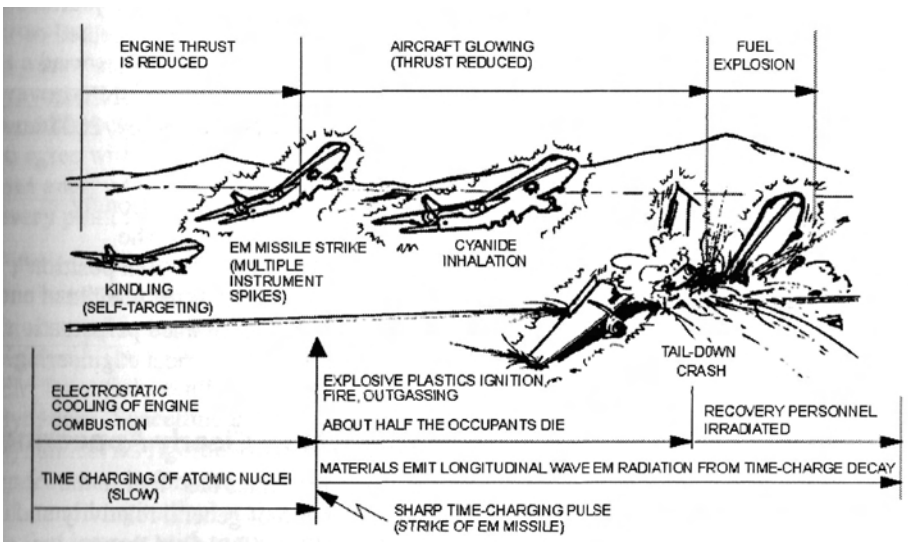

Figure 17 Kill of the Arrow DC-8 at Gander, Newfoundland Dec. 12,1985.

much encouraged that at least one—and possibly two—friendly Western nations now possess quantum potential weapons.

The Long Dry Spell in Correcting Electrodynamics May Be Slowly Ending

In over 20 years of unrelenting effort, until 1999 we were unable to get any significant Western scientists of real "horsepower" (e.g., in non-Abelian electrodynamics, foundations errors in electrodynamics, advanced gauge field theory, general relativity, etc.) to meticulously examine conventional U(1) electrodynamics and its glaring errors, and to look at weapons implications of higher group symmetry electrodynamics.

Beginning about three years ago, however, a noted scientist, Dr. Myron Evans {45,2}, along with other theoretical scientists of the Alpha Institute's Institute of Advanced Study (AIAS), have been extending electrodynamics by developing the 0(3) electrodynamics. They also have deeply examined the Whittaker work of 1903 and 1904 on which the early part of the Russian energetics weapons are based {24}.

The AIAS analyses, and subsequent papers by Dr. Evans and Alex Labounsky as well as by the entire AIAS group, have clearly established the primary importance of time-like precursors of EM fields, operating in massfree spacetime where fields E and B cannot exist. These time-like precursors *create* all the rest of the conventional electrodynamic entities {46}. This is a dramatic extension to electrodynamics and physics across the board. More than 100 papers have been produced to date, with more than thirty published in journals such as *Foundations of Physics*, and many of the others are either accepted or still in the referee process with various journals. Some 60 of the papers were published as a single special edition of the *Journal of New Energy* (JNE) in latter 1999, and a second edition of *Modern Nonlinear Optics*, Wiley, 2001 has been published with many important papers.

However, the problem is that the scientific community, which is strongly committed to "business as usual", has funded none of this work. The conventional lead agencies of the community are still in the "ostrich position", with their heads buried very firmly in the sand with respect to the terrible damage they continue to enforce on this nation by their continued perpetuation of an old, long-archaic, inadequate electrodynamics and electrical engineering.

Engineerable Unified Field Theory Is Now Clearly Appearing

The rapidly emerging AIAS extension of electrodynamics has "met in the middle" with Sachs' {4} revolutionary generalization of general relativity and electrodynamics. For the first time, an *engineerable* unified field theory—employing 0(3) electrodynamic means—is now being produced. The AIAS work in 0(3) electrodynamics was shown to be an important subset of Sachs' approach. It also now provides the full, rigorous theoretical foundation and model for the Priore mechanisms and results.

We also comment most strongly that the important SU(2)xSU(2) electrodynamics as developed by Barrett (47) leads to essentially the same conclusions, since Barrett's electrodynamics is homomorphic with 0(3) electrodynamics. Barrett, of course, is one of the pioneers of ultrawideband radar—another scientific area that was fiercely opposed and suppressed by the orthodox U.S. establishment for some time. Ironically, today those very scientists who were so dogmatic in their vociferous condemnation of UWB radar, have assumed the mantle of "experts in the UWB field", sometimes even taking credit for having "advanced it" in the first place.

Examples of Some Major Non Sequiturs in Conventional Electrodynamics

In every textbook and millions of technical papers in the West, electrodynamicists routinely calculate the "magnitude of the scalar potential". Actually, not a single one—including Maxwell—calculated or calculates the *magnitude of the potential itself.* Instead, they universally calculate the *reaction cross section* of the potential at a point occupied by an assumed intercepting/collecting unit point *static* charge {48}. At best that is a representation of the *intensity* of the field at each point. The reaction cross section of the potential with a fixed unit point static charge is indeed a scalar value. The "scalar" potential itself, on the other hand, *is not* its own reaction cross-section at each point of itself, and it is not a scalar entity at all! Instead, it is a harmonic bundle of bidirectional EM longitudinal phase conjugate wavepairs, as shown by E. T. Whittaker in 1903 {49}. It is and always has been a multi-vectorial, multiwave entity. By slightly reinterpreting Whittaker's work to agree with quantum field theory, the scalar potential is also a circulation of EM energy from the time domain to 3-space and back to the time domain, at every point in space that is occupied by the potential.

Further, the "field" notion is utilized in two self-contradictory manners. On the one hand, it is assumed in the massless reaches of space, and on the other hand it is assumed in mass, *which is the only case in which a force field is properly defined.*[8] The so-called "electromagnetic field" existing in empty space is not an EM force field at all, but a curvature or curvatures of spacetime with assorted ilynamics. Spacetime is after all active, and being active means curvatures and ilynamics. As rigorously shown by the AIAS theoreticians, what exists in *spacetime*—before the force-fields appear on reacting charged mass—are time-like and longitudinal scalar potentials and fluxes. These "pre-EM field" entities in fact interact with mass to produce all the force fields (the electromagnetic fields). Mass is a *component* of force; simply by F == *d*p/dt, which is expanded

[8] Since Maxwell and **the** original pioneers believed in a material ether filling all space, to them t**here** was not a single point anywhere in the universe that was devoid of mass. Hence to them there was only one kind of field: **the** kind that exists in mass.

into F = d(mv)/dt, which is ma + v*(dm/dt).* Note that both terms have mass as a component. Hence there is no force or forcefield when mass is absent. Present mechanics is seriously wrong (and has been wrong for hundreds of years) in assuming a separate massless force acting upon a separate mass.

Jackson, one of the ablest classical electrodynamicists of our day, adroitly states how electrodynamicists skirt that issue. Quoting, p. 249 of his *Classical Electrodynamics,* second edition: *"Most classical electrodynamicists continue to adhere to the notion that the EM force field exists as such in the vacuum, but do admit that physically measurable quantities such as force somehow involve the product of charge and field."*

Our comment is that one does not get an observable until after the interaction of a cause with a previous effect, to provide a change (a new effect). The 4-cause itself—in this case the field that actually exists in the vacuum—is never observed nor is it observable. Its *effect* (force with an affected observable mass as a component of it) is observed. The field in space and the field in matter thus do not even have the same fundamental units, but differ by a factor of m. In electrodynamics the m is avoided by "defining" the field as force per unit coulomb of "charge" (without saying or accounting "charged mass").

Wide Confusion of Cause and Effect

Present electrodynamics (and even the hoary old mechanics, as pointed out) has thoroughly confused the causal (4-space) side of the observation process with the effects (3-space) side—observation yields *3-spatial* entities, not 4-spatial. Indeed, as is well known, *time is not observable, even in theory.* That is really because observation is a *d/dt* process applied by the 3-space intermediary (e.g., mass) being acted upon by the causal (4-space) entity in spacetime, to produce a change in that intermediary (3-spatial) that results (is observed). *A priori,* the output of the observation process does not even exist in time, since its fundamental units are LLL and not LLLT. The observation process is thus *d/dt(LLLT)* => LLL.

Further, electrodynamics omits the fact that, not only does the causal entity act upon the intermediary to produce the *effect* (changes to the intermediary), but *those changes (effects) also act back (in reverse) through the intermediary to produce changes in the causal entity itself.* This mutual interaction between cause and effect (but never stressed in exactly that manner) is well known in GR, where the curvature of spacetime acts upon mass-energy to change it, and the resulting change in mass-energy also acts back upon spacetime to curve it. The omission of the latter "back reaction" in EM theory by Maxwell resulted in omitting half the energy, half the wave, and half the causal entity in spacetime, as well as half the effect. The missing half of the effect appears as the Newtonian third law reaction, which in electrodynamics is just mystically "assumed" to be an effect without a cause.

The vast importance of restoring this missing "back action of effect upon cause" is because it can be deliberately utilized to directly engineer the causal (4-space) state itself, producing nonmaterial "engines" and unobservable functioning robot systems comprised entirely of curvatures of spacetime and their dynamics. Such "causal system robots" (CSRs) can be designed and engineered to then perform almost any desired action upon normal mass systems they encounter. The robots also can easily penetrate vast depths of mass, which is mostly empty space filled with potentials, fields and waves—all of which are just bundles of longitudinal EM waves and their dynamics. "Mass" is actually a vast superhighway through which such CSRs can easily move at the speed of light {50}.

CSRs: Engineering the Unobserved Causal Side To Create Functional Systems

Understanding early on the mutual interaction between cause and effect that existed in their energetics, the Russians were able to engineer this totally new kind of system: the *causal system robot* or CSR (Figure 10). With sufficient theoretical development, one can "work backwards" by adroitly re-engineering the effect to obtain a desired causal system (spacetime curvature set along with its impressed dynamics; (Figure 18) corresponding to some physical system and its changes one desires to engender. One thereby directly creates a deterministic set of spacetime curvatures and impressed dynamics, which we call an "engine" (Figure 18). This *ST curvature engine* system can then function as a completely separate system {51} (Figure 10). One can communicate with it via longitudinal EM waves, control it, etc. By building in scalar interferometry functions, the **CSR** can be given "weapons" capabilities, etc.

- All levels of energy structures and all levels of time structures mold spacetime geometry.
- The "pattern" is called a *template* for a vacuum engine (spacetime curvature engine).
- Spatial and temporal structurings of the engine act upon mass at all levels.
- This produces a template of forces, for precise translations and stresses within the mass at all levels. The forces exist in both time and 3-space.

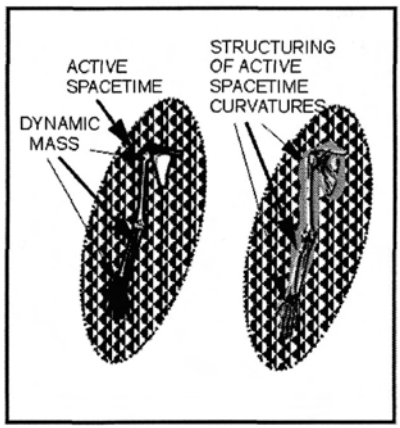

Figure 18 The principle of general relativity extended to include the concept of the vacuum engine.

In theory such a CSR can be assembled to perform any desired function or complex of functions upon matter, fields, potentials, etc. that is desired. In short, one can build real, functioning "infolded" (subspace) robot weapon systems using this "backward engineering of spacetime itself process. The huge underground facilities (hundreds) that the Russians continued to build after the collapse of the Soviet economy and the fall of the Soviet Union, apparently contained the full CSR development and control facilities as well as the operational systems employed for this totally new kind of weapon system.

A great engineering of the future lies in engineering CSRs, which already constitute a great leap forward past the material nanobot technology being pursued in the West.

Making the First CSR is Extremely Difficult; Making a Million Copies Is Easy

The development of a specific CSR with a specific set of functions is akin to developing a highly complex software system of major proportions (several tens of millions of lines of code). The job is extremely difficult, and tortuous "debugging" is required for a lengthy period. Once a single CSR is completed and debugged, however, the production of thousands or even many millions of copies is then a trivial task.

The CSR may be visualized as a sort of vast complex of longitudinal EM waves (recall, we are speaking of ST curvatures, not the conventional EM waves thought to operate on a flat spacetime. *All* EM waves operate in a curved spacetime *a priori,* as clearly shown by Sachs). It turns out that all matter is mostly empty space, filled with potentials and fields. Space itself, considering its energetics, may be taken as a giant scalar potential. All those potentials and fields and waves are in fact nothing but sets of longitudinal EM waves and dynamics. In short, they are vast superhighways for the travel of CSRs and the propagation of longitudinal EM waves.

A CSR can be embedded *within* any kind of EM potential, wave, or field. So to replicate one, one embeds it in a magnetic signal and records that signal on a diskette or other media. Then one makes millions of copies of the diskette, for perhaps 10 cents or less each. Or do it en masse, by first completing a CD-ROM with a hundred or two hundred CSRs embedded in its signals (Figure 19). Then simply reproduce the CD-ROM. Every reproduction has another hundred or two exact duplicates of those CSRs, made for almost no cost at all. With communications built into the CSRs, the command and control facilities take charge of them, give them individual numbers or designations, and a robot armada emerges with most unusual capabilities indeed.

The puzzling underground facilities in Russia (which our fellows apparently never deciphered and which remained a mystery) apparently contained the scientific teams, the research and development facilities, the production

facilities, and the command and control facilities for the new vast CSR weapon complex. It was to see its first great employment at the end of 1999.

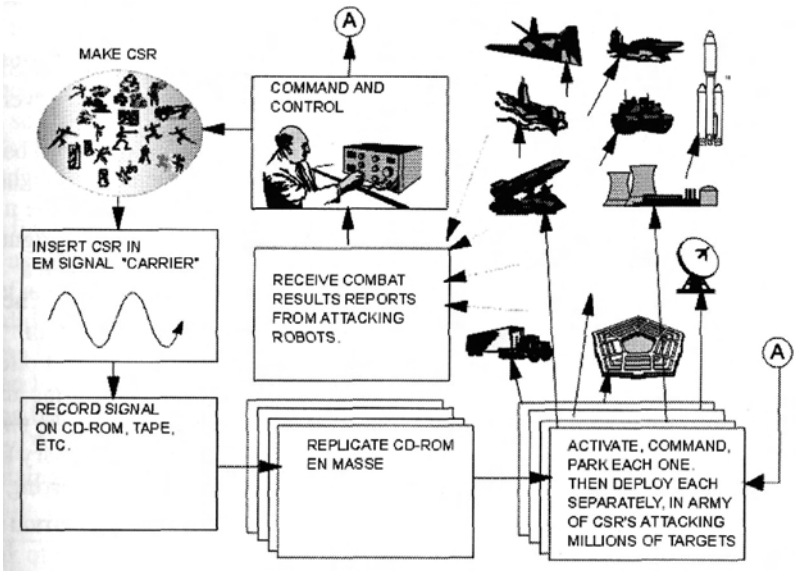

Figure 19 Mass reproduction of a CSR is simple and inexpensive. The CSR resides in, or propagates inside, any EM signal, potential, or field.

In 1999 The KGB Deployed Massive Numbers of CSRs for a Strategic Attack

In latter 1999 the KGB began massively deploying these CSRs of various types throughout the Western world, particularly including the United States. They simply sent the CSRs back "inside" the potentials and fields and waves being emitted from radio stations, TV stations, power lines, satellites, communications systems, inside matter, etc. These CSRs were deployed and infiltrated in major command posts and installations throughout the U.S. and its allies. True to form, the KGB even "stimulated" some major computer systems in critical U.S. government facilities by having the robots "surface" some effects on the Computers, right through the firewall programs (whose EM signals and operations indeed provided nice superhighways for the robots). Our fellows **detected** the interference as a "sophisticated computer hacking attack" (puzzlingly from the Russian Academy of Science), and then the robots "submerged" again after deliberately performing actions to produce obvious changes and guarantee the U.S. detection of those changes. The purpose of this "stimulus and probe" was to see if the U.S. was aware of CSRs and CSR **technology.** We clearly showed we were not, and we still are not aware of them. Fur**ther,** the entire government apparatus—including all our vaunted national

laboratories—knows absolutely nothing at all about CSRs, and none of the laboratories believe it. That is the same posture they've been in with respect to energetics weapons for a half-century. Apparently they will be in that same posture for another half century, left to their own devices.

However, I was not allowed to remain a casual onlooker for this new CSR armada! The KGB also planned to use me as a stimulus to ping the government yet another way, and then assess the government's response.

Here in Huntsville, suddenly I was personally struck by such a CSR right from my computer monitor, with the attack riding through the light from the monitor to my eyes and retinas and right into the brain and nervous system (Figure 20). This was the type of CSR that can lurk in any potential or field inside a computer, and then strike and kill the operator looking at the screen. The CSR took over control of the machine, split the screen so that only one-inch horizontal strips were luminous—one at the top and the other at the bottom of the screen with the middle dark. These two separated horizontal strips allowed scalar interferometry via the inner LWs comprising the light from the two strips. The LWI signals crossed in my vision center, where suddenly ordinary EM signals and waves were produced by the scalar interferometry occurring there.

Stimulating apparently the only analyst capable of recognizing a CSR attack and connecting it with the scheduled giant strategic CSR attack.

KGB General commanding the energetics weapon previously confirmed that what this analyst writes on his computer is received as soon as he writes it. Apparently accomplished by Tempest techniques or directly by energetics.

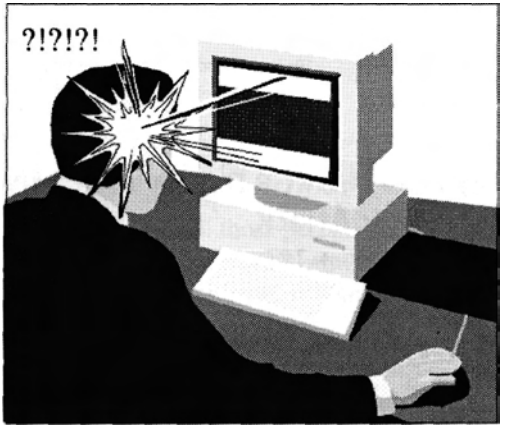

Figure 20 Present author struck by CSR in latter 1999 as a deliberate nonfatal stimulus.

I saw rapid blinding flashes like a hundred flashbulbs exploding at once right in my face. However, the signals representing those "flashes" were being created right there in my vision center. An external camera would have recorded only the weirdly separated screen display. It *would not* have shown the brilliant flashes of light I was seeing, unless it was set up stereoscopically. The strike was deliberately sustained for only about 10 seconds so as to be severe but nonlethal; about 30 seconds would be totally lethal. Violent fibrillation of the heart also resulted explosively, and I was instantly hypnogogic and seriously weakened by

sudden hypoxia from near total lack of blood pumping (because of the fibrillation). The purpose was apparently to strike the only analyst in the U.S. who would recognize what the nature of the attack was, stimulate him, watch him try to notify the government, and then observe the government's reaction. It look four days to recover from the strike. But I knew immediately what had made the strike, and that I had been hit with a CSR weaponized by having a built-in scalar interferometry capability. It was also a very sophisticated CSR, as it showed by assuming complete "intelligent" control of my computer's functions.

When I finally recovered, I did notify the government and warn them of CSRs, exactly as anticipated by the KGB. As might be expected, the government's total disbelief and lack of reaction clearly showed they knew nothing of CSRs. They simply did not believe such weapons existed or even could exist. Sadly, once again one faced the "not invented here" syndrome. General relativity and its provision for spacetime curvatures and their associated dynamics (engines) operating back upon mass are apparently just supposed to remain a theoretical curiosity. Why, obviously no scientist in his right mind would think of weaponizing such!

A more correct answer is, *"Like hell they wouldn't!"* *American* scientists would not think of it, but *Russian* scientists with their national chess-playing psychology will immediately seize upon any opportunity—even many moves ahead in the game—and develop it and utilize it. They understand and use the boa constrictor. We only understand and use the immediate rattlesnake.

How the Asymmetrically Deployed Strategic Attack Was Stopped in Its Tracks

However, we also alerted the "little nation" that has advanced EM weapons technology, which—since early 1997—has been saving the U.S. by forcing the abortion of impending KGB energetics weapons attacks.

When I warned them in 1997 about the MindSnapper weapons and mind-control weapons used against Captains Button and Svoboda, unknown to me at the time they later reacted and suddenly destroyed those facilities in Russia (apparently with violent scalar interferometry strikes). So *that* mind-control type of attack being readied for 1999 was thwarted for a few years by these strikes sometime prior to mid-1998.

But to return to the CSRs. In the latter quarter of 1999, the Russians were developing and deploying throughout the West numerous kinds of CSRs. So the period at the end of 1999/first few days of 2000 attack was already scheduled for a massively programmed CSR attack. It was designed to cripple the entire **nation,** and perhaps even collapse it economically, yet all would be blamed on Y2K! Our scientific ignorance guaranteed that we would blame it on something **mundane that** our scientists could understand: Y2K problems in all the old

software programs running so much of our automated systems, communications, and centralized functioning, accounting, banking, etc. In short, the KGB planned to give us a bicentennial gift: a Y2K nightmare far beyond our wildest fears.

After my recovery from the CSR strike in the latter quarter of 1999, I again urgently alerted the friendly nation of the development of CSRs and their widespread deployment—and informed them of the personal attack on me and specifically why it was made nonfatal. Of course I also alerted our own government. We were scheduled for a *real* Y2K problem that would curl one's hair, so to speak, with everything imaginable failing—and probably all blamed on Y2K.

Admirably, beginning just at the end of 1999, the friendly nation simply began methodically and massively cleaning out all the CSRs, and they disposed of them in very short order! Such CSR systems[9] may easily be located and destroyed by strategic longitudinal EM wave weapons {52}, when and if one has the longitudinal EM wave technology sufficiently developed. So Y2K came and went with only a few relatively minor incidents from the *normal* Y2k problems expected.[10]

However, unknown to our scientists and intelligence community, a great war of a very special kind—*the Earth's first strategic subspace war*—had just been silently fought and won, right there inside our power systems, command and control systems, major weapon systems, electrical power systems, electrical control systems of our nuclear submarines and strategic bombers and missiles, even inside the electronics of our nuclear warheads, etc. And not a bobble showed on the surface, anywhere. This was the first real "subspace" war, where weapons made of pure spacetime curvatures and dynamics were involved as the main offensive battle systems. LWI destruction of numerous CSRs inside potentials and fields in various electronic equipment throughout the nation, created little or no overt signs at all.

This time we won, thanks to the "good guys" and not to our own scientific community. Next time we may not be so fortunate.

The Mostly-Ignored Time-Energy Interaction

For some inexplicable reason, physicists in the West have omitted one-half the actual photon interaction.[11] If one allows the *spatial energy* component of the photon to interact, then one must also account for the simultaneous interaction of the time-component of the photon. A mass m absorbing a photon (AE)(At)

[9] These early CSRs apparently had no "stealth" capabilities built-in, so they were easily detected and destroyed, rather like shooting fish in a rain barrel.

[10] Even so, a normally disastrous Y2K problem was narrowly averted, in the nick of time, by a concerted national software reprogramming effort massively mounted and costing billions of dollars. Otherwise, the expected "ordinary" Y2K problem would have been very bad indeed.

becomes *masstime* (m+dm)t, not mass m. Mass *m* and masstime *mt* are as different as are force *F* and impulse *Ft.* No scientist in his right mind would ignore the *t* in *Ft* and consider just the force *F.* Yet that exact kind of giant *faux pas* has been done for many decades now in the photon interaction. And it is still ubiquitously done in physics. *Mass does not emit photons; masstime does.* Again, physicists confuse effect and cause.

As the Russian energetics weapon scientists know full well, time is actually spatial energy compressed enormously, by at least the factor c^2. Hence time has at least the equivalent energy density of mass. The greatest amount of "energy" existing in a photon—particularly in lower frequency photons—is in that "time" part that is arbitrarily ignored and discarded. An ELF photon has enormously more total energy—by many orders of magnitude—than does a gamma ray photon.

Energy and time components in the photon are canonical. Low frequency photons are reduced in the magnitude of their *spatial* energy component and thereby maximized in their *time* components. For the ordinary (decompressed) *energy equivalency* of the time component, one must multiply the time in seconds by c^2. Halving the frequency, e.g., doubles the time component, whose spatial equivalent energy is now $(2t)\times(c^2)$. With respect to the original photon, the new total energy (achieved by halving the frequency) is given by $[(\Delta E)/2] \times [(2\Delta t) \times c^2] = [(\Delta E)(\Delta t)\times c^2]$. So halving the photon's frequency increases its total energy by a factor of c^2, which is approximately by a factor of 9×10^{16}. Hence photons actually carry enormously greater total energy (most is locked up as time) at low frequency than at high frequency. Indeed, the highest energy photon interactions in the universe are at low frequency, *if and when* a transduction of the available time-energy into spatial energy occurs.

This has been completely missed in the West, but not by the Russian energetics weapons scientists. They have been *engineering* that formidable new high energy but low frequency physics—a physics far more energetic than that used in our most energetic colliding beams in "conventional high energy physics".

The cold fusion processes[12] stumbled onto by Western scientists are using the

[11] I.e., except for accounting for the overall "action" (angular momentum) and such things as **minimum** action theorems, etc. Treating the photon's increment of time specifically as a formidably compressed piece of spatial EM energy does not appear in Western physics. It has **long** been utilized in the KGB's secret energetics weapon science.

[12] For an explanation of the use of time-reversal zones in cold fusion experiments, and some of the resulting new transmutation reactions that result, see T. E. Bearden, *Energy from the Vacuum: Concepts and Principles,* "Chapter 10: Cold Fusion: Low Spatial-Energy Nuclear Reactions at High Time-Energy," Cheniere Press, Santa Barbara, CA, 2002. Available from www cheniere.org. Statistically, the formation of significant time-reversal zones is guaranteed by t**he transient** fluctuation theorem of Denis Evans et al., and by recent experimental work by Evans et al. proving that such zones (where the reactions run backwards) can and do occur at up to **micron** (colloidal) size and for up to two seconds in duration. We stress that this is a recognized, **proven** violation of the second law of thermodynamics already known to physics.

time-energy component of photon interactions, to generate enormous localized EM energy directly upon the interior quarks and gluons of nucleons {53}. We worked out a speculative explanation of the active time-energy transduction mechanisms that fits all the experimental phenomena, including the eerie instrument anomalies occurring in rigorous electrolyte experiments at China Lake for some years. That is included in my new book, *Energy from the Vacuum: Concepts and Principles,* Cheniere Press, Santa Barbara, CA, 2002, available from www.cheniere.org.

Of course consistency alone does not prove it conclusively; consistency is a necessary but not sufficient condition for proof. But at least the proposed explanation is consistent, and nothing else seems to be, at this time. In one chapter in my referenced new book we do cover the cold fusion mechanism and give specific new nuclear reactions producing the excess deuterium, tritium, and alpha particles in so many successful cold fusion experiments worldwide.

My "time-reversal zone" approach is stringent, because the recent work by Denis Evans *et al.* {54} has clearly shown that reactions can and do run in reverse—totally in violation of the second law of thermodynamics—at micron (colloidal) level in size and for up to two seconds in duration (and sometimes even a little longer). So experimental demonstration that the "time reversal zones" I assumed can and do indeed occur has now been accomplished by Evans *et al.* This provides strong experimental and theoretical support for the basic assumption (of the formation and momentary existence of localized time reversal zones that subsequently decay) we used to derive the fundamental cold fusion mechanism including some of the specific reaction equations for excess deuterium, tritium, and alpha particles now demonstrated in hundreds of successful experiments.

In a reversed zone *the law of attraction and repulsion of charges is reversed,* so that like charges attract—sometimes so closely that each enters the strong force region of the other, forming a quasi-nucleus (Figure 21). As the time-reversal zone subsequently decays back to a time-forward zone, the reduced strong force is restored much faster than the Coulomb force is reduced and then reversed back to normal. So during this readjustment decay process, the quasi-nucleus will simply change to an isomer and a known nucleus by quark-flipping to change an H+ ion to a neutron. Note that the "reversal zone" momentarily changes the Coulomb barrier—always the only thing that has really prevented chemical fusion and transmutation at low spatial energy—to a Coulomb attractor. Hence cold fusion—as now backed up by more than 600 successful experiments worldwide, by multiple laboratories and researchers in multiple nations—is an established fact and a herald for a vast new science based on deliberate and intentional reversal of the Coulomb barrier and use of time-energy.

With its usual perspicacity, the organized U.S. scientific community has flubbed it—and flubbed it badly—with respect to cold fusion. Its contribution has

largely been a tirade of ad hominem attacks, slander, and libel of a viciousness seldom seen in the annals of science. Once again, the community is far more devoted to defending its cherished dogma (and its own rice bowls from the conventional Big Nuclear Science that cold fusion thoroughly upsets), than it is in applying scientific method which calls for *believing the experiments* and changing the dogmatic theory.

- Fermions time-reverse in even numbers
- Like charges cluster
- Aqueous solutions contain H+ ions, which are just protons
- Quarks flip as TR zone fades

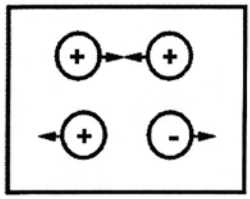

$$2({}_1H_1 + {}_1H_1) \rightarrow 4({}_1H_1) \rightarrow 2({}_0n_1 + {}_1H_1)$$
$$\rightarrow {}_2He_4 = \text{helium (alpha)}$$

Figure 21 Example of a time-reversed zone nuclear reaction common in successful cold fusion experiments.

Development of Threats and Scheduled Attacks Aborted

KGB energetics weapons have long constituted our single most pressing yet largely unrecognized national security problem. That problem has also increased with the growing development and deployment of such weapons by other nations such as China. Some 10 nations, for example, now have scalar interferometry weapons, and even the Japanese Yakuza has them and also has their own secret facilities for producing them in Japan, including small portable units developed for use in assassination and terrorist type warfare within a targeted nation—the United States of America.

Unknown to our government, we narrowly escaped destruction twice in the first half of 1997 from scheduled all-out strategic KGB energetics weapons attacks. **Only** the actions of a friendly small country countered the attacks and caused the **KGB** to abort on each occasion.

When the second scheduled Russian strategic attack was aborted just prior to May 1, 1997, a new KGB counter-counter for the friendly counter used by the **little** nation in latter April 1997 was already rapidly being deployed. The new **Russian** counter-counter—seizure and control of the mind of an operator at a distance, and complete control of his actions while he performs sophisticated

technical tasks—was tested in two separate incidents {55}, first on Captain Button (Figure 22, Figure 23) and then on Captain Svoboda about two months later (Figure 24), each flying an A-10 Warthog aircraft over the U.S.

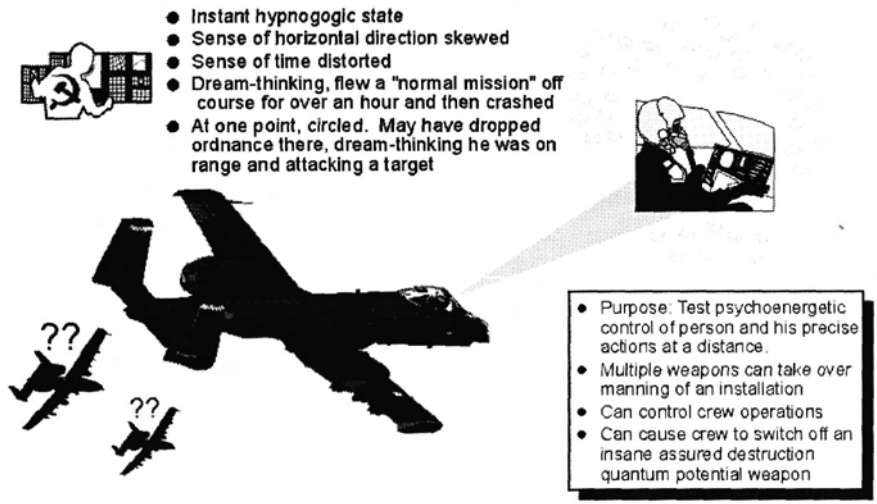

Figure 22 Captain Button's bizarre flight to his death on 2 April 1997.

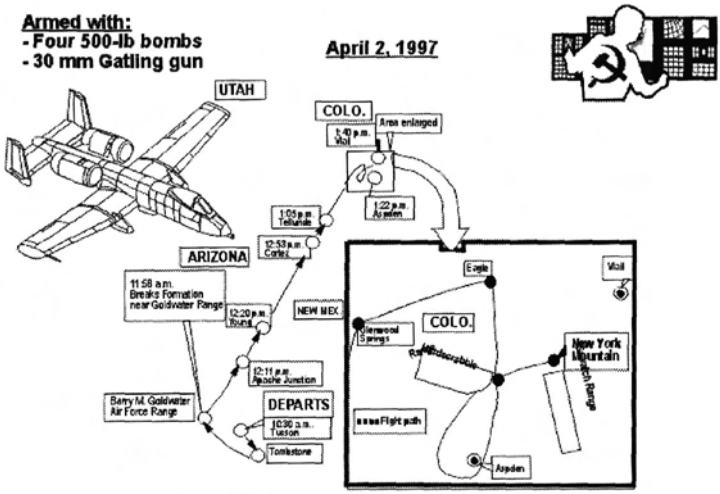

Figure 23 Captain Button's flyaway path to his eventual fatal crash.

The highly successful test against Captain Button (Figure 22, Figure 23) is

particularly significant, as we have explained. Captain Button was controlled while performing highly technical operations, for more than a full hour, and one hour was apparently the acceptance test specification. Captain Svoboda (Figure 24) simply had her mental perception of up and down instantly reversed while climbing her A-10 warthog from low level ordnance delivery on target. Erroneously perceiving she was diving, she immediately "corrected" sharply to "climb", thereby diving headlong into the ground and perishing in the resulting explosion of her aircraft.

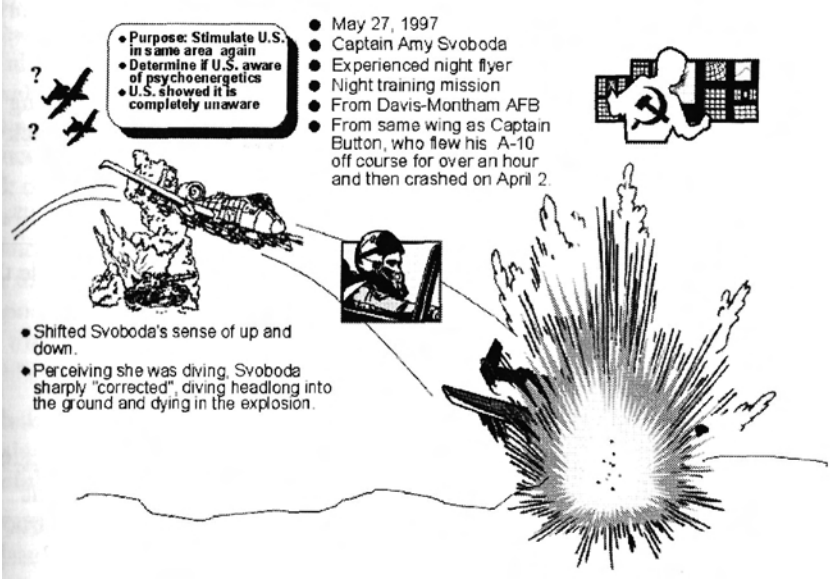

Figure 24 Climbing out of low-level ordnance delivery, Captain Svoboda suddenly dives headlong to her death on 27 May 1997.

Svoboda's kill demonstrated a *tactical destruction* usage, whereas Button's test demonstrated a *strategic* hostile usage of the adversary's defending weapons crew to take action against the adversary's defending strategic weapons system. A new KGB strategic energetics attack against the United States—using the mind control (psychoenergetics) weaponry to take over the operators of the little nation's QP weapon sites and stand the sites back down for maintenance—was rescheduled apparently for latter 1997 to mid-1998 or so. It appears that the extensive preparations for that attack were totally destroyed clandestinely and very suddenly by the friendly little nation some time after we warned them, as we mentioned above.

However, still another Russian counter—the development of "weaponized engines" (functioning causal system robot weapons, "infolded electromagnetic" in form) consisting of organized and functioning systems of spacetime curvatures operating in and traveling through EM fields, potentials, waves, and

signals—came on line (Figure 10, Figure 18). The KGB simply altered the attack plan for a Millennium Strike and completed the forward deployment of these eerie new CSR systems by introducing millions of them directly throughout U.S. facilities, command centers, weapon systems, power grids, ships, aircraft, submarines, missiles, nuclear warheads, computers, communications systems, etc.

We estimate that several million such systems were introduced in that manner, and readied for the Millennium Strike. The United States and its allies were and are almost totally unprepared for this dramatically new kind of strategic warfare that has been developed and deployed against us. No such weapons have previously existed in history. Consequently our national survival and the survival of our allies was once again at stake—and right on schedule during the critical period from mid-1999 through mid-2000 that we had predicted back in 1997.

The die-hard elements of the KGB indeed had a new millennium gift for us, but it was not at all the kind of gift we would appreciate. The KGB is not a monolith! This plot apparently did not include Putin, and it did not include the rest of the KGB, particularly that element reporting to Putin.

Live Destructive Tests Over and Near the U.S. Have Continued

Without elaboration, we believe that the Learjet crash incident and the EA-990 crash incident may have been very sophisticated tests of these new robotic causal EM systems. We also believe that the long years of Russian construction of over a thousand mysterious underground facilities, even though the Russian economy was collapsed and the citizens and soldiers were destitute, is significant. Those facilities apparently contain the set of command and control systems for this vast new strategic weapon system.

The facilities also include the "factories" where the CSRs are made, because the factories are unlike any other factories ever conceived. They do not build "physical" systems, but something more like "software." Only now the "software program" itself is an independent robotic system, with a full set of weapon systems functions, and capable of independent navigation and functioning anywhere, while remaining under KGB command and control via longitudinal EM wave communications infolded inside the potentials of earth, ocean, and space. The facilities also contain the operational forces, headquarters, and communication and control systems that maintain, deploy, and employ (fight) these CSR systems, and direct the battle.

The purpose of the 1998 document we sent to DoD—which did not include the causal robot system armadas later deployed throughout everything in the West—was to inform selected members of the Senate and Congress of the energetics threat situation and summarize it for them. Accordingly, we presented the

background of the development and testing of the KGB energetics weapons since WW II, in some detail, for selected Legislators and their staffs. We also included some specifics on the failure of the U.S. scientific community to keep American science and technology abreast of that of our adversaries.

The Scientific Basis For Energetics Weapons Is Established

As pointed out above, the scientific basis for our early use of Soviet scalar EM interferometry is now rigorously established by work accomplished by the Alpha Foundation's Institute of Advanced Study. It is also rather "old hat" now that all major weapons labs have discovered longitudinal EM waves and are actively working on and with them. The Director of the AIAS, Dr. Myron Evans, is an eminent scientist and theoretician with over 600 papers in the hard science literature. He and his colleagues also have had zero funding for their work on the higher group symmetry electrodynamics necessary to understand such things as energetics. A combination of non-Abelian electrodynamics, advanced gauge field theory, and the impact of E. T. Whittaker's work shortly after the turn of the century has shown that scalar interferometry is real, and that weapons based on scalar interferometry can be a potent threat on the battlefield. The time-like (time-energy) basis for electrodynamics is now clearly established.

With this important new work, we are now only some 40 years behind the Russian weapons scientists! But we are beginning to close the gap—and hopefully that will be done very rapidly.

In 1999 after being personally attacked by a CSR, I again contacted the office of the leader of the friendly small nation and again furnished all the information we possess on the new CSR systems programmed by the KGB as a countering method against the small nation's QP weapons. The outcome was that the little nation destroyed the CSRs in time, as we stated above. We were lucky that (i) the KGB did attack me with one of the weapons, deliberately to "get my strong and immediate attention", and (ii) deliberately did not kill me with the strike. Otherwise, there would have been no warning to the little nation, and the U.S. and its allies would have experienced a "Y2K" problem worse than their wildest fears, possibly collapsing the economy of the United States and much of the developed world.

Our Situation Here In the U.S. Is Precarious

Meanwhile, our own scientific community apparently does little or nothing in these areas, except to castigate, slander and libel anyone daring to suggest that such "out of the box" weapons areas even exist. E.g., there does not appear to be

a single U.S. scientist who knows how to create a *time-polarized* EM wave.[13] There do not seem to be any concerted programs to deal with t-polarized photons and t-polarized EM waves. Our scientists still firmly believe that one has to propagate spatial EM field energy through space to affect a target electromagnetically, when that was obsoleted by Russian "subspace EM longitudinal wave propagation" weapon systems deployed as early as 1963, and was completely obsoleted by deployment of quantum potential weapons in 1989.

Yet a close colleague of the present author has single-handedly developed and demonstrated prototype superluminal communication systems using the infolded (longitudinal EM wave) electrodynamics, and these systems would have been heading onto the market in latter 2001 except for the sudden bankrupting of the major backing company. There has not been any funding forthcoming for his revolutionary work, but only clumsy attempts to take it from him. It is my fear that the further clumsy takeover attempts will be successful, and this desperately needed technology will never see the light of day in defense of our nation. As a single example without further discussion, his work revolutionizes the present notions used in the rapid development of quantum communication and quantum computing, because it revolutionizes the very notion of the Q-bit, completely removing the statistics of the quantum state and making it engineerable. This of course is completely counter to present QM notions, but is consistent with the Bohm hidden variable approach to quantum mechanics.

Meanwhile, our own weapon scientists apparently still do not recognize the possibility of a superluminal longitudinal EM wave communication system, and appear to have no motivation or intention to develop such. This is in a way quite sad; quantum tunneling at more than four times the speed of light, of a clearly recognizable Mozart symphony, has already been demonstrated in a section of a waveguide {56}. Whatever one wishes to call it and however one wishes to do it, superluminal communication of intelligible signals has been clearly demonstrated in the laboratory. For the "infolded" longitudinal EM waves, all the "normal" or "envelope" EM waves, potentials, and fields are just great *superwaveguides* for such longitudinal EM wave "tunneling through subspace" at superluminal speeds.

[13] Keeping one's sense of humor, apparently there has also not been a U.S. scientist who even recognized and knew what actually powered an electrical circuit, until our solution to the source charge problem and publication of it in 1998. Eerily, even after the technical basis for a solution had been proven in particle physics in 1957, no one seemed to have applied the broken symmetry of opposite charges to the common dipole and to a dipolarity such as a scalar potential and a charge (with its associated virtual charges of opposite sign, in the modern view). Everyone accepted that the fields and potentials and their energy are established by their associated source charges, but no one had stated that the source charge receives its input energy from its asymmetry in its seething energy exchange with the active vacuum.

The Dominant Weapons Are Quantum Potential Weapons

Full-bore deployment of Russian quantum potential weapons occurred by the end of 1989, the first lab prototype weapon having been tested in April 1986 against the U.S. air attack on Libya (Figure 25). Beside Russia, two other nations—Brazil and the "little friendly nation"—also had developed quantum potential {57} weapons. The United States did not develop them, or at least apparently not just yet.

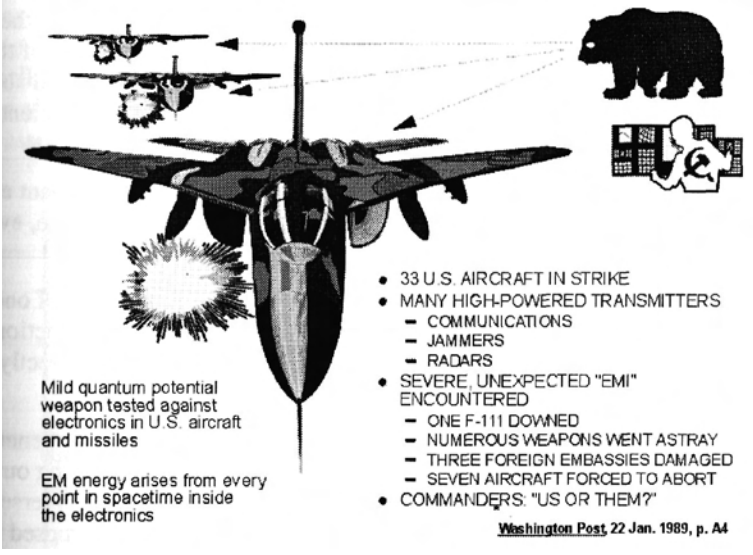

Figure 25 U.S. air strike on Libya, April 1986.

Burlier this year (2002), China also deployed QP weapons, and we now find that an*other friendly* nation has them as well. That brings the total to five, as of this writing. Two of those are friendly, and a third is astraddle of the fence, so to speak. The other two are Russia (the KGB) and China.

At this point China could go either way, so it represents a future enigma. China **has** control of the Panama Canal, and has inserted more than 200,000 Chinese into Panama—which is on the way to gradually becoming a Chinese territory, as soon as the Chinese in Panama outnumber the native Panamanians. In addition, under the Clinton administration China gained access through two U.S. ports (with little checking, so anything can easily be inserted). China also has a**dditional** ports in the Western hemisphere. China is almost certain to eventually attack and seize Taiwan, which puts her on a collision course with the U.S., si**nce** the U.S. has an agreement to defend Taiwan. She has also declared the South China Sea—through which passes some 60% of the oil bound for Japan, a**nd** much oil for other nations also—to be Chinese territorial waters. China also has developed bioenergetics weapons, having long ago induced cancer into most

of the GRU Russian representatives then serving in China. She almost certainly has or is rapidly working to develop psychoenergetics weapons as well.

So far as I am aware, there still exists not a single funded U.S. scientific program to directly correct the glaring errors in our own classical electrodynamics—such as those problems deplored by Nobelist Feynman and Wheeler {58,59,60}. Both knew that the force field concept in space was erroneous. As they put it, only the "potential" for the force field exists in space, in case some charged mass is available there for interaction. But the field itself is created by the interaction and is the effect of it. It does not exist before the interaction occurs. Yet all our texts continue to teach the disinformation of the "field in space." And our science community continues to fiercely defend such dogma, attacking and sometimes destroying the careers of those brave scientists who do try to change it.

One notes that time is multiply-connected, since in theory the same instant exists at every point in the universe. Or said another way, in any instant in time, every point in the universe simultaneously exists.

Operating in the time-domain as a causal system, and then turning out of one point there into any point in 3-space desired, is a means of producing "action at a distance" that obsoletes our old concept of transmitting the energy directly through space {61}.

Presently the U.S. scientific community has little predisposition toward energy turning into the time-domain, operating in the time-domain, then turning out of the time-domain into any desired point in 3-space, anywhere in the universe.[14] Every 3-space point in the universe simultaneously exists in (is superposed in) each point in time, as those points in time occur. In one sense, time can be considered to be the total multiple connectedness of space! We suspect that it may even be possible to interpret "instantaneous" communication—as by a quantum potential—in that "in here-out there" instantaneous fashion via "tunneling through the multiple connection of the time channel".

Finally, mass—being an observable and 3-spatial—does not exist in time. Mass continually turns into masstime (by photon absorption), then masstime turns back into mass (by photon emission). Masstime exists in time, but mass does not. U.S. scientists also seem unaware that the so-called "rate of flow of a mass through time" is generated by the sum total of all photon interactions (both virtual and observable) with that mass. The ubiquitous interaction of a mass with photons also causes that mass to continually recur, and thus to seemingly "continuously exist." It is continually observed, but it does not continuously

[14] If one models the time domain in three dimensions instead of one, e.g., then in theory it becomes possible to "flip" a 3-dimensional mass object into the time 3-domain at a single "moment," then rotate from that "time 3-point" back into 3-space at a new 3-space location anywhere in the universe. Hence the "beam 'em up Scotty!" of the old Star Trek (and the more modern beaming version) may hold more of a promise than just for science fiction entertainment.

exist! Since the photon interaction is engineerable, then it follows that a specific muss can be time-reversed back to an earlier state {62}.

Cellular Time Reversal: Revolutionary Healing by a Team of French Scientists

Priore and eminent French scientists {39,40} unwittingly used the mechanism for time-reversing a mass and every part of it, to time-reverse diseased and damaged cells, including tumor cells, physically changing them back to their previous healthy physical state and condition in vivo. This included all parts of **the** cell, including its genetics. The Priore team demonstrated revolutionary cu**res** of terminal tumors, infectious diseases, atheriosclerosis, and restored depressed immune systems.

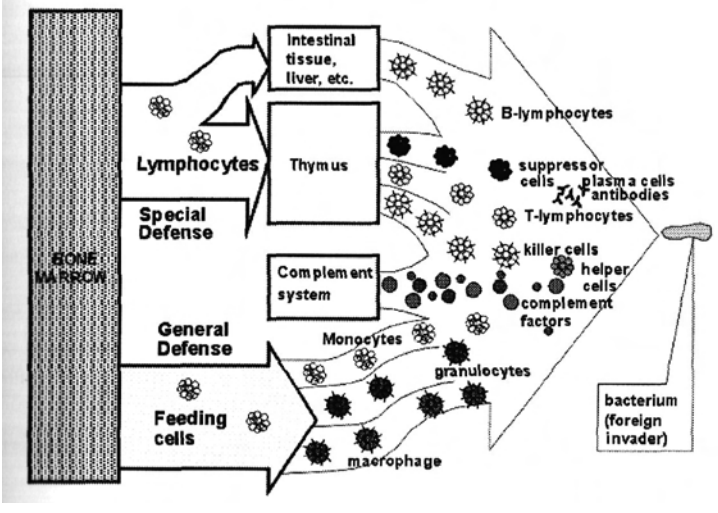

Figure 26 Simplified diagram of the immune system.

The immune system (Figure 26) *heals nothing, not even its own damaged cells.* The human cellular regenerative system {63} is responsible for all *healing* in the body—and it utilizes time reversal of the damaged cells as the active healing mechanism. The regenerative system (Figures 27, 28, 29) pumps the damaged cells with longitudinal EM waves (and therefore with time-polarized EM waves, which always accompany longitudinal EM waves), inducing the cells and all their parts to add the phase conjugates, thereby forming time-polarized EM waves and pumping in the time-domain rather than the 3-space domain. This dramatically extends nonlinear optics to the time domain, and mass pumped in that fashion is time-reversed (propagated back along its own time-track, to a previous physical condition.

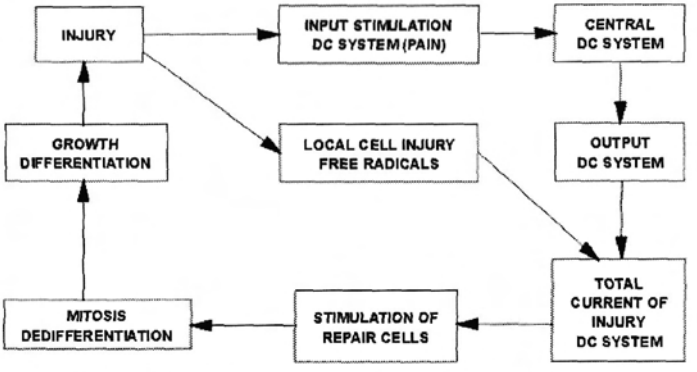

Note: Becker only had conventional EM available, hence was unable to model the inner structuring and inner dynamics of the fields and potentials. *So he missed the deeper "engine and antiengine" mechanisms.*

*Robert O. Becker, "The significance of bioelectrical potentials," Bioelectrochemistry and Bioenergetics, Vol. 1, 1974, p. 191.

Figure 27 Becker's theoretical control system involved with response to injury.

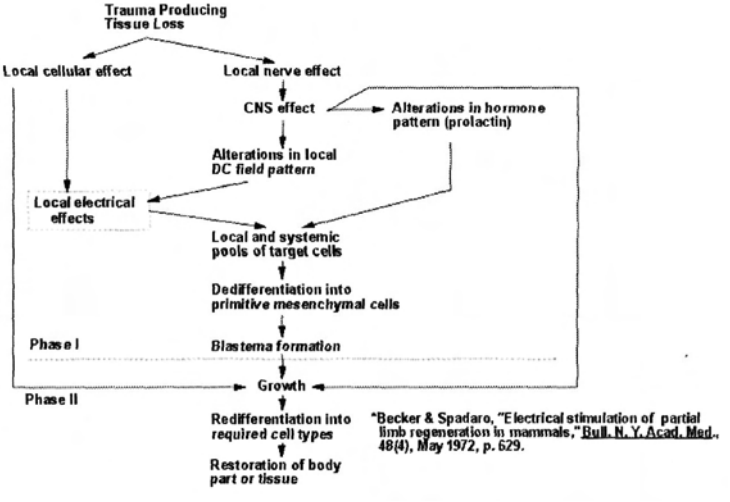

*Becker & Spadaro, "Electrical stimulation of partial limb regeneration in mammals," Bull. N. Y. Acad. Med., 48(4), May 1972, p. 629.

Figure 28 Becker's proposed control system governing regeneration.

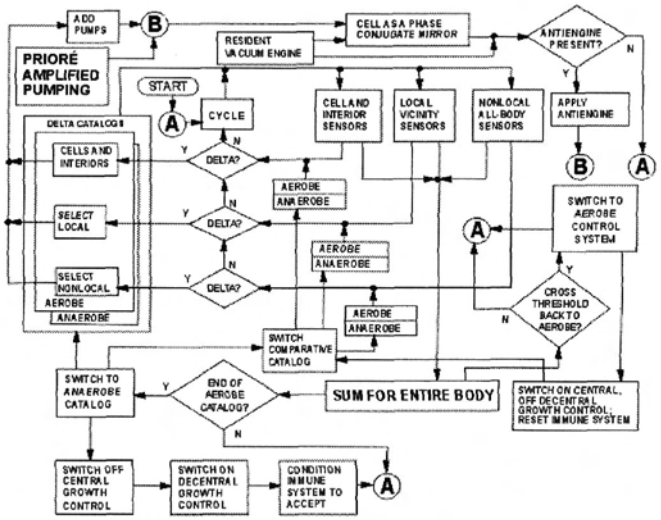

Figure 29 Author's deeper block diagram of the cellular regeneration system.

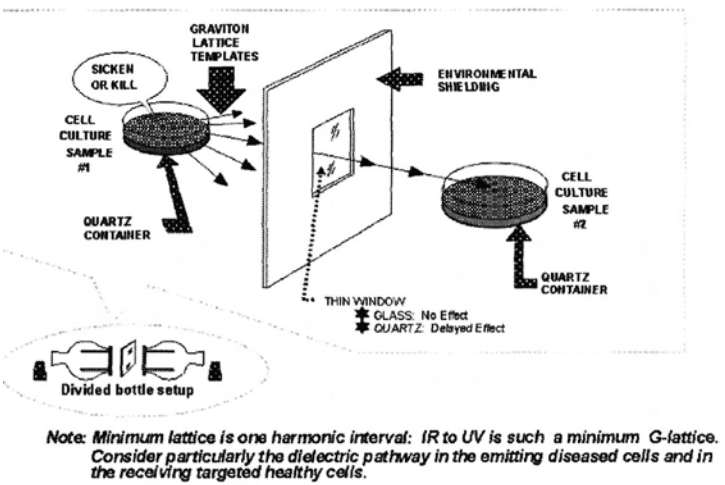

Figure 30 Kaznacheyev's electromagnetic induction of cellular disease and disorder.

Kaznacheyev has shown that essentially any cellular disease or disorder can be electromagnetically induced in cells at a distance (Figure 30). Together with Becker's work, this shows that the cells can be altered either detrimentally (disease induction) or beneficially (disease elimination) by purely **electromagnetic** means. It would seem that diseases such as AIDS, e.g., could be **rather** dramatically cured by use of whole-body longitudinal EM wave radiation

(with its simultaneously time-polarized EM wave radiation), as was done for other diseases by the Priore team and properly reported in the French scientific literature. We have also uncovered a process and method for causing the body to directly produce the time-polarized EM wave pumping, reducing the irradiation to perhaps 30 seconds of pumping instead of two or three hours {64}.

Becker's Study of the Cellular Regeneration System

In all our medical science, the only true healing procedures being utilized appear to be the use of Becker *et al.'s* tiny EM stimulation across otherwise intractable bone fractures {65} (Figure 31), to dedifferentiate (time-reverse) red blood cells, then redifferentiate (time-forward) them again twice to form osteoblasts, which are deposited in the fracture site to make new bone growth. All the other medical procedures seem to be *interventions,* not *healing.* After the intervention—which of course may be urgently necessary—it is then up to the body to heal itself (restore its cellular and tissue damage and functioning). So we have little *healing* science today, and in fact our medical establishment hardly funds any *healing* studies at all. EM radiation is usually considered as something that simply heats tissue. Our present medical science is deeply engrossed in studying the immune system. Again, the immune system heals nothing, not even its own damaged cells.

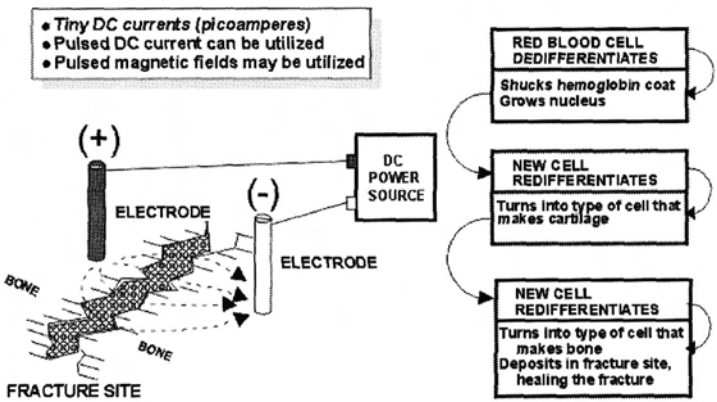

Figure 31 Becker's epochal bone fracture healing.

After the immune system "kills the bad guys" and saves the day, the battlefield is littered with residue and many cells of the body are damaged. The immune system sends in large scavenger cells that clean up the residue. And that's it for the immune system. Comparing it to an army's operation in the field, the immune system is the combat troops, not the medical services.

Restoration (healing) of the damaged cells back to normal is accomplished by

the *cellular regeneration* system (Figure 29). This system is little known and little studied, but mostly studied by Becker (Figures 27, 28). It is a system that functions electrodynamically, but uses time-domain pumping to time-reverse the cells and their every part (including their genetics) back to an earlier state. In biology, the effect is called *dedifferentiation,* but without any knowledge of the actual EM mechanism.

So, within its capabilities, the cellular regenerative system in the body already uses longitudinally polarized EM waves, time-polarized EM waves (TPWs), and optical pumping by LWs and TPWs. Here we point out that neither the longitudinal photon nor the scalar (time-polarized) photon is individually observable; however, the combination of the two is observed as the instantaneous scalar potential {66}. With a little correction to properly make the phase conjugate replica wave a time-polarized EM wave, Whittaker's fundamental bidirectional EM longitudinal wave decomposition of the scalar potential (Figure 32) is consistent. Immediately the direct involvement of both the scalar photon and the longitudinal photon—and both the scalar EM wave and the longitudinal EM wave—are seen in Becker's bone-healing work using a scalar potential (Figure 31).

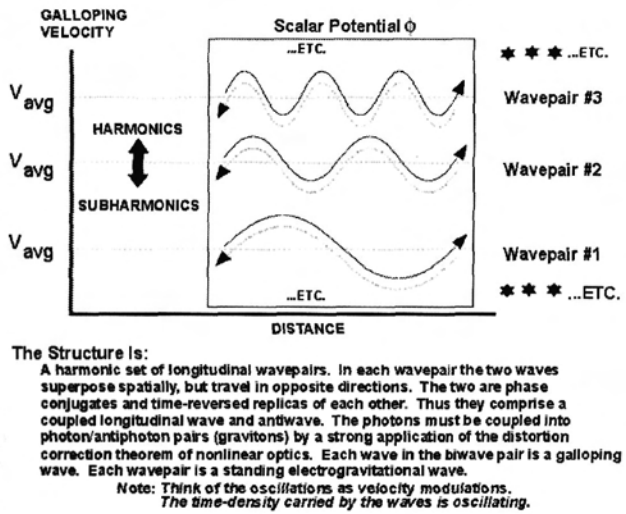

Figure 32 Infolded longitudinal EM biwaves composition of a scalar potential, per Whittaker 1903.

Priore unwittingly stumbled onto the actual mechanism used by all biological systems in "healing" (cellular regeneration), and also recognized how to amplify it (Figure 12). But no one understood its exact nature, including Priore and the scientists who worked with him at the time, and the conventional community still does not understand it. The Russian scientists not only *understood* it early

on, but *weaponized* it as well. So did the Chinese.

Need to Correct and Extend Classical Electrodynamics

The organized scientific community's protracted defense of a seriously flawed classical electrodynamics is long standing. The conventional, comfortable ways of "doing business as usual, leisurely" now threatens the survival of the nation itself. We need to quickly admit and correct long-standing EM errors—such as calculating a reaction cross-section of an entity and calling it the magnitude of the entity itself! Our electrical texts continue to make that fundamental mistake, and they have done it now for 100 years or more. We need to quickly change the classical EM model to include the active vacuum and its interaction, and we need to change all textbooks to clearly state that all EM energy in the universe comes from the active vacuum, via the asymmetry of the source charges in their fierce energy exchange with it.

We also need to point out that all primary electromagnetic entities—the charge, the field, the potential, and every joule of EM energy in the universe—totally violates the second law of thermodynamics. The charge produces continuously increasing negentropy, the field and the potential are formed at expanding light speed across the universe and are perfectly ordered (thereby totally violating the statistical mechanics basis of the second law), and every joule of EM energy is either field energy or potential energy, and hence violates the same statistical basis of the second law.

The Situation Is Serious

Admittedly these are strong statements highly critical of our scientific establishment's track record. But our national survival continues to be increasingly at stake, the situation is serious, and we must not continue to bury our collective heads in the sand like ostriches. We simply cannot continue to idly sit by and pontificate while other groups and nations methodically maneuver technically to cut our collective throats with advanced weapons we cannot defend against, once they find a way to "get by" the little nation that has been countering them for some years. Our own beloved nation may have less than 10 years {67} and perhaps less than three years to survive, unless the organized scientific community is galvanized to focus its very best scientific efforts in the energetics area.

So far, in truly innovative approaches to new methods for electrical energy, the U.S. scientific community is about as energetic as a sand terrapin sleeping in the tropical sun. There is no discernible move to recognize the seriousness of the problem, or to do anything effective about it. In 45 years, the asymmetry of the dipole (and the charge in its modern view as a dipolarity of special kind) has not made it across the university campus from the particle physics department to the electrical engineering department. In fact, the implication of broken symmetry to

electrical engineering and classical electrodynamics seems to still be completely unnoticed by the National Academy of Sciences, the National Science Foundation, our universities, and our great national laboratories. In the scientific community, other than work on vaccines etc., it is largely "business as usual."

A New Manhattan Project Is Warranted

Our need in the energetics weapons area is extreme, as are our needs in the medical area for quick, cheap, easy, and effective portable treatment of the coming mass casualties and our coming dramatic needs in energy. We *do* have superb scientists with the horsepower necessary to do something about it. The astounding, independent work of Sachs, the AIAS, and a few other scientists—which we stress has been unfunded—already clearly proves that. But unless we change the organized scientific community's normal rather snail-like pace—by a strong measure such as a Presidential Decision Directive and a declaration of a Nalional Emergency—the U.S. scientific community will overshoot the point of no return now approaching.

We need a new Manhattan-type project. We need it very quickly. If we do not change and focus our present scientific procedure, then—all too shortly—little that the scientific and intelligence communities are doing will be of value. We shall all be very, very dead or else in a new Dark Ages where most of the world economy has collapsed and freedom has largely disappeared from the face of the Earth.

T. E. Bearden, Ph.D.
Lieutenant Colonel, U.S. Army (Retired)
President & CEO, CTEC, Inc.
Director, Assoc. of Distinguished American Scientists

2002 ENERGETICS WEAPONS THREAT TO THE U.S.

T. E. Bearden 2000
Updated Oct. 1,2002

The U.S. Narrowly Escaped Energetics Destruction Twice in 1997

On two occasions in 1997 (latter February and on May Day), we were scheduled In be strategically attacked without warning and completely destroyed. Eerily, in public statements the leader of the Aum Shinrikyo sect (Figure 33) had foreshadowed the dates for the planned attacks, since his group was also involved—in fact, shooting down the TWA-800 (Figure 34) as advanced practice and stimulation of the U.S. to see if it knew what was afoot. Those two planned strategic strikes in 1997 were avoided only in the nick of time by ac**tions** of a friendly little foreign country, which was the only nation on earth at the time that could counter the KGB quantum potential (QP) weapons. I am sure that proper U.S. agencies intercepted my urgent personal faxes to the Defense Attache in Washington, DC and directly to the Prime Minister of the nation involved. Actions by that nation did succeed in averting our destruction in the nick of time.

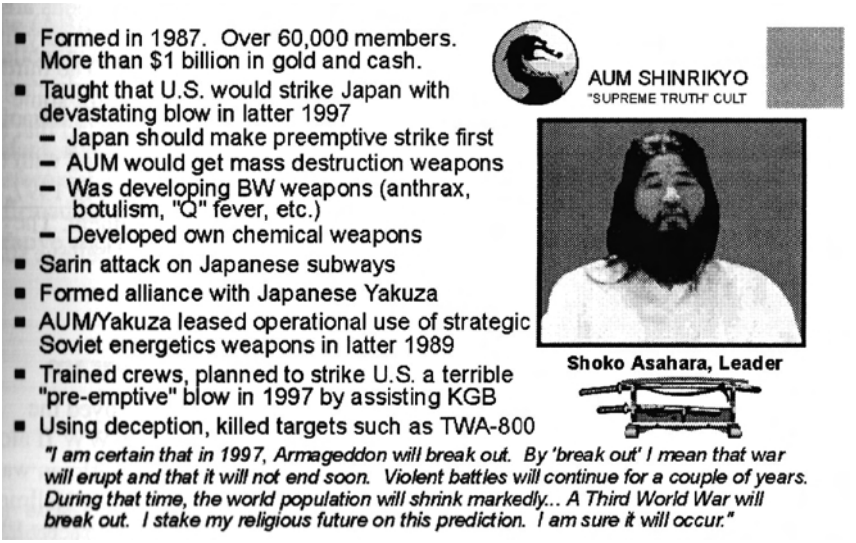

Figure 33 Planned KGB/Yakuza/Aum Shinrikyo attack in 1997 was foreshadowed in public statements made by Shoko Asahara.

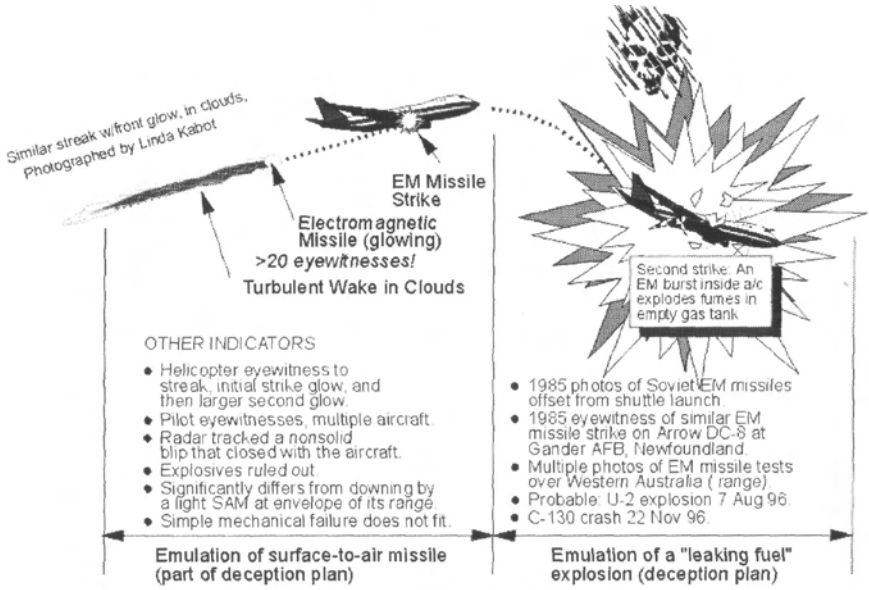

Figure 34 Kill of TWA Flight 800 on 17 July 1996 by Yakuza and Aum Shinrikyo.

Only five nations or national groups have quantum potential (QP) weapons, though one or more additional nations are almost certainly working on them and may even have them. First of the five is the KGB in Russia (the weapons are not in the regular Russian forces, and never have been). Second is the friendly little foreign country to whom we presently owe our continued survival. The third is Brazil (which has had a small and successful QP weapon program for some time). China deployed QP weapons in early 2002, and I recently found that at least one other friendly nation has them as well. I'm not too impressed with that other friendly nation, since they played no role in saving our bacon in 1997. It appears they did not actually know the coming attacks were imminent. They certainly do not have Causal System Robot weapons, nor do they believe such weapons even exist.

Initiation of the Brazilian Energetics Weapon Program

Brazil implemented an energetics weapons program after it employed the repatriated Dr. Hellman, a German scientist taken to Russia after WW II along with the German radar team. Years after being taken to Russia, Hellman was repatriated and made his way back to Germany. In a news interview Hellman reported that he had worked directly on the development of Soviet secret EM weapons which could suddenly free/.e large areas of the ocean surface. That of

course is a scalar interferometry weapon, producing negative (converging) EM energy rather than positive (diverging) EM energy in their distant interference zones.

Also, when the U.S. made David Bohm *persona non grata* in the McCarthy witch-hunts, Bohm was later employed in lecturing and teaching in Brazil for some time. At the time our own scientists continued to pontificate as to whether they *liked* or could *tolerate* Bohm's quantum potential and his hidden variable interpretation of quantum mechanics {3}. Meanwhile, the KGB weapon scientists and the Brazilian Hellman project seized upon Bohm's hidden variable theory with alacrity as soon as he published his seminal paper. Those two weapon groups were already familiar with the internal longitudinal EM wave structuring of potentials, fields, and waves (Whittaker 1903), and immediately saw the fantastic weapons implications of a deliberately structured quantum potential, containing a specific "engine" as desired. Most of our scientists still are unaware of it to this day, and are unaware of its formidable weapon implications when combined with Whittaker's 1904 superpotential paper, his 1903 potential decomposition, and quantum field theory. Most of our scientists still adhere to the Bohr interpretation of QM, which excludes the normal, everyday, observable, ordered universe we all inhabit and observe.[15]

The Bohm quantum potential is, after all, a scalar potential, and at least in theory it has a Whittaker biwave decomposition {68}. Even in the Coulomb gauge, the scalar potential has infinite velocity, as pointed out by Jackson.[16]

Several tests of the "cold explosion" Russian weapons referred to by Hellman have since been openly made. One major test seen by at least five jetliner crews was the anomalous rapidly rising cloud and subsequent extremely huge light globe (ABM energy shield) effects off the Kurils in April 1984 (Figure 35). Two excellent scientific articles on the physical phenomena observed in that incident are published in the prestigious journal *Science* {69}. We had explained the cold explosion phenomena and the ABM energy shield effects some years before that incident. Even ordinary superpotential theory {70} and longitudinal EM wave interferometry at a distance can substantiate the capability. We also positively confirmed by private sources that the scalar interferometry, the MindSnapper (negative energy EMP), and the cold explosion weaponry are real.

[15]This exclusion is euphemistically known as the "missing chaos" problem in quantum mechanics, and it is resolved in Bohm's hidden variable approach.
[16]J.D Jackson, *Classical Electrodynamics*, 2nd Edn., John Wiley & Sons, New York, 1975, p. 222, 223. Usually the instantaneous scalar potential contributes only to the near field.

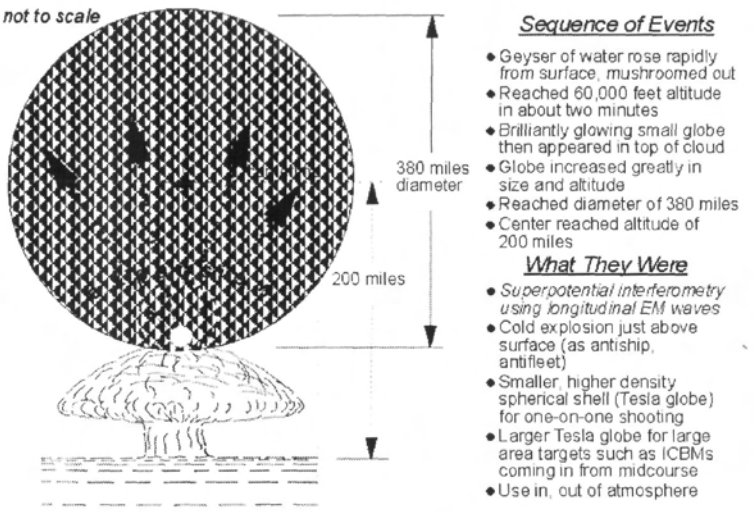

Figure 35 Exothermic (cold) explosion off the Kurils 9 April 1984. A second test, an expanding globe of light, was added in the exothermic mode to demonstrate rapid serial switching between weapon modes.

Related Phenomena

In 1969 in Toronto, Canada, Sid Hurwich demonstrated a device capable of "freezing" a pistol lying on a table so that the gun could physically not be moved and the trigger could not be pulled {71}. For this exhibition of *strong electrogravitation*, general relativistic fields initiated by the EM force field (including the usually unaccounted Heaviside nondiverged component that Lorentz arbitrarily discarded) as the agent of spacetime curvature were used {72}. The strength of the effect was attested by the fact that the hands of the observers' watches all showed "no passage of time" during the half hour they were in the room with Hurwich's device operating.[17]

Rapid development of that strong electrogravitational technology and concomitant energetics then proceeded in another nation. Weapons of such nature were then employed by that nation a few years later, in two well-known international incidents. Clear signatures of the nature of the weaponry utilized were present in those incidents. Details of these incidents will not be included in this paper.

[17] We point out that this is highly interesting itself, since it showed that the observers were operating in a different frame from that of the watches and the gun, which were "frozen". We also point out that recently light itself has been "stopped" in quantum experiments, yielding something quite similar.

Since the energetics weaponry already utilized special EM "hidden variables," Bohm's hidden variable theory and quantum potential were directly adapted into the program to dramatically extend it into the development of quantum potential weapons.

Stalin *Personally* Initiated the Soviet Energetics Program with the Greatest Urgency

While Stalin was at the Potsdam conference, at the close of WWII, the U.S. exploded the first atomic bomb in the desert. Truman informed Stalin in general terms that a powerful new U.S. weapon had been successfully tested. Secretly, Stalin already knew of our atomic bomb progress, for he had a spy in the program. While he was still at Potsdam, he then secretly called the Director of the Soviet atomic weapons program and directed a speed-up.

After we exploded two atomic bombs on Japan, the Japanese surrendered and WWII was over. See again Figure 1. Stalin vehemently ordered his Academy of Sciences to produce the next great technical breakthrough at all possible speed, since the American atomic bomb had frustrated his plan to wait two years after the war while the West speedily disarmed, then march into Europe and take it in six weeks. Now his massed troops could just be bombed back into the Stone Age by U.S. bombers using atomic bombs.

A Great Technical Breakthrough in Physics Can Always be Had in Four Years

The scientific community can have a great new technical breakthrough whenever its furious and dogmatic resistance to innovative discoveries or the possibility of innovative developments can be suspended. All that is necessary is a concentrated group of highly skilled, open-minded scientists, the money and facillities, and a strong headlock placed on the powerful but dogmatic scientific groups who would otherwise hamstring the program and destroy it.[18]

[18] Present day examples are (i) the cold fusion fiasco, where the U.S. scientific community has revealed furious determination to ignore more than 600 successful experiments worldwide, (ii) a similar fury against any and all research into extracting EM energy from the vacuum, even though all EM energy comes directly from the active vacuum via the proven asymmetry of source charges and dipoles, (iii) violent suppression of proven "extended electrodynamics" methods of rapidly curing severe diseases, even in terminal stage (resistance to anything except "cut, drug, burn" and anything that would interfere with the monstrous profits of the large pharmaceuticals), (iv) continuing dedication to an electrical engineering model that does not even model or apply what powers an electrical circuit, (v) continuing resistance to quantum potential research and development, (vi) slavish dedication to "big nuclear science", massive accelerators, dangerous nuclear power plants, and a "hot fusion WPA program", even though much higher energy physics than these programs advocate and use can be and is being done on the tabletop, using time-energy instead of spatial energy, and (vii) increasing "lock-up" of all research funds into the organized hierarchy's politically approved agenda. The community has deviated so far from scientific

We proved it in the WWII Manhattan Project, where we went from nearly zilch to the operational atomic bomb in 4 years. But we did it only by secretly bypassing the conventional U.S. scientific establishment. Einstein wrote to President Roosevelt *around* the scientific community, and when the President approved and ordered the highly classified program, conventional scientists not on the project were just parked on the sideline and ignored so that the job could be completed. The naysayers were also muzzled because of the extreme classification of the project; they faced jail if they engaged in their usual ad hominem attacks and dogmatic eloquence.

Further, today the "Skunk Works" approach repeatedly proves that bold new projects can be done, when the skilled scientists and facilities are mobilized and no adamant opposition by the conventional community is tolerated.

Numerous examples of the U.S. scientific community's suppression of innovation and new technology can easily be furnished. Such are well known to any historian of science. Cold fusion, the amorphous semiconductor by Ovshinsky, the first laser papers, ultrawideband radar, Mayer's original conservation of energy law, Boltzmann's work, Wegener's continental drift, flight of heavier-than-air machines, the rocket as a great strategic weapon, and hundreds of other examples come readily to mind. Such suppression has been *the* major characteristic of the organized scientific community since its inception, as pointed out by numerous leading scientists and authors. As Planck stated, usually one gets a new physics only after the old physicists who so adamantly oppose it just die off and get out of the way.

Today, the U.S. scientific community is in fact our "front line troops," although—except for a little lip service—the managers of the organized scientific community are blissfully unaware of it and have little or no sense of mission in out-of-the-box areas with respect to national survival. It is ironical, e.g., that our orthodox scientific community does not even know what powers an EM circuit—energy extracted directly from the vacuum by the asymmetry of the source charge (considered in its modern view as a dipolarity) and by the source

method in defending archaic theory in the face of experiments that falsify it, that the ubiquitous violation of the law of increasing entropy (second law of thermodynamics) by electrodynamics itself continues to be adamantly resisted using ad hominem and inflammatory attacks, slander and libel, and destruction of scientific careers of researchers. We flatly are not getting our taxpayer money's worth from our present scientific community, and—barring a Stalin-like shakeup from top to bottom—we are not going to get our money's worth in the future unless the community is forced to free up funds for young graduate students and postdoctoral scientists wishing to work in "out of the box" scientific areas. As Max Planck stated, *"An important scientific innovation rarely makes its way by gradually winning over and converting its opponents: it rarely happens that Saul becomes Paul. What does happen is that its opponents gradually die out, and that the growing generation is familiarized with the ideas from the beginning."* In other words, one doesn't get a scientific innovation until the old dogs so bitterly opposing it just die off and get out of the way. This long-known and stated characteristic of the scientific community—its fierce and unrelenting resistance to change and innovation—is presently the greatest threat to the survival of this nation.

dipole (Figure 36).

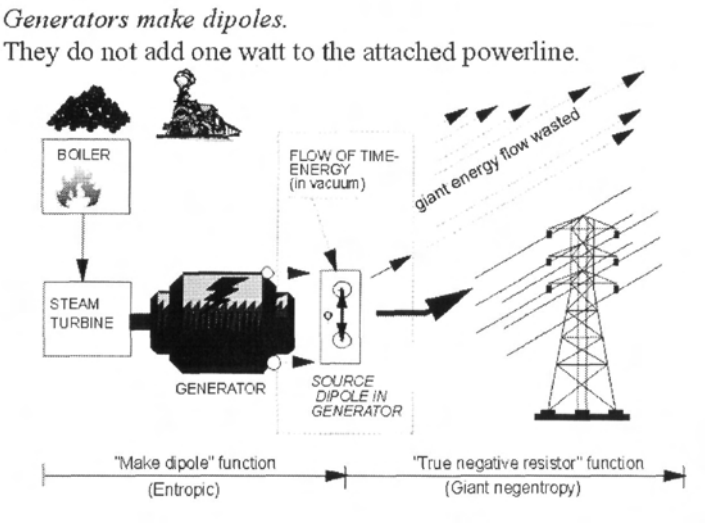

Figure 36 Energy extracted from the vacuum by the asymmetry of the source dipole powers every electric power line and electric circuit.

A Typical Example: The Suppression of Cold Fusion

As an example, much of U.S. Science—dominated by nuclear factions since the adventof the atomic bomb in WWII—vehemently attacked cold fusion and the **cold** fusion researchers, including wholesale ad hominem attacks, with a viciousness seldom seen in the history of science. Many dogmatic scientists declared the entire field at best a mistake and at worst a fraud. Even the character of many of the leading cold fusion scientists was openly impugned and the researchers were slandered and libeled. All this was done by conventional dogmaticscientists who have not solved the fundamental source charge problem {10,12}, have no inkling that all EM energy in 3-space comes from the time-domain {10}, and have not a clue as to what really powers every EM circuit. Since they also do not know where the electrical energy driving the chemistry actually comes from, they have no knowledge of the effects of time-energy in electrolyte solutions.

They also appear to have little or no knowledge of the implications of Evans' and Searles' *transient fluctuation theorem*[19] in thermodynamics showing to what degree the second law of thermodynamics can be violated and reactions can run

[19]D.J. Evans and D. J. Searles, *Phys. Rev. E,* Vol. *50,* 1994. p. 1645.

in reverse, nor its extension to the micron (colloidal) size level and to two seconds in duration.[20] If they did, then they would realize that the Coulomb barrier provided by *repulsion* of like charges (such as two H+ ions), often reverses into the *attraction* of like charges, with the barrier changing into the Coulomb attractor. This can last (by experimental proof shown by Evans *et al.)* up to two seconds, in a volume of fluid up to a micron in diameter. Hence it is not "against the laws of physics and thermodynamics" to observe attraction of two protons in an electrolyte so closely that each enters the strong force region of the other and the two form a quasi-nucleus. In the decay of this reversal zone, the preferred decay of the quasi-nucleus can be by quark flipping in one of the protons, yielding an atom of deuterium emerging from the decayed time reversal zone. Such results have been meticulously observed in many cold fusion experiments in multiple labs and nations, and by multiple researchers. Since these and other novel nuclear transmutation results are *replicated* experiments (more than 600, in multiple labs, multiple nations, and by multiple researchers), it means that no amount of theory can refute them or the results. The harsh skeptics launching the frenzied ad hominem attacks are thus revealed as the unscientific bigots they are, since they ignore substantial experimental results that contradict the prevailing theory. The excess energy production and inexplicable new nuclides (Figures 21, 37, 38) obtained by these multiple experimenters are completely inexplicable by ordinary nuclear interactions in the accepted theory.

- Fennions time-reverse in even numbers
- Like charges cluster
- Aqueous solutions contain H+ ions,
  which are just protons
- Quarks flip as TR zone fades

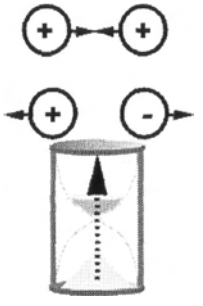

$$({}_1H_1 + {}_1H_1) \rightarrow ({}_0n_1 + {}_1H_1) = {}_1H_2 \text{ deuterium}$$

Figure 37 Electronuclear reaction in a time-reversed zone producing excess deuterium ions.

[20] G. M. Wang, E. M. Sevick, Emil Mittag, Debra J. Searles, and Denis J. Evans, "Experimental Demonstration of Violations of the Second Law of Thermodynamics for Small Systems and Short Time Scales," *Phys. Rev. Lett.,* 89(5), 29 July 2002, 050601.

- As TR zone decays, quasi-nucleus is usually in an excited state
  - — Decay action starts from every point in spacetime inside the nucleons
  - — Moves from inside toward outside
  - — Strikes the nearly free quarks first
- Decay occurs by easy quark flip
- Quasi-nucleus transmutes to an isobar
- If quasi-nucleus is a stable state in a forward time zone, no decay occurs.

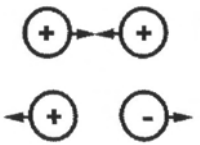

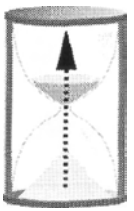

$$_1H_2 + {}_1H_2 \rightarrow {}_2He_4$$

Figure 38 Electronuclear reaction in a time-reversed zone producing excess alpha particles.

Meanwhile, the U.S. Patent Office has been instructed not to accept any patent applications that would interfere with present nuclear planning. Positive cold fusion results have also been successfully obtained in several U.S. government laboratories, including at China Lake where very strange instrumental effects have the experimental team puzzled. I proposed an explanation of those anomalies in August 1998, and have included it in my book just published in September 2002 {73}.

Revolutionary New Processes Are Hidden in the Cold Fusion Experimental Results

Once understood, cold fusion holds the breathtaking key to systems that consume *a tiny fraction of time flow itself* as a fuel to produce copious heat energy for the world's needs. Unknown to the conventional scientists, of course, electrodynamics itself already does this, but it has just not been recognized and accepted. Transducing one microsecond per second of time into transverse wave EM energy will produce some 9×10^{10} watts of real electrical power, if all the transduced EM energy is intercepted and used. This is the *real* way to extract energy from the vacuum and use it cleanly and cheaply.

To grasp such a notion, recall that the fundamental units used in physics are completely arbitrary. It is perfectly possible to express all physics in only a **single** fundamental unit—for example, *the joule*. Time then becomes totally a function of energy. So it is not so insane after all to express time as highly compressed energy. Mass is also highly compressed energy. That concept is now familiar after Einstein, the nuclear age, and $E = mc^2$. Time-as-energy is just as straightforward as mass-as-energy, but it has just not yet come into

recognition.

The *use* of time as compressed energy, however, leads to some profoundly new types of electronuclear reactions presently unknown in particle physics. These new transduction reactions produce the new nuclides in cold fusion experiments, and generate the *electronuclear interaction*. We explain that in some detail in our new book, *Energy from the Vacuum*, previously cited {10}.

When interpreted as using time-energy, cold fusion shows us the way to a new electronuclear regime of nuclear reactions where nuclei, elements, and compounds can just be directly assembled by comparatively weak (in terms of *spatial* energy!) electromagnetic interactions. Presently we have made substantial progress in understanding the fundamental mechanisms generating these electronuclear reactions, after presenting preliminary results in August 1998.

As one example, time-reversing a single fermion (a particle with spin 1/2, 3/2, etc.) is precluded by the Pauli exclusion principle. But one can time reverse *two* of them, or any even number n, where they act as a semi-boson or group of semi-bosons. Simply put, if a time-reversal zone is established momentarily in the region where like charges exist, then the n-tuple fermion cluster can be achieved because the law of attraction and repulsion of charges is temporarily reversed {74,75}. This unexpected "attraction of paired fermions of like sign" will form quasi-nuclei in many cases, particularly in small clusters of two or four, etc.

Hence two H+ hydrogen ions (two protons) in such a time-reversal zone in a fluid are drawn together into a quasi-nucleus, which actually is an excited isomer of deuterium (Figure 37). Time-reversal zones are temporary in cold fusion experiments due to the statistics of their formation and the transient fluctuation theorem {76} of thermodynamics. As the time reversal zone decays, the quasi-nucleus of two protons is increasingly in an excited and unbalanced state. The excited-state *diproton* nucleus decays by flipping a quark in one proton, converting it to a neutron. That produces a *neutron + proton nucleus*, which is a deuterium ion, strictly by electronuclear means. Or four protons may cluster by "attraction in a time-reversal zone" and form a 4-p nucleus. That is an excited isomer of a helium nucleus. As the time-reversal zone decays, first one quark flips in one proton and then another quark flips in a second proton. That produces a helium nucleus - i.e., an *alpha particle*. Or two deuterium ions can attract and form a quasi-nucleus (Figure 38), which is already an exact isomer of a helium nucleus and thus easily decays into an alpha particle by simply "tightening" as the weakened strong force recovers faster than the Coulomb force can reduce, vanish, and resume in the opposite direction. The exact reaction equations for these reactions are given in my new book, *Energy from the Vacuum* {10}.

We filed an Invention Disclosure on the process of forming and using time-

reversal zones to cause like charges to attract and unlike charges to repel *in vacuo,* in fluids, and in other media, resulting in the formation of semi-nuclei as excited isomer states of other nuclei, followed by decay into new nuclides. We will follow it with patent applications in the future. This represents a completely new kind of particle physics interaction presently not included in the textbooks, and not requiring high-energy processes. Literally thousands of new nuclear interactions—all *permissibly* violating the second law of thermodynamics because the statistics permit such violations and experiments prove it—are now possible.

Cold fusion does indeed hold a new kind of nuclear physics in its hand—but a physics presently considered very alien by our orthodox nuclear science community. For decades nuclear scientists have been seeking ever more spatially energetic particle smashing, believing that extreme high energy nuclear reactions and transmutations cannot possibly be done with charged particles at low *spatial* energy. One is sympathetic to the scientists, because even the concept of "low spatial energy transmutation" itself sounds like an oxymoron. And it would be, *if one were limited to spatial energy alone*, as is presently assumed by physicists. But one is also speaking of the neglected and compressed *huge time-energy* component of those low-spatial energy photons, and that is quite a different matter. The lower the spatial energy of the photon (the lower its frequency), the greater the amount of compressed energy transported in the time component as "time". The transposition of time-polarized EM energy into longitudinally polarized EM energy—and vice versa—is already justified in quantum field theory. Use of that extremely high energy component by its transposition or partial transposition into spatial energy in fact provides a much higher energy physics interaction than present orthodox high energy physics utilizes, knows, or considers.

Almost all the learned scientists are thinking *only* of spatial energy, since that is the only kind they have been "taught" to consider. Hence, from their view (i.e., on the premise of their implicit *assumption)* it is perfectly "logical" to condemn cold fusion, since in their view, "cold" implies low (spatial) energy and "fusion" implies high (spatial) energy transmutation. What is unknown to the orthodox community is that the "cold" in cold fusion also implies "extraordinarily high time-energy". So with a little transduction of highly compressed time-energy into spatial energy, "cold" fusion actually can imply "extremely high spatial energy made available by transduction" also.

As an example, the Chief Editor of *Science* recently had the courage {77} to publish results of sonoluminescence research reporting positive experimental transmutation results {78}. A paper was then published in *Nature* {79}, pointing out that the (spatial) energy involved is insufficient for such nuclear transmutation temperature, thereby implying that the reactions reported by the first researchers are not possible.

However, given formation of a time-reversal zone, this second paper is not

necessarily applicable to the sonoluminescence fusion process, because the paper is based on an unwitting two-part premise that *(i) only spatial energy can be used for nuclear transmutation and (ii) no time-reversal zones exist to nullify that premise by having reactions (such as the law of attraction and repulsion of charges) run backwards.* That premise is already experimentally proven to be invalid by Evans et al., and it fails when the time reversal zone effect is considered.

We strongly stress that thermodynamics—both in theory and as demonstrated in experiments—not only allows but predicts—for a certain fraction of the time—the formation and existence of just such "reversal zones" where the usual reactions *run in reverse* {76}. It is also experimentally proven {54}. In that case a much higher energy—time energy—can be and is employed to convert the Coulomb barrier into the Coulomb attractor.[21] We know now (from the experimental demonstrations by Denis Evans et al.) that such "reversal zones" may be up to a micron in size and may endure for up to two seconds. The subsequent decay of that TRZ then allows the quasi-nuclei temporarily formed in it to decay by quark flipping alone, allowing the quasi-nucleus to easily transmute into a perfectly well known nuclear reaction product.

To quote Arthur C. Clarke, when a learned scientist says something is *possible*, he is probably right. When he says something is *impossible*, he is probably wrong.

Stalin's Dictatorial Impact on Soviet Scientific Management's Response

Stalin was a powerful dictator. He simply killed or jailed those who opposed his will. So after his blunt order (Figure 1) circa latter 1945 to find a great new technical breakthrough area quickly, his Academicians and high level science managers were faced with a severe dilemma: They could not afford to *oppose or criticize a vigorous search* for new innovations and a great breakthrough, and they could not remain passive. Their very lives depended on they themselves *personally finding such a breakthrough in great haste and presenting it to Stalin*. They had to actively spur the efforts of their most outstanding subordinates and Soviet science itself, or suffer dire personal consequences. Siberia and prison camps loomed for the lot of them unless they produced.

To put it bluntly, Stalin "got their collective attention" and their "whole-hearted support." Those few who resisted simply were shipped post-haste to the notorious prisons of Siberia, and worked to death in short order.

[21] We strongly point out that, when the reactions run backward and negentropy appears in those reversed regions, the conservation of energy law is violated unless time-energy is being converted to spatial energy. Either we must begin accounting time as energy, or we must give up the conservation of energy law itself. The obvious solution is to account the time energy being utilized, as well as the 3-space energy.

So the highest-level Soviet scientific managers now desperately demanded of their subordinate scientists *anything—anything at all*—that was novel and had breakthrough implications. An almost convulsive national scientific effort was launched immediately, with hardly a detracting voice. A great team of the very best Soviet scientists was rapidly formed and methodically searched the scientific literature of the world from beginning to end. Nothing even remotely like that search and review has ever occurred in the West.

For example, one great technical center set up by the Soviets had a staff of about 2000 Ph.D.s with associated translators, staffs, etc. The Soviets purchased and hauled in copies of all the scientific literature of the West—by the shiploads—to such centers. Their scientists then methodically went through the material, journal by journal, paper by paper, page by page. There are and always have been myriads of innovations and discoveries sitting on the shelf in the scientific literature, never followed up, or opposed by standard models and credos. The first tier of reviewing Soviet scientists was composed of excellent scientists. They skimmed out the "cream" into a select pile which the second tier then analyzed in depth. The second tier was composed of the best nonlinear scientists in the world—the "superscientists."

They were seeking *new principles of nature that could rapidly be developed into highly advanced technology*, and they found them—sitting there in the literature, already pointed out, and long ignored by the Western scientific community.

Shortly Stalin had his great new breakthrough area emerging, and they had their heads.

Our Own Science Community's Progress During These Decades

For decades foundations physicists (Bunge, Feynman, Wheeler, Lindsey, Margenau, etc.) in the U.S. have repeatedly pointed out the substantial foundations problems in electrodynamics. Nobelist Feynman and the great John Wheeler tried to "fix" the problem whereby electrodynamics still erroneously assumes force fields in a space filled with a *material ether* (unit point positive charge, unit point north pole, and unit point mass assumed at every point in space). Unfortunately they failed, primarily because their absorber theory {80} contradicted the photon hypothesis and hence quantum mechanics.

Meanwhile, our own National Science Foundation and National Academy of Sciences has directed only minimal work on correcting electrodynamics and dramatically extending it. Faraday and Maxwell—as did every other scientist at the time—rigorously assumed a material ether. Maxwell's equations also implicitly included that material ether assumption. They still do, even after Heaviside's truncation and Lorentz's symmetrical regauging, because none of the Maxwell-Heaviside equations were changed to eliminate the material fields in space (material ether) assumption after the Michelson-Morley experiments

falsified it.

Every major university in America still teaches that implicit material ether, even though it was falsified over a century ago. That is an exact measure of the caliber of "foundations" work our own scientific community does if left alone. *In more than 100 years, they have not even chosen to root out the material ether from electrodynamics.*

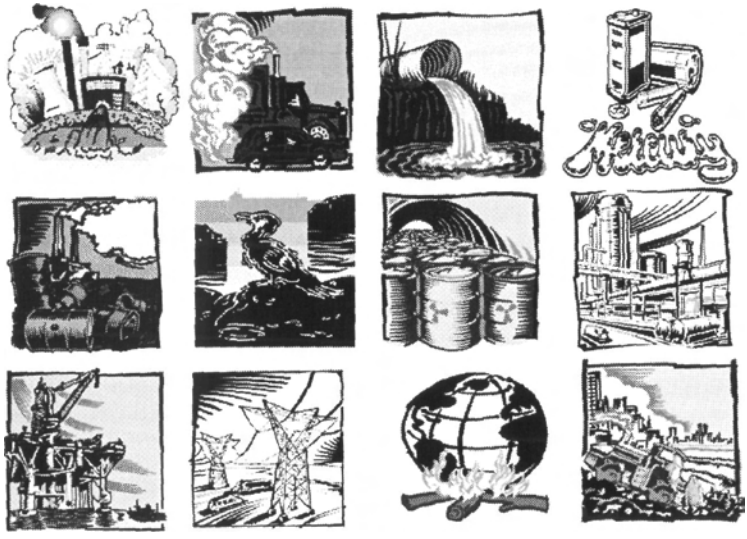

Figure 39 This polluted and suffering planet. Direct result of the scientific community's adamant resistance to upgrading classical electrodynamics and electrical engineering.

The prevailing flippant attitude is that, "Well, your TV set works, doesn't it?" Yes it does, but we also do not have practical electrogravitation and inertial propulsion, nor do we have cheap clean EM energy from the vacuum. Instead, we have a severely polluted planet (Figure 39), ever increasing deaths from biospheric fumes and polluting byproducts, increasing destruction of species, and a monstrous unleashing of far more coal and hydrocarbon burning in our near future while the world tears itself apart and destroys its economy and civilization in a rising series of oil and energy wars. The direct responsibility for that mess lies directly with the scientific community and its fierce resistance to innovative research and development, and changing a century-old, long outmoded classical EM and electrical engineering model.

Wryly put, it's high time we "got the lead out" of EM field theory, where the lead is the material ether and other non-sequiturs cluttering the theory.

Such drastic modeling errors would not be tolerated of government-funded aerospace engineers and contractors developing a new missile system. So it should be equally intolerable in the government-funded scientific community

and in fact in the civilian scientific community as well, and it should not be tolerated of either the National Academy of Sciences or the National Science Foundation.

Einstein {81} said it perfectly, as follows:

> *"...the scientist makes use of a whole arsenal of concepts which he imbibed practically with his mother's milk; and seldom if ever is he aware of the eternally problematic character of his concepts. He uses this conceptual material, or, speaking more exactly, these conceptual tools of thought, as something obviously, immutably given; something having an objective value of truth which is hardly even, and in any case not seriously, to be doubted... in the interests of science it is necessary over and over again to engage in the critique of these fundamental concepts, in order that we may not unconsciously be ruled by them."*

Upholding and perpetuating flawed electrodynamics models seriously impedes the progress of scientific development and revolutionary new technology.[22,23] At some point, one must legitimately question the upper management of the U.S. scientific community for not modifying classical EM and electrical engineering to include the active vacuum exchange with every charge and EM system. In not doing so, they continue to advocate perpetual motion source charges, creating energy from nothing, on a scale unparalleled in history.

It is little wonder that we do not have electrical power systems that successfully and freely utilize more than a trillionth of the vacuum energy they freely extract from the local vacuum. *There is not now and there never has been a single*

[22] Oddly, the conventional electrodynamics model assumes that every source charge freely creates energy out of nothing at all, and pours this energy out continuously in all directions, thereby establishing its associated EM fields and potentials at light speed, reaching out across the universe. From the 1960s alone, the total assumption of incredibly vast numbers of perpetual motion machines has been carefully hidden from the new students, so that today even many professors do not realize that in their model all EM fields and potentials, and every joule of EM energy in the universe, are assumed to be created by a vast assortment of perpetual motion machines called source charges. That problem has not been solved in electrical engineering or in classical electrodynamics, and if the scientists have their way, it is not going to be solved. Yet the basis for its solution—the asymmetry of opposite charges such as the dipolarity (in the modern view) of a source charge—has been in particle physics since 1957, with the award of the Nobel Prize to Lee and Yang in December of that year.

[22] One keeps one's sense of humor. The raucous skeptics and "defenders of the orthodox EM faith" who so noisily denounce legitimate COP>1.0 EM system researchers as "perpetual motion nuts", are themselves unwittingly the greatest perpetual motion nuts ever recorded in history. Further, they are so ignorant of what their present model actually means, that they do not even know it. It is one thing to be ignorant and to recognize it; it is quite another thing to be ignorant and so ignorant one does not know it—45 years after broken symmetry was rigorously established experimentally by Wu and her colleagues, and the Nobel Prize awarded to Lee and Yang.

electrical engineering department, professor, or textbook that knows what actually powers an EM circuit—real observable EM energy extracted from the local seething vacuum by the source charges and the source dipolarity.

Since our scientific community cannot seem to make such a simple change (as including the active vacuum's interaction with every charge and the charge's broken symmetry in that interaction) even 45 years after the basis for that change has been resoundingly proven in particle physics, our national survival is at stake and the nation itself is seriously threatened by the superweapons developed by the KGB over the last five decades. We would have already been totally destroyed—twice in 1997 alone—had it not been for the intervention of a friendly little foreign nation. My colleagues and I played a very small alerting role in those affairs, so we are speaking from experience, not from extrapolation. We would be quickly destroyed today, were it not for the continuing "balance of terror" provided by the little nation.

U.S. Scientists Have Committed Monstrous Crimes and Gone Unpunished

Rather sadly, we also point out another thing that has to be said: *scientists are no more moral or immoral than any other slice of American citizens.* A percentage of scientists is capable of committing horrible scientific crimes, as distasteful as such a statement may be. That includes the deliberate experimentation on humans, resulting in deaths. In short, at least manslaughter and perhaps even murder, since knowledge of the probable results was there beforehand.

One would think U.S. scientists would *never* scientifically condone and perform experiments leading to mass deaths for 30 years (i) as they did in the Tuskegee case in Alabama. Over 400 poor blacks were supposedly treated for syphilis, while actually not being treated at all, but were deliberately tricked and allowed to rot with syphilis so our "ethical" scientists could watch how their brains decayed, so to speak. Over 100 of those poor blacks died with the disease while the scientists cold-bloodedly watched them expire and kept meticulous records. Or (ii) as they did in the case of whole body nuclear radiation for 30 years—again by trickery, deceit, and illegal use of security classification to hide these acts—of helpless retarded children and others, some of whom also died.

Once these heinous incidents were exposed publicly, the political power of the scientific community is such that *no scientist was ever indicted or tried for these heinous mass murders, and none is going to be.* The scientific community *has* <u>*not*</u> fiercely called for punishment of these mass murderers amongst their midst—guilty of precisely the same kind of horrible actions for which we tried and executed war criminals at Nuremberg.

Incredibly, the President of the United States formally apologized for these incidents! He did not turn the case over to the Justice Department for prosecution of high crimes against humanity and mass murder, *as would have*

been done for ordinary citizens. Had a single doctor in his private clinic done such things on his own, he would have been arrested, summarily tried, and either sentenced to life in prison or executed.

The sad thing is that there was really no sharp clamor from the scientific community to bring their fellow scientists to justice, a la Nuremberg. By their silence, the organized scientific community showed a side that scientists are loftily not supposed to possess. *So long as the scientific community continues to tolerate those mass murders of American citizens and not call for justice, then just so long do they stand convicted by their own resounding silence and inaction.*

We cite these painful incidents (there are others!) to point out that one must not deify the scientific community. The conduct of science is no better and no worse than the conduct of human affairs in other areas. Science is also a big business, and it has its moral scientists and its immoral scientists. It does its moral business and it does its immoral business.

We painfully submit that both sides of the scientific character must be considered, when one examines such things as the tolerance or intolerance of the scientific community to dramatic innovation and "out of the box" research. We have to consider it now, because it has become a serious threat to the continued survival of our nation. The conduct of scientific affairs will unavoidably include suppression, maneuvering, spin control, and fierce struggle for power and funds—such is in the very nature of human beings, and it is present in the scientific community on a bell-shaped curve as in all other human communities. It is ongoing widely today, and to an uncomfortably large extent much of science has been captured and effectively controlled by controlling the scientific funding and prescribing what research must be done for the funds available.

As the French say, "The more things change, the more they remain the same." Science is still the same way as it was when Planck made his famous statement. It will still be that way tomorrow, and a century from now. As with any other big enterprise, it has to have checks and balances imposed and enforced on it from outside—by the government itself. Little or no indication exists of that happening in the near future, until we get something like an anthrax spray attack on a large city, and have a million or more Americans dying in the streets.

Energetics: New Principles of Physics and How the Soviets Found Them

Under Stalin's whip, the Soviets particularly sought anything that indicated *possible new principles of nature.* It is no accident that Nobelist Petr Kapitsa later informed Nikita Khrushchev that a means of total neutralization of foreign missiles could only come from *a group of new principles in physics called energetics.* A group of new principles is precisely what energetics *is.* So if our scientific and intelligence communities wish to understand energetics, they must

first understand the new principles it is based upon. They cannot just simply apply ordinary electrodynamics and "business as usual" as they have largely done. The massive Soviet scientific search program spurred by Stalin is where those new principles came from.

When the first tier of Soviet review scientists found something that had not been followed up, and saw that it had significant implications if found valid, that paper was laid aside into a "select" pile. That select pile then went to the "super" scientists, for full-blown review and analysis by some of the brightest and sharpest minds on the planet.

The Russians came up almost immediately with Whittaker's 1903 and 1904 work. That work shows a hidden electrodynamic *longitudinal* EM wavepair structure (in phase conjugate pairs) inside the scalar potential and comprising it.

This is a dramatic extension of electrodynamics to incorporate a full-infolded general relativity infolded inside the electrodynamics. Whittaker showed that scalar potential functions in interference already *create* all the "normal" fields and waves anyway (the beginning of superpotential theory). This novel interferometry and its inherent capability for action-at-a-distance did not elude the Russian superscientists. The superb Soviet scientific team came up with that and with much, much more.

Nothing like the comprehensive, intense review of the entire scientific literature has been accomplished by the U.S. scientific community. Nothing like it is being done now.

Longitudinal EM Wave Interferometry Energetics Was Almost Immediately Uncovered

At the end of WW II, the German radar team and infrared team were taken to Russia. Both teams were years ahead of their Western counterparts.

One of my close colleagues has validated that the German radar team had some severe instrumental anomalies while still in Germany. We think this is what they were:

In WW II the Germans invented radar absorbing materials, to coat their submarine snorkels and prevent Allied antisubmarine warfare bombers from tracking the snorkels and destroying the subs. A wide variety of highly nonlinear, doped materials were investigated. In addition to single beam radar cross section, the Germans also examined the materials in multi-beam illumination circumstances.

It appears that, in some multibeam experiments with some materials, conditions were just right so that the multi-illuminated absorbing material acted as a pumped phase conjugate mirror (PCM), and wave-to-wave interactions emerged. This meant that the absorber material PCM would suddenly gather up

all the energy in the pumping beams, use one of the other beams as a signal input beam, and fire an amplified retroreflected pulse right back down the signal input beam, wrecking the experiment and creating havoc in surrounding equipment.

When the German radar team went to Russia, their knowledge of these anomalies went with them. In the desperate Russian scientific climate to find *lust such anomalies,* this startling and anomalous phenomenon would have been exhaustingly examined and studied, once the German radar engineers got to Russia to their new laboratories.

In short, it appears that the Russians quickly came up with what today is called "nonlinear phase conjugate optics," but first in the radar band rather than optics.[24] So before 1950, it appears that the Russians already had working phase conjugating pumped phase conjugate mirrors for the radar bands and in other bands.

Fisher {82} details that we Americans did not "stumble onto" practical phase conjugate optics experiments until Russian physicists briefed Lawrence Livermore National Laboratory scientists in 1972 about the strange wave in **many** of their optical experiments that "came out of nowhere and restored order **from** disorder." At that time, the KGB energetics weapon scientists had known aboutphase conjugate retroreflection and its amplified pumping, for more than 20 years. Indeed, the first giant strategic scalar interferometers had already been deployed and utilized to kill the U.S.S. Thresher nearly a decade earlier (Figure **6).**

By 1950 Russian Energetics Was Off and Running

By the beginning of the 1950s, the Russian scientists under iron KGB control were already experimenting with "scalar potential interferometry" at a distance, a la Whittaker 1904. Here transverse EM waves, EM fields, and EM energy—either *divergent* (heating) positive energy or *convergent* (cooling) negative enery—could be readily created at a distance {83} (Figures 40 and 41). Further, the longitudinal EM wavepairs used in this interferometry had the marvelous characteristic of easily penetrating right through the earth and ocean, with only a little intervening interaction, given that the LWs are sufficiently well made {84}. The interferometry "beams" can and do also move superluminally—again, right through the earth and ocean.

[24]**Of course, they would also have investigated it at all other bands as well.**

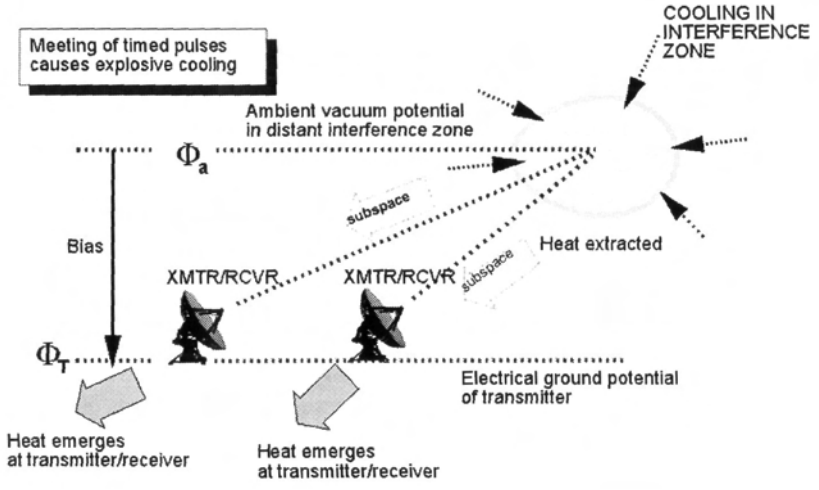

Figure 40 Scalar interferometry in the endothermic (cooling) mode.

It is not accidental that Admiral Gorshkov, head of the Soviet Navy, would later bluntly state: *"We have made the oceans of the world transparent."* And so they had.

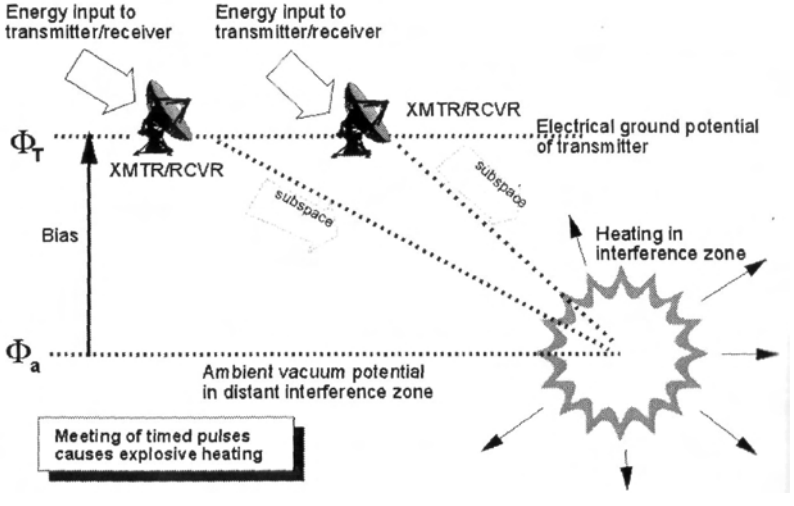

Figure 41 Scalar interferometry in the exothermic (heating) mode.

By 1950, the Russian scientists were experimenting with deliberately creating and phase conjugating longitudinal EM waves, forming phase conjugate

wavepairs. They then assembled the desired (mathematically calculated) sets of those waves, adjusted frequencies and magnitudes, phasing, etc., to produce EM potentials having a desired deterministic internal spacetime curvature set (internal spacetime engines) and dynamics.

As a result, by the mid-50s Russian weapon scientists were already experimenting in *bioenergetics* with the direct inductance of diseases and health changes via the transmission into human targets of such "internally structured" EM potentials, fields, and waves. They were also experimenting with the production of EM energy, potentials, fields, and waves at a distance, directly through the earth and the ocean. Either heating (energy flow divergence) (Figure 41) or cooling (energy flow reconvergence) (Figure 40) could be produced at will in the distant interference zone, merely by altering the bias voltage on the chassis grounds of the interferometer's transmitters. Rapid switching between the exothermic and endothermic modes thus was straightforward {85}, as demonstrated (Figure 35).

By the latter '50s, longitudinal wave interferometry weapons had already emerged from advanced engineering development and were in full production engineering toward deployment. The LIDA device {86} and even more advanced versions for directly affecting the human mind and its state of consciousness had emerged in *psychoenergetics* as one class of devices rather openly released and utilized. The LIDA uses structured EM microwaves {87} to induce a hypnogogic or cataleptic type of trance-like state in either a human or a cat. as tested years later by Dr. Ross Adey of the U.S. Early prototypes were purportedly used against our prisoners in North Korea during the Korean War to assistin their brainwashing by their North Korean Captors. Prisoners reported that its effects were irresistible.

Meanwhile, energetics weapon testing in several major modes was being conductcd, particularly from Soviet research ships over remote regions of the ocean and at night. Descriptions of such tests—many of them seen by passing ship's captains—can readily be found in the open maritime literature. We gathered and published many such incidents and cited references.

Deployment of the Soviet Energetics Weapons and Their Quick Use

In January 1960 Khrushchev spoke obliquely of these "fantastic" new superweapons, just within the portfolio of the Soviet scientists, so to speak, in an important speech to the Presidium. Parts of that speech were reported in the *New York Times* {88}. No one in the West knew what Khrushchev was talking about. Our intelligence community, which bases many of its assessments on the tired old phrase "We have no evidence that..." simply treated it as propaganda, It wasn't, and the U.S.S. Thresher was to be destroyed (Figure 6) three years later by that same weapon Khrushchev was speaking of.

Khrushchev began rapidly inserting long-range missiles and nuclear warheads into Cuba in 1962, precipitating the Cuban Missile Crisis. Kennedy knew Khrushchev's strategic bombers and rockets were in horrible shape, due to direct information received from Colonel Oleg Penkovskiy, a Russian spy in our employ courtesy of British Intelligence. No one knew of the superweapons, but they were not yet operationally ready in Oct.-Nov. 1962. So Kennedy called Khrushchev's bluff and faced him off. Blustering awhile to obtain U.S. assurance that it would not invade Cuba, Khrushchev was forced to back down and withdraw the missiles. In his exuberance he had simply moved too fast in inserting the missiles into Cuba. Had he waited a few months later, the strategic superweapons would have been operational and ready. Any U.S. naval blockading force would have thus faced quick and eerie destruction or disabling, as was soon to be demonstrated in the case of the U.S.S. Thresher and its surface companion, the U.S.S. Skylark.

This severe loss of face by Khrushchev, before the Communist Party, made it imperative that he do something quite dramatic to stay in power, and do it as quickly as possible.

Khrushchev's first large, full-up, strategic longitudinal EM wave energetics interferometer weapon became operational on site by April 1, 1963. A few days later, Khrushchev employed it to kill the U.S.S. Thresher atomic submarine (Figure 6) underwater off the East Coast of the U.S. By simply creating EM noise in an interference zone placed on, in, and around the sub underwater, and thus jamming the sub's electrical controls so that it could not be controlled, the helpless sub sank to crush depth and imploded. The U.S.S. Skylark on the surface had multiple systems seriously jammed or rendered nonoperational. This was the Russian deception plan, to have the kill of the sub resemble an accident.

One day after the successful clandestine kill of the Thresher, the same weapon was used to demonstrate a powerful underwater electromagnetic burst 100 miles north of Puerto Rico (Figure 42). The energetics underwater burst equaled a substantial deep underwater nuclear explosion in size. The burst was seen by a passing U.S. jetliner crew and was reported to the FBI and the U.S. Coast Guard when the aircraft landed in Florida. A colleague interviewed the co-pilot of the aircraft, and relayed the interview information to me.

Khrushchev's Second Demonstration

Deep Underwater EM Explosion 11 Apr. 1963

(Similar to this photo set of a deep underwater nuclear **test** explosion)

Phenomena observed and reported by passing U S jetliner

100 miles north of Puerto Rico, over Puerto Rican Trench (One of the deepest parts of the ocean)

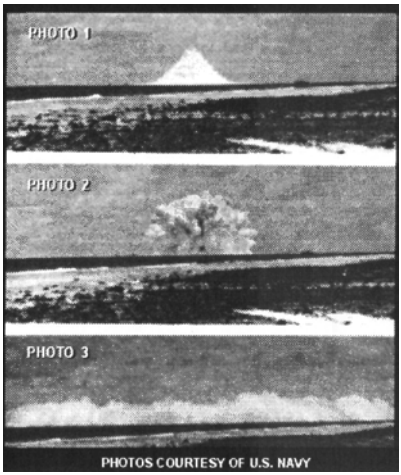

Figure 42 Deep underwater nuclear burst, demonstrating same water phenomenology produced by Khrushchev's second demonstration on 11 Apr. 1963, the day after killing the U.S.S. Thresher.

Why the Soviets Could Continue to Attack and Kill U.S. Targets with Impunity

Ironically, Khrushchev clearly demonstrated the inability of U.S. science to comprehend the numerous test incidents of Soviet LW interferometers, including the actual destruction of strategic U.S. targets (our latest and greatest nuclear attack submarine!) right off our coast. *The greatest strategic weakness of the U.S.—and the thing that may yet completely destroy all of us—is the continuing snail-like pace of U.S. scientific progress in revising, correcting, and extending its seriously flawed classical electrodynamics model. This scientific inertia placed us several decades behind in development of defenses in the areas of longitudinal EM wave weapons, quantum potential weapons, and causal system weapons. It countered our strategic nuclear armada for two decades. We were for some time analogous to the Spanish Navy with its wooden ships, when it faced and was destroyed by American steel ships. Hopefully at least some more modern work has now been accomplished in higher group symmetry electrodynamics, so that we are not quite as defenseless as we formerly were. But we still have a very long way to go.*

When one performs a standard strategic analysis on a nation, one of the areas examined in depth is called *national style.* One of the major characteristics in the U.S. **national** style is that we do not react to slowly increasing threats or changes

(Figure 43). That style particularly applies to the scientific community. Because of it, the Russians knew that our government only inches forward in achieving new *basic* science. We run at enormous speed, doing *applied* science. We are essentially Romans and great engineers. We are largely not Greeks and not great esthetics discoverers. We also will just ignore new threats if they emerge very slowly and are only gradually perceived, and we will hide behind that infamous phrase, "We have no evidence that..."

BOA CONSTRICTOR LIGHTNING STRIKE

Americans tend not to react to slowly increasing things,
but react to rapidly increasing things.

Figure 43 America's national style: we do not react to slowly increasing threats.

In short, *we react to the coiled rattlesnake, not to the boa constrictor*. We are now in a long, bloody, costly war against terrorism because of that very characteristic of our national style. For decades, the slowly increasing infiltration of terrorists and their weapons was just ignored. Oh, yes, the official "threat studies" pointed it out, placidly.[25] But no one got very excited about it. The prevailing attitude was that "Ah, yes, but nothing like that will happen on *my* watch!"

As clearly demonstrated by their successful decades-long radiation of the U.S. Embassy in Moscow, the KGB chess masters knew that, if the test kills using

[25] Indeed, if one will look at the threat studies prior to William Cohen taking office as U.S. Secretary of Defense, one will find widespread complacency about the terrorist threat, and mostly just lip service to it. It was definitely not very important to most of the intelligence and scientific community. Cohen built a fire under the entire threat community, forcing them to get their act together and start actually studying the terrorist threat, asymmetrical warfare capabilities and dangers, and what could be done about it. He did force the research and threat communities to do a creditable job of studying it, and to publish reports detailing it. Unfortunately, the tenor of the political community outside SecDef Cohen's control was basically "business as usual, not to worry." September 11, 2001 changed all that forever. Once again we had waited until the rattlesnake struck and actually bit us, before the nation rose up and paid attention.

their superweapons were not too often repeated, and if they even vaguely resembled other things known in the world, the U.S. scientific community and government investigators would resist all suggestions of Russian superweapons and super technology using new principles of nature. And so would our intelligence community, since they rely on the scientific community for their scientific assessments. They were well aware of our historical "ostrich" position (Figure44).

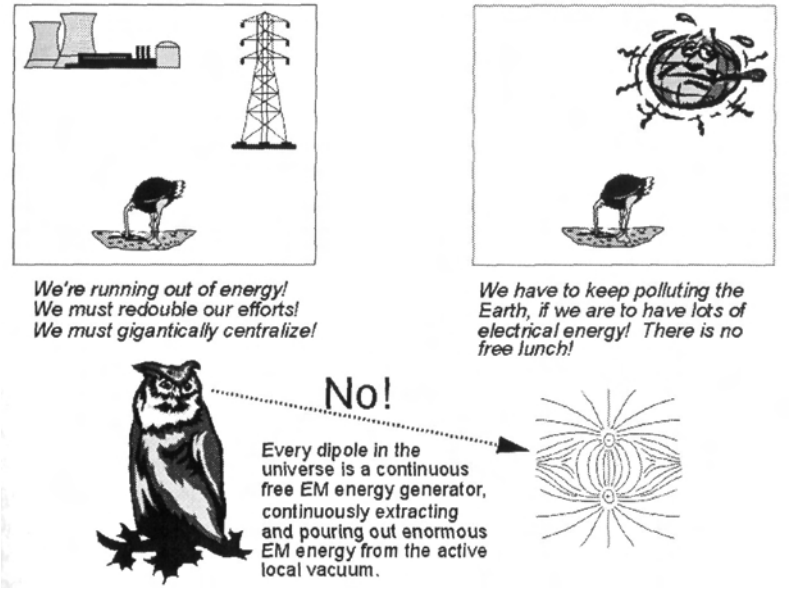

Figure 44 The only energy resource problem is the theoretical ostrich problem in science. We *must* become theoretical owls, rather than ostriches.

The KGB deception just depended upon the U.S. tiger to keep its stripes and exhibit its normal reactions or lack thereof. They also utilized (i) a series of strategic deception plans, deliberately designed to perform the tests suggestive of discredited phenomena such as UFO reporting and "lights at night" types of things, and (ii) a continuing series of subtle and anomalous stimuli (probes) designed to rather slowly attract the attention of U.S. Government at high levels, and of state-of-the-art U.S. government scientific contractors as well. The trick was not to attract U.S. attention *too suddenly or too strongly.* Show them the slow boa constrictor, not the lightning-fast rattler, and see how they reacted, if at all. By their reactions, the KGB could assess whether or not the U.S. governmcnt, intelligence, and scientific communities understood what was happening.

Precisely as anticipated by the KGB, we showed them for some decades that we

really had little or no comprehension of the superweapons and their testing right over our heads. Even today, at least in the open community there is still little recognition, even of the violent weather war raging right over our own heads since July 4, 1976 and easily recognized.[26]

A case in point was the deliberate induction of diseases and health changes in U.S. personnel in the U.S. Embassy in Moscow for over 40 years (Figure 11). On a continuing basis, this excellent intelligence probe showed (by the U.S.'s actions or lack thereof) that we knew nothing about energetics.

Another KGB probe method was to kill a target once in a while, such as a jetliner or a submarine (deliberately rather seldom here, because the U.S. military would react if a certain frequency threshold were exceeded). Such kills resemble or can be posed as natural accidents or terrorist incidents. Quite a number of such incidents have occurred over the last three decades. The National Transportation Safety Board (NTSB) does not have higher group symmetry electrodynamics in its knowledge base or on its "checklists", nor does it have scalar interferometry, psychoenergetics, bioenergetics, or quantum potentials. In total, the results of deliberate stimuli of the U.S. continually assured the KGB chess masters (with 100% certainty) that we were a complete novice in the energetics game, and we were a lamb increasingly ready for the slaughter.

The major contribution to the continued success of these deliberate measures by the KGB has been provided for decades *in the "nonreaction of our own scientific community to slowly increasing threats."* To a lesser extent, our own intelligence community has also not focused sufficiently open-minded and highly qualified scientists to comprehend what is occurring in "new principles of nature" phenomena. "In the box" electrical engineers with Bachelor of Science degrees often are the analysts who analyze and assess such "out of the box" phenomena. Good luck!

Ordinary radar engineers may analyze an ordinary radar rather well. They will never, never become aware of a radar beam carrying infolded spacetime curvature engines. Such is not even in their lexicon or in their belief structure. They have no understanding or experience at all with longitudinal or time-polarized EM waves—most have never even *heard* of time-polarized EM waves. Mention curvatures of spacetime and their dynamics as deliberate "engines" impressed *inside* EM fields and potentials and waves, and one gets a glaze right over the eyes of the intelligence analyst recipient.

Western science conceives the mind as a meat computer, and does not understand that mind operations are totally electromagnetic and causal, but nonphysical—meaning in the time domain rather than in 3-space. Mind

[26] The weather war over our heads has been particularly violent, and violently resisted, this year (2002).

operations primarily use time-polarized EM waves rather than the transductions into transverse EM waves that the scientists actually measure. Hence Western science has not the foggiest notion as to what Russian psychoenergetics is all about, or how it can even "be." Certainly Western science has had no notion of deliberately creating time-polarized EM waves for direct engineering within the mind itself and within the mind's time-EM operations.

As Arthur C. Clarke puts it in his "third law," *"Any sufficiently advanced technology is indistinguishable from magic."*

Our long fascination with our "normal" (optics, IR, UV, radar, COMINT, satellite photography, etc.) technological intelligence collection systems will certainly not lead to any great breakthrough understanding of Russian energetics weaponry. That could only have come through HUMINT or COMINT. HUMINT is an area which, in the past, we have mostly just neglected or given lip service to for decades—and that came back to bite us severely on September 11, 2001. Even when we use HUMINT, it will not yield energetics results if the managers and directors themselves (and the agent handlers in the field) have no understanding of it and do not even know the proper questions to ask. And the system will not deliver results if the Intelligence Collection Requirements do not address the proper issues because ordinary electrical engineers and conventional electrical physicists having no inkling of psychoenergetics, or how it works, drew them up.

COMINT, on the other hand, suffers from its own extraordinary prolific output -as well as by only conventional analysts and conventional scientists examming it. Warehouses of COMINT information often have not even been read in any way except a casual glance by a junior analyst, and certainly have not had serious foundations scientists examine it in detail. ELINT does a little better insofar as a human analyst looking at it, but then what is a conventional electrical engineer or radar engineer to make of a giant hemispherical globe that slowly forms and expands from a tiny "seed bubble" of intense glowing light that appears (Figure 35), as it did off the Kurils in April 1984? What will he label it? "Light phenomena?" Where are the technical descriptors of the actual process forming the phenomenon? Where are the implications as to the strategic military use of such phenomena? The reader can see the point. For decades our analysts ignored prolific reports of such incidents by the hundreds. Why, everybody knew it was glowing swamp gas!

One cannot even write a proper "intelligence collection requirement" if one does not understand the basic phenomenology. So essentially no one in U.S. intelligence was writing the proper intelligence collection requirements.

The Science Behind the Soviet Energetics Weapons

The science behind these weapons is called *energetics*. (See again Figure 8.) Energetics consists of three branches, depending upon the nature of what is

being targeted. The branch targeted against nonliving matter is just called the same name: *Energetics*. Targeted against living cells and biological material, the nervous system, etc., that branch of energetics is called *bioenergetics*. Against the mind and its functions (which are time-like and thus involve scalar photons and time-polarized EM waves), energetics is called *psychoenergetics* {89}. See Figure 45. Psychoenergetics includes both the conscious[27] and unconscious mind[28] of the individual—and even Jung's collective unconscious mind[29] of the entire human species {90}, and in fact even the collective unconscious mind in all species on earth, which corresponds to Lovelock's *Gaia* concept.

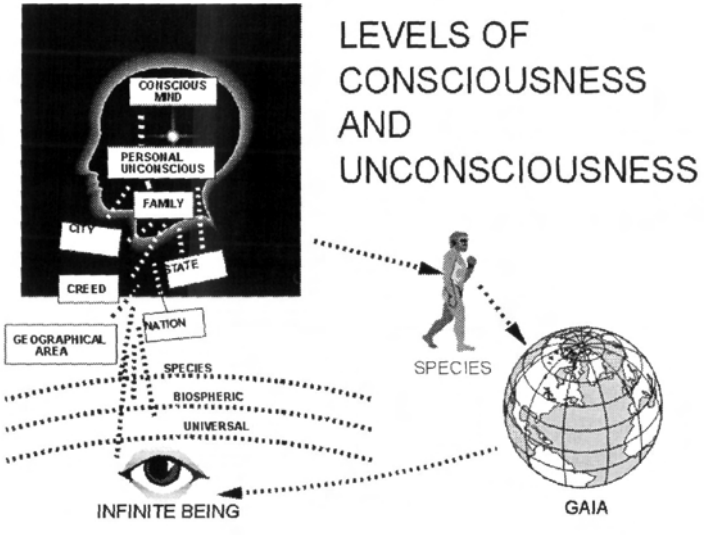

Figure 45 Mind levels are subject to engineering by higher group symmetry electromagnetic (psychoenergetic) weapons.

We remind the reader that we are talking *physics*, not metaphysics and not mysticism. Strong Soviet physics developments over a sustained period have occurred in all three energetics areas, and these areas continue to be developed at present.

Once a nation enters into LW EM development, it has just entered into unified

[27] The conscious mind is a very fast serial processor, processing one snapshot at a time.
[28] The unconscious mind is a massively parallel processor, doing a great many things simultaneously. It is totally conscious, but multiply so. Since the serial processor conscious mind can only "see a single slide projector in the viewgraph at one time", when it "looks at the unconscious mind" it sees a large number of slides simultaneously, hence just sees "black" or "nothingness" (no single thing).
[29] Jung himself labeled it a *mind* (and hence a living entity). His modern followers shudder at such a concept, and very much downplay the "mind" and "entity" aspect, preferring that it just go away.

field theory development also. Particularly with longitudinal EM waves, one is directly engineering general relativity itself, and spacetime itself, as well as the dynamics of spacetime curvatures and sets of such curvatures. But it is an even greater unified field theory than Western physicists suspect. Not only does it unite the four forces of physics, but it also unites mind and matter and their dynamics as well.

We shall also refer to time-polarized EM waves as *time-density waves*. The reason is that a time-polarized EM wave is one where the EM energy is on the time-axis and oscillating along it, like the squeezing of an accordion. In short, it is a longitudinal EM wave on the 4th Minkowski axis *ict*, where the only variable is *t*. Hence it is a wave of the variation of time-density along that axis.

All three branches of KGB energetics use longitudinal EM waves, longitudinal E*M* wave interferometry, and Whittaker-structuring of fields and waves to provide organized curvatures of spacetime known as *spacetime engines* or v*acuum engines*. They also use time-polarized EM waves, as mentioned above. Any or all can also employ the quantum potential as well as negative energy EMP aspects. For now, the reader should just recognize that each infolded longitudinal EM wavepair comprising the scalar potential, includes both a *time-density wave* along the time axis and a longitudinal EM wave in 3-space {91}. So ordinary electrostatic scalar potential fi—ordinary voltage—is made of a harmonic structure of *coupled time-polarized and longitudinal EM wavepairs.*

Oscillations of time density oscillate the local rate of flow of time. In turn, since time has the energy density of mass, its spatial energy equivalence *W is* given by $W = c^2t$. Any change in a time density wave is a very powerful oscillation of loca1 spacetime curvature. So time-density waves constitute a very powerful form of infolded general relativity, inside potentials and hence inside all EM waves and fields. The KGB weapon scientists call that inner general relativity (time density waves) the *information content of the field*. Unfortunately our follows confuse that term with common "spectral analysis" which it very def initely is not. But as part of the deception plan, the Russians are quite happy to help them think it is exactly that, and in fact the Russians go to some pains to continue to help our fellows think that.

KGB energetics involves the use of a highly structured general relativity infolded inside electrodynamics—inside EM potentials, fields, and waves regardless of type. In addition, that very special GR is using the very strong EM force along the time axis as the main agent of curvature. By deliberately structuring these time-polarized EM waves and their dynamics, extremely powerful *spacetime curvature engines* can be employed, either created locally or at a real distance, or also globally in an entire selected distant region.

Once these spacetime curvature engines structure the distant targeted spacetime region. Then in that interference zone the engines therein act upon any mass present. In theory, any physical effect known can be engineered, according to

general relativity, once one can create and utilize the proper set of spacetime curvatures (the proper set of spacetime curvatures and their dynamics). In GR, curvature of spacetime acts directly upon any mass present, and vice versa. With such technology one can therefore *engineer mass* to any level and at any distance (and eventually in any quantity) at will, using energetics methodology. *The engineered mass may be either living or inert* {92}. It follows that bioenergetics and psychoenergetics effects can also be engineered at a distance in similar manner. All it requires is the proper engines for the effects desired in the targets desired.

By using time-density waves and their dynamics, mind itself can be engineered and controlled at a distance as in the cases of Captains Button (Figures 22 and 23) and Svoboda (Figure 24).

The Importance of Scalar Photons and Time-Density Waves

Now we digress momentarily. Again, there are four major photon polarizations in quantum field theory {93}. The first two are *transverse* photons, polarized in the x- and y-direction respectively (transversely to the line of propagation, which is customarily taken along the *z*- axis). Ordinary transverse EM waves are comprised of such photons or blends thereof. Though ignored, EM waves prior to interaction with mass do *transport EM time-energy* as well as EM spatial energy, though in electrodynamics that time-energy transport has been ignored, thus confusing the effect with the cause.

The third polarization is a *longitudinal* photon, vibrating along the *z*- direction (the direction of propagation). Obviously longitudinal EM waves are comprised of such longitudinal EM photons.

The fourth polarization is a *scalar* photon, since it oscillates only along the time axis (the word "scalar" refers to the fact that it has no vector field component in 3-space). In American physics the latter photon is largely ignored since time is not an observable in quantum mechanics. However, such scalar photons do comprise time-density waves and EM time-energy currents, and they are involved in powerfully curving spacetime via oscillating the time domain. Hence by their oscillations they produce spacetime curvature oscillations, which in turn project small components into 3-space. Sufficient such coherent projection components are in fact longitudinal waves in 3-space.

The combination of the scalar and longitudinal photons is observable as the instantaneous scalar potential, and when Whittaker's 1903 decomposition of the scalar potential is slightly corrected, then the scalar potential is comprised of coupled pairs of waves, where each pair consists of a time-polarized EM wave coupled to a longitudinal EM wave. The combination of the scalar and longitudinal EM waves in the presence of charge is observable as the macroscopic scalar potential. Negative charge absorbs the time-polarized photon from the time domain and re-emits a longitudinal photon in 3-space, while the

positive charge absorbs a longitudinal photon from 3-space and re-emits a time-polarized photon in the time domain.

Psychoenergetics: Engineering the Mind-Matter Interaction by Engineering Mind

We shall be interested in what actually constitutes a living biological system in **the** psychoenergetics view (Figure 46). Mind operations are *time-like* rather than existing in 3-space, and for that reason mind and its operations are not observable. Observation is a *d/dt* operator acting on an LLLT ongoing interaction, which removes the T and leaves a frozen LLL snapshot, via d/dt(LLLT) => LLL. *Imposition of observation itself breaks,* any and all connection with time-like operations, including mind and its operations.

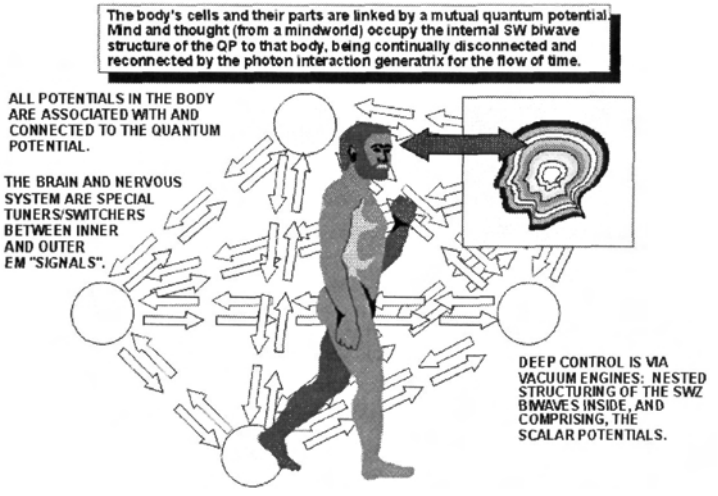

Figure 46 A living biological system (psychoenergetics view).

"Dynamics" involves "velocity", and in general relativity's 4-space velocity is rotation (Figure 47). Any mind-operation or change is dynamics and produces a small velocity, which is a small rotation. This projects a very small component into 3-space, in the physical body, but still in the virtual state. We are speaking of physics rather than metaphysics! *Sufficient* coherent mind operations (changes) have just such small (virtual) rotation components in 3-space that will project coherent little projection components (virtual) into 3-space. Coherently sustaining these components (intent) results in their coherent integration to breach the quantum threshold and become detectable (produce an observable 3-space result). That is how an "intent" change sustained in the mind becomes an actual physical energy input to the body and nervous system.

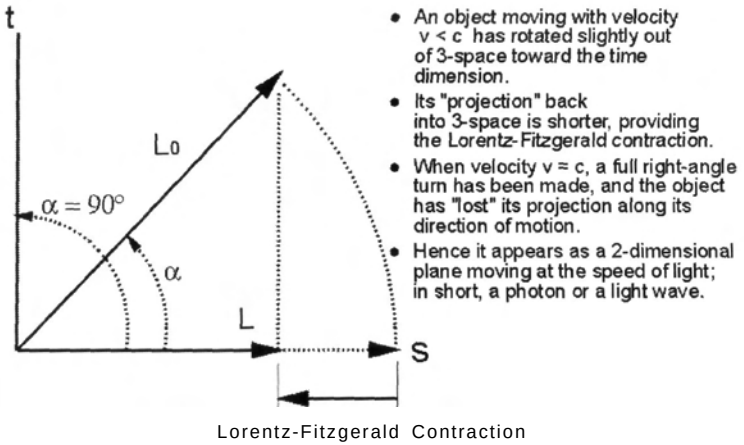

Figure 47 Velocity is rotation. Necessary to understand the mind-body coupling mechanism.

We again stress that the scalar potential is comprised of coupled time-density and longitudinal EM wavepairs. Mental operations also are time-density wave changes, hence they are changes to the interior of potentials, including the ambient potential of the vacuum itself. Potentials superpose, and their coherent internal structures add (integrate) coherently. Hence, mind changes can coherently integrate to produce minute but real, observable, physical input changes to the body system. *Mind permeates the body via the interlinked and superposed potentials of the body.* The living bio-organism's mind and its operations can be modeled as an organized operating wave dynamics inside a scalar potential and superposed potentials of the body of that organism. Since fields are made from the more fundamental potentials, these operations also function inside the fields of the body. The organized time-density dynamics constitute both the conscious mind and its operations and the unconscious mind and its operations. More subtle depths of the time-density dynamics also constitute the human collective unconscious mind functions and operations. Again, we are speaking physics, not mysticism.

See Figure 48. The "component projection" (coherent integration) process from time-like mind operations into 3-space in the body potentials introduces into the living body the *physical* commands correlated to the *mental intent* of that entity. This is the solution {94} to the long unresolved *philosophical problem of intent*, and addresses the unresolved physics problem of *just what constitutes the "observer."* But the subsequent physical changes accomplished by the responding body as a servomechanism, also produce small rotations into the time domain (into the mind domain) but in the virtual state. However, a series ol' coherent physical changes produces coherent virtual state changes in the mind realm, which in turn coherently integrate into perceptual input. In this fashion,

the mind senses the response of the body to its order, and any errors in that response that need correction. The time delay gives also the sense of identity and personal persistence, hence creates the perception of self, the "responding body belonging to self," etc. Interwoven perceptions of coherent rotation changes from other 3-space phenomena that do not respond to mind intent, also create the perception of the "separate physical world." That these phenomena do not respond directly to mental intent creates the perception of the "separateness" of this "external" physical world, while the interweaving creates the perception of "existing simultaneously" with or in the external world.

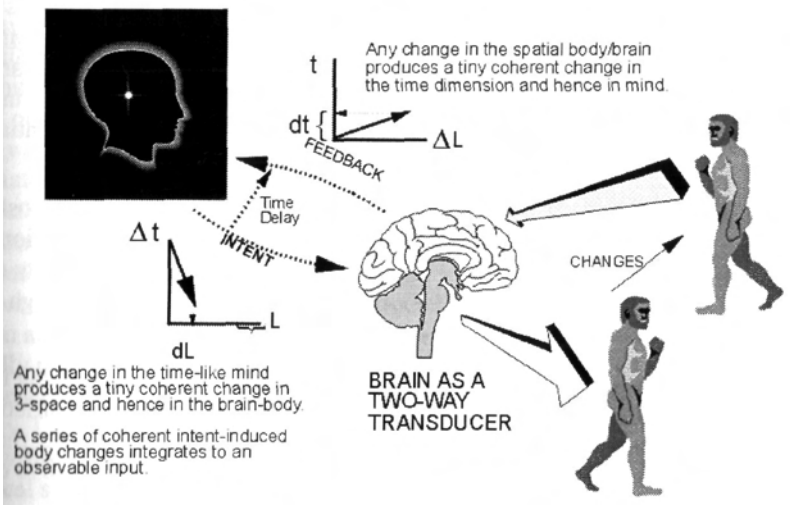

Figure 48 Mind-body coupling mechanism at work.

All of that perception, dynamics, rotation, and processing is subject to direct engineering via psychoenergetics means.

Without further elaboration, we again stress that the conscious mind is a serial processor, whereas the unconscious is a massively parallel processor. Westerners are prone to equate self to consciousness or conscious mind operation alone. That is not the case. Consciousness is just one attribute of the self (of the total feedback loop having delay between feedforward and feedback).

The totality is the mind-body coupling mechanism (Figure 48) enabling a living biological system (Figure 46).

By using time-density waves formed of scalar photons, the mind realm also can be directly engineered by the same energetics technology. Hence, for the Russian energetics weapon scientists there followed the development of psychoenergetics as an entire class of breakthrough electromagnetic weaponry.

This resulted in the development of not only a unified physics of matter and space, but also a unified physics of mind and matter reaction. Any true unified field theory must integrate the observer and the unobserved as well as the various categories of the observed. It is now possible to *directly model and engineer both physical and mental reality and their interaction.* Russian psychoenergetics has been developed to do precisely this {95}.

Quantum Potential Weapons Are Utilized in All Three Energetics Branches

In addition to scalar interferometers, there is another category of energetics weapons used in all three branches. That category involves the use of *quantum potential weapons*, after David Bohm's quantum potential in his hidden variable interpretation of quantum mechanics {96}, published in *Physical Review* in 1952. We openly published one mechanism for creating a quantum potential {97}; there are others.

Presently these quantum potential weapons are the most powerful and most flexible weapons on earth. Nothing else can stand against them. Any nation not possessing QP weapons is already a second-rate power, regardless of how many nuclear missiles, bombers, and submarines it possesses, or how many high-energy lasers and high power microwave weapons it possesses.

The greatest problem the Soviets had was not in *making* the QP itself, but in (a) *localizing* its creation to the specific area or region desired, and (b) restricting its coupling to the type of equipment, entity, level, size, type of nuclei, etc. that was desired. We have not yet fully solved the problem of how they are able to do that, but have made a little progress upon it.

The Importance of Longitudinal EM Waves

The KGB energetics weapons use longitudinally polarized and time-polarized EM waves as their basis, rather than transversely polarized EM waves. There is a surge of renewed U.S. interest—and a revolution in electrodynamics—just underway in this country (and in the major weapons laboratories of other nations) *vis a vis* longitudinal EM wave solutions to the major equations of physics. E.g., one may check the Los Alamos National Laboratory Internet web site for summary papers by Rodrigues and Lu {98}. There are now formal EM wave solutions faster than light speed, slower than light speed, etc. {99}. There is also experimental support for superluminal tunneling of EM waves in waveguides {100}. In addition, as is well known, the speed of the ordinary scalar potential is infinite in the Coulomb (transverse) gauge {101}

Higher topological algebra is being used to embed the electrodynamics in most of the KGB energetics work. Maxwell's original theory {6} was some 20 quaternion and quaternion-like equations in 20 unknowns. Quaternion algebra

has a higher topology than either vectors or tensors. Heaviside and others reduced the quaternion-like theory of Maxwell down to four equations in four unknowns—or to two coupled equations, depending upon how represented—and formed the much lower topology vector algebra in the process. This seriously demoted the topology of electrodynamics and placed undue limitations upon what can be done with it. The subsequent mathematical promotion of electrodynamics to tensor algebra still did not recover much of the EM functioning possible in quaternion algebra. An even vaster, far more powerful electrodynamics emerges in *Clifford Algebra* electrodynamics, which may be the coming modern trend.

However, even with Clifford Algebra, there remain fundamental foundations difficulties—such as bluntly confusing *energy transport* with *energy dissipation, by* arbitrarily integrating the Poynting vector around a closed surface so as to select only the divergent portion of the Poynting energy flow. That produces the *energy dissipation flow* associated with the circuit, not the overall energy flow associated with it. The overall energy flow is some 10^{13} times greater in a nominal case, as (i) discovered by Heaviside in the 1880s, (ii) never even considered by Poynting, and (iii) deliberately discarded by Lorentz with a little integration trick {102} still used by classical electrodynamicists and electrical engineers. Electrical engineering departments, professors, and texts do not know and do not teach that all EM power sources—such as generators and batteries—actually pour out of their terminals a far greater energy flow than the meager shaft energy input to the generator or the chemical energy dissipated in the battery. Lorentz arbitrarily discarded the huge Heaviside nondiverged output energy flow component a century ago, with the observation that it "has no physical significance" {103,104}.

Part of the emerging electrodynamics revolution is intuitively obvious. Higher topology algebra used in one's electrodynamics model means that lots more things can be done—in circuits, equipment, and components. As an example, suppose one can only draw geometrical figures on a flat, uncurved plane. Then compare the figures there to what can be drawn when a third dimension is added so that the plane can be curved, twisted, folded, stretched, compressed, etc. in 3-dimensional space. That is similar to the dramatic differences between electrodynamics in a higher topology algebra and electrodynamics in the far more limited tensor and vector algebras.

Further, if someone's circuits *are working* in a higher topology, a lower topology analysis will not even see their true functioning. This turns out to be true for Tesla's work, where so many pundits have used vector or tensor algebra in the belief that they therefore knew what Tesla was doing. They did not, nor did they even use the proper tools to see what he did. For the proof, see Barrett's examination of Tesla's actual patented circuits, using quaternions {105}.

Energy, Wave Energy, and Wave Speed are All Dramatically Altered

The energy of a pure longitudinal EM wave (LW) is infinite (unlimited). In practice, only an imperfect LW is produced experimentally, and therefore its energy is finite, but that energy may be extremely large, and the wave's propagation may be many times faster than the speed of light. This is much like *quantum tunneling*, which has been measured to be superluminal. Nimtz *et al.*, e.g., have transmitted Mozart's 40th symphony through a barrier in a waveguide at 4.7 times the speed of light {100}. Other researchers have transmitted information at lesser velocities but still at greater than c, the speed of light in standard vacuum.

Einstein assumed light speed in vacuum to be universally constant. That is correct for *transverse* photons and *transverse* EM waves, but not necessarily for other polarizations. Instead, it can be a function of the energy density of the vacuum (i.e., its stress energy density), which can be a matter of the gauge and the wave polarization. Further, *c* as a constant applies to transverse polarized EM waves (which are "surface" waves of the medium, so to speak) and not to longitudinal or time-polarized EM waves (which are "subsurface" or "subspace" waves). In general, the speed of the EM wave can be a function of the energy density of the vacuum (i.e., its stress time-energy density). And it is also a function of the type of EM wave being utilized.

"Empty space" is filled and writhing with the continual transiting of higher order EM waves, the presence of standing high order EM waves, and energetically organized regions where the energy is in the LW mode and in the time-density mode. Indeed, space (more correctly, spacetime) itself is nothing but a plenum of such waves and their wave-to-wave interactions.

The longitudinal and time-density effects in empty space are correlated with seasonal and periodic variations of time-charging and longitudinal EM wave emissions from planets, stars, etc. As a result, the characteristics of empty space itself periodically vary, and these can be detected as variations in the speed of light through the affected space.

The interplanetary radar measurements, e.g., do indeed show several periodic variations of the speed of light in interplanetary space, on a weekly and essentially monthly basis. In this data the proclaimed constant speed of light is upheld only by averaging the measurements over a month-long period, as shown by Wallace {106}. Actually, the scientists are dealing with variations of the periodically varying local time-density of spacetime, but have not taken that into account.

There are also specialized "galloping wave" zones, created by variations in the interferometry of the interpassing and interfering longitudinal EM waves in space. Such galloping waves from wave interferometry are already known in the literature {107} from 0.1 to 100 times the speed of light, but they do this on a

"surge forward and lag backward" mode about an *average* speed of c in the laboratory here on earth. In space away from planetary masses, that value "c" varies from its textbook value also.

All that has really been shown is that interplanetary space is *not quite* uniform after all, contrary to present scientific assumptions.

One would think that this *fundamental foundations anomaly* shown by the interplanetary radar measurements would excite the entire scientific community and trigger a massive scientific investigation. Instead, scientists such as Wallace who publish critical analyses showing that the data directly prove the variation of c in "ordinary" space, are just ignored and essentially "parked on the side-lines" until they eventually fade away.

A Process for Creating Longitudinal and Time-Density EM Waves

Today we know that some plasmas very often can produce a longitudinal EM wave from a transverse EM wave, and can produce a transverse EM wave from an input longitudinal EM wave. This was not known when the Priore team was performing its experimental work. However, it provides one method for producing and detecting longitudinal EM waves.

The Priore team in France unwittingly made longitudinal EM waves by inputing transverse EM waves into Priore's rotating plasma in a giant plasma tube (Figures 12 and 49).

- At the end of the project, Priore had developed a large unit to treat humans.
- A few were treated.
- Cures replicated what had been done in lab animals.
- The massive size of the unit and long treatment time (hours) made the process bulky and very inconvenient — and expensive.
- We proposed a way to do it with a suitcase-sized unit and a treatment time of two minutes.*

*See *Porthole Briefing,* www.cheniere.org

Figure 49 Priore's large plasma tube installation in his 3-stories-high treatment facility for humans. Results obtained in animal experiments were also duplicated in human experiments.

Quantum Potentials and Multiply Connected Spacetime

It appears that a sufficiently clean longitudinal EM wave can be utilized to

create a *quantum potential*, very similar to Bohm's notion, by iterative retroreflection between two phase conjugate reflectors. When sufficient *iterative self-targeting* occurs and persists, the waves eventually "snap in" and fully converge to laser-like beams without any energy divergence {97}. At that point, one has achieved an essentially "pure" LW, which has infinite velocity. For all practical purposes, there is then little or no difference between this wave and a quantum potential.

A pure longitudinal EM wave just "appears instantly" everywhere in space that it will be. It is already an element of a quantum potential. In this sense, all that a "quantum" potential is, is an ordinary scalar potential in which the composite EM longitudinal phase conjugate wavepairs really are pure longitudinal EM waves. It would seem that this also moves the gauge to the Coulomb gauge, so far as the potential is concerned. It follows that, by establishing significant and clean longitudinal EM wave contact between any two points via iterative retroreflections, one establishes a quantum potential if sufficient harmonics are established in the contact. The implications for "phase conjugate shooting" to go one step farther are obvious.

By "scanning" an area with the appropriate LW transmitter array, with deliberately imperfect LWs so that contact reaction occurs, and then decreasing the imperfections in the scanning by iterative retroreflection, it appears that a quantum potential can be created and connected between the transmitters and a desired distant region.

Essentially, in the case of pure longitudinal EM waves and quantum potentials, we must model the situation in terms of a *multiply connected spacetime*. The divergence-free waves are now pure longitudinal waves in one sense, and pure potential beams in another sense. In any case, the Coulomb gauge applies. As is well-known, the potential moves at infinite velocity in the Coulomb gauge.

Thus a single station can be connected by such a QP to any number of distant stations—by first "knitting them together" into a common multiply connected spacetime by iterative mutual LW self-targeting beams. It matters not if one or more distant station(s) is/are then moved beyond the star Sirius; the moment an energy signal appears in the initiating station, it is already instantly in each distant coupled station anywhere in the entire universe. There is no separation distance involved. Here *one no longer needs to propagate transverse EM wave energy painfully through space at the speed of light.* Instead, one is now dealing with multiply connected spacetime. One now has the instant appearance *in each and every distant coupled target* of the energy input into the single "transmitting" or "coupling" station. So the process is a startling and giant "energy amplification method" as should be expected from something that has infinite energy in the first place!

One vulnerability and disadvantage of a QP weapon is that, if the target is aware of one's coupling and also has QP technology, he can now immediately send

back any energy form or "greetings" he wishes, from any one of his coupled targets. He can even do it inadvertently, without even knowing he has been coupled by a quantum potential. In other words, the QP provides a two-way street, if the target is aware of it and has the technology himself, *and even if he is unaware of it and does not have the technology.* For that reason, actual use of the QP weapon in strategic strikes requires caution and special considerations. Usually it requires very rapid single use and then cessation of any further usage.

Need for Caution with QPs Used Against Biological Organisms

Another QP weapon disadvantage is that rather extreme care must be rigidly exercised, particularly when linking living creatures. For living things, the QP is best utilized in the absolute minimum energy mode. E.g., *an extremely weak OP already links every member of the human species.* Suppose one increased that linkage intensity carelessly. Immediately the entire human race is in grave difficulty. Every death of a person feeds into every other living person. Every birth of a baby feeds into every living human. Even the fertilization of one human ova instantly feeds into all other ova. The integration of all those changes would totally disrupt—and instantly destroy—all human life on Earth. Since chimpanzees have very similar genetics to that of humans, all the chimps would probably die also. Other higher primates would also suffer or die, as would many other species.

What might be useful, of course, would be to use a QP to kill every smallpox, HIV, Ebola, and other dread disease pathogen on Earth. If so, it would first have to be made extraordinarily specific, else it could threaten all or most of the life on Earth.

A very useful adjunct would be to use a QP device to nearly instantly scrub and decontaminate (disinfect) an anthrax-contaminated large city—such as New York or Washington, D.C.—by instantly killing all the anthrax spores in that locality. Or to clean all the antibiotic-resistant staph pathogens out of U.S. hospitals by just killing them all instantly and periodically. Or to rid the Earth of necrotizing fasciitis—flesh eating disease pathogens.

An extremely localized QP could be used to connect with all HIV viruses and DNA inside an AIDS patient's own DNA. One could then kill the HIV viruses not yet integrated into the patient's cellular DNA. One could also time-reverse the patient's own HIV-infected DNA back to normal, effectively "removing" the HIV DNA already dumped into the patient's own infected cells. In theory, 100% of the HIV infection could be removed from the patient's body, restoring him or her to a completely HIV-free condition.

A Hypothetical Example

Suppose one arbitrarily increased the even weaker QP that presently joins all living things on Earth, regardless of species. Instantly every living thing on Earth would die, and the Earth would be instantly converted to a sterile planet.

Even though *physically embodied* life was gone, however, all the forms of those species would remain in spacetime activity, their vacuum engines—for both minds and bodies—forever embedded in the local potentials and fields of the material Earth. In other words, the Earth's potentials and the local spacetime potential would still be *dimensioned* and *conditioned* for the life forms that once moved upon it in physical form. The dimensioning and conditioning (engines) for every life form that ever lived on the Earth *exists now* at every point in the Earth and in the local spacetime. With proper application of energetics, in theory it is possible to recover any of these life forms desired, back into living form.

When one understands that environmental aspect, one understands why the Miller-Fox-Urey biogenesis experiments {108,109,110} (Figure 50) would still produce living organisms again. A *physically* dead planet or test flask is not necessarily a "completely dead" planet or flask, when one considers the presence of spacetime engines and dimensioned potentials. One recalls that these forms and engines contain not only physical forms, but also the mind-aspects and the mind/body coupling and dynamics aspects as well.

In short, the entire biochemical notion of biogenesis from truly inert matter devoid of any form of life or pattern of life appears to be a false premise. Since potentials reach to the end of the universe, then any structured potential structures *(dimensions)* the universal vacuum potential everywhere in the universe {111}. The Miller-Fox-Urey experiments were not performed in a truly "sterile" environment after all, when the new energetics is considered {112}. One realizes that the entire universe is alive; the mere presence of a single living microbe or other form anywhere establishes an entire living noosphere. The Russian researchers—such as Kaznacheyev {113}— into EM induction of disease in targeted cells at a distance also realized that biology included a noosphere, and it could be engineered.

- Engines of and from all life forms ever on earth or in the universe exist in the ambient vacuum potential.
- The Miller-Fox-Urey experiments were not in a "sterile" environment.
- Heat (IR) and UV constitute (1) a harmonic interval with a difference frequency, and (2) amplifying by the process previously shown.
- These experiments "kindled" previously living forms from the available gases etc. by amplifying the ancient living engines from their virtual state to the observable state, so that the masses were molded into the physical states of their templates.

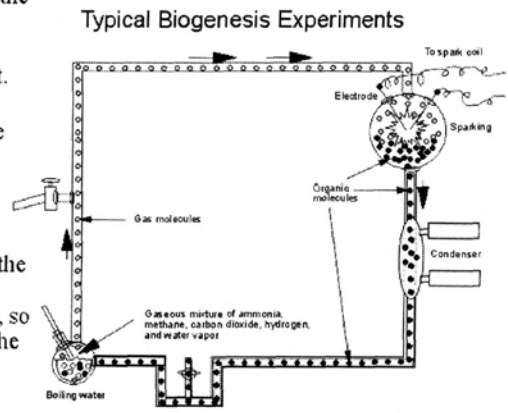

Figure 50 Typical Miller-Fox-Urey biogenesis experimental apparatus.

Herman Kahn, then director of the Hudson Institute (a leading think tank), once remarked that it did not concern him that there existed mechanisms that would destroy all physical life on earth. Instead, he stated, it concerned him that he know almost 200 such mechanisms. The quantum potential weaponry is yet another doomsday weapon with a thousand lethal mechanisms to add to Kahn's list, were he still with us.

The QP Weapon Is a Superb Energy Amplifier "For Free"

In a multiply connected spacetime established between multiple separated (to the observer) stations, one can instantly input one megawatt of power into *every distant stution* by inputting it into a single station. Suppose that coupling station is coupled via QP to one million distant stations (scattered anywhere in the universe). Then in each distant coupled station there now instantly appears one megawatt of power, even though we have input only a single megawatt in our "transmitter" coupled station. This is a superb *one-on-many weapon system and energy amplifier*—perhaps the ultimate weapon system.[30]

AS an analogy for understanding, one can look at it this way. Put a dot (point) on a piece of paper. Mathematics tells us that an indefinite number of other points can be "superposed" directly on that original point. Now input some "energy" into the original point. It instantly appears in each and every other superposed point. That is precisely the way a quantum potential linkage between stations

[30] However, we should not be loo surprised at such "astonishing" effects, once we appreciate that with the quantum potential and pure longitudinal waves one is playing with infinite energy anyway.

works, except that in normal singly-connected 3-space the points are *observed* by a normal observer to be widely separated. Aristotelian logic—which is an "either/or" logic—does not apply. Instead, a higher topology logic applies.[31]

The QP weapon can be used with microwatt input to induce low-level disease states or pre-disease states *(shadow disease states)* (Figure 51) in entire populations. Tests done in this fashion will violate the "vector carrier" aspect of infectious disease transmission. Instead, the tests will cause a few widely spaced nearly simultaneously cases of the disease being tested. Several such tests (e.g., with necrotizing fasciitis) have already been conducted in the populace of the United States.

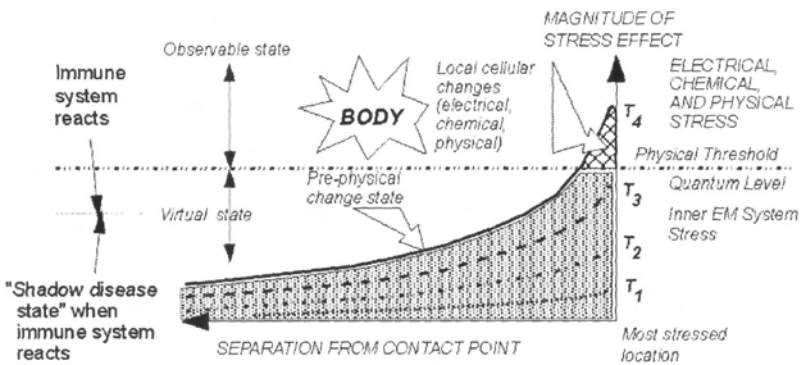

Figure 51 The shadow disease state is that structured virtual state level of the promoting disease engine template, at which the immune system reacts.

Or a QP weapon can be used with megawatt or gigawatt input to blast multiple distant targets simultaneously. One may destroy, e.g., every single transmitter of a given type. Or one may instantly kill all ships and weapons and paraphernalia in a large naval task force steaming toward its target. Or if one wishes to take the ships and equipment, the weapon can just kill all the humans instantly in that task force. ICBM sites, e.g., are vulnerable and obsolete since 1990 to any nation possessing QP weapons. So are underwater nuclear submarines and long-range strategic bombers. The entire strategic and tactical armada we have built up so painfully over the decades is obsoleted—also meaning *countered*—by any enemy possessing sufficiently advanced energetics weapons, and particularly quantum potential weapons.

[31] We developed such a logic years ago, and have recently included **it** in *Energy from the* ***Vacuum*** 2002, *ibid.*

Other Novel Uses of QP Weapons

If an enemy has such QP weapons and you do not, you are easily and directly destroyed at will, once certain other deterrents are overcome. One of these previous deterrents that had to be overcome was the stability of nuclear weapons in our nuclear arsenal. To remove this stability and render them easily destroyed, the holder of a scalar interferometry capability could induce sudden massive fissioning and fusioning of many of the targeted onsite weapons if the scalar potential interferometers were used massively. However, the resulting tremendous nuclear explosions—many "in the dirt and dirty"—would also unacceptably damage the attacker. Further, major antagonists usually clandestinely introduced hidden nuclear weapons into the cities and target areas of their opponents, which practice was known as "dead man fuzing." The notion was that, even if one side suddenly destroyed the other, that destroyed side could stil1 detonate its secret nuclear weapons hidden in the attacker's homeland territory, destroying him as well. In essence, the killed side (the "dead man") had set off the fuzing of his pre-planted weapons, to destroy the attacker even though the "dead man" was already dead.

One strong reason that the Russians pursued the quantum potential weapon so strongly was precisely because it offered a mechanism to solve this "dead-man fuzing" problem, removing it as a viable deterrent. Obviously it would be quite advantageous to be able to dud or destroy these hostile weapons in one's very midst, even though one did not know their locations, and pull the fangs of the dead-man fuzing installed by one's opponent.

There appear to be ways of directly connecting a QP, e.g., to every atomic nucleus of a given type, in a given region (say, in a region consisting of on the surface of the Earth, in the Earth to some depth, in nearby space, on the surface of the ocean, and beneath the ocean). Connection can be made, e.g., to every U235 nucleus and to every weapons grade plutonium nucleus. Or with the technology developed, the users ought to be able to make such connection only between certain pre-selected *localized amounts* of U235 nuclei or plutonium nuclei.

Now suppose that such a QP is established between weapon-sized groups of U235 atoms. Then one hits one U235 nucleus in such a group in an activator station with a neutron bullet. Voila! One simultaneously hits every other linked U235 atom (including the activator station—one just blew it to smithereens if it contained very many U235 nuclei) in such weapon-sized groups. The raw U235 in ores in nature is still okay if the ore contained only tiny traces of U235 nuclei. But all the "neutron-struck" fissionable nuclei in nuclear weapons worldwide—regardless of owner or location—fission in the weapons immediately. That destroys all the nuclear weapons on Earth—including the clandestine nuclear weapons that various nations have spirited into other nations perceived to be their enemies, as a "checkmate" against sudden surprise attack. *One* does not need to know where a weapon is at all.

However, it gets all the weapons by exploding them, and that itself could create a giant nuclear destruction and fallout problem that would probably do in most life on earth because a great many nuclear weapons will have exploded "in the dirt and dirty." In short, it is an entirely unacceptable solution to the dead-man fuzing problem.

Of course, no *sane* enemy would wish to use the QP in such fashion, because it is quite suicidal for him and essentially destroys civilization. But suppose the sane enemy is well aware of the exact nature of the new cold type nuclear reactions (we explained these in an initial rough paper given in August 1998 at an Energy conference in Utah). The energy initiating these "time-reversed" nuclear reactions starts from "inside" the nucleons in the nucleus and moves outward (that is true of any "reversed" zone).

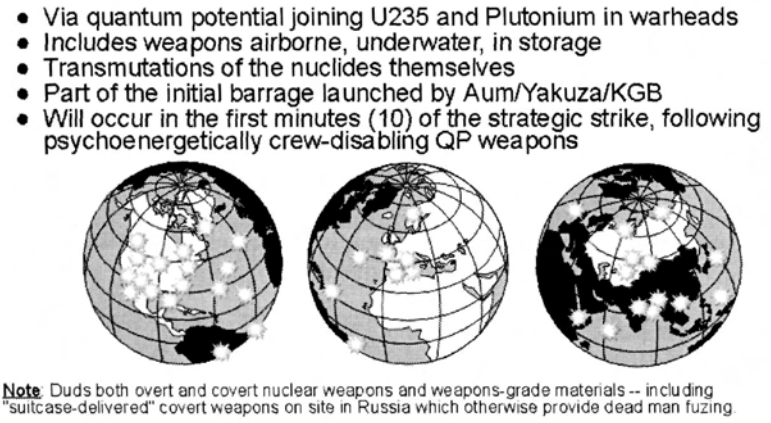

Figure 52 Simultaneous dudding of nuclear weapons worldwide. Also duds nuclear reactors and nuclear propulsion systems.

Direct *isomeric transmutation* then becomes a preferred decay reaction to induce in the nuclear weapons one wishes to dud. By gradually inducing (slowly "kindling") one of these transmutation reactions, one can just "transmute" the U235 to—say—an isomer such as U238, with some readjustment and energy balancing in the ensuing rebalancing decay processes. In that way, one gets no nuclear explosions. One can even choose the transformation or several successive transformations so as to minimize any resulting nuclear radiation. The attacker also destroys all the nuclear reactors, including those in civilian power plants, nuclear submarines, and elsewhere. But he gets just about all the nuclear weapons if he transforms both U235 and plutonium (Figure 52). In about 10 minutes he will dud them all, without any nuclear explosions, but he would probably allow about one hour "just for good measure and nearly 100% certainty."

This offered the Soviets the ideal solution to the worrisome hostile nuclear arsenals of the world, since they also had additional nonnuclear strategic weapons of a different kind and of great power.

Apparently that very kind of QP weapon became operational, on site in Russia, circa 1989 under KGB control. For the first time, it provided the KGB with a guaranteed solution to the nuclear dead-man fuzing problem that had until then prevented its massive use of the scalar potential interferometers (such as in 1985-1986 as originally envisioned by Brezhnev).

By almost simultaneously leasing the earlier scalar interferometer weapons to **the** Yakuza and Aum Shinrikyo at the end of 1989, the KGB obtained an influx of vast new funds {114}. It thus concentrated even more intensely on the more advanced energetics weapons such as QP weapons and psychoenergetics weapons {115}.

So with a QP weapon one can attack multitudes of targets, using a single "coupler" or "transmitter," all without "propagating the EM energy through 3-s**pace."** Further, with the technology developed, only the number of outrigger stations coupled limits the energy amplification achievable. One can alter matter at any level, from the quarks in the protons and neutrons in the nucleus, to the lattice bonds, to the molecular bonds, etc. Or one can structure the emerging energy (that emerges directly out of the local spacetime itself), so that *structured local spacetime curvatures* (engines) appear in the target zone(s). These ST engines can be generated so as to perform macroscopic functions against real systems—e.g., jamming electronics, as against the U.S. air attack on Libya in April l986 (Figure 25), or as was done by a longitudinal EM wave interferometer in the attack and kill of the U.S.S. Thresher (Figure 6) in April 1963 {116}.

The U.S. Narrowly Escaped Destruction Twice in 1997 Alone

On two occasions in 1997 the United States would have been utterly destroyed by the die-hard faction of the KGB, except for direct countering by a friendly little foreign nation. The present author and three colleagues played a very minor role by alerting that nation to the impending attacks. There was certainly no reason to contact officials of our own country; the U.S. was and is powerless to prevent such attacks, although *hopefully* that is changing! It made much better sense contact the only nation that could possibly avert our impending disaster. Of course we later also informed proper U.S. government officials of our actions.

The first strategic attack was scheduled for between early to mid-February, and involved (1) dudding all nuclear weapons, (2) striking the QP weapons in the little nation simultaneously, as well as extant scalar interferometer weapon sites in other foreign nations, and (3) then leisurely blasting cities, facilities, and installations with iterative and continued scalar interferometer strikes. This third

phase would include work assigned to the Yakuza/Aum Shinrikyo teams. That is how the Yakuza (and Aum Shinrikyo) expected to revenge themselves for the Western defeat of Japan in WWII, and for the West's dropping the atomic bomb on Nagasaki and Hiroshima. To be able to "get in on the kill" is why the Aum Shinrikyo and Yakuza leased the scalar (longitudinal EM wave) interferometers from the Russians in the first place {117}.

These, along with negative energy EMP weapons, are the kind of energetics weaponry that now determines our fate, and against which the U.S. presently has still inadequate defenses. Our own scientific community does not believe such weapons even exist—apparently due to the "not-invented-here" syndrome. Most of the U.S. scientific community is thus relatively useless and outdated as far as contributing to the strategic survival of the United States is concerned.

Purpose of the Novel Attack on Captain Button

Hopefully, some scientists are aware of the strange incident that involved the mental seizure of Captain Button in his A-10 (Figure 22) and controlling him for well over an hour (Figure 23), including controlling his perceptions, intent, and actions while performing complex technical tasks. That was the test of a KGB *psychoenergetics* weapon, developing and to be deployed by the KGB. That was the "acceptance test", so to speak—deliberately conducted over the United States—for the KGB's system that would be produced in numbers sufficient to counter the QP weaponry, if the QPs of the little friendly nation were to be placed in the insane command and control mode. This was yet another Soviet counter, planned for the near future against the counter by which the little nation did force abortion of the KGB second attack (scheduled for May 1) in 1997.

The purpose of the attack on Captain Button can be understood as follows: The later second scheduled strategic attack on the U.S.—scheduled for May 1, 1997—was forcibly aborted after the friendly defending nation switched to an *insane* command and control mode. The insane C3 mode counters the MindSnapper type attack that instantly kills all on-site operators and renders the sites too "hot" for new personnel to come in from outside and control it. In short, the U.S. could have been destroyed in that scheduled May 1 attack, but with the change of the friendly QP weapons to insane C3, Russia would also have perished in the immediate quantum potential counterblow from the little nation[32] that would have been automatically delivered by the site weapons themselves. The May 1 attack had been predicated upon the fact that a preliminary MindSnapper (negative energy EMP) attack on the friendly QP

[32] There are also variations. As an example, the insane C3 can also include a separate channel requiring a countering "punch in" code every 15 minutes (as in a heightened alert status) or the control system will order the launch initiation (this accepts that all on site personnel have now been suddenly killed). So the insane control system is also flexible, and many variations and considerations are possible.

weapon sites would have instantly killed all persons on site,[33] and neutralized the site for some months because of the resulting longitudinal EM radiation. However, the shift of the C3 of the QP weapons to insane mode rendered such a pre-emptive MindSnapper attack totally ineffective because Russia would still have been destroyed.

Hence another countering means was required, and in fact that additional system was already in development. It was a very sophisticated array of psychoenergetic weapons, each with a special, highly trained team of operators capable of fully controlling one targeted individual while he was directed and controlled to go about performing desired technical tasks. We estimate that it required one psychoenergetic weapon (very complex, multiple transmitters) and an operator team of perhaps 20 to 30 skilled operators (one for each major human function to be controlled) to adequately control the mind and actions of one distant person performing quite technical tasks. Hence several hundred such "weapon sets" were required to take over all persons on the targeted QP weapons sites in the friendly nation, have the controlled crews deactivate the QP weapons including using the security code and procedures to standdown for maintenance, etc.

Once the QP weapons were totally on standdown, then the MindSnapper would have struck suddenly and killed every living thing on site, neutralizing the site for several months due to subsequent strong longitudinal EM wave emissions from the struck site. No new crews could have entered the site and lived, so the sites could not be operated after MindSnapping, even though the QP weapons were still intact but just on standby. Of course, a third phase then would have involved strikes by scalar EM interferometers to leisurely and completely destroy the systems and sites, permanently taking out the physical system as well.[34] With the first two of that three-part series of strikes completed successfully, then the KGB weapon sites would have been absolutely free to blast North America and our European allies into smoking ruins, leisurely and at will, given the first 10 minutes of dudding all nuclear warheads worldwide, to take care of that old type of "dead man fuzing".

From the open reports of the Button incident, and from the kill of Captain Svoboda a few weeks later, the nature of the next strategic attack that would be scheduled was immediately apparent. Accordingly, we warned the little nation about the shift to a new attack plan, and estimated the new schedule between mid - 1999 and the first of 2000. Of course, we also passed that information on to

[33] We point out that it required a longer time to develop the more powerful negative energy EMP weapons capable of just destroying the sites, personnel and all. The first effective weapons of that type could easily kill personnel brains, nervous systems, and hearts while still doing little damage to the much more robust *QP* systems and on site equipment.

[34] We strongly believe there are shielding provisions at those sites, against scalar interferometry attacks, which reduces their effectiveness and delays their destructiveness. However, so far this analyst has not deciphered those shielding methods or mechanisms.

our government as well, but apparently, no one believed it. The proper U.S. intelligence agencies, however, certainly intercepted my faxes to the little nation's Military Attache in Washington D.C., and particularly my fax a few days before May 1, sent directly to the Prime Minister of that nation and urging the change to an insane command and control system for the QP weapons and the reason why.

It turned out that, some months after I alerted them to the coming psychoenergetics, MindSnapper, and scalar interferometry attack in that order, to be scheduled between mid-to-end of 1999, apparently the friendly nation suddenly struck and utterly destroyed the KGB facilities for the MindControUer negative energy EMP weapons being painfully built up in sufficient number. Probably scalar interferometry weapons were used to destroy them. The onsite psychoenergetics crews and facilities were destroyed and neutralized completely.

Anyway, as we passed mid-1999, the type of "Y2K" problem we were worrying about was whether or not the attack was on, headlined by a psychoenergetics weapon strike on the little nation first, with the three phases as previously scheduled back in 1997.

Later, in early 1999 I realized the Russian/KGB development of the causal system robots (Figure 10), mentioned in the introduction. In the latter part of the third quarter of the year, working at my computer at night, I was struck by one of these very beasts from within my computer (Figure 20), in very bizarre but unmistakable fashion (previously detailed). In 10 seconds I was nearly killed and severely disabled for a period of time (it took four days to recover completely). Because of the features deliberately utilized by the CSR on my computer screen so I would recognize it, I grasped the nature of the attack (the KGB *wanted* me to recognize it, and live to tell about it!), how it was done, how it jammed the brain and vision center and strongly fibrillated the heart, upset the equilibrium, etc. I also realized that, in 20 seconds or so additional exposure, I would have been a very dead person, expiring with a very violent heart attack and severe brain embolisms. Note that the CSR deliberately struck directly from the computer screen through my retinas and onto the nervous system, passing through the vision center and flashing it tremendously, and jamming my mind, brain, and nervous system.

When I recovered shakily about four days later, I notified the small nation, once again, as best I could, giving the exact symptoms of the attack and explaining what it was. By then I knew what was coming down, the form it would take, and the deceptive cover (Y2K uncorrected errors!).

The little nation then quickly proceeded to search out—apparently *inside* the North American signals, potentials, fields, and waves "superhighways" for the CSRs—all the CSRs and destroy them in place. It turns out to be a fairly straightforward operation, once one possesses advanced longitudinal EM wave

interferometry weapons and techniques. Locating a "very dense" and very dynamic set of LWs performing organized functions is analogous to a normal radar locating a large bomber in cloud cover. One "burst" from the LW "radar," and the targeted CSR is completely disrupted and electronically destroyed.

So a very short (lasting a few days) and strange strategic battle was fought in infolded space or subspace, inside our electrical and electrical systems and inside the fields, potentials, and waves in them. A mighty attacking armada of perhaps several million main battle systems was intercepted and destroyed throughout our homeland, without the slightest notice by our own government, scientific, and intelligence communities. And without a whimper of what is usually recognized as "combat actions".

Afterwards, a very simple and innocuous little message was received which, reading between the lines, simply meant "thank you very much." In short, my hard-pressed colleagues and I got a small "Attaboy!" for our role in alerting the friendly nation.

So Y2K and the Millennium Celebration came, while we waited to see if the CSRs were gone or if they would erupt with damage all over the U.S. Fortunately, they were gone like popping balloons, and so the *fourth* scheduled strategic attack upon the U.S. in the space of three years—this time actually launched—was successfully destroyed.

Whatever I can do to help the survival of my country I will continue to do without hesitation, regardless of whether the U.S. scientific, intelligence, and military communities are aware of the new threat or not, and regardless of whether they believe it or not. Presently our fate and that of the Western world rests on the shoulders of a small but advanced and friendly nation. That is beginning to change, it seems, but still not swiftly enough to suit our needs.

We simply must change all that, by developing QP weapons and defenses ourselves. It is not an option; as an example, China has now finished—as of earlier 2002—and deployed QP weapons. Almost simultaneously, China also finished and deployed the more powerful negative energy EMP (MindSnapper-type but much more powerful) weapons and deployed them as well. So we have entered a very dangerous period when the strategic changes that are likely to occur will be both massive and traumatic.

AS this is being written in early October 2002, it is obvious that our nation is also preparing to strike Iraq if need be, either with a coalition effort or alone. If so, then Saddam Hussein will certainly unleash whatever terrorist forces he has in North America. He will attempt to unleash upon us all the weapons of mass destruction at his command. This could even happen within the next 30 days, with the MidEast exploding, giant polarization of the Arab world, general chaos in the MidEast and upset of world oil supplies, and skyrocketing fuel and energy costs with severe impact upon the already seriously ailing U.S. stock market.

If Saddam Hussein succeeds in doing sufficient damage to our cities and energy infrastructure with more weapons of mass destruction than we have credited him with, then the potential economic collapse of the United States and much of the developed world is an uncomfortable possibility. If that happens, turf wars will erupt all over the world, the world economy may collapse, the KGB and rogue Japanese (Yakuza and Aum Shinrikyo) will move and unleash further destruction, Pakistan and India are likely to erupt into a nuclear war, and several other regions may also erupt into nuclear war and use weapons of mass destruction. What China might do in such event is anybody's guess.

In short, the Armageddon we have so long feared, with the resulting collapse or destruction of much of civilization, could well be approaching. Let us hope that dark picture is terribly, terribly wrong, and that we successfully avoid Armageddon one more time!

Meanwhile, we would be in much better shape to weather the coming storm had our scientific community not grossly betrayed us. But if and when millions of Americans are dying in the streets with no effective means of treatment, and no effective defenses to prevent onslaught after onslaught against our nation, all those deaths and all that suffering will be directly the fault of our own organized scientific community.

Rogue Japanese (Yakuza and Aum Shinrikyo) Have a Role

In the information briefing furnished the previously named agencies, we briefly detailed the elements of the attack, how our own nuclear weaponry can be dudded anywhere, etc.

We also detailed the strange role of the Japanese Yakuza and the Aum Shinrikyo, who leased the operational use of the early generations of KGB longitudinal wave interferometry weapons in 1990 directly from the KGB. The first down payment on the lease was $900 million. I previously furnished pertinent information on this to an investigative U.S. Government agency. Since then, the Yakuza have set up their own scalar interferometry weapons development facilities in Japan, including portable energetics weapons,[35] and have assumed a very secret and nearly unsuspected role somewhat similar to Bin Laden's role in the attacks of September 11, 2001—but much more deadly when the coming Armageddon erupts.

Inducing the Gulf War Disease

In 1986, the Russians had already solved the dead man fuzing problem theoretically, but had not yet completed the development and deployment of the

[35] We strongly suspect some of these portable weapons have already been infiltrated into the United States—e.g., to be used against nuclear power plants and other lucrative targets such as refineries, oil fields, etc.

necessary QP weaponry. The KGB's first "combat demonstration" test of the **ability** to localize a QP in a selected region of space was against the U.S. air attack on Libya in 1986. That test apparently used a laboratory apparatus to prove the process. In short, it was a major milestone whose success moved the system into full production engineering and production. The system was then developed at very high speed after the successful demonstration in 1986. The first strategic KGB QP weapon(s) became operational on site in latter 1989.

It was this QP weapon that was used to generate the so-called *Gulf War Disease* in our soldiers in the MidEast. In the action package, I explained precisely how that was done. I have also finally placed the simplified gist of that explanation openly on the Internet for all to see (website www.cheniere.org). Those suffering U.S. veterans were *casualties of war,* not victims of just nerve gas whiffs or chemicals or their own stress, etc. The initial U.S. Government and U.S. scientific community's assertion that "it was all in their heads" and due to stress, insults every veteran who has ever served his nation. One justifiably has contempt for such treatment of our veterans. Sadly, the latest "studies" are **beginning** to conclude the same thing once again.

Apparently our intelligence and military command agencies have not yet learned t**he** lesson of the decades long Soviet microwave radiation of the U.S. Embassy in Moscow, which was responsible for health changes of many kinds in U.S. personnel and was also responsible for the deaths of three U.S. Ambassadors to the Soviet Union. Apparently we are still using radar engineers and electrical engineers for electrodynamics analysis, and these analysts apparently still believe that in the absence of the EM fields there can be no induced EM effects. One sadly comments that, just as the electrical engineering departments of our universities have been unable to walk across the campus to the particle physics department and find out what the discovery of broken symmetry in 1957 portends for their discipline and model, then the intelligence community apparently has not yet learned that no EM analysis of such things as the microwave radiation of the U.S. Embassy in Moscow or the shootdown of the TWA-800 is worth a tinker's dam unless it is a higher group symmetry EM analysis. As Barrett showed, our fellows still have not grasped what Nikola Tesla already accomplished in actual patented circuits circa 1900 and shortly thereafter. Tensor analysis and vector analysis simply will not show what is really there.

Our veterans were hit with a "cocktail mix" of specialized disease "spacetime curvature engines" just below the observable threshold, in the "shadow" (virtual, but nearly observable) state[36] (Figure 53). The immune systems and the cellular

[36] One should think deeply about this, in terms of the solution to the source charge problem (which our engineers have not thought of very much, much less solved). Every charge already "engineers" the virtual stale at will, converting virtual energy into deterministic observable EM energy. That means we can directly engineer the virtual state vacuum itself if we put our minds to it. **Actually** Nobelist Lee has already pointed out that we have *not even tried to do this!* See T. D.

regenerative systems do react to that shadow state level.

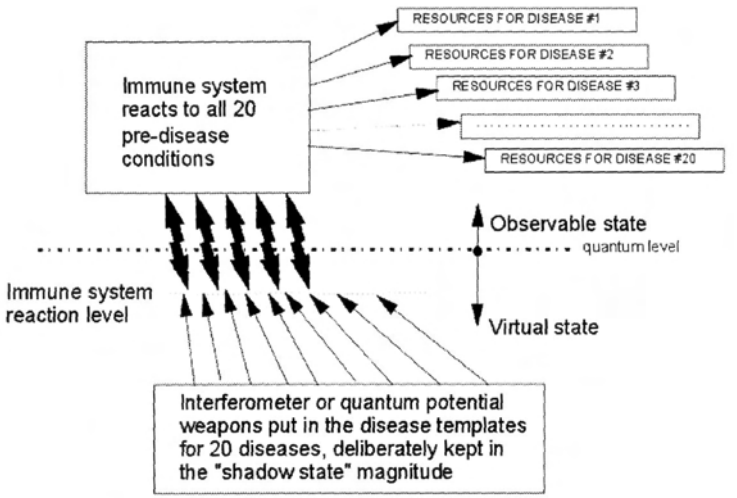

Figure 53 Spreading (thinning) the immune system's ability available to meet a new pathogen.

Such a "simultaneous mix" shadow induction "spreads" the reacting *finite* immune system and regenerative system (Figure 53) and their resources all across that entire mix of shadow diseases, so that only a much smaller portion of the immune system and of the regenerative system is directed against *any one* of the shadow diseases. This in turn greatly heightens (by a factor of 5 or more) the susceptibility of the body to all additional disease pathogens, and it greatly lowers the ability of the body to recover from any disease or biological warfare strike. In addition, the exposed veteran's body fluids and masses have accumulated a persistent "time-density charging" that very slowly decays (by emission of weak *longitudinal* EM waves) over months or even a few years.[37] The sperm from these veterans did indeed have the innate "engines" and therefore the capability to gradually infect their wives. So did the saliva in their mouths. The weak "dimensioned" LW radiation from their bodies could also slowly alter the cellular regeneration and immune systems of their family members in close proximity, over a period of time, thus inducing the disease in them {118,119,120}.

Lee, *Particle Physics and Introduction to Field Theory*, Harwood, New York, 1981, in his "Chapter 25: Outlook: Possibility of Vacuum Engineering," p. 824-828. On p. 383 Lee points out that the microstructure of the scalar vacuum field (i.e., of vacuum charge) *is not utilized.* We add that the West does not utilize it. It has been utilized for some decades in the former Soviet Union and now in the continuing KGB energetics and bioenergetics weapons programs.

[37] See T. D. Lee, "Can Time Be a Discrete Dynamical Variable?." *Phys. Lett.,* 122B(3,4), Mar. 10, 1983, p.217-220.

The induction of GWS in our troops was in fact a test for the *present* clandestine use—already ongoing—of that technique to spread the immune and regenerative systems of the targeted U.S. population. This in turn gradually makes us more susceptible to terrorist BW attacks and disease pathogens of all types *from anyone else*. This tactic is already in place and accomplished, and it will substantially increase the American civilian casualties in our cities when they are subjected to terrorist BW attacks in the near future. *Those attacks now will have some five times the effectiveness that our present planners estimate.* In short, it is going to insure the deaths of millions more Americans. The approaching war in the MidEast, with Saddam Hussein's unleashing of his terrorist assets in the U.S. to the maximum extent possible, thus will probably see a five-fold increase in the effectiveness of some of his mass destruction weapons that Hussein's assets are able to unleash on America.

The entire affair of the Gulf War Disease was both a preliminary test and also a magnificent intelligence probe by the KGB, to clearly demonstrate once again that the U.S. Government and the U.S. scientific community are still nearly totally unknowledgeable of QP weaponry, immune and regenerative system "spreading," disease induction by bioenergetics means, etc. It follows a methodology used with great success for four decades by the KGB,[38] and one that our own government, scientific community, and military community has yet to decipher. *So long as the threat only slowly increases, Americans remain complacent in their ignorance, ignoring the boa constrictor slowly strangling them, while awaiting the cobra seen in the distance?*[9] We have unwittingly cooperated with the KGB boa constrictor for four decades, even as it slowly prepared to crush us. In the Gulf War, that crushing moved to the next threshold, to actually inflict casualties and deaths on U.S. troops and totally get away with it because of the bioenergetics (in the Russian sense) ineptness of the U.S. scientific community.

[38] The decades-long microwave radiation of the U.S. Embassy and induction of health changes and diseases, was a case in point. A high level target—the U.S. Ambassador—was involved, guaranteeing U.S. Government attention at the highest level. Puzzled, the U.S. government would then call in their most trusted EM scientific analysis groups. By the responsive actions then taken by the U.S. at the Embassy, the KGB could ascertain with absolute certainty whether or not our scientists knew of the use of infolded engines in bioenergetics. For more than four decades our actions assured them with 100% certainty that we knew nothing of what their "information content of the field and potential" actually was, or how it had been weaponized and was being used right in front of our faces and before the entire world.

[39] It is bizarre that our scientific community—even after those decades of EM induction of diseases and health changes in American personnel in the U.S. Embassy in Moscow—*still do not and cannot believe that conditioned EM radiation can induce cellular disease.* Such total blindness is inexplicable.

40-Years of Russian Induction of Diseases In U.S. Embassy Personnel

Sadly, our own fellows have never even figured out how the diseases and health changes were previously induced by the KGB for decades in personnel in the former American Embassy in Moscow. Three U.S. Ambassadors to the Soviet Union died as a result of their exposure to that radiation. Many other Americans on site were made ill or suffered health changes.

When Johns Hopkins scientists studied the problem, they found a most anomalous thing: no health changes occurred in areas *where the EM forcefields existed* in the microwave radiation. Instead, the health changes only occurred in areas where the potentials were gradient free so that the force fields were zero—and thus the potentials (and their specific internal "engines") were *persistent.* Using only a classical EM force field analysis—which does not show any of the internal longitudinal EM wave substructuring of the fields, potentials, and waves—the Johns Hopkins scientists erroneously concluded that it could not have been the weak microwave radiation causing the health difficulties, *because no such health difficulties occurred where the forcefields were present.* That is, they very naively assumed that "no force fields" meant no EM effects were possible. Their entire findings thus were based on a total non sequitur, the assumption that there can be no electromagnetically induced physical changes in matter in the absence of fields! The Aharonov-Bohm effect alone falsifies that entire premise. So does general relativity and higher group symmetry electrodynamics.

Actually, the Johns Hopkins scientists had just clearly proven the exact opposite: *that it indeed was the radiation that induced the health changes.* That is simply shown statistically, and it is a deep and continuing mystery how good scientists and their governmental overwatch did not notice the violation of inference methodology.

Simply put, there was 100 percent correlation to the presence of *gradient free EM potentials— the persistent kind.* There was zero correlation (or 100% anticorrelation) to the presence of the normal electric and magnetic fields—i.e., where the potentials changed over a very small region of space. Hence it could *only* have been the constant potentials, else we must throw out statistical inference theory altogether.

If the changes had *not* been caused by the EM radiation at all, one would have had some health changes in regions where fields were present and some health changes where the fields were absent. Considering the lengthy time the radiation persisted and the number of personnel affected, the statistics are decisive. Without question, the cause was indeed the persistent potentials where the **force** fields were zero. Whittaker's two papers—one in 1903 and the other in 1904-would then show how it was done. The 1904 paper and superpotential theory alone would *not* have explained it, since that alone does not include the

"information content of the field"—i.e., spacetime curvature engines infolded inside the normal EM potentials, fields, and waves.

So, the U.S. government and U.S. scientific community "botched it badly," unfortunately, by elemental statistical inference standards. And unfortunately, they have continued to "botch it" to this day. Both the scientific community and the intelligence community missed it. Elementary statistics theory alone, coupled with the Johns Hopkins results, clearly indicates that the microwave radiation was causing the health changes, to a very high degree of confidence.

This demonstrates how "totally inexplicable" some of the effects generated by longitudinal EM wave interferometry and by "structured" or dimensioned potentials, fields, and waves can seem to our conventional scientists. If we examine the serious foundations flaws in classical electrodynamics and electrical engineering taught in our universities, and the near-total lack of higher group symmetry electrodynamics training, we can understand why our scientists and intelligence analysts did not and do not have the background required to properly assess the incidents and effects.

Western Electrodynamics Is in Sad Shape

Actually, numerous scientists have long pointed this out. For example, quoting Mario Bunge {121}: *"...it is not usually acknowledged that electrodynamics, both classical and quantal, are in a sad state."*

In quantum electrodynamics, it is the *potentials* that are the primary causes of all electromagnetic phenomena, not the force fields as used by Johns Hopkins and the Government in its analysis. We know that classical EM is wrong in its focus upon force fields as primary EM causes; the Aharonov-Bohm effect, Berry phase, and geometric phase work in some 20,000 papers in the physics literature already show that. Indeed, we also know that the classical force fields do not even exist apart from mass; in space, only the potential for such a force field exists, in case some charged matter is brought in to interact with the EM entity as it exists in mass-free space (as curvatures of spacetime).

The Aharonov-Bohm effect and its implications have been published in *Physical Review*—our most prestigious physics journal—since 1959. Later publications have included the Berry phase extension of the AB effect, and Aharonov and Anandan's further extension of the Berry phase to what is today called the geometric *phase.* The potentials are indeed the primary EM causes, and *the force fields do not even exist as such in mass-free space, but only in mass.* Yet our classical EM taught in our universities has not been changed in its fundamental acceptance of the material ether since 1865.

Every university in America is still teaching and defending a rather mangled electrodynamics where

(1) The material ether is still assumed, even though destroyed more than a

century ago by the Michelson-Morley experiments;

(2) The force fields are erroneously assumed to exist in massfree space, but in force-free form(!!!) when what actually exists there as an EM disturbance is a general relativistic perturbation of spacetime (i.e., an oscillation of the local curvature of spacetime). Actually, force identically is the time rate of change of momentum, where momentum is mass times velocity. Thus mass is a *component* of force and force field. There is no force or force field without mass. As Feynman put it, there is no force field in massless space; instead, there is only the potential for such a force field to be formed at the various points, should a charged mass be placed at (added to) each of them;

(3) The source charges are erroneously assumed to *create* their fields and potentials and all that energy in them, reaching across the entire universe from each and every charge, right out of nothing at all. This perpetual motion and creation of energy error continues even though particle physics has known (and proven, both theoretically and experimentally) that any charge (as a set of composite dipoles, when the charge is taken with its clustering virtual charges of opposite sign) is a broken symmetry in its fierce energy exchange with the vacuum. Hence the charge extracts that energy in its fields and potentials *from the active vacuum,* and outputs the extracted energy across space {122}.

Our own electrodynamicists and electrical engineering professors and departments would have us believe - and they continue to imply such in every university in America—that every charge is a perpetual motion machine clearly in violation of the master energy conservation dictum that *energy can neither be created nor destroyed.* The complete lack of scientific understanding that every charge extracts energy from the vacuum and freely and continuously pours it out as real observable EM energy, is reflected in rather silly "witch-hunts" {123} against electrical systems which exhibit more energy output than the operator himself inputs—i.e., systems which exhibit a coefficient of performance (COP) of COP>1.0, which are open EM systems far from equilibrium in their active environmental exchange.

Let us reason together! If the second law of thermodynamics really did prohibit COP>1.0 *electrical* systems, then it also would prohibit the demonstrated COP = oo of a solar cell array. It would also prohibit the demonstrated COP>1.0 *mechanical* systems such as a windmill, waterwheel, or sailboat—all of which have COP = oo! In other words, the second law cannot even be a law if it discriminates only one type of energy prohibited from being used for COP> 1.0,

For some inexplicable reason, EM COP>1.0 systems have come to be dogmatically labeled "perpetual motion machines" by the professional skeptics since EM systems must take their excess energy from the known active vacuum environment! In short, the dogmatic scientific community is saying that "windmill-type EM systems" with COP = oo are permissible for exchanges with

physically active and observable environments (such as the sunlight used in solar cells, the heat in the air used in heat pumps, the water currents used hydroelectric power plants, the winds used in windmill power generation, etc.), but they are not permissible for exchanges with the proven modern active vacuum *virtual particle flux energy* environment, even though the discovery of **broken** symmetry in 1957 already proves that all EM energy is indeed freely taken from the seething vacuum environment by the asymmetry of the modern dipolarity of the source charge! We refer the interested reader to the proven broken symmetry of opposite charges {124}. We also refer the reader to Nobelist T. D. Lee's statement applicable to the skeptics' naive notion of symmetry. Finally, in modern physics all the major forces of nature are generated by the exchange of virtual particles. It is these forces that then translate against a resisting mass or entity to provide useful work. So all useful work in the universe already comes from the interactions of the seething virtual flux of the vacuum. On what distant planet have the skeptics been hiding while all this modern physics has been developed?

One must keep one's sense of humor! It is ironic but true that every major university in the U.S. continues to teach, uphold, and advocate—by implication—EM charges as ubiquitous perpetual motion machines, freely creating energy from nothing. And that is those professional skeptics and witch-hunters never mention that their own naive understanding of electrodynamics already implicitly assumes and teaches perpetual motion machines freely creating energy from nothing at all—and on a scale unparalleled in scientific history!

We have one chart with some 32 major foundations errors and flaws in the electrodynamics taught in all our schools; there are many others in addition. This erroneous teaching has so indoctrinated our graduate students that most electrical engineers no longer know the real difference between power (the rate of change of form of energy and thus the rate of production of work) and rate of energy flow (whether it is being dissipated or not).

Every textbook speaks of "sources furnishing power," when it is the rate of dissipation of energy in the individual loads and losses to provide the rate of doing work that *constitutes* power. Sources do not furnish power! They furnish energy flow (specifically, their source dipole furnishes energy flow, extracted and transduced directly from the active vacuum, and only a tiny bit of that enormous energy flow is diverged into the circuit and used). The various components of the receiving circuit interact with that energy flow to catch and dissipate a little of it, thus producing power and work locally in the intercepting and dissipating component.

A massive nondivergent (nonintercepted) energy flow has zero power (time-rate of doing work), but if intercepted and diverged, the divergence may develop enormous power (time rate of doing work) in and upon the interceptor, diverger, or collector. Even many physicists today are confused on the difference between

rate of work and rate of energy flow per se. E.g., for about 30 years now, there has been a polite debate involving that very subject in the *American Journal of Physics.* It is still not completely resolved, because the argument has not actually addressed where all EM energy in fields, potentials, and waves comes from in the first place: directly from the seething vacuum via the asymmetry of the source charge. It also has not addressed the long unaccounted giant Heaviside nondiverged energy flow component.

Toward a Deeper Electrodynamics

The first thing the Soviet Academicians did after WW II was to completely overhaul electrodynamics, but in highly classified areas controlled totally by the KGB. Stalin's boot firmly planted on their backside saw to it, creating the terrible fear that if they failed to produce, they would surely die. Not having experienced such a "Stalin boot," our own scientific community continues leisurely onward, while it teaches 110 years old electrodynamic material filled with non-sequiturs.

The Russian use of the "information content of the field" euphemism is a case in point. Our fellows (in both the intelligence community and the scientific community) assume the Russians are speaking of simple transverse EM wave spectral analysis. Nothing could be farther from the truth. Let me explain.

In 1903, E.T. Whittaker—a leading theoretical physicist at the time—showed that any scalar potential is comprised of a harmonic set of bidirectional *longitudinal EM wavepairs.* Each pair consists of a longitudinal EM wave and its true phase conjugate replica (i.e., its "antiwave", or time-reversed twin, coupled together).

Unknown to Whittaker, that LW wavepair actually includes a *time-density wave* in the time domain, coupled to a longitudinal EM wave in 3-space. Per quantum field theory {66}, such a coupled pair would be observable as the scalar potential. Knowledge of this specialized coupling is necessary in order to properly decipher the Priore mechanism. That mechanism was demonstrated to *time-reverse* (dedifferentiate) a diseased or damaged cell and all its parts back to it previous normal state, *genetics and all.* The time-reversal was accomplished by "pumping" the cell and all its parts in the time-dimension so that time-reversal propagation of the mass-energy is achieved. The time-domain pumping is done by the associated time-density wave, which always accompanies any longitudinal EM wave a priori. So sometimes we sloppily say that the "longitudinal EM wave pumping" causes the time reversal of the mass, but it is really the associated time-density wave pumping that causes it. The time-density wave component also can cause *time charging* or *time-excitation charging* of a mass. During its alternate existence as masstime, the time portion is altered, and that is a time-excitation or time-energy excitation.

It turns out the human cellular regenerative system (Figure 29) also uses the

same time-excitation charging methodology to produce time-pumping of the cell and all its parts. This produces a slow time-reversal (dedifferentiation) of damaged cells back to a previous state. This is in fact the basic mechanism for healing, as used by the living body.

Reversing aluminum, for example, just converts it back to ordinary aluminum. Not too interesting.

Reversing an HIV infected cell, however, would produce a healthy, normal cell with normal genetics. When a damaged cell turns into a cancerous cell, it is due to a process called *promotion* (change of the cell to a cancerous cell). *Reversing a* cancerous cell would change it back to a healthy, normal cell again—in short, it would constitute *demotion* of cancer and then healing of the damage in the now normal but damaged cell. In the AIDS patient, simply pumping the entire body with the time-density wave accompanying the longitudinal EM waves produced in a plasma—as Priore did for terminal tumors—would time-reverse all cells, completely ridding them of any residue of HIV infection. This would remove all the "HIV factories", thus completely solving the problem of AIDS. We have also uncovered a more advanced process where *matter can essentially be directly engineered in any conceivable manner,* including nuclear transmutation etc. We have filed a Provisional Patent Application and will file formal patent applications on those processes in the future, as soon as funds are available (patent attorneys are expensive!)

Time Is Highly Compacted Energy

Since time is energy compacted by some $9x10^{16}$, even small time-density changes can produce enormous spatial energy, should any of that compacted energy be *transduced* from time-density waves into transverse EM waves and thus into spatial EM energy. Such transduction can indeed occur in nonlinear materials and processes, such as in electrolysis.

The New Transduction Model Explains the Cold Fusion Results and Mechanisms

In August 1998, we presented a conference paper pointing out that cold fusion uses this very *transduction of EM wave types,* one into the other. We presented such new concepts as (i) TW to LW to TDW transduction and in the other direction also, (ii) time density charging of a particle to an excited time-density state (analogous to energy charging to an excited energy state), and (iii) the observation that excess phase conjugation in a local region can generate a time reversal zone where like charges attract and unlike charges repel.

With these concepts we were able to explain the excess heat appearing in the cold fusion experiments of hundreds of researchers. We also came up with (iv) a totally new class of nuclear reactions without the usual high-energy

considerations. That is, we showed the exact nature of the electronuclear reaction that is forming the anomalous nuclides in cold fusion experiments. Production of the new nuclides was revealed to be simply what one would expect from this mechanism, as indeed was particle clustering of like-charged particles.

We also explained (v) all the instrumental anomalies occurring in a series of well-documented cold fusion electrolysis experiments at China Lake. In fact, (vi) we added a completely new term to the conservation of energy law, thereby extending it.

An updated explanation is included in my new book, *Energy from the Vacuum*, 2002, *ibid.* With the new transduction interactions, one must state that the total energy in (a) spatial energy form, (b) mass-energy form, and (c) time-energy form is what is conserved.

So when transduction occurs in cold fusion experiments (electrolysis), some of the time-density charge energy is gradually transduced into ordinary transverse EM wave energy, which as it scatters produces excess heat not accounted for in present particle physics interaction models.

Scientists with only the "old" 2-term Einstein conservation law in mind, will be firmly convinced that this excess heat represents a violation of conservation of energy, hence is impossible. So they will question the calorimetry ability of the cold fusion scientists, etc. Unfortunately, the more ardent defenders of the orthodox faith will unjustifiably impugn the intentions and morals of the experimenters themselves with vicious ad hominem attacks. Such has indeed been precisely the case. Many of the harsh scientific critics have acted like cur dogs in a pack attack, and not as scientists at all.

Once one analyzes cold fusion in the new 3-term conservation manner and with the new transduction concepts, one immediately sees that the *overall* conservation of energy is upheld, while the *special case* represented by the former energy conservation law (conservation of the sum of the spatial energy and the mass-energy) is *permissibly* violated. The former case was a special case in that it arbitrarily assumed that no transduction of time-energy into spatial energy or mass energy—or vice versa—occurred.

In essence, successful cold fusion experiments show that, via transduction, a bit of time itself can be "utilized for fuel" and transduced into ordinary EM energy. Energy-wise the system has become a nonlinear open dissipative system[40] far

[40] But we point out one idiosyncrasy of thermodynamics, which defines a "closed system" as one in which mass does not cross the system boundary, but energy is free to exchange across that boundary {125}. Hence, eerily a "closed thermodynamic system" is actually an open system with respect to energy exchange between system and environment. As such, energy-wise the system can be a system far from energetic equilibrium with its external active environment, and still be considered a closed thermodynamic system! Energetically, a *closed thermodynamic system* that exchanges energy but not mass is permitted to exhibit COP>I .0 and even COP = oo!

from thermodynamic equilibrium {125}. As such, it is permitted to (1) self-organize, (2) self-oscillate, (3) output more energy than it itself has, by merely receiving, converting, and using excess energy from its environment (in this rase, from the transduction of a tiny bit of the time-charging that has occurred), (4) power itself while simultaneously powering a load or performing useful work, and (5) exhibit negentropy. With the exception of transduction of time-charge into excess energy, all of that is already in the thermodynamics texts, though it has not been clearly spelled out in electromagnetics texts. The source charge, e.g., exhibits all five of those capabilities. *The inclusion of the time-domain as part of the external active environment, however, is an extension of* ***previous*** *open dissipative system work by leading researchers such as* ***Prigogine.*** *It dramatically extends the meaning of "active environment".*

Why There Is a Time Delay in the Onset of Cold Fusion Phenomena

With an energy-to-time compaction ration of $9x10^{16}$, energy processes have to transduce spatial energy into time for quite a while in order to build up very much *time-excitation charge*. This leads to an initial delay in the onset of the "new law" transduction phenomena, as directly shown by the vast majority of careful cold fusion experiments. This build-up occurs during the "palladium-lattice loading" time, e.g.

By the same token, there is a time delay after cutoff of the input power to such experiments, during which time the slowly decaying time-density charge by its transduction into spatial energy continues to maintain the anomalous new processes (such as excess heat production) as they slowly subside. So the hours-long or even days-long delay phenomena after input power shutdown are also explained by the new approach.

In summary, there exist some very anomalous but very good experiments by excellent scientists—more than 600 of them—that are at least totally consistent with the above new wave polarization transduction model. Consistency with experiments is the first element of proof (it is necessary but by itself it is not sufficient). The new model also contains and obeys the conventional conservation of energy law until the new transduction phenomena become observable, at which time the extended energy conservation law applies. So in its lower limit, the new model corresponds to the present model—again, another requirement of any model purporting to extend a scientific area past that area's conventional model description.

The KGB weapons scientists—not the regular Russian academic establishment—have about a 40-year lead on us in all these areas. While our own scientists have dallied and pursued the standard model, the Russian weapon scientists have produced the equivalent of 10 Manhattan Projects, back-to-back, in the "new" energetics area.

The Early Soviet Longitudinal Wave Interferometers

Using longitudinal EM waves, the early KGB energetics interferometers could pass their beams right through the earth and ocean. LWs readily penetrate matter, reacting with it only weakly.

Some LW interferometry was also done using ordinary EM waves as carriers for the LW wave functions. Each such transverse wave carrier is in fact two scalar potential functions (Whittaker 1904, the initiation of superpotential theory). In each scalar potential for which functions are extracted and used to make the normal transverse carrier wave, there exist LW biwave pairs comprising said potential. So by assembling the desired LW biwave subsets, the two scalar potentials and their resulting interference-produced carrier wave are internally structured as desired. This is the use of the so-called *internal information content of the field*. We speak of such a deliberately structured potential, field, or wave as having been *conditioned*, *dimensioned*, or *activated*. If these terms are deemed inappropriate, just use the more generic term "internally structured." Then one has to explain what the "internal" is, and how this "internal" can be "structured."

In the distant interferometry zone, those *dimensioned* potentials, fields, or carrier waves would interfere and produce the desired alterations in the local spacetime (including specific spacetime curvature engines). Remember, the potentials are just bundles of special waves. We are discussing a special form of nonlinear multiwave interferometry, where the individual waves and waveforms comprising the total wave package assembly constituting a carrier have been carefully chosen in advance.

In the local spacetime in the distant interference zone, such multiwave longitudinal EM wavepair interferometry creates ordinary EM waves and energy that arise directly from each and every point in that individual interference zone. We stress that ordinary transverse wave EM energy propagation through the intervening space between the interferometer transmitters and the distant target *does not occur*.

In January 1960, in a speech to the Presidium, those are the weapons then in final engineering development for production that Khrushchev spoke of as "fantastic new weapons".

Khrushchev Killed the Thresher to Prevent His Own Dismissal

The first deployed large force-structure interferometer weapons became operational circa 1 April 1963. Khrushchev was still smarting from his Cuban missile crisis fiasco and his humiliation by Kennedy. Having overplayed his

hand and gotten caught,[41] Khrushchev was desperate to stay in power and not be thrown out by the Communist Party leaders for such a massive loss of face.

On April 10 of 1963 Khrushchev used his new interferometers to reach through the earth and ocean and "kindle" EM jamming in the electrical controls of the **U.S.S.** Thresher nuclear submarine underwater off the East Coast of the U.S. **The** reader should recall that, wherever the interference zone is established—including in the earth or underneath the ocean, in the atmosphere, or in space—the energy arises directly out of the local spacetime. *There is no Faraday shielding of such effects, which do not depend upon ordinary transverse wave EM field energy propagation through space*. The energy appears everywhere within the targeted object, simultaneously.

It is extremely important that the reader recognize the dramatic difference in the way energy propagates in the new mode as compared to the old "propagation through space" mode. In the old mode, energy transport arises in one spatial location and is considered to proceed serially through the intervening spatial points to the intercepting and interacting particle's location. The Poynting model presently uses only this mode. In other words, the energy propagates from wi*thout* the object *to* the object, and thence *inward inside* the object, if possible as the object interacts.

On the other hand, when the energy arises at each and every point in spacetime, it then propagates outward from each arising point. Thus in the nucleus of an atom, the "energy flow" starts at all interior spatial points and flows or diffuses outward in all directions. So the energy "meets" and interacts with the quarks in the nucleons, *before* it meets the "nucleon as a whole" and translates it. For this reason, with energetics it is easier to alter and "flip" quarks in nucleons than it is to translate nucleons, since one is using the new energy propagation mode. *This simple reversal of the outside-to-inside energy propagation to an "inside-to-outside" mode, is a revolution in particle physics and effects on materials.*

In fact, the energy dramatically enters the "interior" areas of nuclei, nucleons, etc. in a manner heretofore impossible or extremely difficult to achieve by high-energy physics, which can only do it by smashing into the object with sheer brute kinetic energy. Therefore the new "inside to outside" energy propagation mode can produce—at feeble spatial energy—extraordinary nuclear interactions not possible by brute force "outside-to-inside" energy propagation means. By controlling the structuring of the arising of the energy at each point in spacetime, the energy structure interacting with the quarks and other interior components can **b**e tailored to order. This is the primary secret of transmuting an element at a distance by a specialized energetics weapon. The structuring of the emerging

[41] Oddly, had he simply waited a few more months or a year before injecting the missiles and nuclear warheads into Cuba, Khrushchev's strategic scalar interferometers would have become operational. With those in operation, a "Cuban missile crisis" might well have had a different outcome.

internal energy can be deliberately tailored to change quarks in—say—some of the nucleons of U235 and plutonium nuclei. In this fashion nuclear warheads, nuclear powerplants, and nuclear propulsion systems of atomic submarines can be altered at a distance, beneath the earth's surface, beneath the ocean's surface, in space above the earth, etc.

The EM "hash" emerging from the Russian interferometry simply jammed the electrical controls and systems of the Thresher *from inside its very electrical circuits.* Out of control and helpless, the Thresher sank to crush depth and imploded (Figure 6). The EM "splatter" from that interferometry, arising from the local spacetime throughout a surrounding region, engulfed the Skylark, the surface companion of the Thresher. The resulting spurious EM jamming severely interfered with multiple electronic systems on the Skylark. Several electronic systems just ceased working altogether. Their electrical forces were time-energy excited and time-reversed so that electron currents in them became impossible (blocked).

It required over an hour for the Skylark to transmit an emergency message back to the Navy that the sub was in difficulty, through all that interferometry jamming effects. The Russians undoubtedly "tracked" the sub till it imploded, then cut off the interferometry. As the "time-density charging" in the area slowly diminished, all failed electronic systems in the Skylark returned to full functioning. This was because the excess time-energy excitation just decayed away, so that electrical currents could again flow.

Khrushchev Demonstrated the Powerful Blast Capability of Strategic Interferometry

The next day, 100 miles north of Puerto Rico, the same KGB interferometer weapon was powerfully pulsed to produce a giant EM burst deep under the ocean's surface (Figure 42). A cone of water rose up from the surface to about a half-mile in height, observed by the startled crew of a passing U.S. jetliner and reported to the FBI and Coast Guard when the aircraft landed in Florida. As it rose, the cone of water spread into a cauliflower shape typical of a deep underwater nuclear burst that does not vent the gas bubble. Then that giant cauliflower of water fell back out of the sky and into the ocean. The second successful demonstration of Khrushchev's scalar interferometer weapon had been made for the benefit of the Presidium and the leaders of the Communist Party.

With those two dramatic tests, Khrushchev had killed the latest and greatest U.S atomic submarine and demonstrated the awesome power of energetics weapons. He had shown the leaders of the Communist Party that the U.S. had no inkling of his new superweapons. He had struck the U.S. a formidable blow in a direct act of war—but a new kind of *clandestine* energetics war—and gotten clean away with it. Now it was Kennedy, rather than Khrushchev, who had been

duped. So had the entire U.S. Intelligence Community and the U.S. Scientific Community. Sadly, mostly they apparently remain duped or partially duped to this day.

Khrushchev managed to stay in power nearly two years longer by these two demonstrations. So the KGB/Soviets embarked on a decades-long program of buildup and development of the new weaponry, clandestinely, in order to take the U.S. by surprise attack and destroy it utterly.

In 1972 Brezhnev named 1985 as the target year when Russia would be able to do as it pleased, and would essentially control the land, the oceans, and space {126}. This was stated at a secret meeting of the European Communist parties in Europe. A British intelligence agent was in the meeting, and furnished the U.S. that information. Later it was openly released and published.

The Russians met that 1985 deadline, and the resulting increase in killing U.S. missiles and aircraft in 1985-1986 was most indicative. Other indicators such as massive weather engineering were already ongoing.

Weather Engineering Over North America

The first KGB weather engineering tests over the U.S., using their relatively new interferometers, produced signatures of anomalous perfectly round holes appearing in clouds. These experiments started in 1967 or thereabouts. The Russians gave us that very severe "deep freeze" winter of 1967, as an initial weather-engineering test of their energetics interferometry weapons.

The KGB communists do have a sense of historical dates, and they often do things on certain dates in symbolic fashion. Full-time Soviet weather engineering over North America started in earnest on July 4th, 1976—our Independence Day and our bicentennial. This was the KGB's "gift" to the United States on such a historic occasion. Full-bore weather engineering over the Americas has continued to this day, and even increased. It was passed into the hands of the Yakuza and the Aum Shinrikyo upon their leasing of those interferometers on site in Russia at the end of 1989. In 1985 I produced a rather crude videotape[42] (40 minutes) with pictures of the giant radial cloud signatures etc. associated with such weather engineering operations since 1976.

The *basic* weather engineering method is simple. Use an LW interferometer (LWI) to reach through the earth and *cool* the air in a region and produce a high-pressure area, due to the densification of the air. Use another interferometer to *heat an*other area and form a low-pressure area, due to the expansion of the air. Then carefully steer those *highs* and *lows* by gradually and slowing rotating the distant antennae and slowly adjusting the interferometry range simultaneously, according to a calculated schedule.

[42]T. E. Bearden, "Soviet Weather Engineering Over North America," 1985.

By that means, the LWIs easily catch, entrain, and steer the jetstreams largely responsible for our weather. Put sharp loops and twists in that steering, and the huge angular momentum of the jetstreams developed in those sharp turns and circles will spawn tornadoes, violent weather, etc.

The first complete weather engineering system over North America in 1976 also used the Woodpecker's normal EM carrier signals with dimensioning and internal assemblage of the composite longitudinal EM wavepairs. A giant "interference grid" was established over much of North America. A great deal of local adjusting of the interferometry in the grid was necessary. These local grid readjustments caused "sudden popouts" of EM energy, creating many atmospheric booms, rumbles, and explosions.

To really stir up big weather trouble, the Russians—and now the Yakuza and Aum Shinrikyo—also heat or cool areas of the ocean where El Nino and similar "water engines" form. A dimensioned LW interferometer is required for this operation. By slowly and protractedly heating or cooling the water in one of the "warm water engines" fueling the weather, one causes a very significant, long-term, later effect on perhaps an entire continent.

One can create great droughts in some areas, great floods in others, etc. The KGB has been doing this extensively, since 1976. The great floods in Red China a few years ago are a direct example of KGB/Yakuza weather engineering, as is much of the extreme heat of 1998. In fact, thanks to the weather operations of the Yakuza under their KGB mentors, 1998 was the overall hottest year on record till then, since records were kept. At least for the summer of 2002, the record may have been broken again, with a significant season of giant forest fires burning away.

One purpose of the excess heating of the atmosphere, of course, is to do damage. An added "benefit" to the KGB is to furnish support to the environmentalists who are concerned about global warming. Understand, there is indeed such a thing as global warming. But by augmenting the atmospheric (and ice sheet) heating just a bit in a single year, the statistical analyses are skewed. The skewed analyses will show that the global warming problem is far more imminent than it really is, if the LWI engineering of it were suspended. Nobody on either side of the global warming debate seems aware of the LWI intervention that is ruining the results of their models and calculations.

In turn, the heightened global warming indications, detected as a result of the LWI interruptions, impel strong activist support for such things as the Kyoto treaty, *which is specifically designed to the strategic detriment of the U.S.* if and when the U.S. Senate ever approves it. The Kyoto treaty does not even apply to some 160 countries including Russia, China, etc. This focuses a certain proportion of our government time and effort in grappling with an inflated global warming problem, immediately. It directly fits the KGB strategy of "spreading" our government energy and attention all over the map, anywhere

but upon the coming strategic energetics strike and upon energetics weaponry.

The die-hard section of the KGB strategists are chess players. *They will come at you anyway, anyhow, and anywhen that they can.* Everything that can be impressed to serve or support the overall objective, will be impressed and used. That is the overriding principle when analyzing Russian KGB strategy.

Khrushchev meant every word of it when he said to Nixon in their famous Kitchen Debate: *"We will bury you!"* Interestingly, to this day Americans and their government officials have continued to be deceived as to exactly what Khrushchev meant. He meant it literally.

Earthquakes to Order

According to U.S. Defense Secretary Cohen, electromagnetic induction of earthquakes is now recognized by the U.S. Department of Defense, considering his little-noticed statement in Georgia in 1997, which we previously quoted. An interesting exchange of induced earthquakes (Figure 54) had occurred in latter 1988 and early 1989. Here two sides seemed to be "counting rifles."

Opening bet (induced quakes)
- Quebec 25 Nov 88
- Pasadena 3 Dec 88

Raise you
- Armenia 7 Dec 88

Call - what do you have?
- Malibu 8 Jan 89

Four aces
- Soviet Central Asia 23 Jan 89

***Clear** table (stress relief)*
- Bakersfield CA et al. various

Figure 54 Counting rifles with earthquakes: Put up or shut up.

As Secretary Cohen made his April 1997 statement obliquely recognizing the scalar interferometer weapons, the little friendly nation had just completed countering and averting a massive strategic energetics strike upon the United States and Western Europe, scheduled for May 1, 1997 —just three days later. A little more than two months earlier, a previously scheduled attack had also been countered and averted by the same friendly little nation.

Once one can reach into or through the earth and ocean and create energy in a

desired interference zone, induction of earthquakes is simple. Use the interferometers to deposit energy in a fault zone over a period of time. Keep it up, and the piezoelectric plates build up enough mechanical stress to forcibly "slip" and produce an earthquake.

Put the energy in very slowly, and one gets a long "overpotential" effect where the rocks do not slip for a long time, while the energy builds to higher levels due to the static friction of the rocks. Then there occurs a rather rapid catastrophic slip. In short, one produces a large destructive earthquake. The KGB weaponry can produce earthquakes of the highest magnitude if they work at it.

If one wishes to induce a quake in an area where there are no known faults, then one simply focuses the interference zone there inside the solid rocks and proceeds to deposit the energy, preferably rather quickly (in hours instead of days). The entire rock will be expanded and it will fracture, producing an anomalous so-called "flat plate" earthquake.

Around the early 1900s, the "normal" rate of large earthquakes was two or three per year. That gradually increased after WW II. During one week in year 2000, there were some 20 major earthquakes around the globe. Obviously, someone is doing it, since this is far beyond what could be expected naturally. Presently that "someone" is mostly the Yakuza and Aum Shinrikyo, on site in Russia and leasing the LWIs. With the scheduled CSR attacks forcibly aborted, the KGB has the problem of restraining an increasingly impatient Yakuza and Aum Shinrikyo group, while keeping them paying the lucrative lease money. Consequently, inducing some big earthquakes is one way to "keep the troops occupied and busy." Shooting down the occasional aircraft or missile is another way.

I worked for 8 years or more with an inventor (Floyd Sweet, now deceased) who had an energy device {127,128} sensitive to *artificially* induced quakes of that fashion, even such quakes thousands of miles away. The device would sit right on top of a *normal* quake and not react. We could tell within some 8-10 thousand miles—and often even for greater distances— which quakes were artificial and which were natural.

So during that period I was able to clearly ascertain what was going on, and who was doing what to whom, and which quakes were normal and which were manmade. Several artificial U.S. quakes, the Armenia quake, and a subsequent big quake in Russia were particularly interesting in the mid and latter 1980s. The huge 1976 China quake was directly induced by the KGB.

Figure 55 Brewer briefs President Reagan on Soviet scalar EM weapons October 1984, then briefs National Security Council

In 1984, on my behalf Roy Brewer {129} had briefed President Reagan on these scalar interferometry weapons (Figure 55), then briefed the National Security Council. Let us hope that these high level briefings may have borne at least some fruit.

Readying the Weapons for the 1985 Readiness Demonstration Tests

In latter April 1985 I received an urgent call from my close colleague Frank Golden. In his avionics repair work, he suddenly found that his best calibration instruments were very "noisy." He replaced one expensive instrument, and the second was "noisy," also. A third proved equally noisy. This was unparalleled. It was not the instruments, but instead it was all the electronics to be repaired, that were emitting electromagnetic noise!

So Frank borrowed one expensive instrument and brought it home for the weekend. He altered it by a proprietary method so that he could detect energetics radiation. Voila! The entire earth was alive with Soviet energetics signals. The weak interferometry of so many signals impinging into the weakly interacting electronic systems to be repaired, had generated the electronic noise his instruments had detected.

In response to Frank's call, I immediately proceeded to his location. I personally observed on the oscilloscope, as detected by Golden, some 27 pairs of Russian energetics signals, each of the two in a pair being 12 kilohertz apart. (We have

previously explained why two frequencies are used, and one "pretends" one transmitted the difference frequency). Each of these frequency pairs represented the entire earth held in entrained resonance. Each pair was an "energy tap" in the earth, extracting enormous energy from the heat of the molten core of the earth itself and outputting it as 12 kilohertz power for transmission to giant interferometry weapon sites.

Each "tap" was extracting energy sufficient to power perhaps 4 to 6 of the giant intercontinental energetics interferometer weapons. We were observing something like 100 to 150 massive weapons on line and radiating. A full-up strategic dress rehearsal—or preparations for a full-up strategic attack on the U.S.—was underway.

Gorbachev was still a "new man on the job" at that time. Further, 1985 was the 40th anniversary of the end of WWII, and a very important occasion for the Communists and in fact for all Russians. The May Day celebrations that year went on for several days, not just on May 1.

What we were seeing were preparations for a massive May Day weaponry demonstration in and around May 1, 1985. We were observing the preparation and demonstrated readiness of all that great armada of Soviet energetics weapons, to meet Brezhnev's 1985 schedule laid down back in 1972 {126}.

Longitudinal EM wave communications to deep underwater Soviet subs, the huge interferometer armada, and everything else—all were being readied and demonstrated. I can assure the reader that observing full rehearsal of preparations for the next World War was a most sobering experience.

After May 1, most of the armada of interferometers was stood down again because it had been demonstrated that the "ready schedule" had been met. All but one of the giant energy taps in the Earth were also stood down again. That one remained active.

The May Day report to the heads of the Communist Party that year must have really been something!

As usual, apparently our own scientific and intelligence communities did not detect the main activities, and would not have believed it if one told them. They certainly did not believe it when I published it in 1986 in *Fer-de-Lance,* but labeled it sheer fantasy or at best total conjecture.

It was neither fantasy nor conjecture. It was direct experimental measurement. It was in fact what used to be called *scientific method.* The problem with our intelligence agencies was that they operated behind *policies.* Once the *policy* is decided, then regardless of what the intelligence analysis indicates, anything against the official *policy* is just ignored. This neat little *policy* method of doing business has resulted in making our intelligence agencies some of the most political-minded and manipulative groups on Earth.

Meeting the 1985 Schedule for Readiness

In 1985, KGB/Russian preparations began in earnest for the energetics weapons readiness projected for that year by Brezhnev in 1972. Being full-bore tests, these actually went after destruction of vehicles and killing people. These were actual acts of war. The so-called "Cold War" was not nearly so cold as pictured in the news media!

Early that year, an LWI was used to cool the combustion in the engines of a jet liner off the coast of San Francisco, bound for Los Angeles (Figure 56). This flamed-out the engines. The stricken craft fell 30,000 feet before the time-density "cooling" charge drained away, sufficient for the pilot to restart his engines and limp into San Francisco. Gravitational and inertial anomalies—*a clear signature of the use of this EM/GR weapon*—were exhibited upon the personnel in the cockpit. The official investigators ignored those signatures; after all, such is not in their standard checksheets! And everybody knows the standard checklists are already perfect!

SIX MILE DROP IN TWO MINUTES

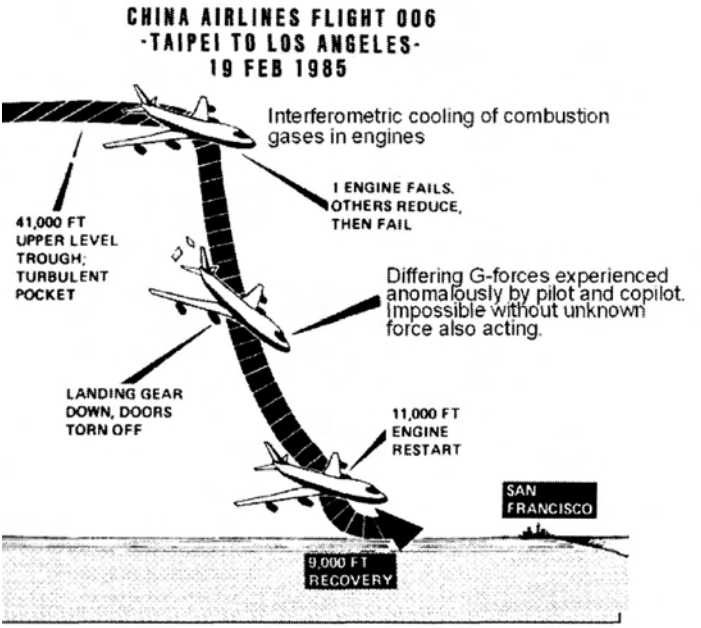

Figure 56 Extinguishing combustion in the engines of a jetliner 19 Feb. 1985.

KGB Crews Regularly Practiced Against U.S. Rocket Launches from Cape Canaveral

In a late Nov. 1985 night shuttle launch at Cape Canaveral, the Russian interferometer crews continued their practice of using the U.S. shuttle launches as convenient "simulated" ICBM launches, for energetics interferometer crew practice (Figures 15 and 16). EM missiles (balls of EM energy formed in the area by distant LW interferometry through the earth) were used as the "destructive agent", but were offset from the actual launch in order not to destroy the shuttle. This was *normal crew drill,* not combat operations. The practice range for energetics weapons is—as might be expected—the actual targeted area and targeted nation itself.

As shown in *Fer-de-Lance,* I published an actual picture (Figure 15) of such a KGB EM missile strike, offset from that shuttle launch in late Nov. 1985 and snapped by Bob Gladwin. I also published an actual picture of a second such EM ball of glowing energy (Figure 16), over the launch site for the same launch, and used as a registration point (the LWs deviate slightly in passage through the earth, since the potentials in the earth are not constant). George Suchary took the second photo.

A standard artillery "shift-from-known registration point" method of firing was being used. In other words, the crews establish LW track on that EM registration ball, right through the earth. That represents *a point having a known set of coordinates*—a registration point—established in the firing computer. Then when the targeted strategic missile (in this case the shuttle's main booster) ignites, the interferometer also tracks the huge ionization target of the exhaust with the same weapon system.

That gives a known *relative* location of the missile rear end, with respect to one's registration settings for the registration point ball of light. Then add some meters to move up onto the missile body proper, and voila! The center of the target missile that will be fired is now in the bulls-eye, so to speak. That is a standard "shift from a known registration point" method of shooting, well known to every artillery group on the planet. The "marker beacon" is what is known as a "high burst registration," except it is not a burst but a steady ball of energy maintained over the area as the registration point.

The distant rocket or missile can now be destroyed in a variety of ways:

(1) Just create a sudden EM surge arising right in that spacetime (that is, just pulse the interferometer). That burns out some of the inner electronics of the missile, causing partial or complete missile failure.

(2) Sharply pulse the interferometer to introduce EM energy surges and sparks in the fuel or solid propulsion, igniting it massively and blowing up the rocket. Works well for aircraft fuel tanks as well.

(3) Form another EM missile and hit the missile broadside with that, burning

through it and destroying it immediately.

(4) Hit it with an explosive EM missile internally, instantly exploding the missile into pieces. Or

(5) Hit it with several of the above simultaneously.

Suchary and Gladwin had captured the direct evidence of KGB dress rehearsal for the strike and kill of the Arrow DC-8 in Gander, Newfoundland about two weeks later.

Kill of the Arrow DC: Practice Turned into Performance

Two weeks later, the same KGB weapon tested against the Cape Canaveral shuttle launch was used to destroy the Arrow DC-8 at Gander, Newfoundland, killing some 256 occupants, 248 of them being U.S. soldiers returning from peace-keeping operations overseas. The aircraft *was not* iced up; later that was clearly established.

See Figure 17. As the ill-fated Arrow aircraft began its thrust down the runway for takeoff, it was already under LW interferometer track (the exhausts of the **engines** were being precisely tracked) by distant KGB operators. The KGB operators simply began to cool the combustion gases in the engine combustion chambers as had been done to a U.S. jetliner earlier that same year (Figure 56) off the coast of San Francisco (there they had completely flamed out the en**gines).** Now they did not want to flame out the engines during take-off, but just wanted to reduce the thrust of those engines.

So the available thrust of the engines began decreasing as the aircraft picked up speed on the runway toward takeoff, even though the turbines were rotating at full speed. For powered flight, it is the *thrust-per-drag ratio* that is important. One can reduce that ratio by ice-loading and therefore increasing the overall aircraft drag, as all Transportation Safety Board checksheets assume if the engines are at full rotation and if operation and icing conditions are present. Or one can reduce the ratio by reducing the engine thrust itself, as was done for the Arrow, even though the plane is de-iced. All the Transportation Safety Board checksheets *assume* that it has to be drag increase, and thus due to icing.

The National Transportation Safety Board (NTSB) investigators know nothing about longitudinal EM wave interferometry and its capabilities—and its development by several nations of the world. Neither do their checksheets. Sad**lly,** the NTSB is not even aware that the electrodynamics and electrical engineering it assumes is so perfect is in fact a decrepit old model based on century-old errors. They are unaware that much better electrodynamics models have long been developed for particle physics, because the crusty old classical model is totally inadequate. Their checksheets also are "unaware" of anything really modern such as electrodynamics models of the higher group symmetry **kind.**

The thrust reduction by combustion gas cooling *does not appear on the official checksheets and is never considered.* It is not considered to this day. It will probably still not be considered this century.

Observers on the ground heard those engines "laboring," which can be a direct symptom of combustion gas cooling and engine thrust reduction. Rough running and missing can be another, if the cooling increases. Engine flameout occurs when the combustion no longer can be sustained because of the dramatically lowered temperature of the gases.

The Arrow Pilot Sensed the Lack of Power, But the Aircraft Was Immediately Hit

See Figure 17. At rotation and liftoff, the pilot of the Arrow DC-8 immediately sensed his lack of lift, and started a slow turn to the right, apparently intending to come around and land again as an emergency measure. Meanwhile, crossed beams had formed in the sky above and off to the right side. From those crossed beams of light, there shot down a bright "streak" of light that struck the fuselage of the aircraft in the right side, ahead of the engines. That was the EM missile strike—just as had been offset from the shuttle launch two weeks earlier in Florida, and photographed by Bob Gladwin.

That piece of Arrow DC-8 fuselage hit by the EM missile, with the burned hole in it, was recovered and tested. Tests showed no explosive residues on the edges of the hole, so it *was not* made by a bomb or other explosive device. Instead, it was made by an EM missile of the type that over a decade later hit the TWA-800 several times off Long Island and killed it.

In the Arrow aircraft's kill, the fiery EM missile sharply ignited the plastics in the forward cabin, which explosively outgassed. One product of such outgassing is hydrogen cyanide. A whiff or two, and all the passengers in that section were already dying of cyanide poisoning. *In the autopsies of the recovered bodies, about half the passengers were already dead of cyanide poisoning before the plane impacted the ground and exploded.* They died while that aircraft was still flying and sinking tail-first toward the ground.

The results of those autopsies were deliberately withheld from the Canadian investigative board.

The impact of the EM missile on the Arrow DC-8 was clearly recorded by sharp, vertical EM surges (spikes) in traces on both data recorders on board the aircraft. In *Gravitobiology,* on p. 82 I printed the recorded sensor responses **for** that signature also.

Elements of the U.S. Government Deliberately Suppressed Vital Evidence

Several eyewitnesses, including Judy Parsons, physically observed the formation of the crossed beams in the sky. Parsons and perhaps others actually saw the streak-down and strike of the EM missile when it hit the doomed Arrow DC-8. Parsons tried to testify, but her testimony was never allowed to be heard by the Canadian Transportation Safety Board. A major U.S. News agency interviewed her, but then squelched the story for some "unknown reason." Other witnesses (who are still reluctant to come forward) did observe the strike of the EM missile also.

Why would the U.S. government deliberately suppress information relating to the cause of the deaths of 248 of our soldiers returning from peacekeeping missions overseas? Why were they so determined that this direct act of war be declared an "accident" in the face of overwhelming evidence that it was not an accident at all?

Iran Contra was not yet divulged at the time. Recall, at very high level our own fellows had directly violated the law, and were engaged in the illegal Iran Contra fiasco up to their eyeballs. Also, some officials in Washington in certain high U. S. Government circles were in near panic, in their personal (erroneous) firm belief that a MidEast-sponsored terrorist bomb had destroyed the Arrow. In that case, so they reasoned, with the murder of 248 of our soldiers, the American public would be so aroused and angry that they would force military action against the MidEast nation or group, and that would then reveal Iran Contra. *Too many highly placed people's hands were dirty!*

So extreme spin control was the major requirement. Damn how many American soilders had just been killed in an overt act of war against the U.S. Damn the implications of the use of eerie new weapons we did not possess. A hue and cry from the U.S. public would almost certainly reveal Iran Contra and smoke out the duly secrets. That must not happen at any cost. Some high officials—particularly the ones who engage in such illegal acts, in assassinations, murders, etc.—are far more interested in covering up their nefarious deeds than they are interested in any kind of justice or morality. Consequently, the fix was in.

So *U.S. officials placed enormous pressure on Canada to produce a finding of icing.* Lots of other skullduggery occurred, which probably constituted criminal activity by some U.S. officials. A high-ranking U.S. military officer arrived on site quickly, apparently under orders to erase that scene as fast as possible. He almost immediately wanted the Canadians to bulldoze over the site, even before recovery operations were complete and while the investigation was just getting underway. The site was bulldozed over in unseemly haste not long thereafter. That would appear to possibly constitute deliberate tampering with the evidence at an official site of investigation, on the part of whoever ordered the General to bulldoze the site precipitously.

In addition, witnesses such as Parsons were never allowed to testify. The Canadian Board waited until the half of its members who strongly opposed any ad hoc finding were absent, and hastily approved a finding of icing as the cause of the "accident." Later the disgruntled Board members who were absent when the "voting" occurred, issued their own minority report. Unfortunately they knew nothing of scalar interferometry and energetics weapons, and so they strongly believed it had to be sabotage and explosives.

Anyway, the blackguards hiding Iran Contra buried the incident, and the savage kill of 248 of our soldiers and 8 civilians went unpunished. Anyone such as the present author who pointed out what had really happened and why, was just branded a lunatic. After all, the blackguards who do not flinch at murder and unapproved assassination do not blink an eye at slander and libel.

The sad part is those fine young soldiers and the 8 civilians who were killed, and the grief and lasting changes made to their families. It is the children who had to grow up without their fathers, the mothers whose husbands were suddenly dead, etc. They deserved much better from their government than they got.

Other Direct Energetics Signatures on the Arrow DC-8

Meanwhile, in the lifting DC-8 the strike of the EM missile had also *time-density charged* the forward cabin materials. Those materials slowly decayed from their excited states via longitudinal EM wave emission. When a human body is subjected to fairly significant LW waves (accompanied with their time-density waves), it gets its internal immune system and cellular regeneration system "jammed," since these systems use LWs and accompanying time-density waves. The cells and tissues are also "time-energy charged" as well, and so spurious LWs continued to be slowly emitted in their tissues and cells locally, leading to gradual, general debilitation. After a time delay for the effects of this time-charge decay to be exhibited, such exposed persons will get sick with odd symptoms of various diseases such as influenza.

The ground handlers on the scene and exposed to the struck materials of the aircraft, were also exposed to longitudinal EM wave radiation from those materials which had been instantly "time-charged" at the powerful strike. Hence they were exposed to fairly significant LW waves, and should therefore have shown later symptomology.

Some 60 or so of the ground handlers actually retrieving the crash materials later sickened with all sorts of mysterious maladies: dizziness, stomach cramps, flu-like symptoms, weakness, nausea, fatigue, etc.—precisely what would be expected if some the materials they were handling were emitting longitudinal EM radiation, exposing them to significant LW radiation. That is a clear signature again of a strike by an EM missile, and the exposure of those retrievers to LW emissions. *In no normal way could 60 of those ground crewmen handling the wreckage debris all come down simultaneously with the exact symptoms of*

LW radiation sickness, unless that was what it actually was.

Many of those sickened persons remained debilitated for years. Probably a few are still alive and debilitated.

There are other signatures on the Arrow DC-8 kill. I did a small bit of work on the problem in the interests of Arrow airlines, but of course the conventional investigators they also hired could only conceive of an ordinary explosive. Nevertheless, I did tell them as best I could what happened to their aircraft, their crewmembers, and our own valiant soldiers.

Our troops on board the tragic Arrow DC-8 *did not* die from a simple over-iced plane that crashed as a result of carelessness in deicing operations. *They died as the result of an act of war against the U.S., carried out by the KGB as a test in an entire series to demonstrate the 1985 readiness that Brezhnev had specified in 1972.* That war is still partially ongoing and undeclared to this very day, with other players such as the Yakuza and Aum Shinrikyo also now in the game—and possibly even the Chinese, who certainly have had the weapons for some time, and have had QP weapons and negative energy EMP weapons since earlier this year (2002).

With the kill of the Arrow DC-8, the KGB made its deadline that had been set down 13 years earlier by Brezhnev. To meet the 1985 schedule, something significant had to be killed successfully and clandestinely, no later than Dec. 31, 1985. The KGB made the schedule on December 12, 1985, by killing the Arrow DC-8 after a warm-up and full dress rehearsal against a U.S. night shuttle launch at Cape Canaveral about two weeks earlier. And they also demonstrated just how ignorant of such energetics weapons and their usage the U.S. government, scientific community, and investigative boards really were.

We were fortunate they did not just go ahead and kill that same shuttle in late November 1985. Instead, they waited and killed the Challenger a few months later.

Other Acts of War Completed the Milestone

Apparently the final demonstration of milestone completion called for the destruction of an aircraft, kill of an ICBM, kill of a space shuttle, induction of earthquakes, and demonstration of the new quantum potential weapon still in the advanced laboratory stage. The KGB completed much of the milestone demonstration in 1985. The remainder they completed in 1986.

In January 1986 they killed the space shuttle Challenger, and the very next night the KGB even gave a big party in Moscow, to celebrate the "perfect success of their active measures" against the shuttle. General Daniel O'Connor, former head of U.S. Army intelligence, personally issued an alert to many high-ranking U.S. government officials, pointing out the almost certain involvement of the KGB and the fact that the loss of the shuttle was almost certainly due to a hostile

act by the Soviets.

In April 1986 (May Day report time was coming!) the KGB killed a Titan ICBM fired from Vandenberg Air Force Base. They also induced several large earthquakes for practice, and then began the induction of the long-dreaded "giant California quake" in the San Andreas Fault zone.

This latter induction of what would have been a massive quake in both San Francisco and Los Angeles, and all along the San Andreas Fault, was countered (destroyed) by a civilian group known to this author, with a backlash that resulted in the Chernobyl incident.

In April 1986 (for the same May Day report) the KGB also demonstrated the effectiveness of their newly emerging quantum potential weapon against the convenient U.S. air attack on Libya (Figure 25).

Kill of the Titan Missile Over Vandenberg Air Force Base

In 1986, the KGB began gingerly using those energetics interferometry weapons to kill other U.S. aircraft and several U.S. missiles, including killing a Titan 34-D fired from Vandenberg AFB on 18 April 1986. The Titan was killed 9 seconds after launch, partially crippling the U.S. space surveillance program. That kill was part of the demonstration of readiness milestone completion.

There was a completely decisive signature on the kill of the Titan. Simply check *Aviation Week & Space Technology,* 124 (17), Apr. 28, 1986, p. 18, where a picture (the one taken from longer range) of the Titan explosion is printed. Look about an inch above that explosion, which is already well developed. There above the Titan explosion sits the KGB ball of light registration point, just as it was sitting over the night shuttle launch in Cape Canaveral in latter Nov. 1985 when videotaped by a private photographer.

I persuaded NBC engineer Ron Cole and his colleagues to analyze a copy of that video tape frame by frame. In 17 frames, that little ball of energy above the explosion moved off on its own course, independent of the Titan explosion. Since the launch area for such missile launches is controlled and there were no aircraft over the explosion, then one again has a very clear signature. The KGB killed the Titan, with 100% certainty.

That of course was a test of the interferometry weapons in the role of *Launch Phase ABM system*. Tested against the Arrow, the KGB operators were emulating test of the system in a *Launch Phase Antibomber role*. These were vital *strategic* weapon tests. I published details of the use of the weapons in many other roles.

Dead-Man Fuzing and Outside Assistance Deterred a Full Strategic Attack in 1986

We have previously documented and published why the U.S. was not fully attacked and destroyed by the Soviets in 1986. It was because of our nuclear facilities, warheads, etc. which would have exploded, creating great fallout hazards worldwide, and because of nuclear dead-man fuzing weapons clandestinely placed in Russia by one or more other nations.

A friendly small nation possessing energetics weapons also intervened directly in l986, and blew up several Russian missile ammunition storage sites, some five or so in six months. In one such explosion, about one third of all the missiles in the Russian Northern Fleet were destroyed. As we stated, the so-called "Cold War" was not nearly so cold as has been represented.

In short, the friendly little nation served notice on the Soviets that, if they moved against the West, the Soviet Union itself would suffer terribly. They put it in language clearly understood by the KGB. So any full-up strategic attack for that period was stalemated by that combination of factors.

A major concern for the Soviets was their inability to counter the dead-man fuzing problem posed by nuclear weapons clandestinely hidden inside Russia and by the nuclear warheads and reactors inside the targeted nation(s). They already had the quantum potential (QP) answer *theoretically,* and had conducted a demonstration test of a laboratory QP device, but they had not yet completed the *QP* weapon systems and deployed them.

Nonetheless, a very powerful strike of peculiar nature—induction of a giant earhquake in the San Andreas Fault zone, including in both Los Angeles and San Francisco—was scheduled. This strike would have caused billions of do11ars worth of damage and would have killed perhaps 200,000 Americans. The initiation of the strike was actually begun in April 1986—as the reader can begin to see, there was to be one helluva May Day report in 1986! Incredibly, a private group here in the U.S. then made a unique and unprecedented contribution that saved the day for Los Angeles and San Francisco.

What Really Happened in the Chernobyl Disaster

Using the "inside" of the Woodpecker beams as superhighways for their longitudinal waves and interferometry, in April 1986 the KGB interferometers had started their build-up of substantial induced EM energy in the sides of the San Andreas Fault that runs through Los Angeles and up through San Francisco. Two beams were being used by the Soviets: One was coming down on the target from the North—coming over the North Pole regions and the ice caps—and one was coming around from the East and upon the target area. Completely (100%) certain signatures were present, including some ELF "chugger" waves symptomatic of the Soviet method of inducing very large quakes. The time-

energy is being used, hence very low frequency ELF is employed to maximize the amount of time-energy available for transduction in the rocks on the side of the fault. The Soviets were building up a very large earthquake—indeed, to spawn a whole series of such quakes all along the San Andreas fault—with severe aftershocks following after the main quake had done terrible damage. In short, they were preparing to hit California with the "big one" that everybody had been anticipating and dreading for so long.

A private group contacted me. They stated they could take out one of the transmitters by producing a powerful (giant) phase conjugate replica signal pulse upon it that would backtrack right into the transmitter and catastrophically burn it out—a surface application of the "phase conjugate shooting" once considered for armed satellites that could shoot down rising hostile ICBMs at 10,000 miles distance. As I understood it, they had a new kind of essentially noise-free regenerative amplifier, used in a transmitter. This meant that *extreme amplification* could be achieved in a pulse response to a received Woodpecker signal, before the transmitter burned out.[43] Since the group had no knowledge of the exact KGB transmitter locations or the possible consequences of such an action, they asked my opinion as to the risks associated. This placed me in a real quandary.

At the time, the U.S. was literally under siege. We have mentioned some of the

[43] A very subtle but important point is this: An energy flow of any amount—say, 10^{20} joules per second—has absolutely *zero power* if none of that energy flow is diverted or changed in form. So if one has a truly perfect noise-free amplifier, and a pure noise-free energy signal input, the signal energy input can be directly and freely amplified without limit, so long as those noise-free conditions can be upheld. In short, that rigorously constitutes *regauging,* and the widely used **and** well-known axiom of gauge freedom—the ability to change the local energy density of a system or spacetime freely and at will—applies. Relativistically, such re-gauging is merely rotating the frame of the system away from the laboratory frame. This group indeed had such an amplifier, which I physically saw, and apparently has it today. Our present texts have not yet realized the real implications of gauge freedom: It means that one can freely amplify energy without limit, once certain conditions (no divergence of the energy or change of its form) are met. This does not violate energy conservation; the "potential energy of a system" is not a fixed number at all, but depends on the frame of the observer vis a vis the frame of the system. We point out that there really are no true conservation laws in general relativity unless introduced by arbitrary measured The great Hilbert already knew this in 1917, two years after the advent of Einstein's general relativity. Hilbert stated: "/ *assert... that for the general theory of relativity, i.e., in the case of general invariance of the Hamiltonian function, energy equations... corresponding to the* ***energy*** *equations in orthogonally invariant theories do not exist at all. I could even take this circumstance as the characteristic feature of the general theory of relativity."* [D. Hilbert, *Gottingen Nachrichten,* Vol. 4, 1917, p. 21]. Loskutov and Logunov commented as follows: *"In formulating the equivalence principle, Einstein actually abandoned the idea of the gravitational field as a Faraday-Maxwell field, and this is reflected in the pseudotensorial characterization of the gravitational field that he introduced. Hilbert was the first to draw attention to the consequences of this. ... Unfortunately, ... Hilbert was evidently not understood by his contemporaries, since neither Einstein himself nor other physicists recognized the fact that in general relativity conservation laws for energy, momentum, and angular momentum are in principle impossible."* ["Nonuniqueness of (he predictions of the general theory of relativity," *Sov. J. Part. Nucl,* 18(3), May-June 1987, p I79).

"target year" activities, such as kill of the Arrow DC-8, flameout of jet engines early in 1985, target practice against shuttle launches at Cape Canaveral in November 1985, etc. Actually kill of targets had continued in 1986. A huge earthquake followed by several large aftershocks had been used against Mexico City on 19 September 1985, causing great damage and demonstrating a little of what might be expected when they chose to hit Los Angeles and San Francisco much harder. The Mexico City quake had been preceded by an induced, giant hailstorm weeks earlier, and on the evening of 18 September 1985 by giant radial cloud signatures accompanying the generation of excess energy in the underlying rocks as the KGB prepared next day's giant Mexico City quake. The reader should recall that, working with Sweet during this period, I knew with certainty which earthquakes were natural and which were manmade.

U.S. missiles and aircraft had been hit, the Challenger had been destroyed, and the Titan 34-D had been destroyed at Vandenberg AFB on 18 April 1986, accompanied by a 100% indicator (the substantiated presence of the marker beacon for registration and shift firing). In addition, a little Richter 5.3 quake in the San Francisco Bay area had been induced by the Soviets on 31 March 1986, a quake which was correlated with preparatory activity on the Woodpecker transmitter signals the day before, showing Soviet induction of the energy to create the quake. Again, we had instrumental evidence that it was manmade.

That quake on 31 March had been a "warm-up" and practice for the big one now about to be induced in both Los Angeles and San Francisco, and along the San Andreas Fault. In fact, it appeared that the entire fault zone would be stimulated by deposit of excess energy all along its length. In that case, induction of a distributed California quake of unprecedented extent and great magnitude was now in process, though just beginning. If that event or those events occurred, the loss of American lives and property would be staggering.

The High Side Risk Factor

The group's query to me presented a very difficult decision situation. Such huge Soviet interferometer beams, once built up, contain *enormous* longitudinal EM wave energy. If a Soviet transmitter were near large nuclear facilities, and were instantly blown and shorted, all that potential energy might flash directly into the ground.

In case of such a catastrophic transmitter failure, an enormously powerful longitudinal wave pulse would spread out in all directions in the surrounding earth. The first nuclear material the pulse encountered would be fissioned abruptly and very violently. If the transmitter were within a few kilometers of one or more of the large "monster" Soviet ICBM sites, the full-up explosion of several 30 or 40 megaton warheads might result—in the dirt and dirty. The resulting fallout and contamination would be massive, would spread round the world, and would eventually kill millions for years to come. Nuclear reactor stations were a similar risk; instant fission of all the fissionable material in one

of them would constitute an unprecedented and giant nuclear explosion, in the dirt and dirty. That was the high side risk.

The Low Side Risk Factor

The low side risk would be that little or nothing at all would happen; perhaps a tremor induced in a nearby fault zone, etc. I knew that the Soviets—after an early Kyshtym transmitter failure—had produced such a flashover on a much smaller scale and that flashover had caused the nuclear explosion of nearby stored nuclear wastes. The resulting fallout contaminated some 1200 square kilometers, which is still contaminated to this day. I also knew that, after Kyshtym, the Soviets had installed safety devices on all their scalar interferometer transmitters in case of just such failures.

So if the safety devices held when the transmitter suddenly shorted out, they could hold the longitudinal EM wave beams and potentials long enough to drain the energy slowly and harmlessly into the earth over an extended period. That was the low side risk.

The *most likely* consequence, of course, would be somewhere in the middle, between the extreme upper risk and lower risk limits. In other words, we could expect some bad repercussions in the Soviet Union almost certainly, but hopefully it would mostly be confined to that spot.

Consequences of Not Taking Counterfire Action

If no action were taken, the risk to the U.S. was appalling. If the transmitters continued, then perhaps 200,000 Americans were going to die in Los Angeles and San Francisco and along the San Andreas Fault. Perhaps 300,000 more Americans would be injured, and many of them would also die. Enormous physical damage would also be done, and those basins would be disaster areas for some years to come. It would be interpreted by our inadequate scientific community as a great "natural" disaster caused by a giant earthquake, and the ghost of Khrushchev would have had one more laugh at us, with his words "We will bury you!" silently ringing in the ether.

My Recommendation to the Counterf ire Group

To save those American lives, some reasonable element of risk had to be accepted. In other words, it became a classic "risk-to-benefit" military analysis, but one that was deadly serious. To me, as a military person the medium risk had to be accepted in such case.

I gave the group my reasoning. They then asked what I would personally do if my own finger were on the fire switch. I answered that I would take out the transmitter or transmitters and save those American lives, accept the medium risk, trust in God, and pray **for** the best. Military decisions often have to be made

in just such uncertain conditions. If one's military could not make such tough decisions, then one's military forces would inevitably lose their wars.

The Group Fired and Took Out a Transmitter

The group thanked me, stated that they would fire, and hung up the phone. See Figure 57. They did fire on April 25, just as they promised, and they did destroy one of the KGB transmitters—apparently located some kilometers (perhaps 30?) from the Soviet nuclear reactors at Chernobyl.

At the moment the transmitter was hit and destroyed, engineer Bill Bise—out in the field with magnetic field detectors and measuring the Woodpecker beams—observed the abrupt failure of the Woodpecker transmitter beam coming around the Earth from the East. Thus, he actually detected the successful destruction of that distant interferometer transmitter. Unknowingly he had detected the results of a great counterstrike in a very dangerous strategic battle.

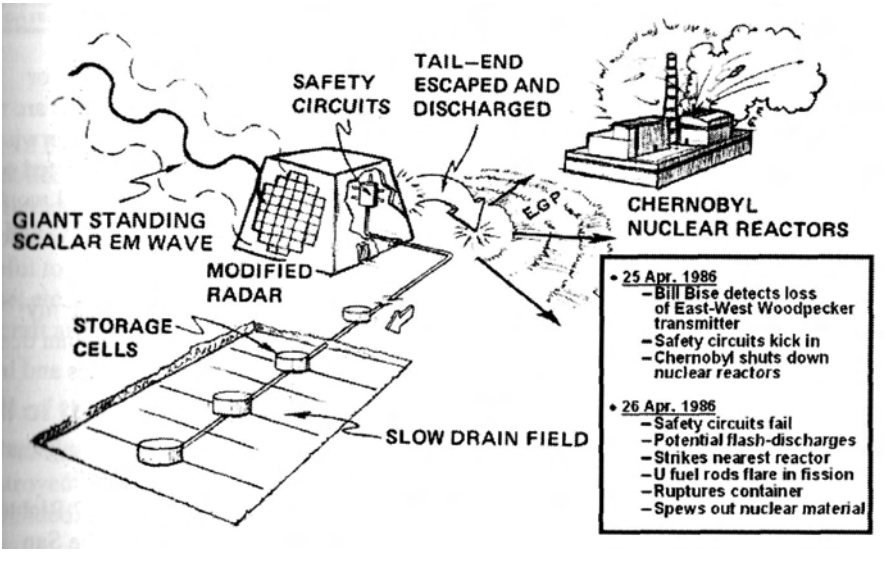

Figure 57 Chernobyl disaster 25-26 April 1986.

Results at the Transmitter and at Chernobyl

We were very, very lucky. At the destroyed transmitter site, the safety circuits kicked in and caught the huge beam potential and held it for about 24 hours, gradually draining down the intense beam energy into the earth in a slow manner all the while.

A **frantic** Russian message to the Chernobyl reactors galvanized the operators to immediately shut down those reactors (put in the cadmium control rods).

However, the uranium in the fuel rods was of course still sitting there. Chernobyl then waited with bated breath to see if the safety circuits would hold.

Then on 26 April, the safety circuits at the transmitter site finally crumbled, and a far weaker LW flashover occurred than would have occurred earlier without the safety. The spreading LWs in the earth struck the nearest reactor core at Chernobyl, preceded seconds before by a tremor induced in the earth at Chernobyl as the LWs arrived. *Part* of the struck uranium in the core fissioned immediately, venting the containment structure and spewing out radioactive material. Nuclear fallout spread over much of Europe. The rest of the disaster is well known.

That unknown group, in my estimation, saved a large number of American lives—at least 200,000 or more and perhaps as many as 300,000. They also prevented enormous physical damage to California, both to Los Angeles and San Francisco and to points in between. The members of that group are the unsung heroes of this bizarre episode. It is my hope that I may live to turn the names of those persons in for the award of a very high Presidential medal. Until then I will not reveal those names under any circumstance.

Whether or not the U.S. scientific and intelligence communities know it or believe it is of no concern. What matters is that a great many Americans are still alive, and their children born since then are alive. Those Americans otherwise would have been very, very dead or never born. I personally have reflected on those desperate circumstances many times. If I had it to do over again, I would unhesitatingly urge the same action: Fire and save those American lives, and accept the medium risk. And pray.

And I did pray after recommending the strike. In my opinion, this time my fervent prayers were answered. I am extraordinarily sorry for the civilian deaths that occurred; all one can say is that it was under severe circumstances and in a very peculiar—and very desperate—war.

The Soviets had many other interferometers on line. They induced a substantial earthquake in Mexico at the end of April. Thus they did complete their "earthquake footsteps" of the milestone. On 7 May they induced a 7.7 Richter quake in the Aleutian Islands. If 7.7 to 9.5 quakes had hit all along the San Andreas Fault in Los Angeles and San Francisco and in between, then the destructive scenario I had envisioned for the West Coast would have occurred.

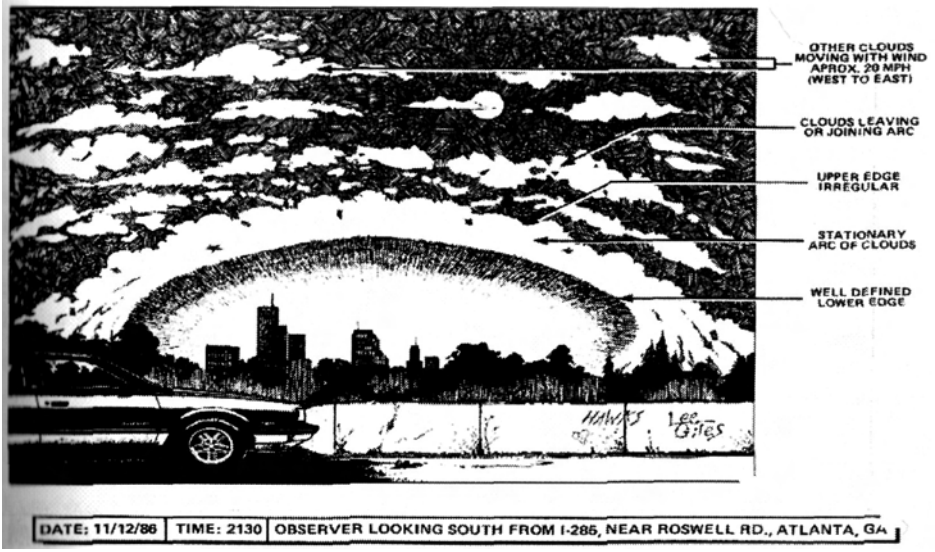

Figure 58 "Bottling up" shield practice over Atlanta 12 Nov. 1986. With a real shield, aircraft or missiles flying into it (from inside or from outside) explode and are destroyed.

On 12 November 1986 the Soviets even placed a giant "dummy shield" (practice) over Atlanta, Georgia (Figure 58). If the shield had been real and not just practice, any aircraft and missiles flying into it would have been instantly exploded and destroyed. That mode—"bottling up" a strategic weapons area—is useful to nullify an entire strategic ICBM launch complex or a large bomber base, etc. It can also "bottle up" a large carrier task force at sea, including the aircraft and the Tomahawk missiles, the shells from the naval guns, etc.

Kill of the Challenger Included Use of Metal-Softening

As we mentioned, during that 1986 preparation period the Russians also destroyed the Challenger spacecraft (January 28, 1986). Numerous signatures abounded, all of which we have already published.

A few weeks before the kill of the Challenger, a close colleague had experimentally proven that a metal-softening signal was indeed placed on the Russian "woodpecker" signals (Figure 7). He did this quite simply: he wired himself into a receiver, through an intervening amplifier, and tuned the receiver to the Woodpecker signals.[44] Then he took nails from a can of nails he was

[44] Here he was taking advantage of the fact that the infolded LW signals inside the Woodpecker carrier wave, comprising the "engines" for metal-softening, also constitute "perfect" divergence-free EM energy, so to speak, at least overall. Amplifying the signal also amplifies the "engine" inside it. When connected to his body, "potentials superpose" is the rule, and that transferred the amplified engines to his body and into the EM field immediately surrounding his body. Hence he softened the hammer metal a tiny bit, and softened the much less tempered nails quite a bit more.

using, and hit them with a hammer to drive them into planks. The nails all folded up instantly like totally wet noodles. A couple dozen, one right after the other. Simultaneously, his son—who was not connected to the Soviet signal—was pounding nails from the same box, normally and without difficulty. None of the nails picked up and pounded by his son experienced any difficulty or softness.

Then my friend disconnected himself from the signal, and waited a bit. Whereupon when he then used nails from that same box, he drove them in without difficulty. There were no more "wet noodle" nails.

We reach a very simple conclusion: When he connected to an amplified Woodpecker signal, his body was time-excitation charged (quick charge and quick decay) with a specific signal so that the nails he picked up were charged. Then when hit with the hammer, the nails acted as if made of very limp rubber without a rebound. When he disconnected from the amplified Woodpecker signal, and waited a moment for the induced charge in his body to dissipate, the nails also discharged their engines and quit acting like limp rubber bands when hit, and became normal nails with normal behavior. That would seem to be quite sufficient to prove the thesis.

The Challenger was then destroyed, as we previously printed, with numerous signatures of the hit, including even a KGB party in Moscow to celebrate the success of killing the vehicle (and getting away with it).

Cold Molding: An Epilog to the Metal-Softening Donnybrook

I was called a total lunatic for pointing out a metal-softening capability on the Russian signals. So be it. Metal softening is achieved by an engine which serves as a pumped phase conjugate mirror for the vibrations and signals in the lattice bonds of metals. Build up that engine in the metal until the precisely reversed and overlaid signals negate the normal signals, and one has "dissolved" the lattice bonds, converting the solid to a liquid. Lattice bond cancellation is not heating.

But that was not to be the end of the "metal softening" story.

A few years later, working informally with a large UK aerospace firm "for free", I furnished them an address in Moscow of some Russian scientists associated on the perimeter of the KGB energetics weapon program. The address had been taken from their cautious advertisement for business on the Internet and furnished to me by a correspondent. A UK engineer fluent in Russian was sent to meet with those scientists in Russia. They nervously showed him several novel things, one of which was "cold-molding" of metal. The liquefied the **metal**

The result was that a hammer blow onto a nail head resulted in the nail acting as a limp noodle upon impact.

without heating, poured it in a mold, and waited for the "effect" to wear off and the liquid to turn back into a solid again.

Briefly, an energetics charge (using LWs) was induced on the metal lattice vibrations, adding their phase conjugate replicas to the interior LWs comprising the lattice bond signals. The metal's atoms were time-density charged to an excited state (presently not recognized in Western science). Thereupon the metal lattice EM forces "dissolved" and the metal became liquid at room temperatures and without heating. The cool liquid metal was then poured into a mold. Then after awhile, the time-density charge and slowly drained away, and the metal resumed its normal solid state—all without any heating whatsoever.

On a subsequent trip the engineer brought that Russian team itself out of Russia and to the UK. The Russian scientists demonstrated cold molding to assembled UK scientists, and to some U.S. visitors. The phenomenon was physically demonstrated and proven.

I was correct about the metal softening then. We were also correct back there in 1986 about the metal-softening signal employed against the Challenger (together with several other things).

There are numerous other signatures on the death of the Challenger. Again, *the death of the Challenger was not an accident.* It was due to a deliberate act of war by the KGB. The KGB knew in advance—after substantial probing incidents—that they would get away with it. And they did so.

Additional Update from Year 1998 to Year 2,000 Has Been Given

In the action package we sent to the DoD in 1998, we told the rest of the KGB energetics weapons story up to that date. We gave the attack plans as we saw them and the most useful types of attacks to be expected.

I hope the reader is interested in this special energetics weapons information. High power microwave weapons, high energy lasers, and nuclear weapons are useful but no longer decisive weapons either strategically or on the battlefield against a foe equipped with such energetics weapons, and particularly against a foe equipped with quantum potential weapons and negative energy EMP weapons.

At present, we are intensely watching to see if we can pick up indicators for the next scheduled strategic attack, its probable timing, and the "new twists" included in it.

Presently, we have perhaps an 80% chance that the little nation can once again counter any new threat and cause the KGB to abort the impending attack. On the other hand, with Putin apparently limiting at least some of the action of the KGB, we have moved into our present asymmetrical warfare against terrorism—

and ultimately against the extensive terrorist teams and assets already infiltrated into our homeland.

As a single example, before the collapse of the former Soviet empire, the Russians long ago slipped in nuclear weapons (from 20 to 40 KT) and hid them in all our large cities and population centers, along with the Spetznaz teams to detonate them on command.[45] Several nations have introduced teams with normal sabotage assets and also with weapons of mass destruction such as radioactive nuclear materials (for a dirty bomb), anthrax, smallpox, bubonic plague, etc. Behind the scenes, the die-hard remnant of the old KGB crew are using QP weapons to "spread" the immune systems (Figure 53) of our populace and materially enhance any BW strikes that the terrorists unleash. The rogue Japanese team (Yakuza and Aum Shinrikyo) on site in Russia are using their LWIs in a giant weather war and the occasional kill of an aircraft, etc. Over the decades Castro infiltrated some 10,000 guerrilla/special forces types trained in camps in Southern Mexico for decades. Probably at least half are still loyal and dedicated—and waiting to blow up bridges, power substations, high voltage power distribution system towers, dams, harbor facilities, refineries, pipelines (both oil and gas), etc. The first phase of WW III—delivery of the weapons of destruction and mass destruction to the targets along with means to unleash them—has already been accomplished.

We are particularly struggling against the rise of asymmetrical warfare—the superpower's paradox (Figure 59)—and our present involvement in that "new" kind of warfare is still quite foreign to us. Only time will tell how well we fare in this new type of war, which we will be engaged in for many years to come. Vice President Cheney rightly regards it as almost a state of perpetual warfare we shall have to learn to live with, as shown by his words on Oct. 21, 2001:

"The war on terrorism will not be over in our lifetime. It is different than the Gulf War was in the sense that it may never end. At least not in our lifetime. The way I think of it is, it's a new normalcy."

[45] See Stanislav Lunev (with Ira Winkler), *Through the Eyes of the Enemy,* Regnery, Washington, 1998. Lunev is a high-ranking GRU defector. He is a former Colonel in the GRU, the military counterpart of the KGB. In p. 22-33, he summarizes the Spetznaz capabilities. On p. 22-27, he summarizes Spetznaz use of nuclear weapons already on American soil. On p. 26, he gives some of the ways in which the Soviets easily brought nuclear weapons into the U.S. On p. 30 he confirms Russian seismic weapons. Use of EMP weapons is on p. 30-31. Use of very, very low frequency weapons to destroy the human brain, put people into a zombie-like state, and aid in brainwashing is confirmed on p. 31. And this is **information** Okayed by the CIA for release!

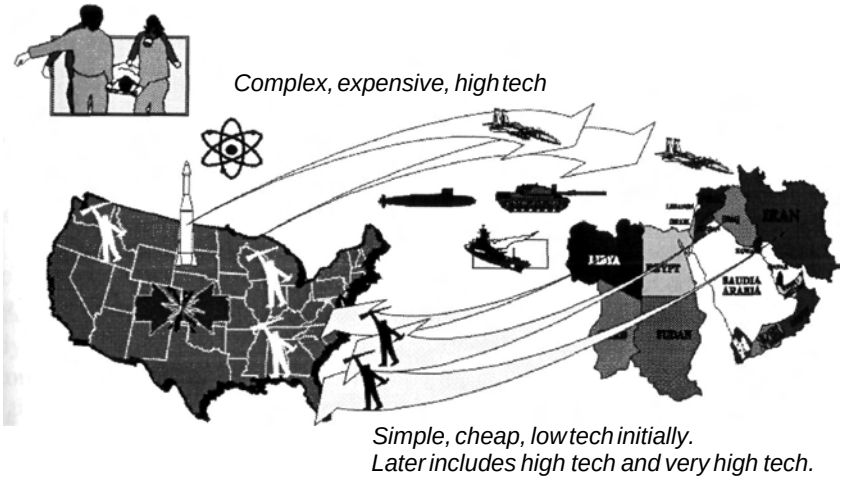

Figure 59 The superpower paradox: Asymmetric cheap WMD strategic strikes and destruction, later becoming extremely high tech and extreme yield.

There is Also a Severe Bioenergetics (EM Biological Warfare) Threat

The threat from bioenergetics is equally vivid. That old die-hard section of the KGB can now attack an entire population, e.g., with electrodynamically (energetics) induced diseases of any kind whatsoever, particularly when using QP weapons. Such attacks are totally immune to inoculations and antibiotic treatment. Any kind of strain or variation of a disease can also be induced in the pathogen pool for that disease. Against a foe who has such capabilities, our entire medical establishment—including all our emergency treatment procedures and agents—*is obsolete right now.* A vaccination and the presence of antibodies, e.g., does absolutely nothing against the EM induction of the exact physical effects and form of a disease, as shown in the decades-long "microwave radiation" of the U.S. Embassy in Moscow (Figure 11).

To the Assistant to the SecDef in such matters, in 1998 we furnished a 200+ page briefing package and loosely proposed a crash development of the new type of medical therapeutic treatment devices pioneered and proven by the Priore group in France in the 1960s and early 1970s. Later, Congressman Cramer queried that office for an answer.

Unfortunately the Assistant SecDef s office erroneously responded to Congressman Cramer that nothing in the literature supported the mechanisms proposed. Indeed, the package we furnished contained a *detailed list* citing the hard French scientific papers in the literature, reporting the exact experiments

and the astounding results obtained. Some 2,000 highly successful animal experiments for more than a decade of experiments in fact supported the thesis, and higher group symmetry electrodynamics fully supports the ability to use EM means to make spacetime curvature engines, so that these engines then interact back upon the targeted matter to perform the actions desired. That it does not appear in conventional electrical engineering is of no consequence; it appears in physics and it is good physics, just on the cutting edge.

We also reported, explained, and cited Becker's epochal work (Figures 27 and 28), which is copiously published in the hard literature and which was an example of the fundamental mechanism also. Becker was twice nominated for a Nobel Prize for his outstanding work. Unfortunately, the Assistant SecDef s office responded with a non sequitur.

Packages were sent also to NIH, NSF, CDC, and several other government agencies. Not a single one of those agencies was interested enough to have a competent scientist contact me and discuss the area. I strongly doubt that a single scientist anywhere in the Government bothered to *seriously* read and ponder the material so painfully and expensively compiled and furnished. Lieutenant Colonel (Retired) Ken Moore and I worked our fingers to the bone for weeks, preparing that briefing, and we spent all the spare money doing it that we could rake up and obtain.

The near-total lack of response itself seems astounding, but it clearly shows the state of U.S. science with respect to novel energetics innovations, even long after those innovations have been experimentally proven and documented in the hard literature, and even after they have been weaponized against us. It is a direct indication of why the U.S. never deciphered what was going on in some four decades of Soviet weak microwave radiation of the U.S. Embassy in Moscow, including the kill (eventual deaths) of three U.S. Ambassadors.

For decades there have been manipulations, to say the least, in the hotly contested field of the biological effects of EM radiation. We refer the interested reader to an excellent expose of that situation: The expose is by Dr. Andrew A. Marino, Ph.D., J.D., *Powerline Electromagnetic Fields and Human Health,* which is current. I believe it can be freely downloaded from: http://www.ortho.lsumc.edu/Faculty/Marino/PowerlineTOC.html. Dr. Marino has been personally and deeply involved in the investigation of EM bioeffects, in court cases, and in Blue Ribbon Panel investigations and proceedings. The book is an eye-opener, and it gives one a good view of the machinations in the EM bioeffects field. We quote directly from Dr. Marino, Chap. 6, p. 1:

> *"Oversimplistic as it may sound, whoever pays for EMF bioeffects research and analysis determines what data is produced and the way it is interpreted. Soon after the possibility that powerline EMFs were health risks was raised in a legal dispute involving the New York Public Service*

Commission, power companies and their trade associations, particularly the Electric Power Research Institute (EPRI), became massively involved in EM bioeffects research. Subsequently, the power industry dominated funding of the effects of powerline EMFs, both in terms of absolute dollars and compared with dollars from non-industry sources...the power companies and their trade associations were deeply deceitful regarding the information they provided to scientists and to the public regarding the potential health hazards of powerline EMFs."

In the entire EM bioeffects field, there does not appear to be any mention of, study of, or recognition of EM bioeffects induced by the most powerful EM factors: longitudinal EM wave irradiation, time-polarized EM wave irradiation, and time-excitation charging of particles throughout the body and its cells, with resulting emission of transduced longitudinal and transverse EM radiation *from-within-to-without.*

National Institute of Health Reaction

NIH replied to my letter and action package from their *Policy*—read: *spin control*—Section. They noted that the package mentioned the Gulf War Syndrome, which was not in their mission area. So they just sent it off packing to DoD (simplest way to get rid of it, apparently no one seriously read it or even cared to read it). I queried them back by separate response letter about their lack of interest in a revolutionary proven new medical methodology well-documented to cure cancer and other dread diseases, in many hundreds of experiments by leading French medical scientists. This was certainly within their mission area.

They hastily replied from the *Policy* Section that, yes of course NIH was interested in all such things, and told me where to "submit a proposal." We never got out of their *Policy* department. Again, not a single competent scientist in the U.S.'s supposed master medical agency apparently even read the package or cared to call and discuss the matter. This was an indicator of their total lack of any grasp of the energetics threat, its testing, and its use to induce the Gulf War Disease.

Now perhaps one can see why we are so far behind the KGB energetics weapons scientists and weapons program.

Marino, *ibid.*, is particularly enlightening on the adamant opposition by appropriate sections of NIH vis a vis the harmful effect of nonionizing EM radiation.

No responses at all were received from the NSF and the CDC, or the other U.S. government agencies to which the package was furnished.

The CDC of course comes under NIH, and thus its responses or lack thereof would be dictated by the parent NIH policies. As for the NSF, Marino, *ibid.*, again is enlightening on the qualifications or lack thereof of its membership.

So as the reader can see, the top of the medical establishment in this nation is flatly not interested in any "controversial" or "out of the box" proven method for curing cancer, dread diseases, and mass treatment of those millions of American casualties that are coming in our cities and population centers. Again, they directly ignore scientific method's very premise: *If the experiment is replicated and contradicts the theory, accept the experiment and change the theory.* I personally concluded that the U.S. Medical establishment largely does not follow scientific method, but follows dogma and the already approved methodologies.

How the New Revolution in Medical Healing Works

For the reader who is a medical scientist and trained in physiology and biology, one might be interested in that revolutionary French therapeutic methodology and how it worked (before it was ruthlessly suppressed in the early 1970s).

Priore's apparatuses (Figures 12,49, and 60) simply pumped the cells of the entire body with longitudinal EM waves (each accompanied of course by its time-polarized twin, in a Whittaker pairing). The cells and every part of them are very nonlinear, so they act as pumped phase conjugate mirrors for Whittaker wave-pair engines resident in the cells and acting as "input signal complexes".

Once the cells are pumped by these now-established *time-density* waves, the damaged or diseased cellular masses slowly "charge up" with excess time-excitation. The irradiation took several hours, and this was the "activation" or "time-excitation charging" stage. Thereafter, the time-charge decayed slowly, all the while constituting *pumping* of every cell and every part of it, in the time domain.

The resident engine in the cell contains two components: (1) the normal or healthy component, and (2) the abnormal component representing disease or debility. Pumping these two components time-reverses both of them and amplifies that reversal. This creates amplified and incredibly precise *antiengines* in each cell and in each part of each cell. These antiengines override the weaker cellular engines resident. In turn, this "reversing" action of the antiengines causes the pumped cellular masses (actually the mass-energy, in its exact structure and dynamics)—at any and all levels, including the genetics—to be time-reversed back to normal. In biological instead of physics terms, it "dedifferentiated" the diseased or altered cells back to a previous healthy state by simply eliminating the diseased engine component. *This is a dramatic extension of nonlinear optical phase conjugation from the 3-space pumping domain to pumping in the complex (time) plane, and it is effective for time-reversing mass-energy at any and all frequencies. We accent that the cellular*

time *reversal back to a previous state includes all the cell's genetics and every* ***part*** *of the cell no matter how small.*

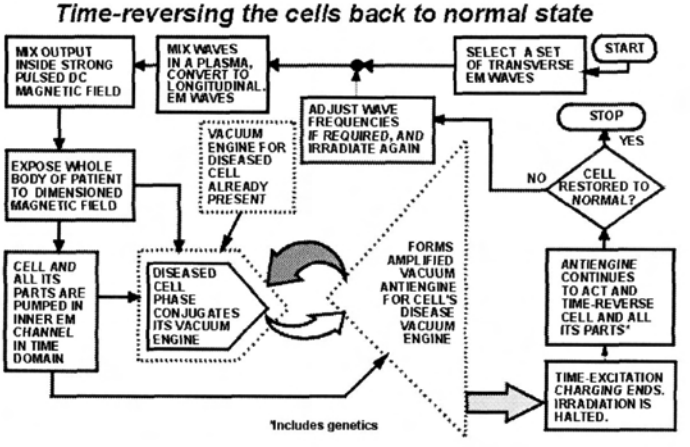

Figure 60 Block diagram of Priore's healing (regenerative and time-reversing) process.

Normal cells are just backed up to a slightly younger condition. Diseased cells **have t**heir abnormal engine component overridden and reversed back to zero (its earlier state), so that only a slightly younger normal engine remains resident in the cell. This simultaneously reverses the cellular masses back to their previous healthy condition.

Contrast this direct healing mechanism to the action of the immune system.

The immune system itself does not *heal* anything. It contains the killers, the scavengers, the locators, the markers, the attackers, and the troops manning the ram**parts.** Usually after a fierce battle with invading hostile pathogens, it wins. Lots of cells still living are damaged in the melee. The immune system scavenger cells then scavenge up the residue littering the battlefield. But *the immune system itself cannot heal and restore a single damaged cell, including one of its own.*

That healing and restoration of damaged cells is the job of the *regenerative system,* still little known and inadequately studied today. Perhaps the most fundamental studies were mostly by Becker *et al.* some decades ago. The regenerative system (Figure 29) is an EM system in its operation, as clearly shown by Becker (Figures 27 and 28), yet it is able to physically differentiate and dedifferentiate cells from one form to another at will, and in highly selective fashion. The regenerative system acts within its limitations (only weak pumping can be done for the time-reversal of diseased or damaged cells) to eliminate the delta (the deviation from normal of the resident engines in the pumped cell). That restores the normal (healthy) engine and slightly amplifies it as well.

It is obviously of the utmost medical importance to understand and apply (and amplify) this little-known technical mechanism by which the regenerative system is able to restore damaged cells back to normal.

It turns out that *the regenerative system in its novel EM functioning uses precisely LW and TDW pumping of those damaged cells and gradually time-reverses their entire masses back to a normal healthy state, within its limitations.*

This is the secret of the mechanism of the cellular regenerative system—which is an electrodynamic system of very unusual nature. The exact mechanism has not previously appeared in the literature. It took me 14 years to uncover that fundamental mechanism, and another 4 or 5 to refine it a bit, even though both Priore and Becker (as well as others) applied it decades before without being able to fully decipher it.

The experimental proof is already in the literature, once one understands the higher topology EM unwittingly used by both Becker and the Priore team. The proper types of higher group symmetry electrodynamics required to understand the action of the cellular regenerative system are available. There exist scientists skilled in their application and use. These scientists and that higher group symmetry electrodynamics are little used, and are never used at all in the medical field. There exists no funding anywhere for higher EM examination and modeling of the functioning of the cellular regenerative system—i.e., for the fundamental healing process.

Just imagine what this could mean to medicine: *One can now develop a new medical science to amplify and apply nature's own proven method of restoration and healing of damaged cells, including all their damaged genetic material.* It matters not what caused the damage, whether pathogen or gamma radiation, whatever. This new therapeutic method is a totally new general relativistic process where powerful spacetime engines are created which work directly upon the damaged cell and every part of it, physically reversing the cell and all its parts precisely back to normal condition.

General relativity rigorously tells us that a precise spacetime curvature engine (set of precise spacetime curvatures) is present and active for every specific disease condition and every nuance in it. It also tells us this flawed (disease or damage carrying engine) continuously operates on the cellular mass at every level, maintaining the exact physical condition of the cell and its dynamics. By creating a precise "anti-engine" and amplifying and applying it, general relativity assures us that we are physically acting upon the cell and all its parts at every level, down to the smallest—to precisely return every part in perfect proportion back to a previous normal healthy condition. *Pautrizel directly proved the time-reversal to an actual earlier state of the cells and the organism* (Figure 61). Amplification by time-domain EM pumping, means that we can cause this time-reversal of the cells back to normal to happen much more

quickly than can the body itself, which can only pump very weakly.

- Pautrizel compared identical treatment of immature rats with immature immune systems, and mature rats with mature immune systems.
- Treatment restored the damaged mature system back to full mature functioning, and it promptly recognized and dispatched the pathogens.
- Treatment restored the damaged immature system back to full immature functioning, unable to cope, and the pathogens promptly reinfected and killed the immature rat.
- The lesson: The body is indeed returned to a previous physical state. The pathogens themselves are not killed by the treatment, but by restoring the ability of the immune system to recognize and destroy them.
- Only *the previous ability* of the immune system is restored by the process.

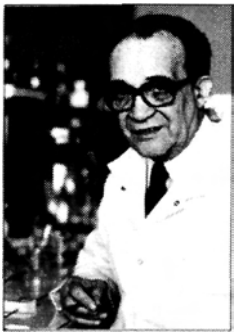

PROF RAYMOND PAUTRIZEL
(Renowned Parasitologist)

Figure 61 Pautrizel's proof of time reversal of the stricken cells back to a previous state.

General relativity also assures us that any and every disease is subject to this novel treatment approach, even diseases which have resisted every other known therapy. The Sachs unified general relativity and electrodynamics, and GR/EM unification applications in O(3) electrodynamics produced by Evans, for the first time provide a solid theoretical basis for Priore's methodology and his evolutionary results. They also offer direct engineering of startling physical cures, once the technology is developed.

The profound implications of that treatment can be seen. Apparently, however, **our** leading governmental agencies and health agencies do not see it, do not wish to see it, have no appreciation for general relativistic effects in healing, and do not intend to have any appreciation for general relativistic effects in healing. Indeed, they seem totally uninterested in even trying to comprehend and research *the fundamental healing mechanism* demonstrated by nature herself.

What the French Researchers Showed

Among other things, the Priore team produced revolutionary cures of *terminal tumors, infectious trypanosomiasis, suppressed immune systems, and atheriosclerosis* in several thousand laboratory animals in rigid laboratory tests under rigorous protocols. Eminent scientists such as Robert Courrier and Raymond Pautrizel worked with the Priore team. Courrier was head of the Biology Section of the French Academy of Sciences at the time, also *Secretaire Perpetuel* of the Academy, and a noted scientist of high stature. Courrier personally presented the astounding Priore results to the entire assembled French Academy. He also sent his own most able scientist assistant to personally

prepare the terminal tumor grafts on the lab animals before their treatment.

A world-renowned parasitologist who did enormously important work with Priore was Raymond Pautrizel, who is still alive at this writing though quite aged. Pautrizel was greatly persecuted for his years of determination and effort. Courtesy of Pautrizel via the late Christopher Bird, I personally have the very Ph.D. thesis that Priore himself submitted to the University of Bordeaux on his revolutionary work. That thesis was maliciously rejected in the suppression that was applied to the project. When the French Government changed to a Leftist government in the mid-70s, Government support was immediately withdrawn and the project was ruthlessly suppressed. Priore later sickened and died and that was the end of that. More than a decade later a brave and determined Pautrizel finally was able to get a doctoral thesis approved in the Priore work area, at the same university, by another doctoral candidate, Eric Perisse {40}.

There are two U.S. patents on the Priore device itself, and of course several French patents also.

All the above was rigorously documented in the 1998 package prepared and submitted by Ken Moore and I.

While Priore was still alive, a team with which I was connected attempted to mount a well-funded effort to restore the Priore methodology while Priore was still alive. We also were viciously suppressed. The lives of our financial backers and their families were threatened. The head of our project was viciously attacked financially and destroyed, fleeing the country for his very life. Whoever thinks that dramatically innovative medical science in this country is just sweet reason and scientific method, should have a strong enema to remove the serious blockages interfering with his perceptions.

This vicious outside suppression of our project so infuriated me that I made a solemn promise that, were it humanly possible, I would decipher the Priore process before I died. It took 14 years, but we made good on that promise. During the 20 years or so since our project was suppressed, it is heartbreaking to consider the millions of children and sickened and suffering people who could have been saved had the project continued and succeeded. It is heartbreaking now to consider the coming millions of casualties in our civilian populace in our cities, most of who are going to die from mass destruction weapons. And most of those would not have to die, would the scientific community waken from its long sleep and discover some modern physics and higher group symmetry electrodynamics—and their application to solve nature's mechanism for **healing.**

When one time-reverses the body's cells and all their parts, one forces the diseased cells to dedifferentiate back to healthy state. We strongly accent that this is accomplished by unified GR/EM processes involving precisely **organized** spacetime curvatures and their local actions in the cells and all their inner components, down to the finest level. It can be rigorously expressed in good unified physics, as expressed in an electrodynamics such as O(3).

The nondamaged or nondiseased cells just get a little younger. That is also highly beneficial; it reverses the ravages of aging, just a little. Indeed, one of the implications of the Priore mechanism is that aging can indeed be reversed by the process and treatment. Again, one must keep one's sense of humor. In order to get this technology and therapeutic method born, what seems to be needed is an extremely wealthy person, strongly desiring to live longer than the expected life **span** and do it in a vigorous, healthy body—and who is willing to fund the project with the necessary $60 million required so to redevelop and extend the Priore technology so it can be readily applied. A byproduct will be the saving of millions of American lives when those coming mass casualties from weapons of mass destruction occur in our cities.

How the Regeneration Mechanism Was Finally Deciphered

What took so long in deciphering the mechanism was the problem of how to make such precisely tailored and exact ST curvature engines, specifically so that they are *exact* antiengines for a specific disease and even a specific pathogen, and even for different versions of the engines for different cells in a single body having different strains of the same pathogen, having different body DNA, etc. For years, the solution of that task seemed hopeless. How on earth could one possibly work all that out in a hundred lifetimes, so that it could be precisely calculated even by an array of the most powerful computers on Earth?

After years of struggling with the problem, in one stroke of enlightenment it was revealed to be the simplest thing in all the world. Absolutely no calculation was necessary, and the exact amplified antiengine effect was a fairly simple and straightforward thing to obtain. General relativity tells us that every cellular mass and each part of it, has its own unique spacetime curvature engine, to the finest detail and an exact fit. As Wheeler put it so nicely {130}, *"Space acts on matter, telling it how to move. In turn, matter reacts back on space, telling it how to curve. "* The mass and its dynamics and the engine and its dynamics constantly interact upon each other, and "keep attuned and in perfect adjustment," so to speak.

That means that a "normal" cell already has just such a precise "normal" ST engine residing in it, and acting upon every component at every level—even in the atomic nuclei. Well, a diseased cell has an absolutely specific structuring, and therefore it also has an absolutely specific ST engine structuring. *A priori that* resident structuring for the diseased or damaged state in the individual cell differs (by some delta) from the structuring of the normal healthy cellular state for that individual cell.

Voila! That means that *the ST engine for the damaged cell can be decomposed into two parts (two engines):* (1) the normal "healthy cell" state engine, and (2) a delta ST engine that has been added to it so that together the two comprise the full ST engine for the exact individual condition of the cell.

What is now needed is a way to produce an exact antiengine of two parts: (1) one for the normal engine and (2) a second one for the delta (disease) engine. Applying this amplified and combined "antiengine" would overpower the resident combined engine, precisely reversing the cellular condition by reducing the delta to zero. Rigorously, the cellular mass and every part of it must then also revert to a previous physical state, or else we must complete discard general relativity itself.

Well, if we were to just time-reverse the resident engine and its two components, that would give us the perfect antiengine with its two components. Amplifying this antiengine would then produce one that was more powerful than the resident engine in the cell. Applying that amplified antiengine to the cell, that would not really change the "normal" engine component, but it would precisely reduce the delta engine component back to zero (its previous state, before it was there!) Voila! A specific healing signal of perfect structure, for the specific deviant condition of the individual cell and its every part.

Since we have a combined GR/EM to use, we can think electrodynamically about this general relativity problem. Immediately we see that phase conjugate optics is a candidate, since the "resident composite engine" can correspond to the "signal" or input wave, and the pumping of the nonlinear mass of the cell and its parts (where they act as nonlinear phase conjugate mirror materials) produces an exact phase conjugate replica (the exact amplified antiengine). The presence of that antiengine overrides the magnitude of the resident engine, and it moves the cell precisely back along the temporal path previously taken. In short, it applies a specific kind of dedifferentiation of the cell back to its previous healthy condition.

Since we extend phase conjugate pumping to the time-energy domain, then the resident composite engine and its time-stream component are the "input." The amplified antiengine and its time domain component will then forcibly propagate that pumped mass energy back over the time trajectory previously taken by it. In short, it will time-reverse the cell and all its parts back to a previous condition, completely eliminating the delta (disease or disorder). The beauty is that it will also reverse damaged or altered genetics, such as in the AIDS disease. It can do this prior to the appearance of health symptoms—it can be done as soon as the patient tests positive for HIV.

Since the antiengine is amplified, it moves the cell back to normal fairly rapidly (in a few hours, for example). At least the time charge for the reversal process is delivered in that period; one may allow (as Priore did) a full week for the time-charge and its transduction to continue reversing the cells. But it is much faster than the normal speed of the human regeneration system using the same process, because now we have greatly amplified the time-reversal rate.

It is therefore ideal for a method of quickly treating mass casualties, particularly since it can be developed and used in a portable unit about the size of a large

suitcase (Figure 13).

Interestingly, during the radiation with LW EM radiation, one also pumps the pathogen and time-reverses it as well. Its "normal state" towards the beginning was a condition whereby it could move with relative immunity past the immune system's opposition, having deceived the immune system. In the treatment, a small amount of the pathogen is therefore converted back into this condition just shy of the beginning, where that part of the pathogens is resistant to the immune system. However, a very small, short "post treatment" irradiation with LW radiation for a much shorter interval and at weaker power, will clean up this altered pathogen residue by allowing the immune system to recognize it and destroy it. Pautrizel clearly demonstrated this significant fact.

Cellular and Body Rejuvenation are Possible, Once the Technology is Developed

One can in fact really accomplish *rejuvenation* of the aged and infirm, as the technology is developed. One could certainly solve the major problems of Medicare, and cut the patient load at least in half, relatively quickly and inexpensively. Of course lots of big U.S. drug companies will be rather violently opposed to any such idea, because much of their empire would be threatened. Much of the organized medical community depends largely on the Big Drug Approach. So the organized medical community will also vehemently oppose it, just as the formal medical science community in France viciously opposed it.

One could also produce cheap, portable LW treatment units *en masse*, which is what we were suggesting to the Assistant. SecDef. That way one could flood the emergency response system (response teams, hospitals, fire stations, police precinct stations, schools, etc.) with quick and effective treatment devices. They could be used to rapidly {131} treat those millions of American casualties that are going to occur when one or more of our cities are attacked in the near future by terrorist WMD attacks. This would save the lives of most of those stricken millions of Americans.

Mow Many Americans Could Be Saved?

For an anthrax attack on Washington, D.C., first generation equipment could save perhaps 70% of those sickened Americans, almost all of who are going to die with *present* capabilities. With second-generation equipment, one could save perhaps 90%.

For an anthrax attack without spreading via QP clandestine preparation of the populace, one would save 0.7 to 2.1 million Americans. With clandestine KGB QP spreading and a *5:1* increase in the yield of the anthrax strike, one would save 3.5 to 10.5 million Americans.

For a truly nightmare attack (as a worst case scenario) perhaps 5 major cities

might be attacked in such manner and to such degree. In that case, one is talking about saving 3.5 to 10.5 million Americans for the unspread attack case, and up to 17.5 to 52.5 million Americans for the spread case.

Further, the development of the necessary portable treatment units is doable and affordable, for mass treatment capability. Training on a portable machine could be done for a high school student in 30 minutes or less, and that student could then give emergency treatment effectively.

Absolutely nothing else out there can presently warrant such projections. Yet this is the very technology our own medical science community is eminently uninterested in, has no knowledge of, does not wish to obtain any knowledge of, and does not wish to scientifically discuss.

There Are No Resistant Strains to the New Technology, and There Cannot Be Any

A most interesting thing is that there cannot be a "resistant strain" of a pathogen for the new treatment methodology, *a priori.* No mass can shield against spacetime curvature effects. Slight adjustments of the controls will adjust the spacetime engines being utilized. Two or three hour's work with a developed unit and a lab team on a new strain would suffice to completely determine the required adjustments, once the technology is developed. The new information could then be quickly relayed to all stations treating patients. On each treatment device, adjusting a few dials and controls for the laptop computer controlling the unit will do the trick. The use of the final device would be so simple that a teenager could be trained to use it in less than 30 minutes.

Such new capabilities are urgently needed not only for the millions of civilian casualties we expect in the future, but also for support of our armed forces in the field. Frankly, the anthrax shots are not going to do them much good, once one realizes that the "spreading" of their immune and regenerative systems is already occurring via KGB quantum potential means. Camel pox is available to any terrorist foe, and has almost the identical actions and constitution as smallpox. Indeed, it is almost identical to smallpox.

The Gulf War Disease and Syndrome were just small preludes of what is to come and what is already being used against the entire U.S., though as yet very clandestinely. Look again at the Kaznacheyev work. *He clearly proved in thousands of successful experiments that any kind of cellular disease or damage or death whatsoever, can be induced at a distance by novel EM means.* Replication experiments were successfully accomplished at the University of Marburg and also at the University of Sydney.

Results of the Priore' Treatments Are Well-Documented and Independently Supported

The Priore team's results are well documented in the hard French scientific literature. At least one French doctoral thesis was eventually accepted upon the work. The astounding results really occurred. They were scientifically substantiated under rigorous protocols and even police-guarded labs for tests by a learn of outside scientists. To then deny those results simply because no one **has** *understood* the active mechanism until now, is to deny the scientific method itself: *Believe the experiment when it refutes the prevailing theory.*

There is also independent work by other scientists that strongly supports the Priore results, once the mechanism is finally understood.

Robert Becker *et al.* in the U.S. conclusively showed that living cells *in situ* can be dedifferentiated, redifferentiated, etc. by laughably weak currents (picoamperes) and DC potentials (which are comprised of those famous Whittaker pairs). Becker was unaware that his potentials included time density waves and longitudinal waves, as predicted by quantum field theory and as shown by Whittaker in 1903 (once one understands that a bidirectional phase conjugate longitudinal EM wavepair is a time-density EM wave coupled to a longitudinal EM wave). Application of such EM potentials by Becker transformed red blood cells into pre-cartilage cells, then further into pre-bone cells. That latter cell type was then deposited in bone fractures, healing them when nothing else would. Becker and others have demonstrated partial regeneration of limbs in small test mammals, using the technique. The bone-healing techniques were finally approved by the FDA and are often used in some hospitals for treating otherwise intractable bone fractures.

Since then, other scientists have shown the directed formation of other types of body cells from cells from distant parts of the body (i.e., muscle-type cells from cells produced in the bone marrow, etc.). Such things are now well documented in the U.S. literature, in at least several hundred papers and in the leading journals including *Nature, Science,* etc.

The Present Threat Is Urgent, and Our Strategic Destruction is Still at Issue

Our own medical community, our science community, and our intelligence community are at least 20 years or more behind the KGB right now. We are also behind the Chinese. In many respects our scientists have simply missed the biggest scientific breakthrough of the century.

It is urgent that we find some way to counter and avoid future strategic energetics attacks sure to be scheduled. The eventual attack actually launched—if the little nation's QP weapons can be countered first—would destroy the U.S. in about 2 hours. It only takes about 10 minutes, it seems, for the QP weapons

already deployed to negate almost all our strategic nuclear arsenal. Thereafter, the KGB and Yakuza/Aum Shinrikyo can simply attack us at will and utterly destroy the U.S. To any loyal American, that is an entirely unacceptable solution.

The most urgent requirement would seem to be immediate and strong contact at the highest level between the U.S. government and the leaders of the little foreign nation (and the other friendly nation) that presently is guarding the ramparts and saving our necks. A cooperative crash program to develop our own QP weapons would seem to be the order of the day, if it can in any fashion be negotiated. But to have any chance of success, the President and the Congress will have to use the utmost care in selecting the U.S. negotiators and scientists to explore this possibility.

Immediate transfer of the requisite capabilities to the U.S. would be desirable, at least from our own view. From their view, of course, we do not necessarily resemble a trustworthy scientific partner at all, based on our past scientific performance, and it is up to the U.S. scientific community to prove to them that the leopard really has changed its spots. That would all have to be negotiated and worked out.

If that is not possible, then it is of extreme urgency that our own country embarks upon a new Manhattan Project to develop strategic quantum potential weapons and defenses. It would be a great relief to discover that such had already been started, but I fear not.

Desperately Needed Defensive Capabilities Can be Provided by a QP Solution

We pose one more very, very useful QP capability prior to closing. As we stated, if a large U.S. city is hit with—say—an anthrax attack done in professional manner, we would expect 1-3 million casualties, according to a well-known major U.S. government study. With immune/regenerative spreading presently already ongoing here in our populace by KGB QP weapons, that figure may actually increase by about 5-fold. So the casualties (prompt and delayed) might well reach 5-15 million, in a single *professional* anthrax spray attack by two persons from one light plane on a calm night dispensing 100 kilograms of anthrax spores sprayed over the city with a simple agricultural sprayer. With the indicated Priore technology and treatment units in all emergency response hands, at least 70% or so of those casualties could be saved. Otherwise, *presently almost all of them will die.* That dramatic saving of lives is one desperately needed capability that could be met.

But there is a further capability of LW technology that nothing else presently known can do without serious impact upon the populace.

After the prompt and shortly delayed casualties are mostly cured and the

remaining fraction dies, a terrible problem of BW contamination still remains. No one anywhere really knows how to clean up an entire city from anthrax spores. But unless harshly decontaminated, that contaminated city is going to be effectively uninhabitable for decades to come, if only the present technology and methods are available. Islands of the coast of Scotland, where anthrax was tested decades ago, are still "hot" and contaminated—and off limits.

The indications are that our nation has developed chemical sprays that can kill and neutralize the anthrax, including in the lungs of the populace breathing the spray. On the other hands, it is indicated that the spray is a high physical stress factor, and some of the more debilitated citizens will be injured or even killed by the spray itself. This includes babies and small children, the aged, those with lung and breathing difficulties, etc. As a matter of national survival, desperate diseases do deserve desperate remedies. So while spraying the zone might itself sicken and kill some thousands of our weaker citizens, at least—so the thinking would go—it saves millions. This of course is similar to the use of triage—reserving treatment and scarce medical capabilities and supplies for treating those most likely to live and recover with treatment, rather than treating those more seriously affected and less likely to survive. Sadly, presently triage will almost certainly be necessary because of very short supplies and treatment teams, etc. So most of those 1 to 3 million casualties will simply be dragged aside and left to die, and just made as comfortable as possible.

However, the QP technology can be adapted to produce systems that can indeed do complete decontamination, very quickly, and without harm to the citizens in zone. The anthrax can simply be modified by specialized spacetime curvature engines—specialized EM fields and waves carrying hidden inner "information content of the field" engines that are designed specifically to change and destroy anthrax and nothing else. Eventually one could develop the capability to do it similarly for *any other* major contaminant, including nuclear radioactive materials contamination of a major city.

Any strategic and tactical analyst can immediately see the tremendous value of such capabilities.

In Conclusion

I hope the above admittedly lengthy overview is of interest to the reader and useful. If we are to survive the debacle that now looms before us in this new asymmetrical war we shall be in for decades, it will require the efforts of leading and dedicated Lawmakers and Overwatch persons. Without firm prodding, the military, scientific, and intelligence communities are likely to just continue their present pace until many or most of us all die suddenly.

The KGB energetics threat is still real and imminent; Russia is not a monolith and Putin still does not have complete control over the KGB. Another full strategic attack is sure to be scheduled before very long by either that die-hard

faction of the KGB, the Yakuza/Aum Shinrikyo, the Chinese (particularly if they move against Taiwan and we defend), or someone. And so our possible deaths also to be taken into account, if we just continue to do business as usual.

Along with other Americans, I love my country and served it to the best of my ability for 20 years of active duty. It is the survival of America itself that is now at stake, both in the asymmetrical war against terrorists and in the continuing war against energetics weapons. Our scientific, military, and intelligence communities simply must be jolted awake and into massive efforts in energetics.

We have the scientists with the required capability. We have the facilities. We have the leadership, and we can do it if we can put this thing under a Presidential Decision Directive, under an Executive Order and a Declaration of National Emergency (along with the several already in effect).

Thomas E. Bearden, Ph.D.
Lieutenant Colonel, U.S. Army (Retired)
President and CEO, CTEC, Inc.
Director, Assoc. Distinguished American Scientists

1986

Fer De Lance

Briefing on Soviet Scalar Electromagnetic Weapons

T. E. Bearden, Ph.D.
LTC, U.S. Army (Retired)
Director, ADAS

1986

Note: This is the original Fer De Lance briefing paper wich includes some minor text and artwork editing.

1986 FER DE LANCE INTRODUCTION & BRIEFING ON SOVIET SCALAR ELECTROMAGNETIC WEAPONS

This briefing presents the basic concepts of Soviet scalar electromagnetic weapons, some of the major types available, and evidence of their widespread testing.

Scalar Electromagnetics is Electrogravitation

Scalar electromagnetics is an extension of present electromagnetics (EM) to include gravitation. That is, it is a unified, and, what is more important, it is a unified engineering theory. Nikola Tesla initially discovered its basis.

In the scalar EM extension, EM field energy can be turned into gravitational field energy and vice versa. This exchange can be patterned and localized, in specific areas or objects. Such a controlled change of electromagnetics to gravitation is not possible in the normal EM or physics presently taught in Western textbooks. However, the bits and pieces of the theory have been scattered through the physics literature for some time, but no orthodox Western scientist seems to have realized that these anomalous portions could be integrated into a startling new physics. Unorthodox experimenters, inventors, and scientists have made discoveries in this arena for several decades, but again have not realized the exact implications or the precise manner in which their results could be combined with present electrical physics.

Fer-de-Lance

Such sluggishness is certainly not present in the Soviet Union. For over three decades, the Soviet Union has been developing electrogravitation and applying it to develop strange new secret weapons of incredible power and capability. They have sustained the largest weapons development program ever launched by any nation, and they have kept it effectively hidden from prying Western eyes. 1 have called this program "Fer-de-Lance," after the deadly South American pit viper of that name.

The dreaded fer-de-lance is a snake of great agility and lethal effect. It often ambushes its hapless prey, and strikes unexpectedly and without warning. Its first sudden strike is usually lethal to its victim, which promptly expires in writhing agony. Since the Soviet development of scalar EM weapons has been designed for the same purpose, the name seems appropriate.

The equivalent effort of about seven Manhattan projects has been poured into Fer-de-Lance by the Soviets, and the program has been successful almost beyond imagination. The eery weapons are now developed, deployed, and

tested. The ambush has been completed; Fer-de-Lance is coiled and ready to strike.

Energetics and Directed-Energy Weapons (DEWs)

The ordinary Soviet name for this type of weapons science is energetics. In the West, that term is believed to be associated with conventional directed-energy weapons (DEWs) such as particle beam weapons, lasers, radio frequency (RF) directed-energy devices, etc. The Soviets do not limit the term in this way.

Western scientists are familiar only with directed-energy weapons where fragments, masses, photons, or particles travel through space and contact the target to deliver their effects. Hence in their thinking they limit the Soviet term "energetics" to the type of weapons they themselves understand - exotic but normal weapons using energy or mass traveling through space to impact a target.

However, it is possible to focus the potential for the effects of a weapon through spacetime itself, in a manner so that mass and energy do not "travel through space" from the transmitter to the target at all. Instead, ripples and patterns in the fabric of spacetime itself are manipulated to meet and interfere in and at the local spacetime of some distant target. There interference of these ripple patterns creates the desired energetic effect (hence the term energetics) directly in and through the target itself, emerging from the very spacetime (vacuum) in which the target is imbedded at its distant location. As used by the Soviets, energetics refers to these eerie new superweapons, as well as to the more mundane DEWs known to the West.

As a consequence of the Soviet breakthrough and decades of feverish development, monstrous strategic weapons undreamed of in the West are already in Soviet hands. A noose is slowly and steadily being tightened about our throats, and it is already the 11th hour.

The Soviets Use a Deception Plan

Concomitant with this supersecret development program, the Soviets developed and implemented an elaborate deception plan to conceal these startling weapons and their nature from Western eyes until it is too late. Soviet deception has been so successful that even when Western scientists are confronted with the actual Soviet tests of these weapons directly over their heads, they do not recognize the weaponry nor the nature of the effects produced.

As early as January 1960, Nikita Khrushchev announced the Soviet development of a new, fantastic weapon. On May 1, 1960 Soviet defensive radars - rigged as prototype weapons of this new kind - probably downed Francis Gary Powers's high-flying U-2 reconnaissance plane over the Soviet Union, precipitating a major diplomatic incident.

On April 10, 1963 one of the first new superweapons operationally deployed was used to destroy the U.S.S. Thresher atomic submarine underwater, off the east coast of the U.S. The next day, April 11, 1963 the same deployed superweapon was utilized in a different mode to produce a giant underwater explosion in the ocean over the Puerto Rican Trench, 100 miles north of Puerto Rico.

Over the years, various aircraft were interfered with or downed as tests of these Soviet weapons. A particular case involved the mysterious loss of F-111s in the Vietnam conflict. At least one downed F-l11 crew was recovered in the subsequent prisoner-of-war exchange. On that aircraft, all electrical systems suddenly were in difficulty simultaneously. All emergency indicator lamps were lit up, "like a Christmas tree." This was probably due to special Soviet teams converting some North Vietnamese SA-2 missile system radars to the scalar EM mode, and employing "scalar beam" interference to produce spurious EM noise throughout the electrical and electronic systems of the aircraft.

In late April/early May of 1985, the entire armada of Soviet strategic scalar EM superweapons was activated as a special celebration of the 40th anniversary of the end of WWII. Activation of this armada (which probably contained over 100 giant weapons), together with 27 giant power systems and a large number of command and control transmissions, was monitored on an advanced, proprietary detection system by Frank Golden. After the giant strategic exercise, which lasted several days, most of the weapons and power sources were once again stood down to "standby."

The NASA shuttle launches provided a convenient opportunity for Soviet testing of these superweapons in a Launch Phase ABM mode, where a launched missile can be detected and destroyed shortly after liftoff. At first, electromagnetic pulse (EMP) bursts on the early shuttle trajectory were deliberately delayed in time, to prevent actual destruction of the target and avoid alerting the U.S. that something unusual was happening.

The shuttle launch of November 26, 1985 saw a particularly significant-test of this kind. In this case, a very loud "sonic boom" or explosion occurred over the launch site 12 minutes after shuttle liftoff, when the shuttle was already away and downrange. At least two previous shuttle launches had also been used as pseudotargets, with delayed booms occurring over the launch site well behind the vehicles.

After the lack of U.S. reaction to these three tests showed that the U.S. still had no knowledge of the new technology and did not even recognize its employment, the Soviets apparently decided to proceed with tests where the target vehicles would actually be destroyed.

On December 12, 1985 the same Soviet weapon tested against the NASA shuttle launches may have deliberately interfered with the controls of an Arrow DC-8 taking off from Gander Air Force Base, Newfoundland. At an altitude of 100

feet, the aircraft - carrying over 250 U.S. soldiers and civilian crew members - lost power and sank into the ground tail-low, killing everyone on board. Three Canadian witnesses to the crash were interviewed over the Canadian Broadcast Corporation's television news on April 8, 1986 at 10 p.m. No flame or smoke issued from the plane before its descent and crash. However, the aircraft was seen to be mysteriously glowing with a yellow glow. That is a signature of the use of a scalar howitzer in the "continuous EM emergence" mode, similar to the manner in which the F-111s were downed in Vietnam. In short, the DC-8's electrical systems were interfered with by electromagnetic noise created throughout each increment of spacetime occupied by the aircraft. The powerful charge created in and on the aircraft also apparently caused the loss of two engines, one after the other. With its controls ineffective and power drastically reduced, the aircraft sank to earth, still in its "tail down" configuration from takeoff, and crashed and burned. The "yellow glow" was a corona due to the acquisition of a high electrical charge by the skin of the aircraft.

Other factors contributing to the crash may have been reduced lift due to poor engine maintenance, increased weight of the aircraft due to icing, and heavy loading. Still, no one has recognized the significance of the "yellow glow" or what it implies, or the possible connection between loss of the aircraft and previous Soviet testing of-a Launch Phase ABM system against U.S. shuttle launches.

As this book goes to press, the last two U.S. Air Force Titan 34-D missiles fired from Vandenberg Air Force Base in California have blown up shortly after launch. The first one blew up on Aug. 28, 1985 just after lift-off. That loss has been attributed to failure of a high-powered fuel pump, causing a massive oxidizer leak and a smaller fuel leak. The second Titan loss occurred on April 18, 1986 when the missile blew up 5 seconds after lift-off. Its loss is still under investigation and no determination of cause has been made. Apparently the shuttle and the Titan presently provide the only viable launch vehicles for launching U.S. "spy" satellites. The loss of these sensitive satellites - if indeed they constituted the payloads - cannot help but be damaging to our strategic surveillance capability. According to the Los Angeles Times, the single remaining KH-11 satellite was launched in December 1984 and, with an expected life of two to three years, it could stop functioning later this year.

Whether or not significant Woodpecker grid activity existed in the vicinity of the Titan launch of August 1985 is unknown at this time. However, significant activity in the grid definitely occurred before the April 18 Titan disaster and on the same day.

On Easter Sunday, Mar. 30, 1986 engineer Ron Cole observed significant **cloud** signatures of grid pattern activity, correlated with Soviet Woodpecker measurements. On April 18, the present author observed traces of a cloud **radial** over Huntsville, Alabama and took photographs of it. Preliminary reports from

Thousand Oaks, California indicate extensive grid activity again on April 18, the day the second Titan exploded.

At least the second of these two missile destructions shortly after launch is suspicious, since the grid positively was active during that time. Also, a clear trail of Launch Phase A8M system indicators exists back to the massive scalar exercise of April/May 1985. The first Titan explosion in Aug. 1985 thus falls within the Soviets' "now let's test them against U.S. launch vehicles" period. The second Titan loss follows highly suspicious losses of the Arrow DC-8 on Dec -T7 1985 and the Challenger on Jan. 28, 1986. The same Soviet weapon system that destroyed those targets may also have destroyed one or both of the critical Titans.

The Soviets have also been able to significantly engineer the weather over North America for more than a decade without being found out. They have tested a fantastic range of anti-ballistic missile (ABM) defense weapons for over two decades, and no one is the wiser in the West.

As previously stated, prior to the end of November, 1985, at least three "wet-run" tests of a Soviet "launch phase ABM system" against actual U.S. shuttle launches were made directly over Cape Canaveral itself, and still no one recognized what was happening or what sort of weapon was being tested. On December 12, destruction of the Arrow DC-8 in Newfoundland produced no indications that the Americans and Canadians knew anything about the nature of the weapon possibly used.

Accordingly, after a sufficient wait to test our reactions (if any), the Soviets prepared to actually destroy a shuttle after its launch.

Destruction of the Challenger in January 1986

As the whole world knows, on January 28, 1986 the shuttle Challenger was launched from Cape Canaveral, Florida after exposure to undesirable weather conditions, and disastrously exploded shortly after launch. The evidence seems to indicate that, as the rising vehicle was stressed, one end of its right booster broke loose, twisting away and into the main fuel tank, causing rupture, spillage of the fuel and catastrophic explosion. Several other anomalies still exist, however, and it is clear that a problem existed with at least one of the booster scals. All seven astronauts aboard the flight were killed in the fiery destruction of the vehicle.

Of course no one had recognized that the Soviets had already tested a launch-phase anti-ballistic missile (LPABM) system against three of our previous shuttle launches. These "wet-runs" used a deliberate "time offset" to delay the explosive emergence of electromagnetic energy in a launched shuttle's location along its trajectory. The delayed test shots resulted in very large "booms" above the Iaunch site after the shuttle was safely out of the area, but did not destroy the

shuttle vehicles themselves. For example, the delayed-shot boom occurred 12 minutes after the evening launch of Nov. 26, 1985. Even a marker beacon (large light in the sky) was utilized on that launch shortly after lift-off. The marker beacon was photographed. In addition, another photograph taken in a time sequence shows another sudden streak of light coming down and ending in a burst of light. This was probably a spatially-offset test of the "pulse" mode for destroying the shuttle. The "light burst" would have been detected in the Soviet Union and scored against its intended offset position. However, another mechanism may have been used to cause destruction of the shuttle itself.

On Jan. 1, 1986 the presence of a metal-softening signal added on to the Soviet LPABM system's scalar EM transmissions was detected by a surprised Frank Golden. The metal-softening ability of the detected signal was experimentally verified by him. Golden also locally nullified the action of the scalar EM signal in a test, rather conclusively establishing (1) that it existed and (2) what it was. The signal was apparently being prepared for use against an upcoming U.S. shuttle launch.

Just prior to the launch of the shuttle in late January, 1986, the Soviets accomplished significant weather engineering over the U.S. The jet stream was severely bent southward in the middle of the U.S., bending rightward again to move across the Florida panhandle. Icy cold air from Canada was drawn far down, into Florida and onto the Challenger sitting on its launch pad. This exposure to cold outside its tested range was probably an additional factor contributing to the Challenger's failure. Positive signatures of the Soviet weather engineering and jet stream manipulation were observed and photographed by several persons, particularly in Alabama and California.

On January 28, 1986, the Soviet scalar EM weapon system effects were sharply localized in the launch zone. Localization involved higher frequencies being present; these are quite painful to small brains - whose hemispheres act as a scalar interferometer and detector - such as in birds. As commented upon by national news commentators, strangely the birds were not flying that morning. Indeed, they were staying down on the ground or avoiding the area, since the sky over the area was painful to them.

As the Challenger rose, the metal-softening signal would have been experienced in and around the boosters shortly after ignition, since the booster flame acts as a special "ion-plasma" turner/detector for the scalar signal. (Certain plasmas have a unique characteristic: they transform an input transverse wave to a longitudinal wave, or an input longitudinal wave to a transverse wave.) The effect of such a local signal is to "change mass in the immediate vicinity" with the particular scalar resonance signal. (Mass acts as a capacitance or accumulator for scalar resonance).

The ill-fated Challenger was doomed. After ignition, the booster flame acted as a ionic plasma detector/amplifier for the scalar metal-softening signal on the

Soviet Woodpecker grid. The metal in and around the booster flame was slowly and steadily weakening due to charge-up with the metal-softening pattern. This attributed to booster leakage from the already cold-damaged seal. The leaking booster poured out smoke and later flame, contributing to the impending disaster.

Substantial winds and air turbulence over the site increased the stress on the Challenger as it rose through this region. This also contributed to the impending disaster and may have been deliberately created there by Soviet weather engineering.

As the Challenger stressed, eventually one or more weakened metal mounts gave way, partially freeing the end of the right booster. The booster oscillated, rotating into the tank and rupturing it. Contact of the escaping liquid fuel and the flame resulted in a fiery explosion, destroying the vehicle.

Even so another anomalous flame or light was observed on the vehicle, and may have represented a very small additional "pulse mode energy form" produced by the Soviet weapon that was attacking the Challenger. The shock of the explosion probably killed the astronauts instantly, although the cabin appears to have remained essentially intact while it plunged several miles to the ocean below.

By treating excess cold exposure to the shuttle, inducing metal-softening in and around the ignited booster, and possible adding a deliberate "intensely hot spot", the Soviets caused the Challenger to weaken and destroy itself shortly after launch, in so subtle a fashion that NASA scientists would not suspect what had actually caused the mishap. The Soviets also had previously withdrawn all their trawlers and ships which normally shadow a shuttle launch, to prevent any suggestion of Soviet presence near or involvement in the catastrophic accident.

A few days later, sporadically intense "high frequency localization signals" were still present on the grid, at least at one hinge-point at Birmingham, Alabama. From 1-4 February 1986, many birds inadvertently flew into the zone when an intense breakout of these components occurred, and dead birds fell from the sky in substantial numbers.

* According to an Urgentgram sent out by General D. Graham, on the evening of the Challenger's loss, KGB headquarters held a party to celebrate "success of their active measure against the shuttle." Note that all Soviet scalar EM weapons - development, testing, deployment, and usage - is under command and control of the KGB.

Among other things, this briefing details the bizarre series of indicators that showed the Soviet intention to destroy the vehicle, and documents the accidental discovery of the signal with which they intended to cause the shuttle to fail and destroy itself.

Technological Surprise and a New Hiroshima

Sadly, the bureaucratic smugness of orthodox Western scientists has materially assisted the Soviet deception process. Most Western managerial scientists - particularly in weapons development activities — have continued to view the Soviets as ignorant peasants, still trying to clean the mud off their boots. This view, of course, is totally untrue and unwarranted.

It takes only a few examples to refute this attitude. In nonlinear mathematics, engineering and science, the Soviets have led their Western counterparts since the beginning. The electromagnetic pulse (EMP) effect of a nuclear explosion appeared in the ordinary Soviet scientific literature before Western scientists were even aware that the effect existed. The Soviets continue to lead the world in explosive welding, titanium forming and welding, etc. While the Soviet scientists exhibit little inclination to build good washing machines, they certainly do produce state-of-the-art technology — and beyond — in any area in which they focus their main efforts. (We do lead the Soviets in some areas such as computers, computer software, miniaturization, etc.)

Once before, a modern nation - the United States - developed a mighty weapon in secrecy and used it to force a powerful foe - Japan — to its knees. The mindbending atomic blows to Hiroshima, and shortly after to Nagasaki, showed once and for all that in the modern age technological surprise can prove instantly disastrous. Yet in our scientific arrogance, we have assumed that no one else will ever do such a thing. We have assumed that it certainly could never happen to us, and that the "secret weapon" scenario will never be repeated. On the contrary, it has happened again, someone else has done it, and it has happened to us.

It has also become fashionable in the West to believe that all the laws of physics are already discovered. We assume we already know all of them. While we have been pridefully crowing this tune, the Soviets have been steadily discovering new laws in secret, as well as new ways to circumvent the old laws.

We Have Given Up Defense in the Larger Sense

Meanwhile, to defend ourselves strategically, we have chosen to forego "defense" and rely almost totally on building a powerful strategic offense that is capable (we think!) of destroying our would-be enemies anywhere in the world. Our offensive striking power is based mostly on a triad of deterrent forces - land-based ballistic missiles, submarine-launched ballistic missiles, and strategic bombers. The cruise missile is presently being added to the triad. If this 4-part offense were nullified or destroyed by Soviet secret weapons, we would be powerless to prevent our own destruction and Soviet domination of the world.

We have been viewing ourselves as Samson, confident in the strength of our locks.

Yet literally our locks have been secretly shorn and the Philistines are already upon us. Indeed, Soviet energetics weapons are now capable of destroying our triad shield, our homeland, our armed forces in the field, and our population, quickly and efficiently. We have a new "gap" of monumental proportions: not a missile gap, not a submarine or bomber gap, and not even a particle beam or laser gap. We have a scalar electromagnetics or electrogravitation gap.

In this briefing, it is my purpose to show a portion of the Soviet weapons developments that have lead me to such dire conclusions. The Fer-de-Lance briefing is also an attempt to galvanize our leaders and scientists into action, for our present total vulnerability to the Soviet Fer-de-Lance weapons is intolerable and unacceptable.

Unless we achieve defenses — and quickly — our own demise in a fashion similar to the Hiroshima-Nagasaki scenario is inevitable and imminent.

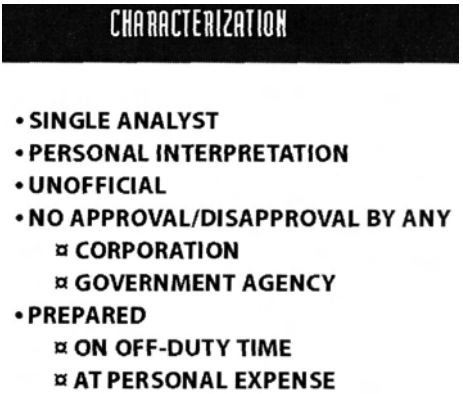

Slide 001: Characterization

We point out at the beginning that this briefing and its interpretation are the result of 22 years of analysis and effort by a single analyst. It is entirely unofficial. It is not approved or disapproved by any corporation, company, or government agency. It has been prepared by this analyst at nights, on weekends, on holidays, and during off-duty time.

It has been prepared mostly at personal expense, though several grants and support have been received from R. J. Reynolds III, Peter Kelly, Mike Bearden, Interdimensional Sciences, Association of Distinguished American Scientists, and others. Very valuable assistance has been received from the U.S. Psychotronics Association and the Planetary Association for Clean Energy. These contributions are deeply appreciated and most gratefully acknowledged.

Graphics and artwork support by Hal Crawford, Margaret Wilson, Tommy Neumann, Ron Cole, and Lee Giles has been invaluable. My sincere thanks go to these artists who have made the presentation vivid and imaginative. A great deal of background support was given by Joe Gambill, Frank Golden, Tom Herold, Ken Moore, Pete Kelly, Eike Mueller and Mel Bartlett and is deeply appreciated.

Finally, the help of many other persons and colleagues too numerous to enumerate is also gratefully acknowledged.

If the U.S. bureaucracy ever moves and develops defenses against scalar EM weapons, it will largely be due to the support of the persons and organizations who have freely given of their talents and resources to further this effort.

OUTLINE

- THREE VIEWS OF ELECTROMAGNETICS
- EXTENDED AHARONOV-BOHM EFFECT
- SCALAR ELECTROMAGENTICS
- KILL/DAMAGE MECHANISMS
- VULNERABILITY
  - ELECTRONICS
  - PERSONNEL
  - EQUIPMENT
  - MATERIAL
- SUMMARY

Slide 002: Outline

This presentation does not attempt to cover the complete field of energetics weapons developed by the Soviet Union. Instead, it concentrates on the major areas necessary to understand the type of weapons likely to be unleashed on our strategicand tactical installations and our troops and their equipment. It does not attempt to present the frightful bio-electromagnetic weapons the Soviets have developed to be unleashed on our populace at large and on our troops in the field. Also, the briefing does not dwell on the historical progression, but on the types of weapons themselves.

Of necessity, it presents several shortcomings in classical EM, and presents three differing views of electromagnetics and what can be done with them. The briefing particularly stresses the Aharanov-Bohm (AB) effect. This mesoscopic effect, which produces action at a distance by pure EM flux and not EM force fields, has been extended by the Soviet weapons developers into the macroscopic world around us.

In addition, we develop the basic concepts of scalar electromagnetics and how electrogravitation is achieved. The basic concepts of scalar interferometry and scalar resonance are briefly advanced, and a few of the major kill and damage mechanisms are presented. The nearly total vulnerability of our present electronicequipment,personnel,communications,vehicles,aircraft,ships, missiles, submarines, nuclear weapons, and materiel is stressed.

Finally, a short summary is given to highlight the main points of the briefing.

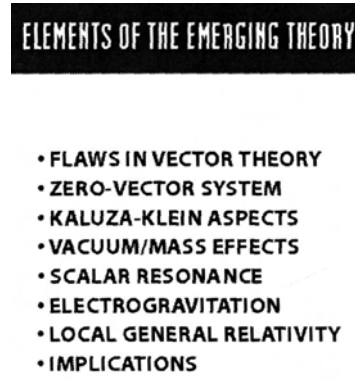

Slide 003: Elements of the Emerging Theory

Specifically, we will point out some flaws in vector mathematics itself, particularly with the concept of the zero force vector. The zero force vector is a system of forces that sum to a zero resultant. Hence the components of the summation represent a patterned stress in the medium to which they are applied, or in which they are imbedded. This includes the vacuum (spacetime) medium. In classical electromagnetics, this vacuum stress due to a zero-vector summation of EM force fields has been totally omitted and ignored.

As such, the EM "zero" force-vector summation produces a "trapped internal EM flux and flux pattern, without resultant (external) force field" condition - precisely as does the Aharonov-Bohm effect. The components of the artificially zeroed system, however, can be transmitted and still maintain their special relationship and coherence. While the AB effect has been shown to hold for the mesoscale (a few thousands of angstroms), the zero-vector scalar EM effect can hold for hundreds of thousands of kilometers.

To provide a unified electrogravitation, we adapt Kaluza-Klein 5-dimensional gravitational concepts to the idea of the zero-vector stress system in vacuum-spacetime. We also point out how simultaneously varying the magnitudes of **the** force components of a stress, all in phase, produces a stress wave or scalar EM wave. Scalar waves are almost always absorbed and emitted by the nucleus of the atom, not by the electrons in orbit.

The relationship of mass and vacuum, and the constitution of the vacuum, are pointed out from the viewpoint of modern quantum mechanics.

How a scalar wave resonance differs from conventional EM resonance is developed briefly. Mass and inertia are the direct result of - and are - trapped scalar resonance. The trapping mechanism is the spin of the particle.

Severely limiting assumptions in ordinary general relativity (OGR) are pointed out. In OGR, it is assumed that the local frame is always a Lorentz frame, and never curved. In other words, local spacetime is always assumed to be flat. This **saves** the conservation laws, simplifies relativity, and reduces "general" relativity to special relativity with distant perturbations and curvatures.

By removing this ad hoc assumption, a much richer local general relativity results. This local general relativity is readily engineered. Note that, in OGR, the physicist has actually assumed that he can never "engineer" local general relativity! Indeed, with the scalar EM approach, he can easily do so, in contradiction to what is taught in all Western universities.

By engineering a local general relativity (LGR), the individual conservation la**ws** can be violated locally. This includes the conservation of energy/momentum, and the conservation of charge, for example.

The major implication of this startling new engineering physics is that one can **engineer** physical reality itself. For example, elements can be transmuted with minuscule energy input, free energy devices are possible, action at a distance is possible, communication faster than light speed is possible, etc.

By using the zero-vector approach, the virtual state can be organized and made **largely** deterministic, rather than statistical. This means that the probabilities of the states propagated forward by the Schroedinger equation can be engineered and changed. Whether or not a certain quantum change shall emerge or not can be determined or substantially influenced in advance. Bohm's hidden variable **theory** now becomes directly engineerable. This is a drastic change to quantum mechanics and physics in general.

Another implication is that this is the final engineering, for it allows the direct engineering of physical reality itself. Humans must now find a way to resolve their differences peacefully, or shortly Man will destroy himself and his biosphere by his own hand.

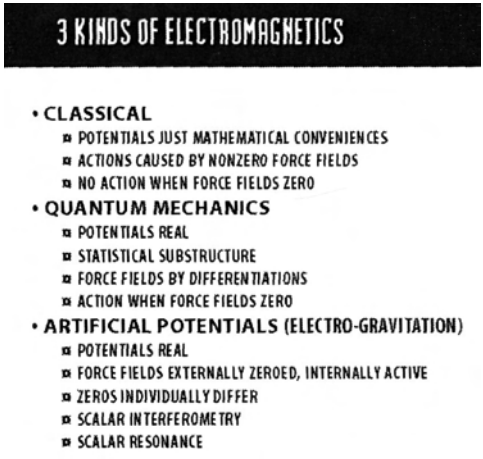

Slide 004: Three Kinds of Electromagnetics

There are actually three kinds - or three views - of EM. These are (1) the classical view, (2) the quantum mechanical view, and (3) the scalar EM or electrogravitational view.

In the classical view, the potentials are just mathematical conveniences and do not physically exist. The real causative agents are the force fields, and there is no longer any electromagnetics going on if the force fields reduce to zero. Further, the ideas of "charge" and "charged mass" have been made erroneously synonymous.

Of course the classical view was formed from the idea of a thin material ether, with electricity as a thin fluid, long before the discovery of the electron. Since most earlier scientists studied string waves and these are transverse, the EM wave was modeled as a transverse wave. Also, detection equipment actually detected transverse waves. The role of electron spin and drift velocity, which would have shown that force-field-causing EM waves in the vacuum could only be longitudinal, was not yet discovered. Maxwell's equations and the classical approach became so engrained that the basic derivations were never corrected for more modern discoveries.

The quantum mechanical view, on the other hand, regards the potentials as the real physical actants, and the force fields are just effects derived from the potentials by differentiating operators. Classically oriented physicists have adamantly opposed this foundations requirement of QM because it would require nearly a complete redo of EM theory. It would also rather drastically

change our ideas of physical reality. For years a controversy has raged around the Aharonov-Bohm effect (which demonstrates the reality of the potentials, among other things). Only this year - 1986 - have most physicists finally accepted the AB effect with its implications (see Physics Today, Jan. 86). However, no changes have yet been made to EM theory and the basic classical approach to electrical physics and engineering.

Yet even the QM view is flawed, since it has not examined the structure of EM forces which sum to a vector zero. Such a system produces stress, and if the summation is in the vacuum itself, it produces stress of vacuum/spacetime. Rigorously, this is a gravitational effect, and the energies of the various EM components in the local region are locked into an artificial potential. From general relativity, this type of potential where the energy density of vacuum is altered is a gravitational potential. From Kaluza-Klein unified theory, it is at least a 5-dimensional gravitational potential.

If the individual force vector components of the vector zero are varying in magnitude - say, all in phase - then they produce a gravitational wave. The energy density of the local vacuum is being rhythmically varied. Call such an EM wave a scalar EM wave, where, by "scalar" we imply that, to an external observer, the EM force vector resultants are identically zero, but the local gravitational potential of the wave is varying. Thus this is an electrogravitational wave, and vector zeroing of EM force fields constitutes a means of changing EM field energy into G-field energy. On the other hand, by breaking up the coherence of the zero-vector summation of the EM forces, nonzero EM resultants are recovered, constituting the change of gravitational energy into EM energy.

A simple means to break zero-summed coherence is by interference of two or more such zero-vector waves.

In this, third view of EM, action at a distance is easily possible, and is the norm rather than the exception. In addition, a new kind of resonance - scalar resonance - exists. The scalar EM wave does not interact with orbital electrons, but rather with the interior of the nuclei of atoms. Thus the new scalar EM resonance is between nuclei and within nuclei.

Slide 005: Bohm-Aharonov Effect

In 1959, Aharonov and Bohm published a fundamental paper in Physical Review, which pointed out the QM implications of potentials as the real entities, while force fields were derived effects. They showed that, even in the presence of zero EM force fields, the potentials may still exist and produce real effects in physical systems. They also suggested experiments to prove these predictions.

Interference of the potentials is the key mechanism producing real effects in charged particle systems, even in the presence of zero E-field and zero B-field. Unfortunately the AB paper did not address the issue of zero-summed systems of EM force fields as one way of producing artificial potentials having unique characteristics

At any rate, the "AB effect," as it came to be called, was rather hotly resisted and debated over the years, until finally it has generally been accepted as proven in 1986. The principle represents a violation of both classical mechanics and classical electromagnetics. It is required, however, by quantum mechanics and quantum electrodynamics. And experiment has proved it.

(See Y. Aharonov and D. Bohm, "Significance of Electromagnetic Potentials in the Quantum Theory," Physical Review, Second Series, 115(3), Aug. 1, 1959, p 485-491.).

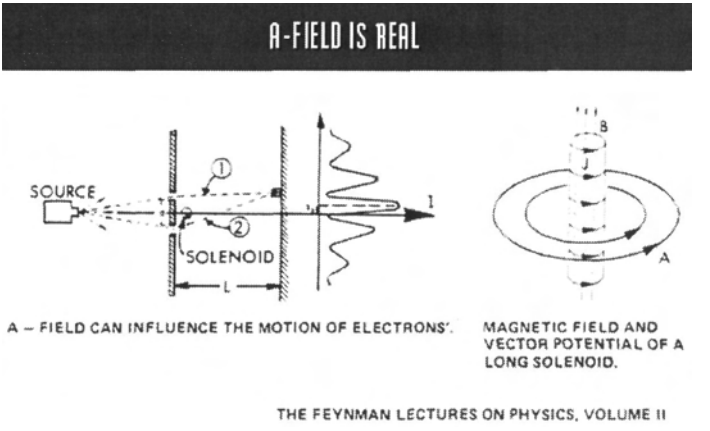

Slide 006: A-Field is Real

In classical EM, the vector magnetic potential (the A-field) had been defined as a mathematical convenience by the equation

$$\nabla x A = B \qquad [1j$$

But if the potentials are real, then conceivably the A field can be loosed from its enchainment to the ∇x operator. In that case, it becomes a free, new, and independent field of nature with potentially unique characteristics. For example, its defining equation shows that magnetic force field can be made from it, and the rightmost term of the equation

$$E = -\nabla Ø - dA/dt \; [2]$$

shows that its time rate of change makes an electric field.

Let us explain this in more simple terms, and somewhat more precisely than conventional theory. We will use the Kaluza unified G-EM interpretation and electron flow in our explanation.

In the A-field, we have a certain kind of 5-dimensional G-potential which can bleed-off as EM force fields in two ways: (1) in a swirl fashion, where the vortex producing the swirl moves parallel to electron movement, and the swirling is a torque or spin, and (2) in a linear fashion, where the time rate of change of the A-potential produces a linear E-field on the electrons.

The first bleed-off as given by equation [1] constitutes the magnetic B-field, and the second bleed-off as given by the rightmost term of equation [2] creates a component of the overall electrical E-field. (Bleed-off of the electrostatic scalar potential produces the other component of the E-field).

Now in general relativity (GR) theory, "the" G-potential is just a conglomerate of many things, each of which has the characteristic of curving spacetime. "The" gravitational field is not a single thing at all, but is composed of a collection of many things.

Thus if we realize that both the electrostatic scalar potential (Ø-field) and the magnetic vector potential (A-field) are components of the 5-d G-potential, then we see immediately that bleed-off of these two components of the 5-d G-potential creates all normal EM force fields.

It follows that, if we produce a zero-vector summation of the two or more EM bleed-offs, we are actually "putting as much back in" to the 5-d G-potential through its A and Ø components as we are taking out electromagnetically. In that case, the 5-potential is in a state of equilibrium with respect to EM bleed-off. It is now forced to bleed-off in the only other way it can: as ordinary 4-dimensional gravitational field. Thus by vector-zeroing EM force fields, we turn EM field energy into G-field energy and vice versa, via the intermediary of the 5-potential.

At any rate, soon after publication of the Aharonov-Bohm paper, experiments showed that, if the magnetic field is trapped inside a long solenoid, a phase shift still is induced in the two-slit electron experiment, even though - classically - no contact of the enclosed magnetic field and the moving electrons occurs. This phase shift is explained by the fact that the freed A-field exists outside the trapping solenoid, even though the B-field does not. Consequently, interaction of this free A-field with the electrons produces a phase shift of the QM interference detection pattern.

This proves that A-field is real and causes physical effects.

It also proves that a form of action at a distance is real, just as required by quantum mechanics.

Years ago, Frank Golden and this author - together with Dr. William Tiller - experimented with "free A-field" devices. Golden went on to develop prototype transmitters and receivers and a prototype underwater communication system.

Since that time, Gelinas has patented several curl-free magnetic vector **potential** (free A-field) devices: see U.S. patent no. 4,447,779, May 8, 1984; 4,429,288. Jan. 31, 1984; 4,429,280, Jan. 31, 1984; and 4,432,098, Feb. 14, 1984. These patents are assigned to Honeywell.

(See also Theodor Kaluza, Sitz. Berlin Preuss, Adad. Wiss. 966, 1921.).

QUANTUM NON-LOCALITY

"The non-local aspect of quantum systems is ... a general property of nature, and not just a freak situation manufactured in the laboratory."

PAUL DAVIES, SUPERFORCE
1984 (PAGE 48)

Slide 007: Quantum Non-Locality

Indeed, quantum systems exhibit nonlocal effects that are general properties of nature. These effects are not just freak situations manufactured in subtle laboratory experiments.

However, if spatial coherence in such microscopic effects can be induced and sustained, then action-at-a-distance can be obtained in large macroscopic systems. This is the engineering aspect of the scalar EM approach.

It is also the aspect that the Soviets have secretly weaponized for over three decades.

The zero-vector EM force-field summation of multiple EM waves is used to transport specific time-phased patterns of EM polarization of vacuum to a distance. There interference of two or more such patterns results in the interference of the internal patterns, breaking of the phase relations, and appearance of positive (added) or negative (extracted) EM energy in the intersection region.

VECTOR MATHEMATICS HAS A FUNDAMENTAL PROBLEM

IN ITS AXIOM FOR THE ZERO VECTOR,
VECTOR ANALYSIS DISCARDS ZERO VECTOR
SUMMATIONS OF ACTIVE SYSTEMS
OF VECTORS.

VECTOR ZERO IS MADE THE ABSENCE
OF ALL VECTORS

(IT CAN ALSO BE THE PRESENCE OF REAL
VECTORS WHOSE VECTOR SUM IS 0.)

Slide 008: Vector Mathematics has a Fundamental Problem

In its concept of the zero vector, vector mathematics discards zero-vector summations of active systems of vectors. It replaces such a summation with a zero vector. This is fine for mathematics as an abstract system, but it is in error when applied to real electromagnetic force fields of nature.

In the abstract mathematics, a vector zero summation is made the "absence of all finite vectors". Further, all vector zeros are made equal. No concept of the "internal stress" of the zero vector exists in abstract vector mathematics.

However, physically the zero summation or "balancing" of vector forces in a medium represents stress in that medium. In the physical case, a vector zero summation system of non-zero vectors has a dynamic substructure, and this substructure is an individual.

Obviously, in the physical case vector zero summations may materially differ, both in the pattern of stress and the magnitude of stress. They cannot all be equated. Further, they are not the absence of vectors, but represent the presence of vectors in a special manner. Such a zero summation of EM vector forces directly stresses the "medium" - which may be the vacuum itself.

In the physical case, several changes to the axioms of abstract vector mathematics are required. (1) the "potential" of a vector zero must be taken into account, such as is represented by the sum of the squares of the magnitudes of its vector components. (2) the specific deterministic pattern of the vector components comprising the zero must be taken into account. (3) The dynamic

variation in both the deterministic directions and deterministic magnitudes of the components and of the overall pattern must be taken into account. (4) Frequencies of the changes in the direction, magnitude, and actual makeup of the vector zero must now be accounted for. That is, time and wavelengths are rigorously aspects of the vector zero, and these may be deterministic variables. Since time itself is now a variable aspect of the vector, the vector zero system can affect its "rate of time flow" in the observer's system. (5) Since a "reference vector zero" can be established at any point of a vector magnitude, then individual vectors themselves may have dynamic substructures inside a special "zero reference" in and on the vector. The patterned potential of a vector is a reality.

This leads to a system of "vectors nested inside vectors" ad infinitum. In other words, it leads to an infinite-dimensional system, and the "opening" of every finite closed vector system through its vector zeroes.

For application to physical electrogravitational systems, at least 5 dimensions are required, four of space and one of time.

Here we still are considering only a special case where all vector zero summations represent EM force field energy locked in a gravitational potential, or gravitational force field energy locked inside the EM potentials. That is, we are prescribing a system where the only intertranslation of energy is among mass, EM field, gravitational field, and vacuum virtual energy (anenergy).

(See T. E. Bearden Toward a New Electromagnetics: Part III: Clarifying the Vector Concept, Cheniere Press, Santa Barbara, Ca. www.cheniere.org, 1983; Part 4: Vectors and Mechanisms Clarified, 1983. See also E. T. Whittaker, Proc. Lond. Math. Soc. 1, 367, 1903; Robert Bruce Lindsay and Henry Margenau, Foundations of Physics, Dover, New York, 1963, p. 283-287; Richard P. Feynman et al, The Feynman Lectures on Physics, Addison-Wesley, New York, **Vol.** I, p.2-4.).

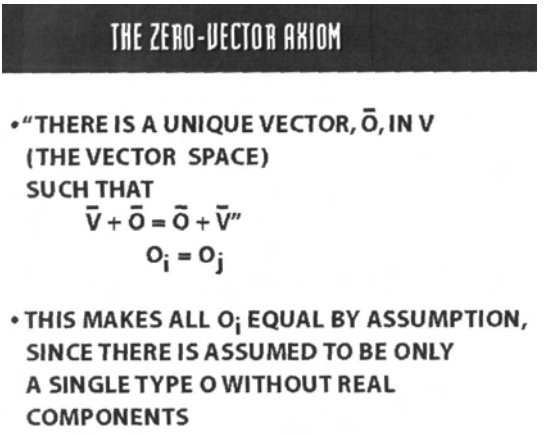

Slide 009: The Zero-Vector Axiom

This slide shows a standard mathematical statement of the zero-vector axiom, used in many texts.

As can be seen, all zero-vectors are made identical, and no substructure is considered.

Such an abstract system of vector mathematics does not fit physical reality. However, when all one's EM foundations concepts are strongly conditioned in this fashion, the gravitational aspects of EM are discarded.

Further, EM theory, experiments, and equipments will be developed along these limiting lines. In that case, EM engineering of gravitational effects will not be developed. One will assume that it is impossible to have a locally curved spacetime, and hence all local frames will be Lorentz frames. Therefore the conservation laws will rigorously apply.

Further, the nonlocal quantum effects will stay firmly in the microscopic world where they belong. Physical macro-reality will stay stable and predictable in a classical manner.

General relativity (in curved spacetimes) will be restricted to the special case of the local special relativistic (uncurved) spacetime, with only distant perturbations (spacetime curvatures).

The world will stay sane and "normal", and the totally variable insanity of physical reality will remain bottled up in the minute microworld or the distant maelstrom of suns, stars, black holes, etc.

The Aharonov-Bohm heresy will stay kaput in the real world and will not be unleashed beyond mesoscopic reality — a few thousand angstroms or so.

With such an error in the application of vector mathematics to physical science, we become "flatland physicists," so to speak. We become like skimmer bugs on the surface of a pond; we have no appreciation of the dynamics of the depths below or of the heavens above.

Worse, we condition our development of instruments according to the fixed notions in our heads. Then we use these "biased" instruments to do experiments that reaffirm our notions. Any deviation suggested to this is considered heresy and nonsense.

And as Max Planck once pointed out, you will get a new physics only when the old physicists — who so adamantly oppose it — die off.

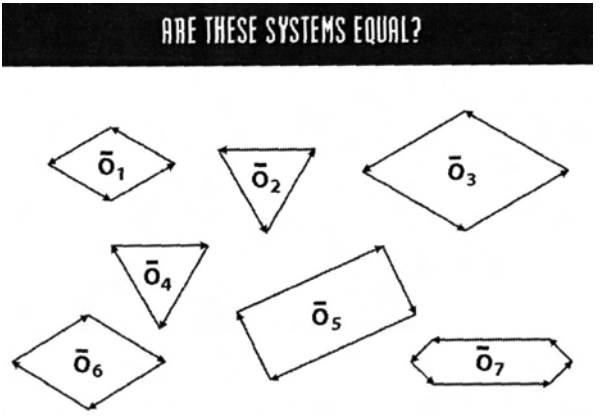

Slide 010: Are These Systems Equal?

Shown here are some representations of various very simple zero-vector systems. As can be seen, the stress magnitudes and the spin and dynamics of all of these systems are very different.

Further, their "stress potential" substructures are not composed of a huge collection of little random force vectors. Instead, their substructures are deterministic. If the components being put into the zeros are varied in direction and magnitude, but always sum to a zero resultant, then highly complex substructure dynamics may be created and utilized, infolded (Bohm's term) inside the zero vector.

In theory one can establish "channels" of communication and power (magnitude) transmission without ever surfacing a nonzero EM force field. In practice one can do this with very little EM spillout. Thus one can establish electrogravitational channels and energy transmission inside normal EM potentials and/or ordinary EM carrier waves.

One can use a conventional system of EM potentials, force fields, and waves as a special kind of "wiring circuit" in and through which to transmit and produce electrogravitational effects. By distant interference, EM effects at a great distance can be accomplished, yet no "ordinary EM energy" has passed between the transmitters and the distant interference zone.

INFOLDED SYSTEMS ARE EXCLUDED BY PHYSICS

DYNAMIC ZERO-VECTOR SYSTEMS ARE NOT CONSIDERED IN ORDINARY GENERAL RELATIVITY, CLASSICAL ELECTROMAGNETICS, OR QUANTUM MECHANICS.

Slide 011: Infolded Systems are Excluded by Physics

Unfortunately, these infolded dynamic zero-vector systems have been eliminated from physics.

They are omitted in classical EM, ordinary general relativity (OGR), and quantum mechanics.

That is, they have been omitted in Western physics.

They have not been omitted in secret Soviet weapons labs and weapons development programs.

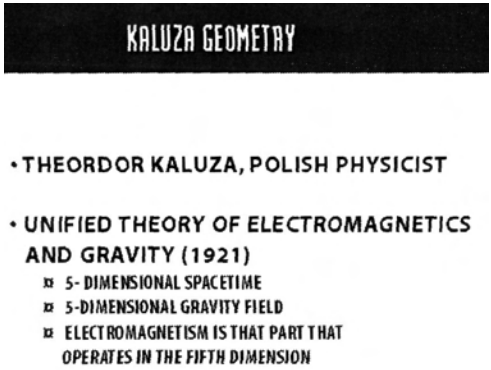

Slide 012: Kaluza Geometry

In 1921, Theordor Kaluza, a Polish physicist, published a unified theory of electromagnetics and gravitation. Albert Einstein, who had had the paper for two years, recommended his paper for publication. In that theory, five dimensions - four space and one time - are utilized in the basic model. This gives a 5-dimensional spacetime.

In the model, electromagnetics and ordinary gravity are two aspects of a single more fundamental field: the 5-space gravity field. Electromagnetism is that part of the 5-field that operates (bleeds-off) in the fifth dimension.

The ordinary 4-space G-field is the small residue that spills over into our ordinary 4-space, and doesn't slide around into the fifth dimension and bleed-off there as electromagnetics.

Implicit in the theory, but not explicitly stated, is the fact that the 5-space G-potential bleeds-off in two fashions: (1) in the 5th dimension nearly unopposed, to produce what we see as EM force fields, and (2) in the ordinary 4-space we live in, which we see as ordinary gravitational field.

Normally almost all the force field bleed-off is in the fifth dimension as EM; only a minuscule bit bleeds off as 4-gravity.

Just as one example, between two electrons the 5-space G-potential bleeds-off into electric force field about 10^{42} times as much as it bleeds-off into 4-space G-field.

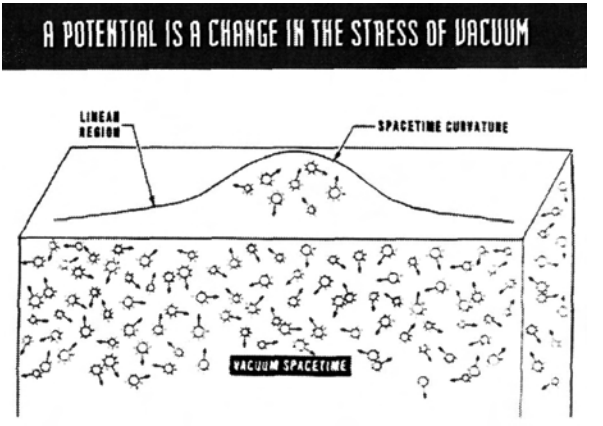

Slide 013: A Potential is a Change in the Stress of Vacuum

In physics, the idea of a "potential" is very poorly defined, if at all. The normal "definition" for the electrostatic scalar potential, for example, is not a definition at all. Instead, it's an abstract operation that tells how to mathematically calculate the magnitude of the potential, by pushing a unit charge in from infinity, against the potential field.

Now ultimately a definition must be an identity statement, not an operational statement about something.

Since I could find hardly anyone who actually understood what a potential was, and how or of what it was composed, I simply took quantum mechanics at face value and constructed this model.

First, the modern view of the vacuum is that it is not an emptiness, but a plenum. It's teeming with an incredible amount of raw energy, existing totally as the temporary bits of energy of virtual particles. That is, the vacuum "energy" exists as the nonintegrated energies of little particles which appear from nothing fare spontaneously created) and disappear into nothing (are spontaneously annihilated) almost instantly. This happens so fast that the little particle and its energy cannot individually be detected; it doesn't hang around long enough.

Hence the fleeting little booger is called a "virtual" particle. Like, "We had 'im there man, for just a moment, but he was gone before we could grab 'im!"

This kind of ghostly particle, however, is very real in modern physics. All observable forces are theorized to be due to the integration or collection of a large number of virtual forces created by exchange of these little particles.

However, this implies a peculiar thing about the vacuum "energy." Actually it's vacuum energies, for each little bit of energy only exists momentarily, then returns to the nothingness from which it came. That is, vacuum virtual energies are totally unintegrated. Each "bit" of virtual energy exists individually. These virtual energies cannot be "added up" to compute the "available energy" unless some collector or integrating mechanism puts them together.

That is, unless some kind of "zipper" is there to "zip them together" into macroscopic, observable energy. The usual "zipper" is a spinning, observable particle of mass. We say that the vacuum energy is unzipped and hence unobservable in that state. We say that "observable energy" is just zipped-together vacuum energies - integrated by and on a spinning, observable particle of mass.

So the vacuum can be visualized as a special sort of violent, unzipped plasma, where the particles of the plasma are fleeting and do not last. We can speak of it also as a sort of special unzipped gas, in the same manner.

The "pressure" of the vacuum gas we refer to as "stress." Due to its violent boiling activity, the vacuum gas is always under very high stress.

This "stressed virtual plasma" identically IS the vacuum and identically IS spacetime. Length, time, frame, mass, etc. - all arise by zipping operations (or understood zipping operations) in and of this raw vacuum/spacetime. When one uses the vacuum notion in this manner, one now uses the term "ether" again. However, this is not the old "thin material ether that hangs around"; this is an entirely new kind. It's a virtual flux and a virtual plasma.

The ether is also what we call "spacetime" in relativity. As can be seen, spacetime is stressed. Further, spacetime has a substructure.

By an uncurved spacetime, we mean one in which the stress of these virtual particles (the "pressure in the ethereal gas," so to speak) is constant from one place to another and from one time to another. Indeed, we also should mean that the stresses of the individual components of the entire plasma are constant from one place to another and from one time to another.

By definition, when we determine the lengths between every two points, we determine a frame. (Actually, we have prescribed a universal "length zipping" operation/mechanism as well as its characteristics.). A "linear frame" or "Lorentz frame" is one in which the pressure or stress remains constant. It may be higher than ambient vacuum, however, due to a particle's or an object's motion through the observer's ether. In the case of constant velocity, the particle/object encounters a higher level of virtual particle flux in the observer's ether, like a vehicle moving through raindrops. It encounters a constant rate of

flux, however. In such constant velocity case, the moving object's frame is said to be "rotated," but not curved, with respect to the laboratory frame of the observer.

In a "curved" spacetime, we mean one in which the stress of vacuum increases or decreases from one place to another, or from one time to another, or both. At one fixed location, if spacetime is curved, then the stress is increasing or decreasing as a function of time. That is, the flux density of that area is changing. We may visualize the local frame as undergoing angular acceleration, rotating more or rotating less. This is a non-Lorentz frame, or curved spacetime. It is also a nonlinear vacuum.

In such a vacuum, local gradients exist in the flux of virtual particles. If affected by (coupled to) one or more of these gradients by a nonzero coefficient, a local object experiences effects (forces and actions) "without observable cause." Observably, conservation laws may be locally violated by these "virtual rivers" of vacuum by coupling, just as a paddlewheel dipped in a river violates its own local "conservation of energy" due to the river providing an energy source to it.

One must be very careful with the "pressure" analogy, however, when one utilizes unified theory (Kaluza theory). We now have a virtual plasma vacuum in five dimensions, not four. But the basic notions to enable our visualization and understanding still apply.

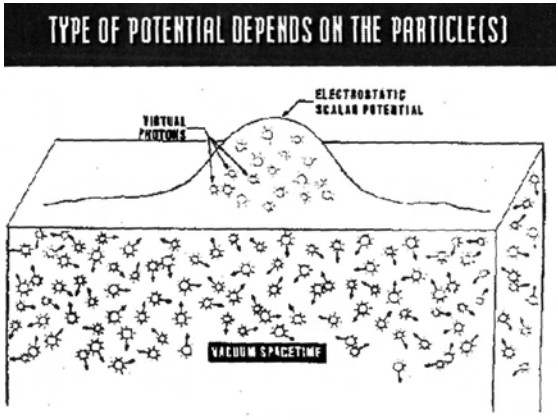

Slide 014: Type of Potential Depends on the Particle(s)

Now one can see that, by choosing the type or class of virtual particle, and looking at its potential or stress in the vacuum, one can have many kinds of "potentials" existing in the overall "gravitational potential" of vacuum spacetime.

For example, the stress of the virtual photon flux (which is what causes electrical charge) is called "electrostatic scalar potential."*

We can choose any other class of virtual particle we wish, and there exists a potential (and "change") for it. There are quark potentials, neutrinic potentials, etc.

Indeed, one of the reasons for ignoring Kaluza unified theory for so long was that it predicts a great many types of potentials and fields which have never been observed and which are unknown. Approximations, which neglected all these mysterious, and unknown fields, gave erroneous results. Perplexed physicists, seeking to simplify matters, simply turned away from it in frustration. They returned to it in the mid-70's when it appeared that 11-dimensional Kaluza-Klein theory possibly offered a complete unified theory.

Actually, the diversity of new fields in Kaluza theory was its strength not its weakness. That they are presently unobservable and undetectable is beside **the** point. Neither is time directly observable; however, we have worked out handy procedures and measurements of spatial quantities, which allow us to infer **time.** We have not just tried to drop it from physics!

And indeed the Kaluza theory is consistent with experiment when the higher fields are included. The message is, we must work out "clocks" for these new potentials and fields, so that they can be inferred with at least some degree of precision

- The character of movement also determines the type of potential. The longitudinal (radial) movement of the virtual photon flux is implied in electrostatic scalar potential. The swirl (tangential) component of this flux might be taken as the magnetostatic scalar potential - a magnetic pole - when the cw and ccw components of the swirl balance, but the sum of their absolute values differs from the sum of the absolute values of the corresponding tangential components in the swirl flux of the local ambient vacuum. If this swirl stress is higher than the vacuum swirl stress, this constitutes a north magnetic pole. If lower, it constitutes a south magnetic pole. If there is a prevalence of direction (cw or ccw) in the swirl (i.e., one component exceeds the other), this corresponds to the magnetic vector potential (the A-field) when the A-field is freed from the magnetic force field (B-field) — i.e., when A-field is freed from its ∇x operator in the equation $\nabla x A = B$. The bleed-off of the excess swirl stress from the north magnetic pole to the deficient swirl stress of the south magnetic pole constitutes the magnetic force field, B — usually referred to simply as the "magnetic field."

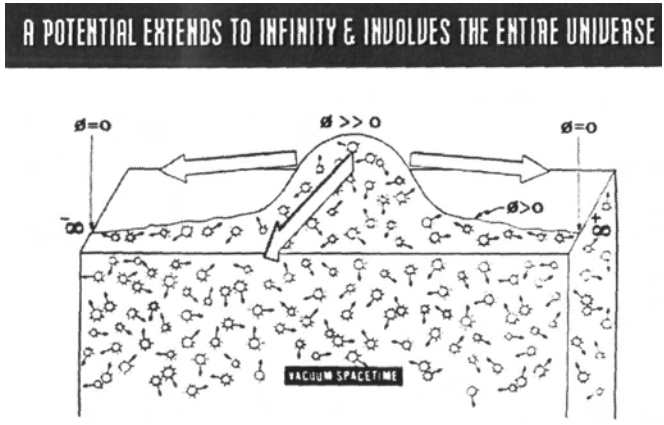

Slide 015: A Potential Extends to Infinity & Involves the Entire Universe

As shown on this slide, the change in the stress of vacuum due to a potential tapers off to infinity. Its magnitude normally does not reduce to zero until infinity.

Some types of potentials reduce much faster or slower than others, however, and so - at some distance away from a common origin of the potentials, one or more may be neglected in its (their) overall effects on an experiment or system.

Also, the speed of propagation of potential is highly dependent upon (1) what type of virtual particle or particles produce its stress, (2) its magnitude, (3) its composition, and (4) the presence or absence of coupling objects and other interacting potentials.

Fundamental observable particles are like little spray pumps and little vacuum cleaners at the same time.

Each is emitting virtual particles into the vacuum in a spray or flux, and at the same time it is absorbing virtual particles from the vacuum spray or flux. It's a little dynamo, and nature furnishes its driving energy unceasingly.

However, each little virtual particle it emits is itself such a little simultaneous pump and vacuum cleaner. That is, it's also emitting an even finer (and faster) flux of smaller virtual particles, and at the same time it's also absorbing flux al this time finer level.

"Bigger fleas have smaller fleas to bite em;

And so on ad infinitum".

We may consider the vacuum to be made of an infinite number of virtual state layers or levels.

It is not too difficult to show that each of these successively deeper, nested "layers" of virtual state corresponds to a successively higher dimension being added to our 4-space basic spacetime. So hyperdimensions and deeper levels of virtual state are one and the same thing.

The basic "speed" of the first layer is c, the speed of light.

The basic "speed" of the second layer is c^2.

And so on.

This is interesting. We may directly engineer the virtual state by means of the vector zero (scalar electromagnetics) approach. By nesting vector zeros inside other vector zeros, we may directly engineer the deeper layers of virtual state, and consequently hyperdimensions.

Scalar electromagnetics thus is virtual state engineering and hyperspatial engineering at one and the same time.

Superluminal communications systems, hyperspace drive, and materialization and dematerialization are all hypothetically possible, using scalar electromagnetics. As the technology develops, we should see the development of many of the systems long thought impossible except in science fiction.

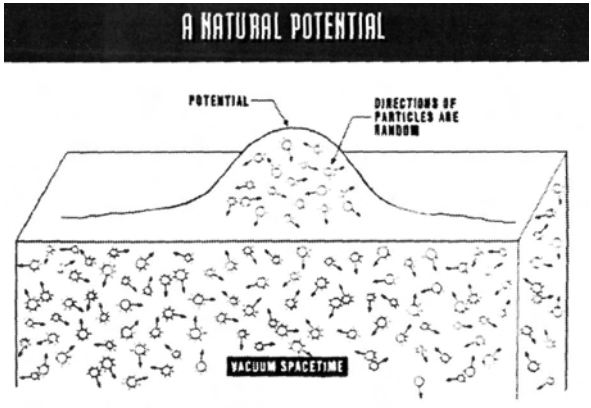

Slide 016: A Natural Potential

There are two broad categories of EM potentials, depending upon the way in which they are formed.

The two categories of potential formation are: (1) natural, and (2) artificial.

The difference is in the virtual particle flux substructure that comprises the potential.

If the substructure of emerging and vanishing virtual particles is random and without deliberate order (polarization) except in one broad, overall sense, then that is a natural potential. As such, there is no deterministic functioning going on inside the substructure of the potential itself. The potential can only act "as a whole" on a charged particle system.

Natural potentials have substructures of random virtual vector components. Any small amount of coherence as a function of distance vanishes quickly (on the order of a few thousand angstroms at most, according to present Aharonov-Bohm experiments).

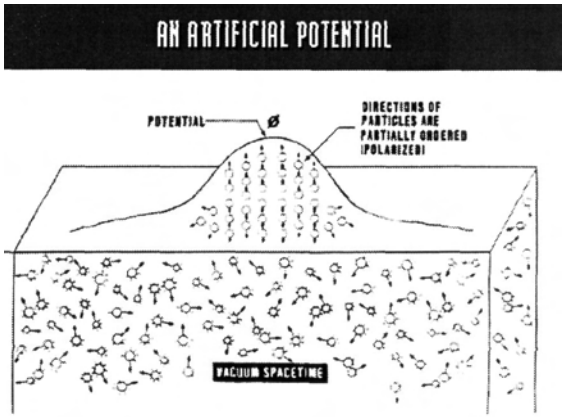

Slide 017: An Artificial Potential

An artificial potential by definition has a substructure composed of deterministic observable vector components, summed to an overall zero vector. Coherence as a function of distance can be maintained over enormous macroscopic distances - even hundreds of thousand of kilometers - by simultaneous transmission of the entire cluster of substructure components as a coherent "zero" group.

To the conventional linear EM detector, at any point along its transmission path, this substructure is detected as a zero-E vector and a zero-H vector. Hence the conventional detector does not see the artificial potential, even if its "stress magnitude" (a function of the magnitudes of all summed components) changes.

Action at a great distance is possible with this artificial potential, however, if a highly nonlinear situation is met so that the phasing of the components is broken or significantly altered. In that case, the components do not sum to zero after their dephasing, and real EM force fields emerge. This "dephasing" can be made to occur at the distant nonlinearity.

Action at a great distance is not possible with the natural potential, but is possible with the artificial potential.

Further, with the transmitted artificial potential, VO must be applied from the transmitter to the distant interruption zone, as if there were no intervening space between.

Note that VO may be positive or negative. Thus energy may emerge at the distant disruption, or be extracted from there. In the first case, energy is input to the transmitter, to re-emerge at the distant dephasing zone. In the latter case, energy is extracted (disappears) from the distant dephasing zone and is received (reappears) back at the transmitter

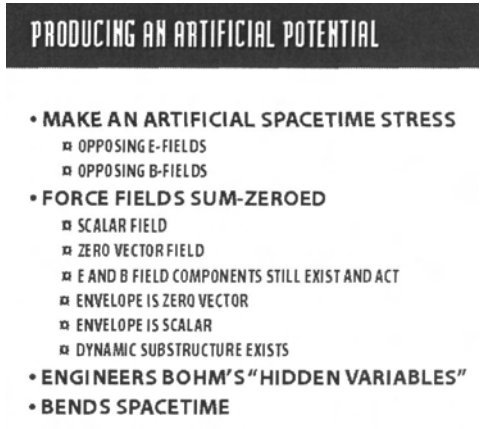

Slide 018: Producing an Artificial Potential

ANartificial potential is deterministically patterned spacetime stress, made by opposing E-fields and/or B-fields so that they sum to vector zeros in a special pattern.

The resulting zero-summed envelope has no EM force field, to an external observer/detector.

However, the infolded E-field and B-field vector components still exist and act. They may dynamically vary, so long as their summation is always kept to zero.

The simplest variation is to vary all their magnitudes at once, by the same degree. In that case, each one comprises an "EM wave." However, the summations of this cluster or "locked group" of waves still exhibit a zero-E and zero-B field to any external observer/detector. In other-words, to an external observer, one now has a varying wave of pure spatiotemporal stress, but one that has a deterministic structure. This is a scalar EM wave, or electrogravitational wave. It is also an alternating current of specific scalar pattern.

Varying the stress of spacetime locally, curves it locally. This violates the conventional assumption of restricted general relativity that local spacetime is uncurved (is a Lorentz frame).

By use of scalar EM waves with deliberate substructures, one can engineer Bohm's "hidden variables" so that quantum mechanics becomes deterministic

rather than statistical. This is a drastic change to the common (Bohr) interpretation of quantum mechanics.

And Einstein's intuition that God does not play dice with the universe turns out to be correct after all.

Since physicists haven't seen where the real game was being played, it has all seemed bewilderingly statistical to them.

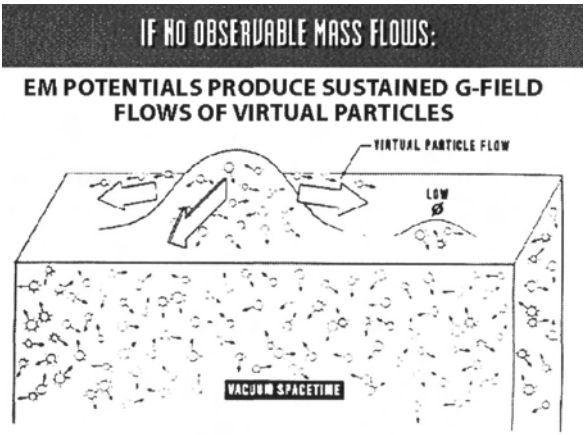

Slide 019: If No Observable Mass Flows:

Since there are no observable mass particles flowing in vacuum, there are no observable force fields produced. Only virtual force fields can be produced in the virtual particle medium that is vacuum itself.

Thus (here is no observable E-field in the vacuum surrounding a charged point. There is, however, a virtual E-field there. When an observable charged particle such as an electron is introduced in the surrounding vacuum and "couples to" (integrates, zips together) the virtual E-field, an observable E-vector force is produced on and of the observable charged particle.

(For the classically trained electrical engineer or electrical physicist, the statement that no E or B fields as such exist in vacuum, is usually bewildering. Let me point out that any so-called "vector field" (such as the assumed E and B vacuum fields) can mathematically be replaced with two scalar fields. See E. T. Whittaker, Proc. Lond. Math. Soc.l, 366, 1903. What we are saying here is that the definition of an E field is in terms of force per unit charged mass. The scalar fields - which are actually what exist in vacuum - provide only a virtual or unzipped E field, until an observable spinning particle couples to both of them by virtue of its "dynamo flux pump" action. The ensemble, then, of two electrostatic scalar potentials coupled to a spinning observable particle, constitutes and is the so-called "E-field.")

When detecting these "vacuum E-fields," it is the free electrons in the electron gas in our probe or antenna which couple to the two "Whittaker scalar fields". These electrons produce ensembles that interact with each other collectively.

Charges in this electron-gas coupled medium is what we actually detect - not "what is in the vacuum."

To repeat this again for emphasis: The usual detector is an "electron-wiggle" detector. It detects changes in its own conduction electron gas, not in the vacuum itself. That is, the disturbance in the virtual-particle vacuum interacts with the observable particles of the electron gas, if (and only if) the spins of these observable particles couple the vacuum disturbance to the electrons and integrate their virtual components. After integration, an observable disturbance of the integrating object - say, the electron - results. It is this electron gas disturbance that is "detected" by almost all orthodox EM detectors.

If the spin of the observable conduction electrons cannot couple the electron to the vacuum flux disturbance, then the normal "simple" detector will not detect the disturbance. (By a "simple" detector we mean one in which the electrons are able to couple to the vacuum disturbance! Little circular definition here!)

Now most potentials reach to infinity before reducing to zero. The change in the virtual particle flux intensity of vacuum - which comprises the potential - decreases with distance from the potential. The magnitude of the change tails off toward zero as one approaches infinity.

To any finite distance, then, there exists a decreased gradient in the change of the virtual flux intensity of vacuum, from a potential. Therefore virtual particles are flowing in the direction of the decrease of this gradient, just as gas molecules flow from a region of high pressure toward a region of lower pressure.

So there is a virtual particle "river" in the vacuum between any two separated points of different potential magnitude. The type of potential determines the type of virtual particle(s) in the river.

If the potential is natural, the gradient river does not carry any coherent substructure.

If the potential is artificial, the gradient river carries the coherent substructure everywhere within it. In this case, there is a flow or "river" of the virtual structure of this coherent pattern in the vacuum between two separated points of different "potential" in that pattern.

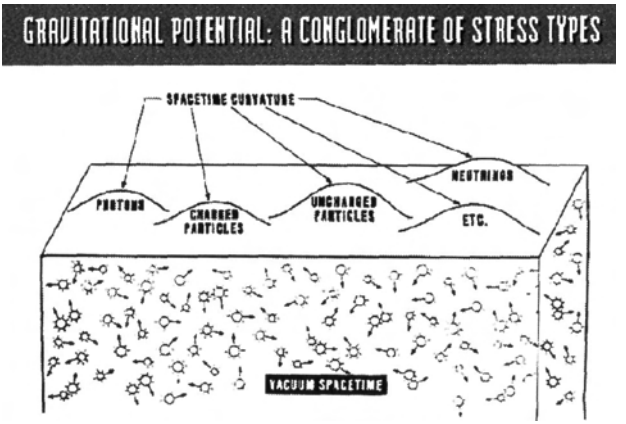

Slide 020: Gravitational Potential: A Conglomerate of Stress Types

Rigorously, all EM potentials are actually part of the overall 5-dimensional gravitational potential.

There is no such thing as "the" singular gravitational potential: instead, it is a conglomerate of different stress types and patterns, each of which is named for the type of action that produces it.

The movement of charged particles, for example, creates electromagnetic potentials. At any point in vacuum, the potential consists of a flux of virtual particles.

The vacuum contains a great variety of particle fluxes. There are virtual photons, virtual electrons, virtual positrons, virtual protons, virtual pions, virtual neutrinos, etc.

The conglomerate stress from all these virtual particle stresses constitutes the overall gravitational potential

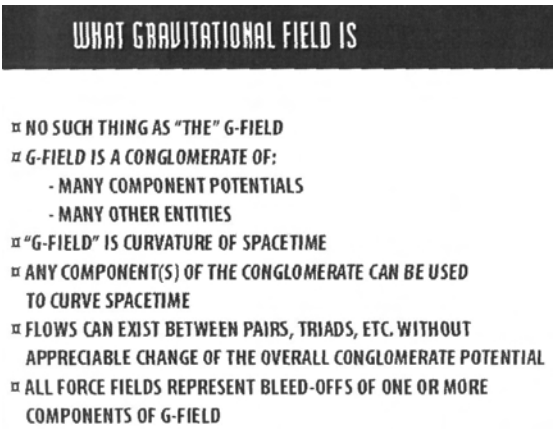

Slide 021: What Gravitational Field Is

As previously stated, there is no such single thing as "the" gravitational field, as is assumed in the Newtonian sense.

G-field is a conglomerate of many component potentials and other entities.

Rigorously, anything that "curves spacetime" is a gravitational field.

In the modern view, all forces ultimately arise, by some means, from the curving of spacetime. Thus all forces and force fields are related to - and caused by, so to speak - gravitational field.

If the vacuum stress is uniform from one place to another in an observer's **frame** then the observer's spacetime is uncurved. The observer's frame, is said to be linear or uncurved; or a Lorentz, frame. In such a situation the conservation laws rigorously apply for macroscopic, closed systems.

If the vacuum stress is not uniform from one place to another, then the spacetime is curved. In such a situation the conservation laws may be violated for macroscopic systems, since they are "opened" to the vacuum stress, and vacuum virtual particle flux gradients exist across the system or portions of it.

Note that the overall stress magnitude may be constant across a region, but its composition may change. That is, two or more components may vary canonically. In that case, the spacetime is uncurved in the gross external sense, but contains specialized "internal" curvature patterns locally. Depending upon

reaction to the canonical infolded curvature patterns, some macroscopic systems will still exhibit conservation, but certain other macroscopic systems may not.

An example is symmetry breaking. Here charge, parity, and time symmetry may be violated individually or in pairs, but not all three simultaneously. An overall conservation law is obeyed, but any two of the three conservation laws can be (und are) violated.

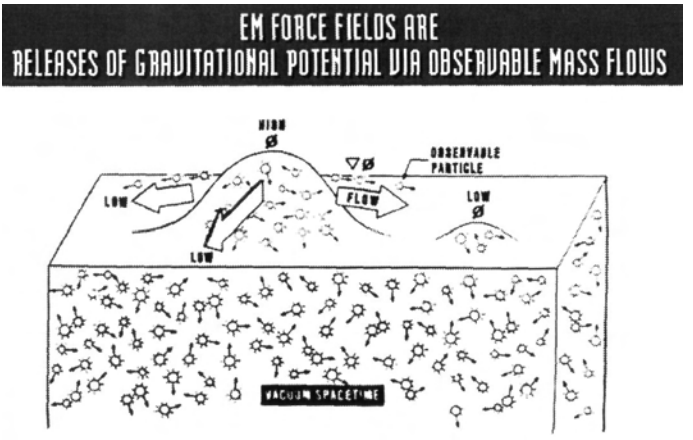

Slide 022: EM Force Fields are Releases of Gravitational Potential via Observable Mass Flows

In Kaluza theory, we may take EM force fields to be the 5th dimensional "bleeding-off" of a 5-G potential. However, in vacuum alone this bleeding-off is totally within the virtual state. That is, only virtual EM force fields exist in vacuum.

By the ordinary term "EM force fields," physics has chosen to imply measureable or observable E and B force fields.

That implies that the 5-G potential gradient flows of virtual particle flux must be coupled to observable charged particles - such as electrons, protons, ions, etc. - before observable E and B force fields exist.

Rigorously, E and B force fields consist of the virtual E and B force fields coupled to observable charged particles. They do not "cause" a particle to accelerate; they are the product of the particle and its acceleration.

As these observable particles are themselves "spray pumps" producing virtual particle flux, then a collection of them represents an increased or decreased **flux** (for negative or positive charge) vis-a-vis the ambient background flux of vacuum. Nature furnishes the continuous power to drive these "virtual flux" pumps.

Normally, EM potentials are formed in natural and manmade electrical circuits by collections of these observable particle "spray pumps." Such collections of

increased or decreased "spray flux" density, of course, represent 5-potentials, gravitationally.

Release of these pumps in conductors or in the vacuum itself results in creating E-fields and B-fields on and of the moving observable charged particles. But release of the observable-particle spray-pumps from the collection (the potential "pressure head" or "source") reduces the potential or "pressure" at the source.

Thus the formation of E and B fields represents the release of the 5-potentials. Hence EM force fields are the bleed-off of 5-dimensional G-potential via observable mass flow.

Since classical EM always seeks to create the force fields, it always bleeds-off and discards the gravitational effects that could be otherwise achieved.

To allow orthodox EM flow is to dissipate the gravitational effects.

Strangle the orthodox EM flows, and you can keep and use the amplified gravitational effects.

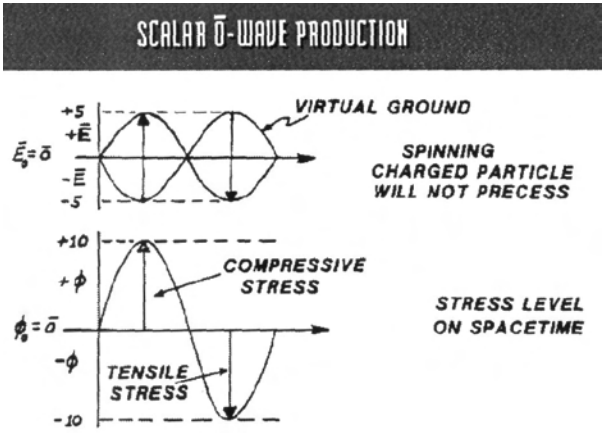

Slide 023: Scalar O-Wave Production

We now visualize the formation of waves of pure stress in the spacetime medium (in the vacuum). These we call scalar EM waves, Tesla waves, electrogravitational waves, longitudinal EM waves, waves of pure potential, electrostatic/magnetostatic waves, and zero-vector EM waves. All these terms are synonymous. Each sheds its own particular light upon the nature of these waves or of their original discoverer, Nikola Tesla.

We use a gedanken experiment, or thought experiment, in which we can be "perfect."

Thus we have two single-frequency EM sine waves whose E-field componenls are shown on the slide. The two waves are of the same frequency, traveling together in the same direction, and superposed 180 degrees out of phase with each other.

In this case, at any spatial point, the summation E and B fields are vector zeros.

However, if we plot the spatiotemporal (vacuum) stress induced by the wave, wo see that it constitutes a sine wave, with compressive stress in one half cycle **and** tensile stress in the second half cycle.

Rigorously this defines a "longitudinal" EM wave - or what Tesla called a "sound wave in the nonmaterial ether."

Also, rigorously it is a gravitational wave, for it is a wave of the curvature of spacetime (nonlinearity of vacuum) itself. That is, what is changing in the wave

is the vacuum stress, or intensity of the virtual particle flux of vacuum. That is identical to changing the curvature of spacetime. In one half-cycle, spacetime is curved positively. In the second half-cycle, spacetime is curved negatively.

Since the increase or decrease of the intensity of virtual particle flux (vis-a-vis the ambient vacuum's virtual flux intensity) represents electrical charge, then in one half-cycle negative charge is represented, and in the other half-cycle positive charge is represented. This directly explains the "positron-electron pair" representation of an electromagnetic photon - the "photon" being one wavelength.

In one half-cycle, time moves slower. In the second half-cycle, time moves faster. Thus scalar waves can also be considered to be "tempic" waves (to use Wilbur Smith's term), or oscillations of the rate of flow of time itself, about the ambient rate of time flow. Since these oscillations are variations in the curvature of spacetime, then they represent gravitational or force-generating waves, when coupled to a mass.

Variations in the rate of flow of time produce force, just as any other type of curvature in space-time does.

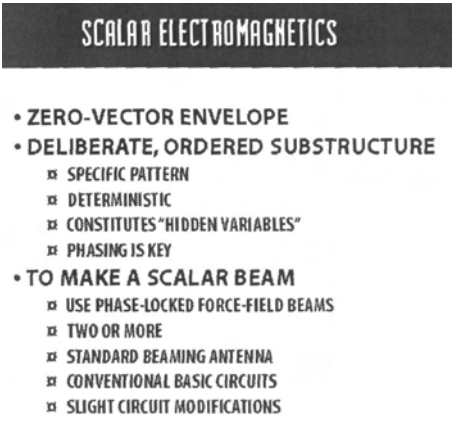

Slide 024: Scalar Electromagnetics

To rehash: scalar waves are zero-vector waves. Patterned E and B fields exist in a relationship where their summation equals vector zero. Electromagnetically, the zero EM "envelope" of a scalar EM wave is composed of a zero-summation of infolded finite EM force-vectors.

However, the internal (infolded) substructure is deliberate, macroscopic, and ordered. Vacuum is polarized deterministically by the wave, and macroscopic spacetime is locally curved by it.

These substructure components constitute Bohm's "hidden variables." They can be manipulated and varied at will. Phasing, beaming, frequency, superposition, interference, resonance, and Fourier expansion are the keys to scalar EM engineering.

To make a scalar beam, special modifications are made to the EM wave transmitter so that, effectively, the transmitter transmits multiple transmissions simultaneously, and these vectorially sum to zero. This is the same thing as transmitting multiple phase-locked EM force-field beams simultaneously, in **the** sum-zeroed fashion.

Standard beaming antennas and conventional circuits can readily be utilized with slight modifications.

Any radar can be converted to a scalar EM radar quite simply. Indeed, a modification kit to accomplish that can be developed and held until the **scalar**

mode is desired. The modification kit can be quickly installed to provide the scalar capability.

Scalar radars, for example, cannot track "corner reflector" targets. However, they can magnificently track smoothly filleted corners; rounded, smoothly curved surfaces; and curved or flat metalized dielectrics. Against aerial targets using special construction to lower their cross-section to normal radars, the application of the scalar radar mode is immediately obvious.

Scalar waves pass through the electron shells of an atom and interact with the nucleus. They are continually absorbed and emitted by all nuclei in the universe.

BACKGROUND FOR THE BRIEFER.

Any large collection of nuclei - such as a star or a planet - is a strong absorber and radiator of scalar wave radiation.

The Sun is a particularly strong source of scalar radiation. This radiation penetrates the Earth deeply, interacting more and more with the deeper layers which, under greater mechanical stress, are more nonlinear. Most of the heat in the molten core of the Earth comes from the dephasing of a portion of this absorbed scalar radiation from the Sun, liberating ordinary EM energy as heat.

The Earth also re-radiates scalar wave radiation back to the Sun. The Sun and Earth are thus coupled into a "scalar" system in equilibrium or near-equilibrium. Each body in the couplet possesses both a feed-forward and a feedback loop.

The Earth also radiates scalar wave radiation to the Moon, and the Moon reradiates scalar radiation back to the Earth. The Earth and Moon also are coupled into a "scalar" system in equilibrium or near-equilibrium. Again, each body in the couplet possesses both a feed-forward and a feedback loop.

The Sun and Moon are correspondingly coupled into a scalar system in equilibrium or near-equilibrium, each with both a feed-forward and a feedback loop.

The Earth, Sun, and Noon thus form a triad-coupled system of special importance to the stability of our existence here on Earth, and the stability of our biosphere.

And so on with all the other planets in the solar system, and combinations thereof.

The solar system is thus a very sensitive scalar-coupled system, with strong subsystems within it.

ADDED FOR THE BRIEFER:

Actually this scalar coupling of the solar system provides a major check on unreslricted use of the large Soviet strategic scalar EM weapon systems. If significant scalar effects are produced on earth in a "pulse" mode, pulsed

disturbance of the earth-sun and earth-moon systems results. Here a danger exists that one or more natural resonances of the coupled system may be excited. If the feedback stimulation of the Sun is not insignificant, for example, large sunspot activity may result sometime thereafter, say in a day or two. If too much or too sharp stimulation occurs on earth, the coupled resonant response from the sun could be disastrous. Indeed, a solar response could be stimulated so that the Sun would violently belch and destroy our biosphere, among other effects. The simplest doomsday stimulation would be for a violent expulsion of Solar EM energy and particles to occur. If this were due to resonance, the expulsion of Solar EM energy and particles would continue during some decay time. In that case, fiery destruction of the earth, strongly indicative of Biblical prophecy, would result. Particularly sensitive are the resonances of the sun-earth, sun-moon, and earth-moon systems.

Note the abnormal influence of the moon on tides - tides of both the tectonic plates and the oceans. One cannot help but point out that, if the earth-moon resonant system were overstimulated, one might expect violent earthquakes of extraordinary magnitude, and tremendous tidal waves hundreds of feet in height. (The potential connection to legends of earth-destroying floods, evidences of extreme water levels in mountains, and legends of ancient cataclysmic destruction of supposedly advanced technological oceanic cultures is obvious.)

Accordingly, use of huge scalar EM weapons is a double-edged sword. Unless carefully employed, use of the weapons could cause a terrible backlash to the user as well as the victim, and even accidentally cause the destruction of the earth itself. It is not accidental that in 1960 Khrushchev stated that his new fantastic weapon could - if unrestrainedly used - destroy all life on earth.

This appalling backlash potential is apparently what prompted Brezhnev in 1975 to make so strong an effort to get agreement to outlaw the development of "new weapons of mass destruction" more frightful than the mind of man had even dreamed of. Gromyko even introduced such a draft agreement into the proceedings of the United Nations. The first article of the draft agreement indicated that the nature of the weapons referred to would be negotiated. Sadly, the entire Western world did not even know what the Russians were talking about.

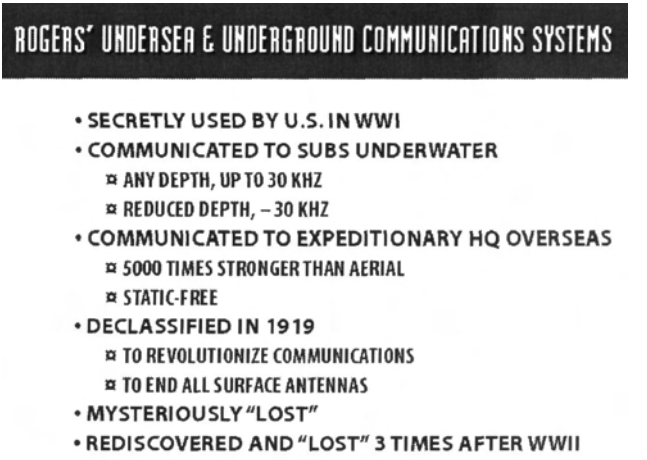

Slide 025: Rogers' Undersea & Underground Communications Systems

In an article in the March 1919 issue of the Electrical Experimenter, a real bombshell was released on an unsuspecting world.

In that issue, details of the Rogers'undersea and underground communication systems were released. These systems had been classified SECRET during WWI, and used to communicate with (1) U.S. submarines underwater around the world, and (2) U.S. Expeditionary Forces Headquarters overseas.

Subs at any submerged depth could be reached with transmitters of frequencies up to 30 kiloHertz. At reduced depths, frequencies above 30 kHz could be used.

At the headquarters of U.S. overseas forces, the signals were received through the earth. They were 5,000 times stronger than aerial signals through the atmosphere, and static-free.

The Rogers' systems were covered by a series of patents. They used special antennas implanted in the ground.

While the patents are somewhat confused, several of the diagrams in the Electrical Experimenter reveal that the antennas were producing scalar waves. Scalar waves can indeed travel through the earth and through the ocean. Indeed, if good quality scalar waves are made, then frequencies well above 30 kHz can be sent through the ocean. Multi-megahertz frequencies, for example, are easily achievable. (The problem, of course, is that these waves are pure zero-vector

artificial potentials that do not move electrons in the conduction gas of a conventional antenna/receiver combination. Normal receivers and detectors do not see them. Special underwater detectors - such as those developed by Frank Golden - are required.).

With the startling declassification and revelation of the Rogers' systems, it was expected that all communications would be revolutionized, and that all surface antennas would be removed.

Strangely, this entire technology faded away quickly, as if it had never been. Certain powerful interests did not wish the extended electromagnetics to be discovered or taught. That, after all, would lead to free energy and loss of economic control of the citizens. That was precisely why Nikola Tesla had already been suppressed.

According to the important research of Dr. Robert Beck, the same scalar technology has been rediscovered and mysteriously "lost" at least three times after World War II!

Today the orthodox establishment is still suppressing it.

One wonders why no orthodox physicist - with the single exception of Dr. Hooper (see U.S. patents 3,610,971, Oct. 5, 1971 and 3,656,013, Apr. 11, 1972) - seems to have experimented with deliberately constructed zero-vector EM waves and devices, and published his results in the literature.

One would think that any university physics department would wish to explore such a gaping void with at least a few graduate student experiments, if for no other reason than scientific curiosity, particularly when the experiment is easily performed, it is totally different from anything else in the theory or literature, and the implications may be formidable. A true scientist in that related field ought to try it!

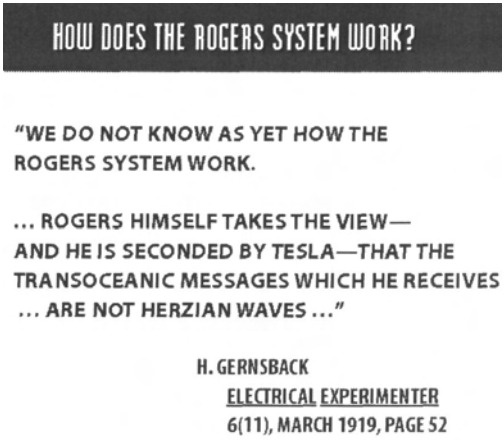

Slide 026: How does the Rogers System Work?

In the same March 1919 issue of Electrical Experimenter, Hugo Gernsback pointed out that no one as yet knew how the Rogers' system actually worked.

Rogers himself believed he was not using conventional Hertzian waves.

Nikola Tesla himself confirmed that the underground and undersea waves were not Hertzian waves.

If so, they could only have been scalar waves.

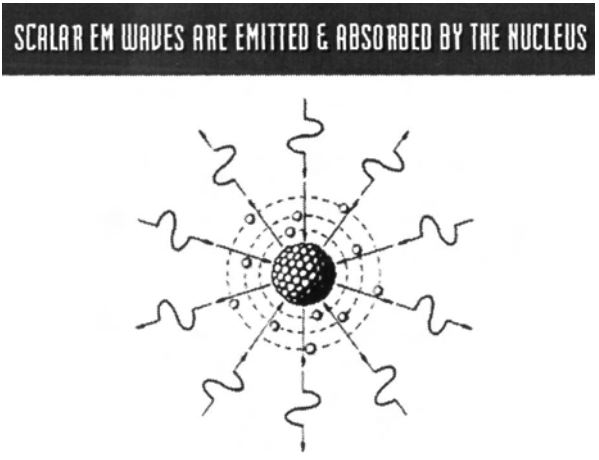

Slide 027: Scalar EM Waves are Emitted & Absorbed by the Nucleus

Normally scalar EM waves do not couple to orbital electrons. Entering into the atom, incoming scalar EM waves penetrate the electron shells without interaction. They continue, penetrating into the interior of the closely packed nucleus, where the extreme nonlinearity of the charged virtual particle flux that binds the nucleons together distorts the scalar wave, dephasing its summed EM vector components. This produces a nonzero EM resultant and polarized pattern directly inside the virtual particle charge flux of the nucleus.

The new EM resultant immediately couples the distorted scalar wave to the nucleus, resulting in absorption of the wave and incorporation of its polarization pattern into the nucleus' virtual flux. This in turn results in a slightly excited nucleus. Normally the excited nucleus will promptly decay by emitting another scalar wave, which passes through the orbital electron shells and radiates out into the universe.

However, as can be seen, if the same strong scalar pattern is constantly radiated into the nucleus and absorbed by it, the excitation of the nucleus "charges up," leading to decay by other modes. In this manner the nucleus can be engineered even transmuted - by rather minuscule power of the engineering radiation signal.

This is how living biological systems are able to transmute elements, as discovered by Louis Kervran. (Kervran was nominated for the 1977 Nobel Prize

for this work.). The biosystem produces scalar EM waves. If the appropriate signal is employed into and on the appropriate nucleus, a changed element emerges. In this fashion chickens denied sufficient calcium in their diet, but allowed a surplus of potassium, are able to transmute some of the potassium into calcium. Note that one of the isotopes of potassium is an isomer of normal calcium. Transmutation of this potassium isomer to calcium is easiest.

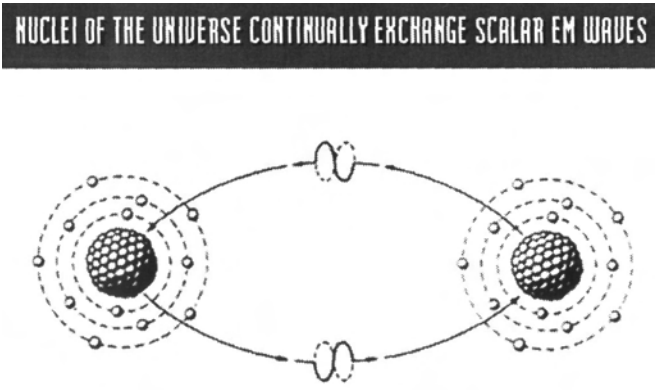

Slide 028: Nuclei of the Universe Continually Exchange Scalar EM Waves

Thus scalar EM waves are continually exchanged by all nuclei of the universe, and the vacuum is - among other things - a seething cauldron of scalar radiation.

In fact, it is this seething scalar wave cauldron that creates the virtual particles and the virtual particle flux of vacuum itself. (Since the scalar EM wave represents an oscillation of the curvature of spacetime, and since everything - virtual or observable - is a curvature of spacetime, then scalar waves can be taken as the universal generatrix.

The intensity of the trapped scalar flux in the nucleus of an atom is responsible for the mass and inertia of the nucleus.

Mass is localized trapped scalar resonance.

The trapping agent is the spin of a particle.

The mass and inertia of the particle are due to the scalar resonance that is trapped. Increasing the amplitude of the trapped scalar resonance increases the mass and inertia; decreasing the amplitude decreases the mass and inertia.

CONVERTING EM FIELD ENERGY TO G-FIELD ENERGY & VICE-VERSA

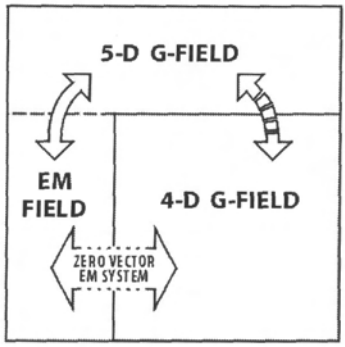

Slide 029: Converting EM Field Energy to G-Field Energy & Vice-Versa

According to Kaluza theory, there are no such things as a separate EM field and a separate gravity field. Instead, in five dimensions there is only one field: the 5-d gravitational field. The EM field is the 5th dimensional aspect, while our **normal** 4-dimensional G-field is the other aspect of the 5-field, in our normal 4-space.

Thus we may say that the 5-field is composed of two components: the 5th dimensional component (our normal EM field) and the component occupying **our** normal 4 dimensions (our normal G-field).

The 5-d "force" field, of course - or the 5-space analogy to a force field - would be due to a gradient or "bleed-off of the 5-d gravitational potential. This gradient in turn is composed of two components: the 5th dimensional "bleed-off" outside our normal 4-space (this outer bleed-off is our normal EM force **field**) and the bleed-off inside our normal 4-space (this inner bleed-off is our normal G-field).

Normally the 5-potential bleeds-off outside our 4-space as EM field, far greater than it bleeds-off inside our world as G-field. Between two electrons, for example, the electric field is about 10^{42} times as strong as the G-field. Since in the Kaluza view there is only one 5-d G-potential that is causing both force fields, this shows that there is an incredibly greater EM bleed-off of the 5-

potential between the two electrons than there is a G-field bleed-off between them.

As shown on the diagram, the 5-d G-field is normally comprised almost entirely of the 5th dimensional EM field. Only a small 4-space G-field component exists.

However, suppose we were to "block" the bleed-off of the 5-potential in the EM mode. Then none of the 5-potential could bleed-off in the 5th dimensional EM field. Instead, it would be forced to bleed-off into the 4-space G-field. In our two-electron example, this "perfect case" would result in the disappearance of the E-field between the two electrons, and the G-field between them would increase to about 10^{42} times its normal strength.

The end result would be that, by blocking the EM force field bleed-off, EM field is converted to G-field. In addition, EM field energy is converted to G-field energy. With the extremely amplified gravitational and inertial effects that result, one can now accomplish direct engineering of gravitation, mass, and inertial effects.

We can effectively accomplish this "blocking the EM bleed-off by opposing EM force fields so that they sum to vector zero. This is the same as summing various 5th dimensional gradients of the 5-potential to a zero vector resultant. In that case, as much "EM bleed-back to 5-potential" occurs as there is "EM bleed-off from 5-potential." This places the 5-potential in equilibrium with respect to EM bleed-off.

Also, another nice thing results: Since we can readily vary the magnitudes of the EM force field components of the vector zero summation, we can actually form phased "zero vector waves" by increasing and decreasing the magnitudes of all the component EM vectors in phase, but retaining their vector summation always equal to zero.

In that case we have produced a very simple 5-space G-potential wave, which concomitantly forces phase-locked variations in the 4-space G-potential. In short, we have produced an electrogravitational (EG) wave, or scalar EM wave for short. This wave described is the simplest EG scalar wave we can produce; much more complex EG waves can be produced and used for highly **specialized** purposes.

The scalar EG wave changes EG potential energy into 4-gravity potential energy in one half-cycle, and changes 4-G potential energy into EG potential energy in the other half-cycle. However, the EG potential energy in the first half-cycle does not react electromagnetically in linear circumstances, since it is electromagnetically a linear vector zero.

So our scalar EG wave actually oscillates energy back and forth between a locked-in 5th dimensional EM potential and a 4-space G-potential. As can be seen, to the linear 4-space observer this scalar EG wave appears as a purely gravitational wave, with G-potential magnitude varying in a wavelike manner.

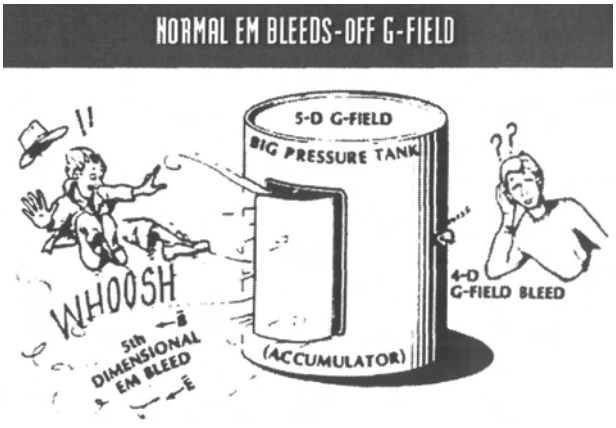

Slide 030: Normal EM Bleeds-Off G-Field

For easy visualization, we may regard the situation in the analogy shown on the slide.

The 5-potential of 5-space vacuum is like a high pressure in a big tank. The tank has a huge open door in the 5th dimension, leading to rapid bleed-off of the 5-presure through the big door; that is, as EM field. Only a very small hole in the tank normally exists in our own 4-space world, so only a very small amount of the pressure bleeds off as our G-field.

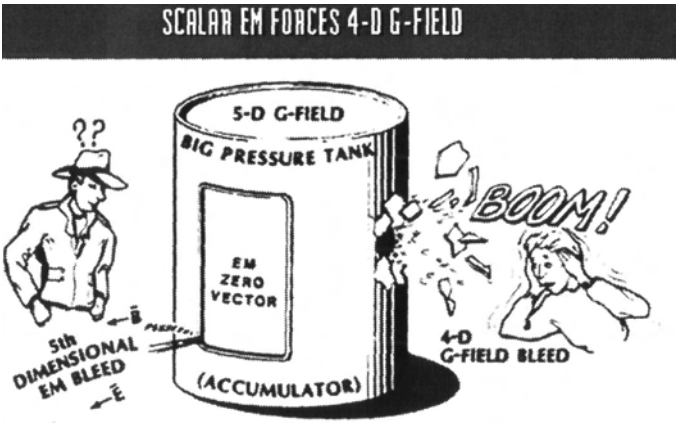

Slide 031: Scalar EM Forces 4-D G-Field

As can be seen however, if we shut the big door so that we have only a little bleed-off through the seals, then most of the pressure is forced to bleed-off through the small opening, greatly enlarging it. In that case, most of the 5-potential bleeds-off as 4-G force field.

The mass exposed to such increased 4-G bleed-off exhibits a much greater mass and inertia.

In fact, mass itself can act as an accumulator for the effect, and it can increase its ability to store trapped scalar resonance. This increases its inertia.

By the use of scalar EM (blocking the EM bleed-off), we can input normal EM energy and obtain powerful gravitational and inertial effects. Many other powerful effects can also be obtained.

DETECTION OF ELECTRO-GRAVITATION

- WHEN ORDINARY EM FORCE FIELDS ARE INTERFERED/SUMMED TO PRODUCE ZERO, AND ARE ALSO LOCKED TOGETHER, THEY PRODUCE STRESS OF VACUUM (GRAVITATIONAL POTENTIAL OF FIELD). THIS IS ELECTRO-GRAVITY.
- WHEN ELECTRO-GRAVITATIONAL FIELDS ARE INTERFERED/SUMMED TO PRODUCE ZERO, AND ARE LOCKED TOGETHER, THEY PRODUCE ORDINARY ELECTRO-MAGNETIC FORCE.

Slide 032: Detection of Electro-Gravitation

Here arc two magic rules in the scalar electrogravitational business:

(1) When ordinary EM force fields are interfered or summed so that they produce vector zero, and the fields are locked together, they produce stress of vacuum (5-potential). One component of this 5-potential is the 4-space G-potential. Since bleed-off as a gradient of this 4-space G-potential is all that is allowed, then the EM destructive interference/zero summation bleeds-off to produce gravitational force field. This is because opposing equal forces, which sum to a vector zero force field resultant, actually produce a stress potential having stress energy of spacetime. And that is a curvature of spacetime, hence gravitational.

In short, total destructive interference of EM waves or force fields produces excess stress potential energy in spacetime, and therefore gravitational force field on detecting/coupled particles.

(2) When electrogravitational fields are interfered/summed to produce vector zero, this destructive interference/zero summation bleeds-off to produce ordinary electromagnetic force field.

In short, destructive interference of scalar EM waves or fields (electrogravitational waves or fields) produces electromagnetic force fields on detecting/coupled particles.

BACKGROUND FOR THE BRIEFER:

Mathematically we can summarize this as follows;

$$G_{(1-4)} = G_{(1-4)}(m) + G_{(1-4)}(EM) \quad [3]$$

$$G_{(1-5)} = G_5 + G_{(1-4)} \quad [4]$$

If $\mathbf{E} = \Sigma \mathring{\mathbf{a}}_i E_i = \mathbf{0},\ E_i \neq \mathbf{0};\ \mathbf{B} = \Sigma \mathring{\mathbf{a}}_i B_i = \mathbf{0},\ B_i \neq \mathbf{0}$ [5]

then $G_{(1-4)}(m) = G_{(1-4)}(EM) = G_5 = G_{(1-5)}$ [6]

and $G_5 = G_{(1-4)} = f[\Sigma(\mathring{\mathbf{a}}_i\, |\mathbf{E}_i|^2)] + g[\Sigma(\mathring{\mathbf{a}}_i\, |\mathbf{B}_i|^2)]$ [7]

and $G_{(1-5)} = G_5 = G_{(1-4)}(m) = G_{(1-4)}(EM) = f(\phi) + g(\mathbf{A})$ [8]

Where:

$G_{(1-5)}$ is the 5-d G potential, or total G-stress on dimensions 1-5.

G_5 is the combined EM potential, or G-stress on dimension 5 only.

$G_{(1-4)}(m)$ is the normal 4-d G-potential of mass alone, or the G-stress due to mass-gravity.

$G_{(1-4)}(EM)$ is any extra 4-d G-potential of mass due to conversion from G_5 stress (normally zero).

E and B are the electric and magnetic force fields.

ϕ is the electrostatic scalar potential.

A is the magnetic vector potential.

Thus the age-old scientific dream of direct engineering of gravitational field — and of spacetime itself — can now become reality. To start, one simply makes an intense EM vector zero and varies its stress intensity and internal pattern of summed components. One also varies the reference potential at which the patterned EM stress zero is created, and the frequency of internal component variation.

BACKGROUND FOR THE BRIEFER.

He that has ears, let him hear.

Here is the secret of antigravity

The "electrical charge" of a charged particle — such as one of the orbital electrons of an atom or one of the protons of its nucleus — represents a difference in flux intensity (potential) between the local particle and its ambient vacuum.

It's the continual bleed-off of gravitational charge as electrical charge.

If that bleed-off is reversed or stopped, a drastic effect on the gravitational potential and charge ensues. The 5-potential and 5-charge have become 4-G-potential and 4-d-charge respectively.

Thus "charging" an object with its scalar EM pattern charges it gravitationally.

Now the only "bleed-off channel" is through the 4-G force field.

Further, in a nucleus the nucleons continually change back and forth between proton and neutron, so the electrical charge is "spread" throughout the nucleus and shared by all the nucleons.

Further, each element (actually each isotope) has its own unique "ensemble pattern" of Fourier expansion scalar frequencies, amplitudes, etc. This pattern, of course, can be reproduced artificially and transmitted by modified EM transmitters (i.e., by scalar EM transmitters). There is, however, a sort of "master key" scalar EM (EG) pattern for nucleons (protons and neutrons which are changing back and forth into each other by exchange of virtual charge currents).

If one "reverses the charge" by inverting this pattern, and then "charges up a mass with the inverted charge," to the external observer the charging mass just gets lighter and lighter, and its inertia gets less and less. Eventually it seems (to him) to acquire negative mass and negative inertia, and just accelerate away from the earth. The object "falls upward" instead of "falling downwards."

There are also some weird time effects. The object can be moving slower through time than the laboratory observer, or even be moving backwards through time with respect to the laboratory observer. (Don't believe everything they laught you in relativity; none of those professors had ever engineered a single general relativistic situation. Little that they teach in GR is based on direct experimcnt. Most of what they teach is already experimentally proven to be incomplete or in need of further extension.).

But back to our slide.

Inside the pattern itself, it's just a quite normal pattern. No change in or on the object seems to have occurred, to it, if the charge is evenly accomplished throughout the object. Indeed, to an internal observer it's the external environment that seems to have suddenly gotten very strange! This is what occasionally happens to a haplessaircraft or ship that experiences anomalous spatiotemporal difficulty in an *occasionally scalar-active* area such as the Bermuda triangle. Under the right conditions, the vehicle's gravitational charge is affected by anomalous changes in the scalar radiation from the earth in that area. To the passengers and crew, it is the external environment that suddenly seems weird. In addition, on-board EM and inertial instruments may be affected, and other electrogravitational effects may also occur, due to differing rates of charge in different parts of the vehicle.).

"Reversing or lowering the EG-charge" is controlled by means of biasing the ground potential on the ensemble pattern transmitters. These transmitters can even be on-board the vehicle itself. (Remember, in scalar EM to transmit is also to receive. A vehicle can change its own bias potential (with respect to local vacuum G-potential) by properly transmitting, which translates to "receiving potential charge." The charge current can either be negative or positive (its potential can be lowered or increased vis-a-vis that of the vacuum.) Think of this as handling positive and negative energy, which means positive and negative gravity.

By "fiddling" with this, you can float metal. Or a human body. Or a battleship. Or a high-speed vehicle containing a crew.

You can even "dematerialize it" or "teleport it."

The Philadelphia Experiment may have been real after all. If so, the test ship and its personnel were "blasted" into this strange realm, instead of making a gentle, controlled entry.

Suppose you materially lower or reverse (adjust) the gravitational charge (gravitation 5-potential with zero-summed EM to throttle EM bleed-off). At zero gravitational charge, to the external observer, such an assumed vehicle would seem to have no mass and no inertia. It is capable of extreme accelerations, right angle turns at full speed, etc. It is also right on the point of dematerialization, and may appear to be glowing or just a vehicle of light.

If the pilot wishes to "land," of course he must adjust the charge on the vehicle.

If the pilot wishes to "dematerialize" or "teleport," again he must adjust the charge on the vehicle.

If he wishes to go "hyperspatial," again he must adjust the charge on the vehicle and allow the proper bleed-off to produce a hyperspatial force. That's done with nested zero summations and nested patterns of scalar EM transmission.

That is, he can charge and bias the vehicle in multiple, nested zero-summations simultaneously.

That is necessary for hyperspatial control and travel.

Note that in lower hyperspace such a vehicle could do some very strange things. Such as "penetrate" solid matter (actually, it goes "around" the 3-space matter in a 4th Kaluza-Klein space).

We might expect to see such vehicles glowing. Their various surface features and mechanisms might appear to be glowing or revolving lights, etc.

They could exhibit incredible "aerodynamic performance," seemingly in the atmosphere. Actually they would not be moving "through" the atmosphere at all but through a higher space outside each particle of atmosphere.

They could seem to materialize and dematerialize.

They could seem to plunge into the ocean or rise out of it.

They could even seem to operate under the ocean or inside the earth itself.

Such anomalous vehicle performances have been seen all over the world, particularly since a few years after WWII.

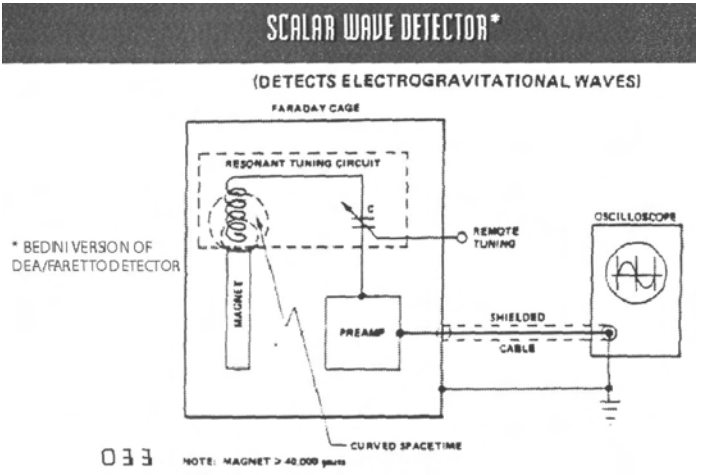

Slide 033: Scalar Wave Detector

On this slide we show a concept for a detector for scalar EG waves. This is the Bedini scalar wave detector, adapted from an original concept by Dea and Faretto.

The idea is quite simple: install a very powerful bar magnet vertically inside a grounded Faraday cage. Then install an open-ended coil longitudinally above the magnet so that a line through the longitudinal axis of the magnet passes through the longitudinal axis of the coil above it. The open end of the coil does not touch the magnet.

Connect the other end of the coil to a variable tuning capacitor, so that the coil and capacitor form a tunable, series-LC-oscillatory circuit. The output of the capacitor is connected to a transistorized preamplifier inside the cage. A tuning shaft for the capacitor is very carefully passed through a small hole in the shield to allow tuning from outside.

The output of the preamp passes very carefully through a small hole in the shield, through a shielded cable, to an adjacent oscilloscope. The cable shield in also grounded to reference ground potential.

The theory is as follows: Suppose a normal EM wave appears inside the cage, above the magnet or closely adjacent thereto. In that case a coupled **oscillation** appears in the field of the magnet, and this oscillation is coupled to the coil immediately above it. If the oscillation is within the bandwidth of the tuned

scries LC circuit, detection occurs. This is amplified by the preamp and passed to the oscilloscope, where it is displayed on the scope.

Note that the detector detects normal EM wave. Now our problem is: how do we get an EG wave to be detected? And how do we assure that we do not detect ordinary EM waves from outside?

Actually this is simple. Ordinary waves (except for quite low frequency) will be grounded out by the Faraday shield, and will not penetrate the cage. Thus these normal EM waves cannot enter the cage and appear above the magnet. They will not be detected.

Scalar EG waves, on the other hand, will enter the cage since they do not couple to conduction electrons in the metal of the cage. Above the pole of the magnet, spacetime is locally bent. After all, a pole is a magnetostatic scalar potential, which is a part of the conglomerate called "G-potential." The pole represents an increase (or decrease, depending upon whether it is a north or a south pole) in the magnetostatic component of the local G-potential. This is a curvature of spacetime. An EG wave entering this region adds a varying component of magnetostatic G-potential, which bleeds-off in the coil as an ordinary EM wave.

Another way to view the detector is to model the EG wave as a longitudinal wave, and an ordinary EM wave as a transverse wave. When the EG wave enters the curved spacetime region above the magnet, to the coil (the "observer" in this case) the longitudinal aspect of the EG wave appears to be rotating back and forth, so that an oscillating transverse component is present. This transverse component appears to the coil as an ordinary EM field, and so the LC circuit detects it if it is in the proper frequency band.

Yet another way to view the situation is to realize that an EG wave entering the magnet results in an oscillation component added to the magnetostatic scalar potential (pole strength) of the magnet. Accordingly, the magnet is a receiver for scalar waves, which are detected to "bleed-off as an oscillation of the magnetic field strength of the magnet. Coupling of this oscillating magnetic field to the coil creates an oscillating current flow into the capacitor. This oscillates the voltage input to the preamp, which amplifies and feeds the signal to the oscilloscope for display.

In fact rather like the latter view! It is important to remember that a magnetostatic potential and an electrostatic potential can be oscillated by a scalar EG wave. By placing a magnetic material inside a Faraday cage, the oscillation of the magnetostatic scalar potential (pole strength of the magnet) can be used as the EG detecting mechanism. By placing a chargeable material inside a Faraday cage, the oscillation of the electrostatic scalar potential can be detected. (Possible examples of the latter type detectors are given by Hodowanec, Radio Electronics, April 1986.)

Note also that one may detect waves at one reference level and not at another. Changing the bias on the zero-reference ground of the Bedini detector affects the detection. To look inside a normal EM carrier (such as the Woodpecker) and see what scalar signals are riding upon it, the carrier may be used to bias the reference ground of the Bedini detector.

To produce a spectrum analyzer, simply use additional series resonant LC tuning circuits in parallel (put multiple taps on the coil, and wire each tap to a separate tuning capacitor of different capacitance). Again, varying the zero reference level is important, as is varying the strength of the magnet.

Golden also has invented an excellent series of scalar wave detectors based upon quite different proprietary principles.

The bottom line is: we can indeed rigorously detect and measure scalar EG waves. When one considers the large sums of money presently being spent to bury large aluminum cylinders etc. in an attempt to detect gravitational waves, one wonders why some funds could not be released to a few unorthodox researchers by the National Academy of Sciences to fund the proven creation and detection of electrogravitational waves!

Note from TEB: I understand that it took Bedini about 600 attempts before he got the device to work. It was then handed over to a different party to produce, who made some "improvements," and the device then failed to work.

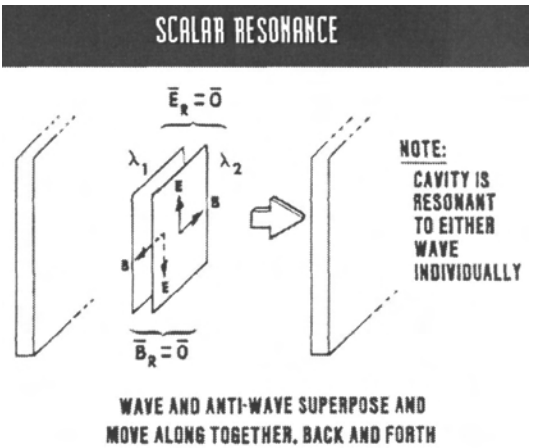

Slide 034: Scalar Resonance

Here we explain a new kind of resonance: scalar EH resonance, or electrogravitational resonance.

First, imagine we have a standard resonant cavity, represented by the two walls in our diagram. In this cavity we have a resonant EM wave moving back and forth, represented by the forward-most plane. In accordance with convention, we show the E-field vector and the B-field vector at right angles in this moving wave front. As the wave front moves back and forth, the vectors vary back and forth; however, at any one point between the walls, the two vectors always have the same value. Thus our resonant EM wave forms a standing wave in the cavity.

Now imagine that a second wave front, precisely like the first and of the same frequency, is superposed over the first wave front and travels along with it. This second wave - the "antiwave" - has its force vectors 180 degrees out of phase with the force vectors of the reference wave. Hence the E-fields and B-fields of the two superposed waves always sum to vector zeros, anywhere in the cavity. To an external observer, the cavity contains no ordinary electromagnetic force fields, hence no ordinary EM energy.

However, the energy density of a single EM sine wave in vacuum is given by

$$[E^2+B^2]/8\pi \qquad [9]$$

This energy density is always positive. Hence the energy density of the two waves at any point x between the walls is equal to

$$[E^2+B^2]/4\pi \qquad [10]$$

where

$$E = E(x) \; ; \; B = B(x) \qquad [11]$$

Thus the energy density of vacuum varies with x. But, rigorously, since the resultant E and B fields are zero, this describes a standing gravitational wave. Hence we have a standing EG wave, existing in the resonant cavity. This is an example of scalar resonance. Rigorously the cavity has mass and inertia, to an outside observer, as a result of the two warps in spacetime it contains.

Note that in one half-cycle the energy density of vacuum is greater than ambient, and in the other half-cycle it is less. In the region of one half-cycle, time flows at a faster rate than to the ambient observer, and in the other half-cycle time flows at a slower rate than to the ambient observer.

One half-cycle appears to contain negative electrical charge, and the other appears to contain positive charge.

One half-cycle appears to contain a north pole (positive magnetostatic scalar potential), and the other half-cycle appears to contain a south pole (negative magnetostatic scalar potential).

Perhaps now one can begin to understand why a continuously accelerated orbital electron in the atom does not radiate EM energy, completely in violation of Maxwell's equations. The electron is naught but a complex aspect of a standing scalar resonance, existing between the nucleus and the orbit.

SCALAR RESONANCE

- NOT IN PRESENT TEXTBOOKS
- CONTROLS NATURE OF PARTICLE
- BENDS SPACETIME
- CONTROLS MASS
- CONTROLS INERTIA
- CONTROLS GRAVITY
- CAN FLOW
- A "MASS" IS LIKE A CAPACITANCE
- HAS A SCALAR MAGNITUDE
- HAS SPECIFIC PATTERNING

Slide 035: Scalar Resonance

Scalar resonance is not in the conventional textbook.

Scalar resonance is a particular zero-summed multi-resonance, electromagnetically, so that it does not act in an electromagnetic manner.

A scalar resonance is a standing electrogravitational wave. It can be made e**lectrically,** but it is not electrical in behavior.

In any scalar resonance, spacetime is curved, and it is the magnitude (and direction; of this spacetime curvature that is oscillating in "standing wave" fashion. In respect to stress of the vacuum medium, one half of a standing sine wave of scalar resonance is tensile; the other half is compressive. However, this is with respect to the local ambient stress of vacuum.

"Mass" of a particle is just a characteristic exhibited by a trapped scalar resonance. Usually this trapping is done by the "spin" of the individual particle.

The concept of "mass" may be compared to the concept of "capacitance." That is, a mass is an accumulator for scalar waves; that is, for scalar resonances. It is continually being "charged" and "discharged" by absorption and emission of sca**lar** waves from and to the ambient vacuum scalar wave flux.

Indeed, the magnitude of a mass may be defined in terms of the absolute value of this "switching" (absorption = switch in; emission = switch out) rate. In a very early paper I defined the mass of an object as proportional to the absolute value of the sum of the input and output switching rates, where each "switch"

represents a change of action of h/(4). (Bearden, Quiton/Perceptron Physics: A Theory of Existence, Perception, and Physical Phenomena, Mar. 1973, AD 763210, available through NTIS.) In that scheme, one kilogram of mass equals a switch rate of 17.053×10^{50} switches per second. An object is in a Lorentz frame when the switch-in and switch-out rates are equal in a given direction. If, in addition, the in-out rates in all directions are constant, the object is "stationary" with respect to a Lorentz observer. If not constant in all directions, the object is in a curved spacetime with respect to a Lorentz observer. In that case either the object's local spacetime is warped or the object is in a generalized, accelerated frame.

In the normal linear spacetime, the "charging" and "discharging" are equal in all directions; hence the "mass" exhibited in any direction is the same.

With respect to an "external observer's" equilibrium flux, a moving object encounters an increased amount of flux rate along its line of motion, just as a moving object in a rainstorm encounters more raindrops per second in the direction of its path, than does a stationary object. Encountering increased scalar wave flux (with respect to the external observer) forces the moving object to absorb and emit scalar waves at a higher rate along its direction of motion than when it is not moving. Thus to the external observer, the mass of the object has increased, insofar as any disturbing force along its line of motion is concerned.

At right angles to its line of motion, however, the flux rate is precisely the same as when the object is at rest. Therefore the "mass" of the moving object with respect to any disturbing force at right angles to its line of motion has not changed, as seen by the external Lorentz observer.

Thus is explained both parts of one of the alltime great mysteries of special relativity: (1) how the mass of an object increases with respect to its motion, and (2) why the mass only increases with respect to its line of motion, and not at right angles to it.

The inertia of a particle is due to its mass, i.e., to the total magnitude of its trapped scalar resonance.

The gravitational attraction between two masses is due to their spacetime curvature. Further, mass is like a capacitance. It can trap additional scalar waves as trapped resonance; hence increase its magnitude or "inertial charge." Or, it can discharge more scalar waves than it absorbs; hence decrease its magnitude or "inertial charge."

Those scalar waves emitted from resonance are emitted as a pattern ensemble of the resonance. Hence they may be regarded as constituting a current of scalar resonance leaving the mass-accumulator-object. Scalar waves absorbed into trapped resonance may be regarded as constituting a current of scalar resonance into the mass-accumulator-object. Thus it is proper to speak of scalar resonance as being able to "flow."

Further, it is possible to increase the mass of an object directly, by transmitting scalar EM waves to it so that it absorbs them. (By "absorbing" scalar waves one means that more enter the object than leave it, so the object acts as an inertial accumulator charging up with inertial charge. This is done by insuring that the reference potential of the scalar wave transmitter is higher than the reference potential of the irradiated object.)

It is also possible to decrease the mass of an object directly, by transmitting scalar EM waves to it so that it emits more than it absorbs. (By "emitting" scalar waves one means that more leave the object than enter it, so the object acts as if it were an inertial accumulator that is discharging its inertial charge. This is done hy insuring that the reference potential of the scalar wave transmitter is lower than the reference potential of the irradiated object.)

As can be seen, the scalar wave "transmitter" is actually somewhat comparable to a heat pump; it can either act as an "energy transmitter" or as an "energy extractor," depending upon the difference in potential between "transmitter" and "receiver."

Finally, scalar resonance can have a specific pattern: both in frequency and in spatial curvature aspects, as well as "rate of flow of time" aspects. Indeed, scalar-wise every object has its individual "scalar pattern" which is a unique fingerprint. Since that print is spatiotemporal, it is a product of the object's entire past history. Thus - scalar-wise - no two objects are identical.

This brings up another rather amazing potential: If a reasonably precise scalar pattern of an object can be "irradiated" and resonated with scalar waves, energy may be created in or extracted from the distant object, just as stimulating one tunning fork can excite another at a distance by sympathetic resonance. We leave it as an exercise for the reader to ascertain the relevance of this statement to clairvoyance, radionics, remote viewing, etc.

For the skeptic, however, we must point out that - rigorously - quantum mechanics requires that, continually, in any localized region of spacetime, the "pattern" of any object in the universe appears momentarily in the virtual state, purely from statistical considerations alone. So long as the situation remains statistical, any place in the universe can continue to have the "ghosts" of everything present there, in an ethereally thin pattern, and the observable world will not be affected by it. However, if one can discriminate and scalarly "charge" or "discharge" individual patterns in this "ghost-realm," action-at-a-distance is directly possible, as is materialization and dematerialization. If one accepts that even thought itself produces such virtual "ghost-patterns" in the virtual particle flux of vacuum, then it is at least theoretically possible to even materialize thoughts and thought images.

We have entered a new kind of reality where the old rules and the old limitations do not necessarily apply.

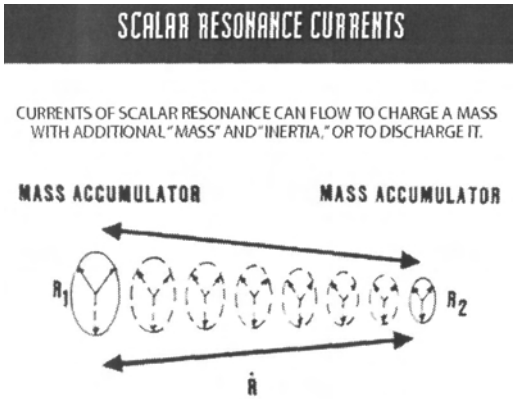

Slide 036: Scalar Resonance Currents

As we pointed out, we can often greatly simplify matters by considering currents of scalar resonance. These currents flow from higher potential to lower potential, regardless of whether we are considering "transmission" or "reception."

Indeed, to "transmit at lower potential" is to receive, and to "receive at higher potential" is to transmit.

Thus the "transmitter-receiver" is a special system where simply biasing the two nodes differently determines which way the scalar resonance current will flow.

We may increase or decrease an object's inertia and mass, simply by properly biasing the transmitter-receiver system's two nodes.

In one accidental experiment of some hours in duration, Golden charged up an area so that, locally, all clocks became erratic. This included electrical clocks, battery-driven watches, wind-up kitchen clocks, and a pendulum-operated grandfather's clock. The rate of flow of time itself was apparently altered in the local area by the accumulated charge, which took some four days to drain off and discharge. At the end of the four days of discharge, all clocks and watches had returned to normal.

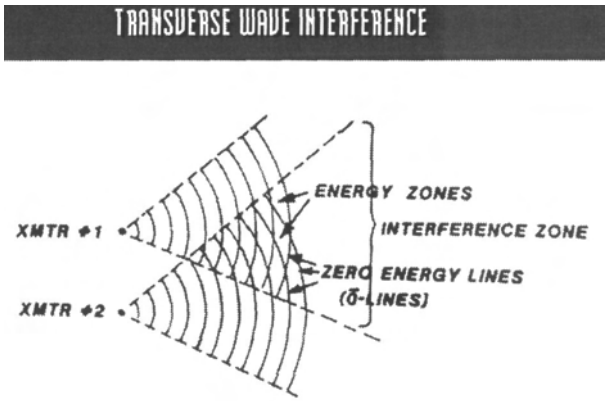

Slide 037: Transverse Wave Interference

On this slide we show the orthodox representation of EM wave interference.

The chart is stylized since we assume two single-frequency EM waves that intersect and interfere in the indicated region.

In the interference zone, in-phase wave amplitudes add (constructive interference) while out-of-phase wave amplitudes subtract (destructive interference). In our stylized mode, we show the zero-summed locations as lines.

Conventionally, these interfering waves are considered to be transverse waves in vacuum.

The point is, in this scheme we think of "putting in the waves of finite amplitude, and creating the zero-amplitude regions by destructive interference." We create additional waves of increased-amplitude regions by constructive iterference.

Note that this view is only half correct. It addresses the electromagnetics, but not the gravitational aspects. Actually the regions of destructive EM interference are regions of constructive G-interference, and the regions of constructive EM interference are regions of destructive G-interference.

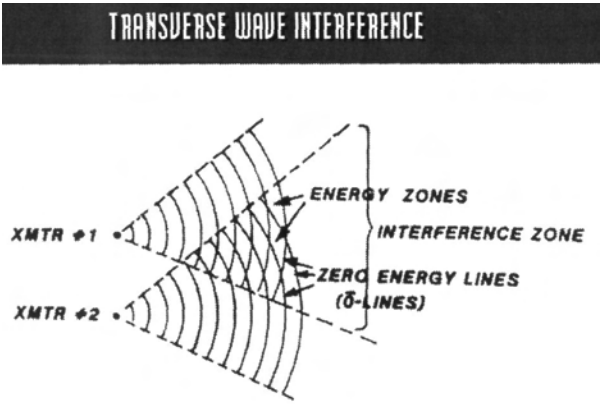

Slide 038: Transverse Wave Interference

Here we show the same interference situation, only now we think of transmitting scalar EM waves, which we model as longitudinal waves.

Again we assume two single-frequency scalar EM waves that intersect and interfere in the indicated region.

However, to an external observer, each of these waves individually appears to have zero E and H fields, hence to contain zero EM energy. That is, conventionally we seem to be transmitting waves of "pure potential," without any "force field" amplitudes whatsoever. We say we are transmitting waves of "artificial potential," since we deliberately constructed the zero-vector-summation scalar waves in the first place.

In the interference zone, a strange thing now happens. The relative magnitudes of the artificial potential of one wave with respect to the artificial potential of the other depend upon the phase relationship between the two. Further, whether the "gradient" so established appears negative or positive also depends upon the phase relationship between the two.

What results is most interesting: the out-of-phase condition now produces an EM gradient whose sign and magnitude are functions of the location within the interference zone.

Thus one now has real, non-zero EM potential gradients, both electrical and magnetic. And so real EM energy has emerged in an interference pattern within the area.

Ironically, we get essentially what we had before! Only now we have "put in the zero-reference lines, and produced the non-zero gradient (energy) zones."

In other words, we have recreated ordinary EM energy at a distance, directly from the interference of gravitational potential energy (anenergy).

And, to the laboratory observer, there has been no "EM wave" energy flow through the intervening space.

This was Tesla's secret of "wireless transmission of energy to a distance without losses."

Further, in a hypothetically perfect case, the interference represents a sort of "energybottle."

But now recall our need to take the sign of the scalar current into account. In this energy bottle, then, EM energy emerges and stabilizes - if and only if our transmitters are at higher reference potential than the ambient interference zone. If our transmitters are biased at lower potential, then energy is extracted from the energy bottle and re-emerges back at the transmitters, where it must be extracted and disposed of, if the transmitters are not to be burned out.

BACKGROUND FOR THE BRIEFER:

If we interfere two transmitters in a region of great energy -such as the molten core of the earth itself- and bias the transmitters negatively, we can extract enormous energy directly from that distant source!

Indeed, a slight variation of this effect is precisely how the Soviet Union obtains the enormous energy with which to power its incredibly powerful strategic "continent-buster"scalar EM weapons. Scalar frequency pairs - 12 kiloHertz apart - are transmitted into the earth itself on some portion of the earth's "giant scalar resonance" frequency curve. Biasing the two transmitters differently with respect to each other produces a high potential difference (voltage) between them. At the same time, biasing them both negative with respect to the earth's molten core produces a scalar resonance current from the core to the two transmitters. In the "outer loop" between the two scalar transmitters, there appears a gigantic voltage and gigantic electrical current that can be captured by appropriate means. This electrical power is tapped off and transmitted to incredibly powerful scalar EM weapon systems. There special accumulators and switchers are are utilized to provide the power of many Niagaras to each weapon.

Just before May 1, 1985 the Soviet Union performed a "full-up" operational test of their entire strategic scalar EM weapons complex. This test was detected and monitored periodically by Frank Golden. Some 27 of these giant Soviet "power taps" were locked into the molten core of the earth, producing forced (entrained)

scalar resonance of the entire planet on 54 controlled frequencies under our very feet. The remainder of the scalar frequency spectrum was ablaze with literally hundreds of Soviet scalar transmitters: probably the entire strategic scalar command and control system to underwater submarines, higher command centers, distant commands, etc. was activated in the giant exercise.

For several days, the system was exercised on a mind-boggling scale, apparently as part of the Soviet Union's highly accentuated 40th anniversary celebration of the end of World War II.

Ironically, not a single U.S. intelligence agency, laboratory, or scientist detected this monstrous exercise for the new Soviet leader, Gorbachev. Not a one of them had a detector for scalar EM radiation, and not a one of them officially believes the exercise ever happened.

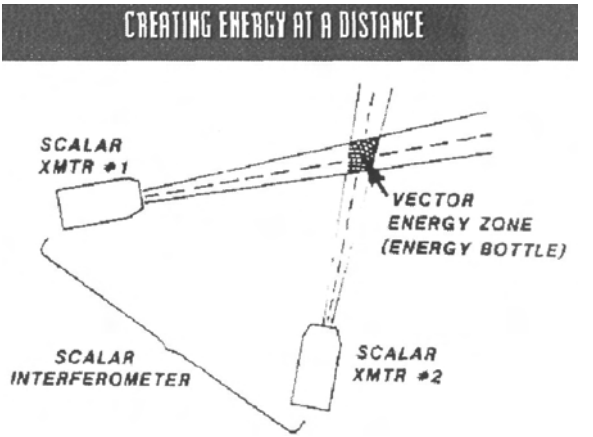

Slide 039: Creating Energy at a Distance

A most useful device is obtained if one uses a scalar interferometer where the two transmitters transmit beams that intersect at a distance.

In the interference zone, an energy bottle is created.

By biasing the transmitter reference potentials well above that of the distant energy bottle, EM energy emerges in that zone. In that case the interferometer is operating in the exothermic mode.

By biasing the transmitter reference potentials well below that of the distant energy bottle, EM energy is extracted from the distant zone and emerges from the transmitter. In that case the interferometer is operating in the endothermic mode.

If the transmitters transmit continuously, the effect in the distant zone is continuous.

If each transmitter transmits a pulse, and the two pulses meet in the distant intersection zone, then an explosive emergence or extraction of energy occurs at the distant interference zone, depending upon whether the interferometer is operating in the exothermic or the endothermic mode.

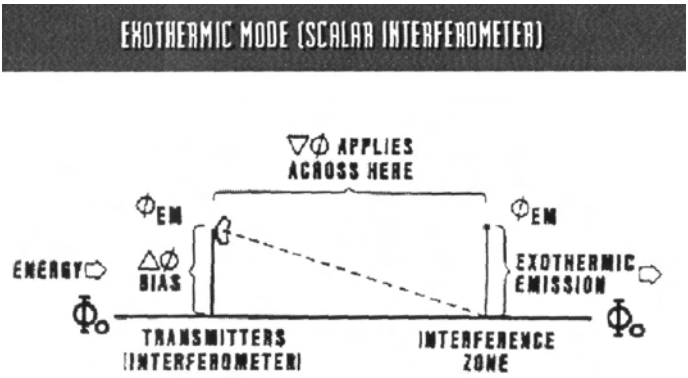

Slide 040: Exothermic Mode (Scalar Interferometer)

For a scalar interferometer, "del phi" (the gradient of the potential) applies between the transmitter site and the distant intersection site, not to the intervening space in between. Thus one speaks of "energy flow" as being between transmitter and intersection, without any "in between." In the intervening space, all the energy exists as locked-in artificial potential, not EM force field energy (gradient bleed-off of potential).

In the exothermic mode, the ground potential of the transmitter is biased well above the ground potential of ambient vacuum. Energy enters the transmitter and "disappears", to "reappear" in the distant interference zone.

If continuous wave transmission is used, the energy continuously appears in the distant zone.

If pulse transmission is used and timed so that the two scalar pulses meet in the distant zone, energy explosively appears there.

If multiple frequencies are transmitted in the manner of a Fourier expansion of a particular geometric form, then a 3-dimensional energy form appears at the distant intersection. In this manner, a spherical or hemispherical shell (a globe of "dome" of EM energy) can be created at a distance. If pulse transmission is used, this will be an impulsive or explosive emergence of that energy form. If continuous transmission is used, this will be a continuous glowing form.

By feeding incredibly powerful transmitters with large amounts of energy extracted from the earth's molten core by "energy taps," very large spherical

globes and hemispherical domes of EM energy can be created. The energy in the interference "shell" of such a sphere or hemisphere is sufficiently dense to lift Dirac matter from the Dirac sea of the vacuum. Thus the shell contains a glowing plasma.

Many such scalar howitzer signatures have been seen over the oceans, particularly over the North Pacific by jet airliners flying into and out of Japan. Also, such globes and domes of light have been seen deep within the Soviet Union, by observers in Afghanistan and by pilots of aircraft landing in Iran.

In the impulsive exothermic mode, a large visible flash will occur if EM energy in the visible spectrum is produced. "Flashes" in the infrared may similarly occur, if the emerging energy is in that spectral band. In September 1979 our Vela satellites detected such a large "nuclear flash" over the South Atlantic, off the southern coast of Africa. A second "nuclear flash" detected by the Vela satellites in 1980 was in the infrared only. Some years ago, a series of Momalous "flashes" and "booms" occurred off the east coast of the United States. These were due to the orientation and alignment -and registration - of one or more Soviet "scalar howitzers" - scalar EM interferometers in the exothermicmode.

Large "booms" occurred over the shuttle launch site at Cape Canaveral, associated with three shuttle launches prior to the end of November 1985. These were tests of such exothermic scalar EM howitzers, being tested as part of the Soviet Launch Phase ABM system. In that mode, the scalar pulses from the two transmitters are injected into special zero-reference scalar EM "channels" established in the EM carriers of the Woodpecker over-the-horizon radars. The scalar pulses travel through these channels, traveling in the ordinary EM beam of the transmitter and following it in its curvature around the earth in the earth-ionospheric waveguide. The scalar pulses are timed, phased, and oriented so as to meet the rising shuttle. In these tests the transmissions were offset in time so the shuttle would not actually be destroyed, but the system could be tested against actual shuttle launches in the U.S.

The specific uses of these various exothermic modes will be covered in later partsofthebriefing.

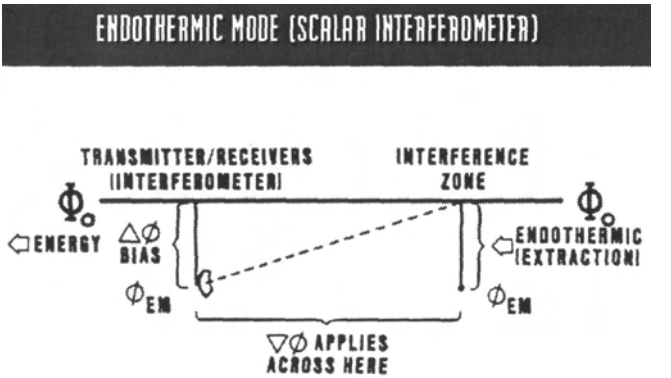

Slide 041: Endothermic Mode (Scalar Interferometer)

In the endothermic mode, the bias on the transmitters is such that energy is extracted from the distant intersection zone, to re-emerge at the transmitters. There the energy must be caught and disposed of if it is not to burn out the transmitters. When very large amounts of energy are extracted from distant points, the Soviets often use a "dump" method of temporarily capturing, and storing in an accumulator, the heat energy emerging at the transmitters. A "scalar energy tap" established into the accumulator then feeds a second howitzer in the exothermic mode. This howitzer is focused on a distant dumpsite - often Bennett Island, where U.S. weather satellites continually observe exhausts.

In the impulsive endothermic mode, energy is impulsively extracted from the distant intersection zone. In the atmosphere this results in a very sharp cooling, or a "cold explosion." It also results in the type of boom and rumble often associated with thunder after a lightning bolt.

On April 9, 1984 the Soviet Union tested such a "cold explosion" off the coast of Japan, near the Kuril Islands. In the suddenly induced low pressure "cold zone" above the ocean, ocean water was sharply sucked up from the ocean, forming a dense cloud. Then air rushing in to the low pressure zone forced the cloud upward, forming a mushroom much like that of an atomic explosion in visual appearance, except for the absence of a flash and the absence of a giant shock wave moving out away from the site of the explosion. (In this case the

Soviets controlled the rise time of the pulse so that no "giant atmospheric boom" occurred.).

As the cloud rises, it expands by mixing - very similar to a giant thunderhead buildup, except much faster. In this case the cloud rose to 60,000 feet in about 2 minutes, spreading out until it reached a diameter of about 200 miles. The pilots and crews of several Boeing 747 jet airliners in the general vicinity saw the incident. Sometime after that, a U.S. weather satellite photo of the area occurred. The cloud in that photo has an anomalous density distribution, differing from that of all other clouds in the area.

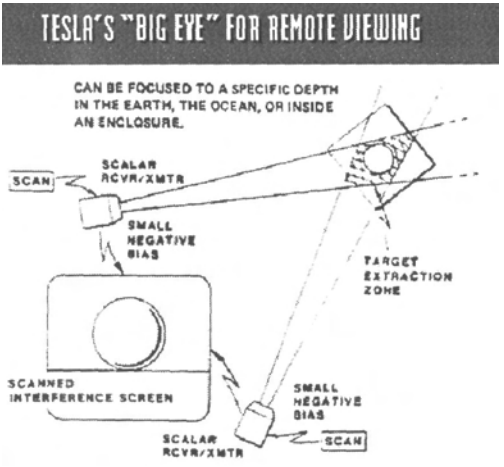

Slide 042: Tesla's "Big Eye" for Remote Viewing

Nikola Tesla also planned a very special use for his endothermic scalar interferometer. He planned to produce what he called his "big eye to see at a distance."

This is accomplished as shown on the diagram. First, the system is only weakly endothermic, so that only a small amount of energy is extracted from the **distant** target. Also, the beams are "scanned" by an open receiver, timewise, from side to side and top to bottom. By scanning yet another single beam through the intersection zone and phasing its pulses, an even better representation can be obtained. Thus the receiver produces a representation of the energy extracted from various locations within the distant endothermic zone. By displaying the received signals on an appropriately scanned screen, a representation of the distant scene in the intersection zone can be created. Indeed this is a special kind of "microwave interferometry," and - with modern techniques - the imagery obtained might be surprisingly good. With development, it might even become as good as the image presently obtained by side-looking acquisition radars.

Interestingly enough, since scalar EM beams will easily penetrate the earth or the ocean, one can also look beneath the earth or beneath the ocean with this type of scanning scalar interferometer.

The importance of this capability to strategic and tactical reconnaissance is obvious. Camouflage, cover, and concealment have no effect on such a **system.** One can easily look inside buildings and into underground facilities. With a small system such as this, the U.S. Marines at Khe Sahn would have had **little**

difficulty locating the tunnels continually dug under the perimeter by the Viet Cong. And targets under jungle canopies are directly visible.

BACKGROUND FOR THE BRIEFER:

It requires little imagination to see that this system is easily adapted to produce an "underwater radar." With such devices, the problem posed by the underwater nuclear submarine is solved. For example, an entire area can be continually searched, much like acquisition radar systems do now. A submarine can be detected and tracked, and none of its ordinary detectors will detect anything out of the ordinary. By using a separate pair of beams in the exothermic mode, powerful scalar pulses can be fired at the distant sub, intersecting at the submarine in a violent EMP throughout the sub and its armament. Thus the sub and all its missiles are destroyed instantly.

Or, continuous exothermic transmission can be used by the targeting weapon at lesser power, gradually interfering with the sub's electrical systems and causing it to lose control. The sub then sinks to crush depth and implodes.

Precisely that scenario seems to be what happened on April 10, 1963 to the U.S.S. Thresher nuclear submarine. It left a signature: the sub's surface companion, the nearby U.S.S. Skylark, was in the "splatter zone" of the underwater scalar interference. That is, spurious EM noise was being generated In all the Skylark's electrical systems, some of which were actually disabled. So intense was the "electronic jamming" that it required over an hour and a half for the Skylark to transmit an emergency message back to its headquarters that the Thresher was in serious trouble and contact with it had been lost. Some of the Skylark's communication systems actually failed, but later resumed operation inexplicably, once the jamming was gone. That type of "jamming" of multiple bands and multiple electronic equipments, of course, together with the anomalous failure of electronic equipment and its later mysterious recovery, were direct signatures of the use of the exothermic scalar interferometer against the undersea target area in the vicinity of the Skylark.

The very next day, Apr. 11, 1963, the same Soviet scalar EM howitzer system was tested in the "destroy submarine" pulse mode. A huge underwater EM blast occured off the coast of Puerto Rico, about 100 miles north of the island. The underwater explosion caused a huge boiling of the surface of the ocean, followed by the rising up of a giant mushroom of water about a third of a mile high. The mushroom of water then fell back into the ocean, completing the signuture.

Fortunately the startled crew of a passing U.S. jetliner that was just passing its checkpoint in that area saw the entire incident. (See Robert J. Durant, "An Underwater Explosion - or What?", Pursuit, 5(2), April 1972, p. 30-31.)

These two incidents were full-up operational tests of Khrushchev's newly deployed superweapons. He probably staged this dramatic one-two punch in a

desperate effort to recover face with the Communist Party after his disastrous facedown by Kennedy in the Cuban Missile Crisis a few short months previously. Apparently the attempt was successful, since he remained in power another year before being deposed.

Slide 043: Site of Mystery Cloud

On this slide we show the location of the "cold explosion" off the coast of Japan on April 9, 1984. The site of the explosion was only about 200 miles from downtown Tokyo. The crews of several jet airliners, including Japan Air Lines Flight 36, saw it.

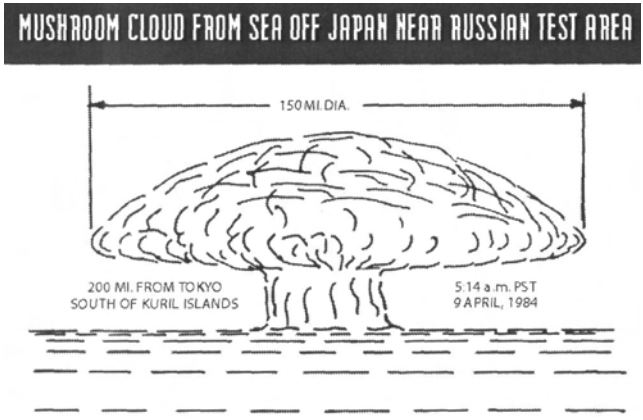

Slide 044: Mushroom Cloud from Sea off Japan near Russian Test Area

A short time before, the Soviets had hastily announced missile tests would be conducted into a zone some distance away from the cold explosion site. This may have been intended as deception to cover this incident, should any foreign nation indicate they understood what was going on.

It also was a direct "stimulus" to the Japanese and the rest of the world: That is, stimulate the system and see if the scientists recognize what happened. If they do, then they know about scalar EM weapons. If they don't, then their countries know nothing of scalar EM weapons, and those countries are defenseless against them.

At any rate, at about 5:14 a.m. Pacific Standard Time on April 9, 1984, a **giant** mushroom cloud erupted above the ocean south of the Kuril Islands. The mushroom rose rapidly, expanding as it rose. In two minutes it had reached **an** altitude of 60,000 feet and a diameter of about 200 miles.

One pilot of a Boeing 747 who observed the cloud was a former B-52 bomber pilot. He described the cloud as very similar to a mushroom cloud from a gigantic nuclear explosion, except there was no flash of visible light. Taking evasive action, he turned off course away from the blast, and braced for a blast shock wave, which never came.

MUSHROOM CLOUD RISING FROM SEA (COLD EXPLOSION)

- 0514 HOURS, 9 APRIL 1984
- GRAY-WHITE CLOUD APPEARED
- ROSE 60,000 FT IN 2 MINUTES
- 180 MILES S.E. OF HOKKAIDO
  200 MILES FROM TOKYO
  SOUTH OF KURIL ISLANDS
- SOVIET MISSILE TESTING SCHEDULED
  ABOUT 350 MILES AWAY
  AT 2100 HOURS, 9 APRIL 1984

Slide 045: Mushroom Cloud Rising from Sea

Indeed, this highly anomalous cloud was due to a cold explosion - a test of a Soviet scalar EM howitzer in the pulsed endothermic mode.

In the weapon's targeted interference zone, EM energy (heat) was rapidly withdrawn when the biased endothermic extraction occurred. Above the ocean an intense low-pressure zone was created. Water from the ocean was sucked up, as if by a giant vacuum cleaner. The water was violently broken into droplets, forming a dense cloud, with a strong upward momentum.

The surrounding higher-pressure air rushed into the low-pressure zone, pushing the rising dense cloud of water vapor upward as its upward momentum continued. Mixing caused rapid expansion of the rising cloud, causing its density to thin measurably as it rose and expanded. An effect very similar to the formation of a strong thunderhead resulted, except much faster.

The mixing cloud also resembled the mushroom cloud from a giant nuclear explosion, just as an emerging thunderhead does.

But no outward blast wave resulted as does from a nuclear explosion. Also, no visible flash occurred, probably as a result of deliberate design by the Russians.

Thus a beautiful "stimulus" and test was conducted: quite a few airliners were "pinged," providing a high-level stimulus to competent observers. The news was sure to be reported by them to several nations. The press was sure to pick up the story. This was a high order stimulus to see whether the U.S., Japan, or other

potential adversaries of the Soviet Union recognized the testing of a cold explosion weapon.

By our reaction, we assured them (with high confidence) that we still knew nothing of scalar EM interferometry or cold explosions.

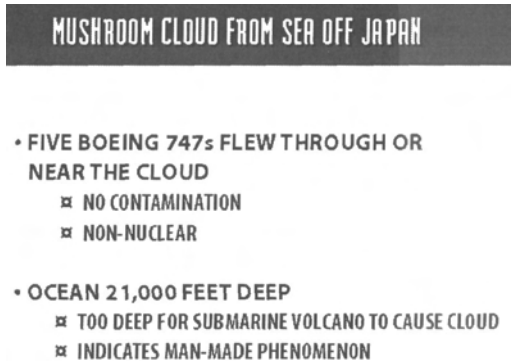

Slide 046: Mushroom Cloud from Sea off Japan

Five Boeing 747's flew through or near the cloud on their way to Anchorage, Alaska. The aircraft were checked at Anchorage for radioactive contamination, but nothing was found. This showed that the huge "explosion" had been non-nuclear.

The ocean in the area is also about 21,000 feet deep. That is really too deep for a submarine volcano to have erupted and caused the cloud. (Besides, a volcano would have continued to snort at least a bit, and so that appears to be out of the question as a possible cause of the incident.)

In short, a manmade phenomenon is indicated.

Indeed, we know it was a cold explosion. As I've stated previously, a colleague has in fact produced the basic effect over a dish of water in the laboratory, using a small scalar interferometer in the endothermic mode.

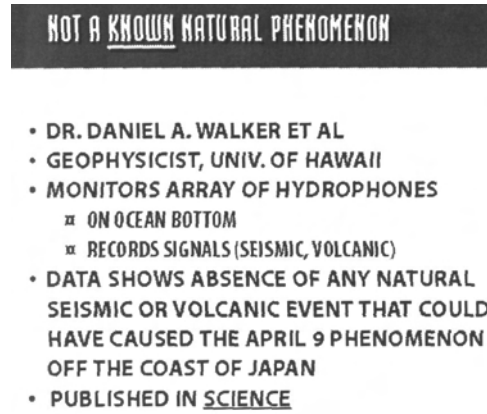

Slide 047: Not a Known Natural Phenomenon

Further, the story does not end there.

A geophysicist at the University of Hawaii, Dr. Daniel A. Walker, together with his colleagues monitor an array of hydrophones on the ocean bottom, recording signals such as seismic incidents, volcano eruptions, etc.

Dr. Walker and his colleagues performed a comprehensive analysis of the data recorded by the hydrophones in and around the time of the incident in question. The data shows the absence of any natural seismic or volcanic event that could have caused the April 9th phenomenon off the coast of Japan.

He and his colleagues concluded that it was either an as yet unknown natural phenomenon, or a man-made phenomenon.

Their report is published in Science. (Walker et al, "Kaitoku Seamount and the Mystery Cloud of 9 April 1984," Science, 227(4687), Feb. 8, 1985, p. 607-611.)

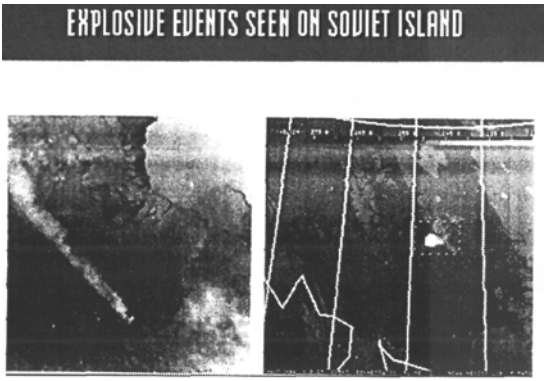

Slide 048: Explosive Events seen on Soviet Island

Here are two U.S. weather satellite photos of the anomalous exhausts on Bennett Island we previously referred to.

The exhaust in the left picture is about 150 miles long, and is nearly horizontal (about 1.5 degrees above the horizontal). It is entirely consistent with the continuous exhaust from a "dumping transfer" scalar EM howitzer in the continuous exothermic mode. (The primary howitzer, of course, was activated in the endothermic mode.)

I think any open-minded investigator must admit that that is indeed a very powerful jet-like exhaust, and not like anything one ever sees from a natural volcano or geological gas vent. If anyone knows of such an anomalous volcanic or geological exhaust, I would be most delighted to see a photo or report. To my knowledge, no such natural photo exists, and no such natural exhaust has ever been reported.

The right picture shows the "puff of an explosive emergence of the exhaust. In other words, this one is the exhaust from a "dumping transfer" howitzer used in the pulsed exothermic mode. Since it did not have so much energy to dump, it could dump it in a pulse. Again, the primary howitzer, of course, was activated in the endothermic mode.

Over 100 weather satellite photos of these anomalous exhausts have been taken since 1974.

One or more U.S. aircraft have even been vectored through the exhausts, and samples of the exhaust taken and analyzed. The exhaust is made up of a little clay and mud and water, and is colder than the surrounding air.

Slide 049: Explosive Events seen on Soviet Island

U.S. weather analysts euphemistically call these exhausts from Bennett Island plumes.

Here is another U.S. weather satellite photo, showing the twin emergence of multiple puffs.

One might expect such exhausts if the secondary "dumping transfer" howitzer is operated in the continuous mode, with continuous extraction by "power tapping" the accumulator of the primary howitzer. In that case, the signature of the exhaust would expose the operation of the primary howitzer. For example, this exhaust would indicate multiple puffs, hence probably multiple frequencies and multiple primary transmitters, each phased in a controlled manner. That of course indicates the production of Fourier expansion forms - of 3-dimensional geometrical forms - by the primary howitzer(s). Since these are puffs, it may indicate the explosive formation of distant spherical balls of energy by the primary howitzer. This in turn indicates the use of a howitzer system in the "pulse firing" mode, which can be used against missiles, ships, aircraft, ground targets, armored vehicles, underwater targets, etc.

Slide 050: Explosive Events seen on Soviet Islands

This slide shows the location of three areas of interest relative to Soviet scalar EM weapons testing.

Wrangel Island, north of the northeastern portion of the Soviet mainland, is associate with tests of these weapons in large circular breakups of the ocean's ice cover. This of course could aid submarines that wished to surface and fire cruise missiles, or submarines that wished to fire from underwater and needed the **ice** broken up.

Strangely enough, Wrangel Island has a most peculiar history: legally it still belongs to the U.S., but has been "given" to the Soviet Union without permission of the U.S. Senate, which is illegal.

Bennett Island, a little farther to the west and still north of the Soviet **mainland,** is noted for its phenomenal number of anomalous exhausts as previously discussed.

North of the Soviet mainland and near its middle lies the large island of Novaya Zemlya. Weather satellites have taken pictures of anomalous circulations over this island, which are further candidates for exhausts from scalar EM howitzer operations.

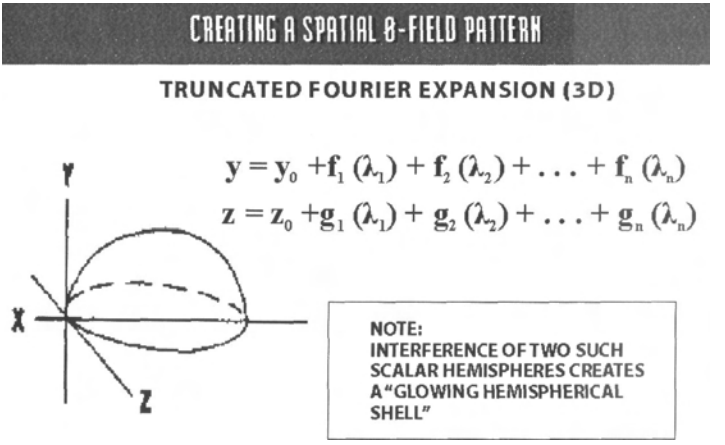

Slide 051: Creating a Spatial 0-Field Pattern

On this slide we show that a hemispherical dome (or other regular shape) can be composed from scalar waves by 3-dimensional Fourier expansion. By truncating the expansion - say after 10 or 12 frequency terms - a good representation of the desired form can be obtained with a practical number of frequencies, and in turn a practical number of transmitters. A computer is used to compute the multiplying functions for each frequency, and the entire complex of frequencies is then transmitted to produce the scalar form. By interfering two such scalar forms, a 3-dimensional shell of locked-in, ordinary EM energy is formed in space.

Interference of two such scalar hemispherical surfaces creates a "glowing hemispherical shell or dome of energy."

Interference of two such scalar spherical surfaces creates a "glowing spherical shell or globe of energy."

Both such geometric forms have been repeatedly seen.

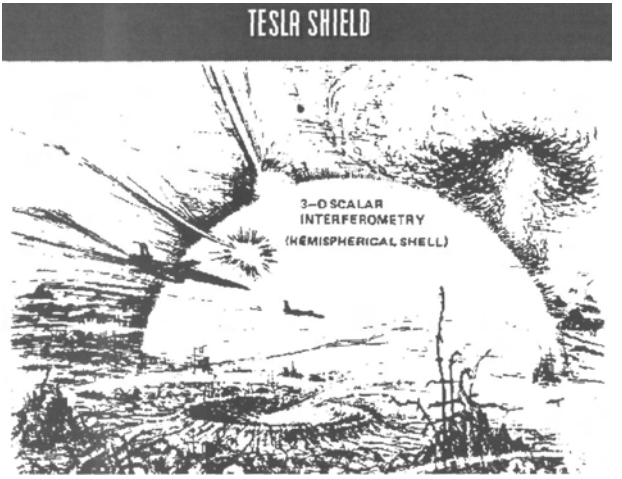

Slide 052: Tesla Shield

Of particular interest is the hemispherical shell of energy, which years ago I dubbed the "Tesla shield."

As shown on this slide, two scalar hemispherical surfaces are created, using multiple frequency transmitters and truncated Fourier series expansions. Interference of the two scalar hemispheres creates a great, glowing hemispherical shell of ordinary electro-magnetic energy. In the shell, the energy density is sufficient to lift Dirac matter from the Dirac Sea of vacuum. The shell is thus filled with a glowing plasma.

Such a shell may be several hundred miles in diameter at the base. The enormous energy required to form such a defense shell is obtained by a "scalar power tap" into the molten core of the earth itself, as previously explained. In late April/early May of 1985, 27 such "power taps" were placed in the earth by the Soviets. If each tap is capable of powering four to six large scalar EM weapons, then the Soviet strategic scalar EM arsenal contains over 100 monstrous superweapons capable of generating exothermic explosions, endothermic explosions, engineering the weather, locating and destroying underwater submarines, detecting and destroying ballistic missiles shortly after launch, detecting and destroying long range strategic bombers as soon as they are airborne, etc.

At any rate, the giant Tesla shield is useful against any penetrating vehicle. If the shell is not so large, its energy density may be very high. In that case, the intense

plasma heating will fuse and even vaporize metallic bodies. In addition, any vehicle encountering the shell is subjected to an extremely intense EMP arising everywhere inside its circuitry. EM shielding is of no use against the creation of energy throughout the spacetime of the circuits; such shielding only helps against energy flow through space in the conventional sense.

Thus the electronics of any vehicle encountering the shield are instantly dudded, whether or not they are shielded against ordinary electromagnetic interference (EMI). This includes the electronics operating a nuclear warhead, carried by a re-entry vehicle. Electrically everything penetrating the shell is totally dudded. Further, explosive materials are exploded when such an EMP is encountered, and combustible materials are fiercely consumed or set afire. Ablative shielding suffers an interesting catastrophe: since energy does not try to "flow into" the shielding but "arises everywhere in it simultaneously", "ablation" occurs everywhere throughout the ablative material, simply exploding it instantly. In addition, for smaller Tesla shells (say of 50 miles diameter) the energy density is sufficient to melt or vaporize metals such as in missile structures.

With such a Tesla shield, there is no need to discriminate true warhead-bearing re-entry vehicles from decoys, chaff, etc. The entire "mess" entering the shield is simply "cleaned up" and "sterilized" or destroyed. The shield can take care of ICBMs/IRBMs and their nuclear warheads, strategic bombers and their nuclear **bombs,** cruise missiles and their nuclear warheads, re-entry vehicles and their warheads, decoys, chaff, etc.

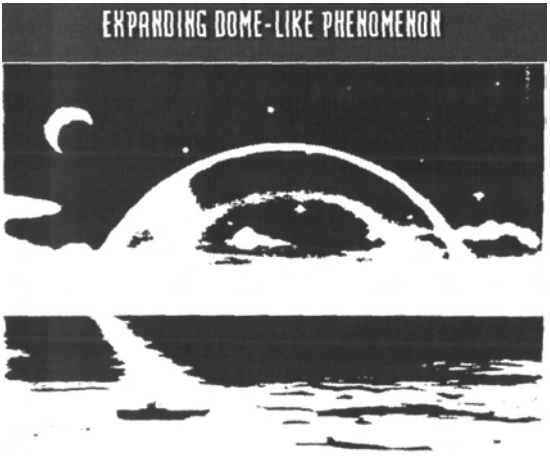

Slide 053: Expanding Dome-like Phenomenon

Here we show one instance of apparent Soviet testing of the Tesla shield (hemispherical shell of energy) over the ocean. This incident occurred in the Caribbean and Western North Atlantic Ocean on Mar. 20, 1969 and is reported in the Marine Observer, Vol. 40, 1970, p. 17. A semicircle of milky white light, quite intense at first, was sighted on the horizon. The semicircle enlarged, dimming as it expanded. The incident lasted for about 10 minutes. Seen from a passing ship, the top of the hemisphere reached a sighting elevation angle of about 50 degrees, while the base of the hemisphere of light subtended an arc of about 70 degrees. This is directly indicative of a test of the Tesla shield, first as a small, more intense shield and then expanding to greater size for a less intense shield whose primary destructive mechanism is EMP. Note that the EMP in a Tesla shield is locally contained in the energy-bottle shell. It is not an ordinary EMP of energy radiated out of the shell.

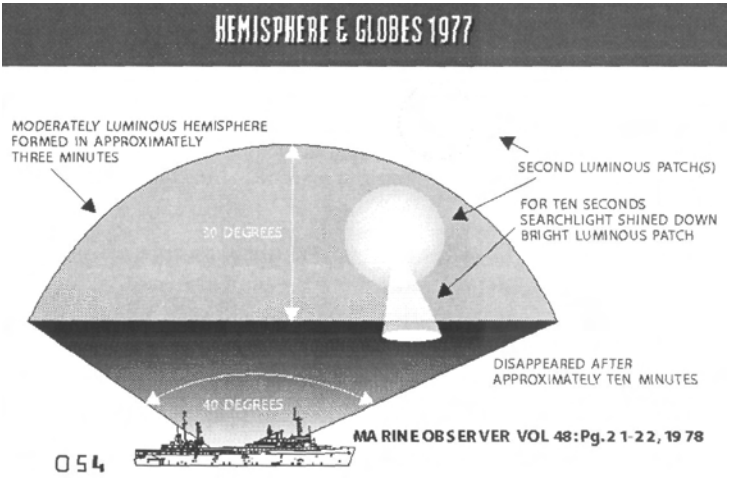

Slide 054: Hemisphere & Globes 1977

Here is a second instance of apparent Soviet testing of the hemispherical Tesla shield over the ocean. This time it is combined with simultaneous testing of two smaller scalar interferometers creating Tesla globes of EM energy.
This incident occurred at 23 degrees 5 minutes north, 17 degrees 25 minutes west. It was sighted and reported by a British ship, H.M.V. Kinpurnie Castle, on Mar. 24, 1977. The report is in the Marine Observer. Vol. 48, 1978, p. 21-22.

First a large, moderately luminous hemisphere of light formed, requiring about 3 minutes to do so. Seen from the ship, the top of the hemisphere was at a sighting elevation angle of about 30 degrees, while the base subtended an arc of about 40 degrees. This was the basic Tesla shield.

Then two other luminous globes or patches of light, each of about 1 degree diameter as seen from the ship, formed in the same area; one inside the shield and one outside it. From the glowing globe inside the shield, a light beam similar to a giant searchlight shone down to the ocean's surface for about 10 seconds.

Again the phenomena lasted about 10 minutes and then disappeared.

The luminous globe or patch inside the hemisphere might be the test of a second weapon deployed from a Soviet aircraft in the area. If so, the aircraft has placed a **strong** spherical shield around itself. In addition, the aircraft is utilizing some sort of scalar interferometer beam weapon in an underwater mode. Probably this would imply a "shot" at a hostile nuclear submarine inside the shielded zone. Thus this aircraft would have the scalar EM equipment to search for the

underwater sub and detect it, and also to concentrate interference energy upon it underwater, destroying it quickly.

Suffice it to say that it is possible to perform scalar interferometry by means of a single beam, in a proprietary process discovered by a close colleague. Thus the "glowing beam to the ocean" resembling a searchlight makes very good sense in the anti-submarine role. The same weapon, of course, could also attack any hostile surface vessel that might have been inside the shielded area at its formation.

The second luminous globe or patch, outside the hemisphere, is probably from a second scalar interferometer from the naval task force, simulating the continuous attack of a certain target (missile or aircraft) outside the protective dome.

As can be seen, this phenomenon is directly indicative of the types of operations one would expect from the testing of Soviet scalar EM weapons at sea, possibly to protect a Soviet naval task force during simulated combat operations.

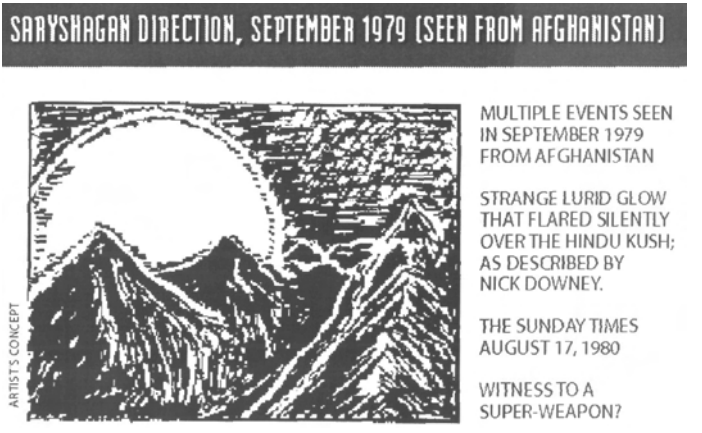

Slide 055: Saryshagan Direction, September 1979

The London Sunday Times of 17 August 1980 contained information and a photo-sketch of incidents of sighting of the testing of very large Tesla globes deep within the Soviet Union. British war cameraman Nick Downie made the sightings from Afghanistan. The phenomena seen were in the direction of the Saryshagan Missile Test Range, which - according to the U.S. Defense Department's Soviet Military Power, 1986 - contains one or more large directed energy weapons (DEWs).

Even though Downie was seeing the giant globe of light from a great distance, it flared silently over the Hindu Kush and expanded to subtend an arc of about 20 degrees, dimming as it expanded. (An arc of 20 degrees subtended by an object many hundreds of miles distant indicates an object of well over a hundred miles in diameter. This gives some idea of the enormous energy being controlled and manipulated by these Soviet weapons.).

Downie saw the sight on more than one occasion in September 1979.

BACKGROUND FOR THE BRIEFER:

In the same month - September 1979 - a stationary luminous globe containing a vertical stripe of black in the center was seen in the sky off Saint Petersburg, Florida. This particular type of sighting in that area has been previously correlated with times of known activity at Saryshagan.

Further, in the same month U.S. nuclear-warning Vela satellites detected a mysterious "nuclear flash" over the South Atlantic, off the coast of Africa. Controversy has raged in U.S. intelligence and scientific circles to this day as to whether a nuclear explosion or some other mechanism produced the flash.

Indeed, the flash may have been produced by a scalar EM howitzer from Saryshagan as one more "ping" of the U.S. intelligence system, to ascertain whether or not it knew anything about scalar EM howitzers. Again, the negative response told them with high confidence that (1) we still didn't know about scalar EM stuff, and (2) we were still absolutely defenseless against the Soviet scalar EM weaponry.

In 1980, a second "Vela flash" was reported. This time it occurred in the infrared region only, which positively rules out any sort of nuclear explosion. Even this increased stimulus still evoked a U.S. action that revealed total ignorance of scalar EM weaponry.

An alternate possibility for the September 1979 Vela flash also exists: countries not hostile to the U.S. may have tested a scalar EM weapon that produced the flash.

At any rate, from Downie's sightings, it is highly probably that the DEW weaponry at Saryshagan Missile Test Range was active in September 1979, and was producing huge Tesla globes. If the DEWs at Saryshagan can produce the giant luminous Tesla globe, they almost certainly are scalar EM interferometers and can produce the giant Tesla shields as well. Downie reported other earlier sightings of similar phenomena seen by Afghans deep within the Soviet Union in the same direction toward Saryshagan.

Briefly let us cover the uses of such a "giant globe" or spherical shell of glowing EM energy and plasma.

By placing such a "giant globe" thousands of kilometers out away from the defended heartland, an entire arc of the sky can be defended against long-range ballistic missile attack in midcourse. During their midcourse trajectory, the attacking missiles would have to penetrate the globular shell twice, exposing them to giant internal EMPs twice. A very high probability thus exists that all missiles entering the space occupied by the globe are dudded upon entry and/or exit. This includes the electronics inside the nuclear warheads themselves. Also, this is particularly effective against MIRV and MARV missile carriers, since the multiple re-entry vehicles are normally still on the main vehicle during most of midcourse. The use of this midcourse ABM globe defense greatly reduces the number of vehicles arriving at the latter part of midcourse and at the terminal phase of their trajectory.

By using a smaller, more intense globe and placing it on incoming clusters of objects or single objects, both EMP and intense local heating are used against the objects. This is suitable in the latter part of midcourse and in the **terminal**

phase of ICBM's, IRBM's, SLBM's, and cruise missiles. It is also useful against incoming strategic bombers and their air-to-surface missiles, both ballistic and cruise.

Two modes of the globes - especially the small ones - can be used. First, the continuous mode can be used to "fry" or vaporize incoming objects in a relatively small volume (say two or three tens of kilometers in diameter). Second, the "pulse" mode can be used to "service" all incoming objects, whether or not they have passed through the "large globe" midcourse defense. This provides an additional guarantee of killing the objects; discrimination is not required, just service all of them. The exposure of all incoming objects to multiple attacks raises the probability of kill to essentially 100%, or as close to that as one wishes. Of course the incoming vehicle may still encounter a terminal defense consisting of the Tesla shield and associated roving "quickshot" small intense globes.

In short, with these systems an essentially 100% ABM and anti-bomber defense is possible. Further, the Soviets have possessed such an effective defense for two decades, just as they have openly stated.

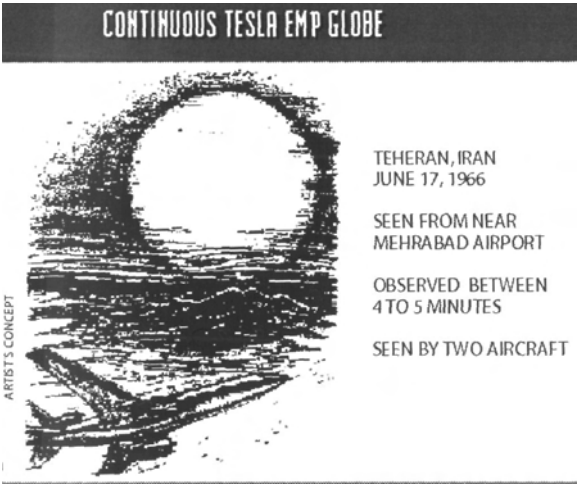

Slide 056: Continuous Tesla EMP Globe

Here is another verified incident of a gigantic test of a Soviet scalar EM howitzer deep within the Soviet Union.

This is a CIA report, released under the Freedom of Information Act. One can be quite sure that the incident occurred as stated.

The phenomenon was seen from two aircraft approaching Mehrabad Airport in Teheran, Iran on June 17, 1966 and reported by their pilots.

On the far horizon deep within the Soviet Union, an intense spherical ball of light appeared, "sitting on the horizon" so to speak. The globe of light increased to enormous size, dimming as it did so, literally filling an arc of the distant sky as it expanded. The sighting was shielded from most ground observers' view at the airport itself due to an intervening mountain range that masked most of tin-phenomenon from the ground.

The silent, expanding globe was observed for four or five minutes before it faded away.

BACKGROUND FOR THE BRIEFER:

Again, this is positive evidence of the testing of a giant scalar EM interferometer, in the "midcourse ABM globe" type of action.

However, note the date - mid 1966! The Soviets have therefore been testing such scalar weapons of enormous size and power for at least two decades. This

implies that development must have started at least a decade earlier, or in the mid '50s.

Still earlier in January 1960 Nikita Khrushchev had announced the development of a "fantastic" Soviet weapon, one that could even destroy all life on earth if unrestrainedly used. In 1962 the ebullient Khrushchev was forced to back down and lose face before John Kennedy in the Cuban Missile Crisis. Khrushchev's missiles and bombers were in woeful shape, as Kennedy well knew (by courtesy of the Soviet spy, Colonel Oleg Penkovsky). Kennedy did not know that Khrushchev's new superweapons were nearing deployment, but were not yet quite ready.

To save face and prevent his immediate ouster, Khrushchev apparently conducted a startling two-strike demonstration of his new weapons as soon as they became operationally ready. On April 10, 1963 he detected and destroyed the U.S.S. Thresher nuclear submarine using a scalar EM howitzer in the underwater "continuous" mode.

The next day he demonstrated the "pulsed" underwater destruction mode for nuclear subs by producing a giant underwater EM explosion underneath the ocean 100 miles north of Puerto Rico. Ironically, just as the Atlantic was coming alive with U.S. naval vessels searching for the lost Thresher, a second test of the weapons that had finished off the sub occurred to the south of them, unnoticed and disregarded, even though seen and reported (to the FBI and the U.S. Coast Guard) by a passing U.S. jetliner's pilot and crew, who observed the underwater explosion.

We thus can peg the development of these weapons by the Soviets as starting well before 1960. The first operational deployment of the giant strategic weaponry occurred in early 1963.

Note that the 1966 testing observed here is completely consistent with this estimated development schedule.

Thus large Soviet strategic scalar EM weapons have been operational on site for 23 years! This implies that at least three additional generations of the scalar EM weapons have been developed and deployed by now.

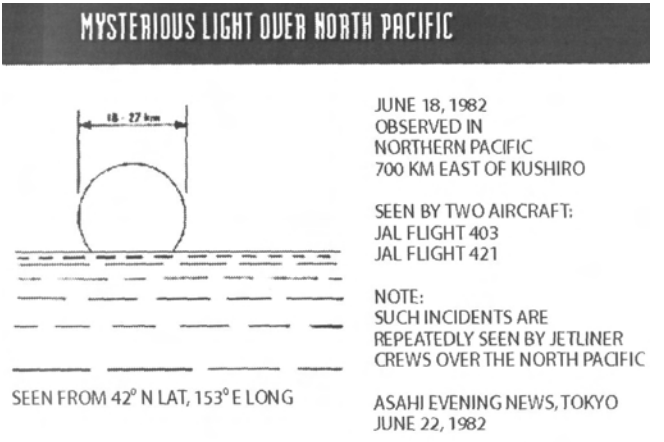

Slide 057: Mysterious Light over North Pacific

Incidents of Soviet testing of the Tesla shield and the Tesla globe weapons are routinely observed by airline pilots flying over the North Pacific into and out of Japan.

This is one typical example. Two jetliners, Japan Air Line flights 403 and 421, sighted and reported a large glowing globe of light sitting just beyond the horizon and extending well above it. The aircraft were in the vicinity of 42 degrees N latitude and 153 degrees longitude at the time. The sighting was thus about 700 miles east of Kushiro.

The pilots estimated the diameter of the ball as at least 18-27 kilometers. Depending upon the actual distance to the sphere, it may have been of much larger size.

This incident is reported in the Asahi Evening News, Tokyo, June 22, 1982.

The jet airliner pilots flying over these waters have reported many other **similar** sightings.

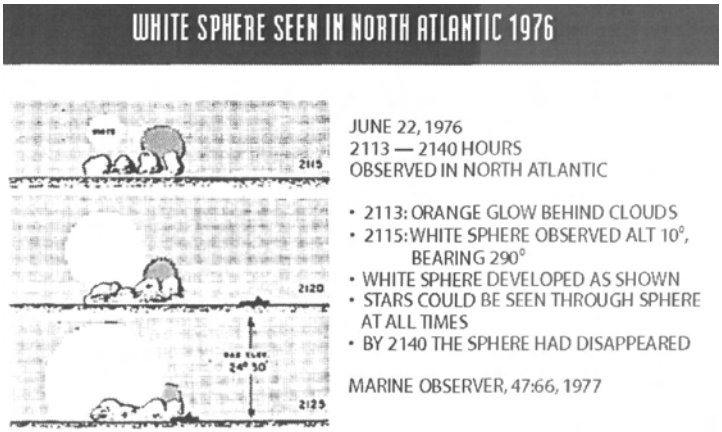

Slide 058: White Sphere seen in North Atlantic 1976

Here is another sighting closer to home.

This incident was observed from a passing ship on June 22, 1976 in the North Atlantic, at about 2113-2140 hours. It is reported in the Marine Observer, Vol. 47. 1977, p. 66.

First, an orange glow was sighted behind some distant clouds. A couple of minutes later, a glowing white sphere of light was observed to the left of the orange glow, just above the clouds. The white sphere then slowly expanded to a much larger sphere, dimming as it expanded. At its maximum size, the top of the white sphere reached about 24 degrees 30 minutes elevation angle to the observer. Development to maximum size required about 10 minutes.

By 2140 hrs the sphere had faded and disappeared. The sphere was sufficiently thin that the stars could be seen through it at all times.

Again this incident strongly fits the large Tesla globe mode of a Soviet scalar EM interferometer.

The significance and role of the orange glow are not known at this time.

Slide 059: Continuous Tesla Fireball

Here is another incident that represents a stimulus to the British government, to see if the British are aware of scalar electromagnetics.

Again, this is a CIA report released under the Freedom of Information Act, so the details are reliable.

On Sep. 10, 1976 British European Airways flight 831, flying between Moscow and London and over Lithuania at the time, observed an intense ball of light above the clouds below the aircraft. The light was so intense that it lit up the sky in the entire vicinity.

The concerned pilot reported the glowing object to the Soviet ground authorities with whom he was in contact. He received the harsh instructions to ignore the light, and essentially to continue on his way out of there.

Here we see an incident involving a small, intense Tesla globe, of the kind with which the defense could "service" objects that had already penetrated a large midcourse globe, or aircraft approaching the defended area.

Obviously the Soviet authorities were tracking the aircraft, and knew it was in the vicinity. It seems logical, then, that they deliberately placed the brightly glowing ball beneath the aircraft so that the pilot and crew could not fail to observe it.

The strange message to the pilot was simply designed to increase the intensity of the stimulus. The stimulus was to be something like, "The Soviets are doing

something in research and development that allows them to create intense balls of glowing light at a distance, and place these objects in the air in and around aircraft, possibly to intercept them." The purpose, of course, was to observe the British government's reaction after the incident was reported by the pilot upon his arrival at London.

Again the reaction of the British - and the U.S. as well - was as predicted. Again we showed that we knew nothing of scalar electromagnetic weapons, and did not recognize one when we encountered its effects.

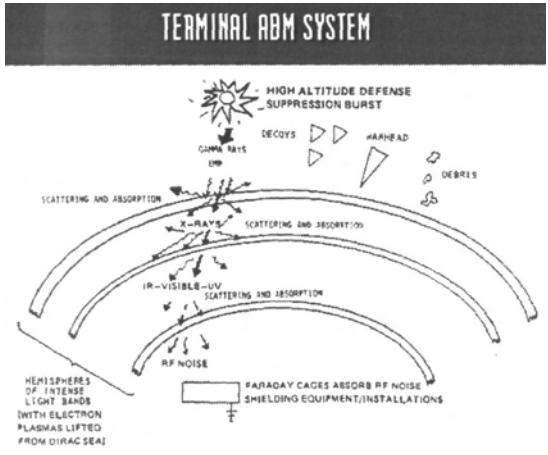

Slide 060: Terminal ABM System

Very neat things can be done if one nests several Tesla shields - say three or four - concentrically, one inside the other. In that case even the nuclear radiation (such as gamma rays) from a defense-suppressive high altitude nuclear burst can be handled.

For example, suppose three such concentric shields are placed over a large vital area. Further, suppose a high altitude nuclear burst is placed up above the outer shield. Gamma radiation almost instantly strikes the plasma in the outer shell, where it is absorbed, scattered, and re-radiated at lower temperature. (That, after all, is what plasmas do.)

Inside the first shell, the scattered radiation is now in the x-ray and ultra-violet region. Let us track the most lethal component, the x-rays.

The scattered x-rays then strike the second plasma shell, and are absorbed, scattered, and re-radiated at lower temperature. Inside the second shell the scattered radiation is now in the visible and infrared region, with a little ultraviolet.

This optical radiation in turn strikes the third plasma shell, and is absorbed, scattered, and re-radiated at still lower temperature. Inside the third shell most of the energy is now in the form of radiofrequency (RF) energy, with a little IR and visible band spectral energy content.

At this point, ordinary electromagnetic interference (EMI) shielding of electronic equipments on the ground and inside the third shield can take care of any RF interference resulting from the emergent RF noise.

As can be seen, three shells are sufficient to convert the gamma and x-ray radiation (and ultraviolet and infrared) mostly to harmless RF energy before all three shells are penetrated. Thus the tactic of deliberate defense suppression by a preliminary high altitude nuclear burst can be countered by multiple Tesla shields.

In addition, of course, any ordinary vehicles penetrating all three shields are exposed to successive violent EMP's, and are almost certainly electrically dudded. The vehicles are also subjected to multiple periods of intense heating, so combustibles, fuels, explosives, and ablatives are destroyed. In addition, metal structures may be melted or vaporized.

Think of it this way: anything that hits one of these Tesla shields goes phht! Just **like** a bug hitting an electrified bugkiller screen.

For years passing ships have observed and reported such multiple-shield "light phenomena" over remote regions of the ocean. U.S. intelligence has routinely **not** paid any heed to reports of "lights at night" over remote ocean areas, and so Soviet tests in this manner have remained relatively unnoticed by officialdom.

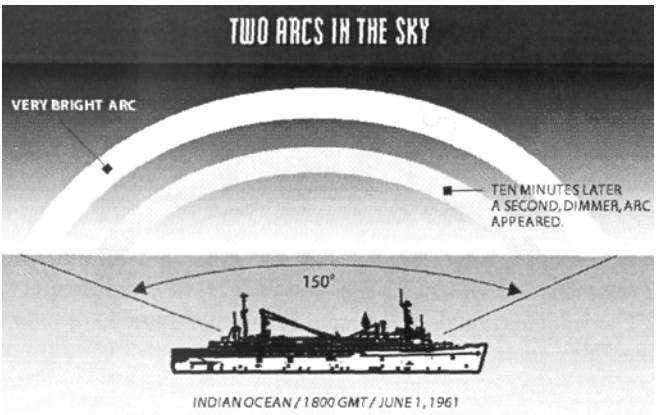

Slide 061: Two Arcs in the Sky

Just to list one incident involving the testing of multiple concentric Tesla shields, here is an early test conducted in mid-1961 over the Indian Ocean.

The incident occurred at 1800 hrs. Greenwich mean Time (GMT) and was observed by a passing ship. The report is contained in Marine Observer, Vol. 32, 1962, p. 64.

First the ship's crew observed a gigantic, very bright arc of light on the horizon or beyond it, with both ends passing below the line of sight to the horizon. This was in fact probably a large Tesla shield, but of such low intensity that only its intersection arc could clearly be seen. The arc subtended an arc of about 150 degrees across its diameter at the bottom. After about 10 minutes, a second and dimmer arc appeared, concentrically inside the first one. The ship thus was observing what probably was the nesting of two giant hemispheres (of EM energy) to provide a multiple Tesla shield.

This was probably a test of an early research and development prototype, since Khrushchev had only announced his new "fantastic weaponry" in development in his January, 1960 speech to the Soviet Presidium. And apparently land-based weapons such as this prototype probably did not become deployed and operational until April 1963. However, even in 1961 the Soviets would have been developing and testing prototypes of the weapon adapted for naval task force protection and usage.

Several other similar phenomena involving nested hemispheres or giant concentric arcs of light have been seen by mariners at sea.

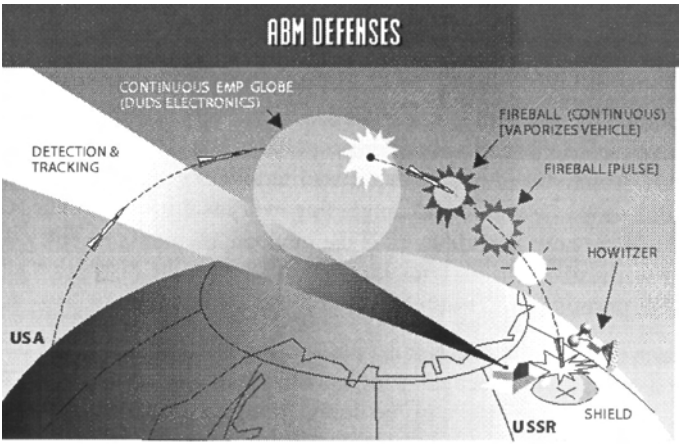

Slide 062: ABM Defenses

When the various capabilities of Tesla shields, globes, and scalar howitzers are integrated together into an ABM defense, a most formidable Soviet strategic defense capability is apparent.

On this slide we deal only with midcourse and terminal phase ABM defense. Later we shall cover the application of these weapons to launch phase ABM defense, primary phase bomber defense, underwater antisubmarine defense, etc.

Suppose the U.S. is provoked to desperately launch a missile attack toward Russia, as indicated on the slide.

First would come the launch phase destruction of the launched missiles, which we will cover shortly.

Any remaining missiles in midcourse would encounter extremely large, glowing spheres of light, where the EM energy density is contained and held in the spherical shell "energy bottle" of the glowing globes. Each globe might cover an are of up to about 20 degrees, as seen from the Soviet defended area. Missiles carrying MIRV and MARV payloads would not yet have deployed their re-entry vehicles.

As a missile and its payload encounter one of the globular shells, an intense EMP is suddenly experienced throughout the missile and all of its components. Again, EMI shielding is of no consequence since the EMP arises in each increment of spacetime throughout the vehicle volume. The result is instantaneous dudding of all electronic circuitry, including the electronics of the

nuclear warheads themselves. The HE content of the nuclear warhead system is violently exploded, totally destroying the configuration of the warhead. A low-order nuclear detonation may occur, but more likely the warhead's nuclear material is just broken up, finely divided, and set afire.

In addition, all combustible materials are set fiercely afire or destroyed. Explosive materials such as booster propellants and HE explosives are violently exploded. Ablative and plastic materials literally explode into pieces, torn apart by sudden violent ablation and outgassing everywhere within. The remnants of the vehicle are now total duds, as is the payload, including re-entry vehicle, nuclear warhead electronics, nuclear materials from the disruption and explosion of the HE portion of the warhead system, etc.

Still, each piece of the debris must pass through the glowing shell once more before it exits. Thus a second "shot", precisely as effective as the first, still awaits each and every piece of the debris plunging along inside the shell as it exits.

As the debris continues on to the latter part of midcourse and early terminal phase, any portions large enough to track are subjected to small, intense Tesla globes where the energy density in the shell is many orders of magnitude greater than in the larger globe used in earlier midcourse. This part of the defense system simply services each incoming "blob" methodically, probably first in the pulse mode. Later, any blobs still remaining are given the maximum "continuous heating" mode with a small Tesla globe, to actually vaporize metals and materials.

In the unlikely event that anything active still remains, or that an object has managed to elude the large and small Tesla fireballs, a Tesla shield is still to bo encountered, towering over the protected area. For significant targets this shield will be concentric, and will contain three or more concentric Tesla shields. Again, the approaching vehicle will be subjected to multiple EMP's and severe heating throughout its volume. In addition, the concentric shields will "clean up and sterilize any gamma radiation and EMP resulting from any deliberate high altitude defense suppression nuclear burst that somehow (inconceivably!) gets through the launch phase ABM system, and the Tesla-globe midcourse and earl terminal phase defenses.

As can be seen, the system complex represents a most formidable defense **that** certainly approaches 100% effectiveness against the present triad, and even against the addition of cruise missiles.

In addition, since these weapons suffer from very strange constraints and limitations, the scalar transmitters are actually dual mode: they become conventional radars by simply switching into the ordinary EM mode. They arc part of the more conventional ABM defense system complexes we presently recognize in the Soviet Union. In this conventional role, backup ABM missile

interceptors are available, to be employed in case the conventional role must be assumed.

Later we will address the reason for the strange limitations that must be placed upon unqualified use of the large scalar EM systems, particularly in the pulse or "burst" nodes.

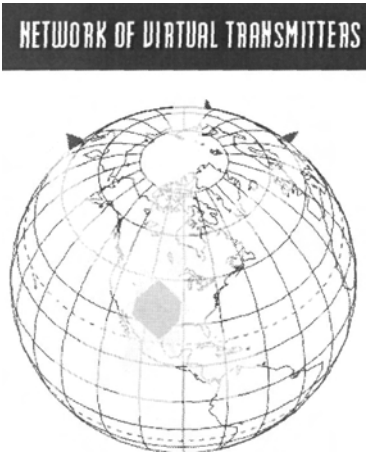

Slide 063: Network of Virtual Transmitters

In July 1976 the U.S. received very special Bicentennial greetings from the Soviet Union.

At that time, communications systems of the world in the 3-30 megaHertz band suddenly met substantial interference from extremely powerful, chirped Soviet transmitters that were suddenly activated. These transmitters continue their transmissions to this day.

Estimates of the power of these enormous transmitters vary, but figures range as high as several hundred megawatts, with a nominal figure being 100 megawatts.

These powerful transmitters were promptly nicknamed "Woodpeckers" because of the characteristic sound of the chirped signal when received. That is, the received signal made a "pecking" sound much like a woodpecker's beak hitting a block of wood.

Several nations protested, but the powerful signals have continued, right down to this day. The only Soviet response was to add a "spread spectrum" capability, so that the transmitter did not dwell too long on one specific frequency, but shifted periodically to other frequencies.

These transmitters have apparently never been precisely located by U.S. intelligence, but their beams carry much of the characteristics of an **over-the** horizon (OTH) radar. They have been dubbed OTH-radars by U.S. intelligence, and can without question perform that mission, in addition to some very interesting missions which U.S. intelligence does not assess.

Soviet Military Power, Department of Defense, 1985, p. 45 shows the direct intersection over the United States of the Woodpecker radar beams used in an OTH-role. We show an illustration of that intersection on this slide.

In addition, we show an additional "scanner" beam that can be scanned across the intersection "grid" over the U.S., formed by waveform interference of two main Woodpecker beams.

These Woodpecker transmitters have a great many diverse functions.

First, they can be used in a conventional over-the-horizon radar node, since their beams follow the earth-ionosphere waveguide and curve around the earth. In this mode they can detect missiles at launch and thereafter, and strategic bombers when taking off and thereafter.

However, these scalar interference grid weapons have many other uses.

First, they can be used to biologically attack entire populations in a targeted area. This aspect is not covered in this briefing. Suffice it to say that phase-locked ELF modulation signals ot 10 Hz and less are often detected on multiple Woodpecker frequencies simultaneously. In a target area, this modulation - if sufficiently stronger than the Schumann resonance of the earth's magnetic field - will entrain a percentage of the brains into "forced entrainment." In that case, these human brains are "synchronized" to the Woodpecker signals so that multiple coherent frequencies are phase-locked into them. That is, multiple coherent EM channels directly into these entrained brains now exist. At that **point,** Fourier expansions may be used to attack specific portions of the brain geometrically.

In addition, scalar EM disease patterns can be modulated upon the carriers, again with Fourier expansions. Specific biological effects can be induced in the entrained populace at will, limited only by the state of the art of the Soviet technology used to attack them. Possible induced effects include instantaneous **death,** heart seizure, severe emotional disruption, loss of control of internal functions, diseases, disabling of the immune system, and even implantation of **thoughts,** emotions, and ideas which are interpreted by the targeted subjects as their own.

While further discussion of this area is beyond the scope of this briefing, the biological aspects of the Woodpecker transmitters are horrible. It suffices to say that, in thousands of experiments, Kaznacheyev demonstrated that almost any **kind** of cellular death and disease pattern could be electromagnetically transmitted. Kaznacheyev reported the effect in the near ultraviolet. Experimenters at the University of Marburg in West Germany duplicated the experiments in the infrared.

The bottom line is that photons themselves can carry death and disease patterns between cells. Scalar E*M* technology allows the synthesis of the actual potential pattern (which after all represents total control of charge and charge distribution,

hence biochemistry in the cell) of a particular cellular disease or death mechanism. Symptoms (and cellular death from them!) of nuclear radiation, chemical poisoning, bacterial infection, and other mechanisms were successfully induced by the Kaznacheyev experiments.

Dr. Popp of West Germany has published an analysis of the virtual photon master control system of the cells. Since scalar EM represents the deliberate ordering of virtual particle flux into deterministic patterns, the master control system can readily be entered with scalar techniques to induce disease and disorder at will.

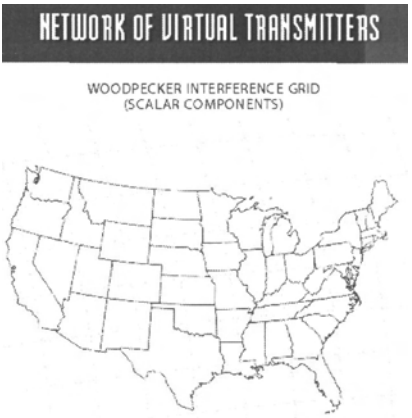

Slide 064: Network of Virtual Transmitters

On this slide we diagrammatically represent the Soviet woodpecker interference grid over the U.S. This grid can easily be used to influence and control the weather, and for over a decade the Soviets have manipulated the weather over the U.S. and other parts of the world.

By the peculiar title of this slide, we wish to call attention to the fact that, in the exothermic mode of scalar interferometry riding on the woodpecker radar signals, each of the woodpecker grid interference cells can act as a little "virtual transmitter." It's exactly as if the Soviets had been permitted to enter the U.S. and build thousands of EM transmitters at regular intervals all over the country!

And of course it's even worse. In the endothermic mode, it's as if the Soviets had been permitted to enter the U.S. and build thousands of "cold generators" all over the U.S. That is, in that mode, each of the "transmitters" can actually extract electromagnetic energy.

These two modes have enabled the Soviet Union to drastically manipulate the weather at will over the U.S. during the last decade (and similarly, for other places as well.)

(For a disclosure of the Soviet weather control operations over the U.S., see T.E. Bearden, Soviet Weather Engineering Over North America, 1-hr. videotape, 1985, available from The Tom Bearden Website www.cheniere.org. We will only summarize here.).

Briefly, inside various reference level zeros on the ordinary EM woodpecker carriers, scalar "channels" are established. Scalar beams, signals, and interferometer pulses and transmissions can be transmitted through these reference channels as if directly through a wire. Phasing, pulse shaping, and Fourier expansion formation of geometric forms are then the key to be used in scalar interferometry through the internal scalar channels of the Soviet woodpecker signals.

By choosing one or more grid cells and using scalar interference there in the exothermic continuous mode, local heating and expansion of the air, and formation of a high-pressure area, occurs.

By choosing one or more grid cells and using scalar interference there in the endothermic continuous mode, local cooling and shrinking of the air, and formation of a low-pressure area, occurs.

By electromagnetic "rotation" of the interfering scalar beams, the hotspots and coldspots can be moved along a desired path and at a desired speed.

By these methods the entire jetstream across the U.S. can be deviated and controlled to a large degree. Moisture can be drawn from the Pacific beyond Southern California and Mexico, and collided over the southern U.S. with extremely cold air brought down from Canada, producing ice storms such as those in and around February 1, 1985.

Violent thunderstorm activity can be induced and directed. By adding "spin", these same storms can be induced to form extensive tornados.

By sustained weather engineering operations, drought or excessive rain and flooding can be induced in areas of the U.S. as desired. Crops can be destroyed or heavily damaged by severe and unseasonal weather.

If the grid is placed in the ground on scalar EM carriers instead of normal EM carriers (and the woodpecker "radars," can switch to, or add, scalar carrier mode whenever they wish), it can be used as an anti-submarine weapon, as we shall see later. It can also be used to cause substantial ocean effects that have drastic consequences on the world's weather - such as the anomalous El Nino of 1982-83.

By localizing one spot of heating at the top of a thunderstorm anvil, and another spot of cooling at its side, a localized downburst can be created. Our weather satellites have detected just such an anomalous combination heating and cooling of thunderstorm anvils over the U.S. While there may exist natural mechanisms to cause this anomalous dual pattern, it may also be caused by Soviet weather engineering, which can cause either broad-area or highly localized effects.

All these types of weather engineering incidents have been deliberately created over the U.S. by the Soviet Union.

Perhaps the greatest weather effects can be induced by altering some of the large-scale normal mechanisms that influence and control our weather. Thus the **artificially** induced El Nino of 1982-83 was a case in point, causing drastic weather upsets worldwide for a year or more.

The last decade has seen weather so anomalous that it could only occur once in 1200 years by chance. It has not been due to normal chance, but by Soviet weather engineering, particularly since the advent of the Woodpecker transmitter complexes.

ADDITIONAL BACKGROUND FOR THE BRIEFER:

The Woodpecker transmitters can carry scalar components, which, in addition to biological strikes, can be used for many other purposes such as to

1. Influence and control the weather,
2. Deviate the giant jetstreams of the upper atmosphere,
3. Detect, track and destroy missiles shortly after launch,
4. Detect, track and destroy strategic bombers and other aircraft,
5. Attack land and ocean surface targets by large aerial electromagnetic explosions: the EM explosion produces the fireball, the thermal effects, and the blast wave of a nuclear explosion without the nuclear radiation and radioactive fallout contamination;
6. Attack surface land and ocean targets by large "cold explosions", where living things freeze almost instantly, leaving the surface facilities and equipment intact,
7. Attack land and ocean surface targets by severe internal electromagnetic disruption, so that all electronics are dudded,
8. Attack personnel on land and sea by direct destruction of their nervous systems with an internally induced strong EMP,
9. Disrupt the operation of distant facilities, equipment, and personnel or destroy food crops in large areas by severe cold or severe heating, or even startling oscillation between the two.

   In addition, the scalar aspects of the Woodpecker transmitters can be beamed through the earth and ocean as surface waves or at a given depth to intersect at a distant region. This mode can be used to

10. Cause distant earthquakes in a distant fault zone by depositing energy in the rocks there, increasing the plate stress until slippage occurs at a fault zone,

11. Cause large, anomalous rocking of an entire plate or large area, by depositing and extracting energy from alternate areas, causing buckling of the large rock plate,

12. Set up an interference grid under the water, so that underwater submarines can be detected, tracked, and destroyed on station and with their missiles still unfired,

13. Attack naval vessels and task forces through the water and through their hulls, without warning,

14. Attack missile silos and nuclear storage sites "before launch", directly through the earth itself,

15. Initiate the full nuclear explosion of implosion-type nuclear warheads on-board missiles on station,

16. Initiate full nuclear explosion of implosion-type nuclear warheads in storage sites and ready reserve,

17. Destroy seaborne and ocean-bottom-mounted mines and underwater sensors, even including entire "fields" of them,

18. Detect and destroy hostile torpedoes, ship-to-underwater anti-submarine missiles, and dumped anti-submarine munitions and charges,

19. "Pump" the electrical grounding of distant electrical power distribution and generation systems so that the system catastrophically fails,

20. "Pump" the electrical grounding of distant electrical power systems so that radio and television transmitters, power grids, and wiring complexes in buildings and facilities radiate a desired scalar wave component or signal complex at equipment and personnel.

All in all, the woodpecker transmitter complexes and other associated scalar EM weaponry are most useful in the major missions required in war.

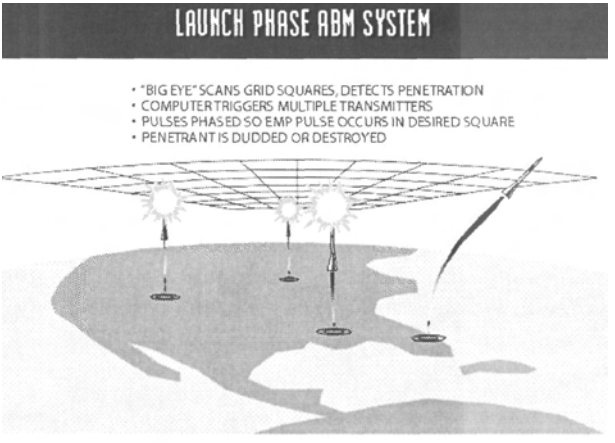

Slide 065: Launch Phase ABM System

On this slide we show the use of the Woodpecker grid in the Launch Phase **ABM** system role.

The scalar components establish an interference grid over the U.S., at some altitude above the earth. One or more separate scalar interferometers transmit through scalar channels established in the Woodpecker's normal EM carriers, scanning through the grid square cells one by one in the "just barely extract energy" endothermic mode.

Back in the Soviet Union, the energy extracted passes through a scanned receiver biased just so that the normal energy extracted from the distant atmosphere does not show on a scanning screen. Any substantial amount of additional energy appearing in the cell - such as from the jet engines of a large aircraft or the rocket exhaust of a large missile - will be detected.

The **operation** of this weapon is four-fold: (1) the scanning interferometer or "big eye" scans the grid squares, detects penetration, and tracks the rising missile. (2) A separate scalar EM interferometer (a howitzer) is controlled by a computer and fired through a separate scalar EM channel opened in the ordinary EM woodpecker carriers. (3) Two timed scalar pulses are fired so that they converge and meet in the grid cell containing the rising missile. This results in the **sudden** emergence of a violent EMP pulse throughout the missile and the surrounding vicinity. (4) All missile and warhead electrical and electronic systems are instantly dudded and destroyed. In addition, fuels, propellants, and

explosives of the missile are immediately ignited, explosively destroying the penetrating missile.

That takes care of the missile target. (The same weapon, of course, can be used against airborne strategic bombers - including Stealth-type bombers. In fact, Gary Powers' high flying aircraft was probably shot down in 1960 by a "jury-rigged" scalar EM howitzer using modified radars and timed scalar pulses to provide an aerial explosion and EMP.)

The Woodpecker grid/howitzer weapon system can be placed over the ocean and used against cruise missiles, naval surface-to-air and surface-to-surface missiles, submarine-launched ballistic and cruise missiles, etc. Placed over a carrier task force, it can also take care of the aircraft launched by the carrier as fast as they are launched. It can also handily take care of the missiles launched by guided-missile cruisers of the accompanying task force.

Now let's take a look at the command and fire control end of this weapon system, way back in the Soviet Union.

SOVIET COMMAND & CONTROL CONCEPT

Slide 066: Soviet Command & Control Concept

On this slide we show a postulated Soviet fire control system for the grid weapon.

Two or more operators sit at a control console, facing a giant display (screen). The display contains a grid, which represents the distant interference grid of the Woodpecker carriers (or scalar EM carriers, if in the underground or underwater mode). A distant missile launched into the real interference grid overhead will cause a spot of light to appear in the appropriate grid square (cell) on the operators' screen. The operators will track the displayed target, select firing mode and type of action, engage the target, and assess whether or not the distant target is killed or missed by the firing.

When a missile is launched in the distant area over which the Woodpecker grid has been placed, it quickly rises through one of the scanned grid cells on its upward journey. As it penetrates the cell, additional energy is extracted (since part of the missile's exhaust energy is now extracted also). At the screen in the Soviet Union, the additional energy received rises above bias, causing a "bloom" or spot of light to appear on the screen at the appropriate grid cell representation.

The distant operator has now detected the missile launch and its location. He places a marker over the target track and activates the computer, also inputting the type of firing or action to be performed. In this case, let us say he wishes a burst of **energy** to emerge inside the distant launched missile, and has activated that mode of firing action.

The computer computes the necessary parameters for another scalar interferometer channel in the exothermic mode, and for firing at the location of the rising missile so that two scalar pulses will meet in the cell penetrated by the rising missile on the other side of the earth. As the channel is opened, the firing solution settled, and the interferometer howitzer readied, the computer activates indicators on the console notifying the operator. When all is ready, a "ready-to-fire" light is lit on the console.

Upon receiving the command to fire and destroy the missile, the operator presses the fire button. The computer fires the activated scalar EM howitzer in the pulse mode. The operator continues to watch his screen.

When the pulses meet in the distant grid cell, a violent EMP suddenly arises in and throughout the missile and its surrounding vicinity. This explodes the missile propellants and warheads, destroying the target.

On the distant screen, a sudden drastic "blossoming" of the target results from the sudden extraction of a great deal of additional energy by the scanning scalar interferometer. The operator thus knows he has made a "kill."

Should for some reason the target be missed, additional energy will still be extracted by the scanning interferometer from the grid cell/vicinity in which the EMP suddenly emerges. The distant operator will still see a bloom on his scope, but not nearly so great as when the missile explodes. He thus knows that the EMP effect of the firing has occurred, but the target has been missed (he will see the bloom in its offset location as well). In that case, the operator can quickly mark the EMP location, hit the switch, and the computer will automatically correct and fire again.

At any rate, for a miss a large "sonic boom" or blast still results in the EMP emergence zone from sudden heating of the air. These are precisely the type of booms that were associated with three NASA shuttle launches prior to the end of 1985. These were actual testing of this weapon system, using the shuttle launches to provide a target, and delaying the burst some minutes so the shuttle would not actually be destroyed. On Nov. 26, 1985 a "marker beacon" (glowing ball of light) was also created over the site. This was probably to orient satellites and other detection systems. Some 12 minutes after that nighttime launch, a large blast occurred over the site, heard for hundreds of miles up and down the coast. Shortly after, the light suddenly moved away very rapidly - faster than a jet aircraft.

If many missiles are being launched, the operator marks them rapidly, one after the other, and the howitzer fires burst after burst at them, decimating the launched missiles, one after the other. In this fashion most of the counterstrike missiles launched by the U.S. would be destroyed shortly after launch, greatly reducing the number of missiles that make it to midcourse.

However, apparently the loss of the shuttle launched on Jan. 28, 1986 was caused by the addition of a metal-softening pattern in the exothermic mode, in and around the booster, using the actual booster ionic flames as a receiver-amplifier. This led to the failure of one of the supports and the partial breakaway of the right booster. The booster rotated into the tank, causing damage and the resulting explosion when the venting main fuel hit the booster flame.

By spread spectrum techniques and proper timing and phasing, one system of Woodpecker transmitters can set up multiple interference grids, in various parts of the world. The scanners and howitzers can operate in the appropriate zones, again by spread spectrum techniques and proper timing and phasing.

In fact, the latest versions probably can operate in the "ordinary EM carrier" (atmospheric) mode and the "scalar EM carrier" (underwater and in the earth) mode simultaneously - again by timed switching between EM and scalar EM carriers, spread spectrum techniques, and timing and phasing of howitzers and Manners.

Thus a single system can operate in the earth, underwater, and atmospheric modes. It can operate against the very wide range of different targets previously mentioned. It can do all this "simultaneously," from a real-time practical viewpoint.

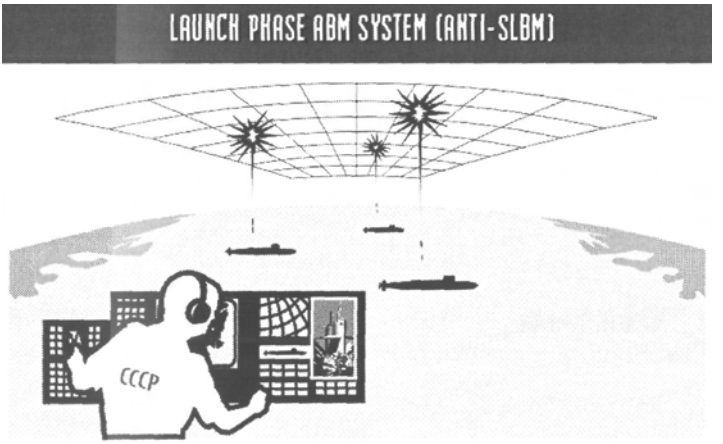

Slide 067: Launch Phase ABM System (Anti-SLBM)

Here we show the operation of the system in the atmosphere over the ocean, to destroy sub-launched ballistic missiles such as Poseidon and Polaris. The system operation shown uses the normal EM Woodpecker carrier frequencies, with scalar components to establish the interference grid, and scalar channels for the scanners and howitzers. The grid can be set up by this method anywhere in the world.

As can be seen, during their early launch phase, this mode will take care of the missiles launched from underwater U.S., British, and French nuclear submarines.

Remember, this is just one mode in which the system is operating. It can at the same time have other interference grids at other locations, and even in other modes, including underwater grids used against the submarines themselves, it can be engaging a multitude of targets of a wide variety of types, essentially all simultaneously.

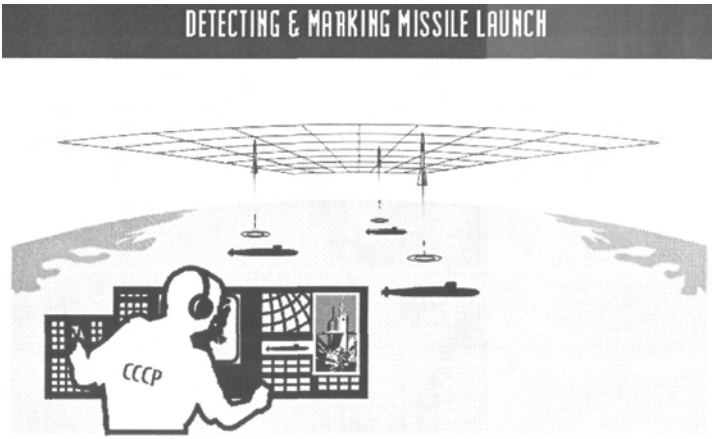

Slide 068: Detecting & Marking Missile Launch

Here we show the missiles launched from the underwater submarines, when just detected in the atmosphere over the ocean. As each rising missile is detected, an operator at the screen places a cursor (a "marker") over the detected track spot on the scope.

The computer quickly computes the firing parameters and indicates when the system is "ready to fire."

By using additional scalar scanner frequencies in the multi-gigaHertz range and fine scanning, the operator is able to accomplish non-cooperative target identification.

After the operator places a cursor over a target, the advanced system fine-scans and identifies it as hostile, then continues the track in automatic.

When the operator presses the fire button for a designated target, the computer intiates fire by the appropriate scalar EM howitzer through established grid scalar firing channels.

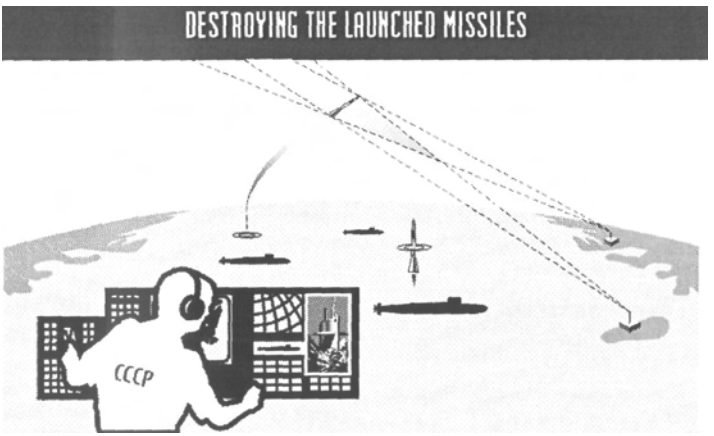

Slide 069: Destroying the Launched Missiles

On this slide we temporarily omit the interference grid and diagrammatically show the operation of the scalar EM howitzer. As shown, two pulses are fired so that they meet in the grid cell where the rising missile is located. A drastic EM pulse suddenly emerges everywhere throughout the missile and its vicinity causing instant missile destruction.

Of course, individual howitzers not in the Woodpecker carrier's scalar channel can also fire at the missiles in the purely scalar exothermic mode. Or they can utilize the large "Tesla globe" in the continuous mode, the small Tesla "ball of light" in the continuous or pulsed mode, etc.

Also, continuous EM energy can be caused to emerge in a broader, "defocused" interference area causing electronic dudding of circuits in vehicles over a wider area. This is a very useful mode to use against mass attacks by many aircraft and/or many missiles at the same time. That is, the entire formation can be attacked in the "dud electronics" mode, and then followed up by more intense servicing of each individual hapless target.

Again, in 1960 Gary Powers was probably downed by a crude prototype scalar interferometer "howitzer" obtained by modifying two ordinary radars. At least the Soviets had previously been unable to down a penetrating U-2 with missiles they possessed. We know the scalar howitzers were in development, for Khrushchev had announced to the Presidium in January 1960 that a new "fantastic weapon" was in development. A development prototype was probably used to down Powers' aircraft.

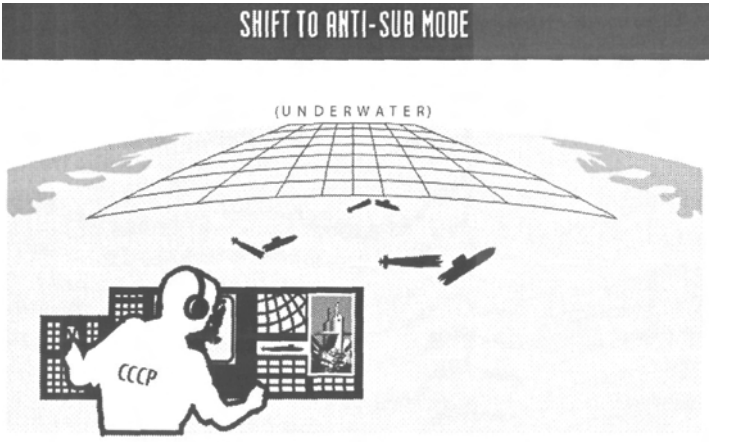

Slide 070: Shift to Anti-Sub Mode

In the underwater mode portrayed on this slide, the Woodpecker transmitters have been switched to "scalar carriers" mode and the carrier beams transmitted through the ground and into the ocean underwater. (Remember, an artificial EM potential that does not couple to charged particles or ions will travel through the ocean, but a force field will not.)

Thus a giant scalar interference grid is now established underwater. Additional scalar beams in the weakly endothermic mode scan this grid. When a submarine enters tne grid, it substantially changes the potential in that cell, and the scanner picks this up. The distant screen now displays the sub as a "track" of light in the appropriate grid square cell. The computer switches in fine-scanning and non-cooperative target identification. It identifies the target as hostile and alerts the operator (by blinking the track and changing its color to red, for example).

As before, the operator marks the target and enters the firing mode and type of action desired. Again, let us assume the "EMP burst" mode of destruction is to be used. The computer computes the firing parameters and readies the howitzer, When the commander gives the command to fire, the operator presses the firing button. The computer fires the howitzer.

Two scalar pulses proceed through the howitzer scalar channel and meet in the submarine. Throughout the sub and its vicinity, a violent EMP is suddenly experienced, knocking out the electrical systems, electronic equipment, and igniting propellants and explosives in the on-board missiles and armament. This explodes the submarine, missiles, and torpedoes instantly.

At the distant command console, the scanners detect the violent eruption of energy from the exploding submarine. It appears on the screen as a sudden strong blossoming of the track. The operator assesses that the target has been destroyed. He immediately engages another target if one is present.

If the EMP is off-course and misses, the scanners still pick up a smaller blossoming in the offset location. The operator immediately knows he has missed the target. He marks the offset bloom, presses the switch for "Correct!" and the computer makes the firing correction. When the operator again gets a Ready-to-Fire light illuminated, he presses the firing button and fires again at the target, this time with corrections applied.

Again, the same Woodpecker system - using timing, phasing, scalar/EM switching and spread-spectrum techniques - may be involved in several grids and many types of targets. When in a target-rich environment, the firing operators may be very busy indeed.

As we shall later see, the same weapon system may also be firing in the "cold explosion" or pused endothermic mode, where intense bursts of instant and severe freezing are unleashed in the target zone.

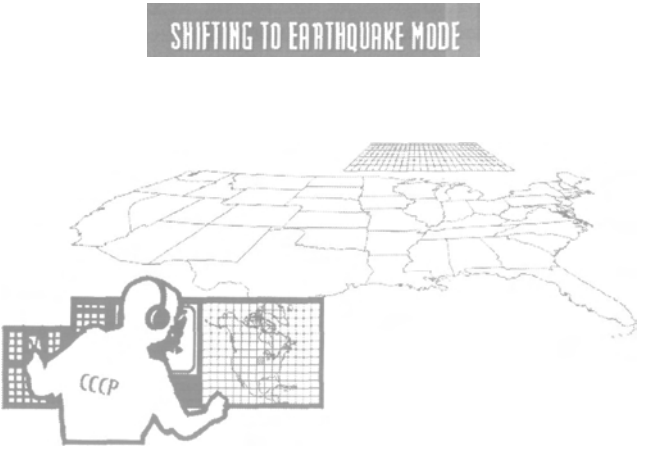

Slide 071: Shifting to Earthquake Mode

The uses of the complex grid, scanners, and scalar howitzers is limited only by human ingenuity and state-of-the-art of the technology developed.

By shifting to the scalar-carrier mode and transmitting in the surface layer of the earth, the interference zone can be established in a distant region of the earth, beneath the earth's surface.

Suppose we establish a very small interference grid in the earth at and around a distant fault zone. Then by steadily depositing energy in the zone in the continous exothermic mode, the stress in the fault area is steadily and gradually increased. Eventually the plates on each side of the fault will slip, and a "natural appearing earthquake" occurs. If the energy is deposited slowly and gently, a gentler quake can usually be effected. If the energy is deposited fairly rapidly, a higher peak stress can usually be reached before the rocks slip, and a larger, more destructive earthquake results.

By making a wider grid in the earth in a larger area, a strange kind of earthquake can be induced, whether or not a fault zone exists in the area. By pouring energy out of alternate cells and extracting energy from the others, a "wave-like" buckling tensile and compressive stress is created throughout the zone. As this continues, the entire plate area will try to oscillate, moving and causing an anomalous sort of "rocking, flat earthquake" throughout a large area.

Not too many days after the destruction of the Challenger on January 28, 1986, such an anomalous "flat earthquake" occurred in the U.S., near the Great Lakes,

involving some 10 states. This was probably the subsequent testing of an additional weapons mode of the same Soviet scalar EM system that destroyed the shuttle.

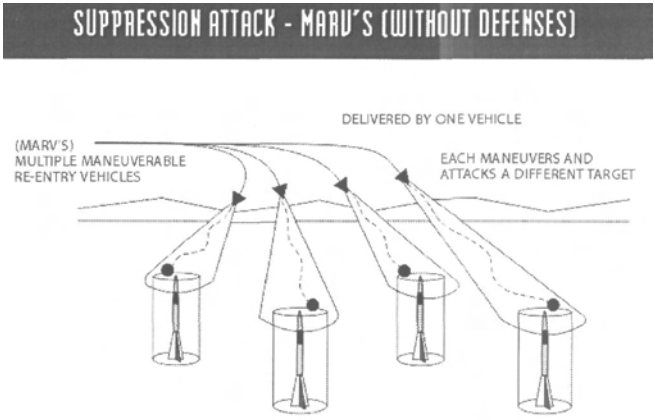

Slide 072: Suppression Attack—MARVs (without defenses)

Now to shift the emphasis a bit, and look at the impact on some "normal" strategic systems and concepts.

On this slide we show the basic idea of suppression attack against an enemy's ground based missile force in fixed-site silos. The attack uses multiple maneuverable re-entry vehicles (MARVs) delivered by a single carrier missile, which acts as a "bus." The bus ejects the MARVs at the appropriate time, and each of the MARVs heads toward its predesignated target, maneuvering as it re-enters the atmosphere and proceeds to the target. The maneuver makes conventional intercept of the MARV by conventional anti-ballistic missiles more difficult.

In this manner, missile silos without defenses may be caught by surprise and destroyed.

The "bus" concept actually multiplies the number of targets a single launched missile can attack, and the maneuvering of the MARV increases the difficulty of defending the target area by orthodox means.

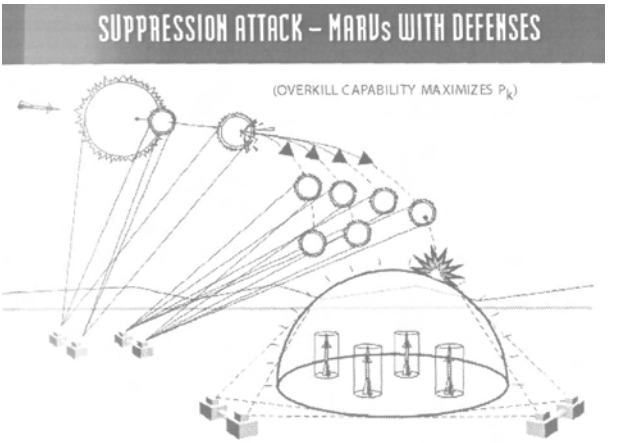

Slide 073: Suppression Attack—MARVs (with defenses)

Now suppose some of the scalar EM defenses we have discussed are added to the picture.

On this slide we show a similar missile field, defended by a Tesla dome and by multiple scalar howitzers.
The howitzers take the incoming buses under attack during the early midcourse phase, by means of very large spherical EMP globes. Many of the buses - and their entire payloads, including the nuclear warheads themselves - are dudded by these midcourse defenses.

Servicing of dudded vehicles that have penetrated the globe now occurs farther along in midcourse. Each dud vehicle may be serviced, for example, with a small globe in the continuous mode for an appreciable number of seconds. This causes vaporization or fusing of the physical structures of the vehicles.

Groupings of incoming vehicles may also be serviced by medium-sized globe in the pulse mode. This assures dudding, and is especially useful for clearing away chaff and debris with smaller ballistic coefficients. It also is useful to further insure that the nuclear warheads themselves are totally dudded.

An additional wrinkle is to place scalar signal patterns - that affect and transmute a nuclear warhead's radioactive nuclei - onto a continuous globe. In short, by the proper scalar signals it is possible to transmute plutonium and uranium into harmless elements, and it can be done at a distance. The 4th and 5th generation Soviet scalar EM technology is probably capable of doing **this**

This insures that, not only are the incoming nuclear warheads electromagnetically inert, but they are also nuclearly inert and incapable of generating nuclear explosions.

Still another wrinkle - particularly useful against implosion-type weapons - is to utilize a scalar signal pattern that causes sudden generation of neutrons in the active material (plutonium or uranium). This harmlessly explodes the nuclear warheads while they are far away from their intended targets and out in space. The burst mode is probably the most useful for this tactic.

Note that, if desired, this same tactic - exploding the nuclear weapons themselves - can also be utilized in the Launch Phase ABM system grid against the missiles after launch. This capability converts an adversary's intended nuclear attack against you to an actual attack against himself!

Also note that the adapted grid system in the surface of the earth can be used to explode the nuclear warheads in ICBMs while they are still in the silos, or to explode nuclear warheads in storage. In the underwater mode, the nuclear warheads in the Poseidon and Polaris missiles on-board the nuclear submarines can be exploded in a similar manner. In fact, the nuclear reactor used to furnish the power for the nuclear submarines can also be exploded or disabled in this manner, as can land-based and ship-based reactors.

Again, this actually turns an adversary's own nuclear weapons against him. His own weapons can be used to obliterate him. Without scalar defenses, possessing the capability of nuclear attack becomes a serious detriment!

But back to our slide. Just in case something gets through this formidable defense somehow, the Tesla Shield (dome) provides the final reiteration that takes care of any residue "leakage."

The sum total of these defenses fully justifies the 1968 Soviet statement in Military Strategy that the USSR has achieved a 100% defense, and the West has

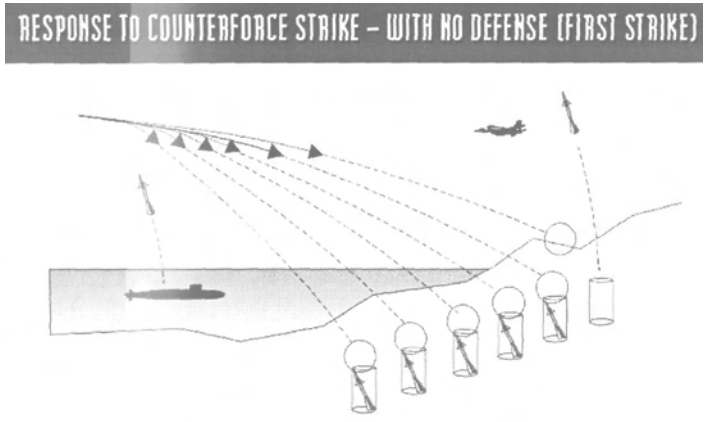

Slide 074: Response to Counterforce Strike with No Defenst

Here we show the orthodox concept of response to a surprise counterforce nuclear strike when the surprised force has no defenses.

A great percentage of the attacked missile silos are destroyed. The surprised side thus is able to mount only a limited strike in retaliation. Perhaps he is able to launch some remaining silo-based missiles that escaped destruction. He is also able to launch missiles from any of his underwater nuclear submarines that escaped. Some of his strategic bombers may have escaped destruction on the ground or while airborne on station; these surviving bombers can be directed to proceed with strategic reprisal against the enemy.

As can be appreciated, this entire concept is now totally obsoleted by the Soviet possession of scalar EM weapons.

The "mutual assured destruction" capability - or MAD concept as it was so aptly named! - is no longer mutual.

And for two reasons: (1) the Soviet surprise attack could destroy essentially all our Triad forces wherever they are, in the first attack. (2) Even if a very small number of our strategic forces survive, the puny strike we could attempt to launch could be repeatedly decimated from launch to terminal phase.

The restraint on the Soviets is not because of our Triad forces. The restraint is twofold: (1) a second nation has scalar EM weapons, and would undoubtedly unleash them upon the Soviet Union with great violence if such a massive

world-wide destruction of U.S. forces occurred or was threatened (is it really "accidental" that six major Soviet missile ammunition storage sites mysteriously exploded within seven months?); (2) the closed-loop scalar radiation exchange system of Earth-Sun could be inadvertently "tweaked" in the feedback loop from Earth to Sun, so that a large solar scalar resonance was stimulated. In that case the Sun could emit a mighty resonant "burp" that would simply wipe out all life on Earth in a fiery shower.

The "terror" in the "balance of terror" between nations has just increased by many, many orders of magnitude.

The biblical prophecy that the Earth will be wiped out by "fire and brimstone from heaven" is very near fulfillment now.

Put another way, the pucker factor - even on the Russians who may contemplate unleashing Armageddon - is higher than any Western strategic analyst has ever imagined, even in his wildest nightmares.

Truly these weapons are "more frightening than the mind of man has imagined," as Brezhnev put it in 1975.

The frightening scalar EM weapons can be used, but only very, very gingerly indeed. If a slight mistake is made, everybody loses everything.

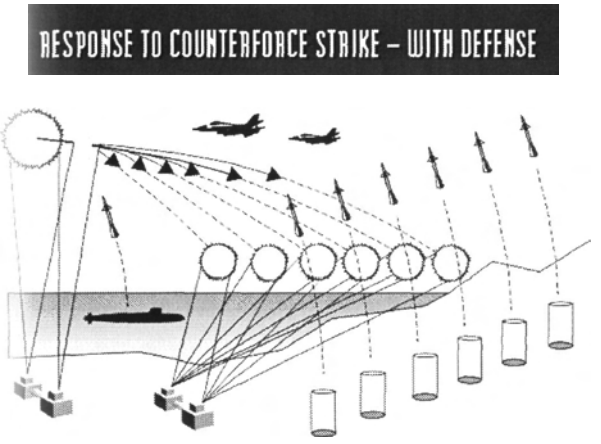

Slide 075: Response to Counterforce Strike with Defense

On this slide we show the impact of scalar defenses against an adversary who possesses only the orthodox nuclear weapons and delivery systems, and makes a "first strike" by surprise against his opponent.

In this case, the attacked opponent has scalar EM defenses.

With just the midcourse and terminal scalar EM howitzer defenses, almost all of the attacking missiles and re-entry vehicles are destroyed.

If for some reason (such as to prevent triggering the sun and destroying the world inadvertenly!) the attacked adversary does not wish to attack strategically with scalar EM weapons, he may now launch a massive retaliatory strike on his opponent.

And if that opponent has no ABM defenses, he's just bought the farm.

What a funny coincidence! Long ago, we crazy Americans chose to put all **our** eggs in the offensive basket. That is, we thought the Soviets cannot dare to strike us because we will have enough surviving missiles to penetrate any orthodox defense and destroy them in return. They would also have the same "mutual assured destructon (MAD)" capability, of course!

The MAD concept was aptly acronymmed - it was an insane idea from its inception. That is, the Soviets were not supposed to defend their cities **and** populace, and neither were we. That way, you see, we could destroy their

citizenry at will, and they could destroy ours at will. We deliberately agreed to that, thinking - in our insanity - that the Soviets agreed also.

Of course the Soviets weren't playing the same lunatic's game at all. They simply fed our own garbage back to us, and we importantly thought we were negotiating something. Unknown to us, they were secretly building and deploying scalar EM defenses even then. Since we didn't know of any other defense, we assumed the Soviets could not defend their citizenry with ABMs any better than we could defend ours with ABMs. So we blithely scrapped our ABMs.

The high government officials of the United States of America grossly violated our constitution and their sworn oaths of office. Our constitution specifically charges the government of the United States to defend the people of the United States. That means our officials are specifically charged with defending our people. Yet they deliberately agreed not to do so, and they deliberately sacrificed us in advance.

They committed treason of the highest kind, by deliberately surrendering us to total destruction anytime the big balloon goes up.

The constitution doesn't charge the government with surrendering our citizens to destruction under any circumstances. It charges the government with defending us against destruction.

Ronald Reagan is the first U.S. president in some time to see through the MAD concept. At least he stands forthrightly for defense. It's just a shame that the government and scientific leaders under him aren't aware of the Soviet scalar weapon developments, so they could brief him on these startling developments.

Be sure you understand what the government leaders before Reagan have been saving. For years, our official policy has effectively said to the Russians: "We will allow each side a token defense only. We deliberately will not defend ourselves, so that anytime you decide to strike us you can destroy us. In return, however, we do not think you will want to strike us, for we believe that - before we become ashes from that strike - we can get enough away at you, to destroy you as well. Of course we believe you are in the same sort of boat."

Then we said, "There! That's settled! What a relief! Nobody can strike anybody anymore. Now can we talk about partial disarmament and on-site inspection?"

The Soviets just kept their astonished amusement to themselves and kept building scalar defenses (and scalar offenses as well!). Their deception plan called for imbedding the scalar EM weapons in ordinary systems when possible, and hiding the scalar EM weapons tests in ordinary weapons tests when possible. Of course they had to be adamant in their opposition to on-site inspection; after all, even Western scientists, if allowed on site with the dual-mode weapons, might suspect something was different and possibly things were amiss.

The Soviet deception has worked like a charm. The U.S. MADmen who created and implemented the MAD doctrine have succeeded in prejudicing two generations of academicians and elected U.S. leaders against the need for effective defense. A vast wasteland of inane paper studies - learnedly dealing with ABM's, penetration tactics, leakage, force and counterforce, radar blackout, electronic warfare, etc. etc. - has been churned out by our military, industrial, and university "think tanks" to clog the minds, efforts, and literature of our defense and governmental establishments.

Our homeland has no effective ABM defense (and very little defense against aircraft or subsonic cruise missiles).

Our field army has no effective ABM defense (or air defense). Our naval forces have no effective ABM defense (although they are better defended against air attack than the field army). Yet ballistic missiles - and to some extent cruise missiles - have supposedly been our greatest threat for decades, followed closely by the secondary threat of massed aircraft attack.

A cynic might take the stand that, if our Defense Department hasn't been allowed to defend us (with deployed weapon systems, not by "paper studies") against what we ourselves have proclaimed is our biggest threat, then why is it called the Defense Department? Why not call it the No-defense Department'?

Understand, a great many fine, hard-working people in DoD have certainly tried to get adequate defenses developed and deployed. The sheer weight of the bureaucracy and its mind-numbing entanglements has prevented it.

But it's even worse. Our bureaucrats - both in government and in "big, organized science" - have been so caught up in the "Russians are really just ignorant peasants" syndrome and the "not-invented-here" (NIH) syndrome that they've not recognized the greatest scientific and technical breakthrough in history. Such a breakthrough - far greater in importance that the nuclear bomb has been made, developed, and deployed by the Soviet Union, all in secrecy and behind the smokescreen of a masterful deception plan.

We've totally missed the most incredible "secret superweapons" development program of all times, and the worldwide testing of the weapons themselves.

Hiroshima and Nagasaki should serve as object lessons in the price of ignorance of such technological breakthroughs.

History does repeat itself. But this time it's not we Americans who got the growl new superweapon first.

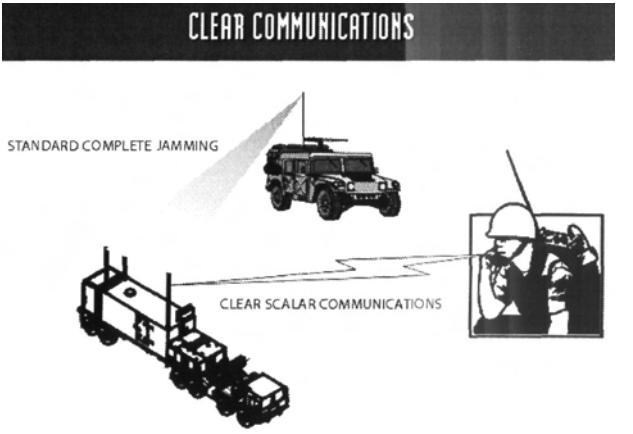

Slide 076: Clear Communications

Now let us rapidly give some unique capabilities that one can do with scalar EM in smaller things. Not only can scalar EM weapons be used in the big "continent burning" strategic weapons, but they can also be used for a variety of smaller defense tasks.

For example, one can establish a zero reference anywhere one wishes in an ordinary carrier. Inside that zero, one can establish as many independent "carriers" as one wishes, and hide them completely from ordinary detectors.

The way to do that is easy. Take as complex a signal as you wish. Subtract it from zero. That gives a "complement" which, when summed with the original signal, will produce the zero. Then only a scalar detector can go inside the zero and pull out the individual components.

So take a carrier wave. Let the enemy jam it completely, with gobs of power.

Your scalar communication channel stays serenely there, calm and unjammed. The enemy thinks you're jammed and can't communicate. Meanwhile, you continue to communicate just fine.

Or be real smart. Take one of those components inside the first zero. Pick a zero reference inside it. Hide still more carrier components inside the second zero. Do this as many times as you wish.

You can put all the telephone calls in the United States of America on one carrier. And you can keep them clear, right through total jamming.

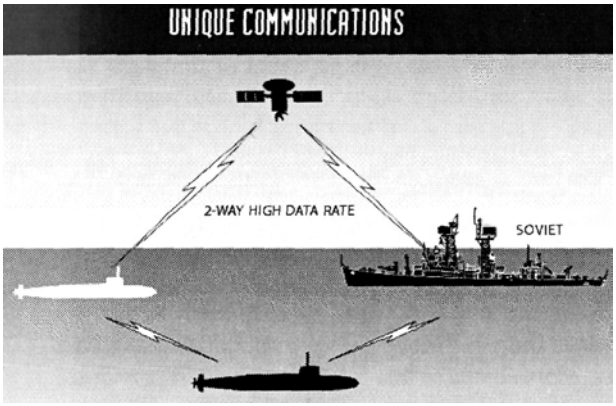

Slide 077: Unique Communications

But that's still not all.

You can also communicate with your submarines underwater. High data rate. Chat away as you wish. You can scramble, frequency hop, encrypt, the works. They can also communicate back to you.

Remember. EM force fields of any appreciable frequency won't travel through the water. Natural EM potentials grab charged particles and ions, so they won't travel through the ocean either. But artificial potentials don't grab onto charged particles or ions, and they will go through the ocean quite nicely.

Everything - aircraft, ships, shore installations, submarines, etc. - can communicate like gangbusters if they possess scalar EM technology.

In fact, you can even build scalar EM underwater radar if you wish.

The airborne scalar EM radar can see under the ocean with a little adjustment. perhaps as well as a conventional side-looking radar sees distant targets today, The airborne scalar EM radar can detect and track the underwater submarine while tooling along.

In fact, the airborne scalar EM radar can then destroy the sub, by using a **little** scalar interferometry. And it's even possible to do scalar interferometry with a single transmitter! How, is proprietary to a friend.

In fact, you can even use your enemy's jamming transmission as a "wire" along which to establish your scalar EM channels. You can use these scalar channels In the "weakly endothermic mode" to locate his transmitter and "lock-in" on it. You can "walk" the lock-in right past his encryption function to the "clear" Input, and receive and record that in the clear. All this from a distance.

You can then destroy his equipment if you wish, or just continue to monitor him in the clear if it's important to do so. Perhaps now we can understand what the decades-long weak microwave radiation of the U.S. Embassy in Moscow is all about. Or why the Soviets are building a nice new Embassy, bristling with antennas, on the high ground in Washington, D.C.

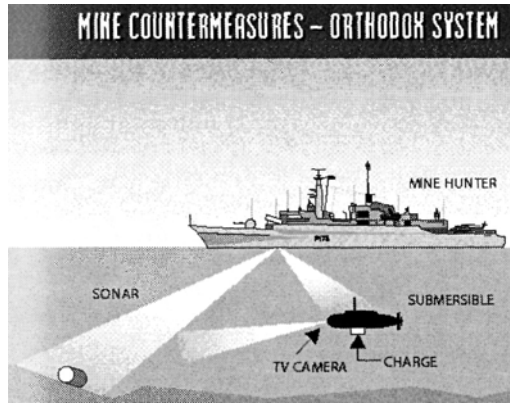

Slide 078: Mine Countermeasures—Orthodox System

Take something like mine countermeasures, for example. Finding and destroying mines - particularly those placed on the bottom in relatively shallow areas such as ports and rivers - is a really tough problem.

Presently it's often done as portrayed on this slide.

Here a minehunter ship uses an underwater sonar to locate the mine, or what resembles a mine. Then it directs a submersible robot vehicle to proceed over to the object and examine it with an underwater television camera. If it's a mine, the submersible places a remotely operated charge beside it, then chugs away. When it reaches a safe distance away, the charge is exploded, causing the mine to detonate.

A very painful process. Very time consuming, and very difficult.

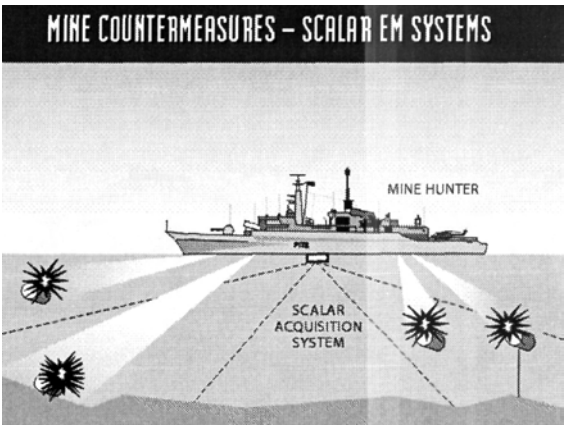

Slide 079: Mine Countermeasures—Scalar EM Systems

Now try the same thing while using scalar EM underwater systems. The scalar EM acquisition system is really a sophisticated scalar radar. It scans a large area rapidly, locating moored mines, bottom-planted mines, and drifting mines.

The acquisition system is also a scanned "underwater eye." The operator in the surface vessel can tell whether or not it's a mine he's located.

Once thc target mine is detected, a computer computes the firing parameters for a scalar interferometry pulse to hit it and destroy it. The operator fires the pulse, destroying the mine.

The same system that detects the mine at a distance identifies and destroys it at a distance. In this way large areas can be quickly scanned and swept clean of mines.

If a suspicious object is detected and one is still not quite sure it's a mine, shoot it anyway! If it's a mine, it explodes. If it's just a rock, nothing happens. So the samesystemcando"discriminationbyfire."

The same system is useful to destroy midget submarines, bottom crawlers, etc.

It can also wipe out whole arrays of underwater sensors by electromagnetically dudding them.

It can take on a sub if it has to! Here it would just gently kindle EM energy inside the sub's controls, causing it to lose control of all its systems. The sub

would then sink to crush depth and implode. The scalar EM mine sweeping system could, of course, simply "blow" the sub, but might itself get caught in the resulting explosion.

SCALAR ANTI-PERSONNEL WEAPON

Slide 080: Scalar Anti-Personnel Weapon

From a military viewpoint, these scalar EM weapons are really quite all-around weapons.

For example, they are very lethal against personnel.

Set in the "high intensity pulse mode," one blast and a person's nervous system is destroyed instantly. Total, instantaneous death results. One can blast away at entire groups of infantrymen, for example. It's the peak power that's important, not the average power. So the weapon doesn't require too much battery power.

Set on a lower intensity pulse mode, one zap can simply knock out a person, rendering him instantly unconscious.

Quite useful if one needs prisoners to interrogate. Also very silent, which is useful in operations employing stealth and surprise.

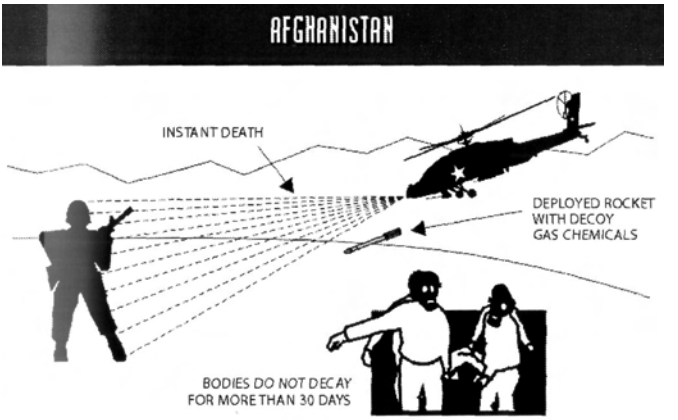

Slide 081: Afghanistan

The Soviets are employing just such a scalar "death ray" weapon in Afghanistan, apparently in the noses of some of their HIND helicopters.

These choppers usually fire gas rockets to camouflage the testing of the tactical scalar death ray. For example, they may fire rockets filled with nerve gas, and some persons will die convulsively from the chemical.

Those hit by the scalar EM weapon, however, have a most peculiar death **mode,**

Death comes instantly and totally. There is no convulsion, no response. The entire nervous system is destroyed instantly. Every living cell in the body is killed instantly, including all bacteria, germs, etc.

A body hit with this thing falls like a limp rag and lies where it falls. It doesn't decay in even 30-45 days. In a macabre fashion, it's been reduced to something like food irradiated with nuclear radiation; everything is killed, so the material is preserved for an extended period before any decay can set in.

Western military authorities have speculated that this strange death is due to some sort of eery new gas.

However, even with the most virulent gas, some seconds are required for a b**ody** to die. And while it's dying it goes into convulsions. Violent convulsions.

This eery, instant death that leaves a non-decaying corpse is not due to a **gun,** This is the signature of a high-powered pulse kill using a scalar EM weapon

The associated gas rockets are the disguise used to fool our intelligence analysts.

They're just part of the Soviet deception plan.

ADDITIONAL NOTES AND REFERENCES

15. For details of the mysterious, instant deaths in Afghanistan, see Yossef Bodansky, "Soviets testing chemical agents in Afghanistan," Jane's Defence Weekly, 1(13), Apr. 7, 1984, p. 508

Slide 082: Scalar Anti-Tank Weapon

Such weapons are also effective against armored vehicles, for example.

They can be carried by personnel, mounted on vehicles, mounted in helicopters, etc.

They are truly all-purpose weapons.

An infantryman with a bazooka-sized scalar EM pulse weapon can easily knock out a tank with one shot. The armor has no effect; scalar EM goes right through conductive shielding and Faraday cages.

And with the same weapon he can knock out another tank, and another, and another...

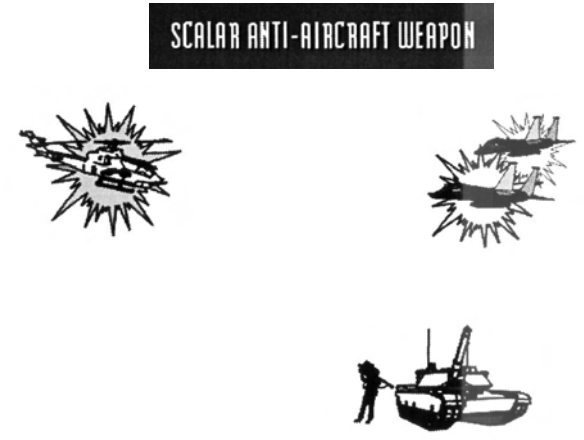

Slide 083: Scalar Anti-Aircraft Weapon

And, if a helicopter or a fixed-wing aircraft attacks him, he can bring the same weapon to bear on it.

He can knock down a chopper or a jet. With one shot.

And another. And another.

Also, it's a line-of-sight weapon. He doesn't have to compute lead angle and all that jazz. Just aim, get the target in his sights, and pull the trigger.

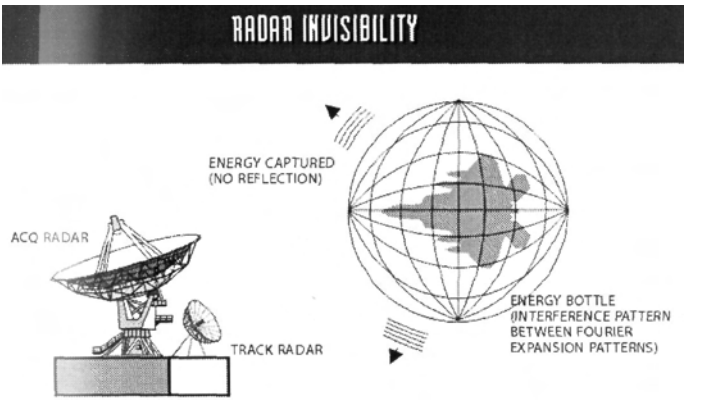

Slide 084: Scalar Anti-Aircraft Weapon

Another neat trick you can do with scalar EM is make an aircraft invisible **to** ordinary radar.

Just use multiple transmitters on the airplane to establish a spherical interference shell, in the bandwidth of the threatening radar, around the aircraft.

When the signal pulse (or continuous wave) from the ground-based radar **strikes** the "energy bottle" in the shell, it interferes with it and is diffracted, scattered, and partially absorbed.

The ground-based radar doesn't get any coherent return pulse or return signal reflected from the target.

Radars don't track aircraft; they track the reflection of their own signal bouncing off aircraft. No reflected signal, no aircraft - as far as a radar is concerned.

To shield against a passive radar (one which tracks emissions from the aircraft), just detect and complement your own emissions so that "near zeroes" result In the spectrum of interest.

Or do both, to protect against both.

It's even possible to cool the exhaust and heated surfaces of the aircraft by a scalar EM adaptation of electrostatic cooling. Theoretically it's even possible to cause the aircraft to "disappear" optically. Takes a bit of doing, but it's possible The basic scheme here is that, when a photon hits the target from a given direction, it's absorbed totally, and a corresponding or "matching" photon is

emitted from the opposite side in the same direction the original photon was going. In that fashion, the light emitted from the target from one direction seems to have "passed through it" from the other direction.

Since that's what empty space does, then what a distant observer sees is "empty space," so far as he can tell.

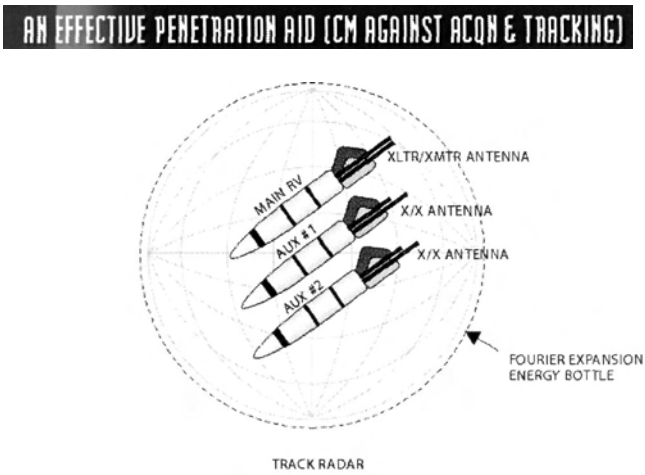

Slide 085: An Effective Penetration Aid

Of course you can do the same thing for re-entry vehicles.

Use some multiple antennas on a vehicle. Or better yet, use satellite RV's to carry the extra transmitters necessary for scalar interferometry.

Deploy the interferometer RV's and activate the scalar EM transmitters. Place an energy bottle Fourier expansion interference shell around the ensemble in the bandwidth of interest.

Radars in that bandwidth now will be unable to detect the incoming ensemble. If nothing detects the threat, nothing is going to shoot at it or react to it.

This can also be used on a bus vehicle during midcourse, for example.

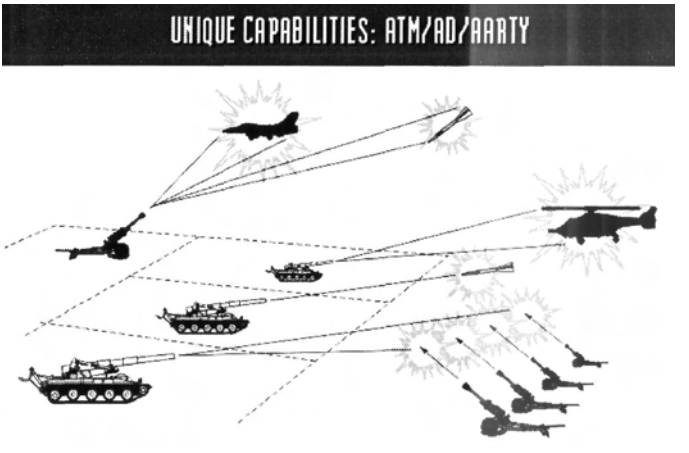

Slide 086: Unique Capabilities: ATM/AD/AARTY

But the uniqueness of scalar EM devices and weapons doesn't end there.

You can hit lots of other threats that are presently difficult or impossible to effectively handle.

For example, on the tactical battlefield, the same scalar EM radar interferometer system can defend against tactical missiles (ATM role), aircraft (AD role), cruise missiles (ACM role), and even artillery and mortar shells (AARTY role).

How the devil, you might ask, can it defend against artillery and mortar shells?

Simple. Sweep the artillery or mortar barrage with closely spaced pulses. Sorta like a machinegun. Or more like a phased-array radar.

If the peak power in the sweeping pulses is sufficient, the explosives are sparked and detonated. Fuses are destroyed.

So even mortar and artillery rounds can be destroyed, by the same system providing air defense and anti-tactical missile defense.

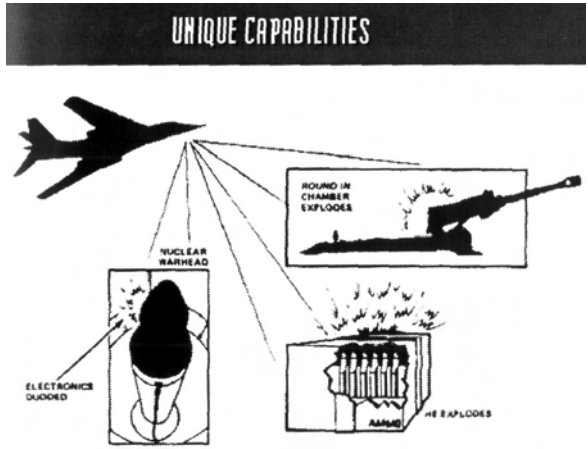

Slide 087: Unique Capabilities

That's still not all.

An incredible number of different types of targets can be attacked with scalar EM weapons.

For example, aircraft equipped with scalar EM weapons can attack targets such as loaded artillery pieces. The round in the chamber explodes, destroying the weapon.

It can also attack nearby stored ammunition. Again, the high explosive in the ammunition explodes, destroying the store.

Even underground missiles can be attacked. The scalar pulse will go right through the overhead cover and dud the electronics, including the nuclear warhead. It will also detonate the HE in the warhead and detonate the fuels and propellants.

A great variety of other targets can also be attacked, as we shall see.

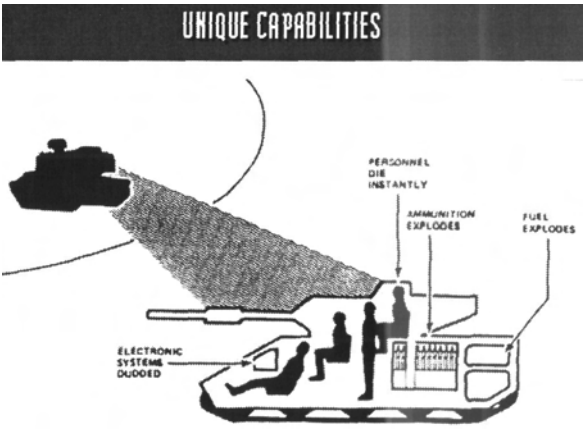

Slide 088: Unique Capabilities

For example, suppose one attacks a tank.

With scalar EM pulse, the personnel die instantly. Total personnel kill is achieved.

All electronic systems of the tank are dudded. Total systems kill is achieved.

The ammunition in the tank explodes. Total kill is achieved.

The fuel explodes. This is another total kill mechanism.

That tank has been killed totally, by a variety of mechanisms, all simultaneously.

That's a k-kill in any analyst's book.

And **don't** worry about retrieval and repair. That tank is finished permanently.

Even **the** most modern tank is just as vulnerable as the most obsolete.

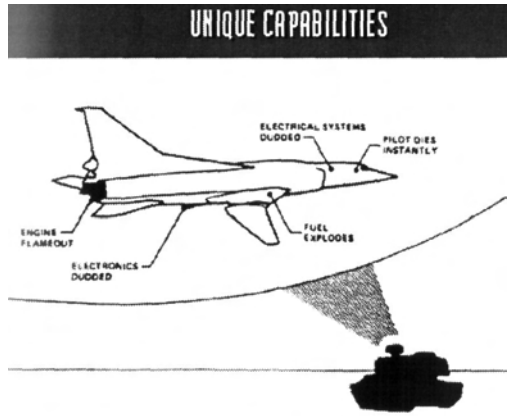

Slide 089: Unique Capabilities

Suppose one attacks a fighter-bomber aircraft.

Again, the kill is catastrophic from multiple simultaneous kill mechanisms.

The pilot and crew die instantly. Total destruction of their nervous systems.

The electrical systems are dudded.

The electronics in all avionics and ordnance is dudded.

The fuel explodes.

HE in on-board or out-board ordnance explodes.

The jet engine flames out if the pulse is powerful enough.

That aircraft is finished. Permanently.

And it's point-and-shoot, line-of-sight.

Even the most modern aircraft is just as vulnerable as the most obsolete.

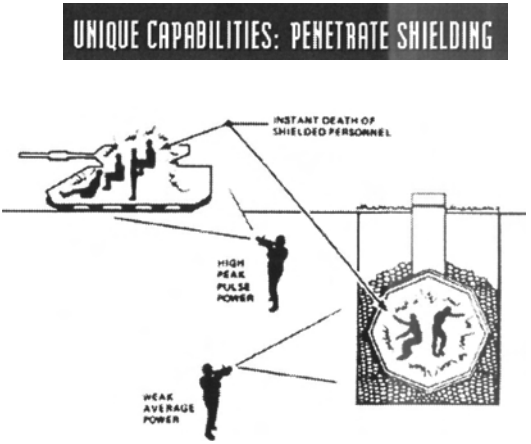

Slide 090: Unique Capabilities: Penetrate Shielding

Shielding is ineffective.

The scalar pulse (or continuous wave) can go anywhere gravity can go.

It penetrates the steel hull of tanks and armored vehicles.

It penetrates underground shelters and bunkers.

It penetrates pillboxes and fortifications.

Foxholes are no protection. Just shoot through the earth into them.

There is no longer any place to hide.

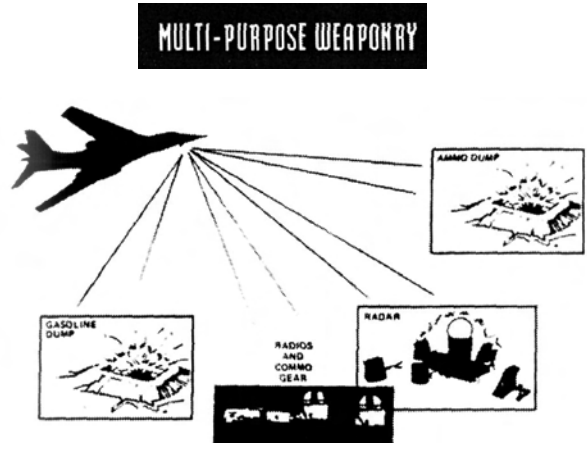

Slide 091: Multi-Purpose Weaponry

These scalar EM weapons are all-purpose. Things such as ammunition dumps, radar systems, radios and communication gear, communications centers, gasoline dumps, etc. can easily be destroyed.

Not only that, but the weapons can be swept, giving area coverage.

You can hit both point targets and area targets.

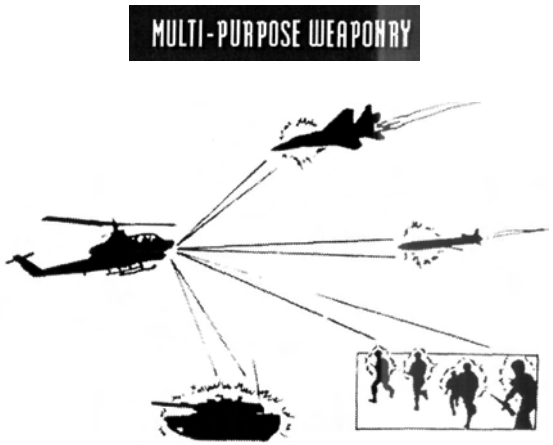

Slide 092: Multi-Purpose Weaponry

Look at what a weapon a helicopter becomes.

The same vehicle, equipped with scalar EM weapons, can engage and destroy jet aircraft, other helicopters, cruise missiles, personnel, and armored vehicles.

It can also hit all the other targets we've been talking about. Any vehicle equipped with scalar EM weapons becomes a formidable destroyer on the battlefield.

And "reconnaissance by fire" takes on a particularly lethal meaning.

For example, don't worry about the enemy in cover and concealment, or highly camouflaged.

Don't worry about decoys or dummy positions.

Just sweep the area with scalar EM fire. The actual targets will be discriminated by fire and destroyed.

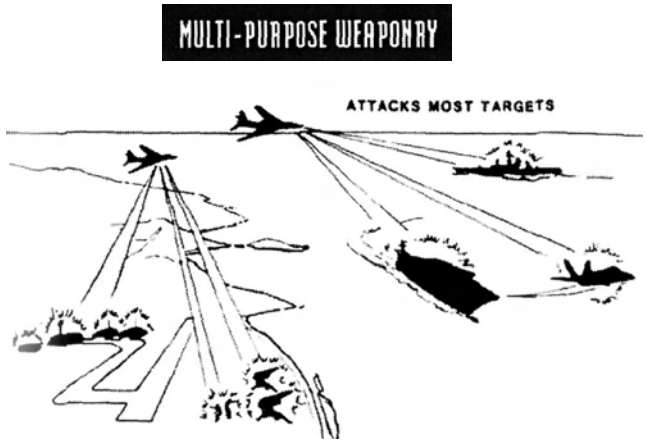

Slide 093: Multi-Purpose Weaponry

As can be seen on this slide, most targets of interest can be attacked.

A single aircraft can sink an aircraft carrier or destroy a battle cruiser from afar.

It can also destroy aircraft, ground installations, artillery, personnel, nuclear weapons storage sites, tanks, vehicles, fuels, and combustibles.

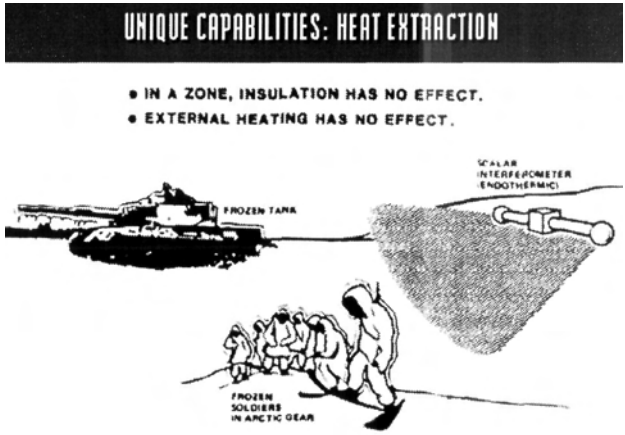

Slide 094: Unique Capabilities: Heat Extraction

Or one can get truly exotic.

To prevent destroying equipment and installations, the endothermic mode can be utilized.

Cold explosions can be used to freeze tanks, personnel, and equipment.

The equipment and tanks thaw out.

The personnel thaw out too, but they are dead when they do. Heaters and arctic clothing are no protection.

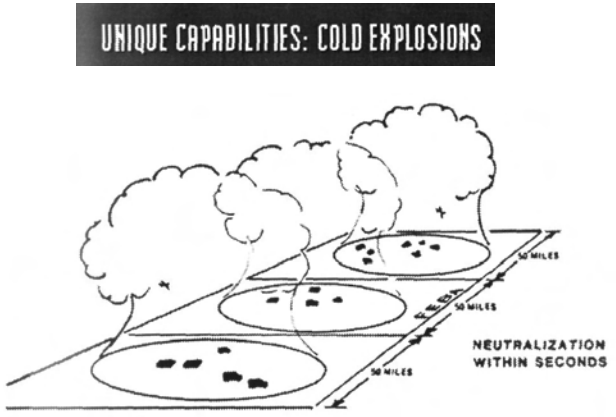

Slide 095: Unique Capabilities: Cold Explosions

For example, suppose three cold explosions, each 50 miles in diameter, are placed upon the front-line strength of NATO.

In seconds there is no longer any "front line strength" of NATO. Every living thing is frozen into a block of ice.

A few more of these things placed on selected rear area installations, and the battle is over before it gets started. Say in about one minute flat!

Suppose NATO is quickly defeated - say in two days. And then the Russians offer us a "Dunkirk." They agree to allow us to evacuate the beaten remnant of our forces.

Are we going to evoke a strategic nuclear exchange, or are we effectively "decoupled" from Europe? Particularly if the Soviets also offer sweeping accommodations to the Europeans, and they accept? If we punch the strategic button, we guarantee our own absolute destruction. (MAD doctrine and all **that,** old chap!)

Whether or not we could do anything to the Russians is a matter of conjecture.

For a demonstration, they could even invite us to launch a couple of missiles, and destroy them over our heads shortly after launch.

And they could take out a few submarines under the ocean, just to make it believable.

And destroy some SAC bombers that are orbiting on station.

Or take out a U.S. Naval Task Force, with a nuclear carrier, as a demonstration that they mean business.

Would a sane President go ahead and destroy us, or accept the Soviet's "Monroe Doctrine" and an "armistice"?

If the Soviets thought he was seriously contemplating ordering a nuclear strike, they could immediately destroy all our nuclear armaments where they sit. Our own weapons would obliterate us!

What would Congress do - after the Soviet Union had demonstrated its absolute power, offered a Dunkirk and armistice, and threatened our total destruction if we "reached for the holster," so to speak - when it realized the President might actually be contemplating evoking assured national suicide?

What would you do if you were a Congressman? If you were the President?

Slide 096: The Transmitter is the Major Weapon

As shown on this slide, with scalar EM the transmitter becomes the major weapon on the battlefield.

Almost every type of target of any importance can be easily and effectively attacked and destroyed or nullified by scalar EM weapons.

Small wonder the Soviets do not discard their thousands of "old" radars!

How effective do you suppose some of their "old" transmitters on their "old" aircraft might be?

What chance do you think SAC bombers would have against thousands of "old" radar-directed gun sites and "obsolete" air defense missile sites?

Could it be that even something like the old SA-1 could be startlingly effective?

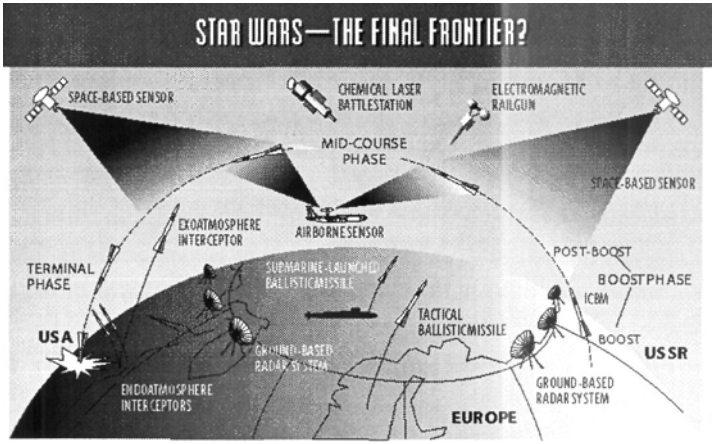

Slide 097: Star Wars—The Final Frontier?

But what of our advanced concepts, such as the strategic defense initiative?

Here we show some of the expensive and complex components of that powerful system.

We have ground-based radars, endoatmospheric interceptors, exoatmospheric interceptors, airborne sensors, space-based sensors, chemically propelled interceptors, electromagnetic railguns, particle beam weapons, high energy lasers, etc. all tied together by a massive command and control system. This massive, expensive system is designed to detect and destroy missiles, including ICBMs, IRBMs, cruise missiles, SLBNs, etc.

The system detects the missile launches and engages them from launch on in to the terminal phase.

Massive systems. Electromagnetic marvels. Nuclear-pumped lasers of staggering power. Perhaps even x-ray and gamma ray lasers. Directed energy RF weapons. Stupendous railguns. Sensors everywhere. Giant webs of communications. Banks of computers and control systems.

And it's totally vulnerable to scalar EM interferometer weapons. Giant scalar EM "radars" can simply sweep through all that like a scythe through standing hay.

As it stands, it's obsolete before its design is even finished.

It's obsolete to Soviet scalar EM weapons that are already deployed and operationally tested in place!

Without scalar EM weapons and defenses, all our present weapons and concepts are deadly vulnerable.

The war is over before it hardly gets started. It's not a war; it's more like a clay pigeon shoot.

Understand, if orthodox science was all the Russians possessed, the Strategic Defense Initiative would be the way to go.

But they do possess something else, and presently they have all the trump cards in the deck.

COMPARISON OF EM CONCEPTS			
CHARACTERISTIC	THEORY		
	CLASSICAL EM	QM VIEW	SCALAR EM (ARTIFICIAL o)
VACUUM SPACETIME	LINEAR NO CHARGE	LINEAR, CHARGED (VIRTUAL) STATISTICALLY	NONLINEAR, CHARGED (VIRTUAL) W/ DETERMINISTIC COMPONENTS
VIRTUAL SUBSTRUCTURE	NONE (FLUID EQUATIONS)	YES STATISTICAL	YES. STATISTICAL. DETERMINISTICALLY WEIGHTED
FORCE IN VACUUM?	CAUSE YES	EFFECT YES	EFFECT NO
ZERO FORCE FIELDS	NO EFFECT	BOHM-AHARONOV EFFECTS	SUBSTRUCTURE EFFECTS, ENGINEERABLE
POTENTIALS	FICTICIOUS	REAL, PRIMARY. STATISTICAL SUBSTRUCTURES	REAL, PRIMARY. DETERMINISTIC SUBSTRUCTURES
CAUSATIVE AGENT	FORCE FIELDS	POTENTIALS	POTENTIALS AND INFOLDED FIELDS OF SUBSTRUCTURES

Slide 098: Comparison of EM Concepts (Chart)

On this slide and the three that follow, we show a comparison of some of the major characteristics of the three kinds of electromagnetics.

We compare the classical, the quantum mechanical, and the scalar EM (electrogravitational) views of electromagnetics

Notice the differences between the three in regards to vacuum spacetime, virtual substructure, force, whether or not force exists in vacuum, the effect of zero force fields, potentials, and what is to be regarded as causative agents.

COMPARISON OF EM CONCEPTS			
CHARACTERISTIC	THEORY		
	CLASSICAL EM	QM VIEW	SCALAR EM (ARTIFICIAL ∅)
CHARGE CONSERVATION	YES	YES	NOT NECESSARILY
ACTION AT A DISTANCE	NO	NO, EXCEPT BOHM-AHARONOV EFFECTS	YES, SCALAR INTERFEROMETRY
SCALAR (ZERO-VECTOR) RESONANCE	NO	NO	YES
INERTIA IS ELECTRICAL	NO	NO	YES
GRAVITY IS ELECTRICAL	NO	NO	YES
MASS IS ELECTRICAL	NO	NO	YES

Slide 099: Comparison of EM Concepts (Chart)

Now note the differing views of charge conservation, action at a distance, scalar resonance, and whether inertia, gravity, and mass are electrical.

COMPARISON OF EM CONCEPTS			
CHARACTERISTIC	THEORY		
	CLASSICAL EM	QM VIEW	SCALAR EM (ARTIFICIAL o)
CHARGE	WITH MASS	WITH MASS	MASSLESS
RELATIVISTIC EFFECTS DUE TO	VELOCITY	VELOCITY, INTERFERING POTENTIALS	INTERFERING POTENTIALS
HIDDEN VARIABLE	NO	STATISTICAL, NEGLIGIBLE	DETERMINISTIC, MAJOR ROLE
VECTOR THEORY APPLIED TO EM	OK	OK	REQUIRES REVISION
VACUUM EM WAVE	TRANSVERSE	TRANSVERSE	LONGITUDINAL W/ SWIRLS
ENERGY/MASS CONSERVATION	YES	YES	NOT NECESSARILY, AN ENERGY CONSERVED

Slide 100: Comparison of EM Concepts (Chart)

Continuing, note the differences in the views of charge, what relativistic effects are due to, whether or not one has hidden variables and whether they are enginerrable, how vector theory is applied to electromagnetics, the nature of the EM wave in vacuum, and conservation of energy/mass.

SUMMARY (1)

- AHARONOV-BOHM EFFECT
  - VERIFIED
  - MESOSCOPIC SCALE (CENTIMETERS)
  - NEED MACROSCOPIC COHERENCE
  - POTENTIAL WEAPON IMPLICATIONS
  - PROBABLE SOVIET WEAPONIZATION
- 6 TO 8 ADDITIONAL ORDERS OF MAGNITUDE NEEDED

Slide 101: Summary (1)

Now we examine the three views for whether or not electro-gravitational waves exist and what they interact with, the number of required spacetime dimensions the type of geometry, the nature of a zero-summed EM vector, local and distant relativity aspects, and whether or not the probability states propagated by the Schroedinger equation can be deterministically engineered.

As can be seen from the last four slides, the three views are quite different, and the scalar EM view is drastically different.

SUMMARY (1)

- AHARONOV-BOHM EFFECT
  - VERIFIED
  - MESOSCOPIC SCALE (CENTIMETERS)
  - NEED MACROSCOPIC COHERENCE
  - POTENTIAL WEAPON IMPLICATIONS
  - PROBABLE SOVIET WEAPONIZATION
- 6 TO 8 ADDITIONAL ORDERS OF MAGNITUDE NEEDED

Slide 102: Summary (1)

In summary, we can now state unequivocally that the Aharonov-Bohm effect has been conclusively proven, at least for the mesoscopic scale over a few thousand Angstroms, and possibly over a few centimeters.

But inthese experimental proofs; the "natural" type of potential has been used, it is basically incoherent in its substructure, dooming the effect to stay small.

By utilizing macroscopic EM force fields and waves to zero-sum and comprise artificial potentials, the coherence can be maintained over a macroscopic distance - even for hundreds of thousands of kilometers.

The weapons implications - only some of which we have set forth in this treatise - are mindboggling.

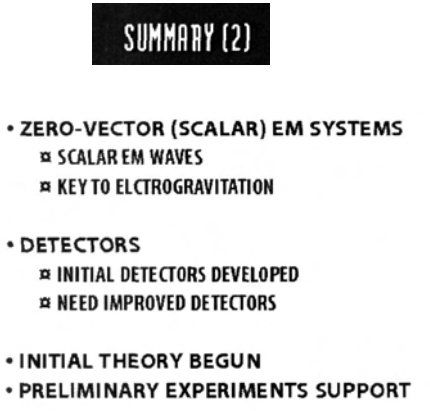

Slide 103: Summary (2)

Zero-vector (scalar) EM systems are the key to scalar EM waves, which are actually electrogravitational waves.
Scalar wave detectors nave been developed and are being improved. Further improvement is needed. This development is limited only by funds.

The initial theory has been begun. More work is needed. Again, this development is limited only by funds.

Preliminary experiments support the scalar EM concepts.

Equipment can be designed and made to work electro-gravitationally.

And it has been.

SUMMARY (3)

- INTERFERENCE PHENOMENA ARE KEY
  - ACTION AT A DISTANCE
  - EXOTHERMIC MODE
  - ENDOTHERMIC MODE
  - 3-D FOURIER EXPANSIONS (TRUNCATED)
- EFFECTS IN/ON NUCLEUS
- NOT ENERGY TRANSMISSION THROUGH SPACE
- SHIELDING INEFFECTIVE

Slide 104: Summary (3)

Interference phenomena are key.

One can get action at a distance - even over hundreds of thousands of kilomcters.

One can engineer gravitational and inertial effects.

One can engineer the nucleus, including transmute it, easily and cheaply. One could clean up all the nuclear wastes.

Electromagnetic energy can be produced at a distant target, or extracted from a distant **target.**

This is is not energy transmission through space in the form of EM force fields. Instead, it is transmission through spacetime in the form of electrogravitational potentials.

Conventional EM shielding is ineffective against scalar EM.

SUMMARY (4)

- MOST SYSTEMS ARE VULNERABLE
  - ELECTRONICS (INCLUDING OF FUZING/WARHEAD)
  - PERSONNEL
  - EXPLOSIVES/PROPELLANTS/FUELS
  - ORDNANCE
  - SHIPS/SUBMARINES/TORPEDOES
  - AIRCRAFT/HELICOPTERS/MISSILES/DRONES
  - TANKS/APCs/WEAPONS CARRIERS/SP ARTY
  - COMMUNICATIONS/SATELLITES/RADARS/C^3I
  - DEW SYSTEMS
  - SURVEILLANCE/SENSOR SYSTEMS
  - MINES/ARTY ROUNDS/NUCLEAR WARHEADS

Slide 105: Summary (4)

Almost every weapon system we presently have - or are developing - is totally vulnerable to scalar EM weaponry.

This includes personnel, electronics (including fuzing and warhead), explosives, propellants, fuels, ordnance, ships,
submarines, torpedoes, aircraft, helicopters, missiles, drones, rockets, tanks, armored vehicles, weapons carriers, self-propelled and towed artillery, communications, satellites, radars, command and control, directed energy weapon systems, surveillance and sensor systems, mines, artillery rounds and ammunition, nuclear warheads, etc.

We are in dire straits. We need a "Manhattan Project" of the highest priority. Now!

The Soviets have already had the equivalent of seven or eight Manhattan Projects in this area.

SOVIET DEFENSE AGAINST MISSILES

"In our country the problem of eliminating rockets in flight has been successfully solved by Soviet science and technology...

It is interesting to note that the problem of anti-missile defense is far from being solved in the West."

SOKOLOVSKIY
MILITARY STRATEGY
THIRD EDITION, 1968

Slide 106: Soviet Defense Against Missiles

Here is a significant statement by Sokolovskiy, contained in Military Strategy, 3rd edition, 1968.

This is not propaganda. The Soviets really do have an effective missile defense. We do not. At the present rate we're going, we may not have one in the year 2000 - if we live that long.

SURPRISE BY USING SECRET WEAPONS

"Each side secretly develops new means of warfare in order to employ them unexpectedly. History knows many examples how the employment of a new weapon initially gave considerable success because the enemy, caught unawares and not knowing the combat capabilities of this weapon, was for some time incapable of effective counteraction."

V. YO SAVKIN
THE BASIC PRINCIPLES OF OPERATIONAL ART AND TACTICS
MOSCOW, 1972

Slide 107: Surprise by Using Secret Weapons

The Soviets took to heart the lesson of our secret development of the atomic bomb. Thrust suddenly upon a fanatical nation, the atomic bomb brought the empire of Japan to its knees.

Other lesser examples - such as the impact of the German V-l and V-2 missiles and jet fighter - also were not lost on the Soviets.

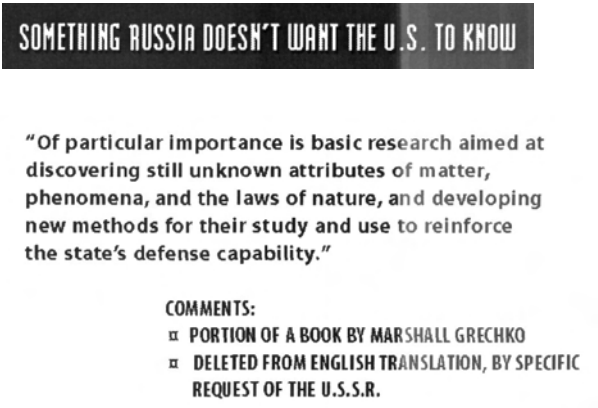

Slide 108: Something Russia Doesn't Want the U.S. to Know

But Marshall Grechko said it even plainer.

He made it clear that the Soviet Union has actively searched for great technical breakthrough areas, particularly in discovering new laws of nature, unknown attributes of matter, and new phenomena, and developing their use for defense.

He made it so clear that the Soviet Union formally requested the U.S. State Departmentto have deleted from its. English translation that portion of his book.

That is a positive signature that the statement is exceedingly sensitive to the Soviets. In other words, it's a real tipoff.

So of course the State Department leaned on the publisher and got that section eliminated.

ADDITIONAL NOTES AND REFERENCES

1. Nikola Tesla, "The Problem of Increasing Human Energy," Century magazine, June 1900, p. 208-209. In this article Tesla spoke of using standing waves to produce distant effects and locate objects such as ships. At this point he was thinking of a scalar radar locator, something more advanced than even our radar today. It was also capable of producing electrical effects at any part of the globe. To quote: "Stationary waves... mean something more than telegraphy without wires to any distance... For instance, by their use we may produce at will, from a sending station, an electrical effect in any particular region of the globe; we may determine the relative position or course of a moving object, such as a vessel at sea, the distance traversed by the same, or its speed..."

2. Nikola Tesla, "The True Wireless," Electrical Experimenter, May 1919, p. 87.

3. T. E. Bearden, Comments on the New Tesla Electromagnetics: Part I: Discrepancies in Present EM Theory, Tesla Book Co., 1580 Magnolia, Millbrae, CA 94030, 1982.

4. T. E. Bearden, Toward a New Electromagnetics: Part III: Clarifying the Vector Concept, Tesla Book Co., 1580 Magnolia, Millbrae, CA 94030, 1983.

5. T. E. Bearden, Toward a New Electromagnetics: Part 4: Vectors and Mechanisms Clarified, Tesla Book Co., Millbrae, California, 1983, p. 6, 39.

6. T. E. Bearden, Solutions to Tesla's Secrets and the Soviet Tesla Weapons, Tesla Book company, 1981

7. T. E. Bearden, Tesla's Secrets and the Soviet Tesla Weapons, 1 hr. 40 min. videotape, Weather Engineering, POB 1472, Huntsville, AL 35807, 1981.

8. T. E. Bearden, Soviet Weather Engineering Over North America, 1-hr. videotape, Weather Engineering, POB 1472, Huntsville, AL 35807, 1985.

9. T. E. Bearden, Star Wars Now! The Bohm-Aharonov Effect, Scalar Interferometry, and Soviet Weaponization, Tesla Book Co., 1984

10. Stefan T. Possony, "The Tesla Connection," Defense & Foreign Affairs, Aug. 1984, p. 12-14, 27.

11. Stefan T. Possony, "Psy-War: Soviet device experiment," Defense & Foreign Affairs Daily, 12(104), June 7, 1983, p. 1-2. Reports on Dr. Ross Adey's investigation of the Soviet LIDA device which is used to bombard human brains with radio waves in the 40 MHz region. Also reports on work by A. S. Davydov of the Ukrainian Academy of Sciences, who discovered how the blood-brain barrier can be penetrated by low-frequency radio waves so that brain cells are affected.

12. Fritz Albert Popp, "Photon storage in biological systems," in Electromagnetic Bioinformation: Proceedings of the Symposium, Marburg, Sep. 5, 1977. Edited by Fritz Albert Popp et al, Munchen, Wien, and Baltimore, 1979, p. 123-149. Dr. Popp has discovered, both theoretically and experimentally, that mitogenetic radiation from cells can be seen as a sort of "waste" from a virtual electromagnetic field with a high coherence. This field has a tendency to become stationary over the whole organism. In addition, it includes the storage of "virtual" coherent photons. (In other words, there is a master EM field with high coherence, stationary over the whole body. This is the cells' master control system. Storage of virtual photons -- i.e., scalar signals -- occurs in this field.).

13. To gain an appreciation of the Aharonov-Bohm effect, see Y. Aharonov and D. Bohm, "Significance of Electromagnetic Potentials in the Quantum Theory," Physical Review, Second Series, 115(3), Aug. 1, 1959, p. 485-491. For an exhaustive discussion of the Aharonov-Bohm effect and a large number of references, see S. Olariu and I. Iovitzu Popescu, "The quantum effects of electromagnetic fluxes," Reviews of Modern Physics, 57(2), April 1985. See also Bertram Schwarzschild, "Currents in normal-metal rings exhibit Aharonov-Bohm effect," Physics Today, 39 (1), Jan. 1986, p. 17-20.

14. For details of the mysterious explosions of six major Soviet missile ammunition storage sites in seven months, see photograph, Jane's Defence Weekly, 2(3), July 28, 1984, p. 92; see also Mark Daly, "Goa and Goblet SAMs in Severomorsk explosion," Jane's Defence Weekly, 2(6), Aug. 18, 1984, p. 224; Derek Wood, "Soviets' northern fleet disabled... 'not viable' for six months," Jane's Defence Weekly, 2(1), July 14, 1984, p.3; Derek Wood, "Six explosions in the past seven months," Jane's Defence Weekly, 2(1), July 14, 1984, p. 3; John Moore, "The aftermath of Severomorsk," Jane's Defence Weekly, 2(6), Aug. 18, 1984, p. 224.

15. For details of the mysterious, instant deaths in Afghanistan, see Yossef Bodansky, "Soviets testing chemical agents in Afghanistan," Jane's Defence Weekly, 1(13), Apr. 7, 1984, p. 508.

16. For details of the Enhanced-V cloud signature of severe weather, see Gary Ellrod, "Dramatic examples of thunderstorm top warming related to downbursts," National Weather Digest, 10(2), May 1985, p. 7-13; T. J. Fujita, "Manual or Downburst Identification for Project Nimrod," SMRP Research Paper No.156, University of Chicago, 1978; D. W.McCann, ., The Enhanced-V: A Satellite Observable Severe Storm Signature," Monthly Weather Review, 111, 1978, p. 887-894.

17. For a good discussion of the modern view of the vacuum, see
I.J.R. Aitchison, "Nothing's plenty: The vacuum in modern quantum field theory," Contemporary Physics, 26(4), 1985, p. 333-391.

18. For a discussion of the ring interferometer experiments related to quantum and gravitational effects, see G.E. Stedman, "Ring interferometric tests of classical and quantum gravity," Contemporary Physics, 26(4), 1985, p. 311-332.

19. For information on self-induced transparency with pulsated light, see E. L. Hahn, Scientific American, June 1967. This is a scalar EM effect. The phenomenon is observed only in insulators, not in conducting materials. A dielectric tends to stop the flow of electrons, thus stopping the bleed-off of the Kaluza-Klein 5-potential as EM force fields. Thus through the insulator or dielectric, an electrogravitational pulse is transmitted. When this pulse emerges from the other side of the

dielectric, then electrons are free to move again and form ordinary EM fields, resulting in resumed EM bleed-off of the KK (Kaluza-Klein) 5-potential. Thus ordinary photons strike the dielectric, changing into electrogravitational waves which transit the opaque dielectric, and these EG waves transform back to EM waves on the far side of the dielectric. Advanced scalar EM application of this effect can make an object optically invisible.

20. For a lucid and profound presentation of the entire subject of elementary particle physics and quantum field theory, see T. D. Lee, Particle physics and introduction to field theory, Harwood Academic Publishers, New York, 1967. Subjects covered include those at the forefront of current research. Chapter 16, "Vacuum as the source of asymmetry," is particularly important. Here Lee concisely covers the idea of degenerate vacuum states, vacuum structuring, and vacuum effects causing symmetry breaking (violation of conservation laws). An excellent coverage of asymmetries and observables is given on p.181-188. For example, whenever symmetry is spontaneously broken, a nonobservable (virtual entity) has become observable. Thus there exist mechanisms for the direct translation between virtual and observable states.

Most engineers are unaware that physics has already rigorously proven (both theoretically and experimentally} that conservation of energy can be physically violated, even by excitation of the vacuum.

However, in the present assumption of a randomized virtual microstructure of a vacuum potential, these broken symmetry effects are individually confined to very small microlevels. For example, on p. 383, Lee points out that the microscopic structure of the scalar vacuum field (i.e., of vacuum charge or "potential") is not utilized.

This of course is reasonable if all vacuum potentials used in particle physics are treated as having a randomized microstructure of virtual particle flux vectors. Since any appreciable directional coherence in such a randomized microstructure could persist only over extremely tiny distances, then the microstructure of vacuum degenerate states has negligible local effects in ordinary macroscopic systems.

In other words, these conservation violation effects would be very difficult to coherently capture and utilize to provide "free energy, emerging from the vacuum."

The randomized momentary coherences, however, are responsible for the violent microfluctuations of the EM fields, well-known in classical electrodynamics. An approach such as taken by Yater or Moray would be necessary to achieve a vacuum energy tap under such conditions. To achieve usable macroeffects, a very large collection of charge or magnetic material, etc. would be required before the probability of usable coherences would become sufficiently large. Therefore this area is neglected in practical physics and engineering.

However, this is precisely where scalar EM is lost in conventional theory and engineering practice. In scalar EM, the coupling together of macroscopic EM force field vectors into a summed zero system means that the vacuum potential's microstructure is now macroscopically ordered by that system. Further, it is sustained during translation through space. In such case, one has produced directional gravitational potential gradients that have macroscopic range and form. Further, by coherently varying the amplitude of the individual components of the zero vector system, a gravitational wave -- a controlled oscillation of the degenerate states or vacuum -- is produced. By processing the EM components, this gravitational wave can be narrowed, formed into a beam, and projected. Two such beams can be interfered, even at a great distance, producing G-interference and causing EM effects to emerge in the distant interference zone. Thus scalar EM profoundly affects quantum mechanics, quantum field theory, particle physics, general relativity, and electromagnetics.

21. For some strong and pertinent critique of present scientific bias, see Ruggero Maria Santilli, Ethical probe on Einstein's followers in the U.S.A.: An insider's view, Alpha Publishing, POB 82, Newtonvllle, MA 02160. Santilli is a highly published physicist and the editor of a refereed scientific journal, the Hadronic Journal. After lengthy attempts to correct injustices within the Scientific system, to no avail, he finally has gone public with his specific charges. Santilli references senior Russian physicist G. Yu. Bogoslovsky, whose 1984 paper "Generalization of Einstein's relativity theory for the anisotropic spacetime," whose research would have been impossible in the U.S. Quoting Santilli: "He would have been discredited, humiliated, and chased out of these institutions [Harvard, M.I.T., and Yale] beyond any reasonable doubt by ample documentation on similar cases." Again to quote Santilli: "Papers bearing the title of 'Generalization of Einstein's relativity' are routinely permitted with human dignity at Moscow University in the U.S.S.R., but they are absolutely inconceivable today at the departments of physics of Harvard University, of the Massachusetts Institute of Technology, of Yale University and of other similar institutions in the U.S.A., as numerous senior scientists would readily testify."

You see, dear reader, there has been a deep scientific conspiracy in the U.S. to prevent any change in the severe restrictions placed on general relativity by Einstein. This has reduced GR to a sort of "special relativity, with only distant perturbations." Specifically, it has excluded scalar electromagnetics and branded as heresy the inconceivable idea that general relativity could be local, and engineerable.

Now you know why the Soviets have been able to develop these monstrous weapons for over three decades while our scientists slept at the wheel. Scientific arrogance and pride has been our greatest enemy.

See also Bryan G. Wallace, "The great speed of light in space coverup," Scientific Ethics, 1(1), Feb. 1985, p. 2-3; "Radar testing of the relative velocity of light in space," Spectrosc. Lett. 2, 1969, p. 361; Wallace, "Letter to the editor," Physics Today, 36(1), 1983, p. 11; "Letter to the editor," Physics Today, 37(6), 1984, p. 15. See M.E. Ash et al, Astron. J., 72, 1967, p. 72. Direct experiments on Einstein's second postulate, in the 1961 interplanetary radar contact with Venus, challenge whether relativity is correct. Variations of over 30,000% of the best possible general relativity fit the MIT Lincoln Lab could generate were measured. The variations were not random but contained diurnal, lunar, and synodic periodic components. See also Bryan G. Wallace, Spectrosc. Lett. 4, 1971, p. 79 for an analysis of published 1961 data on the interplanetary radar contact with Venus that concludes that the data showed a component that was relativistic in the Galilean c+v sense. See also Wallace, "The Unified Quantum electrodynamic ether," Foundations of Physics, 3, 1973, p. 381. which details Measurements strongly challenging the Einstein assumption of the constant velocity of light, and deals with the nature of the ether. See also Thomas E. Phipps, Jr., "Critique of accepted theories of special relativity and electromagnetism," Scientific Ethics, 1(2), Apr. 1985, p. 17-23.

22. For a sample of Soviet scientific freedom from narrow-minded bias in general relativity, see V. I. Denisov and A. A. Logunov, "The inertial mass defined in the general theory of relativity has no physical meaning," Teor. i Matemat. Fizika, 51(2), May 1982, p. 163-170 (In Russian). See also A. A. Vlassov and V. I. Denisov, "Einstein's formula for gravitational radiation is not a consequence of the general theory of relativity," Teor. i. Matemat. Fizika, 53(3), Dec. 1982, p. 406-418. Here we find that the intensity of gravitational radiation and the total intensity determined in the general theory of relativity in accordance with Einstein's formulas depend on the choice of the coordinate system, so that they can be made to vanish or even become negative. [Note by T.E.B.: If local curvature is

engineerable, as in scalar EM, the local choice of coordinate systems can itself be directly engineered. This clearly implies that scalar EM can thus produce either "positive" intensity radiation or "negative" intensity radiation; thus it can "produce energy at a distance" or "extract energy from a distance.]
Continuing with Denisov: This result is a particular consequence of the general assertion to the effect that in general relativity there are no energy-momentum conservation laws for a system consisting of matter and the gravitational field. [Note by T.E.B.: Thus we can have an energy source or energy sink appear in the distant interference region, where matter has been lifted from the Dirac sea and exposed to the highly nonlinear interfering EG fields.]. See also V. I. Denisov and A. A. Logunov, "New theory of spacetime and gravitation, "Teor. and Matemat. Fizika, 50(1), July 1982, p. 3-76. Points out that ". . . the gravitational field in general relativity is completely different from other physical fields and is not a field in the spirit of Faraday and Maxwell." (p. 3, English version).

23. In the Proceedings of the Tesla Centennial Symposium, an IEEE Centennial Activity, Colorado College, Colorado Springs, Colorado, Aug. 9-11, 1984, see Richard A. Blade, "Modification of Maxwell's equations in free space to account for nonzero photon mass and scalar electromagnetic waves," p. 91-92; Jack Y. Dea, "Scalar fields: their prediction from classical electromagnetism and interpretation from quantum mechanics," p. 94-98; Robert W. Bass, "Self-sustained non-Hertzian longitudinal wave oscillations as rigorous solutions of Maxwell's equations of electromagnetic radiation," p. 89-90; T. E. Bearden, "Tesla's electromagnetics and its Soviet weaponization," p. 119-138.

24. To see the limiting assumptions imposed on general relativity that results in the severely restricted "ordinary general relativity" taught in almost all Western universities. see Charles W. Misner, Kip S. Thorne and John Archibald Wheeler, Gravitation, W. H. Freeman and Co., San Francisco, CA, 1973, p. 19-21, 71-72, 367-369. Among other things, these arbitrary restrictions save the conservation laws. When they are removed. the conservation laws can be violated.

25. Several anomalous events -- skyquakes, booms, or earthquakes -- have been documented in Europe. See H. W. Haak. "The Seismic event of November 9, 1983: Earthquake or sonic boom." Seismic Activity in Western Europe, (With particular consideration of the Liege Earthquake of November 8, 1983), Ed. by Paul Melchior, D. Reidel Publishing Co., 1985, p. 215-222. For such events in the United States, see S. Claflin-Chalton and G. J. MacDonald, "Sound and light phenomena," The Mitre Corporation, McLean, Virginia 22102, Nov. 1978.

26. Fundamental experiments were performed by Eotvos et al. in the early 1920s. See R.V. Eotvos, D. Pekar and E. Fekete, Ann. Phys. (Leipzig) 68, 1922, p. 11. Actually a fifth force of nature due to hypercharge may have been found by these experiments. See Ephraim Fischbach et al. "Reanalysis of the Eotvos experiment," Physical Review Letters, 56(1), Jan. 6, 1986, p. 3-6. See also F. D. Stacey and G. J. Tuck, Nature 292, 230 (1981); S. C. Holding and G. J. Tuck, Nature 307, 714 (1984); G. W. Gibbons and B. F. Whiting, Nature 291, 636 (1981); F. D. Stacey, in Science Underground, edited by M. M. Nieto et al., AIP Conference proceedings No. 96, (American Institute of Physics, New York, 1983, p. 285. See also S. H. Aronson et al, Physical Review Letters 48, 1982, p.1306; Physical Review D 28, 1983, p. 476, 495. Also, comparison of satellite and terrestrial determinations of the gravitational field constant reveals significant disagreement: see R. H. Rapp, Geophys. Res. Lett. 7, 1974, p. 35; Bull. Geod. 51, 1977, p. 301.

27. John J. A. O'Neill. "Tesla cosmic ray motor may transmit power 'round the earth: Famed scientist, on eve of 76th birthday, says he has succeeded in harnessing 'penetrating rays' to operate small motive device." Brooklyn Eagle, July 10,1932. Tesla reported he had harnessed "cosmic rays" and caused them to operate a small motive device. Tesla's use of "cosmic rays," however, encompassed scalar EM radiation. Tesla later seems to have progressed to a simpler motive unit. In the Kansas City Journal-Post, Sep. 10, 1933, he stated: My power generator will be of the simplest kind -- just a big mass of steel, copper and aluminum, comprising a stationary and rotating part, peculiarly assembled." A similar type of "gravitational turbine" seems to have been invented by John Bedini.

28. To see just how arbitrary and postulational are present "definitions" of mass and force, see Robert Bruce Lindsay and Henry Margenau, Foundations of Physics, Dover Publications, New York, 1963, p. 283-287. Note on p. 283 that a "field of force" at any point is actually defined only for the case when a unit mass is present at that point. Also see Richard P. Feynman, Robert B. Leighton, and Matthew Sands, The Feynman Lectures on Physics, Addison-Wesley, New York, Vol. 1, 1963, p. 2-4 for a definition of the electric field in the context of its potentiality for producing a force. This problem did not exist for the original foundation of electromagnetic force fields in vacuum, since the vacuum was assumed to be a material ether. With the modern view a nonmaterial ether has emerged, yet the classical electromagnetic theory has not been made sufficiently rigorous in distinguishing "observable" and "virtual" electromagnetic force fields.

29. E. P. Battey-Pratt and T. J. Racey, "Geometric Model for Fundamental Particles," International Journal of Physics, Vol. 19, No. 6, 1980, p. 437-475.

30. Some years ago, Dr. William Tiller produced very important "free A-field" theoretical work which showed waves which did not fall off as $1/r^2$. Interesting theoretical work in scalar wave theory has also been advanced by Dea. See Jack Dea, "Fundamental Fields and Phase Information," presented at the 1985 U.S. Psychotronics Association Conference, Bergamo Center, Dayton, Ohio, July 1985. Dea has formulated an important theory for vacuum EM scalar waves, derived from Maxwell's equations with zero E and B fields. He predicts waves whose intensity falls off with distance as 1/r instead of $1/r^2$, and detection of these waves by various means. He shows simple generators for the waves. Detection is quantum mechanically by electron interference, not by single electrons. Thus such scalar waves will pass through normal Faraday shields. In his theory Dea does not address the question of spin vortexes in vacuum scalar waves. It is the present author's view that all vacuum waves are scalar waves, and the primary distinction between the "transverse" EM wave and the longitudinal scalar wave is simply the presence or absence of spin-vortexes. Indeed, one may argue that the present "vector wave" EM theory can be replaced by a scalar wave theory. In 1903 Whittaker proved that any vector field can be replaced by two scalar fields. See E. T. Whittaker, Proc. Lond. Math. Soc.1, 367, 1903. By implication, since a vector wave is simply a moving vector field, it can be replaced by two moving scalar fields.

31. David Jones, "Israel's Secret Weapon," Weekend Magazine, Dec.17, 1977.

32. John Hutchinson, private communication. Masses of wood, metal, etc. -- some weighing over 60 lbs. -- have been levitated by Hutchinson.

33. For a description and details of the April 9, 1984 incident off Japan, see Daniel A. Walker, Charles S. McCreery, and Fermin J. Oliveira, "Kaitoku Seamount and the Mystery Cloud of 9 April

1984," Science, 227(4684), Feb. 8, 1985, p. 607-611. See also transcription from Japan Airlines flight 036 to Anchorage International Flight Service, 9 April 1984, at 1406 Greenwich mean time, Federal Aviation Administration (FAA) — Alaska Region; Jim Derry, Special Agent, FAA-Alaska Region, interviews with Captain C.H. McDade, Japan Airlines Flight 036, with Captain Cornelis Vander Berg, KLM Royal Dutch Airlines Flight 868; with First Officer Reint Sol, KLM Royal Dutch Airlines Flight 868, and with Captain Mike Howe, Flying Tiger Lines Flight 078, Anchorage Daily News, 10 April 1984, p. A-l; Anchorage Daily News, 12 April 1984, p. A-l; Honolulu Advertiser, 10 April 1984, p. B-l; Newsweek, 30 April 1984, p. 25, Gregg Ripee, "Mushroom cloud sighted off Japan," Los Angeles Daily News, 11 April 1984, p. 1,8; Ross Gelbspan, "Mystery cloud baffles scientists," Boston Sunday Globe, 13 Jan. 1985, p. 1, 14; T.E. Bearden, Soviet Weather Engineering Over North America, 1-hr. videotape, 1985. See also McKenna, Daniel L. & Daniel Walker,"Mystery Cloud: Additional Observations", Science, 234(4775), Oct. 24, 1986, p. 412-413.

34. For a description of the April 11, 1963 anomalous underwater explosion north of Puerto Rico, see Robert J. Durant, "An Underwater Explosion — or What?", Pursuit, 5(2), April 1972, p. 30-31.

35. For details of the loss of the U.S.S. Thresher and the interference experienced by the U.S.S. Skylark, see John Bentley, The Thresher Disaster, Doubleday, Garden City, N. Y., 1975, particularly p. 164. Some of the communications systems of the Skylark experienced temporary failure, but were not disabled, later resuming operation.

36. The Soviet Union has a well-established history of interfering with and destroying aircraft; for example, for a listing see "Soviet and Warsaw Pact air incidents," Jane's Defence Weekly, 3(2), Jan. 12, 1985, p. 58.

37. For details of the anomalous "nuclear flashes" detected by U.S. Vela satellites, see "Scientists Fail to Solve Vela mystery," Science, 207, 1 Feb. 1980, p. 504-506. "Satellite Evidence Shows 'possibility' of Nuclear Test, DOD Says," Aerospace Daily, Oct. 29, 1979, p. 286. "A Flash of Light," Newsweek, Nov. 5, 1979, p. 64-65. "Was It a Nuclear Device?", Newsweek, July 21, 1980, p. 19. "Diverging Views," Washington Roundup, Aviation Week & Space Technology, July 21, 1980, p. 15. Philip J. Klass, "Clandestine Nuclear Test Doubted," Aviation Week & Space Technology, Aug. 11, 1980, p. 67, 69, 71-72. "Debate continues on the Bomb That Wasn't," Science, 209, 1 Aug. 1980, p. 572-573. "Navy Lab Concludes the Vela Saw a Bomb," Science, 209, 29 Aug. 1980, p. 996-997. See also Jack Anderson and Dale Van Atta, United Press Syndicate, "CIA knew South African-Israeli nuclear test was coming," Birmingham Post-Herald, Apr. 26, 1985, p. A5. The latter article repeats the CIA/DIA argument that the Vela incidents represent concurrent South African-Israeli testing of atomic weapons. Taiwan is considered a possible third partner. According to Anderson and Van Atta, a South African navy contingent was "in the area" at the time of the 1979 Vela detection, and Israel and South Africa were cooperating on an atomic bomb project as early as 1966. Apparently U.S. announcement of an impending South African atomic test in the Kalahari Desert in 1977 led to such an outcry that the test was suspended. Anderson and Van Atta cite succeeding visits to South Africa by Israeli scientists, technicians, and defense officials. However, since the actual Vela detections showed some deviations from what would be expected from nuclear tests, one can speculate that Anderson and Van Atta have presented evidence for the development of scalar electromagnetic weapons by two additional countries. One may further speculate that this could reveal what has been checking the Soviets from simply moving against the West with scalar electromagnetic weapons.

Indeed, the mysterious destruction of six major Soviet missile ammunition storage areas within the space of seven months could have been a preemptive measure and warning to the Soviets if they had actually been considering moving against the West. Also, other incidents reported in the South Atlantic may possibly be associated with the program producing the "Vela flashes." For example, see N.W.C. Rutherford, "Unidentified Phenomena," Marine Observer, 51, 1981, p. 186 for a description of a great bluish-white flash and small bolt of lightning, indicating some sort of anomalous electrical discharge, on Dec. 23, 1980 at 2245 hours (10:45 p.m.). Many other anomalous flashes for which no known causative mechanism exists have been detected by satellites. For example, the OSO-2 and OSO-5 satellites have detected about one mysterious short (less than 0.1 sec) flash about every ten orbits, at times when the fields of view of the telescopes were well above the earth. As many as three of the satellite's photometers have detected a flash simultaneously. These flashes must be removed from any discussion of satellite-observed lightning; see J. G. Sparrow and E. P. Ney, "Lightning Observations by Satellite," Nature, 232, 1971, p. 540.

38. For a description of sightings of enormous glowing globes of light deep within the Soviet Union in the direction of Saryshagan, see Gwynne Roberts, "Witness to a Super Weapon?", The Sunday Times, London, England, Aug. 17, 1980. Several incidents were observed by Downie and others.

39. For an artist's conception of a directed energy weapon installation at Saryshagan, see Aviation Week & Space Technology, July 28, 1980, p. 48. For a DOD sketch, see Soviet Military Power, 1985. Obviously classically-trained U.S. military analysts, with no knowledge of scalar interferometry, have not considered the installation as a candidate hyperspatial howitzer.

40. For a description of multiple pilot sighting (from Iran) of an enormous glowing globe of light deep within the Soviet Union, see Central Intelligence Agency (CIA) Information Report No. CO-B-321/15354-66, "Sighting of Unusual Phenomenon on Horizon Near Iranian/USSR Border," Sep. 8, 1966, released on 15 Dec. 1978 under the Freedom of Information Act (FOIA). The sighting occurred at 2142 hours (9:42 p.m.).

41. For details of sighting of the intensely glowing ball of light near British European Airways flight 831 between Moscow and London, see CIA Foreign Intelligence Information Report CO-B-324/33601-76, "Aerial observation of intense Source of Light," Nov. 18, 1976, released on 15 Dec. 1978 under the FOIA. The incident occurred between 1800 and 1900 hours (6:00-7:00 p.m.). The light was observed for 10-15 minutes, until the aircraft had flown past and left the light behind.

42. For other examples of pertinent 1ight phenomena: F. S. Angus and G. Carling, "Optical Phenomenon: Caribbean Sea; Western North Atlantic," Marine Observer, 40, Jan. 1970, p. 17-18; R. A. Holmes, "Unidentified Phenomenon, off Barbados, West Indies," Marine Observer, 40(229), July 1970, p. 107-108; H. K. Dyer, "Unidentified Phenomenon: Western North Atlantic," Marine Observer, 43, July 1973, p.114. For a 1961 double concentric hemispheric shape observed in the Indian Ocean, see Marine Observer, 32, 1962, p. 64. For a particularly significant combination of forms, see Marine Observer, "Unidentified Phenomenon," 48, 1978, p. 21-22. Also, on the night of July 26, 1984 the pilot and crew of a Boeing 747 (American carrier) flying from Tokyo to Fairbanks, near the Kuriel Islands, at 47 5'44" N: 161 00'05" E, noticed a slowly expanding hemisphere of white light off to their left above the horizon. The shell of light continued to expand over a 10-minute

period until ahead of them and to the right. The crew braced for a shock wave which never arrived. Their weather radar saw nothing out of the ordinary. The shell of light had sharp edges and was semi-transparent so that stars became visible through it. (Richard F. Haines, private communication, Sept. 27, 1984). See also Richard Hall, "Aerial anomalies at sea," The Info Journal, 4(3), May 1975, p. 6-9 for an unusual light phenomenon seen in the Caribbean by the R.M.S. Carmania (British). The phenomenon occurred four times at precise hourly intervals, strongly suggesting an artificial origin. See also F. Shepherd, "Cloud: Strait of Gibraltar," Marine Observer, 51(273), July 1981, p. 107-108 for an incident of associated cloud, arch, and anomalous pressure effects. For another significant airline sighting by Japan Airlines flights 403 and 421 of a giant, expanding globe of light on June 18, 1982, in the North Pacific, 100 km. east of Kushiro, see the Asahi Evening News, Tokyo, Japan, June 22, 1982. For additional evidence that nomadic tribesmen passing through Kazakhstan repeatedly observe such gigantic light phenomena in close association with Saryshagan missile test range, and that Soviet deception planners foster the notion of "UFO activity" as a Red Herring, see Robert Jackson, "KGB takes to the flying saucers!", Northern Echo, Darlington, England, March 15, 1984.

43. For details of Khrushchev's announcement of a Soviet superweapon, see Max Frankel, "Khrushchev Says Soviet Will Cut Forces a Third; Sees 'Fantastic Weapon'", New York Times, Jan. 15, 1960, p. 1.

44. See Christopher S. Wiren, "Brezhnev Calls for Accord against 'Terrifying Arms,'" New York Times, June 14, 1975, p. 1, 11. In a major Kremlin speech on June 13, 1975, Leonid I. Brezhnev included a statement that one major concern not covered by existing agreements was "assuming ever greater urgency with each passing day." Calling for a ban on new weapons of mass destruction, the Soviet leader stated: "The level of modern technology is such that a serious danger arises of creating weapons more terrifying than nuclear ones." He stated, "The reason and conscience of humanity dictate the necessity of erecting an insurmountable barrier to the development of such weapons." See also Malcolm W. Browne, "Senatorial Group Received by Brezhnev," New York Times, July 3, 1975, p. 2. Leonid Brezhnev repeated his proposal to a group of U.S. senators on July 2, stating that the capability to develop more terrible weapons was obvious. He emphasized, however, that he "had no particular weapon in mind." Here he may have been deliberately misleading the U.S. senators, to prevent revealing that the Soviet Union had already developed such weapons, and was horrified at their potential for total destruction. E.g., if massive and rapid scalar explosions occur, the linearity of spacetime -- and the orderly flow of time itself -- may be seriously perturbed throughout the earth and its adjacent space. From a general relativistic viewpoint, such an event might well prove catastrophic for the entire biosphere. Boris N. Ponomarev, a Soviet national party secretary, again raised the same issue to a delegation of visiting U.S. congressmen in the Kremlin on Aug. 11, 1975; see Christopher S. Wren, "Moscow Now Pressing Disarmament." New York Times, Aug. 12, 1975, p. 6. At the United Nation's thirtieth session of the General Assembly on Sept. 23, 1975, Foreign minister Andrei A. Gromyko strongly raised the same issue, warning that science can produce "ominous" new weapons of mass destruction. He urged that all countries, led first by the major powers, should sign an agreement to ban the development of these unspecified new weapons. He even offered a draft, entitled "Prohibition of the Development and Manufacture of New Types of Weapons of Mass Annihilation and of New Systems of Such Weapons." The first article provided that the types of these new weapons would be "specified through negotiations on the subject." Because of its fixation on nuclear weapons, the West may have lost its only opportunity to prevent the spread of scalar electromagnetic weapons of power unprecedented even by nuclear arms. Of course, it may also have

been a Soviet ploy to prohibit the U.S. from developing scalar electromagnetics defensive weaponry to counter the massive strategic scalar electromagnetics weapons already developed, tested, and deployed by the Soviet Union. Certainly in 1973 at a secret meeting in Prague with European communist leaders, Brezhnev had laid out a firm statement of Soviet domination of the world by 1985. See "Secret Speech: Did Brezhnev Come Clean?", National Review, 29(8), Mar. 4, 1977, p. 248, 250. Brezhnev's speech contained statements such as: "We are achieving with detente what our predecessors have been unable to achieve using the mailed fist...come 1985 we will be able to extend our will wherever we need to." Brezhnev stated the Soviet Union would control the oceans of the world, 90% of the land, and the air and space above. A front-page Boston Globe article on Feb. 11, 1975 was the first to carry the story. A copy of Brezhnev's secret speech was obtained by British intelligence in 1973, but denigrated by Secretary of State Kissinger. Apparently the first official U.S. reference to Brezhnev's startling speech did not appear until the 1976 National Intelligence Estimate. Although the big intelligence bureaucracies can do a fantastic job with "current intelligence," their record at predicting a drastic change is woeful, precisely because of the political nature of bureaucracies. See "What is Intelligence," Colonel William V. Kennedy et all, Intelligence Warfare: Penetrating the Secret World of Today's Advanced Technology Conflict, with an introduction by Dr. Ray S. Cline, Crescent Books, New York, 1983, p. 8-23. Intelligence Warfare is heartily recommended as the single book which best gives the reader a grasp of modern technical intelligence organizations, capabilities, and operations.

45. For details of Soviet weather engineering operations over the U.S., see Thomas E. Bearden, "USSR: New beam energy possible?", Defense & Foreign Affairs Daily, 13(111), June 12, 1984, p. 1-2. Cloud signature patterns reported in the article have been repeatedly sighted over multiple areas in the U.S. A series of anomalous "hole in the cloud" patterns, possibly associated with early Soviet weather engineering efforts over the U.S., was widely seen in 1967-68. See Weatherwise, 21(4), Aug. 1968, cover and p. 143; 21(5), Oct. 1968, p. 194-195, 204-205; 21(6), Dec. 1968, p. 238-245. Peculiar stationary blocking patterns have also been observed to occur and influence weather over the U.S., leading to severities such as the winter of 1976-77. See K. K. Tung and R. S. Lindzen, "A theory of stationary long waves, Part 1, A simple theory of blocking; Part 2: Resonant Rossby waves in the presence of realistic vertical shears; Part 3, Quasi-normal modes in a singular waveguide," Monthly Weather Review, 107(6), June 1979, p. 714-774. See also T. E. Bearden, Soviet Weather Engineering Over North America, videotape, 1985 for an expose or the physics and some major incidents of major Soviet weather engineering, including details and photographs of cloud signature patterns. See also C. B. Baker, "Soviet Weather Mayhem," Youth Action News, Nov. 1983, P.O.B. 312, Alexandria, Virginia 22313, p. 1-8; C. B. Baker, "Diabolic Soviet Warfare," Youth Action News, Nov. 1984; For a conventional Soviet look at weather modification (possibly intended to mislead the West), see E. T. Protasevich, "Microwave weather modification," Soviet Technical Physics Letters, 7(3), March 1981, p. 114-115. For a downburst mechanism, see Gary Ellrod, "Dramatic examples of thunderstorm top warming related to downbursts," National Weather Digest, 10(2) May 1985, p. 7-13. See Art and Kay Westermann, Weather War — Worldwide, Liberty Bell Books, POB 288, Sedona, Arizona 86336, 1983. See also U.S. Senate Resolution on Environmental warfare, July 11, 1973.

46. For details of the Soviet Woodpecker beams bending around the earth and intersecting over the U. S., see Christopher Chant and Ian Hogg, Nuclear War in the 1980's?, Harper & Row, New York, 1983, p. 71. See also Soviet Military Power, U.S. Department of Defense, 1985, p. 45. The

intersection forms an interference grid. Scalar EM channels added to the Woodpecker carriers then provide a corresponding sca1ar EM interference grid in the scalar area.

When adjusting the scalar interferometry components of the grid, bursts in the interference and discharges of energy as well as bursts of energy extractions occur. This leads to the production of anomalous aerial phenomena such as explosions, rumblings, airquakes, etc. In addition, direct Bohm-Aharonov forces may be engendered in ground structures, shaking buildings and windows, etc. without seismic disturbances. Such anomalous disturbances have been widely noted in the open U.S. press. E.g., particularly see Kenneth F. Bunting and Daniel M. Weintraub, "Mysterious Rumbles Jar Southland," Los Angeles Times, Dec. 8, 1984, CC(II), p. 1,10; Let Scarr, "People shook up over mystery shakes," The San Diego Union, Dec. 8, 1984, p. Bl, 4. Following this and a Dec. series of anomalous aerial disturbances off the Los Angeles/San Diego coast, a sharp and unexpected weather front appeared, racking the area with high winds on the night of Dec. 12, producing widespread damage and power outages. The newly-formed front moved on to produce significant snowstorms in other areas. See Ted Thackery, Jr., "Winds Kill Two, Wreak Havoc as They Sweep Through the Southland," Los Angeles Times, Dec. 14, 1984, MF/Part II, p. 1,8; "Even Tucson gets snow in storm that dumps 20 inches," AP release, Los Angeles Herald Examiner, Dec. 14, 1984, p. A-12. During several months prior to the December 1984 Los Angeles incident, anomalous electrical failures and outages had occurred in the San Diego and Southern California area, possibly due to scalar interferometry adjustments in the Woodpecker grid over the area. For other typical incidents possibly associated with adjustment of the interference grid, see "Who boomed? Odd Noise unnerves Ohioans," Journal, Milwaukee, Wisconsin, Dec. 28, 1982; "Tremors shake Miss. Gulf Coast," Times-Picayune, New Orleans, Louisiana, Feb. 27, 1983; Sandra Skowron, "Sonic boom is just Mother Nature," Beaver Co. Times, Beaver Falls, Penn., Jan 13, 1983; "Booms in Rockland, New York Times, Mar. 1. 1979, Sec. 8, p. 82; "Loud 'boom' unexplained," Star-Beacon, Ashtabula, Ohio, Feb. 21, 1983; Paul Senecton, "The word is now IDENTIFIED," Mail, Hartlepool, England, Feb. 3, 1985: On Jan. 23, 1974 a mysterious explosion over North Wales rocked a 60-mile radius area. Associated anomalous light phenomena were also seen. Hundreds and hundreds of anomalous booms, aerial rumbles, and aerial explosions, many accompanied by flashes or anomalous shaking of ground structures, buildings, windows, etc., have occurred over the U.S. and other Western nations in the 60's, 70's, and 80's.

On occasion, an aircraft at the proper altitude and position can conceivably experience interference in its electrical systems and in its engine combustion processes due to exothermic kindling or endothermic extraction of electromagnetic energy. The combustion processes of aircraft engines produce highly ionized gases in very nonlinear conditions. These can act as strong dephasers and decouplers of the vector EM components of a vector zero summation in a scalar interference zone. Exothermic interference would have little effect on combustion, but strong endothermic interference can result in engine flameout. Anomalous simultaneous failure of jet and propeller-driven aircraft engines sometimes occurs. For high altitude grids, this can result in engine flameouts, but restart and recovery after unusual loss of altitude has dropped the aircraft out of the scalar interference zone. Several candidate incidents over and near the U.S. exist, particularly where power failures were experienced by multiple aircraft. The more usual exothermic case, however, if substantial could result in anomalous loss of control of the aircraft. For a recent candidate incident, see "Jetliner drops 32,000 feet; 400 aboard; 50 are injured," Associated Press release, Huntsville Times, Feb. 20, 1985, p. 1 and "China Airlines Pilot Denies Cockpit Error," Associated Press release, Huntsville Times, Feb. 21,

1985, p. A-9. Deliberate use of this effect as an anti-strategic-bomber weapon capable of destroying bombers at or shortly after takeoff is possible (the Arrow DC-8 which crashed just after takeoff from Gander Air Force Base, Newfoundland on December 12, 1985 may have been deliberately interfered with by just such a Soviet weapon -- see extensive newspaper and TV news coverage of that event).

In scalar EM interference with aircraft, certain signatures may occur. Different instruments may sharply contradict each other, since their activation and inactivation is no longer a simple function. The pilot's instrument panel, for example, may indicate failure of the control system, when actually it has not failed, and the flight recorder may record that the control system is still operating. In such case, the pilot may take proper action based on his own instrumental readings, yet these actions may be contraindicated for the actual status of the aircraft, resulting in opposing pilot/autopilot actions. Tentative indications of the jetliner that anomalously dropped 32,000 feet and recovered are that apparently such anomalous instrument disagreements occurred. Another signature is that, as the EM charge accumulates in and on the aircraft, its skin charges up electrically, producing a glowing corona similar to St. Elmo's fire. The Arrow DC-8 was observed to be glowing yellow by eyewitnesses, according to the Canadian Broadcast Corporation's 10:00 p.m. network TV news on April 8, 1986.

47. T. E. Bearden, Star Wars Now! The Bohm-Aharonov Effect, Scalar Interferometry, and Soviet Weaponization, Tesla Book Co., Millbrae, California, 1984, p. 19-22.

48. For a paper possibly related to the first Bedini scalar wave detector from the "free A-field is a scalar field" view, see Robert R. Lewis, "Aharonov-Bohm effect for trapped ions," Physical Review A, 28(3), Sept. 1983, p. 1228-1235. This paper analyzes the role of the Aharonov-Bohm effect for the bound states of a charged particle in the superposition of two fields: a uniform magnetic field plus the vector potential of a solenoid. Gives exact solutions for a solenoid of zero size and discusses the corrections due to a solenoid of finite size. Shows that a series of new "betatron resonances" appear in the spectrum, dependent on the flux quantum number. The fundamental betatron resonance remains narrow and unshifted for solenoid radii large enough to broaden and shift the cyclotron resonance. See also W. Ehrenburg and R. E. Siday, Proc. Phys. Soc. London, Sect. B62, 1949, p. 8 which, among other things, discusses the effect of the vector potential in electron interferometry, where the insertion of a tiny solenoid between the interfering paths is shown to give an additional phase difference proportional to the flux through the solenoid. The resulting shift in the fringe system is called the Aharonov-Bohm effect.

49. Frank Golden has developed a most important and precise scalar EM detection system to display scalar EM signals on a cathode ray tube. His important measurements have mapped the scalar resonant frequency responses of the entire earth. Two completely different types of scalar instrumentation show precise agreement on the frequency maps. The measurements show that the Soviet Union has for some time entrained the entire earth into giant scalar electromagnetic resonances on two frequencies approximately 12 kilohertz apart. It is the opinion of the author that the beat frequency between these two giant resonances is utilized by the Soviet Union to extract enormous power from the earth, essentially by a mechanism that Golden has uncovered. A complex of four to eight weapon systems might reasonably be powered from the single bi-resonant tapping source. In April 1985 Golden discovered the rather sudden activation of many other scalar frequencies with characteristics resembling command and control communications. In addition, a significant number of additional paired scalar resonances had been entrained upon the earth. It is the

opinion of the author that this showed a major activation of the Soviet strategic scalar electromagnetic defense system, with the power up of from 80 to 100 weapons, along with the complete command and control system. Golden has previously built a prototype of an actual Soviet scalar communications system and demonstrated that it works. Because of the impending mayday and the 1973 statement by Brezhnev indicating that 1985 was a critical planning year, the sudden activation of such massive numbers of weapons and communications was alarming. Accordingly, the author discreetly notified certain contacts to alert the U.S. system. Golden then detected the periodic turn-on and turn-off of the systems, indicating a large command and control exercise rather than preparations for direct tactical use. An additional difference, however, was the change from scalar electric to scalar magnetic field on many of the large transmitters. This is indicative of electrostatic location, targeting, and adjustment of the target on the earth and then switching to the "power input" mode. It is the opinion of the author that this indicated the choice of a geological target and proceeding to attack that geological target in the "slow buildup" mode. Again, proper contacts were so notified.

50. A very good coverage of the Soviet microwave radiation of the U.S. Embassy in Moscow is given in Paul Brodeur, The Zapping of America, W. W. Norton & Co., New York, 1977, passim. None of our U.S. Embassy security personnel knew of scalar interferometry, nor did they possess scalar electromagnetics detectors. Further, orthodox U.S. scientists were also ignorant of scalar electromagnetics. The Soviets were thus in a position to tailor the radiation signals and precisely determine what our on-site personnel would detect. Details of the effects on U.S. Embassy personnel, possibly associated with the microwave radiation, are given by Brodeur. A great number of related releases by the open news media also exist. For example, see Robert C. Toth, "Radiation Devices Bug U.S. Embassy," Huntsville Times, reprinted from the Los Angeles Times, Feb. 8, 1976; "U.S. Screening out Soviet 'Listening Rays'," United Press International release, Washington D.C. Star, Feb. 11, 1976; Norman R. Beebe, "Nixon Exposed to Radiation In Russia?", Associated Press release, Huntsville Times, Apr. 30, 1976; Barton Reppert, "U.S. Scientists Puzzled Over Embassy Radiation Effect," Associated Press release, Huntsville Times, May 28, 1976; Barton Reppert, "Radiation Entering Embassy in Moscow through Phone Line," Associated Press Release, Huntsville Times, May 28,1976. See also Martin Ebon, Psychic Warfare: Threat or Illusion, McGraw Hill Book Co., New York, 1983.

51. For details of the electromagnetic transmission of cellular disease and death, see Vlail P. Kaznacheyev, "Information function of ultraweak light flows in biological systems," Problems in Biophysics, Novosibirsk, 1967, p. 7-18. Kaznacheyev et al, "Conditions necessary for appearance of distant intercellular interactions after UV-radiation," Bulletin Experimentalnoy Biologii i Meditsiny, (5), 1979, p. 468-471; Distant intercellular interactions in a system of two cultures connected by optical contact," Ultraweak Luminescence Biology, Moscow, 1972, p. 224-227; "Distant intercellular interactions caused by UV-radiation," Photobiology of a Living Cell, Leningrad, 1979, p. 221-223; "Studies on the biological role of electromagnetic emission as a factor of adaptive behavior of cells under conditions of latitude changes," Abstracts of the second all-union conference devoted to the problem of human adaptation to different geographical, climatic, and labor conditions, Novosibirsk, 1977, p. 101-104; Vlail P. Kaznacheyev, S. P. Shurin and L. P. Mikjhailova, "Distant intercellular interactions in a system of two tissue cultures," Official Bulletin of the committee on inventions and discoveries affiliated to the council of ministers of the USSR, Discovery no. 122 (19), 1973, p. 3, also printed in Psychoenergetic Systems, 1(3), Mar. 1976, p. 141-142; "Apparent Information Transfer

Between Two Groups of Cells," Psychoenergetic Systems, 1(1), Dec. 1974, p. 37.

52. For evidence of anomalous scalar reflection out of the scalar grid caused by a Navy chaff drop, See "Navy sabotages traffic lights, TV sets," United Press International, PM cycle, Jan. 11, 1985; "Power blackout blamed on anti-radar particles," United Press International, AM cycle, Jan. 11, 1985; "Power Disrupted Briefly After Navy Plane Drops Metallic Strands," Associated Press, AM cycle, Jan. 16, 1985.

53. A good summary of the early incidence of the Soviet Woodpecker signals is given by Bradley Wells, "The Russian woodpecker: a continuing nuisance," CQ, Nov. 1984.

54. A particularly important Soviet Paper is E. B. Smetanin, "Electromagnetic field in a space with curvature -- new solutions," Soviet Physics Journal, 25(2), Feb. 1982, p. 107-111. In this paper, a solution to the stated problem is obtained, which may be regarded as a classical model of a charged particle that has both a magnetic moment and a nonzero magnetic charge density. Interaction with spacetime curvature can disrupt the gauge invariance of the EM field, and it can also reestablish invariance in an initially noninvariant theory. (Hutchinson has had anomalous breaks of metal caused by standing scalar waves, which seems to be due to a mechanism that produces monopoles and deposits them in the metal at standing-wave nodes. This paper should be directly applicable.)

See also Yu. S. Vladimirov and A. A. Kozlenkov, "6-optics and a general theory of gravitation and electromagnetism," Soviet Physics Journal, 27(12), Dec.1984, p. 1039-1041; V. G. Bagrov and M. D. Noskov, "New exact solution of the Dirac equation. XI," Soviet Physics Journal, 27(12), Dec. 1984, p. 1030-1034. See particularly V. I. Petukhov and I. A. Kuzin, "Weak processes in the field of a gravitational wave," Soviet Physics Journal, 27(12}, Dec. 1984, p. 1025-1029.

In the latter paper it is significant that the decay probability increases in a locally curved spacetime, and that solutions are obtained for circularly polarized waves.

(In EM waves, circularly polarized waves have special characteristics in nonlinear isotropic media: exact solutions exist. Also, when two longitudinal sine waves of differing frequencies are transmitted into a nonlinear isotropic medium, the apparent difference frequency is transmitted as a sine wave, undistorted. This characteristic has been used by Westinghouse to produce improved sonar transmission through seawater, for example. The scalar EM (electrogravitational) wave may be represented as a longitudinal EM wave. Immediately, if one wishes to produce a pure scalar EG wave in the nucleus of an atom, two frequencies should be transmitted such that their difference is the frequency wished. Or circularly polarized waves may be utilized.)

Note that, by implication, one should be able to deliberately tailor scalar EM waves to greatly speed the decay of long-lived radioisotopes, such as are contained in radioactive wastes from nuclear reactors and other processes.

55. For some evidence of continuing persistence of the higher frequency scalar components applied to the scalar grid on Jan. 28, 1986 to localize the effects when attacking the Challenger, see "Poison suspected in unexplained deaths of birds," Huntsville Times, AP release, Feb. 6, 1986. From 1-4 Feb.

1986, various kinds of dead birds -- such as blackbirds, cardinals, sparrows and bluebirds -- plummeted to the ground in Birmingham, Alabama. At first some sort of mysterious poison was suspected, but later was ruled out. During this period, the woodpecker grid was particularly active in weather engineering operations. Multiple sightings of giant cloud radials occurred in various places throughout the U.S. The retention of the high frequency components possibly was intensified in the Birmingham area sporadically during the period. Birds flying into this zone would be killed if their brains acted as scalar receivers and were sufficiently jammed by the signals. Normally Huntsville (further north) is a "hinge point" for increased scalar activity, to start the Jetstream bending northeast to move along the Appalachian mountain chain. However, just before 28 January the jetstream had been diverted further south than usual by the Soviet interference, bringing unseasonably cold weather to Florida and the waiting Challenger on its launch pad. Probably hinge points further south than Huntsville were needed for this operation. If these more southern points were retained for a few days, and the high frequency components were retained, then an inadvertent high intensity area of these components may have sporadically occurred in the Birmingham area, killing the birds.

For description of the Apr. 18, 1986 Titan blast and its ramifications to the spy satellite program, see James Gerstenzang and Ralph Vartabedian," Los Angeles Times News Service, "Titan Blast to Hurt Spy Program," Huntsville Times, Apr. 19, 1986.

56. For another very important paper indeed, see Vu. G. Ignat'ev, "Relativistic kinetics of an anisotropic plasmalike medium with damping in a field of gravitational radiation," Soviet Physics Journal, 27(12), Dec. 1984, (English translation: Plenum, June 1985), p. l066-1069. If we substitute the vacuum "virtual plasma" for the observable plasma, this paper may be part of the smoking gun to show that the Soviet Union has developed scalar electromagnetics. Extrapolating from this paper, the amplitude of the "induced longitudinal field" is proportional to the square of the amplitude of the gravitational wave (GW) in an initially isotopic medium, but reduces to a linear proportionality as the medium develops nonlinearities (anisotropies or inhomogeneities). Whereas conventional GW are considered to be weak, the scalar GW may be very strong since we ourselves determine the variation in the energy density of vacuum it involves. Further, sharply spiked scalar EM (EG) pulses may develop appreciably more amplitude that the linearly calculated amplitude from the magnitudes of the zero-summation components. The end result is that (1) we can produce powerful gravity waves using the scalar EM approach, (2) local spacetime can be curved, producing violation of the conservation laws, and (3) the assumption of a local Lorentz frame made by Einstein as a limitation on ordinary general relativity is falsified.

In passing, note that immediately one also has a clear basis for the excess local production of energy when the battery furnishing power to a DC series motor is sharply spiked backwards in a "recharging" fashion. Further, the ions in the battery (which are several hundred thousand times as massive as an electron) possess a resonance on the order of 16 megahertz in a typical lead-acid battery. Under the correct conditions, the ions collect the excess energy (due to the initial square effect) produced by a sharp pulse of recharging potential. The ions are shocked into resonance and, on reversal, "overshoot" and deliver this excess energy to the plates, recharging the battery. Thus such a system can violate linear conservation of energy because spacetime is locally curved by the spiking, and excess energy from the excited local vacuum is collected by the ions and delivered to the plates. This is precisely the effect upon which the first Bedini free-energy motor depended. The timing and adjustment, however, are highly critical and difficult, and the battery takes a rather severe

beating.

57. For details and photographs of highly anomalous exhausts seen on Bennett Island, see "Explosive Events Seen on Soviet Island," Aviation Week & Space Technology, Sept. 26, 1983, p. 31. NOAA-6 and NOAA-7 weather satellite photographs of massive smoke plumes, one of them 150 miles long and nearly horizontal, are shown. Also, in U.S. weather satellite photos of Novaya Zemlya, similar plumes have been detected, making this location a tentative candidate for a second Soviet "exhaust site." See also Letter John M. Miller, Geophysical Institute, University of Alaska, Jan. 4, 1985 with attachment, "Bennett Island plume cases recently found." Satellite photos showing actual circular breaking of arctic ice have also been taken near Wrangel Island. See Sam Bishop, "UA photos show Soviets break ice for missiles," Fairbanks Daily News-Miner, Dec. 15, 1984, p. 1,3; Craig Covault, "Soviet Abi1ity to Fire through Ice Creates New SLBM Basing Mode," Aviation Week & Space Technology, Dec. 10, 1984, p. 16-17. Wrangel Island in fact has a bizarre history: it belongs to the U. S., but has been illegally given to the Soviets and occupied and used by them. For details, see "Wrangle over Wrangel and the Weather War," Don Bell Reports, 32(9), Mar. 8, 1985.

58. For details of anomalous blinding (probably by scalar EM means) of U.S. satellites, see Philip J. Klass, "Anti-Satellite Laser Use Suspected," Aviation Week & Space Technology, Dec. 8, 1975, p. 12-13. For details of anomalous failures and recoveries of a British satellite, see Joe Schwartz, Nature, 280, July 12, 1979, p. 95.

59. For other possible evidence of traces of Soviet scalar EM activity over the oceans, see George D. Curtis, "An electromagnetic radiation pattern over the ocean," Undersea Technology, 5(8), Aug. 1964, p. 29-30, 40. In producing a scalar wave, there exists a sort of "signal to noise" ratio of the desired scalar wave to an accompanying, undesired normal EM component. Due to practical equipment imperfections, the generated scalar wave inevitably is accompanied by a small residue of ordinary EM wave. While measures can be taken to further purify the scalar wave, a residue always remains. Curtis may have detected the weak EM residue accompanying early Soviet interference gridding for weather control testing over the U.S.

60. Interactions which occurred between Khrushchev and renowned physicist and Nobelian P. Kapitsa are of interest. Khrushchev desired absolute defense of the Soviet Union so that the Soviets might be able to launch any action desired without risk or serious concern. Kapitsa informed the Soviet leader that, if a means of total neutralization of foreign missiles was to be found, it could only come from a group of new principles in physics which was called " energetics." The term "energetics," of course, was contracted from "psychoenergetics," and is essentially the expanded physics/electromagnetics that this author has dubbed scalar electromagnetics.

Strangely, a portion of a book by Marshal Grechko was deleted from its English translation at the specific request of the Soviet Union to the U.S. State Department. The passage stated: "Of particular importance is basic research aimed at discovering still unknown attributes of matter, phenomena, and the laws of nature, and developing new methods for their study and use to reinforce the state's defense capabilities."

The most definitive Soviet book on military strategy is titled Military Strategy (Voyennaya

Strategiya). See V. D. Sokolovskiy, Soviet Military Strategy, third edition, edited with an analysis and commentary by Harriet Fast Scott, Crane, Russak & Company, Inc., New York, 1975. There are three editions, the latest in 1968. In the third edition, the exotic weapons normally proposed for defense against strategic ballistic missiles -- such as particle beams, high energy lasers, exotic nuclear warheads, plasma weapons, antigravitational weapons, etc. -- are discussed and discounted by implication. The statement is made several times that 100% defense against missiles and aircraft is possible. A statement is also made that it is interesting to note that this capability (a solution to the strategic missile defense problem) has been achieved by the Soviet Union, but not by the West (e.g., p. 298.) In the same edition, a previous definition of antimissile defense obviously consisting of radars, computers, and interceptor missiles is deleted (see author's note 190, p. 454).

The Soviets also recognize the great importance of technical surprise: "The experience of war shows that warring sides quite often have tried to employ new types of weapons to this end to achieve surprise, which are a surprise for the enemy or are little known to him. Each side secretly develops new means of warfare in order to employ them unexpectedly. History knows many examples how the employment of a new weapon initially gave considerable success because the enemy, caught unaware and not knowing the combat capabilities of this weapon, was for some time incapable of effective counteraction… The mass introduction of new weapons into an army usually cannot remain secret for long for the other side. -- New means of warfare, and in mass numbers, are impossible to create often and quickly. In this regard, the sides have begun to take other paths concerning the attainment of surprise along with searches for new weapons and their sophistication." V. Ye. Savkin, of The Basic Principles Operational Art and Tactics, Moscow, 1972, U.S. Air Force translation, U.S. Government Printing Office, Washington, D.C. 20402.

61. The Soviets have not discarded most of their old radars, and have continued to develop, build, and deploy giant new radars (in apparent violation of SALT agreements), which U.S. analysts always analyze in conventional fashion. It is fairly straightforward, simple, and inexpensive to modify an ordinary pencil beam radar to produce scalar wave beams and geometrical scalar Fourier expansion forms. Radars can provide a wide array of totally new and unexpected capabilities when utilized in the scalar electromagnetics mode. Even older Soviet radars, with antiaircraft gun sites and older surface-to-air missile sites, will exhibit new and startlingly advanced capabilities against ballistic and cruise missiles and Strategic Air Command bombers. Since there are many thousands of these older Soviet radars still operationally deployed, in the scalar mode the Soviet strategic defense may well approach 100%, just as Military Strategy implies. Also, the antiaircraft and antimissile defense capability of Soviet land forces may be far greater than anything presently estimated by U.S. analysts.

62. To the physicists, engineers, and researchers who have made the tough sledding to this point, congratulations! Here's a bonus for you.

Turn to page 32, equation [7]. Time differentiate it (this is left as an exercise for the reader). Collect terms and study the result intensely.

Now you have the reason why rise time is so important from a scalar EM viewpoint. You can also see why spiking the innate inductance of any system very sharply is so important. Fast rise time greatly increases the value of the time derivative terms, and your gravito-inertial effects go up with

the collective squares of your zero-vector summed components. Any system has at least a little inductance. For sharp spikes, the gravitational potential goes very high. The inductance of the system momentarily opposes any current (translation: opposes any current bleed-off, or EM force field bleed-off). During that time you've got the 4-space G-potential to use. If you need to hold it longer to use it, then increase the inductance.

Now you can see why extremely rapid discharge of properly tuned, giant Tesla coils give gravitational and inertial effects sometimes.

You can see why the sharp "EMP" (electromagnetic pulse) from a nuclear explosion or EMP generating device can penetrate the ocean.

That's why the spikes (such as used by the neurophone) can carry messages directly into the brain and nervous system. You also should see why the Soviet woodpecker carriers (a Soviet over-the-horizon radar system) are loaded with scalar EM spikes (Bedini has precisely detected them from 50 Hz to 10 MHz; Golden has detected them into the gigahertz range.) to work on the humans in the targeted area. They're zapping the hell out of us. And they have done something similar at the U.S. Embassy in Moscow for decades.

Bedini has developed a simple, cheap device to mess up the phaselocking of the scalar EM spikes on the woodpecker carriers. It's based on the fact that the Russkies use a lot of circularly polarized transmitters when they make the spikes. Here's what to do: Take 4 strong bar magnets and an old (but operational) long-playing record turntable. Set it on 33-1/3 RPM speed. Glue the magnets on the top of the turntable, standing vertically, symmetrically placed around the turntable's outer edge. Place them so that on one a north pole is up, on the next a south pole is up, then a north up, then a south up. Now turn the turntable on and let it run. This gadget makes a slowly rotating magnetostatic wave. (Yes, it will also make a rotating "magnetic" wave, which is actually two rotating magnetostatic waves.). These rotating magnetostatic waves will interfere with the scalar spikes, changing them to EM (electromagnetism) and slowly rotating their phase. This breaks the phaselock of the Soviet circularly polarized scalar EM signal on the human brain. This gadget will protect the average large room.

But back to our differentiated equation.

Now you should also see why the first Bedini motor is so "devilishly difficult" to adjust. You've got to get the effect and examine it in well under 20 nanoseconds. You'll need an oscilloscope of 350 MHz range or so. Microwave-quality bench equipment is necessary; the ordinary electrical and electronic shop equipment is not good enough. You can also see why the ordinary lead-acid battery takes such a beating. However, a special battery certainly can be designed to take it. Now you know.

Okay, you tigers. Go get 'em.

63. Now here's a final bonus for the persistent reader.

This time, see J. N. Brittingham, "Focus Wave Modes in Homogeneous Maxwell's Equations:

Transverse Electric Mode," J. Appl. Phys. 54, 1983, p. 1179-1189; T. T. Wu and R. W. P. King, "Comment on 'Focus Wave Modes in Homogeneous Maxwell's Equations: Transverse Electric Mode' [J. Appl. Phys. 54, 1179 (1983)]", J. Appl. Phys. 56, 1984, p. 2587; T. T. Wu and H. Lehmann, "Spreading of Electromagnetic Pulses," J. Appl. Phys. 58, 1985, p. 2064-2065; T. T. Wu, "Electromagnetic Missiles," J. Appl. Phys. 57, 1985, p. 2370-2373. Pay particular attention to the latter paper.

Because of the Strategic Defense Initiative (SDI) and other programs, great interest has recently been kindled in using EM pulses to carry energy from a high-powered source to a target. However, so far almost all the work is still couched in terms of purely ordinary (though sophisticated) electromagnetics. It still involves the EM concept of "EM energy flow through the intervening space from the transmitter to the target." As such, the work to date still suffers from all the self-imposed ills and limitations of using the classical force fields concept of EM.

However, the theoretical work of these referenced papers is of great interest to us here.

In the first paper, Brittingham sparked a great deal of interest with theoretical work which promised a permanently focused 3-dimensional concentration of EM energy that propagates in a straight line with the speed of light. That is, this mode used a newly formulated wave packet (called the "focus wave mode") that acted as a non-dissipating EM soliton.

In the second reference, it was concluded that Brittingham's focused wave packet actually satisfied Maxwell's equations, but not the associated boundary conditions.

[Comment by this reviewer: both of these formulations use "linear time" and a "linear frame," ignoring the local general relativity aspects. Indeed, Brittingham's "focused wave packet" can be made by the zero-vector approach! However, it will not be an "EM" packet, it will be a pulse (or oscillating wave, depending upon how it is made) of 5-gravity potential. As such, it contains a multiplicity of locked-in, 5th-dimensional, non-zero EM gradients in and EM gradients out. Collectively these gradients themselves constitute a deterministic "flux of gradients" or an EM flux in the 5th dimension, with no resultant effective current of EM gradients. In other words, it's possible to build a "flux of gradients" and to have a "current of gradients," just as in ordinary EM it's possible to have a "flux of virtual particles" and a "current of virtual particles." The argument concerning the EM boundary conditions of Maxwell's equations is not relevant in such a case. The only boundary involved is the zero itself.]

Be that as it may, the 4th reference is of direct interest. In this paper, Wu has done us a great service. He shows that, under transient excitation, an antenna of finite size can transmit energy to a faraway receiver so that the energy decreases as slowly as one wishes. An electromagnetic pulse of energy with such slow decay is conveniently referred to as an "electromagnetic missile."

The electromagnetic missile has important applications, according to Wu. One possible application is the transmission of

information in a manner that is very difficult to intercept or jam. A second possible application is to

destroy or disable a distant target. However, Wu feels that so much energy is required [remember, he is speaking of EM non-zeroed force fields traveling through ordinary space] that a like1y radiating source must be something like a nuclear explosion. However, as Wu points out, a nuclear explosion produces a powerful EM pulse which includes frequencies from microwaves to gamma rays. To weaponize the explosion to produce a coherent beam, the nuclear explosion must be controlled to produce a coherent radiating source and a pulsed laser-like EM beam. Wu points out that such a technology is difficult and has not been developed.

We comment as follows: It is certainly true that enormous energy is required if the waves in the pulse remain electromagnetic -- that is, if they have non-zero resultant E and B fields to the external observer.

On the other hand, if we form a complex of waves in opposition so that we control the energy content of each individual component wave, but blend all the waves so that their collective envelope wave has zero E-field and zero B-field resultants, then -- to the external observer -- the EM energy is infolded and unzipped electromagnetically. It is now electrogravitational energy, and limitations of "EM force field energy flowing through space or through a physical medium" need no longer apply. However, we may still look at each EM component wave as an individual EM wave, moving in the Kaluza-Klein 5th dimension that is wrapped-around each and every point in our ordinary 4-space. In other words, to the ordinary 4-spacetime observer, each component wave has a special channel around every point of his space, not through it. Thus we have established multiple EM channels "just outside" each point of observer space. These we call "scalar channels," and EM energy can move through each one as if it were moving through a wire. The relative potentials between the "ends of each wire" determine in which direction the "EM energy current" flows along the wire.

And in each of these "special channels," we just have a normal kind of space (to the internal observer). Wu's paper assures us that we can get as much of the input energy to the distant target as we desire. The problem then is how to break the zero-summed EM envelope (and hence the "zero channel" for each component EM energy wave) in the distant target itself, spilling the infolded contents of all the special channels back into ordinary spacetime as EM energy (either positive or negative).

That, of course is easily done by interference in the distant zone. As previously stated, there is a way in which we can even perform this interference in a single scalar beam. Since the newly formed EM energy emerges from each and every increment of spacetime occupied by the distant target, it already emerges inside the very vitals of the target. It does not have to translate through the intervening ordinary space between transmitter and target. Instead, it goes through the Kaluza-Klein fifth dimension. It translates along a line through our space, but not through our space. With the scalar EM approach, we transmit EM energy through hyperspace, not through normal space.

Hereafter we will adapt and expand Wu's SDI term "electromagnetic missile" to include these electrogravitational aspects. In other words, we include the "scalar EM missile", which consists of an infolded multiple of Wu's ordinary EM missiles moving together coherently in special sheathed hyperspace channels.

In Appendix I we show an anomalous photograph taken by Bob Gladwin, just before the shuttle launch of Nov. 26,1985. While the photograph may be an artifact, it also is a candidate for the test strike of such a Soviet scalar "electromagnetic missile" tested against an aiming point offset from the shuttle launch which followed a few seconds later. The test was accomplished before the shuttle was launched, and offset from it, so that it positively would not endanger the shuttle itself. The conditions under which this spectacular photograph was taken happened to coincide with the special conditions required to photograph such scalar EM energy. Those conditions are clarified and explained in the Appendix.

My deep appreciation goes to Mr. Gladwin for allowing me to use this photograph. As we will point out in Appendix I, the video camera caught a picture of the Soviet scalar EM marker beacon associated with the Titan explosion of April 18, 1986. One can rest assured that the Soviets probably destroyed that vehicle, using a scalar EM missile.

APPENDIX 1: SOME IMPORTANT INDICATORS AND DESTRUCTIVE TESTING

Some of the indicators which bear on the use of the Soviet
scalar electromagnetic grid via the Woodpecker EM carrier beams are given in this appendix. along with other information believed pertinent to overall scalar EM effects.

IN ADDITION, THE THESIS OF ACTUAL LIVE TESTING OF THESE WEAPONS BY THE SOVIETS -- TO INCLUDE THE DESTRUCTION OF A TROOP-CARRYING U.S. AIRCRAFT, A SHUTTLE, AND A TITAN MISSILE -- IS ADVANCED AND INDICATORS PRESENTED.

An anomalous photograph taken by Bob Gladwin is presented which possibly may have captured the "smoking gun" -- the strike of a
Soviet scalar EM missile at an offset aim point near the shuttle Atlantis, just before its launch on Nov. 26, 1985. However, this photograph is caveated since it may also represent an anomalous but ordinary artifact. captured in some as yet unknown manner. The manner in which such a photograph may have been taken -- when normally the scalar energy does not show on a photo -- is explained.

Another photograph taken by George Suchary after the launch did
capture the Soviet "marker beacon" utilized in the test firing, however. This independent photograph is presented, and adds credence to the thesis that the Gladwin photograph captured the test of a Soviet scalar EM pulse missile.

- INDICATORS AND SUCH -

1. Continual cloud radials have repeatedly been seen and photographed over Los Angeles, California or its vicinity.

Los Angeles is also apparently a "hinge point" for bending and controlling the jetstream. Three typical radials seen to form one after the other by Margaret Wilson (and sketched and airbrushed by her) in the greater Los Angeles area are shown in figures 1, 2, 3, and 4. These radials were formed on Sunday, Jan. 26, 1986. Ms. Wilson had heard my Saturday night "Soviet Weather Engineering" broadcast over KABC Los Angeles, and my request that anyone who saw the typical radial cloud formation should photograph or draw it, noting time and location, and send the photos or drawings to me.

As Margaret described it. "To my astonishment, the next day I not only saw one, but three in the sky at the same time.

The time of the first one was Sunday, Jan. 26, at 1:15 p. m.
. . . I stepped out the back door for some minor errand and noticed a
fan of long straight clouds in the sky. The sky had been filled with dark clouds most of the morning but this had been breaking up and the western half of the sky was now clear with these lines of clouds spread out on it. I immediately thought of your request and tried to see the bottom of the fan which was hidden behind bushes and a garage. When I stepped into the street, I saw there was a semi-circle beneath them.

Not having film and a wide-angle lens on my camera. I knew I couldn't capture it in its entirety. I am, however, a retired commercial airbrush artist so I quickly sketched the formation. It is illustration #1.

It was in the western sky, the base of the central semi-circle sitting about 15 degrees above the ocean horizon. It was very clear and sharply defined. The semi-circle was broken at the top and the two broken ends curled inward like commas. As I sketched the wind deformed it somewhat, the right half of the whole formation sliding down away from the left.

Ten minutes later it was getting quite clear of clouds except
for a bank over the Santa Monica Mountains to the north and there, straight north, another fan was forming. As I watched it took shape -- illustration #2. The same broken semi-circle (with commas') but this time the bases of the rays were feathered about half-way out with end halves long straight wisps.

As I sketched, another fan had begun to take shape

further east. It was hard to tell its size but I had estimated the first one at about 15 miles across and the second a little larger and the third larger yet. At the peak of its formation it looked like illustration #3. ...There in the middle of the central circle, hazy and a little faint was what looked like the top of a mushroom cloud. Or was it only a distant thunderhead that coincidentally found its way to a place behind the formation? The arms of the last, largest formation were rather wavy and feathery like some gigantic sea creature. It did not disperse as fast as the others, but held for a couple of hours, though it was pretty distorted by then. I could not estimate its size as I wasn't sure of its altitude.

Were they aircraft contrails? Certainly not! There was an airliner in the sky at the time -- a mere scratch on the smooth blue sky (see illustration #3, right center.).

The three formations were present in the sky at the same time although the first was getting quite distorted by the upper level winds before the last reached its peak.

Tuesday our weather changed from hot and sunny to rainy as the weather man said the path of the jetstream altered, and then there was the space shuttle explosion.

...The Russians seemed very sincere in their sympathy for the loss of our astronauts but only two days later it was printed in TASS and I personally heard Vladimir Posner say that Russia hoped that the United States would now realize what could happen if the S.D.I. program was further pursued. Was this friendly concern or a threat? It is very evident that if the S.D.I. can destroy a missile in flight, it can also destroy one on the ground. This would immediately put all Russian missiles in [reach of] our arsenal. They are already in place in the most desirable target areas -- their own launch sites. I'd be panicky too if I were a Soviet leader."

[Ed. comment: My sincere thanks to this thoughtful lady who took the time to sketch the cloud radial phenomena occurring in the Los Angeles "jetstream pivot point" at this critical time, just prior to the launch and destruction of the Challenger.

Anomalous cloud grid activity (formation and dissolution) in
the Los Angeles area has been positively correlated with Soviet Woodpecker activity by engineer Ron Cole, with 100% correlation in 30 straight Woodpecker measurement runs. Statistically, of course, this
is quite decisive.].

2. Continual cloud radials have repeatedly been seen and photographed over Huntsville, Alabama, associated with weather engineering and grid activity. Typical radials seen by this author are shown in Bearden, Soviet Weather Engineering Over North America, 1-hr. videotape, 1985. Huntsville is apparently a pivot point or "hinge point" for bending and controlling the jetstream.

3. Spectacular cloud grid patterns have been seen over Huntsville, Alabama and Los Angeles, California. An excellent videoclip of one of the Los Angeles area grids, personally observed and shot by KABC Open Mind talk show host Bill Jenkins, is shown in Bearden, Soviet Weather Engineering Over North America, 1-hr. videotape, 1985. An artist's sketch of an earlier gigantic grid, extending from horizon to horizon in every direction, seen over Huntsville, Alabama by Tom Bearden and Ken Moore, is also shown in the tape. The videotape is available from P.O. Box 1472, Huntsville, AL 35807. Sketches and details of another highly anomalous grid pattern observed in the greater Los Angeles area by engineer Ron Cole are shown in figures 5 and 6.

The reason that clouds of water droplets and/or ice particles detect the scalar interferometry and form signature patterns is simple: Consider each H_2O molecule as having two light little hydrogen atoms hanging on to the much heavier oxygen atom. The covalent sharing with the oxygen atom of the electron from each hydrogen atom means that (1) the electrostatic scalar potential between the H ion and the O ion it is bonded to, is rhythmically varying as the electron is shared back and forth, (2) this varying potential contains "electron spin holes" since it is made by the moving electron, (3) two such varying potentials exist since there are two H atoms sharing covalent electrons with the O atom, (4) the two H ions are at an angle of over 100 degrees with respect to each other, (5) the molecule assembly thus constitutes one part (one half, so to speak) of a scalar interferometer with imbedded electron spin holes for electron hooking, (6) Incident scalar waves from outside the system interact with the "half scalar interferometer." This scalar interferometry interaction is coupled to the covalent bonding electron because of the internal spin hole pattern of the molecular half of the interferometer. The coupled electron moves with the scalar pattern's changes, causing an observable interaction with and in the electrical structure

and ionic potential of the molecule, (7) the weak H to H hydrogen bonding between molecules connects resulting ionic potential changes to the structuring of the entire macroscopic cloud assembly. Thus by scalar interferometry with the H_2O "half interferometers", an incident scalar EM pattern is detected and translated into patterns of E and B force fields. The H_2O molecules then "line up" in accord with the electrical patterns detected.

Thus the clouds form "signature patterns" according to the incident scalar EM radiation patterns. Giant cloud radials in the targeted area are probably due to the type and shape of antennas -- including the type and shape of the electrical wires establishing the antennas' ground planes -- 640used by the Soviet Union to project the scalar waves. Note that such "radial" antenna patterns were occasionally used by James Harris Rogers in his underground and undersea scalar EM transmission system.

[For Rogers' patents, see U.S. patent numbers 1,316,188, Radiosignaling system, Sept.16, 1919; 1,322,622, Wireless Signaling System, Nov. 25, 1919 (figure 6 of this patent clearly shows a "radial wire" ground plane antenna); 1,349,103, Radiosignaling system, Aug. 10, 1920 (the fourth version in figure 1 shows inside/outside variation which, for the long waves used, to a distant observer appears as a varying magnetostatic scalar potential using opposing B fields); 1,349,104, Radiosignaling system, Aug. 10, 1920; 1,220,005, Wireless Signaling System, Mar. 20, 1917; 1,303,729, Wireless signaling system, May 13, 1919; 1,303,730, Radiosignaling system, May 13,1919; l,315,862, Radiosignaling system, Sept. 9, 1919; also 958,829, Method and Apparatus for Producing High Frequency Oscillating Currents, May 24,1910.].

4. Anomalous power outages in Ventura County, Southern California on Nov. 8 and 9, 1985. Again, engineer Ron Cole, who lives in the affected area, investigated and reports as follows:

"On the evening of 11-8-85 in a rural area of Ventura County known as Carlisle Canyon, a strange electrical phenomenon began to occur at about 10:15 p.m. Our first observation was that random white dots began to appear on the TV screen, then began to increase in size and brightness. The brighter the dots got, the dimmer certain lights in our home became. Yet later we found that, when some lighting circuits were dimming, other circuits were causing lights to

shine much brighter than normal. After a bit of checking, we were able to determine that lighting circuits common to pole 1 of the service transformer were the ones that were seeing a reduction in voltage, while all circuits on pole 2 were seeing an increase in voltage.

There is another interesting condition that was observed on the TV screen. The dots were in sync with the vertical field or frame rate of the signal. This means that the interference had to be of a frequency of 59.7 Hz or 29.85 Hz. Normal power line interference will form a grouped dash pattern across the screen and will strobe upward at the rate difference of 59.7 Hz or 29.85 Hz. In the 8 November case, there was no strobing of the dots whatsoever.

These conditions continued off and on for the rest of the entire evening and were observed by no less than six other persons that I know of. They were observed over the entire TV frequency spectrum, low band VHF, high band VHF, and on two UHF channels. Line interference is almost always most prominent on the low band VHF frequencies only.

These anomalous events would take place on a somewhat irregular time pattern; anywhere from 3 to 10 minutes apart. They would always last for about 2 minutes.

At 12:30 a.m. I went to bed and was not aware of any further activities until 6:20 a.m., at which time I was awakened by several sharp snapping or cracking sounds coming from the walls of my house. I rolled over and went back to sleep, only to be reawakened about 15 minutes later by my wife, who informed me that the power and phones were out. My comment was, "Some dummy must have crashed into a power pole," and I dozed off again.

At 10:15 a.m. the power and phones came back on line. Shortly after, our phone began to virtually ring off the hook. About a dozen neighbors up and down the canyon wanted me to check out their electrical wiring and various appliances. All of them were trying to explain their individual encounters and what took place when the power went out. Such things as wires snapping in walls, singing and humming sounds coming from wiring in walls, strong smell of ozone, light bulbs exploding, buzzing coffee pots, and a handful of other phenomena all took place just before the power went out at 6:20 a.m.

A typical example was that of Rob Steel. [Ed: Name changed for this report; his real name is in my files.] Rob lives four miles down the canyon from us. He had just turned on the lights in his barn and was getting ready to feed

the livestock, when he realized he had left several needed items in the garage located about 75 yards from the barn. Upon entering the garage, he saw the garage lights began to flicker, then go to a dim orange glow. Upon stepping from the garage area, Steel saw that lights in the barn were so bright that he thought the entire structure was about to explode. He froze in his tracks for a moment and his whole house and garage began to hum. Then everything went out.

An interesting point to inject is that Mr. Steel's home and several others farther down the canyon from us are being fed from a different 19 kv power feeder source than the 14 kv feeder that supplies us and most homes in the canyon.

At about 2 p.m. on 11-9-85 I was in contact with the power utility company (Southern California Edison Company) to inquire as to the cause of the power outage. My first assumption was wrong. No power poles had been knocked down; only a ceramic fuse in the 19 kv feeder system had blown and a two-pole oil breaker had kicked out on the 14 kv feeder system. Load charge recorders at the power company show that both fuse devices kicked out at exactly the same time, but they are in no way common to each other as to load distribution. They only supply power to adjacent areas.

Also, the phone company has no record of its service being out, yet the phone service was restored when the power was restored. The phone company does not use Edison Company's power to power its phones. Again, the only commonality is that the phones and phone lines were in the same area.

Numerous magnetic breakers, used as manual switch devices for well pumps and other services, were on when power was returned. These switches had previously set in their off state.

A strong electrical-type ozone odor was detected at five locations at the time the power went out.

Later we found that a Research and Development laboratory in a nearby area measured 29 Hz intermittent signals late on the night of 11-8-85. These signals were interfering with some critical tests the lab personnel were trying to accomplish. The laboratory itself did not experience a power outage.

At this point in time, the only realistic surmise we can come up with is that a tremendous ELF or scalar ground wave was adding and subtracting to the grounded neutral service side of the power pole transformers so as to sum in

and out of phase. When peak nodes were achieved, all line transformers ended up back-feeding the feeder lines out of phase, causing the final power outage.

Twenty-one persons are aware of the strange conditions of the power outage and prior events. [Ed: Their names are in my files.]"

Editor's comment: Another anomalous power outage also occurred in the same area. This occurrence is possibly associated with effects of the scalar interference grid adjustments. If the Soviets were preparing for a major test of the grid in the Launch Phase ABM mode, substantial tests and exercises may have been performed before the actual "wet run" against the shuttle launch on Nov. 26, 1985 -- about two and a half weeks after the anomalous power outage at Carlisle Canyon.

See the Rogers' patents, referenced above, for ideas of how scalar EM signals couple to the power lines and telephone lines.

As this book goes to press, John Bedini has notified me that his new and very sensitive developmental scalar detector positively verifies scalar frequency "spike" activity on the Woodpecker grid (and possibly the ground reference) from 50 Hz to 10 MHz. A normal instrument will definitely not see these signals. John's lab is at Sylmar, California and about 70 miles from Carlisle Canyon.

5. During the Skylab mission, NASA astronauts observed and photographed a mysterious green glow of the atmosphere. The glow was over 1,000 miles long and over 100 miles wide. From Carlisle Canyon, Ventura County, California the sky has also been observed to possess a mysterious green glow from horizon to horizon, on three occasions. [Editor's comment: It is hypothesized that this green glow is associated with grid activity in the Launch Phase ABM System mode.]

6. Just prior to the hapless launch of the Challenger on Jan. 28, 1986, the Soviet Union sharply bent the jetstream down through the center part of the country, then curved it eastward across the Florida panhandle. This exposed the waiting Challenger on the launch pad to severe cold air, brought down from Canada by the sharply deviated jetstream. The use of the scalar interferometry aspects of the Woodpecker grid for weather engineering over the U.S. has been documented previously. [Bearden, Soviet Weather Engineering Over North America, 1-hr. videotape, 1985;

Bearden, "USSR: New beam energy possible?", Defense & Foreign Affairs Daily, 13(111), June 12, 1984, p. 1-2.]. Wilson's cloud radial sightings on Jan. 26, 1986 and Cole's giant cloud grid sightings on Jan. 24, 1986 are directly connected with adjusting the Woodpecker grid and deviating the jetstream, to carry cold air to the Florida launch site.

7. The previous testing of the grid in the Launch Phase ABM/Anti-bomber Mode, using actual jet aircraft as "wet-run" targets, has been demonstrated by various anomalous incidents.

As one probable example, see "Jetliner drops 32,000 feet; 400 aboard; 50 are injured," AP release, Huntsville Times, Feb. 20, 1985, p. 1 and "China Airlines Pilot Denies Cockpit Error," AP release, Huntsville Times, Feb. 21, 1985, p. A-9. In this incident (see figure 7) a Boeing 747, flying at 42,000 feet and bound for Los Angeles, experienced unusual engine flameouts while still out from San Francisco. In a hair-raising plunge toward the earth, the pilot fought to restart the engines and regain control of the aircraft. After a fall of some 32,000 feet in two minutes, the engines finally restarted, and the pilot was able to fly into San Francisco and land safely.

We have already explained how the Soviets are able to track the aircraft's jet engines. Later in this Appendix we show just how accurately an actual "scalar EM missile" may be focused by the Soviets on a hapless target. If a negatively biased pulse or continuous wave scalar EM "energy extraction" beam hits the engines, the extraction of energy will result in engine flameout. (No heat energy, no combustion of the fuel.). This is apparently what happened to this aircraft. In the presence of "splatter" from the extraction beam targeted at the engines, the aircraft instruments were seriously affected. Different instruments have different responses to such an anomalous scalar EM kindling effect. Thus a signature would be that the instruments disagree with each other, and need not record what actually occurred. This appears to have been the case, constituting a signature that scalar EM was targeted against the aircraft. The pilot's instruments apparently indicated that the control system had failed, while the flight recorder apparently indicated that it had not.

Let us assume this was a Soviet test. When the distant Soviet operator turned off the extractor beam, the engines returned to normal state after a "discharge time constant" period. They normalized before the plane struck the ground,

so the pilot was able to restart the engines and proceed.

Notice that this was a limited test to cause engine flameout only. If the scalar EM missile had been used against the aircraft in the "pulse" mode, it would instantly have exploded in mid-air.

The crash of an India jet aircraft outside Great Britain may have been a test of the same weapon in the pulsed "destroy aircraft" mode, since there are indications that the aircraft suffered an anomalous midair explosion. Another candidate for such a possible "shoot-down" of a jet aircraft is an (Italian) Itavia DC-9 that crashed into the Mediterranean in June, 1980. Both Itavia and the Italian Transportation Minister Salvatore Formica believed that a missile struck the jetliner and was the likely cause of the crash. It may have been a scalar EM missile and a full-up test by the Soviet Union. See "Plane was probably hit, judge says," Birmingham Post-Herald, Jan. 17, 1981.

Also the present author has knowledge of at least one instance in the early 1980's when an American-made tactical ballistic missile was anomalously destroyed shortly after being launched by troops in Europe. The destruction was anomalous and a large hole was inexplicably burned through the side of the missile -- exactly as if it had been struck by a scalar EM missile test in the anti-tactical missile (ATM) role.

8. As another example of airborne scalar EM activity in the Woodpecker grid, in January 1985 a U.S. Navy-dispensed chaff cloud, dispensed well-offshore from San Diego, California was caught by an unexpected wind and blown toward the city. (See figure 8.). As the chaff cloud moved in, significant failures of electrical systems and electrical components resulted. Power was disrupted to as many as 60,000 homes by the incident.

The sudden, unpredicted wind was suggestive of a wind blowing toward an artificially created low pressure area. Under certain conditions, a specialized structure such as that of a piece of sophisticated chaff will reflect scalar waves of frequencies within its cut bandwidth. If scalar modulation frequencies within the chaff bandwidth were present on the Woodpecker carrier grid above and surrounding San Diego, a myriad of reflecting bits of chaff in the moving chaff cloud would produce myriads of random, invisible "fireflies" of EM energy kindled at a distance, from random scalar interferometry, in a zone surrounding the cloud. As these invisible "firefly" pulses of

EM energy pulsed inside components of the electrical systems and electrical controls in San Diego and vicinity, extensive and random internal electrical interference occurred. This lead to widespread, anomalous electrical failures throughout the city.

Note that this activity preceded the huge Soviet scalar EM exercise of April-May 1985. The grand exercise would certainly have been scheduled well in advance by Soviet strategic forces controlling the scalar EM howitzers and Woodpecker grid weapons, and adjustments and smaller tests would have been being made for some months before the tests.

9. Other anomalous "electrical strikes" certainly exist, suggesting Soviet testing may occur widely throughout the world, yet be reported as ordinary but anomalous phenomena. An example which comes readily to mind is the anomalous blast (or blasts) that struck Bell Island, off the east coast of Newfoundland, on April 2, 1978. Persons on the shore of Conception Bay reported seeing fireballs coming down out of the sky and hitting the island, according to Royal Canadian Mounted Police. Highly anomalous atmospheric electrical activity preceded the blast. This may have been Soviet testing of scalar-created electromagnetic missiles. Extensive information on this incident can be obtained from P.A.C.E., 100 Bronson Ave., Apt. 1001, Ottawa, Canada T1R 6G8.

As another possible example, villages in an area of West Donegal in Ireland have been terrorized by freak "lightning bolts" for over two years. Roofs have been literally stripped off, windows smashed, telephones and television sets blown up, and pipelines wrecked. On Dec. 25, 1984 a mighty blast caused a three-day blackout: it accompanied a snowstorm, the first "white Christmas" in the area in 20 years. See "Bolts from the blue," Fortean Times, Issue no. 45, Winter 1985, p. 5.

10. Scalar spikes or pulses from the Soviet testing may also cause other anomalies, including deaths of unsuspecting persons using the telephone. For a candidate event of this type, see "Killer Phones," Fortean Times, Issue no. 45, Winter 1985, p. 8-9; also AP release, Huntsville Times, May 30, 1985; AP newswire June 2, 1985; and New York Times, Sep. 11,1985.

On May 21, 1985, five days after passing a complete physical examination, 17-year-old Jason F. Findley of

Piscataway, New Jersey was on the phone at his grandmother's house, talking to his girl friend. An odd click occurred on the line, followed by a gasp from Findley and then only the TV playing in the background. His grandmother found him unconscious, still clutching the phone in his hand. Rushed to Muhlenberg hospital, he was pronounced dead shortly afterwards. An autopsy could not determine the cause of death, and the telephone company found the phone working properly, properly grounded, and no evidence of excess electrical charge. Findley was lying on a wooden bed which would not conduct electricity. He had a hemorrhage of the inner ear. There had been an electrical storm over Scotch Plains, New Jersey the night Findley died.

AP wire services were told by the special forensic investigator with the New Jersey medical examiner's office that about six people had died in the U.S. in similar circumstances. Others had reported being knocked unconscious by "high voltage shock" from their telephones. Several weeks before Findley's death, another man from Whitehouse Station, New Jersey had been found unconscious with a telephone in his hand. According to the Consumer Product Safety Commission in Washington, D. C., in 1984 nearly 12,000 people in the U. S. were taken to emergency rooms with injuries related to telephones. A hundred of them died, although exact details were not revealed.

Note that the giant Soviet scalar exercise of May 1985 had been detected and verified by Golden. Substantial activity in the Soviet weapon complex, and in the Woodpecker grid over the U.S, continued throughout May and beyond. A phone line may by chance detect one or more atmospheric scalar EM pulses, just as occurred in the blackout in Ventura County, California on Nov. 8-9, 1985. These scalar pulses can travel along a phone line and be broadcast into a person's ear and brain from the telephone earpiece. The proper scalar EM pulse can induce both "acoustic shock" in the inner ear and "electrical shock" conditions in the nervous system. The pulse may also interrupt the body's electrical timing pulses to the heart, causing the heart to stop without physical damage. The scalar EM shock to the brain and nervous system can knock the person unconscious or, if sufficiently strong, kill him instantly. The condition is worsened if the person is ungrounded, since then he acts as a large, open-ended capacitance in series with the telephone instrument's

inductance. In such case, the scalar resonance of the equivalent series LC circuit can be sharply excited and resonated. By the nonlinearities of the body and nervous system, the scalar resonance can be translated into an ordinary electrical pulse or resonance. Since the scalar power is not translated into ordinary power except inside the nonlinearities of the human capacitor/nervous system, no damage to the telephone or phone lines need happen. [At the ComTec exhibit in Las Vegas in 1984, John Bedini demonstrated powering a 200-watt speaker system through a 100-foot length of #40 magnet wire, using scalar EM means. He put some 200 "watts equivalent" of scalar energy through the tiny wire to the speakers, where a small Bedini translator translated it back into ordinary electrical "force field" energy, powering the speakers. This was much to the astonishment of the technical audience, since the wire was quite cool and exhibited no evidence of heating, even though by conventional thinking it should have been instantly melted.]

The bottom line is: With increased Soviet scalar weapons activity over the U.S., the telephone system is likely to become more hazardous to humans using it, when th e instrument is connected to th e external wire. A radio ph one is much saf er against anomalous scal ar EM "spiking."

11. The metal-softening detected and verified by Frank Golden on Jan. 1, 1986 is certainly indicative of a new mechanism or effect added to the Woodpecker grid. The highly specialized nature of the particular detector/amplifier which Golden was using provides strong evidence that the signal was actually derived by recording the scalar EM signals produced by a human cerebrum (two cerebral hemispheres connected by the corpus callosum, forming a scalar interferometer) when the human was successfully performing psychokinesis (metal-bending). The fact that Golden was able to nullify the signal locally by special methods worked out by him lends further credence to this hypothesis. In any event, three hours of very objective experimental data strongly support this thesis. It is therefore indicated that (1) the metal-softening signal had been added for a purpose, and (2) something made of metal was going to be softened, leading to its failure. Certainly the Challenger would have been an ideal target; softening the metal on its boosters and fasteners by even a small percentage would significantly reduce the vehicle's ability to withstand the

stress during launch. This of course is circumstantial evidence only, but the finger of suspicion is there nonetheless. It is a fact that the metal-softening signal was and is in the Soviet Woodpecker-repertoire; it is a presumption that it was intended for use against the Challenger.

- FINAL DRESS REHEARSAL BEFORE THE BIG SHOW -

12. The shuttle launch from Cape Canaveral on the evening of Nov. 26, 1986 seemed smooth as silk to the army of official observers and onlookers. In reality the Soviet Union clandestinely conducted one or more Launch Phase ABM System tests against the vehicle, using it as a convenient target.

Figures 9, 10, 11, and 12 are included to give the reader some preliminary background on the highly significant events which occurred in conjunction with this flight, and previous to it. These figures are newspaper articles from the News Tribune, Fort Pierce, Florida. The articles are used by permission.

Anomalous atmospheric "booms" and airquakes had occurred in the Florida area for over three and a half years prior to the launch. Sixteen counties, most of them on the northern Gulf coast or close to it, had reported booms during the two-year period preceding April 1984. State and local emergency preparedness officials and U.S. Air Force Base representatives met but could not resolve the mystery of what was causing all the anomalous booms.

In fact, many booms had occurred in and around the gulf coast of Florida, particularly offshore from St. Petersburg, starting from several years earlier.

These anomalous booms were caused by the Soviets adjusting and testing the Woodpecker scalar EM grid for weather engineering and potential weapons use. The booms and airquakes were certainly not confined to Florida alone, but also occurred at many other locations throughout the U. S. and Europe.

Mysterious, highly localized seismic microquakes also had occurred at widely scattered locations throughout the U. S.

On at least two shuttle flights prior to the Nov. 26, 1985 launch, large anomalous "booms" had occurred over or around the launch site after launch. No one in NASA knew what they were or what caused them.

So prior to Nov. 26, the Soviets had already prepared and tested the Launch Phase ABM system mode of the grid against at least two U.S. shuttle launches. However, so eerie and strange are the scalar EM weapons that they had been able to do so without the U. S. government even becoming aware of what was going on. In the Kremlin, they must have marveled at our continued ignorance.

At any rate, they tested the Launch Phase ABM system again on Nov. 26, and this time private U.S. citizens happened to capture at least some evidence of what was going on. It still would have died there without surfacing, except for a curious chain of events. Let me briefly recount those events.

****

Lucius Farish publishes a fine little monthly newsclipping collection called UFO Newsclipping Service (Route 1, Box 220, Plumerville, AR 72121). In it she includes clippings on all sorts of anomalies, including UFO's, strange light phenomena, etc. Because of my long work in UFOs (for some time now, placed on the back burner due to the press of my work in Soviet scalar electromagnetic weapons), I've subscribed to Farish's service for several years.

And this time my unorthodox interests certainly paid off. Farish published a clipping of the article, "NASA officials stumped by strange light, boom," by Susan Burgess, News Tribune writer (see figure 10). The moment I read the article, I realized that the Soviets had actually tested the Launch Phase ABM System's area mode against the shuttle launch of Nov. 26, 1985. Further, George Suchary had taken a picture of the marker beacon as it was slewed away at the conclusion of the test.

With alacrity I contacted Ms. Burgess and, through her, George Suchary. Both were very helpful, and Mr. Suchary gave me permission to use his important photograph of the light moving away after the test. Ms. Margery Bril , the kind librarian at the News Tribune, sent me four clippings.

After reading the article by Julie Enders, Showcase Editor of the News Tribune, I contacted her also. Although extremely busy, Ms. Enders kindly gave me additional details, including the fact that Bob Gladwin had taken a series of eight stills of the launch itself, and in one frame an anomalous, curving line of light with a splash on the end

appeared.

At first I thought it might be the answer to a dream. Very tentative information suggested that the "curved light with a splash on the end" might have occurred in one of the pictures taken during the launch sequence itself, with the light striking directly under the shuttle shortly after it lifted off. I was positive the Soviets could strike at the shuttle (or a missile) with a "scalar EM pulse" missile, but hardly dared hope someone could have actually been lucky enough to get a photograph of it.

From my acquaintance with two masters of paranormal photography -- the indomitable Trevor James Constable and a close friend, Joe Gambill -- I understood how one could possibly get a picture of such a strike -- assuming it occurred -- at night, when the same picture could not have been taken in the daylight. I also understood why the camera might catch it when the human eye would not see it.

It seemed that, between them, these friendly, cooperative persons just might have gathered together the positive evidence to prove that the Soviets had struck at the shuttle with an offset test of a scalar EM missile, using a marker beacon for adjustment. (As it turned out. it was not to be as definite as that!) However, time was of the essence.

The Soviet tests had definitely included a test in the "area burst" mode, which can catch and destroy several missiles fired from a deployed silo complex at once. The clinching evidence I had needed for so long on a Soviet test of the pulse mode -- the scalar EM pulse missile -- just might be there in one of Bob Gladwin1s photographs. But there was no time to lose; such evidence is fleeting. and unless I moved quickly, it was likely to fade away and disappear forever. With persistence, the rest followed swiftly. Mr. Suchary graciously gave me permission to use his photographs. These of course prove that the marker beacon was there. (In addition, it was seen by numerous persons.). The News Tribune gave me permission to print the articles. Mr. Gladwin furnished his negatives and gave me full permission to analyze and use his photographs. Personal friends, Everett and Shirley Edwards, printed the photographs in their private darkroom so the negatives would not be out of safe hands for even a moment.

At the time, this book was almost finished. If the photo of the candidate Soviet use of the electromagnetic missile was accurate, quick work would be necessary if it was to be included. My friend and publisher, John Ratzlaff. had

already agreed to swiftly publish this large output as soon as I could get it to him. At Omni Video Publishing, Ms. Electra Briggs was alerted to the potential importance of what was coming. She and Mr. Glenn Shoemaker swung by my house from New Orleans, and a quick, informal videoclip was taped, announcing the book. (Murphy's law -- if anything can go wrong, it will -- got me there. Inexplicably, in my near-total fatigue from months of 19-hour days and 7-day weeks on this project, I spoke the date of the Titan explosion as April 19th, knowing full well it was the 18th! It happens. Electra suggested she slap a correcting statement over the video. Done. Be ready to get it out. It's too important; don't sweat the small stuff.)

Zerox copies of the photos were received. There in the fifth photo (or so it seemed) was an unequivocal strike of the scalar EM missile, in the launch sequence itself. The assumed strike seemed to have occurred right under the shuttle, a few seconds after liftoff.

The evidence seemed complete. All that was left was to receive the actual negatives and verify the sequence. At last we seemed to have the smoking gun. The Soviets would have been caught redhanded.

Based on the advance zerox copies, the manuscript was altered. Everything was ready. And then the negatives came in.

In this business, you learn to meet and accept a lot of failures. Things often go astray, and don't wind up as they seem at first blush. This time was no exception. Murphy got us again! The photos on the negative were in a different order then they had been on the zerox copies.

There's no mistaking the order in which the pictures were taken. There they are on the negatives, one right after the other, and clearly numbered. And the curving light with a splash at the end did not occur during the launch sequence at all. Instead, it was taken before the launch -- just how long remained to be seen. Everett and Shirley took the photo and developed it at both extremes: very dark and very light, to bring out all the details possible.

The results were most interesting. As shown on the lighter print (figure 13), the light does not curve down out of the sky and strike toward the ground, it turns up toward the sky and strikes above the distant treeline. Further, as shown on the darker print (figure 14), it does consist of a little ball of light, just like a scalar EM missile would appear. No apparent structure to hold the light appears in either picture, though one could not positively rule this out completely

without microdensitometer tests. (One can inadvertently get artifacts like this by focusing on a ball-like light bulb, for example, and then moving the camera while the shutter is still open. On the other hand, there is no evidence that this happened at all, and no street lamp post or other foreign object in the photo.)

(The remaining photos of the liftoff sequence are shown in figure 15.).

We called Mr. Gladwin. He verified that the photos had been taken in order, one right after the other. He had not had the camera on a tripod, but had steadied it on a railing. In other words, the "light streak with a burst on it" had been taken just before the liftoff. Also, Mr. Gladwin had not observed 'the marker beacon, and had not attempted to photograph any such "light in the sky." In fact, visually he had not observed any such streak and burst of light in any scene he was photographing.

So the question is, exactly what did Mr. Gladwin photograph in that photo, just prior to the shuttle's liftoff? The answer is. we just don't know for sure.

Let's run through the two possibilities:

(1) He may have snapped an artifact while moving the camera. If so, the camera was definitely quite still at least most of the time the lens was open, for the treeline is quite clear in the lighter photo, which reduces light saturation and shows details more clearly. Further, there is no evident support or structure attached to the light itself; it seems to be a "disembodied" light. So this possibility is ambiguous, though reasonable. Mr. Gladwin does not recall any such movement of the camera; it was steady while he was shooting.

(2) He may still have snapped a scalar EM missile. If so, it means the Soviets fired a "small test" of the exothermic pulse or scalar EM missile in advance of the actual shuttle launch. Let's pursue that for a moment, and suppose it to be true.

The Soviets already had the marker beacon up in the sky -- that's certain. Many persons saw it. Soviet trawlers off shore and Soviet satellites could also have given the actual position of the marker beacon. Thus the Soviet LPABM System would have had (a) the actual parameters the computer had used to transmit the beacon, and (b) the actual location at which the beacon emerged. Comparison of (a) and (b) is much like having a "meteorological data message" in field artillery: One has the corrections to apply for specific conditions of the medium that cause deviation.

These corrections can then be applied to calculated or "table" data to adjust firing for real-world conditions.

So far so good. The Soviets had the exact position of the registration beacon, and could apply corrections for a shot of the scalar EM missile. They certainly would know the exact position of the shuttle on its launch pad.

If a fairly substantial offset for the scalar EM missile shot were used, "mett corrections" could be applied and a small scalar missile could be zinged in, stopping momentarily at the final offset "strike" position so that a track could be obtained by the scanner extraction beam. Then by comparing the detected offset position of the "burst" of the scalar EM missile to the detected offset position of the marker beacon, the difference could be applied to the beacon's true position to get the true strike position of the missile. The offset used could then be subtracted to give the location where the missile would have struck without the offset, had it actually been fired at the rising shuttle after liftoff. This "adjusted final strike position" could be compared to the shuttle's expected early trajectory (which varies only slightly from standard for the first few seconds) to determine the expected combat success of the shot. It's a little roundabout, but it's a very safe way to do it if one wants quite positive assurance that the missile will not strike the shuttle and destroy it. Since the Soviets delayed the "area burst" and its concomitant atmospheric "boom" to T + 12 minutes, it is evident that a large offset was used for the area strike -- probably about 10 extra minutes -- to positively assure that there would be no actual damage or threat to the shuttle.

It seems logical, then, that they might fire the small scalar EM missile well offset from the shuttle, and just before its launch, to prevent any possibility of actual damage to the shuttle.

So there you have it. Mr. Gladwin's photograph is consistent with such a careful, safe scalar EM missile test by the Soviets, prior to the actual liftoff of the shuttle. On the other hand, it's not possible to say with certainty that that is what it is. It may simply be a very peculiar artifact. In fac, if it were not for the other indicators, one would most certainly not consider such a bizarre possibility as an offset Soviet scalar EM missile strike at the shuttle.

If the "streak" photo is examined as a candidate for a sca1ar EM missile test, then one other thing must be explained: Why did the film capture the test when observers did not see it at all? That, of course, we can explain!

So back to our presentation. Here I'm going to assume -- and accent that this is a postulation -- that the Gladwin photo actually represented a scalar EM missile test. We will run through a possible sequence of events, based on that assumption. We will hypothesize the LPABM system operation and the Soviet conduct of the test. The major events here in the U.S. may be quite real; those assumed to occur in the Soviet Union, of course, are "author's license" -- but hopefully realistic.

****

The evening of Nov. 26, 1985 is perfect. At Cape Canaveral, the shuttle Atlantis is poised on its launch pad waiting to move majestically into the heavens on its impending journey. As launch time approaches, everything is as smooth as a cat's whisker. There is, however, just one small anomaly.

A mysterious light is hanging up in the sky, staying still for awhile, then gently rocking back and forth. The light is a Soviet marker beacon for a scalar EM howitzer. The howitzer, employed in a special scalar EM channel contained in the Woodpecker transmitters and interference grid, will shoot through the EM carriers at an aiming point offset from the shuttle.

Since this is still to be a nondestructive test, no chances will be taken. The pulse mode will be used, and a "scalar EM missile" -- a bundle of energy buried in hyperspace around its moving zero-point in this world -- will be fired directly at an offset aiming point prior to launch of the shuttle. A substantial offset in distance will be used to prevent posing any danger of inadvertently hitting the shuttle on its launch pad.

The marker beacon is necessary for precision. Its desired position will be calculated and the beacon will be placed on station. By placing this source of continuous EM energy in the area, it can be detected by the scanning "energy extraction beam" and tracked by the distant Soviet operator. Soviet trawlers and satellites monitoring the test will report the true position of the marker beacon, which will deviate from the calculated location due to conditions of the channel medium (the Woodpecker beams) at the time. Comparison of the beacon's true position to its desired, calculated position "registers" the marker beacon and yields the "meteorological corrections" which must be applied to standard firing table calculations. These corrections can be

applied to any further shot into the area to correct its aim, just as standard field artillery applies registration corrections in the target area.

When the shuttle boosters ignite, an additional track will be obtained from it. The offset from the received track of the marker beacon and the received track of the shuttle booster flame thus will give the exact correction or "shift" from the marker beacon settings that should be used to set the howitzer's aim. In other words, a "relative" firing, offset from the marker beacon registration track, will automatically compensate for any vagaries of the medium experienced by the beams in transmission.

The Russians, being excellent artillerymen, have simply applied the standard artillery technique of shifting from a known registration point.

The Soviet Launch Phase ABM System is cocked and ready. This is the last test in the "wet run" series in which an offset will be used. If everything goes as planned, future shots will move into the next phase, where actual U.S. targets will be destroyed. The two great powers are already at war, but one of them does not know it yet. Because of the importance of this last test before the next step in hostilities commences, Gorbachev himself is monitoring the test.

The countdown begins. In Florida a great many persons are observing the event. George Suchary has already spotted a strange light hanging in the sky, where none ought to be. Bob Gladwin, resting his camera on a railing, prepares to snap his first picture so that he will be sure to have a sequence completely across the launch.

Deep within the Soviet Union, a large display screen is illuminated. The marker beacon's track is clearly shown on the display, as are synthetic symbols for the shuttle on its launch pad, several Soviet ships off the coast of Florida, and several Soviet satellites.

The control officer barks, "Missile test! Proceed!" The simulation officer presses a switch, and a simulated shuttle launch track appears.

The operator responds immediately, "Launch detected!" The identification officer, scanning the frequency components and the signature of the energy extracted from the launch, calls out, "Missile! Target hostile!" He presses a button, and a light illuminates on the panel, marking the target as a hostile missile. The launch track begins to blink.

The control officer announces, "Prepare to fire!" "Pulse mode!" "Strength one!" "Test!" "Apply burst

offset!" The operator rapidly flips switches, setting the mode of fire and the offset. Instantly lights light to show that the computer has computed the shift and offset, and corrections. A red "Ready to Fire" light illuminates and a low siren begins its wobbulating growl.

The control officer orders, "Fire!" The operator presses the fire switch. A "Fire" light appears. A slight, deep shudder is felt briefly as the howitzer fires its scalar EM pulse missile of deadly energy. On the screen, the path of the scalar EM missile is traced out as it speeds toward its target far over the horizon.

In Florida, George Suchary is getting more and more curious about that pesky light. Bob Gladwin is preparing to snap his first photo as the final seconds of the countdown tick away.

On the distant Soviet screen, a sudden small burst appears, superposed over the synthetic shuttle track. The operator yells, "Burst!" On a smaller screen, a vertical profile shows the strike directly underneath the target. Immediately a blinking "Target Killed" light appears as the computer assesses the shot a kill.

The operator excitedly calls out, "Kill !" "Direct Hit!" Cheering breaks out from the firing team and the onlookers. Gorbachev and his entourage are smiling broadly and clapping. The cheering quickly hushes as the crew and participants continue to watch the track of the rising shuttle, and prepare for the launch and the next test.

Bob Gladwin has snapped his first picture (figures 13 and 14) leaving the shutter open a bit to allow for the nighttime conditions. As luck would have it, the scalar EM missile strike Occurs during the time the shutter is open. The film has captured the strike by a special process, even though human eyes have not seen it. (We will explain that shortly.).

At 7:29 the Atlantis's boosters ignite and the vehicle begins to rise smoothly off the launch pad. She will continue to rise, then pitch over to a 45 degree angle and proceed down range..

Bob Gladwin is snapping pictures regularly, one after the other.

In the local Florida area, hundreds and hundreds of persons are watching the flawless launch. The tip-off of the Indian River Community College basketball game and the St. Lucie County School Board meeting are held up while participants watch the Atlantis begin to rise serenely upward.

In the Kremlin, another track has appeared on the

control screen display. Once again the sharp-eyed operator snaps, "Launch detected!" The identification officer, scanning the frequency components, tersely rasps "Missile! Target hostile!" Again he presses a button, and a light lights on the panel, marking the target as a hostile missile.

The control officer orders, "Simulate multiple firings!" The simulation officer acknowledges, "Multiple firings simulated!" and presses a button to cause the computer to simulate multiple launches on the display.

Immediately other synthetic target tracks begin to appear on the display screen, one by one, clustered around the shuttle launch at various separation distances, pre-arranged to represent multiple firings from a missile silo complex for this exercise. A special audio alarm sounds as each track appears.

The operator immediately calls out, "Multiple tracks! Missile launches!" and then "Identified hostile!"

The control officer orders, "Prepare to fire!" "Area pulse mode!" "Test!" "Apply time offset ten!"

The operator flips switches rapidly, acknowledging. Lights illuminate on the console, showing status of preparation for firing. The "Ready to Fire" light illuminates and the low siren begins again.

Back in Florida, Bob Gladwin has stopped snapping photographs. George Suchary has gone into his house to find his Polaroid camera and take a picture of that pesky light still hanging up there in the sky.

Back in Russia, the fire control officer orders, "Fire!" The operator presses the fire switch. The "Fire" light illuminates, immediately blinking, and the siren changes tone. On the display screen, all target tracks are blinking. A large light on the console comes on, showing that an "exercise time offset" of 10 minutes has been applied. A digital clock starts ticking off the minutes.

Minutes pass as the offset time ticks down.

Back in Fort Pierce, George Suchary is coming out to take photographs of that darn light, which is <u>still</u> hanging up there!

Folks are streaming back into the Indian River Community College gymnasium for the basketball game. Attendees at the St. Lucie County School Board meeting are wandering back inside, to get ready for the meeting.

More minutes pass.

Back at the control console in the Kremlin, the offset clock ticks down to zero. The siren ceases its wobbulating tone and holds a steady note. The "Fire" light ceases

blinking and illuminates with steady brilliance. A deep shudder is felt as the howitzer fires again. On the screen, the rapid trace of the mighty scalar EM serpent is shown as it races toward its target.

Suddenly it reaches the target area, and a large blossoming light appears, covering all the target tracks. The operator announces, "Burst!"

All the target tracks flare brightly, then dwindle and die. The "Targets killed" light illuminates and the operator yells, "Kill! All targets killed!"

Wild jubilation breaks out. Everyone is grinning and clapping. Gorbachev personally congratulates the fire control officer and pumps his hand. The tension relaxes visibly. In the noise, the operator touches a joystick and slews away the marker beacon, preparing to shut down the system.

The final test has been a crowning success. Now the real first phase of active combat begins. "And the fools don't even know it yet!" a grinning Gorbachev delightedly announces.

Back in Fort Pierce, precisely 12 minutes after liftoff, high in the atmosphere above the launch site and a little downrange, a tremendous rumbling boom suddenly rocks the coast for hundreds of miles in each direction. The blast is heard as far north as Charleston and as far south as Key West.

George Suchary is taking pictures (figure 10) as the hanging light in the sky suddenly begins to move away, obeying the controls of a Russian operator thousands of miles away. Bob Gladwin has already finished snapping his photographs (figures 13, 14, and 15) of the launch and taken down his camera.

The anomalous light disappears rapidly in the distance, moving faster than any jet aircraft.

People gradually resume their normal activities, talking about the beautiful evening and the perfect launch. Many of them have noticed the strange light that hovered and bobbled in the sky, then sped away.

The final Soviet registration of their eerie weapons for World War III has been completed. A totally different kind of Pearl Harbor -- more akin to a Trojan Horse -- has been prepared for the unsuspecting United States.

Countdown toward Armageddon begins.

****

George Suchary's photograph of the marker beacon, just after it had started slewing away, is shown in figure 10, as printed in the News Tribune.

Bob Gladwin's photographs of the shuttle launch are shown in figures 13, 14, and 15.

Figures 13 and 14 show two developments of the same shot, one light and one dark. The light one shows the treeline in focus in the distance, with the light streak and burst.

Figure 15 shows liftoff of the shuttle and its rise and tilt over on the first part of its trajectory.

Figure 16 shows a possible detailed interpretation of the first Gladwin photo. The simulated aim point was offset from the shuttle, and the strike was directly at the offset point. The computer computed the burst strike strike of the scalar EM missile from the adjusted registration data, and determined whether or not the target was killed.

The control precision is shown by the small size of the scalar EM missile.

The strike of the weapon is caught by the camera, but not seen by the naked eye. None of the many hundreds of onlookers saw the strike, though all of them saw the shuttle launch.

There is a very good reason for that, though it is not commonly known.

Constable

The reason is that Bob Gladwin's camera was utilizing a form of photography pioneered -- to the best of my knowledge -- by Trevor James Constable. At least I learned about it from Constable's books and articles. I then told it to my good friend, Joe Gambill, and Joe applied and adapted it to the unusual photography which he performs. Both Constable and Gambill are masters of this type of photography. Once I got deeply into scalar electromagnetics, I finally figured out what was going on in this methodology.

Briefly, here's the way it works. Scalar energy, of course, has to be detected by some sort of interference phenomenon. There exists a very special way to get a camera to perform such interference for you.

In the EM spectrum, the infrared and the ultraviolet have a special relationship to each other. The ultraviolet is exactly twice the frequency of the infrared, if the two zones are properly chosen. In other words, the UV is the first

harmonic of the IR.

The scalar EM energy, since it operates in the Kaluza hyperspace surrounding every point in ordinary space, may be considered to be composed of pure spin. (That is, it's moving in a dimension where each particle of that dimension is spinning). Harmonics there are spin harmonics.

In this photon-interaction produced level of reality (the ordinary world), the IR and UV bands are more closely connected to the "shadow world" in which scalar energy moves. Thus there is a sort of shadowy "swirling" of the scalar energy near the IR and the UV. Entry of the scalar energy into this world, through the IR and UV windows by a kind of "harmonic interferometry," is normally prevented by the presence of visible light. That is, visible light "squelches" the "paranormal channel" that lurks beneath the IR and UV zones.

To make use of the IR and UV interference source zones, Constable covered his camera lens with a special filter (18A) which is opaque to the visible light spectrum and transparent to the IR and UV. Note that the film is sensitive to the IR and UV region we are talking about, but the human eye is not.

When pointed at a sufficiently strong source of scalar energy, such a specially filtered camera has unique characteristics. It strips out the visible spectrum, but still admits the IR and UV spectrum. The scalar energy surges through these two source windows, and phaselocks harmonically. That is, the scalar energy entering through the UV window fits twice neatly in the scalar energy entering through the IR window. This interference, on the film, is (recall) swirling in frequency. The net result is that the film records the interfering scalar energy as visible spectrum energy.

Infrared film can be used to increase the response in many circumstances.

Both Constable and Gambill have rigorously proven this technique in literally thousands of "paranormal" photographs. (They do not necessarily use my scalar EM terminology, but the technique is rigorous and works, regardless of terms.)

Under nighttime conditions, sometimes the particular lens and film combination will phaselock between IR and UV for incident scalar EM energy. This is particularly true when a relatively strong source of IR is in the vicinity.

While Bob Gladwin was taking his photographs, there

was no suppression of the IR/UV phase-lock effect by visible light because it was night and there was hardly any visible light entering his lens.

Thus his camera lens and film formed an IR/UV phase-locked interferometer that detected and recorded the strike of the scalar EM missile underneath the shuttle, even though human eyes did not detect it.

At this point it would be interesting to know whether NASA may have had IR cameras focused on this shuttle launch (which was at night). If so, it would also be interesting to know whether any of them may have developed the IR/UV phaselocked interferometer effect, and captured the strike of the weapon.

Note that daylight shots would automatically break the IR/UV phase-lock possibility, by jamming out the effect with visible light, unless a special filter is used to filter out the visible light but leave both the IR and UV.

One would hope that both NASA and the U.S. Air Force will take note and discreetly add a specially filtered camera to the instrumentation observing and recording all future daylight launches.

To recapitulate the major events at the shuttle launch on Nov. 26., 1985, see figure 17. A marker beacon was placed in the vicinity, high over the area, for precise registration and location of tracks relative to it. A scalar EM missile strike may have occurred just prior to launch, and offset from the shuttle.

Then the shuttle lifted off. The exercise called for simulating multiple launches from a missile field. The area code was computed, and the fire order given. A substantial time delay -- say, 10 minutes or more -- was used to absolutely assure that the actual shuttle was well away from the engage blast.

Twelve minutes after launch, the delayed firing in an area "multiple missile kill" mode occurred, producing a massive boom heard for hundreds of miles up and down the east coast. After the boom, the marker beacon was slewed away, and photographed by George Suchary just as it moved.

The shuttle moved on downrange and went merrily on its way, blithely unaware of the jaws of the tiger that had snapped shut behind it.

To the Soviets, this final test of the preparation phase was highly successful. They were now ready to increase the risk level and fire the first round of World War III.

- THE SHOW BEGINS -

13. On Dec. 12, 1985 the same Soviet weapon tested against the previous NASA shuttle launches and against various aircraft may have deliberately interfered with the controls of an Arrow DC-8 taking off from Gander Air Force Base, Newfoundland. At an altitude of 100 feet, the aircraft -- carrying over 250 U.S. soldiers and civilian crew members -- lost power and sank into the ground tail-low, killing everyone on board. It was a tragedy of enormous proportions to the U.S., and especially to the families and friends of the brave servicemen and crewmembers who lost their lives.

Three Canadian witnesses to the crash were interviewed over the Canadian Broadcast network television news on April 8, 1986 at 10:00 p.m. No flame or smoke issued from the plane before its descent and crash.

However, witnesses reported seeing the aircraft mysteriously glowing with a yellow halo. That is a signature of the use of a scalar howitzer in the "continuous EM emergence" mode, similar to the manner in which several F-111's were downed in Vietnam.

In short, the DC-8's electrical systems were interfered with by electromagnetic energy and noise created throughout each increment of spacetime occupied by the aircraft. A powerful charge was rapidly created in and on the aircraft structures and skin. The "yellow glow" seen by the witnesses was a corona due to the skin of the aircraft acquiring a high electrical charge.

Something also apparently caused the rapid loss of two engines, one after the other. This indicates that the distant Soviet operator may have struck at the engines, one after the other, with a scalar "energy extractor beam." Thus he apparently tracked the aircraft as it moved down the runway, then used two modes against it: one to create serious EM interference with the electrical systems of the aircraft, and one to disable the engines.

With its controls ineffective and power drastically reduced, the doomed aircraft sank to earth, still in its "tail down" configuration from takeoff, and crashed and burned.

Admittedly other factors may also have contributed to the crash. These included reduced lift due to poor engine maintenance, increased weight of the aircraft due to icing, and heavy loading. However, normally the aircraft could still have taken off and flown to its destination. (See "Arrow Air was absolutely safe, FAA official says," UPI release,

Birmingham Post-Herald, Apr. 17, 1986.)

To date, no official seems to nave recognized the sinister significance of the "yellow glow" or what it implies. No one seems to have connected the loss of this aircraft, the mysterious booms over U.S. shuttle launches, the Woodpecker interference grid, the anomalous loss of the U. S.S. Thresher, the high altitude "booms" off the east coast of the U.S. some years back, the puzzling loss of two critical Titan launch vehicles in a row, anomalous engine flameouts of civilian jetliners, etc.

Certainly officialdom has not recognized that a Soviet Launch Phase ABM System is being tested directly over its collective head, to include actual destruction of U.S. aircraft, missiles, and space vehicles with concomitant severe loss of American lives.

Direct and diabolical acts of war have been committed upon us by the Soviet Union, but in a fashion that still eludes our erstwhile pundits.

However, it is not as simple as that. To even energize giant scalar EM weapons is to run a risk -- to all mankind -- so horrendous that it boggles the imagination. Truly it deserves Brezhnev's 1975 phrase, "...more frightful than the mind of man has ever imagined."

Shortly we will reveal exactly what he meant.

- Apr. 18, 1986: Death of a Titan -

14. As this book goes to press, the last two U.S. Air Force Titan 34-D missiles fired from Vandenberg Air Force Base in California have blown up shortly after launch. The first one blew up on Aug. 28, 1985 just after lift-off. That loss has been attributed to failure of a high-powered fuel pump, causing a massive oxidizer leak and a smaller fuel leak. The second Titan loss occurred on April 18, 1986 when the Missile blew up 5 seconds after lift-off. Its loss is still under investigation and no determination of cause has been made. Apparently the shuttle and the Titan presently provide the only viable launch vehicles for launching U.S. "spy" satellites. The loss of these sensitive satellites -- if indeed they constituted the payloads -- cannot help but be damaging to our strategic surveillance capability. According to the Los Angeles Times, the single remaining KH-11 satellite was launched in December 1984 and, with an expected life of two to three years, it could stop functioning later this year.

Whether or not significant Woodpecker grid activity existed in the vicinity of the Titan launch of August 1985 is

unknown at this time. However, significant activity in the grid definitely occurred before the April 18 Titan disaster and on the same day.

On Easter Sunday, 30, 1986 engineer Ron Cole observed significant cloud signatures of grid pattern activity, correlated with Soviet Woodpecker measurements. On April 18, the present author observed traces of a cloud radial over Huntsville, Alabama and took photographs of it. Preliminary reports from Thousand Oaks, California indicate extensive grid activity again on April 18, the day the second Titan exploded.

At least the second of these two missile destructions shortly after launch is highly suspicious, since the grid positively was active during that time. Also, a clear trail of Launch Phase ABM system indicators exists back to the massive scalar exercise of April/May 1985. The first Titan explosion in Aug. 1985 thus falls within the Soviets' "now let's test them against U.S. launch vehicles" period.

The second Titan loss follows highly suspicious losses of the Arrow DC-8 on Dec. 12, 1985 and the Challenger on Jan. 28, 1986. The same Soviet weapon system that destroyed those targets probably also destroyed one or both of the critical Titans.

At least, on the second Titan explosion, the Soviets left another signature. In one of the videotapes taken of the explosion, the marker beacon can be seen well , above the exploding debris, moving away from the explosion site.

See for yourself! Refer to "Titan Explosion Cripples U. S. Launch, Surveillance Capability," Aviation Week & Space Technology, 124(17), Apr. 28, 1986, p. 16-19. Specifically, look at the color photo of the explosion on p. 18.

Look well above the explosion (about one inch on the page) and to the left (about one inch on the page) of the center of the top of the fireball portion. There you will see a little light, caught in the very act of moving away.

At my rather frantic urging, engineer Ron Cole sought out a copy of the original videotape. He and a team spent two hours, going through this portion of the tape frame by frame. The light is there. It's real. And it moves on out of there, well above the explosion and independent of it.

It's the Soviet marker beacon, caught in the very act. Here I want to express my sincere appreciation to Ron Cole for his untiring efforts to nail this light down. Without his dedication to supporting this investigation, it would have been impossible to say for sure that the light was there.

So we have caught the bear red-handed, with his fingers in the cookie jar. If the marker beacon is there, you may rest assured that the Soviets destroyed that Titan missile, with very high probability. [See also "Investigators Search for Clues to Cause of Titan Blast," Aviation Week & Space Technology, 124(17), Apr. 28, 1986, p. 19-20; also "Titan Accident Prompts Funding, Technology and Policy Questions," AW&ST, 124(17), Apr. 28, 1986, p. 21.].

Continue

Figure 1. Wilson's first cloud radial

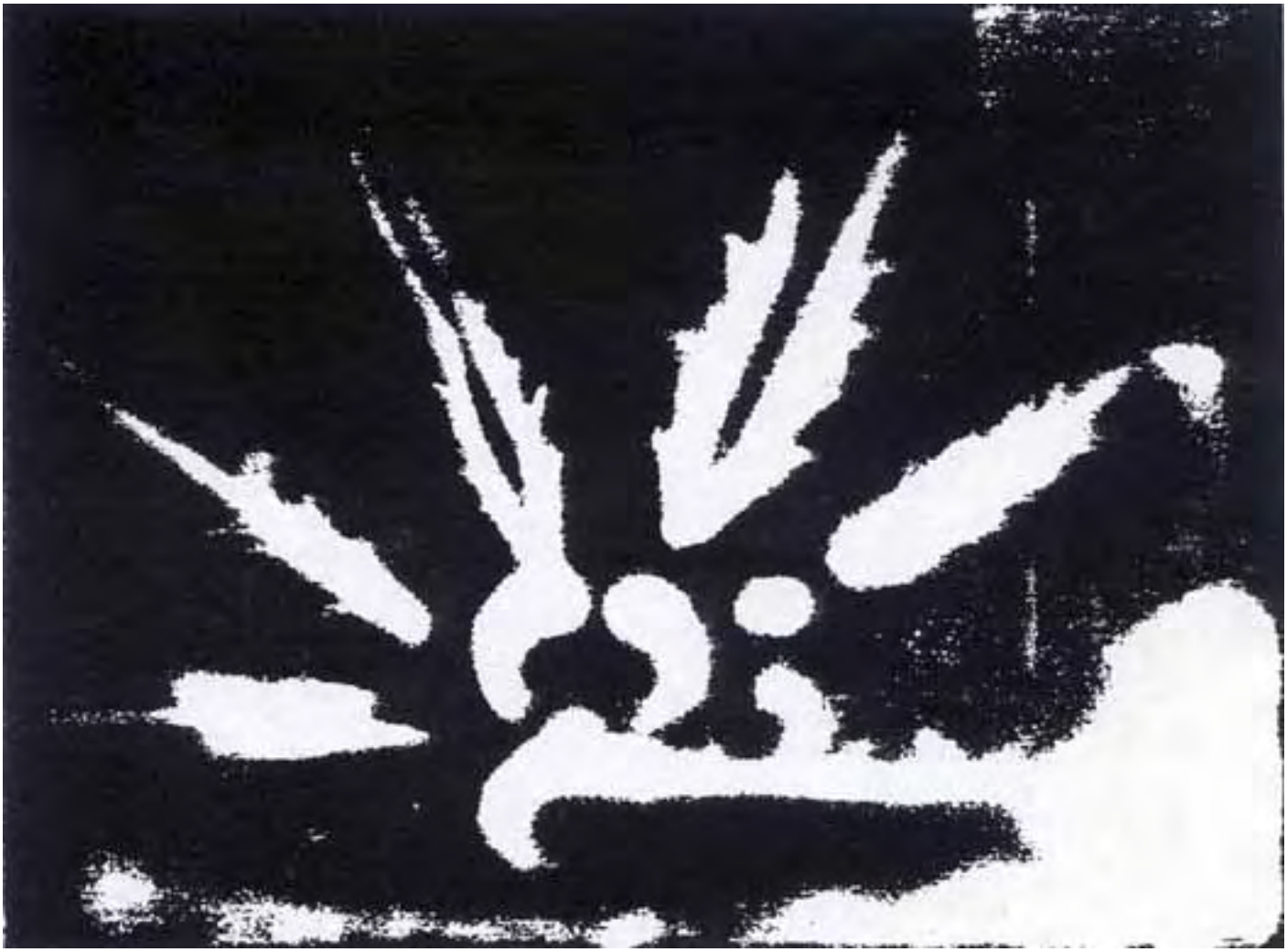

Figure 2. Wilson's second cloud pattern

Figure 3. Wilson's third cloud radial

Figure 4.

PLACEMENT OF WILSON'S THREE RADIALS

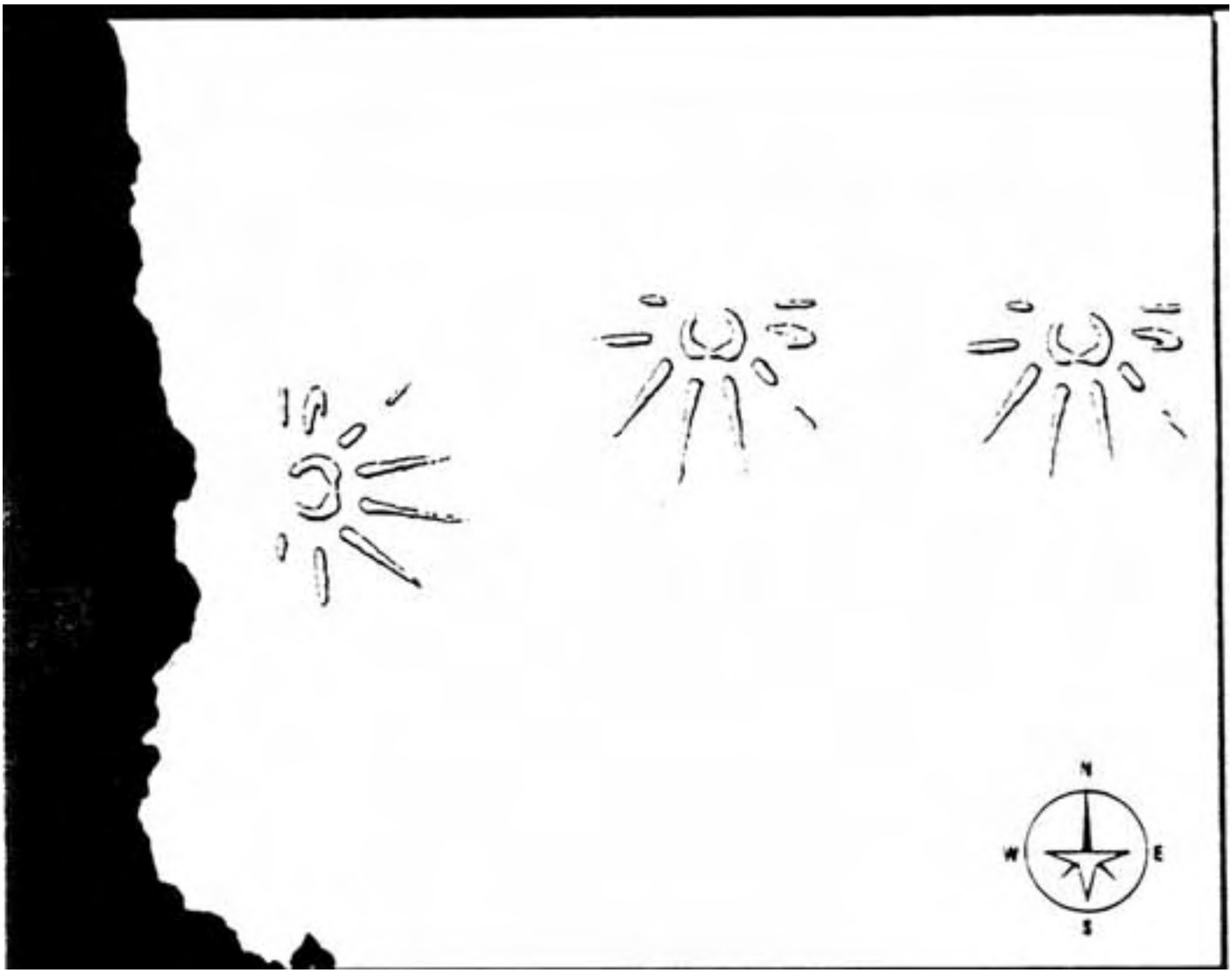

Figure 5.

VIEW FROM WESTLAKE OVER VENTURA COUNTY, CA

1-24-86, 280• WEST/NORTH-WEST

11:45 AM PST

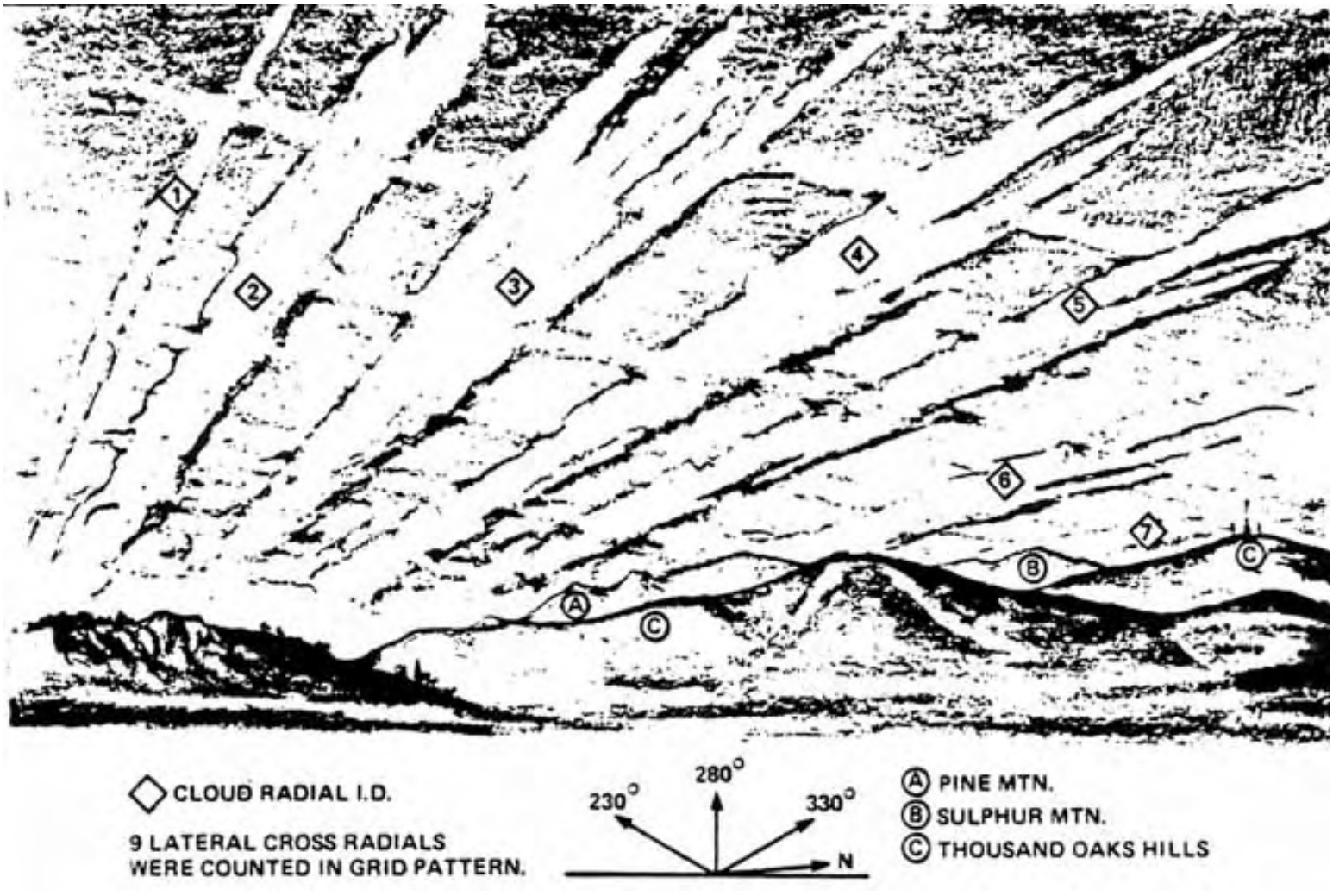

Figure 6.

GRID VECTOR APPROXIMATION
1-24-86 VENTURA COUNTY, CA

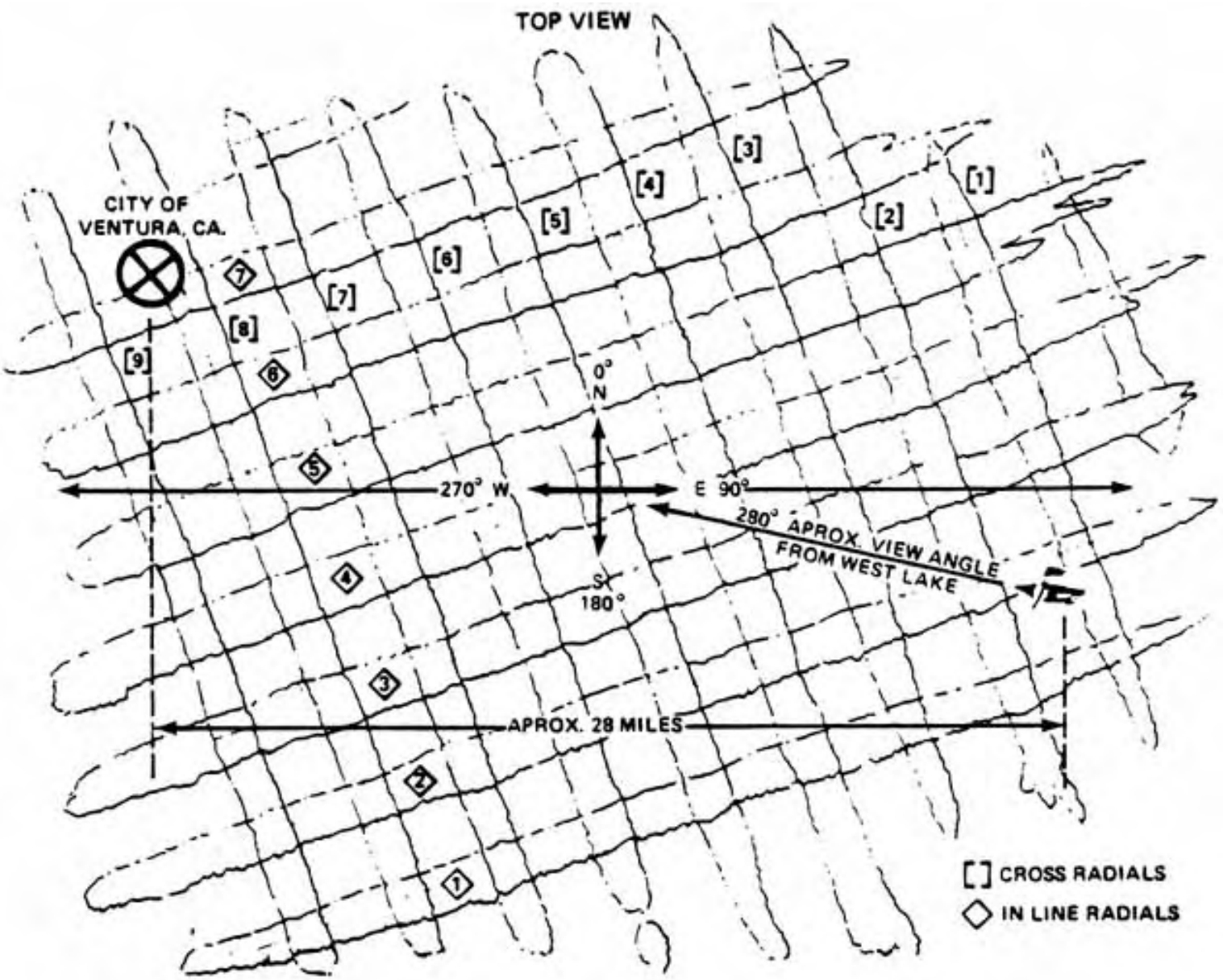

Figure 7.

SIX-MILE DROP IN TWO MINUTES

CHINA AIRLINES FLIGHT 006
- TAIPEI TO LOS ANGELES -
19 FEB 1985

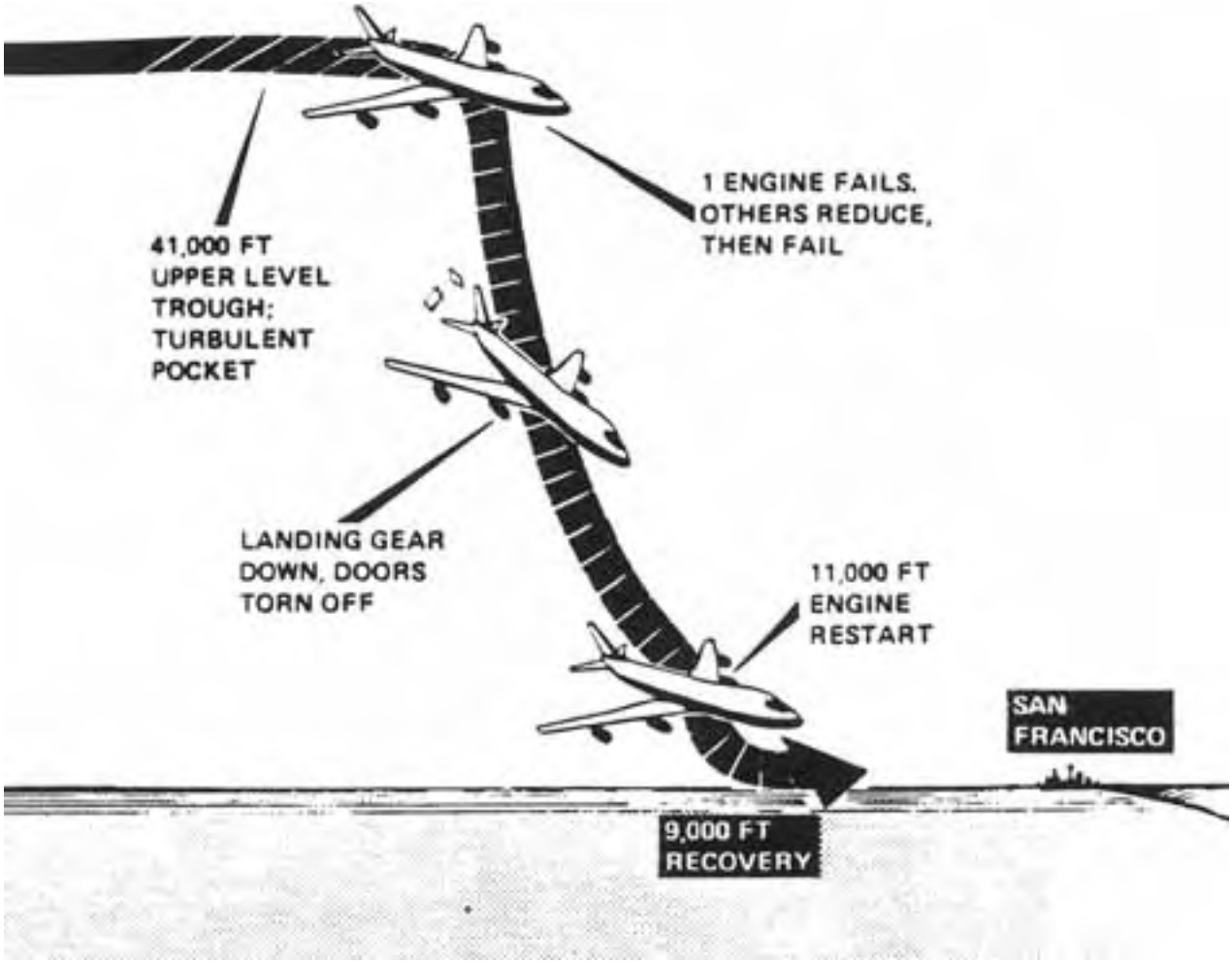

Return to Fer de Lance Index

The Tom Bearden Website

Fer de Lance

Figure 8.

SAN DIEGO CHAFF INCIDENT, JAN. 1985

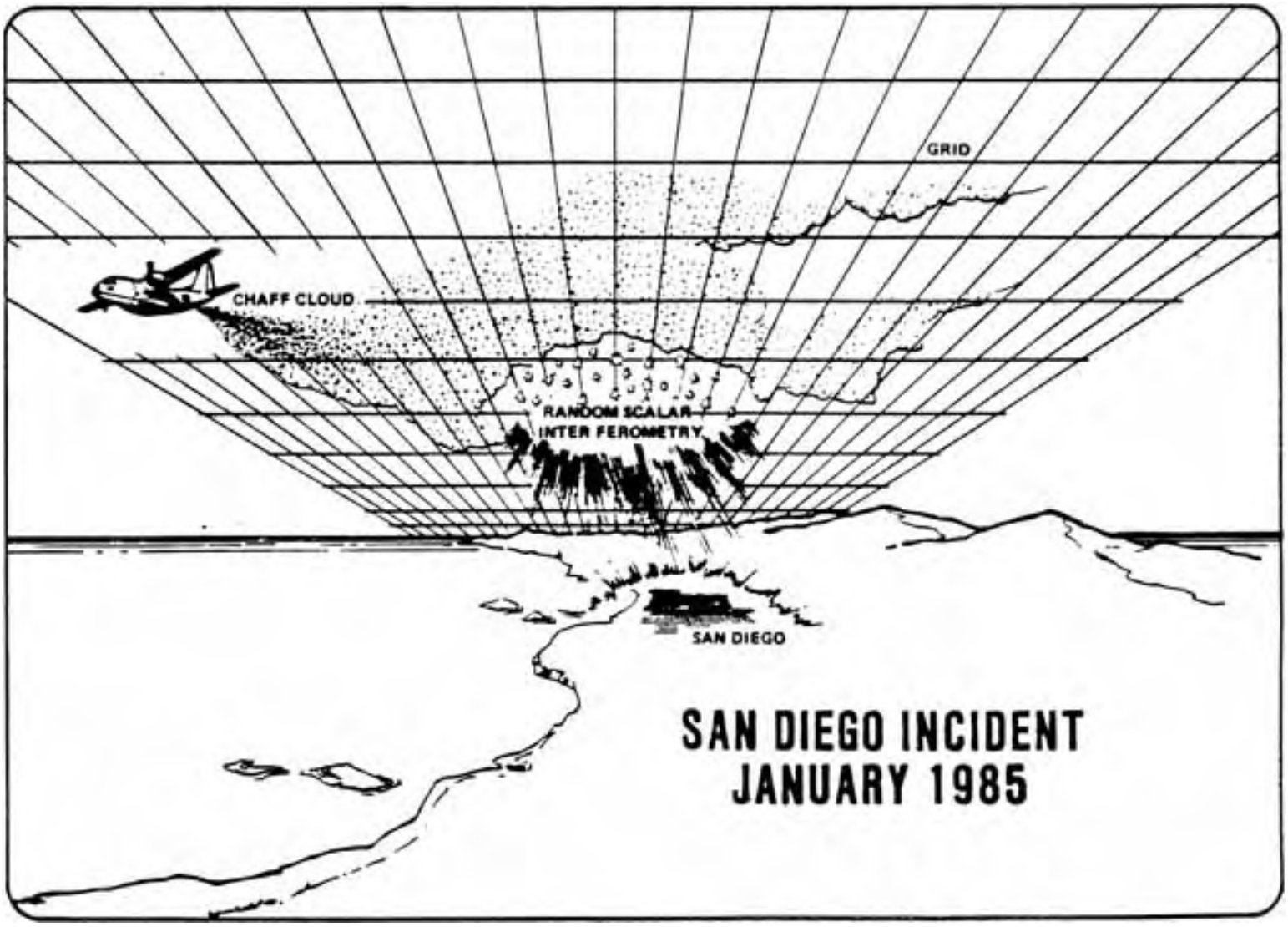

Return to Fer de Lance Index

EM Missile Strike, Offset from Night Shuttle Launch

Cape Canaveral, Florida

PHOTO BY BOB GLADWIN

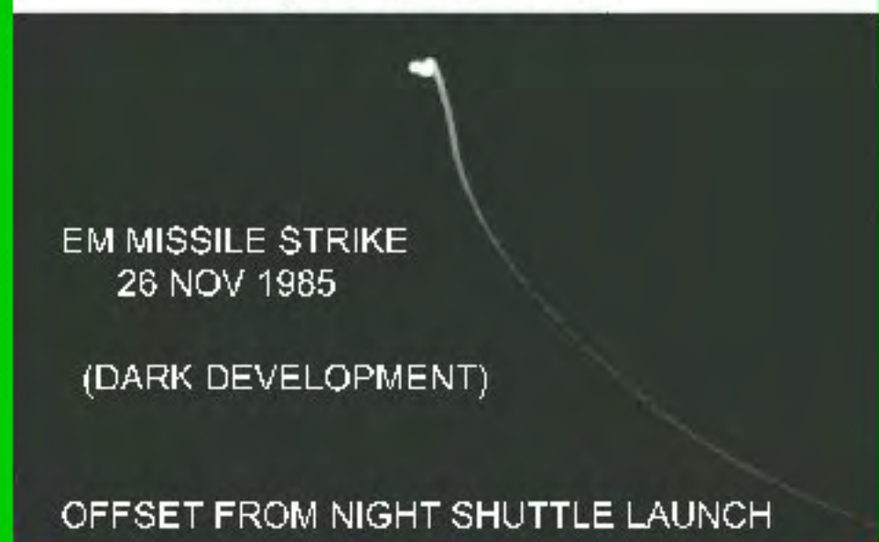

© T.E. BEARDEN 1995

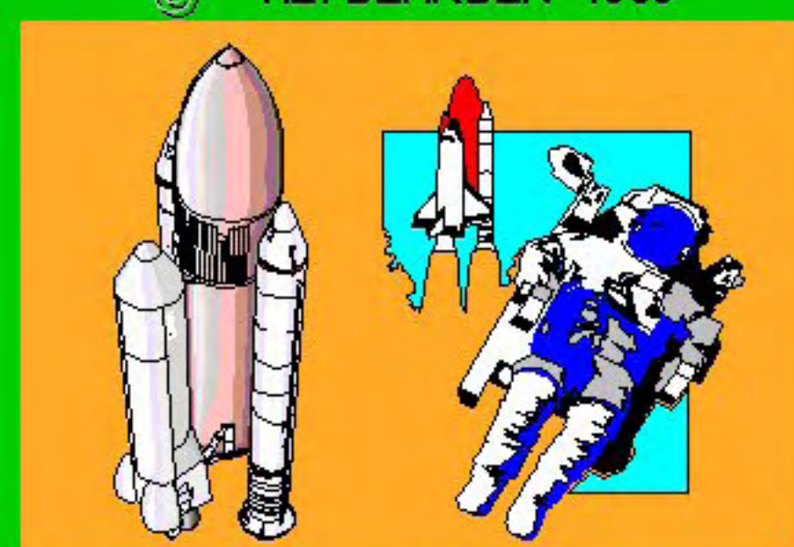

The Smoking Gun on 26 Nov. 1985

Longitudinal EM Wave Interferometry: Exothermic

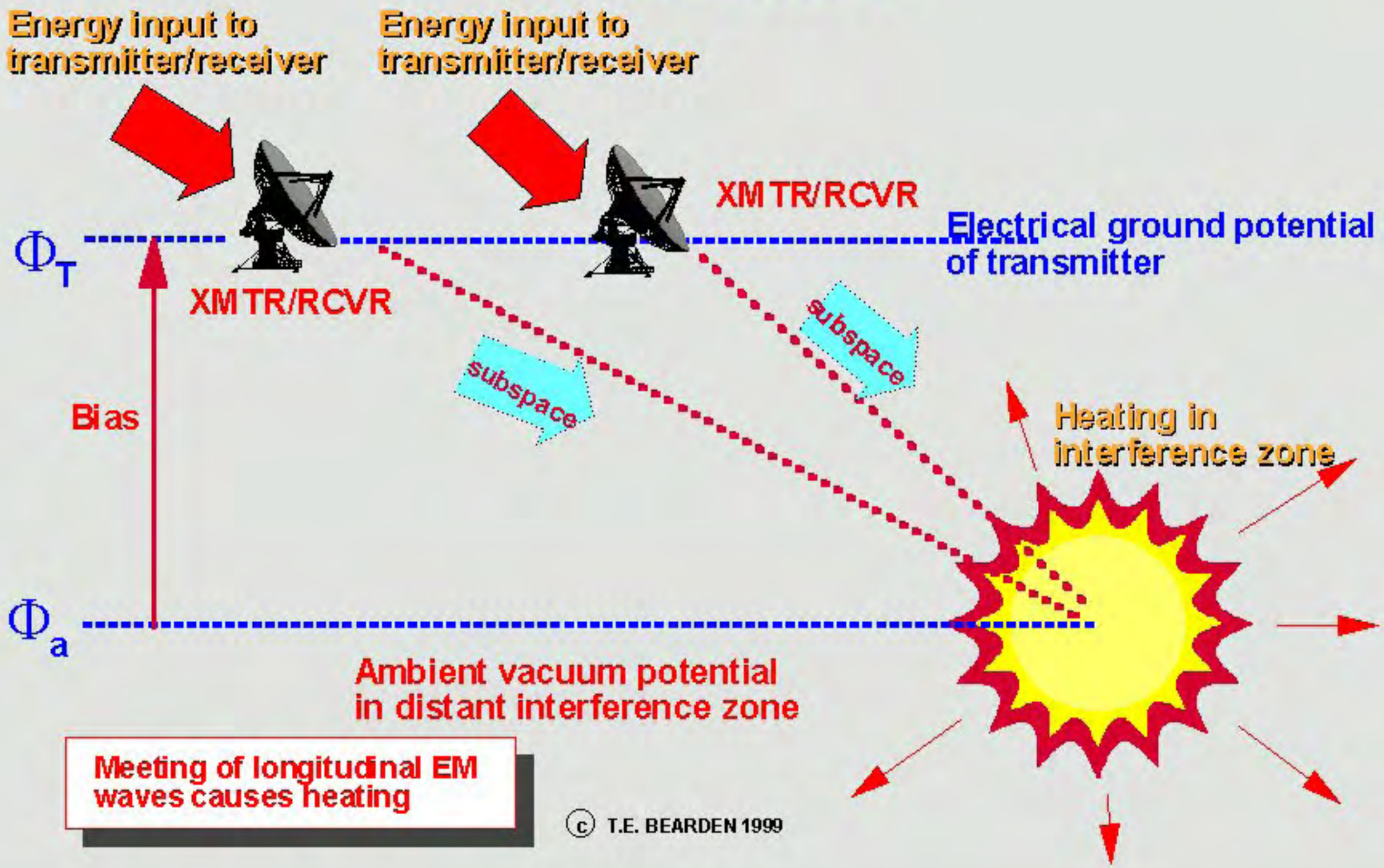

Meeting of longitudinal EM waves causes heating

© T.E. BEARDEN 1999

Longitudinal EM Wave Interferometry: Endothermic

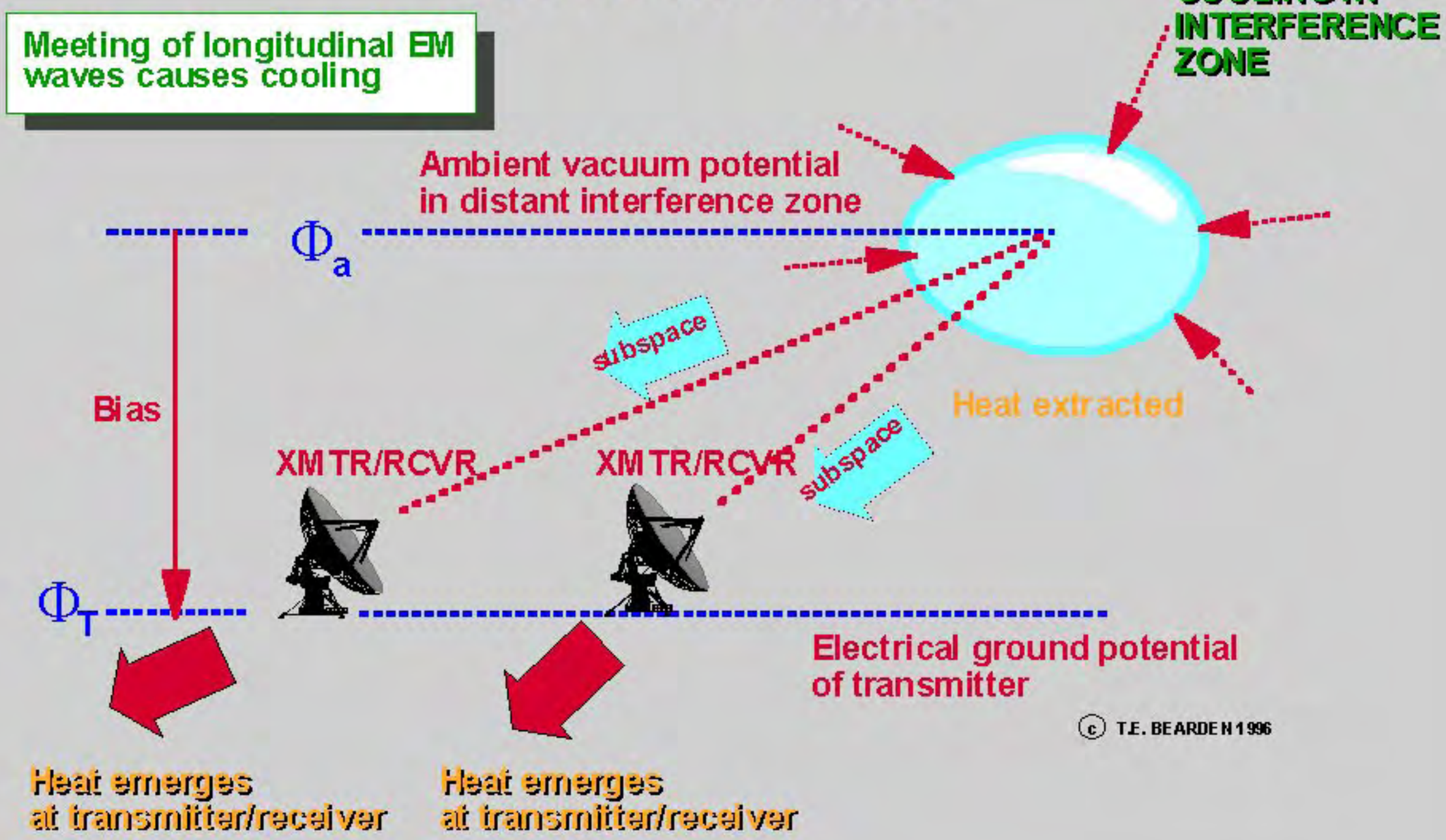

- More Frightening Than the Mind of Man Has Ever Imagined -

Brezhnev's unheeded 1975 characterization of these weapons as "more frightening than the mind of ran has ever imagined" has very real justification. In a moment we shall explain what he meant. We shall also explain why the Russians may be serious about substantial nuclear disarmament.

There is now a "balance of terror" loose in the world that makes the old MADmen's MAD concept look like a sunny day in Hawaii.

Let me explain just a little of what I mean.

The scalar EM can and does use an ordinary EM beam as a medium. Many, many scalar EM channels can be infolded into an ordinary carrier. Thus the amount of energy stored in the carrier as "electrogravitational" energy has little to do with the feeble amount of electromagnetic energy stored in the EM carrier signal.

Thus in one sense, when the Soviets are employing the big "continent buster" weapons, literally hundreds of millions -- or even billions -- of watts of energy may be infolded into the seemingly weak carrier beams. All this energy is in the scalar EM channels established in the carriers.

Plus which, the scalar beams are employed in a "standing wave" node. Each scalar standing wave is like a gigantic "capacitor": It is highly charged. Under normal conditions, it has a charge and discharge time constant as well. If something were to "short circuit" one of these huge standing waves -- say, one with a thousand megawatts in it -- all that stored electrogravitational charge would discharge through the short circuit into whatever is on the other end of the short, and into the ground itself. In other words, the earth itself in that location would receive a mighty electrogravitational pulse (EGP). The ground in a region surrounding the discharge point would "charge up" just like a capacitor, and would transmit the EGP as a hemispherical current into the earth and spreading around it. This is where the real problem cores in.

The problem, as originally discovered by Wilhelm Reich [orgone energy was and is real, and is simply one form of scalar electromagnetics], is that radioactive material has a very great affinity for this EGP and undergoes a drastic reaction to it. Crudely, it works like this:

Imagine the vacuum as a virtual particle gas. This gas is under extremely high "pressure" or, more correctly, internal Stress. This stress is a gravitational potential.

However, the stress of the ambient vacuum is normally about the same in most localities. So a chunk of radioactive material doesn't experience a difference in vacuum potential across itself or throughout itself. In other words, the scalar EM fluxes in and out of every part of the nucleus are very high, but of equal magnitudes. The radioactive nucleus, however, is "unbalanced"; that is, it has an extra bit of unresolved EG potential which it would very much like to get rid of or discharge, by spitting out one or more particles. That is, it would like to "decay" to a more stable configuration. A nucleus that is trying to decay to a more stable configuration is a radioactive nucleus.

Remember, the radioactive nucleus is involved in a tremendously dynamic virtual particle flux exchange with the vacuum potential. And a part of it isn't quite in balance in that flux. Sooner or later the right "bobble" in the input flux will come along, and the nucleus will decay and emit a particle and/or radiation. By measuring the level of decay activity in a certain amount of the radioactive material, we can determine a "decay constant," or basically the probability that a nucleus will decay in one second. We can then determine how long it will take that chunk of material to decay away to a stable, relatively inert material. Some materials only require a few minutes to decay, while others may require thousands of years.

Now if you suddenly and drastically change the stress of the vacuum in which a radioactive nucleus is imbedded, you change the potential placed on the unbalanced nucleus. You hit it, in other words, with a strong EG potential pulse -- an EGP. That instantly unbalances the nucleus and it decays explosively. That is, it changes the decay constant and the probability of decay.

Basically that's what happens in a nuclear implosion weapon: You hit the radioactive hunk of material in the center with a very high, imploding pressure wave, which is carrying an EGP. The EGP causes all the nuclei to decay nearly instantly, producing a nuclear explosion.

The bottom line is: strong EGPs wreak havoc if they happen to hit anything radioactive. Such as nuclear warheads, in missiles or in storage. Such as nuclear reactors. Etc.

Now do you begin to see the problem? Let me spell it out.

Suppose the Soviets have activated some of their giant scalar EM transmitters, to place a giant weather engineering grid over the U.S., or to knock down a Challenger or a Titan. They've got their scalar EM beams all charged up. One of the giant Woodpecker transmitters has -- let's say -- 500 megawatts in its infolded scalar EM standing waves. Everything is going good. They're socking it to the Americans and the Europeans.

All those multiple scalar EM frequencies they're using to form the patterns, etc. have to all be absolutely phaselocked. Therefore all the transmitters have to be rigorously phaselocked, too.

And suddenly something goes wrong. A major amplifier/transmitter controlling or stabilizing the phaselocking malfunctions. The phaselock is disturbed, and begins to quiver.

Emergency circuits react instantly, trying to stabilize the situation and restore the quivering phaselock. Little "shorts" are being applied to the circuitry and to the "giant capacitor" that is the scalar EM standing waves. Dumps and discharges of EM energy are beginning to flash in the transmitter and associated circuits -- and into the ground. These make the situation more unstable. Feverishly the emergency circuits struggle to contain this thing -- and Wham! they cave in, all at once.

Now you get a mighty and continuing discharge of the scalar EM energy in that standing wave back into the transmitter and into the ground. It burns out the transmitter. And the discharge continues as the "capacitor" drains all its EG energy into the earth in a giant pulse.

Around the transmitter site, the EGP is transmitted radially away, still very much like a standing scalar wave. It reaches the first nuclear facility. Let's suppose it's a nuclear reactor. Specifically, let's suppose it's a nuclear reactor at Chernobyl.

If you'll check Soviet Military Power, DoD, 1986 you'll find that there's a big ABM radar site not far from Chernobyl. And Canadian sources verify that one of the large Woodpecker transmitters seems to be sitting in that general location. Now check "The Soviet Nuclear Disaster," The Wall Street Journal, Apr. 30, 1986, p. 24. Check the small drawing in the lower right corner of the bigger drawing. Here you can see that a Woodpecker transmitter located near Chernobyl would ideally transmit nearly due west to intersect over the U.S., entering across North America from its east. Other Soviet "over-the-horizon (OTH) radar transmitters" go over the north polar regions, to enter the U.S. from the North. The two then form a giant interference grid over the U.S. (You can see that in Soviet Military Power.).

Suppose you were in the field in the U.S., measuring the Woodpecker signals. Suppose the stronger beam was coming from the east. You would be able to see this with your instruments.

Now suppose the giant transmitter near Chernobyl got into the type of failure we're talking about. The emergency circuits panic and cut down the EM carriers, trying to drain away the standing scalar waves in a controlled fashion. Then your instruments would suddenly record the "new" direction as coming from the north, since the east carrier is gone.

That's exactly what engineer Bill Bise detected out in California, about the time it appears the reactor at Chernobyl began to get in trouble.

Let's continue with our scenario. Suppose the emergency circuits at the discharging Chernobyl transmitter contain things for awhile. The standing scalar waves are steadily draining into the earth. The EG potential starts to rise at the Chernobyl nuclear power plant.

In the nuclear reactors, the decay constant of the uranium in the fuel rods changes. Additional radioactivity begins to pour out of the uranium. The reactor alarms go off, and the crew takes measures to reduce the problem. The control rods go further in, to slow it down.

But the EG charge keeps increasing. The radioactivity of the uranium continues to increase. The control rods go further in to counteract this. The electrical controls begin to act up, showing anomalous indications. The radioactivity increases. In panic, the controls are fought until the control rods go all the way in. The reactor should in fact now be shut down completely, in normal circumstances.

Things settle and hold a bit. The scalar EG charge increases. Finally the "shutdown" reactor starts to increase in radioactivity again. The control rods can't handle it. Everything is heating up, including the graphite moderator. Back at the transmitter, the emergency circuits finally are overwhelmed and give in. They fail all at once. The dreaded "uncontrolled short circuit" now exists between the collapsing standing wave and the earth. A gigantic discharge of EGP into the earth occurs at the

transmitter site.

In the desperate reactor, suddenly a great EGP appears. Instantly the uranium goes intensely radioactive. A gigantic pressure of heat, steam, graphite and radioactive materials bursts out of the reactor, breaching the building and erupting violently into the atmosphere. The core melts down. The graphite moderator ignites. You've got the realization of the nuclear engineer's worst fears: core meltdown and reactor out of control. It's afire and spewing deadly radioactivity out by the gobs. And the heat! It's like hell itself opened up for business in this spot.

At any rate, something very similar to that seems to have happened at Chernobyl.

This author believes something similar happened in 1957 in the Southern Urals. (See Zhores A. Medvedev, Nuclear Disaster in the Urals, Translated by George Saunders, W. W. Norton & Co., 1979, p. 150.). In the Kyshtym area, an explosion of nuclear wastes stored underground occurred in the winter of 1957-58. The area for miles around was contaminated, and is still contaminated to this day.

Recall, Khrushchev spoke of a fantastic weapon in development in January 1960. Early prototypes of the weapon would have been in development and testing in 1957. Probably at that time there were no emergency control circuits to handle standing wave collapse, or only primitive circuits at best.

If the failure of a transmitter occurred in full-power experiments, the unrestrained collapse of the standing scalar EM wave would most certainly have produced a large EGP in the ground, and instantly activated the nuclear wastes stored nearby. Eyewitness accounts reportedly stated that the wastes exploded, and that is totally consistent with our thesis. It is in fact a scalar EM accident signature.

Any nuclear facility at all is an incredible and monstrous risk whenever scalar EM weapons are active.

Of course, one's nuclear facilities are at risk if one's enemy has scalar EM weapons and fires at them, as we covered earlier in this book.

However, they are at terrible risk even from one's own scalar EM weapons. The consequences ot a relatively simple electronic failure can be catastrophic; not only for the local nation, but for the earth as a whole.

To show what we mean:

Suppose a similar scalar EM accident -- such as seems possibly to have happened at Chernobyl -- occurs at some other giant Soviet "radar" facility. Further, suppose this particular transmitter is not too many tens of kilometers away from a Soviet missile silo complex. Just to really throw in the grit, suppose these missiles are the "big monsters" with--- say -- a 50 megaton warhead in each missile. Suppose there are 10 of them in the complex.

Let's say this accident occurs "catastrophically" -- that is, the emergency control circuits are

overwhelmed immediately and a discharge of all the scalar energy begins at once.

A giant EGP strikes the earth, spreads in all directions, and strikes the waiting monster missiles. In their implosion trigger warheads and in their fissionable and fusionable payload, everything goes at once. Actually, it goes better than when normally triggered. So each one goes at about 100 megatons.

You've just had a monstrous 1,000 megatons of nuclear explosion in the earth. You get a giant earthquake. If it's not too far from the ocean, you get a tidal wave also. You get incredible amounts of lethal dirt and debris, radioactive and deadly, hurled violently into the air.

This is just about the equivalent of a "normal all-out nuclear war!"

And what about the other side's detection and early warning systems? Who's going to alert whom, and for what? How many missiles get launched?

I think you see the point.

And I haven't even covered what a giant EGP can do to humans. If it's truly a catastrophic failure, you can get an EGP that can wipe out half a mighty nation in one burst!

And if the discharge happens to tickle the Sun and Moon's feedback loops the wrong way, you'll get convulsions of the earth, mighty burps of the sun raining fire and brimstone on the earth, and a violent increase in the interior heat of the earth's molten core, with a concomitant eruption of that core right up though the mantle.

In other words, it could be "back to the beginning" for the earth, and start all over -- if, that is, some semblance of an earth survived.

The Soviets know full well the implications of their giant scalar EM weapons. (Remember, I estimate they have over a hundred of these monsters, based on Frank Golden's detection of their full-up exercise in April/May 1985.).

Scalar EM weapons have added a totally new dimension to the meaning of the word "terror". If one develops them and his adversary does not, nothing on earth can stand against them. So in Man's present state, the temptation to develop them is nearly irresistible.

On the other hand, if one's adversary already has developed them, one is already totally defeated unless one also develops them. Again, the need to develop them is imperative.

Yet, whenever one activates a large scalar EM weapon, one immediately places the entire earth in deadly peril. The slightest misstep, and it's curtains for everyone. And it's curtains for the earth as well.

So one is damned if one does, and damned if one does not.

We have reached the final turning point in human history. The clock is ticking away the last years -- or days -- of the lives of all humans on earth. There has never been such a threat.

We simply have come to the crossroads. somehow, all Mankind has to change.

Infatuated with the thirst for ultimate power, we are facing two doors. Behind one is a beautiful lady, and the fulfillment of all man's dreams: control of physical reality itself. Behind the other is the deadliest tiger ever dreamed of in our wildest nightmares.

Which is it to be, the lady or the tiger?

SCALAR EM INOCULATION AND ITS IMPLICATIONS

My appreciation goes to Gary North for his openly sharing the above important information with the public. Human nature being what it is, one or more of his more dire scenarios is going to happen sooner or later.

The problem becomes enormously more compounded if the hostile agent or agents possesses sophisticated scalar EM technology.

With scalar technology, there exists the potential that the worm or virus can be implanted from a distance. If scalar scanning devices of sufficient precision can be developed, then major software residing in a chip, a computer, or on a disk can be read from a distance. With scalar EM methods, the ordinary software "guards" are totally ineffective. The scalar "reader" could simply read off the software directly as the disk or device goes about its normal operations.

After the software is read, a germ or a virus is designed to produce a particular problem as desired and upon special stimulus. Then a scalar "imprinter" device is used to produce the necessary digital pulses directly upon the media in which the software resides. The required code has now been .implanted. In effect, the operating system has been injected from a distance, and contaminated with the desired "sleeping agent" -- germ or virus. From there on, it's just like Gary North's scenarios.

So the scalar EM technology can probably be used (at least eventually) to place "mines" in systems in advance, for damage or destruction at a future date. At least it's possible in principle.

However, it's not the injection of computers and equipment that bothers me. It's the injection of human beings. Here's generally how it can be done (and possibly is being done).

Basically, human brains have various rhythmic waves which represent "envelope pulsations" of the entire electrical system. However, it is not the EM force fields represented by these pulsations which are important: it is the summed-zero (scalar) patterning of the entire complex of neuron firings which represents the real activity of the brain -- and represents it thoughts and emotions. A storage system for these patternings exists, but it's a scalar pattern storage, not an E and B field storage. The storage system is in the nuclei of the tissues of the nervous system itself, not in electrical or electrochemical potentials.

At any rate, the human brain rhythms are also "riding along" relatively entrained to the Schumann resonance of the earth's magnetic field. So all the patterning of the brain is grouped together into giant overall orders, and one or more of these is normally synchronized to our natural environment.

If a varying magnetic signal of extremely low frequency -- say 10 hertz -- bombards the brain with greater power than the earth's magnetic field, it is possible for the brain's rhythm to be "forcibly entrained" to synchronize with that signal, rather than with the normal Schumann resonance. If a large number of brains are forcibly entrained to such a signal, and the signal is artificial, then a master coherent phasing of all the brains to the transmitted signal has been accomplished.

And that can be utilized -- and is utilized -- by the Soviet Union. On the Woodpecker signals, Bob Beck has detected up to 16 carriers, each with a 10 Hertz modulation, and with all the 10 Hz modulations in phase.

Let's stress what we're saying here. At times, the Woodpecker signals have shown 16 carrier frequencies which contain the same 10 Hertz modulation, and which are all kept coherently sync-locked.

If those signals and the modulations are strong enough, the brains in a targeted area demodulate the 10 Hertz signal and phase-lock to it -- actually, to them. At that point, the brains are entrained to

a 10-Hertz driver, and 16 channels of multimegahertz frequencies are locked-in to the brain.

Now if the Soviets have broken the genetic code of the human brain (which they have) and succeeded in developing the ability to implant thoughts, emotions, pictures, etc. (which at least to a degree they have), then they can simply record the proper signals from human guinea pigs, using scalar technology and instrumentation. They can tailor those signals and add them onto the Woodpecker carriers, using scalar EM techniques. By using most of the sixteen carriers as a means to express Fourier frequency expansions, specific areas and functions of the brain can be targeted.

Notice that the distant transmitters al ready "know" the correct phasing; just use the 10 Hertz modulation signal as a reference. In that case, phasing takes care of itself inside the captured human brains.

The brain has a unique characteristic. If a signal arises inside it, it interprets that it itself originated the signal. Thus for the first time in history , true unwitting "robot" actions and emotions can be engendered in masses of human beings.

But it's still worse. The Kaznacheyev experiments (see references) proved conclusively that electromagnetic signals can carry and transmit cellular disease and death patterns into a targeted biosystem. You can rest assured that the Soviets continued on to actually measure and determine a wide variety of death and disease scalar patterns. All of that can be added on to the Woodpecker carriers so that the population in the intersection grid area is devastated. One can even test it out in advance by producing a modified pattern of a disease in the targeted populace, and keeping the percentage of brains entrained down to a small level. This lowers the number of persons "injected" from a distance to a small percentage of the populace. Then the outbreak of the "new strain" of a familiar disease -- such as influenza, pneumonias, and something like AIDS -- can be monitored to provide targeting and effectiveness data. Notice that a series of diseases was experienced by U.S. personnel assigned to the U.S. Embassy in Moscow, probably as a result of the so-called "weak microwave radiation" of the Embassy by the Soviet Union.

But that's not all. Much more subtle effects can be produced in the targeted populace, without anyone getting wise. Cancers and leukemias should be relatively easy to induce. Also, the immune system can simply be attacked directly. If done slowly, a series of common, ordinary diseases will just seem to get "tougher and tougher to cure." Actually it's not the disease that got tougher, it is the immune systems that got weaker. It is my opinion that precisely that sort of testing -- against the immune system -- has been accomplished by the Soviet Union against the U.S. since about October, 1985. A great percentage of influenza patients during the period from then until now have had complications. So much so that multiple sessions -- as many as 3 to 5 -- of antibiotics are necessary before the patient recovers. At least in the Huntsville, Alabama "hinge pin" area, that seems to have been the case. This author personally experienced this, having influenza and follow-on complications for a period of seven months -- something quite different indeed for him.

But it's even worse.

The human scalar EM nervous system ("inside" the ordinary EM signals and functioning of the system) also has its own resident "software." It has special storage media contained in its brain. its cells, and its genetic material, and its actual nucleons. All of these storage media are continually telecommunicated with via scalar EM means. The "stability" of what each of us is, is largely conditioned by those recordings. As personalities we literally "are" what we have experienced, felt, thought, and did. Our whole "functioning conscious system" has been evolved by our experience, and it continues to be "us" by means of continual reference to the record base.

I hope you now realize that the actual record base itself can conceivably be altered by scalar electromagnetic means, even from a distance. Even by the hidden scalar EM content of 16

Woodpecker carriers, locked into a captured brain and pouring in their deadly content. It is conceivable that even what one is can be taken from him, and what someone decides he will be, he will be.

A totally new -- and ultimate -- form of "slavery" has emerged.

Also, look at all this scalar EM functioning of the human system as a special kind of cybernetics. A scalar EM computing software and hardware system.

What if scalar techniques are used to plant "worms" and "viruses" in this system? With hidden triggers? What about a series of them, so that a range of "eruptive software diseases" can be stimulated at will?

And guess what. Such scalar EM "worms" and "viruses" can even be induced by contact with or consumption of "contaminated" water and food. Or saliva. Or other body fluid.

So you can see the possibilities of "seeding" a population with a staggering variety of time-bombs.

I think you begin to see the point. Now you can change North's "Soviet blackmail" scenario drastically. In a new scenario, Gorbachev simply announces to Reagan that a graduated series of specific sweeping changes are going to happen in our population -- changes which we are absolutely powerless to stop. The last stages are various deaths. The master "trigger" for this series has already been initiated. Incidentally, the Soviet populace has been carefully "seeded" with the proper antidotes. The Russian leader demands certain things (very similar to what North's scenario utilized). Unless his demands are met, a "killer virus" will be activated by a special signal. If so, everyone dies. The first step change in the series will start to occur in a few hours. And it does.

In fact, this scenario could be added to North's scenario, and both used simultaneously. What do you think the President and the Congress would do? Or could do?

There are other even more diabolical possibilities, but these should be quite sufficient to illustrate the point.

Pandora's box has already been spilled, and the end of humanity is ticking away like a time-bomb. It's already nearly midnight, and the watchman hasn't even sounded the alarm yet.

I certainly can anticipate the next question: Have the Soviets already "seeded" the populations of the U.S. and other selected western nations with scalar EM viruses and germs"?

The answer is, I simply don't know. And just like Gary North, I don't know what if anything can be done about it if they have. This researcher certainly doesn't have all the answers. An immediate national crash program to develop scalar EM defenses is essential if we are not simply to be crushed beneath the hammer and sickle. It takes funding, people, facilities, and time.

In some 22 years of unrelenting struggle to convince the system we've got a terrible problem, I've hardly been able to move it off dead-center (no pun intended). This book, produced under extreme workload stress, is all I can do to raise the alarm. I've given it my very best shot.

What happens now remains to be seen. Other hands, hearts and minds are going to have to take up the task and carry it forward. This researcher has reached his limit, and has no more left to give.

1986 APPENDIX II

COMPUTER WORMS AND VIRUSES, AND THE IMPACT OF SCALAR EM

Source: - Gary North, "Electronic Aids (Parts 1 and 2)," Remnant Review, 12(20), Nov. 1, 1985, p. 1-8; 12(20), Nov. 15, 1985, p. 1-8. POB 8204, Fort Worth, TX 76124. Phone (817) 595-2691.

Annotation: - Two deliberately un-copyrighted issues to alert the public to software worms and viruses, and their implications for drastic interruption of society. Describes a hypothetical scenario in which drastic scrambling and destruction of banks' computer tapes, files, and records occur due to software worms and viruses. Written in first person by Gary North. [Slightly edited.]

Article: - "Worms." Earlier this year, I read a very interesting article on a major problem facing computer software (programs) development companies. A program comes on one or more 5.25-inch plastic discs. It takes only a few seconds to copy a program on one disc to a blank disc, which costs $3. Yet these programs normally run at least $250, and usually sell at $495, and sometimes cost thousands. Very few are less than $100. So you have a major temptation: make a $500 asset out of a S3 asset. Insert the $500 program into drive A, write "COPY A:*.*.B:" and hit the "enter key;" sixty seconds later, you have a $500 program in drive B.

There are ways to make this copying more difficult. The companies code the programs, and force you to have a control disc in drive A at all times. These "copy protected" programs are a hassle for users. We cannot put them on "hard (big) disc" easily, and sometimes the control disc dies for some reason. Then what? Your data are locked in your hard disc or on a floppy disc, but you can't get to the data because the control disc is not functioning. You order a replacement. Weeks go by.

Last year, several firms came up with a solution. It is called a worm. A worm is a command that is built deep into the complex code that creates the program itself. These are incredibly complex codes, and it is easy to bury a command in them. They cannot be traced.

What does the worm do? It "eats" things. Say that you are a software thief. You make a copy of a non-copy-protected disc, either to use on a second computer, or to give (or sell) to a friend. The program works just fine. But when the program is copied to a new disc, the worm is "awakened." It bides its time, maybe for many months, maybe for years. The program's user is blissfully unaware that a monster lurks inside his pirated program. He continues to enter data, make correlations, etc. He becomes completely dependent on the program.

Then, without warning, the worm strikes. Whole sections of the data disappear. Maybe the data storage disc is erased. Maybe it is just scrambled. Even his back-

up data discs have worms in them. Everything he entered on those discs is gone. Forever.

Can you imagine the consternation of the user? He has become dependent on a booby-trapped program. His business could simply disappear. For the savings of $500(stolenprogram),hecouldloseeverythinghehas.

Several firms threatened to insert worms into their programs. But then they backed off. They are afraid that lawsuits initiated against them might go against them in court. They could be hit for damages suffered by the thieving victims. Juries might decide that the punishment, a bankruptcy) was too much for the crime (a $500 theft).

So far, no worms are lurking in any commercial software programs — as far as I know and the industry knows, anyway. But what if a disgruntled programmer was to hide one in a master copy of, say, Lotus 1-2-3, the most popular business program on the market? What if ten thousand copies a month go out for, say, three years? Then, without warning, every company that has started using them loses three years of data? They sue Lotus. Lotus goes bankrupt paying lawyers. No company in the industry is willing to talk about this sabotage threat publicly. Obviously.

LARCENISTS

I just happened to stumble across an article on worms in a computer magazine. It occurred to me that it might be possible to use the worm technique as a form of deliberate sabotage rather than just as a copy protection device. But what did I know? I'm not a computer expert.

I know a computer expert, however. I mean, a real expert — one of those people you occasionally read about. In the world of business, they're called "space cadets." They operate somewhere in between the asteroid belt and Jupiter. But this one is different. He's a businessman, too.

I got him to sit down with me to discuss the problem of worms. It turned out that he has a real fascination for the topic. He tells me that there are advanced design worms, called 'viruses' by 'hackers' — computer freak programming geniuses. "The software virus is the most terrifying thing I've ever come across," he told me. And then he showed me why. My initial scenario is based on only a portion of his estimation of the threat. It gets a lot worse.

He gave me a 90-minute FIRESTORM CHAT interview. He must remain anonymous. He used to be a software developer for programs that were used in the U.S. banking system, but is now employed in a highly sensitive job in a related industry. Therein lies his problem. If he were to tell the story of what he is capable of doing to these banks, his firm might lose a lot of sales. He can't "go public." Let's call him Tom.

Let me summarize briefly some of the details he gave to me. They floored me. They're going to floor you.

(1) Jackpotting. The rush is on in the banking world to get automated teller machines (ATM's) into shopping malls, supermarkets, and in front of every bank. We've all seen them. Just walk up, punch in your card number, ask for cash, and you get it.

In a busy location, one of these machines can hold as much as $250,000 in cash, mostly small bills. These machines are controlled by computer. They are hooked up to the bank's computer system, usually by phone lines. This local line, Tom tells me, is what computer freaks call THE LOOP. The loop is wide open to tampering. He says that what computer thieves are doing is to hook up a cheap Apple II computer, tie into the phone lines, break into the ATM, and get it to empty itself. This is "jackpotting."

He tells me that ATM thieves are hitting banks continually, but nothing is getting to the press. The banks have yet to show a profit with the ATM's so far, which is understandable. They are hoping to get their machines placed in key locations, so "market share" is crucial to their plans. They are suffering horrendous losses in the short run in the hope that long-run profits will pay off, if and when a defense is developed.

The banks are saying nothing because of their fear that if the extent of the losses gets into the press, they will be forced by pressure from depositors — bank runs — to cancel the ATM's. The losses are horrendous, he says. At present, there is no known defense, given the communications technology.

(2) Rounding Off. This is the "preferred" computer bank theft system. Someone on the inside who has access to the software takes advantage of the banks' need to round off numbers. The programs carry numbers out to 13 places. Banks can't use all that space. So when they balance the books (interest rates at, say, 9.873), they just don't count every tenth of a cent. The program is assumed to round off the numbers randomly. What does the bank care? But the thief has set up bank accounts that absorb those random tenths or hundredths of a cent. In millions of dollars worth of transactions (federal funds, etc.), programmers in some cases have stashed away hundreds of thousands of dollars — maybe millions — over a few years. No one knows how much of this goes on.

How could a bank spot this? The books would always balance to the penny. How would the accountants ever know?

I think of a story that Adam Osborne tells in his paperback book, Running Wild. The president of a large firm was looking out his window one day, and he noticed two Rolls Royce cars parked next to each other. He inquired as to the owners. They were two men in the data processing department. He called in investigators, and the cars and the men disappeared. They fled to Brazil and took their cars with them; **Brazil** has no extradition treaty with the U.S. Years later, as

Osborne was writing the story, the firm still hadn't figured out what they had done.

ARSONISTS

These are the fearful ones, far more than the larcenists. These are the practical jokers who get into a major data bank and trash things. It's a kind of multimillion-dollar "Kilroy was here" graffitti.

How easy is it to get in? Incredibly easy. The boy in "War Games" really could have broken into most firms' telephone-connected computers. Computer programs exist that allow the user to hook up his computer to a phone line and randomly dial numbers until they hear the telltale whine of a computer line. It then notes the phone number and goes on its way, searching out more lines.

They can do it by long distance, free of charge. The telephone company has a tough time tracing those who use various sorts of electronic black boxes to call anywhere on earth at no charge. Some people get caught, of course. "The tip of the iceberg," says Tom.

How do they get in? Easy: few systems are protected, once you locate the line. If one is, he says, you create a deliberate error. Most programs then collapse the protective shell, and the hacker finds himself inside the heart of the system. Tom has designed a program that keeps this from happening to his company's programs, but few companies have anything like it.

It's very easy to get in if someone has "logged on," — opened his terminal's connection to the main computer — if the system is connected to phone lines. Or anyone in the company can just tap in, if someone has left his desk and left the computer on. It's common to forget and leave an open terminal.

He showed me. He says anyone can get fired for leaving a computer on. He demonstrated his point. With 40 computers on line, he ran a quick search and found two of them "logged on," despite the fact that it was after hours. All the security in the world can't do anything if a computer line is open. It's like a burglar alarm; it's worthless if you leave the door unlocked or leave the keys lying around. That janitor you hired. Is he a computer illiterate? Or a plant?

Once inside, what can you do? Steal a fortune? Yes, if you really know the system. He told me he could easily steal $3 million from a local bank, even as an outsider. He would then offer to give it back and keep his mouth shut about how easy it was if the bank would pay him 10% the take. He thinks most banks would capitulate for fear of the publicity. In any case, he knows that he probably wouldn't get caught.

How about creating a new identity? The grade-changing scene in "War Games" is true. You could even create a new identity, give yourself high grades in any academic discipline, just by breaking into a university's database. There is very little security here, he says.

But for sheer vindictiveness, for sheer envy, consider the possibilities of a virus-implanter. He gets inside the computer for a major communications link: telephones, large information database, bank wire transfer, or whatever. Then he lays the egg: a tiny, untraceable brief instruction. Inside a huge database are just a few characters. These float inside a system, seeking to devour certain kinds of data, or executing certain routines.

There is a game played by computer freaks called "Core War." They try to implant these killer messages, which seek out each other and battle one another. If you find one morning that yours has been consumed, you lost the battle. That was probably the origin of worms and viruses.

TERRORISM

Say that a revolutionary terrorist group, or some anti-zionist group gets a "ringer" into a system. He might be a computer genius type. Everyone knows they are either oriental, dark-skinned people with accents, or teenagers. The firms don't hire teenagers, but they hire a lot of foreigners. They may even check the guy's credentials. Electronic credentials. (Ha!) Then they turn the guy loose in the system.

The virus is implanted deep inside the system. It can then be transferred to any other bank's computer by means of EFT (electronic funds transfer). Maybe it is triggered when someone with a peculiar name and address opens a bank account. Three days later: Bam! The data disappear. They haul out the back-up tapes. Bam! The virus is on them, too. It is a process of infection, contamination, and incubation. There is no known defense. Not yet. This is the bottom line.

ANTIBODIES

The designer of a virus can also design an "antibody." The antibody is a counter-virus agent that seeks out a virus and destroys it. But like other antibodies, it must be specific. The only way today that an antibody system can be created is to know what kind of a virus is involved beforehand.

Tom says that people are now selling antibodies at very high prices. Who is paying? Big companies that suspect that there is a virus present in their computers. In all probability, the guy selling the antibody created and injected the virus. But now can any businessman prove it? So he pays the blackmail.

NATIONAL DEFENSE

A Soviet agent or American spy working for the Soviets penetrates any of a dozen computers used by the military. He plants a virus. The computers talk to each other, and the virus spreads to all of them. It tells them to execute a certain routine when a certain command is entered at a missile-controlling terminal. That command might interfere with a routine that activates a missile or launches it. Upon reading that command, the virus shuts down the computer, or scrambles

the executing program, or scrambles the data. No more "launch on warning." No more launch at all. Dead metal.

Scenario: The President of the United States receives a telephone call on the "red phone" — the direct link to Moscow. He lifts the receiver and says, "Hello."

"Mr. President, this is Michael Gorbachev. You must recognize my voice. I have very little time. I will come directly to the point. You have refused to back down on your threat to implement your Strategic Defense Initiative. You intend to go ahead with space-based weapons. My military staff informs me that they think that the United States has the technology to implement it, and that it could place my nation's military strategy in jeopardy. We cannot allow you to do this.

"If we allow you to deploy the SDI, it will be too late for us to respond effectively. Therefore, we are taking the initiative today. I issued orders this morning to put Soviet military units on immediate alert. We are abiding by your biblical rule to announce the initiation of hostilities before striking. Neither the Japanese nor the Germans gave us this courtesy. If you do not come to terms with us, we will launch a first strike against your nation in three hours. We will delay for one day, if you agree to follow a precise procedure that I will outline shortly.

"At one time we feared nuclear retaliation. We no longer do. Within two hours, you will know why not. I suggest that you instruct your ballistic missile team to prepare your missiles for a strike. Then, to prove to yourself that we no longer are concerned about retaliation, launch one or two of them. As far as I am concerned, launch all of them. But please instruct your senior military commanders to report back to you concerning the effects of their instruction. I suggest that you try launching three or four as a test. We don't care which ones.

"Mr. President, let me tell you what is going to happen. As soon as anyone attempts to launch a missile, that missile's computer guidance system will shut down. It will lock up tight, and you will not be able to unlock it within the time you need to respond to our attack. Two hours and thirty minutes from now, your nation will have no remaining Minuteman III missiles to respond with, should you finally unlock your frozen computers.

"I suggest that you contact your senior officers now. You will have to mobilize them within 60 minutes. The test should take about 30 minutes. I will telephone you again in 90 minutes to present our terms of surrender." Click.

The President calls the Joint Chiefs. If he is lucky, he will be able to locate two of the three in time. They will be paralyzed. Who wouldn't be? But in all likelihood, they will at least test Gorbachev's theory. They will order one or (wo missiles launched. The computer guidance system on both will shut down the system. They will try two or three more, with the same result. They will attempt to launch one from a submarine, with the same result.

The President brings in senior Congressional officials and the remaining Joint Chiefs member to the White House.

Exactly 90 minutes after he had hung up, Gorbachev telephones back. He presents his list of demands. First, the immediate removal of U.S. troops from Europe. Second, the withdrawal of personnel from Diego Garcia Island in the Indian Ocean. Third, the breaking of diplomatic relations with Red China and Taiwan. Fourth, the removal of all U.S. troops from Korea. Fifth, a moratorium on all debts owed to U.S. banks by the Soviet Union and its client states. Sixth, the removal of all Minuteman III missiles from their silos. Seventh, the return of all U.S. submarines to port. If he agrees, and the orders are delivered within two hours, the Soviet Union will delay launching a first strike. The President complies.

They might do it with our communications satellites, Tom says. You might do it with any aspect of U.S. data transmission. The virus could sit dormant in a system for years, and no one would know. Triggered, it would then strike.

THE WEST'S VULNERABILITY

The West has become increasingly dependent on computers. We can no longer function without them. The Third world hasn't. Neither has the U.S.S.R. Their technology is still pre-computer. They are inefficient, but they are far less vulnerable.

Tom says that the world of computers presumes that almost everyone is essentially honest, and that all the brightest programmers must be honest. They aren't. Thus, the members of the entire system — banks, national defense, large and small businesses, public utilities — have opened themselves to attack. The attackers are invisible.

"Nothing I have seen in all my years of computers scares me as much as this does," he says. "The system has been designed in terms of a far older set of standards, especially with respect to security. It is totally vulnerable."

He compares it to plague, or venereal disease. People copy each other's software to save a few bucks. They use public access databases. They use "loops" — the phone lines. Yet these transmission belts of information can become transmission belts of collapse.

This is what I have harped on for twenty years: the potential for a collapse of the division of labor. We become rich by means of a brilliant technology, yet we become dependent on it to an extent that no previous society ever has.

Centralized institutions are most vulnerable, but because we use public transmission lines, from microwave transmissions to cables in the ground, each local unit is vulnerable. Those who would choose to bring down the system need only plant electronic viruses in a handful of major common-use databases or transmission sources, and live years or ten years later, the disease hits.

It could bring down the system if technological defenses are not developed. Nothing on the immediate horizon points to a solution, he says. The silence of those who should know what to do indicates that they don't know what to do, but they don't want panic to spread.

Is this fantasy? Last summer a 23-person team broke in (by phone) to Chase Manhattan Bank's computer.

Break-in: - Continuation of part 1, a treatise on worms and viruses in cybernetic systems.

"Maybe you saw the article buried somewhere in your newspaper. I saw it in the New York Times (Oct. 19):

> "A group of at least 23 teen-age computer users broke into a Chase Manhattan Bank computer installation by telephone in July and August and "significantly damaged" bank records, the Federal Bureau of Investigation said yesterday.
>
> Chase officials insisted that no money was stolen or transferred out of customer accounts as a result of the break-ins, and said no intrusions have been detected recently. But Federal officials, in an affidavit, said that in several cases the youths changed passwords, preventing customers — and in one case a unit of the bank itself — from gaining access to their own computer files."

And where were these teen-agers located? In San Diego, across the continent! It gets even more ludicrous:

Federal officials said that most of the offenders were probably too young to be prosecuted.

Robert D. Rose, the assistant United States Attorney handling the case, said: "We're not yet sure what we are going to do. But these things can get out of hand — it did get out of hand — and we have to treat them seriously."

Treat what seriously! "These things?" What things? If they can't legally treat the electronic trespassers seriously, just what is the man talking about? He is talking about the topic, above all topics, that bank and government officials don't want to face: the vulnerability of their computer records.

I have seen no follow-up on this story in the conventional press. A brief article did appear in the computer-oriented tabloid, Info World (Oct. 28). It turns out that the students had broken into the fifes of Interactive Data Corp. of Waltham, Massachusetts, which maintains the bank's financial records. The break-ins were discovered in late July. They had obtained the toll-free 800 number which was restricted (Ha!) to Interactive Data subscribers. As late as October 9, an illegal entry was observed. In short, it took ten weeks after the break-ins were discovered to put a stop to them.

The response of the bank's bureaucracy was predictable. It will ever be thus: "Bank officials are claiming that the FBI exaggerated the nature of the activities of the suspected individuals. A spokesperson for Chase Manhattan said that Interactive's customers were not prevented from accessing their accounts and that none of Interactive's data was altered or manipulated in any way." In response, FBI supervisory agent John Kelso said that the FBI has sworn affidavits from bank officials that say data has been manipulated or damaged. "That sounds pretty serious to me," he volunteered.

Here is the capper: Interactive Data has 25,000 subscribers who are tied into that toll-free phone line. Try keeping tight security on a system with 25,000 users. Chase Manhattan couldn't. If they can't, who can?

And if Chase Manhattan Bank was vulnerable to 23 teenagers who are too young to prosecute, consider its vulnerability to just one envy driven genius who knows all about electronic viruses. The students that did this were apparently just goofing around. But what if just one malevolent computer freak decided to "get even" with Chase Manhattan? What if he had phoned in just once or twice, implanted a long-dormant data-killing virus, and quit? What if he had tied its detonation to, say, a calendar clock in the Interactive computer? If it took security forces from July until early October 15 to raid the 23 students' homes, they would never have spotted one break-in. They could not have traced it, either. Conclusion: we have a risk-free opportunity for electronic arson. We face a potential electronic epidemic. And when I say "we" I mean the entire financial system of the West.

Sure, all the bank "spokespersons" in the world will tell you, "No problem." But there is a problem. A horrendous problem.

At this point, it really gets interesting. Chase Manhattan Bank has just announced that we will be able to set up our own personal electronic banking facilities with them by buying an expanded version of *Managing Your Money*, Andrew Tobias' home financial management.

Citicorp and Bank of America have opted for *Dollars and Sense* a rival program. You will be able to pay monthly bills electronically, balance your "checkbook," monitor your net worth, buy and sell stocks, etc., etc., just by dialing Citicorp or Chase Manhattan. Fantastic! But despite all the assurances, I get nervous. Yes, I know no one will be able to break in and tamper with the numbers. But 23 teenagers shouldn't have been able to do it, either. And now we're talking about a lot more subscribers than 25,000.

Obviously, the master program used by the banks will prohibit easy entry. Unfortunately, someone has to write the program. Can you imagine the blackmail possibilities? Some hotshot programmer could build-in a bomb, and then threaten to detonate it. In fact, he could merely pretend to have inserted a virus. Who would want to call his bluff? Not Chase Manhattan, I would bet.

CORE WARS REVISITED

In May of 1984, A. K. Dewdney published an article in Scientific American's "Computer Recreations" column. It was a light-hearted-piece on how computer experts can get involved in playing this exciting game of "blow up your opponent's defenses." You know: recreation! In the March 1985 issue, he wrote a follow-up. It begins:

"When the column about Core War appeared last may, it had not occurred to me how serious a topic I was raising. My descriptions of machine-language programs, moving about in memory and trying to destroy each other, struck a resonant chord. According to many readers, whose stories I shall tell, there are abundant examples of worms, viruses and other software creatures living in every conceivable computing environment. *Some of the possibilities are so horrifying that I hesitate to set them down at all.*"(emphasis added.)

It turns out that tne French nave been enjoying a novel on the international implications, *Softwar: La Guerre Douce,* by Breton and Beneich. A translation is scheduled for publication here by Holt, Rinehart & Winston. The study revolves around the sale of a high-power computer to the Soviet Union. The U.S. allows its export because it has a "software bomb" in it. When the U.S. Weather Service announces a certain temperature at St. Thomas in the Yirgin Islands, the program proceeds to subvert every piece of software in the Soviet Union.

A pair of Italian programmers was "inspired" by the translation of Dewdney's original article to dream up a virus (a virus is a computer-to-computer killer, whereas a worm is resident in one man's computer). They figured out that by infecting a disk operating system disk (these start computers and tell them what to do with programs and electronics), and then installing it on disks used by the biggest computer shop in the city, they could create an epidemic. They decided not to do it. In short, the only restraint is self-restraint.

A high school student in Pittsburg wrote a virus that was subtler than a data-destroying virus, which at least tells us that we have a problem. His virus created a plague of very subtle errors in the disk operating system. "All of this seems pretty juvenile," he wrote, but "Oh woe to me! I have never been able to get rid of my electronic plague. It infested all of my disks, and all of my friends' disks." He wrote a program to destroy the virus (an "antidote" to it) but it is not anywhere near as effective as the virus is.

Warning: do not copy disks from your friends' copies. This act of piracy could cost you plenty.

A COMMERCIAL WORM

Just a few days after I wrote "Electronic AIDS, Part 1," 1 read a column in the Washington Times, the conservative (Moonie-owned) daily newspaper. One of the reporters has a computer. He had purchased a newly released program from

Microsoft Co., called "Access." Understand that Microsoft supplies the disk operating system that is used by the IBM PC, the most popular microcomputer. In other words, this is no backyard company. It is one of the two or three software giants in the U.S. (Its owner is under age 30, which tells you something about who is pioneering the microcomputer revolution).

As he was setting up his computer to take advantage of this telecommunications program, a warning flashed on his screen: "The weed of crime bears bitter fruit. Now trashing your program disk." Wham! He lost all his files — probably a couple of year's worth of work. Sure, he was probably smart enough to have made back-up copies, but think of the risk. And what if it had been a worm that kept silent for a few years, infecting all of his back-up disks?

He called Microsoft, and they gave him the runaround. They told him that they were not responsible. Some programmer had put in the worm in order to zap program pirates, but the journalist insisted that he was an original buyer. Tough luck, they told him. Obviously, they didn't know that he was a reporter.

Then he published his article. All of a sudden, the victim was not some average buyer. He was big trouble. Things started moving. InfoWorld (Oct. 28) reports that Microsoft has admitted that a programmer put in the worm, but without permission. The offending text has now been removed, we are assured. But what if it had sat in the master for three years? Here is the premier firm in the software.

This is not idle speculation. It has already happened, verifying my hypothetical scenario within a few days after I published it.

Can you imagine the absolute havoc that a dormant worm or virus could create if it were imbedded in all updates of Microsoft's masters of PC DOS and MS DOS, the operating systems for all IBM microcomputers and IBM-compatible microcomputers? It could cost the U.S. economy billions, and some microcomputer-dependent firms wouldn't survive. Any Microsoft spokesman who says, "It's impossible; it could never happen," has to explain how it already did happen to "Access."

ADAM OSBORNE'S WARNING

You may know the name Adam Osborne. He invented the revolutionary portable computer, the Osborne 1. Before there was an Osborne 2, the company went bankrupt. Compaq, the most successful first-year firm in U.S. history (over $100 million in sales in its 12 months of operations) and others built imitations that were far superior.

That isn't my point, however. Adam Osborne was "present at the creation" of the microcomputer industry. He created Osborne publications, and then sold out to McGraw Hill. He knows what is going on. In his delightful paperback book, Running Wild, which is a history of the microcomputer (desk top) revolution,

1975-82, he offers this warning. He says that three areas should not be allowed to be computerized: 1) bank money transfers; 2) the stock market; 3) elections.

All three are just about fully computerized. Another ten years, or maybe five, and they will be 100% computerized. Several firms allow microcomputer buying and selling of stocks (e.g., Charles Schwab), and New York Stock Exchange floor transactions eventually will be fully computerized, at which time it will be pressured to get rid of the "specialists" who make (and sometimes manipulate) the market, short-term — Richard Ney's hated "Wall Street Gang" — but the price of getting rid of them may turn out to be horrendously high.

"The great fortunes of the 21st century," Osborne predicts, "will be the legacies of the great computer thieves of the 20th."

Three years ago, I used a firm to supply computer services I needed. The head of it was a former businessman, quite young, and a true "space cadet." I've quoted him in the last issue. I call him Tom. He operated in a world far removed mentally from the rest of us. He is a nice fellow, a Christian, and a moral philosopher of sorts.

He ran the operations of the local elections. He did it fairly inexpensively. He told me why: "I want to keep these elections honest. It would be incredibly simple to rig the program to produce whatever outcome I wanted in close races. If I can do it, anyone with enough skill to set up the system could do it."

I asked him if he thought Osborne was correct in his predictions about bank theft. "It would be a piece of cake for me to steal three or four million from any local bank. I could go in the next week, offer to give the money back, keep 10% as a finder's fee, and promise not to tell the press how easy it was to steal. They would probably pay me my 10% just to keep me quiet."

Look, These people are geniuses. Worse, they are geniuses in a very narrow field technically, which is now being used to control darned near everything. This unique intellectual-technical skill is the possession of literally a handful of people, mostly under 35 years of age. They are "fooling around" with Chase Manhattan Bank's computers. What happens when a few of them stop fooling around and get deadly serious?

Computer program designers keep telling us that there is no 100% secure way to defend data banks. Maybe there will be a 98% secure system someday, but not now. To defend itself, the system relies on the integrity of youth. In short, self-government is the major defense.

And where have they learned self-discipline? In the public schools?

"NOW YOU'VE DONE IT!"

About four years ago, I read an article in the *Rolling Stone,* the tabloid aimed at rock music fans. It was the only article I ever read in that periodical. It was a gem.

It described a subculture of students at Stanford University, "hackers." These people are computer freaks. The mainframe computer at Stanford was cheaper to use after midnight, so from midnight to 6 a.m., the hackers gathered at their terminals. They lived on candy bars, junk food, and high-technology dreams.

One of the games they played was breaking into each other's programs. It was considered the mark of a master hacker to be able to crack another hacker's defenses. They would spend hours trying. They were "hacker-crackers."

One bright fellow then designed a classic booby trap. He wrote a program that warned trespassers not to tamper with it. This, of course, alerted every would-be electronic safe cracker to the challenge. It was a complex program, and it took days to crack it. Then, after repeated warnings, the successful trespasser got a surprise. Japanese letters appeared on his screen. Roughly translated, the words proclaimed, "Now you've done it!"

At that point, the victim's computer screen went blank. Then the names of all his own computer files appeared on the screen — files that may have taken years to assemble. One by one, they blipped off the screen. In horror, the victim would stare at the screen, unable to stop the process.

As it turned out, the booby trap was only a practical joke. It really didn't erase all the victim's files. It only listed the names, and then erased them. But for a horrifying few minutes, the victim wouldn't know this.

Hackers play games. Very interesting games.

The kind of people who spend six hours, midnight to 6 a.m., trying to break into each other's programs are different from the rest of us. Among their ranks are some highly individualistic people. Some of them are libertarians. I mean anarchists. They are electronic "don't tread on me" sorts of people. They do not appreciate bureaucracy. They appreciate being pushed around even less.

The folks at Chase Manhattan really do have a problem. Do you attempt to prosecute a legally un-prosecutable kid? A kid who has already cracked your computer system? I don't think you do. You play the role of stern but appreciative banker. "Son, I am impressed by your ability to break in. But understand, we are honest people. There is a code of honor here. You wouldn't want to break that code — of honor, I mean — would you?" Because if this kid gets angry, he can do it again. Quietly. And next time, he deposits a virus.

Of course, Chase may hire a programming team to create an unbreakable system. Sure. "Hire fox A. Give him chain link fence B. Hire him to build fence B around chicken coop C."

TEEN CHALLENGE

Suppose that the public gets wind of the threat to the whole banking system that is posed by viruses. What do the bankers (or anyone else) announce to the

public? "We want to assure you that our computer program is impenetrable. No one can break in. It is foolproof."

Here is the challenge — rather like the Stanford program that announced: "Do not trespass." These kids see breaking-in as a challenge, a kind of sport. They do not regard it as theft. They do not regard it as vandalism, even if it costs a company millions of dollars to unscramble. They may be ethical in other respects, but they think of "core wars" as a game.

How would you like to be the 60-year-old banker who doesn't know a byte from usury, but whose public relations department tells him to inform the public that nobody can crack his bank's code? To cite Mr. T in "Rocky III," that bank is dead meat. So are its depositors.

But if he keeps quiet, and the story still gets out about the vulnerability of the system, one or two small "virus-demolished" banks could trigger a collapse of the system, as people do the only smart thing: run for cash. The whole fractional reserve banking system would deflate; only the FED's printing presses could "save the day," in a wave of fiat money.

What I am saying is this: I think that we will see the end of fractional reserve banking in our day. At the very least, I think we will see it subjected to tremendous shocks. People will lose faith in electronic promises made by bureaucrats who do not know anything about the monsters that their efficient computers can be turned into.

Attack on Martinsburg. Now, let's take it a step farther. Some day some state or Federal bureaucrat is going to step on the toes of some genius entrepreneur who has created a software development firm. The bureaucrat will try to wrap this entrepreneur in red tape. Or maybe — just maybe — he will try to sock him with a tax bill that the entrepreneur regards as unfair.

In Martinsburg, West Virginia, there is a large computer. It is owned and operated by the Internal Revenue Service. Into it, over the next five years, the I.R.S. apparently intends to deposit all the records it can assemble on every U.S. taxpayer. This computer database will be the biggest in the world. It is the tool by which the I.R.S. hopes to increase taxpayer compliance. And it may succeed. For a while.

This is one reason for saving all letters to and from the I.R.S. If the I.R.S. becomes dependent on its computer system, which is likely, then any short-circuiting of its database could create havoc for tax collecting. If word gets out that a major failure has hit the I.R.S., the tax revolt could multiply overnight. You would see the deficit become astronomical. If the I.R.S. continues to tie its "voluntary" compliance program to the myth of the "all-seeing computer," then news of the computer's scrambling could backfire.

It is possible that the story of the I.R.S. database is a myth. Maybe they aren't going to build it. But if the public believes that such computer power is at the

disposal of the I.R.S., and taxpayers then learn either that the system has been blown, or that it was mythical from the start, the tax revolt could spread like an epidemic. The electronic epidemic-could trigger a tax revolt epidemic.

He who lives on the cutting edge of technology eventually dies on the cutting edge of technology.

"PEOPLE ARE BASICALLY GOOD"

Let's return to my taped interview with "Tom." In a 90-minute interview, we covered a lot of ground. But one topic that stands out in my mind is our discussion of the pre-supposition that goes into the creation of a computer-based society. The computer people have all adopted the assumption that undergirds modern science, namely that, participants are well meaning, that they will not fake their experiments, and that they will play fair. If scientists had to check every aspect of every article, science could not advance very fast.

What about the computer industry? The whole system rests on faith: "Men are not malevolent. They are not envy-driven. They will not deliberately seek to destroy the work of some random victim." Tom says categorically that this assumption is false. There are bad people with tremendous computer skills, and modern society has not restructured its economic institutions to protect itself.

Here is one example of a break-in technique. Someone phones in to a computer, which has been left open temporarily by some user. The lock is unlatched; he needs no key to get in. He then seeks to penetrate the inner core of the program, such as a bank's program. He creates a deliberate error, which all too often triggers a kind of electronic explosion. The protective shell self-destructs, and the invader now finds himself inside the system, where far fewer defense mechanisms exist.

Tom designed his own firm's defense against this tactic. His program automatically records the source of the error, and throws the user out of the program. The program has protection against deliberate errors, but most of them don't, he says. A major error simply collapses the program's outer shell.

In my previous issue, I speculated that a Soviet spy or agent could penetrate U.S. computers. Note: I did not assume that he would simply phone in; I assumed that a disloyal programmer, or a team, could plant the virus as insiders. From there, the virus would spread through the system through normal telecommunications. Several people have written in to tell me that a wrecker cannot destroy the system by penetrating it from the outside. They may be correct. But when informed that I am assuming an inside job by someone with access to a major computer, the critics have admitted that this might be possible.

The weed of crime bears bitter fruit: for honest, computer-dependent people.

FEDERAL FUNDS

The Federal Funds bank transfer lines allow banks to borrow money overnight. Hundreds of billions of dollars go across these lines every working day. The bank's computers communicate with each other by means of this telecommunications hook-up. What if someone were to plant a long-delay virus in the software that operates these transfers? And what banker has even thought about this problem?

What if this scenario was to take place: a virus triggers the disruption of bank records — not a total breakdown initially, but disruptions in the data? It might be weeks or months before auditors recognized the extent of the problem.

As rumors begin to leak out about complex accounting or other data-management problems of major banks all over the U.S. (including off-shore branches), the various banking regulatory agencies would be swamped with crises and outside rumors. Then, all at once, bank computers begin breaking down.

The rumors then explode. The lines appear in front of banks. The only answer at this point is to print up paper money. It would be printed by the hundreds of billions in order to offset the deflationary effects of bank runs (paper money that is pulled out but not re-deposited in another bank).

You could topple the fractional reserve banking system all over the world. The entire payments system could easily become engulfed in chaos. Debits and credits would no longer be meaningful. A pure paper money inflation would replace the manipulated, "fine-tuned" monetary inflation of modern central banking.

All of a sudden, market-created alternative currencies would be revived. It would then be metallic cash that talks loudest. Silver dimes are not electronic. "They can't be infected electronically." They still circulate when banks are "temporarily closed, due to circumstances beyond our control."

The loss of efficiency would be initially horrendous, I would guess. The division of labor would break down. You could then have the crash that lurks in the minds and suspicions of average depositors. Who says it cannot happen? A lot of public relations firms hired by the banks — computer illiterates in high places?

What we have is an internal bank money wire system that is totally vulnerable to some vindictive programmer. There is little doubt in my mind that the bankers are desperately fearful of this sort of vandalism. It could topple people's confidence in the fractional reserve banking system, and confidence is the only thing that keeps it going.

Conclusion. Technologically, there is no solution at this point. I have no heartening message. Maybe later; not now. Keep precious metal coins. Don't

assume that it can't happen here. It can. The only thing holding it back is the restraining hand of God, through the temporary self-restraint of a technological priesthood.

[Reviewer's comment: I was unaware of the problem of computer worms and viruses until I read Gary North's two articles. His open release of this important information is appreciated.]

SCALAR EM INNOCULATION AND ITS IMPLICATIONS

My appreciation goes to Gary North for his openly sharing the above important information with the public. Human nature being what it is, one or more of his more dire scenarios is going to happen sooner or later.

The problem becomes enormously more compounded if the hostile agent or agents possesses sophisticated scalar EM technology.

With scalar technology, there exists the potential that the worm or virus can be implanted from a distance. If scalar-scanning devices of sufficient precision can be developed, then major software residing in a chip, a computer, or on a disk can be read from a distance. With scalar EM methods, the ordinary software "guards" are totally ineffective. The scalar "reader" could simply read off the software directly as the disk or device goes about its normal operations.

After the software is read, a germ or a virus is designed to produce a particular problem as desired and upon special stimulus. Then a scalar "imprinter" device is used to produce the necessary digital pulses directly upon the media in which the software resides. The required code has now been implanted. In effect, the operating system has been injected from a distance, and contaminated with the desired "sleeping agent" — germ or virus. From there on, it's just like Gary North's scenarios.

So the scalar EM technology can probably be used (at least eventually) to place "mines" in systems in advance, for damage or destruction at a future date. At least it's possible in principle.

However, it's not the injection of computers and equipment that bothers me. It's the injection of human beings. Here's generally how it can be done (and possibly is being done).

Basically, human brains have various rhythmic waves, which represent "envelope pulsations" of the entire electrical system. However, it is not the Et, force fields represented by these pulsations which are important: it is the summed-zero (scalar) patterning of the entire complex of neuron firings which represents the real activity of the brain — and represents its thoughts and emotions. A storage system for these patternings exists, but it's a scalar pattern storage, not an E and B field storage. The storage system is in the nuclei of the tissues of the nervous system itself, not in electrical or electrochemical potentials.

At any rate, the human brain rhythms are also "riding along" relatively entrained to the Schumann resonance of the earth's magnetic field. So all the patterning of the brain is grouped together into giant overall orders, and one or more of these is normally synchronized to our natural environment.

If a varying magnetic signal of extremely low frequency — say 10 hertz — bombards the brain with greater power than the earth's magnetic field, it is possible for the brain's rhythm to be "forcibly entrained" to synchronize with that signal, rather than with the normal Schumann resonance. If a large number of brains are forcibly entrained to such a signal, and the signal is artificial, then a nester coherent phasing of all the brains to the transmitted signal has been accomplished.

And that can be utilized — and is utilized — by the Soviet Union. On the Woodpecker signals, Bob Beck has detected up to 16 carriers, each with a 10-Hertz modulation, and with all the 10 Hz modulations in phase.

Let s stress what we're saying here. At times, the Woodpecker signals have shown 16 carrier frequencies that contain the same 10-Hertz modulation, and which are all kept coherently sync-locked.

If those signals and the modulations are strong enough, the brains in a targeted area demodulate the 10-Hertz signal and phase-lock to it — actually, to them. At that point, the brains are entrained to a 10-Hertz driver, and 16 channels of multimegahertz frequencies are locked-in to the brain.

Now, if the Soviets have broken the genetic code of the human brain (which they have) and succeeded in developing the ability to implant thoughts, emotions, pictures, etc. (which at least to a degree they have), then they can simply record the proper signals from human guinea pigs, using scalar technology and instrumentation.

They can tailor those signals and add them onto the Woodpecker carriers, using scalar EM techniques. By using most of the sixteen carriers as a means to express Fourier frequency expansions, specific areas and functions of the brain can be targeted.

"Notice that the distant transmitters already "know" the correct phasing, just use the 10 Hertz modulation signal as a reference. In that case, phasing takes care of itself inside the captured human brains.

The brain has a unique characteristic. If a signal arises inside it, it interprets that it itself originated the signal. Thus for the first time in history, true unwitting robot actions and emotions can be engendered in masses of human beings.

But it's still worse. The Kaznacheyev experiments (see references) proved conclusively that electromagnetic signals can carry and transmit cellular disease and death patterns into a targeted biosystem. You can rest assured that the Soviets continued on to actually measure and determine a wide variety of death

and disease scalar patterns. All of that can be added on to the Woodpecker carriers so that the population in the intersection grid area is devastated. One can even test it out in advance by producing a modified pattern of a disease in the targeted populace, and keeping the percentage of brains entrained down to a small level. This lowers the number of persons "injected" from a distance to a small percentage of the populace. Then the outbreak of the "new strain" of a familiar disease — such as influenza, pneumonia, and something like AIDS — can be monitored to provide targeting and effectiveness data. Notice that a series of diseases was experienced by U.S. personnel assigned to the U.S. Embassy in Moscow, probably as a result of the so-called "weak microwave radiation" of the Embassy by the Soviet Union.

But that's not all. Much more subtle effects can be produced in the targeted populace, without anyone getting wise. Cancers and leukemia should be relatively easy to induce. Also, the immune system can simply be attacked directly. If done slowly, a series of common, ordinary diseases will just seem to get "tougher and tougher to cure." Actually it's not the disease that got tougher, it is the immune systems that got weaker. It is my opinion that precisely that sort of testing — against the immune system — has been accomplished by the Soviet Union against the U.S. since about October 1985. A great percentage of influenza patients during the period from then until now have had complications. So much so that multiple sessions — as many as 3 to 5 — of antibiotics are necessary before the patient recovers. At least in the Huntsville, Alabama "hinge pin" area, that seems to have been the case. This author personally experienced this, having influenza and follow-on complications for a period of seven months — something quite different indeed for him.

But it's even worse.

The human scalar EM nervous system ("inside" the ordinary EM signals and functioning of the system) also has its own resident "software." It has special storage media contained in its brain, its cells, and its genetic material, and its actual nucleons. All of these storage media are continually telecommunicated with via scalar EM means. Those recordings, largely condition the "stability" of what each of us is. As personalities we literally "are" what we have experienced, felt, thought, and did. Our whole "functioning conscious system" has been evolved by our experience, and it continues to be "us" by means of continual reference to the record base.

I hope you now realize that the actual record base itself can conceivably be altered by scalar electromagnetic means, even from a distance. Even by the hidden scalar EM content of 16 Woodpecker carriers, rocked into a captured brain and pouring in their deadly content. It is conceivable that even what one is can be taken from him, and what someone decides he will be, he will be.

A totally new — **and** ultimate — form of "slavery" has emerged.

Also, look at all this scalar EM functioning of the human system as a special kind of cybernetics. A scalar EM computing software and hardware system.

What if scalar techniques are used to plant "worms" and "viruses" in this system? With hidden triggers? What about a series of them, so that a range of eruptive software diseases can be stimulated at will?

And guess what. Such scalar EM "worms" and "viruses" can even be induced by contact with or consumption of "contaminated" water and food. Or saliva. Or other body fluid.

So you can see the possibilities of "seeding" a population with a staggering variety of time-bombs.

I think you begin to see the point. Now you can change North's "Soviet blackmail" scenario drastically. In a new scenario, Gorbachev simply announces to Reagan that a graduated series of specific sweeping changes are going to happen in our population — changes which we are absolutely powerless to stop. The last stages are various deaths. The master "trigger" for this series has already been initiated. Incidentally, the Soviet populace has been carefully "seeded" with the proper antidotes. The Russian leader demands certain things (very similar to what North's scenario utilized). Unless his demands are met, a "killer virus" will be activated by a special signal. If so, everyone dies. The first step change in the series will start to occur in a few hours. And it does.

In fact, this scenario could be added to North's scenario, and both used simultaneously. What do you think the President and the Congress would do? Or could do?

There are other even more diabolical possibilities, but these should be quite sufficient to illustrate the point.

Pandora's box has already been spilled, and the end of humanity is ticking away like a time bomb. It's already nearly midnight, and the watchman hasn't even sounded the alarm yet.

I certainly can anticipate the next question: Have the Soviets already "seeded" the populations of the U.S. and other selected western nations with scalar EM viruses and germs7

The answer is, I simply don't know. And just like Gary North, I don't know what if anything can be done about it if they have. This researcher certainly doesn't have all the answers. An immediate national crash program to develop scalar EM defenses is essential if we are not simply to be crushed beneath the hammer and sickle. It takes funding, people, facilities, and time.

In some 22 years of unrelenting struggle to convince the system we've got a terrible problem, I've hardly been able to move it off dead-center (no pun intended). This book, produced under extreme workload stress, is all I can do to raise the alarm. I've given it my very best shot.

What happens now remains to be seen. Other hands, hearts and minds are going to have to take up the task and carry it forward. This researcher has reached his limit, and has no more left to give.

APPENDIX III: CONTINUING THE SCENARIO

On May 3, 1986 a stunning loss of a U.S. Delta rocket carrying a critically-needed weather satellite occurred. The rocket suffered a shutdown of its main engine during launch and began to veer off course, causing the range safety officer to destroy it.

The takeoff of the blue and white Delta "workhorse" from launch Pad A at Cape Canaveral at first appeared picture-perfect. About a minute later, six of the nine booster rockets were expended and the remaining three switched on. Shortly after that, the rocket seemed to lose power. The main liquid-fueled engine had suddenly shut down, with the three strap-on boosters still burning. The rocket then had no stability and started to slowly drift off course, creating an increasing angle of attack. Within a few seconds, the nose cone snapped off under the severe stress. The U.S. Air Force range safety officer then sent a destruct command to the stricken rocket, which exploded in a ball of flame.

The Delta, built by McDonnell Douglas, had previously piled up a continuous string of 43 successful launches. Since 1960, 177 launches have occurred, and the success rate has been 94%. The Delta is one of the most reliable rockets ever built.

The unexpected shutdown of the main engine was perplexing. At a news conference following the mishap, William Russell. NASA's Delta project manager. stated: "It was a very sharp shutdown. almost as if it were a command shutdown."

Preliminary data, such as turbine speed and temperatures in and around the engine, "all appeared to be very normal." Russell said.

It may well have been a "command shutdown," unknown to Bill Russell and his NASA engineers.

Preliminary runs of the videotapes of the incident, aired by the national TV news media, show that during liftoff, a mysterious light approached the rocket from below and from the side. rising and striking the vehicle. This light and its path are strongly reminiscent of the first anomalous "light streak and ball" photo taken by Bob Gladwin just prior to the shuttle launch on November 26, 1985.

Let' s suppose that on May 3 the Soviet scalar EM grid was in the launch Phase ABM system mode and was tracking the launch of the Delta rocket.

If the anomalous light that moved up and contacted the rocket was a small ball of continuous electromagnetic energy formed by a distant Soviet scalar EM howitzer, then the rocket's main engine control circuits would have received a sudden and continuous pulse of EM power. This would probably have shutdown the engine by an actual "command" signal, artificially delivered. *

---

*Engineers have now determined that such a shorting of the engine circuitry occurred, causing engine shutdown.

Certainly such mysterious switching of satellite circuits has occurred before, probably due to Soviet scalar EM precision testing. For example, the British Ariel VI satellite has exhibited very strange anomalies in its command and control circuitry -- in fact, with very precise control switching

being exhibited as if from an external source.

Thus a very small scalar EM missile may have been utilized by the Soviets to disrupt the control circuits in the rocket. A resulting pulse of power in the engine shutdown command circuit could have "ordered" the shutdown of the main engine -- just as it appeared.

It remains to be seen whether or not the Soviets used a "marker beacon" associated with the disruption of the Delta launch. One news photograph seems to contain a suggestion of such a light, but the videotapes must be studied frame by frame before it can be ascertained exactly what if anything is really there.

If a marker beacon was not used, the distant Soviet operator could simply have "popped out" the continuous EM ball of energy, tracked it and the ascending rocket exhaust, and "joysticked" the scalar EM missile up into the rocket.

Analysis of this incident is continuing, so nothing is certain as we go to press.

However, if this incident was indeed another Soviet kill, then it will have served the Russians well. Much of the world's media attention will now be focused on NASA's launch difficulties, and away from the recent Chernobyl nuclear reactor disaster in the Soviet Union. It's bound to take some of the media pressure off the Soviets.

In addition, it further cripples the U.S. satellite program. Loss of this critical weather satellite payload seriously reduces U.S. weather monitoring capabilities.

Further, the U.S. space program now appears to be all but grounded by the Challenger, Titan, and Delta explosions. For example, it will require about 18 months for the U.S. to redesign the shuttle so that America's shuttle program can get going again. So things are delayed until summer of 1987 at the earliest.

Meanwhile, the Russians are set to grasp the lead in the space race. In 1985 they launched about 100 rockets, five times as many as the U.S. They have a shuttle program of their own, well underway, with a flight expected within months. Earlier this year, they launched Mir, a second generation space station; a U.S. version is still some eight years away.

Charles Vick, of Huntsville, Alabama's Space and Rocket Center, summed it up: "They have their standard military program, a shuttle program and the equivalent of an Apollo program, all within a 10-year period. It's awesome."

An experienced propagandist like Gorbachev certainly understands the advantages of a strong Soviet push into space, such as (1) military advantage, (2) national prestige, (3) scientific achievement, and (4) projecting an image in the world's news media that the Soviets are first in space exploration.

So the failure of the Delta rocket provides many benefits to the Soviet Union.

It also continues to exercise and demonstrate Soviet mastery of the skies over North America itself.

Meanwhile, two U.S. nuclear submarines have "inadvertently" run aground in the last month or so.

Gorbachev again seems disposed toward a summit meeting soon.

If it's held, the agenda may be quite different from the one President Reagan is prepared for.

The clock ticks on toward midnight.

2002 ENDNOTES

1. It is actually a unified field theory since the infolded electrodynamics inside all EM potentials, fields, and waves is utilized—and the internal electrodynamics forms spacetime curvatures and dynamics of those ST curvatures.

2. M. W. Evans, "0(3) Electrodynamics," *Modern Nonlinear Optics,* 2nd Edition, M. W. Evans (Ed.), Wiley, New York, 2001, Vol. 2, p. 79-267.

3. David J. Bohm, "A Suggested Interpretation of the Quantum Theory in Terms of'Hidden' Variables, I and II." *Phys. Rev.,* 85(2), Jan. 15, 1952, p. 166-179 (Part I); 180-193 (Part II); — "Quantum theory as an indication of a new order in physics." A:, *Found. Phys.,* Vol. 1, 1971, p. 359; B: "Implicate and explicate order in physical law," *Found. Phys.,* 3(2), 1973, p. 139-168.

4. Mendel Sachs, General *Relativity and Matter,* Reidel, 1982; — "Symmetry in Electrodynamics: from Special to General Relativity, Macro to Quantum Domains," *Modern Nonlinear Optics,* 2nd Edition, Wiley, New York, Vol. 2, p. 677-706.

5. M. W. Evans, P. K. Anastasovski, T. E. Bearden et al., "On Whittaker's Representation of the Electromagnetic Entity in Vacuo, Part V: The Production of Transverse Fields and Energy by Scalar Interferometry," *J. New Energy,* 4(3), Winter 1999, p. 299-301 gives a basic mathematical expose of scalar interferometry.

6. James Clerk Maxwell, "A dynamical theory of the electromagnetic field," *Phil. Trans. Roy. Soc,* Vol. 155, 1865, p. 71, 459. Orally presented in 1864. This was Maxwell's definitive presentation of his theory, with 20 quaternion and quaternion-like equations in 20 unknowns. Also in *The Scientific Papers of James Clerk Maxwell,* edited by W. D. Niven, Dover, New York, 1952, Vol. 1, p. 526-604.

7. In T. E. Bearden, *Gravitobiology: A New Biophysics,* Cheniere Press, Santa Barbara, Ca. www.cheniere.org, 1991 we first exposed the quantum potential weapon and some of its uses and characteristics.

8. A negative energy EMP weapons strikes the target or target area with an extreme pulse of negative energy empty Dirac Sea 4-holes. As a result, the free electrons flowing in electrical currents in the struck target instantly disappear by re-absorption into the Dirac Sea. A living body struck by such a blast is totally and instantly dead in every smallest part, since all its brain and nervous system currents, cellular currents, etc. are instantly and totally extinguished. The Russians tested this weapon in the 1980s in their war in

Afghanistan, against two Afghan villages. I spent two hours in Washington D.C. with the then-representative of the Mujahedin to the U.S. Government, verifying the incidents and going over the exact characteristics of the instantaneous deaths of those villagers. With such a sudden death, the mind-body interconnection loop is instantly severed, so that the mind is instantly snapped loose from its connection to the body—hence my use of the term "MindSnapper." The struck body usually emits longitudinal EM waves for an extended period, so that vultures and other predators will not approach the bodies and eat them. All bacteria, viruses, etc. in the body are also killed instantly, and the body does not decay, even in 30 or 60 days.

9. As can be seen, the negative energy EMP weapon is an all-purpose weapon extremely effective against every kind of target: missiles, aircraft, communications, satellites, ships and particularly aircraft carriers, personnel, generators, power systems, the electronics of nuclear warheads, submarines, tanks and vehicles, and the electrical and electronic controls of any kind of machinery or equipment. Such weapons are the second most powerful weapons on earth. In the first part of 2002, a U.S. 2-carrier task force maneuvered in the South China Sea as a precautionary warning to the Chinese that we would defend Taiwan. Unknown to that fleet, tracking it and trained on it were the newly deployed Chinese negative energy EMP weapons, which could have destroyed the entire task force—everything in it—with a few shots in less than 10 minutes.

10. T. E. Bearden, *Energy from the Vacuum: Concepts and Principles*, Cheniere Press, Santa Barbara, CA, 2002. Chapters 1 and 2 give a deeper coverage of this and similar foundations principles.

11. As is well known, Russian theoreticians have always been the best nonlinear scientists on Earth, since the beginning. They still are.

12. See T. E. Bearden, "Giant Negentropy from the Common Dipole," *J. New Energy*, 5(1), Summer 2000, p. 11-23 for solution of the source charge problem. On DoE restricted website http://www.ott.doe.gov/electromagnetic/ and on www.cheniere.org. The problem of the source charge can be solved by treating (with the modern quantum field theory viewpoint) the "isolated" observable charge and its cluster of virtual charges of opposite sign as a composite dipole. Because of the broken symmetry of its opposite charges, any dipole or dipolarity continuously receives virtual energy from the seething vacuum, transduces it into real observable EM energy, and pours out observable photons in all directions at the speed of light. See also E. T. Whittaker, 1903, *ibid.* There is a scalar potential between the ends of each dipole. The scalar potential may be decomposed into a bidirectional set of longitudinal EM phase conjugate energy from the time dimension (from the imaginary plane) and outputs that EM energy in the real 3-space. 3-space conservation of energy flow

is violated, but 4-space conservation of energy flow is upheld. This rigorously follows from the discovery of broken symmetry of opposite charges in 1957—one of the types of asymmetry for which Lee and Yang received the Nobel Prize.

In classical electrodynamics, the charged particle itself is *assumed* to be the source of its own fields and potentials. In other words, the charge is implicitly considered to be *creating*—right out of nowhere—the Poynting energy flow it continuously pours out across the universe in all directions. That makes the charge a perpetual motion machine of the grossest kind, violating the maxim that energy can neither be created nor destroyed.

So the greatest perpetual motion advocates of all times are our own classical electrodynamicists and electrical engineering departments and professors who still ignore the active vacuum interaction that is missing from the classical model. They thereby ignore that the charge is a broken 3-symmetry in its violent exchange of virtual energy with the active vacuum, and merely organizes and emits in observable form a fraction of the energy it continuously receives from the imaginary plane (from the time domain). Yet, that broken symmetry has been known in particle physicists, both experimentally and theoretically, for 45 years.

When Maxwell wrote his theory, neither the electron, the atom, nor the nucleus had been discovered. There was no knowledge of the Drude electron gas, electron spin, etc. There was no knowledge of the nucleus of the atom, and even the atom itself was still contentious. A thin material ether (fluid) was believed to fill all space, so that no point in all the universe was empty of mass. Consequently, E and B were conceived as physical force fields in a material medium—the luminiferous ether. All Maxwell's equations—including the subset selected and modified by Heaviside that today are called "Maxwell's equations"—assume this material ether to this day.

Electricity was thought to be a "thin material electric fluid" running through wires like water through a pipe. The magnitude of the potential was not used; its reaction cross-section was calculated and erroneously used as its magnitude, as it is today (although a good electrodynamicist does know that it is only the *intensity* of the potential, not its magnitude).

Faraday believed that his "lines of force" were taut physical "strings" in this material ether, and that EM perturbations were the vibrations of these taut strings. As he clearly states in his 1873 *Treatise...*, Maxwell sought to capture Faraday's work exactly. He simply *assumed* Faraday's "plucked taut string" waves. Later the measurement in instruments of what was actually the lateral gyroprecession of electrons in receiving wires was thought to prove that the incoming ether vibrations were transverse, like those string waves, because the detected electric **fluid (electron** precession) waves in the receiving wire were

transverse. The drift velocity of electrons longitudinally in a wire (in a typical case, several inches per hour) was unknown. A charge *q* was just a piece of electric fluid, much like a cubic centimeter or other volume of fluid; it had no connotation of "charged particle." There was no concept in all of physics of EM energy flowing through space. There was no knowledge that the same fields created in the transmission wire, which perturbs the Drude electrons laterally, also perturbs the positively charged nuclei laterally, in the opposite direction, highly damped but with equal energy.

There was no way to realize that the energetic perturbation of the curvature of spacetime around the sending wire antenna, by the Drude electron perturbation energy, is simultaneously accompanied by an equal and opposite perturbation of the curvature of spacetime in the opposite direction (energy density, not amplitude of the disturbing wave, determines the degree of curvature of the surrounding spacetime). Hence Maxwell omitted precisely one half the EM energy, one half the EM wave, and one-half the electrodynamics. As a consequence, the "Newton's third law recoil" of the nuclei today is thought to spontaneously arise as if some mystical demon observes the Drude electron perturbations, and simultaneously kicks the positively charged nuclei in the equal and opposite direction. Hence Newton's third law, so to speak, is erroneously still omitted from classical electrodynamics, and the better texts say so.

In the 1880s, the Michelson-Morley experiments falsified the material ether. Not a single one of the Maxwell-Heaviside equations were ever changed to this day. Instead, the electrodynamicists eventually announced that, since there was no longer an ether, they were not using one! Then a total non sequitur was incorporated: that in massfree space, the same E and B fields (defined as material entities and thus existing only in mass) still remain but the forces go to zero. Simple algebra reveals this clever, insidious faux pas, using the E-field as an example: First, F == d/dt(mv), so mass is a component of force. (This reveals the great error due to the hoary old notion that a separate force acts upon a separate mass; the mass is a component of the force, and the force is a coupled system of a curvature of spacetime and a charged mass.). Then E == F/q, which rigorously holds when mass is present.

Now for whatever reason, let F = 0. Then F/q = 0 and E = 0 also, else we must discard algebra. What actually remains is easily explained in general relativity terms (available since before 1920). The couplet of a curvature of spacetime and a charged mass is broken up by absenting the mass. What remains is that specific curvature of spacetime. GR assures us that curved ST acts upon mass, and that any force involves a curvature of ST. Yet in more than 80 years, this erroneous old "material ether remnant" in electrodynamics has been fiercely defended. Every textbook today uses and confuses the E and B fields in two dichotomous fashions: (1) as massive force fields existing only in the presence

of mass, and as "massless force-free fields" existing only in the absence of mass. This of course is a non sequitur.

13. E. T. Whittaker, "On the Partial Differential Equations of Mathematical Physics," *Math. Ann.*, Vol. 57, 1903, p. 333-355. The "scalar" potential itself is not even a *scalar entity,* as shown rigorously by Whittaker. Instead, it is a harmonic series of bidirectional EM longitudinal phase conjugate wavepairs, and it decomposes into that series. Hence it is a *multiwave, multivectorial entity.*

14. C. N. Yang and R. L. Mills, "Conservation of Isotopic Spin and Isotopic Gauge Invariance," *Phys. Rev.*, Vol. 96, 1954, p. 191.

15. The term "energetics" simply means *energy as the primary thing in the universe.* Rankine first used it. G. Helm in 1887 revived Rankine's term "energetics" and factored energy into an *intensity* factor and an *extensity* factor (which today we would call potential and kinetic energies). William Ostwald in 1893, 1895, and 1901 raised the concept of "energetics" (energy as the primary thing in the universe) to the forefront. Thus when the Russians developed new extensions and principles in weapons physics, they simply used the historical notion of "energy as the primary thing in the universe" and adopted the earlier name for it: *energetics.*

16. Later when Khrushchev demanded a 100% antimissile defense, famed Russian Nobelist Petr Kapitsa answered, *"If a means of total neutralization of foreign missiles is to be found, it can only come from a group of new principles in physics, called energetics".*

17. See T. E. Bearden, "Mind Control and EM Wave Polarization Transductions, Part I", *Explore,* 9(2), 1999, p. 59; Part II, *Explore,* 9(3), 1999, p. 61; Part III, *Explore,* 9(4,5), 1999, p. 100-108. It appears that Sachs' unified GR and EM approach is perhaps the best Western physics model to apply to analysis of the KGB energetics weapons. However, because of the third branch *(psychoenergetics:* engineering the mind directly), Sachs' work would appear to need further extension along the lines indicated by the present author in the cited paper.

18. See T. E. Bearden, "EM Corrections Enabling a Practical Unified Field Theory with Emphasis on Time-Charging Interactions of Longitudinal EM Waves," *J. New Energy,* 3(2/3), 1998, p. 12-28; — *Energy from the Vacuum,* 2002, *ibid.* For nuclear transmutation at a distance (e.g., dudding all nuclear weapons by transmuting U235 and weapons grade plutonium), extension is required along the lines indicated by the present author in these references.

19. See M. Sachs, *ibid.,* also M. Sachs, "Relativistic Implications of Electromagnetic Field Theory," in T. W. Barrett and D. M. Grimes, eds., *Advanced Electromagnetism,* World Scientific, 1995, p. 551. The Sachs theory

already expresses the greatest generalization possible of electrodynamics, and fully justifies the preceding view.

20. See Whittaker, 1903, *ibid.;* — "On an Expression of the Electromagnetic Field Due to Electrons by Means of Two Scalar Potential Functions," *Proc. Lond. Math. Soc,* Series 2, Vol. 1, 1904, p. 367-372. The latter paper was published in 1904 and orally delivered in 1903. Per these two Whittaker papers, it is known that (i) ordinary EM fields and waves are the result of interference of two or more scalar potential functions, (ii) scalar potentials are comprised of harmonic sets of bidirectional EM phase conjugate wavepairs, (iii) all ordinary EM fields and waves and potentials have LW EM dynamics internally, and (iv) in theory, this "infolded" electrodynamics can be engineered. Sachs' theory dramatically extends the richness of that internal electrodynamics ignored in the West, and highlights the general relativity (sets of spacetime curvatures, or "engines", involved).

21. E.g., *Marine Observer* was a rich source for Russian energetics weapons testing in remote ocean areas, sighted by ships' captains and crews and entered into the ships' logs.

22. Portions of Khrushchev's statements to the Presidium are given in Max Frankel, "Khrushchev Says Soviet Will Cut Forces a Third; Sees 'Fantastic Weapon'," *New York Times,* Jan. 15, 1960, p. 1.

23. See Whittaker 1903 and 1904, *ibid.,* for the original basis of scalar interferometry and its creation of any kind of EM field, potential, and wave in the interference zone.

24. Also see M. W. Evans, P. K. Anastasovski, T. E. Bearden et al., On Whittaker's Representation of the Electromagnetic Entity in Vacuo, Part V: The Production of Transverse Fields and Energy by Scalar Interferometry, *J. New Energy,* 4(3), Winter 1999, p. 76 for mathematical proof of scalar interferometry. There are several other AIAS papers in the same issue of *JNE,* dealing with interferometry and with the implications of the Whittaker papers.

25. As an example, the U.S.S. Skylark, surface companion of the Thresher, was beset by mysterious "jamming" of multiple types of EM systems in multiple bands. So bad was it that it required more than an hour to get an emergency message to Naval headquarters that the Thresher was in serious difficulty. Later, as the scalar interferometry died away, all the EM systems aboard the Skylark resumed normal functioning. The Skylark was in fact in a "splatter zone" of the underwater interference zone around the Thresher.

26. Circa the end of 1989, the earlier longitudinal EM wave weapons on site in Russia were leased to a rogue Japanese group comprised of Aum Shinrikyo and Yakuza, who have been operating those weapon systems—on site in Russia—since then. Senator Sam Nunn's investigations revealed the presence

of the Aum Shinrikyo in Russia, to include establishing a university there. His investigators missed the Yakuza involvement and also missed the exotic weaponry aspects as one might expect.

27. I concluded from this remark that TEMPEST techniques are probably used at some nearby site not too distant from my home here in Huntsville, to read and record my work as I write it on the computer. That appears to be a good assumption.

28. As a small example of what can be done, see a series of papers by M. W. Evans, P. K. Anastasovski, T. E. Bearden et al, published in *J. New Energy*, 4(3), Special Issue, Winter 1999. The papers are: (a) "On Whittaker's Representation of the Electromagnetic Field in Terms of Two Scalar Potentials, Part I"; (b) "An Experimental Test of the Existence of Whittaker's *g* and/Fluxes in the Vacuum"; (c) "On Whittaker's Representation of the Classical Electromagnetic Field in Vacuo, Part II: Potentials Without Fields"; (d) "On Whittaker's F and G Fluxes, Part III: The Existence of Physical Longitudinal and Timelike Photons"; (e) "Representation of the Vacuum Electromagnetic Field in Terms of Longitudinal and Time-like Potentials: Canonical Quantization"; (f) "On Whittaker's Analysis of the Electromagnetic Entity, Part IV: Longitudinal Magnetic Flux and Time-Like Potential Without Vector Potential and Without Electric and Magnetic Fields"; (g) "On Whittaker's Representation of the Electromagnetic Entity in Vacuo, Part V: The Production of Transverse Fields and Energy by Scalar Interferometry"; and (h) "On Extending Whittaker's Theory, Part VI: Photons Without Fields and Vector Potentials".

29. As an example, one part of the strategic deception plan was devoted to convincing the West that Soviet psychoenergetics was nothing but a technical wrinkle upon the rather harmless Western parapsychology. This part of the program was completely successful for decades. Another very clever use of deception is to allow release of some real scientific advances that lead the West, but are not too important to the KGB in the weapons arena. The increasing emphasis on torsion fields is an example of this "deception by giving good information that directs the adversary upon a path one wishes him to take", effectively steering him away from the path one wishes him to avoid. Lately, however, there is an uproar amongst the academicians in the Russian Academy of Sciences over this very point, that torsion fields being presented as the "end all, be all" is simply disinformation.

30. With their deployment of QP weapons in 2002, the Chinese are also on the way to having this capability.

31. The multiply connected spacetime (MCS) or quantum potential weapons went on site circa latter 1989. A laboratory prototype had been tested against the U.S. air attack on Libya in April 1986. For details of the extremely anomalous jamming **of aircraft** and missile guidance and control systems in that

attack on Libya, see Mark Thompson, "Mixed signals may have misguided U.S. weapons," *The Washington Post,* Jan. 22, 1989, p. A-4.

32. One or more QP weapons also apparently induced the Gulf War Disease in MidEast forces in the Gulf War. We have previously explained the peculiar anomalies, how it was done, why the endemic natives did not contract the disease, why the French forces did not contract it but U.S., British, and Canadian forces did, etc. We briefly discussed quantum potential weapons in T. E. Bearden, *Gravitobiology: A New Biophysics,* In T. E. Bearden, *Gravitobiology: A New Biophysics,* Cheniere Press, Santa Barbara, Ca. www.cheniere.org, 1991.

33. (a) Yossef Bodansky, "Soviets testing chemical agents in Afghanistan," *Jane's Defence Weekly,* 1(3), Apr. 7, 1984, p. 508 gives something of the two Soviet tests of this weapon in Afghanistan. In addition to the fierce blast of empty Dirac Sea 4-holes, these weapons produce a powerful time-polarized EM pulse in the area, producing a very sharp "jerk" in the rate of flow of time, (b) The mind-body coupling mechanism—which cannot withstand such a sharp jerk in the rate of flow of time—has been given by T. E. Bearden, "Mind Control and EM Wave Polarization Transductions," *Explore,* 1999, *ibid.* This sharp "jerk" in time-flow instantly snaps the mind-body coupling mechanism for any living thing in the struck area. A very small version of this weapon was tested twice in Afghanistan, where the bodies in the "mind-snapped" zone died instantly, fell like limp rags, never twitched, and did not decay or get molested by insects or scavengers for the 30 days it required the Mujahedin to fight their way back into the two struck villages. The Mujahedin thought it was some new, extremely fast acting nerve gas, which they dubbed "smerch" or "death wind".

34. Two Ph.D. scientists were working closely with me on this entire effort, as was another close colleague. There was much more involved in the effort that is so briefly mentioned here.

35. Secretary of Defense William Cohen at an April 1997 counterterrorism conference sponsored by former Senator Sam Nunn. Quoted from DoD News Briefing, Secretary of Defense William S. Cohen, Q&A at the Conference on Terrorism, Weapons of Mass Destruction, and U.S. Strategy, University of Georgia, Athens, Apr. 28, 1997.

36. T. E. Bearden, *Energetics: Extensions to Physics and Advanced Technology for Medical and Military Applications,* CTEC Proprietary, Mar. 21, 1998, 200+ page inclosure to CTEC Letter to Gen. (Ret.) Walter Busby, Deputy Secretary of Defense for Counterproliferation and Chemical and Biological Defense, March 21, 1998. Copies were sent to various other U.S. government agencies, including to NIH, CDC, the USAF, etc.

37. See Vlail Kaznacheyev and L. P. Mikhailova, *Ultraweak Radiation in Intercellular Interactions,* [in Russian], Novosibirsk, 1981. An English exposition of much of the Kaznacheyev material is given in Vlail Kaznacheyev, "Electromagnetic Bioinformation in Intercellular Interactions," *Psi Research,* 1(1), Mar. 1982, p. 47-76. The work of Vlail Kaznacheyev led to the understanding of how to electromagnetically transmit cellular death and disease into targeted cells (or bodies) at a distance, and involved thousands of lab experiments. Highly sanitized work revealing the results but not the mechanisms, were permitted in order to stimulate the West to see if it knew about energetics.

38. See Stanislov Lunev and Ira Winkler, *Through the Eyes of the Enemy: Russia's Highest Ranking Military Defector Reveals Why Russia Is More Dangerous Than Ever,* Regnery, Washington, D.C., 1998. The Red Chinese also were able to decipher the Russian EM disease transmission methodology, early on. As a strange kind of "poetic justice" action the Chinese induced cancer into many Russian spies stationed in the Russian Embassy in China. Quoting Lunev, p. 160: "...I *was not the only person who was stationed in Beijing to come down with cancer...Almost all of the GRU officers stationed in China with me have been diagnosed with cancer. People assigned to the embassy had told me that they were picking up high levels of radiation from the apartment building around the embassy compound. Whether it was a form of high-tech monitoring or a conscious effort to harm our health, it seems to have been successful. So much so that in 1992 the GRU was asked to investigate the high rate of cancer among embassy officials. The findings, however, have never been made public; in part, no doubt, because of the rapprochement between Russia and China."*

39. See my "Porthole Briefing", on www.cheniere.org. Also see "Le Probleme Priore," *Rapport de la Commission de I'Academie des Sciences a Monsieur le Ministre d'Etat charge de la Recherche et de la Technologie,* France, 1982, p. 1-22; J. B. Bateman, "Microwave Magic," Office of Naval Research London Conference report, ONRL C-14-77, 1977; —*A Biologically Active Combination of Modulated Magnetic and Microwave Fields: The Priore Machine,* Office of Naval Research, London, Report R-5-78, Aug. 16, 1978; — "Staging the Perils of Nonionizing Waves," *European Scientific Notes,* ESN 32-3-85-88, 1978; T. E. Bearden, "Energetics Update and Summary," Parts 1, *Explore More,* No. 1, 1996, p. 13-18; Part 2, *Explore,* 8(1), 1997, 53-56; Part 3, *Explore,* 8(2), 1997, p. 42-45; Christopher Bird, "The Case of Antoine Priore and His Therapeutic Machine: A Scandal in the Politics of Science," Explore, 5(5-6), 1994, p. 97-110; R. Cambar, "Rapport general des travaux de la Commission de Controle constituee en vue de verifier l'un des effets biologiques obtenu par l'utilisation de l'appareillage de Priore A. Bordeaux," [General findings of the work of the control commission formed to verify one of the biological effects obtained by use of the apparatus of A. Priore at Bordeaux],

1969; R. Courrier, "Expose de M. le professeur R. Courrier Secretaire perpetuel de 1'Academie des Sciences fait au cours d'une reunion a l'lnstitut sur les effects de la machine de M. A. Priore 26 Avril 1977" [Presentation by Professor R. Courrier, Perpetual Secretary of the Academy of Sciences, made at the meeting of the Academy on the effects of the machine of M. A. Priore.]; Jean-Michel Graille, *Dossier Priore: A New Pasteur Affair,* De Noel, Paris, 1984 [in French]; Antoine Priore, "Apparatus for producing radiations penetrating living cells," U.S. Patent No. 3,368,155, Feb. 6, 1968; — "Method of producing radiations for penetrating living cells," U.S. Patent No. 3,280,816, Oct. 25, 1966; — "Procede et dispositif de production de rayonnements utilisables notamment pour le traitement de cellules vivantes," [Procedure and Assemblage for Production of Radiation Especially Serviceable for the Treatment of Living Cells], Republique Francais Brevet d'Invention P.V. No. 899.414, No. 1,342,772, Oct. 7, 1963; A. Priore, *Guerison de la Trypanosomiase Experimentale Aigue et Chronique par L'action Combinee de Champs Magnetiques et D'Ondes Electromagnetiques Modules* [Healing of intense and chronic experimental trypanosomiasis by the combined action of magnetic fields and modulated electromagnetic waves], thesis submitted in candidacy for the doctoral degree, 1973—rejected when the project was suppressed.

40. Eric Perisse, *Effets des Ondes Electromagnetiques et des Champs Magnetiques sur le Cancer et la Trypanosomiase Experimentale* [Effects of Electromagnetic Waves and Magnetic Fields on Cancer and Experimental Trypanosomias], Doctoral thesis, University of Bordeaux No. 83, March 16, 1984. Although Priore's own thesis was suppressed in 1973, Pautrizel nevertheless finally succeeded in getting this doctoral thesis by Perisse approved on the work, at the University of Bordeaux which had rejected Priore's thesis, after eleven more years had passed. Considering the viciousness of the suppression, this was a major accomplishment.

41. The photo was taken by George Suchary of the registration point (ball of light) high over the Nov. 1985 night shuttle launch from Cape Canaveral. For a photo of the same kind of "ball of light" registration point above the kill of a Titan missile launched from Vandenberg AFB in early 1986, see reference 39 below.

42. The picture by Canadian investigators showing the hole burned through the right fuselage ahead of the engines of the Arrow DC-8 is shown in T. E. Bearden, *AIDS: Biological Warfare,* Cheniere Press, Santa Barbara, Ca. www.cheniere.org , 1988, p. 52.

43. See T. E. Bearden, *Gravitobiology: A New Biophysics,* Cheniere Press, Santa Barbara, Ca. www.cheniere.org, 1991, p. 82. Two sensors on-board the Arrow DC-8 independently recorded the sharp electrical spike generated by the strike of the EM missile.

44. "Titan Explosion Cripples U.S. Launch Surveillance Capability," *Aviation Week & Space Technology,* 124(17), Apr. 28, 1986, p. 16-19. Specifically see the picture of the explosion on p. 18. It clearly shows the Soviet marker beacon (little ball of light) well above the missile explosion. General background on the Titan explosion and investigation is given in "Investigators Search for Clues to Cause of Titan Blast," *Aviation Week & Space Technology,* 124(17), Apr. 28, 1986, p. 19-20.1 persuaded NBC engineer Ron Cole with a team of engineers to examine the videotape of the explosion, frame by frame. In 17 frames the ball-of-light (registration point) is visible, and moves away completely independent of the explosion. No "bogies on the range" were reported at Vandenberg AFB.

45. Dr. Evans is co-discoverer with Vigier of the B(3) field, now well established but still not in the textbooks. He is the Director of the Alpha Foundation's Institute of Advanced Study (AIAS) and has over 600 papers and books in the literature.

46. M. W. Evans, P. K. Anastasovski, T. E. Bearden et al., "On Whittaker's F and G Fluxes, Part III: The Existence of Physical Longitudinal and Timelike Photons," *J. New Energy,* 4(3), 1999, p. 68-71; — "Representation of the Vacuum Electromagnetic Field in Terms of Longitudinal and Time-Like Potentials: Canonical Quantization," *ibid.,* p. 82-88; — "On Extending Whittaker's Theory, Part VI: Photons Without Fields and Vector Potentials," *ibid.,* p. 79-81.

47. Terence W. Barrett, "Electromagnetic Phenomena Not Explained by Maxwell's Equations," in Lakhtakia, A. (ed.): *Essays on the Formal Aspects of Electromagnetic Theory,* World Scientific Publishing, River Edge, NJ, 1993, p. 6-86; — "On the distinction between fields and their metric: the fundamental difference between specifications concerning medium-independent fields and constitutive specifications concerning relations to the medium in which they exist." *Ann. Fond. Louis de Broglie,* 14(1), 1989, p. 37-75; — and D. M Grimes. [Eds.] *Advanced Electromagnetism: Foundations, Theory, & Applications.* World Scientific, (Singapore, New Jersey, London, and Hong Kong), Suite 1B, 1060 Main Street, River Edge, New Jersey, 07661, 1995. In the latter book see T.W. Barrett, "Sagnac Effect: A Consequence of Conservation of Action Due to Gauge Field Global Conformal Invariance in a Multiply-Joined Topology of Coherent Fields," p. 278-313.

48. But see Craig F. Bohren, "How can a particle absorb more than the light incident on it?" *Am. J. Phys.,* 51(4), Apr. 1983, p. 323-327. By *resonating* the intercepting charged particle, its reaction cross section increases, and more EM energy is collected and re-radiated by the charge than is input to it by the conventional accounting (which only accounts the input Poynting energy that would be intercepted by a *static* charge). The conventional input energy

calculation therefore ignores the huge nondiverged Heaviside component surrounding the Poynting component and wasted. The resonant particle sweeps out past the usual Poynting component into the unaccounted Heaviside input component, and collects excess energy. The Bohren experiment with resonant charged particles produces COP =18. Metallic particles at ultraviolet frequencies are one class of such particles and insulating particles at infrared frequencies are another. For independent confirmation of the Bohren experiment, see H. Paul and R. Fischer, {Comment on "How can a particle absorb more than the light incident on it?'},"*Am. J. Phys.*, 51(4), Apr. 1983, p. 327.

49. E. T. Whittaker, 1903, *ibid.*

50. A beneficial use, e.g., would be to use such CSRs to investigate and report the interior of the sun and planets, including the Earth and its core. Since a CSR can also travel "through" the interior of a light beam, in theory such could be dispatched back into some of the nearer stars to also explore and report their interior.

51. This is no more curious than stating that sets of waves and their dynamics can exist in space, without interacting with mass, and that they can then later interact with a mass system to change it in specifically designed manner. Since longitudinal EM waves and their dynamics are "infolded" inside ordinary EM waves, fields, and potentials, they are also infolded "inside" the ambient vacuum potential, which itself is a part of the local vacuum potential. In short, one forms highly complex LW wavesets and functional dynamics, in essentially a sort of "subspace" as popularized by the Star Trek television series. The LW "engines" are identically ST curvature engines. A close colleague of the present author has in fact already invented and rigorously demonstrated such a communication system, but his former funding by several very large communications companies collapsed before he could develop and employ this system for the commercial market.

52. This is easily understood if one shifts one's vision from "space" to "subspace." Subspace is filled with (literally is composed of) longitudinal EM waves and their dynamics. The CSR's are quite unique, enormous systems "singing away" with longitudinal EM waves. So a longitudinal EM wave interferometer can easily locate them by sweeping its beams through subspace, as a radar sweeps to track aircraft in space. Once the CSR target "pings", the system automatically hits it with a profusion of interacting LWs, completing disrupting and destroying its dynamics. Scratch one system. Probably several million such systems were destroyed throughout the West (command centers, power grids, submarines, nuclear bombers, etc.) in rapid fire order, all without any external "spatial" sign other than perhaps a wee bit of very low level "EM noise" briefly as a struck CSR fractured.

53. See M. Sachs, *Quantum Mechanics from General Relativity,* Reidel, 1986. Sachs'unified field theory, e.g., applies equally to the quarks and gluons, as it does to the nucleons, the atoms, molecules, and macroscopic objects and phenomena. See also M. Sachs, "Symmetry in Electrodynamics: From Special to General Relativity, Macro to Quantum Domains," in *Modern Nonlinear Optics,* Second Edition, 3 vols., M. W. Evans (ed.), Wiley, 2001; vol. 1, p. 677-706.

54. G. M. Wang, E. M. Sevick, Emil Mittag, Debra J. Searles, and Denis J. Evans, "Experimental Demonstration of Violations of the Second Law of Thermodynamics for Small Systems and Short Time Scales," *Phys. Rev. Lett.,* 89(5), 29 July 2002, 050601.

55. The tragic death of Captain Hess was also very probably such a test. Hess, perfectly normal and happy, laid out his uniform in the early morning and then went for his customary morning jog. He suddenly veered aside, sat down in a path and stabbed himself 26 times, all deep stab wounds, four of which would be totally incapacitating (two right through the heart) to any normal individual experiencing normal shock, etc. To a psychoenergetically controlled individual where shock does not occur nor does emotion or pain, this is understandable. Add this to the incidents involving Captains Button and Svoboda, and one begins to see the picture.

56. W. Heitman and G. Nimtz, "On Causality Proofs of Superluminal Barrier Transversal of Frequency Band Limited Wave Packets," *Phys. Lett. A196,* 1994, p. 154-158. Aichmann and Nimtz and co-workers at the University of Cologne have transmitted 8.7 GHz microwaves (free space wavelength 3.4 cm) traveling in a rectangular wave-guide that contains a "barrier" section of reduced dimensions. They have recently transmitted Mozart's 40th Symphony as frequency modulated microwaves through a barrier wave-guide at an FTL group velocity of 4.7 c, receiving audibly recognizable music from the microwave photons that survived their barrier passage. The transit time through the barrier was about 81 picoseconds and was observed to be constant for barriers with widths varying from 4.0 cm to 11.4 cm.

57. Quantum mechanics in fact requires instantaneous transmission of effects. A mishmash of learned contention would have us believe one can "transmit" energy instantly, but not intelligence. This argument has essentially stymied our scientific establishment so that it has not really funded strong investigation in this area. It is a stupid argument: Simply transmit one change, then a second one, then a third one, in serial order, where the "order" contains the intelligence. No different from Morse code. Somehow the pundits so certain that intelligence cannot be superluminally transmitted seem to have forgotten what "intelligence" is. They also seem to have assumed that one superluminal change can be **transmitted** on order, but a second, third, and fourth cannot.

58. Feynman and Wheeler tried very hard to formulate a new absorber theory of electrodynamics to eliminate many of the fierce foundations problems. Wheeler described the effort this way: *"...we may summarize the account of radiation reaction given by Wheeler and Feynman in 1945. In it every charged particle is envisaged as coupled to every other charged particle by a field that is symmetric in time: half advanced, half retarded. Interconnections run forward and backward in time in such numbers as to make an unbelievable maze. That weaving together of past and future seems to contradict every normal idea of causality. However, when the number of particles is great enough to absorb completely the signal starting out from any source, then this myriad of couplings adds up to a simple result: the familiar retarded actions of everyday experience, plus the familiar force of radiative reaction with its familiar sign."* [John Archibald Wheeler, "Law without law," in *Quantum Theory and Measurement.*, preprint, p. 39].

Unfortunately, when the foundations of any science are closely examined in their roots, one runs into the age-old bane of the philosopher: ultimately opposites are identical, at least prior to the observation (separation) action to separate them. It follows that all scientific reasoning is circular at its most primary basis.

59. See Charles W. Misner, Kip S. Thorne and John Archibald Wheeler, *Gravitation,* W. H. Freeman, San Francisco, CA., 1973, p. 71. Wheeler spoke of that inescapable fact in this manner: *"Here and elsewhere in science, as stressed not least by Henry Poincare, that view is out of date which used to say, 'Define your terms before you proceed.' All the laws and theories of physics, including the Lorentz force law, have this deep and subtle character, that they both define the concepts they use (here B and E) and make statement about these concepts. Contrariwise, the absence of some body of theory, law and principle deprives one of the means properly to define or even to use concepts. Any forward step in human knowledge is truly creative in this sense: that theory, concept, law, and method of measurement—forever inseparable—are born into the world in union."*

60. Also see T. E. Bearden, *Energy from the Vacuum: Concepts and Principles,* 2001, *ibid,* for a rework and extension of Aristotelian logic to eliminate its present fatal flaw, extending it into a 5-law logic.

61. The very notion of "propagation of energy through space" is radically extended in the extended unified EM and GR being pursued by AIAS and Sachs. Time-like EM energy currents dominate in the vacuum. E.g., see M. W. Evans et al., "Representation of the Vacuum Electromagnetic Field in Terms of Longitudinal and Time-like Potentials: Canonical Quantization," *J. New Energy,* 4(3),Winter l999,p. 82.

62. Multiwave interactions (between transverse EM waves) produce time-reversed EM waves (phase conjugate replicas of the signal wave input). That method time-reverses EM energy in waveform. To time-reverse EM energy in mass form, simply pump that mass with time-polarized EM waves. As an alternative, it may be pumped with longitudinal EM waves (which are always accompanied by time-polarized EM waves anyway), and the pumped mass is also pumped in the time-domain because of the presence of the time-polarized EM waves in the pumping. We previously filed an invention disclosure with the U.S. Patent Office dealing with how to do that.

63. Mostly studied by Becker. See (a) R. O. Becker, "The control system governing bone growth in response to mechanical stress," *J. Ark. Med. Soc,* Vol. 62, 1966, p. 404; (b) — and David G. Murray, "The electrical control system regulating fracture healing in amphibians," *Clinical Orthopaedics and Related Research,* Vol. unk, No. 73, Nov.-Dec. 1970, p. 169-198. This latter paper is the definitive technical exposition by Becker of his electrical control system ideas and findings. Good references for the educated layperson are (c) R. O. Becker, "A technique for producing regenerative healing in humans," *Frontier Perspectives,* 1(2), Fall/Winter 1990, p. 1-2; (d) Robert O. Becker and Gary Seldon, *The Body Electric: Electromagnetism and the Foundation of Life,* William Morrow and Company, New York, 1985; and (e) Robert O. Becker, *Cross Currents: The Promise of Electromedicine, the Perils of Electropollution,* Tarcher, St. Martin's Press, New York, 1990.

64. A provisional patent application has been filed on the process, and an overview of the method can be seen as the "porthole briefing" on my website www.cheniere.org.

65. (a) C. A. L. Bassett; R. O. Becker, and R. J. Pawluk, "Effects of electric currents on bone in vivo," *Nature,* Vol. 204, Nov. 14, 1964, p. 652-654. The complete electrical control system (conventional EM theory) for the healing of bone fractures is given in (b) R. O. Becker, *Clinical Orthopedics and Related Research,* Vol. 73, 1970, p. 169. A paper "putting it all together" is (c) R. O. Becker, J. *Bioelec,* Vol. I, 1982, p. 239.

66. F. Mandl and G. Shaw, *Quantum Field Theory,* Wiley, 1984, Revised Edition 1993, under the heading "5.2 Covariant Quantization" and "5.3 The Photon Propagator" in Chapter 5. The longitudinal and scalar photon polarizations are not directly observable, but only in combination, where they manifest as the instantaneous Coulomb (i.e., electrostatic) potential interaction, *"which emerges as an exchange of longitudinal and scalar photons."* So the common old electrostatic scalar potential is actually comprised of longitudinal EM waves and time-polarized EM waves.

67. With the MidEast increasingly set to explode, we may be facing the unleashing of weapons of mass destruction, a vast shortage and curtailment of

available oil and energy, and a total collapse of the Western economy and therefore most of the world economy, in as little as three or four years, if the impending energy crisis worldwide is not resolved quickly. See T. E. Bearden, ADAS position paper, "The Unnecessary Energy Crisis: How to Solve It Quickly," *ibid.* As this is written, we have already had a warning shot across our bow: the vicious terrorist attacks on September 11, 2001. We are in Afghanistan and elsewhere in a war against terrorism, and anyone can see the escalation in the MidEast toward war between the U.S. and Iraq, and almost certainly a resulting explosion in the MidEast and unleashing of the hostile terrorists assets and mass destruction weapons already inside the United States. Since modern economies are based on cheap energy, and cheap energy is largely based on cheap oil, then with surging energy demands worldwide we shall see "oil wars" erupt and rage worldwide, with terrorist retaliations and attacks—using weapons of mass destruction—occurring in U.S. cities. *Unless energy from the vacuum is quickly developed and deployment begun at high speed, we risk the coming collapse of the world economy, great destruction of populaces, and a new Dark Ages.*

68. E. T. Whittaker, 1903, *ibid.*

69. Daniel A. Walker, Charles S. McCreery, and Fermin J. Oliveira, "Kaitoku Seamount and the Mystery Cloud of 9 April 1984," *Science,* Vol. 227, Feb. 8, 1985, p. 607-611; Daniel L. McKenna and Daniel A. Walker, "Mystery Cloud: Additional Observations," *Science,* Vol. 234, Oct. 24, 1986, p. 412-413.

70. Superpotential theory was initiated by E. T. Whittaker, extending earlier concepts advanced by G. Johnstone Stoney. See E. T. Whittaker, *Proc. Lond. Math. Soc,* Series 2, Vol. 1, 1904, p. 367-372. Nisbet extended the Whittaker and Debye two-potential solutions of Maxwell's equations to points within the source distribution. This is a full generalization of the vector superpotentials (for media of arbitrary properties) together with their relations to such scalar potentials as those of Debye. See A. Nisbet, *Physica,* Vol. 21, 1955, p. 799. Also, A. Ricci in 1901 introduced what might be called the magnetization potential, satisfying a certain equation, as an alternate to the Hertz vector. This was a part of early vector superpotentials. For an excellent overview discussion of superpotentials and related things, see Melba Phillips, "Classical Electrodynamics," in *Principles ofElectrodynamics and Relativity,* Vol. IV of *Encyclopedia ofPhysics,* edited by S. Flugge, Springer-Verlag, 1962. Phillips discusses, for example, that Whittaker 1903 (note: oral delivery; paper was published in 1904) was the first to prove that one can derive a general electromagnetic field from two scalar functions, which are really components of the vector superpotentials, with proper choices of the gauge functions. Whittaker's method is well known in the treatment of transverse electric and transverse magnetic modes of a cylindrical cavity or a waveguide. Nisbet has shown that this result may be extended within the source distribution (assumed

given) by a suitable choice of stream functions. The Debye potentials and the Bromwich potentials are essentially radial components of the vector potentials of which Whittaker potentials are the real parts. So in general the particular integral (the stream potentials) of the inhomogeneous Maxwell equations may be so chosen that the complementary function can be expressed in terms of only two scalars, which are components of the vector superpotentials. The Whittaker and the Debye-Bromwich potentials are special cases of two vector superpotentials.

71. David Jones, *Vancouver Sun Times,* Weekend Magazine, Dec. 17, 1977, p. 17.

72. For more specific information on the production of practical antigravity and an experiment demonstrating it, see T. E. Bearden, *Energy from the Vacuum: Concepts and Principles,* Cheniere Press, Santa Barbara, CA, 2002, Chapter 8. Approach to Antigravity.

73. T. E. Bearden, *Energy from the Vacuum: Concepts and Principles,* Cheniere Press, Santa Barbara, CA, 2002, Chapter 10. Cold Fusion: Low Spatial-Energy Nuclear Reactions at High Time-Energy. By inadvertently using highly compressed time-energy, cold fusion researchers are actually using—on the tabletop—higher energy density than our present high-energy physics uses in its largest accelerators. The conventional scientific community does not have a single scientific program dedicated to using time as energy, even when one's physics model can legitimately be made of a single fundamental unit. When the joule is chosen as that unit, then time becomes totally a function of energy, just as is mass. The use of mass-energy gave us the nuclear age; the use of time-energy will give us a far greater age, if we can ever get the scientific community off its duff and moving.

74. Further, the second law of thermodynamics has long been known not to apply to a single charge, atom, or molecule or to a small group. For such microscopic phenomena, there will occur reversed reactions a certain small fraction of the time. But also see G. M. Wang, E. M. Sevick, Emil Mittag, Debra J. Searles, and Denis J. Evans, "Experimental Demonstration of Violations of the Second Law of Thermodynamics for Small Systems and Short Time Scales," *Phys. Rev. Lett.,* 89(5), 29 July 2002, 050601. These researchers have experimentally proven that the second law can be and is violated for much larger scales—up to micro (colloidal) size—and for much longer times (up to two seconds). Hence it is now proven that such "reversed zones" where reactions run backwards for quite a bit, can and do in fact occur on the colloidal scale, sufficient for the formation of large clusters of like charges. Evans and his colleagues have pointed out that these results dramatically affect chemistry.

75. Shoulders has been creating and using such charge clusters for years. See Kenneth R. Shoulders, "Energy Conversion Using High Charge Density,"

U.S. Patent # 5,018,180, May 21, 1991; — "Energy Conversion using High Charge Density," U.S. Patent No. 5,123,039, 1992; — "Method and Apparatus for Production and Manipulation of High Density Charge," U.S. Patent #5,054,046, 1991; — U.S. Patent #5,054,047, 1991; — "Circuits Responsive To and Controlling Charged Particles," U.S. Patent 5,148,461, 1992; — and Steve Shoulders, "Observations on the Role of Charge Clusters in Nuclear Cluster Reactions,"J. *New Energy,* 1(3), Fall 1996, p. 111-121.

76. D. J. Evans and D. J. Searles, *Phys. Rev. E,* Vol. 50, 1994, p. 1645.

77. See Donald Kennedy, "To Publish or Not to Publish," *Science,* Vol. 295, 8 Mar. 2002, p. 1793.

78. R. P. Taleyarkhan, C. D. West, J. S. Cho, R. T. Lahey Jr., R. I. Nigmatulin, and R. C. Block, "Evidence for Nuclear Emissions During Acoustic Cavitation," *Science,* Vol. 295, 8 Mar. 2002, p. 1868-1873. Quoting from the abstract: "In cavitation experiments with deuterated acetone, tritium decay activity above background levels was detected. In addition, evidence for neutron emission near 2.5 million electron volts was also observed, as would be expected for deuterium-deuterium fusion. Control experiments with normal acetone did not result in tritium activity or neutron emissions."

79. Yuri T. Didenko and Kenneth S. Suslick, "The energy efficiency of formation of photons, radicals and ions during single-bubble cavitation," *Nature,* Vol. 418, July 25, 2002, p. 394-397.

80. E.g., see John Archibald Wheeler and Richard Phillips Feynman, *Phys. Rev.* 59, 1941, p. 683; —"Interaction with the Absorber as the Mechanism of Radiation," *Rev. Mod. Phys.,* 17(2, 3), Apr.-Jul. 1945, p. 157-181.

81. Albert Einstein, "Foreword," in Max Jammer, *Concepts of Space: The History of Theories of Space in Physics,* Harvard University Press, Cambridge, Massachusetts, 1969, p. xi-xii.

82. Robert A. Fisher, [Ed.], *Optical Phase Conjugation,* Academic Press, NY, 1983, p. xv.

83. Basically, the choice between distant heating in the interference zone, or distant cooling, is as simple as how one biases the ground potential used for the electrical grounds of the interferometer transmitters. Biasing well above the ambient potential in the distant IZ produces divergent EM energy (heat) forming and radiating in the distant zone. Biasing well below the ambient IZ potential produces convergent EM energy (cold) forming and radiating in the distant zone.

84. Mass is mostly empty space filled with EM potentials, fields, and waves. Since these potentials, fields, and waves are simply bundles of longitudinal EM waves and their impressed dynamics, it follows that mass itself

is mostly a "giant superhighway" for the transmission of LWs. This is actually a sort of "subspace" transmission "right through" matter, so to speak.

85. As demonstrated by such dual serial usage by a giant interferometer in the anomalous and explosive "cloud" phenomena near the Kurils in April 1984. For excellent descriptive articles and a hard look at the phenomena, see Walker et al., *Science, ibid.*

86. See "Soviet device uses radio waves as tranquilizer," AP release, *Huntsville [Alabama] Times,* May 19, 1983. See also W. Ross Adey, "Biological effects of low energy electromagnetic fields," *Proc. NATO Adv. Study Inst. on Advances in Biological Effects and Dosimetry of Low Energy Electromagnetic Fields,* Plenum Press, New York, 1983, p. 359-391. Adey apparently was aware only of ordinary U(l) electrodynamics. He describes the **LIDA** device as follows: *"Soviet investigators have also developed a therapeutic device utilizing low frequency square wave modulation of a radiofrequency field. This instrument know as the LIDA, was developed by L. Y. Rabichev and his colleagues in Soviet Armenia, and is designed for the 'treatment of neuropsychic and somatic disorders, such as neuroses, psychoses, insomnia, hypertension, stammering, bronchial asthma, and asthenic and reactic disturbances.' It is covered by U.S. Patent #3,773,049. In addition to the pulsed RF field, the device also delivered pulsed light, pulsed sound, and pulsed heat. Each stimulus train can be independently adjusted in intensity and frequency. The radiofrequency field has a nominal carrier frequency of 40 MHz and a maximum output of approximately 40 watts. The RF field is applied to the patient on the sides of the neck through two disc electrodes approximately 10 cm. in diameter. The electrodes are located at a distance of 2-4 cm from the skin. Optimal repetition frequencies are said to lie in the range from 40 to 80 pulses per minute. Pulse duration is typically 0.2 sec. In a 1-year trial period, the instrument was used on 740 patients, including adults and children. Positive therapeutic effects were claimed in more than 80 percent of the cases treated."* We accent that this is one of the simplest Russian psychoenergetics devices, obsoleted very early on, and thus released very early for public use.

87. Since U.S. researchers are unaware of the EM wave polarization transduction mechanisms, and in general have no instruments for detecting longitudinal EM waves, the specific transduction effects on humans would not be measured by U.S. laboratories. Hence the U.S. scientists could only think of it in conventional electrodynamic terms, and remained totally unknowledgeable about the specific transduction mechanisms in the human body producing time-polarized EM waves and effects from the device.

88. Max Frankel, "Khrushchev Says Soviet Will Cut Forces a Third; Sees 'Fantastic Weapon'," New *York Times,* Jan. 15, 1960, p. 1.

89. For a simplified introduction to psychoenergetics and the mind-matter coupling mechanism, see T.E. Bearden, "Mind Control and EM Wave Polarization Transductions, Part I", *Explore,* 9(2), 1999, p. 59; Part II, *Explore,* 9(3), 1999, p. 61; Part III, *Explore,* 9(4,5), 1999, p. 100-108.

90. One of the serious goals of the die-hard KGB psychoenergetics scientists appears to be to achieve the capability of directly engineering the entire human collective unconscious mind. The plan envisioned is to convert the human species into a sort of "giant ant species" where each one has perfect, machine-like niche and function (except, of course, for the elite Communist masters). In short, they conceived back there in the 1960s that such a "perfect communist state" for all humanity was in fact possible to achieve technically, with sufficient development of psychoenergetic technology. They are apparently well along the way toward achieving that goal. [The U.S. has not even conceived such a scientific possibility, and modern cognitive science in the West seems bent on the rather astounding proposition that mind itself does not even exist!]. We point out that no type of physical defense is even possible against such a capability engineered into the collective human unconscious, once it is achieved. The only "counter" is to use the same technology (it has to first be developed) to "re-engineer" what will have been done. But our fellows have not even conceived the possibility of the threat, much less the cause or the counter. Hence they continue to totally misunderstand what happened to Captains Button, Svoboda, and Hess in successful mind-control tests achieved perfectly at great distance.

91. To see the nature of the time-density wave (which is basically a longitudinal EM wave along the time axis), due to the perfect correlation between time-energy flow currents and variations with respect to longitudinal EM waves, see T.E. Bearden, "Giant Negentropy from the Common Dipole," 2000, *ibid.* Not stressed in the paper is the fact that the same dipolar negentropy with correlated EM time-energy currents and EM spatial energy currents, exists in the "individual" photon. Further, they can occur in coupled photon-antiphoton pairs, yielding the graviton. For time-polarized EM photons, it appears that two photon-antiphoton pairs are coupled, yielding the "supergraviton." Elsewhere we have briefly and addressed these novel formations as hypotheses.

92. Induction of specific diseases and health changes in the U.S. Embassy in Moscow over four decades, included causing the deaths of three U.S. Ambassadors. It was accomplished by implementing desired disease-pattern "engines" infolded inside field-free potentials. The Johns Hopkins study of the radiation patterns revealed a most significant finding: All the affected persons were in regions of the Embassy where the Russian microwave radiation *fields* were absent. In short, where the field-free—and thus very stable—potentials existed. Since these scientists (and most others in classical EM) consider that EM effects are caused only by fields, they concluded (totally erroneously) that

these health changes could not have been caused by the microwave radiation. To the contrary, they had just clearly proven that the radiation was indeed the cause. They showed a 100% correlation to the *presence of field-free potentials,* and a 100% anticorrelation to where the fields were present. This was for induced phenomena over several years. Had the radiation not been the culprit, then some health changes would have occurred where the fields were present, and some would have occurred where they were absent. That is not what happened at all, and this inexplicable logical non sequitur against common statistical inference was the accepted decision. The truly revealing aspect was that *apparently the entire U.S. Intelligence community had no competence or capability in higher group symmetry electrodynamics.*

93. E.g., see Lewis H. Ryder, *Quantum Field Theory,* Cambridge University Press, 2nd Edition, 1996, p. 147+ which covers the four photon polarizations. See also F. Mandl and G. Shaw, *Quantum Field Theory,* Wiley, 1984, Revised Edition 1993, under the heading "5.2 Covariant Quantization" and "5.3 The Photon Propagator" in Chapter 5.

94. We elaborate on this somewhat, in "Mind Control and EM Wave Polarization Transductions", *ibid.*

95. Again, we point out the unified field approach of Mendel Sachs as probably being the best Western model in which to grapple with these phenomena.

96. David J. Bohm, "A Suggested Interpretation of the Quantum Theory in Terms of'Hidden' Variables, I and II." *Phys. Rev.,* 85(2), Jan. 15, 1952, p. 166-179 (Part I); 180-193 (Part II).

97. T. E. Bearden, *Gravitobiology: A New Biophysics,* Cheniere Press, Santa Barbara, Ca. www.cheniere.org, 1991.

98. W. A. Rodrigues Jr. and J.-Y. Lu, "On the existence of undistorted progressive waves (UPWs) of arbitrary speeds 0 < v < oo in nature," *Found. Phys.,* 27(3), 1997, p. 435-508. A slightly corrected version is downloadable as hep-th/9606171 on the Los Alamos National Laboratory web site. It includes corrections to the published version.

99. W. A. Rodrigues Jr. and J. Vaz Jr., "Subluminal and Superluminal Solutions in Vacuum of the Maxwell Equations and the Massless Dirac Equation," *Adv. Appl. Clifford Algebras,* Vol. 7(S), 1997, p. 457-466.

100. E.g., see A. Enders and G. Nimtz, *Phys. Rev. Lett.,* Vol. 48, 1993, p. 632. Enders, Aichmann, Nimtz and co-workers at the University of Cologne have transmitted 8.7 GHz microwaves (free space wavelength 3.4 cm) traveling in a rectangular wave-guide that contains a "barrier" section of reduced dimensions. They transmuted Mozart's 40th Symphony as frequency modulated

microwaves through a barrier wave-guide at an FTL group velocity of 4.7c, receiving audibly recognizable music from the microwave photons that survived their barrier passage.

101. J. D. Jackson, *Classical Electrodynamics*, 2nd Edition, Wiley, New York, 1975, p. 222.

102. See H. A. Lorentz, *Vorlesungen Uber Theoretische Physik an der Universitat Leiden, Vol. V, Die Maxwellsche Theorie (1900-1902)*, Akademische Verlagsgesellschaft M.B.H., Leipzig, 1931, "Die Energie im elektromagnetischen Feld," p. 179-186. Figure 25 on p. 185 shows the Lorentz concept of integrating the energy flow vector around a closed cylindrical surface surrounding a volumetric element. This is the procedure which arbitrarily selects only a small component of the total energy flow in space outside a circuit and associated with it—specifically, the small Poynting component diverged by the surface charges into the conductors to power the electrons—and then treats that tiny component as the "entire" vast energy flow (which may be a trillion or more times greater in magnitude). Thereby Lorentz arbitrarily discarded all the huge *Heaviside* energy transport component that does not strike the circuit at all, is not diverged into the conductors, and is just wasted. See Oliver Heaviside, *Electrical Papers*, Vol. 2, 1887, p. 94. Quoting: *"It [the energy transfer flow] takes place, in the vicinity of the wire, very nearly parallel to it, with a slight slope towards the wire... . Prof. Poynting, on the other hand, holds a different view, representing the transfer as nearly perpendicular to a wire, i.e., with a slight departure from the vertical. This difference of a quadrant can, I think, only arise from what seems to be a misconception on his part as to the nature of the electric field in the vicinity of a wire supporting electric current. The lines of electric force are nearly perpendicular to the wire. The departure from perpendicularity is usually so small that I have sometimes spoken of them as being perpendicular to it, as they practically are, before I recognized the great physical importance of the slight departure. It causes the convergence of energy into the wire."*

103. When it is associated with positive energy fields and potentials from positive mass, positive energy source charges, we have nominated that long-unaccounted Heaviside energy flow component as the source of the excess gravity holding the arms of the spiral galaxies together (a solution to the dark matter problem). When it is associated with negative energy fields and potentials from negative-energy Dirac Sea holes in 4-space, we have nominated that unaccounted energy flow component as the source of the excess antigravity responsible for accelerating the expansion of the universe (a solution to the dark energy problem).

104. About a year from now, Bedini and I will also release a very novel use of this Heaviside energy flow component in inverted circuits—circuits that

operate almost completely in reverse from normal textbook circuits. This is a totally new kind of circuit that we hope will revolutionize power systems and electronic control systems. Until our intellectual property rights are secured, we are not releasing any details at all.

105. Terence W. Barrett, "Tesla's Nonlinear Oscillator-Shuttle-Circuit (OSC) Theory," *Ann. Fond. Louis de Broglie,* 16(1), 1991, p. 23-41. Tesla was able to shuttle energy around in his circuits at will. Barrett went on to improve the process and patent two versions. See T. W. Barrett, "Active Signalling Systems," U.S. Patent No. 5,486,833, Jan. 23, 1996. This is a signaling system in time-frequency space for detecting targets in the presence of clutter and for penetrating media. See also T. W. Barrett, "Oscillator-Shuttle-Circuit (OSC) Networks for Conditioning Energy in Higher-Order Symmetry Algebraic and RF Phase Conjugation," U.S. Patent No. 5,493,691. Feb. 20, 1996.

106. Bryan G. Wallace, "The Unified Quantum Electrodynamic Ether," *Found. Phys.,* 3(3), Sept. 1973, p. 381-388.

107. William G. Harter, John Evans, Roberto Vega, and Sanford Wilson, "Galloping waves and their relativistic properties," Am. J. *Phys.,* 53(7), July 1985, p. 671-679. Most waves caused by a single frequency source have a galloping motion. The only exceptions are the very special cases of absolutely pure moving waves or absolutely pure standing waves. The superposition and resulting interference of two oppositely moving waves generally yield a wave having nonuniform motion; in short, the wave rushes forward rapidly, then slows appreciably, etc. A relativistic example is given in which the source frame observes a very nonuniformly galloping wave whose velocity varies between 0.01 c and 100 c, even though its average velocity is c. Relativistic properties of interfering electromagnetic plane waves are discussed.

108. S. L. Miller, "The Formation of Organic Compounds on the Primitive Earth," *Ann. NYAcad. Sci.,* Vol. 69, 1957, p. 260; — *Bioch. Biophys. Acta.,* Vol. 23, 1957, p. 480-489; — *Science,* Vol. 117, May 15, 1953, p. 528-529; — and H. C. Urey, "Organic Compound Synthesis on the Primitive Earth," *Science,* Vol. 130, 1959, p. 245-251.

109. R. Harada and S. Fox, "Thermal Synthesis of Natural Amino-Acids from a Postulated Primitive Terrestrial Atmosphere," *Nature,* 201(4917), 1964, p. 335-336; S.W. Fox, "How Did Life Begin?", *Science,* 132(3421), July 22, 1960, p. 200-208; — and S. Yuyama, "Abiotic Production of Primitive Protein and Formed Microparticles," *N.Y. Acad. Sci. Ann.,* Vol. 108, June 1963, p. 487-494; — and K. Harada, "Thermal Copolymerization of Amino Acids to a Product Resembling Protein," *Science,* 128(333), 1958, p. 1214; — and M. Middlebrook, "Anhydrocopolymerization of Amino Acids Under the Influence of Hypothetically Primitive Terrestrial Conditions," *Federation Proc.* Vol. 13, Mar. 1954, p. 211.

110. H. C. Urey, "On the Early Chemical History of the Earth and the Origin of Life," *Proc. Nat. Acad. ScL,* 38(4), 1952, p. 351-363.

111. I.e., one may speak of the "potential" of a specific engine of a former life form, and then realize that the potential for that form reduces in magnitude inversely as the radial distance from the Earth. However, it does not reduce to zero until an infinite distance is reached.

112. As an example, a great EM energy flow—produced by the cross product ExH of the earth's magnetic field and the earth-to-electrosphere electric field—flows from West to East around the earth, nearly parallel to the equator. Infolded in that great EM energy flow are all the structures of all the genetics and life forms on earth, or that have ever been on earth and conditioned the natural scalar potential of the earth. The vials in the laboratory experiments of Miller, Fox, and Urey were all continually bathed in that great energy flow, which within it contained the entire life structure and dynamics of the planet. So no "inert" experiments were ever performed, contrary to the interpretations of the scientific community.

113. Vlail Kaznacheyev and L. P. Mikhailova, *Ultraweak Radiation in Intercellular Interactions,* [in Russian], Novosibirsk, 1981 [an English exposition of much of the Kaznacheyev work is given in Vlail Kaznacheyev, "Electromagnetic Bioinformation in Intercellular Interactions," *Psi Research,* 1(1), Mar. 1982, p. 47-76.] Kaznacheyev, e.g., appears to have headed the Soviet team actually producing the basis for the disease-inducing technology utilized for four decades in the microwave radiation of the U.S. Embassy in Moscow.

114. Specifically, the down payment was $900 million in gold. The lease is probably about $1 billion per year. Thus the Yakuza acquired very powerful strategic weapons, and became a secret power to be reckoned with internationally and strategically. Since 1990, weather engineering over the U.S. and occasional shootdown of aircraft (such as the TWA-800) have been by rogue Japanese fingers on the scalar interferometer weapon triggers, on site in Russia.

115. The Yakuza has also transferred some of the longitudinal EM wave interferometry technology to their Japanese facilities. One such system has apparently been deployed in the power grid, and has been used to kill some government officials who opposed the Yakuza. This information was obtained by some brave Japanese risking their lives to get the information to the present author.

116. Many important KGB weapon tests happened in April of various years; the KGB weapons folks were simply preparing for their May Day reports, and each wished to have a good one.

117. Sen. Sam Nunn's investigation teams verified that the Aum Shinrikyo were actively seeking the "Tesla Weapons", with the Aum Shinrikyo even visiting the Tesla Museum in Beograd for that purpose. We have 100% certain confirmation of the Yakuza and Aum Shinrikyo leasing of the scalar interferometers from the KGB and Russian Mafia (working for the KGB) at the end of 1989 or first few days of 1990. Sen. Nunn's report confirms that the Aum Shinrikyo set up a University in Moscow. Our comment is that this is where the Russians actually taught the Japanese crews the science and technical functions so that they could successfully man and use the scalar (longitudinal EM wave) interferometry weapons.

118. Recall that in the 1950s and early 1960s, Kaznacheyev et al., *ibid.*, had already clearly proven that nearly any form of cellular change, damage, or disease could be induced in cells at a distance by purely electrodynamic means.

119. In the kill of the Arrow DC-8 at Gander, Newfoundland on 12 Dec. 1985, the struck aircraft did charge up with time-density charging, and many pieces of the wreckage did indeed emit longitudinal EM waves thereafter for some time. Consequently, the Canadian recovery crews working the site and handling the materials, were exposed to longitudinal EM wave radiation for varying degrees of exposure. It follows that many of those on-site handlers should have later come down with physical ailments, with symptoms such as flu-like features, weakness, heart palpitations, headaches, dizziness, disturbance of equilibrium, and with various infections because of weakened immune systems. They also should have had weakened cellular regenerative (healing) systems, so their physical problems would endure and largely remain. About five dozen of the recovery personnel did come down with those exact symptoms, and many remained disabled or debilitated for some years.

120. We have also explained (a) why the French forces in the Gulf War did not get GWS, while American, British, and Canadian forces did, (b) why the native population did not exhibit GWS, and (c) the remaining anomalous phenomena associated, such as the semen "infecting" the wife, the children catching similar or related conditions from sustained close proximity to their father's biofields (transmission of engines), etc.

121. Mario Bunge, Foundations of Physics, Springer-Verlag, New York, 1967, p. 176.

122. T. E. Bearden, "Giant Negentropy from the Common Dipole," J. *New Energy*, 5(1), Summer 2000, p. 11-23 gives the solution to the long-vexing source charge problem. The paper is also carried on DoE restricted website http://www.ott.doe.gov/electromagnetic/ and on www.cheniere.org

123. Two examples of inane articles and actions in this respect, revealing no knowledge that every charge in the universe already exhibits COP = oo, are (a)

Graham P. Collins, "There's No Stopping Them: Perpetual Motion is alive and well at the U.S. Patent Office," and (b) Resolution by the Executive Board at the June 2002 meeting of the American Physical Society (APS) as follows: *"The Executive Board of the American Physical Society is concerned that in this period of unprecedented scientific advance, misguided or fraudulent claims of perpetual motion machines and other sources of unlimited free energy are proliferating. Such devices directly violate the most fundamental laws of nature, laws that have guided the scientific progress that is transforming our world."* So the learned APS has just declared the source charge as an unacceptable "free energy" machine and perpetual motion machine, since the charge simply sits there and continuously pours out real observable EM energy in all directions at the speed of light, without any observable EM energy input. Thus the APS has implicitly declared all EM fields and potentials and their energy—which includes every joule of EM energy in the universe, in matter or in space—to be unacceptable byproducts of perpetual motion nonsense. We heartily call upon the APS in the name of science to enforce their resolution in the orthodox academic community, who are the greatest perpetual motion advocates in history. To be consistent with their own resolution, they must root out and destroy—from all texts and universities and from the scientific literature—any mention whatsoever of charge, field, potential, and EM energy. Either they must do that, or stand hoisted on their own petard as a dogmatic group still very much unaware of why the Nobel Prize was awarded to Lee and Yang in 1957 and what the proof—by Wu et al.—of the asymmetry of opposite charges means with respect to the source charge considered in its modern quantum field theory view as a dipolarity of a bare infinite central charge surrounded by clustering virtual charges (also infinite charge) of opposite sign in the active vacuum. Every electrical engineering department and professor and textbook still uses a model and teaches a subject assuming that every charge in the universe freely creates energy from nothing at all. Further, the APS in every annual meeting also tolerates, encourages, and publishes multiple papers and presentations with the same such unacceptable perpetual motion assumptions in them. Such is the lofty understanding of our present organized scientific community, which seems much more politically bent than scientifically bent. The simple Bohren experiment and the entire area of negative resonance absorption of the medium has long been established in nonlinear optics, and such experiments widely yield a nominal COP = 18. In other words, the experiments nominally output 18 times as much energy as the operator inputs, and the excess input energy is furnished absolutely for free from the active vacuum's exchange. In this case the Executive Board of the APS is not even aware of what its own physics discipline has long proven and accepted in particle physics, for nearly a half century. Neither are the self-appointed defenders of the faith, who also are totally unaware of what physics has already proven with a Nobel Prize awarded nearly a half century ago.

124. C. S. Wu, E. Ambler, R. W. Hayward, D. D. Hoppes and R. P. Hudson, "Experimental Test of Parity Conservation in Beta Decay," *Phys. Rev.*, Vol. 105, 1957, p. 1413. We also quote Nobelist T. D. Lee as follows: *"Since nonobservables imply symmetry, any discovery of asymmetry must imply some observable. The experiment of Wu, Ambler, Hayward, Hoppes and Hudson... established the asymmetry between the positive and negative signs of electricity."* [T. D. Lee, *Symmetries, Asymmetries, and the World of Particles*, U. Wash. Press, Seattle, 1988, p. 11.].

125. Dilip Kondepudi and Ilya Prigogine, *Modern Thermodynamics: From Heat Engines to Dissipative Structures*, Wiley, New York, 1998, reprinted with corrections 1999.

126. See "Secret Speech: Did Brezhnev Come Clean?" *National Review*, 29(8), Mar. 4, 1977, p. 248, 250

127. For the energy description of this device and some results, see Floyd Sweet and T. E. Bearden, "Utilizing Scalar Electromagnetics to Tap Vacuum Energy," *Proc. 26th Intersoc. Energy Conversion Engineering Conf. (IECEC '91)*, Boston, Massachusetts, p. 370-375.

128. Also see my book, *Energy from the Vacuum*, 2002, *ibid*, which includes photographs of the self-powering Sweet device, courtesy of Walter Rosenthal.

129. Roy Brewer was very active in Hollywood Unions against Communists when they were busily penetrating the Hollywood complex. He was a staunch anti-communist, fighting them out of control of the unions, way back when. Ronald Reagan was a personal friend of his of long standing, and Roy had open access to the White House when Reagan was President.

Roy briefed Reagan on the Russian scalar weapons, and Reagan believed him. Three times, Reagan ordered his Secretary of Defense to take action in that area, but neither of the three did so because the U.S. Intelligence Community did not believe it and adamantly opposed any such action. We took quite a beating in those days, for quite a long time (some years), before certain key parts of the Government finally believed us, checked it out experimentally, and found that it worked.

Roy also introduced me to the Duke de Grantsmesnil, one of the last of the great old British intelligence men, now unfortunately deceased. In the hectic 1997 days when we were trying desperately to warn a little friendly nation (and our own) against a coming great strategic strike on the U.S. and other allies, the Duke played a major role in introducing us directly to higher political levels in that little nation - which was the only nation on earth that could counter the pending strike. The first planned strike scheduled in February 1997 was successfully countered, only to be immediately rescheduled. In the second

incident, the attack was scheduled for May 1, 1997. We finally realized why the hostile nation could reschedule and go ahead, and needed then to warn the little nation of the reason in some detail. We had tried everything to get certain information through, and all means had failed. A former ambassador of that nation to Great Britain was also assassinated during that struggle. Roy Brewer was one of the key fellows assisting in that attempt, as were other personal colleagues of mine who also were witnesses and direct participants in those desperate events. When all else failed, I finally just faxed the Prime Minister directly, in the clear, some five days before the attack, urging the most urgent and immediate action possible by the Prime Minister. A complete change in command and control of the weapon was required, and that change had to be made and then the hostile nation had to be notified that the change was in place (and probably shown that it was). The Prime Minister accepted the message and the necessary action was carried out immediately. So two days or so before the actual attack was scheduled, that great hostile armada began standing down. Oh, the hostile nation and its leaders could have easily destroyed the entire United States in two hours or so, without fail! But then their own country would have promptly disappeared from the face of the earth. So they stood down. And our own Intel community never even picked it up (they did get my messages alerting the U.S. Government, but thought it was a joke or something). They, of course, also intercepted my open fax to the Prime Minister, and so were all over me for that one for a while thereafter.

Interestingly, at the very time that great armada was just beginning to stand down, then Secretary of Defense William Cohen made the following statement at a conference in Georgia: "Others are engaging even in an eco-type of terrorism whereby they can alter the climate, set off earthquakes, volcanoes remotely through the use of electromagnetic waves...so there are plenty of ingenious minds out there that are at work finding ways in which they can wreak terror upon other nations...It's real, and that's the reason why we have to intensify our efforts, and that's why this is so important." Secretary of Defense William Cohen at an April 1997 counterterrorism conference sponsored by former Senator Sam Nunn. Quoted from DoD News Briefing, Secretary of Defense William S. Cohen, Q&A at the Conference on Terrorism, Weapons of Mass Destruction, and U.S. Strategy, University of Georgia, Athens, Apr. 28, 1997.

Ironically, the Secretary was referring to the earlier scalar interferometer weapons, and now the quantum potential weapons etc. He was completely unaware that a great strategic strike had actually been scheduled and was just being aborted as he was speaking those words.

Roy Brewer is one of those fellows who has been a great American, has served his country admirably during his lifetime, and contributed greatly to preventing a planned take-over by the Communists of the labor unions of America. In

addition, he helped set up the contacts with the friendly **liltle foregn nation, so** that on four occasions planned attacks to destroy the United States have been successfully aborted or handled.

As you know, one of the great failures in the Communist plan to have America go communist was their failure with the labor unions. And we owe that failure to the steadfast efforts of some staunch folks like Roy Brewer. He helped save our nation when many of us were still wearing knee pants.

130. Wheeler's principle, as stated in W. Misner, K. S. **Thorne, and J.** A. Wheeler, *Gravitation,* W.H. Freeman and Co., San Francisco, 1973, p. 5.

131. With the new improvements we uncovered, treatment time can be reduced to 5 minutes per patient. Three such treatments one week apart would be what are required. Hence one machine station could treat a patient every five minutes, around the clock. With sufficient portable treatment units, mass treatment for mass casualties would become a practical reality.

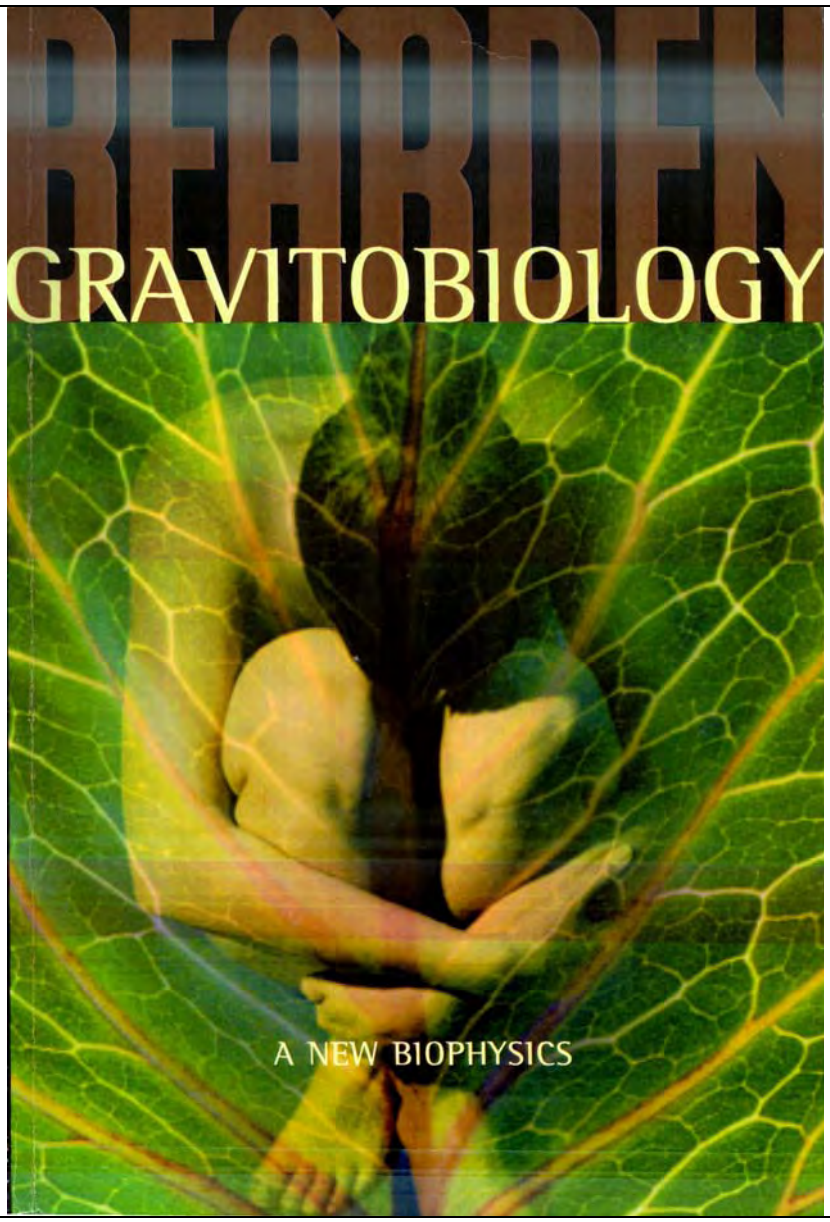

Sweating done by red_gonzo.

Note: sometimes formatting of the text may be a little fuzzy. It's all because the OCR process didn't go as smoothly as I expected. Also there may be some errors inside text so be vigilant. In any case share this book, send emails to people about knowledge contained in it. This book should especially be interesting to any person in medical community as it provides a direct alternative to tablet based medicine of today.

TABLE OF CONTENTS

Title **Page**

List of Figures....iii
List of Tables....iv
Introduction....1
Woodpeckers: A Soviet Bicentennial Present to the U.S....15
Misidentification as an OTH Radar....15
Immediate Weather Engineering Over North America....15
Given a Dose of Their Own Medicine....16
Launch-Phase Antibomber and Antimissile Weapons....16
How This Paper Came About....16
Start With These References....17
Technical Basis for Soviet EM Biological Warfare....17
Biological Implications....18
Internal and External EM Energy....18
Vacuum Engineering and Activation....20
The Nuclear Charge Spreads....20
Activation of Photons....20
Western Physicists Missed It....21
Chaos: Hidden Order Underlying Randomness....21
Special Implications for Quantum Mechanics....22
It Was Already Implicit Within the Theory....22
The Case of Opposite Charges....23
Whittaker Rediscovered Tesla's Standing Columnar Wave....24
Soviet Weaponization....25
Detection and the Aharonov-Bohm Effect....25
Distant Heating or Cooling: Hot or Cold Explosions....25
Artificial Highs and Lows to Steer the Jet Streams....26
Soviet/German Discovery of TR Radar Waves....26
Targeting U.S. Embassy Personnel in Moscow....27
A Reinterpretation of the Johns Hopkins Investigation....27
Advanced Photobiology Aspects....29
Inducing Diseases in U.S. Embassy Personnel....31
Pieces of the Vacuum Medium....32
The Quantum Potential....33
Detection of Scalar EM in Woodpecker Signals....36
Whittaker Waves, Aharonov-Bohm Effect, and Hidden Variables....37
More on Kaznacheyev and Priore....37
Biological Warfare Implications....38
Work of Beck, Hunt, and Lisitsyn....39
Explanation of EM Biological Trigger Windows....41
Relation to Chaos Theory....43
More on Internalized Energy....44
Mechanisms For Evolution, Gaia, and Morphogenetic Field....45
The Unsuspected Deadly Nature of Internal EM Pollution....48
How the Drug Culture Was Really Created....50
Ubiquity of Internal EM Energy....53
A Very Different Physical Reality....54
Solving the Quartz vs. Glass Transmission Problem....54
Detection is Actually Binary....58
The Problem is Our Rigid Mindset....59
The Soviet Electromagnetic BW Threat Is Real....60

LIST OF FIGURES

Figure	Title	Page
1	Two kinds of EM energy: stress and translation	3
2	The photon as a single oscillation of a minimal carrier wave	3
3	Coupled photon/antiphoton pair (simplest graviton)	4
4	The potential is composed of gravitons, whose structures consist of bound photons and antiphotons	4
5	THE Whittaker standing potential wave	5
6	Infolded EM structure of the Whittaker beam	6
7	Destructive and constructive interference	6
8	Nonlinear materials produce harmonics in positive time	7
9	Time reversal of a fundamental plus harmonics can produce a stronger fundamental	8
10	Ordinary mirror reflection vs. phase conjugate mirror reflection	8
11	Pumped phase conjugate mirror (PPCM)	9
12	Potential persistence vs. gradient discharge	28
13	The Kaznacheyev cytopathogenic (CPG) effect	30
14	The quantum potential EMI "fireflies" effect	34
15	Mechanism for forming a quantum potential	35
16	Strategic EM BW implications of world-wide targeting transmitters such as the Soviet Woodpeckers	40
17	Chaos: The collected emergence of large-scale order from disorder	44
18	Earth, Sun, and Moon are Whittaker-coupled	45
19	The Kaznacheyev apparatus for cytopathogenic experiments	55
20	The Whittaker-structured graviton lattice of vacuum/spacetime	56
21	Death of the Arrow DC-8, Dec. 12,1985	80
22	Electrical spikes in two on-board sensors of the Arrow DC-8, caused by strike of an EM missile during liftoff rotation	82
23	Engines disabled, a passenger jet drops six miles in two minutes	84
24	Strike of an EM missile, offset from launch of the shuttle Atlantis on Nov. 28,1985	86
25	Soviet Woodpecker beams intersect over North America	86

LIST OF TABLES

Table	Title	Page
1	The graviton vacuum potential	5
2	Quantum potential (QP) characteristics	10
3	Hidden variable theory quantum potential	10
4	Countering EM biological warfare	30
5	Electromagnetic biological warfare (EMBW)	31
6	Real-time anomalous EMI interference via quantum potential	34
7	Recent Pentagon EMI studies	35
8	Countering EM BW (signal available)	38
9	Countering EM BW (signal unavailable)	38
10	Biological warfare implications	39
11	Lisitsyn's report	41
12	Why EM trigger windows?	42

Introduction

This may be the most important and far-reaching paper **that** this researcher has ever written. The knowledge and utilization of gravitobiology will profoundly alter the entire future of mankind.

The paper has been very difficult to write. It advances what — to the West — is an astounding breakthrough in understanding the mechanisms for the direct biological effects of Maxwellian electromagnetics.[1] However, one is given great pause at the sobering implications for both good and evil.

Although secretly well-known and highly developed in the Soviet Union for decades, this new technology ushers in a completely new area to the West: electrogravitobiology, or shortened, *gravitobiology* — which infolds and drastically extends present photobiology.[2]

Gravitobiology is the application of a unified field theory conception of electromagnetics (EM) and gravitation (G) to the total energetics exchanges (1) between a living organism and its external environment (interexchanges) and (2) inside the living organism and between, within, and among its parts and its whole (intra-exchanges).

Gravitobiology drastically changes the present reductionist view of photobiology, where *the whole is simply the sum of its parts,* and the superposition principle rigorously holds. In photobiology (and, in general, in ordinary physics), one specifies the externalized field/matter exchange on, between, and amongst the parts. Then it is assumed that one has specified the total action of the whole. On the other hand, in gravitobiology reductionism and superposition are only pale shadows of the total biological truth. Now one approaches a completely holographic situation: The part exchanges with and conditions the whole, and the whole exchanges with and conditions the part[3]

In gravitobiology, fundamental changes are made to two "untouchable" primary sciences: general relativity and quantum mechanics. In so doing, one unites and extends both of them into a common unified approach, and drastically enriches the present conception of the physical exchanges in, of, between, among, and within physical systems. The foundations changes to general relativity allow the incorporation of a hidden variable theory (the Whittaker internalized EM energy structure of the potential) without violation of Bell's theorem.

So First one must change general relativity. One must unite EM and G on the most fundamental level possible: that of the quantum particles of the fields.[4] The clue to the procedure is the fact that, in quantum field theory, the graviton has spin-2 and the photon has spin-1. This strongly suggests that two photons ought to couple together to produce a graviton, if the resultants of the E- and B-fields of the coupled photons are reduced to zero. In fact, such a bound (coupled, as in a standing wave) photon/antiphoton pair makes a basic spin-2 *graviton.*

However, in the vacuum, virtual photons are appearing (creation) and disappearing (annihilation) all the time, at incredible rates. Further, from the standpoint of GB we state that these virtual photons are also coupling (modulating each other) and decoupling (demodulating) all the time, again at an incredible rate. The virtual photons are coupling and decoupling (modulating and demodulating) with each other at such intense rapidity that to speak of a *fixed spin-2 coupling* ignores the fact that it is really only an averaged coupling that stably exists. Any number of photons can simultaneously modulate — and they do. And just as quickly, they decouple. Hence the number of instantaneously coupled photons at a point in the vacuum is

always dynamically changing over a very great range of values. Further, continual decoupling of these coupled photons also occurs with intense rapidity. The coupled-photon *ghost form* structures in the vacuum are always continually being annihilated, as well as created. In his fastest observation, of course, the macroscopic observer delects/observes the sum of a vast number of these virtual photon coupling/decouplings. He will thus detect *only the average coupling.*

The upshot is that *on the average,* the number of photons in each graviton may appear to the macroscopic observer to be stabilized at some value between zero and infinity, including *fractional* values. Further, one can now speak of the *distribution* of the coupled-photon ghost forms, and hence of graviton spin-value in local observer spacetime. One can also speak of the *relative density* of any particular local ghost form in the vacuum, seemingly the *instantaneous local density* of that ghost form with respect to the macroscopic observer.

One also can speak of the *reality density* of each ghost form in the local vacuum, with respect to its relative density vis a vis all the local coupled-photon ghost forms, during a unit time interval. For that particular form, one can also speak of its "Q" or *reality stability* — that is, how *sharply* (and hence how stably) something is real. As can be seen, this approach immediately affects our entire conception of virtual and observable physical realities and their relationships and interactions with each other. When a ghost form reaches a sharpness of one or more, it has reached/breached the threshold of observable quantum change, and is no longer just a virtual-state form. Further, we will shortly find that we can structure and engineer these virtual state coupled-photon ghost forms at will. In gravitobiology, *physical reality itself becomes deterministically tuneable, changeable, engineerable, and not fixed at all.* Physical reality is not like a stone, but rather it is like a stabilized bubble lightly floating on a rushing torrent of water. An *observably real* form is an equilibrium in the violent flux of the creation and annihilation of virtual state vacuum ghost forms of all kinds, such that it has sufficiently stable density to consistently breach the quantum threshold.

To show the basis for this graviton concept, several figures are required. Figure 1 shows the two kinds of EM energy: (1) translation (externally acting) EM energy and (2) stress (internally acting) EM energy. To first order, Figure 2 shows how we consider the photon as a single oscillation of a minimum observable monochromatic EM wave.

Figure 3 shows the coupled photon/antiphoton pair that comprises the basic graviton. On the average, uncurved spacetime is nominally composed of such spin-2 gravitons. To the first order, a spacetime composed of spin-2 gravitons is said to be *a flat* spacetime.

However, spacetime in a sense may be regarded as a conglomerate of potentials — including the scalar EM potentials. Therefore the simplest structure of *EM scalar potentials* (trapped EM energy) is also nominally composed of such spin-2 gravitons. Note that each of the coupled photons in the graviton may be constantly circling the other at nominal light speed tangentially, but the *graviton system itself* may be essentially stationary. In other words, the two trapped photons in a simple graviton are like whirling dervishes, spinning and running at top speed in non-translating circles.

Of course, the graviton system can also translate *as a system.*[5] Figure 4 shows this dynamic graviton system concept and Table 1 summarizes it.

In addition to spatial linkage of their hidden EM Whittaker wave contents, gravitons link or exchange contents via harmonic and subharmonic EM frequency chains. Thus one has photon communication (translation) between gravitons in two fashions: (1) *horizontally* (along spatial wavelength chains), and (2) *vertically* (via harmonic frequencies). Note that horizontal (wavelength) communication is linear, while harmonic (frequency) communication is nonlinear.

For that reason, linear media translate horizontally, passing a frequency without changing it; while nonlinear media translate vertically, changing a frequency that is passed.

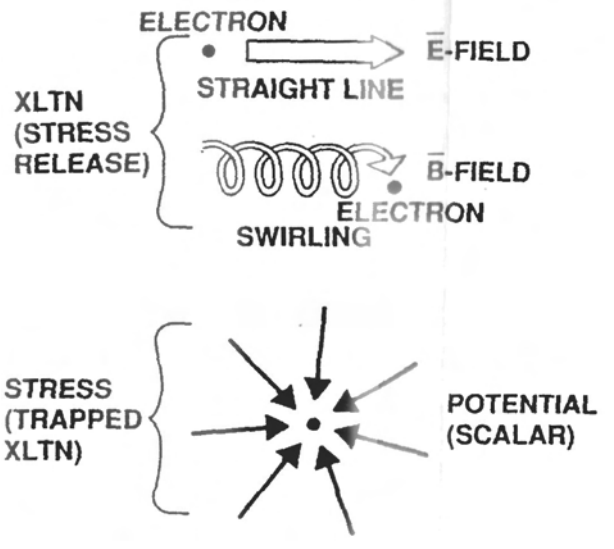

Figure 1. Two kinds of EM energy: Stress and translation. EM translation energy does external work. EM *stress* energy does internal work on the medium.

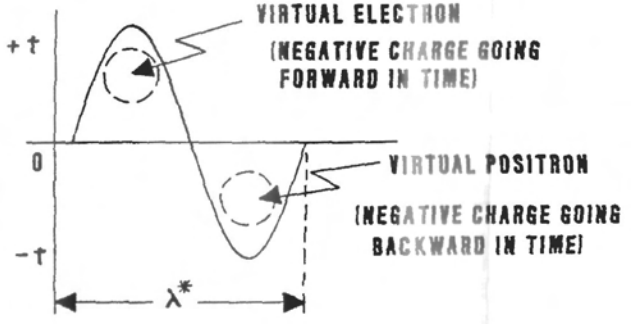

Figure 2. **The** photon as a single oscillation of a minimal carrier wave.

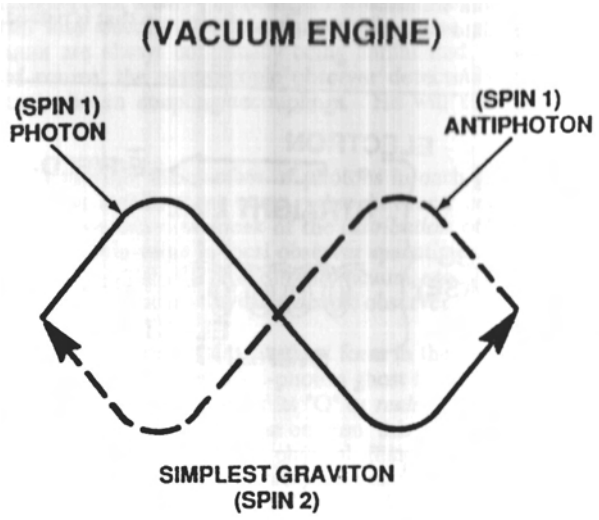

Figure 3. Coupled photon/antiphoton pair (simplest graviton).

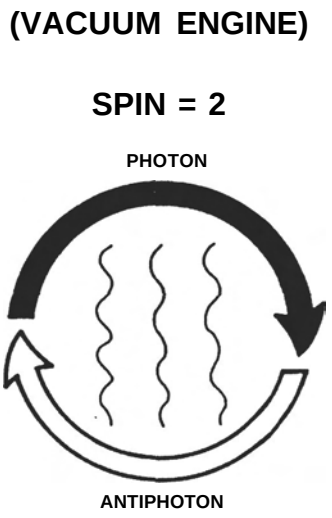

Figure 4. The potential is composed of gravitons, whose structures consist of bound photons and antiphotons.

Table 1. The graviton vacuum potential.

- **PHOTON TRANSLATES AT C**
- **SCALAR POTENTIAL IS STATIC**
  - **TRAPPED "CHARGE"**
  - **TRAPPED PHOTONS (VIRTUAL)**
- **HOW DO YOU <u>TRAP</u> A PHOTON?**
  - **MAKE A GRAVITON**
- **EM SCALAR POTENTIAL IS MADE OF <u>GRAVITONS</u>**
- **VACUUM/SPACETIME MEDIUM IS MADE OF <u>GRAVITONS</u>**
- **GRAVITON IS <u>A PIECE OF VACUUM MEDIUM</u>**

The scalar EM potential may be regarded as an infinite set of pairs of bidirectional EM planar waves, where the two members of each pair are multiplied together, totally *modulating* each other.[6] Figures 5,6, and 7 show this effect.

(TESLA'S STANDING COLUMNAR WAVE)

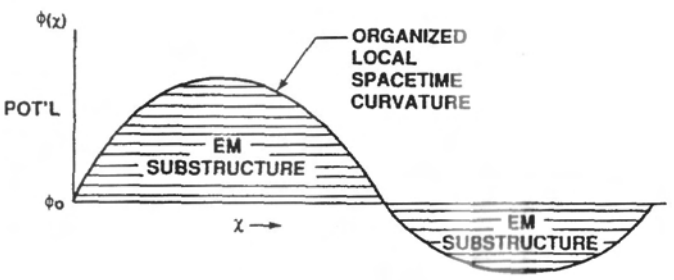

NOTE: SHAPE MAY BE ALL ABOVE OR ALL BELOW AMBIENT VACUUM POTENTIAL.

Figure 5. The Whittaker standing potential wave.

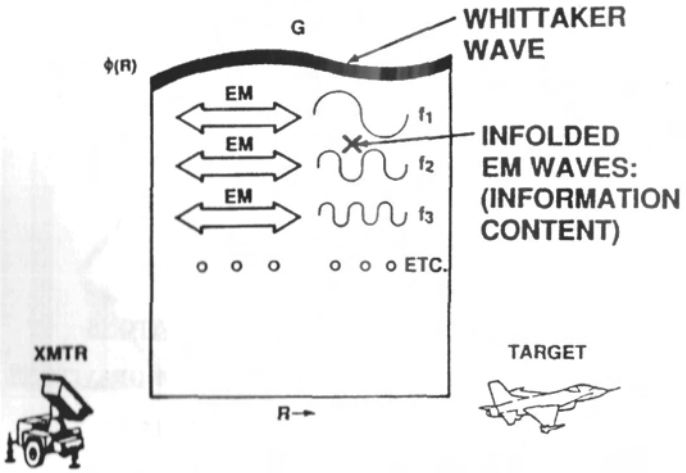

Figure 6. Infolded EM structure of the Whittaker beam.

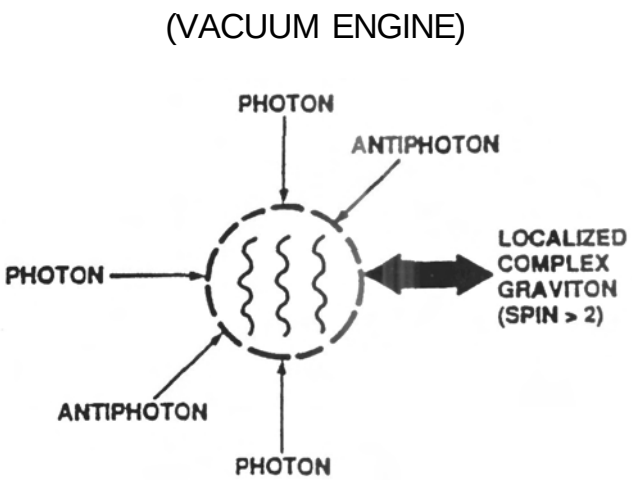

Figure 7. Destructive and constructive interference. Destructive interference of photons infolds them as EM structures inside gravitons; i.e., it constructs gravitons. Destructive interference of gravitons outfolds the internal EM structures; i.e., it constructs ordinary EM.

In a scalar EM potential the EM energy communicates vertically, which is harmonic translation of frequency energies, or time-wise. The time-wise two-wave EM energy communication represents a *stress upon the rate of flow of local observer time;* hence it represents *gravitational stress.* Further, the local rate of flow of time is determined by this local time-stress of vacuum potential. *One can easily engineer the harmonic bidirectional wave structure of the vacuum potential When one does so, then one also (1) curves local spacetime, (2) deterministically structures that local curvature with selected hidden-variable EM engines, (3) changes the local rate of flow of time, (4) gravitationally affects local systems, and (5) dynamically structures that local gravitational change to affect different system structures at will.*

Immediately this graviton concept focuses intensive attention to the nonlinear aspects of the problem, and hence to modulation and demodulation. Nonlinear materials, after all, are materials which directly exhibit the production of harmonics from a fundamental, as shown in Figure 8. However, as previously pointed out, production of harmonics affects the time-stress and the local rate of flow of time in an area. This is a gravitational effect, and hence nonlinear EM actions contain gravitational action components. *Nonlinear materials can and do void the mutual exclusivity of the classical EM and G fields, and interact in a unified-field manner.*

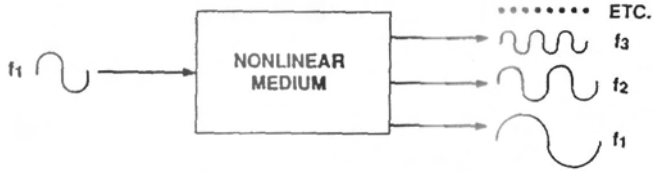

Figure 8. Nonlinear materials produce harmonics.

Also, in a true time-reversed situation, nonlinear materials can exhibit the production of a stronger fundamental from a combination of the fundamental and its harmonics, as shown in Figure 9. Thus there is a very clear difference between a true time-reversed EM wave and an ordinary EM wave with the same envelope and directional characteristics, contrary to most of the present treatments in physics.[7] The latter *case, pseudo-conjugation,* is not all true conjugation.

Figure 10 shows a comparison of phase conjugate mirror reflection and standard mirror reflection. Figure 11 shows the four-wave mixing concept by means of which the energy in pump waves A_1 and A_2 is utilized to produce an amplified phase conjugate replica wave A_3 in response to the weak input signal wave A_4. This gives a powerful means for producing and amplifying the time-reversed wave.

So a graviton is regarded as *a particle (cell) of the vacuum and of the spacetime medium.* It is in fact any one of the *ghost forms* we previously referred to. But it is not a sternly fixed, quantized fundamental particle, in the sense presently used in physics. Instead, the graviton is like a

quivering balloon or jelly-like cell in the vacuum medium, with many input and output pipes (coupling and decoupling waves) in and out.[8] The instantaneous size and composition of the balloon (the *graviton cell)* depends upon a multiplicity of internal states and their exchanges. A relatively stable graviton cell — such as the nominal spin-2 graviton — represents only an envelope of the average equilibrium state of multi-photon coupling in a dynamic coupling and decoupling photon flux.

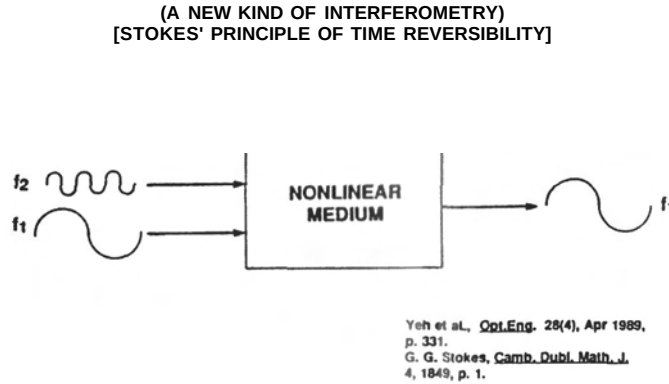

Figure 9. Time reversal of a fundamental plus harmonics can produce a stronger fundamental.

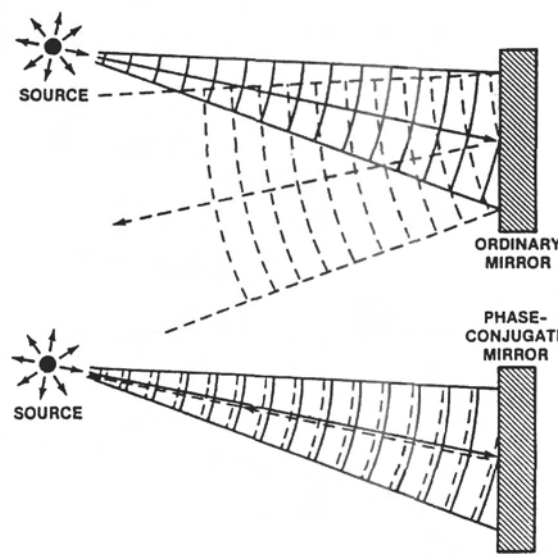

Figure 10. Ordinary mirror reflection versus phase conjugate mirror reflection.

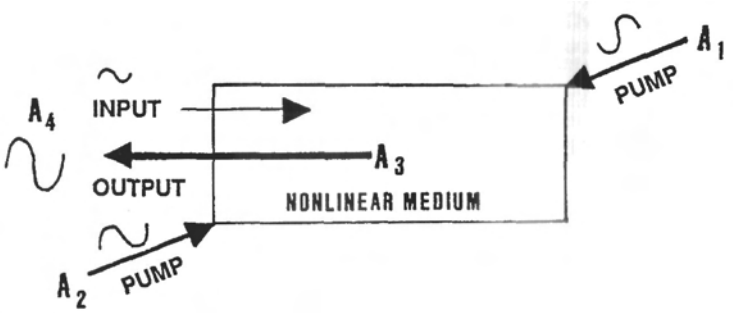

Figure 11. **Pumped** phase conjugate **mirror (PPCM).** The PPCM material acts as a triode **amplifier. Pumping and four-wave mixing allows strong amplification.** The phase conjugate **replica A_3 of signal input** A_4 **may contain up to all the energy in** A_1 **and** A_2.

Thus the graviton is the average coupled-photon structured cell of the local vacuum EM potential. When the graviton (average) spin is two, the local spacetime is flat and uncurved. *All that the concept of "flat spacetime" means is that the predominant average activity of the virtual photons of the local vacuum flux is simply the coupling and decoupling of pairs of single photons and single antiphotons.* When the graviton (average) spin is less than or greater than two, the local spacetime is curved, and EM and G are no longer mutually exclusive. Spin less than two gives curvature in one manner, and spin greater than two gives curvature in the opposite manner.[9] *All that the concept of "curved spacetime" means is that the predominant average activity of the virtual photons of the local vacuum flux involves either (1) increased decoupling and decreased coupling of photon/antiphoton pairs (negative curvature; graviton spin less than two), or (2) decreased decoupling and increased coupling of photonlantiphoton pairs (positive curvature; graviton spin more than two.)*

In quantum mechanics (QM), any EM frequency — even in a single quantum — now must be regarded as continually having internal dynamic exchanges subharmonically and harmonically. Indeed, each photon wavelength (single oscillation) must be considered as a graviton cell having **its** own spectral content. At the same time, it is also a part of the spectral content of many other **graviton** cells. Note that this describes a holographic connection and interaction. It also accounts for the fact that the photon stubbornly refuses to act solely as a simple, localized particle. One therefore regards photons as single-wavelengths of waves, to the first order. One regards the vacuum as composed of harmonic bidirectional wave structures, always marvelously and dynamically varying at incredible rapidity. This photon-structured vacuum permits the inclusion of internalized ordered-photon structure in spacetime, *in quantum change itself.*

Accordingly, the fundamental QM postulate that quantum change is random must be changed. Since there now may exist hidden subquantal and quantal orders within the randomness, the altered postulate must state that quantum change is *chaotic.* This produces an *already chaotic* quantum mechanics, and resolves one of its most pressing foundations difficulties: that of the missing chaos.[10]

It turns out that these changes to GR and QM unite them into a single unified conceptual approach. However, they also implement to the hilt a vital hidden variable theory and a graviton-

structured potential, to include the *quantum potential* (see Table 2 and Table 3), which can yield action at a distance. Now nonlocal effects arc also subject to deterministic engineering.[11]

Table 2. Quuntum Potential (QP) Characteristics.

- NO POINT SOURCE
- NOT RADIATED
- QP BETWEEN TWO PARTICLES
  - INTERACTION DOES NOT VANISH AS SPATIAL SEPARATION BECOMES VERY LARGE
  - INSTANTANEOUS CONNECTION
- DEPENDS ON QUANTUM STATE OF SYSTEM AS A WHOLE
- SYSTEM PARTS CAN BE GREATLY SEPARATED

Table 3. Hidden Variable Theory Quantum Potential.

- $V_{quantum} = (\hbar^2/2m) \frac{\nabla^2 \sqrt{\rho}}{\sqrt{\rho}}$
- "A QUANTUM PARTICLE MOVES AS IF IT WERE SUBJECT, IN ADDITION TO EXTERNAL POTENTIALS, TO A POTENTIAL WHICH IS A FUNCTION OF ITS OWN PROBABILITY DISTRIBUTION.
- BOHM'S H.V.T. ASSUMES
  - PARTICLE AND WAVE FUNCTION REAL AND SEPARATE
  - WAVE FUNCTION OBEYS SHROEDINGER'S EQUATION
  - PARTICLE OBEYS CLASSICAL MECHANICS
  - PARTICLE COUPLES TO WAVE FUNCTION THROUGH A QUANTUM POTENTIAL

LEE SMOLIN, "STOCHASTIC MECHANICS, HIDDEN VARIABLES, AND GRAVITY," QUANTUM CONCEPTS IN SPACE AND TIME. PENROSE/ISHAM, EDS. CLARENDON PRESS, OXFORD, 1986, PG. 165-166.

By far the most significant EM biological effects occurring in and on a biological system are due to its gravitobiological (internalized multi-photonic) exchanges. There are great differences between single-photon (monochromatic) interactions and multi-photon interactions. A priori the very notion — and the physical selection — of a monochromatic single photon interaction assumes that the multiphoton coupling of the graviton has already been destroyed. This discards any notion of a consistent and persistent graviton structure, since a monochromatic photon does not independently exist until its *coupling shell* graviton is destroyed or excluded. Spectral (harmonics) interactions, on the other hand, may well involve substantial and profound multiphoton, infolding, and outfolding effects that do not appear at all in monochromatic interactions. *A dramatic extension of photobiology is involved in gravitobiology.*

In the new model, permissibly the linked internal structure of spacetime may be partially ordered deterministically. This internally structured spacetime[12] underlies quantum change itself and is available for dynamic utilization and manipulation by living systems. This is particularly significant since the living system, its cells, and all its subcellular and multicellular parts deliberately utilize deterministic *internal* communication (Whittaker photon exchange) through the medium of the *hidden* internal EM photon structures of stabilized gravitons comprising scalar potentials. In short, for its living communication and control of both mental and physical processes, the biological system utilizes *internalized EM energy* in hidden harmonic Whittaker photon channels inside scalar potentials.[13]

Of course, externally one can also directly engineer a harmonic photon/wave structure and infold it as a hidden stress pattern structuring of Whittaker potentials. Such externally engineered Whittaker/Devyatkov signals provide a totally new and startling capability to directly and deterministically enter into all the biological organism's hidden internal control and communications systems — both physical and mental. With this approach, all internal living biophysical and biomental processes are now open to external engineering, manipulation, and control. Further, this is already well-known to the Soviets as evidenced by the work of Devyatkov,[14] Kaznacheyev,[15] and others.[16]

We strongly point out that gravitobiology deals with the dynamic structuring, tailoring, and engineering of the vacuum state itself — including the virtual state, spacetime, and subquantal and quantal change. Since all physical observables may be regarded as *collections* or *integrations* of subquantal and quantal changes, *we are now dealing with the ability to directly structure, tailor, manipulate, and engineer physical reality itself.* Also note particularly that the *living* aspects of a biosystem — mind, thoughts, memories, lives, emotions, personality, etc. — themselves may be regarded as equilibria and dynamic structures in the deeper nested levels of the virtual particle flux of vacuum/spacetime.[17] We have long pointed out that mind and matter share one "real" dimension in common: that of *time.* In structuring the vacuum and the curvature of spacetime, one is also producing a substructure in *time itself* — in both mind and matter. Accordingly, vacuum engineering (gravitobiology) implies that *we are also dealing with the ability to directly structure, tailor, manipulate, and engineer mind, emotions, personality, deeper mental reality, and life itself.*

The implications for technology development — and consequently for humanity itself — are awesome, both for good and for evil. For the good, we now see a breathtaking vista where a simple, cheap, and ready "cure" for almost any disease or health disorder will eventually become available. We see eventually the direct capability to access such heretofore excluded areas as all conscious and unconscious mental functioning, emotions, intelligence, memory (both short term and long term), and personality itself. *Eventually education will be by direct loading of the proper "software".* Even a severe personality disorder will be directly and quickly correctable. Even more astounding, it should be possible to reverse the aging process itself. Also note that, quantum mechanically, mechanics is electromagnetic at its basis, since exchange of virtual photons generates all mechanical **forces.** Thus even the mechanical aspects of disease —

crippling, twisted spines, shortened and gnarled limbs, physical malfunctions, physical defects, etc. — all will be directly treatable and curable.

For the bad, we see a mind-numbing vista where men can (the Soviets already have done so) utilize electrogravitobiology (EGB) for terrible new mass weapons of *electromagnetic biological warfare (EMBW).* The means for ultimate human enslavement — absolute mental manipulation and control from external means — can be developed, and this will certainly be noticed by would-be dictators and meglomaniacs.

The ability to develop and utilize EM disease-inducing and immediate death-inducing scalar EM weapons has already been developed by the Soviet Union in secret KGB laboratories. We will not dwell extensively on the potential horrors of such EM BW warfare. With the new weapons any nation on earth can be devastated — physically, mentally, or both — relatively simply and in short order, with tens and even hundreds of millions of prompt casualties. We point out that small tactical EM BW "death ray" weapons have already been clandestinely tested by the Soviets in Afghanistan, accounting for the *smerch* or instant-kill "nerve gas attacks" — so called.[18] When a body was struck by this weapon, not a single twitch or movement resulted in it thereafter, ever again. Not a single nerve impulse firing occurred, ever again, in the struck body. Every cell, bacterium, virus, paramecium, etc. in the entire body was instantly dead. The body simply fell like a limp dishrag and lay crumpled and still where it fell. A decisive signature of this weapon was that, with every cell and bacterium dead, the dead bodies did not decay for a very extended period (even 30 days) — precisely as if they had been deeply irradiated with cobalt-60 nuclear (gamma) radiation. No gas or chemical attack can do that.

The weapons vista for this entire area — which the Soviet refer to overall as *energetics,* is sobering. Khrushchev himself stated to the Presidium in 1960 that these new, fantastic weapons then in Soviet development could wipe out all life on earth if unrestrainedly used.[19] One strongly suspects that Khrushchev was referring to the EM BW directed energy weapon (DEW) aspects of energetics.

In the 1975 SALT Talks, Leonid Brezhnev even tried to get an agreement for banning the development of such new mass weapons. He personally met with visiting Senators and other Congressional leaders to point out the pressing and urgent need for limitations on these new weapons.[20] In fact, he called them weapons *"...more frightful than the mind of man has ever imagined."* That same year, Gromyko introduced to the United Nations General Assembly a draft treaty for the ban of these mass destruction weapons, and urged the nations of the world to sign it as a most urgent matter.[21]

Unfortunately, the rest of the world simply did not understand what the Russians were talking about

Thus one has great qualms — and much personal anguish — when even approaching this gruesome area. Certainly that is true for this analyst. Were it not for the fact that the Soviets have already discovered and highly weaponized these EM BW effects, I most certainly would turn my attention firmly away from this entire area.

However, such frightful EM BW DEW weapons *have* already been secretly developed and deployed by the Soviets. For over three decades they have used our reaction or nonreaction to the weak EM BW against personnel in the U.S. Embassy in Moscow[22] to gauge our knowledge — or *lack* of it — of unified EM/G biological warfare. In the nearly unthinkable event that war should break out between the Soviet Union and the West, the West will simply be immediately devastated by these eerie, mind-numbing EM BW weapons before it even knows what hit it. *When we have absolutely no counters, such attack becomes a preferred Soviet option and very likely.* A wide range of options is available to the Soviet Union in utilization of both EM BW DEWs and conventional BW agents. Clandestine, slow BW attacks can be so insidiously hidden and

cleverly employed that the Western nations — because of their present scientific and intelligence shortfalls and biases — will not even comprehend that the BW "slow strike" — on several fronts and employing differing agents and methodologies — was deliberate, until it is far too late to do anything about it

I firmly believe that, one way or another, such a clandestine "slow biological warfare strike", using viral and bacteriological agents and EM BW DEW augmentation as well — is already well underway against us. Further, it is still totally unrecognized as such by the West.[23]

Nonetheless, there is still great hope. If this nation wakes from its lethargy and puts its mind to it, gravitobiology can be quickly developed. Slow (and even prompt) BW attack can then easily be countered. *Unless gravitobiology is developed, we do not have now, and we shall not have in the foreseeable future, any effective defenses whatsoever to a BW attack, whether clandestine or open, and whether by conventional BW agents orEM BWDEWs.*

The scientific and engineering mindset and the need for a little highly unorthodox EM/G effort is all that presently blocks us from quickly achieving sufficient defensive capabilities for parity in this absolutely vital area.

Leaving the weapons aside for a moment, the new technology's positive benefits to mankind can be enormous — *"far more beneficial than the mind of man has ever imagined,"* to paraphrase Brezhnev. The control and vanquishing of all the ravaging illnesses and diseases is there, available for us to develop and employ for the benefit of everyone on earth, and for our children yet to come.[24] The vista of complete and thorough education for everyone — economically and universally available — is also something that has never existed but will now become possible, since eventually the necessary software and operating systems for any human skill or field can be directly loaded, so to speak.

With a developed knowledge of the external and internal energy balances of our biosphere, we can clean up the biosphere, permanently rid ourselves and our children of poisonous chemical and nuclear wastes, and restore the vitality of the planet for our living health and enjoyment

But make no mistake: This technology will give us the capability to engineer reality itself—both physical reality, life, and mind. *And we will be able to engineer it to be either a heaven or a hell; the choice is strictly up to us.*

Faced with the looming advent of this new science, certain of my associates and I have striven over the last four years to obtain funding for a major research institute, to develop scalar EM, gravitobiology, and novel energy and antigravity devices for the betterment of mankind. However, all our efforts have been thwarted. It has become increasingly apparent that the present scientific and control mindsets are so strongly entrenched, and so dedicated to suppressing any such attempt to break the economic and technological stranglehold on our citizenry, that the vision of such an institute is just a dream and not to be taken seriously.

Consequently, I have reluctantly concluded that this information must be openly released, for that is the only remaining way to overcome the solid barrier against the new technology and its benevolent use for humankind. I believe that a well-informed, concerned citizen is also a good thing for democracy and our free way of government. At least if there are frightful dangers facing us and terrible reefs to be avoided, *let us know what the dangers are and where the reefs are.*

In that vein, this paper is reluctantly written and circulated. This technology — of which only a tiny glimpse is provided here — is truly *a force amplifier* of vast gain. It is a massive amplifier for both good and evil, for any knife cuts both ways. How any tool is *utilized* depends upon the hand

and intent of the user, not upon the tool itself. Every tool is amoral, and only humans apply it morally or immorally.

Gravitobiology conceptually points the way to unleashing some of the most formidable tools ever conceived. Let us fervently pray that wisdom will prevail and these new tools will be utilized for Man's good, to heal him and not to kill him.

Man is upon the threshold of a crisis between the good and evil sides of his nature that is unparalleled in all human history. Whatever the reader's faith, I ask for your prayers. Most assuredly they will be sorely needed in the days to come.

Tom Bearden

January 1991

Woodpeckers; A Soviet Bicentennial Present to the U.S.

On July 4, 1976 the Soviet Union presented the United States of America with a most unusual bicentennial present: On that date, extremely powerful Soviet transmitters were energized in the communications band (3-30 MHz), causing interference with communications all over the world. The "chirped" signals of the new transmitters gave them a most peculiar sound, very much like that of a woodpecker's beak striking a flat block of wood. HAM operators immediately dubbed these new monster transmitters *"Woodpeckers."* Official protests by the various nations did little good. The Soviets insisted that the Woodpecker transmitters were "experimental" and necessary. The Woodpecker transmitters continued to pour out their bothersome worldwide interference, and they do so to this day.

Misidentification as an OTH Radar

The U.S. Department of Defense (DOD) scientists and engineers proclaimed the new monster Soviet transmitters to be simply *over-the-horizon (OTH) radar transmitters.* Of course, signals in the communication band will reflect off the earth's ionosphere, so that the signals can be transmitted beyond the radio horizon, reflecting around the earth in multiple bounces within the earth-ionospheric wave guide. For that reason, OTH radars commonly utilize one or more such frequencies. However, there are certain fairly stringent limitations on an OTH radar that are evidenced in its signals. While the Woodpeckers usually exhibit those characteristics, often they also exhibit a great many other characteristics that would be useless or even detrimental to purely OTH radar functioning. Therefore the consensus among many analysts — including, for example, one or more of our most knowledgeable OTH radar experts — is that the Woodpeckers *can* function as OTH radars if need be, but their primary purpose appears to be far more complicated than OTH radar sensing and ranging.[25] Officially, however, the U.S. Department of Defense and the U.S. intelligence communities still label the Soviet Woodpeckers as OTH radars.

Immediate Weather Engineering Over North America

For the next decade after the initial operational capability (IOC) advent of the Soviet Woodpeckers in 1976, the weather over North America was highly anomalous. In fact, the prestigious journal *Science* eventually pointed out that such an anomalous weather decade could be expected only once in 1200 years.[26] During this anomalous decade, of course, the Woodpecker transmitters were very active. Indeed, their beams regularly intersected over the United States in an interference "grid."[27] Finer interferometry patterns within this overall interference "grid" were used to create and move high pressure and low pressure areas over desired areas in the U.S., steering and controlling the giant jetstreams over the U.S. and directing the course of U.S. weather. The present author has fully documented and explained the use of the Woodpeckers in the weather control mode.[28] Further, we have long documented the use of the Woodpeckers as highly unusual directed energy weapons.[29] In addition, we have pointed out the Soviet capability to utilize the Woodpecker weapon systems to produce biological effects,[30,31] but have not heretofore given a full explanation of the exact EM mechanism for that capability. In this paper we present a more technical explanation of the biological effects of scalar electromagnetics — including as utilized by Soviet weapon systems such as the 14-year-old Woodpeckers, and the decades-long Soviet microwave radiation of personnel in the U.S. Embassy in Moscow. For details of the Embassy radiation, see Brodeur,[32] Johns Hopkins

University's study of the **health status of Embassy penonnel,**[33] The U.S. Commerce Department's funded study of **the** radiation,[34] **and other references.**[35]

Given a Dose of Their Own Medicine

After some time, the aggravated HAM operators banded together and formed a group action. Many of them recorded the Woodpecker's signals on tape and, at a prearranged time, suddenly turned **all** their transmitters on with the tapes playing, transmitting back to the Woodpecker receivers the taped replicas of their own jamming signals. The woodpecker transmitters were observed to become confused. They frantically changed channels and desperately tried to avoid the HAM operators' transmitted replica signals. Unable to do so, finally the Woodpeckers went off the air completely. Thereafter a modicum of caution began to be utilized by the Woodpeckers. They changed channels frequently so as not to "jam" one HAM channel continually, and substantially decreased their degree of interference with other communications equipments. Also, electronic filters to add on to one's receiver and filter out the Woodpecker's annoying "chirps" were produced in the West and made available to HAM operators and other communications groups. An uneasy truce resulted, and there the matter rests today, insofar as communications is concerned. The Woodpeckers have continued to operate at will.

Launch-Phase Antibomber and Antimissile Weapons

In latter 1985 and early 1986, the Soviet Union employed the internalized EM energy capabilities of the Woodpecker weapon systems to directly attack, disable, and destroy a series of U.S. aircraft and missiles. (We shall address internalized EM energy shortly.). We have previously documented these overt Soviet acts of war[36] and will not repeat that documentation here. We have also pointed out that 1985 was the specific Soviet target year to have all these weapons online and ready to go, as specifically stated by Leonid Brezhnev at a secret meeting of European Communist Party Leaders in Prague in 1972.[37] Indeed, at that time Brezhnev actually confirmed that detente was part of a deliberate Soviet deception plan.[38]

How This Paper Came About

Recently a frequent correspondent who is knowledgeable in HAM radio — and well familiar with the annoyance of interfering signals from the powerful Soviet Woodpecker transmitters in the communications band (3-30 MHz) — sent me a Federal Communications Commission (FCC) compilation of Soviet Woodpecker signal radiations and requested my comments. The editor of an important journal in England also urgently requested more definitive information on the Woodpecker's biological warfare capabilities. I quickly dashed off short responses to these two correspondents, but I realized that the biological capabilities of EM transmitters, including the Woodpeckers, required a more lengthy paper to provide an adequate explanation.

This paper is a much-expanded version of my responses to those two correspondents. Its purpose is to more fully reveal precisely how the Soviets can utilize EM transmitters such as the Woodpeckers to transmit biological effects — including *any kind of cellular death or disease whatsoever*— and induce and create these effects in a targeted distant population. In this paper we will detail some of the powerful electromagnetic (EM) biological warfare (BW) capabilities of electromagnetic transmitters, including the Woodpecker weapons systems. This will complete our expose of the unsuspected capabilities of the Woodpeckers.

Start With These References

First the concerned U.S. scientist should recognize that Soviet scientists — particularly those who work on highly secret Soviet EM biological warfare weapons projects — do not utilize the type of biophysics known to Western scientists. Instead, they have applied a unified EM/G field theory, called *energetics,* to photobiology and created a new, highly classified Soviet biophysics which this author refers to as *gravitobiology.* Accordingly, to understand the real, classified Soviet biophysics, the concerned U.S. scientist must be prepared to (1) acquire extensive new knowledge and a drastically different technical viewpoint, (2) search Western orthodox and unorthodox scientific literature in photobiology and unified quantum field theory physics, to discover potential candidate areas that the Soviets may have developed and applied, and (3) look behind the deliberate deception involved in most openly published Soviet biophysics papers and search for possible significant clues.

First, he or she should read and digest the two Whittaker papers,[39,40] ponder what is meant by Devyatkov's *information content of the field*[41,42] in light of Whittaker's infolded EM structuring of the scalar potential, and Kaznacheyev's extensive cytopathogenic work in EM induction of cellular death and disease at a distance.[43,44] Next he or she should study the implications of time-reversal in physics,[45] and the potential implications of utilizing in biology the time-reversed (phase conjugated) EM waves[46] which the U.S. discovered in the open Soviet scientific literature in the late 1960s and early 1970s. Finally, he or she should study the photobiology work of West German scientists such as Popp.[47,48] Those references should be studied first. Then he or she should study in detail the difference between Heaviside's/Gibb's vector EM curtailment of Maxwell's theory[49,50] and the original quaternion Maxwell theory,[51] because the Heaviside/Gibbs theory (the present classical EM theory) is only a subset of Maxwell's actual *unified EM/G field theory.*[52] Finally, by combining all this information and reiterating the study of the reference material until it can be successfully integrated in one's understanding, one has the basis of the "*whole banana"* of Soviet gravitobiology, so to speak.

One then has the basis of unified EM/G theory (energetics) with which the Soviets started some 40 years ago — and the beginning of which Maxwell had already published in 1873. From that foundation, it's not too terribly difficult for a good laboratory team to piece together the theory — and gradually develop practical, working hardware on the laboratory bench.

Technical Basis for Soviet EM Biological Warfare

Our scientists in the State Department, DoD, CIA, DIA, FCC and other U.S. governmental agencies are never going to understand the full biological warfare (BW) capabilities of electromagnetic transmitters such as the Woodpeckers — or develop new instruments to measure what specific biological information their signals really contain — until they understand *scalar electromagnetics.* Ordinary (classical) electromagnetics was produced by Heaviside and Gibbs in a *substantially truncated* version of Maxwell's true quaternion EM theory, as previously pointed out[53] by this author.[54]

Ordinary EM (and its *externalized* energy) cannot exhibit the capabilities we are referring to, or produce such "biological death and disease ray" results as are possible with specialized scalar EM transmitters. Instead, one must recover and utilize the scalar part of Maxwell's quaternion EM **theory** — the portion that was discarded by Heaviside and Gibbs.

Maxwell's original theory was a unified theory of EM and gravity (G), with the electrogravitational aspects being captured by infolding functions of the vector E and B force

fields inside the scalar component of the quaternion.[55] Thus Maxwell's quaternion theory, for example, also prescribed scalar waves of pure potential (trapped) EM energy, where this potential energy contained hidden, deterministically structured, *internal* bidirectional EM wave patterns — yet no external E- and B-field force resultants appeared in the overall vector summation envelope.[56] This can readily be seen by simple examination of the scalar component of the quaternion.[57] This pure *scalar potential (wave)* with a hidden deterministic EM wave substructure aspect was completely discarded by Heaviside and Gibbs. It is still discarded by classical vector electromagnetics theory today, even though it is experimentally verifiable and testable — and *engineerable.*

Scalar EM,[58] however, is a unified field theory of electromagnetics and gravitation, since it recaptures the scalar wave portion of electromagnetics that was erroneously discarded by Heaviside and Gibbs. In short, scalar EM captures, infolds, and hides deterministic EM waves inside EM scalar potentials — and also then interferes the structured scalar potentials to outfold the EM energy and recover it at a distance. That distant interference recovery, however, can be in the form of either negative (time-reversed) or positive EM energy, merely by how one biases the ground potential of the scalar interferometer relative to the ambient potential in the distant interference region.

Since it is known that potentials are gravitational (they are composed of trapped energy and energy is gravitational), then scalar EM is a unified field theory of electromagnetics and gravitation. Obviously these unified scalar fields with their hidden internal structures[59] have a great many more capabilities and uses than do the far more restricted classical EM force fields.

For four decades the Soviets have secretly developed this scalar EM/G theory and technology — which they call *energetics* — and have used it to develop and deploy secret unified field theory (UFT) superweapons of enormous power and startling capabilities.[60,61]

Biological Implications

The infolded, deterministic, hidden EM wave structure inside the scalar EM potential is called the *information content of the field* by Soviet scientists.[62,63] The Soviets know that it is this infolded and hidden EM structure — the *internalized* or *covert* EM energy of the potential field — that is deterministically utilized by living biological systems in all their cellular control and regulatory functions. Thus by deliberately manipulating this internalized EM energy structure of the scalar EM potential, the Soviets have found it possible to accomplish astounding EM biological effects — both for healing and for biological warfare — that are entirely undreamed of in the West.[64] The Soviet energetics technology can manipulate, change, control, or destroy literally any of the key biological functions of the living system — including *mental* and *behavioral* functions.

Internal and External EM Energy

In his 1903 Mathematische Annalen paper,[65] Whittaker demonstrates a standing, spatially-fixed wave of pure potential, but one with an infolded, highly dynamic, hidden EM forcefield substructure containing *hidden* bidirectional pairs of EM waves/energy. Again, see Figure 6 for a diagrammatic portrayal of this Whittaker wave (scalar EM wave).

In the diagram, in each pair of infolded EM waves, the two coupled waves flow in opposite directions *inside the standing potential wave.* Further, their speed is not limited to the normal

speed of light in vacuum.[66] In each pair, the two waves are multiplied together. Hence they *modulate* each other, locking together into graviton waves rather than photon waves.[67] *Each paired EM planar wave couplet is a hidden EM stress energy channel in vacuum spacetime, and in this channel EM energy flows in either direction — in fact, in both directions at once.* Further, there is continual constructive and destructive interference of these two waves, yielding continual coupling into pairs of photons and decoupling into photon/antiphoton pairs. In short, continual creation and annihilation of spin-2 gravitons is occurring. *A scalar potential, then, is composed of this dynamic structure.* Taking the Whittaker approach to the lowest level possible, this author has previously presented a unified field development of photon/antiphoton structures inside gravitons, unifying gravitation and electromagnetics at the most fundamental level — that of the quantum particles of the fields.[68] Figures 1,2,3, and 4 developed this *unified particles* approach.

The bottom line is this: There are two fundamental kinds of electromagnetic energy: (1) First, there is *externalized* EM energy. This is the normal "wave envelope" EM force field translation energy that acts externally upon each charged particle, to translate the particle as a single unit. The resulting unitary changes (translations) of charged particles *as wholes* produce the normal EM interactions upon things and objects, as seen by the external observer. Indeed, this process is external observation, and external observation is this process. (2) Second, there is also *internalized* EM energy, where EM forces act in antiparallel pairs. This *EM stress energy pattern acts* internally upon a charged particle or medium, specifically structuring the virtual particle flux exchange of the particle with the vacuum, or of the medium with the vacuum. This vacuum exchange with the particle, of course, constitutes the *charge* of the particle. The electric charge of a particle is due to the exchange of virtual photons between the vacuum and the mass of the particle. Note that the Whittaker structure represents deterministic structuring of this vacuum exchange with the mass of the charged particle. *It represents deterministic structuring of massless electric flux itself, in electromagnetic terms, and this does not presently appear in electrical physics theory.* Instead, orthodox theory *assumes* that the structuring is random, when in fact it is not — from Whittaker's work.

Western scientists do not normally even detect or recognize this internalized EM energy. Our instruments normally see only the gross static EM potential energy by actualizing it into gradients (force-fields) that translate charged particles.

External EM energy is the face that the scalar EM potential exhibits in its outer bulk interactions with gross matter. Internal EM energy is the face that the scalar EM potential exhibits in its inner interactions with the virtual particle flux of the vacuum — and with every charged particle in the universe, *most especially with the charged particles in the nuclei of atoms.*

Internal EM energy is the infolded EM stress energy inside the vacuum potential. Note that all scalar EM potentials are vacuum potentials. Deterministically structuring the infolded EM planar waves in the Whittaker structure of the vacuum potential is *vacuum engineering.*[69] It is also structuring the local spacetime, and curving it whenever the Whittaker potential differs from **the** potential of ambient vacuum/spacetime.

In our present engineering, at best we see only the gross envelope or bulk translation energy overall charging or draining energy) of the EM potential (trapped EM energy) that was exhibited by translating charged particles. We never detect the dynamic, hidden, bidirectional-wave EM substructure content and interactions of the EM vacuum potential. This undetected internalized EM energy that is infolded inside the scalar potential is electrogravitational energy, **since** all EM potentials are gravitational in nature, as is well-known.[70]

Vacuum Engineering **and Activation**

Note that the vacuum/spacetime consists *only* of internalized (infolded) (virtual) energy. Everything — every particle, wave, etc. — that exists or moves in the vacuum continually *internally* exchanges with the vacuum flux, since in fact every entity itself is only a special kind of equilibrium state in this vacuum flux. Everything, so to speak, is simply a special kind of fragile balloon in a many-pipe flow situation.

If the vacuum that an entity exists or moves in is deterministically structured, the vacuum exchange with the internal energy of the entity is structured. Just as changing the colors of the flows into and out of the balloon will gradually change the color of the balloon, the entity, will gradually "charge up" its internal energy to any persistent change in the vacuum's virtual particle flux. This charging process is called *activation.* If the vacuum exchange then changes back to normal, the structure of the internal EM energy of the entity will gradually return to normal. The entity then is said to have *discharged* (with respect to the new pattern or structure it had charged up with previously.) Discharge is also called *deactivation.*

The mass of an observable entity is a direct indication of its degree of total exchange with the vacuum. Since most of the mass of an atom is in its nucleus, then one is particularly interested in the activation and deactivation of the nucleus, for that is where the process largely occurs. The deterministically structured potential reaches directly to the nucleus of the atom, and the interaction between internal structuring is far greater in the nucleus than in the electron shells of the atom.

The Nuclear Charge Spreads

As the nucleus charges up with a new vacuum potential pattern, its EM coupling with the electron shells gradually is changed also, producing electron changes (of a wide variety) as well. *Activated* masses — atoms, nuclei, ions, neutrons, and electrons, for example — can then exhibit quite abnormal external chemical, electrical, and gravitational interactions as compared to unactivated (normal) "inert" masses.[71] If there is any sort of deterministic pattern in the activation, the activated nuclei can act very differently in their electrical, chemical, *and nuclear* interactions.[72]

Thus the internal energy structure of everything that exists or moves through the vacuum — every particle, wave, etc. — interacts with the internal structure of the potential (spacetime).[71] Everything is continually charging and discharging internally. Any change in the infolded Whittaker structuring of the local vacuum potential will gradually activate everything — virtual or observable — existing or moving locally through that region.

Activation of Photons

If one wishes to produce strongly activated photons that have a selected internal energy structure, one first produces a scalar EM potential with that structure and charges/activates matter (atomic nuclei) with it. Then one uses four-wave mixing in that material to evoke a highly amplified phase conjugate replica wave in response to a weak signal wave. The highly amplified replica will internally contain a strong replica of the selected structure.

EM waves whose potentials[74] are comprised of such activated photons can be produced and transmitted. When this activated wave is absorbed in a distant target, its internalized EM interaction will deposit this selected structure in the target mass. Gradually that internal activation structure will diffuse through the mass — particularly its atomic nuclei, then its lattice structure — so that the target becomes activated as well, with the desired pattern. Continued Irradiation of the target will result in a certain equilibrium "charge level" for that selected activation structure (partial potential) being present in equilibrium in the atomic nuclei of the target EM coupling to the electron shells and further interatomic interaction gradually activates the material lattice of the target with that Whittaker structure.

When external photon interactions now occur with the activated target material, kindling of the hidden virtual-state order may produce sufficient coherent integration to breach the quantum threshold and produce observable physical change. This will produce an "anomalous" change with respect to normal macroscopic interactions. Physical reality itself has been directly engineered and altered.

For specialized applications, extremely intense pulses with selected internal energy substructures can be generated. When these strike a target, immediate and intense effects can be obtained, particularly in the atomic nuclei. Fissioning of a nuclear material, for example, can be directly accomplished by this process. With slightly less intense application, specific cellular diseases or behavioral patterns can be promptly induced in biological systems.

Western Physicists Missed It

In experimental physics, Western scientists have been preoccupied with ever more subtle detection of charged particles translated by the *externalized* envelope energy of EM waves and potential gradients. They have not recognized that (1) gravitational potential stress always has a hidden electromagnetics substructure,[75] (2) the greatest portion of this substructure is electromagnetic, and (3) that hidden EM substructure can be deliberately controlled and utilized to manipulate particles, atomic nuclei, and gross matter (both living and nonliving) in ways that arc completely impossible with the present *envelope* translation electromagnetics.

The hidden EM stress substructure can be deliberately engineered by composing it of a proper deterministic set of EM waves and signals, and infolding these together with their equal phase conjugates into a modulation and standing wave resonance process.[76] This produces an "artificial" or internally patterned/activated potential with the desired Whittaker bidirectional EM wave structure hidden inside. Since earliest times, living systems have utilized these internal EM energy channels and performed such "vacuum engineering" by infolding. Because we have not recognized or measured this internalized EM energy in biology and physics, we have heretofore completely failed to penetrate to the active infolded EM signals and hidden EM control mechanisms of living biological systems — literally because our present instruments cannot detect and measure their functioning nor the hidden EM energy they utilize.

Chaos: Hidden Order Underlying Randomness

Because we have been preoccupied with *externalized* EM interactions, we have been reductionist in our outlook upon physical reality. Accordingly we have built a present physical science and biology that is almost completely *reductionist* (i.e., we believe that the whole is just the sum of the parts, and that is all there is to it.). However, the interactions of *internalized* EM stress energy transcends reductionism. Then the whole is no longer just the sum of its parts, but also is

changed and affected by the overall nonlinear internal interactions of its parts — both with each other and with the whole itself. Then we indeed have a new holographic science whose true ordered nature does not presently appear to us through our crude "externalized energy" detectors except as *chaos* — the mysterious presence of hidden order in apparent randomness. When such "randomness with hidden order" — chaos — is integrated and collected, surprising and unsuspected order emerges macroscopically.[77]

Special Implications **for Quantum Mechanics**

However, quantum mechanically this implies that there exists hidden order even inside a single quantum of change. That is, the hidden order is *subquantal,* hence *virtual.*[78] This tells us that the virtual state itself is ordered by Whittaker structured-potential methods.

But this changes the interpretation of one of the postulates (fundamental assumptions) of present quantum mechanics itself. Now one must postulate that quantum change is *chaotic,* rather than purely *random.*[79] For large collections/integrations of quantum changes, the hidden internal order emerges and stabilizes. Thus quantum change is statistical, but it is not the Gibbs statistics of a random variable; rather, it is *chaotic* statistics. Since the macroscopic implies large collections/integrations of the virtual, the chaotic statistics of quantum change yields an ordered macroscopic universe that emerges from *seemingly* random (but actually, already chaotic) microscopic changes.[80]

It also resolves one of the burning issues in quantum mechanics today: the problem of the missing chaos.[81] One simply alters the fundamental interpretation of the QM postulate — that quantum change is statistical — to mean that quantum change is *chaotic.* This places quantum mechanics upon an *already chaotic* basis, resolving the QM foundations difficulty of the missing chaos.

It Was **Already Implicit Within** the Theory

Actually, from still another viewpoint, the whole thing should have been apparent long ago. Numerous physicists have struggled with the embarrassing fact that the energy in the G-field is *negative* energy. For the G-field, like "charges" — that is, all masses, so to speak — *attract* each other. Their unrestrained attraction does work on the G-field between them and increases the energy of the field (potential) at the same time that the kinetic energy of the masses is increased. But conservation of energy states that the energy of the system (kinetic energy of the particles plus the potential energy of the field) must remain constant if there are no other sources or sinks. Hence the increased energy of the G-field must be negative, since the increased kinetic energy of the particles is positive. To drive these "like G-charges or masses" apart, one has to input additional positive energy to the field to cancel some of its negative energy. Therefore one has to expend additional positive energy to separate two masses against the G-field attraction.

In electromagnetics, of course, like "charges" — either electrical or magnetic — repel each other, and their unrestrained repulsion weakens the EM field (potential) energy at the same time that the kinetic energy of the charges is increasing. Conservation of energy of the system thus requires that positive energy "goes out of the weakening EM potential, driving the repelling electrical charges apart and increasing their kinetic energy. This means that the energy of the electric field (potential) is positive.

So we now speak of positive *(externalized)* field energy and negative *(internalized)* field energy. What we call *normal EM energy* is *externalized (outfolded)* EM energy. What we call *normal*

gravitational potential is in fact *internalized (infolded)* EM energy. This of course is completely consistent with Sakharov's seminal 1968 hypothesis that the gravitational field is not a primary field of nature, but is generated by — and composed of— other ordinary fields.[82] In fact, to the first order it is generated by, and composed of, infolded electromagnetic fields. Sakharov's hypothesis has led to an explosive development of stochastic gravitation,[83] culminating in the very important papers of Harold Puthoff.[84] Indeed, the modern vacuum is anything but empty, but is filled with Whittaker order and structure, incredible density of disintegrated EM energy, and violent virtual particle flux of an intensity and density that boggles the imagination.[85]

The Case of Opposite Charges

In passing, for the purist we briefly point out the case of opposite charges. First, let us look at equal but opposite *electrical* charges. Electrically, two unlike charges are seen by the external observer to attract each other, and increase the strength of the field. However, *charge-wise only (not mass),* each charge is now the antimatter partner (time reversal) of the other. In quantum mechanics, time is not an observable, but only a parameter. Since we never *see* time but only infer it from observed spatial changes, we will just see the *spatial* track of the time-reversed forces and the energy situation. Thus we will see mutual "time-reversed repulsion" — which corresponds to *mutual attraction* as seen by the time-forward observer. The electric field now seems to add negative energy. That is, additional positive energy is seen to be extracted from the electric field, to increase the kinetic energy of the attracting particles, which means that the negative energy of the field is increased. However, the external observer does not see this energy as negative but as positive. He sees the positive energy of the electrical field increased.

When unrestrained, two unlike *gravitational* charges (i.e., a positive mass and a negative mass) act in similar time-reversed fashion. The situation is exactly opposite to the case of the electrical charges and fields. To the forward-time external observer, the two unlike gravitational masses will be seen to repel (i.e., to "time-reversed attract) each other and decrease the negative energy of the gravitational field between them.

We also examine another case: the coherent integration of photons. We choose to regard a photon as a coupled electron-positron pair, in the virtual state. There are now two ways of ordering collections of photons.

First, if we parallel-order the positrons and parallel-order the electrons, this is coherent integration of photons, which is involved in a single EM sine wave, for example. In this case, we still have all the positive charges opposed to all the negative charges, so the situation remains *photons* and electromagnetic. In an EM sine wave, the electric charges are collected in the positive E-field portion of the wave, and the positrons are collected in the negative E-field portion of the EM wave. This wave will always interact with a charged particle, regardless of its phase, at all but its beginning, ending, and middle "zero E-field" points.

The second way to order collections of photons is to equally collect electrons and positrons. That is, for each electron/positron photon, its antiparticle (its antiphoton, which in this case is a positron/electron photon) is collected with it. Voila! The vertically parallel electrons and positrons attract each other, so that *all resultant E-fields of this collection are zeroed, vectorially.* Further, each photon/antiphoton pair now has spin-2, which does not constitute a photon with non-zero E-fields, but a *graviton* with zeroed E-fields. That is, we have created a pure electrostatic scalar potential, with a hidden *internal* EM wave/photon coupling and decoupling structure. In this coupling, which we have very crudely described, photons/antiphotons are continually coupling and uncoupling. From Whittaker's work, the coupling and uncoupling are phasing, both vertically and horizontally, so that harmonic sets of paired bidirectional EM waves

are seen to be internally moving (photons coherently coupling in one direction and antiphotons coherently coupling in the other, then decoupling, then recoupling, etc.) inside the potential.

What we have done, in short, is turn electromagnetic energy into gravitational energy. What emerges from all this is a clear principle (which can be demonstrated in the laboratory, with only medium difficulty): The one-to-one addition of an electromagnetic wave and its phase conjugate replica of equal magnitude, results in a gravitational envelope wave of pure scalar potential. In Bohm's terms, it infolds the electromagnetics into a hidden, ordered EM structure of a standing gravitational wave. Note that this gives a new view of negative energy vs. positive energy. We may state now that positive energy is ordinary, time-forward, outfolded EM energy; and negative energy is nonordinary, time-reversed, infolded EM energy.

But if that is true, then one of the cornerstone physics assumptions is false: that is the assumption that a photon and an antiphoton are identical. Indeed, this is false, as this writer has protested for years. Further, it is easily proven that it is false. We do so as follows: First, take a phase conjugate mirror material. We now wish this material to sometimes emit ordinary photons (which it will do, for example, by simply heating it). We also wish it to sometimes emit antiphotons, or time-reversed photons (which it will do when stimulated by absorbing another photon, and emitting a phase conjugate replica. Now we measure the recoil of the mirror material *when it emits a photon or antiphoton.* That's fairly readily done; a little tricky, but not too difficult Any decent university lab can do it easily. An interesting thing now emerges: *The mirror material measurably recoils as required by conventional theory when it emits an ordinary photon. It does not recoil as required by conventional theory when it emits an antiphoton.* We therefore have shown that, in some very fundamental fashion, *a photon and an antiphoton are very different, and their emission is very different from the fundamental criterion of Newton's third law.* Q.E.D.

Whittaker Rediscovered Tesla's Standing Columnar Wave

Actually the standing Whittaker 1903 wave is the same strange new wave that Nikola Tesla experimentally discovered emanating from Colorado thunderstorms four years earlier — on the night of July 3-4, 1899.[86] This was Tesla's famous *standing columnar wave.* Let us give credit where credit is due: in later years the Great Electrician repeatedly stated that he was not using transverse EM waves, but rather he was using *longitudinal EM "sound" waves* — waves of compression and rarefaction of the etheric medium (of the virtual particle flux of vacuum) itself.[87] In other words, he was using *stress waves of the vacuum ether* — pure potential waves, precisely the same as those for which Whittaker wrote the theory in 1903.

In fact, then, Tesla was using Whittaker standing potential waves with deterministic bidirectional EM transverse wave hidden substructures. He had discovered and was utilizing the *internalized* EM energy (i.e., the information content) of the field as well as its *externalized* EM energy the field. Generations of Western physicists and electrical engineers — brought up on an exclusive diet of the Heaviside/Gibbs vector truncation of Maxwell's unified electrogravitation — have condescendingly believed that Tesla was mistaken.[88] They have haughtily proclaimed that no one could produce and utilize longitudinal EM waves — because *they themselves* could not do so! Those same physicists and engineers have not had the slightest understanding of what Tesla really discovered and used. And they have not had the slightest knowledge of the Whittaker papers, which have been there in the literature all these years, neglected in the West. Unfortunately, Whittaker's work and Tesla's work were uncovered, thoroughly investigated, extended, applied, and intensively utilized long ago by Soviet scientists to produce powerful new secret superweapons and frightful EM biological warfare weapons.[89]

Soviet Weaponization

The Soviets simply took the internalized EM energy theory directly from the Whittaker papers in the open literature and weaponized it. Taking the Whittaker viewpoint, the most important and insidious thing about the Woodpecker transmissions is the *infolded* EM content inside their standing (persistent) potential waves — *not* the "external envelope" E- and B- translation fields that constitute the "normal" electromagnetics familiar to our own scientists and engineers. It is the infolded paired bidirectional EM waves and energy — the hidden *internalized* EM energy that has been added within and to the normal envelope E- and B-field translation energy — that allows the Soviets to utilize two quite different kinds of EM energy, and conceal the most important kind from prying Western investigators.[90]

What this means is that if one just measures the *externalized* E- and B-fields transmitted by the Woodpecker transmitters — as Western scientists and engineers do — then one misses the most important thing. Oh, one will believe the Woodpecker is an over-the-horizon (OTH) radar, alright, for it obviously can perform that function by the highly restricted *envelope* (outfolded, externalized) EM that we Westerners already know about, measure, and use. But one will not see or know anything about what the Whittaker standing potential waves of the Woodpeckers can do and are doing — both energetically and biologically — with their hidden internalized EM information content/structures.

Detection and the Aharonov-Bohm Effect

To get at the infolded EM structure of the Whittaker potential, one must make a two-stage detecting instrument. The instrument must contain a *shielded interference first stage,* where two or more Whittaker potentials interfere, a la the Aharonov-Bohm effect.[91] [An overview of the Aharonov-Bohm effect is given by Olariu and Popescu.[92] For confirmation of its proof and begrudging acceptance, see Schwarzschild.[93] For weapons potential, see Bearden.[94]] By that initial interference in the first stage, Whittaker's second paper[95] shows that you will "outfold" the hidden EM contents of the interfering potentials, even if the interference is accomplished at a great distance. Voila! "Normal" (externalized) EM energy magically appears at the output of the first stage interference. The first stage was shielded, of course, to prevent any other spurious ordinary EM radiation to reach the region of the output of the first stage and contaminate our subsequent measurement of the first stage output. The second stage consists of a suitable *normal E*M instrument, spectrum analyzer, etc. to measure the outfolded EM spectrum, power density, distribution, timing, phasing, etc., allowing one to "track backwards" and characterize the *hidden EM information content* that was infolded inside the Whittaker potential.

Note that, taken together, the two Whittaker papers prescribe a means for producing a macroscopic Aharonov-Bohm effect at an appreciable distance — something which is eminently weaponizable.[96] It appears, of course, that the Soviet Union has done just that very thing.[97]

Distant Heating or Cooling: Hot or Cold Explosions

In the macroscopic world, interference of two OTH Whittaker beams of widely separated Woodpecker OTH transmitters produces EM energy at a distance (in the distant interference zone). However, this *outfolded-at-a-distance* energy can either be *negative* EM energy or *positive E*M energy.[98] Negative (timc-reversed) EM energy will do negative (negentropic) work: It

represents the reordering of scattered/disordered EM energy in the interference zone. This of course directly corresponds to *electrostatic cooling* in that zone.

On the other hand, positive (time-forward) EM energy will do positive (entropic) work: it represents the further disordering/scattering of the EM energy in the interference zone. This in turn corresponds to *electrical heating* in that zone. Whether heating or cooling is produced by Whittaker/Aharonov/Bohm (WAB) interference in the distant target zone depends simply upon how the electrical grounding of the Soviet Woodpecker transmitters is potentially biased vis a vis the local ambient vacuum potential in the interference zone. If the Woodpecker ground potential is higher, positive energy (and concomitant heating) will be produced in the distant interference zone. If the Woodpecker ground potential is lower, negative energy (and concomitant cooling) will be produced in the distant interference zone. The Whittaker scalar interferometer can produce the heating or cooling in the distant interference zone very slowly, gradually, or explosively." Indeed, incorporation of Whittaker's hidden EM structure inside the scalar potential requires a revision of all our present energy concepts.[100]

Artificial Highs and Lows to Steer the Jet Streams

One can now see that, by simply changing the biasing of the Woodpecker transmitters, in a distant region the Soviets can produce atmospheric heating (and consequent lower pressure from the lowered density of the expanded air) or atmospheric cooling (and consequent higher pressure from the increased density of the contracted air.). Thus the Soviets can easily make high pressure areas or low pressure areas in the Woodpecker interference zones over the U.S. (and elsewhere) as desired. By deliberately placing and moving these artificially created high and low pressure areas, the jet streams over North America can be deviated and steered at will. This is the major means by which the Soviets engineer the weather over the United States today. Recall again that the Woodpecker transmitters really were a Bicentennial gift to us from the Russians, for they were cranked full-up on July 4,1976. Since that time the weather over the U.S. has been far, far more anomalous than could even remotely be expected statistically. Note also that July 4, 1976 was the 77th anniversary of Nikola Tesla's discovery of his "standing columnar wave" — the Whittaker standing potential wave that the Soviet Woodpeckers utilize to engineer America's weather.

Soviet/German Discovery of TR Radar Waves

One should also realize that the Soviets discovered time-reversed (TR) EM waves right after World War II. In the latter 60's and early 70's, to their astonishment, Western scientists found time-reversed EM waves emerging in the open Soviet nonlinear optics literature. In 1972, two Soviet scientists briefed U.S. scientists at Lawrence Livermore National Laboratory on nonlinear optical phase conjugate waves.[101]

At the end of World War II, the Soviets discovered four-wave mixing and pumped phase conjugate mirror effects in the German radar team's anomalous radar experiments with multibeam illumination of radar absorbing material (RAM). Specifically, in multibeam illumination of RAM materials, one gets four-wave mixing and amplified phase conjugate replica effects. The phase conjugate replica, of course, is a time-reversed EM wave. Further, in four-wave mixing, this time-reversed EM wave can be amplified. Thus anomalous, amplified, time-reversed radar waves would have been encountered in the radar team's experiments. The Soviets obtained the entire German radar team — RAM materials, multibeam illumination anomalies and all — at the end of the war. In deciphering these anomalies, the Soviets and their German

protegees discovered time-reversed EM waves, phase conjugate replicas, pumped phase conjugate mirrors, and multiwave mixing effects. And they first discovered them in *radar* waves — microwaves — not in *optical* waves.[102]

Targeting U.S. Embassy Personnel in Moscow

Accordingly, the Soviets began to apply TR EM waves to *radar* (microwave) prototype directed energy weapons (DEWs) by about 1950 or so. And in the early 1950s they promptly started the weak microwave radiation of the U.S. Embassy in Moscow, targeting the U.S. Ambassador and guaranteeing highest-level U.S. attention. The purpose was to stimulate the U.S. with the new technology, to see what reactions and responses we produced on site at the Embassy. In other wnrds, by watching our *technical* reaction at the site, the "Embassy stimulus" allowed the Soviets to find out whether or not we knew about Whittaker potentials and their infolded EM substructures, Kaznacheyev EM induction of diseases, etc. By our total lack of any scalar EM reaction, we conclusively showed the Soviets that we still only knew of ordinary *externalized* (envelope) electromagnetics.[103] Specifically, we were totally unaware of the infolded-EM Whittaker potential wave whose deterministic internal structure constituted *specific cellular biological information.* This hidden *information content of the field* was utilized to generate specific diseases in U.S. Embassy personnel, including three U.S. Ambassadors.[104]

A Reinterpretation of the Johns Hopkins Investigation

Some years later, Johns Hopkins scientists investigated the Soviet microwave radiation of our Moscow Embassy and found that *no diseases were induced in personnel in Embassy locations where E- and B-fields from the radiation existed.*[105] The patterns of the non-zero force-field radiation areas inside the Embassy were carefully modeled by the Johns Hopkins team.[106]

Predictably, Johns Hopkins scientists ignored the potentials and concluded that, since no diseases occurred in personnel located where the E- and H-fields were, it could not have been the microwave radiation causing the effects. This conclusion, of course, follows the classical EM assumption that *only* the nonzero E- and B-fields are causative agents. Note, however, that the *persistence of the potentials* is inversely proportional to the strength of the EM force fields (Figure 12). After all, a force field is just a gradient in a potential, which means a *bleedoff* or escape of that potential by translation of charged particles. Potentials *persist* where there is no bleed-off (i.e., where there are no force fields). Whittaker potentials, which in the absence of interferometry do not produce external gradients, normally do not produce force fields and move electrons to measure. Normal instruments will therefore usually fail to detect the presence of persistent potentials — for exactly the same reason they fail to detect the ambient vacuum potential in which they are immersed.

The *Johns Hopkins scientists reached a totally wrong conclusion.* Since 1959 and the Aharonov-Bohm paper,[107] physicists have known that the EM force fields are not even primary; the potentials are primary, and the force fields are *effects* created directly in the system itself by interference of the potentials. However, as yet this has not widely filtered down into conventional electrical engineering as a major consideration! Precisely stated, what the Johns Hopkins investigation actually showed was that it was not the E- and B-fields — the force fields - that were inducing the diseases. However, the microwave radiation was definitely involved, or else there would not have been such total anticorrelation to the force fields. That is, if the microwave radiation was not a factor, then some of the diseases should have occurred in the absence of the force fields, and some should have occurred in the presence of the force fields.

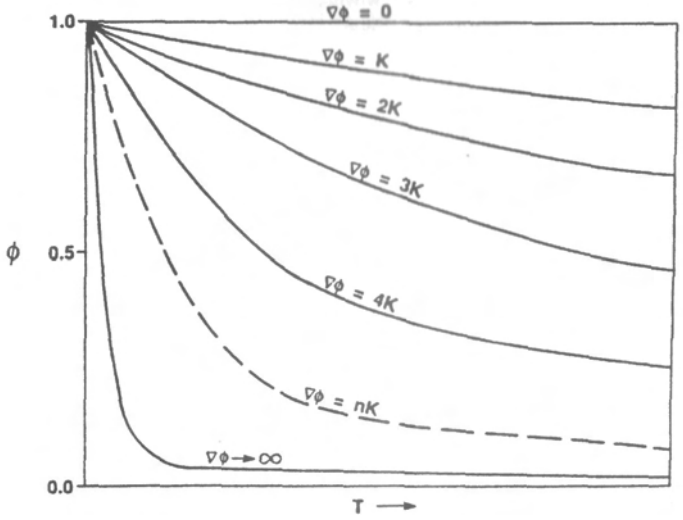

Figure 12. Potential persistence vs. gradient discharge. The curves are adapted to show typical declining exponential variation of the discharge.

Note that, other things being equal, total correlation to the absence of one of a pair of canonical variables may be very high correlation to the presence of the other canonical variable. From Whittaker's 1904 paper, we know that we can discard the notion of the E- and B-fields in the microwave radiation pattern in the Embassy, and replace these force fields with interfering, dynamic (changing) and *interfering* scalar EM Gelds. Indeed, as Whittaker showed, two source of interfering scalar potential fields/beams are sufficient to produce the EM force fields. *Twin-beam transmitters, and therefore the presence of interference — was in fact present in the microwave transmissions,* as verified later. Where Whittaker standing potential waves are not in interference, the waves remain as force-Geld-free potentials. In those regions, the E- and B-fields are zero.

The point is, the stable presence of EM force fields and the stable presence of EM scalar potentials are canonical. The hidden EM bidirectional wave structure of these stabilized potentials is still there and stabilized, even when the external force fields are zero.

That is, in the presence of the Whittaker potentials where scalar interferometry does not occur, the externalized EM force-field waves are zero. However, the internalized bidirectional EM wave structure of the Whittaker potentials is very much present. If the harmonics of the enfolded EM Whittaker structure have been deliberated created to possess a disease pattern signature, then that disease pattern is present in the persistent potentials. A body exposed to that activated potential will gradually "charge up" its master cellular communication system with the disease pattern. Thus that body will activate its defenses, try to throw off the disease, but be unable to rid its cellular control system of the cytopathogenic pattern that is affecting all its cells That body will thus gradually develop the disease, with sufficiently prolonged exposure to the cytopathogenic pattern on the internalized EM of the persistent potentials.

What Johns Hopkins researchers actually found is that the *changing* EM microwave potentials were not inducing the health changes in Embassy personnel. Ergo, if it was the electromagnetic radiation, it had to be the persisting (unchanging) potentials — the standing potential waves a la Whittaker. And there was essentially 100 percent correlation between induction of the diseases and the possibility of the presence of the persistent microwave EM potentials. From there, the induction of the diseases can be explained via Kaznacheyev's *cytopathogenic effect,*[108] Devyatkov's *information content of the field,*[109] and a deterministic infolded internal energy structure of the Whittaker potentials.[110]

The Johns Hopkins study actually showed a high correlation between the presence of persisting microwave potentials and the locations of the induced health problems in Embassy personnel Since it showed total lack of correlation to the force fields, it eliminated any other causative agent *except* the structured Whittaker potentials. If the microwave radiation had not been inducing the illnesses, then some health changes should have occurred in personnel in locations where the E- and B-fields were present, as well as in some locations where they were absent.

The Johns Hopkins team members were highly capable scientists and very good electrical engineers — but completely lacking in knowledge of structured Whittaker potentials, the Devyatkov/Whittaker infolded EM bidirectional wave-pairs that constitute a hidden deterministic Information content of the field, and the Kaznacheyev EM induction of disease at a distance (cytopathogenic effect). Of course, the twin-beam part of the microwave radiation gives a clue to the Whittaker/Aharonov/Bohm interferometry involved, and how to get the graviton (Whittaker potential) radiation back into EM photon radiation structures inside the Embassy interference zone.[111]

Advanced Photobiology Aspects

It should be pointed out that apparently the U.S. did not even bother to translate Kaznacheyev's important 1981 book on the EM induction of cellular death and disease.[112] Figure 13 shows a diagrammatic illustration of the cytopathogenic effect, as demonstrated in thousands of military experiments by Kaznacheyev's team. And apparently U.S. researchers still have not translated Devyatkov's book on the information content of the field.[113] The overwhelming importance of the most crucial photobiological work in the world simply has not been recognized to date by Western scientists and intelligence analysts.

If one checks Devyatkov's work, one finds that (1) the Russians obviously know all about the coded EM potential — they refer to the infolded EM waves in the Whittaker potential as the *information content of the field.* Devyatkov also points out the incredible medical implications, and strongly stresses that this is *not* normal communications theory! He gives a part of the theory in his paper — all the while carefully keeping from revealing that the "field" being structured with information content consists of the *structured scalar Whittaker potentials.* He is not referring to modulations on the carriers or to wave-front shaping of the EM forcefield waves. Of course he refers to healing and diagnosis; the effect can be used either for direct healing of diseases[114] or for the *direct electromagnetic induction of the desired diseases themselves.*[115]

Electromagnetic healing works this way: (1) The Kaznacheyev cytopathogenic signals for a specific cellular disease is time-reversed (phase conjugated). This produces a specific healing signal complex. The complex signal may also be powerfully amplified by pumped four-wave mixing techniques, using a pumped phase conjugate mirror. (2) The healing signal complex is infolded into a structured Whittaker standing potential wave. By Whittaker's 1904 paper, this infolds the signal complex into one or both of the two scalar potentials that are involved in the production of a normal EM wave. This process yields, for example, a normal EM wave which has

been internally altered with the hidden information content of that healing signal. Or, if one wishes, one may simply utilize a single Whittaker standing potential wave directly, and infold the healing signal complex in it. (3) The wave with its healing information content/structure is broadcast into a targeted living body, where it gradually charges up *(activates)* the body's master cellular control system with the desired healing signal complex. In turn, the cellular control system carries this complex to every cell of the body, gradually activating all of them with the healing signal. At the same time, the immune system is conditioned and charged (activated) for the specific healing process. Table 4 summarizes this EM healing methodology.

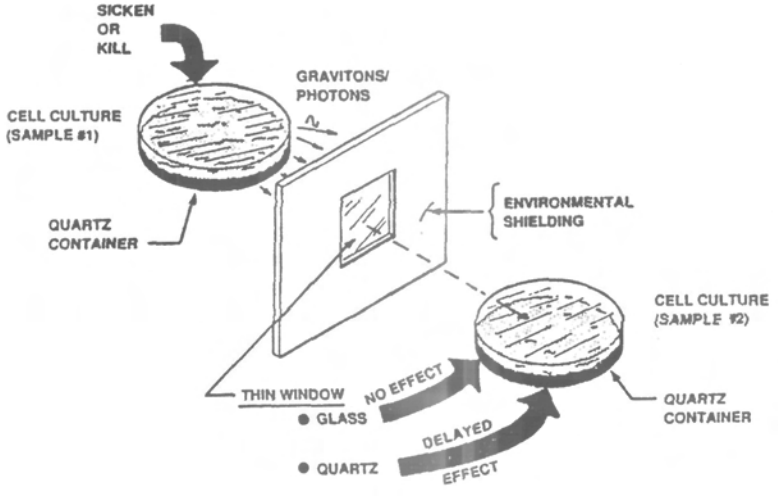

Figure 13. The Kaznacheyev cytopathogenic (CPG) effect. Death and disease transmission by deterministically structured gravitons. The gravitons contain disease-specific infolded photon patterns that represent specific disease information. The destruction of the harmonics of the Whittaker pattern destroys the time-sync of the photons, freeing them and destroying the gravitons.

Table 4. Countering EM Biological Warfare.

- **PER QUANTUM MECHANICS:**
  - **MECHANICS IS EM AT BASE**
  - **CHEMISTRY IS EM AT BASE**
  - **BIOTOXINS ARE EM AT BASE**
- **ALL BW IS EM BW AT BASE**
- **PREPARE WHITTAKER EM ANTIDOTE AS FOR AN UNKNOWN DISEASE**
- **IRRADIATE PERSONNEL WITH WHITTAKER EM ANTIDOTE**
- **DISEASE IS REVERSED IN SYSTEM TESTED**

The Soviets have long since developed this capability, and they continue to hold it highly secret. Techniques similar to this give the Soviet Union a perfect defense against surreptitious biological warfare.

The Soviet Union is in a position to be able to successfully defend against any sort of biological warfare attack, by any kind of biological agent. It is presently the only nation on earth that possesses such a capability, or that has the ability to employ biological warfare to the hilt without fearing retaliation in kind. Thus, *for at least three decades biological warfare has been a preferred Soviet option since no other country has such anti-BW defenses and the Soviet Union does.* And their decades-long microwave radiation of personnel in the U.S. Embassy in Moscow, to induce mysterious health problems and diseases, has continued to show them that the U.S. knows nothing of this technology, and is unprepared to defend against it.

Inducing Diseases in U.S. Embassy Personnel

In the microwave radiation of the U.S. Embassy in Moscow and the deliberated induction of diseases and health problems in Embassy personnel, Table 5 summarizes how the diseases and health problems are induced. All that is necessary is just to use and infold the Kaznacheyev cytopathogenic EM signal complex (the K-signal) directly into a Whittaker potential, without first time-reversing it. If only the optical spectrum for the specific cytopathogenic effect is available, it can readily be translated to the microwave spectrum by using the principle of subharmonic oscillation.[116] Such "specifically activated" potentials (signals) can be broadcast by transmitters as standing Whittaker potential waves, and used (with or without scalar Whittaker interferometry) to directly produce the disease pattern in targeted personnel. To produce efficient charging or activation of the targets with the disease pattern, the potentials must be persistent and stable, producing a steady "trickle current" of structured scalar potential pattern into the atomic nuclei of the bodies of the targets. There it gradually charges the nuclei and the master cellular control system.

Table 5. Electromagnetic Biological Warfare (EM BW)

- **DETERMINE KAZNACHEYEV OPTICAL DISEASE PATTERN**
- **TRANSLATE TO MICROWAVE FREQUENCY REGION**
  - **SUBHARMONIC OSCILLATION**
  - **RETAIN PRECISE HARMONIC RELATIONSHIPS**
- **EXPRESS MICROWAVE PATTERN AS A WHITTAKER/ DEVYATKOV STRUCTURE**
- **INFOLD SIGNAL COMPLEX INTO CARRIER(S)**
- **INCLUDE BIOSYNC MECHANISM OR OVER-RIDE**
- **TRANSMIT INTO TARGETED POPULATION**
- **ACTIVATION/KINDLING OCCURS, INDUCING DISEASE**

Real transmitters and equipments are imperfect. When these internally structured Whittaker waves are utilized in real transmisions, some interference of the infolded waves usually may

occur. Thus small, normal EM signal frequencies — similar to EM "splatter" or noise, but consisting of small, outfolded complex EM frequency spectra (according to Whittaker's 1904 paper) — may still be produced. U.S. investigators will detect *that* spectrum of normal EM waves, using their normal EM detectors. They will then puzzle over what the detected spectrum and its changes and content mean. Again, this is one more refinement of the stimulus to see if the U.S. recognizes the Kaznacheyev/Devyatkov content, and whether it knows how it was infolded and outfolded. For this reason, the Soviets often used twin-beam microwave radiation, to provide the necessary Whittaker scalar interferometry for outfolding to guarantee our detection of E- and B-fields inside the Embassy.[117] This deception plan, for example, seems to have completely fooled the Johns Hopkins researchers.

Thus the Soviets can intentionally induce desired disease(s) in human or animal bodies at a distance — such as in personnel inside the U.S. Embassy, in a targeted population half way round the world, or in a targeted mammalian population such as porpoises in the ocean.[118] Sea lions or seals would also provide excellent test specimens for such clandestine testing.[119]

However, note that in the target zone the diseases will be induced only where the potentials persist — that is, where there are little or no E- and B-fields formed to "bleed-off" the structured or *activated* potential that contains the infolded disease signal complex. *Note again that this sort of thing is precisely what the Johns Hopkins study really showed, but the study scientists did not consider the potentials and their persistence as a possible inducing agent, since they had no knowledge of Whittaker-structuring of potentials.*

Pieces of the Vacuum Medium

We have previously detailed some of the things that can be done with this approach — and some of what *has* been done with it by the Soviets. Some of this documentation has been with respect to Soviet biological warfare,[120] some has been with respect to Soviet scalar EM weapons,[121] phase conjugation in Soviet superweapons has been accented,[122] and Soviet prowess in weather engineering and steering of the jetstreams over North America has been documented.[123] The reader is also strongly referred to my July 1989 update[124] delivered to the USPA Annual Symposium, Sacramento, California. There the reader will find how to directly unify gravitation and EM in the most fundamental manner: by letting the simplest graviton (spin 2) be composed of a coupled photon/antiphoton (each of spin 1) Whittaker substructure wave pair.

Potentials are composed of gravitons, not just photons. Per Devyatkov and Whittaker, gravitons can be deliberately structured internally so that they contain any desired photonic pattern/structure of spacetime whatsoever — including specific structures for a specific disease information content.

The graviton is a flexible, dynamic *piece of the local vacuum medium.* The exact photon coupling of the photons and antiphotons is statistical; that is, they are always coupling and uncoupling at a tremendous rate, at any point. The average coupling gives the average value of graviton spin The graviton is the photon-coupled aspect; coupling is statistical, and so the graviton is just the statistical average of the photon/antiphoton coupling. Spin-two gravitons constitute an uncurved local spacetime. Gravitons which *on the average* are substructured with less than or more that two photons, so that each total graviton spin is less than or greater than two, constitute a locally curved spacetime. That condition violates Einstein's general relativity assumption (postulate) that the local spacetime is always flat.

This piece *of the vacuum medium* — the photon-structured statistical graviton — is considered high state secret by the Soviet Union.[125]

The Quantum Potential

The present author's 1989 USPA *Scalar EM Update* paper also developed a specific mechanism by means of which a *quantum potential (QP)* is generated, either accidentally or deliberately.[126] Formation of a quantum potential leads to *nonlocal* effects being produced instantaneously between participating components and equipments, even though they may be widely separated. When the equipments start being connected by a common quantum potential, these widely separated equipments and/or materials start partially acting as if they were all part of the same *local* system, and not separated at all! The effect (self-ordering of the potentials into a quantum potential) increases as the signal density of the environment increases.

Note that a local observer at one of the pieces of affected equipment will see anomalous and spurious internal EM signals apparently "generated" internally in, and appearing in, his electronic equipment, with no apparent cause or logical explanation. Indeed, since we do not design and build electronic equipment to operate in a quantum-potential connected manner, the extra signals cause serious interference in the electronics functioning, often even damaging or destroying the circuits themselves. Every signal produced in any one of the QP-participating equipments is at least partially and instantly input to all the rest of the participants as well. Thus each local observer sees anomalous and spurious internal "jamming" signals that interfere with the electronics functioning, and that may even disable or destroy it Again, he sees no logical explanation for these mysterious internal jamming signals, which seem to spontaneously arise out of nowhere. When subjected to the QP effect, electronic equipments throughout an area exhibit massive and shocking aberrations, bizarre malfunctioning, and spurious failures. Every circuit, equipment, generator, warm source (IR), etc. in the area contributes to the effect. It is purely a function of the signal density, and has only very little to do with the power of the individual signals.

A startling example of the formation of a quantum potential, and an unexpected severe effect from these nonlocal effects, was experienced in the April 1986 U.S. air attack on Libya. The QP formed as a result of the increased signal density (and the concomitant increased occurrence of multiwave mixing phenomena) of the EM environment.[127] Figure 14 and Table 6 illustrate these anomalies experienced in the attack. Table 7 summarizes recent Pentagon studies of electromagnetic interference (EMI). It appears that, unless EMI shielding is universally incorporated in U.S. equipments, U.S. military forces may encounter catastrophic electronic equipment failures in the *really* dense signal environment expected in the European theater.

Even with EMI shielding, however, there is another effect, presently unknown to U.S. analysts, that may well predominate: that is, the formation of a quantum potential can still occur. If a QP forms, the subsequent wholesale failure of electronic equipments on the battlefield due to nonlocal self-ordering of the atomic nuclei in the radiating circuits and equipments may prove catastrophic. Further, both enemy and friendly radiations and circuit signals will contribute to increasing the effect. Figure 15 shows the mechanism for generating a QP.

The Soviets, for example, are fully aware of this QP effect, including how to deliberately generate a quantum potential in a given area. They also can be expected to know how to shield their own electronic equipments against these nonlocal QP effects, so they can operate in a QP environment — at least in one that is not too strong, but which would still be strong enough to disable and destroy electronic equipments not shielded against quantum potential self-ordering Of the nuclei. The West does not yet even know of the QP effect, much less how to shield against it. The U.S. shields against ordinary EMI, but knows nothing of the quantum potential and does not shield against it. EMI shielding will increase the signal density required for QP formation by about two or three orders of magnitude, but will not eliminate the effect. It will just move the QP effect to a higher threshold of formation.

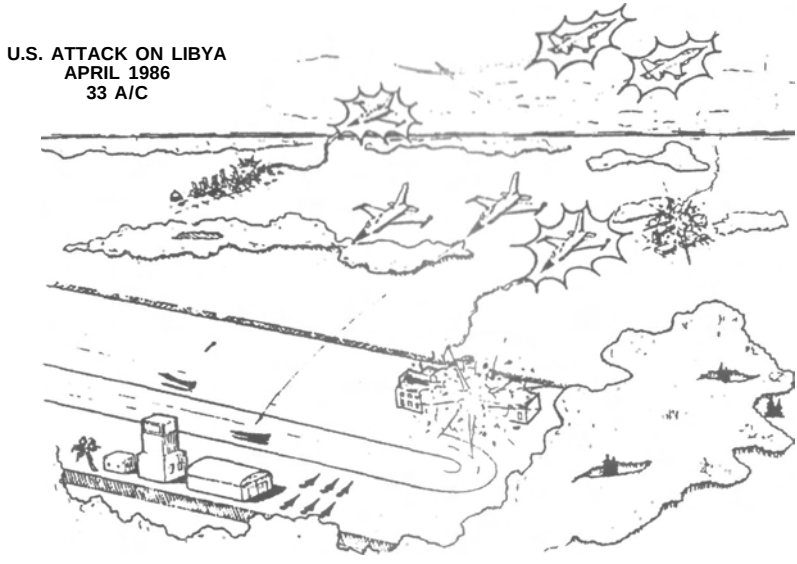

Figure 14. The quantum potential EMI "fireflies" effect.

Table 6. Real-Time Anomalous EMI Interference Via Quantum Potential. U.S. Airstrike on Libya in April, 1986.

[WASHINGTON POST, 22 JANUARY 1989, p.A4]

- **33 U.S. AIRCRAFT IN STRIKE**
- **MANY HIGH-POWERED TRANSMITTERS**
  - **COMMUNICATIONS JAMMERS**
  - **RADARS**
- **SEVERE, UNEXPECTED EMI ENCOUNTERED**
  - **ONE F-111 DOWNED**
  - **NUMEROUS WEAPONS WENT ASTRAY**
  - **THREE FOREIGN EMBASSIES DAMAGED**
  - **SEVEN AIRCRAFT ABORTED**
- **STRIKE COMPLETED, BUT WITH DIFFICULTY**
- **IRATE COMMANDERS AFTER STRIKE: "US OR THEM?"**

Table 7. Recent Pentagon EMI Studies.

- **U.S. TRANSMISSION COMBINATIONS CAN**
  - **AFFECT AIRCRAFT FLIGHT CONTROL**
  - **TURN OFF FUEL SUPPLY**
  - **CAUSE UNCOMMANDED DIVE/TURN**
  - **BRING DOWN U.S. WARPLANES**
- **SEVERE EMI EFFECTS IN STRIKE ON LIBYA**
- **UH-60 BLACKHAWK HELICOPTER PROBLEMS**
  - **UNCOMMANDED TURNS**
  - **FIVE EMI CRASHES SINCE 1982**
  - **$175 MILLION PROGRAM LAUNCHED TO SHIELD IT**
- **7-MONTH PRELIMINARY AIR FORCE STUDY OF LIBYA EMI**
  - **SEVERE EMI PROBLEM EXISTS**
  - **EMI SHIELDING IN HI-TECH WEAPONS OFTEN WAIVED**
  - **THOUSANDS OF CONFLICTS POSSIBLE**
- **MAJOR 3-YEAR, $35 MILLION, 66-MAN STUDY PERFORMED**

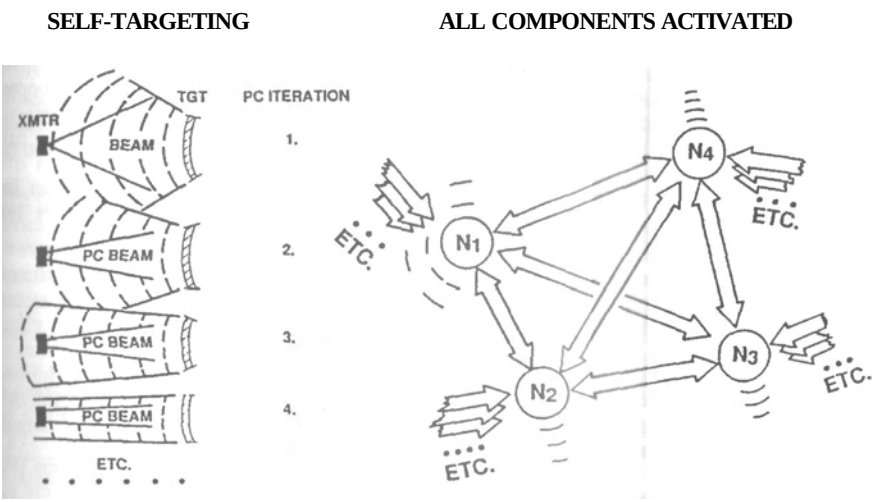

Figure 15. Mechanism for forming a quantum potential. Self-targeting exchange in infolded Whittaker channels between nuclei leads *to* nuclei pumped four-wave mixing, amplification, and consequent growth of time-sync'd potentia (the quantum potential) in widely separated nuclei and signal-interacted equipments.

Variations of the Woodpecker transmitters, for example, and of ultra-wideband transmitters could be adapted for the purpose of creating such an EM signal density in the environment that a quantum potential would begin to form.

Thus on a future battlefield, we may still get the shock of our lives when a great deal of our high-tech equipment — which is very good equipment — suddenly begins to malfunction and fail. Systems such as surface-to-air missile systems, radar systems including AWACS, power generators, tank fire control systems, aircraft avionics and fire control systems, missile guidance and control systems, and communications systems may fail us at the most intense part of the battle, when the need is the greatest, if a quantum potential forms on the battlefield.[128]

What I did not mention in my 1989 Sacramento paper is that the quantum potential can also be internally structured with a deterministic, enfolded EM content. The QP is also constructed of photon-structured gravitons, just as is the normal potential. The QP therefore has a Whittaker bidirectional transverse wave substructure. Note particularly Ignatovich's mention of just such a structure in the potential for the Schroedinger equation (see reference 16 above). Transmission of the graviton envelope is essentially a phase wave transmission and is instantaneous. We accent that, when QP weapons are utilized and a deliberate Whittaker structure is introduced in it, very powerful effects can be generated that cannot be resisted or opposed by ordinary means. A QP, for example, can conceivably be tailored so that it nullifies or destroys only a single, particular type of weapon or system, or mix of them. *It can be used to generate any desired effect in equipment or personnel at a distance.*

In this manner, the biological cytopathogenic effects — cellular death and disease — can also be produced *at a distance* and throughout a very wide area, without any *apparent* direct EM transmission of them in the ordinary sense. (Of course a *healing* signal can also be implanted in a QP, as an antidote.) It is conceivable that, using the Woodpecker transmitters, the Soviets may be able to induce in a targeted population the eerie situation where, the more persons that become infected with a particular disease, the more infectious the disease becomes *by noncontact means, directly through a specifically structured bio-quantum-potential linking that population.* Further discussion of this quantum mechanical action-at-a-distance EM biological warfare effect is beyond the scope of this paper. The reader is referred to cogent references on the quantum potential[129], on the Aharonov-Bohm effect,[130] and on the inconsistencies between quantum mechanics and general relativity.[131,132,133] The reader may combine the information in those quantum potential references with the information in this paper and draw his or her own conclusions.

Detection of Scalar EM in Woodpecker Signals

In August 1989, a close colleague/inventor friend positively detected scalar EM radiation directly connected with several giant radial clouds in the sky just off the California coast. Each of these clouds was "stabilized" against winds and did not move; other normal clouds in the sky moved right along in the winds blowing inland from the ocean. Further, on several occasions the scalar EM radiation was observed by my colleague to suddenly be cut off, and in each case thai associated radial cloud dissipated within seconds. Such giant patterned clouds, with radial cloud streamers radiating from the center, have been widely observed across North America, connected with Soviet weather engineering.[134] Speculation on this scalar beam weather engineering has been published in a national medium.[135] Several types of radial clouds — the single radial, the connected twin, and multiple separate singles and twins — have been observed.[136]

Whittaker Waves. Aharonov-Bohm Effect, and Hidden Variables

Note that Whittaker's 1903 paper[137] predates the modern (Bohm's) hidden variable theory (HVT) of quantum mechanics.[138] Whittaker's 1904 paper[139] — producing EM forces from interfering scalar EM potentials, even at a distance — also predates Aharonov and Bohm's seminal 1959 paper[140] on the primacy of the EM potentials rather than the force fields, and their prediction of just such a Whittaker scalar interferometer effect in the total absence of the electromagnetic force fields.[141]

Recently modern researchers, working on acoustic missiles and with the scalar acoustic wave equation, have "rediscovered" Whittaker's 1903 infolded bidirectional planar waves inside the scalar wave[142]; however, apparently they have not yet realized the application of this to scalar E*M* potentials, for use in their work on *electromagnetic* missiles. Thus it appears that our directed energy researchers are still not fully aware of the scalar extent of the Russian microwave directed energy techniques and capabilities.

More on Kaznachevev and Priore

In the U.S. neither the intelligence community nor the scientific community at large seems to have become aware of Whittaker's infolded intermodulating pairs of bidirectional EM transverse waves inside a standing potential wave,[143] and of their importance. Obviously our scientists and analysts therefore have not connected Whittaker structuring of the potential with Devyatkov's information content of the field, or with Kaznacheyev's cytopathogenic effect — the induction of cellular death and disease electromagnetically at a distance. As briefly covered in this paper, this Whittaker internalized EM energy mechanism *is* the mechanism that has been used by the Soviets in the microwave radiation of personnel in the U.S. Embassy in Moscow for over three decades, to generate health problems and diseases. Two U.S. Ambassadors were stricken with leukemia-like disease and died.[144] A third Ambassador (Stoessel) sickened during his tenure and even bled from the ears. Some years later, Stoessel also died of a leukemia-like disease.[145]

While the U.S. officially held steadfast to its pronouncement that the microwave radiation was harmless and not the cause of the personnel sicknesses and health problems, the Moscow Embassy was declared a hazardous duty post and government personnel were given a 20 percent differential in pay. Obviously the radiation was important to the Soviets, because they ignored requests from several U.S. Presidents to stop the radiation. The Johns Hopkins study[146,147] actually provides very strong correlation of the induction of health problems in Embassy personnel to the presence of persisting (unbled) potentials rather than forcefields (bleeding-off potentials).[148] Note that Kaznacheyev — the world's greatest expert in the electromagnetic induction of death and disease at a distance — now works with two secret Soviet agencies near Moscow which develop high-powered microwave directed energy weapons.[149] The obvious conclusion is that the Soviets are also developing, or have already developed, a range of powerful photogravitational EM BW weapons of mind-numbing power.[150]

Further, the U.S. has obviously not connected Whittaker's fundamental work with Antoine Priore's phase conjugating and multi-signal-infolding RF/rotating plasma device for curing cancer and leukemia with just such potential fields with infolded EM information content.[151],[152],[153] This means that U.S. analysts have not realized that phase conjugating a Kaznacheyev cytopathogenic signal pattern for a particular disease generates a specific healing (Priore/Devyatkov) signal for that disease. Consequently Western scientists have not realized that this mechanism can quickly provide a specific antidote signal for any biologically-induced disease, either known or unknown. Translation of the antidote signal to microwaves, etc. then readily yields a specific and effective

treatment signal. Tables 8 and 9 summarize the effective gravitobiological countermeasure to biological warfare.

Table 8. Countering EM BW (Cytopathogenic Signal Available)

- DETERMINE INFOLDED EM BW SIGNAL STRUCTURE
- TRANSLATE TO MICROWAVES
- PHASE CONJUGATE TO PRODUCE EM ANTIDOTE STRUCTURE
- INFOLD EM PHASE CONJUGATE STRUCTURE INTO CARRIER POTENTIAL
- IRRADIATE AFFECTED PERSON/POPULATION
- ACTIVATION/KINDLING OCCURS, REVERSING THE DISEASE

Table 9. Countering EM BW (Cytopathogenic Signal Unavailable)

- TREAT AS IF FOR UNKNOWN DISEASE
- CONSTRUCT EM BW SIGNAL STRUCTURE FROM DISEASED CELL CULTURES
- TRANSLATE SIGNAL COMPLEX TO MICROWAVES
- PHASE CONJUGATE SIGNAL COMPLEX TO PRODUCE ANTIDOTE STRUCTURE
- INFOLD EM PHASE CONJUGATE STRUCTURE INTO CARRIER POTENTIAL
- IRRADIATE AFFECTED PERSON/POPULATION
- ACTIVATION/KINDLING OCCURS, REVERSING THE DISEASE

Biological Warfare Implications

To date, the U.S. has not realized the profound biological warfare (BW) implications of all this. The real BW implications (Table 10) are as follows: (1) The Soviet Union has developed, tested and perfected methods of inducing cellular changes, diseases, and death at a distance by means oft specialized electromagnetic signals, whose specialized structure is not discernible or detectable by normal detectors. (2) The Soviet Union has developed, tested, and perfected methods of quickly producing EM antidotes to counter disease induced by any sort of new and unknown biological warfare agent. Mass EM treatment of personnel — including whole populated areas — can begin probably within two hours or less from the time personnel first are exposed or start to sicken. (3) The Soviet Union therefore is the only nation in the world that has a complete

affective counter to biological warfare. (4) The Soviets now regard biological warfare — particularly covert and deceptive BW — as a highly preferred option, because of the defenselessness of other nations against BW attack, and the strong ability of the Soviets to defend and negate such attacks in retaliation. (5) This BW preference has already existed in the Soviet Union for at least two decades, based on the timing of the Kaznacheyev experiments, Devyatkov work, and early period of the demonstrated Priore effects in France. (6) As clearly demonstrated, for example, by the long U.S. inaction or ineffective action regarding the Soviet microwave radiation of our Moscow Embassy, the U.S. has a characteristic national style of little or no reaction to slowly increasing threats, and this is well-known to the Soviet. (7) *Given the first six BW implications, it is highly probable that the Soviets have already unleashed clandestine, "slowly increasing" biological warfare against the West, both with BW agents and/or EM agents, or EM augmentation.*[154]

Table 10. Biological Warfare Implications.

- THE SOVIETS HAVE DEVELOPED AND PERFECTED HIGHLY EFFECTIVE
  - EM BIOLOGICAL WARFARE
  - COUNTERS TO BIOLOGICAL WARFARE
  - MASS DEATH RAY WEAPONS
- THE USSR IS THE ONLY NATION WITH A COMPLETE COUNTER TO BIOLOGICAL WARFARE
- BW AND EM BW (COVERT AND OVERT) ARE PREFERRED OPTIONS FOR THE SOVIET UNION
  - MUTUAL ASSURED DESTRUCTION IS TOTALLY DESTABILIZED FOR SUFFICIENTLY COVERT SOVIET BW STRIKES
  - SITUATION HAS EXISTED FOR AT LEAST TWO DECADES
  - U.S. NATIONAL CHARACTERISTIC: NO REACTION TO SLOWLY INCREASING THREAT
- THE SOVIETS MAY HAVE ALREADY UNLEASHED A MAJOR "SLOWLY INCREASING" BW STRIKE: AIDS

Work of Beck. Hunt, and Lisitsyn

We mention one indicator of Soviet EM BW *capability* designed into the Woodpecker weapon system. Using this design capability, entire distant populations can be biologically attacked by the Woodpeckers, based on other known capabilities that have been observed in the Woodpecker signals.

Some years ago, Dr. Robert Beck observed transmitted signals on some 15 or more simultaneously Woodpecker channels where their ELF (e.g., 10 Hz) pulse repetition rates were precisely phaselocked together.[155] Further, ELF waves in the vicinity of 10 Hz have been shown to be capable of entraining the normal brainwaves of humans.[156] Normally a healthy person's

brainwaves would appear to be comfortably entrained to the 7.83 Hz main Schumann resonance of the earth's magnetic field. This means that, under those conditions, the common 10 Hz pulse repetition rate of the Woodpecker is capable of entraining the brainwaves of a percentage of the population in a distant targeted area. (To entrain a greater percentage, the transmitter power would simply be increased).

Each entrained distant brain has 15 or more "signal channels for Whittaker infolding", and for induction of cellular diseases and death, behavior changes, etc. a la Kaznacheyev and a la Devyatkov. Further, the Soviets have the proper phasing in the entrained brains: by phasing input conglomerates of signals and infolding them a la Whittaker, they are properly aligning those infolded signals for in-phase delivery to the distant entrained brain. Figure 16 shows this situation.

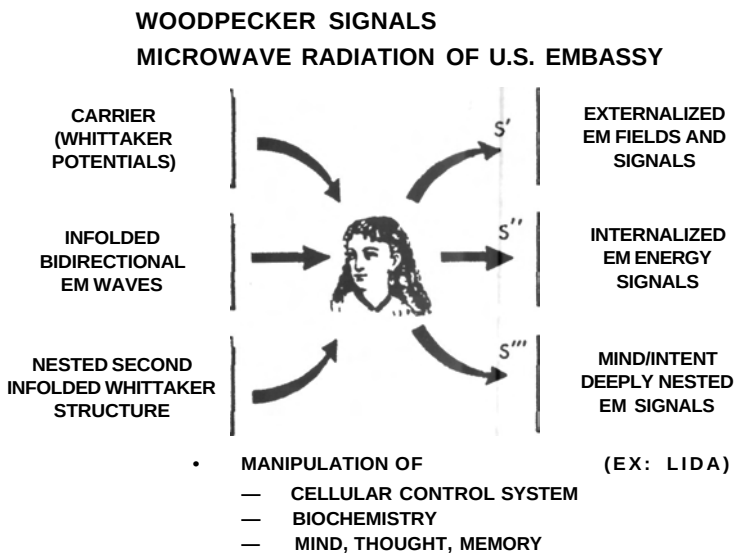

Figure 16. Strategic EM BW implications of world-wide targeting transmitters such as the Soviet Woodpeckers.

In epochal work, Dr. Valerie Hunt has already shown that human brain waves contain hidden order. In her seminal experiments, first each of several detected ELF frequency bands of human brainwaves was split into two replicas, and one of the replicas was delayed for, say, 6 milliseconds. In each frequency channel, the delayed and nondelayed signals are then beat together and recorded on an oscillograph. Under these conditions a startling pattern of *chaotic attracted* appears in the recorded oscillograph traces. This shows clearly that hidden deterministic substructures of hidden EM order exist concealed inside human brainwaves. Since Dr. Hunt has deliberately selected multiple frequency bands, this implies that this hidden order probably represents deterministically created and infolded multiple EM bidirectional waves (channels) is Whittaker potentials. *This is very strong evidence that the human brain utilizes Whittaker potentials and Whittaker-infolding in its internal communications — directly correlating with the Soviet approach by Kaznacheyev, Devyatkov, and Lisitsyn.*

In the latter 1960s S.K. Lisitsyn[157] pointed out that the Soviets had broken the "genetic code" of the human brain. (See Table 11). Lisitsyn reported that, in some 23 frequency channels in all, 11 were independent. This implies that a minimum of 11 independent infolded Whittaker bidirectional EM wave bands are required for the mind's control of all the functions of the body, both mental and physical. This lends further EM BW importance to Beck's observation of multiple Woodpecker channels — more than the *"Lisitsyn minimum"* required if infolded in a Whittaker potential wave and used to produce *almost any kind of mental or physical effect in distant targeted populations.*

Table 11. Lisitsyn's Report.

- THEORY DEVELOPED AND FITTED
- HYSTERESIS MEMORY LOOP
- CONTROLLED INDUCTION IN MIND
  - IMAGES
  - SENSATIONS
  - PREDETERMINED EMERGENCE
- 23 EEG BANDS
  - UP TO 8.1×10^{20} HZ
  - 11 INDEPENDENT CHANNELS
- HUMAN BRAIN CODE BROKEN (DECYPHERED)

If a distant brain is entrained by the Woodpecker, all 15 or so phaselocked Woodpecker channels, when infolded, would also be phaselocked into that brain, for possible Kaznacheyev disease induction or Devyatkov induction of behavior and cellular changes, etc. *It is also possible to produce direct images, emotions, thoughts, and memories in distant brains and personalities, via the Whittaker-structred potentials.* This was long ago hinted at by Soviet researchers in their heavily censored publications on *"biological radio."*

Explanation of EM Biological Trigger Windows

A straightforward explanation now is possible for the strange phenomenon of many biological-effect EM "triggers" being (1) very, very weak and (2) having a narrow window of EM amplitude of power. Below a minimum EM power level, the effect does not occur; and above a maximum EM power level that is only slightly higher, the biological effect also does not occur. Only within the narrow power window is the effect induced by the EM trigger signal.

This window effect can be readily understood when one realizes that by "weak envelope magnitude, or power," one is actually expressing and dealing with a function of the integrated (summed) power of *the total number of infolded Whittaker bidirectional planar waves,* both coherent and incoherent, contained in the structuring of an artificial potential. We further are comparing the degree of coherence of that potential's substructure to its degree of incoherence.

However, now we must use a quite different comparison and analysis process from that of ordinary analog signal theory. By analogy, this dependence upon the *number* of infolded signals is comparable to a *digital* process, such as that of the dot resolution of a printed picture. Also, it is an *imperfect* process. We are speaking of a case where each thing (dot) is a little bit fuzzy, not completely razor-sharp. Our problem is that now (1) we must have sufficient dot density (of our fuzzy dots) to have a clearly recognizable image, yet (2) we must not have so great a density (of our fuzzy dots) that the image is smeared out and obscured in a sea of common gray or black fuzziness. Table 12 summarizes the effect.

Table 12. Why EM Trigger Windows?

- WELL-KNOWN WINDOW EFFECT
  - WEAK EM TRIGGER SIGNALS
  - MINIMUM SIGNAL STRENGTH THRESHOLD
  - SLIGHT INCREASE OKAY (GIVES WINDOW)
  - LITTLE MORE INCREASE EXCEEDS MAXIMUM THRESHOLD
- CHARACTERISTICS OF
  - CHAOS (HIDDEN ORDER INSIDE DISORDER)
  - QUANTUM CHANGE (PHOTON) IS FUZZY
  - DIGITAL RESOLUTION OF FUZZY DOTS
- REFER TO LOGISTICS EQUATION (CHAOS)

So unless a certain number of coherent EM transverse waves (fuzzy dots) are infolded (printed), the pattern (image) to be engendered in the target is sufficiently incomplete that it cannot sufficiently "charge" and structure the dynamically-fed potentials of the cell. That is, the ratio of the amount of internally infolded signal (i.e., of the dots) to the amount of noise already in the infolded potential structure — the *signal-to-noise ratio*, or the *contrast* — must be sufficient to produce a stabilized signal *(resolved image)* within the potential's substructure, *over and above the noise that already exists therein.* Otherwise there is insufficient resolution. In turn, this accounts for the minimum value of the EM threshold for induction of a particular biological effect: it is the threshold where the activation signal complex becomes recognizable or detectable by the biosystem's internal Whittaker-channel detectors. At the minimum threshold, there are enough dots (infolded coherent biphotons) to discriminate coherently-structured gravitons.

Also, corresponding to each dot being fuzzy, each infolded EM wave is actually imperfect. It itself possesses noise distortion (fuzziness, or some lack of resolution) of its own. Remember, both the photon and the graviton are *statistical* entities; they are not at all "brick-like" particles. Therefore, not only does one infold a "pure EM activation signal" on each wave, but one also infolds some inadvertent "EM distortion" (fuzziness) as well.

As integration occurs and more activation signal is collected, additional noise (fuzzines, smearing) is also infolded inside the potential's structure. As collection continues to increase, the resolution of the signal is gradually deteriorated. When deterioration is sufficient, resolution of the image (pattern) by the biological system's detectors is no longer possible. This accounts for a maximum threshold at which the coherence of the signal has been lost.

Thus this accounts for the maximum value of the EM threshold for induction of a particular biological effect. Above the maximum threshold, internal signal resolution is lost. Additional power may produce gross energy effects (heating, chemical changes, mechanical damage), but will not produce precisely controlled changes via the mechanism of redirecting the body's own internal control mechanisms.

When the signal is within the window, the signal-to-noise ratio (and the resolution) is discriminated to produce a stabilized pattern/signal (image), and so this signal complex will activate and charge the system until the biological effect macroscopically emerges. That is, within the window the signal resolution is sufficient to produce *the information content of the field* that generates and activates the biological effect, *using the body's own internal control system.* Depending upon the particular physical/chemical/biological effect engendered, the biological response may be (1) immediate, (2) after a short "charge-up" time delay, (3) after a more extended "charge-up" delay, or (4) after a substantially extended "charge-up" delay that may be many years.

We now are equipped to understand the "window of magnitude" that most often exists in the weak EM induction of biological effects in living systems. Only at or above the minimum threshold does sufficient resolution of the pattern signal for biological activation occur. Above the maximum threshold, the infolded pattern or "image" is no longer discriminated.

The amplitude of the weak signal potential our normal instruments are measuring is in general a function of the summation of the simultaneous amplitudes of the infolded and hidden Whittaker EM waves inside that potential. Further, most of our instruments have nowhere near the response needed to accurately measure individual components of such an ultra-wideband series of frequency signals as evidenced by Lisitsyn. Therefore, in most experimental work in the literature, our instruments have grossly integrated the signal complexes over a relatively long time. That is, our instruments have almost never yielded anything of the structure we were trying in measure. *Presently most of this is hidden in what we simply see as very fine noise in our instruments, if we see it at all* Roughly, then, the measured amplitude of the potential we see is a (nonlinear) function of the number of infolded Whittaker EM waves, to the first order. The minimum number of infolded EM signals required for image resolution, together with the maximum number of infolded EM signals that must not be exceeded if image resolution is not to be lost, are the two primary factors involved in whether activation occurs or not. They create the minimum and maximum signal thresholds for inducing the biological effect.

Relation to Chaos Theory

Most of this can be much more precisely stated in terms of chaos theory, but that is beyond the scope of this paper. However, for an indication, see Figure 17, which is a standard portrayal of the chaos inherent in the logistic equation. We can readily understand the minimum and maximum biological trigger thresholds from this figure. As can be seen, as the R value increases toward 1, there is no discernible pattern or "image" (signal). That is, there is insufficient resolution to detect the true signal order. At a threshold just past R=1, resolution rapidly improves so that a true, discernible analog pattern or signal (line) exists. Just before reaching R=3, the "fuzziness" spurts up again, until bifurcation occurs. Now there are two values, or *two* discernible analog signals, one of them nearly the mirror image of the other. At about R=3.5, fuzziness starts to increase again, this time due to another bifurcation. Thereafter bifurcation increases so dramatically that, between about 3.5 to 4, rapid loss of any recognizable analog pattern or signal occurs. From R=4 on, the system is totally chaotic, and absolutely no recognizable "image" (signal) occurs.

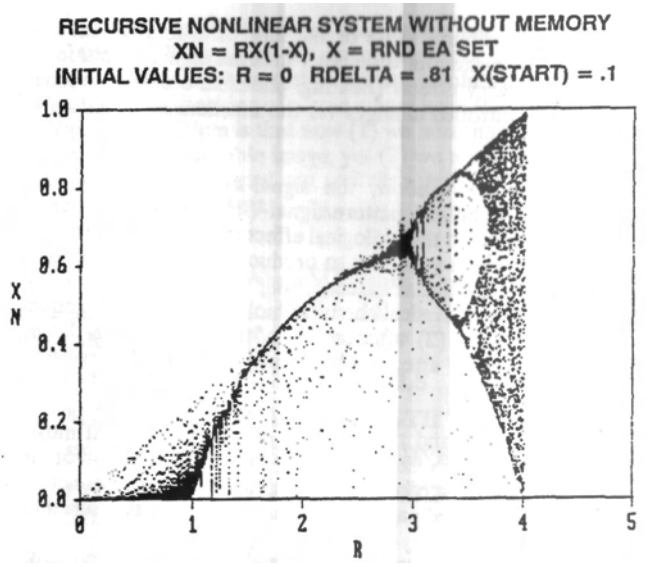

Figure 17. Chaos: The collected emergence of large-scale order from disorder. The apparent disorder actually contains hidden order.

The human biological EM system works this way. As can be seen, for activation/kindling there is a "window" with minimum and maximum values. Only in this window is there a discernible image (signal). Normal detectors tend to determine only the analog (envelope) value, not the individual structure showing the window where the coherent signal is reasonably resolved.

Experimentally, the situation is further compounded by the fact that the instrument itself also exhibits chaos effects such as the window of the logistics equation.

More On Internalized Energy

Again, it should be strongly accented that *the true "living EM energy" of biological systems is internalized, infolded EM energy.* It is the infolded and hidden EM energy of the organized bidirectional EM wave systems inside the Whittaker potential. It is *photon-structured graviton* energy. This is not the externalized EM energy of the EM wave envelope, with which Western science is presently so preoccupied. This energy does not appear in the electrical engineering or electrical physics textbooks. Nonetheless, our health and our very lives depend upon it.

Plants, animals, the earth, the oceans, the rivers, the atmosphere, and the clean environment are continually activated and filled with this internalized, infolded EM energy. In its radiation, the Sun pours forth enormous amounts of it (Figure 18), which we never measure with *our* instruments. The earth, sun, and moon particularly — and the other planets to a lesser extent - form a giant, Whittaker-communicating system that provides the very lifestream that sustains us

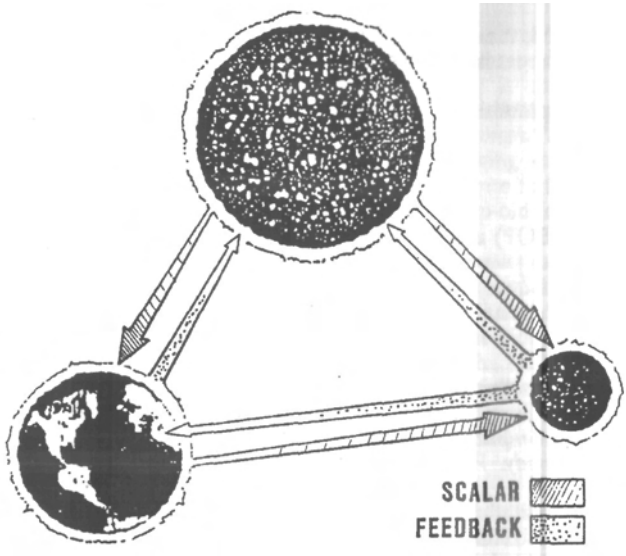

Figure 18. Earth, Sun, and Moon are Whittaker-coupled.

Mechanisms For Evolution. Gaia. and Morphogenetic Field

For all the creatures and species on earth, the Whittaker structured potential mechanism provides the precise physical mechanisms for evolution, and for Sheldrake's *morphogenetic field*. Every creature continually contributes structures into the quantum potential for its own species, and the quantum potential for every species is part of the overall planetary quantum potential for all its living things.

Each species has its own quantum potential, to which every action, movement, thought, or incident of, by, and to its members contributes a minute amount of substructuring. Thus very, very slowly the species bio-quantum-potential adapts from the combined experiences of all its members, and the species "learns." Sudden wholesale changes, of course, can extinguish a species before this mechanism has time to adapt. But if the species has time, it will adapt to even harsh changes inflicted by its environment, and it will change and survive. The *species bio-quantum-potential* provides the exact mechanism for the species to change, adapt, and evolve to survive the slowly changing adversities of its environment.

lt should specifically be noted that potentials organize into entire hierarchies of organization. That is, a potential is normally a conglomerate composed of many smaller potentials, each of unique Whittaker structure. The stress of a potential is rather analogous to the pressure in a mixture of gases; the overall pressure of the gaseous mixture is composed of *partial* pressures of the various gaseous components. Each gaseous component has its own individual contribution to the overall pressure of the entire gaseous mix.

In the case of the potential, the overall Whittaker structure of a particular potential is comprised of the overall Whittaker structures of its component potentials.

The point is, a quantum potential of one entity is composed of *the partial* quantum potentials of its component entities.

Note that each living cell of a biological organism is itself a complete biological organism. Each j cell has its own individual bio-quantum-potential. Insofar as that cell is concerned, its "species" bio-quantum potential (BQP) is the body bio-quantum-potential of the whole animal of which the cell is a part. (Even organs of an animal have their own biopotentials, as does every physical structure and division of everything in the universe. And everything intracommunicates and intercommunicates via hidden EM energy.)

Successively deeper Whittaker potentials are nested inside the bio-quantum-potential for the cell, one for each next smaller level of interior structure. The end result is that this cellular hierarchical structure continues directly down into and onto the nucleus of each atom composing that structure. *This is the manner in which the life of a living system is attached to, and activates, the physical matter of its body. We have thus specified precisely what the living spirit of a body is.*

Communication between all living levels continually occurs via the mechanisms contained in the two Whittaker papers (W-1903: infolding external EM at one level into internal EM at the next lower level; and W-1904: outfolding EM at one internal level to the next outer externalized level). Thus in a true sense, all life on the planet is completely intercommunicative and intracommunicative. *Literally, the planet is a living being, and a special kind of Gaia exists.*

Particularly strong Whittaker-structuring communication occurs between an individual member of a species and its species bio-quantum-potential at fertilization/conception and at death. Thus at cell division (formation of a new cell), mitogenetic radiation is more strongly emitted, showing that increased communication has occurred in a (relatively) impulsive manner. The recorded experience of the body is communicated to the new cell at this time. At the death of the cell again mitogenetic radiation is more strongly emitted, showing that again impulsive communication has occurred. The recorded experience of the cell — particularly its most recent experiences — are impulsively transmitted at this time, from the outfolding Whittaker structures of its bio-potential.

Similarly, at the fertilization of an egg and the conception of an animal, biocommunication is impulsively exchanged between the newly conceived entity, the body of its mother, and the species bio-quantum-potential. At the death of the individual animal, a relatively impulsive communication again occurs between the cells of the dying body, the dying organism, and the animal's species bio-quantum-potential.

Thus it can be seen that the adaptation or evolution of a species is subject to both *slow* communication components and various impulsive communication components. The development of the bodily form of the members of a species thus can undergo *jumps* from greater "impulsive discharges" rather than just slow gradual change. That is, obviously a reptile species could not gradually develop a wing by small degrees. Instead, to develop a wing, the wing must appear at once. This can occur under heavy, sustained pressure on the species, stimulating and building a specific phase conjugate portion of the bio-quantum-potential (BQP) of the species In the ghost forms existing in the vacuum potential, the form for that wing definitely exists, at does the ghost form for anything else that can be imagined. Intercommunication between the atomic nuclei of the living organism and the vacuum potential continually and strongly occurs there is a violent flux exchange at all times between these nuclei and the vacuum.

The external experiences being impulsively communicated back to the atomic nuclei from the species and its members thus continually diffuses on out into the surrounding vacuum potential. The surrounding vacuum potential's Whittaker structuring is continually activated by the Whittaker-structuring of the overall bio-potential of the individual animal. *Thus we have specified the specific mechanism for, and the form of, the long-sought "aura" of the living animal or person.* That aura is quite real, and it does exist. Further, knowing what it is, we can now develop instruments to detect and record it, including systems to analyze its contents. *Let it be strongly pointed out here that we are talking physics, not mysticism.*

On the other hand, we are most certainly not talking the present *rank scientific materialism.* To state it in more theological terms, *man is truly made in the image of his creator. And the image of the creator is the quantum potential of the vacuum.* Further, Man — as is every other living thing created by the Creator — is always and forever in direct but hidden communication with the image of his Creator. It is that image mechanism and its adaptive intervention that is the cause of all evolution. The Creator indeed made man — and everything else — out of the dust of the earth. And indeed he activated his creation with the "breath of life." *The new physics does not dispose of God; to the contrary, it marvelously and nondogmatically — and scientifically — reveals his ubiquitous presence and his ubiquitous hidden intervention.*

In so doing, the new physics also does away with the present scientific nonsense of dogmatic scientific materialism. We are not robots and machines; we are living souls. Our minds and our beings are not captured in the puny electrical discharges of our brains and nervous system, but in marvclous structures pervading the entire universe, everywhere, everywhen, in the internal Whittaker structure of every point in spacetime. Each has a spirit (that which motivates matter), and that spirit is a form in the Whittaker-structures of all the potentials of the universe. Further, the spirit is eternal. Destruction of the physical body does not alter the fact that the individual spiritual form and its every deed, thought, feeling, and experience exists for all eternity, in every part of the universe, directly in the form and image-potential of God. We indeed are eternal, and our true self is nonmaterial and immortal. The shabby treatment of our present scientific orthodoxy in attempting to deny us our spiritual heritage is refuted, and this refutation is scientifically testable. *We challenge the present dogmatism to practice scientific method and put it to legitimate experimental test* Spend some money and some time, and do it right The necessary instruments can be developed. The necessary tests can be performed. The necessary results can be shown. And, given those results, the present materialism must be cast aside as an infantile derangement. It is long past the time when science should put away such juvenile things, and get on with a more mature, adult world. If it does this, then science can contribute to the salvation of MAN. If it does not do it, it will continue to contribute to the destruction of Man.

We show now the causative mechanism for adaptive evolution.

In ihe gravitons composing the vacuum potential, one photonic element is "time forward" and one is "time-reversed." These are phase conjugates. Thus, any pattern consistently happening to the species diffuses into the vacuum potential, where its oppositive or "negative feedback" component is automatically selected/created by phase conjugation.

The bottom line is this: the external factors causing stress on a species automatically (but slowly) generate a time-reversed response in the activation of the vacuum potential. That is, *the species' need-charge generates an activated phase conjugate response-charge, effectively charging up (integrating) the very ghost form or forms in the virtual state of the vacuum that would fulfill that need.*

As is well-known in physics, a virtual entity can become real and observable if energy is added to it. Thus the species-need is steadily causing just such "addition of energy" to the virtual state ghost form that answers that need. When sufficient energy has been udded (when it has been

sufficiently charged/activated), the ghost form starts emerging into the observable state, in the conceptions (via impulsive discharge) taking place in the species. *Then species members start being born with that evolutionary change already fully established.*

This is the specific mechanism for evolution of the species. It explains not only slow adaptation, but also impulsive adaptation. It explains why evolution/adaptation occurs in jumps rather than in continuous changes. And it also explains why, in desperate circumstances when sufficient time still is available, rather drastic jumps can occur.

The Unsuspected Deadly Nature of Internal EM Pollution

In addition to the "externalized energy balance" of nature, there is a heretofore unsuspected (by Western reductionists) *internal energy balance* of nature. This internal energy balance is of vital importance when we consider how the planet is being polluted. The most deadly pollution of this planet is the steady and increasing pollution of the internal "rivers of life" inside the biological potentials of the planet and all its living systems. That is, we are steadily polluting the very intercommunication and intracommunication fields that sustain life as we know it. In short, we are slowly killing the living mechanism in and on this biosphere. We are slowly sickening unto death, and no one even knows it.

Environmental and ecological issues cannot be adequately discussed and completely dealt with until our science develops a sufficient knowledge of internalized EM energy, its exchanges within the environment, and the overall internalized energy balance of nature and of our biosphere.

The importance of electronic smog — of the vast and increasing multitude of individual signals that now fill our environment — cannot be overemphasized, nor can its future impact. This smog is slowly producing an artificial quantum potential on earth, one that has a most deadly and lethal "jamming noise" structure, and steadily contaminating the natural quantum potentials and bio-quantum-potentials that are our heritage. This pollution even includes the internal pollution of the tri-system: the coupled Sun, Earth, and Moon. We are slowly poisoning the life mechanisms in this entire region of the solar system. As we charge-up the Earth's potential, that charge is diffused to both Sun and Moon through the hidden internal communicative bidirectional EM Whittaker structures. We are not only slowly extinguishing ourselves, but also the Triad system.

In biological systems the presence and effects of the increasing jamming of our living energy flows will be evidenced by anomalous effects, often by very slow effects for which we do not recognize a causal connection. Long-range detrimental effects from this smog are occurring now, such as extremely slow jamming of our immune systems, leading to a rise in arthritic diseases, immuno-suppressive opportunistic infections, etc. Also, such diseases as influenzas will slowly seem to become harsher and harsher. Indeed, new strains will appear, and they will be much harsher and more resistant to medical treatment. Continually stimulated, the immune system slowly begins to improperly react in and upon the body, and so the auto-immune reactions increase slowly, year by year. Leukemia — cancer (control disorder) of the blood — is increasing, as are other cancers. The sperm count of young American males has already decreased by up to 50 percent.

The real problem behind the puzzling and anomalous effects of video screen emissions that computer operators are exposed to is the fact that each electron striking the screen comes to an extremely abrupt halt, creating a very sharp individual EM potential gradient signal change, with very high frequency components. Added to the other frequency components in the tube — such as due to scanning of the beam, internal circuit operations, magnetic focusing, etc. — this means that the electrostatic potential emanuting from the face of the tube is filled with a conditioned

Whittaker structure from all the electronic hash inside the computer, tube, and screen. This structure has a very harsh micro-microstructure of hidden sharp signals from the rather instantaneous stoppages of electrons on the screen. This is a "Whittaker hash", and its effects continually diffuse into the vision center, brain, and nervous system of the operator. The light from the tube is conditioned with this Whittaker structure, and when absorbed by the retinas of the eyes, it imparts and diffuses that hidden structure directly onto the nervous system and the surface of the brain. By diffusive activation (charging), this gradually spreads into the other parts of the body, particularly in and through the master cellular control system, and partially charges their potentials with the hash. After hours of exposure, kindling of the Whittaker structure in the physical system is sufficient to be expressed as physical changes such as headaches, vision effects, dizziness, etc. Very subtle blood tests should also reveal blood changes, particularly typical of weak auto-immune reactions, or typical of weak stimulation of the immune system. The more subtle parts of the master control system are affected as well. With repeated and daily exposures, the "hash activation" partial charge is sustained in the body, continually interfering with precise control mechanisms. Thus an increased incidence of fetus defects, responsive abortions by the body, and birth defects in infants of exposed pregnant women has a causative basis.

In a radar system, there is "splatter" and noise from all the various circuits, the transmitter, and reflections in the area. Harmonics, reflections from surrounding plates, panels and objects, and the continual interference of all these signals, form a Whittaker potential with a sharpened and dynamic "hash" for its internal structure. This hash continually diffuses into radar operators and maintenance personnel exposed to it. Diffusion of the jamming "hash" leads to slow, harmful variations in the master cellular control systems of the exposed personnel. Defective sperm cells can result A higher incidence of cancer and leukemia results in operators extensively exposed to such "non-ionizing radiation" in their everyday duties.

Powerlines act as antennas, continually picking up and re-radiating all the electronic signals that impinge upon it, no matter how weak. Myriads of television, radio, power machinery, and other electrical/electronic signals are involved. Further, the power flowing through the line carries all the electronic smog from any place along it to all the others (time-reversed components of the infolded Whittaker structure considered.) So it is a vast gatherer of electronic smog, which is infolded inside its potential and re-radiated everywhere along its length. With the criss-crossing of numerous new lines every year, and the drastic increase in communications signals, electronics signals, and electrical signals, we are slowly poisoning our entire biospheric living internal river of life. *We are steadily contaminating and poisoning the entire planetary potential, and each and every year we are dramatically increasing this deadly effect.*

In the modern home and office, we are particularly "blessed" with these interactions. Numerous electrical and electronic gadgets whir and operate and create EM fields and weak EM radiation signals. The electrical powerline brings to our home all the internal patterns that have been impressed from afar; literally it brings us weak electronic hash from the entire earth. The light from our electric lights and lamps carries this hash directly into our retinas, brains, and nervous systems. The Whittaker structures are modulated into the sound from our radios and stereos, entering our ears and auditory systems, on into our nervous systems and brains. Watching television, the light from the tube contains all this hash and also the internal hash of its own circuits, tube, and its screen hash. Continual weak EM hash continually impinges on our skin by radiation from light sockets, appliances, and fixtures. If we sleep under an electric blanket, we sleep directly in an alternating magnetic field that penetrates even down to the nuclei of the atoms of our body, directly inputting the hash into our body's biopotentials. Even when turned off, the fixtures and appliances in our home continue to emit Whittaker standing potential waves, exposing us to weak but continual hash. Thus the same cellular changes, etc. that occur in video screen operators and radar operators begin to gradually occur in our bodies, from the EM pollution of our environment. Usually, however, we get a smaller "dosage rate" than the screen

operator or radar operator, and so the changes occur more gradually. Our unhealthy EM hash environment is already inducing leukemia and cancer, and immune system defects and diseases, gradually over a period of years.

"Hot spots" will obviously occur, where the dosage rate is increased because of particular reflections, reinforcements, interferences, etc. Such cancer and leukemia hotspots do indeed exist, without any presently known explanation.

In the "normal" weak EM noise environment that used to exist on earth, the minimum threshold effect provided security against the normal weaker background. The maximum threshold effect provided security against sudden larger "EM jamming" occurrences. In today's EM noise environment, both of these protection thresholds are becoming inadequate.

How the Drug Culture Was Really Created

Much of our present younger generation is electronically "plugged in," to put it mildly. Heavy rock concerts at great volume blast into their listening audiences not only the rock music but also the EM hash from all the effects previously listed. They also blast a certain type of philosophy, of frenzied sex, violence, contempt for society, and rebelliousness. The guitar has been lowered onto the player's body so that its neck becomes a giant phallus. Frenzied movements of the player demonstrate overtly full preoccupation with sexual stimulation and orgasm. The impact of these giant emotional mass experiences of the audiences is reminiscent of the huge Nazi rallies that Hitler used to so effectively condition a generation of Germans, and use them, once conditioned, to launch an attack on the civilized world that resulted in the deaths of over 100,000,000 people. Certainly orthodox psychologists and psychiatrists have already addressed the parallel of the rock concert to the orthodox understanding of mass conditioning. We will shortly address an unorthodox element of which the present scientists are unaware.

In addition to their mesmerized attendance of rock concerts, often youths continue their heavy listening schedule at high volume from their own stereos and transistor radios, often with earphones which can sustain the loud volume in their ears. In their automobiles, the youth oil today has installed huge speaker with powerful amplifiers, to continue their exposure to the volume and inadvertently to the EM hash. They also continue their sustained and dramatic exposure to the synthesis philosophy expounded by modern rock music and rock musicians.

But there is another, highly effective, subliminal conditioning effect that goes completely unrecognized. The information content of the rock music (and, as anyone knows who translated it, much of it has a "message" of violence and contempt for the female and for society) is also modulated into the internal Whittaker structures of the hash. *This "wired-in generation" thus is continually conditioning itself by a new and unique process. It is directly conditioning the memory personality, and deep unconscious mind by charging and activating the biopotentials on the atomic nuclei directly.*

There already exist forces hostile to the structure of Western society that secretly know the semblance of this, and know that the present electronic conditioning of the youth of our society can undermine all its values. There is thus a hidden threat to our youth and to our society. Both are already being manipulated, and almost no one in orthodoxy seems to suspect it. Certainly the mass news media do not take up the cudgel; they are far too busy making money from the very advertisements that continue to plant the seeds for continually conditioning the children for each forthcoming new generation.

We have a drug problem, and we shall continue to have one, no matter what "swat teams" and "special operations forces" we muster against the drug barons. *Much of the youth of the present generation has a different culture, and a different cultural background, and a different attitude toward drugs, sex, and violence than anything the older generations knows or can relate to.* Rape, violence in our cities, contempt for society expressed as vicious attacks on old people and helpless persons, increased child molestation, and expression of sex-in-violence such as "wilding", are the end results of this continual conditioning. We are speaking of a matter of degree; as the degree of heavy internalized conditioning increases, the degree of criminal expression of this inner content increases. Just as the great psychologist Jung observed in his patients the increasing dark content of the unconscious mind being conditioned into Germans by Nazism, and predicted a direct and violent overt expression of it (in the Second World War), so one sees today an increasingly violent and crime-ridden future for the cities of America, from the steady manipulative internalized EM conditioning of our youth.

But, the reader may ask, is all this really true? Can one explain how and why we acquired the drug problem in the first place? The answer to both questions is yes.

The real cause of the present drug problem in America is never mentioned or addressed. It is not present in the learned but biased studies of our great think tanks. It is not known or realized by our drug enforcement officials. Neither the Congress nor the Executive Branch is prepared to deal with it. (In fact, because of the financial implications, they would most probably hamstring any effort at exposing it and dealing with it directly, just as they hamstring efforts to declare alcohol and tobacco addictive drugs.)

The real genesis of the drug problem in America is the pain reliever and pill advertisements on television particularly, and to some extent, those on radio and in motion pictures.

Think of it this way: In the 1950s and 60s America became "televisionized." Most households — even those of the poor — obtained television sets. The reason was for entertainment, and the intended enrichment of our lives. In fact we got that aspect of television, and we also got something far more pervasive and far deadly. We had taken a viper to our bosom, so to speak.

Americans were enraptured with television, to put it mildly. The television set became the center of entertainment and the center of attention in massive numbers of households. Millions of little babies, with their little formative minds absolutely pliant and absorptive, watched thousands of hours of television — including thousands of hours of television pill commercials and pain reliever commercials. Always depicted were situations where *life's problems have a chemical solution.* Has mama had a trying day, dropped the iron, and dropped and broken the dish of food? Pop a pill, a soother of the nerves. Got a headache from tension or sinus? Pop a pain reliever. *Pop a pill, baby! Life's problems are solved with a chemical solution!* That was the unceasing message that was pounded into all those little absorbing, non-censoring, non-evaluating minds. *Already in a passive state and highly suggestible, these little minds absorbed the message into their deepest unconscious, repeatedly, continually, as the norm for society and the preferred, ideal behavior.*

The pill merchants, in their ubiquitous greed, really did a number on our children. They conditioned an entire generation — and continue to condition each new one — that *chemicals are the solutions to life's problems.*

It's bad enough conditioning if one just considers the classical conditioning mechanism in the passive state, a la Hitler. But when one also considers the *internalized* conditioning of the infolded Whittaker structuring, these kids got the whole enchilada.

And this was further supported by the children observing adults — often their own parents — with a dependency on pain relievers, alcohol, nicotine, and aspirin and pain relievers. The medical profession has long since been powerfully conditioned and subverted by the large drug companies that allopathic medicine, with an occasional surgery, is the primary constitution of the practice of medicine. Anything electrical, of course, is automatically labeled a fraud, and persons attempting to investigate the possibility of electromagnetic healing are severely chastised, just as are naturopaths, chiropractors, holistic practitioners, etc. Indeed, the EKG and the EEG were once labeled as frauds, and their practicioners as charlatans. So also was physical therapy, and its practicioners were hounded and prosecuted. Allopathic medicine is a monopoly and an oligarchy; it has subverted the state and uses the power of the state to enforce its own dogma.

The big drug companies love it. Tons of money are made, milking the public as a milk cow, selling them lucratively priced drugs by the trainload. The doctors get rich. The drug companies get rich. The cow gets milked. The lawyers get rich by sueing the doctors to "share the proceeds." Best of all possible worlds. The drug commercials contain to blast their way from television into the young, pliant, passive minds of infants, with thousands and thousands of hours of the message that *chemicals are the solution to life's problems. They are good. They heal people. Society approves. See your friendly drug merchant.*

Now of course there is a place for allopathic medicine. Properly used, some drugs can be beneficial. None of them can do a thing for healing the body; at best, they can suppress the symptoms of a disease and allow the body time to muster its own recuperative and healing forces. The blunt truth is that the natural mechanisms of the body are what heals it, not the drugs. The drugs, however, may be judiciously used to assist in this process. In this paper, in castigating the drug advertisements, we are speaking of *the degree of near-total reliance on using drugs that* is *advocated.* Commercial drug advertisements constitute a giant, infectious disease and they should be ruthlessly eliminated from our television and radio commercials. Otherwise, these harlots will continue to seduce each succeeding generation, and we will continue to have a giant and increasing drug problem because the *demand* will continue.

The answer isn't spending more money and milking the taxpayer. The answer is to root out the source of the infection. And the answer is also to control the infectious agent so it does not rear up and strike again.

The formative minds of our infants should not be allowed to be playgrounds for the drug merchants to romp in and sew their deadly infection. We deserve better than that. Our government watchdogs ought to get off their posteriors and pass legislation that outlaws all such incessant propagandizing of our babies, children, and adolescents. It is a crime against society to *deliberately engender the need* for drugs in our children, just as surely as it is a crime for someone to *sell* them illegal drugs. Eerily, our warped society declares war on the illegal drug producers while ignoring the very agent that created the problem in the first place, and continues to create it.

Just as industry once practiced child labor and horrible exploitation of the nation's children, the present "legitimate" drug companies, doctors, and television and advertising industries are also exploiting our children and corrupting their minds. Is financial gain worth that much? Are we so mad that we cannot see what we are doing to our children? What we have already done to many of our children, now the young adults of America? Is there anyplace in America where the insidious damage has not been done? Is there anyplace in American where the need for elicit drugs has not already been created, and is continuing to be created?

In God's name, wake up, Americans!. How long will we allow these men in dark blue suits and with corporate mentalities to exploit and mutilate our children? And for dark, foreign forces to

deliberately augment and manipulate our children with suggestion and conditioning that simulate that mechanism?

One wonders. And ponders. And takes up one's pen and writes. Does anyone heed the message?

To stop this thing is simple, but it will require a very long time. We have to get the pill advertisements completely off television and radio. We must, whether we like it or not, censor the content of the deliberate, mass conditioning of the minds of our youth with hate, bigotry, abnormal sex, and violence. As a man thinketh in his heart, so is he. Condition the heart (the unconscious mind), and you form the person. Must we allow our children to be deliberately manipulated and conditioned by hostile and detrimental forces? Let's at least get the drugs, hate, bigotry, and violence out of there. Let's attack the drug problem at the heart, where the need for it is being created. Let's crush that serpent and destroy it, and prevent it from biting and infecting our babies, children, and adolescents.

Ubiquity of Internal EM Energy

As we stated, internal EM energy is ubiquitous. It is everywhere, all-pervasive.

The inclusion of internal exchanges, of course, is completely anti-reductionist. Now you are not just what you are, but also what everything and everyone else is as well. Ironically, present Western biology seems bent upon the road back to hard reductionism. This can only reinforce and sustain our presently primitive and inadequate "cut 'em, drug 'em, and burn 'em" medical science, as well as our inadequate knowledge and consideration of the internalized energy of living systems and or our irreplaceable biosphere.

We also point out just how fundamental the Whittaker-based methodology is. In a very nice summary paper dealing with the remarkable capabilities of recursive methods,[158] Soviet physicist V. K. Ignatovich points out that recursive relations are involved in a wide variety of fundamental physical problems, including molecular gas diffusion, scattering of a quantum mechanical particle from potentials, etc. There is also direct involvement with the Schroedinger equation itself. Indeed, one of the striking features pointed out by Ignatovich is what can only be called a Whittaker-structure (of superimposed bidirectional plane waves going in opposite directions) comprising the potential utilized in the Schroedinger equation. Interestingly, in the infinitesmal gaps where the potential is zero (mathematically, such gaps could essentially be inserted at will), the wavefunction itself is comprised of this bidirectional Whittaker structure, and the only difference between two wavefunctions in two gaps is a phase factor that is calculable.[159]

In short, deterministic Whittaker-infolding of bidirectional EM plane waves is the key to direct engineering of the Schroedinger equation itself — hence of *all physical change*. From the very beginning, living biological systems have utilized Whittaker-structuring in their deepest biological control systems. This has allowed them to utilize very minute voltages and currents, yet precisely communicate these incredibly weak signals through a very "noisy" ordinary EM environment inside the body.

The emergent picture is this: (1) the normal externalized EM force fields represent dynamic, externalized bleed-ins and bleed-offs (by acceleration of charged particles) of the external amplitudes of scalar potentials, *without* affecting the fundamental infolded substructure of the potentials. Such force fields represent primarily the *externalized* EM dynamics of the potentials, the part where gravitational potential turns itself into electromagnetic force. (2) Whittaker-infolding of such EM forces in bidirectional EM wave pairs inside the scalar potentials allows

calm, smooth, deterministic communication between all the parts of the biological organism, normally without undue disturbance from the externalized maelstrom of "first order" physical reality (single photon interactions with matter." These hidden Whittaker structures represent the *internalized* EM dynamics of the potentials and their intercommunication and intracommunication.

A Very Different Physical Reality

While beyond the scope of this paper, we point out in passing that consideration of the I internalized EM energy of biological systems (and of the universe) gives a quite different kind of "physical reality picture" than the normal first-order reality. Biological functioning in this different reality realm therefore exhibits quite different characteristics from the normal *externalized* aspects of biological actions.

Direct mechanisms for mind, thought, emotion, memory, hidden inter- and intra-cellular communication, etc. result from the new approach. In addition, mechanisms for previously rather mysterious parapsychological phenomena — such as psychokinesis, precognition, and postcognition — also result. Further, it is now clear why heretofore such phenomena have been demonstrable only statistically and even then only minimally. The true deterministic EM signals involved were very, very weak infolded Whittaker structures inside scalar EM potentials. Since our present instruments have all measured the much more powerful *externalized* EM energy, we have only been able to statistically discriminate (and very weakly at that!) the emergent order in rather large-scale *integrated* chaos effects. Thus for the most vital living functions of the organism, we could only show weakly ordered and statistically significant small deviations from randomness. We stress that all these "internalized reality" subject areas, regardless of how mysterious they have previously seemed, are now open to direct investigation and even direct engineering. We further stress that spacetime, quantum change, the Schroedinger equation, parapsychological phenomena, and physical and mental reality are all now unified and accessible to scientific investigation and direct engineering.

Solving the Quartz vs. Glass Transmission Problem

In passing, we point out a solution to one of the problems that have puzzled Western analysts for over two decades. In the Kaznacheyev cytopathogenic experiments (as shown diagrammatically in Figure 19), disease and/or death is induced into one cell culture by optical EM radiation emanating from an adjacent but environmentally shielded contaminated culture. Similar disease-induction experiments have been successfully performed in West Germany, Australia, and at least by one U.S. researcher.[160] Kaznacheyev's results were obtained by weak optical radiation through a thin quartz window, but not through a thin window of ordinary glass. He reported the discovery of weak mitogenetic photons in the near-ultraviolet (near-UV) which purportedly induced the effect.

In West Germany, University of Marburg researchers duplicated the experiment, ostensibly discovering weak mitogenetic photons in the IR frequency region, which purportedly induced the effect.

However, it is not nearly so simple as measuring single-frequency photons. We are dealing with internalized energy, and hence with the *infolded coupled-photon graviton* structure of Whittaker potentials. This hidden infolded structure is the information content" of the radiation emanating from the diseased cell culture — graviton containing containing hidden EM photon information

that can induce the same disease or physical conditions in the targeted cells if delivered to them intact. Further, the bidirectional EM wave structure of the Whittaker potential consists of pairs of contratraveling EM waves *multiplied* together, hence *modulating* each other and locking together. To form gravitons, multiple photons are locked together in n-tuples (both in number and in harmonic frequencies) by this process. *All gravitons containing information must have harmonic substructures, else modulation of monochromatic photons did not occur to produce them.*

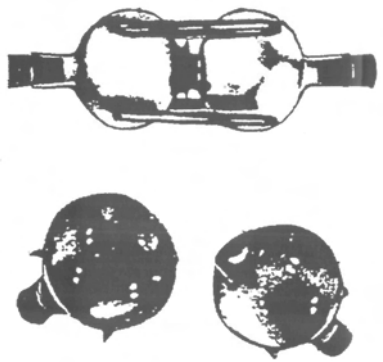

Figure 19. The Kaznacheyev apparatus for cytopathogenic experiments. Many thousands of experiments were conducted by two military institutes.

Another way of saying the same thing is that gravitons represent a special, linked-photon, averaged lattice in the vacuum flux. Horizontally (spatially) the photons are linked into gravitons by bidirectional EM waves; vertically (time-wise) the photons are linked in frequency by harmonic and subharmonic oscillation. Figure 20 shows the general scheme of this Whittaker **lattice.**

The reader should be at pains to understand, however, that the lattice structure shown in Figure 20 is *not* fixed, but consists of averaged equilibria in the fiercely boiling vacuum virtual particle flux. The fierce vacuum flux actually consists of the continuous dynamic interference of myriads of just such Whittaker structures created in the macroworld. Each part of the macroworld, on the other hand, is just an equilibrium condition in that *overall* flux cauldron. As can be seen, according to this model, physical reality is a hologram, and in an eerie fashion Mach's principle rigorously applies.

The point is, both modulation (infolding) and subsequent demodulation (outfolding) of the internalized EM energy are operations that only occur in *nonlinear* materials. A nonlinear material is one which, in reaction to an introduced monochromatic wave, produces harmonics in addition to the fundamental frequency. Being entirely a *nonlinear-based effect and mechanism, the cy*topathogenic (Kaznacheyev) effect requires *harmonics* if it is to be transmitted and exhibited. It is not the singular EM force fields which carry the information for the cytopathogenic effect; it is the multiple internalized EM-waves in the substructures of Whittaker potentials that carry it. A *harmonic series of bidirectional waves* must carry it. Hence to induce the disease in the second sample, one harmonic interval is the smallest bandwidth that must be

infolded in the diseased cells, transmitted intact through the window to the targeted cell culture, and absorbed and deposited therein. Further, between-harmonics signals are jamming noise, insofar as the harmonic Whittaker structures of a particular pattern are concerned. This explains why Constable and Gambill were able to occasionally take paranormal photographs through filter glass that was transparent to IR and UV, but opaque to the visible spectrum in between. UV is a first harmonic of IR. The filter glass passed one harmonic interval, and blocked out the outside and inside "jamming" signals.

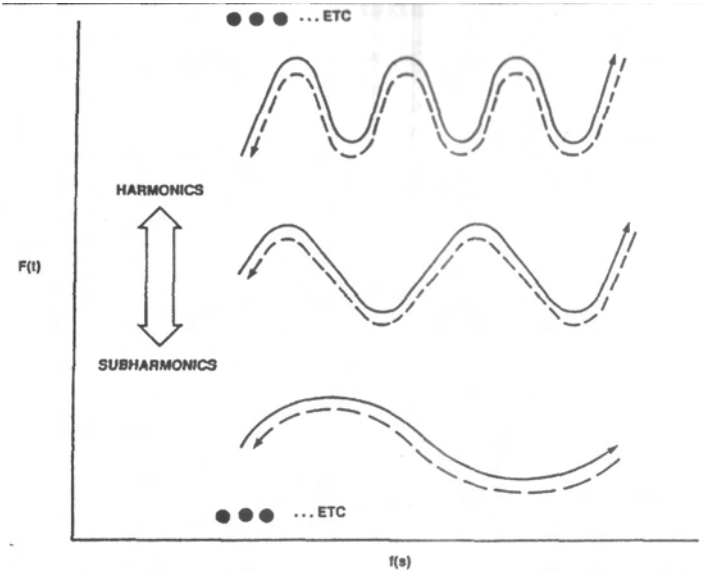

Figure 20. The Whittaker-structured graviton lattice of vacuum/spacetime. Breaking the time sync of the photon structures accounts for the "collapse of the wave function" and leads to photon interaction. In uncurved spin-2-graviton spactime, one photon is measured, and the antiphoton produces Newton's third-law reaction force, usually just recoil in the measurement instrument, which is ignored.

Quartz passes both IR and UV, in addition to the visible spectrum. Kaznacheyev's experiments were performed in the dark, and so the jamming noise of the visible spectrum was absent Therefore the thin quartz window passed one optical harmonic, because the UV is twice the frequency of the IR.

That is, the thin quartz window was able to pass *gravitons* — coupled photon/antiphoton pairs - rather than just individual photons. The gravitons had been emitted from diseased cells, and the exact Whittaker structure for the disease was contained in the gravitons. In these gravitons, their internal photons retained their spatial and harmonic coherence and correspondence, which retained the disease pattern. When the disease-structured (cytopathogenic) gravitons were deposited in healthy cells shielded from the visible "jamming" spectrum, the biopotential of the healthy cell structure gradually charged up and *became activated with* the Whittaker-structured disease pattern. Thus the specific disease was gradually kindled in the targeted healthy cells.

Normal window glass, on the other hand, does not pass a full harmonic interval. That is, it busted up the gravitons, separating them into weak photon emissions that did not retain their previous spatial and harmonic coherence in a structured-graviton spacetime lattice. That of course destroyed the photon-to-photon coherence and the infolded "information of the field" that carried the specific disease structure. Therefore when the two cell cultures are separated by thin window glass, the graviton pattern is broken up and the disease is not kindled in the targeted cell culture by mitogenetic photons passing through the windowglass.

Hence the disease can be transmitted through the quartz, but not through the thin windowglass. With a quartz window, the disease is transferred *electrogravitationally* by the structured charge of the arriving intact gravitons. With a windowglass window, the gravitons are busted up and the disease pattern lost in the window, leaving isolated photons to arrive in the targeted cell culture and be deposited. Since the disease information has now been lost, the targeted cell culture does not contract the disease.

Actually, the effect induced by infolded harmonic radiation in the optical range can also be achieved in the appropriate microwave range, so long as properly structured, *coupled-photon/antiphoton* gravitons — including the necessary harmonics — are maintained. The major mechanism for this "translation to different frequency bands" is already well-known in the theory of forced oscillations, but it is little-utilized in normal engineering. The translation mechanism is s*ubharmonic oscillation.*[161]

In subharmonic oscillation, a frequency that is a subharmonic of some higher (even much higher) resonant frequency can trigger the higher-frequency oscillation. Subharmonic oscillation is particularly applicable to living systems, because (1) their physical structures are highly nonlinear, (2) a great number of biological oscillators are nonlinear, (3) in general, nonlinear oscillators may vary both their frequency and their amplitude, particularly as a transient effect, (4) nonlinear oscillators are characterized by an initial transient period followed by the attainment of a stable period, (5) subharmonic frequencies in highly nonlinear materials will richly generate harmonics, so that the particular required harmonic of interest will very probably be produced, (6) the initial transient period of the nonlinear oscillator often acts as a sort of *harmonic frequency sweep* to simulate many harmonics, including the one of interest, and (7) the transient stimulus of the desired harmonic overcomes "static or initial" damping so that only the much-lower "dynamic" damping is produced.

Subharmonic oscillation is very important in Whittaker-structuring. A Whittaker-structured potential is already harmonically structured — essentially from near 0 Hz to near infinity (as was pointed out by Lisitsyn in a disguised manner). The Whittaker-structuring is a spatial and harmonic structuring of a partial potential component of the total spacetime potential. Subharmonic resonance plays a major role in this structured lattice —far more than we have previously suspected in our study of subharmonic resonance in nonlinear gadgets.

The implication of high biological nonlinearity and subharmonic oscillation is that Kaznacheyev cytopathogenic optically-induced effects can readily be translated to cytopathogenic *microwave*-induced effects—because they already are!. An optical Devyatkov information substructure can also be translated to a microwave Devyatkov information substructure. Further, if the optical Kaznacheyev cellular disease-inducing signal sets captured from a diseased cell culture are phase-conjugated, this yields a *specific curative signal complex for that specific disease.* This optical curative signal structure can then be subharmonically translated and Whittaker-infolded to yield a curative microwave Devyatkov information signal. This is the basic mechanism for direct engineering of EM healing apparatuses, such as were successfully developed by Antoine Priore and properly tested by eminent French scientists working with him, in the 1960s and 1970s.[162,163,164,165]

The near-total EM cures for cancer, leukemia, AIDS, and hosts of other debilitating diseases too numerous to mention can be developed in rather straightforward fashion, given the funding, scientific team, and facilities to accomplish the task.

Detection is Actually Binary

But how can all of this have escaped our finest researchers and theorists for so long? We present a brief presentation of why this has eluded the attention of our scientists.

First, though not too well-known, all detection is actually *binary,* although in almost every single detector only one part of the detected two components is utilized for the "measurement."[166] The other part of the binary detection occurs in the atomic nucleus, and is ignored or discarded in almost all "measurements" we presently perform, and in almost all the instruments we build and use.

Note that each element of the EM structure of the Whittaker potential is binary; there are two bidirectional waves in each one. In the linear situation, our normal instruments demodulate a photon and an antiphoton from each binary *graviton* structure of this binary channel. In its output, the instrument separately utilizes the externalized (electron-moving) wave or photon as the "detected signal," while utilizing the other demodulated antiphoton or antiwave to produce the "recoil of the atomic nuclei" of the instrument itself — in other words, to produce Newton's third law reaction force! Indeed, the universality of Newton's third law is prima facie evidence of the existence of the coupled-photon/antiphoton graviton *prior to demodulation and measurement of photon interaction effects.*[167] Classical electromagnetics has always been a derivative of the real unified-field "electromagnetics" that actually exists in nature, and we have always been misled by the very EM instruments we are so proud of!

In a nonlinear situation, on the other hand, we are inevitably dealing with a harmonic situation Any photon incident into a highly nonlinear material will generate harmonic photons, each of which will generate further harmonics, etc. Further, the nonlinearity generates time-reversal (phase conjugation), so that time-reversed replicas of these harmonic spectra are also generated But nonlinear materials are also modulators and demodulators. Hence the nonlinear material is continually infolding and outfolding the Whittaker structure harmonics. In our *normal* detectors and detector theory, we discard the entire infolding aspect of the situation, and usually much of the rich harmonic spectra as well. We certainly fail to recognize the continual creation and annihilation of dynamic photon-structured gravitons. For those, we simply treat the gross *captured EM energy* aspect, in that it determines the overall envelope magnitude of the scalar potential.

The point is, in a nonlinear optical graviton situation which must involve infolded IR and UV photons, our *photon* detector busts up gravitons, and it may measure either a UV photon or an IR photon, depending upon the mechanics of the situation. It will not normally "measure" or indicate both, since it discards and neglects one or the other as its own "instrument recoil." And it will tell us almost nothing of the very rich dynamic graviton structuring and exchanges that an occurring. It will give us no picture at all of the infolded Whittaker structure and the internalized EM energy order.

We have always been applying nonunified EM technology to unified field theory problems anyway Hence for three decades Western "single photon" scientists and engineers have remained completely puzzled and baffled by (1) Kaznachcycv's *"graviton is a multi-photon-unit and in structure can be deterministic"* work, (2) Devyatkov's *"the particular photon structure of the graviton is the information content of the potential/graviton field,"* and (3) the microwave radiation

of the U.S. Embassy in Moscow. We also were puzzled by (4) the strange Petukov/Toth episode involving the Soviet classification of a paper on bio-particle emissions and "little pieces of the vacuum medium." And of course we never understood Tesla when he adamantly insisted that the EM waves in vacuum were not transverse but were *longitudinal* waves, or EM "sound waves," as he referred to them. And all our textbooks today utilize macroscopic E- and H-fields in the vacuum — when no such thing exists now or ever existed. E- and H-waves are *matter waves,* usually of the conduction electron gas in our conductors. They are *not* what is coming in from the vacuum and interacting with that conducting electron gas in our detectors. However, since our instruments actually detect and measure the movement of the conduction electrons, then indeed we detect and measure E- and H-fields — *inside our instruments, not in the vacuum.* Isn't it a bizarre aberration of scientific thought — just as Tesla stated — that all our science and engineering continues to teach and accept such a fundamental mistake?

Note that a gradient in the graviton field (in the scalar EM potential) must involve the translational exchange of photons between adjacent standing gravitons. When one understands the unified-field approach, it is totally to be expected that the diseases induced in the Embassy personnel in Moscow would not occur where E- and B-fields *("single-photon-interaction-with-matter"* field stuff) were present, but only where these single-photon fields were not broken out of the Whittaker potential *("stabilized multi-photon-coupling* field stuff) before reaching the targeted bodies. In other words, the diseases occurred where the *potentials persisted,* and where the force fields (the bleed-offs of the potentials) were absent. Johns Hopkins researchers found this to be precisely the case, but did not realize and consider the *EM potential* aspects. Their "photon detectors" destroyed half of the actual *structured graviton* mechanism involved. Hence they erroneously concluded that it was not the microwave radiation that was causing the anomalous diseases and health changes in Embassy personnel.

They rightly concluded that it was not the monocular EM photon field component of the microwave radiation that was the inducing agent. However, they assumed that there was no other component of the radiation that could have been involved; i.e., they assumed that the force fields and the microwave radiation fields were one-and-the-same, totally. Had they known of Whittaker-structured potentials as the explanation of Kaznacheyev's cytopathogenic effect, they most certainly would have considered the persistent potentials. In that case, *from the data and measurements they had, they would have concluded that it was the multiocular EM photon-structured Whittaker potentials that were the inducing agents.*

The Problem is Our Rigid Mindset

It is simply incredible when hundreds of thousands of Western PhDs are graduated in electrical physics and electrical engineering, and hardly a single one knows that what he was taught as "Maxwell's equations" were not *Maxwell's* equations at all: not a single one of those Heaviside/Gibbs critters ever appeared in a book or paper by James Clerk Maxwell.[168] And almost nobody checks! Almost no one goes back to Maxwell's *quaternion* theory to see whether or not Heaviside and Gibbs "got it right" in their vector interpretation. With the exception of Dr. Henry Monteith,[169,170,171] and a few notable other scientists, almost no one in the West seems to have previously noticed that Maxwell's original quaternion theory was already the magic unified field theory of G and EM that everyone is supposedly seeking! And it is already in an *engineerable* format. You can engineer it on the lab bench and it works.

Our real problem is our dogmatic scientific mindset, particularly with respect to electromagnetics. In the West we seem to think we already know everything, and that the Soviet scientists are just a bunch of ignorant peasants still trying to clean the mud off their boots.

Those same scientific "peasants", however, have always been the leading nonlinear mathematicians and nonlinear scientists of the world — and they still are. We've really got a lesson or two to learn from them after all. Let us hope we do so before it is too late for our survival.

The Soviet Electromagnetic BW Threat Is Real

The Soviet threat in electromagnetic biological warfare is real. It has been developed over a period of at least 40 years. The trace is clear. It is also clear that biological warfare is now, and has been for some time, a preferred option for the Soviet Union. It is rapidly becoming a preferred option for much of the Third World today.

We have seen that the "new" electromagnetic biological warfare has already been used to attack and kill Americans — even Americans of very high rank, such as several U.S. Ambassadors to the Soviet Union. However, note that this attack has also been *slow-acting.* The Soviets have taken full advantage of the important American national characteristic of not reacting to a slowly creeping threat.

Meanwhile Gorbachev, who is perhaps the greatest propagandist the world has ever seen, has made sweeping concessions and unheard-of changes. U.S. leaders, even of the Department of Defense and the President himself, have been taken in by the Great Charmer. The heavily liberalistic U.S. news media seems almost ecstatic in their perception that the end of the cold war is here. Indeed, during the month of November 1990, the Cold War was officially declared dead.

Glasnost is the new phrase that is being repeated by our news media, in a growing euphoria of *peace in our times.* Neville Chamberlain would be proud of his new protegees.

As far as Glasnost goes, we had better keep our powder dry and recall the following quote:

> "War to the hilt between communism and capitalism is inevitable. Today, of course, we are not strong enough to attack... To win we shall need the element of surprise. The bourgeoise will have to be put to sleep, so we shall begin by launching the most spectacular peace movements on record. There will be electrifying overtures and unheard-of concessions. The capitalist countries, stupid and decadent, will rejoice to cooperate in their own destruction. They will leap at another chance to be friends. As soon as their guard is down, we shall smash them with our clenched fist."

Dimitry Z. Manuilsky
Lenin School of Political Warfare
Moscow (circa 1934)

NOTES AND REFERENCES

1. The closest thing to gravitobiology is the present photobiology, which deals with the biological effects of ordinary photons and electromagnetic waves. Photobiology (PB) is a small subset of gravitobiology (GB). GB also includes the biological effects of hidden coupled-photons and hidden bidirectional EM waves inside scalar EM potentials — infolded inside spacetime itself. Since these hidden EM channels are utilized by the living biological system in all its primary control systems — including for cellular control and mind control — then GB drastically extends PB.

2. Gravitobiology, short for *electrogravitobiology,* is the as-yet-embryonic science that deals with biological effects/uses of the uniGed electrogravitational Geld. It is understood that the unification of electromagnetics and gravitation is accomplished at the most fundamental level, that of the quantum particles of the fields. The graviton is considered to be composed of photons, but variable in size, dependent upon the number of photons comprising the graviton *on the average.* Thus the graviton is dynamic in structure and magnitude, contrary to present treatment in physics. To speak of a *discrete graviton,* then, having a stable *average spin* is to speak of a time-averaged entity that is a stable equilibrium state/structure in the violent virtual particle flux of vacuum.

3. This of course describes a dynamic holographic reality.

4. Present quantum field theory utilizes the photon as the quantum particle of the electromagnetic Geld, and the graviton as the quantum particle of the gravitational Geld. Each quantum particle is treated as quantized in spin, so that its spin never varies. However, in gravitobiology (GB) the graviton (and indeed, the photon as well!) is considered to be dynamically varying at each instant, at an incredible rate. When time-averaging yields discrete stable spin values, these are regarded as gravitons. Thus the individual, momentary graviton may have spin of two, more than two, or less than two, in contradistinction to present quantum Geld theory. In gravitobiology the graviton is *statistically discretized* but not actually *individually quantized.*

5. Gravitons are time-averaged envelopes, and can move at any velocity — similar to phase waves. What is moving in an electrogravitational wave is photon coupling and decoupling.

The reader is cautioned, however, that in physics the graviton is still not a well-defined, well-understood, and agreed-upon entity. Whether or not a graviton exhibits mass or is massless remains an open question. Linearity versus nonlinearity of the graviton is also yet to be totally resolved. The state of the subject in present physics is thus unclear. Indeed, it can be surmised that, if gravitons exhibit mass, then gravitons in deep space could possibly account for the cosmological "missing mass" needed to close the universe. As an example, for a discussion that favors graviton mass, see O. Costa de Beauregard, "Massless or Massive Gravitation?", *Foundations of Physics Letters,* 3(1), 1990, p. 81-85. As an example to show how concepts such as "photon" and "graviton" have a very complicated background that affects whether or not unification of physics can be accomplished, see Horst-Heino von Borzeszkowski, "Remarks on the Physical Reality of Gravitons," *Foundations of Physics,* 20(4), 1990, p. 435-445.

6. Presently, the only basic definition of modulation simply states that, when one wave modulates another, the two lock together in one fashion or another as a single, more complex wave. When such a complex wave is demodulated, the two locked-together waves are separated from each other to become independent waves. The exact

mechanism by means of which modulation and demodulation occur have heretofore been totally unknown, although the results have always been readily describable mathematically.

7. A normal or time-forward wave is time-forward as seen by the external observer. The observer's forward flow of time is created by the rate of virtual photon scattering interactions within one kilogram of mass of his body/his instruments, as compared to the same rate in another external observer. Steady forward passage of time simply represents a steady rate of such internal virtual photon scattering action. Thus positive time flow and entropy are simply two sides of the same coin; the rate of formation of entropy is directly correlated with the rate of flow of positive time. Note that rate of flow of time is identically the rate of formation and dissolution of time, as carried in the virtual photons.

   Negative time flow, to the external observer, is created by the rate of photon reordering actions (negentropy) within one kilogram of mass of the observer's body/his instruments. Steady time-reversal simply represents a steady rate of the reordering action. Thus negative time flow and negentropy are simply two sides of the same coin; the rate of formation of negentropy is directly correlated with the rate of flow of negative time.

   Each mass can and does exist in a combination of the two time streams. Thus the actual time-flow rate of mass can seem to be slowed, as some additional negentropy and additional negative time are created by time-reversed photon interaction (antiphoton interaction) with mass.

   The normal (time-forward) EM wave contains and carries positive energy and positive time; each of its photons is comprised of (+dE)(+dt). On the other hand, a time-reversed EM wave contains and carries negative energy and negative time; each of its antiphotons is composed of (-dE)(-dt).

8. It is accented that our graviton is highly dynamic. Hidden photons and EM waves flow through it laterally (spatial flow) and also vertically (harmonic and subharmonic flow via subharmonic oscillation). This flow or flux through the graviton is continually changing: "the" graviton is an average, or photon-coupled form in equilibrium. Since spacetime is constructed of such dynamic gravitons, this means that the frame concept is now fuzzy and statistical as well. One can now speak of the *stability of a frame,* the *"Q" of a frame, "spreading the Q" of a frame* so that its former fixed points become smeared in n-dimensions and only approximate, etc. *It is the geometry itself that is now smeared and averaged.*

9. Obviously we are referencing the concept of the graviton to the external observer, who sees things on a macroscopic scale that have in fact been highly integrated in the vacuum. He sees the averaged integral results of myriads of tiny, turbulent, macroscopic and submicroscopic changes. Thus the *spacetime* and the *frame* that he sees have submicroscopic hidden substructures. *Curvature* of spacetime actually refers to the change in potential (local hidden energy density) of spacetime. This density may increase or decrease, giving two types of curvature, one positive and one negative, with respect to local ambient spin-two vacuum. In addition, the local spacetime curvature always has a hidden electromagnetic structure, part of which may be deterministic and even deliberately constructed and engineered at will.

   We should also certainly point out that Einstein's general theory of relativity is not necessarily the last word on gravitation and curvature of spacetime. For example, it is possible to formulate a contradiction-free theory of the gravitational field without even invoking the notion of curvature of spacetime at all. For example, see N.N. Razgovorov,

"Dynamic treatment of gravitation. The interaction equation and equations of the gravitational field," *Izvestiya Vysshikh Uchebnykh Zavedenii, Fizika,* 33(5), May 1990, p. 89-94 [in Russian]. An English translation is in *Soviet Physics Journal,* 33(5), November 1990, p. 458-462.]. Sachs, for example, has even produced a quaternion generalization of Einstein's tensor formulation of general relativity that may predict a fundamental and testable difference in gyroscopic precession. See Mendel Sachs, *General Relativity and Matter,* Reidel, Dordrecht, The Netherlands, 1982. See also Mendel Sachs, "The Precessional Frequency of a Gyroscope in the Quaternionic Formulation of General Relativity," Foundations of Physics, 19(1), 1989, p. 105-108.

10. For an excellent lay discussion of the missing chaos problem, see Robert Pool, "Quantum Chaos: Enigma Wrapped in a Mystery," *Science,* 243(4893), Feb. 17, 1989, p. 893-895. For a more technical discussion, see P.V. Elyutin, "The quantum chaos problem," *Sov. Phys. Usp.* 31(7), July 1988, p. 597-622.

11. For an introduction to Bohm's hidden variable theory, see D. Bohm, *Phys. Rev.* 85, 1952, p. 166,180; *Causality and Chance in Modern Physics,* Routledge & Kegan Paul, London, 1957; "Hidden variables and the implicate order," in *Quantum Implications: Essays in Honour of David Bohm,* Eds. BJ. Hiley and F. David Peat, Routledge & Kegan Paul, London & New York, 1987, p. 33. See also D. Bohm and BJ. Hiley, *Found. Phys.* 5, 1975, p. 93; *Found. Phys.* 12, 1982, p. 1001; *Found. Phys.* 14, 1984, p. 255. See also Y. Aharonov and D. Albert, "The issue of retrodiction in Bohm's theory," in *Quantum Implications: Essays in Honour of David Bohm,* ibid., p. 223. For a discussion of what nonlocal theory may really entail in terms of *modular* variables, see Yakir Aharonov, "Non-local phenomena and the Aharonov-Bohm effect," *Quantum Concepts in Space and Time,* Eds. R. Penrose and CJ. Isham, Clarendon Press, Oxford, 1986, p. 41-64. For other important discussions see Lee Smolin, "Stochastic mechanics, hidden variables, and gravity," ibid., p. 147-173; and Abner Shimony, "Events and processes in the quantum world," ibid., p. 182-203. For a new viewpoint on emission processes, see Robert M. Wald, "Correlations and causality in quantum field theory," ibid., p. 293-301; and Serge Haroche and Daniel Kleppner, "Cavity quantum electrodynamics," *Physics Today,* Jan. 1989, p. 24-30.

12. That is, photon-structured gravitons. Nonlinear gravitons were discovered by Newman (1975) and Penrose (1976). See E.T. Newman, in *General Relativity and Gravitation,* Eds. G. Shark and J. Rosen, Wiley, New York, 1975; R. Penrose, *Gen. Rel. Grav.* 7,1976, p.31.

The reader should reflect for a moment: If general relativity (GR) already says that the gravitational potential is a conglomerate, then even orthodox GR implies that it has an *internal structure.* Since stress is the only way one can trap forces, and stress is inherently composed of bidirectional pairs of forces, it follows that the G-potential and the scalar EM potential — both of which *trap forces* — are both composed of *stresses.* Hence Whittaker's bidirectional EM force wave internal structure of the potential conceptually follows in straightforward fashion.

However, this constitutes a structuring of spacetime and of the *curvature* of spacetime. Reflect again for a moment: What are the unrestricted implications of geometrically curved spacetime? Simply that spacetime can be geometrically shaped, molded, twisted, and otherwise arranged into intricate — even dynamic — patterns. Since spacetime is much like a virtual gas (its flux is not of molecules but of virtual particles), it has a virtual stress (virtual *pressure,* so to speak).

It is also revealing to compare the situation of puttcrned spacetime curvature to the shapings of clouds in the atmosphere. Just as clouds are made of drops of water/ice suspended in an even finer flux of atmospheric gas molecules, just so the top level of virtual particle flux in vacuum/spacetime is "suspended" in an even finer level of virtual particle flux. Just as the water droplets constituting clouds can be formed into almost any shape or combination of shapes (patterns) to provide an infinite variety of cloud patterns, so can the top levels of the virtual particle flux of spacetime itself be formed into an infinite variety of forms or "orderings".

13. In two fundamental papers in 1903 and 1904, E.T. Whittaker wrote the basis for a complete scalar electromagnetics and an *engineerable and testable* unified field theory of electromagnetics and electrogravitation. See (1) E.T. Whittaker, "On the partial differential equations of mathematical physics," *Mathematishe Annalen,* Vol. 57, 1903, p. 333-355; (2) E.T. Whittaker, "On an expression of the electromagnetic field due to electrons by means of two scalar potential functions," *Proceedings of the London Mathematical Society,* Series 2, Vol. 1, 1904, p. 367-372. In the first paper Whittaker described hidden bidirectional pairs of EM waves that comprise the scalar potential itself. Each of these bidirectional pairs in the Whittaker harmonic structure of potential (and hence of vacuum) is an internal EM wave/energy channel or *hidden photon channel through spacetime itself.* In the second paper, Whittaker showed that any present EM vector force field can be replaced by the two interfering scalar fields. In short, Whittaker showed that present electromagnetics can be converted to scalar fields and scalar interferometry, and will include even EM waves.

Some years ago, this present author realized the profound and absolutely fundamental significance of these two Whittaker papers, and formed a scalar electromagnetics theory from the implications of Whittaker's work. Unfortunately, Whittaker himself never realized that he had already written an engineerable unified field theory, for he never realized that his EM scalar potentials were also *gravitational* potentials. In the Western world, apparently no one else paid any particular attention to these two Whittaker papers and their profound import. Accordingly, they passed into obscurity. This author is convinced, however, that Soviet scientists reviewed these two papers after WWII, and founded a new and highly secret unified field theory, which they dubbed *energetics,* upon Whittaker's unnoticed work.

14. N.D. Devyatkov and M.B. Golant, "Prospects for the use of millimeter-range electromagnetic radiation as a highly informative instrument for studying specific processes in living organisms," *Sov. Tech. Phys. Lett.* 12(3), Mar. 1986, p. 118. See also N.D. Devyatkov, ed., *Applications ofLow-Intensity Millimeter Wave Radiation in Biology and Medicine* [in Russian], IRE Akad. Nauk. SSSR, Moscow, 1985. Devyatkov and Golant are at some pains to conceal that the "information content of the EM field" is actually the particular Whittaker-structure of the scalar potential.

15. Vlail P. Kaznacheyev and L.P. Mikhailova, *Ultraweak Radiations in Intercellular Interactions,* [in Russian], Novosibirsk, 1981; and Vlail P. Kaznacheyev, "Electromagnetic Bioinformation in Intercellular Interactions," *PSI Research,* 1(1), Mar. 1982, p. 47-76. Although the latter journal is now defunct, the referenced article in it contains a considerable amount of the information printed in Kaznacheyev's referenced book.

16. For example, see V.K Ignatovich, The remarkable capabilities of recursive relations," *American Journal of Physics,* 57(10), Oct. 1989, p. 873-878. Particularly notice that Ignatovich points out a remarkable bidirectional wave structure inside the potential associated with the Schroedinger wave itself. However, he gives no credit to Whittaker's

1903 paper pointing out precisely that structure in *any* scalar potential, about two decades before the beginning of quantum mechanics. It also seems at least somewhat curious, if nothing else, that Ignatovich's paper closely follows this author's calling national attention (in national symposia and conferences) to the significance of the first and second Whittaker papers and of the structured potential. The form of Ignatovich's paper is almost as if the Soviets wish to see whether or not American physicists are yet aware of the significance of the Whittaker-structured potential to an *enumerable* unified field theory. In other words, this may be related to the Soviets' use of the structured potential in their microwave radiation of the U.S. Embassy in Moscow since the latter 1950s. There, the object was simple: Pick a high level target, the U.S. Ambassador to the Soviet Union. Electromagnetically induce some health problems and biological changes in U.S. Embassy personnel, using the internalized-EM Whittaker-structured scalar potentials — or, in short, *energetics.* These puzzling health changes will guarantee the personal attention of the NSA, CIA, State Department, U.S. President, etc. When no one can explain what's happening, they would turn to the U.S. scientific community for an explanation. If no scalar counteractions are made by the U.S. onsite at the U.S. Embassy in Moscow, then the Soviet planners would know that the U.S. was unaware of scalar electromagnetics as an engineerable unified field theory. In that case the Soviets would know with one hundred percent accuracy that the U.S. knew nothing of scalar EM (energetics), and hence had not developed scalar EM (energetics) weapons in secret, and also had no defenses against the secretly-developed Soviet scalar EM (energetics) weapons. For years, the U.S. answer/response — or *complete lack* of it — onsite at the Moscow Embassy reassured the Soviets that we were defenseless. If Ignatovich's paper is the same sort of probe, then by the lack of response to his *American Journal of Physics* article the Soviets may rest assured that the U.S. scientific community is basically still unaware of scalar electromagnetics/energetics as an engineerable unified field theory. However, slowly a very small part of academia is beginning to wake up to the potential — pun definitely intended! — of Whittaker's two papers.

17. T.E. Bearden, *The Excalibur Briefing,* 2nd Edition, Strawberry Hill Press, San Francisco, California, 1988, p. 194-198.

18. For details of mysterious, instantaneous deaths in Afghanistan, see Yossef Bodansky, "Soviets testing chemical agents in Afghanistan," *Jane's Defence Weekly,* 1(13), Apr. 7, 1984, p. 508. For indications of a much "milder" EM disease induction weapon possibly used to kill top Radio Free Europe executives in Munich, see "Does Romania have a 'cancer' weapon?", in "Washington Whispers, Death by Radar," *U.S. News and World Report,* Dec. 12,1988, p. 15.

19. For substantiation that Khrushchev reported the development of a fantastic new weapon, see Max Frankel, "Khrushchev Says Soviet Will Cut Forces a Third; Sees 'Fantastic Weapon,'", *New York Times,* Jan. 15,1960, p. 1.

20. Christopher S. Wren, "Brezhnev Calls for Accord against 'Terrifying Arms'", *New York Times,* June 14, 1975, p. 1, 11; Malcolm W. Browne, "Senatorial Group Received by Brezhnev," *New York Times,* July 3, 1975, p. 2; Christopher S. Wren, "Moscow Now Pressing Disarmament," *New York Tunes,* Aug. 12,1975, p. 6.

21. Draft agreement introduced by Andrei A. Gromyko to the United Nations' thirtieth session of the General Assembly on Sep. 23, 1975: *Prohibition of the Development and Manufacture of New Types of Weapons of Mass Annihilation and of New Systems of Such Weapons.* The first article provided that the types of these new weapons would be *"...specified through negotiations on the subject."*

22. To the Soviets, the microwave radiation of the U.S. Embassy in Moscow is a beautifully designed and very valuable intelligence collection **tool:** First, irradiate a high level U.S. target — the U.S. Ambassador to the Soviet Union. Use Whittaker-structured microwave potentials to induce a variety of health changes and diseases in Embassy personnel, including serious illnesses (and eventually deaths) of U.S. Ambassadors. This provides a strong stimulus and guarantees the direct attention of the CIA, DIA, NSA, NSC, DARPA, State Department, Department of Defense, and the President of the U.S. Puzzled, they will turn to highly competent U.S. scientific establishments to ascertain what exactly is going on. That is, the *best* knowledge of the U.S. system will be brought to bear on this puzzling problem. *By the subsequent U.S. reaction — or lack of it — on site at the Moscow Embassy, the Soviets can ascertain with 100 percent certainty whether or not the U.S. is aware of scalar electromagnetics.* If unaware, of course, then the U.S. has not developed scalar EM weapons of its own, or defenses against such weapons.

23. For more specific details, see T.E. Bearden, *AIDS: Biological Warfare,* Tesla Book Co., POB 1649, Greenville, TX 75401,1988.

24. For example, in the 1960s and 70's French inventor Antoine Priore, working with some of the finest French medical scientists, positively proved that killer diseases such as cancer, leukemia, sleeping sickness, etc. can be cured electromagnetically. This was not anecdotal material, but rigorous scientific experiments properly performed and reported in the French medical journals. For a complete resume of the Priore Affair, see Jean-Michel Graille, *Le Dossier Priore,* De Noel, Paris, 1984 [in French]. For a substantial synopsis, see Christopher Bird, "Appendix I: The Case of Antoine Priore and his Therapeutic Machine: A Scandal in the Politics of Science," in T.E. Bearden, *AIDS: Biological Warfare,* ibid. p. 346-375. See also Priore references, ibid., p. 333-339. For an excellent summary of the Priore Affair, with some details of the working of Priore's machine, particularly see David M. Rorvik, "Do the French have a cure for cancer?", *Esquire* Magazine, July 1975, p. 110-111,142-149.

25. For an early discussion of the Woodpecker and some of the disagreement between analysts, see "Powerful Soviet radio signal protested," *Aviation Week & Space Technology,* Nov. 8, 1976. For an interesting report on the Woodpecker, see Robert Horitz, *The Woodpecker Project- A Preliminary Report,* Association of North American Radio Clubs, Jan. 8, 1987. Also, it is at least an interesting "coincidence" that the depletion of the ozone in a giant hole over Antarctica was only discovered in 1977 — after the powerful Soviet Woodpecker transmitters began operation in 1976.

Other leading scientists have at least speculated on potential EM biological warfare capabilities of the Woodpecker, though of course in the vein of conventional EM effects on biological systems. Cf "Soviet device uses radio waves as tranquilizer," Associated Press release, *Huntsville [Alabama] Times,* May 19,1983. In this article, Dr. Ross Adey is quoted as having tested the Soviet Lida machine, which generates pulsed 40 megahertz radio waves and broadcasts them to affect biological systems. Adey described testing the machine on a cat, and in two or three minutes the cat was sitting quietly, almost as though transfixed, and uninterested in its surroundings. The animal remained uninterested in its surroundings, according to Adey, for some 20 to 30 minutes after the machine was turned off.

Dr. Robert Becker has particularly pointed out that the available evidence suggests that the Woodpecker is multipurpose, and could include an experimental attack directed against Americans. See Chapter 15: "Maxwell's Silver Hammer," of Robert O. Becker,

M.D. and Gary Selden, *The Body Electric: Electromagnetism and the Foundation of Life,* William Morrow & Co., New York, 1985, p. 271-329.

26. Since that announcement in *Science,* the weather over the United States has continued to be more anomalous than could possibly be attributed to chance excursion from norm. For a more orthodox concept of weather manipulation via ordinary EM means, see Bernard J. Eastlund, *Method and Apparatus for Altering a Region in the Earth's Atmosphere, Ionosphere, and/or Magnetosphere,* U.S. Patent no. 4,686,605, Aug. 11,1987. Eastlund's process can be used to steer distant jet streams, to disrupt communications worldwide, and to destroy or deflect a missile attack. Significantly, the U.S. government requested Eastlund *not* to patent the weatherwar process. For other related orthodox references, see G. Meltz and F.W. Perkins, "Ionospheric Modification Theory," *Radio Science,* 9(11), Nov. 1974, p. 885-888; Carrol et al, "The Platteville High Power Facility," ibid., p. 889-894; W.E. Gordon and H.C. Carlson, Jr., "Arecibo Heating Experiments," ibid., p. 1041-1047; Meltz et al., "Ionospheric Heating by Powerful Radio Waves," ibid., p. 1049-1063. Since microwave heating is of interest in the Eastlund phenomenon, related references on electron cyclotron resonance heating are of interest Cf Batchelor and Goldfinger, "A theoretical study of electron-cyclotron absorption in Elmo bumpy torus," *Nuclear Fusion,* 20(4), 1980, p. 403-418 and Kosmahl et al, "Plasma acceleration with microwaves near cyclotron resonance," *Journal of Applied Physics,* 38(12), Nov. 1967, p. 4576-4582. See also "The MST Radar at Poker Flat, Alaska," *Radio Science,* 15(2), Mar.-Apr. 1980, p. 212-223. Interestingly, Eastlund's patent cites a reference to Nikola Tesla in *Liberty Magazine,* Feb. 1935, p. 7. Finally, for a Soviet orthodox paper on the possibility of using intense microwave radiation to influence the weather and cause precipitation from clouds, see E.T. Protasevich, "Microwave weather modification," *Soviet Technical Physics Letters,* 7(3), Mar. 1981, p. 114-115.

27. For illustrations of the Woodpecker intersection grid over the U.S., see Christopher Chant and Ian Hogg, *Nuclear War in the 1980's?,* Harper & Row, New York, 1983, p. 71; *Soviet Military Power,* U.S. Department of Defense, 1985, p. 45.

28. Bearden, *Soviet Weather Engineering Over North America,* 1-hr, videotape, 1985; "USSR: New Beam Energy Possible?", *Defense & Foreign Affairs Daily,* 13(111), June 12,1984, p. 1-2. Ironically, results of this Soviet engineering of the weather over the U.S. is being accomplished nearly continuously at present. The results of the artificially created highs and lows — and their movement across the U.S. — has now been detected by our atmospheric scientists, particularly at the University of Illinois in Urbana-Champaign. Beginning on Jan. 5, 1990, the "strange weather phenomenon" was detected as a large-scale pressure wave, enormous in size and extent, traveling at about 50 miles per hour. On Jan. 14, a similar detection of the effect was made, and again in March. On Dec. 21, 1990, again the large-scale pressure wave was detected. In the past, solitary pressure waves have been detected in the atmosphere, but always small and only as a local effect. These observations are the first detections of large solitary pressure waves, 80-100 kilometers in wavelength, six kilometers high, and extending north-south across two states. The two Jan. 1990 waves lasted 11 and 16 hours respectively. Already the researchers are accepting the phenomenon as natural, and excitingly stating that it can be used to "predict the weather ahead of the traveling giant wave. *One would certainly hope so, since the giant wave is a Russian scalar wave interferometry creation in the first place, designed to direct and influence the weather over the U.S.I* However, now we are going to see our atmospheric scientists accepting these heretofore unheard-of phenomena as absolutely natural! As this author stated once before, U.S. our scientists do not recognize Soviet weather engineering when it's right over their heads in plain view, because they know nothing of scalar EM waves and scalar interferometry. For a reference to the

detection of these giant, moving pressure waves, sec "Strange Pressure Waves Crossed MidWest in 1990," *Watt Street Journal,* Jan. 15,1991.

29. Bearden, *Fer-de-Lance: A Briefing on Soviet Scalar Electromagnetic Weapons,* Tesla Book Co., POB 1649, Greenville, TX 75401, 1986; *AIDS: Biological Warfare,* Tesla Book Co., 1988; Solutions to Tesla's Secrets and the Soviet Tesla Weapons, Tesla Book Co., 1981; "Soviet Psychotronic Weapons," 1978; *The Excalibur Briefing,* Strawberry Hill Press, San Francisco, 1980; "Star Wars Now: The Bohm-Aharonov Effect, Scalar Interferometry, and Soviet Weaponization," Tesla Book Co., 1984; Tesla's Electromagnetics and Its Soviet Weaponization," *Proceedings of the Tesla Centennial Symposium,* IEEE and International Tesla Society, Colorado College, Colorado Springs, Colorado, 1984; and others such as *Analysis of Scalar Electromagnetics,* Tesla Book Co., 1990 and "Soviet Phase Conjugate Weapons: Weapons That Use Time-Reversed Electromagnetic Waves," *Bulletin,* Committee to Restore the Constitution, POB 986, Fort Collins, Colorado 80522, Jan. 1988.

30. T.E. Bearden, AIDS: *Biological Warfare,* 1988, p. 226.

31. T.E. Bearden, *Fer-de-Lance,* 1986, p. 220-223.

32. Paul Brodeur, *The Zapping of America: Microwaves, Their Deadly Risks, and the Cover-Up,* W.W. Norton & Co., New York, 1977, p. 39-40,60-61,95-134.

33. A.M. Lilienfeld et al, *Foreign Service Health Status Study: Evaluation of Health Status of Foreign Service and Other Employees From Selected Eastern European Posts,* Department of Epidemiology, of Hygiene and Public Health, The Johns Hopkins University, Baltimore, Maryland, Final Report, July 31, 1978. Dr Lilienfeld, professor of epidemiology, also directed a study in the early 1960s which pointed out a possible connection between Down's syndrome in children and exposure of their parents to radar. [See Arnold T. Sigler, Abraham M. Lilienfeld, Bernice H. Cohen, Jeanette E. Westlake, "Radiation Exposure in Parents of Children with Mongolism (Down's Syndrome)," *Bulletin of the Johns Hopkins Hospital,* Vol. 117, 1965, p. 374-399.] He also directed another study which found a significant increase of chromosome abnormalities in the blood of persons who had formerly been radar workers. Dr Lilienfeld obviously was a highly qualified and excellent choice to direct a study of the U.S. Embassy personnel health problems vis a vis the Soviet microwave radiation of the U.S. Embassy. That U.S. biophysics knew nothing of infolded Devyatkov structures of Whittaker potentials and human vulnerability to such EM biological warfare is most certainly not the fault of Dr. Lilienfeld. See also Robert C. Mallalieu, A *Model of the Microwave Intensity Distribution Within the U.S. Embassy, Moscow 1966-1977,* Report FS-80-166, Applied Physics Laboratory, Johns Hopkins University, Baltimore, Maryland, Aug. 1980. Dr. Mallalieu is a very capable scientist and, just as for Dr. Lilienfeld, it is most certainly not his fault that the U.S. biophysics community had no knowledge of the Soviet method of inducing cellular diseases and changes by means of infolded hidden bidirectional EM wave structures of Whittaker potentials. All of the very able Johns Hopkins scientists in fact did a highly capable job *with the tools they had available to bring to bear on the problem.* It was simply their *tools and theoretical models* that were inadequate and failed them.

34. *Microwave Radiation at the U.S. Embassy in Moscow and Its Biological Implications: An Assessment,* U.S. Department of Commerce, Doc. #NTIA-SP-81-12, Mar. 1981.

35. See also Martin Ebon, *Psychic Warfare: Threat or Illusion,* McGraw Hill, New York, 1983, passim. See also Captain John D. LaMothe, *Controlled Offensive Behavior — USSR,* Report ST-CS-01-169-72, Defense Intelligence Agency, Washington, D.C. (Released

under FOIA). See also Captain John D. LaMothe and Mr. Louis Maire, *Soviet and Czechoslovakian Parapsychology Research,* Report DST-1810S-387-75, Defense Intelligence Agency, Washington, D.C. (Released under FOIA). See also Barton Reppert, Associated Press release, "Microwaves in Moscow remain mystery for U.S.," *Huntsville [Alabama] Times,* May 22,1988, p. IB, 4B.

36. Cf Bearden, *Fer-de-Lance,* 1986; *AIDS: Biological Warfare,* 1988; "Soviet Phase Conjugate Weapons: Weapons that use Time-Reversed Electromagnetic Waves," *CRC Bulletin,* Jan. 1988.

37. See "Secret Speech: Did Brezhnev Come Clean?", *National Review,* 29(8), Mar. 4, 1977, p. 248,250.

38. William Beecher, "Brezhnev termed detente a ruse, 1973 report said," *Boston Globe,* Feb. 11,1975, p. 1,12.

39. E.T. Whittaker, "On the partial differential equations of mathematical physics," *Mathematische Annalen,* Vol. 57, 1903, p. 333-355. A copy of this paper is included as Annex B of this book.

40. E.T. Whittaker, "On an expression of the electromagnetic field due to electrons by means of two scalar potential functions," *Proc. Lond Math. Soc,* Series 2, Vol. 1, 1904, p. 367-372. A copy of this paper is included as Annex C of this book.

41. N.D. Devyatkov and M.B. Golant, "Prospects for the use of millimeter-range electromagnetic radiation as a highly informative instrument for studying specific processes in living organisms," *Soviet Technical Physics Letters,* 12(3), Mar. 1986, p. 118.

42. N.D. Devyatkov, *Ed,,Applications of Low-Intensity Millimeter Wave Radiation in Biology and Medicine* [in Russian], IRE Akad. Nauk. SSSR, Moscow, 1985.

43. Vlail P. Kaznacheyev and L.P. Mikhailova, *Ultraweak Radiations in Intercellular Interactions* [in Russian], Novosibirsk, 1981.

44. Vlail P. Kaznacheyev, "Electromagnetic Bioinformation in Intercellular Interactions," Novosibirsk, 1981 [in Russian]. English translation in *Psi Research,* 1(1), Mar. 1982, p. 47-76; V.P. Kaznacheyev et al, "Distant intercellular interactions in a system of two tissue cultures," *Psychoenergetic Systems,* 1(3), Mar. 1976; Vlail P. Kaznacheyev et al, "Apparent information transfer between two groups of cells," *Psychoenergetic Systems,* 1(1), Dec. 1974; V.P. Kaznacheyev, "Information Function of Ultraweak Light Flows in Biological Systems," in *Problems in Biophysics,* Novosibirsk, 1967, p. 7-18 [in Russian].

45. For a detailed exposition of time reversal in physics, see Robert G. Sachs, *The Physics of Time Reversal,* University of Chicago Press, Chicago, 1987.

46. As early as 1898 Carl Barus — in a paper titled "A curious inversion in the wave mechanism of the electromagnetic theory of light," American Journal of Science 5 (Fourth Series), May 1898, p. 343-348 — showed an interpretation of Maxwell's electromagnetic wave equations that could *make the wave run backward.* His paper was ignored, but it may have been the first indication of what today in nonlinear phase conjugate optics is known as the *time-reversed EM wave.* Some appropriate references on phase conjugate/time-reversed EM waves are: (1) Amnon Yariv, "Chapter 16: Phase Conjugate Optics — Theory and Applications," *Optical Electronics,* 3rd Edn., Holt, Rinehart and Winston, New York, 1985; (2) Robert A. Fisher, Ed., *Optical Phase*

Conjugation, Academic Press, New York, 1983; (3) U. Yu Zel'dovich et al, *Principles of Phase conjugation,* Vol. 42, Springer Series in **Optical** Sciences, Theodor Tamir, Ed., Springer-Verlag, New York, 1985; (4) David M. Pepper, "Nonlinear Optical Phase Conjugation," *Optical Engineering,* 21(2) Mar./Apr. 1982, p. 156-183; (5) David M. Pepper, "Applications of Optical Phase Conjugation," *Scientific American,* 254(1), Jan. 1986, p. 75; and (6) F.V. Bunkin et al, "On sound phase conjugation with amplification of phase-conjugated wave," *Soviet Journal of Quantum Electronics,* Vol. 11,1980, p. 687.

47. Fritz Albert Popp, "Photon Storage in Biological Systems," in Fritz Albert Popp et al, Eds., *Electromagnetic Bio-Information: Proceedings of the Symposium, Marburg, September 5, 1977,* Urban & Schwarzenberg, Baltimore, 1979, p. 123-149. This very important paper presents Popp's discovery of the body's master cellular communication system. Ruth has experimentally confirmed the existence of the *degradation radiation (death photons)* of Kaznacheyev. Experimental results of Ruth and others have led Popp to postulate that biological systems generally have the capacity to store coherent photons which come from the external world, and that ultraweak photon emission from biological systems is governed by photon storage (i.e., *charge up of coherent internal structuring of the electrical charge or potential)* within the cell population. [Note that the present author's dynamic *statistical graviton as photon/antiphoton coupling* concept, in conjunction with Whittaker-structured potentials on atomic nuclei, gives the precise mechanism by means of which Popp's coherent virtual photons are stored as components of gravitons in Whittaker potentials.]. See also Fritz Albert Popp, *Biophotonen. Ein neuer weg zur Losung des Krebsproblems,* Verlag fur Medizin, Heidelberg, 1976 [in German].

48. For a much earlier and very useful work on mitogenetic radiation, see Otto Rahn, *Invisible Radiation of Organisms,* Verlag von Gebruder Borntraeger, Berlin, 1936. Rahn points out that dividing cells — and dying cells — emit a primary biological energy in the ultraviolet light range around 2600 angstroms. This *mitogenetic radiation (MR)* can be transmitted through quartz to cause conspicuous stimulation of mitosis in isolated cell colonies. The book includes methods of observing biological radiations, special characteristics of the radiation, analysis of the mitogenetic effect, etc. An earlier book on this subject, with a fairly complete bibliography up to 1932, is W. Stempell, *Die Unsichtbare Strahlund der Lebewesen,* Jena, Gustav Fischer, 1932 [in German]. Note that this German work preceded the Soviet work of Kaznacheyev after WWII, including the EM transmission of cellular effects through quartz windows.

49. T.E. Bearden, "Maxwell's Lost Unified field Theory of Electromagnetics and Gravitation," *Proceedings,* PACE Third International New Energy Technology Symposium, June 25-28,1988 at Maison du Citoyen, Hull (Ottawa), Canada, 1988.

50. T.E. Bearden, "Maxwell's Original Quaternion Theory Was a Unified Field Theory of Electromagnetics and Gravitation," *Proceedings,* PACE Third International New Energy Technology Symposium, June 25-28,1988 at Maison du Citoyen, Hull (Ottawa), Canada, 1988.

51. For a cogent argument about what might have been discovered much earlier in physics if quaternions had not been cast aside, see James D. Edmonds, Jr., "Quaternion Quantum Theory: New Physics or Number Mysticism?", *American Journal of Physics,* 42(3), Mar. 1974, pi 220-223. Just how much more powerful was Maxwell's quaternionic expression of EM theory than was Heaviside's (i.e., the modern) vector interpretation, was succinctly expressed by Josephs as follows: *"Hamilton's algebra of quaternions, unlike Heaviside's algebra of vectors, is not a mere abbreviated mode of expressing Cartesian analysis, but is an independent branch of mathematics with its own rules of operation and its own special*

theorems. A quaternion, is, in fact, a generalized or hypercomplex number..." (H.J. Josephs, The Heaviside papers found at Paignton in 1957," *Electromagnetic Theory by Oliver Heaviside, Including an account of Heaviside's unpublished notes for a fourth volume, and with a foreword by Sir Edmund Whittaker,* Vol, III, Third Edition, Chekea Publishing Co., New York, 1971, p. 660.

52. For example, one difference between vectors and quaternions is of particular interest. In multiplication, when the multiplied vector components of two quaternions produce a zero vectorial resultant, the product of the quaternions may still produce a nonzero scalar resultant Further, this scalar resultant has a *hidden variable* internal structure of infolded functions of the component vectors that have vectorially "zeroed" or "cancelled." When the interacting zero-summed vector components of the quaternions are EM force vectors, the nonzero scalar component of the quaternion resultant — with its deterministic, infolded, zero-summed (and so *oppositively paired)* vectors represents a *trapped EM stress of spacetime,* and hence it is a *deterministicalfy EM-substructwed scalar potential.* Further, this scalar potential's deterministic, infolded EM vector structure is vector zeroed, hence constitutes a force-free field, *with its presence and its infolded EM structure completely hidden from normal "electron translating" detectors.* This structured quaternionic force-free potential represents a *patterned change in the local stress energy density of vacuum.* If the infolded vectors are functions of time, then each infolded component of the structured potential is time-varying. One can even produce standing waves of, and deterministically structured dynamic patterns in, the locally trapped energy density of vacuum. *These changes/waves in the local vacuum stress energy density represent very strong, engineerable, electrogravitational changes/waves in the local rate of flow of time, and in the local curvature of spacetime/vacuum itself.* This directly extends present Einsteinian general relativity, making it an empirical engineering science, and adding in the missing electromagnetics as well. In short, Maxwell's original quaternion theory was already a unified field theory of gravitation and electromagnetics — it was a testable and engineerable theory of *electrogravitation.*

Oliver Heaviside abhorred the quaternion, since it linked together a scalar component and a vector component, or *"apples and oranges,"* in his view. When he excised the scalar component of the quaternion to produce his vector mathematics for translations of Maxwell's theory, Heaviside threw away *electrogravitation.*

As is well-known, Maxwell prepared his EM model based on his mechanical model of the etheric medium. Also, Maxwell himself was well aware of the importance of EM stress in the medium, although he had apparently not realized that this represented gravitational "charge" or *gravitational potential.* He knew that vectors alone could not express EM stress effects, but quaternions captured them. For example, quoting from Maxwell's *A Treatise on Electricity and Magnetism,* Vol. 1, 3rd Edition, New York, 1954: *"There are physical quantities of another kind which are related to directions in space, but which are not vectors. Stresses and strains in solid bodies are examples, and so are some of the properties of bodies considered in the theory of elasticity and in the theory of double refraction. Quantities of this class require for their definition* <u>*nine*</u> *numerical specifications. They are expressed in the language of quaternions by linear and vector functions of a vector."* Unfortunately the internal structure of atoms was not known at the time, so Maxwell had no way of arriving at the activation charging of atomic nuclei by EM stress. Note that Maxwell's book was first published in 1873.

See also R. Chen, "Cancellation of internal forces," ,American *Journal of Physics,* 49(4), Apr. 1981, p. 372 for a discussion of summation vectors and *internal* vectors. Internal forces occur in equal and opposite pairs (i.e., as stresses), so they contribute nothing to the vector sum (i.e., to external trunslation). Note, however, that just this sort of stress in

the medium or in the system is what was captured by the non-disappearing scalar component of the resultant in quaternion multiplication, even when the *vector translation* component of the interaction resulted in a zero transition (vector) resultant.

The scalar component of Maxwell's quaternions captured and retained the *internal vectors* that result from zero-vector summations of non-zero EM force fields. *Oliver Heaviside (and to a lesser extent, Williard Gibbs) discarded the entire internal EM vector region when he excised the scalar component of the quaternion. The internal EM vector region is the electrogravitational region, and that is what was discarded — all those parts of Maxwell's theory where EM forces turn to gravitational potential. Accordingly, Heaviside only captured a subset of Maxwell's unified EM/G field theory; he captured only that small subset where gravitation and electromagnetism are mutually exclusive.*

In the vacuum, this internal or infolded EM stress energy constitutes *a change of the local gravitational potential, hence a curvature of the local spacetime.* Further, a *deterministic structure* of these equal and opposite pairs of internal EM forces can be and is infolded within the potential, and hence "hidden" within a structured change to the local vacuum/spacetime.

Ironically, Maxwell in 1873 had already written a theory that embodied David Bohm's hidden variables, which Bohm would produce three quarters of a century later. In addition, Maxwell had already falsified the general relativity theory that Einstein was to produce four decades later, for Maxwell's infolding of EM forces into a gravitational potential had already curved — *and deterministically structured* — local spacetime. Not knowing that EM forces can be internalized and trapped, and used to curve spacetime, Einstein considered only the extremely weak gravitational force as an agent of spacetime curvature. But the G-force is so very weak (say, 10^{-42} or so as strong as the EM force) that only a huge collection of mass — such as the sun or a star — would exert G-forces powerful enough to curve spacetime sufficiently to be detected. Since the observer, his laboratory, and his instruments would never be on the surface of the sun or of a star, Einstein reasoned that — where the observer was — local spacetime would essentially be flat and never curved. Accordingly, he made a most erroneous postulate in his general relativity theory: he postulated that the local spacetime would be flat, and uncurved. The error is that he stated the postulate incorrectly. *Rigorously, he should have postulated that the local spacetime would not be curved whenever only the weak gravitational force was used as the agent for curvature, for that is the correct statement of the postulate and what it assumed.* Accordingly, Einstein did not at all write a complete theory of curved spacetimes. Instead, he wrote a very special case. His postulate of the locally flat spacetime contains unwitting, hidden assumptions that (1) electromagnetism is always mutually exclusive from gravitation, (2) only the weak gravitational force is used as an agent to cause spacetime curvature, and (3) electromagnetic field in free space (actually, in spacetime) always moves at the speed of light and is never *locally trapped.*

Einstein then spent the rest of his life in a fruitless search to try to find how to recover the electromagnetics which his general relativity theory excluded. Ironically, he never realized — as did none of the relativists — that his own postulate of a flat local spacetime prevented any unification of EM and G, because it inadvertently had already declared them mutually exclusive.

53. Bearden, "Maxwell's Lost Unified Field Theory...", 1988.

54. Bearden, "Maxwell's Original Quaternion Theory...", 1988.

55. See note 52. There are actually two kinds of EM energy: (1) *externalized* EM energy, or EM energy in translation, and (2) *internalized* EM energy, or EM energy trapped with a medium and not externally translating. Note that the trapped internal EM energy is quite dynamic, and continually acting on the local medium. Note also another marvelous thing which orthodox physics has completely missed: *Trapped internal EM energy is essentially perpetual; it may be regarded as continually doing internal "work" on the medium, but since it is not translatable externally, it cannot dissipate.* This is because "trapped" means that the energy is in its own "closed system"; therefore the energy of that closed self-system is conserved (perpetual) until something breaks (opens) up the closed self-system. It is energy that is actually completely dynamic, but localized. This is a new and more rigorous interpretation of *potential energy:* Potential energy is simply localized energy that is not translating externally, hence is never dissipated as *external* work. It is continually and completely doing *internal* work.

What we are saying is that the very concept of energy is simply that of continual expenditure of work completely locally and internally — on and in the medium — without external translation *through* the medium. *That can be taken as the definition of a medium: an entity or regime where this holds.* Hence the difference between energy and work is simply only *external translation.* That is, with zero external translation, there is zero external scattering because no distance is involved — and work has been equated to the external scattering of EM energy in multiple directions over specific distances. We accent the latter statement: the present concept of physical work a priori assumes simultaneous external translation of EM energy (trapped work) into multiple directions at once — i.e., it assumes *scattering.*

The situation is clarified if we realize that we can consider any particular thing as simply a collection of even finer things. Applying this principle, the energy of one object becomes the local collection of the energies of many finer objects. The energy of one finite region of spacetime becomes a collection of the energies of even finer regions of spacetime, where these finer regions are all part of the larger collective region. When energy does not externally translate, it does not matter whether or not it is thought of as "energy" in the rather mystical orthodox sense of "the capacity to do external work", or if it is thought of as "continually occurring internal work without external translation" —which latter, of course, just simply means without doing *external* work.

The result of all that laborious reasoning is this: energy may be regarded as internalized work. Work may be regarded as externalized and scattered energy. Presently, internalized work is sometimes referred to as *virtual* work. I.e., work is being done, but not in external translation.

One additional factor must be noted: Since the energy of an object is actually a localized collection of the energies of many smaller subthings of the object, then those subthings may be externally translated in two fashions: (1) they can be translated in multiple directions, out of the region, in which case their energies now are not integrated. In other words, the "energies" of the subobjects now react individually with the observer/detector/instrument. We may say that the "energy of the original region" — which was an integral of all the subenergies — has now been *disintegrated.* In physics, the notion of this disintegration of internalized energy by external scattering is known as *the production of heat.* The concept of heat applies to the degree of external scattering and hence disintegration of internalized energy. Things which can be lined up and integrated are things that arc *ordered.* Thus the scattering of internalized energy (the scattering of *order)* is *disordering* of energy.

Note also that we are now somewhat in violation of the present interpretation of thermodynamics, as regards the notion of *temperature.* We state unequivocally that any instrument only measures or detects its own internal change, nothing else. No instrument actually measures the "temperature" of an object or region; instead, at least a little bit of energy from that region must be externally translated from the region and into the instrument, to cause an internal change (internal work) in the instrument. But in that case *we did not actually measure the temperature content of the object or region.* We actually detected the *escape and disordering* of some of that temperature content and "measured" the characteristics of the externalized escape. In ascribing a temperature to the object, we are actually making a statement about *the rate at which that object's trapped internal EM energy can externally translate and escape and be scattered, given the chance to do so.* Rigorously, this is in accord with the quantum mechanical view. An object has no such thing as a temperature, until we *measure* or *detect* or *observe* the temperature. Even then, we do not measure or detect or observe the temperature, but only a certain change in it.

Now there are actually three kinds of external translation of energy that can be made — thermodynamics only accounts for two.

First, we can have external scattering translation, which equates to the orthodox concept of external work. In that case, the internal energy/work is "being expended as external work." Note that the work is always being done in a different region from where the energy is, conceptually, when we state that "energy is being expended as work."

Note now that the externalizing translation requires movement through an external distance, hence through time. Since in the macroscopic world EM energy normally scatters off atoms by its interaction with their electron shells, then in the macroscopic world EM energy is continually and continuously being expended as work. That is, order (integrated internal energy) is continually being expended as disorder (external disintegration of the previously internally integrated energy). This process — of continual production of disorder by external EM scattering — is known as *entropy.* The external scattering/disordering actually involved "translation through time." Now, actually, in physics the universe is composed of angular momentum — which has the units of energy multiplied by time. Further, the observable universe can only change in incremental unite of action, called quanta. One quantum consists of a little piece of energy welded to a little piece of time, so to speak, with no seam in the middle. Hence for energy to "translate", quantum change must occur, and in this case we must think of the external scattering and disintegration of internalized energy as actually being the external scattering of internalized collections of quanta. But in that case, the internal collected quanta contained internally collected time amounts as well as energy amounts. Hence in the entropic macroscopic world we are continuously scattering not only EM energy but EM time. What we call the "rate of flow of time" consists of nothing but the external translation/scattering of action, hence the external translation/scattering of energy and the external translation/scattering of time. *The normal "flow of time" is actually the external disintegration/scattering of internalized integrated/boundary-coherent time. In other words, the production of entropy and the production of the "forward flow of time" are actually one and the same thing. Further, the "rate of flow of time" is simply the "rate of production of entropy." If we change the rate of production of entropy, we change the rate of flow of time, and vice-versa.*

The second form of external translation of internalized energy is to translate all the subenergies in parallel, coherently. Thus if we translate the internal mass (which is just internalized or trapped energy) of an object through space and time coherently, we

"translate the object" through space and time. In this case no entropy is produced (conceptually speaking), and the object does not "age-change" as such. Everything in the object is just as it was. *If an object did this and only this, it also would not "move in time" a priori, as far as it itself was concerned,* for it would experience no entropy and no internalized change of action, hence no internal change in time. Interestingly, it would also be completely unobservable by any other "physical observer" or "physical observing/detecting/measuring instrument." It is interesting, but well beyond the scope of this paper, that objects can actually be induced to move in a fashion very close to this second translation, and this has been experimentally verified. We will not discuss the second case further, except to say that our very notion of something "moving through space" captures this aspect. The fact that normally objects still exchange and scatter energy and time externally, even when "moving through space", means that we still see them as moving through normal time (through *scattering* time.) Rigorously, objects which move through normal space and time are objects which (1) keep much of their internalized energy unscattered, so that they move through space, and (2) scatter some part of their internalized energy, so that they move through scatter-time or normal-time.

The third form of external translation/scattering of internalized energy is marvelous indeed: *It is negative.* In this case, scattered external energy is actually focused back into the internal, ordered, integrated energy of the object. But since this actually involves action, or "energy x time,", then the object does not scatter/disintegrate time, but rather it coherently collects/integrates time. To the object, this is a time-reversed situation. Rigorously, the object exists in integrating time, not disintegrating time. *The object is time-reversed.* Note that the second law of thermodynamics — which we have just violated — *assumes* that time flow is always positive; i.e., that internalized EM energy/time are always being externally scattered/disintegrated. Rigorously, the second law of thermodynamics — the law of entropy — only applies to the forward flow of time. It specifically does not apply to the time-reversed situation, for obviously that would be re-ordering and negentropic. *Entropy is only one side of a two-sided coin; negentropy is the other side.*

Re-ordering of EM energy is occurring, and that is the concept of *negentropy.* This EM energy that re-orders is *phase-conjugated,* i.e., *time-reversed.* It is referred to as *negative energy.* We point out that this is a perfectly permissible form of energy translation, and it can be quite readily engineered on the laboratory bench, and even amplified. Most physicists presently are very uncomfortable with the time-reversed EM wave, even though it is a proven fact. They desperately try to ignore the negentropic implications, for that means the violation of the second law of thermodynamics, which they strenuously try to hold sacrosanct. And the fact that one can easily amplify the negentropy *directly from entropy,* merely by pumping a phase conjugate mirror, also is most studiously avoided *because of total, utter fear of the awful implications of that experimental fact.*

56. Bearden, "Maxwell's Original Quaternion Theory...", 1988, p. 8.

57. Again refer to Maxwell's quote in note 52 above. If the vectors are waves, their amplitudes are functions of time. It is easily seen that the infolded functions of. these vectors waves, in a vector-zero resultant summation of opposing vectors, can and will also be waves. Since the vector translation resultant is always zero, then the overall magnitude of the standing scalar potential wave may change, or not change, according to the specific internal EM waves and their relationships. In any case, the potential wave — which in the limiting case may be just a so-called "fixed change" in the scalar potential — will be a composite of its internal, dynamic, EM waves which individually are translating. The external potential, being a composite formed of relationships, is similar to a phase wave, hence can "move or translate through space" at any velocity, simply depending

upon its internal arrangement. Note that scalur EM waves are very complex in structure, and cannot normally be described by single overall characterizations such as "frequency," "wavelength," etc. Those are *string* wave concepts, and scalar waves are almost always radically different from string waves.

58. Originally I chose the term *scalar electromagnetics* for my unified field theory work, since I based it on Whittaker's fundamental 1903 and 1904 papers. In his 1904 paper, Whittaker had already shown that all of classical EM could be replaced by an electromagnetics based on *scalar potentials* and *scalar potential interferometry*.

Whitney has pointed out that a slight correction to Whittaker's 1904 paper is required, since Whittaker assumed the standard Lienard-Wiechert (LW) mode for the EM potentials created by rapidly moving point sources. The LW model was derived at the turn of the century, before the full development of special relativity theory. The LW model is faulty because it fails to conserve total charge. See Cynthia Kolb Whitney, "On the Lienard-Wiechert Potentials," [unpublished]; "Generalized functions in relativistic potential theory," *Hadronic Journal*, Vol. 10,1987, p. 289-290; and "A new perspective on the hydrogen atom," *Physics Essays*, 1(2), July 1988, p. 52-55. Whitney also shows that most modern derivation methods for the relativistic EM potentials have been "retrofitted" to the Lienard-Wiechert results in most present-day texts. She has found — and corrected — the error that has been passed along by almost all other theorists. A significant change in the orientation of the longitudinal E-field occurs in the altered and corrected formulation of the potentials. This field directionality becomes significant in any multi-body system, since the new direction provides a torque on the accelerated system as a whole, producing an energy transfer that works in opposition to radiation and moves energy from fields and to particle orbits.

The Lienard-Wiechert error inherent in Whittaker's paper is not fatal, however, and merely implies that one may need to utilize some four or so potentials — instead of just two — to fully replace classical EM by scalar potential interferometry when torquing and multi-body systems are considered.

59. Again, quaternionic or Whittaker infolding of functions of EM force vectors inside a scalar EM potential produces a scalar field with a hidden internal structure that can be deterministic. If the infolded vectors are rhythmic (waves), the scalar potential will have pairs of bidirectional waves multiplied together, infolded as a Whittaker structure.

60. The Soviets obtained the German radar team at the end of WWII. That team had developed radar absorbent materials (RAM), and had also noticed anomalies in their RAM materials when testing them for simultaneous illumination by multiple radar beams. This actually produced the first four-wave mixing phenomena, the first time-reversed EM wave, and the first pumped phase conjugate mirror material — in *radar*, not in optics.

After WWII, the Soviets also had embarked on a desperate crash effort to try to catch the West, develop nuclear weapons, and develop ballistic missiles and anti-bomber missile defenses.

With the Western development of the atomic bomb, Stalin had been frustrated in his plans to wait two years, keep his armies intact, and let the West beat its swords back into plowshares. He had planned to then march into Europe and take it in six weeks — and he could have done so, except for the advent of the atomic bomb. Now the West could bomb him back to the stone age if he massed his armies and tried to move into Europe.

However, Stalin also knew that the atomic bomb would not be the last great scientific and technical breakthrough. Stalin was also an iron dictator who brooked no opposition; he killed his enemies. He marshalled his scientists to actively — even frenziedly — search for the next such decisive technical breakthrough area. They were to leave no stone unturned until they found such an area. Stalin would follow the same scenario demonstrated by the West against the Japanese. When the new breakthrough area was found, the entire resources of the Soviet state would be marshalled behind it, to develop it in great secrecy. At the eleventh hour, they would then thrust it upon the West by surprise. The West, utterly confused and helpless, would be forced to surrender to Stalin's aims. This was Stalin's plan.

Under that plan, the Soviets purchased all the scientific journals and literature of the West back to the beginning. They transported shiploads of this scientific and technical material back to Russia, and set up large institutes to examine every paper. In one such institute, some 2,000 PhDs — together with a complete translation staff—was assembled to meticulously review this scientific literature. Anything unusual or interesting was put aside for further, more exhaustive review. In this way the Soviets discovered such long-ignored scientific gems as the two Whittaker papers of 1903 and 1904. They discovered negative energy, negentropy, the time-reversed wave, and pumped phase conjugate mirrors — all in radar experiments, which were then reproduced in optical experiments because of the reduced size and increased accuracy. The very best scientists available were utilized.

The Soviets have always been the best nonlinear scientists in the world, and they succeeded magnificently in this effort. They broke through to a new, *engineerable* unified field theory, dubbing it *energetics*. And the entire effort was done in greatest secrecy, under the complete and total control of the early version of what is today the Soviet KGB.

By 1950, research in the new field was beginning, and at top speed — but all in completely secret laboratories, under the tightest security, and under the complete control of the KGB. And the program is still under their complete control — for research and development, deployment, and employment of the new superweapons. By the mid-SOs, prototype weapons — some of very large magnitude — were undergoing serious testing.

In the winter of 1957-58, for example, an accidental failure in a huge Soviet Whittaker-wave experimental transmitter in the Southern Urals (near Kyshtym) resulted in the discharge of a very large electrogravitational (EG) potential into the earth. This EG pulse struck the nearby stored nuclear wastes, sharply increasing the nuclear potential on the radioactive nuclei. Since this caused the radioactive nuclei to immediately fission, producing a nuclear explosion *in the dirt and dirty*. The resulting radioactive fallout contaminated a large area — over 1,000 square miles in extent — and it is still deadly radioactive to this day. [For an orthodox presentation of the Kyshtym explosion, see Zhores A. Medvedev, *Nuclear Disaster in the Urals*, Translated by George Saunders, W.W. Norton & Co., 1979.]

61. In January 1960, Nikita Khrushchev announced to the Soviet Presidium the forthcoming advent of fantastic weapons. He stated that these new superweapons in advanced development were so powerful that, if unrestrainedly used, they could wipe out all life on earth.

In May 1960 Francis Gary Powers' high-flying U-2 spy plane was mysteriously disabled on a spy mission over the Soviet Union. Some difficulties with the autopilot were first experienced. Then a dull thump was felt by Powers, and a tremendous orange flash lit the cockpit and sky. *The flash persisted, however, showing that it was not a normal explosion at all, but a persistent and sustained EM fireball.* The U-2 was disabled and Powers bailed out, to be captured by the Soviets. When Eisenhower publicly lied about the U-2 mission, calling it a "weather plane," an angry Khrushchev cancelled the forthcoming summit meeting with the American President, then exhibited the captured U.S. pilot for all the world to see.

In the fall of 1962, the Cuban Missile Crisis occurred. Khrushchev introduced long range nuclear-capable missiles into Cuba — missiles whose nuclear firepower would have covered the United States like a blanket. Khrushchev was attempting to change the world balance of power in a single stroke. Fidel Castro was in fact urging the Soviet leader to proceed and launch a full nuclear strike against the U.S. However, in an "eyeball to eyeball" confrontation, President John F. Kennedy forced the Soviet leader to blink and back down, challenging him pointblank with a U.S. naval blockade of Cuba and an alerted strategic bomber and missile force ready to strike the Soviet Union with a massive nuclear strike.

After blustering just long enough to obtain a guarantee that the U.S. would not invade Cuba, Khrushchev had no recourse but to submit and withdraw the missiles, for his new superweapons were not yet operational. This was a serious humiliation and a loss of face before the Communist leaders and before the world. Khrushchev's days as the leader of the Soviet Union were numbered unless he staged some dramatic coup to recover.

Less than six months after his humiliation by Kennedy, Khrushchev struck back venomously with his just-operational scalar EM superweapons — the very ones he had referred to in 1960. On April 10, 1963 a giant Soviet scalar EM interferometer was used to produce EM interference with the electrical controls of the underwater U.S.S. Thresher atomic submarine off the U.S. East Coast. The stricken submarine, unable to respond to its jammed controls, sank to crush depth and imploded. *(Khrushchev had demonstrated to the leaders of the Communist Party that his weapons could easily defend against underwater subs by simply jamming their controls, making them helpless hulls which would sink to their implosive destruction.)*

At the same time the sub was stricken, a weapon signature was created. The sub's surface companion — the U.S.S. Skylark — encountered "EM splatter" which produced noise jamming and anomalous failure of multiple electronic systems. Some EM systems simply ceased functioning completely — then hours later resumed functioning as if nothing had happened. *(This cannot be done by normal electronic warfare, but is a signature of scalar impulse charging followed by gradual discharge.)* The anomalous EM interference experienced by the Skylark was so intense that more than an hour and a half was required to relay an emergency message back to Naval Headquarters that the Thresher was in difficulty and possibly lost. For details, see Bearden, AIDS: *Biological Warfare,* and *Fer-de-Lance.* For a conventional account, see John Bentley, *The Thresher Disaster: The Most Tragic Dive in Submarine History,* Doubleday & Co., Garden City, New York, 1975.

The standing scalar potential wave — discovered experimentally by Nikola Tesla on the night of July 3-4, 1899 in his Colorado Springs Laboratory — was fully developed theoretically by Whittaker in 1903. (See Reference 39). This scalar wave easily goes through the earth or the ocean. *It interacts with atomic nuclei, not electron shells.* Confronted with the ocean or the earth, the standing potential wave — with its hidden

internal bidirectional EM wave substructure — just sees its natural medium — a collection of nuclei. It is not disturbed or bothered by the ions in the ocean, which are such a formidable barrier to ordinary EM force field waves. With the intersection of two *very weak* scalar EM beams locked on the underwater Thresher, ordinary EM energy appeared by destructive interference of the scalar wave envelope, destroying the envelope and freeing the internal EM energies. Thus the use of two scalar interferometer beams in the ocean to intersect and jam an underwater submarine is rather straightforward, with scalar electromagnetic weapons. Indeed, an area of the ocean can simply be scanned by such an interferometer, to jam all underwater submarines and cause them to sink to their destruction. Note that, with their electronics squelched or jammed, such stricken subs cannot fire their nuclear missiles. Indeed, the electronic circuits in the nuclear weapons themselves are jammed and squelched, preventing arming and operation of the weapon.

On April 11, 1963, one day after the kill of the Thresher, a Soviet scalar EM interferometer weapon — probably the same one that ever so gently touched the U.S.S. Thresher — was gigantically pulsed, to intersect two giant potential pulses underwater, deep under the surface of the ocean 100 miles north of Puerto Rico. The tremendous outburst of unfolded EM energy in the destructive scalar interference zone produced a huge electromagnetic explosion deep underwater. Except for nuclear radiation, this *underwater electromagnetic burst* produced all the phenomena of a deep underwater nuclear burst. A cone of water rose out of the ocean to a height of half a mile, mushroomed out into a giant mushroom shape, then fell back into the ocean. The explosive eruption was observed by the pilot and crew of a passing U.S. jetliner, and reported to the FBI and the U.S. Coast Guard. *Khrushchev had demonstrated the weapon's ability to drastically attack and destroy underwater targets, or even use such great underwater bursts to destroy whole flotillas of surface vessels.* Ironically, just at the time that the waters off the East Coast of the United States were alive with ships searching for the lost Thresher, the same weapon that killed the Thresher was tested again, and no one realized what was occurring.

With these two strategic demonstrations and Soviet involvement in events leading to the assassination of President John F. Kennedy on November 22 of that same year, Khrushchev soundly avenged himself for his humiliation by Kennedy and the United States in the 1962 Cuban Missile Crisis. After that 1962 humiliating facedown and Khrushchev's forced withdrawal of his long range missiles from Cuba, the Communist Party leaders had been moving to remove Khrushchev from power. Khrushchev's dramatic, successful 1963 demonstrations and the death of John F. Kennedy, all under cover of an effective deception plan, persuaded the Communist leaders to continue him in power for a little longer.

Soviet tests against actual U.S. targets continued over the years. In 1972 at a secret meeting in Prague of the leaders of the European Communist parties, Leonid Brezhnev confirmed that detente was a hoax *(just as Gorbachev's Glasnost is a hoax!).* Brezhnev named 1985 as the year that the Soviets would be ready to control the skies, the oceans, and most of the land area as they might wish. In other words, all the great strategic scalar EM weapons would be completed, deployed, and operationally tested.

On December 12, 1985, Soviet "over-the-horizon radars" — with infolded Whittaker bidirectional EM wave structures to provide distance-independent holography and dispersion-free phase conjugate shooting — locked-on and destroyed a U.S. Arrow Airlines DC-8 jet aircraft at Gander International Airport, Newfoundland. In destroying the aircraft as a demonstration that the 1985 schedule had been met and the Americans were none the wiser, the Soviets killed 248 U.S. Army troops and 8 civilian crewmembers.

[See Figure 21]. The troops were U.S. paratroopers returning to their home station from UN peacekeeping duties in the Middle East. They were coming home for Christmas, and their parents, families, and friends were waiting for them in happy anticipation. The terrible tragedy took those happy young lives, and the lives of the fine Arrow crew — one of its best. It was not an accident, and it was not a terrorist bomb that destroyed the aircraft and killed all those young soldiers and the crew. It was a brutal, cynical, overt act of war by the Soviet Union. It was the final demonstration to Gorbachev of meeting the Soviet 1985 schedule for having these giant weapons deployed and operationally ready *and tested.* Just two weeks earlier, the weapon had been tested for the third time against a U.S. shuttle launch, but in a nondestructive manner. Some six weeks after killing the Arrow, the same weaponry would be used in a highly specialized kill of the Challenger with its crew of seven. But here is what really happened to the Arrow DC-8 on December 12,1985.

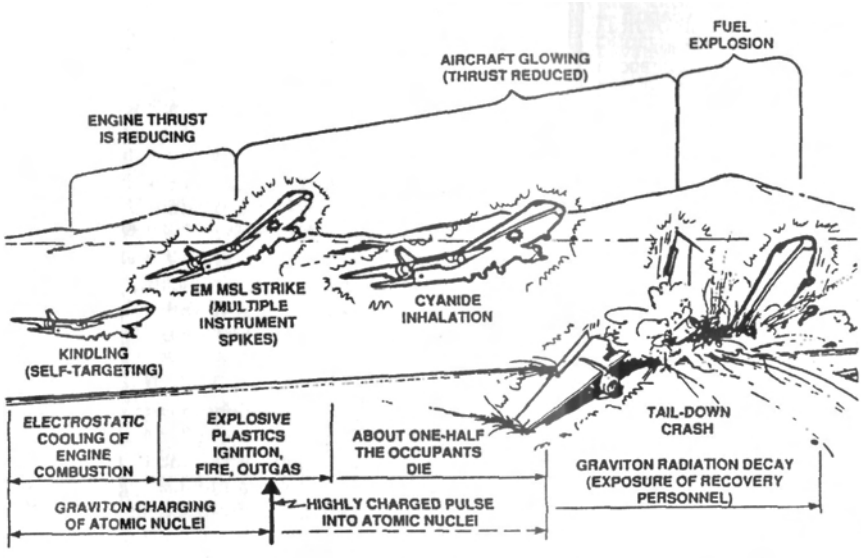

Figure 21. Death of the Arrow DC-8, December 12,1985.

For brevity, we skip all preliminaries, and go immediately to the aircraft as it built up speed down the runway on its takeoff run. As the Arrow DC-8 aircraft sped down the runway, an eyewitness observed multiple beams of light form in the clouds overhead — in fact, she observed the self-focusing of the scalar potential beams of the interferometer. This self-focusing (self-targeting) began to cause electrostatic cooling in the aircraft engines' combustion gases. *This is easily accomplished by properly adjusting the bias potential on the electrical ground of the distant interferometer transmitters in Russia, so that the transmitter potential is below the ambient potential of the target — the aircraft speeding down the runway in Newfoundland. If the transmitter potential is lower, a gradient exists in the scalar beam Whittaker structure joining the aircraft and the Russian transmitters, and*

energy will flow through the internal Whittaker structures, from hot spots on the airplane,— such as the fiercely burning combustion gases — to the distant transmitter electrical ground. This will electrostatically cool the greatest hot spots — the hot combustion gases inside the engines.

The electrostatic cooling in the combustion gases inside the engines caused them to lose exhaust gas velocity, hence reducing the engines' thrust —just at takeoff rotation. As the aircraft began to rotate for liftoff, its engines were already losing substantial thrust, ***although they were still rotating at full speed.***

Once the weapon was focused, Soviets fired an electromagnetic missile directly at the aircraft, using distance-independent holography, employing the internal Whittaker EM wave structures of the scalar potential beams. The interfering sky beams flared as an electromagnetic missile formed and shot to the aircraft. *(The EM missile strike was seen* ***by the witness as just a ball or beam of light that streaked from the glowing beams in the*** *clouds, down to the aircraft)* The EM missile struck the aircraft in the right side of its fuselage ahead of the engines and blasted a hole right through the fuselage. *This* ***anomalous hole was noted. It was tested and found to have*** *no chemical residues, proving* ***that it was not due to a chemical explosion or a terrorist*** *bomb. However, it* was *due to the* ***strike of the EM missile!***

The fierce ball of EM energy penetrated the fuselage and struck the aircraft's interior plastics, explosively igniting them instantly — all just at liftoff. Multiple independent witnesses saw the aircraft glowing with an orange light, from the fierce firelight shining out the windows and the radiant energy of the locked-on interferometry beams. ***Interestingly, the witness that*** *saw* ***the*** *beams form in the sky, and the beam shoot down and strike the aircraft, was not allowed to present her testimony to the official board of investigation.*

The flaring of the skybeams associated with the EM *missile* strike, and the glow on the aircraft from the electrical energy in the locked-on scalar EM beams, *brightly lit up the* ***cabs of trucks speeding down the nearby*** *highway.* **The** strike of the EM missile also caused a sharp electrical spike in two instruments on board the aircraft, as recorded by the flight **recorder.** ***The instruments and the flight recorder*** *actually recorded the strike of the EM missile itself.* [Figure 22]. The aircraft was glowing from the Whittaker beam structure holography and beam tracking and self-targeting. Inside the struck aircraft, in addition to the explosive fire and fierce firelight, violent outgassing from the explosive ignition of the plastics produced an explosion of soot and toxic fumes, including highly lethal hydrogen cyanide gas. With a breath or two, lethal doses of the toxic fumes were inhaled by the surrounding occupants. About half the personnel on board were already dead or dying of cyanide poisoning as the faltering plane reached its high point of less than 100 feet, still tail-down.

The U.S. Army performed autopsies on the remains of *almost all the dead personnel in the* ***crash. These autopsies indicated that almost half the*** *personnel were already dead of* ***hydrogen cyanide poisoning before the airplane exploded*** *on impact with the earth. This* ***autopsy information was illegally withheld from the*** *official investigating board for the* ***accident — another deliberate criminal interference with the*** *proceedings.*

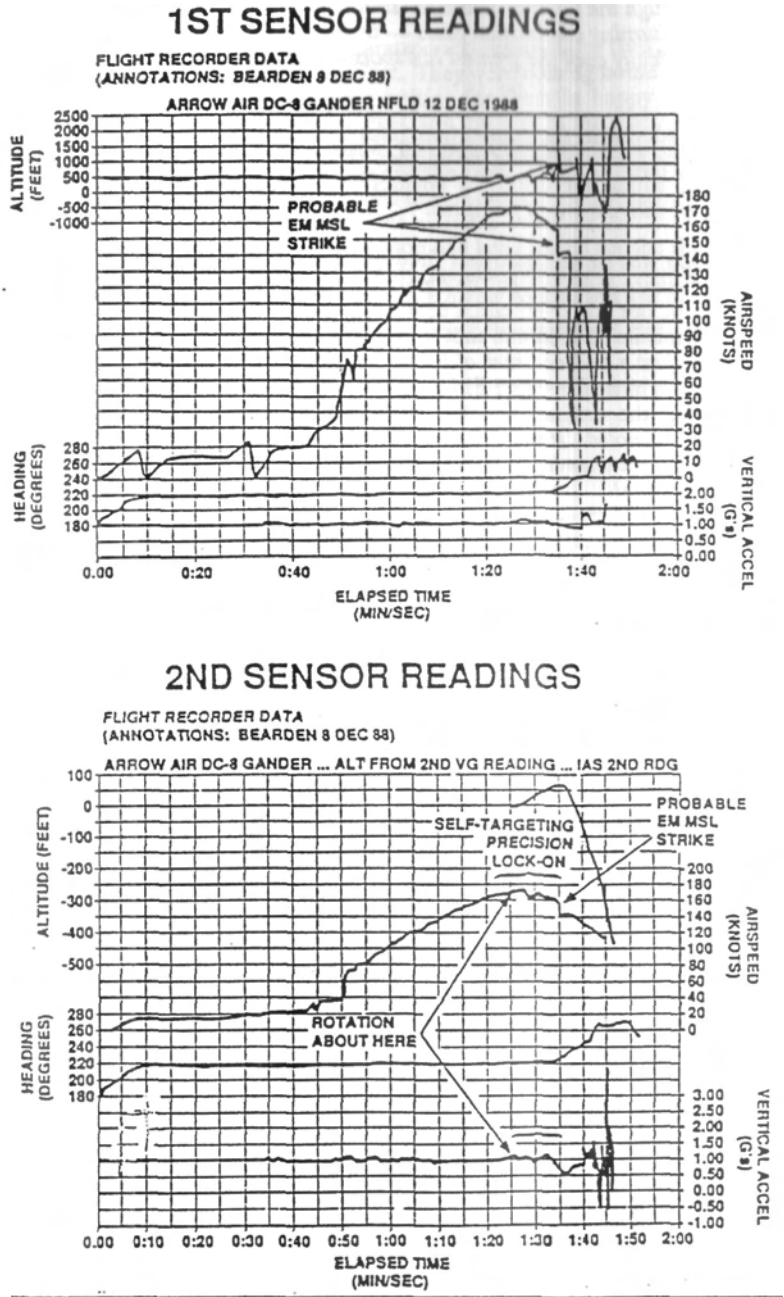

Figure 22. Electrical spikes in two on-board sensors of the Arrow DC-S, caused by strike of an EM missile during liftoff rotation.

But to return to the faltering Arrow DC-8. With its engine thrust steadily diminishing by electrostatic cooling of engine combustion gases, even though the turbines were rotating at good speed, the stricken aircraft sank, still tail down, and struck the ground, exploding and killing the remaining personnel on board, and scattering the burning wreckage over the crash area. ***However, the sharp strike of the EM missile with its extremely powerful associated scalar EM pulse had intensely "quick-charged" and activated the atomic nuclei of aircraft materials, metals, etc in the adjacent areas of the aircraft surrounding the strike.*** **These Whittaker/scalar-activated (scalar-charged) nuclei were now emitting strong scalar graviton radiation. So strong scalar graviton radiation—scalar potential radiation —was issuing from the scattered parts and burning materials in the crash area. During the next few days, recovery personnel were exposed to this unsuspected scalar radiation. Many of them (about 60 or so) later developed delayed illnesses and health changes** ***similar to those in scalar-radiated U.S. Embassypersonnel in Moscow:*** **dizziness, headaches, nausea, stomach and intestinal upset, liver changes, blood changes, vertigo, and stress** syndrome **symptoms.**

We accent this point **most** strongly: We have seen these symptoms before, in personnel radiated by the Soviets at the U.S. Embassy in Moscow. The Johns Hopkins study of that situation clearly shows that the active ingredient is the scalar potential, not ordinary **EM force fields. We know it is scalar EM** potential radiation that causes these delayed health **symptoms.** ***Further,*** *from* ***our*** *study of the Kaznacheyev cytopathogenic effect, the Popp* ***cellular communication system,*** *and the Priore anti-cancer machine, we know the precise mechanism that causes* ***the*** *diseases.*

The signatures of the use **of the** scalar EM weapon are clear. Further, additional strong **evidence exists of prior 1985 nonlethal** testing of the same weapon that was utilized to kill the Arrow DC-8.

Several months before the kill of the Arrow DC-8, another anomalous loss of engine **power by an aircraft is** interesting. In February 1985, on a flight from Taipei to "Los **Angeles, a China Airlines Boeing** 747SP **about** 300 miles northwest of San Francisco was **subjected to a similar but milder** "self-targeting **and** cooling of engine combustion gases" **treatment by the same Soviet** weapon. **[Figure 23].** At 41,000 feet the aircraft first **experienced a slight turbulence — probably just when the** scalar **lock-on** of the weapon **occurred, where the emerging outfolded EM energy in the surrounding** air created some **slight turbulence. Then self-targeting began in the Whittaker structure of the Woodpecker standing potential wave interferometer beams. The** initiation of self-**targeting narrowed the interferometer onto its engine combustion** gases target in the **aircraft engines, causing substantial emergence of negative** energy **in their** combustion **gases. This electrostatically and drastically cooled the** combustion **gases,** causing seriously **decreased exhaust velocity, loss of engine thrust, and a special type of engine flame-snuffing. First one engine failed from the drastic cooling of its** gases, and then the others **failed in short order. The failures and resulting plunge of the aircraft left several signatures, however, of the anomalous mechanism causing them.** *Electrical power on* ***board the aircraft did not fail,*** *because the engine failure was anomalous loss of thrust in* ***fully rotating turbines due to direct electrostatic cooling of the combustion*** *gases in the* ***engines themselves.*** **Hence the mechanically-coupled electrical generators were still rotating at full speed and producing electrical power, and so the aircraft** electrical system **maintained power. Passenger oxygen masks did not deploy, indicating that engine** ***rotational*** **power (not** ***thrust!)*** **was** always available **to** operate electrical and pressurization **systems. In a hair-raising, uncontrolled plunge of the aircraft toward the earth, the pilot fought to restart the engines and regain control of the aircraft. The instruments reacted anomalously. The crew reported that the stick shaker did not activate and the** overspeed

warning clacker did not activate. Severe G-loads were experienced in the downward plummet of the aircraft, causing severe distortion of the tail cone and damage to that section.

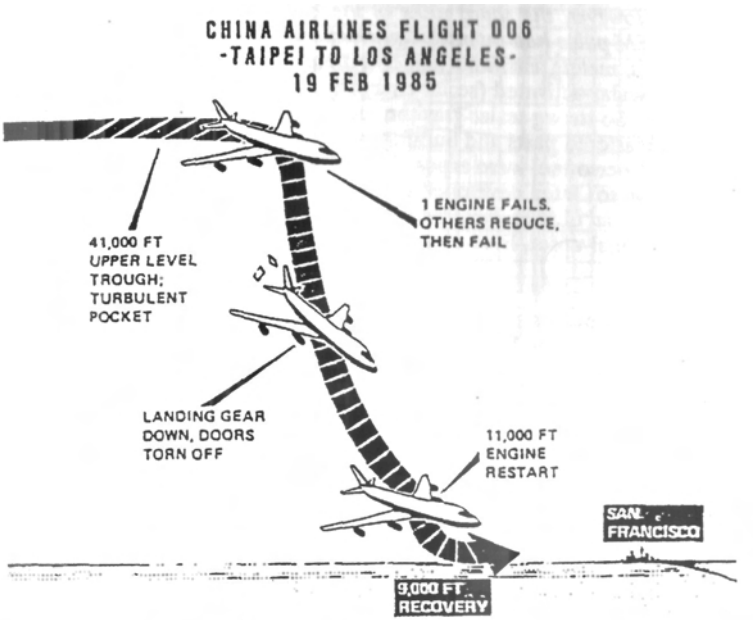

Figure 23. Engines disabled, a passenger jet drops six miles in two minutes.

Anomalies in the G-forces inside the aircraft also occurred. The flight engineer was totally immobilized by the g-forces at his cockpit duty station, yet the pilot and copilot directly on either side of him were unaffected. *This is a highly significant "selective gravity and selective inertia" anomaly and a clear signature* of the negative energy being introduced into the aircraft by the self-targeting Whittaker beams. As the aircraft plummeted down, it fell out of and away from the intersecting Whittaker interference beams. Apparently the distant Soviet operator deliberately did not continue to track and attack the target as it fell. Once the aircraft fell out of the EM kindling/outfolding in the beam intersection, the scalar activation in the engines and vicinity began to decay away. Since no drastic pulse input — such as the strike of an EM missile — was employed by the Soviet weapon, scalar activation was not severely high. Thus only light-to-moderate activation of nuclei occurred, and this is a short-lived phenomenon that will decay quickly once the steady activation beams are removed. In other words, the excess scalar charge on the nuclei began to discharge by scalar emission, and the cooling of the combustion gases began to decrease steadily.

Instrumental anomalies occurred as well, since instruments interact individually to being scalarly activated. The crew reported that the cockpit instruments detected immediate autopilot disengagement; flight data recorder instruments showed that the autopilot did not disengage during the initial descent. Thus both the pilot and the autopilot

conceivably were fighting to move the control surfaces during at least the initial phase of the fall. The landing gear lowered, but the pilot did not initiate the action.

After a fall of some 32,000 feet in about 2 minutes, the Whittaker/scalar EM activation was discharged sufficiently so that, with internal combustion cooling greatly diminished, **the** pilot managed to restart three engines and regain control of the aircraft. The crew then made an emergency landing at San Francisco International Airport. For example references, **see** (1) Bearden, *Fer-de-Lance,* Mar. 4,1985, p. 175-176; (2) *Aviation Week & Space Technology,* Feb. 25,1985, p. 28; Mar. 4,1985, p. 29; (3) "Jetliner drops 32,000 feet; 400 aboard; 50 are injured," AP release, *Huntsville [Alabama] Tunes,* Feb. 20,1985, p. 1; (4) "China Airlines pilot denies cockpit error," AP release, *Huntsville [Alabama] Times,* Feb. 21,1985, p. A-9.

But there is much additional evidence that bears directly on the scalar kill of the aircraft at Gander.

On Nov. 26,1985, two weeks before the kill of the Arrow DC-8, the same Soviet weapon was tested nondestructively against a U.S. shuttle launch at Cape Canaveral, Florida. *(This was the third nondestructive test using a launching space shuttle/booster as a convenient simulated ICBM practice target)* Seconds before the launch, an offset strike of an EM missile was actually photographed by Bob Gladwin: [Figure 24]. The photograph was later printed by this author [Bearden, *Fer-de-Lance,* 1986, p. 187.] Over the general launch area, another holographic ball of light — a marker beacon used by the Whittaker interferometer for precise distance-independent registration in the target area — was clearly observed by hundreds of persons and photographed by George Suchary. [Bearden, *Fer-de-Lance,* 1986, p. 182]. A similar holographic ball of light for precise registration was also videotaped above the explosion of a Titan 34-D missile seconds after launch in April 1986; that Titan was also destroyed by the strike of an EM missile or by a very strong EM pulse through the Whittaker channel of a Soviet scalar interferometer. [See Figure 25]. In 1986 a Delta rocket was also destroyed by the range safety offer after an anomalous internal EM surge command shut down the main liquid-fueled engine, with the three strap-on boosters still burning, so that the rocket went unstable. A mysterious light streak was observed on videotape to approach the rocket from below and from the side, rising and striking the vehicle, just before the mysterious main engine shutdown. Precisely such anomalous "internal command and control switching by introduction from an external source" has been exhibited by the British Ariel VI satellite as well. Also in Spring of 1986, a French Ariane missile suffered mysterious shutdown interference, resulting in the destruction of the rocket.

In the case of the Arrow DC-8, high U.S. and Canadian ofGcials — not knowing anything of scalar electromagnetics — were probably very afraid that the aircraft had actually been bombed by a terrorist group, possibly on behalf of the Iranians. High U.S. officials were most anxious not to reveal anything further about the Iran/Contra weapons affair and its official U.S. governmental coverup. *This probably explains why a U.S. Army General quickly arrived at the Gander crash site and brought exceedingly strong pressure to bear to quickly bulldoze over the crash residue. It also probably explains why most eyewitness testimonies that contradicted the — probably deliberately selected — "ice buildup" cover story were withheld from the accident investigation board, and why the board was not permitted open access to the files and witnesses!* This unprecedented action, of course, is tantamount to deliberately withholding evidence from a court and interfering with a court trial — a criminal offense. High U.S. officials would have been most anxious to keep from revealing any sign of onboard fire or explosion, since — if the crash *had* been due to a terrorist bomb — this might fully open up the investigation and drive it sufficiently far afield to reveal the Iran/Contra coverup by the U.S. government.

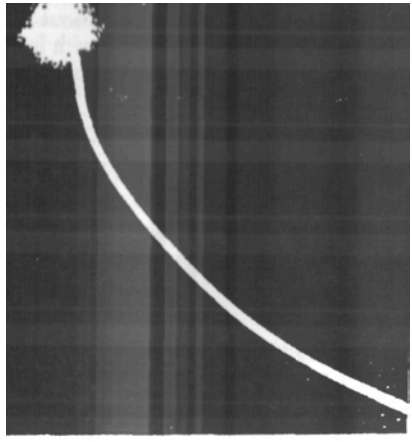

Figure 24. Strike of an EM missile, offset from launch of the shuttle Atlantis on November 26, 1935. Photo by Bob Gladwin. Several other major anomalies also occurred. Two weeks later, the same Soviet weapon destroyed the Arrow DC-S at Gander, Newfoundland.

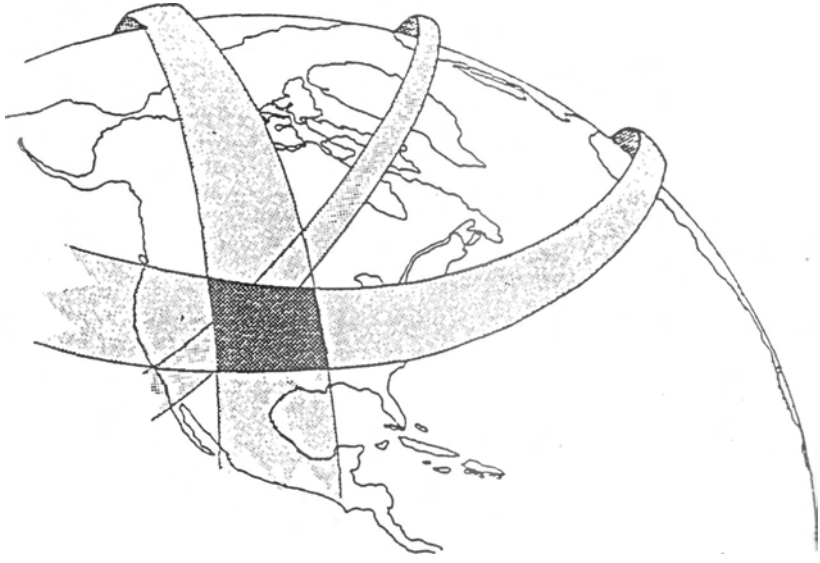

Figure 25. Soviet Woodpecker beams intersect over North America. This Soviet Tesla/Whittaker weapon can destroy U.S. ICBMs and bombers at launch and takeoff and during the initial phases of flight. It can also destroy carriers task forces at sea, and underwater submarines.

So in addition to the wanton Soviet act of war and murder of the troops and crew aboard the Arrow DC-8 aircraft, a gross miscarriage of justice occurred due to (1) technical ignorance of scalar electromagnetics and of signatures of the strike of a scalar EM weapon, (2) deliberate high-placed collusion and manipulation, and (3) probable mistaken off-the-record belief by high U.S. officials that the crash was really caused by a bomb planted by a terrorist group backed by Iran. By rather gross manipulation of the investigation, of the files, and of the board itself, the "accident" was officially blamed on human error due to failure to de-ice the aircraft. The members of the board split in their finding, however, and a minority opinion was also produced, denying the ice theory.

Families of the deceased U.S. soldiers have demanded a thorough reinvestigation. This researcher stands ready to open his files to the investigating board, a Congressional investigating committee, or any special board investigating the "accident". I will gladly provide substantial briefings regarding the complete history of Soviet scalar EM weapons and their testing, the precise mechanisms and signatures of scalar EM weapon strikes and kills, and specific indicators in the Arrow DC-8 crash incident that remove any doubt as to what actually caused the crash. There the matter stands.

62. Devyatkov and Golant, "Prospects for the use of millimeter-range electromaanetic radiation...", 1986.

63. Devyatkov, Ed., *Applications of Low-Intensity Millimeter Wave Radiation...,* 1985.

64. Again recall Khrushchev's 1960 statement that these new fantastic weapons *could wipe out all life on earth if unrestrainedly used.* Also recall Brezhnev's 1975 characterization of the weapons as *"...more frightful than the mind of man has ever imagined."* Even in more orthodox chemical warfare, the Soviets are forging ahead. For example, the prestigious *London Sunday Times,* Oct. 1, 1989 reported the Soviet development of genetically engineered toxins designed to have a very specific effect for a defined time — such as violent diarrhea, uncontrolled weeping, etc. The Soviets have consistently lied about the extent of their chemical and biological warfare developments.

65. Whittaker, "On the Differential Equations...", 1903.

66. Ibid., p. 355. Further, the speed of light itself is not constant, but varies as a function of the local energy density of spacetime — i.e., as a function of the magnitude of the ambient spacetime potential itself.

67. Multiplication of waves signifies a *modulation* process, which locks the pair together. In gravitobiology, this also locks paired photons together, building graviton structures and scalar EM potentials rather than EM force fields.

68. In present quantum field theory, the spin-2 graviton is taken to be the quantum particle of the gravitational field, while the photon is the quantum particle of the electromagnetic field. Essentially every field is so visualized, hence the name *quantum field theory.* In scalar EM, the graviton is envisioned as an average over time of the constantly changing photon coupling/decoupling less than, equal to, or greater than two, according to whether local spacetime is negatively curved, flat, or positively curved. This is also consistent with the modern view of a field: because of vacuum fluctuations, rigorously one no longer speaks of "the" field, but of *the probability of a particular field configuration.* See Charles W. Misner, Kip S. Thome, and John Archibald Wheeler, *Gravitation,* W.H. Freeman and Co., San Francisco, 1973, p. 1191.

69. Thus we are implementing what heretofore has only been speculated upon. For example, see T.D. Lee, Chapter 25: Outlook, "Possibility of vacuum engineering," *Particle Physics and Introduction to Field Theory,* Harwood Academic Publishers, New York, 1981, p. 826. Also, recently it has been realized that spontaneous emission, for example, is not a fundamental property of matter as previously believed. Instead, it is actually a property of the atom-vacuum system and its virtual particle flux (VPF) exchange. It is also possible to alter that VPF exchange system and thus alter spontaneous emission. Cavity quantum electrodynamics is one of the recently uncovered examples by which spontaneous emission can be profoundly affected by altering (structuring) the vacuum states. See Serge Haroche and Daniel Kleppner, "Cavity Quantum Electrodynamics," *Physics Today,* Jan. 1989, p. 24-30.

70. There is in fact no precise definition at all of the gravitational field! In the general relativity theory, many mathematical things are associated with gravitation. Cf Misner, Thome And Wheeler, Gravitation, 1973, p. 399. Quoting: *"...The terms 'gravitational field' and 'gravity' refer in a vague, collective sort of way to all of these entities. Another, equivalent term for them is the 'geometry ofspacetime."*

The present author's comment is that Whittaker shows us how to deterministically structure and curve spacetime — including locally — and utilize this structured spacetime curvature in an engineering fashion.

71. Activation of the atomic nucleus — by a deterministically patterned, massless charge structure — can be thought of as analogous to *charging a capacitor.* However, now in addition to the "gross overall magnitude of charge," we must speak of the *magnitude of each specific charge* of a particular graviton structure. The overall gross charge may have many infolded individual graviton structures (charges), each of which may be at a different magnitude. *Now we may deterministically collect, store — and then discharge and utilize — specific spacetime/graviton/virtual particle flux patterns/structures, all hidden inside the envelope of "normal" potential/charge and inside "normal" electromagnetics.*

Note that this notion of a set of "partial charges," each of differing graviton-patterned structure, is similar to the notion of "partial pressure" in mixtures of gases. In the case of gases, the overall mixture has an overall pressure, but specific parts of that total pressure are due to the specific component gases. In the new view, overall massless photon flux (electric charge) exchange between vacuum and a charged particle of mass, also consists of specific "partial charge" components. Further, some of these "partial charge components" can be deterministically structured.

Another way to say this is as follows: The overall stress of the vacuum exchange with a particle of mass constitutes the *overall charge* of the particle. In the case of *virtualphoton* exchange between vacuum and mass particle, the overall exchange flux constitutes the overall *electric charge* of the particle. That overall electric charge (overall photon flux) may be composed of several components. *In some of these flux components, the photon flux exchange may be deterministically organized.* Thus we can speak of the partial "electric stress" or electric charge of each component. The overall electric stress, or electric charge, is the sum of the *compoonent partial* electric stresses/charges.

We have moved the concept of electric charge an entire level deeper than is presently in orthodox physics, by introducing the notion that an overall statistical virtual particle flux has ordered components. Quantum mechanically, the electric charge of a charged particle is due to an exchange of virtual photons, between the vacuum and the mass of the particle. Now we have added hidden structure to that virtual photon flux exchange

that constitutes the electric charge of the mass. However, structuring of the (observably) massless virtual particle flux that is "charge" is easily proven by a *gedanken (thought) experiment* as follows: In present electrical physics, it is universally postulated that each potential has a charged particle somewhere as its source or generatrix. It is also universally postulated that, at a distance from the charge that is the source of the potential, the potential is inversely proportional to the square of the distance, in the most general ideal case. Thus the potential from the charge has everywhere in finite space a nonzero value.

Now suppose that suddenly an electric charge is introduced (spontaneously created) in a small region. This charge is the source of a suddenly created potential, which — it is usually assumed — travels outward in all directions from the source, at the speed of light, decreasing inversely as the square of the distance. Theoretically, this potential will continue to expand out into the universe forever, at the speed of light, never quite becoming zero. By common physics assumption, all charges in the universe have such traveling potentials moving out into space, all the time.

Now select a very distant point, many lightyears out into deep space. Through this point, incalculable weak potentials — from an incalculable number of distant charges — are moving through a small differential volume surrounding the point, from and toward all directions. These potentials are continually changing and interfering with each other. Since the distant charges were dynamic (i.e., part of moving systems, exploding stars, whatever), the potentials in the flux through the differential volume are highly dynamic and changing. The interferences of these potentials generates pair creation, pair annihilation, and other virtual particle processes at an incredible rate and in an incredible variety. In the differential volume of space around that point, *this violent, continual interference of potentials produces what is a violent, extreme, virtual particle flux.*

However, we can take such a differential volume around any point in the universe, and a similar virtual particle flux will be present, generated by the local interference of potentials from the distant charges of the universe. *The virtual particle flux of vacuum is completely deterministic a priori!.* It is still *statistical,* because a macroscopic observer will be unable to have instruments fine enough to detect and measure each and every single virtual particle in the flux. However, it still contains *hidden order.* In short, this virtual particle flux of vacuum is *chaotic,* not *random,* as we have just shown. All electric charge of fundamental particles always did contain deterministic substructures. All we are saying is that, to have higher levels of order inside the charge structuring, all that is necessary is to cohere the part of the basic determinism into higher levels of determinism. To complete our gedankenexperiment, we now show that.

We now simply introduce some ordinary electric charges into and onto a geometric structure, such as a wire grid, or a shaped physical pattern of arbitrary intricacy. The charges adjust themselves according to the pattern, proximity, etc. When they are adjusted, we note that, in addition to the physical material, we have a specific, geometric *charge structure* in space at this location. Now we simply examine the potential radiating out into space from this charge structure. The potential from this overall geometric charge source will carry a structure into space that is precisely correlated to the charge source. Let us suppose that several (say, three) major geometric forms exist in the charge structure. Then three major geometric forms exist in the potential radiating out into space. Let us now traverse around the surface of a giant spherical shell — say a lightyear away — that has the geometric charge source as its center. The magnitude of the potential on each element of that surface is precisely correlated to the distant corresponding parts of the charge source. Let us now wiggle the charge source back and forth. One year later, corresponding wiggles (increases and decreases) of the values of

the potentials in each differential surface element will also fluctuate, in precise correlation to the manner of movement of the distant source one year earlier.

Mathematically, we are quite free to break the overall charge of the source into three parts, one for each of the three main parts of the geometric charge structure. By the superposition theorem, the potential from this three-fold charge structure, at any distant point in space, can be separated into three potential components or elements. Each of these potential components — which is now a *partial* potential with respect to the total potential — is precisely correlated to one of the three distant parts of the distant charge source.

But that demonstrates that the virtual particle flux of vacuum — the potential — at any point can be and is structured. Further, it demonstrates a case of deliberately structuring the distant potential — and the distant virtual particle flux of vacuum — deterministically. *Q.E.D.*

This line of reasoning was advanced by this author *conceptually,* many years ago. Happily, Puthoff has placed it on a rigorous mathematical basis, and extended it to show a complete giant universal feedback loop, via vacuum fluctuation, between all the charges of the universe. See H.E. Puthoff, "Source of vacuum electromagnetic zero-point energy," *Phys. Rev. A,* 40(9), Nov. 1,1989, p. 4857-4862.

In the new concept, as a result of structuring of the charge flux, we have violated yet another of the physics tenets about charged particles: the present assumption that, in a collection of one type — say, electrons — each is always identical to any other. This identity assumption requires random variable treatment of the statistics, since the identical electrons are now a random charge ensemble. However, in the new view the electrons can have differing infolded *charge structuring,* and the specific virtual particle exchange of each electron with the vacuum may be differently structured, although the total charge of each electron is the same magnitude. That is, the *overall* electron charges may be identical, but the electrons may have differing and deterministic *partial* charges. Thus the overall potential from a charge may have a deterministic or *information* content that is deliberately created and formed (shaped) by a living system. This hidden "information content of the field," as the Soviets call it, has been used by biological systems since time immemorial. It is used in controlling their deepest, most subtle living functions. Normal "electron-wiggler" detecting instruments do not see this hidden information substructure.

The potential pervades an atom, completely through the electron shells and into the nucleus, centering itself there. As a particular partial potential is steadily impressed on the nucleus, gradually the nuclear potential changes its internal structuring so that more of it is composed of that partial potential and structured accordingly. This is known as *activation* of the nucleus, with a particular charge structure or information content. The EM coupling between nucleus and electron shells gradually changes the electrons in the shells slightly — including the covalent electrons bonding the atom to other atoms in a molecule. Gradually these bond structures also shift and change accordingly, as the activation pattern spreads through the bonding lattice structure. This is known as *activation of the material.* (Years ago, I called this activation process *kindling,* that is, the gradual integration/collection of deterministic virtual patterns (of the hidden information content of the potential field) into corresponding macroscopically observable patterns. Activation of a material (or solution, or gas, or wave, or an overall charge potential) with a hidden information content consisting of deterministic partial potentials is the hidden physical mechanism and basis for psychometry and homeopathic medicine, for example, but those are matters for discussion later in the paper.

In closing this note, an electron or other fundamental charged particle can also have a different *magnitude* of electrical charge than the accepted standard value. By internally structuring the potential and adjusting the magnitude of its components, the charged particle can be raised through a continuous spectrum of excited states (potential charge), and these excited states (this potential) can be detenninistically substructured (tailored with hidden information) to affect the consequent interaction with a particle or other entity when the excited state discharges to interact with it In this discharge, the hidden information content can be integrated and collected on the interacting particle, changing the normal interaction that occurs — an example being, of course, homeopathic potentization and subsequent deterministic structuring and electrochemical action in the body from the potentized solution. This is how the electrical pattern of a chemical or compound can be impressed into and onto the bonding structure of water, for example, to potentize it with the "form" or information content of that compound, even though not a single molecule of the original compound physically remains in the water. In the ensuing chemical interactions of the potentized water with the body, the activated information of the compound's form is discharged into the body and its cells, accomplishing electrochemical changes similar to those induced by the real physical compound itself when present. Electromagnetic homeopathy using the hidden information content of the field is the system of medicine that Devyatkov is talking about in his research and testing. See Devatkov and Golant, ibid, and Devatkov, Ed., ibid.

Obviously, for example, when a group of nonidentically activated electron charges interact, hidden order in the overall chaos (overall chaotic charge, or conglomerate potential) may lead to quite different macroscopic behavior of the system than pure random variable statistics would predict. That is, unexpected large-scalar ordered behavior of the entire system of collected, interacting electrons may emerge and even stabilize. This can affect the apparent inertia, mass, chemical, and electrical behavior exhibited by the system.

Which is why there presently is no really adequate definition *of gravitational field.* (See note 70 above). While this point is obvious, it is very important. If one structures the local spacetime, one can get devices to work abnormally, since now the interaction of spacetime with the devices is not just simply the statistical interaction of a randomized virtual particle flux. The "laws of nature" have been slightly altered, so to speak.

For example, Frank Golden once developed an electric motor which, after several years, produced an output power that was 1.67 times the input power. What we did not know was that his years of operation and struggle with the motor and its structure had gradually deterministically charged-up (activated) the local atomic nuclei and activated the local vacuum potential. Thus the motor gradually "grew" its increase in power, seemingly violating conservation of energy if one tried to regard the motor as a closed system. (Of course it was now an *open* system, receiving an input from the structured vacuum as a hidden source. In other words, Frank had formed a *structured quantum potential* in the local area, coupled to the machine.)

Frank then changed jobs and moved to a new location several hundred miles away. He thus moved the motor several hundred miles, whereupon it promptly relapsed back into just an ordinary electric motor, though still some 90 percent efficient. The motor was then in an *unstructured, unactivated* vacuum potential at the new location, and hence had lost its hidden quantum potential source.

Thunderstruck, the two of us were enlightened by Dr. William tiller, who was aware of the specific "growth effect" we had encountered, though apparently unaware of its

quantum potential mechanism. Tiller, a brilliant scientist, called it *growing the archetype*, and he had previously encountered the same phenomenon in his own seminal experiments with unusual detection systems.

We should have kept the original motor at the original site, made additional motors and moved them radially outward about 200 miles away or to where they would still exhibit about 1.1 to 1.2 efficiency. Then, all the while running the original motor in its original location, we should have run these "outrigger" motors until their efficiencies grew to 1.67, Then we should have extended the outrigger ring again, etc. After about five or six extensions, the vacuum structuring/activation and the activated quantum potential could be expected to spread on around the earth, in the entire local vacuum potential of the earth itself. Thereafter, that particular motor form would work anywhere on earth with 1.67 or so efficiency, because it would be able to directly tap a hidden vacuum source. Regrettably, Frank could not afford another five years or so to regrow the first potential activation/structuring for the motor's format.

The sharp-eyed reader should also note a specific analogy between this effect and Sheldrake's morphogenetic field. For the explanation of the quantum-potential basis for this effect — and for Sheldrake's morphogenetic field — see T.E. Bearden, "Update on Scalar Electromagnetics: New Breakthroughs," paper delivered to the USPA Annual Symposium, Sacramento, California, July 19S9.

74. We choose to regard the EM wave in Whittaker fashion, as consisting of interfering scalar potential waves. See Whittaker, "On an expression of the electromagnetic field..." ibid., 1904 for insight as to how such scalar interferometry produces ordinary EM forcefield energy. Any or all of these interfering potentials may be Whittaker-structured in accordance with Whittaker, "On the partial differential equations of mathematical physics," ibid., 1903.

75. Specifically, it has an infolded Whittaker bidirectional EM wave pair structure (graviton structure). We are free to tailor that internal structure and use it as we wish.

76. By composing such bidirectional EM pairs deterministically and locking them all together, one can compose a Whittaker potential (structured local ST curvature) with a deterministic internal energy pattern. Perhaps an easy way to do this is to form the spectrum of ordinary waves desired, split the spectrum into two replicas, phase conjugate one replica, then mix the nonconjugated replica and its time-reversed replica in a highly nonlinear medium, such as a rotating plasma, to modulate them together. The union of a wave and its phase conjugate or antiwave unites the energy of both waves — which just adds *spatially*. However, the resultant E-fields and H-fields of the wave/antiwave combination are zero vectorially. Thus one has produced a pure, standing wave of scalar potential, without EM force field resultants, and the wave/antiwave component EM energies are localized and trapped. That of course is a *gravitational wave*. In additional photons/antiphotons are coupling and uncoupling. This represents the continual creating and annihilation of spin-2 photon/antiphoton pairs. But a spin-two particle, without EM force fields but with energy that is trapped spatially, describes a *graviton*. Further, the component E and H fields are still there vectorialiy, inside the zero resultant system. *Spatially the E-fields add and the H-fields add (by courtesy of the distortion correction theorem in nonlinear phase conjugate optics);, however, they are respectively and directly oppositive in the time (fourth) dimension. Hence they produce an electromagnetic stress in the fourth dimension only, and thus on the rate of flow of time itself.* Since the magnitude of the spatially additive E-field summations and H-field summations in the standing potential wave are periodic, their time-stressing summation periodically varies the stress on the local rate of flow of time. In other words, we have also produced a *wave like*

alteration of the rate of flow of local time. Quantum mechanically, energy and time are canonical in the photon. Therefore the local spatial oscillation of trapped graviton energy and the local oscillation of the rate of flow of time are inversely related. When the trapped energy in the wave is greatest, the local rate of flow of time is slowest. Hence we have also inadvertently shown the exact physical mechanism which produces time dilation, and the curvature of spacetime as welL

77. Note that one nontrivial result is the emergence of a stable macroscopic world with macroscopic order and structure, from what was apparently "random" quantum change. One now can immediately verify the truth of the old adage, "As above, so below." Since the external world is just the outfolded collected content of the inner order, then internally reflecting our macroscopic scientific concepts and models is justified. This in fact resolves several quite puzzling problems such as (1) why mathematics, founded on the external view, applies to the internal and is thus so *universal,* (2) why "it is so simple!", to paraphrase Feynman's quizzical pondering of quarks, and (3) why a logic of only a few rules can be so all-encompassing. It also should tell us why the intensive study and investigation of hidden variable theories is the single most important thing that can be done to advance physics today.

78. If there is hidden order in a single quantum, one must consider that order as being in the virtual state. Otherwise it would not be hidden, but would itself be observable. Being observable would imply that it was at least one quantum in size, in which case it could not be hidden inside a single quantum because it would be equal to or larger than the quantum.

79. Again, for a most spectacular paper dealing with the order in the vacuum fluctuations, see H.E. Puthoff, "Source of vacuum electromagnetic zero-point energy," *Phys. Rev. A.,* 40(9), Nov. 1,19S9, p. 4857-4S62. This important paper may be interpreted to establish that the virtual particle flux of vacuum is causal Puthoff shows that the fluctuations of the zero-point EM fields in the vacuum are deterministic. If one interprets these fluctuation fields as creating and driving the virtual particle flux of vacuum, then the virtual particle flux is also deterministic. Of course this is a penultimate expression of the hidden variable viewpoint, and again, "as above so below." It is also a profound statement of the present author's fourth law of logic: That which is totally disordered must also be totally ordered. (Order is relative. That which is totally disordered locally is totally ordered nonlocally — just as Puthoff showed.) For explanation and proof of the fourth law of logic — including the proof that it has always been hidden in Aristotle's three laws of logic anyway — see Appendix III: "A Conditional Criterion for Identity, Leading to a Fourth Law of Logic," in Bearden, *AIDS: Biological Warfare,* 1988, p. 428-443.

80. Again, it can only be the collection of the hidden, infolded, stable order inside chaotic quantum change that produces a stable macroscopic physical reality.

81. Again see note 10.

82. A.D. Sakharov, *DokL Akad. Nauk SSSR [Sov. Phys. Dokl.],* Vol. 12, 1968, p. 1040.

83. Stochastic gravitation is summarized up to 1982 in S. Adler, *Rev. Mod. Phys.,* Vol. 54, 1982, p. 729.

84. H.E Puthoff, *Phys. Rev. A,* Vol. 39, 1989, p. 2333; *Phys. Rev. D,* Vol. 35, 1987, p. 3266; *Phys. Rev. A.,* 40(9), Nov. 1,1989, p. 4857-4862. See also Harold Puthoff, "Everything for nothing," New Scientist, July 28,1990, p. 52-55.

85. For example, see Timothy Boyer, "The classical vacuum," *Scientific American,* Aug. 1985, p. 70; Walter Greiner and Joseph Hamilton, "Is the Vacuum Really Empty?", *American Scientist,* March-April 1980, p. 154; Roman Podolny, *Something Called Nothing — Physical Vacuum, What is It?,* Mir, 1986; IJ.R. Aitchison, "Nothing's plenty: The vacuum in modem quantum field theory," *Contemporary Physics,* 26(4), 1985, p. 333-391. For indications that a Soviet team under Chernetskii, at the Moscow Georgi Plekhanov Institute of the National Economy, may have succeeded in tapping the vacuum energy, see Andrei Samokhin, "Vacuum energy — a breakthrough?", *Speculations in Science and Technology,* 13(4), 1990, p. 273-275. For a note of cautious optimism as to the possibility of tapping the vacuum energy, see also H.E. Puthoff, The energetic vacuum: implications for energy research, *Speculations in Science and Technology,* 13(4), 1990, p. 247-257. We note, however, that none of the discussions on possibilities of tapping vacuum energy to date have considered pumped phase conjugate mirrors as already exhibiting negentropy, Whittaker's two fundamental papers for structuring the vacuum and intertranslating between electromagnetic and gravitational energy, or the use of time-reversed entities such as the time-reversed EM wave. Also, for hints of a new application of nonlinear vibrations mechanics that may eventually apply to the problem by analogy, see I. Usvitsky, "Friendly Vibration," *Science in the USSR,* No. 6, Dec. 1990, p. 81-87.

86. Nikola Tesla, Colorado Springs Notes 1899-1900, Nolit, Beograd, Yugoslavia, 1978, p. 61-62. On July 3, 1989 and on through the evening into the morning of July 4, Tesla observed standing potential waves from a traveling thunderstorm, even after the storm had traveled a distance of several hundred miles. He recorded this significant discovery in his laboratory notes on July 4,1899.

87. For example, see Nikola Tesla, "Pioneer Radio Engineer Gives Views on Power," *New York Herald Tribune,* Sep. 11,1932. Quoting: "...I showed that the universal medium is a gaseous body in which only longitudinal pulses can be propagated, involving alternating compressions and expansions similar to those produced by sound waves in the air. Thus, a wireless transmitter does not emit Hertz waves which are a myth, but sound waves in the ether, behaving in every respect like those in the air, except that, owing to the great elastic force and extremely small density of the medium, their speed is that of light."

Our comment is as follows: Tesla was absolutely correct in his view that only longitudinal waves were produced in the vacuum. We detect and measure *transverse* EM waves in our detectors, however, due to their detection of *electron precession* in the electron gas of the detectors, wire probes, etc. themselves. We do not measure what is in the vacuum, but *the result on the electron gas in our instrument from interacting with what is in the vacuum.* For an explanation, see Bearden, Tesla's Electromagnetics and its Weaponization," *Proceedings of the 1984 Tesla Centennial Symposium,* International Tesla Society, Colorado Springs, Colorado 1984.

Further, Tesla's view of the ether as gaseous is essentially correct. If one characterizes the quantum mechanical virtual particle flux of vacuum, then this flux of particles is a peculiar "gas" whose component particles — instead of being persistent — come into being spontaneously, exist only fleetingly, and nearly instantly disappear again. But these particles are real, as has been shown by experiment, for their interaction produces real effects in observable detecting systems of the proper sort. Thus the ether is a gas of *fleeting,* nonpersisting (virtual) particles rather than of persistent particles. But it is a gas nonetheless, and Tesla was correct.

88. Essentially they have insisted that Tesla used only transverse wave (translation) EM and hence was only utilizing ordinary LC resonance. Indeed, Tesla was adamantly opposed to the Hertzian idea of transverse EM waves in the ether. He was very struck with the utilization of a wave-complex of frequencies rather than a single frequency — something he had demonstrated with his radio-controlled automata before 1900. E.g., see Nikola Tesla, The True Wireless, "*Electrical Experimenter,* May 1919, p. 29. Here one finds that, when considering Tesla's use of resonance, one *"...must not view it in the light of present day science."* (Ibid., p. 29.) Further, Tesla stated that his *"...transmission through the earth is in every respect identical to that through a straight wire."* (Ibid., p. 62).

In Nikola Tesla, "My Inventions: Part V. The Magnifying Transmitter," *Electrical Experimenter,* June 1919, p. 176, Tesla stated that *"...this wireless transmitter is one in which the Hertz-wave radiation is an entirely negligible quantity as compared with the whole energy."* On p. 178 of the same article, Tesla stated that *"The transmitter was to emit a wave-complex of special characteristics..."*

Tesla always insisted that EM waves in the ether were longitudinal (compression and rarefaction) waves similar to sound waves in the gaseous atmosphere, not transverse waves similar to those in plucked strings. In his article, "The True Wireless," p. 87 he stated: *"The Hertz wave theory of wireless transmission may be kept up for a while, but I do not hesitate to say that in a short time it will be recognized as one of the most remarkable and inexplicable aberrations of the scientific mind which has ever been recorded in history."*

89. For details see Bearden, *AIDS: Biological Warfare,* 1988; *Fer-de-Lance,* 1986 — and, of course, this present article.

90. When great military campaigns or undertakings are planned or in progress, a detailed and sophisticated deception plan is prepared and implemented to deceive the enemy as to the exact operational intent until the last possible minute. For decades such a massive deception plan has been utilized by the Soviets to deceive the West as to Soviet development and utilization of scalar EM weapons. This includes such characteristics as (1) massive censorship of Soviet scientific literature, (2) concealing the development and testing of scalar EM weapons by embedding them in the development and testing of orthodox weapons systems and on orthodox weapon ranges, (3) surreptitious testing of the scalar EM weapons in distant ocean areas at night, (4) constant stimuli — such as the microwave radiation of personnel in the U.S. Embassy — to ascertain whether or not the targeted government knows and recognizes scalar EM utilization, and (5) surreptitious testing against U.S. ships, aircraft, installations, and rockets to generate incidents which, on the surface, appear to be accidental explosions, spurious electromagnetic interference or noise, accidental aircraft crashes, normal metal fatigue, accidental rocket failures, etc.

Y. Aharonov and D. Bohm, "Significance of Electromagnetic Potentials in the Quantum Theory," *Physical Review, Second Series,* 115(3), Aug. 1,1959, p. 458-491.

92. S. Olariu and I. Iovitzu Popescu, "The quantum effects of electromagnetic fluxes," *Reviews of Modem Physics* 57(2), April 1985 gives an extensive discussion of the Aharonov-Bohm effect (which proves the primacy of the potentials rather than the force fields) and an extensive list of references.

93. Bertram Schwarzschild, "Currents in normal-metal rings exhibit Aharonov-Bohm effect," *Physics Today,* 39(1), Jan. 1986, p. 17-20 confirms that the Aharonov-Bohm effect has been proven to the satisfaction of all but the most diehard skeptics.

94. This author's rather crude booklet (Beardcn, *Star Wars Now! The Bohm-Aharonov Effect, Scalar Interferometry, and Soviet Weaponization*, Tesla Book Co., 1984) may have been the first paper in English to clearly speak of the weapons implications of the Aharonov-Bohm effect, specific effects that could probably be attained at a distance by such weapons, and evidence for the Soviet development of them.

95. Whittaker, 1904, ibid.

96. See Bearden, *Fer-de-Lance,* and *AIDS: Biological Warfare* for details on Soviet weaponization of scalar EM interferometry. Also, without naming the Aharonov-Bohm effect as such, but utilizing the concept of scalar beam interferometry as an explanation of Soviet Tesla weapon developments, see this author's paper, Tesla's Secret and the Soviet Tesla Weapons," Tesla Book Co., 1981.

97. Bearden, "Appendix IV: List of Selected Incidents," in *AIDS: Biological Warfare,* 1988 contains an abbreviated chronology of events associated with Soviet development and testing of scalar EM weapons, including Aharonov-Bohm effect scalar interferometry weapons.

98. One considers the Whittaker potential's bidirectional EM wave structure as two bidirectional *energy currents* flowing in a hidden channel between the transmitter (initiation site) and the distant target where the Whittaker potential ends (i.e., the intersection site). Thus, with reference to this energy flow, when transmitter/intersection potentials are equal, no *net* resulting EM energy is transferred from transmitter to interference zone.

When the transmitter's potential is greater than the intersection zone's potential, net energy flows through the hidden channel, *flowing from transmitter to the target/interference zone.* It emerges there as positive energy (scattering/disordering energy, or heat). When the transmitter's potential is less than the intersection zone's potential, positive energy flows through the hidden channel, *flowing from the distant target/interference zone (and cooling that zone in the process) back to the transmitter (and emerging there to heat the transmitter.* In the latter case, the transmitter must transfer the excess heat away or dissipate it locally.

It is as if the distant zone and the transmitter are directly connected together with little of no separation. In that case, one looks at the gradient in potential between the two points. For a positive gradient in one direction, the positive energy flows counter to that direction. For a positive gradient in the other direction, the positive energy flows in the reverse direction from the first case.

However, as can be seen from the bidirectional wave pairs in the Whittaker structural energy is always flowing through the hidden Whittaker channel in *both* directions simultaneously. From the transmitter viewpoint, positive energy is being transmitted and flowing from the transmitter to the zone in one wave, while negative EM energy is being transmitted and flowing in the other wave, from transmitter to the distant zone. The difference in potential between distant interference zone and the transmitter, however, determines which transmission channel — the negative or the positive energy - predominates. If there is no potential difference, then the energy flows are equal, and no net energy flow occurs. If a positive potential gradient exists from transmitter to zone then negative transmission predominates and heat energy extracted from the distant zone must be continually dissipated at the antenna. At the same time, the distant zone is cooled. If a negative potential gradient exists from transmitter to zone, then positive

transmission predominates and positive energy emerges in the distant zone as heating. Note that transmitting negative or time-reversed energy is precisely the same as receiving positive or forward-time energy.

An easy rule is this: To the transmitter, the sign of the gradient from transmitter to intersection zone is the reverse of the sign of the energy transmitted to the distant zone. Another rule is this: Biasing the electrical ground potential of the transmitter positively, produces positive energy transmission. Biasing the ellectrical ground potential negatively, produces negative energy transmission.

In scalar electromagnetics, every transmitter is both a transmitter and receiver — and so is every receiver. In one case the scalar interferometer extracts heat from the distant interference zone (the *endothermic* mode). In the other case the scalar interferometer produces heating in the distant interference zone (the *exothermic* mode).

99. Thus the weapon system has two modes: exothermic, where heat (EM disordering) emerges in the interference zone, and (2) endothermic, where cooling (EM reordering) emerges in the interference zone. Sharply pulsed, powerful inputs produce distant hot or cold explosions, depending upon whether the exothermic or endothermic mode is utilized.

The best way to regard the Whittaker interferometer operation is to visualize a hidden pipe connecting the transmitter and the distant target. In one mode, heat is pumped to the site (and the transmitter is cooled), while in the other mode heat is extracted from the site (and the transmitter is heated).

Extensive use of such interferometry in the endothermic mode results in large amounts of heat at the transmitter site, which must be exhausted. The Soviet scheme is to simply use another Whittaker interferometer connected to a distant exhaust site. That is, the second interferometer receives the excess heat energy from the endothermic first interferometer, and exothermically transmits it to a distant targeted "dump" or exhaust site.

Bennett Island is one such Soviet dump site, where hundreds of anomalous dumping "plumes" and exhausts — some over 150 miles long — have been photographed by U.S. weather satellites. For example, see "Explosive events seen on Soviet Island," *Aviation Week & Space Technology*, Sep. 26, 1983, p. 31 for pictures of Soviet scalar EM interferometry exhausting from Bennett Island. A second Soviet exhaust site exists on Novaya Zemlya.

At any rate, a scalar interferometer can produce heat in a distant zone or extract heat from that distant zone. It can do this gently or explosively, and for a short duration or continuously. Use of the interferometers in coupled pairs, one endothermic and one exothermic, allows one to serve the other as the disposer of waste heat. Also, when the exothermic mode is utilized, the server can extract the energy from a separate distant area and transfer it to the drastically cooling exothermic partner to maintain its temperature.

100. Since ordinary texts are quite confusing on the question of energy, a short dissertation is in order. First, present energy concepts are essentially based on the classical notion of a closed system. Quantum mechanically, that is not true at all; in the entire universe, there exists nothing that is static, and there exists not one single closed system. The vacuum flux/spacetime fluctuation is in violent motion. *Everything* supposedly "static" is in fact only an entity that emerges in this flux cauldron by being in dynamic equilibrium. Thus

one rigorously speaks of equilibrium states and their probabilities, not the existence of static things per se.

When several or many things are in states of stable equilibrium in the background flux, such that one can describe them as highly persistent entities with mathematical relationships between each other, then these equilibria may be said to comprise a *system*. In the classical system, the flux exchanges between the parts and the vacuum may then be ignored, since input exchanges and output exchanges precisely balance. Then the system may be treated as a closed system, with no hidden sources or sinks. Notice that this model presumes (1) there is no hidden order in the background flux, which is purely random and statistical, (2) there are thus no chaotic interactions of the flux exchange when integrated over a period of time or reasonable region of space; the integrated random flux exchanges simply "average to zero," (3) one does not deliberately introduce and collect hidden order in the vacuum flux, to generate a hidden source or sink, (4) one may use the concept of a *stable frame* to mathematically model the system, in which each smooth dimensional axis represents a highly integrated (over all space and time) zero average of fluctuations in the vacuum virtual particle flux exchange with the matter in the system, (5) note that the very prescription of a "universal frame" prescribes the smoothed geometry of the entire equilibrium universe in advance, as well as the nature of the vacuum VPF exchange with matter throughout the universe, (6) macroscopic conservation laws then rigorously apply to the system so long as the frame coordinates remain smoothed to zero *average* fluctuation everywhere, so that linear superposition applies, (7) quantized (fixed) magnitudes of charge, spin, inertial mass, universal constants, etc. apply universally, so long as the frame remains "smoothed", (8) the observer's "rate of flow of time" is assumed to be positive, and (9) the observer's rate of flow of time is assumed to be constant.

Assumption number 8 implies that (a) gravity is an *attraction* of mass, (b) all mass and energy are positive, (c) the vast majority of photoelectric interactions is between photons and negative electrons in atomic shells, so that positive time continues and the familiar macroscopic "forward arrow of time" physical reality is continually created and annihilated, quantum by quantum, at a fantastic rate, providing the past, present, and future, (d) almost all expended energy is scattered, so as to produce entropy, positive work, the positive flow of observer time, steadily increased disorder, etc.

Those are indeed formidable lists of assumptions and implications. They all rest on one fundamental premis: that the virtual particle flux exchange of vacuum remains statistical, random, and constant in volumetric density. Fortunately, today all those assumptions on the formidable list can be modified, because one can now engineer the vacuum's VPF exchange with the atomic nucleus and with charged matter. Now even physical reality itself, as we know it, can be modified and engineered at will, as the technology develops.

In the last two decades, nonlinear materials effects have been discovered which allow altering one or more (or all) of the preceding assumptions, because these effects allow altering and engineering the VPF exchange between vacuum and matter. These discoveries include four-wave mixing, time-reversed EM-waves and their pumping amplification, etc. They also include the Whittaker infolded hidden variable engineering techniques, still undeveloped in the West, and the new cavity quantum electrodynamics.

At any rate, these new principles and techniques allow one to directly engineer and structure the vacuum flux exchange with matter. They allow the translation of negative (reordering) energy from positive (disordering) energy, etc. They allow the production of negative time flow in photoelectric interactions, rather than just positive time flow. And they allow the production of negentropy rather than just entropy.

But how are we to understand negative energy and negative time and their implications?

First, by energy we actually mean *the amount of ordering* or *the amount of coherence* that exists in some dynamic, on-going process of the universe.

What we call static potential energy is actually stored in dynamic, stable, coherent equilibrium processes — it is just *not translating and not scattering.*

The very concept of potential energy, quantum mechanically, implies stable perpetual motion.

What we mean by kinetic energy is a *translating coherence in some underlying dynamic process.*

Kinetic energy is translating, but it is not scattering.

By positive work, we mean *the scattering of stored coherence (energy),* which we refer to as the *"expenditure"* of energy. Rigorously, when we expend energy as work, we convert some stored coherence into incoherence (scattering), as seen by the forward-time observer. This is most important: It does not require energy expenditure per se to turn a shaft, but only to *"overcome the friction, or resistance to turning."*

What we really mean by "overcome the resistance" is that a certain amount of scattering will be invoked upon the energy coherence, producing incoherence. That way we "lose" the energy — i.e., we lose a certain amount of the coherence of the system. Relatively coherent systems, which in their operation produce scattering or incoherence (i.e., work), require constant input of more coherence (i.e., energy).

In the not too distant future, machines will no longer be designed that way. Instead, they will employ time-reversed stages to flow incoherence ("scattered energy") hack to coherence ("reordered energy).

These time-reversed stages will of course be open systems, simply taking what is needed from the vacuum VPF to continually restore the input energy. Such machines, of course, will not need continual inputs of fuel in the macroscopic sense. In the microscopic sense, they will continually receive an input of virtual energy from a Whittaker-structured vacuum, cohering it into the macroscopic world, and gating it. In a sense these machines will all be heat pumps of a special sort. And as is well-known, the usable output of a heat pump may be considerably greater than the energy expended to pump the energy from the source to the scattering region (where it is scattered.)

In our present designs, to make matters worse, we normally utilize and expend the *carrier* of the coherence as well as the coherence. This creates the fuel concept, where the fuel is the carrier of the stored energy (coherence). If one only expends and scatters, one continually requires refueling in order to continue the scattering process (doing work). Present engineering and physics utilize the closed system concept exclusively, hence *it rigorously maintains the engineering of systems that require fuel to operate.*

Of course, it does not have to be that way. If we engineer and structure the vacuum, then one may take whatever energy one needs from an inexhaustible source. That is, if one has a flowing river and puts a paddlewheel in it, one can freely extract shaft power and do work with it. The paddlewheel is a "gate": it taps a hidden source for free. If we wish to be non-polluting, of course, we should return the *scattered energy* (the work) back to the

vacuum, as reordered VPF, rather than leaving the scattered energy in the macroscopic environment as "waste heat."

Thus one way to build a so-called *free energy device a* to cause the local vacuum to form a river of potential VPF gradient, and then to develop devices and processes to "tap that VPF river" of energy. This directly converts virtual energy to observable energy. By definition, when one converts virtual energy to observable energy, the local spacetime is curved. Note that the present highly restricted general relativity theory *assumes* one cannot tap the local energy of vacuum, because it assumes that the local spacetime is always flat!

Another way to produce a so-called "free-energy" device is to utilize pumped four-wave mixing, where natural stresses are utilized to furnish the pump waves. Converting normal potentials to Whittaker-structured potentials, and increasing the potentials on the nuclei of targeted material with activated charge structures, produces hidden structured nuclear potential sources (activated atomic nuclei) which can be tapped for energy by several methods. The beauty of this approach is that *once the charge structures are created on the activated nuclei, the vacuum simply replenishes the extracted energy (coherence) as fast as it is withdrawn.* This in fact was the type of source that Frank Golden had created via a local quantum potential, to provide a local source for his open-system motor and yield an output to input ratio of 1.67 (see note 73).

Yet another way to build a "free-energy" device is to recycle disordered energy, created by doing work, back to ordered energy. This is simply recycling disorder back to order, by use of time reversal. That is, when coherence is processed and expended into incoherence, that is what *generates* the forward flow of time. (Actually, that is *identically* the forward flow of time.) So forward time automatically implies the passing of order into disorder (i.e., scattering of EM energy). But since that is so, the opposite kind of time — negative time, or time reversal — must represent the passing of disorder back to order. So to accomplish negentropy, one must manipulate negative time generation devices so that the previously produced incoherent EM energy is returned precisely backwards along its previous scattering path. A priori, that will reorder the scattered energy.

This is done by a two-phase system. One phase looks normal: ordered energy is scattered to do normal work, resulting in a cache of disordered energy. The disordered energy is collected and time-reversed (phase conjugated) by pumped four-wave mixing. This returns the scattered energy precisely backwards along its previous scattering path, reordering it. Thereafter the recycled energy is used (scattered) again, recycled (reordered), used (scattered) again, etc. *Note that this can actually be done,* since all the microparts of the energy — whether ordered as a system or disordered as heat — are *individually* ordered equilibria in the disordered flux of vacuum. Everything is constantly driven by the vacuum flux anyway, everything is in an open loop system. Therefore it is a matter of g*ating* energy that is already flowing as a flux, and hence in both manners; energy is both scattering (diverging from the particle to the vacuum, hence disordering) and reordering (converging from the vacuum back to the particle) constantly. *That is what the "virtual particle flux exchange of the vacuum with the charged particle" is already doing, all the time, with every charged particle, with fantastic power.* Electric charge — and its analogue, magnetic charge — are both tremendous dynamos. Electric charge and magnetism are already mighty engines, waiting for us to gate their energies to our needs. If we utilize our system as an open system and do vacuum structuring, we are in fact structuring (and gating) the virtual particle flux of vacuum. In other words, we are structuring massless charge — the potential itself. *We are then directly gating the vacuum's own engines.* It's just like putting a paddlewheel in a river, only the river we use is subtle, and so must be our paddlewheel.

Objections based on the second law of thermodynamics are usually raised. This law states that, *unavoidably,* in any operation in a closed system, if that operation does external work, you unavoidably reduce the order in the system. That, of course is true if and only if (1) the system is a closed system, and (2) time flow is forward or positive. Actually, the second law actually states only that *the flow of time is always positive.* A steady flow of time in a region means only that there exists a steady rate of scattering of EM energy in the region, a priori.

Note that we have violated both fundamental conditions required for the second law of thermodynamics to hold. Ergo, it should come as no distinct shock that we can readily violate the second law.

The second law presupposes *positive time flow only.* In positive time, the second law is the *law of entropy.* That is the law of disordering or scattering of EM energy. If we make a system produce some negative time, however, then we invoke the negative time aspect of the second law. In negative time flow, the second law is inversed, and it becomes then the *law of negentropy.* In a driven, open-loop macroscopic system, we may seemingly judiciously manipulate the virtual particle flux exchange to accomplish "free energy" and perpetual motion, *in the view of any observer who persists in regarding our macroscopic system as a closed system.*

So we can readily violate local conservation of energy, using amplified time-reversed (phase conjugated) EM energy operations. Whether or not we may be violating overall conservation of energy in the entire universe depends again upon an assumption that one must make. If we assume that the entire universe is closed and conservative, then we do not violate the overall conservation of the universe, but only violate it locally. If, on the other hand, we like the big bang theory and several other of the present very advanced cosmologies, then the vacuum merely pumped itself up to a vastly excited state and exploded, producing the present universe we live in. In that case, the universe is not closed, and it is not energy-conservative anyway. We leave it to the reader to take his or her choice in assumptions. In either case, we can violate the so-called conservation of energy *locally,* and run our motors and power our homes very cheaply indeed.

The amplification method is purely and simply standard, well-known four-wave mixing theory. What orthodox physicists have not realized is that the amplified phase conjugate replica produced by a true pumped phase conjugate mirror is already *negative energy.* As is already in the literature, the reflection/emission of a phase conjugate replica wave by the mirror *does not cause recoil of the mirror.* Pseudo-conjugation, which involves reflection/emission of an ordinary EM wave with a distorted wavefront, *does cause the mirror to recoil* This destroys the present assumption in physics that the antiphoton and the photon are identical. *The antiphoton doesn't cause recoil of the mirror, but the photon does.* So the reader may rest assured that there is something in what the present author is saying after all, and *present physics is just flat wrong in some of its assumptions.*

Understandably, it is very much counter to the interests of the control groups to have this kind of knowledge spread around widely. We are not supposed to discover that, using *open system engineering techniques,* vacuum structuring, and amplified time-reversed waves, technology really does permit a "free lunch" after all. Obviously, however, our academic community is only going to get grants to study closed system conservative energy processes, not open system nonconservative energy processes incorporating time-reversed wave techniques.

At any rate, the scalar EM transmitter, since it is working in both the positive and negative streams of time, is to be considered both a transmitter and a receiver. A "system" is to be considered that consists of the transmitter, the target/receiver, and two hidden bidirectional Whittaker-EM-wave energy currents between transmitter and target Depending upon the relative "grounding bias" vis a vis the transmitter, the receiver/target, and the local vacuum, one may cause "flow" of an excess of ordering from the transmitter to the receiver, or "flow" an excess of disordering from the transmitter to the receiver. Use of coupled scalar transmitters utilizes a two-stage flow process so that the effective flow of order/disorder is between a distant "dump site" and the desired "target site."

101. See Robert A. Fisher, Ed., *Optical Phase Conjugation,* Academic Press, New York, 1983 p. xv. On May 22,1972 two Soviet scientists — from the P.N. Lebedev Physical Institute in Moscow — visited Lawrence Livermore National Laboratory. There they mentioned Dr. B. Ya. Zel'dovich's observation of an extremely curious "distortion undoing" property of the stimulated Brillouin backscattering process in a CS2-fiIled waveguide. Very little reaction by American physicists occurred initially. During the next five years, however, the American reaction had slowly grown until U.S. scientists had become quite interested in phase conjugation and the time-reversed EM wave — at least in *optics.* To this day, very little U.S. work has gone into developing practical microwave phase conjugation devices, in spite of the portentous weapon implications of time-reversed microwave beam weapons. Today, however, at least *some* microwave work in the pumped phase conjugation area has finally started. Cf Session 2, Directed Energy Concepts, Proceedings, SPIE Vol. 1061, *Microwave and Particle Beam Sources and Directed Energy Concepts (1989),* Jan. 16-20,1989, Los Angeles, California.

102. Investigator Ken Moore has confirmed with the World War II German rocket team chief that the German radar team indeed encountered serious anomalies in their experiments.

103. For example, eventually the State Department placed ordinary aluminum window screens over the Embassy windows, etc. to act as Faraday shields. These screen shielded out some 90 per cent or so of the microwave *force field* component of the radiation, but essentially none of the standing Whittaker potential wave portion. This clearly showed the Soviets that we knew nothing of standing Whittaker potential waves, and the need for nonlinear absorber shielding rather than linear conductive/reflective shielding.

104. Two U.S. Ambassadors, Llewellyn Thompson (1953-1957) and Charles Bohlen (1957-1962,1967-1969), predecessors of Stoessel, later died of cancer. Stoessel suffered nausea and bleeding in his eyes while at the Embassy *(New York Times,* Feb. 26, 1976) and was transferred from Moscow in September 1976 because of a strange blood ailment, and reassigned as Ambassador to West Germany. He also died with a leukemia-like disease some yean later. Blood tests administered to personnel at the Moscow Embassy found that about one-third of the Embassy personnel had a higher than average number of lymphocytes in cell counts. Such elevated white corpuscle count — lymphocytosis — is evidence that the body is resisting some sort of disease-inducing agent. Such a reaction *could* occur in resistance to some sort of viral infectious agent, of course. However, *it would most certainly occur in resisting exposure to an EM cytopathogenic Kaznacheyev disease signal pattern in the Whittaker-structured potential.*

In 1959 during then Vice-President Nixon's visit to Moscow, fairly intense levels of microwave radiation were also detected at the U.S. Ambassador's Spasso House mansion in Moscow. Secret Service agent James Golden discovered the radiation of the Ambassador's residence. Nixon slept there and may have been irradiated for one night

before the Russians stopped the radiation. Nixon was scheduled to tour Soviet nuclear facilities, so the Secret Service team was well-equipped with dosimeters and radiation monitors. Interestingly, the radiation of the Ambassador's house was discovered with an *ionizing radiation detector* — a dosimeter. This is one of the few instruments that will detect standing scalar EM potential waves, since increase in the local potential and the addition of a Whittaker bidirectional EM substructure causes increased ionization of gases. Ionizing radiation detectors, such as nuclear dosimeters and Geiger counters, will detect such increased ionization of their internal gases. If the standing scalar potential wave is sufficient to cause ionization in these detectors, then the detectors will detect the Whittaker potential.

105. A. M. Lilienfeld et al, *Foreign Service Health Status Study...,* 1978.

106. Robert C Mallalieu, A *Model of the Microwave Intensity Distribution...,* 1980. See also *Microwave Radiation at the U.S. Embassy...,* Dept. of Commerce, 1981.

107. Y. Aharonov and D. Bohm, "Significance of Electromagnetic Potentials...," *Physical Review,* 1959.

108. Vlail P. Kaznacheyev and L.P. Mikhailova, *Ultraweak Radiations in Intercellular Interactions* [in Russian], Novosibirsk, 1981. See also previous notes regarding Kaznacheyev references.

109. N.D. Devyatkov, Ed., *Applications of Low-Intensity Millimeter Wave Radiation in Biology and Medicine* [in Russian], IRE Akad. Nauk. SSSR, Moscow, 1985.

110. Whittaker, 1903,1904.

111. By scalar interferometry, per Whittaker 1904; per Aharonov and Bohm, "Significance of electromagnetic potentials...", 1959.

112. Vlail P. Kaznacheyev and L.P. Mikhailova, *Ultraweak Radiations in Intercellular Interactions* [in Russian], Novosibirsk, 1981.

113. N.D. Devyatkov, Ed., *Applications of Low-Intensity Millimeter Wave Radiation in Biology and Medicine* [in Russian], IRE Akad. Nauk. SSSR, Moscow, 1985.

114. As was done in the Priore devices in France in the 1960s and 70s.

115. By subharmonic translation, the Kaznacheyev optical cytopathogenic signals emitted by cells dying of a particular disease can be translated into the microwave region, and a microwave pattern signature of that specific disease can be generated, in a manner similar to a carrierless radar of the ultra-wideband type. Then irradiating human targets, even many thousands of miles distant, with the specific microwave cytopathogenic pattern can induce the disease outright in the targeted population. Much weaker, continual radiation with the disease pattern will gradually condition the targeted biological systems for the specific disease, *gradually weakening their immune systems against that specific disease.* In this manner, a relatively harmless influenza, measles, or other disease can gradually be converted into a potent killer *in that targeted population.* In the mid-to-latter 1980's, the Soviets conducted precisely such immune-notching experiments against test mammals off the eastern coast of the U.S. — they targeted porpoises and lowered their immunity against a common organism normally infecting porpoises and simply making them a bit ill. In the test, hundreds and hundreds of porpoises died from the now-potent disease — not

because the disease organism had altered, but because their immune systems had been deliberated "notched" for greatly reduced immunity against that disease.

By time-reversing (phase conjugating) a Kaznacheycv cytopathogenic pattern for a specific disease, a specific electromagnetic antidote pattern can be generated. By irradiating a biological target with that antidote, that actual disease in the biosystem can be cured directly, by electromagnetic means. That is the actual treatment to which Devyatkov is referring, while concealing the role of internalized EM, phase conjugation, and the persistent structured scalar potential.

116. For an explanation of subharmonic oscillation, see "Nonlinear Forced Oscillations," in *Modem Mathematics for the Engineer,* Edwin F. Beckenbach, Ed., McGraw-Hill, New York, 1956, p. 18-20. Note that, in this graviton theory, gravitons are already linked spatially and harmonically/subharmonically. Subharmonic oscillation already exists; it does not have to be created.

117. Twin beams have often been detected in the radiation, fulfilling the requirements for Whittaker scalar EM interferometry. Just how long the Soviets have possessed this technology is evidenced by the fact that the microwave radiation induction of health problems and diseases in personnel in the U.S. Embassy in Moscow began in the mid-50s. The importance of the Embassy radiation, as an intelligence collection tool, is shown by the fact that the Soviets have pointedly continued the radiation even though several Presidents have protested and asked them to stop.

118. Standing Whittaker potential waves can easily penetrate the earth and the ocean, carrying their hidden bidirectional EM wave substructures with them. Therefore underwater and underground targets can be targeted with ease — as was the *U.S.S. Thresher* atomic submarine in April 1963 (see note 61 above). For example, drastic "on-site" or "near-site" testing of Woodpecker induction of disease would be helpful for calibration, realistic field exercise training, and analysis of results prior to actual EM attacks on human targets. For a possible massive Soviet long range EM BW test against dolphins off the East Coast of the U.S., see Joseph F. Sullivan, "Search widening for clues in puzzle of mounting dolphin deaths," *New York Times,* Aug. 9, 1987, p. 32; "Air search finds dolphin deaths are more common than suspected," *New York Times,* Aug. 13, 1987. See also Jean McNair, "Dolphins died of common sea bacterium; scientists baffled," AP release, *Huntsville (Alabama) News, Aug.* 19,1987, p. B-5; Julia Lawlor, "Key: Failure of mammals' defenses," *USA Today,* Jan. 19,1988, p. 1A-2A. One would also suspect that the Soviets have conducted other such tests around the globe.

119. For a probable similar Soviet long range EM BW test against seals in Europe, see David Dickson, "Canine distemper may be killing North Sea seals," *Science,* Vol. 241, Sep. 9, 1988, p. 1284.

120. Bearden, *AIDS; Biological Warfare.*

121. Bearden, *Fer-de-Lance.*

122. Bearden, "Soviet Phase Conjugate Weapons."

123. Bearden, *Soviet Weather Engineering Over North America.* See also "Strange Pressure Waves Crossed MidWest in 1990," *Watt Street Journal,* Jan. 15,1991.

124. Bearden, "Update on Scalar Electromagnetics: New Breakthroughs."

125. See Martin Ebon, *Psychic Warfare: Threat or Illusion?*, McGraw-Hill, New York, 1983, p. 1-11. On June 11, 1977 *Los Angeles Times* reporter Robert Toth met with a Soviet biophysicist, Valery G. Petukhov, and received a manuscript — a scientific paper — from him. On walking away with the paper, Toth was seized by Soviet agents and taken to a police station for interrogation, as was Petukov. A senior academician from the Soviet Academy of Sciences, Professor I.M. Mikhailov, examined the paper and stated that it contained state secrets. Specifically, Mikhailov said: *"The article beginning Petukhov, Valery G., from the words 'micro-organism self-radiation...' to the words'...by means of vacuum particles in space,' states that within the content of living cells are particles... and. these particles are grounds for discussing the fundamental problems of biology in the context of biology and parapsychology. There is also information about the uses of such particles. This material is secret and shows the land of work done in some scientific institutes of our state."*

After additional interrogation several days later, Toth signed a statement and was eventually released, as was Petukov.

Before the ill-fated meeting, Toth had previously met with Petukov, who was apparently Chief of the Laboratory of Bio-Physics at the State Control Institute of Medical and Biological Research. He informed Toth that he, Petukov, was working on a theory of parapsychology based on particles emitted from living cells. These particles could carry information and could explain the basis for parapsychology. In mid-June the Soviet biophysicist had telephoned Toth to tell him that his experiments had been successful, proving his theory. He wanted to give Toth a paper describing his work for publication in the West, because he knew the Soviet authorities would never let his paper be published. It was this 20-page paper that Petukov handed to Toth, triggering the seizure of both men by Soviet authorities.

From the above, one can almost certainly conclude that Petukov's particles that are "pieces of the vacuum medium" were gravitons, and the paper contained a theory of gravitobiology. From Mikhailov's statement, this information was considered a state secret. From our discussion of gravitons and their biological implications, Kaznacheyev's cytopathogenic effect, Devyatkov's information content of the field, and the long years of Soviet microwave radiation of the U.S. Embassy in Moscow, one can most certainly affirm that Petukov's experimental proof of his "particles" and his theory of them indeed duplicated highly classified Soviet EM BW weapons work.

The present author states emphatically that a scientific theory of parapsychological and paranormal phenomena can be formulated from the gravitobiology approach. Further, the formalized theory will be testable. Thus Petukov's information that he had actually experimented with his theory, and experimentally proven it, are consistent with gravitobiology.

126. T.E. Bearden, "Update on Scalar Electromagnetics: New Breakthroughs." The mechanism for generation of a quantum potential depends upon four-wave mixing effects inside the EM bidirectional wave structures of Whittaker potentials of atomic nuclei. A phase conjugate replica — including one that is amplified — is emitted from a pumped/stressed nucleus in response to a small scalar EM signal wave from another nucleus. That signal wave in turn may have been an amplified phase conjugate replica in response to yet another signal wave at another stressed/pumped nucleus.

In a dense signal environment, the probability for multiphoton interaction increases. But multiphoton interaction can easily constitute pumped four-wave mixing, if three waves

are involved (the fourth wave can be generated by the pumped mirror material, where two waves act as the pump wave and the third wave acts as a signal wave.) Thus in a dense signal environment, the probability of forming "pumping/stressing" of the nuclei increases as some function of the number of signals per second per unit volume, as does the probability of pumped four-wave mixing incidents. But notice that each amplified phase conjugate replica is not scattered, but returns precisely to the nucleus where the original signal wave was emitted. In other words, a laser-like coherence of exchange of energy between nuclei begins to occur as environmental signal density increases sufficiently. Note also that this is a *self-organizing and self-ordering behavior.*

The major communication between the nuclei, insofar as the input signal waves are concerned, is in the hidden EM bidirectional wave structure of the standing Whittaker potentials formed on each nucleus and extending out toward infinity, intersecting all the other nuclei in the region. The internal bidirectional EM waves are not limited to light speed, but may move much faster.

In this dense signal environment, then, increased self-ordering of the potentials in the Whittaker-communicating atomic nuclei begin to occur. An emission from one equipment or area is an input to all of the communicating, self-ordering nuclei. So in a variety of electronic equipments in a dense signal environment, gradual self-targeting by repetitive phase conjugation leads to coherent self-organizing of the nuclear potentials, and the formation of a quantum potential. In each equipment, "spurious" signals appear that are actually instantaneous inputs from other connected but distant electronic equipments.

Rigorously, a quantum potential has now begun to form among all the participating atomic nuclei. All participating electronic equipments begin to partially act as if they were all parts of a single equipment system, without spatial separation of the parts.

The precise physical mechanism by means of which the quantum potential is formed is an original discovery by the present author. Note particularly that formation of quantum potentials is subject to experimentation, using this approach and this mechanism.

For various papers treating the quantum potential (but without any notion of the actual mechanism that creates one), see *Quantum Implications; Essays in Honour of David Bohm,* Eds. B.J. Hiley and F. David Peat, Routledge & Kegan Paul, London & New York, 1987. Also, particularly see the various papers on this subject in *Quantum Concepts in Space and Time,* Eds. R. Penrose and C.J. Isham, Clarendon Press, Oxford, 1986. These two references are highly recommended.

127. See Mark Thompson, "Mixed signals may have misguided U.S. weapons," *The Washington Post,* Jan. 22,1989, p. A4, for a good description of the incident.

128. Though details are still sketchy, there also appears to have occurred the formation of a quantum potential during a large exercise in the MidEast several years ago. The exercise involved a large number of aircraft, radars, radios, etc.

129. See B.J. Hiley and F. David Peat, "General introduction: the development of David Bohm's ideas from the plasma to the implicate order," *Quantum Implications...,* ibid., p. 13. Quoting: *"...the quantum potential contains an instantaneous connection rather than the expected retarded connection. In some ways this is like a reintroduction of a land of action-at-a-distance, a feature that goes against the whole historical development of physics."* Also, particularly see the characteristics of a quantum potential, listed on p. 15. On p. 23, Hiley and Peat show that the quantum potential itself is determined by an

infolding-unfolding process. A more directly physical — and testable — model of this exact quantum potential formation process has been given by Bearden, as briefly sketched out in note 126 above.

For some nonlinear and nonlocal quantum mechanical implications upon certain general properties of spacetime events and processes, see Abner Shimony, "Events and processes in the quantum world," *Quantum Concepts in Space and Time,* R. Penrose, and CJ. Isham, Eds., Clarendon Press, Oxford, 1986, p. 182-203. Quoting from p. 186: *"...unless revolutionary evidence is presented in favour of changing the relativistic conception of space-time structure, an acceptable hidden variables theory must conform to this structure."* Quoting again (p. 192): *"...local hidden variable theories may be possible only if relativity theory is replaced by a radically different theory of space-time structure."* Note that the present photon-coupled averaged graviton theory of the structure of space-time is just such a "radically different theory" as is required. Particularly see Yakir Aharonov, "Nonlocal phenomena and the Aharonov-Bohm effect," ibid., p. 41-56 for a discussion of modular variables and the capability to violate normal conservation laws of nature.

130. Particularly see Y. Aharonov and D. Bohm, "Significance of Electromagnetic Potentials in the Quantum Theory," *Physical Review,* Series 2,115(3), Aug. 1,1959, p. 485-491. See also S. Olariu and I. Iovitzu Popescu, "The quantum effects of electromagnetic flaxes," *Reviews of Modem Physics* 57(2), April 1985 for an extensive list of references on the AB effect.

131. Particularly see Lee Smolin, "Stochastic mechanics, hidden variables, and gravity," *Quantum Concepts in Space and Time,* ibid., p. 147-173 for a discussion of (1) some hidden variable possibilities in quantum mechanics, (2) (p. 165) the fact that Bell's theorem seems to indicate the possibility that nonlocal correlations may be found between any pair of systems which have previously interacted, and (3) (p. 166) the possibility that nonlocal variables might even dominate the energetics of a QP-connected system and swamp the local physics completely.

132. In Maxwell's original quaternion EM theory, the scalar component captured the internal, infolded stress energy when EM force fields interacted to produce zero force field resultants. In the vacuum, this infolded EM structure formed a local scalar potential and structured the local vacuum, curving local spacetime in the process. By discarding the scalar component of the quaternion, Heaviside threw this structured potential out of classical electromagnetic theory. This in turn threw out correlated "action at a distance" from EM theory. In appropriating Gibb's thermodynamics statistics for quantum change, quantum mechanics was constructed with a similar omission of hidden EM order (chaos), even though it statistically retained the necessity for action at a distance. See again note 52. Indeed, Heaviside's vector curtailment of Maxwell's quaternion theory can be experimentally shown to be in error, and a modification of Weber's action at a distance theory shown to be consistent with those experiments. For a discussion of the limitations of the Heaviside theory (so-called "Maxwell's theory"), see J.P. Wesley, "Weber Electrodynamics, Part I: General Theory, Steady Currents"; "Weber Electrodynamics, Part II: Unipolar Induction, Z-Antenna", *Foundations of Physics Letters,* 3(5), 1990, p. 443-490. Part III (to be published) will deal with the impact of Weber electrodynamics on mechanics and gravitation.

133. Again see note 52. By overstating his assumption that local spacetime was flat, Einstein excluded the internal, infolded EM structure of stressed spacetime, thus excluding EM from unification with general relativity. The single feature that could have unified electromagnetics, quantum mechanics, and general relativity was hidden, infolded EM

energy of spacetime. Ironically, each of the three disciplines eliminated this feature, either at its formation or shortly thereafter by retranslation.

134. T.E. Bearden, *Soviet Weather Engineering Over North America,* 1-hr, videotape, 1985.

135. T.E. Bearden, "USSR: New beam energy possible?", *Defense & Foreign Affairs Daily,* 13(111), June 12,1984, p. 1-2.

136. For example photographs and artists illustrations, see Bearden, *Soviet Weather Engineering Over North America,* 1985. For a spectacular example of the rapid formation of three giant radial clouds over Los Angeles on Jan. 26, 1986, see Bearden, *Fer-de-Lance,* p. 168-169. Margaret Wilson observed these three sharp, distinct giant radial clouds form one after the other, at 10-minute intervals. These sharp cloud signatures were associated with Soviet bending of the jet stream sharply southward at Los Angeles, then steering the jet stream eastward across the U.S. far to the south of its normal path. The Soviet purpose was to bring cold arctic air down upon the Florida Panhandle, exposing the waiting shuttle at Cape Canaveral to abnormally cold temperature stress, and this was successfully accomplished. The shuttle, of course, was the ill-fated *Challenger,* which two days later was destroyed by the Soviet Union shortly after launch, on Jan. 28, 1986. For a discussion of the many positive indicators that the Soviets destroyed the shuttle, see Bearden, *AIDS: Biological Warfare,* 1988 and *Fer-de-Lance,* 1986.

Indeed, the Soviet KGB gave a party at their Moscow headquarters on the evening of the day that the shuttle was destroyed. *The stated purpose of the party was to celebrate the success of their active measures against the Challenger!*

137. E.T. Whittaker, "On the partial differential equations of mathematical physics," *Mathematische Annalen,* vol. 57,1903, p. 333-355. See also Note 13 above.

138. D. Bohm, *Phys. Rev. 85,* 1952, p. 166,180.

139. E.T. Whittaker, "On an expression of the electromagnetic field due to electrons by means of two scalar potential functions," *Proc. Lond. Math. Soc,* Series 2, Vol. 1, 1904, p. 367-372. See also note 13 above.

140. Y. Aharonov and D. Bohm, "Significance of Electromagnetic Potentials in the Quantum Theory," *Physical Review,* Second Series, 115(3), Aug. 1,1959, p. 485-491.

141. In fact, in his 1904 paper Whittaker shows that *all* classical force field electromagnetics can be replaced by scalar EM potentials and their interferometry. Specifically, any EM force Geld can be replaced by two scalar potential fields. Per Whitney, a completely accurate replacement may require four scalar potential fields rather than two. (Cynthia Whitney, private communication, 1990).

142. Richard W. Ziolkowski, "Localized transmission of wave energy," *Proc. SPIE* Vol 1061, *Microwave and Particle Beam Sources and Directed Energy Concepts,* Jan. 1989, p. 396, 397. For a mention of this same bidirectional EM wave Whittaker structure in the potential connected with the Schroedinger wave, see Ignatovich (reference 16, above.).

143. Thus they have not realized the profound importance of the Whittaker work, or that Whittaker wrote the basis for an *engineerable* unified field theory of electromagnetics and gravitation that has been extended and drastically weaponized by the Soviet Union.

144. The two previous ambassadors who died of leukemia-like diseases probably induced by the Soviet microwave radiation of the Embassy were Llewellyn Thompson and Charles Bohlen.

145. Walter Stoessel Jr. died of leukemia in Dec. 1986 at the age of *66.* He served three tours in Moscow: 1947-49 as a second secretary, 1963-65 as minister-counselor, and 1974-76 as U.S. Ambassador to the Soviet Union. His latter tour as Ambassador to the USSR was cut short by reassignment to another post in 1976 because he had developed a leukemia-like illness.

146. See note 33 above.

147. See note 34 above.

148. The necessity for persistence of the structured potential in induction of diseases is that one must *charge up* or *activate* the potentials of the atomic nuclei in the targeted human cells with a consistent Whittaker bidirectional EM substructure. This charge-up can be a time-consuming process, particularly when fairly weak signals are involved. By holding a persistent potential value, the infolded deterministic Kaznacheyev/Devyatkov disease structure acts much like a "constant voltage charger" applied to a "capacitor" to charge it up — only, in this case, the infolded EM substructure is slowly charging-up the nuclear potentials of the atomic nuclei with the desired Whittaker infolded structure.

149. Executive Intelligence Review Special Report, Walter J. Hamerman et al, *An Emergency War Plan to Fight AIDS and Other Pandemics,* Feb. 15,1986, p. 86.

150. Ergo Brezhnev's characterization of weapons of this nature as *"more frightful than the mind of man has ever imagined."* Khrushchev in 1960 stated that these weapons were so powerful that, if unrestrainedly used, they could wipe out all life on earth.

151. See note 24 above. For a complete resume of the Priore Affair, see Jean-Michel Graille, *Le Dossier Priore,* De Noel, Paris, 1984 (in French). See also Christopher Bird, "The Case of Antoine Priore and His Therapeutic Machine: A Scandal in the Politics of Science," in Bearden, *AIDS: Biological Warfare,* Tesla Book Co., 1988, p. 346-375.

152. For additional information on the Priore affair, see David M. Rorvik, "Do the French have a Cure for Cancer?", *Esquire* Magazine, July 1975, p. 110-111, 142-149. See also J.B. Bateman, "A Biologically Active Combination of Modulated Magnetic and Microwave Fields: The Priore Machine," Office of Naval Research, London Report R-5-78, Aug. 1978. See also J.B. Bateman, "Microwave Magic," Office of Naval Research London Conference Report, ONRL C-14-77,1977.

153. See also A. Priore, "Method of Producing Radiations for Penetrating Living Cells," U.S. Patent No. 3,280,816, Oct. 25,1966.

154. For a development of this startling thesis vis a vis the AIDS crisis, see T.E. Bearden, *AIDS: Biological Warfare,* Tesla Book Co., 1988. See also EIR Special Report, Warren J. Hamerman et al, *An Emergency War Plan to Fight AIDS and Other Pandemics,* Feb. 15, 1986.

155. Simultaneously phaselocking of 10 Hz pulses on multiple Woodpecker channels was previously mentioned in Bearden, *The Excalibur Briefing,* 1st Edn., Strawberry Hill Press, San Francisco, 1980, p. 258-260.

156. Robert C. Beck, "Extreme Low Frequency Magnetic Fields and EEG Entrapment, A Psychotronic Warfare Capability?", Bio-Medical Research Associates, Los Angeles, Mar. 1978.

157. S.K. Lisitsyn, "New Approach to the Analysis of Electroencephalograms," *Problems of Bionics (Selected Articles),* p. 16-25, Defense Documentation Center Report AD 730045.

158. V.K. Ignatovich, "The remarkable capabilities of recursive relations," *American Journal of Physics,* 57(10), Oct. 1989, p. 873-878.

159. Ibid. Unfortunately Ignatovich apparently knew nothing of Whittaker's expression of this over eight decades earlier, and he does not reference Whittaker's work.

160. I am informed that the American researcher G. Wilbanks has successfully duplicated the Kaznacheyev experiments.

161. Again see "Nonlinear Forced Oscillations," in *Modem Mathematics for the Engineer,* Edwin F. Beckenbach, Ed., McGraw-Hill, New York, 1956, p. 18-20.

162. R. Courrier, 1977. "Expose de M. le Professeur R. Courrier secretaire perpetuel de l'Academie des Sciences fait au cour d'une reunion a l'lnstitut sur les effects de la machine de M.A. Priore le 26 Avril 1977." (in French).

163. M.R. Riviere, A. Priore, F. Berlureau, M. Fournier and M. Guerin, "Phenomenes de regression observes sur les greffes d'un lymphosarcome chez des souris exposees a des champs electromagnetiques," [Phenomenon of regression observed on the graftings of a lymphosarcome in mice exposed to electromagnetic fields], *Compt. Rend. Acad. Sci.* (Paris), 1965, vol. 260, p. 2099-2102 [in French].

164. R. Pautrizel, M.R. Riviere, A Priore, and F. Berlureau, "Influence d'ondes electromagnetiques et de champs magnetiques associes sur l'immunite de la souris infestee par Trypanosoma equiperdum," [Influence of electromagnetic waves and associated magnetic fields on the immunity of the mouse infected with the Trypanosoma equiperdum], *Compt Rend. Acad. ScL* (Paris), 1966, Vol. 263, p. 579-582 [in French].

165. R. Pautrizel, A. Priore, AN. Pautrizel and P. Chateau-Reynaud-Duprat, "Guerison de la trypanosomiase experimentale par l'association de champs magnetiques et d'ondes electromagnetiques: une stimulation des defenses de l'organisme," [Cure of the trypanosomias by associated magnetic fields and electromagnetic waves: a stimulation of the organism's defenses], Communication presented to the *Journees Nationales Microondes — Colloque Hertzienne et Dielectriques,* Lille 26-29 juin 1979, p. 31.

166. See Richard Kidd et al, "Evolution of the modern photon," *American Journal of Physics,* 57(1), Jan. 1989, p. 27-35.

167. Our detectors measure on the time-forward photon half, not the time-reversed photon (antiphoton) half. The antiphoton half produces a slight recoil force (Newton's third law reaction force) in our instruments, which we totally ignore.

168. For confirmation that the Heaviside equations — which presently are erroneously called "Maxwell's equations" — are not to be found anywhere in *any* of Maxwell's books and papers, see H.J. Josephs, "The Heaviside papers found at Paignton in 1957," *Electromagnetic Theory by Oliver Heaviside,* including an account of Heaviside's

unpublished notes for a fourth volume, and with a foreword by Sir Edmund Whittaker, Vol. m, Third Edition, Chelsea Publishing Co., New York, 1971, p. 647. See also Sir Edmund Whittaker, "Oliver Heaviside," *Bulletin of the Calcutta Mathematical Society,* Vol. 20,1928-29, p. 202. See also Paul J. Nahin, Oliver Heaviside: *Sage in Solitude,* IEEE Press, New York, 1988, p. 9, note 3.

Also, it is little known that, in his later years, Heaviside may again have turned to quaternion operations, and even developed a "unified" theory of electromagnetics and gravity. These papers were never published, but were reported found in 1957 (some electrical scientists, however, continue to dispute the authenticity of the papers, which were found under some floorboards in the apartment where Heaviside lived alone until his death). Little or no adequate review of this unified theory has been made, though several writers have waxed eloquent and expressed judgements pro and con as to the theory's authenticity, its promise, or its alleged uselessness.

169. Henry C. Monteith, "Dynamic Gravity and Electromagnetics Processes, Part *I," Journal of the U.S. Psychotronics Association,* 1(2), 1988 (presented July 1987).

170. Henry C. Monteith, Dynamic Gravity and Electromagnetics Processes, Part II," July 1988. Also, in July 1989 Monteith presented two other fundamental papers in this area to the Annual USPA Symposium in Sacramento, California.

171. Henry C. Monteith, "Visualization and Duality in Mathematical Physics," Apr. 15,1986.

TABLE OF CONTENTS (CONCLUDED)

NOTES AND REFERENCES

ANNEX A: INTERVIEW WITH TOM BEARDEN

ANNEX B: WHITTAKER PAPER 1903

ANNEX C: WHITTAKER PAPER 1904

ANNEX D: POSSIBLE WHITTAKER UNIFICATION OF ELECTROMAGNETICS, GENERAL RELATIVITY, AND QUANTUM MECHANICS

POSSIBLE WHITTAKER UNIFICATION OF ELECTROMAGNETICS, GENERAL RELATIVITY, **AND** QUANTUM MECHANICS

PART I: BACKGROUND

T.E, Bearden
Association of Distinguished American Scientists
2311 Big Cove Road
Huntsville, Alabama 35801

ABSTRACT

Unrecognized for what it was, in 1903-1904 E.T. Whittaker (W) published a fundamental, engineerable theory of electrogravitation (EG) in two profound papers. The first (W-1903) demonstrated a hidden bidirectional EM wave structure in the scalar potential of vacuum, and showed how to produce a standing scalar EM potential wave ~ the same wave discovered experimentally four years earlier by Nikola Tesla. W-1903 is a hidden variable theory that shows how to deterministically curve the local and/or distant spacetime using EM. W-1904 shows that all force field EM can be replaced by interferometry of two scalar potentials, anticipating the Aharonov-Bohm effect by 55 years and extending it to the engineerable macroscopic world. W-1903 shows how to turn EM into G-potential, curve local and/or distant spacetime, and directly engineer the virtual particle flux of vacuum. W-1904 shows how to turn G-potential and curvature of spacetime back into force-field EM, even at a distance. The papers implement Sahkarov's 1968 statement that gravitation is not a fundamental field of nature, but a conglomerate of other fields. Separately applied to electromagnetics (EM), quantum mechanics (QM), and general relativity (GR), an extended superset of each results. The three supersets are Whittaker-unified, so that a testable, engineerable, unified field theory is generated. EM, QM, and GR each contained a fundamental error that blocked unification, and these three errors are explained. The Schroedinger potential can also be structured and altered, indicating the direct engineering of physical quantum change. Recently Ignatovich has pointed out this hidden bi-directional EM wave structure in the Schroedinger potential, without referencing Whittaker's 1903 discovery of the basic effect Coupling of photon/antiphoton pairs into spin-2 gravitons, and decoupling of gravitons to yield paired photons, follows and extends photobiology. An engineerable, hidden-variable theory of the operation of mind, personality, and memory can be constructed and tested. Some of the profound implications for all of physics and biology are pointed out

Electromagnetics Theory Has Foundations Difficulties

There exists today a small but growing number of serious scientists who have become aware that the presently accepted electromagnetic theory is seriously flawed. Shortcomings in the theory are readily cited.

For example, in railgun experiments the Lorentz force law has been falsified. It was always an approximation, and does not adequately approximate at high energies.[1]

Also completely contrary to orthodox EM theory, the EM force fields are not primary agents at all, but are effects produced in and on the physical system by the potentials. As an example, we cite the Aharonov-Bohm effect, which proves that, even in the total absence of the force fields,

the potentials remain and can interfere at a distance to produce real effects in charged particle systems.[2] Finally the AB effect has been proven to the satisfaction of all but the most diehard skeptics.[3] However, its fundamental impact on the basic notions underlying classical EM theory continues to be resisted by all but a handful of scientists.

These present shortcomings were not present in the original *quaternion* EM theory by James Clerk Maxwell.[4] Indeed, the original Maxwell theory contains many things that were mistakenly eliminated from the abbreviated *vector* theory that was formulated by Heaviside and Gibbs, and finally adopted.[5] Further, these things that do not exist in conventional EM theory, but that exist in Maxwell's actual quaternion theory, can be used in specially designed equipment, and the operation of that equipment will be inexplicable by present-day electromagnetic theory. This can be even further explained and developed experimentally according to Whittaker's fundamental approach.[6]

In a direct sense, Whittaker showed how to engineer the structured scalar potential, to build vacuum engines with hidden electromagnetic wave structures that are still unsuspected today. Much of the content of the Aharonov/Bohm paper was anticipated - and extended in an engineerable, testable manner -- by Whittaker in 1903 and 1904.

In 1903 Whittaker showed that a standing scalar potential wave can be decomposed into a special set of bidirectional EM waves that convolute into a standing scalar potential wave. As a corollary, then, a set of bidirectional EM waves -- stress waves -- can be constructed to form a standing scalar potential wave in space. Since all potentials represent trapped energy density of vacuum, they are gravitational in nature.[7] The standing Whittaker scalar potential wave represents a standing wave of variation in the local curvature of vacuum, sharply in contradiction of the assumptions of present electromagnetics and general relativity.[8]

The very next year, Whittaker's second paper (cited above) showed how to turn such G-potential wave energy back into EM energy, even at a distance, by scalar potential interferometry, anticipating and greatly expanding the Aharonov-Bohm effect. Indeed, Whittaker's second paper shows that the entire present force-field electromagnetics can be directly replaced with scalar potential interferometry.

This is even more striking when one realizes that potentials pervade through the electron shells of an atom, directly reaching the nucleus and centering on it. *External* changes (gradients; force fields) of the potentials interact primarily with the electron shells of the atom. The primary interaction between the infolded, *internalized* EM bidirectional wave structure of a Whittaker potential is with atomic nuclei, rather than the atom's electron shells, because in the standing Whittaker potential wave the magnitude of the external potential is not changing. For the First time, then, the Whittaker methodology allows the direct engineering and structuring of the nuclear potentials themselves, even with miniscule EM power, which is a new capability of striking importance and application. As just one example, the binding energy of an atomic nucleus is directly accessible and - theoretically -- engineerable.

Recently Ignatovich has pointed out the hidden bi-directional EM wave structure in the Schroedinger potential, without referencing Whittaker's 1903 discovery of the basic effect.[9] Also, recently modern researchers, working on acoustic missiles and with the scalar acoustic wave equation, have "rediscovered" Whittaker's 1903 infolded bidirectional planar waves inside the scalar wave.[10] They do not appear to have yet recognized its relevance to their work in *electromagnetic* missiles.[11]

Whittaker's paper takes on a significant new meaning, however, in light of Sakharov's 1968 hypothesis that gravitation is not a primary Geld of nature, but is produced as a result of interactions of other fields.

Sakharov's Hypothesis and Stochastic Electrodynamics

Recently new developments in stochastic electrodynamics (SED) have shown that many fundamental parts of physics are "already unified" in terms of electromagnetics and gravitation. SED experienced almost explosive activity and development following Sakharov's 1968 hypothesis that the gravitational field may not be a primary field of nature, but a secondary or residual effect associated with other nongravitational fields.[12] Actually, general relativity has always focused on energy as the thing which really has gravitation. Trapped energy, such as mass, is particularly important. But since mass is essentially trapped EM energy, relativity has essentially assumed Sakharov's hypothesis anyway, without stating it so explicitly. Further, it considers "the" gravitational potential as a conglomerate of other things.[13]

Starting from Sakharov's postulate, to the first order gravitation should be due to some aspect of the EM field, since EM is the strongest force normally encountered in the macroscopic world experimentally. Thus Sakharov focused attention upon the zero-point EM energy fluctuations (ZPF) of vacuum. Sakharov conjectured that the Lagrange function of the G-field is generated by vacuum polarization, due to fermions.[14] Akama et al examined the potential generation of gravity as a collective excitation of fermion-antifermion pairs.[15] Haxlacher and Mottolo proved that spacetime (ST) curvature can arise from the quantum fluctuations of pure gauge fields.[16] Zee showed that gravity is generated as a symmetry-breaking effect in quantum field theory in which a dynamical scale-invariance breaking is postulated to take place at energies near the Planck mass.[17] Amati, Veneziano and Yoshimoto showed that in pregeometric models the Einstein action and metric may be generated from quantum fluctuations of matter fields.[18] A review of the exploding field was given by Adler,[19] with particular emphasis on the case of renormalizable field theories with dynamical scale-invariance breaking, in which the induced gravitational effective action is finite and calculable.

Recently the well-known physicist, H.E. Puthoff of the Institute of Advanced Study at Austin, has applied the SED approach to significantly advance the stochastic electrodynamics field. He has successfully explained why the atom's orbital electrons do not decay into the nucleus, even though by conventional EM theory each electron must constantly radiate EM energy, since it is constantly accelerated.[20] He has also shown that gravitation can indeed be regarded as an induced effect associated with zero-point EM fluctuations of the vacuum.[21]

Finally, Puthoff has shown a feedback-derivation of the source of the vacuum EM zero-point energy fluctuations from quantum fluctuation motion of particles driven by the ZPE.[22] Thus quantum fluctuation motion of particles and vacuum ZPE fluctuations are connected by a causal, self-regenerating cosmological feedback cycle.

There are several important conclusions to be taken from the important SED work since Sakharov's seminal suggestion, as follows: (1) In stochastic electrodynamics, very solid theoretical foundation exists for electrogravitation. (2) The vacuum EM ZPF may be regarded as causally connected to quantum mechanical particle jitter (Zitterbewegung motion) and vice versa, though the feedback mechanism into the virtual particle flux of vacuum is normally hidden by the large-scale integration represented by any macroscopic object or process. (3) The SED theoretical demonstration of this hidden mechanism adds new emphasis on the rather neglected hidden variable theories. (4) In some fashion, statistical quantum change is chaotic rather than random, *for it has already been shown by Puthoff that the vacuum ZPF fluctuations driving everything are totally deterministic.* It follows that, theoretically, hidden order already exists in quantum change, and quantum change must be *already chaotic.* Thus one can state that quantum change can at least partially be deterministically ordered, affected, and manipulated, *because it already is.* (5) It follows that there may well exist engineerable mechanisms that can affect or manipulate quantum change.

What Whittaker has described in his 1903 paper is a *standing electrogravitational wave* -- a standing wave in the local curvature of spacetime itself - that can readily be constructed experimentally. This Whittaker standing potential wave is precisely the new form of standing EM wave that NikoLa Tesla had experimentally discovered being radiated from a thunderstorm four years earlier, on the night of July 3-4, 1899, and which he recorded in his Colorado Springs Notebook on the morning of July 4, 1899.[23] Further, Whittaker's paper directly implies that the hidden variable determinism shown by Puthoff to be driving the zero-point EM fluctuations can also be engineered, both locally and at a distance.

In short, Whittaker's 1903 paper shows how to turn electromagnetics into gravitational potential. Unknowingly, Whittaker already showed the correct engineering way to unify EM and G fields, and already falsified one of Einstein's later primary GR assumptions -- that the local spacetime is never curved — in a testable manner, over a decade before Einstein published his theory of general relativity.

In the very next year, 1904, Whittaker's second paper (orally presented in 1903) was published.[24] In this little-noticed paper Whittaker shows that *all* classical force field electromagnetics can be replaced by scalar EM potentials and their interferometry. Specifically, any EM force field can be replaced by two scalar potential fields and scalar interferometry. The combination of this paper and the 1903 *Mathematische Annalen* paper not only includes the Aharonov-Bohm effect, but specifies a testable method for producing a macroscopic Aharanov-Bohm effect, even at large distances.[25]

Present Electromagnetic Theory is Incomplete

As stated above, Maxwell's original EM theory was written in quaternions, which were an extension to the complex number theory and an independent system of mathematics. In short, since the quaternion is a hypernumber, Maxwell's theory was a *hyperspatial* theory — not just the limited three-dimensional subset that was extracted and expressed by Heaviside and Gibbs in terms of an abbreviated, incomplete vector mathematics.[26]

Oliver Heaviside was a brilliant, self-taught genius who never formally attained a university degree, and whose papers were printed in technical magazines rather than scientific journals. When Maxwell published his *Treatise* in 1873, Heaviside was just teaching himself differential equations. Heaviside's imagination was completely seized by Maxwell's book, and Maxwell forever became his hero. However, he had great difficulty with quaternions and could not completely understand them.

A severely puzzled Heaviside abhorred the quaternion, since it linked together a scalar component and a vector component — or "apples and oranges," in his view. He excised the scalar component of the quaternion and excluded the hyperspatial characteristics of the directional components of the quaternion - producing his much more limited vectors. To unite magnetics and electromagnetics, the simplest complex aspect of the quaternion had to be restored by resorting to ordinary imaginary numbers. These machinations to the quaternion theory, however, discarded its unified field theory aspects. In short, Heaviside produced a very practical, highly restricted subset that was far easier to engineer -- but he threw out electrogravitation in the process. Further, Heaviside hated the potential because he did not truly understand it. He stated that it was *"...mystical and should be murdered from the theory."* He conditioned generations of physicists and engineers to erroneously believe that the potential was just a mathematical convenience, and had no actual physical realization. Indeed, most electrical physicists and electrical engineers are still of that erroneous persuasion today, even though the

Aharonov-Bohm work has long-since falsified such a position, both theoretically and experimentally.

The present author has previously pointed out that Maxwell's quaternion theory was in fact a unified theory of electromagnetics and gravitation, and that the scalar component of the quaternion was the electrogravitational part.[27] That part was discarded by Heaviside and Gibbs, and so electrogravitation no longer appears in the electromagnetics that resulted from Heaviside's and Gibbs' surgery on Maxwell's quaternion theory.

Electrogravitation Was Also Excluded From General Relativity

The electrogravitational effect was also erroneously excluded from Einsteinian general relativity (GR). Einstein unwittingly narrowed his general relativity to only a subset of an unrestricted general relativity of curved spacetime. This GR error was an indirect result of the fundamental Heaviside/Gibbs omission error in classical electromagnetics.

Unfortunately, Einstein's view of electromagnetics approximated the classical Heaviside/Gibbs view. In classical EM theory, the electrical potentials - which actually were electrogravitational potentials - were already discarded as having no physical significance, and EM was considered mutually exclusive to G. Therefore, Einstein only considered the weak gravitational force due to the attraction of mass, in developing his general relativity theory of curved spacetime. The G-force is far weaker than the E-force; for two electrons, for example, the attractive G-force between them is on the order of only 10^{-42} times as strong as their electrical E-force repulsion. Thus the G-force is incredibly smaller than the EM force. If only the weak G-force is considered for curving spacetime, then there will never be an *observable* curvature except in the immediate vicinity of a very large mass — such as on the surface of the sun or near a star.

Einstein reasoned that the laboratory and the observer/scientist/instrument would never be on the surface of the sun or near a star. Therefore, the local spacetime -- where the lab and the scientist/observer and his instruments are ~ would never be observably curved. The local spacetime of the observer would always be flat. Unfortunately Einstein overgeneralized his thought examination, and he stated one of his fundamental postulates of general relativity as *"The local spacetime is always flat."* This is an erroneous overstatement. The postulate should be more correctly stated as follows: *"The local spacetime is always flat, whenever only the weak gravitational force is used for the agent of curvature, and the observer is not near a large collection of mass, such as a star."*

The two statements of the postulate differ fundamentally. Einstein's overstatement of the postulate does not allow the far stronger EM force to be used for curvature; *in effect, his own postulate excluded electromagnetics from curvature unity with gravitation, in his own general relativity theory.*[28] On the other hand, the corrected statement of the postulate admits the following corollary: *"When a very strong force such as the electromagnetic force is used for the agent of curvature, the local spacetime may be curved, even though the observer is not near a large collection of mass, such as a star."*[29]

Unfortunately, Einstein's modern followers have raised Einstein's theory to a dogma,[30] and have vigorously enforced his overstatement of the locally flat spacetime. In so doing, general relativity has been erroneously reduced to a theory that is basically not experimental: *A priori, if the local spacetime is flat, then there is no local experiment or local apparatus that involves or yields a curved local spacetime.*

The Restricting of Quantum Mechanics

Today, quantum mechanics is our most successful physics theory. Its predictions - even the eery prediction of action at a distance - have been proven time and time again. However, quantum mechanics theory is known to have a formidable and serious difficulty: Try as they will, quantum physicists cannot find chaos in the theory. The theory is known to be wrong unless it possesses chaos (hidden order inside its statistics), yet the best efforts of quantum physicists have failed to find it.[31]

Again, any mathematical discipline is totally implied by its foundations postulates, and that is true of quantum mechanics. If the best efforts of the ablest physicists of the day cannot find chaos in the present QM, then one may suspect that the present QM does not contain chaos (hidden order). If that is true, then some present postulate - either explicit or implicit - of QM must exclude hidden order in quantum change. If so, the "real" QM needed is a superset that has at least two subsets: one (the missing) subset includes chaos, while the present subset excludes chaos. Our line of reasoning leads us to suspect that one or more of the postulates of the present QM theory is in error or overly restrictive, and must be changed to allow the missing chaotic subset.

Indeed, we may resolve this formidable QM problem quite simply by examining the *statistics* utilized by quantum mechanics. When QM was being formulated, scientists simply appropriated and included the thermodynamic statistics of Williard Gibbs (the same Gibbs who, together "with Heaviside, was responsible for the highly restricted vector subset of Maxwell's theory of electromagnetics.). Gibbs' statistics was totally based on the notion of the random variable. That is, the change (value assumed by the variable in a specific instance) is not only totally statistical, it is also *totally random.* Quantum physicists assumed a postulate of QM as follows: *quantum change is totally statistical* However, because of the Gibbs statistics, in their application of the theory they *interpreted* that postulate in a much stronger fashion, as if it had been stated thusly: *Quantum change is totally statistical and randomized.* The actual postulate and the presently applied interpretation of it are in fact two quite different statements, and the interpretation is far more restrictive than actually implied by the postulate itself.

Further, the strong interpretation can readily be falsified. As an example, the macroscopic universe is simply a large integration (collection) of quantum changes. If these component quanta occur totally randomly, then no integration of them would yield the ordered, macroscopic world we all live in, because integrated randomness is still random. Therefore, since the ordered macroworld exists, the present QM strong interpretation of its own statistical quantum change postulate is invalid.

Also, if quantum change were totally random, then there would never be any possibility, *a priori,* of engineering it deterministically. On the other hand, if hidden order is admitted, there is at least *the possibility* of directly engineering physical quantum change itself.

Interestingly, the renowned physicist David Bohm has shown that a hidden variable theory of quantum mechanics can actually be constructed, whereby one could potentially engineer physical change.[32] It is well-known that experimental physics does not in any manner refute hidden variable theories. Because of the historical attachment of physics to the theory of the random variable, such contrary notions as chaos (hidden order) and hidden variables have simply been shuffled aside. The usual objection is Occam's razor; a theory must predict something different, or it is said to be unwarranted.[33] The Whittaker hidden variable approach certainly predicts many profoundly different engineerable effects and capabilities that mandate its full examination.

A much better, more valid interpretation of the quantum change postulate is as follows: *Quantum change is statistical, and may contain hidden order.*

The two interpretations differ sharply. In the new and less restrictive reinterpretation, one has two cases or subsets of QM as follows: (1) the subset where quantum change contains partial order, hence is *already chaotic*, and (2) the special subset where the internal order has vanished, leaving the statistics as Gibbs' random variable statistics, and exhibiting the present quantum mechanics without chaos. The first subset also has a special subset, where the statistics is totally deterministic, but information on the variables is lost.

The new interpretation is consistent with Bohm's hidden variable theory, and it is also consistent with the Schroedinger equation, which in the QM model already propagates the QM states forward in time with absolute determinism. It is not consistent with the Copenhagen interpretation, which only applies to the present QM subset. This can be seen as follows: If quantum change is engineerable by Whittaker hidden variables, then the inner contents of the engineered quantum change are known. This knowledge applies to the subset where QM change is engineered (the new subset), but not to the subset where all variables are random variables and hence not subject to engineering. Therefore the Copenhagen interpretation applies to the random quantum change subset, but not to chaotic (partially ordered) quantum change subset.

Happily, the reinterpretation of the postulate now allows a sufficient collection of the already-chaotic quantum change to produce the well-ordered, macroscopic universe we all live in. Also, the new interpretation is testable, and it can be falsified or verified in the laboratory.

The End Result of Abbreviating Maxwell's Theory

In discarding the scalar component of the quaternion, Heaviside and Gibbs unwittingly discarded the unified EM/G portion of Maxwell's theory that arises when the translational/directional components of two interacting quaternions reduce to zero, but the scalar resultant remains and *infolds* a deterministic, dynamic structure that is a function of oppositive directional/translational components. In the infolding of EM energy inside a scalar potential, a *structured* scalar potential results, almost precisely as later shown by Whittaker but unnoticed by the scientific community. The simple vector equations produced by Heaviside and Gibbs captured only that subset of Maxwell's theory where EM and gravitation are mutually exclusive. In that subset, electromagnetic circuits and equipment will not ever, and *cannot* ever, produce gravitational or inertial effects in materials and equipments. Brutally, not a single one of those Heaviside/Gibbs equations ever appeared in a paper or book by James Clerk Maxwell, even though the severely restricted Heaviside/Gibbs interpretation is universally and erroneously taught in all Western universities as *Maxwell's theory*.

As a result of this artificial restriction of Maxwell's theory, Einstein also inadvertently restricted his theory of general relativity, forever preventing the unification of electromagnetics and relativity. He also essentially prevented the present restricted general relativity from ever becoming an experimental, engineerable science on the laboratory bench, since a hidden internalized electromagnetics causing a deterministically structured local spacetime curvature was excluded.

Quantum mechanics used only the Heaviside/Gibbs *externalized* electromagnetics and completely missed Maxwell's *internalized and ordered* electromagnetics enfolded inside a structured scalar potential. Accordingly, QM maintained its Gibbs statistics of quantum change, which is non-chaotic a priori. Quantum physicists by and largely excluded Bohm's hidden variable theory,

which conceivably could have offered the potential of *engineering quantum change - engineering physical reality itself.*

Each of these three major scientific disciplines missed and excluded a subset of their disciplinary area, because they did not have the scalar component of the quaternion to incorporate. Further, they completely missed the significance of the Whittaker approach, which already shows how to apply and engineer the very subsets they had excluded.

What now exist in these areas are three separate, inconsistent disciplines. Each of them unwittingly excluded a vital part of its discipline, *which was the unified field part* Ironically, then, present physicists continue to exert great effort to find the missing key to unification of the three disciplines, but find it hopeless, because *these special subsets are already contradictory to one another,* as is quite well-known to foundations physicists.

Obviously, if one wishes to unify physics, one must add back the unintentionally excluded, unifying subsets to each discipline. Interestingly, all three needed subsets turn out to be one and the same. So application of Whittaker's work to each one of the three disciplines produces the necessary superset of each, and these three supersets are unified in and on the common, added, Whittaker subset.

Further, the Whittaker unification linkage of the three disciplines is testable. It is engineerable. It works.

NOTES AND REFERENCES

1. P. Graneau, *Ampere-Neumann Electrodynamics of Metals,* Nonantum, Massachusetts, Hadronic Press, 1985. See also P. Graneau and P.N. Graneau, "Electrodynamic Explosions in Liquids," *Appl. Phys. Lett,* Vol. 46,1985, p. 468; R. Azevedo, P. Graneau, P.N. Graneau, and C. Millet, "Powerful Water Plasma Explosions," *Phys. Lett* Vol. 117, 1986, p. 101.

2. See Y. Aharonov and D. Bohm, "Significance of Electromagnetic Potentials in the Quantum Theory," *Physical Review,* Second Series, 115(3), Aug. 1,1959, p. 458-491. This paper pointed out the primacy of the potentials. Instead of being *causative* agents, the force fields are actually *effects* generated from the potentials. This is in complete violation of both classical electromagnetics and classical dynamics, but it is absolutely required by quantum mechanics. For an extensive discussion of the Aharonov-Bohm effect and an extensive list of references, see S. Olariu and I. Iovitzu Popescu, "The quantum effects of electromagnetic fluxes," *Rev. Mod. Phys.* 57(2), Apr. 1985.

3. See Bertram Schwarzschild, "Currents in normal-metal rings exhibit Aharonov-Bohm Effect," *Physics Today,* 39(1), Jan. 1986, p. 17-20 for confirmation.

4. James Clerk Maxwell, A *Treatise on Electricity and Magnetism,* Oxford University Press, Oxford, 1873. The third edition is published by Dover, 1954.

5. Maxwell's true theory of electromagnetics is contained in some 200-odd *quaternion* equations, and is far more complex than the gross *vector* simplification developed by Heaviside and Gibbs after Maxwell's death. For a cogent argument about what might have been discovered much earlier in physics if quaternions had not been cast aside, see James D. Edmonds, Jr., "Quaternion Quantum Theory: New Physics or Number Mysticism?", *American Journal of Physics,* 42(3), Mar. 1974, p. 220-223. Just how much more powerful was Maxwell's quaternionic expression of EM theory than was Heaviside's (i.e., the modern) vector interpretation, was succinctly expressed by Josephs as follows: *"Hamilton's algebra of quaternions, unlike Heaviside's algebra of vectors, is not a mere abbreviated mode of expressing Cartesian analysis, but is an independent branch of mathematics with its own rules of operation and its own special theorems. A quaternion is, in fact, a generalized or hypercomplex number..."* (H.J. Josephs, "The Heaviside papers found at Paignton in 1957," *Electromagnetic Theory by Oliver Heaviside,* Including an account of Heaviside's unpublished notes for a fourth volume, and with a foreword by Sir Edmund Whittaker, Vol. III, Third Edition, Chelsea Publishing Co., New York, 1971, p. 660.)

6. See E.T. Whittaker, "On the partial differential equations of mathematical physics," *Mathematische Annalen,* Vol. 57, 1903, p. 333-355; "On an expression of the electromagnetic field due to electrons by means of two scalar potential functions," *Proceedings of the London Mathematical Society,* Series 2, Vol. 1,1904, p. 367-37Z

   Contrary to present EM theory, *if one wishes to study the primary electromagnetic, gravitational, and electrogravitational processes of nature, one applies Whittaker methodology.* Further, this methodology is completely engineerable and testable, and it drastically extends and perfects the present electromagnetics, general relativity, and quantum mechanics and unifies them into a unified, testable theory.

7. In the modern view, it is trapped energy that is gravitational, mass being viewed as simply such trapped energy. We point out that Einstein's formula $E = mc^2$ actually is an expression for mass in terms of its trapped *electromagnetic* energy. Thus we extend the

modern view by stating that, to first order, Newtonian gravitational attraction is due to the attraction of *spatially entrapped electromagnetic energy.* Since the electromagnetic scalar potentials represent just such spatially entrapped EM energy, then they hold a special significance gravitationally.

8. This assertion can be tested. At the nodal points of the standing potential wave, the rate of flow of time is normal. At nonzero points along the wave, however, the local rate of flow of local time varies from normal. After a proper-time interval for the observer at the nodal point, normal clocks and watches at different non-nodal points along the wave will appreciably vary in their time reading. Initially synchronized clocks will thus be found to disagree, if placed in different positions in the Whittaker wave and allowed to remain for a test period. In the past, various inventors have anecdotally demonstrated this effect. As an example, see David Jones, "Israel's Secret Weapon?, *Vancouver Sun Times,* Dec. 17,1977, p. 17.

9. V.K. Ignatovich, "The remarkable capabilities of recursive relations," *American Journal of Physics,* 57(10), Oct. 1989, p. 873-878.

10. Richard W. Ziolkowski, "Localized transmission of wave energy," Proc. SPEE, Vol. 1061, *Microwave and Particle Beam Sources and Directed Energy Concepts,* Jan. 1989, p. 396-397.

11. An *acoustic missile* is essentially a slug of acoustic energy that holds together as it travels, striking and damaging or destroying a target. An *electromagnetic missile* is a slug of EM energy that holds together as it travels to a target and strikes it.

12. A D. Sakharov, "Vacuum Quantum Fluctuations in Curved Space and the Theory of Gravitation," *Sov. Phys. Dokl.,* Vol. 12, 1968, p. 1040. See also the related discussion in Misner, Thome and Wheeler, *Gravitation,* 1973, p. 426.

13. Note that this assigns an *internal structure* to a gravitational potential.

14. A D. Sakharov, *Theor. Math. Phys.,* Vol. 23,1975, p. 435.

15. K. Akama et al, *Prog. Theor. Phys.,* Vol. 60,1978, p. 868.

16. B. Hasslacher and E. Mottolo, *Phys. Lett,* Vol. 95B, 1980, p. 237.

17. A Zee, *Phys. Rev. Lett.,* Vol. 42,1979, p. 417.

18. D. Amati and G. Veneziano, *Phys. Lett.,* Vol. 105B, 1981, p. 358; S. Yoshimoto, *Prog. Theor. Phys.,* Vol. 78,1987, p. 435.

19. S. Adler, *Rev. Mod. Phys.,* Vol. 54,1982, p. 729.

20. H.E. Futhoff, "Ground State of Hydrogen as a Zero-Point-Fluctuation-Determined State," *Phys. Rev. D.,* 35(10), May 15,1987, p. 3266-3269.

21. H.E. Puthoff, "Gravity as a Zero-Point-Fluctuation Force," *Phys. Rev. A,* 39(5), Mar. 1, 1989, p. 2333-2342. See also H.E. Puthoff, "Source of Vacuum electromagnetic Zero-Point Energy," *Phys. Rev. A.,* 40(9), Nov. 1, 1989, p. 4857-4862. Changing the vacuum potential constitutes a fluctuation directly in and of the zero-point energy of vacuum, and hence, by Puthoffs mechanism, it does indeed induce a gravitational effect. At the level

of the vacuum virtual particle flux exchange with the charged nucleus, producing an electromagnetic change also produces a gravitational change, and vice-versa.

22. Puthoff, *Phys. Rev. D*., 35(10), May 15,1987, p. 3266-3269.

23. Nikola Tesla, *Colorado Springs Notes 1899-1900*, Nolit, Beograd, Yugoslavia, 1978, p. 61-62.

24. E.T. Whittaker, "On an expression of the electromagnetic field due to electrons by means of two scalar potential functions," *Proc. Lond. Math. Soc*, Series 2, Vol. 1, 1904, p. 367-372.

25. The potential for weaponization of the Whittaker work should be obvious.

26. Toward the end of his life Heaviside lived as a recluse in a small garret apartment, and may have returned again to his struggle with quaternions. In the 1950's handwritten notes of a theory of gravitation, written in quaternion mathematics, were found beneath the floor boards of his tiny study.

27. T.E. Bearden, "Maxwell's Original Quaternion Theory Was a Unified Field Theory of Electromagnetics and Electrogravitation," *Proceedings*, International Tesla Society Symposium, Colorado Springs, Colorado, July 1988. See also T.E. Bearden, "Maxwell's Lost Unified Field Theory of Electromagnetics and Gravitation," *Proceedings*, PACE Third International New Energy Technology Symposium, June 25-28, 1988 at Maison du Citoyen, Hull (Ottawa), Canada, 1988.

28. Ironically, Einstein then spent the remainder of his life, desperately trying to unify electromagnetics and gravitation in his theory of general relativity, never realizing that his own overstatement of his "flat local spacetime" postulate precluded his success and foredoomed all his efforts to failure.

29. To appreciate just what can actually be done with local spacetime curvature, see E.B. Smetanin, "Electromagnetic field in a space with curvature - new solutions," *Soviet Physics Journal*, 25(2), Feb. 1982, p. 107-111. In this paper, a solution to the problem stated in the title is obtained, which may be regarded as a classical model of a charged particle that has both a magnetic moment and a nonzero magnetic charge density. Interaction with spacetime curvature can disrupt the gauge invariance of the EM field, and it can also re-establish invariance in an initially noninvariant theory. Notice that, if we curve the local spacetime, Smetanin's theoretical phenomena — none of which is adequately described in the conventional electromagnetics theory - may apply. Specifically, *the charged vacuum itself - the local curved spacetime* - can furnish a nonzero magnetic charge density to the charged particles in the system. The local spacetime becomes a source of energy, which is added to the exposed system. Local violation of energy conservation can occur in the system, because it is now an open system containing a hidden vacuum energy source.

30. For a detailed expose of the scientific suppression used to uphold the present GR, written by an inside scientist of excellent ability, and one with over 100 published papers in the literature, see Rugero Maria Santilli, *Ethical Probe on Einstein's Followers in the USA: An Insider's View*, Alpha Publishing, POB 82, Newtonville, Massachusetts 02160, 1984.

31. For a discussion of the missing chaos in quantum mechanics, see Robert Pool, "Quantum Chaos: Enigma Wrapped in a Mystery," *Science,* 243(4893), Feb. 17, 1989, p. 893-895. For a more technical discussion see P.V. Elyutin, The quantum chaos problem," *Sov. Phys. Usp.* 31(7), July 1988, p. 597-622.

32. For an entry point into the literature of hidden variable theory, see *Quantum Implications: Essays in Honour of David Bohm,* B. J. Hiley and F. David Peat, Eds., Routledge & Kegan Paul, London & New York, 1987.

33. However, even if it predicts something new and is warranted, it still may not be adopted. An example is the continuing reluctance of physicists to refonnulate EM theory, stressing the primacy of the potential and the fact that not the force field but only the *potential* for the force field exists in the vacuum. Even more so, it is well-know that detection is actually binary, and we throw away precisely half of almost every detection our instruments make. Cf Richard Kidd et al, "Evolution of the modern photon," American Journal of Physics, 57(1), Jan. 1989, p. 27-35. Generally in every electromagnetic interaction of our instruments, two photons are produced: one a time-forward photon, and the other a time-reversed photon. Our detectors exxentially measure the time-forward photon half, not the time-reversed photon (antiphoton) half, the antiphoton half produces a slight recoil force (Newton's third law reaction force) in the mass (nuclei) of the instrument, which we ignore. Also, we continue to ignore the evidence that the photon and antiphoton are not identical. In a pumped phase conjugate mirror, for example, the emission of a normal photon from the mirror material results in a recoil of the mirror; the emission of an antiphoton by the mirror material, however, does not result in recoil of the mirror. Physics is still not consistent, as is well-known to foundations researchers, but is generally not accented to university students.

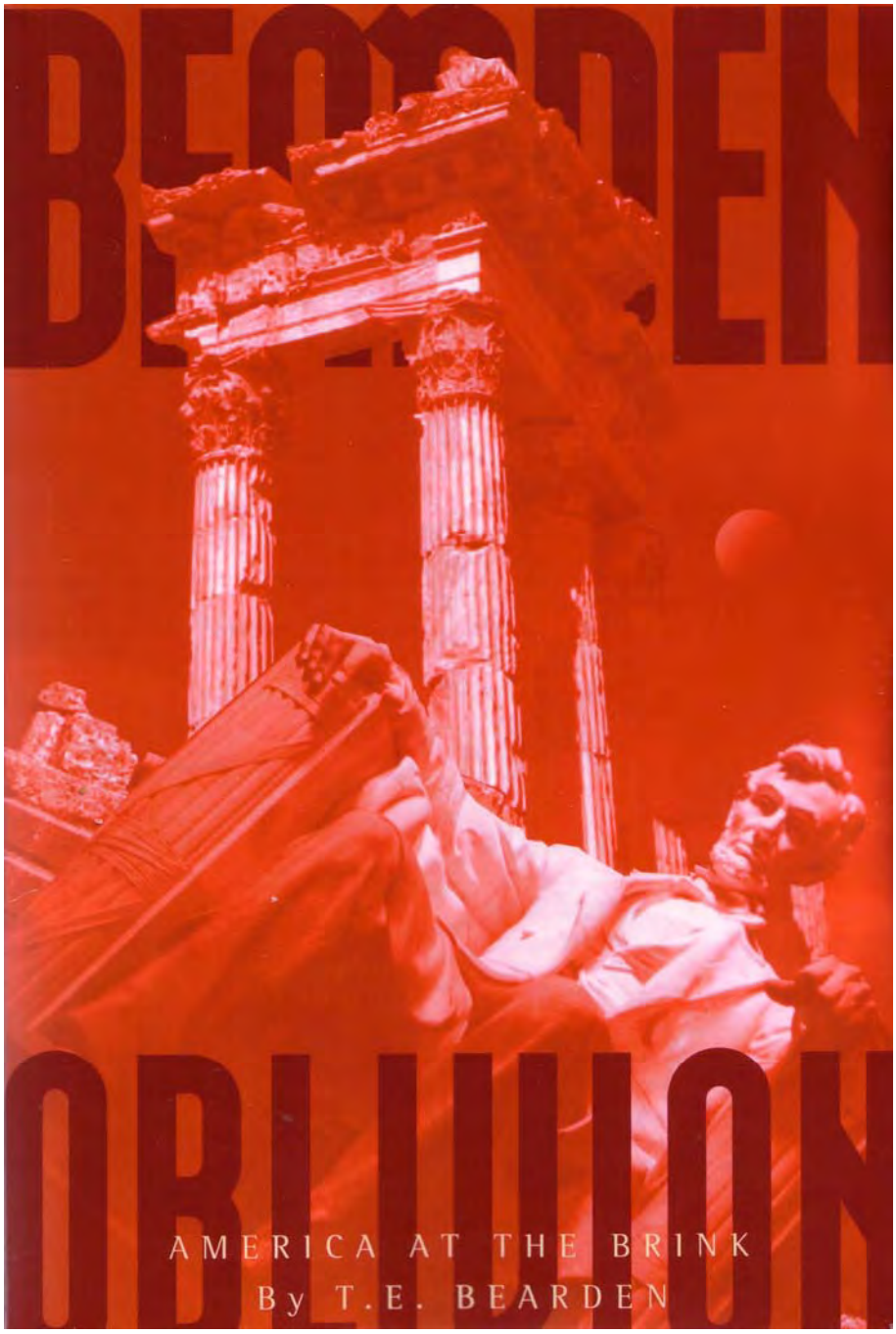
BEARDEN
OBLIVION
AMERICA AT THE BRINK
By T.E. BEARDEN

Table of Contents

Strategic Aspects of the Asymmetric War on the U.S.

Cold War Development of Scalar Interferometry 1
Incidents Where Outside Intervention Saved the United States..... 1
Yakuza Acquisition of Soviet Superweapons 2
Our Desperate Need to Correct the Seriously Flawed Classical
Electromagnetics (CEM) and Electrical Engineering (EE) Models..... 4
How the Notion of Transverse EM Waves in Space Originated..... 9
CEM and EE Still Erroneously Assume the Old Material Ether..... 10
Our Archaic and Flawed Situation in CEM/EE Today 11
Other Severe Foundations Errors in Our CEM/EE 14
The Development of Scalar Interferometry 14
The Yakuza Strategic Role in Our Present Terrorism Threat 15
Suppression of "Energy-from-the-Vacuum" Electrical Systems 16
Yakuza Production of Portable Scalar Interferometers.....21
Afghanistan, Iraq, Al Qaida, and Intended Muslim Jihad.....23
Our Analysts Missed the Yakuza's Key Role and Significant Aspects
of the Centrally-Coordinated KGB/FSB Strategic Plan 25
Coup de Grace: Strategic Strikes of Great Magnitude.....27
Summary of Some Weather Engineering and Other Capabilities.....30
U.S. Societal Polarizations Are Being Gradually Increased.....33
Insertions Far Exceeding Public Acknowledgment.....36
Modern Asymmetrical War: The Scorpion Duel.....37
Distant Military Actions: Necessary but Not Sufficient.....39
Asymmetric Warfare Simplified: An Overview.....40
A Few Questions to be Answered.....42
The Ease with which Terrorists Could Obtain WMDs.....45
A Simple but Lethal Strategic Strike with Horrific Casualties.....46

The True Cause of Gulf War Disease 47
Terrorism by Electromagnetic Biological Warfare 49
Unethical Release of U.S-Made BW Mycoplasma 52
No Effective Treatment for Mass Casualties.....55
Impact of Immune System Spreading.....59
Impact of Smallpox Release..... 61
The Grim Nuclear Problem 61
Harshness of the Terrible Decontamination Problem 64
Summary and Conclusion..... 67

Slide Briefing

PART A: Statement; Preface; Foreword; Summary 71
PART B: Background and Weapons Testing..... 131
PART C: Move Toward First Strategic Energetics Attack..... 163
PART D: Second and Third Attacks Scheduled and Aborted 191
PART E: Bioenergetics and Its Weaponization..... 209
PART F: Psychoenergetics and Its Weaponization 247
PART G: Conversion 271
PART H: APPENDIX - Problems in Western Science 289
PART I: APPENDIX - Vulnerability of Network-Centric Warfare..... 331

Strategic Aspects of the Asymmetric War on the U.S.

Including Scalar Electromagnetic Weapons and their Terrorist Uses

T. E. Bearden

First edition Oct. 13,2004

Drafted Sept. 11, 2004 on the Third Anniversary of 9/11/01

Revised and updated 23 April 2005

Cold War Development of Scalar Interferometry

Prior to 1990, the weather over North America was being steadily engineered by the KGB — particularly beginning on July 4, 1976 — using giant strategic scalar interferometers on site in Russia {i, ii, iii, iv}. From the beginning of the development program which started shortly after WW II, the KGB personally controlled the development of startling new Russian weapons under the Soviet energetics program {v, vi, vii}. That program was for the research and eventual development of highly advanced new superweapons more powerful than the atomic bomb.

The new superweapons were developed, produced, manned, and operated by the KGB itself, and were never placed in the hands of the regular Russian armed forces. Speaking to the Presidium in 1960, Khrushchev referred to the forthcoming scalar interferometer weapons with the following statement:

> "We have a new weapon — just within the portfolio of our scientists, so to speak — so powerful that, if unrestrainedly use, it could wipe out all life on earth."

The large Soviet strategic scalar interferometers were deployed and became operational in April 1963 — a bit too late for use by Khrushchev to counter the U.S. confrontation in the Cuban Missile Crisis of latter 1962. However, the first operational weapon was used to destroy the U.S.S. Thresher nuclear submarine while on underwater maneuvers off the East Coast of the United States, in April 1963. Thereby Khrushchev demonstrated the power of his new weapons over nuclear submarines — one of the major three elements of the strategic military nuclear firepower of the United States. Extension to the other two elements — intercontinental ballistic missiles (ICBMs) and strategic bombers — was obvious.

Incidents Where Outside Intervention Saved the United States

Many dramatic but largely unheralded incidents occurred during the so-called "Cold War". For example, in the 1970s a small nation saved the United States from total destruction by Soviet nuclear weapons which had been inserted in our

cities. That nation did it very simply: they likewise inserted an appreciable number of nuclear weapons of their own, some thermonuclear, inside Russia itself, in its population centers and its primary target zones.

All these inserted nuclear weapons — both in the United States and in Russia — are still there with their activation teams, waiting. In such manner was the "balance of terror" — the Mutual Assured Destruction or MAD doctrine — really implemented and enforced vis a vis the Soviet Union. At the time this approach to deterrence was called "Dead Man Fuzing".

In April 1986 a private little U.S. group intervened to prevent a forthcoming giant earthquake that was being built up for the greater Los Angeles and San Francisco areas by the KGB scalar interferometers. Via a special electronic device, the group suddenly destroyed one of the distant Soviet scalar interferometer transmitters — thereby initiating the nearby Chernobyl nuclear incident but preventing the loss of perhaps 200,000 U.S. lives in Los Angeles and San Francisco, together with preventing terrible destruction and economic damage.

Also in 1986, the same friendly little nation again prevented our strategic destruction by even more powerful energetics weapons developed by the Soviet Union. As early as 1984, the friendly nation simply began exploding very large Russian missile ammunition storage sites, to warn the Soviet Union of what was in store for it, if it attacked.

In 1997, again the U.S. would have been utterly destroyed on two occasions had it not been for the same little nation. Several professional colleagues and I played a desperate role in both of those frighteningly real incidents, which were never reported in the news media. Indeed, our own intelligence agencies had no inkling that a full strategic Soviet superweapon attack to destroy the United States was imminent on each of the occasions (the second of which would have occurred on May 1, 1997) {viii}. The May Day attack for 1997 would have been the "big one", had the Federal Security Service (FSB/KGB) not been checkmated by "an offer it could not refuse" — delivered once again by the friendly nation. During those critical periods when every hour on the clock seemed a week in length, the hostile armada that would have struck us included the Japanese Yakuza and Aum Shinrikyo teams on site in Russia, operating leased KGB/FSB strategic scalar interferometers against the U.S.

Yakuza Acquisition of Soviet Superweapons

With the collapse of the old Soviet Union's economy, by the end of 1989 the Russian financial situation was grim. By courtesy of the Russian Mafia {ix} — which works directly for the FSB/KGB — a rogue Japanese group consisting of the Yakuza {x} and the Aum Shinrikyo cult {xi} was conducted to Russia in latter 1989, met with the KGB, and leased some of those large KGB strategic scalar interferometers on site in Russia {xii}. The down payment was $900 million U.S. in gold bullion, and the lease is rumored to be some $1 billion per year. The payment was no problem for the Japanese team. The Yakuza had ripped off the

Japanese taxpayer fur hundreds of billions of dollars, never repaid, and so the rogue Japanese group could easily afford such leasing {xiii}.

The Yakuza and Aum Shinrikyo then assigned teams to man those superweapon sites and begin weather engineering operations against the United States and other targets. The Aum Shinrikyo even set up a small university in Russia where the energetics theory and technology could be taught to the rogue Japanese teams by the KGB scientists.

After much training, in 1990 the rogue Japanese teams began operating the leased interferometers {xiv} worldwide for weather engineering and other purposes under the supervision of the FSB/KGB. The Yakuza and its vast resources worldwide were thus incorporated into the FSB/KGB planning and coordination for the coming destruction of the United States and the Western world.

Much later, Western investigations into the Aum Shinrikyo did clearly establish the sect's links in Russia, but missed the major involvement of the Yakuza. The Soviets easily made it appear that contact of the Aum Shinrikyo with Russia had been harmless (with the exception of the sarin nerve gas). Quoting Turbiville {xv}:

> "Russian, Japanese, and other investigators quickly identified a substantial number of [Aum Shinrikyo] sect members in Russia, including members in the government and other walks of life. Media commentators took note of a 'gas analyzer' of Russian origin seized at a sect facility; reports of Aum Shinrikyo sect members among Russian Radiation, Chemical, and Biological Defenses Troops; alleged sect ties to the Russian Academy of Sciences; the large volume of commercial Russian ship and aircraft traffic between Russia and Japan; and other issues that suggested questionable Russo-Japanese linkages to sarin production or transport... Official Russian military and security service spokesmen, while acknowledging Aum Shinrikyo's presence in Russia, reiterated the absolute security of military chemical depots and munitions..."

So it was that in early 1990, the FSB/KGB transferred their North American weather engineering operation to the Yakuza/Aum Shinrikyo teams, who perpetuated it using the Russian scalar interferometers that the Yakuza had leased. Today the rogue Japanese teams on site in Russia and elsewhere continue their weather engineering against the United States under FSB/KGB supervision.

At the end of 2004, the FSB/KGB and Yakuza entered the 2-year "Operations Phase" of asymmetric war against the United States. Weather operations — including Hurricanes Charlie, Frances, Ivan, Jeanne, etc. — intensified and remain intense, wreaking great economic damage. The program included directly influencing and controlling each hurricane's power and behavior, as well as directing its course, speed and targeting path. Indeed, Ivan did a 180 degree turn, and Jeanne did a 360 degree loop before reaching Florida, demonstrating an unprecedented and sophisticated level of storm control.

Meteorologists do recognize periods of increased or decreased hurricane activity for various reasons {xvi}, but very few consider deliberate human induction of

hurricanes or human control over their direction, power, and progress {xvii}. Fortunately, a few do.

Indeed, in latter March of 2004, Hurricane Catarina — the first-ever recorded in the South Atlantic — formed and came ashore in Brazil on March 28 with 90 mph winds, doing substantial damage. So while the conventional wisdom is that hurricanes cannot form (naturally) in the South Atlantic, this one did and "broke all the records". It appears to have been a deliberate probe by the Yakuza: Produce and drive ashore a hurricane where the textbooks state one is impossible, to test whether Western governments and scientists recognize the artificial weather engineering. The answer, of course, is that — as expected — the West did not recognize its importance, or that it was a deliberate "stimulus." Western meteorologists and governments simply shrugged off Hurricane Catarina as an interesting little phenomenon of no great concern.

Some time after their 1989 lease of the Russian interferometers, the Yakuza carried the science and technology of scalar electromagnetics (energetics) back to Japan. There they set up their own clandestine facilities to manufacture such weapons, including small portable scalar interferometers, electromagnetic pulse (EMP) weapons, and even negative energy EMP weapons. Any group or nation possessing scalar interferometers is also able to produce either positive energy EMP or negative energy EMP in the distant interference zone. Smaller, more portable weapons then follow.

Selected portable weapons of such types will be inserted — probably have already been inserted — into the U.S. for destroying its key internal targets and centralized electrical power system. With the final coup de grace to be delivered about two years from now, the loss of our national electrical power system is intended to evoke the catastrophic collapse of the entire U.S. economy, followed by the fall of other Western nations' economies like toppling dominoes.

Despite the risk, the U.S. Government, scientific community, intelligence community, and electrical power industry seem totally incapable of confronting the desperate requirement to replace our entire centralized electrical power system with fuel-free self-powering "energy from the vacuum" (EFTV) systems as rapidly as possible. Merely mentioning the requirement evokes psychological displacement activity, denial, and fierce personal attacks on the proponent. It also induces strong opposition from the powerful cartels in our society — energy, science, government, the environmental community, the financial and industrial community, etc. Hence the U.S. continues "energy business as usual", while the clock licks away to our destruction {xviii}.

Our Desperate Need to Correct the Seriously Flawed Classical Electromagnetics (CEM) and Electrical Engineering (EE) Models

In the past we have described the longitudinal electromagnetic (EM) wave transmitters used in these interferometer weapons with the phrases "scalar electromagnetics" and "scalar interferometry" {xiv}. Tesla did not originate these

terms, nor did he originate scalar interferometry, although he had indeed stumbled onto longitudinal EM waves and what can only be called force-free precursos engineering {xix}. Quoting Tesla {xx}:

> "...I showed that the universal medium is a gaseous body in which only longitudinal pulses can be propagated, involving alternating compressions and expansions similar to those produced by sound waves in the air. Thus, a wireless transmitter does not emit Hertz waves which are a myth, but sound waves in the ether, behaving in every respect like those in the air, except that, owing to the great elastic force and extremely small density of the medium, their speed is that of light."

If "gaseous body" is replaced with the modern term "virtual particle flux (active virtual state gas) of the vacuum", Tesla's words agree with the basic view of the modern active vacuum.

Whittaker's 1903-4 discovery that sets of longitudinal EM waves actually comprise all normal EM waves, fields and potentials {xxi,xxii} leads to a much more fundamental electrodynamics in which ordinary EM waves, potentials, and fields can undergo sophisticated alteration, enabling them to contain hidden internal field vectors and dynamics. ("Dynamics" refers to change over time.)

Indeed, the so-called "transverse EM waves" measured by our instruments are merely precession wave envelopes of charged particles (charged masses) responding gyroscopically at right angles to the more fundamental longitudinal EM waves. Longitudinal waves are force-free except when interacting with matter.

Transverse EM force field and force field waves exist only in association with charged matter, never in free space. What exist in space as the "precursor field" are the Whittaker sets of bidirectional longitudinal EM wave pairs, for each force field wave, force field, or potential in charged matter when the precursor wave-sets are interacting with that charged matter. What Whittaker showed as the "decomposition" of such waves is actually the precursor longitudinal force-free EM wave mixture existing in charge-free space, whose summation — via the wave interaction with charged matter — yields transverse force field waves. An EM wave in space (i.e. where no matter is present) actually consists of a dense, multi-frequency mixture of bidirectional longitudinal EM wave pairs. It is not a "pale thin shadow" of the form of the matter wave in charged matter.

Every EM "field" and "wave" and "potential" in space — including so-called "static" fields and potentials — actually exists as a large ensemble of ongoing EM energy flows in the form of those propagating longitudinal EM wave sets. But our standard classical EM and electrical engineering model's false assumption of a material ether has prevented recognition of the fundamental character of these longitudinal EM wave ensembles. The model continues to erroneously assume forces and force fields in space. Yet forces and force fields cannot occur in space but only in mass, because one of the components of force is mass, by the definition $F = dp/dt = d/dt(mv)$. Simply replace m by 0, and $F = 0$.

When electrons are in a conductor, their travel is limited to a few inches per second down the wire in a typical nominal case. Thus, when an electron in a wire experiences a longitudinal EMF, it has to precess laterally. Most of its motion is perpendicular to the wire. This rotational movement is what generates the transverse EM waves that our instruments measure, as the electrons respond to the more fundamental longitudinal vibrations. At least Jackson {xxiii} clearly states what CEM/EE assumes:

> "Most classical electrodynamicists continue to adhere to the notion that the EM force field exists as such in the vacuum, but do admit that physically measurable quantities such as force somehow involve the product of charge and field."

So the measured EM transverse force F is the effect of a more primal, precursor, force-free EM field (longitudinal precursor waves) in space, in and on charges q in the ongoing interaction of that precursor EM field with those charges q. To see this, examine the simple equation F = Eq, as a definition F = Eq. In the absence of charged matter, q = 0 and F = 0, but E, defined as the mass-free wave in mass-free space, need not be zero. It is a force-free precursor field wave set in space with no charges present. Further, for a given $q \neq 0$, if E = 0 and thus precursor field interactions are absent, then F = 0, but $q \neq 0$. For that reason, as Jackson admits, the observable E-force (i.e., in charged matter q) has to involve the product of charge and field. But the notion — almost universally assumed by universities teaching CEM/EE — that a force field somehow exists in mass-free space, Jackson admits, is totally false.

The energy flux of the vacuum is enormously dense and comprises the scalar potential of Einstein's spacetime itself. This energy decomposes into Whittaker harmonic sets of bidirectional EM longitudinal phase conjugate wave pairs {xxi}.

It is an axiom that any mathematical model, including this one, can be engineered by a model of sufficiently higher group symmetry. The mathematics generally used to model Western classical force-field electrodynamics is U(l), a lower group symmetry model. Thus, CEM/EE can be engineered using a more sophisticated mathematical model, as the preceding discussion of precursor fields pointed out.

Our scientists, engineers, and thermodynamicists have also largely failed to grasp the implications of the gauge freedom axiom when asymmetrical rather than symmetrical regauging is used. The first requirement for EFTV systems producing more energy output than the operator alone inputs is to break Lorentz symmetry in the system's circuitry and thus to violate the Lorentz invariance imposed by the U(1) theoretical equations by which CEM is presently modeled.[1] Further, when

---

[1]See Maxim Pospelov and Michael Romalis, "Lorentz Invariance on Trial," Physics Today, 57(7), July 2004, p. 40-46 for a good discussion of present efforts to violate invariance and Lorentz symmetry.

one deals with force-free EM fields, potentials, and waves as they exist in mass-free space, a priori one does not have to "pay" to furnish the energy flows that are necessary to develop powerful working forces in matter. Instead, one only has to deliberately direct nature's own energy flows, exhibited by the internal Whittaker decomposition of any static EM potential, field, or wave in space; the energy is already pouring freely from every charge.

Force is an ongoing effect of a more primary ongoing precursor interaction between dynamic spacetime (and dynamic virtual particle flux or VPF of the vacuum) with mass. Force is not a fundamental cause. Every EM field or potential in space is in fact already a great set of ongoing free EM energy flows, steadily flowing from the associated source charge(s). Any "energy" being lost to provide that set of energy flows is furnished by the reordering of disordered virtual energy absorbed by the source charge from the seething vacuum. Since the totally-disordered vacuum is already at maximum entropy state, at equilibrium, any change in that state is a negative entropy change a priori. Using such thus involves negative entropy engineering. (The terms "precursor engineering" and "negative entropy engineering" are essentially synonyms.)

Thus precursor engineering advances beyond the present notion of four primary forces of nature. Instead of four primary forces, precursor engineering deals with four "brands" of precursor wave sets and energy flows, each kind interacting with a particular kind of mass to produce one particular kind of "fundamental force". The Whittaker decomposition for an EM force field in matter actually gives the energy flow set, which is the form of the actual precursor EM energy field in space. Envelope summation never occurs until the precursor energy interacts with charged matter.

In theory, by asymmetrically directing these Whittaker precursor energy flows, one can generate forces of any strength and pattern in charged matter. One can even shape the internal dynamics (to be explained later) of such forces. We refer to forces created in this manner as "engines". The energy for creating these engines is present in nature; one only needs to furnish switching and control. By paying a small energy "cost," one can direct and structure the desired patterning and dynamics of large precursor flows of energy in space. The interaction of these "precursor engines" with charged matter can produce very powerful forces in charged matter.

In hard military terms, precursor engineering (that is, Soviet energetics) provides an enormous and ubiquitous force amplifier that may be put to startling use on the battlefield.

Very large energy effects in physical matter can thus be obtained for only a small investment in switching and control of nature's ubiquitous free energy flows. Conservation of energy is not violated, since the charges furnish the excess energy utilized, in their continuing extraction of real EM energy flow from the vacuum's

fluctuations.[2] Thermodynamics is not violated, because these precursor energy flows are nonequilibrium steady state systems, with continuous free energy input from the vacuum's subquantal fluctuations and with continuous free energy output in the form of the precursor energy flows.

This is negative entropy engineering, the ultimate "far from equilibrium" approach that totally violates the present flawed Second Law of thermodynamics {xxiv}.

Observable forces and force fields do not exist in empty space. They exist only in matter, because matter is a necessary component of force. Subquantal energies fluctuating in the vacuum of space are not observable until they produce state changes in matter. Our fundamental mechanics greatly errs in assuming a separate vector force in mass-free space, acting upon a separate mass. No such "separate force in mass-free space" exists, and none can exist, since mass is a component of force by F = d/dt(mv). If m = 0, then F = 0. When there is no mass, there is no force. As Nobelist Feynman stated: "Everything we know is only some kind of approximation, therefore, things must be learned only to be unlearned again or, more likely, corrected."

Speaking specifically about force, Feynman stated {xxv}: "...in dealing with force the tacit assumption is always made that the force is equal to zero unless some physical body is present... One of the most important characteristics of force is that it has a material origin..." "If you insist on a precise definition of force, you will never get it!"

But then, facing Feynman's dilemma of defining a force, what kind of electromagnetics exists in force-free space, prior to the presence of mass and thus prior lo the formation of forces and force fields assumed by the present CEM/EE? Speaking of the electric field from a source positive charge in space, and the responses of charged masses placed in that field and interacting with it, Feynman stated {xxvi}:

> "...the existence of the positive charge, in some sense, distorts, or creates a "condition" in space, so that when we put the negative charge in, it feels a force. This potentiality for producing a force is called an electric field."

Feynman also pointed out that we really did not know what "energy" was. In the particle physics view of energetics, what basically exists in mass-free spacetime is the disintegrated and disordered virtual particle flux (VPF) of the vacuum. Energy in said space means an ordered change in that VPF. In the general relativity view of energetics, the basic space is "spacetime" which now must be considered highly structured and highly dynamic. Energy in said spacetime is a change or distortion in its curvature.

---

[2] In this book we give the exact mechanism by which the charge does this.

All of the so-called "energy in space" - such as a field or a potential - may be thought of as an organized change of the virtual state energy and curvature of spacetime. The "enormous" vacuum energy (using the term "enormous" as if the energy were already coherently integrated) is actually disintegrated into very tiny virtual bits of energy and ordered patterns in that energy. The energetic vacuum consists of intense and dense subquanlal fluctuations! An EM field, potential, or wave in vacuum (i.e. in empty space) is actually an organization (ordering) and dynamics imposed upon and in the basic disordered VPF and virtual energy. The fundamental field or potential is thus an "organizing pattern" of ongoing energy flows, and must already include negative entropy, since it reorders the disordered virtual energy of the vacuum a priori {xxvii}.

Any persisting pattern (organization) of EM change in a region of the VPF — once it interacts with observable charged matter — can be and is integrated to the quantum level so that it becomes observable EM change and produces force and force fields in the charged matter with which it interacts.

There is no observable force a priori until a pattern of virtual change in a region of the vacuum (a vacuum engine or precursor engine) is reacting with observable matter and being integrated to observable quantum level in that interaction. We have explained that integration process elsewhere {xxvii, xxviii} as demonstrated by every charge in the universe.

If charges did not reorder and integrate disordered virtual stale energy changes to observable state energy changes, there could not be any observable EM forces in nature, or any observable masses in nature.

How the Notion of Transverse EM Waves in Space Originated

To explain sets of longitudinal EM waves in the vacuum, and also to explain then detection as transverse waves in a receiving conductor {xxix}, consider the longitudinal flow of Drude electrons in a conductor, which is known to be severely restrained. While the electrons in the Drude gas may individually move at greater velocity, their net flow longitudinally down the conductor is the drift velocity {xxx}, usually on the order of a few centimeters per second in a typical bench circuit with small voltages and currents {xxxi}, very much less than the speed of the field or potential down the wire. Hence there exists an effective restraint of the electron's spinning gyro axes in the longitudinal or current-flow direction along the conductor.

To a first order, when the precursor longitudinal EM force impinges upon them, the Drude electrons — due to their continuous spin — act as gyros with longitudinally restrained axes. They occasionally slip a bit longitudinally, but are immensely freer to move transversely. So they easily precess with lateral motions that can be very large and/or very fast indeed.

The intense lateral precession of the "Drude electron as a gyro" quite well demonstrates the overall longitudinal nature of the causative disturbing precursor

agent(s), with the longitudinal impulse force strongly resitted by the longitudinal restraint force, and with most of the electron's effect force being the resulting gyro-electron precession force at right angles.

Even when electrons are in empty space and not in a conductor, their mass inertia and spin results in a similar much larger precession at right angles to the longitudinal disturbing forces of the precursor force-free fields and waves.

The observation of the lateral electron precession waves of these precessing Drude electrons in our instruments is the accepted measurement of the so-called transverse EM waves in vacuum. The measurement does not measure the oscillation direction of the causative precursor EM wave in vacuum at all, but only its oscillation effect created in the precessing Drude electrons of the charged matter. There are really no transverse EM waves in mass-free space, albeit we seem to be stuck with such a model since the founders of classical electrodynamics assumed the material ether filling all space, which they modeled as matter waves (force field waves) in space.

If there were such a material ether, then there would be matter and charge at every point in space, and there would indeed be transverse charge precession EM waves in this "ethereal but real matter" filling all space. The CEM/EE model of electrodynamics and its equations have implicitly propagated the erroneous assumption of a material ether and the misinterpretation of what our instruments are measuring, from at least 1865 to the present day. Yet the material elher was falsified over a century ago, in 1887. The false assumption of the material ether and the resulting false assumption of the transverse EM force field wave in space continues even after Drude's fundamental work —just as the erroneous notion of a separate force vector in space acting separately upon a mass is still propagated in basic mechanics.

It is astounding that the NAS, NSF, NAE, Doe, national labs, and universities blithely continue to propagate such known errors in major models, even after eminent scientists such as Wheeler, Feynman, and many others have pointed out that there are no forces or force fields in space.

We know of no other Western analyst who has pointed out the lateral precession of Drude electrons resulting from their longitudinal restraint to a slow drift velocity. This phenomenon appears to prove that the EM wave sets in matter-free space are longitudinal rather than transverse, precisely as Tesla stated.

We pointed out this anomaly in the erroneous "force in empty space" theory for years, to little avail. The Soviets not only discovered it but also highly weaponized it shortly after WWII, in their secret superweapons science called "energetics".

CEM and EE Still Erroneously Assume the Old Material Ether

The misinterpretation of the detected transverse EM force field waves as actual force-field waves in a material space has been perpetuated erroneously since the inception of classical electrodynamics, and it continues today. The entire U.S.

scientific apparatus — including the National Academy of Science, National Science Foundation, National Academy of Engineering, Department of Energy, national laboratories, and universities — continues to bury its head firmly in the sand, covering itself with the old luminiferous material ether.

Because of its importance, we reiterate that those measured waves in our measuring instruments actually are integrated transverse EM force field effect waves in and of the interacting Drude electron material medium in the conductors of the intercepting instrument. But the causative interacting EM field entities in the vacuum are themselves force-free longitudinal EM wave set disturbances of the curvature of spacetime (general relativity view) and of the local VPF of the vacuum (particle physics view). Else the theory of gyro precession is voided by every Drude electron and transverse EM force field wave detection in Drude electron gases.

The EM force fields so blithely assumed by our present electrodynamics absolutely do not and cannot exist in mass-free space, since force only exists in a muss system, and then only during its interaction with force-free precursor fields. Because of charged particle spin, the elemental responses of the charged mass system are precessions at right angles to the disturbing force-free fields. Neither do transverse EM "effect" waves exist in mass-free space, but only in charged mass systems (such as the Drude electron gas) engaged in an ongoing interaction with the longitudinal precursor waves. Here also, the elemental response of the mass system is at right angles to the force-free fields of the disturbing precursor wave set.

The primary, longitudinal force-free fields in massless space are the more fundamental EM fields, as Tesla had realized. Tesla actually began the process later partially captured by Whittaker {xxi, xxii}, which was taken to fruition after WW II by Soviet weapon scientists as the new weapons science of energetics. It is what the present author is calling precursor waves, precursor fields, and precursor engineering, in trying to penetrate the mind-fog barrier generated by the "transverse EM forcefield wave in space" idea so branded into scientific and engineering minds.

Our Archaic and Flawed Situation in CEM/EE Today

Sadly, electrical engineering departments still erroneously teach EM force fields and EM transverse EM force field waves in space — a notion which still assumes the old luminiferous material ether {xxxii} that was falsified in 1887 by the Michelson-Morley experiments {xxxiii}.

Reiterating: Jackson, one of the superb electrodynamicists of our day, at least admits that the problem exists and that electrodynamicists continue to ignore it. He states {xxxiv}:

> "Most classical electrodynamicists continue to adhere to the notion that the EM force field exists as such in the vacuum, but do admit that

> physically measurable quantities such as force somehow involve the product of charge and field."

In summary, one does not have electromagnetic force until the "force-free precursor field in space" is interacting with charged mass. It can easily be seen by examining the simple standard EM equation F = Eq, and writing it as F = Eq so that it becomes a true definition of the electromagnetic force field. Now let q = 0, as it would be in space. In that case, F = 0, even though $E \neq 0$. In that identity, the actual E-field in space is force free, and force is the ongoing interaction — of the force-free E-field in space — with charged mass q. Given q and its interaction with force-free E, that ongoing interaction is the rigorous definition of — and generatrix for — electric field force itself. What is missing from the identity and therefore the definition is that F and E are at right angles to each other because of the spin of the charged particles comprising q.

Again, let q = 0, while E remains nonzero. In that case, there is no ongoing interaction of E with charged matter, since there is no charged matter. Therefore the effect of such a reaction — force F — goes to zero because there is no interaction and therefore there is no effect of an interaction. So the equation should really be written as an identity, to show clearly that electric field force is produced by, and exists as, an ongoing interaction of the force-free E-field in space with charged matter q.

The very concept of "electromagnetic field" must therefore be separated into two parts. Using "the E-field" as an example, E_M refers to the E-field interacting with mass, and E_S to the E-field in empty space. Using this notation we might state that $E_M = f(E_S \times q)$. In short, if there is any chance for misunderstanding, the writer/lecturer should clearly explain whether he is referring to the force-free E-field E_S in space, or to the force E-field E_M in matter. Indeed, the CEM/EE model itself should be altered to clearly show that difference.

The sharp-eyed reader will note that we may have (hopefully successfully!) indicated the solution to Feynman's force definition problem, at least electromagnetically: An electromagnetic force in static charged matter is identically the ongoing effect (in the static charged matter) of an ongoing interaction of the force-free EM field in space with that static charged matter.

Eminent scientists such as Feynman, Wheeler, Lindsay, Margenau, Bunge, and many others have pointed out that there are no force fields in space. But our electrical engineering departments and classical Maxwell-Heaviside electro-dynamicists refuse to change and correct the horribly flawed CEM/EE model. Repeating for emphasis, Feynman {xxvi} stated it this way:

> "...the existence of the positive charge, in some sense, distorts, or creates a "condition" in space, so that when we put the negative charge in, it feels a force. This potentiality for producing a force is called an electric field."

In other words, a true E_S-field is a "force-free condition in pure mass-free space;" it has only the capability to interact with a charged mass and thus create force in that ongoing interaction. Feynman understood that "true fields" were naught but conditions in space itself, and changes in space itself. He clearly understood that only the interaction of the field-in-space with charged mass - should some be introduced — produces EM force fields in that charged mass.

So our present electrical engineers have absolutely no notion at all of what a force-free EM field in mass-free space really is. They have never even calculated a real EM-field in space, and they do not do so today — nor do their professors and their textbooks, though all profess to do so.

One is reminded of Tesla's acrid remark[3] when he stated:

> "The Hertz wave theory of wireless transmission may be kept up for a while, but I do not hesitate to say that in a short time it will be recognized as one of the most remarkable and inexplicable aberrations of the scientific mind which has ever been recorded in history."

Tesla also was well aware that energy could be had from space, for the taking, and he was at some pains to express it. In 1900 he stated:

> "Whatever our resources of primary energy may be in the future, we must, to be rational, obtain it without consumption of any material."

Nearly a decade earlier, he had formally[4] stated:

> "Ere many generations pass, our machinery will be driven by a power obtainable at any point in the universe. This idea is not novel... We find it in the delightful myth of Antheus, who derives power from the earth; we find it among the subtle speculations of one of your splendid mathematicians...Throughout space there is energy. Is this energy static or kinetic? If static our hopes are in vain; if kinetic — and this we know it is, for certain — then it is a mere question of time when men will succeed in attaching their machinery to the very wheelwork of nature."

Tesla himself was stopped from doing that very thing, by powerful vested interests who realized that for the financial cartels involved in energy, energy must continue to come from fuels and materials, etc. Today, similar cartels of very great power still control which way science thinks and researches, and still effectively destroy any scientist who dares to seek energy from the vacuum, and Tesla's nonmaterial energy source "obtainable at any point in the universe".

---

[3] Nikola Tesla, "The True Wireless." Electrical Experimenter. May 1919.

[4] Nikola Tesla, in a speech in New York to the American Institute of Electrical Engineers, 1891.

The primary factor responsible for successfully suppressing most attempts to scientifically research EFTV is the scientific community's continuing insistence on the absurd notion of force fields in space.

Other Severe Foundations Errors in Our CEM/EE

Indeed, besides the material ether (falsified over a century ago), the inane CEM/EE model still erroneously assumes a flat spacetime (falsified since at least 1916) and an inert vacuum (falsified since at least 1930). It also assumes that every EM field, potential, and joule of energy in the universe was freely created from nothing at all by the associated source charge, which the theory begrudgingly admits continuously emits real observable EM energy without any energy input. In so doing, the CEM/EE model implicitly assumes the universal violation of the conservation of energy law.

Every EE department, professor, and textbook in the United States unwittingly advocates the total violation of energy conservation, without even recognizing it. So do our National Academy of Sciences, National Academy of Engineering, National Science Foundation, Department of Energy, great national laboratories, universities, our intelligence analysts — and the entire Taliban-like professional Skeptic community — by not pointing out the known terrible errors in classical electrodynamics and electrical engineering, and by not correcting the flawed model!

The concerned reader should make a determined effort to find any single textbook that presents and lists the foundations assumptions in the CEM/EE model, and discusses which are still true and which have been falsified by the progress of modern physics. The reader will not find any such textbook, nor will he find any project to correct the textbooks, in any of the previously named scientific groups and organizations.

The Development of Scalar Interferometry

There are two papers by E. T. Whittaker, one in 1903 {xxi} and the other in 1904 {xxii}, that detail the beginning of scalar interferometry. Shortly after WW II, these two papers were a starting point in the Soviet Union scientists' development of a secret weapons science called energetics, which led to the development of powerful scalar interferometers that are now possessed secretly by at least 10 nations worldwide, and even by the Japanese Yakuza. For a deeper understanding of scalar interferometry, a higher group symmetry electrodynamics must be used {xiv}, instead of the Standard Model's limited U(1) electrodynamics.

After leasing large strategic scalar interferometers in Russia, the Yakuza took the technology back to Japan and set up production facilities of their own. This was not an act of the Japanese government but of the Japanese Mafia in concert with a remnant of the Aum Shinrikyo (under its new name, Aleph). The Yakuza is very powerful, and it penetrates the Japanese government and also every large Japanese

company. All dealings with any large Japanese company inherently involve the Yakuza, due to their penetration into all aspects of Japanese society and business.

In 1997, then Secretary of Defense William Cohen— at a conference on Weapons of Mass Destruction (WMD), held in Georgia under the auspices of Senator Sam Nunn — publicly confirmed this kind of electromagnetic weaponry without the technical details. He also confirmed the weather engineering, climate control, induction of earthquakes, and stimulation of volcanoes into eruption. Secretary Cohen stated {xxxv}:

> "Others [terrorists] are engaging even in an eco-type of terrorism whereby they can alter the climate, set off earthquakes, volcanoes remotely through the use of electromagnetic wave. ... So there are plenty of ingenious minds out there that are at work finding ways in which they can wreak terror upon other nations. It's real, and that's the reason why we have to intensify our efforts, and that's why this is so important."

This was the first time (and to my knowledge, the only time) a high U.S. government official has openly confirmed the superweapons. So obviously certain parts of our government do know about such weapons, but there has been little or no communication of that to the public, save by Secretary Cohen's illuminating statement.

The news media at the time — panting heavily after the juicy Clinton-Lewinsky sex scandal — totally ignored Cohen's epochal strategic statement. So much for the perspicacity of our news media!

The Yakuza Strategic Role in Our Present Terrorism Threat

Today the Yakuza/Aum Shinrikyo, one of our deadly foes, will be involved in the planned destruction of the United States that is scheduled to conclude about three years from now. A major facet of the plan is the destruction of the power grid in about two year's time. The incidents will start very gradually at first[5], and then escalate fairly rapidly until the power system is in ruins. There are already sufficient terrorist assets inserted into the U.S. — being held ready and waiting - to destroy the nation, particularly when one considers the damage potential of scalar interferometers. A single large interferometer can, for example, disable the entire power system and keep it nonfunctional by causing power surges at will. It can destroy power plants, grids, distribution stations, refineries, etc. Or it can keep the system failing and nonfunctional by damaging or destroying electronic controls.

---

[5] The 2004 hurricane passing through the Gulf of Mexico did substantial damage to the oil and gas pipelines and some of the oil rigs. That decreased our daily supply of oil and gas, was been partly responsible for oil prices going above $50 per barrel, and still plays a role in their continuing to rise.

One keeps hoping that the Administration - whether Republican or Democratic - will alert the American public to this possibility, but nothing has been said by officials of either party. Too many high level government people take the attitude that the American public just could not withstand such information. Further, within the government the entourage {xxxvi} seems to have again largely suppressed the information that Defense Secretary Cohen knew and publicly confirmed.

The Yakuza strategic threat to the U.S. is one of the most potent we face today, and it increases year by year. That threat — as is much of the organized international terrorist threat — is being generally coordinated from the old die-hard Communist faction of the FSB/KGB. The Yakuza strategic threat is also being generally ignored by our intelligence analysts, yet the Yakuza are proteges of the same dominant FSB/KGB faction, the one which possesses, controls, and utilizes the Russian energetics superweapons, never having allowed them to pass into the regular Russian armed forces. Thereby the communist faction retains power and will do so.

President Vladimir Putin, from the younger faction of the KGB, would like to reach an accommodation with the U.S. However, the Russian communist faction, which remains dominant, prohibits him from doing so. Accordingly, Putin has been forced to reinstitute harsher state control measures and take control of domestic oilfields from private industry. Instead of becoming the "trusted cheap oil supplier" to the United States as Putin wished, Russia has allowed China to invest in developing Russian oil fields. This appears to be part of the new alliance among Russia, China, and India.

Suppression of "Energy-from-the-Vacuum" Electrical Systems

Electrical power systems freely taking their energy from the vacuum rather than from fuel are suppressed worldwide by several large and powerful cartels — including in the U.S. scientific community — and for some time the Yakuza has suppressed all EFTV systems successfully developed in Japan.

As part of their scheduled plan to catastrophically collapse the U.S. economy by obliterating our power supply, the Yakuza have suppressed several of these legitimate Japanese overunity electrical power systems — such as the Takahashi magnetic Wankel engine {xxxvii} and the Kawai motor {xxxviii} — to prevent them from being marketed.

Were these already-developed Japanese systems allowed on the market, they would quickly resolve the world energy crisis, and enable the dismantling and rapid replacement of the horridly vulnerable, centralized U.S. electrical power system. Needless to say, the availability of such systems would cleanse the biospheric contamination from energy-related operations and developments, alleviate the march toward global warming, etc.

All the field energy and potential energy used in every EM circuit already comes directly from the vacuum, and not from cranking a generator shaft or dissipating chemical energy in a battery. The energy is extracted from the vacuum itself by the system's source charges and dipolarities. And yet our own scientific community perpetuates a model assuming that the field energy from the charges - and therefore the available usable energy in the circuit — is freely created out of nothing at all, while also erroneously teaching that it is the mechanical power turning the generator shaft which powers the electric distribution line and distant loads.

We do not have to rediscover how to extract usable EM energy from the seething vacuum! Every charge in the universe already continuously does that, and it continuously gushes forth real EM energy extracted from its ongoing "ratcheting" vacuum interaction. All we have to do is learn how to properly intercept, extract, and use the already-real energy flows from source charges and dipoles. This has to be done by uncovering and eliminating the limitations unwittingly incorporated into the CEM/EE model — such as the ubiquitous closed current loop circuit containing the source dipolarity (the source of potential wired into the external circuit as a load to be continually destroyed — and such as insisting on invariance and Lorentz symmetry of the model because of the "mathematical beauty" in symmetrized equations and an invariant system. "Invariance" refers to the notion that no new net observable is permitted when the equations are regauged. To do that requires symmetrical regauging, which kills any modeling of asymmetrical receipt of excess energy from the active environment. The Lorentz symmetry of our inane electrical power circuits thus guarantees that the much simpler Lorentz-invariant equations can be used to describe the deliberately crippled system's operation. It also guarantees that the system will not electrically perform with a coefficient of performance (COP) > 1.0.

The scientific and industrial and financial entourages love it, and will do whatever is required — destroy careers, withhold funds and tenure, or even kill the researchers — to keep that status quo. Hence it is not accidental that, in a world filled with an uncountable number of free energy generators called "source charges", our vaunted scientific community still opposes energy from the vacuum systems and will not fund or allow research on them. Their position is the ultimate irony, because all of the energy driving every EM system ever built has been extracted from the seething subquantal fluctuations of the vacuum!

On the other hand, by deliberately avoiding the Lorentz-invariant equations, one can violate the Lorentz symmetry, resulting in asymmetrical circuits and systems that collect excess energy (i.e., asymmetrically regauge themselves) from the active vacuum's interaction with all the circuit's charges. Asymmetrical regauging freely produces a net nonzero force field. A properly designed circuit can utilize this force field to dissipate the previously-collected "free potential energy" in external loads to power them almost "for free" (as far as any cost to the operator for the energy dissipated). No law of physics is violated, and no valid law of

thermodynamics is violated (once the erroneous Second Law is corrected, and is no longer the oxymoron and "half law" it presently is).

Sometimes simple equations contain profound truths. Because a potential (envelope) is actually a set of ongoing EM energy flows, then from any fixed source of potential V, any amount of energy W can be freely collected on intercepting charges q, given sufficient q and also dq/dt = 0. The simple equation is W = Vq. Further, by only increasing V, while pinning a fixed amount of intercepting charges q so that i = dq/dt = 0, any amount of potential energy density V can be freely produced in the system by work-free voltage amplification alone. Regauging is changing the potential(s), nothing else.

From such simple equations, one can see that a circuit can self-regauge and take on extra potential energy freely, from any external source of potential energy providing the necessary potential energy flow, without having to do work — so long as the source of potential is not deliberately destroyed. This is done in a two-phase process. In the first phase, dq/dt is made to equal 0 by pinning the charges q to prevent current flow. In this phase the pinned charges are freely potentialized. One can potentialize as many charges as desired without draining the external source of potential, because the source's dipolarity is not reduced. In the second phase, the source of potential is disconnected, the circuit is re-closed and the charges q are unpinned. Now the circuit freely dissipates the previously-collected energy to power loads "for free". The circuit can perform this two-phase process repetitively and continuously because dq/dt = 0 during the potentialization process.

In short, the external source of "static" potential will last indefinitely, so long as current is not forcibly pushed up through its dipolarity's back emf. Via a flashlight battery or electret as the "external potential source, " under proper circumstances sufficient energy could be extracted from the vacuum to power New York City, at least in theory.

We do not have to learn how to extract energy from the vacuum. We only have to learn how to more properly use the energy freely flowing from charges already doing so, and build and use circuits that do not keep killing the source of potential energy flow faster than they power their external loads. The energy we input to the shaft of the generator is to continually restore the destroyed dipolarity, that we intentionally build our "external systems" to do, faster than they power the external loads. We pay the power company to engage in a giant wrestling match inside its generators and lose.

Our classical electrodynamicists and electrical engineers have missed the fact that, since every EM field and potential is a pattern in the continuous flow of EM energy from the associated source charges, the field or potential is itself a set of continuous free EM energy flows. To see it and prove it, simply decompose the field or potential by Whittaker's methods {xxi,xxii}.

Members of our company, CTEC, personally witnessed the Yakuza suppression of Japanese EFTV electrical systems during our negotiations for rights to market Kawai's self-powering Kawai motor right here in Huntsville, Alabama in 1996. The board directors and the author, as chief executive office, had reached agreement with Kawai late one Thursday afternoon. The Yakuza arrived by private jet from Los Angeles that night. The next morning, a stunned and totally demolished Kawai no longer controlled his invention, his company, his life, or further developments. If not for the Yakuza's intervention, CTEC would have placed self-powering Kawai motors on the world market by mid-1997.

Such self-powering electrical systems are no more mysterious than windmill powered generators or solar cell array power systems. In each case, the active vacuum environment furnishes all of the energy required. Even though any system has losses and its overall thermodynamic efficiency cannot exceed 100%, the coefficient of performance can equal infinity when the external active environment, not the operator, is the source of all of the energy collected.

Energy-from-the-vacuum systems to replace our centralized electrical power grid would take nearly-free energy directly from the local vacuum, needing no external fuel, pipelines, fleets of tankers, railroad coal cars, refineries, etc. Most of the massive and expensive support structure for our bloated centralized electrical power system would gradually be dismantled as it was replaced by a decentralized EFTV system. Our present dependence on foreign oil and gas would vanish forever, accompanied by a dramatic reduction in environmental pollution and a dramatic uplift to the economy.

The U.S. electrical power system would no longer be remarkably vulnerable. Replacement of most of the centralized power system would be of enormous economic benefit and of enormous strategic importance. Presently, we have some two years to get a substantial percentage of that task done, in precisely that manner. Otherwise, we will see the centralized electrical power system destroyed, followed shortly thereafter by the catastrophic collapse of the U.S. economy. And then will immediately follow the methodical destruction of the United States - every last man, woman, and child. At least those are the plans of the enemy waging the asymmetrical war against us, and soon to spring up and proceed internally inside the United States.

The resulting benefits of such a centralized, fuel-free system to the taxpayer and to the long suffering destitute peoples of the world would be incalculable — but the incredible loss of revenue to the large energy cartels now in power worldwide would be directly calculable! Such powerful organizations do not surrender their vast empires and dominant positions without a major struggle.

So certain elements of those cartels already suppress "free energy" developments worldwide, and they have been doing so since Stubblefield {xxxix} (even before Tesla). Those who engage in energy from the vacuum research, if successful, can easily "meet with a sudden suicide" on the way to the supermarket, unless they exercise exceeding care. Or one can be hit in the midst of a crowd by an ice dart

dipped in curare, to that one convulses and dies right there with a "seizure" and massive heart and brain damage.

Or heroin can be planted on the premises secretly by an intruder. Then the regular narcotics police are "tipped off. They raid the place, the dogs sniff out the large cache of heroin, and one has "been caught red-handed" as a dirty old dope dealer. One winds up behind bars for 20 years or so, wondering how it all happened.

Or one encounters a "throw-away" assassin, who has been brutally conditioned. After he successfully fixates on his target, then later he will march right up to the targeted individual in a public restaurant, pull out a pistol and empty it at point blank range into the target, killing him. He will remain right there until the police come and haul him away. And even electric shocks on his testicles will not elicit any useful information from him.

Or, more simply, one just meets with a fatal auto accident.

Or one gets hit with a microwave "shooter" whose wavefront has been carefully modified by the Venus ECM (electronic countermeasures) technique, to dramatically disrupt the receiving heart by throwing it into violent and uncontrolled fibrillation. The target falls, goes into convulsions, thrashes a bit, and expires with a legitimate massive stroke, heart attack, or both. The smaller short range shooter is about the size of a small paperback textbook, and fits inside the assassin's coat pocket. A larger longer range shooter is about the size of a bazooka. It will shoot right through walls and windows, killing a person inside the building (after locating the target's body heat through the wall or window with an infrared device).

Or a professional hit man kills the person, making it appear that some hoodlum committing a robbery or some such did the crime. Recently Dr. Gene Mallove, an excellent alternative energy and cold fusion researcher and a highly dedicated scientist, probably was murdered by this latter type of professional hit. It was probably arranged by the entourage of the powerful consortium (both industry and science) planning to rip off the U.S. public for more than a trillion dollars, to build hundreds of pebble bed nuclear reactor power plants. To do that, they need helium, which is in short supply and expensive. But in "cold fusion" there is a nuclear reaction which generates helium {xl}, and it can be developed to do it copiously and cheaply. So the cartel needs to appropriate that reaction from cold fusion, and pretend it is hot fusion, while still keeping cold fusion suppressed. Mallove, the great champion of cold fusion, would have prevented that, and he had the respect and connections to do it. Obviously, Mallove had to go. No one would have believed suicide, so it had to be more mundane. Hence a "lowly burglar" beat him to death.

Those are just a sampling of the many methods — professional clandestine assassination, jailing, suppression — currently used against some EFTV researchers.

Unfortunately, President Bush - with a serious energy crisis approaching and with continuing bum scientific advice from our scientific community - has been persuaded to back that big nuclear power program. So the cartels in industry and science that are grabbing all the research funds for big nuclear power, hot fusion, hydrogen economy, etc. are in fact preventing any appreciable research in the one area that can do the job: energy from the vacuum. Planning and funding the building of big nuclear power plants that will go on line in about 5 to 7 years, to feed a distribution system that will be destroyed two years hence, in a United States that will be destroyed within a year following, simply will not do the job. Instead, it will exacerbate the problem. It will, however, guarantee that when Rome burns it will burn completely. Presently that is the main function of our power industry and our scientific community, who still have no notion of the terrible threat and destruction bearing down on this entire nation.

But to seek out what our own science is doing in EFTV research, simply visit the websites of the National Academy of Science, National Science Foundation, Department of Energy, national labs and universities, and search for any real EFTV research program or solution that would enable our survival in this three year period we have entered. Cut through the rhetoric and hype for any real content that would solve the problem. There is none, and there is not going to be any.

The sites and organizations are still blindly accepting the very seriously flawed electrical power engineering, the material ether, force fields in empty space, flat spacetime, inert vacuum, and other gross scientific errors. The reader will find that "business as usual" and the interests of the powerful scientific cartels — hot fusion, nuclear power plants, fuel cells, etc. — are being pursued, with a little sop to the environmentalists in such things as solar cell array power systems windmill-powered generating systems, etc.

To sum it up: Not only is our scientific community fiddling while Rome prepares to burn, but it is also ensuring that Rome bums completely.

Yakuza Production of Portable Scalar Interferometers

The Yakuza now produce their own scalar interferometer weapons in their own facilities in Japan, including small, portable versions. This Yakuza activity has no relationship to the Japanese government. Small versions of these Yakuza weapons which can fit into a small sports utility vehicle (SUV), and undoubtedly some are also already inserted in the U.S., to be used a few times during the next two years against our refineries, nuclear power plants and hydrocarbon-fueled power plants, oil fields and Gulf oil rigs, control systems and substations for the centralized power grid, pipe line hubs, long high voltage distribution lines, etc. In short, the Yakuza can already lay down the U.S. electrical power system, for months at a time or permanently — and it can do it easily, quickly, and at will.

Even normal cyberwar techniques will do it for extcnded periods, as is well known by cyberwar specialists. For example, quoting from a PBS interview with Joe Weiss {xli}:

> Question: "So just put it all in perspective. What's the worst-case power scenario, power we're talking here — power lines, power grid?"
>
> Answer: "Absolute worst? I won't even say absolute, but a very worst case could be loss of power for six months or more."
>
> Question: "Over how big an area?"
>
> Answer: "Big as you want."
>
> Question: "Is that a possibility?"
>
> Answer: "Yes."

Presently we are in the two year "slowly escalating" initial operations phase of the centralized asymmetric warfare plan for the destruction of the United States.

Then, beginning about two years from now, the final operations phase will swiftly occur, and the already damaged entire U.S. centralized electrical power system will be destroyed quickly and rather permanently. The destruction will be by combined attacks, including cyberwar, with a guaranteed destruction furnished by Yakuza tactical and strategic interferometers, portable EMP shooters, etc.

The destruction of the United States, with the aid of the Yakuza, is coordinated by centralized planning under the old die-hard Communist faction of the FSB/KGB, which controls the Russian Federal Security Service and the Russian superweapons. Possession and operation of the Russian superweapons ensures this faction's dominance.

Russian President Vladimir Putin comes from the younger, more modern faction of the FSB/KGB, which would very much like to reach an accommodation and become the United States' trusted cheap oil supplier. This arrangement would benefit every level of the Russian economy as result of pumping in U.S. development and royalty money.

However, supplying copious Russian oil to the United States contradicts the Communist faction's fervent plans to totally destroy the United States. Thus Putin has been stymied to a large extent {xlii}. Instead, Russian oil shipments to China, over land by rail, were stopped, stimulating China into a more aggressive stance in other world oil markets such as the Middle East. Consequently, China bought in to the Russian oil fields, after the largest oil consortium in Russia came under legal attack and direct interference by the State, with the State eventually taking over the oil fields under the guise of a State protege company. Indeed, a new alliance between China, Russia, and India bodes ill for our access to energy and for other things as well.

The old Cold War has not gone away, contrary to popular conception. Instead, it has just been turned into a more sophisticated kind of war, called "asymmetric"

warfare. The same "old dogs" are still calling the shots, like a tired old black and white movie from the 1930s. Hence our asymmetric war problems (i.e., our War on Terrorism and the war of terrorism on us) will continue. As an example, Putin caving in to pressure, again centralized and tightened the control of the Russian government, setting aside the reforms of open election that had been partially implemented {xliii}. In addition, he had to seize the oil fields and assign then to a puppet company controlled by the Russian state.

Afghanistan, Iraq, Al Qaida, and Intended Muslim Jihad

The international terrorists are also being subtly and not-so-subtly manipulated, and we will see the anti-American polarization in the MidEast continue and intensify. Many foreign Arab fighters are fighting in Iraq and Afghanistan right now. Their number and organization — and centralized coordination — will continue to increase.

There are still serious nuclear proliferation problems to be faced in North Korea, Iran, and elsewhere. Iran has defiantly announced it is resuming uranium enrichment and nuclear power plant development. Short of a few ineffective sanctions or attacking Iran, it seems that little can be done {xliv}. However, clear signals from Israel emerge that eventually such will not be tolerated, and Israel will strike if necessary.[6] North Korea remains defiant and almost certainly already has a small number of nuclear weapons. Pakistan and India — both nuclear powers — continue a stand-off and are often eyeball to eyeball. With the alliance of India to China and Russia, that "eyeball to eyeball" confrontation could be aggravated at will.

Israel is extremely concerned about the path Iran is taking to achieve a nuclear weapons capability. The Israelis, having purchased several hundred "bunker-busting" bombs from the U.S., at some point may conceivably take out the Iranian nuclear facilities to prevent an unacceptable Iranian nuclear knockout threat against Israel.

The MidEast situation will further heat up, not lessen, over the next two years. It's called bleeding the U.S. dragon — and it is indeed economically bleeding us.

The intent of our foes is also to deliberately bring substantial factions of the Muslim world to a state of Jihad against the United States, necessitating additional commitment of U.S. forces out of country, and increasing the already-pressing

---

[6] E.g., see full page ad, by FLAME (Facts and Logic About the Middle East) in U.S. News and World Report. Mar. 28, 2005, p. 69, entitled "The Holocaust: Sixty Years Later: Has the spirit of Auschwitz been revived?" Quoting: "If Iran isn't stopped from acquiring nuclear weapons, there can be little question that, with or without the approval of the United States, Israel would have to preempt and, just as it destroyed the Osirak nuclear plan of Iraq in 1981, would destroy the Iranian nuclear installations — by whatever means it might take."

economic strain on the U.S. Quite simply we have run out of troops necessary to continue our worldwide tasks and missions. Unless a draft is reinstituted, we are also seriously challenging our reserves and National Guard. Any draft imposed is likely to reinitiate an intense polarization inside the U.S. over the war and America's foreign commitments.

Claiming that America had declared war against God and his messenger, Bin Laden has called for the murder of any American, anywhere on earth, as the "individual duty for every Muslim who can do it in any country in which it is possible to do it. " {xlv}.

In an American national television interview from Afghanistan, Bin Laden stated his intention to kill innocent civilians as well as military, without hesitation {xlvi}:

> "It is far better for anyone to kill a single American soldier than to squander his efforts on other activities... We believe that the worst thieves in the world today and the worst terrorists are the Americans. Nothing could stop you except perhaps retaliation in kind. We do not have to differentiate between military or civilian. As far as we are concerned, they are all targets."

The 9-11 Commission Report summarized the unrelenting attitude as follows {xlvii}:

> "Many Americans have wondered, "Why do 'they' hate us?" Some also ask, "What can we do to stop these attacks?" ... Bin Laden and al Qaeda have given answers to both these questions. To the first, they say that America had attacked Islam; America is responsible for all conflicts involving Muslims. Thus Americans are blamed when Israelis fight with Palestinians, when Russians fight with Chechens, when Indians fight with Kashmiri Muslims, and when the Philippine government fights ethnic Muslims in its southern islands. America is also held responsible for the governments of Muslim countries, derided by al Qaeda as 'your agents'.... To the second question, what America could do, al Qaeda's answer was that America should abandon the Middle East, convert to Islam, and end the immorality and godlessness of its society and culture. [Al Qaeda states] '... you are the worst civilization witnessed by the history of mankind.' If the United States did not comply, it would be at war with the Islamic nation, a nation that al Qaeda's leaders said 'desires death more than you desire life'."

This perhaps explains the morose statement of Vice Present Cheney, only a month or so after 9/11, and after he had received intensive briefings on terrorism and its present conduct against the United States. Cheney stated {xlviii}:

> "The war on terrorism will not be over in our lifetime. It is different than the Gulf War was in the sense that it may never end. At least not in our lifetime. The way I think of it is, it's a new normalcy."

Bin Laden also certainly knows the importance economics plays in a war. His original wish for the 9/11 strikes was to hit several nuclear power plants etc., damaging the ability of the centralized grid to furnish power, as well as posing a possible nuclear hazard and risk. He felt he lacked sufficient control to do it, so

opted fur highly symbolic targets: the twin towers, the Pentagon, and the White House.

Indeed, after 9/11 Bin Laden stated {xlix}:

> "Al Qaeda spent $500,000 on the [September 11 attacks], while America, in the incident and its aftermath, lost — according to the lowest estimate - more than $500 billion. Meaning that every dollar of al Qaeda defeated a million dollars, by the permission of Allah!"

He declared his policy is "bleeding America to the point of bankruptcy," and joked about the U.S. "economic deficit... estimated to total more them a trillion dollars. " Indeed, our known total obligations are already some $47 trillion dollars, and climbing.

Welcome to asymmetric warfare, where war is war, peace is war, and there is only perpetual war, including a virulent form of economic warfare augmented by "stretching and bleeding the dragon" and by direct damage of infrastructure.

Our Analysts Missed the Yakuza's Key Role and Significant Aspects of the Centrally-Coordinated KGB/FSB Strategic Plan

Our own intelligence agencies do not appear to be aware of the key role played by the Yakuza. Nor are they aware, it seems, that the Communist faction of the KGB/FSB directs the entire asymmetrical warfare against us, so that, rather than isolated incidents, the actions of all the far-flung pieces are coordinated in a strategic plan of increasing intensity and effect. Our intelligence analysts do not appear to realize that we have entered into a 3-year Operations Phase schedule - consisting of a two-year initial "gradual intensification" period and a 1-year "maximum intensity and total destruction" period — to collapse and destroy the United States.

The strategy for the initial two-year period is to "bleed and disorganize the dragon" until it collapses in fatigue and economic chaos. Mind conversions - inserting an additional modified mind in a human, then switching control of the thought and behavior between the individual's normal mind and the implanted mind, thus altering the individual's behavior as desired — will be massively unleashed to guarantee total confusion and disorder. The plan for the third year is to violently attack and dismember the prostrate dragon, swiftly and utterly destroying the United States by totally unleashing the terrorist assets already inserted into the U.S. and waiting.

At present, "bleeding the dragon" is in full progress and being steadily increased as part of the overall strategic plan against us. We are already stretched well past the capability of our regular Armed Forces, and we are inducting many of our Reserves and National Guard forces for repeated tours overseas. We have no national draft, and a bitter societal polarization will occur if the draft is reinstated. Our national debt and expenses are escalating rapidly. Our country is hemorrhaging jobs also, further increasing unemployment and financial duress.

Hurricane and storm damages are being escalated by the increased intensity of the Yakuza weather engineering. The American dollar is propped up only by ever-increasing purchases of U.S. Treasury instruments by foreign nations such as China and Japan, which could change at any time. Several prominent Asian politicians and central bankers have recently made public statements suggesting a coordinated intent to divest dollar-denominated reserve assets and shift reserves to other currencies. An avalanche of covert dollar selling appears to have already begun.

Many destructive natural phenomena can be evoked or augmented by the scalar interferometry weapons possessed by the Yakuza. Such phenomena include volcano eruption, earthquake induction, and weather and climate engineering, as confirmed by Secretary Cohen's epochal 1997 statement. But the achievable phenomena also include tsunamis, freak waves in the open ocean, and rogue waves of numerous kind and occurrence {l}. Quoting Wolfgang Rosenthal of the GKSS Research Centre in Geesthacht, Germany on rogue waves {li}:

> "The waves exist in higher numbers than anyone expected... Two large ships sink every week on average. But the cause is never studied to the same detail as an air crash. It simply gets put down to 'bad weather'."

Even super-carrier ships are frequently destroyed by such waves {li}:

> "Over the last two decades more than 200 super-carriers — cargo ships over 200m long — have been lost at sea. Eyewitness reports suggest many were sunk by high and violent walls of water that rose up out of calm seas."

That's an average of ten per year. Indeed, a satellite test readily confirmed the occurrence of such previously unsuspected freak giant waves {li}:

> "As part of a project called Max Wave — which was set up to test the rumors — two ESA satellites surveyed the oceans. During a three week period they detected 10 giant waves, all of which were over 25m (81 ft) high."

And that was just a one-time survey by only two satellites.

Indeed, during that exact three week period while the Max Wave satellites were seeking out huge rogue waves, two large tourist liners endured terrifying ordeals from such waves but survived. The Breman and the Caledonian Star cruisers had their bridge windows smashed by 30m high waves in the South Atlantic.

It appears that at least 10 to 12 oil tankers are lost each year to giant rogue waves alone. To appreciate total shipping losses from all causes: In a single year— 1981 - 250 ships of 500 tons or greater size were lost and perished {lii}. Many of these were probably sunk by unexpected large rogue waves.

We hardly need point out that a giant oil supertanker on the ocean is also easily destroyed in a single shot by a strategic scalar interferometer. A burst of energy, placed adroitly under the surface by a distant interferometer, can also produce large waves that arise and smash a ship. This also "disguises" the incident as if it were due to anomalous large waves of natural origin.

With U.S. dependence on foreign oil and most of the oil delivery dependent on supertankers, oil continues to climb in price. In the past the U.S. government has opened the Strategic Oil Resrve a bit, to assist two hard-hit companies while they scrambled to reinstate their supply. It has also just recently squeaked through the authority to drill for petroleum in the Artic National Wildlife Refuge.

It would take very little Yakuza effort to increase the loss of oil tankers, further strangling the U.S. oil supply and dramatically increasing prices. Since the oil supply for all oil-dependent nations comes from known major oil field locations and harbor facilities, deliberate and careful reduction of the tanker fleet and facilities can place extraordinary pressure on oil's availability for several major nations at once.[7]

Coup de Grace: Strategic Strikes of Great Magnitude

Great "coup de grace" blows have also been prepared by the Yakuza, in order to guarantee the catastrophic collapse of the U.S. economy, followed by the swift destruction of the United States itself. Several of these involve opportunistic volcano eruptions and tsunamis {liii} that can readily be evoked.

As an example, prior to the end of 2004 the Yakuza registered one or more of its large scalar interferometers upon one of the world's largest supervolcanoes — whose calderas lie beneath or near Yellowstone National Park. The symbolic timing so close to the anniversary of the 9/11 attack should not be overlooked. The Yellowstone supervolcano erupts about every 600,000 years, and some 640,000 years have elapsed since its last eruption. Hence — geologically speaking - its next eruption is overdue, and the caldera undoubtedly harbors great pent-up stress. Presently a Yakuza finger is on the trigger of the registered scalar mterferometer(s). If that finger pushes the trigger, the interferometer will gradually inject tremendous energy into the Yellowstone supervolcano's stress zone, resulting in a violent eruption. Its previous eruption, about 640,000 years ago, devastated much of North America, including most of the higher life forms.

By deliberately kindling the supervolcano into eruption, most of North America would be devastated, and particularly most of the United States {liv}. The supervolcano could eject more ash, lava, rock, and debris than the entire Grand Canyon can hold. Additional side effects would include the instant destruction of most of the agricultural food crops in North America by covering the farmland with thick ash a meter or more in thickness. Survivors would be faced with the immediate problems of starvation and fatal lung disease (Marie's disease), the degree of lung disease varying with exposure to silicon particles of different sizes. Food animals would also be killed in the same catastrophe.

---

[7] In 2004 a Yakuza-generated and Yakuza-steered hurricane passing through the Gulf of Mexico also was accompanied by just such freak waves, which were responsible for much more damage being done to the Gulf oil rigs and pipelines than initially thought. Pipelines on the seafloor were damaged particularly heavily, requiring very costly repairs.

Even worse damage occurred some 74,000 years ago or so, when another large supervolcano exploded, killing all human life on earth except for a few thousand in Africa. More on that shortly.

Most of all, in 1997 Secretary of Defense William Cohen specifically confirmed that terrorists already were using electromagnetic weapons to stimulate volcanoes into eruption {xxxv}. Since that is confirmed, and since the Yakuza has the scalar interferometers to do so, it follows that the Yakuza also will have identified the volcanoes in which the most damaging eruptions could be induced to strategically destroy or severely maul the United States. And so it has.

To further illustrate the killing power of a supervolcano, consider the eruption, about eleven million years ago, at Bruneau Jarbridge south of Hagerman, Idaho. This eruption covered half of North America with ash two meters thick. Distinctive fossils as far away as Nebraska, 1600 to 2000 kilometers distant, reveal ash piled two meters high that choked the vast animal population of North America to death. Marie's disease, a deadly lung disease caused by ash exposure, contributed to the mass extinction of North American megafauna.

Also consider what probably happened about 74,000 years ago with the explosion of the supervolcano whose caldera today lies under Lake Toba on the Indonesian island of Sumatra. Though the findings are still controversial, increasingly it appears from multiple evidence that the eruption of Toba wiped out all human life on earth except for a few thousand humans in a location in Africa. This follows a formal theory by Professor Stanley H. Ambrose {lv}, which has gained support as a result of independent geological {lvi} and genetic evidence {lvii}.

Genetically, the human mitochondrial genetic trace clearly shows a dramatic and sudden reduction in genetic variability (called a genetic bottleneck) some 74,000 years ago. Also, present human genetics shows that the ancestors of every person living today came from Africa. After a period of continuing extinction, then during the last 74,000 years following that violent eruption, every human born on the planet descended from the few thousand humans in Africa who survived. Apparently all other humans on earth perished, along with their inherited genetic variations, producing a profound genetic bottleneck in the entire human species {lviii}.

Quoting Professor Lynn Jorde, a specialist at the University of Utah who uses deep analysis of mitochondrial DNA to investigate mankind's past {lvii}:

> "We have a dramatic reduction in genetic diversity during this time when the population is very small and then after the bottleneck the people who we see today would be descendants only of those who survived. And they're going to be genetically much more similar to one another, reducing the amount of genetic variation. ...Mutations in the mitochondria take place with clocklike regularity, so the number of mutations gives us a clock essentially that we can use to approximately date the major event. In the case of a population bottleneck, we think that this would have occurred roughly 70-80,000 years ago, give or take some number of thousands of years. So then the real question

is: What could have caused such a reduction - an extreme reduction - in the human population down to as few as 5 or 10,000 individuals?"

Increasingly the cause appears to be almost certainly the recognized supervolcano eruption at Toba, some 74,000 years or so ago {lix}.

As another example, there is a volcano named Cumbre Vieja, on the Island of La Palma in the Canary Islands, which split in the past. The split-off western flank - about the size of the entire Isle of Mann - still hangs above the ocean, poised to slip into the sea. Its eventual crash into the sea will evoke massive tsunamis, moving outward at some 600 miles per hour. Within 7 to 10 hours, an immense wall of water, up to several tens of meters high, will strike New York, Boston, and the eastern seaboard, penetrating inland and devastating the area {lx}. It is not a matter of if the incident will occur, but only a matter of when.

Tsunamis from underwater volcanoes, seafloor earthquakes, and other shocks occur around the world, including in the Pacific Ocean. Quoting {lxi}:

> "In the last 1,000 years, Pacific Ocean tsunamis have been observed and recorded over 1,000 times. All of these were major catastrophic events, since smaller events often go unrecorded."

Cumbre Vieja presents another wonderful opportunity to the Yakuza, who almost certainly has registered their scalar interferometers on it, intending to evoke a tsunami by triggering the volcano into eruption. If so, then this is one of the earthquake eruptions that are aknost certain to be initiated by the Yakuza, during the next two years, to assist in causing huge economic damage and mass casualties to the east coast of the United States. Incredibly, the U.S. apparently does not monitor Cumbre Vieja to enable hours of advance warning of the giant tsunami. Without a warning system and lead time to evacuate major cities, great loss of life and economic destruction can be expected.

Further, there are conditions off the west coast of the U.S. that are also suitable for induction of undersea quakes and large tsunamis. Undoubtedly these arc already on the Yakuza's target list and schedule for striking.

As pointed out by Stockton {lxii}, there is also the possibility of heating methane hydrates (frozen natural gas) on the eastern continental shelf to cause missive undersea landslides, which would also cause tsunamis.

The strategic significance of Secretary of Defense Cohen's statement {xxxv} in April 1997 becomes abundantly clear. He was referring to a grave strategic destructive capability, already in the hands of the terrorists and available. He was confirming that this capability is already being used by the terrorists in their asymmetric war against us.

That strategic destructive capability, when adroitly utilized, as in the simple examples given, is as powerful as the full nuclear ICBM capability of the Soviet Union or the United States.

Since the Yakuza interferometers can also massively intervene in submarine volcanic and earthquake activity on the ocean floor worldwide, their capability to induce giant tsunamis and other violent waves, in addition to giant quakes and volcanic eruptions, is of the gravest significance.

Indeed, the Yakuza recently spectacularly demonstrated such effects, under the direction of the FSB/KGB. On Dec. 26, 2004 they initiated the magnitude 9.3 seafloor quake that caused severe tsunamis and loss of life in Asia, now thought to include more than 300,000 deaths in addition to enormous economic damage.

Summary of Some Weather Engineering and Other Capabilities

Some of the simpler scalar interferometer capabilities in engineering of the weather and geophysical events are:

a. Steering the jet stream, thus steering a weather entity (i.e., storm, front, air mass, and hurricane). Warming the air in one region expand it so it becomes less dense, creating a low pressure area. Gradually moving the target interference zone determines its path. Cooling the air in a region produces the opposite effect, a high pressure zone, steerable in the same fashion. By making multiple highs and lows and adroitly positioning and steering them, the jet streams and other prevailing winds can be entrained, captured and steered. This alone allows substantial augmentation and steering of weather effects.

b. Warming or cooling the atmosphere in a storm or front to affect its power.

c. Producing sharp negative energy EM pulses inside a storm so that the negative energy Dirac sea holes "eat" electron charges, reducing the storm's charge and power.

d. Producing positive energy EM pulses just outside a storm in order to lift extra electrons from the Dirac Sea, to increase the storm's charge and power. In that case the resulting Dirac holes expand outward and away from the storm, having no effect on it. As they meet stray electrons, these holes eat the electrons and both disappear back into the vacuum, as ordinary vacuum (the Dirac Sea).

e. Building very large rotational atmospheric flow in the path of a storm, and then sharply decreasing the diameter of its curvature, so that the storm's angular momentum spawns concentrated spin flows or meteorological circulations, to form tornadoes, waterspouts, etc.

f. Establishing a large high pressure area in a region to block lower-pressure normal winds and storm directions.

g. Establishing a large low pressure area in a region to attract higher-pressure normal winds and storm activity.

h. Focusing the interference zone inside a volcano's magma chamber and steadily depositing additional EM energy there builds up internal pressure, causing an eruption. A slow rise in pressure, resisted by friction, engenders a large and violent eruption, and consequently maximizes the distant dispersion of great quantities of ash, lava, and other debris.

i. By more rapidly inputting the energy into the volcano, the eruption will occur at a lower pressure and so a smaller eruption will ensue.

j. All sorts of EM energy forms glowing spheres, hemispheres, etc. can be produced and used against various targets, for electrical and electronic destruction or for an electromagnetic explosion when the energy contacts the intended target.

k. Depositing extra intcrfcrometry energy into a fault zone increases stress and piezoelectric activity in the rocks, thereby inducing an earthquake when the rocks finally slip. By adjusting the rate at which the excess energy is added, the size of the resulting earthquake can also be changed.

l. By increasing the charge of a storm, its electrical activity and the resulting lightning strikes can be increased. This is useful, e.g., in repeatedly producing large forest fires, particularly when combined with weather engineering to produce a drought condition. On the other hand, by decreasing the charge of a storm, its electrical activity and therefore its lightning strike activity can be decreased.

m. By inducing repeatedly pulsed negative energy in an area containing living animals or humans, the animals or humans can be directly killed. Strong pulsing will result in rather instant death, where the bodies drop limply, with not even a nerve cell firing thereafter. Everything living — cells, microbes, viruses, whatever — in the powerfully struck bodies is killed instantly, and the bodies do not decay, even over a month or more. The Soviets tested such weaponry in this mode against two Afghan villages in their own war in Afghanistan, and it is probable that the Yakuza has produced portable negative energy EMP weapons with similar capability.

n. The longitudinal EM wave sets — and beams of such — transmitted by a scalar interferometer easily penetrate Faraday shields, the ocean, the earth, etc. That is because matter is mostly empty space filled with Whittaker EM fields and potentials, which in turn are bundles of longitudinal EM wave sets. Hence matter is a "superhighway" for the throughput of longitudinal waves. Such longitudinal wave weapons are very useful in attacking deep underground targets and facilities and destroying them or wreaking damage. As an example, the leader of a nation can be killed sitting in the chair at his desk, by a precision scalar interferometer. The interferometry focus has been demonstrated down to a few inches. In Japan, the Yakuza has demonstrated this capability on a few occasions to kill several Japanese critics inside shelters or shielded facilities. The significant impact on the very notion of shielding by strategic command and control centers in underground bunko and facilities can be easily appreciated. Essentially all facilities and personnel become completely vulnerable.

o. The use of a more portable scalar interferometer to destroy the electronic controls of a normal or nuclear power plant from a distance is obvious. With nuclear power plants this poses the risk of a melt down. Electrical controls for pipe valves, etc. are also vulnerable; spent nuclear fuel rods are largely stored in underwater pools on normal power plant sites. If valves open and the water drains from those pools, the rods will heat up and a melt down or very hazardous venting of radioactivity can ensue.

p. The control systems for hydroelectric dams are deadly vulnerable to scalar interferometry attack.

q. Large electronic complexes such as switching and control systems, centralized control systems for power grids and substations, etc. are highly vulnerable to attack by long- or short-range scalar interferometers.

r. Chemical plants, refineries, fuel storage sites, tank farms, etc. are also highly vulnerable to scalar interferomctry, including to portable attack.

s. Liquid natural gas ships, oil tankers, etc. are also extremely vulnerable to scalar interferometry attack.

t. Surges on the power distribution grid transmission lines can easily be accomplished by scalar interferometry at will, methodically causing great damage to the grid and emergency shutdown of most of its "feeding" power plants. As much of the grid as desired can easily be kept nonfunctional, as long as desired, by occasional repeats from a single long-range scalar interferometer.

u. Any communications center or headquarters is completely vulnerable to attack and destruction by strategic or portable scalar interferometers. Since a scalar interferometer can also produce negative energy EMP pulses of extreme lethality in the interference zone, all centralized command and control systems are essentially totally vulnerable. As an example, our own future network centric warfare communications systems can be totally destroyed in a few minutes by only a few scalar interferometers, even by just one.

v. Many other capabilities also exist to use the interferometry to affect the weather, the atmosphere, the rocks in the earth or at the bottom of the ocean, etc.

Once the Yakuza scalar interferometers are factored into the strategic terrorist threat situation, there is no recourse that can save the present centralized electrical power system, large U.S. command and control systems, etc.

The only way to prevent the total economic collapse of the United States induced by collapsing the centralized electrical power system is to immediately initiate the strongest possible energy from the vacuum systems development and production program. For the nation to survive the coming destruction of its power system, the goal must be to replace the entire centralized power system, including its long distribution lines and large feeder power plants, with decentralized EFTV power systems as rapidly as possible. That centralized system is simply not defensible and not sustainable against current threats, and against the hostile assets already successfully inserted or waiting abroad to support terrorist operations inside the U.S.

So the strongest possible immediate efforts are necessary if we are to prevent our total economic collapse in about two years, and also our subsequent total destruction by combined scalar interferometry and internal terrorist attacks. A massive Manhattan-type project to develop and deploy EFTV electrical power systems is most urgently required, as at least equal to the highest U.S. priority. We bluntly state without further discussion that such EFTV systems are indeed already developed in our own country and worldwide, and so they are available, but they have deliberately been withheld or suppressed for decades. Now they must be unleashed.

Short of a direct Presidential order and Presidential Decision Directive, there appears to be no way that the necessary program can be or will be galvanized because every powerful scientific industrial, and government laboratory cartel in our society is bitterly opposed to any such program or action. Our morose assessment is that, unless some other major strategic factor significantly enters the conflict, the Yakuza and other terrorists — attacking our present centralized and totally vulnerable control, planning, and energy systems - will probably succeed in catastrophically destroying the U.S. economy on schedule. If so, that will leave the U.S. prostrate for its subsequent rapid physical destruction by the jubilant Yakuza in a giant "turkey shoot". And hence our oblivion.

U.S. Societal Polarizations Are Being Gradually Increased

Among sociologists, there is much support for the notion that societal polarizations naturally tend to increase {lxiii}. Further, many pollsters state that the nation is very seriously polarized already, particularly since the recent presidential election. For example, quoting John Zogby on the 2004 elections {lxiv}:

> "I have been calling this the Armageddon election now for months because we are so polarized, so split culturally, politically, ideologically, demographically, like almost no other time in American history. ... The last time the nation was this deeply divided over what course to take was the original Armageddon election of 1800."

However, for the first time in history, certain rather esoteric "mind war" FSB/KGB weapons are being directly employed to gradually and reliably intensify the societal polarizations in America— straight vs. gay, conservative vs. liberal, Republican vs. Democrat, one religion against another, one race against another, labor class vs. financial class, etc. The strategic objective is to increase and intensify the extreme ends of these polarizations, by altering the behaviour of certain leaders. With intensification, the polarizations will slowly become so fierce that, about two years from now, serious rioting and bloodshed massively spilling into the streets and cities will result in chaos, martial law, etc. and severe polarization and disorganization. In short, the society will be engaged in fiercely consuming itself.

So far, the deliberate escalation of our societal polarizations by the new mind war and conversion techniques is right on schedule, as anyone can see now, and will increasingly see over the next two years.

U.S. societal polarizations will continue to increase now that the election is over. Temporary conversions and fractional conversions {vii} of the minds and mind operations (and therefore the behavior) of selected leaders or prime movers in the various polarization areas are being used and will increase. This capability arises from the branch of energetics known as psychoenergetics, and such measures are now being used selectively to intensify our polarizations. Particularly see our giant briefing on mind war and conversions, in the second part of this book.

Dramatic tests of the distant, total control over the mind and behavior of a person performing an intensive technical task (flying and operating an aircraft as a weapons platform) {lxv} were conducted against Captains Button and Svoboda in 1997. A third test against Captain Hess in 1998 demonstrated total control of the autonomic nervous system as well. Those dramatic "suicides" were deliberate, high profile stimuli to see if our own intelligence analysts knew anything about psychoenergetics yet. The answer was a very resounding and clear "No, they are still ignorant of that area, they are very determined to remain ignorant of that area, and hence the nation is still deadly vulnerable to use of such weapons and effects."

Our scientific community still does not understand that mind operations are totally electromagnetic but temporal, not spatial, although they also have virtual state projections in 3-space. Because the scientific community has suppressed the source charge problem, they have no notion of the exact mechanism by which virtual state changes can be integrated to observable changes, electromagnetically by the action of charge itself.

They also do not understand that observations in 3-space have small virtual state projections in the time domain (as mind operations). Our scientists have no understanding at all that mind operations are (i) electromagnetic, (ii) temporal, and (iii) directly engineerable and creatable (but using time-polarized EM photons and waves). They do not understand what thought is, what intent is and what its exact mechanism of expression is, and how mind and body are coupled to provide a living biological system.

Again, because our nation is so totally vulnerable to mind war conversions and fractional conversions, a U.S. crash program of utmost rapidity to catch up in that area, under a Presidential Decision Directive, is urgently required.

For example, on his customary morning exercise jog at a military post in the U.S., in March 1998 Captain Gordon Hess suddenly veered aside, sat down, took out his knife and calmly stabbed himself in the neck and torso some 26 times, including multiple thrusts directly through the heart. Note that the shock of a stab through the heart is considered in forensic medicine as generating such shock and recoil of the autonomic nervous system that it is not possible for an intentional suicide to continue, much less to achieve a total of 26 repeated stabs until the body simply became nonfunctional and toppled over.

In short, total control of even the deep autonomic nervous system was demonstrated resoundingly. The purpose of the test was two-fold: (i) demonstrate distant instant conversion and total control, including of the autonomic nervous system itself, and (ii) stimulate and "ping" U.S. intelligence to see if they knew what was going on, what had been tested, and why. Both purposes were achieved, The test went perfectly, and the U.S. demonstrated it was totally asleep and totally ognorant of such technology, and even of the technology's ansatz. Indeed, by order of the U.S. Army, two days later front loaders dumped two tons of dirt on the death scene, effectively hiding any further evidence. This is reminiscent of a

similar U.S. government action at the crash site of the Arrow DC-8 at Gander Air Force Base, Newfoundland in I985. A general officer arrived very quickly on the scene, and had the entire area bulldozed after extracting the wreckage.

As stated, the Yakuza is a major arm and the protege of the FSB/KGB's coordinated asymmetric war and terrorism, carrying the bulk of the strategic war to be conducted within the U.S., and reporting to those die-hard old communists who are the hidden FSB/KGB directors. The Yakuza view is that - together with the other terrorist organizations already having infiltrated substantial assets into this nation, and together with chaos in U.S. streets due to severe polarizatopms gradually being intensified now — they are already helping to bleed the dragon increasingly. Then as the scenario progresses they will joyfully begin the direct destruction of the centralized U.S. electrical power system and other key economic targets (harbors, refineries, pipelines, etc.). They will also participate in immune system spreading (explained later in this paper), as a force amplifier to biological warfare strikes by other terrorists. As all of this hostile action and destruction ramps up over the next two years, it will crescendo and catastrophically collapse the entire economy of the U.S.

Added to assure that great economic collapse, there will also be a sudden and massive collapse of "group ordering and coherence" (GO) induced by massive conversions of "sleeper" inserted conversions and fractional conversions. E.g., by sudden switching conversion of massive numbers of key persons whose behavior instantly and dramatically changes all over the map, the order and coherence of any important group can be and will be devastated and lost, immediately. Our police forces may suddenly begin attacking our populace, while crews manning and operating our ICBMs, nuclear subs, and nuclear bombers "go crazy" and erratically start firing at our own cities, and at each other. And so on, in a society that has suddenly erupted into total schizophrenia. Throughout the U.S. and Canada, GO will rather dramatically become NO-GO, as all group coherence is lost and total chaos sets in, as in the two examples given..

Given the planned present offensive schedule and the insertions already accomplished, indeed the plan for full strategic destruction of the U.S. is likely to succeed.

The psychoenergetics conversions and fractional conversions are a major strategic weapons program in support of the present three-year "Operations Phase" schedule for strategic destruction of the U.S. So it is also a program that supports the strategic destruction of the centralized U.S. electrical power system including its infrastructure, as one purpose.

The original targets desired by Bin Laden for the 9/11 attack actually were nuclear power plants etc. —parts of the centralized electrical power system — rather than the more symbolic Twin Towers, Pentagon, and White House. The targeting was apparently changed by Bin Laden himself. He felt that his assets in place and available were not yet sufficiently trained to produce a truly effective, coordinated simultaneous set of attacks on nuclear power plants and other

"harder" targets. So to guarantee success, he opted for strikes on symbolic but softer targets, which would provide great publicity stimulus in the MidEast for his cause, in addition to causing great consternation in the United States.

Insertions Far Exceeding Public Acknowledgment

Long before its economic collapse in the latter 1980s, the former Soviet Union inserted nuclear weapons in all our major cities and population centers, along with Spetznaz teams to detonate them on command. Lunev's book {lxvi} even tells a few of the ways the weapons were inserted. Those weapons and teams, still controlled by the old-guard Communist faction that dominates the FSB/KGB, are still here, still waiting for the order to detonate the nuclear weapons and destroy the United States. The Communist faction (not the younger and more liberal faction from which Putin comes) is the one plotting to destroy the United States.

These Russian nuclear weapons and teams may be brought into play during the operations phase as several substantial nuclear explosions in major U.S. population centers that will be blamed on the international terrorists. The result will be great loss of life, nuclear contamination of several large U.S. cities, complete overwhelming of our Homeland Defense and medical capability to handle mass casualties, and terrible physical damage to further guarantee the scheduled catastrophic U.S. economic collapse once the centralized electrical power system is taken out.

As previously mentioned, we would have been destroyed by the former Soviet Union in the late 1970s, by those successfully inserted Soviet nuclear weapons already at their target sites on station in the U.S., except that a friendly nation also inserted nuclear weapons massively into the cities and key target areas of Russia. Those friendly weapons are also still in place, waiting for the order for their detonation if necessary. This sort of thing in the "old days" of cold war intelligence was called dead man fuzing. It is still in place today, but its "range of uses and functions" has substantially increased.

Being chess players and rational adversaries, the Russians can be countered by a balance of terror including dead man fuzing — the old Mutual Assured Destruction (MAD) notion with the twist of using inserted nuclear weapons already on site in the targeted nation — because they will not just commit mass suicide for Mother Russia. So the United States survived in the 1970s, courtesy of a friendly nation, and we were not suddenly destroyed by American city after city blowing up in a nuclear inferno. The MAD tactic worked because the adversaries were known and their location could be destroyed at will.

However, with irrational foes such as those in the war on Islamic terrorism, mutual assured destruction is not an effective deterrent. There is no single nation or location in which to insert "dead man fuzing" against the terrorists or target with deliverable weapons of mass destruction. The present terrorists are not localized, but are dispersed worldwide and embedded in the civilian populaces of many nations, including our own. In that case, there is only assured destruction of

the nation targeted by the terrorists, if and when the terrorists successfully place enough weapons of mass destruction into the targeted nation(s). In short, MAD simply turns into AD. The terrorists will soon achieve that capability, if they have not already reached it.

In the case of assured destruction, the insertion phase — which can reach a very high assurance level before the operations phase is initiated — becomes the key to winning or losing, given that the terrorists have or obtain sufficient WMD assets to insert.

The purpose of strategic asymmetric warfare is to kill or destroy the targeted populace. It is a fanatical ultimate expression of General George Patton's famous, blunt statement:

> "I want you to remember that no bastard ever won a war by dying for his country. He won it by making the other poor dumb bastard die for his country..." {lxvii}.

Modern Asymmetrical War: The Scorpion Duel

We thus are back to the absolutely primitive warfare of two dueling scorpions: He who first succeeds at insertion, and then strikes his enemy hard and decisively in his vitals, is he who wins a priori.

The procedure is to first ensure that one will hit the foe's vitals catastrophically, and sufficiently to destroy the entire foe himself. That is the Insertion Phase. Then the procedure is to unleash what has been assembled, thereby destroying the foe. That is the Operations Phase.

Hence the success of the insertion phase — inserting the necessary WMD and operational teams into those vitals in advance — predetermines the success of the subsequent operations phase, where one strikes on order, unleashing the WMD and destroying the nation's vitals and therefore destroying the foe.

For the targeted scorpion, there is no turning back or delay, once the insertion phase of the scorpion duel begins against him. Successful insertion of the required WMD and WMD teams — during a time our folks innocently think of as "peacetime" — almost inevitably wins the war by destroying the penetrated adversary very shortly after the operations phase begins. In a nutshell, those two phases — insertion followed by operations — constitute the "offense" part of asymmetric war. And since peacetime is just the insertion phase, asymmetric war is perpetual war, whether or not shooting is ongoing.

There has been little public "briefing" by our government on what the estimated success of the insertion phase against us has been and is now. Apparently much of the analysis is in disarray, filled with assumptions, and very short on actual definitive data. It also follows that most definitive data in this area would be highly classified, particularly to protect effective human intelligence (HUMINT) sources.

Now one can appreciate VP Cheney's morose statement. Since "peacetime" now is just another name for "insertion phase", then "perpetual peace" is still "perpetual war" in the new vernacular. So we have entered a "perpetual war" we have not previously known or understood. There is no real peace in the sense we think of it. There never will be any peace again, until one opposing side of the dueling scorpions is utterly destroyed.

The "defense" part for the terrorists is to hide or defend their own "vitals" — their actual bases, support organizations, supply routes, troops and forces and equipment, etc. In the present asymmetric war, there are no single terrorist bases for us to just "knock out" decisively. We cannot win this war by simply having our troops riding out of "Fortress America", meeting and defending some hostile army on some distant battlefield, and then riding back into our protected fortress again. There no longer exists such a thing as a "protected Fortress America ".

Instead of an identifiable single army on a single foreign battlefield, the terrorist foe's "vitals" are hidden around the world, in many places, and in many ways. Many of them — often the most dangerous of them — are secretly hidden right here in the United States, inserted during the insertion phase which has been ongoing for at least 20 years.

In the U.S., we cannot "hide" our vitals such as refineries, pipelines, railroads, bridges, electrical power plants and long transmission lines, harbors, water supplies, food supplies, etc. Instead, we can only try to protect them against their certain attack, and try to limit the damage and destruction. The main target for the terrorists is not just our military forces, but is primarily our civilian populace and especially our national economy — which is particularly vulnerable by the rather simple destruction of our centralized electrical power system and its primary support infrastructure.

The real art of asymmetric war is to first draw most of the targeted opponent's military forces out of the protected fortress and get them scattered widely in distant locations and distant struggles. By augmenting the distant resistance, this forces the targeted nation's military forces mostly to be deployed elsewhere, leaving the internal fortress itself much less protected, and thus making it highly vulnerable.

Once the major decisive action is shifted to inside the protected fortress, there is an urgent necessity for (i) a strong Homeland Defense, (ii) well-organized and effective mass casualty treatment capabilities (which presently do not exist), and (iii) strong border defenses, sealing of the borders, and interception of insertion attempts as they occur, etc. This also presently is not in place; our borders are full of holes and in many ways almost a joke. There is also the urgent need to go after the opposing scorpion's "vitals" wherever the pieces can be located and "fixed in place" and destroyed.

Ironically, for the U.S. these urgent needs come at a time when our HUMINT resources have largely been abandoned or nullified, by the past fascination of our

intelligence community for technical widgets such as satellite photography, etc. So our ability to ferret out inserted cells and WMD has been sharply reduced by the intelligence community itself.

Effective HUMINT takes years to get established with successful agents infiltrated into the terrorist cells and planning organizations. So not too much is going to be rapidly accomplished to resolve our HUMINT shortfalls. Much of what HUMINT is available is either from foreign sources or is due to the clandestine cooperation of much of the peaceful U.S. Muslim community, which sees this nation as its own country, and thus sees any threat to destroy the U.S. as a threat against the peaceful Muslim religion itself. To understand some of the factions and divisions of the Muslim world, the reader is referred to treatises by Williams {xcvi, xcvii}.

But the scorpion duel is highly sensitive to being able to (i) find the opponents vitals (which now are the inserted assets and terrorist teams within one's own nation) and (ii) go after the scorpion's vitals and destroy them in what are erroneously called "peacetime operations". Ironically, one sets up winning or losing the asymmetric war, by one's actions in peacetime. Once in an asymmetric war, "peacetime" is the absence of significant overt active hostilities, but with the presence of fierce covert insertion and preparations for the follow-on operations phase and the "knockout" punches.

Distant Military Actions: Necessary but Not Sufficient

Hence one cannot think of winning major battles and the asymmetric war in a few months or even a few years, simply by fighting successfully on well-defined distant battlefields. Those distant conflicts and confrontations are necessary but not sufficient, a term mathematicians delight in using. It simply means one has to do it, to prevent losing, but by itself it is not sufficient to win the war on terrorism.

Instead, one must also think of a continuing gritty, gruesome war, lasting for decades, ongoing in one's own cities and population centers and installations. One rather gradually grinds down the terrorist opponents and rather gradually uncovers and destroys the various parts of their vitals, while protecting one's own vitals as much as possible, and while rooting out everything one can of the insertions made by the foe or further attempted by the foe. Here effective HUMINT is vitally important, and our shortage of it is a grave strategic vulnerability. Obviously our intelligence agencies are also scrambling to try to get such HUMINT effectively going again.

If one destroys the terrorists' assets and capabilities before they destroy him, one survives, but still must root and destroy the terrorists themselves. If one does not succeed in doing that, one dies because the terrorists will resurge and destroy him without mercy. This is the message the Al Qaida and other terrorists are symbolically sending, when they behead prisoners and hostages. It is absolutely a scorpion duel to the death.

With the abrupt wake-up call of 9/11, we were suddenly confronted with the continuing and unrelenting nature of this asymmetric warfare. At least officialdom and our armed forces were confronted with it; there has been no truly adequate news briefing or educational series for the American public on such matters.

The military schools of the Army, Navy, and Air Force do include education on such asymmetric warfare, including highly classified courses at the top secret level. But certainly the U.S. public still does not understand the absolute necessity for Cheney's morose statement or the full nature of the new reality of asymmetric war {xlviii}. Indeed, much of our population is polarized, because of— for one thing — a substantial and naive belief that all problems could readily be solved by negotiation, if only Bush were so inclined.

Indeed, as with every other strong and emotional subject, the subject of "asymmetry" in warfare is itself a societal polarization area. Typical "anti-views" simply downplay the very notion of asymmetry as being "nothing new or special" in warfare {lxviii}. As one reads such treatises, it becomes crystal clear that our own strategic planners and strategic theorists themselves are often confused, simply recasting asymmetric war into what has gone before. They are not factoring in such radical developments as the Yakuza's acquisition and use of scalar electromagnetic superweapons, or the dramatic change that occurs in the theory once full strategic U.S. destruction is a capability already in terrorists' hands, with multiple knock-out blows already cocked and waiting. And they certainly are not factoring in the stunning implications of mind war, conversions, etc.

If one can disable an entire populace mentally, at a single stroke, one can use such "mind war" conversion switching to destroy any order in the society nearly instantly.

With suitable preparation during the insertion phase, terrorists and foes with such capability can indeed achieve sudden massive "knockout" of a targeted populace, in ways presently not dreamed of by the open press.

Asymmetric Warfare Simplified: An Overview

Let us briefly discuss this "new" kind of "old" warfare in the most direct manner possible. The present war is a very different kind of warfare called asymmetric war. It consists of two phases: (1) the insertion phase, (conducted in what we erroneously call "peacetime"), during which the necessary WMD and teams to operate and unleash them are inserted in the targeted nation's populace, population centers, and key target areas and made ready to go, and (2) the operations phase, in which the inserted forces and assets are unleashed, thereby destroying the targeted nation — in this case, the U.S. itself. The bulk of the target and intention is to kill U.S. civilians and destroy critical facilities right in the U.S. homeland — as many as possible, as efficiently as possible, and wherever and whenever possible.

Secondary[8] to the important of population kill during the operations phase is the destruction of the targeted nation's economy, catastrophically and decisively. If the foe succeds dramatically in accomplishing the insertion phase, the foe will almost automatically win the follow-on operations phase a priori, unless he is an utter fool.

Further, the development of secret weapons and superweapons is not confined just to their use in overt warfare. Depending on their nature, they can also be used in covert or asymmetric warfare, in great surprise and shock upon the targeted populace.

Our very real problem today is that the insertion phase has been going on for at least two decades, while we were literally "sleeping" as far as intercepting and degrading the insertion effort by any substantial degree at all. The blunt truth is that the terrorists' Insertion Phase has just about been successfully accomplished already. We are in grave danger of being utterly destroyed, with high assurance, in the three-year Operations Phase whose first part has already begun.

Compare the conduct of asymmetric warfare as analogous to orienting and setting up weapons and ammunition and target lists for a massive artillery barrage, and preparing to make a massive attack with that barrage. One first gets the artillery guns shipped into the necessary assembly areas, assembled in place, with their ammunition and crews inserted and made ready, with their target lists completed and waiting. Then one gets the vast assembly of guns and crews properly registered on their specific targets and ready to go. That's the "insertion" or "preparation" phase for a normal mass artillery bombardment.

Then the assemblage of "weapons in place" simply fires the massive barrage on order, and that is the "operations" phase, exploding with suddenness and great violence right on the enemy's vitals. An important major characteristic of this "normal" warfare insertion phase is that it is the insertion of the delivery systems, to chosen "attack positions" outside the targeted area.

In asymmetric war, instead of assembling all the external delivery systems (cannon, rockets, missiles, bombers, etc.) it is as if most of the deadly ordnance is already delivered and is assembled right in its target areas, inside the targeted nation, along with the necessary teams to set them off right there in place. Long-range additional systems placed "outside" the targeted nations can also assist or lend support, particularly if the systems are still secret and unknown to the targeted nation.

---

[8] However, if the economy can be catastrophically destroyed along with total disordering of the society by sudden massive mind conversions, destroying all coherence, the entire population is reduced to hapless targets and already completely defeated. Such a hapless populace can then be methodically destroyed.

In short, in asymmetric warfare the "delivery" pan of the former operations phase is pre-accomplished, before hostilities even begin. So the insertion phase gets the artillery rounds placed right at the target during "peacetime", and avoids any further assembling of the external artillery pieces, rocket launchers, and other delivery systems necessary in the conventional war approach.

Thus successful insertion in asyminetric war overcomes one of the vagaries of standard war: the inaccuracies and mishaps caused by misdeliveries and/or losses of the delivery systems themselves prior to delivering the ordnance on the distant targets. In normal war, those misdeliveries and losses to the delivery systems directly subtract from the effects achieved on the target once the attack is initiated. In asymmetric war, the cost of misdeliveries and losses to the inserted WMD are paid for before the hostilities and before the attack (the operations phase) begins. So given a successful insertion, "delivery system losses" prior to attack do not subtract from the effectiveness of the attack results, once the attack is initiated. Indeed, successful insertion is a great force amplifier.

Once the hostile terrorists possess weapons of mass destruction and have already delivered them onsite to the actual targets, the "massive barrage" of the operations phase is certain to destroy the targeted foe, if the terrorist leaders have any competence at all in their planning and preparations. The great advantage of the insertion phase is that it covertly prepares a great "barrage" where the "ordnance delivery to the exact target locations " has already been accomplished and its lethal effectiveness against the actual targets has therefore been assured in advance. With proper stealth and intrigue, the insertion phase can be accomplished slowly and at will, and without any extraordinary resistance being offered by the "sleeping" targeted nation or population! After all, it is "peacetime" when such clandestine insertion operations are conducted. In the new concept, "peace" is simply the insertion phase of the perpetual war.

So asymmetric war bypasses much of the normal overt concern with long range delivery systems such as ICBMs, strategic bombers, aircraft carriers, nuclear submarines, etc. The usual giant armada of delivery systems is largely unnecessary, if the terrorists can successfully perform the covert insertion phase, instead, the terrorists' major early activity is in ordnance procurement, not in building long range delivery systems.

Obviously asymmetric war dramatically differs dramatically from normal symmetric war, and so there are definitely some new questions which must be asked and answered.

A Few Questions to be Answered

In an asymmetric war situation, some major appropriate questions for the targeted nation are: Are all the terrorists identified as to parent organization, etc.? How certain is the targeted nation that there have been no substantial omissions from its foe identification and capabilities list? Are there already effective compensatory

plans in case there suddenly are uncovcred additional tcrrorist organizations or parent organizations, and/or additional capabilities?

What is the WMD and other clandestine weapon capability of the terrorists, their organizations, their supporting nations or groups, etc.? How certain is the targeted nation that there have been no substantial omissions from the weapons capability lists? Are there already effective compensatory plans in case there suddenly are uncovered additional WMD or clandestine weapon capabilities of the terrorists or their parent organizations?

In view of Secretary of Defense William Cohen's seminal 1997 statement, what specifically is the capability of the terrorists to cause those volcanic eruptions, weather engineering and climate control, and initiation of earthquakes? Particularly in view of anomalous quake swarms ongoing, and the disastrous 9.3 undersea quake on Dec. 26, 2004 that initiated the catastrophic tsunamis in Asia? What specifically is the nature of these strange "electromagnetic" weapons confirmed by Defense Secretary Cohen? What specifically are the counters to them, and specifically how effective are these counters? Further, why is so large a percentage of the government still unknowledgeable of this critical portion of the terrorist threat and thus totally unprepared for it? Why has the American public not been completely and adequately briefed on these confirmed terrorist developments?

Even though known specific foreign areas with concentrations of the terrorist organizations and/or their support groups are targeted for attack and neutralization, how much of the total terrorist capabilities have been reduced by such measures? What if anything has been the impact on the inserted capabilities already inside the United States?

Exactly what information is officially available (and to what degree of confidence) on the "missing" 5 Ukraine SS-19 Stiletto ICBMs, each missile with 6 nuclear warheads and each warhead of several hundred kilotons yield? {lxix} To add spice to the controversy, three years after "all" the SS-19s were supposedly turned in and accounted for, another 31 physically turned up in Ukrainian silos and warehouses! One also questions what happened to the additional 230 or so missing "extra" nuclear warheads from the Ukraine total? {lxx, lxxi} What happened to the missing Russian suitcase nuclear weapons? {lxxii} What happened to the 20 suitcase nuclear weapons allegedly purchased by Bin Laden {lxxiii}, etc.? What if anything has been done about the already-inserted Russian nuclear weapons and Spetznaz teams in our cities and population centers? What if any defense or countermeasures exist to prevent our destruction at some point, from these nuclear weapons alone? And again, why has not the American public been adequately briefed on such hostile capabilities and on the "nuclear knives already at our throats"?

How long has the insertion phase been ongoing? How effective or ineffective has interception and neutralization or intercept of the insertion attempts been? Again, why has the American public not been thoroughly briefed on these areas? Why

has the Congress not been adequately briefed on them? What is Homeland Defense doing about them?

What is the probable target listing believed to have been compiled by the terrorists, based on their actual weapon capabilities and the degree of insertion success actually accomplished? Considering Bin Laden's background in economics, and his past statements on the importance of disrupting the economics, is not the near-absolute vulnerability of our centralized electrical power system our greatest strategic weakness, insofar as catastrophic collapse of the U.S. economy being introduced? If so, why has the scientific community and industrial community been allowed to push for hot fusion, hundreds of pebble bed reactor nuclear power plants, etc. when our entire centralized electrical power system will be destroyed long before any of those could come on line? Even if the nuclear power plants were built and on line, they too are "sitting ducks" and "fat targets", so what is to prevent their easy instruction by the Yakuza scalar interferometers, both long range external systems and portable inserted systems?

What are the various options for the assessed terrorist "preparation" at the particular stage of their insertion phase, or in the near future? Which of these options have the greatest probabilities of destroying or inflicting unacceptable damage on the targeted nation? Which of these options are also matched by known or detected insertions already accomplished or attempted?

Since we know that certain of our enemies — e.g., the KGB/FSB — understand the importance of surprise weapons or superweapons, what is our very best assessment of the probability and capability for the terrorists possessing and inserting surprise weapons or superweapons for which the targeted nation has little defense capabilities? E.g., what about the surprise "electromagnetic" weapons the U.S. Secretary of Defense confirmed, while most of the U.S. government officials — and even our own intelligence agencies, which still largely base their EM intelligence analyses on the totally inadequate electrical engineering model — are still unaware of them? Why has not our scientific community been made fully aware of them, and put to intensive work on them? And since it is perhaps our greatest vulnerability, why is an aged piece of inadequate EM modeling with known serious falsities still perpetuated by the U.S. scientific community, NAS, NSF, NAE, the DoE, etc.? Who's competently watching the "technical store" anyway — is anyone? Or is everyone just blithely accepting the self-serving scientific cartels' pronouncement that "we are the greatest"?

With a three-year plan already in motion for our total destruction, and with a large key role played by the vulnerability of our electrical power system and its coming destruction, why are not our Department of Energy, National Academy of sciences, National Science Foundation, etc. already under strong Presidential orders to reprioritize their energy research at the greatest speed possible? Why has not the U.S. scientific community already corrected the terribly flawed CEM/EM mess that is taught in our universities and used by our power engineers? Why are

they not conducting a massive Manhattan-type project for energy from the vacuum systems to totally replace the present centralized power system? Then is no other possible solution, once one recognizes that the centralized electrical power system itself is going in be destroyed with very high assurance, within about two years from now. So why are all our scientific efforts actually siphoning off research funds for puerile things which will take decades and will not do the job even then, while enriching and perpetuating the "scientific entourages" driving this sad situation? Since a major part of the problem is the great leap forward of the Russian science of energetics — now 50 years old — and its development of superweapons, then why are our scientists still largely preoccupied with standard electrical engineering and classical electrodynamics — models so hideously flawed and made so antiquated by the progress of physics that they should have been dramatically changed at least three quarters of a century ago?

Why is there no really substantive understanding or definitive work ongoing to lapidly develop means of collecting and using the unlimited free EM energy pouring from every charge and dipole in the universe, including in every EM circuit and self-restricted electrical power system?

Many other similar questions can be and should be raised, but the foregoing questions demonstrate the direction and intent of what should be queried.

The Ease with which Terrorists Could Obtain WMDs

In facing an asymmetric war launched against us, the availability of clandestine WMD to the terrorists, so that the weapons can be inserted, becomes a primary consideration — along with an extraordinary need to understand the new superweapons and rapidly develop counters and defenses.

An internet search for two search terms: Voz Island in the Aral Sea {lxxiv} and anthrax, will quickly demonstrate the ready availability of WMD to any competent and supported terrorist organization. The Russian biological weapons research and production facilities there were the world's best, appreciably ahead of similar facilities in the West. Hundreds of tons of very high quality biological warfare agents were just dumped on Voz Island from those Russian facilities. Quoting Marshall, Malakoff, and Holden {lxxiv}:

> "The United States and Uzbekistan are close to finalizing plans for a $6 million cleanup of a former Soviet bioweapons facility. The effort is aimed at preventing terrorists from harvesting live anthrax spores from a secret dumping ground.
>
> For nearly 60 years starting in the 1930s, the Soviets released anthrax, plague, and other weaponized pathogens on Vozrozhdeniye (Resurrection) Island in the Middle of the Aral Sea. In 1988, at the end of the Cold War, weaponeers buried tons of a particularly potent strain of powdered anthrax at the site, mixing the bacteria with bleach in steel drums to kill it. But several years ago testers found that some of the anthrax is still alive, and water diversions from the shrinking Aral Sea have since opened a land bridge to the once isolated island. Fearing

> that terrorists might try to harvest ready-made bioweapons from the site, U.S. Officials agreed in October to pay for destroying the anthrax and a nearby testing facility."

Actually, for quite some time, any funded terrorist organization that wished a copious supply of the finest anthrax ever made, and wished a strain already resistant to many of our treatments, could just go to Voz Island, pay the natives a little sum, and dig up the dirt in the appropriate part of the dump site, sack it up, and carry it away. Or pay the natives a bit more, and they would dig it up and sack it for the buyer. Wash out the dirt, and one would have all one wanted of the highest grade anthrax spores ever made. It's safe to assume that those terrorist organizations who wanted a copious supply of high grade anthrax already obtained it with relative ease.

Bin Laden also obtained anthrax and other BW agents from other sources {lxxv}, as well as at least a few nuclear weapons.

Other BW agents and nuclear materials were available on Voz Island also, in the same way. And much of that WMD procurement will already have been covertly inserted into the U.S. E.g., where do our agencies think that the extraordinarily high grade anthrax mailed in some letters after 9/11 could have come from? Most probably, it came right from Voz Island.

The mailing of high grade anthrax in letters sent to a few important U.S. targets after 9/11 was not an attack at all, nor was it so intended. The mailings were undoubtedly a small test attack to ascertain the amount of disruption and economic damage that could in theory be obtained by mass mailings simultaneously, through the mail in many locations, to thousands of targets. The results obtained by these little sample mailing tests showed that mass mailings of anthrax powder, in letters sent to selected high level targets, would create chaos, extensive delay, and substantial economic disruption. Here again one sees the coordinated planning toward our economic disruption, damage, and collapse.

A Simple but Lethal Strategic Strike with Horrific Casualties

As is known, anthrax is highly lethal when ingested or breathed into the lungs. So a simple spray attack on a large metropolitan area, by a small 2-seat Cessna aircraft with two men aboard — one flying and one spraying out the side — could account for from one to three million casualties {lxxvi}, almost all of whom will die. Quoting Betz {lxxvii,}:

> "A 1993 study by the Office of Technology Assessment concluded that a single airplane delivering 100 kilograms of anthrax spores — a dormant phase of a bacillus that multiplies rapidly in the body, producing toxins and rapid hemorrhaging — by aerosol on a clear, calm night over the Washington, D.C., area could kill between one million and three million people, 300 times as many fatalities as if the plane had delivered sarin gas in amounts ten times larger."

Needless to say, the emergency treatment capabilities of the entire struck area would be completely overwhelmed. In such a case, triage becomes the official policy. Unless the treatment were started immediately for a civilian who inhaled the anthrax, it would be largely ineffective anyway. Once the symptoms appear, conventional treatment is largely hopeless.

Triage is the classification (medical screening and sorting) of patients to determine the need and priority for treatment and transportation {lxxviii}. Triage generally separates patients into four categories, according to the priority for treatment that will be followed:

High Priority (Red): Patients who need immediate treatment and immediate transport in order to survive. (But refer also to category 4 below). Those who need immediate treatment but cannot be expected to survive even if treated go into category 4 (Black), not Red.

Intermediate Priority (Yellow): Patients who will most likely survive but require treatment.

Low Priority (Green): Patients who require little or no treatment or whose treatment and transportation can be delayed.

Lowest Priority (Black): Patients who cannot be expected to survive even with treatment, those who cannot be expected to survive in a mass casualty situation, and those whose vital signs are absent.

In a mass casualty situation with very scarce supplies and nowhere near sufficient mass treatment capabilities, triage becomes necessary and officially applies. That means casualties classified in the Black (lowest priority) category — such as patients already showing the anthrax symptoms, and therefore almost certain to die with or without treatment — will just be set aside, made as comfortable as possible, and allowed to die. There is very little to be gained by treating them with conventional treatment. Even if given every treatment available, almost all of the patients in this category would die anyway. With triage sorting, the very scarce and precious antibiotics and treatments will be reserved for those who have a better chance of surviving if treated.

This is one of the harsh decisions, of the type formerly reserved for military forces in the field under desperate circumstances, which will have to be made for our civilian populace and wounded as well.

The True Cause of Gulf War Disease

By use of scalar interferometry (as is possessed by the Yakuza) or quantum potential weapons (which the Yakuza does not have, but the KGB/FSB does), in advance of the attack it is possible to trick the immune system of each person in the targeted populace area so that it erroneously "detects" invasion by, say, two dozen different pathogens at once. This is done by simply placing the EM "shadow disease engines" or "shadow precursor engines" (in the virtual level just

beneath quantum level) for those specific pathogenic conditions in weak EM radiation or in quantum potentials focused into the bodies in the area targeted.

The immune system reacts to what it detects, not necessarily to what is actually occurring. Given this deliberate stimulation and the resulting alarming false detection, the deceived immune system desperately spreads its finite assets across those "detected" two dozen invading "shadow" pathogens. And it does detect the interaction of faint precursor engines for the specific two dozen diseases, deliberately radiated into the body and thus interacting with charges in its cellular mass. Such a "spread" immune system is then just about totally vulnerable to any real attack by any normal opportunistic real pathogen in the area — either natural or terrorist-induced — because the immune system cannot marshal any additional resources. In a bizarre way, this is a new form of asymmetric biological warfare, designed to pre-disable the immune systems of the targeted populace, dramatically increasing the effectiveness of the real BW pathogen being introduced (by anyone, including other terrorists).

In the absence of deliberate BW pathogen attack, the result of spreading the immune systems in a targeted area is an extraordinarily heightened vulnerability of the radiated populace to ordinary opportunistic infectious pathogens in the populace's environment, to which the humans in that populace are then physically exposed.

There are always such opportunistic pathogens in one's environment, but usually the immune system can handle most of them with a shrug. But the deceived living body with a spread immune system will be quickly and easily attacked by multiple environmental pathogens, unable to effectively resist, and without the organism's usual immune system's protective resistance {lxxix}. That living body with its spread immune system will shortly develop a whole "cocktail" mix of opportunistic diseases. If the immune spreading intensity is lowered a bit, then only a percentage of the persons with the effect will develop the "cocktail mix of diseases" syndrome. If the immune spreading is lowered even further, then only those persons already having additional "immune system lowering" will be affected.

This "spreading of the immune system" is what was deliberately done to generate the "Gulf War Disease" in some of our soldiers in the first Gulf War. The immune systems of our soldiers in certain areas — already weakened a bit by multiple vaccinations — were spread by hostile forces, as a test to see if our scientists and analysts recognized what was being done. The immune spreading signals were deliberately lowered to the point that none of the French troops — who had refused to take the mix of vaccinations we administered our own forces, and which do reduce the ability of the immune system for some weeks — developed the "cocktail mix" diseases and syndrome, while some of the U.S., Canadian, and British forces who did have lowered immune systems as a result of their vaccinations did develop the "cocktail mix of diseases" called the Gulf War

Syndrome. The natives in the area had not had their immune systems lowered by vaccinations, and so no change occured in that populace.
Our scientists did not understand it at all. They did not understand it then, they do not understand it to this day, and they will not understand it tomorrow unless forcibly ordered to meticulously consider and experimentally investigate what happens when immune systems are indeed spread in the fashion being advanced, and when specific tailoring to select the targeted populace subset is also used.

Combining immune system pre-spreading with subsequent real BW attack will increase the yield of the attack itself by a factor of at least three. At the same time, other opportunistic infections will also interact very strongly, with little resistance, so that a "cocktail" mix of diseases will ravage the population whose immune systems have been spread.

We point out but do not further discuss the dramatic effect on those treated Triage casualties, if those casualties have pre-spread immune systems. The effectiveness of the treatment will be severely lowered, so that a much greater percentage of those treated will also die.

Our scientists still have not comprehended the higher group symmetry electromagnetic mechanisms by which health and disease changes in personnel in the U.S. Embassy in Moscow were induced during several decades of microwave radiation by the Soviet Union. They do not intend to further try to understand it, and they have simply buried it. It does not matter that three U.S. Ambassadors eventually died as a result, or that hundreds of persons were made sick or developed real diseases. Also, our scientists do not know how to properly investigate and explain the directly related Kaznacheyev experiments {lxxx}, nor do they intend to. As a consequence, they have already guaranteed that BW attack on the U.S. populace under the conditions stated above will be spectacularly successful, while U.S. treatment of the mass casualties will spectacularly fail.

This appalling situation further buttresses our previous comment that, not only will our scientific community fiddle while Rome prepares to burn, but it is also assuring that it burns completely.

Terrorism by Electromagnetic Biological Warfare

Not comprehending "immune system spreading" or how it is induced, our medical scientists certainly have no knowledge of the electromagnetic use of specific precursor engines for a specific disease — such as anthrax — to directly induce the disease in targeted bodies in an entire great area. Instead of the passive measure of immune system spreading, the same EM weapons can directly transport and induce the precursor engines for developing the anthrax conditions in the bodies in a large targeted populace — such as the greater Washington D.C. metropolitan area, which was the area considered in the referenced Government study involving a spray anthrax attack {lxxvi}.

For example, the exact structural pattern of the necessary disease induction engines for anthrax can be directly "recorded" from the EM emissions of sickened human cells or humans with anthrax. Such ordinary EM carrier emissions do contain those specific anthrax EM disease engines as infolded Whittaker patterns {xxi, xxii} — particularly in the infrared and ultraviolet spectrum, and particularly when both spectral ranges are considered simultaneously (i.e., when a full harmonic interval of radiation is considered, and especially when that harmonic brackets the visible spectrum and the targeted organism is in the dark to remove possible interference from the intervening visible light spectrum). Our scientific leaders have little or no understanding of the Kaznacheyev experiments, and most of them simply are not interested in understanding them, since it would require thinking in terms of a higher group symmetry electrodynamics, not the common old seriously flawed electrical engineering.

Hence they do not even conceive of the result of electromagnetically enhancing a strike by a BW agent such as anthrax, or of electromagnetic biological warfare, where the disease itself is induced in the body by the exact disease engine that pathogens carry, but mostly without the intervening physical carrier. This "direct induction of the specific disease condition" via tailored induction of the appropriate specific EM disease engines in the bodies of the targeted populace, is another gargantuan force amplifier that can be either used alone or in conjunction with the previous force amplifier of spread immune systems. The U.S. has no defense against it, nor do our medical science leaders and establishments intend to develop such defenses. Terms such as "immune system spreading," "precursor engineering," "precursor disease engine," and "electromagnetic biological warfare" are not even in their lexicon.

As a force amplifier, the combination of the two force amplifiers — immune system spreading and EM BW induction of a single disease simultaneously — can increase the overall casualties from an anthrax attack by from 5 to 10 times what would be obtained by the basic anthrax spray attack of physical anthrax spores alone. An influenza epidemic, e.g., can be made horrific beyond all present expectations, as can a smallpox outbreak, etc.

Further, the present physics of the vacuum already prescribes the basis for precursor engines and their use, including their use in induction or augmentation of disease, or in elimination of disease. Quoting Aitchison {lxxxi}

> "Vacuum polarization, in general, alters the effective force law. Forces, in quantum field theory, are understood as being due to the exchange of virtual quanta... In the case of QCD and QFD,... a crucial new feature is that the force-field quanta themselves carry the 'charge' of the force-field, i.e. it is as if the photon of electromagnetism carried electromagnetic charge."

Notice, however, that even Aitchison failed to recognize there were no force fields in space, but only the precursors, and that precursor engineering is involved. Every chemical and biochemical reaction emits characteristic EM radiation — based on the making and breaking of electron bonds etc. as modeled by ordinary

chemistry. Even these radiations could be recorded and played buck, inducing disease, without even going into the more complicated explanation oi precursor states and virtual disease engines.

The upper limit of the force amplification (more simply, the gain) achievable by precursor attack combinations is of course the limit entailed by the size of the targeted population. Medical and emergency personnel in biohazard protection suits and "deeply protected facilities" are just as vulnerable to this mode of attack as the unprotected populace. So devastation of the treatment teams and facilities also results. Further, even decontamination spraying to kill the anthrax spores would not mitigate the damage already done by EM BW.

The combination of force amplifiers, coupled with an anthrax spray attack even much weaker than that in the Congressional study, can effectively infect and sicken almost the entire population, with nearly everyone becoming casualties and dying. EM BW thus becomes a strategic force amplifier of strategic "total knock-out " strike implications.

In a mass casualty situation, the presence of these force amplifiers will also move the vast percentage of the stricken casualties to triage category Four (Black). Casualties in the Black category will receive no treatment, but will just be allowed to die — even if some vestiges of the treatment teams and facilities survive. The use of the force amplifiers means that a much greater percentage will be classified Black and be allowed to die without treatment under normal triage rules.

But our own National Institutes of Health (NIH) and medical science community — and our own intelligence community in that area — are simply not interested in such bioenergetics weapons already developed and tested. Nor have they apparently done even elementary homework in the area of higher group symmetry electrodynamics. Most do not even recognize the term! Nor have they funded any specific higher group symmetry electrodynamics research in the area, outside the terribly crippled U(1) electromagnetics and electrical engineering, even though the disease force amplifier capabilities of higher group symmetry electrodynamics have already been repeatedly demonstrated, first by the KGB against the U.S. Embassy in Moscow in the former Soviet Union and then by the KGB/FSB in Russia against our troops in the first Gulf War.

The FSB/KGB already knows and plans such force amplifying measures, which will likely be unleashed upon us to dramatically augment any milder conventional BW attacks. The nature and magnitude of the asymmetric war to be unleashed against us is dramatically different from what our society knows, expects, and plans for.

Sadly, most of our present scientific medical research is a vast wasteland as far as any study of (1) scalar interferometry use in disease induction or force amplification, (2) the mechanism used in the decades long EM induction of health changes and diseases by the long so-called "microwave radiation" of the former U.S. Embassy in Moscow, (3) the spreading of immune systems of a targeted

population, and (4) electromagnetic induction of specific disease in a targeted populace via the induction of the specific precursor engine for that specific disease. Further, our medical scientists' knowledge of higher group symmetry electrodynamics appears to be nil. Worse, the organized medical science community appears to have no concern at all over its own total lack of knowledge in such higher forms of electrodynamics. Possibly, a part of this nonchalance may be due to — or influenced by — the important financial exchanges that have long occurred in the past between some NIH scientists and outside industrial cartels intent on keeping medical science within the bounds presently imposed.

But as a step in the right direction, NIH has imposed stricter rules on its scientists with respect to their consulting to, or employment by, outside drug companies which in turn are receiving payments from NIH funding {lxxxii}. The agency has even proposed banning all its scientists from doing any consulting work with drug companies for a year {lxxxiii}, while the agency's investigations continue. Recently a real clampdown has been ordered, effectively closing this questionable avenue. Let us fervently hope that this cleanup continues, so that NIH really does again function as an independent government agency dedicated to the benefit of the American public, not just for the benefit of the big drug companies. At this point, every little bit helps!

Unethical Release of U.S-Made BW Mycoplasma

Sometimes, there also appears to have been collusion between the NIH and rather illegal (and unethical) testing on human citizens without their consent. As an example, our NIH leaders are still doing absolutely nothing at all about the modified mycoplasma BW agent {lxxxiv} that our own BW researchers developed in the 1950s to burrow inside red cells, feed off their hemoglobin shells, and dramatically decrease the oxygen transport capability of the red cells in the blood. This modified BW mycoplasma agent was developed, and then it was thinned by about 2,000 times and sprayed into the populace and into the environment by combined U.S./Canadian teams in the 1950s in Canada. It was also sprayed by U.S. agencies in Florida.

These sprayings caused the deliberately-manufactured BW agent to enter the mosquito population and thence into the human population of North America. Indeed, in the cooperative joint U.S./Canada program, the modified mycoplasma agent was deliberately implanted in mosquitoes by the government researchers, and those mosquitoes were then released, to ascertain the "spread effectiveness" of the mosquitoes as disease vectors. That's rather like firing some machinegun bursts at random into a very large crowd, to determine the average pattern of "hits" and "kills".

The author personally contracted that specific biological warfare disease — courtesy of our own BW scientists and the inane officials directing the tests, who carelessly assumed that dilution rendered the mess safe — while in the U.S. Army, residing in Quebec, with duty station at the Canadian Armament Research

& Development Establishment (CARDE) at Valcartier, Canada in 1966-68. I survived three serious hospitalizations in Canada only by the final Herculean efforts of the French doctors in Quebec, who opened both the chest cavity and the abdominal cavity and moved the internal organs around for about 3 hours, aerating the tissues thoroughly and unknowingly killing the exposed surface mycoplasma. After that oxygenation of the tissues, the mycoplasma already burrowed inside the red blood cells survived and then went dormant, slowly increasing over the next three decades. I survived, but with a time bomb ticking away inside my body.

Left with slowly increasing chronic fatigue syndrome over the next 33-year period, I even managed to serve a tour in Vietnam and still no one knew what was wrong. No medical tests or examinations showed what it was. I retired from active military service at the end of 1975, and was employed in the aerospace industry in Huntsville, Alabama.

Then in spring 2001, resurgence of the mycoplasma generated runaway heart fibrillation and a heart attack. When the terrorist attack of 9/11 struck a stunned America later that year, I was still struggling to stay alive from the heart attack, with runaway heart fibrillation, and significant hypoxia from my own prior encounter with a "terrorist BW attack", where the terrorists were our own fellows!

As fate would have it, a colleague with the equivalent of a Ph.D. in biochemistry who checks on me about once a year then called; he has been in many "deep black" programs, most of which do not officially exist. He knew of the mycoplasma BW agent development program and the mycoplasma spraying in Florida and Canada. He immediately recognized that the strange malady contracted in Canada in 1968 was actually that BW mycoplasma.

He also told me where to get definitive information on the web and from Senate hearings, and voila! The puzzle was solved. Finally in Dec. 2001 a Specific lab test was obtained and the chronic BW mycoplasma infection confirmed - after 33 years of puzzlement, doubt, and slowly increasing physical debilitation. The resulting treatment was a year (2002) on antibiotics, which did annihilate the mycoplasma that were hiding in the red blood cells. But it did not and cannot undo the damage already done throughout my body during those 33 years. As my doctor stated, "You name it, it's damaged. "

After such a long-term case, one has permanent chronic fatigue, cannot walk very far or stand very long at all, and one takes blood thinner for the rest of one's life to try to prevent strokes and blood clots. One also takes medication to try to control the heart fibrillation and stay alive. The eventual expectation is to go on a pacemaker, then eventually have another unexpected heart attack or stroke, finishing the process. I've also now developed pulmonary fibrosis.

The problem is that, if one takes all the medication necessary to control the heart fibrillation, it also reduces the volume of blood pumping, which places one back in hypoxia, leading to strokes and/or heart attacks. If one does not take the

fibrillation control medication, one reverts back into hypoxia from the fibrillation, which leads to strokes and/or heart attacks. With the usual treatment by well-meaning heart doctors, one is damned if one does and damned if one doesn 't. They do not and will not prescribe remedial oxygen, since they do not consider any possible involvement of mycoplasma in heart problems and attacks. Attempts to get the NIH to notify the heart clinics and doctors of this terrible problem have fallen on deaf ears — probably because of the NIH's original involvement in producing the modified mycoplasma and unleashing it upon an unsuspecting and trusting North American populace. Hence the NIH does not wish to admit that such programs ever even took place with its participation.

The only way out of the dilemma is to take the medicine to defeat the fibrillation, and also take extra oxygen to prevent the resulting hypoxia. So I take remedial oxygen and pay for it on my own volition, since the heart doctors know nothing of the modified BW mycoplasma and they do not wish to hear of it. Nor does one's insurance company, Medicare, the Veteran's Administration, etc. Nor does the NIH. All those fine agencies simply wish that the disabled veteran with such BW-modified mycoplasma would just die and get out of the way.

By taking one's own remedial oxygen, one remains just barely above the hypoxia zone, at least until something else unexpected occurs to make things worse. That way, one remains alive a while longer, perhaps even for a few years. Even so, one has acquired a delayed death sentence just waiting to happen at any moment. And one remains with severe chronic fatigue, weakness, etc.

Perhaps then it is understandable that the present author has a very personal interest in that particular B W mycoplasma disease and that set of incidents, and in the continuing gross failure of the NIH to acquaint heart doctors in the U.S. of that nefarious program and what happened. Today there is a direct involvement of this BW-modified mycoplasma in a significant fraction of patents with heart disease, chronic fatigue syndrome, etc. Many of the citizens of the U.S. and Canada already have that BW organism infecting their bodies, like a ticking time bomb waiting to erupt perhaps many years later. To this day, very few hospitals and medical clinics are capable of doing the test that can detect the very specific type of BW-modified mycoplasma.

Apparently the NIH considers any contact on this problem — or a similar BW problem — a hot potato to be handled by its "policy" section (i.e., "spin control" section). Bluntly, the attitude seems more concerned with political control than with saving the lives of countless American citizens who unknowingly continue to be afflicted with that BW-modified mycoplasma, continue to die of its complications, or are disabled and their lives shortened because of it. NIH political orientation seems to be one of the major shortcomings of the U.S. in its required defenses against the biological warfare aspects of the "new " asymmetric war. It also appears that the NIH directly participated and cooperated with the U.S. BW organizations that developed and unleashed the BW mycoplasma in the first place. If so, the misdirected attention of the NIH to cover up will probably

continue, and that will help guarantee much of the success and increased mass casualties resulting from professional terrorist BW strikes against the U.S. populace in the near future

Ironically, that nefarious modified mycoplasma is a strange kind of BW "force amplifier" that the Soviet BW weapons labs initially developed to "soften us up". Eerily, they themselves did not have to introduce it into the North American populace. Instead, we ourselves developed it and — in what has to he one of the most stupid and asinine BW actions of all time — we deliberately unleashed it into our own environment and against our own North American populace In comic relief, one is tempted to remark that "With friends like that, who the hell needs enemies!"

No Effective Treatment for Mass Casualties

Sadly, in this present asymmetric warfare problem, we are forced to conclude that the N1H and the Centers for Disease Control will not do the research necessary to develop adequate response therapies and means for quick, effective treatment of mass BW warfare casualties. Seemingly they continue to prefer Category 4 triage — just letting most of the patients die — to developing unorthodox but real mass treatment capabilities. None of the associated agencies appears likely to develop anything innovative in this area, and particularly not a portable higher group symmetry electromagnetic treatment unit {lxxxv} that could effectively treat those millions of Category 4 Triage casualties that will result and die in our cities in the near future.

As we mentioned, there is a precursor EM engine for every disease and every debilitated condition of the living body. That means there is also a precursor EM anti-engine that can be formed, amplified, and introduced into the diseased patient — and that will very quickly reverse the disease condition in situ and cure the disease. Because the anti-engine is electromagnetic and can therefore be amplified, the treatment period can be reduced to circa five minutes of non-ionizing radiation by the amplified specific disease anti-engines. In such treatment, the body's own potentials and fields thus have the anti-engines kindled inside them, and after the treatment is removed, the body's own "activated" fields and potentials — at every level — now continue diminishing and destroying the disease engine, and reversing the patient's condition back to normal.

Further, anti-engine patterns for a variety of expected and known BW agents can be developed and incorporated into such treatment machines, and the machine can then just be "switched" to the appropriate anti-engine-generating radiation spectrum required to treat the patient's BW condition (destroy the patient's specific disease anti-engine and reverse the patient's condition back to normal). The radiations from the machine are after all precursor radiations, whether or not the scientists using the machines know it.

As a further example of U.S. medical orientation, in 1998 the author, with a colleague, tried very hard to persuade the NIH, DoD, USAF, and other federal

agencies to develop a portable unit for such EM mass casually treatment in a crash U.S. government program, to save millions of lives in the coming asymmetric warfare debacle {lxxxvi}. The EM mechanism proposed would have generated an amplified anti-engine for a specific BW-induced disease. "Pumping" the diseased body with opposing longitudinal EM waves will form amplified anti-engines to a specific disease engine in the stricken body. By then radiating the body with the amplified anti-engine, or simply pumping the body to produce the amplified anti-engine, it overrides the actual disease engine, eroding away the disease engine and the disease along with it, and reversing the physical condition back to normal. Or, in biological terms, this is the secret of dedifferentiation of a diseased or disordered cell or cellular body back to normal cells and normal health. It is quick, it was thoroughly proven in France in the 1960s and 1970s, it was evidenced in Becker's work, and it was documented in the hard French medical science literature. Once developed, this would be a mass casualty treatment therapy far superior to anything presently existing, which could save millions of lives in the debacle now roaring down upon us.

The NIH, DoD, USAF, CDC, and other federal agencies had not the slightest notion of what we were talking about, and we never got out of the "policy" section at NIH, even with the assistance of Congressman Bud Cramer. Not a single scientist in any of those government agencies cared a whit, or even called to discuss the proposal and its novel physical mechanism. Apparently none checked the hard scientific references we cited from the French medical science literature where the basic mechanism had been proven.

None of those agencies had the foggiest notion that the decades-long microwave radiation of the U.S. Embassy in Moscow already demonstrated the use of higher group symmetry electrodynamic "disease engine" signals to directly generate health changes and diseases at will. They had no concept of the use of appropriate amplified "anti-signals" and "disease anti-engines" to reverse and cure illnesses, or that an extended EM can be developed to either induce or cure specific diseases to order as one desires.

They certainly do not comprehend the higher group symmetry operation of the human cellular regenerative system — which is responsible for the body's healing — and have not gone much further than Becker's brilliant seminal studies of that system {lxxxvii}. Unfortunately, Becker's work was limited by his use of U(1) electrodynamics. Otherwise, Becker would have had the "anti-engine" EM healing process then and there. Even so, he almost deciphered the control operation of the cellular regenerative system {lxxxviii}. His EM healing method for otherwise intractable bone fractures survived and is still utilized in some hospitals from time to time {lxxxix}. It is simple to understand: an electrostatic scalar potential (common voltage) decomposes into a set of bidirectional EM longitudinal precursor bidirectional wave pairs — in other words, a perfect set of "pump waves" for creating specific amplified anti-engines for the specific disease or disorder. So Becker's silly little DC voltage across a horrible bone fracture actually contained and initiated a most important and specific mechanism for

producing specific anti-engines and specific dedifferentiation of the diseased cells back to earlier normal condition.

In show what simple potential (voltage) across an otherwise intractable fracture can do, using its component longitudinal EM pump waves, Becker showed that it dramatically affects many of the red cells that arrive in the fracture area, reconverting those affected red cells to a suitable "precursor" cell (more primitive, earlier cell). The "pumped" red cell shucks its hemoglobin and grows a nucleus - this is dedifferentiation, and it is generated by the appositive longitudinal Whittaker precursor wave sets — that constitute the voltage — acting as "pump waves" in the nonlinear optical sense. The pumped bone fracture site has thus become a pumped phase conjugate mirror site, with the input or "signal wave" being the specific physical disorder's "engine" already in the stricken body. The amplified phase conjugate output is the amplified specific "anti-engine" for that specific disease or disorder condition.

In accord with nonlinear optical pumping theory, the energy of the pumping waves then establishes an amplified "phase conjugate replica" signal set. This amplified signal (anti-engine) will then quickly reverse the entire physical red blood cell back along its past travel through time in its past short life (red cells only live about three months). Hence the red cell dedifferentiates back to an earlier stage. The "delta" condition in the fracture site involves bone cells. So the red cell is redifferentiated by the pumping to move forward to the type of cell that makes cartilage. Then it further redifferentiates yet again to the type of cell that makes bone, and that cellular material is deposited in the fracture site, healing it.

In simple language, that is precisely how Becker's bone-healing EM treatment works. The process and its proven experimental success already demonstrates the beginning of the required capability to treat and reverse diseases and physical injury conditions by a peculiar variation of nonlinear optical pumping, using the "disease or disorder engine" as the input signal, producing an amplified "anti-engine". This anti-engine forcibly interacts upon any and all aspects of the cells and the physical body to reverse the situation and restore the body to health.

But the NIH was not interested, even though the elements of this process had also been resoundingly proven by the Priore group in France, in rigorous work funded by the French government.

Eventually the NIH just shipped the entire package over to the DoD (to whom we had already sent the package anyway) because the package mentioned the Gulf War Syndrome and "that was the purview of the DoD". In short, the NIH wasn't interested in what Gulf War Syndrome really was, or in curing it either. So unless it involves drugs or some form of ionizing radiation treatment or some such, our own NIH was not and is not interested in a proven, demonstrated cure for cancer and other dread diseases, accomplished in France in the 1960s and early 70s, with astounding experimental results of thousands of lab animal experiments already rigorously reported in the French medical science literature but resoundingly suppressed today.

The same U.S. agencies lack any understanding of the mechanism that induced the "Gulf War Disease" and the causes of diseases and health changes at the U.S. Embassy in Moscow.

The entire U.S. medical science community is still using an archaic seriously flawed classical electromagnetics of the material luminiferous ether, rather than the more modern higher group symmetry electromagnetics of mass-free spacetime. Consequently it is far more concerned with the immune system's responses which "physically kill the bad guys", or harsh drugs which "chemically kill the bad guys", rather than the cellular control system responses which actually accomplish all healing within the body after the "bad guys" are already dead.

The immune system and the drugs do not actually "heal" anything — not even the immune system "s own damaged cells. The fundamental orientation of American medicine is on physically attacking and killing the pathogens which transport the disease engines, rather than on augmenting and amplifying how the damaged body then regenerates its own cells and reverses its own disease engine via use of higher group symmetry electrodynamics. This strongly prejudices and canalizes our medical science development. It also makes us extraordinarily vulnerable — helpless is the proper word — to the coming mass casualty attacks in our cities and population centers.

But to uphold the status quo, our medical scientists seem quite willing to accept that, for really substantial WMD attacks, triage Black will apply on a massive scale. So they will just let most of the casualties die without any treatment at all. The predetermination to lose all those American lives has already been made, and it seems that nothing will change it.

Indeed, the entire U.S. electrical engineering community itself does not realize that it doesn't even know or apply what electrodynamics in mass-free space is.. In the face of such appalling scientific ignorance for more than a century, it is little wonder that our nation is so terribly behind in understanding what can be done — and is being done — by the terrorists using the primary (precursor) electrodynamics in free space, before its interaction with matter. In short, our analysts have not comprehended Soviet energetics for nearly a half century, and they have no intention of comprehending it now, even though it is being used against us for powerful strategic weapons we cannot counter.

Our national agencies adamantly are not going to develop the proven Priore-type EM treatment or really get to the bottom of Becker's anomalous EM bone fracture healing, because such would not be common old electrical engineering. It would also greatly disturb the pharmaceutical cartels, which have bought American medical science by financing research, medical scholarships, medical university expenses, etc. and by providing "consulting fees" etc. to a variety of scientists in the system. Even though most of those cartel companies are benign or even intentionally beneficial, any threat to their dominant positions evokes a sharp response from their evil 1% entourages. One can easily meet with a "sudden suicide on the way to the supermarket" and such.

Our scientific leaders are not going to demand the correction of that terribly flawed electrical engineering model, which is our single greatest national vulnerability and the one that is being capitalized upon by coordinated terrorism and asymmetric warfare to destroy us in within the three year Operations Phase we entered at about the beginning of 2005. We are going to unnecessarily lose millions of American lives, with most casualties receiving no treatment at all.

Those future wounded Americans would not have to die if such EM countermeasures were intensely developed in portable treatment machines and massively deployed {xc}. We are describing a vast force amplifier that could be developed for the defending nation that has been targeted and very seriously struck. Our own government and scientific community adamantly will not permit its study or development, and will simply "fight to the death of every one of us" to preclude such a desperately needed therapeutic method and capability,[9] despite rigorous scientific proof by the Priore group in the 1960s and early 1970s {xci}, as aforesaid.

Impact of Immune System Spreading

Weapons such as scalar interferometers in the hands of the Yakuza have given the terrorists a terrible force amplifier of WMD bioweapons that parallels the destruction capabilities of all a modern state's ICBMs, strategic bombers, nuclear subs, aircraft carriers, etc. All without a single ICBM, strategic bomber, nuclear sub, or aircraft carrier.

So for the strategic asymmetric war threat, now one considers — say — three large U.S. city areas hit just about simultaneously by effective anthrax spray attacks, and augmented by EM BW means. One immediately sees the grim picture very probably in store for us. To be conservative, we assume 1 million casualties in each city as the "baseline" achieved by the spray attack pathogen itself. Thus a total of 3 million casualties are obtained in the three strikes, with no other augmentation. However, if immune system spreading were also incorporated simultaneously, the casualties in each city will reach, say, 3 million, almost all of whom will die. That is a total of 9 million American casualties in the three cities — and almost all of those wounded will perish.

---

[9]The leopard has not changed its spots. See Betsy McKay, "CDC Aims to Create Experimental Pandemic Bird-Flu Virus," Wall Street Journal. Wed. Mar. 28, 2005, p. Bl, B2. Incredibly, CDC as part of the NIH is still engaging in the deliberate production of potentially highly contagious pathogens, capable of causing rampaging pandemics if unleashed or accidentally escaping. All sorts of "reasons" are advanced. A little analysis from the viewpoint of precisely what FSB/KGB bioenergetics can do in such situations would be enlightening — but then neither CDC nor NIH knows anything about bioenergetics, even after four decades of its testing against us to see if we recognize it. Again, with friends like that, who needs enemies!

And that's three small 2-place aircraft, six terrorists, three little agricultural hand sprayers, 300 kilograms of anthrax spores from Voz Island, and a little gas and time.

If, in addition to the immune system spreading, some supporting scalar interferometers are also inducing the same anthrax disease pattern via EM BW, that's now perhaps 5 million casualties in each city area, for a total of 15 million American casualties, almost all of whom will die. If the intensity of the scalar interferometry disease induction is further increased, that's perhaps 18 million or so total American casualties in those three city areas — almost all of whom will die.

Here one directly sees the transition from the kind of estimates our own analysts usually make for BW agent attacks, to estimates that show the more maximum risk of massive strategic destruction and even strategic knockout of the U.S. by the same "front line terrorist troops", due to the advent of the supporting scalar interferometers, immune spreading, and EM BW.

All that would be caused overtly by 6 men, three light 2-place Cessna-type aircraft, 3 little agricultural sprayers which can be purchased at any Home Depot or similar store, and 300 kilograms of anthrax spores from Voz Island — and, in the 9, 15, and 18 million casualty cases — a little force amplification support from three or more scalar interferometers.

But that's not the end of it.

In addition, the contamination of those large built-up population areas will require the ruthless spraying of decontamination agents, killing many thousands more of our own populace. The effectiveness of the decontamination sprays would also be seriously hampered if the scalar interferometers continue their EM BW anthrax induction. None of these kinds of "force amplifier" effects are presently known or taken into account by our analysts and our intelligence agencies. They are designing and planning for the type of warfare they themselves know and expect. They are not designing and planning for the type of warfare that is coming down upon us.

The most urgent "action fact" that should be concentrated upon by our medical science agencies is that most of those casualties are going to wind up as triage Black category 4 patients. Most are not even going to be treated, and so almost all of them will die. The jobs of the leaders of our national health research agencies should be made directly dependent upon them rapidly examining and finding new and revolutionary treatment capabilities that will negate the present "triage 4" massive catastrophe. If they can't or won't do it, replace them!

And there are viable candidates to examine. We have pointed out that the "amplified disease anti-engine" treatment approach is capable of rapidly causing the reversal of the disease, even in those who presently will be assigned to triage Black category 4. Most of those terrible casualties now falling into triage Black category 4 would fall within triage Red category 1 instead, if small portable

treatment devices are available by the thousands. There is simply nothing else out there that will produce such a dramatic savings of human lives, and probably the survival of our nation itself.

Impact of Smallpox Release

It is almost inevitable that the terrorists also obtained smallpox BW agents — to could anyone who wanted it, had guts and had money. Reliable information already confirms that the terrorists obtained many BW agents, including smallpox by going into the BW labs in former Soviet republics, and buying it. Or one got it from North Korea. Or one just hired very desperate Russian smallpox BW scientists who urgently needed to support their families. Or one got some of it from Voz Island.

The collapsing Soviet state was unable to pay salaries to scientists, generals or soldiers for protracted periods. In desperation to get money to survive, those individuals were forced into extreme measures. Anything there that one wished to buy could be bought, including even a nuclear submarine — see Lunev's book for an incident {ix} where a Russian nuclear submarine was actually purchased. Among other things, one could obtain smallpox agent and the services of Soviet BW smallpox specialists themselves. And of course it included nuclear weapons.

Once smallpox is unleashed in any major city on the planet, it will eventually kill almost one-third the present human population. Quoting Garrett {xcii}:

> "If the smallpox virus were released today, the majority of the world's population would be defenseless, and given the virus' 30 percent kill rate, nearly two billion people would die."

Note that Garrett also knew nothing about immune system spreading, or direct "smallpox engine" induction electromagnetically, to augment and increase the kill rate. Smallpox will almost certainly be released against the U.S. populace, probably with EM augmentation. The Yakuza and other terrorist organizations will see to it, with smallpox toxin supplies almost certainly already inserted in the U.S. and waiting, and with the scalar interferometers already waiting to induce immune system spreading and direct EM BW engine insertion in the targeted populace.

As an intellectual exercise, we leave it to the reader to ponder the impact of a few limited smallpox releases in our cities combined with simultaneous wide usage of the force amplifiers (immune system spreading and EM BW smallpox induction) previously discussed, particularly in the grim absence of any effective mass casualty treatment capabilities. The impact is not pleasant.

The Grim Nuclear Problem

One can also see the damage that can and will be done by dirty weapons (ordinary high explosives surrounded with nuclear materials), spreading nuclear fallout in densely populated areas..

But there is another, even grimmer, side of the story. When the Soviet Union collapsed economically, many nuclear weapons were made available on the black market, and sold to the highest bidder. Some 200 or more nuclear warheads for missiles came up "missing" from the Ukraine alone. Quoting Communist Party leader Petro Symonenko {xciii}:

> "Out of 2,400 nuclear warheads which were on Ukrainian territory, the withdrawal of only 2,200 warheads has been verified. The fate of the remaining 200 warheads is unknown."

Further, in 1996 Alexander Lebed, then Boris Yeltsin's national security adviser, reported that some 100 suitcase-sized Russian nuclear bombs were missing. In a donnybrook, some Russian officials denied the existence of such weapons, while others confirmed their existence. The charges and counter charges faded away, and nothing was ever resolved.

Nuclear weapons do not just "go missing" with a shrug of one's shoulders!

All those missing weapons were in fact sold on the nuclear black market. Guess who bought them, and guess where many of them have been inserted already, waiting to go, along with teams trained to detonate them on command. It is almost certain that Bin Laden and Al Qaida succeeded in purchasing some of the stray Russian nuclear weapons. Other terrorists such as the Yakuza and the Aum Shinrikyo almost certainly purchased some of them also.

Terrorist efforts to obtain further bomb grade material such as highly enriched uranium (HEU) have continued. Quoting Bunn and Wier {xciv}:

> "The 41 heavily armed, suicidal terrorists who seized hundreds of hostages at a Moscow theater in 2002 reportedly considered seizing the Kurchatov Institute instead — a site with enough highly enriched uranium for dozens of nuclear weapons... Al-Qaida has been actively seeking nuclear material for a bomb and has strong connections to Chechen terrorist groups."

Bunn and Wier {xcv} also point out that:

> "More than 130 research reactors in dozens of countries still operate with HEU fuel, and many have no more security than a night watchman and a chain-link fence. Pakistan's heavily guarded nuclear stockpiles face huge threats, from both insiders and outsiders, including large remnants of al-Qaida and the Taliban in the country." ... Comprehensive U.S.-funded security upgrades have been completed for only 22 percent of Russia's potential nuclear bomb material; upgrades for tens of thousands of bombs' worth of material are still incomplete."

At this moment, no one knows how many Russian nuclear weapons have gone "missing" and were sold on the world black market by unpaid Russian generals and soldiers desperate for money to feed their families. No one knows how many Russian nuclear weapons are still "going missing" and being sold on the nuclear black market. Because the terrorists wanted them and had the funds, and because the Russian generals and soldiers sold them to someone, it does not take a rocket

scientist to understand that the two parties almost certainly did business with one another. For more specific information, sec Williams {lxxiii, xcvi}.

The Al Qaida has quietly confirmed to the Arab world that it, the Al Qaida, already has inserted seven nuclear weapons in major U.S. cities, and some of the weapons were 200 KT. At least one U.S. author has assessed the Al Qaida as having nuclear weapons in the U.S. {xcvi}. The present author personally suspects the actual number inserted by the Al Qaida and other terrorist organization combined is about double that figure, at least. Bin Laden apparently bought some 20 suitcase nuclear weapons himself {xcvii}, using funding obtained from the Arab world and/or drug production in Afghanistan.

Recall that the KGB/FSB faction which controls the Russian superweapons — and the leasing and transfer of scalar interferometry technology to the Yakuza/Aum Shinrikyo — also controls the previously inserted Russian nuclear weapons in American cities, as well as the associated Spetznaz teams. During this orchestrated two year period we have now entered, somewhere in the United States at least some of those weapons are very probably going to be transferred or sold to the Yakuza/Aum Shinrikyo, and perhaps a few will go to other well-organized groups such as Al Qaida.

The capability exists. It serves the purpose of the FSB/KGB in assuring the destruction of America. It will be done.

As another example, the former Soviet Union also probably inserted anthrax and smallpox agents into the U.S., along with teams to unleash them on command. If so, those assets are also still here, waiting for the order to move. It seems highly probable that at least some of these BW weapons caches will also be released to the terrorist organizations such as Al Qaida, for use in the coordinated coming attacks.

So in addition to the BW threat, somewhere between 14 and 40 already inserted hostile nuclear weapons probably form the "minimum nuclear weapons pool" available to the coordinated terrorists during this two year period. At least that would appear to be a reasonable estimate. We accent that this estimated nuclear weapons pool has — with high probability — already been inserted on site in the U.S. This is another startling capability of the present terrorists to deliver a resounding strategic nuclear knock-out blow against the United States, without ever firing a missile or launching a strategic bomber.

These are examples of the true state of affairs concerning the "War on Terrorism". The great battle of that war has already slowly started, with the zeroing in of strategic Yakuza scalar interferometers on the Yellowstone supervolcano (giving them a "single shot knockout capability against the U.S.), and with the subsequent Yakuza induction of the 9.3 seafloor earthquake on Dec. 26, 2004 that induced the catastrophic tsunamis in Asia. Presently additional U.S. volcanoes are active and rumbling, as are hundreds of seafloor volcanoes. And so the action is slowly beginning. The FSB/KGB will gradually unleash these terrorist assets, and then

their initially sporadic attacks will be deliberately increased, with maximum effort at the very end of the second year and over the first half of that following third year. The intent is to generate a terrible and catastrophic economic collapse of the U.S. two years hence, and then have the Yakuza methodically destroy our cities and every living American.

Harshness of the Terrible Decontamination Problem

No one has a good solution to decontaminating mass metropolitan areas that have been destroyed or heavily damaged and that are dramatically contaminated with nuclear fallout. Neither does anyone have a solution for decontaminating the distant large nuclear fallout areas surrounding those devastated cities after the nuclear detonations.

Consider the similar terrible task of decontaminating a large city (such as Washington D.C. in that government study), once the city has been sprayed en masse with anthrax by the terrorists. Yes, there are some chemical sprays that will kill the anthrax spores (else they last for a century or more, apparently). But these sprays are very harsh. To spray a civilian populace and area with them is to unavoidably kill a certain number of thousands of one's own sprayed civilian populace. Multiple sprayings of each contaminated area will be necessary, in order to attain the required assurance of sufficient decontamination.

So far as is known, there are no similar sprays available that can remove contaminating nuclear radiation!

Now note the extreme severity of the coming decisions necessary in asymmetric war. In war, high level military commanders have always been faced with agonizing decisions. For example, suppose an Army commander has — say — a dozen divisions under his control. Suppose his war front is attacked by overwhelmingly superior forces, and breakthrough and destruction of his Army is imminent. The commander will have to deliberately sacrifice — say — two divisions (that's 36,000 men) by hurling them into the teeth of the attacking forces, to temporarily halt and delay the attack momentum while those two divisions fight and die. They will be ground up just like hamburger meat, but that delays the enemy onslaught for a precious short time.

That desperately-bought short delay time gives the Army commander the chance to get his other 10 divisions out of there, and back to prepared defensive positions, to live to fight another day. This way, he saves the bulk of his army, by deliberately sacrificing those two divisions. The point is, military commanders have always had to agonize and sometimes deliberately send large numbers of men under their control to their certain deaths. The soldiers sent on such missions also knew when they received their orders that they went to their certain deaths.

Any fool can make a military decision when there is a "good" option and a "bad" option. But when there are only two "bad" options, one is forced to decide for the

"least worst" of the options — even though it entails the deliberate sacrifice of friendly lives to save otln

Now the battlefield is our own cities, and the targeted force is our own civilian populace. That same type of "least bad" decision necessity falls now on the sacrifice of some thousands of our own civilians. Some commander at high level (probably the President himself) will have to assess the situation as so desperate that multiple decontamination sprayings of the anthrax-contaminated area and populace are absolutely necessary, to prevent spreading mass destruction by anthrax carried to other areas, and resulting in the deaths of many millions more. So such an order will have to be given, agonizingly, to spray multiple times (necessary to neutralize the anthrax with a good probability of success).

Each massive spraying might kill perhaps an additional 5,000 or even 10,000 U.S. civilians. Heartbreakingly, these will be the most defenseless and helpless of our citizens, and the ones we would strongly wish to defend to the death with our very lives and with every heartbeat in our breasts. The most vulnerable group will largely consist of persons with hampered breathing or vulnerable immune systems - the old, the feeble, babies, the sick, nursing home occupants, etc.

It has been said that war is hell, and indeed it is. Asymmetric war resoundingly brings that hell home to our civilian populace.

In the past, our troops have mostly ridden out of the protected U.S. fortress/castle to a foreign land, and fought the war "over there", with our civilian populace largely immune and shielded from the horrors of such fighting, particularly when the fighting is intense. Now in addition to our involvement in foreign places, in asymmetrical warfare the major battleground is right here in our own cities, because the major target being attacked by the hostile forces is our civilian populace — including our aged, the infirm, women and children, babies, etc. These devils who are our foes believe that, if they can kill lots of American civilians, babies, etc., they personally acquire a very high religions status from God Almighty. In short, we are up against a fanatical, irrational foe, one who has also unfortunately had two decades or more of almost unrestricted access into the United States, to insert the necessary WMD assets for this "final great Jihad" against us in our cities and homeland.

This "final great Jihad", in the operations phase fought inside our cities and nation, is what is really coming upon us, together with a similar grim dedication to our total destruction by the Yakuza. This is the coming horrible nature of the struggle. We are actually in a clash to the death between civilizations and cultures. Quoting Seib[10]:

---

[10] Gerald F. Seib, "Deeper Threat is Being Missed amid Iraq Debate," Wall Street Journal. Wed. 8 Sep. 2004, p. A4.

> "The far bigger question is whether the U.S. it engaged in a historic clash of civilizations with the Islamic world. ...The U.S. ... has reached no consensus on a strategy for dealing with a clash of civilizations."

Seib further states[11]:

> "The bin Laden goal isn't simply to humiliate the U.S. Nor is it to overthrow the government of Saudi Arabia, or Egypt, or Jordan. The goal is to eliminate those governments — in fact, to eliminate those nations."

According to the present Yakuza/KGB/FSB and international terrorist plans, their actions are expected to reduce the U.S. to lying prostrate and helpless two years from now. With a U.S. nation in utter chaos and ruin, and economically already collapsed catastrophically, a touch-up with the FSB/KGB quantum potential weapons (the most powerful weapons on earth, but possessed by at least five nations) would quickly dud every nuclear weapon, ICBM, nuclear bomber, nuclear power plant, nuclear submarine propulsion system, etc. on the planet {xcviii}. The dudding could be achieved in about 10 minutes, although an hour or so seems to be allotted for it. This is "pulling the dragon's teeth and claws." The conventional strategic military power (ICBMs, nuclear bombs and warheads, and nuclear subs etc.) will be suddenly disabled and effectively wiped out, to exist no more. All that giant strategic apparatus will be just so much trash on the garbage dump of history.

Further, the U.S. society will be enmeshed in total chaos from the intensity developed in its polarizations. The society will be massively spilling its own blood, fighting in the streets, as a result of conversions of the leaders of the polarization areas. In addition, massive "sleeper" conversions suddenly triggered en masse throughout our government leadership, scientific leadership, police, armed forces, large technical corporations etc., will generate a society instantly gone totally berserk. We shall see police attacking cities and civilians, armed forces attacking each other and the civilian populace, etc. The order in all organizations that is necessary for civilization to survive will suddenly have dissipated, never to return again. This is one way in which, by themselves, psychoenergetics weapons can totally destroy an entire culture or the entire Western civilization.

At that point, with a U.S. in total chaos, the Yakuza gleefully plan to participate in the methodical destruction of the United States — the terminal part of the present Operations Phase. It will be a turkey shoot. The Yakuza will be freed to just blast away at will with their scalar interferometers, as they wish, to continue to the full destruction of the United States by destroying cities, infrastructure, and the entire civilian populace.

The intention of this unholy war against us, by both the recognized terrorists and the Yakuza/Aum Shinrikyo is to kill every American (and every Israeli also) —

---

[11]Seib, ibid.

men, women, children, babies, all of us. It is actually a war intended to totally destroy our civilization - and every living American.

We will see the operational unleashing of this terrible plan, already just beginning lining the two years starting at the beginning of 2005, and gradually increasing in intensity, and finishing at the end of the second year with the catastrophic economic collapse of the United States. Once the economic collapse is complete and chaos is supreme, the sudden dudding of all our nuclear weapons, power plants, and nuclear propulsion systems will be the coup de grace that leaves us a hapless target. The rest of it is the turkey shoot, to simply execute us and finish us off.

In the interim, we will see damaging volcano activity increasing, and very probably we will see powerful tsunamis striking both the U.S. West Coast and East Coast.

If it were to somehow become necessary, the Yakuza will also trigger the Yellowstone supervolcano into violent eruption, destroying the United States and most of North America.

Summary and Conclusion

In closing, we reiterate some massive strategic capabilities already registered and waiting. Toward the end of 2004, the Yakuza scalar interferometers registered (zeroed in) on the Yellowstone Caldera, the largest supervolcano on this planet. With that "registration" completed, they now can initiate that supervolcano into violent eruption, whenever they wish. Again, the supervolcano's eruption will likely expel more ash, lava, debris, and rocks than the entire Grand Canyon can hold, devastating a large part of North America.

The caldera is overdue for another eruption anyway, so undoubtedly there is increased geophysical stress there already. One should also check the latest findings in geology, and see what happened to North America the last time that Yellowstone Caldera erupted violently. The last eruption devastated quite a portion of North America, killing most of the higher forms of life in a large area.

Now check what happened the last time the somewhat smaller Toba supervolcano in Sumatra, Indonesia erupted violently, about 74,000 years ago. It destroyed all human life on earth, except for a few thousand humans in Africa {lix}. The human genetics shows this sudden "bottleneck" in our genetic variability that sudden occurred about 74,000 years ago {lix}. Also, this is why the present human genetics also shows that "we all came from Africa". And so we did; we are all descendants of that small group left alive in Africa about 74,000 years ago.

In registering on the Yellowstone caldera, the Yakuza has already achieved an additional tremendous "knockout" strategic strike capability against the United States. The Yakuza can indeed wipe out much of North America in a single strike, then finishing the destruction of the United States at its pleasure. There are of

course other volcanoes in the U.S. that can also be stimulated into eruption to add to the chaos and carnage. Several of them are already being "actively tickled".

Again, in 1997 U.S. Secrelary of Defense Cohen already confirmed the use by terrorists of electromagnetic weapons for precisely such purposes — initiating volcanoes, generating earthquakes, and controlling our weather and climate. The recent September 2004 "shooting" of one powerful hurricane after the other into the United States, is just one example. The economic damage done by those hurricanes Charlie, Frances, Ivan, etc. has been adequately covered on the national news, so it is already familiar to the reader.

Other powerful capabilities available to the Yakuza scalar interferometers are also possible and therefore registered, such as deliberately generating tsunamis that then strike targeted coastal areas at jet liner speed {xcix}. One such "tsunami looking for just a touch to complete its preparations to happen" is provided by the Cumbre Vieja volcano in the Canary Islands. A large section of the volcano has already broken loose, and threatens to slide into the sea. If so, it will generate an enormous tidal wave (tsunami) that will strike the East Coast of the United States a few hours later {lx}.

For example, quoting Bill McGuire, director of the Benfield Grieg Hazard Research Centre at University College in London {c}:

> "A 12-mile chunk of the Cumbre Vieja volcano in the Canary Islands rattled loose during a previous eruption and is at risk of smashing into the Atlantic Ocean, triggering what could be one of the largest tidal waves in recorded history. ... It's not a matter of if, but when."

Obviously, if this "submarine slump-induced tsunami" is induced sharply by Yakuza scalar interferometry, so that the slump occurs with sufficient force, then 8 to 10 hours later a great tidal wave 70 feet or more in height (conservative estimate! Some estimates run 200 feet high) could strike New York and the Eastern U.S. Coast, as well as the Caribbean, moving at some 600 miles per hour. Such a giant tsunami would penetrate inland and devastate entire coastal areas. It is an opportunity that will not have gone unnoticed by the Yakuza, and undoubtedly one or more scalar interferometers have already registered on that target. Again, we strongly stress Defense Secretary Cohen's confirmation of just such use of electromagnetic weapons by terrorists. This is one more example of what can be done by "deliberately evoking, assisting, and directing already available giant geological forces".

So weather engineering and steering and augmenting hurricanes and other storms is just one facet of the real threat. But it is a very important part of the strategic threat, as indicated by Secretary of Defense Cohen in 1997.

Hostile Yakuza fingers are already on the triggers of those zeroed-in scalar EM interferometry weapons, 24/7, waiting for the order to be given to strike. If deemed necessary, this already includes the eruption of the Yellowstone

supervolcano and the massive tsunami hitting the Eastern U.S. seaboard from induced violent eruption of the Cumbre Vieja vulcano.

These two examples are the kind of things that, to one extent or another, are now coming down the pike at us full-speed.

We have also briefly pointed out the horrific casualties that can be obtained by very small and simple anthrax attacks, when bolstered by force amplifiers (immune system spreading and EM BW disease induction).

As can be seen, once the superweapons (such as scalar interferometers) already in the hands of the asymmetric warfare terrorists (the Yakuza component) are factored into the analysis, indeed the terrorists have already achieved a strange kind of "rolling thunder" strategic knockout capability against the United Slates. At least publicly, this major change in the capabilities of the terrorists against the United States has not been analyzed or pursued by the conventional U.S. government agencies and their traditional support analysis agencies. Specifically, the U.S. Congress has not been adequately informed, particularly of the terrible mess that our decrepit old electrical engineering really is, and the consequences of not correcting it when our foes already have done so.

Finally, the reader is strongly urged to review in detail the section on psychoenergetics weapons and scenarios, in the second part of this book. Massive conversions will be used against the U.S. and Western nations, and it alone can in fact wipe out Western civilization. Hundreds of scenarios are available; several examples have been chosen and will be discussed. Massive insertions of "sleeper" personas in massive numbers of individuals in the targeted U.S., Israel, and Western Europe are already underway. The nonmaterial precursor robots, which were launched against us in an eerie and officially undetected giant war against us at the end of 1999 and first few days of 2000, are once again coming at us en masse. Again the reader is strongly urged to check the information on that potent threat in the second part of this book.

When the strategic strikes and new kinds of force amplifiers are factored into the war with terrorism, we find that we now confront a den of raging but carefully controlled tigers, not just a den of small cats using car bombs and solitary humans with strapped on C-4 explosives. Instead, we confront a coordinated strategic threat of awesome and unprecedented power and tremendous damage capability, one that already has the capability to destroy us several times over, and one that is slowly tightening the noose about our collective necks in a deliberate three year schedule ending in our total destruction and oblivion.

SLIDE BRIEFING PART A: Statement; Preface; Foreword; Summary

OBLIVION 71

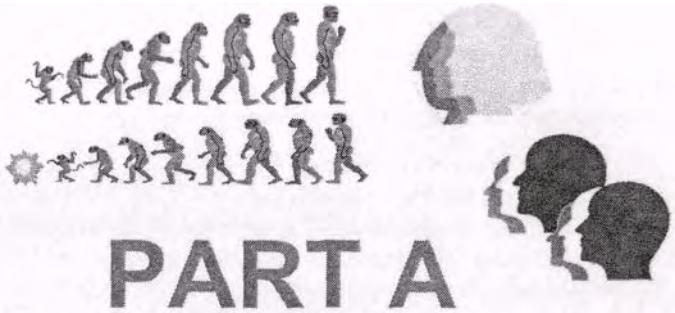

Statement, Preface, Foreword,
Executive Summary

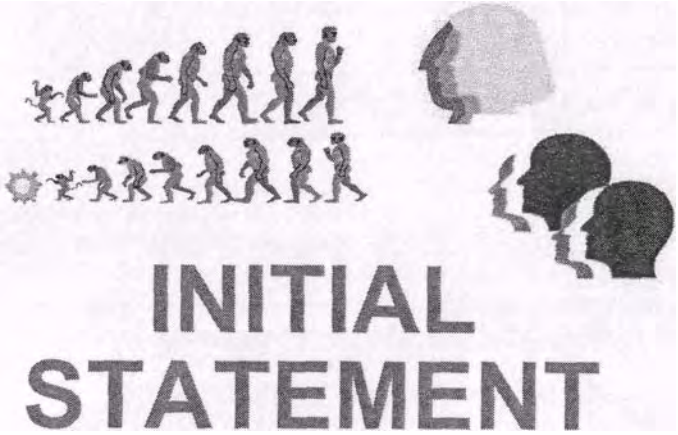

Statement of the situation

- Since the late 1970s, Israel has repeatedly saved the United States from pending destruction.
  - 1970s, saved us from already-inserted Spetznaz teams with nuclear weapons, who would have blown up our cities.
  - 1986, saved us from pending Soviet attack with energetics weapons, particularly scalar interferometers.
  - 1997, saved us from Soviet attack twice, which would have been attacks by the full energetics weapons arsenal.
  - 1999-2000, destroyed millions of nonmaterial robots in subspace inside EM signals, fields, and potentials throughout the U.S.
- Presently, attack is again scheduled, with addition of the eerie new mind conversion techniques of mind war.
- Israel may be able to save us once again, in which case we shall survive. Otherwise, we will be destroyed, beginning about two years from now.

Mini Wars: Catastrophic end of civilization?

- "I firmly believe that before many centuries more, science will be the master of man. 7% engines he will have invented will be beyond his strength to control. Some day science shall have the existence of mankind in its power, and the human race [shall] commit suicide by blowing up the world."

Henry Adams, 1862

- COMMENT: With perfection and unleashing of psychoenergetics weapons, we have reached that time envisioned by Adams, in little more than a century.

End of technological species: The final catastrophe (1)

- Some decades ago, we pointed out that a technological (tool-using) intelligent species eventually poses its own self-destruction, by the ever-increasing power of its tools and by its inbuilt inhumanity of one human member for another.*
- Either the technological species uses its eventual technology to transcend the inhumanity of one human for another, or it uses it to utterly destroy itself because, of its innate inhumanity.
- It is not accidental that we find no signs of intelligent life on other distant planets and in distant galaxies.

End of technological species: The final catastrophe (2)

- Today the human technological species has developed and tested eerie superweapons that breach the threshold required to move into the final decision domain. We have entered that domain already.
- Accordingly, within the next three years we face coming calamities so appalling they numb the mind and nearly defy the imagination.
- Our most basic human element — the ability to function mentally as a unitary individual or group — may disappear forever, destroying the species.

*T. E. Bearden, The Excalibur Briefing. Strawberry Hill Press, San Francisco, 1980. Updated edition, Cheniere Press, 2001.

GO: Group coherence and Order (1)

- The functioning of the human species — from the individual to large nations to the entire species — is determined by the ability to group coherently and thus by the ability to order (cohere)
  - Restricted loss of GO in individual is neurosis (sickness).
  - More general loss of GO is psychosis (insanity).
- Neurosis and psychosis also exist in the group.
  - Restricted loss of GO in the group is group neurosis (sickness).
  - More significant loss of GO in the group is group psychosis (insanity).
- Complete loss of GO in the individual or group is total chaos and total insanity (the old notion of hell).

GO: Group coherence and Order (2)

- FSB/KGB developments in psychoenergetics provide the ability to affect, reduce, and eliminate GO in the individual, a small group, a large group, a nation, or a group of nations.
- The technology provides for reducing or eliminating GO at any or all elements of the attacked society. In effect, for complete "dissociation" of the society.
- It is being unleashed, eventually massively, spelling the rapid demise of the U.S. and Western Europe.
- The genie cannot be rebottled. Ultimately it may destroy GO for all human society. If so, the dissociated human species rapidly consumes itself and dies.

Development and destruction of the human species

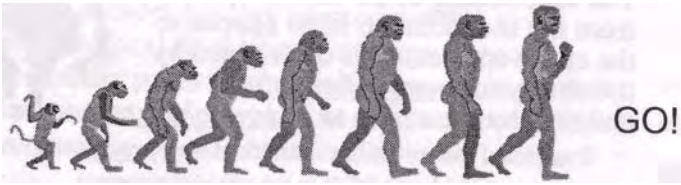

Development of humankind (association)

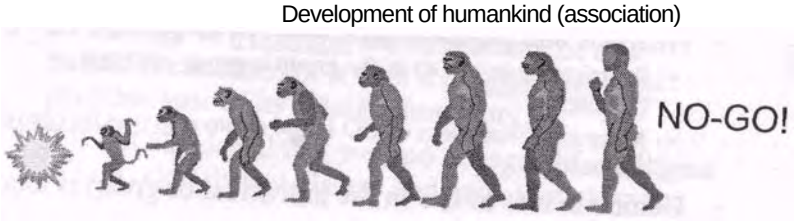

Destruction of humankind (dissociation)

End of technological species: One possible catastrophe (1)

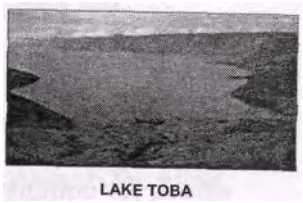

* Some 74,000 years ago, a great supervolcano at Lake Toba on the Island of Sumatra violently erupted.
  - Destroyed all humans on earth except for a few thousand in Africa.
  - All Present humans have descended from them.
* Human genetics records the severe "genetic bottleneck" in human genetic variability that occurred.
* Hence present human genetics shows that "we all came from Africa".

End of technological species: One possible catastrophe (2)

- Underneath Yellowstone National Park in the U.S. lies another great supervolcano, with 3 calderas, and it is overdue to erupt.
- In 1997 SecDef Cohen confirmed terrorists' use of "EM weapons" to cause earthquakes, erupt volcanoes, and control our climate and weather.
- The Yakuza zeroed-in large scalar interferometers on Yellowstone in 2004; can evoke its eruption at will, destroying the United States in a single shot.
- The Yakuza generated the 9.3 undersea test quake in Asia on Dec. 26, 2004 which caused the catastrophic tsunamis in Asia, killing more than 300,000.

End of technological species: The final catastrophe (3)

* With the rise of energetics, FSB/KGB superweapons have been developed which target material systems, living bodies, and living minds in ways never before thought possible.
* To create, engineer, shape, control, or destroy living human minds at will — including all of them on Earth in one strike — uproots the basis for all human order.
* By destroying coherence of mind and minds, no human or organization can survive or function.
* It poses unthinkable catastrophes exceeding any past disaster the human species has experienced.

End of technological species: The final catastrophe (4)

* These psychoenergetics weapons have been developed, tested, and deployed en masse.
* We have entered the last three years of the gradually escalating Operations Phase of asymmetric war against us, which will little resemble anything we have known and experienced before.
* We may see catastrophic destruction of civilization itself, and perhaps of all human life on earth.
* Our purpose is to point out the elements of the coming catastrophe, in the hope that somehow it can still be avoided or at least lessened in severity.
* Otherwise, the coming debacle may soon finish what Toba almost accomplished 74,000 years ago.

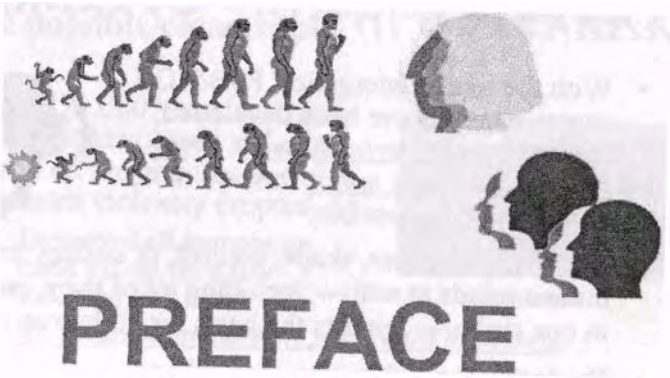

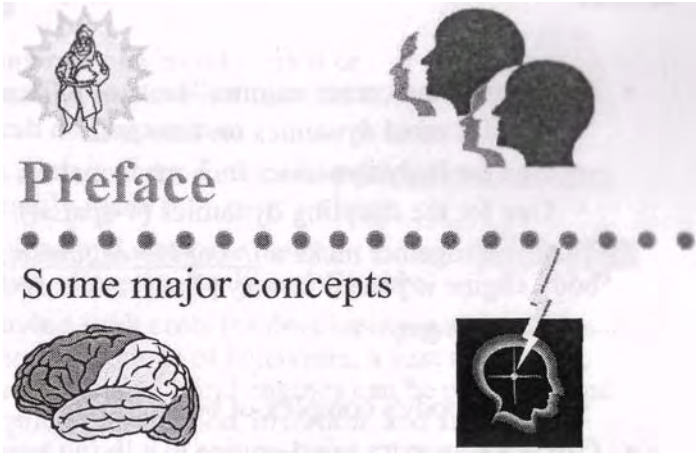

Mind war is the use of conversions

* The Creator created life and living biological systems.
  * Created the process for making life and living systems
  * Science can discover and engineer this process.
* FSB/KGB scientists have done precisely that.

  * From a distance, can insert altered variant of targeted mind in targeted individual's body.
  * Can switch between the two ("conversion").
  * Changes the behavior designed for targeted individual, or any number, as desired. Conversions against U.S. and others (such as Israel) underway.
* Conversions, fractional conversions will play a major role in U.S. economic collapse two years from now, and in the destruction of the U.S. that will follow.

A living mind can be produced and formatted, as can a variant of it (1)

- Make three "precursor engines" (sets of ST curvatures).
  - One for mind dynamics on time axis.
  - One for body dynamics in 3-space matter.
  - One for the coupling dynamics (4-spatial).

- The three together make a living bio-organism, once the body engine is placed in very pliant matter such as:
  - Electron gas.
  - Plasma.
  - Living body's complex of body currents.

- Can place an extra mind-engine in a living human body, using the resident body-engine and coupling-engine.

A living mind can be produced and formatted, as can a variant of it (2)

- Can insert the biosystem in an ashtray or in a living body.
- Can insert just the altered mind dynamics (or a fraction of it) in a targeted person's body.
- Switching between original and replacement minds, or between fractions, is called "conversion" or "fractional conversion".

- Conversion dramatically alters individual's behavior, as when multiple personalities switch in a schizophrenic.
- The individual's new behavior is determined by the dynamics designed into the new engine.

Achieving strategic mind war! (1)

- Making one new mind variant or variant of a major mind fraction is difficult and expensive.
- Once made and the sunk costs paid, unlimited clones are readily made for a penny a copy.
- Can clone and stockpile many millions of copies, easily and cheaply.

- By paying sunk costs for developing initial fractional engines for a range of behaviors, a vast arsenal of deviant fractional mind engines can be produced and stockpiled for selection, insertion, and switching.

Achieving strategic mind war! (2)

- Decisive strategic mind-war via selected or massive conversions becomes both practical and doable.

* "Sleeper" conversions can be implanted in leaders, key personnel, etc. in advance (in an insertion phase).
* Gradual switching generates slowly increasing change in behavior and in internal societal friction.
* Switching massively all-at-once generates a sudden and permanent collapse of an entire society into utter chaos.

- The massively switched society violently destroys itself rapidly and completely.

Scenario examples

* President's own converted guards suddenly shoot him.
* Sudden conversion of President, Vice-President, Congress, Judges, Pentagon leaders and high executives paralyzes the nation.
* Police forces suddenly begin attacking civilians. One's own Armed Forces begin destroying each other and our own populace and cities.
* The sides of any societal polarization begin vehemently attacking and killing each other.

* Strategic weapons operators "go berserk", change codes, launch on our cities, friends, or indiscriminately.
* Hundreds of other scenarios are possible.

Precursor fields and actions: The secret of "energetics" science (1)

» Force exists in mass and mass systems, not in space.

* In space, there is only curvature or distortion regions of spacetime, with dynamics.
  - Such dynamic ST regions are force-free "fields" and "potentials" in space.
  - Every field and potential is already a set of energy flows.*
  - The field-in-space is a dynamic "precursor" state, consisting of energy flow dynamics.
  - A specific "pattern" of the energy flow dynamics in space and time is called an "engine".
* Engineering the precursor state (precursor engineering) is directly engineering nature's fundamental free EM energy flows and their dynamics.

*As shown by E.T. Whittaker in 1903 and 1904, without introducing the source charge. Specifically, EM fields and potentials are sets of ongoing energy flows, freely streaming from the associated source charge(s) producing the field or potential and its energy.

Precursor fields and actions: The secret of "energetics" science (2)

* Precursor engineering:
  - Basically negentropic: only a little entropy is produced for control.
  - Ongoing interaction of dynamic precursor engine with matter produces a directly analogous force engine acting in that matter.
  - Controls, directs, switches nature's free energy flows!
  - Extends "gauge freedom" notion, in that the energy itself is free, and one only pays for a little switching and control of nature's free energy flows.
* Body and its dynamics are dynamics in 3-space.
* Mind and its dynamics are EM dynamics on the time axis. Can be directly engineered via EM methods based on quantum field theory's time-polarized photon.

About models and modeling (1)

* Choice of fundamental units in one's physics model is totally arbitrary*
* Consider a model with only a single fundamental unit: the joule. Everything else — including length, time, mass, etc. —becomes a function of energy.
* We can even make that fundamental unit a joule of EM energy. A priori, energy can be changed in form to any other form. Everything then becomes a function of EM energy.
* Thus time has (and is) a special form of EM energy, just as is mass.

* E.g., see discussion of such systems of "natural units" in J.D. Jackson, Classical Electrodynamics. Wiley, NY, 1999 in his Appendix on Units and Dimensions.

About models and modeling (2)

* This extends the time-polarized photon concept in quantum field theory, since all dynamics and functions on the time axis can be considered special EM energy dynamics and functions.
* Mind operations and dynamics are on the time-axis (they occur in time, not in space). Hence they also are special EM energy dynamics, capable of being directly engineered.
* By engineering time-polarized EM photons, fields, and waves, mind dynamics can be directly produced and engineered.
* Time-energy-EM dynamics in a given mind can also be directly engineered. Another set can be cloned identically, or another set cloned and altered as desired.
* Two variations can be made, inserted in a body, and their connection to the body can be switched between them.

Precursor engineering and mind conversion (1)

- A specific set of forces in/on matter is an ongoing force (material) engine formed and acting in/on that 3-matter.
- Producing it, there is an ongoing interaction of a precursor (nonmaterial) engine and that 3-space matter.

- In the mind realm (time), there are internal patterns, compressions, rarefactions, etc.
  * Compressions of time energy are analogous on the time dimension to "matter", so to speak, in 3-space.
  - The mind interactions can be roughly thought of as analogous to the spatial situation where precursor engines act on "densities of energy called matter" to generate the final "force engines".
- One speaks of "mind energy" and "mind force", to separate thinner intent time actions from the final mind engine that has rotations into 3-space and the body.

Precursor engineering and mind conversion (2)

- Mental intent acting on denser time creates mind engines on the time axis.
- By relativistic 4-space rotation, mind engines also project coherent EM engines in 3-space virtual state.

* Negative entropy operation of charges in the brain and nervous system of a body integrates the coherent virtual mind engines into observable EM engines.
* Thus mind engines cohered into observable 3-space engines acting on coupled matter in a body create intentional behavior in that body.
* Creation and switching of different precursor mind engines is conversion. Switching of fractional precursor mind engines is, fractional conversion.

Precursor engineering and nonmaterial robots (1)

* For every material robot, there exists a force engine for its dynamics, and therefore a precursor (force-free) engine for them. This precursor engine is a nonmaterial robot a priori.
* The precursor engine may be produced alone, then inserted into an electron gas, plasma, or other actual physical system to produce the robotics functioning of a material body.
* The precursor engine "nonmaterial robot" can be inserted into distant targeted national facilities, equipment, weapons, etc. and then activated on call, producing material robots that act on call.

Precursor engineering and nonmaterial robots (2)

- Start with a precursor engine "nonmaterial robot" and an artificially created mind (dynamic intent engine and corresponding mind engine).
- Coupling of mind (precursor) engine and a precursor robot engine gives a "living nonmaterial robot" (a living and dynamic 3-space virtual state engine robot in 4-space).

- The living nonmaterial robot engine set can also be inserted into distant targeted national facilities, equipment, weapons, human bodies, etc. and activated in compliant mass into intelligent functioning.
- Energetic robots dramatically extend material robotics.

What this briefing is about

- Background of energetics weapons is included, with emphasis on conversion, its science, and its intended use.
- Part of what the FSB/KGB developed as energetics superweapons science.

- Three branches, according to what is targeted:
  - Energetics (against inert physical systems, targets)
  - Bioenergetics (against living biological bodies).
  - Psychoenergetics (against living minds and behavior).
- Dramatic tests in 1996, 1997, etc. are detailed.
- In Russia, energetics superweapons science is still highly classified; operated by FSB/KGB, not armed forces.
- West has not developed energetics or defenses against it.

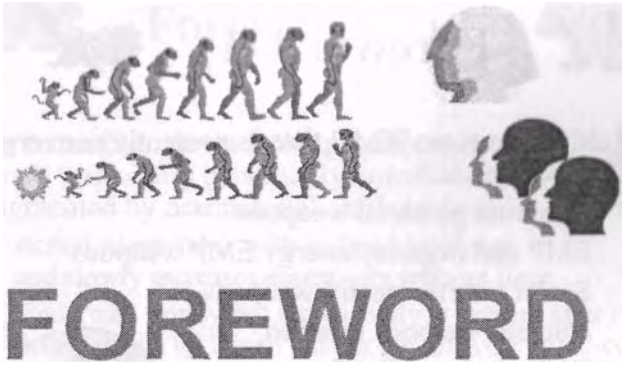

Foreword

Strategic asymmetric warfare plan of the FSB/KGB with the special role of the Yakuza

Foreword (1)

* Multiple strategic WMD threats presently converging to destroy the U.S.
  - Quantum potential weapons
  - EMP and negative energy EMP weapons
  - Scalar interferometry weapons
  - Nuclear weapons inserted
  - Biological warfare threat
  - Bioenergetics threat*
  - Psychoenergetics threat**

* Knockout capability achieved

---

* Little understood or appreciated by U.S. intelligence (uses electrical engineer analysts).

** Not understood or believed by U.S. intelligence (no scientific analysts even understand it).

Foreword (2)

* Have passed from insertion phase of strategic asymmetric warfare to a 3-year operations phase

* Operational incidents will increase next 2 years inside U.S. while U.S. dragon is increasingly "stretched and bled" overseas economically

- Two years from now, the threats will generate catastrophic economic collapse of the United States, then begin methodically destroying it.
- Will increase damage to centralized electrical power system and destroy it two years hence.

Foreword (3)

- An immediate threat is the psychoenergetics threat (especially personality conversion) augmented by nonmaterial carrier robots.
  - Actual usage starts with isolated incidents and slowly increases essentially without limit.
  - * Underway slowly but increasingly at present after recovery delay caused by Israeli destruction of KGB mind-control facilities sometime after mid-1997.
- Main focus of this brief is the conversion threat, with limited background of overall energetics threat.
- U.S. must rapidly achieve and implement counter, or in 2 years probability of our total destruction is very high.

Japanese Yakuza play a special role as FSB/KGB proteges (1)

- Regard themselves as last of the Samurai.
- Often glorified in Japanese movies and media.
- View our defeat of Japan in WW II and our dropping the atomic bomb on Japan as the greatest dishonor in Japanese history.
- In their view, the only way to erase this shame is to destroy every living American.
- In a giant land scandal in Japan, Yakuza ripped off Japanese taxpayer for about $300 billion.
- Penetrate all large Japanese companies and government.
- Allied with old Aum Shinrikyo for technical expertise.

Japanese Yakuza play a special role as FSB/KGB proteges (2)

* FSB/KGB proteges for strategic asymmetric war in the U.S., coordinated by FSB/KGB communist faction.
* Acquired scalar interferometry super-weapons at end of 1989, along with EMP and negative energy EMP aspects, by leasing them from KGB in Russia.
* Can use high altitude EMP or negative energy EMP to knock out centralized power grid at one shot, along with a myriad other electronic systems such as power plants.
* Achieved single-shot destruction capability against U.S., by violently erupting Yellowstone supervolcano at will.

Japanese Yakuza play a special role as FSB/KGB proteges (3)

- Yakuza leased use of scalar interferometers from FSB/KGB in latter 1989.
- Engineered weather over North America.
- Shot down aircraft and missiles, etc.
- Initiated earthquakes and stimulated volcanoes into eruption.
- Proteges for Russian FSB/KGB for internal damage and destruction of the U.S.
- About 1 Jan. 2005, moved into final 3-year operations phase to destroy U.S. Two years to generate incidents, then catastrophic collapse of U.S. economy by destruction of centralized electrical power system etc.
- Then methodically destroy all Americans.

EMP: Expert testimony to Congress*

* "A nuclear bomb detonated high above the United Slates could unleash an electromagnetic pulse that would shut down the nation's power grid and, along with it, communications, water supplies and even food transportation."

* "If the effect is long-lasting enough, it also could trigger a social collapse that could conceivably cause the deaths of millions of people and, temporarily, push the nation back 100 years... "

Note: Yakuza scalar interferometers can produce strong EMPs anywhere in and over the U.S. at will.

•As reported by Dee Ann Divis, "Protection not in place for electric WMD," UPI, Mar. 9, 2005, reporting on testimony by Lowell Wood and Peter Pry, respectively member and senior staffer on the Commission to Assess the Threat to the United States from Electromagnetic Pulse Attack. Wood and Pry testified on Mar. 8, 2005 before the Senate Subcommittee on Terrorism, Technology and Homeland Security.

Yakuza achieved U.S. knockout capability as scheduled

- In last quarter of 2004, Yakuza zeroed-in large scalar interferometers on the Yellowstone supervolcano.
- Violent Yellowstone eruption would destroy 70% of North America. Would destroy almost all of the United States.

- Yakuza achieved a one-shot U.S. knockout capability.
- Yellowstone susceptible, sensitive, overdue for eruption.
- Circa beginning of 2005, asymmetric war against U.S. changed from insertion phase to final operations phase.
- For major demonstration at end of insertion phase, Yakuza generated 9.3 seafloor earthquake on Dec. 26, 2004, producing devastating tsunamis in Asia.

Hostile quake-inducing usage is confirmed

* In 1997 U.S. Secretary of Defense William Cohen* confirmed that such terrorist quake-induction was occurring. He stated:

"Others are engaging even in an eco-type of terrorism whereby they can alter the climate, set off earthquakes, volcanoes remotely through the use of electromagnetic waves... So there are plenty of ingenious minds out there that are at work finding ways in which they can wreak terror upon other nations... "

"It's real, and that's the reason why we have to intensify our efforts, and that's why this is so important. "

* Quoted from DoD News Briefing, Secretary of Defense William S. Cohen, Q&A at the Conference on Terrorism. Weapons of Mass Destruction, and U.S. Strategy. University of Georgia, Athens, Apr. 28, 1997.

Alliance in progress

- China, Russia, and India alliance growing.
- Energy is a pressing problem for China.
- U.S. now hampered in access to Russian oil.
  - Helps "bleed the U.S. dragon" in preparation for the hidden program to cause catastrophic U.S. economic collapse.
  - Probably ordered by FSB/KGB communist faction.

- China "bought into" the Russian oilfields and program.
- China and Russia announced they will hold military maneuvers and exercises in China later this year (2005).

Alliance in progress (2)

- China has 200,000 Chinese in Panama; controls both ends of the Panama Canal. Has access ports in U.S. and this hemisphere.
- China has full complement of energetics superweapons and nuclear weapons.
- China active in North Korean situation. North Korea admits it has nuclear weapons.
- Iran, Syria, Iraq, Afghanistan, Korea are hot spots, will continue to be hot.
- Watch for heat-up of the Taiwan situation, India-Pakistan also. China will take Taiwan by force.
- South China Sea declared as Chinese territorial waters.

Present Operations Phase

- FSB/KGB/Yakuza Operations phase of the asymmetric war is the three years we are now in. The first two years are critical to safely knocking out the U.S.
  - Yakuza has U.S. knockout capability
  - Shot giant 9.3 seafloor quake 12/26/04 generating terrible Asian tsunamis.

- Plan is centrally coordinated by FSB/KGB die-hard communist faction, which retains and operates the Russian superweapons and is the main power in Russia. Yakuza are FSB/KGB proteges.
- Putin from younger KGB faction; wishes accommodation with U.S. Not the main power in Russia; follows orders.

Present Operations Phase (2)

* Incidents will begin gradually in the U.S. and escalate. Al Qaida and other terrorists participate as they can.
- Yakuza scalar interferometers gradually destroy U.S. centralized electrical system, some refineries.* Also use EMPs.

* Causes catastrophic U.S. economic collapse. Massive sleeper conversions nullify friendly Israeli quantum potential counters.
* Yakuza methodically destroys prostrate U.S. cities, installations, etc. — fulfilling its mission of killing every living American.
- If necessary, Yakuza will erupt the Yellowstone supervolcano to assure total destruction of the U.S.

* E.g., BP refinery explosion in Texas City, TX in latter March 2005 is suspicious. The fires and explosion followed an FBI warning that terrorist attacks might be made on Texas refineries. No one has considered scalar interferometry could be involved.

Bioenergetics aspects of the Operations Phase

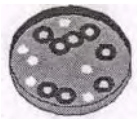

* FSB/KGB will "touch up" American immune systems with quantum potential weapons.
  * "Spreads" immune system's assets to prepare for dozens of expected "shadow diseases".
  * Not much additional assets left for the spread immune system to react to actual pathogens.
- Increases the casualties from BW attacks (such as anthrax sprayed in cities) by a factor of at least three.
- Two terrorists, one light plane, a small agricultural sprayer, and 100 kilograms of anthrax can produce 3 to 9 million casualties in a sprayed city.*

* Due to immune spreading, this is three times the results of the official study done as U.S. Congress, Office of Technology Assessment, Proliferation of Weapons of Mass Destruction: Assessing the Risks. Government Printing Office, Washington, D.C., 1993.

Bioenergetics aspects of the Operations Phase

- Anthrax spray attack and other BW attacks by terrorists will thus be unexpectedly devastating.
- The BW threat includes anthrax, smallpox, and many other dread diseases including avian flu and Ebola.

- No truly effective US BW treatment is available for mass casualties.
  - Most casualties will already have symptoms.
  - Will be assessed as triage category 4 (black) and just dragged aside to die without treatment.
- Essential decontamination spraying with harsh chemicals will kill thousands of additional citizens.

Devastating use of conversions (1)

- FSB/KGB can and does make living minds and biological system engines in the lab.
- Insert a target's mind-clone (with built-in specific behavioral changes) in a targeted individual's body and nervous system, waiting.

- Or insert a fraction of that mind, altered — and waiting.
- Plant such "sleeper" conversion clones in hundreds of thousands of key persons, awaiting activation.

Devastating use of conversions (2)

* Switch selected inserted minds or fractions at will, from a distance.

  Switch massively. Behavior of masses of leaders and critical persons instantly alters, causing total chaos.

* System begins intensively fighting and destroying itself.

* Produces the ultimate "Manchurian candidate" nightmare.
* Also counters the friendly little nation previously saving the U.S. with its quantum potential weapons. It suddenly destroys itself in utter societal chaos.

General scenario and status (1)

* Yakuza achieves knockout capability against U.S. (done).
* Massive sleeper conversions inserted. Counters strategic defenses (ongoing).
* Launch operations phase (operations phase begun).

* Stretch out U.S. overseas, increasing economic difficulty, "bleed the dragon" until it is hemorrhaging copiously (begun, will increase).
* Increase polarization intensities in our society (begun).
* BW strikes, in-place nuclear weapons strikes, inside U.S. (ready)
* Weather, quakes, volcano eruptions, tsunamies (set and ready)

General scenario and status (2)

- Spread immune systems increase casualties (ready)
- Destroy centralized U.S. power system (capability now)
- Massive conversions in; total chaos (insertion begun)
- Catastrophic economic collapse of U.S. occurs (begun and progressing)
- QP strike neutralizes U.S. nuclear weapons (set to go)
- Yakuza interferometers freed (weapons poised)
- Yakuza methodically destroys cities, installations, all living Americans (ready)
- If necessary, Yakuza strikes Yellowstone supervolcano, destroying the U.S. (ready)

Point and counterpoint (1)

» North Korea announced it already has nukes.

* Will be part of the "disturbances abroad".
* Itself stretched, U.S. may consider arming Japan and South Korea with nuclear weapons.

* If arm Japan, some of the nukes will pass into Yakuza hands. Yakuza undoubtedly working on obtaining nukes now; almost certainly has some.
* Some Soviet-inserted nukes already in the U.S. may be given to Yakuza anyway.
* Having scalar interferometers, Yakuza automatically has EMP and negative energy EMP weapons. Will use such weapons also.

Point and counterpoint (2)

* Insertion phase completed.
* Nuclear weapons inserted, ready.
- BW capabilities inserted, ready.
* Limited conversions are increasing polarizations.
- Massive sleeper conversions inserted or being inserted.
- Yakuza knockout capability achieved against U.S.
* Has knockout capability now against U.S. power system.
- Hot spots overseas already heating up.
- Alliance between Russia, China, India.

Point and counterpoint (3)

- Have entered final Operations Phase now.
* Two years until catastrophic U.S. economic collapse and chaos, following destruction of electrical power system, some refineries, etc. by Yakuza scalar interferometers.
* Yakuza then methodically completes destroying U.S. in the third year.

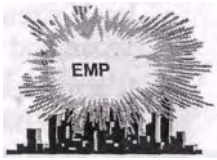

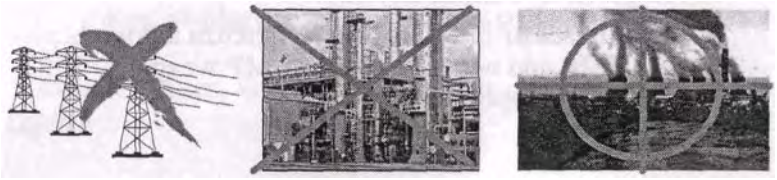

Why the Yakuza?

- Yakuza consider themselves as last of the Samurai.
  - Greatest shame in Japanese history was defeat in WW II and U.S. dropping atom bomb on Japan.
  - * Can only erase it by killing every living American man, woman, and child.

- Allied with Aum Shinrikyo, Yakuza leased KGB large scalar interferometers on site in Russia in 1989.
- FSB/KGB uses Yakuza for protegees, to perform the direct "internal" war against the U.S. and its populace.
- U.S. intelligence has no notion of the Yakuza as a formidable force easily capable of destroying U.S.

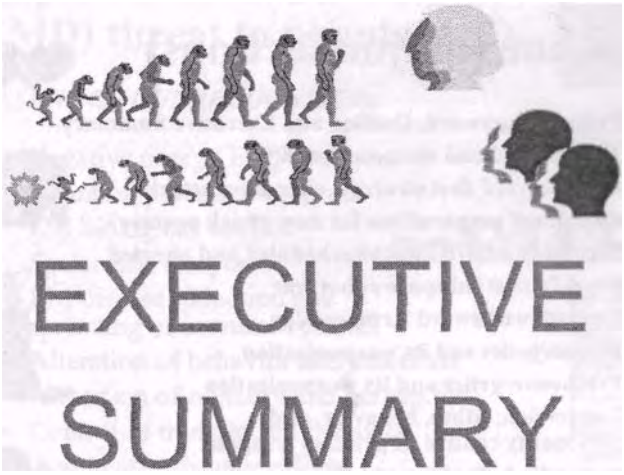

Executive Summary

With accepted threat included

Outline (major sections)

- Preface, Foreword, Outline and Executive Summary
- Background and weapons testing
- Move toward first strategic energetics attack
- Continued preparations for new attack posture
- Second and third attacks scheduled and aborted
- World's first subspace robot war
- Countdown toward Armageddon
- Bioenergetics and its weaponization
- Psychoenergetics and its weaponization
- Conversion: Mind, behavior, and personality control as primary weapon
- Appendix 1: Problems in Western science
- Appendix 2: Technical-Theoretic Vulnerability of Network-Centric Warfare

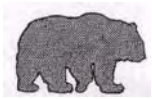

Weapons of mass destruction (WMD) threat to populace (1)

RECOGNIZED TODAY:

- Sabotage and interdiction
- Chemical and biological weapons
- Nuclear materials and weapons
- Powerful explosives
- Assassination, hostages
- Contamination (NBC)
- Shoulder-fired AD missiles
- Terrorism
- Nuclear weapons hidden in our cities (but shunned)

Weapons of mass destruction (WMD) threat to populace (2)

PRESENT BUT UNRECOGNIZED:

- Negative energy EMP weapons
- Quantum potential weapons
- EM biological warfare
- Scalar EM weapons
- EM disease induction and spreading of immune systems
- Alteration of behavior and emotions
- Alteration of memory and perception
- Control of thought and behavior
- Action at a distance effects
- Causal System Robots (CSRs)
- Massive sleeper conversions

USGS PHOTO

Russia has long had the inserted ability to totally destroy the U.S.

- During Cold War, Soviets inserted nuclear weapons and Spetznaz teams into our major cities and population centers.*
- Spetznaz teams can detonate the nuclear weapons, producing from 100 to 150 million casualties and destroying the U.S.
- Israelis inserted similar teams and nuclear weapons (including thermonuclear weapons) into Russia. Deterred Russians.
- These hidden weapons were known as "dead man fuzing". Gave mutual assured destruction deterrence with its "assured" capability on both sides (the reason the Cold War was "cold").
- Weapons are still on site in U.S., under command of die-hard old Communist faction of KGB (with new FSB name).

---

* Lunev's book gives some of the ways the weapons were inserted. See Stanislav Lunev (with Ira Winkler), Through the Eves of the Enemy. Regnery, Washington, 1998, p. 22-33. Lunev is our highest ranking GRU defector. Common shipping containers are also handy for inserting.

China is also involved (1)

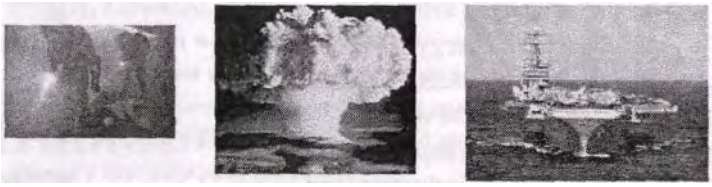

- China declared South China Sea her own territorial waters
- China will eventually take Taiwan by force
- Has massed missile artillery trained on Taiwan
- Held invasion practice on island near Taiwan

China is also involved (2)

- China has deployed quantum potential weapons
- Deployed fearsome EMP weapons utilizing negative energy rather than positive energy (based on Dirac sea theory)
  - Strike of negative energy extinguishes all electron currents
  - Duds electrical and electron systems instantly
  - Instantly kills struck bodies (zeroes brain, nerve currents)
  - Instant kill of missiles, aircraft, and electronics in nuclear warheads

* Ultimate "death ray"; make large or small, even portable
* Chinese "pinged" this analyst, trying to see how he knew the "cold energy" weapons had been deployed

China is also involved (3)

* After China's invasion practice, in mid-August 2001 a 2-carrier-group U.S. task force maneuvered in South China Sea to caution China
* The new Chinese negative energy EMP weapons were trained on the task force
* Could destroy it within 10 minutes
* Chinese military strike aircraft buzzed the ships and carriers, repeatedly trying to evoke U.S. forces to fire on them. Fortunately U.S. didn't.
* Had we fired, the task force would have been quickly destroyed as test of new negative energy EMP weapons.

Estimate on China (1)

- China given favored nation status and use of two U.S. ports during Clinton administration (move to encourage peaceful accommodation).
- Controls ends of Panama Canal.
- Has inserted some 200,000 Chinese into Panama.
- Eventually will outnumber the Panamanians.
- Panama will become a sort of Chinese province.
- China has other ports in the Western Hemisphere.
- Powerfully driven by escalating energy needs. Increasingly competitive for oil, gas, etc.
- New alliance between Russia, China, and India.

Estimate on China (2)

- Has nuclear weapons, and deployed quantum potential weapons and negative energy EMP weapons, the two most powerful weapons on Earth, other than the robots and conversion. Probed this analyst to see if he knew of the negative energy EMP weapons and deployment.
- Preparing both ways; for accommodation with U.S. and also to be able to destroy the U.S.
- Will take Taiwan by force, initiating conflict with U.S. if necessary. Hence needs dead man fuzing of U.S.
- China has probably already inserted some nuclear weapons, BW agents, and the required teams inside many of our major cities and population centers.

Militant Arab terrorists' asymmetric warfare plan (1)

* Terrorists understand asymmetric warfare and WMD.
* Learned from "dead man fuzing" between Russia and U.S.
    * MAD deters rational opponent such as chess players.
    * Does not deter irrational opponent.
    * Inserted WMDs provide a knockout capability.

» Intent to achieve strategic knockout capability against U.S.

* Together with Israel, the "Great Satan" is to be destroyed at all costs. WMD, particularly BW and nukes, are required.

» Part of unceasing holy Jihad by radical Moslems.

* Will not end until U.S. is destroyed or until fanatical Islamic groups are nullified.

Militant Arab terrorists' asymmetric warfare plan (2)

IRAN X-55 MSL

* Main objective is to obtain nuclear weapons and clandestinely insert them into U.S. cities; then detonate them.
* 30 to 50 inserted warheads needed.
* Al Qaeda may have 7 to 15 nuclear warheads already inserted (10 and 100 KT) in 7 to 15 U.S. cities.

Osama bin Laden

* May have others for additional insertion.
* Supportive Arab states such as Iran are intent on obtaining nuclear weapons capability of their own.

IRAN PRESIDENT
Mahmoud Ahmadinejad

* Russians are assisting them to build nuclear facilities.

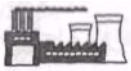

Mechanism to obtain nukes (1)

- Iran and terrorist-backing states seek nuclear power plants.
- Iran is constructing several such plants; one hidden underground.
- One in particular, being constructed by the Russians, will produce weapons grade plutonium.

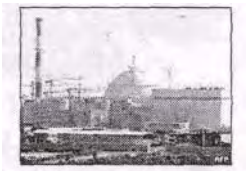

IRAN NUCLEAR POWERPLANT

- Iran intends to become major nuclear power.
- In 2004 Iran and Russia announced this power plant has been completed

* Russia now contracted to help Iran finish, and to furnish fuel.

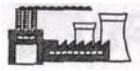

Mechanism to obtain nukes (2)

- The Iranian nuclear plant could be producing in perhaps a year, since Russia is helping and will furnish fuel.
- Yearly it will produce weapons grade plutonium for 20 to 50 nukes.
- Separation of the plutonium is straightforward.
- In about 2 years, up to 30 nuclear weapons may be available, and more each year thereafter, from that plant.
- Other nukes will be available from weapons grade material of other plants.
- Negotiations to avoid this continue, with little avail.

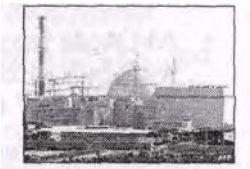

IRAN NUCLEAR POWERPLANT

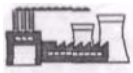

Mechanism to obtain nukes (3)

- North Korea has some nuclear weapons; is producing nuclear plants. Al Qaeda has a few purchased nuclear weapons.
- Several other Arab nations backing terrorists considering same.
- About 2 to 3 years from now, Al Qaeda and other organized terrorist organizations will have their nukes inserted. May be at half-capability now.
  - Can then utterly destroy the United States.
  - Have purchased at least a few nuclear weapons.
- Have obtained and inserted BW including anthrax.

IRAN NUCLEAR POWERPLANT

On Al Queda plans:

- Insertion of nuclear weapons relatively easy and safe.
  - Used method proven by large drug dealers.
  - 98% of all standardized shipping containers were never inspected anywhere in the world.*

- Hid weapons in standard shipping containers.
  - Formerly high probability of getting through undetected.
  - U.S. trucking industry and railroads will load the containers at the port and transport them to the waiting terrorist teams on site in U.S.
- Clandestine transport across unguarded and remote wild U.S. borders by teams, and insertion by sea.
- High probability of success in insertion. U.S. borders unsealed; insertion across borders readily possible.
- U.S. has deployed nuclear detectors in U.S. cities, and is acting to prevent or hamper new WMD insertions.

Terrorists understand economic warfare (1)

* Quoting Osama bin Laden* after 9/11:

- "Al Qaeda spent $500,000 on the [September 11 attacks], while America, in the incident and its aftermath, lost — according to the lowest estimate — more than $500 billion. Meaning that every dollar of al Qaeda defeated a million dollars, by the permission of Allah!"
- He declared his policy is "bleeding America to the point of bankruptcy, " Joked about U.S. "economic deficit... estimated to total more than a trillion dollars.. "

Terrorists understand economic warfare (2)

- Quoting Niall Ferguson*:

"A doomsday scenario is plausible. ..another, bigger September 11 is quite likely... a crisis over Taiwan would send Shockwaves through the international system ... revolutionary regime change in Saudi Arabia would shake the world... detonation of a nuclear device in London would dwarf the assassination of Archduke Ferdinand as an act of terrorism... Like the passengers who boarded the Lusitania, all we know is that we may conceivably sink. Still we sail. "

---

* Niall Ferguson, "Sinking Globalization," Foreign Affairs. 84(2), Mar./Apr. 2005, p. 76-77. He is Professor of History at Harvard University, Senior Fellow at the Hoover Institution, Stanford University, and Senior Research Fellow of Jesus College, Oxford Univ.

The growing U.S. financial problem*

- Huge spending ongoing: "Guns, butter, tax cuts". "The federal government's obligations, current liabilities, and unfunded fiscal commitments are over $43 trillion and rising.... "*

* As Zuckerman points out:
  - "The estimated net worth of American families is slightly over $47 trillion, and nearly all of it — 90 percent — would be needed to cover government's current obligations. "*
  - "According to the GAO, it would take real double-digit growth over the next 75 years to pay off our current debt— an impossible task... "*

* David Walker, head of the Government Accountability Office.
** Mortimer B. Zuckerman, "The case of the 12 zeros," U.S. News & World Report, Mar. 21, 2005.Zuckerman is editor in chief of the news magazine.

Refinery explosion in Texas City, TX in March, 2005

* Could be scalar interferometry-initiated, in which case U.S. agencies would conclude it's not terrorism (and they did).
* Agencies would not recognize scalar interferometry use.
* E.g., FBI pulled back its anti-terrorism investigators. Quoting FBI spokesman Al Tribble*:

"There's no criminal investigation as it pertains to terrorism al this time.., "We're convinced through our bomb technicians, our personnel that were sent down there, the authorities that are on-site, and the BP officials that there are no reports of any breaches of security . There's been no suspicious activity reported. The blast characteristics aren't consistent with any sort of terrorist-type of threat or activity. So we pulled our people back. "

* There have been no new U.S. refineries built in a quarter of a century. What we have are running at 96% capacity, barely able to "keep up" with demand.

* (McVicker/Hedges, Houston Chronicle).

Success always attracts others

- Russian FSB/KGB faction under die-hard Communists controlling the inserted Russian WMD weapons and super-Weapons; may be unable to resist the opportunity.
- China may be unable to resist the opportunity.
- Yakuza/Aum Shinrikyo are actively participating.
- Hence there is a growing, loose but immense attack consortium of terrorists, Russia, China, Yakuza/Aum Shinrikyo, North Korea, etc.
- Any major terrorist nuclear attack on the U.S. may draw consortium into full massive attacks on the U.S.
- Probability of destruction of the U.S. is very high; critical point by two years from now (now being Feb 2005).

Update: Yakuza role In asymmetric war on U.S.

- The Yakuza is a major protege of the FSB/KGB; is coordinated and to be used against the internal U.S.
  - Yakuza regard themselves as last of the Samurai.
  - Greatest shame in Japanese history was our WWII defeat of Japan and dropping atom bomb on Japan.
  - Stain can only be removed by the total destruction of every American man, woman, and child.

- Operations phase: Gradual economic bleed and destruction, particularly of U.S. electrical power system.
  - Centralized system will be destroyed in two years.
  - Simple since scalar interferometers are available.
  - Evokes catastrophic economic collapse of the U.S.
  - Western European economy also collapses in response.

- Yakuza will then destroy U.S. cities and populace at will.

Bottom line: WW III in progress, "Peacetime" was insertion phase (1)

* In 2 years or less, with a few more nukes inserted in U.S. cities Al Qaeda will also achieve ability to effectively destroy the United States.
* Yakuza already achieved U.S.-destroying capability with scalar interferometers registered on Yellowstone supervolcano and other volcanoes.
- This is WW III. "Peace" is totally eliminated. There are two main phases in this asymmetric war:
  - Insertion phase, when WMD are being inserted. Lasted 20 years. Mistakenly called "peace".
  - Operations phase, when WMD are unleashed.
- We are now in the Operations Phase vis a vis the FSB/KGB, Yakuza, and Al Qaeda.

Bottom line: WW III. in progress. "Peacetime" was insertion phase (2)

- Negotiations, statesmanship, UN debates necessary, but are only coverage for ongoing insertion phase and operations phase. We must also:
  - Decisively defeat future WMD insertions.
  - Nullify previous WMD insertions.
  - Unceasingly attack terrorist elements.
  - Develop Priore-type effective EM treatment of mass casualties at highest possible national priority.

* U. S. has deployed sensitive nuclear detectors in our cities and population centers, is building a homeland defense, and has taken other measures such as a massive reordering and improvement of intelligence.

Terrorists' backup WMD capability (I)

- WMD such as smallpox, anthrax, dirty nuclear explosions etc. can severely damage or destroy the United States.
- BW agents made by many nations are available. Insertion continues.
- Anthrax spores available for years on Voz Island* in the Aral Sea. Those who wanted anthrax, got it easily. Already inserted into the U.S.**
- Smallpox and BW Soviet scientists were available for buy and hire, and multiple terrorist-backing nations bought and hired them.

* Vozrozhdeniye Island is located in the Aral Sea between Kazakhstan and Uzbekistan. Hundreds of tons of biowarfare agents, etc. were dumped there by the Russians.
** Witness the high grade anthrax mailings (a test, not a strike) after 9/11.

Terrorists' backup WMD capability (2)

- Significant insertion in U.S. already accomplished, especially anthrax.*
- A single professional anthrax attack on Washington DC, sprayed from a light aircraft, will produce 1-3 million casualties.**
- If smallpox is unleashed in a single major city, it will eventually kill some two billion persons worldwide — nearly 1/3 the human population.
- Will be unleashed — matter of when, not if.
- The inserted nukes and dirty weapons will also be unleashed.

* Witness the high grade anthrax mailings (a test, not a strike) after 9/11.
** KGB/FSB's immune system spreading increases these BW casualties by a factor of 3.

Additional threats (1)

* Russian nukes and Spetznaz teams already inserted in U.S. cities, ready.
* Can destroy the U.S. at any time.
* Originally deterred by Israeli nukes inserted in Russian cities.
* Chinese probably inserted or inserting nukes, perhaps BW agents and teams also.
* China planning for either accommodation or attack.
* Yakuza inside U.S., probable significant insertions, have scalar interferometers and EMP weapons, both long range and portable.

Additional threats (2)

* Yakuza building small, relatively portable scalar interferometer weapons.
* Inserting them with teams, to strike nuclear power plants, refineries, and other critical targets.
* Already mans long-range interferometers on-site in Russia.
* Strongly engineers weather over North America, occasional aircraft shootdown, etc.

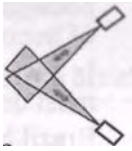

* Has negative energy EMP weapons also to attack U.S. cities, nuclear power plants, refineries, grid, etc.
* Directly generated the 9.3 earthquake causing the recent terrible tsunamis in Asia.

Additional threats (3)

- Castro has inserted 10,000 guerrillas in U.S. over the decades. Perhaps 5,000 are still viable assets for sabotage and asymmetric warfare.
- Miscellaneous BW, chemical, and guerrilla threats from other foreign assets inserted by other nations (Iran, Syria, Libya, etc.).
- U.S. borders still essentially open; insertion still easy and continues.
- Most standard shipping containers still unchecked.

Additional threats (4)

* Brazil is an another unknown quantity; has scalar interferometers and quantum potential weapons.
* Met with FSB/KGB in Iceland and signed nonaggression pact. Russians have no intention of honoring it.
* In any major strategic strike on the U.S., FSB/KGB must destroy Israel and Brazil due to their QP weapons.
* Brazil hired the German scientific leadership of Russia's scalar interferometry development (by the German radar team) after WWII, once the German team was released by the USSR. This initiated Brazil's superweapon program.
* David Bohm's visit to Brazil allowed picking his brain on quantum potentials. Brazil then developed QP weapons.

Slyness of KGB plans: The chessplayer outlook pervades

* "Each side secretly develops new means of warfare in order to employ them unexpectedly. History knows many examples how the employment of a new weapon initially gave considerable success because the enemy, caught unawares and not knowing the combat capabilities of the weapon, was for some time incapable of effective counteraction. " [1]

* "Of particular importance is basic research aimed at discovering still unknown attributes of matter, phenomena, and the laws of nature, and developing new methods for their study and use to reinforce the state's defense capability. " [2]

---

1. V. Yo Savkin, The Basic Principles of Operational Art and Tactics. Moscow, 1972.
2. Portion of a book by Marshall Grechko, deleted from its English translation by specific request of the USSR.

Strengths on the side of the U.S.

- Large strategic nuclear capability.
- Israel has powerful quantum potential weapons, deters many scenarios.
  - Has repeatedly rescued the U.S. from planned FSB/KGB strategic attacks.
  - Has inserted nuclear weapons inside Russian cities, population centers, and key areas.
  - Has at least a limited capability against mind conversion and psychoenergetics.
  - Can defend against precursor robots.
- U.S. believed to have some secret weapons of its own; exact types and details unknown.

Main weaknesses of U.S. could be solved by vigorous action (1)

- Americans do not react to slowly increasing threats.
- Public and officials still not educated as to what is really going on. Other than Cohen's statement, officialdom has been resoundingly silent on superweapons, their development and testing, etc. Intelligence analysis still using puerile old CEM/EE model.
- Historically, American preparation occurs after sudden attack has already occurred (reacting to the cobra's strike).
- Borders need to be sealed; standard shipping containers need to be checked.
- Develop mass casualties EM healing device (Priore type).
- Quickly develop and deploy fuel-free electrical power systems taking energy from the seething vacuum.

Main weaknesses of U.S. could be solved by vigorous action (2)

- Predominance of archaic, error-riddled classical electromagnetics (CEM) and electrical engineering discards:
  - Precursor engineering and nonmaterial robotics.
  - COP > 1.0 electrical power systems "fueled" by vacuum energy.
  - Engineering understanding of mind, mind dynamics.
  - Understanding of "electromagnetic" induction of diseases, etc.
  - Understanding of psychoenergetics.
  - Production of living minds and living systems.
- Combination places U.S. at grave strategic disadvantage.

* T.E. Bearden, "Errors and Omissions in the CEM/EE Model", at http://www.cheniere.org/techpapers/

Energetics: Precursor engineering (1)

- Present CEM/EE falsely assumes:
  - Force fields in space (exist only in matter).
  - A material ether (falsified since 1887).
  - A flat spacetime (falsified since 1916).
  - That EM fields, potentials, and energy are freely created out of nothing at all, by source charges — totally in violation of conservation of energy law.
  - That static EM fields and potentials are frozen. Instead, they are nonequilibrium steady-state sets of ongoing dynamic, free flows of EM energy.
- Any amount of force or energy can be collected from a given "static" field or potential, if one has sufficient collecting charge, by F = Eq; W = ϕq.

Energetics: Precursor engineering (2)

- Present EM circuits are made Lorentz-symmetric, by wiring external source of potential into its own external circuit, while current is flowing, as a load to be destroyed
- Professors and texts do not calculate the force-free EM energy field as it exists in space as a precursor of the EM-field of force in matter . None ever have. Ongoing precursor field interaction with charge gives force fields.
- EM energy flow is already free. Force-free EM energy field in space can be engineered by paying a little for switching and control, first making a precursor EM engine with desired dynamics. One need not pay for the energy itself since all EM energy is in freely flowing streams already, pouring from source charges and dipoles.

Energetics: Precursor engineering (3)

- There is not now, and there never has been, a single EE department, professor, or textbook that teaches calculation of the EM field in space. Instead, they teach calculation of its, force field effect in charged matter, created by ongoing interaction of that real EM field with that charged matter.
- There is not now, and there never has been, a single EE department, professor, or textbook that teaches (or knows) how an electrical power system is really powered. It isn 't powered by cranking the shaft of the generator!
- So long as our scientific community ignores the source charge problem (swept under the rug for a century), we will remain at the mercy of those who did correct the flawed CEM/EE model, did calculate force-free EM fields in space, and did develop precursor engineering.

Tie "New" Strategic Problem (1)

- Nonmaterial energetics robots (self-powering precursor engines) carrying specific spacetime curvature engines (weapons engines) have been fully developed and deployed under the FSB/KGB's die-hard Communist faction.

- Totally new form of asymmetric war: Nonmaterial fighting systems.
  - First war already fought (few days, 1999-2000).
  - * Small non-Western nation destroyed robot armada of millions of such robots inside U.S. in subspace interior to normal EM field signal envelopes.
- West is 50 years behind, has no defenses against such. Scientific community responsible for U.S. vulnerability.

The "New" Strategic Problem (2)

- Can be superior to all other forms of combat.
- Economics dirt cheap (penny a system after sunk costs paid).
- Effectiveness is complete against defenseless targets.
- Targeted Western nations vulnerable and defenseless.
- Western science is woefully inadequate and completely unaware of this technology; has slept for 50 years, intends to keep on sleeping.
- CIA, NSA, DIA, NSC, NAS, NSF, think tanks, etc. appear essentially unaware of energetics precursor robots technology and development.
- Largely unaware of conversion science and threat. Use standard CEM/EE instead of energetics.

Characteristics of nonmaterial energetics (precursor) robots (1)*

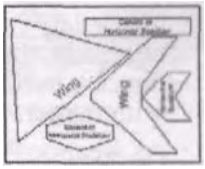

* For every physical system and its functions, there is a corresponding set or "template" of spacetime (ST) curvatures (a set of precursor energy field dynamics), acting on the charges and masses to generate all system forces and their actions.
* EM fields and potentials in space are force-free energy fields and specialized curvatures of spacetime. A template of desired ST curvatures and their dynamics can be formed separately, as a harmonic set of precursor bidirectional EM LW wavepairs and their dynamics.

---

* Also referred to as "causal system robots".
** Spacetime curvature (energy) may also be taken as change of virtual particle flux of vacuum.

Characteristics of nonmaterial energetics (precursor) robots (2)*

- Precursor robot is a template of ST curvature dynamics.
- It is nonmaterial and force-free.
- When it interacts with charged matter, the ongoing interaction produces force dynamics in that charged matter.

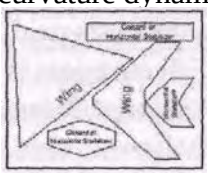

- Functions — communication, weapons, surveillance, weapons functions, etc. — can be "built-in".
- The "robot" is then commanded via EM longitudinal wave LW communications systems.
- An entire robot armada of millions of such robots can be assembled and controlled in distant battle.

* Also referred to as "causal system robots".
** Spacetime curvature (energy) is also change of virtual particle flux of vacuum.

Characteristics of nonmaterial energetics (precursor) robots (3)

- Spacetime curvature is energy. ** Since ST curvature is energetic, the template/robot is a self-powered system, hence a nonmaterial robot fighting system once it interacts with matter.
- As weapons it uses precursor energy engines, not the usual material engines.
- Interaction of precursor engines in matter produces the desired real fighting engine effects. Almost any physical effect can be generated.
- Precursor engine robots easily travel through earth, ocean, space, since ordinary EM fields, potentials, and waves are bundles of LWs and superhighways.
- First making one robot is expensive and difficult; next million copies are 1 cent each.

Implications of "new" warfare (1)

* Demise of the U.S. in 2-3 years is highly probable unless an immediate Manhattan Project is launched under direct Presidential Directive at highest priority and speed.

* Nonmaterial robots and switchable sleeper conversions are presently two of the greatest threats, of the several rapidly converging.
* But the U.S. will likely be struck by all the threats.
* Developing EM treatment of mass casualties is absolutely necessary if to avoid most (being Triage Category 4) just set aside and allowed to die.

Implications of "new" warfare (2)

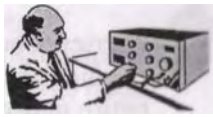

* To have a survival chance, greatest effort, speed, and closest possible selection of scientists are required.
* Close coordination with friendly foreign weapons scientists at the highest level is imperative.

* Some nations do have some counter-measures and destroyed the first nonmaterial robot armada attacking in 1999-2000 after being alerted by this analyst and three close colleagues. U.S. has nothing.
* One, possibly two nations may have limited capability against conversion technology.

Conversion: Matured mind control threat capabilities (1)

- Secretly entrain or enslave leaders and personnel at any and all levels
- Install secret multiple personalities
- Switch their personalities at will
- Easily defeat detection systems
- Penetrate all compartments
- Compromise all information
- Manipulate and increase polarization intensities

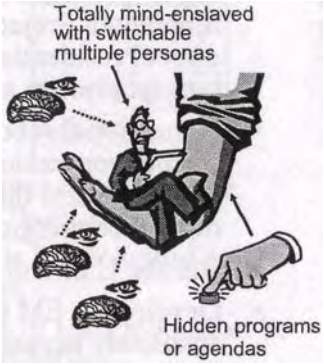

Conversion: Matured mind control threat capabilities (2)

- Carrier robots with mind-engines access every part of the entire nation
- Augments and completes carrier robot forces with bioenergetics engines and energetics engines
- Because of ease of reproduction (penny each), may be cheaper than any other form of combat
- Possible to subvert a government or culture, armies, organizations, nation

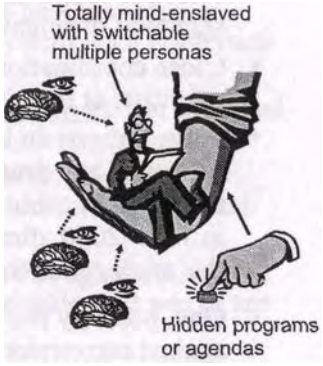

Conventional secrecy is compromised

* "Secure phone" to one's ear with head in the EM field is a direct pipeline into one's entire mind, memory, knowledge, behavior.
* Any signal path into a computer etc. is a pipeline also.
* Psychoenergetics technology can "search, find, and download" the information rapidly.
  - Pass inside EM fields in matter, thus through walls, safes, vaults, mountains, ocean, earth, etc.
  - Pass through encryption device to raw input information.
  - Scan, copy, download, and transmit the information.
  - Penetrate any meeting, vault, sweep processes, etc.
* Limited only by the ability to process the enormous amount of information gathered.

Nonmaterial robot capabilities

* Nonmaterial (precursor energy field) robots with weapons can attack, control, disrupt, destroy
  - Any and all inert matter systems (energetics carrier robots).
  - Any and all living biological systems (bioenergetics carrier robots).
  - Minds of selected personnel (psychoenergetics carrier robots).
* Robotic systems can self-install and reside inside matter or EM field, using the charges of that matter or energy of that field to form a functioning "physical" body.
  - Becomes a mine system designed against any target.
  - Its auxiliary robots can be weapons against any and all targets.
* Ultimate "mine warfare". Segments of (or entire) physical environment of targeted nation can be filled with deadly weaponry unceasingly attacking targets.

To understand the robots, new concepts are necessary (1)

- Infolded interior structuring of ordinary EM fields, potentials, and waves as biwave pairs. Normal EM is just "envelopes".*
- Infolded longitudinal EM waves produce oscillating energy densities (curvatures) of spacetime precursors (basis for engines).
- "Engine" concept (curvatures of spacetime functioning as a system to perform any set of operations upon and in matter desired).
- Precursor engine interacts with mass to produce a real, physical force system (engine) operating on that mass

* Basis has been in physics since two papers by Whittaker in 1903 and 1904.

To understand the robots, new concepts are necessary (2)

- "Mind engine" concept: Electrodynamics based on scalar EM waves on the time axis, using scalar photons from quantum field theory coupled to longitudinal photons, so that couplets are observed as instantaneous scalar potentials (voltages).
- "Nonmaterial robot" system concept as extension of engine and mind-engine concepts. Robots are by definition self-powering.

- Carrier robots infold numbers of weapon/action robots within their own interior electrodynamics.

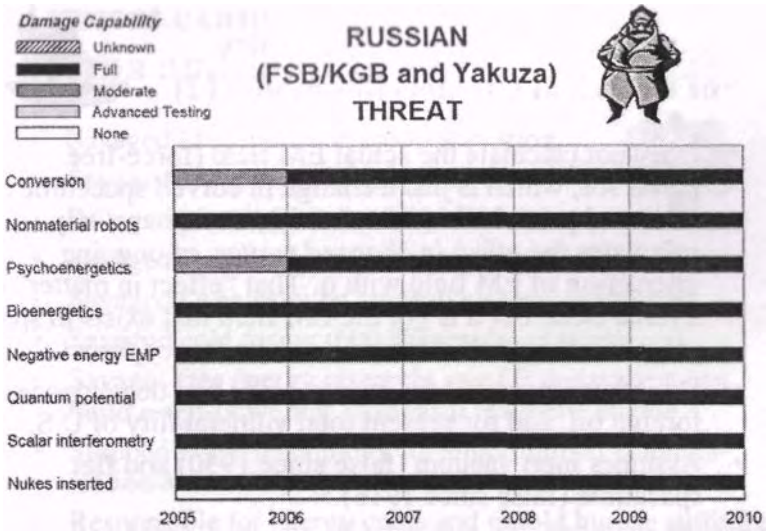

Afterword: Examples of inanity of electrical engineering model (1)

- Has not solved its "source charge problem" in over 100 years. Solution summarized in this brief; basis in physics since 1957 award of Nobel Prize to Lee and Yang.

- Still assumes material ether (and force fields in vacuum) a century after falsified.
- Assumes all EM fields and potentials and their energy are freely created out of nothing at all by source charges.
- Assumes "static" field or "static" potential is frozen. Each was proven to be a set of inexhaustible, ongoing EM energy flows, a century ago, by E. T. Whittaker.
- Doesn't know or teach what really powers an electrical circuit or device. Not a single EE department, professor, or text ever has. NAS, NSF, NAE, universities, scientific societies etc. not acting to correct these known errors.

Afterword: Examples of inanity of electrical engineering model (2)

- Does not calculate the actual EM field (force-free precursor, which is just a change in curved spacetime or in virtual particle flux of vacuum); never has. Only calculates the effect in charged matter, of ongoing interaction of EM field with q. That "effect in matter" is a force field, but it is not the EM field that exists in space prior to interaction. Mass is a component of force!
- Directly responsible for energy crisis and dependence on foreign oil, and for present total vulnerability of U.S.
- Assumes inert vacuum (false since 1930) and flat spacetime (false since 1916).
- Discards Heaviside energy flow component (up to a trillion times as much flow as in Poynting flow).

Afterword: Examples of inanity of electrical engineering model (3)

- Arbitrarily eliminates COP energy-from-the-vacuum (EFTV) systems, by using circuits that self-enforce Lorentz symmetry (forward emf and back emf forced to be equal).
- That allowed use of simpler (Lorentz-invariant) equations to describe the operation of such "self-crippling" circuits.
- Discarded all permissible COP>1.0 Maxwellian systems.
- As a simple analogy, it destroys — so to speak — electrical heat pumps. Normally a heat pump receives and uses excess energy from the environment, thus enabling COP>1.0 and also self-powering. Instead, symmetrized EM only permits the EM "heat pump" to be on resistance heating, never using an extra joule of EM energy from the environment.
- This is particularly inane since all EM energy occurs in continuing free flows, never as so many rocks in a rockpile.

Typical examples of scientific dogma and suppression (1)

- Savaged Meyer on energy conservation.
- Savaged Wegener on continental drift.
- Savaged pioneers of ultrawideband radar.
- Savaged Becker on revolutionary EM healing.
- Savaged Ovshinsky on amorphous semiconductors.
- Savaged cold fusion (600 successful experiments).
- Savages free energy research; any EE department can build a self-powering Takahashi magnetic engine.
- Stopped Fogal technology for superluminal communication and removing noise from digital signals/photos.
- Responsible for energy crisis and untold human suffering.

Typical examples of scientific dogma and suppression (2)

- Ruthlessly suppressed revolutionary electro-healing (unwittingly using precursor disease antiengines) by French scientists on the Priore team.
- Ignored attempt in 1998 to get U.S. to develop it for quick mass casualty treatment and curing. Most BW casualties now will be Triage Category 4, set aside and allowed to die. Scientific community is responsible.
- Did not solve four decades of EM induction of diseases and health changes in personnel in Moscow Embassy by precursor field "disease engines".
- Most scientists think we are "meat computers". Have no notion of time-as-energy, scalar photon, or thought and mind operations as time-axis EM dynamics.

Additional observation

- Key persons who could engender understanding of the threat science are viciously attacked and vilified.
- Agents and agents of influence involved, per gaming and disinformation techniques. Murder also used.
- Dramatically reduces probability that U.S. government and scientists wake up to what is ongoing.
- Performed by U.S. cartels and also FSB/KGB.
- For KGB, it is part of the overall attack support plan* to insure that the U.S. sleeps on, preoccupied with Afghanistan, Iraq, Iran, North Korea, oil, reactors, etc.

* An important strategic attack plan will always have an accompanying deception plan. The more important the attack, the more elaborate the deception plan. Obviously the FSB/KGB has a comprehensive (and very successful) strategic deception plan.

A famous quote:

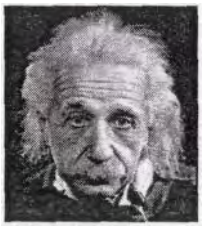

"I know not with what weapons World War III will be fought, but World War IV will be fought with sticks and stones."

Albert Einstein.

- The weapons used in the ongoing WW III are indeed strange and previously unknown in the West.
- Scientifically we have been asleep for decades, it seems, as to the nature of these eerie weapons.
- We must react swiftly, for there is little action time left.

Conclusions (1)

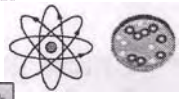

- World War III is in full progress.
- Multiple total destruction plans against the United States now implemented and converging.

* Success probability very high (maybe 98%).
  - Inserted nukes and BW; scalar interferometers, QP weapons; negative energy EMP; robots; mind control; and conversions.
  - * U.S. scientists unaware; few defenses.
  - ♦ Time is very short — less than 3 years; and two year critical period with extensive conversion strikes.

Conclusions (2)

- U.S. is unacceptably vulnerable:
  - Appalling age and flaws of EM models and electrical engineering.
  - Naivete, dogma, and cartels in scientific community, industry, government, medical community, etc.
  - Intelligence community and political community unaware; have inadequate scientific advice. Thus ineffective.
  - Nation essentially unprepared for the type war ongoing.
- Main decision makers lack knowledge of eerie new weapons technology and how to defend against it.
- Cannot even recognize nature of an attack (Button, Svoboda, Hess, Thresher, Gander, Challenger, Titan, TWA-800, Yellowstone, Asian tsunamis, etc.).

Conclusions (3)

- Unless galvanized by strongest possible Presidential action and crash project to develop counters, U.S. will likely be destroyed in 3 years or less.*

- Unless forced in strongest manner, the organized U.S. scientific community will not only fiddle while Rome burns, but it will also assure that Rome burns completely.

* Now in 3-year Operations Phase. At end of 2 years is the decisive point.

Desperate U.S. needs

- Presidential Decision Directive in strongest terms.
- Force scientific community to correct CEM/EE model.
- Expunge 1% evil entourages in national labs, etc.
- Countermeasures against conversion, precursor robots.
- U.S. quantum potential weapons, precursor robots.
- Mind-engine production capability.
- Fuel-free energy-from-the-vacuum power systems.
- Portable Priore-type medical treatment units.
- Sealing of borders and inspection of cargo containers.
- Briefing of Congressional leaders and decision makers, mayors, governors, legislatures, police forces, etc.
- Tailored briefing of American populace and news media.

(SLIDE BRIEFING CONTINUED)

PART B: Background and Weapons Testing

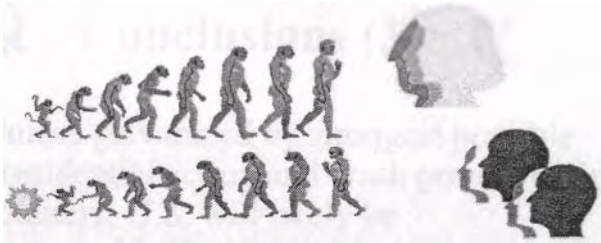

BACKGROUND AND WEAPONS TESTING

Background and weapons testing

Russian and Western science compared

Section contents

* Russian science
  - Energetics
  - ♦ Bioenergetics
  - * Psychoenergetics
  - * Engines and robots
  - Carrier robots
- Western science
  - * Serious flaws
  - Electrodynamics
  - * Electrical engineering

Stalin's dictum in 1945 removed any resistance from his scientific community

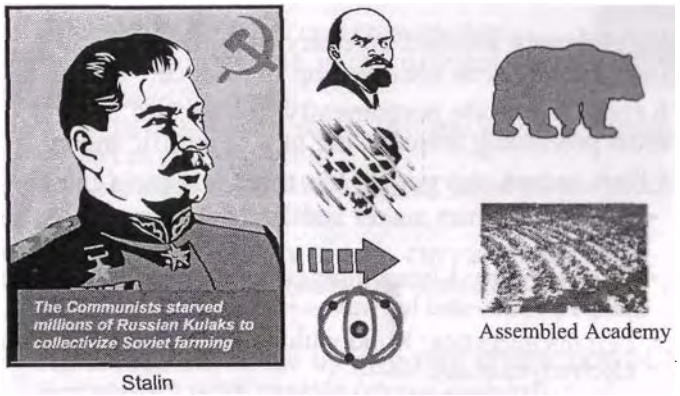

"The destiny of communism has been frustrated by the U.S. development of the atomic bomb. That is not the last great technical breakthrough. The next one will be Soviet! You will provide me with that great new technical breakthrough at all speed, or I will have your heads. Do / make myself clear, comrades?"

Response to Stalin's iron dictum

* Soviet Academy of Science desperately sought anything anomalous and not followed up, which could be weaponized for a new "great weapon".
* Search included mind, living bodies, inert matter areas.
* Reviewed, corrected scientific models, e.g., CEM/EE.
* Hauled in copies of scientific literature journals of the West, from Day 1, to analysis institutes by shiploads.
* One institute alone had some 2,000 Ph.D.'s and their staffs (translators, secretaries, etc.).
  - Reviewed each page of each journal issue. Selected interesting items previously not followed up.
  - These reviewed by best nonlinear scientists in the world.
* Energetics born in 3 to 4 years; used to design weapons.

Energetics: Result of this great Russian effort

- Immediately focused on everything important that had not been followed up in science.
- Kept this attitude permanently; researched most promising areas, using new scientific models.
- Effort named energetics; has three targeting categories:
  - Energetics: Inert matter and EM fields, potentials, and waves.
  - Bioenergetics: Living biological matter with biofields, biopotentials, and biowaves.
  - Psychoenergetics: Mind with its scalar (time-polarized) electrodynamics).
- Expanded QFT's scalar and longitudinal photons; couplet observed as scalar potential (voltage).

Targets of the three branches of energetics weapons

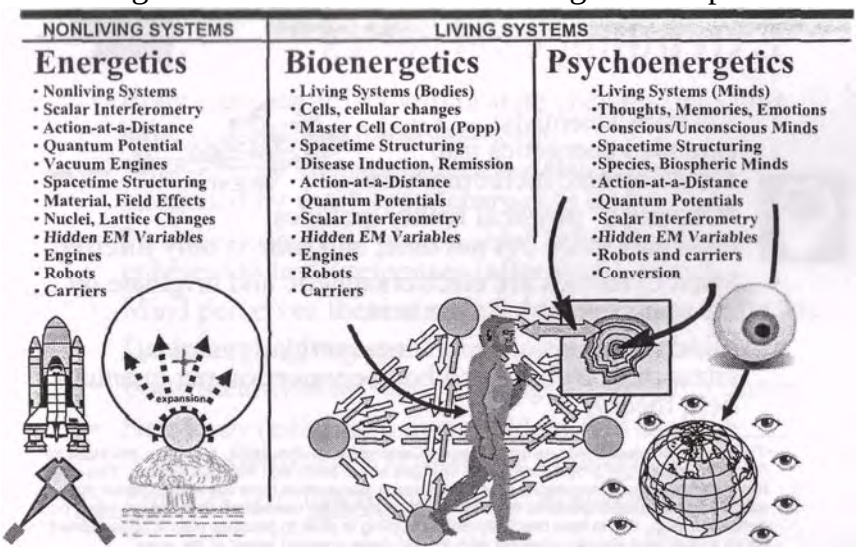

Origin, of term "energetics"

WILLIAM RANKINE

* Energetics term recognizes energy as the primary thing in the universe.
  - Rankine first used it.
  - G. Helm revived it, separated it into an intensity factor and an extensity factor.
  - Ostwald in 1893, 1895, and 1901 raised the energetics concept to the forefront.
* In general relativity terms, curvature of spacetime is essentially the same as "energy" or "energy in motion".
* All forces are made by ongoing interaction of ST curvature* with matter (mass-energy).

---

* In particle physics, substitute "change in VPF of the vacuum" for "ST curvature".

Extending energetics

- Russians scientists extended energetics into n-dimensions, including time.
- "Observed" physical reality includes mass and space but not time, and time is only inferred.
- Mind dynamics are electromagnetic and originate on the nonobservable* time axis.
- Mind dynamics are EM time-energy dynamics, interacting with a mind/body connection per quantum field theory.

•Time is not an observable, even in theory. Coherent time dynamics, however, are input as 3-space virtual state projections to the charges in the brain and nervous system. The charges integrate coherent integrations of virtual 3-space projections from the mind's intent dynamics, outputting observable photons which are EM observables correlated to coherent intent time dynamics. E.g., that is how the body-mind coupling is able to produce output observable EM nerve spikes and signals coherent with mental (time domain) intent of the mind.

Mind-to-body coupling mechanism

- Time is not an observable, hence mind is not observable.
- Mind changes on time axis project virtual state intersections in 3-space, into the coupled nervous system.
  - * Charges in body system provide coherent integration of virtual state changes into observable photons.
  - * Intent changes thus integrated into coherent observable EM, with small integrating delay.
  - * Occurs in "spike" areas (in dendrite discharges).
- Coherent integration produces intent-coherent EM discharges in body's nervous system.
- Servomechanism control theory then applies in body.

Body-to-mind coupling mechanism

* Body changes reflect virtual state changes onto time axis, into coupled mind dynamics.
* Time-energy virtual changes are also coherently integrated by the 4-space charges in body.

* Produces coherent "perceivable" mind changes coherent to body responses (after small delay).
* Mind perceives these changes, compares, readjusts, etc.
* Delay in total loop gives sense of personal identity.
* Body identified as 3-space changes coherent to intent.
* Non-body (external universe) identified as those 3-space changes not responding to intent.
* Provides self, functioning in the world of non-self.

Energetics for superweapons

* Khrushchev demanded 100% ABM defense.

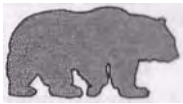

* Kapitsa replied to Khrushchev:

"If a means of total neutralization of foreign missiles is to be found, it can only come from a group of new principles in physics, called energetics."

Basic Energetics

- Scalar interferometry
- Longitudinal EM waves
- Precursor engines
- Negative energy EMP
- Quantum potential
- Nonmaterial robots
- Carrier robots
- Mind control
- Mind conversion
- Building living systems including living minds

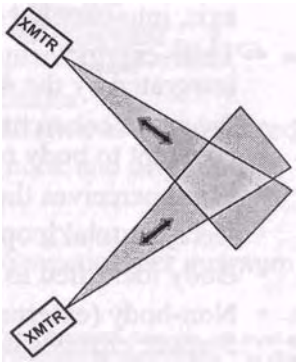

Selected energetics tests

- Scalar interferometry
- Kill of U.S.S. Thresher
- Deep underwater explosion
- Disease inductions at U.S. Embassy
- Tesla Shields (ABM defense)
- Cold Explosions
- Weather engineering
- Flameout of aircraft engines
- Kill of Arrow DC-8
- Kill of Challenger
- Kill of TWA-800
- Quantum potential test
- Mind tests — Button, Svoboda, Hess, etc.
- Robot tests, robot strategic war

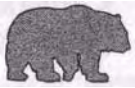

Whittaker's inner electrodynamics* shows the precursor form in space (1)

* Combination of the two Whittaker papers "decomposes" all EM fields, potentials, and waves into a far more fundamental longitudinal EM biwave dynamics. The latter highly complex continuous flow structure is the engine or dynamic form of patterning of the field, potential, or wave and its dynamics as it actually exists in mass-free space.
* A longitudinal wave is an oscillating change of energy density in spacetime, hence an oscillating ST curvature. Whittaker's structure is actually the form in which the spacetime precursor EM potential, wave, or field exists in space.

* The 1904 Whittaker paper initiated superpotential theory. The 1903 paper has been essentially ignored.

Whittaker's inner electrodynamics* shows the precursor form in space (2)

* The fields, potentials, and waves taught in CEM/EE are the integrated charged matter fields, potentials, and waves existing only in charged matter when it is being acted upon by the Whittaker precursor engines.
* Integration of the precursor EM engine structure occurs only in charged mass.
* Combination of the two papers provides basis for a directly engineerable unified field theory (UFT), more fundamental than what is used in the West in its century-old electrodynamics and electrical engineering.
* Soviets began intensive development of this UFT immediately after WWII with a series of Manhattan-style projects.

Precursor scalar potential in space: longitudinal EM biwave sets

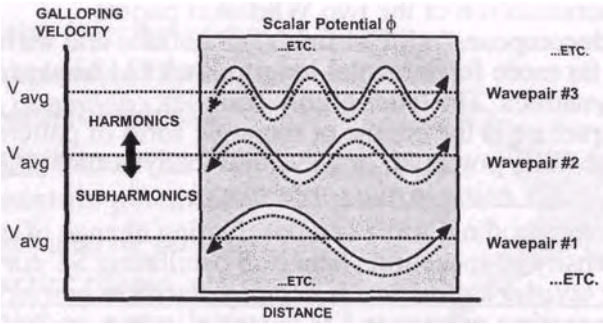

The Precursor Structure Is:
A harmonic set of longitudinal wavepairs. In each wavepair the two waves superpose spatially, but travel in opposite directions. The two are phase conjugates and time-reversed replicas of each other. Thus they comprise a coupled longitudinal wave and antiwave. The photons must be coupled into photon/antiphoton pairs (gravitons) by a strong application of the distortion correction theorem of nonlinear optics. Each wave in the biwave pair is a galloping wave. Each wavepair is a standing electrogravitational wave.

Note: Think of the oscillations as velocity modulations. The time-density carried by the waves is oscillating.

Quantum field theory

- Four types of photons (polarizations): x, y, z, t.
- Two (x, y) are transverse photons (familiar).
- Third is longitudinal (z) photon; energy oscillates to and fro along line of propagation. Bunches and thins energy density of space; is dynamic oscillation of curvature of spacetime.
- Thus is basis for engineerable integrated unified field theory.
- Fourth is scalar (t-polarized) photon. Energy oscillates to and fro along the time axis. Dilates and compresses time; hence is dynamic oscillation of curvature of spacetime.
- Scalar and longitudinal photons are individually nonobservable; but the combination of the two is observed as instantaneous scalar potential (common voltage).

Scalar interferometer*

- Energy effect in distant zone may be either heating or cooling, and slow (rising) or fast (explosive).
- Specific patterns of local ST curvature and dynamics (engines) may also be produced.
- Beams easily pass through the Earth or the ocean, whose internal fields and potentials are superhighways for internal longitudinal EM waves.

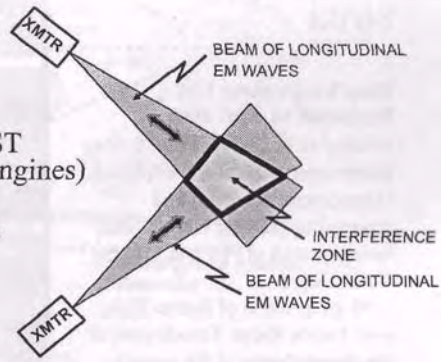

* Proof is given in M. W. Evans, P. K. Anastasovski, T. E. Bearden et al., "On Whittaker's Representation of the Electromagnetic Entity in Vacuo, Part V: The Production of Transverse Fields and Energy by Scalar Interferometry," J. New Energy. 4(3), Winter 1999, p. 76-78.

Khrushchev's First Demonstration Strike

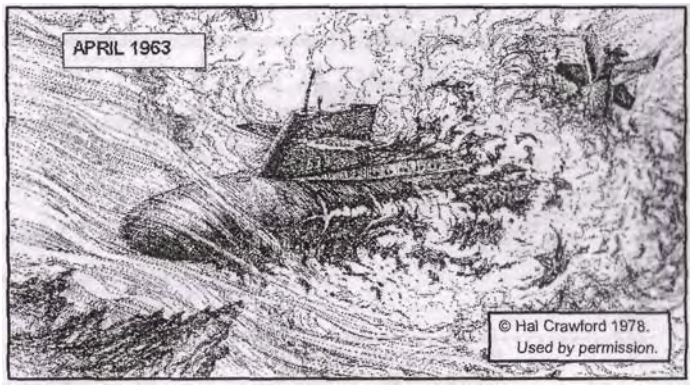

- Kill of the U.S.S. Thresher. With her electronic controls jammed in the hash of a scalar interferometer whose IZ surrounds it underwater, the hull of the doomed submarine implodes when she reaches crush depth.
- The internal electronic jamming signals arise from the local spacctime everywhere within the sub (within the IZ).
- USS Skylark, companion surface ship nearby and in the "splatter" zone of the IZ, had multiple electronic systems fail, etc. totally anomalously.

Khrushchev's Second Demonstration Strike

Deep Underwater EM Explosion 11 Apr. 1963
(similar to this photo set of a deep underwater nuclear test explosion)
•Phenomena observed and reported by passing U.S. jetliner; later reported to FBI and to U.S. Coast Guard
•100 miles north of Puerto Rico, over Puerto Rican Trench (one of the deepest parts of the ocean)

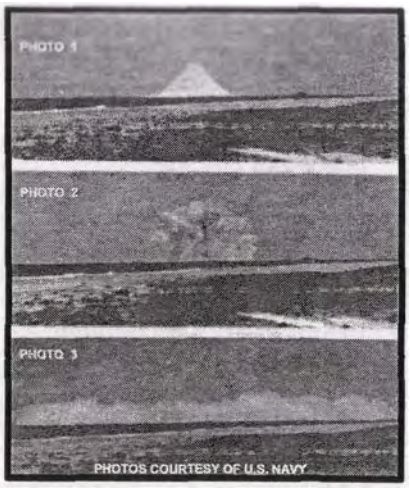

Deep underwater nuclear burst, demonstrating same water phenomenology produced by Khrushchev's second demonstration on 11 Apr. 1963, the day after killing the U.S.S. Thresher.

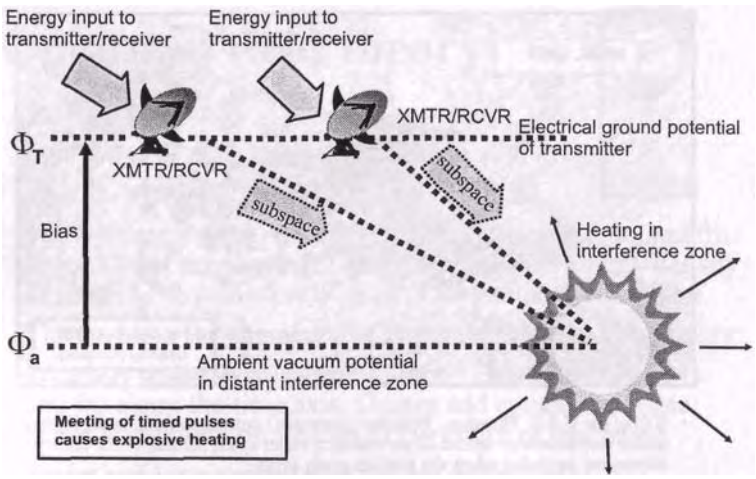

Scalar interferometry in the exothermic (heating) mode.

We may call the internal Whittaker electromagnetics a special kind of "active subspace", which it is. One can infold as many such "subspaces" inside normal EM fields, potentials, and waves as one desires. Hence one can engineer n-dimensional space with the new electrodynamics.

Scalar Interferometry In The Endothermic (Cooling) Mode

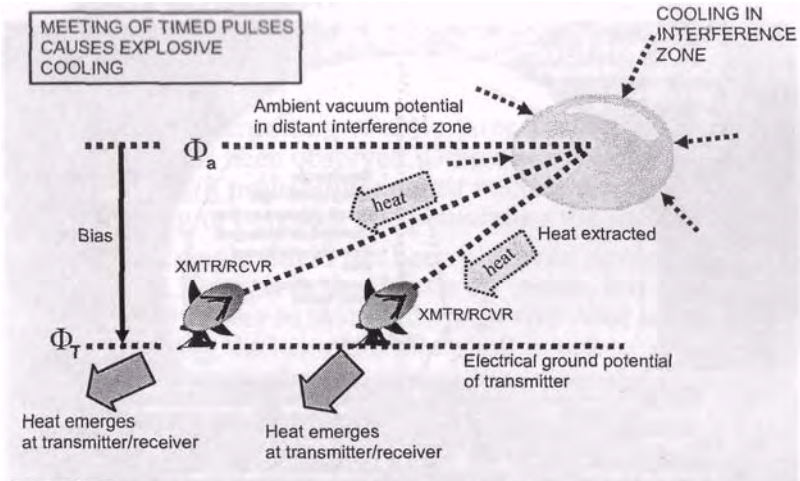

In the endothermic mode, tremendous heat is received back in the transmitters. Soviets further retransmit the heat via interferometers to a distant "exhaust" point. Bennett Island was used for such an exhaust point for decades, and our observation platforms saw a great many 150 miles-long jets of exhaust effects in narrow beams at shallow angles.

The Tesia Shield: Hemispherical Shell of Glowing Energy

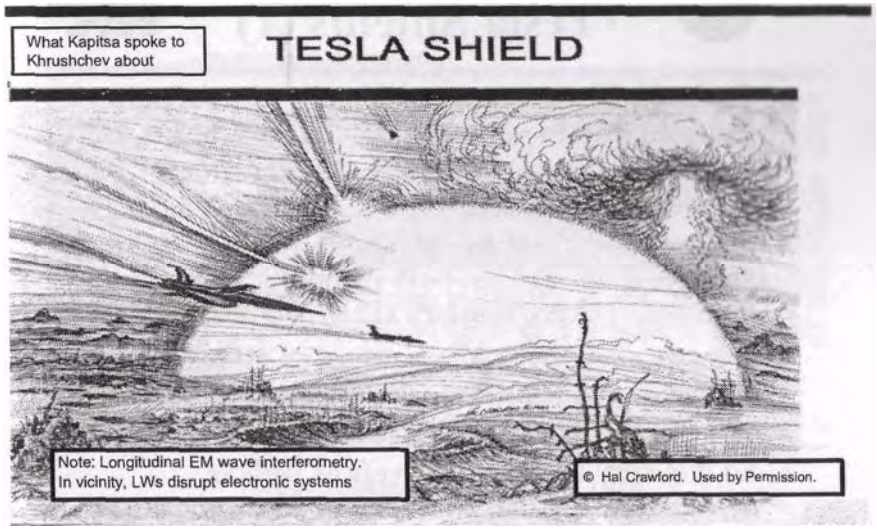

GIANT MISSILE SHIELD TEST SEEN BY PASSING SHIP'S CREW

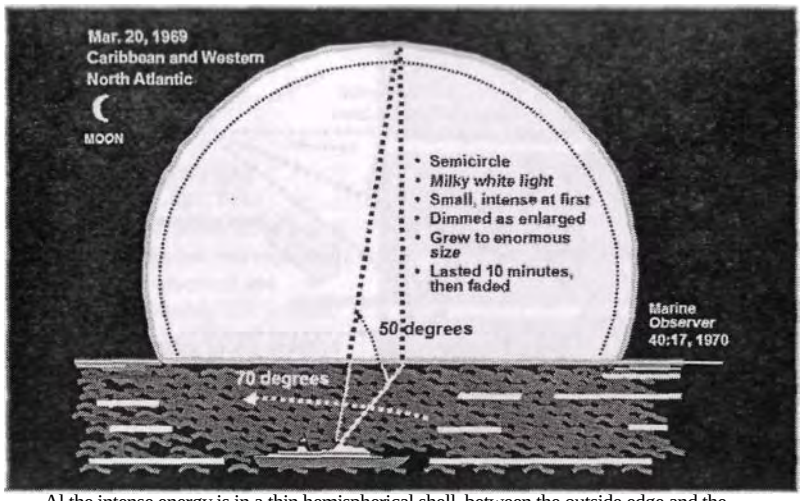

Al the intense energy is in a thin hemispherical shell, between the outside edge and the inner dotted line. A missile or an aircraft passing through that intense energy zone is instantly destroyed, electronics dudded, warheads exploded, crew instantly dead, etc.

Special note on Tesla Shields (1)

- Tesla shield placed over a friendly site defends against incoming missiles, aircraft, warheads, etc. If shield is made with "one-way out engines", defensive site can fire out and nothing can fire in.
- Unrestricted Tesla shield placed over a hostile site, "bottles it up" against both incoming and outgoing vehicles, rockets, artillery shells, bombs, etc.
- If made one-way in, the bottling up allows outside firings into the targeted site, which itself cannot fire out. Useful against ICBM silos and similar targets.
- So it is very useful offensively as well as defensively. E.g., an entire naval task force at sea could be "bottled up" and neutralized.

Special note on Tesla Shields (2)

- Multiple internesting of up to three Tesla shields (shells) has been observed. Dramatically increases weapon kill probability against nuclear weapons incoming or outgoing and penetrating the shields.
- A giant single shield has been observed covering Atlanta, Georgia in the "bottle up" mode, but with minimal power so that no damage was done to aircraft penetrating the hemispherical shell in either direction.
- A shield is effective as a cover over hostile ICBM fields, to destroy their hostile ICBMs shortly after launch, while permitting some Russian ICBMs to penetrate and destroy the complex. Russia has had a dramatically effective launch phase ABM system for decades. So has the Yakuza, on-site in Russia.

Nick Downie's sighting from the ground of distant Soviet missile shield tests.

Missile Shield at Sary Shagan

THE SUNDAY TIMES, 17 AUGUST 1980.

WARFARE

Witness to a super weapon?

Nick Downie describes the strange bright glow that flared silently over the Hindu Kush

Gwynne Roberts

London Sunday Times, 17 Aug 1980

Typical shield test, northern route to Japan, seen by passing airliner
Many dozens of such tests have been seen and reported. Sightings were so common that pilots simply quit reporting them.

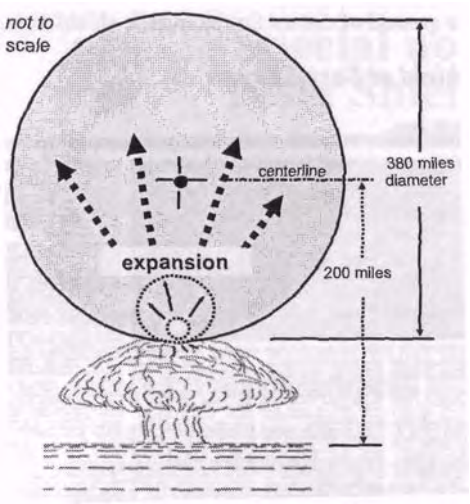

Sequence of Events

- Geyser of water rose rapidly from surface, mushroomed out
- Reached 60,000 feet altitude in about two minutes
- Brilliantly glowing small globe then appeared in top of cloud
- Globe increased greatly in size and altitude
- Reached diameter of 380 miles
- Center reached altitude of 200 miles

What They Were

- Superpotential interferometry using longitudinal EM waves
- Cold explosion just above surface (as antiship, antifleet)
- Smaller, higher density spherical shell (Tesla globe) for one-on-one shooting
- Larger Tesla globe for large area targets such as ICBMs coming in from midcourse

Use in, out of atmosphere

Endothermic (cold) explosion off the Kurils 9 April 1984 Followed by a second test, an expanding globe of light, added in the exothermic mode to demonstrate rapid serial switching between weapon modes

Weather engineering by scalar interferometry

INTERFERENCE GRID
© Tony Craddock 2004

- Steering jet streams
  - Make low pressure areas (endothermic)
  - Make high pressure areas (exothermic)
  - Move highs and lows, to entrain and steer the jet streams.
  - Displace cold air from Canada, warm air from Gulf, and where they meet provides sharp fronts and very violent weather.

* Sharp bends in jet stream add angular momentum.
  - Spawns tornadoes, powerful storms
  - Generates much atmospheric energy and lightning.
  - Ignites fires in those areas deliberately kept dry.

* Maneuvering and pulsing high and low pressure areas vertically above each other produces sudden downbursts.

- Many combinations and variations available and tested.

Vivid example of detailed structuring in weather engineering interferometry

Courtesy Scott Stevens, www.weatherwars.info

A few weather engineering signatures*

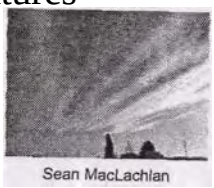

- Giant radial clouds, twin giant radials.
- Sharp "grid" of interference patterns across a giant section of the sky.
- High structure in a giant radial or twin giant radial.
- Moving giant radial or twin (crews sometimes just use a major highway, and move it along over that highway).
- Anomalous aerial booms, flashes, etc. when "adjusting a grid" or structure of a giant radial.

- A large number are documented in T. E. Bearden, "Soviet Weather Engineering Over North America", a 45-minute videotape. Huntsville, Alabama was a chosen "turning point" to turn the jetstreams up along the Southeast coast Hence over the years we observed hundreds of cases and signatures and photographed dozens of them. Other present-day examples are on www.cheniere org Also particularly see Scott Stevens, www.weatherwars.info.

Giant radial with internal structuring

Photo by Scan MacLachlan

Directional radial with structuring

Photo by Sean MacLachlan

Structuring in clouds

Photo by Marcia Stockton

More structuring in clouds

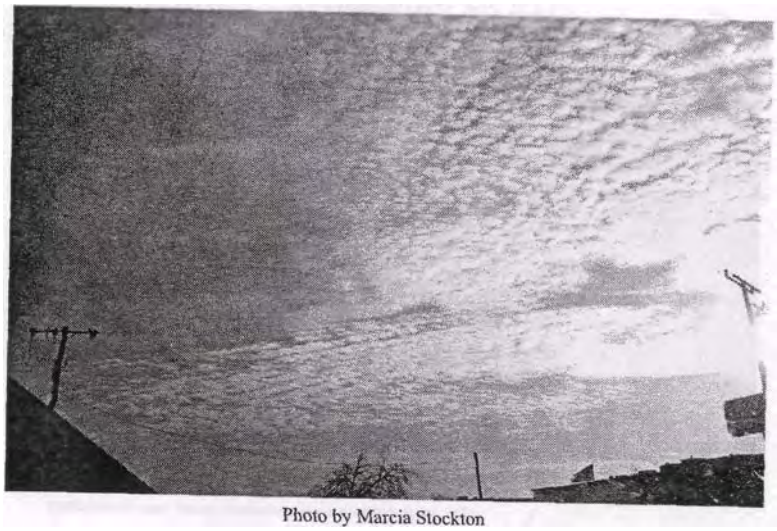

Photo by Marcia Stockton

Complex structuring in clouds

Photo by Marcia Stockton

Spectacular spiral cloud (1)

Photo by Tony Craddock

Spectacular spiral cloud (2)

Photo by Tony Craddock

Other geological uses of scalar interferometry (1)

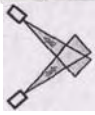

- Deposit energy in fault zones, to generate piezoelectric pressure.
  - Quakes result when plates slip.
  - Slow increase gives great overpressure prior to slip; hence it produces a very strong quake such as 8.0 or even 9.5.
  - More rapid increase usually gives less overpressure prior to slip; hence medium quake.
  - Quite rapid increase gives tremors and small quakes to medium quakes at will, adjustable as to size.
- Deposit energy in rocks in a no-fault zone, and produce anomalous quakes. Can vary magnitude by adjusting rate of energy deposit, as stated.

Other geological uses of scalar interferometry (2)

PLUME 03-08-05
FROM MOUNT ST HELEN

* Initiate volcano eruptions by deposit of energy.
* Use sea-bottom quakes to generate tsunamis.
* When this first written (July 27, 2003), many volcanoes around the world were suddenly active. Still are.
  - Too many to be totally "natural".
  - Were and are Yakuza practice and preparations.
- Highly destructive 26 Dec 2004 tsunamis induced in Asia were a Yakuza opening test for the Operations Phase of asymmetric war just entered. They induced the 9.3 quake in the ocean floor causing the tsunamis.

How much does weather and climate affect us?

- "40% of the $10 trillion U.S. economy is affected by weather and climate changes. "
  Conrad C. Lautenbacher, U.S. Undersecretary for Commerce, Wall Street Journal. July 28, 2003.
- So in addition to what nature's changes already do, those weather and climate changes being augmented or implemented by hostile weather engineering are costing us a bundle.
- This is a special kind of war, waged in "peacetime", and frightfully damaging economically.
- Weapons use confirmed in 1997 by SecDef Cohen.
- It's just part of the ongoing "bleed the U.S. dragon".

Other uses of scalar interferometry (2)

- Deposit negative EM energy in fault zone where pressure is rising naturally or by weapons.
  - Extracts energy from the zone.
  - Reduces pressure, avoiding pending quake.

* Deposit EMP in control center of power plant,* such as a large nuclear power plant. Controls are dudded, runaway reactor core risks meltdown.

* Generate explosions in refineries, oil fields, either of positive energy or of negative energy.

- Use in bioenergetics and psychoenergetics attacks as well (produce engines in the interference zone).

* Negative energy EMP destroys all solid state electronics instantly. A strong negative energy EMP kills generators, current devices, and all living systems. Since nuclear binding energy is negative, such EMP arising in spacetime in the interference zone can and does directly affect and perturb nuclear material in the core, or in stored control rods. If specific "engines" are also incorporated, the core runaway can probably be induced directly.

Other uses of scalar interferometry (3)

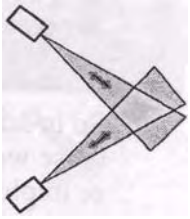

- Scalar interferometer beams and signals can be "imbedded" in two or more normal but powerful EM signals from "normal" transmitters, and used wherever the signals meet or overlap.
- Can also operate totally "inside" a normal static potential, EM field, etc.
- Thus scalar interferometry was "buried" and disguised inside the Soviet Woodpecker signals.
- U.S. CEM/EE measurements of the overall Woodpecker signals showed nothing of it.
- Hence our nation slept on, sublimely ignorant in its belief in its archaic and flawed CEM/EE.

Typical ABM Defenses
(widely deployed by mid-70s')

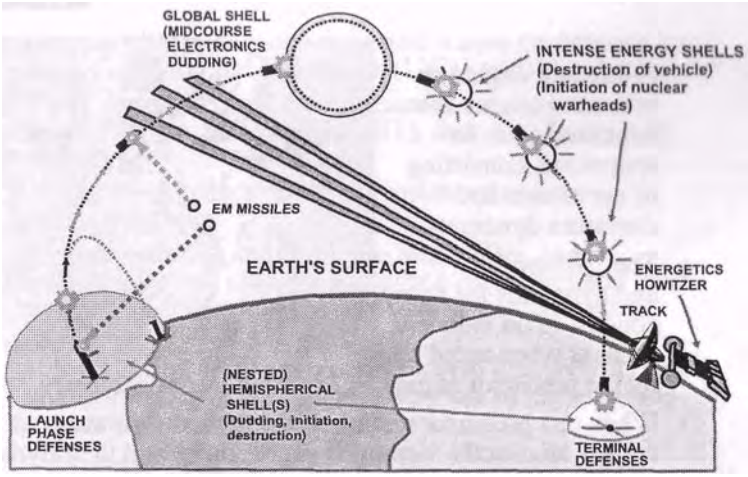

Vacuum engine (precursor engine) concept (1)

* Wheeler* said:
  "Space acts on matter, telling it how to move. In turn, matter reacts back on space, telling it how to curve. "
* Wheeler's principle can be expanded for a whole set of spacetime curvatures and their dynamics, leading to the spacetime curvature engine concept.
* This also affects virtual particle flux of vacuum, so it creates an exactly corresponding vacuum engine.
* There is no observable mass in space, so these are "massless engines"; i.e., they are precursors to the force engines that result in matter when the precursor engines interact with it.

---

* Wheeler's principle, as stated in W. Misner, K.S. Thorne, and J.A. Wheeler, Gravitation. W.H. Freeman and Co., San Francisco, 1973, p. 5.

Vacuum engine (precursor engine) concept (2)

- A vacuum engine or precursor engine is a structural form in spacetime, consisting of curvatures and curvature dynamics.
- The "pattern" and dynamics for many actions, to be induced in mass when acted upon by the precursor engine, is captured by the geometry.
- When this precursor engine then interacts with mass, it creates an exactly correlated set of forces and their dynamics, acting in that mass.

Vacuum engine (precursor engine) concept (3)

- Said another way: Levels of dynamic energy structures and levels of dynamic time structures mold spacetime geometry itself.
- This precursor "pattern" and its dynamics is called a template or engine.
- The precursor template interacts with, and structures, the virtual particle flux of vacuum.
- This forms an exactly corresponding vacuum engine (still a special precursor template).
- Spatiotemporal structurings and dynamics of the engine structuring and dynamics of the VPF act upon mass at all levels.

Engines (vacuum engines, spacetime curvature engines)

- Normal EM fields, potentials, and waves decompose into sets of longitudinal EM waves (LWs) and their dynamics.*
- Since these LWs and their dynamics are dynamics in energy density of spacetime (ST), they are dynamic ST curvatures.
- They enfold general relativity inside extended electrodynamics.
- By manipulating and changing these LWs, one manipulates and changes spacetime curvatures and their dynamics (and virtual particle flux of vacuum and its dynamics as well).
- It is a Unified Field engineering where one controls and engineers a set of ST curvatures by use of higher group symmetry electrodynamics.

* E.T. Whittaker. Math. Ann., 57, 333-355 (1903);— Proc. Lond. Math. Soc, Series 2, 1,1367-372(1904).

Signal vs. precursor vacuum engine: bioenergetics example

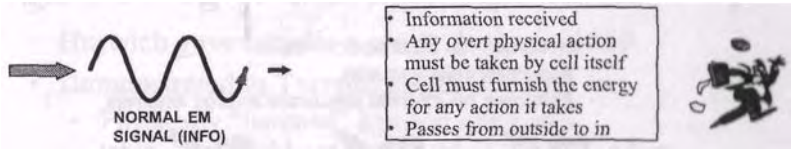

A. Cell must do the action itself; vacuum energy exchange is passive. Energy or fuel for doing the action must be added to cell externally.

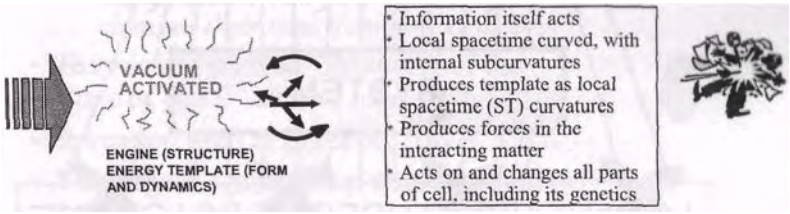

B. Cell is acted upon; vacuum energy exchange does the specific action. No energy or fuel for doing the action need be added to ceil externally.

Unified field theory requires modeling and use of supersystem

Three supersystem components interact with each other:

- System and its force dynamics
- Local active vacuum and its precursor energy dynamics (and engines).
- Local curvatures of spacetime and their precursor dynamics (and engines).

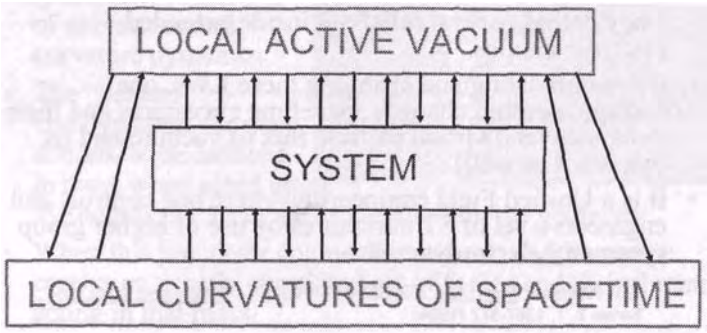

Classical EM kills the supersystem, prevents supersystem engineering

- Assumes flat local spacetime
- Assumes inert vacuum
- Assumes no internal precursor energy engines.

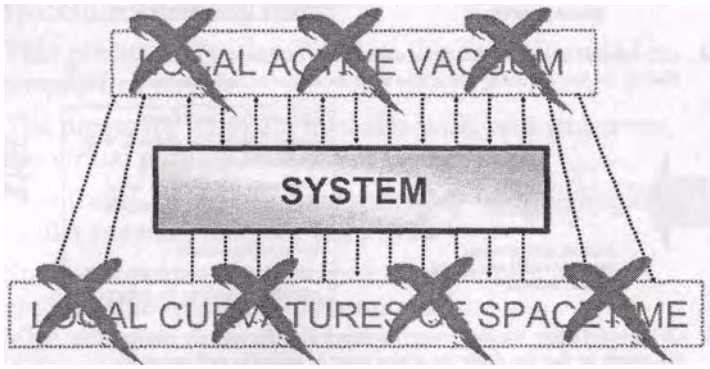

Modeling the supersystem

- Higher group symmetry electrodynamics must be used
  - Quaternions as a minimum.
  - O(3) EM developed by Evans.
  - SU(2)xSU(2) EM favored by Barrett.
  - Clifford algebra EM shown by others.

- The algebra selected must be capable of modeling the supersystem interactions (system, active vacuum, curvatures of spacetime) and their structural dynamics.
- It becomes an engineerable grand unified field theory. Evans' new GUFT appears particularly noteworthy.
- Russian energetics is precisely such a model, obtained by correcting the known serious errors in CEM/EE.

Inertial field device of Toronto inventor Sid Hurwich*

- Hurwich gave Israelis a secret device in 1969.
- Demonstrated to Toronto police in 1969.
  - Physically "jammed" a piston lying on a table, so it could not be moved or fired.
  - After a half-hour in the room for the experiment, clocks and watches had not changed their time from time of entry.

- Hurwich was given "Protector of the State of Israel" award, June 1976.
- Invention used at Entebbe, July 3, 1976.
- Used again against Iraqi nuclear reactors.**

* David Jones, "Israel's Secret Weapon," Vancouver Sun Times. Weekend Magazine, Dec. 17, 1977, p. 17.
** Private U.S. source who observed aspects of it.

Novel capability from "freezing time" (1)

* The flow of time slows in a rotated frame.
* Rotating frame by 90 degrees "freezes" time. Rotated object appears as just "light" in the lab frame.
* To rotated observer, lab itself appears as "just light"; can walk through it.
* Hurwich only affected the inertia of some objects in his early device, but effectively.
* In one experiment Golden affected clocks and watches, of all types, for four days.

Novel capability from "freezing time" (2)

- Operating in one's own locally rotated orthogonal frame, one can "step around" a 3-space lab wall.
  - In lab frame one appears to pass through a wall.
  - In one's own frame, the wall is "of light" and one merely steps through that light.
  - Rotated person sometimes referred to as "cloaked".
  - Bullets pass harmlessly through a cloaked person.
- At least two nations have such capability, as does a not-so-nice group using it for assassinations.
- We had a friendly demonstration and two hostile demonstrations (surviving the latter by blind luck).

Some demonstrated capabilities

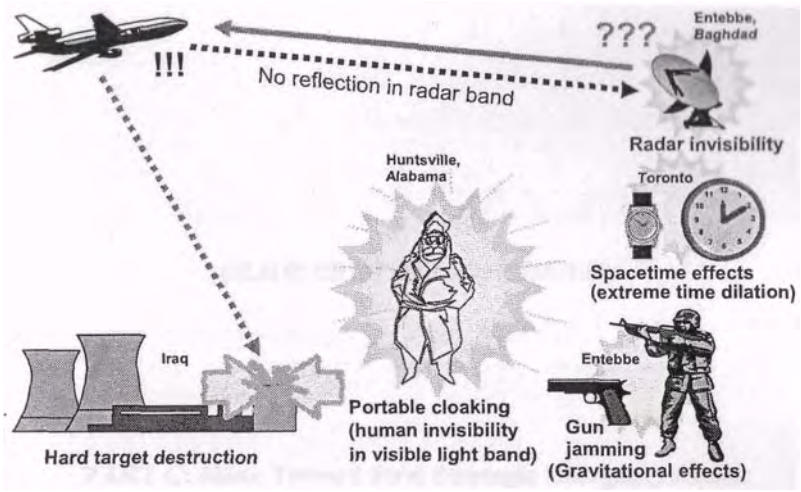

(SLIDE BRIEFING CONTINUED)

PART C: Move Toward First Strategic Energetics Attack

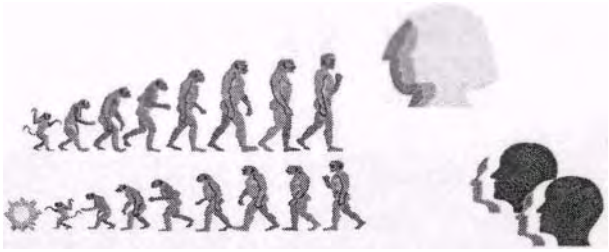

MOVE TOWARD
FIRST
STRATEGIC
ENERGETICS
ATTACK

Move toward first strategic energetics attack

Brezhnev's timetable and slowly escalating incidents

Section contents

- Schedule
- Typical test strikes
- Characterization and capabilities
- Unexpected retaliation
- Israeli retaliation
- Scheduled strike aborted

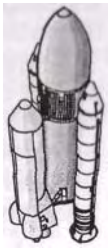

Khrushchev's Jan. 1960 statement to the Presidium

- "We have a new weapon, just within the portfolio of our scientists, so powerful that, if unrestrainedly used, it could wipe out all life on earth. "
- "It is a 'fantastic' weapon. "
- Ever the ebullient peasant, Khrushchev sought to very quickly change the balance of power.
- Impatiently moved before his scalar interferometers were in operation.

Generation of the Cuban missile crisis

- Khrushchev inserted long range missiles and nuclear warheads into Cuba in latter 1962, to change the balance of power quickly.

- His strategic scalar interferometers were not yet deployed and ready. His nukes and ICBMs were also in bad shape.
  - Kennedy called his hand, and he was caught bluffing.
  - After blustering to get U.S. agreement not to invade Cuba, he was forced to back down, suffering severe humiliation before the world and the Communist Party.
- When his strategic interferometers came on line, he unleashed two demonstrations to recover face.
  - Killed the U.S.S. Thresher on station underwater, off the East Coast of the U.S.
  - Produced a giant underwater EM energy burst the next day, 100 miles from Puerto Rico.

Brezhnev's schedule:

- "We are achieving with detente what our predecessors have been unable to achieve with the mailed fist...
  ...by 1985 our power will be so irresistible that we can do what we wish anywhere on the globe. "
- A decade later, at a secret meeting of European Communist Parties in 1972, Brezhnev laid out the 1985 goal and time table.
- In 1985 the Soviets would be ready to move to dominate the earth.

1985 Soviet preparations

* For May Day 1985, a huge Soviet exercise placed 27 "power taps" in the Earth, powering up scalar EM weapons arsenal.
* Each tap estimated to power up to 6 huge weapons.
- In 1985, initiated earthquakes, extensive weather engineering, killed aircraft and missiles, tuned up metal softening signals, initiated a series of highly anomalous storms and electrical activity in the atmosphere. Test shots offset from shuttle launch killed Arrow DC-8 at Gander, Newfoundland.
* In 1986, stepped up kill of aircraft, missiles, rockets, etc.
- Israel had struck Russians hard in 1984, in one strike destroying one third of all missiles in Soviet Northern fleet.
- Israel also checked the Soviet strategic attack plans shaping toward mid-to-latter 1986.

SIX MILE DROP IN TWO MINUTES

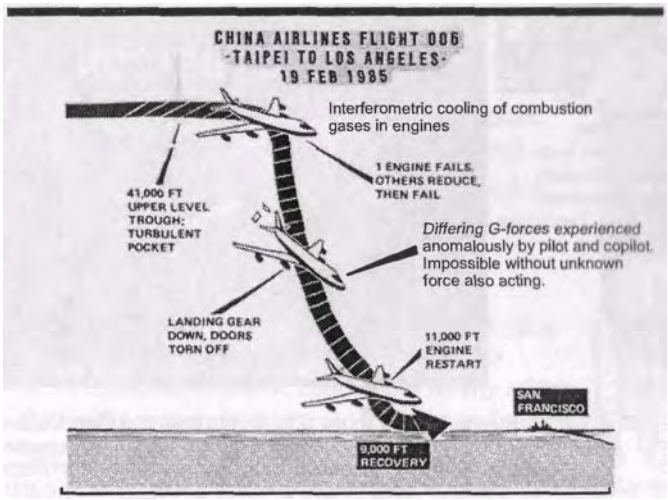

Cooling and extinguishing combustion in the engines of a jetliner 19 Feb. 1985. Use of scalar interferometry in endothermic mode.

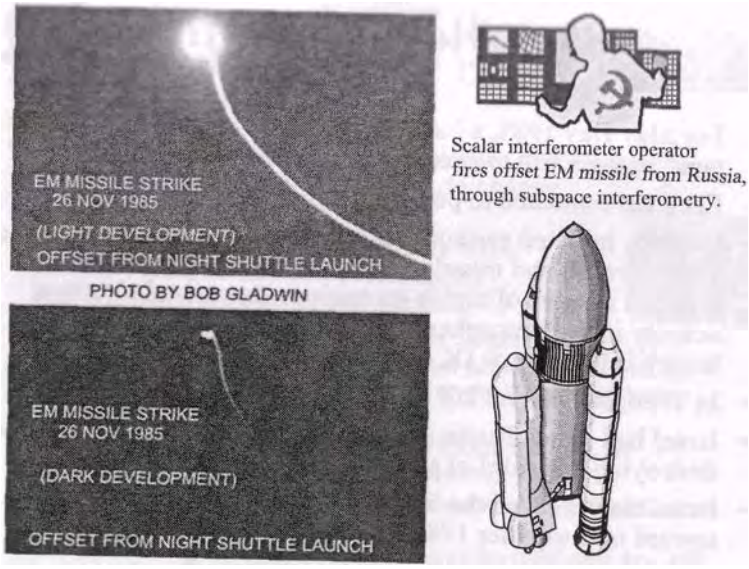

Actual Soviet EM missile strike offset from U.S. shuttle launch at Cape Canaveral on 26 Nov. 1985. This was the smoking gun.

Two weeks later, the same weapon killed the arrow DC-8 at its takeoff from Gander, Newfoundland on Dec. 12, 1985, and demonstrated meeting schedule.

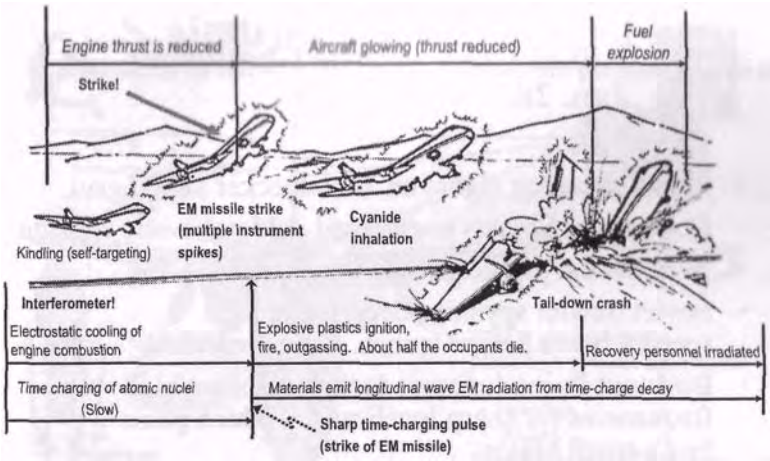

Kill of the Arrow DC-8 at Gander, Newfoundland Dec. 12, 1985. Dual use of scalar interferometry in endothermic mode (cool combustion in engines to reduce lift) and exothermic mode (strike with EM missile, as at Cape Canaveral 2 weeks earlier by same weapon).

Kill of Arrow DC-8

* Demonstrated meeting Brezhnev's schedule. Killed 248 U.S. soldiers, 8 crew personnel.
* Interferometer weapon tested in both modes:
  - Endothermic mode (cooling combustion of engines).
  - Exothermic mode (strike of EM missile).
* Successful as high level probe.
  - NSC was caught thinking it was Arab bomb, thus having to hide its illegal Iran-Contra activity.
  - U.S., Canadian scientific community totally asleep.
  - Political community interested in "burying" the incident quickly, as "icing accident".

- U.S. pressured Canadian government, ignored eyewitness of strike (not allowed to testify to investigation board) sent in a General Officer to bulldoze over the site quickly, withheld autopsy reports from Board.
- Ignored decisive later signatures such as dozens of handling personnel sickened by longitudinal EM wave radiation from the struck parts of the aircraft.

Kill of space shuttle Challenger Jan. 28, 1986

- Metal-softening signal on Woodpecker signal grid.
- Cold stress; Soviets engineered cold wave into Florida.
- Booster seal problem (thus aggravated).
- Soviet trawler spyships departed at high speed 4 hours before launch. Unprecedented.
- Birds not flying (unprecedented). Shows high frequencies for sharp localization, which pains bird's small brains.
- That night, KGB headquarters gave a party in Moscow to celebrate "perfect success of their active measures against the Challenger".*

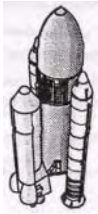

*Per General Daniel O. Graham, Director of Project High Frontier and former head of Army intelligence. General Graham died in 1996.

Proofof metal-softening signal: In Tennessee, Frank Golden softens nails with amplified

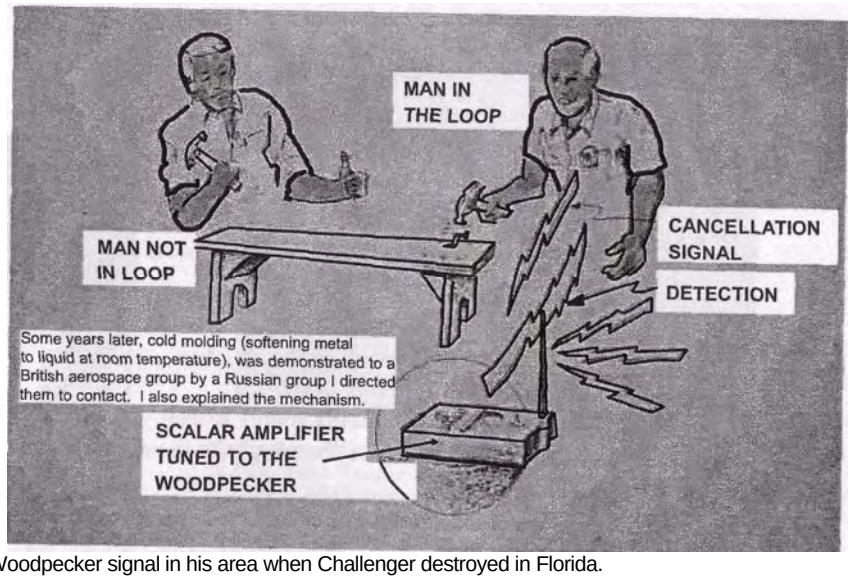

Woodpecker signal in his area when Challenger destroyed in Florida.

U.S. air strike on Libya, April 1986

Encountered test of a lab prototype quantum potential weapon.

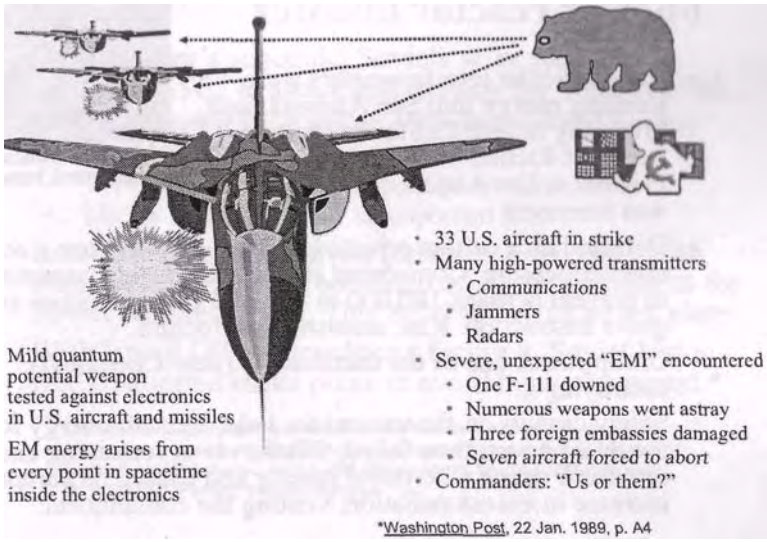

Chernobyl disaster - Apr 25-26,1986

* Great nuclear disaster at Chernobyl
* One of the nuclear reactors suffered a disastrous venting of its containment building
* Spewed out radioactive material, which spread extensively.
* Casualties, etc.
* Was pre-emptive strike by a private U.S. group.

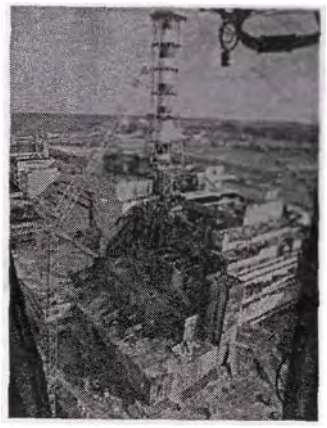

What caused Chernobyl's nuclear reactor disaster

GHOST TOWN NEAR CHERNOBYL TODAY

- Russian scalar interferometers were kindling energy into San Andreas fault, preparing to give California its long-expected Richter 9.0+ quakes in San Francisco, Los Angeles, etc. "Big One" was imminent.
- Detected by a certain private U.S. group able to use a novel countermeasure. Considered striking the distant transmitters to prevent perhaps 100,000 to 200,000 U.S. casualties and grave destruction. Risk assessment: Medium.
- Group struck one of the transmitters (near Chernobyl), destroying it.
- Safety circuits on the transmitter held, bled off energy for nearly 24 hours, then failed. Flashover of remaining energy into earth struck Chernobyl reactor and caused its abrupt increase in excess radiation, venting the containment.

Chernobyl disaster 25-26 April 1986

An intense countermeasures pulse EMP from the U.S., backtracking on the interferometer signal wave, struck the transmitter(s), destroying one.

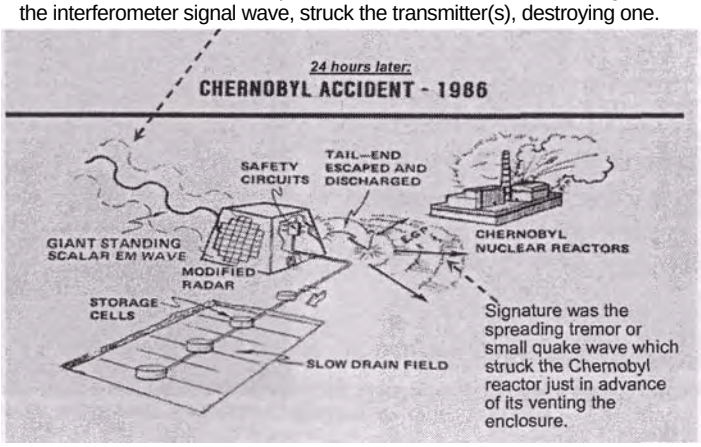

Israel forced Soviet 1986 attack plans to be aborted

- On Brezhnev's schedule, Soviets were prepared by the end of 1985 to attack and destroy the West in 1986.
  - * Kill of Arrow DC-8 in Dec. 1985 demonstrated meeting the schedule.
  - * 1984, '85, '86 very active in scalar weapons tests.
  - * Middle East was to play an important role.

« Israel struck hard at Soviet forces in 1984; one strike alone destroyed some one-third of all the missiles in the Soviet Northern Fleet. This delayed Soviet attack plans.

* With Israeli QP superweapons facing it, Soviet Union (KGB) aborted strike plans to avoid being destroyed.*

---

* Development, operation, and control of the Russian energetics weapons have always been by the KGB, not by the regular Russian armed forces. Today the KGB is known as the FSB (Federalnaya Sluzhba Bezopasnosti), or in English, Federal Security Service.

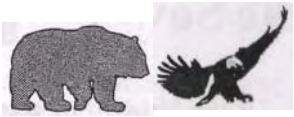

Continued preparations for new attack posture

Chessplayers think many moves ahead; the game continues.

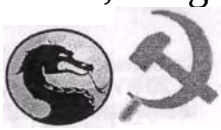

Section contents

- Tesla shields and typical tests.
- Earthquakes and Cohen's 1997 statement.
- Quantum potential and weapons capabilities.
- EM biological warfare.
- Dudding nuclear weapons.
- Aum Shinrikyo and Yakuza involvement.
- Typical test kill (TWA-800).

Blunt warning from the Soviet Union

* "If the United States deploys a shield in space, the Soviet Union will have several options, none of what Washington would wish... The Soviet Union will very quickly find a response of which the United States has no inkling as yet. "

Soviet Chief of Staff Sergei Akhromeyev, in the Washington Times of Aug. 26, 1986, warning the United States that the Soviet Union could have an unpleasant surprise response if the U.S. deploys its Strategic Defense Initiative (SDI) in space.

Comment: At the time, the Soviets had inserted nuclear weapons of 20 KT to 40 KT into most major U.S. cities, along with Spetznaz teams to detonate them on order. Those weapons and their teams are still here. See Lunev's book for some of the methods used to get the weapons into the U.S. In addition, at the time, the Soviet giant strategic scalar interferometers had been deployed for 23 years

Shield test over Atlanta, Georgia 12 Nov. 1986

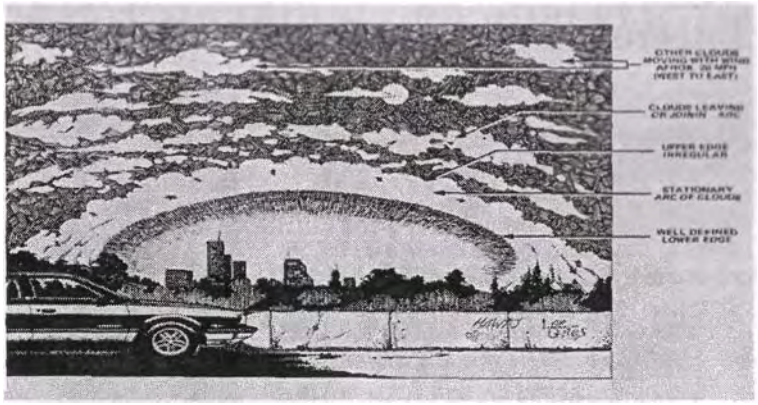

"Bottling up" shield practice over Atlanta 12 Nov. 1986.
With a real shield, aircraft or missiles flying into it
(from inside or from outside) explode and are destroyed.

Put up or shut up: Counting rifles with earthquakes

(One of the aftermaths of the 1986 Chernobyl counterstrike)

Opening bet (induced quakes)

- Quebec 25 Nov 88
- Pasadena 3 Dec 88

Raise you

- Armenia 7 Dec 88

Call - what do you have?

- Malibu 8 Jan 89

Four aces

- Soviet Central Asia 23 Jan 89

Clear table (stress relief)

- Bakersfield CA et al. (various)

SecDef Cohen confirms scalar interferometry weapons activity

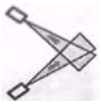

"Others are engaging even in an eco-type of terrorism whereby they can alter the climate, set off earthquakes, volcanoes remotely through the use of electromagnetic waves... So there are plenty of ingenious minds out there that are at work finding ways in which they can wreak terror upon other nations. It's real, and that's the reason why we have to intensify our efforts, and that's why this is so important."

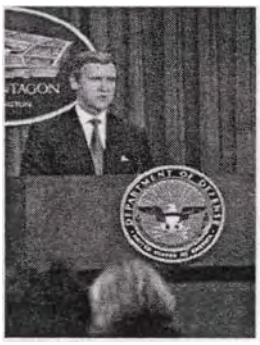

*Quoted from DoD News Briefing, Secretary of Defense William S. Cohen, Q&A at the Conference on Terrorism, Weapons of Mass Destruction, and U.S. Strategy, University of Georgia, Athens, Apr. 28, 1997.

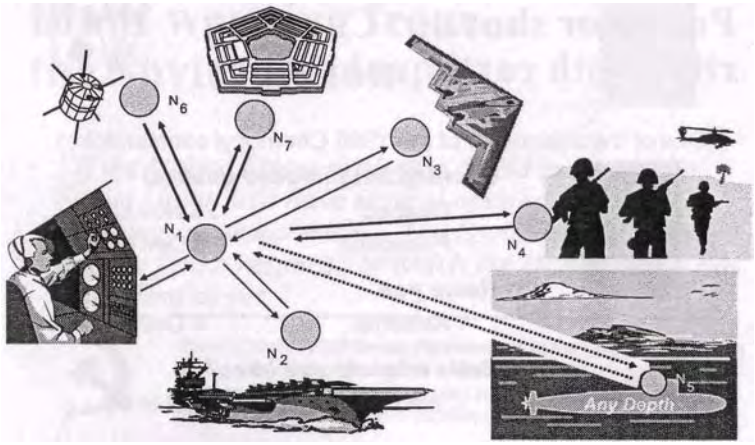

Strikes through multiply-connected spacetime. One joule of energy inserted into the lab connector, also simultaneously appears at each and every distant connected target. Tremendous "force amplifier" in military terms: can strike a thousand or million targets at once, using the energy one would only use for a single target in conventional strike.

Quantum potential instantly attacks widely separated targets. Embedded specific engines perform specific functions such as dudding nuclear warheads, propulsion, powerplants in 10 minutes.

HVT quantum potential (1)

* Bohm's quantum potential:

$$V_{quantum} = \left(\frac{h^2}{2m}\right)\frac{\tilde{N}^2\sqrt{r}}{\sqrt{r}}$$

* "A quantum particle moves as if it were subject, in addition to external potentials, to a potential which is a function of its own probability distribution."

Assumptions of Bohm's quantum potential

* Particle and wave function are real and separate
* Wave function obeys Schrodinger's equation.
* Particle obeys classical mechanics.
* Particle couples to wave function through a quantum potential.

$$(r = Y\bar{Y})$$

Quantum Potential Characteristics

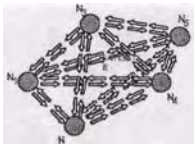

* No point source, not radiated.
* For QP between two particles:
  * Interaction does not vanish as spatial separation becomes very large.
  * Instantaneous connection through multiply-connected spacetime.
* Depends on quantum state of system as a whole.
* System parts can be greatly separated.
* Most powerful weaponry on earth. Five nations* have it deployed, sixth is closing fast.

---

* Russia (KGB), Brazil, China, Israel, and one other.

At the infinite velocity of the quantum potential:

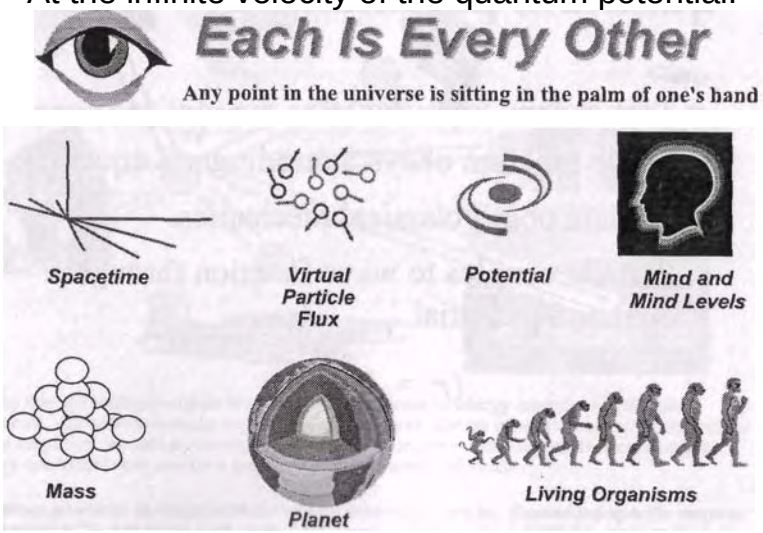

Usefulness of quantum potential (QP)

- Physical reality has vast spectrum of QPs.
  - A QP connects every member of the human species.
  - All atoms of a specific kind have a weak QP.
  - All systems of a specific kind have a weak QP.
- All human minds have a QP, as do all human bodies.
- Soviets can form a QP among desired targets in a given area, and strengthen that QP in that area at will.
- Effect produced by QP weapon in one lab target is simultaneously produced in all participants in the QP.

Usefulness of quantum potential. (QP) (2)

- QP weapons can attack a vast array of widely separated targets with one shot.
- A "mix" QP can be formed by "mixing" multiple component QPs.
- QP can contain a specific precursor engine, or a group of them.
- QP weapons are most powerful weapons on earth.
  - Could indeed destroy the entire human species with a single shot, killing every human everywhere.
  - Or could destroy every AIDS virus and every smallpox pathogen with a single shot.
- Can dud every nuclear weapon, propulsion system, and power plant in about 10 minutes.

Radionics: Elementary QP use

- When a body interacts with an external object by photon interaction, the body and that object are linked by a very weak QP that is established.
- A photo of a person is directly QP-linked to him.
- Hieronymus patented use of effect in the 1940s.
  - Killed insects in distant field by treating photo of the field with insecticide in his radionics machine producing a weak QP.
  - * Cut out checkerboard pattern; killed bugs only in sections that were intact in segmented photo. Bugs migrated to the holes.
- Ukako corporation killed bugs for farmers for a decade as a useful commercial service, in multiple states.
- Was outlawed when states realized could also kill humans.
- Bin Laden and other high terrorists, e.g., could be killed instantly right where they are, merely from their photographs.

Quantum potential is a fantastic energy-amplifying weapon

* Use one primary "station" in operations station
- Connect primary station to a large number of objects or systems in many remote places.
* Insert a one megawatt EM pulse into primary.
- Each and every distant object or system simultaneously has that same 1 MW of energy appear in it instantaneously, because of multiply connected spacetime (effective "superposition" of all participating targets).
* If attack a million targets, it is the same as attacking the "primary" and simultaneously all others with the same single attack. This is a vast "force amplifier" effect.
- 1 MW input in one local target gives 1,000 gigawatts total "output" in distant targets. Nothing else compares.

EM biological warfare

- Create Kaznacheyev's "disease engine" by pumping diseased cell in the time domain, then phase conjugating once again in time domain.
- Infold the disease engine in a carrier as a Whittaker-Devyatkov structure.
- Transmit the carrier signal(s) into targeted population conventionally or use quantum potential.
- Kindling of the disease occurs in the target bodies, inducing the disease. Gulf War disease induced this way.
- Note: Quantum potential (QP) is an ideal carrier; can strike entire populace at once, with disease engine(s) desired.
- QP with one robot carrier and its engines can instantly strike all targets on earth with reproduced robot/engine copies.

Countering EM BW: When signal is available

- QP defense is like dueling scorpions: He who strikes first to the vitals, wins.

* Receive, phase conjugate by time-pumping.
* Embed amplified phase conjugated engines in signals for transmission.
* Transmit amplified phase conjugated engines.
* Variation: put the antiengines inside the hostile transmission signal itself and fire.
* Places it back into the hostile transmitter(s).
* Hostile transmitter then transmits both the engine and antiengine, nullifying its own effect.

Possible advanced EM BW

- Covert EM BW using disease engines.
  - Materials activated (dimensioned).
  - * Water structured (dimensioned).
  - * Radio, TV emissions structured.
  - * Electrical power grid signals structured.
  - Use of quantum potentials with engines.

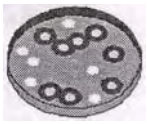

- Mindsnapper (negative energy EMP).
  - ♦ Tested twice by Russians in Afghanistan.
  - Instant and total death: Separates all mind-aspects from every living system in struck area.

* Enhance or nullify vaccines and antibiotics.

* Enhance or nullify BW strikes in an area.

Indicators in EM BW

• Gurvich:	Mitogenetic radiation
• Kaznacheyev:	Cytopathogenic mirror effect
• Devyatkov:	Information content of the field
• Whittaker:	Infolded LW electrodynamics
• Lisitsyn:	Genetic brain code broken
• Popp:	Master cellular control system
• Sakharov et al.:	New approaches to general relativity
• Becker:	Cellular regenerative system
• Sachs:	Unified field theory
• Evans:	O(3) electrodynamics Grand unified field theory (engineerable)
• Bearden:	Engines using infolded LWs

QP weapons summary (1)

Induce health changes and diseases in entire focused national populace at once. Has been tested in U.S.

- Expose immune systems to "shadow" (virtual) disease engines of many diseases at once. Immune system "spreads", thus totally vulnerable to any BW attack or opportunistic infections (Gulf War Disease was such a test). Tested in U.S.

- Dud all nuclear weapons, propulsion systems, power plants on earth or in an area in 10 minutes.
  - As vacuum engine carrier, induce any desired effect simultaneously in millions of selected targets.
- Can attack physical systems, minds, bodies, electronics, nuclear, etc. by its internal engine(s).
- Most powerful weapon on earth; 5 nations now have it: Russia, Brazil, China, Israel, and one other friendly nation. A sixth nation is closing on it rapidly.

QP weapons can nullify:

- Nuclear dead-man fuzing weapons.
- ICBM nuclear warheads and electronics.
- Strategic bomber nuclear weapons and electronics.
- Nuclear submarine nuclear weapons and electronics.
- Nuclear submarine propulsion systems.
- Electrical power systems.

- Electronics and communications systems.
- Specific chemical agent contamination, biological agent contamination, or vaccines.
- Human immune systems.
- Satellites, ships, planes, subs, rockets, radios.

Simultaneous dudding nuclear weapons worldwide, and nuclear reactors and nuclear propulsion systems.

- Via quantum potential joining U235 and Plutonium in warheads.
- Includes weapons airborne, underwater, in storage.
- Transmutations of the nuclides themselves by inserted engines.
- Part of the initial barrage to be launched by Aum/Yakuza/KGB.
- Will occur in the first minutes (10) of the strategic strike, following psychoenergetically crew-disabling QP weapons strikes.

Note: Duds both overt and covert nuclear weapons and weapons-grade materials — including covert weapons inserted on site in Russia which otherwise provide dead man fuzing.

Negative energy EMP

- Employs negative energy electrons (persistent Dirac Sea holes) and their negative energy EM fields and potentials.
- Extreme electromagnetic pulse of these negative EM energy fields strikes target with giant pulse of Dirac Sea holes, "eats" free electrons.*
  - All electron currents in target extinguished instantly.
  - Personnel die instantly; no nerve or brain currents. No cell twitches again; all bacteria, viruses, etc. killed. Soviets tested on two Afghan villages in 1980s war.
  - Mind-body coupling mechanism instantly destroyed, hence nickname "Mindsnapper". Mujahedin called it "wind of death".
  - All communications, electronics, missiles, nuclear warhead electronics, guidance systems, aircraft, ships instantly killed.

---

* Produces lattice positrons (excess positive charges) by eating orbital electrons.

Negative energy EMP (2)

- Kill of an entire naval attack force, massed armor attack force, satellites, ICBMs, aircraft, tactical missiles, artillery shell fuzes, communications, tanks, ships, etc.
- Can kill an entire large installation or city the same way, instantly.
- Or can kill more localized targets such as electrical power plants, power distribution lines and substations, refineries, chemical plants, port installations, Pentagon, C2 facility.
- Can "eat" electron charges in a strong storm front, reducing the storm energy.
- All purpose weapon; second only to QP weapons, new generation of carrier robots with energetics weapons, and sleeper mass conversions.

Briefing to N-4 in 1996

- J-6 Staff Director for C4 systems (Adm. Cebrowski) requested briefing on Tesla electrodynamics. Naval command in Flo proposed this author brief the Admiral. I agre
- Naval Ordnance Lab and Naval Research Lab then set up a 40-man Ph.D. board as a gauntlet, directed I be interrogated and savaged by board.
- I refused. These folks had fiercely savaged UWB radar pioneers such as Harmuth and Barrett and claimed UWB radar was impossible.* They knew nothing of higher group symmetry electrodynamics; and were part of the problem, not the solution.

* They later claimed to have been "pioneers" of UBW radar themselves!

Briefing to N-4 in 1996

- N-4 informed "briefer has declined the briefing" Questioned why, so command had to tell him.
- N-4 immediately dissolved the gauntlet board, limited NOL and NRL to one member each at the brief, ordered that briefer not be interrupted.
- I then briefed the N-4 on what Tesla EM was, and strongly urged another weapons briefing on Russian energetics weapons. Second brief was not held.
- Later, three colleagues and I played intense, desperate role in Israelis countering and blocking a massive KGB strike on the U.S. by those energetics (Tesla) weapons, that would have destroyed this nation on May 1, 1997.

AUM SHINRIKYO:

IF ANYONE HAD LISTENED AND UNDERSTOOD*

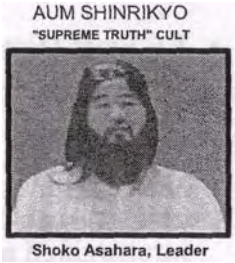

- Cult formed in 1987. Over 60,000 members. More than $1 billion in gold and cash.
* Taught that U.S. would strike Japan with devastating blow in latter 1997
  * Japan should make preemptive strike first
  * AUM would get mass destruction weapons
  * Was developing BW weapons (anthrax, botulism, "Q" fever, etc.)
  * Developed own chemical weapons

* Made sarin attack on Japanese subways
- Formed alliance with Japanese Yakuza

AUM SHINRIKYO:
Alliance with the Japanese Yakuza

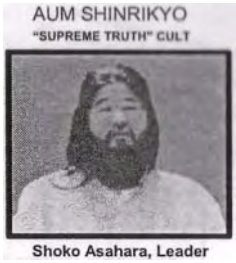

Shoko Asahara, Leader

- Formed alliance with Yakuza
  AUM/Yakuza leased operational use of strategic Soviet energetics weapons (strategic scalar interferometers) in latter 1989
- Trained crews, planned to strike U.S. a terrible "preemptive" blow in 1997 by assisting KGB
- Using deception, killed targets such as TWA-800
- Shoko Asahara's public statements foreshadowed Yakuza/Aum Shinrikyo participation in the KGB's strategic plan to attack and destroy the U.S. in 1997.

Asahara's public statement

* Asahara's public statements hinted at his plans with the Yakuza to participate in the scheduled FSB/KGB strike on the U.S. in 1997.
* Quoting Asahara:

  "I am certain that in 1997, Armageddon will break out. By 'break out' I mean that war will erupt and that it will not end soon. Violent battles will continue for a couple of years. During that time, the world population will shrink markedly... A Third World War will break out. I stake my religious future on this prediction. I am sure it will occur."

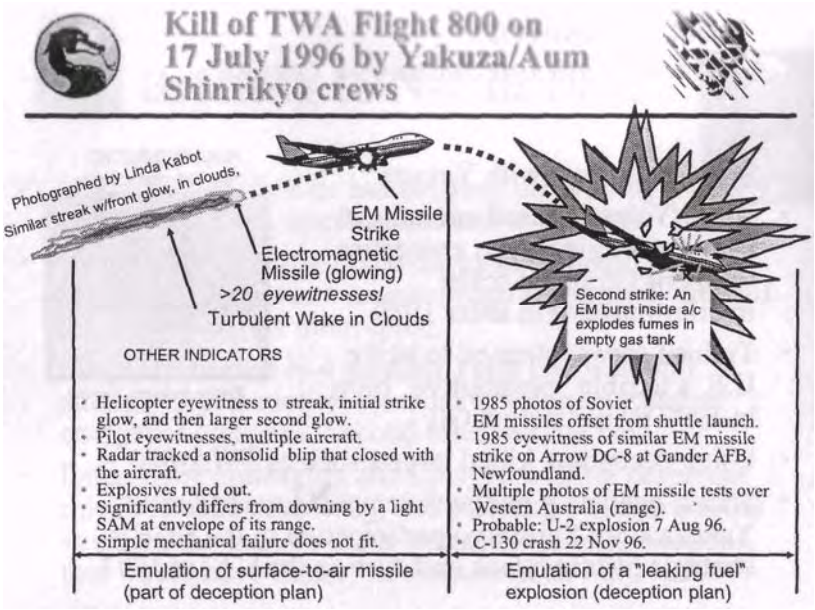
Kill of TWA Flight 800 on
17 July 1996 by Yakuza/Aum
Shinrikyo crews
Photographed by Linda Kabot
Similar streak w/front glow, in clouds,
EM Missile
Strike
Electromagnetic
Missile (glowing)
>20 eyewitnesses!
Turbulent Wake in Clouds
Second strike: An
EM burst inside a/c
explodes fumes in
empty gas tank
OTHER INDICATORS
• Helicopter eyewitness to streak, initial strike glow, and then larger second glow.
• Pilot eyewitnesses, multiple aircraft.
• Radar tracked a nonsolid blip that closed with the aircraft.
• Explosives ruled out.
• Significantly differs from downing by a light SAM at envelope of its range.
• Simple mechanical failure does not fit.
• 1985 photos of Soviet EM missiles offset from shuttle launch.
• 1985 eyewitness of similar EM missile strike on Arrow DC-8 at Gander AFB, Newfoundland.
• Multiple photos of EM missile tests over Western Australia (range).
• Probable: U-2 explosion 7 Aug 96.
• C-130 crash 22 Nov 96.
Emulation of surface-to-air missile
(part of deception plan)
Emulation of a "leaking fuel"
explosion (deception plan)

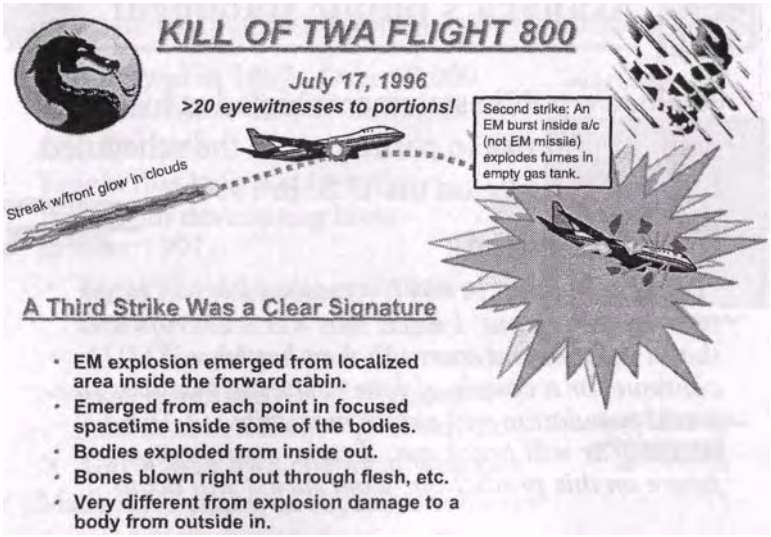
KILL OF TWA FLIGHT 800
July 17, 1996
>20 eyewitnesses to portions!
Second strike: An
EM burst inside a/c
(not EM missile)
explodes fumes in
empty gas tank.
Streak w/front glow in clouds
A Third Strike Was a Clear Signature
• EM explosion emerged from localized area inside the forward cabin.
• Emerged from each point in focused spacetime inside some of the bodies.
• Bodies exploded from inside out.
• Bones blown right out through flesh, etc.
• Very different from explosion damage to a body from outside in.

EM MISSILE PRACTICE

Latter Sept. - Early Nov. 1996

[Many Witnesses]

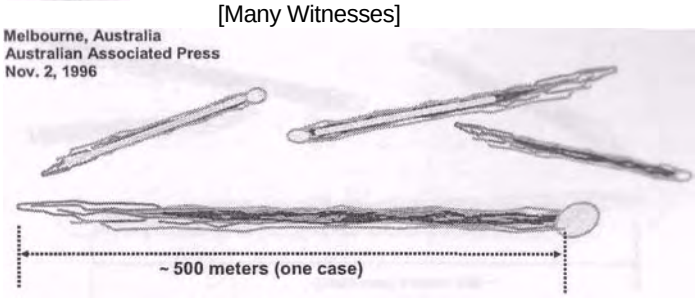

Aum Shinrikyo/Yakuza also conducted extensive firing practice tests over Western Australia. Tests after TWA-800 demonstrated what had killed the aircraft.

EM MISSILE PRACTICE AND DECEPTION

Nov. 17, 1996 at 2220 hrs.

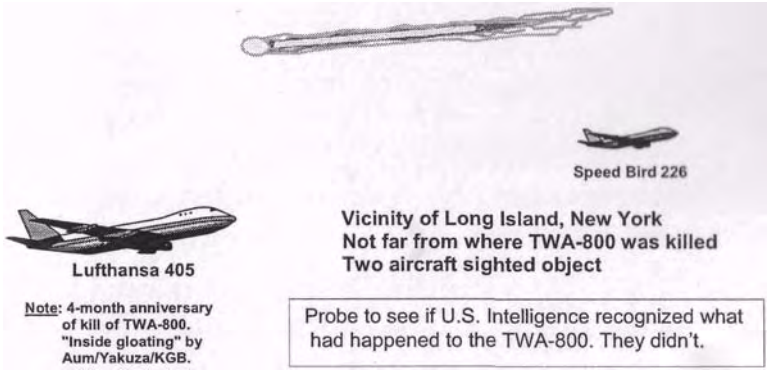

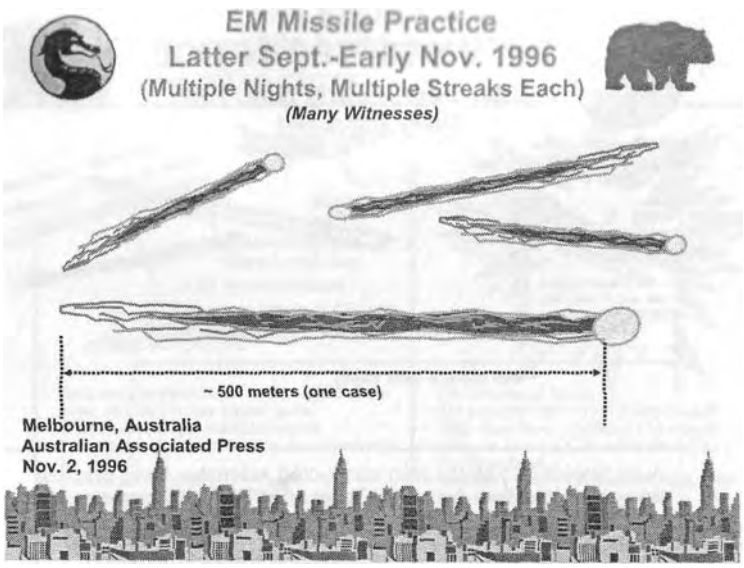
EM Missile Practice
Latter Sept.-Early Nov. 1996
(Multiple Nights, Multiple Streaks Each)
(Many Witnesses)
~ 500 meters (one case)
Melbourne, Australia
Australian Associated Press
Nov. 2, 1996

(SLIDE BRIEFING CONTINUED)

PART D: Second and Third Attacks Scheduled and Aborted

Second and third attacks scheduled and aborted

1997 was a very busy year

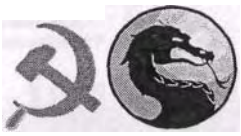

Section, contents

- Attack countering in 1996-97.
- Actions 1996-1997.
- Desperate actions.
- Attack scheduled February 1997.
- The answer: The Israelis are sane, but the problem is insane.
- Desperate situation, desperate action.
- A bit of irony.
- Afterword.

Attack countering in 1996-97

- Contacted by Harry Mason, Australian geophysicist.
  - First-hand information on anomalous lights, explosions, quakes in West Australia.
  - Obviously were energetics weapons tests.
  - Alerted me to involvement of Aum Shinrikyo, Yakuza.
  - Furnished material on Aum Shinrikyo and Yakuza.
  - Mason eventually visited me here in the U.S. for illuminating discussions.
  - From these, we pieced together modifications to Soviet 1996-97 attack scenario.
- Had it not been for Harry's input, we would not have had the picture in time to alert the countering nation.

Actions 1996-1997 (cont'd)

- Mason provided special information that consortium of Aum Shinrikyo and Yakuza had leased use of the earlier generation Soviet energetics weapons.
- Initial downpayment $900 million in gold.

Obtained Sen. Sam Nunn's report on terrorism, etc. including Aum Shinrikyo. Researched Yakuza.

- Feverishly increased work on weapons briefing.
  - By late 1996, three colleagues and I desperately were trying to get message to high Israelis, that attack was forthcoming. Israel was and is the only nation which could and can counter such an attack by a rational foe.
- FSB/KGB attack first scheduled for February 1997.

Desperate actions

* Attempted to alert former Israeli ambassador to UK, who had confirmed weapons to UK intermediary.
* Ambassador was assassinated one week before emissary could reach him.
* In desperation, sent alerting fax to Israeli Embassy Defense Attache, in Washington, D.C.
* A well-known Ph.D. and close colleague wrote a supporting study. Another close Ph.D. colleague delivered a copy to the Israeli Consulate to California.
* Scheduled attack countered by Israeli action; aborted.
* Informed U.S. channels of actions (not believed).
* Relaxed, breathed easier, back to energy and medical research.

Attack rescheduled

* To our astonishment, shortly it became obvious that the attack was rescheduled for May 1, 1997.
* We were completely perplexed as to how that could be, and Russia not disappear from the Earth if the attack were launched.
* A great deal of anguish and wracking of one's brain resulted.
* The answer was disarmingly simple, so it was difficult to recognize.

Answer: Israelis were sane; but the problem was insane

- Israelis had incorporated a sane C2* system.
  - Wait till recognize preparations, meet, decide, then issue launch order for preemption.
  - Easily countered by negative energy EMP.
  - Kill all QP personnel suddenly, then destroy site.
  - Counter simply by rescheduling order of attacks.

  Must be insane C2 system.
  - Every 2 hours, computer issues real launch order.
    - Launch sequence starts "for real", threat or no threat.
  - A time interval is available in the sequence where code can be entered to abort attack and revert weapons, if crews are alive.
  - Otherwise, QP weapon systems fire and Russia disappears from the face of the Earth. In short, it is a wrinkle on the old dead-man fuzing and mutual assured destruction (MAD).

*Command and control.

Desperate situation, desperate action

- Latter April; clock ticking, five days from attack and certain destruction of the U.S.
- Desperately faxed Israeli Prime Minister directly, explaining problem and solution.
- Urgently requested Israel switch C2 to insane system immediately, and notify Russians.
  - It was quickly done.
- Two days before attack, the armada began standing down, much to the relief of my colleagues and me.
- Informed official U.S. channels of all actions. They did not believe it.

A bit of irony

- At about the time the great armada started standing down, Secretary of Defense Cohen was making his 1997 statement at a Georgia conference, confirming the earlier scalar interferometry weapons.
- The Secretary did not know that the attack had been imminent, or that it was standing down as he spoke.
- The U.S. Intelligence Community still did not believe it at that time, and did not know of the attack plan.
- By a hair's breadth the United States survived, thanks to the friendly nation and its QP weapons.
- The FSB/KGB simply resumed its planning and maneuvering toward another attack opportunity.

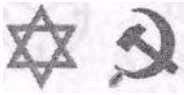

Afterword

* Also warned Israel and others about mind control capabilities achieved by Russia, evidenced by test kills of Captains Button and Svoboda.
* Some time later (unsure when), the main facilities producing those weapons were destroyed.
* Those facilities will remain destroyed for a great many years; but others now operating elsewhere.
* This pre-emptive action gave us a couple years of respite, until the robot attack at the end of 1999 occurred as a special "Millennium Gift" to the U.S.

Afterword (2)

- FSB/KGB strategic plan to attack and destroy United States must include nullifying Israeli counterstrike by QP and other major superweapons.
- FSB/KGB plan of Strategic Asymmetric War must include such neutralization.
  - Major neutralization possible by use of massive numbers of "sleeper" conversion personas inserted into (a) appropriate governmental leaders and into (b) control/operational personnel for key superweapons.
- Sudden massive conversion in Israel disrupts government, produces utter chaos. Israel destroys itself.
  - Asymmetric war passed into Operations Phase circa beginning 2005; means massive sleeper conversions being inserted worldwide, ready for triggering.

World's first subspace precursor robot war

An eerie war fought inside internal structures of EM fields and waves. I.e., fought inside group internalspace (a special subspace).

Section contents

* KGB continues developments.
* Aum Shinrikyo and Yakuza involvement.
* Weather engineering.
* Causal system robots.
* Precursor robot tests.
* Subspace precursor robot war.
* Afterword.

FSB/KGB continued weapon development and attack planning

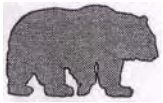

* Incidents and tests continued worldwide.
  - By FSB/KGB.
  - By rogue Japanese (Aum Shinrikyo and Yakuza).
  - By other nations.
* Several nations/groups (including Yakuza) used Western Australia for a target range.
* Extensive tests documented by geophysicist Harry Mason.

» Occasional aircraft, missile interference or kill.

* Full-bore weather engineering continued.

Aum Shinrikyo and Yakuza involvement

- On site in Russia, manning strategic scalar interferometer sites (kind that killed U.S.S. Thresher).
- Heavily engaged in weather warfare over the U.S. and North America since early 1990, other range practice in Australia.

- Itching to begin firing to destroy U.S. cities and major installations.
- Yakuza now a major, hidden world force.
  - Penetrates all major Japanese companies.
  - Penetrates Japanese government.
  - Large presence in oriental populations in U.S. cities.
- Yakuza is FSB/KGB protege for asymmetric warfare against the internal U.S.; intends to destroy us.

U.S. weather engineered by rogue crews on-site in Russia (1)

- Steering jet streams.
  - Make low pressure areas (endothermic).
  - Make high pressure areas (exothermic).
    - Move highs and lows in coordinated fashion, to entrain and steer the jet streams.
- Displace cold air from Canada, warm air from Gulf.
  - Where they meet provides sharp fronts and violent weather.
- Basic "cross-ploughed field" grid pattern covers a broad area for structuring in the grids (choosing localized cooling, heating, force engines in air.

U.S. weather engineered by rogue crews on-site in Russia (2)

- Placing sharp bends in jetstream adds great angular momentum.
  - Spawns tornadoes, powerful storms.
  - Generates much atmospheric energy and lightning.
  - Ignites fires in those areas deliberately kept dry.
- Maneuvering and pulsing high and low pressure areas vertically above each other can produce sudden downbursts.
- Adding spiral twists can generate sudden tornadoes.
- Created earthquakes and stimulated volcanoes into eruption; generated tsunamis.

Causal (precursor) robots and the subspace war of 1999-2000

* For any set of force dynamics in a material system, there is a corresponding set of nonmaterial precursor dynamics. That set is a nonmaterial precursor "engine" (cause) for the physical robotic system's dynamics and functioning.
* The precursor engine can travel through and inside Whittaker structure of an EM signal, wave, field, potential, etc. Easily travels through matter and through EM radiations from target.
* A material robot thus has a precursor robotic "engine". When this precursor robot engine interacts with proper type of matter, the material robot functions emerge and are performed.
* FSB/KGB developed formidable army of the robots.
* Unleashed them throughout the U.S. in latter 1999. Israelis destroyed precursor robot army in latter 1999-early 2000.

Causal System (Nonmaterial) Precursor Robots

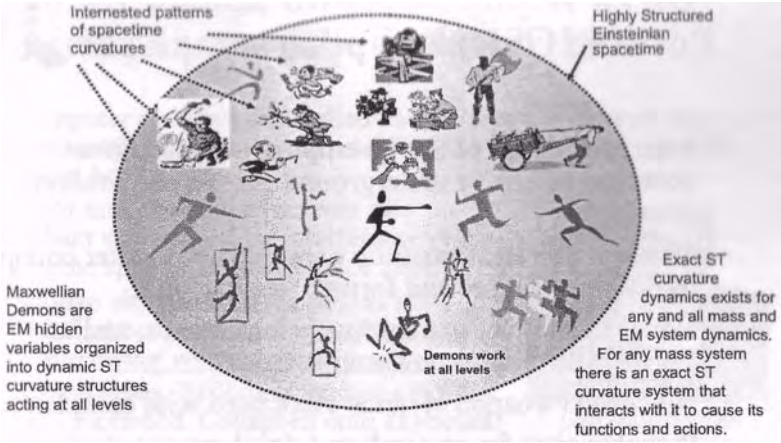

Causal system robots (CSRs). These are sets of ST curvature engines, with functions organized into a single complex weapon system with communication, propagation, weapons effects, and command and control functions incorporated. When the CSR interacts with targeted mass, the mass and its fields perform those system functions.

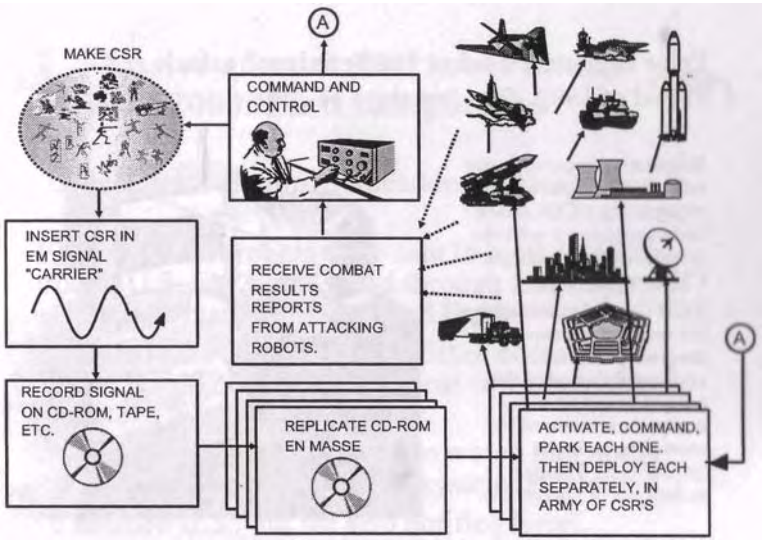

Mass reproduction of a CSR, once made, is simple and inexpensive.
The CSR resides in, or propagates inside, any Eli signal, potential, or field.

Possible CSR* weapons complexes

* Prior to collapse of Soviet empire, U.S. satellites observed extensive underground sites in preparation (hundreds).
- Construction and operation continued even after collapse of Soviet economy and former Soviet Union.
- Hence must be of extraordinary importance, and to FSB/KGB (the real power in Russia).
* No normal weapon systems associated with complexes.
- Probable sites for research and development, deployment and worldwide employment of CSR robots.

---

* Causal System Robot. Same as nonmaterial robot; vacuum engine robot, spacetime curvature robot, precursor robot. See slide in Appx 1 on cause and effect.

Prior to planned robot "millennium" attack at end of 1999, first few days of 2000

- Stimulating apparently the only analyst capable of recognizing a CSR attack and connecting it with the scheduled giant strategic CSR attack.
- KGB General commanding the energetics weapon program previously confirmed that what this analyst writes on his computer is received as soon as he writes it (probably by Tempest techniques or energetics).

- Present author was struck by CSR in latter 1999 to give a strong but deliberately nonfatal stimulus. Reported; intelligence agencies did not believe it.
- If planned attack had occurred, Western analysts would have believed it was a severe Y2K problem, more serious than had been anticipated.

Robot attack on this analyst as an intelligence probe in latter 1999

• Computer suddenly controlled itself. Screen split, with two horizontal bands about two inches wide each, one at top and one at bottom.

LAST QUARTER 1999

- Light thus entering eyes from two radiant sources (scalar interferometry). Engine appears in interference zone.
- Sudden violent rapid flashes, as if 100 flashbulbs at once. Created in vision center where nerve signals crossed.
- Instant heart fibrillation, nervous system malfunctioned. Collapsed onto keyboard.
- Ten seconds exposure (30 would be fatal).
- Required 4 days to recover. Then we notified the Israeli Military Attache in Israeli Embassy, etc.
- Israelis destroyed millions of robots throughout America.

Massive nonmaterial robot attack 1999-2001): First subspace war

- Y2K problem ongoing, tremendous work ongoing to avoid it.
- Millions of CSR robots were sent in by the KGB* through U.S. EM signals, and through EM fields and potentials in matter of ocean and Earth.
- Penetrated all over U.S., in satellites, command centers, ICBM electronics, nuclear sub electronics, computers, NSA, CIA, DIA, etc.
- Struck ("pinged") this analyst, to watch him notify "system" and see if the official system understood.
- We notified U.S., but we also notified Israel.

*New name is Federal Security Services, but the leopard has not changed its spots. Superweapons controlled by old die-hard Communist faction, who wish to destroy the U.S. Younger faction (from which Putin came) wishes accommodation. Unfortunately the old faction is in control.

Earth's first subspace war

* Israel quickly destroyed millions of robot weapon systems on site in electronics and installations and computers and command centers in the U.S., in Israel, and in other Western nations.

- A strategic war of eerie kind occurred in those few days, and it did not make a whimper or attract attention of our intelligence community. Millions of robots were destroyed.
* The "infolded" EM inside all normal EM fields, potentials, and waves is a special "subspace" mathematically, including inside the Earth's matter and the ocean's matter.
- The first great subspace war was fought at the change of the millennium for several days, inside EM signals in our systems, computers, etc., and no one knew it.

Afterword to tie eerie 1999-2000 strategic war

* The West slept on and did not believe the eerie nonmaterial precursor robots - or the war - at all.
* We also warned the "little nation" of the mind-control psychoenergetics tests as against Button and Svoboda, and the coming capability of this threat.

  * The subject had arisen in the previous attack scheduled for May 1, 1997, which was narrowly avoided.
* Many months later a garbled communication indicated that Israel had suddenly struck those psychoenergetics facilities also, totally destroying them.
* We did receive an "attaboy" for in-the-nick-of time warning provided in latter 1999.

Countdown toward destruction

Converging WMD threats

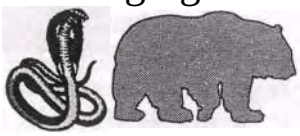

Section contents

- International terrorism.
- Wake-up call.
- Subsequent events.
- Calm before the storm.
- Personal conclusions.
- Time criticality.

International terrorism escalates

- International terrorists struck hard on Sept. 11,2001.
  - * World Trade Center (Twin Towers) and Pentagon.
  - * One aircraft, redirected, was targeted against White House and the President. Crashed by onboard struggle.
  - * Osama Bin Laden was a household word.

Twin Towers burning after strikes by two aircraft - AP Photo.

- Suddenly the "D.C. Doldrums" regarding terrorism and WMD threats were destroyed.

The wake-up call

* A month or so later, President Bush and VP Cheney had been rather thoroughly briefed.
* They understood the nature of this war. VP Cheney said:

"The war on terrorism will not be over in our lifetime. It is different than the Gulf War was in the sense that it may never end. At least not in our lifetime. The way I think of it is, it's a new normalcy. "

Vice President Dick Cheney, October 21, 2001.

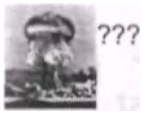

Subsequent events

• President Bush retaliated against terrorism.

• Afghanistan, where the Taliban had long harbored Osama Bin Laden.

• Iraq, with its record of backing terrorism and mass murder of its own civilians (and its capability for WMD).

• Occupation of Iraq and Afghanistan is ongoing, as U.S. strives to get free, modern governments installed, economy restored, and proper internal security forces formed and trained. Resistance and incidents continue. Bin Laden remains at large, Saddam Hussein is caught and awaiting trial. Hussein's two sons have been killed.

• For FSB/KGB, this is a "bleeding the U.S. dragon" period.

Calm before the storm

• U.S. national election also sowed divisiveness and preoccupied nation for more than a year.

• International terrorists continue insertions.

* Yakuza prepares portable interferometers; North Korea and Iran pursue nukes.
* Castro's inserted 10,000 guerrillas still here.
* Russian nuclear weapons still in U.S. cities.
* Chinese quiet insertion probably ongoing.
* Russian KGB has prepared robots again.

* Inserted conversions finishing; probes will be evident as buildup almost certainly underway inside the U.S. itself.

Personal conclusion of this analyst

- Multiple strategic WMD threats and attacks are rapidly converging on the U.S. simultaneously.
- U.S. woefully unaware of the eerie war and capabilities.
  - U.S. in grave danger, may be destroyed.
  - * U.S. scientific community has failed us.
  - * Government and intelligence community have totally inadequate scientific advice.
  - Meanwhile, clock ticks toward midnight.

- Insertion phase completed; now in operations phase.

Yakuza registered superweapons on Yellowstone Caldera; achieving knockout capability against U.S. with one shot.

- Shot 9.3 seabottom quake on Dec. 26, 2004 which caused giant tsunamis in Asia.

* T.E. Bearden, "Errors and Omissions in the CEM/EE Model", at http://www.cheniere.org/techpapers/

Threats - working

- Energetics weapons threat.
  Bioenergetics weapons threat.
- Robots weapons threat.
- Psychoenergetics weapons threat.
  - Conversions threat
  (to be discussed).
- Terrorists nuclear and
  BW weapons threat.
- Chinese threat.
- Yakuza/Aum Shinrikyo threat.

(SLIDE BRIEFING CONTINUED)

PART E: Bioenergetics and Its Weaponization

Bioenergetics and its weaponization

Use of infolded EM against living bodies, biofields, and biopotentials

Section contents

- Basic bioenergetics.
- Selected tests.
- Body radiates its internal patterns.
- Information content of the field.
- Ramifications.
- Kaznacheyev experiments and results.
- Microwave radiation of U.S. Embassy.
- Becker's work and ramifications.
- Priore's work, results, and ramifications.
- Shadow disease state, immune system reaction.
- Spreading the immune system.
- Gulf War Disease: Russian test.
- 1998 proposal for portable treatment unit.

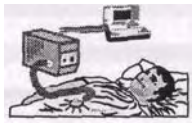

Basic bioenergetics

- Scalar interferometry.
- Longitudinal EM waves
- Bioenergetic Engines.
- Negative energy EMP.
- Quantum potential.
- Nonmaterial robots attacking bodies.
- Carrier robots with bioenergetic weapons.

Selected bioenergetics tests

* Kaznacheyev experiments
* Microwave radiation of U.S. Embassy
  * Disease induction
  - Deaths of three U.S. Ambassadors
* Gulf War Syndrome

* Immune system spreading
* Carrier robot test against this author

The body continually receives and retransmits EM energy

- The body may be considered as a dielectric.
- Every part of the dielectric participates in absorption and emission of each photon to and from any point on the surface.*
- Mechanical force effects are also electrical in nature and exchange similarly.
- CEM/EE does not account for precursor engines in the exchange

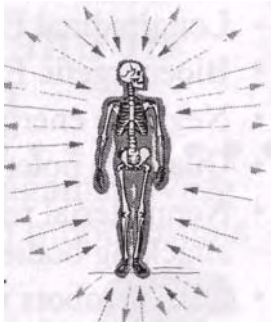

* Reali, G. C, "Reflection from dielectric materials," American Journal of Physics, 50(12), Dec, 1982, p. 1133-1136. The reflected field from a dielectric material is not generated just at its surface but comes from everywhere in the interior of it.

Ramifications (1)

- An EM "dielectric transmission path" connects every part of every cell to every part of the body surface.

* Electrical processes in the body, including deep within the cell and its nucleus, participate in absorption and emission of every photon to and from the body's outer surface (and every mechanical force experience).

- All body electrical processes participate in exchange of precursor engines between body and environment.

* EM emission energy of the body is a conglomerate mix of fractions or all processes and functions ongoing in the body or affecting it, including in every cell. Including the engines.

Ramifications (2)

- Reaction of each photon absorbed on any point of the outer surface of the body, connects through the dielectric transmission path to every part of the body, including to every part of every cell*. Skin absorption connects incident signals and engines everywhere throughout body also.
- Every body emission is participated in by every part of the body, including all cells.
- Body emission "changes" environment, adding EM radiation and engines.
- Body's EM absorption allows environment to change or affect every internal function and part of the body.
- The body's reaction (healing) system continually readjusts, corrects deviations from normalcy, in every cell.

* In quantum physics, part of the photon is localized and part is nonlocalized, reaching even across the universe.

Ramifications (3)

- Total of all impinging external EM radiation upon the body, plus mechanical "special EM" radiation, affects and changes body and all its processes, participating in them.
- Impinging EM radiation engines can be manipulated to either harm or heal the body and any or all of its cells.
- The body must continually overcome these externally-induced EM changes in its cells and processes, to maintain normalcy.
- The poorly studied cellular regenerative system performs the restorative function, which is the fundamental "healing" function of the body.*

*The cellular regenerative system was mostly studied by Becker and a few others. See R. O. Becker, and David G. Murray, "The electrical control system regulating fracture healing in amphibians," Clinical Orthopaedics and Related Research, No. 73, Nov.-Dec. 1970, p. 169-198.

Ramifications (4)*

- EM fields and waves decompose into differential structures of two scalar potentials.
- Each of the scalar potentials decomposes into a harmonic series of bidirectional longitudinal EM wavepairs (LWs). "Engines" (special LW sets) may be inserted and carried.
- Zero vector summations of such internally structured fields make scalar stress potentials with infolded structured longitudinal wave structures and dynamics.
- Correct multiwave EM waves radiated onto body pass or diffuse back through all "emission channels" (portholes).
- Any internal part or function of cells, etc. can be directly affected, changed, controlled, etc.**

---

* See the two Whittaker papers, 1903 and 1904, referenced elsewhere.
** See also Porthole Briefing on website www.cheniere.org, as well as Provisional Patent Application freely given to public domain.

Devyatkov's "information content of the field" (engines by another name)

* Nonthermal millimeter waves.
  - Used in living systems.
  - Sharply resonant actions.
* Hypothesis now a theory.
  - Experiments since 1960s.
  * Confirmed.
* Now basis for
  * Experimental research.
  * Use in medicine and biology.
* New kind of photobiology.

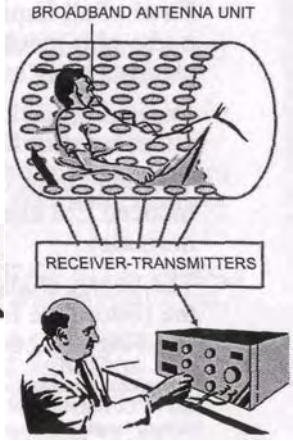

Information content of the field (2)

- Contrary to communications theory
  - Effect increases as frequency *decreases*
  - *Number* of resonant frequencies determines
  - Signature of time-component engines
- For a resonant system
  - Average linear dimension L, wavelength λ
  - V = propagation velocity
  - λ = V/f
- Number of resonant frequencies
  - Increases as λ decreases
  - In proportion to L/λ
- For each resonant frequency:
  - Particular distribution in the system
  - Determines state of the system

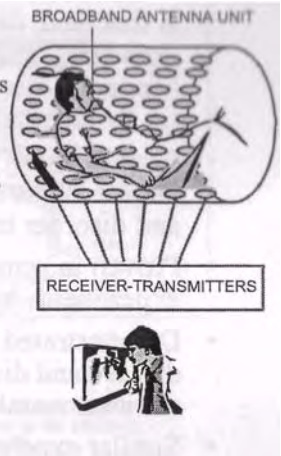

Extended dielectric radiation properties

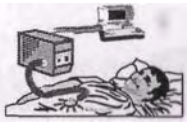

- Every part of body dielectric participates in absorption and emission of each photon at any point on the body's surface.* The energy portion of the photon carries engines.
- The forces are due to ongoing interactions between precursor energy engines and the body's charged matter, at all levels from smallest to largest.
- All the body's internal EM fields, potentials, and waves decompose via Whittaker 1903 and 1904 into harmonic series of longitudinal EM biwave pairs and their dynamics.
- Thus all external EM radiation of the body carries the internal biwave pair dynamics of the total interior, including every cell and every condition.

---

* Reali, G. C, "Reflection from dielectric materials," Am. J. Phvs. Physics. 50(12), Dec. 1982, p. 1133-1136. The reflected field from a dielectric material is not generated just at its surface but comes from everywhere in the interior of it. This results in direct communication of engines between all elements of the body and between the body and all elements of the environment.

Proof that the cellular condition is radiated from groups of cells

- A diseased, damaged, or infected cell culture will and does emit "engines" for its exact internal EM condition, hence the disease or damage "generatrix form" itself (in the internal structuring of the EM radiations).
- Further, these "state" emissions can couple into other targeted cells to produce disease and disorder in them.
- Proven in some 5,000 Russian experiments by Kaznacheyev.

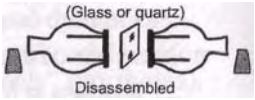

- Demonstrated induction of cellular disease and disorder between EM-coupled but otherwise environmentally shielded cell cultures.
- Similar experiments have been successfully replicated in the West by Reid et al, and by Popp et al.

Kaznacheyev's two-chamber apparatus

(EM Induction of effects of diseases, physical damage, nuclear radiation, toxins)

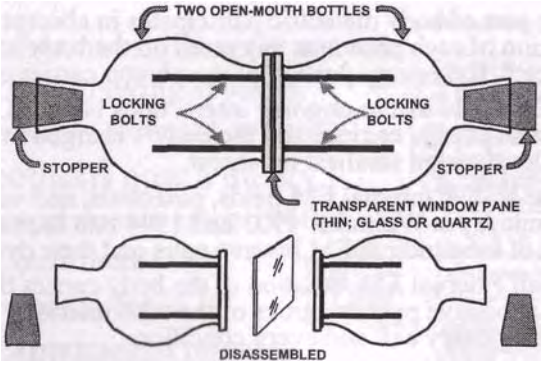

A cell culture is divided into two parts. Cells on the left are then damaged in some selected fashion. With a thin windowglass divider, cells on the right remain healthy. With a thin quartz divider, after a delay the cells on the right begin to die with the same disease, or exhibit the same damage. This directly demonstrates vacuum energy (subtle precursor energy engine) action.

Kaznacheyev's EM induction of cellular disease and disorder

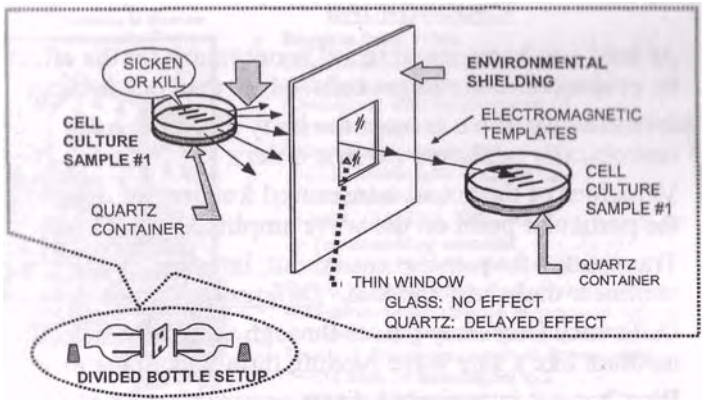

Note: Minimum lattice is one harmonic interval: IR to UV is such a minimum G-lattice. Consider particularly the dielectric pathway in the emitting diseased cells and in the receiving targeted healthy cells.

Another surprising feature of Kaznacheyev's experiments

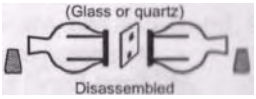

- Experiments do not work if targeted cells are in normal light, such as sunlight*.
- The normal light bandwidth occupies less than a harmonic interval between ultraviolet and infrared
- Hence its difference frequencies also fill such an interval For a set of n frequencies, the number d of difference frequencies is d » n.
- The visible light spectrum "jams" specific internal EM signal inputs through dielectric pathway into the body, turning most environmental signals into harmless warmth.

---

* It has also been shown that if bacteria are killed in the "dark" by UV, then 24 hours (12 generations) later are placed in sunlight, a substantial fraction of the "dead" bacteria will revive. Suspended but maintained mind engines, matter engines, and their coupling engine after physical death are demonstrated. In other words, it demonstrates how living systems can be made and assembled from "parts". The Russian energetics weapons scientists have that full capability today.

Ramifications of Kaznacheyev's experimental results (1)

* At least one harmonic interval is necessary for the effect to be evidenced in the target cells. More than one is better.
* Interestingly, if we assume the body dielectric to be isotropically nonlinear (to first order):
- Velocities of the actual transmitted frequencies depend upon the particular point on the wave amplitude.
- Transmitted frequencies overshoot, interfere, breakup in nonlinear dielectric medium. Difference frequencies do not.
* Difference frequency passes through nonlinear dielectric medium like a sine wave passing through a linear medium*.
- West has not investigated direct communication of EM "hash" difference frequencies in dielectric human bodies.

---

* Owen Flynn, "Parametric arrays: A new concept for sonar," Electronic Warfare Magazine, June 1977, p. 107-112.

Ramifications of Kaznacheyev's experimental results (2)

- A heterodyne signal — at the difference frequency between an input signal and a reference signal — can be enhanced by adding noise* as is well-known.
- Thus the signal of the disorder in the cellular pattern emitted from diseased cells, received by normal cells, can be amplified electronically and rather easily.
* Powerline radiation (electronic smog, a form of noise) thus carries its own amplification mechanism. Eventually the amplification overcomes any squelching by sunlight, etc.
* The Russians promptly (as early as the late 1950s) weaponized and tested these and similar effects.

---

* Dykman, M. I. et al., "Noise-enhanced heterodyning in bistable systems," Physical Review E. 49(3). Mar. 1994, p. 1935-1942.

Microwave radiation of U.S. Embassy in Moscow

BACKGROUND

- Began in latter 1950s
- Discovered on VP Nixon's trip
- Initially thought to be nuclear radiation (Discovered with Gcigcr counter?)
- High level target — U.S. Ambassador
- Guarantees personal attention of:
  - U.S. Ambassador to USSR
  - U.S. President
  - NSA, CIA, D1A, NSC, etc.
  - Top consulting scientists
  - Leading U.S. scientific institutions

- Two U.S. Ambassadors died, another sickened
- Anomalous health changes in personnel, only in zero-field (zero potential gradient) areas!
- Four U.S. Presidents requested Soviets cease
  - Cut from 18 watts/sq cm to 2
  - Then again increased
- No one could understand what was going on
- Aluminum screens were placed over windows
  - Moscow was declared a hazardous duty zone

More on Embassy radiation

- Diseases, health changes statistically significant, not accidental
- Johns-Hopkins scientists measured field radiation patterns inside Embassy accurately.
- Health changes occurred only where fields absent.
- Concluded EM radiation was not the cause.* Their own measurements falsified their conclusion.

- Actually it proved some characteristic of the field-free (stationary) potentials was the cause, due to their 100% correlation. Direct indication of precursor engines.
- Standard electrical engineering erroneously considers the force fields in charged matter to be primary causative agents. They are not; the precursor force-free fields in space are.

* If EM radiation were not the cause, then the outbreaks would have appeared both in field areas and in areas devoid of fields.

Purpose of Embassy radiation

- Struck a high level target (U.S. Ambassador). Three U.S. Ambassadors died as a result. Hundreds sickened or had health changes.
- Ambassador target guaranteed attention of CIA, DIA, NSA, etc. Analysts baffled. Agencies turned to scientific advisors.
- By U.S. reactions taken at the Embassy, Soviets determined with 100% reliability whether U.S. knowledgeable in energetics and whether U.S. had defenses. They didn't. They still only know EE.
- U.S. put up window screens against the "normal EM field" radiations. Ineffective for stationary potentials.
- Proved our ignorance. Valuable intelligence assessment tool to the Soviets for decades.

RADU vs. Radio Free Europe*

- Mysterious radiation device, size of small watch
- Used by Romanian President to dispose of enemies
- Causes rapid growth of cancer in those persons exposed (per General Ion Papeca)
- Bizarre cancer deaths in Radio Free Europe
  - Four top officials
  - Included three successive Directors
  - After death threats from Romanian secret service
- Hence some other nations know of— and have — at least some of this technology.

*U.S. News & World Report, Dec. 12, 1988, p. 15.

Lunev* on Chinese capability (1)

- Lunev has cancer, as do most other GRU operatives that were stationed in China.
  - Lunev is highest ranking GRU defector to U.S.
  - When China and Soviet Union had basic disagreement, Chinese induced cancer in almost all the on-station GRU operatives.
  - Lunev also states China is U.S.'s greatest threat.
  - New alliance between Russia, China, and India.

* See Stanislav Lunev, Through the Eves of the Enemy, Washington, DC: Regnery Publishing, 1998. Lunev was a Colonel in GRU intelligence.

Chinese capability (2)

- China has WMD and superweapons.
  - Nukes, ICBMs, subs, bombers.
  - * Quantum potential weapons.
  - * Negative energy EMP weapons.
  - Scalar interferometers.
  - BW weapons and bioenergetics weapons.
  - Probably well-along on psychoenergetics as well.
- China prepares both to reach accommodation with the U.S. and to be able to destroy the U.S.
- China's fiercely increasing energy needs are stoking the fires of U.S./China conflict, competing for foreign oil.
- China probably aware of the present FSB/KGB plan, use of the Yakuza, etc. Has new alliance with Russia.

Simplified diagram of the immune system

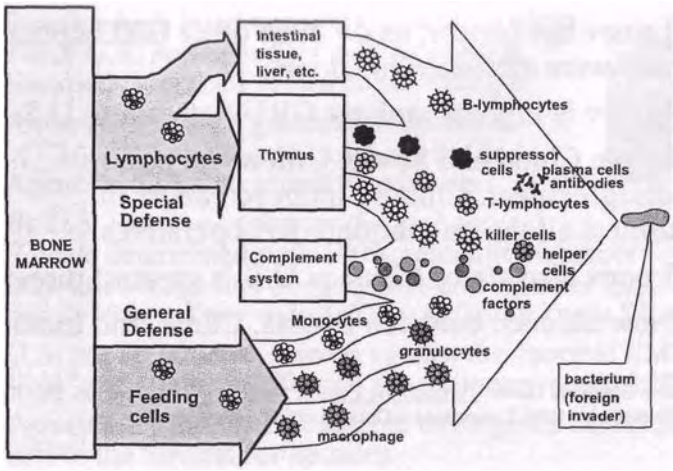

The puzzle of morphogenesis: Lack of knowledge of engines

* "It remains a challenge, however, to understand precisely how the combination of tissue repair mechanisms with reactivation of embryonic programs can generate growth, pattern formation, and morphogenesis in an adult animal."

Quoting Jeremy P. Brockes, "Amphibian limb regeneration: Rebuilding a complex structure," Science. 276(5309), Apr. 4, 1997.

Comment: Cannot be understood until a much better CEM/EE model is used for analysis and understanding, and until knowledge of how the master cellular control system and the cellular regenerative system use such electrodynamics with "engines" to cause forward actions (differentiation) and "anti-engines" to reverse damage (dedifferentiation).

Effects of dynamic structuring of the scalar potential: Engines

"It is now known that the d.c. potentials measurable on the intact surfaces of all living animals demonstrate a complex field pattern that is spatially related to the anatomical arrangement of the nervous system... "
Robert 0. Becker, "The significance of bioelectric potentials," Bioelectrochemistry and Bioenergetics, Vol. 1, 1974, p. 188.

- Comment: Potentials and their complex field patterns possess internal longitudinal EM biwave dynamics (engines) for all nervous system and cellular arrangement and functioning of the entire organism.
- The fields radiated from the body enfold samples of all such internal patterns and signals (all such engines).

Epochal work of Robert Becker

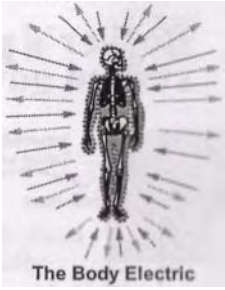

Controlled cellular dedifferentiation and redifferentiation, and the cellular regeneration system

Preliminary remarks

- Medical research and study centers on immune system.
  - Immune system heals nothing.
  - Fights invading pathogens, wins, cleans up.

- Healing and restoration accomplished by the poorly-studied cellular regeneration system.
  - EM system and EM techniques, not drugs.
  - Cannot be understood via standard CEM/EE. Requires higher group symmetry CEM to model it.
- Becker came within inches of deciphering the regenerative system; but CEM/EE failed him. Demonstrated cellular dedifferentiation and redifferentiation by EM means.
  - Nominated 3 times for the Nobel Prize.
  - Ruthlessly suppressed for his efforts. Funds pulled, forced to retire early.

Becker's proposed control system governing regeneration

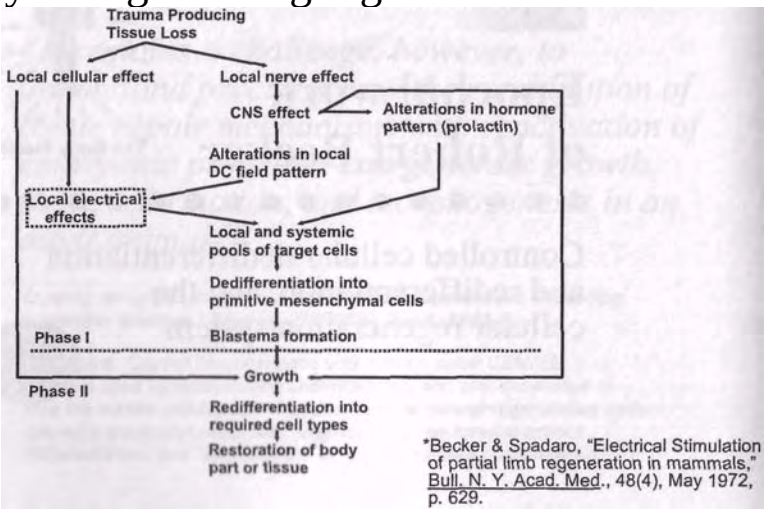

*Becker & Spadaro, "Electrical Stimulation of partial limb regeneration in mammals," Bull. N. Y. Acad. Med., 48(4), May 1972, p. 629.

Becker's theoretical control system involved with response to injury

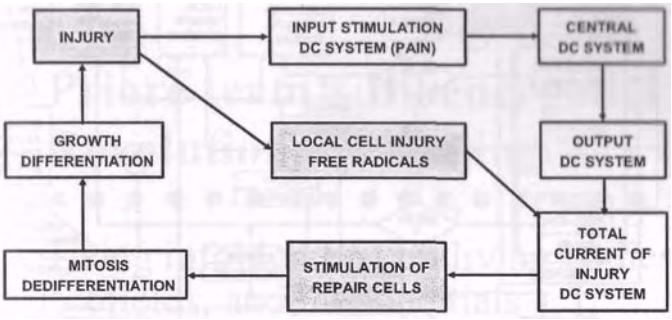

Note: Becker only had conventional EM available, hence was unable to model the inner structuring and inner dynamics of the fields and potentials. So he missed the deeper "engine and antiengine" mechanisms.

*Robert O. Becker, "The significance of bio-electrical potentials," Bioelectrochemistry and Bioenergetics, Vol. 1, 1974, p. 191.

Extending Becker's work

- Becker had only the archaic CEM/EE model available; flawed and grossly inadequate.
  - Insufficient group symmetry.
  - Already eliminates the "infolded" longitudinal wave EM that structurally and dynamically comprises normal EM potentials, fields, and waves.
  - Eliminates supersystem, engines, and anti-engines.
  - The missing internal LW EM is what is manipulated and used by the cellular regenerative system.
- Nonlinear phase conjugate optics not yet developed when Becker did his seminal work; time-reversed EM unknown.

  Successful higher symmetry electrodynamics models — such as 0(3) — have been developed and are available.*

* See M. W. Evans, "0(3) Electrodynamics," Series Editor M. W. Evans, Modern Nonlinear Optics. Second Edition, 3 vols., Wiley, 2001; Vol. 2, p. 79-267

Author's diagram of cellular regenerative system functioning

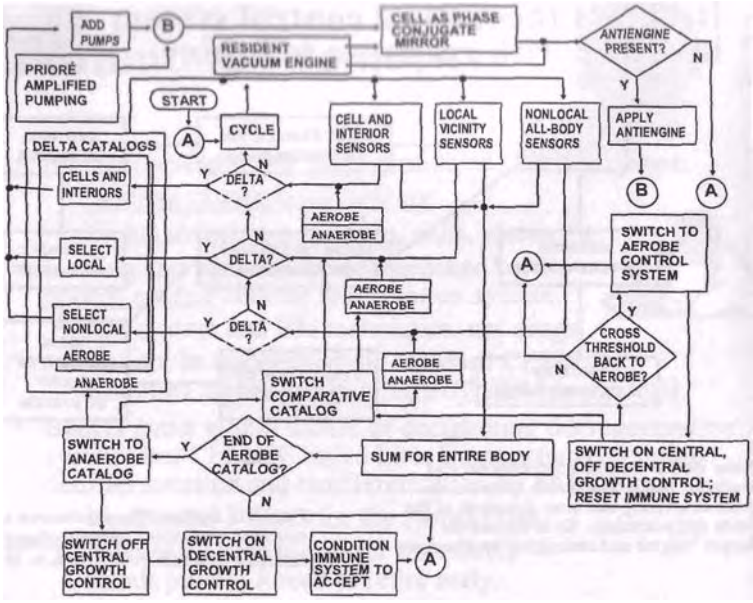

Becker's epochal bone fracture healing

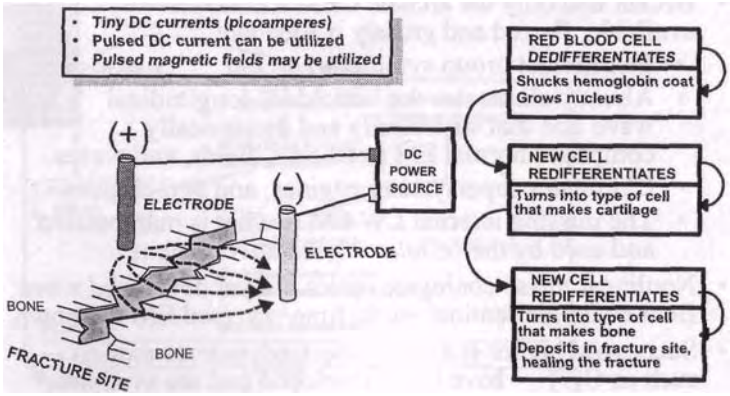

One of the few EM healing modalities approved by FDA and utilized in some U.S. hospitals every year to cure intractable bone fractures.

Priore team's Bioenergetics: Revolutionary healing

Using infolded EM on living bodies, biofields, and biopotentials

Priore's sensational results

- Revolutionary cures of terminal cancers and tumors in lab animals. Replicated in humans.
- Cured dread diseases such as trypanosomiasis.
- Reversed clogged arteries.
- Restored suppressed immune systems.
- Did double-blind tests, proving efficacy. Caused a sensation in French medical community.
- Some eminent French scientists worked on it.
- Spectacular results personally presented to l'Academie by Robert Courrier, head of biology section and Secretaire Perpetuel of the Academy.
- Independent tests by Courrier's personal assistant and by University of Bordeaux verified results

Priore (right) makes a point to Chaban-Delmas, Mayor of Bordeaux

* Many of the Priore team's experiments were done in Bordeaux.
* Antoine Priore patents:
  * "Apparatus for producing radiations penetrating living ceils," U.S. Patent No. 3.368,155, Feb. 6, 1968.
  * "Method of producing radiations for penetrating living cells." U.S. Patent No. 3,280,816, Oct. 25, 1966.
  * "Procedc ct dispositif dc production dc rayonnements utilisables notamment pour le traitement de cellules vivantes," [Procedure and Assemblage for Production of Radiation Especially Serviceable for the Treatment of Living Cells], Republique Francais Brevet d'Invention P.V. No. 899.414, No. 1,342,772, Oct. 7, 1963.

Priore's laboratory and device for treating small animals

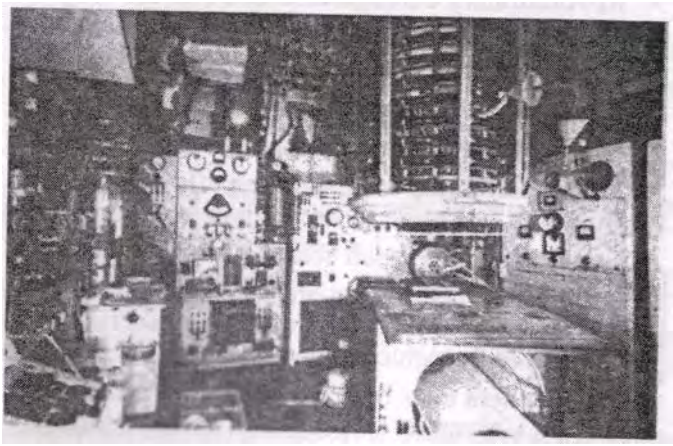

Mechanism of the Priore therapy

- Produced specifically structured scalar potential
  - Some 17 EM frequencies were mixed in a rotating plasma
  - Phase conjugates added by plasma Modulated onto a rippling magnetic field; carried it to every cell and all interior parts
  - Formed scalar potential with inner EM longitudinal pump waves
  - Hyperspatial pumping of cells/parts as pumped phase conjugate mirrors (PPCMs)
- Each disease has its "disease-specific" vacuum engine.
- Amplified anti-engine created by the LW pumping.

Mechanism of the Priore therapy

- "Inner EM" pumping with longitudinal EM waves created amplified and specific anti-engine
- Amplified anti-engine rapidly reversed (dedifferentiated) cells/parts back to normal state
  - Cells returned to control by cellular control system
  - Restored cellular control system to full former functioning
- Scrubbed out the cumulated precancerous state
- Eliminated "shadow" disease state
- Restored the immune system to previous normal functioning
- No excessive trauma to treated animal

Block diagram of Priore's healing (regenerative and time-reversing) process

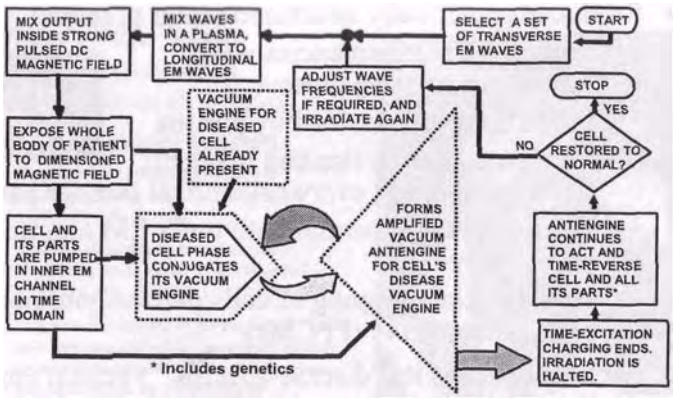

- The damaged or diseased cell has (1) normal engine and (2) delta disease engine.
- Making antiengine for both, and irradiating cell with it, time-reverses the cell and gradually erases the delta condition, healing the cell.
- This is the body's own cellular regenerative mechanism, which Priore amplified.

Pautrizel's proof of time reversal of the stricken cells back to a previous state

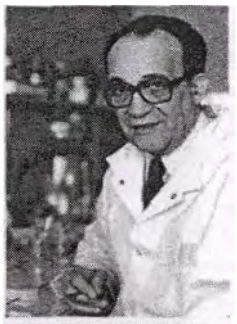
PROF. RAYMOND PAUTRIZEL
(Renowned Parasitologist)

* Pautrizel compared identical treatment of immature rats with immature immune systems, and mature rats with mature immune systems.
* Treatment restored the damaged mature system back to full mature functioning. It then recognized and dispatched the pathogens.
* Treatment restored the damaged immature system back to full immature functioning, unable to cope. The pathogens promptly reinfected and killed the immature rat.

Pautrizel's proof of time reversal of the stricken cells back to a previous state (2)

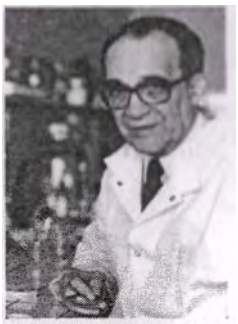

PROF. RAYMOND PAUTRIZEL
(Renowned Parasitologist)

- The lesson: The body is indeed returned to a previous physical state, or dedifferentiated back along its previous differentiation pathogenic path through time.
- Pathogens themselves not killed by the treatment, but by restoring the ability of the immune system to recognize and destroy them.
- Only the previous ability of the immune system is restored by the process, which is a method for controlled biological dedifferentiation (time reversal of the stricken cells).

3-Stories high treatment facility

Priore's large plasma tube treatment facility for humans.
Results were duplicated in human experiments,

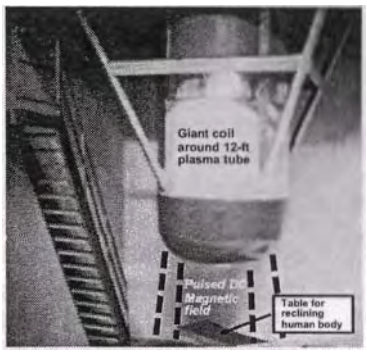

- At the end of the project, Priore had developed a large unit to treat humans.
- A few were treated.
- Cures replicated what had been done in lab animals.
- The massive size of the unit and long treatment time (hours) made the process bulky and very inconvenient — and very expensive.
- We proposed a way to do it with a suitcase-sized unit and a treatment time of two minutes.
  (See Porthole Briefing, www.cheniere.org)

17-foot Priore plasma tube

Used in large machine (3-stories high) to treat a limited number of human patients

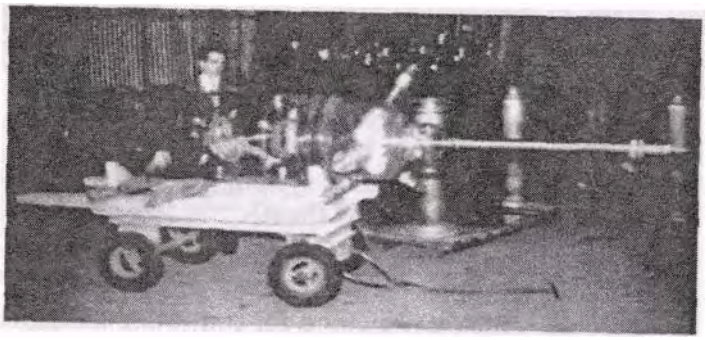

Plasma tube converts transverse EM waves to longitudinal EM waves, impressing them inside a magnetic field in a huge coil around the tube. The "engine-carrying" magnetic field then penetrates the targeted living body down to atomic nuclei.

Some peculiar results by the Priore team

- Once a rat is cured of a particular disease:
  - A single drop of blood from the cured rat, injected into another rat stricken with same disorder, would result in the injected rat getting well slowly.
  - Ability to transfer immunity and healing in the extracted drop of blood gradually decayed over period of a few weeks.
- Even the fields and potentials in the blood had been altered internally, in the treated animal.
- Injected animal's cellular regenerative system could time-domain pump over the entire body, everywhere reducing the delta between that injected drop of blood now the rat's own, and the rest of the blood in its body.
- Shows anti-engines in molecular potentials of the blood of the cured rat, and diffusion of this antiengine pattern in EM exchange with the environment as time passes.

Regeneration in a strain of rat with part of its immune system missing

- In mammals, the immune system plays a role ill reducing the regeneration capability, compared to that of more primitive systems.
- In a strain of rat where that "suppressive" part of the immune system is missing, the regenerative capability is dramatically increased.
  - Can regrow cut away sections of tail.
  - Regrows plug cut out of ear.
  - Reconnects severed optic nerve.
  - Partially restores severed spinal cord.

- The suppressive "delta" engine of the immune system, operating simultaneously with the underlying primitive regenerative engine, sums to the modern much-reduced regenerative engine in the mammal.

Implications to therapeutic healing

• •

Controlled cellular dedifferentiation and redifferentiation, and the cellular regeneration system

Bombshell: Amplified EM healing

- Amplified disease anti-engine quickly reverses disease.
- Unified field theory approach and supersystem analysis has broken the basic mechanism for healing itself.
  - The Sachs unified field theory applies and has been partially fitted.
  - Evans-Vigier O(3) electrodynamics can properly model it, including both the internal and external electrodynamics and effects of engines.
  - * Direct engineering development is now possible.

- Experimental proof of results obtainable already exists in the French hard medical literature.
- A medical revolution is in the offing. Must change from century-old mindset against EM healing, and discover higher group symmetry EM, precursor engines and anti-engines as used by living biological systems.

Potential Medical Applications

- Non-traumatic cancer treatment
  - Cure cancers and leukemias of all types
  - * Remove pre-cancerous state; prevent promotion.
  - * Restore damaged system
- Treat and cure infectious diseases
- Cure AIDS and restore immune systems
- Defense against biological warfare
  - Quickly cure virulent diseases from unknown agents
  - * Treat, cure BW victims after symptom developed
  - Both civil populace and armed forces
- Dramatically lower health costs
- Rejuvenate the aged

An observation for the future

- When the science of precursor engines is developed, physicians will be able to tailor these engine combinations to restore severed human spines, regrow severed limbs,* etc.
  - They will also be able to direct the body's "normal growth" to reduce and direct birth defects, genetic defects, mental defects, etc.
  - Aging can and will also be reversed.

*Such capability has been partially shown in lab animals by Becker and others. E.g., see R. O. Becker and Joseph A. Spadaro, "Electrical stimulation of partial limb regeneration in mammals," Bull. N.Y. Acad. Med. Second Series, 48(4), May 1972, p. 627-64.

A very important fact

- The two engineers who worked directly with Priore, and who built his successful treatment machines, are still alive.
- A well-funded research program with these engineers could reproduce working machines and again demonstrate revolutionary results achieved by Priore, Pautrizel, etc.

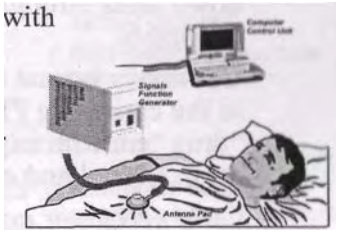

- Once the results are reproduced, this shows the machines do initiate revolutionary healing.
- The government scientific community could then have a very rapid Manhattan-type program to develop portable EM treatment machines, capable of saving millions of U.S. lives in coming terrorist BW attacks.

To treat and save mass casualties: Portable unit urgently needed (1)

- A small, portable, relatively inexpensive treatment unit, not requiring plasmas etc.
- Treatment in 2 to 5 minutes rather than 2-hours. Simple treatment application, almost anywhere.

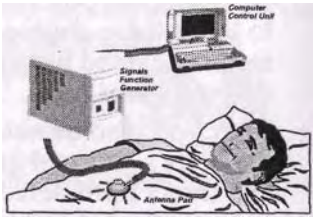

- Effective in advanced stages after symptoms emerged, as well as prior to emergence of symptoms.
- Effective against a wide array of illnesses.

- Development difficult; use is easy. High school student can be trained to use it in 30 minutes.

To treat and save mass casualties: Portable unit urgently needed (2)

- Unsuccessfully urged crash program to develop, flood down units through emergency organizations in great quantities.
- Obviously is total anathema to the entire Big Pharmaceutical "drug 'em with expensive drugs" cartel and community.

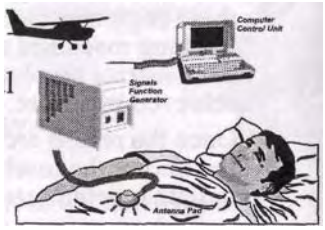

- Once precursor anti-engine treatment is out of the genie's bottle, medical science will be dramatically altered.
- Could save millions of those future Triage Category 4 (black) patients who presently would be allowed to die.

Proposal to DoD, USAF, NIH, CDC, etc. in 1998

• In 1998 we proposed that U.S. government undertake crash Manhattan-style project to develop small, portable EM precursor engine treatment units for mass casualties

- Extension of proven Priore mechanism.
- Develop in 2 years, at a cost of $40-100 million.

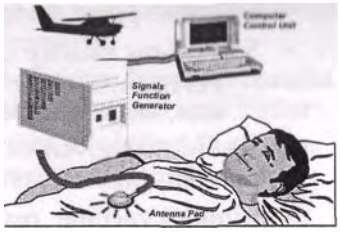

- First generation devices could save 70% of mass casualties. Second generation devices could save perhaps 90%.
- Patient treatment time 5 minutes. Produce thousands, flooded down to hospitals, fire stations, police stations, emergency crews.
- 30 min. training to learn to set controls, etc.

Portable unit for rapid, effective treatment of mass BW casualties

- Two blankets have antennas in them.
- Uses an advanced but simple concept.
- Eliminates plasma tub) mixing etc.

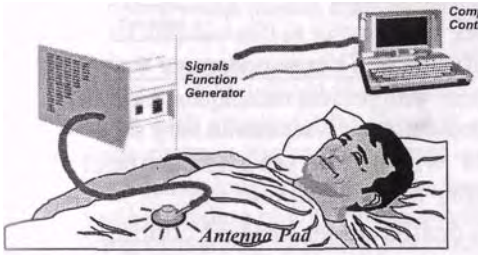

- Computer-controlled complex signal structure.
- Irradiation for 2 minutes.
- Three such treatments one week apart.
- Unit can be made self-powering on vacuum energy.

Anthrax spray attack (1)

- OTA study: Some 200 pounds released in a spray, on calm night over Washington, D.C. could result in from 1 to 3 million casualties. Three times that, if immune systems spread by QP weaponry

- Symptoms usually in 2-10 days
  - Flu-like symptoms; then 1-3 days later, shock and breathing problems cause death in up to 100%
- Antibiotics given early (before symptoms) can prevent infected persons from becoming ill

- Limited vaccine, reserved for military
- Portable bioenergetics treatment device could save 70% or more after symptoms already evidenced

* Multiply this number by at least threefold if immune systems are spread by QP.

Anthrax spray attack (2)

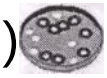

- Highly lethal when spores inhaled.
- No present effective treatment at all unless treatment begun immediately.
- After symptoms appear, little or no chance to survive regardless of present treatment or not.

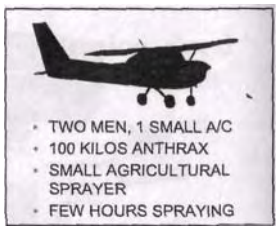

- Most casualties will fall in Triage category 4 (black).
  - Useless to treat them with present techniques: likely die.
  - Must conserve medicines and vaccines in very short supply.
- Category 4 patients will just be set aside without treatment, and simply allowed to die.
- Millions of certain deaths under present conditions.
- NIH and other institutions totally uninterested.

Smallpox: highly contagious, no known cure, little vaccine

- Killed more than 500 million people in 20th century before eradicated in 1977; vaccinations ceased in 1980. (*A few million doses of vaccine left.)
- Russians kept pathogen, developed new and virulent strains, sold to terrorists.
- Symptoms appear in about 12 days: fever, headache, nausea. Rash similar to chickenpox appears, turns into hard blisters.
- Highly contagious, kills one-third of its victims. If immune systems spread, will spread easier and faster and kill two-thirds of its victims.
- If smallpox unleashed in any major city on earth, will eventually kill 2 billion persons, or about 1/3 of the human species — unless radical new cure is found and utilized.
- Could be contained by portable bioenergetics.

Urgent U.S. need for portable bioenergetics treatment machine*

- Five nations have developed quantum potential weapons using Bohm's hidden variable theory of quantum mechanics.
- Can induce disease engines in matter or bodies at a distance.
- Have developed "spreading" of immune systems in a targeted populace (cleverly tested in Gulf War against U.S. troops)
  - Cocktail mix of disease engines for 2 dozen different diseases.
  - Targeted area's human immune systems react to these engines when they are still in virtual state, just below quantum threshold.
  - Spread immune system's resources "thinned" across response to two dozen shadow diseases at once.

- Then hit with a terrorist BW attack; spread immune systems are overwhelmed easily and quickly.
  - Yield (casualties) of the attack is increased by factor of 3-5.
  - Some spreading of U.S. immune systems accomplished and is being maintained for reimplementation.

---

* Considering secret involvement of clandestine superweapons

Additional advantages

- Can be developed in a crash program in 2-3 years.
- After sunk costs, projected cost per unit in mass production is less than $150,000.
- Can be produced by the thousands.
- Large numbers of emergency operators easily produced.
- Emergency training could be by watching a 30 minute film, then performing one supervised group practice run.
- First generation equipment can save some 70% of the coming mass casualties from anthrax etc.
- Basis proven in France in thousands of lab animal experiments, documented in scientific literature.

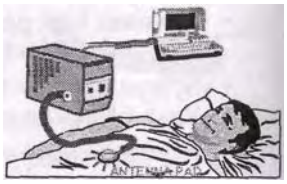

Outcome of 1998 proposal

- No one had any notion what we were talking about, nor did they care one whit.
  - At NIH, we never got out of the "policy" section.
  - Seeing Gulf War Syndrome, NIH shipped package to DoD.
  - Uninterested in a scientifically proven method for revolutionary cure of cancer and infectious diseases.
- Apparently no one checked a single French scientific reference. Not a single scientist called to discuss the mechanisms, quality of the proofs, French literature, etc. Absolutely no interest whatsoever.
- But exercises and studies show we are in horrible shape as far as effectively treating mass casualties.
- We are actually much worse off than the studies show, due to QP augmentation by immune system spreading, EM BW, and carrier robots.

Weapons applications (already developed or in development)

- EM engines for any disease or disability
- Delivered by normal EM signals, QP weapons, robots, carrier robots.
- Attack entire populace or any fraction desired.
  - Induce diseases desired.
- "Spread" targeted immune systems so BW attacks by international terrorists have extraordinary success.
- Render vaccines etc. ineffective.
- Cripple or destroy a populace slowly or with great speed, as desired.

Shadow disease state and immune system reaction

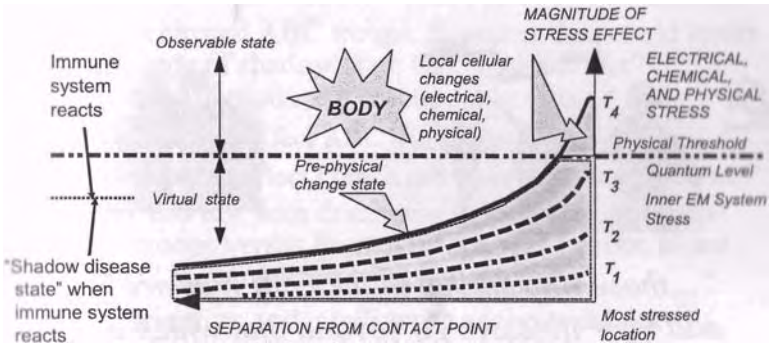

- The shadow disease state is that structured virtual state level of the promoting disease engine template, at which the immune system reacts before disease is observable.
- Eventually one will have a yearly exam, and then a quick treatment to remove all shadow state conditions prior to actual disease development. Will include aging rehabilitation.

Spreading (thinning) the immune system's ability to meet a new pathogen

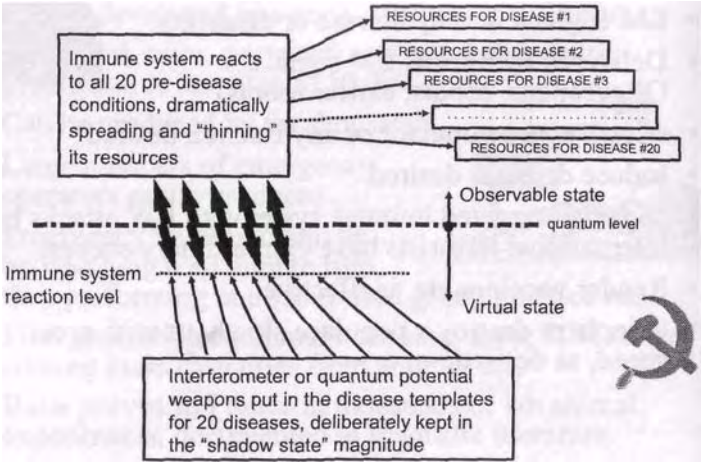

Gulf War Disease: Finding and statement*

" ...those who served in the Gulf War are ill and their illnesses go beyond that which is explained by stress or psychiatric diagnosis. "

---

* Research Advisory Committee on Gulf War Veterans Illnesses, 2002

Gulf War Disease (1)

- KGB test of closely controlled immune system spreading by QP weapon with "cocktail mix" in shadow state.

  - Americans, British, Canadian (ABC) troops were given harsh mix of inoculations; French troops (and native populace) were not.
  - ABC immune systems were temporarily depressed for some months by the inoculations, but not French (or native populace) immune systems.
- Shadow state effects in innoculation-lowered ABC troop immune systems much more pronounced than in French and natives.

Gulf War Disease (2)

- For vaccinated ABC troops, Russians thus could lower magnitude of shadow state QP "cocktail mix" necessary to produce a reactionable effect.*

  - Would still affect ABC troops' immune systems
  - * Would not affect French and native immune systems.
- Using this test with dramatically different effects in ABC troops versus French troops was a probe to see if the U.S. recognized what had happened.
- U.S. scientists and intelligence analysts did not recognize it at all, and still do not understand it.

---

* The reader is reminded that charged particles negentropically order and integrate coherent virtual state energy patterns (precursor engines) to observable state EM force-field energy patterns (engines).

Gulf War Disease (3)

- Lowered ABC immune systems still form a statistical distribution.
  - KGB further lowered magnitude of shadow state cocktail mix, so only a percentage of ABC immune systems would be permanently affected.
  - With 45 years (9 generations of weaponization) experience in disease induction, this was simple for Russian bioenergetics scientists.

* A percentage of ABC troops' immune systems were spread and disabled; no effect on French and natives.

- Opportunistic diseases such as mycoplasma did the rest.

* Veterans who became ill because of their spread immune systems developed "cocktails" of diseases.

Gulf War Disease (4)

- Gulf War Disease thus is a cocktail mix of real opportunistic diseases; several such as mycoplasma being prominent.

* French troops and natives were essentially unaffected.

- A deliberate probe, so Russians could see if U.S. understood QP weapons and immune system spreading. They didn't and they don't. NIH doesn't want to hear it.

  See our expose on exchange of EM radiation between environment and deep interior of human bodies.

- QP exposure charged the veterans' bodies with the cocktail mix engines. Exchange of body fluids, or prolonged exposure to body emanations, could induce symptoms and diseases in some wives and children.

Indications of testing immune system spreading

- Subsequently, immune system spreading was tested in entire U.S. very carefully and at low level.
  - Various diseases such as necrotizing fasciitis used.
  - Signature is an absence of disease vector "path" record, but simultaneous statistical distribution of cases appearing throughout entire U.S.
  - Again, a probe to see if NIH and the U.S. had their heads out of the sand. They didn't, and they don't.
  - Some diseases such as mad cow disease in Canada and Europe almost certainly have KGB "steering" and "augmentation" effects. Avian flu or something similar could be the next test.

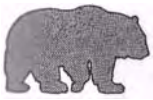

Conclusions

- Over several decades a strange strategic set of "combination" BW attacks developed and prepared.
  - BW strikes on the U.S. by any group, will likely be augmented by FSB/KGB using QP spreading of U.S. immune systems.
  - Can gradually raise the damage with other diseases such as mad cow disease, SARS, avian influenza, mycoplasma pneumonia, etc. Or, e.g., with normal flu, for epidemic.
  - Adaptable for rapid massive destruction or gradually escalating destruction. Destroys the U.S. either way.
- Combinations provide an "over-the-threshold" capability to insure full strategic destruction of the U.S.
- NIH and U.S. government unaware.

(SLIDE BRIEFING CONTINUED)

PART F: Psychoenergetics and Its Weaponization

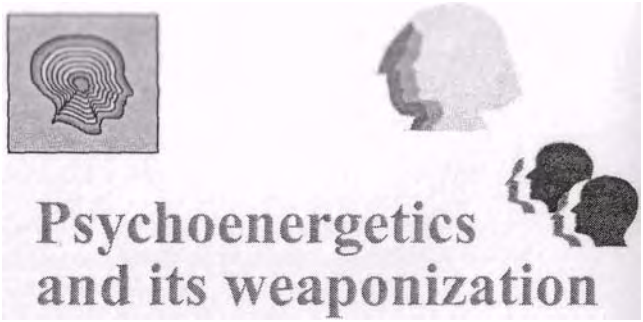

Use of infolded precursor EM engines against mind and mind operations

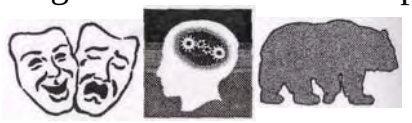

Section contents

- Intelligence statement.
- Basic psychoenergetics.
- Model of living system.
- Mind levels and mind/body coupling.
- LIDA machine and tests.
- Personality mechanism.
- Model of life and death.
- Biogenesis.
- Captains Button, Svoboda, and Hess.
- Present mind control and new psychoenergetics.

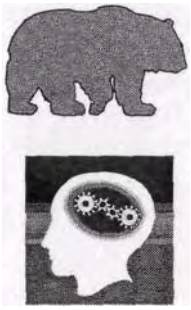

U.S. Intelligence statement on Soviet Psi research*

- Sooner or later, Soviets may be able to:
  - Know contents of documents
  - Know troop and ship movements
  - Know installation locations and nature
  - Mold thoughts at a distance
  - Disable equipment at a distance
  - Kill persons at a distance
- Comment: These capabilities and more exist now
- Soviet psychoenergetics is a. physics, not Western parapsychology as commonly believed

---

* Controlled Offensive Behavior - USSR (U).
DIA Report ST-CS-01-169-72, July 1972.

A statement necessary for Western culture and scientists

- When God created life and living systems, He also created the process for making life and a living biological system.
- The process is still there and it exists as a process in and of this 4-spatial world.
- Once the process is discovered and modeled, technology can be developed to apply the process at will.
- So scientists can scientifically study the process and develop the technology to use it.
- Can make a living mind and living biological system, and tailor it to form and whatever behavior is desired.
- That superweapon science is called psychoenergetics.

A major Western problem (1):

Deep cultural bias against engineering the creation of life as a special electrodynamics

- Debate endlessly, deride experiments, etc.
- No definitions for intelligence, consciousness, life, living system.
- Do not understand mind dynamics as special EM dynamics on the time axis, using time-polarized photons and EM waves from quantum field theory.
- Have many viewpoints of living mind/body system; most favor materialism's "meat computer" notion.
- Very fuzzy on unconscious vs. conscious, and interrelation of the two.
- Do not understand "unconscious" mind is multiply conscious. A half century behind FSB/KGB psychoenergetics scientists.

A major Western problem (2):

Deep cultural bias against engineering the creation of life as a special electrodynamics

- Notions rather 3-spatial and mechanical. No notion of:
  - Mind operations as electrodynamics on the time axis (time-polarized photons)
  - "Engines" and "precursor engines" concepts.
- No apparent use of higher group symmetry electrodynamics in biology; but just standard EM.
- Some good experiments and projects nonetheless. Aleksandr has proposed five axioms of consciousness, which is at least a decent beginning.
- Sometimes must state to Western scientists: "When God created life, He created the process for creating it. That process exists and can be utilized. "

Choice of fundamental units is arbitrary (1)

* The choice of fundamental units in one's physics model is completely arbitrary.*

* A viable physics model can be made using only a single fundamental unit, and it has been done.
* E. g., choose the joule (energy) as the only fundamental unit.
* All other "fundamental units" are functions of energy alone.
* Time itself, e.g., becomes a pure function of energy.
* Hence can speak of "extracting energy from time".

*E.g., see discussions by Jackson in his Classical Electrodynamics. 2nd and 3rd editions

Choice of fundamental units is arbitrary (2)

• In a model using the joule as the only fundamental variable, time itself becomes a function of energy.

- One function of energy can be changed into another. Energy can neither be created nor destroyed, but only changed in form.
- Time can be changed into energy and vice versa. And so on. Space (L^3) also is purely a function of energy, and energy can be extracted from it.
- Time has correlates to any energy entity, such as mass-energy, momentum, "body", field, photon, etc.
- Since EM energy occurs in flows which can be engineered, everything becomes engineerable.

Forefront Western view

* Igor Aleksander, emeritus professor, senior investigator in neural systems at Imperial College, London:

* "When it comes to consciousness nobody really understands what they are talking about. "
* Some researchers advocate consciousness is an illusion.
* Strident dispute occurs over what is precisely meant by "machine intelligence". Can machines develop intelligence, or are they clever programs that only "mimic"?
* Others insist humans are only clever machines; brain is a "meat computer" with the mind itself just an illusion.*

---

* Aleksander predicts that in the future machines will themselves at least claim to be conscious. In his view, the machines are already beginning to "awaken". Some others in the forefront of mind and consciousness research share his view

Basic psychoenergetics

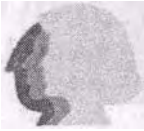

- Mind: "Sophisticated EM engine" in the time domain.*
- Mind operations on time-axis have coherent virtual-state projections into 3-space body (brain). Charges integrate.
- Integration of coherent virtual 3-space changes, correlated to mind's intent, forms coherent, real 3-space EM inputs to brain and nervous system.
- Movements of body elements give reverse rotational projections from 3-space to mind.
  - Coherently integrated to perceivable state to give feedback and "personal identity".
  - * Engineerable with higher group symmetry EM.

---

* There are four photons in quantum field theory: Two transverse, one longitudinal, and one time-polarized. So there do exist photons (and therefore electromagnetics) active on the time domain. Combined longitudinal and time-polarized photons observed as a spike of scalar potential (i.e., as a voltage spike).

New view of a living biological system (i)

- The mind and its operations is an engine in time domain.
- The body and its force functions is an engine in 3-space.
- The mind-body linkage mechanism is an engine in pliant mass with rotations in 4-space. Thus the "triad system".
  - All three engines can be engineered at will with higher group symmetry electrodynamics. Each has its precursor.
- The engines can be individually made, recorded, stored, joined, activated, etc. to form real living biosystems.
- Living robots can be formed (including at a distance) by insertion of triad precursor systems in pliant matter (electron gas, plasma, Whittaker interior of EM signals).

New view of a living biological system (2)

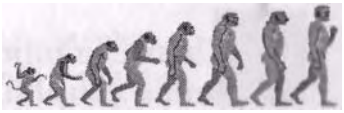

- The "life-forming process" given by the Creator is still present and available!
- Any type of living system is engineerable.
- One can make a toaster, a napkin — any bit of mass — alive. Some specialists already feel that "machines are awakening".*
- Energetics scientists have made living nonmaterial robots that can reside in any bit of matter and adapt its charges to perform the functions of its "body".

---

* For a thought-provoking article, see Igor Aleksander, "I, computer," NewScientist. 19 July, 2003, p. 40-43.

Delay between mind-body and body-mind coupling mechanisms (1)

- A mind change (dynamic) on the time-axis creates a virtual projection component in 3-space (in the associated body).
  - * "Intent" involves coherent "continued" mind changes, producing continual coherent virtual projection components in the 3-space body.
  - Coherent serial summation (integration)* in the body produces delayed observable photon changes in the 3-space body, correlated to mental intent.
- Hence the coherent mind intent produces observable but slightly delayed body changes in nervous system.

---

* The coherent summation process is provided by charges q absorbing virtual changes, coherently integrating them to quantum level, and re-emitting observable photons. Hence psychoenergetics cannot be understood without the solution to the source charge problem, accomplished by the present author in 1999 and published in 2000 and subsequently.

Delay between mind-body and body-mind coupling mechanisms (2)

- A body-change in 3-space creates a virtual projection component on the time-axis, in the associated mind.
  - * Coherent body changes produce coherent "virtual state" projection components on the time-axis, in the mind.
  - * Coherent serial summation (integration) produces perceivable, delayed (time-polarized photon) changes in the mind, correlated to body responses.
  - * Hence the coherent body responses produce perceivable but slightly delayed mind changes.
- The total mind-to-body-to-mind delay/feedback loop creates the "sense of self" and sense of "my body".

Velocity of an object involves rotation out of 3-space toward the rime dimension

* Necessary in order to understand the mind-body coupling mechanism.
* Body dynamics initiate on the L axis; mind dynamics initiate on axis T.

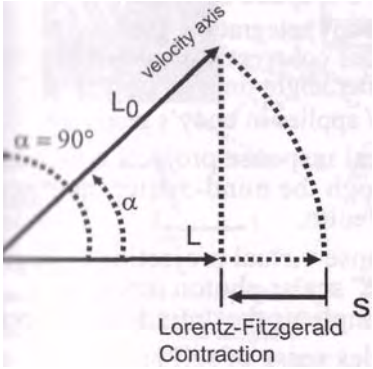

- An object moving with velocity v < c along axis L has rotated from 3-space axis L toward the time dimension t by a small angle a.
- The object's "projection" back into 3-space, on axis L, is shorter, providing the Lorentz-Fitzgerald contraction.
- When velocity v = c, a full right-angle turn has been made, and the object has "lost" its projection along its direction of motion (axis L).
- Hence to the external observer it appears as a transverse 2-dimensional plane moving along L at the speed of light; in short, a photon or a light wave.

"Velocity" of a temporal change involves rotation, out of the time axis into 3-space

- Necessary in order to understand the mind-body coupling mechanism.
- Mind dynamics initiate on the t axis; body dynamics initiate on axis L.

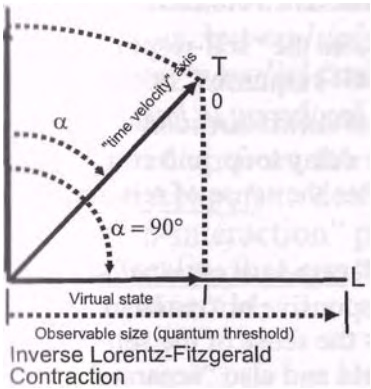

- Temporal photon's "velocity" (analogous to v < c) along axis T has rotated slightly away from time axis T toward 3-space axis L by small angle.
- Projection of the rotation, back into 3-space, on axis L, appears in the virtual state on axis L. Call this the inverse Lorentz-Fitzgerald contraction.
- When temporal velocity is analogous to v = c, a full right-angle rotation has been made, and the object has "lost" its projection along its temporal direction of motion (axis T).
- Integration on axis L of coherent serial changes of such temporal "mind" rotations produces real, observable photons on L, that are direct analogies of "mental intent".

How personality, awareness, and sense of being in the world are established (1)

- Time-EM mental intent projects virtual EM changes into the mind-matter interface's 3-space body side.
  - Via charge negative entropy integration, continued coherent intent projections coherently integrate into observable EM input, after slight time delay.
  - Servomechanism theory applies in body's response.
- As body responds, physical response projects coherent virtual changes back through the mind-matter interface and into mind (the time) realm.
- Continued coherent response virtual projections integrate into "mentally observable" scalar photon input, after slight time delay. This completes the "mind-body" loop.
- Time delay in loop provides sense of self and conscious awareness of the body and of the physical world.

How personality, awareness, and sense of being in the world are established (2)

- Meanwhile, other physical universe change projections arrive in time domain which don't coherently integrate.

* Coherence to intent separates the "self-responses" of the body, from the "non-self-responses" of the external physical world which are incoherent to intent.
* The delay in the complete delay loop, and comparison of response to intent, creates the sense of self and living ("my" body, "my" mind).
* Comparison to the "self s" response physical world (the body) and the non-responsive or "external" physical world perceptions, creates the sense of the self being both "in" the physical world and also "separate" from it.

Mind-body coupling mechanism at work

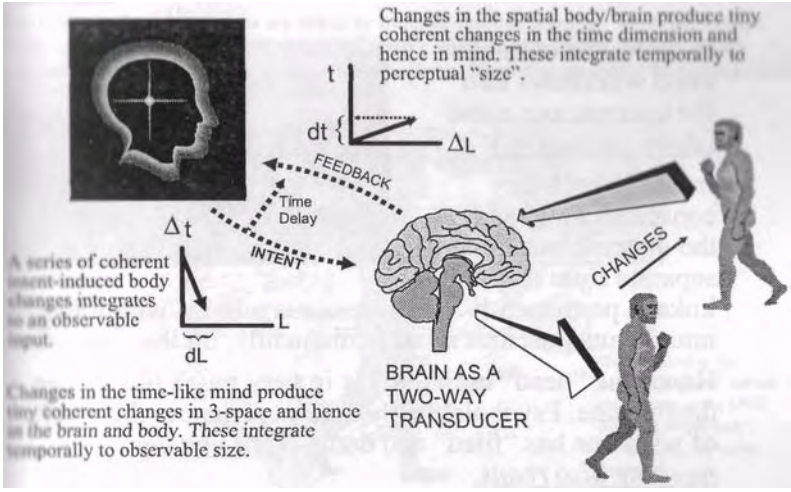

Mind levels and life and death (1)

- The conscious mind is a serial processor.
- The unconscious mind is totally conscious, but multiply so. It is a massively parallel processor.
- The conscious mind is a "periscope" projected up from the unconscious (up periscope!) to deal with the "photon-interaction" perceived serial reality that constitutes the physical world.

Mind levels and life and death (2)

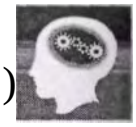

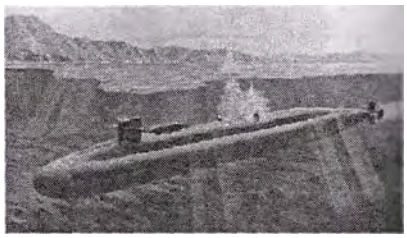

- In sleep, the conscious mind withdraws into the unconscious mind (down periscope!).
- In death, both the conscious mind and the unconscious mind separate from the body linkage permanently. The conscious mind is withdrawn into the unconscious mind permanently, on the time axis.
- Hence the "dead" individual is in very much like a deep dream state. Psychologically, one experiences the result of what one has "filed" and done. What one has sown, now one also reaps.

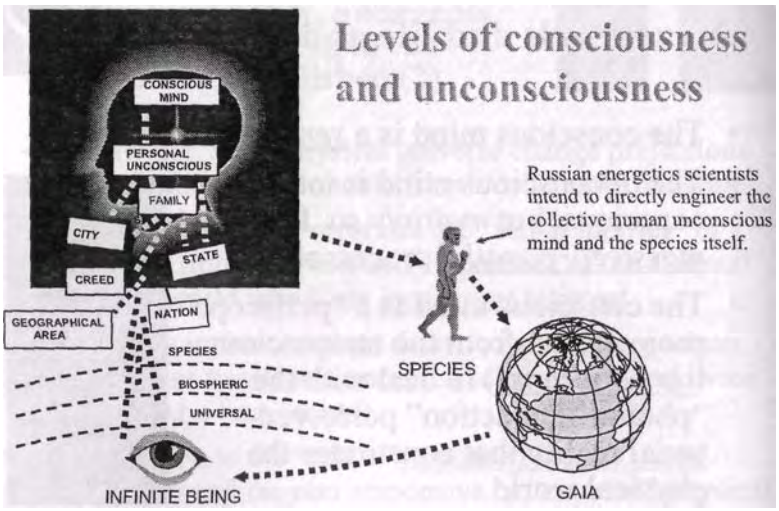

Mind levels are subject to engineering, attack, control, change, and destruction by higher group symmetry electromagnetic (psychoenergetic) technology.

A living biological system (psychoenergetics view)

The body's cells and their parts are linked by a mutual quantum potential. Mind and thought (from a mindworld) occupy the internal SW biwave structure of the QP to that body, being continually disconnected and reconnected by the photon interaction generatrix for the flow of time.

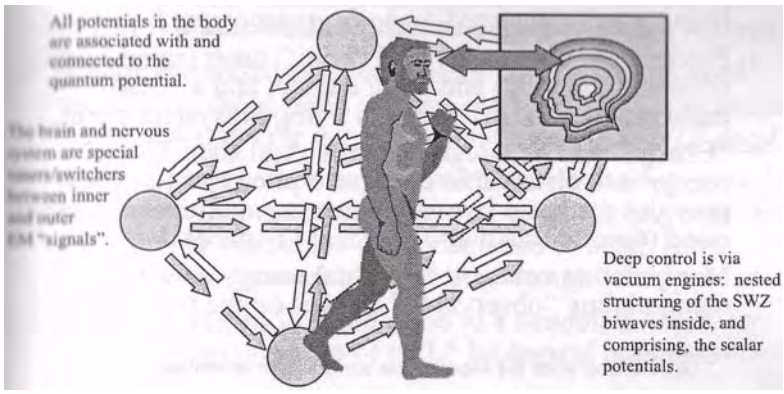

Mind levels and life and death (3)

- Each "dead" mind still exists in its unconscious, which further exists in the collective human species unconscious on various levels — all in time domain.
- Death and life are therefore directly connectable (both exist in the same time)
- Dead (disconnected) minds can be engineered (in the time domain) as well as living minds connected to functional physical matter "bodies".
  - A mind-engine on the time domain, without a connected body-engine in 3-space, is what the "death state" is. However, the conscious mind portion is withdrawn into the unconscious portion.
  - The collective human species unconscious can in theory be "engineered", as can the biospheric collective unconscious for all species, etc.

Mind levels and life and death (4)

- Present biogenesis experiments occur in a nonliving disconnected mindworld environment as well as in a living mind-connected-to-body environment. *
- Produce the proper physical "body" tuner (mind-body coherent coupling) and body engine, and a "dead" mind reconnects, producing a living biosystem again.
- "Charge" and its integration of virtual state 3-space energy into observable correlated photons in 3-space provides the basic two-way intercommunication between mind (time) domain and physical (3-space) domain.
- Manipulating coherent L^3 virtual energy entities is manipulating "observable" entities on the time-axis.

* I.e., it follows since the experiments occur in time as well as space.

Life and death: Energetics perspective (1)

* A mind engine, coupled to a mind-body link engine and a body engine functioning in matter, is a living organism.

* Mind (time-engine) in collective species unconscious but separated from a functioning mind-body link and body engine in matter, is L^3-dead (separated from body) but still electrodynamically active in the time domain.
  - Still "living" (existing and functioning) in the time-domain, it exists in the time domain as time-polarized EM dynamics.
  - The "dead" or bodiless functioning mind can be recoupled to a body-engine, by a suitable mind-body coupling engine.

* Thus one can directly engineer a living biological entity, including building its mind-engine, its body-engine, and its mind-body coupling engine.

Life and death: Energetics perspective (2)

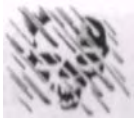

* All mind engines from every living system ever in the universe, pervade all spacetime since potentials do and did so and they reside in the 4-potentials. Inner structuring of EM is a vast world having so-called "Akashic records."

* We are immersed in a completely "living though dead" universe as far as mind engines are concerned. The entire physical 4-universe is L^4 -alive but much is also L^3-dead.

* Mind engines can be engineered and constructed, as well as spatial body engines and mind-body coupling engines. They can be connected or reconnected to again form living beings (special biological systems).

* Reconnecting an L^3-dead mind to a suitable L^3 body is physical reincarnation of an L^4 biological organism.

Selected psychoenergetics tests

- LIDA machine
- Lisitsyn decomposition
- Captain Button
  * Points demonstrated
  * Captain Svoboda
  * Points demonstrated
  * Captain Hess
  * Points demonstrated

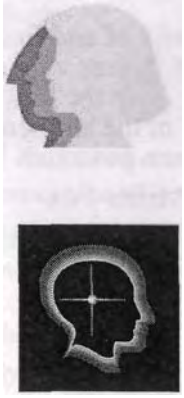

Russian LIDA Machine*

* U.S. Patent #3,773,049.
* For treatment of neuropsychic and somatic disorders, such as neuroses, psychoses, insomnia, hypertension, stammering, bronchial asthma, and asthenic and reactive disturbances.
* Pulsed RF field, pulsed light, and pulsed heat.
* Positive therapeutic results in 80% of patients.
* Early psychoenergetics device, quickly superceded, hence released for medical use.

---

* W. Ross Adey, "Biological effects of low energy electromagnetic fields," Proc. NATO Adv. Study Inst. on Advances in Biological Effects and Dosimetrv of Low Energy Electromagnetic Fields. Plenum Press, New York, 1983. Study shows West knew and knows only ordinary electrodynamics and EM, and has no knowledge of real psychoenergetics. Not even aware that EM force fields do not appear in massfree spacetime, but only curvatures of spacetime appear there. Unaware that mass is a component of force, by $F \equiv \partial/\partial t(mv)$.

Typical Miller-Fox-Urey biogenesis experimental apparatus (1)

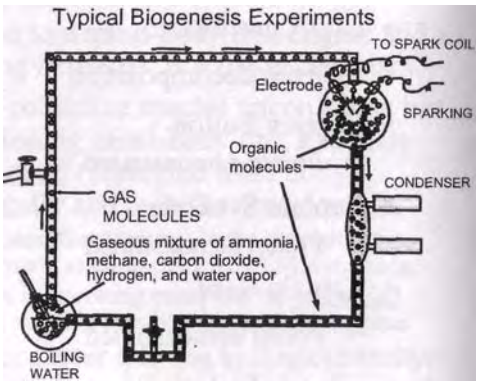

- Engines of and from all life forms ever on earth or in the universe exist in the ambient vacuum potential.
- The Miller-Fox-Urey experiments were not in a "sterile" environment.
- Heat (IR) and UV constitute (1) a harmonic interval with a difference frequency, and (2) amplifying by the process previously shown.

Typical Miller-Fox-Urey biogenesis experimental apparatus (2)

- These experiments "kindled" previously living forms from the available gases etc. by amplifying the ancient living engines from their virtual state to the observable state, so the masses were molded into the physical states of their templates.

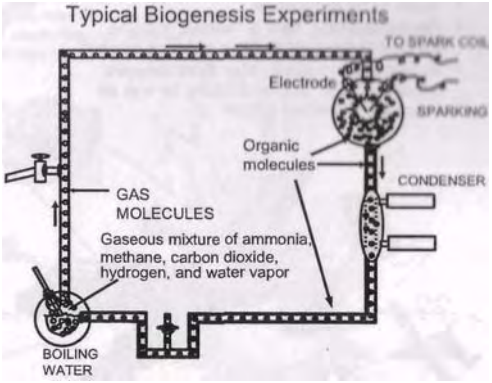

* KGB psychoenergetics weapons scientists understand this.

Three spectacular FSB/KGB psychoenergetics tests in U.S.

- Captain Button's bizarre flight to his death on 2 April 1997.
- Demonstrated control by switched persona.
  - Target individual performing technical tasks.
  - Captain Svoboda's "death dive" on 27 May 1997.
  - Demonstrated switching a fractional conversion.
- Simply switched Svoboda's sense of up and down.
- Svoboda reacted with new fraction, diving to her death.
- Captain Hess's strange suicide on 4 March 1998.
- Demonstrated ability to function coolly in spite of autonomic nervous reflexes until body is nonfunctional.
- Example of complete conversion,

Captain Button's bizarre flight to his death on 2 April 1997

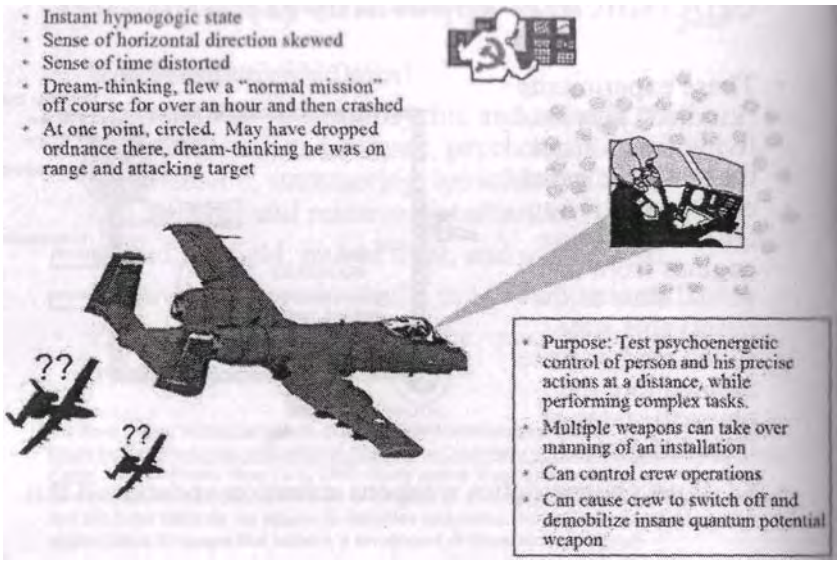

Captain Button's flyaway path to his eventual fatal crash

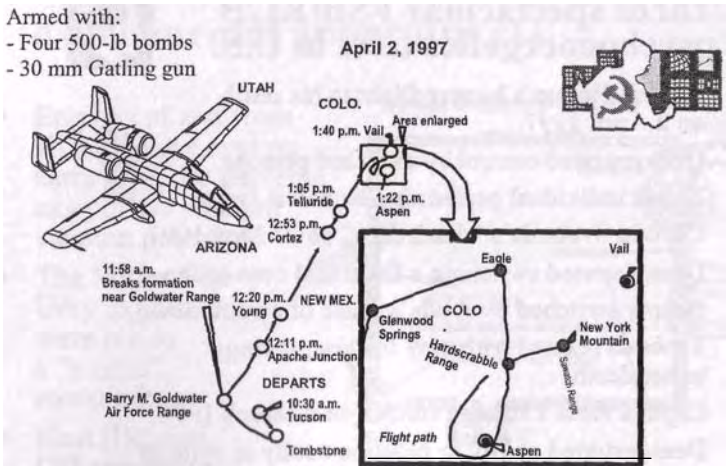

Many distinctive Russian tests have occurred in the month of April over the years, in preparation for the annual May Day report to the die-hard communist faction of the KGB.

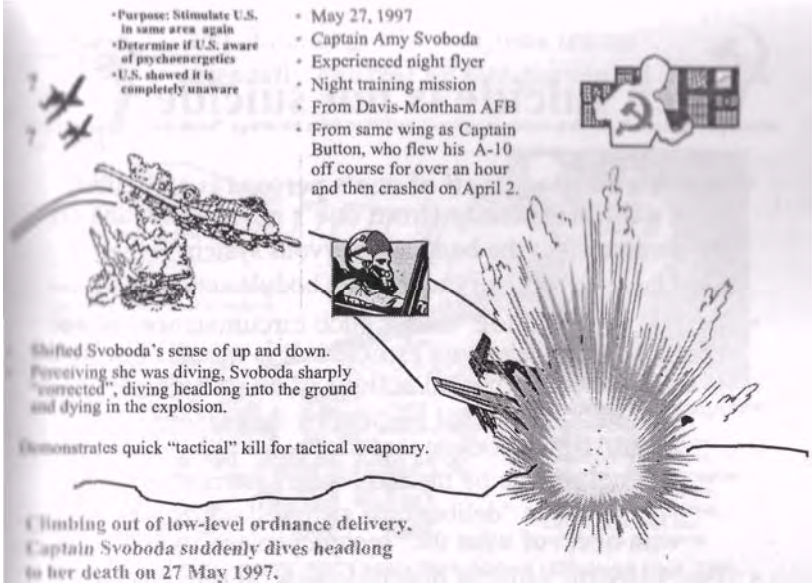

Captain Hess's death: conversion including autonomic nervous system

- Capt. Gordon Hess, NY Army National Guard.
- Early morning jog, Mar. 4, 1998, Ft. Knox, KY.
- Veered aside, sat down, and stabbed himself 26 times with relatively small Leatherneck utility knife.
  - * Penetrated left heart ventricle twice; each a disabling blow.
  - • Penetrated lung with hemorrhaging 4 times (disabling).
  - • Penetrated liver once.
  - * Four L-shaped wounds (calmly twisted the knife).
  - • Demonstrates deep control of autonomic nervous system; calmly ignored pain, hemorrhaging, etc. altogether.
  - • Officially declared a "suicide". Impossible.
  - • Probably an acceptance test of Russian psychoenergetics weapon improvement from 1997 (Button and Svoboda).
  - • Suspended autonomic system reflexes in the conversion.

When suicide is not suicide

- When a fraction or all of one's persona is switched, then a different entity (from one's normal persona) is
  - In control of the body and nervous system
  - Ordering and carrying out the body's actions.
- Intentional "suicide" under such circumstances is not normal "single persona" suicide. It is murder because it is by direct intent and actions of an outside party.
  - It is still "intentional suicide" by the persona in control of the body at that time.
  - It is not suicide by the individual's normal persona.
  - Analogous to "deliberately switched schizophrenia", with intent of what the "second persona" will do.
- Psychiatrists, clinical psychologists, and law enforcement officers cannot properly assess it.

Present mind control capabilities

- Conversion or control mind directly.
- Complete control over mind and body, including autonomic nervous system.
- Consider controlled actions desired for a given purpose:
  - Each requires a persona, characteristics, emotions etc.
  - In short, one "conditioned" personality (engine).
  - Can have multiple such conditioned personality engines available, each for different purpose, task, and mission.
  - Switch personality engines in controlled person at will.
- Carrier robots can transport multiple engines, including energetic, bioenergetic, psychoenergetic. Can "infect" multiple targeted persons or persons of opportunity.
- Converted person is a multiple purpose weapon system.

Psychoenergetics weapons teams mentally control all site personnel

Counters all sane mad* systems and nullifies human component of all weapon systems

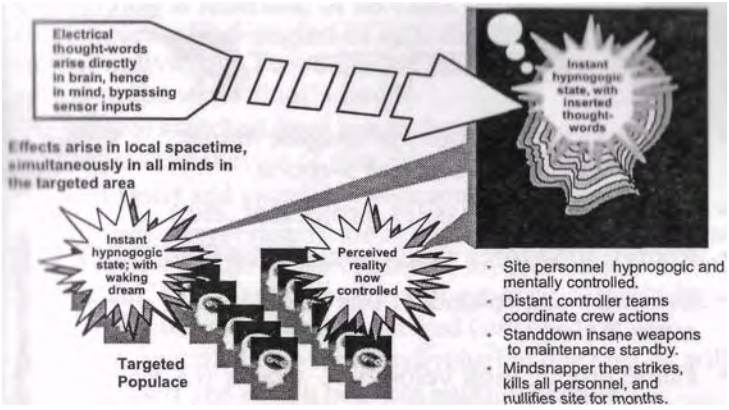

Indicators: Two A-10 incidents 1997, Captain Hess incident, LIDA device since 1950s.

* MAD = Mutual Assured Destruction.

Psychoenergetics weapons teams switch sleeper conversions in all crewmen

Counters all sane mad* systems and nullifies human component of all weapon systems

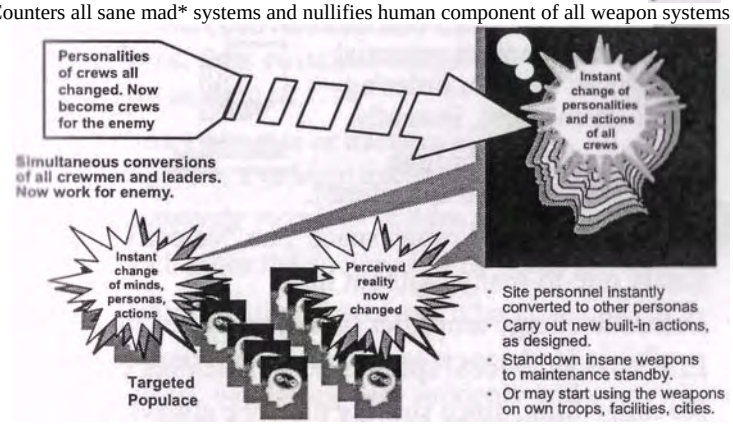

Indicators: Captain Button and Captain Hess incidents.

Propagation of Weapon Effects (1)

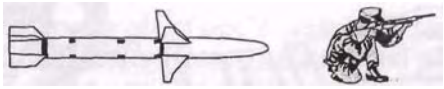

- Conventional weapons propagate matter or energy or both through 3-space.
- Matter (bombs, missiles, projectiles, etc.).
- Energy (EM force fields, sonic force fields, etc.)
- Basically one-to-one, or one "bus" to many-on-any.
- Finite propagation velocity v: where $0 < v < c$.
- Time delay: Shielding and pre-strike retaliation possible.

Propagation of Weapon Effects (2)

- Structured quantum potential propagates vacuum ordering (vacuum engines), instantly.
- Zero time delay (through multiply-connected spacetime).

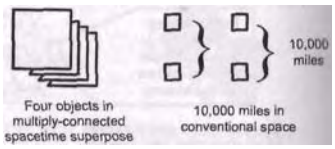

- No propagation "through space", no "velocity" as such.
- Easily one-to-many, without limit.
- Dramatic energy amplifier (gates, amplifies flux ordering).
- Effects arise in local spacetime; no shielding possible.
- No range limit, since striking distance always zero.
- QP weapons obsolete all other weapons.

Conversion and fractional conversion (1)

* Conversion is insertion of an extra variant of complete mind-engine of an individual, in that individual. Two separate personalities reside in the individual's body.
  - Control switched from one to the other at will.
  - Alters the behavior of that individual at will.
  - Can insert and switch between multiple variants.

  * Fractional conversion is the insertion of an extra variant of a fraction of the mind-engine of an individual, in that individual. The fraction is for a given area of behavior.
  - The fractions can be interchanged (switched) at will.
  - Alters specific behavior of individual in one area, at will.
  - Can insert and switch between multiple fractions.
- Can insert and switch between more than two.

Conversion, and fractional conversion (2)

* Can pre-insert conversions and fractional conversions, then switch at will, or as frequently as desired.
  - Can insert personas or fractions in an entire populace or large fraction.
  - Can massively switch all of them at once.

  * Instantly changes the society and its behavior.
- With all coordination destroyed, utter chaos reigns.

  • Massive conversions can cause a society to rapidly destroy itself, beginning very suddenly and everywhere in the society.

Sleeper conversions

* Conversions or fractional conversions that are inserted, but not switched and activated for a lengthy period, are called "sleepers".
* A few leaders, a fraction of the society, or all the individuals of a society can have sleepers inserted, ready for switching.
* Multiple personas or fractions can be in each individual, waiting for switching conversion.
* Tailored switching then allows "tailoring" of both the societal responses and the momentum of the converted society's changes and actions.

The new psychoenergetics

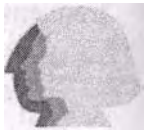

* Coupled with QP weapons using engines against mind and mind dynamics.
* Coupled with carrier robots each transporting hundreds of mind-control engine subrobots for unleashing.
* Now becomes a separate, great strategic threat more ominous than an all-out nuclear strike.
* Can be cleverly done so unsuspecting nation(s) never really know(s) what happened, till too late.
* Western science, military, and governments are unaware, unprepared, and nearly defenseless.

(SLIDE BRIEFING CONTINUED)

PART G: CONVERSION

Conversion: Mind, behavior, and personality control as primary target

Unified energetics capabilities, including robots and engines

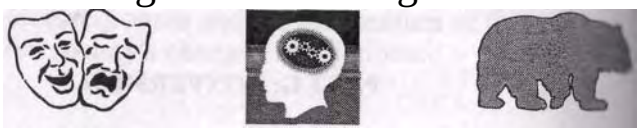

Section contents

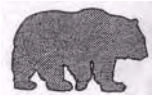

- Russian National Style
- Strategic attack plan(s)
- Tests and stimuli expected
- Advance indicators
- Defense and counters
- Conclusions
- Recommendations

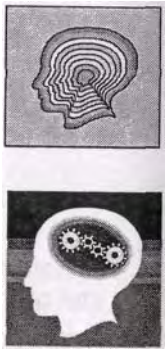

National style (Russian): Chessplayer approach

* Develop each weapon type (move) secretly.
* Always have elaborate deception plan,
* Multiple specific "stimuli" probes tested in advance of planned actual attack.
* Ascertains opponent unaware of "technique" and coming attack(s).

* Attacks lulled opponent unless countered.
* Continues rapid revision and improvement.
* When countered once, returns with improved techniques, new probing, and new attack(s).
* Never quits; always maneuvering to attack and win.

On elements of the strategic KGB attack plan (1)

* Only outline of probable type plan(s) seen:
* Attack to be strategic, massive (incredibly so).

* Number of robots/engines may be 100-200 million.
* Includes positive nullification of Israel, and of any U.S. retaliatory capability, in first ten minutes.
* May include nullification of Brazil and China also.
* Includes nullification of entire strategic strike capability of the United States — practical by the robots and QP weapons — in that 10 minutes.

On elements of the strategic KGB attack plan (2)

- Massive mind control conversions nullify both personnel, facilities, weapons, command and control, support facilities, populace.
  - Wholesale disruption and nullification of government officials, congress, military commands.
  - Total anarchy quickly.
- Defeat prepared in insertion/preparation phase.
- Insertion phase has been largely successful; U.S. to be defeated in operations phase just begun.

Expected tests and stimuli (1)

- Next generation engines and robots.
- Great new development beyond Captains Button, Svoboda, and Hess.
- Probing should be ongoing now, using conversions at selected levels.
  - One or two (few) high government officials or personnel surrounding or subordinates.
  - One or two personnel in critical facilities (e.g., nuclear).
  - One or two personnel in extremely sensitive intelligence agencies.

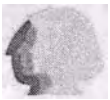

- Show multiple personas switching as probe to see if U.S. understands.
- Armada and extreme strategic attack planned for about a year later, after the exposures.

Expected tests and stimuli (2)

- Some tests should be bizarre.
  - Person performs some bizarre act or action, totally noncharacteristic.
    - Personas deliberately switched.
    - Psychiatrists treat it as "psychiatric problem".

  - Overwatch (via robots) assures that system does not understand, with 100% certainty.

- Tests should include such acts as:
  - Compromising national security.
  - Committing espionage but so it is easily detected.
  - Physical involvement such as with nuclear materials, biological warfare agents, drugs, etc.

Advance indicators expected (1)

- Signature indicators in major command and control facilities, sensitive agencies, critical weapons such as ICBMs and nuclear subs, strange symptoms in computers etc. Tests in Congress, Executive Branch, perhaps in judicial branch, and in JCS.
- Several high officials converted — at least two.
- Series of a few increasingly bizarre conversions.
- Perhaps a Supreme Court Justice or the Vice President, etc.

- Several high military officers converted.
- Conversions (few) in news media and public, slowly increasing.

Advance indicators expected (2)

* After some of the bizarre conversions, will then begin gradual "minor" conversions of public, public officials, military personnel, news media on broader scale.
* Opinions and media coverage gradually change.
* Similar opinion changes occur in Arab nations, Islamic populaces, Europeans, Africans, China, etc.
* Anti-Americanism steadily rises, "normal" terrorist incidents increase, incidents in U.S. increase.
* May be a special effect in the extremists of both left and right, racism, all social issues to foment conflict.
* Increasing conflict will start to unravel the entire society.
* UN should also be unraveled and effectively neutralized by strident differences arising and increasing.

Advance indicators expected (3): Orchestration

* Orchestration of world arena actions by orchestration of leadership of factions, nations, and their actions.
* Opinions and media coverage gradually orchestrated.
* Changes occur in Arab nations, Islamic populaces, Europeans, Africans, China, etc., centrally ordered.
* Orchestrate special effects in the extremists of both left and right, racism, all social issues to foment conflict.
* Intensifying conflict starts to unravel targeted societies, control world nations' behavior and actions.
* UN, NATO, etc. to be unraveled and neutralized by strident differences arising and increasing.

Advance indicators expected (4)

- Conversions of foreign high officials, so that friendly nations begin to act as hostile nation
- Strong, even bizarre developments against Israel.
  - Another indicator will be terrorists — stimulated into unleashing major BW strikes etc., in our cities and populace — having unexpected effectiveness due to KGB QP spreading of immune systems in the U.S. populace.
    - Smallpox, anthrax high possibilities.
      - Ebola virus and necrotizing fasciitis, avian flu etc. also possible, as is smallpox.

Blurring of classifications

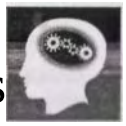

- Intelligence agencies are familiar with the definitions of "agent" vs. "agent of influence".
- Conversion and multiple personas gives switching of a given person between:

  - Normal person (one's normal personality).
  - Agent of influence (a second persona which is "oriented" in a specific direction, to take specific actions at its own volition), or
  - Agent (a third persona which actually communicates with the "agent handlers" etc. and works for them).
- In any case, the person and his personas are manipulated like a puppet on a string.

Defense and counter-measure capabilities

- Very few possible for U.S. at present.
- Urgent that knowledge of the capability and such hostile measures be spread.
- Israelis have some lesser countermeasures which must be rapidly expanded.
- U.S. must have immediate crash national program, with a target completion date of a year only.
- Must have strongest possible Presidential Directive, action, and total support from any agency as needed. Move now, or it will be too late.

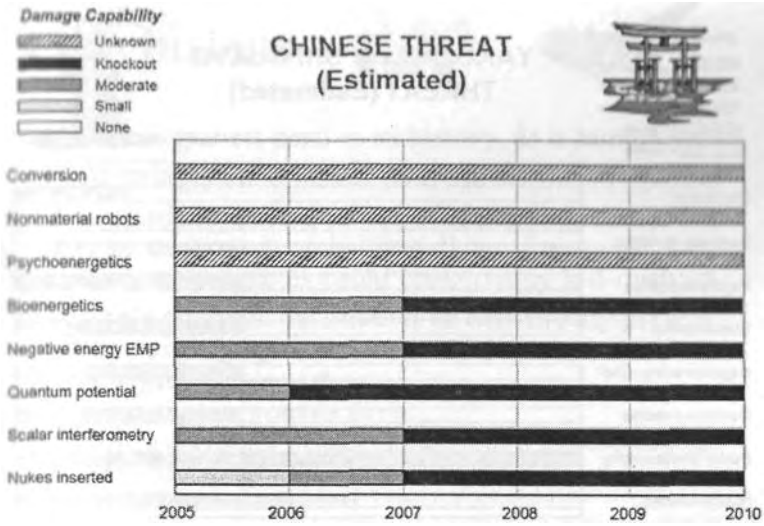
Damage Capability
Unknown
Knockout
Moderate
Small
None
CHINESE THREAT
(Estimated)
Conversion
Nonmaterial robots
Psychoenergetics
Bioenergetics
Negative energy EMP
Quantum potential
Scalar interferometry
Nukes inserted
2005
2006
2007
2008
2009
2010

Damage Capability
Unknown
Knockout
Moderate
Small
None
BRAZILIAN THREAT
Brazil signed nonaggression pact with Russia/
KGB. Russia (FSB/KGB) will not honor it.
Conversion
Nonmaterial robots
Psychoenergetics
Bioenergetics
Negative energy EMP
Quantum potential
Scalar interferometry
Nukes inserted
2005
2006
2007
2008
2009
2010

Damage Capability
Unknown
Knockout
Moderate
Small
None
YAKUZA/AUM SHINRIKYO
THREAT (Estimated)
Conversion
Nonmaterial robots
Psychoenergetics
Bioenergetics
Negative energy EMP
Quantum potential
Scalar interferometry
Nukes inserted
2005
2006
2007
2008
2009
2010

Damage Capability
Unknown
Knockout
Moderate
Small
None
ORGANIZED
INTERNATIONAL
TERRORIST THREAT
Conversion
Nonmaterial robots
Psychoenergetics
Bioenergetics
Negative energy EMP
Quantum potential
Scalar interferometry
Nukes inserted
2005
2006
2007
2008
2009
2010

Conclusions

- U.S. is in gravest peril in its history, as is humanity
- Most stringent and fastest possible action is required

  Two-thirds to three-quarters of human population may be destroyed; probably will be. Eventually the entire human species could conceivably self-destruct.
- Multiple strategic destruction threats already present, others converging.
  - Energetics weapons threat.
  - Bioenergetics weapons threat.
  - Psychoenergetics weapons threat, robots and conversions.
  - Terrorists weapons threat (nuclear and BW).
  - Chinese threat.
  - Yakuza/Aum Shinrikyo threat.
  - Orchestrated dissolution of U.S. society, Europe, UN, etc.

Recommendations (1)

- Crash nuclear scanning of all incoming shipping containers.

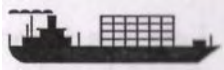

- Crash development of energetics science and some new counters in one year or less.
  - * No more than two years available.
  - Immediate Presidential Decision Directive issued, highest priority.

- Crash development, mass production of fuel-free self-powering electric power systems taking their energy freely from the vacuum. Essential.

  - Immediate cooperation with Israelis for initial counters.

Recommendations (2)

- Crash development of the science and new counters in one year or less. No more than two years available.
- Crash development of Priore-type treatment devices to survive stimulated large terrorist BW attacks, with immune spreading and mass casualties certain. The devices are absolutely essential.

- Immediate "think tank" of most-capable young scientists to clarify the psychoenergetics problem and actions to be taken.
- Brief U.S. public on insertions of nuclear weapons and anthrax already accomplished, so will support the program.

Final comments (1)

- Less than 3 years before our total destruction.
- Any delay of prompt and drastic national action is fatal.

- Biggest problem is the U.S. scientific and intelligence communities, still sublimely resting in archaic EM theory and electrical engineering. The national labs are nearly useless for the correction effort, as are NSF, NAS, and NAE, DoE, etc.
- Leaders of the two communities must be bluntly shocked as drastically as Stalin shocked his Academy of Science in 1945.

Final comments (2)

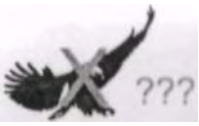

- The President of the U.S. will have to deliver a "meat axe" ultimatum to the Intelligence Agencies, National Academy of Sciences, National Academy of Engineering, National Science Foundation, NIH, the great national laboratories, etc.

- Any science or intelligence leader opposing the program should be immediately relieved under full presidential wartime powers.
- It's either fish or cut bait immediately. It's do or die.
- For those of us who are religious, it is also a time for fervent prayers on behalf of our threatened nation.

(SLIDE BRIEFING CONTINUED)

PART H: APPENDIX; Problems in Western Science

Appendix 1: Problems in Western science

Energy science's flaws and limitations

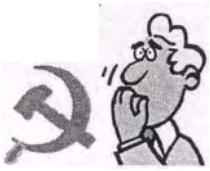

Energetics: start by correcting the flawed CEM/EE model

- The classical EM and EE model is seriously flawed, and has been for more than a century.*
- Soviet energetics started by a massive correction and reworking (and extension) of CEM/EE.
- To understand energetics and energetics weapons, it is essential to first grasp the horrendous errors that are perpetuated in CEM/EE in our universities.
- More extensive systems of electromagnetics have been developed in physics (Yang-Mills theory, higher group symmetry EM, etc.) because CEM/EE does not adequately describe nature.
- The falsity of assuming force fields in space started with basic mechanics several hundred years ago, and was continued into CEM/EE by its founders.

---

* T.E. Bearden, "Errors and Omissions in the CEM/EE Model", at http://www.cheniere.org/techpapers/

Seriously flawed path of classical electrodynamics

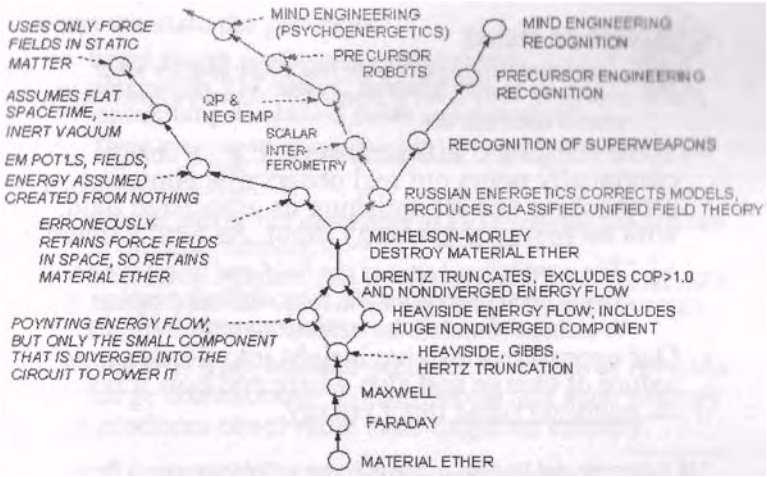

Electrodynamics and electrical engineering

* There is not now, and there never has been, an EE department, professor, or textbook that knows and teaches what really powers an EM circuit or system.
- Every EM circuit and system is powered by EM energy extracted from the vacuum by the asymmetry of opposite charges on the ends of the source dipole.*

  Basis proven in particle physics since 1957.**
  - All EM field energy and EM potential energy in a circuit is extracted from the local vacuum by the source charges q of the circuit. None comes from mechanical energy input by cranking the shaft of the generator.

---

* See Steven Weinberg, Dreams of a Final Theory. Vintage Books, Random House, 1993, p. 109-110. Dipolarity includes the classical "isolated" source charge, when the charge's polarization of its surrounding vacuum is accounted. An isolated charge is actually an infinite bare charge in the middle, surrounded by an infinite virtual charge of opposite sign. The difference as seen by an external instrument is finite, and it is the textbook value of the observed "classical charge".

** See C. S. Wu et al., "Experimental Test of Parity Conservation in Beta Decay," Physical Review, Vol. 105, 1957, p. 1413. Lee and Yank received Nobel Prize

Nature of charge is unresolved

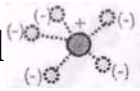

- Silverman stated:

  "...curiously enough, we do not know exactly what charge is, only what it does. Or, equally significantly, what it does not do. "*

- Some things are still a mystery. E.g., a charge continually pours out real observable photons, establishing and replenishing its associated field, with no observable energy input. As Sen** stated:

  "The connection between the field and its source has always been and still is the most difficult problem in classical and quantum electrodynamics. "

- Our approach does give insight into the dynamic nature of charge and also where and how it receives its nonobservable input energy.

* M. P. Silverman. And Yet It Moves: Strange Systems and Subtle Questions in Physics. Cambridge University Press, 1993, p. 127.
** D. K. Sen, Fields and/or Particles. Academic Press, London and New York, 1968, p. viii.

The Source Charge Problem (1)

- Kozyakov** stated the problem more bluntly:

  "A generally acceptable, rigorous definition of radiation has not as yet been formulated. ...The recurring question has been: Why is it that an electric charge radiates but does not absorb light waves despite the fact that the Maxwell equations are invariant under time reversal? "

- We solved the problem in 1999 and published it.**

* B. P. Kosyakov, "Radiation in electrodynamics and in Yang-Mills theory," Sov. Phys. Usp. 35(2), Feb. 1992, p. 135, 141.
** (a) T. E. Bearden, "Giant Negentropy from the Common Dipole," Proc. Conqr. 2000. St. Petersburg, Russia, Vol. 1, July 2000 , p. 86-98; (b) — "Extracting and Using Electromagnetic Energy from the Active Vacuum," in M. W. Evans (ed.), Modern Nonlinear Optics. Second Edition, 3 vols., Wiley, 2001; Vol. 2, p. 639-698; (c) —Energy from the Vacuum: Concepts and Principles, Cheniere Press, Santa Barbara, CA, 2002, (d) M. W. Evans, T. E. Bearden, and A. Labounsky, "The Most General Form of the Vector Potential in Electrodynamics," Found. Phvs. Lett.. 15(3), June 2002, p. 245-261.

The Source Charge Problem (2)

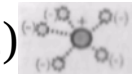

- First we state the problem:
  - Every charge continuously radiates real, observable EM energy, forming and replenishing its ordered fields and potentials.
  - There is no input of observable EM energy to the charge.
- Either the charge:
  - Creates energy out of nothing at all (falsifying the first law of thermodynamics), or
  - It receives, reorders, and integrates disordered virtual state energy from the vacuum into ordered observable energy (falsifying the second law of thermodynamics).
- The latter is true, and the second law requires revision. A charge continuously consumes virtual state entropy and produces observable state negative entropy.

The Source Charge Problem (3)

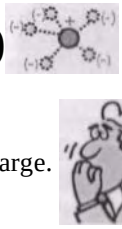

* There is continual:
  - Disordered virtual photon energy input to the charge.
  - Reordering of the input virtual energy, and
  - Coherent integration of the reordered virtual EM energy input into output as quanta (observable photons)
* So the charge continually radiates observable photons in all directions, extracting the necessary input energy from the vacuum subquantal fluctuations.
* We do not have to discover how to extract EM energy from the vacuum via a "new device"!
* Every charge in every circuit and system already does it, freely and continuously.
* We just must learn to properly catch and use the freely flowing EM energy from the vacuum.

EM energy occurs as sets of ongoing EM energy flows

* Every EM field and potential — whether "static" or "dynamic" — is a set of ongoing EM energy flows.
  - Whittaker proved it for the scalar potential in 1903.
  - In 1904 he proved any field decomposes into differential functions on two scalar potentials.
  - If we further apply his 1903 decomposition to each of the "base" scalar potentials of the 1904 paper, EM field emerges as a set of energy flows also.
- Hence Whittaker's work also shows that — in producing its fields and potentials — the source charge is pouring out real EM energy continuously.
- Thus EM "static "fields and potentials are ongoing sets of EM energy flows, not "chunks" of static energy.

The source charge solution: Free EM energy from the vacuum

* The emitted observable EM radiation continually establishes and replenishes the associated spatial EM fields and potentials of the source charge, spreading at light speed in all directions continuously.
- There is no "static" EM field from a "static" source.
* The "static" EM field, its source charge, and the vacuum input form a nonequilibrium steady state (NESS) system of continual, observable photon emissions and flow from the seething vacuum.
* So is the "static" EM potential.
- Every EM field, EM potential, and joule of observable EM energy is already a set of ongoing free flows of EM energy extracted from the vacuum.

A charge is a dipolar ensemble (1)

- An "isolated charge" polarizes its vacuum medium.*

- Considered from a quantum field theory view, the isolated classical charge is a bare infinite charge in the middle surrounded by an infinite charge of virtual particles, of opposite sign.
- The charge ensemble is thus a special kind of dipolarity. It exhibits asymmetry of opposite charges in its virtual photon exchange *a priori*.
- Both the bare charge in the middle and the surrounding polarized charge are *infinite*. Their difference is *finite*. The two infinite charges will forever sustain the finite difference, so long as the polarization ensemble is not forcibly altered.

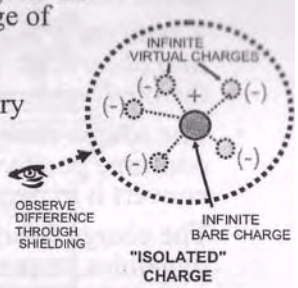

* For a beautiful discussion of the polarization and much more, see Steven Weinberg, Dreams of a Final Theory, Vintage Books, Random House, 1993.

A charge is a dipolar ensemble (2)

- Because of the broken symmetry of the infinite dipolarity, a set of energy flows with finite intensity must therefore emerge from the polarized charge ensemble. Playing with charges means playing with finite differences between appositive infinite energy flows.
- Because the fundamental charges have infinite charge and infinite energy, the flow of energy from the charge will be sustained forever.
- The broken symmetry of opposite charges was proven by Wu et al. in 1959, and a Nobel Prize was awarded to Lee and Yang the same year.

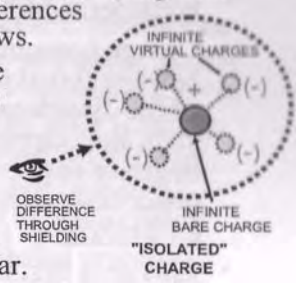

- The observable flow of EM energy is from virtual energy that has "become observable" (been reordered, coherently integrated to the quantum level, and re-emitted as quanta).

Solution to the source charge problem

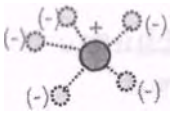

- Opposite charges also are a broken symmetry in the fierce vacuum's virtual particle exchange.
- Continually absorbs virtual EM energy, transduces it into observable EM energy (photons), and then emits the observable photons in all directions in 3-space.
- The source charge and any dipolarity continuously consume positive entropy of the virtual state and convert it to negative entropy of the observable state.
- The charge falsifies the present second law of thermodynamics, requiring its revision, and is an example of a real system continuously producing negative entropy.*

* First such known physical system, although permissibility was theoretically demonstrated by D. J. Evans and Lamberto Rondoni, "Comments on the Entropy of Nonequilibrium Steady States," J. Stat. Phvs.. 109(3-4), Nov. 2002, p. 895-920.

Where EM energy comes from:

- Every joule of EM energy comes from the vacuum, via broken symmetry of source charges (dipolarities, considering polarized vacuum).
- Charge consumes positive entropy (breaks symmetry) of the disordered virtual state and converts it to negative entropy of the observable state. There is a *hierarchy* of symmetries.*

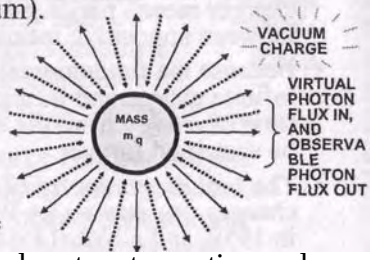

- Charge is first known physical system to continuously produce negative entropy, as theoretically possible**.

* This violates Klein geometry; Leyton geometry must be used. See Michael Leyton, A Generative Theory of Shape, Springer-Verlag, Berlin, 2001.

** Evans and Rondoni, "Equilibrium microstates which generate second law violating steady states," Phvs. Rev. E, Vol. 50,1994, p. 1645-1648.

The magic reordering (negative entropy) process

$$m^*(t) = m(t_0) + dm_1 + dm_2 + dm_3 + \ldots$$

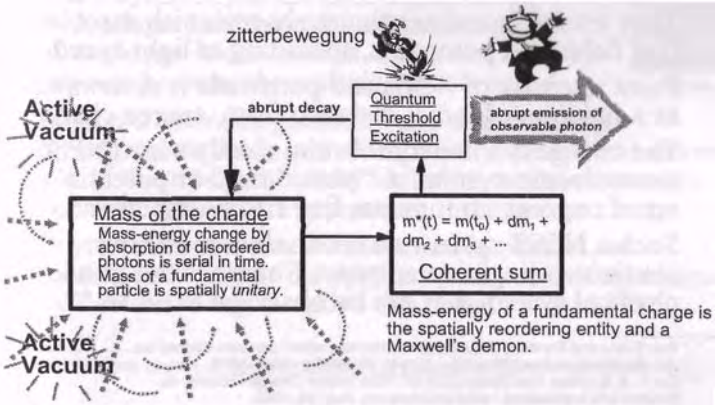

The fundamental charged particle continually absorbs disordered virtual state EM energy and re-emits it as ordered observable EM energy

- Each increment absorbed of virtual energy produces a virtual-change of the charge's already unitary mass.*

  The serial differentials of its mass-energy are spatially re-ordered energy. Each is a change to what is there before.
- The differentials thus coherently sum, so a single, unitary differential of virtual mass-energy (its excitation) grows.
- When the quantum threshold is reached, there is enough new mass-energy to produce a real, observable photon .
- Zitterbewegung** shakes out an observable photon, emitted from the particle in its abrupt excitation decay.
- Fevnman ratcheting: The virtual excitation process continues again, and the process reiterates unceasingly.

---

*This is a true Maxwell's Demon, totally destroying the present second law of thermodynamics.

** Zitterbewegung is a local circulatory motion of the electron presumed to be the basis of the electron spin and magnetic moment. One physical interpretation is given by David Hestenes, "The Zitterbewegung Interpretation of Quantum Mechanics." Found. Phvs.. 20 (10), 1990, p. 1213-1232.

Virtual photon interactions reveal secret of negative entropy

- Observable photons from source charge continuously radiate away at speed of light.
- They establish and continuously replenish associated EM fields and potentials, spreading at light speed.
- Point intensity of fields and potentials is deterministic, as a function of radial distance from source charge.
- The charge is a nonequilibrium steady state (NESS) deterministic system. A "static" field or potential is a set of ongoing continuous free EM energy flows.
- Such a NESS system theoretically can exhibit continuous negative entropy. Charge is the first known physical system that can be observed to do so.**

* See Evans and Rondoni, "Equilibrium microstates which generate second taw violating steady states." Phys. Rev. E. Vol. 50, 1994, p. 1645-1648.
** See T. E. Bearden, Fact Sheet 2003-01, "The Source Charge Problem: Its Solution and Implications," www.cheniere.org, Aug. 18, 2003.

Charge falsifies the old second law of thermodynamics to any macroscopic level since the fields and potentials are deterministic (.1)

- Charge exhibits continuous negative entropy production.
  - Falsifies second law, which is based on Klein's 1872 geometry* and group theoretic methods.
  - Validates theoretical proof that continuous production of negative entropy is possible, as shown by Evans and Rondoni.**
- In Klein geometry, a broken symmetry at one level loses the information at that level, reducing the overall symmetry to that of the lower level. This is a positive entropy process because the ordering is decreased.
- So dS > 0 is arbitrarily "wired in" to Klein geometry!

*Felix Klein, "Vergleichende Betrachtungen uber neuere geometrische Forschungen," 1872.
**D. J. Evans and Lamberto Rondoni, "Comments on the Entropy of Nonequilibrium Steady States." J. Stat. Phvs.. 109(3-4), Nov. 2002, p. 895-920.

Charge falsifies the old second law of thermodynamics to any macroscopic level since the fields and potentials are deterministic (2)

- In Leyton's object-oriented geometry,* a broken symmetry at one level generates a new symmetry at the next higher level, with a layer incorporating all information of the lower levels. This is a negative entropy process because the ordering is increased.
- Leyton's extended geometry and deeper group theoretical methods inherently falsify the present second law of thermodynamics by including negative entropy and the negative entropy action of the source charge.
- Leyton's work is a new revolution in physics, as fundamental as was the original prediction of asymmetry by Lee and Yang, awarded the Nobel Prize in 1957.

* Michael Leyton, A Generative Theory of Shape. Springer-Verlag, Berlin, 2001

Breaking the zero-symmetry state of the disordered vacuum (1)

* Vacuum fluctuations are disordered and subquantal, overall (statistically).

- Hence the overall ordering (symmetry) of the vacuum may be taken as zero. This zero symmetry is a specific symmetry state of the overall vacuum.

* But in these fluctuations, local polarizations (opposite charges) continually appear and disappear

- While a local polarization exists, it is a "broken symmetry" of the vacuum state. Hence it is a local violation of the "zero symmetry" of the overall vacuum, and the usual transient fluctuation theorems apply.*

* E.g., see D. J. Evans and D. J. Searles, "Equilibrium microstates which generate second law violating steady states," Phys. Rev. E. Vol. 50, 1994, p. 1645-1648.

Breaking the zero-symmetry state of the disordered vacuum (2)

- Equilibrium is the state of maximum entropy of a system.
- In a system in statistical equilibrium, local transient statistical fluctuations continually occur.
- In a local transient fluctuation
  - Equilibrium is broken and entropy is momentarily reduced.
  - The Second Law of thermodynamics is violated and such fluctuation obeys a transient fluctuation theorem.*
  - Violation can last appreciably — e.g., up to two seconds.**
- Local nonequilibrium steady state interactions with the observable state (as with a fundamental charged particle) can violate the second law of thermodynamics.***

* E.g., see D. J. Evans and D. J. Searles, Phvs. Rev. E. Vol. 50, 1994, p. 1645-1648.
** G. M. Wang et al., Phvs. Rev. Lett.. 89(5), 29 July 2002, 050601.
*** D. J. Evans and Lamberto Rondoni, J. Stat. Phvs.. 109(3-4), Nov. 2002, p. 895-920.

Every charge consumes positive entropy of virtual state and produces negative entropy of observable state

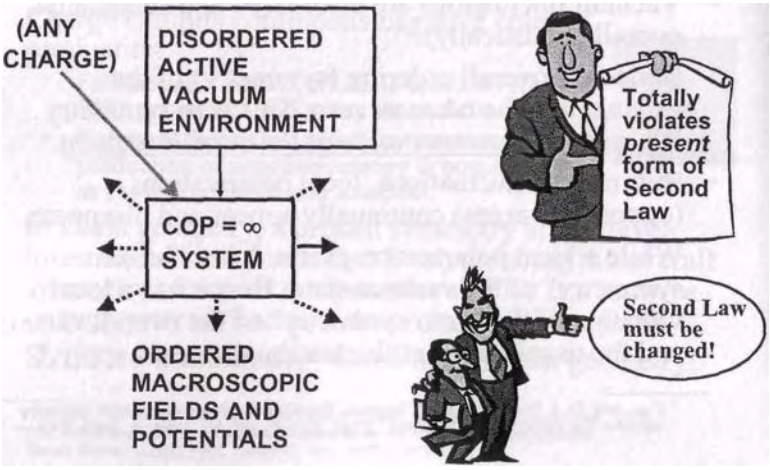

Biochemistry and EM models (1)

- Medical scientists analyze such things as teratomas in terms of biochemistry and the biochemical model.
- An assembly of charges and charge distributions, with their associated fields and potentials, drives chemistry at base level.

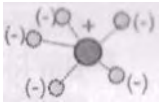

- The force dynamics of the charge assembly are generated by a corresponding assembly of spacetime curvatures and their dynamics (a spacetime curvature engine).
- This precursor engine is the force-free cause that is driving the charge assembly and generating its dynamics, producing all forces in the matter and therefore the chemistry ongoing in that matter.

Biochemistry and EM models (2)

- Force dynamics of the charge assembly are generated by a precursor force-free spacetime curvature engine.
- This precursor engine is the force-free cause that is driving the charge assembly and generating its dynamics, producing all forces in the matter and therefore the chemistry ongoing in that matter.
- Precursor fields and potentials are not modeled in classical U(1) EM theory or quantum electrodynamics.
- CEM/EE model is 140 years old and seriously flawed.
- Precursor force-free EM fields and potentials — and their interaction with charges to produce the force fields and dynamics — can be modeled in unified field theory (such as that of Sachs and that of Evans in O(3) electrodynamics).

Biochemistry and EM models (3)

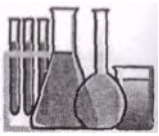

- Conventionally a causative EM field in space is "defined" as the diversion from a spatial force field by and during its interaction with charge.

* But force exists only in and of mass. Mass is a component of force, by F = dp/dt = d/dt(mv).

* There is no force field in space. Assuming one in space substitutes "effect in matter" for "matter-free ST curvature cause" — a logical non sequitur.

- CEM/EE also assumes charged matter (the material ether) filling all space, and calculates and uses only the force field existing in that assumed charged matter.
- CEM/EE does not and cannot calculate the force-free precursor EM field in space — the actual EM field.

How CEM/EE erroneously assumes force fields in space

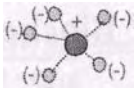

* Jackson* shows how electrodynamicists simply avoid (and dispose of) the problem of a force-free, massless EM field in space, rather than a force field:

> "Most classical electrodynamicists continue to adhere to the notion that the EM force field exists as such in the vacuum, but do admit that physically measurable quantities such as force somehow involve the product of charge and field. "

---

* J. D. Jackson, Classical Electrodynamics. 2nd Edn., John Wiley & Sons, New York, 1975, p. 249. Jackson is one of the leading classical electrodynamicists and either highlights or clarifies many issues.

U.S. scientists do not calculate the EM field in space, but only in charged matter

- So CEM/EE still erroneously assumes a material ether and force fields in space. Ignores the precursor field.
- There is not now and there never has been an EE department, EE professor, or EE textbook that teaches how to calculate the (precursor) EM field in space.
- This is a known major flaw in the CEM/EE model. It has been pointed out in one fashion or another by many physicists such as Wheeler and Nobelist Feynman.
- The CEM/EE model is seriously flawed, and the flaws emerge in biochemistry and medical science.
- At least Jackson clearly states the gross error that is still accepted and used by CEM/EE.

* J. D. Jackson, Classical Electrodynamics. 2nd Edn., John Wiley & Sons, New York, 1975, p. 249.

Correction to basic mechanics and a solution to Feynman's problem of defining force*

- F = $\partial/\partial t$(mv), so mass is a component of force.
- Force and force fields exist only in matter, not in massfree space.

- There is no separate "massless vector force in space" acting upon a separate mass.
- Thus in EM models, cannot legitimately use force field as a causative agent in space, as present models do.
  - ♦ EM field in space is a massless, force-free causative agent (curvature of spacetime) — a precursor to force field in matter.
  - * Force-free EM field's ongoing interaction with charged matter identically is a force field in that matter. Force is the interaction effect in and of the charged matter itself, not the cause.

* Richard P. Feynman, Robert B. Leighton, and Matthew Sands, The Feynman Lectures on Physics, Addison-Wesley, Reading, MA, Vol. 1, 1964, p. 2-64, 12-2; Vol. 2, p. 1-3.

What physics has to say about EM field in space

Richard Feynman

* Feynman* clearly states that the EM field in space is not a force field.
- It is a characteristic of space that produces a force field when and if it interacts with charged matter.

" ...the existence of the positive charge, in some sense, distorts, or creates a "condition" in space, so that when we put the negative charge in, it feels a force. This potentiality for producing a force is called an electric field. "

"We may think of E(x, y, z, t) and B(x, y, z, t) as giving the forces that would be experienced at the time t by a charge located at (x, y, z), with the condition that placing the charge there did not disturb the positions or motion of all the other charges responsible for the fields. "

*Feynman, Leighton, and Sands, The Feynman Lectures on Physics. Addison-Wesley, Reading, MA, Vol. 1, 1964, p. 2-4; Vol. 2, p. 1-3.

Maxwell's theory was curtailed*

"[T]he A field [for the potentials] was banished from playing the central role in Maxwell's theory and relegated to being a mathematical (but not physical) auxiliary. This banishment took place during the interpretation of Maxwell's theory... by Heaviside... and Hertz. The 'Maxwell theory' and Maxwell's equations' we know today are really the interpretation of Heaviside... Heaviside took the 20 equations of Maxwell and reduced them to the four now known as 'Maxwell's equations'. "

COMMENT: Maxwell's primary theory was 20 quaternion-like equations in 20 unknowns.**

*Terence W. Barrett, "Electromagnetic Phenomena Not Explained by Maxwell's Equations," A. Lakhtakia, ed., Essays on the Formal Aspects of Electromagnetics Theory. World Scientific Publishing, River Edge, NJ, 1993, p. 11 and generally p. 6-86.
** James Clerk Maxwell, "A Dynamical Theory of the Electromagnetic Field," Royal Society Transactions, Vol. CLV, 1865, p 459

Necessary EM corrections*

- Higher symmetry, non-Abelian electrodynamics models have been developed in particle physics
- The new approach extends these models to also incorporate general relativity, thus producing a unified field theory*.
- In the new approach, spacetime curvature engines are perfectly natural and understandable, and can be directly modeled and engineered by advanced theorists.

* The theory is sufficiently advanced and robust that technology and engineering can now advance.

* This would be a great leap forward for biochemistry and medical science, particularly in therapeutic methods.

---

* Sachs's unified field theory implemented by O(3) electrodynamics developed by Evans presently is suitable to use. Numerical methods are often required, particularly when asymmetry is invoked, Lorenz symmetry is violated, and Lorentz-invariant equations cannot describe all the dynamics and results.

A fundamental charged particle is a Feynman ratcheting system* (1)

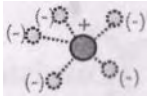

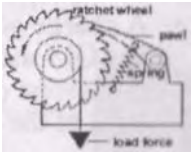

- Assume fundamental charge at ZPE equilibrium state (lowest quantal level).
- Disordered virtual photons from vacuum are absorbed serially by the fundamental charged particle. This is a reordering of the absorbed energy in 3-space and time.
  - Mass of a fundamental particle is already unitary in 3-space.
  - The unitary mass increases by little serial differential increases
  - * The serial integration completes the negentropy process.
- On the mass-energy, the same type of virtual energy differential thus appears in serially increasing order. The mass-energy of the charge at lowest quantum level (ZPE equilibrium state) has a series of coherently integrating differential increases in the virtual state.

---

* E.g., see Jack Denur, "Modified Feynman ratchet with velocity-dependent fluctuations," posted on web at http://www.ipmt-hpm.ac.ru/SecondLaw/down/170.pdf.

A fundamental charged particle is a Feynman ratcheting system (2)

- When the integrating differential virtual state mass-energy reaches the next higher quantum energy level, the violent zitterbewegung (jitter) of the absorbing charged particle abruptly initiates emission of an observable photon.
  - The emission abruptly decays the integrated excited state of the charged mass back to zero reference (i.e., the ZPE equilibrium state at base level).
  - Process continually reiterates since virtual disordered photons are continually absorbed in serial order by each charge, driving the process. This is a Feynman ratcheting effect.

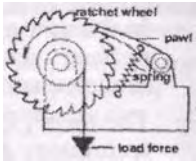

- The charge continually emits real observable photons in all directions, without any observable energy input. The input is a "sorted and reordered" virtual state energy input.The charge is a Feynman ratchet system, producing continuous negative entropy from positive energy and its "ratcheting" action.

Consistent with ZPE concepts, thermodynamics, and EFTV concepts (1)

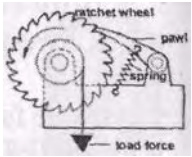

- A charge at zero absolute temperature has QM movements and energy. This is the lowest quantal level, called "zero-point energy" state of the observed charged particle.
- The interaction of the charge — its absorption of disordered subquantal virtual energy fluctuations, their conversion to differentials of unitary mass-energy with serial ordering, and coherent integration of the mass-energy differentials — excites the charge to the next higher quantum level, moving it out of ZPE-level equilibrium.
- The excited (potentialized) charge is then permitted to decay back to ZPE level, emitting an observable photon.

Consistent with ZPE concepts, thermodynamics, and EFTV concepts (2)

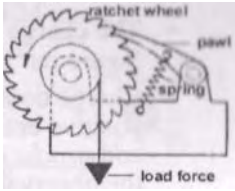

- Continual iteration of this "ratcheting" action — converting absorbed virtual state energy to emitted observable state energy and reiterating — provides continual emission of real photons by the charge, where energy of the emitted photons has been "lifted" from the virtual state vacuum.
- There is no "observable" (quantal) energy input because the required energy input is in subquantal form.

* ZPE consistency is upheld, thermodynamicists are happy, and EFTV enthusiasts are happy.

- Electrodynamicists should be happy that the long-vexing source charge problem is finally resolved!

Nonequilibrium steady state system

* A nonequilibrium steady state (NESS) system can:

- Self-order.
- Self-oscillate or self-rotate.
- Output more energy (as powered loads, etc.) than what the operator alone inputs. The excess energy input comes directly from the active environment, as free energy transfer.
- Power itself and its load (its associated observable fields and potentials in space). The input energy comes from the active vacuum environment, via the source charges, and the operator need not pay for it.
- Exhibit negative entropy.

PRIGOGINE

* The charge with its subquantal vacuum energy input and its observable EM energy output is a NESS system providing freely flowing EM energy from the vacuum.

All EM energy is free: EM fields and potentials are sets of ongoing and free EM energy flows (I)

- The charge is a nonequilibrium steady state (NESS) system. So are its' "static" fields and potentials.

- Charge continually consumes vacuum's positive entropy at the virtual state level, and produces negative entropy output at the observable level.
  - * Transduces absorbed disordered virtual state energy (from vacuum subquantal fluctuations) into observable state energy (real observable photons, real EM fields).
  - * Falsifies the old second law of thermodynamics, requiring its correction and extension.
- Continuously produces negative entropy observably, as shown theoretically possible by Evans and Rondoni.*

* D. J. Evans and Lamberto Rondoni, J. Stat. Phys., 109(3-4), Nov. 2002, p. 895-920.

All EM energy is free: EM fields and potentials are sets of ongoing and free EM energy flows (2)

- A truly "static" EM field does not exist**;
- Every EM field is a set of NESS flows of energy*** from its associated source charge or dipole.
- All we have to do is learn how to properly intercept, collect, and freely utilize the freely flowing EM energy.
- The collection and utilization process is an asymmetrical process a priori.
- Lorentz made the CEM/EE equations symmetrical so that simpler Lorentz-invariant equations could be used.
- The first requirement for COP>1.0 EFTV systems is to violate Lorentz symmetry in one's circuits, so that non-invariant equations cannot model their operation

* See Tom Van Flandern, Phys. Lett. A, 250, Dec. 21, 1998, p. 1-11.
** E.T. Whittaker, 1903 and 1904 (ibid.).
*** Many methods found by inventors are given in T. E. Bearden, Energy from the Vacuum: Concepts and Principles, Cheniere Press, 2002. For rigorous proof that violating the Lorentz symmetry condition allows EFTV systems, see M.W. Evans et al., Phvsica Scripta. Vol. 61,2000, p. 513-517.

Importance of solution to source charge problem (1)

- The source charge transduces disordered virtual fluctuation energy from the vacuum into real, usable EM energy flows comprising its fields and potentials.
- Extracting usable energy from the vacuum, any amount, anywhere, is straightforward. Every charge already does it freely.*

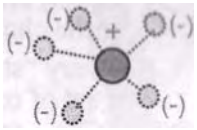

  - Just assemble some charge or a dipole. It will freely radiate real EM energy indefinitely, so long as it exists.
  - Use a collecting circuit having overall broken Lorentz symmetry.
  - Potentialize the circuit with charges pinned so dq/dt = 0.
  - When current flows and the collected energy is dissipated in the load, the source of potential and energy flow must not be connected into that external circuit as a load to be destroyed.

---

* Again, for examples of such systems produced by inventors, see T. E. Bearden, Energy from the Vacuum: Concepts and Principles. Cheniere Press, 2002. E.g., any EE department can readily build the Takahashi magnetic Wankel engine (suppressed by the Japanese Yakuza), which kills its own back mmf and thus produces a nonconservative rotation force, continually driving the engine and powering its load. It may also be readily made self-powering.

Importance of solution to source charge problem (2)

* There is no scientific excuse whatsoever for an electrical engineering that implicitly assumes that
  - Every EM field and potential (and every joule of EM energy) is freely created by the source charge from nothing at all.

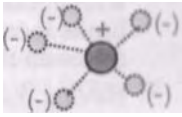

  - EM fields and potentials are "static".
  - Circuits must be built Lorentz-symmetric so as to deliberately self-destroy their own dipolar source of free EM energy from the vacuum.
  - EM energy occurs in "chunks" called joules. Instead, it occurs in free flows of EM energy — in joules per second.
  - EM fields in space are force fields.
- We must rethink our concept of EM energy and its use. The old "first principles" are seriously flawed.

EM energy is free, but we've not yet learned to use it properly! (1)

- Every charge is already a "free gusher of EM energy" that will flow forever if the charge is left undisturbed.
- Every "static" EM field or potential is thus a set of ongoing steady-state EM energy flows.*
  - Van Flandern's analogy applies.**
  - A "static" EM field or potential is like an unfrozen waterfall, rather than like a frozen waterfall as erroneously portrayed.
- Having the source connected to its external circuit while current is flowing destroys the source dipolarity — and the free flow of energy from the vacuum — faster than the load is powered.

---

* E. T. Whittaker, Math. Ann. Vol. 57, 1903, p. 333-355 and Proc. Lond. Math. Soc. Series 2, Vol. 1, 1904, p. 367-372 proved that any EM field or potential is a set of ongoing bidirectional EM energy flows.
**Tom van Flandern. Phvs. Lett. A 250. Dec. 21, 1998, p. 8-9.

EM energy is free, but we've not yet learned to use it properly! (2)

- Imposition of Lorentz symmetry to allow simpler (Lorentz invariant) equations is wrong. Building only symmetric circuits limits them to COP < 1.0, and keeps the meter on the gas pump and the meter on one's house.
- Having the dipolar source connected to its external circuit while current is flowing:
  - Destroys source dipolarity — and the free flow of energy from the vacuum.
  - Uses half the free EM energy collected on circuit charges to destroy source dipole and cut off free energy flow from vacuum.
- We have not learned how to intercept work-free potential energy flow, collect it for free without current flowing, then disconnect source and allow current to flow, freely dissipating the freely collected energy to power external loads "for free".

Energy, Spacetime, Vacuum VPF

- There really has been no satisfactory definition of energy.

• Energy change is measured, not energy per se.

♦ Energy can be defined in either of two ways:
  - Spacetime is identically energy.
  - Virtual particle flux (of the vacuum) is identically energy.
  - In either case, the energy density is enormous.

* A "change of energy" thus means two things:
  - A change (i.e., distortion or curvature) of spacetime.
  - A change in the virtual particle flux (VPF) of the vacuum.

♦ The "field" is a region of distorted spacetime and altered VPF.

* Fields and potentials decompose into sets of energy flows. So they are regions of flowing changes in spacetime distortion, and flowing changes in vacuum VPF.

The entropy concept Implicitly assumes its own contradiction (1)

- Price points out the problem*:

  "A century ago Ludwig Boltzmann and others attempted to explain the temporal asymmetry of the second law of thermodynamics. The hard-won lesson of that endeavor — a lesson still commonly misunderstood— was that the real puzzle of thermodynamics is not why entropy always increases with time, but why it was ever so low in the first place. "

- For a system initially in equilibrium, the concept of further entropy production implicitly assumes a previous negentropic process has occurred to provide additional usable (controlled) order (usable energy) in the system, that is to be disordered and decontrolled.

* H. Price, Time's Arrow Today. S. F. Savitt, Ed., Cambridge University Press, 1995, p. 66-94.

The entropy concept implicitly assumes its own contradiction (2)

- Scientists balk at the necessity for initial negative entropy production, and largely avoid facing it.
- Usually they arbitrarily invoke positive entropy occurring in the external environmental system, and thus furnishing the energy — to the system — in work-free manner but with work in the environment.
- This just moves the problem to an outside system (the environment) and does not solve it.
- Scientists stared at the necessity for equal negative entropy first occurring, and then walked away, rather than dealing with it*.

---

* By his hierarchies of symmetry and change to geometry, Leyton solved the problem. See Michael Leyton, A Generative Theory of Shape, Springer-Verlag, Berlin, 2001.

Importance of Leyton geometry*

- We also must upgrade thermodynamics by adopting Leyton geometry instead of the limited 1872 Klein geometry.
- Leyton's work proves negative entropy as the other "missing" half of the Second Law of thermodynamics — the half which is transduction of entropy into negative entropy, as exhibited by the source charge and its deterministic EM fields and potentials and their energy.

Dr. Michael Leyton

---

* See Michael Leyton, A Generative Theory of Shape, Springer-Verlag, Berlin, 2001. Leyton's object-oriented geometry uses more advanced groups and group operations than the old 1872 Klein geometry. Klein geometry has entropy "welded in", so to speak. In Leyton geometry, this is not the case; rather, negative entropy is also included, particularly in Leyton's hierarchies of symmetry.

The Leyton effect:

- In Klein geometry, broken symmetry at a given level loses the information at that level and reduces the overall group symmetry. This is basically a "wired-in entropy operation."
- In Leyton geometry, broken symmetry at a given level automatically creates a new symmetry at the next higher level, with a layer that captures all the lower level information. Hence a broken symmetry increases the overall group symmetry. This is a negative entropy operation a priori.
- Leyton geometry thus produces a hierarchy of symmetries, missing from Klein geometry.

Leyton's geometry solved the overall problem of thermodynamics

- The overriding thermodynamics problem is: If the second law is correct, and entropy can only stay the same or increase, then how did the entropy of the universe ever get so low in the first place? And how is it so low now?
- How does a system, once reaching equilibrium (maximum entropy), ever depart from equilibrium to lower entropy?
- The old second law also does not consider negative energy and negative energy EM fields — the so-called "dark energy" of the universe. It does not account for negative mass matter — the so-called "dark matter" of the universe.
- Problem recognized — and unsolved — for a century.
- It cannot be solved unless there is also a law of negative entropy production, which immediately requires hierarchies of symmetry. Leyton's work provides that missing law.

Correction of the second law of thermodynamics (1)

- We have proposed the following correction:
  "For a system initially in equilibrium, first some negative entropy is produced in the system, departing it from equilibrium and lowering its entropy so it has some controlled order (energy) to be decontrolled and disordered. In interactions thereafter, the entropy remains the same or increases, unless additional interactions producing negative entropy arise and interfere. "

* This statement is consistent with experiment (e.g., Wang et al.*), Leyton geometry,** and the source charge's ratcheting production of its associated EM fields and potentials and their energy.***

---

* G. M. Wang, E. M. Sevick, Emil Mittag, Debra J. Searles, and Denis J. Evans, "Experimental Demonstration of Violations of the Second Law of Thermodynamics for Small Systems and Short Time Scales," Phys. Rev. Lett. 89(5), 29 July 2002, 050601.
** Michael Leyton, A Generative Theory of Shape. Springer-Verlag, Berlin, 2001.
*** T. E. Bearden, Energy from the Vacuum: Concepts and Principles. 2002.

Correction of the second law of thermodynamics (2)

- Present second law is ($0 < dS < +\infty$), which states that the system entropy can only stay the same or increase.
- System in equilibrium is in state of maximum entropy. Thus to produce entropy, the system must first depart from equilibrium, lowering its entropy.*
- This is a negative entropy operation ($-\infty < dS < 0$) and it produces a "potentiahzed" system or "excited" system not in equilibrium.*
- The excited or potentiahzed system can then entropically decay back to equilibrium condition, if no further excitation or potentialization (negative entropy operation) occurs to interrupt it. This is ($0 < dS < +\infty$) — the present old second "half-law".

•If the energy is furnished to the system in the same form as the system's potential energy that is changed in magnitude, no work is done. This is gauge freedom, which is inherently negentropic. If the energy is furnished in a different form, work is required in order to change the form of the input energy.

Correction of the second law of thermodynamics (3)

- The two serial actions of negative entropy and positive entropy form a ratcheting process, similar to Feynman's ratchet.
- The second law has always been an oxymoron implicitly assuming its own contradiction has first occurred but has not been accounted.
- The new, complete second law is just ($-\infty < dS < +\infty$), and it states that in an interaction the system may produce negative entropy, positive entropy, or stay at the same entropy level — all depending upon the nature of the interaction.

Correction, of the second law of thermodynamics (4)

$\boxed{W = Vq}$

- New, corrected second law is ($-\infty < dS < +\infty$).
- In macroscopic systems, often potentialization and dissipation are serial, discrete operations. In that case:
  - First ($-\infty < dS < 0$) occurs separately.
  - Then ($0 \leq dS < +\infty$) occurs separately.

- So in this special case the new second law is:
  ($-\infty < dS < +\infty$) = ($-\infty < dS \leq 0$) + ($0 \leq dS < +\infty$)
- The implicitly assumed unaccounted negative entropy operation is clear, as is the proper meaning of the old second "half-law". It was just entropic decay back to equilibrium, of a previously excited system.
- Now electrical engineering can proceed with negative entropy engineering, directly.

Correction of the second law of thermodynamics (5)

$$\boxed{W = Vq}$$

- The new second law and revised first law allow self-powering electrical power systems taking their input energy freely from the vacuum. The source charge is one such self-powering EM system.
- From any fixed source of potential V, given sufficient q any amount of potential energy W can be freely collected, by W = Vq, or for a given q by using repetitive collection-dissipation with the source connected only in collection.
- In short, just use a similar "ratcheting" operation as shown by the source charge.

Implications for electrical power systems: A permanent solution to the energy crisis (1)

* For $(-\infty < dS < +\infty) = (-\infty < dS \leq 0) + (0 \leq dS < +\infty)$:
  - No law of nature states we ourselves must pay for the extra potentialization energy $(-\infty < dS \leq 0)$. Pure asymmetric regauging (voltage amplification) can supply it.
  - Conservation of energy merely requires that something (such as the environment) must furnish it, since we dissipate it by $(0 \leq dS < +\infty)$. Any source of potential can give it freely.
  - We can. insist on furnishing it by brute force, paying for it.
  - Or we can allow nature to furnish it freely — including from the vacuum.
* EM energy in nature occurs in steady, inexhaustible free energy flows from all source charges and dipoles. This allows use of work-free asymmetric regauging.

Implications for electrical power systems: A permanent solution to the energy crisis (2)

- We may therefore freely collect extra EM potential energy from the gushing energy flows coming from the circuit charges or system charges.
- By adroit switching, this potential energy can be dissipated in an external load to "power" it, without using half of it to "kill the source dipolarities".

* We need pay only a little for the "switching and control" (S&C) energy dissipated.

« From the output load energy, we can extract that small S&C energy via positive feedback from the load output to the S&C unit, so the S&C unit is a small part of the "powered load".

* In that way, the working system is also self-powered by energy freely extracted from the vacuum.

Example: Any EE department can build a self-powering magnetic Wankel engine (1)

- It is a rail gun wrapped nearly in a complete circle, reducing back mmf to a very small open section.
- A pole piece with coil covers gap. A very small trickle current is in the coil.
- Current is sharply broken as rotor enters gap.
- Lenz law surge of current creates magnetic field that momentarily overrides back mmf field.
- Rotor passes through a zero "back mmf" field; even a forward mmf field.
- Pay a little, get engine with no back mmf, violating Lorentz symmetry. COP > 1.0 easily.

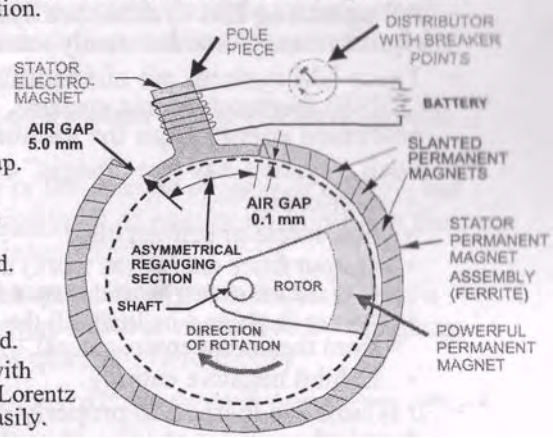

Example: Any EE department can build a self-powering magnetic Wankel engine (2)

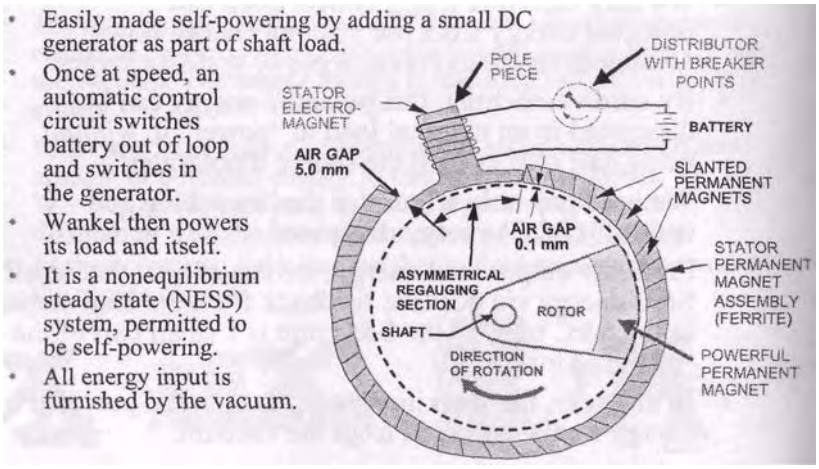

Since EM fields and potentials are sets of energy flows:

- All operating EM systems are systems far from equilibrium. Consider steady state condition:
- These EM systems are nonequilibrium steady state (NESS) thermodynamic systems, freely receiving their processed energy from the vacuum environment.
- Such a system has five "magic" characteristics. It can:
  * Self-order.
  * Self-rotate or self-oscillate.
  * Output more energy (as work) than the operator inputs (the excess energy input comes from the environment).
  * Power itself and its load (all the energy input comes from the active environment).
  * Exhibit negative entropy.
- It is time we learned to properly utilize our NESS EM electrical power systems, rather than killing them.

Why Yakuza suppresses the Wankel magnetic engine and several others

- About two years from now, with scalar interferometry the Yakuza plans to disable the centralized electrical power system of the U.S., to never work again.
- As total economic collapse looms, U.S. will finally boot its scientific community hard, and there will be desperate search for a quick solution.
- Through the Japanese government the Yakuza will offer Japanese self-powering systems as the quick answer.
  - * Draws off all available desperation funding that is "last ditch" U.S. effort to prevent total economic collapse.
  - * By delivering only a few systems and very slowly, that "last ditch" U.S. science effort will be thwarted.
- As a result, there will be a total U.S. economic collapse, which — coupled with conversions, nuclear explosions in cities, anthrax attacks, etc. —will finish off the U.S.
- Yakuza then kills remaining members of U.S. population.

Correcting an erroneous interpretation of the first law of thermodynamics (1)

- The First Law is erroneously thought to define any change in magnitude of an external parameter of the system as work a priori.*
- Potential energy of a system in a given form is such a parameter.
- Work rigorously is the change of form of energy, but not change of magnitude of energy remaining in the same form. The latter requires no work.
- Mere change of magnitude of potential energy of a system is regauging, and it is work-free by the gauge freedom axiom of quantum field theory.

* E.g., see Ralph Baierlein, Thermal Physics. Cambridge University Press, 1999, p. 2.

Correcting an erroneous interpretation of the first law of thermodynamics (2)

* Present interpretation of the first law excludes gauge freedom — a major non sequitur requiring correction.
* If energy is input — by the external environment or fixed source of potential — to the system in the same form as the external parameter's energy, then no work is required.
- In that case, the change of the external parameter's magnitude is by work-free asymmetric regauging.
- If energy is freely input to the system in a different form than the external parameter's energy, then work must be done to change the form of the input energy, before it can change the magnitude of the external parameter.
* Properly switched and controlled, a potentializing source of freely flowing EM energy can furnish an unlimited amount of freely collected potential energy, indefinitely.

Correcting an erroneous Interpretation of the first law of thermodynamics (3)

- $W = \phi q$ shows that any amount of energy W can be freely collected from a fixed scalar potential ϕ, by charges q, if the amount of charge q intercepting the energy (deviating it from the flows comprising ϕ) is freely variable.
- If the amount of charge q is also fixed, any amount of energy W can still be freely collected from ϕ by ratcheting iterative static collection of energy *into* the circuit and dynamic dissipation of energy *from* the circuit to power loads.

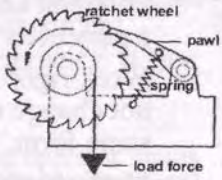

- Similarly, any amount of emf force can be freely collected from a fixed E-field by $F = Eq$.
- Presently only the intensity of the force field and the potential are defined, and then only as how much is diverged from the actual spatial EM field or potential by a unit point static charge assumed at each and every point.

Correcting an erroneous interpretation of the first law of thermodynamics (4)

* At best, the present calculation of "the field" is only an "indication" of the point intensity of field and potential, for interaction with static charges. It's actually a statement on reaction cross section of the unit point static charge.
* If the charge self-resonates at the frequency of the input energy, its interception (divergence) of energy increases, resulting in a different "field intensity defined" for the same "field". E.g., for the same amount of charge, the resonance case generates 18 times as much output energy from the same input as does the static charge case,* with no change in the operator's input. I.e., COP = 18.
* Presently no one calculates "the field" or "the potential" a priori, but only its "dependent point intensity" as determined for static charges.

* See Craig F. Bohren, "How can a particle absorb more than the light incident on It?" Am. J. Phys. 51(4), Apr. 1983, p. 323-327.

Contrary to popular opinion, perpetual motion is permissible and well-known

* Newton's first law of motion is the law of perpetual motion.
  - An object placed in motion remains in that state of motion in a straight line, unless changed by an external agent.
  - With no force interruption, the state of motion is perpetual.
  - The object needs no input of energy, and it does no work.
- Solid state physics students do perpetual motion experiments.
  - Once initiated in a superconducting ring, a persistent superconducting current will continue perpetually.
  - Careful measurements and proper statistical analysis indicates a half-life expectancy of some 10^{23} years.* The accepted age of the universe is about 1.4×10^{10} years.
  - The persistent ring current will last a great many orders of magnitude longer than the present universe has existed.

• Charles Kittel, Introduction to Solid State Physics. Seventh Edition, Wiley, New York, 1996, p. 359.

Common objection to COP > 1.0 power system as a forbidden perpetual motion machine is nonsense (1)

- Max Planck stated the erroneous objection this way: "It is in no way possible, either by mechanical, thermal, chemical, or other devices, to obtain perpetual motion, i.e., it is impossible to construct an engine which will work in a cycle and produce continuous work, or kinetic energy, from nothing. "
- The statement contains two premises, one false and one true. It erroneously equates the two, and assumes that this proves the false premise. That is a simple logical non sequitur.
  * False premise: Perpetual motion is impossible. Falsified by Newton's 1st law and today's persistent super-conducting experiments in solid state physics labs.
  * True premise: No engine can do continuous work in a cycle without energy input.
  * The "i.e.,..." erroneously equates the two as the same thing. That is a non sequitur.

Common objection to COP > 1.0 power system as a forbidden perpetual motion machine is nonsense (2)

- That this rather inane non sequitur has not been noticed for more than 100 years of using it for "knee-jerk" condemnation is inexplicable.
- Perpetual motion has nothing to do with performing work or receiving extra energy input. It is simply Newton's first law of motion.
- Perpetual motion is experimentally proven. From several sources, one can even purchase a standard kit and perform a successful perpetual motion "persistent superconducting current" experiments oneself.
- Can have a perpetual motion machine doing work, if:
  * Necessary energy is received (as from the vacuum).
  * On the average the system is a NESS system.
- E.g., one can have a "self-powering" EM power system.

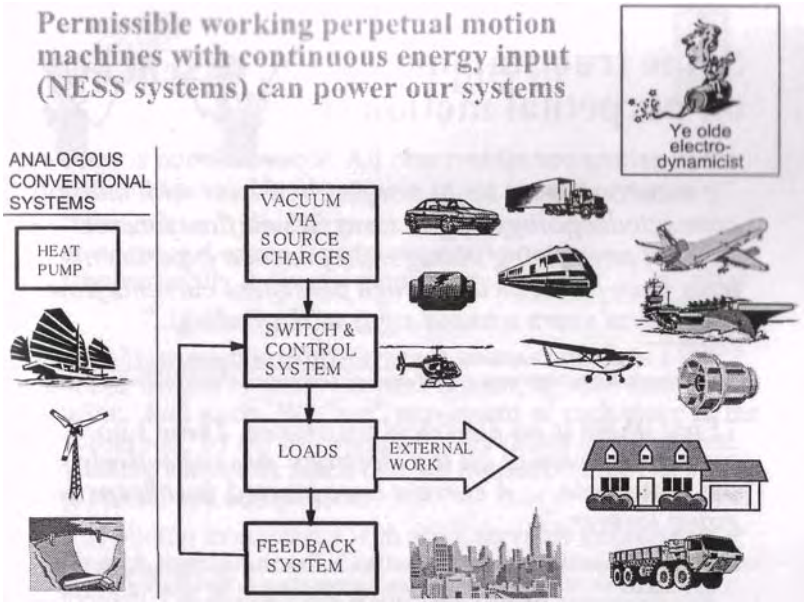

An interesting fact: The entire scientific community can be wrong for more than a hundred years

- In science model errors, often simple foundations are wrong, rather than the complicated mathematics.
- E.g., for more than 100 years the scientific community has automatically condemned "perpetual motion" and "dirty old forbidden perpetual motion machines".
- It seems that no one has previously subjected the typical nonsense statement to a simple sophomore logic analysis
- Indeed, it continues to be used to denigrate EFTV, cold fusion, and other researchers and to slander them.
- To borrow a phrase from Nikola Tesla:

  "... [Eventually] it will be recognized as one of the most remarkable and inexplicable aberrations of the scientific mind which has ever been recorded in history. "

Some true statements on perpetual motion (1)

"If a current is set up in a superconductor with multiply connected topology, e.g. a torus, it will flow forever without any driving voltage. (In practice experiments have been performed in which persistent currents flow for several years without signs of degrading). "

Peter J. Hirschfield, U. of Florida, Physics Teaching Notes. Chapter 5, Superconductivity, http://www.phys.ufl.edu/~pjh/teaching/phz7427/7427notes/ch5.pdf.

"First, there is no electrical resistance. There's no resistance because all the electrons are collectively in the same state. …A current once started, just keeps on going forever."

Richard P. Feynman, Robert B. Leighton, and Matthew Sands, The Feynman Lectures on Physics. Vol. Ill, Quantum Mechanics, Addison-Wesley, Third Printing 1966, p. 21-08. Feynman was speaking about persistent superconducting currents.

Some true statements on perpetual motion (2)

- Roy* sums it up elegantly:

"It follows from Newton's laws that an isolated system in motion, on which no [net] force or torque is acting, exhibits precisely perpetual motion of the second kind. An example of perpetual motion of the second type is the orbiting of electrons around the atomic nucleus. ... perpetual motion of the second type is common on atomic and celestial scale; however, such a motion is not common in everyday life. The best known example of perpetual motion in everyday life is superconductivity, in which a current circulates ceaselessly in a wire loop without a battery. "

* Bimalendu N. Roy, Fundamentals of Classical and Statistical Thermodynamics. Wiley, Chichester, 2002, p. 59.

The march of time in physics

- Time is not observable. All observables are spatial, oof spatiotemporal. No observable exists in time, a priori.
- "Observation" is a $\partial/\partial t$ process imposed upon an ongoing 4-space (spatiotemporal) process. Dimensionally it gives a momentary snapshot:

$$\partial/\partial t\ (L^3T) = L^3$$

- An observation yields a frozen 3-space snapshot at one instant in time. The next instant, another snapshot is taken. And so on. We "see" movement of each piece of the "observed" by (a) its continual observation at high speed, yielding snapshots much like the frames of a movie, and (b) recall and comparison.
- The photon interactions with an observable generate its "march through time". Continuity is achieved by recall and comparison in the mind of the observer.

More sweeping changes to physics (1)

- What we refer to as "propagation of energy through 3-space" is in fact successive 3-positioning of a circulation of energy in 4-space, between the time-axis and a 3-space point and back, or vice versa
- This latter 4-circulation is what we refer to as "charge". Hence negative charge is energy circulation from T to L^3, and positive charge is energy circulation from L^3 to T.

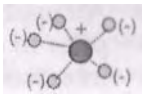

- Charge conservation is the complete 4-circulation. Due to vacuum polarization, any classical charge is a dipolarity, hence involves both energy flows.

More sweeping changes to physics (2)

* Zero charge may be either absence of circulation, or the presence of the same magnitude of equal and opposite circulations. The first is stress-free, while the second produces a stress 4-potential, a change in energy density of the vacuum, and a curvature in spacetime.

- Propagation of EM energy through 3-space actually is the successive positioning of the 4-circulation — the propagation of a 4-circulation.

* This explains Silverman's comment that "we really do not know what charge is... ", by revealing at least a view of how charge can be modeled.

More sweeping changes to physics (3)

- "Massless cause", "massless field", "massless potential", "curved spacetime", "exchange of virtual particles" are all slightly different aspects of the same precursor: massless cause (massless potentials and fields in space and changes of VPF in vacuum).

* All apply to the unobservable condition that exists prior to observation (observation occurs only after interaction of precursor with mass).

♦ Observation of the process whereby an ongoing massless cause is interacting with a previously observed "effect" to change it, is a $\partial/\partial t$ operation induced upon that LLLT process to produce a new "frozen LLL snapshot" (observed effect).

More sweeping changes to physics (4)

- The $\partial/\partial t$ operation induced upon ongoing 4-interaction between a 4-cause and a previous 3-effect, yields the newly observed "form" of the observable, which provides the "change" to it (when compared in memory to previous effect observed).
- The best physics and engineering is to consider a set of such 4-causes — that will interact with or are interacting with a system — to be a nonmaterial, force-free precursor "engine". Directly engineering and using such "precursor engines" is a new and more fundamental approach. It is in fact that of FSB/KGB energetics.
- Precursor engineering (energetics) is a priori an engineering grand unified field theory approach.

Peculiar note on Dirac "hole" thermodynamics

- In thermodynamics, several areas are already known and accepted to violate the second law. One of these is sharp gradients, about which "Not much is known either experimentally or theoretically".*
- A very sharp gradient in energy density across a region of vacuum lifts electrons out of the Dirac Sea, leaving behind unfilled holes. Some of these holes can and do persist, not meeting electrons to "eat", refill and vanish.
- The hole (negative mass energy, negative energy EM fields and potentials) is not a positron (positive mass energy, positive energy EM fields and potentials).

* p. 459, Dilip Kondepudi and llya Prigogine, Modern Thermodynamics: From Heat Engines to Dissipative Structures. Wiley, Chichester, 1998, Reprinted with corrections Oct. 1999.

Note on dark energy and dark matter problems (1)

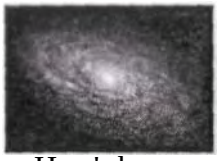

- Dark energy is just negative EM energy. Here's how.
- Persisting or temporarily persisting Dirac sea holes are negative mass-energy "source charges".
- While existing, as a source charge a hole produces negative energy EM fields and potentials, spreading at light speed from the moment of hole formation by sudden removal of its filling electron by sharp energy gradients.
- When the long-ignored Heaviside curled energy flow component is also considered, the negative energy field energies involved are perhaps a trillion times greater than conventionally can be estimated via Poynting theory.
- Nonsignificant antigravitational effects are thus produced, by negative mass of holes and by negative energy fields.

Note on dark energy and dark matter problems (2)

- A fraction of Dirac holes produced in violent gradient processes in the galaxy do persist. They are repelled away from the masses producing them, and stream toward the outside of the galaxy.
- As they exit the galaxy, they slow due to increasing repulsion from the matter of distant galaxies. Thus with passage of time there is a slowly increasing "pooling" of Dirac holes (dark matter) outside each galaxy.
- These increasing pools gravitationally repel the originating galactic matter, reducing that matter's escape due to velocity outward and centrifugal forces.
- The pools also gravitationally repel the matter of distant galaxies, so that a gradually increasing expansion acceleration occurs.

Note on dark energy and dark matter problems (3)

- In the dark matter problem, the G-forces produced on the galactic arms to hold them together have been assumed to be positive gravity forces from hidden (dark) mass inside the galaxy and arms.
- Instead, it is proposed that those forces are in fact antigravity forces — from accumulations of Dirac holes (negative mass matter) just outside the galaxy — acting back on the galactic matter to repel it.
- As source charges, these persisting holes continue to radiate negative energy photons, producing and sustaining negative energy EM fields and potentials. Those contain the missing "dark energy" of the cosmos.
- Dark energy is just the negative energy fields and flows from dark (negative) matter as source charges.

Dark (negative) energy and dark matter: Galaxy Integrity and expansion of the universe (1)

- A sudden impulsive and very strong energy gradient across a region of vacuum lifts electrons from the Dirac sea, flowing in one direction, and leaving behind unfilled negative energy Dirac holes flowing in the opposite direction. The flowing Dirac holes are currents of "dark matter" (matter having negative mass energy).
- The negative-energy hole is not a positive-energy positron, contrary to the prevailing interpretation. A positron has positive mass-energy and positive energy fields; a hole has negative mass-energy and negative energy fields. Equating the two has always been a logical non sequitur.
- As a source charge, the persisting hole emits negative energy photons, establishing and continually replenishing its associated negative energy EM fields and potentials, spreading at light speed.
- Violent sharp-gradient processes in galactic matter continually produce such outward light-velocity streams of negative energy fields followed by much slower streams of dark matter (holes).

Dark (negative) energy and dark matter: Galaxy integrity and expansion of the universe (2)

* The outward-spreading dark (negative mass) matter streams are slightly repelled gravitationally by positive-energy masses in the galaxy. Thus they "navigate" slightly through a galaxy, avoiding matter except for those electrons forcefully meeting them and recombining without radiation.
- The dark matter tends to slow down outside the galaxy and exhibit dynamic cumulation (nonequilibrium steady state) outside, due to gravitational back-repulsion from the cumulations of negative energy outside other galaxies, etc.
- The cumulation of this dark matter around and outside each galaxy repels positive matter back into its own galaxy and also repels positive matter in all distant galaxies.
* Onward-racing negative energy fields with their Heaviside energy components contribute substantially to the effect.

Dark (negative) energy and dark matter: Galaxy integrity and expansion of the universe (3)

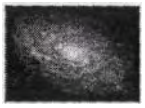

- Considering the long-neglected giant Heaviside energy component of this negative EM energy flow and dark matter flow, its cumulation outside the galaxy far exceeds conventional calculations and leads to significant gravitational repulsion effects.
- From the collection/cumulation outside the galactic masses, the gravitational repulsion back into the galactic matter (e.g., back into a spiral galaxy's arms from the altered space surrounding each arm) holds the galactic matter together, preventing it from flying apart due to centrifugal forces overriding the normal positve gravitational attraction.
- This is largely the phenomenology erroneously labelled the "dark matter" effect. It is not an attraction from inside, but a repulsion from outside.

Dark (negative) energy and dark matter: Galaxy integrity and expansion of the universe (4)

- Continuing accumulation of dark matter and negative energy concentrations outside each galaxy results in the increasing mutual repulsion of galaxies. At some point in the past, with the increasing Dirac hole cumulations the increasing mutual gravitational repulsion of the galaxies caught up with and exceeded their gravitational attraction, and it continues to slowly increase, further exceeding it.
- This reversed the deceleration of the expansion and generated and continues to generate the acceleration of the expanding universe, by gradually increasing the mutual departing intervelocities of the galaxies.
- Originally positive G attraction between galaxies was slowing universe expansion. Finally the cumulating antigravity caught up and surpassed it. So now the expansion of our universe is increasingly accelerated.

Dark (negative) energy and dark matter: Galaxy integrity and expansion of the universe (5)

* Negative energy and dark matter can be investigated on the bench, using Bedini techniques* and other techniques used by Sweet.**
* Together with its Heaviside component, dark energy from the dark matter produces significant antigravity effects** and many other effects.

---

* John C. Bedini and Thomas E. Bearden, "Radiant Potential Energy Charger", U.S. Provisional Patent Application ER 677978580 US, 2004. A formal patent application is in preparation.

** Floyd Sweet and T. E. Bearden, "Utilizing Scalar Electromagnetics to Tap Vacuum Energy," Proc. 26th Intersoc. Energy Conv. Enq. Conf. (IECEC '91). Boston, Massachusetts, 1991, p. 370-375. A highly successful antigravity experiment was performed, with the VTA unit losing 90% of its weight on the bench. Results are reported in the paper.

Dark (negative) energy and dark matter: Producing anomalous Pioneer drag

- In a galaxy, violent gradient processes are continually occurring, continually producing dark matter and flows of negative energy slowly cumulating outside the galaxy. Dark matter accumulations outside produce more antigravity fields back into the galaxy, acting on galactic matter, than does the thinner concentration in the flow inside the galaxy. A similar effect surrounds the sun.

NASA's Pioneer spacecraft

- A spacecraft moving away from our sun towards the outside of the galaxy, experiences a "net drag" force upon it, due to the excess G-repulsion from the outside dark matter accumulation. This accounts for the anomalous drag experienced by NASA's Pioneer 10 spacecraft and some others.

Some aspects of Bedini's important negative energy Investigations (1)

- EM energy flow occurs in two main forms:
  - Divergent (positive) energy flow, where the energy is always trying to diverge out of its flow direction through space and escape back to the environment.
  - Convergent (negative) energy flow, where excess negative energy from the vacuum environment is trying to enter and increase the ongoing flow of negative energy.
- "Conductivity" means the ability of the conductor to "hold in" the positive energy on its flow path through space, and to "hold back" excess negative energy from the vacuum attempting to freely flow into and increase a negative flow of energy through space.
- "Impedance" is reduction of conductivity (ability to hold in or hold back the change in energy flow).

Some aspects of Bedini's important negative energy investigations (2)

* Positive energy flow encountering an impedance will "lose some energy" diverged from the energy flow path. Less energy flow along the path leaves the impedance than entered it.
* Negative energy flow encountering an impedance will "gain some negative energy" converged in from the environment. More negative energy flow along the path leaves the impedance than entered it.
* Negative energy flow passing through a series of impedances can undergo tremendous gain, freely receiving excess negative energy from its environment.

Some aspects of Bedini's important negative energy investigations (3)

* Negative energy flow passing through a series of impedances freely receives excess negative energy from its environment via each "impedance".
* If loads are designed for negative energy, impedance of load provides an additional energy flow gain.
* Such negative energy flows are nonequilibrium systems, freely receiving excess negative energy from their environment.
* In theory, a flashlight battery producing a little negative energy could be used in a circuitry of special iterative series impedances to power a large city.
* The vast excess EM energy gathered would freely come from the vacuum environment.

Conversion of negative EM energy to positive" EM energy

- Converting negative energy to positive energy is simple.
  - Charge a capacitor (or battery) with the negative energy, by connecting the battery "backwards" and pulsing it with negative energy pulses.
  - The battery charges rapidly, and also undergoes appreciable rejuvenation inside.
  - The battery charges with much less "operator-input" energy, because the environment freely inserts additional negative energy via the impedance of the battery.
  - Switch away the rapidly charged battery into another circuit, connecting it normally.
  - The battery discharges more "normal positive EM energy " into the loads and losses of that circuit than the operator furnished to do the switching and controlling.

* Scientific study and development of negative energy loads and systems can rapidly solve the energy crisis forever.

Einstein's admonition

"... the scientist makes use of a whole arsenal of concepts which he imbibed practically with his mother's milk; and seldom if ever is he aware of the eternally problematic character of his concepts. He uses this conceptual material, or, speaking more exactly, these conceptual tools of thought, as something obviously, immutably given; something having an objective value of truth which is hardly even, and in any case not seriously, to be doubted. …in the interests of science it is necessary over and over again to engage in the critique of these fundamental concepts, in order that we may not unconsciously be ruled by them. "

(SLIDE BRIEFING CONTINUED)

PART I: APPENDIX; Vulnerability of Network-Centric Warfare

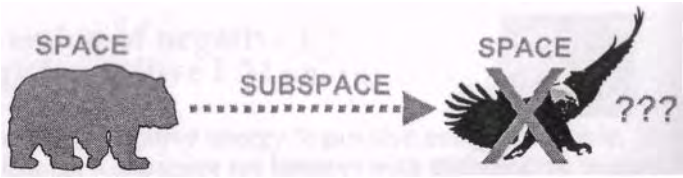

Appendix 2: Example: Vulnerability of Network-Centric Warfare

Nullified by asymmetric energetics warfare

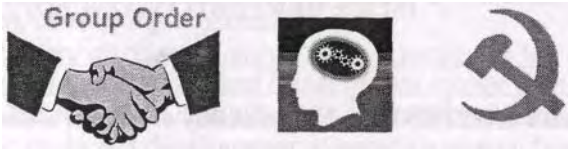

Basic Idea in Network-Centric Warfare NCW)

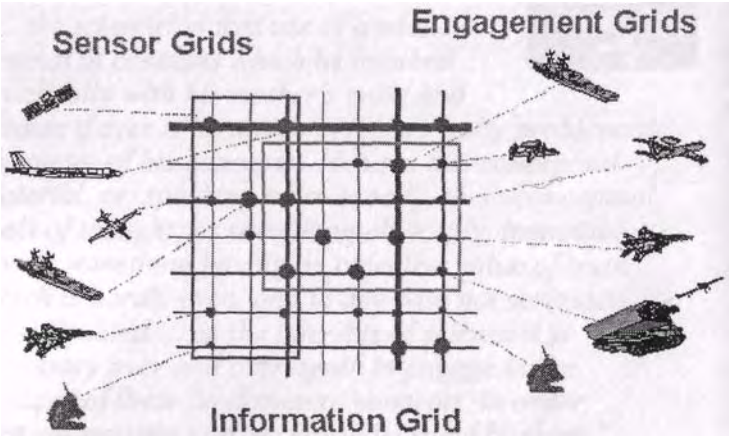

Network-centric warfare (NCW) in part of the theater

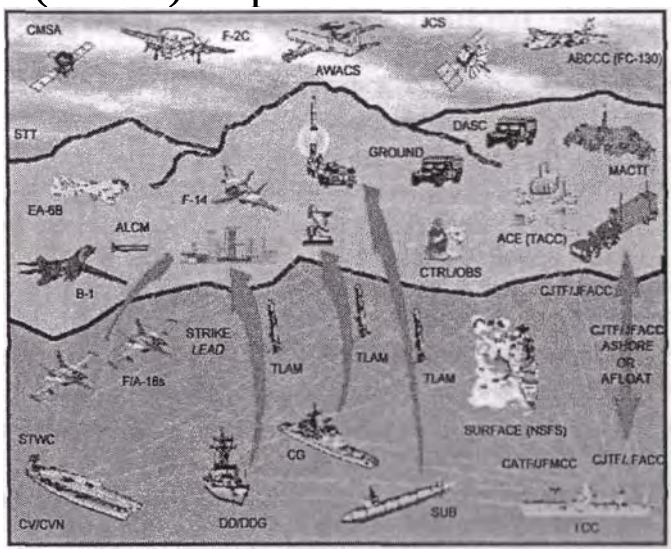

Network-centric warfare

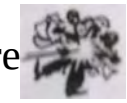

- A developing U.S. style of warfare based on force transformation and total network implementation on the battlefield, to unify and coordinate resources, forces, and actions.
- Particularly directed toward interoperability.
- Ensures all facets are "playing from same sheet of music".
- Shifts sources of power to information-based activities.
- Commanders effectively direct the various elements of the action, in real-time or near-real-time.
- Replaces the older notion of "orchestrating the battlefield", but goes much further by accenting interoperability, communications, and architecture.

---

* E.g., see Max Boot, "The Struggle to Transform the Military," Foreign Affairs, Mar./Apr. 2005, p. 103-118. Also see briefing on http://sunset.usc.edu/gsaw/gsaw2005/s8/slater.pdf

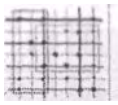

Network-centric warfare includes many good things

- Continuous adaptive acquisition
- Robust operational prototyping
- Capability in the hands of people as possible, then issue the next item, then the next, constantly growing and changing
- Better than forecasting a need 15 to 25 years hence, freezing design then making it fit into the reality that emerges
- Work-in strategy threats and technology first, which yield concept development
- Balanced approach between creativity and implementation
- Train for the known but educate for the unknown
- Based on mission capabilities package — the sum total of that which is necessary to perform a task

Largely taken from presentations by Admiral Arthur Cebrowski, Vice Admiral USN (Ret.), who is Director of Office of Force Transformation.

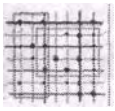

Basic intent of NCW (1)

(Also see following slide)

* Time delays out of Observe, Orient, Decide, Act (OODA) loop.*

* Immediacy of NCW information permits accomplishing OODA cycle on a smooth, nearly continuous basis at all levels of command, for "empowered self-synchronized" operations.

* With training, immediacy of near-total information available at all levels should further accelerate the semi-independent operations for "much greater speed of command."

* Permits decentralizing or flattening the command structure, taking the control function down to the lowest practicable level of command and shortening the response cycle.

* Col. John Boyd's famous loop, widely known in strategy circles.

Basic intent of NCW (2)

Self-Synchronization and the Speed of Command

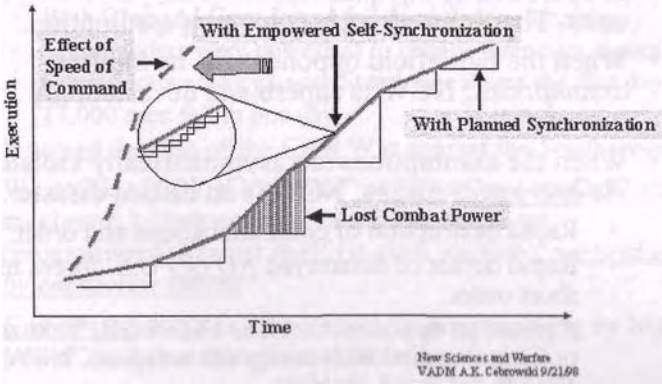

The asymmetric response

Marshall Andrei Grechko

- "History knows many examples how the employment of a new weapon initially gave considerable success because the enemy. caught unawares and not knowing the combat capabilities of this weapon, was for some time incapable of effective counteraction."

  (V. Yo. Savkin, The Basic Principles of Operational Art and Tactics, Moscow, 1972.)

- "Of particular importance is basic research aimed at discovering still unknown attributes of matter, phenomena, and the laws of nature, and developing new methods for their study and use to reinforce the state's defense capability. "

  (Marshall Andrei Grechko)

Network-centric warfare: Assumptions defeated

- NCW assumes GO — Group Order and coherence — in operation of equipment, networks, personnel, and units. That is an already-countered assumption.
- When the battlefield opponent fits its implicit assumptions, NCW is superb and devastatingly successful.
- When the assumptions are asymmetrically violated via energetics means, NCW is an instant disaster.
  - Rapid destruction of communications and order.
  - Rapid defeat of disarrayed NO GO U.S. forces in short order.
  - Against an opponent (such as FSB/KGB, Yakuza, or China) armed with energetics weapons, NCW is already rendered obsolete.

Incident in World War I

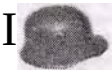

* In WW I, in one incident commanders produced a rigid plan of attack, massive, and down to the finest details.
♦ Predicted superb success for such a superb plan.
- The attack was a total disaster. The Germans violated the programming assumptions and chewed up the operation.
* Lessons to be learned:
  * A strategy may work against an opponent fitting its implicit assumptions.
  * It fails miserably against a foe who can and does deviate asymmetrically from the implicit assumptions.
- Remark: Network-centric war worked decisively against a highly inferior Iraqi military, but proved nothing at all for asymmetric warfare in a modern energetics weapons arena.

Programmed forces: Gettysburg

- At the battle of Gettysburg, forces reacted with programmed or stereotyped responses.
  - Both Blue and Gray forces followed their programs.
  - Commanders were powerless to change their own tactics.
  - Confederate cavalry under Stuart was absent the first day.
  - 17,000 men fell in one day.

* It turned the tide of the Civil War against the Southerners.

- We speak of "BlueGray War" or "BlueGray conflict" as maximum killing conflict, in a force that is set (programmed) against itself (in civil warfare), particularly by energetics means.
- Conversion enables the ultimate "reprogramming by higher power" and thus the ultimate BlueGray war.

Part of a song* about the Battle of pettysburg

"Seventeen thousand fell today;
The cannons roared and blew them all away.
Blood ran red from Blue and Gray,
And seventeen thousand fell today."

"Broken bodies lying all around,
Mould'rin' in the sun and on the ground.
Pigs and vultures came from far away —
Lawd, they had a feast laid out today."

---

* "Seventeen Thousand Fell Today," T. E. Bearden, 1999. And yes, the pigs and vultures did feast outside Gettysburg on the great number of fallen bodies, both blue and gray.

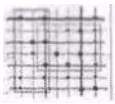

GO assumptions in NCW become NO-GO in reality

- ♦ Against energetics weapons, stability of C4 (command, control, communications, and computer systems) quickly vanishes.
  - Signals fail.
  - Facilities fail.
  - Equipment fails.
  - Personnel fail.

* Energetics warfare on all three fronts (energetic, bioenergetic, psychoenergetic) completely erases stability in all four areas.
- Initiates immediate and ultimate BlueGray internal conflict.
- Against a modern energetics warfare foe, the network-centric force without energetics nearly instantly succumbs.
- With psychoenergetics, GO becomes NO-GO in the targeted soldiers, regardless of how large the group. Group ordering instantly vanishes, and utter chaos is explosively induced.

For a world army of energetics robots

* After sunk costs on the front end, replica precursor robots cost about one cent each.
* A billion "carrier" robots — each with a thousand "secondary" weapons robots aboard — is about 1.001 trillion weapons costing a bit more than $10 billion.
* This is sufficient to attack and destroy all modern nations, peoples, installations, weapons systems, etc. many times over. Nothing is immune or protected.
- Even $1 billion (and time to reproduce all those robots and expense to get control of them) is sufficient to allow destroying all one's enemies with their weapons systems, populations, facilities, and installations.

Some example scenarios

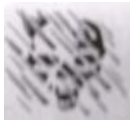

- New National Emergency scenario.
- » Chinese scenario.
- Terrorist scenario.
- Gradual defeat scenario.
- Dissolution of society scenario.
- Sudden defeat scenario.
- Massive sleeper conversion scenario.

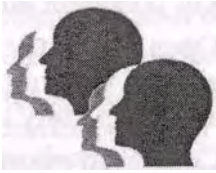

Scenario 1: Substantial new national emergency arises

- U.S. President is whisked on board Air Force One, complete with entourage.
- Key congressmen are whisked to secret underground facility.
- Alert forces react, patrolling skies, border, oceans, cities, etc.
- Command and control centers on full alert and in emergency operations.
- ICBM, bomber, and nuclear subs ready and/or deployed.

Kill of President and Vice President:

Use of ultimate "throwaway" assassins (1)

* Converted staff and security personnel on board the Presidential aircraft have personas triggered by implanted, waiting robots.
* BlueGray conflict erupts on AF-1. Converts kill president and his party.
* Open gun battle between security people. Converts kill others, who are completely outnumbered.
- Converted pilots calmly fly AF-1 into the side of a mountain, turning it into a fireball and dying with it.

WHEN REAGAN SHOT

Kill of President and Vice President:

Use of ultimate "throwaway" assassins (2)

- At same time, other conversions are triggered in separate facilities of the Vice President. Converts destroy facilities and kill the VP.
- Simultaneously, triggered conversions in congressional facilities occur. Converts methodically kill all personnel and congressmen, then destroy facility with themselves in it.
- Facilities and personnel for Joint Chiefs, Supreme Court, State Department, etc. are destroyed in similar fashion.
* Very quickly the U.S. is devoid of most of the leaders of its government. Process can continue further downward.

Sleeper conversions triggered and key personnel destroyed

- Key personnel converted; energetics robots begin destroying equipments, C4, weapons, patrol vehicles, etc.
- BlueGray warfare erupts throughout security forces as equipment fails or is destroyed.

- Converted and nonconverted personnel in security forces "eat themselves" by killing each other off.
- Command and control centers "eat themselves" and fail.
- Entire strategic force has bombers, weapons, nuclear subs, carriers, etc. destroyed by robots. Converted personnel attack and "eat each other" and destroy own friendly facilities by BlueGray conflict.
- Entire U.S. is utterly destroyed, as robots finish mop-up.

Additional actions

- Massive robot attacks and conversions unleashed on cities, civilian populace, facilities such as power stations and refineries, ports, etc.
- Civilian populace in full BlueGray war because of extensive conversions. Populace consumes itself.
- Power stations, refineries, port facilities, bridges, major buildings and facilities destroyed.

- America becomes a smoking ruins.
- Anew, "Pigs and vultures came from far away,
  Lawd, they had a feast laid out today. "

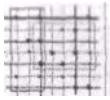

End result: GO to NO-GO

- System stability and survival assumptions of network-centric warfare are totally negated.
- Without energetics defense, network-centric warfare forces can be swiftly and easily destroyed in the era of asymmetric energetics weapons.
- Nuclear weapons, nuclear propulsion systems, and nuclear power systems are easily and quickly dudded by QP weapons.
- Strategic capability of the United States is very rapidly destroyed.

Scenario 2: Chinese scenario (1)

- China prepares both ways: to accommodate, and to strike and destroy.
- FSB/KGB inserts mass "sleeper" personas in all key Chinese officials.
- Cooperation (or conversions) in Chinese at various levels, and in targeted nation's (U.S.'s) port and security personnel.

- Chinese insert numerous shipping containers filled with nuclear weapons and other WMD, into United States. Converts in U.S. ports and in officialdom assist overtly.
- 50 to 100 Chinese nukes inserted in U.S. cities.

Scenario 2: Chinese scenario (2)

- Inserted nukes are detonated, in the dirt, destroying major U.S. cities; 150 million U.S. casualties.
- BlueGray war erupts; Yakuza finishes off U.S.
- FSB/KGB then promptly retriggers massive sleeper Chinese conversions.
- Violent BlueGray war erupts in China and China destroys itself very quickly.
- FSB/KGB emerges winner.
- If deemed necessary, sleeper conversions in Yakuza destroy Yakuza also.

Scenario 3: Terrorist scenario

* Organized terrorist leaders undergo conversions, as do selected ancillary U.S. personnel etc.
- ♦ Converts in several nations provide nuclear weapons to terrorists (such as Al Qaeda).
- Containers filled with nuclear weapons openly inserted in U.S.; U.S. converts assist directly.
- ♦ 50 to 100 nukes inserted into U.S. cities, also other WMD.
- Terrorist converts detonate nukes, destroying cities and producing 150 million casualties.
* U.S. BlueGray war erupts due to internal conversions. Yakuza finishes off the U.S.
- FSB/KGB retriggers terrorist converts.
- BlueGray war consumes terrorist organizations, Arab nations, etc. which eat themselves.

Hypothetical conversation

* Q: "How many dedicated hard-core terrorists would you like inserted in the United States? "
* A: "One million. "
* Response: "Piece of cake. From a distance we will put sleeper conversion personas in a million carefully chosen Americans (young, strong, active, intelligent, knowledgeable) and suddenly switch them. "

* Q: "Will they be dedicated, and will they be willing martyrs? "
* A: "Far better than any you presently have available for insertion. They will also be unrecognizable prior to the conversion switching. "

Scenario 4: Gradual defeat scenario (1)

* Conversions in selected elements of U.S. society, with sophisticated switchable personas.
* Polarizations — disagreements, oppositions, fanaticism — intensify slowly in polarized society.

* Courts, law bodies, law enforcement, government levels gradually split into multiple warring factions.
* Entropy of society grows steadily and without bounds, spurred by slow increase in converts who keep intensifying polarizations. There is chaos in the streets.
* Entropy and conflict increase to where paralysis begins.

Scenario 4: Gradual defeat scenario (2)

- Economy collapses, culture collapses.
- Will, emotional intent, and ability to get things done wither away and die. U.S. society grinds to a halt, consumes itself.

- U.S. is "defeated" mentally and emotionally, fading into entropy (anarchy) with direct self-killing and intense BlueGray war. GO becomes NO-GO.
- Yakuza scalar interferometers augment the chaos and destruction, assisting in causing catastrophic U.S. economic collapse.

- Then Yakuza methodically completes total destruction of the U.S. with its scalar interferometers.

Scenario 5: Dissolution of society (1)

- Switchable persona conversions in selected leaders of U.S. activist groups, influential groups, media groups.
- Some gradually switched into conversion; deepen disinformation and activist programs.

- News media, government agencies, activists perverted.
- U.S. groups set against other U.S. groups, with slowly increasing fanaticism.
- BlueGray war between groups starts and increases steadily in intensity. Society begins to consume itself.

Scenario 5: Dissolution of society (2)

- Purposeful and concerted peaceful actions mostly cease; nation and culture come unglued as senseless violence begins and escalates.

- National culture unravels, polarized opposing groups are "eating each other". Dissolution of the nation, of the culture, and of "normal" GO efforts such as by populace, military forces, police forces.

- Electrical power system destroyed; economy violently collapses.
- Robots and Yakuza "finish off remainder of populace and society.

Scenario 6: Sudden defeat

- Massive converts triggered by "switching-in" pre-installed "sleeper" persona conversions.
- Extensive BlueGray warfare erupts in fierce intensity.
  - Precursor robots simultaneously attack massively, destroy installations, cities, facilities, power systems, weapons systems, command and control systems, etc.

  - Terrorists simultaneously unleash anthrax, smallpox, nukes, scalar interferometry.

- At same time, converted U.S. armed forces groups begin attacking American cities and each other with U.S. nukes, biowar, missiles, and field forces. U.S. military neutralized.

- Total BlueGray warfare without rhyme or reason rapidly consumes America, collapsing the populace and the entire nation. Then Yakuza methodically finishes off remnants.
- Can occur in two days or less; even in two hours.

Scenario 7: Massive sleeper conversion

- Pre-insert switchable sleeper personas in millions; all leaders.
  - Congress, president, cabinet, high officials, defense leaders.
  - Particularly saturate leadership of WMD retaliation and deterrence, military, police.
  - Particularly include Israel.

- Evoke "sudden destruction" scenario, just after switching-in all sleeper conversions.
- Entire society quickly nullified as all sanity and ordering lost. President, Congress, pentagon hierarchy, all security hierarchies commit suicide or destroy each other and populace.
- Society destroys itself at same time that Yakuza, terrorists, and others are attacking and destroying any remaining vestiges.

Important conclusion

* Present scenario chosen seems to be a combination of the slow dissolution scenario and the massive sleeper scenario.
* Must have the massive sleeper scenario to nullify Israel, else FSB/KGB and Russia destroyed also.

* Assuming the combination:
  - The slow scenario for us lasts two years, peaking to destruction of U.S. centralized electric power system, refineries, etc. and with catastrophic economic collapse.
  - Just prior to that climax, sudden dramatic demise of Israel occurs via evoking the massive sleeper scenario upon that state.
  - Sleeper conversion personas already inserted in both the U.S. and Israel, perhaps UK and others, in massive numbers.
* The Yakuza will play the major protege role in the internal overt destructive actions against the U.S.

* U.S. is unprepared to detect or defend against inserted sleeper conversion personas, triggerable at any time.

Remarks

- Hundreds of other scenarios exist and can be initiated. Limited only by imagination and ingenuity of planners and by availability of energetics weapons and capabilities.

- All concepts that "military organizations and systems keep functioning and viable as totally reliable forces" are in error from the outset by conversions, including U.S. network-centric warfare.
- Presently planned Army of the Future is neutralized and defeated by energetics warfare. It can be neutralized in the mind, body, equipment, signals, organizations, and functions modes simultaneously.
- One or more of these or similar scenarios are now in place and already slowly progressing in the operations phase of asymmetric war against us.
- By early 2007, operations phase is expected to destroy us.

Final urgent commentary (1)

- Russian energetics has secretly applied Einstein's admonition for more than a half century.
- Long ago worked the major "kinks" out of EM, GR, quantum theory, etc. and achieved a grand unified field theory (GUFT) that has been highly weaponized.
- Our immediate problem is to sufficiently catch up at the most desperate speed possible, particularly in psychoenergetics. Barrier is U.S. scientific community.
- Presently we cannot defend against the eerie new destruction threats rapidly converging upon us, at the same time different but equally destructive threats are converging or have reached total destruction capability.

Final urgent commentary (2)

* The greatest problems are our severe lags in our

  - Century of delay in correcting the terribly flawed CEM/EE model.
  - 60 year delay in psychoenergetics, massive sleeper conversion, and the eerie nonmaterial robots.

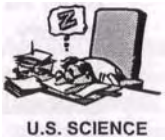

* Unless U.S. science is sharply awakened from its century-long slumber, we are essentially already defeated and finished.

Final urgent commentary (3)

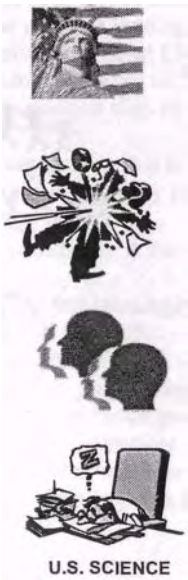

* We presently have one slim chance.
* Given that Israel does somehow have defenses in psychoenergetics, then Israel may be able to save the U.S. again, as it did in the 1970s, in 1986, twice in 1997, and again at the end of 1999 and in the first part of 2001.
* If, on the other hand, Israel itself will be destroyed this time, then nothing we have will save us.
* In that case, the U.S. scientific community will have destroyed us.

Final urgent commentary (4)

* The darkest days in the history of our republic lie immediately ahead of us.
- Hopefully present, rapid Israeli developments (and others) may reduce or nullify the conversion threat.

- If we are to survive, we shall need the most strenuous and rapid effort in our history, now.
- In times of grave peril, Americans have always rallied to national liberty and survival. We must do so again.
* God bless and keep America! We pray for its survival.

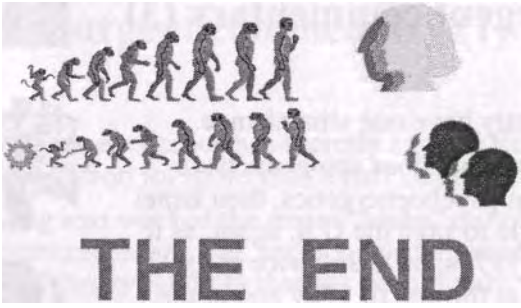

References

i. T. E. Bearden, Fer-de-Lance. Cheniere Press, Santa Barbara, 2nd edition, 2003, gives a reasonably good overview of the Russian/Soviet/KGB/FSB development and use of what is called energetics weapons. These are superweapons using a new approach for using force-free fields in space prior to their interaction with matter to form force fields in matter. We have also called this new approach "precursor engineering", in order to tie it to conventional Western physics as an extension thereof, and hopefully to convince Western scientific leaders to correct the seriously flawed and horribly archaic old classical EM and electrical engineering models taught today in Western universities.

The standard CEM/EE model is so fouled with known major errors that it has become a reflection on the lack of scientific ethics at the highest levels of our scientific community, Our scientific leaders continue to advocate and promulgate such erroneous models, and are directly contributing to the imminent destruction of our nation and people. They continue to ignore the serious flaws of the models as pointed out by imminent scientists such as Feynman, Wheeler, Bunge, Lindsay, Margenau and many others. This cannot be simply shrugged aside and ignored with impunity, if we wish to survive.

Because of its long inaction on this problem, the U.S. scientific community is directly responsible for the presently escalating energy crisis, and it is also partially responsible for the high probability of success of the present 3-year terrorist strategic program leading to our total destruction. It is further responsible for our having no effective "amplified EM anti-engines" treatment for mass casualties, so that millions of stricken Americans will die who did not have to, had the scientific community changed its ostrich position with its head firmly in the sand.

Any high level scientific organization or group involved in electromagnetics that is not discussing and working on the source charge problem — how a charge continuously pours out observable photons in all directions, without any observable energy input — is a scientific organization or group that is participating actively though unwittingly in the coming destruction of our nation and our people.

By the same token, any high level intelligence agency not addressing this seemingly innocuous "archaic CEM/EE model" problem will have no knowledge of the KGB energetics weapons and capabilities. Any such intelligence group is simply failing to perform its designated scientific intelligence mission. Sadly, almost all our present high level intelligence agencies have hardly even heard of the problem; most don't even care that it exists. They certainly have not considered such "foundations issues" to involve winning or losing the asymmetric terrorist war against us. Consequently, that war now enfolds and coordinates the international terrorists also, including the hidden key role being played by the Yakuza.

ii. T. E. Bearden, "Precursor Engineering: Directly Altering Physical Reality," Explore, 13(2), 2004, p. 50-60 somewhat crudely describes the basis for energetics, which the Soviets developed as a science of secret superweapons long since developed, deployed, and clandestinely being utilized against us.

iii. Sec T . E Bearden, "Soviet Weather Engineering over North America," 1-hour videotape, 1985 for documentation of some of the early Soviet weather engineering operations, with pictures of the specific cloud signatures etc. Or just check the news regarding the recent 2004 Caribbean hurricanes being ginned up one after the other, strongly controlled, and strongly pounding the Southern and Eastern seaboards.

iv. See (a) M. W. Evans, P. K. Anastasovski, T. E. Bearden et al., "On Whittaker's Representation of the Electromagnetic Entity in Vacuo, Part V: The Production of Transverse Fields and Energy by Scalar Interferometry," Journal of New Energy. 4(3), Special Issue, Winter 1999, p. 76-78. This paper gives a succinct mathematical development of scalar interferometry, using a higher electrodynamics with O(3) group symmetry. The original two papers by Whittaker are (b) E. T. Whittaker, "On the Partial Differential Equations of Mathematical Physics," Math. Ann., Vol. 57, 1903, p. 333-355, and (c) — "On an Expression of the Electromagnetic Field Due to Electrons by Means of Two Scalar Potential Functions," Proc. Lond. Math. Soc. Series 2. Vol. 1, 1904, p. 367-372. The two papers can be downloaded in PDF form from www.cheniere.org. The 1904 paper initiated that area of electrodynamics known as superpotential theory.

v. T. E. Bearden, Fer-de-Lance. 2nd Edition, Cheniere Press, 2003, with update, gives a rough time table for the development of these energetics weapons, the main types developed, and many actual test incidents for the weapons.

vi. T. E. Bearden, Gravitobiology, Second Edition, Cheniere Press, 2003 covers some of the biological aspects.

vii. T. E. Bearden and K. D. Moore, Conversion: A Major Strategic Threat. 2003, a 300+ page color slide briefing, covered the bizarre but highly successful mind-engineering (psychoenergetics) aspects. (It was an earlier version of the second part of this book). It was produced and delivered pro bono to a three-letter U.S. government agency. No open release of this document has been made by the authors. The document gives the basis for actual production of a living and functioning human mind in the laboratory, the insertion of that mind in another human being, and alternation (conversion) between the two minds to shift the behavior of the individual back and forth at will. Information on that subject is in the present paper.

What is demonstrated in a multiple personality case can be directly produced on the laboratory bench and in any human target anywhere on the planet.

An operational fraction of the mind can be used in conversion techniques also, without total mind switching but only with switching of that fraction involving a certain area or class of behavior.

Thus selected leaders in a societal polarization area, on both extreme ends, can be selectively and repeatedly "temporarily converted" to more extreme and dramatically different behavior and leadership, to push the polarization to greater intensity. That capability will be increasingly exercised over the next two years. The general background of the KGB development of this ability, actual dramatic human test incidents, and the science on which it is based are given in the present book. The application and role of conversion in the present 3-year coordinated terrorist program to destroy the United States is also included — briefly in Part I, and more extensively in Part II.

viii. On April 28, 1997 — even as Defense Secretary William Cohen was publicly confirming at a conference in Georgia that "terrorist" electromagnetic superweapons were being used to engineer the weather and climate, trigger volcanoes into eruption, and

generate earthquakes — the moments were ticking away for a sudden massive Russian/KGB superweapon attack on May 1 that would have utterly destroyed the U.S. in two hours or less. Eerily, neither Dr. Cohen nor our U.S. intelligence agencies knew what was actually transpiring and coming down upon us, even as the Secretary spoke. Five days before the scheduled attack, we had sent a desperate fax to the prime minister of the supporting nation, pointing out a critical change that had to be made in their most powerful superweapon's command and control system. The change was quickly made and the Soviets were so notified. We waited in agony as the clock ticked until, with two days remaining before May 1 (the scheduled attack date) — and while Secretary of Defense Cohen was speaking in Georgia — that giant armada started standing down, and Armageddon was again avoided by a hair's breadth.

ix. Stanislav Lunev (with Ira Winkler), Through the Eves of the Enemy. Regnery, Washington, 1998 gives a good accounting of the powerful part played by the Russian Mafia in the aftermath of the Soviet Union's economic collapse. Lunev is the highest ranking GRU defector. He is a former Colonel in the GRU, the military counterpart of the KGB. On p. 22-33, he summarizes the Spetznaz capabilities. On p. 22-27, he summarizes Spetznaz use of nuclear weapons already on American soil and in our cities. On p. 26, he gives some of the ways in which the Soviets easily brought nuclear weapons into the U.S. On p. 30 he confirms Russian seismic weapons. Use of EMP weapons is on p. 30-31. Use of very, very low frequency weapons to destroy the human brain, put people into a zombie-like state, and aid in brainwashing is confirmed on p. 31. Lunev was of course not allowed to detail the most highly relevant energetics weapons information. The book as published had to be cleared and approved by the U.S. Central Intelligence Agency, which would obviously not allow such details to be included.

x. For some details on the Yakuza, see (a) Brian Bremner, "The Samurai Meets the Godfather." Business Week. Jan. 29, 1996. On p. 47, Bremner gives a quick, half- page overview of the Yakuza in Japan. (b) — "How the Mob burned the Banks: The Yakuza is at the center of the $350 billion bad-loan scandal." Business Week. Jan. 29, 1996, p. 42-43, 46-47. This article summarizes the Yakuza involvement in, and cause of, the huge bad-loan banking scandal that occurred in Japan. This rip-off of the Japanese taxpayer enriched the Yakuza. See also (c) Michael Hirsh and Hideko Takayama, "Big Bang or Bust?" Newsweek. Sept. 1, 1997, p. 44-45. The Yakuza rip-off of the Japanese banking system may have been for as much as $600 billion. Our comment is that any high U.S. Japanese official seriously protesting the Yakuza involvement at the time, was in grave danger of being killed. Several were in fact assassinated by the Yakuza.

xi. Many details on the Aum Shinrikyo are given in Global Proliferation of Weapons of Mass Destruction. Part I. Senate Hearing 104-422. Hearings Before the Permanent Subcommittee on Investigations of the Committee on Governmental Affairs. U.S. Senate, Oct. 31 and Nov. 1, 1995. Sadly, that Subcommittee seems to have known nothing at all about the Soviet superweapons acquired by the Yakuza/Aum Shinrikyo, although that information certainly is known to certain U.S. Government agencies.

xii. We acknowledge the significant contributions of Australian geophysicist Harry Mason, who furnished this vital information and verified its authenticity.

xiii. See (a) Michael Hirsh and Hideko Takayama, "Big Bang or Bust?" Newsweek. Sept. 1, 1997, p. 44-45; (b) Brian Bremner, "How the Mob burned the Banks: The Yakuza

is at the center of the $350 billion bad-loan scandal." Business Week. Jan, 29. 1996, p. 42-43, 46-47.

xiv. See (a) M. W. Evans, P. K. Anastasovski, T. E. Bearden et al., "On Whittaker's Representation of the Electromagnetic Entity in Vacuo, Part V: The Production of Transverse Fields and Energy by Scalar Interferometry," Journal of New Energy. 4(3), Special Issue, Winter 1999, p. 76-78. This paper gives a succinct mathematical development of scalar interferometry, using a higher group symmetry electrodynamics. The original Whittaker papers giving the basis for scalar interferometry are listed in references {xxi, xxii} below.

xv. Graham H. Turbiville, Jr., Weapons Proliferation and Organized Crime: The Russian Military and Security Force Dimension. U.S. Air Force Academy, Institute for National Security Studies, Colorado Springs, CO, June 1996.

xvi. For conventional consideration of hurricane increases, see (a) Lennart Bengtsson, "Hurricane Threats," Science. Vol. 293, 20 July 2001 p. 440-441; (b) Stanley B. Goldenberg et al., "The Recent Increase in Atlantic Hurricane Activity: Causes and Implications," Science. Vol. 293,
20 July 2001 p. 474-479. For a young weatherman who recognizes the direct use of weather engineering when he sees it, and is steadily reporting and exposing it, see meteorologist Scott Stevens' website http://www.weatherwars.info.

xvii. A notable exception is meteorologist and TV weatherman Scott Stevens, who observes and publishes much information on the weather war going on in the skies over the United States, on his website http://www.weatherwars.info/.

xviii. Particularly professional and hard-hitting coverage of the desperate energy situation is given by Matthew Simmons, head of Simmons & Company International. Highly professional presentations of the real situation in energy worldwide, is available in PDF format from the Simmons website http://www.simmonsco-intl.com/.

xix. T. E. Bearden, "Precursor Engineering: Directly Altering Physical Reality," Explore. 13(2), 2004, p. 50-60. Briefly, there are no forces or force fields in mass-free space, but only in mass systems. For electromagnetic systems, what we call "force" is the ongoing interaction of the force-free EM field in space, with charged mass q. That ongoing interaction is identically force. Force is therefore the ongoing effect of a more fundamental ongoing causative interaction of curved space with mass.

The field in space is simply an energy pattern, existing as a change to the virtual particle flux of the vacuum (particle physics view) and a curvature of spacetime (general relativity view). It is also a set of Whittaker energy flows, where by "change in energy" we mean "change in the VPF of the vacuum," and "change in the curvature of spacetime". Accordingly, we may formally define energy as spacetime curvature, and also as change in the VPF of the vacuum.

The precursor EM field is simply the EM field as it exists in mass-free space, prior to the field's interaction with matter to form forces and a force field.

The precursor EM field — even a "static" field — is also a set of ongoing Whittaker energy flows that continue so long as the field is merely present. So unlimited energy flow itself is free for one's taking and using, from any precursor (force-free) field or potential that is established in space. A region of spacetime curvature may be modeled as comprised of a harmonic series of bidirectional longitudinal EM waves —real EM energy flows from

the source charges producing the associated EM fields and potentials (EM curvatures of spacetime). One merely has to intercept and collect the freely flowing EM energy from any static field or potential, and prevent any of the collected energy being used in one's circuit to destroy the source of potential or the source of field. This is easiest accomplished by potentializing the circuit with its charges q pinned, so dq/dt = 0. Then switch away the completely undepleted external source of potential, recomplete the circuit (as with a diode and resistor in series), unpin the electrons and allow current to flow. The new "freely potcntialized" circuit will then freely dissipate power in that circuit's loads and losses, until a11 the initial free potential energy is dissipated. The free energy flow phenomenon and insulting free potential energy change in the absence of current, actually is the physical mechanism that generates the gauge freedom axiom, whereby the potential — and thus the potential energy — of any EM system can be freely changed at will, and without doing work.

Because precursor fields are copious free flows of energy continually extracted from the vacuum via the source charges, one can directly engineer very powerful changes in the energy of the causative force-free precursor field, requiring that one furnish only a bit of work for the switching and structuring and controlling of the freely available energy flows comprising that change. Thus one can almost freely produce a very large precursor energy field set prior to forces and "field work" being involved at all. By subsequently interacting this very large but nearly free precursor energy field set with charged mass in a physical system, extraordinarily large forces and physical effects (work) are then almost freely produced in the mass system. This strongly calls attention to the fact that there are no "conservation of work" laws in physics! There are only conservation of energy laws. Work is simply changing the form of energy; if the "energy changed in form" is received for free, then so can the resulting work be "for free". In the present scientific view, this is negentropic engineering — and it is perfectly permissible by the laws of nature and of physics.

One must also be careful to distinguish between "internal system work" and external work by the system on something else (an external load). To do internal work, a single joule of EM energy can be "used" (converted in form) again and again, to produce multiple joules of work all internally on the system. Work rigorously is the change of form of energy. Given X joules of energy to begin with, one can get X joules of work in one change of form of the energy — and if that work was internal and none of the energy in the new form is lost from the system, one still has all the energy left within the system, just in a different form from what it was in the beginning. If the system still collects this energy in its new form and does not allow its dissipation, it can again be changed in form (e.g., back to the original form) to produce X more joules of work internally to the system. But then the energy is still present, and now in the original form again! Closed looping that "circulation" of changing-form-energy, while preventing any losses of the circulation flow, is a problem for the dogmatic advocate castigating perpetual motion (which is actually Newton's first law of motion). The "perpetual motion while doing continuous work with no additional energy input is impossible" statement contains a false assumption: that each time energy changes form and thereby does work, the work is external work by the system on an external load, and the control of the energy in the new form is just "lost" — i.e., the energy in the new form is just dissipated on out of the system, never again to return. One does not have "dissipation of energy" as work unless the energy in its new form after the work is lost from the system. If it is not dissipated out of the system, control of it by the system has not been lost. It can again be used to perform additional internal work in the

system, though not external work outside the system if it is to continue doing internal work. So it will do that internal system work indefinitely. Note that this form of "perpetual motion and perpetual internal work with no additional energy input" is quite compatible with the conservation of energy law, once one recognizes the difference between internal work and external work, and understands that work is rigorously the change of form of energy, nothing else. It is still quite true that, in the engineering sense where one wishes to do external work on an external load outside the system, then the dissipated energy performing work in the external load is not recovered (usually), and the usual simple thermodynamics emerges.

By precursor engineering (i.e., Russian energetics), one can pay a little bit to almost freely engineer very large energy patterns in mass-free spacetime, prior to their subsequent interactions with matter. Then by simply interacting these "almost freely developed pure energy structures and dynamics" with charged matter, very great work (force effects, or force engines acting in that charged matter) can be almost freely produced, including at great distances. By continuing to propagate a hoary old false EM model that still assumes force fields in space (and thereby still assumes the old material ether), our own scientific leaders are blindly and very determinedly withholding the U.S. scientific community from knowledge and use of precursor engineering (energetics) and therefore from knowledge and use of negative entropy engineering. Since the KGB weapon scientists are using precursor engineering (energetics) in superweapons of great power, the ignorance of our scientific leaders and their refusal to change the terribly flawed CEM/EE model are leading the United States directly into our catastrophic destruction.

xx. Nikola Tesla, "Pioneer Radio Engineer Gives Views on Power," New York Herald Tribune. Sep. 11, 1932.

xxi. E. T. Whittaker, "On the Partial Differential Equations of Mathematical Physics," Mathematische Annalen, Vol. 57, 1903, p. 333-355. Downloadable from www.cheniere.org.

xxii. E. T. Whittaker, "On an Expression of the Electromagnetic Field Due to Electrons by Means of Two Scalar Potential Functions," Proc. Lond. Math. Soc. Series 2, Vol. 1, 1904, p. 367-372. Downloadable from www.cheniere.org.

xxiii. J. D. Jackson, Classical Electrodynamics, 2nd Edn., Wiley, 1975, p. 249.

xxiv. Elsewhere we have formally corrected the present Second Law of thermodynamics, which is an oxymoron implicitly assuming its contradiction has first occurred (to move the system away from equilibrium, thus lowering its entropy — a negative entropy operation). The old Second Law deliberately does not account its assumed preceding negative entropy operation. It then accounts only for the entropic decay of the out-of-equilibrium system back to equilibrium — the state of maximum entropy. That is why it prescribes only the production of increasing positive entropy.

Written presently as $(0 \leq \Delta S < +\infty)$, the Second Law assumes — but deliberately does not account for— its own contradiction by a prior negative entropy operation $(-\infty < \Delta S \leq 0)$, and thus formally is a logical oxymoron and always has been. The old Second Law $(0 \leq \Delta S < +\infty)$ must be replaced by the new law $(-\infty < \Delta S < +\infty)$, which now also accounts for the previously unaccounted but implicitly assumed prior negative entropy precursor operation.

Very often, this overall new Second Law is applied in systems in two serial phases: first

an excitation (potentialization, or asymmetric regauging) phase occurs in which the system departs from equilibrium via the new half-law $(-\infty < \Delta S \leq 0)$. The potentialization phase is then followed by the excited system's decay back to equilibrium by the old half-law $(0 \leq \Delta S < +\infty)$. For such separate potentialization and decay phases, the second law can be expressed as the equation $(-\infty < \Delta S < +\infty) = (-\infty < \Delta S \leq 0) + (0 \leq \Delta S < +\infty)$. In that form, the old second law is the rightmost term and is easily seen to be only a "half-law". It merely accounts the decay of a previously excited system, back to equilibrium. The new overall Second Law is (i) consistent with experiment, (ii) includes the known thermodynamic contradictions to the old Second Law (several are given in Kondepudi and Prigogine, Modern Thermodynamics, Wiley, 1999, p. 459), (iii) includes transient statistical fluctuations in an equilibrium system including their initial negative entropy halves, (iv) removes the logical error in the old law's statement, and (v) now includes negative entropy engineering (precursor engineering, or what the Soviet KGB weapon scientists dubbed "energetics"). Since every charge and dipole in the universe explicitly and freely pours out real observable EM energy at light speed, without any observable energy input (which means with only virtual-state energy input), then every charge already demonstrates eontinuous production of negative entropy and experimentally falsifies the present old Second Law. It does, however, comply with the new and corrected Second Law, which is clearly and experimentally established once one studies the "source charge problem" together with its polarization of the vacuum and its consequent "broken symmetry of opposite charges" solution. Every charge therefore happily and continuously produces negative entropy, of the sort shown theoretically possible by D. J. Evans and Lamberto Rondoni, "Comments on the Entropy of Nonequilibrium Steady States," J. Stat. Phys., 109(3-4), Nov. 2002, p. 895-920. Evans and Rondoni despaired of finding any real system exhibiting such continuous production of negative entropy, but did allow that, for deterministic systems, the "problem remains." After solving the long-vexing source charge problem, we then nominated every charge and dipole (and dipolarity) in the universe as examples of real physical systems continuously producing negative entropy as predicted by Evans and Rondoni.

xxv. Richard P. Feynman, Robert B. Leighton, and Matthew Sands, The Feynman Lectures on Physics. Addison-Wesley, Reading, MA, Vol. 1, 1964, p. 12-2.

xxvi. Ibid. Vol. 1, 1964, p. 2-4.

xxvii. See T. E. Bearden, Fact Paper, "Perpetual Motion vs. 'Working Machines Creating Energy from Nothing': With a Discussion of Perpetual Extraction and Emission of Real EM Energy from the Vacuum," available on website www.cheniere.org. The paper also gives a full explanation of the exact reordering and coherent integration mechanism used by every source charge to produce continuous negative entropy.

xxviii. T. E. Bearden, Energy from the Vacuum: Concepts and Principles. Cheniere Press, Santa Barbara, CA, 2002.

xxix. P. Drude, Ann. Physik. Vol. 1, p. 566; Vol. J, 1900, p. 370, 869.

xxx. See Raymond A. Serway, Physics for Scientists and Engineers, with Modern Physics. Third Edition, updated version, Saunders College Publishing, Philadelphia, 1992, p. 742-745 for a pertinent discussion of drift velocity.

xxxi. Scrway, ibid. p. 744 shows a typical calculation of a drift velocity of 2.46 x 10exp(-4)m/s.

xxxii. See E. T. Whittakcr, A History of the Theories of Aether and Electricity. London, 1958 for a treatise on ether theories, their type, their development, etc.

xxxiii. (a) A. A. Michelson and E. W. Morley, "Influence of motion of the medium on the velocity of light." American Journal of Science. Vol. 31, Series 3, 1886, p. 377-386; (b) — "The relative motion of the earth and the luminiferous aether," American Journal of Science. 4(3), 1887, p. 333; (c) — "On the relative motion of the earth and the luminiferous aether," Phil. Mag. 24(4), 1887, p. 449.

xxxiv. J. D. Jackson, Classical Electrodynamics, 2nd Edn., John Wiley & Sons, New York, 1975, p. 249.

xxxv. Secretary of Defense William Cohen at an April 1997 counterterrorism conference sponsored by former Senator Sam Nunn. Quoted from DoD News Briefing, Secretary of Defense William S. Cohen, Q&A at the Conference on Terrorism. Weapons of Mass Destruction, and U.S. Strategy. University of Georgia, Athens, Apr. 28, 1997.

xxxvi. In any large and powerful organization, essentially the leader does not personally implement anything, but makes decisions and issues orders. The circle immediately surrounding him (first level down in the organization) is his advisors and staff; they also do not personally implement, but relay the orders to appropriate sections of the organization. The second level down is where the large parts (directorates, Sections, etc.) of the organization exist. A manager at that second level down is busy with administration matters, so he personally does not implement. But at the third level down, where the suborganization is now smaller, that manager is usually the implementer. To implement is to perform actions laterally, in and outside the organization, so the third level manager's world is largely a lateral world, with extensive functions, contacts, agreements, etc. with outside groups and agencies. Now call those third level managers and organizations the "implementation entourage" or just the "entourage" for short. This is where all the lateral action happens.

Now apply the bell-shaped normal distribution curve to the entourage managers. At least 9% are lacking in matters such as ethics etc. Shrink that 9% down to 1%, and now one has managers who are in fact very evil persons. They would kill their own grandmother to gain power, control, etc. Law and rules mean nothing except unfortunate encumbrances. Hereafter we will simply call this evil, grasping, conniving 1% "the entourage", simply understanding it is only 1% or so of those managers at that level. But the entourage is the level at which all the skullduggery, murders, assassinations, etc. are planned and either carried out or arranged. We are speaking of every large and powerful organization on Planet Earth! The entourage is dictated by primate dominance, and this big monkey game has been going on in humans as long as there have been humans.

xxxvii. (a) "The Takahashi Magnets and Motor", Infinite Energy. Vol. 1, No. 5&6, Nov 1995/Febl996, pp. 35-37; (b) Tony Edwards, "'Accident' in lab creates super motor." The [London] Sunday Times, Dec. 10, 1995. Edwards reported an electric motor scooter with top speed of 50 mph and range of more than 500 miles using an electromagnetic engine and magnets developed by Takahashi.

The new scooter, developed by Sciex Corporation of Japan, ran on four ordinary 12-volt car batteries. The magnets were based on powder-metallurgy techniques and special

neodymium material which produced a magnet with the world's highest Megagauss Oersted rating at the time. 55 MgOe was the maximum previously, but Takahashi's magnet material achieved 120 MgOE. The Takahashi engine produced 15 horsepower from just a few amperes of electricity. When the scooter was free-wheeling, the engine became a generator and partially recharged the batteries.

Another novel use of the Takahashi magnets was as "battery doublers" to extend the life of rechargeable batteries. Thin inch-wide squares, attached to mobile phone batteries, doubled the amount of charge they retained and allowed the batteries to last twice as long. (c) Also see entries under magnetic Wankel engine, in T. E. Bearden, Energy from the Vacuum: Concepts and Principles. Cheniere Press, Santa Barbara, CA, 2002, p. 363-368.

Any university electrical engineering department worth a hoot can readily build a magnetic Wankel engine, which kills its back mmf and thus continuously develops torque in a single rotary direction. One pays only a tiny bit to kill the back mmf, and self-powering of the system and its load can be achieved by tapping off a bit of power from the shaft-powered generator, and feeding it back to power the switching and control circuit. That none of our EE departments design and build such devices is a sad commentary on the lack of "forward vision" of our scientific community.

xxxviii. (a) Teruo Kawai, "Motive Power Generating Device," U.S. Patent No. 5,436,518. Jul. 25, 1995; (b) see also Bearden , Energy from the Vacuum. 2002, p. 363, 371-375, 500. In 1996 Kawai met with this author and his CTEC board of directors, here in Huntsville, Alabama. After much negotiation on his second trip here, Kawai and CTEC reached agreement. We at CTEC would immediately proceed to set up laboratory and production facilities for producing and marketing worldwide Kawai's self-powering motor, so that in 1997 we would have had such systems in mass production and on the world market everywhere. Our only exclusion would have been Japan, as Kawai had already licensed the marketing rights for that nation. Kawai was backed by the second richest man in Japan, a multibillionaire, and he was financing our effort himself. In short, full financing was already accomplished. The night of the same day that we reached agreement verbally, a private jet arrived post haste from Los Angeles, with Yakuza on board. The next morning Kawai no longer controlled his company, his invention, or his own fate. He was absolutely stunned and shamed, and could hardly lift his head to look me in the eye. He was a totally broken man. Instead, we found ourselves facing the arrogant Yakuza, some with the blue markings and the missing fingers, and very hostile Japanese. The agreement with Kawai was dissolved by the Yakuza right there on the spot. The Japanese team then coldly packed up the Kawai motors that had been shipped to us, and bundled up the Kawai team and left. And that was that. But once one understands the Yakuza's role in this Operations Phase that opened about the first of 2005, one then understands why the Yakuza have suppressed all the Japanese overunity EM systems.

xxxix. Appreciable details on Nathan Stubblefield and his inventions are given by Gerry Vassilatos, Lost Science: New Edition. Adventures Unlimited Press, 2000. Tesla visited Stubblefield and got some of his own impetus from observing the anomalous and awesome electrical power effects achieved by Stubblefield. Many of the stunning effects achieved by Stubblefield have also been successfully replicated by inventor John Bedini.

xl. We give the specific nuclear reaction in T. E, Bearden. Energy from the Vacuum: Concepts and Principles. Cheniere Press, 2002, p.569, reaction equation (12).

xli. See http://www.pbs.org/wgbh/pagcs/frontline/shows/cyberwar/interviews/weiss.html.

xlii. According to Italian channel RAI 1, on Sept. 18, 2004 there was an attempt on Putin's life by planting two car bombs along his automobile route. Security forces discovered the cars and dismantled the bombs. Putin has also nullified the election process in Russia, and has thus returned the nation to some of the stronger control mechanisms by the old Communist Party methods. One sees the heavy hand of the Communist faction of the KGB/FGB — which controls the organization and the superweapons and thus controls Russia — as behind the return to greater authoritarian hold over the Russian populace.

xliii. See Matthew Kaminski, "KGB Democracy," Wall Street Journal, Sept. 17, 2004, p. A14.

xliv. For a commentary, see (a) Henry Sokolski, "It's Almost Too Late to Stop Iran," Wall Street Journal. Sept. 27, 2004, p. A18. See also (b) Henry D. Sokolski and Patrick Clawson, Editors, Checking Iran's Nuclear Ambitions, Institute for Strategic Studies, 2004. As of this writing, Iran is continuing on its path to building nuclear reactors capable of furnishing weapons grade materials for nuclear weapons. Further, Russia is again assisting Iran in building the reactors.

xlv. Fatwah, Feb. 1998, issued in the name of the World Islamic Front, and signed by Bin Laden, Zawahiri, and two others.

xlvi. Osama Bin Laden, ABC-TV Interview in Afghanistan, May 1998.

xlvii. The 9/11 Commission Report, Sept. 2004, p. 51 -52.

xlviii. Vice President Dick Cheney, October 21, 2001.

xlix. As reported by Niall Ferguson, "Sinking Globalization," Foreign Affairs. 84(2), Mar./Apr. 2005, p. 76-77. Ferguson is Professor of History at Harvard University, a Senior Fellow at the Hoover Institution, Stanford University, and a Senior Research Fellow of Jesus College, University of Oxford.

1. http://www.math.uio.no/~karstent/waves/index_en.html contains a summary article on mathematical attempts to model freak waves and uncover their causes. The article is Kristian B. Dysthe et ah, "Freak Waves, Rogue Waves, Extreme Waves and Ocean Wave Climate," June 2003. The authors are all mathematicians at various Norwegian universities and doing research on such waves. As can be seen, these types of waves occur far more frequently than previously suspected, can be larger than previously thought possible, but are also still little understood. Some of the attempted theoretical explanations are summarized in the article, with pros and cons of each being given also.

li. See http://news.bbc.co.Uk/l/hi/sci/tech/3917539.stm, "Freak Waves Spotted from Space", BBC News.

lii. Per statistics of the Head Department of Navigation and Oceanography (HDNO) of the Russian Federation Ministry of Defence.

liii. See Bill McGuire, A Guide to the End of the World: Everything You Never Wanted to Know. Oxford University Press, paperback, Aug. 2004 details the phenomenology of large volcano eruptions, supervolcanoes, and tsunamis, among other catastrophic geological events. McGuire is the Benfield Professor of Geohazards and also is

the Director of the Benfield Greig Hazard Research Centre, Department of Geological Sciences, Universily College London, Gowcr Street, London WC1E 6BT.

liv. See "Supervolcanoes," BBC2, Thursday 3 Feb. 2000; available for downloading from website http://exodus2006.com/transcript.htm.

lv. See http://www.anthro.uiuc.edu/faculty/ambrose. Stanley H. Ambrose is an Associate Professor in the Department of Anthropology and Department of Nutritional Sciences at the University of Illinois Urbana-Champaign, and also is Director of the Anthropology department's Environmental Isotope Paleobiogeochemistry Laboratory.

Ivi. E.g., see Jorge A. Vazquez and Mary R. Reid, "Probing the Accumulation History of the Voluminous Toba Magma," Science. Vol. 305, 13 August, 2004, p. 991-994.

lvii. From a transcript of an interview on BBC, available for downloading on website http://www.davidpbrown.co.uk/nota-bene/dna.html.

lviii. See Merritt Ruhlen, The Origin of Language: Tracing the Evolution of the Mother Tongue, Wiley, 1996. There is also persuasive linguistic evidence supporting this bottleneck hypothesis, along the lines presented by Ruhlen. Our special thanks to Marcia Stockton for pointing this out.

lix. E.g., see (a) Stanley H. Ambrose, "Late Pleistocene human population bottlenecks, volcanic winter, and differentiation of modern humans," Journal of Human Evolution. Vol. 35, 1998, p. 115-118; (b) S. H. Ambrose, "Population Bottleneck," in R. Robinson (ed.), Genetics. Macmillan Library Reference, 2002 [a 4-volume encyclopedia of genetics]; (c) M. R. Rampino and S. H. Ambrose, "Volcanic winter in the Garden of Eden: The Toba super-eruption and the Late Pleistocene human population crash," in F. W. McCoy and G. Heiken, (eds.), Volcanic Hazards and Disasters in Human Antiquity. Geological Society of America Special Paper , Vol. 345, 2000, p. 71-82.

lx. For detailed modeling, see Steven N. Ward and Simon Day, "Cumbre Vieja Volcano — Potential collapse and tsunami at La Palma, Canary Islands," American Geophysical Union, 2001. Available from http://www.benfieldhrc.org/SiteRoot/tsunamis/WardandDay.pdf.

lxi. See www.oceansatlas.org/unatlas/issues/emergencies/OceanPhenHDNO/Dangerous.html. The information on hazards to shipping and losses of shipping is provided by the Head Department of Navigation and Oceanography (HDNO) of the Russian Federation Ministry of Defence.

lxii. Marcia Stockton, private communication.

lxiii. James Davison Hunter, Culture Wars: The Struggle to Define America. Basic Books, New York, 1991 (Paperback edition, 1992). Dr. Hunter is Director, Institute for Advanced Studies in Culture, and is also the William R. Kenan Jr. Professor of Sociology and Religious Studies at the University of Virginia.

lxiv. John Zogby, President of the Zogby International Survey firm. Quoted from John Mariani, "Zogby Describes Divided Nation," The Post Standard. Sept. 24, 2004. Article is carried on website http://www.synracuse.com/elections/poststandard/index.ssf?/base/news-l/1096017657151770.xml

lxv. Details of these dramatic deaths, and how they were technically achieved, are given in T. E. Bearden, Fer-de-Lance. Chenicre Press, updated 2003.

lxvi. Stanislav Lunev (with Ira Winkler), Through the Eves of the Enemy, Regnery, Washington, 1998. Lunev is the highest ranking GRU defector. He is a former Colonel in the GRU, the military counterpart of the KGB. In p. 22-33, he summarizes the Spetznaz capabilities. On p. 22-27, he summarizes Spetznaz use of nuclear weapons already on American soil. On p. 26, he gives some of the ways in which the Soviets easily brought nuclear weapons into the U.S. On p. 30 he confirms Russian seismic weapons. Use of EMP weapons is on p. 30-31.

lxvii. U.S. General George S. Patton Jr., in his speech to Third U.S. Army troops on the eve of Operation Overlord in 1944.

lxviii. As a typical example, see Colin S. Gray, "Thinking Asymmetrically in Times of Terror," Parameters. U.S. Army War College Quarterly, Spring 2002, p. 5-14. The basic message of the article is that asymmetric war is really nothing new, even the concept doesn't have any real content, and the terrorists can do a little damage and we will take some damage, but we will survive as always. In the vernacular, it proposes that we shouldn't sweat the small stuff; everything is still AOK and there isn't any really new or unique problem. Now contrast this with the recent registration of a Yakuza scalar interferometer on the Yellowstone caldera, so that in a single shot most of the United States can be destroyed. We really do not recall seeing that kind of thing occur in our past "asymmetric" wars, nor do we see initiation of earthquakes such as the 9.3 quake on the seafloor on Dec. 26, 2004 that initiated the catastrophic tsunamis in Asia. But one notes that, in 2002 — five years after Defense Secretary's confirmation of special terrorist EM weapons generating earthquakes, evoking volcanoes into eruption, and controlling our climate and weather — the official publication Parameters of the U.S. Army War College apparently has no knowledge whatsoever of such terrorist capabilities or of such terrorist demonstrations.

lxix. Missing and unaccounted, in the official Ukraine records and accounting for its nuclear weapons transfer to Russia. The reader should understand that there are no officially acknowledged missing nuclear weapons, and there likely never will be! In the real world, there turns out to be hundreds of such weapons that have "mysteriously disappeared from accounting," and then in the hue and cry and charges and counter charges, the hullabaloo has just faded away and been ignored.

lxx. The Ministry of Defense reported on transfer and destruction by the Ukraine of 3772 nuclear warheads, but the general staff reported there were more than 4,000 to begin with. In other words, something other than transfer or destruction was done with some 230 or so Ukrainian nuclear warheads.

lxxi. Even under U.S. agreement with the Russians (START II) for dismantling some of the nuclear weapons, there has been no truly accurate accounting. E.g., quoting from Jo L. Husbands, BITS Research Report 97.1, Part II: Domestic and International Politics: The U.S. Response to the Russian Nuclear Legacy. Nov. 1997: "From the outset, the Russian government was unwilling to permit the United States to have a role in the actual dismantlement of former Soviet/Russian nuclear warheads. The United States therefore cannot say with certainty how many warheads have actually been dismantled at the four Russian dismantlement facilities... " In other words, much of it is smoke and mirrors.

So the reports of precisely how many warheads were transferred and/or dismantled and destroyed are not accurate at all in their "total numbers," and they never have been. Instead, the infamous and deceitful catch-all phrase so long used by our intelligence agencies to cover ignorance was invoked. The phrase is "We have no evidence that..., " which usually is a bald-faced attempt to cover up something which we absolutely do not know the truth or falsity of, or that is embarrassing, or that is a political hot potato. Usually the evidence is indeed there somewhere, but it indicates something contrary to the prescribed "official intelligence position" of the agency. Analysts who push too hard in advancing what the intelligence database really states, when it is against the official policy position, do not fare well or last very long in the U.S. intelligence community.

lxxii. In 1996 Gen. Alexander Lebed, then President Boris Yeltsin's national security adviser, reported that 84 suitcase-size nuclear weapons were missing from Russia's arsenal. Other Russian officials denied the claim, and U.S. officials discounted it. The matter was never resolved, but just gradually ignored.

lxxiii. Paul L. Williams, Al Qaeda: Brotherhood of Terror. Alpha Books, Indianapolis, 2002 states Russian and U.S. intelligence sources are aware that bin Laden purchased 20 suitcase nuclear weapons in 1998 from Chechen Mafia agents for S30 million in cash and a quantity of heroin whose street value was $700 million. Williams is a former FBI consultant and the author of several important books on terrorism.

lxxiv. Eliot Marshall; David Malakoff, and Constance Holden, "Bioweapons Cleanup," Science. Vol. 295, 25. Jan. 2002, p. 603.

Ixxv. Simon Reeve, The New Jackals: Ramzi Yousef. Osama bin Laden, and the Future of Terrorism. Northeastern University Press, Chicago, 1999, p. 208.

lxxvi. The study reference is: U.S. Congress, Office of Technology Assessment, Proliferation of Weapons of Mass Destruction: Assessing the Risks. Government Printing Office, Washington, 1993, p. 54.

lxxvii. Richard K. Betts, "The New Threat of Mass Destruction," Foreign Affairs. 77(1). Jan/Feb. 1998, p. 32.

lxxviii. Manitoba Health, Emergency Treatment Guidelines: General - Triage. Aug. 2004. This Canadian guide is deliberately referenced to show that the triage procedure is a necessary medical emergency procedure, recognized internationally.

lxxix. Our own National Institutes of Health (NIH) knows nothing about higher group symmetry electrodynamics, knows nothing about precursor engineering (the Soviet energetics science), at best knows the standard but seriously flawed electrical engineering and classical Maxwell-Heaviside electrodynamics, never understood the induction of health changes and diseases in U.S. Embassy personnel in Moscow by the decades of so-called "microwave radiation of the U.S. Embassy." knows nothing of the mechanism proved by Priore and important French scientists to yield revolutionary electromagnetic cures for dread terminal illnesses (such as cancer, clogging of the arteries, some infectious diseases tested, etc.), knows absolutely nothing at all about Soviet bioenergetics or its mechanisms and capabilities, and certainly knows nothing of (and does not even "believe") the startling capabilities of Soviet/Russian/FSB/KGB psychoenergetics and its biogenesis ability to build an actual living mind and mind operations in the laboratory, then clone or reproduce it or them by the millions.

N1H and its subsidiary organizations seem interested in maintaining the status quo in medical science and adhering scrupulously to present medical treatment mechanisms and theoretical understanding. They seem to block and deny any and all more advanced and innovative research, particularly if advanced group symmetry electrodynamics is involved.

They have little knowledge of the actual healing mechanism of the body (its cellular regeneration system, which is a highly special electromagnetic system), and do not understand the higher group symmetry electrodynamics of that system. Further, they do not intend to even study the kind of "novel" electrodynamics and electrodynamics' mechanisms used by the body for all its cellular healing processes. Instead, they are absolutely determined to continue with drugs, vaccinations, surgery, antibiotics, and conventional medical therapies. They therefore are determined that the majority of those coming mass casualties from anthrax spray attack etc. shall be untreatable, so that most of those poor patients will be dragged aside and left to die without treatment, under Triage procedures. Hitler in all his death camps may not have produced as many millions of deaths as will this dogmatic policy of our medical science institutions.

Consequently, we are 50 years behind where we should be in medical therapy technology. We are also extremely vulnerable to mass casualties generated in our population centers by terrorist WMD attacks. Whether intentional or unintentional, NIH's actions and policies are designed to keep us in that situation indefinitely.

lxxx. (a) Vlail Kaznacheyev and L. P. Mikhailova, Ultraweak Radiation in Intercellular Interactions, [in Russian], Novosibirsk, 1981. An English exposition of much of the Kaznacheyev work is given in (b) Vlail Kaznacheyev, "Electromagnetic Bioinformation in Intercellular Interactions," Psi Research, 1(1), Mar. 1982, p. 47-76. See also (c) Vlail Kaznacheyev, "Apparent information transfer between two groups of cells," Psychoenergetic Systems. 1(1), Dec. 1974, p. 37. (d) Vlail Kaznacheyev et al., "Distant intercellular interactions in a system of two tissue cultures," Psychoenergetic Systems. 1(3), Mar. 1976, p. 141-142. In the same issue, see (e) "A Comment" by William A. McGarey, p. 143; and (f) "A Comment" by Arthur C. Hastings, p. 143-144.

lxxxi. Aitchison, I. J. R., "Nothing's Plenty: The Vacuum in Modern Quantum Field Theory," Contemporary Physics. 26(4), 1985, p. 372.

lxxxii. See Rick Weiss, "NIH to Set Stiff Restrictions on Outside Consulting," Washington Post. Aug. 4, 2004, p. A01.

lxxxiii. "US NIH Wants 1 Year Moratorium on Drug Co. Collaborations," Dow Jones Newswires. 9-24-04 1318ET.

lxxxiv. (a) The U.S. Patent is "Pathogenic Mycoplasma", US Patent No. 5,242,820, issued September 7, 1993. Dr Lo is listed as the Inventor and the American Registry of Pathology, Washington, DC, is listed as the "Assignee"; (b) for a summary, see Donald W. Scott, "Mycoplasma: The Linking Pathogen in Neurosystemic Diseases," Nexus Magazine, Aug. 2001. Particularly see (c) US Senate, Ninety-fifth Congress, Hearings before the Subcommittee on Health and Scientific Research of the Committee on Human Resources. Biological Testing Involving Human Subjects by the Department of Defense. 1977; released as US Army Activities in the US Biological Warfare Programs, Volumes One and Two, 24 February 1977. See also (d) Donald W. Scott and William L. C. Scott, The Brucellosis Triangle. The Chelmsford Publishers, Sudbury, Ontario ,Canada, 1998.

lxxxv. The interested reader is referred to our "Porthole Briefing" on website www.cheniere.org.

lxxxvi. (a) T. E. Beardcn, Energetics: Extensions to Physics and Advanced Technology for Medical and Military Applications, Mar. 21, 1998, 200+ page enclosure to CTEC Letter to Gen. (Ret.) Walter Busby, Deputy Secretary of Defense for Counterproliferation and Chemical and Biological Defense, March 21, 1998., also the enclosure to CTEC letter to Major General Thomas H. Neary, Director of Nuclear and Counterproliferation, Office of the Deputy Chief of Staff, Air and Space Operations, HQ USAF, May 4, 1998. Copies were also sent as enclosures to letters to NIH, CDC, and several other government agencies and laboratories, (b) T. E. Bearden, "Method, System and Apparatus for Conditioning Electromagnetic Potentials, Fields, and Waves to Treat and Alter Matter," Application No. 60/339,122, Dec. 7, 2001. This is the provisional patent application that the present author openly released to the public domain in Dec. 2002, and it is posted on www.cheniere.org. (c) See also T. E. Bearden, Porthole Briefing, available on www.cheniere.org.

lxxxvii. (a) B. Baker; J. A. Spadero, and R. O. Becker, "Electrical stimulation of articular cartilage," Annals of New York Academy of Sciences. Vol. 238, 1974, p. 491-499; (b) R. O. Becker, Carlton F. Hazlewood, Abraham R. Liboff, and Jan Walleczek, "Electromagnetic Applications In Medicine," NIH-OAM Electromagnetics Panel Report, Jan. 15, 1993; (c) Robert O. Becker and Andrew A. Marino, Electromagnetism and Life. State University of New York Press, Albany, 1982; (d) Robert O. Becker, "The neural semiconduction control system and its interaction with applied electrical current and magnetic fields," Proceedings of the XI International Congress of Radiology. Vol. 105, 1966, p. 1753-1759, Excerpta Medica Foundation; Amsterdam; (e) R. O. Becker, "The direct current field: A primitive control and communication system related to growth processes," Proceedings of the. XVI International. Congress of Zoology, Washington, D.C., Vol. 3, 1963, p. 179-183; (f) R. O. Becker, Charles H. Bachman, and Howard Friedman, "The direct current system: A link between the environment and the organism," New York State Journal of Medicine. Vol. 62, April 15, 1962, p. 1169-1176.

lxxxviii. R. O. Becker and David G. Murray, "The electrical control system regulating fracture healing in amphibians," Clinical Orthopaedics and Related Research. No. 73, Nov.-Dec. 1970, p. 169-198. This is the definitive technical exposition by Becker of his electrical control system ideas and findings.

lxxxix. (a) R. O. Becker and D. G. Murray, "A method for producing cellular dedifferentiation by means of very small electrical currents," Trans. N.Y. Acad. Sci.. Vol. 29, 1967, p. 606-615; (b) Becker, R. O., and Joseph A. Spadaro, "Electrical stimulation of partial limb regeneration in mammals," Bulletin of the New York Academy of Medicine. Second Series, 48(4), May 1972,
p. 627-64' (c) C. A. L. Bassett; R. O. Becker, and R. J. Pawluk, "Effects of electric currents on bone in vivo," Nature, Vol. 204, Nov. 14, 1964, p. 652-654.

xc. T. E. Bearden, Porthole Briefing, available on www.cheniere.org.

xci. See (a) A. J. Berteaud and A. M. Bottreau, "Analyse des rayonnements electromagnetiques emis par l'appareil Priore," [Analysis of the electromagnetic radiations emitted by the Priore apparatus],D.R.M.E., 1971, p. 3-12; (b) A. J. Berteaud, A. M. Bottreau, A. Priore, A. N. Pautrizel, F. Berlureau, and R. Pautrizel, "Essai de correlation entre revolution d'une affection par Trypanosoma equiperdum et l'action d'une onde

electromagnetique pulsee et modulee," [Trial of the correlation between the evolution of a disease by Trypanosoma equiperdum and the action of a pulsating and modulated electromagnetic wave], Compt. Rend. Acad. Sci. (Paris), Vol. 272, 1971, p. 1003-1006; (c) R. Cambar, "Rapport general des travaux de la Commission de Controle constitute en vue de verifier l'un des effets biologiques obtenu par l'utilisation de l'appareillage de Priore A. Bordeaux," [General findings of the work of the control commission formed to verify one of the biological effects obtained by use of the apparatus of A. Priore at Bordeaux], 1969, 1 vol.; (d) R. Courrier, "Expose par M. le Professeur R. Courrier, Secretaire Perpetuel de L'Academie des Sciences fait au cours d'une reunion a L'Institut sur les effets de la Machine de M.A. Priore le 26 Avril 1977," [Presentation by Professeur R. Courrier, Perpetual Secretary of the Academy of Sciences, made at the meeting of the Academy on the effects of the machine of M.A. Priore.]; (e) G. Delmon and J. Biraben, "La croissance du carcinome de Guerin sour Faction de champs electromagnetiques," [The growth of carcinoma treated by the action of electromagnetic fields], Rev. Path. Comp., 3(2), 1966, p. 85-88; (f) G. Mayer, A. Priore, G. Mayer and R. Pautrizel, "Action de champs magnetiques associes a des ondes electromagnetiques sur l'orchite trypanosomienne due lapin," [Action of magnetic fields associated with electromagnetic waves on the typanosomian orchitis of the rabbit], Compt. Rend. Acad. Sci. (Paris), Vol. 274, 1972, p. 3011-3014; (g) Priore's doctoral thesis (which was rejected when the project was suppressed) is: Guerison de la Trvpanosomiase Experimentale Aigue et Chronique par L'action Combinee de Champs Magnetiques et D'Ondes Electromagnetiques Modules [Healing of intense and chronic experimental trypanosomiasis by the combined action of magnetic fields and modulated electromagnetic waves], thesis submitted in candidacy for the doctoral degree, 1973; (h) Eric Perisse, Effets des Ondes Electromagnetiques et des Champs Magnetiques sur le Cancer et la Trvpanosomiase Experimentale [Effects of Electromagnetic Waves and Magnetic Fields on Cancer and Experimental Trypanosomias], Doctoral thesis, University of Bordeaux No. 83, March 16, 1984; (i) For a limited background and light technical coverage of Priore's work for the educated layman, see T. E. Bearden, "Vacuum Engines and Priore's Methodology: The True Science of Energy-Medicine, Parts I and II," Explore!. 6(1), 1995, p. 66-76; 6(2), 1995, p. 50-62; (j) For somewhat more specific technical details, see T. E. Bearden, Energetics of Free Energy Systems and Vacuum Engine Therapies. Tara Publishing, Internet node www.tarapublishing.com/books, July 1997; (k) for a summary of the entire Priore affair, see Christopher Bird, "The Case of Antoine Priore and His Therapeutic Machine: A Scandal in the Politics of Science," Explore!. 5(5-6), 1994, p. 97-110; (1) For detailed coverage of the entire Priore affair, see Jean-Michel Graille, Dossier Priore: Une Nouvelle Affaire Pasteur. [The Priore Dossier: A New Pasteur Affair?], De Noel, Paris, 1984 [in French]; (m) For a technical description of the ordinary EM and physics characteristics of the Priore radiation (but not the active mechanism), see A. J. Berteaud and A. M. Bottreau, "Analyse des rayonnements electromagnetiques emis par l'appareil Priore," ["Analysis of the electromagnetic radiations emitted by the Priore apparatus"], D.R.M.E., 1971, p. 3-12. Priore's patents are (n) Antoine Priore, "Apparatus for producing radiations penetrating living cells," U.S. Patent No. 3,368,155, Feb. 6, 1968; (o) Antoine Priore, "Method of producing radiations for penetrating living cells," U.S. Patent No. 3,280,816, Oct. 25, 1966, (p) Antoine Priore, "Precede et dispositif de production de rayonnements utilisables notamment pour le traitement de cellules vivantes," [Procedure and Assemblage for Production of Radiation Especially Serviceable for the Treatment of Living Cells], Republique Francais Brevet d'Invention P.V. No. 899.414, No. 1,342,772, Oct. 7, 1963.

xcii. See Laurie Garrett, "The Nightmare of Bioterrorism," Foreign Affairs. 80(1), Jan. /Feb. 2001. p. 76-89. 1 lie quote is from p. 77.

xciii. As reported in "Alert as Nuclear Bombs Go Missing," The Drudge Report. Sept. 17,2002.

xciv. Matthew Bunn and Anthony Wier, "Preventing a Nuclear 9/11," Washington Post, Sept. 12, 2004, p. B07.

xcv. Ibid.

xcvi. Paul L. Williams, Osama's Revenge: The Next 9/11: What the Media and the Government Haven't Told You." Prometheus Books, 2004. Williams is a former FBI consultant and author of several treatises on terrorism.

xcvii. Paul L. Williams, Al Qaeda: Brotherhood of Terror. 2001.

xcviii. See (a) T. E. Bearden, Fer-de-Lance. Cheniere Press, 2003 (updated) for some details on quantum potential weapons and their usage. Also see (b) T. E. Bearden, Gravitobiology. Cheniere Press, 2003 (updated) for additional details. Some five nations of the world now possess QP weapons, and a sixth nation is obtaining them. China, Russia, Brazil, Israel, and one other friendly nation are the five present nations.

xcix. For background on such tsunamis when naturally induced, see David R. Tappin, Editor, Submarine-slump-generated Tsunamis. Special edition of Marine Geology. Volume 203, Issues 3-4, 30 January 2004, pages 199-386.

c. Paul H. B. Shin, "Killer wave lying in wait: Volcano could unleash horror," New York Daily News. Aug. 29, 2004, http://www.nydailynews.com/news/story/226886p-194881c.html.—

Technical Background on the Priore Healing Process

Contents

1. Technical Background on the Priore Healing Process
2. Transduction of EM wave types by successive phase conjugation.
3. Time-charging and Time-density excited states
4. Interference for transduction in slow decay of time-density excited states
5. Infolded longitudinal biwaves composition of a scalar potential
6. Scalar potential interferometry produces all EM force fields and waves
7. Some serious flaws and errors in classical EM theory (#1-16)
8. Some serious flaws and errors in classical EM theory (#17-32)
9. Abnormal penetration depth of weak signals due to photon interaction
10. Amplified replica of body's signal complex to reverse cellular disease & damage
11. Amplified replica of body's signal complex to correct a congenital condition

Technical Background on the Priore Healing Process

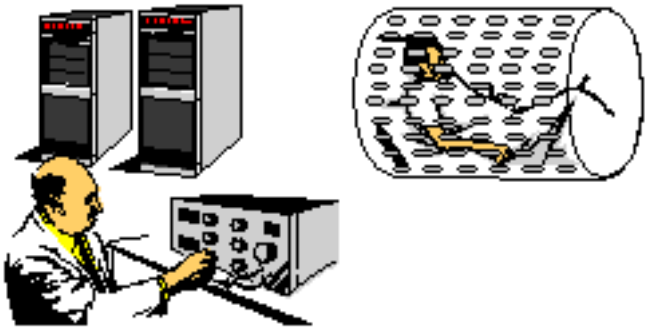

© T.E. BEARDEN 2001

Published by Lotus® Freelance Graphics®

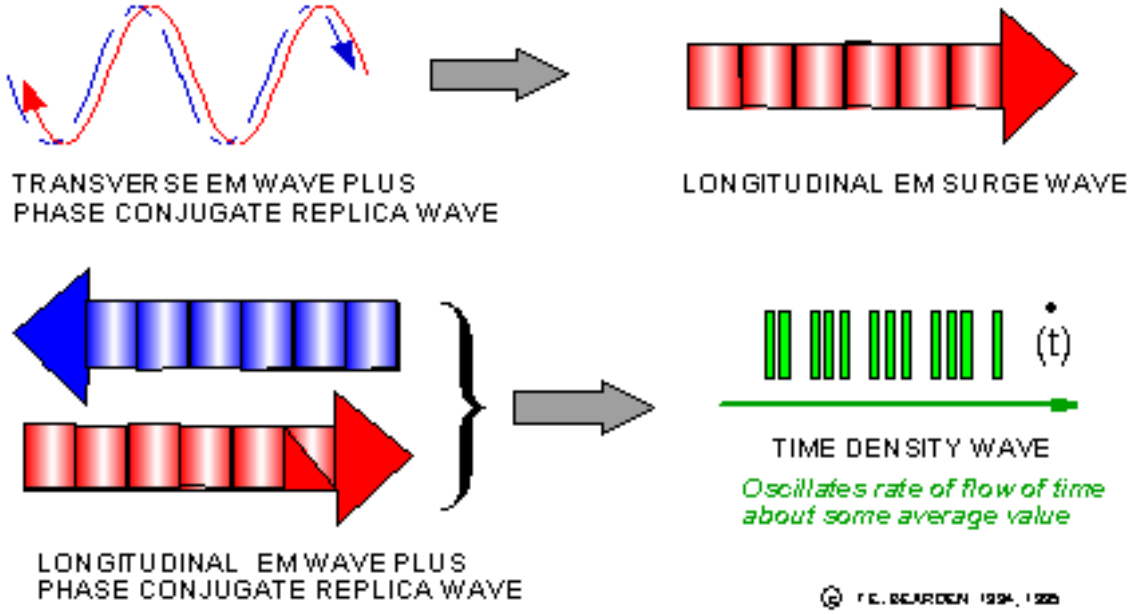

Figure 1. Transduction of EM wave types by successive phase conjugation.

Published by Lotus® Freelance Graphics®

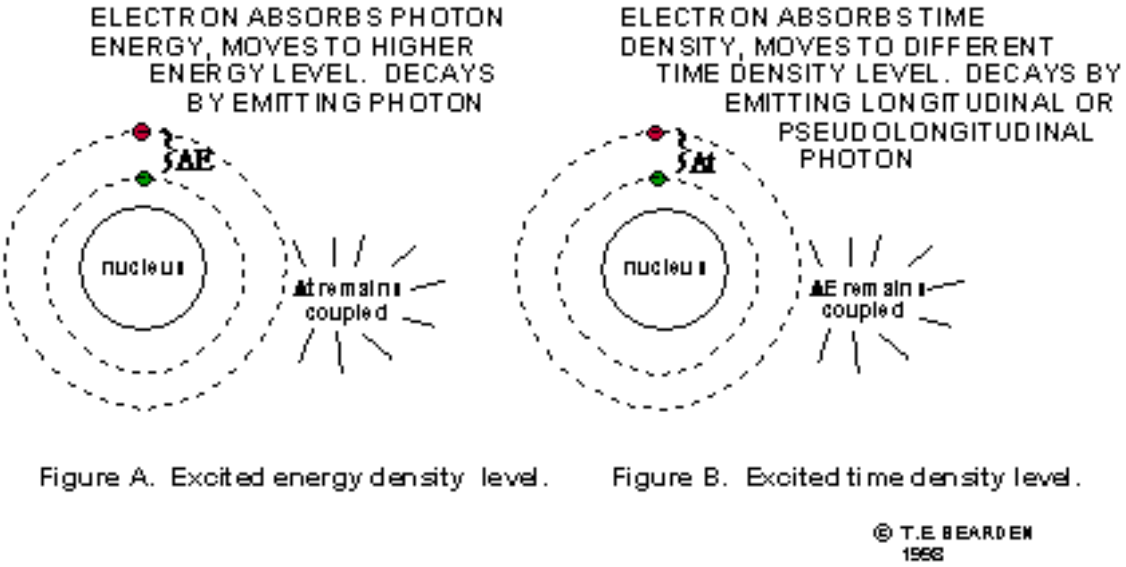

Figure 2. Time-charging and Time-density excited states, contrasted to ordinary spatial energy excited state.

Published by Lotus® Freelance Graphics®

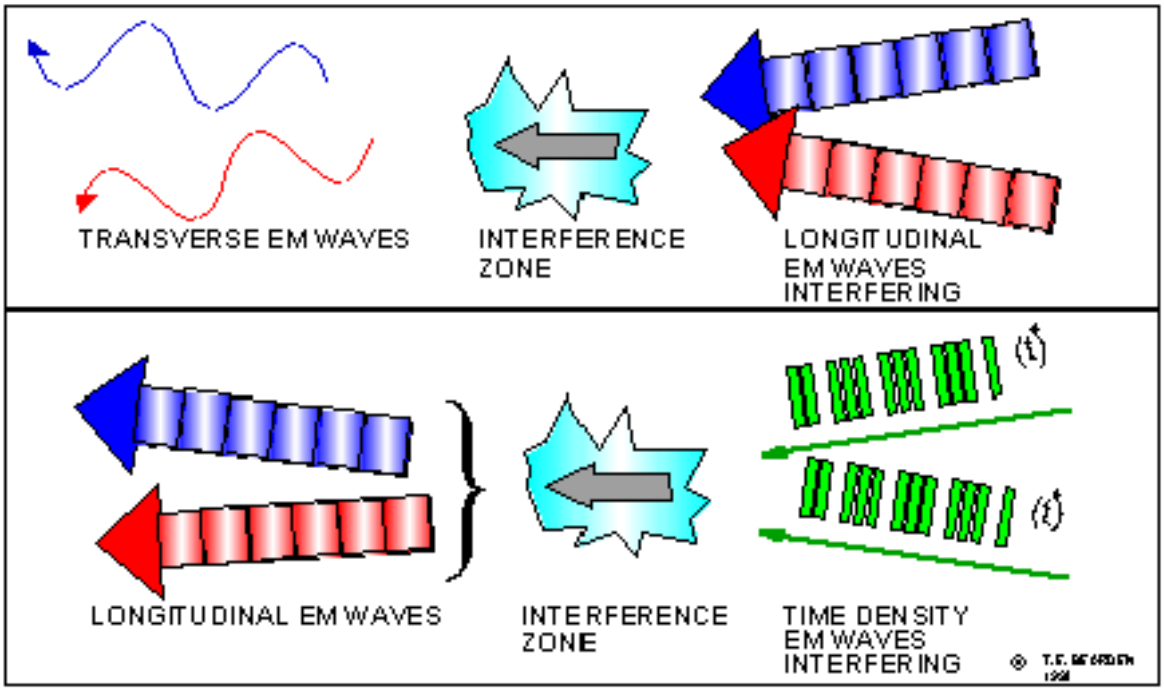

Figure 3. Interference processes for transduction in slow decay of time-density excited states.

Published by Lotus® Freelance Graphics®

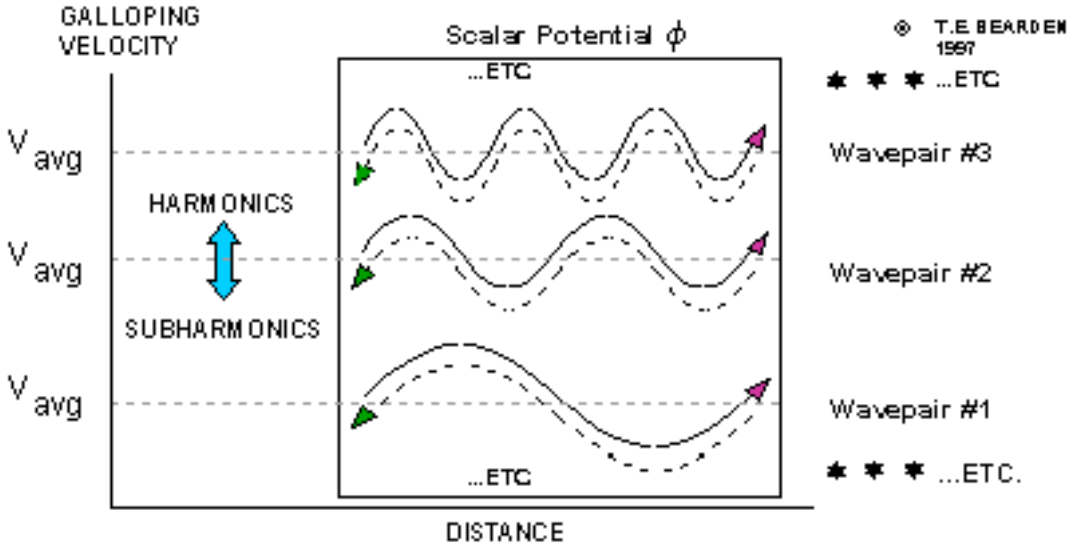

The Structure Is:

A harmonic set of longitudinal wavepairs. In each wavepair the two waves superpose spatially, but travel in opposite directions. The two are phase conjugates and time-reversed replicas of each other. Thus they comprise a coupled longitudinal wave and antiwave. Each wavepair is a time-density wave and therefore an electrogravitational wave.

Figure 4. Infolded longitudinal biwaves (time-density EM waves) composition of a scalar potential.

Published by Lotus® Freelance Graphics®

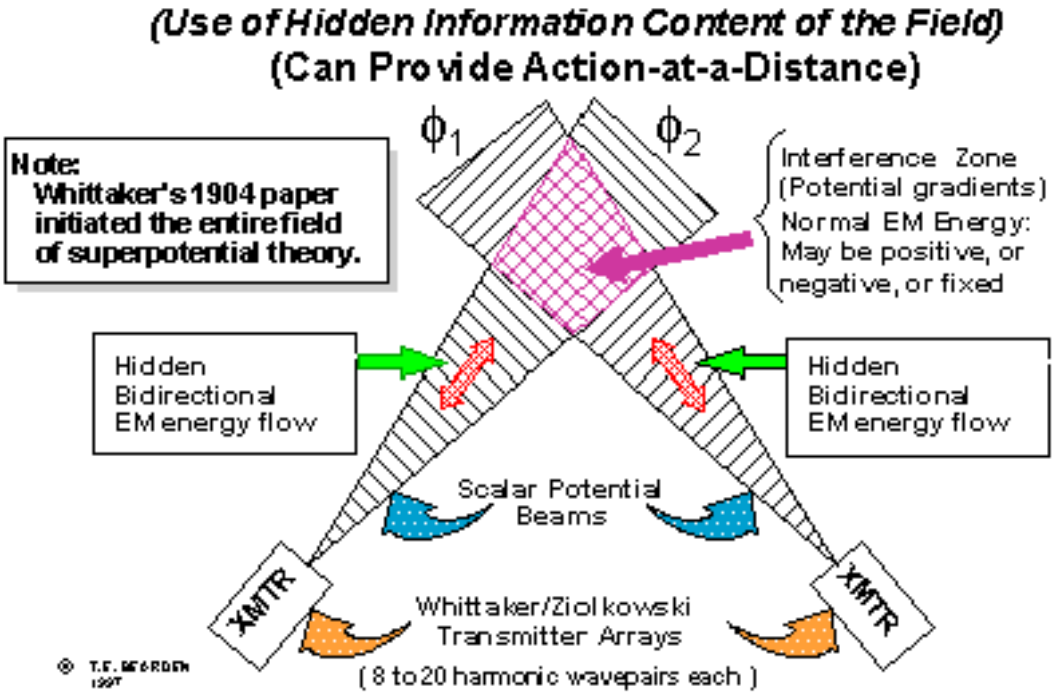

Figure 5. Scalar potential interferometry (between the two sets of bidirectional longitudinal EM wavepairfunctions) produces all EM force fields and waves.

Published by Lotus® Freelance Graphics®

1. Eliminates the Internal EM Inside the Scalar Potential.
2. Equations Still Assume Material Ether Per Maxwell (Unchanged).
3. No Definition of Electrical Charge or of Scalar Potential.
4. Use of Force Fields in Vacuum is False (and Known to be So).
5. Treats Charge q as Unitary Instead of Coupled System q = ϕ(q)m(q).
6. Confuses Massless Potential Gradients as Forces (See #3, #4).
7. Does Not Utilize Mass as a Component of Force (See #23).

---

8. Erroneously Assumes EM Force Fields as Primary Causes.
9. Topology of EM Model Has Been Substantially Reduced.
10. Does Not Include Quantum Potential or Action at a Distance.
11. Does Not Include Superluminal Velocity of Inner EM Components.
12. Does Not Utilize Extended Near-Field Coulomb Gauge Effects.
13. Does Not Include EM Generatrix Mechanism for Time Flow.
14. Does Not Unify Photon and Wave Aspects (Requires 7-D Model).

---

15. Does Not Include Electron Spin and Precession (See #19, #24).
16. Treats EM Energy As Existing In "Chunks," Instead of as Flow.

Figure 6. Some serious flaws and errors in classical EM theory (#1-16)

© T.E. BEARDEN 1994, 1997

Published by Lotus® Freelance Graphics®

17. Confuses Energy and Energy Collection (See #16).
18. Discards Half of Every EM Wave in Vacuum (See #22).
19. Erroneously Uses Transverse Vacuum Wave; It's Longitudinal.
20. Arbitrarily Regauges Maxwell's Equations to Eliminate Overunity.
21. Omits Phase Conjugate Optics Effects (The *Rule* in Internal EM).
22. Does Not Include EM Cause of Newtonian Reaction Force.
23. Erroneously Assumes Separate Force Acting on Separate Mass.
24. Confuses Detected Electron Precession Waves as Proving Transverse EM Waves in Vacuum (Remnant of Old "EM Fluid" Concept).
25. Due to Error in String Wave, Omits the Ubiquitous Antiwave.
26. *Assumes* Equilibrium; Not True Unless Include Vacuum Interactions.
27. Higher Topology Required, to Model Electromagnetic Reality.
28. Lorentz surface integration discards Poynting energy transport.
29. Has nothing at all to say about form of EM entities in massless space.
30. Eliminates the infolded general relativity using EM-force as curve agent.
31. Does not include longitudinal EM waves as time domain oscillations.
32. Does not include EM mechanism that generates time flow and flow rate.

Figure 6. Some serious flaws and errors in classical EM theory (#17-32)

© T.E. BEARDEN 1994, 1997

Published by Lotus® Freelance Graphics®

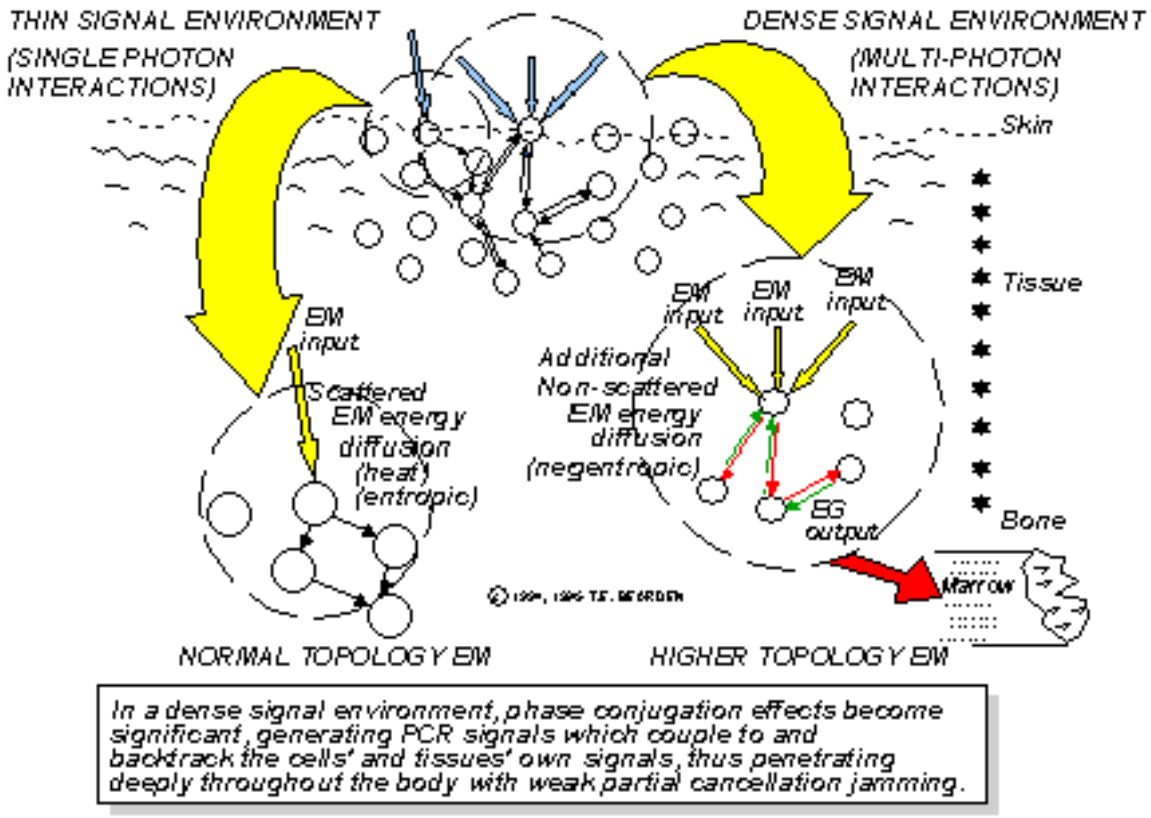

Figure 30. Abnormal penetration depth of incident weak signals due to multiphoton interaction in a dense weak signal environment.

Published by Lotus® Freelance Graphics®

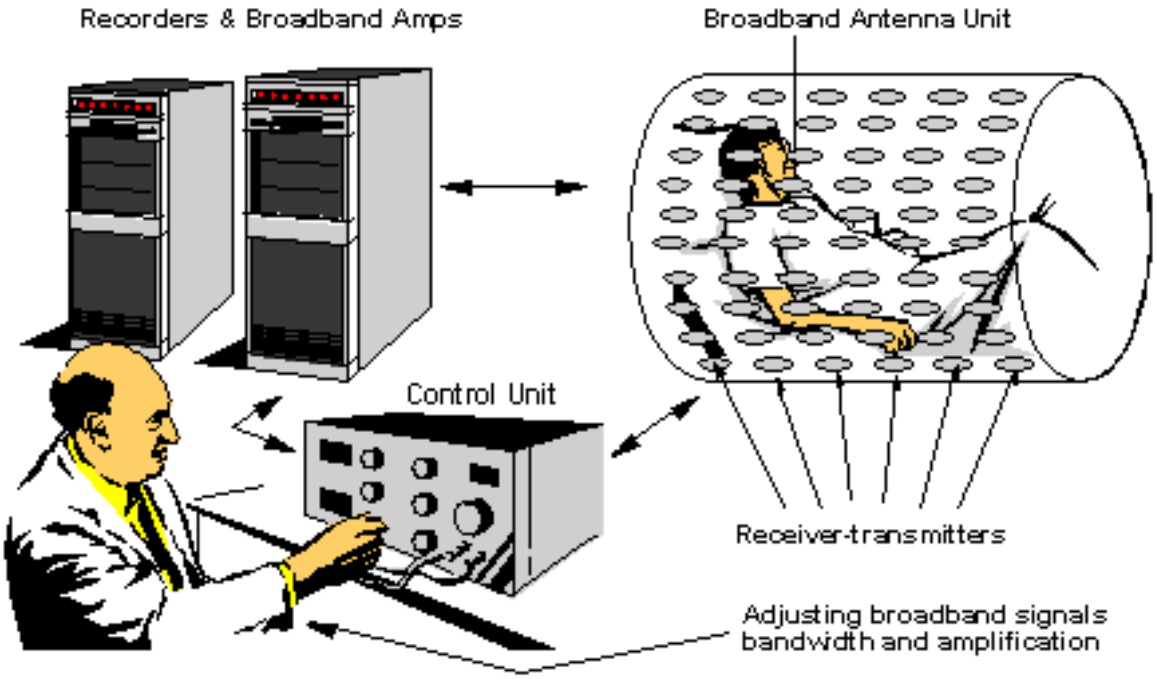

Figure 31. Using an amplified replica of the body's own dense, broadband signal complex to irradiate it, producing deeply-penetrating and precise longitudinal EM wave sets that pump cells and reverse cellular disease and damage.

Published by Lotus® Freelance Graphics®

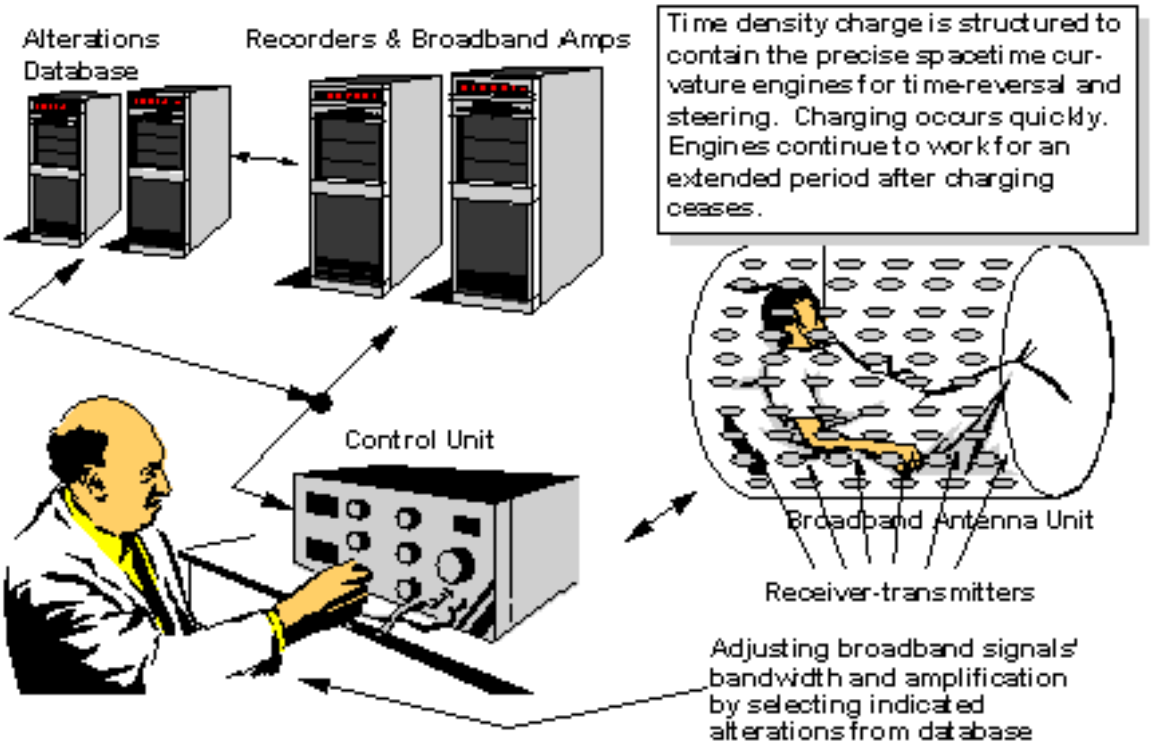

Figure 9. Using an amplified replica of the body's own dense, broadband signal complex containing added alterations, to irradiate the body and produce deeply-penetrating precise time-density charging for cellular time-reversal, while steering the time-reversal trajectory to also correct a congenital condition.

© T.E.McFadden 004

Published by Lotus® Freelance Graphics®

Attempts to detect the torsion field nature of scalar wave generated by dual Tesla coil system

Gao Peng

***Abstract*—Scalar wave was found and used at first by Nikola Tesla in his wireless energy transmission experiment. Prof.K.Meyl extended the Maxwell equation and found the lost scalar wave part. The scalar wave theory proposed by Prof.K.Meyl indicates that the torsion field is the nature of scalar wave. This work attempts to detect the torsion field nature of scalar wave generated by the dual Tesla coil system, using the torsion balance consisting of a wooden frame. The result is positive and two kinds of torsion field including left-handed and right-handed are detected in dual Tesla coil system.**

I. Introduction

As everyone knows, Nikola Tesla is the first experimental physicist to conduct the no-loss wireless transmission of energy experiment as scalar wave radiation, of course there are many other names too. Mainly the western scientific community and scientists call it scalar wave, such as Tom Bearden, Eric.P.Dollard, Prof.K.Meyl and so on. Of course, the similar results were obtained by S.V.Avramenko, G.F.Ignajev and others[1] in Russia. N.Tesla's original patent in US is No. 649.621 on 15.5.1900:Apparatus for transmission of Electrical Energy[2].

There are many devices and patents based on torsion field in N.Tesla's inventions, such as the Tesla coil, which is the most popular one in Figure1; and Tesla turbine, which is a mechanical device of fluid mechanics in Figure2.

There is the similar core principle in these two kinds of device. Let us pay special attention to N.Tesla's statement in 1891 that the ether behaves as a fluid to solid objects and as a solid to light and heat. And this ties in directly with the work of Dr.N.A.Kozyrev[1].

The electromagnetism should follow the principle of fluid mechanics. There is the vortex structure in not only both the Tesla coil and the Tesla turbine, but also most of his inventions.

Prof.K.Meyl has done many works on Tesla's technology and scalar wave theory. For example, he found the lost scalar wave part of Maxwell's equation and extended the field theory. And he also found the magnetic scalar wave at first, which is also called "Meyl's wave"

The laboratory of Beijing Wellan Century Co., Ltd;
The Scalar Wave Technology Research Web in China
email:gpufo@outlook.com

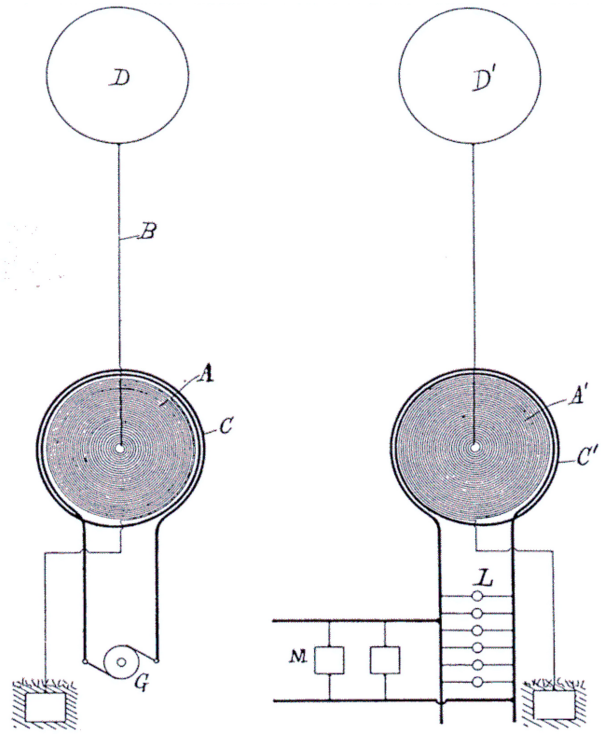

Figure1. Tesla Coils in N.Tesla's patent, No.649.621

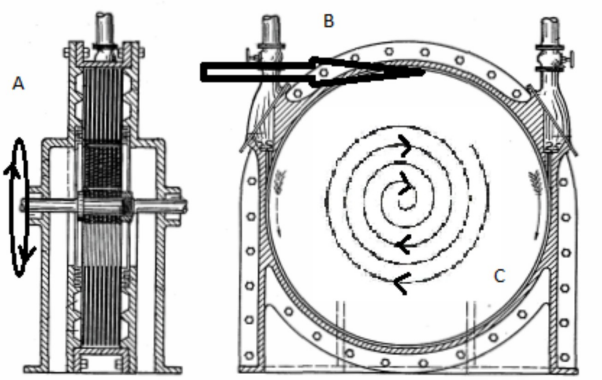

Figure2. The structure of Tesla turbine

In addition to the theory, Prof.K.Meyl also did many scalar wave kits and devices for demonstrating the Tesla's technology and something new, such as the wireless energy transmission, the biological and medicine effects and so on.

According to Prof.K.Meyl's vortex model of scalar wave, the scalar wave in Tesla's scalar system is the electric scalar wave in Figure3.

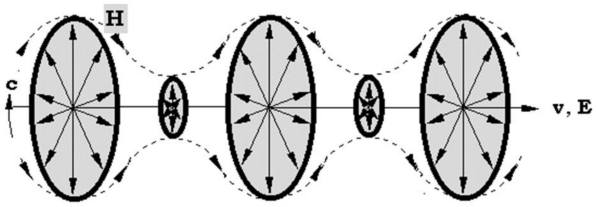

Figure3. The vortex model of electric scalar wave [3] (Quote from: DNA and Cell Resonance, wrote by Prof.K.Meyl.)

The direction of the ring-like vortex and the field pointers are perpendicular. And the vector of the H-field points into the direction of the vortex centre and the vector of the E-field axially points to the outside [3].

So this work wants to detect the vortex of scalar wave using a torsion balance consisting of a wooden frame. Author believes the scalar wave consisting of vortex is a kind of non-stationary spinning, and will talk about it in details on the analysis part.

II. Description of devices and methodology

In this work, the Phase-Conjugate-Resonator consists of two standard pancake Tesla coils, two wooden frames in different size, and some auxiliary objects were used. In this section, it will be discussed in three parts: the Phase-Conjugate-Resonator, the methodology and the full configuration of hardware.

A. *The Phase-Conjugate-Resonator.*

In N.Tesla's patent [2], we can see the basic structure of Tesla coil. There are the same parameters in these two Tesla coils. There are large numbers of coils winded in pancake structure in the secondary coil, the center of the secondary coil is connected to a smooth spherical antenna and the end of coil at the outside is connected to ground. There are only few numbers of coils in the primary coil but the diameter of the wire of primary coil is much larger than the diameter of the wire of secondary coil.

The complete Tesla scalar system consists of two same Tesla coils, one is the transmitter and the other one is the receiver. When the two Tesla coils get the true resonance, the scalar wave will be generated. According to Prof.K.Meyl, the condition of the scalar wave resonance is:

- The same frequency;
- The same wave shape, respectively modulation;
- The opposite phase shift [3].

The most important condition is the opposite phase shift between the transmitter coil and the receiver coil. When the three conditions are met, the scalar wave will be generated. The dual Tesla coil system can be also called the Phase-Conjugate-Resonator.

The Phase-Conjugate-Resonator in this work consists of two standard pancake Tesla coils, which are made on printed circuit board. The advantage of using the printed circuit board to make the coils is that it can ensure the two coils produced by factory are extremely same. One Tesla coil acts as the transmitter and the other coil acts as the receiver.

The secondary coil is printed on the top of the printed circuit board and the total length of the secondary coil is 16 meters. The center of the secondary coil is connected to a series of pillars of brass, and at the end of the series of pillars of brass, a stainless steel ball whose diameter is about 150mm is connected. The outside end of the secondary coil is connected to a ground line, which is the link of the transmitter and receiver.

The primary coil is printed under the printed circuit board with wider copper wire. The primary coil is connected directly to the output of the RF driver circuit. At the exact resonance frequency, there will be low impedance at the primary coil of the transmitter. So the RF driver should be a special one, this will be discussed later.

The two coils of the Phase-Conjugate-Resonator are in Figure 4.

Figure4. The two Tesla coils in Phase-Conjugate-Resonator

The signal generator and the RF amplifier circuit are also needed for driving the transmitter of the Phase-Conjugate-Resonator. The signal generator is DDS type,frequency range is 0-8 Mhz, the output impedance is standard 50 Ohms, which is suitable for the input impedance of RF amplifier. The RF amplifier is a kind of class AB amplifier, whose bandwidth is 3-30 Mhz and designed power is 45 watts. But the output impedance of the RF amplifier should not be 50 Ohms because of the low impedance of the primary coil of transmitter coil. So the impedance of primary coil and the output impedance of RF amplifier should be matched.

As to the adjustment of the Tesla Phase-Conjugate-Resonator, we should pay attention to what N.Tesla said in 1927:

”The mode of propagating the currents from the transmitter through the terrestrial globe is most extraordinary considering the speed of the electrification of the surface. The wave starts with a theoretically infinite speed, slowing down first very quickly and afterwards at a lesser rate ... The mean surface speed is thus about 471,200 kilometers per second – fifty seven percent greater than that of the so-called Hertz waves – which should propagate with the velocity of light if they exist ... in the system I have devised only force is conveyed to all points of the earth, the energy itself travelling in definite paths determined beforehand. Perhaps the most wonderful feature is that the energy reaches the receiver without the slightest dispersion, so that an incomparably greater amount is collected than is possible by radiations [4].”

Prof.K.Meyl also talked about the transmission of scalar wave with 1.5 times the speed of light [5]. In this work, there are two frequencies, one is the frequency of LC resonance, other one is the frequency of Phase-Conjugate-Resonance. According to 1/4 wavelength theory, the wavelength would not change with the same coil, so the ratio of speeds would be equal to the ratio of frequencies. In this work, the frequency of LC resonance is 2.65 Mhz, and the frequency of Phase-Conjugate-Resonance is 4.17 Mhz, so the ratio of these two frequencies is about 1.57 .

That’s the whole configuration of the Phase-Conjugate-Resonator, corresponding to the condition of scalar wave.

B. Methodology.

There are many methods for detecting torsion field, see [6]. In this work, the torsion balance consisting of a wooden frame is chosen to detect the torsion field generated by the dual Tesla coil system.

The torsion balance method is very sensitive and it can be rotated by torsion field directly. In [7][8], this method was used by V.Zamsha and V.Shkatov in their telekinetic experiment with two photos at distance of about 8000 kilometers. There was obvious rotation of wooden frame after the palm was near the photo of wooden frame remotely. The video of this experiment is in [9].

There are also many experiments showing this method by V.Zamsha in [10][11][12]. In these experiments, the wooden frame was rotated by the photo of crystal, the hands, the photo of human and the torsion field generator.

Of course this method is also verified by other scientists and is also easy-built. So it’s chosen in this work. The wooden frames used in experiments are in figure5. There are different sizes of them, the side length of left frame is 148mm and the side length of right frame is 206mm.

C. The full configuration of hardware.

In this part, all kinds of the hardware are combined to a whole system to conduct the experiment. The full configuration is in Figure6. In this configuration, the transmitter is put on the table. The receiver is put into a closed hardboard box on the ground. The wooden frame is suspended at the top of the stainless steel ball antenna by a very thin line.

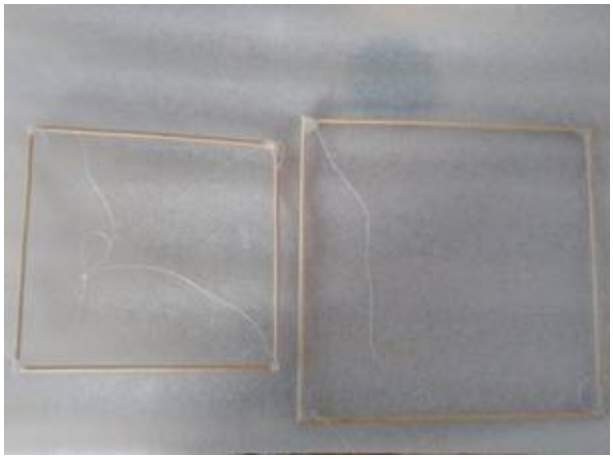

Figure5. The wooden frames used in experiments

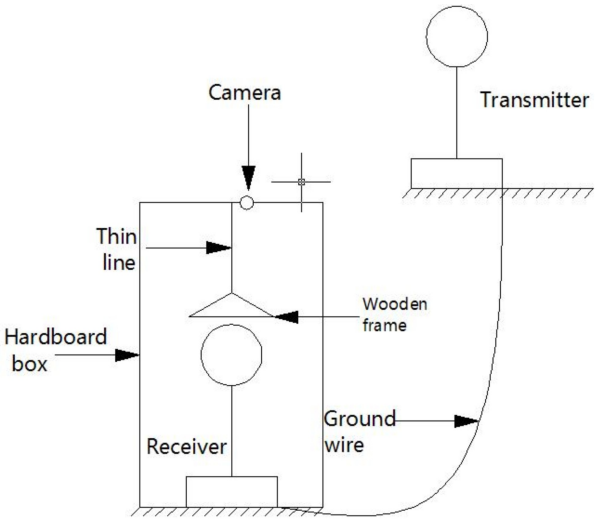

Figure6. The full configuration of experiments

The other side of this thin line is connected at the center of the top cover of box. There is a hole next to the center at the top cover of box, it’s used to place a WIFI camera here. Then the scene in the box can be watched in real time at any place.

III. Experimental process

In this section, the experiment process will be described in detail. There are two representative and independent experiments in this part. The torsion balance consisting of the wooden frame is used in the experiments.

A. The experimental process in detail.

In the first experiment, the wooden frame whose side length is 148mm was used. The wooden frame was put into the hardboard box hung by a very thin line. Then the hardboard box was closed and the author used the WIFI camera to watch the inside of the box on the computer a few meters away. Before the beginning of this experiment, the author let the wooden frame be relaxed until it was static. The relax time was more than 24 hours, and the screen on the computer showed that the wooden frame was almost static. The static wooden frame could not rotate in a closed box if there was no extern force. The process is in block figure7 and the video [13].

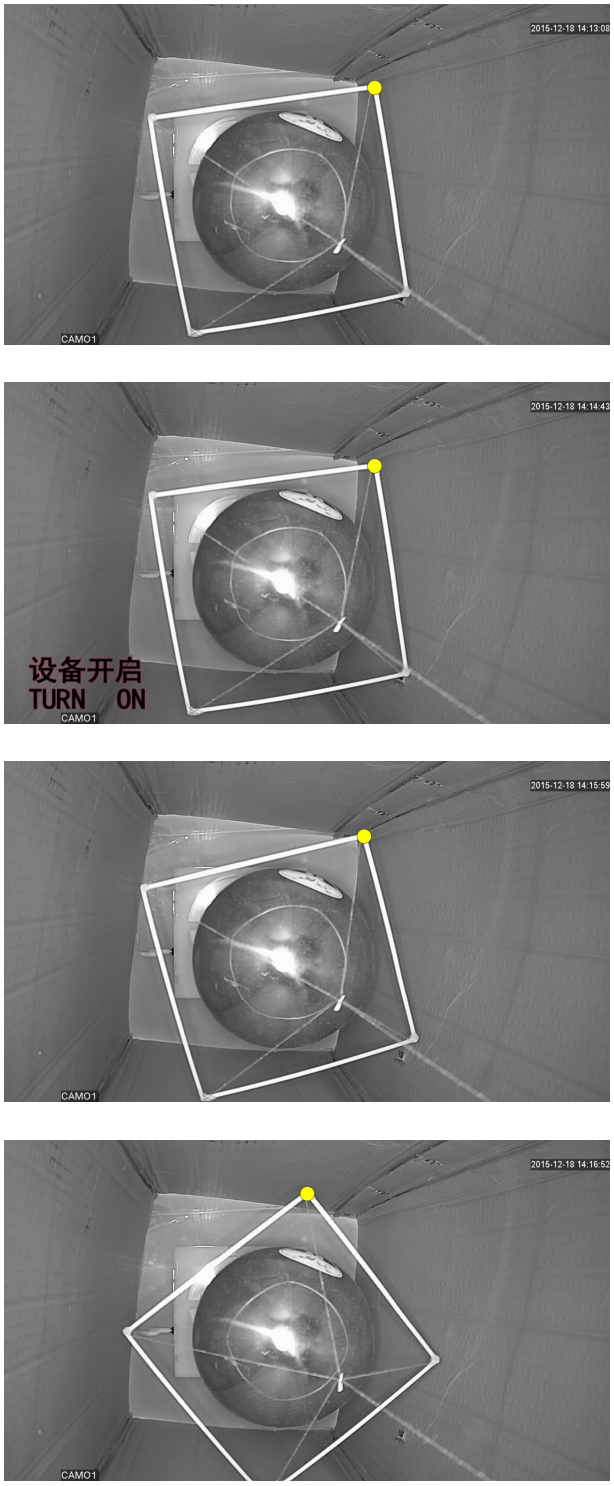

Block figure7. Sample positions of the wooden frame in the first experiment, one of the corners was marked using a yellow circle.

As we can see from the video, there is regular movement of the wooden frame. The direction of rotation was counter clockwise from the camera. At first stage, the angular acceleration of wooden frame was the largest at the beginning of the movement, then the acceleration would become smaller and smaller because the torque force of the thin line whose direction was opposite to the direction of torsion field force would become larger and larger. And the angular speed of wooden frame would be larger and larger. At second stage, the angular speed of wooden frame became largest when the torque force of the thin line was equal to the torsion field force generated by the dual Tesla coil. Then the angular acceleration would change its direction and became larger and larger because the torsion field force didn't change but the torque force of the thin line became larger and larger as the wooden frame rotated. The angular speed of wooden frame would be smaller and smaller until the wooden frame stopped.

Then the wooden frame would be back and forth for several times as the law said above. At last, the wooden frame would be static in a position, where the torque force of the thin line was equal to the torsion field force. This position would be between the original position and the maximum angular position of the wooden frame. In fact, the wooden frame would back to the original position after turned off the device. But this process was not in this video. It will be discussed in the second experiment.

In the second experiment, the wooden frame whose side length is 206mm was used. This larger wooden frame was in the same position as in the first experiment. Other configuration was also the same. But in the second experiment, the author didn't wait until the wooden frame was static, because the wooden frame was more sensitive with larger size. It was very difficult to let the wooden frame be absolutely static. So the second experiment began when the wooden frame was oscillating back and forth in a small scale. If the wooden frame rotated in a large scale after turning on the device, it also could show some significant results. The process is in block figure8 and the video [14].

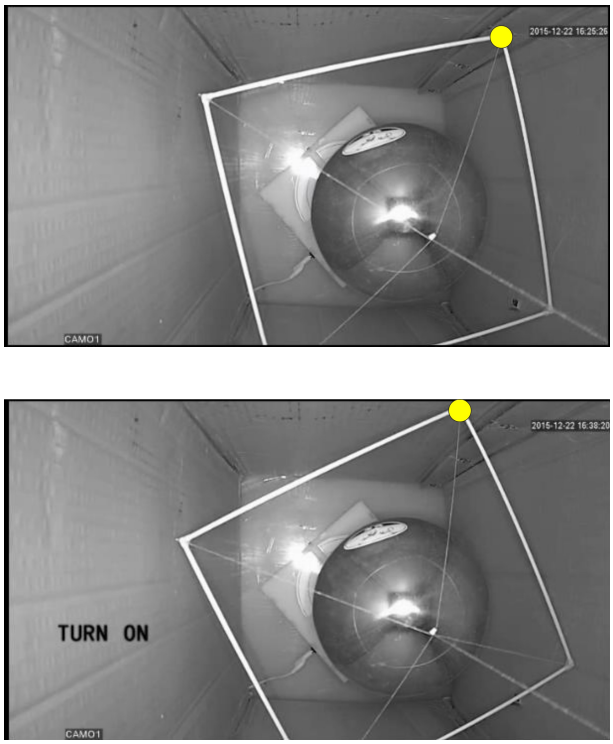

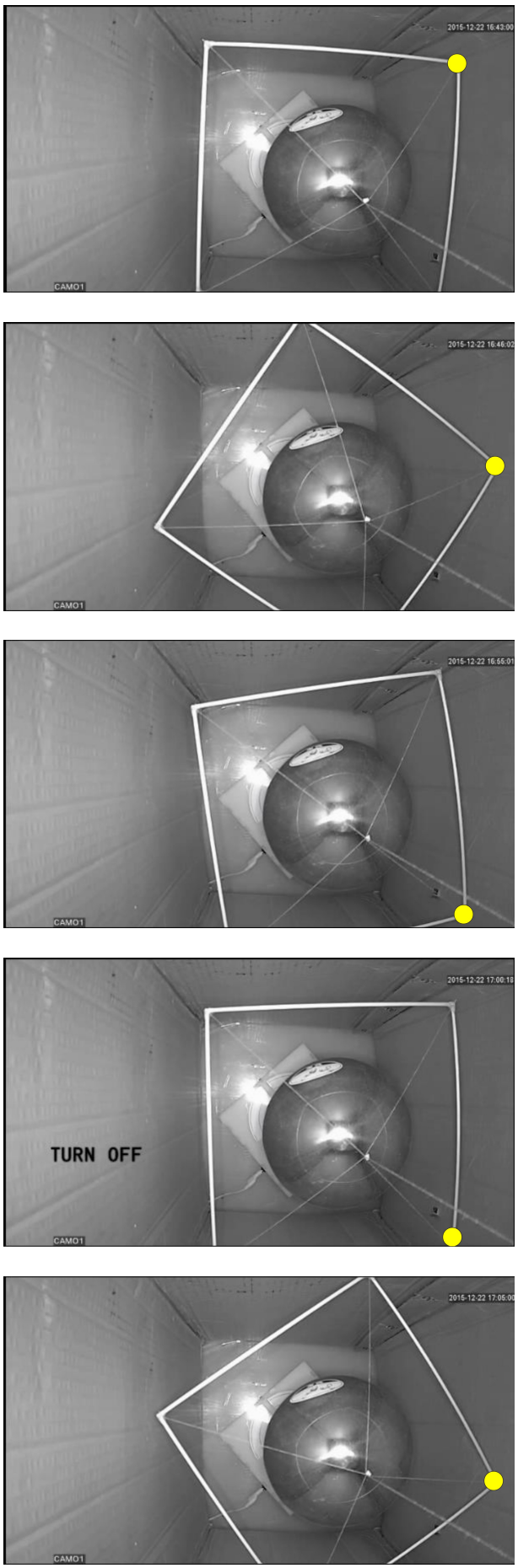

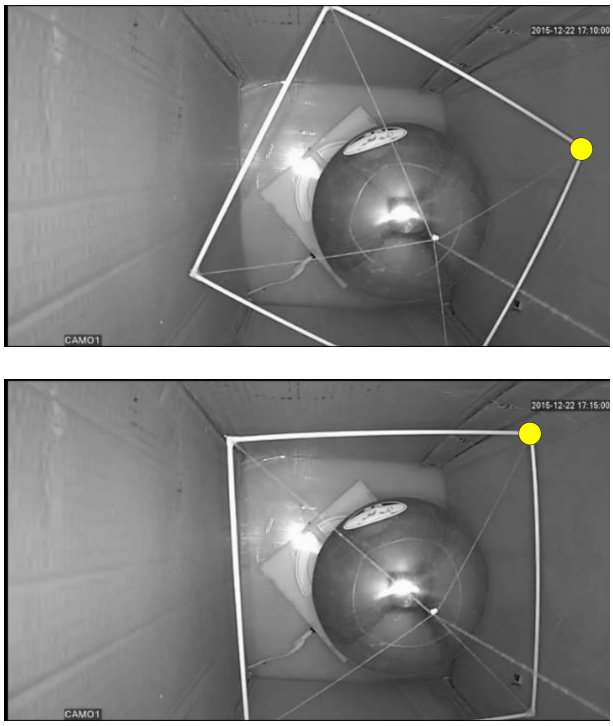

Block figure8. Sample positions of the wooden frame in the second experiment, one of the corners was marked using a yellow circle.

The video is 4X speed faster than the normal speed of the original video, because the original video is too long. As we can see, the sample positions are also more than the first experiment, because the movement back to the original position is also recorded in this video.

In the second experiment, there was also regular movement of wooden frame. But there was obvious difference between the first experiment and the second experiment. The direction of rotation was clockwise from the camera. Before the beginning of the second experiment, the wooden frame was not static but it was already oscillating back and forth in a small scale. After turning on the device, the wooden frame began to rotate just like the law in first experiment. The total path of the wooden frame was nearly half a circle. It was a obvious result driving by the torsion field force.

There was also a more complete movement process in the second experiment compared with the first one. The process back to the original position was recorded too after turning off the device. As we can see from block figure8, after turning off the device, the wooden frame began to rotate in counter clockwise. Because there was no torsion field force in this time, there was only torque force of the thin line itself in this time. So this force would drive the wooden frame to the original position before the beginning of the experiment.

IV. Analysis of Results

The results above can be replicated in other author's experiments. The wooden frame whose side length is 148mm rotates in counter clockwise from the camera but the one whose side length is 206mm rotates in clockwise from the camera.

There is regular movement in both of these two experiments, it's obvious that it can't be the random factors leading to the movement of wooden frame.

A. *The dual vortex structure.*

Because the two wooden frames are in the same position at the top of the antenna of receiver coil in dual Tesla coil system,just the side length of these two wooden frames is different. So we can move the two wooden frames in one plane in figure9 to analyze.

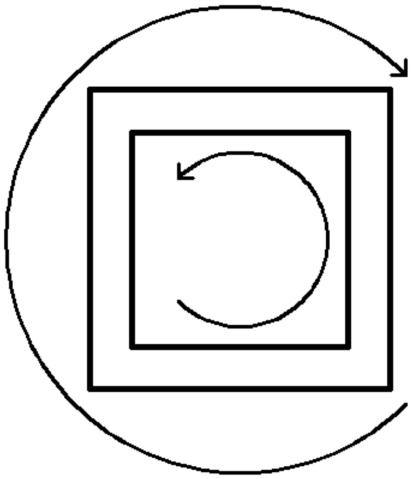

Figure9. Two wooden frames in one plane from the camera

As we can see in figure9, only the side length of two wooden frames is different, other conditions are all the same in these two experiments. But there are two kinds of torsion field including left-handed and right-handed are detected in dual Tesla coil system. It seems that there is a dual vortex structure in scalar wave.

As everyone knows, there is dual vortex phenomena in fluid mechanics. Leonardo da Vinci had observed in liquids the two basic types of vortices in duality:"one of these vortices moves slower at the center than it does at its perimeter and the other moves faster at its center than it does along the perimeter[15]."

And according to Prof.K.Meyl's scalar wave theory, there are two basic types of vortices too. One is the current vortex which has the property of expansion and the other one is the potential vortex which has the property of concentration found by Prof.K.Meyl.

The tornado is a kind of typical phenomena of dual vortex. It consists of expanding vortex from inside and counter vortex contracting from outside. From the results of this work, the dual vortex structure is also detected using two wooden frames with different sizes. So there is the "electromagnetic tornado" in dual Tesla coil system, the author thinks it's a basic structure for wireless energy transmission.

B. *Scalar wave consists of non-stationary spinning.*

In one of the Dr.M.Krinker's works, the 14g disk suspended inside the double quadrupole spinner turned for about 10 degrees. The spinning in the quadrupole spinner was modulated in amplitude specially, so the non-stationary spinning was generated to drive the disk [16].

Non-stationary spinning is very important to generate the mechanical torque which can rotate the wooden frame. According to the model of scalar wave in Figure3, there are many vortices with different diameters perpendicular with the direction of transmission. These vortices follow the Lorenz Transformation. When the diameter of vortex is the maximum, then the angular speed is the minimum at the anti-node; when the diameter of vortex is the minimum, then the angular speed is the maximum at the node. The angular speed of the vortices between anti-node and node are different and the scalar wave is a kind of longitudinal wave with the property of oscillation, so the vortices of scalar wave are a kind of non-stationary spinning.

V. Conclusions and further developments

In this work, author mainly did many experiments using the torsion balance consisting of wooden frame. Two typical experiments are chosen to be analyzed. To be honest, the second experiment is not designed intentionally. Author just wants to improve the sensitivity using the larger wooden frame at first, but the opposite direction is detected. Author believes that the size of dual vortex structure generated by dual Tesla coil system can be changed with different power.

Some conclusions:

- The nature of scalar wave is torsion field.
- There are two kinds of torsion field including left-handed and right-handed in the resonant dual Tesla coil system. They are combined to become a tornado structure.
- The vortices of scalar wave are a kind of non-stationary spinning.
- The torsion balance consisting of wooden frame is a sensitive method to detect the torque generated by the torsion field.

Of course this work is just a beginning, further exploration and experiments are needed. For example, testing with different driving power for Tesla scalar system; testing with different position of wooden frame; testing the transmitter coil and receiver coil of Tesla scalar system simultaneously; testing Tesla scalar system for non-local effects and so on.

VI. Acknowledgment

Author would like to thank V.Shkatov and V.Zamsha, who wrote the book called "Torsion Field and Interstellar Communication". Author got Mr.V.Zamsha's permission to translate this book into a Chinese version and spread it for free. There is no this book, then there is no this work. Author also would like to thank Mr.M.Krinker for some discussions and the joint non-local experiments. Further more, author would like to thank Association of Unconventional Science and Cybertronica Research for their translated English version papers and files about torsion field.

REFERENCES

[1] Vesperman. Gary. Space travel innovations.

[2] Nikola Tesla. Apparatus for transmission of electrical energy. May 15 1900. US Patent 649,621.

[3] Konstantin Meyl. Dna and cell resonance. *INDEL G mb H Verlagsabteilkung, Villingen-Schwenningen,(2ndedn), Germany*, 2011.

[4] Nikola Tesla. World system of wireless transmission of energy. *Telegraph and Telephone Age*, 1927.

[5] Konstantin Meyl. Scalar waves: Theory and experiments1. *Journal of Scientific Exploration*, 15(2):199–205, 2001.

[6] Serge Kernbach. On metrology of systems operating withhigh-penetratingemission. *International Journal of Unconventional Science*, 1(2):76–91, 2013.

[7] Vitaliy Zamsha and Victor Shkatov. Telekinetic experiment with two photos at distance of about 8,000 kilometers.

[8] Victor Shkatov and Vitaliy Zamsha. Torsion field and interstellar communication. 2015.

[9] Victor Shkatov and Vitaliy Zamsha. https://youtu.be/ld7-hk5xmzq.

[10] Vitaliy Zamsha. https://youtu.be/mm8ih3q-3nq.

[11] Vitaliy Zamsha. https://youtu.be/ucw0hq687ds.

[12] Vitaliy Zamsha. https://youtu.be/e7pivjo–v4.

[13] Gao Peng. https://www.youtube.com/watch?v=uosaexjbsgm.

[14] Gao Peng. https://www.youtube.com/watch?v=kvkbocxkhxe.

[15] Konstantin. Meyl. About vortex physics and vortex losses. *Journal of Vortex Science and Technology, Ashdin Publishing, Vol. 1 (2012)*, (Article ID 235563):10 pages doi:10.4303/jvst/235563, 2012.

[16] Mark Krinker. Some physical aspects of artificial and natural field gyroscopes. relation to atmospheric phenomena and geo-pathogenic zones. 2014.

A Visual Tour of what they don't want you to know about electrical circuits

10 TRILLION PERCENT OF THE CURRENT PRODUCED IS WASTED!

---

1. The scalar potential is a harmonic set of phase conjugate longitudinal EM waves.
2. The dipole is a true negative resistor.
3. The dipole's broken 3-symmetry initiates a spreading giant negentropic reordering of a fraction of the vacuum's energy.
4. Energy flow contours surrounding a transmission line.
5. Heaviside and Poynting energy flow components. The Heaviside component is often **10 trillion times** the Poynting component, but **is simply wasted** in ordinary single-pass energy circuits.
6. Negative resistance process v. positive resistance process.
7. Lorentz's integration trick to discard the enormous Heaviside non-diverged energy flow component.

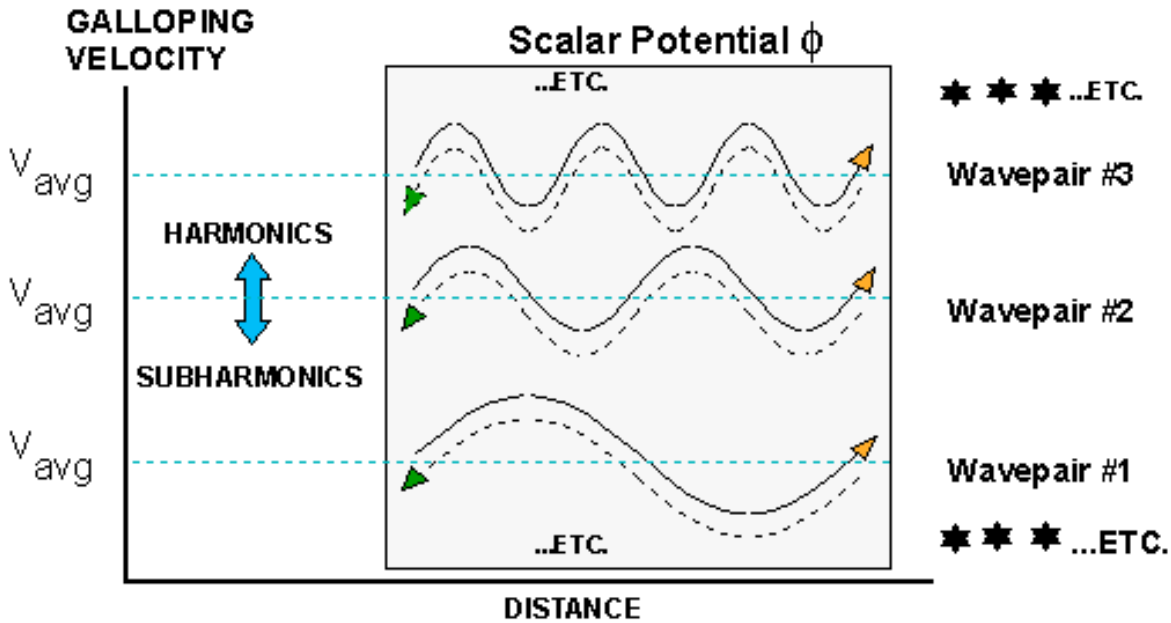

Next Slide

Return to Index

The Structure Is:

- A harmonic set of longitudinal phase conjugate wavepairs.
- In each wavepair the two waves superpose spatially after detection, but travel in opposite directions.
- The convergent wave set is in the imaginary plane, and hence is not observable. It is EM energy incoming to the potential (dipolarity) from the time domain.
- The charge's spin is 720 degrees, 360 in the real plane and 360 in the imaginary plane.
- Hence the charge receives the complex convergent EM energy, transduces it into real EM energy, and emits enormous energy at the speed of light in all directions -- which includes bidirectional pairs in 3-space (after the reaction, being after "observation").
- This produces the fields and potentials from the "source charge or dipole."
- Mandl and Shaw argue that the scalar (time-polarized) photon and longitudinal photon are observable only in similar pairs, which then makes the instantaneous scalar potential. Thus their quantum field theory work strongly supports the "negative resistor" interpretation of the scalar potential and our solution to the source charge and source dipole problem.

Figure 1. The scalar potential is a harmonic set of phase conjugate longitudinal EM waves.

Note: Decompose the potential between the end charges of the dipole

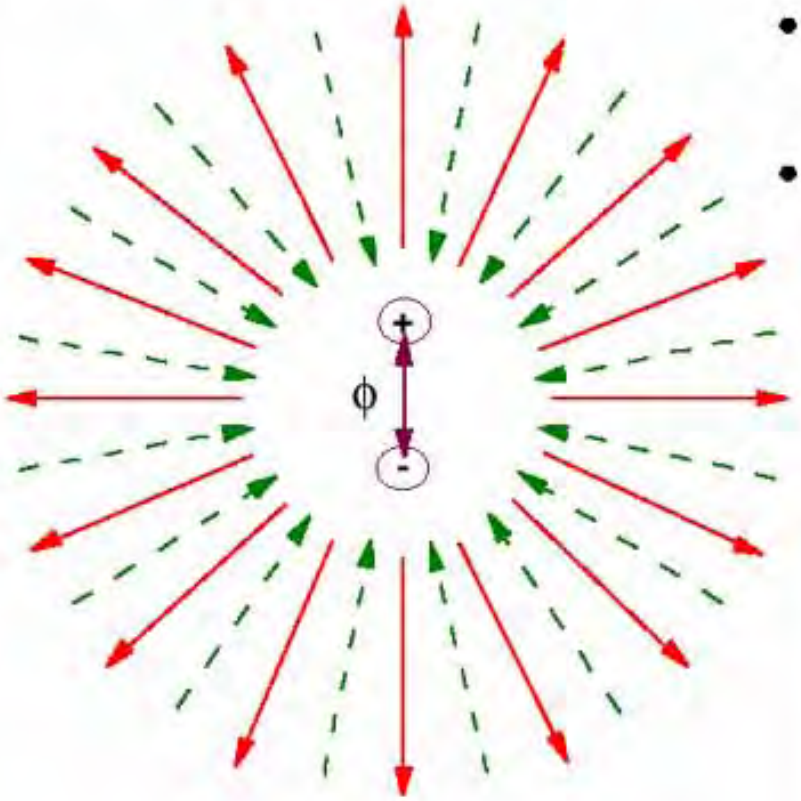

- Receives enormous EM energy in complex plane (similar to reactive power)
- Transduces it into real EM energy and emits it in all directions at the speed of light
- The emitted EM energy forms the fields and potentials and their energy, across space, from this "source dipole"

* Basis established by E.T. Whittaker, "On the Partial Differential Equations of Mathematical Physics," Math. Ann. 57, 333 (1903). Ignored since then.

LEGEND

Outgoing real EM energy

Incoming complex EM energy

Figure 2. The dipole is a true negative resistor.

Next Slide

Return to Index

Previous Slide

Broken 3-space symmetry initiates jump to 4-space symmetry between complex plane and real plane. Energy flow is now conserved in 4-space, but not in 3-space. This is the true negative resistor effect, and a negentropic reordering of the vacuum.

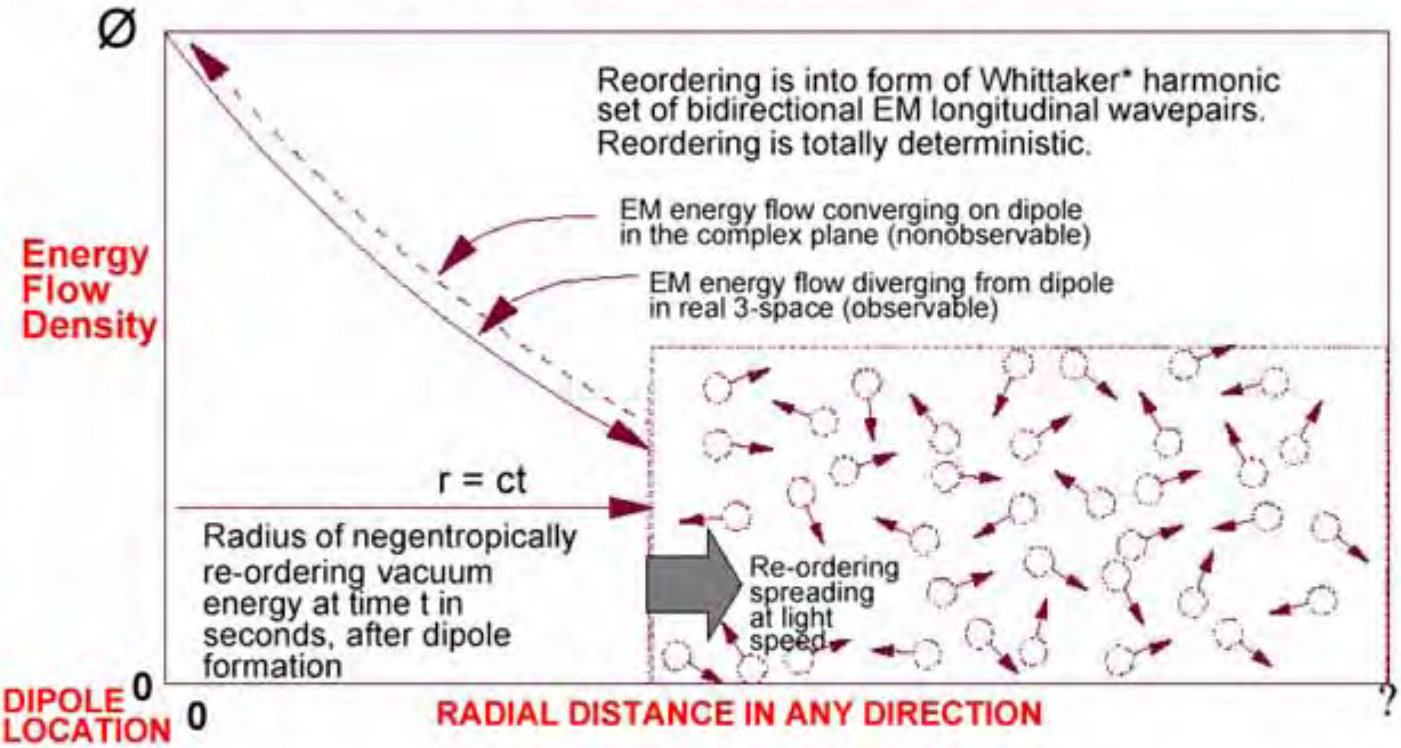

Figure 3. The dipole's broken 3-symmetry initiates a spreading giant negentropic reordering of a fraction of the vacuum's energy.

Next Slide

Return to Index

Previous Slide

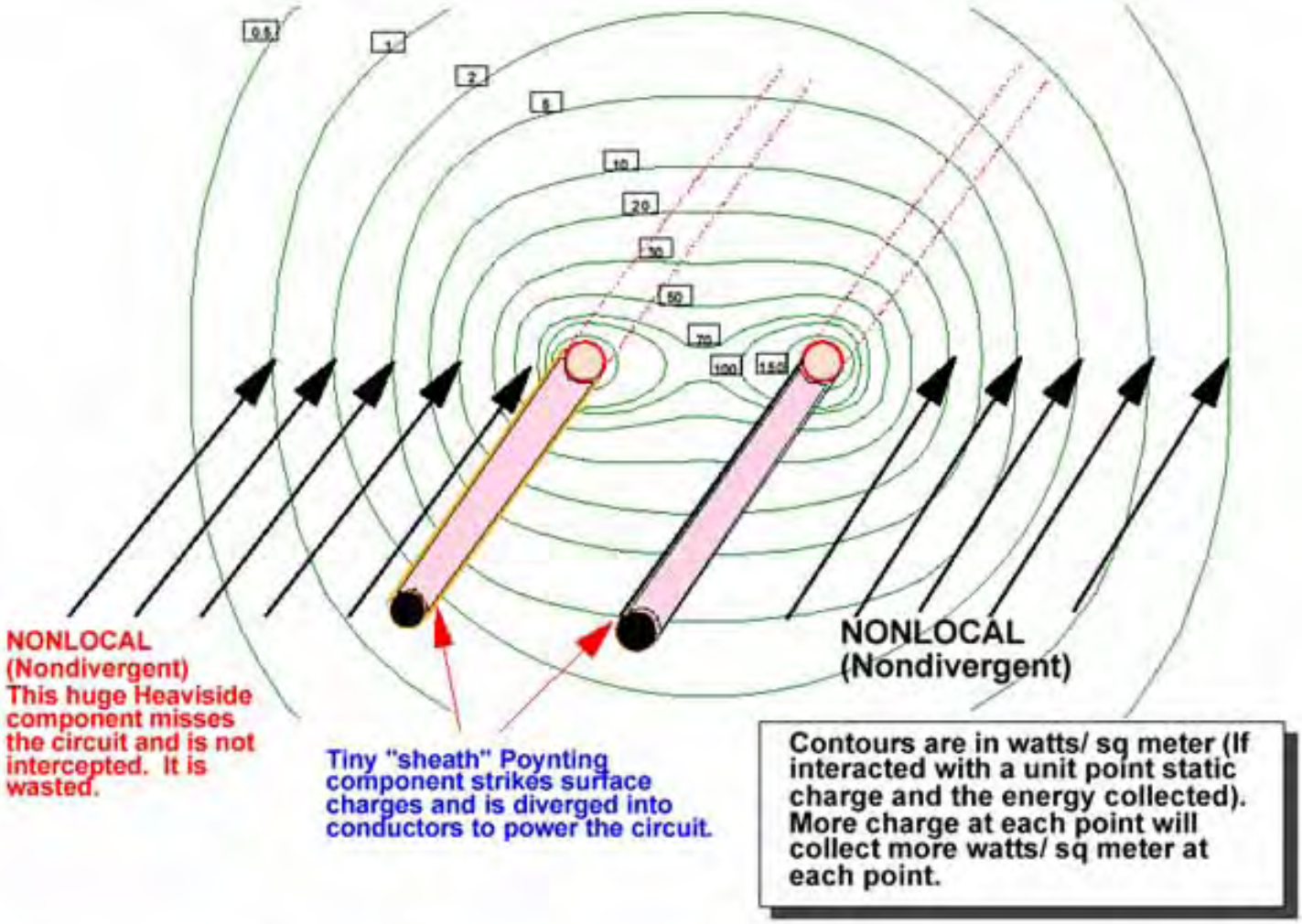

Figure 4. Energy flow contours surrounding a transmission line.

Next Slide

Return to Index

Previous Slide

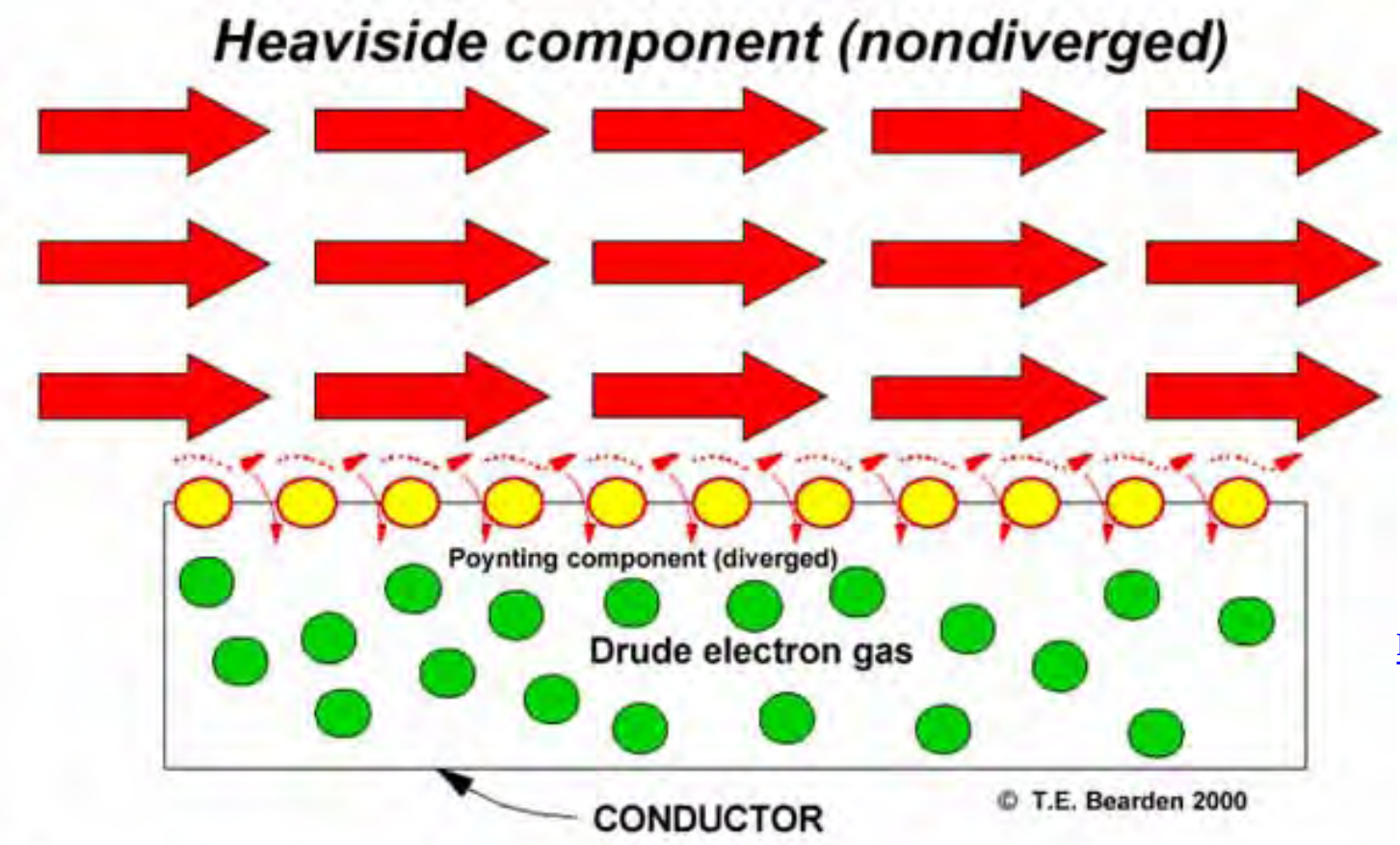

Figure 5. Heaviside and Poynting energy flow components. The Heaviside component is often 10 trillion times the Poynting component, but is simply wasted in ordinary single-pass energy flow circuits.

Next Slide

Return to Index

Previous Slide

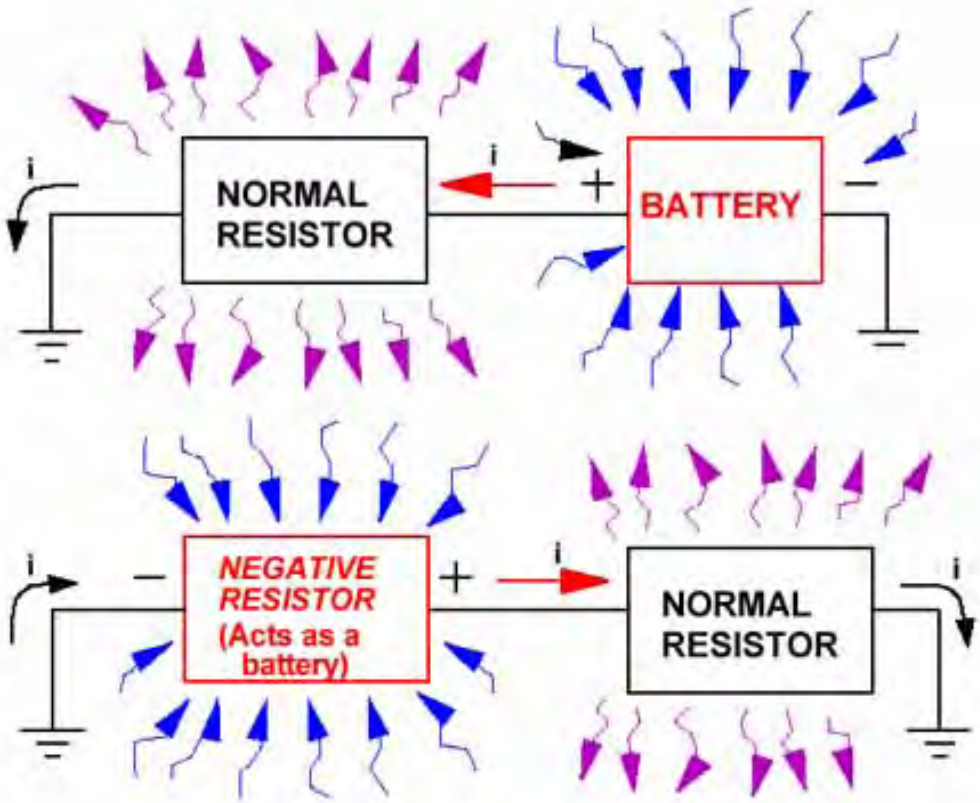

Figure 6. Negative resistance process vs. positive resistance process. A negative resistor receives energy in unusable form, transduces it, and outputs it in usable form. A positive resistor receives energy in usable form, and scatters it into unusable form.

Next Slide

Return to Index

Previous Slide

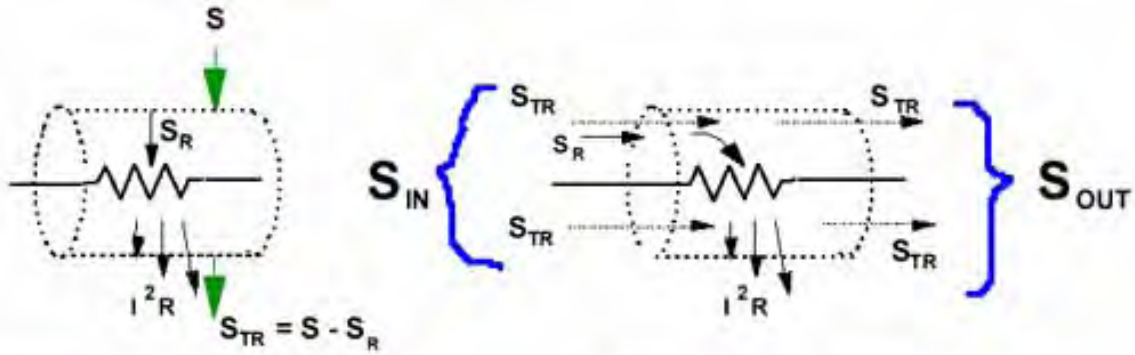

1a. Lorentz surface integration.

1b. Actual S in and S out.

Return to Index

Previous Slide

See Panofsky & Phillips, Classical Electricity and Magnetism, 2nd. edn., Addison Wesley, 1962, p. 178-181.

Note: If the S-vector is integrated over the closed surface, then all nondiverged energy flow is zeroed, leaving only the very small component of the input S-flow that is powering the joule heating of the resistor. In short, only the small component of the S-flow that is equal in magnitude to the Poynting vector remains. This measures only the tiny portion of the S-flow that is intercepted and diverged into the conductors by their surface charges, powering the electrons and then dissipated out of the resistor as joule heating.

The Lorentz procedure arbitrarily discards the enormous Heaviside component that misses the circuit entirely and is wasted. This results in a non sequitur of first magnitude in energy flow theory .

Figure 7. Lorentz's integration trick to discard the enormous Heaviside non-diverged energy flow component.

The Tom Bearden Website

34 Flaws in Classical EM Theory

Note: If the scientific community had done their job, this Website would probably not be necessary.

---

1. SLIDE 1
2. SLIDE 2
3. SLIDE 3
4. SLIDE 4
5. SLIDE 5

Flaws In Classical EM Theory

1. Eliminates the Internal EM Inside the Scalar Potential.
2. No Definition of Electrical Charge or of Scalar Potential.
3. Equations Still Assume Material Ether Per Maxwell (Unchanged).
4. Use of Force Fields in Vacuum is False (and Known to be So).
5. Treats Charge q as Unitary Instead of Coupled System $q = \phi(q)m(q)$.
6. Confuses Massless Potential Gradients as Forces (See #3, #4).
7. Does Not Utilize Mass as a Component of Force (See #23).

© T. E. BEARDEN 1999

Next Slide

Return to Index

Flaws In Classical EM Theory (2)

8. Erroneously Assumes EM Force Fields as Primary Causes.
9. Topology of EM Model Has Been Substantially Reduced.
10. Does Not Include Quantum Potential or Action at a Distance.
11. Does Not Include Superluminal Velocity of Inner EM Components.
12. Does Not Utilize Extended Near-Field Coulomb Gauge Effects.
13. Does Not Include EM Generatrix Mechanism for Time Flow.
14. Does Not Unify Photon and Wave Aspects (Requires 7-D Model).

© T. E. BEARDEN 1999

Next Slide

Return to Index

Previous Slide

Flaws In Classical EM Theory (3)

15. Does Not Include Electron Spin and Precession (See #19, #24).
16. Treats EM Energy As Existing In "Chunks," Instead of as Flow.
17. Confuses Energy and Energy Collection (See #16).
18. Discards Half of Every EM Wave in Vacuum (See #22).
19. Erroneously Uses Transverse Vacuum Wave; It's Quasi-Longitudinal.
20. Arbitrarily Regauges Maxwell's Equations to Eliminate Overunity Maxwellian Systems.
21. Omits Phase Conjugate Optics Effects (Which are the *Rule* in Internal EM).

© T. E. BEARDEN 1999

Next Slide

Return to Index

Previous Slide

Flaws In Classical EM Theory (4)

22. Does Not Include EM Cause of Newtonian Reaction Force.
23. Erroneously Assumes Separate Force Acting on Separate Mass.
24. Confuses Detected Electron Precession Waves as Proving Transverse EM Waves in Vacuum (Remnant of Old "EM Fluid" Concept).
25. Due to Error in String Wave, Omits the Ubiquitous Antiwave.
26. *Assumes* Equilibrium; Not True Unless Include Vacuum Interactions.
27. Higher Topology Required, to Model Electromagnetic Reality.

© T. E. BEARDEN 1999

Next Slide

Return to Index

Previous Slide

Flaws In Classical EM Theory (5)

28. Lorentz surface integration discards Poynting energy transport.
29. Has nothing at all to say about form of EM entities in massless space.
30. Eliminates the infolded general relativity using EM-force as curve agent.
31. Does not include longitudinal EM wave phase conjugate pairs as time domain oscillations.
32. Does not include EM mechanism that generates time flow and flow rate.
33. Does not include time-excitation charging and decay.
34. Does not utilize time-reversal zones.

© T. E. BEARDEN 1999

Return to Index

Previous Slide

VACUUM ENGINES AND PRIORE'S METHODOLOGY: THE TRUE SCIENCE OF ENERGY-MEDICINE

Part I of II

© Copyright 1995 by T. E. Bearden

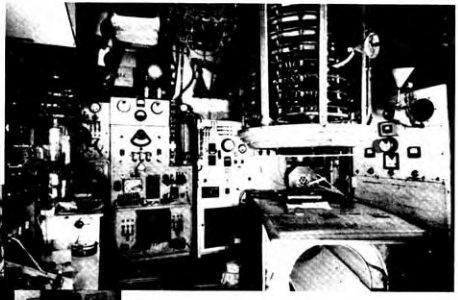

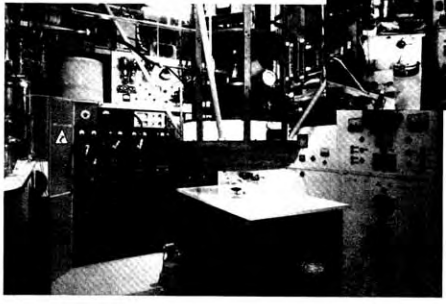

Photo 1. (to the right) Priore's laboratory. Workbench with animal cage is in the right foreground, under a large overhead assembly to hold the coil for producing the rippling magnetic field.

Photo 2. (below) Priore's laboratory. Workbench now has coil installed. The rippling magnetic field descended vertically through the patient. The magnetic field was modulated by the wave/antiwave output of 17 EM waves mixed in a rotating plasma in a giant mixer tube.

December 1, 1994

Overview

In the late 1960s and early 1970s, Antoine Priore and a team of leading French scientists demonstrated conclusive, total remissions of terminal tumors and infectious diseases in hundreds of laboratory animals. Their research was performed under rigorous scientific protocols and funded by the French Government. The approach employed very complicated mixing of multiple EM signals in a rotating plasma, and modulating the mixed output upon a very strong rippling magnetic field to which the body of the test animal was exposed. Complete remission of the treated diseases was obtained. In addition, the animals' immune systems were also restored to normal. Further, disease-specific antibodies were also created: a single drop of blood drawn from an animal that had been treated and recovered, and injected into the body of a second animal with the same terminal illness, resulted in total remission of the disease in the second animal *and its total recovery*. In the mid-70s Priore's work was suppressed, because of hostility of the oncology community, change of the French Government and loss of further funding, and complete inability of physicists and biological scientists to even hypothesize a mechanism for the curative results.

After a 10-year struggle to discover the Priore mechanism, the present author has proposed a sweeping new explanation for the exact Priore curative mechanism. It represents a totally new kind of medical therapy – one which can dramatically treat and cure a breathtakingly wide variety of diseases. The electrical physics is based on the Stoney, Whittaker, and Ziolkowski decomposition of the scalar EM potential into bidirectional EM wave pairs. Deliberate assembly of such a structure forms a *vacuum engine* of nested curvatures of local spacetime.[1] Priore unwittingly made such a hyperspatially structured vacuum engine, one with the special characteristic that it *time-reversed* (dedifferentiated) diseased cells back to their earlier normal state. The Priore approach not only produces remission of a specific targeted disease, but also fully restores the cells and "factories" of the patient's immune system because they too revert back to their previous healthy condition.[2]

[1] *In short, Priore found and utilized a method of electromagnetically engineering general relativity in the laboratory – something physicists had not done and have no knowledge of. Neither have they done it overtly today, and neither do they have knowledge of it today.*

[2] *We point out that chemistry is largely driven by charge and charge distribution. The new methodology essentially controls charge and its distribution. Hence it can control and order all the biochemistry.*

Becker et al have shown conclusively that very weak DC currents and pulsed magnetic fields can produce cellular dedifferentiation (change to a previous state) and redifferentiation (change forward to a new state). It follows that transcription (change of the genetics) must also be altered correspondingly. Becker was nominated for a Nobel Prize for his experimental and theoretical demonstration of the mechanism. He also proposed a fundamental electrical control mechanism to account for his revolutionary results.

Kaznacheyev et al have shown that almost any cellular disease or damage can be transferred electromagnetically from one cell culture to another under special conditions. Popp has theoretically and experimentally shown that an electromagnetic master cellular control system exists in the body, as indeed has Becker. Thus it is clear and independently demonstrated that (1) disease can be created or reversed electromagnetically, and (2) the fundamental cellular control system is electromagnetic in nature. We comment that, viewed as physical materials, the cells and their constituents are sufficiently nonlinear that their EM functions, responses, and effects transcend the present classical EM model. A modern addition to nonlinear electromagnetics is the methodology and results of nonlinear phase conjugate optics (NLO). Accordingly, understanding of the higher topology EM/bioeffects functioning requires application and understanding of NLO principles, *regardless of frequency band.*

We also extend the general relativity model by addition of higher topology EM. We incorporate the Stoney/Whittaker/Ziolkowski decomposition of the scalar EM potential into hidden bidirectional waves. This is then applied to structure and engineer the vacuum. The method is also capable of structuring and engineering both mind and matter.

As a case in point, the elements of the new EM bioeffects approach are applied to the Gulf War Syndrome – the strange conglomerate of illnesses and symptoms developed by many Gulf War participants, usually beginning shortly after their arrival back in the United States from the MidEast. Previously unrecognized biological effects of a dense EM signal environment are advanced and their causative mechanisms explained. These new "dense signal environment" bioeffects, coupled with other simultaneous biologically-active suppressants, allow a full explanation of the Gulf War Syndrome and its characteristics. Both normal and anomalous symptoms are explained.

The Priore approach extends and complements Becker's pioneering approach by allowing positive engineering control of dedifferentiation of cells and their redifferentiation. A cancer cell may be regarded as a dedifferentiation or partial dedifferentiation of a normal cell back toward a more primitive or "immature" geological form. In NLO terms, this is a form of phase conjugation (time reversal) of the cell back toward a previous state, or even its *ancestral* cellular form *(see figure 1 below).* By phase conjugating the cancer cell anew and amplifying the process, the diseased cell can quickly be reversed back to a normal cell.

It is possible, using the Priore technique, to phase conjugate cells in the body, including all of them simultaneously if need be. Further, conjugation can be made specific to the type of cell or tissue one desires to affect. One need not "know" the specific disease's "EM signal complex," one must simply "pump the cell correctly" where it and its parts are treated as pumped phase conjugate mirrors (PPCMs). In a higher EM topology, the "diseased-cell-as-a-PPCM" already possesses a special "standing signal wave" input that represents the erroneous *vacuum engine* associated with the change to the specific disease state. Pumping the cell *in this special EM topology* creates the precise, amplified *vacuum anti-engine* in this same special EM topology and renormalizes the cell.

Because of the special EM topology utilized, direct engineering of both mind and matter are provided by the new approach, which also represents a unification and extension of electromagnetics, quantum mechanics, general relativity, and biology. It should be capable of reversing most physical and mental disorders that assail a biological organism.

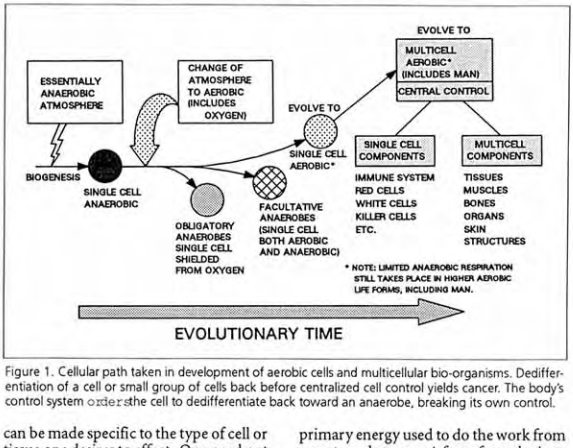

Figure 1. Cellular path taken in development of aerobic cells and multicellular bio-organisms. Dedifferentiation of a cell or small group of cells back before centralized cell control yields cancer. The body's control system orders the cell to dedifferentiate back toward an anaerobe, breaking its own control.

Introduction

In this paper we discuss the present method of utilizing EM energy in science and engineering, and also discuss a radically different second method that is beginning to emerge *(see Table 1 on following page).* The main text is an overview, with technical elaboration in the footnotes.

The first (Type 1) engineering method may be likened to a leaky pipe: We always pour in more energy than the work we get back out. We have to furnish the primary energy used to do the work from an external source. A few of our devices, such as a common heat pump, are open systems extracting and using some excess energy from an external source. These devices may have a coefficient of performance (COP) – work output of the machine divided by work done on the machine to run it – of greater than unity. However, the vast majority of our machines have COPs of less than 1.0. Many of them have COPs of less than 50%, and many have COPs of less than 30%.

As can be seen, Type 1 engineering is very wasteful of energy! In a sense, the present struggle to attain room temperature superconductivity is a struggle to eventually have many more machines that attain a COP approaching 1.0, and so decrease the waste of energy in our

Table 1. Two Ways To Do Engineering.

- *Type 1* Engineering: Vacuum Quiescent, Use External Energy Upon Matter
  - Does not involve mind, thought, life, time streams
  - Time is not an observable
  - Must furnish all the energy
  - Western science uses this method.
- *Type 2* Engineering: Gate and Structure the Vacuum Flux Itself
  - Involves mind, thought, life, time streams
  - Time is an observable
  - Furnish only initial energy, and maintenance
  - Use vacuum's energy (vacuum engines)

Type 1 machines. Vacuum engines allow COPs of far greater than 1.0.

After several decades of painful progress in understanding the nature of the quantum mechanical vacuum, today it is accepted in physics that the vacuum itself is a seething inferno of electromagnetic energy. It is thus a legitimate source of energy, could we but extract and use it. This is now accepted both by leading physicists and by the U.S. Patent Office. Further, as of 1993 it has been clearly shown that, contrary to conventional objections, thermodynamics does not rule out the extraction and utilization of the vacuum's energy as heat and power to operate our engines.[3]

We have now reached one of the great scientific plateaus of history: (1) *The vacuum is energetic, containing an incredible density of electromagnetic energy in a violent flux;* (2) *at least in theory, it is possible to extract energy from the vacuum and utilize it;* and (3) *every particle of mass exists as a nonlinearity in a violent flux of virtual particle energy exchange with the vacuum. In short, every system is an open system, being violently "driven" by the vacuum flux, where normally the "driving flux" is in equilibrium or nearly so.*

This paper briefly describes a great new scientific breakthrough which is approaching as a result of the new understanding of the vacuum energy. This new scientific development will usher in the greatest change to humanity of all time (*see Figure 2*). It is characterized by the laboratory ability to: (4) Deterministically structure and gate the vacuum's fierce flux of virtual particle energy – even at a distance – and make the vacuum itself an ***engine*** to do any kind of work on an embedded physical system that we choose.[4] (5) Deterministically form a quantum potential, and utilize this potential to achieve essentially instantaneous action at a distance.[5] (6) Engineer the hidden inner structure of any potential; this includes also the potential for the Schroedinger equation, including Bohm's ***quantum potential,*** so that physical reality can actually be engineered prior to the collapse of the wave function and the occurrence of the quantum change. This is engineering and altering an entity in its *pre-reality state.* (7) Engineer and alter the flow of time and the laws of nature in a particular area, including the entire planet or solar system. (8) Simply and cheaply treat and cure essentially every present infectious disease and many other abnormalities. This includes cancer, leukemia, AIDS, malaria, sleeping sickness, arteriosclerosis, etc. – even mental disorders. It also includes reversing the effects of the aging process. (9) Directly engineer, form, create, heal, or modify mind, thought, long-term memory, life, etc.[6] And finally, (10) Directly engineer and alter the species quantum potential, an entire species, and the planetary quantum potential for all species and all living creatures on earth.

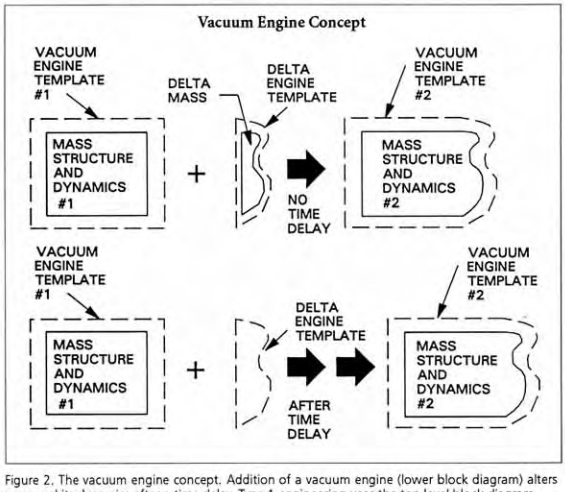

Figure 2. The vacuum engine concept. Addition of a vacuum engine (lower block diagram) alters mass and its dynamics after a time delay. Type 1 engineering uses the top level block diagram.

[3]Daniel C. Cole and Harold E. Puthoff, "Extracting Energy and Heat from the Vacuum," **Physical Review E**, 48(2), Aug. 1993, p. 1562-1565.

[4]*In other words, to perform vacuum engineering, extended from the suggestion of Nobel Laureate T.D. Lee (**Particle Physics and Introduction to Field Theory,** Harwood, New York; Chapter 25: Outlook, "Possibility of Vacuum Engineering," p. 824-828.). Lee recognizes that vacuum engineering can in theory be accomplished, but also that this has never even been tried.*

[5]*For a presentation of the mechanism for creating a quantum potential, see T.E. Bearden, **Gravitobiology,** Tesla Book Co., Chula Vista, CA, 1991, p. 33-36.*

[6]*The weapons developers are slowly grappling their way toward this new science, which the Russians call energetics. Application to the physical world at large is just referred to as energetics. Application of energetics to mind engineering is called **psychoenergetics.** Application to the physical body and its structures is called bioenergetics. In the U.S., development of mind and behavior alteration and control is now being dealt with in embryonic fashion under the subject heading of nonlethal warfare.*

This paper is an informal "quick note" to point out the new scientific plateau and introduce the second kind of science and engineering. The new ***vacuum engineering***[7] offers the greatest threat to humanity that has ever existed,[8,9,10] and at the same time offers the greatest promise of benefit.

For our very survival, it is absolutely imperative that informed citizens be aware of this dramatic change, which is just now starting. The powerful new science and engineering must be controlled and used for humanity's benefit, not its detriment. Else it will eventually be let loose unrestrainedly, to destroy all life on earth – a possibility indicated by Nikita Khrushchev in 1960.[11]

The First Kind of Engineering (Type 1)

First there's the normal way to do engineering (Type 1), which we are all taught as engineers and scientists. Here the vacuum/spacetime itself stays *inert* and out of our way.[12] We ourselves furnish energy into or onto the system we are trying to move or activate, spilling some of this energy all the while, and we struggle until we get the mass to move and the system to operate and perform work.

This "first kind" of engineering is essentially a continual *wrestling match*. Nature herself is the opponent. The engineer furiously struggles with nature, to force her to do the work he wishes to do. *This is the only overt kind of engineering presently done on earth*. It is primitive and severely limited in what it can do. In Type 1 engineering, the mind and thought are not affected since the *flow of time connectivity* and the *flow of mind connectivity* are not affected.

The Second Kind of Engineering (Type 2)

Clandestinely, however, the Russians (actually, the KGB) in their secret advanced weapons labs, and three other nations not hostile to the U.S., have also weaponized a second kind of science and engineering, but kept it firmly a secret of the highest order. The second kind of engineering (Type 2) is dramatically different, far more powerful, and essentially unlimited in what it can do. Some of the simpler elements have spilled into the open press. For example (*see Figures 3 & 4 on next page*), Vlail Kaznacheyev and his colleagues have shown, in thousands of meticulous experiments, that almost any disease or damage to cells can be induced in an isolated cell culture by electromagnetic radiation from the diseased or damaged culture, if a full harmonic interval (infrared to ultraviolet) is open for electromagnetic (photonic) exchange between the cultures.[13] The present author's proposed mechanism for the Priore and Becker results also explains the Kaznacheyev results.[14] It also explains the decades-long Russian induction of health changes and diseases in the microwave radiation of the U.S. Embassy in Moscow.[15]

In Type 2 engineering, the background vacuum/spacetime itself is deliberately altered, structured, and made asymmetrical. One then uses this *struc-*

[7]*Terminology after Nobel Laureate Lee, ibid., p. 383. Lee points out that the microscopic structure of the scalar vacuum field is not utilized. The particulate flux structure can indeed be engineered, but this has never even been tried by conventional physicists. An excellent coverage of asymmetries and observables is given on p. 181-188. E.g., whenever a symmetry is spontaneously broken, a nonobservable (virtual entity) has become observable. There thus exist vacuum engineering mechanisms for the direct translation between virtual and observable states. Indeed, a whole new vista has opened in physics – some are calling it a "new physics" – due to the discovery that it is possible to directly amplify the virtual state into observable state. E.g., see Serge Haroche and Daniel Kleppner, "Cavity quantum electrodynamics," **Physics Today**, Jan. 1989, p. 24-30 for an overview. In 1979 the present author foresaw, albeit crudely, the emergence of virtual state engineering by means of a possible hyperspatial (virtual state) amplifier. See T.E. Bearden, "Virtual state engineering and its implications," National Technical Information System, Report AD-A065762, 1979.*

[8]*The Russian weapon engineers model the vacuum as a virtual EM dipole plasma, rather than as a simple particle flux; e.g., see A.V. Chernetski, "Processes in Plasma Systems with Electric Charge Division," Georgi Pleckonov Institute of National Economy, Moscow, 1989 for an introductory theoretical exposition of the basic model with respect to physical energy systems.*

[9]*Use of dipoles focuses immediately upon the hidden electromagnetics. Application of plasma theory then exposes the higher nonlinear EM aspects and the characteristics of a higher topology EM theory. Interestingly, Priore used all the elements fitting this theoretical model, employing a giant plasma-filled tube for multi-signal EM mixing, to produce "hidden EM" vacuum engines.*

[10]*Decades ago, the Russians also applied the virtual EM dipole plasma vacuum to the problem of direct engineering of mind, behavior, and cellular control functions. For the fact that they succeeded in decoding the mind/brain/s operations, see S.K. Lisitsyn, "New approach to the analysis of electroencephalograms," Problems of Bionics (**Selected Articles**), p. 16-25, National Technical Information System Report AD 730045. See also the various references by Kaznacheyev, sanitized by the Soviet State at the time to prevent revealing the actual primary mechanisms.*

[11]*For a partial discussion of Khrushchev's statement of the impending availability of such new Soviet superweapons, see Max Frankel, "Khrushchev says Soviet will cut forces a third; sees 'Fantastic Weapon'," New York Times, Jan. 15, 1960, p. 1.*

[12]*Technically the vacuum is always highly active, in violent flux exchange with all particles of mass. However, in Type 1 engineering this exchange activity is in equilibrium. So action and reaction are balanced in all directions. With no observable asymmetry, no single net force accumulates for the observer to see, and the vacuum appears to be an "emptiness."*

[13]*See Vlail Kaznacheyev and L.P. Mikhailova, **Ultraweak Radiation in Intercellular Interactions**, [in Russian], Novosibirsk, 1981. Vlail Kaznacheyev, "Electromagnetic Bioinformation in Intercellular Interactions," **Psi Research**, 1(1), Mar. 1982, p. 47-76 contains an English translation of much of the information referenced in Kaznacheyev's 1981 book. See Vlail Kaznacheyev et al, "Distant intercellular interactions in a system of two tissue cultures," Psychoenergetic Systems, 1(3), Mar. 1976; "Apparent information transfer between two groups of cells," **Psychoenergetic Systems**, 1(1), Dec. 1974; V.P. Kaznacheyev, "Information function of Ultraweak Light Flows in Biological Systems," in **Problems in Biophysics**, Novosibirsk, 1967, p. 7-18 [in Russian]; V.P. Kaznacheev and A.V. Troftmov, Cosmic Consciousness of **Humanity:** Problems of New Cosmogony. Elendis-Progress, Tomsk, Russia, 1992.*

[14]*See T.E. Bearden, Gravitobiology, Tesla Book Co., P.O.B. 121873, Chula Vista, CA 91912; 1991. See also Bearden, Cancer and the Unresolved Health Issues in the Biological Effects of EM Fields and Radiation, Tesla Book Company, 1993.*

[15]*The Soviets radiated the U.S. Embassy in Moscow with weak microwave radiation for decades, starting in the early 1950s. Anomalous health changes and diseases were induced in U.S. Embassy personnel. Three Ambassadors eventually died of leukemia-like illnesses of mysterious nature. The results of the Johns Hopkins scientific study of the Embassy radiation problem also provide strong evidence for the explanation, since health changes and diseases only occurred in those areas of the Embassy where the EM force fields from the radiation were zero. In other words, induced health changes occurred only in personnel in those Embassy areas where the potentials from the radiation had zero gradients, so that the potentials were persistent. This 100% correlation to persistent potentials exclusively, is exceptionally strong evidence that the EM radiation was the actual cause. If independent of the EM radiation, health changes would not have precisely correlated to any component of the radiation! The Johns Hopkins scientists were quite competent, but only considered classical EM theory (CEM) in their assessment. CEM assumes that, when the force fields are zero, the electromagnetic actions are zero. That of course has been disproved in quantum mechanics, which has shown theoretically and experimentally that the potentials, not the force fields, are the primary causes of all EM phenomena. [See Y. Aharonov and D. Bohm. (1959) "Significance of Electromagnetic Potentials in the Quantum Theory," Physical Review, Second Series, 115(3), 1959, p. 485-491; Bertram Schwarzschild, "Currents in normal-metal rings exhibit Aharonov-Bohm effect," Physics Today, 39(1), Jan. 1986, p. 17-2.] Even when the force fields are zero, the potentials may remain and provide real changes in charged particle systems by scalar interferometry. Indeed, the force fields do not even exist in vacuum, as CEM assumes. The Johns Hopkins scientists concluded – based on the erroneous CEM model they applied – that since no force fields were present where any of the health changes occurred, the cause could not have been the weak microwave radiation. Had it not been the radiation, some of the health changes would inevitably have occurred where the EM force fields were nonzero. The investigators' results falsified their own study's conclusion, by simple expectation mathematics. Had they known of the SWZ structured potential and its possibilities, they would have realized that by showing 100% correlation to the force-free potentials, they had actually proven that it was indeed the radiation that was the cause, and the force-free potentials component was the actual culprit The team was excellent; its tools failed it. For a complete discussion, see Bearden, Gravitobiology, 1991, p. 27-32.*

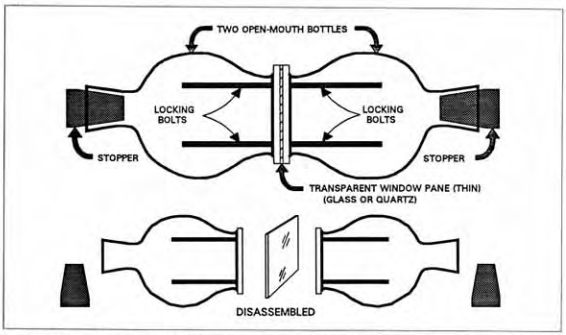

Figure 3. Kaznacheyev's two-chamber apparatus. A cell culture is divided into two parts. Left ones are damaged or killed. Effect is replicated in right cells through windowglass, but not quartz.

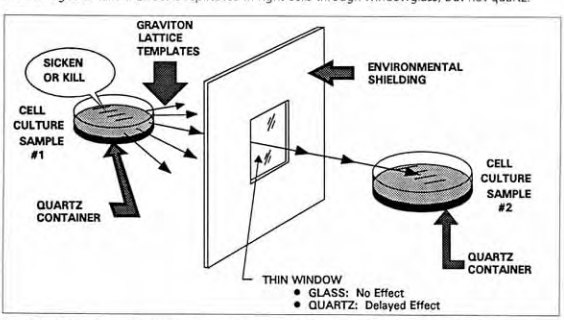

Figure 4. Kaznacheyev's cytopathogenic mirror effect: Death and disease transmission via graviton lattice templates. Quartz passes a minimum G-lattice, glass does not.

tured, asymmetrical vacuum to do the work and furnish all the required energy flow.

The vacuum is known to be a *seething inferno of energy.*[16] It is a violent flux of virtual particles, according to quantum mechanics (QM). A ***virtual particle*** is one which quantum mechanically arises out of nowhere and almost instantly returns to nowhere. It may be highly energetic and "hotter than a firecracker" while it exists. But its span of existence is so short that our instruments cannot *individually* detect it.

However, we can and certainly do experimentally detect the result of the interaction of *large numbers* of virtual particles. Physics states that all forces of the universe are caused by the exchange of such virtual particles. It is also theoretically and experimentally proven that every particle of mass is in a violent virtual particle flux exchange with the surrounding vacuum. Several experiments directly show this – the Lamb shift for one.[17] The Lamb shift is largely due to fluctuations of the hidden virtual flux exchange with the vacuum, and involves a local energy density far greater than the surface energy density of the sun's surface.

Vacuum Engines: Ordering and Utilizing the Vacuum Virtual Particle Flux

In Type 2 engineering, one structures and orders the violent virtual particle flows of the fundamental vacuum/spacetime (VST) itself.[18] Accordingly, it alters and orders the vacuum's violent energetic exchange with any mass particles and physical systems in the area. One *oneself* does not input the energy that does the actual work on the material system located in that region of VST. Instead, one only inputs the energy necessary for the *gating and directing* of the VST flux energy in that area. This structuring and gating of the virtual particle flux forms an organized, energetic pattern which I have dubbed a ***vacuum engine*** (after Nobel Laureate Lee's recognition that the vacuum itself could in theory be engineered, but that such had never even been tried).

This ***vacuum engine*** now does the work and furnishes all the working energy. We just have to pay to set up the *gating mechanism and the template* in the beginning, and continue to pay a little bit to sustain them. Literally we have created

[16] *For a good overview of the active vacuum, see R. Podolny, Something Called Nothing: Physical Vacuum: What Is It?, translated by Nicholas Weinstein, Mir Publishers, Moscow, 1986, revised from the 1983 Russian edition. See also I.J.R. Aitchison, "Nothing's plenty: The vacuum in modern quantum field theory," Contemporary Physics, 26(4), 1985, p. 333-391; Jack S. Greenberg and Walter Greiner, "Search for the sparking of the vacuum," Physics Today, 35(8), Aug. 1982, p. 24-32; Richard E. Prange and Peter Strance, "The semiconducting vacuum," American Journal of Physics, 52(1), Jan. 1984, p. 19-21; Walter Greiner and Joseph Hamilton, "Is the Vacuum Really Empty?", The American Scientist, 68(2), Mar.-Apr. 1980, p. 154-164; Timothy Boyer, "The Classical Vacuum," Scientific American, Aug. 1985, p. 70. See also important papers by H.E. Puthoff: "Source of vacuum electromagnetic zero-point energy," Phys. Rev. A, 40(9), Nov. 1, 1989, p. 4857-4862; "Gravity as a zero-point fluctuation force," Phys. Rev. A., 39(5), Mar. 1, 1989, p. 2333-2342; and "The Energetic Vacuum: Implications for Energy Research," Speculations in Science and Technology, 13(4), 1990, p. 247-257.*

[17] *W.E. Lamb, Jr. and R.C. Retherford, "Fine structure of the hydrogen atom by a microwave method," Physical Review, Vol. 72, 1947, p. 241-243. Demonstration of the displacement of one of the fine structure electron states of the hydrogen atom by a frequency of about 1060 megacycles played a central role in the development of quantum mechanics, and earned Lamb the Nobel Prize. The observation makes the reality of dynamic vacuum fluctuations inescapably evident.*

[18] *Since the vacuum can be altered, we now must speak of various vacuua, not just one. "A" vacuum, "a" spacetime, and "a" scalar potential are synonymous. "The" ambient vacuum at any local point is a maelstrom of the scalar (hidden multiwave) interferometry of potentials from every charged particle in the universe (adapting Puthoff's Cosmological Feedback Principle). This scalar EM interferometry creates the EM fluctuations of the quantum mechanical vacuum, by Whittaker 1903 & 1904.*

a stupendous *energy amplifier*.[19] By continuing to expend a little maintenance and steering energy, we can gate and utilize the energies of an enormous engine which can apply incredible energy densities, even at a distance. In principle it can apply anything from a feather's touch up to the explosion of a star. It can be used to engineer anything from a single particle or wave, to the atomic nucleus, to a planet or a sun.[20]

Engineering General Relativity & Nesting Spacetime Curvatures

We actually engineer general relativity (GR) itself, since the Stoney,[21] Whittaker,[22] and Ziolkowski[23] (SWZ) papers point the way to how to do just that *(see figure 5)*. In short, by using the SWZ approach, one is able to utilize electro-magnetics in a new way, to directly form these curvatures of local spacetime. We also *nest* these curvatures to form a ***template*** of structured multiple curvatures; this template constitutes the deliberate format of the vacuum engine *(see figure 6)*.

Indeed, this is a radically different concept of spacetime structure. It is well-known that, whenever one applies a local hidden variable theory, the GR theory of spacetime structure must be radically altered.[24]

We stress that, in Type 2 engineering, one directly extends, applies and engineers general relativity, but by a novel use of electromagnetics. As can be seen, establishment science is not doing that at all, but is doing only Type 1 engineering. Literally anything one wishes can be engineered in the Type 2 fashion, at least in theory, including transmutation of elements, materialization and dematerialization of matter, free energy electrical power sources, and antigravity. However, Type 2 engineering is even more powerful than that. It also is the ultimate form of virtual reality engineering, for it allows the direct engineering of both physical reality and the mind itself.

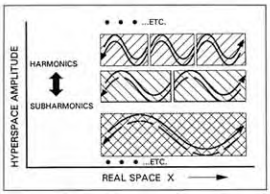

Figure 5. Stoney/Whittaker/Ziolkowski internal EM biwave structure of the scalar EM potential.

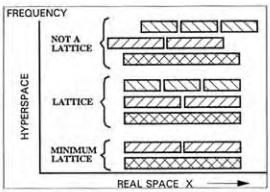

Figure 6. Grav iton lattices and nonlattices. Templates require G-lattices. Minimum lattice is one harmonic interval.

Mind, 3-Space, Hyperspace, Mind Flow, and the Flow of Time

Mind exists in time, but not in our familiar 3-space. Mind does not exist spatially in the same 3-space in which we model physical phenomena.[25] Mind occupies (to the physicist) only one dimension – the time dimension – of Minkowski's 4-space of physical matter. This means that the attachment of mind to matter (in a living biological organism) involves a *mind flow* process, hidden in and occupying the *time flow* process *(see figure 7 below)*.

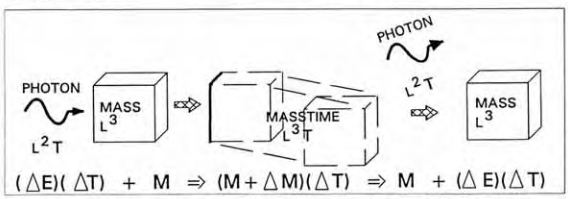

Figure 7. The photon interaction generates observed quantum change and the discretized flow of time. A particle usually connects to only a single delta T at a time. Every other particle is connected to that small increment of time also, as are all minds.

[19] *An example of such an actual amplifier was Floyd Sweet's vacuum triode – a 6-lb., solid-state device containing special coils and two separated barium ferrite magnets. The magnets were specially activated by Sweet's proprietary process so as to powerfully self-oscillate at a chosen ELF frequency, such as 60 Hz. [Such self-oscillation of barium compounds are well-known, but at optical frequencies. Use of a photorefractive magnetic material that is also an insulator allowed Sweet to initiate self-oscillation at ELF frequencies.]. An input sine wave of 10 Volts and 33 microamperes then produced 500 watts of phase conjugate replica EM power, extracted from the self-oscillation energy between the vacuum and the magnets. The amplifier gain (COP) of this open system, self-oscillating, pumped phase conjugate mirror device was some 1,500,000. A successful antigravity test of the device was also performed by Sweet at my urging, and resulted in a controlled reduction of its weight on the laboratory bench by 90%. For as much as could be revealed of the operation and testing of Sweet's proprietary device, see Floyd Sweet and T. E. Bearden, "Utilizing Scalar Electromagnetics to Tap Vacuum Energy," Proceedings of the 26th Intersociety Energy Conversion Engineering Conference (IECEC '91), Boston, Massachusetts, 1991, p. 370-375. Unfortunately nothing can be done with the device – e.g., because of formidable legal entanglements due to the conflicting agreements Sweet made with different financial backers. However, McLain & Wooten have produced a repicable, tested, overunity device & full construction details have been rebuilt on Internet.*

[20] *In the modern geometrical view, all individual field energies come from the conglomerate structure called "gravitational field." Transforming one field energy into another kind may be done by first transforming the initial field energy back into G-field energy, then re-releasing the G-field energy as the desired new type of field energy. Vacuum engines allow control and utilization of this process.*

[21] *G. J. Stoney, "XLVIII. On a Supposed Proof of a Theorem in Wave-motion, To the Editors of the Philosophical Magazine," Philosophical Magazine, 5(43), 1897, p. 368-373.*

[22] *E.T. Whittaker, "On the Partial Differential Equations of Mathematical Physics," Mathematische Annalen, Vol. 57, 1903, p. 333-355; "On an Expression of the Electromagnetic Field Due to Electrons by Means of Two Scalar Potential Functions," Proceedings of the London Mathematical Society, Series 2, Vol. 1, 1904, p. 367-372.*

[23] *Richard W. Ziolkowski, "Exact Solutions of the Wave Equation With Complex Source Locations," J. Math. Phys., 26(4), April 1985, p. 861-863. See also Ioannis Besieris, Amr M. Shaarawi, and Richard W. Ziolkowski, "A bidirectional traveling plane wave representation of exact solutions of the scalar wave equation," J. Math. Phys., 30(6), June 1989, p. 1254-1269. See also Michael K. Tippett and Richard W. Ziolkowski, "A bidirectional wave transformation of the cold plasma equations," J. Math. Phys., 32(2), Feb. 1991, p. 488-492.*

[24] *E.g., see Abner Shimony, "Events and processes in the quantum world," in Quantum Concepts in Space and Time, Eds. R. Penrose and C.J. Isham, Clarendon Press, Oxford, 1986, p. 192: "...local hidden variable theories may be possible only if relativity theory is replaced by a radically different theory of spacetime structure." (My comment is that this should not be surprising, since classical electromagnetics, quantum mechanics, and general relativity are in profound contradiction of each other, and cannot be unified as they are, in spite of decades of Herculean efforts by many excellent physicists).*

[25] *We may model a mind as a separate 3-space, and its functional operations as "physical" in that hyperframe. Thus a mind and its operations are hyperspatial and outside physical matter's 3-space. Both mind and matter 3-spaces share a common 4th (time) dimension. So it requires at least seven dimensions to model a living creature, eight to model a species, and nine to model all life on earth. The 4th dimension of the mindworld hyper-4-space coincides with the 4th dimension of the physical world's Minkowski 4-space. A priori, mind/matter engineering operations involve engineering and structuring the time stream. This allows engineering either physical reality or mental reality or both simultaneously.*

Normally, so QM tells us, the observation process destroys time, so that all "observables" are spatial only. So the completion of each observable change in a living mass system momentarily destroys the only connection that the mass had with its associated mind! It vanished in the so-called "collapse of the wave function."[26,27,28] Fortunately, little pieces of time are always being serially added and subtracted by the ubiquitous photon interaction process with every mass. Hence the body's particles of mass are continually being *connected to* and *disconnected from* little serial bits of the time stream, and from corresponding serial bits of the *mindstream* of that individual.

Type 2 Disruption of Time and Mind

Type 1 engineering does not disrupt or affect the flowing time stream. Hence it does not disrupt or affect the flowing mindstreams of biological systems in the vicinity.

This is not necessarily true of Type 2 engineering! Type 2 engines of appreciable power can and will disrupt and destroy the body's continual detachment from and re-attachment to its mind-stream. Type 2 engines will appreciably disrupt and alter the flowing time stream, and thus disrupt and alter the flowing mindstreams of all life forms in the vicinity. The size of the "vicinity" depends upon the size of the engine.

So to beneficially utilize vacuum engines, we do not strive for control of vast energies. We must use a surgeon's scalpel, so to speak, instead of a giant steam hammer. If one seeks weapons, on the other hand, one will strive for control of much greater vacuum engine energies. The KGB secret laboratories, e.g., have pursued this goal for over four decades. Several generations of Type II weapons have been developed and deployed, all under continued KGB control and operation. These Type 2 weapons could, in the words of Khrushchev's address to the Presidium in January 1960, *"...wipe out all life on earth if unrestrainedly used."* Now one can easily see how that could happen: ***Any massive use of Type 2 weapons will substantially upset the time stream on earth, including all individual time streams. It will so disrupt all the mind streams of all earth's creatures that their connections to their physical bodies will be instantly broken.*** At least now we know why Brezhnev himself was so frightened of these weapons in 1975.[29]

Another unusual characteristic of Type 2 engineering is the *slowly decaying persistence of any special vacuum engine structure artificially created in the vacuum.* We may analyze this effect in terms of the "ghost forms" of quantum mechanics.[30,31,32]

Engineering the Mind, Its Operations, and Its Contents

The vacuum engine affects/curves/structures not only the three *spatial* dimensions of ST, but also the *time* dimension. Hence the vacuum engine approach can be used to engineer not only the observable physical matter (which is 3-spatial), *but also the mind and thought (which are time-like to the external observer).* Literally one can "get into the mind's connection channel" and alter the mind, its contents, and its operations at will by using appropriate vacuum engines.

By appropriately and selectively nesting the spacetime (ST) curvature structuring, one can even reach beyond the

[26] *Rigorously, the emission of a photon by the living mass destroys its time channel, thus collapsing the wave function and disconnecting the mind. Absorption of another photon immediately thereafter adds an increment of time back to the mass, forming* **masstime** *and reconnecting the time channel and hence the mind channel. Mass does not exist in time per se; masstime does. The temporary disconnection of the time channel by photon emission causes the wave function to collapse; a priori a wave cannot exist without some time available in which to wave! This in fact produces the observable mass from masstime. The problem is that the physicists have ignored the transport by the photon of Δt as well as ΔE. Thus they have not noticed that the ubiquitous photon interaction with a mass creates the continual addition and subtraction of time increments. This continual coupling and uncoupling of mass to and from the time dimension creates a* ***discretized*** *flow (passage) of time for that mass. This continual connection and disconnection of a mass to and from only a tiny little piece of the time channel is responsible for the past and the future not being observable; "being observable" is simply being connected to a single small Δt increment, not all the increments that have gone before or that will follow hence. When one looks at the corner of a room, the 3-spatiality of one's mass instrumentation system is why one can see length, width, and height but not the fourth dimension, time.*

[27] *Since the photon interaction – including the virtual photon interactions – can be engineered, obviously the passage of an object through the discretized timestream can also be engineered, electromagnetically. Not only can a photon, electron, or proton be time-reversed, but also an assemblage of photons, electrons, protons and neutrons can be time-reversed. Among other things, this means that a diseased living physical cell can be time-reversed (dedifferentiated) back to a previous healthy state, as shown by Priore and also by Becker. Kaznacheyev, as does Becker, also shows that healthy living cell can be "time-forwarded" (differentiated) to a new state, if bombarded with the weak vacuum engine templates (graviton lattice structures) for that state. The minimum graviton lattice (ordering of SWZ wavepairs) utilizes one harmonic frequency interval. Thus quartz will pass Kaznacheyev's cytopathogenic effect, since it passes IR to UV – one harmonic interval. Ordinary window glass does not pass a complete harmonic interval, hence cannot pass the minimum graviton lattice and destroys the disease-inducing vacuum engine template.*

[28] *Since the entire area is highly nonlinear, then nonlinear oscillator theory applies. Graviton lattices may therefore be activated harmonically or subharmonically. This means that "optical band" results can be initiated by analogous subharmonic input – e.g., microwaves or even sound waves. G-lattices work like music; one recognizes a C-chord regardless of the octave. In similar manner, vacuum engines (G-lattices) may be shifted by any number of octaves, with initiation of results then being delayed in the responding physical systems, as prescribed by nonlinear oscillator theory.*

[29] *See Christopher S. Wren, "Brezhnev Talk for Accord against "Terrifying Arms", New York Times, June 14, 1975, p. 1, 11.*

[30] *Since statistically every possible change in the vacuum is constantly and continually occurring in each and every differential volume, no matter how small, then from time to time in that maelstrom any physical (and mental) template we care to visualize appears, exists for a very short but finite time, then disappears, then reappears, etc. Such a continual, untidy characteristic is called a* ***ghost form,*** *and usually downplayed or ignored in the teaching of QM because it is "unpleasant." However, anything and everything – no matter how bizarre and whether living or inert – has a small but nonzero "density of reality" in the vacuum flux. Everything that ever was or will be, and everything that never was and never will be, is also there. The point is, creation of a vacuum engine template for a ghost form adds energy to (activates) that form. Just as a Dirac "ghost form electron" can be lifted from the vacuum by adding energy, so can any other ghost form, be it "living" or "dead." The process is fundamental and not just for electrons. Adding energy to a ghost template, we increase the local energy density of that ghost form in all electrical potentials in the entire area. This structuring of vacuum spacetime extends radially in all directions, tailing off to zero at infinity. When the inputting energy is ceased, the energized/activated form will then gradually decay over a period of time.*

[31] *We may compare the activation, persistence, and decay of the ghost form to an accumulator fed by two inputs, one blue liquid and one yellow liquid, with an outlet pipe on the opposite side. Suppose only the blue pipe is turned on; the tank is filled with blue liquid and blue liquid comes out the outlet. Now we turn on the yellow valve, and yellow liquid also starts entering. Over a period of time, the liquid in the tank will gradually turn green, as will the fluid from the outlet. Now we turn off the yellow valve. Over a period of time, the fluid in the tank will gradually turn back to blue color, as will the outlet liquid. Energizing and decaying ghost template structuring of the vacuum works the same way.*

[32] *For inputs that have raised the ghost template near or above the observable (quantum) threshold, this "decay time" may be quite long. Golden once accidentally charged up his local area with such a local template, in a powerful experiment that lasted about eight hours. Materializations occurred, determined by the thought-form (steady ghost form) inputs from the minds of the unintentional participants. In addition, interference with the timestream occurred, as indicated by all local clocks – mechanical, electrical, pendulum, etc. – going substantially astray. The materializations decayed away in a couple of hours, simply dematerializing back into the virtual state when their average energy density level reduced past the quantum threshold. It required four days for the entire "ghost template" to decay away and for the clocks in the area to fully resume normal operation.*

ordinary 3-space and get directly into the higher dimensional space one may mathematically use to model the mind *(see figure 8)*. One can then directly "engineer" in that *pure mind* arena (in the *mental spacetime*, in the modeling sense). This capability, I believe, was responsible for Brezhnev's vivid fear of these weapons in 1975, and his statement to visiting U.S. senators that, not only must the nations of the earth ban nuclear weapons, but also the development of new weapons of mass destruction *"more frightful than the mind of man has ever imagined."*[33] Gromyko later introduced a draft treaty to that effect to the United Nations the same year, and urged the nations of the world to sign it.[34] Article one of the draft treaty stated that the Russians would identify the type of weapons when negotiations on the treaty started. *No one had the slightest notion what the Russians were referring to.* However, three other nations – not hostile to the U.S. – later did develop some of these Type 2 weapons. The Soviet Union was already engaged in operational testing against U.S. and other targets, with incidents mistaken for "accidents" or "anomalies" by the world's news agencies.[35] During the beginning of the 1980s the three nations began checking the Soviet Union by demonstrating their own use of the weapons against Soviet targets. Again the open press did not recognize the true nature of the incidents involved. At the close of the 1980s the triad *vigorously* "checked" the Soviet Union, clearly demonstrating their ability to devastate the Soviet Union should it attempt to devastate friendly nations.

So a special case of "deterrence by massive retaliation" came into being in the Type 2 weapons area as well as in the conventional and nuclear areas. Does the reader recall, e.g., the mysterious explosion of several Soviet missile ammunition

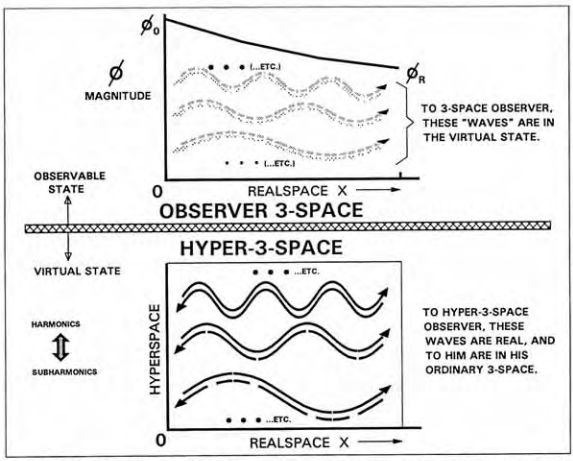

Figure 8. The 7-space EM potential. In observer 3-space (top figure), the potential is composed of a virtual particle flux. In hyper 3-space, the potential is a harmonic series of a SWZ bi-directional EM wavepairs.

storage sites in the space of a few months in 1983-84?[36] A single one of these explosions destroyed a third of all the missiles in the entire Soviet Northern Fleet. There were other major incidents whose true nature and cause went unnoticed.

Frustrated in the intent to dominate the world by surreptitious, delicate use of its Type 2 weapons, the economy of the Soviets simply fell apart. The Berlin Wall was torn down and the Soviet Union broke apart into independent regional nations.

In that upheaval of the Soviet Union, however, the KGB remained intact, well-funded, and still firmly in possession and control of the Type 2 superweapons, including development, manufacturing, deployment, manning, and operational employment.[37,38]

Wheeler's Principle and Its Extension

Einstein has strongly pointed out the necessity to review foundations *(see table 2)*.

The great physicist Wheeler has a very nice statement on the curvature of spacetime. Briefly, he summarizes the gist of GR as *"Geometry tells mass how to move, and mass tells geometry how to curve."*[39] By "geometry" he is referring to *spacetime*. So we may immediately sub-

[33] *Wren, 1975, ibid.*

[34] *Prohibition of the Development and Manufacture of New Types of Weapons of Mass Annihilation and of New Systems of Such Weapons, draft treaty introduced by Gromyko at the United Nations' 30th session of the General Assembly, New York, Sept. 23, 1975. The first article provided that the types of these new weapons would be "specified through negotiations on the subject."*

[35] *A long list of these incidents has been published by this author, through the Tesla Book Company. See T.E. Bearden, Soviet Weather Engineering Over North America, 1985; Fer-de-Lance, 1986; AIDS: Biological Warfare, 1988, Analysis of Scalar Electromagnetics, 1990, and Gravitobiology, 1991.*

[36] *See photograph, Jane's Defence Weekly (JDW), 2(3), July 28, 1984, p. 92; see also Mark Daly, "Goa and Goblet SAMs in Severomorsk explosion," JDW, 2(6), Aug. 18, 1984, p. 224; Derek Wood, "Soviets' northern fleet disabled... 'not viable' for six months," JDW, 2(1), July 14, 1984, p. 3; Derek Wood, "Six explosions in the past seven months," JDW, 2(1), July 14, 1984, p. 3; John Moore, "The aftermath of Severomorsk," JDW, 2(6), Aug. 18, 1984, p. 224.*

[37] *To survive as the leader of Russia, Yeltsin of necessity formed a pact with the KGB. KGB support insured that no coup of substance could be mounted against him, and that the KGB would insure his remaining in power. In return, Yeltsin saw that the KGB was well-funded, remained intact, retained all its secret weapons laboratories and secret weapon scientists and manufacturing facilities, and retained and continued to operate all its deployed, operational superweapons. The KGB changed its name and continued business on a less public profile. Publicly it officially turned a "much gentler face" toward the Russian citizenry. But essentially the KGB still controls most of the Russian military officer corps. Through the KGB/military connection the Communist Party can still accomplish a military coup and seize control of the country again, at least for the foreseeable future, when it chooses to do so. The Russian threat has not disappeared; it is simply hibernating.*

[38] *The Communists/Generals in control of the KGB and these superweapons are perfectly capable of turning the unfortunate dissolution into an excursion scenario of their long-planned major concessions offensive prior to ultimately striking the West with a clenched fist and destroying it. The communist aim has not changed one iota since 1917, although the communists have temporarily lost or relinquished control over the Russian civilian populace. For a description of this "29th move of the chess game," see T.E. Bearden, "Glasnost: 29th Move of a 30-Move Chess Game," Raum & Zeit, 1990.*

[39] *W. Misner, K.S. Thorne and J.A. Wheeler. (1973) Gravitation, W.H. Freeman and Co., San Francisco, 1973, p. 408. On p. 5 the principle is stated as "Space acts on matter, telling it how to move. In turn, matter reacts back on space, telling it how to curve." Thus space is already a vacuum engine that acts on matter, and mass-energy acts on space to curve it.*

Table 2. Einstein on Reviewing Foundations

"...the scientist makes use of a whole arsenal of concepts which he imbibed practically with his mother's milk; and seldom if ever is he aware of the eternally problematic character of his concepts, He uses this conceptual material, or, speaking more exactly, these conceptual tools of thought, as something obviously, immutably given; something having an objective value of truth which is hardly even, and in any case not seriously, to be doubted. ...in the interests of science it is necessary over and over again to engage in the critique of these fundamental concepts, in order that we may not unconsciously be ruled by them."

Albert Einstein, "Foreword," in Max Jammer, Concepts of Space: The History of the Theories of Space in Physics, Harvard University Press, Cambridge, Massachusetts, 1969, p. xi-xii.

Table 3. Wheeler's Principle and a Corollary

Wheeler

"Geometry tells mass how to move, and mass tells geometry how to curve."

By "geometry" is meant "spacetime." Translating: "Mass tells spacetime how to curve, and curved spacetime tells mass how to move."

Corollary

"Trapped EM energy tells spacetime how to curve. The structuring of that trapped EM energy tells the resulting curved spacetime how to nest its curvatures. This forms a vacuum engine. Its nested curvatures of local spacetime tell mass and energy how to structure and move. By forming vacuum engines deterministically, one may use them to affect, alter, and change local mass, energy, and mind as desired."

stitute synonyms to yield "Mass tells spacetime how to curve, and curved spacetime tells mass how to move."

We further modify and extend this latter statement, replacing mass by its trapped EM energy (this is consistent with general relativity) and adding nesting of such trapped energies. We also allow for altering the timestream, the mind, and the mindstream. With these modifications, a corollary to Wheeler's principle results as follows: *"Trapped EM energy tells spacetime how to curve. The structuring of that trapped EM energy tells the resulting curved spacetime how to nest its curvatures. This forms a* ***vacuum engine.*** *Its nested curvatures of local spacetime tell mass and energy how to structure and move. By forming vacuum engines deterministically, one may use them to affect, alter, and change local mass, energy, and mind in any manner desired" (see table 3).*

To gain a "feel" for spacetime curvature, one may visualize it as analogous to the variation of local pressure in a gas or fluid.[40] Using the earth's atmosphere as a model, we may precisely create pressure points and areas (lows and highs) throughout, and gradually move them at will. This control of highs and lows will allow control and direction of the atmospheric flows. Theoretically, the entire atmospheric flow of the earth can be steered and controlled, by using such an approach. In short one can directly "steer" the weather worldwide, or over a given continent. Present Russian development allows this weather control process to be done sufficiently to control and steer the great jet streams, with concomitant direct influencing of the weather.[41] *We have not had any truly "normal" weather over the U.S. since 1976.*

Type 2 Engineering Is Just Beyond the Present Vanguard of Science

As can be appreciated, Type 2 engineering is beyond vanguard science. The forefront of orthodox science is still where Wheeler's original statement is, and does not apply the SWZ methodology nor nesting of spacetime curvature. Science still does not even try to create vacuum engines and perform vacuum engineering *(see table 4 on page 76)*. Conventional scientists are still very firmly rooted in Type 1 engineering.

In ordinary GR, nowhere does there appear a precise definition of the term "gravitational field."[42] The G-field is just a *conglomerate of loose things*, and – by Sakharov's postulate – not a fundamental field of nature at all.[43] It already follows that, since "gravitation" is "geometry of spacetime," then "curvature" of spacetime is achieved by altering and changing the "conglomerates that comprise G-field" from their ambient conditions. The ability to structure and nest such curvatures also follows in straightforward fashion.[44]

Pumped Phase Conjugate Mirrors and the Priore Mechanism

The astounding thing is that Antoine Priore, using pure intuition, was able to arrive at an exact process for forming a special kind of beneficial vacuum engine![45]

We know today – but scientists did not know it when most of Priore's work was being done! – that a highly nonlinear material acts as a ***phase conjugate mir-***

[40] *It is actually the variation of the local energy density of the vacuum from its normal value.*

[41] *See T.E. Bearden, Soviet Weather Engineering Over North America, 1-hr. videotape, 1985. Available through the Tesla Book Co. In the last few years, the Russians have substantially increased their weather engineering capability and activity. Most of the transmissions from this system are now fairly good electrogravitational waves (coupled wave/antiwave pairs), with EM imperfections many dB below signal level. Hundreds of them are utilized when the system is actively employed over the U.S. By applying Whittaker 1904, these signals – invisible to the normal receiver – can be received and displayed.*

[42] *Misner, Thorne and Wheeler, Gravitation, 1973, p. 399.*

[43] *A.D. Sakharov, "Vacuum Quantum Fluctuations in Curved Space and the Theory of Gravitation," Soviet Physics Doklady, Vol. 12, 1968, p. 1040-1041 [English translation.] Sakharov's article (in Russian) is in Doklady. Akad. Nauk SSSR, Vol. 177, 1967, p. 70-71.*

[44] *General relativists already accept the vacuum as containing a 4-momentum-flux river. See Misner, Thorne, and Wheeler, Gravitation, 1973, p. 130-131. They treat the stress energy tensor as a machine (ibid., p. 131). The only difficulty is that they have not realized that, by applying the SWZ approach, much more complicated "vacuum machines" than they have considered can be built and utilized electromagnetically.*

[45] *See Christopher Bird, "The Case of Antoine Priore and His Therapeutic Machine: A Scandal in the Politics of Science," Explorel, 5(5-6), 1994, p. 97-110 for an excellent summary of the Priore Affair. The Priore group cured terminal tumors, sleeping sickness, and arteriosclerosis in lab animals and restored suppressed immune systems. Eminent, even world-renowned French scientists worked with him. The work was funded by the French government and published in leading French scientific journals. It was suppressed when the French government changed to a leftist government in the mid 70s.*

ror[46,47] *(see figures 9 & 10).* In other words, when one puts in a sine wave, e.g., in addition to producing harmonics the nonlinear material will also produce a strange, backward-traveling replica of the input wave. This "backward wave" has been well-known since the early 1970s. It is truly a *time-reversed* wave (Barus wrote the solution much earlier).[48] It will backtrack back through space, over the *exact* path taken by the input wave.[49,50] If the input wave is continuous, this "phase conjugate replica" (PCR) time-reversed wave will precisely appear everywhere in space that the input wave occupies.

The key here is "everywhere in space." It does not matter how tortuous and twisted the route taken by the input wave; the PCR will backtrack it and appear spatially superposed with it. This has been *experimentally* proven many times in nonlinear optics.[51] One concludes that the vacuum has a memory,[52] and the PCR wave can retrace the memory of the path previously taken by its stimulus.

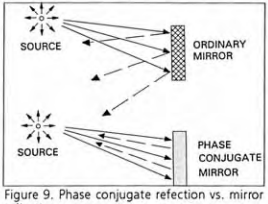

Figure 9. Phase conjugate refection vs. mirror reflection.

Figure 10. Pumped phase conjugate mirror.

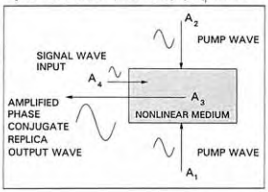

Another nice thing has been discovered and is used in the relatively new nonlinear optics. If one "pumps" the phase conjugate mirror with opposing waves (such as, e.g., bidirectional EM wavepairs), then up to all the energy in the pump waves is absorbed and re-emitted in the "crawfishing" PCR wave.[53] In other words, the stimulated PCM can be made into an amplifier of the time-reversed wave output, just by "pumping" it with the proper bidirectional wavepairs.[54,55]

Anomalous "Bio-Jamming" and Deep Diffusion by EM Smog

Pumping by EM waves or by simultaneously varying EM forces due to opposing streams of photons will produce a much higher probability of 4-wave mixing and multiphoton interactions. Simply put, this probability is a function of the sheer photon/signal density, along the lines pointed out – but not clarified – by

[46] *Elsewhere we have pointed out that, for the primary EM interactions with a living system, we must employ an electromagnetics of higher topology than the conventional EM (either vector or tensor). Barrett has shown that a higher topology EM will involve and exhibit nonlinear optical functioning without necessarily employing optical materials. See T.W. Barrett, "Tesla's Nonlinear Oscillator-Shuttle-Circuit (OSC) Theory," Annales de la Fondation Louis de Broglie, 16(1), 1991, p. 23-41. Thus if we wish to utilize higher topology EM functioning in and on the body/mind, or just to comprehend such functioning, the nonlinear optical processes will form part of that functioning. We must be familiar with phase conjugate optics functions, regardless of the frequency range we operate within, and we must examine the situation accordingly.*

[47] *In the conventional struggle to elucidate EM effects on biological systems, the failure to realize this higher topology principle has led to experiments that are often difficult or impossible to replicate, primary interactive mechanisms remaining a mystery, and the inability to definitively answer even the simplest question such as "Does power line radiation enhance the emergence of cancer and leukemia, and if so, how and under what circumstances?" Forty years of research by able and determined EM bioeffects scientists have thus failed us, because the model they so stringently apply is grossly in error. What they have thoroughly proved is that their fundamental model is incorrect and inadequate for the intended purpose for which it is being utilized. The solution is not to just continue more experiments in the same vein, but to revise the model itself. We have previously pointed out (Bearden, Cancer and the Unresolved..., 1993, ibid., p. 40) the present EM bioeffects model, the modification areas required, and how to ascertain when the adjusted model is correct.*

[48] *Carl Barus, "A Curious Inversion in the Wave Mechanism of the Electromagnetic Theory of Light," American Journal of Science, Vol. 5, Fourth Series, 1898, p. 343-348 gives the first known solution of Maxwell's equations for a time-reversed or "backwards-traveling" EM wave.*

[49] *According to the well-known "Distortion Correction Theorem" of nonlinear optics. For a precise statement of the theorem, see Amnon Yariv, Optical Electronics, 3rd Edn., Holt, Rinehart and Winston, New York, p. 500-501. See particularly Chapter 16: "Phase Conjugate Optics – Theory and Applications."*

[50] *For the space-borne laser, e.g., the U.S. uses iterative phase conjugation – known as self-targeting – of a booster-reflected laser signal to keep a powerful laser beam locked upon the same spot on a distant missile booster, rising during its launch phase, long enough to burn through the casing and destroy the booster, even 10,000 miles away. The process is known as phase conjugate shooting.*

[51] *A striking example is given by David M. Pepper (1986) "Applications of Optical Phase Conjugation," Scientific American, 254(1), Jan. 1986, p. 75. Possibly the best extant introduction to the subject of nonlinear optical phase conjugation is David M. Pepper, "Nonlinear Optical Phase Conjugation," Optical Engineering, 21(2) March/April 1982, p. 156-183.*

[52] *Without extended discussion we call attention to the importance of this finding with respect to homeopathic medicine and therapy. In fluids, obviously one proceeds from vacuum flux organization and memory upward through matter's organization (and hidden memory), through the individual particles of the nucleus, to the nucleus, to the atom, to the molecule, etc. Between the atom and the molecule levels we encounter hydrogen bonding actions in fluids, which is of great importance to the biochemistry, especially the protein chemistry. It is possible to show that the mind operations and the cellular control operations also SWZ structure the H-bonding activities of the body's aqueous fluid; it can also be shown that any chemical, drug, additive, and EM smog also structures and affects the H-bonding. However, further discussion of these two elements is beyond our scope for this presentation.*

[53] *Note that "pumping" is simply a expansion of the notion of stressing the material. Emission of the amplified PCR wave is a kind of piezoelectric release of the stress energy. The point is that physical stress of a material can be freely tapped and energy continually extracted, if that stress is varying. The McLain/Wooten device uses that principle.*

[54] *To create a normal PCR wave response to an overt EM signal wave input, nonlinear optics uses overt EM pump waves. For the hidden EM signal wave input – i.e., for the hyperspatial vacuum engine as input – one must use "hyperspatial" wave pumping. The "cell as a phase conjugate mirror" must be pumped by hidden (hyperspatial) EM waves inside a scalar EM potential. In the normal case, an amplified, normal EM PCR wave is produced in response to a normal signal wave input and normal pump waves. In the vacuum engine case, an amplified, hyperspatial EM PCR wave complex is produced in response to a hyperspatial signal wave input and hyperspatial pump waves.*

[55] *Note that the amplified PCR wave represents a reorganization and deterministic redirection of stress energy. Hence it is a time-reversed operation, and also a negentropic operation. Since the PPCM operates as an open system not in thermodynamic equilibrium, with input of excess energy in the form of the pumping, negentropic operation is permitted by nonlinear thermodynamics (of a system far from thermodynamic equilibrium) For a lay summary of such thermodynamics, see Gregoire Nicolis, "Physics of far-from-equilibrium systems and self-organization," in Paul Davies, Ed., The New Physics, Cambridge University Press, Cam bridge, 1989, p. 316-47. For a more technical presentation, see G. Nicolis and I. Prigogine, (1987), Exploring Complexity, Piper, Munich, 1987. Prigogine received the Nobel Prize for his pioneering work in this field.*

Devyatkov et al.[56,57] Thus dense electronic smog – even though it contains only extremely weak signals – increases the nonlinear optics type of interaction. This allows anomalously deep penetration and *diffusion* of special weak EM signals due to the "pumping" aspect of multiphoton interaction. The nonlinear cells and cell parts act as pumped phase conjugate mirrors (PPCMs) when subjected to multiphoton interactions.

Worse, the *signal wave* inputs to the PPCMs are the normal weak EM signals of the body itself. Hence the resulting PCRs from the PPCMs are superposing phase conjugates of the body's normal signals. This results in (1) a "diffusive" effect in the body of the PPCM formations, and (2) formation of very weak "EM cancellation" signals throughout the body, specifically targeted to the body's own control signals, including those to and of the immature immune cells in the bone marrow. In the bone marrow, "*partial-cancellation jamming*" *(see figure 11)* occurs in the normal control and development of the immune system cells as they are created. Slowly errors and degradation damage accumulate with time, including over the years. This cumulative immune system damage combines with other damage effects due to pesticide residues, pollutants, etc. The combined degradation results in long-term cumulative damage to the immune system and its cells. Increasing errors in the immune system's functioning eventually result in appearance of immune system disorders and increasing vulnerability to

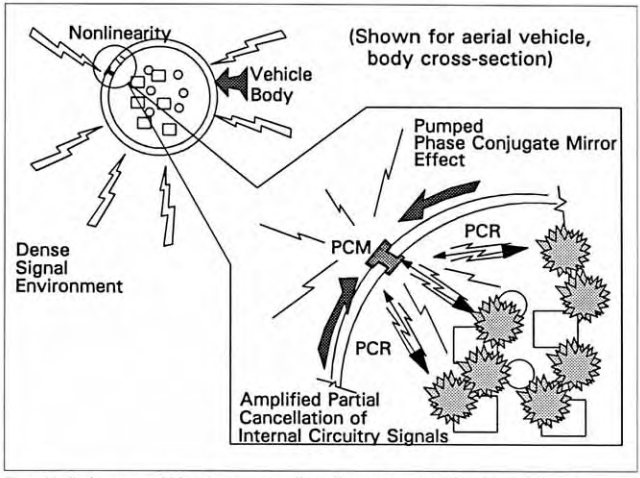

Figure 11. Single versus multiphoton penetration effects. Phase conjugation effects become of significance, generating PCR signals which couple to and backtrack the cells' and tissues' own signals, this penetrating throughout the body with weak partial cancellation jamming.

Table 4. Mechanism for the Priore Therapy

- Produced Specific SWZ-Structured Scalar Potential
  - 17 EM frequencies mixed in a rotating plasma
  - Phase conjugates added by the plasma
  - Formed vacuum engine with hyperspace pump waves
  - Modulated onto a rippling magnetic field which carried it to every cell and all its parts
  - Jyperspatial pumping of cells/parts as PPCM's
- PPCM's created amplified anti-engines for disease there
- Anti-engine reversed cells/parts back to normal state
  - Cells return to control by cellular control system
  - Restored cellular control system to full functioning
- Scrubbed out the cumulated precancerous state
- Eliminated shadow disease state
- Restored the immune system to high functioning
- No excessive trauma to treated animal

In Part II of this wonderful article, by Mr. Bearden, a few of the topics you can look forward to are; The Gulf War Syndrome, How to Make a Gravitational Wave & Curve Spacetime, Potentials & Gravity and How Priore Made Vacuum Engines.

[56] *The Russians refer to the hidden EM wave structure of the scalar potential – i.e., to the SWZ structuring and vacuum engine templates – as the information content of the field. Western scientists assume this phrase refers to ordinary spectral analysis and communications, ignoring those statements that the normal EM theory does not apply. Also, Devyatkov et al seem in no great hurry to express their true meaning more clearly. See N.D. Devyatkov (Ed.), Applications of Low-Intensity Millimeter-Wave Radiation in Biology and Medicine, IRE Akad. Nauk. SSR, Moscow, 1985. [in Russian]. See also N.D. Devyatkov, Yu. V. Gulyaev, et al, [Organizing Committee Chairmen], Digest of Papers - International Symposium on Millimeter Waves of Non-thermal Intensity in Medicine, co-sponsored by Research and Development Association "ISTOK" and Research Institute of U.S.S.R. Ministry of Electronic Industry ("ORION"), Moscow, Oct. 3-6, 1991. Collection of 300 papers. [In Russian].*

[57] *However, some leading Western scientists – such as Wheeler, Feynman, and Jaynes – strongly advocate replacing the present erroneous concept of the EM force field existing in spacetime with the notion that what exists there instead is an information storage device containing a summary of what we need to predict the behavior of a charge if there should be one at the point. E.g., see J.A. Wheeler and R.P. Feynman, "Classical electrodynamics in terms of direct interparticle action," Reviews of Modern Physics, Vol. 21, 1949, p. 425-433; E.T. Jaynes, "Probability in quantum theory," in Complexity, Entropy, and the Physics of Information, Ed. W.H. Zurek, Addison-Wesley, Redwood City, CA, 1990, p. 33-55.*

VACUUM ENGINES AND PRIORE'S METHODOLOGY: THE TRUE SCIENCE OF ENERGY-MEDICINE

Part II of II

© Copyright 1995 by T. E. Bearden

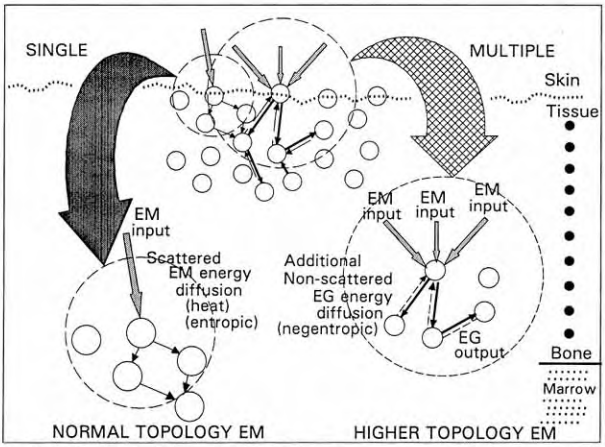

Fig. 12. Single versus multiphoton penetration effects. Phase conjugation effects become of significance, generating PCR signals which couple to and backtrack the cells' and tissues' own signals, thus penetrating throughout the body with weak partial cancellation jamming.

The Gulf War Syndrome

For very dense EM smog environments such as in the recent Gulf War, both the anomalous EM diffusion effect and the partial cancellation jamming effect on humans are dramatically accelerated. Cellular and immune system damage that would require decades of exposure at very low EM smog levels will cumulate in only a few months. In turn, this accelerated malfunctioning of the cellular control system and the immune system enhances the effects of other biological suppressants already present in the body or encountered during the dense signal environment exposure period. These augmented suppressants include the degradation due to the individual's prior lifetime EM smog exposure, attack by unfamiliar disease organisms endemic to the areas, exposure to oil fire smokes and pollutants, exposure to increased UV from solar radiation, and exposure to chemical agents and possibly surreptitious biological warfare agents.[58]

Further, in the haste to protect the troops from possible chemical and biological attack, all soldiers were administered a nerve agent called pyridostigmine bromide; in addition, approximately 150,000 were inoculated with anthrax vaccine, and 8,000 also received experimental botulism toxin shots.[59] Normally for medically-administered agents, the relatively minor suppression effects on the immune systems and body are followed by quick recovery, due to a properly functioning immune system and cellular control system. However, all three of these Gulf War preventive medical treatments do create "small cases of sickness" in the normal body.[60] In other words, a low level of the disease strain *is created* in the patient. Further, even after the apparent "initial recovery," there will now be a much longer dormant "apparently healthy" period during which the *vacuum engine templates for the disease remain, until they have finally decayed away.* In a sustained dense signal environment, this "decay away" period may be dramatically extended or never occur; in fact, the disease may progress from the vacuum-engine state to the low level physical state, then into a fully developed syndrome.

So we introduce the concept of the *relative level of a disease.* First, the disease and/or its vacuum engine templates are in the body. A low level or absence of disease, as we normally think of it, is with respect to the high disease level – the full-up, developed state of the disease. A disease level is "low" because of the ability of the immune system to fight it, overcome it, and reduce it to a "pre-disease" state; and the ability of the cellular control system to eventually rid itself of the disease vacuum engine templates, retaining only antibodies against its re-invasion. When the disease is not physically present according to conventional medical standards, but nonetheless the vacuum templates are present and not yet cleared out, we shall refer to that state as the shadow state of the disease. The cellular control system largely combats this state.[61]

[58] *Both Senator Riegle's and Senator Rockefeller's May 1994 hearings concluded that all 695,000 troops who served in the Gulf War were also exposed to chemical and biological toxins.*

[59] *Stephen Salgaller, "U.S. Role in Gulf War Illness." Letters,* **Science News,** *146(7), Aug. 13, 1994, p. 99.*

[60] *Note that at least one of these three treatments was still quite experimental. Consequently there exists less confidence in stating that its normal side effects are minimal and tolerable.*

[61] *Apparently by being able to phase conjugate with weak amplification, so that it forms anti-engines that usually are stronger than the disease's vacuum engines, gradually reversing the shadow state to normal.*

If the immune system and cellular control system are impaired, a shadow state of the disease can gradually progress to a "low level" of disease, then to a higher level, and become serious or even life threatening. This is true when conventionally the disease is physically absent but its shadow state is still present and cannot be disposed of by the cellular control system, as clearly shown by Kaznacheyev's experiments.[62,63]

We point out, but do not pursue, that the cellular control system also deals with the shadow states of diseases. In the normal state of "free from disease," the cellular control system successfully and continually deals with incident diseases, overcoming them at the shadow state level. Its process for continual disposal of the shadow state residues is hypothesized to be a version of slightly amplified phase conjugation of the vacuum engine's shadow state level.

In the model we are advancing, the disease entry and development occur by successively (1) creating its shadow state and successfully maintaining it in spite of the cellular control system's phase conjugation efforts, (2) breaching the threshold of physical changes, so that at least physical indicators of the struggle by the now-involved immune system appear, (3) progressing until conventional medicine recognizes "low level disease or infection," (4) increasing until conventionally-recognized "developed disease or infection," (5) increasing until the disease is serious and even life-threatening, and (6) increasing until the patient can no longer sustain life and dies. *We note that the best preventative medicine would and should be practiced at the shadow infection level.* The Priore therapeutical approach is capable of doing that.[64]

In the "normal" – if such an adjective can be used! – sustained "weak EM smog" exposure, the shadow state may last for several years or even several decades, prior to sufficiently accumulated degradation of the cellular control system and the immune system to allow the physical emergence of the disease. For much denser EM smog, such as existed in the Gulf War, the shadow incubation process is highly shortened, as is the time to progress from one stage to another higher stage of the disease or disorder condition.

In other words, in a dense but weak EM smog environment, the recovery from "minor diseases" actually administered as part of the initial vaccination and preventive medicine will be substantially altered because of the accelerated damage to the immune system and cellular control system. The control/immune degradation may be fast enough that the disease starts increasing from the shadow state toward higher levels, instead of being reduced and eliminated by the control/immune systems.[65,66]

Consequently, the Gulf War participants were thrust into a unique new situation: The second (shadow state) phase of decay of the "minor diseases" created in the bodies receiving the three preventive medications was interfered with by the EM fog. Because of individual variation in past cumulative damage experience, the individual control/immune systems varied from soldier to soldier. The smog environment varied in density and intensity from place to place, and from time to time. Hence the degree of interference varied from soldier to soldier because of (1) variation of past control/immune degradation, (2) variation of the EM smog exposure, and (3) variation of exposure to other suppressants. A bell-shaped distribution curve of the extent of the *net interference to net control/immune functionality*[67] would result, when the soldiers are taken as a group. That is, some of the participants just had a somewhat longer 2nd phase recovery period; some an extended 2nd phase recovery period; some a sustained, gradual rise in the 2nd phase, toward physical disease but not yet developing the Gulf War Syndrome. Some had a sustained, quicker rise toward actual physical disease instead of a decay, and have had sufficient time to develop the physical disease.

When the additional individual expo-

[62] *Kaznacheyev, several references, ibid. That is, suppose we have the shadow disease possess only a strength such that the normal cellular control system and immune system could overcome it. If the cellular control system is weakened, the disease progresses across the physical barrier. If the immune system is still strong, it can handle the encroaching disease, but will give physical indicators of its struggle (increased white corpuscles, etc.) If the immune system is also degraded, the disease will progress to low level physical disease, higher level, etc. On the other hand, if the cellular control system is normal but the shadow state of the disease is amplified, the phase conjugation defenses of the cellular control system will be breached and the disease will impel itself into low-level disease, then high level, and then kill the cells, in spite of a normal immune system combatting the breach of the cellular control system. This latter is what Kaznacheyev's experiments showed. It is also what the decades of Soviet weak microwave radiation of the U. S. Embassy in Moscow showed.*

[63] *The discerning reader will note that we are presenting the gist of a new theory of cellular disease.*

[64] *We also point out the electromagnetic biological warfare capability in this area, long since developed by the Russians and under total control of the KGB. The U.S. Embassy radiation, including the health changes and the death of three U.S. Ambassadors, was just to stimulate the U.S. intelligence and scientific communities at the highest levels. By the U.S. electromagnetic response at the Embassy itself, the Soviets could then know for certain whether or not the U.S. was aware of this EM biowar capability, and whether or not it had secretly developed defenses. Our actions assured them we had no such capabilities and no defenses – and were totally unaware of the true nature of the Embassy radiation.*

[65] *Note that the multiplicity of the assault on the control/immune systems augments the resistance and recovery difficulty. E.g., each B-cell lymphocyte can attack only a single antigen – alien property of the surface of an invader. There are about one billion B-cells in the human body, which between them are specific for about a million antigens. As can be seen, the immune system is continually having to develop B-cells with new specificities due to the continual meeting of new strains of antigens. Cumulated damage to this system affects both the body's resistance to diseases it has already acquired specific B-cells for, and its resistance to new strains for which it must make B-cells for new antigens. There is a sort of threshold, at any given time, beyond which the B-cell responses cannot keep pace, and start being overwhelmed. There is also an error tolerance level; when the errors due to deterioration surpass this level. the immune system will often begin attacking the body's own tissues in error. This results in disorders such as arthritis and cartilage and joint deterioration. With sufficient errors, previous immunity abilities also are degraded, so that more ordinary diseases become serious threats.*

[66] *The administering of three "lightly suppressive" treatments closely occurring with the soldier's entry into the Combat Zone thus posed a significantly greater problem than normal to his or her control/immune systems' operations, because the control/immune systems were suddenly degraded and hampered by the suppressive effects of the dense EM signals environment. In other words, the control/immune systems were moderately attacked by the three medical treatments (three enemy light cavalry divisions), and at the same time the entire control/immune system complex was subjected to substantial interference and suppression (the normal friendly) troop divisions were simultaneously placed under fierce and sustained attack throughout the zone. A general whose divisions are already committed in furious combat and under heavy bombardment, as are all his command posts and communications systems, has great difficulty freeing up, reconfiguring, and recommitting some of his committed troops to properly combat three other enemy forces that suddenly have appeared over the horizons from other directions!*

[67] *We may also define this as a disease progression ratio. This ratio should assume a distribution curve. For first-order simplicity, we are assuming a normal distribution.*

sures are factored in, there should have been essentially three broad groups: (1) relatively minor damage sustained, where any overt effects will only begin to appear many years hence if at all, (2) more damage sustained, where overt effects will begin to appear within the next few years, and (3) heavier damage sustained, where overt effects begin to appear either while still in the Gulf Region or within some months or so after returning.

Hence many of the Group 3 veterans of the Gulf war developed anomalous infections and immune system disorders shortly upon their return from such damage-accelerating exposure, resulting in the mysterious "Gulf War Syndrome." Conventional medical science will recognize – and has recognized – the overt phase 3 physical disease syndrome, but its cause and effective treatment remain and will remain medical mysteries. Conventional medical science will entirely fail to recognize Groups 1 and 2 cases, and will label them as due to aging, mental stress, or ordinary rise of diseases.

The syndrome has involved the "anomalous EM smog diffusion" process, as previously explained. It may – and in many cases it will – exhibit certain "signature" differences from normal diseases. The genetics of the victim are affected, and so are altered by induced transcription[68] to carry at least a portion of the "syndrome template." Semen, ova, saliva, and blood will particularly be so affected. A wife may complain that her husband's body fluids are now irritating to her skin, even producing "burning" sensations. Children conceived and born may be borne with the syndrome, or with one or more aspects of it.[69] The syndrome template can be transmitted by exchange of body fluids, so wives may also contract the syndrome and develop the disease from their husbands.[70]

Conventional EM Bioeffects Knowledge Is Insufficient

Present "EM bioeffects" scientific models contain absolutely no modeling of partially jamming the body's own special EM control system by turning its EM signals partially into G-signals, thereby partially nullifying them. It also contains no modeling of the anomalous EM diffusion process.[71] Thus the conventional medical approaches also do not contain any proper means of accounting the mechanisms for, and results of, long-term exposure to electronic smog and other combined agents and effects. Conventional scientists also have no knowledge of the major degradation mechanisms involved. The conventional medical models specifically are useless when confronted with something such as the Gulf War Syndrome or the decades of Russian microwave radiation of the U.S. Embassy personnel in Moscow. Capable scientists turn to their conventional models for answers, and the models fail them. Therefore present medical science is baffled when faced with such diseases and syndromes.[72] (*See figure 13 on next page*)

How to Make a Gravitational Wave and Curve Spacetime

We return now to the fundamentals of Type 2 engineering.

If one superposes an ordinary EM wave with its true phase conjugate replica wave, where the two waves are of equal strength, the *EM forcefield aspects* of the combined wavepair (standing wave) vanish, while the energy-density aspects remain. At every point the E-fields and the B-fields sum to vector zero *forcefield* resultants. The standing wave that results will not cause EM movement of charged particles.

However, the *energy densities* of the two locked (and now "hidden") EM waves remain and add. By standard GR, this "trapped EM density standing wave" must constitute a standing gravitational wave and a standing wave in the local curvature of spacetime!

It follows that, by assembling a harmonic set of such wavepairs, a la Stoney and Whittaker, one can form a region of spacetime such that the energy density is deterministically altered and controlled, and to engineering levels.

Engineering general relativity suddenly became a lot easier! Ironically, present physics only considers primarily the *very weak* ST curvature that can be obtained by the extremely weak gravitational "attraction of mass" G-force. For electrons, e.g., the G-force is only on the order of 10^{-42} times as strong as the electric force. Consequently orthodox GR simply "cannot pack enough trapped G-field energy into the local space" in the laboratory to get measurable effects. Only in the vicinity of a very large mass, such as the sun or a star or a black hole, does the weak G-force reach sufficient strength to yield directly observable, strong effects. Yet by using EM vacuum engines and the SWZ approach, one can obtain readily-measurable GR effects right on the laboratory bench.

The conventional medical models specifically are useless when confronted with something such as the Gulf War Syndrome or the decades of Russian microwave radiation of the U.S.

[68] *Note that the transcription component may continue to develop in the same "post disease" manner as does the shadow disease of the overall Gulf War Syndrome. The returnee continues to experience EM smog and other control/immune suppressants, though at a lesser level than experienced in the Gulf War environment.*

[69] *Such aspects are highly controversial. A few affected families are reporting such symptoms and aspects, but officially "there is no evidence" for them. However, with the initial appearance of the syndrome, officially veterans who complained of this illness were briefed by these same medical "au thorities" that their physical symptoms were stress-related, and that the cause was all in their mind!*

[70] *In a fashion similar to Priore's animal experiments that demonstrated the transfer of curative templates by a single drop of blood. Kaznacheyev showed that disease templates could also be transferred.*

[71] *In fact, EM bioeffects research for decades has used, and continues to use, sheer energy deposition (scattering of EM energy by the tissues – heat by another name!) as a measure of the exposure level. They have not applied nonlinear phase conjugate self-targeting effects at all.*

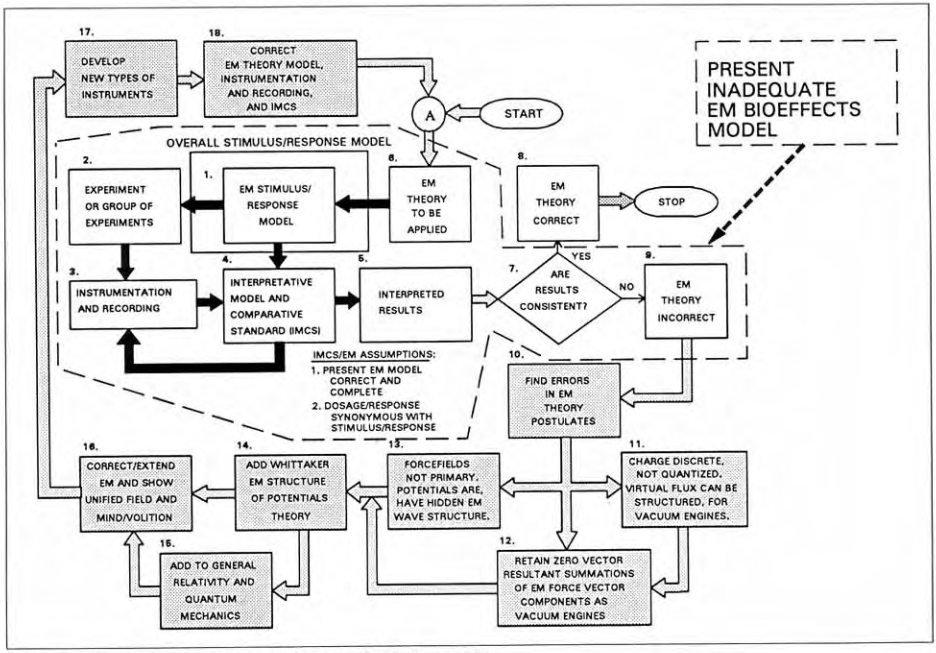

Fig. 13. Necessary corrections for the present inadequate EM bioeffects model.

Potentials and Gravity

Obviously one can simply add harmonics of such EM "locked in" wavepairs, to produce a standing "constant value potential" pattern of a fixed *excess* energy density of vacuum or a fixed *decrease* in the energy density of vacuum. This harmonic series of bidirectional EM wave pairs – the *sum set* of wavepairs – is precisely what Stoney and Whittaker showed makes an ordinary EM scalar potential. In other words, they showed the actual energy-trapping mechanism, and dramatically altered the view of a scalar potential as being simply an "electrostatic" entity and a scalar field. Instead, it is a *hidden-variable energy flow process.*[73,74,75]

Its external "scalar field" aspect is just its "local energy density" aspect, not its fundamental nature.[76]

As is well-known in GR, all potentials are gravitational because they contain trapped energy. *Any* trapped energy is gravitational, a priori, according to GR. Ziolkowski independently rediscovered the SW decomposition in the 1980s and extended it to also add the product set. Since multiplication of waves is *modulation*, in my opinion Ziolkowski actually wrote the basis for hyperspatial (or subspatial, if one models physics in only 4-dimensions) communication at superluminal velocity, essentially instantaneously anywhere in the universe. (*See figure 14 on opposite page*)

"Paired assembly of an EM wave and its true PCR" was and is the way to turn EM energy directly into gravitational en-

[72]*Just as it is also essentially baffled by many conventional dread diseases such as cancer, leukemia, AIDS, arteriosclerosis, etc. – which indicates that the conventional "models" for those diseases are also seriously deficient.*

[73]*The present preoccupation of physicists with the scalar potential is simply to provide an algorithm for calculating the local energy density – in excess joules per collecting point-coulomb of charge – and erroneously call that the definition of the potential. The magnitude of the energy collection density of the potential at a point is not what the potential is, and such is not its definition. Defining how much water can be poured out of a standard bucket, when it is dipped into a flowing river and filled with water, does not define the river!*

[74]*From the particle view, the potential is an ordering in a virtual particle flux of the vacuum. From the wave view, the potential is comprised of an ordered, harmonic series of SWZ bidirectional EM waves, where each wave reaches to the ends of the universe before having a zero energy density. It follows that the energy in each hidden sine wave is infinite, just as it is for any overt theoretical EM sine wave. So any potential – even that of a flashlight battery – already involves an infinite amount of flowing hidden EM energy, being exchanged by the source and the entire universe, flowing in both directions along any radial from the source of the potential. The scalar potential is a flowing, continual exchange of energy between each and every point in the universe and the local source of the potential.*

[75]*Both the wave and particle forms of the potential exist simultaneously. The particle nature exists in Minkowski 4-space. The "hidden SWZ waves" exist in a hyper-4-space whose time dimension is the same as that of Minkowski 4-space. The scalar EM potential actually exists as a 7-dimensional entity. The internal hidden EM flow is not confined to the speed of light in space, because it does not flow "through" 3-space; instead, it flows "around" it.*

[76]*E.g., Whittaker, 1904, ibid. shows us that all of classical electromagnetics can be made by the interference of two scalar fields, which is just a special kind of hyperspatial multiwave interferometry.*

ergy.[77] This is the unification of EM and GR that eluded Einstein all the latter part of his life, and that has continued to elude scientists today. This is the way to "trap" EM energy locally, even though the EM wave energy is flowing at the speed of light or greater. This is the way to change EM energy into gravitational energy.[78] Further, it is engineerable and testable. Remember, physics requires that energy be conserved; however, it can certainly *change its form*. GR already says that it is the trapped energy that is gravitational, not mass per se, and regardless of what kind of energy is trapped. Ultimately Einstein's formula $E = mc^2$ is actually a statement of the trapped EM energy in a mass. However, heretofore no one had the slightest notion as to the actual trapping mechanism. The SWZ work actually shows the trapping mechanism itself and allows the engineering of *electrogravitation*.

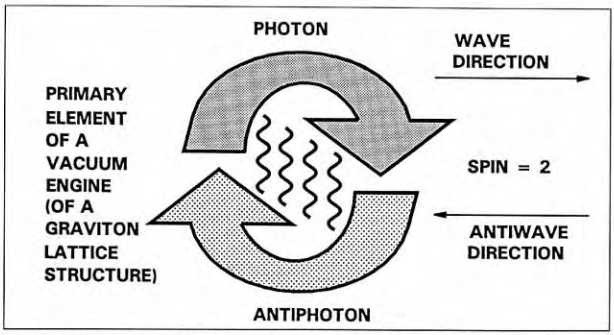

Fig. 14. A graviton is a coupled photon/antiphoton pair. In the bidirectional wavepair of the SWZ internal structure of the scalar potential, photons in the wave continually couple and uncouple as the wave and antiwave pass through each other.

How Did the Revolutionary Stoney/Whittaker Work Go Unnoticed?

Apparently, neither Stoney nor Whittaker realized that their work was pure electrogravitation. *When the referenced papers by Stoney and Whittaker were published, special relativity, general relativity, and quantum mechanics had not even been born yet!* Indeed, there still was not a wide adoption of Heaviside's vector interpretation of Maxwell's fading quaternion theory. Even classical EM was still in its infancy and just getting off to a good start.

In the 1980s Ziolkowski realized that the internal biwaves of a potential could be engineered, but remained primarily focused upon his important work with electromagnetic missiles and focus waves (slugs of EM energy which stay together as they travel, and do not spread out.) Ziolkowski is one of the pioneers in that field.

How Priore Made Vacuum Engines

This "vacuum engine methodology" was and is what Priore's intuition led him to! For the electromagnetic treatment of laboratory animals, his EM therapy device first inputted some 17 or so frequencies into a rotating plasma.[79,80] We know today that such plasmas *phase conjugate* the wave inputs, but that was not known when Priore first did it.

Obviously Priore himself did not understand the actual mechanism, but his brilliant intuition led him to discover how to do it! For many years no one knew how aspirin worked, yet that did not prevent it from being used widely and effectively.

In other words, Priore used the plasma to *unwittingly* add PCRs to each of his waves and form 17 magic SWZ "wavepairs." The entire SWZ wavepair assembly thus made an *artificial potential*, having a "vacuum engine" pumping substructure of hidden bidirectional EM waves. Adjustment of selected frequencies away from their harmonic positions adds multiplications and beat frequency modulations, creating *specific* templates and *specific* vacuum engines. These SWZ waves are hyperspatial; hence they are in the domain of the deep mind's cellular control system. When an abnormal body cell is pumped by these hyperspatial waves, the cell's own hyperspatial vacuum-engine "signal input complex" triggers a specific dedifferentiation anti-engine for that specific abnormal state. By Wheeler's principle, if spacetime curvature is *present in* the material cell, its energy and template are *applied to* the cell and act upon it. With vigorous pumping, the anti-engine is also *amplified* and so the cellular response is more rapid. In other words, the amplified anti-engine fairly quickly overpowers the disease engine and reverses the abnormal cell and all its contents back to their previous *normal* states. (*See figure 15 on the following page*)

Priore's new signal complex came out of the plasma mixing (phase conjugating) tube with SWZ structures of wavepairs, where each pair was composed of two bidirectional (opposing) EM waves. Priore then modulated this output upon a very strong, rippling magnetic field as a carrier, and radiated the body of the patient with that resultant field and its transported hyperspatial SWZ anti-engine components.

Nuclear magnetic resonance guarantees that such a magnetic field with all its modulations will be delivered entirely through the body, penetrating the flesh and bones and even the atomic nuclei themselves. It will certainly penetrate the bone marrow where all the blood cells (which includes most of the immune system's cells) are born! It will penetrate everywhere else also. So all the cells of the immune system will be exposed to the AC magnetic carrier and its impressed hyperspatial biwaves and their modulations.

The body's cells and cell-parts are highly nonlinear, and so they are also *demodulators*. They strip off the SWZ modulations. This puts the amplified vacuum anti-engines directly into and

[77] *I have previously pointed out that, in a coupled wave/antiwave pair, the photons in the wave and the antiphotons in the superposed phase conjugate replicate wave also pair into photon/antiphoton pairs, which have spin-2 helicity and hence are gravitons. This follows merely from a strong application of the distortion correction theorem. However, it is the fundamental union of EM and G into a single engineerable theory. See Bearden,* ***Gravitobiology,*** *1991, p. 1-9.*

[78] *By Whittaker 1904, we can always interfere two such potential fields and obtain an EM field, even at a distance. Thus we can also readily turn the gravitational (trapped EM) energy back to EM field (untrapped EM) energy.*

[79] *David M. Rorvik, "Do the French Have a Cure for Cancer?"* ***Esquire,*** *July 1975, p. 110-11, 142-149 gives an overview of the Priore Affair and some details of the electromagnetics of the machine.*

[80] *Note the immediate connection to the Russian energetics model, which is directly fashioned after the nature and nonlinear EM functioning of plasmas. Priore was directly applying Soviet energetics, although neither he nor any other Western scientist could have known that.*

onto the cells, including all the cells of the immune system, and including each and every part of each cell. Small wonder then that the Priore methodology could restore suppressed immune systems! Time-reversing the damaged immune cells and their damaged internal components back to a previous healthy state was one magnificent result. The radiation also delivers the modulations directly into the master potential (the body's quantum potential) that contains its mind, its long-term memories, and its master control system for all cells. Thus not only are the diseased cells and the immune cells affected, but also the *master cellular control system* for all body cells is directly affected.[81]

In a related work, Becker (*See figure 16 on the following page*) and his colleagues stimulated bone healing in difficult fractures by use of tiny DC currents. They have shown that picoamperes of steady DC current trickled across the fracture site induces bone healing. Becker showed that, surprisingly, red blood cells are dedifferentiated – shucking their hemoglobin and growing a nucleus in the process. These cells redifferentiate into the kind of cells that make cartilage. Then *those* cells redifferentiate anew, into the kind of cells that make bone, and heal the fracture with new bone deposit. Becker also proposed a complete, operational DC control system, staying within the limitations of conventional EM theory.[82,83,84]

15-A. Priore demonstrates a point to Mr. Chaban-Delmas, Mayor of Bordeaux and a friend and mentor.

15-B. Dr. Raymond Pautrizel, noted immunologist, worked directly with Priore. Dr. Pautrizel is Professor Emeritus, University of Bordeaux, and holder of the first chair in immunology in France.

Dr. Robert Courrier (not shown), head of the Biology Section of the French Academy of Science as well as its Secretaire Perpetuel at the time, was also a noted colleague. He personally presented the astounding results of the Priore Team's experiments to the Academy.

Fig. 15. Priore was supported by notable French political leaders and eminent French scientists were his close scientific colleagues.

A proposed explanation of the fundamental vacuum-engine mechanism for the Priore and Becker effects has previously been given in some detail by Bearden.[85] (*See figure 17 on next page*)

[81] *We refer to an expanded version of Popp's cellular control system. E.g., see Fritz Albert Popp, "Photon Storage in Biological Systems," in Fritz Albert Popp et al, eds.,* ***Electromagnetic Bio-Information: Proceedings of the Symposium, Marburg, Federal Republic of Germany, Sep. 5, 1977;*** *Urban & Schwarzenberg, Baltimore, 1979, p. 123-149. Popp reports the theoretical and experimental discovery that mitogenetic radiation from cells can be seen as a sort of "waste" from a virtual electromagnetic field with a high coherence. This field has a tendency to become stationary over the whole organism. In addition, it includes the storage of "virtual" coherent photons.* ***Comment:*** *Our substitution of the SWZ hidden wave approach to replace Popp's QM particle approach greatly facilitates understanding and specifying the control system, and materially eases direct engineering of it.*

[82] *E.g., see R.O. Becker, "The direct current field: A primitive control and communication system related to growth processes."* ***Proceedings of the. XVI International. Congress of Zoology****, Washington, D.C., Vol. 3, 1963, p. 179; "The control system governing bone growth in response to mechanical stress."* ***J. Ark. Med. Soc.****, Vol. 62, 1966, p. 404; R.O. Becker and D.G. Murray, "A method for producing cellular dedifferentiation by means of very small electrical currents."* ***Trans. N.Y. Acad. Sci.****, Vol. 29, 1967, p. 606. See particularly Robert O. Becker, "The significance of bioelectric potentials."* ***Bioelectrochemistry and Bioenergetics,*** *Vol. 1, 1974, p. 187-199. Becker proposes that a complete, operational system exists in living organisms, and controls such basic functions as growth, healing, and biological cycles. The system is described in anatomical detail. It functions as a data transmission system in an analog fashion using varying levels of direct current as its signal. The system interlocks physically with the nervous system and is postulated to be its precursor. There are two electrochemical limbs of great significance in the operation of the system. One is between the DC system and the nervous system; the other is between the DC system and all body cells. The concept explains all of the diverse effects reported for the biological effects of applied electrical currents including: electrical anesthesia, electrical growth control, and electroacupuncture. It also furnishes a testable hypothesis for predicting other effects of clinical significance.*

[83] *We comment that the SWZ approach allows control and conditioning – both externally and internally – of both limbs of Becker's proposed DC control system.*

[84] *See also C.W. Hsue, "A DC Voltage is Equivalent to Two Traveling Waves on a Lossless, Nonuniform Transmission Line,"* ***IEEE Microwave and Guided Wave Letters,*** *Vol. 3, 1993, p. 82-84. Hsue shows that the steady DC voltage on a transmission line powering a resistive load, mathematically decomposes into bidirectional EM traveling waves. The bone-healing setup used by Becker et al is precisely of this configuration. The fracture corresponds to the resistive load and the two electrodes on each side correspond to the transmission lines. Hence Becker's team actually employed a form of the Stoney/Whittaker/Ziolkowski harmonic biwave decomposition of the scalar potential, to accomplish hyperspatial pumping and formation of anti-engines of vacuum energy. So this is another application of the same basic "cell-reversing" methodology, as also utilized more extensively by Priore. Becker's brilliant work of course was and is independent and unique, and he was nominated for a Nobel Prize because of his absolutely fundamental work in showing electromagnetic differentiation and dedifferentiation of cells. That he has not been awarded the prize is regrettable and, in my opinion, an injustice.*

[85] *T.E. Bearden, "Mechanism for Long-Term Cumulative Biological Effects of EM Radiation," presented to the 70th Annual Meeting of the Alabama Academy of Science, University of Alabama at Huntsville, March 25, 1993. A digest of this presentation is published by the Tesla Book Company, P.O. Box 121873, Chula Vista, CA 91912 as T.E. Bearden,* ***Cancer and the Unresolved Health Issues in the Biological Effects of EM Fields and Radiation,*** *1993 and includes both text and hard copies of viewgraphs.*

How the Priore Vacuum Engine Reversed Cells to a Previous State

Taking a GR view, any mass already has its own vacuum engine for its exact form and internal structure and dynamics, in the finest detail. That particularly follows Wheeler's principle; if the mass is there, the appropriate spacetime curvature and dynamic energy structuring is there. If the mass has internal structuring, so does the spacetime curvature: it becomes *nested* curvatures with a precisely correlated template. In short, any mass – living or not – is imbedded in a precise vacuum engine. Any and every change adds a specific delta to this vacuum engine component. Just as a tree has rings for its past years and an onion has layers, the vacuum engine of an object has an exact template for that object's entire past, *as do the mind and its components also.*[86]

So when a normal living cellular mass changes to a diseased state, *a priori* it has added an additional delta vacuum engine (representing the change that resulted in the disease) to its original vacuum engine (which represents the original healthy state of the cell). The cell and all its parts are highly nonlinear and act as phase conjugate mirrors, *including to the higher topology (hyperspatiality) of the vacuum engine. Any living system we isolate and study is at least 7-dimensional.*

Putting all this together, we now can understand the marvelous nature of what Priore did. By exposing the body, treated part, cells, and cell parts to Priore's modulated rippling magnetic field, the "hidden pump waves" carried by that magnetic field are applied to each and every cell and to all its parts, in the exposed area. *In the exposed area, each and every cell and its parts become powerfully pumped phase conjugate mirrors for its hyperspatial vacuum engine complex.*

Extending the language of nonlinear optics, the particular *net* vacuum engine of the diseased cell or part constitutes a "standing input" *hyperspatial signal wave complex*, already input to the hyperspatially pumped phase conjugate mirror cell or cell part. When pumped by "hidden" pump waves, each and every one of those PC mirrors will now originate an *amplified phase conjugate replica of the signal wave complex. Each one will produce a highly amplified, time reversed replica of*

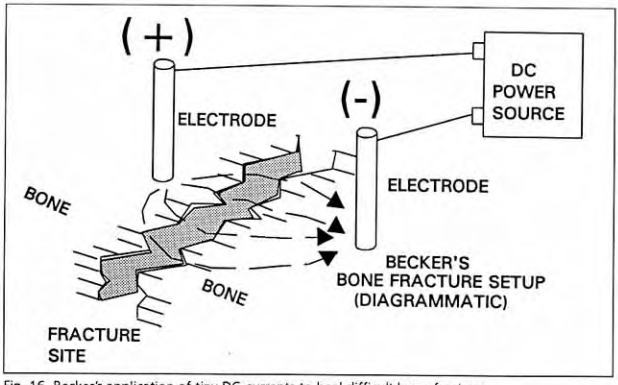

Fig. 16. Becker's application of tiny DC currents to heal difficult bone fractures.

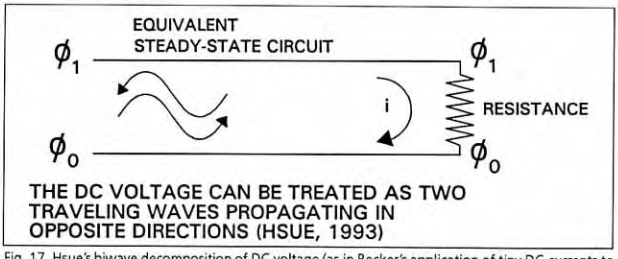

Fig. 17. Hsue's biwave decomposition of DC voltage (as in Becker's application of tiny DC currents to heal difficult bone fractures).

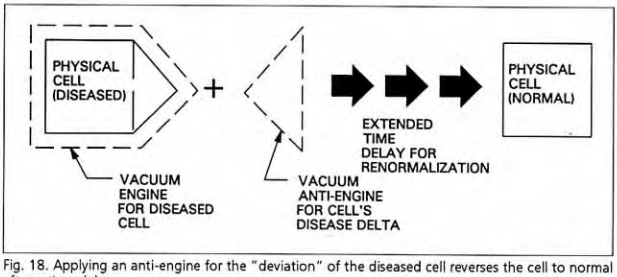

Fig. 18. Applying an anti-engine for the "deviation" of the diseased cell reverses the cell to normal after a time delay.

its specific standing vacuum engine. This includes amplified time reversed replicas of both the "healthy" component of each standing vacuum engine and the "disease delta" component. (*See figures 18 above and 19 on following page*)

In other words, every pumped diseased cell and cell part – including the genes and chromosomes – will produce a very powerful, highly amplified, "reverse vacuum engine" (an *anti-engine*) which is fantastically specific and precisely time-reverses the cell and its parts, including the genes and chromosomes as well, back to their *previous normal states.*

[86] *If one alters the internal structure (rings) of a tree, one changes the tree. If one alters the internal structures and dynamic functioning of matter, one changes the matter accordingly. If one alters the internal structures and dynamics of the mind, one changes the mind, its contents, and its function ing accordingly, as well as the subsequent behavior exhibited by the altered individual.*

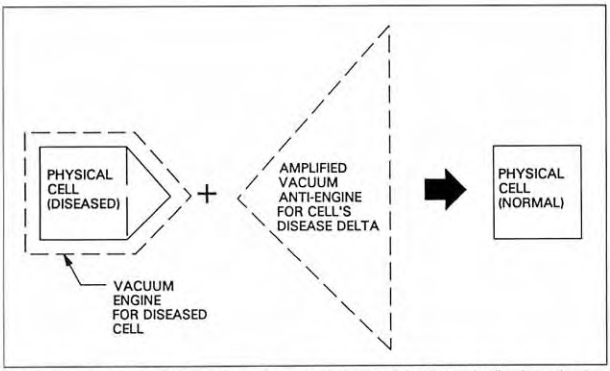

Fig. 19. Applying an amplified anti-engine for the "deviation" of the diseased cell reduces the time delay required to reverse it back to normal.

Rejuvenation

Any *normal* cell that is exposed to hyperspatial (Priore-type) pumping just reverts to a *slightly younger* normal state. Note that this allows *rejuvenation*.[87] Priore's earliest experiments that so riveted his attention and set him on the path of discovery, were in fact the abnormal prolongation of the life of fruits! For each class of disease, Priore just had to fiddle with the frequencies until he had the right set of pump waves for the specific "disease delta vacuum engine." This he did by trial and error. So when it is "Priore-pumped," a cancer cell reverses back to a normal cell, as does a precancerous cell as well.

The revolutionary Priore therapy is startling but simple. The diseased cell is analogous to an automobile that has been driven slowly off the road into the rough. Priore's methodology shifts the car into reverse gear, guns the engine, and quickly and precisely backs the car back onto the roadway. It is one of those profoundly beautiful embodiments analogous to Faraday's unipolar generator; it strikes directly to the heart of the fundamental principle. A cell develops damage and disease over a period of time. Simply time-reverse it quickly back to its original healthy state.

AIDS Could be Quickly Cured the Same Way

Given Priore-pumping, an AIDS-infected cell would revert back to a normal cell, including all its genetics, and including for all of the hundreds of "strains" of AIDS that exist in an advanced AIDS patient. With this ap- proach one could completely reverse and eliminate AIDS whenever a positive reading occurs in the HIV virus test, and prior to the appearance of the actual physical sym- ptoms! If the person just has the antibodies and not the disease, the treatment will still do him absolutely no harm. (It will actually make his cells a "little bit younger and more vigorous," and help his immune system.) If he has both the AIDS antibodies and the infection as well, he will be completely cured and his immune system will be restored to complete vitality.

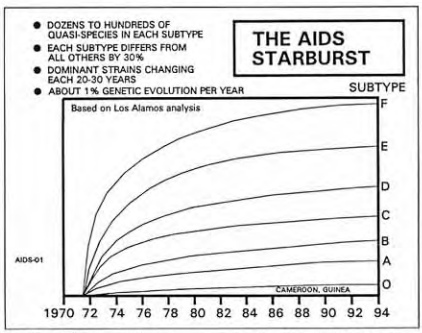

Fig. 20. AIDS is continually changing since the HIV virus is a retrovirus and unstab.

Most Diseases Could be Cured by the New Therapeutic Modality

Any infectious disease known or unknown can be cured by the same means. The marvelous thing is that one need not know the specific technical pattern for the delta vacuum engine for a specific disease! One just has to *correctly adjust the hidden SWZ pumping frequencies.*

Arteriosclerosis

In arteriosclerosis, it has been found that the greatest part of the damage is due to the presence of some rather ordinary viruses, and abnormal cell growth by the body's own cells as a result of triggering by previous viral infection. Cellular reversal (dedifferentiation) gets it all; the viruses and the abnormal cells. Everything reverts to normal, and the body's restored processes quickly "police up" the extra cell growth, using its natural control processes which are now restored to full functioning. *This is how the Priore team was able to so dramatically cure the "clogged arteries" of laboratory animals.*

The Priore approach (pumping of the

[87] *One should not be surprised that a time-reversal operation upon an entire body leads to reversal of physical aging in that body! But we point out that the time reversal we speak of is not at all the "time travel to the past" so beloved by generations of science fiction writers. For that, one would have to reverse each and every part of the universe simultaneously, except the observer, back to an exact former state, in perfect universal coordination. One would have to pump the entire universe, except for the observer! The observer would then remain as is with no change, while his entire world "went back in time" to a past state. The pumping of the universe would have to stop instantaneously (decay of the false vacuum?), and the universal anti-engine would have to stop operation and decay instantaneously (another big bang, perhaps?). We are not referring to anything such as that! We are referring to the reversal of a single little part of the universe, back to its previous state, which is practical and can be done. Universal time reversal – and hence time travel for the observer – is not practical, at least within our present knowledge and within the time reversal model we are applying. We should point out, however, that time reversal is a legitimate part of physics, and is not science fiction. E.g., for an overview, see Robert G. Sachs,* ***The Physics of Time Reversal,*** *University of Chicago Press, Chicago, Illinois, 1987.*

diseased cell's self-contained vacuum engine to create a very powerful vacuum anti-engine and reverse diseased cells back to normal) is the most powerful therapy for cellular disease ever conceived of. If the cells have ever been normal, they can be reverted to normal.[88] One can also probably regrow lost limbs, etc. but that takes too long to explain here! The methodology should also be able to completely reverse disorders such as Alzheimer's disease, and very probably muscular dystrophy as well. It should even be possible to reverse the physical effects of aging!

Much More Than This Introduction Has Been Theorized

This is the gist of the mechanism for the Priore therapy's startling success, although it has required some 10 years of very hard work to decipher the mechanics of the process. Along the way, I have also personally discovered and added a great deal more (for example, the quantum potential aspect of a living system and any enclave of living systems, the mechanism to generate a quantum potential, the precise mechanism for Sheldrake's morphogenetic field, the mechanism for directed evolution, the unusual electromagnetic nature of mind and thought, the mechanism for engineering mind and thought, engineering the entire species, and engineering the entire living biosphere), but this much should suffice for now for introductory purposes.

A technical book has been laboriously begun, and hopefully will be finished and published in about a year. Two 2-hour videos are also tentatively being planned. A four-hour technical briefing has already been prepared and presented.

Reactions to this Vacuum Engine Explanation

In response to numerous queries as to the reactions to this explanation of the Priore mechanism: Reactions tend to be rather good when (1) the technical person is open-minded, in other words, a friendly skeptic, (2) the technical person endures a grueling 2-hour or 4-hour detailed slide presentation I prepared, and (3) sufficient follow-up dialogue is accomplished to answer residual questions. Otherwise, the "mental jump" required of the participant is just too great.[89] Also, perhaps 60-70% of the conventional scientists are absolutely against anything that smacks of "revolutionary." From about half of this contingent the approach may generate disbelief and even overt emotional hostility, just as Priore himself and his associates encountered.[90]

However, some of the sharpest young graduate students readily make the transition, if they interact with me for a long enough period and enough times to understand the physics of the approach. *It did not take me 10 years to decipher an easy thing!* The causative mechanism for Priore's accomplishment is terribly involved and very, very deep. It is slightly beyond the present scientific vanguard, although the bits and pieces necessary to decipher the Priore mechanism are now in the literature. But putting them together has been a bone-crushing, terrible task. Priore was truly a century ahead of the science of his time!

Nonetheless, there is much hope, because the material is slowly taking root in a few sharp young graduate minds. For example, one of the major Eastern Universities would be astonished to know that their sharpest, brightest young PhD candidate – one they already assume will win a Nobel Prize in the future – is a full convert, and thoroughly understands cellular reversal by hidden-variable SWZ pumping, a la Priore. But at my strong urging, he is keeping it a secret until he graduates, and then he will *gradually* begin to filter in some of these ideas. That way he does not initiate his destruction by his peers because of too much energetic advocacy too quickly.

The Priore Approach is Urgently Needed

We simply must get this Priore therapeutic approach developed, for it is extremely important to all humanity. Our very survival may depend upon it.

Presently all our antibiotics are beginning to fail; the disease organisms are becoming quite resistant. Already our hospitals have strains of diseases that few if any antibiotics will touch. Hundreds of thousands of hospital patients each year are already experiencing complications due to contracting an antibiotic-resistant infection. Probably about 20,000 a year are dying as a result, and the death rate is increasing. In the future, one will have to seriously weigh whether it is better for one's chance of survival to enter the hospital and be treated, or to take one's chances with the disease and not enter the hospital.

With the rising failure of the antibiotics, (*See figure 21 on page 60*) and the rising possession of tailored biological weapons by hostile nations and international terrorists,[91] (*See figure 22 on page 60*) we shall shortly have no defense against an onslaught of pandemics unheard of since the Black Death swept medieval Europe of one third the population. Literally the age of pestilence and dread diseases of Revelations is upon us.[92]

[88] *They can also be "reversed to normal" even if they have never before been normal. The master cellular control system contains a master blueprint for the normal cell and can make an appropriate template for the specific disease delta vacuum engine, or one can be introduced (e.g., by injection of a drop of blood from a person previously cured of that specific disease; this was in fact demonstrated by the Priore group.). Pumping will then reverse the patient back to normal, as was actually shown by the Priore group. Indeed, the body's own system may be able to use the correct anti-engine template from the drop of blood and cure itself without pumping, as was also shown by the Priore group, if the body itself is reasonably healthy.*

[89] *Simply "dropping it on someone" by mail, for example – as I did to Elizabeth Taylor's foundation and Ross Perot's office – is just too much for a casual reading to grasp. A polite acknowledgment was received from the Taylor foundation, and no acknowledgment at all was received from the Perot camp.*

[90] *As an example, Priore completed the course work for his PhD and submitted his thesis, documenting his formidable and revolutionary work. Because of the ferocity of the oncology establishment toward the Priore team and its accomplishments, the university rejected his thesis. During the two decades or so since then, untold millions have died worldwide from diseases the team cured. These deaths could have been prevented had the Priore work been vigorously pursued and developed by the scientific community.*

[91] *It is not a question of if the international terrorists will use biological weapons against the U.S. civilian populace, but only of when. Astoundingly, often it may even be possible for the terrorists to simply buy their biological warfare agents from us! In a lawsuit by Desert Storm Syndrome victims against certain U.S. companies, one of the companies is alleged to have sold germs – such as anthrax, tularemia, and botulism – to Iraq by mail. These are highly effective biological warfare agents. E.g., a few spray tanks spraying such agents over a large U.S. city complex at night, using an easily obtained light plane to get in a few hours "flying practice," would result in tens or even hundreds of thousands of deaths within days. According to U.S. government-released data, inhaling a few anthrax spores into the lungs has a very high probability of killing the inhaler, unless treatment is started immediately. Even with immediate treatment, many deaths will still occur. A substantial number of nations are now obtaining and producing lethal biological warfare agents – which have been called the "poor man's atomic bomb." Some of the international terrorist groups are also acquiring the biological warfare agents.*

[92] *A good exposition of the rapidly increasing resistant-disease problem is given by Garrett, Laurie,* ***The Coming Plague: Newly Emerging Diseases in World out of Balance,*** *Farrar, Straus and Giroux, New York, 1994.*

In addition, the costs of the present allopathic medicine are rising rapidly and threatening to either bankrupt the nation, or become so expensive that only the wealthy can afford adequate medical care. Even the wealthy could be trapped in the future and denied adequate medical treatment. The Clinton Medicare bill, if approved, would make it a felony to pay a doctor out of one's own pocket, after denial of such treatment by the administrative bureaucracy. It also makes it a felony for the doctor to give the treatment to the disapproved paying person. Thus both the patient and the doctor could be sent to prison, wealthy or not.[93]

Cell Conjugation by Vacuum Anti-Engines Is the Only Hope

Priore's approach offers an answer to both the age of pestilence and the impending biological warfare strikes against our armed forces and our civilian population.[94,95] By prompt cellular reversal, infection even by totally unknown and modified agents can be quickly voided. Infection by newly adapted, resistant strains of presently known diseases can be quickly conjugated. So the problem of the failing vaccines and antibiotics can be solved quickly, simply, and cheaply. However, the cell-reversing treatment devices and trained, experienced medical staffs must be widely available!

Diseased cell conjugation by EM means is also the only therapy that can largely *eliminate* the debilitating diseases of humanity. Per Wheeler's principle, vacuum engines can mold the *physical matter* of the living body and conditions, operations, and content of the mind, memory, and personality. As the Priore therapy is developed and extended, it will become possible to correct bent spines, mental retardation, mental diseases, genetic defects, physical accidents and disabilities, birth defects, etc. It will be possible to regrow amputated limbs and restore deteriorated cartilage, organs, and joints. It should also be possible to directly remove deep psychiatric problems, heal chemical imbalances, and address and heal such presently difficult disorders as schizophrenia.

The development and application of Type 2 medical engineering can usher in the greatest, most beneficial revolution of all time. As just *one* example, eventually it will be possible to quickly educate students by simply loading the appropriate "software" into their minds and long term memory, in only a few weeks of "sessions." At that point there need no longer be, anywhere in the world, an educationally disadvantaged person.

It can also be used to usher in the most diabolical revolution of all time if we are not careful to (1) be informed of the Type 2 engineering area, including who is developing what, and for exactly what purposes, and (2) rigorously control the development and use of this technology as it progresses. Our legal, political, and scientific leaders – and we common citizens – will have to grapple with the ethics of what is done and to and for whom it is done. Just as one example, the same technology that will allow direct loading of the software in the long-term memory to achieve rapid education, will allow altering or changing any part of the long term memory, including the built-in emotional responses, etc. *Loading software is loading software! What is loaded depends only upon what is in the software.* In theory it is possible not only to alter the learned behavior, memories, emotions, and reactions, but also the genetically "born-in" behavior, emotions, and reactions. The potential for the Type 2 engineering to be used for enslaving and roboticizing humanity should be obvious.

Far more carefully than with any other technology in history, we must ensure that this new one is developed for good, not for evil. To quote an old adage, *the price of freedom is eternal vigilance.* Never before in all of history have those words been more true.

In Conclusion

Pioneers such as Priore, Becker, Kaznacheyev, and Popp have shown us a

[93] *In fact, under present law all property, homes, bank accounts, and monies of both the patient and the doctor would simply be confiscated – without any legal charge, arrest, or trial – under an absolutely medieval reinterpretation of U.S. law that has again given police at all levels such sweeping and unconstitutional powers. The Clinton Health Care Plan, presently on hold but still alive and sure to be introduced again, is reported to include the establishment of an entire department solely devoted to confiscating assets from patients and doctors who commit such "crimes." Defendants victimized by the present confiscation reinterpretation of law have a slim chance of even forcing the issue into a court. Even if they succeed in getting into court for a hearing, win it and get full "exoneration," the authorities can still keep the property! In the most insane and unjust legal action in all of U.S. history, this law now charges the property itself with having committed the crime, not the erstwhile human defendant. By what means can the "property" defend itself? No one has an answer, for the property is not an individual and has no legal rights for jury protection under the law! U.S. lawyers and judges are actually insisting that this is rational and makes sense. They have already precisely redefined U.S. law into what is specifically required to institute a police state. The police forces who carry out this confiscation are themselves awarded a percentage of the "haul." What does the citizen do when the police forces themselves become the robbers by administrative fiat, and there is no court redress possible? Ostensibly passed to counter organized crime and the drug cartel, this law has rapidly been applied directly to the citizenry, and its use is one of the fastest growing "new techniques" by the various levels of law enforcement. In this paper we have deliberately not dwelled upon the political aspect of the already-emerging police state in control of medical treatment. We simply summarize how the bureacratic medical establishment is likely to meet the challenges of the coming plagues and the associate astounding rise in medical costs. In fact the reader will almost certainly see the rise of an iron "state dictatorship" in medicine, as is already emerging in other legal areas.*

In this paper my primary purpose is technical, not political, so we defer detailing the more involved political aspects of the emerging police state (the New World Order – more aptly the New World Feudalism) to other more capable authors and sources. One central thought should remain firmly in mind All political systems and isms tend ultimately to feudalism, which is always the best system for the oligarchy or elite at the top who control and own everything. In any society, there is always an on-going struggle by a fraction of the most powerful to convert the society to special forms of feudalism.

[94] *Some biological agents are very lethal and the associated disease develops at a frightening pace. E.g., the strains of Staphylococcus bacteria that cause necrotizing fascitis and necrotizing myositis – two versions of the "flesh-destroying" disease – are noteworthy examples. Necrotizing is causing inflammation and/or death of tissue, fascitis refers to "sheet" or connective tissue, and myositis refers to muscle tissue. Recently the Quebec separatist leader Lucien Bouchard was suddenly felled by necrotizing myositis, lost a leg, and at this writing is stable and will recover. The disease is usually fatal in 80% of the cases. There is nothing diabolical in his contacting the disease; the bacteria are present from time to time and can enter the body through a nick or otherwise. The disease and the bacteria are known; however, in the past such cases have been relatively rare. The lethality of the disease is augmented by the rapidity of its development. Delayed recognition of the disease may place the patient already beyond the ability of conventional agents to arrest it in time to save him. With the modern hospital and population environment being highly favorable for the more rapid modification and adaptation of disease organisms, even previously rare diseases such as necrotizing fascitis/myositis are ticking time bombs waiting to become resistant to our antibiotics and explode in the dense urban populations.*

[95] *We refer to strikes using biological organisms. We have mentioned but deliberately not dwelled upon the use of electromagnetic induction of lethal cellular diseases at a distance. Such strategic capability to attack a nation and destroy its citizens and soldiers is presently on-line in Russia, under total control by the KGB, not by the conventional Russian military forces.*

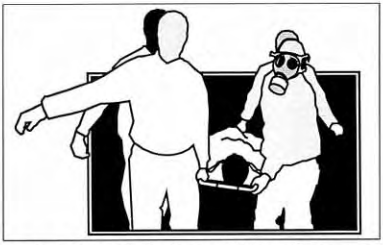

Fig. 21. Present antibiotic therapy is failing as disease organisms adapt.

Fig. 22. Terrorists will eventually use biological warfare strikes. Biological warfare is an increasing threat to military forces and the civil populace.

great vision. Having seen it, when one looks at the incredible human suffering throughout the world, and then at the formidable problems of our Type 1 medical science that is struggling so mightily and losing the battle, one is reminded of a phrase by Dante:

"Heaven wheels above you

Displaying to you her eternal glories

And still your eyes are on the ground."

With every fiber of our being, we exhort the scientific community to lift its eyes from the ground, and develop and apply the Type 2 medical technology as rapidly as humanly possible, for human benefit. Else half of humanity will perish in the coming tide of pestilence. Even the conventional scientists agree that the pestilences are coming, and that conventional approaches are already losing the battle. Long ago Albert Einstein wrote these prophetic words:

"It would of course be a great step forward if we succeeded in combining the gravitational field and the electromagnetic field into a single structure. Only so could the era in theoretical physics inaugurated by Faraday and Clerk Maxwell be brought to a satisfactory close."

Einstein's passionately-sought unification of EM and G has now been accomplished. It has magnificent medical science applications for the benefit of all humankind. Meanwhile, in the orthodox medical journals, the scientists themselves are recognizing the demise of antibiotics and the coming unstoppable plagues. The scientists are redoubling their efforts to apply the present inadequate models, and their efforts are admittedly failing. *If they keep to their present course, the war is already lost!*

In the name of all the bleeding, suffering, and dying peoples of the world, we must do better than that! We can do better than that, if we rapidly redevelop and apply the Priore approach.

We call fervently for a great new "War on Disease" that is empowered, funded, and staffed to perform the task. It can be done in perhaps three years, and perhaps for as little as $60-100 million if we streamline procedures, keep the bureaucracy off the team's necks, and give the team scientists the authority of a War Commander with a mission order to *get on with it.*

What happens next is up to the scientists, the politicians, and the concerned leaders of all the nations of the world. *They simply must not fail us.* They and their families are in the same frying pan as the rest of us. This is not the time for dogma, posturing, arrogance, protecting one's territory, yapping about who's going to control the presently inadequate medicine, yakking about pseudoscience, striving for personal position and power, bowing to the big drug companies and their vested interests, and playing the "Who's to be the big monkey?" game. *We need a new Manhattan Project. We need it now.*

Else we who have sown the wind will most certainly reap the coming whirlwind.

Additional References

Priore, Antoine. (1963) "Procede et dispositif de production de rayonnements utilisables notamment pour le traitement de cellules vivantes." [Procedure and Assemblage for Production of Radiation Especially Service able for the Treatment of Living Cells.] Republique Francais: Brevet d'Invention P.V. No. 899.414, No. 1,342,772, Oct. 7, 1963.

Priore, A. (1966) "Method of producing radiations for penetrating living cells," U.S. Patent No. 3,280,816, Oct. 25, 1966.

Priore, A. (1968). "Apparatus for producing radiations penetrating living cells." U.S. Patent No. 3,368,155. Feb. 6, 1968.

Priore, A. French Patent No. 1,342,772. Letter, R. Pautrizel to his colleagues at the University of Bordeaux, Sept. 11, 1979. Letter, R. Pautrizel to his colleagues, Mar. 26, 1969.

*Graille, Jean-Michel, **Le Dossier Priore,** [Dossier Priore: A New Pasteur Affair] De Noel, Paris, 1984 [in French]. Details the entire Priore affair.*

*Pautrizel, R., M.R. Riviere, A. Priore, and F. Berlureau. (1966) "Influence d'ondes electromagnetiques et de champs magnetiques associes sur l'immunie de la souris infestée par Trypanosoma equiperdum," [Influence of electromagnetic waves and associated magnetic fields on the immunity of the mouse infected with the Trypanosoma equiperdum] **Compt. Rend. Acad. Sci.** (Paris), 1966, Vol.60,p.2099-2102.[in French].*

*Pautrizel, R.; A. Priore, F. Berlureau, and A.N. Pautrizel, "Stimulation par des moyens physiques des defenses de la Souris et du Rat contre la trypanosomiase experimentale." [Stimulaton, by physical means, of defenses of the mouse and of the rat against the experimental Trypanosoma.] **Compt. Rend. Acad. Sci.** (Paris), Vol. 268, 1969, p. 1889-1892. [In French].*

Pautrizel, R., A. Priore, A.N. Pautrizel, and P. Chateau-Reynaud-Duprat.(1979) "Guerson de la trypanosomiase experimentale par l'association de champs magnetiques et d'ondes electromagnetiques: une stimulation des defenses de l'organisme." [Cure of experimental trypanosomias by associated magnetic fields and electromagnetic waves: a stimulation of the organism's defenses.].

Communication presented to the Journées **Nationales Microondes - Colloque Hertzienne et Dielectriques,** Lille 26-29 juin 1979, p. 31.

Pautrizel, R.; A. Priore, F. Berlureau, and A.N. Pautrizel, "Action de champs magnetiques combines a des ondes electromagnetiques sur la trypanosomiase experimentale du Lapin." [Action of magnetic waves combined with electromagnetic waves on the experimental trypanosoma of the rabbit.] **Compt. Rend. Acad. Sci.** (Paris), Vol. 271, 1970, p. 877-880.

Pautrizel, R.; A. Priore, M. Dallochio and R. Crockett, "Action d'ondes electromagnetiques et de champs magnetiques sur les modifications lipidiques chez le Lapin par l'administration d'un regime alimentaire hypercholestrole." [Action of electromagnetic waves and magnetic fields on provoked lipidic modifications in the rabbit by the administration of an alimentary hypercholesterol diet.] **Compt. Rend. Acad. Sci.** (Paris), Vol. 274, 1972, p. 488-491. [In French].

Pautrizel, R.; A. Priore, P. Mattern, and A.N. Pautrizel, "Stimulation des defenses de la souris trypanosomee par l'action d'un rayonnement associant de champ magnetique et ondes electromagnetiques." [Stimulation of the defenses of the trypanosomized mouse by the action of a ray associated with a magnetic field and electromagnetic waves." **Compt. Rend. Acad. Sci.** (Paris), Vol. 280, 1975, p. 1915-1918. [In French]

Pautrizel, R.; A. Priore, P. Mattern, A.N. Pautrizel, and A. Capbern, "Guerison de la trypanosomiase chronique du Lapin a Trypanosoma equiperdum par l'action combinee de champs magnetiques et d'ondes electromagnetiques modules." [Healing of chronic trypanosomia by trypanosoma equiperdum of the rabbit by the combined action of magnetic waves and modulated electromagnetic waves.] **L. Protozool.,** Vol. 22, No. 3, 1975, p. A 84.

Pautrizel, R. "La trypanosomiase experimentale: stimulation des defenses de L'organisme par des moyens physiques." [Experimental trypanosomiasis: stimulation of the organism's defenses by physical means.] **XVIIth Seminar on Trypanosomiasis Research,** Londres, 22-23 Sept. 1976.

Pautrizel, R.; P. Mattern, A.N. Pautrizel, and A. Priore, "Effets des champs magnetiques et des ondes electromagnetiques modules sur la trypanosomiase experimentale." [Effect of magnetic fields and modulated electro magnetic waves on experimental trypanosomiasis]. **Ann. Soc. Belge Med. trop.** [Annals of the Belgium Society of Tropical Medicine], Vol. 57, 1977, p. 501-523.

Pautrizel, P. Mattern, A. Priore, A.N. Pautrizel, A. Capbern, and T. Baltz, "Importance des mecanismes immunitaires dan la guerison de la trypanosomiase experimentale par stimulation physique." [Importance of immune mechanisms in the cure of the experimental trypanosomias by physical stimulation.] **Compt. Rend. Acad. Sci.** (Paris), Vol. 286, 1978, p. 1487-1492. [In French]

Pautrizel, R. and A. Priore, "Un aspect spectaculaire du bioelectro-magnetisme: permettre a l'organism de se debarrasser d'un infection aig ue ou chronique sans l'aide d'aucune substance medicamentese." [A spectactular aspect of bioelectromagnetism: Permitting the organism to rid itself of an old chronic infection without the aid of any medical substance.] **Communication presented to the 104eme Congres National des Societes Savantes,** Bordeaux, 17-21 Avril 1979 – section **Sciences,** p. 112.

Pautrizel, R. and A. Priore, "Guerison de la trypanosomiase experimentale par association de champs magnetiques et d'ondes electromagnetiques." [Cure of trypanosomiasis by associated magnetic fields and electromagnetic waves.] **Communication presented to the Symposium International des Therapeutiques Ondulatoires,** Versailles, 19-20 Mai 1979, p. 9.

Pautrizel, A. Priore, A.N. Pautrizel and P. Chateau-Reynaud-Duprat, "Guerison de la trypanosomiase experimentale par l'association de champs magnetiques et d'ondes electromagnetiques: une stimulation des defenses de l'organism." [Cure of trypanosomiasis by associated magnetic fields and electromagnetic waves: a stimulation of the organism's defenses.] Communication presented to the **Journees Nationales Microondes - Colloque Hertzienne et Dielectriques**, Lille 26-29 Juin 1979, p. 31.

Riviere, M.R., A. Priore, F. Berlureau, M. Fournier and M. Guerin, "Phenomenes de regression observes sur les greffes d'un lymphosarcome chez des souris exposées a des champs electromagnetiques." [Phenomena of regression observed on the graftings of a lymphosarcoma in mice exposed to elec tromagnetic fields]. **Compt. Rend. Acad. Sci.** (Paris), Vol. 260, 1965, p. 2099-2102 [in French]. This reports the curing of lymphosarcoma, which is a malignant lymphoma that tends to metastasize freely and spread throughout the body. It easily leads to the condition of lymphomatosis, which is the presence of multiple lymphomas in the body, including wide distribution through the various organs, lymph tissue, and tissue resembling lymph tissue.

Riviere, M.R.; A. Priore, F. Berlureau, M. Fournier and M. Guerin, "Action de champs electromagnetiques sur les greffes de la tumeur T8 chez le Rat." [Action of the electromagnetic fields on the graftings of the T8 tumor on the rat." **Compt. Rend. Acad. Sci.** (Paris), Vol. 259, 1964, p. 4895-4897.

Riviere, M.R.; A. Priore, F. Berlureau, M. Fournier and M. Guerin, "Effets de champs electromagnetiques sur un lymphosarcome lymphoblastique transplantable du Rat." [Effects of electromagnetic fields on lympho blastic lymphosarcoma transplantable from a rat.] **Compt. Rend. Acad. Sci.** (Paris), Vol. 260, 1965, p. 2099-2102.

COMMENT: Lymphosarcoma is a malignant lymphoma (malignant tumor of lymph or lymph-like tissue) that tends to metastasize freely and spread throughout the body. It easily leads to the condition of lymphomatosis, which is the presence of multiple lymphomas in the body, including wide distribution through the various organs, lymph tissue, and tissue resem bling lymph tissue. A lymphoblast is a cell giving rise to lymphocytes, the colorless weakly motile cells produced in lymphoid tissue and include the cellular mediators of immunity, constituting some 20 to 30 percent of the leukocytes (white blood cells) of normal human blood. In effect the experimenters have healed a transplanted condition that represents a serious leukemia.

Riviere, M.R. and M. Guerin., "Nouvelles recherches effectuees chez des rats porteurs d'un lymphosarcome lymphoblastique soumis a l'action d'ondes electromagnetiques associees a des champs magnetiques." [New research on rats having lymphoblastic lymphosarcoma, submitted to the action of electromagnetic waves associated with magnetic fields.] **Compt. Rend. Acad. Sci.** (Paris), Vol. 262, 1966, p. 2669-2672.

COMMENT: Lymphosarcoma is a malignant lymphoma (malignant tumor of lymph or lymph-like tissue) that tends to metastasize freely and spread throughout the body. It easily leads to the condition of lymphomatosis, which is the presence of multiple lymphomas in the body, in cluding wide distribution through the various organs, lymph tissue, and tissue resembling lymph tissue. A lymphoblast is a cell giving rise to lymphocytes, the colorless weakly motile cells produced in lymphoid tissue and include the cellular me diators of immunity, constituting some 20 to 30 percent of the leukocytes (white blood cells) of normal human blood. In effect the experimenters have healed a condition that represents a serious leukemia.

Delmon, G. and J. Biraben, "La croissance du carcinome de Guerin sur l'action de champs electromagnetiques." [The growth of carcinoma treated by the action of elec tromagnetic fields.] **Rev. Path. Comp.,** 3(2), 1966, p. 85-88.

Berteaud, A.J.; A.M. Bottreau, A. Priore, A.N. Pautrizel, F. Berlureau, and R. Pautrizel, "Essai de correlation entre et l'action d'une onde electromagnetique pulsee et modulee." [Trial of the correlation between the evolution of a disease by Trypanosoma equiperdum and the action of a pulsating and modulated electromagnetic wave.] **Compt. Rend. Acad. Sci.** (Paris), Vol. 272, 1971, p. 1003-1006. [In French].

Mayer, G.; A. Priore, G. Mayer and R. Pautrizel, "Action de champs magnetiques associes a des ondes electromagnetiques sur l'orchite trypanosomienne due lapin." [Action of magnetic fields associated with electromagnetic waves on the typanosomian orchitis of the rabbit.] **Compt. Rend. Acad. Sci.** (Paris), Vol. 274, 1972, p. 3011-3014. [In French]

COMMENT: Orchitis is inflammation of a testes. Trypanosomes are protozoan flagellates of genus trypanosoma which infect humans and animals and are responsible for various serious diseases such as Chaga's disease, dourine, nagana, sleeping sickness, and surra. Chaga's disease is marked by prolonged high fever, edema, and enlargement of the spleen,

liver, and lymph nodes. Dourine is a dis ease favoring horses and asses, marked by inflammation of the genitals, subcutaneous edematous plaques, low-grade fever, progressive paralysis, emaciation, and death. Nagana is a highly fatal disease in/ of domestic animals in tropical Africa marked by fluctuating fever, inappetance, edematous swelling, and sluggishness, and is transmitted by the tsetse fly and possibly by other biting flies. Sleeping sickness is a serious disease that is prevalent in much of tropical Africa; it is marked by fever, protracted lethargy, tremors, and loss of weight, and is transmitted by tsetse flies. Surra is a severe Old World febrile and hemorrhagic disease of domestic animals and is transmitted by biting insects.

Courrier, R., "Expose par M. le Professeur R. Courrier, Secretaire Perpetuel de L'Academie des Sciences fait au cours d'une reunion a L'Institut sur les effets de la Machine de M.A. Priore le 26 Avril 1977." [Presentation by Professeur R. Courrier, Perpetual Secretary of the Academy of Sciences, made at the meeting of the Academy on the effects of the machine of M.A. Priore.] [In French] Courrier's presentation of the Priore machine and its positive cures of terminal cancers and leukemias in laboratory animals, under proper scientific protocols.

Ruth, Barnard. "Experimental investigations on ultraweak photon emission." **In Electromagnetic Bio-Information: Proceedings of the Symposium**, Marburg, Sept. 5, 1977. Proceedings edited by Fritz Albert Popp et al., Urban and Schwarzenberg, Munchen Wien, and Baltimore, 1979, p. 107-122.

Ryaby, J.T.; D.A. Grande, F.P. Magee, and A.M. Weinstein, "The effect of combined AC/DC magnetic fields on resting articular cartilage metabolism." Presented at the 1st World Congress for Electricity and magnetism in Biology and Medicine, Orlando, FL, June 14-19, 1992.

Vladimirov, Yu. A., "Ultraweak luminescence of subcellular structures," **Ultraweak Luminescence in biology, Proceedings of the Symposium**, Moscow, 1969 [In Russian].

Kaznacheyev, V.P., "Informational function of ultraweak flows of light in biological systems," in **Materials of Science Conference: Physical and Mathematical methods of Research in Biology and Medicine, Novosibirsk**, 1965, p. 38-41 [In Russian].

Kaznacheyev, V.P. et al, "Studies on the biological role of electromagnetic emission as a factor of adaptive behavior of cells under conditions of lattitude changes," **Abstracts of the Second All-Union Conference Devoted to different Geographical, Climatic and Labor Conditions,** Novosibirsk, 1977, p. 101-104 [In Russian].

Kaznacheyev, V.P. et al., "Conditions necessary for appearance of distant intercellular interactions after UV radiation," **Bulleten Experimentalnoy Biologii i. Meditsiny**, No. 5, 1979, p. 468-471.

Possony, Stefan T., "Psy-War: Soviet device experiment," **Defense and Foreign Affairs Daily**, 12(104), June 7, 1983, p. 1-2.

Kaznacheyev, V.P. and L.P. Mikhailova, "Ultraweak Radiations in Intercellular Interactions," Novosibirsk, 1981 [In Russian]. English translation: San Francisco, Washington Research Center, 1982.

Kaempffert, Waldemar, "'Dead' organisms revived," Science in the News: **Science Digest**, May 1950, p. 77-78.

"Rejuvenating Light," **Scientific American** May 1949.

Popp, Fritz Albert; Gunther Becker, Herbert L. Konig, and Walter Peschka, Eds., **Electromagnetic Bio-Information: Proceedings of the Symposium**, Marburg, Sept. 5, 1977, Urban & Schwarzenberg, Baltimore, 1979.

Lilienfeld, A.M. et al, **Foreign Service Health Status Study: Evaluation of Health Status of Foreign Service and Other Employees From Selected Eastern European Posts**, Department of Epidemiology, Of Hygiene, and Public Health; The Johns Hopkins University, Baltimore, Maryland, final Report, July 31,1978.

Mallaliew, Robert C., **A Model of the Micro wave Intensity Distribution within the U.S. Embassy, Moscow 1966 to 1977,** Report FS-80-166, Applied Physics Laboratory, Johns Hopkins University, Aug. 1980.

Microwave Radiation at the U.S. Embassy in Moscow and Its Biological Implications: An Assessment, U.S. Depart ment of Commerce Doc. No. NTIA-81-12, Mar. 1981.

Novak, Rachel. "Flesh-Eating Bacteria: Not New, But Still Worrisome." Research News, **Science**, 264(5166), June 17, 1994, p. 1665.

Olariu, S. and I. Iovitzu Popescu. "The Quantum Effects of Electromagnetic fluxes," **Reviews of Modern Physics**, 57(2), April 1985, p. 339-436.

Opall, Barbara. "U.S., Russia Hope to Safeguard Mind-Control Techniques." **Defense News**, Jan. 11-17, 1993, p. 4, 29.

Penrose, R. "The Nonlinear Graviton." **General Relativity and Gravitation**, 7(2), 1976, p. 171.

Perez, Jose and Carson Jeffries. "Effects of additive noise on a nonlinear oscillator exhibiting period doubling and chaotic behavior." **Physical Review B. Condensed Matter**. Series 3, 16(6), Sept. 15, 1982, p. 3460-3462.

Phipps, Thomas E. Jr. "Critique of accepted theories of special relativity and electromagnetism," **Scientific Ethics**, 1(2), Apr. 1985, p. 17-23.

Popp, Fritz-Albert and Ke-hsueh Li. "Hyperbolic Relaxation as a Sufficient Condition of a Fully Coherent Ergodic Field." **International Journal of Theoretical Physics**, 32(9), Sep. 1993, p. 1573-1582.

Reid, B.L. "Propagation of properties of chemical reactions over long distance in the atmosphere as seen by crystal growth pattern changes." **Australian Journal of Medical Laboratory Science**, Vol. 7, Feb. 1986, p. 30-35.

Rodemann,. H.P., H.P. Peterson, K. Wchwenke, and K. Hartmut von Wangenheim. Terminal differentiation of human fibroblasts is induced by radiation." **Scanning Microscopy**, 5(4), Dec. 1991, p. 1135-43.

Rodemann, H.P.; K. Bayreuther, and G. Pfleiderer. "The differentiation of normal and transforman fibroblasts in vitro is influenced by electromagnetic fields." **Experimental Cell Research,** Vol. 182, 1989, p. 610-621.

Santilli, Ruggero Maria. "Partons and gravitation: some puzzling questions." **Annals of Physics**, 83(1), Mar. 1974, p. 108-157. Proves that electric field and gravitation are not mutually exclusive. One is left with one of two assumptions: (1) the strong assumption, that both are identically the same thing, or (2) the weak assumption, that both are partially the same thing.

Saxl, Erwin J. and Mildred Allen. "1970 solar eclipse as 'seen' by a torsion pendulum." **Physical Review D. Particles and Fields,** 3(4), Feb.15, 1971, p. 823-825.

Sheldrake, Rupert. **A New Science of Life**: The Hypothesis of Formative Causation, Blond & Briggs, Ltd., U.S. reprint, J.P. Tarcher, Inc., Los Angeles, 1982.

Smetanin, E.V., "Electromagnetic field in a space with curvature – new solutions," **Soviet Physics Journal**, 25(2), Feb. 1982, p. 107-111.

Tapscott, Mark. "DOD, Intel Agencies Look at Russian Mind Control Technology, Claims." **Defense Electronics**, 25(8), July 1993, p. 17.

von Borzeszkowski, Horst-Heino. "Remarks on the Physical Reality of Gravitons," **Foundations of Physics**, 20(4),1990, p. 435-445.

Wheeler, John Archibald and Richard Phillips Feynman. "Classical electrodynamics in terms of direct interparticle action," **Reviews of Modern Physics**, 21(3), July 1949, p. 425-433.

Goodman, Glenn W. Jr. "Upping the Nonlethal Ante," **Armed Forces Journal International**, July 1994, p. 13.

Jammer, Max. **Concepts of Space: The History of Theories of Space in Physics**. Harvard University Press, Cambridge, Massachusetts, 1969

Jammer, Max. **Concepts of Force**. Harvard University Press, Cambridge, Massachusetts, 1957.

Jammer, Max. **Concepts of Mass**. Harvard University Press, Cambridge, Massachusetts, 1961.

Javier, R.T.; F. Sedarati, and J. G. Stevens. "Two avirulent Herpes simplex viruses generate lethal recombinants in vivo." **Science**, 234(4777), Nov. 7, 1986, p. 746-747.

Wheeler, J.A. and R.P. Feynman. "Classical Electrodynamics in Terms of Direct Interparticle Action," **Reviews of Modern Physics**, Vol. 21, 1949, p. 425-433. The electromagnetic field as such does not actually exist in spacetime, but is a summary of what we need to know about distant charges in order to predict the behavior of a charge if there should be one at that point. In other words, the EM field represents an information storage device.

Jaynes, E.T. "Probability In Quantum Theory," in **Complexity, Entropy, and the Physics of Information**, Ed. W.H. Zurek, 1990, pp. 33-55, Addison-Wesley, Redwood City, CA. Strongly points out that the EM field does not exist in spacetime, but represents an in formation storage device.

Editorial Note: *We would like to express our appreciation to Mr. Bearden for this wonderful article.*

The Tom Bearden Website

Table of Contents

A Sensitive Scalar Wave Detector

1.
2.
3.
4.
5.
6.
7.
8.
9.
10.
11. Figure 11. NETWORK OF VIRTUAL TRANSMITTERS
12. Figure 12. VIRTUAL TRANSMITTERS IN THE INTERFERENCE GRID
13. Figure 13. GIANT RADIAL RELATED TO A VIRTUAL TRANSMITTER
14. Figure 14. FORMATION OF A SINGLE GIANT RADIAL
15. Figure 15. FORMATION OF A DOUBLE GIANT RADIAL
16. Figure 16. DETECTION OF TRANSVERSE AND LONGITUDINAL WAVES

Return to Homepage

from **STAR WARS NOW!**

The Bohm-Aharonov Effect, Scalar Interferometry, and Soviet Weaponization
by Lt. Col. T.E. Bearden (retd.), 1984
Copyright

A Sensitive Scalar Wave Detector

Very briefly we present a method of making a very sensitive scalar wave detector so that direct measurement and quantization can be established.

First, we regard one oscillation (one wavelength) of the scalar potential wave as a longitudinal photon. Note that this photon contains a substructure, which may be deliberately determined (when artificially made) or randomized (when naturally made in the idealized case).

For convenience we represent normal linearized vacuum (spacetime) as a horizontal or longitudinal vector (Figure 4), implying the direction of motion of the wave in the laboratory frame. By horizontal position in our diagram, we imply a linear, uncurved spacetime and a non-rotated frame. We represent the longitudinal scalar wave as a horizontal vector, and the usual Hertzian wave as a vertical or "transverse" vector. We visualize a normal detector as detecting only a vertical or "transverse" vector, as we have illustrated in Figure 4.

As can be seen, in a linear, unrotated or uncurved spacetime a pure scalar wave has no vertical component projected upon the laboratory frame vector, so it is not detectable by normal detectors.

To detect the scalar wave, of course we could bend it so that it has a projected vertical component in the laboratory frame (Figure 5). However, this would be an impure wave, not a pure scalar wave, and that is not what we wish.

A better way is to bend or curve spacetime itself in a small region, so that a longitudinal wave that passes through that region now possesses a vertical component with respect to that region (Figure 6). Thus a normal detector there will detect that vertical component. We conduct the detection current out of the "bent spacetime" region to an outside (normal) detector, and we then have a scalar wave detector.

To illustrate, we show conceptually how this has been successfully done. Figure 7 shows the concept. First, we utilize a magnetic pole to provide the infolded energy (potential) to bend or curve spacetime. To reach good sensitivity, we need a pole strength connected with a magnetic field strength of 40,000 Gauss or higher. We utilize a small superconducting magnet, which can reach field strengths of from 40,000 to 80,000 Gauss.

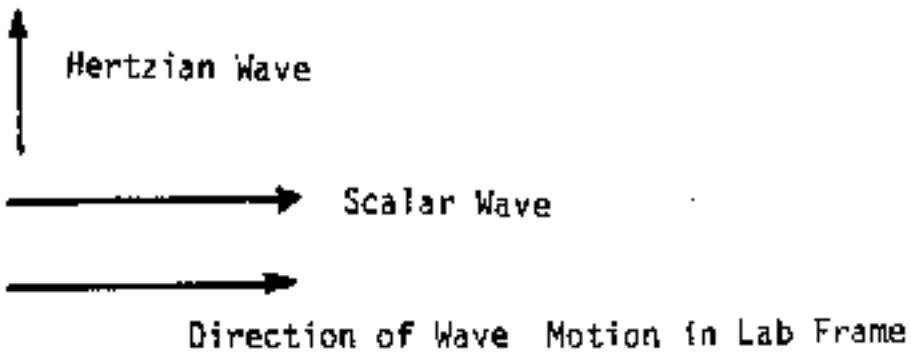

Figure 4. Linear, uncurved laboratory frame.

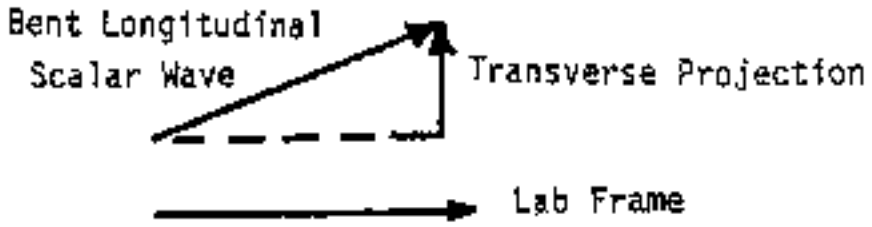

Figure 5. Rotating the longitudinal wave produces a transverse component.

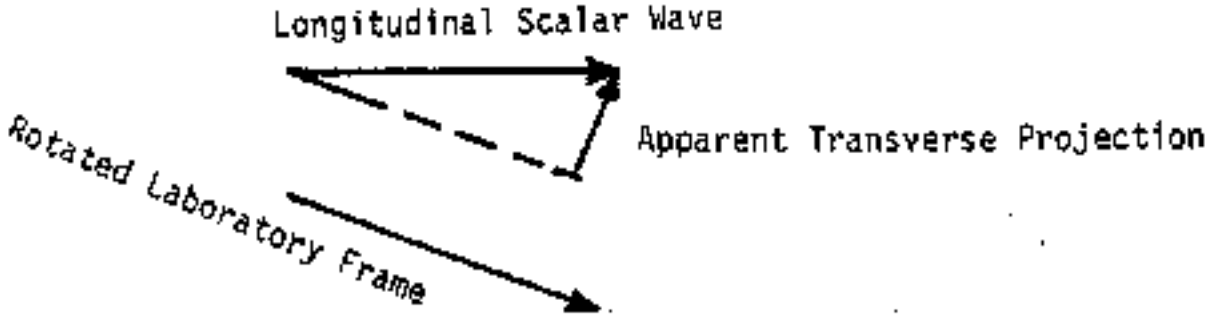

Figure 6. Bending the laboratory spacetime frame produces a transverse component.

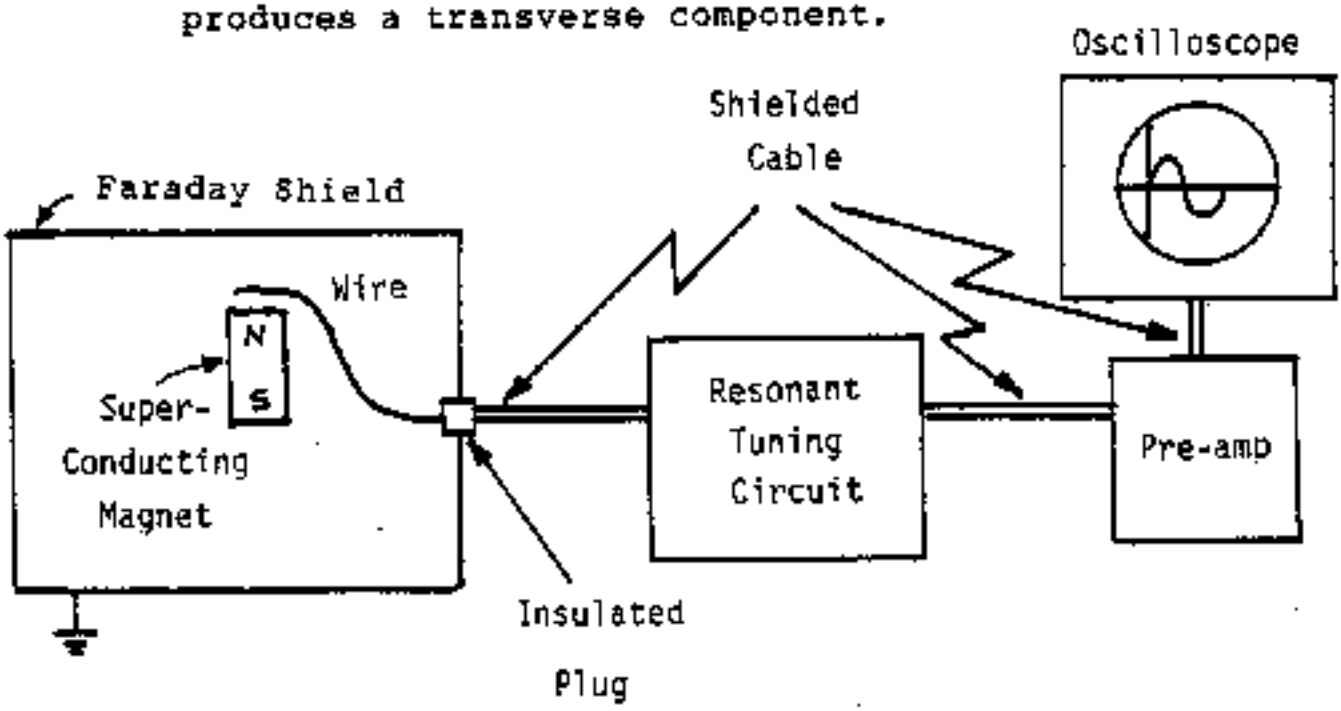

Figure 7. A sensitive scalar wave detector.

Figure 7. A sensitive scalar wave detector.

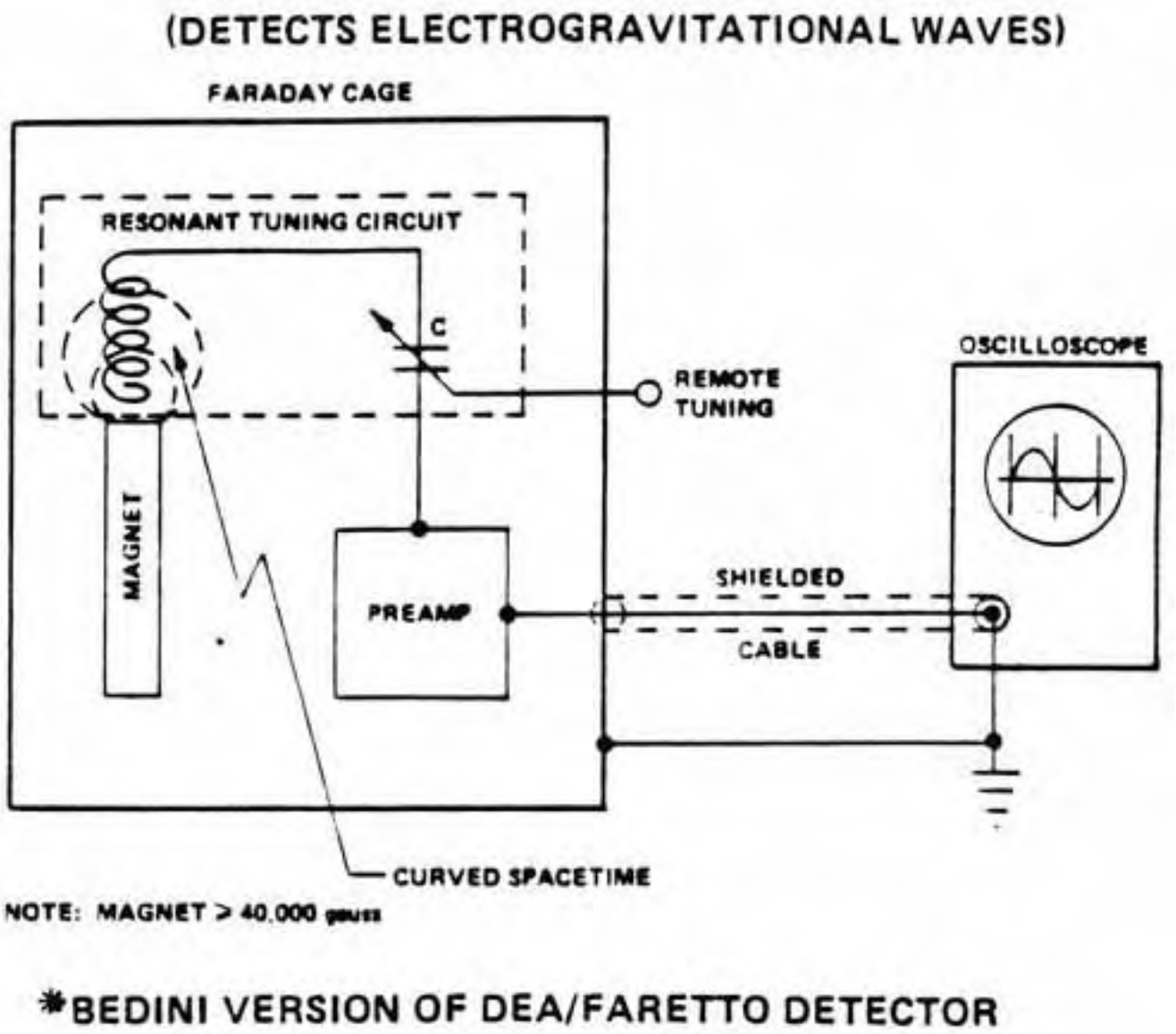

Slide 33 - FER DE LANCE

Then to prevent detection of superfluous "normal" radiation, we shield the entire magnet in a grounded Faraday cage, as shown in the figure. Hertzian waves will be grounded in this shield, while scalar waves will readily penetrate it undiminished. In other words, the Faraday cage serves as a "stripper," to strip away the ordinary waves, leaving only the scalar waves to penetrate inside. An ordinary wire lies at the top of the magnetic pole, in proximity to it. The wire runs out of the Faraday cage through an insulated port to a resonant tuning circuit, which is sharply tunable over the range of frequencies we are interested in. A preamp amplifies the output of the tuner, and in turn feeds the input of an oscilloscope or other detector.

With this detector we can select the frequency desired, and detect any passing scalar waves of that frequency. By other variations of amps and preamps, regenerative circuits, etc. we can obtain all the

sensitivity desired, and utilize ordinary detection equipment already well-known and highly developed.

Additional Information about detecting Scalar Waves

Figure 11. NETWORK OF VIRTUAL TRANSMITTERS

(See Woodpecker Grid)

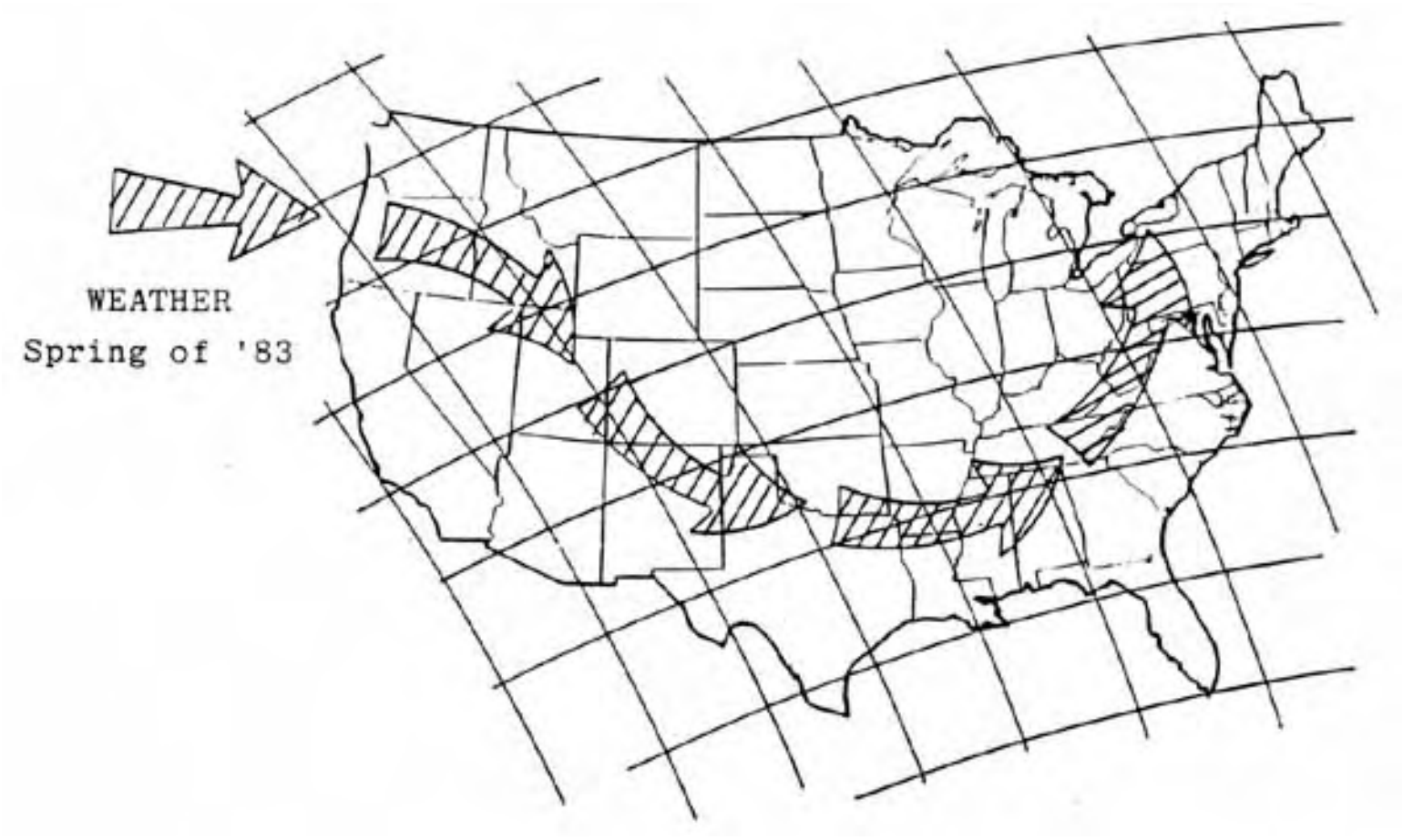

Next Figure

Figure 12. VIRTUAL TRANSMITTERS IN THE INTERFERENCE GRID

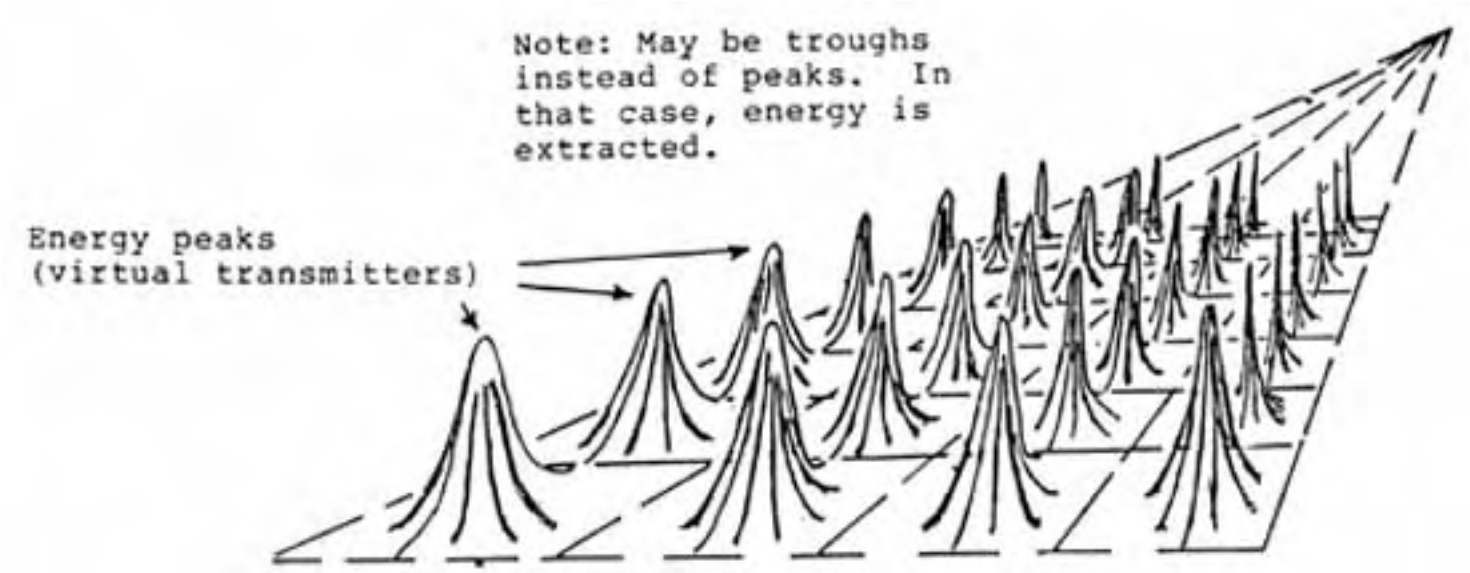

Next Figure

Previous Figure

The Tom Bearden Website

Figure 13. GIANT RADIAL RELATED TO A VIRTUAL TRANSMITTER

Fall 1983: Florida Alabama

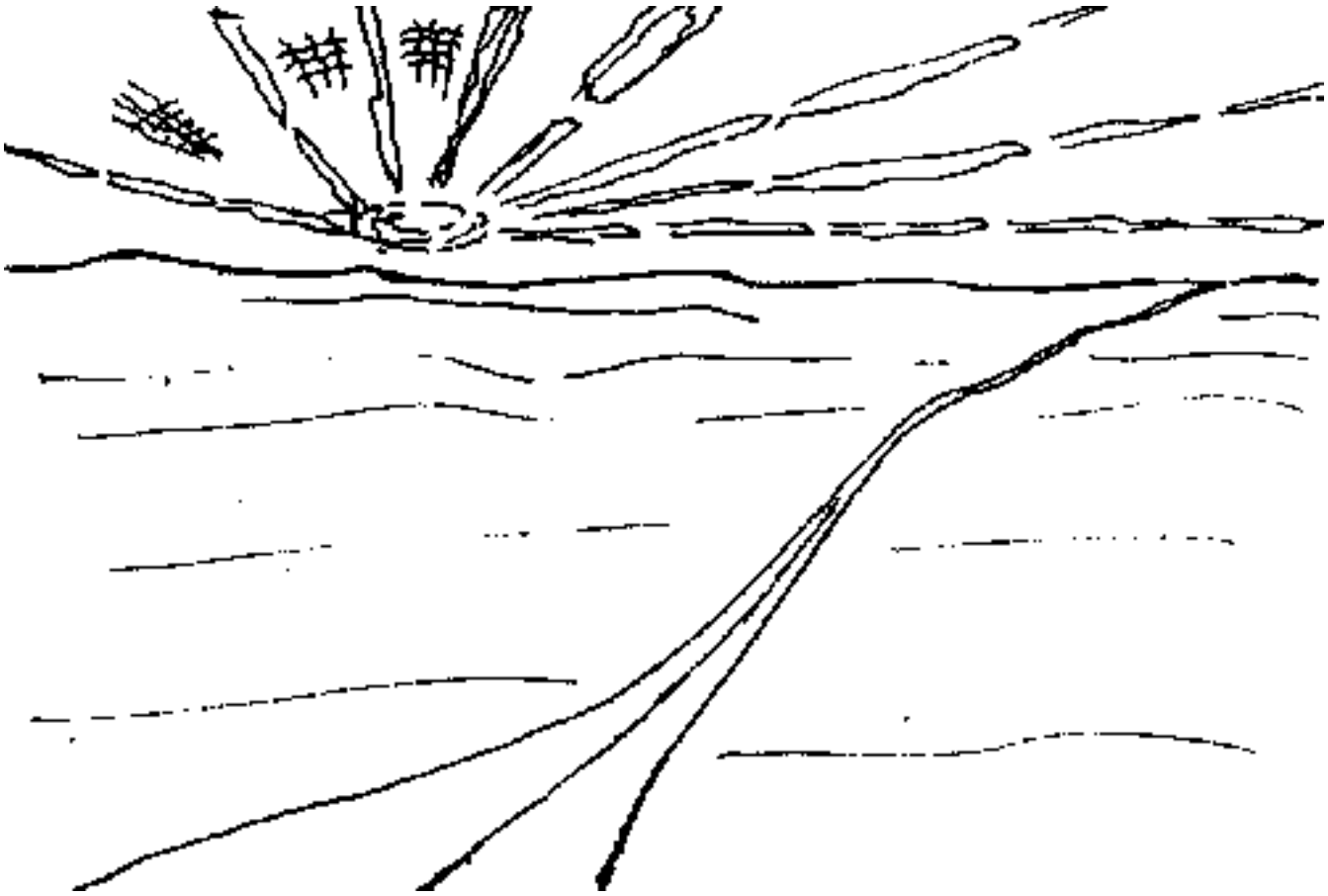

Next Figure

Previous Figure

[The Tom Bearden Website]

Figure 14. FORMATION OF A SINGLE GIANT RADIAL

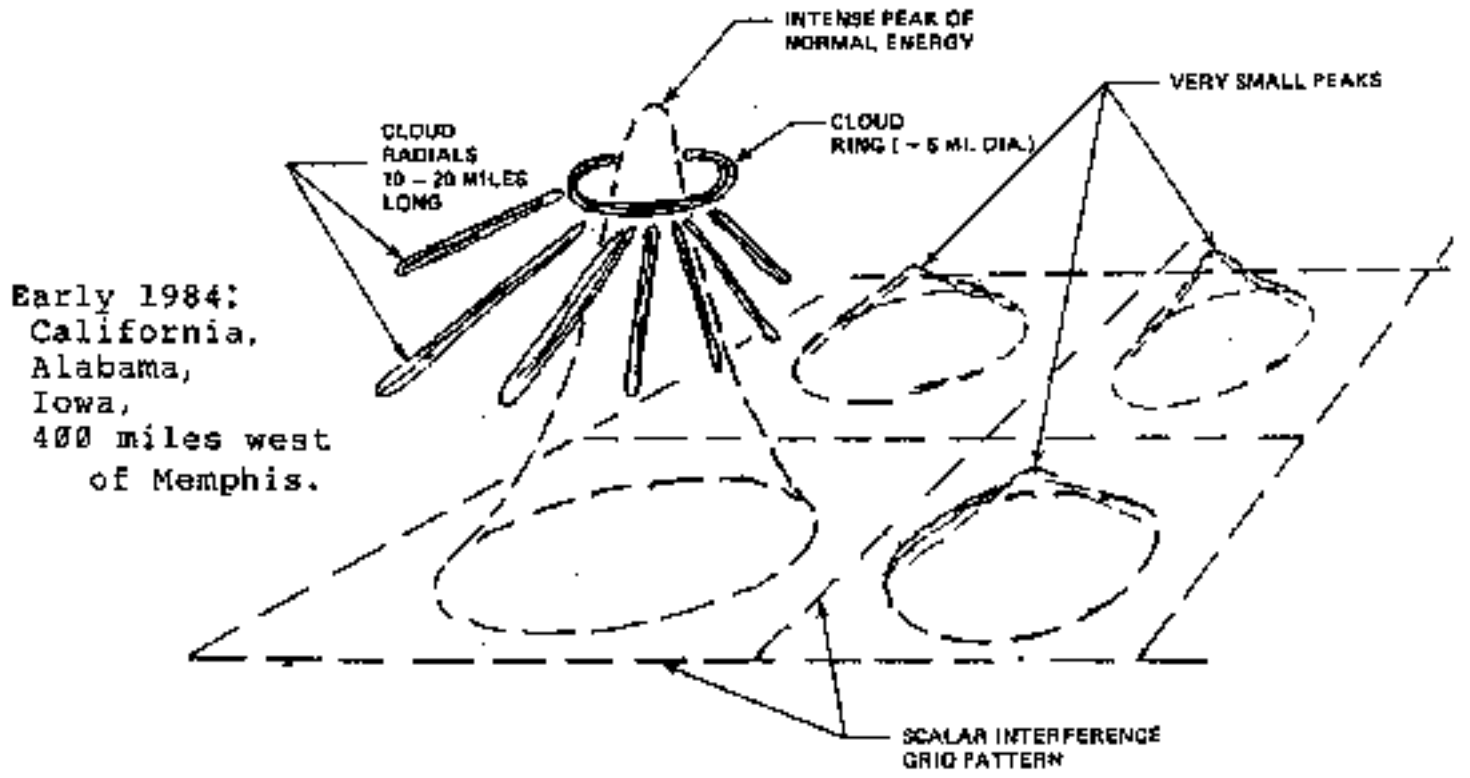

Excerpt P 172
FER DE LANCE

A Briefing on Soviet Scalar Electromagnetic Weapons
by Lt. Col. T.E. Bearden (retd.), 1986
Copyright

2. Continual cloud radials have repeatedly been seen and photographed over Huntsville, Alabama, associated with weather engineering and grid activity. Typical radials seen by this author are shown in Bearden, Soviet Weather Engineering Over North America, 1-hr. v1deotape, 1985. Huntsville is apparently a pivot point or "hinge point" for bending and controlling the jetstream.

3. Spectacular cloud grid patterns have been seen over Huntsville, Alabama and Los Angeles, California. An excellent videoclip of one of the Los Angeles area grids, personally observed and shot by KABC Open Mind talk show host Bill Jenkins, is shown in Bearden, Soviet Weather Engineering Over North America,;1-hr. videotape, 1985. An artist's sketch of an earlier gigantic grid, extending from horizon to horizon in every direction, seen over Huntsville, Alabama by Tom Bearden and Ken Moore, is also shown in the tape. The videotape is available from P.O. Box 1472, Huntsville, AL 35807. Sketches and details of another highly anomalous grid pattern observed in the greater Los Angeles area by engineer Ron Cole are shown in figures 5 and 6.

The reason that clouds of water droplets and/or ice particles detect the scalar interferometry and form signature patterns is simple: Consider each H2O molecule as having two light little hydrogen atoms hanging on to the much heavier oxygen atom. The covalent sharing with the oxygen atom of the electron from each hydrogen atom means that

1. the electrostatic scalar potential between the H ion and the O ion it is bonded to, is rhythmically varying as the electron is shared back and forth,
2. this varying potential contains "electron spin holes" since it is made by the moving electron,
3. two such varying potentials exist since there are two H atoms sharing covalent electrons with the O atom,
4. the two H ions are at an angle of over 100 degrees with respect to each other,
5. the molecule assembly thus constitutes one part (one half, so to speak) of a scalar interferometer with imbedded electron spin holes for electron hooking,
6. Incident scalar waves from outside the system interact with the "half scalar interferometer." This scalar interferometry interaction is coupled to the covalent bonding electron because of the internal spin hole pattern of the molecular half of the interferometer. The coupled electron moves with the sca1ar pattern's changes, causing an observable interaction with and in the electrical structure and ionic potential of the molecule,
7. the weak H to H hydrogen bonding between molecules connects resulting ionic potential changes to the structuring of the entire macroscopic cloud assembly. Thus by scalar interferometry with the H_2O "half interferometers", an incident scalar EM pattern is detected and translated into patterns of E and B force fields. The H_2O molecules then "line up" in accord with the electrical patterns detected.

Thus the clouds form "signature patterns" according to the incident scalar EM radiation patterns. Giant cloud radials in the targeted area are probably due to the type and shape of antennas including the type and shape of the electrical wires establishing the antennas' ground planes -- used by the Soviet Union to project the scalar waves. Note that such "radial" antenna patterns were occasionally used by James Harris Rogers in his underground and undersea scalar EM transmission system.

Next Figure

Previous Figure

Figure 15. FORMATION OF A DOUBLE GIANT RADIAL

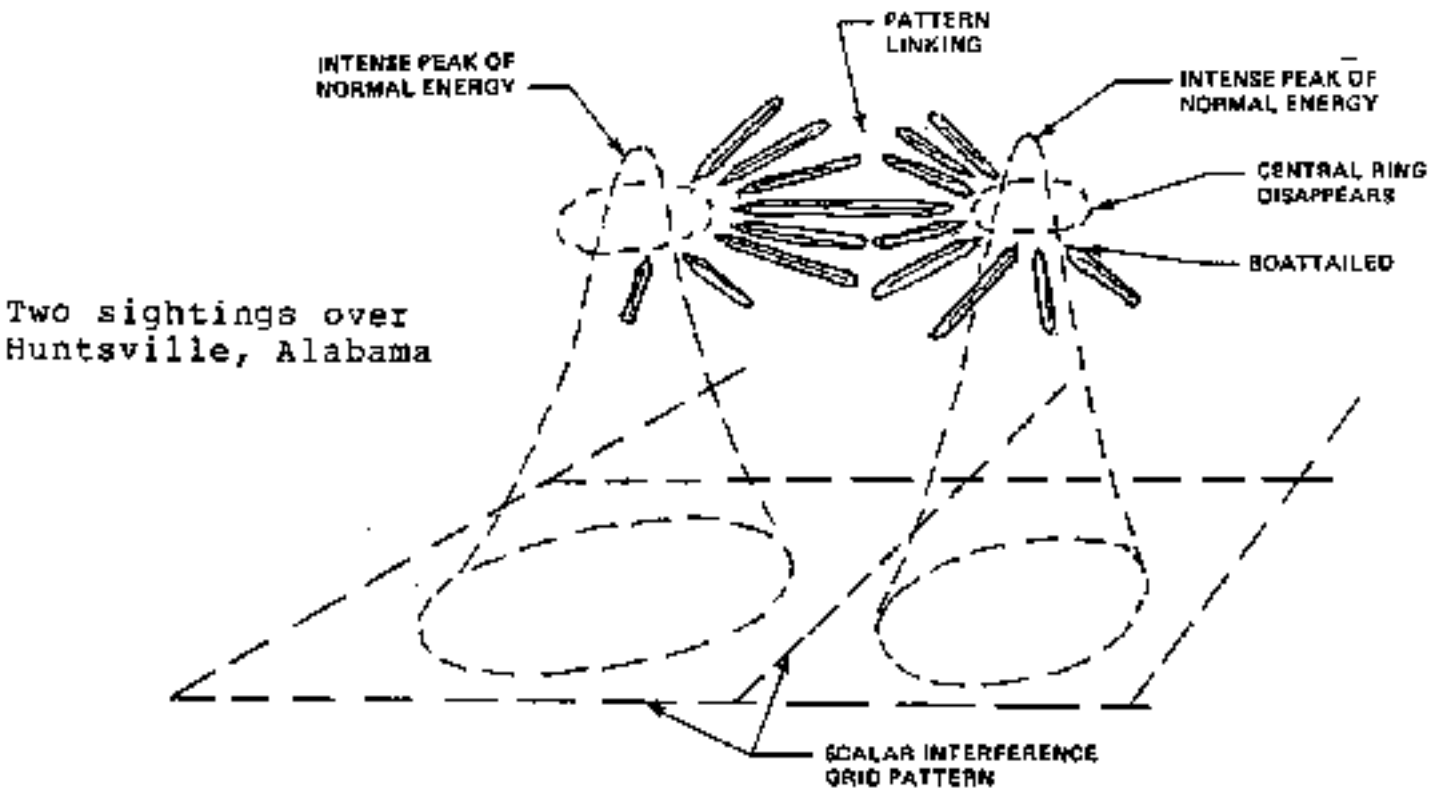

Next Figure

Previous Figure

Figure 16. DETECTION OF TRANSVERSE AND LONGITUDINAL WAVES

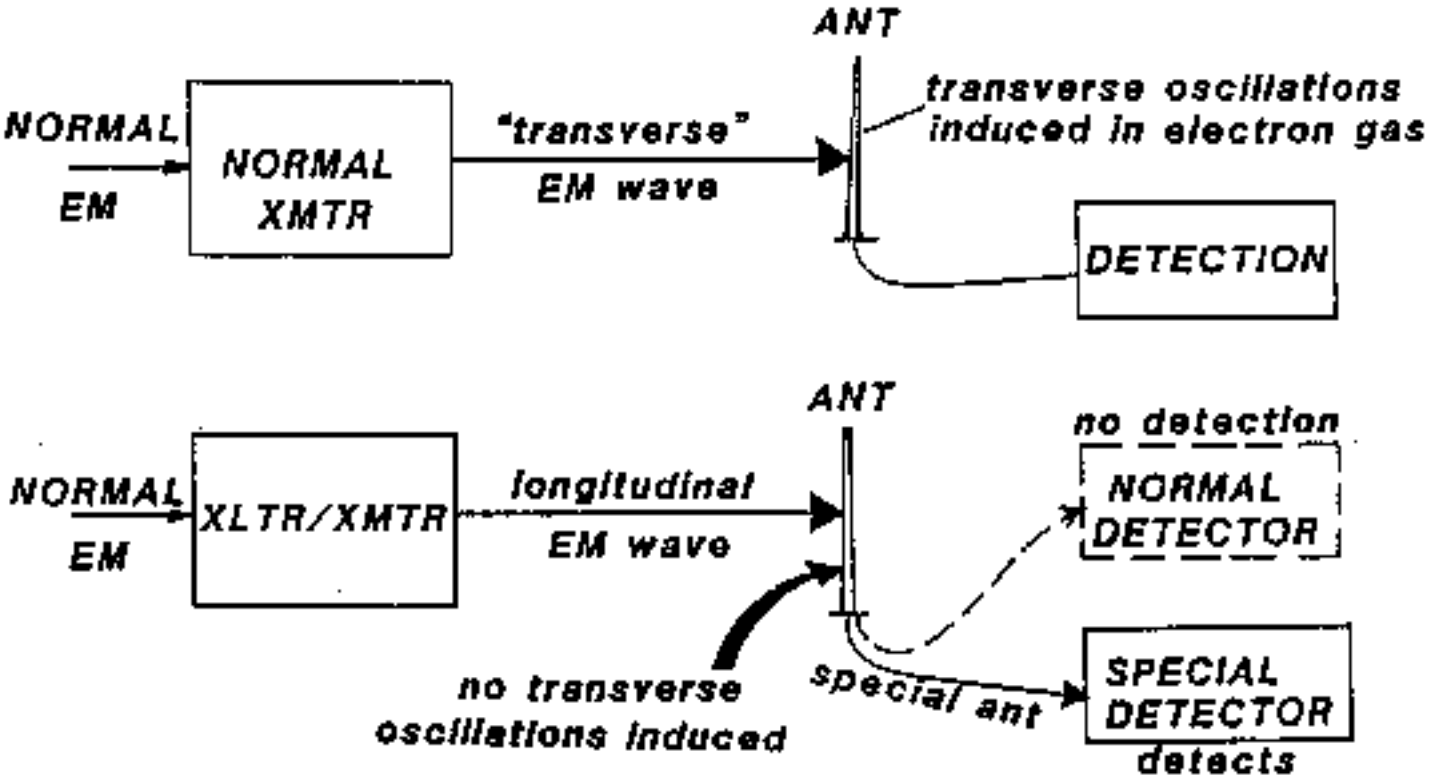

Next Figure

Previous Figure

HUNTSVILLE EDITION

The Southeast's Oldest E-Zine!

Chasing the Wild Dragon Tables and Figures

By Tom Bearden

Figures

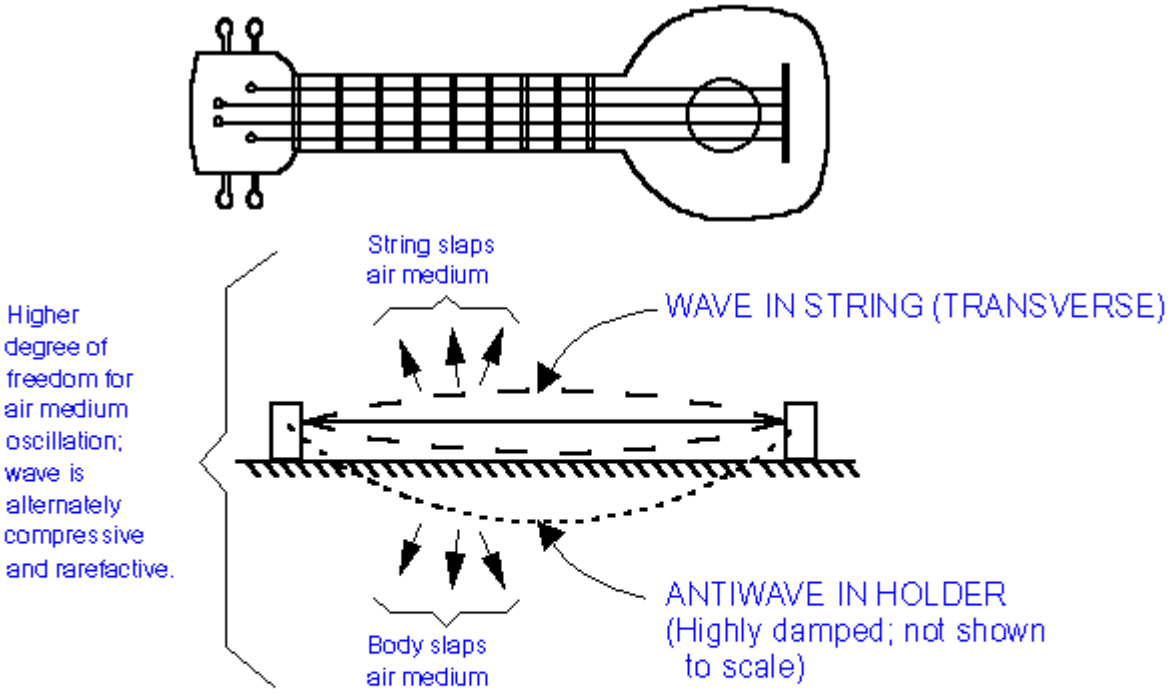

Figure 1. Air medium disturbances generated by plucked string.
Two waves are created, both slapping the air medium at the same time, but in opposite directions. A disturbed medium oscillates according to its own degrees of freedom. The air has more degrees of freedom than the string. A wave of compression and rarefaction is created in the air medium.

D-1-F 1 © 1993 T.E. Bearden

We use cookies to ensure that we give you the best experience on our website. By using this site you are accepting our usage of cookies. Ok

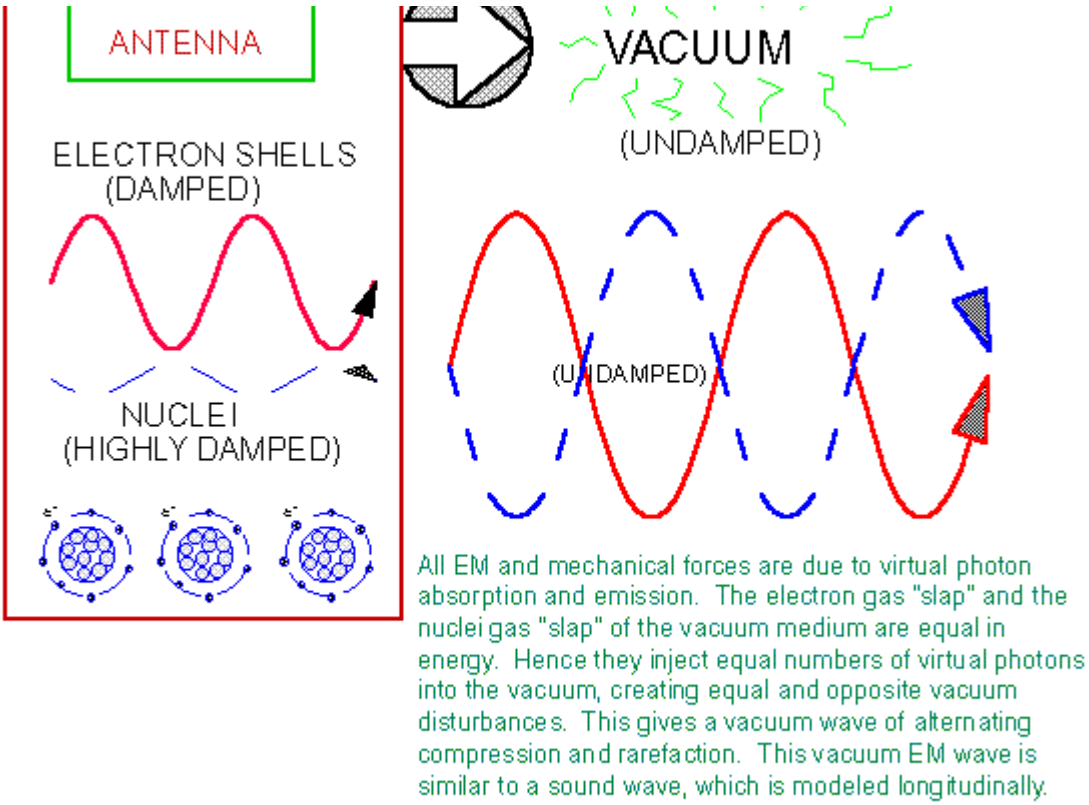

Figure 2. Launching an EM wave from a wire antenna.

D-1-F2 © T.E. BEARDEN 1994, 1995

We use cookies to ensure that we give you the best experience on our website. By using this site you are accepting our usage of cookies. Ok

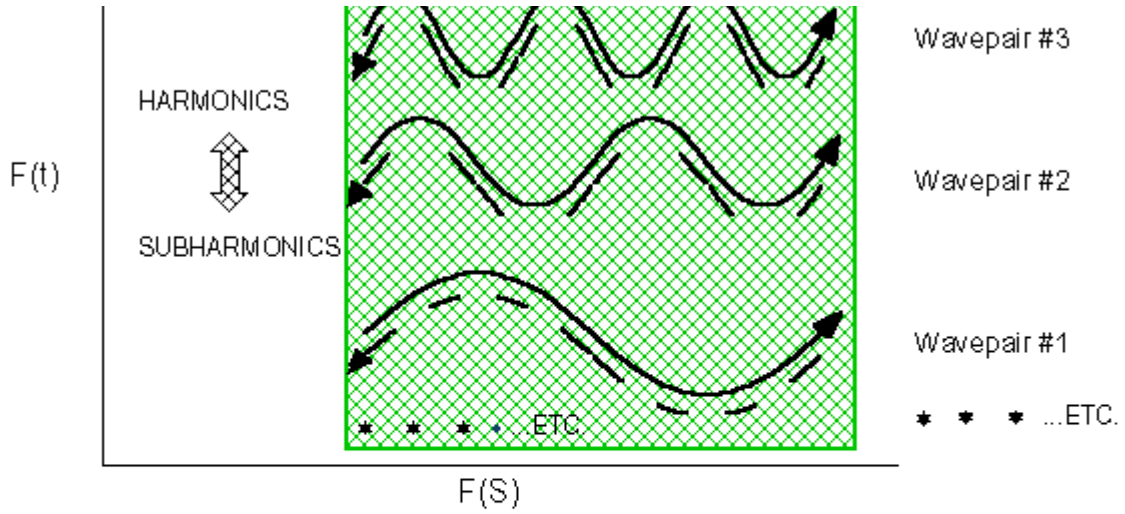

Figure 3. Internal Wave Structure of the scalar potential.

A harmonic set if wavepairs, where in each wavepair the two waves superpose spatially, but travel in opposite directions. The two waves in each pair are true phase conjugates and time-reversals of each other. Thus they comprise a coupled wave and antiwave. The photons must also be coupled into photon/antiphoton pairs, by a strong application of the distortion correction theorem of nonlinear optics.
Each wavepair is a standing electrogravitational wave.

D-1-F3

© T.E. Bearden 1984, 1985

We use cookies to ensure that we give you the best experience on our website. By using this site you are accepting our usage of cookies. Ok

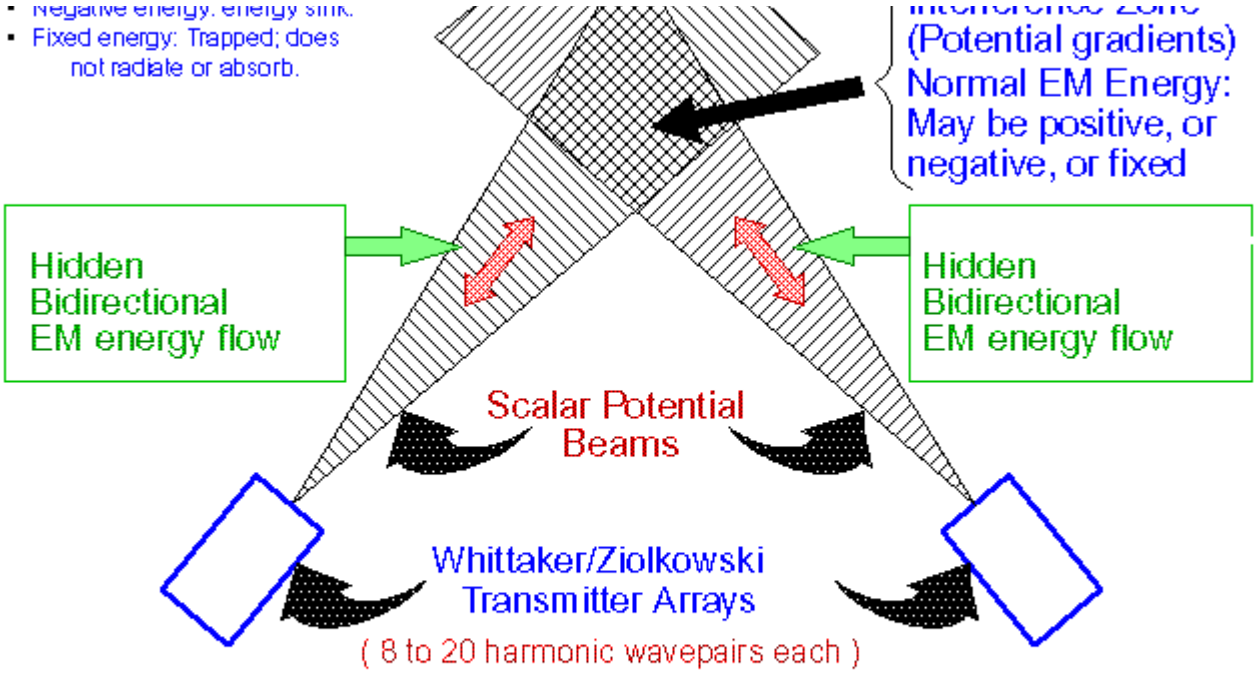

Figure 4. Scalar potential interferometry provides action-at-a-distance. It already creates normal EM fields and waves.

D-1-F-1 © 1991 T.E. Bearden

We use cookies to ensure that we give you the best experience on our website. By using this site you are accepting our usage of cookies. Ok

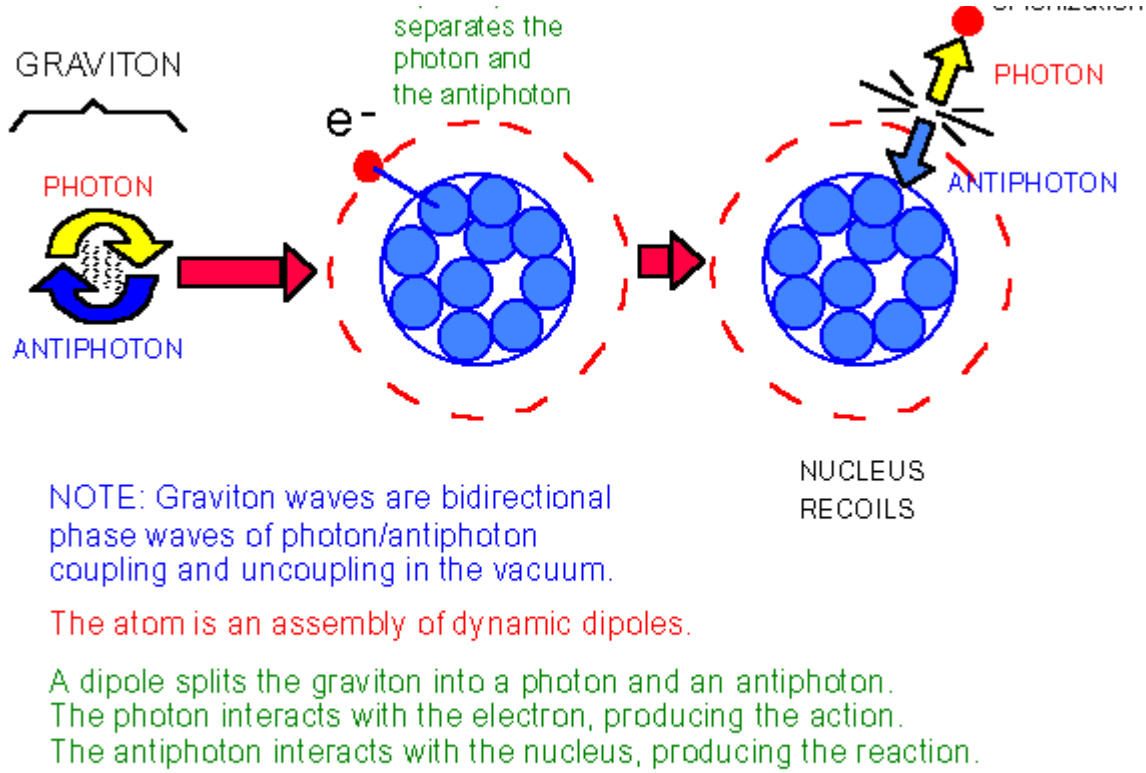

Figure 5. Graviton interaction with matter produces the photon interaction and Newton's third law reaction.

D-1-FS

We use cookies to ensure that we give you the best experience on our website. By using this site you are accepting our usage of cookies. Ok

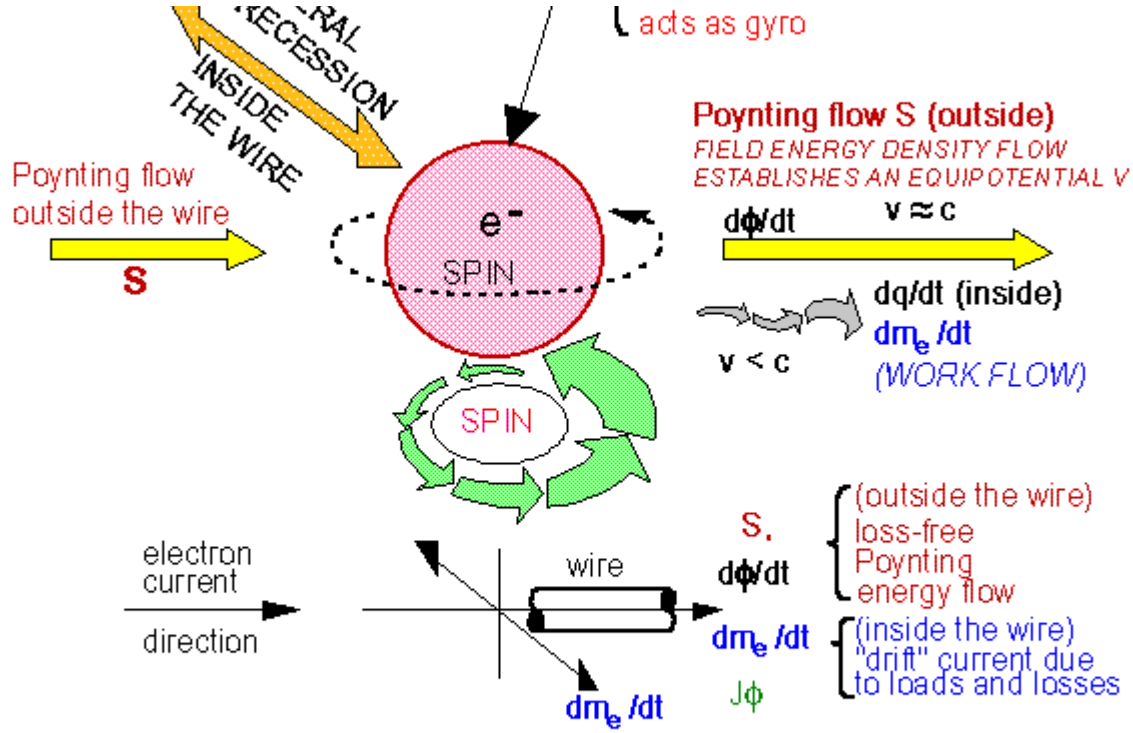

Figure 6. Currents in and along a conductor, with electron precession.

D-1-F6 © 1993 T.E. Bearden

We use cookies to ensure that we give you the best experience on our website. By using this site you are accepting our usage of cookies. Ok

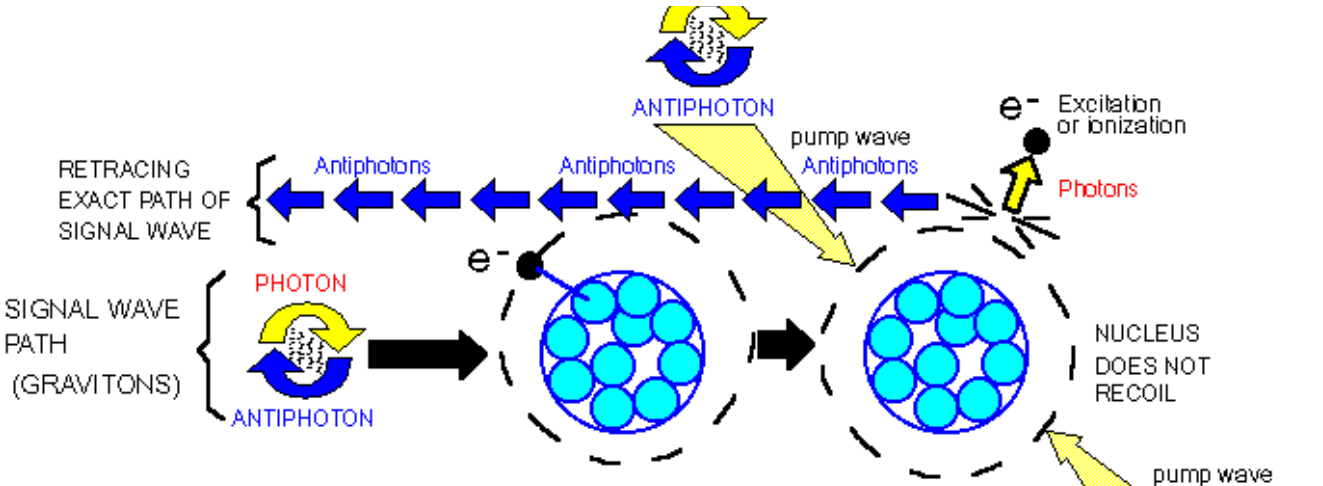

- Dipolarity of the atom separates photon and antiphoton.
- Photon interacts with electron.
- Pumped nonlinear atom acts as a pumped phase conjugate mirror. Directs the antiphoton back along the path taken by graviton.
- Antiphoton does not interact with nucleus. Thus there is no nuclear recoil force generated.
- Nucleus thus does not recoil.
- Not a violation of Newton's third law, once one understands the mechanism that generates third law reaction. In the absence of the generating mechanism, there is no third law recoil. In EM field theory, the "missing antiwave" has necessitated third law omission.

Figure 7. Emission of antiphoton; nucleus does not recoil. Atom acts as a pumped phase conjugate mirror.

D-1-F7 © 1995 T.E. Bearden

We use cookies to ensure that we give you the best experience on our website. By using this site you are accepting our usage of cookies. Ok

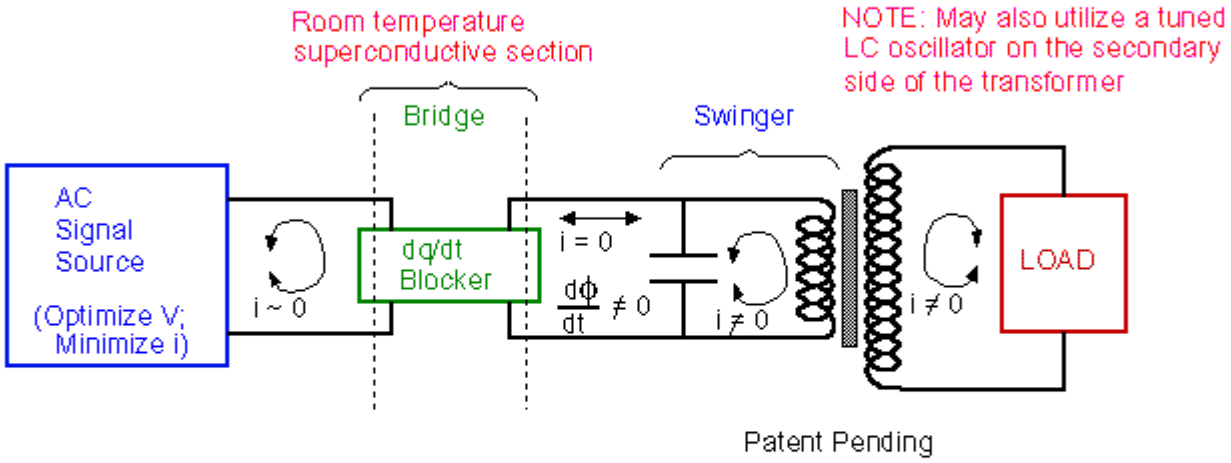

Figure 8. dq/dt-free driving a swinger by S-flow.

Poynting energy flow S with its accompanying potential V is shuttled from the source to a tuned LC oscillator in resonance at the driving frequency or slightly below. The LC oscillator is driven by S-flow and dV/dt flow alone. The swinger furnishes its own free electrons, which receive S and EMF from the bridge, thereby producing dq/dt.

D-1-F5

© T.E. Bearden 1993, 1994, 1995

We use cookies to ensure that we give you the best experience on our website. By using this site you are accepting our usage of cookies. Ok

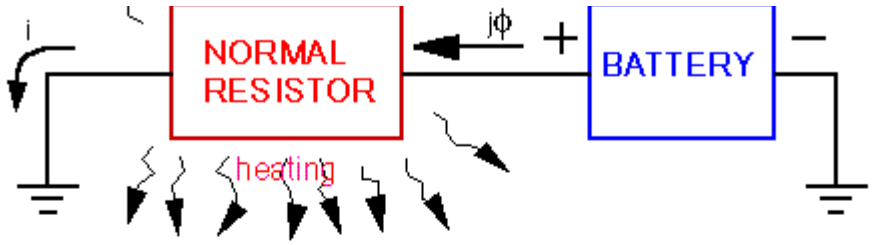

Figure 9a. Normal resistor receives ordered energy and scatters it.

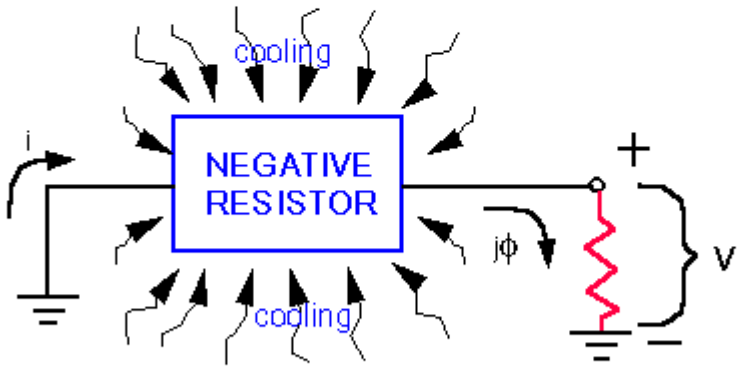

Figure 9b. Negative resistor receives, concentrates, and reorders scattered energy.

Figure 9. Normal resistor versus a negative resistor.

D-1-F9 © TE. Bearden 1993, 1995

Some 17 signals were fed into a rotating plasma, which added phase conjugates to them. This infolded 17 wavepairs, each pair a coupled wave/antiwave, thereby forming a scalar potential with an artificial Whittaker pump wave internal structure. This infolded pump wave complex was modulated onto a powerful, rippling magnetic field, guaranteeing penetration even into the atomic nuclei. A specific, amplified antiengine for the exact cellular disease state was generated, reversing the diseased cells back to a previous healthy state.

Figure 10. Priore's laboratory apparatus for cellular reversal.

D-1-F10 © TE. BEARDEN 1993, 1995

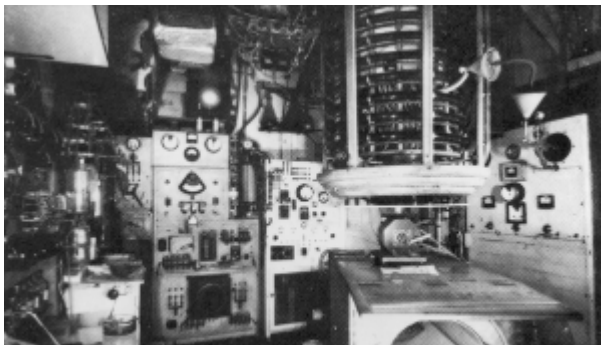

We use cookies to ensure that we give you the best experience on our website. By using this site you are accepting our usage of cookies. Ok

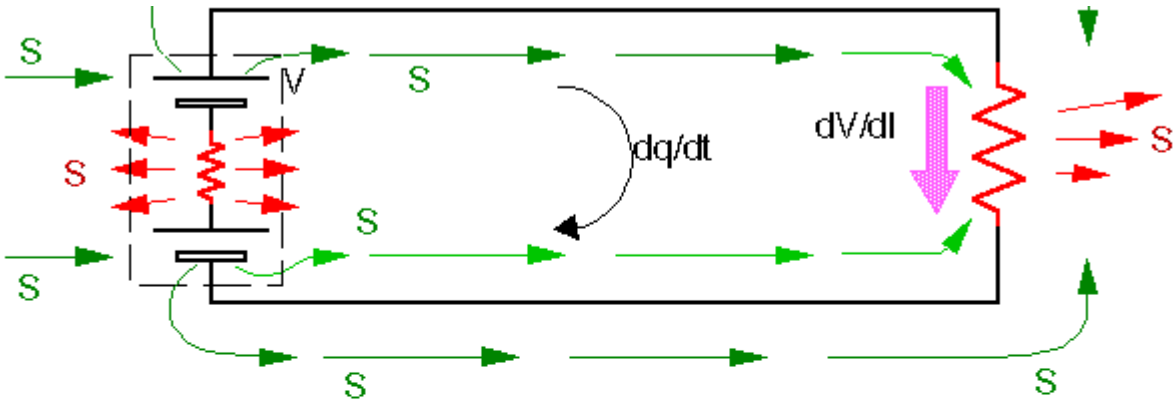

Note: EM texts err in showing the battery "gate" as the source of energy.

Figure 11. Poynting S-flow along a simple circuit.

From particle physics, any electric charge is a broken symmetry in the vacuum's virtual particle flux. Any dipole is thus two locally broken symmetries. Thus the dipole acts as a gate/source, driven by the fierce vacuum flux. So a dipole already "extracts" and gates EM energy flow, directly from the seething vacuum.

Every battery and generator is already a "free energy" source of extracted and gated EM energy from the vacuum.

D-1-F11

© T.E. Bearden 1994

We use cookies to ensure that we give you the best experience on our website. By using this site you are accepting our usage of cookies. Ok

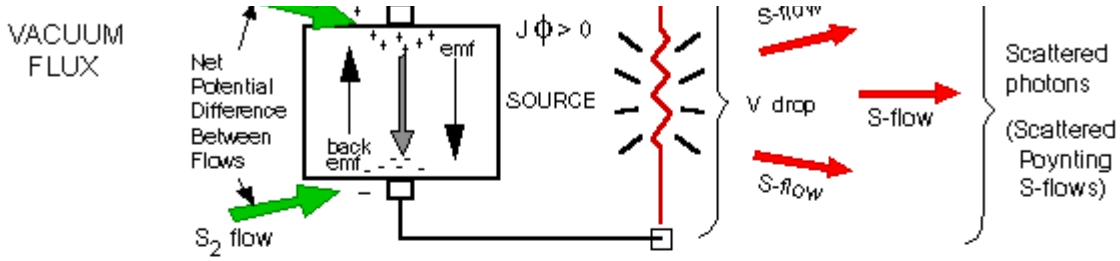

Figure 12a. Normal current flow; Jϕ is the electron transport of energy, while S is the speed-of-light Poynting energy flow.

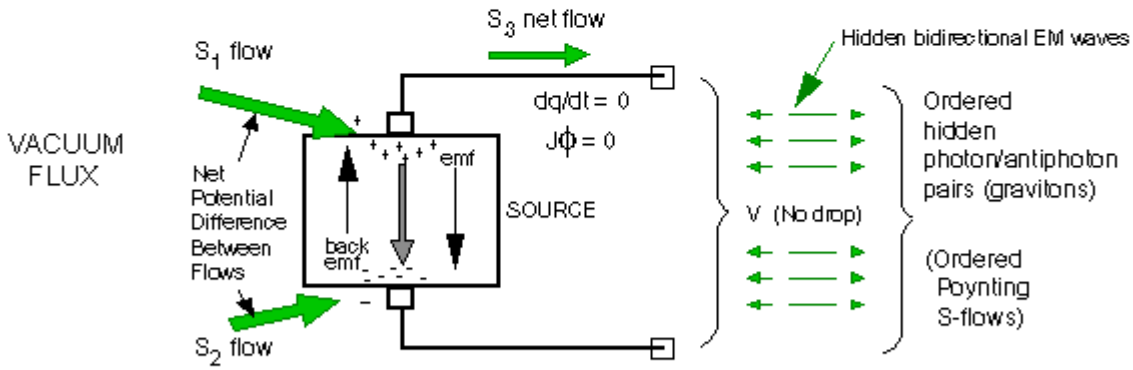

Figure 12b. In a conductor with dq/dt blocked; S-flow and hidden Whittaker-wave flow continue.

Figure 12. Overt and covert field energy density flows.

D-1-F12

© 1994, 1995 T.E. Brandon

We use cookies to ensure that we give you the best experience on our website. By using this site you are accepting our usage of cookies. Ok

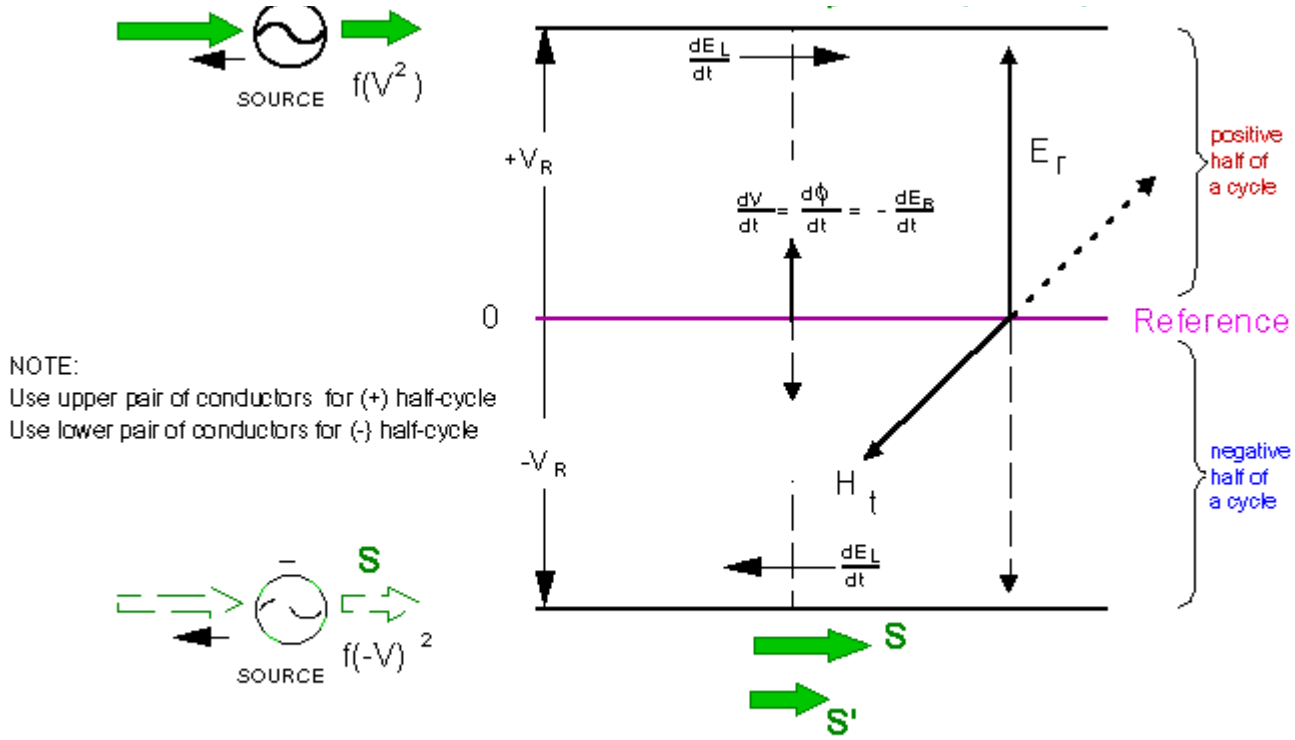

Figure 13. Poynting vector currents S and S' versus massless displacement currents.

D-1-F13 © 1995 T.E. Bearden

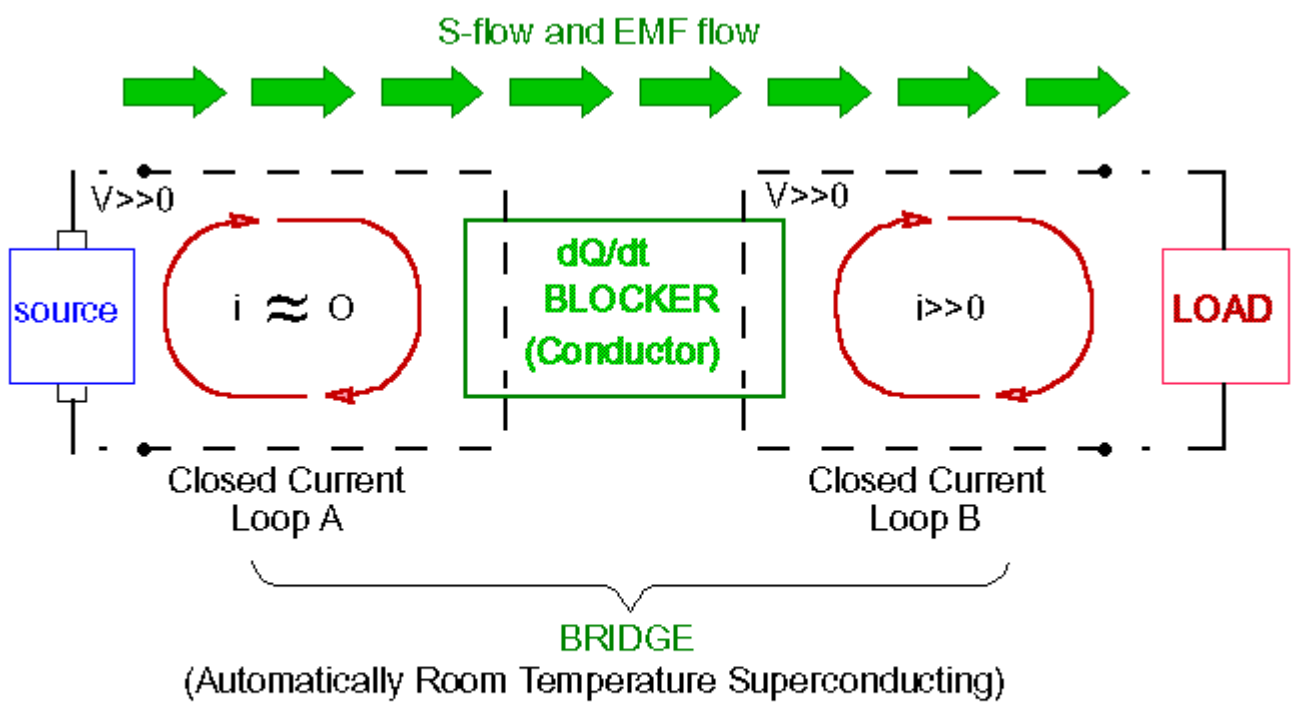

Figure 14. Bridging to enable room temperature superconductivity.

We use cookies to ensure that we give you the best experience on our website. By using this site you are accepting our usage of cookies. Ok

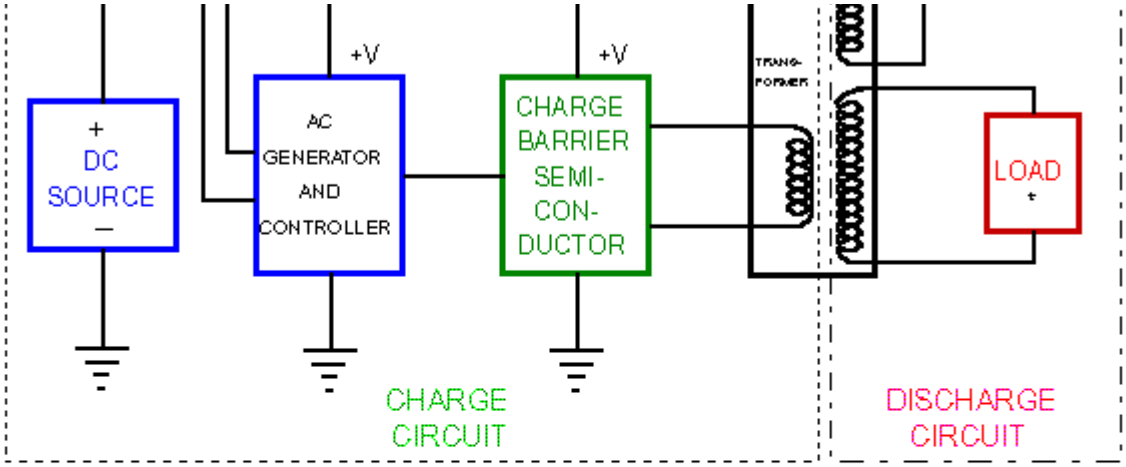

Patent Pending

* NOTE:
DISCHARGE CIRCUIT AND LOAD GROUND
MUST BE ISOLATED FROM THE
CHARGE CIRCUIT GROUND.
FEEDBACK LOOP MUST BE RIGIDLY CLAMPED AND LIMITED.

Figure 15. Use of Fogal semiconductor for overunity (closed system).

D-1-F15

© 1993, 1995 T.E. Bearden

We use cookies to ensure that we give you the best experience on our website. By using this site you are accepting our usage of cookies. Ok

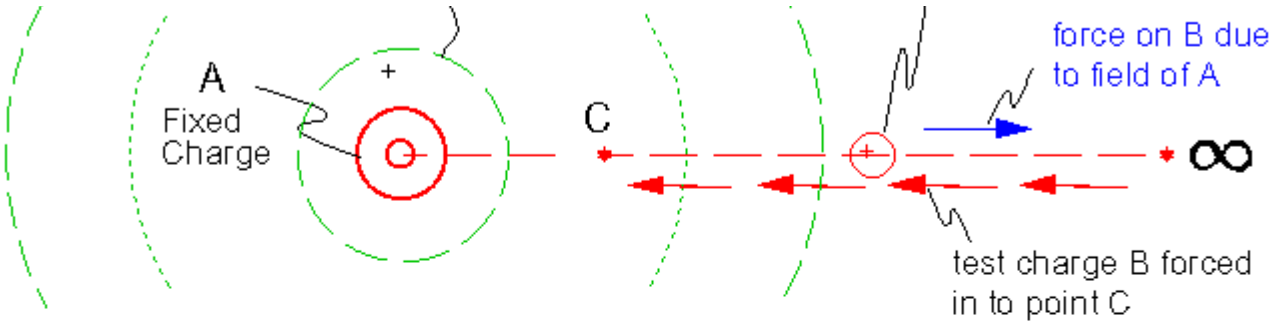

Figure 16a. Magnitude of the scalar potential is determined by work required to push in a unit charge from infinity; e.g., against a repelling like charge. If test charge is released, work will be performed upon it to translate it back toward infinity

Figure 16a. Process for overunity coefficient of performance.

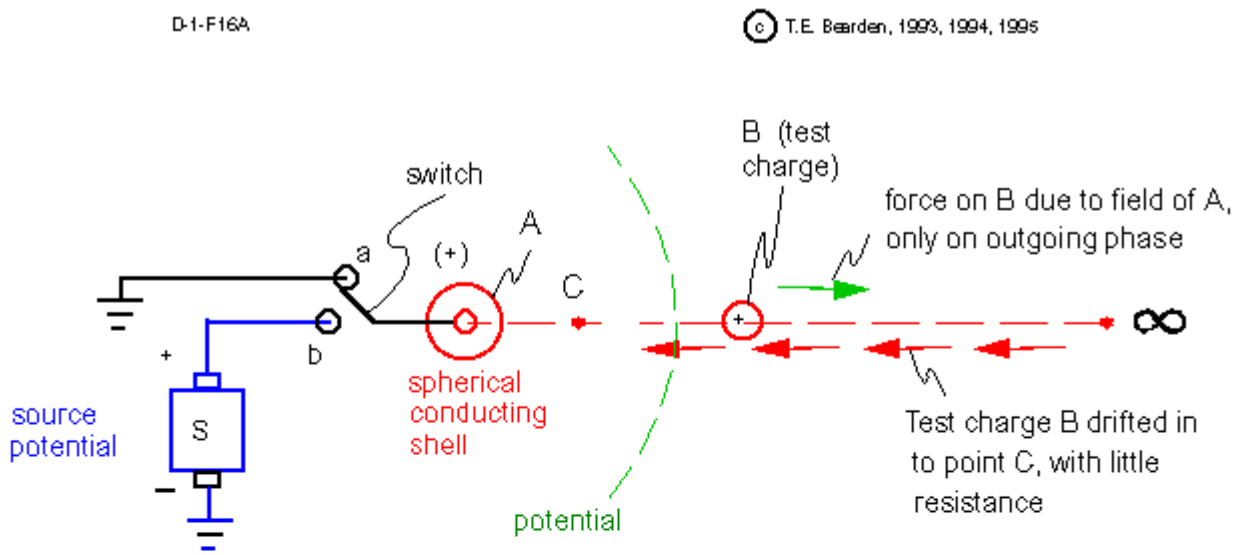

Assumptions: Capacitance of A very small; charge B large, power-free switching

Switch potential off, drift in test charge B, switch potential back on. Can now get free work from repelled test charge B. Get much more free work if A is at a high potential, and charge B is large.

Figure 16 b. Demonstration of overunity efficiency

We use cookies to ensure that we give you the best experience on our website. By using this site you are accepting our usage of cookies. Ok

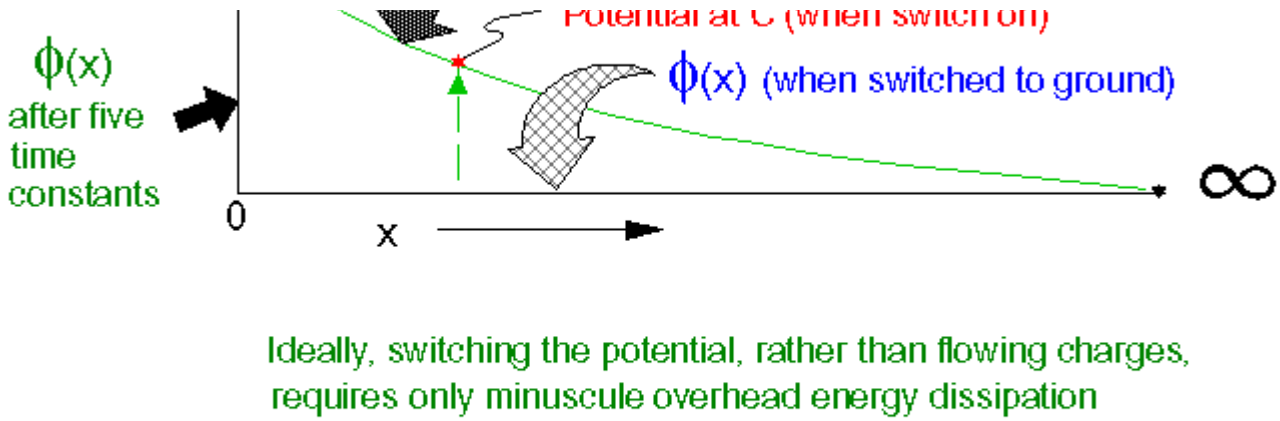

Figure 16c. Potential to which test charge is exposed.

D-1-F16C © T.E. Bearden, 1993, 1994, 1995

Open system receiving excess energy from an external source

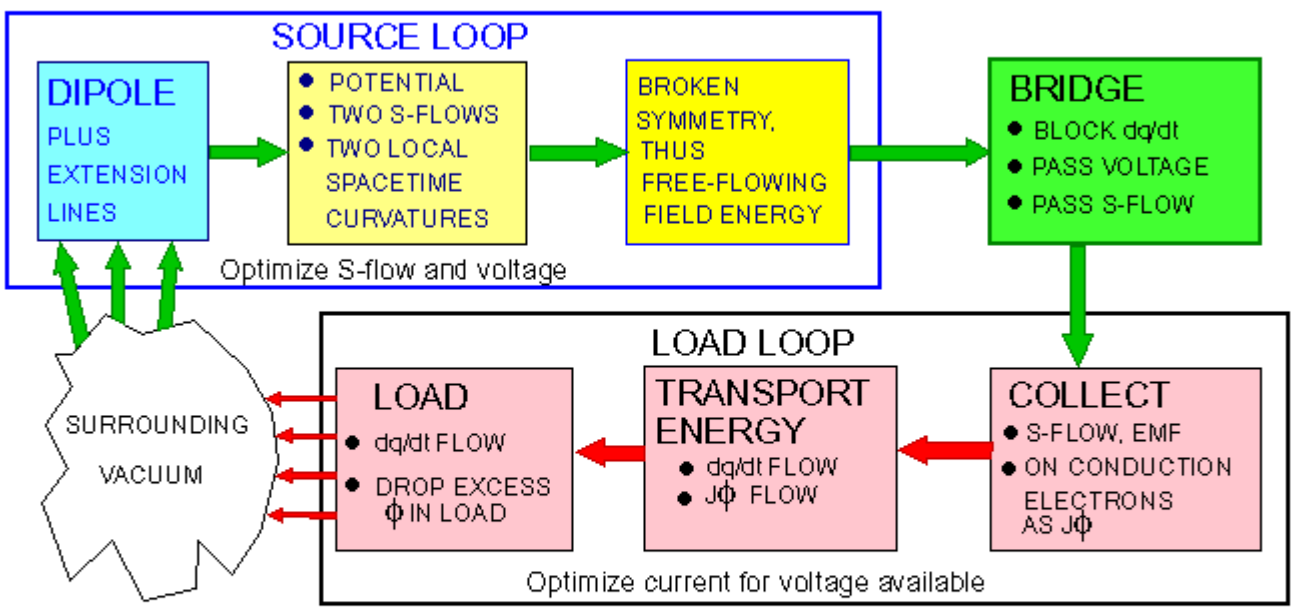

Figure 17. Operation of an overunity electrical power system.

D-1-F 17 © 1992 T.E. Bearden

We use cookies to ensure that we give you the best experience on our website. By using this site you are accepting our usage of cookies. Ok

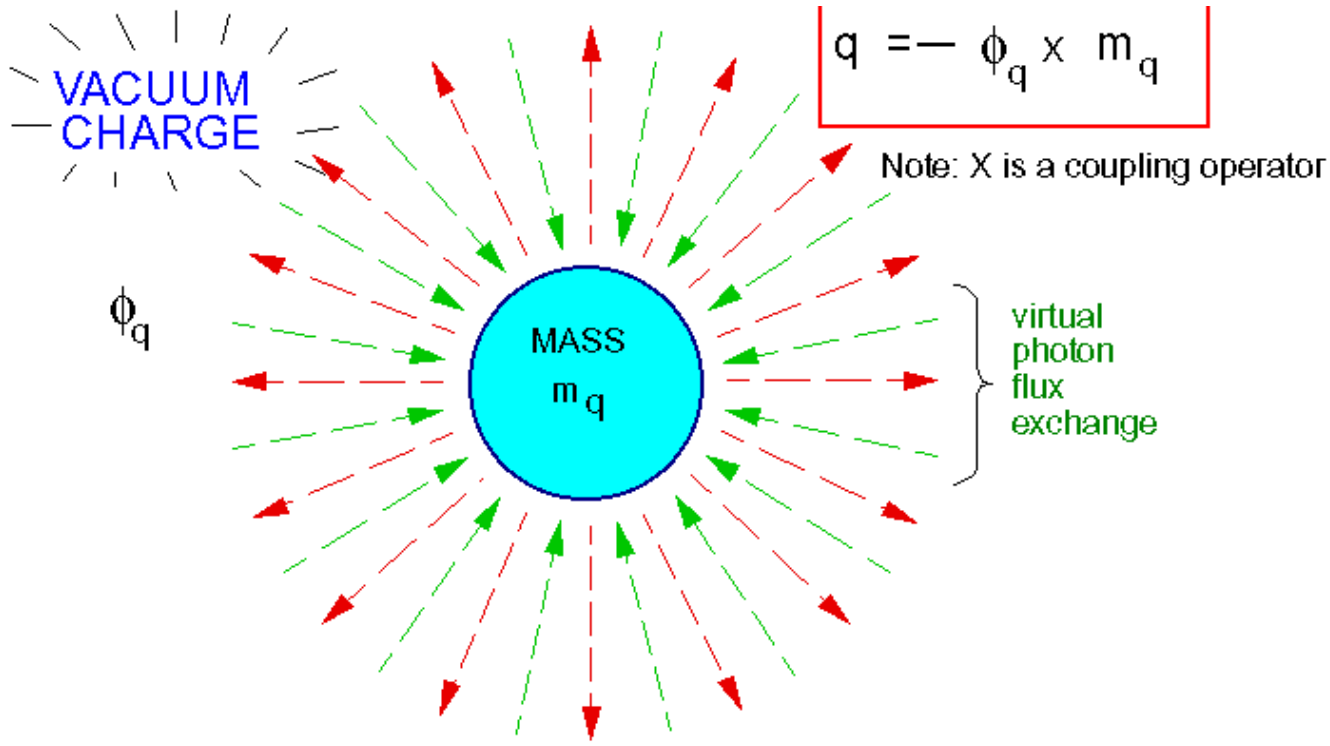

Figure 18. An electric charge q is a broken symmetry. It continuously and violently exchanges energy with the vacuum.

D-1-F 18 © 1994 T.E. Bearden

We use cookies to ensure that we give you the best experience on our website. By using this site you are accepting our usage of cookies. Ok

The Tom Bearden Website

CANCER AND THE UNRESOLVED HEALTH ISSUES IN THE BIOLOGICAL EFFECTS OF EM FIELDS AND RADIATION

- Text of Booklet
- List of Accompanying Slides (63)

The Tom Bearden Website

CANCER AND THE UNRESOLVED HEALTH ISSUES IN THE BIOLOGICAL EFFECTS OF EM FIELDS AND RADIATION

Largely taken from the author's presentation, "Mechanism for Long-Term Cumulative Biological Effects of EM Radiation," 70th Annual Meeting of the Alabama Academy of Science, University of Alabama at Huntsville, 25 March 1993.

T.E. Bearden
Association of Distinguished American Scientists
POB 1472
Huntsville, Alabama 35807

Go to Slides

Abstract

Both postulates in the conventional EM bioeffects model are in error, as is the classical electromagnetics model (CEM) itself. Major errors in CEM are presented. The QM view is taken that all EM phenomena are caused by the potentials, not the force fields. Using the Whittaker/Ziolkowski (WZ) internal structure of the scalar potential, Bohm's quantum potential and an engineerable variant of his hidden variable theory emerge. A strong candidate emerges for the internal mechanisms used for mind, thought, long term memory, and deep cellular control by Popp's master cellular control system. An environmental negative feedback mechanism is stated for long-term, cumulative causative mutation, yielding Sheldrake's morphogenetic field, which is a species quantum potential. Utilizing the new EM bioeffects model, Kaznacheyev's demonstration that any cellular death or disease can be caused electromagnetically is explained. A new definition for cancer is advanced, as is a long-term cumulative mechanism that causes it. The mechanism for Priore's demonstrated cures of terminal tumors in laboratory animals under rigorous scientific protocols is explained. A solution for the major cumulative mechanism for biological effects of EM fields and

radiation is presented. A self-targeting mechanism is presented whereby complex WZ EM biwave pumping of the "cell as a nonlinear phase conjugate mirror material" produces an exact EM antidote signal for the specific cellular disease. It is argued that inexpensive, quick, nondebilitating, cures can be developed for most major dread diseases, including cancer, arteriosclerosis, and AIDS. Priore's remarkable and previously unexplained cures of terminal tumors in lab animals are cited as examples of applying the new model, albeit unwittingly.

The Basic EM Bioeffects Model Is In Error

As is well-known, the field of EM fields and radiation effects on biological systems is actually in something of a shambles. In over 40 years of studies and experiments by careful researchers, the results are inconsistent, contradictory, and usually difficult or sometimes impossible to replicate. Attempted replications often give contradictory results, erratically. Researchers cannot rigorously answer even the simplest question, such as "Does power line radiation contribute to the incidence of cancer and leukemia, and if so, how and under what circumstances?" Causative mechanisms have so far eluded research. Powerful vested interests fund many of the studies. Consequently a great deal of controversy exists in the field. Opinions and positions range from the "microwave oven" position that "if it doesn't appreciably heat tissue, it doesn't harm biological organisms," to the "total fear" position that "any and all non-ionizing radiation is harmful; we just don't know by what mechanism." Legal actions to limit human EM radiation exposure are increasingly being initiated by concerned citizens' groups.

What has actually been "proven" by the nearly fruitless EM bioeffects effort to date is that the fundamental EM bioeffects model being utilized by the researchers is totally inadequate for the *task intended*. If that is true, then 40 more years of continuing to apply the same inadequate model isn't going to make very much additional progress. Further, if the fundamental model is faulted, then what is needed is a detailed examination of *the* model to discover and correct those foundation faults.

In tackling this model foundations problem, I have performed a systems engineering layout of the fundamental EM bioeffects model, and stated its two major postulates. Both postulates turn out to be in

error! Immediately one can easily see *why* the field is in such a state of confusion. However, no true systems engineer would stop there. I have also performed a systems engineering layout of precise corrections for the two postulates, thereby correcting and extending the model so that it can yield consistent, replicable results and causative mechanisms. All of this is a rigorous procedure, and straightforward systems engineering methodology.

However, the results point to profound changes, which I have been immersed in deeply studying for quite some time. Out of this approach has emerged something quite fundamental: *a strong candidate for the internal mechanisms used for mind, thought, long term memory, and the deep cellular control system for all cells of the body.* A mechanism for species adaptation also emerges that is quite capable of explaining (and yielding) long-term directed mutation, including the "species jump," where a species such as a bird emerges in short order (not gradually) from a species such as a reptile. The known "species jump" has been a deep mystery to evolution theory, which simply could not explain it. Another thing that has emerged is a startling new *electromagnetic* causative mechanism for cancer, leukemia, etc. At the June 1993 Brain-Mind Symposium in Los Angeles, I will present that exact mechanism. The mechanism is capable of laboratory test, and validation or falsification. We will also present an entirely new approach to EM effects on biological organisms, and present the major new mechanism involved. The new mechanism has fundamental application to the theory of diseases, and offers potential curative mechanisms for dread diseases such as cancer, arteriosclerosis, and AIDS. I explain some of the necessary background in the following paragraphs.

Classical Electromagnetics is Seriously Flawed

As is well-known, there exist severe contradictions between classical electromagnetics (CEM), general relativity (GR), and quantum mechanics (QM). As presently constructed the three disciplines cannot be unified, even by Herculean efforts. Particularly with respect to the primary causative agents for electromagnetic phenomena, the foundations of QM and of CEM are in profound disagreement. CEM assumes *the forcefields* as primary causes, paying only lip service to the potentials and treating them as primarily mathematical conveniences. QM, on *the* other hand, has long since [since 1959] shown that the force fields are simply *effects*

in and on the charged particle system, and are not causes. Instead, QM has shown that the *potentials* are the primary causes of all EM phenomena. In charged particle systems, potentials can interfere and cause observable EM phenomena such as the Aharonov-Bohm effect in the complete absence of the force fields. Herein lies *the* reason for the present dire straits of EM bioeffects research. We explain further:

CEM theory was originally formulated by James Clerk Maxwell in terms of quaternions. Note that quaternion algebra has a much higher topology than either vectors or tensors, the mathematics in which CEM is presently expressed. None of the present "Maxwell's equations" _ universally taught as due to Maxwell _ ever appeared in anything by Maxwell himself. Depending upon what you wish to call a fundamental equation, Maxwell's true equations are the numerous *quaternion* equations included in one almost incomprehensible chapter of his 1873 book. The present four "Maxwell's Equations" are in fact due mostly to Oliver Heaviside, and to a lesser extent to Gibbs and Hertz. The major player was Heaviside, a very brilliant but self-educated man who never attended University.

At the time Maxwell's book was published, Heaviside was just teaching himself calculus and differential equations. Seeing the book, he was electrified by it, and Maxwell became his undying hero. Maxwell died not long after, of stomach cancer.

Heaviside believed _ as did almost every scientist at the time _ in the older medieval tradition that *forces* were the causes of all physical effects. He had great difficulty with the potentials, stating that they were *"mystical and should be murdered from the theory."* We know today in modern quantum field theory that forces are effects, not primary causes of anything. In fact, it is the exchange of virtual particles with a mass that generates all forces upon it. As is well-known to foundations physicists today, "force" does not exist without the mass present to be acted upon, and without the action of a potential gradient upon the mass. We know that there are no force fields in the vacuum, and hence potential gradients in the vacuum are not forces, even though they are commonly assumed to be. CEM has not been corrected for these glaring defects: it prescribes force fields in the vacuum, and it prescribes that potential gradients are forces, even in the absence of any mass for the gradients to act upon.

Heaviside also abhorred the quaternion theory. The coupling of a scalar component with three directional components was, in his

view, "mixing apples and oranges." He knew that engineers would never master Maxwell's use of quaternion mathematics because of its difficulty. Consequently, Heaviside simply chopped off the scalar component of the quaternion and discarded it, then formulated this new "truncated to a vector" version as a much simpler mathematics, albeit of decreased topology. What he unknowingly threw away was the ability of the quaternion theory to capture an *internal* deterministic, vectorial EM structure of the scalar potential. *[It turns out that he also discarded the unification of EM and gravitation by throwing out the scalar component, but that is outside the scope of my presentation.]* Years later as a lonely recluse in a small upstairs apartment, Heaviside turned back to quaternions to work on a theory of gravitation, according to papers found hidden beneath the floor of his study many years after his death.

Learned journals of the day would not accept Heaviside's papers for publication, because of the assumed "brutality" of his mathematical methods. So Heaviside began publishing very practical papers in a technical magazine, for the time roughly equivalent to *Scientific American* today. These practical papers gave transmission line theory, transformer theory, etc. _ things very useful to the early would-be "engineers" who were struggling with installing telegraph lines, undersea telegraph cables, etc. The vector mathematics utilized by Heaviside was much easier to understand and apply, and his work was eminently practical. Consequently it was eagerly seized upon and applied. The result was that Heaviside's EM model became the ipso facto CEM standard. Note that, at the time, only about 30 or so scientists in the world were truly "learned" in EM _ either from the vector standpoint or from the quaternion standpoint. Further, not much *practical* work was being done by the few quaternion practitioners.

A short "debate" over whether EM should use Maxwell's quaternion model or the Heaviside/Gibbs vector model occurred prior to the turn of the century, mostly in the journal *Nature*. It never involved over a handful of scientists, and it wasn't much of a debate. The vectorists simply threw out the quaternion EM theory and adopted the vector theory of Heaviside and Gibbs. Note that this represented a substantial curtailment of Maxwell's actual theory. *In other words, you can actually do a lot more in and with EM fields and circuits than what now appears in "modern" EM theory, and "modern" EM analysis won't even show it.* Barrett's Oscillator-Shuttle-Circuit analysis of Tesla's actual patented circuits shows this clearly and resoundingly. Also, *living systems utilize the discarded subset of EM for their most vital control functions, and the present theory and*

methodology will not detect or "see " this. Thus this curtailment alone has resulted in the profound crippling of the conventional EM bioeffects model and efforts to apply it.

The Present CEM is a Flawed Subset of Nature's Electromagnetics

So we have several serious things that are quite wrong with current CEM theory. First, the theory (and its practice) are *artificially* limited to only a subset of the real EM that can be achieved and utilized. The present CEM unwittingly excludes the very type of EM utilized by living systems for their deepest control functions. It also excludes electrogravitation. Second, Maxwell's theory was actually based upon the assumption of a *mechanical (material) ether,* which meant that he could logically assign material forces to the "vacuum" or "ether fluid." Heaviside's translation (and curtailment) to vectors did not charge this "material ether" and "force field in vacuum" assumption.

However, in 1887 the Michelson-Morley experiment resoundingly destroyed the notion that the ether is material. If the ether were truly a thin material fluid, then forces and EM force fields would indeed exist in it. Since the ether is not material and forces exist only in, on, and of matter, no E-field or B-field exists in the nonmaterial vacuum; none ever has, and none ever will. In his three volumes of physics, Feynman pointed out that only the *potential* for the EM force fields exists in the vacuum; the only thing that exists in vacuum is *potentials,* after all! The vacuum is just a fantastic collection of interfering potentials and potential gradients. Rigorously, the E- and B-fields we detect with our instruments *exist only in the electron gas in the probes we utilize.* This is well-known to a few foundations physicists, but the CEM model has never been corrected for these foundations errors.

Note that the loss of the material ether also falsifies one of the three key assumptions in modern potential theory: the notion that the gradient of the potential comprises a force field. We know today that the CEM equation $E = -\nabla\phi$, is actually incorrect *for the vacuum.* It is correctly *measured;* since that is exactly what is detected when the vacuum $\nabla\phi$ potential gradient couples to the free electrons in our detecting/measuring instruments. What we detect as E, however, is actually $[(\nabla\phi \bullet (e^-)]$, or the potential gradient coupled to the

electrons, including their masses. Specifically, we do not detect the nonmaterial (VO that actually exists in the vacuum. We detect electron wiggles in the free electron gas in the conductors of our instruments; we do not detect "vacuum wiggles" per se.

Neither Maxwell's quaternion EM equations nor Heaviside's vector EM equations include electron spin effects, but actually model electricity as a "thin fluid." Hence the EM equations of either model are *fluid dynamic* equations. Specifically, the measured transverse EM waves exist in the electron gas of our detectors; any detector detects only its own internal change, *not* the external agent that interacted and caused that internal change. White the "signal" races down the conductors in our probes and sensors at essentially the speed of light, the "free" electrons in the electron gas in those conductors are *longitudinally* restrained. The electrons must essentially move laterally from their initial distribution inside the conductor to its skin, then "slip" slightly down the wire on the skin at only the electron drift velocity, which is a fraction of a centimeter per second. The spinning electrons in the electron gas, being longitudinally restrained, act as *gyroscopes.* When disturbed by an interacting force, they precess. It follows that the lateral motion of the electrons inside the conductors of our detectors is just this "electron precession." It also follows that the direction of the disturbing force must be at right angles to the electrons' measured transverse precession movement. Rigorously, EM waves in the vacuum thus are *longitudinal,* not transverse. We *measure* transverse waves in our detectors and instruments because we are detecting and measuring the *electron precession waves in the free electron gas in the conductors of those instruments.* But as Tesla pointed out, there are no Hertz waves in the vacuum; instead, EM waves in the vacuum are longitudinal "sound" waves, or *waves of rarefaction and compression of the medium.* From modern QM we also know what the medium is: it is a flux of virtual particles. Again, as can be seen, the CEM model is seriously in error in its representation of EM waves in the vacuum.

We will not pursue this further; it is well-known to a few physicists in foundations work (but not to most electrical engineers and electrical physicists!) that classical EM theory is seriously flawed, and that it should be upgraded to correct those flaws. As is well-known in QM since 1959, it is the potentials that are the actual causes of all EM phenomena, and the potentials can interfere to cause real EM effects in charged particle systems, even in the absence of the force fields. The Aharonov-Bohm effect is an

example, as are several other derivative effects well-established in the literature. What has been ignored even in QM, however, is the *organized internal structure* of the potential, even though the original (vector) discovery by Stoney occurred in 1897 and was extended by Whittaker in 1903.

This internal structure of the scalar potential had been implicitly present in Maxwell's 1873 quaternion theory, as an integral part of the scalar component of the quaternion resultant of the intera**ct**ion between two or more quaternions. In quaternions, a scalar entity may be regarded as a special quaternion entity whose translation has been reduced to zero. A vector entity may be regarded as a special quaternion entity all aspects of which are translating, and no nontranslating aspect is present. Thus the scalar quaternion entity may be totally composed of vector components, so long as they sum or multiply to a zero translation resultant but possess a finite nontranslating magnitude.

The Scalar Potential Has an Internal Bidirectional Wave-Pair Structure

In a profound but ignored 1903 paper of enormous consequences, E. T. Whittaker decomposed the scalar EM potential into a harmonic set of bidirectional wave pairs, extending the original 1897 work of Stoney. Each wave pair consists of a wave and its phase conjugate replica (its "anti-wave" or "time-reversed twin".). Thus the scalar potential has a rich internal biwave structure. [Further, one can *make* a scalar potential by simply assembling the necessary multiple waves, and one can alter the internal structure of the potential at will by altering the waves utilized in the assembly process.] In 1904 Whittaker published a formidable second paper, showing that all of CEM could readily be replaced by scalar potential *(hidden multi-wave)* interferometry. In other words, scalar EM is far more basic and extensive than is the present CEM with its emphasis upon the force fields.

E.g., you can alter the internal structure of the Schroedinger potential, and place deterministic biwave "hidden variables" inside. You can then "engineer" these hidden variables _ and consequently the Schroedinger potential _ by external means. In other words, you can even accomplish *at least limited engineering of quantum change itself.* This of course reduces the Gibbs statistics (which assumes a

totally random quantum change) to a special case, and provides a more general case of chaotic quantum change, which is still statistical but may contain hidden order. Note that this statement is experimentally testable. It also resolves the greatest problem in quantum mechanics today: the problem of the missing chaos (hidden order).

In 1989 Ignatovich placed a paper in the *American Journal of Physics* pointing out a similar internal biwave structure of the Schroedinger potential, but none of our scientists seems to have realized the profound implications. *If we apply these proven mathematical extensions of electromagnetics, we are now dealing with a higher topology hidden variable theory, along the lines shown by Bohm, but one that is engineerable on the lab bench.*

Ziolkowski's Extension Allows Hyperspatial Communication

In 1985, a brilliant EM scientist named Ziolkowski independently rediscovered Whittaker's internal biwave harmonic decomposition of the scalar potential. He also extended the "internal structure" theory, to encompass not only the sum set but also the product set. Since the product of waves represents modulation, Ziolkowski's brilliant work provides the setting for *direct information communication capability* in the internal structuring of the scalar EM potential.

Further, this internal channel is in the virtual state, so one is accomplishing virtual state engineering, in the sense of the vacuum engineering posed by Nobelian Lee. If one uses a 4-space Minkowski model, the Whittaker/Ziolkowski channel information may be viewed as *subspace* communications. If one utilizes an n-space Kaluza-Klein model, where n is greater than 4, then the Whittaker/Ziolkowski channel information may be viewed as *hyperspace* communications. *Living systems already use this inner EM channel.*

Living Systems Use the Internal Channel Communication

It turns out that living systems utilize precisely the Whittaker/ Ziolkowski (W/Z) mechanism for their deepest functions and control systems _ including mind, thought, long-term memory, and the master cellular control system (MCCS) discovered by Dr. Popp of Germany. What we are stating is that, for the very first time, *we now*

know where and how the mind's "deepest software" is, its fundamental mechanism, and how to go about programming it directly. However, we first must develop new measurement instruments.

Unfortunately, present EM instruments are almost all only "electron-wiggle" detectors; they detect only the *translation of electrons. A gradient* in the potential will couple to electrons and translate them. The *gradient-free* potential does not translate electrons, and it is the internal biwave W/Z structure of that gradient-free potential that we need to measure. Presently no known instrumentation will do that.

However, if two different scalar potentials are interfered [Whittaker 1904], their interference reproduces potential gradients [normal "force field" EM], which *do couple to electrons and translate them.* In fact, potential gradients (which in CEM are erroneously called "force fields") were already shown by Whittaker to be entirely due to the interferometry of two scalar potentials. So new "scalar interferometry" instruments must be developed to "outfold" the internal contents of the scalar potential as gradients, and then utilize normal instrumentation to measure those interference gradients and calculate the potential's internal structuring. One form for the detector is the use of a standard potential (with a known internal biwave structure) inside a Faraday-shielded chamber, so that the test gradient-free potential (which penetrates such a cage) interferes with the standard potential inside the cage to produce gradients therein. *A* probe in the interference zone detects the gradients as electron translations, which are conducted externally to amplifiers, meters, spectrum analyzers, computer programs, etc. The end result is the determination of the internal WZ structure of the test potential. Other detector types are possible; this is just a "straightforward" type.

Thoughts, Mind, Memory, and Cellular Control Are Measurable

What we are saying is that, by developing the proper instrumentation, it is possible to directly detect and examine thoughts, memory, and deep control system functioning of the biological organism, including the deep internalistics of its personal quantum potential. We are speaking of the pending emergence of an experimental science, not just a speculation.

However, we are dealing now with a form of "hidden variable" theory, but one that is engineerable and testable. So we will become directly involved with Bohm's *quantum potential*, both experimentally and theoretically. *A* quantum potential can connect widely separated systems by instantaneous effects, as if the systems were not separated but were located together as a single system. Further, the quantum potential does not have a single localized source. Suffice it to say that in 1991 I published the discovery of how a quantum potential is actually created. If one utilizes the proven "self-targeting" or iterative phase conjugate shooting mechanism from the Strategic Defense Initiative, and applies it to the WZ waves internal to the scalar EM potentials from two separated charges, then in a dense signal environment the self-targeting interaction may be initiated, so that the separate potentials merge into a single nonlocalized or "spread-out" potential consisting of laser-like beams between the charged particles comprising the separated systems involved. In that case, part or all of any EM change in one system is immediately experienced in the other systems participating in the effect. The communication is superluminal. The limitation to luminal velocity applies only to the "surface gradient" of a potential, not necessarily to the bidirectional waves in its WZ internal structure. Those internal waves are in either hyperspace or subspace, depending upon whether one models the situation in more than four dimensions or in only four.

The point is, *the quantum potential also has a W/Z internal structure.* And that structure can be deliberately created and engineered by external means. Action at a distance is not only possible but engineerable.

Living Systems and Quantum Potentials

It turns out that the living organism utilizes a quantum potential _ a *special scalar potential connecting all its internal atomic nuclei* _ for its volition, deep control, and mind and thought processes and operations. This can even be taken as a flat definition of a living system. A living system utilizes internal WZ structuring of this scalar potential connecting all the atoms (nuclei) of its body mass, for its deepest control processes. Any system not having or doing this is not a living system. This also resolves the age-old philosophical question of how mental *intent* cm cause physical response, but that is beyond the scope of my presentation. It also

explains why viruses can be precipitated out of solution as a crystal, and the crystal stored for decades. Then when the crystal is redissolved, the individual viruses separate and resume their "living" state. Suspended animation of the viruses results when their physical matter and its quantum potential remain intact, and the stored WZ structures in the quantum potentials on the atomic nuclei of that matter remain the same.

It further turns out that the species itself has a much weaker (at a deeper level topologically) quantum potential connecting all its members (all the atomic nuclei in their bodies). This corresponds to Sheldrake's morphogenetic field _ that field is just a *species quantum potential.* Jung's collective unconscious, e.g., can be directly expressed in this model scientifically and testably _ but again that is beyond the scope of this presentation.

Newton's Third Law Requires Forces to Occur in Oppositive Pairs

Newton's third law is a sleeping tiger, with surprising implications when awakened and explored. For example, it rigorously requires that forces (including EM forces) must occur in oppositive pairs, This alone falsifies the CEM notion that *oscillating "singular-force"* electric and magnetic waves appear in either a material ether or physical matter. At least two waves must exist, the wave and its oppositive or *antiwave.* Further, the wave and antiwave must be intimately coupled. Heretofore the antiwave has simply been ignored, or when anyone pointed out that it was present in our detectors, it was just considered to be "Newton's third law reaction wave." "Newton's third law" was just mysteriously invoked, as if it had no causative mechanism. Yet in quantum field theory the cause of all forces is the absorption or emission of *virtual particles.* The cause of all mechanical and electromagnetic forces is the absorption or emission of virtual *photons. So* Newton's third law for mechanical and electromagnetic reactions must also be due to the exchange of virtual photons. In other words, there was an extra half of the "something" in the vacuum that interacted with our detectors and gave us the "free electron gas's transverse precession waves. That "extra half' was exactly equal and opposite, and interacted in the atomic nuclei of the conductors and the mass of the instrument to give a set of physical Newtonian recoils. That half is equal and opposite to the half we actually recognized. The point is, equal and

opposite forces actually interacted with our instrument. Thus a stress wave interacted with it, not a unitary oscillating wave.

What occurs in vacuum must be a stress wave, not a unitary force field wave. In short, as stated (but not elaborated) by Feynman, it is a *potential* wave, or an oscillation in the potential gradients and magnitudes, not the force fields. Since in modern theory force is an *effect* and not a cause, we interpret and extend Newton's third law to state that the *causes* of all forces must occur in oppositive pairs also. Thus the cause of an EM force field must be the interaction of two scalar potentials _ just as Whittaker's 1904 paper proves.

In quantum field theory any mechanical or EM force is caused on a mass by absorption and emission of virtual photons. Accordingly, let us examine the smallest possible EM or mechanical "force" _ that one caused by the absorption of a single virtual photon. Newton's third law requires that two photons (the causes) must occur, not one. Further, in all cases, the one must be the exact antiparallel to the other. The only thing always meeting that condition for a photon is its exact antiphoton _ its *time-reversed, phase conjugate replica twin.* But a phase conjugate *replica* photon must also superpose spatially with its parent photon _ that's what phase conjugate replicas normally *do,* according to the distortion correction theorem of nonlinear phase conjugate optics. Thus instead of the conventional "single photon" interaction, the actual vacuum entity engaged in the interaction with an atom is a *coupled photon/antiphoton pair.* A coupled photon/antiphoton pair has spin-2, hence is a *graviton.*

Gravitons and Graviton Interaction

So arguably "photon interaction" has been *graviton* interaction all along. In the interaction with an atom, the graviton splits into a photon and an antiphoton. The photon usually interacts with the electron shells, being absorbed by an electron to raise its energy level, then re-emitted and scattered outward from the atom. This absorption and scattering of photons _ *containing their components of energy and time* _ from the electron shells of the atom creates movement of the atom through external observer time. The photon interaction between a mass and its environment creates the forward flow of time for that atom and its seemingly entropic external (photon interaction created) universe.

The antiphoton half of the graviton is time-reversed, which we see as *spatially* reversed. Consequently we see it move in the opposite direction to its externally-directed photon twin. So the antiphoton focuses inward and interacts with the atomic nucleus, providing the Newtonian third law recoil of the atom. The blithe assumption of an "automatic" third law reaction force has always concealed the fact that the so-called *photon* interaction is actually a *graviton* interaction. Further, the positive charge of the atomic nucleus is due to the time reversal interactions of antiphotons with the nucleons, which reverses the charge from that of the negatively charged electrons in the atom's electron shells.

Proof: Excising the Antiphoton Violates Newton's Third Law

This graviton interaction hypothesis is testable. Note that, if the hypothesis is correct, then when an atom or mass emits antiphotons or antiwaves (phase conjugate photons or phase conjugate replica waves), it means that the inward-burrowing antiphotons have been "tricked" into coming out of the atom instead, so they can comprise the time-reversed wave. If they come outward instead of going inward when they split from the parent gravitons, they do not interact with the nuclei to cause their recoil. In that case, there would be no recoil. And indeed, so it *is. In a phase conjugate mirror material, the mirror does not recoil when it emits a phase conjugate replica wave, even a powerful one due to powerful pumping.* This is not true when the mirror material emits a pseudo-conjugate wave. A pseudo-conjugate mirror, e.g., emits an ordinary "time-forward" wave with a distorted wave front, so that it will "retroreflect" in a manner similar to the phase conjugate replica wave. However, the pseudo-conjugate wave is not a true time-reversed wave. Consequently, the mirror will recoil when it emits the pseudo-conjugate wave, because the antiphotons from the graviton interaction still penetrate to the nucleus and interact there, while the time-forward photons constitute the pseudo-conjugate wave actually emitted. This is experimentally verifiable. Among other things, it establishes that there exist differences between the photon and the antiphoton.

Looking at the photon aspects of this, one realizes that one must be very careful in applying the conventional assumption that the photon and the antiphoton are identically the same. Actually they are not the same "internally." The photon can be thought of as carrying or

consisting of (+□E)(+□t), while the antiphoton can be thought of as carrying or consisting of
(-□E)(-□t). Thus both have positive spin, but differ in their internal components. The lack of recoil in a phase conjugate mirror that emits a true time-reversed replica wave is already in the literature, though derived by statistical quantum mechanical arguments. It has also been pointed out by other physicists that all measurement/ detection is actually binary, but that the "internal energy" half is almost always ignored [it's just considered to be "Newton's law", automatically revoked, and swept away in that euphemism.].

Graviton Lattice Structure of the Scalar Potential

When we examine the WZ structure of a scalar potential, in each biwave the wave and antiwave are phase conjugates. It follows that the photons in the wave and the antiphotons in the antiwave are phase conjugates also. This means that, as the two waves flow through each other spatially, photon/antiphoton pairs continually couple and uncouple. Hence gravitons continually couple and uncouple. Further, since the wave pair frequencies are phaselocked between pairs, *the scalar potential is a phaselocked lattice of statistical (continually forming and unforming) gravitons.*

Let us now consider the interactions of an organism with environmental photons as the interactions of the organism with environmental *gravitons*, and specifically with graviton lattices.

Cumulative Buildup in the Quantum Potential of the Antisignal

If the *photon half (of the graviton interactions)* in the electron shells of the living body are considered as environment signals/ interactions, then precise *antisignals* or anti-interactions, constituting perfect negative feedback from all of an organism's physical environmental experiences, are experienced in the organism's atomic nuclei. Note that there they have partially affected the internal structuring of the quantum potentials _ both the personal quantum potential and the species quantum potential. The point is, *cumulative negative feedbacks (exact phase conjugates) for all the environmental experiences and stresses an organism experiences, build in both the personal QP and the species QP of*

that organism. A part of the entire species' cumulation of species-common antisignals also exists deep in the quantum potential of the living biological system.

So for any protracted stress experienced by the organism, in its personal QP a coherent cumulative negative countermeasure feedback _ one which by its time-reversed nature would reduce that stress _ continually builds. The phase conjugates of the "well-rounded" or highly varying stresses of multiple types will tend to mostly balance or "zero out." However, a sustained stress of one kind will result in coherent cumulation and increase in the "signal-to-noise ratio" of the amplitude of the antisignal for that particular stress, compared to the amplitude of the average of all the antisignals experienced. This is similar to the case where, in a sea of radar noise, a coherent radar signal were continually present and integrating coherently. Continual coherent integration, of course, results in continual increase of the signal-to-noise ratio for the coherent signal, and eventually it emerges from the "sea of noise" as a discernible [in this case, observable and physical] antisignal.

This "cumulative kindling of antisignals" occurs in both the personal QP and the species QP; however, the species QP is many, many orders of magnitude less than the personal QP. Hence much greater time is required for "kindling" of species changes (evolution) than for kindling individual countering adaptations.

Exercising to get in shape is a simple example of physically stressing the body cells so that the high-level feedback mechanism in the MCCS will kindle appropriate antisignals and order the cells to adjust their functioning in a fashion such that the level of performance being called for can be accomplished more easily, thus reducing the stress level. The adaptive mechanism ordering the adjustment of the body cells is the coherent negative feedback in the personal QP, created from the stress signals from the sustained "workout" exercises. This is a fairly rapid, "high-level" mechanism; many other much slower (and some much faster) feedback reaction mechanisms also exist.

Hypoxia As a Result of Interference With Hydrogen Bonding to Hemoglobin

We now point out the recently discovered water H-bonding effect on

the hemoglobin in the blood, where the H-bonding activity increases the ability of the hemoglobin to carry oxygen. Some 60 or 70 water molecules surround the hemoglobin molecule, engaging in extensive H-bonding interactions with it, which substantially increases the hemoglobin's purely chemical ability to bind and transport oxygen. Importantly, contamination of this water in the blood fluid drastically affects this H-bonding benefit, and reduces the hemoglobin's ability to carry the extra oxygen. Thus contamination of the internal blood fluid by chemicals, agricultural pesticides, smoke, etc. directly and dramatically lower the oxygen availability to the body's cells, resulting in a continuing "oxygen hungry" state (hypoxia) in most of the body's cells.

It also is now known that H-bond structuring of water is highly dynamic and constantly adaptable, and it possesses a high degree of internal order. A conglomerate of H-bond structures in an area or a volume can be considered an *H-bond potential,* since the gradient oppositions sum to produce stress potentials. Thus in the H-bonding fluid surrounding the hemoglobin molecule, there exists an H-bond scalar potential, and by Whittaker/Ziolkowski (W/Z) decomposition it has a multi-wave structure. Any and all contamination of the fluid _ including by electromagnetic fields and signals, chemicals, etc. _ alters the H-bonding structuring and hence the internal W/Z structure of the H-bond potential. *The end result of adulteration of the H-bonding structure of the blood fluid is a condition of hypoxia induced in the cells of the body due to reduced oxygen transport by the hemoglobin of the red blood cells.*

Any single EM signal is the result of the interference of two scalar EM potentials, as shown by Whittaker. It is the result of the interference of the *internal EM wave structures* of those scalar EM potentials. Multi-signal EM radiation must be regarded as interference of multiple pairs of scalar potentials. These interfering potentials penetrate to the atomic nucleus in the body, and thus interact with the internal personal quantum potential utilized by the body in its deep cellular control. Also this multi-signal EM radiation, *no matter how weak,* directly interacts with the H-bonding structure of the H-bonding blood fluid. Even single-signal EM radiation still forms oppositive pairings with the weak fields already existing in the body, thus also forming W/Z structured potentials. From the interferences in the body of multiple such potentials and their internal structures, there also are created gradient (force field) interactions upon the blood cells and the hemoglobin. In short, low-level background EM radiation can also interact with the H-bonding

of the hemoglobin to seriously lower its oxygen transport capability, just as any other contaminant. The denser the external environment, the greater is the interferometry and the interference with the hydrogen-bonding augmentation of oxygen transport. It follows that, when thrust into a truly dense signal environment, some exposed individuals may receive a "cumulative H-bonding interference dosage" that, when added to their existing prior dosage, is sufficient to result in physical symptoms "ordered" into the cells by the antisignals kindled in their quantum potentials. In the recent Gulf War, many Americans were suddenly thrust into one of the densest EM signals environment in history. Shortly after returning from that ultrashort conflict, many of these exposed veterans have experienced delayed health changes presently known as "Gulf War Syndrome." While the military has attempted to portray this syndrome as "stress-induced" emotional' trauma, most of these veterans when tested are found to be emotionally stable. Further, there was much less combat stress on our troops in the Gulf war than in WWII, the Korean War, or the Viet Nam War, as shown by less than 200 combat deaths! Essentially the war was almost a "shooting gallery," and so combat stress is simply not viable as a proposed causative agent for the Gulf War Syndrome.

Chemical, Mechanical, and Electrical Interactions are Electromagnetic Anyway

Indeed, chemistry is largely due to electric charge and charge distribution anyway. So if we view the physical contaminants in the blood view *chemically,* they are caused by electromagnetic means at root basis. Thus even the "chemical" contaminants interact electrically and via potential (multiwave) interferometry with the H-bonding potential. Further, in quantum field theory, all mechanical forces are due to the exchange of virtual photons, and hence also are *electromagnetic at their very basis.* The bottom line is that all chemical, mechanical, and electrical interactions are in fact electromagnetically caused. Further, since both the internal and external structures of the potential are engineerable, the mechanical and electrical forces on the mass particles _ and the virtual photon exchanges causing these forces _ are directly engineerable. *All of these chemical, mechanical, and electrical interactions in the cells can be affect*ed *and even engineered electrically. This is true from the atomic nucleus, to molecules, to material lattices, to human cells, to tissues, and even to the mind and long-term storage templates (internal WZ structured forms in the QP) in the biological organism.*

As cam be seen there are many other weaker, direct interactions of "force-field" radiation; however, here we are interested in the interaction of that radiation with the inner structure of the H-bond potential'., to reduce the oxygen transport capability of the hemoglobin. *In any case, the total sustained interaction of chemical and physical contaminants and EM fields and radiation can result in a sustained oxygen-deprivation (hypoxia) condition for the body cells, even to a dramatic degree.* Further, by graviton interaction, *a sustained, cumulated set of antisignals is also automatically generated in the personal quantum potential as a set of negative feedback signals to take corrective actions to alleviate the oxygen depletion condition.* Note that the cumulating antisignal condition is general and affects the immune system and its cells as well.

The Example of Smoking

Obviously the tars, particles, and nicotine of the smoke inhaled by the smoker dramatically contaminate the fluid in the smoker's lungs, in the very place where the hemoglobin of the red cells is taking on oxygen. Drastic interference with the H-bond stimulus of the hemoglobin occurs. The result is an immediate and dramatic reduction of the oxygen-transport capability of all the hemoglobin in the red cells as they pass through the contaminated lungs and are exposed to fluid contamination. An immediate oxygen-deprivation condition thus is created in the body. Due to the magnitude of the stressing signal, the major portion of the antisignal is also of substantial magnitude _ hence immediate counteraction orders accumulate in the personal QP, specifically in Popp's master cellular control system. So very rapidly the body has negative feedback countersignals from the central cellular control system, ordering the body to take actions to reduce the cellular need for oxygen. The metabolism is lowered, the body relaxes, and the appetite is suppressed; all counters to the cells' hypoxia condition by lowering the cellular requirement for oxygen.

In spite of heroic "high level antisignal" physical cellular compensations to reduce the use of oxygen, however, the condition of cellular oxygen shortage may still continue, in the case of the smoker or substantial environmental contaminants such as secondary smoke. So in addition to the prompt countersignals, additional much-

weaker countersignals are also slowly accumulating in the personal quantum potential's central cellular control system.

Cumulative, Deep, Long-Term Countering Signals

We now need one additional bit of information. In addition to its personal quantum potential, a biological organism also is connected to a species quantum potential joining all the members of its species. This is a much weaker quantum potential; nonetheless, potentials superpose, so one small "part" of the personal quantum potential is actually the species quantum potential _ in other words, Sheldrake's morphogenetic field. Deep within its own personal quantum potential the living system also possesses all the cumulatively ordered steps (species antisignals that were implemented) of its species evolution. With very *long coherent cumulation, countersignals can be stimulated in the individual bio-organism's quantum potential _ and in its deep cellular control _ that are counters to the original signals that ordered directed mutation and the primeval evolution of the constituent cells themselves.*

In a sustained cellular hypoxia stress environment, the "do whatever is necessary to reduce oxygen usage" countersignals will continue to cumulate from successively deeper levels in the QP over an appreciable time. These continue to slowly "kindle" after the "first high-level antisignal actions" that cumulated past the "noise" (quantum) threshold reached their limits of physical reactions and are still insufficient to resolve the problem. As the hypoxia stress in the cells continues, then much weaker but coherent countersignals that trigger deeper cellular adaptation actions eventually have time to cumulate past the quantum threshold to the observable state. These long-term cumulated antisignals come from much deeper, even from the species quantum potential itself.

These cumulating deep countersignals are phase conjugates _ *reversals, or dedifferentiation commands* _ of the previous directed mutation signals that ordered evolutionary changes in their predecessor cells in the far distant past. *These long-term antisignals thus contain a signal to reverse the original cumulative countersignals in the cellular species potential that caused the cells early ancestral anaerobic cells on earth to change (differentiate) into largely aerobic cells, after the earth's atmosphere acquired significant amounts of oxygen. In short, a deep signal is slowly*

cumulating that, when it emerges, will order the dedifferentiation of the affected cell back down the evolutionary road toward the anaerobe. The first steps are reductions of centralized cellular control, including growth control.

In other words, under sustained cellular hypoxia a countermeasures signal to the cells, ordering them to dedifferentiate back toward the anaerobic state, is slowly building in the personal quantum potential from a much weaker, lower level "under the common countersignals noise level" all the while. If significant oxygen-deprivation continues for a sufficiently long time, this deep countersignal eventually emerges in Popp's MCCS system in the personal QP, *ordering the affected cells to dedifferentiate back toward their anaerobic state.* The first step back is to break away from centralized control by the higher organism _ which results in individual "tumerous" or "uncontrolled" cells. *From sustained cellular hypoxia there exists a slowly increasing precancerous state, even years before the outbreak of physical cancer.* This precancerous state has great influence upon the "single cells" of the organism, which includes the cells of the immune system. Thus the precancerous state is characterized by increasing errors in, and slow weakening of, the immune system. Arthritis and similar debilitating immune system disorders appear to be largely the result of this "precancerous" long-term cumulation.

Note that the most stressed cells in the body automatically provided the greatest magnitude of "negative feedback input." Notice also that the feedback is a phase conjugate replica; it therefore "backtracks" its initiating stress input signal. In short, the degree of feedback antisignal received by a cell or group of cells varies according to the degree of stress they experienced. Thus those cells sustaining the longest and greatest stress get this drastic dedifferentiation countersignal first. E.g., this accounts for the (usual) localization of the resultant tumor in the lungs of a smoker, at least initially. It also accounts for the stress-damage mechanism for such disorders as arthritis.

A New Definition of Cancer

In the new model being advanced, *cancer and leukemia are centrally-commanded. final, desperate. "first-step dedifferentiation" adaptive attempts by the stressed. affected cells experiencing sustained oxygen shortage (hypoxia) to reverse their cellular*

evolution and return to the anaerobic stage of their distant ancestry.

The cause of cancer and leukemia _ and indeed of all diseases _ is *electromagnetic* in nature, and it can be straightforwardly treated and cured *electromagnetically,* if one utilizes the extended W/Z aspects of the higher topology EM actually written by James Clerk Maxwell. This statement is based on experimental proof; it is not conjecture. We discuss that proof below.

As we saw, in general the strength of the cumulating countersignal inversely depends on the distance in the body of the affected cells from the source of greatest contaminant stimulation. As the deeper "dedifferentiation" countersignal reaches the quantum threshold in the most affected area, a small group of localized cells located there take the first step back along the "single-anaerobe to single aerobe to multiple aerobe" evolutionary chain. That first dedifferentiation step breaks the cells away from centralized control of the MCCS in the personal quantum potential. Those dedifferentiated cells become independent cells or a small independent cell-groupings. They constitute a *tumor,* or *leukemia* if occurring in the blood cells. They simply are no longer under the control of the body's MCCS in the personal quantum potential, even though the body's logistical services (nutrients, oxygen, etc.) continue to be furnished to them.

At this point the tumor becomes an independent cellular organism, living in an environment where its body host continues to furnish its food and oxygen, and its host's immune system cells do not recognize the altered cells as foreigners to be attacked and destroyed. Consequently there is no "large organism" central control of the tumor's growth, and the tumor cells divide and multiply apace. This loss of centralized growth control and the resulting unchecked cellular division and replication is in fact recognized by scientists as the major distinguishing characteristic of cancer and leukemia. With central control lost, groups of cancer cells or individual cancer cells may break away and travel to other locations in the body via body circulation systems. This results in metastasis, the spread of the cancer to other sites in the body, where they continue to be recognized as "self" by the immune system cells and continue to be supplied with oxygen and nutrients for continued growth.

The Tumor Has Become a Parasite Organization

Think of it this way: In a living body, each cell is already a single, independent, living creature all its own. It even has its own small "personal quantum potential" _ we have argued that that is an *a priori* condition of being alive. However, each cell in a multicellular organism normally is under a centralized electromagnetic control system (which functions in the organism's higher-level personal quantum potential), so that the organism lives and functions as an overall higher-level unit. If a cell (or group of cells) has separated from this centralized EM control, but is still living and functioning, then obviously the cell is no longer under the whole organism's MCCS and personal quantum potential. However, it still possesses its own control system, and its own personal QP. If the breakaway is by a small group of cells, then they are loosely under a "small group" quantum potential and MCCS as well. That is, they have gone from "large-scale central control" to a "much lower" level of centralized cellular control, accounting for the "tumor as an individual multicellular entity." Nourished by the host body, the new parasitic organism _ the tumor _ grows at an unchecked rate. Again, we argue that *the problem is electromagnetic in nature, and it can be "fixed" electromagnetically.*

The Cumulative Pre-Cancer State

With this picture of the long-term cumulative causative mechanism for cancer and leukemia, a far better picture of the pre-cancer state has emerged. The pre-cancer state is a hidden EM change of state comprised of a *cellular dedifferentiation order,* back down the species' cellular evolution trail, and the magnitude of that change of state is slowly increasing inside the organism's quantum potential. The eventual observable cancer is an actual cellular dedifferentiation due to the localized breaching of the quantum threshold by this cumulating hidden EM dedifferentiation order to move away from centralized control and back toward the anaerobic cellular state.

Becker's Profound Experiments

It has already been experimentally shown that very minute amounts of direct electrical currents, e.g., can cause cellular dedifferentiation and redifferentiation. In breathtaking work of Nobelian quality, Becker has proven that even picoamperes of localized electrical

current are sufficient to cause cellular dedifferentiation and redifferentiation, even repetitively. Incredibly, he proved that this was true for red blood cells, which first dedifferentiated to more primitive cells, the redifferentiated to precursors of cartilage cells, then redifferentiated to bone cells in a "bone fracture" area and healed the bone fracture. Since picoamperes can be generated by the cumulative countersignal mechanism (via Whittaker scalar interferometry), directly affecting the MCCS and the cells as well, then the connection between scalar potentials/potential interferometry and *dedifferentiation* mechanisms assumed to be involved in cancer and leukemia essentially follows from interpretation of Becker's pioneering work. To further strengthen the assumption, Hsue has recently (1993) shown that a DC voltage is in fact equivalent to two bidirectional EM traveling waves _ which directly indicates a WZ type implication in Becker's profound work itself. Thus Becker actually utilized a hidden, bidirectional WZ wave structure inside the voltage gradient between his electrodes in his DC current dedifferentiation and redifferentiation of blood cells. He conclusively demonstrated that cellular dedifferentiation and redifferentiation _ both of them *genetic* changes _ can in fact be caused by such an internal biwave EM structure of a steady, persistent scalar potential gradient. Further, he demonstrated that *these El~-induced cellular genetic changes can be self-targeted toward reversal of the specific damage condition, even though several successive genetic changes may be necessary m reach the ultimate cellular genetic form required for healing.*

Pre-Cancer State and Prognosis For Treatment Effectiveness

To summarize, whenever a cancer or leukemia detectably exists, regardless of the cancer site, a pre-cancer state also exists in the remainder of the body, and the immune system is affected generally. Further, this pre-cancer state pre-existed the actual emergence of the tumor itself. The new EM bioeffects model also sheds light on the probable effectiveness of conventional treatment, and probability for a "cure" that lasts for the rest of the patient's life.

If the cumulative countersignal slowly kindling in the remaining pre-cancer state is sufficiently below the quantum threshold, then conventional treatment of the cancer _ such as excision _ can eliminate the tumor, and no other tumors may then develop before the normal physical death of the body, even though slow increase of

the pre-cancer state continues. In other words, in that case the cumulative antisignals in the pre-cancer state locations other than the original cancer site never reach the quantum threshold prior to the natural death of the patient. On the other hand, if the cumulating antisignals in the pre-cancer state generally are very close to the quantum threshold, then recurrence of the tumor is highly likely. In the first case the curative prognosis is excellent; in the second case it is poor.

Also, we point out that many present treatments (such as nuclear radiation) themselves cause significant stress on the body and its cells and further deterioration of the immune system. They also generate an additional "antisignals" level in the personal quantum potential, resulting in an actual *increase* in the level of the pre-cancer state in the organism. If the combination of the pre-cancer state at time of treatment, plus the increase in the pre-cancer state due to treatment, is sufficient to breach the quantum level, then that treatment will prove to be of little or no avail to the patient. The tumorous condition will recur, and sometimes massively (the tumor metastasizes), regardless of whether further treatment is given or not. In that case the patient will die, unless somehow the pre-cancer state is lowered, the tumor cells are reverted back to centralized cellular control, and the immune system is restored to effective functioning so that excess cells are eliminated. Presently there is no conventional treatment that is capable of accomplishing the three requirements for a desperately ill patient's recovery from the "terminal" cancer condition.

Seeking the Complete Cancer Cure

From the new EM definition of cancer and leukemia and the new cumulative causative mechanism, one can see just how severely limited are the present medical weapons against this dread disease. It follows that, *if the cause is totally electromagnetic, then a totally effective treatment can only be sought as an electromagnetic therapy. Since the EM cause is in an extended EM domain, then axiomatically a totally effective treatment can only be sought in the same extended EM domain.*

The complete cure for cancer and leukemia, of course, would be to completely neutralize or "zero-out" the patient's cumulative Whittaker/Ziolkowski countersignal buildup in the MCCS/personal

QP. This can be done *prior to* the cumulation reaching the overt physical disease stage, or *after* it has already reached that stage. It can readily be done electromagnetically, using the multi-biwave tailored EM and self-targeting to provide an exact counter-countersignal (or antidote signal) to the cumulation signal itself. *This is a scientific fact and it has been rigorously proven, although the methodology could not heretofore be technically explained and understood.*

Priore's Cure of Terminal Tumors and Other Diseases

Such a total cancer-curative procedure was repeatedly demonstrated in live animal experiments in the late 1960s and early 1970s by Antoine Priore in France, under rigorous scientific protocols and supervision by eminent French scientists [such as Robert Courrier, head of the Biology Section of the French Academy of Science, and *Secretaire Perpetuel* of the Academy at the time]. The advantage of the Priore type approach was that it rapidly reversed the dedifferentiation away from centralized control of the affected (tumor) cells. The tumorous cells simply redifferentiated back to normal cells under centralized control of the MCCS/personal QP. (If too numerous because of the tumor's growth prior to its redifferentiation, normal body mechanisms absorb and dispose of the excess cells). Further, such treatment removed *all the pre-cancerous state from the rest of the body, preventing recurrence or spread of the tumor*. It is the only "total cure" for cancer, including the cumulated pre-cancer state, that has ever been scientifically demonstrated. And lastly, it accomplished these results without severe trauma to the body or further trauma to the immune system. Indeed, the exact opposite was the case.

Working with Priore, the eminent French scientist Pautrizel showed that the Priore treatment restored and stimulated the immune system back to its robust normal functioning, as would be predicted by the present model we are proposing.

Scientists at the Time Did Not Have the Necessary Knowledge for Understanding

It is a great tragedy that the active mechanism of the Priore device

was not understood _ even by Priore himself and even by very knowledgeable physicists assigned to the program to try to ascertain the machine's mechanism. The phase conjugate or "time-reversed" EM wave was unknown until it was discovered in the open Soviet literature in 1972. Almost all of our knowledge of such waves dates from that time. In the same year, two Soviet scientists briefed American scientists at Lawrence Livermore National Laboratory on *optical* phase conjugation. Thereafter, some American scientists began intense work on optical phase conjugation.

However, the time-reversed wave is a solution to the wave equation and applies to all kinds of waves, not just EM. Phase conjugation of sound waves, e.g., is readily accomplished. The time-reversed wave solution actually appeared in the scientific literature in 1898 in a paper by Barus, who pointed out that this strange solution "made the wave run backward." But at the time the Priore program's funding was withdrawn by the French government about 1974-75, little or no understanding of the time-reversed EM wave existed as yet in the West, and of course the Whittaker work had always been ignored and was unknown also. *Literally, with the technical tools available to them at the time, the French physicists, biologists, and oncologists had no chance at all of fathoming the causative mechanism in the Priore experiments.*

Nature of the Priore Treatment

Briefly, Priore mixed some 17 frequencies in a rotating plasma in a giant tube. We know today that one function of the kind of plasma he used is to produce a phase conjugate replica wave, for an input wave. Thus Priore unknowingly achieved coupled wave/antiwave pairs in his device. The output of the plasma tube was then coupled to (modulated upon) a "rippling magnetic field" of appreciable strength. The magnetic field guaranteed penetration of the entire body and every cell in it, carrying its modulated Whittaker/ Ziolkowski internal potential structure with it. The "ripple" in the magnetic field guaranteed penetration to the atomic nuclei, and interaction with them, via nuclear magnetic resonance. In turn, unknown to Priore or the scientific team, this guaranteed the interaction of the plasma-produced W/Z structure with the internal W/Z structure of the personal QP joining those atomic nuclei. Thus the Priore approach (1) formed a deliberate counter-counter signal W/ Z structure; i.e., Priore constructed a *specific electromagnetic*

antidote, (2) carried that antidote into all the atomic nuclei of the treated body by nuclear magnetic resonance, and (3) caused interaction with and neutralization of the internal W/Z dedifferentiation countersignal structure already present in the personal QP joining all the atomic nuclei of the treated body, *zeroing out or canceling the tumorous and pre-tumorous states existing throughout the body.*

The end results were that (1) the cumulated counter-signal to the tumor cells to dedifferentiate back toward anaerobic cells was removed, (2) the body's own centralized cellular control over the tumor cells was restored, and (3) the entire cumulated pre-cancer counter-signal pattern in the personal quantum potential was removed. In short, the individual organism started over again with a "clean slate" insofar as long-term cumulation of cancer-inducing signals in the personal quantum potential was concerned.

Furious Reaction by Orthodox French Oncologists

The Priore material, device, procedures, and results are all properly documented and presented in the peer-reviewed French medical literature. Priore obtained both French and U.S. patents on the device and on his treatment process. Robert Courrier, head of the Biology Section of the French Academy of Science, personally introduced the astounding Priore team results to the Academy. It caused a furor, and a vicious reaction of most of the orthodox French oncology establishment. Because no one could understand how the mechanism worked, there was loud and raucous insistence that "science must not be done with black boxes!" This overly pious attitude is strange, since the Priore results were multiply replicated and scientifically impeccable, and such things as aspirin were utilized for decades before their active mechanisms were understood. Indeed, in epidemology the use of vaccines and such is directly based on statistically showing that the results are real, even if the active mechanism is not understood.

When the French Government changed to a leftist government in the mid 1970s, the implacable foes of the Priore work prevailed, and the new leftist government withdrew all further funding. Priore later died, and that was the end of that.

Of all areas and treatments known to this researcher, the Priore

approach is the only one that has been rigorously and scientifically proven in laboratory animals, was essentially 100% effective, and was performed under proper rigorous scientific protocols. That it has continued to be ignored by the medical and biological communities is a profound tragedy, but one due more to ignorance of the active mechanisms for the treatment than of deliberate intent.

There Is Also Deliberate Suppression

Nevertheless, there is also an element of deliberate suppression involved. Some years ago I was personally involved with a special group in an effort to restore the Priore device, when Priore was still alive. Our group obtained a tentative agreement with both the French Government and with the Priore group. The Priore machines were to be rebuilt in Bordeaux, France under the personal supervision of Priore himself. Some of the scientists who had worked with him were still alive, and would have been involved in the project. Our group had some $16 million support pledged by some wealthy backers to fund the project.

Almost immediately after our group's successful conclusion of the tentative agreements, the lives of all our backers and the lives of their families were threatened. All backing was withdrawn. The leader of our group, a Nashville businessman, came under sustained personal and business attack. He eventually lost almost everything he had, and fled this country for his life. He is still in hiding to this day. Antoine Priore then died and that was that.

The only part of the project that remained was my own grim determination to eventually provide the detailed mechanism by means of which the remarkable Priore therapeutic cures were accomplished. Success has finally been achieved after a decade of unrelenting struggle to completely explain the cause of cancer and the active mechanism by means of which the Priore group obtained such astounding scientific results.

I strongly urge medical science to take a new, hard look_ both theoretically and experimentally _ at the proven anti-cancer results obtained by Antoine Priore and the noted scientists who worked with him. I also strongly point out that new thinking, new theoretical tools, and new experimental instrumentation are needed for that re-examination. In addition I have pointed out the precise nature of the

new thinking, tools, and instrumentation required.

What About Other Diseases Such As AIDS?

The question now arises about other diseases, particularly AIDS. Can the expanded Priore methodology provide equally dramatic cures of dread diseases other than cancer and leukemia? Can it conceivably cure AIDS? The answer is a resounding "Yes!"

Almost all disease conditions are electromagnetic in nature, in the sense of the extended EM bioeffects model we have outlined. The basic methodology of forming a counter-countersignal to a specific disease state can be extended to many other diseases, and to AIDS as well. The "self-targeting" effect in the cellular dedifferentiation induced by the extended EM methods results in a countersignal being produced to the *last major genetic change undergone by the diseased cell.* In the case of an HIV-infected cell, its genetics have been changed (differentiated) from normal to infected. In its internal WZ structure, the strongest resultant signal complex is thus the HIV infection differentiation command. *When pumped by the internal bidirectional WZ wave structure of the applied scalar potential, the "cell-as-a-nonlinear-phase-conjugate-mirror-material" generates a precisely tailored anti-AIDS cellular genetic dedifferentiation signal. The cell thus dedifferentiates back to a normal cell with normal genetics.*

In addition to Priore's work and Becker's results, the remaining experimental foundation for our startling statement on extended-EM reversal of AIDS was established decades ago _ as early as the late 1950s _ by the Soviet researcher Vlail Kaznacheyev.

Implications of Kaznacheyev's Experiments

In some 17,000 experiments Kaznacheyev showed that *any* cellular disease or disorder can be transmitted between cell cultures "electromagnetically" in an unknown fashion. The model we have briefly advanced here, if slightly extended to include the concept of the W/Z structure being a *graviton lattice structure, is* fully capable of explaining Kaznacheyev's results, the mechanisms, etc. This EM-transmission of disease effect shown by Kaznacheyev is known as

the *cytopathogenic mirror effect*, and it has been replicated by researchers at the University of Sydney in Australia, at the University of Marburg in Germany, and by at least one researcher in the United States.

In short, what Kaznacheyev's research showed is that there exists a specific EM signal pattern of some mysterious, not-understood nature that can induce a specific cellular disease in a group of cells absorbing that signal pattern. If we regard the healthy state of the cell as "condition A" and the specific diseased state as "condition B," then specific EM signal pattern C causes the cell to move from condition A to condition B. It immediately follows that an antisignal to C _ that is, the phase conjugate of C, which is a time-reversed replica of C _ will move the diseased cell from condition B back to condition A, curing the disease. Time reversal of "sickening" is "healing." It follows from Kaznacheyev's work that (1) a specific signal pattern exists as the causative inductive factor for each specific cellular disease, and (2) a specific "antidote" signal pattern exists as the causative curative factor for that specific disease, the antidote signal being merely the time reversal or phase conjugate replica of the cytopathogenic signal. While Kaznacheyev never publicly produced the cytopathogenic mechanism, such a mechanism follows from the WZ extension of EM, and the long-term causative disease-induction mechanism I have advanced.

Creating a Specific "EM Antidote" to a Specific Disease

Consider the cumulative EM causes of changes to a cell, including to its genetics, as a serial chain of signals. Indeed, consider them as the layers of an onion, where the outer layer is the most recent. Additional layers may be added to the onion by "time forward" actions, or "differentiation" actions. If we now wish to "peel" the onion, that too is a successive, serial action, accomplished by "phase conjugate" or "time reversal" operations. These result in serial cellular dedifferentiation actions. By treating the cell and its genetics and internal parts as "highly nonlinear material structures and therefore phase conjugate mirror materials," we can "pump" the cell and its parts by bidirectional EM waves to convert the cell to a pumped phase conjugate mirror (PPCM). By orthodox nonlinear phase conjugate optics theory, with a signal wave present, the PPCM cell will emit a precise phase conjugate replica (PCR) wave. If we pump the cell with a complex of pump biwaves, the cell can and will

emit a precise phase conjugate wave complex in response to a complicated signal wave complex input that is present.

For a diseased cell, we regard the disease as a differentiation of the cell, and the primary cause of the differentiation (the EM cytopathogen) as a complex WZ waveset infolded inside the personal quantum potential (in which all the body's cells exist and in whose internal signal dynamics they participate). With the pumped cell as a PPCM, and the EM cytopathogen present as an input signal wave complex to the PPCM, a precise, amplified, "EM antidote" PCR wave-complex is emitted by the parts of the PPCM cell. Each part gets a PCR complex signal order, dedifferentiating that part back the first step. A diseased part steps back to a normal part. A normal part steps back to a normal part. The diseased cell is thus dedifferentiated back to a normal cell with its parts all normal. Because the PCR wave complex is amplified, the dedifferentiation is must faster than was the original dedifferentiation. Thus an HIV-infected cell that has been "dormant" for an extended period can still be dedifferentiated back to a normal cell that is HIV-free.

So a self-targeting counter-countersignal can be automatically "developed" and generated in the body's diseased cells, for each specific cellular disease or disorder condition, or even for a mix of diseases and disorders. This is accomplished by the automatic phase conjugating action of the "cell-as-a-PPCM", when pumped by the hidden EM bidirectional structure of a scalar potential. In practice, Priore did find it necessary to adjust the particular frequency mixes he used for different disease conditions. We hypothesize that this adjustment was necessary to arrive at the proper pump wave complex that would in fact allow the proper PCR wave complex to be emitted for a particular disease type or class. Although photobiologists regularly report mitogenetic radiation emitted by a cell in the optical region, the effects desired in the cells can be produced by a different frequency regime, because of the known phenomena of nonlinear harmonic and subharmonic resonance. Since in a W/Z structure it is the *harmonic intervals and their relative relationships* that are of fundamental importance, the frequency regime of a detected W/Z structure can be shifted either harmonically or subharmonically. Priore, e.g., worked at radar frequencies in the low gigahertz range. For simplicity we may think of the frequency complex as a sort of "musical chord" composed of multiple tones. We may play the same "chord" either on the high scale or a lower scale, and still recognize the tune if the relative frequency interrelationships of the tones are retained.

A Possible Simplification of Priore's Methodology

If we turn away from the classical vector/tensor EM model presently in vogue to a higher topology EM model such as quaternions or Clifford algebra, the extended EM bioeffects model can be mathematized and refined by experiment. For example, Barrett has shown that the nonlinear phase conjugate optics effects can be obtained in ordinary circuits without the use of optical materials, when those circuits are designed and function in accord with a higher topology EM such as quaternions. Thus the circuitry of the EM emission devices themselves can be constructed to perform time-reversal of EM waves, phase conjugate replicas, 4-wave mixing, and pumped phase conjugate mirror effects, without use of normal optical materials or procedures. Priore utilized a plasma in a giant gas-filled tube, in which to mix his 17 frequencies and accomplish (unknown to scientists at the time) phase conjugation. Barrett's work implies that the necessary phase conjugation, and amplification, can be accomplished by purely electromagnetic circuitry, once the functioning of the circuitry is designed and understood in a higher topology algebra such as quaternions or Clifford algebra.

Priore demonstrated cures for diseases other than cancer. Different settings produced cures for sleeping sickness, e.g. Clogging of the arteries was also completely reversed by a variation in the Priore treatment. In addition, Pautrizel working with Priore positively demonstrated the restoration of vigorous, natural functioning to the immune system of the treated animal.

Kaznacheyev's Viral Disease Experiments: Implications for an AIDS Cure

Kaznacheyev has already demonstrated that viral-caused diseases can be induced by purely EM means in cell cultures. What this means is that cellular genetic changes also are electromagnetically induced at root basis. We regard this as a cellular differentiation. But both Becker and Priore have shown that cellular dedifferentiation can also be induced electromagnetically, by the extended scalar EM. It follows that viral-caused diseases _ including AIDS _ can be cured by purely EM means, simply by creating the proper dedifferentiation signal complex in the diseased (differentiated) cell. To determine the

proper disease induction (dedifferentiation) signal pattern for the disease, the disease-inducing signal complex must be phase conjugated, and the phase conjugate replica must be amplified. The phase conjugate replica may be stimulated at the proper frequency regime by a signal complex at a much lower frequency regime. Hence the detectable photobiological optical cytopathogenic signal complexes may have their PCR counterparts stimulated by irradiation with a proper signal complex at a lower frequency regime (e.g., millimeter wave band) for use in treatment

In Conclusion

Again we strongly accent that one must take the "musical" approach: A disease pattern or a curative pattern is a complex of special frequencies and their antiwaves, similar to a musical chord. That same chord can be played in a higher or lower key, and the body will still determine the correct relationships by harmonic or subharmonic oscillation. It will still recognize the "melody" and its background chordal accompaniment; although the *individual* frequencies have changed, their *relative* relationships have not changed.

All biochemistry, genetics, and cellular effects are subject to affectation and control by proper manipulation of the W/Z structures inside scalar EM potentials. We have stated that the living organism already utilizes the internal EM structuring for mind, thought, and long-term memory, as well as the master level cellular control system we have accented. For the first time, the "software" and "firmware" of the mind appears to be directly available, something which has never before existed in science. The model advanced in my work is intended to point the way toward such use in medical science on a substantial scale, to achieve healthier, more effective, and far cheaper treatments for many of our desperate diseases that presently require costly, protracted treatments, often harsh and debilitating in and of themselves. We strongly believe that, given the direct attention of the scientific community and proper funding support, near-total, quick, and very economical cures can be developed for such dread diseases as cancer, leukemia, and AIDS. We point out also that the Priore team demonstrated cure of sleeping sickness in lab animals, as well as the direct unclogging of arteries and other blood vessels.

We also strongly accent the "self-targeting" feature when the

diseased cell is "pumped" as a phase conjugate mirror material by the internal WZ biwave structure of an artificially-structured scalar EM potential. The cytopathogenic disease-induction signal complex is present in the cell and all its parts. By varying the frequencies in the internal biwave structure of the pumping potential, and hence in the pumping of the cell-as-a-PPCM, the cell is enabled to produce from and into all its parts the proper phase conjugate replica wave complex for its specific cellular disease. *Hence it produces a specific electromagnetic antidote for its own specific disease condition.* We need only adjust the frequency content of the artificial potential until the proper PCR signal complex is produced. Further, that PCR wave complex is amplified because of the pumping. Therefore the "treatment time" can be very short, and need not be anywhere near as long as the time originally required for the cytopathogenic EM signal complex to cumulate.

Today a variety of dread diseases continue to plague humankind. Untold millions of persons are suffering and dying, when the beginning of an effective, quick, inexpensive therapeutic approach capable of essentially 100% cures of cancer, leukemia, and other diseases has been demonstrated more than two decades ago.

With the exposition of the fundamental mechanism for this new therapeutic approach, perhaps the scientific community will return with renewed vigor to develop this promising area and alleviate the death and suffering so widespread today.

LIST OF KEY REFERENCES

Aharonov, Y. and D. Bohm. (i959) "Significance of Electromagnetic Potentials in the Quantum Theory," Physical Review. Second Series, Vol. 115, No. 3, p. 458491.

Aitchison, I.J.R. (1985) "Nothing's plenty: the vacuum in modern field theory." Contemporary Physics, 26(4), p. 333-391.

Amato, Ivan. (1992) "A New Blueprint for Water's Architecture," Science, Vol. 256, Jun. 26, p. 1764.

Barrett, Terrence W. (1990a) "Maxwell's Theory Extended (Part 1)," Annales de la Fondation Louis de Broglie, Vol. 15, No. 2, p. 143-183.

Barrett, Terrence W. (1990b) "Maxwell's Theory Extended (Part 2," Annales de la Fondation Louis de Broglie, Vol. 15, No. 3, p. 253-283.

Barrett, T.W. (1991) "Tesla's Nonlinear Oscillator-Shuttle-Circuit (OSC) Theory," Annales de la Fondation Louis de Broglie, Vol. 16, No. 1, p. 2341.

Barrett, Terrence W. (1992) "Electromagnetic Phenomena Not Explained by Maxwell's Equations," Annales de la Fondation Louis de Broglie [in publication].

Barus, Carl. (1898) "A Curious Inversion in the Wave Mechanism of the Electromagnetic Theory of Light," American Journal of Science, Vol. 5, Fourth Series, p. 343-348.

Bearden, T. E. (1988) "Maxwell's Original Quaternion Theory Was a Unified Field Theory of Electromagnetics and Gravitation," Proceedings of the International Tesla Symposium, Colorado Springs, Colorado.

Bearden, T.E. (1990) A Proposed Mechanism for Noyes' Power Technology, Assoc. Dist. Am. Sci., Huntsville, Alabama.

Bearden, T. E. and Walter Rosenthal. (199la) "On a Testable Unification of Electromagnetics, General Relativity, and Quantum Mechanics," Proceedings of the 26th Intersociety Energy Conversion Engineering Conference (IECEC '91), Boston, Massachusetts, p. 487492. Also distributed over Internet.

Bearden, T. E. (199lb) Gravitobiology, Tesla Book Co., 1417 Second St, Suite H-102, Coronado, California 92118.

Bearden, T. E. (1992a) "A Redefinition of the Energy Ansatz, Leading to a Fundamentally New Class of Nuclear Interactions," Proceedings of the 27th Intersociety Energy Conversion Engineering Conference (IECEC '92), Town & Country Hotel Convention Center, San Diego, California, p. 4.3034.310.

Bearden, T.E. (1992b) An Interpretation of Whittaker's Harmonic Biwave Decomposition of the Scalar Potential. and His Replacement of Orthodox EM Forcefield Waves by Scalar Potential Interferometry, Assoc. Dist. Am. Sci., Huntsville,

Alabama. [In publication].

Bearden, T.E. (1992c) EM Cytopathogenic and EM Healing Transmissions, Assoc. Dist. Am. Sci., POB 1472, Huntsville, Alabama 35807.

Bearden, T.E. (1992d) Background for Pursuing Scalar Electromagnetics, Assoc. Dist. Am. Sci., POB 1472, Huntsville, Alabama 35807. Distributed over Internet.

Bearden, T.E. (1992e) On the Unresolved Health Issues in Power Line Radiation and EM Fields and Radiation: A Fundamental New Approach, Assoc. Dist. Am. Sci., POB 1472, Huntsville, Alabama 35807.

Bearden, T.E. (1993a) "The Final Secret of Free Energy," Assoc. Dist. Am. Sci., POB 1472, Huntsville, Alabama 35807. Distributed over Internet.

Bearden, T.E. (1993b) "Mechanism for Long-Term Cumulative Biological Effects of EM Radiation," Presented to the 70th Annual Meeting of the Alabama Academy of Science, University of Alabama at Huntsville, March 25, 1993.

Becker, Robert and Gary Selden. (1985) The Body Electric, William Morrow and Company, New York.

Belyaev, B.N. (1980) "On Random Fluctuations of the Velocity of Light in Vacuum." Izvestiya Vysshikh Uchebnykj Zavendin. Fiyska (11). Nov. 1980. p. 3742. [In Russian]

Besancon, Robert M., Ed. (1974). The Encyclopedia of Physics, 2nd Edn., Van Nostrand and Reinhold, New York, p. 729-731.

Bird, Christopher. (1988) "The Case of Antoine Priore and His Therapeutic Machine: A Scandal in the Politics of Science," Appendix I in T.E. Bearden, AIDS: Biological Warfare, Tesla Book Co., Chula Vista, California.

Bohm, David. (1952) Physical Review, Vol. 85, p. 166, 180.

Bohm, David. (1980) Wholeness and the Implicate Order,

Routledge & Kegan Paul, Ltd., London.

Boyer, Timothy H. (1975) "Random electrodynamics: the theory of classical electrodynamics with classical electromagnetic zero-point radiation." Phvsical Review D. Particles and Fields. Series 32. 11(4). February 15, 1975. p. 790-808.

Boyer, Timothy H. (1985) "The Classical Vacuum." Scientific American. Aug. 1985.

Casimir, H.B.G. (1953) "Introductory results in quantum electrodynamics." Physics (19). p. 846-849.

Davies, Paul C.W. (1982) "Something for Nothing." New Scientist. 94(1307). May 27, 1982. p. 580-582.

Dirac, P.A.M. (1930) "A theory of electrons and protons." Proceedings of the Royal Society of London. Series A. 126(801). Jan. 1, 1930. p. 360-365.

Elyntin, P.V. (1988) "The Quantum Chaos Problem," Sov. Phys. Usp., Vol. 31, No. 7, p. 597-622

Feynman, Richard P., Robert B. Leighton and Matthew Sands. (1963) The Feynman Lectures on Physics, Addison-Wesley, New York, Vol. I.

Fulcher, Lewis P., Johann Rafelske, and Abraham Klein. (1979). "The decay of the vacuum." Scientific American. 241(6). December, 1979. p. 150-159.

Graham, G.M. and d.G. OLahoz. (1980) "Observation of static electromagnetic momentum in vacuo." Nature. 285(5761). May 1980. p. 154-5.

Greenberg, Jack S. and Walter Grenier. (1982) "Search for the sparking of the vacuum." Physics Today. August, 1982. p. 24-32.

Hiley, B.J. and F. David Peat. (1987) "General Introduction: The Development of David Bohm's Ideas From the Plasma to the Implicate Order," B.J. Hitey and F. David Peat, Eds. Quantum Implications: Essays in Honour of David Bohm, Routtedge & Kegan Paul, London.

Hsue, C.W. (1993) "A DC Voltage is Equivalent to Two Traveling Waves on a Lossless Nonuniform Transmission Line," IEEE Microwave and Guided Wave Letters, Vol. 3, p. 82-84.

Ignatovich, V.K. (1989) "The Remarkable Capabilities of Recursive Relations," American Journal of Physics, Vol. 57, No. 10, p. 873-878.

Jackiw, R. and J.R. Schrieffer. (1981) "The decay of the vacuum." Nuclear Physics B. Vol. 190. p. 944.

Jackson, J.D. (1975) Classical Electrodynamics, 2nd Edn., John Wiley & Sons, New York.

Kaznacheyev, Vlail and L.P. Mikhailova. (1981) Ultraweak Radiation in Intercellular Interactions, [in Russian], Novosibirsk.

Kaznacheyev, Vlail. (1982) "EIectromagnetic Bioinformation in Intercellular Interactions," Psi Research, p. 47-76.

Kervran, Louis. (1982) Transmutations a Faible Energie (Naturelles et Biologiques), Maloine S.A., Paris.

Kidd, Richard et al. (1989) "Evolution of the Modern Photon," American Journal of Physics Vol. 57, No. 1, p. 27-35.

Lee, T.D. (1981) Particle Physics and Introduction to Field Theory, Harwood, New York Chapter 25: Outlook, "Possibility of Vacuum Engineering," p. 824-828.

Lindsay, Robert Bruce and Henry Margenau. (1963) Foundations of Physics, Dover Publications, New York.

Maxwell, James Clerk. (1873) A Treatise on Electricity and Magnetism, Oxford University Press, Oxford.

Misner, W., K.S. Thorne and J.A. Wheeler. (1973) Gravitation, W. H. Freeman and Co., San Francisco, p. 399; 1191.

Ohno, M. and K. Takagi. (1992) "Schlieren Visualization of Acoustic Phase Conjugate Waves Generated by Nonlinear Electroacoustic Interaction in $LiNbO_3$," Applied Phvsics Letters, Vol. 60, No. 1, p. 29-31.

Pool Robert. (1989) "Quantum Chaos: Enigma Wrapped in a Mystery," Science, Vol. 243, p. 893 - 895.

Popp, Fritz Albert. (1979) "Photon Storage in Biological Systems," in Fritz Albert Popp et al, eds., Electromagnetic Bio-Information: Proceedings of the Symposium. Marburg. Federal Republic of Germany. Sep. 5. 1977; Urban & Schwarzenberg, Baltimore, p. 123-149.

Prange, Richard E. and Peter Strance (1984) "The superconducting vacuum" American Journal of Physics . 52(1). January 984. p. 19 - 21.

Puthoff, Harold E. (1987) "Ground State of Hydrogen as a Zero-Point-Fluctuation-Determined State." Physical Review D. 35(10). May 15, 1987. p. 3266-3269.

Puthoff, Harold E (1989a) "Gravity as a Zero-Point-Fluctuation Force " Physical Review A.39(5). March 1, 1989. p. 2333 - 2342.

Puthoff, Harold E. (1989b) "Source of Vacuum Electromagnetic Zero-Point Energy, Physical Review A.40(9). p. 4857 - 4862.

Puthoff, Harold E. (1991) "The energetic vacuum: implications for energy research." Speculations in Science and Technology. 13(3). p. 247-257.

Rorvik, David M. (1975) "Do the French Have a Cure for Cancer?" Esquire, July 1975, p.110-11, 142-147.

Sachs, Robert G. (1987) The Physics of Time Reversal, University of Chicago Press, Chicago, Illinois.

Sakharov, A.D. (1968) "Vacuum Quantum Fluctuations in Curved Space and the Theory of Gravitation," Sov. Phys. Dokl., Vol. 12, p. 1040.

Schwarzschild, Bertram. (1986) "Currents in Normal-metal Rings Exhibit Aharonov-Bohm Effect," Physics Today, Vol. 39, No. 1, p. 17-20.

Sheldrake, Rupert. (1981) A New Science of Life: The Hypothesis of Formative Causation, Blond & Briggs, Ltd., U.S. reprint, J.P.

Tarcher, Inc., Los Angeles, 1982.

Stoney, G. J. (1897) "XLVIII. On a Supposed Proof of a Theorem in Wave•motion, To the Editors of the Philosophical Magazine," Philosoph. Magazine, 5(43), p. 368-373.

Strand, J. (1986) "Photons in Introductory Quantum Physics," American Journal of Physics. Vol. 54, No. 7, p. 650-652.

Sweet, Floyd and T. E. Bearden. (1991) "Utilizing Scalar Electromagnetics to Tap Vacuum Energy,~ Proceedings of the 26th Intersociety Energy Conversion Engineering Conference (IECEC '91), Boston, Massachusetts, p. 370-375. Distributed over Internet.

Tesla, Nikola. (1932) "Pioneer Radio Engineer Gives Views on Power," New York Herald Tribune, Sep. 11, 1932.

Thompson, Mark. (1989) "Mixed Signals May Have Misguided U.S. Weapons," The Washington Post, Jan. 22, 1989, p. A4.

Wheeler, John archibals. (1968) "Superspace and the nature of quantum geometrodynamics." In: Topics in Non-linear Physics, Edited by Normal J. Zabusky. Springer-Verlag. 1968. p. 642.

Whittaker, E.T. (1903) "On the Partial Differential Equations of Mathematical Physics," Mathematische Annalen, Vol. 57, p. 333-355.

Whittaker, E.T. (1904) "On an Expression of the Electromagnetic Field Due to Electrons by Means of Two Scalar Potential Functions," Proceedings of the London Mathematical Society, Series 2, Vol. 1, p. 367-372.

Ziolkowski, Richard W. (1985) "Exact Solutions of the Wave Equation With Complex Source Locations," Journal of Mathematical Physics, Vol. 26, p. 861.

Ziolkowski, Richard W. (1989a) "Localized Transmission of Wave Energy," Proc. SPIE. Vol. 1061. Microwave and Particle Beam Sources and Directed Energy Concepts. p. 396-397.

Ziolkowski, Richard W. (1989b) "Localized Transmission of Electromagnetic Energy," Physical Review A, Vol. 39, p. 2005.

Ziolkowski, Richard W. (1989c) "Localized Transmission of Wave Energy," Proc. SPIE. Vol. 1061. Microwave and Particle Beam Sources and Directed Energy Concepts. p. 396-397.

Ziolkowski, Richard W. (1992a) "Localized Wave Transmission Physics and Engineering," Physical Review A (in Press).

Ziolkowski, Richard W. (1992c) "Properties of Electromagnetic Beams Generated by Ultra-Wide Bandwidth Pulse-Driven Arrays, IEEE Trans. Ant. Prop. (Submitted).

Ziolkowski, Richard W., Amr M. Shaarawi, and Ioannis M. Besieris. (1989) Nuclear Physics B (Proc. Suppl.), Vol. 6, p. 255-258.

Ziolkowski, R. W. and Lewis, D.K. (1990) "Verification of the Localized Wave Transmission Effect," Journal of Applied Physics, Vol. 68, p. 6083.

Go to Slides

The Tom Bearden Website

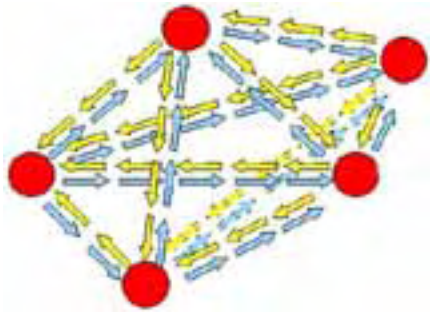

CANCER AND THE UNRESOLVED HEALTH ISSUES IN THE BIOLOGICAL EFFECTS OF EM FIELDS AND RADIATIONS

Slide Index

---

1. Title Page
2. Introduction
3. Einstein on Review of Foundation
4. Some Problems in Electromagnetic Foundations
5. Notions in the Concept of the Potential
6. Foundations of Scalar Electromagnetics
7. Inner EM Waves of a Scalar Potential
8. Graviton/Whittaker Lattice Structure of the Scalar Potential
9. Internal Wave Structure of the Scalar Potential
10. Lattice and Nonlattice Gravitons
11. Scalar EM Potential Interferometry
12. Scalar Potential Interferometry
13. Some Problems in Foundations of General Relativity
14. Some Problems in Foundations of Quantum Mechanics
15. Physics Disciplines are Presently Inconsistent
16. The Present EM, GR and QM are Subsets, each omits the Whittaker Internal EM
17. Unified Field Secret: Apply Whittaker Theory
18. Present Definition of "Energy" is Erroneous
19. Some New Definitions
20. Definitions (Continued)
21. Definitions (Continued)
22. Electric Charge, Open System

23. Graviton as a Coupled Photon/Antiphoton Pair
24. Photon Interaction is usually Graviton Interaction
25. Photon Interaction with the Material Atom
26. Photon Phase Conjugate interaction with an Atom
27. Nonlinear Material and Time-Domain Resonance
28. Subharmonic Oscillation
29. The Quantum Potential
30. Quantum Potential Characteristics
31. Self-Targeting creates a Quantum Potential
32. Approach applied to correct present EM bioeffects experimental model
33. Two Stages of Cancer Production
34. More on Promoters
35. EM Biological Effects: Some Changes Demonstrated
36. EM Biological Effects: Inhibition of Melatonin
37. Other EM Biological Effects
38. Becker's Bone-Healing Application of Tiny DC Currents to Fractures
39. Questions on Carcinogens and EM Radiation
40. Direct and Delayed EM Bioeffects
41. Cumulative Feedback Reaction Loop for Induction of Long-Term Effects
42. Species Reactive Adaptation
43. Inheritance of Acquired Traits
44. Anomalous EM Jamming Mechanism
45. Anomalous Depth Penetration
46. The Evolutionary Path of Multicellular Organisms
47. Development of Multi-Celled Organisms
48. Effect of Fluid Contamination on Hemoglobin's Oxygen Transport
49. First Step in Oxygen-Deficiency Dedifferentiation
50. Cumulative Growth of Dedifferentiation Signals
51. Cumulative Emergence of Cancer into the Physical State
52. Precancer State Condition determines Treatment Success
53. Starting From the Scalar EM View: A New Definition of Cancer
54. The Immune System
55. Kaznacheyev's Apparatus
56. Death and Disease Transmission via Graviton Templates
57. Microwave Radiation of U.S. Embassy in Moscow
58. John Hopkins Study of Embassy Microwave Radiation

59. Priore's Laboratory
60. Mechanism of the Priore Therapy
61. Drastically Reduced Deterioration with Priore Therapy
62. The Missing Piece of the Puzzle
63. Summary and Conclusion

MECHANISM FOR LONG-TERM, CUMULATIVE BIOLOGICAL EFFECTS OF EM FIELDS AND RADIATION

T. E. BEARDEN*

* A.D.A.S.
POB 1472
HUNTSVILLE, AL 35807

Next Slide

Return to Cancer Paper

INTRODUCTION

- **PROBLEMS IN EM BIOEFFECTS DETERMINATION FOR FOUR DECADES**
  - DIFFICULTY IN REPLICATION
  - STUDIES ARE CONTRADICTORY
  - EMOTIONALISM, CONTROVERSY, VESTED INTERESTS
  - LACK FUNDAMENTAL MECHANISMS
- **ESTABLISHES THAT MODEL UTILIZED IS INADEQUATE**
- **WILL CRITIQUE STANDARD MODEL**
- **WILL PROPOSE ALTERATION AND EXTENSION**
- **WILL EXAMINE FUNDAMENTAL CONCEPTS, PER EINSTEIN**

Next Slide
Previous Slide

EINSTEIN ON REVIEWING FOUNDATIONS

"...the scientist makes use of a whole arsenal of concepts which he imbibed practically with his mother's milk; and seldom if ever is he aware of the eternally problematic character of his concepts. He uses this conceptual material, or, speaking more exactly, these conceptual tools of thought, as something obviously, immutably given; something having an objective value of truth which is hardly even, and in any case not seriously, to be doubted. ...in the interests of science it is necessary over and over again to engage in the critique of these fundamental concepts, in order that we may not unconsciously be ruled by them."

Albert Einstein, "Foreword," in Max Jammer, Concepts of Space: The History of the Theories of Space in Physics, Harvard University Press, Cambridge, Massachusetts, 1969, p. xi-xii.

JCS-11A

© 1993 T.E. BEARDEN

Next Slide

Return to Index

Previous Slide

SOME PROBLEMS IN ELECTROMAGNETICS FOUNDATIONS

- **NOTION OF FORCEFIELD**
- **NATURE OF THE VACUUM**
- **NATURE OF ELECTRICAL CHARGE**
- **NOTION OF POTENTIAL**
- **NOTION OF ENERGY**
- **NOTION OF QUANTIZED ELECTRICAL CHARGE**
- **NOTION OF TIME**
- **CONSIDERED MUTUALLY EXCLUSIVE TO GRAVITY**
- **FRAME VERSUS SPACETIME**
- **CLOSED SYSTEM ASSUMPTION**
- **TOPOLOGY AND DIMENSIONALITY OF THE MODEL'S MATHEMATICS**
- **UNDEFINED, OR IMPROPERLY DEFINED, CONCEPTS**

Next Slide

Return to Index

Previous Slide

NOTIONS IN THE CONCEPT OF THE POTENTIAL

- **CONCEPT OF THE POTENTIAL HAS DEVELOPED AS SEVERAL FUNDAMENTAL NOTIONS:**
    - **AS THE "INTERNAL" STORAGE OF ENERGY IN SOME FASHION**
    - **AS A POINT-VALUE FUNCTION IN 3-SPACE**
    - **AS A SCALAR FUNCTION WHOSE SPACE RATE OF CHANGE YIELDS A VECTOR FORCE**
- **THE ENERGY STORAGE MECHANISM IS QUITE UNKNOWN.**
- **NO THOUGHT HAS BEEN GIVEN TO SIMULTANEOUSLY DEFINING IT AS HAVING A HYPERSPATIAL WAVE SET COMPOSITION.**
- **THE THIRD NOTION EFFECTIVELY MAKES ALL FORCES LOCAL A *PRIORI*, AND EXCLUDES ACTION AT A DISTANCE BY *POSTULATION*.**
- **THE THIRD NOTION IS KNOWN TO BE INCORRECT. THE GRADIENT OF A POTENTIAL DOES NOT PRODUCE A FORCE UNTIL A MASS IS PRESENT, TO WHICH THE GRADIENT COUPLES.**

Next Slide
Previous Slide

Founders of Scalar Electromagnetics

- **G.J. Stoney:**

Decomposed the scalar potential into bidirectional wave pairs.

"On a supposed proof of a theorem in wave-motion," Phil. Mag., 5(43), 1897, p. 368-373 (and several other papers).

- **E.T. Whittaker:**

Decomposed the scalar potential into a series of bidirectional EM wave pairs in harmonic series, where the two waves in each pair are conjugates (i.e., a wave/antiwave pair) and are longitudinal waves.

"On the partial differential equations of mathematical physics," Math. Ann., Vol. 57, 1903, p. 333-355.

Showed that all classical EM -- including waves -- can be replaced by two interfering scalar potential functions.. (This founded superpotential theory, extended by Nisbet, Bromwich, Debye, McCrea, and others.)

"On an expression of the electromagnetic field due to electrons by means of two scalar potential functions," Proc. Lond. Math. Soc., Series 2, Vol. 1, 1904, p. 367-372.

- **R.W. Ziolkowski:**

Independently rediscovered the biwave decomposition of the scalar potential and added the product set (in theory enabling modulations and communications) to Stoney and Whittaker's sum set.

Various papers, 1985 to date.

© T.E. BEARDEN 1993, 1995

Next Slide

Return to Index

Previous Slide

INNER EM WAVES OF A SCALAR POTENTIAL

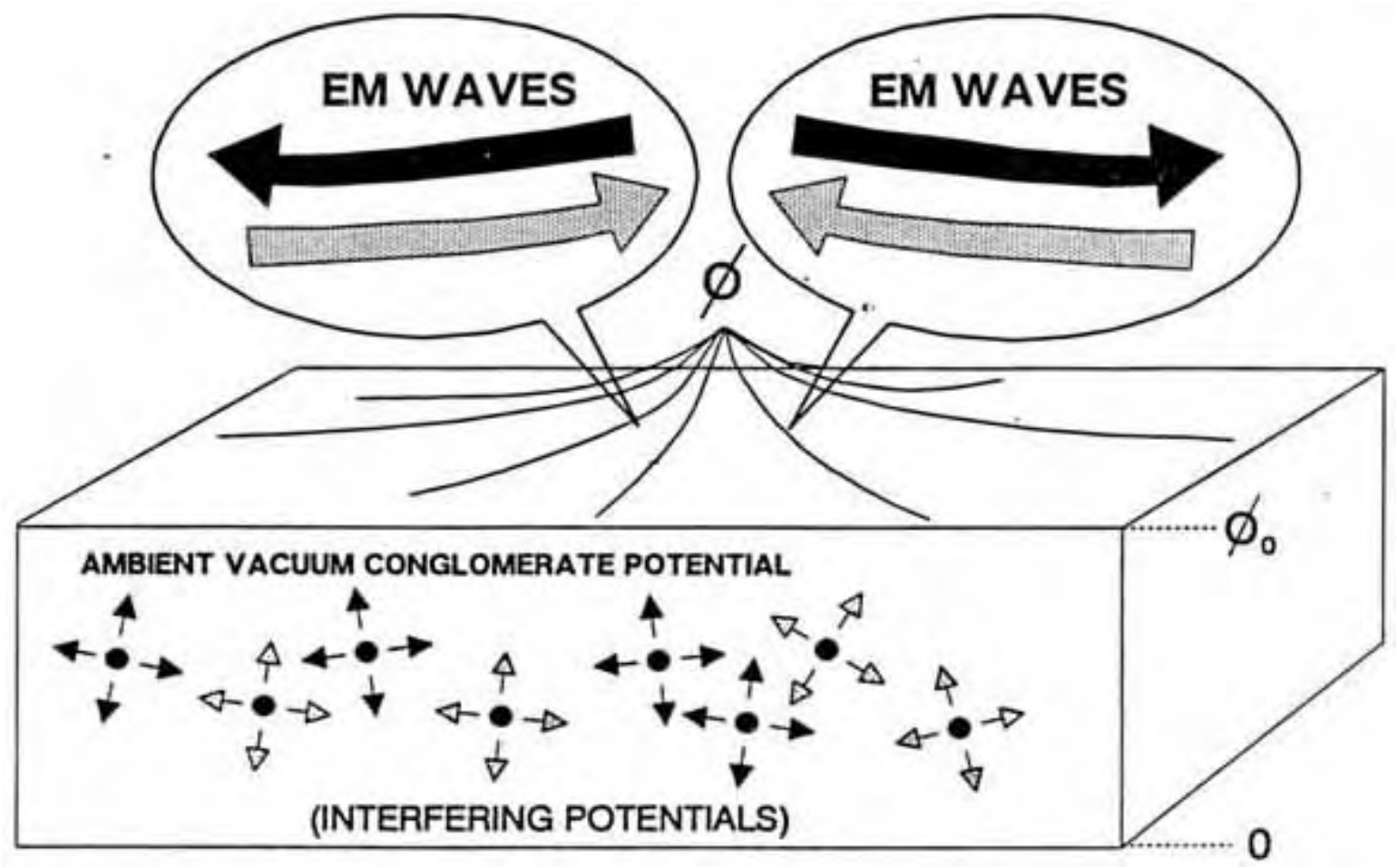

Next Slide
Previous Slide

GRAVITON/WHITTAKER LATTICE STRUCTURE OF THE SCALAR POTENTIAL

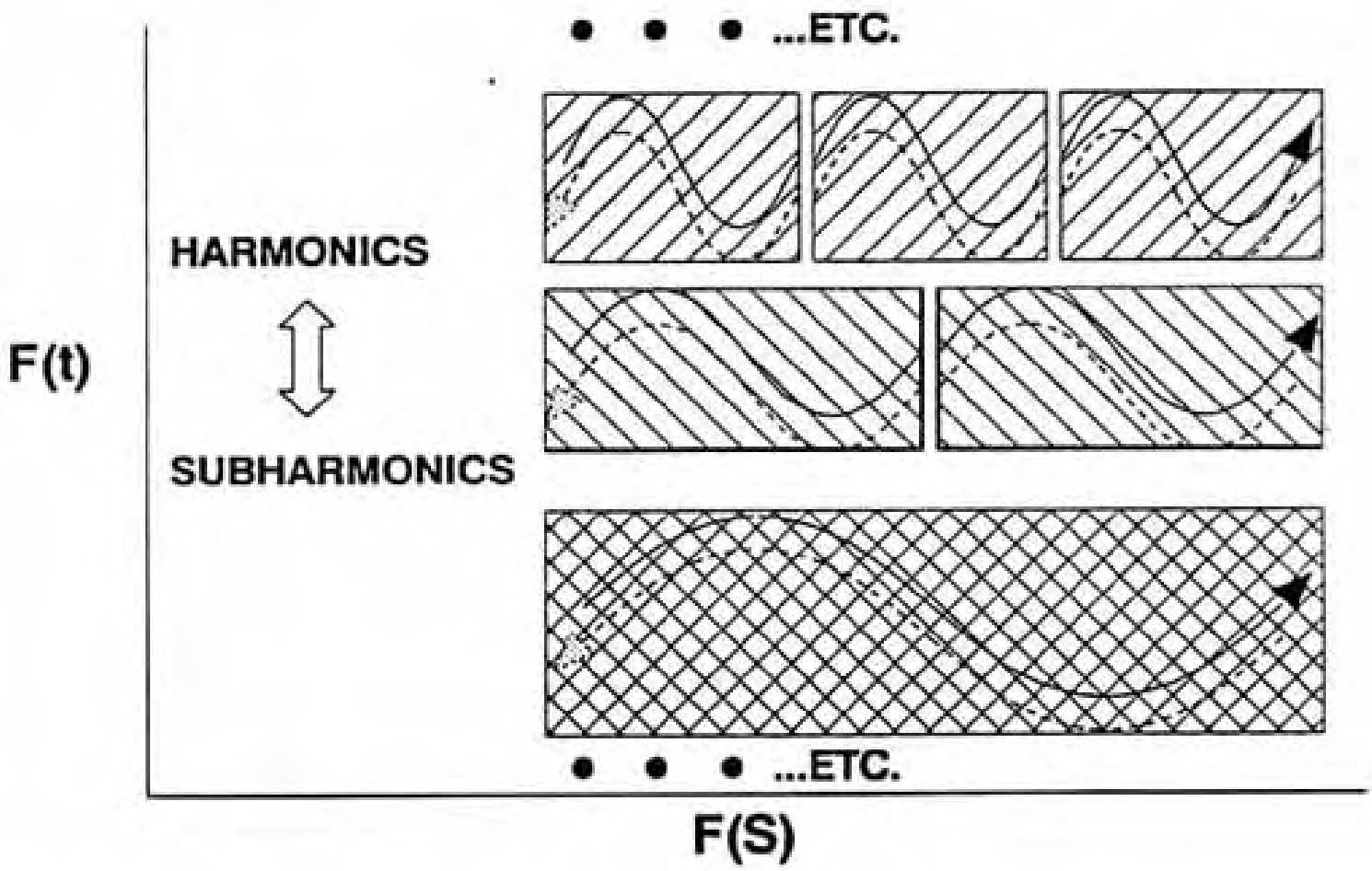

Next Slide
Previous Slide

Infolded longitudinal EM biwave composition of a scalar potential

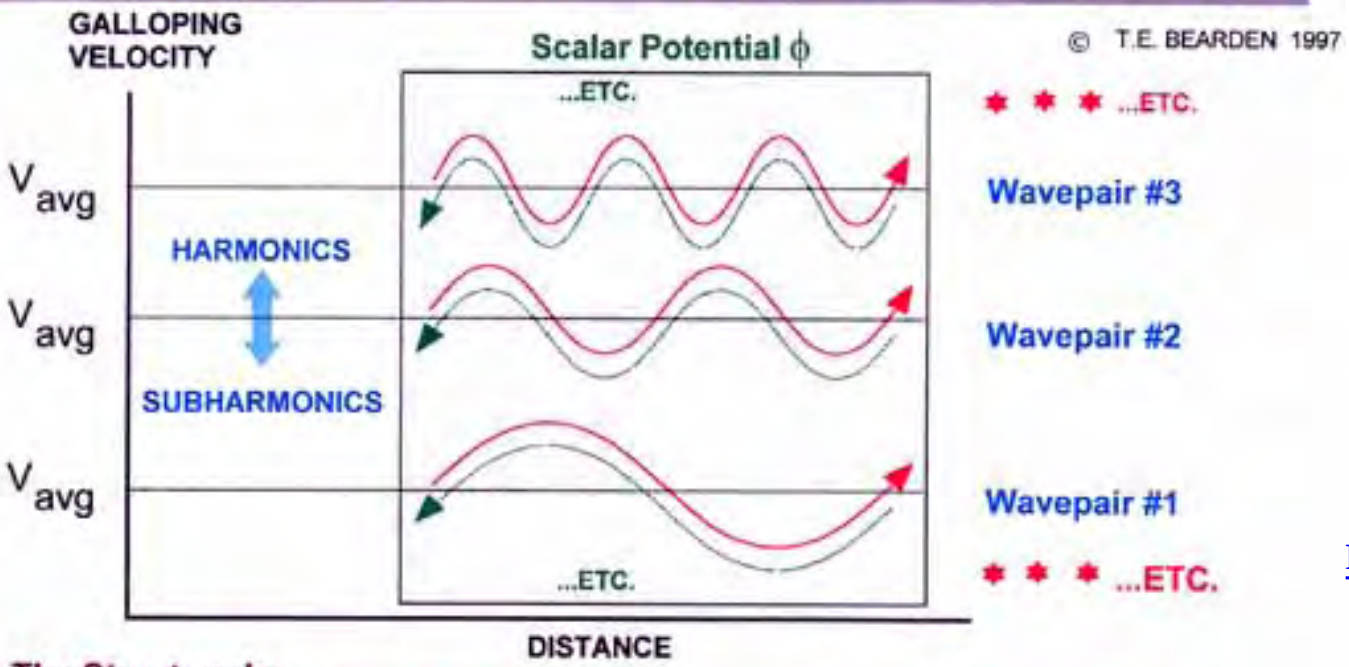

The Structure Is:

A harmonic set of longitudinal EM wavepairs. In each wavepair the two waves superpose spatially, but travel in opposite directions. The two are phase conjugates and time-reversed replicas of each other. Thus they comprise a coupled longitudinal wave and antiwave. The photons must be coupled into photon/antiphoton pairs (gravitons) by a strong application of the distortion correction theorem of nonlinear optics. Each wave in the biwave pair is a galloping wave. Each wavepair is a standing electrogravitational wave. In nonlinear optics, such a wavepair is a pump wave which pumps in the time domain.

Note: Think of the oscillations as velocity modulations.

Next Slide

Return to Index

Previous Slide

LATTICE AND NONLATTICE GRAVITONS

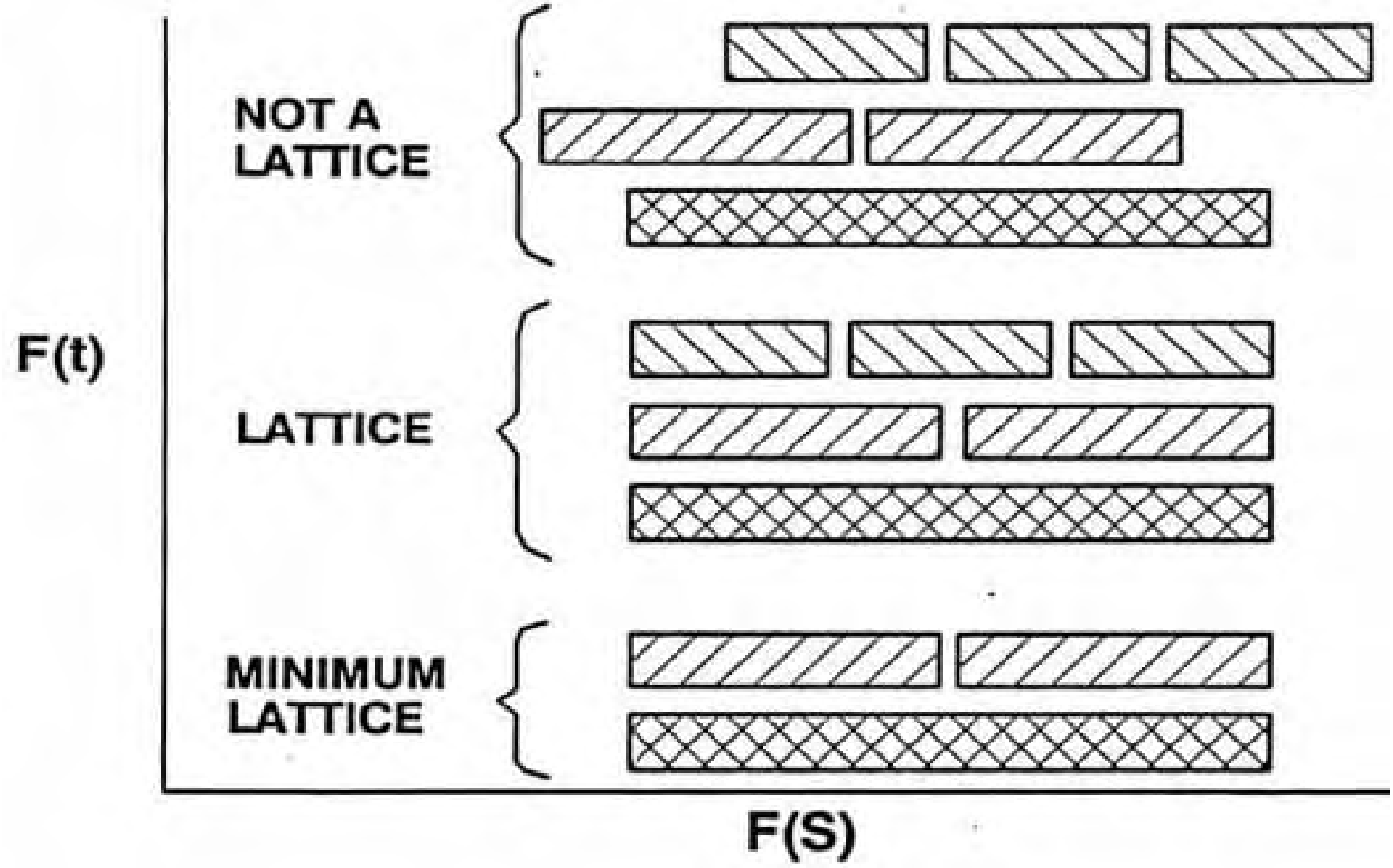

Next Slide
Previous Slide

SCALAR EM POTENTIAL INTERFEROMETRY

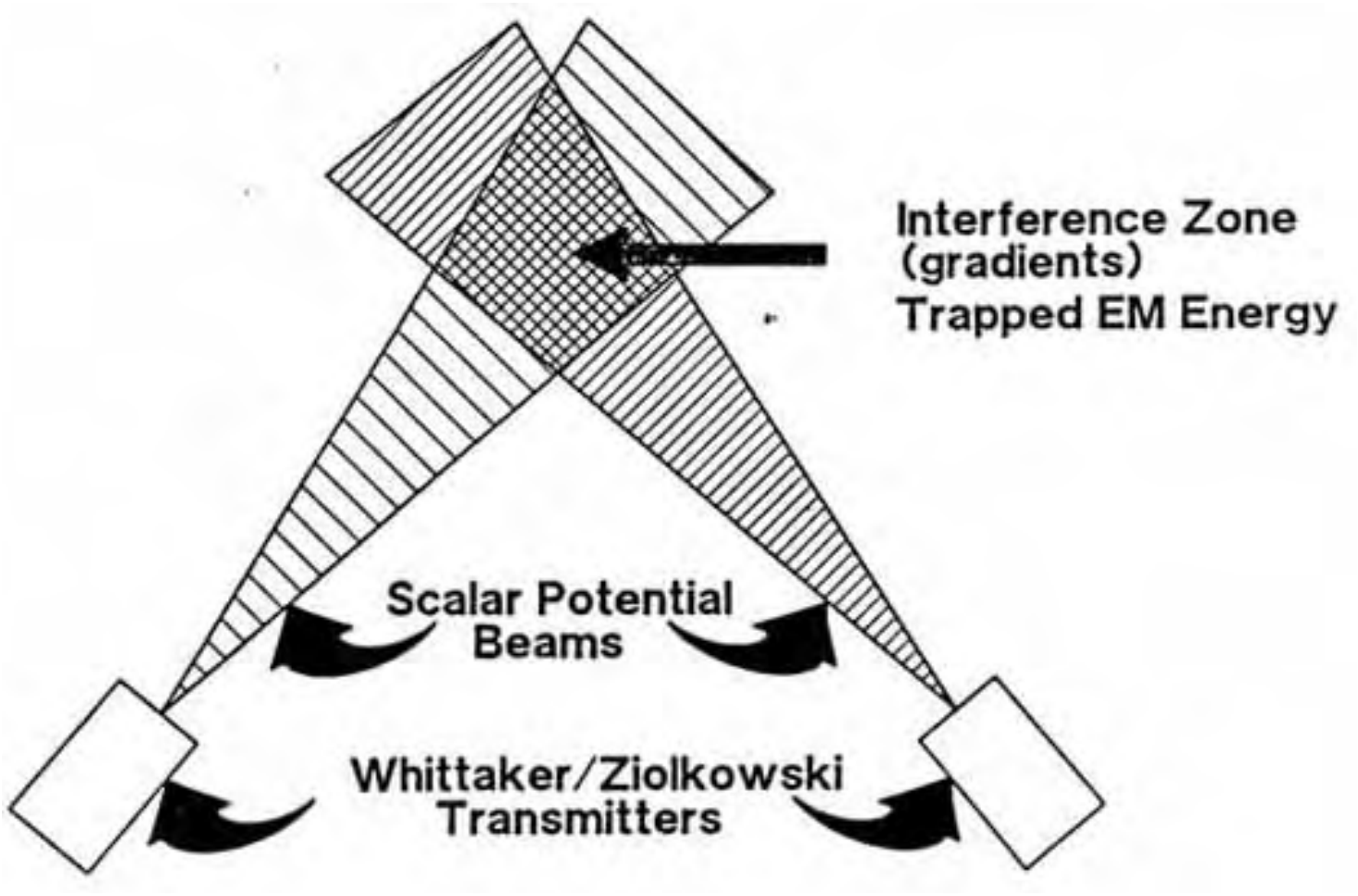

Next Slide
Previous Slide

SCALAR POTENTIAL INTERFEROMETRY

- Between two scalar potentials, **interferometry** is:
  - Interference of the multi-wave sets in hyperspace.
  - Production of gradients in the 3-space point values
  - In the classical (erroneous) postulation, the creation of forces in 3-space.
    > Force does not exist until the gradient couples to an observable mass.
    > There are no E-fields and B-fields as such in the massless vacuum, but only potential gradients.

Next Slide
Previous Slide

SOME PROBLEMS IN FOUNDATIONS OF GENERAL RELATIVITY

- **EINSTEIN'S FLAT LOCAL SPACETIME POSTULATE**
- **ONLY CONSIDERS THE VERY WEAK G-FORCE AS AN AGENT FOR SPACETIME CURVATURE**
- **EXCLUDES UNION WITH EM FIELD**
- **EXCLUDES ACTION-AT-A-DISTANCE, WHICH IS REQUIRED BY QUANTUM MECHANICS, AND PROVEN**
- **EXCLUDES UNION WITH QUANTUM MECHANICS**
- **SPECIFICALLY EXCLUDES ELECTROGRAVITATION**
- ***IS ESSENTIALLY NOT AN EXPERIMENTAL SCIENCE***

Next Slide

Previous Slide

Return to Index

SOME PROBLEMS IN FOUNDATIONS OF QUANTUM MECHANICS

- **EXCLUDES CHAOS (HIDDEN ORDER), AND THIS IS KNOWN TO BE IN ERROR**
- **ORDERED MACROREALITY CANNOT EMERGE FROM INTEGRATING DISORDERED (RANDOM) CHANGES**
- **USES RANDOM-VARIABLE STATISTICS FROM GIBBS THERMODYNAMICS**
- **NOTION THAT QUANTUM CHANGE - HENCE ROOTS OF PHYSICAL REALITY - CANNOT BE ENGINEERED**
- **REQUIRES ACTION-AT-A-DISTANCE EFFECTS**
- **CONTRADICTS CLASSICAL MECHANICS, GENERAL RELATIVITY, AND CLASSICAL ELECTROMAGNETICS**

Next Slide

Return to Index

Previous Slide

PHYSICS DISCIPLINES ARE PRESENTLY INCONSISTENT

	GENERAL RELATIVITY (GR)	
QUANTUM MECHANICS (QM)	???	CLASSICAL EM THEORY
	MIND & SUBTLE ENERGY	

Next Slide

Return to Index

Previous Slide

THE PRESENT EM, GR AND QM ARE SUBSETS, EACH OMITS THE WHITTAKER INTERNAL EM.

A	B
PRESENT EM (EXTERNALIZED ASPECTS OF POTENTIALS)	EXCLUDED EM (INTERNALIZED ASPECTS OF POTENTIALS)

A	B
PRESENT GR (DISTANT SPACETIME CURVATURE) (LOCAL ACTION)	EXCLUDED GR (LOCAL SPACETIME CURVATURE) (ACTION AT A DISTANCE)

A	B
PRESENT QM (EXTERNALIZED STRUCTURE OF POTENTIALS)	EXCLUDED QM (INTERNALIZED STRUCTURE OF POTENTIALS) (CHAOS)

Next Slide

Return to Index

Previous Slide

UNIFIED FIELD SECRET: APPLY WHITAKER THEORY

	GENERAL RELATIVITY (GR)	
QUANTUM MECHANICS (QM)	APPLY WHITTAKER THEORY	CLASSICAL EM THEORY
	MIND & SUBTLE ENERGY	

Next Slide

Return to Index

Previous Slide

PRESENT DEFINITION OF "ENERGY" IS ERRONEOUS

- **PRESENT: "ENERGY IS THE CAPACITY TO DO WORK."**
- **ACTUALLY, WORK IS THE SCATTERING (DISSIPATION) OF ENERGY.**
- **THE PRESENT DEFINITION STATES THAT "ENERGY IS THE CAPACITY TO DO SCATTERING OF ENERGY."**
- **ENERGY CAN BE SCATTERED, YIELDING WORK. BUT THE CAPACITY TO PERFORM THAT SCATTERING IS NOT ENERGY! (E.G., IT MAY BE RESISTANCE.)**
- **COMPARE TO: "A FISHHOOK IS THE CAPACITY TO CATCH FISH."**
- **ACTUALLY, A FISHHOOK IS A BENT WIRE WITH A BARB. IT *HAS* THE CAPACITY TO CATCH FISH (GIVEN OTHER CONDITIONS). BUT THE CAPACITY TO CATCH FISH IS NOT WHAT IT *IS*.**

Next Slide

Return to Index

Previous Slide

SOME NEW DEFINITIONS

- **QUANTUM MECHANICAL VACUUM** - an intense flux of virtual particles, filling the "emptiness" of spacetime/vacuum.
- **ENERGY** - any ordering, either static or dynamic, in the virtual particle flux of vacuum.
- **EM ENERGY** - any ordering, either static or dynamic, in the virtual photon flux of vacuum
- **WORK** - the local scattering of energy; the local disordering of the order in the VPF.

Next Slide

Return to Index

Previous Slide

DEFINITIONS (CONTINUED)

- **POTENTIAL** - any ordering, either static or dynamic or combination, in the VPF of vacuum
  - same definition as energy
  - must have internal order, hence structure
- **SCALAR POTENTIAL** - any static ordering in the VPF of vacuum, with respect of the external observer
- **VECTOR POTENTIAL** - any dynamic (non-stationary) ordering in the VPF of vacuum.
  - must have internal order, hence structure

Next Slide

Return to Index

Previous Slide

DEFINITIONS (CONTINUED)

- **Electrostatic Scalar Potential** - any static (stationary) ordering in the virtual photon flux of vacuum.
  - Whittaker decomposed the ESP into bidirectional EM wavepairs in a harmonic structure.
  - We interpret the wavepair set as existing in hyperspace (in hyper-3-space).

- Thus the ESP is a 3-space point function, and a hyper-3-space vector function, in 7-space.

- In Hyper-3-space, the ESP is an ordering established throughout the universe.

Next Slide

Return to Index

Previous Slide

ELECTRIC CHARGE, OPEN SYSTEM

- The ***electric charge*** of a charged particle is due to a violent exchange of virtual photons between the charged particle and the local vacuum VPF
  - photons continually absorbed from the vacuum
  - photons continually radiated back to the vacuum
  - this exchange flux is what electric charge ***IS***.
- In the nucleus, everything is changing into everything, so to speak. It is a furious, ***VPF-driven*** cauldron.
- the nucleus is an open, driven system, normally in equilibrium with respect to VPF input and output.

Next Slide

Return to Index

Previous Slide

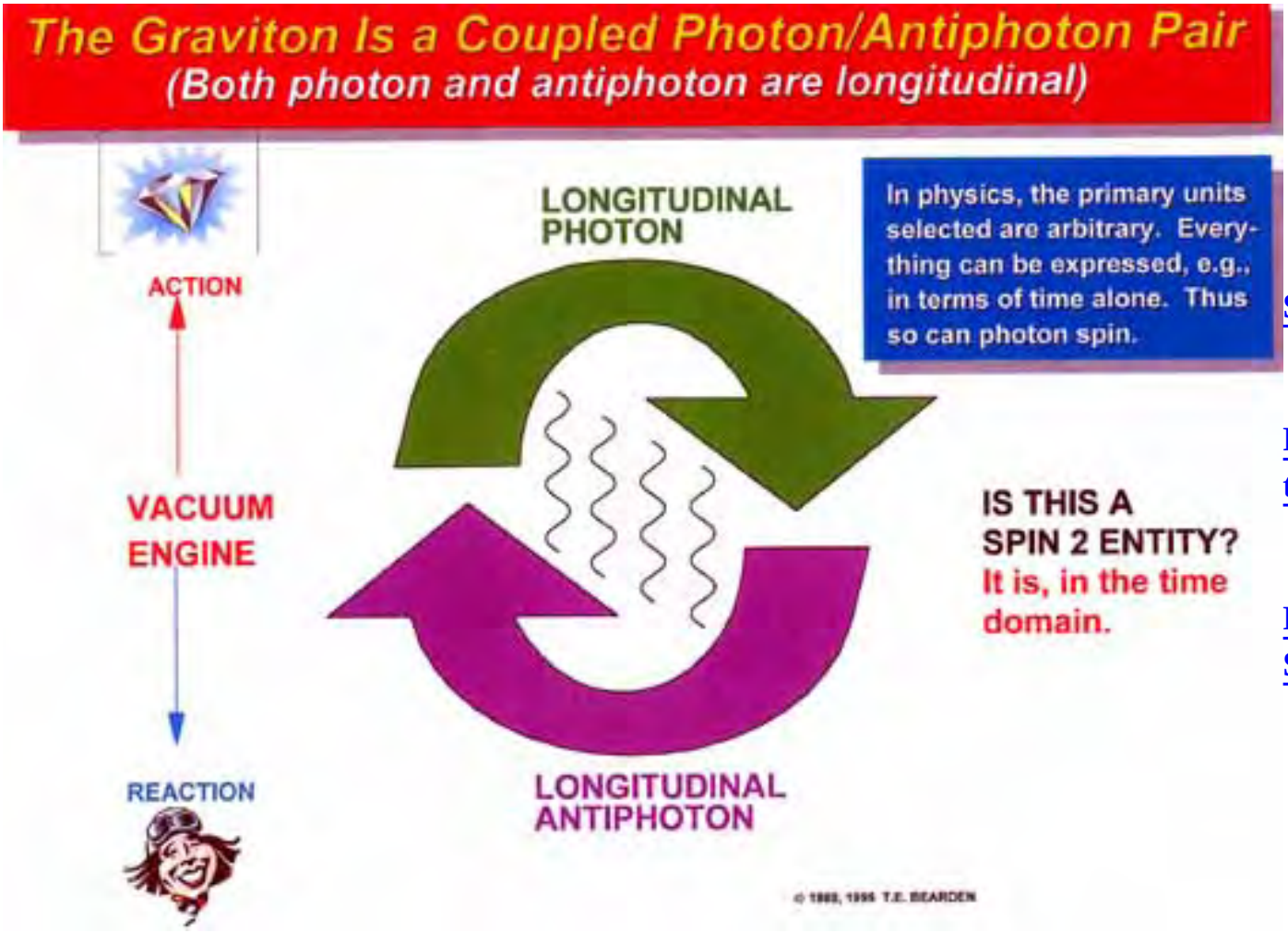

Next Slide

Return to Index

Previous Slide

PHOTON INTERACTION IS USUALLY GRAVITON INTERACTION

- Graviton interaction is a photon/antiphoton interaction

- Photon interacts with electron shells
  - Scattering produces the entropic (forward) flow of time
  - Produces electron translation in our detectors

- Antiphoton interacts with nucleus primarily
  - produces nuclear recoil
  - produces Newton's third law of motion

Next Slide

Return to Index

Previous Slide

PHOTON INTERACTION WITH THE MATERIAL ATOM

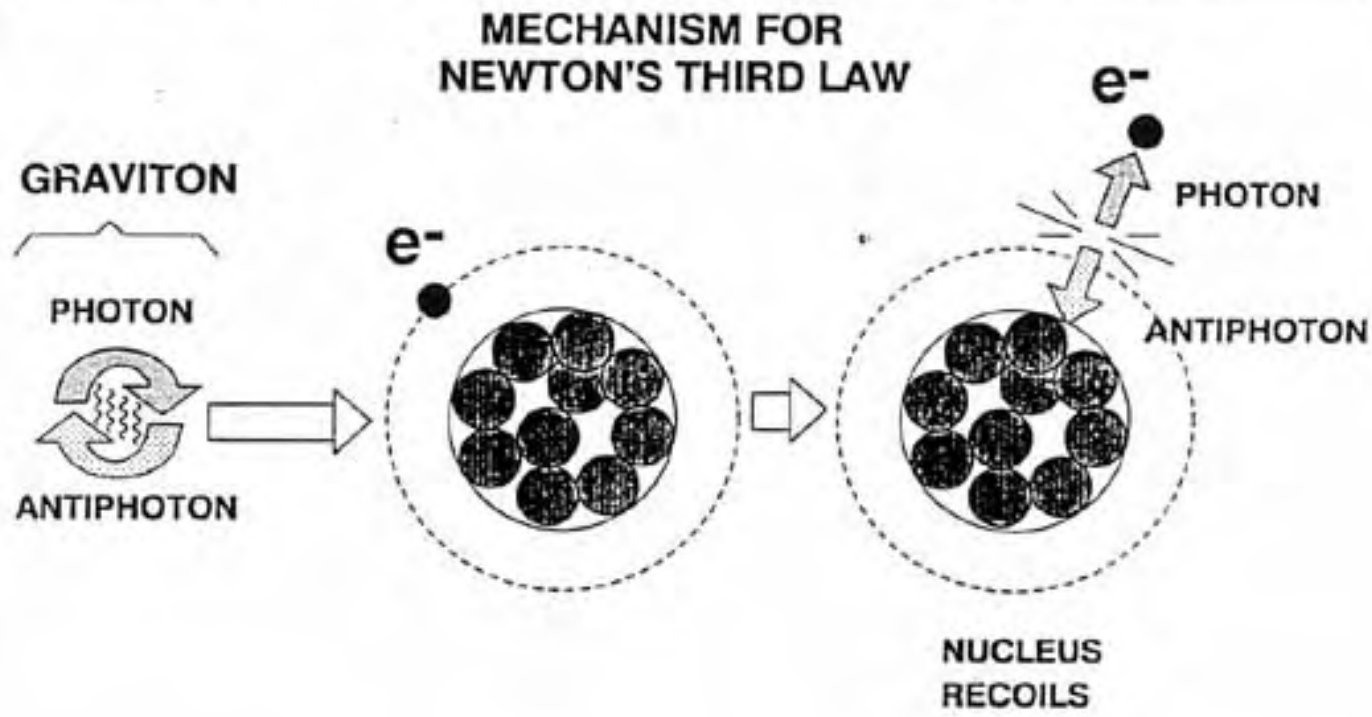

Next Slide

Return to Index

Previous Slide

PHOTON PHASE CONJUGATE INTERACTION WITH AN ATOM

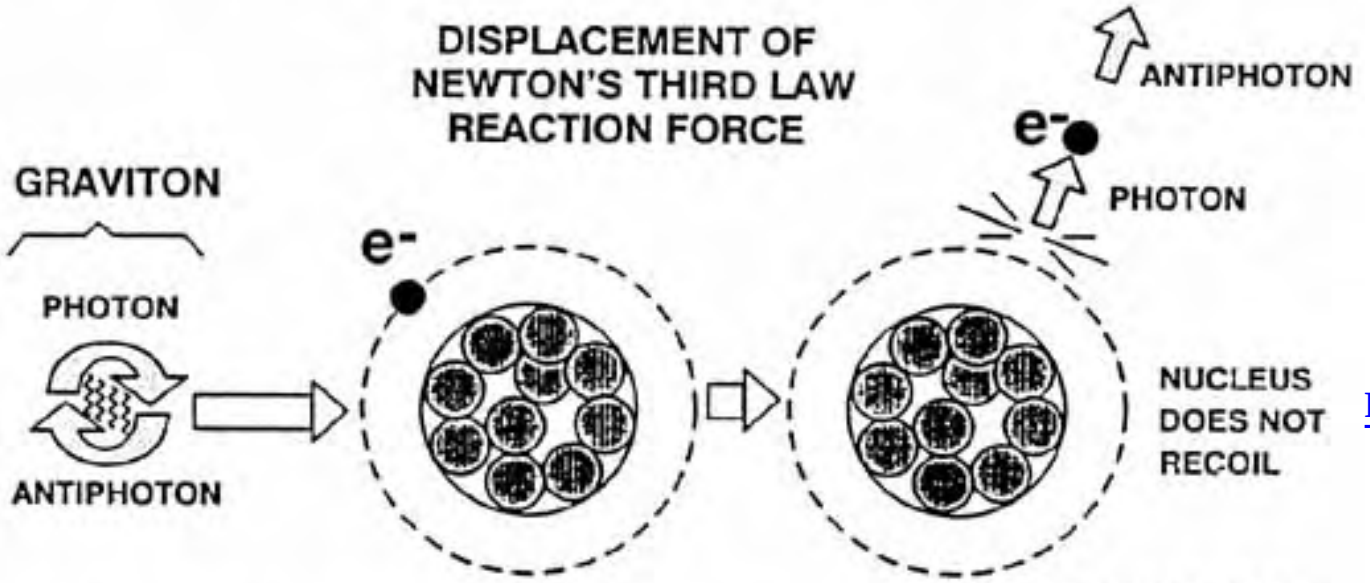

PHASE CONJUGATE INTERACTION

NOTE: Graviton waves are bidirectional phase waves of photon/antiphoton coupling and uncoupling in the vacuum.

Next Slide

Return to Index

Previous Slide

NONLINEAR MATERIAL AND TIME-DOMAIN RESONANCE

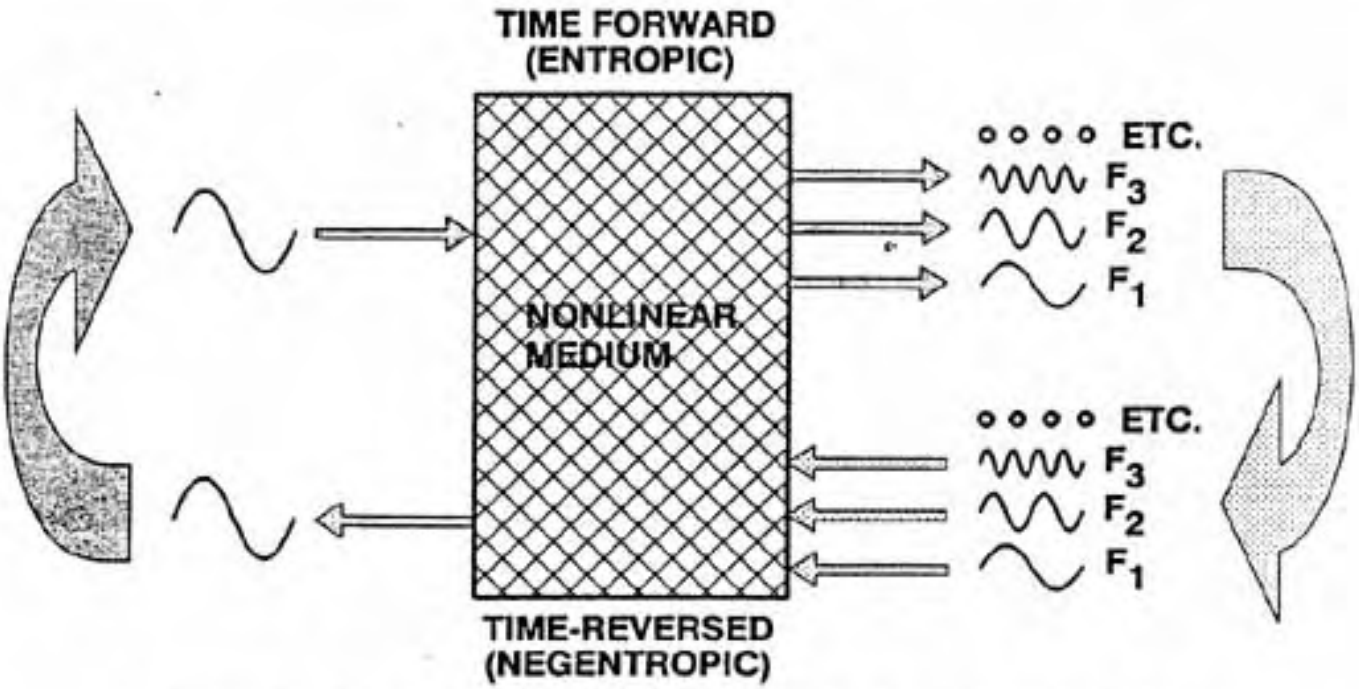

GROUPS OF RESONATORS ENTRAINED IN TIME AND SPACE
(MAY ENABLE SELF-OSCILLATION)

Next Slide

Return to Index

Previous Slide

SUBHARMONIC OSCILLATION

- **CAN TRANSLATE FROM ONE FREQUENCY REGIME TO ANOTHER.**
- **E.G., OPTICAL TO MICROWAVE**
  - **HOWEVER, MUST PRESERVE HARMONICS**
  - **ONE HARMONIC INTERVAL IS ESSENTIAL**
- **KAZNACHEYEV'S CYTOPATHOGENIC EFFECT:**
  - **QUARTZ PASSES ONE HARMONIC INTERVAL.**
  - **WINDOW GLASS DOES NOT.**
- **WHITTAKER'S INFOLDED EM STRUCTURE**
- **DEVYATKOV'S INFORMATION CONTENT OF THE FIELD.**
- **MULTIPLE PHASELOCKED WOODPECKER PULSE REPETITION RATES.**

Next Slide

Return to Index

Previous Slide

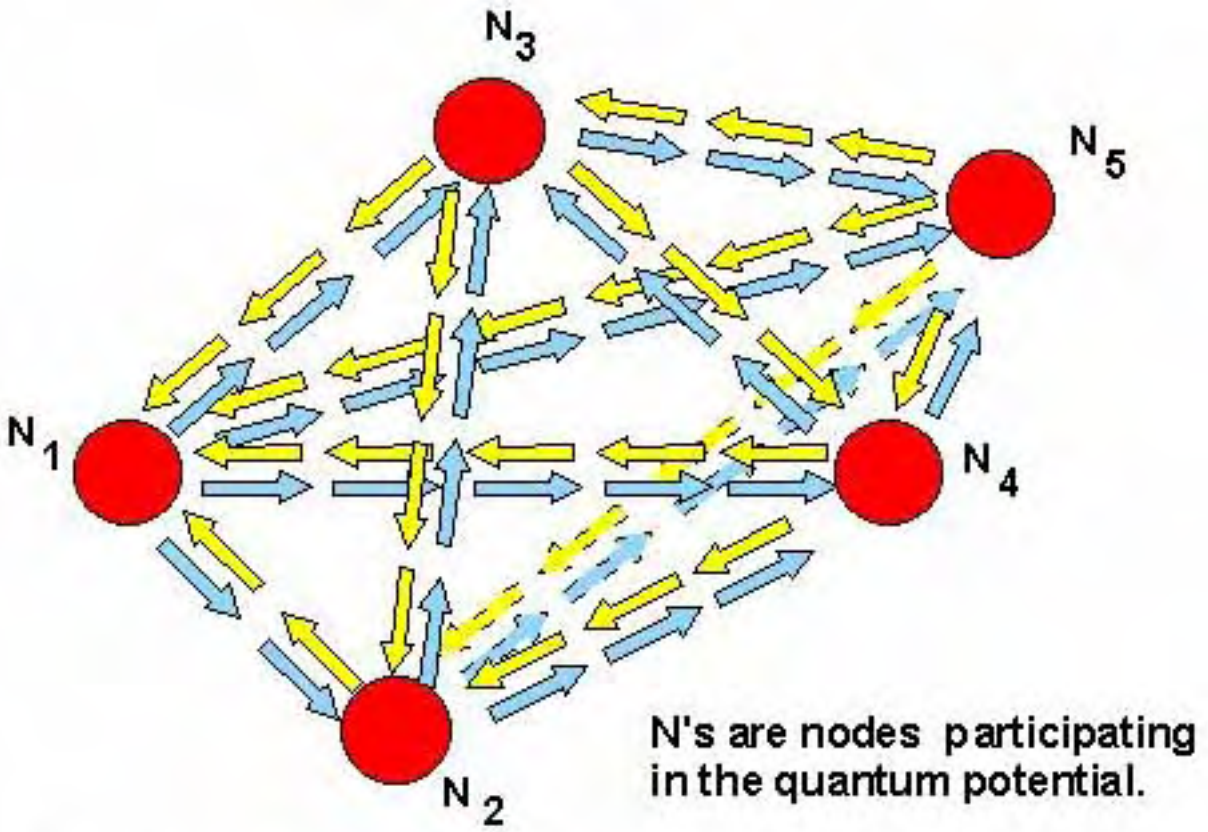

The quantum potential exists as narrow, laser-like beams between participating nodes, even when the nodes are widely separated. The beam space is multiply-connected; transmission is instantaneous.

Next Slide

Return to Index

Previous Slide

QUANTUM POTENTIAL CHARACTERISTICS

- **NO POINT SOURCE**
- **QP BETWEEN TWO PARTICLES**
  - INTERACTION DOES NOT VANISH AS SPATIAL SEPARATION BECOMES VERY LARGE

  - INSTANTANEOUS CONNECTION

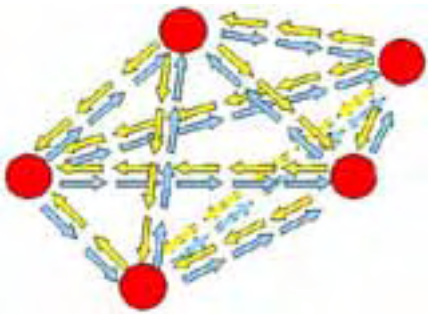

- **DEPENDS ON QUANTUM STATE OF SYSTEM AS A WHOLE**

- **SYSTEM PARTS CAN BE GREATLY SEPARATED**

Next Slide

Return to Index

Previous Slide

Self-Targeting in Inner EM Channel Can Produce a Quantum Potential

Once QP is established, energy transmission is direct and instantaneous. Energy input to one single participant will simultaneously appear in all other participants, the amount depending on their fractions of participation with the input station.

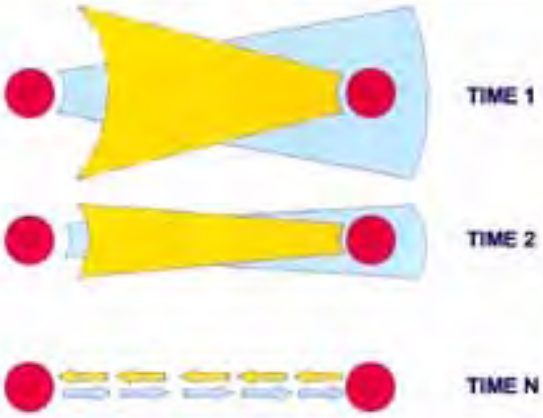

NARROWING OF INTERACTING POTENTIALS INTO LASER-LIKE BEAMS, BETWEEN TWO PUMPED SOURCES. NOW ONLY LONGITUDINAL WAVES CONNECT THE LINKED OBJECTS.

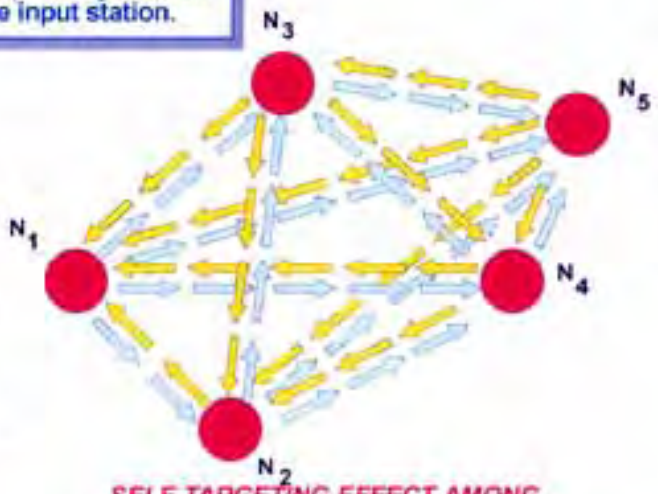

SELF-TARGETING EFFECT AMONG ALL PAIRS OF INTERACTING PUMPED SOURCES

© 1988, 1995, 1996 T.E. BEARDEN

Next Slide

Return to Index

Previous Slide

Corrections For the Present EM Bioeffects Model

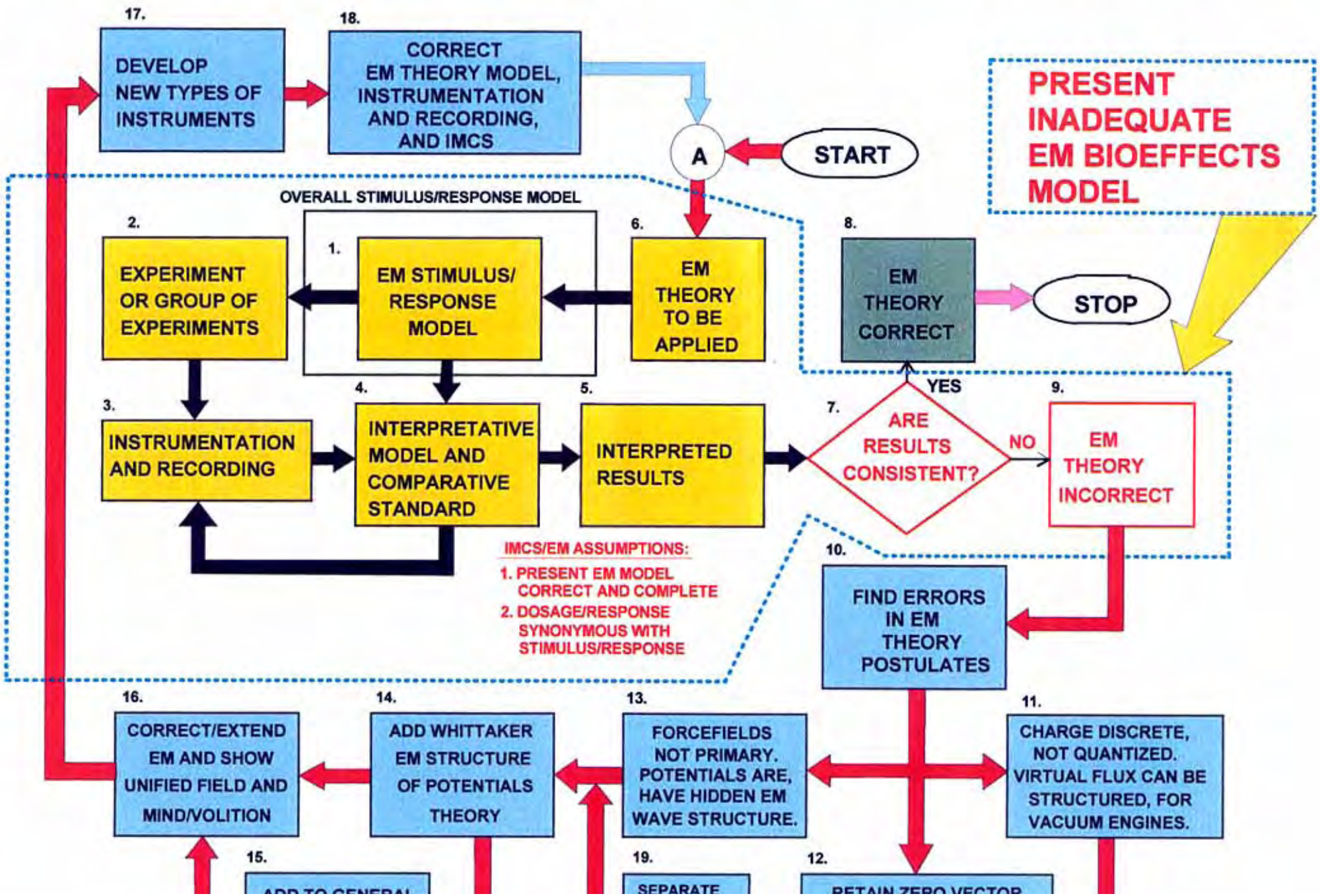

Next Slide

Return to Index

Previous Slide

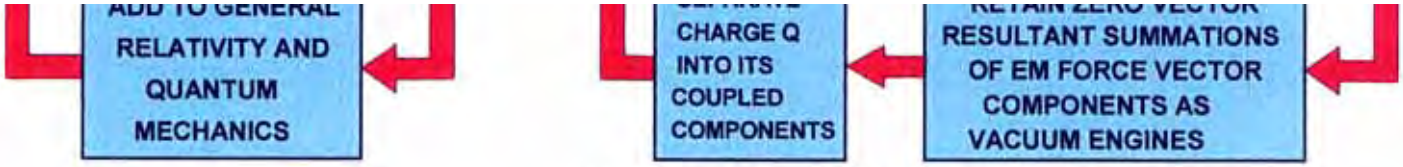

JCS-44

© 1991, 1993, 1995 T.E. BEARDEN

TWO STAGES OF CANCER PRODUCTION

- **INITIATION**
  - DNA IN CELL NUCLEUS IS DAMAGED
  - CELL MUTATES
  - INITIATOR: AN AGENT THAT DAMAGES THE DNA IN A CELL, CAUSING IT TO MUTATE
  - THE CELL IS NEOPLASTIC, OR PRECANCEROUS
- **PROMOTION**
  - PROMOTER: AN AGENT THAT CAUSES A CANCER CELL TO DEVELOP INTO A TUMOR
  - EXPOSURE TO THE PROMOTOR CAUSES THE CANCER CELL TO UNDERGO UNCHECKED CELL DIVISION
- **EXACT CAUSE OF UNCHECKED CELL GROWTH IS NOT CLEARLY UNDERSTOOD**
  - DNA BLUEPRINT ON TRANSMITTER RNA CHANGES?
  - NORMAL TRANSMISSION OF MESSAGES FROM THE CANCER CELL TO ITS DAUGHTER CELLS CHANGES?

Next Slide

Return to Index

Previous Slide

MORE ON PROMOTERS

- KNOWN TO ATTACK THE CYTOTOXIC LYMPHOCYTES IN THE IMMUNE SYSTEM THAT WOULD NORMALLY KILL TUMOR CELLS
  - INHIBITS CYTOTOXITY OF THESE LYMPHOCYTES
  - PREVENTS THEM FROM DOING THEIR JOB
- KNOWN TO CAUSE CHANGES IN SIGNALS OR MESSAGES BEING CARRIED ACROSS THE CELL MEMBRANE
  - NOTE: ELECTRICAL POTENTIALS ON THE MEMBRANE
  - ELECTRIC FIELDS ARE CHANGES IN ELECTRICAL STRESSES
  - STRESS IS KNOWN TO BE A FACTOR IN CANCER
- WITHOUT EXPOSURE TO A PROMOTER, CANCER WILL NOT PROCEED
- LATENCY PERIOD: TIME BETWEEN INITIATION AND PROMOTION STAGES OF CANCER DEVELOPMENT

Next Slide

Return to Index

Previous Slide

EM BIOLOGICAL EFFECTS: SOME CHANGES DEMONSTRATED

- CHANGES AT THE CELL MEMBRANE
  - PARTICULARLY CALCIUM ION FLUX INCREASE
  - PARTICULARLY AC AND DC FIELDS COMBINED
- RATES OF DNA AND RNA SYNTHESIS
- CHROMOSOMAL ABERRATIONS AND BREAKS
- RNA TRANSCRIPTION
- ENHANCED GENE EXPRESSION
- EFFECTS ON CELL PROLIFERATION, BUT DEPENDS ON MITOTIC STATUS OF CELL POPULATION DURING EXPOSURE. DEPENDS ON
  - EM FIELD INTENSITY
  - EXPOSURE DURATION
  - CELLULAR FACTORS
  - EXTRACELLULAR FACTORS
- INCREASED CALCIUM FLUX IN BRAIN CELLS (IN VIVO STUDIES OF LIVE ANIMALS)

Next Slide

Return to Index

Previous Slide

EM BIOLOGICAL EFFECTS: INHIBITION OF MELATONIN

- MELATONIN PRODUCED BY PINEAL GLAND AT NIGHT
  - REGULATES CIRCADIAN RHYTHMS
  - HAS ONCOSTATIC PROPERTIES (INHIBITS TUMORS)
  - USED IN CHEMOTHERAPY, PARTICULARLY AGAINST BREAST CANCER AND PROSTATE CANCER
  - CANCER PATIENTS USUALLY HAVE REDUCED LEVELS
  - REDUCED LEVELS CONTRIBUTE TO DEPRESSION, SEVERE MOOD CHANGES, PSYCHIATRIC DISORDERS
- PRODUCTION OF MELATONIN CONTROLLED BY AMOUNT OF LIGHT DETECTED BY THE RETINA
  - BLIND WOMEN HAVE GREATLY INCREASED LEVELS
  - BLIND WOMEN HAVE MUCH LESS BREAST CANCER
  - HIGHEST CANCER INCIDENCE IS BREAST CANCER
    - INCREASING IN INCIDENCE
    - INCREASING IN MORTALITY
- EMF EXPOSURE INHIBITS NIGHTTIME PRODUCTION OF MELATONIN. SUCH SUPPRESSION OF MELATONIN IS IMPLICATED IN ETIOLOGY OF BREAST, PROSTATE, OVARIAN, AND MELANOMA CANCER

Next Slide

Return to Index

Previous Slide

OTHER EM BIOLOGICAL EFFECTS

- **MAGNETIC FIELD INDUCING OF BIRTH DEFECTS IN CHICKS**

- **MORE CONTROVERSIAL EPIDEMIOLOGY STUDIES FOUND**
  CORRELATIONS BETWEEN EMF AND
  - BRAIN TUMORS
  - MISCARRIAGES IN PREGNANT FEMALES USING VDTS
  - BIRTH DEFECTS
  - INCIDENCE OF LEUKEMIA IN CHILDREN

- **BECKER SHOWED THAT PICOAMPERES OF CURRENT USED**
  IN EM-ASSISTED BONE HEALING CAUSED PROFOUND CELLULAR CHANGES
  - RED BLOOD CELLS DEDIFFERENTIATED
  - SHED HEMOGLOBIN AND GREW NUCLEI
  - REDIFFERENTIATED INTO CARTILAGE-HEALING CELLS
  - REDIFFERENTIATED INTO BONE-HEALING CELLS
  - THEN HEALED THE FRACTURES

Next Slide

Return to Index

Previous Slide

Becker's dc treatment of bone fractures

Application of tiny DC currents to heal difficult bone fractures. Only picoamperes are utilized. Pulsed DC current or pulsed magnetic fields may also be utilized.

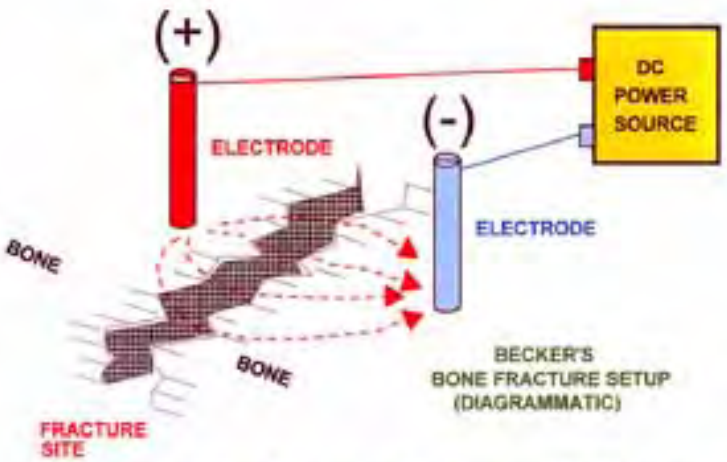

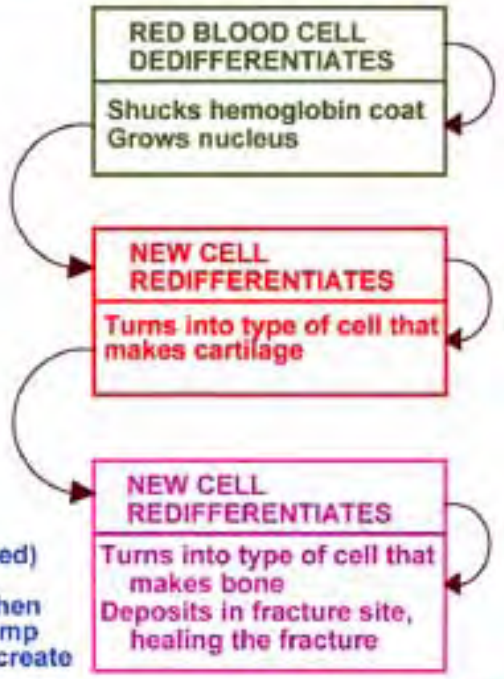

Proves that cells can be time-reversed (phase conjugated) (dedifferentiated) or time-forwarded (redifferentiated) by application of very weak electromagnetic signals, when those signals contain longitudinal bidirectional EM "pump wave" wavepairs, which cause the cell and its parts to create precise vacuum antiengines.

© 1993, 1996 T.E. BEARDEN

Next Slide

Return to Index

Previous Slide

QUESTIONS ON CARCINOGENS AND EM RADIATION

- UNRESOLVED QUESTIONS ON EM RADIATION
  - DOSAGES
  - ACTIVE MECHANISMS
  - REPLICATION DIFFICULTIES
  - MEASUREMENT DIFFICULTIES
  - WHERE, WHEN, HOW ILL EFFECTS OCCUR
- SIMILAR QUESTIONS EXIST ABOUT EVERY CARCINOGEN
- SCIENCE REALLY DOES NOT UNDERSTAND THE MECHANISMS OF A SINGLE CHRONIC DISEASE, INCLUDING CANCER
  - FACTORS SUCH AS MIND, STRESS, SPONTANEOUS REMISSION, PLACEBO EFFECTS, AND COMBINATIONS OF FACTORS ARE PARTICULARLY TROUBLESOME
  - GENERATION OF THE PLACEBO EFFECT BY THE REGENERATION & RECOVERY SYSTEM IS UNRECOGNIZED

© 1994, 1995 T.E. Bearden

Next Slide

Return to Index

Previous Slide

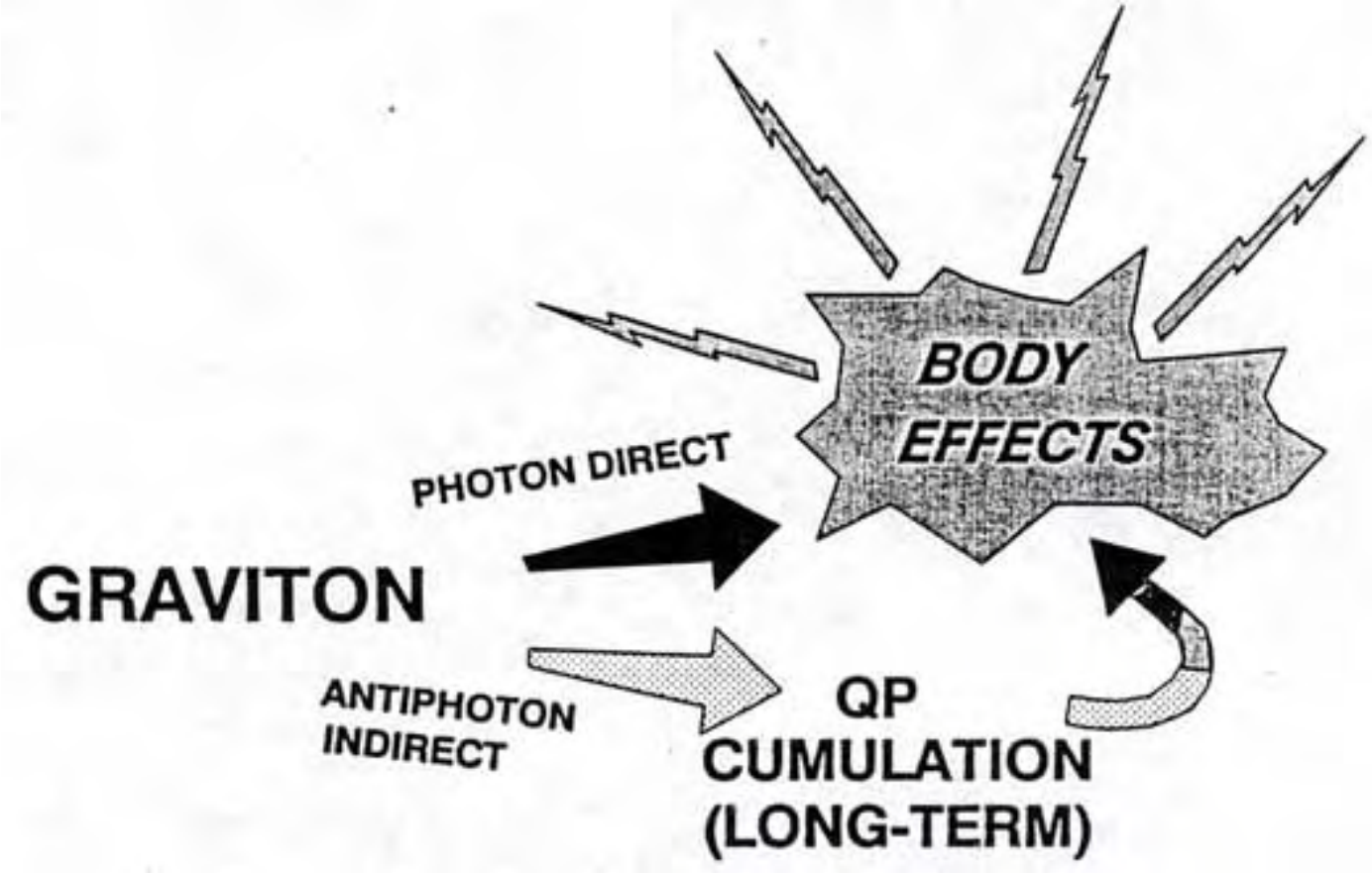

Next Slide

Return to Index

Previous Slide

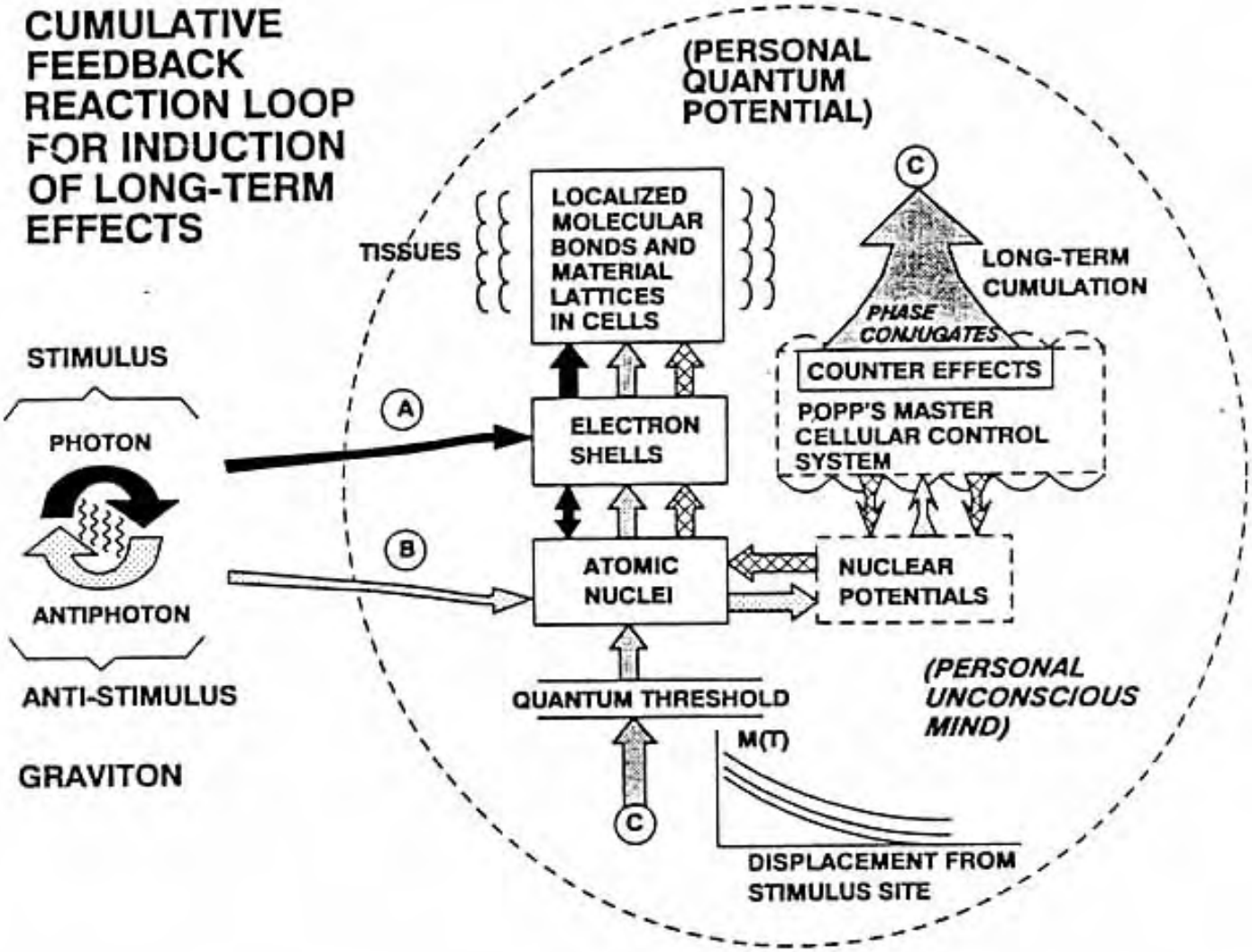

Next Slide

Return to Index

Previous Slide

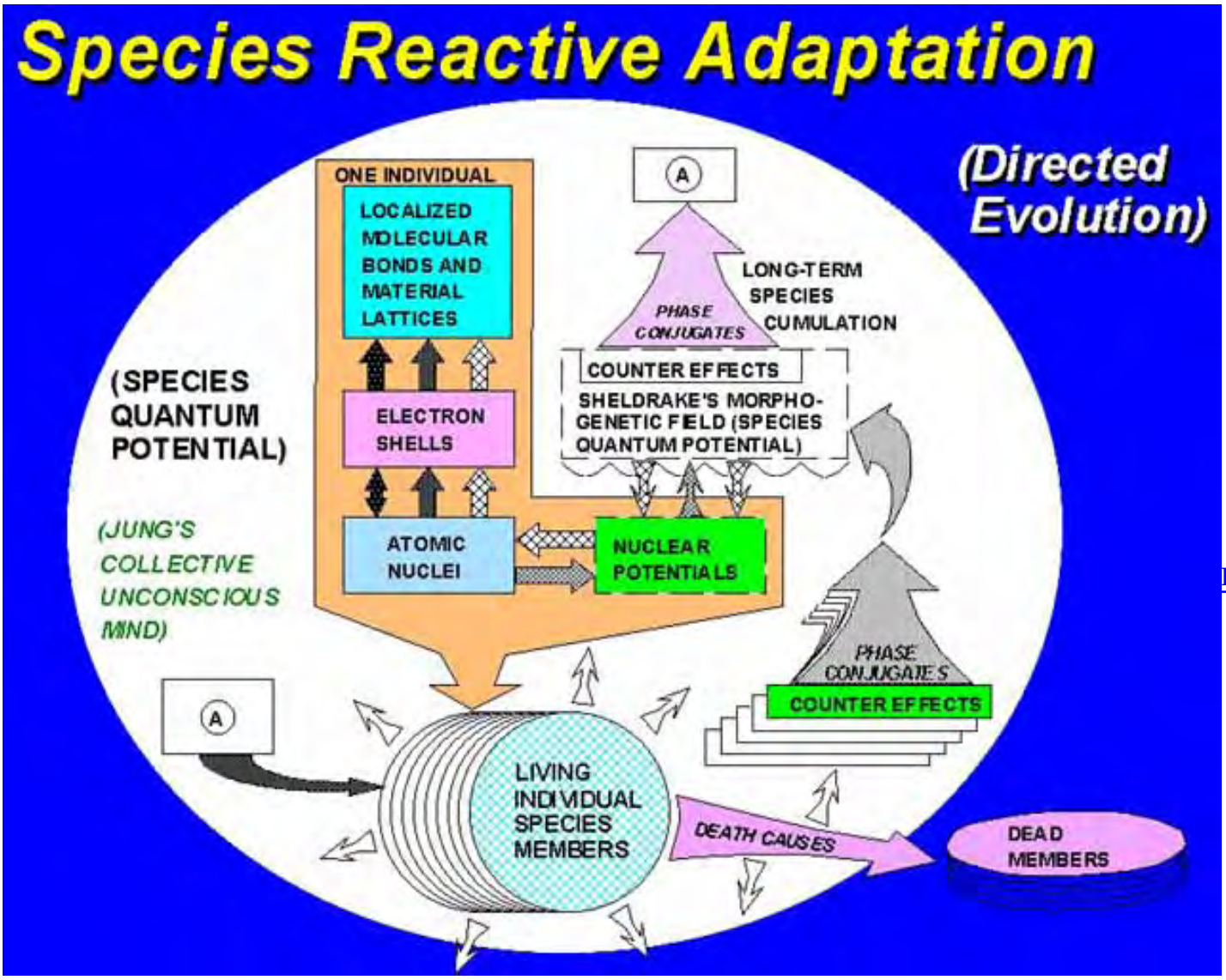

Next Slide

Return to Index

Previous Slide

INHERITANCE OF ACQUIRED TRAITS

- Evolutionary biology assumes mutations are random events
  - Causes of heritable differences separated from their consequences for survival and reproduction
  - Likelihood of any particular mutational event assumed independent of its particular value to the organism
  - Natural selection then assumed to increase the frequency of advantageous alleles
- Evidence for directed, non-random mutation
  - Removing cell-wall from bacterium: acquired nakedness is then inherited
  - Protozoan Oxytricha double monsters (siamese twins)
    - Bisected lengthwise, normal reproduction
    - Bisected crosswise, double monsters reproduce
  - Virus Sigma and fruit fly sensitivity to CO_2
  - Specific sets of genes either eliminated or added to an organism by organelles, plasmids, bacteria or other agents
- Genes are acquired vertically from ancestors and horizontally from a variety of other factors

Next Slide

Return to Index

Previous Slide

Deep penetration of weak signals in a dense signal environment, by nonlinear retroreflection

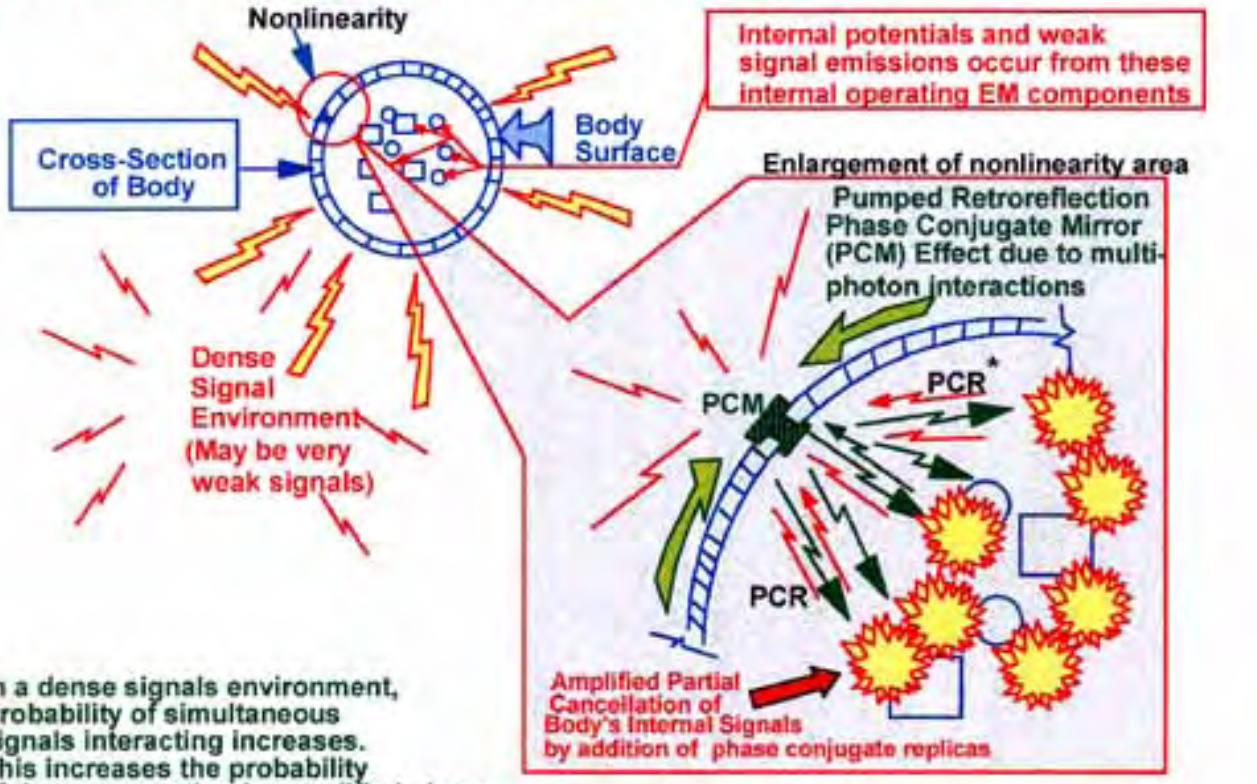

In a dense signals environment, probability of simultaneous signals interacting increases. This increases the probability of deep penetration by amplified phase conjugate reflections of weak internally generated signals from the interior, impinging upon the pumped (stressed) nonlinear surface areas where the simultaneous exterior interactions occur.

* Phase conjugate replica

© 1993, 1995 T.E. Bearden

Next Slide

Return to Index

Previous Slide

ANOMALOUS DEPTH PENETRATION

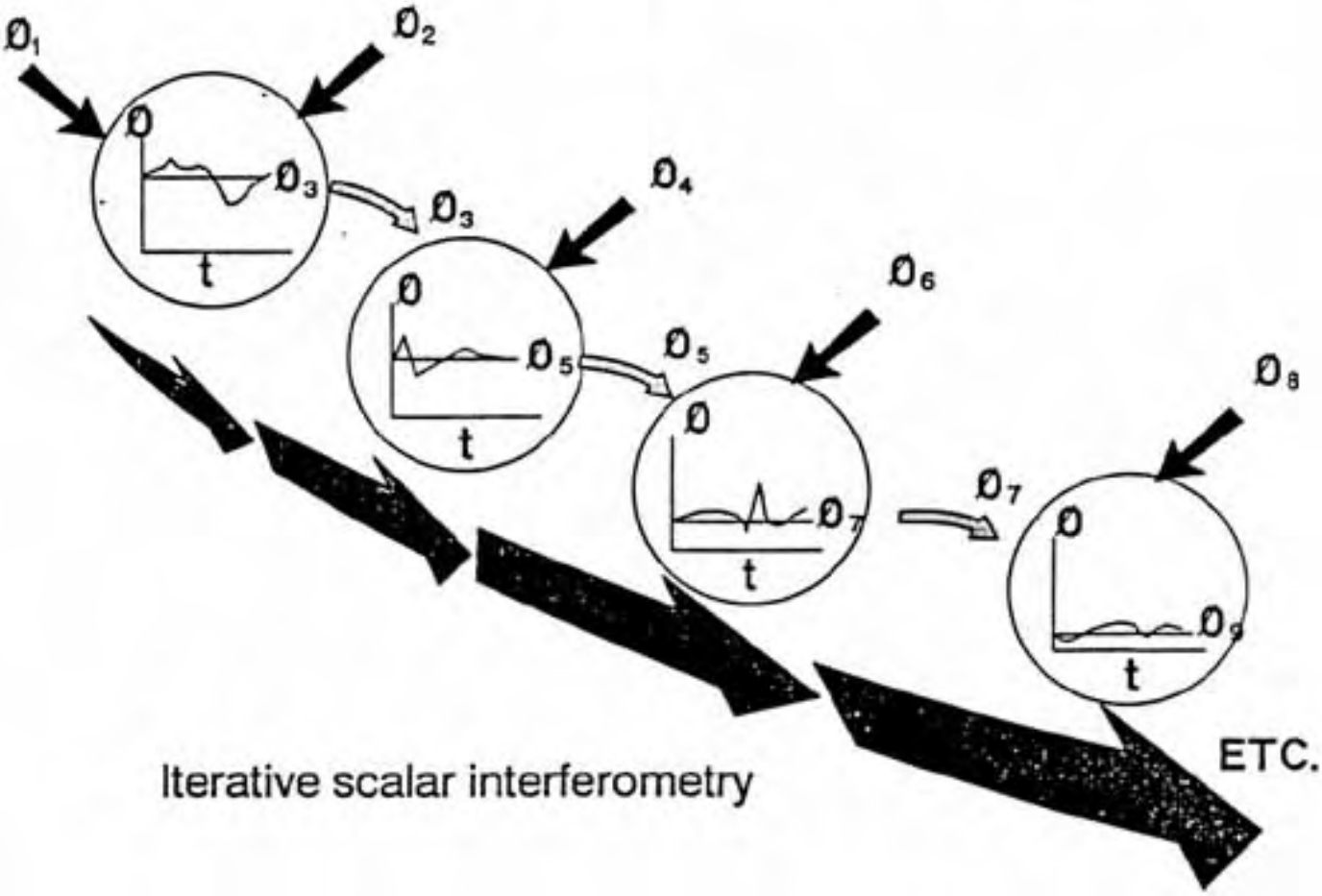

Next Slide

Return to Index

Previous Slide

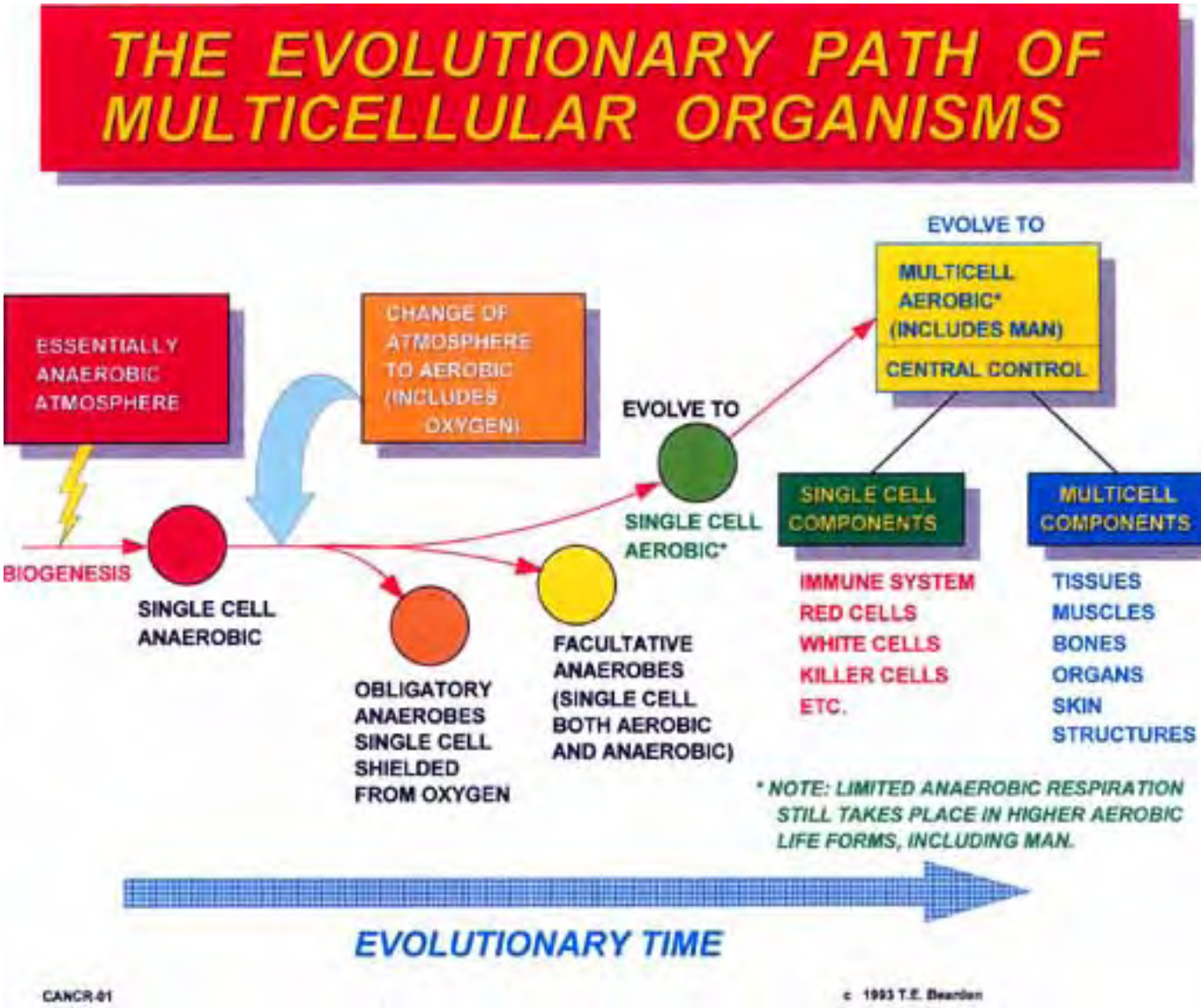

Next Slide

Return to Index

Previous Slide

DEVELOPMENT OF MULTI-CELLED ORGANISMS

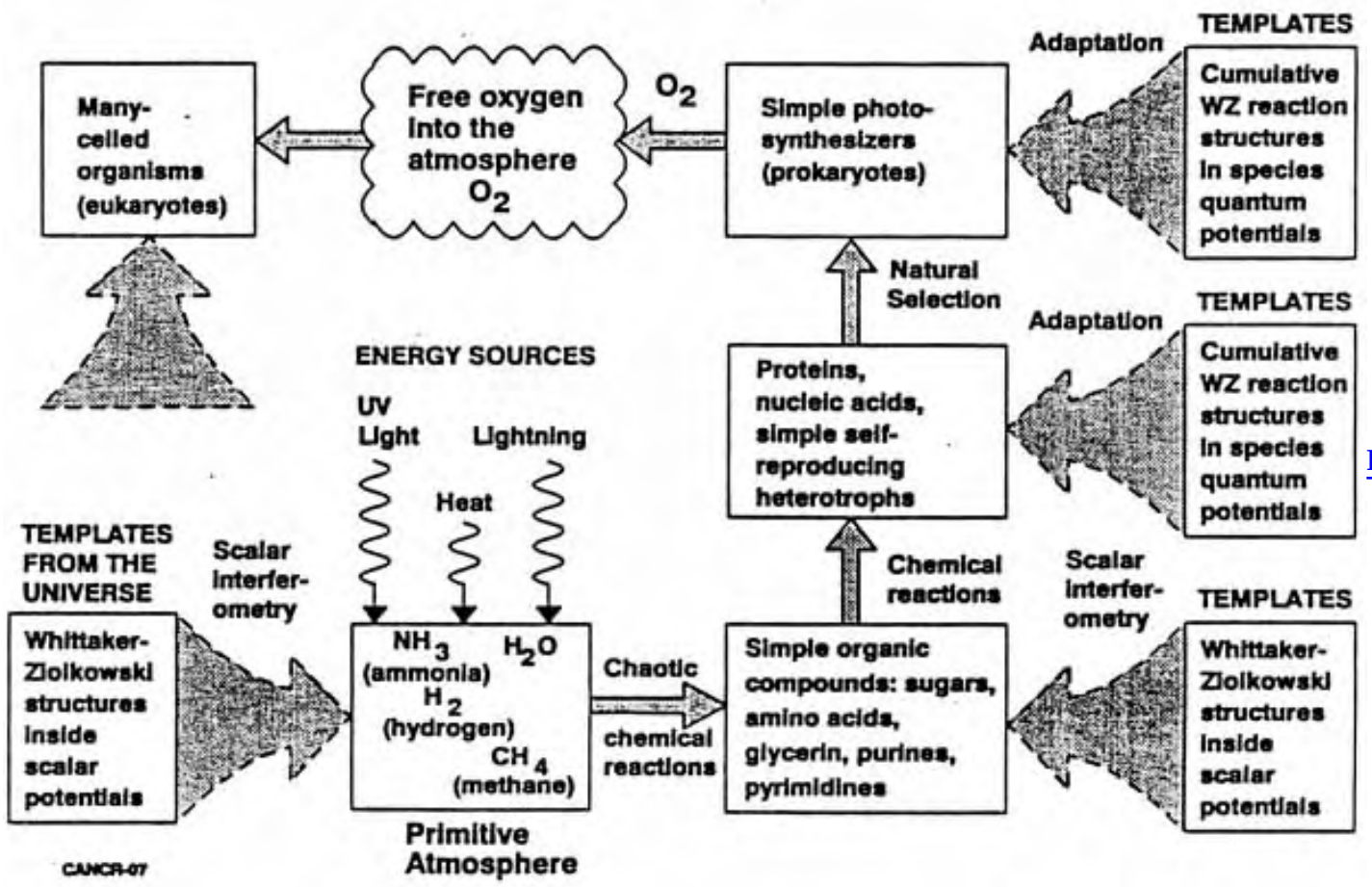

Next Slide

Return to Index

Previous Slide

EFFECT OF FLUID CONTAMINATION ON HEMOGLOBIN'S OXYGEN TRANSPORT

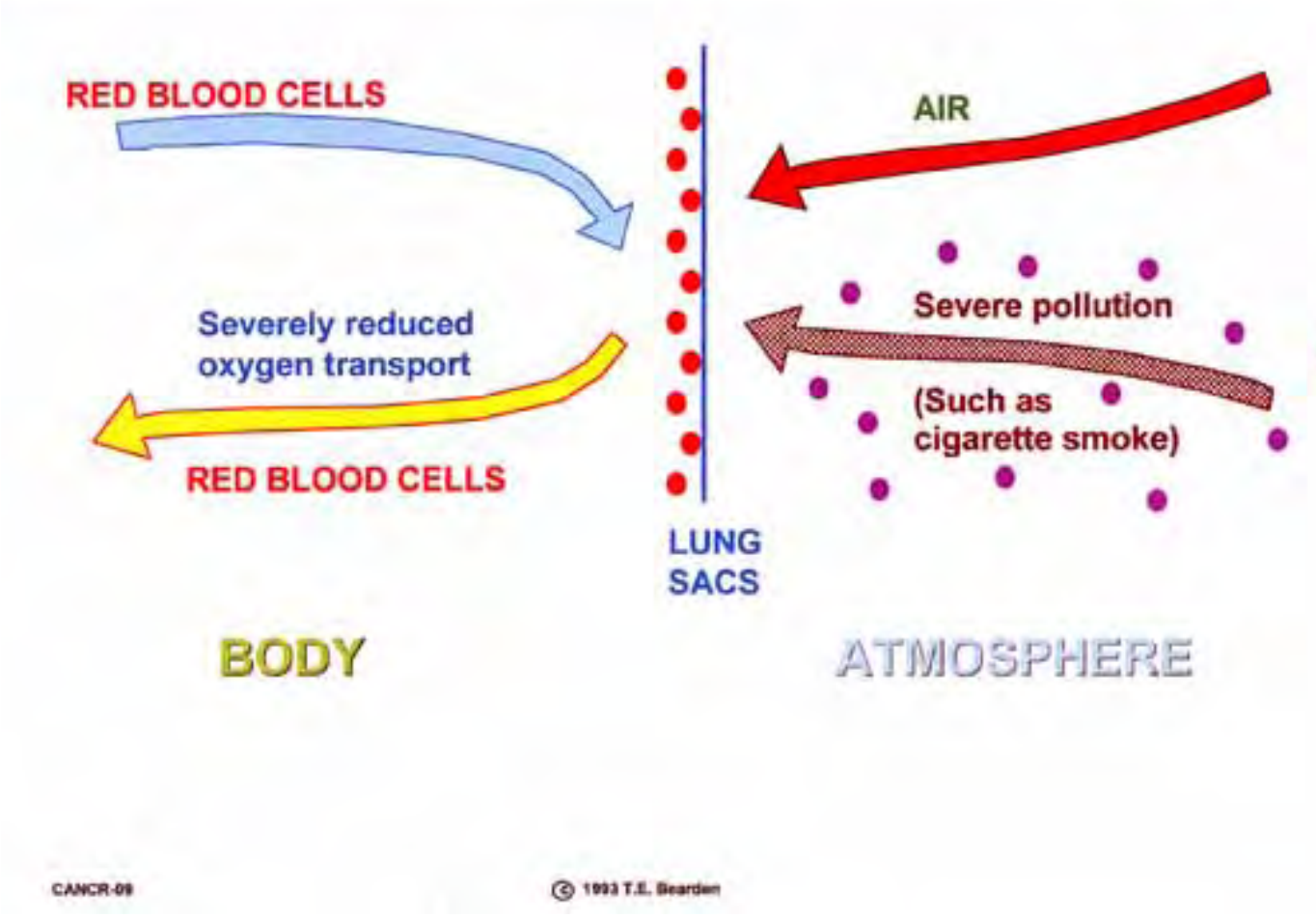

CANCR-09

© 1993 T.E. Bearden

Next Slide

Return to Index

Previous Slide

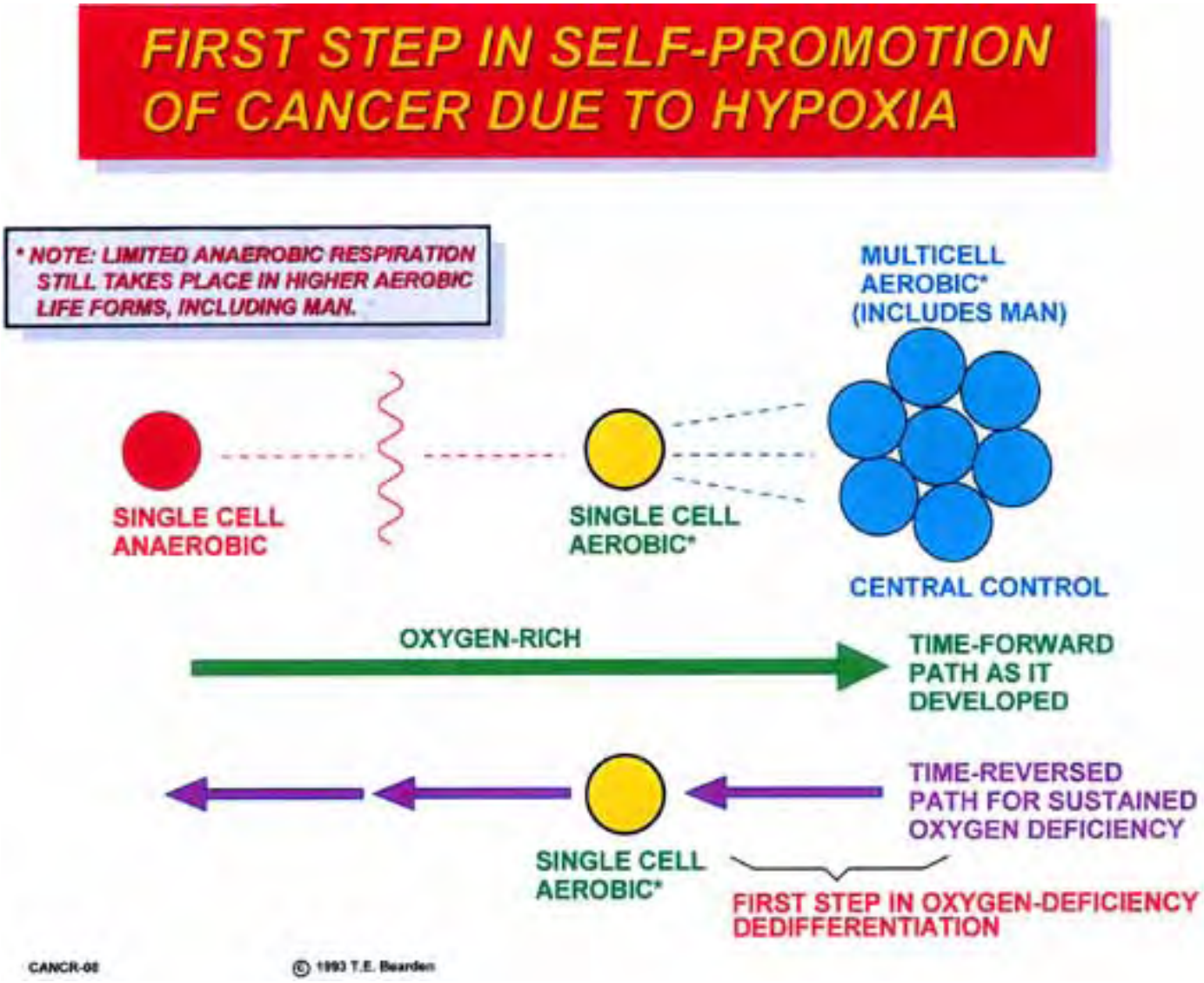

Next Slide

Return to Index

Previous Slide

CUMULATIVE GROWTH OF DEDIFFERENTIATION SIGNALS

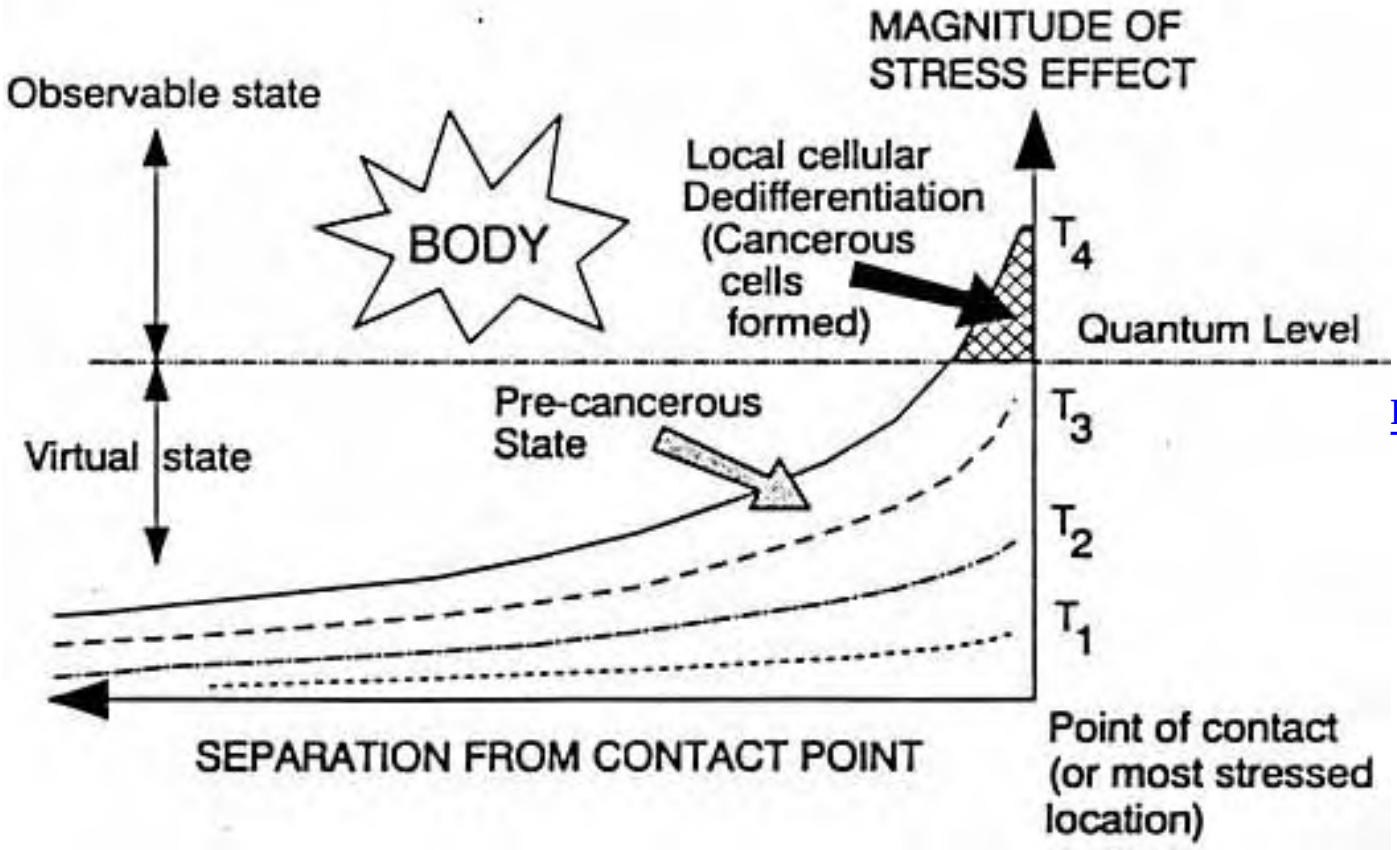

Next Slide

Return to Index

Previous Slide

CUMULATIVE EMERGENCE OF CANCER INTO THE PHYSICAL STATE

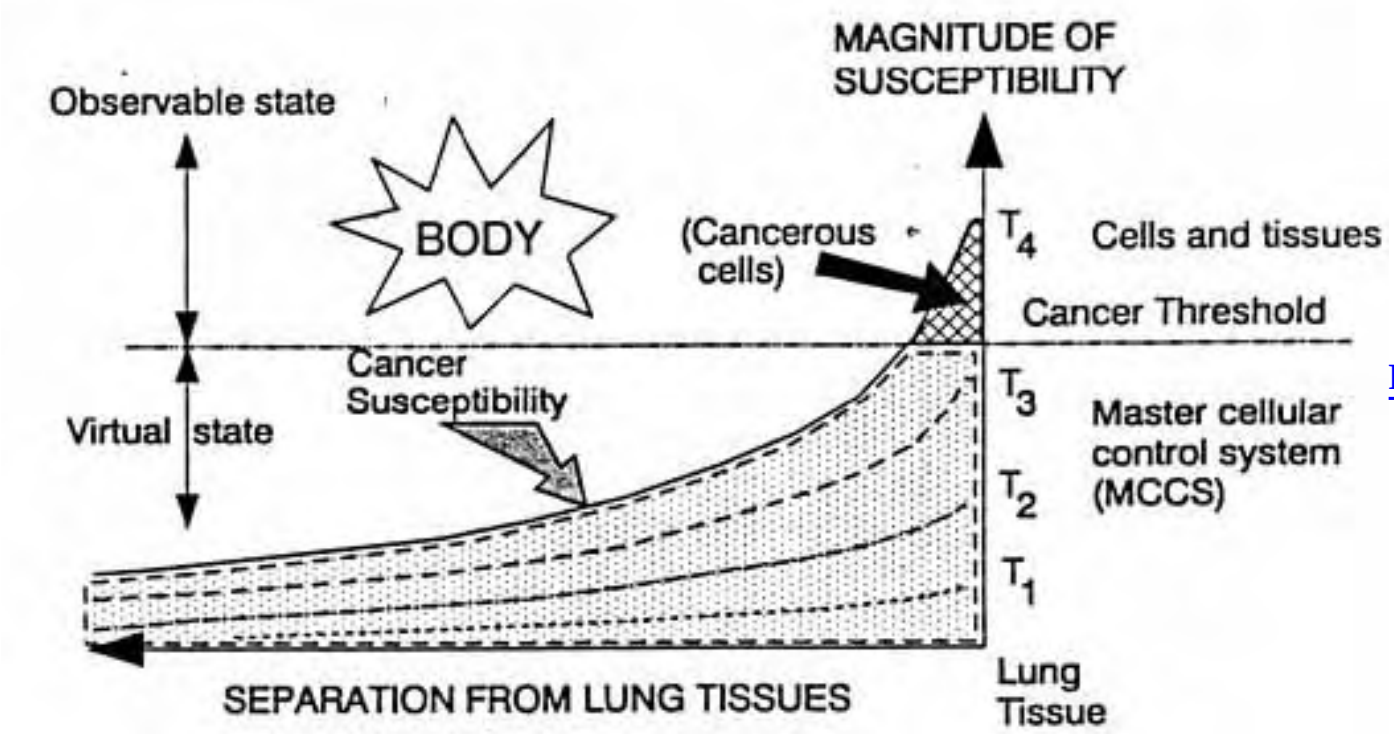

Next Slide

Return to Index

Previous Slide

PRECANCER STATE CONDITION DETERMINES TREATMENT SUCCESS

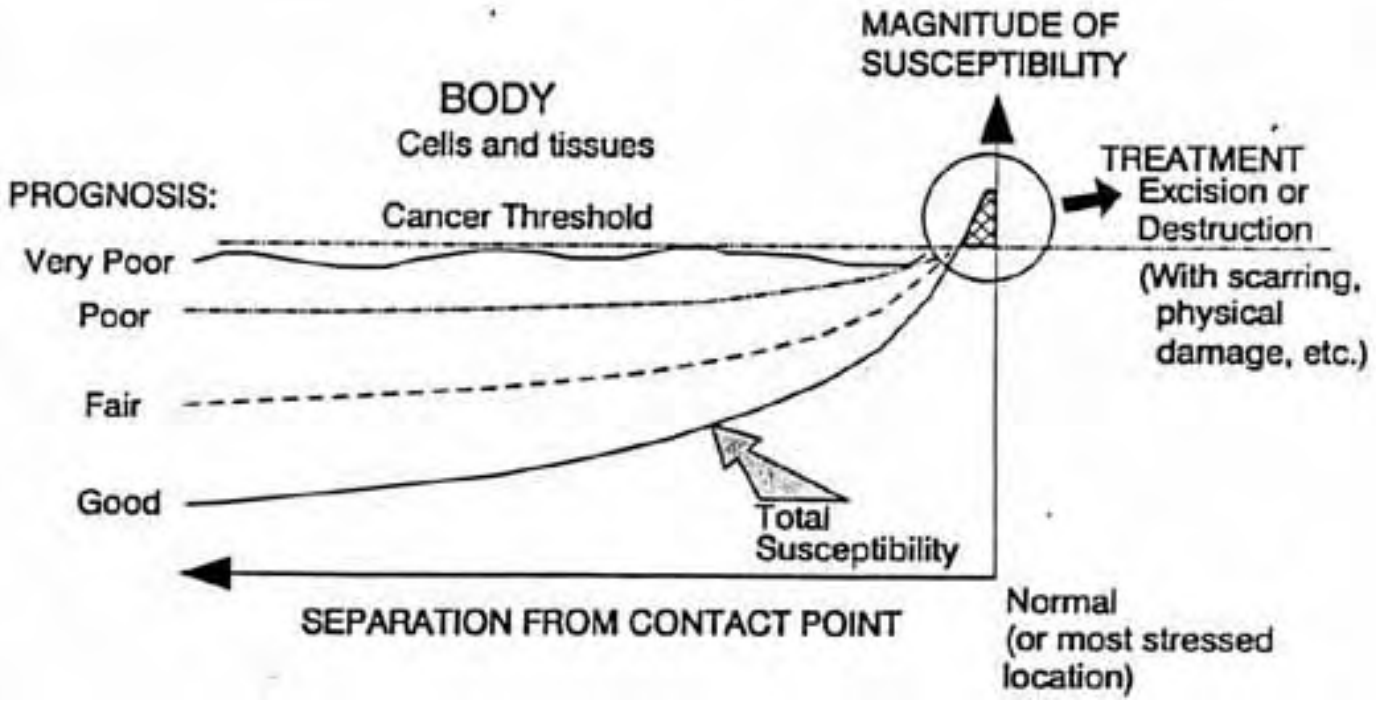

Next Slide

Return to Index

Previous Slide

Starting From the Scalar EM View:
A NEW DEFINITION OF CANCER

- CANCER AND LEUKEMIA ARE:

  Centrally-commanded, final, desperate, "first-step dedifferentiation" adaptive attempts by the stressed affected cells experiencing sustained oxygen shortage, to reverse their cellular evolution and return to the anaerobic stage of their distant ancestry.

- THE CAUSE IS LONG-TERM CUMULATIVE, AND ELECTROMAGNETIC IN NATURE.

- A TOTAL CURE CAN BE ACHIEVED ELECTRO-MAGNETICALLY, AS WAS DEMONSTRATED.

Next Slide

Return to Index

Previous Slide

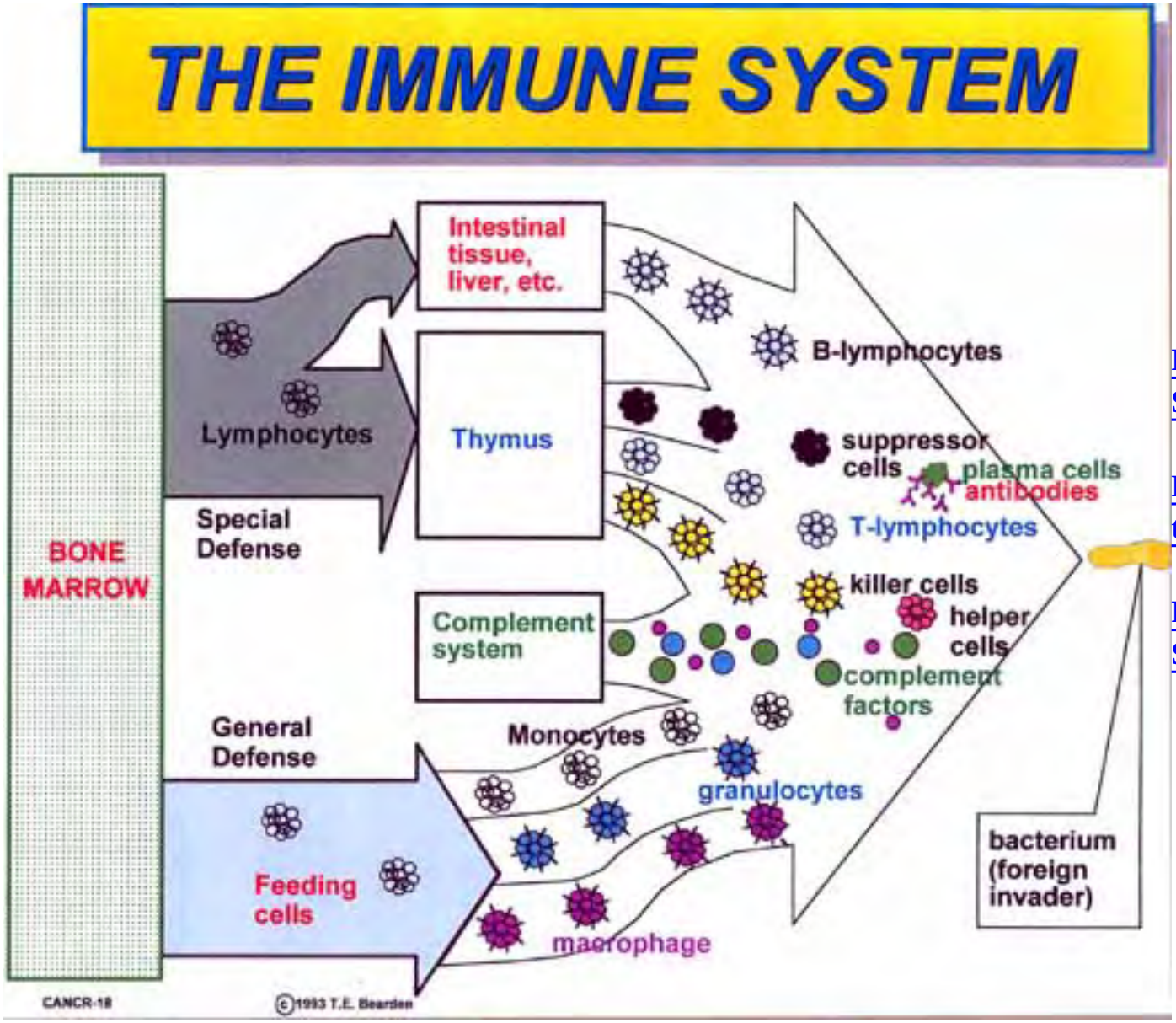

Next Slide

Return to Index

Previous Slide

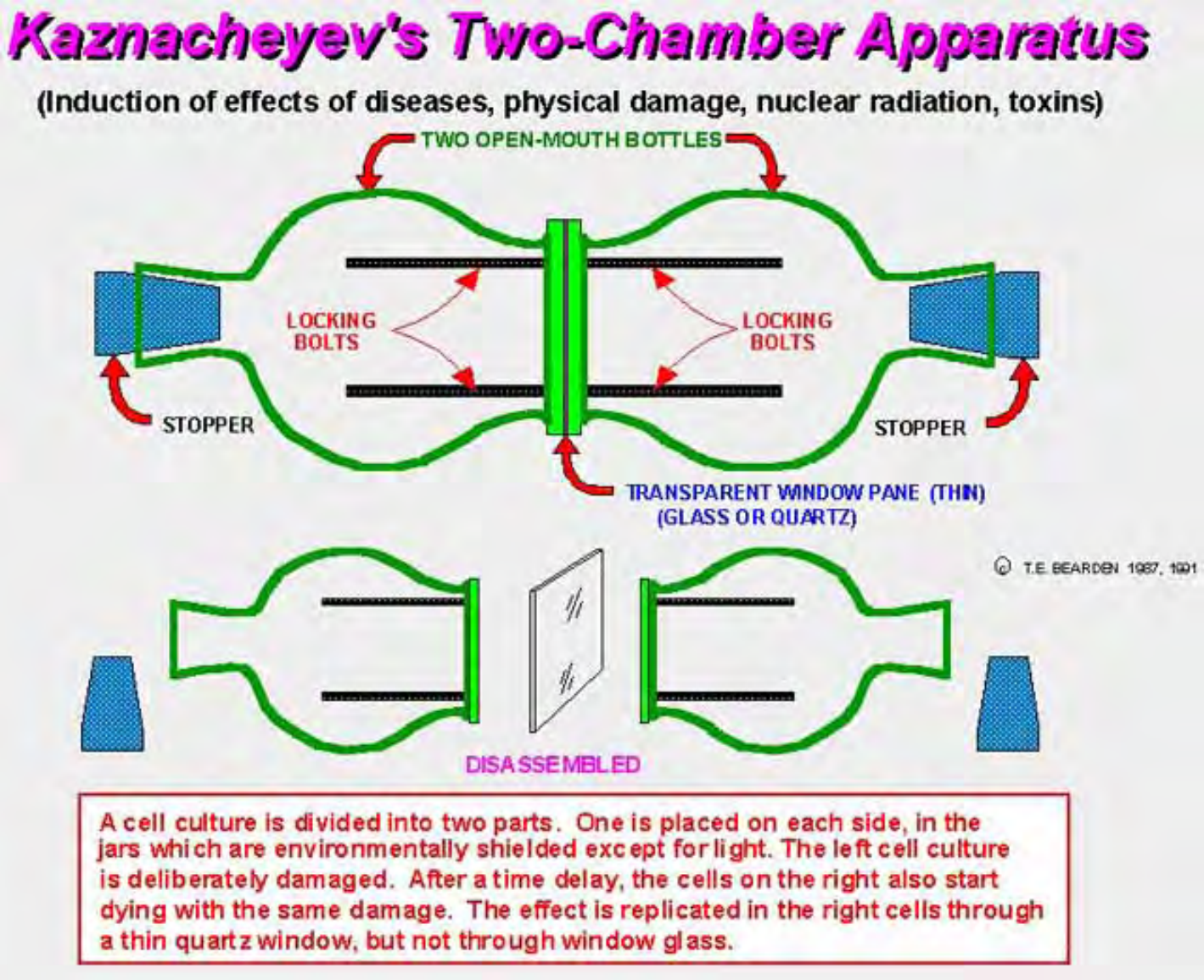

Next Slide

Return to Index

Previous Slide

Kaznacheyev's Cytopathogenic Mirror Effect

Disease vacuum engines transported by photons and waves

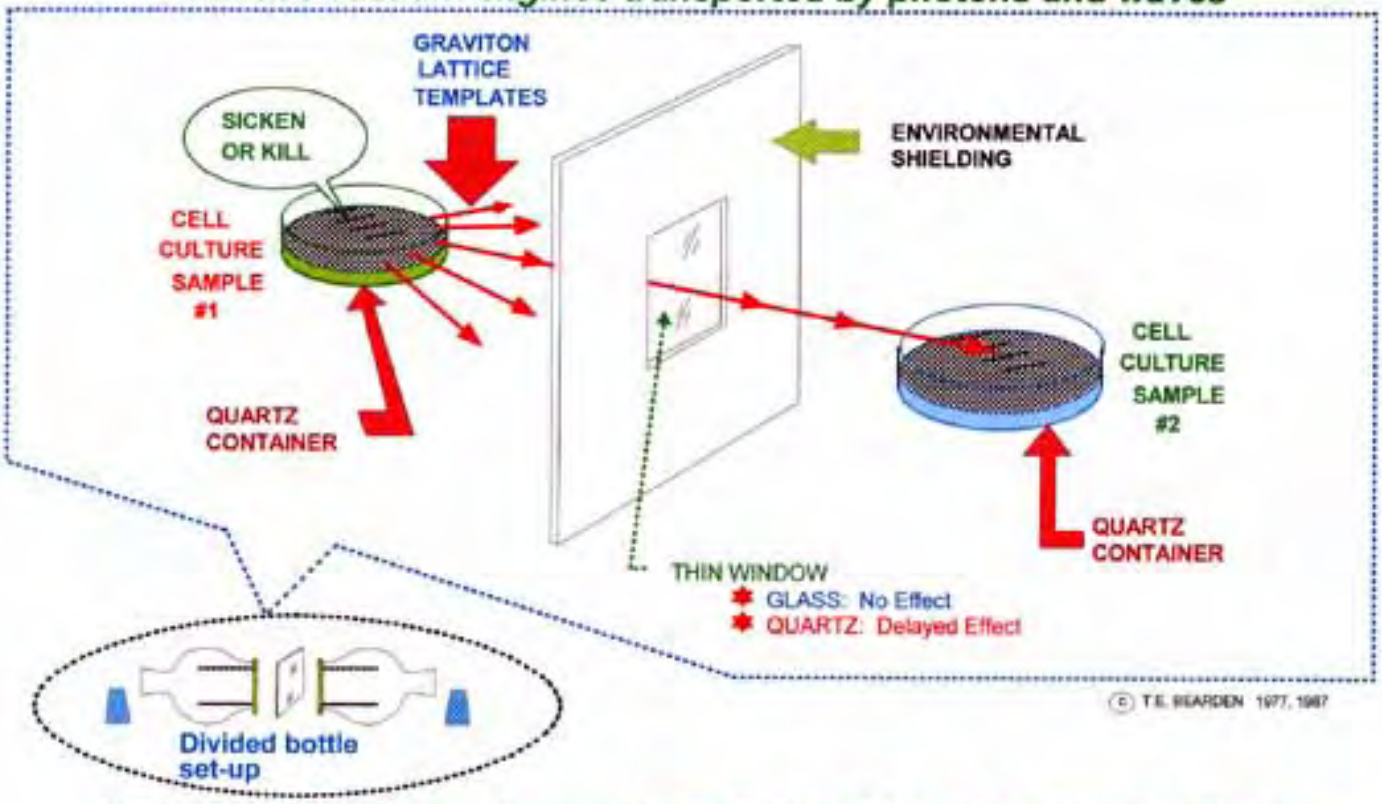

Note: Minimum lattice is one harmonic interval: IR to UV is such a minimum G-lattice.

Distant induction of cellular death and diseases, by special EM means. Coupled photon-antiphoton pairs (gravitons) in a structured harmonic lattice ordering constitute the disease or disorder template.

Next Slide

Return to Index

Previous Slide

MICROWAVE RADIATION OF U.S. EMBASSY IN MOSCOW

Former U.S. Embassy in Moscow.

Selected clipart © by Lotus SmartPics™

BACKGROUND

- Began in latter 1950s
- Discovered on VP Nixon's trip
- Initially thought to be *nuclear* radiation (Discovered w/Geiger counter?)
- High level target -- U.S. Ambassador
- Guarantees personal attention of:
  - U.S. Ambassador to USSR
  - U.S. President
  - NSA, CIA, DIA, NSC, etc.
  - Top consulting scientists
  - Leading U.S. scientific institutions
- Two U.S. Ambassadors died, another sickened
- Anomalous health changes in personnel, only in zero-field (zero pot'l gradient) areas!
- Four U.S. Presidents requested Soviets cease
  - Cut from 18 watts/sq cm to 2
  - Then again increased
- No one could understand what was going on
- Aluminum screens were placed over windows
- Moscow was declared a hazardous duty zone

© 1995, 1996 T.E. BEARDEN

Next Slide

Return to Index

Previous Slide

JOHN HOPKINS STUDY OF EMBASSY MICROWAVE RADIATION

- **EXCELLENT SCIENTIFIC TEAM**

  - PERFORMED CLASSICAL EM INVESTIGATION

  - CAREFULLY ESTABLISHED THE FORCE FIELD PATTERNS

  - NO HEALTH CHANGES OCCURRED IN PERSONNEL WHERE THE FORCE FIELDS WERE PRESENT (NONZERO)

  - ALL HEALTH CHANGES OCCURRED IN PERSONNEL WHERE THE FORCE FIELDS WERE ZERO (ABSENT)

- **ASSUMED THAT ALL EM ACTION IS DUE ONLY TO FORCE FIELDS**

  - CONCLUDED THAT MICROWAVE RADIATION COULD NOT HAVE CAUSED THE HEALTH CHANGES

- **CONCLUSION WAS IN SERIOUS ERROR**

  - CORRECT CONCLUSION: HEALTH CHANGES WERE TOTALLY CORRELATED TO ABSENCE OF FORCE FIELDS

  *** TOTALLY CORRELATED TO PRESENCE OF GRADIENT-FREE POTENTIALS, OR NOT TO RADIATION AT ALL**

  *** IF NOT TO RADIATION AT ALL, THEN HEALTH CHANGES WOULD HAVE ALSO OCCURRED WHERE FORCE FIELDS WERE PRESENT**

- **THEREFORE THE HEALTH CHANGES WERE TOTALLY CORRELATED TO THE GRADIENT-FREE POTENTIALS, AND TO THE EM RADIATION**

Next Slide

Return to Index

Previous Slide

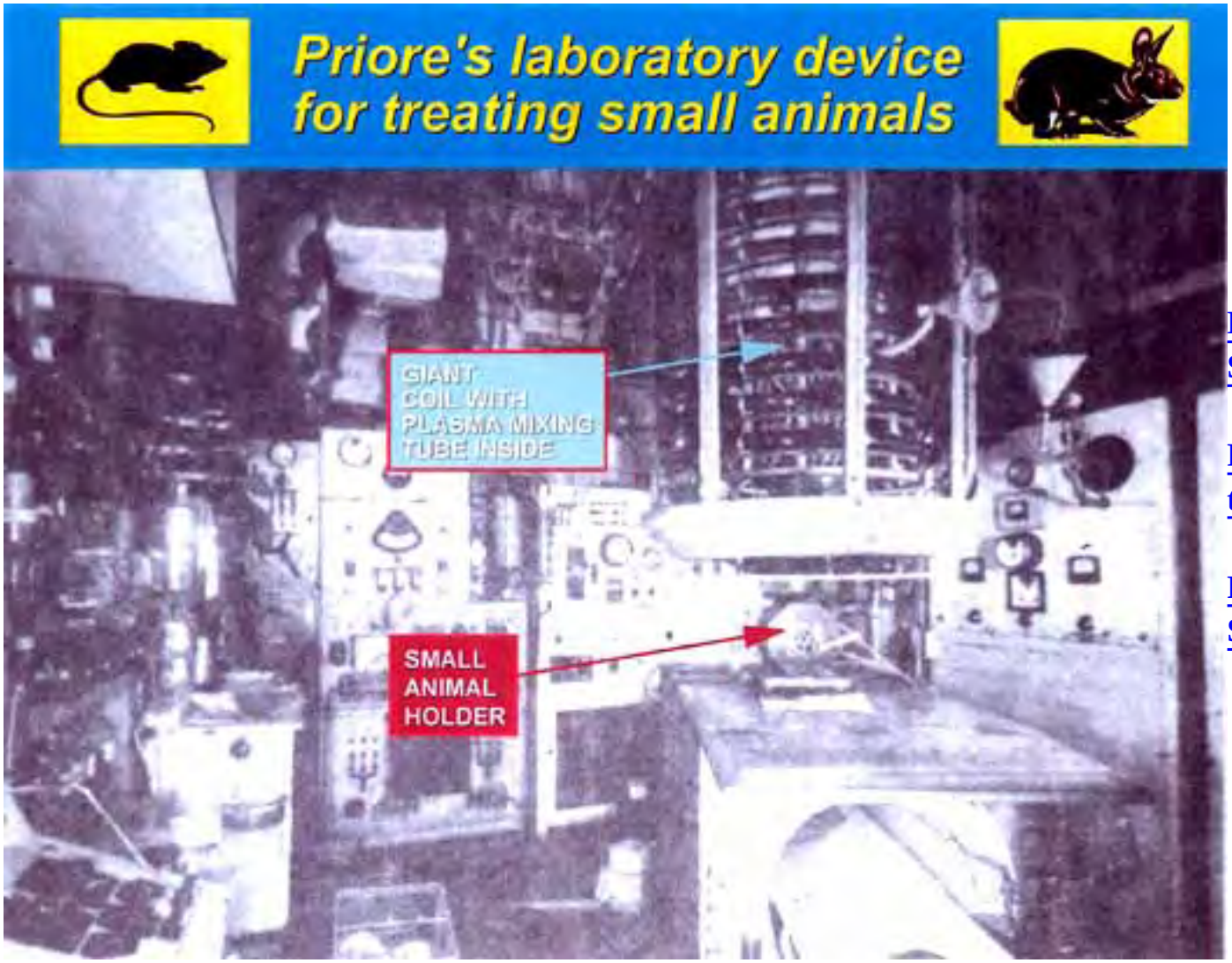

Next Slide

Return to Index

Previous Slide

MECHANISM OF THE PRIORE THERAPY

- **PRODUCED A DETERMINISTIC WZ STRUCTURED SCALAR POTENTIAL**
  - **17 FREQUENCIES MIXED IN A ROTATING PLASMA**
  - **PHASE CONJUGATES ADDED BY THE PLASMA**
  - **MODULATED ONTO A RIPPLING MAGNETIC FIELD WHICH CARRIED IT TO ATOMIC NUCLEI**
  - **INTERACTED DIRECTLY WITH PERSONAL QUANTUM POTENTIAL**

- **NEGATED THE LONG-TERM CUMULATIVE CELLULAR DEDIFFERENTIATION ORDER GENERATED BY LONG-TERM HYPOXIA. TUMOR CELLS REVERTED TO NORMAL CONTROL**

- **SCRUBBED OUT THE CUMULATED PRECANCEROUS STATE**

- **RESTORED THE IMMUNE SYSTEM TO HIGH FUNCTIONING**

- **NO EXCESSIVE TRAUMA TO TREATED ANIMAL**

Next Slide

Return to Index

Previous Slide

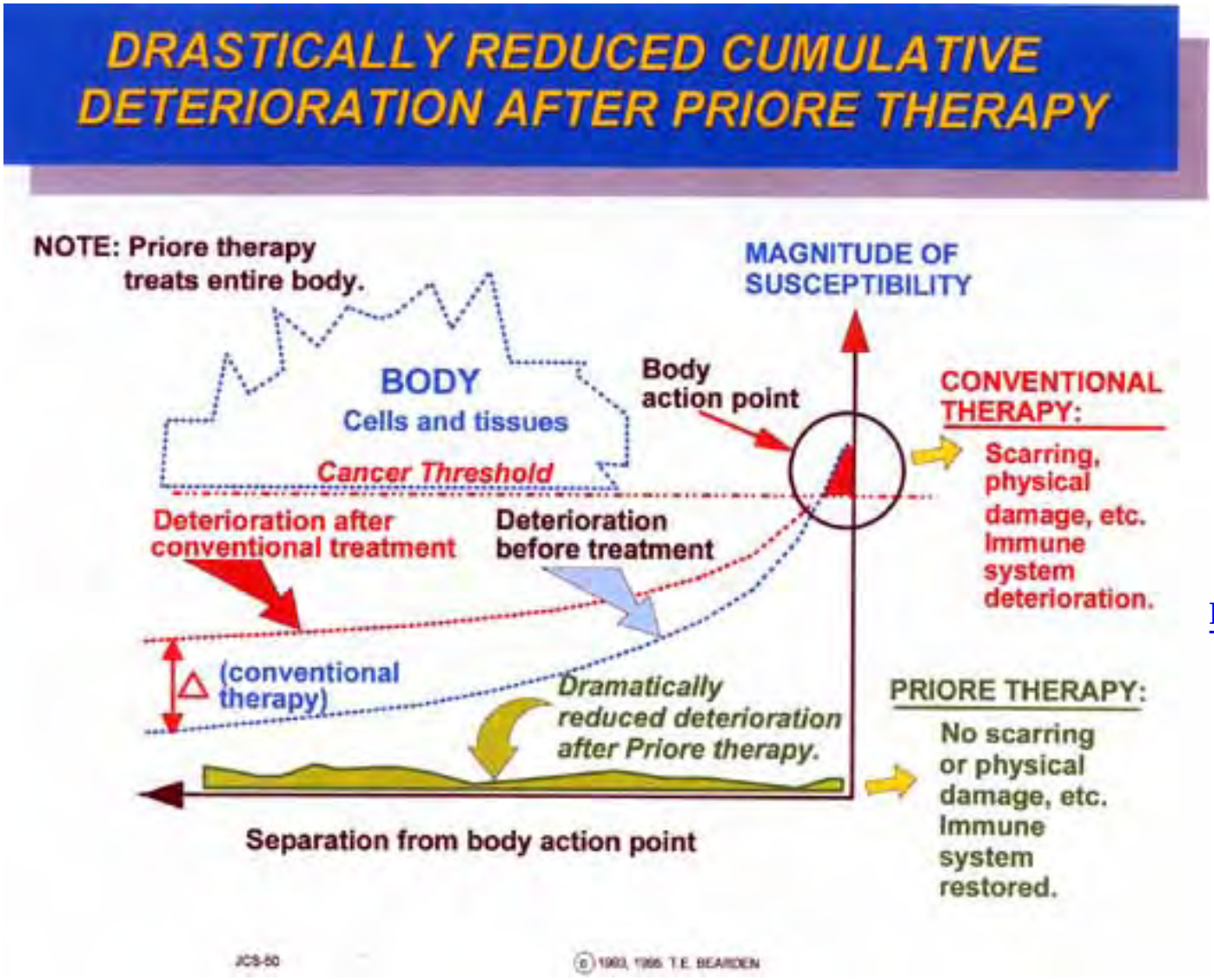

Next Slide

Return to Index

Previous Slide

THE MISSING PIECE OF THE PUZZLE

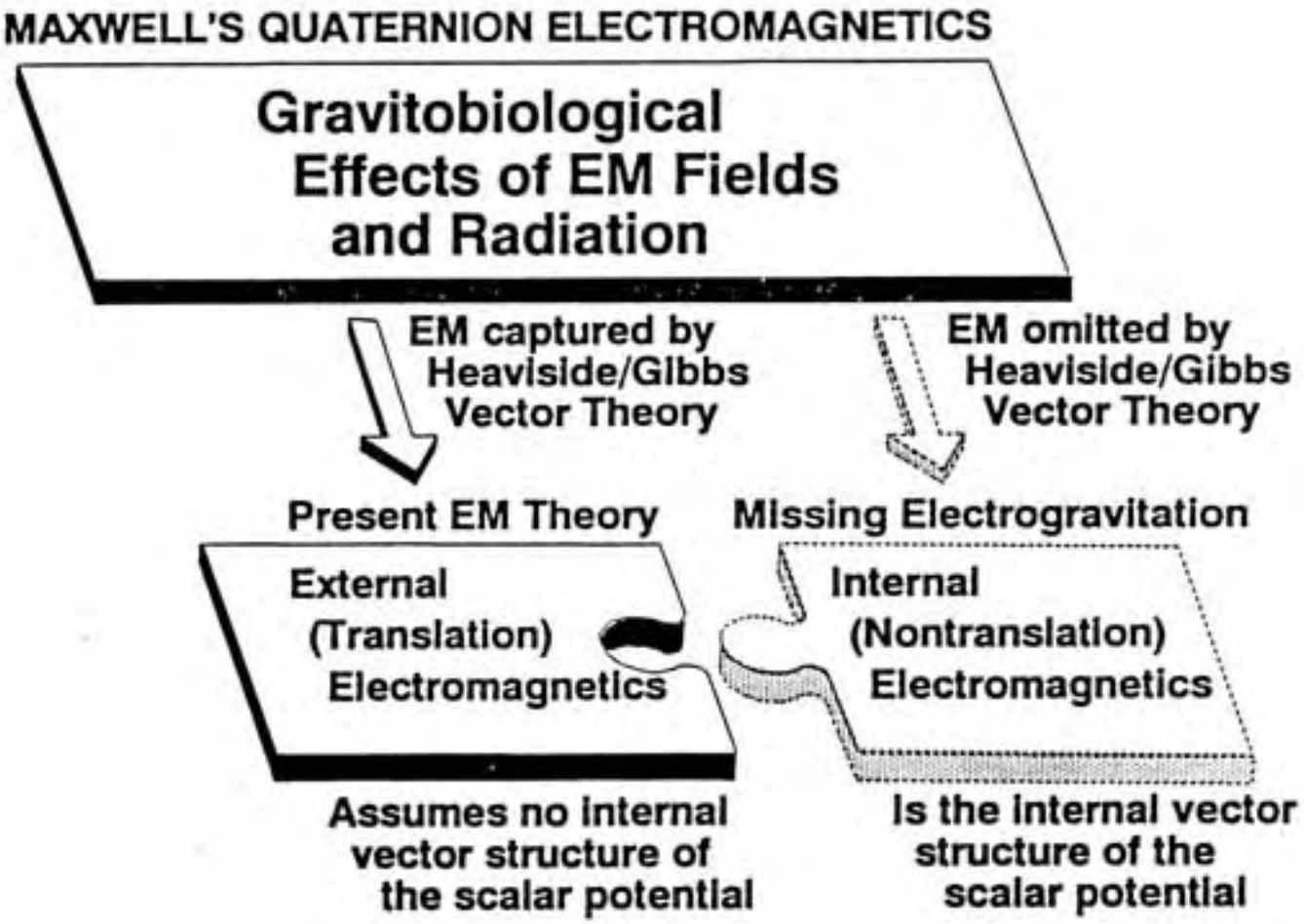

Next Slide

Return to Index

Previous Slide

SUMMARY AND CONCLUSION

- **RECOMMEND SERIOUS EXAMINATION OF THE NEW APPROACH**
- **RECOMMEND REVIVAL OF PRIORE-TYPE RESEARCH ON**
  AN URGENT BASIS
- **CAN BE EXTENDED TO OTHER DISEASES**

  - AIDS
  - ARTERIOSCLEROSIS
  - SLEEPING SICKNESS
  - ETC.
- **A NEW THERAPEUTIC PARADIGM OF GREATLY INCREASED**
  SCOPE AND EFFECTIVENESS MAY BE POSSIBLE
- **IN ADDITION, DRASTIC REDUCTION IN MEDICAL COSTS**
  COULD POTENTIALLY RESULT

Return to Index

Previous Slide

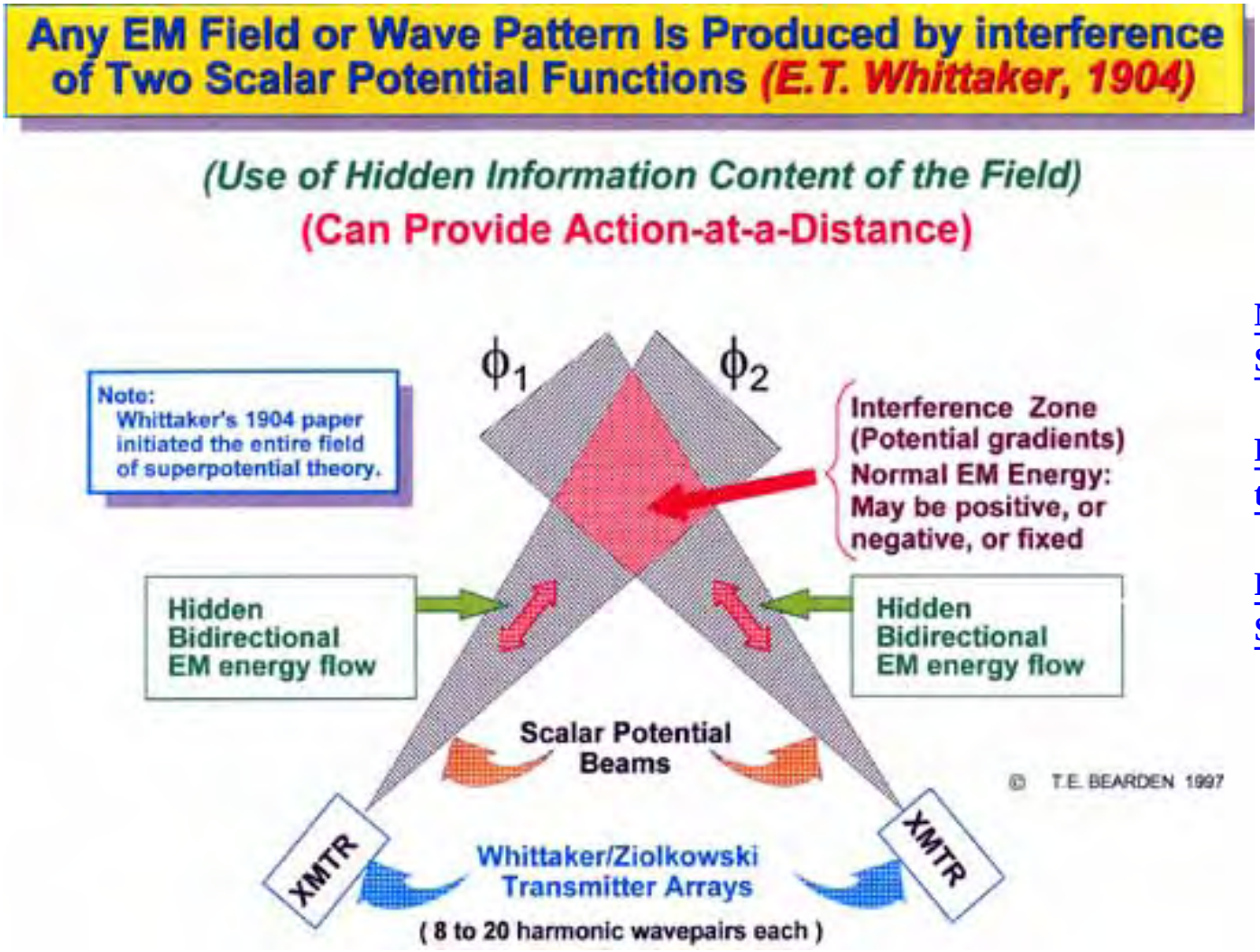

Next Slide

Return to Index

Previous Slide

http://www.cheniere.org/books/cancer/CANCR-19.jpg

MECHANISM FOR LONG-TERM, CUMULATIVE BIOLOGICAL EFFECTS OF EM FIELDS AND RADIATION

T. E. BEARDEN*

* A.D.A.S.
POB 1472
HUNTSVILLE, AL 35807

http://www.cheniere.org/books/cancer/CANCR-19.jpg24.11.2003 21:52:38

Defense Department Briefing on Priore Treatment to counter Biological Warfare

---

SLIDE LIST

Solutions to Mass Casualties Treatment Problem

Threat and Current Status

1. Title Page
2. Key Points in the New Technology
3. Title Page
4. Title Page
5. The Terrorist Threat
6. The Superpower Paradox: Asymmetric Cheap WMD Strategic Strike and Destruction
7. Mass Casualty Problem: Aerial Anthrax Spray on Washington, D.C.
8. Present Status of the WMD Threat to the United States
9. Some Present Problems in the WMD Defense Capabilities

Historical Solution: Priore Treatment Therapy

10. Title Page
11. Priore's laboratory device for treating small animals
12. Antoine Priore with the Mayor of Bordeaux
13. Raymond Pautrizel, eminent French parasitologist, who worked with Priore
14. 12-Foot plasma tube in Priore's large device
15. Priore's 3 1/2 stories high device for whole body treatment of humans
16. Mechanism of the Priore therapy
17. Priore's therapeutic methodology: using infolded longitudinal EM waves as NLO pump waves, to pump in the time domain
18. Drastically reduced cumulative deterioration after Priore therapy

Extended Physics and Background

19. Title Page
20. Founders of Scalar Electromagnetics
21. Subdivisions of Soviet Energetics

22. Bunge on the Status of Classical and Quantum Physics
23. Einstein on Reviewing Foundations
24. Fields and Potentials have been "defined" only in and on matter
25. Maxwell's Equations are Matter-To-Matter Transforms
26. Electrodynamicists' Reaction to Removal of the Material Ether
27. The Missing Infolded Electrodynamics
28. Nonlinear Optics Distortion Correction Theorem
29. Infolded longitudinal EM biwave composition of a scalar potential
30. The Zero-Vector Axiom Destroys "Topologies Within Topologies"
31. Stoney-Whittaker Bidirectional Longitudinal EM Wave-Pair
32. Undistorted Progressive Waves (UPWs)
33. Velocity modulating a longitudinal EM wave oscillates rate of flow of time
34. The Graviton is a Coupled Photon/Antiphoton Pair
35. Mechanism for Physical Change and the Flow of Time
36. Any EM Field or Wave Pattern is Produced by interference of Two Scalar Potential Functions (E.T. Whittaker, 1904)
37. Mass is transparent to longitudinal EM waves, which move through the infolded interiors of internal waves, potentials, and fields in the mass
38. Deep penetration of weak signals in a dense signal environment, by nonlinear retroreflection
39. The Immune System
40. Popp's master cellular control system
41. Cancer: characteristics
42. The evolutionary path of multicellular organisms
43. Effect of fluid contamination on hemoglobin's oxygen transport
44. First step in Self-Promotion of Cancer due to Hypoxia
45. Becker's Cellular Growth Control
46. Becker's dc treatment of bone fractures
47. Becker's theoretical DC control system involved with responses to injury
48. Becker's theoretical control system governing regeneration
49. Link Between Standing DC Potentials and the Nervous System
50. Becker's Findings on Cellular Injury and Regeneration
51. Corrections For the Present EM Bioeffects Model
52. R&R System - Regeneration Example
53. Kaznacheyev's Cytopathogenic Mirror Effect
54. Microwave Radiation of U.S. Embassy in Moscow

55. Self-Targeting in Inner EM Channel Can Produce a Quantum Potential
56. Quantum potential and hidden variable theory
57. Participants in a quantum potential share a common multiply-connected spacetime (MCST)
58. Gulf War Syndrome and Typical Comparative Disease Curves
59. Force Fields and Symmetry
60. Aspects of Strong Local Asymmetry
61. Other Aspects of Strong Local Asymmetry
62. Small Entities Emit Powerful S-Flows
63. What is the "magnitude" of a potential?
64. Table A1. The Vacuum Energetically Interacts With Every Particle, Continually
65. Extended Superpotential Theory (Adding Vacuum Engines)
66. Vacuum Engine: Jillions of Working ST Demons
67. Active Spacetime and a Specific Vacuum Engine (A General Relativistic Concept and Analogy)
68. Extension of Wheeler's general relativity principle
69. Signal versus Vacuum Engine
70. Electronuclear Interactions by Vacuum Engines
71. Vacuum Engineering
72. Impact of Vacuum Engineering
73. A Dramatic Extension to Nonlinear Optical Pumping
74. Time Conservation and Some Properties (Energy and time are canonical)
75. A Dramatic Extension to Nonlinear Optical Pumping
76. Key Points in the New Technology

Modern WMD Solution: Portable Treatment Systems

77. Title Page
78. Portable Priore-Type Treatment System
79. Portable System Block Diagram
80. Portable Priore Technology Unit
81. Saving the Stricken Civilians

Conclusions: Technology Practical, Proven

82. Title Page
83. Summary and Conclusions

Recommendation: Crash Development Program

84. Title Page
85. Recommend implementing:
86. Final Thoughts

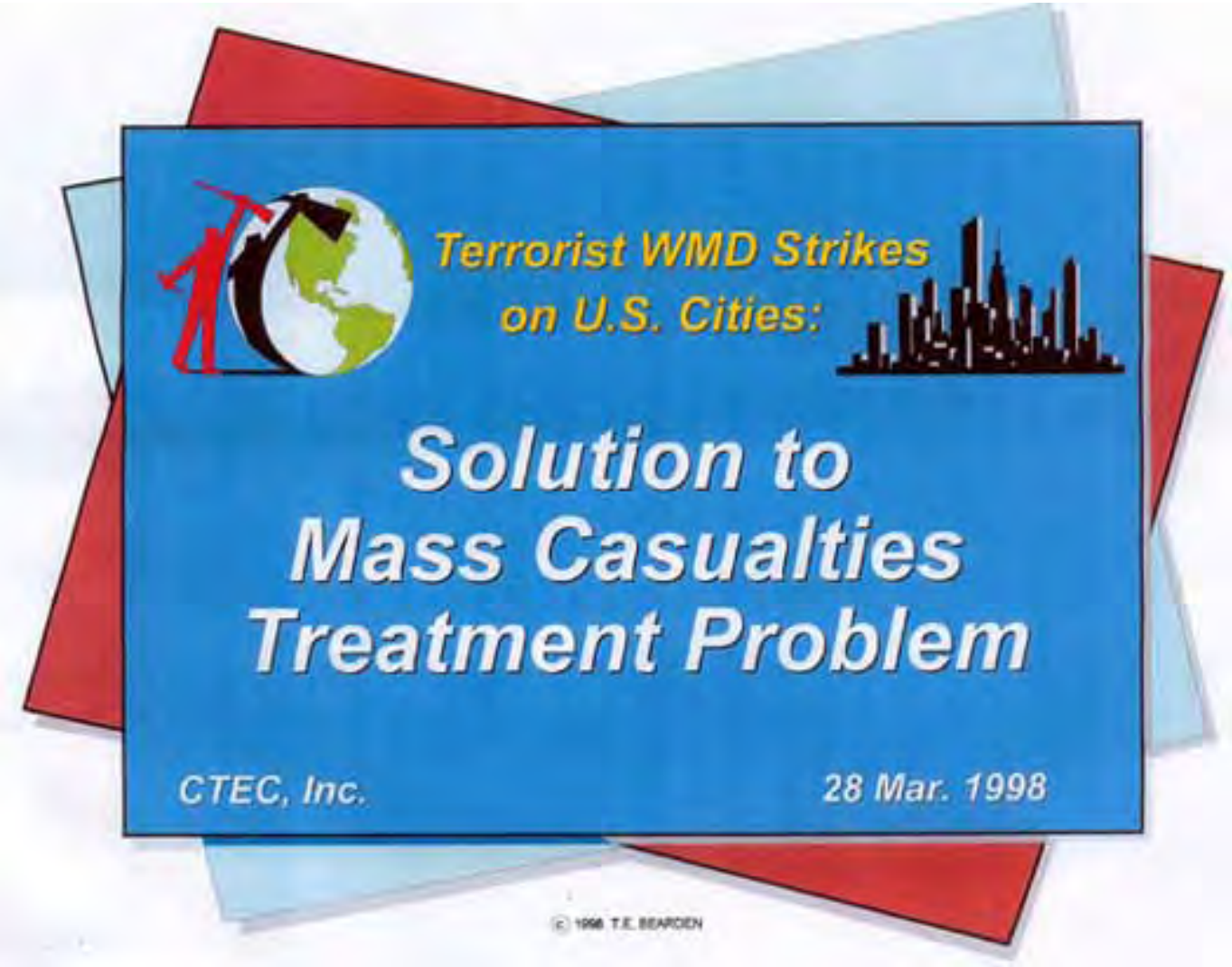

Return to Slide Index

Next Slide

Key Points in the New Technology

- There is a vast new kind of electrodynamics *hidden inside* all EM potentials, fields, and waves
  - Longitudinal EM waves and complexes
  - Oscillations in time domain

- These complexes are an *infolded general relativity*
  - Clustered formations of *spacetime curvatures*
  - *Very powerful*, since the EM force is used as the agent of curvature

- In general relativity, similar precise complexes permeate and *act on any mass at all internal levels*
- With this approach, one *can now manipulate matter* -- living or inert -- *in any manner desired*, depending only on the level of development of the technology
- Priore unwittingly used this to *cure dread diseases*
- This is a *revolution in all of science*

© T.E. BEARDEN 1998

- *We have uncovered the major mechanisms* to utilize

Return to Slide Index

Next Slide

Previous Slide

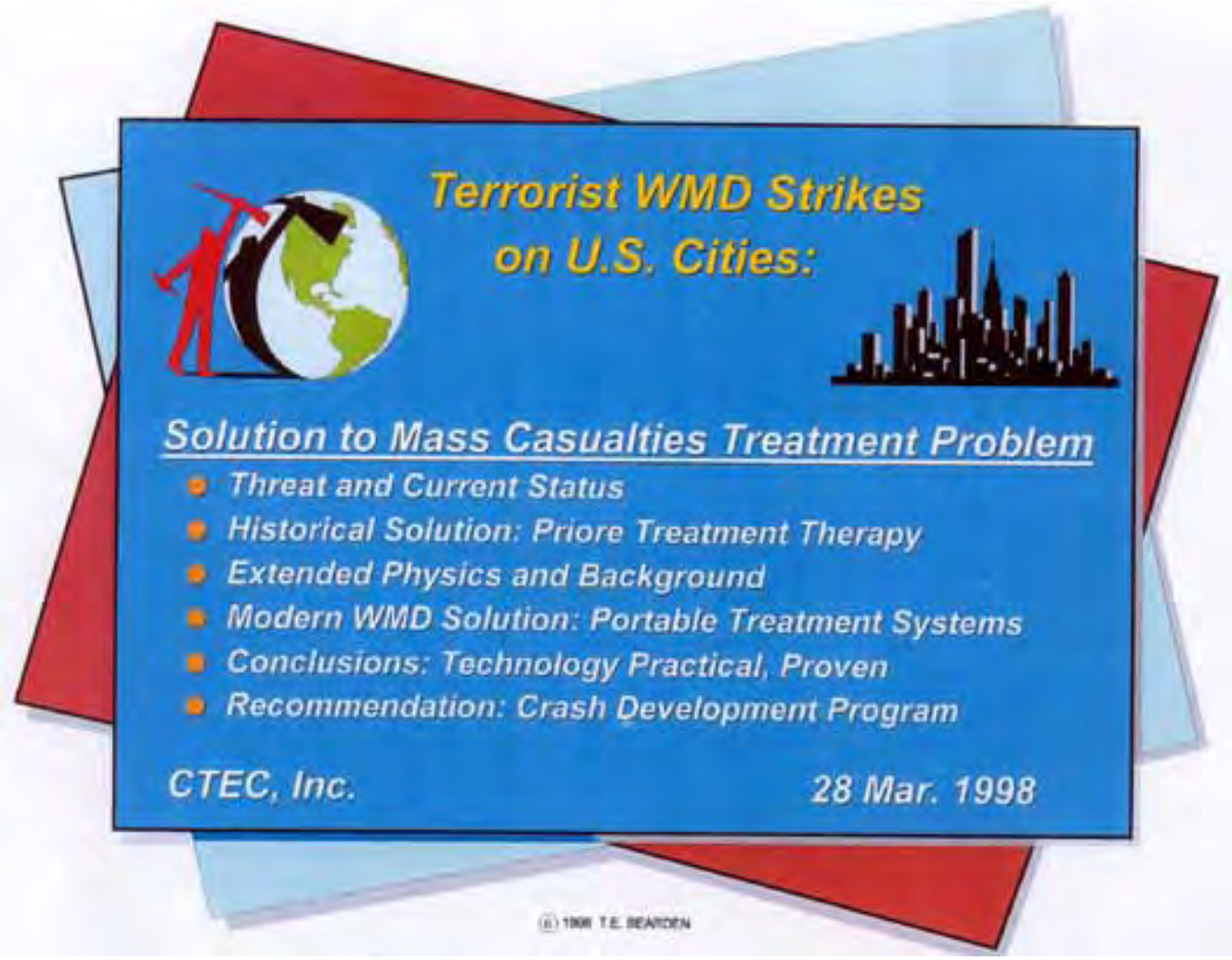

Return to Slide Index

Next Slide

Previous Slide

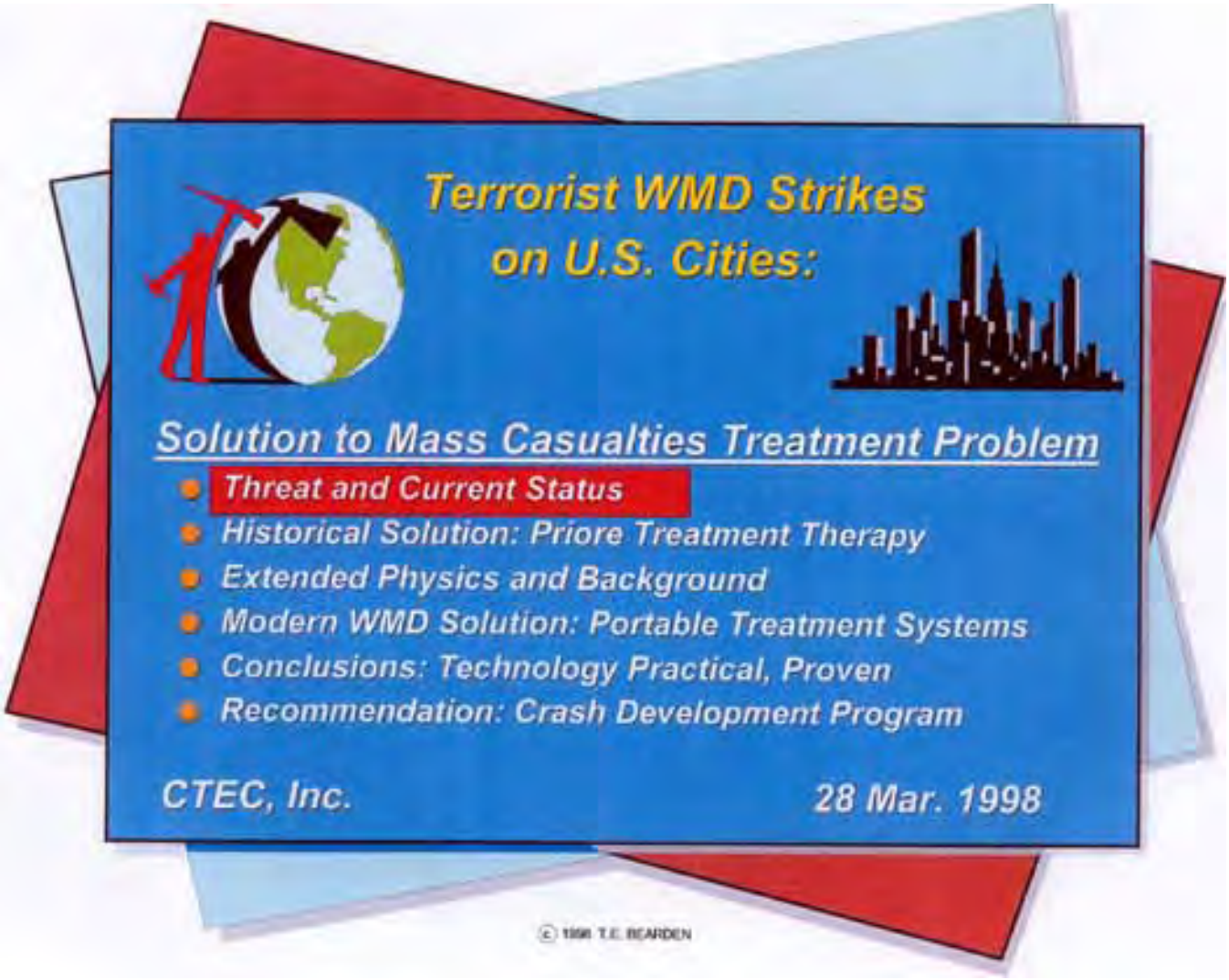

Return to Slide Index

Next Slide

Previous Slide

THE TERRORIST THREAT

TODAY:

- Sabotage
- Chemicals
- Biological agents
- Nuclear materials
- Powerful explosives
- Assassination
- Kidnapping and hostages
- Contamination
- Shoulder-fired AD missiles
- Terrorism

FUTURE ADDITIONS:

- EM weapons
- EM biological warfare
- Scalar EM weapons
- Scalar EM disease induction
- Alteration of behavior and emotions
- Alteration of memory
- Direct thought control
- Action-at-a-distance effects

© 1992, 1996 T.E. BEARDEN

JCS-52

Return to Slide Index

Next Slide

Previous Slide

[Return to Slide Index](#)

[Next Slide](#)

[Previous Slide](#)

Mass Casualty Problem: Aerial Anthrax Spray on Washington, D.C.

- One terrorist, one light aircraft with spray tank
- 100 kilograms of anthrax
- Flies over greater metropolitan Washington, D.C.
- Calm night
- 1-3 million casualties result*
- Most of those stricken will die
- Presently little can be done to save the stricken civilians
- Attacks on several population centers might produce some 10 million or more casualties

© 1996 T.E. MEAGER

*Per OTA Report to Congress, 1993

Return to Slide Index

Next Slide

Previous Slide

Present Status of the WMD Threat to the United States

- Many foreign nations are hostile to the U.S. and sponsor terrorists
- Some 25 nations have WMD or are acquiring them
  - BW agents and weapons
  - Chemical agents and weapons
  - Nuclear materials and weapons
- Thousands of students and emigres
- Infiltrated teams, BW, other WMD already
- Castro guerrillas infiltrated over the years
- Can do unacceptable damage to U.S. now
- *May reach first strike knockout capability*

© 1996 T.E. BEARDEN

*Per OTA Report to Congress, 1993

Return to Slide Index

Next Slide

Previous Slide

Some Present Problems in the U.S. WMD Defense Capabilities

- No shelters (require overpressure, BW filtering, masks, showers, supplies)
- No stockpiled vaccines, medical supplies, immunoglobulins, masks, suits, food, fuel, generators, heaters, water purification units
- Totally insufficient medical facilities, personnel, and emergency response teams
- Triage, full martial law will be required
- No answer to massive decontamination problem
- State, county, city inadequately staffed and insufficiently trained for mass casualties
- Terrorist teams, BW agents, other WMD on site, waiting
- Water supplies, food, crops, farm animals also vulnerable
- Electric power grid, bridges, trains, railroads vulnerable
- Present medical science cannot save very many of the casualties, now or in the foreseeable future

© 1998 T.E. BEARDEN

Return to Slide Index

Next Slide

Previous Slide

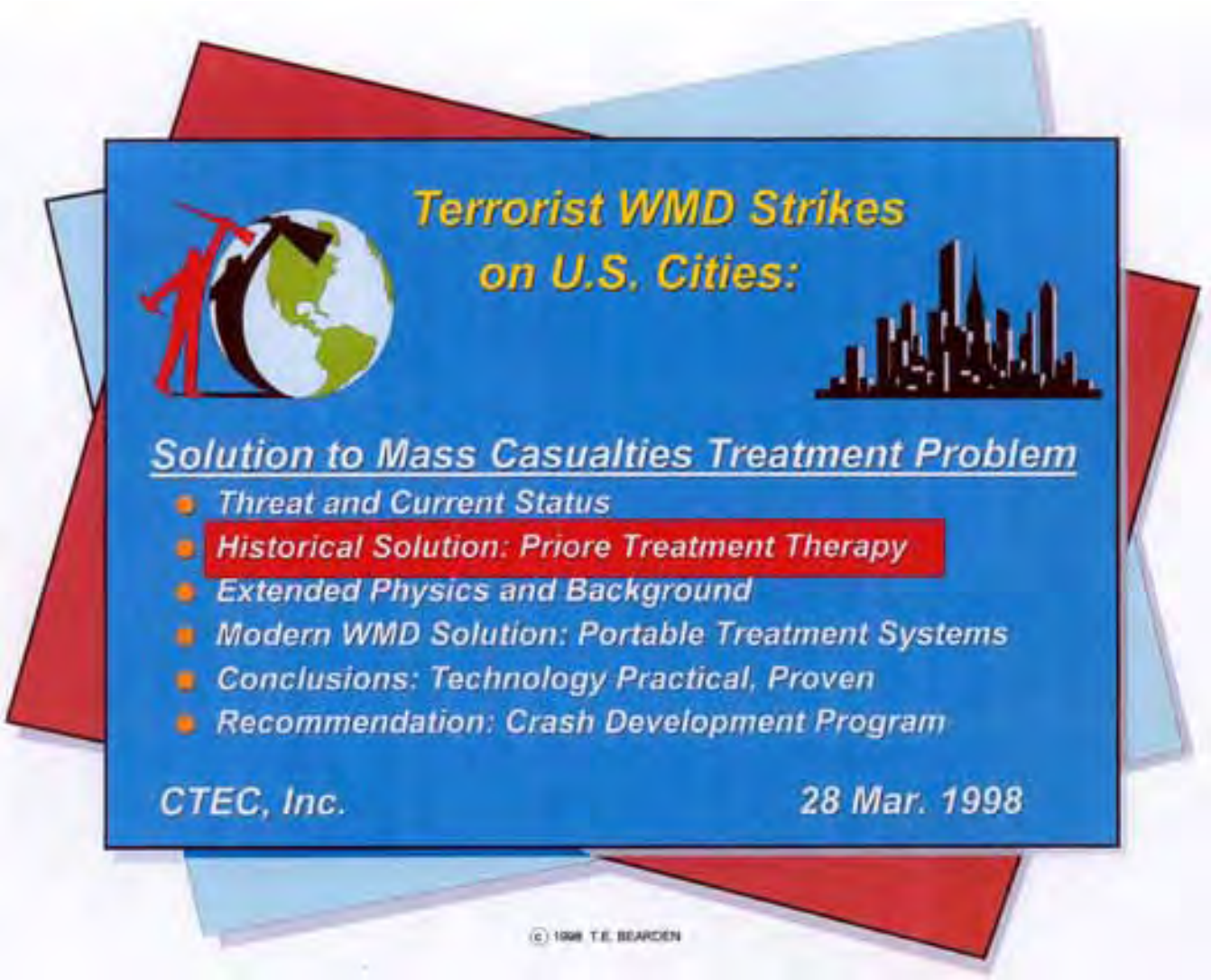

Return to Slide Index

Next Slide

Previous Slide

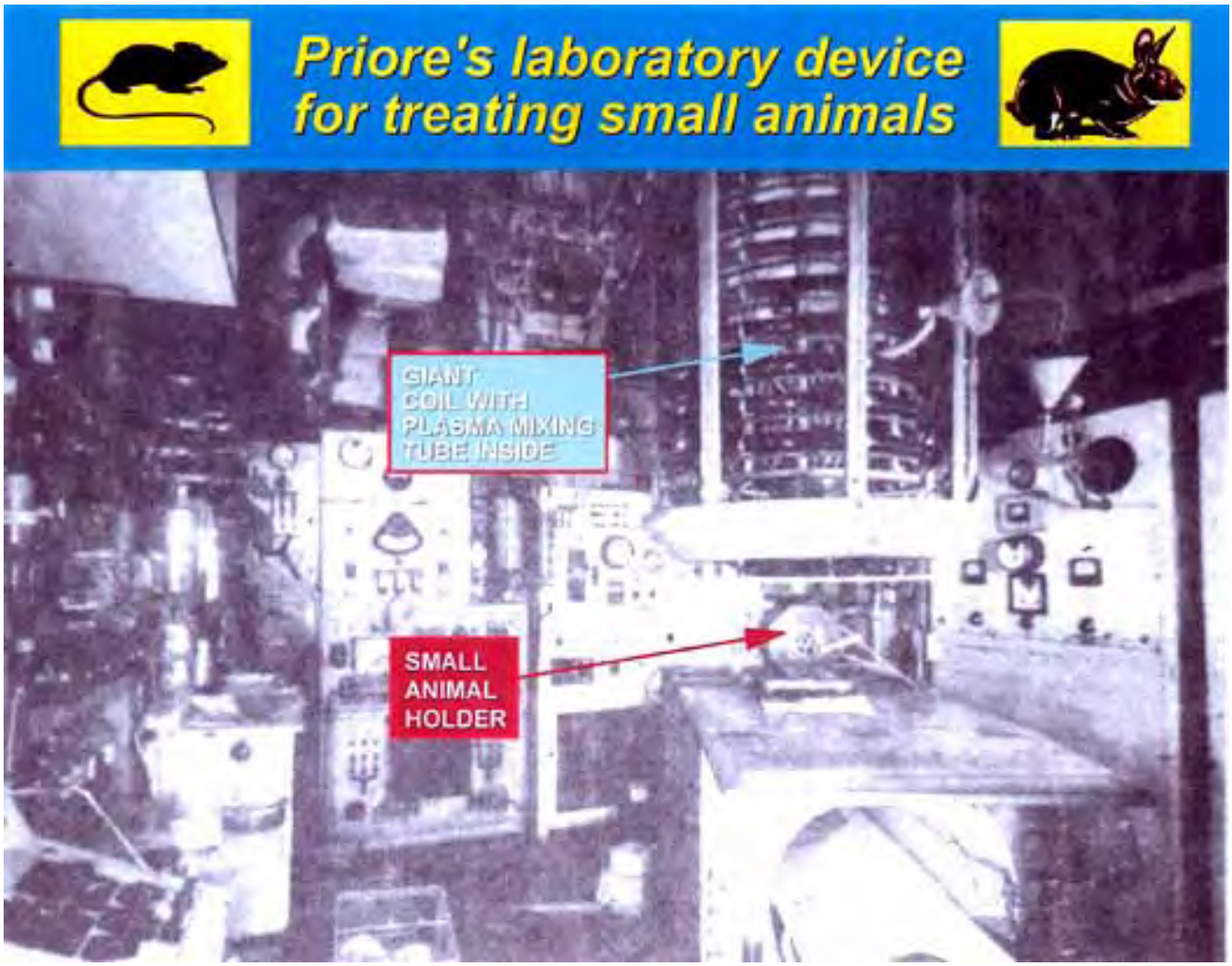

Return to Slide Index

Next Slide

Previous Slide

Photo courtesy of Bob Whitney

Antoine Priore (right) with the Mayor of Bordeaux, Mr. Chaban-Delmas.

The Priore technical mechanism unwittingly involved a dramatic extension to both nonlinear optics and general relativity. However, nonlinear optics itself had not yet been born in the 1950s and 1960s when Priore worked out his methodology. The extension to general relativity has not been previously envisioned even to the present day. When the Priore project was suppressed by the changed French government in the mid-1970s, nonlinear optics itself was just being initiated. To the present day, however, there has previously been no inkling of the dramatic extension to NLO that arises by using longitudinal EM pump waves and thereby pumping in the time domain.

It is little wonder that Priore himself did not understand the nature of the technical mechanism he was utilizing, and neither did anyone else, and neither *has* anyone else prior to this time.

© 1998 T.E. Bearden

Return to Slide Index

Next Slide

Previous Slide

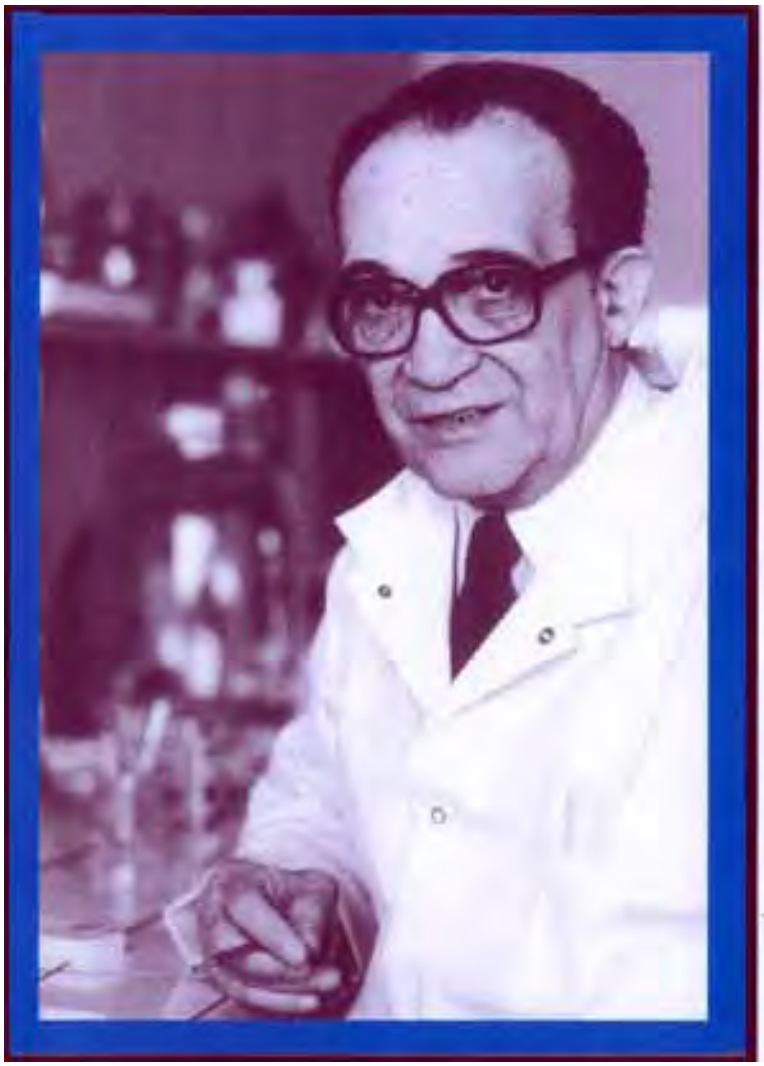

Raymond Pautrizel, eminent French parasitologist who worked with Priore

Among other things, Pautrizel treated seriously infected immature rats with the Priore ray. These rats had never had a mature immune system. When they were removed from the machine, they still sickened again and died, because their immature immune systems could not resist the pathogen *(Trypanosoma)*. So even though the damaged cells were reversed back to normal, the "normal" immune system was unable to fight off pathogens, which reinfected the cells and killed them, killing the rats.

This established the time-reversal nature of the therapy.

© T.E. BEARDEN 1997

Return to Slide Index

Next Slide

Previous Slide

12-Foot plasma tube in Priore's large device

[Return to Slide Index](#)

[Next Slide](#)

[Previous Slide](#)

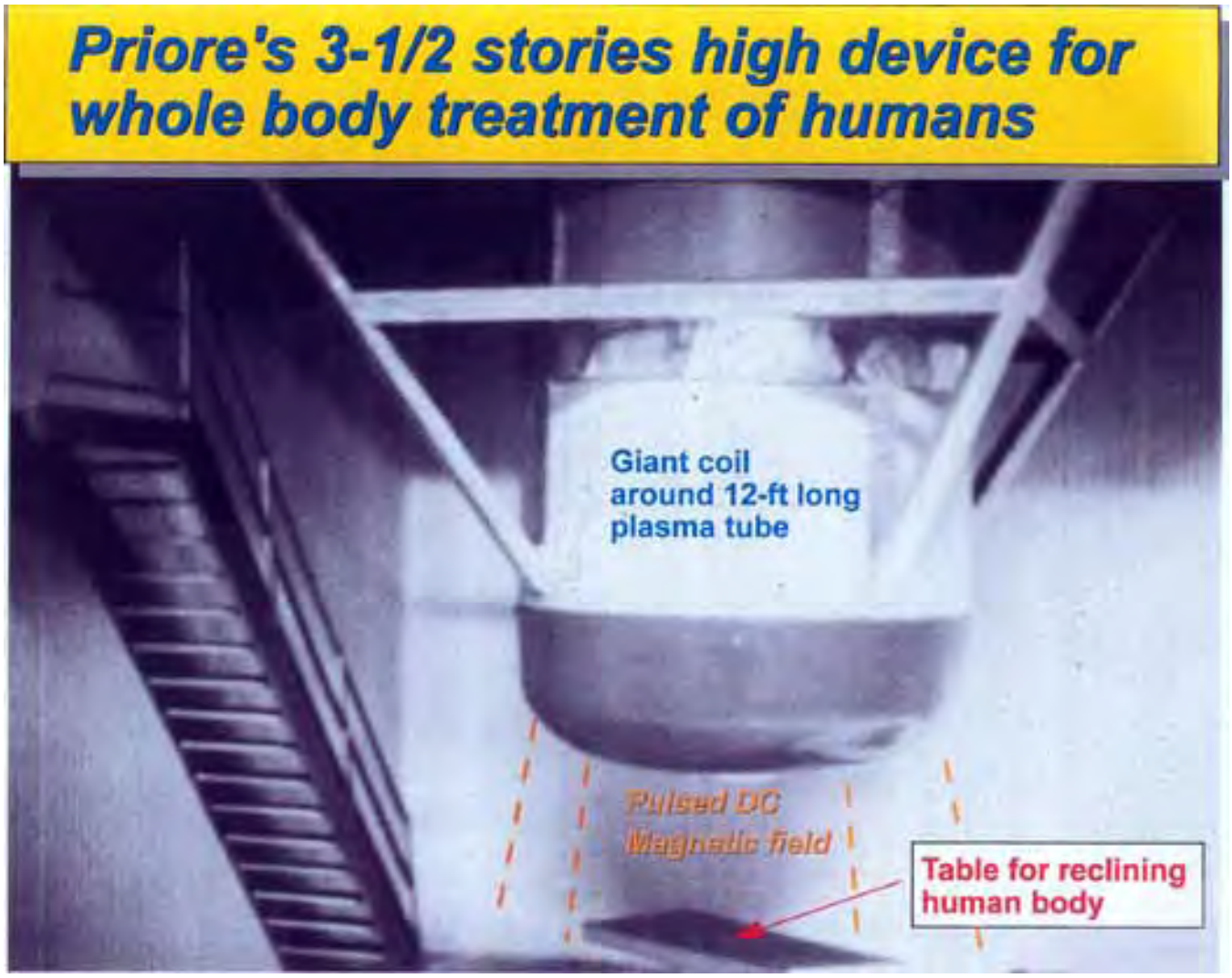

Return to Slide Index

Next Slide

Previous Slide

MECHANISM OF THE PRIORE THERAPY

- FACT: DISEASE-SPECIFIC VACUUM ENGINE PRESENT FOR ANY CELLULAR DISEASE, BY WHEELER'S PRINCIPLE
  - *DISEASE CAN BE REVERSED BY CREATING AMPLIFIED VACUUM ANTI-ENGINE (BEARDEN'S PRINCIPLE)*
  - *ANTI-ENGINE IS CREATED BY PUMPING THE NONLINEAR CELLS IN THE "INNER EM" DOMAIN, TIME-REVERSING THEM*

- PRIORE UTILIZED A PLASMA TO PHASE CONJUGATE AND "INFOLD" MULTIPLE BIDIRECTIONAL LONGITUDINAL EM PUMP WAVES
  - *17 FREQUENCIES MIXED IN A ROTATING PLASMA*
  - *PHASE CONJUGATES ADDED BY THE PLASMA*
  - *INFOLDED MIX INTO STRONG PULSED DC MAGNETIC FIELD, WHICH CARRIED IT INTO ATOMIC NUCLEI*
  - *PUMPED ALL NONLINEAR CELLULAR COMPONENTS TO PRODUCE AMPLIFIED, SPECIFIC VACUUM ANTI-ENGINE*

- NEGATED THE LONG-TERM CUMULATIVE CELLULAR DEDIFFERENTIATION ORDER GENERATED BY LONG-TERM HYPOXIA. TUMOR CELLS REVERTED TO NORMAL CELLS.
- SCRUBBED OUT THE CUMULATED PRECANCEROUS STATE
- RESTORED THE IMMUNE SYSTEM TO HIGH FUNCTIONING
- NO EXCESSIVE TRAUMA TO TREATED ANIMAL

CANCR-69

© 1994, 1996, 1998 T.E. BEARDEN

Return to Slide Index

Next Slide

Previous Slide

Priore's therapeutic methodology: Using infolded longitudinal EM waves as NLO pump waves, to pump in the time domain

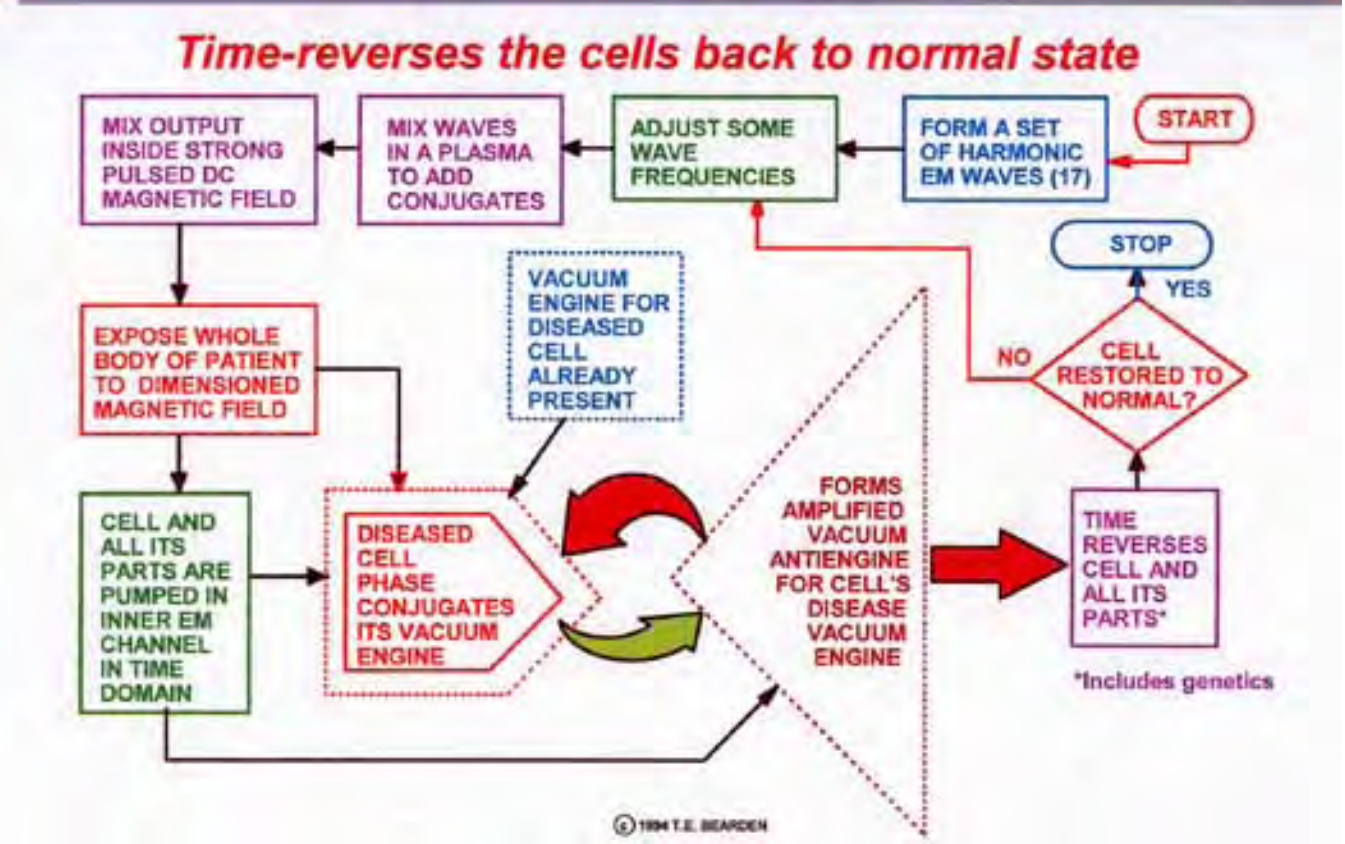

Return to Slide Index

Next Slide

Previous Slide

DRASTICALLY REDUCED CUMULATIVE DETERIORATION AFTER PRIORE THERAPY

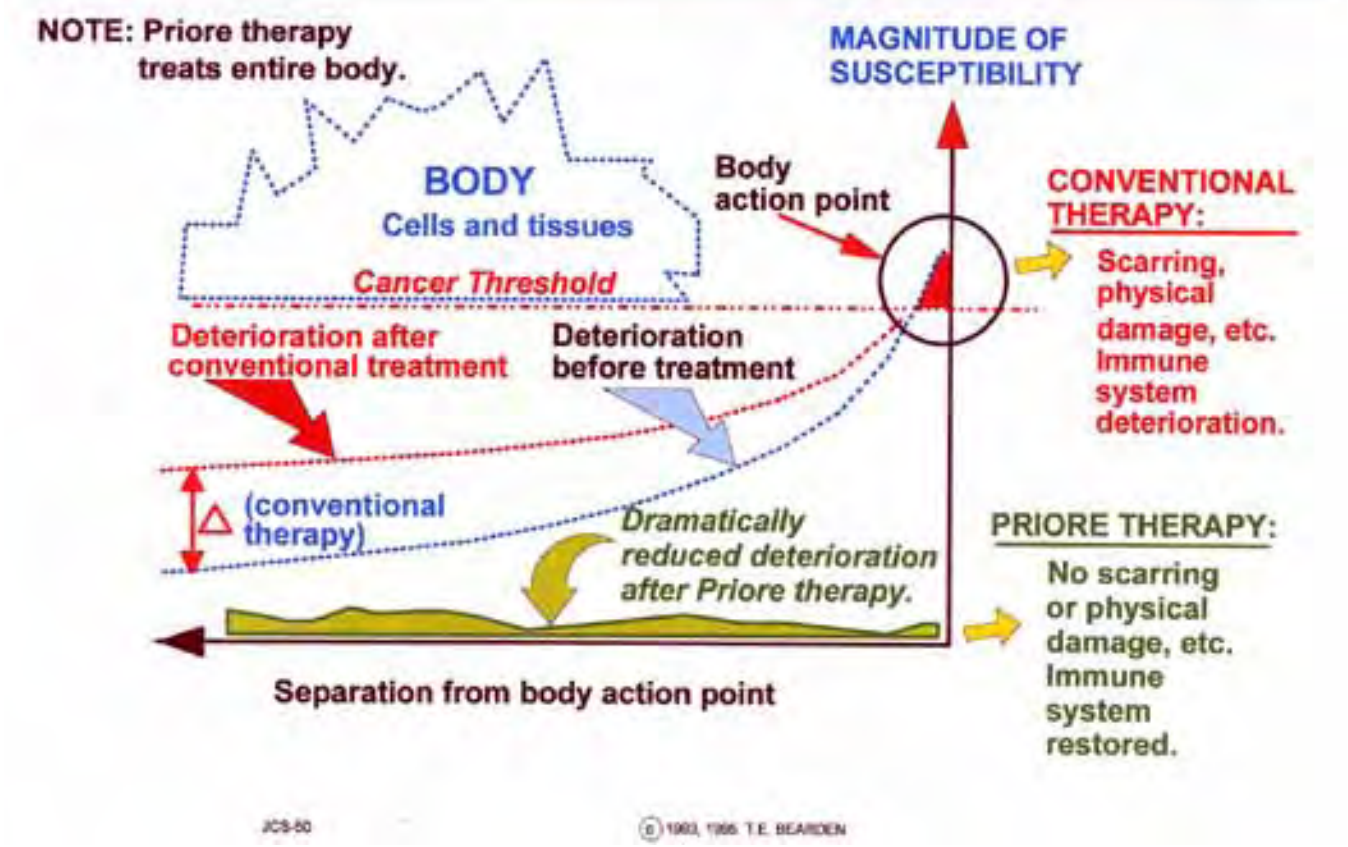

Return to Slide Index

Next Slide

Previous Slide

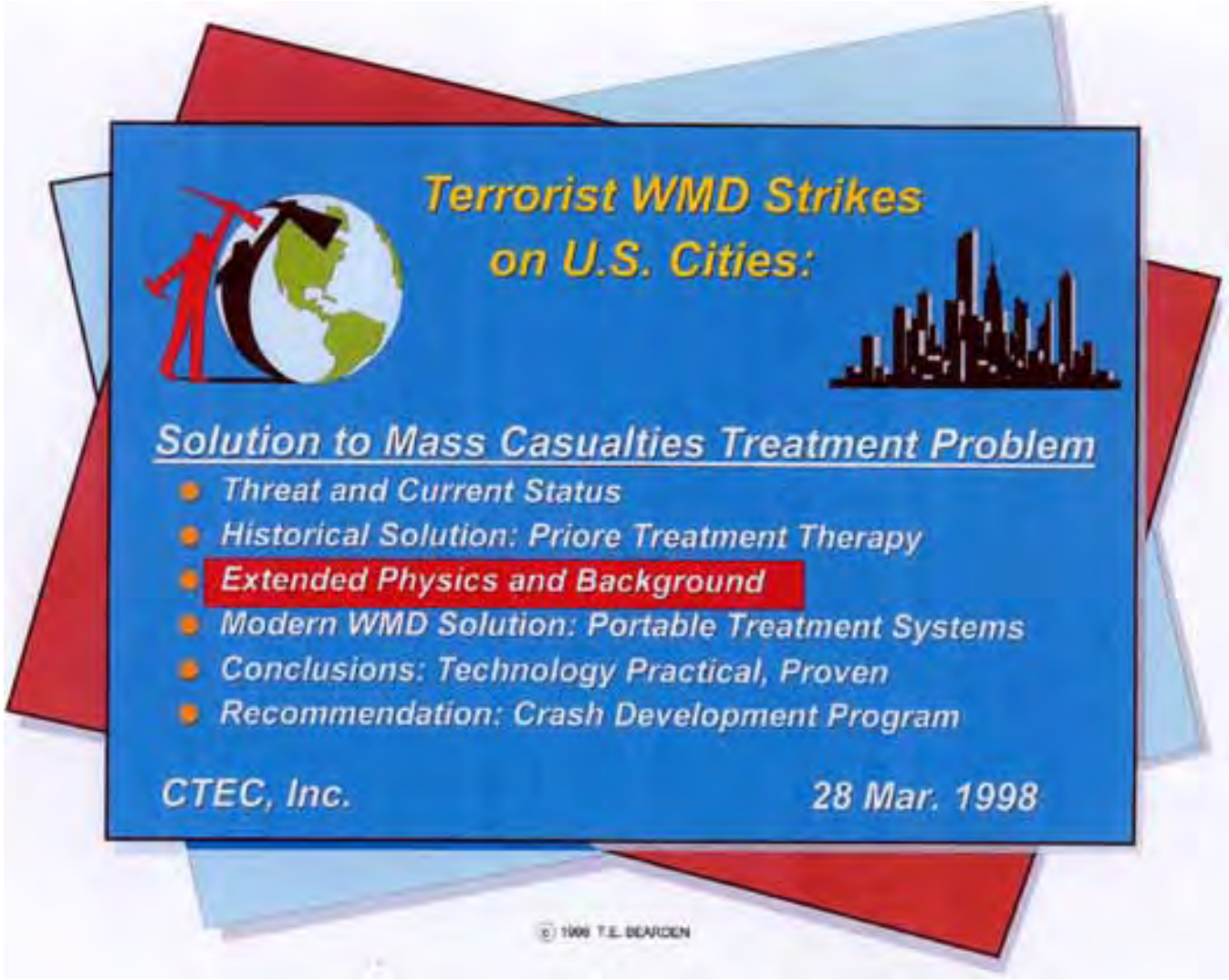

Return to Slide Index

Next Slide

Previous Slide

Founders of Scalar Electromagnetics

- **G.J. Stoney:**

Decomposed the scalar potential into bidirectional wave pairs.

"On a supposed proof of a theorem in wave-motion," Phil. Mag., 5(43), 1897, p. 368-373 (and several other papers).

- **E.T. Whittaker:**

Decomposed the scalar potential into a series of bidirectional EM wave pairs in harmonic series, where the two waves in each pair are conjugates (i.e., a wave/antiwave pair) and are longitudinal waves.

"On the partial differential equations of mathematical physics," Math. Ann., Vol. 57, 1903, p. 333-355.

Showed that all classical EM -- including waves -- can be replaced by two interfering scalar potential functions.. (This founded superpotential theory, extended by Nisbet, Bromwich, Debye, McCrea, and others.)

"On an expression of the electromagnetic field due to electrons by means of two scalar potential functions," Proc. Lond. Math. Soc., Series 2, Vol. 1, 1904, p. 367-372.

- **R.W. Ziolkowski:**

Independently rediscovered the biwave decomposition of the scalar potential and added the product set (in theory enabling modulations and communications) to Stoney and Whittaker's sum set.

Various papers, 1985 to date.

© T.E. BEARDEN 1995, 1995

Return to Slide Index

Next Slide

Previous Slide

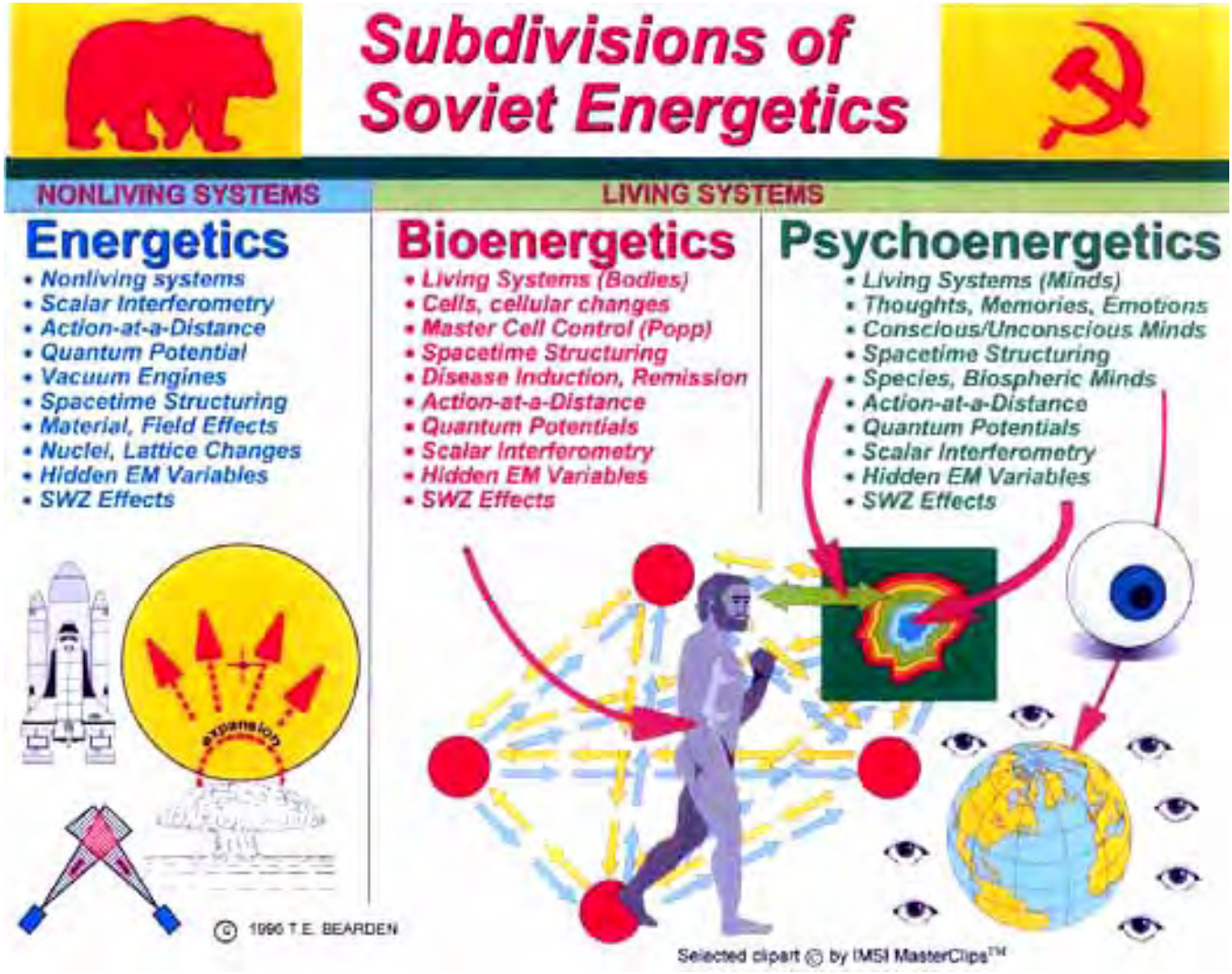

Return to Slide Index

Next Slide

Previous Slide

Bunge on the Status of Classical and Quantum Physics

"... it is not usually acknowledged that electro-dynamics, both classical and quantal, are in a sad state... the best modern physicist is the one who acknowledges that neither classical nor quantum physics are cut and dried, both being full of holes and in need of a vigorous overhauling not only to better cover their own domains but also to join smoothly so as to produce a coherent picture of the various levels of physical reality."

*Mario Bunge, Foundations of Physics, Springer-Verlag, New York, NY, 1967, p. 176..

© 1996 T.E. BEARDEN

Return to Slide Index

Next Slide

Previous Slide

EINSTEIN ON REVIEWING FOUNDATIONS

"...the scientist makes use of a whole arsenal of concepts which he imbibed practically with his mother's milk; and seldom if ever is he aware of the eternally problematic character of his concepts. He uses this conceptual material, or, speaking more exactly, these conceptual tools of thought, as something obviously, immutably given; something having an objective value of truth which is hardly even, and in any case not seriously, to be doubted. ...in the interests of science it is necessary over and over again to engage in the critique of these fundamental concepts, in order that we may not unconsciously be ruled by them."

Albert Einstein, "Foreword," in Max Jammer, Concepts of Space: The History of the Theories of Space in Physics, Harvard University Press, Cambridge, Massachusetts, 1969, p. xi-xii.

JCS-11A

© 1993 T.E. BEARDEN

Return to Slide Index

Next Slide

Previous Slide

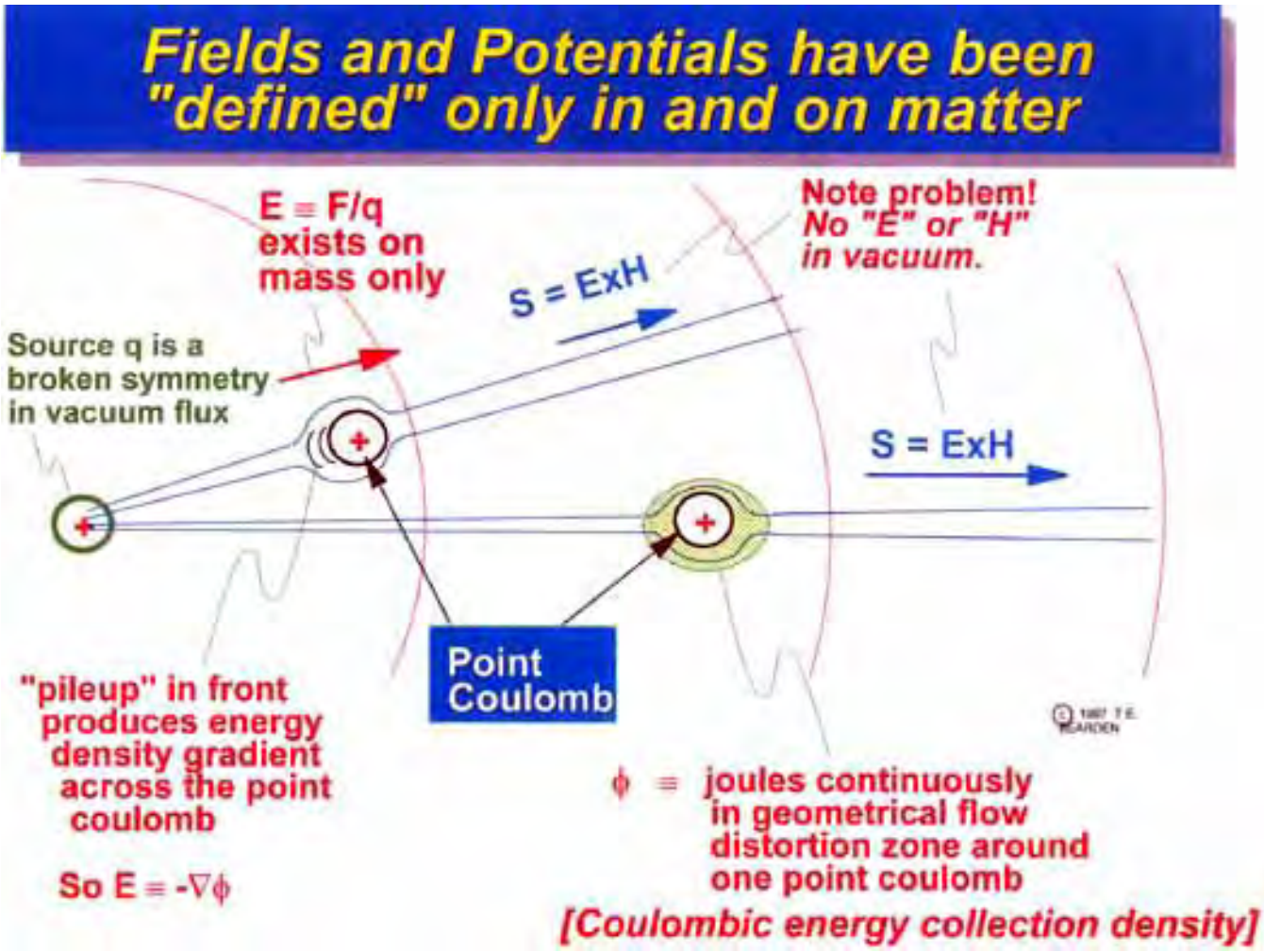

Return to Slide Index

Next Slide

Previous Slide

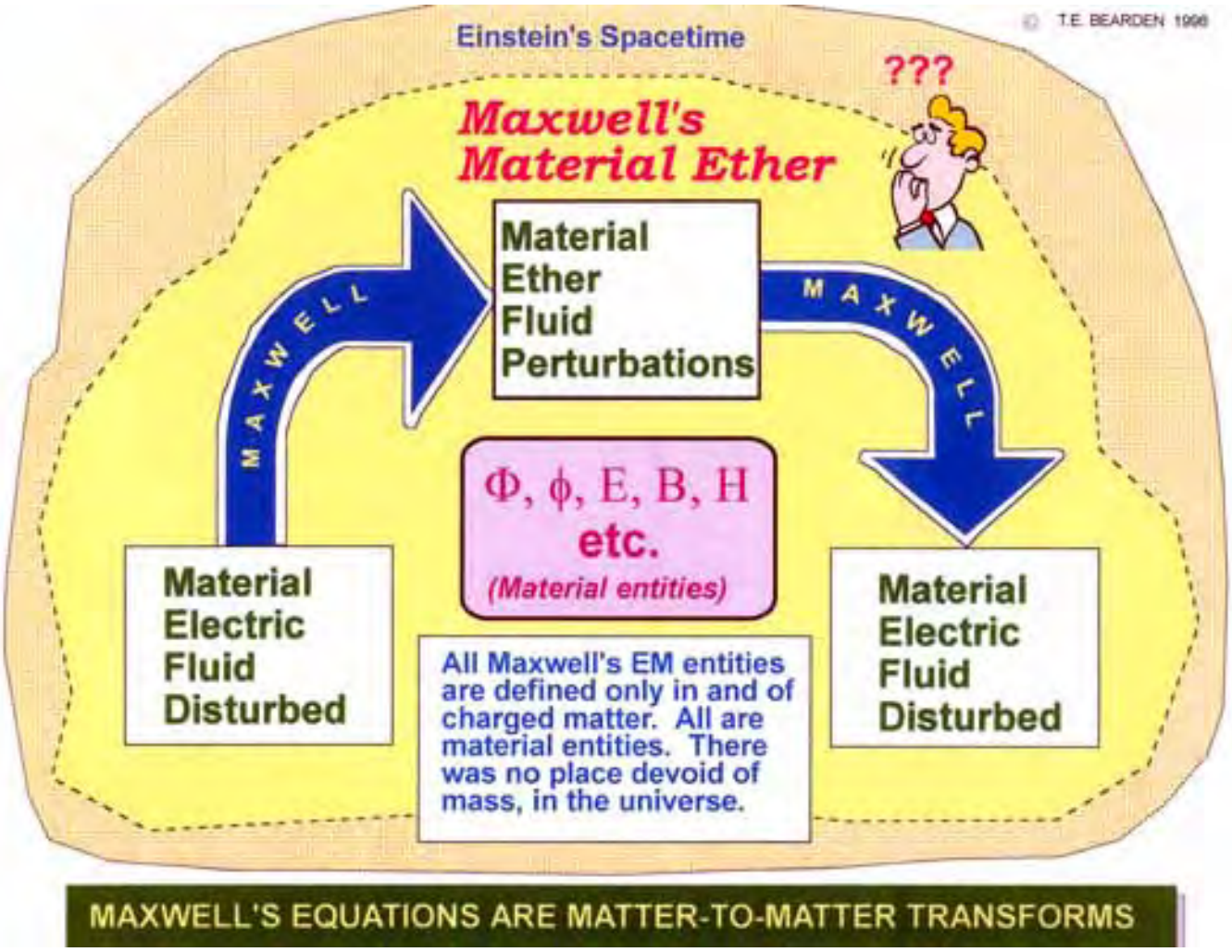

Return to Slide Index

Next Slide

Previous Slide

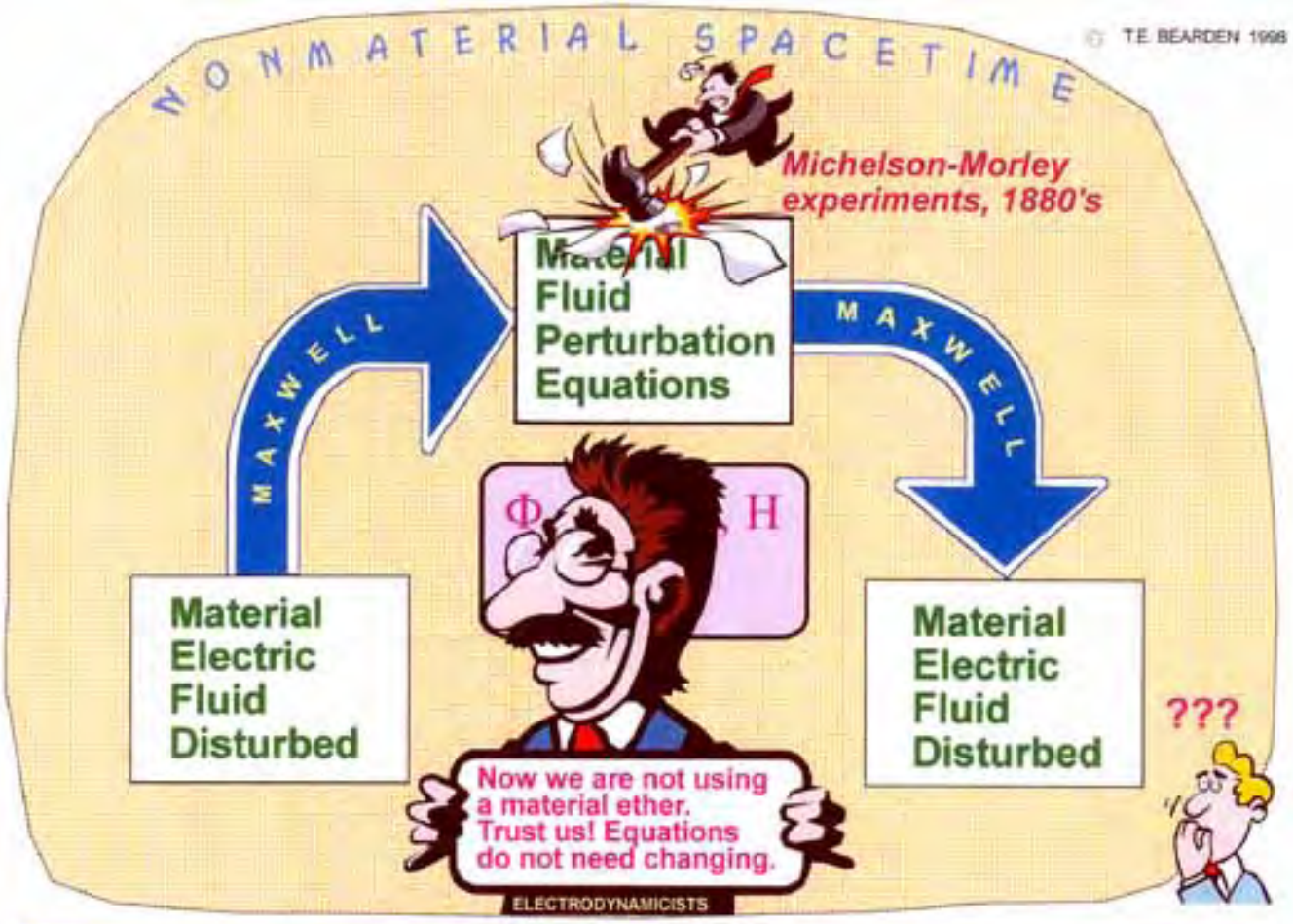

Electrodynamicists' Reaction to Removal of the Material Ether

Return to Slide Index

Next Slide

Previous Slide

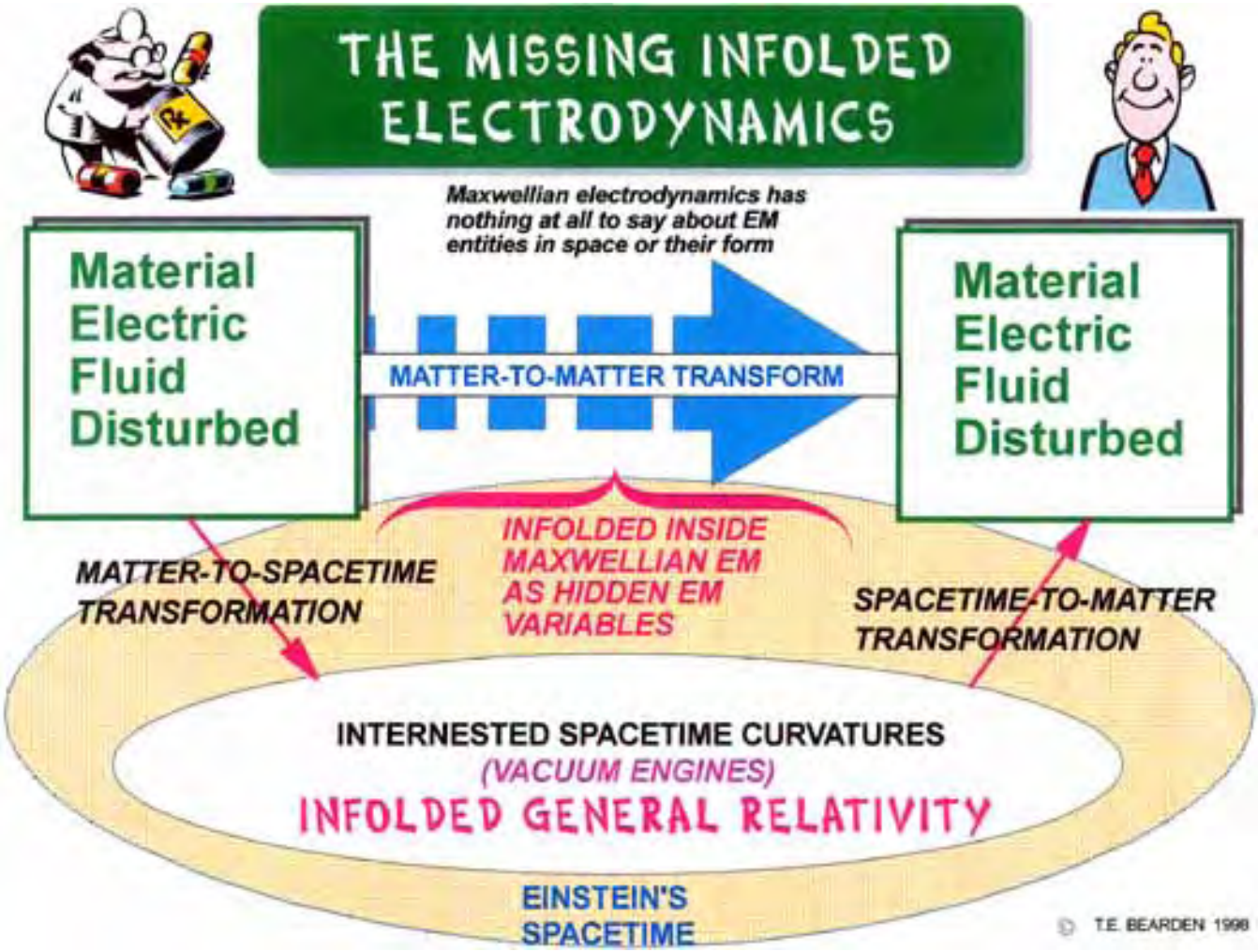

Return to Slide Index

Next Slide

Previous Slide

Nonlinear Optics
Distortion Correction Theorem

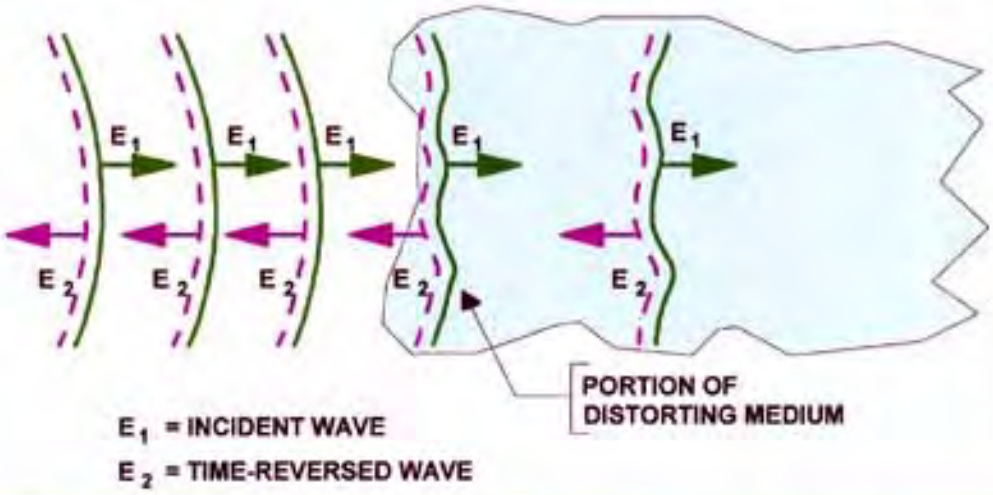

"If a scalar wave $E_1(r)$ propagates from left to right through an arbitrary but lossless dielectric medium, and if we generate in some region of space [say near z = 0] its phase conjugate replica $E_2(r)$, then E_2 will propagate backward from right to left through the dielectric medium, remaining everywhere the phase conjugate of E_1."

JCS-64

© 1994, 1995, 1996 T.E. BEARDEN

Return to Slide Index

Next Slide

Previous Slide

Infolded longitudinal EM biwave composition of a scalar potential

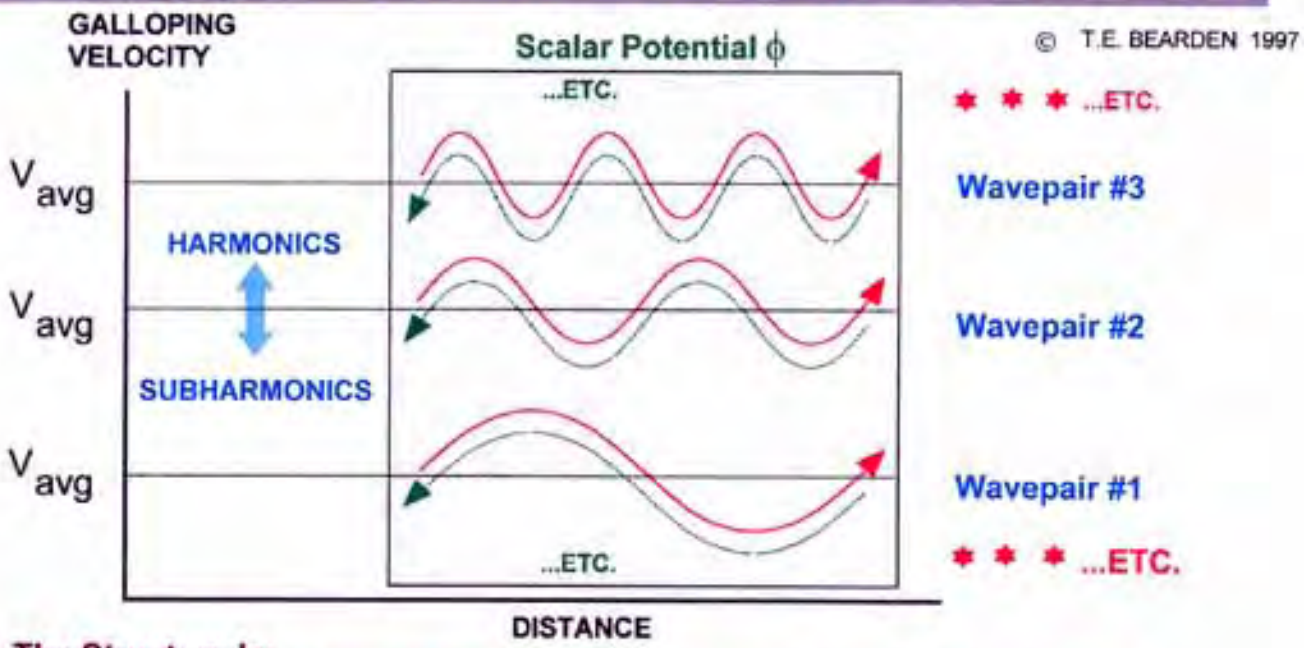

The Structure Is:

A harmonic set of longitudinal EM wavepairs. In each wavepair the two waves superpose spatially, but travel in opposite directions. The two are phase conjugates and time-reversed replicas of each other. Thus they comprise a coupled longitudinal wave and antiwave. The photons must be coupled into photon/antiphoton pairs (gravitons) by a strong application of the distortion correction theorem of nonlinear optics. Each wave in the biwave pair is a galloping wave. Each wavepair is a standing electrogravitational wave. In nonlinear optics, such a wavepair is a pump wave which pumps in the time domain.

Note: Think of the oscillations as velocity modulations.

Return to Slide Index

Next Slide

Previous Slide

The Zero-Vector Axiom Destroys "Topologies within Topologies"

- The axiom: There is a unique vector, $\bar{0}$, in V (the vector space) such that
  $$\bar{V} + \bar{0} = \bar{0} + \bar{V}$$
- Note that $\bar{V} + \bar{0}_i = \bar{0}_j + \bar{V}$; $\bar{0}_i = -\bar{0}_i = n\bar{0}_i$
  so $\bar{0}_i = \bar{0}_j = \bar{0}_k = \ldots + \bar{0}_n = \ldots$
- This makes all $\bar{0}_i$ equal by assumption, since there is *assumed* to be only a single type $\bar{0}$ without real components
- In fact, $\bar{0}$ is <u>*not unique*</u>. An *infinite number* of different zero-vector systems, with real components, satisfy the zero-vector axiom.

Return to Slide Index

Next Slide

Previous Slide

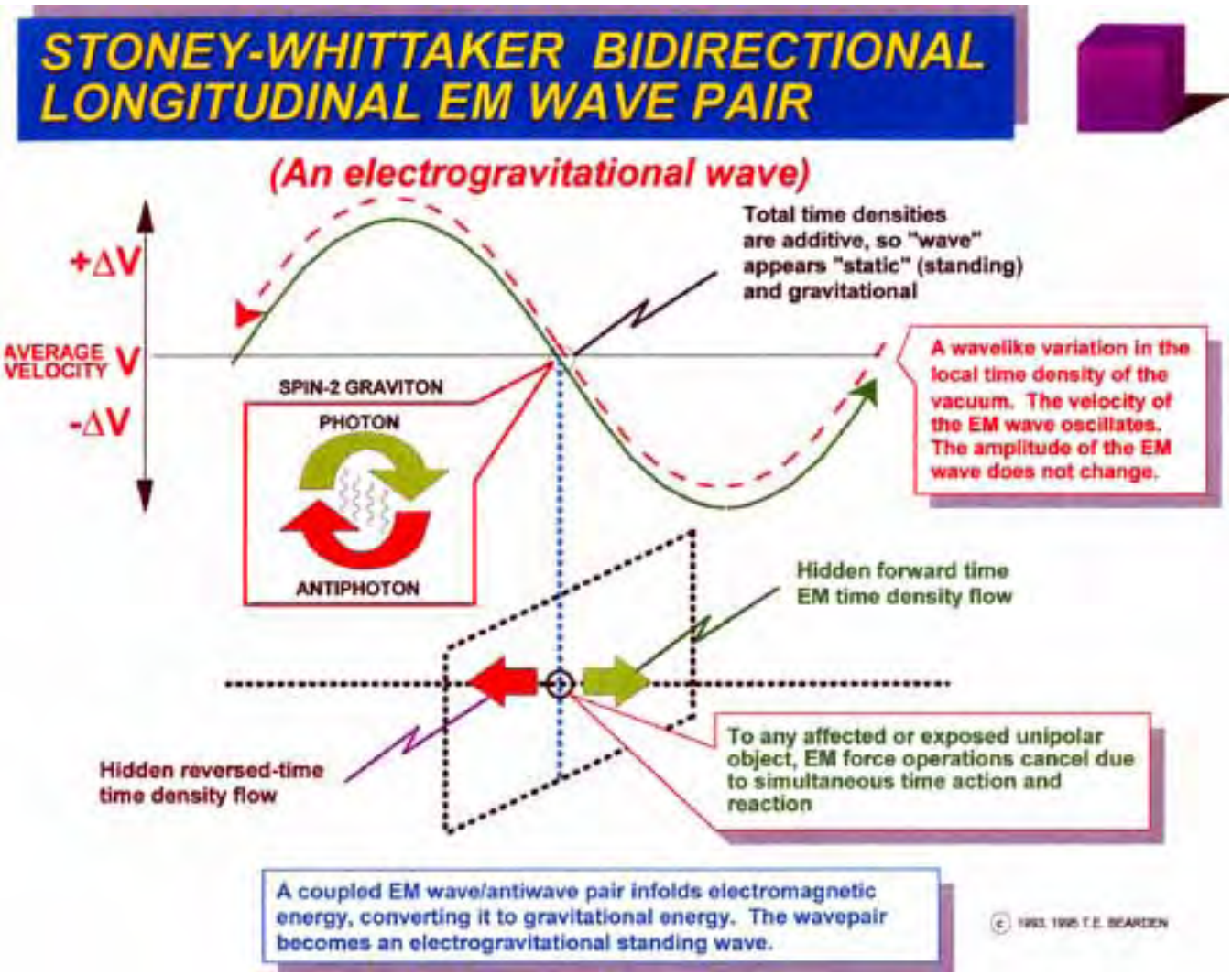

Return to Slide Index

Next Slide

Previous Slide

Undistorted Progressive Waves (UPWs)*

(waves with velocity v, where $0 \leq v \leq \infty$)

- Major equations of interest having UPW solutions are:
  - *Homogeneous wave equation*
  - *Maxwell equations*
  - *Dirac, Weyl, and Klein-Gordon equations*

*Rodrigues and Lu, *Found. Phys.* 27(3), 1997, p. 435-508.

- UPWs are translationally invariant, and do not spread, or they reconstruct their original form after a certain period.
- UPW solutions have infinite energy. Quasi-UPWs can have finite energy and can in principle be launched into space.
- Subluminal Maxwell solutions are called *EM particles*. Superluminal Maxwell solutions are called *X-waves*.
- *Experimental results indicate such waves will be produced within the next few years.*

© 1996 T.E. BEARDEN

- *Nimtz has translated Mozart's 40th symphony at v = 4.7c.*

Return to Slide Index

Next Slide

Previous Slide

Velocity modulating a longitudinal EM wave oscillates rate of flow of time

$$V = \frac{L}{t}$$

Observer sees it this way

Constant transverse wave magnitude

Wave oscillates its velocity along its path, about a nominal value

Wave oscillates this way

Constant transverse magnitude

Wave oscillates magnitude of its transported t, about a nominal value

Note:

- Waves consist of photons
- Each photon consists of energy x time
- Each photon carries time as well as energy
- A wave is both a spatial energy dynamics and a temporal dynamics
- Wave complexes carry dynamic time structures as well as dynamic energy structures

© 1997 T.E. BEARDEN

Return to Slide Index

Next Slide

Previous Slide

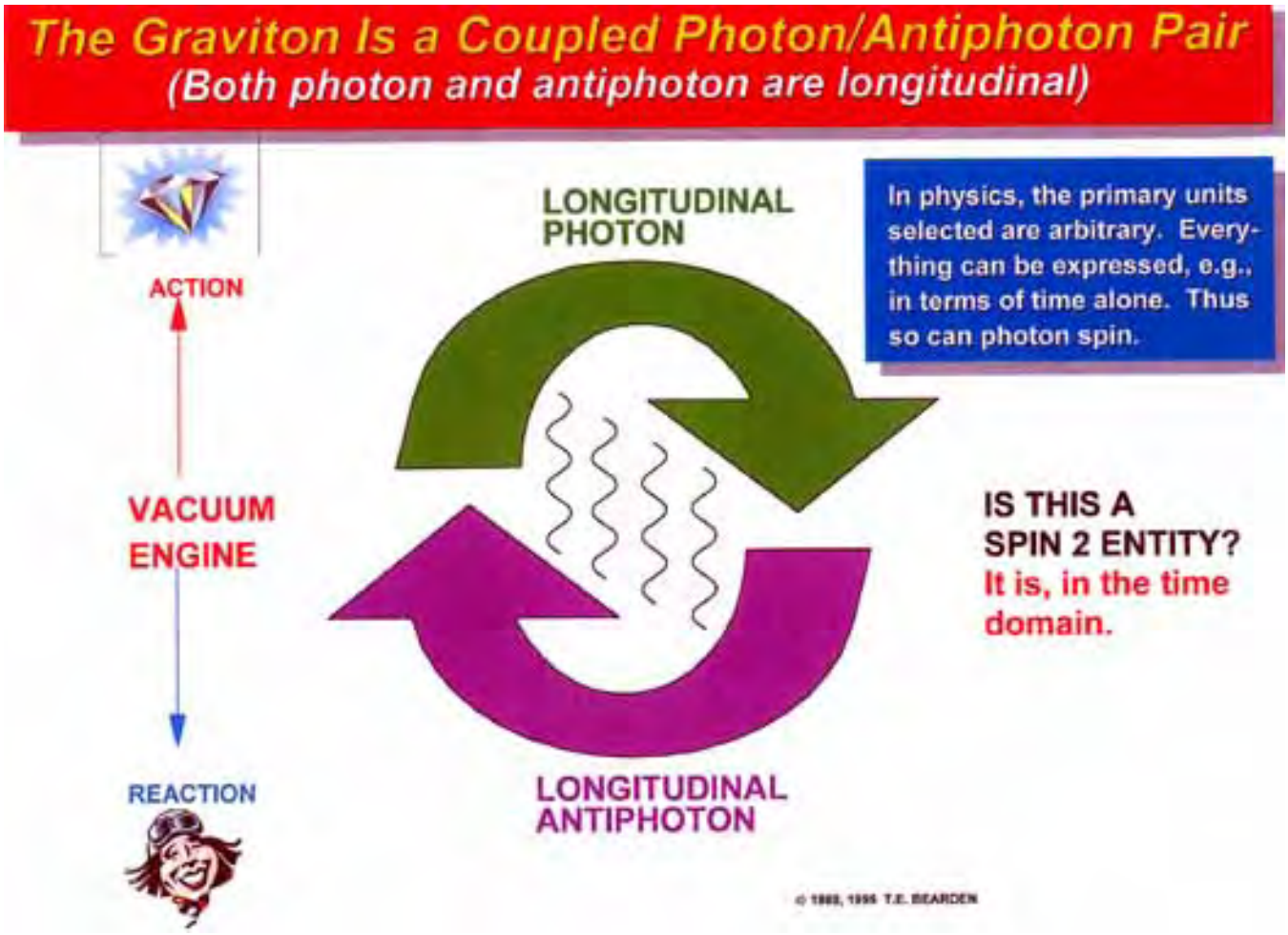

Return to Slide Index

Next Slide

Previous Slide

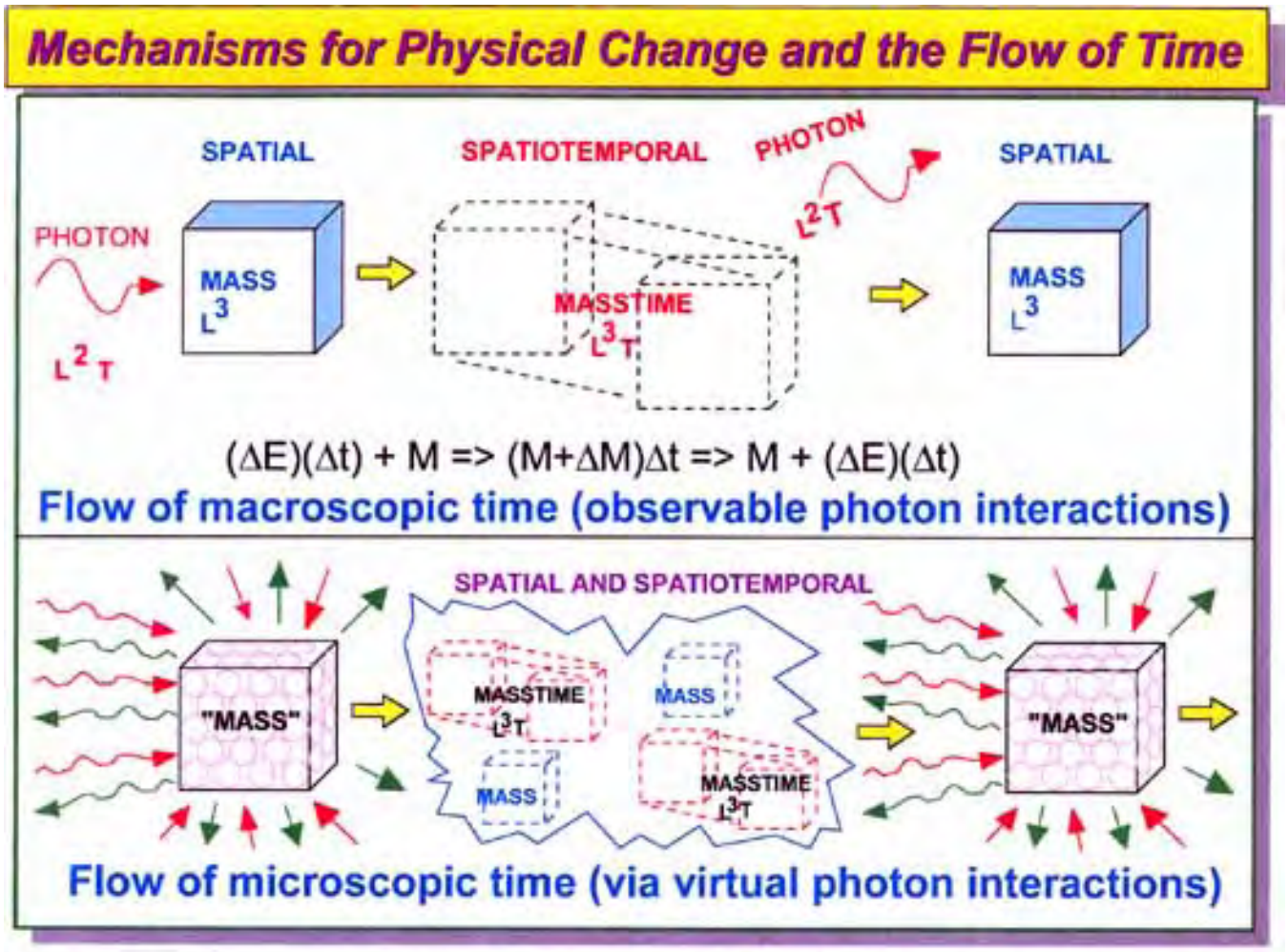

The photon interaction generates an observed quantum change and a discretized jump in the rate of time flow. A particle observably changes by only a single Δ t at a time. The background flow of time in which the jump in rate occurs, is created by the continual absorption and emission of virtual photons.

© 1994 T.E. BEARDEN

Return to Slide Index

Next Slide

Previous Slide

Any EM Field or Wave Pattern Is Produced by interference of Two Scalar Potential Functions *(E.T. Whittaker, 1904)*

(Use of Hidden Information Content of the Field)

(Can Provide Action-at-a-Distance)

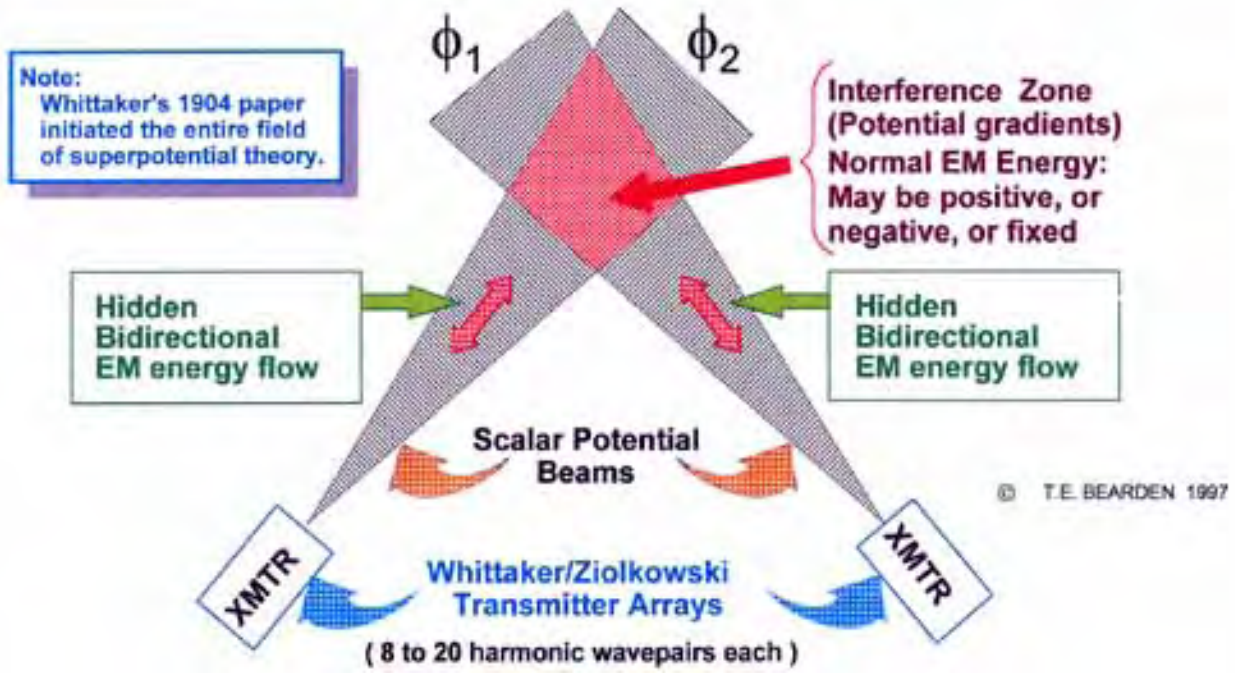

Return to Slide Index

Next Slide

Previous Slide

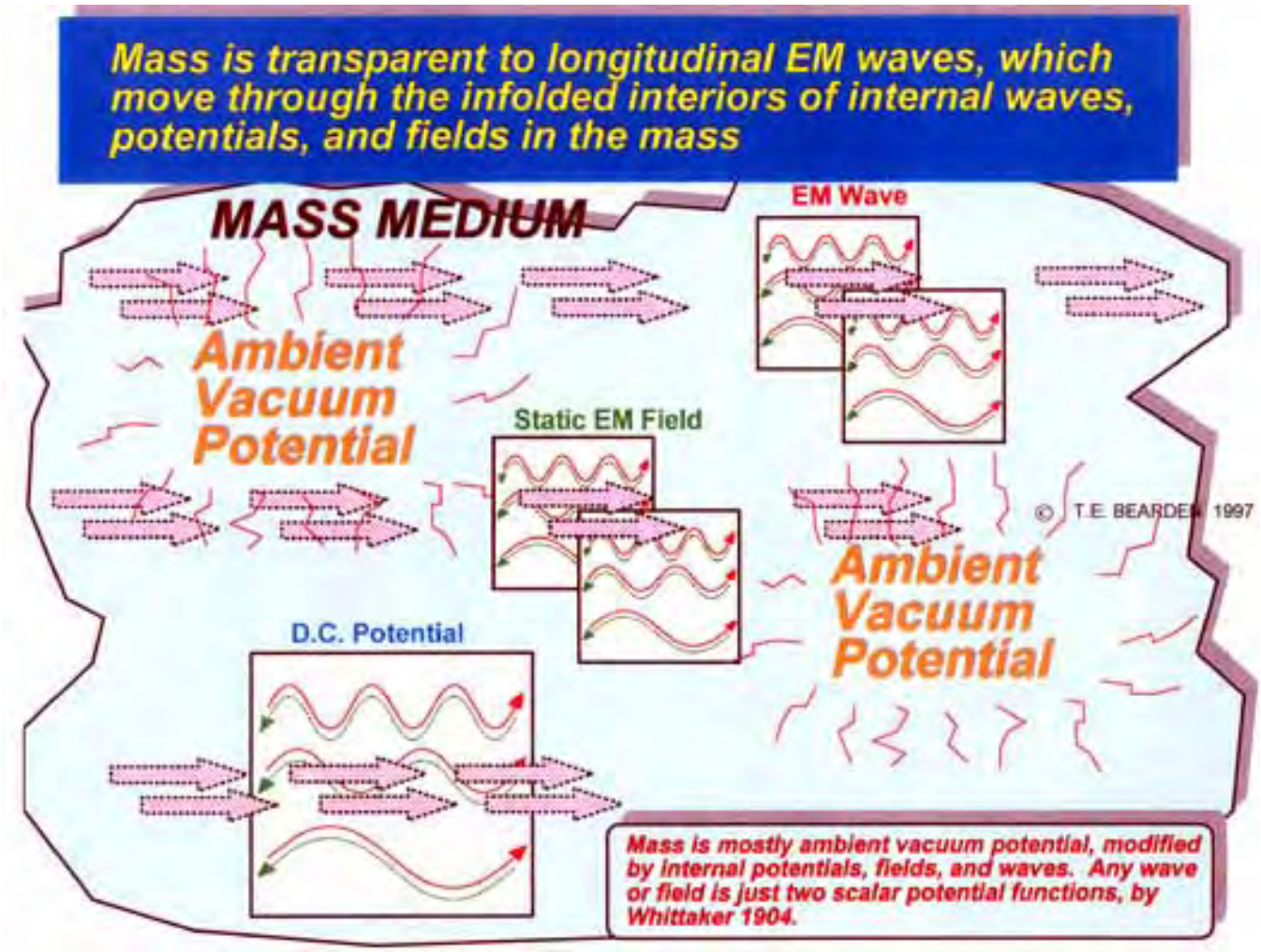

Return to Slide Index

Next Slide

Previous Slide

Deep penetration of weak signals in a dense signal environment, by nonlinear retroreflection

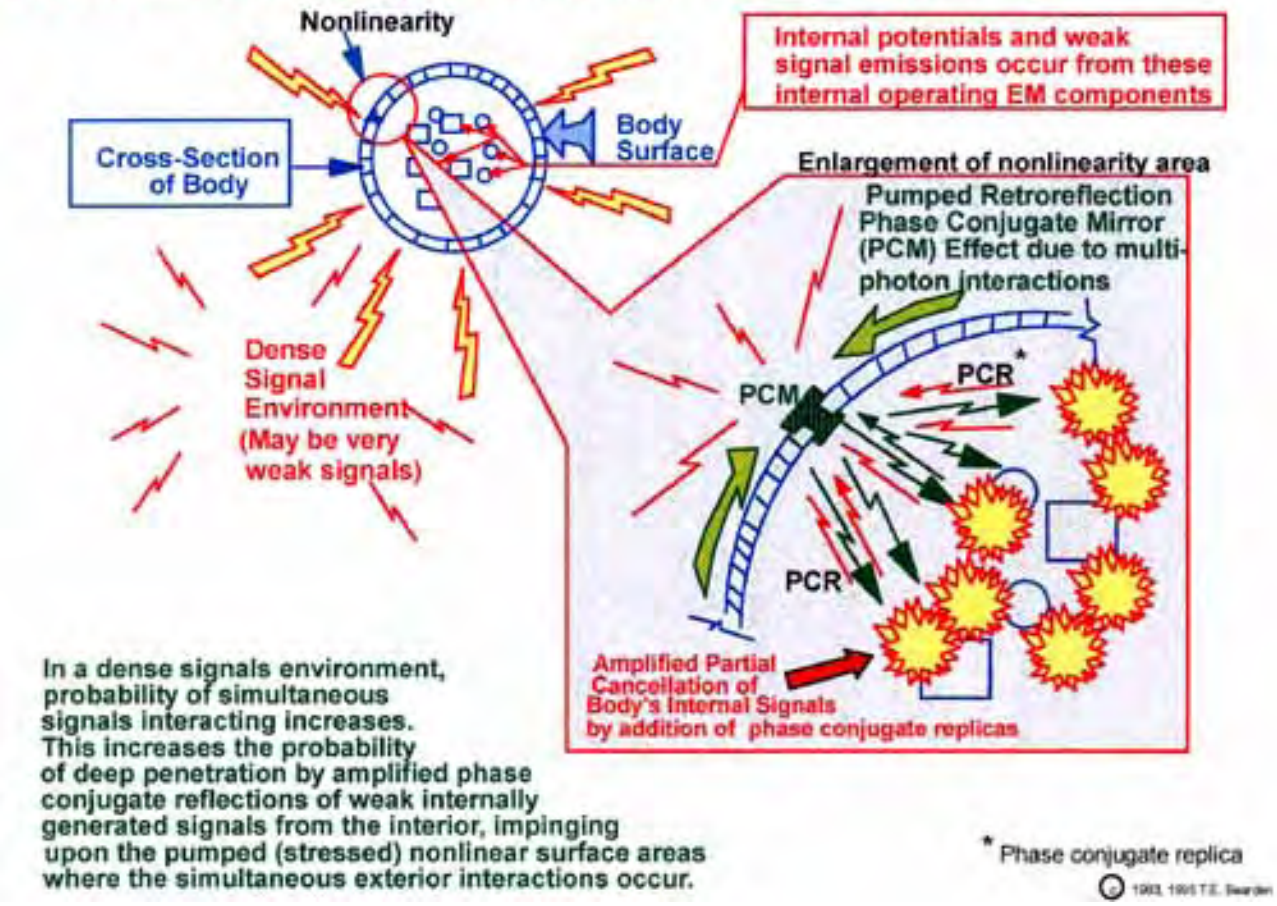

Return to Slide Index

Next Slide

Previous Slide

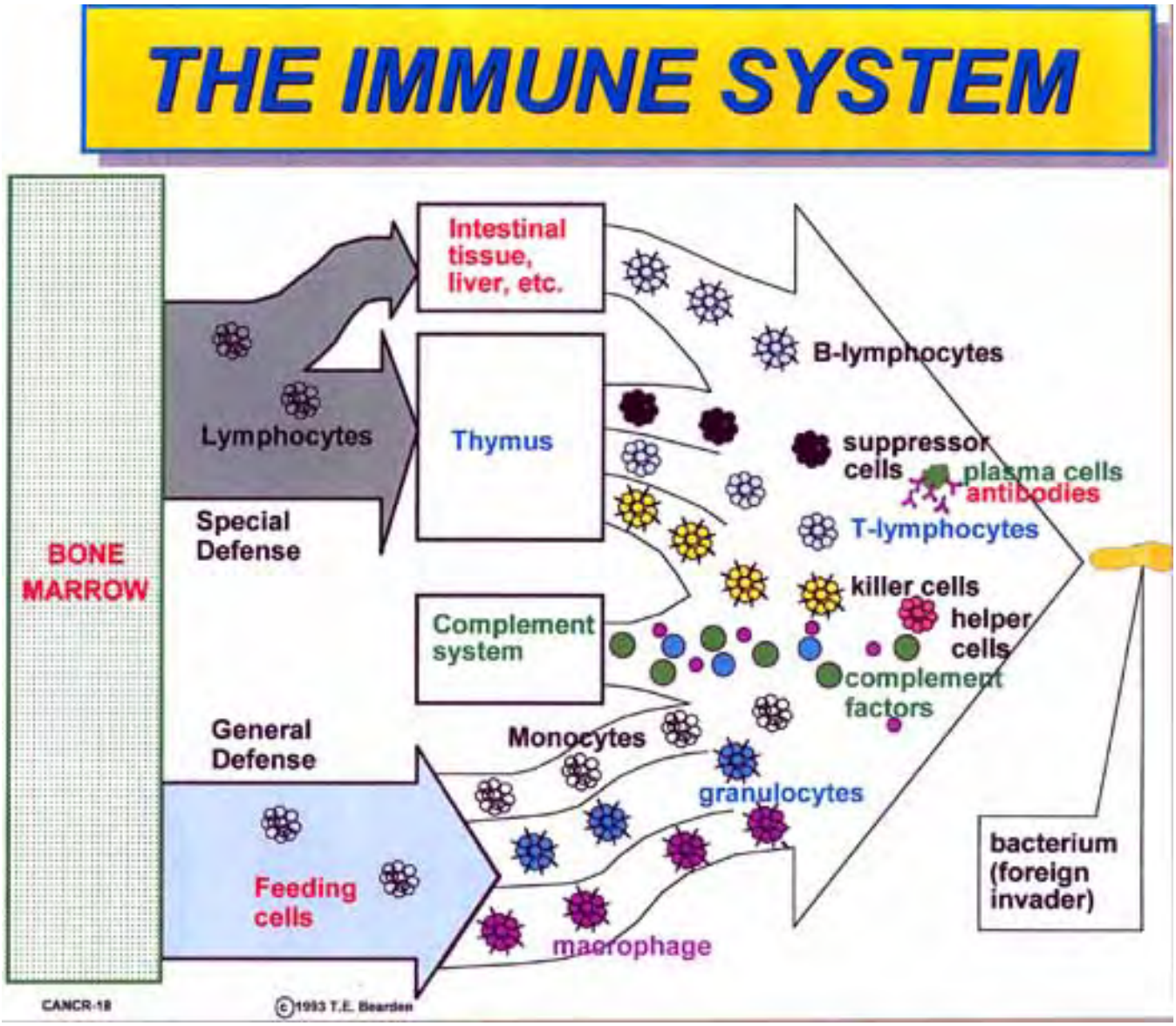

Return to Slide Index

Next Slide

Previous Slide

Popp's master cellular control system

- Provides coherent, long-range interactions in biological systems
- Is an organized morphogenetic field at the basis of functional control

- Emission very sensitive to almost all external and internal influences
- Both spontaneous and delayed luminescence occur
- Photons stored in cell during the delay

- Leakage provides ultraweak, coherent biophoton emission from the system
- Fractional intensity pattern: few to some 100s of photons/cm^2/sec
- Optimum signal-to-noise ratio

- A single delayed biophoton may be able to trigger 10^{10} reactions in a cell before its release
- Spectrum almost continuous within optical range from 200-800 nm.

- Biophoton emission shows biological system always out of equilibrium
- Emission has holistic characteristics
- Correlations to most, if not all, of the biological functions of the organism

- DNA, all other processes are sources
- Single main process of whole system, different processes strongly coupled
- Information function and sync of biological clocks (oscillators)

© 1997 T.E. BEARDEN

Return to Slide Index

Next Slide

Previous Slide

CANCER: CHARACTERISTICS

- NOT ONE DISEASE BUT A WHOLE RANGE
- STARTS IN ORDINARY (AEROBIC) CELL
- CELL SHAKES OFF BODY'S DICTATORIAL CONTROL*
- STARTS UNCONTROLLED DIVISION
- BECOMES A LUMP
- CAN SEND FORTH CANCER CELLS
  - THROUGH BLOOD
  - THROUGH LYMPH
- THESE FORM METASTASES (SECONDARY TUMORS)
- OFTEN BECOME ANAEROBIC (NON-OXYGEN USING)
- ENIGMA IS FAILURE OF IMMUNE SYSTEM TO ATTACK SOME TUMOR CELLS
  - SUPPRESSOR CELLS MAY CURB IMMUNE SYSTEM
  - TUMOR MAY LACK ANTIGENS NORMALLY IDENTIFIED BY THE IMMUNE SYSTEM

**R&R system forces cell back toward anaerobe*

CANCR-26

© 1993 T.E. Bearden

Return to Slide Index

Next Slide

Previous Slide

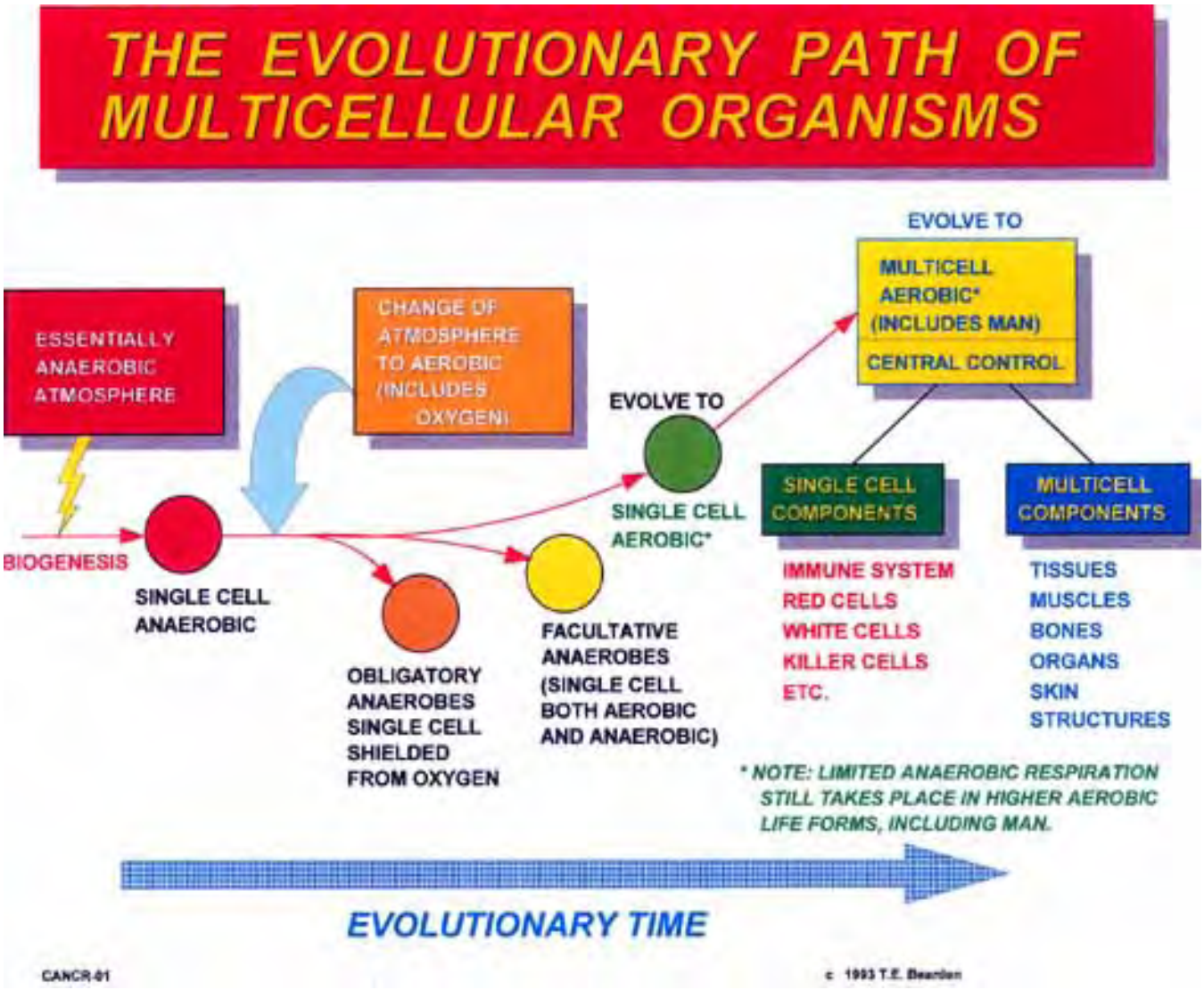

Return to Slide Index

Next Slide

Previous Slide

EFFECT OF FLUID CONTAMINATION ON HEMOGLOBIN'S OXYGEN TRANSPORT

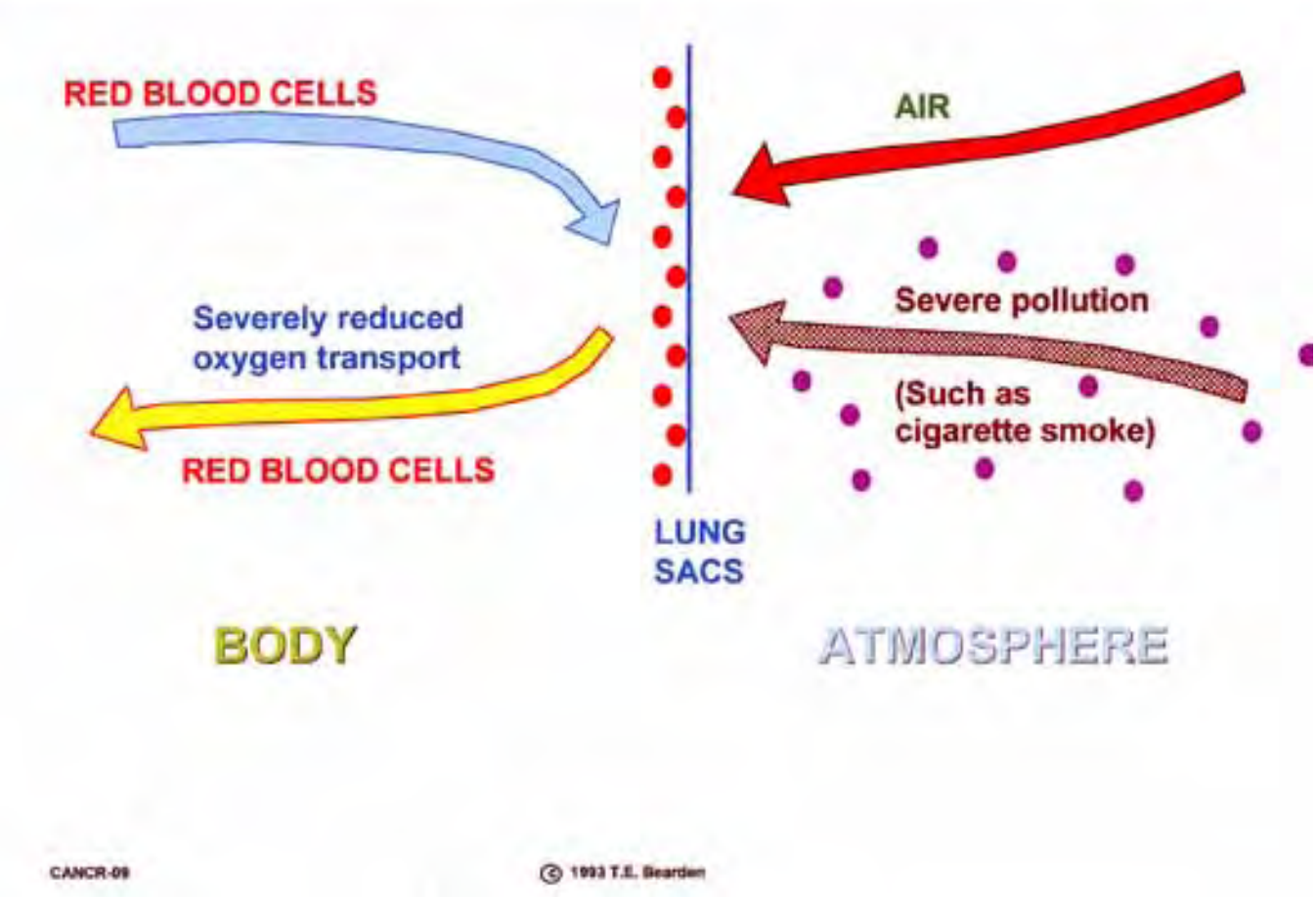

Return to Slide Index

Next Slide

Previous Slide

FIRST STEP IN SELF-PROMOTION OF CANCER DUE TO HYPOXIA

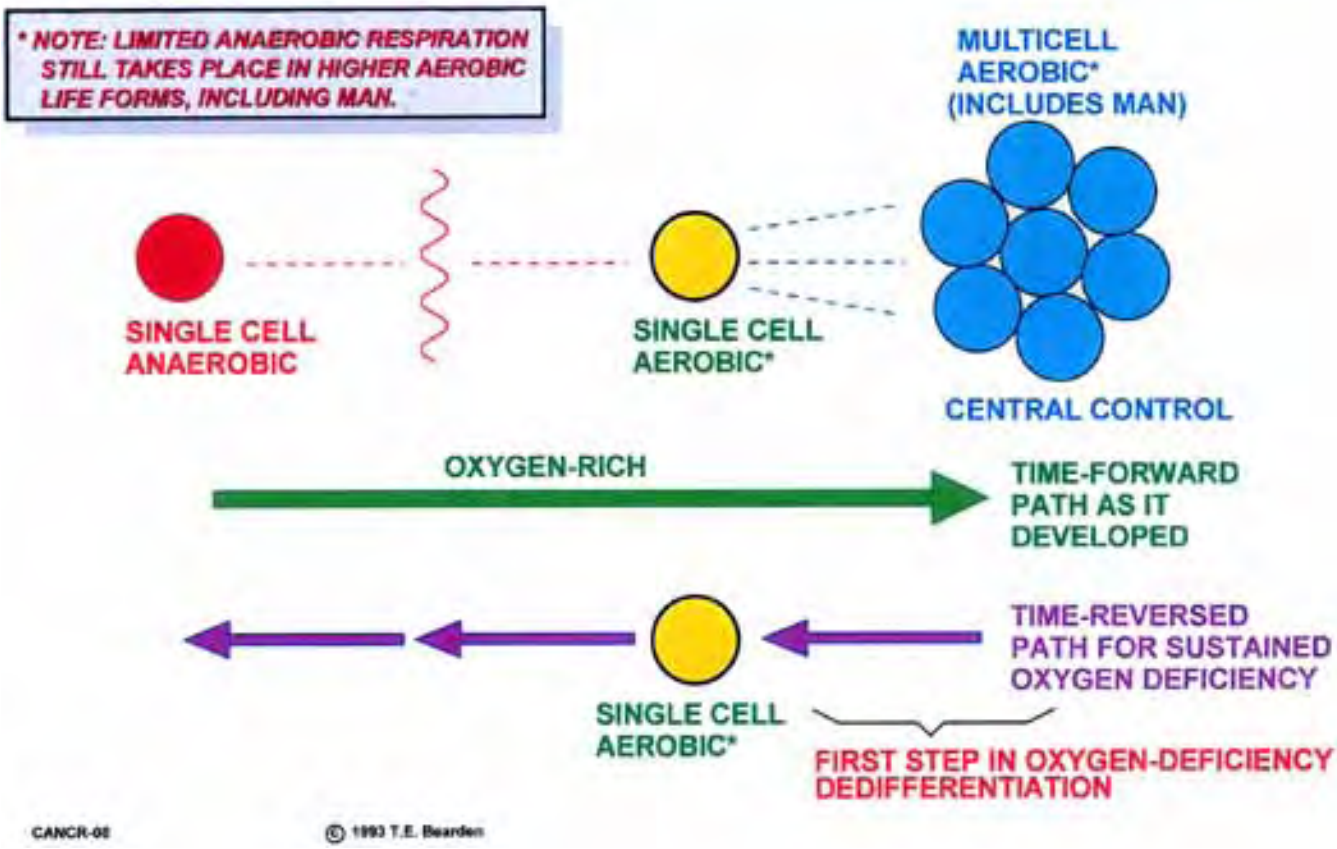

Return to Slide Index

Next Slide

Previous Slide

BECKER'S CELLULAR GROWTH CONTROL

- Two major links uncovered between :
  - The DC system and nervous system
  - The DC system and all body cells
- Bioelectric potentials of primary importance
- Physiology presently considers controls limited to:
  - Neural action potential
  - Various hormone chemical agents
  - Chemical agents associated with DNA/RNA system
- Complete Operational Biological Control System:
  - Controls growth, healing, biological cycles, etc.
  - Operates in ANALOG mode; various levels of DC
  - Interlocks physically with nervous system (and may be its precursor)
  - Other chemical agents
  - Tissue growth and healing NOT INCLUDED
- Medical community now more concerned with diseases resulting from:
  - Inadequate/abnormal growth
  - Inadequate healing

Return to Slide Index

Next Slide

Previous Slide

Becker's dc treatment of bone fractures

Application of tiny DC currents to heal difficult bone fractures. Only picoamperes are utilized. Pulsed DC current or pulsed magnetic fields may also be utilized.

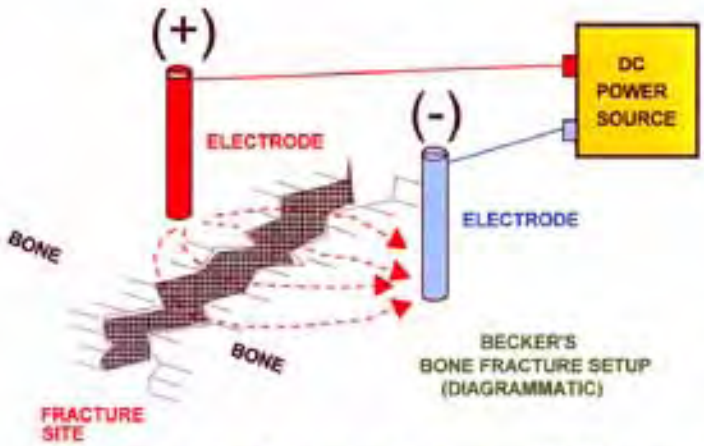

RED BLOOD CELL DEDIFFERENTIATES
Shucks hemoglobin coat
Grows nucleus

NEW CELL REDIFFERENTIATES
Turns into type of cell that makes cartilage

NEW CELL REDIFFERENTIATES
Turns into type of cell that makes bone
Deposits in fracture site, healing the fracture

Proves that cells can be time-reversed (phase conjugated) (dedifferentiated) or time-forwarded (redifferentiated) by application of very weak electromagnetic signals, when those signals contain longitudinal bidirectional EM "pump wave" wavepairs, which cause the cell and its parts to create precise vacuum antiengines.

© 1993, 1995 T.E. BEARDEN

Return to Slide Index

Next Slide

Previous Slide

Becker's theoretical DC control system involved with response to injury*

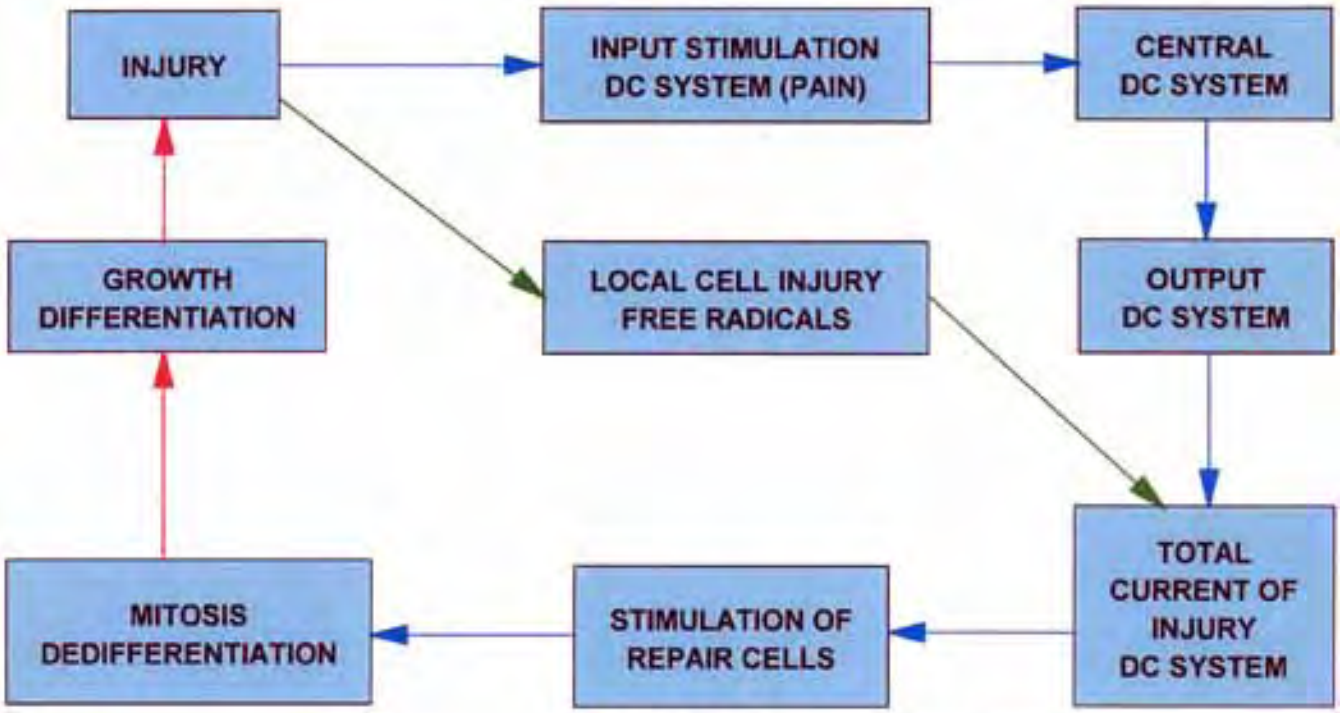

*Robert O. Becker, "The significance of bioelectrical potentials," Bioelectrochemistry and Bioenergetics, Vol. 1, 1974, p. 191.

Return to Slide Index

Next Slide

Previous Slide

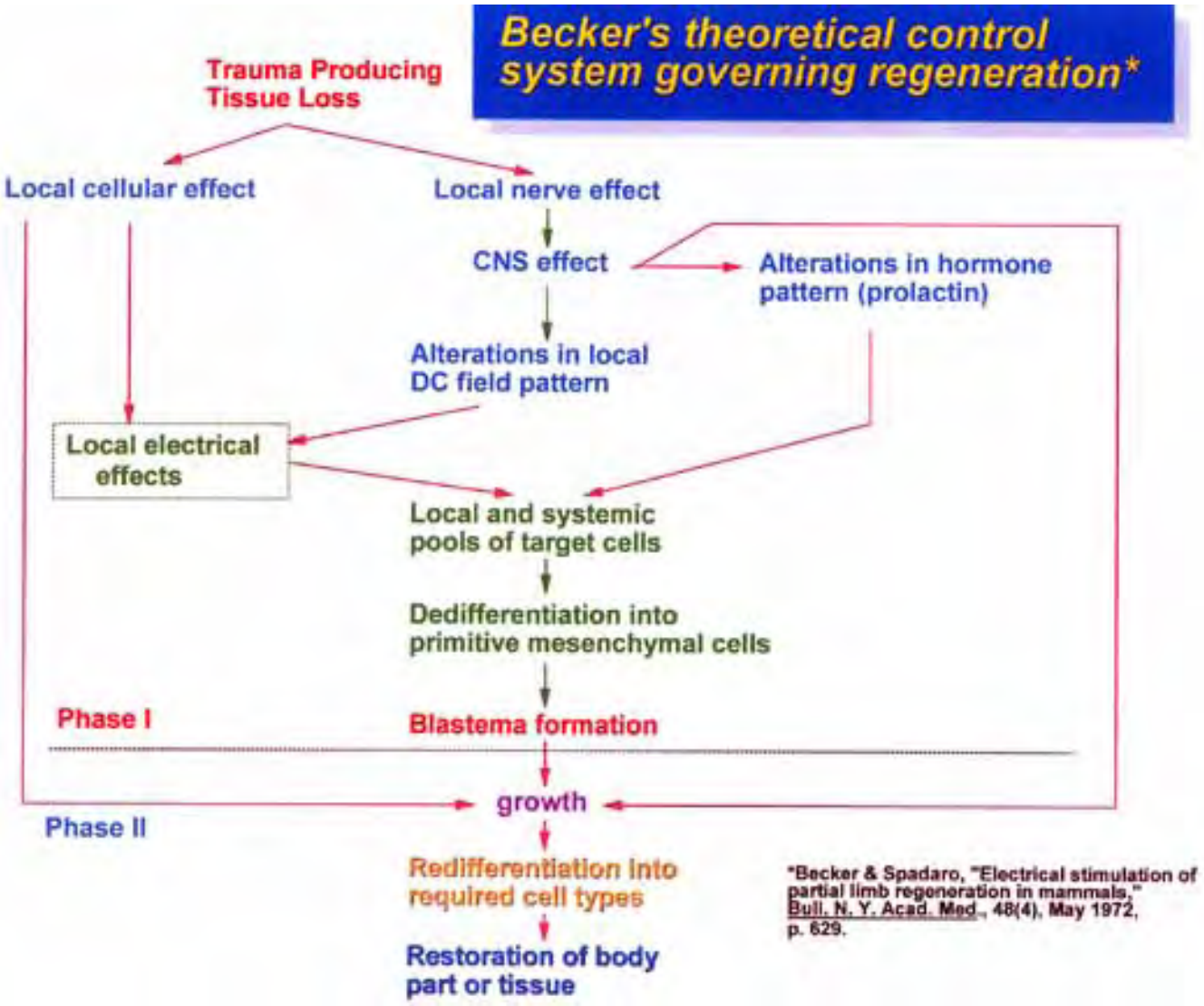

Return to Slide Index

Next Slide

Previous Slide

Link Between Standing DC Potentials and the Nervous System

- Standing DC potentials on intact surfaces of all living animals demonstrate a complex field pattern spatially related to the anatomical arrangement of the nervous system
  - Can be measured directly on the peripheral nerves
  - Polarity difference related to whether nerve is or is not a sensor
  - Steady (weak) current flow exists
  - Demonstrates solid state/semiconductor phenomena
  - Accurately reflects (amplitude and polarity) the general level of neural activity
    - Sleep versus wakefulness
    - Anesthesia versus conscious
    - Other parameters
- DC levels determine the level of neural activity
- Action potential system exists upon a substratum of DC potentials which pre-existed it
- DC potentials substrata had and have control functions over basic properties of the living organism

© T.E. BEARDEN 1998

Return to Slide Index

Next Slide

Previous Slide

Becker's Findings on Cellular Injury and Regeneration*

- Cellular processes are regulated by a precise control system
- Attempted to apply engineering control-system theory
- Cells and tissues have solid-state electrochemical features which provide control signals in the control system
  - Growth process
  - Electron transfer
  - Semiconduction
  - Self-organizing *(NOTE: Implies hidden variables and nonlocal causality)*
- Complex electrical events at the injury site initiate cellular aspects such as dedifferentiation and mitotic activity
- Regeneration is a 2-step process, each with different controls
  - Electrical triggers with threshold values results in appearance of blastema
  - Complex data transmission to blastema establishes it as a self-organizing system capable of growth and redifferentiation
  - Mammals lack ability to produce blastemas except for bone, but partial regeneration growth has been shown in response to electrical stimuli
- Growth related to electrical more than electrochemical aspects
- Hematopoietic marrow as source of cells for the blastema
  - Monocytes can take place in regenerative processes in limbs
  - Lymphocytes can dedifferentiate under certain circumstances
  - Marrow elements can be induced into osteogenesis

*R.O. Becker & J.A. Spadaro, "Electrical Stimulation of Partial Limb Regeneration in Mammals," Bull. N. Y. Acad. Med., 48(4), may 1972, p. 627-641.

© T.E. BEARDEN 1998

Return to Slide Index

Next Slide

Previous Slide

Corrections For the Present EM Bioeffects Model

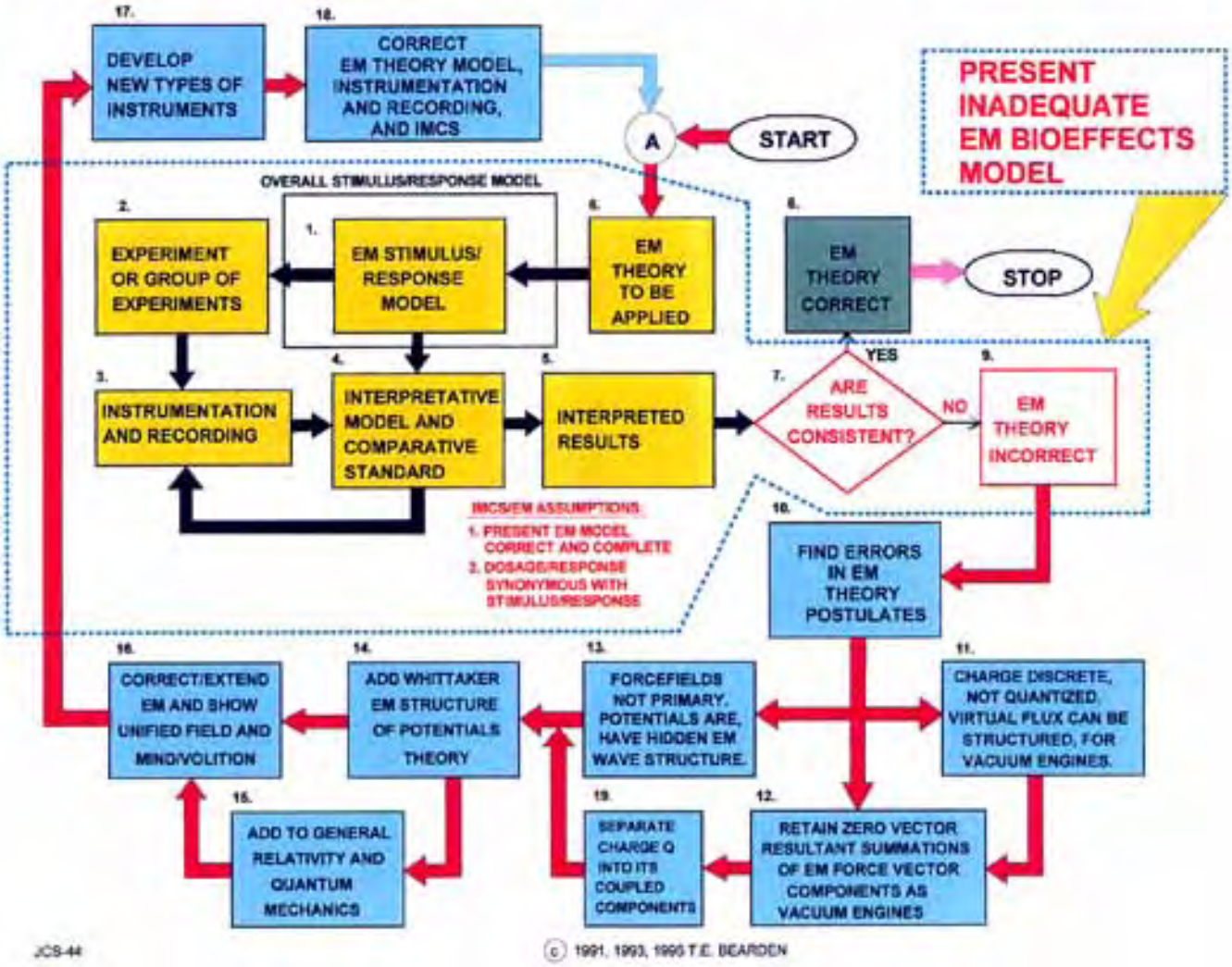

Return to Slide Index

Next Slide

Previous Slide

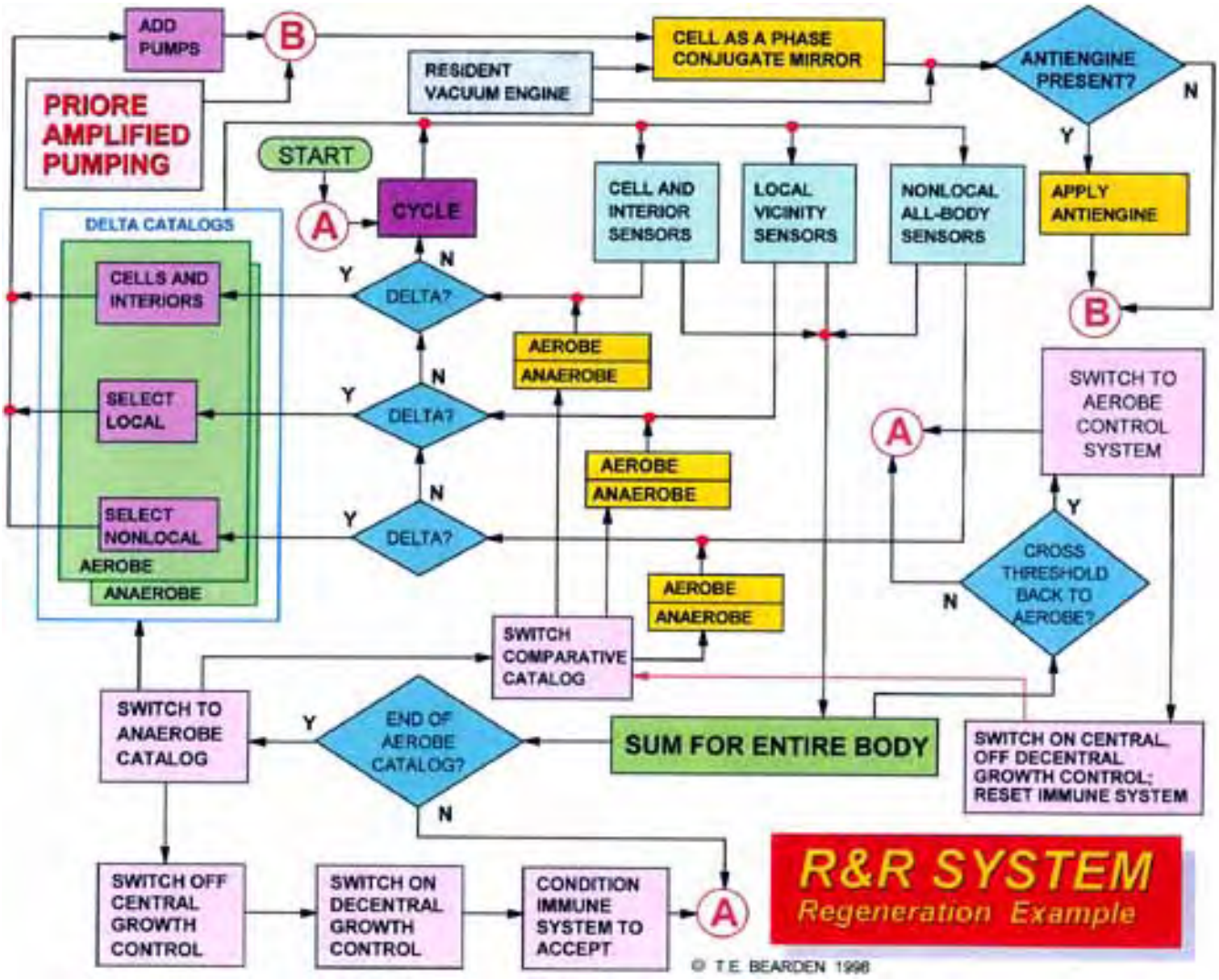

Return to Slide Index

Next Slide

Previous Slide

Kaznacheyev's Cytopathogenic Mirror Effect

Disease vacuum engines transported by photons and waves

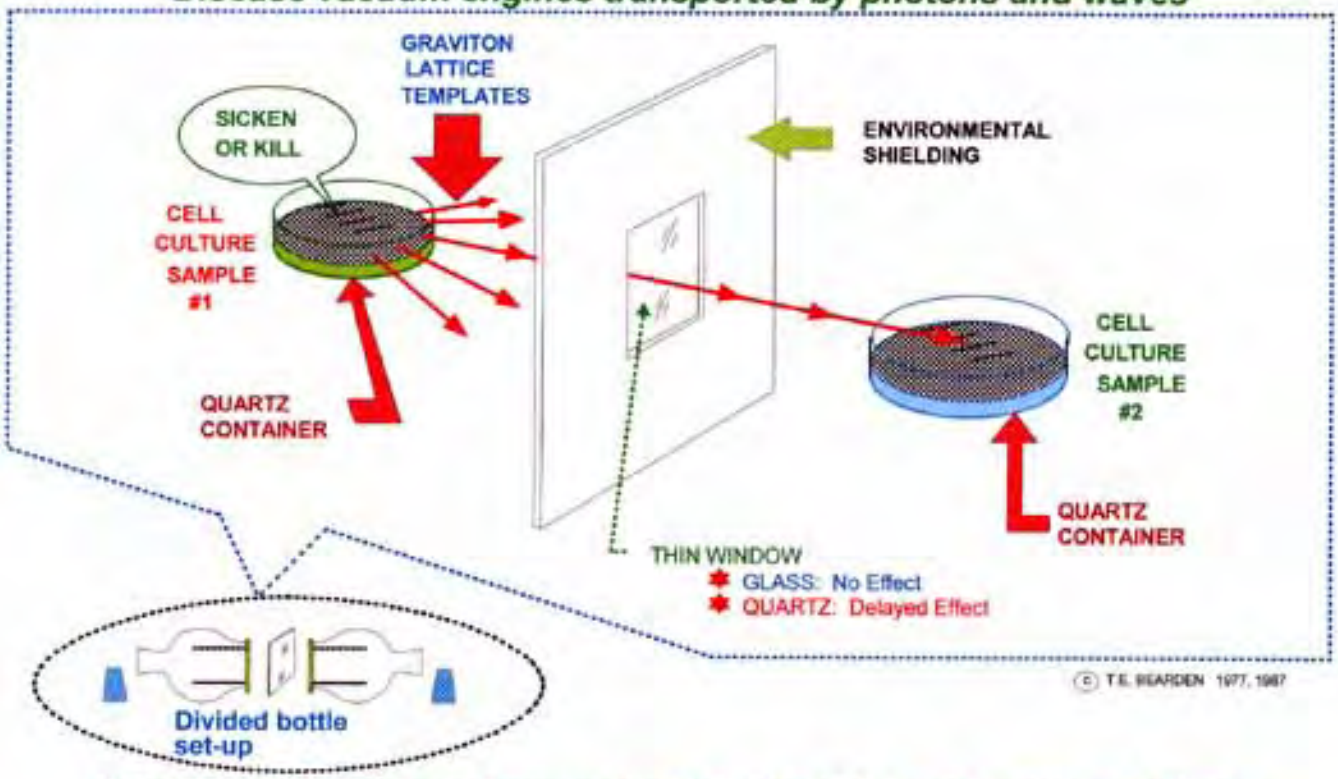

Note: Minimum lattice is one harmonic interval: IR to UV is such a minimum G-lattice.

Distant induction of cellular death and diseases, by special EM means. Coupled photon-antiphoton pairs (gravitons) in a structured harmonic lattice ordering constitute the disease or disorder template.

Return to Slide Index

Next Slide

Previous Slide

MICROWAVE RADIATION OF U.S. EMBASSY IN MOSCOW

Former U.S. Embassy in Moscow.

Selected clipart © by Lotus SmartPics™

BACKGROUND

- Began in latter 1950s
- Discovered on VP Nixon's trip
- Initially thought to be *nuclear* radiation (Discovered w/Geiger counter?)
- High level target -- U.S. Ambassador
- Guarantees personal attention of:
  - U.S. Ambassador to USSR
  - U.S. President
  - NSA, CIA, DIA, NSC, etc.
  - Top consulting scientists
  - Leading U.S. scientific institutions
- Two U.S. Ambassadors died, another sickened
- Anomalous health changes in personnel, only in zero-field (zero pot'l gradient) areas!
- Four U.S. Presidents requested Soviets cease
  - Cut from 18 watts/sq cm to 2
  - Then again increased
- No one could understand what was going on
- Aluminum screens were placed over windows
- Moscow was declared a hazardous duty zone

© 1995, 1996 T.E. BEARDEN

Return to Slide Index

Next Slide

Previous Slide

Self-Targeting in Inner EM Channel Can Produce a Quantum Potential

Once QP is established, energy transmission is direct and instantaneous. Energy input to one single participant will simultaneously appear in all other participants, the amount depending on their fractions of participation with the input station.

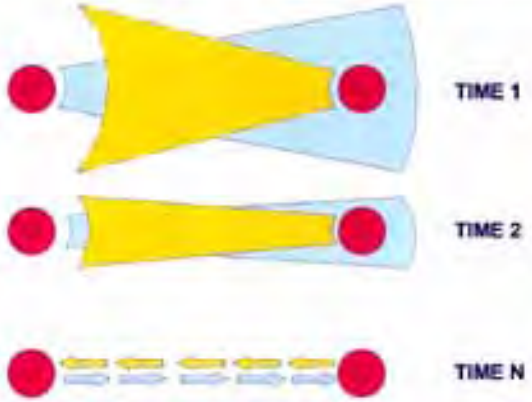

NARROWING OF INTERACTING POTENTIALS INTO LASER-LIKE BEAMS, BETWEEN TWO PUMPED SOURCES. NOW ONLY LONGITUDINAL WAVES CONNECT THE LINKED OBJECTS.

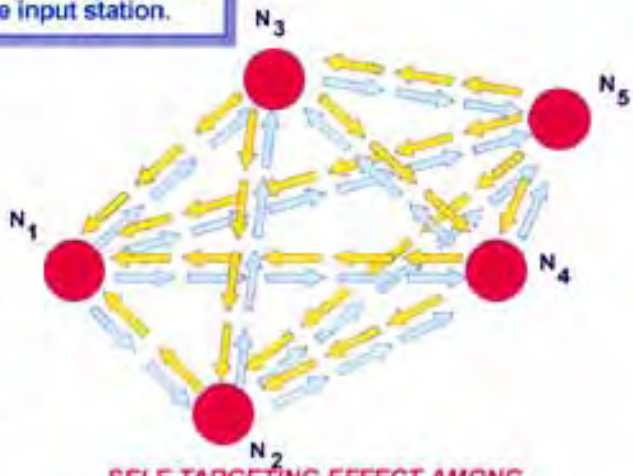

SELF-TARGETING EFFECT AMONG ALL PAIRS OF INTERACTING PUMPED SOURCES

© 1986, 1995, 1996 T.E. BEARDEN

Return to Slide Index

Next Slide

Previous Slide

Quantum potential and hidden variable theory

a. Quantum Potential Characteristics

(C) 1989, 1995, 1997 T.E. BEARDEN

- No point source
- Not radiated
- Quantum potential between two particles
  - Interaction does not vanish as spatial separation becomes very large
  - Instantaneous connection, so multiply-connected space

b. Hidden Variable Theory and the Quantum Potential

- $$V_{quantum} = \frac{\hbar}{2m}\frac{\nabla^2\sqrt{\rho}}{\sqrt{\rho}}$$
- "A quantum particle moves as if it were subject, in addition to its external potentials, to a potential which is a function of its own probability distribution."
- Bohm's H.V.T. assumes:
  - Particle and wave function real and separate
  - Wave function obeys Shroedinger's equation
  - Particle obeys classical mechanics
  - Particle couples to wave function through a quantum potential

Return to Slide Index

Next Slide

Previous Slide

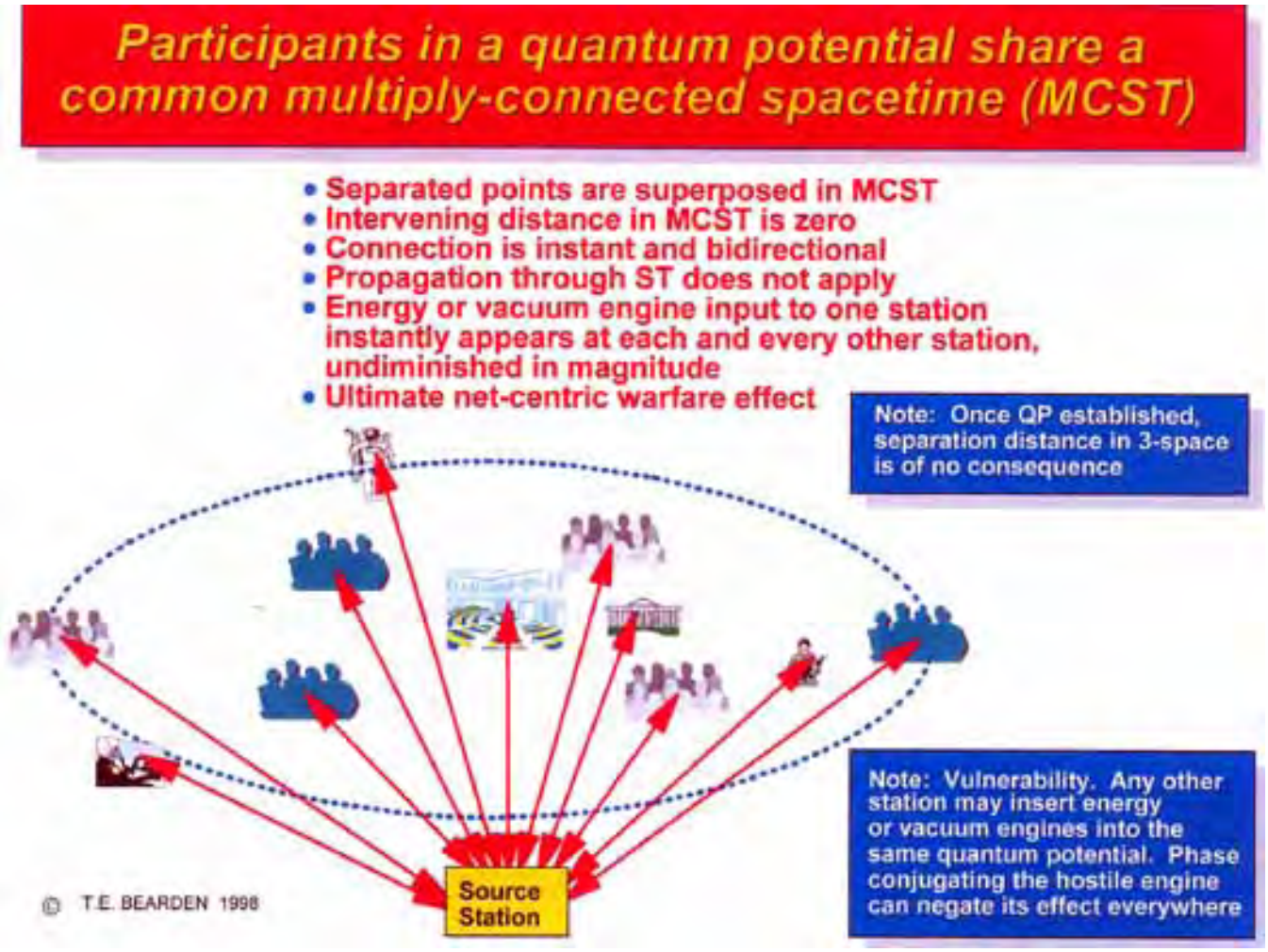

Return to Slide Index

Next Slide

Previous Slide

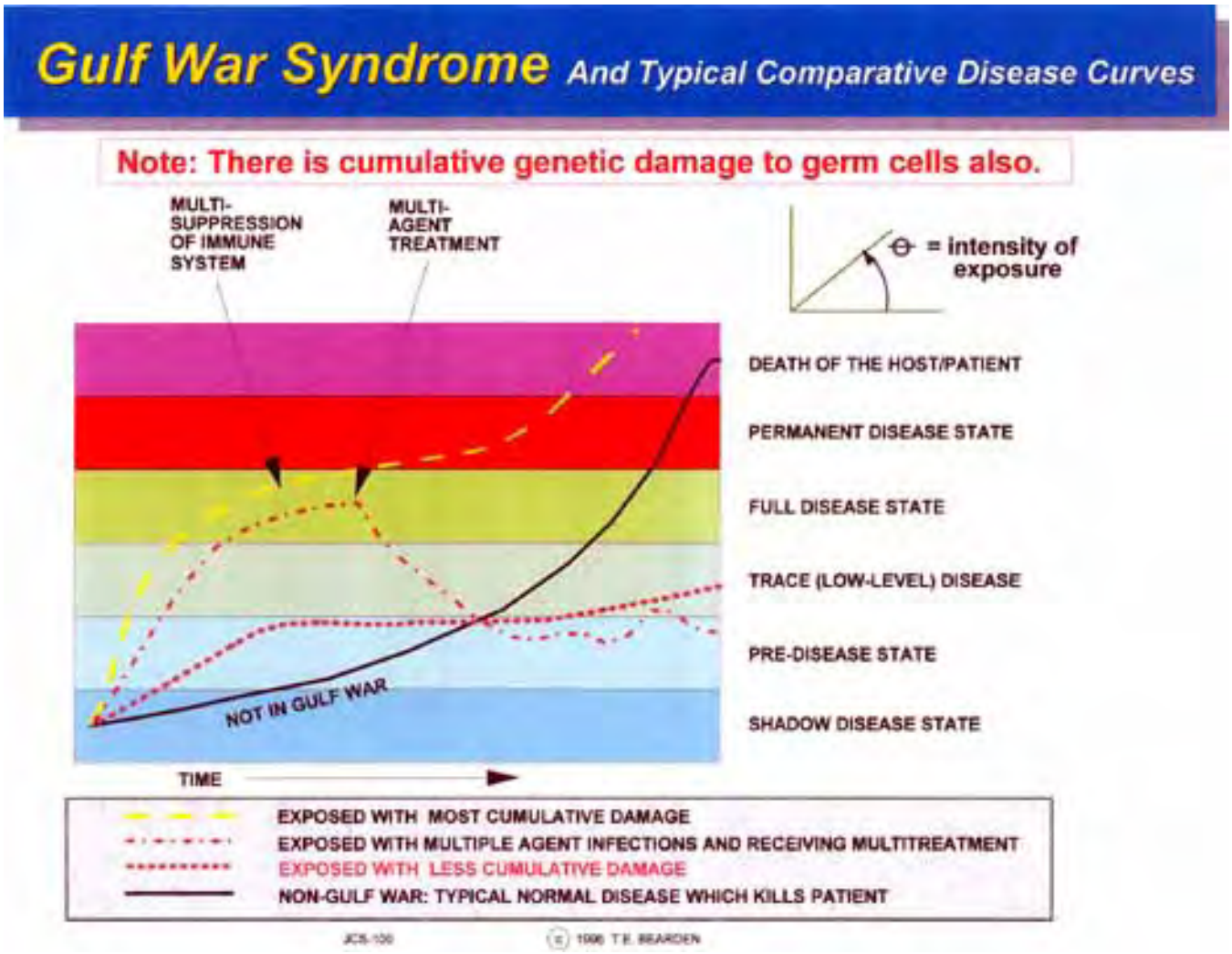

Return to Slide Index

Next Slide

Previous Slide

Force Fields and Symmetry

- Force fields are nature's way of imposing local gauge symmetries on the world
- E.g., electromagnetic field is a manifestation of the simplest known gauge symmetry consistent with the principles of special relativity
- For the EM case, the gauge transformations correspond to changes in 'voltage' from place to place

© T. E. Bearden 1995, 1996

Return to Slide Index

Next Slide

Previous Slide

Aspects of Strong Local Asymmetry

- If local asymmetry is strong, conservation laws may be appreciably violated
  - Energy
  - Charge
  - Spin
  - Momentum
  - Angular momentum

© T. E. Bearden 1995, 1996

- Properties of an object may differ appreciably for
  - Different observers
  - Different detecting means
  - One time to another
  - One position to another
- STRUCTURING THE INFOLDED EM INSIDE POTENTIALS, FIELDS, AND WAVES
  - Strongly breaks local symmetry
  - Provides spacetime engines giving the above effects

Return to Slide Index

Next Slide

Previous Slide

Other Aspects of Strong Local Asymmetry

© T. E. Bearden 1995, 1996

- Local spacetime is curved
- Lorentz invariance of vacuum is violated
- May be a local "sink" or "source"
- Gravitational/inertial effects from EM
- Translation between virtual and observable
- Electrogravitational solitons
- Action at a distance
- Transmutation effects may exist
- Scalar/pseudoscalar field translation
- COMMENT: Thus the use of infolded longitudinal EM fields and waves to strongly break local symmetry allows internested clustering of spacetime curvatures. These spacetime structures are *vacuum engines*, or *spacetime engines*.

Return to Slide Index

Next Slide

Previous Slide

Small Entities Emit Powerful S-Flows

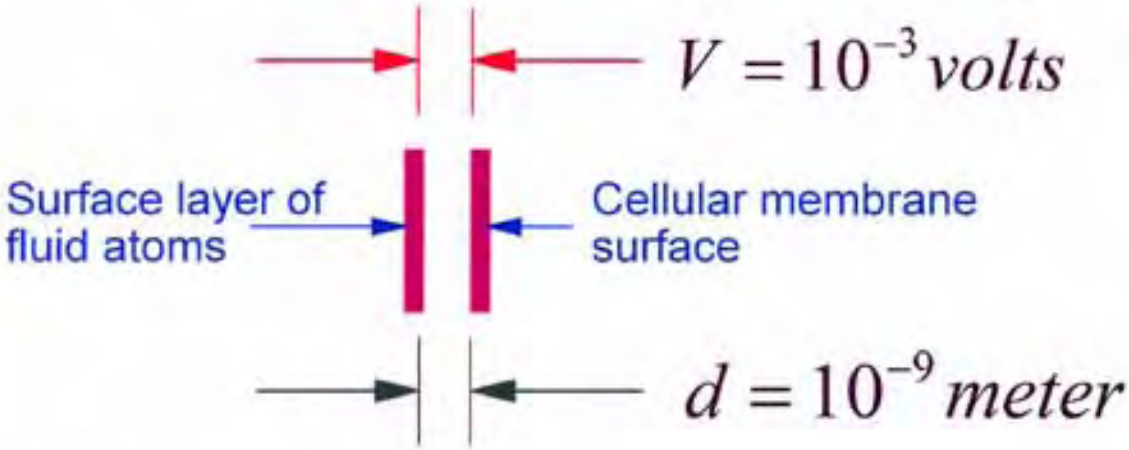

$$E = 10^{6}\ \text{volts / meter}$$

$$S \approx f(E^2) = f(10^{12})$$

© 1997 T.E. BEARDEN

Return to Slide Index

Next Slide

Previous Slide

What is the "magnitude" of a potential?

- What is taught is the *"interaction cross section,"* i.e., the joules collected from the associated S-flow by one point coulomb of intercepting/collecting charge.

$$W = Vq = \phi q \quad \text{(joules)} \qquad [1]$$

$$\phi = W/q \quad \text{(joules/coul)} \qquad [2]$$

Let $\phi < 1$ and fixed; $q \Rightarrow n$ where $n = \infty$

$$W \Rightarrow k, \text{ where } k = \infty \qquad [3]$$

- *From any "finite" potential, no matter how small, an unlimited amount of energy can be collected, by increasing the collection (number of coulombs) (interaction cross section).*
- Actual magnitude of the potential ϕ must be very, very large, since we can treat it as infinite or unlimited, via $W = \phi q$.
- *Else Equation [1] could not be linear.*

© T.E. BEARDEN 1997

Return to Slide Index

Next Slide

Previous Slide

Table A1. THE VACUUM ENERGETICALLY INTERACTS WITH EVERY PARTICLE, CONTINUALLY.

- The vacuum is:
  - Ground (zero) state of the electromagnetic (photon) field.
  - Ground (zero) state of mass field.
  - Empty of *observable* particles or photons.
  - Filled with *non-observable* (virtual) particles and photons.
  - Violently fluctuating microscopically and electromagnetically.
  - Constantly interacting with all particles, including partially shielding their bare charges.
- Lamb Shift -- vacuum's alteration of the energy level of an electron in the hydrogen atom.
  -- Difference in energy (frequency units) is 1057.862 MHz.
  -- Lamb was awarded a Nobel Prize for showing this.
  -- Energy *density* exceeds that of the sun's surface!
- Casimir Effect -- vacuum creates an attraction between two conducting surfaces in close proximity.
  -- experimentally proven, well-known.

© 1993, 1995 T.E. BEARDEN

- Cole and Puthoff proved that there is no thermodynamic reason why energy cannot be extracted from the vacuum as heat and power, and utilized.
- The common dipole is a broken symmetry in the virtual photon flux of vacuum. It extracts virtual energy, integrates it, and re-emits it as Poynting energy density flow S = ExH (which observably interacts with charged particles and magnetic poles).

Return to Slide Index

Next Slide

Previous Slide

Extended Superpotential Theory

(Adding Vacuum Engines)

- Any EM field or wave is created by (comprised of) two potentials which interfere with each other in a given area
  - *May be either scalar or vector potentials*
  - *May interfere locally or at a distance*
  - *Process is distance independent*
- Any scalar potential is comprised of a harmonic series of bidirectional longitudinal EM wavepairs (Whittaker 1903).
- Ziolkowski circa 1985 added the interior product set to Whittaker's sum set. Thus he added modulations.
- By assembling a deliberate "sum and product" set of biwaves, a scalar potential can be created having an internal deterministic structure.
  - *This structures local vacuum potential/spacetime curvatures, in specific forms (templates)*
  - *Now have added vacuum engines*
  - *Have infolded general relativity inside electrodynamics*

© 1996 T.E. BEARDEN

Return to Slide Index

Next Slide

Previous Slide

Vacuum Engine: Jillions of Working ST Demons

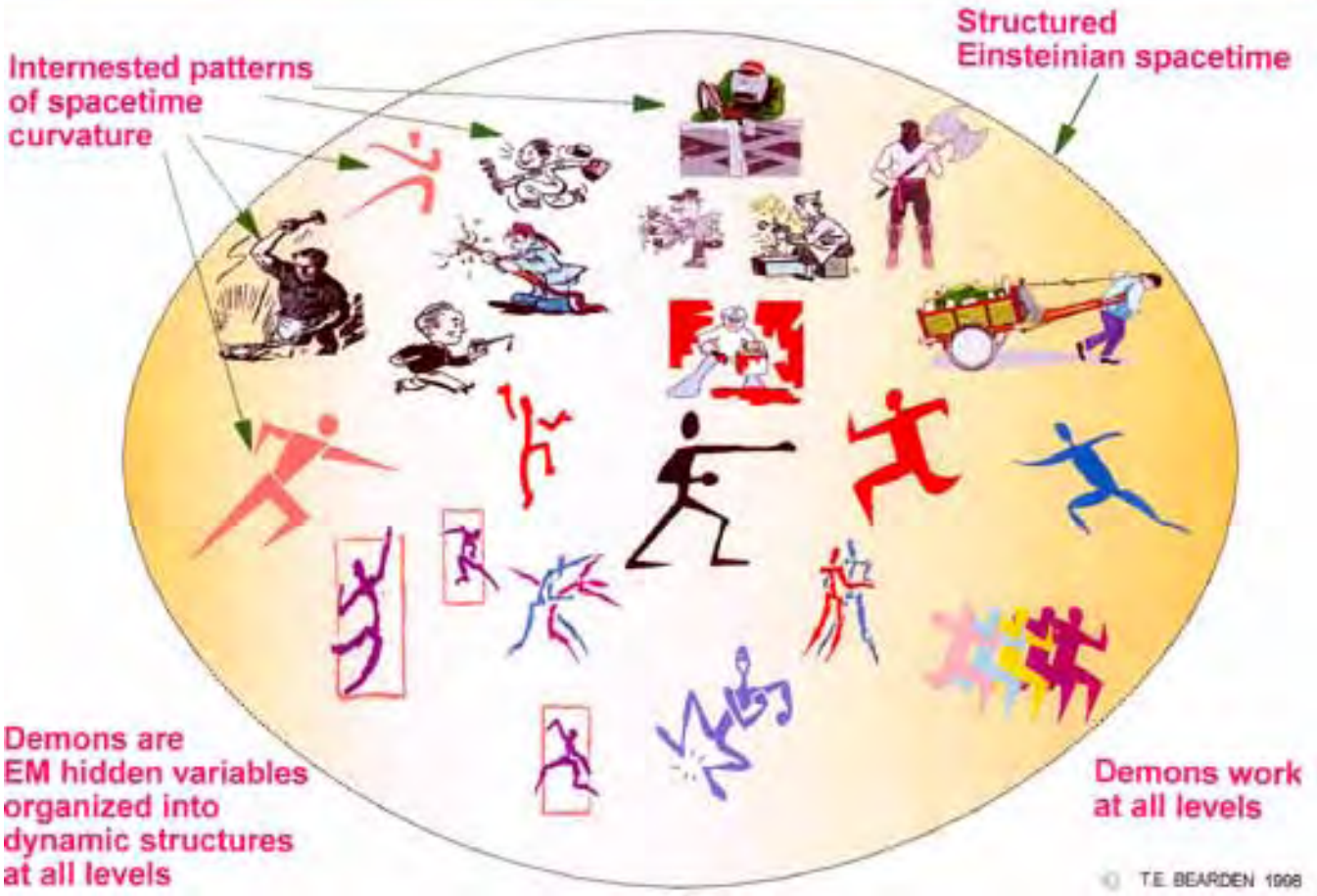

Return to Slide Index

Next Slide

Previous Slide

Active Spacetime and a Specific Vacuum Engine

(A General Relativistic Concept and Analogy)

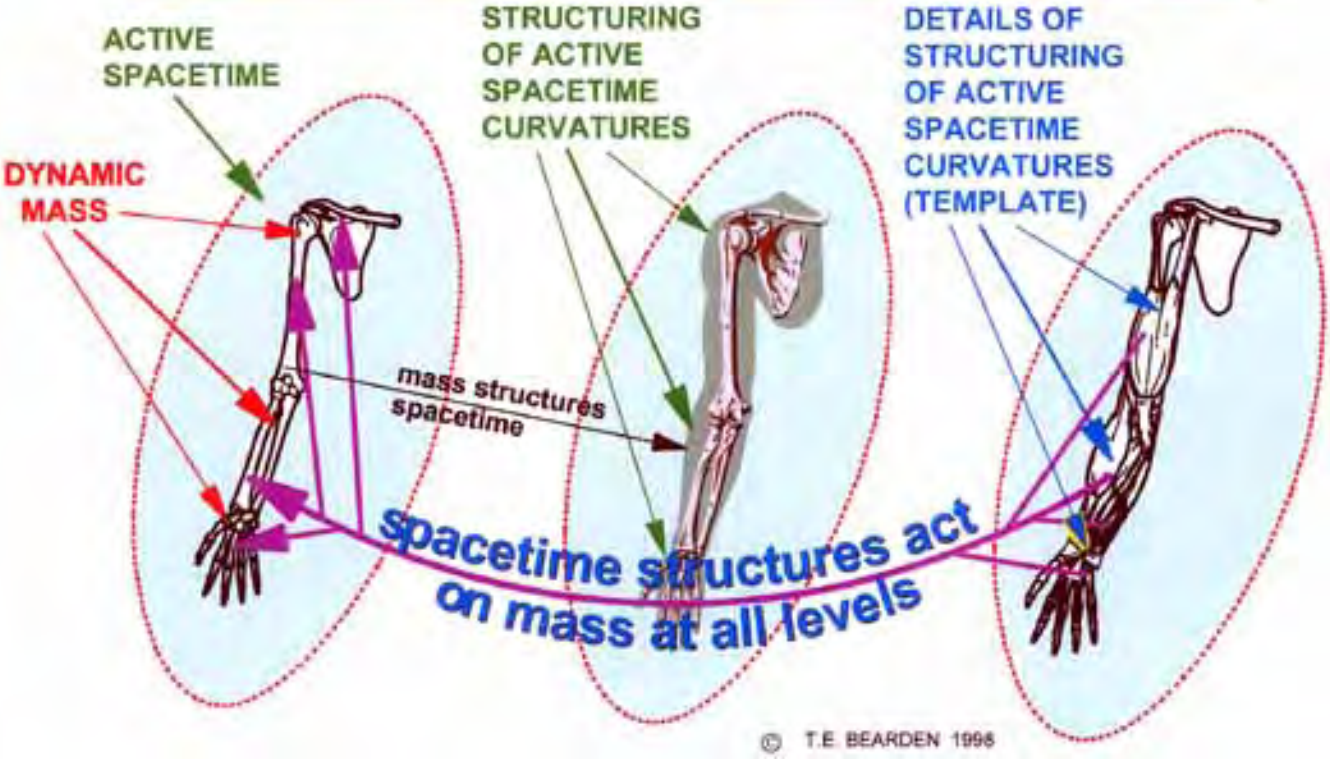

Return to Slide Index

Next Slide

Previous Slide

Extension of Wheeler's general relativity principle:

- Mass (trapped energy) and its structuring curves and structures spacetime complexes (engines).
- Curved and structured spacetime engines produce forces on mass and its components, telling them how to move and structure.
- Since very strong EM force is used as agent of curvature, very powerful general relativistic effects can be obtained by arranging the LWs in the input EM potentials, fields, and waves.
- General relativity becomes directly engineerable in devices of unparalleled capability.

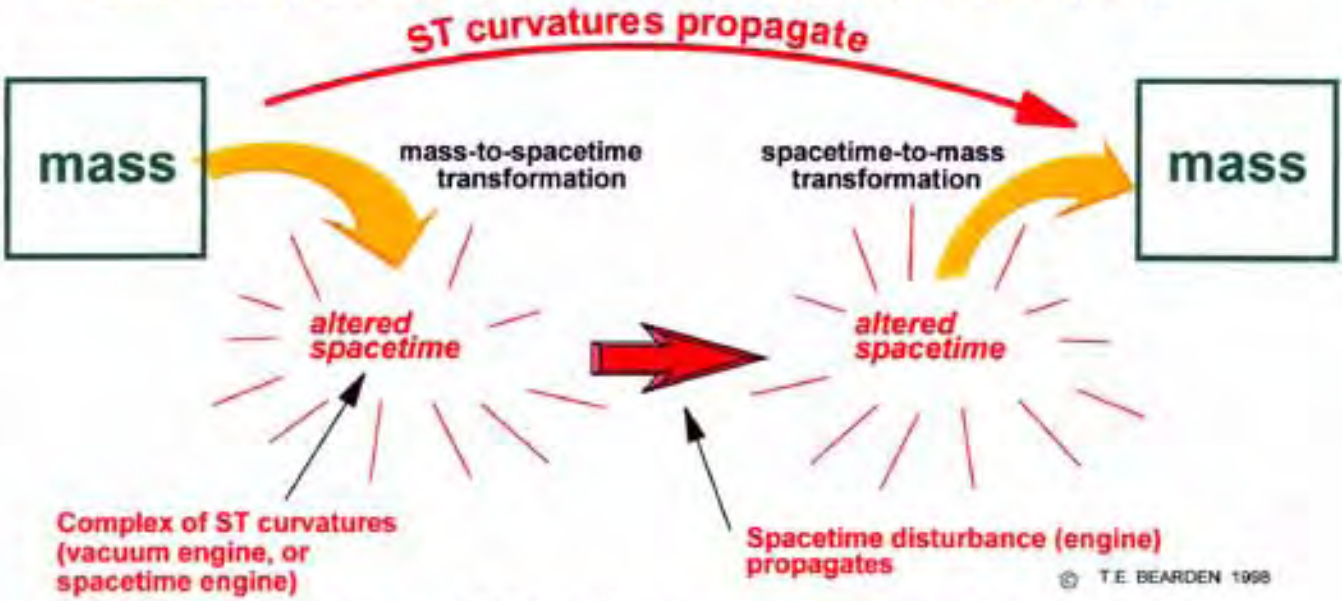

Electrodynamics has a hidden but ignored electro-general-relativity infolded inside (comprising) its so-called potentials, fields, and waves (in space in the absence of mass). What are presently defined as potentials, fields, and waves rigorously exist only in, on, and of charged mass, as pointed out by Aharonov and Bohm in 1959. All of this is just longitudinal EM waves and their interactions.

Return to Slide Index

Next Slide

Previous Slide

SIGNAL VERSUS VACUUM ENGINE

SIGNAL (INFO)

- INFORMATION RECEIVED
- ANY OVERT PHYSICAL ACTION MUST BE TAKEN BY RECEIVER

A. *Receiver must do the action itself; vacuum energy exchange is unaltered. Energy or fuel for doing the action must be added to receiver externally.*

© 1994, 1996, 1997 T.E. BEARDEN

Selected clipart© by Lotus SmartPics™

VACUUM ACTIVATED

ENGINE (STRUCTURE)
TEMPLATE (FORM)

- "INFORMATION" ITSELF ACTS
- VACUUM FLUX GRADIENTS CHANGE ALL PARTS AND CHARACTERISTICS OF RECEIVER, INSIDE AND OUT

B. *Receiver is acted upon; altered vacuum energy exchange does the specific action. No energy or fuel for doing the action need be added to receiver externally.*

[Return to Slide Index](#)

[Next Slide](#)

[Previous Slide](#)

Electronuclear Interactions by Vacuum Engines

- An EM potential is gravitational due to its trapped energy.
- A local EM potential is a local curvature of spacetime.
- *Structured* potentials are structured *(nested)* local spacetime curvatures; hidden variable theory applies.
- Structured potentials thus are *vacuum engines*.
- Gradient-free potential penetrates the atom, into nucleus.
- *With steady application, a structured gradient-free potential can be used to engineer the atomic nucleus at will.*
- Normal cold fusion systems structure a small fraction of their potentials, by chance geometries, boundaries, etc.
- This produces some new nuclides, but haphazardly.
- *The process can be developed and controlled. The nucleus can be deterministically engineered at will.*

© 1997 T.E. BEARDEN

Return to Slide Index

Next Slide

Previous Slide

Vacuum Engineering

Using Inner EM Energy and Structuring to Engineer Physical Reality

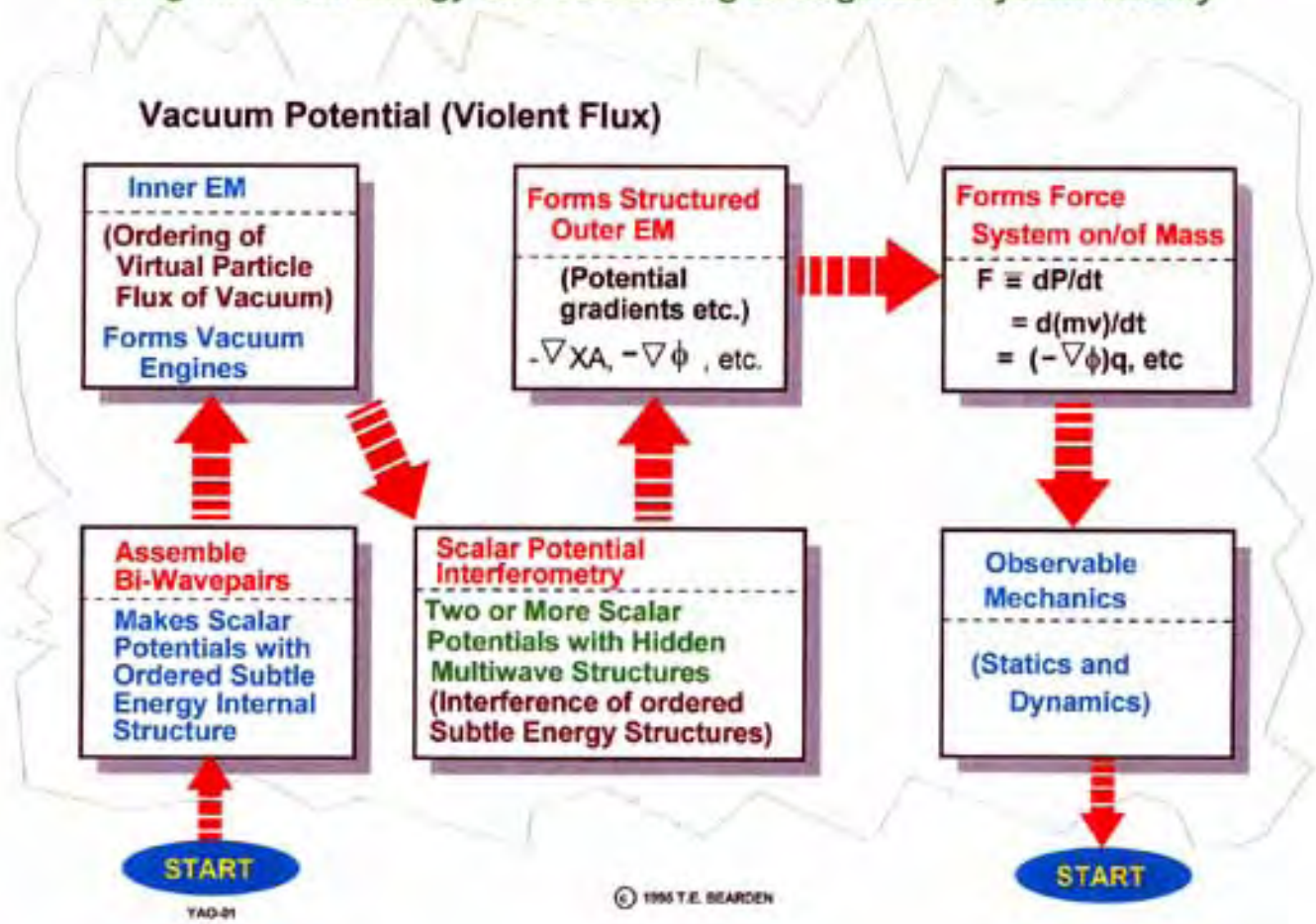

Return to Slide Index

Next Slide

Previous Slide

Impact of Vacuum Engineering

- "If they [quantum fluctuations of vacuum] can be [tapped], the impact upon our civilization will be incalculable. Oil, coal, nuclear, hydropower, would become obsolete -- and so would many of our worries about environmental pollution."
- "Don't sell your oil shares yet -- but don't be surprised if the world again witnesses the four stages of response to any new and revolutionary development:
  - 1. It's crazy!
  - 2. It may be possible -- so what?
  - 3. I said it was a good idea all along.
  - 4. I thought of it first."

© 1996 T.E. BEARDEN

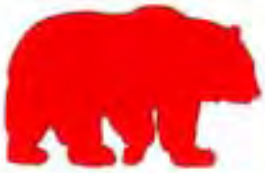

Arthur C. Clarke
"Space Drive: A Fantasy That Could Become Reality"
Nov./Dec. 1994

- *Comment:*
  - *Every dipole's broken symmetry in its energetic exchange with the vacuum already freely extracts vacuum energy.*
  - *In power sources, the dipole gates the extracted energy out as S = EXH, which flows almost entirely outside the conductors.*
  - The circuit interacts with, and uses, only about 10^{-13} of S. The electrodynamicists calculate only this small S-component.

Return to Slide Index

Next Slide

Previous Slide

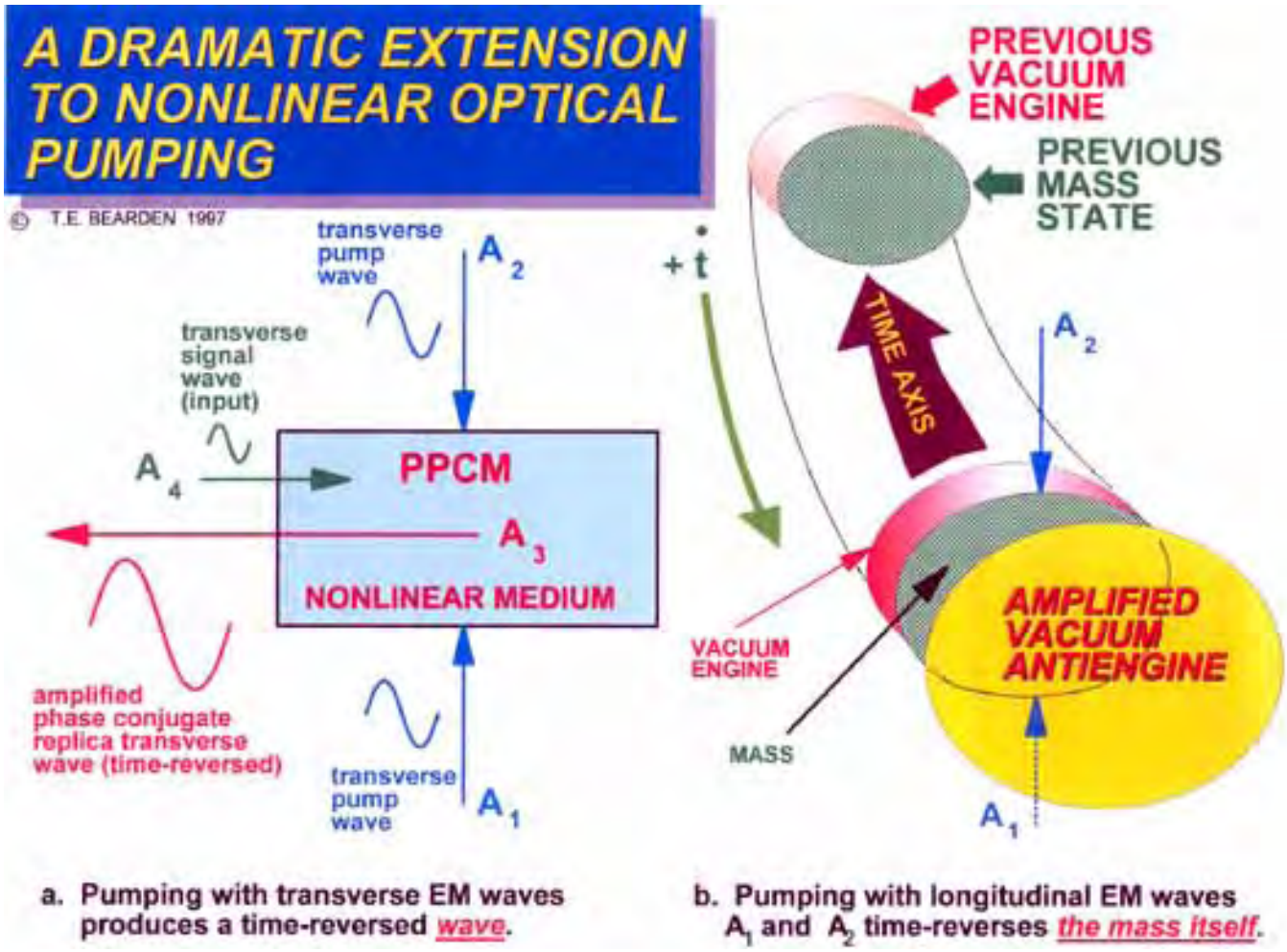

a. Pumping with transverse EM waves produces a time-reversed *wave*.

b. Pumping with longitudinal EM waves A_1 and A_2 time-reverses *the mass itself*.

[Return to Slide Index](#)

[Next Slide](#)

[Previous Slide](#)

Time Conservation and Some Properties

(Energy and time are canonical)

- Time can neither be created nor destroyed
  - *Its form can be changed, and it can be positive or negative*
  - *Time can be collected or dissipated, converged or diverged*
  - *Time can oscillate and move in waves*
  - *Longitudinal (infolded) EM waves oscillate time*
- Time is always in motion, and that motion is variable
  - *Collected/collecting time is a continuing stationary change in an ongoing time flow*
  - *Time/collecting time can be internested and internally structured*

© 1996 T.E. BEARDEN

- Time has gravitational aspects
  - *Negative (trapped) time is antigravitational*
  - *Emitting negative time is gravitational, to the emitter*
- Nonlinear optical pumping can use longitudinal EM waves
  - *Pumping a nonlinear mass by longitudinal (infolded) EM waves pumps it in its masstime form, in the time domain*
  - *This creates an amplified vacuum antiengine for the mass, and time-reverses the mass back to a previous state*

Return to Slide Index

Next Slide

Previous Slide

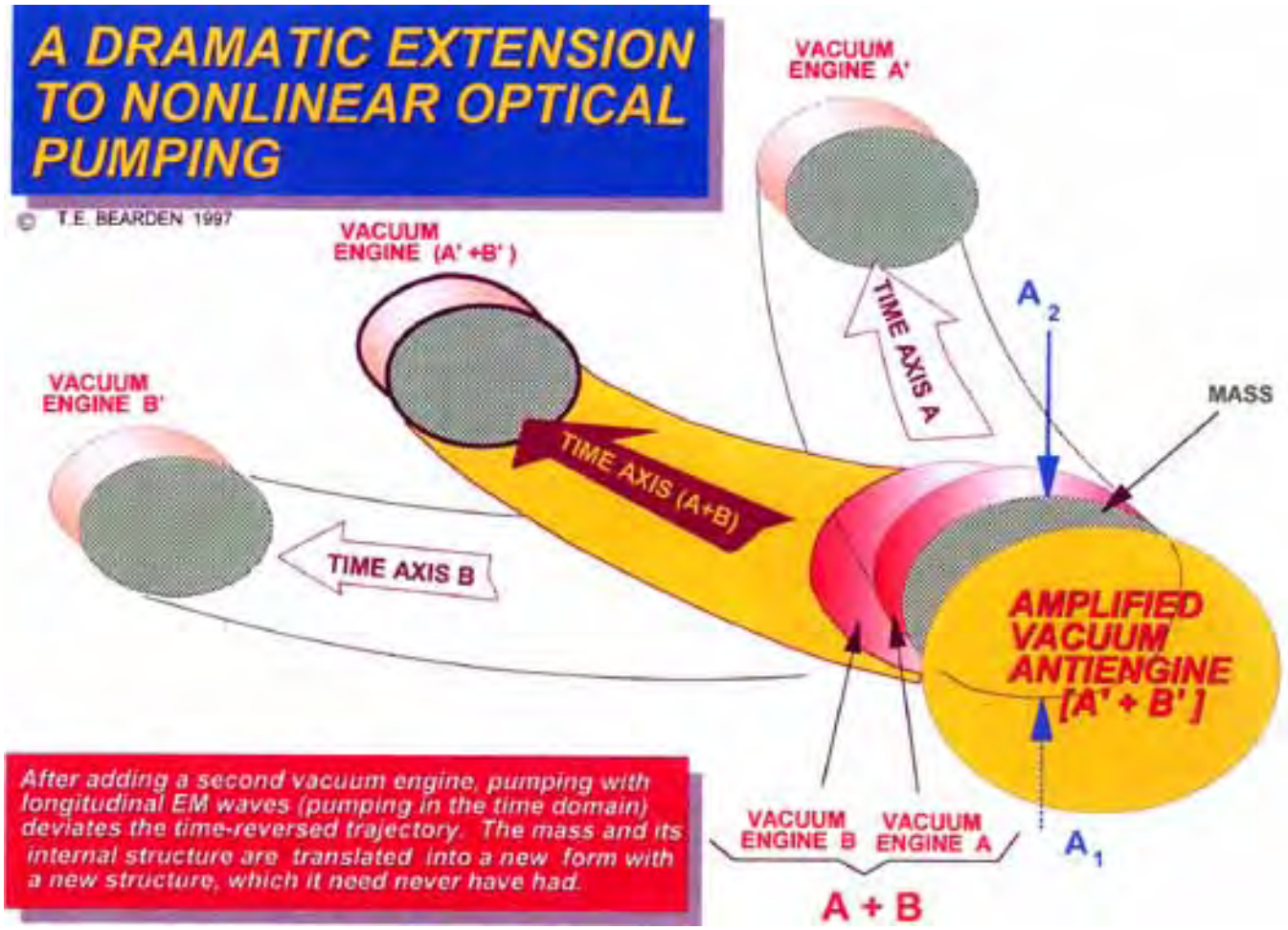

Return to Slide Index

Next Slide

Previous Slide

Key Points in the New Technology

- There is a vast new kind of electrodynamics *hidden inside* all EM potentials, fields, and waves
  - Longitudinal EM waves and complexes
  - Oscillations in time domain

- These complexes are an *infolded general relativity*
  - Clustered formations of *spacetime curvatures*
  - *Very powerful*, since the EM force is used as the agent of curvature

- In general relativity, similar precise complexes permeate and *act on any mass at all internal levels*
- With this approach, one *can now manipulate matter* -- living or inert -- *in any manner desired*, depending only on the level of development of the technology
- Priore unwittingly used this to *cure dread diseases*
- This is a *revolution in all of science*

© T.E. BEARDEN 1996

- *We have uncovered the major mechanisms* to utilize

Return to Slide Index

Next Slide

Previous Slide

Return to Slide Index

Next Slide

Previous Slide

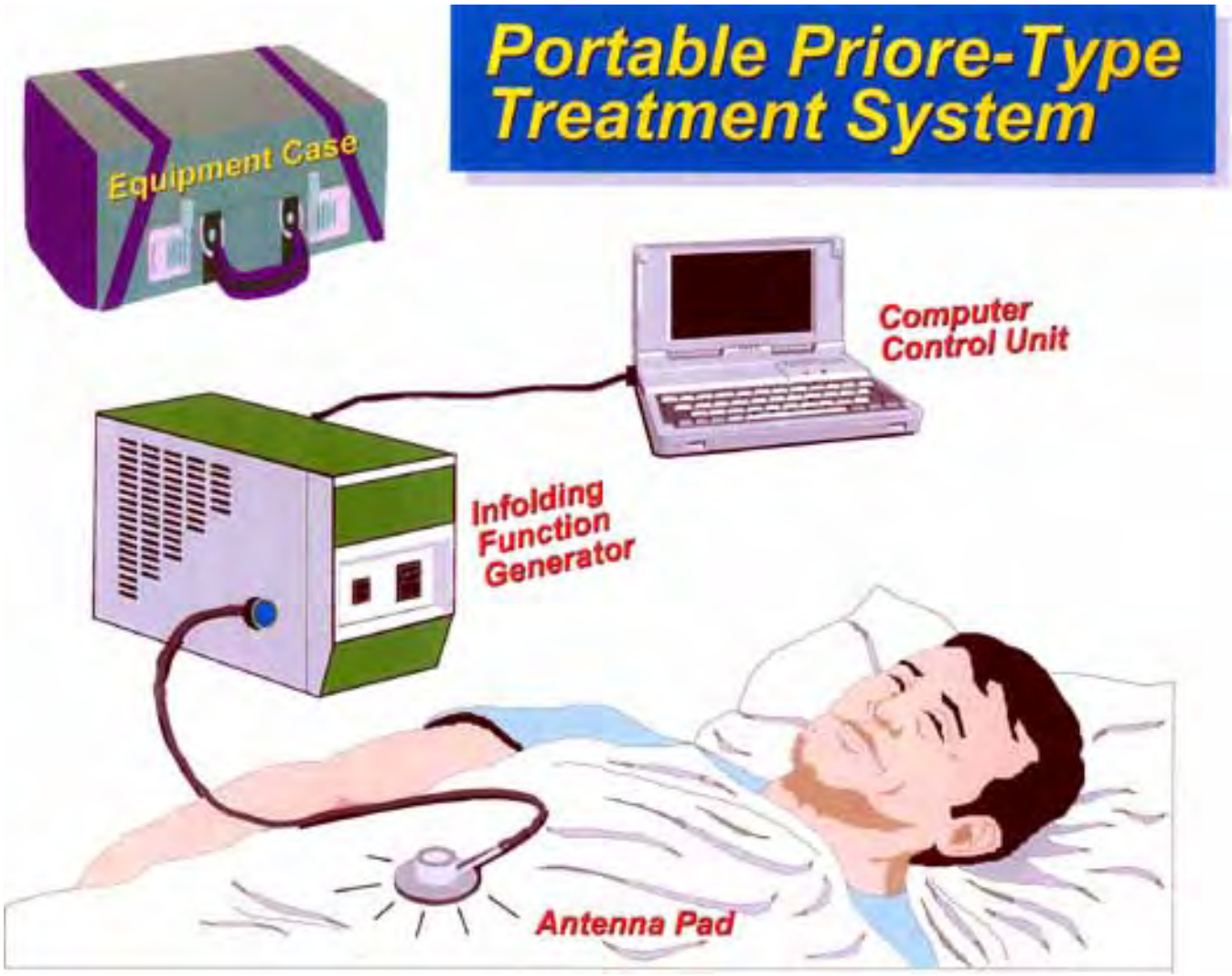

Return to Slide Index

Next Slide

Previous Slide

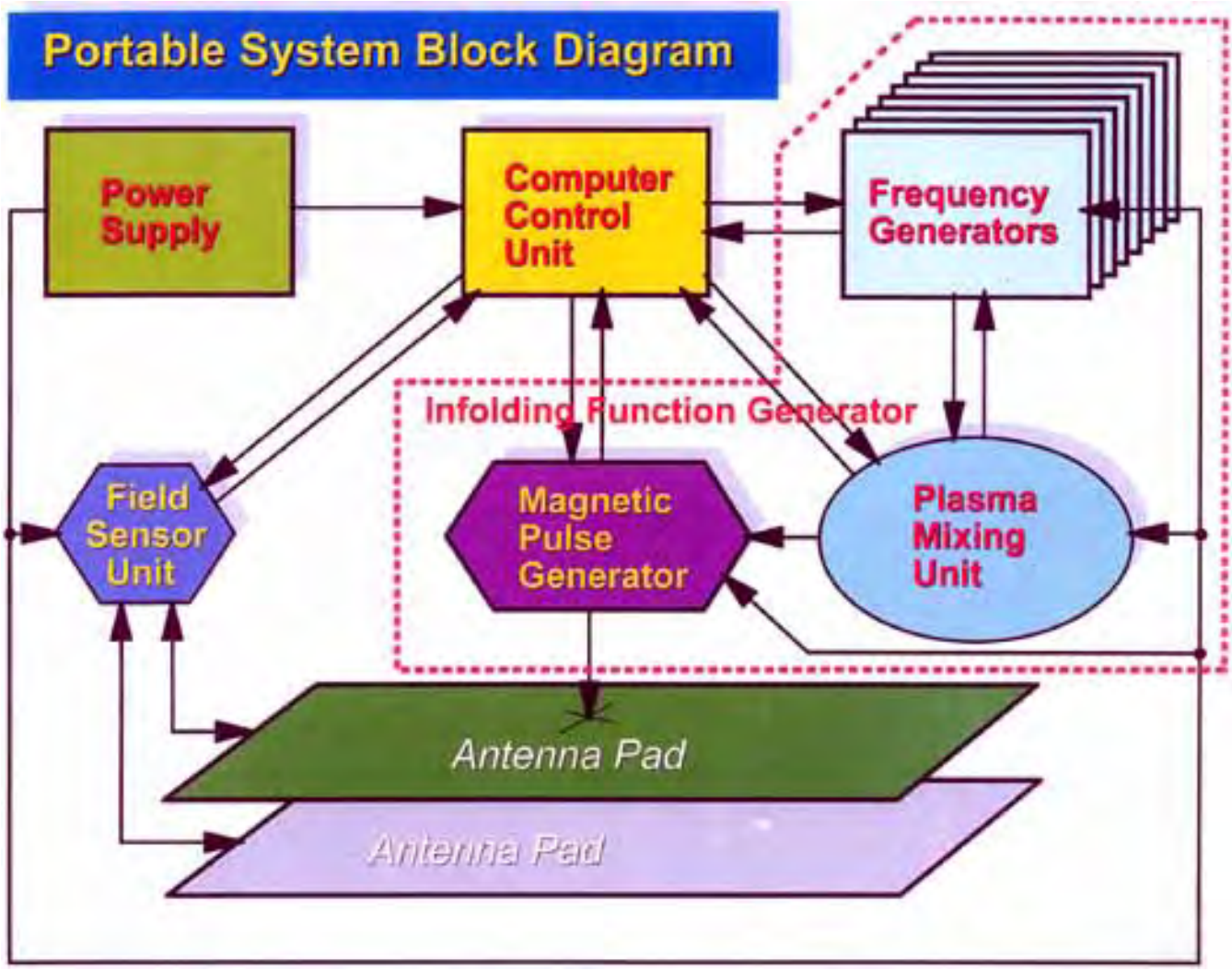

Return to Slide Index

Next Slide

Previous Slide

PORTABLE PRIORE TECHNOLOGY UNIT

- FACT: DISEASE-SPECIFIC VACUUM ENGINE PRESENT FOR ANY CELLULAR DISEASE, BY WHEELER'S PRINCIPLE
  - *DISEASE CAN BE REVERSED BY CREATING AMPLIFIED VACUUM ANTI-ENGINE (BEARDEN'S PRINCIPLE)*
  - *ANTI-ENGINE IS CREATED BY PUMPING THE NONLINEAR CELLS IN THE "INNER EM" DOMAIN, TIME-REVERSING THEM*

- PRIORE UTILIZED A PLASMA TO PHASE CONJUGATE AND "INFOLD" MULTIPLE BIDIRECTIONAL LONGITUDINAL EM PUMP WAVES
  - *17 FREQUENCIES MIXED IN A ROTATING PLASMA*
  - *PHASE CONJUGATES ADDED BY THE PLASMA*
  - *INFOLDED MIX INTO STRONG PULSED DC MAGNETIC FIELD, WHICH CARRIED IT INTO ATOMIC NUCLEI*
  - *PUMPED ALL NONLINEAR CELLULAR COMPONENTS TO PRODUCE AMPLIFIED, SPECIFIC VACUUM ANTI-ENGINE*

- NEGATED THE LONG-TERM CUMULATIVE CELLULAR DEDIFFERENTIATION ORDER GENERATED BY LONG-TERM HYPOXIA. TUMOR CELLS REVERTED TO NORMAL CELLS.
- SCRUBBED OUT THE CUMULATED PRECANCEROUS STATE
- RESTORED THE IMMUNE SYSTEM TO HIGH FUNCTIONING
- NO EXCESSIVE TRAUMA TO TREATED ANIMAL

CANCR-49

© 1994, 1996, 1999 T.E. BEARDEN

Return to Slide Index

Next Slide

Previous Slide

SAVING THE STRICKEN CIVILIANS

SURVIVORS OF N CASUALTIES

(N = 1-40 MILLION)

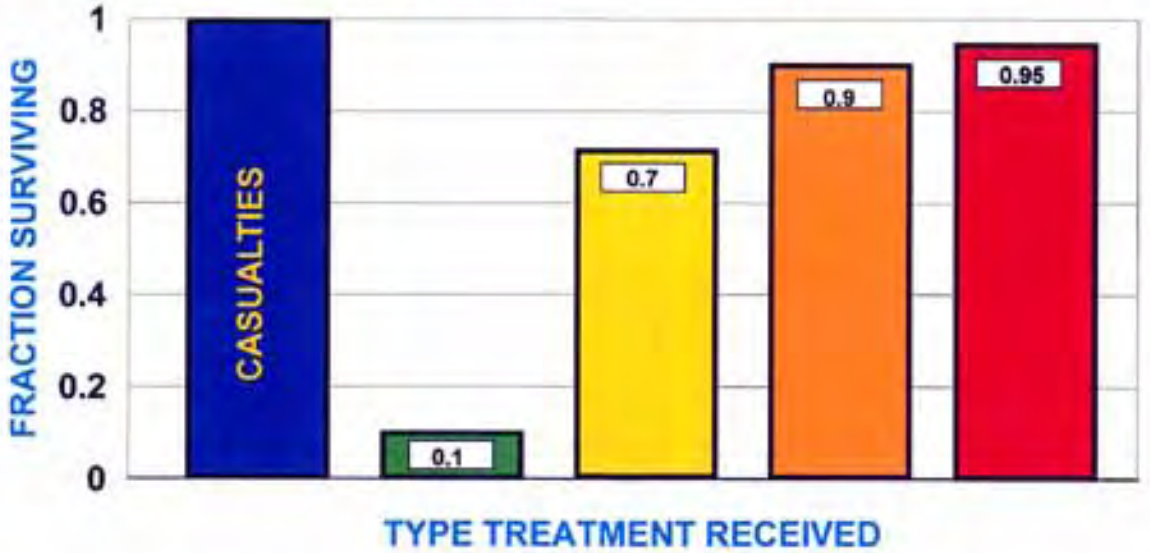

EXPRESSED IN FRACTION SURVIVING
- With conventional treatment
- With 1st generation P-treatment
- With 2nd generation P-treatment
- With 3rd generation P-treatment

Return to Slide Index

Next Slide

Previous Slide

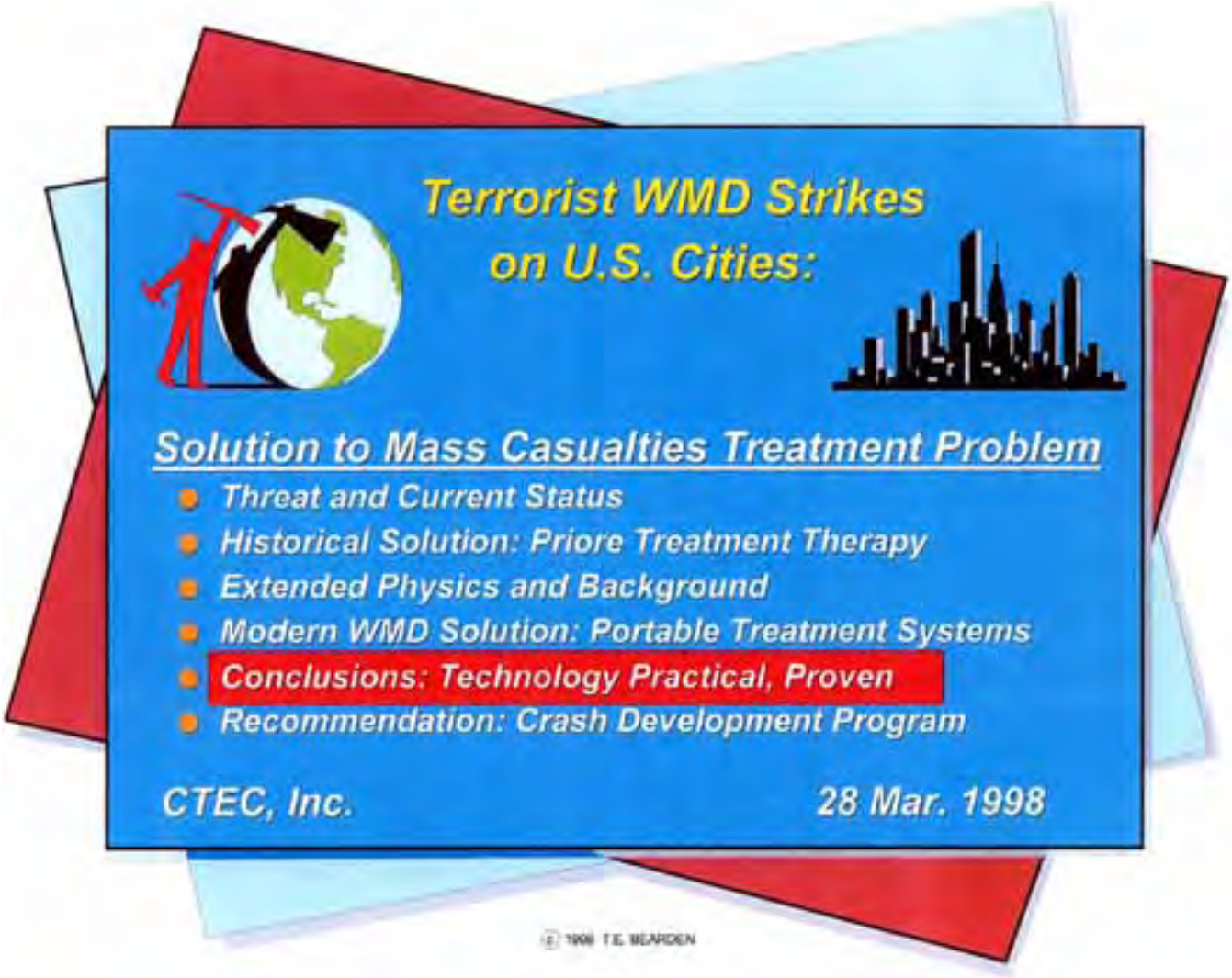

Return to Slide Index

Next Slide

Previous Slide

Summary and Conclusions

- **A new therapeutic paradigm of great scope and effectiveness has been developed**
  - *Will provide effective, quick treatment of mass casualties*
  - *Will provide cures for unknown agents*
  - *No pathogen strains are resistant to this process*
- **Results have been proven experimentally**
  - *Documented in French scientific literature*
  - *Rigorous scientific protocols, eminent scientists*
  - *Technical mechanism deciphered*
- **Will treat and cure many diseases**
  - *Aids, atheriosclerosis, cancer and leukemia*
  - *Sleeping sickness*

© 1993 T.E. Bearden

- **Portable units can be developed quickly**
  - *18-month crash development program required*
  - *high level authority and overwatch essential*
- ***Will solve the BW mass casualty treatment problem, both civilian and military***

Return to Slide Index

Next Slide

Previous Slide

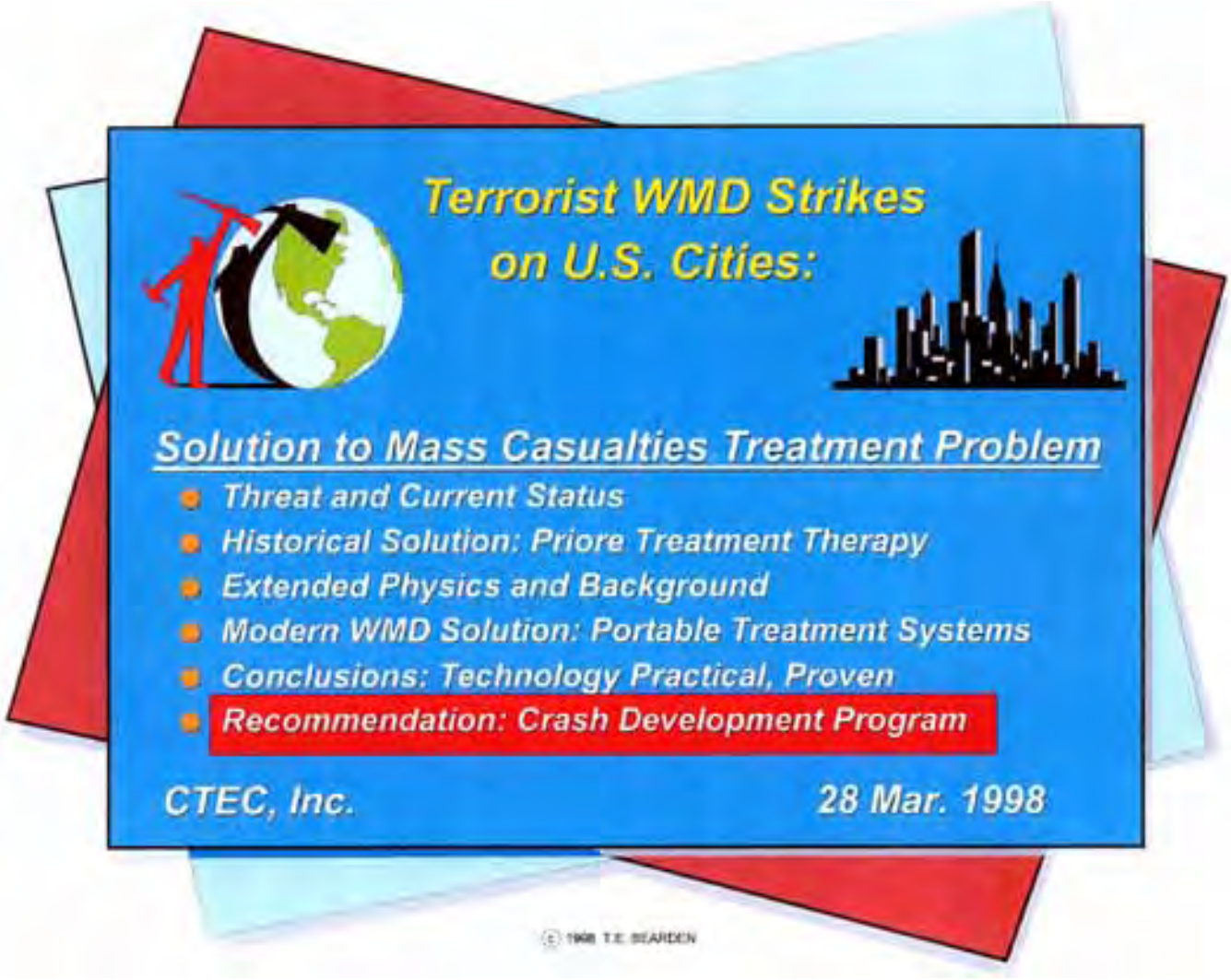

Return to Slide Index

Next Slide

Previous Slide

Recommend implementing:

- Crash development program
  - Suitcase-sized portable unit
  - 18-month Manhattan-type project
  - Simultaneous theoretical modeling, animal testing w/breadboard models
  - SecDef and Congressional overwatch
  - Presidential Decision Directive
- Parallel logistics support program
  - Plan high speed production lines
  - Mass distribution, storage, maintenance
  - User, maintenance training
  - Plan C4 and usage at all levels
  - Integrate firemen, police, National Guard, FEMA, medical facilities, etc.

Return to Slide Index

Next Slide

Previous Slide

Final Thoughts:

- The current internal BW threat can and will kill more Americans than all our previous wars combined
- The Priore technology is the only solution in sight that can save most of those casualties

Return to Slide Index

Previous Slide

CTEC, Inc.
2311 Big Cove Road
Huntsville, AL 35801
(256) 533-3682 Ph/
(256) 539-5951 Fax

CTEC, Inc.

June 24, 1998

Dr. Jane F. Kinsel, Director
Office of Policy Analysis
Department of Health & Human Services
Bathesda, MD 20892

Dear Dr. Kinsel:

Your letter of June 8 is appreciated. However, the entire action package had already gone to the Assistant SecDef and also to Major General Neary in the USAF.

The proof of a revolution in medical treatment was in the package. The basis for it is already demonstrated experimentally in the scientific literature, both in the U.S. and in France. We are speaking of something already proven, but missed by the entire U.S. medical community. Strong words, but true. Let me be specific.

Any cell in the body can be time-reversed (physics term) or dedifferentiated (biology term) back to an earlier state, by pumping (i.e., "squeezing" in simple terms) that cell with longitudinal EM waves as pump waves. There are considerable papers in the French scientific literature showing the experimental results.

Apply that to cancer. We are stating bluntly that all cancerous cells in the body can be "depromoted" back to normal cells easily. Further, the damage previously done to them (such as by sustained hypoxia due to contaminants reducing the oxygen-carrying ability normally given to it by some 60-to-80 surrounding water molecules per red cell and the consequent H-bonding interactions) will also be reversed. The cells can all be returned to healthy, normal cells again, without "killing" or "burning" or "cutting" anything.

With some development of the technology, you can quickly and easily cure every cancer patient in every hospital in the United States.

Now apply it to AIDS. Since you can time-reverse every cell in the body, you can time-reverse the HIV-infected cells – genetics and all – right back to normal cells with normal genetics. Those cells not infected and healthy, will just get a "little younger" again.

So with that small development, you can quickly and easily cure every AIDS patient in every hospital in the United States.

I would have thought that NIH would certainly be interested in such a revolutionary therapy which has already been demonstrated in laboratory experiments. World-renowned French scientists – such as the eminent parasitologist Pautrizel and research PhDs assigned directly by Robert Courrier, head of the Biology Section of the French Academy of Sciences, worked with Prioré in performing those startling experiments that proved what we are saying.

The method was rigorously shown to cure infectious diseases (such as trypanosomiasis), atherosclerosis (which now afflicts millions of Americans), and terminal tumors. It was shown to reverse suppressed immune systems back to normal vigorous functioning.

Please permit me to disagree with you that the examination of such is not the mission of the NIH. To the contrary, it is precisely the NIH which should have some of its very best scientists looking into this.

The action package to DoD was to propose a crash program to develop this methodology in the form of a small, portable unit for treatment of mass casualties resulting from a terrorist BW attack on our cities (now expected in the next few weeks, as you must be aware). The leading Arab terrorist of the world has already promised just this.

We are speaking of several million Americans who are going to die. They are going to die in spite of everything that NIH and its labs can do, even though I know you will make a heroic effort. With NIH present methods, you cannot do very much for those stricken Americans at all. Everything we have in the "normal" kit bag is almost useless against a knowledgeable spray attack of modified smallpox (as you know, the Russian secret BW labs have made and sold tons of that already, to guess who!). Or a spray of tularemia (you are well aware of the extreme lethality of that), or anthrax (easily obtained). It is also common knowledge that these terrorist teams with their BW agents are already on site in this country, waiting for the word to attack. This has now been officially raised to our primary Strategic Threat.

In the face of such looming strikes on the U.S., I simply cannot believe that the NIH does not feel it within their mission to rigorously check out a proposed method for saving perhaps 70% of those coming deaths (first generation equipment), and up to 90% with second generation equipment.

Perhaps you just did not read the package carefully. I urge you to do so.

Else NIH is going to look very, very bad when (1) the strikes do occur, (2) they can't handle them (and they cannot, as you well know), (3) they had within their hands in advance, a proposed methodology that could have been investigated intensely, to save millions of those stricken Americans.

As a staunch supporter of NIH and especially CDC, I have to believe that there is a different attitude there. If NIH is not interested in a previously experimentally demonstrated method of saving millions of Americans, then the only recourse left is the political channel.

I assure you that my critique of electrodynamics is well-founded, as supported by various leading physicists such as Nobelist Feynman (who stated bluntly that the field concept is wrong), Wheeler, Bunge, and so on. It is inexplicable why all our universities are still teaching a 130 year old abridged (Heaviside's) subset of Maxwell's theory, and one that still contains a material ether even though that was falsified 110 years ago!

You already have seen the misuse of this technology by the Russians, in the decades-long radiation of the U.S. Embassy in Moscow. Is it not NIH's mission to understand how they generated all those diseases and health changes? Have you ever looked into Kaznacheyev's experiments showing that ANY cellular disease or disorder can be induced in cells at a distance by purely EM means? Have you looked into what got eliminated from electrodynamics by ignoring the hidden longitudinal EM inside every potential, field, and wave? Do you realize what ignoring that has done to American chemistry, biochemistry, and medical science?"

I would hope that the NIH would at least be interested in its own mission area!

I challenge you bluntly to admit that no one presently understands the primary operation of the human cellular *regenerative* system. That's because its technical principle is not presently in our recognized physics, biochemistry, and medical science – even though it has been in the hard physics literature since 1903-4. Becker's epochal work came closest; since he only had access to the conventional EM model, it failed him. But he at least showed you rigorously that cells can be changed (both differentiated and redifferentiated) all over the map by laughably weak EM – picoamperes of current, which means persistent DC potentials. In the microwave radiation of the U.S. Embassy, all the health changes occurred in regions absent of fields – i.e., absent of bleed-off of the potentials. Hence in regions of stable DC potentials! With 100% correlation of the health changes to persistent, gradient free potentials, and 100% anticorrelation to changing potentials (i.e., fields), our own scientists concluded totally erroneously that it could not have been the EM radiation causing the changes, when their own results had just proven that it was.

Now I ask you: Can NIH explain how it was that the DC potentials caused those health changes? I think not. If it could, it would understand the action package I wrote, and its importance.

This is not a "political" letter. I'm just an ordinary American citizen who has done about 30 years very hard work on this particular area. The work is good enough now to stand on its own merits. The scientific community will eventually accept it, about 50 years from now. But we cannot wait 50 years! Those millions of Americans are going to die, because of the bureaucracy and inaction of our own scientific organizations. Whether they like it or not, the U.S. scientific community is now the forefront of the struggle for this nation to survive. And they are failing us dramatically.

So as a parent who wants his children to live, and his neighbors' children to live, and those millions of soon-to-be stricken Americans to live also, I urge you to at least have someone competent in physics (and knowledgeable that the foundations of physics itself are in woeful shape!) check the work. Has anybody there *read* any of the references to the Prioré work I cited? Does anyone there realize that *there are no EM forcefields in space?* Probably not.

Dr. Kinsel, there is a time for "business as usual" and there is a time to do some serious new work. Those stricken Americans are going to be lying there. Nothing NIH can do is going to stop that. That's a given, and it is not my own estimate. It's the official estimate. And you *know* you presently do not have the tools to do anything really effective about it.

Frankly, I interpret your letter to me as just the normal "spin control" for easy disposition. I would hope that NIH would seriously rethink the situation, get off the "spin control" and "business as usual" posturing, and do something dramatically different for a change.

What have you got to lose? A little time from perhaps two or three of your best scientists.

What have you got to gain? Saving untold millions of American lives. A new, *already partially demonstrated* cure for most dread diseases such as AIDS and cancer – diseases which you presently cannot do very much about in spite of decades of heroic struggle.

Sincerely,

cc: Senator Shelby, Congr. Cramer

T.E. Bearden
President and CEO

CTEC, Inc.
T.E. Bearden, President & CEO
2311 Big Cove Road
Huntsville, AL 35801-1351
(256)533-3682 ph/(256)536-0411 Fax

CTEC, Inc.

May 12, 1998

Dr. Harold Varmus, Director
National Institute of Health
Bathesda, MD 20892
(301) 496-1766

Dear Dr Varmus:

We have recently sent action documents to the Director of Nuclear and Counterproliferation, Office of the DCS, Air and Space Operations, HQ USAF and to the DoD (General Busbee) Assistant Secretary of Defense, as well as several Senate and House committees, which may be of interest to you. For one thing, we give the technical mechanism used to generate the Gulf War Syndrome. The same weaponry is now being used to rapidly induce new strains of certain pathogens worldwide. I urge you to closely read that section of the letter to MG Neary which explains the GWS, why the French did not get it, and why Southern Iraqis got an increase in cancer and leukemia but not GWS. Also explained is how the "microwave radiation" of the U.S. Embassy in Moscow induced diseases for decades, and how we failed to comprehend it because the standard EM model deceived us.

There is a way to treat and quickly cure most diseases, including the mass casualties resulting from a terrorist BW strike on our civilian population centers, our military bases, or our forces in the field. The method is little known, but was scientifically demonstrated in France in the 1960s and early 1970s before cancellation of the Prioré Project when the French Government changed. Eminent French scientists worked on the project, and the results are fully documented in leading French scientific journals. References are listed in a separate attachment.

Previously the Western scientific community has been unable to understand the technical mechanism responsible for such remarkable cures, because of serious foundations flaws in Western physics and electrodynamics. *Foundations* physicists have long been aware our science is flawed, and have pointed out many of these fundamental errors. However, the operational science establishment has not paid attention, even though physicists such as Feynman and Wheeler pointed out that the notion of "force fields in space" was totally wrong.

As a primary example, there is an "infolded" electrodynamics inside all potentials, fields, and waves that is far more primary than the coarse EM that is in our textbooks. It is actually an infolded general relativity, and this is what the Russians have weaponized. This infolded EM-GR has been ignored in the West (but not in Russia) since 1903.

As another example the potentials, fields, and waves of present electrodynamics are rigorously defined – and exist – only in the presence of mass. They do not exist in such form (force fields and oscillating force fields) at all in space, in the absence of mass. Rigorously, Maxwell's equations are mass-to-mass transforms, since Maxwell and everyone at the time assumed the ubiquitous presence of the material ether. In other words, to the founding electrodynamicists, there was no place in all the universe that was devoid of mass. Hence they defined all EM entities as entities containing mass. Even though Michelson-Morley experiments of more than a century ago destroyed that material ether, not a single Maxwellian equation has ever been changed! They still assume the material ether.

Specifically missing from our electrodynamics are two essential transforms: (1) the mass-to-spacetime transform, and (2) the spacetime-to-mass transform. In other words, these two transforms are "infolded" or hidden inside (comprise) the end point extremum case – the mass-to-mass transform actually written by Maxwell.

But these two missing transforms are just general relativity (they correspond precisely to Wheeler's principle of general relativity). So general relativity has always been infolded inside electrodynamics as we know it, but ignored. Further, this is a very powerful general relativity, since it uses the very strong EM force as the agent of spacetime curvature. Hence now one can engineer a powerful general relativity in the laboratory and in practical devices, and even action-at-a-distance, which one cannot do using merely the staid and weak G-force.

It turns out that longitudinal EM waves as shown by E.T. Whittaker in 1903 and 1904 are far more primary than our present EM theory and even our present GR theory. Both EM and GR are directly engineerable using longitudinal EM waves, including subluminal and superluminal EM waves in vacuum, and including action at a distance. One can engineer complexes of spacetime curvatures as desired, which in turn are *spacetime engines* (Wheeler's term). These engines can act upon mass – either living or inert – in any fashion desired, and at any distance desired.

The little-known and poorly understood Regeneration & Recovery (R&R) system – as contrasted to the immune system – utilizes this exact "spacetime engine" methodology to restore damaged or diseased cells, within its limitations – "dedifferentiating" or "time-reversing" them back to normal. The mechanism is fully explained in the attached package. The proposed program applies this fundamental method to greatly amplify the effect. Thus cancer cells can be reversed back to normal cells, HIV-infected cells (HIV-factories) can be reversed back to normal cells (genetics and all), etc. This represents a dramatic and unparalleled new medical therapeutic methodology of extreme power. The same techniques can simply be conjugated one additional time, and used to produce diseases and cellular changes at a distance, including in entire mass populations, as the KGB is doing right now. Specifically, by impressing an extremely weak "cocktail mix" of disease spacetime engines on the U.S. populace, the immune systems are reacting and being "spread thin" across several "shadow state" infectious pathogenic conditions. Thus when an actual terrorist BW attack occurs, the lethality of the strike will be remarkably enhanced because the immune systems will be "thinned" in their ability to fend off this new pathogen. By doing it this way, BW warfare can actually be conducted upon the U.S. without anyone being the wiser.

Our very survival as a nation is threatened by remarkable KGB weapons using this fully documented, extended electrodynamics. Bluntly, unless we take off our scientific blinders and understand Russian energetics weapon science, GWS and the Embassy health changes in Moscow were just a picnic before what is upon us. After two decades of work on the KGB energetics weapon problem, we have fully deciphered the technical mechanisms and what energetics is, as well as citing many of the Russian weapon tests and how they were done. Again, you can see that for yourself in the package.

Now that we understand the technical mechanisms, we are proposing rapid redevelopment of the Prioré process, in portable suitcase-sized units to be mass produced and filtered down into the entire emergency community for mass treatment of lethal infectious diseases resulting from BW strikes. And we are strongly urging the U.S. scientific community to quickly investigate and come to grips with this vast new *biological engineering* mechanism. Our very survival depends on it.

The inclosed documents provide an overview of the process. There is nothing else on the scientific horizon that can save the majority of all those stricken Americans, once the first foreign-sponsored terrorist teams strike our population centers with BW agents.

Sincerely,

Incls: Full package with table of contents

T.E. Bearden
President & CEO

The Tom Bearden Website

Life Systems
Toward the Beginning of the End

---

1. Toward the Beginning of the End: Capstone Presentations
2. Toward the Beginning of the End
3. Biospheric Evolution
4. A Living Biological System
5. The Evolutionary Path of Multicellular Organisms
6. To Paraphrase Churchill
7. Directed Evolution: Mechanism for Species Reactive Adaptation
8. Earth's Poynting Energy Flow
9. The Immune System
10. Mind and Matter Interaction
11. Levels of Consciousness and Unconsciousness
12. Access to Mind, Memory and Thought
13. US Intelligence Statement on Soviet Psi Research
14. Mind and Matter Interaction
15. Conscious and Unconscious Minds
16. Velocity is Rotation
17. Species Reactive Adaptation: Directed Evolution
18. Technology's Goal
19. Technology's End
20. Technological Species' Problems

The Tom Bearden Website

Briefings

One of Tom's first public lectures: World Futures Society 1982
Other panelists included James Beale, Carol Rosin, Barbara Marx Hubbard and Glenn Doman

---

The "Porthole" Concept
Extension of the Priore Method of Healing as applicable to the treatment of biological warfare effects and cellular afflictions such as cancers, AIDS etc.
NEW

Hubbert's Peak: The Impending Oil Crisis, by Professor Kenneth S. Deffeyes
Book Review and Slides

A National Report on America's Energy Crisis
by Energy Secretary Spencer Abraham - March 19, 2001

Commentary and Slide Show (66) by Tom Bearden

A Visual Tour of what they don't want you to know about electrical circuits
10 Trillion Percent of the Current Produced is Wasted!

Weapons Slides

The Missing Infolded Electrodynamics
85 slides

A Brief Technical Background to the Extended Priore Healing Methodology
11 slides

Briefing sent by Tom Bearden to Defense Department, National Institute of Health, USAF, National Science Foundation etc. re extended and improved Priore Treatment to counter mass casualties from Biological Warfare

- Letter to DHHS re adoption of Priore technology
  24 June, 1998
- Letter to NIH re adoption of Priore technology
  12 May, 1998

Towards the Beginning of the End - Lecture in Florida for Capstone Presentations, Sept. 1998

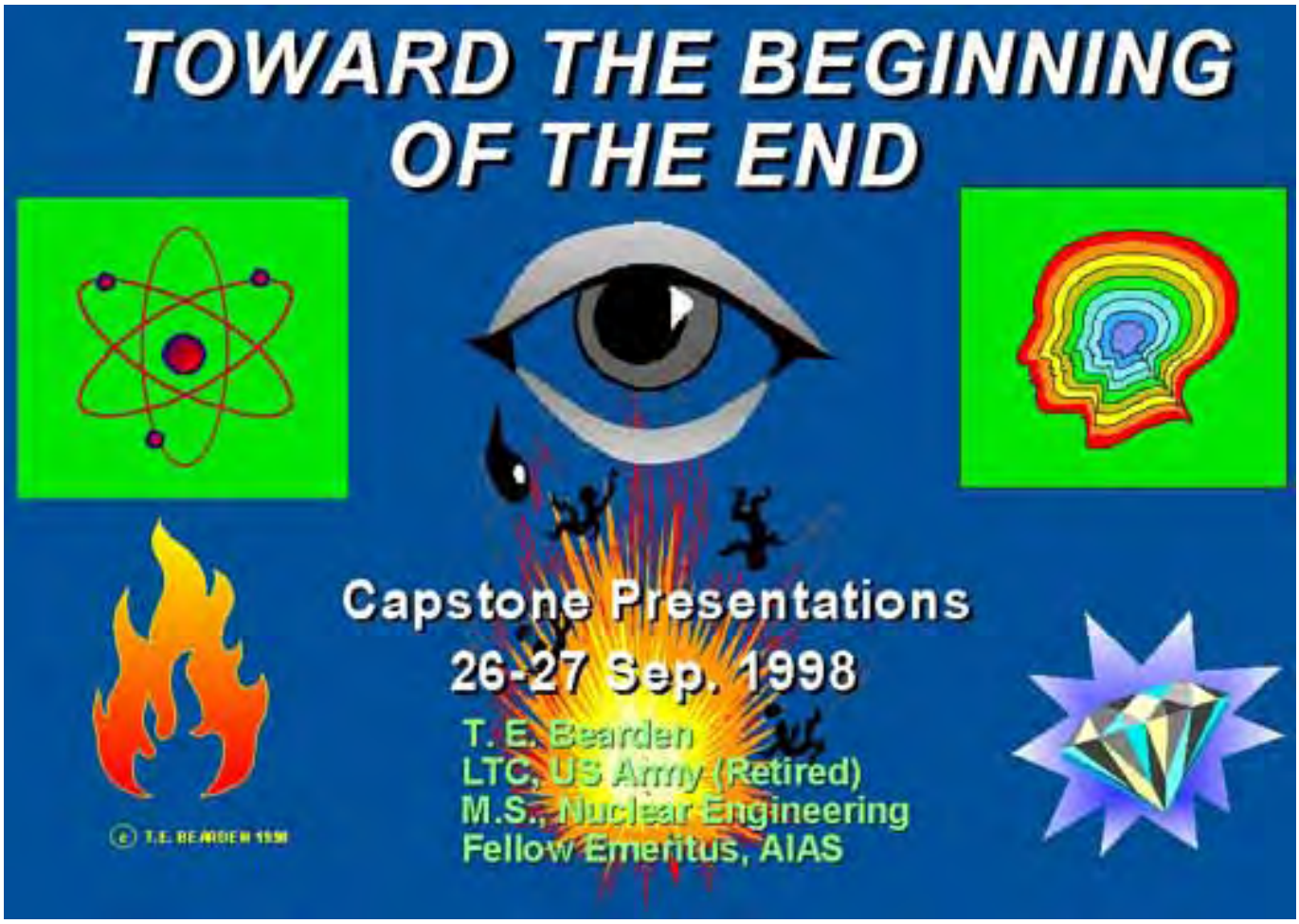

Return to Slide Index

Next Slide

Previous Slide

Return to Slide Index

Next Slide

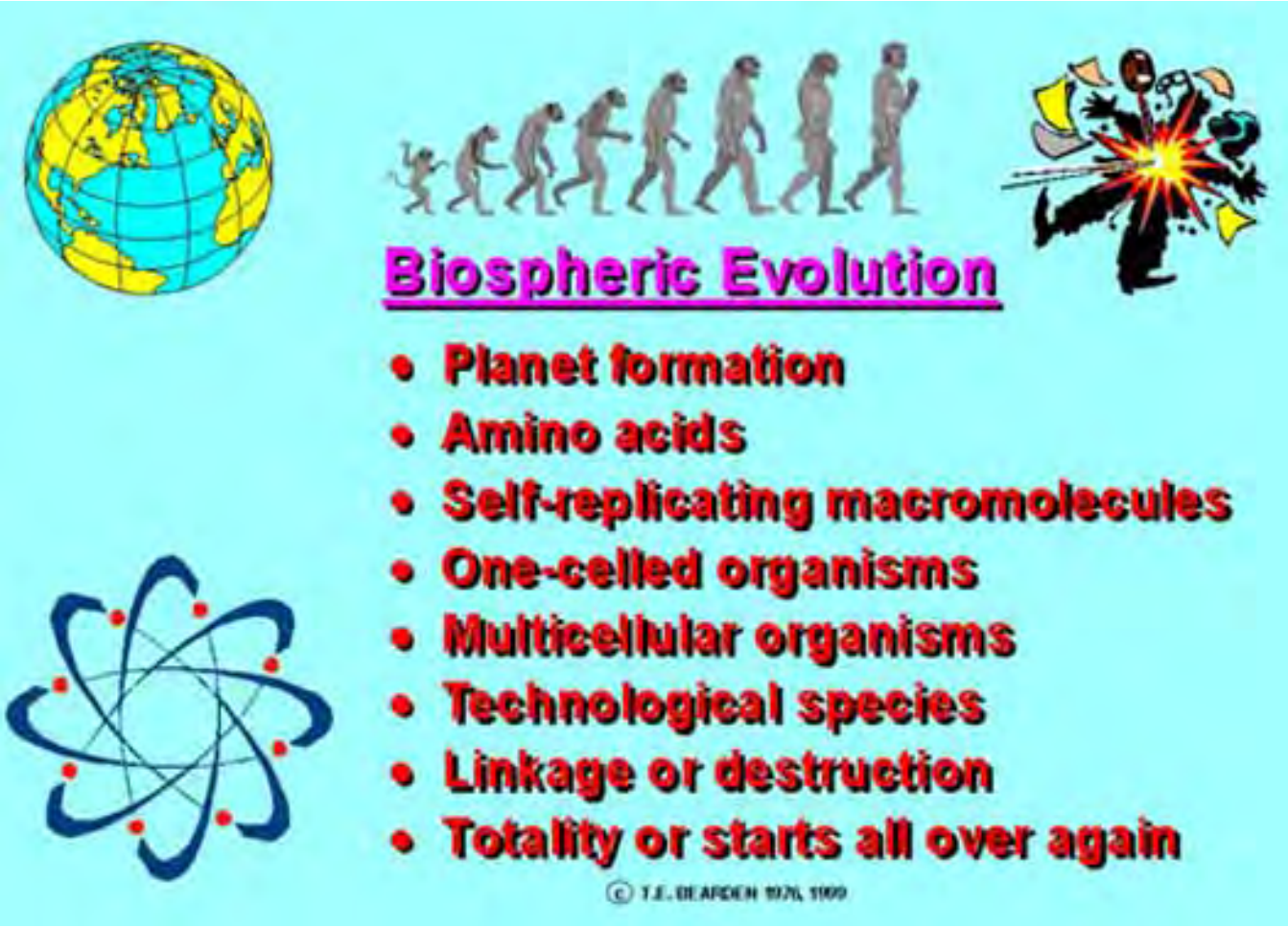

Return to Slide Index

Next Slide

Previous Slide

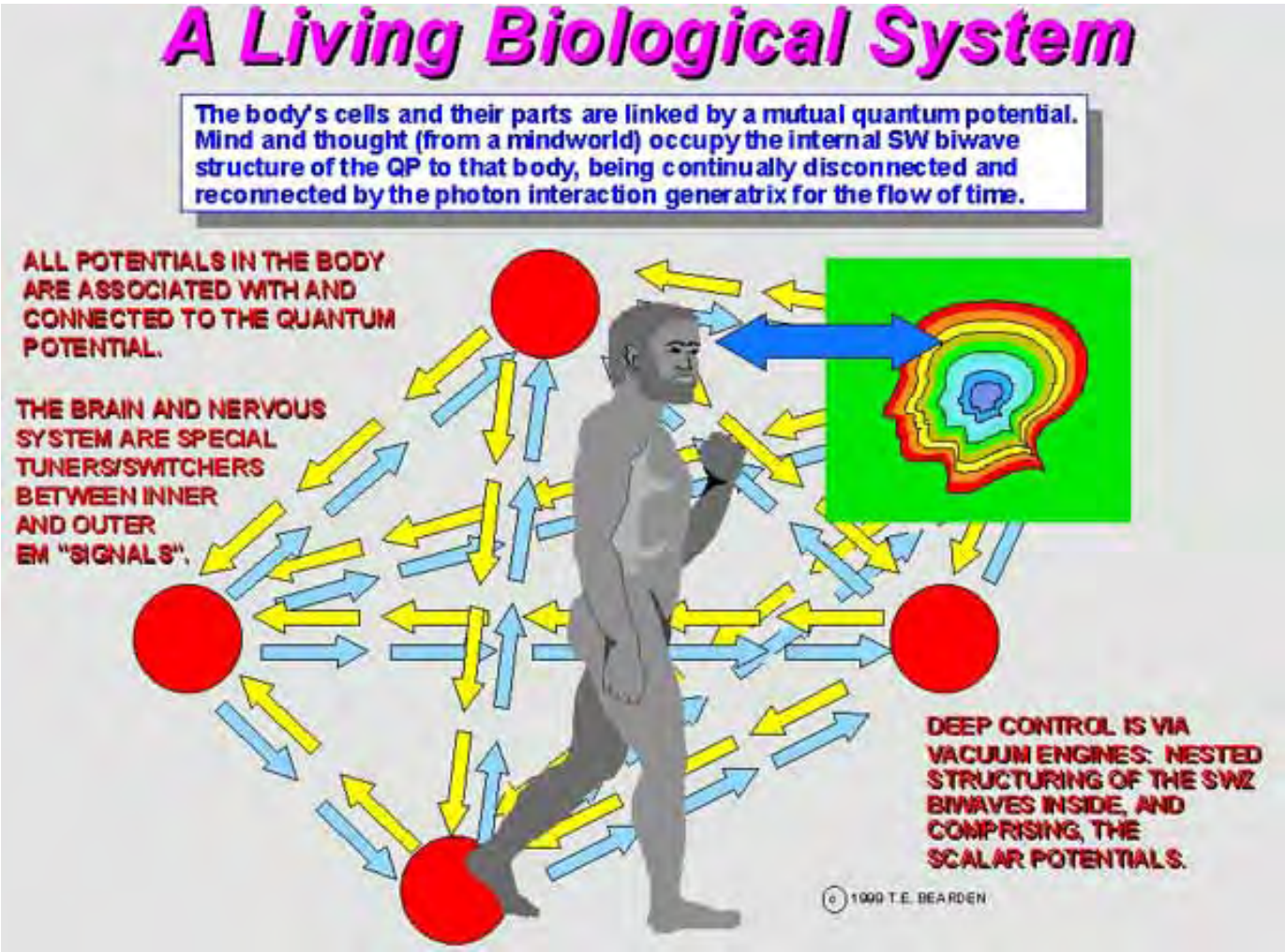

Return to Slide Index

Next Slide

Previous Slide

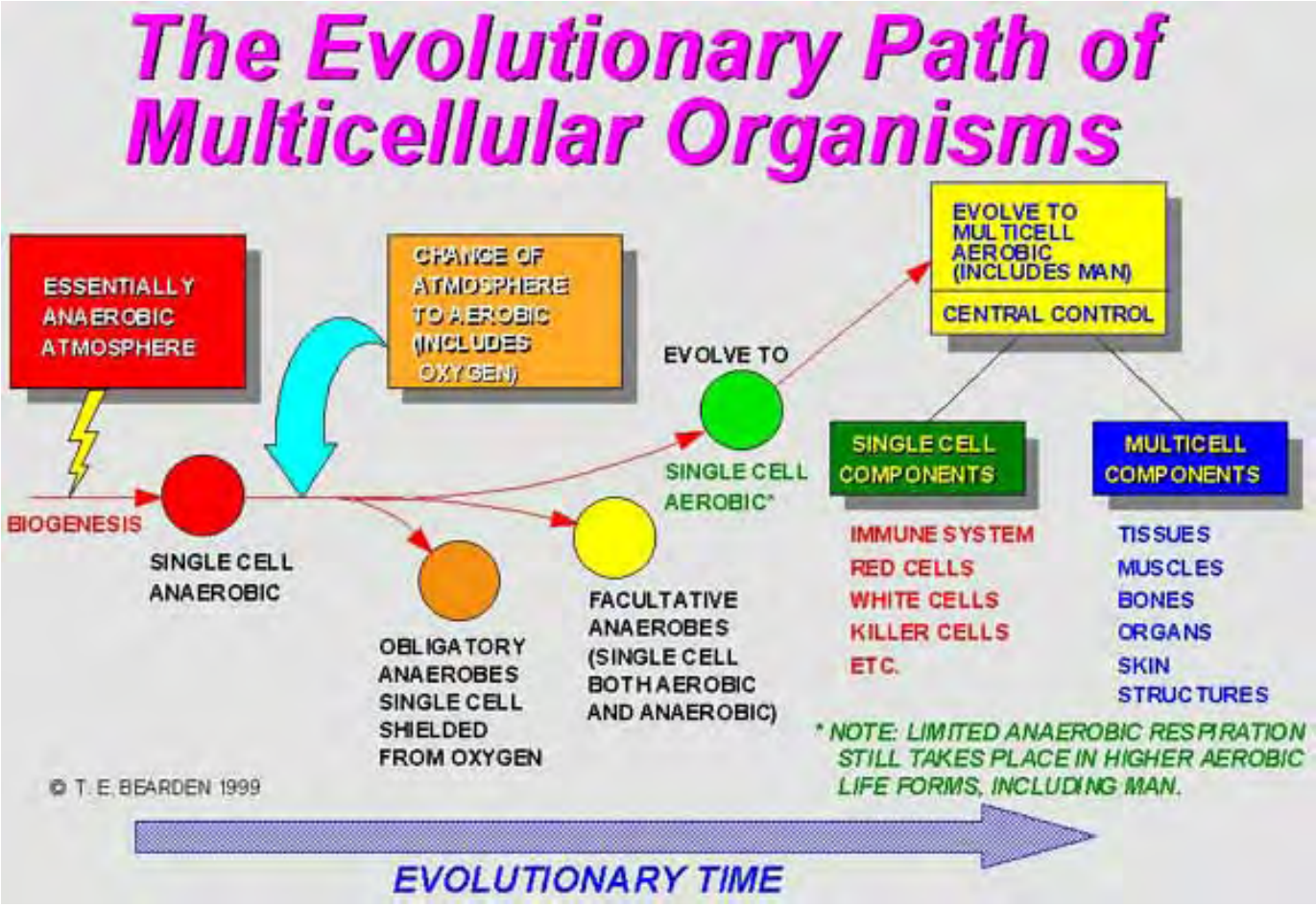

Return to Slide Index

Next Slide

Previous Slide

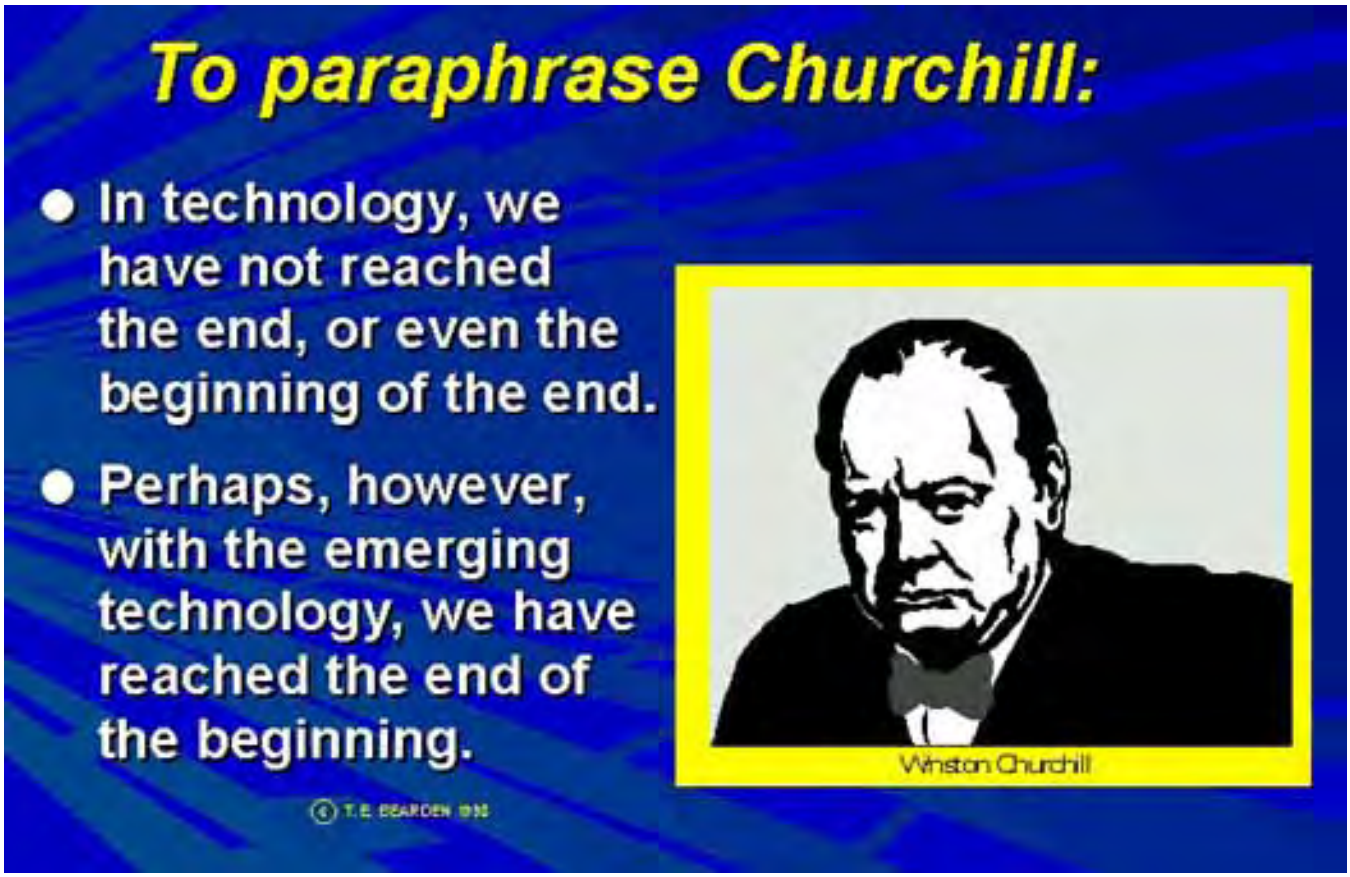

Return to Slide Index

Next Slide

Previous Slide

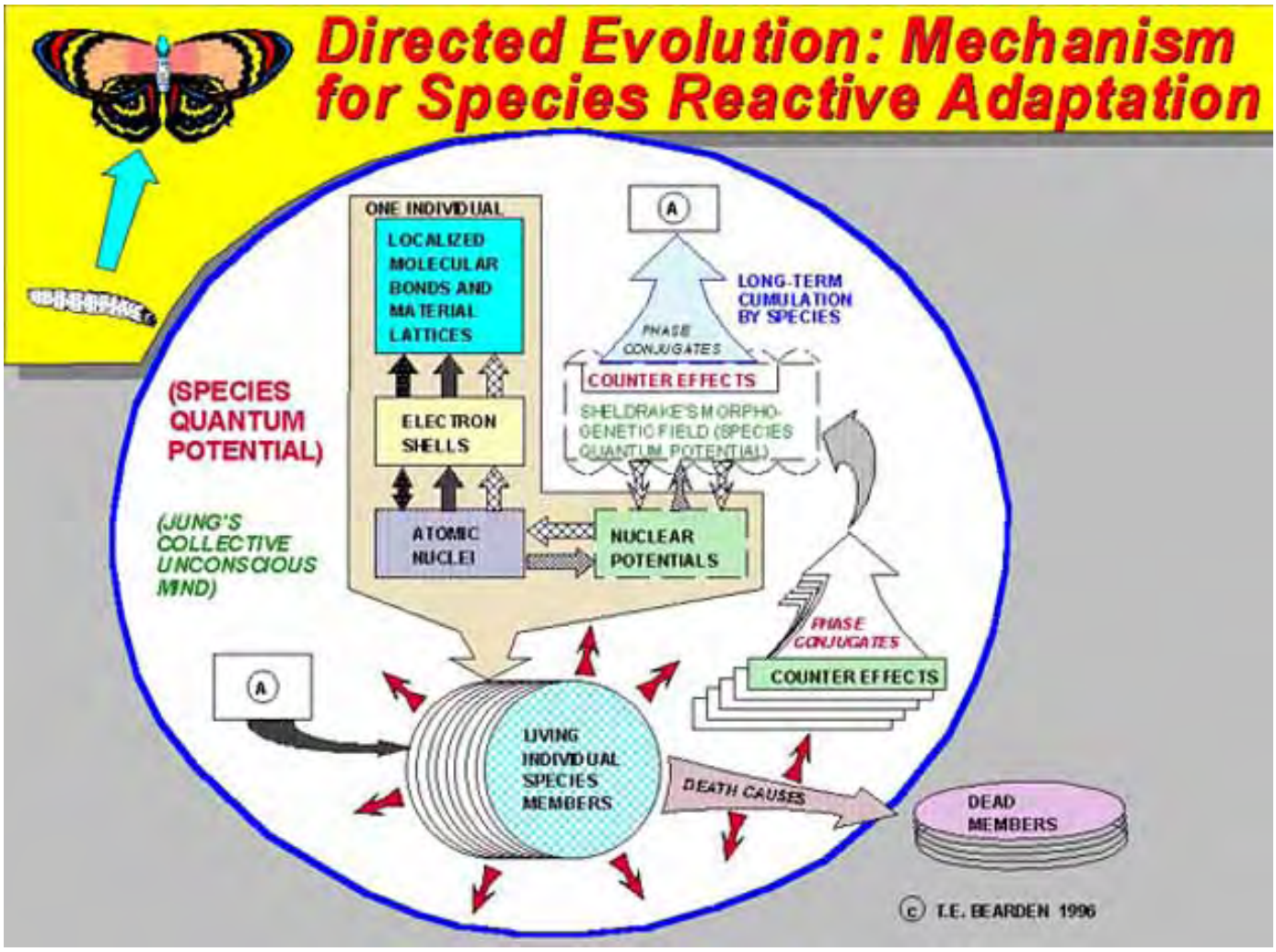

Return to Slide Index

Next Slide

Previous Slide

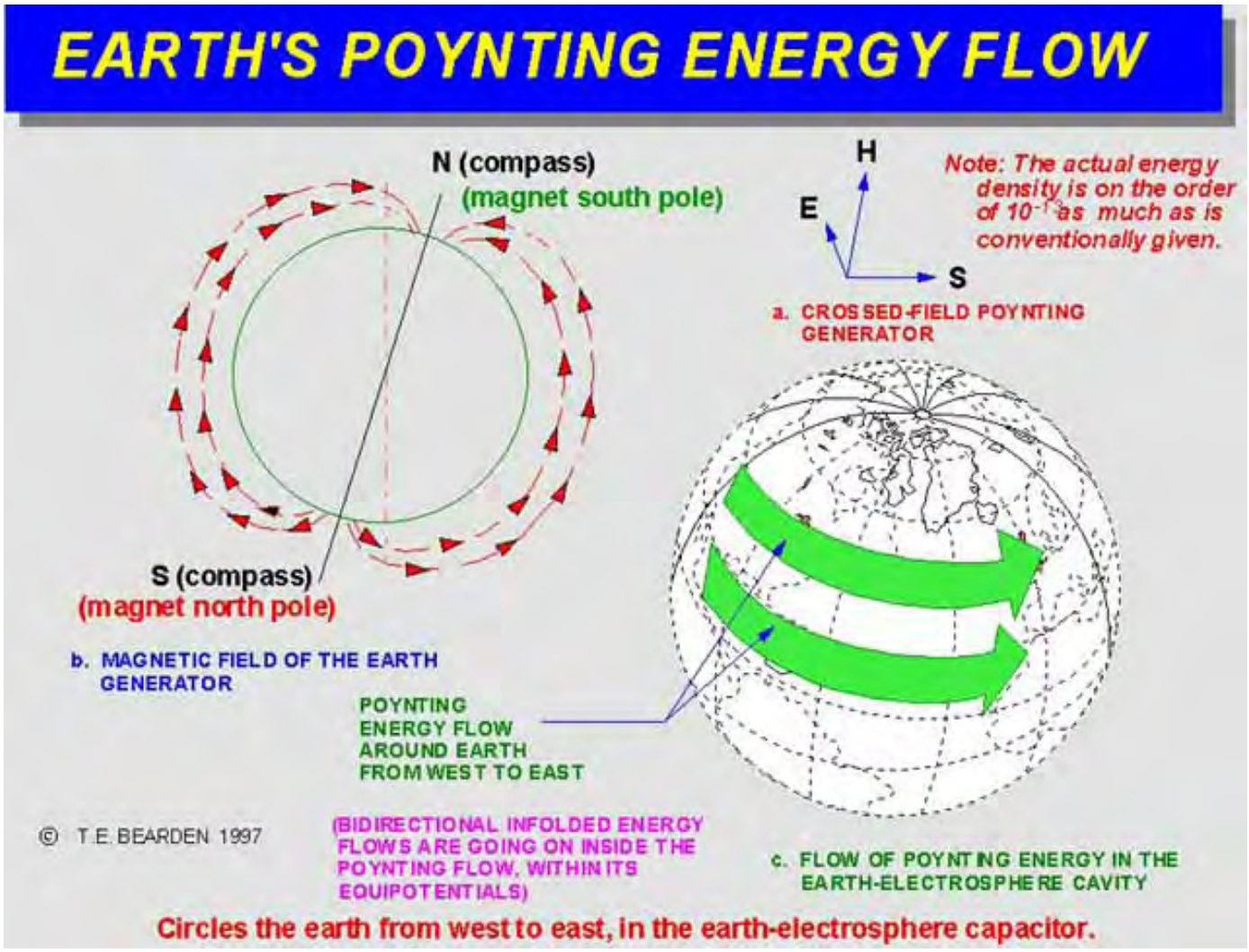

Return to Slide Index

Next Slide

Previous Slide

Note: Should be 10^{13}

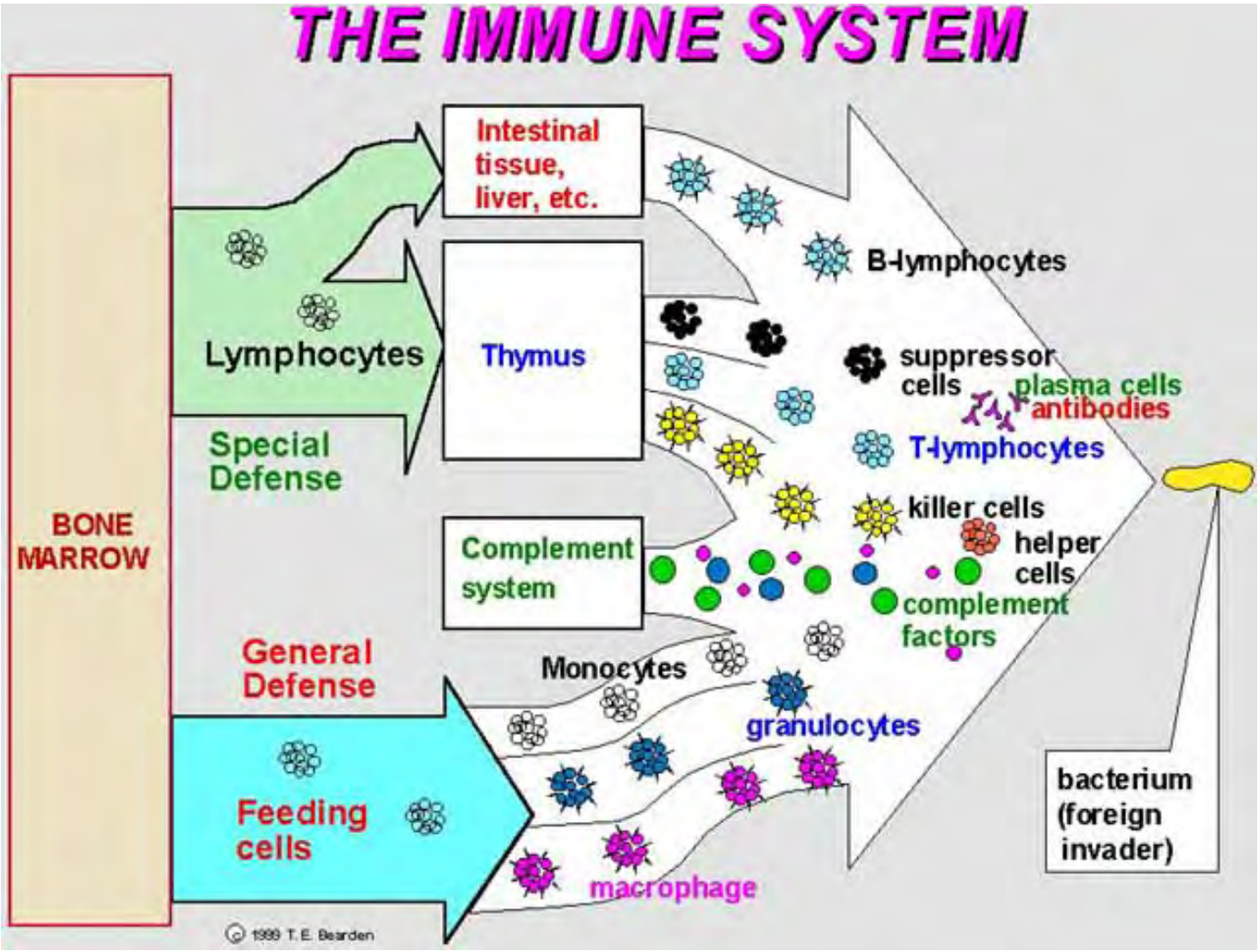

Return to Slide Index

Next Slide

Previous Slide

Mind and Matter Interaction

- Living systems: matter, mind, life, death, time
- Function of the extended quantum potential
- Nature of conscious and unconscious mind
- Gaia and collective species unconscious mind
- EM topology vs. mind and matter interactions
- Paranormal phenomena: Mechanisms
- Unsuspected EM effects on biological systems
- Recovery system: Use of scalar "internal" EM
- Vacuum engines, death rays, and healing rays
- Priore's scalar EM therapeutic method
- Resolution of the fundamental technological species problem: The Lady or the Tiger?

© T.E. BEARDEN 1996

Return to Slide Index

Next Slide

Previous Slide

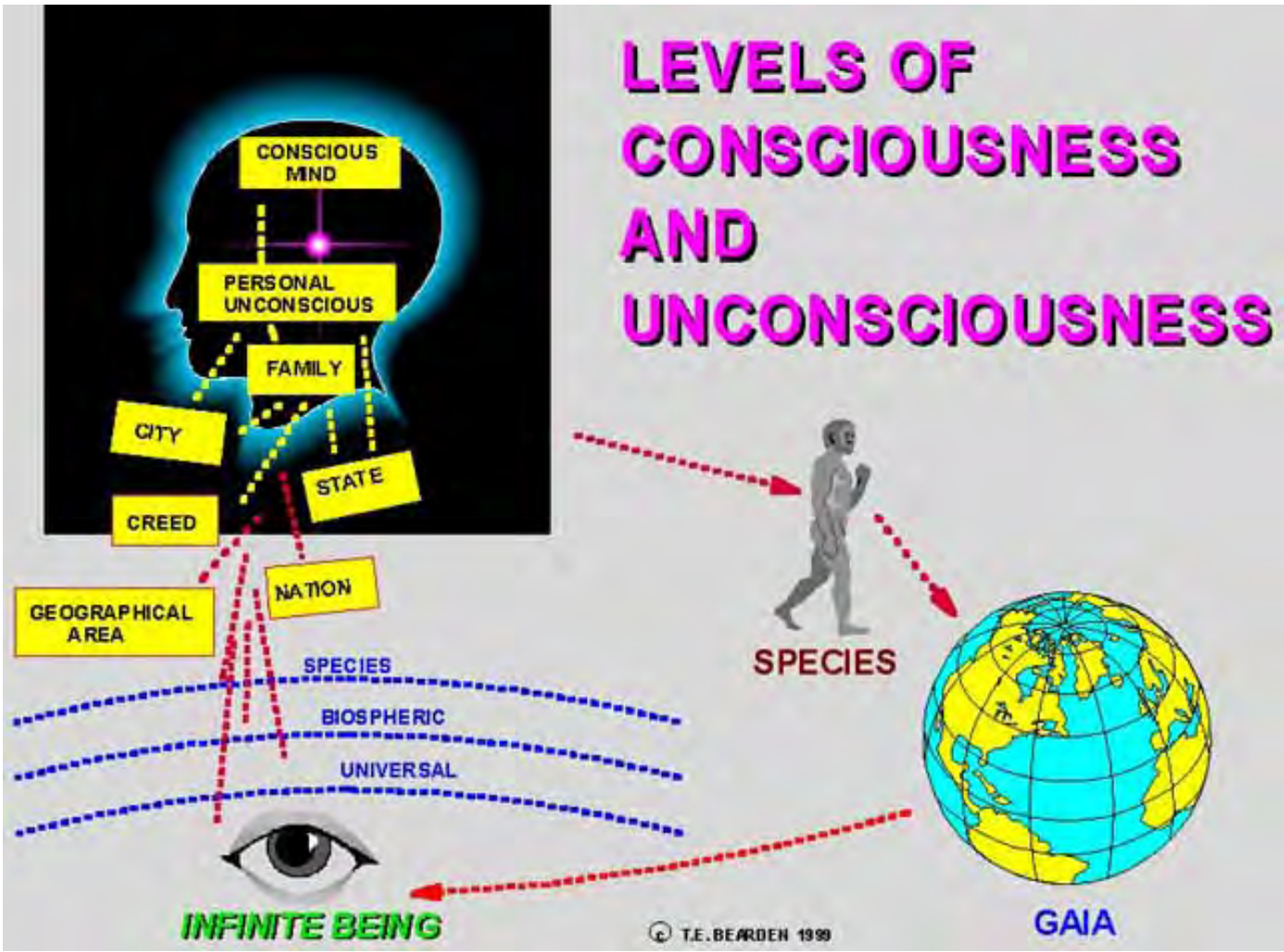

Return to Slide Index

Next Slide

Previous Slide

Access to Mind, Memory, and Thought

- Internal Whittaker channels in Body
- Used for master control functions
  - Mind, memory, thought
  - Master cellular control
  - Immune system
  - Regenerative system
- Dynamics infolded inside longitidinal EM biwave structure of scalar potentials
- Gives access to mind and control software

© T.E. BEARDEN 1997

Return to Slide Index

Next Slide

Previous Slide

U.S. Intelligence Statement on Soviet Psi Research*

- Sooner or later, Soviets may be able to
  - Know:
    - Contents of documents
    - Troop and ship movements
    - Installation locations and nature
  - Mold thoughts at a distance
  - Disable equipment at a distance
  - Kill persons at a distance
- *Comment: Soviet psychoenergetics is a physics, not Western parapsychology. Much of this capability now exists and has been weaponized in action-at-a-distance weapons.*

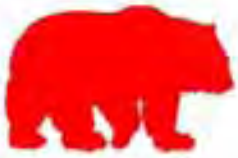

© 1996 T. E. BEARDEN

*Controlled Offensive Behavior - USSR (U)
DIA Report ST-CS-01-169-72, July 1972

Return to Slide Index

Next Slide

Previous Slide

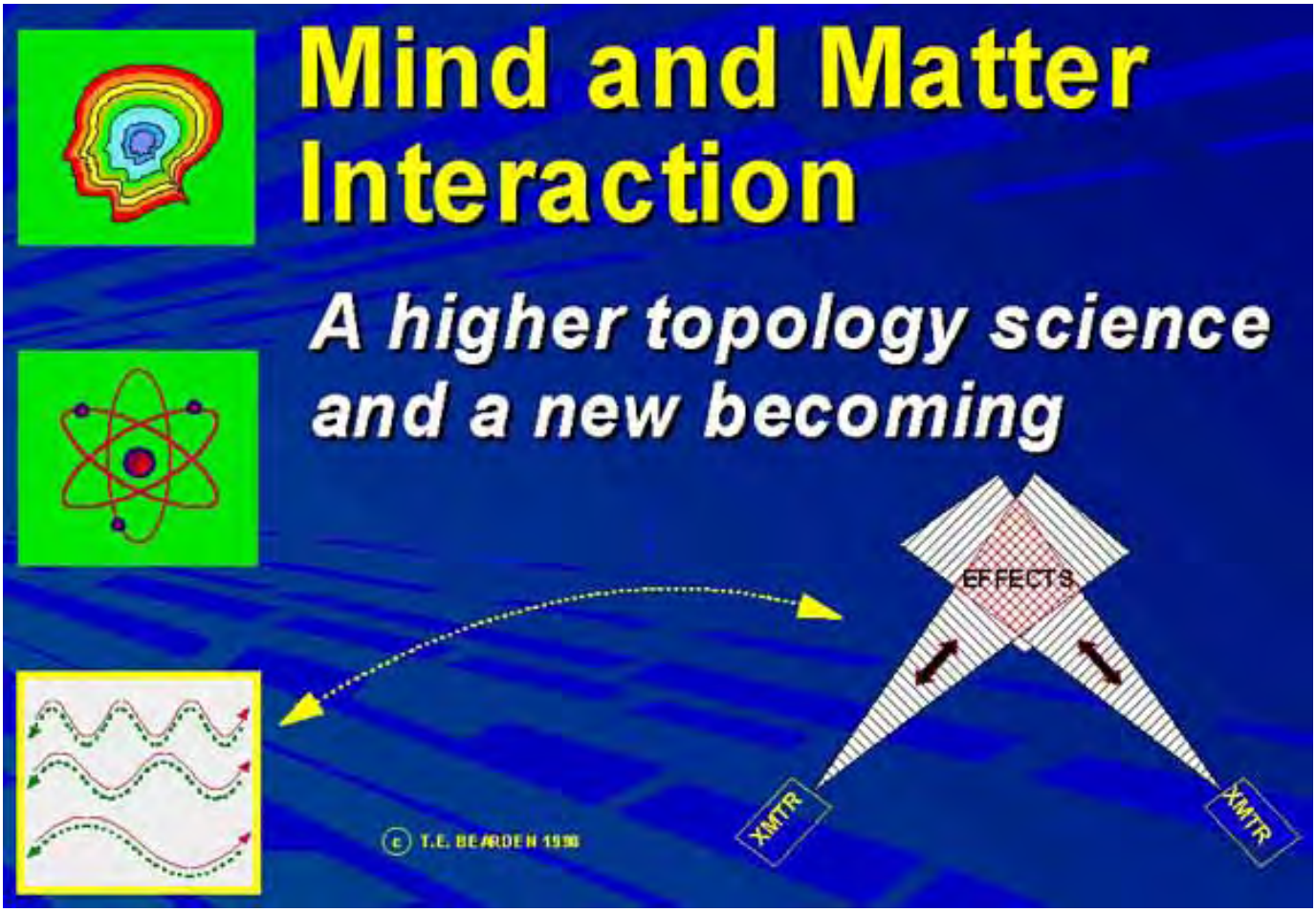

Return to Slide Index

Next Slide

Previous Slide

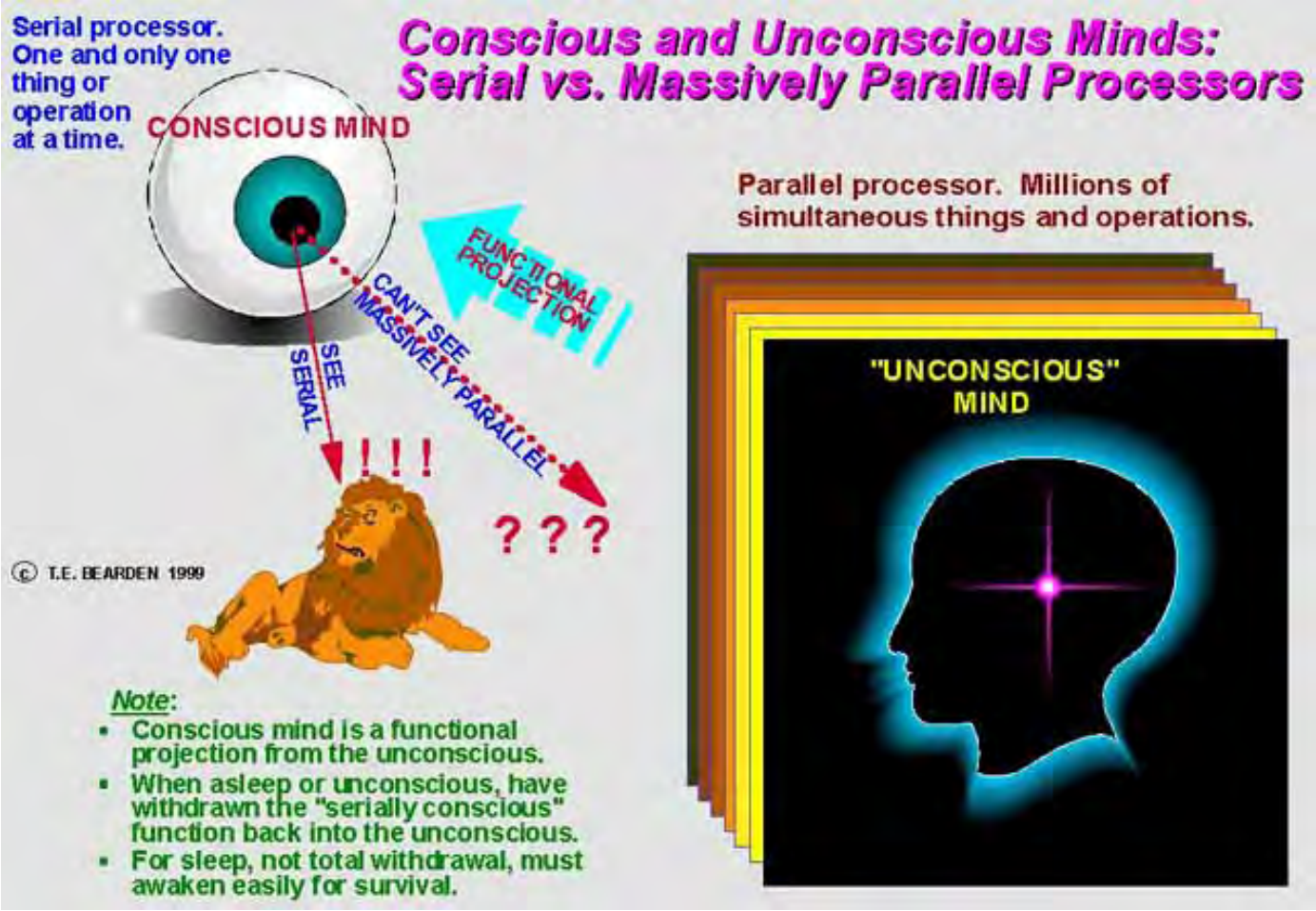

Return to Slide Index

Next Slide

Previous Slide

Velocity Is Rotation

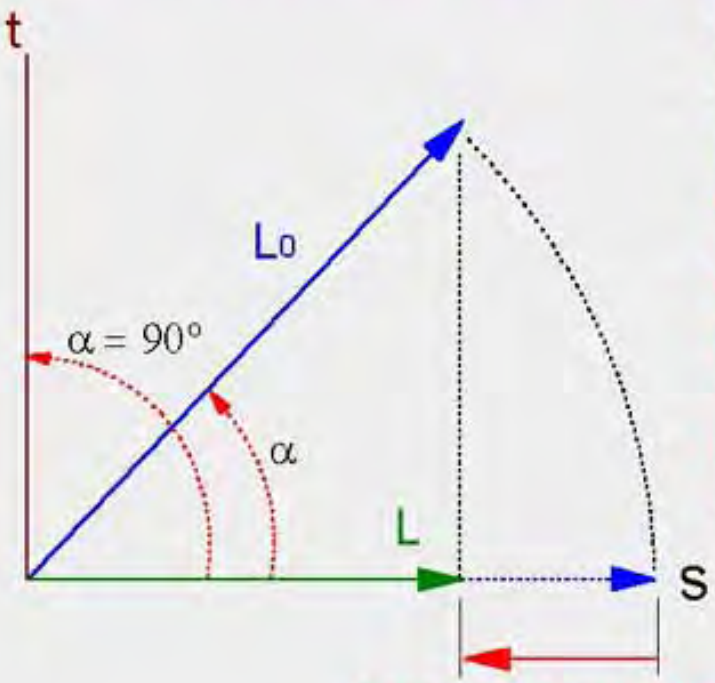

An object moving with velocity v < c has rotated slightly out of 3-space toward the time dimension. It's "projection" back into 3-space is shorter, providing the Lorentz-Fitzgerald contraction.

When velocity v = c, a full right-angle turn has been made, and the object has "lost" its projection along its direction of motion. Hence it appears as a 2-dimensional plane moving at the speed of light; in short, a photon or a light wave.

© 1999 T.E. BEARDEN

Lorentz-Fitzgerald Contraction

Next Slide

Return to Slide Index

Previous Slide

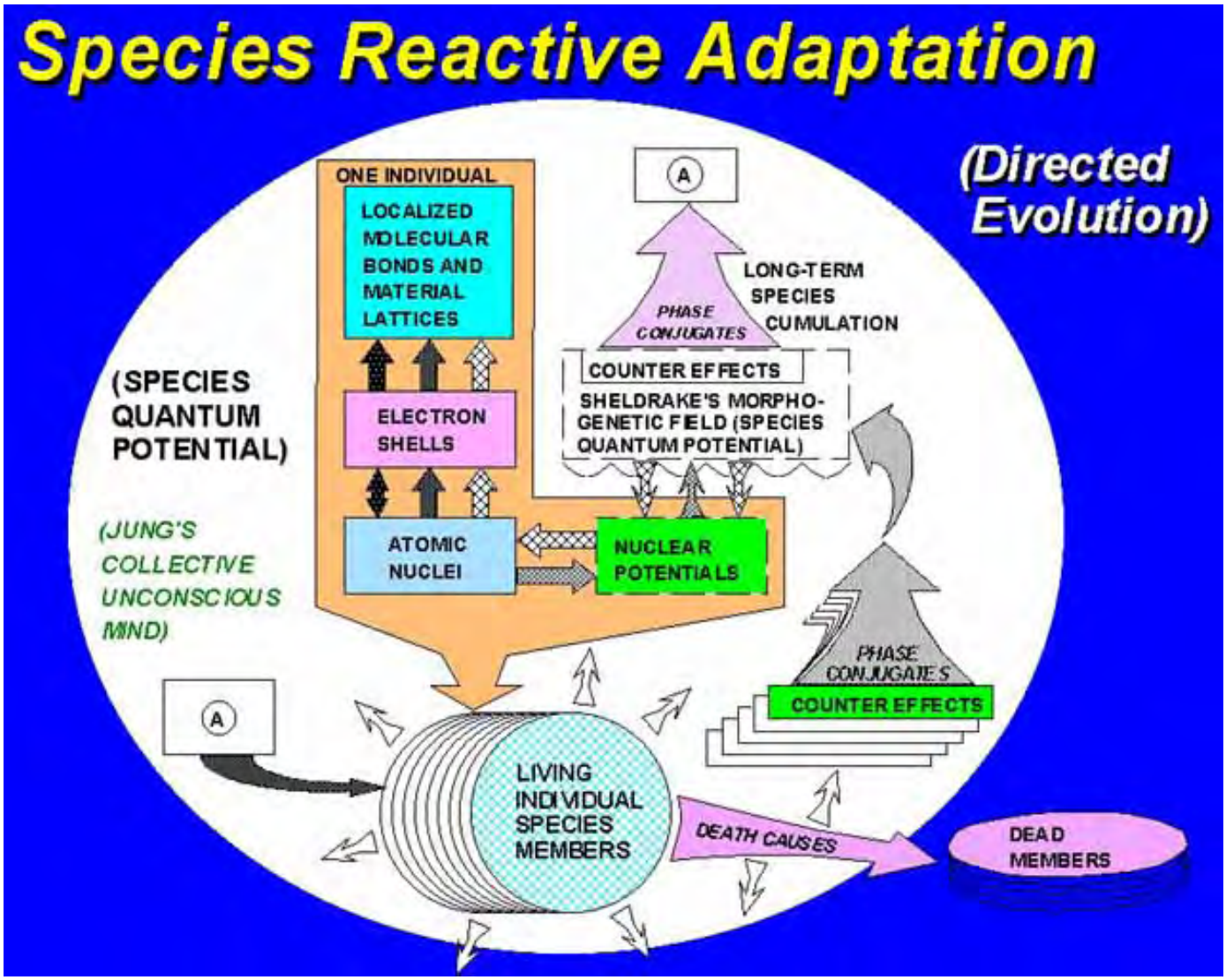

Return to Slide Index

Next Slide

Previous Slide

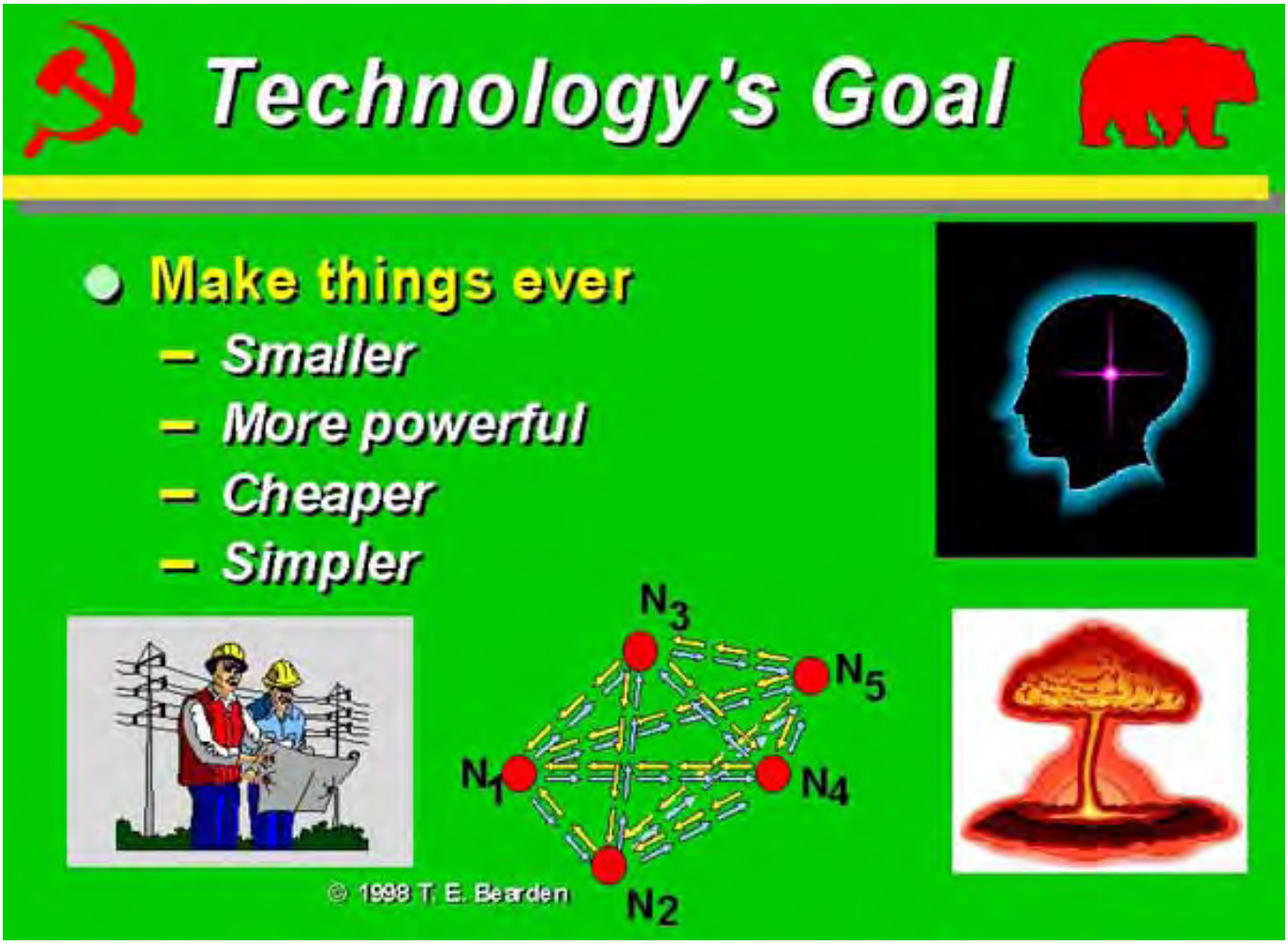

Return to Slide Index

Next Slide

Previous Slide

Return to Slide Index

Next Slide

Previous Slide

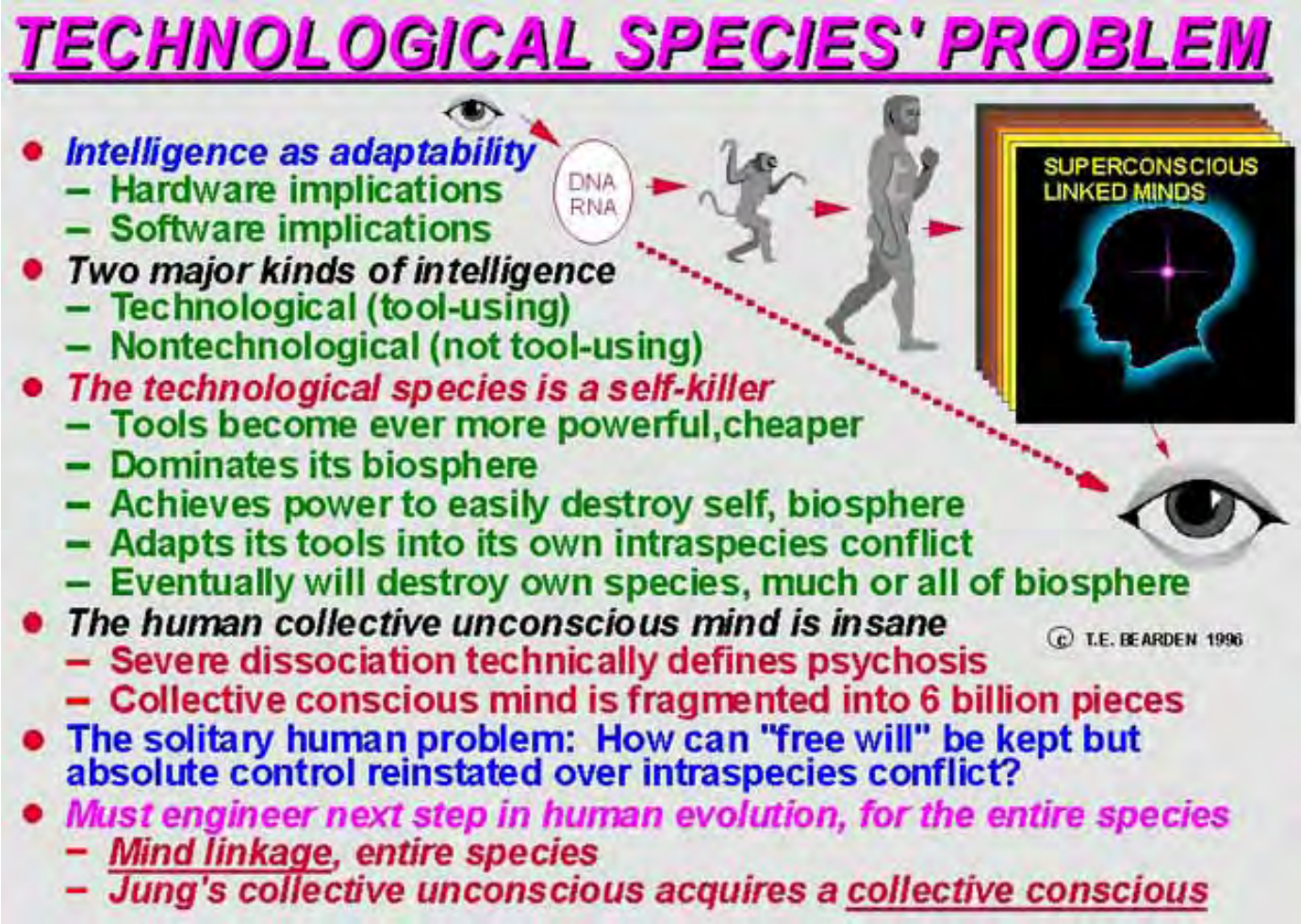

Return to Slide Index

Previous Slide

Weapons Slides

The Tom Bearden Website

Help support the research

"Others [terrorists] are engaging even in an eco-type of terrorism whereby they can alter the climate, set off earthquakes, volcanoes remotely through the use of electromagnetic waves… So there are plenty of ingenious minds out there that are at work finding ways in which they can wreak terror upon other nations…It's real, and that's the reason why we have to intensify our [counterterrorism] efforts." *

Secretary of Defense William Cohen at an April 1997 counterterrorism conference sponsored by former Senator Sam Nunn. Quoted from DoD News Briefing, Secretary of Defense William S. Cohen, Q&A at the Conference on Terrorism, Weapons of Mass Destruction, and U.S. Strategy, University of Georgia, Athens, Apr. 28, 1997.

Slides
(covers period up to 1999)

- The Coming Strategic Attack on the United States
- Outline
- Loss of two separate A-10 Warthogs in 1997
- Typical ABM Defenses (Widely Deployed by mid-70s)

- Launch Phase Anti-Missile System
- Launch Phase Anti-Bomber System
- HC-130s Engines Quit, Aircraft Crashes
  Nov. 22, 1996
- 1996 Actions by this analyst
- Additional Information Exists: Not Analyzed, Not Integrated in Briefing
- Kill of Arrow DC-8, Gander AFB, Dec. 12, 1985
- Satellite Photos of Plumes in Soviet Arctic Since 1974
  See "Fer de Lance" for additional information
- Aum Shinrikyo ("Supreme Truth" Cult), Shoko Asahara, Leader

  Aum Shinrikyo - Anatomy of a Dangerous Cult
- Ashkhabad Problem and Its Solution
- Strange Characteristics of Iran Quake, Sep. 1978
- Iran Earthquake, September 1978
- Situation Now (Assessment)
- Situation Now (Assessment 2)
- Aspects of Strong Local Asymmetry
- Mass Casualty Problem: Aerial Anthrax

Spray on Washington, D.C.

- Present Status of the WMD Threat to the United States
- Some Present Problems in the U.S. WMD Defense Capabilities
- Internal Terrorist Threat with Weapons of Mass Destruction: Now & Future
- Attempt to Ban Energetics Weapons Worldwide
- Brezhnev's Schedule
- Large glowing Tesla globe witnessed in Red China by hundreds
- Cold Explosion -- 9 April 1984 Near Kurils, and formation and growth of spherical shell (globe)
  Sequence of Events
- Cold Explosion -- 9 April 1984 Near Kurils, and formation and growth of spherical shell (globe)
  What They Were
- Cold Explosion -- 9 April 1984 Near Kurils (Plus additional weapons effects)
- Countering Insane MAD Systems:
  Find Loophole, Exploit It
- Next Generation Counter to Both Sane and Insane MAD systems
- Simultaneous Dudding of Nuclear Weapons Worldwide

- Simultaneous Dudding of Nuclear Weapons Worldwide
- Operation Divine Wind II
- Advanced EMBW Applications
- EM Biological Warfare (EMBW)
- Microwave Radiation of U.S. Embassy in Moscow
- Pentagon EMI Studies, 1989
- EM Missile Practice (6 slides)
- Subdivisions of Soviet Energetics Program
- Communism's Goal
- Manuilsky's Goal vs. Status Today (Dec. 1996)
- Professor Hellman, German Scientist Released from Work in Soviet Union
- Hemispheres and Globes of Light (4 slides)
- How Could Such Superweapons Ever Be Concealed?
- Soviets Easily Concealed These Superweapons for Four Decades
- Microscope-type, laser-like interferometer for inducing quick α-decay in samples of otherwise longer-lived isotopes
- Longitudinal Wave Interferometry: Endothermic

- Longitudinal Wave Interferometry: Exothermic
- U.S. Air Attack on Libya, April 1986
- Lightning Wall
  circa 1959-1960
- Lisitsyn's Report: Brain Code Broken
- Large Longitudinal Wave Interferometer (LWI) Accident
- Large Longitudinal Wave Interferometer (LWI) Accident
- Use of Hidden Information Content of the Field Can Provide Action-At-A-Distance
- Two Types of Mutual Assured Destruction (MAD) System
- Psychoenergetics Weapons Teams Mentally Disable All Personnel
- Strikes Against Special Ship and Energetics Weapons Sites
- "Mindsnapper" Attack on Special Ships and Energetics Weapons Sites
- How Much Off Guard Are We?
  (7 Slides)
- Possible Targets: 1995-9 Escalation Phase
- Propagation of Weapon Effects
- Yugoslav Earthquake, Followed by Cold Explosion
  April 15th, 1979

- Countering an Insane QP Weapon
- Gulf War Disease: KGB QP Weapon Induced ST Curvature Engines for a Cocktail of Diseases
- Self-Targeting in Inner EM Channel Can Produce a Quantum Potential
- Mechanism for Producing a Quantum Potential
- Major Principles for Use of Quantum Potential Weapons
- Major Principles for Use of Quantum Potential Weapons (2)
- Instantaneous Communication by a Quantum Potential
- Participants in a quantum potential share a common multiply-connected spacetime (MCST)
- Quake in Tangshan, China
  28 July, 1976
- Exchanging Earthquakes
- Instant Communication by a Quantum Potential
- Westerners Do Not React to Slow Threats
- Characterizing a Given Risk or Risk Factor
- Technical Risk Management
- Aum Shinrikyo's Sarin Facility

- In Scalar Beam Interference Zone
- Physicist Schappeller Auralaz Munster, Austria
- Initial Soviet Plan for Cold War, After WWII
- Josef Stalin: Absolute Dictator
- Exploding any Resistance by Operational Scientists
- Significant Soviet Statements
- Captain Svoboda Dives Headlong to Her Death
- T-polarized Beam Projector
- Possible Tests (1)
- Possible Tests (2)
- Possible Tests (3)
- Possible Tests (4)
- Mushroom Cloud Rising From Sea
- Launches from Cape Canaveral and Vandenberg AFB Provided Practice Targets of Opportunity
- The sinking U.S.S. Thresher, with her controls jammed, implodes when she reaches crush depth
- Embodiment of an instrument array sufficient to discriminate when time-density charging has occurred, and that transduction

of time-charge decay has occurred.

- Time-Polarized EM Wave Interferometer Creating Space-Time Curvature Engines in a Distant Interference Zone
- Transmutation of Radioactive Nuclei at a Distance
- Transmutation of Radioactive Nuclei
- Typical Tesla Shield, Northern Route of Japan
- A Curious Tide in Human Affairs
- Large Scalar EM Interferometer (LASI) Accident Near Urals, 1958
- The Superpower Paradox: Asymmetric Cheap WMD Strategic Strike and Destruction
- The KGB/Yakuza-Aum War Plan
- Why Western Science is Ignorant of KGB Energetics
- Transmutation of Radioactive Nuclei at a Distance
- TheYakuza
- Yugoslav Earthquake, Followed by Cold Explosion
  April 15, 1979

---

* Note that the Secretary did not speak the words in square blocks; these were added by the writers later,

probably to "soften the tone" of the Secretary's information release. So the Secretary confirmed that some nations of the world -- not just some ragged terrorists, as the writers tried to imply for spin control -- do possess novel electromagnetic weapons and are using them to induce earthquakes, engineer the weather and climate, and trigger volcanic eruptions.

THE COMING STRATEGIC ATTACK ON THE UNITED STATES

By an AUM/Yakuza/KGB/Communist Coalition Using Energetics SuperWeapons

T.E. Bearden, LTC
U.S. Army (Retired)
M.S. Nuclear Eng.
Fellow Emeritus, AIAS

With Technical Background and History of Energetics Weapons

Partial support by the Association of Distinguished American Scientists is gratefully acknowledged.d

© 1995, 1996, 1999 T.E. BEARDEN

Outline

- Background: Classical Electromagnetics (and Defects)
- Background: Energetics (Scalar Electromagnetics)
- Background: Soviet Energetics Weapon Development
- KGB/Communist Plans
- Countering of Soviet/KGB/Communist Plan in Mid-80s
- Soviet Economic Collapse and Adaptation of Plan
- Weapons Bleed-Out: KGB/Russian Mafia
- Yakuza: The Japanese Mafia
- Aum Shinri Kyo (Supreme Truth) Cult
- Coalition: Aum/Yakuza/KGB/Communists/Russian Mafia
- Operation Divine Wind II: Three Phases
  - Phase I: On-Site Training Phase (Completed)
  - Phase II: Escalation Phase (In Progress)
  - Phase III: 1997 Strategic Strike on the United States
  - Support Plan A: Feints, Deception, Sabotage & Terrorism
  - Support Plan B: Test Range
  - Support Plan C: Worldwide Weather Engineering
  - Support Plan D: Strategic and Combat Intelligence
- Special Information
- Recommended Actions

© 1995, 1996 T.E. BEARDEN

The Tom Bearden Website

Help support the research

Loss of two separate A-10 Warthogs in 1997

- A-10 Mysterious Flyaway and Crash - April 2, 1997
- Death of Second A-10 Pilot - May 27, 1997
- Captain Button's Mysterious Flyaway and Eventual Crash
- Death of Second A-10 Pilot - May 27, 1997

A-10 Mysterious Flyaway and Crash

April 2, 1997

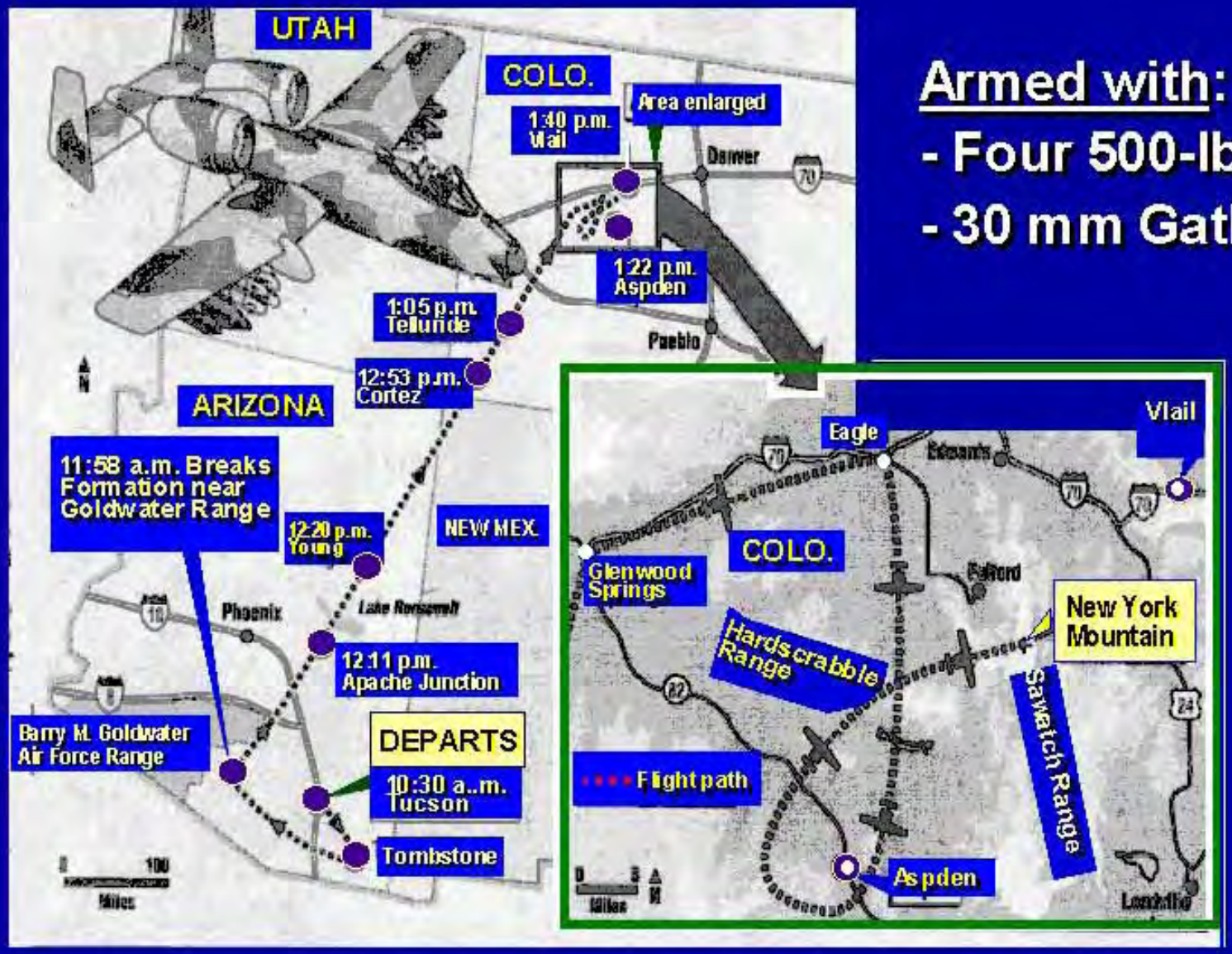

Armed with:

- Four 500-lb bombs
- 30 mm Gatling gun

Death of 2nd A-10 Pilot May 27, 1997

- Captain Amy Svobody
- Night training mission
- From Davis-Montham AFB
- From same wing as Captain Button, who flew his A-10 off course for over an hour and then crashed on April 2.
- Climbout from ordnance delivery on target
- Nosed down sharply and dived into ground

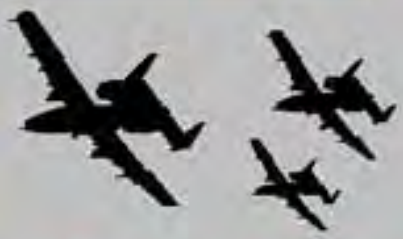

Companion A-10's

- Experienced night flyer & instructor
- Nosed sharply over and flew into ground
- Psychoenergetic kill

© T.E. BEARDEN 1999

Psychoenergetic weapon induced instant hypnogogic state and reversed Svoboda's sense of up and down.

A-10 Mysterious Flyaway and Crash

April 2, 1997

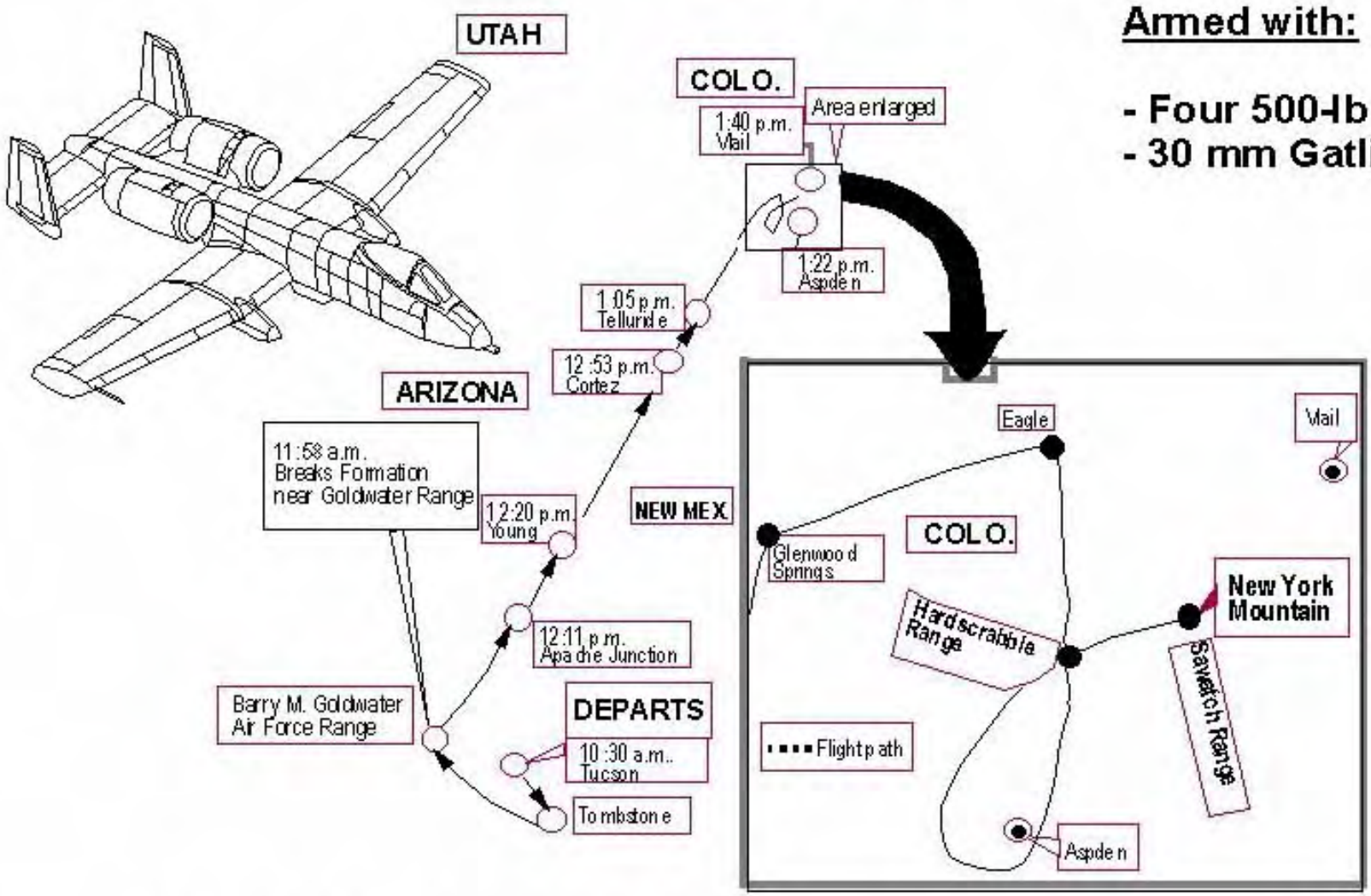

Armed with:

- Four 500-lb bombs
- 30 mm Gatling gun

Figure 14a. Captain Button's mysterious flyaway and eventual crash.

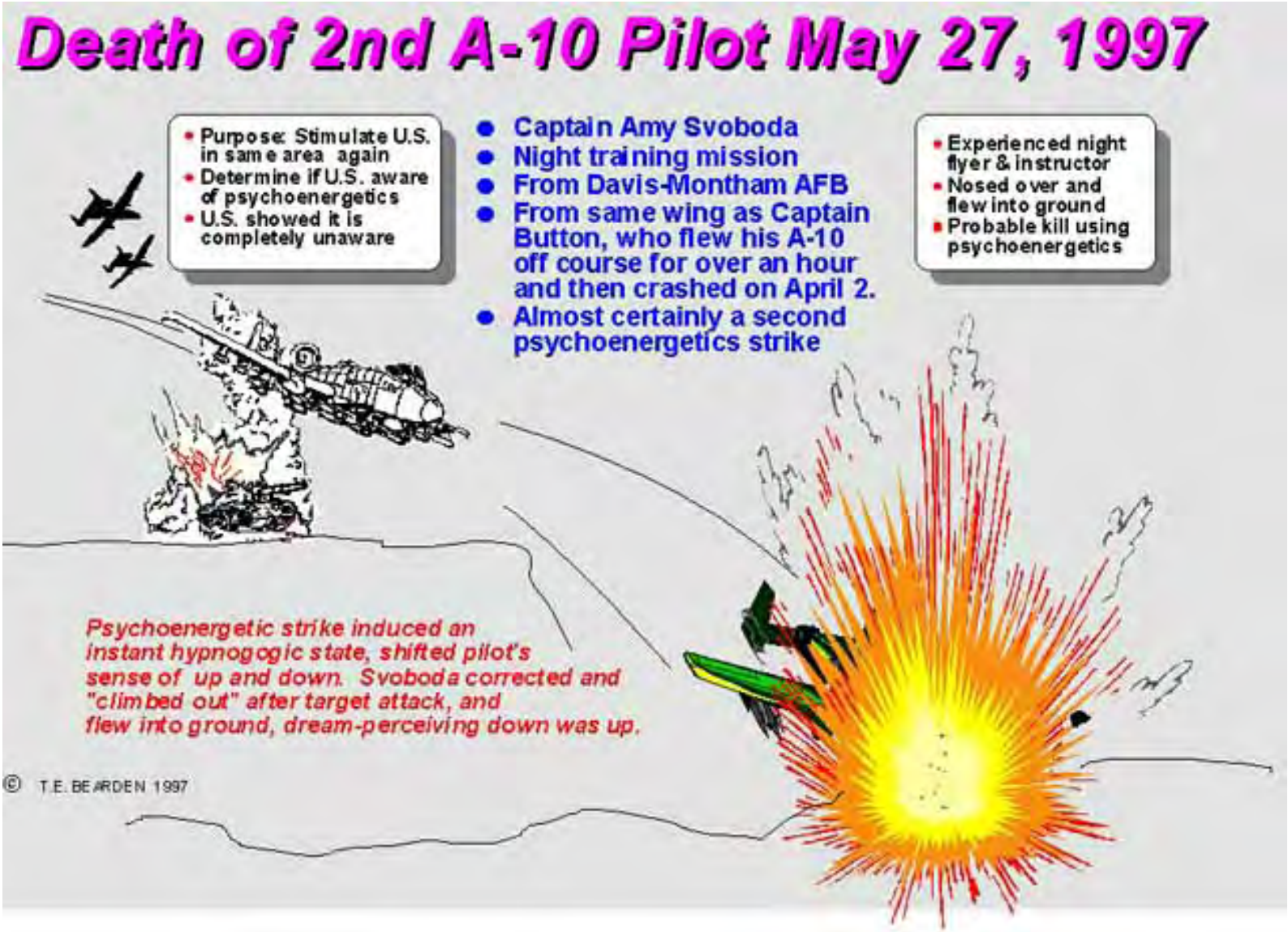
Death of 2nd A-10 Pilot May 27, 1997
• Purpose: Stimulate U.S. in same area again
• Determine if U.S. aware of psychoenergetics
• U.S. showed it is completely unaware
• Captain Amy Svoboda
• Night training mission
• From Davis-Montham AFB
• From same wing as Captain Button, who flew his A-10 off course for over an hour and then crashed on April 2.
• Almost certainly a second psychoenergetics strike
• Experienced night flyer & instructor
• Nosed over and flew into ground
• Probable kill using psychoenergetics
Psychoenergetic strike induced an instant hypnogogic state, shifted pilot's sense of up and down. Svoboda corrected and "climbed out" after target attack, and flew into ground, dream-perceiving down was up.
© T.E. BEARDEN 1997

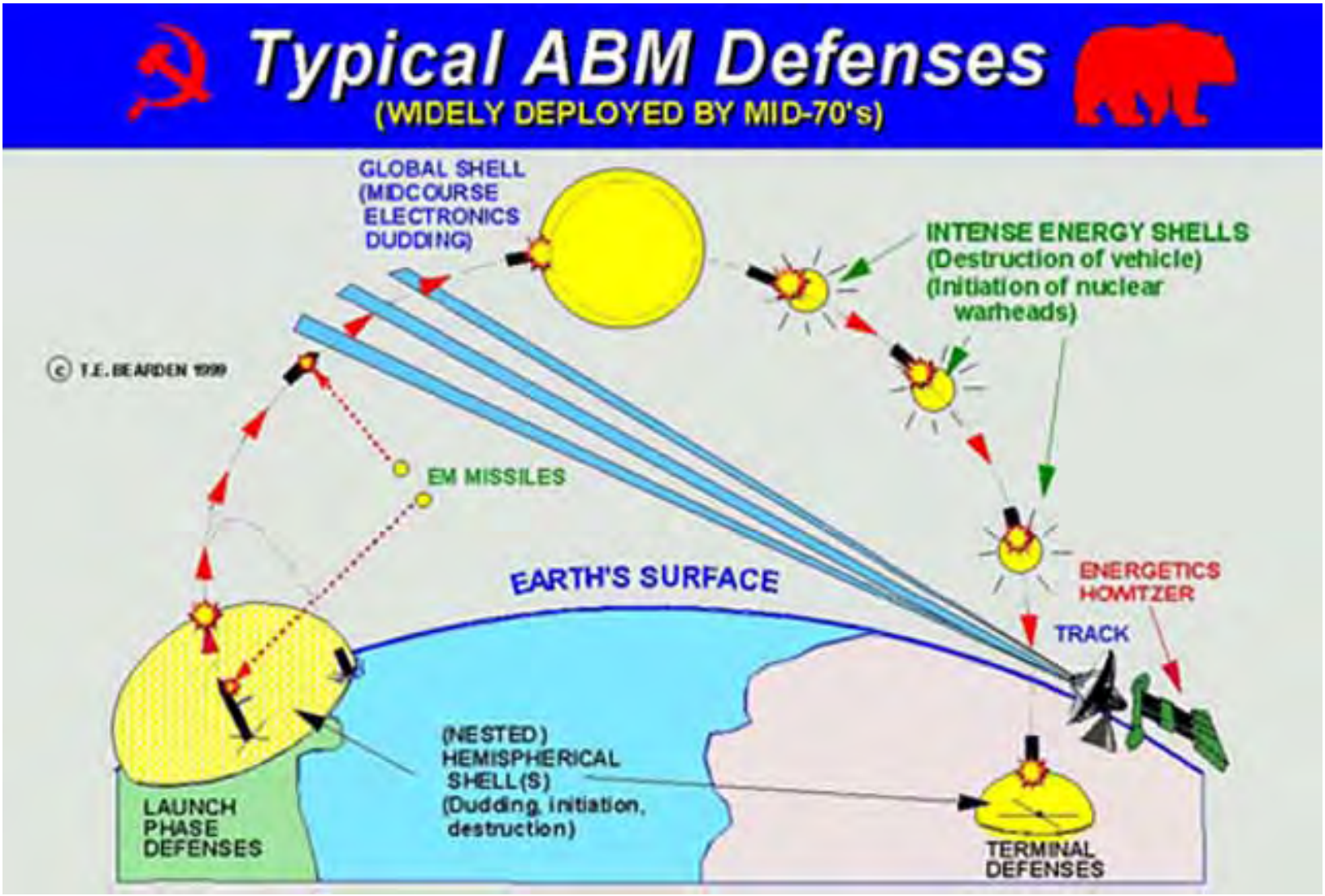
Typical ABM Defenses
(WIDELY DEPLOYED BY MID-70's)
GLOBAL SHELL
(MIDCOURSE
ELECTRONICS
DUDDING)
INTENSE ENERGY SHELLS
(Destruction of vehicle)
(Initiation of nuclear
warheads)
© T.E. BEARDEN 1999
EM MISSILES
EARTH'S SURFACE
ENERGETICS
HOWITZER
TRACK
(NESTED)
HEMISPHERICAL
SHELL(S)
(Dudding, initiation,
destruction)
LAUNCH
PHASE
DEFENSES
TERMINAL
DEFENSES

LAUNCH PHASE ANTIMISSILE SYSTEM

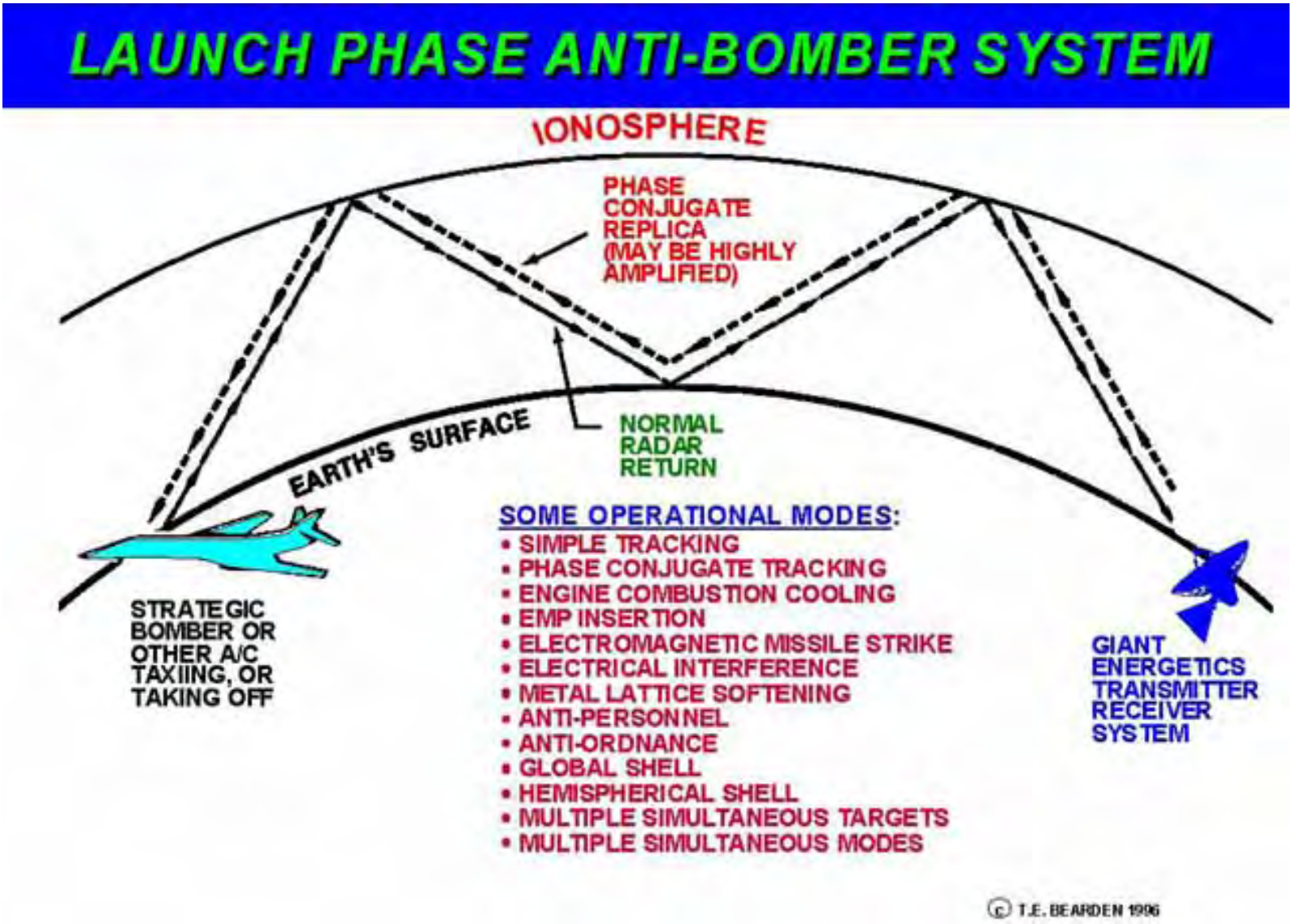
LAUNCH PHASE ANTI-BOMBER SYSTEM
IONOSPHERE
PHASE CONJUGATE REPLICA (MAY BE HIGHLY AMPLIFIED)
NORMAL RADAR RETURN
EARTH'S SURFACE
STRATEGIC BOMBER OR OTHER A/C TAXIING, OR TAKING OFF
SOME OPERATIONAL MODES:
• SIMPLE TRACKING
• PHASE CONJUGATE TRACKING
• ENGINE COMBUSTION COOLING
• EMP INSERTION
• ELECTROMAGNETIC MISSILE STRIKE
• ELECTRICAL INTERFERENCE
• METAL LATTICE SOFTENING
• ANTI-PERSONNEL
• ANTI-ORDNANCE
• GLOBAL SHELL
• HEMISPHERICAL SHELL
• MULTIPLE SIMULTANEOUS TARGETS
• MULTIPLE SIMULTANEOUS MODES
GIANT ENERGETICS TRANSMITTER RECEIVER SYSTEM
© T.E. BEARDEN 1996

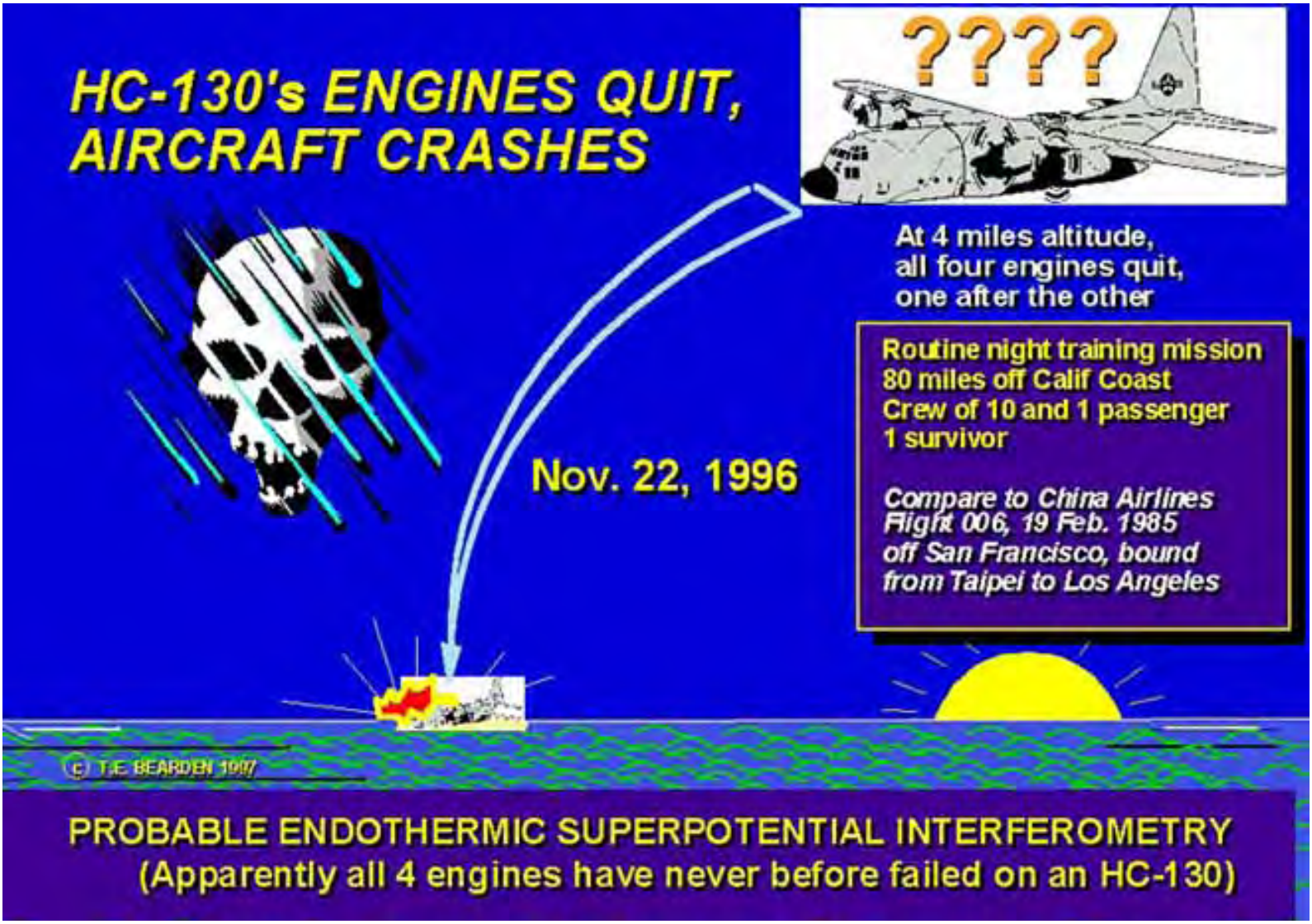
HC-130's ENGINES QUIT, AIRCRAFT CRASHES
????
At 4 miles altitude, all four engines quit, one after the other
Routine night training mission
80 miles off Calif Coast
Crew of 10 and 1 passenger
1 survivor
Compare to China Airlines Flight 006, 19 Feb. 1985 off San Francisco, bound from Taipei to Los Angeles
Nov. 22, 1996
© T.E. BEARDEN 1997
PROBABLE ENDOTHERMIC SUPERPOTENTIAL INTERFEROMETRY
(Apparently all 4 engines have never before failed on an HC-130)

CTEC PROPRIETARY

1996 Actions by this analyst

- In July 1996, with the kill of TWA-800 it became apparent that the KGB/Communists were preparing a massive strategic energetics attack upon the U.S.

© T.E. BEARDEN 1997

- Began intensive, nearly round-the-clock effort to uncover what was happening, and what had occurred in KGB/Com weapons since 1991
- Began preparing full-up set of briefing slides simultaneously
  - In early 1996, had briefed J6 on scalar EM, per his request
  - Had strongly suggested a follow-on weapons brief
  - Adamant opposition by NRL, NOL, others
- Similar energetics attack scenario in 1986 was countered. Soviets at that time did not possess operational QP weapons, and so could not successfully overcome dead-man fuzing
  - Also could not dud nukes worldwide, because QP required.
  - First lab prototype QP test was in April 1986
- KGB had solved the dead-man fuzing problem by QP's. Deployed circa 1989-1990. Some earlier weapons then leased.

Additional Information Exists; Not Analyzed, Not Integrated in Briefing

- Yakuza arranged involvement of
  - Red Chinese
  - North Koreans
  - A Taiwanese element
- Aum Shinrikyo may have been used as "Red Herring" to deceive West
- Oriental faction plots to strike Russians after the successful first strike on West
- KGB/Russians aware, will counter
  - Plan pre-emptive strike against Oriental faction first
  - Have reserved most advanced, powerful energetics weapons for that purpose

© 1999 T.E. SEARDEN

The Tom Bearden Website

Help support the research

Kill of Arrow DC-8, Gander AFB, Dec. 12, 1985

- Slide 1
- Slide 2
- Slide 3
- Slide 4
- Slide 5
- Slide 6

KILL of ARROW DC-8
Gander AFB, Dec. 12, 1985
• Soviet EM missile weapon strike practice two weeks earlier at Cape Canaveral
► Offset from night shuttle launch
► EM missile photographed by Bob Gladwin
► Associated marker beacon photographed
• Canadian Board split on findings
► Half thought icing, half disagreed intensely
► "Due to icing" approved with half absent
► Separate dissenting finding issued
• U.S. officials hiding Iran/Contra affair
► Feared terrorist bomb, MidEast sponsor
► Pressured Board, Gen. Off. bulldozed site
• Lack of icing on aircraft later validated

KILL of ARROW DC-8
Gander AFB, Dec. 12, 1985
• Eyewitness observed beams form in the sky
• Saw streak-down and strike of EM missile
– Struck right fuselage ahead of the engines
– Hole was burned through fuselage there
– Photo of hole published in AW&ST
– No explosive residues on hole
• Consistent with ignition and outgassing of plastics in forward cabin
• Consistent with pre-crash HCN deaths

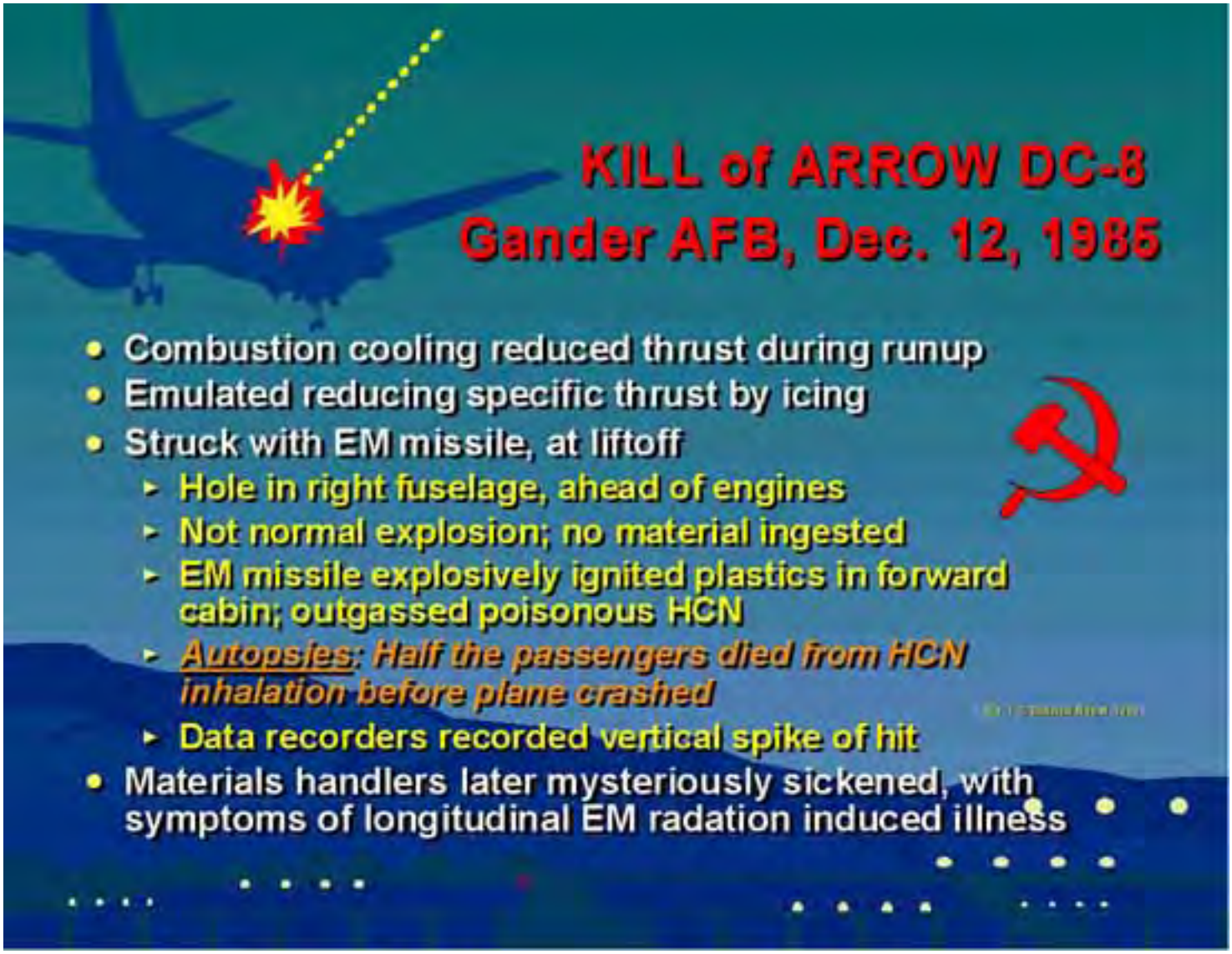
KILL of ARROW DC-8
Gander AFB, Dec. 12, 1985
• Combustion cooling reduced thrust during runup
• Emulated reducing specific thrust by icing
• Struck with EM missile, at liftoff
▸ Hole in right fuselage, ahead of engines
▸ Not normal explosion; no material ingested
▸ EM missile explosively ignited plastics in forward cabin; outgassed poisonous HCN
▸ Autopsies: Half the passengers died from HCN inhalation before plane crashed
▸ Data recorders recorded vertical spike of hit
• Materials handlers later mysteriously sickened, with symptoms of longitudinal EM radation induced illness

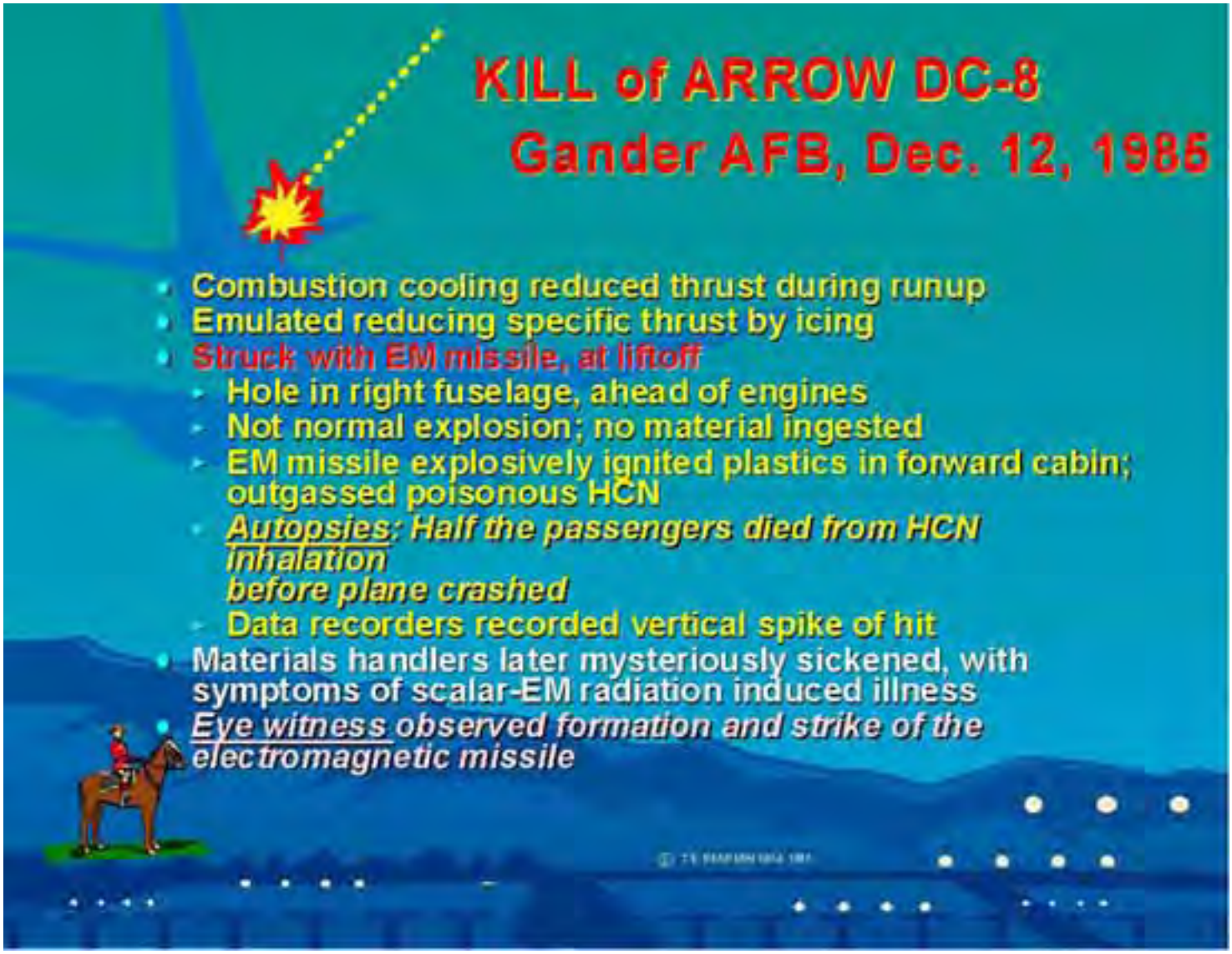
KILL of ARROW DC-8
Gander AFB, Dec. 12, 1985
Combustion cooling reduced thrust during runup
Emulated reducing specific thrust by icing
Struck with EM missile, at liftoff
Hole in right fuselage, ahead of engines
Not normal explosion; no material ingested
EM missile explosively ignited plastics in forward cabin; outgassed poisonous HCN
Autopsies: Half the passengers died from HCN inhalation
before plane crashed
Data recorders recorded vertical spike of hit
Materials handlers later mysteriously sickened, with symptoms of scalar-EM radiation induced illness
Eye witness observed formation and strike of the electromagnetic missile

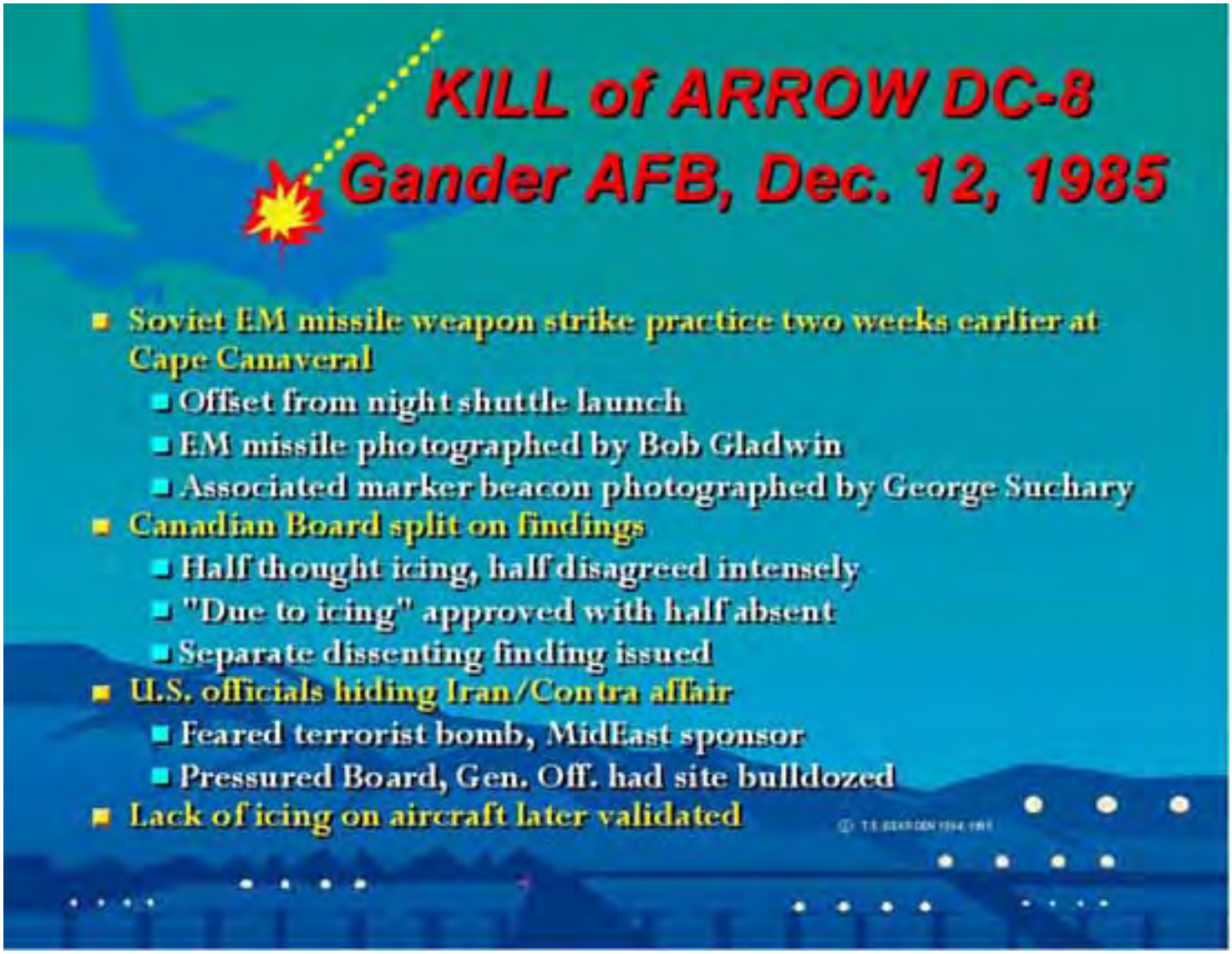
KILL of ARROW DC-8
Gander AFB, Dec. 12, 1985
Soviet EM missile weapon strike practice two weeks earlier at Cape Canaveral
Offset from night shuttle launch
EM missile photographed by Bob Gladwin
Associated marker beacon photographed by George Suchary
Canadian Board split on findings
Half thought icing, half disagreed intensely
"Due to icing" approved with half absent
Separate dissenting finding issued
U.S. officials hiding Iran/Contra affair
Feared terrorist bomb, MidEast sponsor
Pressured Board, Gen. Off. had site bulldozed
Lack of icing on aircraft later validated

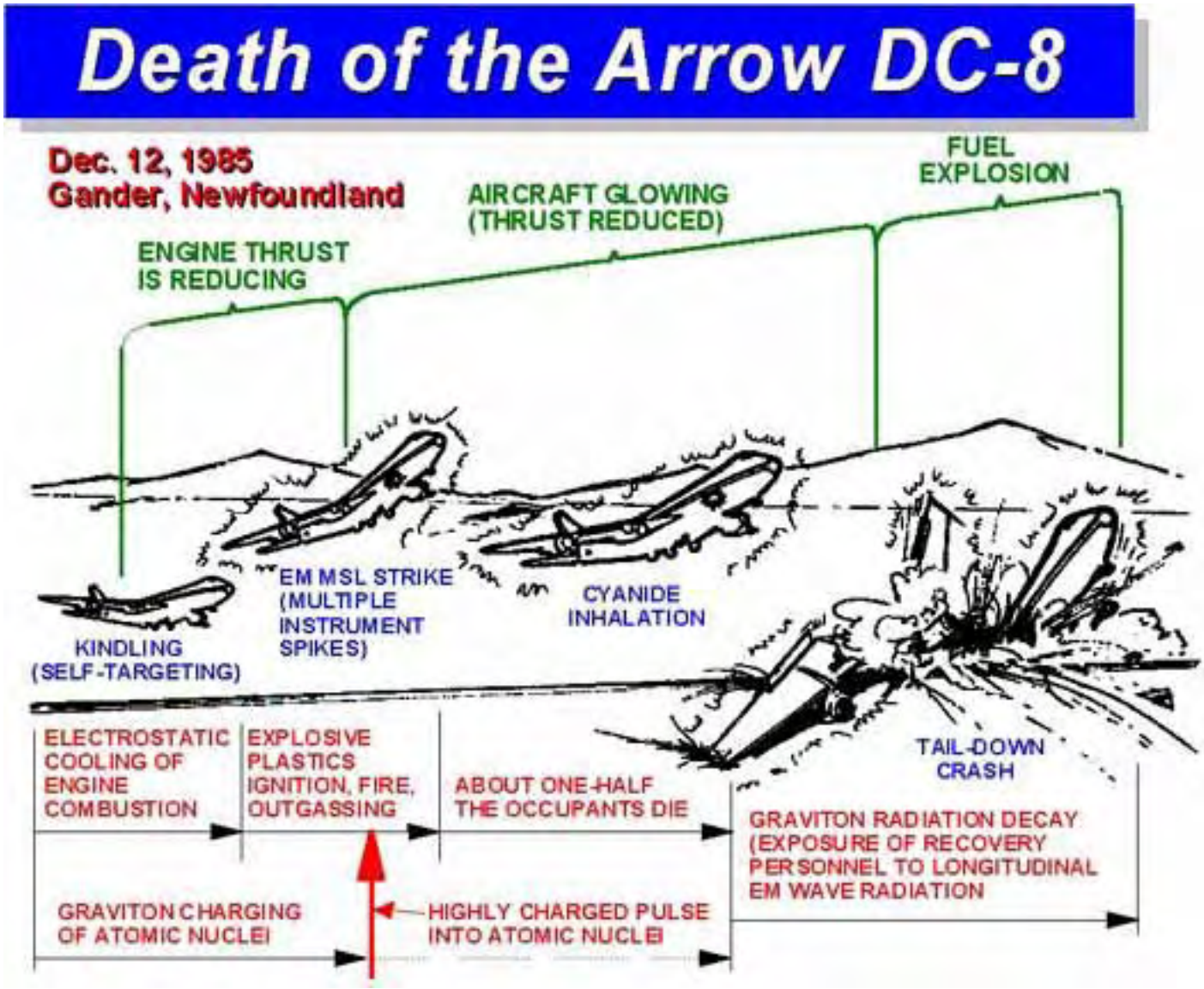
Death of the Arrow DC-8
Dec. 12, 1985
Gander, Newfoundland
ENGINE THRUST IS REDUCING
AIRCRAFT GLOWING (THRUST REDUCED)
FUEL EXPLOSION
KINDLING (SELF-TARGETING)
EM MSL STRIKE (MULTIPLE INSTRUMENT SPIKES)
CYANIDE INHALATION
TAIL-DOWN CRASH
ELECTROSTATIC COOLING OF ENGINE COMBUSTION
EXPLOSIVE PLASTICS IGNITION, FIRE, OUTGASSING
ABOUT ONE-HALF THE OCCUPANTS DIE
GRAVITON RADIATION DECAY (EXPOSURE OF RECOVERY PERSONNEL TO LONGITUDINAL EM WAVE RADIATION
GRAVITON CHARGING OF ATOMIC NUCLEI
HIGHLY CHARGED PULSE INTO ATOMIC NUCLEI

Satellite Photos of Plumes in Soviet Arctic Since 1974*

- Two aircraft flew through for analysis
  - Solid material, mostly ice, a little clay
  - Much colder than surrounding air
  - *Signature of cold exhaust from exothermic scalar interferometry operations*
  - No volcanic material
  - No radioactive material

- May be 2 to 3 times as many incidents
  - Only examined satellite imagery in winter
  - Only periodic satellite coverage
  - Hypothesized methane venting, cloud seeding

© 1996 T.E. BEARDEN

*As of 1989, when this information was gathered

AUM SHINRIKYO
("SUPREME TRUTH" CULT)

Shoko Asahara, Leader

© 1995, 1998 T.E. BEARDEN

Ashkhabad Problem and Its Solution

- ***PROBLEM:***
  - Stress increasing in two-plate fault zone
  - 1,000 shocks yearly
  - Kara Kum canal
  - Hydraulic pressure
  - 1948: Ashkhabad 80% destroyed by quake

- ***SOLUTION:***
  - Stress-relieve plate stresses from fault

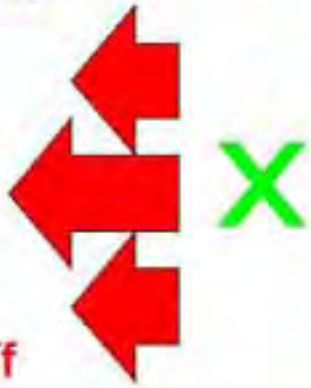

- ***IMPLEMENTATION:***
  - Induce nearby earthquake
  - Deceive by *predicting* a quake, setting off nuclear explosion

© 1996 T.E. BEARDEN

Strange Characteristics of Iran Quake, Sep. 1978

© 1996 T.E. BEARDEN

- **Signatures**
  - 7.4 on Richter scale
  - No aftershocks: 6.0 expected (normal)
  - Strange epicenter
  - Anomalous depth

- **Deception**
  - 10 MT Soviet nuclear explosion 36 hours before the quake
  - Prior disinformation regarding Soviet attempted development of focusing shock waves from underground nuclear explosions, to cause distant earthquakes

Iran Earthquake Sept. 1978

- Killed 25,000 Iranians
- Soviet city of Ashkhabad saved
- Soviets "predicted" quake in advance; then induced it
- Quake had serious anomalies (signatures)
- Deception measures were used by Soviets
  - Prediction in advance
  - "Theory" of quake-induction by nuclear explosions
  - Fired underground nuclear explosion as "Red Herring" candidate for cause

© 1996 T.E. BEARDEN

Situation Now (Assessment)

- In May 1997: second A-10 pilot (lady), in pullup from night ordnance delivery on target, was struck with psychoenergetic weapon takeover. Sense of vertical was reversed. She perceived herself diving, sharply corrected, and dove headlong into the ground.

- Additional aircraft kills uncovered, including one 4-engine aircraft whose engines all failed. This closely repeats the earlier 1985-1987 scenario.
- Korean Airlines Flight 801 crashed on Guam on anniversary of loading of the atomic bomb that was dropped on Hiroshima in WW II. The Enola Gay, which dropped the bomb, took off from Guam in wee morning hours of August 6, 1945. The local opns order on Guam was also issued on Aug. 5.

- *Presently the Coalition (KGB/Communists/Aum Shinrikyo/Yakuza) is waiting for proper time to launch the final strike. It is still on.*

Situation Now (Assessment 2)

- April 97: Mind control test against Captain Button:
  - Demonstrates ability to control crewman in complex operations for more than one hour.
  - KGB requires one hour total QP crew control on a site to have crew disable insane QP wpns.
- Once QP systems disabled, Mindsnapper attacks and instantly kills every living thing in QP site area. Contaminates area for months (emits longitudinal EM wave radiation, which disrupt any life forms attempting to enter struck area). Sites nullified.
- Mind control over one crewman requires one weapon system plus up to 20-30 operators for controlling thoughts, hearing, perceptions, etc.
- *In Apr. 97, KGB building and deploying weapons and training crews. Ready for new attack 1999-2000.*

Aspects of Strong Local Asymmetry

- If local asymmetry is strong, conservation laws may be appreciably violated
  - Energy
  - Charge
  - Spin
  - Momentum
  - Angular momentum
- Properties of an object may differ appreciably for
  - Different observers
  - Different detecting means
  - One time to another
  - One position to another

© T E Bearden 1995, 1996

Mass Casualty Problem: Aerial Anthrax Spray on Washington, D.C.

- One terrorist, one light aircraft with spray tank
- One kilogram of anthrax
- Flies over greater metropolitan Washington, D.C.
- Calm night
- *1-3 million casualties result**
- *Most of those stricken will die*
- Presently little can be done to save the stricken civilians
- *Attacks on several population centers might produce some 10 million or more casualties*

© 1991 T E BEARDEN

*Per OTA Report to Congress, 1993

Present Status of the WMD Threat to the United States

- Many foreign nations are hostile to the U.S. and sponsor terrorists
- Some 25 nations have WMD or are acquiring them
  - BW agents and weapons
  - Chemical agents and weapons
  - Nuclear materials and weapons
- Thousands of students and émigrés
- Infiltrated teams, BW, other WMD already
- Castro guerrillas infiltrated over the years
- Can do unacceptable damage to U.S. now
- *May reach first strike knockout capability*

© 1998 T.E. BEARDEN

*Per OTA Report to Congress, 1993

Some Present Problems in the U.S. WMD Defense Capabilities

- No shelters (require overpressure, BW filtering, masks, showers, supplies)
- No stockpiled vaccines, medical supplies, immunoglobulins, masks, suits, food, fuel, generators, heaters, water purification units
- Totally insufficient medical facilities, personnel, and emergency response teams
- Triage, full martial law will be required
- No answer to massive decontamination problem
- State, county, city inadequately staffed and insufficiently trained for mass casualties
- Terrorist teams, BW agents, other WMD on site, waiting
- Water supplies, food, crops, farm animals also vulnerable
- Electric power grid, bridges, trains, railroads vulnerable
- Present medical science cannot save very many of the casualties, now or in the foreseeable future

© 1996 T.E. BEARDEN

Internal Terrorist Threat with Weapons of Mass Destruction: Now & Future

TODAY:

- Sabotage
- Chemicals
- Biological agents
- Nuclear materials
- Powerful explosives
- Assassination
- Kidnapping and hostages
- Contamination
- Shoulder-fired AD missiles
- Terrorism

FUTURE ADDITIONS:

- Orthodox EM weapons
- Energetics EM biological warfare
- Scalar EM (energetics) weapons
- Scalar EM disease induction
- Alteration of behavior and emotions
- Alteration of memory
- Direct control of thoughts, perception
- Quantum potential weapons
- Psychoenergetics weapons
- Action-at-a-distance effects

© 1992, 1996, 1998 T. E. BEARDEN

Attempt to Ban Energetics Weapons Worldwide

- On June 13, 1975, in a major speech Brezhnev urged the United States to agree on a ban of research and development of new kinds of weapons "more terrible than anything the world has known."
- On July 2, 1975 Brezhnev repeated his proposed ban on development of frightful new weapons, to a group of U.S. Senators.
- In August 1975, Ponomarev called for a ban on frightful new weapons of mass destruction.
- On Sept. 23, 1975 Gromyko presented a draft treaty agreement to the 30th Session of the UN General Assembly, for banning development of frightful new weapons.
- *No one had the foggiest notion what the Russians were talking about!*

© 1996 T.E. BEARDEN

Brezhnev's Schedule

"We are achieving with detente what our predecessors have been unable to achieve with the mailed fist...
...by 1985 our power will be so irresistible that we can do what we wish anywhere on the globe."

Leonid Brezhnev,
in a secret 1973 meeting in Prague
with European Communist leaders.

"By the early 1980's we and our allies will control the high seas, space, and most of the earth's land area."

Kosygin,
to Imelda Marcos,
July 1978

In 1985-87, the Soviets did attempt to move, still constrained by nuclear dead man fuzing. That attempt was blocked, primarily by scalar EM countering demonstrations and dead man fuzing.

In April 1986, the first Soviet lab prototype of a quantum potential weapon specifically designed toward 10-min neutralization of nukes worldwide was gingerly tested against our U.S. airstrike on Libya. It was weakly tested in the "induced EMI" mode, for deception.

By 1990 that weapon was deployed and a new attack preparation phase was entered, scheduled for 1997.

© 1996 T.E. BEARDEN

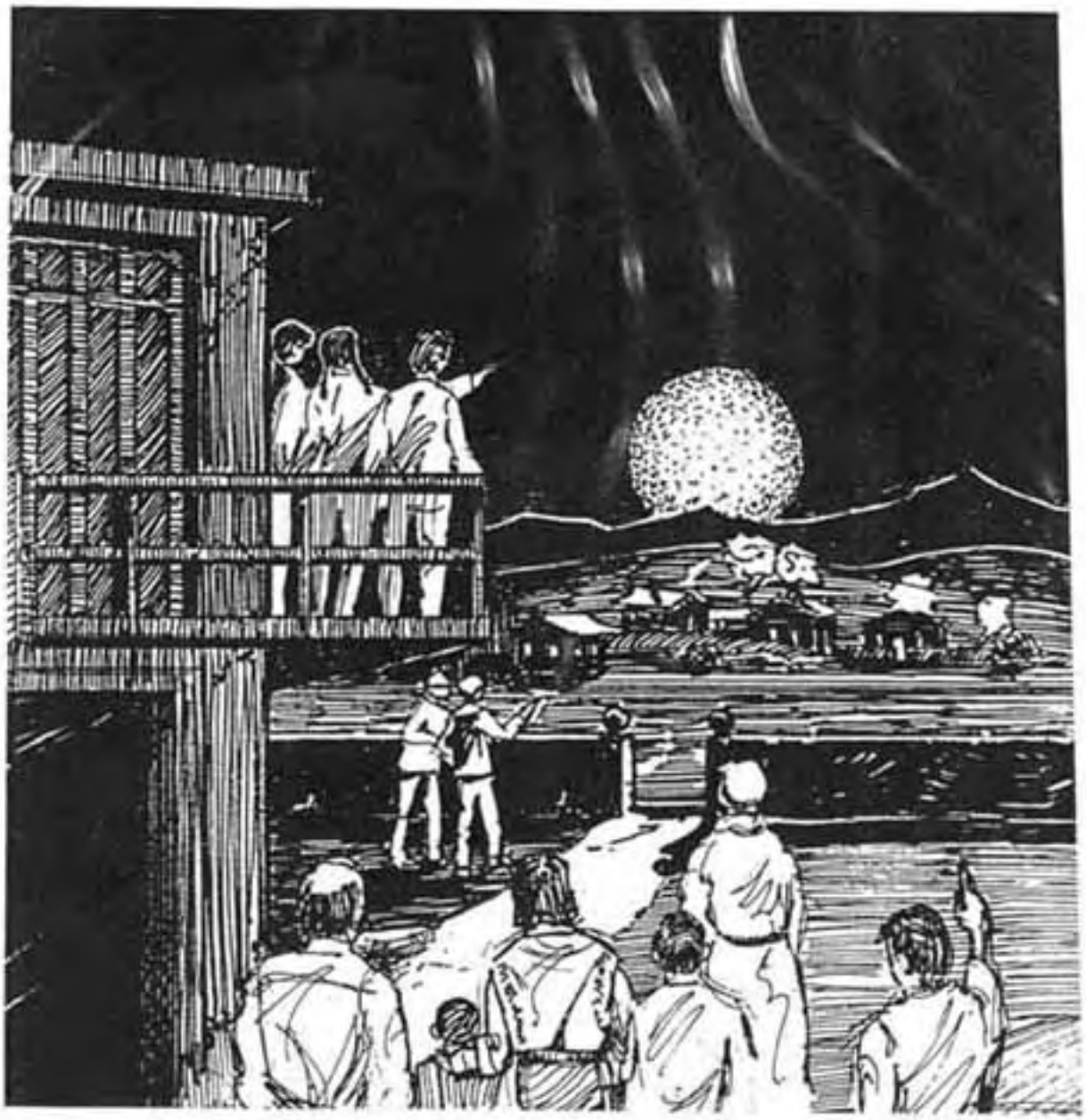

COLD EXPLOSION -- 9 April 1984 Near Kurils

And Formation and growth of spherical shell (globe)

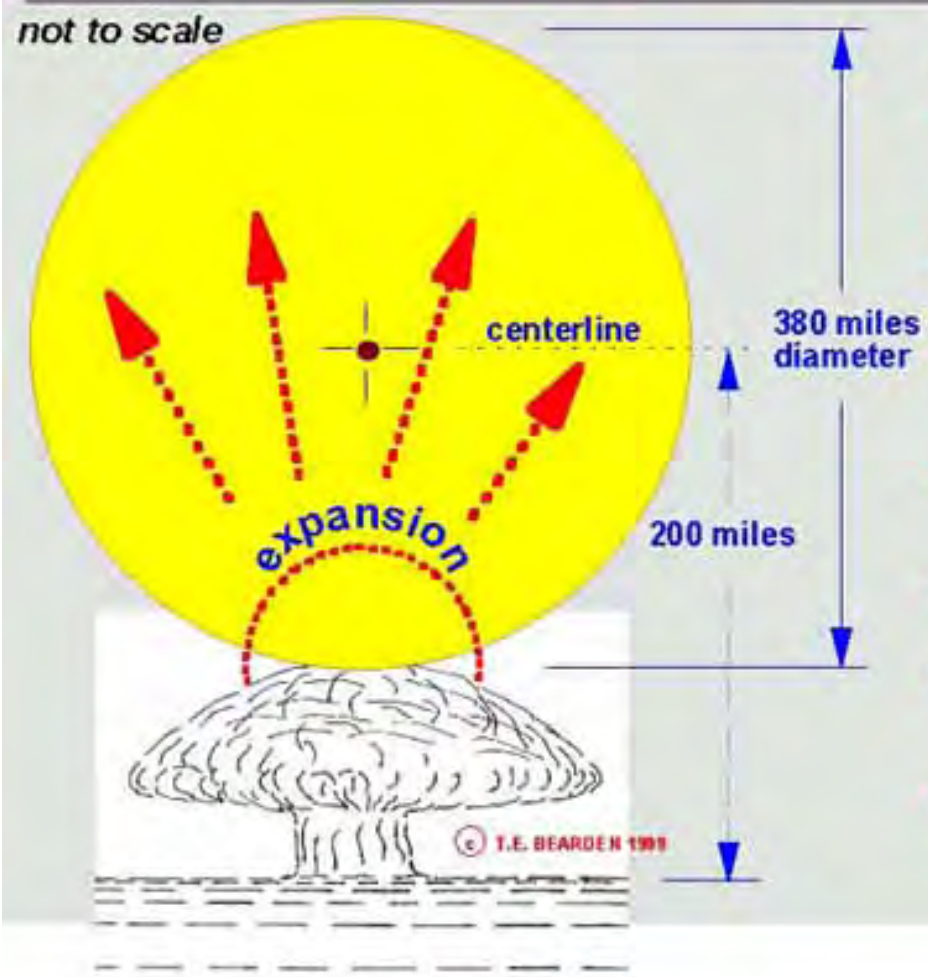

Sequence of Events

- Geyser of water rose rapidly from surface, mushroomed out
- Reached 60,000 feet altitude in two minutes
- Brilliantly glowing globe then appeared in top
- Globe increased greatly in size and altitude
- Reached diameter of 380 miles
- Center reached altitude of 200 miles
- Observed by multiple qualified pilots

COLD EXPLOSION -- 9 April 1984 Near Kurils

And Formation and growth of spherical shell (globe)

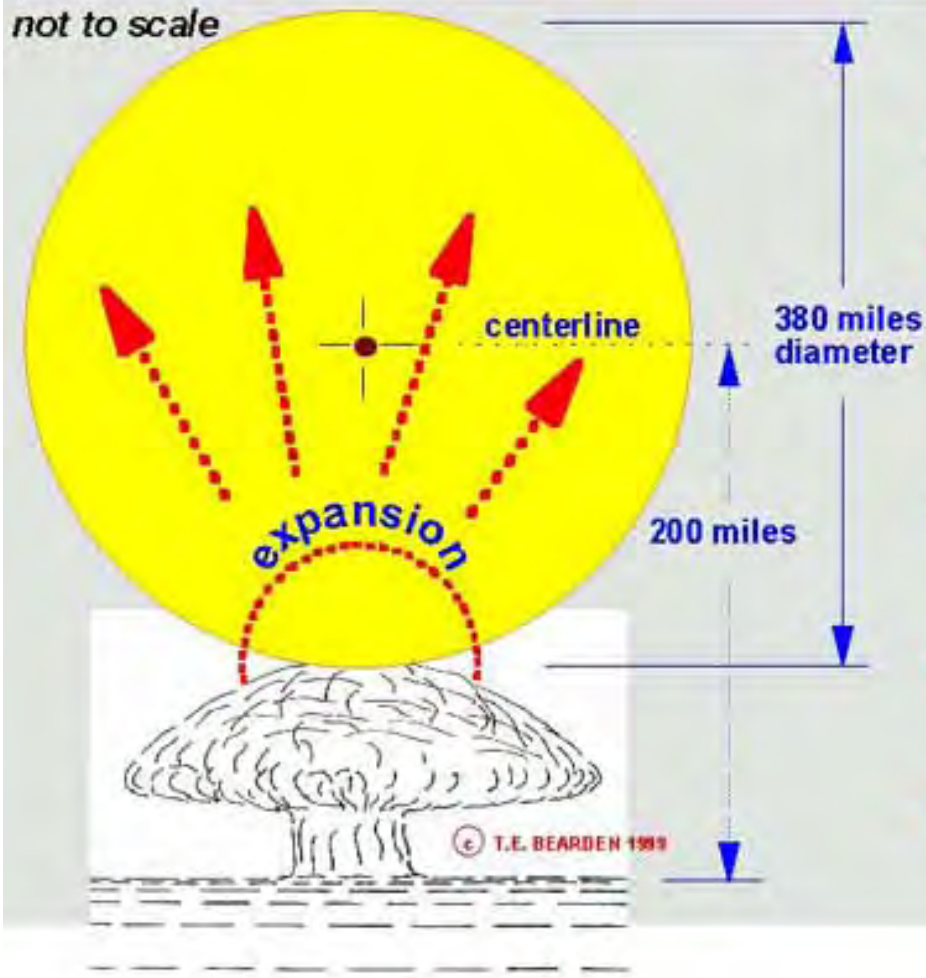

What They Were

- Superpotential interferometry using LWs
- First, a cold explosion just above surface
- Then small intense shell of glowing EM energy for 1-on-1 targeting
- Larger globe for large area as for ICBM targets approaching in zone
- With ST engines, can dud incoming nukes and all electronics
- Use in or out of Earth's atmosphere

COLD EXPLOSION -- 9 April 1984 Near Kurils
(Plus additional weapons effects)
JAL
Halo expanded to giant globe.
380 miles diameter, center over 200 miles
high.
© T.E. BEARDEN 1996

Countering Insane Mad Systems: Find Loophole, Exploit It

- If MADs not quantum potential systems, easily countered by instant QP strike which destroys targeted MAD weapons worldwide with certainty.
- Have to be certain of types of dead-man fuzing. All dead-man fuzing weapons must be included in the assured target list for the striking quantum potential weapon.

© 1995, 1996 T.E. BEARDEN

- Multiple targeted MADS require multiple vacuum engines in the striking quantum potentials.
- Uncertainty and risk introduced if not certain of all MAD systems and all dead-man fuzing systems.

- Newest generation psychoenergetic LW interferometry weapons can instantly take over minds of all personnel on targeted sites, with targeted crews quickly disarming their own MAD weapons' launch capability as well as the weapons themselves.
- Mindsnapper then kills all living things and contaminates sites.
- Next generation QP Psy-En weapons can disrupt and destroy minds of an entire targeted national population. The nature of warfare moves irrevocably to the human mind, where of course the fundamental problem arises anyhow.

Next Generation Counter to Both Sane and Insane MAD Systems

- ***Localized quantum potential in an area, used in psychoenergetics mode***
  - Gradually produces mild, continuous hypnotic state
  - Targeted population remains entirely conscious, functional
  - Internal "word thoughts" emerge directly in subconscious
  - Targeted persons all unaware of these "word thoughts"
  - Operates somewhat similar to "post hypnotic suggestion"
  - Gradually changes emotions, psychological outlook
  - Over a period of time, deviates and entrains entire target population's outlook, belief structure, temperament
- ***Moves Psywar to inside the human component***
- ***Human minds are the only battleground***
- ***Can be accomplished without overt signature***
- ***Countered only by inserting same methodology into deeper mind level (collective unconscious)***

Simultaneous Dudding of Nuclear Weapons Worldwide

- Via quantum potential joining U235 and Plutonium in warheads
- Includes weapons airborne, underwater, in storage
- These are *transmutations of the nuclides themselves*
- *Part of the initial barrage launched by Aum/Yakuza/KGB*
- *Will occur in the first minutes of the strategic strike, following psychoenergetically crew-disabling QP weapons*

Note: Duds both overt and covert nuclear weapons and weapons-grade materials -- including "suitcase-delivered" covert weapons on site in Russia which otherwise provide dead man fuzing

© T.E. BEARDEN 1996

Simultaneous Dudding of Nuclear Weapons Worldwide

- Via quantum potential joining U235 and Plutonium warheads
- Includes weapons airborne, underwater, in storage
- These are not explosions, but are *transmutations and increased fissioning rates*
- *Part of the initial barrage launched by Aum/Yakuza/KGB*
- *Will occur in the first minutes of the strategic strike*

© T.E. BEARDEN 1996

Note: Duds both overt and covert nuclear weapons and weapons-grade materials.

The Tom Bearden Website

Help support the research

Operation Divine Wind II

Slide 1

Slide 2

Slide 3

Slide 4

YAKUZA &
AUM SHINRIKYO

DIVINE WIND II

U.S.

★ **A secret coalition of Yakuza/Aum Shinrikyo and KGB/Communist forces plan to launch a massive, surprise energetics attack on the United States, given a low-risk opportunity.**

★ **Major weapons utilized will be the scalar EM (energetics) superweapons (including quantum potential weapons) that were developed, deployed, and operated by the KGB under the former Soviet Empire, and continuing after its dissolution.**

KGB

★ **Yakuza/Aum crews have extensively trained and test-fired, from on-site in Russia. They have *leased* operational control of the first three generation energetics superweapons (which work by superpotential interferometry).**

MINDSNAPPER AND
PSYCHOENERGETICS

★ ***The Escalation Phase of interdicting and destroying actual U.S. targets (e.g., TWA-800, two A-10s) is already underway.***

★ ***The first blow in the Strike Phase will dud all nuclear weapons and weapons materials worldwide, in minutes; destroy special ship and energetics weapon sites instantly, disable 99% of the U.S. population instantly, and kill 80% of targeted populations in from 10 minutes to 3 days.***

© 1995, 1996 T.E. BEARDEN

QUANTUM
POTENTIAL

YAKUZA &
AUM SHINRIKYO

U.S.

DIVINE WIND II

- ★ A secret coalition of Yakuza/Aum Shinrikyo and KGB/Communist forces plans to launch a massive, surprise energetics attack on the United States and its allies, given the first low-risk opportunity.

© 1995, 1996, 1999 T.E. BEARDEN

KGB

- ★ Attack was thwarted twice in 1997 by a small nation countering with QP weapons.
- ★ KGB psychoenergetics counter for the last QP weapon counter was tested in April 1997.
- ★ Ready time for a new scheduled attack is latter quarter 1999 through first half of 2000.

YAKUZA &
AUM SHINRIKYO

DIVINE WIND II

© 1995, 1996 T.E. BEARDEN

- ★ **A secret coalition of Yakuza/Aum and KGB/Communist forces will launch a massive, surprise, strategic attack on the United States in 1997.**
- ★ Major weapons utilized will be the scalar EM (energetics) superweapons that were developed, deployed, and operated by the KGB under the former Soviet Empire, and continuing after its dissolution.
- ★ Yakuza/Aum crews have extensively trained and test-fired, from on-site in Russia. They have *leased* operational control of the energetics superweapons.
- ★ *Escalation Phase of interdicting and destroying actual U.S. targets (e.g., TWA-800) is already underway.*
- ★ *The first blow in the Strike Phase will dud all nuclear weapons and weapons materials worldwide, in minutes; destroy special ship and energetics weapon sites instantly, and kill 80% of targeted populations in 3 days.*

KGB/COMMUNISTS

MINDSNAPPER

QUANTUM
POTENTIAL

OPERATION DIVINE WIND II

Three Phases and Support

Operational Phases

- Phase I: On-Site Training Phase (Completed)
- Phase II: Escalation Phase (In Progress)
- Phase III. 1997 Strategic Strike on the U.S.
  - *First strike (QP) in Phase III duds all nuclear weapons and nuclear powerplants worldwide, in minutes*
  - *Psychoenergetic strike (QP) disables people instantly*
  - *Mindsnapper attack of special assets for 100% success*
  - *QP initiation of fast-acting, lethal diseases kills 80% of targeted populations in three days or less*

© 1995, 1996 T.E. BEARDEN

Support Plans

- Plan A: Feints, Deception, Sabotage, and Terrorism
- Plan B: Testing and Test Range
- Plan C: Worldwide Weather Engineering
- Plan D: Strategic and Combat Intelligence

Advanced EMBW Applications

- Covert EMBW: Examples
  - Activate materials and their potentials with ST disease engines. Potentials superpose and their infolded ST dynamics diffuse
  - Activate water's structuring (H-bonding) potential with disease engines
  - Bias electrical power grid ground fields by weak diseases
  - Employ disease-structured quantum potential in distant area
- Overt death ray (mind snapper)
  - Powerful scalar EM pulse in target area "jerks" rate of flow of time
  - The "time snap" sharply separates mind from body and each cell
- EMBW CM:
  - Irradiate bodies with longitudinal EM waves; self-converts to t-pumping and produces exact amplified ST antiengine
  - Antiengine arises out of local ST, affects all parts of all cells
  - Cells are t-charged with antiengine structure
  - Continuing action restores regenerative and immune systems and reverses cellular damage

© T.E. BEARDEN 1995, 1999

EM Biological Warfare (EMBW)

- KGB/Communists have developed highly effective
  - Electromagnetic biological warfare (EMBW)
  - Counters to orthodox biological warfare
  - Mass death ray weapons
    - Small version of "mindsnapper" tested in Afghanistan
    - Killed occupants in two villages, in separate strikes
    - Unusual aspects (so-called "smerch" gas)
- Russia/KGB is the only group with a complete counter to biological warfare, either covert or overt, and to EMBW
- EMBW (covert and overt) is a preferred option for KGB
  - MAD Doctrine is completely destabilized for a sufficiently covert Russian EMBW strike
  - Situation has existed for at least two decades
  - Can alter germs, bacteria, viruses of specific kind, in a specific target area, to produce antibiotic-resistant strains
  - Can induce any kind of cellular disease or damage at a distance
- U.S. national characteristic: no reaction to slowly increasing threat

© T.E. BEARDEN 1999

Microwave Radiation of U.S. Embassy in Moscow

Former U.S. Embassy in Moscow.

BACKGROUND

- Began in latter 1950s
- Discovered on VP Nixon's trip
- Initially thought to be *nuclear* radiation (Discovered w/Geiger counter?)
- High level target -- U.S. Ambassador
- Guarantees personal attention of:
  - U.S. Ambassador to USSR
  - U.S. President
  - NSA, CIA, DIA, NSC, etc.
  - Top consulting scientists
  - Leading U.S. scientific institutions
- Two U.S. Ambassadors died, another sickened
- Anomalous health changes in personnel, only in zero-field (zero pot'l gradient) areas!
- Four U.S. Presidents requested Soviets cease
  - Cut from 18 watts/sq cm to 2
  - Then again increased
- No one could understand what was going on
- Aluminum screens were placed over windows
- Moscow was declared a hazardous duty zone

© 1995, 1998 T.E. BEARDEN

Pentagon EMI Studies, 1989

Washington Post, 22 Jan. 1989, p. A4

- Analysts of severe EMI effects in strike on Libya, 1986
  - performed major 3-year, 66-man study
  - Blamed effects on U.S. forces' own signals
  - Did not know of any other "signals" present
  - Knew nothing of quantum potential weaponry, energetics weaponry
- 7-month preliminary study
  - Severe EMI Problem exists
  - EMI shielding often waived in our weapon systems
  - Thousands of conflicts possible
- Also studied UH60 Blackhawk helicopter problems (which *were* due to its lack of good EMI shielding, and not quantum potentials)
  - uncommanded turns
  - Five EMI crashes 1982-1989
  - $175 M program to shield it
- So found that U.S. transmission combinations can
  - Affect aircraft flight control
  - Turn off fuel supply
  - Cause uncommanded dive/turn
  - Bring down U.S. warplanes
- *Actually, Libyan EMI was induced by Soviet quantum potential tests which can do all those things and much more*

© 1996 T.E. BEARDEN

EM Missile Practice

- EM Missile Practice
  Latter Sept. - Early Nov. 1996
  Melbourne, Australia
- Deception: Using EM Missile to Reinforce Notion of SAM Attack
  Saturday evening, Nov. 16, 1996
- Intelligence Probe: Insuring U.S. Still Unaware of Energetics Weaponry
  Thursday, December 12th, 1996
- EM Missile Strike, Offset from Night Shuttle Launch, Cape Canaveral, Florida
  The Smoking Gun in November 1985
- Distant Operator Onsite in Russia Slew Away Registration Point
  Marker Beacon over Night Shuttle Launch, 26 November, 1985
- EM Missile Practice and Deception
  November 17, 1996

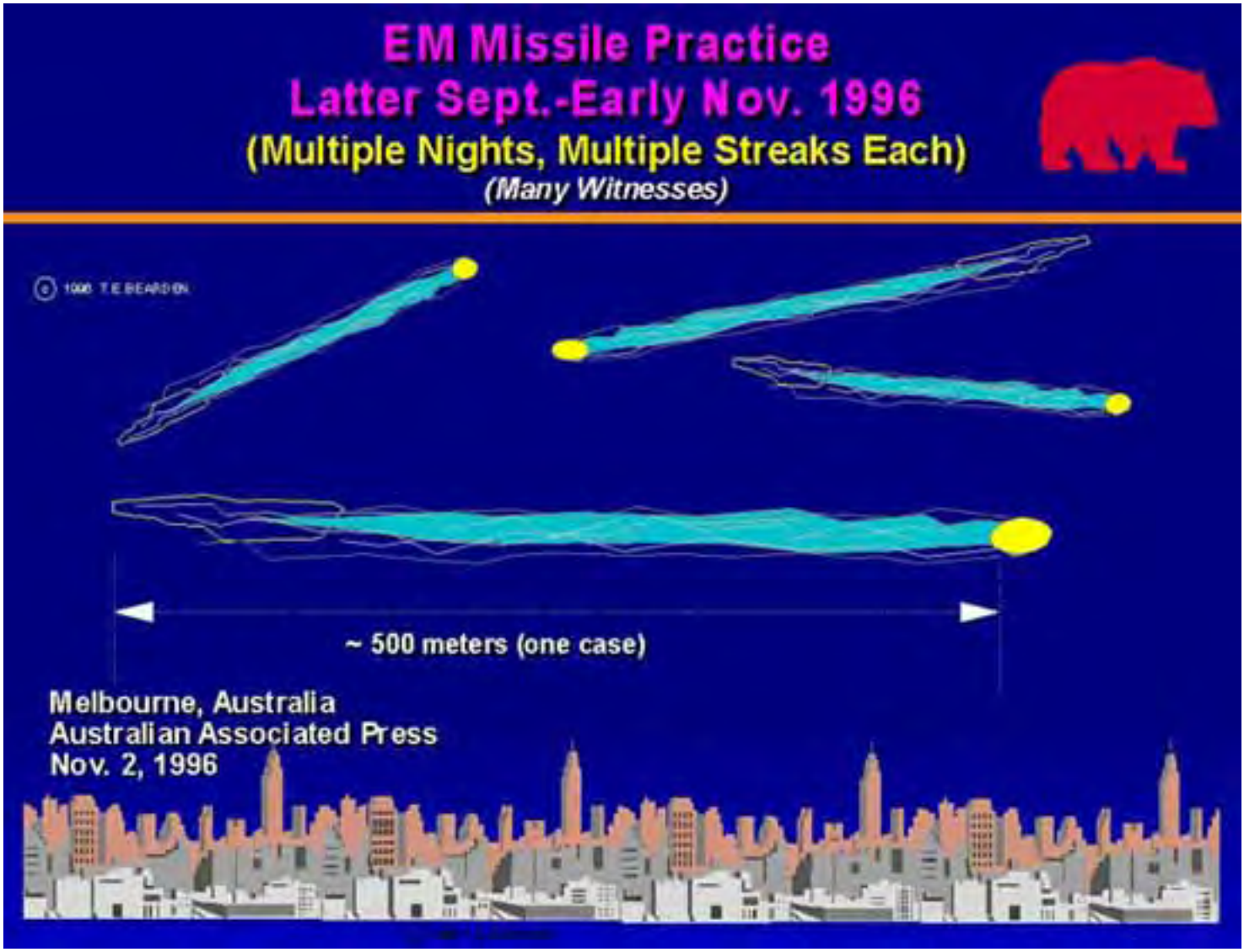
EM Missile Practice
Latter Sept.-Early Nov. 1996
(Multiple Nights, Multiple Streaks Each)
(Many Witnesses)
© 1996 T.E.BEARDEN
~ 500 meters (one case)
Melbourne, Australia
Australian Associated Press
Nov. 2, 1996

Deception: Using EM Missile to Reinforce Notion of SAM Attack

Saturday Evening
Nov. 16, 1996

Note: Meteor shower was forecast, which provided perfect decoy to FBI investigators, to steer them off the true scent.

Pakistan International Airlines Flight 712, just after takeoff from John F. Kennedy Airport, on path similar to that taken by TWA Flight 800, July 17, 1996

© T.E. BEARDEN 1996

Intelligence Probe: Insuring U.S. Still Unaware of Energetics Weaponry
Thursday
Dec. 12, 1996
Pilot sighted what he called a "green flare".
No danger, no evasive action.
Saudi Arabian Airlines 747
en route from Riyadh, Saudi Arabia
to John F. Kennedy Airport.
At 12,000 ft., not far from where
TWA Flight 800 was killed on July 17, 1996
FBI: "Probably a meteorite."
© T.E. BEARDEN 1996

EM Missile Strike, Offset from Night Shuttle Launch

Cape Canaveral, Florida

PHOTO BY BOB GLADWIN

© T.E. BEARDEN 1995, 1999,

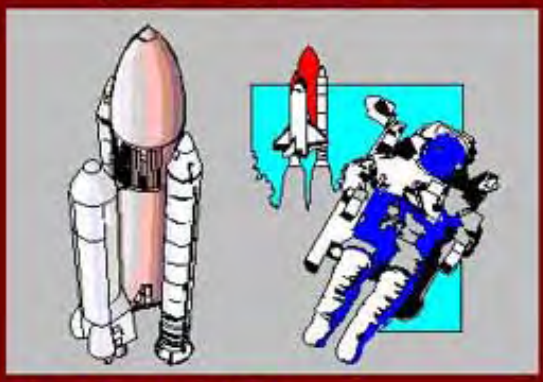

The Smoking Gun in Nov. 1985

Distant Operator Onsite in Russia
Slews Away Registration Point
© T.E. BEARDEN 1995, 1999.
MARKER BEACON
Over Night Shuttle Launch
Cape Canaveral, Florida
26 Nov 1985
Photographed by George Suchary
28 Nov 1985
Two weeks later, the same weapon killed the Arrow DC-8
at its takeoff from Gander, Newfoundland.

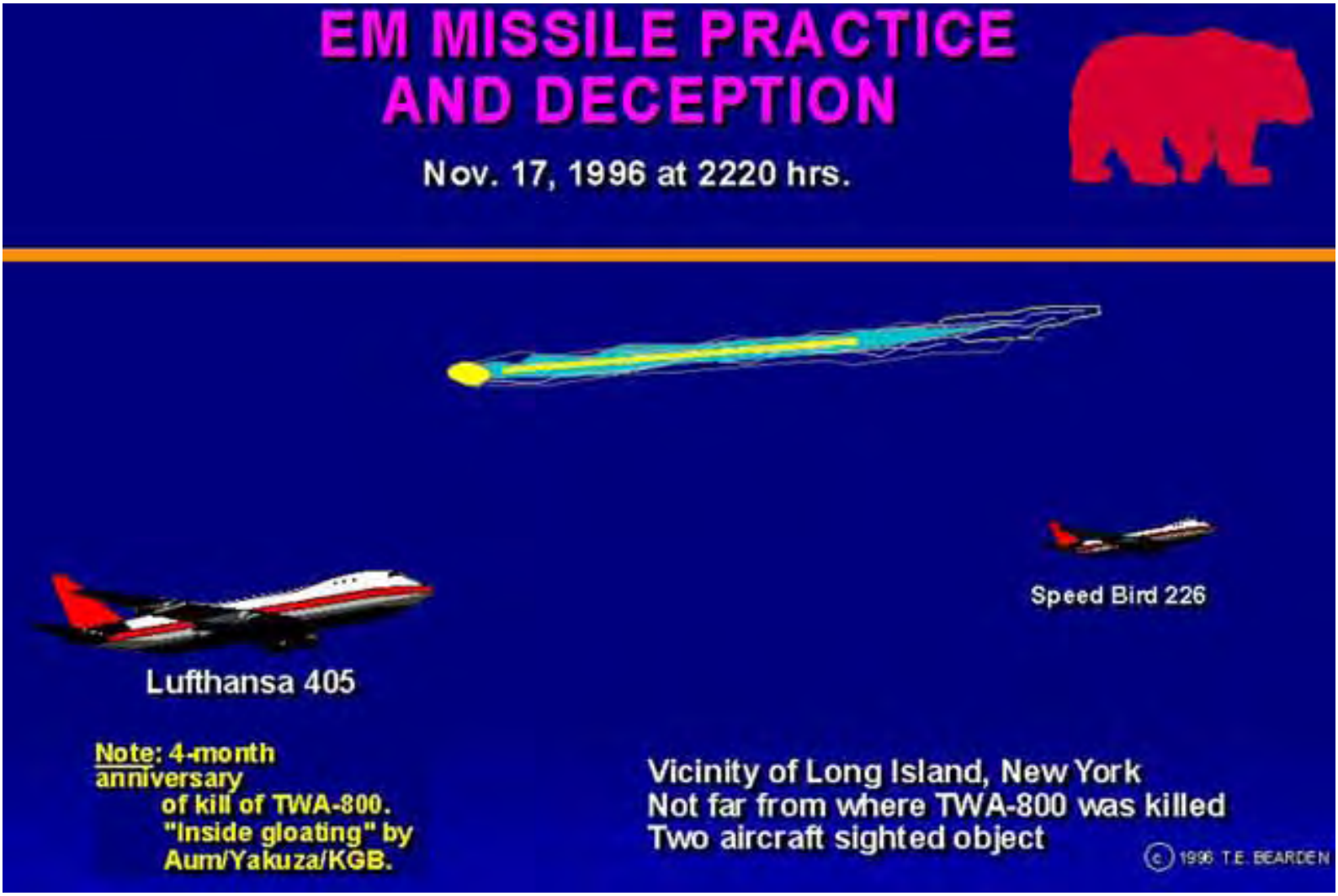
EM MISSILE PRACTICE
AND DECEPTION
Nov. 17, 1996 at 2220 hrs.
Speed Bird 226
Lufthansa 405
Note: 4-month
anniversary
of kill of TWA-800.
"Inside gloating" by
Aum/Yakuza/KGB.
Vicinity of Long Island, New York
Not far from where TWA-800 was killed
Two aircraft sighted object
© 1996 T.E. BEARDEN

Subdivisions of Soviet Energetics

NONLIVING SYSTEMS

Energetics

- Nonliving systems
- Scalar Interferometry
- Action-at-a-Distance
- Quantum Potential
- Vacuum Engines
- Spacetime Structuring
- Material, Field Effects
- Nuclei, Lattice Changes
- Hidden EM Variables
- SWZ Effects

LIVING SYSTEMS

Bioenergetics

- Living Systems (Bodies)
- Cells, cellular changes
- Master Cell Control (Popp)
- Spacetime Structuring
- Disease Induction, Remission
- Action-at-a-Distance
- Quantum Potentials
- Scalar Interferometry
- Hidden EM Variables
- SWZ Effects

Psychoenergetics

- Living Systems (Minds)
- Thoughts, Memories, Emotions
- Conscious/Unconscious Minds
- Spacetime Structuring
- Species, Biospheric Minds
- Action-at-a-Distance
- Quantum Potentials
- Scalar Interferometry
- Hidden EM Variables
- SWZ Effects

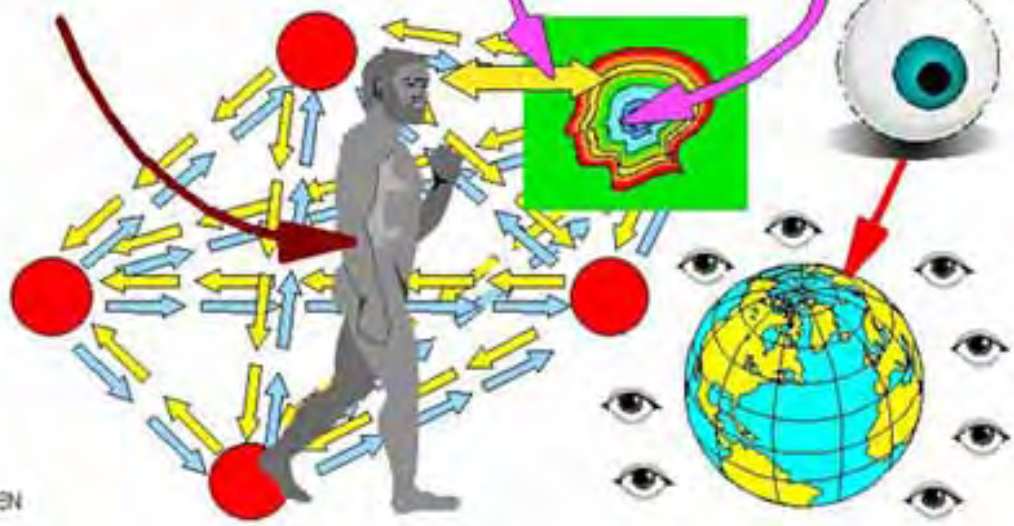

© 1996 T.E. BEARDEN

Communism's Goal

- "War to the hilt between communism and capitalism is inevitable. Today, of course, we are not strong enough to attack... To win we shall need the element of surprise. The bourgeoisie will have to be put to sleep. So we shall begin by launching the most spectacular peace movements on record. There will be electrifying overtures and unheard-of concessions. The capitalist countries, stupid and decadent, will rejoice to cooperate in their own destruction. They will leap at another chance to be friends. As soon as their guard is down, we shall smash them with our clenched fist."

Dimitry Z. Manuilsky
Lenin School of Political Warfare, Moscow
(circa 1934)

© 1996 T.E. BEARDEN

Manuilsky's Goal vs. Status Today

Manuilsky, 1934	Situation, Dec. 1996
▪ War is inevitable.	▪ Has not changed.
▪ Not strong enough to attack now.	▪ Strong enough now; preparations completed. Need right opportunity.
▪ Need surprise.	▪ Have achieved total surprise.
▪ Must put us to sleep.	▪ We are sound asleep.
▪ Need most spectacular peace movement on record.	▪ Done. We think the Russian threat gone, cold war ended.
▪ Electrifying overtures, unheard-of concessions.	▪ Done, and still occurring every day. It has worked beautifully.
▪ Capitalists will cooperate.	▪ We are cooperating in spades!
They will leap to be friends.	▪ We've leaped, and are leaping.
▪ They will let down their guard.	▪ No ABM, junked lots of nukes, shrunk our forces to the bone.
▪ We'll strike them then.	▪ They would have struck (twice) in 1997, but for deterence by another nation (not U.S.) having QP weapons
	▪ *They are still looking for a risk-free opening to strike*

© 1996, 1997 T.E. BEARDEN

Professor Hellman, German Scientist Released from Work in Soviet Union

- Worked in Soviet Union after WWII
- Eventually escaped to Germany, then to Brazil (handsome offer)

© 1996 T.E. BEARDEN

- Took part in highly unusual Soviet energetics development and experiments
- Large areas of the sea could be and were *suddenly frozen*
- *No particular attention was paid to this information by highly qualified scientists*
- *In intelligence terms, this is A-1 information of the highest caliber*
- *Bohm also was invited to Brazil, which started an energetics weapon program. Brazil developed such weapons including weak quantum potential weapons (0.95 confidence)*

Hemispheres of Light

- March 20th, 1969
  Caribbean and Western North Atlantic
- Hemisphere and Globes, 1977
  24 March, 1977
- Virgin Islands Incident
  August 1969
- Typical Shield Test, Northern Route to Japan
  June, 1982

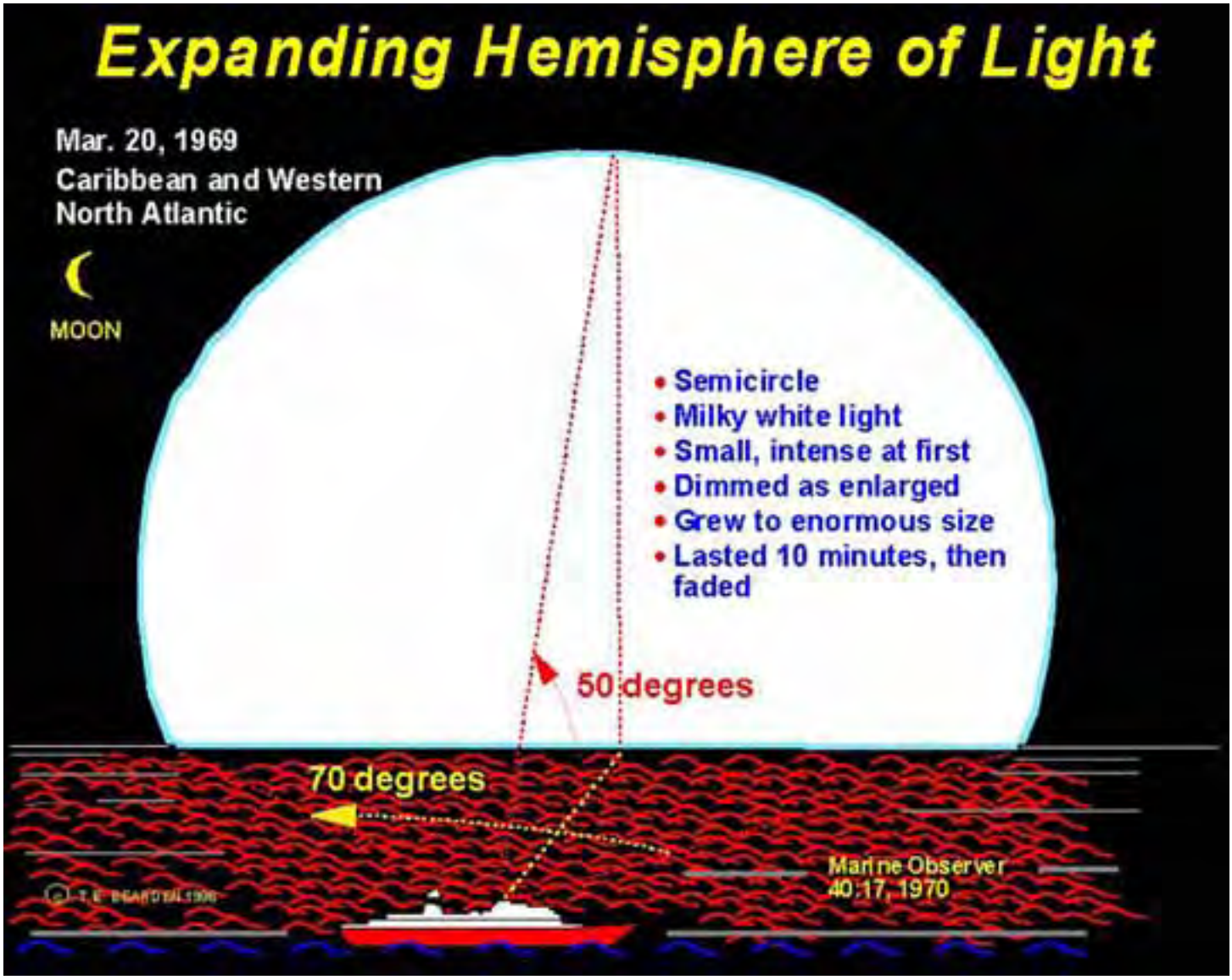
Expanding Hemisphere of Light
Mar. 20, 1969
Caribbean and Western
North Atlantic
MOON
• Semicircle
• Milky white light
• Small, intense at first
• Dimmed as enlarged
• Grew to enormous size
• Lasted 10 minutes, then faded
50 degrees
70 degrees
Marine Observer
40:17, 1970

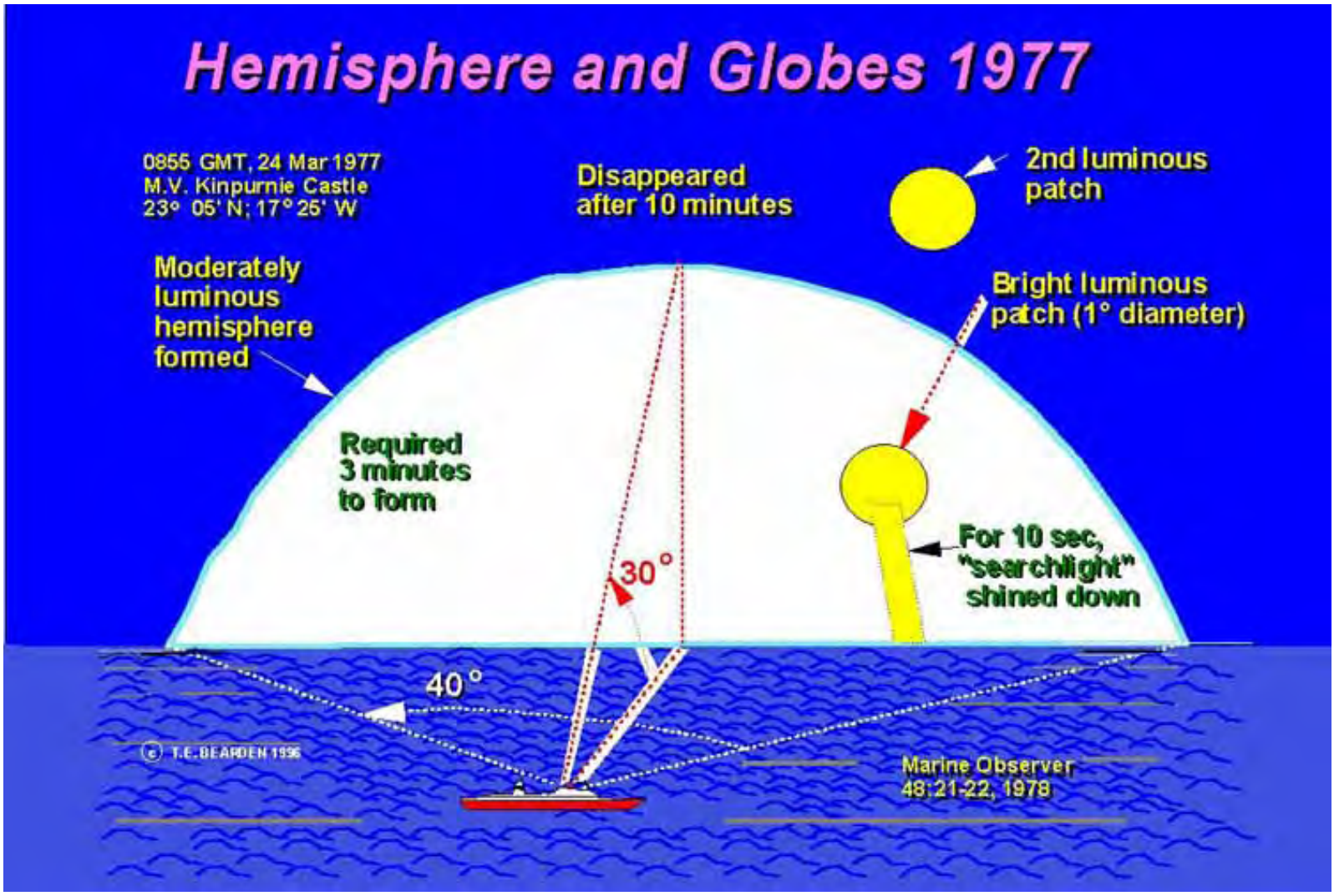
Hemisphere and Globes 1977
0855 GMT, 24 Mar 1977
M.V. Kinpurnie Castle
23° 05' N; 17° 25' W
Disappeared after 10 minutes
2nd luminous patch
Moderately luminous hemisphere formed
Bright luminous patch (1° diameter)
Required 3 minutes to form
For 10 sec, "searchlight" shined down
30°
40°
© T.E. BEARDEN 1996
Marine Observer 48:21-22, 1978

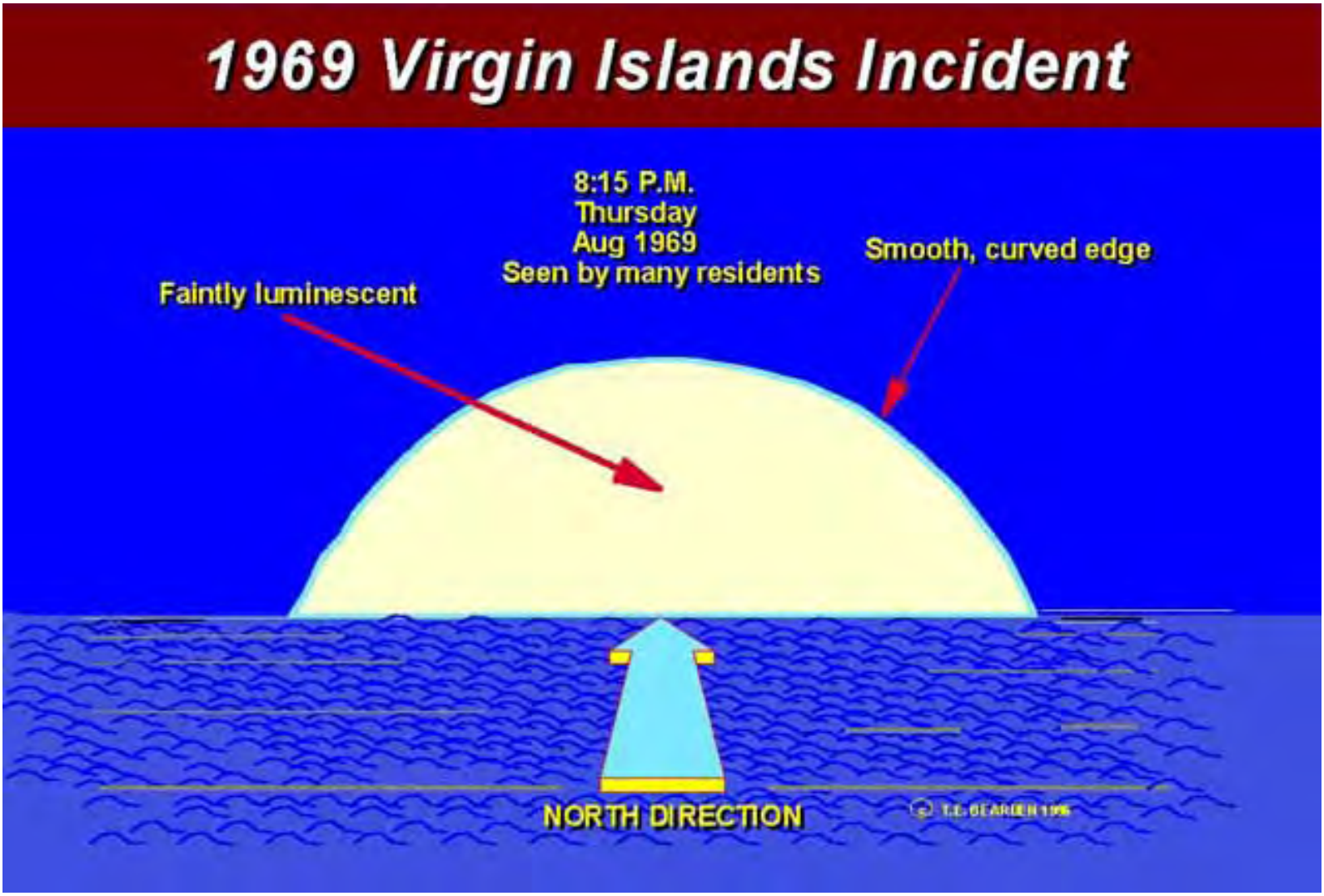
1969 Virgin Islands Incident
8:15 P.M.
Thursday
Aug 1969
Seen by many residents
Smooth, curved edge
Faintly luminescent
NORTH DIRECTION

Typical Shield Test, Northern Route to Japan
18-27 km diameter
Asahi Evening News, Tokyo
June 22, 1982
Multiple tests seen per month, for years.
Pilots simply ceased reporting them.

How Could Such Superweapons Ever Be Concealed?

- Arthur C. Clarke's law states:

  "Any sufficiently advanced technology is indistinguishable from magic."

- To U.S. scientists, "magic" means "impossible"
- Longitudinal EM waves and LW interferometers have been regarded as fantasy and impossible
- To deceive foe on rather open use of unknown technology without discovery:

  "Disguise its uses as understandable accidents, human error, acts of nature, other known technology, etc."

© T.E. BEARDEN 1996, 1999

Soviets Easily Concealed These Superweapons for Four Decades

- Intensive Soviet deception plan utilized
  - Embedded in other weapon system tests
  - Made to resemble natural acts, accidents, etc.
  - Open science releases coordinated to show Russian scientists worked on "normal" science
- West thought Russian scientists inferior
- U.S. scientific community was and is dogmatic, and fiercely suppresses real scientific innovation
- Terribly flawed electrodynamics not ruthlessly shaken and changed in West

© T.E. BEARDEN 1996, 1999

- West had no basis for understanding energetics

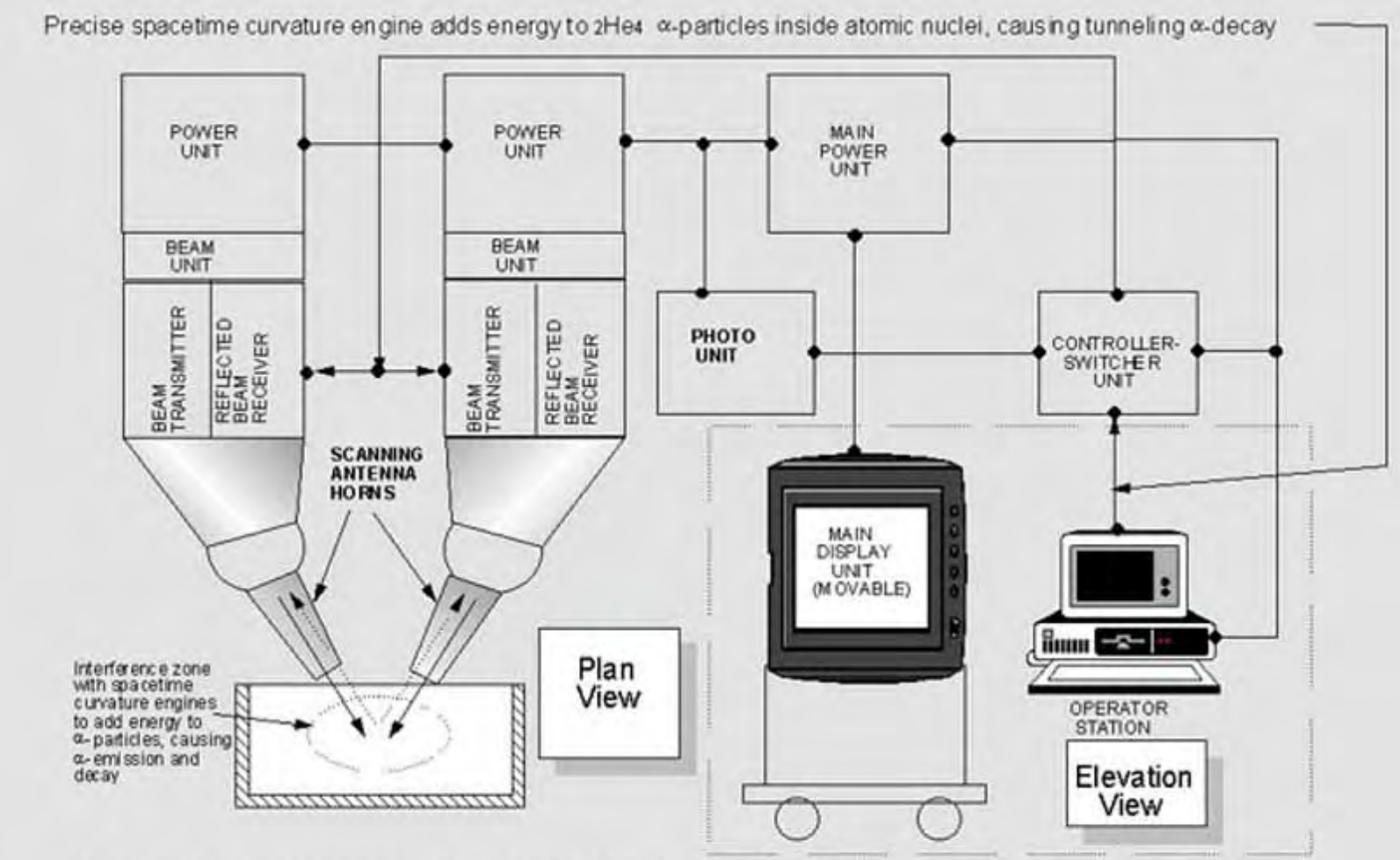

Figure 26. Microscope-type, laser-like interferometer for inducing quick α-decay in samples of otherwise longer-lived isotopes.

© T.E. BEARDEN 1998

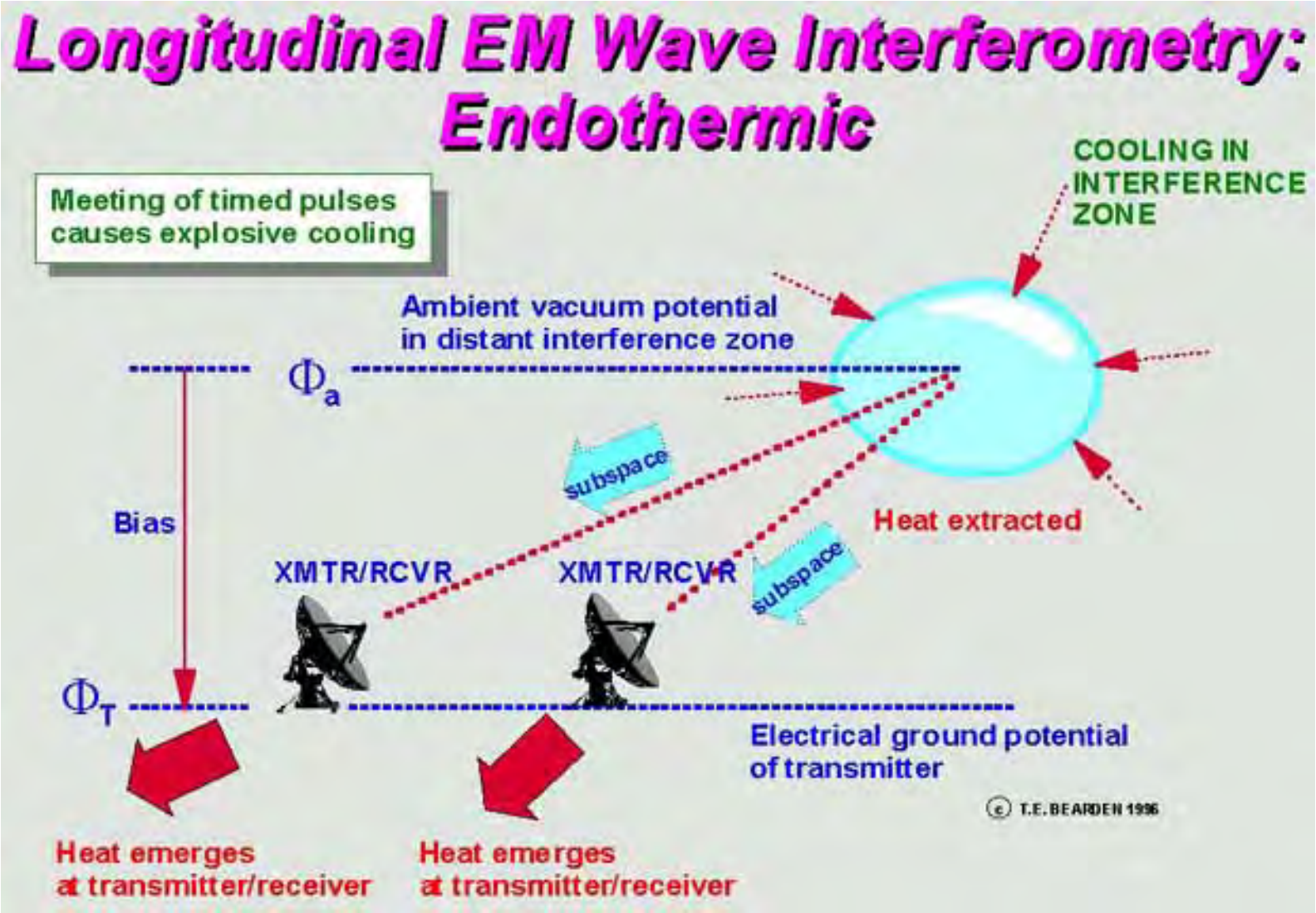
Longitudinal EM Wave Interferometry: Endothermic
Meeting of timed pulses causes explosive cooling
COOLING IN INTERFERENCE ZONE
Ambient vacuum potential in distant interference zone
Φ_a
subspace
Bias
Heat extracted
XMTR/RCVR
XMTR/RCVR
subspace
Φ_T
Electrical ground potential of transmitter
© T.E. BEARDEN 1996
Heat emerges at transmitter/receiver
Heat emerges at transmitter/receiver

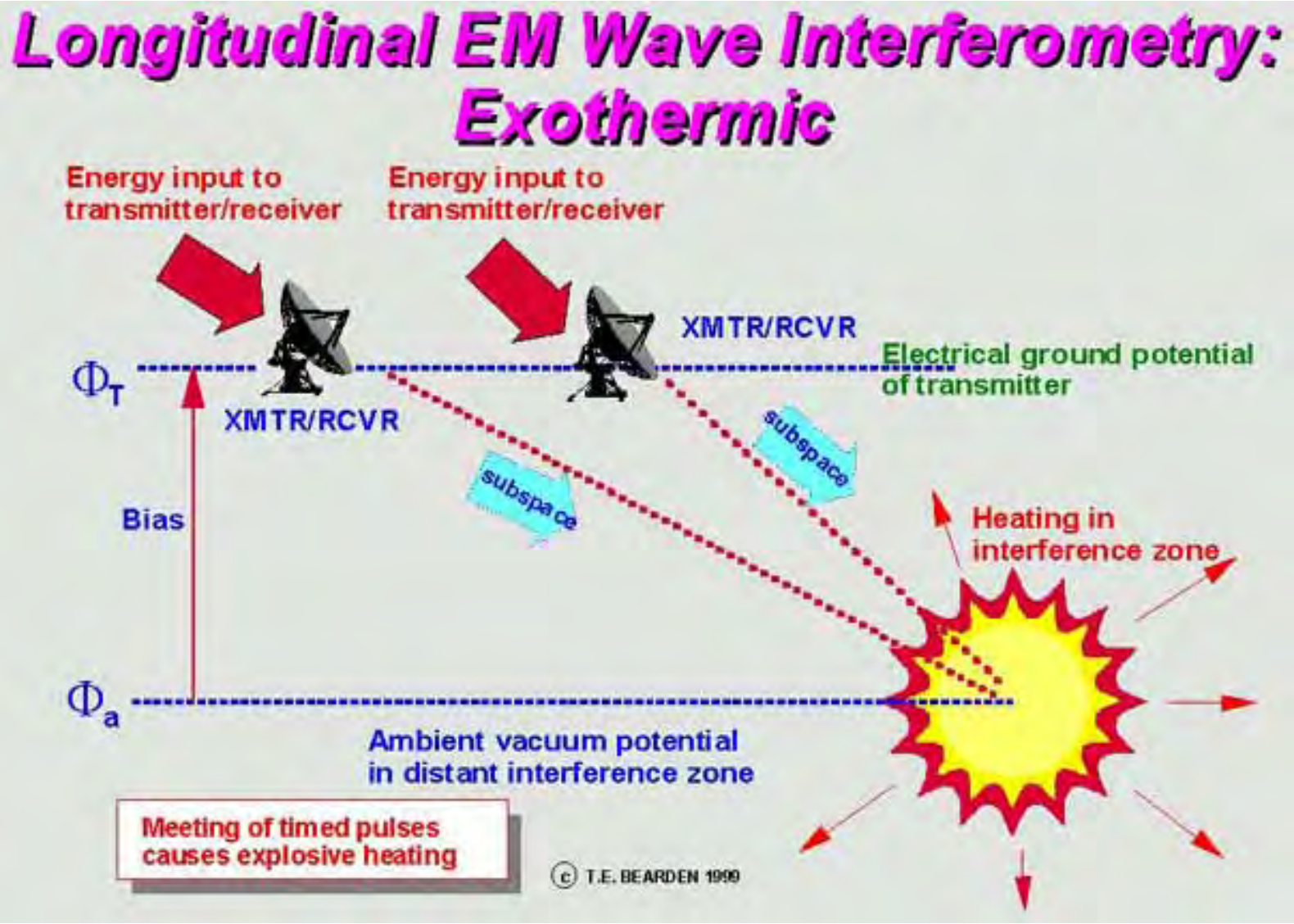
Longitudinal EM Wave Interferometry: Exothermic
Energy input to transmitter/receiver
Energy input to transmitter/receiver
XMTR/RCVR
XMTR/RCVR
Electrical ground potential of transmitter
Φ_T
subspace
subspace
Bias
Heating in interference zone
Φ_a
Ambient vacuum potential in distant interference zone
Meeting of timed pulses causes explosive heating
© T.E. BEARDEN 1999

The Tom Bearden Website

Help support the research

U.S. Air Attack on Libya
April 1986

- Slide 1
- Slide 2
- "Washington Post" Article
  January 22, 1989

U.S. Airstrike on Libya
April 1986*
• 33 U.S. AIRCRAFT IN STRIKE
• MANY HIGH-POWERED TRANSMITTERS
– COMMUNICATIONS
– JAMMERS
– RADARS
• SEVERE, UNEXPECTED "EMI" ENCOUNTERED
– ONE F-111 DOWNED
– NUMEROUS WEAPONS WENT ASTRAY
– THREE FOREIGN EMBASSIES DAMAGED
– SEVEN AIRCRAFT FORCED TO ABORT
• COMMANDERS: "US OR THEM?"
*Washington Post, 22 Jan. 1989, p. A4
Mild quantum potential weapon tested against electronics in U.S. aircraft and missiles
EM energy arises from every point in spacetime inside the electronics

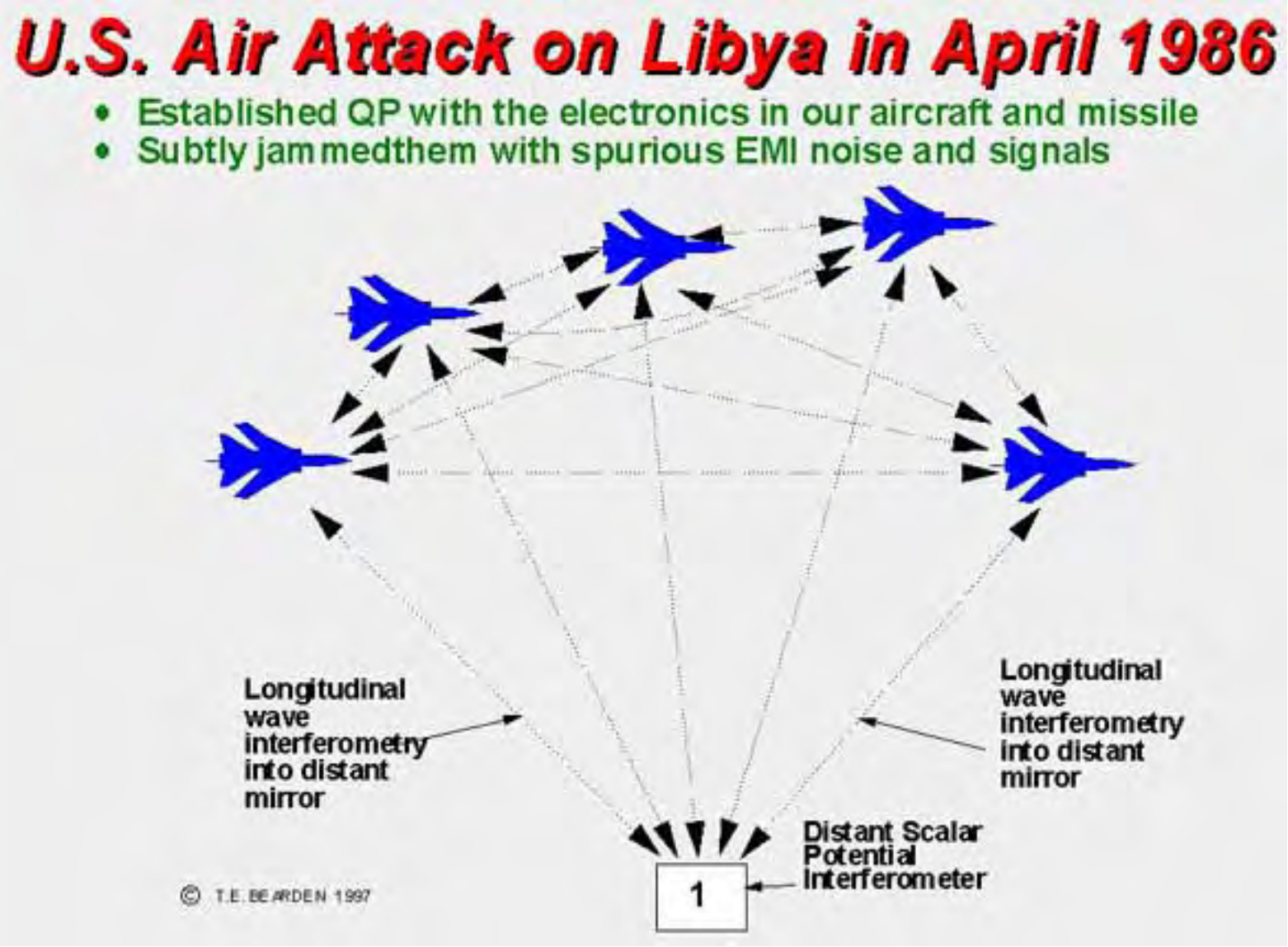
U.S. Air Attack on Libya in April 1986
• Established QP with the electronics in our aircraft and missile
• Subtly jammedthem with spurious EMI noise and signals
Longitudinal wave interferometry into distant mirror
Longitudinal wave interferometry into distant mirror
Distant Scalar Potential Interferometer
1
© T.E. BEARDEN 1997

Lightning Wall

- Aircraft on course of 270 degrees
- Approached "solid wall of lightning" in an otherwise cloudless sky
  - From very high altitude to near the water
  - Extended north-south as far as one could see
- Radar scope clear
- *Rigged aircraft for heavy weather*
- *Plunged directly through wall*
- *Wall was very thin*

circa 1959-1960
Interview with Patrol plane commander
U.S. Navy P5 aircraft
Over Atlantic, 200 miles east of Norfolk

© T.E. BEARDEN 1996

Lisitsyn's Report: Brain Code Broken

- THEORY DEVELOPED AND FITTED
- HYSTERESIS MEMORY LOOP
- CONTROLLED EM INDUCTION
  - IMAGES
  - SENSATIONS
  - PREDETERMINED EMERGENCE
- 23 EEG BANDS
  - UP TO 8.1×10^{20} HZ
  - 11 INDEPENDENT CHANNELS

S.K. Lisitsyn, "New Approach to the Analysis of Electroencephalograms," DDC Report AD73005, p. 16-25.

JC1-34

© 1979, 1985, 1991 T.E. BEARDEN

Large Longitudinal EM Wave Interferometer (LWI) Accident

- 1958 nuclear explosion near Urals
  - Contaminated 1200 square kilometers
  - Signature of large LWI accident
  - Buried atomic wastes suddenly exploded
  - Region contaminated to this day
- Soviets were well along with advanced LWI prototypes and testing
  - In Jan. 1960 Khrushchev announced these forthcoming "fantastic" weapons
  - 1958 difficulties would have been resolved by 1960

© T.E. BEARDEN 1990, 1999

Large Longitudinal EM Wave Interferometer (LWI) Accident

- Expected cause of 1958 accident
  - Huge LW energy beams built up
  - Catastrophic short-out in transmitter
  - LW energy flashed over into earth and spread
  - Struck and fissioned stored nuclear wastes
- Developed new safety circuits
  - For transmitter short-out, instantly activates to hold LW beam energy and prevent flash-over
  - Similar accident happened in 1986 at Chernobyl, except private U.S. group blew that transmitter to prevent catastrophic quake in California

© T.E. BEARDEN

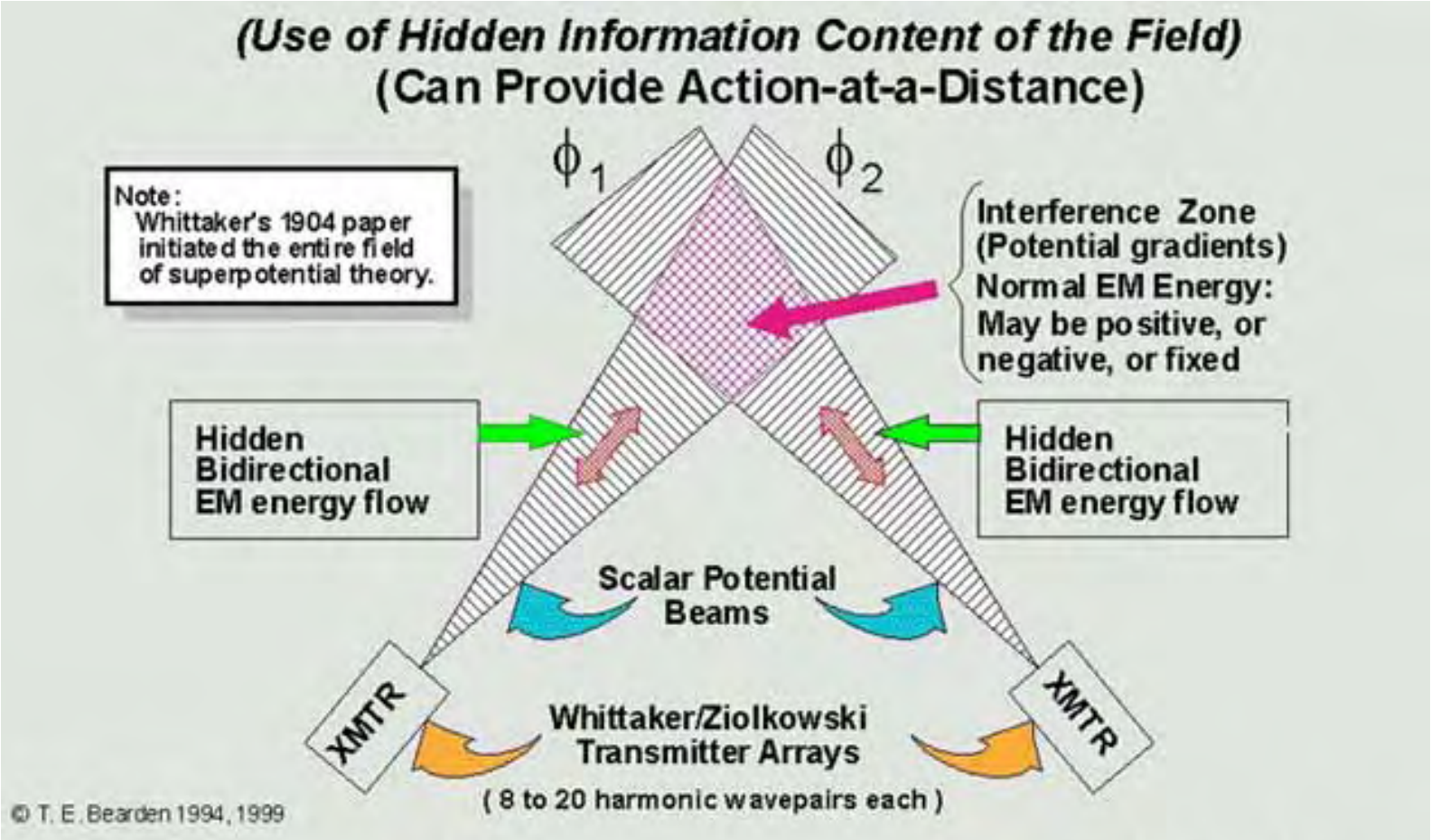

Figure 5. Scalar potential interferometry (between the two sets of bidirectional longitudinal EM wavepair functions) produces all EM force fields and waves.

Two Types of Mutual Assured Destruction (MAD) Systems

- ***Sane system:***
  - Turned off or on standby
  - Wait until attacked or attack is imminent
  - Humans consider situation, make strike decision
  - Command order issued to weapons officers
  - Human finger initiates launch sequence
  - Usually requires code entry, etc. for assured launch control

- ***Insane system:***
  - Computer periodically (e.g., every 2 hours) initiates launch
  - During sequence, there is a period (say, 2 min.) where operators can enter stop order (usually coded)
  - If correct stop not entered, weapons automatically launch
  - if correct stop entered, computer resets, and after another 2 hrs, automatically reinitiates the launch sequence

© 1996, 1997 T.E. BEARDEN

Psychoenergetics Weapons Teams
Mentally Disable All Personnel
(COUNTERS ALL SANE MAD SYSTEMS)
(NULLIFIES HUMAN COMPONENT OF ALL WEAPON SYSTEMS)
ELECTRICAL THOUGHT-WORDS ARISE DIRECTLY IN BRAIN, HENCE IN MIND, BYPASSING SENSOR INPUTS
INSTANT HYPNOGOGIC STATE, WITH INSERTED THOUGHT-WORDS
Effects arise in local spacetime, simultaneously in all minds in the targeted area
INSTANT HYPNOGOGIC STATE; WITH WAKING DREAM
PERCEIVED REALITY NOW CONTROLLED
TARGETED POPULACE
• Site personnel instantly hypnogogic and mentally controlled.
• Distant weapon controller teams coord crew actions
• Standdown insane weapons to maintenance standby.
• Mindsnapper then strikes, kills all personnel, and nullifies site for months.
Indicators: Two A-10 incidents 1997, LIDA device since 1950s.
© 1996 T.E. BEARDEN

Strikes Against Special Ship and Energetics Weapon Sites

- Via powerful scalar EM pulses in each targeted area, so sharp time-jerks occur
  - Mind and its operations exist in time but not in 3-space
  - Coupling interaction of mind operations to body occurs through flow of time
  - Flow or change of flow of time must be smooth, for coupling of mind to body
- *Sharp jerk in time flow snaps mind's coupling to body, instantly separates mind*
- *Instant death for every virus, bacterium, cell, insect, mammal, living creature*
- *Contaminates struck sites for months, perhaps a year*

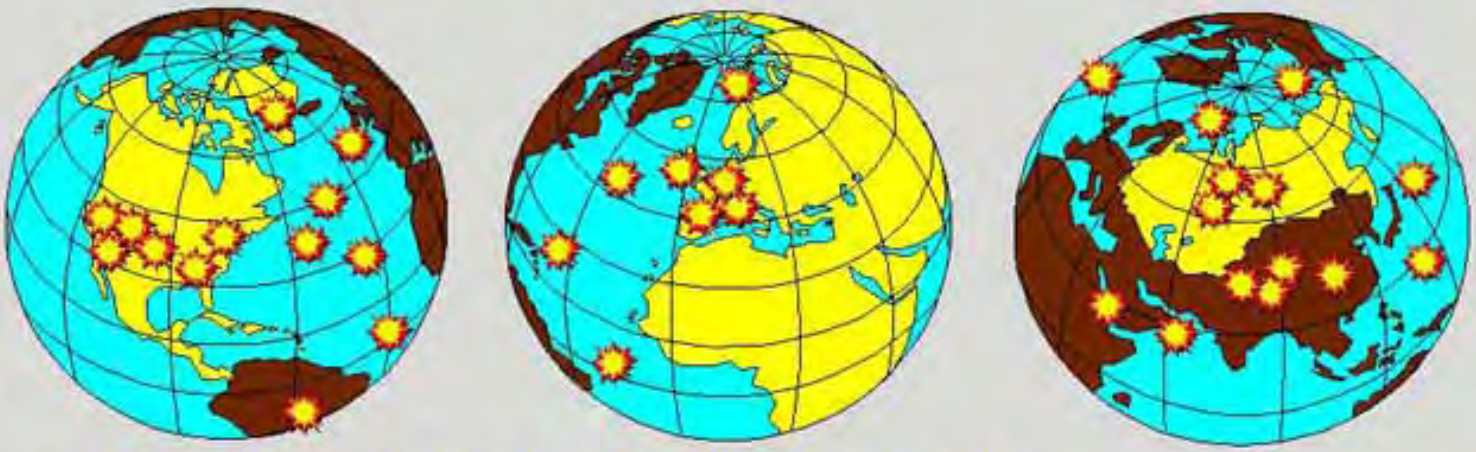

Note: In other words, this is the part of the "preparation barrage" that attacks the enemy's response capability (i.e., his "artillery" and his "airpower") and suppresses it. The use of the "mindsnapper" weapons provides 100% assurance of success.

© T.E. BEARDEN 1996

"MINDSNAPPER" ATTACK ON SPECIAL SHIPS & ENERGETICS WEAPONS SITES

"We have a new, fantastic weapon ... so powerful that, if unrestrainedly used, it could wipe out all life on earth."

Khrushchev, speaking to Presidium, Jan. 1960

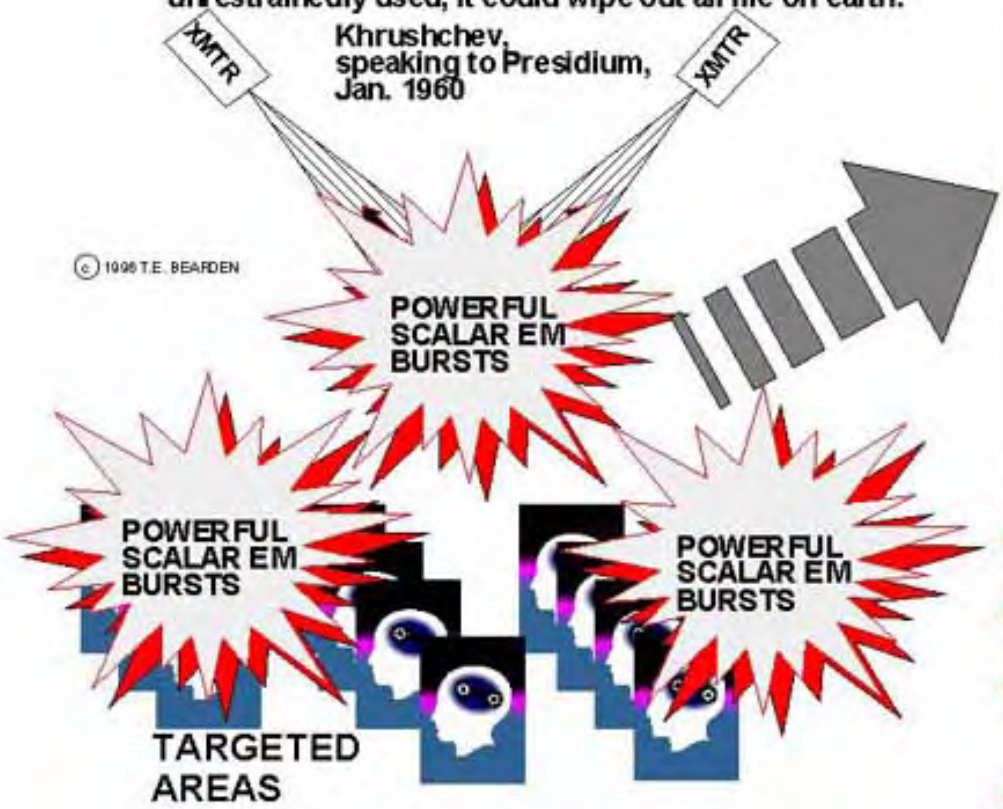

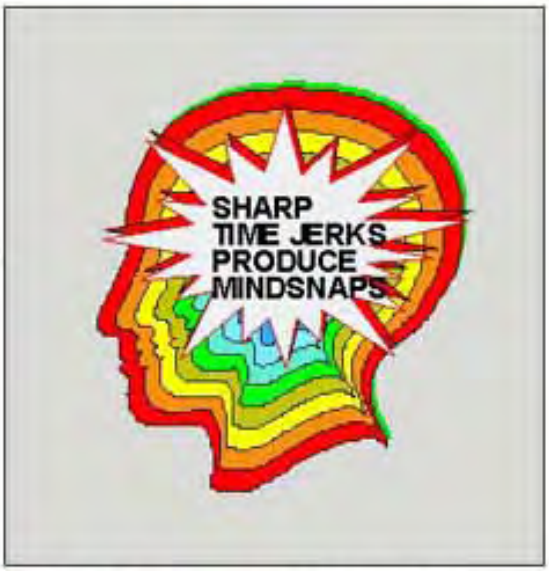

- Minds snapped loose from bodies (every living thing)
- Struck areas completely sterilized of all life
- LWs emitted; slow decay of time-charge makes contamination persistent
- Tested twice in Afghanistan

The Tom Bearden Website

Help support the research

How Much Off Guard Are We?

- Slide 1
- Slide 2
- Slide 3
- Slide 4
- Slide 5
- Slide 6
- Slide 7

How Much Off Guard Are We?

- *Legitimate U.S. forces have no energetics weapons or defenses against them*
- *No DoD general, military officer, or enlisted person reporting to the government of the United States has <u>any:</u>*
  - Training in energetics or energetics weapons
  - Experience in energetics or energetics weapons development and usage
  - Training in strategy, tactics, deployment, and employment of energetics weapons
  - Knowledge of energetics weapons effects and capabilities
  - Knowledge of the energetics weapons, tactics, deployment, and employment by the KGB/Russians
- *Civilian and military, scientific and intelligence, and news media personnel do not recognize energetics weapons effects happening right over their own heads*

© 1999 T.E. BEARDEN

How Much Off Guard Are We?

- Kill of U.S.S. Thresher in 1963 not recognized. Left signatures.
- 23 years of KGB weather engineering, particularly over U.S. and North America, ignored and not recognized.
- Decades of irradiation of U.S. Embassy, fatally injuring three U.S. Ambassadors, health changes in personnel shrugged off ineptly.
- Massive building of underground sites, all through former Soviet Union, lamely speculated as perhaps "ABM" system or?.
- 1985, 1986 Soviet kills of U.S. aircraft, spacecraft, personnel ignored as "accidents" by legitimate U.S. communities.
- Quantum potential strike on soldiers in Gulf war ignored.
- Quantum potential deterioration of U.S. populace's immune systems ignored.
- Exchange of earthquakes and massive retaliatory destruction of Soviet missile ammunition storage sites, 1986-1989, ignored.
- U.S. scientific and military communities adamantly refuse to rework electromagnetics, though known to be seriously flawed.
- Refuse to apply Stoney/Whittaker work to engineer hidden variables, even though present quantum mechanics also known to be wrong because it does not contain such "hidden order."
- Refuse to develop, structure, and apply Bohm's quantum potential, for instantaneous action at a distance. Russians developed it.

© 1996-199 T.E.BEARDEN

How Much Off Guard Are We?

- **Kill of U.S.S. Thresher in 1963**
  - Not recognized.
  - Left signatures.
- **23 years of KGB weather engineering**
  - Particularly over U.S. and North America
  - ignored and not recognized.
- **Decades of microwave irradiation of U.S. Embassy**
  - Fatally injured three U.S. Ambassadors
  - Induced health changes in personnel
  - Shrugged off ineptly.
- **Massive building of underground sites**
  - All through former Soviet Union
  - Lamely speculated as perhaps "ABM" system or?.

© 1996 T.E. BEARDEN

How Much Off Guard Are We?

- 1985, 1986 Soviet kills of U.S. aircraft, spacecraft, personnel ignored as "accidents" by legitimate U.S. communities.
- Quantum potential strike on soldiers in Gulf war not recognized, ignored.
- Quantum potential deterioration of U.S. populace's immune systems ignored.
- Exchange of earthquakes and massive retaliatory destruction of Soviet missile ammunition storage sites, 1986-1989, ignored.

How Much Off Guard Are We?

- U.S. scientific and military communities adamantly refuse to rework electromagnetics, though known to be seriously flawed.
- Refuse to apply Stoney/Whittaker work to engineer hidden variables, even though present quantum mechanics also known to be wrong because it does not contain such "hidden order."
- Refuse to develop, internally structure, and apply Bohm's quantum potential, which gives instantaneous action at a distance and great energy amplification.
- Russians developed quantum potential weapons, which obsolete all other weapons.

© 1996 T.E. BEARDEN

JUST HOW MUCH OFF GUARD ARE WE?
Kill of TWA-800 1996
Kill of USS Thresher 1963
Cold Explosion Off Japan Apr 1984
Kill of Space Shuttle Challenger 1986
From The Huntsville (AL) Times 18 Sep 96:
"Retired Gen. Wayne Downing concluded that U.S. forces are so far superior to potential foes that opponents have turned to terrorism as the only way of challenging them."
The Times also provided the information that Defense Secretary William Perry agreed with Gen. Downing's conclusion.
President's party airplane crash 1996
3 Dead U.S. Ambassadors from Moscow Embassy Radiation
QP Gulf War Syndrome: 16,000 persons disabled
QP jamming, U.S. air attack on Libya, 1996
Kill of Arrow DC-8 Gander AFB Dec 1985

JUST HOW MUCH OFF GUARD ARE WE?`

3 Dead U.S Ambassadors, U.S. Weather Engineered 20 years

Kill of USS Thresher Nuclear Submarine Apr 1963

QP Test on U.S. Troops in Persian Gulf, 1991 (Gulf War Syndrome)

TWA-800 1996; President's C-130 crash 1996

Arrow DC-8 Gander AFB Dec 1985

Challenger 1986

Quantum Potential Jamming of Air Attack on Libya Apr 1986

Blind Euphoria to Even the Ballistic Missile Threat

- U.S. National Intelligence Estimate (NIE) released in Nov. 1996 states there is no foreseeable threat to the U.S. from "indigenous missiles" for at least 15 years.
- Clinton has claimed a program for ABM defense is too expensive, would violate ABM Treaty with former USSR.
- Soviets developed an ABM system in violation of the treaty.
- In June 96 Russia test-launched an SS-19, their 26th ICBM test in 5 years.
- *"Russia still retains and is modernizing a vast nuclear arsenal... still the only nation of earth that could destroy America in a matter of minutes. Indeed, given the weakness of the Russian Army, Russia's superpower ambitions rest more than ever on its nuclear capabilities."* *
- "For the first time since the dawn of the nuclear age, there is not a single Russian missile pointed at America's children." **

Comment: Punch a computer button and the missiles are pointed! The armed missiles are still there, ready and waiting.

Bulleted info courtesy Washington Inquirer, June 24, 1996.

* House Nat'l Security Chmn, Floyd Spence.
** Bill Clinton, State of the Union Message.

© 1996 T.E. BEARDEN

Possible Targets: 1995-9
Escalation Phase
(Based on 1985-87 test program)
Earthquakes
Missiles
Power Grids &
Distribution Systems
Satellites
Ships
Shuttle
Launches
& Flights
JETLINERS
Radio/TV
Subs
Microwave Nets
Radars &
Nets
Communications
and Computer Nets

Propagation of Weapon Effects

- All conventional weapons use propagation through 3-space of matter or energy or both
  - Matter (bombs, missiles, projectiles, etc.)
  - Energy (EM force fields, sonic force fields, etc.)
  - Basically one-to-one, or one "bus" to many-on-many
  - Finite propagation velocity v: where $0 < v \leq c$
  - Time delay: Shielding and pre-strike retaliation possible
- Structured quantum potential propagates vacuum ordering (vacuum engines), instantly
  - Zero time delay (through multiply-connected spacetime)
  - No propagation "through space", no "velocity" as such
  - Easily one-to-many, without limit
  - Dramatic energy amplifier (gates, amplifies flux ordering)
  - Effects arise in local spacetime; no shielding possible
  - No range limit, since striking distance always zero
- QP weapons obsolete all other weapons

© 1989, 1995, 1998 T. E. BEARDEN

Yugoslav Earthquake, Followed by Cold Explosion

Apr. 15
1979

- Magnitude 7.2 on Richter scale
- Epicenter 33 km. deep
- More than 100 aftershocks
- At Kamenari:
  - Adriatic sea mushroomed up
  - Like atomic bomb explosion
  - Signature of a cold explosion
  - Similar to Apr. 1984 test off coast of Japan, near Kurils (see inset graphics)
- Note that April is a significant test month for the Communists (preparing official reports for May Day?)

© T.E. BEARDEN 1994, 1995

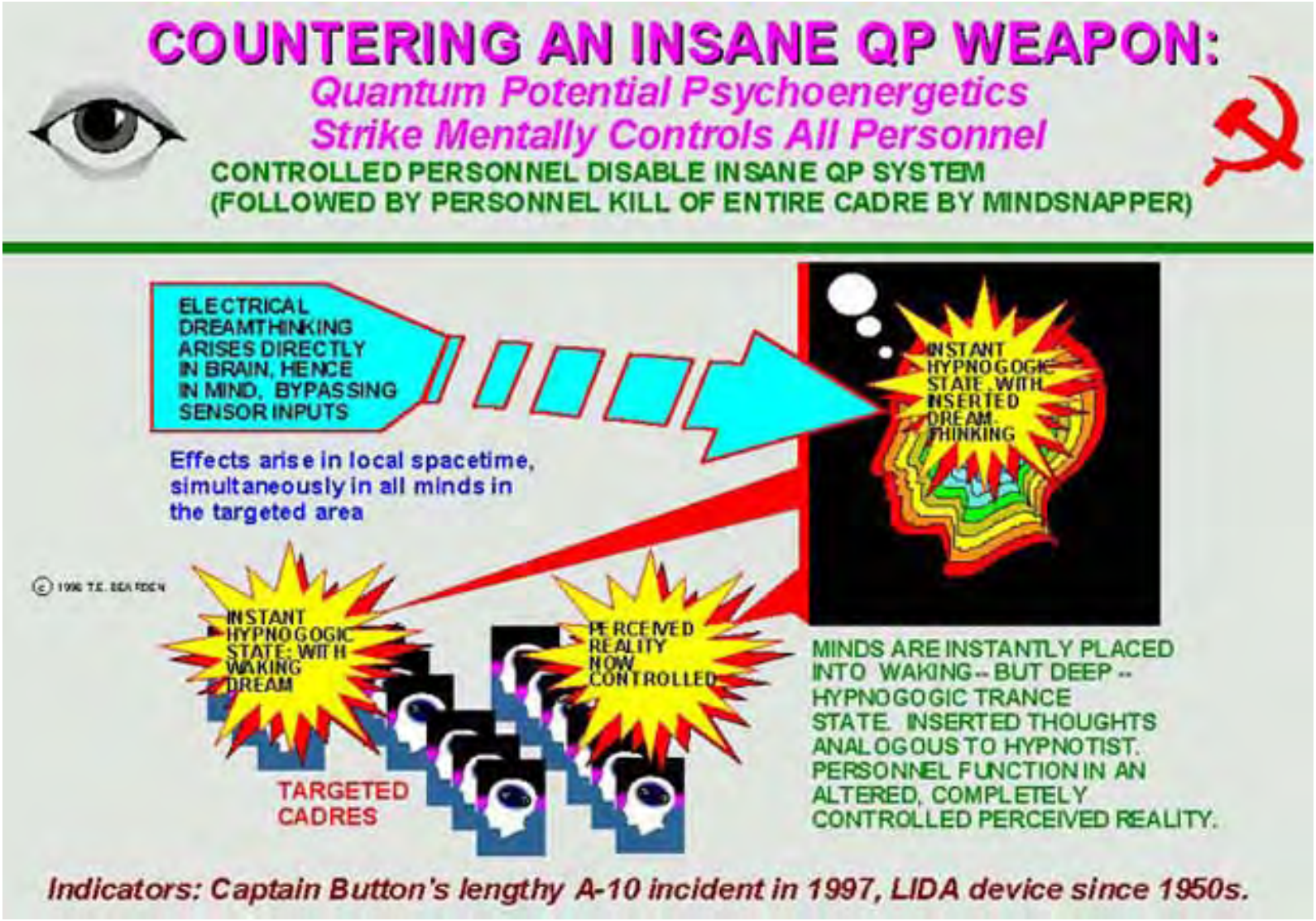
COUNTERING AN INSANE QP WEAPON:
Quantum Potential Psychoenergetics
Strike Mentally Controls All Personnel
CONTROLLED PERSONNEL DISABLE INSANE QP SYSTEM
(FOLLOWED BY PERSONNEL KILL OF ENTIRE CADRE BY MINDSNAPPER)
ELECTRICAL DREAMTHINKING ARISES DIRECTLY IN BRAIN, HENCE IN MIND, BYPASSING SENSOR INPUTS
Effects arise in local spacetime, simultaneously in all minds in the targeted area
INSTANT HYPNOGOGIC STATE, WITH INSERTED DREAM-THINKING
INSTANT HYPNOGOGIC STATE, WITH WAKING DREAM
PERCEIVED REALITY NOW CONTROLLED
TARGETED CADRES
MINDS ARE INSTANTLY PLACED INTO WAKING -- BUT DEEP -- HYPNOGOGIC TRANCE STATE. INSERTED THOUGHTS ANALOGOUS TO HYPNOTIST. PERSONNEL FUNCTION IN AN ALTERED, COMPLETELY CONTROLLED PERCEIVED REALITY.
Indicators: Captain Button's lengthy A-10 incident in 1997, LIDA device since 1950s.

Gulf War Disease: KGB QP Weapon Induced
ST Curvature Engines for a Cocktail of Diseases
LIBYA
EGYPT
CHAD
SUDAN
SAUDIA ARABIA
IRAN
IRAQ
© 1999 T. E. BEARDEN
Distant Scalar Potential Interferometer with iterative self-targeting

Self-Targeting in Inner EM Channel Can Produce a Quantum Potential

Once QP is established, energy transmission is direct and instantaneous. Energy input to one single participant will simultaneously appear in all other participants, the amount depending on their fractions of participation with the input station.

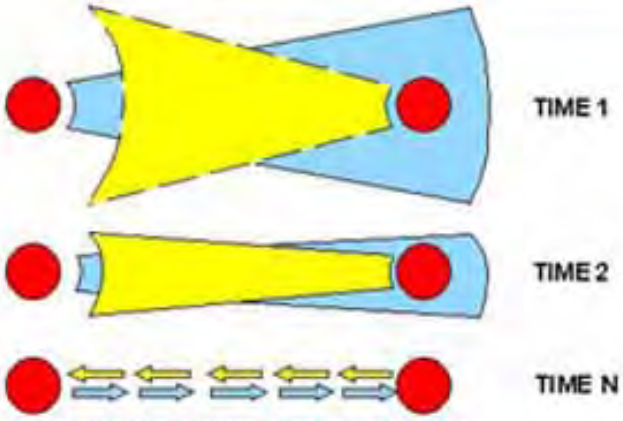

NARROWING OF INTERACTING POTENTIALS INTO LASER-LIKE BEAMS, BETWEEN TWO PUMPED SOURCES. NOW ONLY LONGITUDINAL WAVES CONNECT THE LINKED OBJECTS.

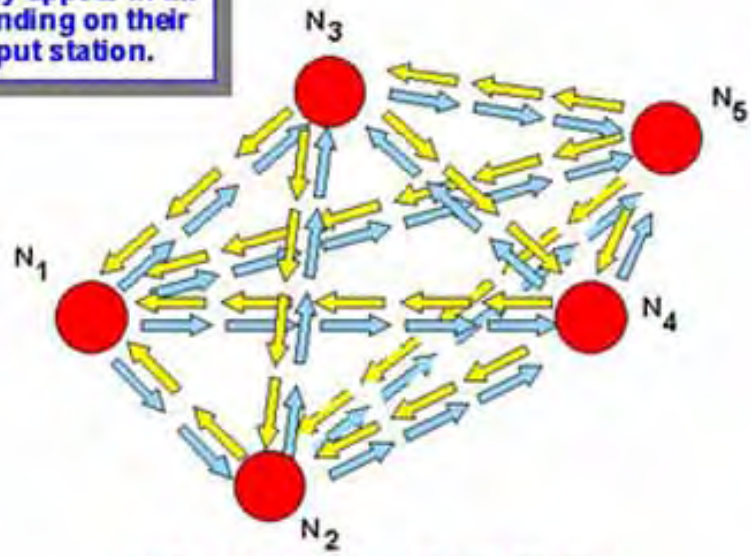

SELF-TARGETING EFFECT AMONG ALL PAIRS OF INTERACTING PUMPED SOURCES

© 1989, 1995, 1996 T.E. BEARDEN

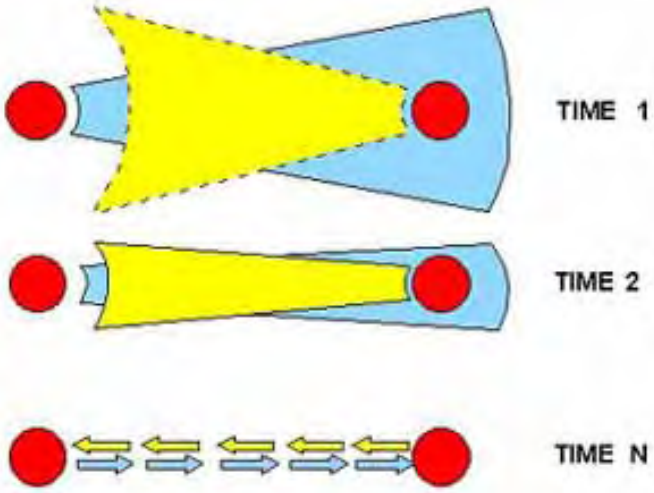

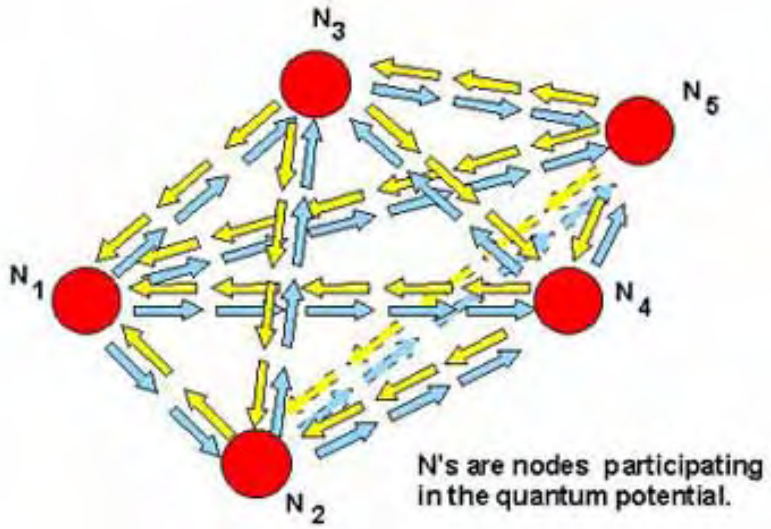

a. Iterative retroreflection between any pair of nodes narrows the interconnecting potentials to a laser-like, bidirectional beam. Iterative phase conjugate reflection provides self-targeting.

b. The quantum potential exists as narrow, laser-like beams between participating nodes, even when the nodes are widely separated. The beam space is multiply-connected; transmission is instantaneous.

© 1989, 1995 T.E. BEARDEN

Consider the hidden Stoney/Whittaker bidirectional EM waves that comprise the potential from each source node. If these nodes have sufficient intersymmetry of dynamic material form, then self-targeting occurs between the two nodes of any nodal pair. By iterative phase conjugate reflection, the scattering is narrowed into interconnecting wavepairs, in laser-like beams, between each two nodes. Thus the interconnecting potentials narrow into laser-like, bidirectional beams. The Coulomb gauge may apply, and a quantum potential may be formed.

Figure 30. Mechanism for generating a quantum potential, by iterative self-targeting induced into a system of multiple scattering nodes. Once a QP is established, spatial separation has little or no effect.

Major Principles for Use of Quantum Potential Weapons

- Must disable dead-man fuzing prior to massive use of scalar interferometry weapons.
- Must assure immediate, complete nullification of unique enemy assets (quantum potential assets, special ships, and energetics weapons).
- Personnel can be destroyed instantly with mindsnapping; area is sterilized of life, and effect persists, gradually dying away.
- Personnel can be disabled instantly with various psychoenergetic weapons; area not sterilized.
- Personnel can be destroyed in short order by using EM BW weapons; area not sterilized.
- If foe has energetics weapons, then it is a quick-draw "gunslinger" contest unless insane MAD systems deployed.
- Complete surprise is of decisive importance.
- Tailor effect used to specific target, objective.
- *Note: Must use "insane" MAD systems to deter.*

© 1996 T.E. BEARDEN

Quantum Potential Weapons: Major Principles (Continued)

© 1996 T.E. BEARDEN

- Three major classes of use exist:
  - Use of bulk energy only (as in bulk heating or cooling) without substructuring
  - Use of internal structuring of the bulk energy, so that *vacuum engines* appear in target
  - Use of more deeply nested engines allows direct intervention in mind, long term memory, perception, thoughts, emotions, personality
- Use of vacuum engines allows engineering at a distance of:
  - *Atomic nuclei* including structures, reactions, and transmutations
  - *Bulk matter* including translations, lattice bonding, chemistry, chemical interactions, electromagnetic interactions
  - *Deep biological control systems* such as
    - Becker's cellular control (recovery) system
    - Popp's cellular control system
  - *Cells* including:
    - Structuring, differentiation and dedifferentiation
    - Genetic changes, chemical changes
    - Induction of disease states without normal disease vectors
  - *Mind/matter interface*, including long-term memory, perception, emotion, thought, mental state

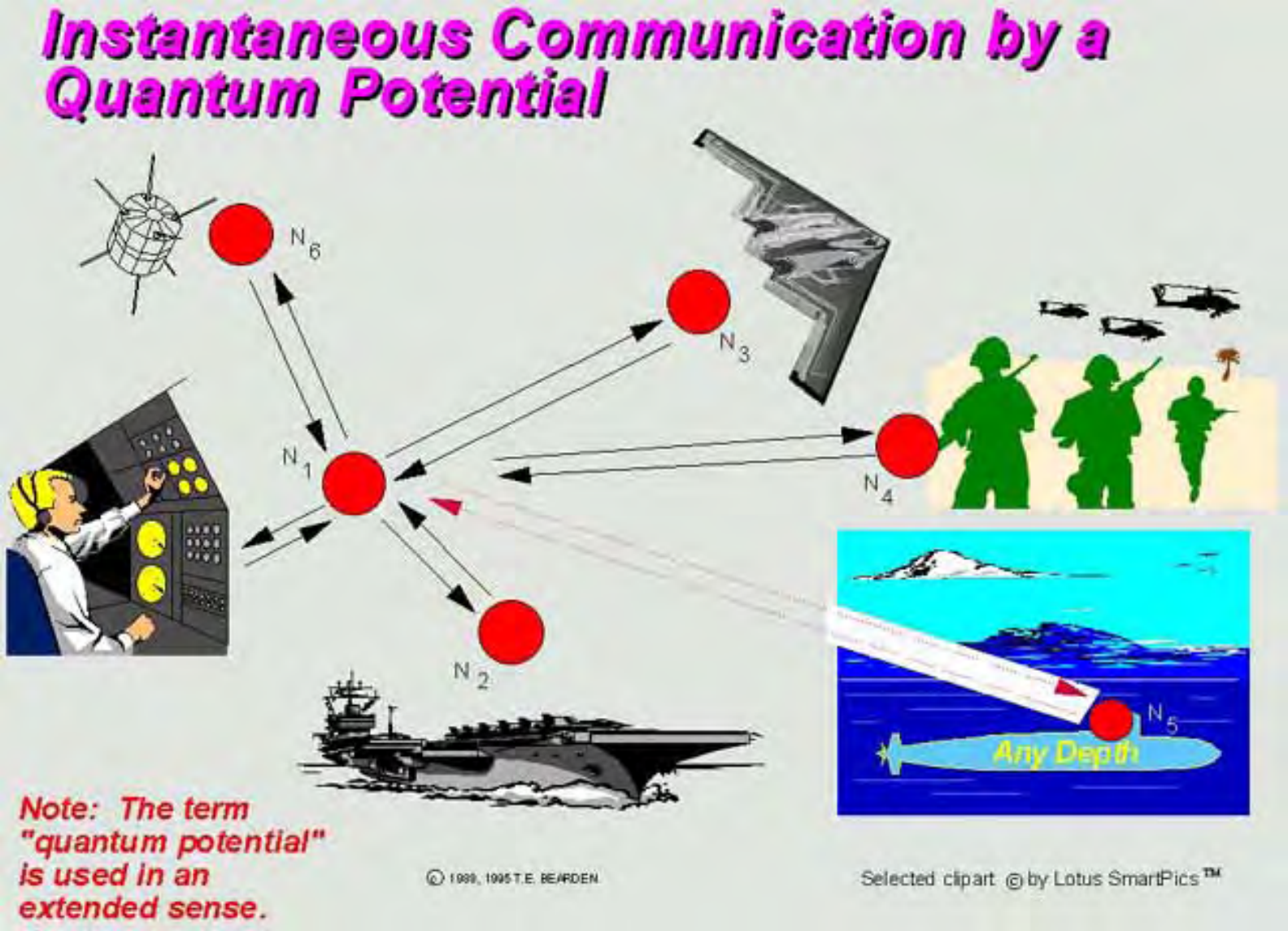
Instantaneous Communication by a Quantum Potential
N6
N3
N1
N4
N2
N5
Any Depth
Note: The term "quantum potential" is used in an extended sense.
© 1999, 1995 T.E. BEARDEN
Selected clipart © by Lotus SmartPics™

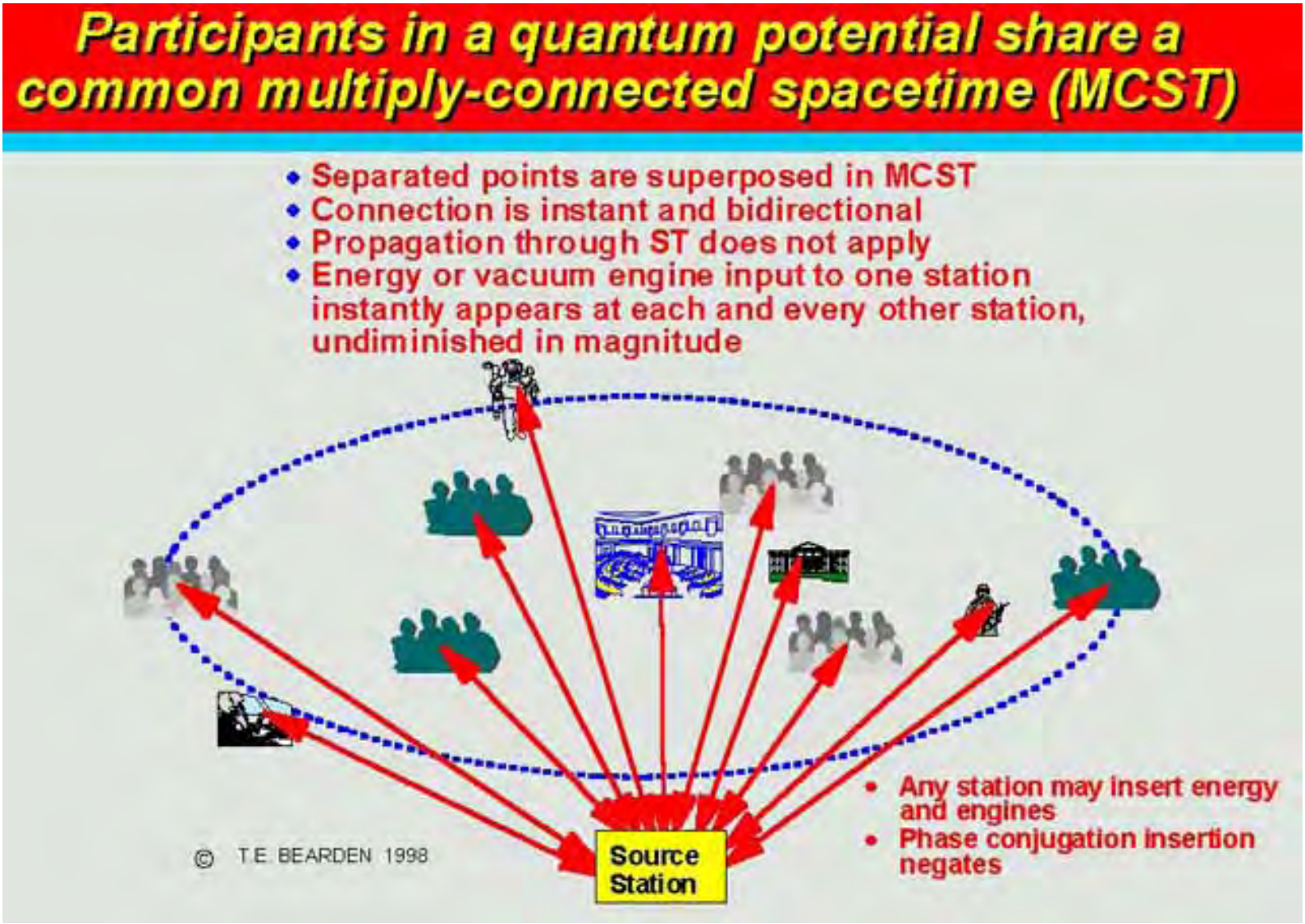
Participants in a quantum potential share a common multiply-connected spacetime (MCST)
• Separated points are superposed in MCST
• Connection is instant and bidirectional
• Propagation through ST does not apply
• Energy or vacuum engine input to one station instantly appears at each and every other station, undiminished in magnitude
• Any station may insert energy and engines
• Phase conjugation insertion negates
Source Station
© T.E. BEARDEN 1998

Quake in Tangshan, China

28 July, 1976

- 7.8 on Richter scale
- Hundreds of thousands killed
- Accompanied by extensive light, electrical effects
  - Starting 3 to 5 days before
  - Communications interference within 250 km
  - Sky lighting observed
- [Personal comments]

© T. E. BEARDEN 1999

Counting Rifles: Put up or shut up!

(Exchanging Earthquakes)

Opening bet

- Quebec 25 Nov 88
- Pasadena 3 Dec 88

Raise you

- Armenia 7 Dec 88

Call - what do you have?

- Malibu 18 Jan 89

Four aces

- Soviet Central Asia 23 Jan 89

Clear table (stress relief)

- Bakersfield et al various

© T.E. BEARDEN 1990

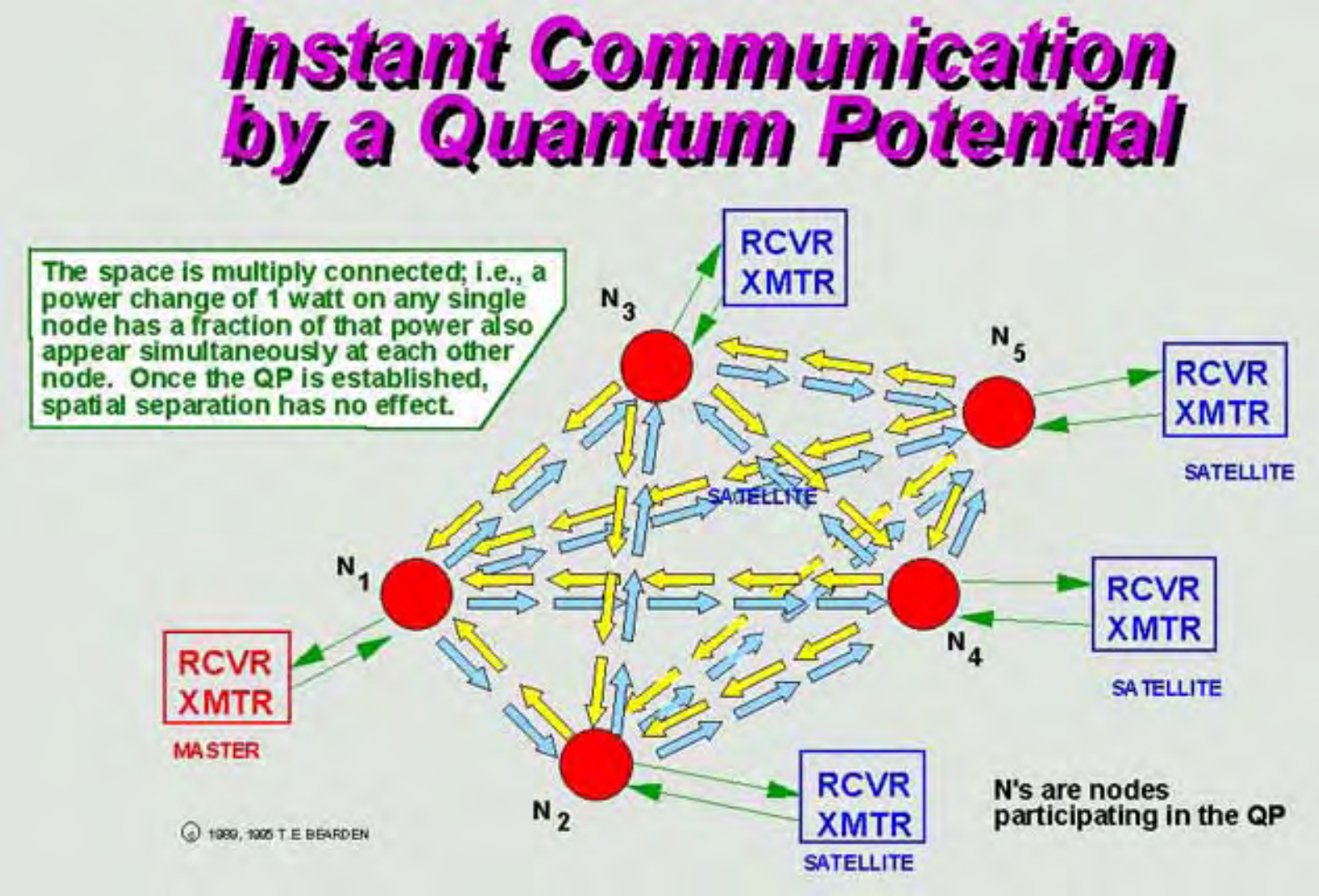
Instant Communication by a Quantum Potential
The space is multiply connected; i.e., a power change of 1 watt on any single node has a fraction of that power also appear simultaneously at each other node. Once the QP is established, spatial separation has no effect.
RCVR XMTR
N3
N5
RCVR XMTR
SATELLITE
SATELLITE
N1
RCVR XMTR
N4
SATELLITE
RCVR XMTR
MASTER
N2
RCVR XMTR
SATELLITE
N's are nodes participating in the QP
© 1999, 1005 T.E BEARDEN

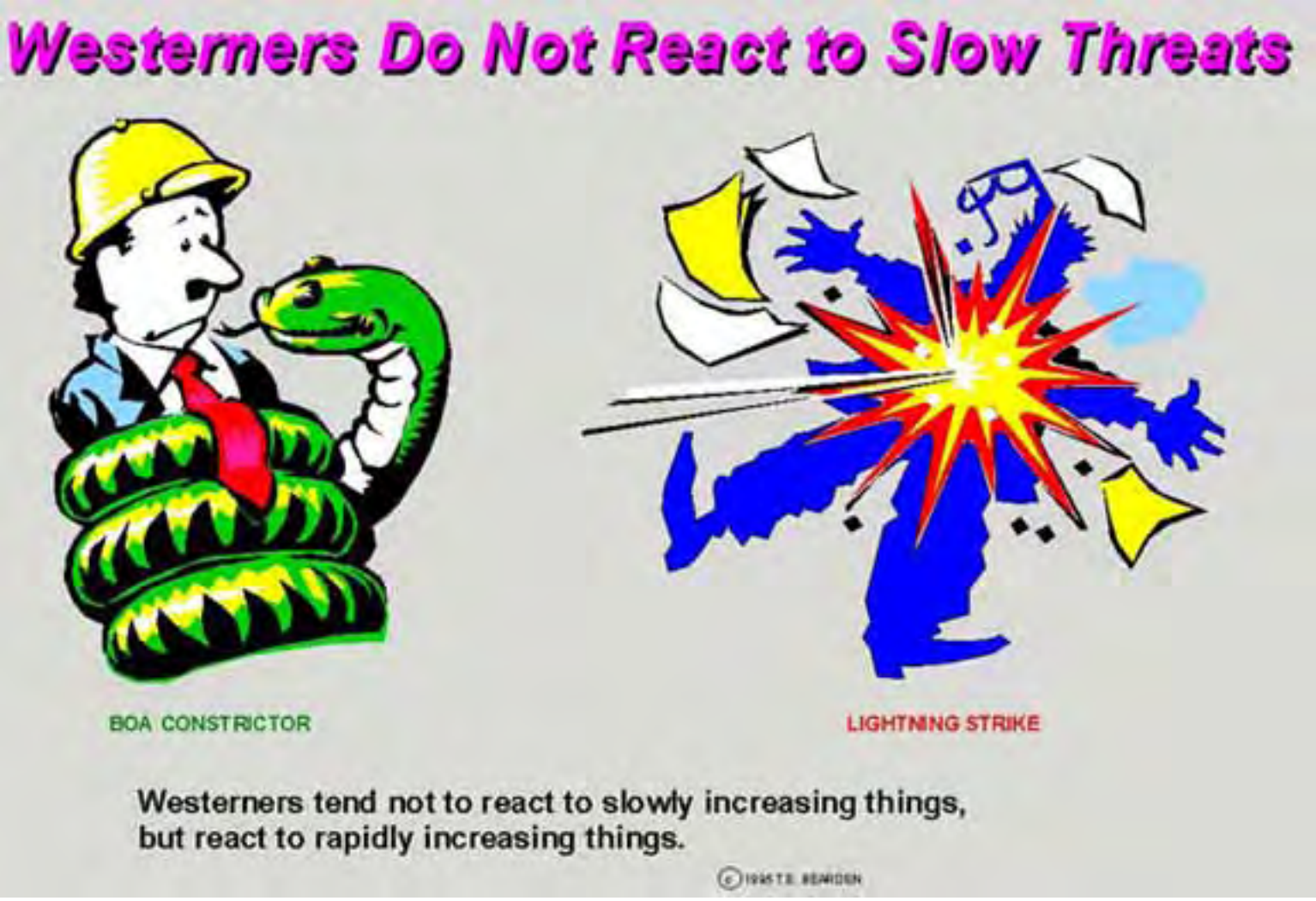
Westerners Do Not React to Slow Threats
BOA CONSTRICTOR
LIGHTNING STRIKE
Westerners tend not to react to slowly increasing things,
but react to rapidly increasing things.

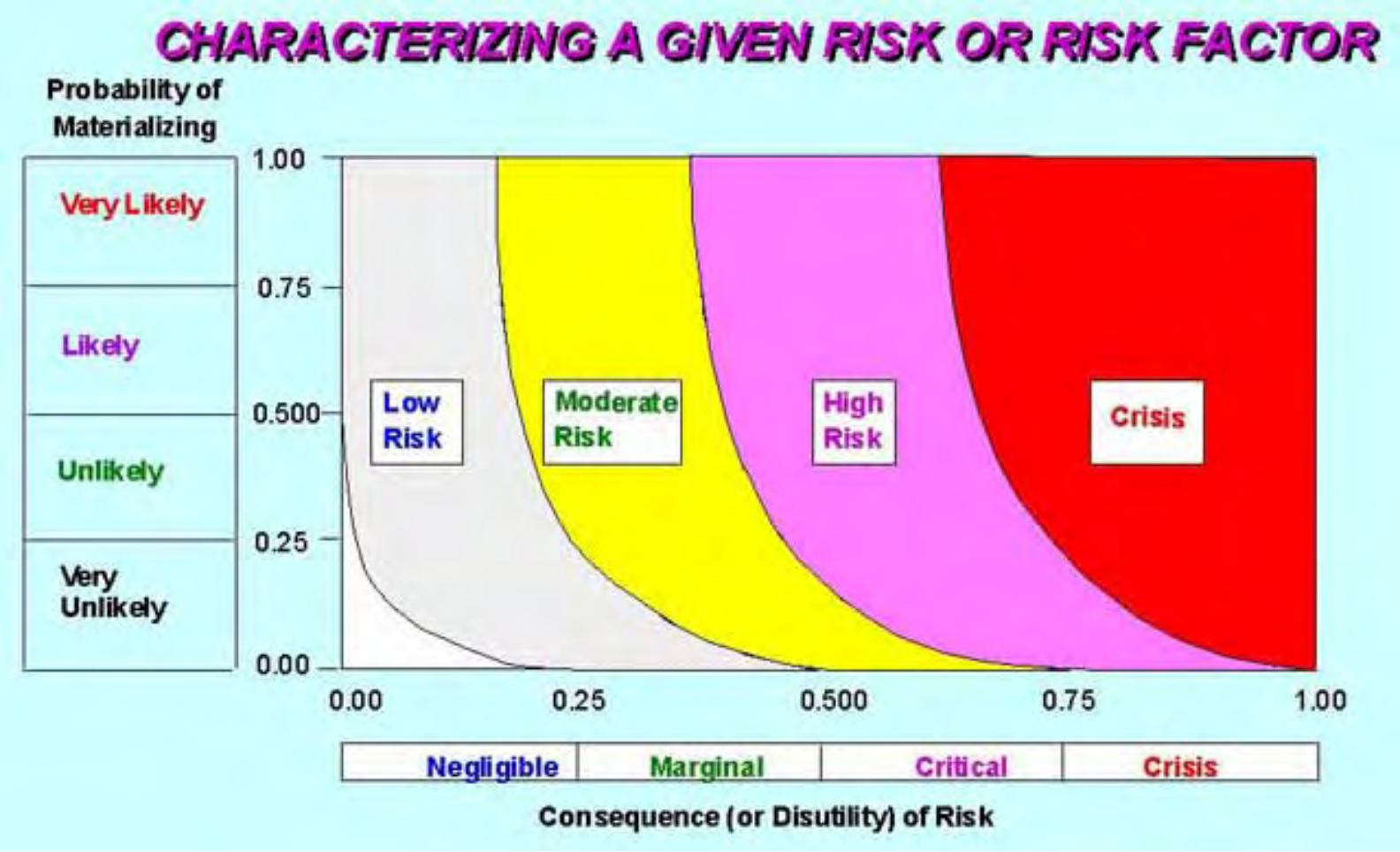
CHARACTERIZING A GIVEN RISK OR RISK FACTOR
Probability of Materializing
Very Likely
Likely
Unlikely
Very Unlikely
1.00
0.75
0.500
0.25
0.00
Low Risk
Moderate Risk
High Risk
Crisis
0.00
0.25
0.500
0.75
1.00
Negligible
Marginal
Critical
Crisis
Consequence (or Disutility) of Risk

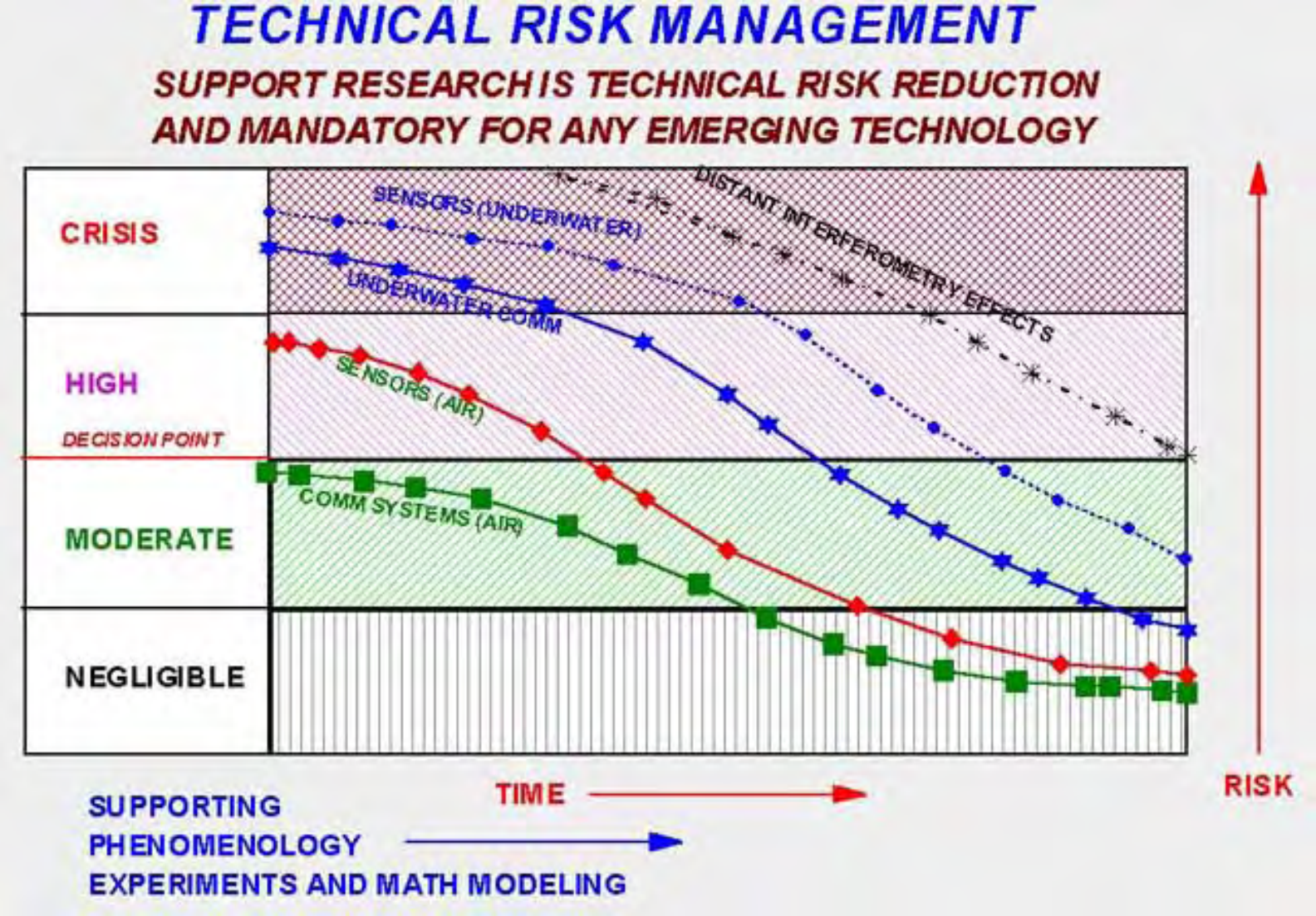
TECHNICAL RISK MANAGEMENT
SUPPORT RESEARCH IS TECHNICAL RISK REDUCTION
AND MANDATORY FOR ANY EMERGING TECHNOLOGY
CRISIS
HIGH
DECISION POINT
MODERATE
NEGLIGIBLE
SENSORS (UNDERWATER)
DISTANT INTERFEROMETRY EFFECTS
UNDERWATER COMM
SENSORS (AIR)
COMM SYSTEMS (AIR)
TIME
RISK
SUPPORTING
PHENOMENOLOGY
EXPERIMENTS AND MATH MODELING

Aum Shinrikyo's Sarin Facility

The interior of Satian No. 7, a suspected sarin production plant

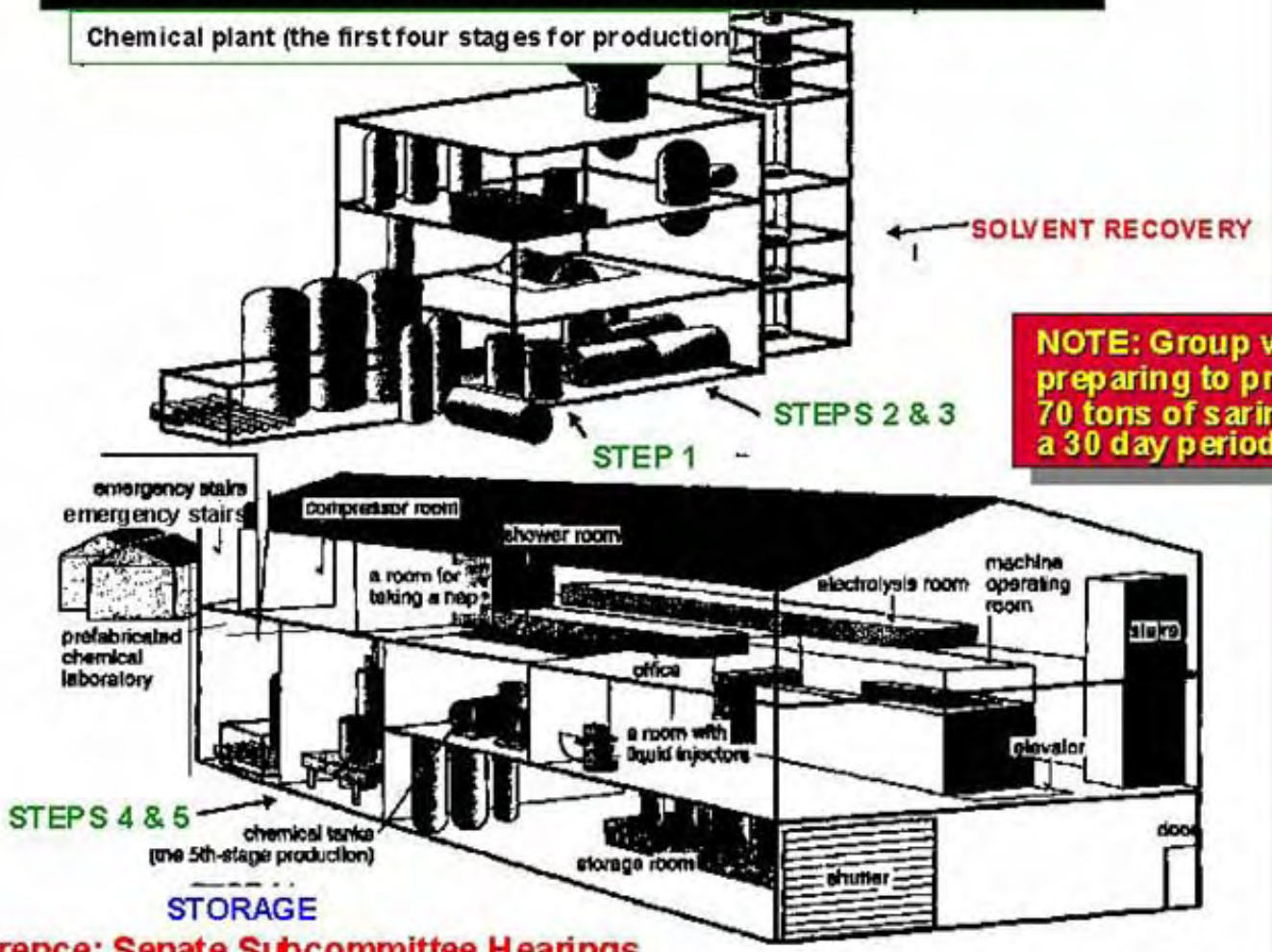

NOTE: Group was preparing to produce 70 tons of sarin in a 30 day period.

Reference: Senate Subcommittee Hearings

In Scalar Beam Interference Zone

- De-phasing of wave/antiwave pairs occurs
- Zero-summation destroyed
- Ordinary EM reappears [Whittaker 1904]
- Ordinary energy appears or disappears (i.e., may produce heating or cooling)
- Energy bottle effect
- Can add or extract EM energy
- Can produce specific ST curvature engines

© T. E. BEARDEN 1999

Physicist Schappeller Auralaz Munster, Austria:

- British Intelligence interview, about 1948
  - Used Kaluza-Klein theory
  - Worked with Russians
- Schappeller claimed he could:
  - Cause "implosions" rather than explosions
  - Use gravitational and electromagnetic energy
  - Cause large areas of the ocean to freeze
  - Tap earth-ionospheric field
  - Produce enormous energy
- *This is precisely what Hellman worked on in the USSR, after WW II!*

© 1996 T E BEARDEN

Initial Soviet Plan for Cold War, After WW II

- Develop and deploy SAM bomber defense
- Catch up in atomic weapons
- Master and apply rocketry
- Wed atomic warheads to rockets
- Initiate "Cold" War
  - Bleed the dragon
  - Guerrilla wars
  - Terrorism
  - Insurgencies
- *Find, develop, and weaponize next great technical breakthrough area as highest national priority*

© 1996 T.E. BEARDEN

Josef Stalin: Absolute Dictator

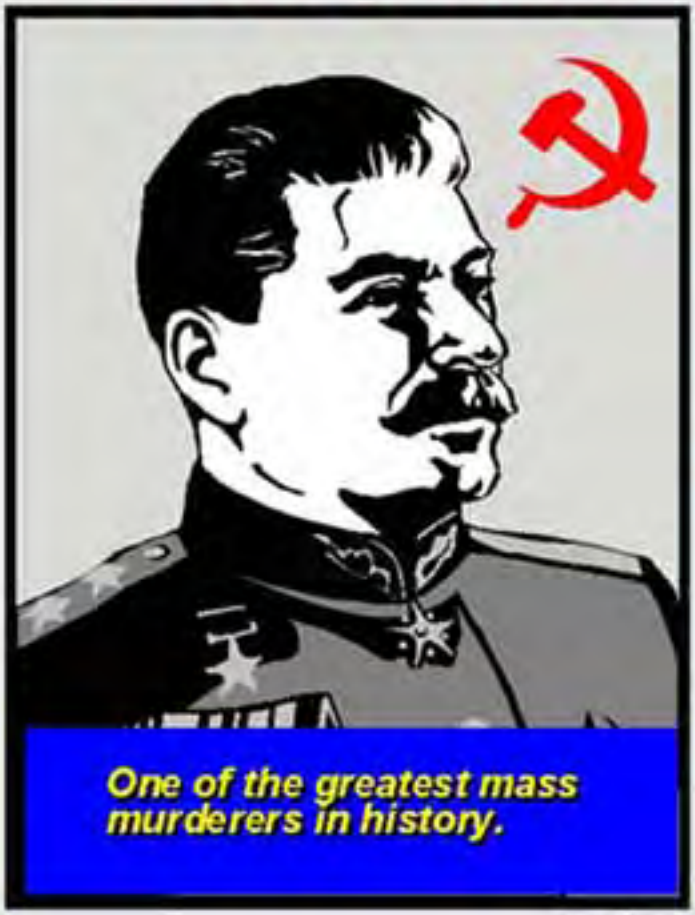

- Secret police and spies everywhere
- Purged his own officer corps
- Always deeply suspicious
- Regularly purged his enemies or those perceived to be shaky or untrustworthy
- Absolute power, justice had nothing to do with it
- Opponents often just disappeared in the night, never to be seen again
- Secret police often tortured, killed them
- Others sent to slave labor camps to die by severe work, starvation, and beatings or downright massacre
- Had experienced unusual abilities of Wolf Messing, so knew that some persons could do unusual things
- Forced Soviet weapon physics into this psychoenergetics realm also

© T.E. BEARDEN 1997

Exploding any Resistance by Operational Scientists
Josef Stalin
© T.E. BEARDEN 1997
The Communists slaughtered 20 million Russian Kulaks to collectivize Soviet farming
Assembled Academy
"The destiny of communism has been frustrated by the U.S. development of the atomic bomb. That is not the last great technical breakthrough. The next one WILL be Soviet! You will provide me with that great new technical breakthrough at all speed, or I will have your heads. Do I make myself clear, comrades?"

Significant Soviet Statements

- "In the final revolution, it does not matter if three-quarters of the earth is destroyed, so long as the other quarter emerges communist." *[Lenin]*

- "If a means of total neutralization of foreign missiles is to be found, it can only come from a group of new principles in physics, called energetics." *[Nobelian Petr Kapitsa, to Nikita Khrushchev, in answer to Khrushchev's demand for a 100% method of defense against long range missile attack.]*

- "We will bury you." *[Khrushchev, to Nixon, Kitchen Debate]*

- "We have a new weapon, just within the portfolio of our scientists, so to speak, which is so powerful that, if unrestrainedly used, it could wipe out all life on earth. It is a *fantastic* weapon." *[Khrushchev, speaking to the Presidium, Jan. 1960]*

© 1996 T.E. BEARDEN

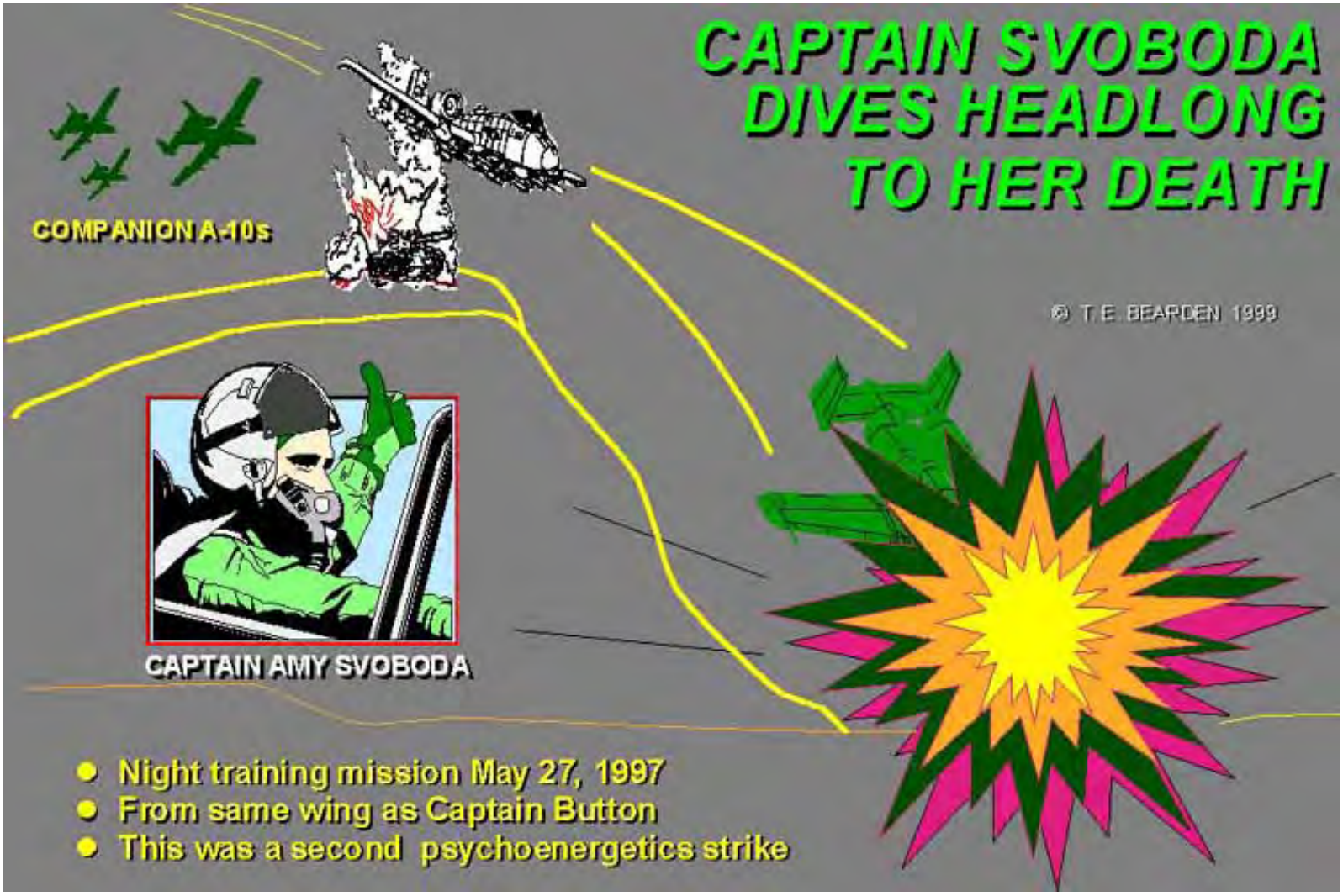
CAPTAIN SVOBODA
DIVES HEADLONG
TO HER DEATH
COMPANION A-10s
© T.E. BEARDEN 1999
CAPTAIN AMY SVOBODA
• Night training mission May 27, 1997
• From same wing as Captain Button
• This was a second psychoenergetics strike

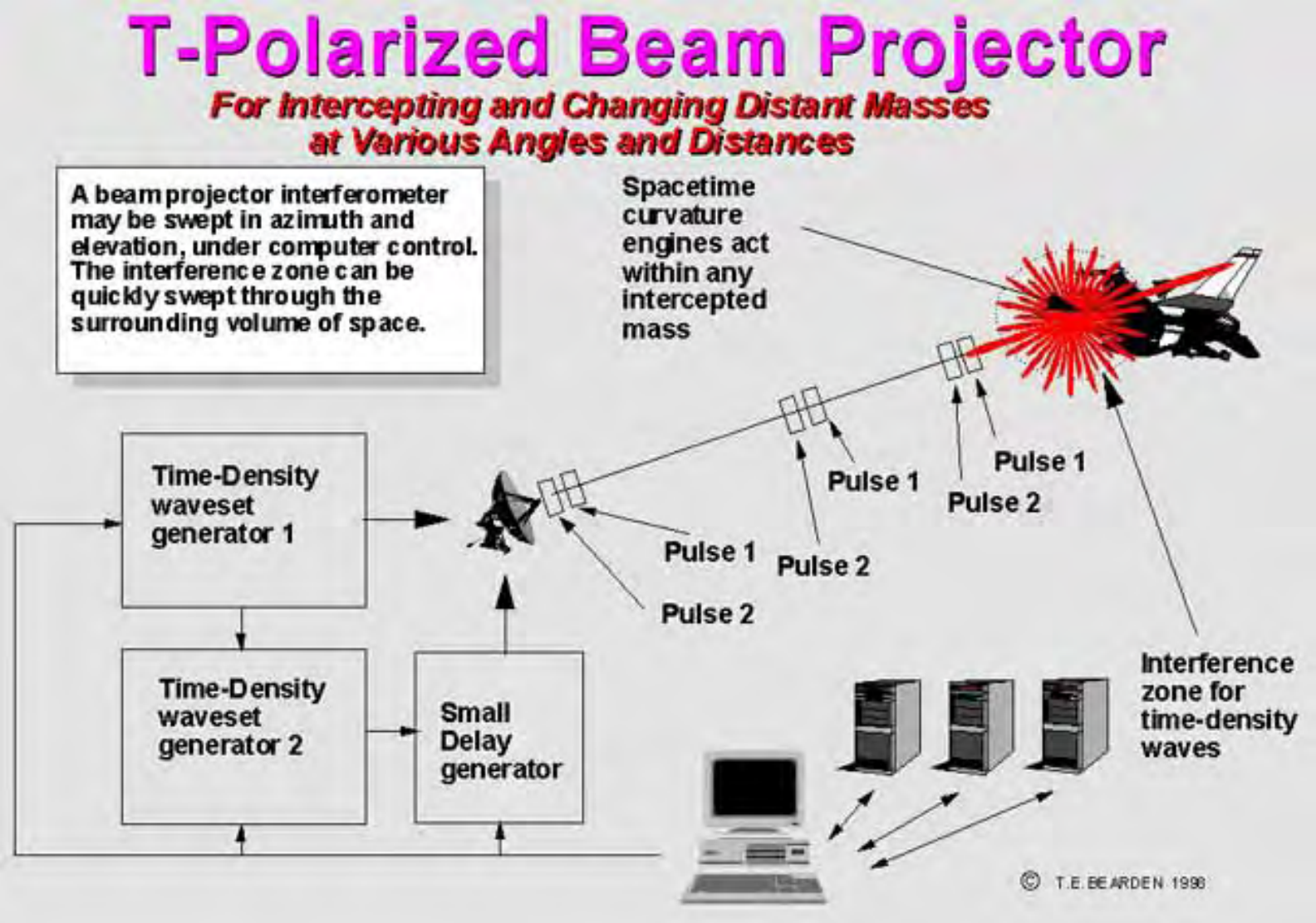
T-Polarized Beam Projector
For Intercepting and Changing Distant Masses
at Various Angles and Distances
A beam projector interferometer may be swept in azimuth and elevation, under computer control. The interference zone can be quickly swept through the surrounding volume of space.
Spacetime curvature engines act within any intercepted mass
Time-Density waveset generator 1
Time-Density waveset generator 2
Small Delay generator
Pulse 1
Pulse 2
Pulse 1
Pulse 2
Pulse 1
Pulse 2
Interference zone for time-density waves
© T.E. BEARDEN 1998

Possible Tests (1)

- 1958 nuclear accident in Urals
- Disease induction in U.S. Embassy personnel in Moscow
- Siberian disease/death transmission experiments
- Destruction of USS Thresher nuclear submarine, Apr. 10, 1963
- Nuclear explosion transmitted into ocean underwater, 100 miles north of Puerto Rico, Apr. 11, 1963

© 1996 T.E. BEARDEN

Possible Tests (2)

- Eight F-111's downed in Vietnam immediately after deployment
- Several large earthquakes
- Mysterious aircraft losses in groupings
- Numerous underground "nuclear" tests
- Nuclear tests at Semipalatinsk without associated seismic activity
- High altitude rumbles, snaps, booms
  - *Off English coast*
  - *Off East coast of U.S.*
  - *Over West Coast of U.S. in thunderstorms*

© 1996 T.E. BEARDEN

Possible Tests (3)

- Blinding of several U.S. satellites (up to 4 hours in duration)
- Cold Explosion off Kurils 1984
  - First, a cold explosion
  - Then test of giant Tesla shield 300 mi. dia.
- Tests offset from shuttle launch Nov. 85
- Kill of Arrow DC-8,Gander, NFLD Dec. 1985
- Titan kill, Vandenberg AFB, CA early 1986
- Kill U.S. Challenger, off Cape Canaveral 1986
- Earthquakes induced, 1986-88
- Dozens of tests of shields around the world
- Decades of radiating U.S. Embassy in Moscow

© 1996 T.E. BEARDEN

Possible Tests (4)

- Extensive tests 1990-99 in Western Australia
- Engineering of weather since 1990 by Yakuza
- Possible nuclear dudding test in WA in 90s by Aum Shinrikyo
- C-130 engine flameout kill
- TWA-800 kill 1997
- Gulf War Disease Induced, 1991
- Spreading of immune systems of U.S. populace, 1990s
- Psychoenergetic control of Captain Button
- Psychoenergetic control of Captain Svoboda
- Twice in 1997, within days of full strategic destruction of U.S.

© 1996 T.E. BEARDEN

Mushroom cloud rising from sea

- 0514 hrs, 9 April 1984
- Gray-white cloud appeared
- Rose 60,000 feet in 2 minutes
- South of Kuril Islands
  - *180 miles southeast of Hokaido*
  - *200 miles from Tokyo*
- Soviet missile testing scheduled about 350 miles away, at 2100 hrs, 9 April 1984

© 1999 T. E. BEARDEN

Launches from Cape Canaveral
and Vandenberg AFB
Provided Practice Targets of Opportunity

The sinking U.S.S. Thresher, with her controls jammed, implodes when she reaches crush depth

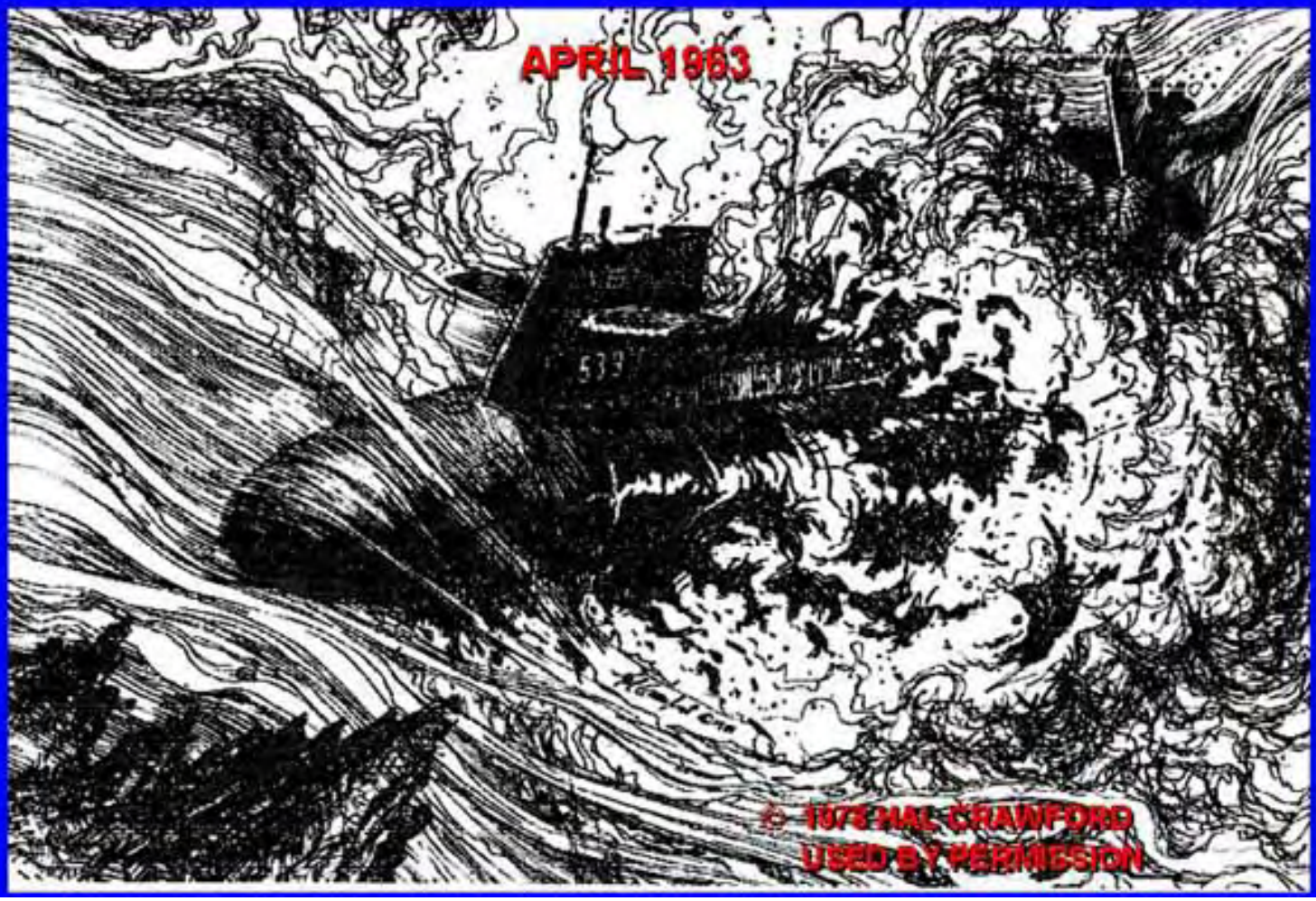

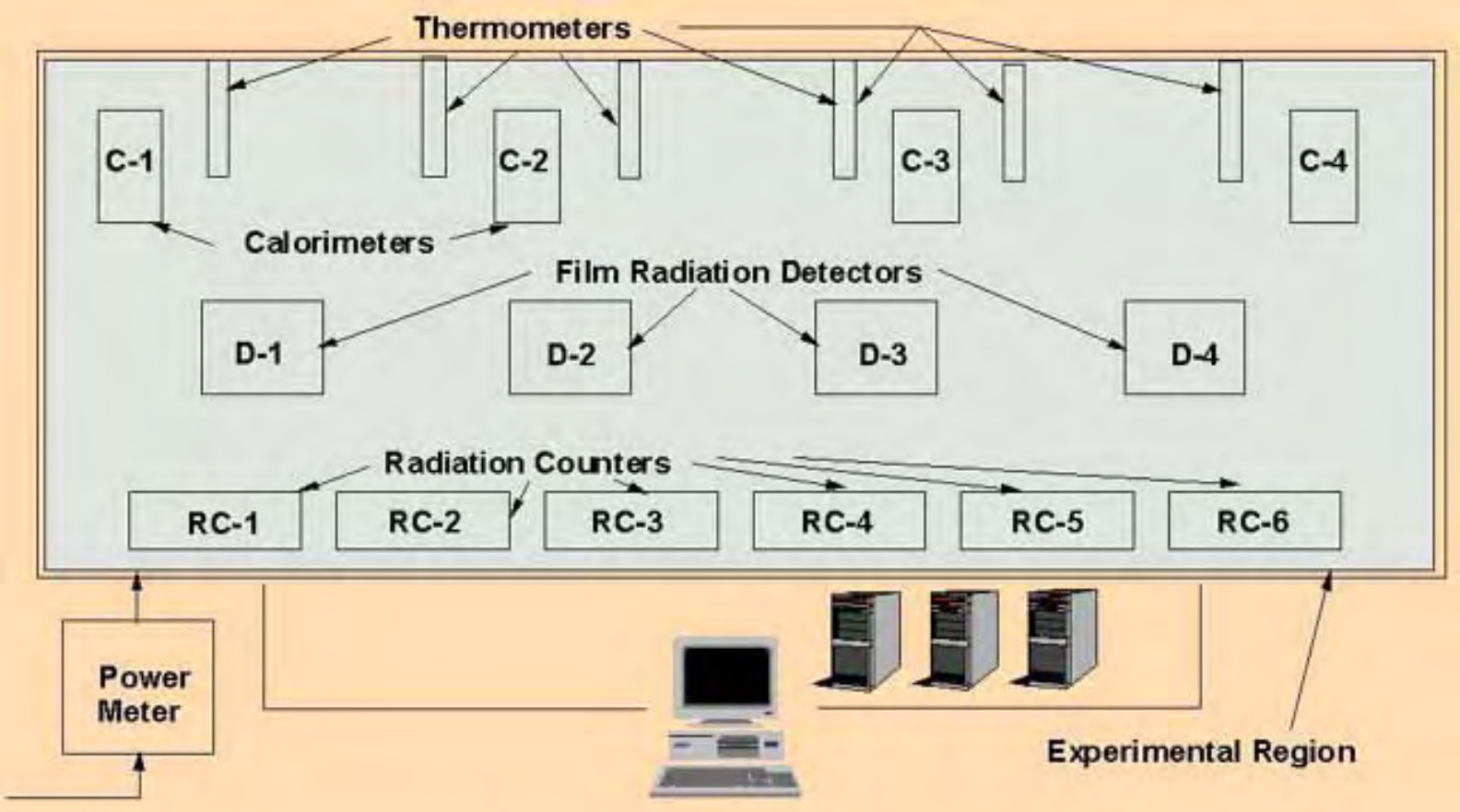

Figure 32. Embodiment of an instrumental array sufficient to discriminate when time-density charging has occurred, and that transduction of time-charge decay is occurring.

© T.E. BEARDEN 1998

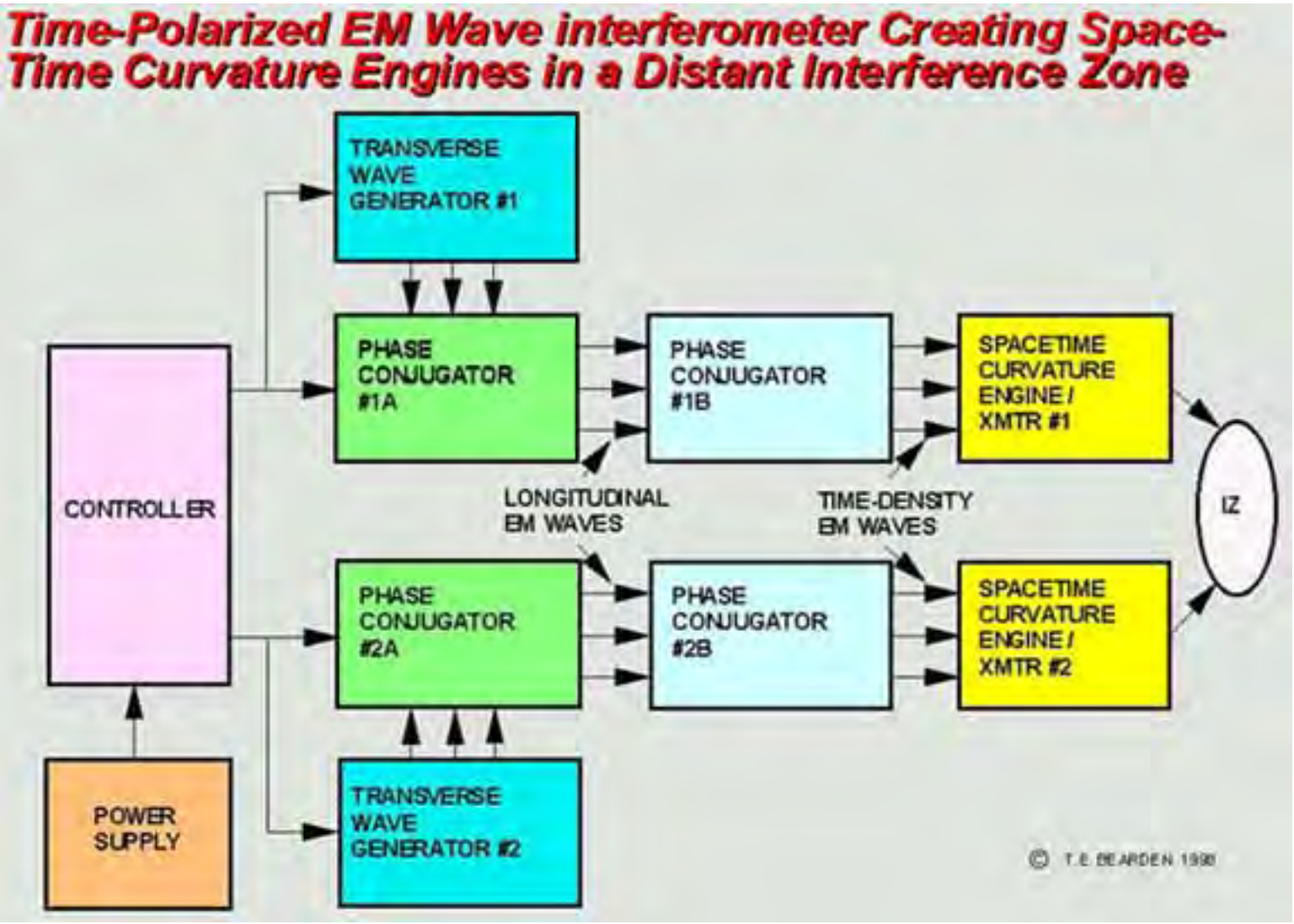
Time-Polarized EM Wave interferometer Creating Space-Time Curvature Engines in a Distant Interference Zone
TRANSVERSE WAVE GENERATOR #1
PHASE CONJUGATOR #1A
PHASE CONJUGATOR #1B
SPACETIME CURVATURE ENGINE / XMTR #1
CONTROLLER
LONGITUDINAL EM WAVES
TIME-DENSITY EM WAVES
IZ
PHASE CONJUGATOR #2A
PHASE CONJUGATOR #2B
SPACETIME CURVATURE ENGINE / XMTR #2
POWER SUPPLY
TRANSVERSE WAVE GENERATOR #2
© T.E. BEARDEN 1990

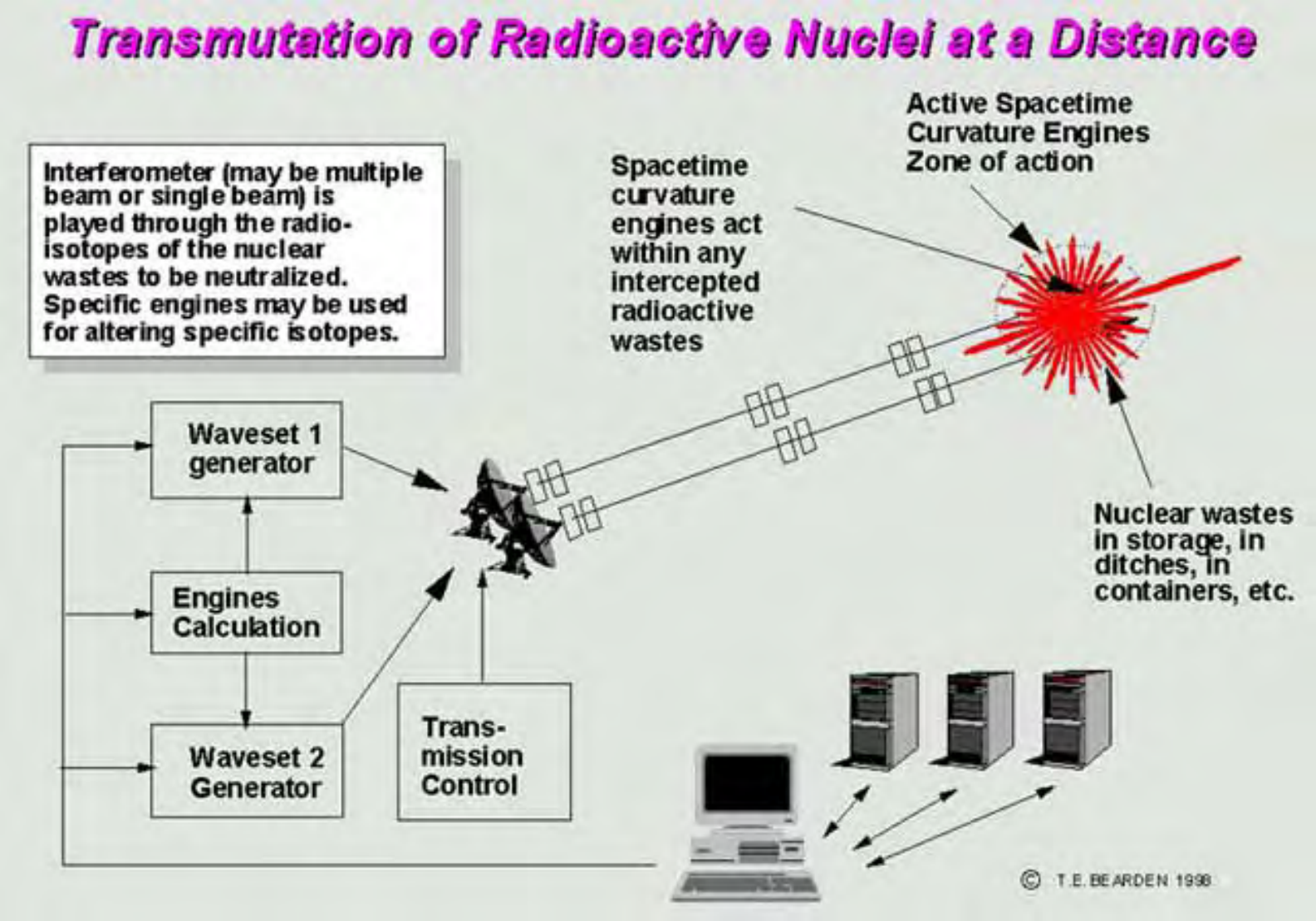
Transmutation of Radioactive Nuclei at a Distance
Interferometer (may be multiple beam or single beam) is played through the radio-isotopes of the nuclear wastes to be neutralized. Specific engines may be used for altering specific isotopes.
Spacetime curvature engines act within any intercepted radioactive wastes
Active Spacetime Curvature Engines Zone of action
Waveset 1 generator
Engines Calculation
Waveset 2 Generator
Trans-mission Control
Nuclear wastes in storage, in ditches, in containers, etc.
© T.E. BEARDEN 1998

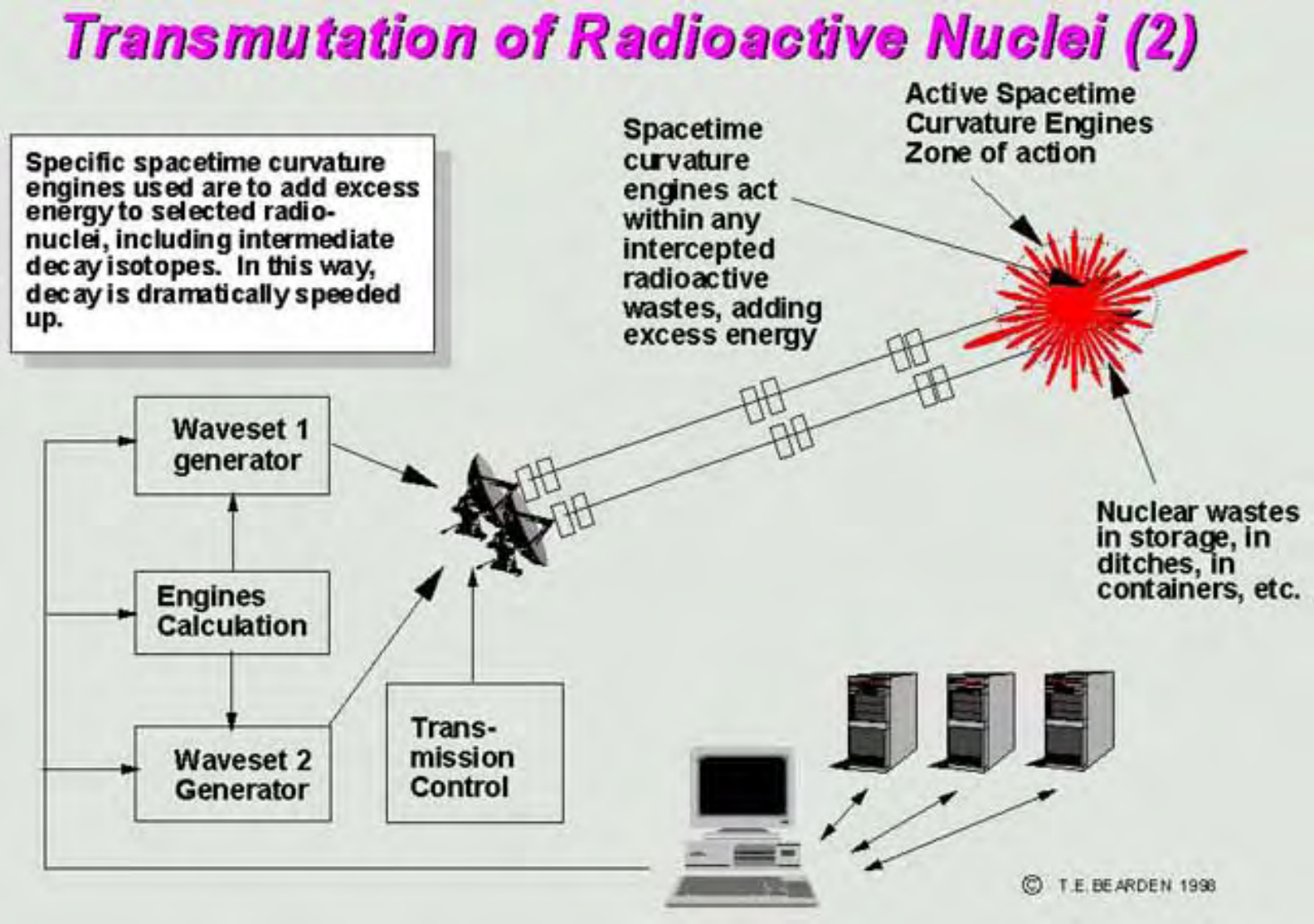
Transmutation of Radioactive Nuclei (2)
Specific spacetime curvature engines used are to add excess energy to selected radio-nuclei, including intermediate decay isotopes. In this way, decay is dramatically speeded up.
Spacetime curvature engines act within any intercepted radioactive wastes, adding excess energy
Active Spacetime Curvature Engines Zone of action
Nuclear wastes in storage, in ditches, in containers, etc.
Waveset 1 generator
Engines Calculation
Waveset 2 Generator
Trans-mission Control
© T.E. BEARDEN 1998

Typical Shield Test, Northern Route to Japan
18-27 km diameter
Asahi Evening News, Tokyo
June 22, 1982
Multiple tests seen per month, for years.
Pilots simply ceased reporting them.
© T.E. BEARDEN 1994,1995

A Curious Tide in Human Affairs

To win its freedom in the long run, usually a group must defeat its attackers or suppressors *at least twice*.

- We fought the British twice for our independence.
- We are fighting ourselves twice to free the slaves. - American Civil War
  - Civil rights struggle
- We beat the Germans twice, in WW I and WW II
- We beat the Hispanics in the Spanish-American War. *That's once*. (They're winning the second by crossing the border. The U.S. is becoming a Hispanic Nation).

But we also have some unfinished business at hand.

- We checked the Russians in the Cold War. *Once*.
- We checked the Japanese in WW II. *Once*.
- We checked the KGB in the Cold War. *Once*.
- We checked the Communists in the Cold War. *Once*.
- We checked Saddam Hussein in the Gulf War. *Once*.

Large Scalar EM Interferometer (LASI) Accident Near Urals, 1958

© T.E. BEARDEN 1994, 198

- 1958 nuclear explosion near Urals
  - Signature of large scalar interferometer (LASI) accident
  - Buried atomic wastes suddenly exploded
  - Large region contaminated to this day
- Soviets were well along with advanced LASI prototypes and testing
  - Khrushchev announced forthcoming advent of these "fantastic" weapons in Jan. 1960
  - 1958 difficulties could have been resolved by 1960
- Expected 1958 cause: transmitter short-out and failure in a nearby LASI discharged its cumulated energetics beam energy into the ground
- *Spreading ground pulse struck nearby atomic wastes, fissioning nuclei*

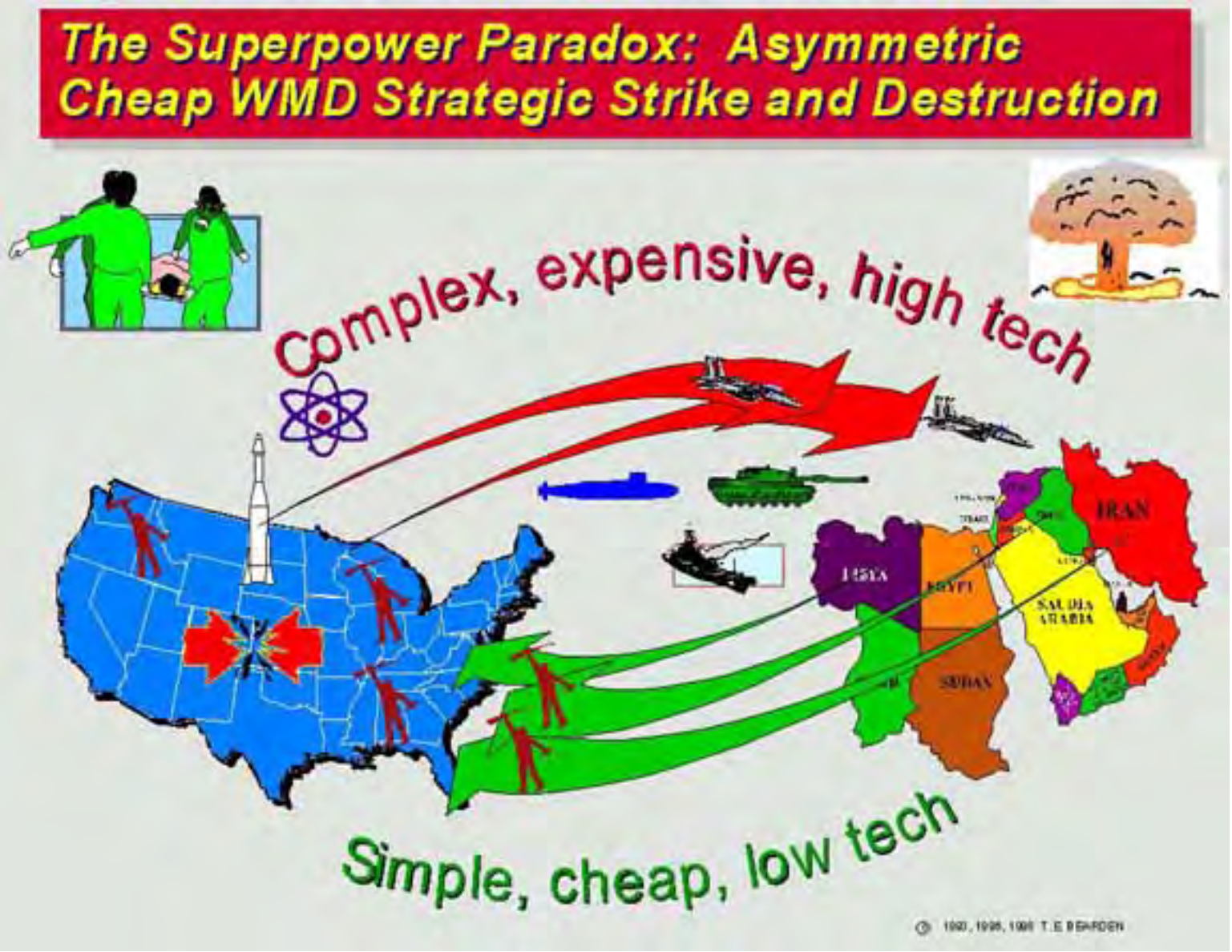
The Superpower Paradox: Asymmetric
Cheap WMD Strategic Strike and Destruction
Complex, expensive, high tech
IRAN
LIBYA
EGYPT
SAUDI ARABIA
SUDAN
Simple, cheap, low tech

THE KGB/YAKUZA-AUM WAR PLAN

- *Dud all quantum potential weapons in other nations via psychoenergetics.*
- *Remove U.S., Israel, Brazil, West Europe as military powers.*
- *Destroy nuclear weapons, hostile energetics weapons, hostile ships, 80% of targeted populaces in first hour of strikes.*

LEASE

1990-91

Aum/Yakuza Acquired Use of on-site Russian Scalar EM (Energetics) Weapons.

Began Geosurvey of Test Range (Western Australia) for training.

KGB Tested QP population wpn (Gulf War Syndrome)

TRAIN

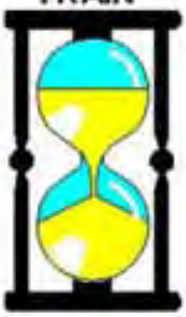

1991-94

Began extensive training of AUM-Yakuza crews in Russia, with practice firing into Western Australia. J-team took over world-wide weather engineering. Preparing for occupation of West Australia.

ESCALATE

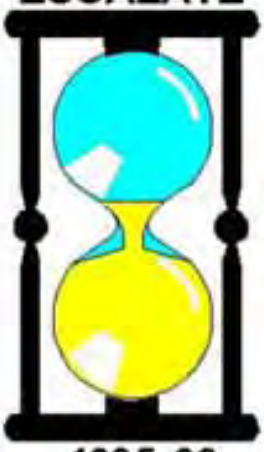

1995-99

Began EM kill of selected lone U.S. targets, law strategic deception plan.

U-2 a/c? USAir 747?
TWA-800 C-130
ValueJet? A-10s

Surged electrical grids. Worldwide practice kills, scalar interferometry. QP modification of selected pathogens

STRIKE!

Plan:
Trigger terrorist BW, & WMD attacks.
Enhance BW infections with QP wpn.
When ready, counter insane QPweapons with psychoenergetics. Destroy QP wpns.
Dud all nuclear weapons worldwide;
Time-snap ships, scalar weapons sites;
Attack major target populations w/QP.
Then cleanup with interferometry strikes.

©1996, 1999 T.E. BEARDEN

Why Western Science is Ignorant of KGB Energetics

- *Foundations* of electrodynamics and much of Western physics are seriously flawed
- Only just rediscovering longitudinal EM waves
- No knowledge of using time-polarized EM waves
- Does not know a powerful GR is hidden in EM
- Ignores inner structure of potentials, waves, fields
- Hotly defends errors, ignores for a century
- Determined to push big nuclear science
- Suppresses research to approved dogma by rigorously controlling precisely what research the funds can be used for

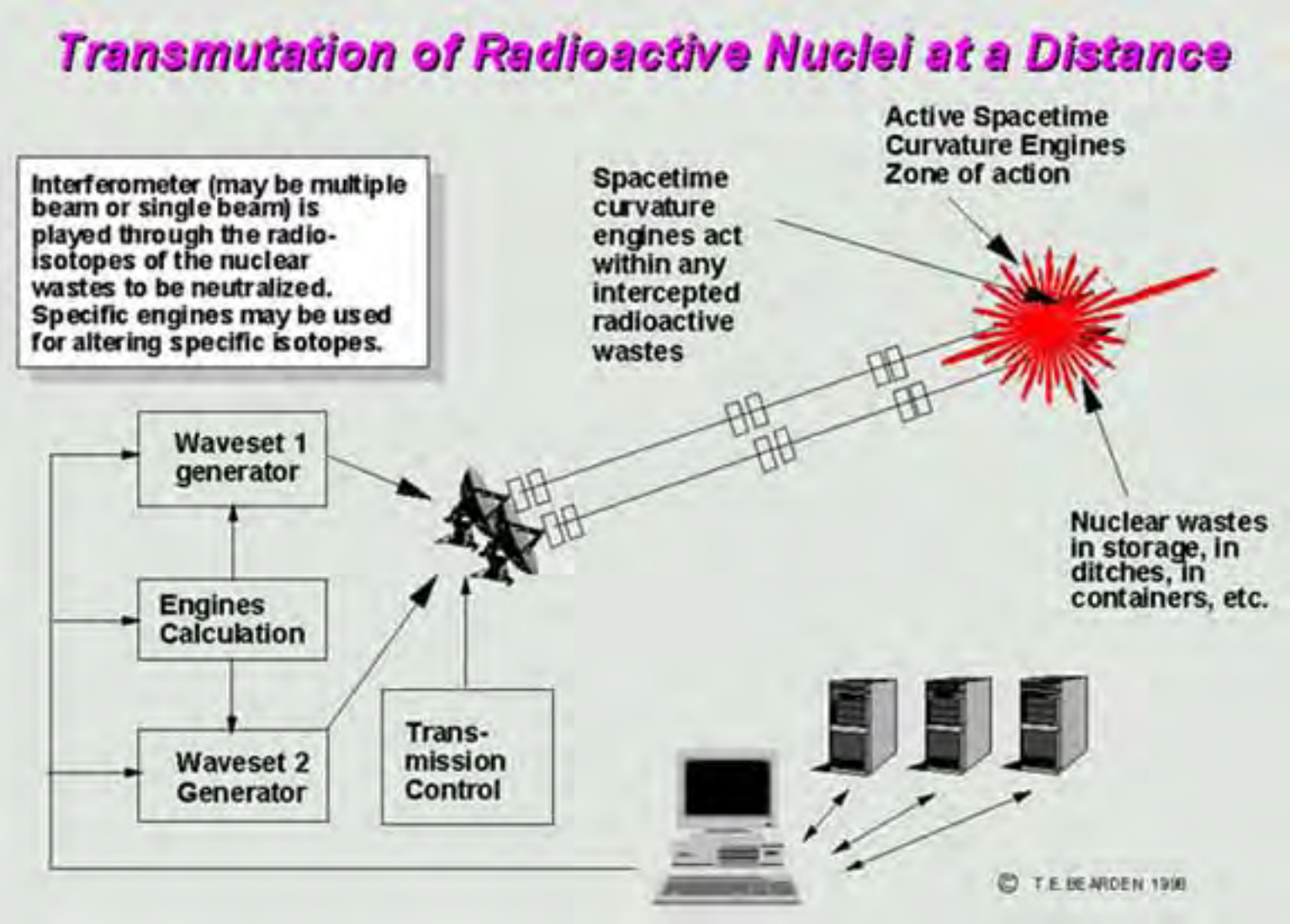
Transmutation of Radioactive Nuclei at a Distance
Interferometer (may be multiple beam or single beam) is played through the radio-isotopes of the nuclear wastes to be neutralized. Specific engines may be used for altering specific isotopes.
Spacetime curvature engines act within any intercepted radioactive wastes
Active Spacetime Curvature Engines Zone of action
Nuclear wastes in storage, in ditches, in containers, etc.
Waveset 1 generator
Engines Calculation
Waveset 2 Generator
Trans-mission Control
© T.E. BEARDEN 1998

THE YAKUZA

(JAPANESE MAFIA)

To do business with Japan is to do business with the Yakuza

The Last Samurai, Defending Bushido

© 1995, 1996, 2001 T.E. BEARDEN

- **3 Major Yakuza Groups, In Coalition.**
- **Penetrate Japanese Government.**
- **Open Offices, Signs on Street.**
- **Public Romanticizes Yakuza as Last Japanese Samurai**
- **In Large High-Tech Corporations.**
- **In Control of Japanese Banks.**
- **Japanese Real-Estate Rip-off.**
- **$500 - 1,000 Billion per Year Income.**
- **Rapidly Spreading in U.S.**
- **Uniting Mafia Groups Worldwide.**
- **Coalition with Aum Shinrikyo.**
- **Leased Russian Energetics Weapons.**
- **Crews On-site in Russia, Trained.**
- **Practice Firings into Western Australia for Three Years. (Dozens of Shots per Month)**
- **Now in Escalation Phase, Killing U.S. Targets.**
- **All-out Strike on U.S. ready 1999-2000.**
- **Now held in check by KGB, dead-man fuzed by small nation friendly to U. S.**

Yugoslav Earthquake, Followed by Cold Explosion

Apr. 15 1979

- Magnitude 7.2 on Richter scale
- Epicenter 33 km. deep
- More than 100 aftershocks
- At Kamenari:
  - Adriatic sea mushroomed up
  - Like atomic bomb explosion
  - Signature of a cold explosion
  - Similar to Apr. 1984 test off coast of Japan, near Kurils (see inset graphics)
- *Note that April is a significant test month for the Communists (preparing official reports for May Day?)*

© T.E. BEARDEN 1994, 1996

The Tom Bearden Website

TOWARDS A NEW ELECTROMAGNETICS
PART 4: VECTORS AND MECHANISMS CLARIFIED

by Lt. Col. T.E. Bearden (retd.), 1983
Copyright

Title Page

Foreword

1. TOWARDS A NEW ELECTROMAGNETICS - ACKNOWLEDGEMENTS
2. OUTLINE
3. CHARACTERISTICS OF SELECTED CONCEPTS
4. QUOTE FROM NIKOLA TESLA
5. FORCE BETWEEN TWO LIKE CHARGES
6. REPETITIONS LEAD TO THE VECTOR "FIELD" CONCEPT
7. A SCALAR HAS A HIDDEN (VIRTUAL) VECTOR SUBSTRUCTURE
8. SCALAR AND VECTOR SUBSTRUCTURES
9. SUPERPOSITION DOES NOT ELIMINATE THE VIRTUAL SUBSTRUCTURE
10. PHYSICAL VECTORS
11. THE FOUR VECTORS OF PHYSICS
12. FORCE DEFINITION
13. FORCE IS AN EFFECT, NOT A CAUSE
14. FORCE AND Ë-FIELD DO NOT EXIST IN VACUUM
15. COROLLARIES
16. ENERGY IS DERIVED, NOT FUNDAMENTAL
17. EXISTENCE IN, AND PASSAGE THROUGH, TIME
18. SOME IMPLICATIONS
19. CONSERVATION OF ANENERGY (AE): (AN EXPANDED CONSERVATION LAW)
20. FREE ENERGY IS ALLOWED

21. SCALAR POTENTIAL CAN FORCE THE RELATIVISTIC CASE
22. SCALAR STRESS WAVE (Ö-WAVE) (TESLA WAVE)
23. SCALAR Ö-WAVE PRODUCTION
24. A SIMPLIFIED CHARGED PARTICLE
25. A CHARGED PARTICLE IS A SPECIAL KIND OF "SPRAY NOZZLE"
26. AN OBSERVABLE CHARGED PARTICLE IS DIRECTLY CONNECTED TO VIRTUAL PARTICLE FLUX VACUUM
27. SPIN COUPLES VACUUM TO PARTICLE
28. ELECTRON PRECESSION (SIMPLIFIED)
29. VACUUM/SPACETIME IS PURE VIRTUAL PARTICLE FLUX ($Ø_0$)
30. VACUUM IS:
31. GRADIENT OF ELECTROSTATIC POTENTIAL
32. IN A ∇Ø, A CHARGED PARTICLE MOVES ITSELF
33. ELECTROMAGNETIC WAVES IN ELECTRON GAS IN A CONDUCTOR
34. ELECTROMAGNETIC WAVES IN VACUUM
35. DETECTION OF TRANSVERSE AND LONGITUDINAL WAVES
36. CREATING A "RIVER" OF ANENERGY
37. A 2-WIRE SYSTEM IS CONSERVATIVE
38. A HOLLOW CHARGED SPHERE
39. ONE-WAY GATE VALVE
40. SIMPLE FREE ENERGY MOTOR
41. THE TRANSLATOR
42. TRANSVERSE WAVE INTERFERENCE
43. LONGITUDINAL WAVE INTERFERENCE (SCALAR WAVES)
44. CREATING ENERGY AT A DISTANCE
45. NONLINEARITIES CAUSE SHIFTING (PARTIAL TRANSLATION)
46. THE SCALAR AURA.
47. VIRTUAL FLUX AND MAGNETIC FIELD (LINEAR CASE)
48. PRODUCING MAGNETIC MONOPOLES
49. BREAKING METAL WITH MAGNETIC MONOPOLES
50. CREATING AN INERTIAL FIELD (ANTIGRAVITY)
51. EFFECTS ON HUMANS
52. INITIATING SPECIFIC BIOLOGICAL EFFECTS
53. GROUND-TO-AIR USE

54. TACTICAL AIR-TO-GROUND USAGE
55. INTEGRATED WEAPONS DISPLAY (MODIFIED JAMMER)
56. RADAR INVISIBILITY
57. NETWORK OF VIRTUAL TRANSMITTERS
58. CONCLUSION

Return to Homepage

TOWARD A NEW ELECTROMAGNETICS

PART 4: VECTORS AND MECHANISMS CLARIFIED

(©) 1983 T. E. Bearden

All rights reserved.

Delivered to the 1983 Annual Conference

of the

U. S. Psychotronics Association

July 20-24, 1983

at the

University of Portland

Portland, Oregon

The Tom Bearden Website

--FOREWORD --

This paper is an adaptation of the oral/visual presentation given by the author at the 1983 Annual Conference of the U. S. Psychotronics Association on Saturday, July 23, 1983.

The presentation was delivered directly from the vugraphs alone, and not from a formal, written text.

The title of the presentation at the conference was "New Electromagnetics: Where the 'Old Math' Took the Wrong Turn."

As originally conceived, the lecture was to be given in a single period of some 45 minutes and cover only the first part of this paper, the clarification of the vector concept in physical theory. The Symposium director so graciously scheduled two periods instead, allowing time to present additional material further clarifying vector and scalar waves, and to present a variety of unusual physical mechanisms that apply the concepts.

After the conference, the author prepared this paper directly from the same slides, in the same order. However, no attempt was made to match the words in this paper to the words actually delivered in the formal presentation. The gist of the two, however, are the same -- except that, in the conference lecture, the author covered (as an aside) some important additional material: (1) the nature of what actually occurs in an "electrical ground," and (2) the author's explanation of the theory of Tesla's magnifying transmitter.

An audio tape and a videotape of the author's USPA presentation were made by the conference officials. Copies are available at nominal cost from Mr. Robert Beutlich, Secretary/ Treasurer, U. S. Psychotronics Association, 3459 Montrose Avenue, Chicago, Illinois 60618, U.S.A.,
phone (312) 478-7715.

The Tom Bearden Website

SLIDE 1.

TOWARD A NEW ELECTROMAGNETICS

© 1983 T.E. BEARDEN

ALL RIGHTS RESERVED

ACKNOWLEDGEMENTS

I would like to express my deep appreciation to two of my fellow colleagues, Dr. William Tiller and Mr. Frank Golden, for many fruitful hours of discourse and interchange on these and related subjects.

Also, I wish to thank the Association of Distinguished American Scientists (A.D.A.S.) for support and assistance in the long and arduous struggle to revise the basic foundations of electromagnetics and mechanics.

Next Slide

SLIDE 2.

OUTLINE

- **MAIN BRIEFING**
  - **> TRANSLATOR EFFECTS**
  - **> POTENTIAL WEAPONS**
  - **> INCIDENTS**
  - **> CONCLUSION**
- **HISTORICAL BACKGROUND**
  - **> TESLA/MORAY**
  - **> WWII AND AFTER**
- **ELEMENTS OF THE EMERGING THEORY**
  - **> LONGITUDINAL/ TRANSVERSE WAVES**
  - **> VACUUM/MASS EFFECTS**
  - **> FLAWS IN VECTOR THEORY**
  - **> IMPLICATIONS**

This presentation is one part of a three part presentation, consisting of the main briefing on physical effects, the historical background, and the elements of the emerging new electromagnetics.

In this present briefing I will not cover the historical background. Instead, first I will address the concepts of the new theory, and then I will give an abbreviated main briefing, including some weapon aspects. I will present one simple free energy motor and show how it works, and where it gets its energy.

Much of this material I have known for some time, but have hesitated to release it because it enables one to develop -- in a fairly straightforward manner -- weapons and beams (ray) systems that can disable electronics, computers, communications, and people. Anyone

handy in electronics, who has a few thousand dollars and access to bench equipment and an electronics parts supply house, can develop these weapons in his or her basement workshop. But because certain very radical elements in this country already know some of this information and may plan to utilize such devices in criminal activities, I am openly releasing the information as a warning, to be prepared.

Of course there are many good things that can be developed with this technology, including machines to heal a remarkable variety of ailments and illnesses. I strongly urge everyone to use this information wisely and only to benefit other human beings. There exists a cosmic or karmic law for those who misuse it against their fellow persons; if one does that, one will assuredly suffer the consequences.

Also, I strongly urge the development of Western defenses against the Soviet strategic and tactical weapons; already developed utilizing these principles. Unless the West wakes up to the extreme urgency of this task, in the near future we may be overwhelmed in short order by a much harsher, dictatorial system. If that should happen, it will plunge the human race into a new dark ages far more terrible than that dark period in history following the fall of Rome.

These are the final times, and this is the beginning of the final technology. The ability to directly engineer physical reality itself has been laid in our laps. Pandora's box is already spilled open, and there is no longer any stopping the new technology.

Let us prepare, then, for that which is to come.

With these introductory remarks, let us now turn to the main presentation.

Next Slide

SLIDE 3.

CHARACTERISTICS OF SELECTED CONCEPTS

CONCEPT	CHARACTERISTIC
• ENERGY	FLOW OF OBSERVABLE MASS PARTICLES
• ANENERGY	FLOW OF VIRTUAL PARTICLES
• PRESENT "CHARGE"	VIRTUAL PARTICLE FLUX TIED TO OBSERVABLE MASS PARTICLES
• TRUE CHARGE	VIRTUAL PARTICLE FLUX WITHOUT MASS
• FLUX	MULTI-DIRECTIONAL FLOW THROUGH A POINT
• FLOW	UNI-DIRECTIONAL MOVEMENT OF A FLUX [GRADIENT]
• CURRENT	UNI-DIRECTIONAL GRADIENT OF A [USUALLY CONSTRAINED] FLUX

On this slide I show some fundamental defining characteristics of energy, "charge" or charged mass as presently in the theory, flux, flow, and current. These fundamental concepts are often somewhat confused in the literature.

Particularly note that the concept of energy, being tied to "the capacity to do work," is specifically tied to the concept of mass. Eventually, energy must be expressed in terms of moving masses -- specifically, in accelerating or decelerating masses.

I introduce the term "anenergy" here, specifically in relation to

the concept of a virtual particle. Anenergy is roughly equivalent to the present idea of "virtual energy,"
except it more precisely implies the flow or flux of virtual particles.

We also redefine charge as virtual particle flux, in order to remove the present error in EM theory where "charge" always implies a charged mass. The electrostatic scalar potential, phi (Ø) , then merely becomes the intensity of the massless charge -- that is, the intensity of the virtual particle flux -- at a point. Let me point out, however, that in the new view this "point" is always in n-dimensional space, where n is equal to or greater than four. The present 3-space formulation of Ø is thus a highly special case.

Next Slide

The Tom Bearden Website

SLIDE. 4

QUOTE FROM NIKOLA TESLA:

**"THE HERTZ WAVE THEORY OF WIRELESS TRANSMISSION MAY BE
KEPT UP FOR A WHILE, BUT I DO NOT HESITATE TO SAY THAT
IN A SHORT TIME IT WILL BE RECOGNIZED AS ONE OF THE MOST
REMARKABLE AND INEXPLICABLE ABERRATIONS OF THE SCIENTIFIC
MIND WHICH HAS EVER BEEN RECORDED IN HISTORY."**

Nikola Tesla
"The True Wireless,"
The Electrical Experimenter

One of the things we will find is that Hertz or transverse electromagnetic waves are strictly mass waves in a charged mass particle medium.

For example, transverse EM waves do not, and CAN not, exist in vacuum. Vacuum EM waves are longitudinal waves of compression and rarefaction. What is compressed and rarified is the virtual particle flux that comprises vacuum itself. Vacuum EM waves in this virtual flux are just like sound waves in air -- in the flux of molecules and atoms that comprise the atmospheric gas.

Nikola Tesla, of course, knew this and he frequently pointed out the falsity of the accepted transverse wave theory. Here is one Tesla quote, for example, taken from The Electrical Experimenter. (PAUSE)

Almost every scientist -- even the "Tesla bugs" -- have thought Tesla wrong in his adamant opposition to the idea of Hertzian waves in the vacuum.

As we shall see, Tesla was right and all the present scientists and textbooks are wrong .

Next Slide

The Tom Bearden Website

SLIDE 5.

FORCE BETWEEN TWO LIKE CHARGES

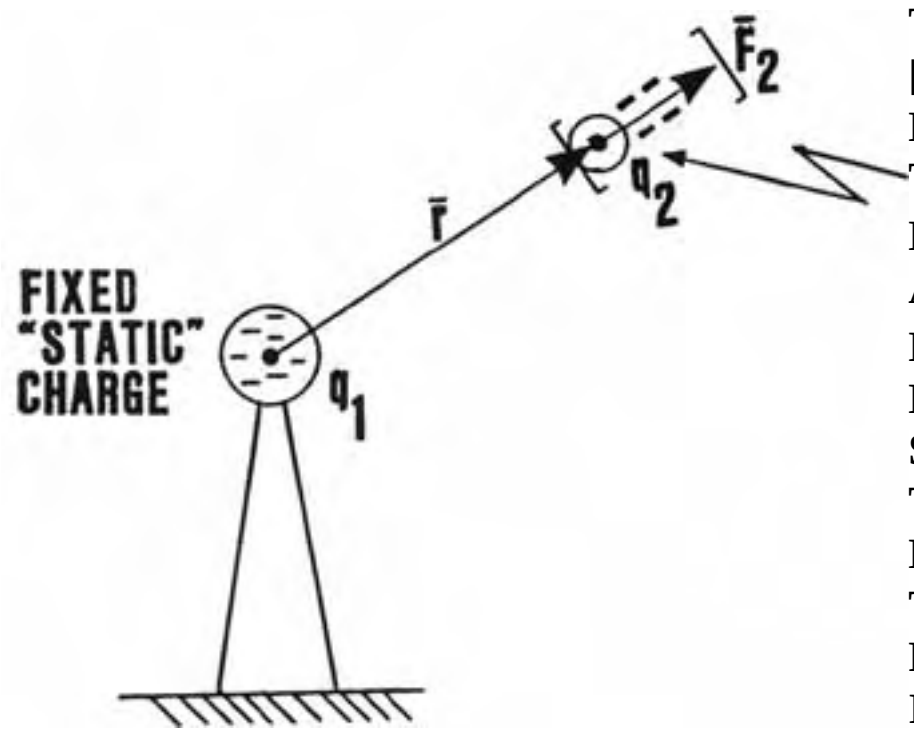

A NEGATIVELY CHARGED TEST MASS [e.g., AN ELECTRON] BROUGHT INTO THE VICINITY OF q_1 EXPERIENCES A FORCE $\bar{F}_2$ AS SHOWN. NOTE THE ELECTRON ACTUALLY IS SPINNING. THIS HAS NEVER BEEN DONE WITH A TRUE "STATIC CHARGE", FOR THERE IS NO SUCH THING IN NATURE.

In my presentation last year, I noted some 22 fundamental flaws in present electromagnetics theory. One of these flaws was in the actual vector theory itself. As we shall discover, one cannot simply plug geometrical vectors into physical systems without making fundamental errors. The vector concept itself must be adapted, for there are now four different kinds of vectors in physics, all confused as the same thing. We will come to that shortly.

To begin, let us look at the fundamental kind of experiment, shown on this slide, from which the idea of electrical force and electric field was taken.

We have a fixed static charged object q(l) in the laboratory, and we bring in a test charged mass q(2). The test charged mass may even be a single electron, as we illustrate here. We show in our example the fixed charge to be negative. When we release the test charge electron, it accelerates away from the fixed charged mass, as shown on the

diagram. Note that we have no force at all until we bring in the test charged mass. Indeed, we shall find that the force is actually COMPRISED OF the accelerating test electron. Specifically, it is not something mysterious which appears in vacuum and PUSHES on the electron. We shall find that FORCE IS AN EFFECT, NOT A CAUSE. It CONSISTS OF the "smeared mass" that is accelerating -- in this case, it consists of the smeared, accelerating electron.

We summarize the experiment: in the absence of the charged test particle, no force exists in the vacuum. When we bring in the test charged mass, it accelerates away, and THE FORCE CONSISTS OF THAT ACCELERATING CHARGED MASS PARTICLE. The experiment does not at all address or deal with WHAT EXISTS IN THE VACUUM AROUND CHARGED MASS Q(l) IN THE ABSENCE OF TEST CHARGED MASS Q(2). Any assumption of a force existing in the vacuum is sheer speculation and not based on this experiment.

Next Slide

The Tom Bearden Website

SLIDE 6.

REPETITIONS LEAD TO THE VECTOR "FIELD" CONCEPT

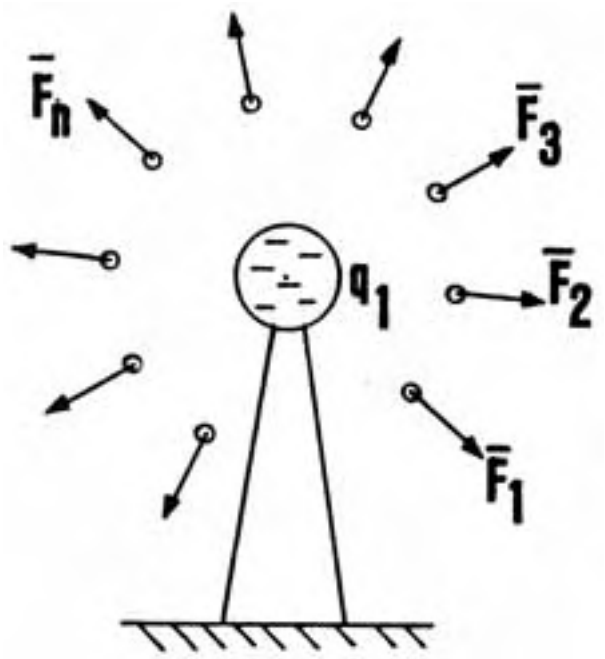

REPEATING FIGURE 4 A NUMBER OF TIMES LEADS TO SETS OF FORCE ARROWS, WHICH WE THEN VISUALIZE IN TOTAL AS A FIELD, Ë, OF FORCE(S) ABOUT q_1

RIGOROUSLY, THIS "FORCE FIELD" WOULD REQUIRE THAT A SPINNING CHARGED PARTICLE OF MASS EXIST AT EACH AND EVERY POINT IN SPACE ABOUT q_1

On this slide, we show that, as we repeat the experiment by bringing in the test charged mass from differing directions, the same thing happens around the fixed charged mass q(l). Test charged mass q (2) -- our electron -- accelerates radially away from q(l).

As we repeat the experiment and draw many of the little arrows radially outward, gradually the idea of a "vector field" emerges. That is, we form the idea that, at every point in space around fixed charge q (l), there exists one of our little vector arrows. Thus we assign a vector field to the space: to every point of it, there is assigned both a magnitude and a direction.

However, note that this does not describe the situation as it exists, at any time, in the "present." That is, rigorously any one arrow only exists whenever a little test charged mass is present and accelerating radially away.

We may take the view that the arrow WILL exist WHEN a test

charged mass is brought to that point and released. In that case, the arrow WILL exist in the FUTURE, not the present. And we may refer to that as, it POTENTIALLY exists, when and if.. ..etc.

So already we see a fundamental logical problem in the idea of such a field. It WILL exist in the future, but only POTENTIALLY exists in the present.

Of course I am not the first one to point out such difficulties; the fact that the field concept is erroneous is already well-known to foundations scientists. But it is such a USEFUL concept that it is retained.

Now the Ë-field, or electric field, is defined as "the accelerating force on a charged mass per unit charged mass accelerated by it." If there is no charged mass present to be accelerated, then there can be no Ë-field present.

So Ë-field cannot exist in vacuum, for vacuum presupposes the absence of all observable mass.

So we can rigorously say that no Ë-field of force exists around the charged mass q(l) IN THE PRESENT. At best, it can only POTENTIALLY exist IN THE FUTURE.

Next Slide

The Tom Bearden Website

SLIDE 7.

A SCALAR HAS A HIDDEN [VIRTUAL] VECTOR SUBSTRUCTURE

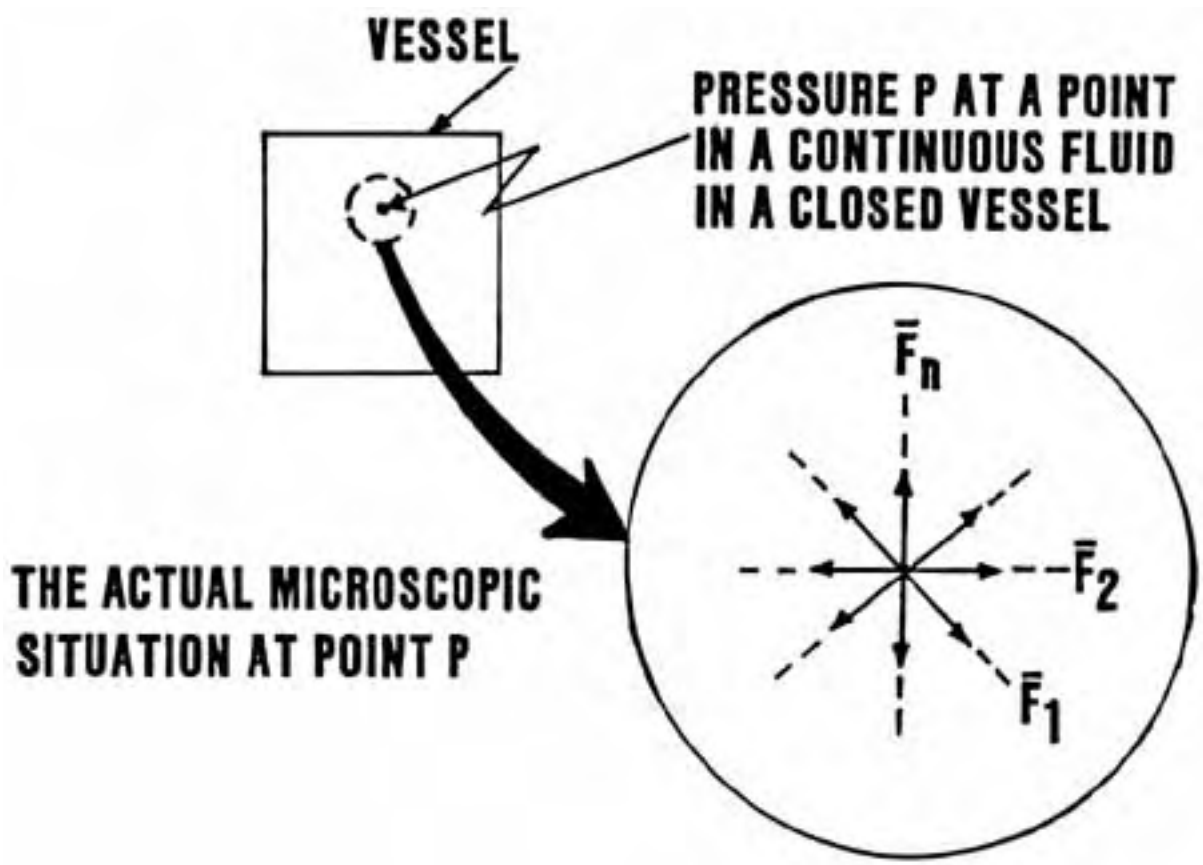

Our next slide shows that a physical scalar quantity has a hidden vector substructure.

For example, we show on the left a closed vessel containing a pressurized gas. The pressure at a point in the gas is a scalar quantity, since it has a magnitude but not a direction. However, physically what we have in the gas is a flux of individual molecules continually through any small volume, which we may let approach a point in the limit. Thus we have a flux in all directions through the point at which we specify pressure.

That is, the scalar "pressure" at a point may be said to contain a substructure of individual molecule flow vectors.

All physical process scalars have such hidden substructures. In

the equilibrium case, the summation of all the individual flux vectors yields a resultant vector zero.

Thus we take the view that ANY PHYSICAL PROCESS SCALAR IS ALSO A ZERO VECTOR, AND ANY ZERO VECTOR IS A SCALAR AND CONTAINS A SUM-ZERO HIDDEN VECTOR SUBSTRUCTURE.

Next Slide

[The Tom Bearden Website]

SLIDE 8.

SCALAR AND VECTOR SUBSTRUCTURES

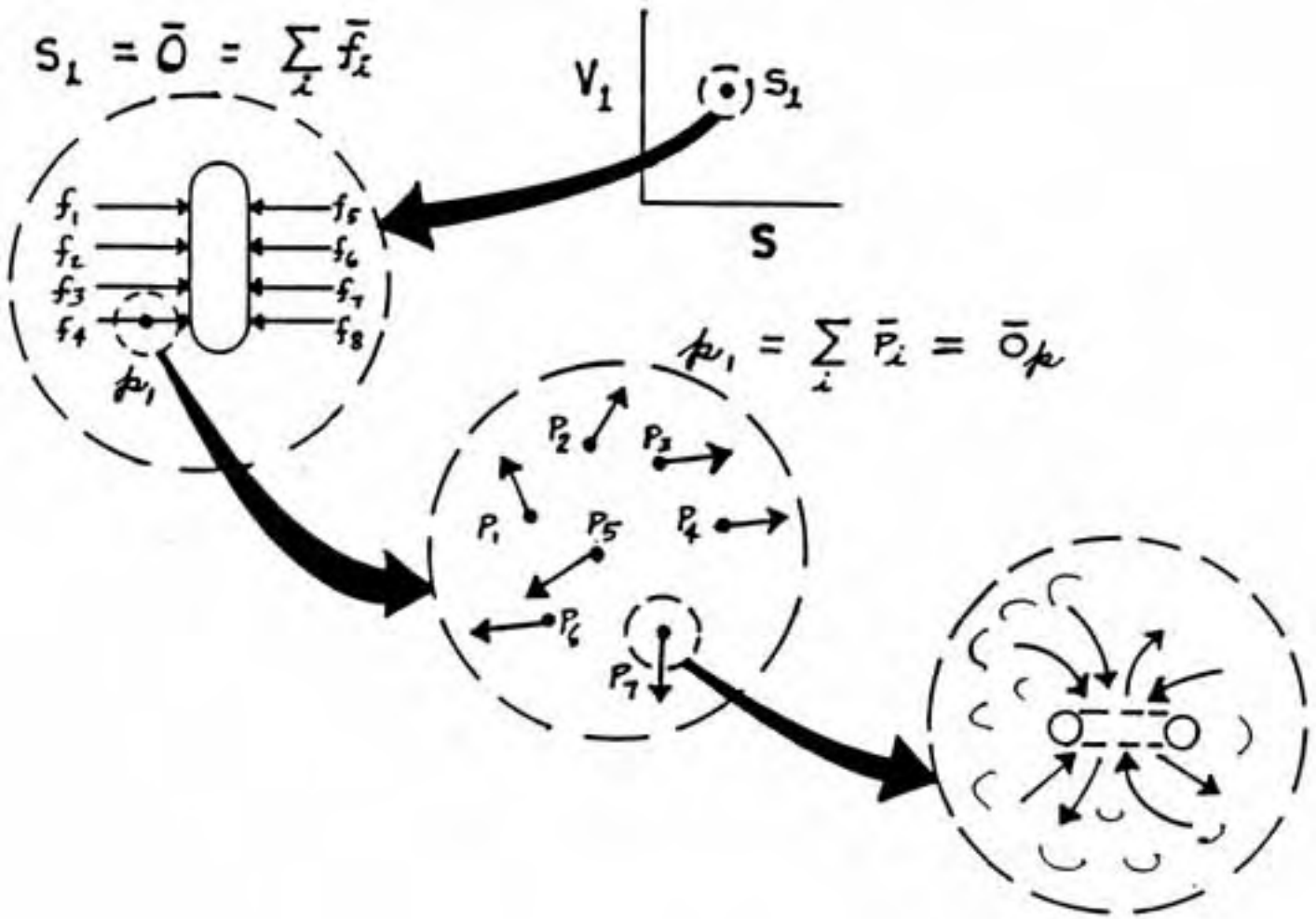

Now let us see if we can do some unusual thinking about the hidden vector substructure of a scalar or zero-vector.

On the leftmost figure in this slide, we show a plate with balanced opposing forces. The vector summation of all the forces' is zero, so the system has no resultant vector. The plate therefore does not move. However, the plate -- that is, the medium in which the forces act -- is stressed, much like the previous example of pressure in a gas. The difference is that now the stress is patterned in its substructure, and not random. Now suppose we rhythmically vary the forces, each the same, in a regular manner in time. Yet we maintain a continuous balance, so there is never a system resultant greater than zero. In this case, we maintain our vector zero, but we are producing regular stress waves in the plate medium..

I think you now can see that I can vary the individual opposing vector pairs so that rhythmic waves flow from top to bottom, or from bottom to top. That, of course, will describe a vector gradient traveling through the medium, and that will be an ordinary "vector wave." Is there any way I can make waves through the medium, and not have such vector waves ever appear?

Indeed there is, if I look further into the substructure. Take one point on one of the vectors shown acting on the plate in the left diagram. That point is a scalar, and it also has a substructure of even finer vectors, as shown in the lower middle figure. And any point in one of these second-order hidden vectors is a scalar and composed of a still finer hidden vector substructure, as shown in the lower right figure. This process repeats ad infinitum, and all is structures within structures. At least it can be modeled that way, for it already is treated that way in particle physics.

Now go back to the second order vector substructure. Here I can establish whatever patterns I wish, and not affect the first order pattern shown in the figure on the left. I can even rhythmically vary things in the second order substructure, and leave a blissfully unchanged first order substructure, to the first order observer.

So I can make as many waves; as I wish through the medium, as long as I stay second order or higher, and the external observer will never see any change at all unless he has a special detector of some sort to detect the lower substructure changes.

As I showed in the Appendix to my book, The Excalibur Briefing, these substructures are in reality the same thing as hyperspaces. And movements in them can proceed much faster than the speed of light.

So I can have higher order signals and waves through the stressed medium without changing the overall first order stress in the medium.

This is a sort of super-relativity; the present relativity is just a special case.

Superluminal communication systems are perfectly possible, but not with the present first order transmitters and receiver/detectors.

Note also that higher order stresses -- stresses in the higher order substructures -- represent special stresses in time, and time has an internal stress-pattern substructure. The higher order stress waves are phase waves or phase fluctuations in that respect.

Also note that Charles Musés has already created the hypernumber mathematics of the structure of time, and it is largely in his mathematics that these concepts will have to be mathematically modeled.

Next Slide

SLIDE 9.

SUPERPOSITION DOES NOT ELIMINATE THE VIRTUAL SUBSTRUCTURE

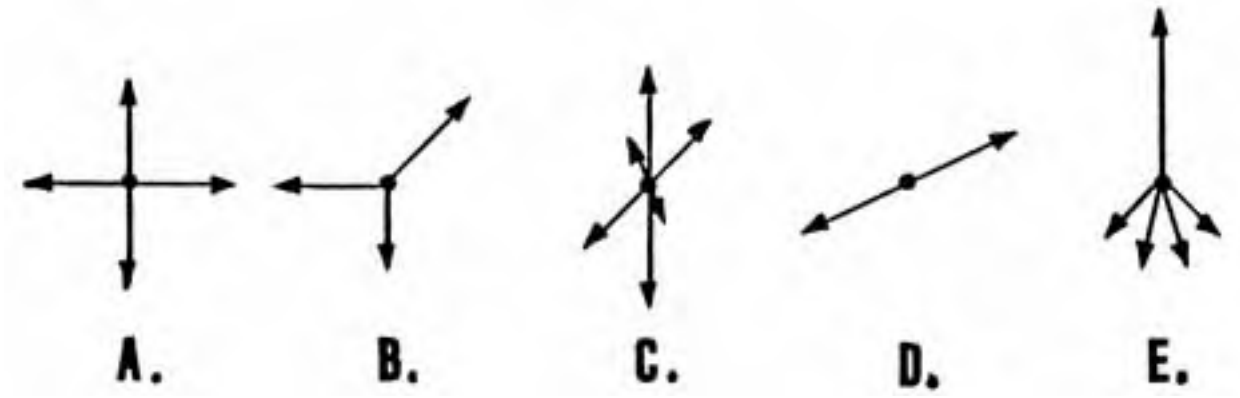

TWO OR MORE MACROSCOPICALLY "EQUAL" VECTORS OR SCALARS CAN DIFFER DRASTICALLY IN THEIR VIRTUAL SUBSTRUCTURE DISTRIBUTIONS. EVEN TWO "ZEROS" MAY BE DYNAMICALLY DIFFERENT DUE TO THEIR DIFFERING SUBSTRUCTURES.

Next we show some simple substructures of a zero vector. All of these vector systems sum to zero vectorially. Note that if we superpose two of these structures, all substructure vectors are still present., and the vector summation is still zero.

Also notice that, from the standpoint of substructuring, zeros can be and are drastically different.

We can even make rhythmic waves in the substructure by superposing patterned zero vectors in a regular fashion.

Next Slide

SLIDE 10.

PHYSICAL VECTORS

- **VECTOR: A "SMEARED PARTICLE"**

- **FOUR MAJOR PARTICLES IN PHYSICS:**
  - POINT [MASSLESS, CHARGELESS]
  - MASS [CHARGELESS]
  - CHARGED MASS
  - CHARGED POINT [MASSLESS}

- **LEADS TO FOUR MAJOR VECTORS:**
  - GEOMETER'S
  - MECHANIC'S
  - ELECTRICIAN'S
  - ADVANCED ELECTRICIAN'S

In quantum mechanics, as we approach the quantum level, we find that the notions of a particle (static concept) and a wave become inseparable. That is, any particle becomes a "smear" in length and time, and it becomes inseparable from its smear. At the quantum level, there is no separate energy, length, mass, momentum, energy, or time -- all are welded together inextricably into a quantity called "action," having the units of angular momentum.

So at the fundamental quantum level, a moving point becomes a smear, and a vector represents a physical, undifferentiated entity.

To go quickly, we now define a vector as consisting of a smeared particle. That is, the particle is smeared in both time and length, and it is not differentiated from time or length.

There are four kinds of particles in physics which can be smeared to form vectors. First, there is a point in space or spacetime. This point may be approximated as massless and chargeless. At least that is the way the geometers of old conceived it in the abstract, and so the idea of a "point" in space assumes it to be chargeless and massless. Second, there is a tiny particle of mass, often abstracted to be a "point-mass," but visualized as having no charge. This is the mechanic's particle. Third, there is a tiny charged mass, such as an electron, and this is the electrician's particle. Again, it is often abstracted as a charged point-mass. Fourth, there is a charged point, having no mass, and this is the advanced electrician's particle, which he uses to form the idea of potentials and fields.

Smearing these four particles at the fundamental quantum level produces four different kinds of physical vectors: the geometer's, the mechanic's, the electrician's and the advanced electrician's vectors. They are all different.

Next Slide

[The Tom Bearden Website]

SLIDE 11.

THE FOUR VECTORS OF PHYSICS

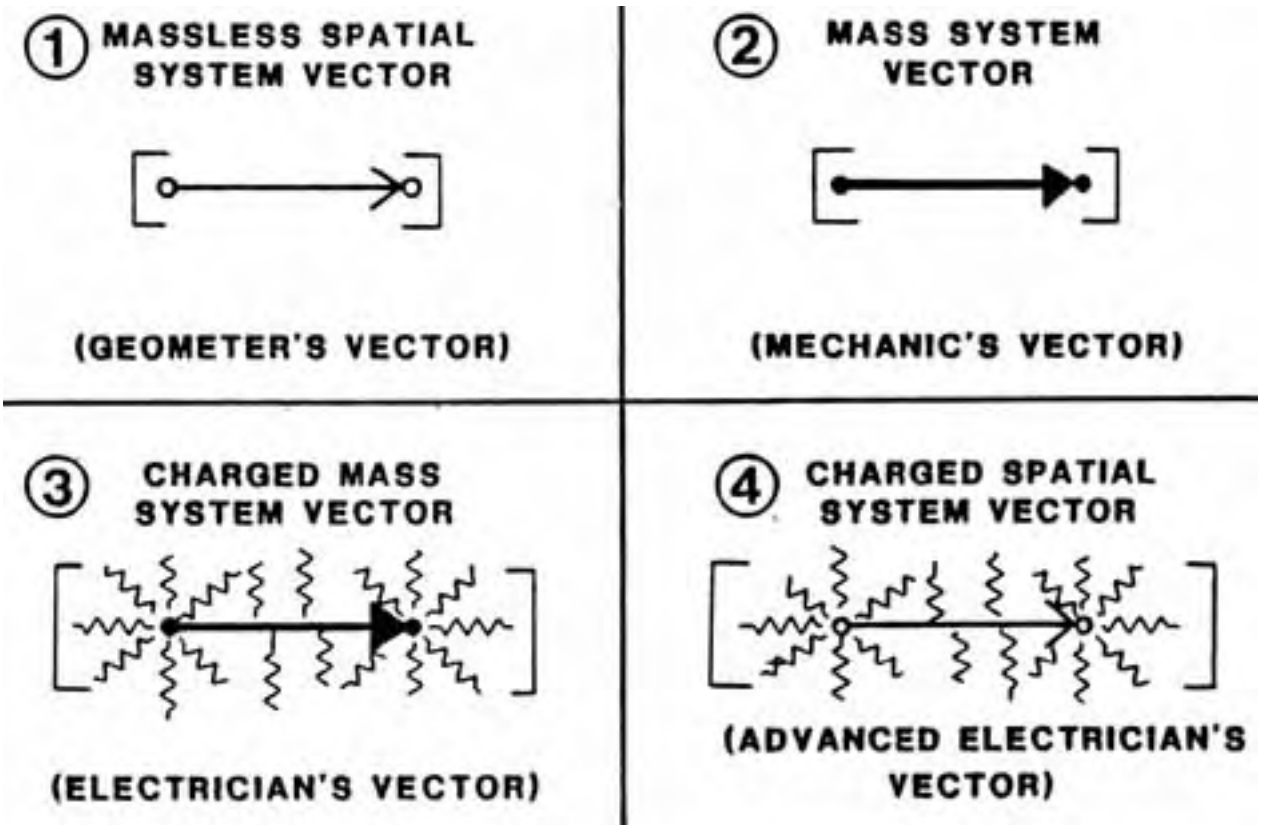

On this slide we show a graphic illustration of each of these vectors.

Note that they may be visualized as smeared particles, but the particle is not separate from the smear in time and length.

Each vector must be considered as a unitary entity -- it is a special kind of quantum, if you will.

Each is a special quantum of motion.

And Dewey Larson has it right when he says, "All is motion."

Next Slide

The Tom Bearden Website

SLIDE 12.

FORCE DEFINITION

- ***A TRUE DEFINITION IS AN IDENTITY.***

$$F \equiv d/dt\ (mv)$$

- **FORCE CONSISTS OF THE TIME RATE OF CHANGE OF MOMENTUM**
- **MOMENTUM IS A MASS SMEARED THROUGH A LENGTH IN A CERTAIN TIME**
- **FORCE CONSISTS OF MASS-MOTION-CHANGE**
- ***FORCE IS AN EFFECT, NOT A CAUSE !***

We now look a little closer at the concept of a force.

I point out that a true definition is an identity. If a supposed definition of an entity is not an identity for that entity, then it is not a definition at all, but only a statement ABOUT the entity.

It may come as somewhat of a shock to the normal engineer and scientist that the foundations concepts of physics -- such as force, mass, energy, etc. -- are ALL in serious difficulty and contain many unresolved logical conflicts.

Force is in that kind of difficulty, and it has that kind of logical conflict.

In fact, in its force equations, physics has not even applied its own present definition of force.

As we show here, force is generally defined as the time rate of change of momentum.

If that is true, then as an identity the definition states that a force CONSISTS OF the time rate of change of momentum.

And of course, momentum is mass times velocity. Hence momentum is a mass smeared through a length and through a certain time.

Force then consists of the time rate of change of that smearing. That is, we smear the mass through time and length, faster or slower.

But if force CONSISTS OF that smearing change, it does not CAUSE it.

Force is thus an effect or result, not a cause.

This implies that there is a more fundamental mechanism that causes or generates force itself -- ANY force. If we can find that hidden mechanism, we may well find the long-sought unified field theory, since it will unify all forces on a common mechanism.

Next Slide

The Tom Bearden Website

SLIDE 13.

FORCE IS AN EFFECT NOT A CAUSE

---

1. $\bar{P} = M\bar{V}$ (MACROSCOPIC)

2. $\bar{P} \equiv \overline{[M\bar{V}]}$ (MICROSCOPIC)

3. $\bar{F} = \frac{d\bar{P}}{dt}$ (MACROSCOPIC)

4. $\bar{F} \equiv \frac{d\bar{P}}{dt} \equiv \frac{d}{dt}\overline{[M\bar{v}]}$ (MICRO)

   $\equiv \overline{[M\bar{v} + M\bar{a}]}$

5. $F \equiv \overline{[M\bar{a}]}$ (NONRELATIVISTIC)

6. FORCE CONSISTS OF A "SMEARED MASS"

7. IT IS MASS-ACCELERATION, IT DOES NOT CAUSE IT.

8. FORCE IS AN EFFECT, NOT A CAUSE!

On this slide, we show briefly how one might express this idea in mathematical symbology.

Macroscopically, momentum consists of mass times velocity. Microscopically, the mass and the velocity are inextricable, and it is not proper to speak of a "mass in motion," but only of "mass-motion." We show this in equation 2.

We take the macro definition of momentum, as shown in equation 3, and express it for the microscopic, unseparated case, as shown in equation 4.

In the nonrelativistic case, we may consider m-dot to be zero, since the time rate of change of mass is almost zero. In that case, force may be defined for the microscopic case as a smeared accelerating mass, as shown in equation 5.

Force thus consists of the welded mass and acceleration, with no seam in the middle.

It IS mass-acceleration; it does not CAUSE it. Therefore force is an effect, not a cause.

Next Slide

The Tom Bearden Website

SLIDE. 14

FORCE AND $\bar{E}$-FIELD DO NOT EXIST IN VACUUM

1. $\bar{F}_p \equiv \overline{[M_p \circ \bar{a}_p]}$

2. WITHOUT M, THERE IS NO M_p, NOR $\bar{F}_p$

3. HENCE FORCE DOES NOT EXIST IN VACUUM.

4. $\bar{E}_{cm} \equiv \dfrac{\bar{F}_{cm}}{q_{cm}}$

5. WITHOUT M, THERE IS NO $\bar{F}_{cm}$, NOR q_{cm}.

6. HENCE $\bar{E}$-FIELD DOES NOT EXIST IN VACUUM.

7. SIMILARLY, $\bar{B}$ AND $\bar{G}$ DO NOT EXIST IN VACUUM.

8. NO FORCE FIELD EXISTS IN VACUUM.

But if force CONSISTS OF mass welded to acceleration, it cannot exist in the absence of mass.

Hence force does not exist in vacuum.

Further, the Ë-field (Electric field) of a charged particle is defined as the force on a charged mass, divided by the mass. That is, the Ë-field is thought to represent the force per unit charged mass. And then it is assumed to exist in vacuum.

But vacuum is without mass or charged mass, observably. Without mass, neither force nor charged mass exists.

Therefore the Ë-field does not exist in the vacuum.

Magnetic field (B) and gravitational field (G) are similarly defined, and they have the same logical difficulties.

Therefore neither magnetic field nor gravitational field exist in vacuum.

A priori, NO force field exists in vacuum.

The greatest error in physics has been the assignment of a force as a cause, and thus assigning it to the vacuum. The force is an effect, and it never exists in vacuum, a priori.

Next Slide

The Tom Bearden Website

SLIDE 15.

COROLLARIES

- **MORE PRIMARY MECHANISM CAUSES/GENERATES FORCE -- ANY FORCE**
- **FORCE DOES NOT EXIST IN VACUUM, SINCE VACUUM IS THE ABSENCE OF MASS**
- **FORCE FIELDS DO NOT EXIST IN VACUUM**
    - **E-FIELD**
    - **B-FIELD**
- **TRANSVERSE [HERTZIAN] WAVES DO NOT EXIST IN VACUUM**

Without belaboring the issue, I now point out and summarize some of these conclusions.

First, a more primary mechanism causes or generates force -- ANY force.

Second, force implies the presence of mass a priori. Force does not exist in vacuum, since vacuum is the absence of mass.

Third, no force fields of any kind exist in vacuum, including Ë-field, B-field, and gravitational field.

Fourth, since Hertzian waves are defined in terms of Ë and H force fields, and these fields do not exist in vacuum, then Hertzian waves do not exist in vacuum.

Tesla pointed out long ago that vacuum EM waves are longitudinal waves, not Hertz waves. Vacuum EM waves are similar to sound waves in a gas.

The Hertz wave exists as a matter wave in the electron gas in a transmitting antenna, and in the electron gas in a receiving antenna, but does not exist in the vacuum in between the two antennas. Between them, EM waves are longitudinal waves.

Next Slide

[The Tom Bearden Website]

SLIDE 16.

ENERGY IS DERIVED, NOT FUNDAMENTAL

- ENERGY IS CONGRUENT TO WORK

$$dW = \bar{F} \cdot \bar{d}S$$

- BUT FORCE IS AN EFFECT, NOT A CAUSE
- THUS WORK IS AN EFFECT, NOT A CAUSE
- ENERGY≡WORK CAPACITY
- A MORE FUNDAMENTAL MECHANISM GENERATES "ENERGY"

$$\Delta E = \frac{\Delta A}{\Delta T}$$

- ENERGY IS AN EFFECT, NOT A CAUSE

Energy is usually taken as "the capacity to do work" at some future time. In other words, when we refer to the energy of something, we refer to HOW MUCH WORK IT CAN DO IN THE FUTURE, IF AND WHEN WE ARRANGE FOR IT TO DO IT. Rigorously, a body has no "work" at a particular instant in time, so we use "energy" to refer to potential work that can, or will, be done in the future. Thus energy is always congruent to work in the future.

And for that reason, the units of energy are the units of work; the only difference is in the time the work is done, relative to the "now" or "present" we are speaking of.

Energy is the potential for work to be done in the future.

But what is work?

Well, work is defined in terms of the movement of a force through a distance. And it is understood that only the projection

of the force along the line of movement is "working." Thus work is defined differentially as shown on the slide. The differential of work is equal to the dot product of the moving force times the differential of displacement.

But as we have seen, force is an effect, not a cause.

That is, when we calculate the work done, it's always in the past, never in the present or future. It's always been DONE, and has been expended.

Being in the past, it's gone forever, so it certainly isn't the CAUSE of anything which happens in the future.

Thus work is an effect, not a cause.

That's interesting, because then it certainly does not directly generate "energy," since energy is something in the present which speaks of future work to be done.

Rigorously, the fundamental quantum -- which is what exists in the present, in unseparated and unquantized form -- consists of action. NOT energy, NOT time, NOT length, NOT momentum exclusively, but all of these IN<u></u>clusively.

And a change in energy occurs when a quantum is separated at a certain rate in time. Thus delta energy equals the time rate of change of action, or delta action divided by the delta time used in separating the quantum and fissioning it into parts (collapsing the wave function).

Thus energy itself is an effect or result of a more fundamental mechanism, and it is not a cause.

In quantum mechanics all this has been neatly "buried" in the mysterious "collapse of the wave function," which is supposedly what "causes" everything to happen. And then we swear that what results after the collapse is a totally statistical selection from the possible states of the system we are examining. We thus say that the microworld is totally statistical at base. Of course we also build a wave equation or wave function which propagates forward in time with rigorous causality, and that wave or function absolutely controls the basket of "possible states" allowed .

All that says is that the "wave function times time" is what exists in the present, when observation has not been made by "stopping time." And then we "stop time" in a rather blunt manner, somewhat like firing a billiard ball blindly into a group of billiard balls on a table, and we live with what gets hit and pops out.

If we examine this "time" that is flowing, look into its substructure, and arrange that substructure as we will, we can control which "billiard ball" is hit and which pocket it goes into. By working on the vector substructures of time, we can thus deliberately control the microworld and make it causal, not

statistical. Quantum mechanics is in error in stopping where it has; it is presently only a first order approximation of the real quantum mechanics that awaits.

Einstein was correct after all; God does NOT play dice with the universe when one considers all levels.

One finds oneself in a statistical situation at one level only when the constituent sublevels of it are uncontrolled.

Next Chapter

SLIDE 17.

EXISTENCE IN, AND PASSAGE THROUGH, TIME

- **IN RELATIVITY, TRANSLATION OF A BODY AND PASSAGE THROUGH TIME ARE RELATED**

$$\Delta L = C \Delta T$$

- **"MASS" IS SPATIAL**
  - DOES NOT EXIST IN TIME
  - "MASS-TIME" EXISTS IN TIME

- **VIRTUAL FLUX TO AND FROM A BARE PARTICLE DETERMINES ITS "PASSAGE THRU TIME"**

- **SPHERICAL SPIN OF A MASS PARTICLE [L^3] COUPLES IT TO THE SPACETIME VACUUM [L^3T] VIRTUAL PARTICLE FLUX**

- **PASSAGE THROUGH ORDINARY TIME IS CONTROLLED BY CREATION AND ANNIHILATION OF QUANTA**

On this slide, we simply point out that translation of a body through space and its passage through time are related, according to relativity.

Now "mass" is spatial.

It does not exist in time.

Only things which contain the unit of time can "exist in time."

Otherwise, the thing only exists as such when the passage of time has been momentarily stopped -- usually by photon emission and the consequent carrying off of the time unit by the photon.

Since every mass that has temperature -- and every mass does -- is continually absorbing and emitting photons, then the mass is continually grabbing a time tail (absorption) and losing it (emission) shortly thereafter.

Masstime is what exists in time, not mass.

And every mass particle is continually turning from mass to masstime to mass, etc.

Indeed, it is the summation of the absorption and emission of virtual subquanta by a mass particle -- i.e., its "charge" -- that determines its rate of flow through "time."

And the spherical spin of a mass particle couples the particle of mass to the spacetime vacuum; that is, to the virtual particle flux.

Passage through ordinary time is controlled by creation and annihilation of quanta, and these processes are controlled by substructure (subquantal) actions and interactions.

Next Slide

The Tom Bearden Website

SLIDE 18.

SOME IMPLICATIONS

- **MODIFIES CONSERVATION OF CHARGE**
- **MODIFIES CONSERVATION OF ENERGY**
  - ***MASS***
  - ***ENERGY***
  - ***ANENERGY (MASSLESS CHARGE)***
- **MODIFIES NEWTON'S LAW**
  - ***FOR EVERY ACTION, THERE IS AN OPPOSITE AND EQUAL REACTION***
  - ***REACTION NEED NOT BE LOCAL***
  - ***REACTION NEED NOT BE ANTIPARALLEL***
- **UNIFIED FIELD THEORY**

Without belaboring the issue, I now simply point out some implications of the new approach.

First, we modify two laws -- the conservation of charge and the conservation of energy -- by combining them into one law, a new conservation law in which anenergy is conserved.

Neither charge per se nor energy per se need be conserved; but the overall anenergy (massless charge) equivalency is what is conserved. This allows us to derive mechanisms for free energy from the vacuum, for example. These mechanisms readily violate the present conservation of energy law, but do not violate the overall conservation of anenergy law.

It is the total anenergy equivalency of mass, energy, and massless charge that is now to be conserved in general. The old laws are now just special cases.

Also, Newton's third law -- for every action there is an equal and opposite reaction -- is modified. It still applies, but in changed form.

The reaction still occurs, but it need not be local, and it need not be antiparallel to the original action.

Thus it is now possible to design and build a "locally reactionless" inertial space drive for a vehicle.

The final implication is that the common mechanism producing force -- any force -- provides a unified field theory. Specifically, it provides one which easily lends itself to direct engineering. It is not esoteric nor mysterious. It is practical and physical, and it can be done with some modifications to our present electrical circuits and devices.

Next Slide

[The Tom Bearden Website]

SLIDE 19.

CONSERVATION OF ANENERGY (AE): (AN EXPANDED ENERGY CONSERVATION LAW)

1. CONSERVATION OF CHARGE:
   - "CHARGE" = MASS (M_c) + CHARGE (AE_c)
   - $|M_c| + |AE_c| = K_1$
2. CONSERVATION OF ENERGY:
   - DYNAMIC ENERGY (E)
   - ENERGY EQUIVALENCE OF MASS (M_E)
   - $|E| + |M_E| = K_2$
3. ADDING (1) AND (2):
   $|M_c| + |AE_c| + |E| + |M_E| = K_1 + K_2 = K_3$
4. LETTING $|M| = |M_c| + |M_E|$,
   $|M| + |E| + |AE_c| = K_3$
5. LETTING $|M| = AE_1$, $|E| = |AE_2|$, $|AE_c| = AE_3$,
   $AE_1 + AE_2 + AE_3 = K_3$

We briefly show a simplified derivation of the new conservation of anenergy law.

We express the conservation of charge law by correcting the term "charge" to show its true meaning: charged mass. We use the absolute value symbol to mean the "anenergy equivalency."

As shown on the slide, we account separately :for the mass (m-sub-c) of the conserved charges and the virtual particle charge flux (the anenergy -- AE-sub-c) of the charges conserved. That law now says that the absolute values of the masses and the massless charge fluxes have a total constant summation.

For a dynamic mass, we do a similar thing, in this simplified case ignoring potential energy of position, and taking the energy equivalence of the dynamic energy (M-sub-E) and the rest mass energy of the particles, M-sub-E. The conservation of energy now states that these two terms have a constant absolute value summation.

We add equations 1 and 2, getting equation 3. We consolidate like terms to get equation 4.

Expressing all terms in their anenergy equivalencies (absolute values), we get equation 5, which is the overall conservation of anenergy equivalency.

Note that we now can change mass into energy or anenergy (massless charge), energy into mass or anenergy, and anenergy into mass or energy.

Thus we can turn everything into pure vacuum ether (pure massless charge, pure anenergy, pure electrostatic scalar potential, pure stress on spacetime) or we can turn part of the vacuum into energy or particles of mass.

Vacuum now becomes a very real thing indeed.

It is pure anenergy.

Pure massless charge, pure electrostatic scalar potential, pure "broken bits" (subquantal bits) of (quantized) energy.

The vacuum is identically the virtual state.

It is not an emptiness filled with virtual things; rather, it IS the sum total of those virtual things, for they are totally unseparated until some sort of "conceptual observation" is invoked.

Physics should have adopted Einstein's suggestion that the vacuum, complete with its EM and gravitational fields, be called the ether.

Next Slide

The Tom Bearden Website

SLIDE 20.

FREE ENERGY IS ALLOWED

- **ANY ONE-WAY GATING PROCESS FROM ANENERGY TO ENERGY YIELDS "FREE ENERGY" SINCE THE ANENERGY IS AUTOMATICALLY REPLENISHED BY THE UNIVERSE.**

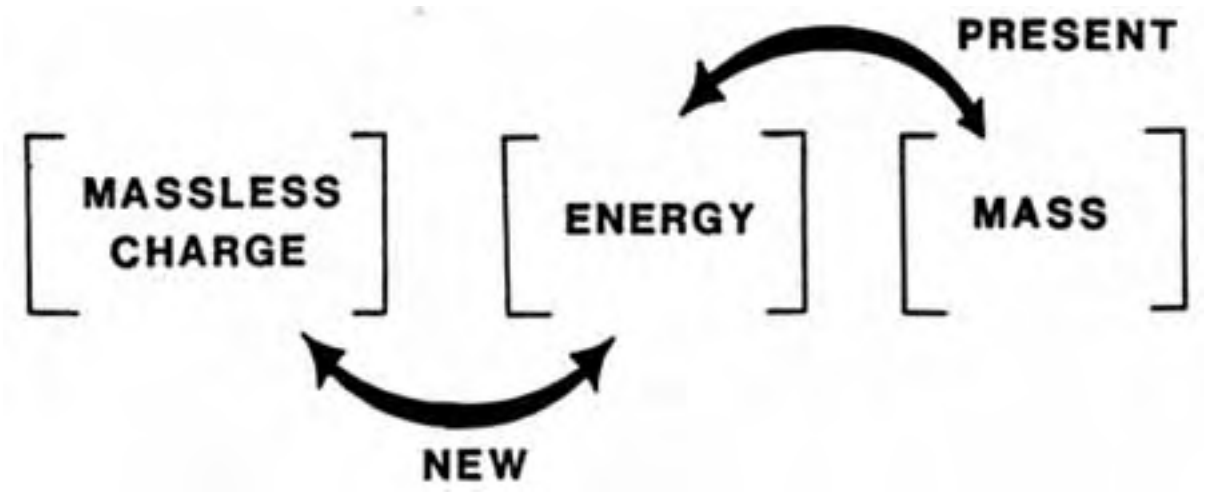

Now we can put the search for free energy devices on a rigorous scientific basis.

As shown here, mass and energy are translatable one into the other. So are massless charge and energy.

And the universe is filled with fantastic amounts of anenergy; ultimately, that is what the universal vacuum IS.

Any one-way gating process from anenergy to energy yields "free energy" since the anenergy is automatically replenished by the universe.

A sort of Maxwell's demon, after all, is what we need. Only we need one which works with the virtual state, not observable molecules.

Fortunately nature has provided several Maxwell's demons of this sort, if we but recognize them and learn to use them.

Next Slide

SLIDE 21.

SCALAR POTENTIAL CAN FORCE THE RELATIVISTIC CASE

- **FOR SCALAR POTENTIAL ENERGY OF APPRECIABLE SIZE RELATIVE TO A PARTICLE'S REST ENERGY.**
  - **NEWTONIAN MECHANICS AND**
  - **THE SCHRODINGER EQUATION**
- **MAY BE INADEQUATE**
  - **EVEN IF V/C IS SMALL**

Bloch & Crater, "Lorentz-invariant potentials and the non-relativistic limit," American Journal of Physics, Vol. 49, No. 1, Jan. 1981, pp. 67-75

First, let us now digress to point out that one does not have to have relativistic velocity to obtain relativistic effects.

One can use the common electrostatic scalar potential to drive the situation relativistic. On this slide we show just one of several references in the standard literature that address this fact.

Let's understand what we are saying.

Anything you get from a relativistic situation, you can get directly by cleverly applying electrostatic scalar potential.

You can get a change in the passage through time, you can get energy changes, mass changes, inertial resistance changes, etc.

You can bend, warp, and twist spacetime like a pretzel.

If you "wave" the scalar potential by simply varying it , you can create pure time waves. You can also produce pure inertial field waves, pure gravitational waves, etc.

The ability to engineer the curving of spacetime allows the direct ability to engineer physical reality itself.

Next Slide

The Tom Bearden Website

SLIDE 22.

SCALAR STRESS WAVE [O-WAVE] [TESLA WAVE]

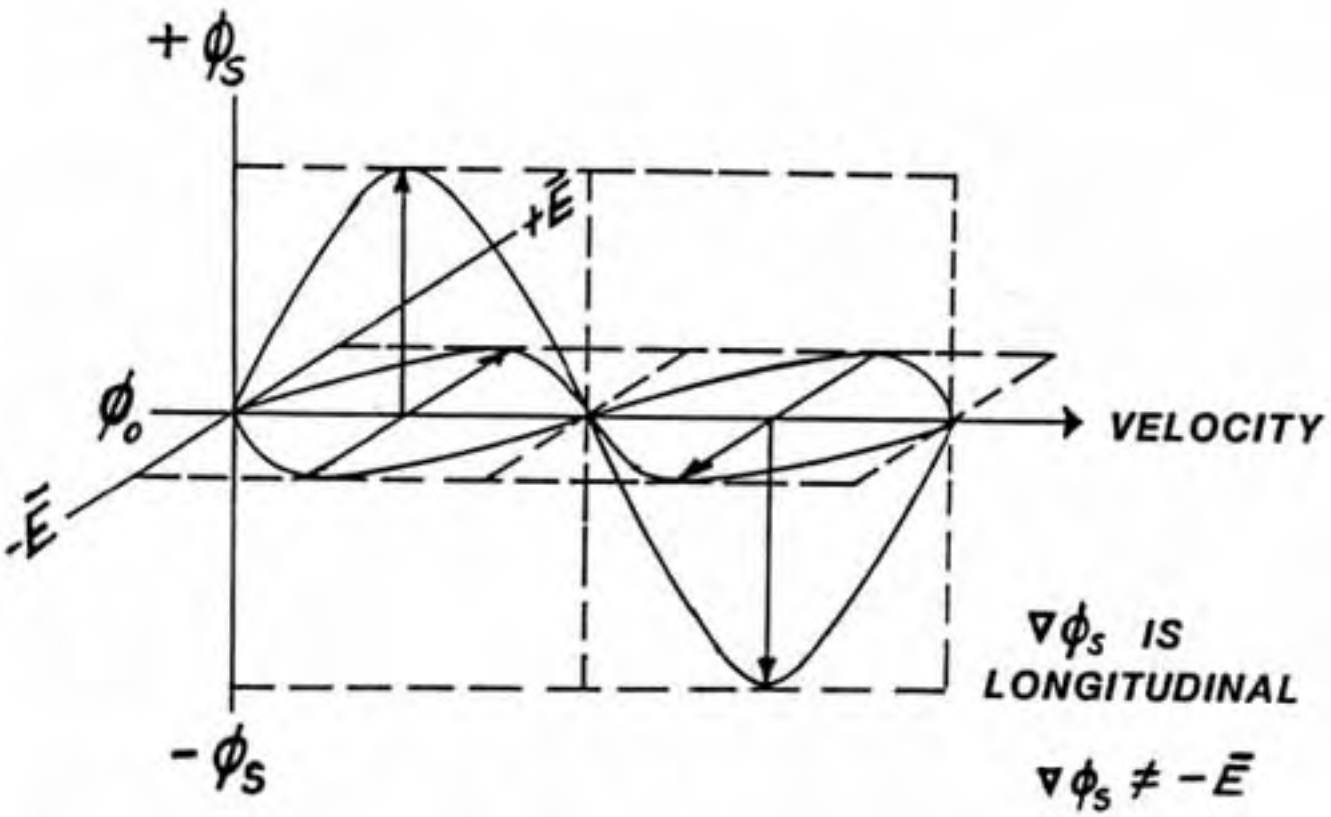

On this slide we now show a simple way to make a scalar, zero-vector wave -- the kind of wave originally discovered by Nikola Tesla.

It's simple. We just believe that a sum-zero vector substructure makes a scalar quantity, and we MAKE some scalars that way.

We also understand that a zero-gradient of a scalar is a zero vector, so that the scalar itself may be taken to be a zero vector.

The simplest explanation of this wave is as follows:

First, in physics we have two competing, mutually exclusive theories as to the nature of

electromagnetic energy: the wave theory and the particle theory. Physicists argued for decades over these theories, for some experiments support one and some support the other. They never solved the problem; they just agreed to quit arguing. They formulated the "duality" principle to allow the saving of face to both sides.

Briefly, the duality principle implies that, whatever the nature of electromagnetic energy is before an interaction, in the interaction you can get it to act as a wave or as a particle. In other words, AS IT EXISTS, BEFORE THE INTERACTION, it is implicitly both particle and wave, joined together in some fashion, without being explicitly either one.

With the fourth law of logic, this becomes perfectly clear. With three-law Aristotlean logic, the problem is unresolvable.

Let us use this idea of "explicit duality without implicit duality" to analyze the wave shown on the slide.

First, from a wave aspect, the E-fields and the B-fields of the two waves do superpose and vectorially add. Since the waves are 180 degrees out of phase, the exterior resultant wave has a zero electric field and a zero magnetic field. Therefore it is a "zero-vector" wave, or "scalar" wave. It's a wave of pure stress in spacetime.

However, this scalar wave has a precisely determined substructure, consisting_of two ordinary sine waves, each of which comprises an ordinary E-H vector EM wave.

Now we apply the photon consideration (remember, before we interact with the wave, it must implicitly possess BOTH wave and particle natures combined, and we have so far only examined the implication of the wave nature.

The theory of photons' states that they are monocular critters. Photons pass right through other photons without interaction, in a linear situation. Therefore they can coexist without interaction, which is what we show here.

One photon, by the way, is one wavelength .

The photon theory requires that both substructure waves continue to exist as independent photons. Therefore we are assured that our substructure is intact.

However, notice that the totality of the two

waves stresses spacetime. In other words, we have twice the stress on spacetime now as we would have from either wave separately.

This wave is therefore just a pure stress wave in spacetime itself.

This thing oscillates time, oscillates the relativity of the situation, and can affect energy, time flow rate, inertia, gravity, etc. aspects of an absorbing system.

Note that we have a rhythmic oscillation in phi (Ø), and we have a longitudinal stress wave, very similar to a sound wave. The MEDIUM for this wave is the virtual particle flux that identically comprises vacuum spacetime itself.

Next Slide

The Tom Bearden Website

SLIDE 23.

SCALAR Ö-WAVE PRODUCTION

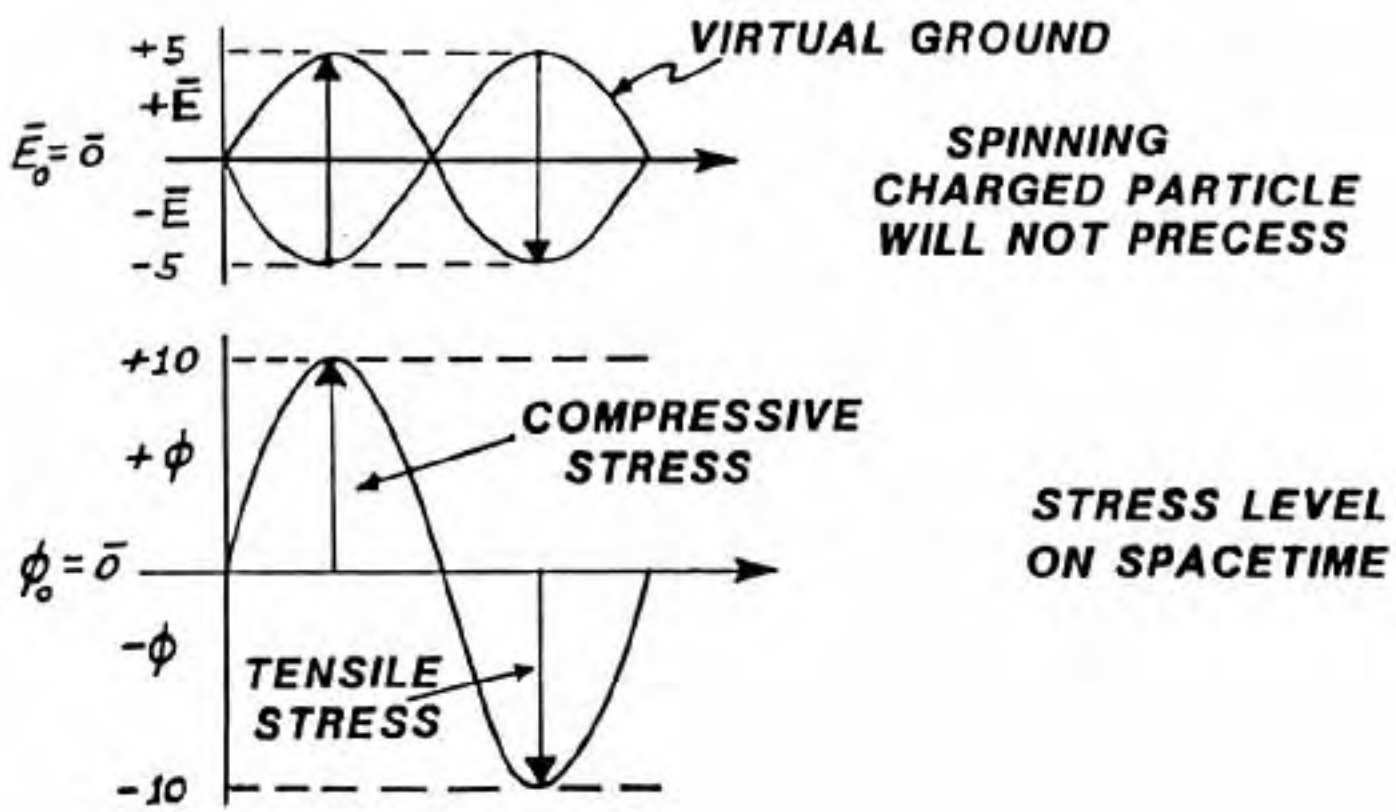

On this slide we show how to regard the magnitude of the stress, by using one wave envelope as "virtual ground." In the top diagram, the original E-field stress of each wave has a magnitude of 5, and the composite stress wave now has a magnitude of 10, in whatever units we choose to express them.

We show in the bottom diagram that during one half cycle we have compressive stress in the virtual particle vacuum flux, and during the second half cycle we have tensile stress.

This shows the wave is like a sound wave in the gaseous molecules of the air.

However, this wave has one difference. It also

oscillates time, and thus has at least one additional degree of freedom, compared to ordinary EM waves.

In fact, this wave can be made n-dimensional and hyperspatial.

As a first order approximation, we can treat such a wave in
a spatial fashion, if the wave is not too great in magnitude and the relativistic oscillation of time and inertia is not too large.

Next Slide

The Tom Bearden Website

SLIDE 24.

A SIMPLIFIED CHARGED PARTICLE

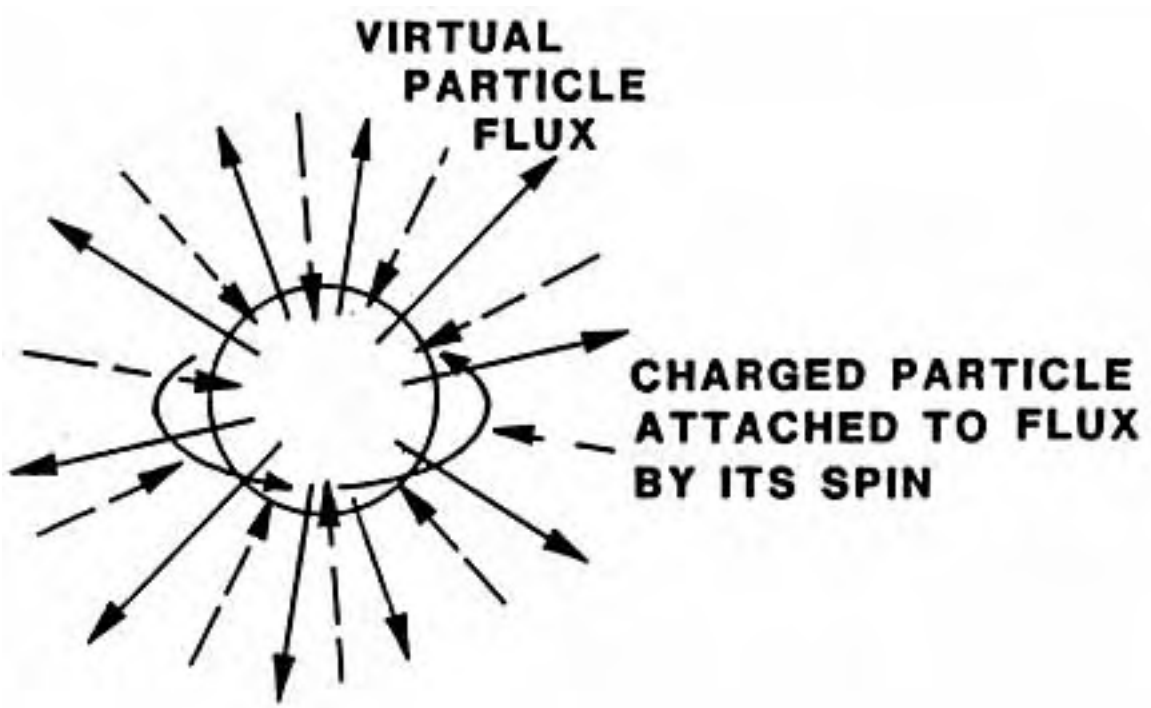

(THINK OF THE FLUX IN AND OUT, EXCEPT GRADIENTS ARE SPIRAL-LIKE, DUE TO PARTICLE'S SPIN)

We now digress slightly to pick up some more concepts.

On this slide, we show a simplified physical model of a charged particle. According to present particle physics, we model it as an observable, spinning bare mass in the middle, connected to a spray of virtual particles on and off the mass in all directions.

It is the spin of the mass that "attaches" the spray of virtual particles to and from itself.

Note that, because of the spin, the gradient lines of flux will actually be spiral or vortex in nature.

Also note that, when EM theory was founded, no one knew that an electron was spinning. Electron spin was therefore omitted from the foundations of present

electromagnetic theory, and compensated for later by strictly ad hoc measures.

Next Slide

The Tom Bearden Website

SLIDE 25.

A CHARGED PARTICLE IS A SPECIAL KIND OF "SPRAY NOZZLE"

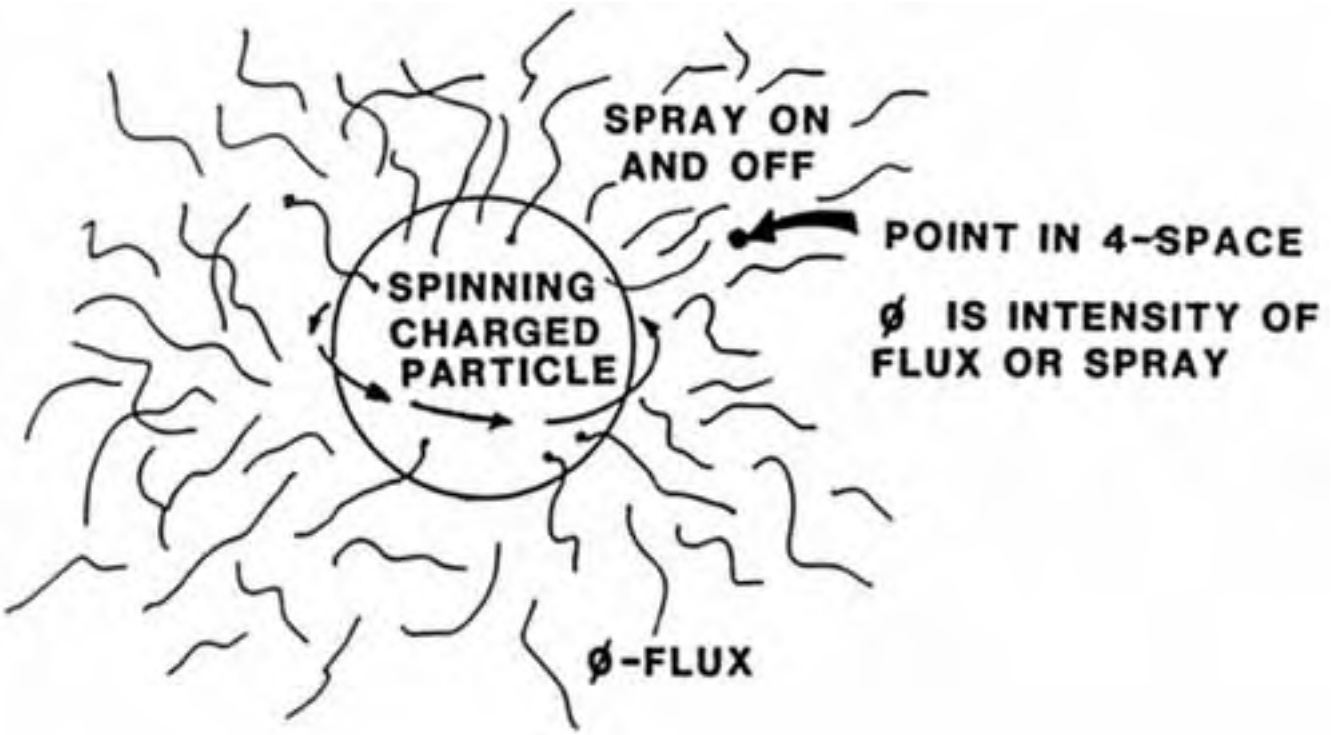

(SPRAY IS THROUGH 4 DIMENSIONS, NOT JUST 3)

Here we show a very important concept, and a very important fact of nature.

A charged particle may be idealized as a special kind of spray nozzle.

The 3-dimensional particle of mass is spraying out virtual particle fluid, and sucking in virtual particle fluid, in four or more dimensions.

We never have to furnish or replenish the spray. Nature provides that. And it's inexhaustible. It comes from the entire virtual particle flux vacuum of the universe. It's already connected firmly to matter, by its connection to the spinning charged particle of mass.

I repeat and strongly stress: This tremendous, continuous spray of virtual particles is absolutely free,

and absolutely furnished by the universe.

We don't have to create the basic pumps for the fluid. We just move the spray nozzles around, by moving the spinning charged masses around.

We never furnish any ultimate energy to or in our present EM circuits. We just pump around the spray nozzles, gating the spray furnished by the universe.

Next Slide

The Tom Bearden Website

SLIDE 26.

AN OBSERVABLE CHARGED PARTICLE IS DIRECTLY CONNECTED TO VIRTUAL PARTICLE FLUX VACUUM

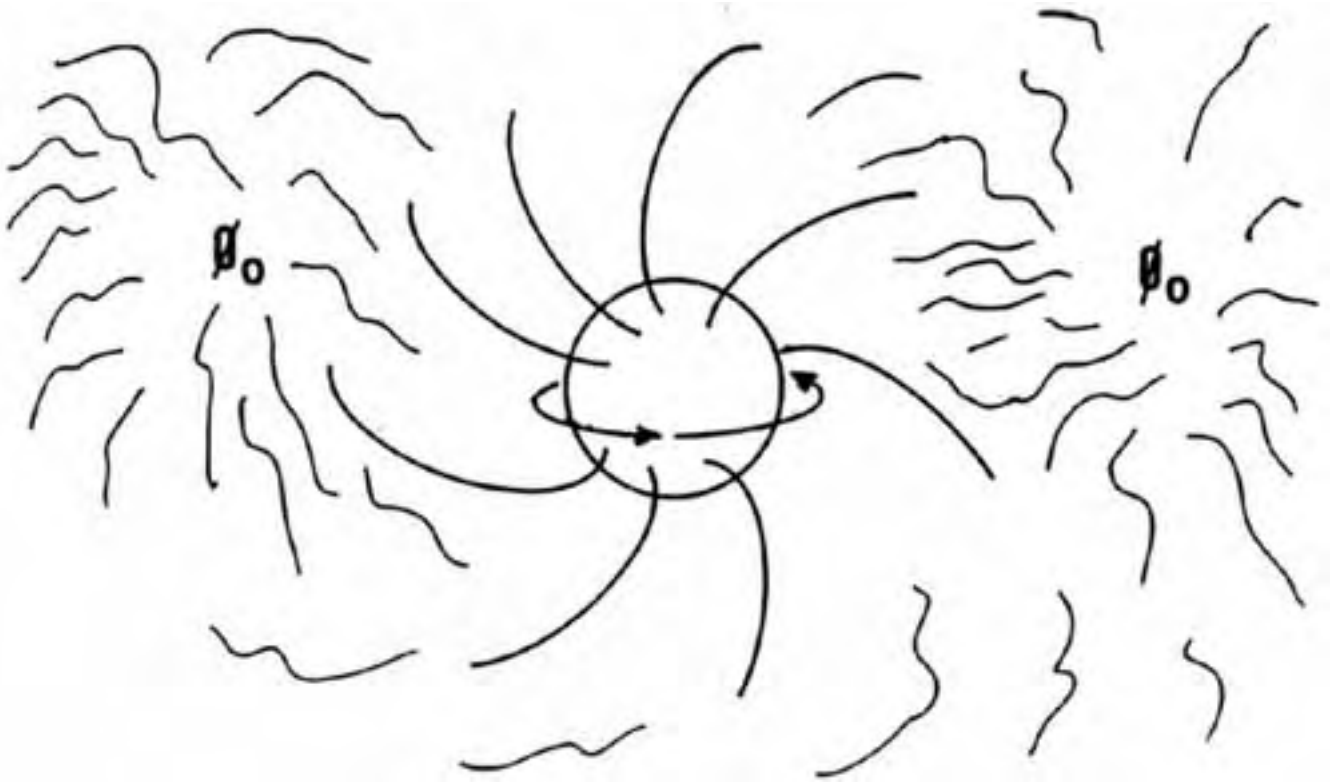

On this slide we accent that our 3-dimensional particle of mass is directly connected by its spin to the vacuum ether itself. To the virtual particle flux that identically IS the vacuum spacetime.

Interestingly, relativity states that the mass itself is nothing but a "kink" or curvature in spacetime .

The fact that the surface of the particle is spinning at right angles to the virtual particle vacuum flux "drags" part of the flux along with it, spiraling it, and certainly "kinking" or "bending" the vacuum flux .

That's the MECHANISM for the bending of spacetime. And that's what MAKES the particle of mass in the first place, and reduces its dimensionality to three.

Also note that the vacuum IS phi-sub-zero, and that is never
a zero value. This is contrary to present EM theory, which erroneously assumes phi-sub-zero -- the charge of vacuum -- to be zero or non-existent.

Next Slide

The Tom Bearden Website

SLIDE 27.

SPIN COUPLES VACUUM TO PARTICLE

- **SPHERICAL ROTATION IS THE KEY**
- **A PARTICLE CAN BE MODELED AS A SPHERICALLY ROTATING VORTEX OF SPACETIME**
- **ITS MASS IS DUE TO ITS SPIN**
- **THE SPINNING OBJECT IS CONTINUALLY CONNECTED TO ITS ENVIRONMENT**
- **VERY HIGH VALUES OF ELECTROSTATIC POTENTIAL CAN INDUCE RELATIVISTIC CONDITIONS**
    - **CHANGE RATE OF FLOW OF TIME**
    - **EVEN THOUGH VELOCITY IS NONRELATIVISTIC**

E.P.BATTEY-PRATT AND T.J.RACEY
"GEOMETRIC MODEL FOR FUNDAMENTAL PARTICLES,"
INTL. J. OF PHYS. 19, NO. 6, 437-475, 1980

In fact, the bits and pieces of many of the new concepts are strewed all through the scientific literature. Here we show one example, establishing a good model that spin of a particle couples the particle to the vacuum .

This paper is by E.P. Battey-Pratt and T.J. Racey, and was . published in the International Journal of Physics in 1980.

Note again that very high values of electrostatic potential
can induce relativistic conditions, even though relativistic velocity is not present.

Next Slide

The Tom Bearden Website

SLIDE 28.

ELECTRON PRECESSION (SIMPLIFIED)

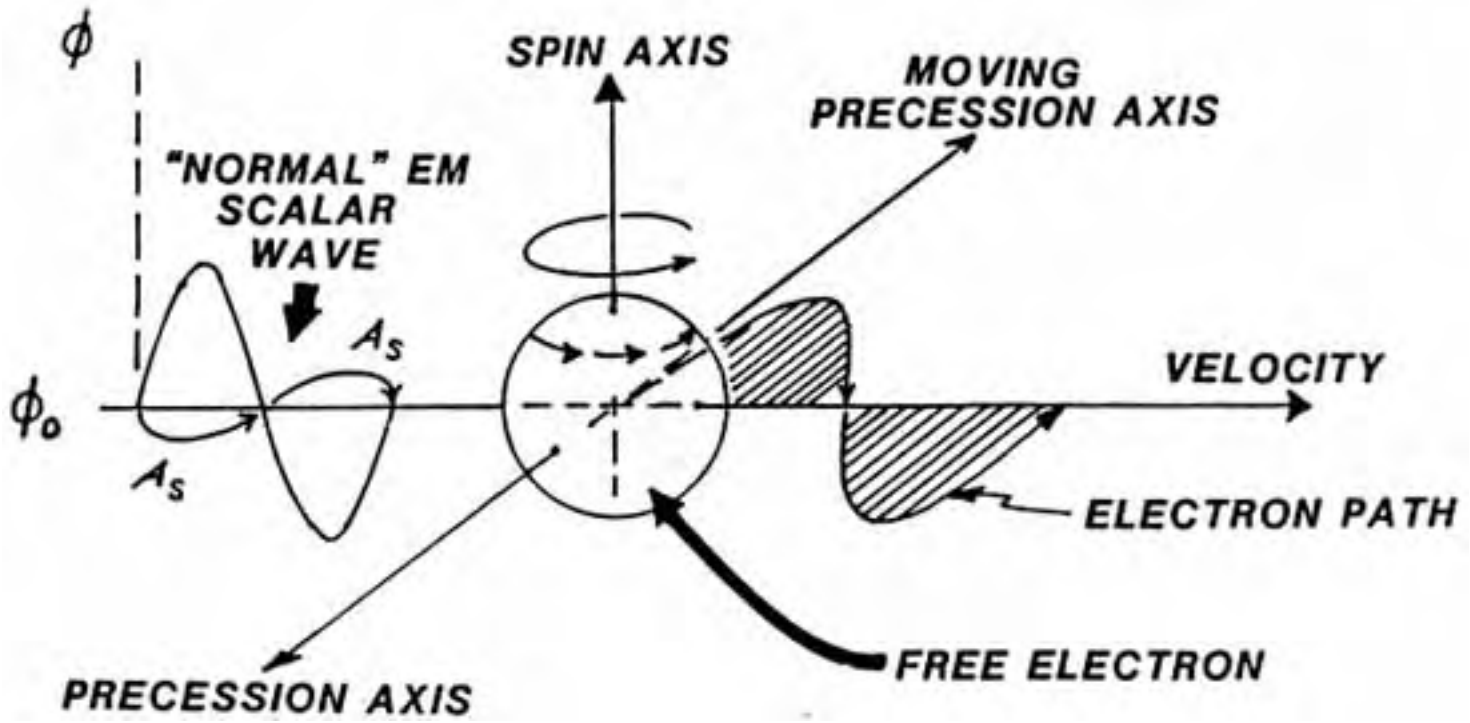

On this slide I show the effects of precession of an electron when it encounters a longitudinal scalar wave that contains "spin vortex holes" for the electrons to fall into and mesh its spin with.

The basic idea here -- that electron precession accounts for the Hertzian waves in the electron gas in a transmitting antenna and in a receiving antenna, came from my close colleague and friend, Frank Golden, and I am most happy to give him full credit for this important insight.

As we have previously stated, transverse (force) waves cannot exist in vacuum in the absence of mass. Hertz waves therefore cannot exist in vacuum, just as Tesla stated.

Yet we know that Hertz waves exist in the electron gas in

our transmitting antennas and in the electron gas in our receiving antennas. How then do we get Hertz waves here, if only longitudinal waves can exist in the vacuum in between?

Electron precession is the key.

We never measure what's happening in vacuum with our instruments. Instead, almost always we measure what is happening to and in the electron gas in our antenna or probe and feeding current to the instrument.

Here we show a "normal" EM vacuum wave -- which is a longitudinal wave containing spin vortexes from the electrons that generated it -- approaching and striking a spinning charged electron. As the peak and trough of the wave passes, it is as if we had a force pressing against the spinning electron, first along the line of wave travel, and then antiparallel to the wave travel. *(that is, "explaining" it in present concepts.)*

The electron acts as a little gyroscope, and precesses laterally, first in one direction and then the other.

Therefore the wave recovered in the electron gas in our receiving antenna or instrument probe is a transverse Hertzian matter wave.

Hertz waves are always <u>matter</u> vector waves.

Vacuum EM waves are always nonmaterial <u>longitudinal</u> scalar waves.

Longitudinal scalar waves in vacuum normally contain many spinning vortex "holes" of flux, created from the spinning electrons which launched the wave and stayed behind in the transmitting antenna. This kind of longitudinal wave is directly detectable by a normal free electron charged gas in a receiving antenna or probe. It also directly interacts with free electrons in a conducting metal shield, and so is shielded by Faraday cages.

On the other hand, our zero-vector longitudinal wave, made
by opposing waves, contains opposing spin holes which annihilate or cancel each other.

In the absence of spin holes, the longitudinal wave will not mesh with spinning electrons in a conductor, and so it is not detectable in the normal fashion. It also does not interact with free electrons in a conducting metal shield, so it readily penetrates Faraday cages.

An easy way to see that electrons do not interact with that substructured longitudinal zero-vector wave is to visualize both substructure component waves interacting on the electron simultaneously, pushing in opposite directions equally. In that case the electron tries to precess in both directions, equally, and so it does not precess in either direction. Therefore it does not "detect" the passing wave.

The wave without "golf ball holes", however, is detectable
by any circuit having high nonlinearity actions occurring in it. Such highly nonlinear dynamic areas act to provide a phase shifting between the composite substructure waves. This phase shift results in violation of the sum-zero condition, producing a "normal" EM wave which deposits energy in the out-of-phase area.

From the spin vortex "golf ball hole" concept, the out-of-phase condition means that now we have an alternating preponderance of spin holes, spinning first in one direction and then in the other. Thus the electrons in the nonlinear, phase shift area are hooked and oscillated (precessed) to and fro, producing energy.

Solid state, highly doped transistors are particularly vulnerable to this effect, as are gas discharge tubes, spark and cascade ion discharges, plasmas, etc.

Next Slide

The Tom Bearden Website

SLIDE 29.

VACUUM/SPACETIME IS PURE VIRTUAL PARTICLE FLUX ($Ø_O$)

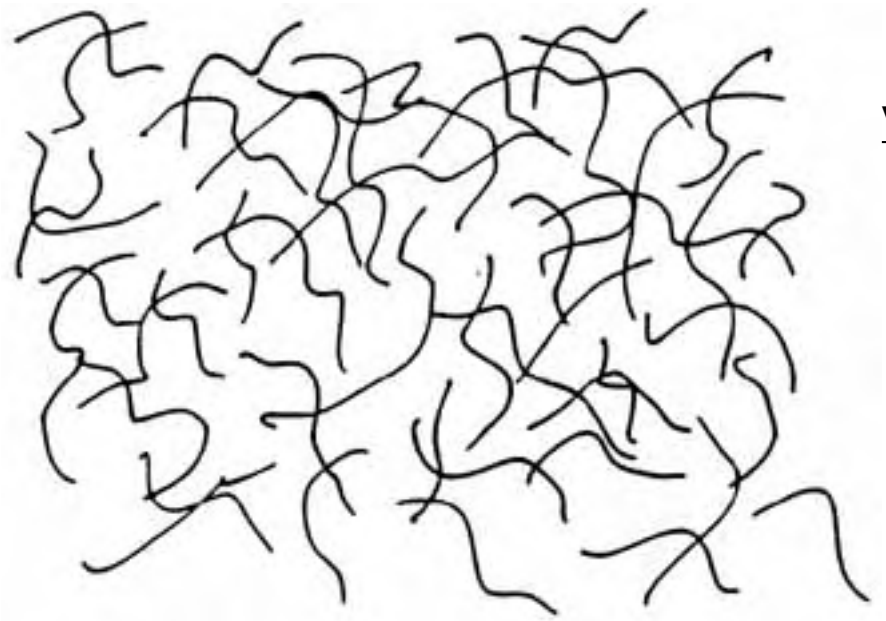

VACUUM IS IDENTICAL TO:

- **VIRTUAL PARTICLE FLUX**
- **SPACETIME**
- **ANENERGY**
- **$Ø_0$**
- **MASSLESS CHARGE**

VACUUM IS:

- **MADE OF UNQUANTIZED ACTION**
- **WITHOUT DEFINITE LENGTH INTERVALS**
- **WITHOUT DEFINITE TIME INTERVALS**
- **N-DIMENSIONAL (UNFIXED)**

We pause here to again summarize some important things we now know about vacuum.

Vacuum IS IDENTICAL TO virtual particle flux, spacetime, anenergy, Phi-subzero, massless charge, unquantized action, and infolded energy, momentum, length, time, power, velocity, acceleration, etc.

Vacuum is made of unquantized action, dimensionally.

It is without definite length or time, as Einstein stated.

It is n-dimensional, where n is always four or

greater.

It is not an emptiness filled with things. Rather, it is identically a plenum filled with things which are totally unseparated, unfixed, and undetermined.

From vacuum: mass, energy, time, frames, and all the rest of physical reality are dynamically made.

Vacuum is the ether. The ether has never been eliminated from physics. Ether just has become much more subtle, and physicists have used other names for it.

Next Slide

SLIDE 30.

VACUUM IS:

- **SPACETIME (L^nT, WHERE $n \geq 3$)**
- **CHARGE (MASSLESS)**
- **ELECTROSTATIC SCALAR POTENTIAL $Ø_0 \neq 0$**
  ERROR IN PRESENT THEORY
- **BROKEN BITS OF ENERGY (SUBQUANTAL)**
- **PURE VIRTUAL PARTICLE FLUX**
- **O-WAVE FLUX**
- **MULTILEVEL, STRUCTURED, PATTERNED**
- **A VIRTUAL PLENUM**
- **AN OBSERVABLE EMPTINESS**

Again, we list some of the things that vacuum identically is.

It is spacetime, massless charge, electrostatic scalar potential, broken bits (subquantal) of energy, pure virtual particle flux, zero-vector wave flux, multilevel, structured, patterned, a virtual plenum, and an observable emptiness.

It is all things and contains all things in potential state.

It is not, in that it is not observable. But from it comes all observables.

It is both ordered and disordered, simultaneously.

It involves four-law logic, not just three-law Aristotlean logic.

Next Slide

The Tom Bearden Website

SLIDE 31.

GRADIENT OF ELECTROSTATIC POTENTIAL

IN VACUUM

$$\nabla Ø \neq Ë$$

ON AND OF A MOVING CHARGED PARTICLE

$$\nabla Ø = Ë$$

Again I accent that, in vacuum in the absence of a charged spinning particle of observable mass, del-phi does not yield an Ë-field, and the conventional equations of EM are wrong in that respect.

In the presence of a spinning charged particle, in a del-phi which contains electron-vortex-holes to mesh with, the charged particle attaches itself to the moving del-phi flux gradient, moving itself with the river. This produces an Ë field. The Ë-field CONSISTS OF the smeared electron, it does not CAUSE THE MOVEMENT of the electron. It is an effect, not a cause. The conventional equation for del-phi equals E is correct for matter waves in electron gases; it is not correct in vacuum itself.

Next Slide

The Tom Bearden Website

SLIDE 32.

IN A ∇Ø, A CHARGED PARTICLE MOVES ITSELF

∇Ø>0 IMPLIES A MOVING RIVER, AND THE CHARGED PARTICLE IS "HOOKED TO" THE RIVER

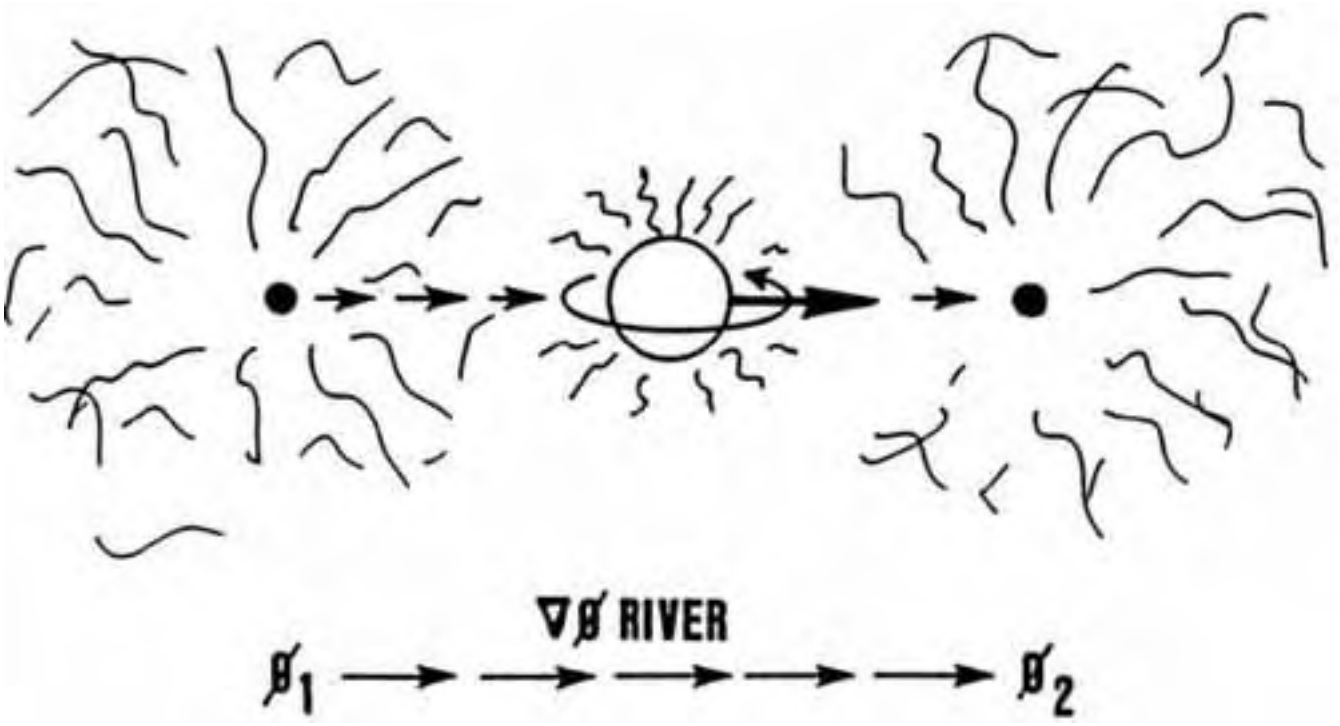

We show clearly on this slide that a spinning charged particle, when it hooks to a spin-hole in a del-phi river, MOVES ITSELF.

Note that a del-phi implies a "pressure difference" in phi-flux between two points. Therefore there is a moving river -- a gradient -- of phi-dot, moving from the higher pressure to the lower.

If a charged particle is attached to this moving river, it flows along with the river. It is just like putting a boat into a moving stream of water. If the boat "latches" to the moving water, it moves with the river.

Electron spin and spin vortexes in the del-phi mesh, to accomplish the "hooking" or "latching."

Once hooked into a moving river, the electron moves itself. One does not have to furnish work to move it.

If the river is accelerating, the electron will accelerate itself.

By cleverly gating such rivers into and onto sources of free electrons, one can directly produce free energy.

The extra energy comes from converting anenergy (massless charge, vacuum flux) to energy of a moving mass.

Next Slide

SLIDE 33.

ELECTROMAGNETIC WAVES IN ELECTRON GAS IN A CONDUCTOR

- **VECTOR WAVES**
- **CONTAIN E, B FIELDS**
- **GENERATED BY SPIN COUPLING OF ELECTRONS WITH SCALAR WAVE "SPIN-HOLES"**
- **WAVES OF FORCE**
- **HERTZIAN WAVES**
- **TRANSVERSE WAVES**
- **WAVES OF ELECTRON PRECESSION**

Here we pause to summarize the characteristics of electromagnetic waves in the electron gas of a conductor.

First, these are vector EM waves in the accepted sense.

They contain E and B fields.

They are generated by spin coupling of electrons with spin-holes in a scalar wave delta-phi river. The electrons move themselves under that condition, producing work and forces.

They are waves of force or force field variations.

They are Hertzian waves.

They are transverse oscillatory, not longitudinal.

They are matter waves.

They are waves of electron precession.

Next Slide

SLIDE 34.

ELECTROMAGNETIC WAVES IN VACUUM

- **SCALAR LONGITUDINAL WAVES**
- **VECTOR ZERO [Ö] WAVES**
- **WITHOUT Ë, B FIELDS**
- **INTERNALLY STRUCTURED**
- **PATTERNED**
- **MAY CONTAIN ELECTRON "SPIN-HOLES"**

Here we summarize the characteristics of electromagnetic waves in vacuum.

They are scalar longitudinal waves of alternate compression and rarefaction of the vacuum virtual particle flux.

That is, they are waves of electrostatic potential.

They are zero-vector waves.

They are internally structured and patterned.

They usually contain electron "spin holes" unless made in a fashion so as to make opposing spin holes that cancel each other.

Since they are pure phi-waves, they need not be limited in velocity to the speed of light.

They are hyperspatial waves.

They are waves in virtual state itself.

Next Slide

[The Tom Bearden Website]

SLIDE 35.

DETECTION OF TRANSVERSE AND LONGITUDINAL WAVES

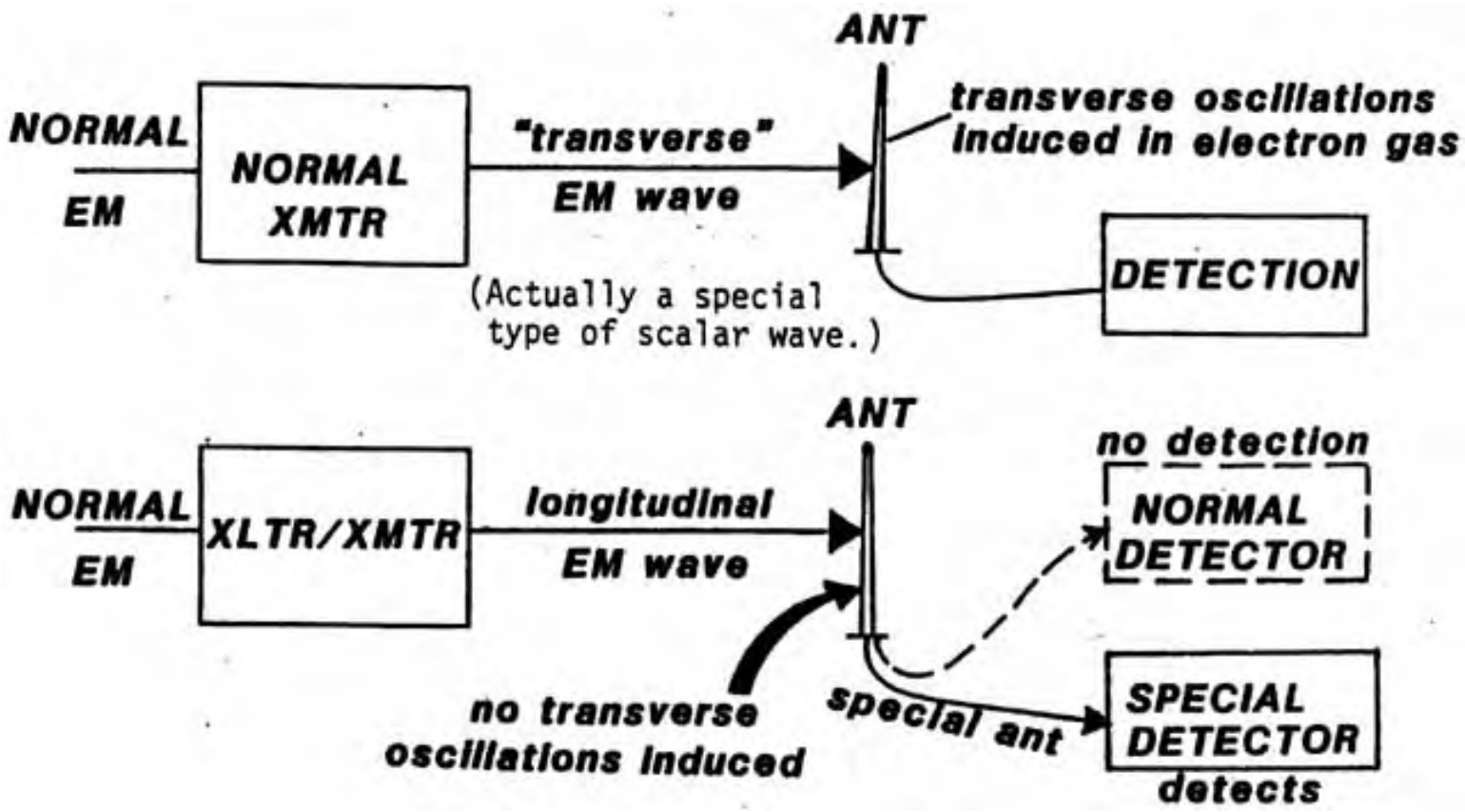

In the top drawing on this slide, we show a normal transmitter putting out a normal EM wave, which received in a normal antenna/receiver. What we call a "transverse" wave rigorously exists only in the electron gas in the transmitting antenna and in the electron gas in the receiving antenna. Specifically, a longitudinal wave exists in the vacuum in between the two antennas. However, due to the method of production, the longitudinal wave contains spin-holes for electrons, so the electrons in the receiving antenna readily couple with the wave by falling into and meshing their spins with the spins of the spin-vortex holes. Electron precession produces electron gas waves that are transverse oscillatory, hence Hertzian waves in nature.

In the bottom drawing, we show a translator/

transmitter. In other words, we oppose ordinary EM waves in a sum-zero substructure, deliberately producing longitudinal EM waves in vacuum with the spin-hole vortexes canceling each other. This type of wave does not "hook" spinning electrons in the normal receiving antenna, and thus it is not detected. The normal antenna/receiver system never sees it at all.

However, by means of a special antenna which generates nonlinear phase shifts in the composite substructure waves, "hooking" holes are restored in an oscillatory nature. Electrons then hook with this output and detect the wave.

Note that it requires a two-stage detector, operated in an interferometer fashion, to detect this pure scalar wave.

Next Slide

The Tom Bearden Website

SLIDE 36.

CREATING A "RIVER" OF ANENERGY

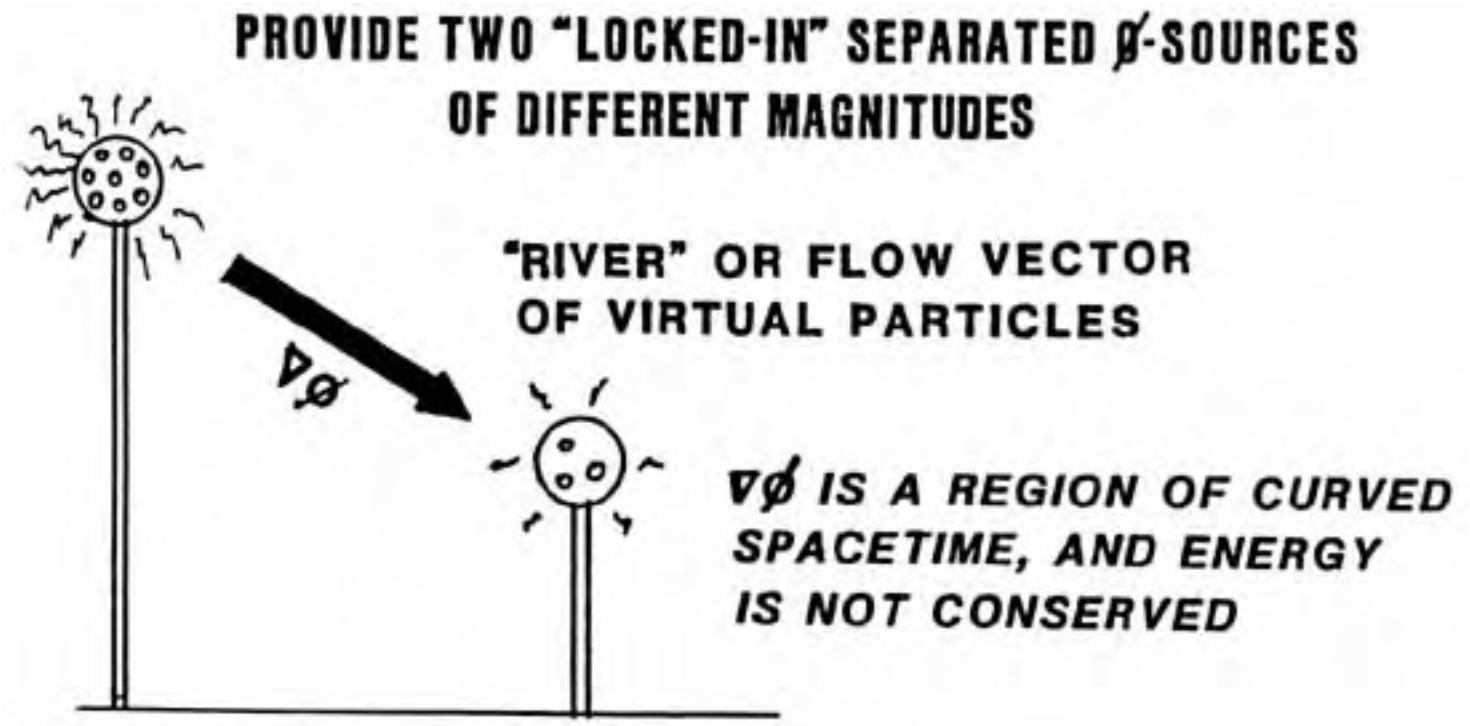

IN VACUUM, THIS IS NOT YET A VOLTAGE DROP (NO MASS FLOW),
NOR IS THERE AN Ë-FIELD

Now if we wish to get free energy, we are going to have to provide a continuous anenergy river, and a means of tapping it to produce mass movement.

This slide shows one easy way to make an anenergy river.

We simply pump some electrons (spray nozzles) onto an elevated charged ball, and we LEAVE them there. A second ball is connected to ground. A higher phi -- that is, a denser spray -- is now in the vicinity of the elevated ball on the left. A lower phi -- that is, a less dense spray -- is in the vicinity of the lower ball on the right. Between the two balls, now, there is a

gradient in phi, and a virtual flux flowing from the "higher virtual pressure" to the "lower virtual pressure."

This del-phi river does NOT constitute an Ë-field, as we have previously pointed out.

The del-phi region, however, is definitely a region of curved spacetime. As is well known from general relativity, in such a region energy need not be conserved.

Therefore it is entirely possible -- consistent with ordinary physics -- to violate conservation of energy in this del-phi river, if one believes general relativity. If one argues adamantly that conservation of energy cannot be violated under any circumstances, then one must throw out general relativity. Also, one must throw out most of particle physics, whose explanations presently involve virtual interactions, each of which violates the conservation of energy.

Next Slide

The Tom Bearden Website

SLIDE 37

A 2-WIRE SYSTEM IS CONSERVATIVE

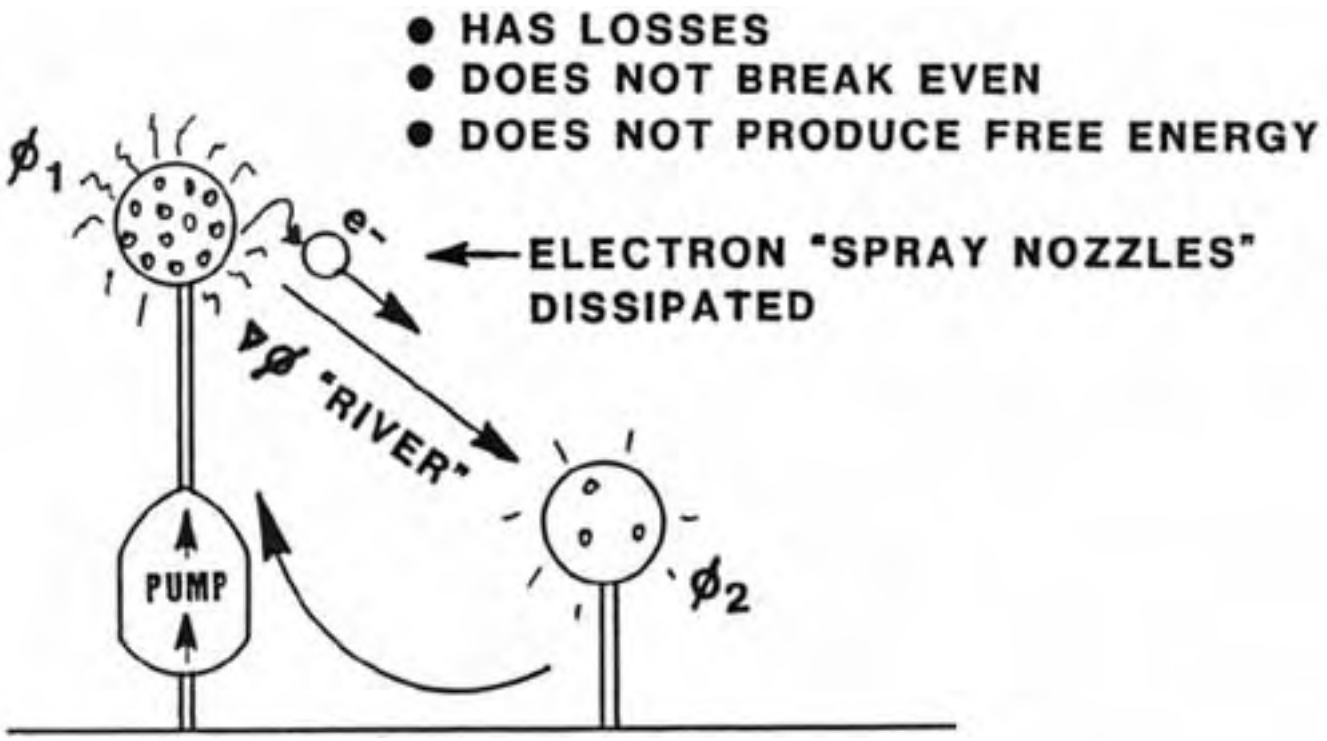

REPLENISH SPRAY NOZZLES BY PUMPING MORE ELECTRONS. (MOVING ELECTRON MASSES AGAINST A "SPRAY PILEUP" REQUIRES WORK.

Here we show that, as engineers, we've all been tricked into releasing our virtual rivers so that we would not discover free energy.

While I cannot prove this as yet, I tentatively suspect that J. P. Morgan and Thomas Edison are directly responsible for this occurring. Tesla utilized a single-wire system; we have all been taught to utilize only two-wire systems.

What we in effect do is connect a wire or circuit to our charged ball, allowing our hose nozzles to drain away.

In other words, we first do some work to pump hose nozzles (electrons) into and onto our elevated

reservoir, so we will obtain a denser flux, and a flux river to utilize. Then we release the nozzles themselves, and let THEM move on the flux river, deplenishing our river. Of course we can get back as much energy as we pumped up there in the first place. But this two-wire system is at best theoretically even. Since real circuits have losses, we can never even quite break even. Thus we have to continue to pump hose nozzles, and let them bleed off to provide energy, in a less-than-100% fashion.

By foolishly releasing our hose nozzles, we guarantee that we will never achieve free energy. And that's nice, because the people who control things, and for their own wealth and power depend on selling us energy at high prices, are guaranteed to stay in power and control.

One is never truly free unless one is energy independent, in a self-contained fashion.

Tesla nearly succeeded in giving us free or very cheap, inexhaustible energy -- and for that reason was quickly and dramatically suppressed.

Only three graduate schools of electrical engineering existed in the U.S. The only one of any real importance was at Columbia University.

Only one or two professors were necessary to "reach" to modify and subtly direct the entire foundations of the emerging electrical theory.

Professors were in general poor, and had no research funds unless some rich industrialist or philanthropist gave them a few dollars.

The setup then was certainly very ripe for Morgan and Edison to stop free energy, and suppress Tesla at the same time. They could have done so by influencing only one -- or at most two -- theoreticians at Columbia.

At any rate, the theory was developed in such fashion as to rule out the single wire circuit and the longitudinal wave. Free energy was suppressed, and the financial empires of Morgan and Edison stayed secure.

Next Slide

The Tom Bearden Website

SLIDE 38.

A HOLLOW CHARGED SPHERE

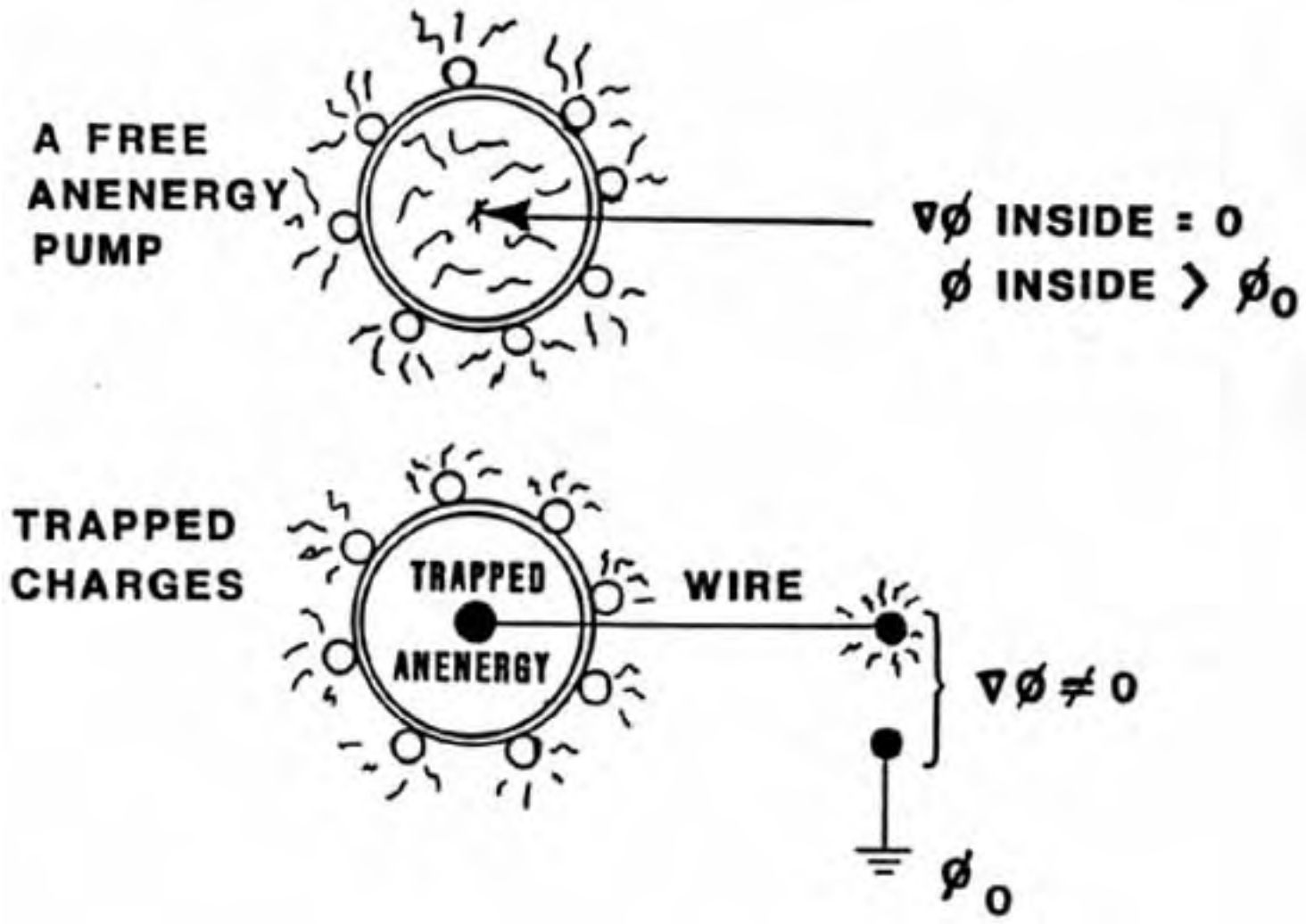

Here we show another easy source of a higher vacuum charge, hence an easy source for a free river.

Simply charge up a sphere. As is well known, inside that sphere one has no del-phi. So one can introduce an electron therein and not produce an Ë-field .

However, since we've piled up additional spray nozzles, the density of the spray inside the sphere (as well as outside it) is certainly higher.

In other words, the inside of the sphere is also a source
for an increased del-phi river. In the bottom drawing, we drill
a tiny hole in the sphere, insulate a thin wire running into the inside of the sphere, and run the wire out to a terminal opposing another grounded terminal.
Between the two terminals now there must exist a del-phi river.

And between those terminals there now exists a curvature of spacetime, hence the theoretical possibility to obtain free energy without violation of principles.

Next Slide

[The Tom Bearden Website]

SLIDE 39.

ONE-WAY GATE VALVE

(ANENERGY TO ENERGY)

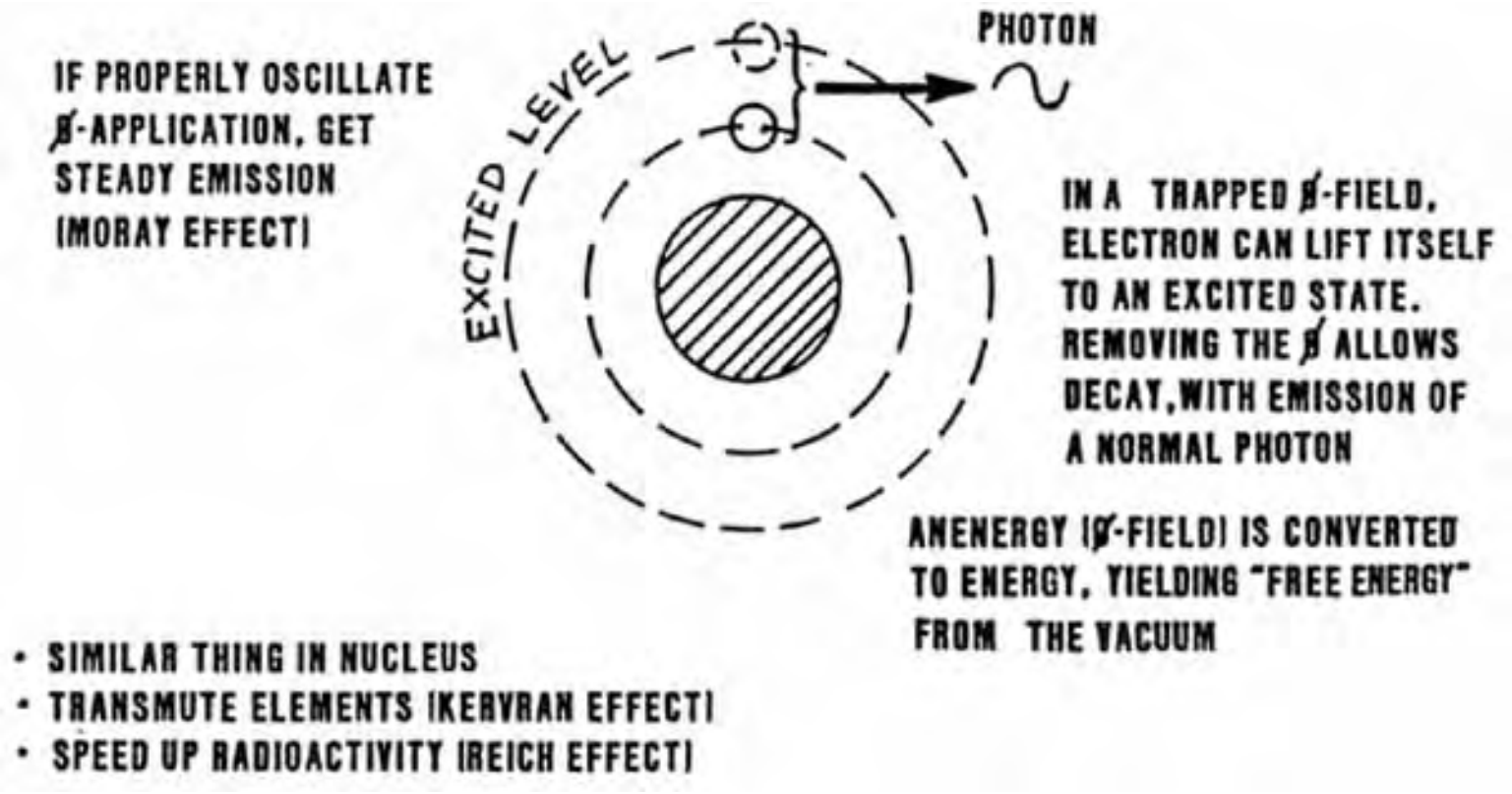

Here we show one way to provide a one-way gate valve from a del-phi river to energy released into the outside world.

By providing a properly tuned, oscillating phi wave, one can cause an orbital electron in an atom to raise itself to an excited state. Remember, in a del-phi, an electron that hooks to it raises itself.

We then switch out the phi application, and the excited electron decays in normal fashion, emitting a normal photon of energy.

By phase locking the processes, one produces a steady stream of photons.

By absorbing or directing the photons, one can

produce heat, light, energy beams, etc.

By this means, one produces free energy by gating anenergy into energy.

And if one does not release spray nozzles in the phi-oscillations which feed the mechanism, one has an inexhaustible energy production.

A very similar thing can be done with the excited states of the nucleus. For example, by using a radioactive material with a predisposition to emit some particle -- say an electron -- the nucleus can be made to continually emit the particles WITHOUT ITSELF DECAYING INTO BYPRODUCTS. In other words, an electron is lifted from the Dirac sea of vacuum to instantly replace the electron emitted from the nucleus.

This provides a one-way gate valve from the Dirac sea to the external universe.

Theoretically, these mechanisms are no more mysterious than a hydraulic ram, which raises water higher than the stream that feeds the ram.

In the 20's and 30's, T. Henry Moray successfully built such gating devices for converting vacuum anenergy to external energy.

In the Kervran effect, living systems are able to directly transmute elements, even though they only possess feeble energies, by influencing the virtual particle interactions in the nucleus that furnish its binding energy.

Reich used an adaptation of a cloudbuster -- which emits scalar waves -- to drastically speed up radioactive decay of radioelements.

Both plants and animals transmute elements by similar processes.

Next Slide

TOWARDS A NEW ELECTROMAGNETICS
PART 4: VECTORS AND MECHANISMS CLARIFIED

SLIDE 40,

SIMPLE FREE ENERGY MOTOR

BATTERY RECHARGES ITSELF

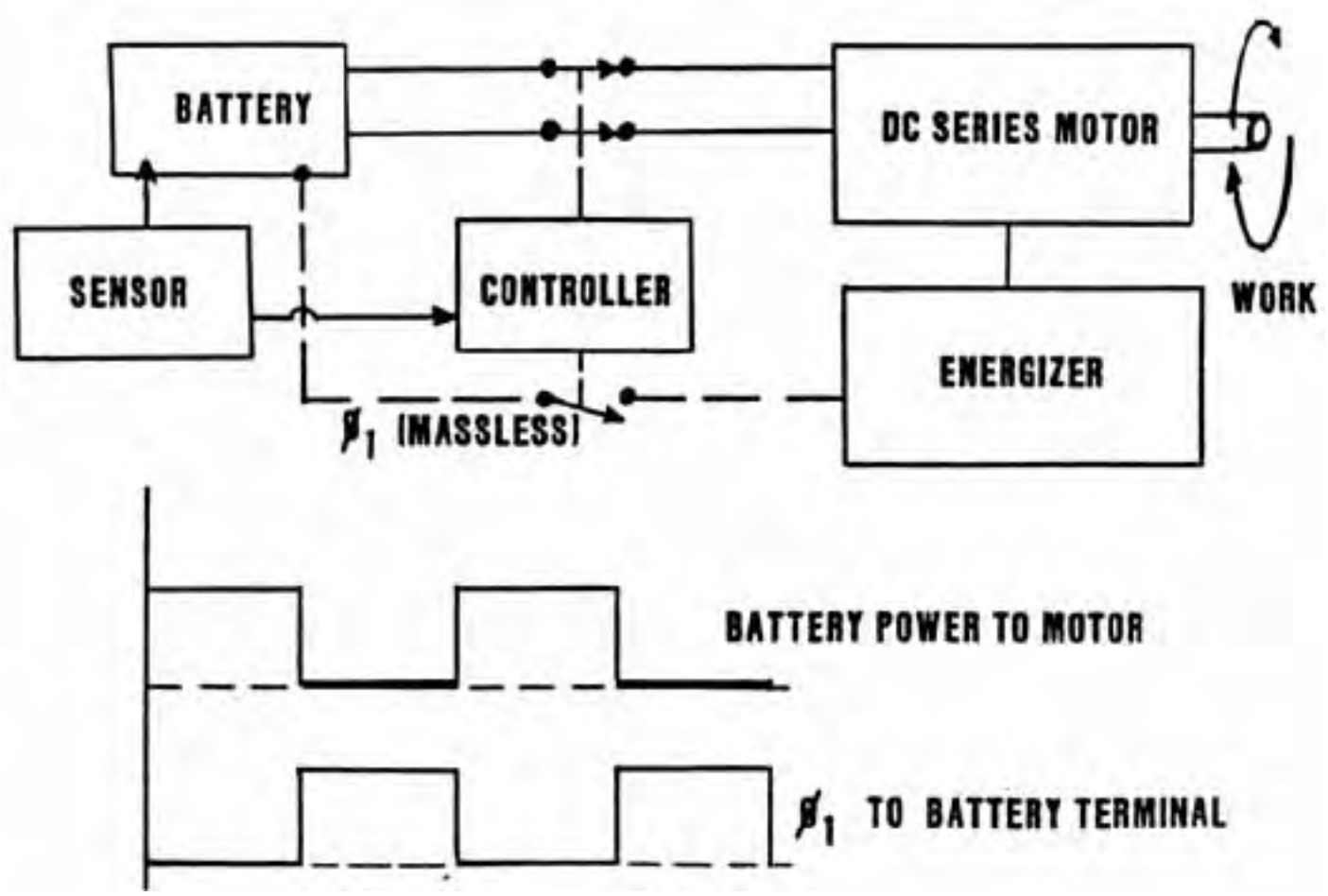

On this slide, we show a theoretical scheme which several researchers have discovered and used to build simple free energy motors.

In this scheme, we drive an ordinary d.c. series motor by a two wire system from an ordinary battery. The motor produces shaft horsepower, at -- say -- some 30 or 40 percent efficiency, compared to the power drained from the battery. This much of the circuit is perfectly ordinary.

The trick here is to get the battery to recharge itself, without furnishing normal power to it, or expending work from the external circuit in the process.

To do this, recall that a charged particle in a "hooking" del-phi river moves itself. This is true for an ion, as well as for an electron. We need only make the del-phi in correct fashion and synchronize it; specifically, we must not release the hose nozzles we utilize to produce our del-phi river or waves.

The inventors who have discovered this have used various variations, but here we show a common one.

First, we add an "energizer" (often referred to by various other names) to the circuit. This device makes the del-phi waves we will utilize, but does NOT make currents of electron masses. In other words, it makes pure Ø-dot. It takes a little work to do this, for the energizer circuit must pump a few charges now and then. So the energizer draws a little bit of power from the motor, but not very much.

Now we add a switching device, called a controller, which breaks up power to the motor in pulses. During one pulse, the battery is connected and furnishes power to the motor; during the succeeding pulse, the battery is disconnected completely from the motor and the output from the energizer is applied across the terminals of the battery.

If frequency content, spin-hole content, etc. are properly constructed by the energizer, then the ion movements in the battery reverse themselves, recharging the battery. Again, remember that these ions MOVE THEMSELVES during this recharge phase. Specifically, we are NOT furnishing ordinary current to the battery, and we are not doing work on it from the energizer.

If things are built properly, the battery can be made to more than recover its charge during this pulse

cycle.

To prevent excess charge of the battery and overheating and destroying it, a sensor is added which senses the state of charge of the battery, and furnishes a feedback signal to the controller to regulate the length of recharge time per "power off" pulse. In other words, the system is now self-regulating.

The relation between power pulses and recharge pulses is shown on the graphs at the bottom. Note that regulation may decrease the time of recharge application of the del-phi river.

This system, if properly built and tuned, will furnish "free shaft energy" continually, without violating conservation of anenergy. Remember that the del-phi condition across the battery terminals means that spacetime is suddenly curved there, and conservation of energy need no longer apply.

Again, this system is consistent with general relativity and with the fact that Ø-field alone can drive a situation relativistic. We have deliberately used these facts to do direct engineering. Our "extra energy" comes from shifting phi-flux -- the energy of the universal vacuum spacetime -- directly into ordinary energy for our use. Thus we draw on an inexhaustible source, and our device is no more esoteric than a paddlewheel in a river. The only difference is that, in this case, we have to be clever enough to make and divert the river in the right timing sequency.

This is a free energy device which an ordinary person, who knows a little electronics, can experiment with in the basement. To develop it, one is talking several thousands of dollars and a lot of persistence and tinkering; one is not talking millions.

WARNING: THE PRECEDING EXPERIMENTS ARE HAZARDOUS. DO NOT ATTEMPT THESE EXPERIMENTS UNDER ANY CIRCUMSTANCES UNLESS YOU ARE AN EXPERIENCED ELECTRICAL RESEARCHER, EXPERIENCED IN PERFORMING EXPERIMENTS WITH LEAD-ACID BATTERIES AND PULSE CHARGE AND DISCHARGE OF SAME, AND UNLESS YOU ALSO USE ALL SAFETY PRECAUTIONS SUCH AS GOGGLES

AND PROTECTIVE GLOVES, SLEEVES, AND APRON. YOU MUST NOT HAVE OTHER INFLAMMABLE LIQUIDS OR OTHER SUBSTANCES PRESENT WHICH COULD BE IGNITED AND BURN OR EXPLODE. SURGED LEAD-ACID BATTERIES PRODUCE HYDROGEN GAS, WHICH CAN EASILY EXPLODE SINCE SPARKING ALSO CAN OCCUR. THE ACID FROM SUCH AN EXPLOSION CAN EASILY BLIND YOU IF IT GETS IN YOUR EYES, AND IT CAN BURN YOUR SKIN. IN ADDITION, LEAD AND LEAD COMPOUNDS ARE POISONS, AND ARE TO BE HANDLED ONLY BY EXPERIENCED RESEARCHERS. THESE EXPERIMENTS ARE NOT FOR AMATEURS UNDER ANY CIRCUMSTANCE, BUT ONLY FOR EXPERIENCED PROFESSIONALS WITH PROPER KNOWLEDGE AND TRAINING, AND USING PROPER PRECAUTIONS. NEITHER THE AUTHOR NOR THE PUBLISHER IS REPONSIBLE OR LIABLE FOR ANY ACCIDENTS OR DAMAGE YOU MAY ENCOUNTER, AND ALL EXPERIMENTATION WITH THESE DEVICES AND PROCEDURES IS AT YOUR OWN ASSUMED PERSONAL RISK.

Next Slide

[The Tom Bearden Website]

SLIDE 41.

THE TRANSLATOR

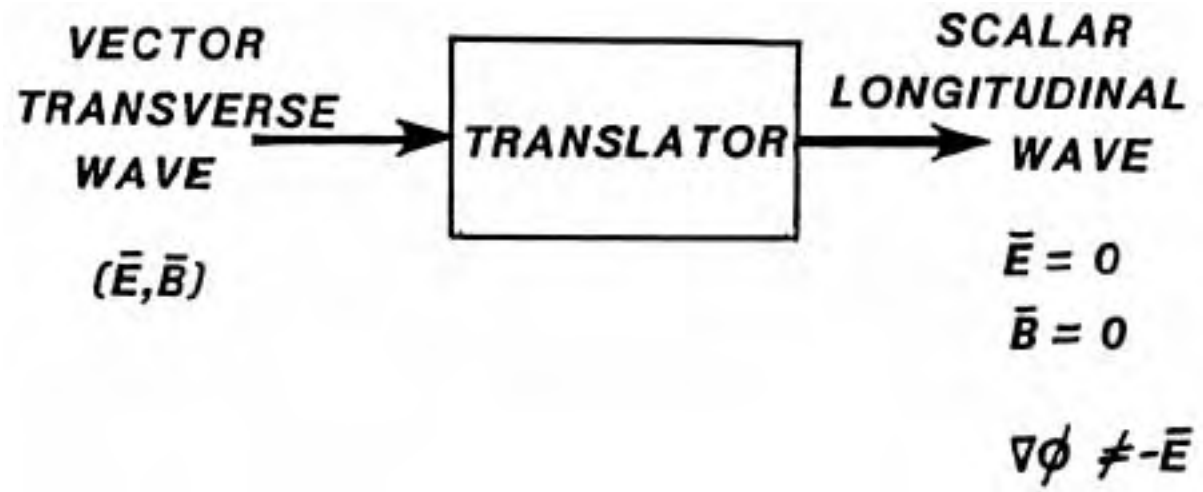

We now turn to a fundamental concept we need in order to understand some of the effects used by the Soviets in their Tesla weapons.

Note that one other country -- one not hostile to the U.S. -- also has such weaponry.

This slide shows the concept of a TRANSLATOR. Briefly, if we input a transverse matter wave, the translator outputs a scalar longitudinal wave without spin vortex hooks. If we input a scalar longitudinal wave -- even one without hooks -- the translator puts out a normal vector transverse matter wave.

We define a translator as anything which will accomplish one or both of those functions (usually both).

Basically, any device which is TOTALLY nonlinear to transverse waves will produce scalar waves from a transverse wave input. Any device which is totally nonlinear to longitudinal waves will produce transverse waves from a longitudinal wave

input.

It is comparable to certain plasmas, which, as is well known, produce such a translator effect. If you input longitudinal waves, you get transverse waves. If you input transverse waves, you get longitudinal waves. And the plasma is rather totally nonlinear.

Again, if our translator outputs non-hooking waves, it means that the component substructure waves oppose each other in sum zero fashion, and "kill" or nullify the vortex spin-holes.

Next Slide

The Tom Bearden Website

SLIDE 42.

TRANSVERSE WAVE INTERFERENCE

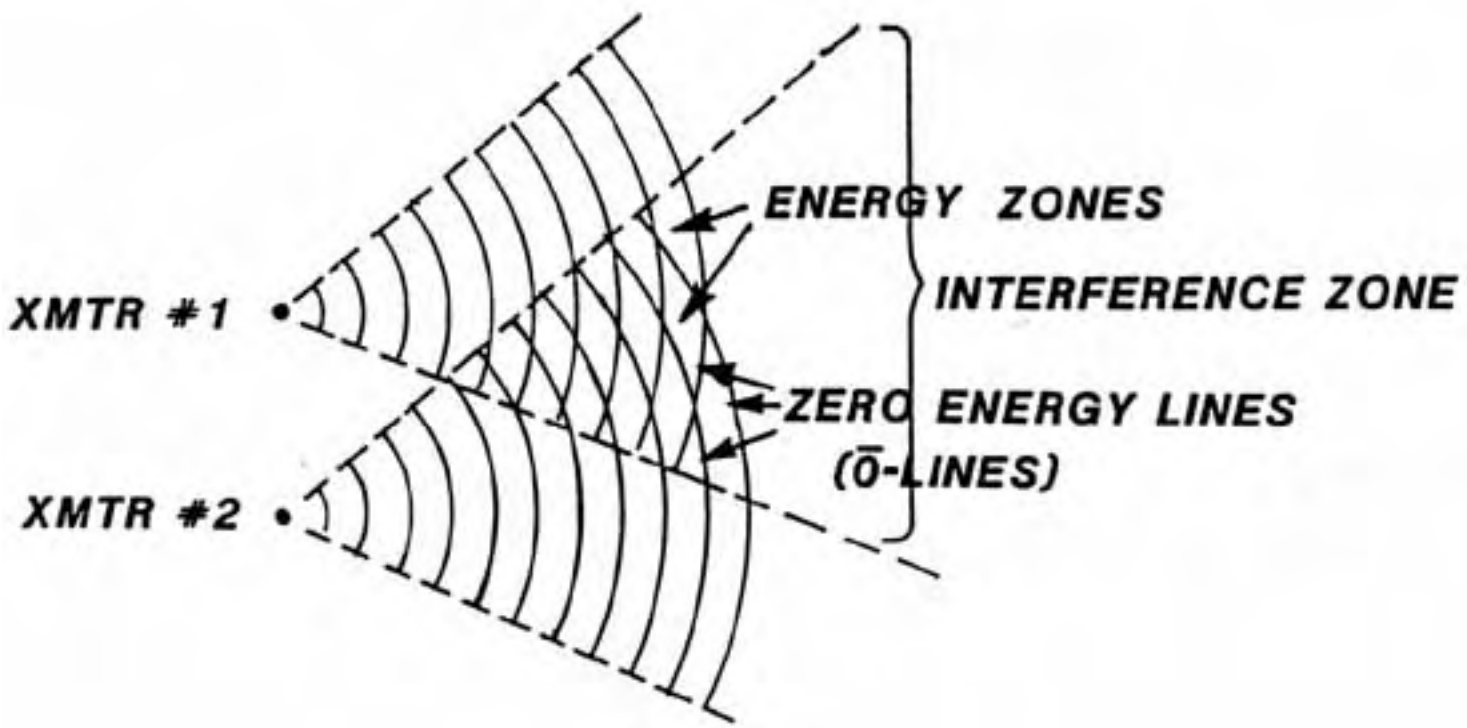

On this slide we show "normal " transverse wave interference, as we presently teach it in our textbooks.

We visualize two identical transmitters, each producing a beam in a pattern of about 55 degrees of so.

Where these beams overlap -- in the ideal, perfect case, we have constructive and destructive interference, with absolute zero-vector linear regions being formed. We put in the energy, and out-of-phase interference creates the zero zones, which contain no energy as such.

We point out, however, that these zero-lines are scalars,
and contain high stresses on spacetime.

Next Slide

The Tom Bearden Website

SLIDE 43.

LONGITUDINAL WAVE INTERFERENCE [SCALAR WAVES]

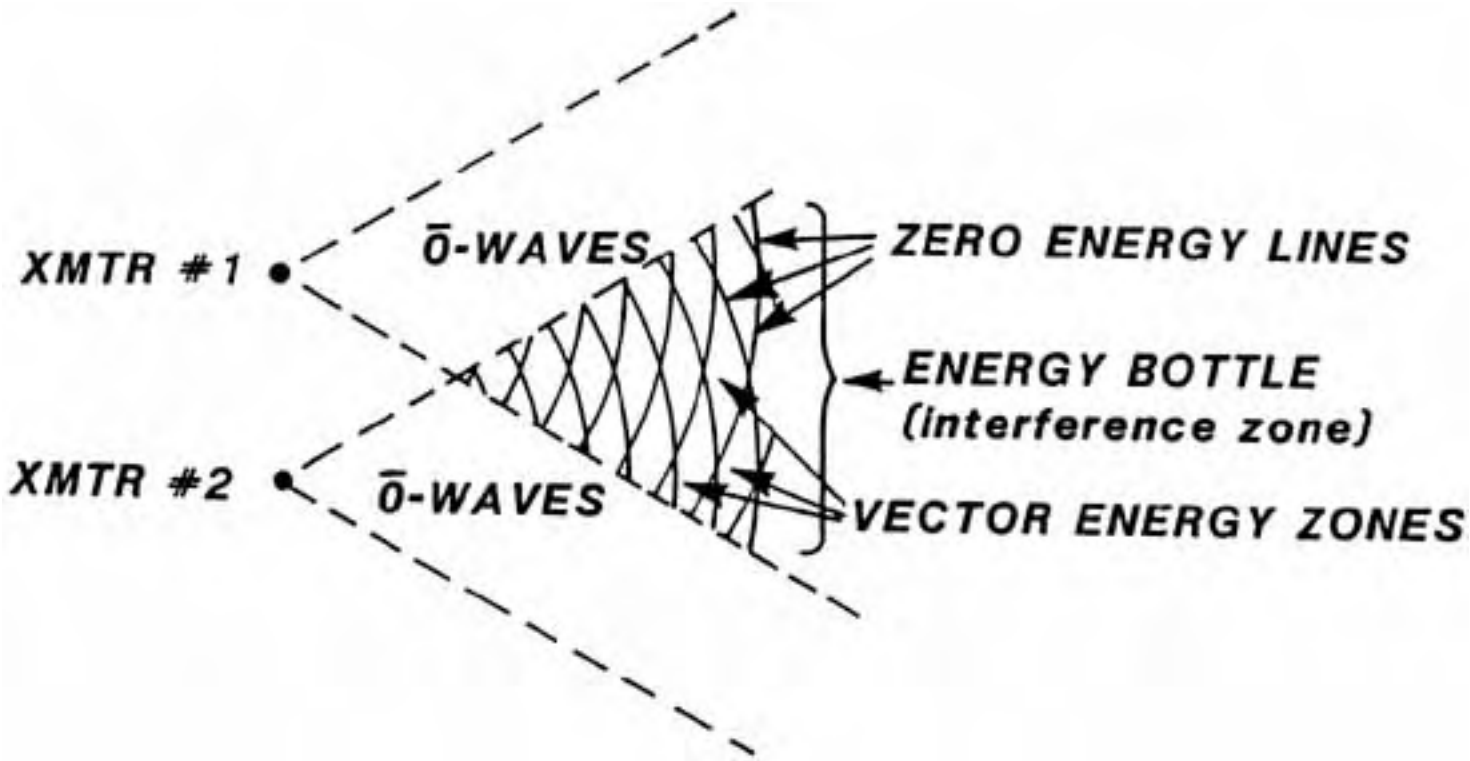

On this slide we show the interference pattern that emerges from the interference of two identical scalar wave beams from translator/transmitters.

Now note we are interfering two zero-vector waves, each containing a substructure. In this case we assume similar substructures.

What happens now is that we get a similar interference pattern, but with some startling differences.

First, we put in the zero-lines. These represent in-phase conditions for the substructures.

. Second, the substructures themselves interfere, and form energy in the grid zones between intersecting zero-lines.

In the perfect case, however, this energy cannot

radiate away. It is physically created and trapped as if in an "energy bottle." We are CREATING this energy at a distance, and storing it in a bottle. If the bottle were perfect, we would continue to accumulate energy in the grid zones -- notice we are continuing to pour energy into both transmitters, and there is zero ordinary energy anywhere else except in the grid zone "bottles."

If we turn off the transmitters smoothly, we extinguish the energy in the bottle completely. It is sucked right out of there, and the vacuum returns to its normal condition.

If we erratically and nonlinearly turn off the transmitters, we destroy the bottle and "dump" the energy suddenly. This is exactly like a sudden EMP from a nuclear weapon. A sudden pulse of energy is freed to radiate and interact in the region where the bottle was.

The high altitude booms off the East coast of the U.S. a few years ago were made in precisely this fashion, from such a weapon being adjusted and calibrated in the Soviet Union.

Next Slide

The Tom Bearden Website

SLIDE 44.

CREATING ENERGY AT A DISTANCE

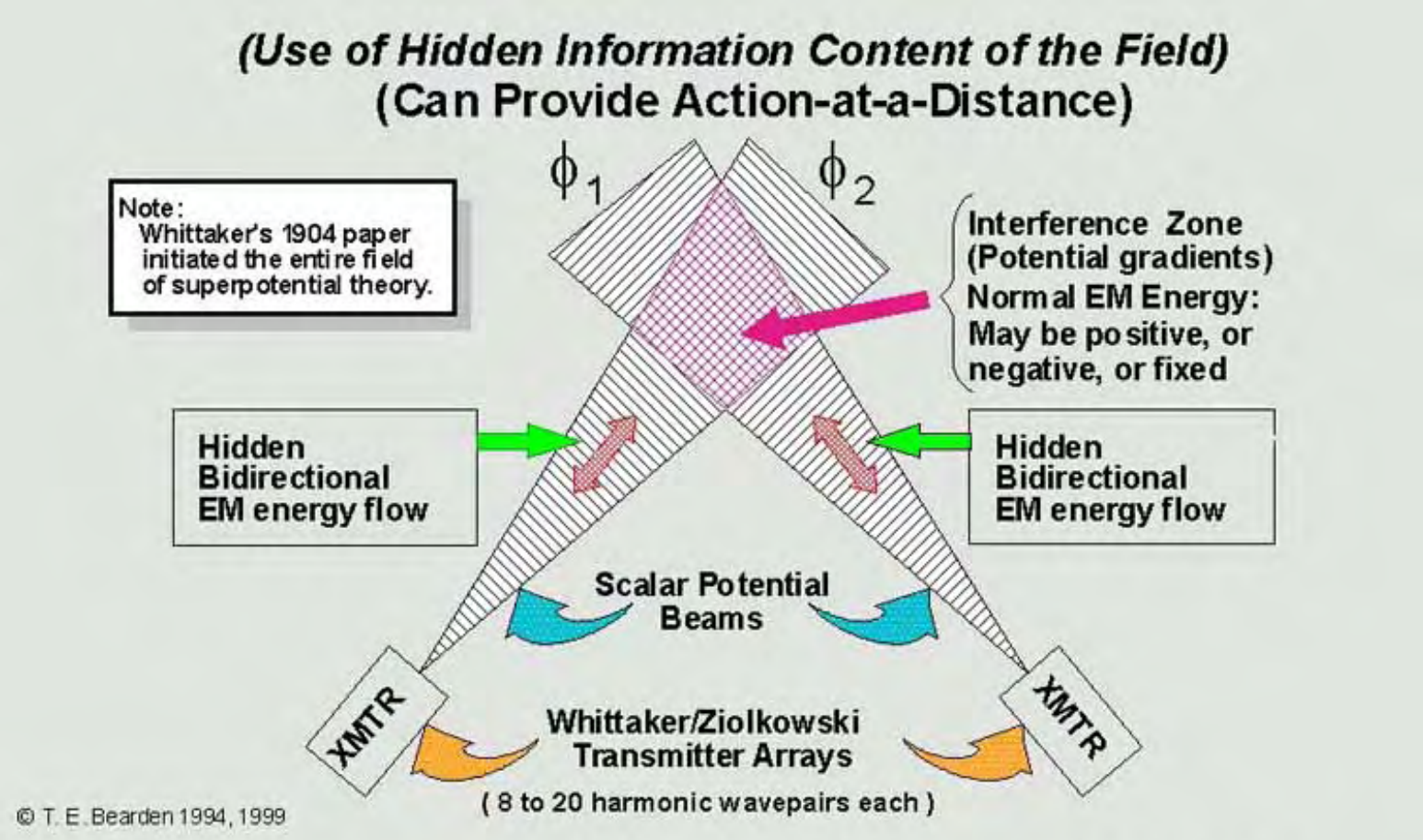

Figure 5. Scalar potential interferometry (between the two sets of bidirectional longitudinal EM wavepair functions) produces all EM force fields and waves.

But let us look at one way to do this sort of thing more efficiently.

Here we show two scalar transmitters (that is, two translator /transmitters) which form narrow beams, and which cross those beams at a distance.

In the crossing zone, scalar interference is established, making an energy bottle and producing trapped or locked in energy.

If I have a physical target in that crossed zone, I can literally "fry" the target, for I get all the power inputted to the transmitters contained in the bottle zone. I don't have any square law losses.

I can heat a metal object white hot at a distance, for example. Because all real bottles are slightly imperfect, the real bottle is leaky and some photons escape. I can observe the white hot steel in the bottle,

and I can record and measure the temperature from the escaping photons, by simple radiometric methods.

Now if I smoothly turn off both transmitters linearly, all the energy in the bottle disappears immediately. I can immediately reach in and pick up a black, cool piece of steel. And that cannot be done with ordinary inductive or radiowave heating.

That has been done in a laboratory on the North American continent.

Next Slide

The Tom Bearden Website

SLIDE 45.

NONLINEARITIES CAUSE SHIFTING [PARTIAL TRANSLATION]

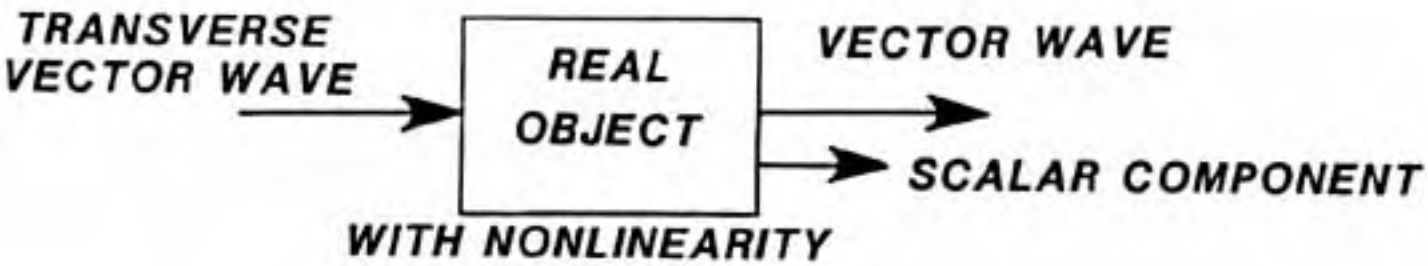

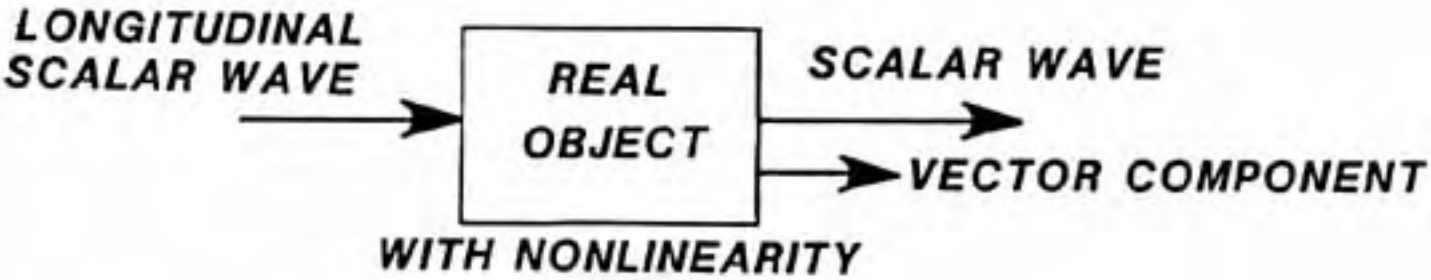

Here we show the results of electrical nonlinearities in an object which encounters a true translated (non-hooking) scalar wave. All objects have some electrical nonlinearities in them, and so all act partially as translators.

This means that any real object creates a small scalar aura around itself from its continual temperature interactions -- from absorbing and radiating ordinary EM waves. In addition, the object normally is subject to undetected scalar wave radiations, and so it also produces a small aura of transverse vector waves around itself by translation.

All real objects accomplish at least a little bit of translation.

Next Slide

TOWARDS A NEW ELECTROMAGNETICS
PART 4: VECTORS AND MECHANISMS CLARIFIED

SLIDE 46.

THE SCALAR AURA

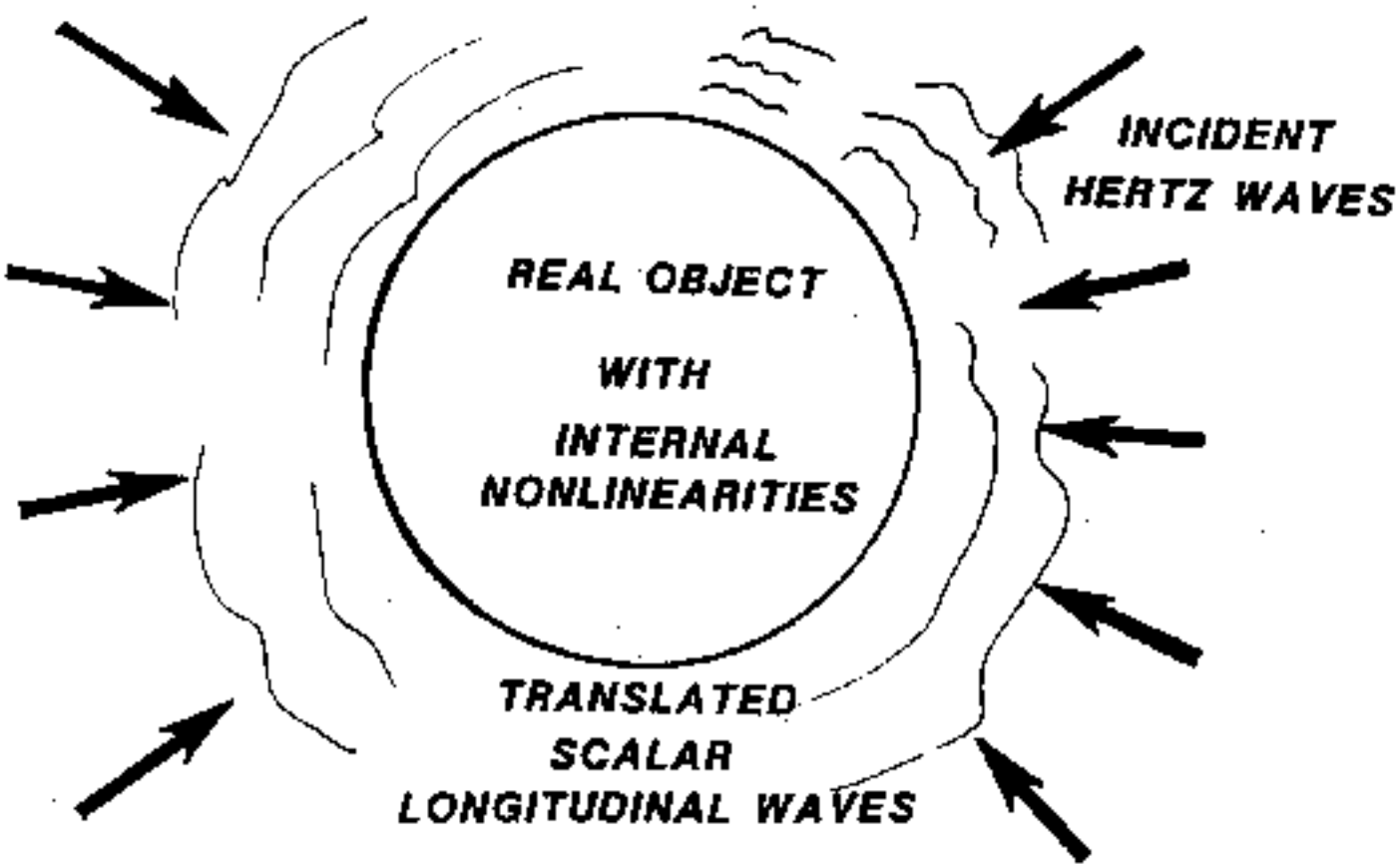

We examine now an object with temperature, that is, a normal object continually absorbing ordinary EM radiation and continually emitting EM radiation.

The object has a small fraction of its incident energy expressed as a scalar aura around it, because of translation. Note that normal detectors will not detect this aura, but special two-stage interferometric detectors will detect it. Also note that the object replenishes- the ordinary radiation flow by its translation of some of its incident scalar radiation into the normal or "transverse" (so-called) radiation.

The entire internal pattern -- all interactions and functions of the body -- are precisely present in its scalar aura, down to the finest detail. This makes an x-ray pale by comparison.

True psychics actually use the nonlinearity of their nervous systems (note the avalanche ion discharges across dendrite gaps) and the interferometric aspects (note two cerebral hemispheres, connected by a corpus callosum) to detect the scalar aura. This is a physical fact and not esoteric delusion. To control this, however, is normally as difficult as learning to walk a high wire and do acrobatics on it. There are not many high wire walkers in the world, but it certainly is a skill within human control capability and purview.

T. Galen Hieronymus was absolutely correct when he stated that the entire internal working pattern of an object is radiated by that object in terms of an extraordinary energy, which he called "eloptic" energy. It is actually translated scalar wave energy, and entirely consistent with present EM theory when the glaring errors in its foundations are corrected.

Shortly I hope we will see instrumentation which can directly examine the scalar aura in the finest detail, seeing every illness, and simply setting dials to radiate the body with gentle, harmless scalar waxes to directly correct illnesses.

Next Slide

The Tom Bearden Website

SLIDE 47.

VIRTUAL FLUX AND MAGNETIC FIELD [LINEAR CASE]

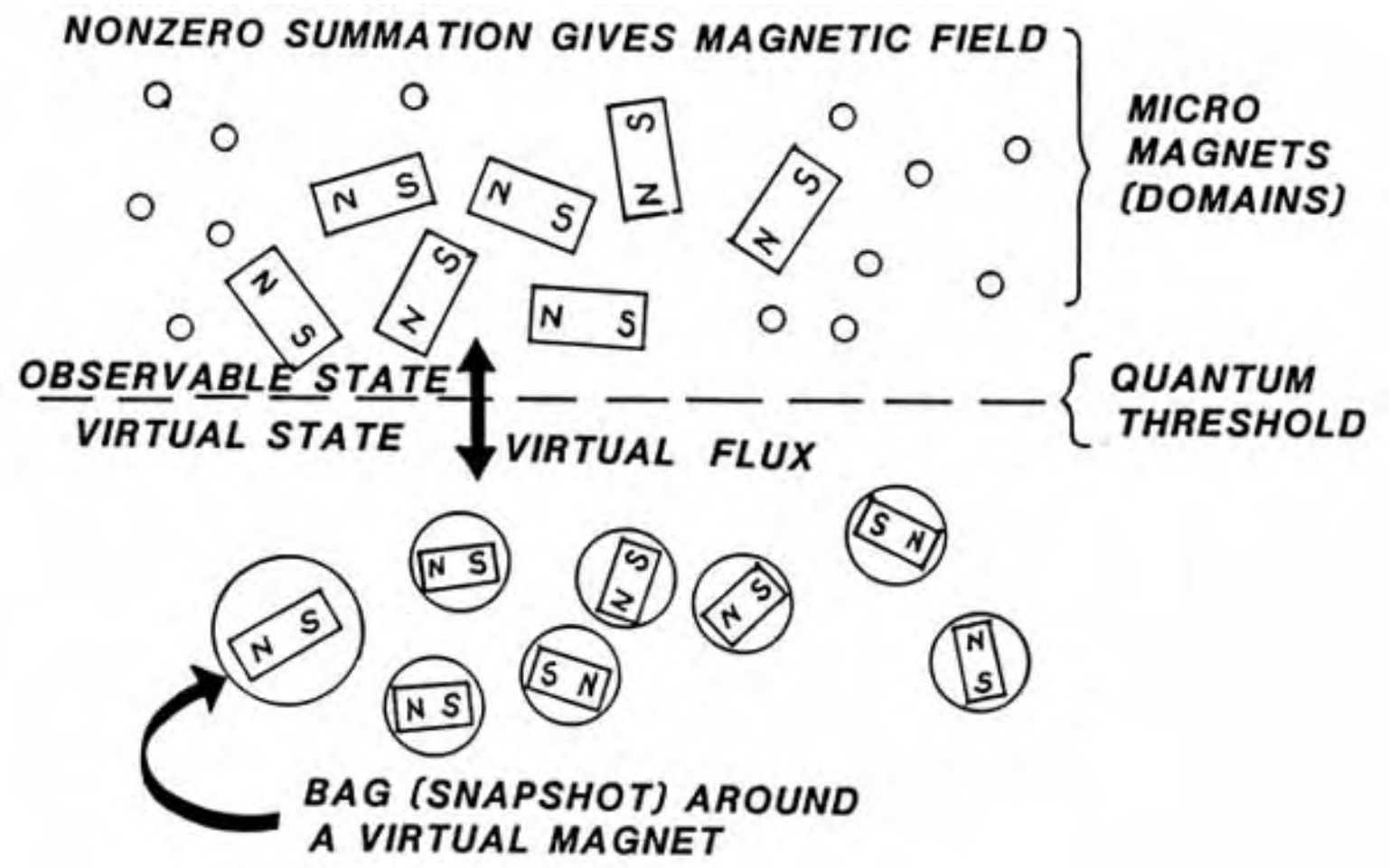

Briefly, let's look at some nice things we can do with magnetism. Specifically, let's find out how to make magnetic monopoles and use them to do things in the laboratory. This again has been done in a laboratory on the North American continent.

First, about all the present science can tell us about a magnet is that "a big magnet is made of littler magnets." And if we examine one of the smaller magnets, it's made of even smaller magnets. This is like saying big dirt piles are made of smaller dirt piles, and that explains what dirt is.

However, let's use that with our knowledge of the virtual flux vacuum.

In this slide, we show diagrammatically the situation for a common magnet. Note that domains in the magnetic material are themselves little magnets, and their alignment and vector summation determine whether or not there's said to be a magnetic field present. Nonzero summation states that there's a resultant magnetic vector, and hence an external magnetic field. Zero summation states there's no external nonzero resultant, hence no external magnetic field.

Actually, there's an external scalar magnetic potential field, even when the external vector magnetic field is zero. The substructure is still there.

If we pursue this "big magnets are composed of smaller magnets," eventually we reach the quantum threshold, and we have a substructure of virtual, subquantal magnets in vacuum, in the virtual particle flux. At least we conceive each little virtual particle as if it were spinning, and hence a little magnet.

We put a conceptual bag around each little virtual magnet.

In a linear situation, the north pole is as strong as the south pole, and so just outside the bag, the poles cancel or appear zero. Since the virtual bag appears to be zero length to an external macro observer, the poles seem to be directly superposed on top of each other, yielding no pole at all to the observer.

However, you and I now know that both poles are still in there, in the virtual substructure, and we certainly have remaining with us a translated scalar magnetic field.

There's a virtual flux to and from each observable particle of charged mass in the observable state as shown, but this flux is now scalar in virtual magnets, except for nonlinearities in the structures

above the quantum level. Thus accelerated portions -- atoms with electrons in whirling orbit, spinning electrons, protons, etc. -- possess nonzero ordinary vector magnetic fields by translation. Again, notice the successive interlocking levels of reality, all the way from deep in the virtual state into interlocking levels in observable state.

Next Slide

The Tom Bearden Website

SLIDE 48.

PRODUCING MAGNETIC MONOPOLES

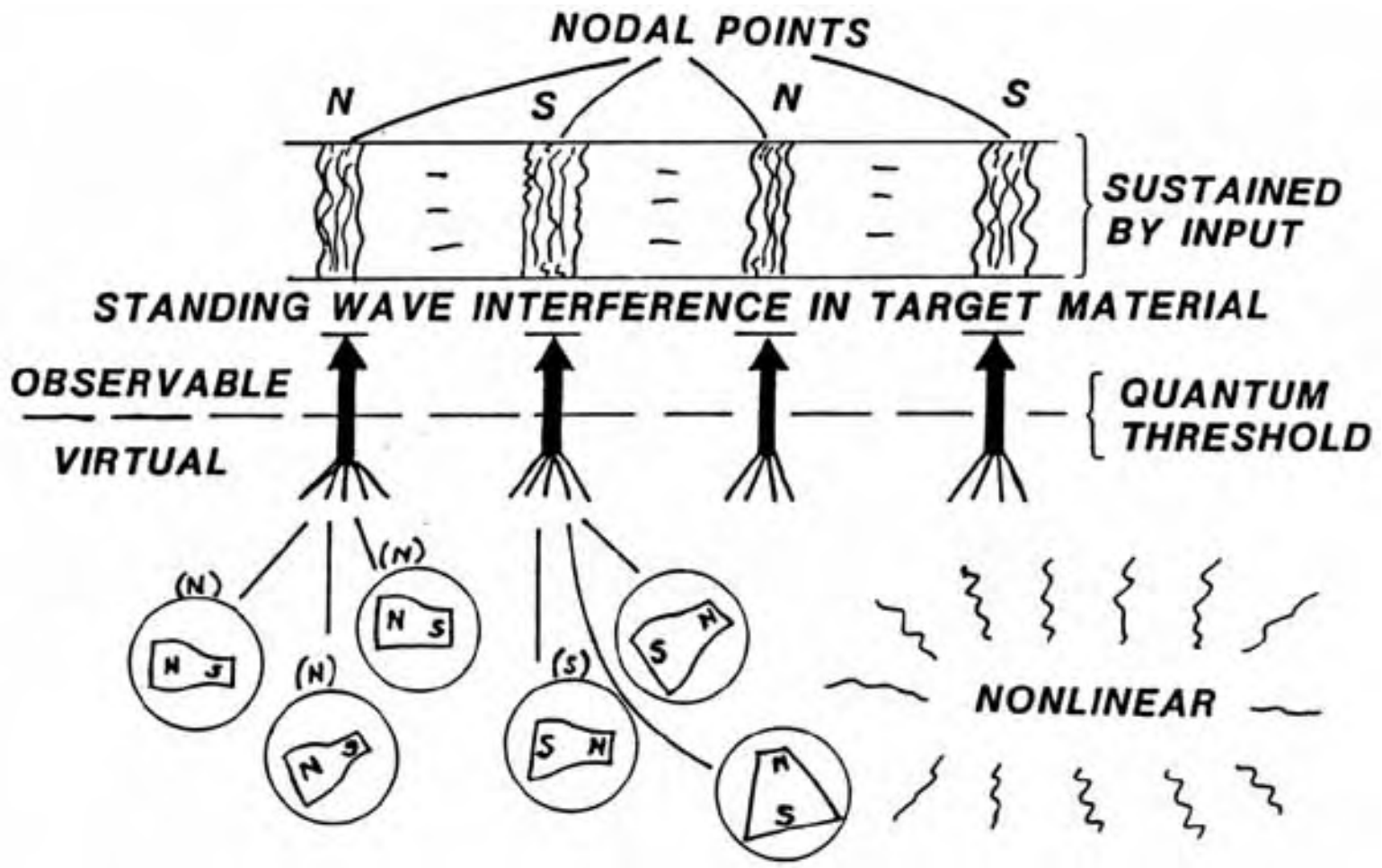

Now let us look at a non-linear case of the same sort of thing. Now the bags are still around the little virtual magnets, but they are nonlinear. This means that, to an observer outside the bag, one pole seems bigger or more powerful than the other. In other words, to the quantum observer, this bag appears to be a magnetic monopole at a point.

In the flux still on and off each observable spinning charged mass, we now have a steady component of "monopoles". If we have a standing scalar wave present in a physical material in which the nonlinearity exists -- and the scalar waves can even be PRODUCING that nonlinearity -- we will have nodes

available at which the monopoles will congregate and emerge and interact.

North monopoles will congregate at one node, while south monopoles will congregate at the next, and so on in alternating fashion.

That means that, at anyone node, monopoles of the same kind are steadily being "deposited" in the material. These monopoles strongly repel each other, and so the material at that node is increasingly stressed in a tensile fashion.

Eventually the material will be torn apart at the node,
stress relieving the situation. Movement of the material will release the nonlinear condition, stopping monopole production and deposit. However, at a break node, the same kind of magnetic pole will appear on each side of the break.

That is, the breaks will be N-N, S-S, N-N, S-S, etc.

An ordinary magnetic does not do that when it breaks. Instead, it breaks N-S, N-S, etc.

Next Slide

The Tom Bearden Website

SLIDE 49.

BREAKING METAL WITH MAGNETIC MONOPOLES

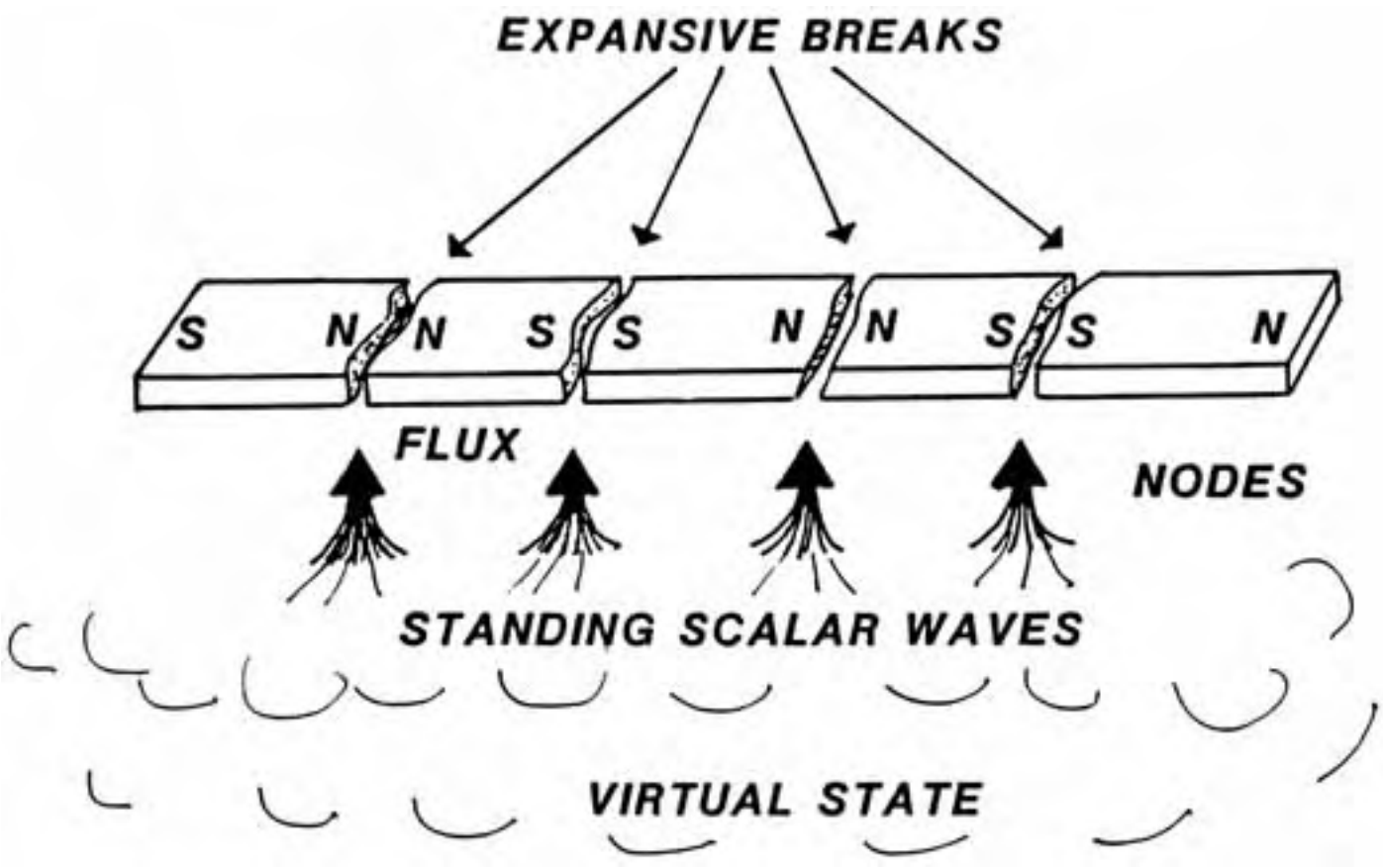

Again, metal has been broken in a North American laboratory utilizing the production and deposit of magnetic monopoles in this fashion.

On this slide we show what was done.

An ordinary bar of steel was exposed to standing scalar waves in a nonlinear situation, depositing magnetic monopoles at the wave nodal points in the metal bar. The breaks occurred as shown on this slide.

Much of what I am presenting is based on certain experiments accomplished in experimental laboratories here and abroad. Most of the mechanisms have actually been produced in the lab. However, these are proprietary labs and I cannot violate trust and

reveal the precise construction details utilized. In some cases I have not seen the precise constructions, but only the direct results.

But ironically, the production of magnetic monopoles -- which has fiercely resisted the normal scientific approach -- yields readily to the new approach.

Next Slide

[The Tom Bearden Website]

SLIDE 50.

CREATING AN INERTIAL FIELD (ANTIGRAVITY)

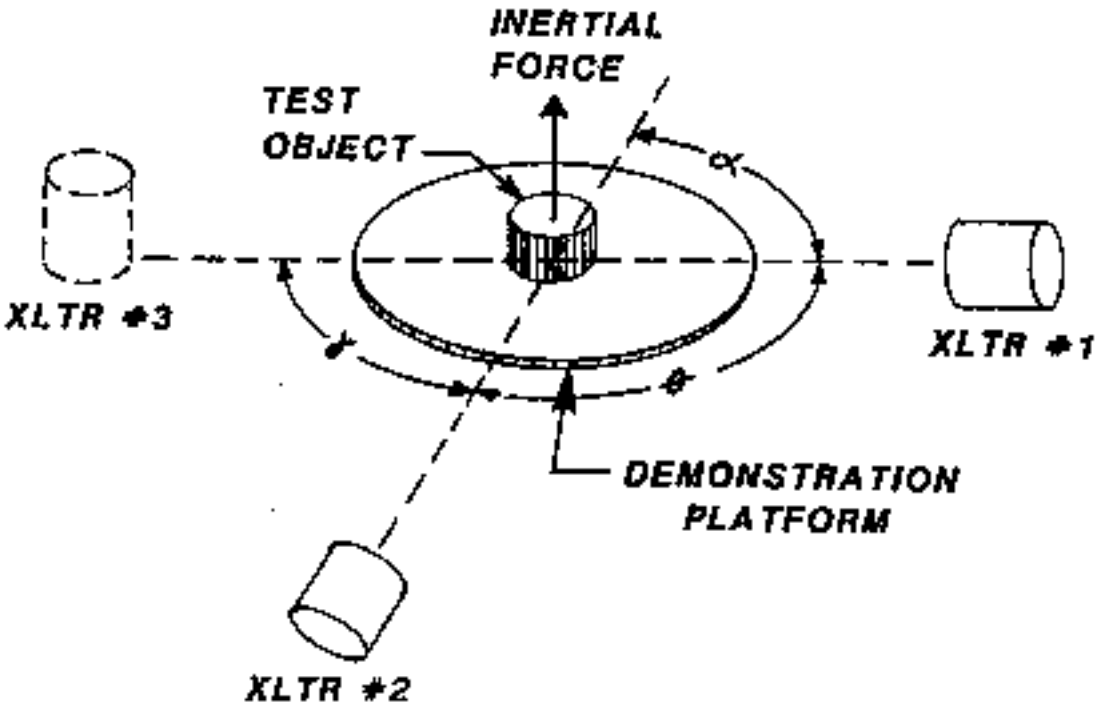

We now show schematically how to produce an inertial field, or antigravity. Also an inertial space drive can be produced in this manner.

This again has been done in a North American laboratory. In fact, inertial fields have been produced in more than one lab here in North America.

In the setup shown here, three translator/ transmitter projectors are used and oriented so as to give three-dimensional interference, or interference along all three spatial axes.

By controlling the substructures of the three projectors all together, one can control the precise phasing in all substructures, with respect to a common time reference.

By this means, a unilateral force can be created of each and every charged mass particle (that is, on each proton) in the nucleus.

Since we know that the neutrons and protons in a nucleus of an atom are continually interchanging, one into the other, back and forth, all of the nucleons can be treated as "diffuse protons" for mass purposes, and scalar wave interaction purposes.

Thus if we have the correct pattern to affect protons, we can control the phases of the substructure waves of the projectors so as to produce unilateral, parallel forces on and of each spinning proton in the nucleus.

This means we can produce unilateral thrust in an object exposed to the triad interference of the projectors.

In short, this produces antigravity. If sufficient force is produced, the test object in the interference zone simply lifts itself off against earth gravity. This has been done in North America.

If we phase the projectors so that counterbalancing forces are produced on each proton, we can either make the proton "lighter" inertially or "heavier."

In fact, we could "freeze" a common pistol so that it could not be moved and its trigger could not be pulled, simply by sufficiently increasing its inertia. This was done in experimental demonstrations in Toronto, Canada in 1969, and witnessed by the Chief of the Homicide Squad of the Toronto police. It was his pistol that was frozen for the demonstration.

If the projectors themselves are on board a space capsule, for example, they can produce such a unilateral thrust in and of a central mass or disc attached to the of the craft. By this means, an inertial spacedrive can be built.

Next Slide

[The Tom Bearden Website]

SLIDE 51.

EFFECTS ON HUMANS

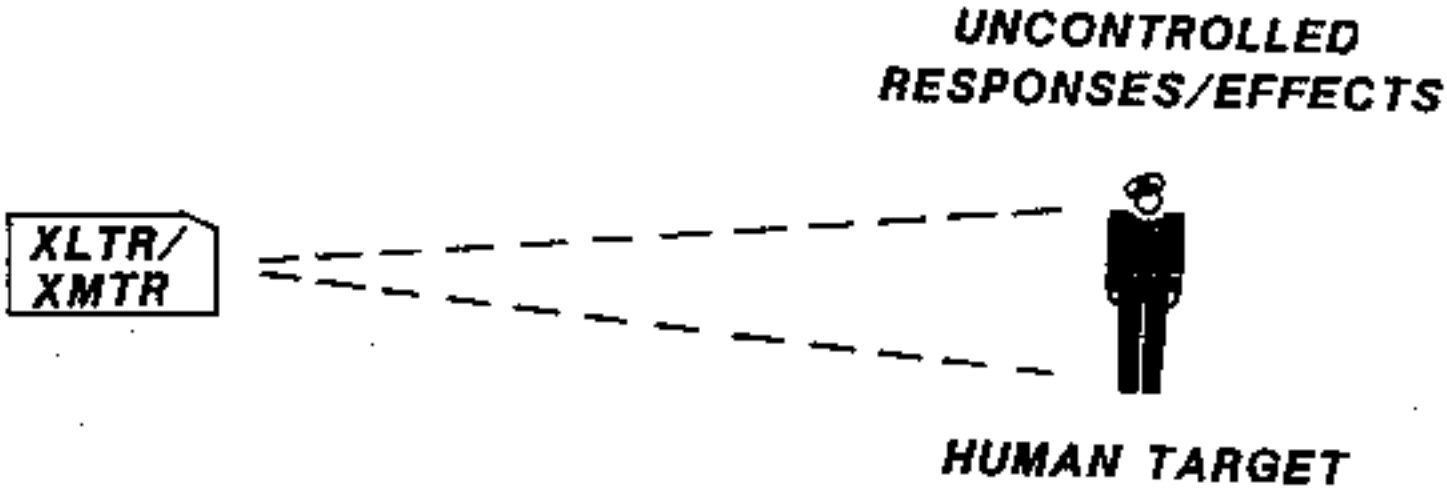

Now let us look at some of the effects on humans, when radiated with a true scalar wave beam from a translator/transmitter.

First, the human nervous system is highly nonlinear. Essentially, across billions of synapses, sudden ion discharges -- analogous to spark discharges -- are continually or periodically occurring. Brain waves, for example, are not waves along wires; instead, they are waves of avalanche discharges across tremendous numbers of nerve cell gaps.

The central nervous system is thus highly nonlinear, and the gap firings of the nerve endings act as translators.

These translators partially translate incident scalar waves, so that additional transverse matter waves -- or ordinary energy inputs -- occur in the ion discharges.

Thus additional energy is being added to the nervous system by incident scalar waves.

Many long-term effects of the environment on the body are gradually kindled in this fashion, even

over a period of years.

For a stronger dosage of scalar waves, the nervous system experiences "jamming" of its signals. This leads to four basic "noise jamming" effects.

If a small dose is absorbed, the interference is slight. One feels as if one had taken a whiff of anaesthesia -- an unreal, dreamy feeling.

If a slightly larger dose is absorbed, the interference is moderate. Now the single channel system -- the motor system -- goes, and the individual is paralyzed. Mentally he is barely conscious, in a sort of hypnogogic, waking dream state. Any tendency toward epileptic seizure or other nervous disorder may surface here, as may heart palpitations or even heart failure.

For a heavier dosage yet, the interference is now strong. Now the multiple systems start failing. Consciousness is lost and the individual is in a deep coma. In addition, seizures and convulsions, and loss of control of some body functions, may occur. The autonomic nervous system is keeping the heart beating with difficulty and keeping the body gasping for breath.

For a very strong dosage, the entire nervous system fails and death results almost immediately. This is quite similar to the effects of nerve gas.

These are the four major symptoms of scalar wave radiation of the body and translating absorption by the nervous system in an uncoordinated fashion.

Next Slide

The Tom Bearden Website

TOWARDS A NEW ELECTROMAGNETICS
PART 4: VECTORS AND MECHANISMS CLARIFIED

SLIDE 52.

INITIATING SPECIFIC BIOLOGICAL EFFECTS

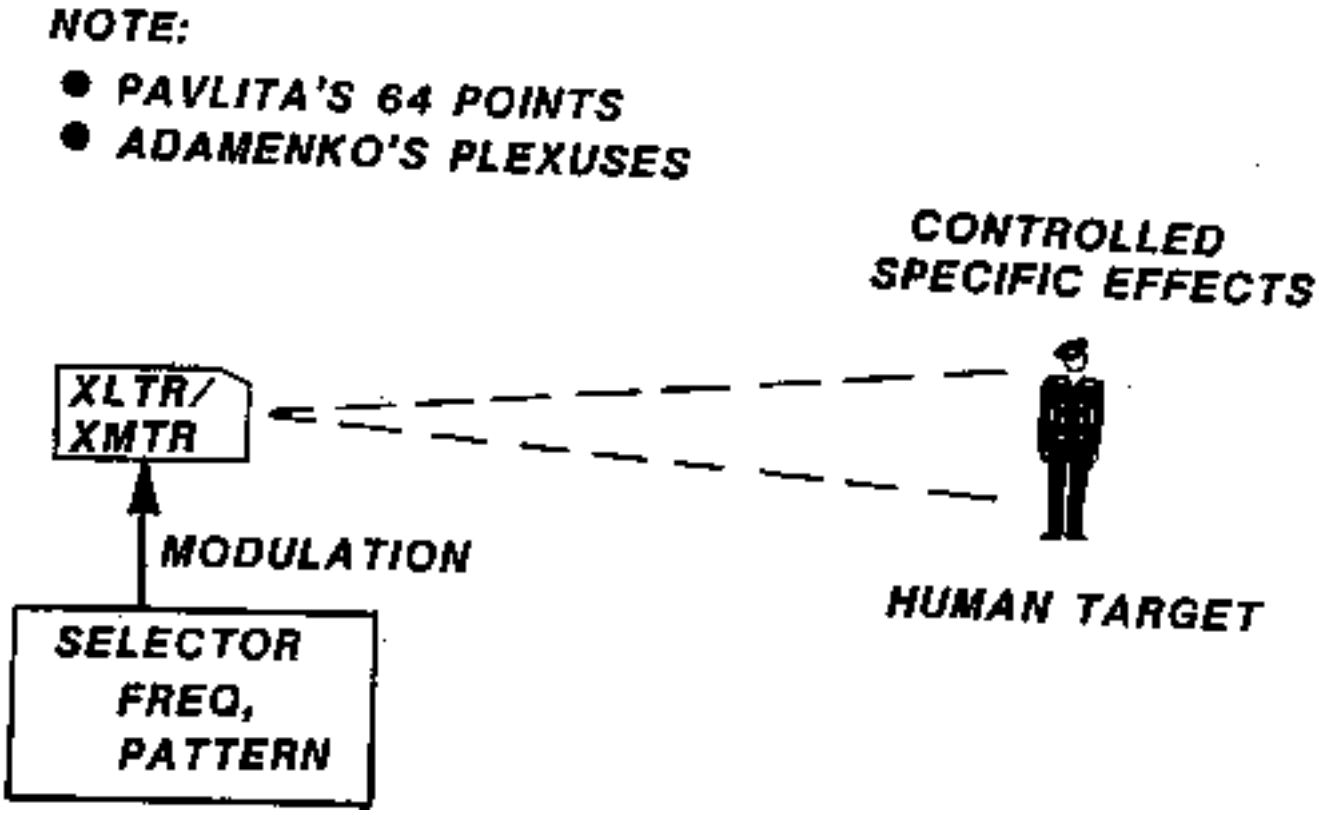

If we now add precisely patterned modulations to the substructure waves of the scalar zero vector beam, we can induce deliberate patterns in the dosage absorbed by a biological system.

As Kaznacheyev's experiments showed, any death or disease pattern can be induced upon an electromagnetic carrier -- specifically, upon the near-ultraviolet as an example. Some of his experiments were duplicated at the University of Marburg in West Germany, utilizing infrared carriers. These patterns can be dumped into cell cultures, eventually kindling the pattern of death or disease in the target cells.

The same can be done to a human from an external source. The major entry point is the acupuncture system, which reacts to scalar waves and transfers them to the nervous system for translation.

Pavlita, Czechoslovakian engineer, has built "psychotronic generators" for over 30 years that affect the human body. Adamenko, Soviet physicist, found that the acupuncture points formed groupings or plexuses that were frequency sensitive. In other words, certain frequency bands affect one plexus more than others. Further, these acupuncture points are known to be connected to effects produced at remote locations in the body.

Pavlita stated he had found 64 different sensitive "points" on the body, and had succeeded in building a generator for each. If by his points he meant Adamenko's plexuses, then frequency patterns can be created that affect certain acupuncture groupings -- and thereby certain specific body locations and effects -- more than others.

It thus appears reasonable that, by placing the proper frequency pattern in the modulations of the substructure waves feeding into the translator/ transmitter, the scalar ray or beam can be made highly selective as to body part affected and the effect generated or kindled in the body.

By this means, specifically tailored attacks on the body can be created.

Strong emotions such as sheer terror, overpowering rage, blind panic, etc. can be induced. Or physical effects such as epileptic seizure, loss of control of internal functions, loss of muscular control, severe weakness, specific failure of an individual organ such as the heart or liver, or blackouts and comas can be induced. In addition, patterns for specific toxins and diseases can be induced. With a strong absorption, these changes can be effected quickly. Imagine bubonic plague developing in 30 seconds, for example, or the effects of a cobra bite developing in 10 seconds.

If the individual is placed in crossed interference beams (that is, in the interference zone of a scalar interferometer), strong effects can be produced essentially instantly, including instantaneous death.

Of course BENEFICIAL effects can also be accomplished. As instrumentation is developed, one should be able to scan the aura, do a computerized

readout to show the different medical problems either developed or developing in the body, have the computer compose a "cancellation or offsetting pattern," and radiate the body with a totally beneficial pattern, customized for that particular condition at that particular time. One should be able to quickly cure cancers and leukemias, for example, even of the brain and of the bone marrow. One may even be able to quickly reverse the effects of aging; at least there is no foreseeable reason why it should not be possible.

The new technology is a very powerful tool, and it can be used for either good or bad, depending upon the intent of the developer and the user.

Next Slide

The Tom Bearden Website

SLIDE 53.

GROUND-TO-AIR USE

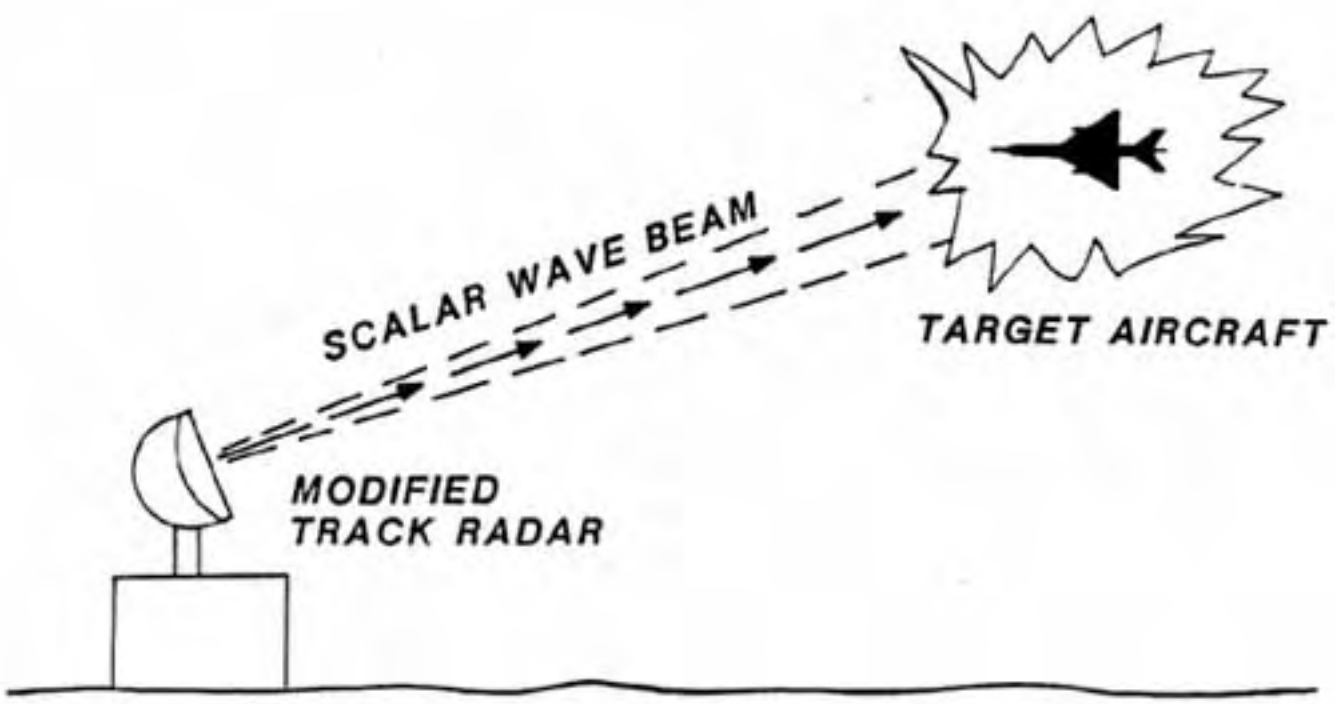

Here we show another use of the scalar beam technology already developed by foreign powers.

A modified track radar -- either continuous wave or pulsed -- transmits a scalar wave beam. It radiates an incoming hostile aircraft, keeping the beam on it, and kindling energy in the nonlinear electronic circuits of the aircraft by translation. Communications, navigation systems, avionics systems, electronic fuze systems, ignition and control systems, airborne radar, missile armament electronics, etc. are all vulnerable to this translation kindling of internally jamming energy from the incident scalar beam.

The electronics can be knocked out and the aircraft knocked down.

The pilot himself is also vulnerable because of his highly nonlinear central nervous system.

Some or all of the eight F-111's mysteriously

lost in
Vietnam may have been bagged by modified SA-2 FANSONG radars, using this effect.

Next Slide

The Tom Bearden Website

SLIDE 54.

TACTICAL AIR-TO-GROUND USAGE

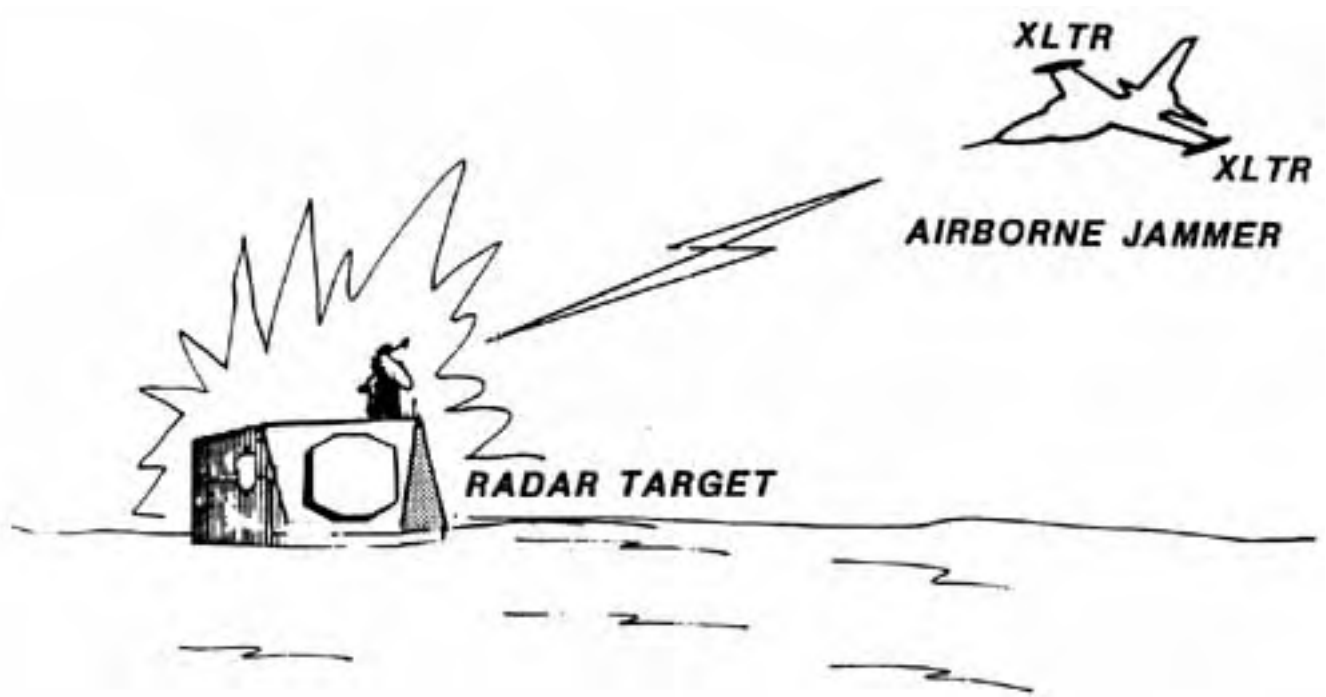

As shown on this slide, the technology is also usable from aircraft against ground targets, particularly ground-based radars and communications systems.

As shown, the aircraft has a modified jammer, able to emit a beam of scalar energy from one or more translator/transmitters.

By simply training a beam on the radar, eventually the radar can be knocked out. That is the simplest use.

A more sophisticated usage is provided by more than one translator/transmitter, acting as a scalar interferometer.

In this mode, each translator/transmitter emits multiple scalar carrier frequencies. Two Fourier expansions are established, so that a three dimensional "ball" or sphere of interference-zone energy is established. By pulsing or phasing, this ball is moved to strike the location of the radar, delivering a large burst of energy to it and knocking it out. Alternatively,

the energy bottle is "dumped" when it reaches the targeted radar or its near vicinity.

A still better way is to fire one Fourier scalar pattern directly at the target radar, then fire a second pulse faster so that it overtakes the first directly upon the target. (The ensemble of such a pattern acts as a soliton, and its velocity is controllable by controlling the amplitude of the pattern generated).

When the second scalar overtakes the first, a sharp interference is formed, with a fast energy bottle, which is then nonlinearly dumped in microseconds or milliseconds. In this fashion, all the energy put out by the jammer is delivered directly upon and into the target in one sharp EMP pulse, much like that from a small nuclear explosion. The target is destroyed.

Note that such a weapon can be utilized against tanks, vehicles, explosives, missiles, ammunition, bridges (the airblast), bunkers (the blast can occur INSIDE the enclosure), ships, planes, personnel, and targets of varied types.

The Soviets have had such secret weapons for years.

One additional country has them also.

Next Slide

The Tom Bearden Website

SLIDE 55.

INTEGRATED WEAPONS DISPLAY (MODIFIED JAMMER)

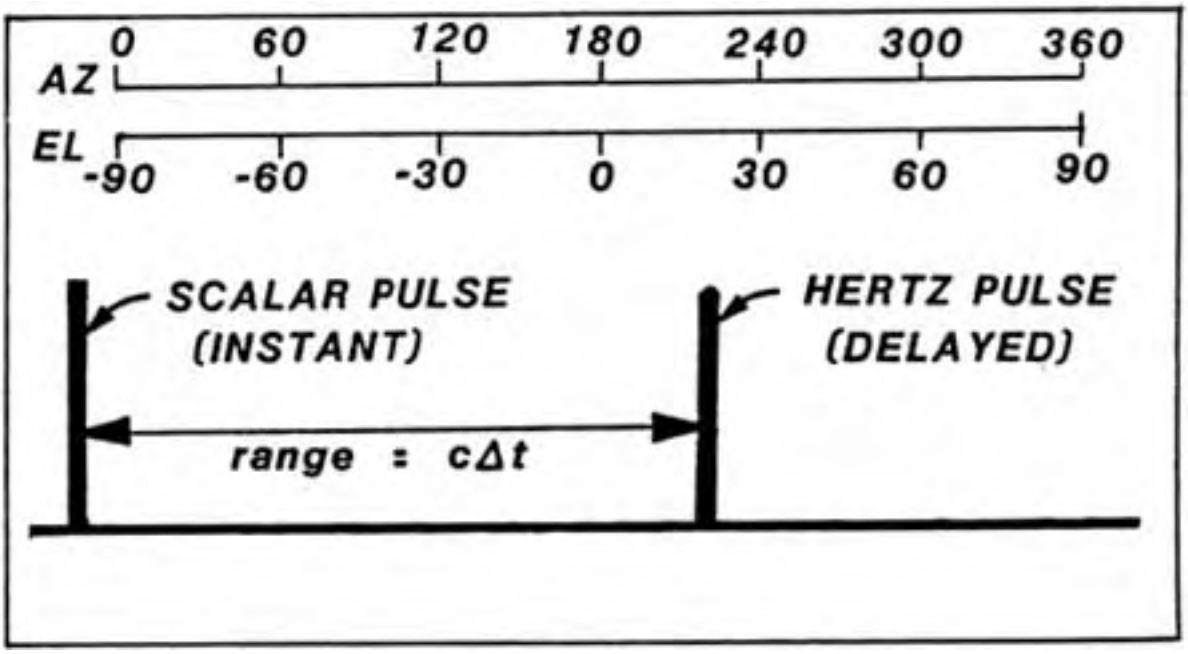

Here we show diagrammatically what a modified Soviet integrated weapons display for a modified jammer might be, to employ scalar interferometer weaponry.

As the "main bang" is emerging from the antenna of the target radar on the ground, the phi-field from it reaches to infinity, including through the aircraft with a finite magnitude. In the a1rcraft, two channels act in interferometer fashion as a scalar detector for phi-dot. The main bang creation (phi-dot) is detected, and displayed as the leftmost pulse.

At that time, a computer time-base starts clocking off microseconds.

At some time later, the third channel, acting as a normal receiver, receives the ordinary "Hertz" pulse from the radar, which has traveled to the aircraft at the

speed of light.

The computer converts elapsed time between the scalar pulse and the Hertz pulse to range.

Azimuth and elevation angle to the radar are obtained by normal angle tracking.

At this time, the computer has the exact coordinates of the radar, allowing for motion of the aircraft during the lapse time.

The computer switches the interferometer into transmit mode, and arranges amplitude patterns to target the radar.

It fires the first scalar pulse, then fires the second so as to create the full EMP directly upon the target.

The EMP flash occurs, destroying the radar.

At that time, another target can be processed.

In a more advanced weapon, scanning may be used to detect, locate, target, and engage multiple targets, including incoming air-to-air and surface-to-air missiles, one after another.

The same weapon is usable against a variety of aerial and ground based targets.

The major weapon is the electronic emitter, not a missile or ordinary ordnance.

Hordes of such special "jammer aircraft" now become a potent force on the battlefield, destroying all before them with annihilating ray weapons.

Star war is a reality now.

The High Frontier is already seriously obsolete.

Our entire defense establishment is completely vulnerable to these weapons at present, for we have not developed countermeasures or defenses.

Next Slide

The Tom Bearden Website

TOWARDS A NEW ELECTROMAGNETICS
PART 4: VECTORS AND MECHANISMS CLARIFIED

SLIDE 56

RADAR INVISIBILITY

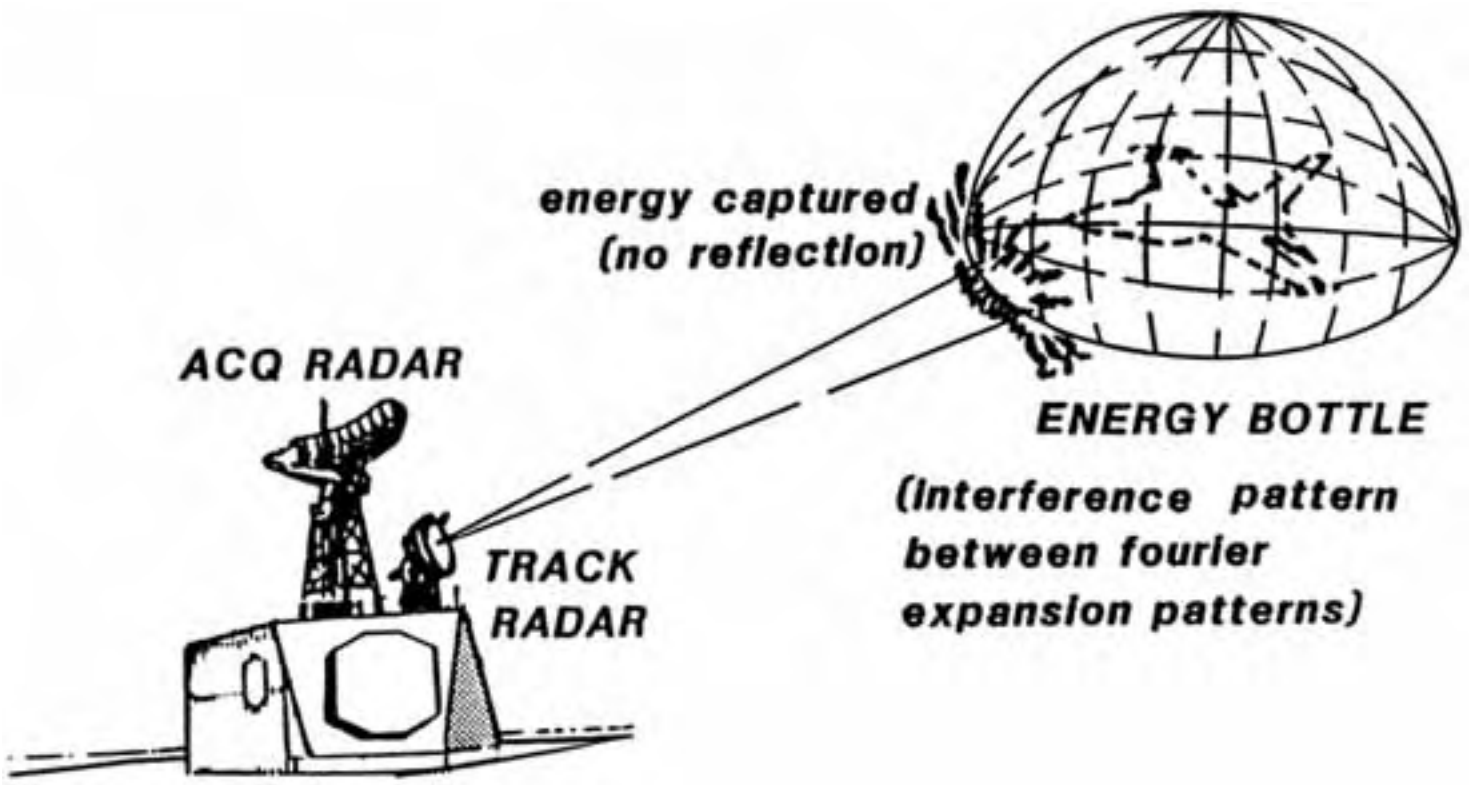

On this slide we show another effect which can be obtained. We can make an airplane invisible to ordinary radar.

Imagine now the same "jammer" type aircraft with three channels, one for use in scalar interferometry and one as an ordinary channel.

This time, a Fourier interference pattern is established around the aircraft, so this establishes an "energy bottle" around the plane. We specifically arrange this bottle in the frequency band of the hostile radar we wish to avoid. For multiple bands, we establish multiple bottles -- this just requires more

frequencies or more translator/transmitters.

The beam from the ground radar now strikes the energy bottle, and its energy enters and is trapped in the bottle grids. Since the bottle is leaky, the incident energy gradually disperses and "leaks" out all around, with very little emerging energy.

The ground radar receives no return pulse or reflection.

Therefore it sees no target.

The same interferometer system is usable both in this defensive screen fashion and in the attack fashion previously discussed.

Use of this system has been demonstrated internationally.

An energy bottle has been created in a North American laboratory as well.

Next Slide

The Tom Bearden Website

SLIDE 57.

NETWORK OF VIRTUAL TRANSMITTERS

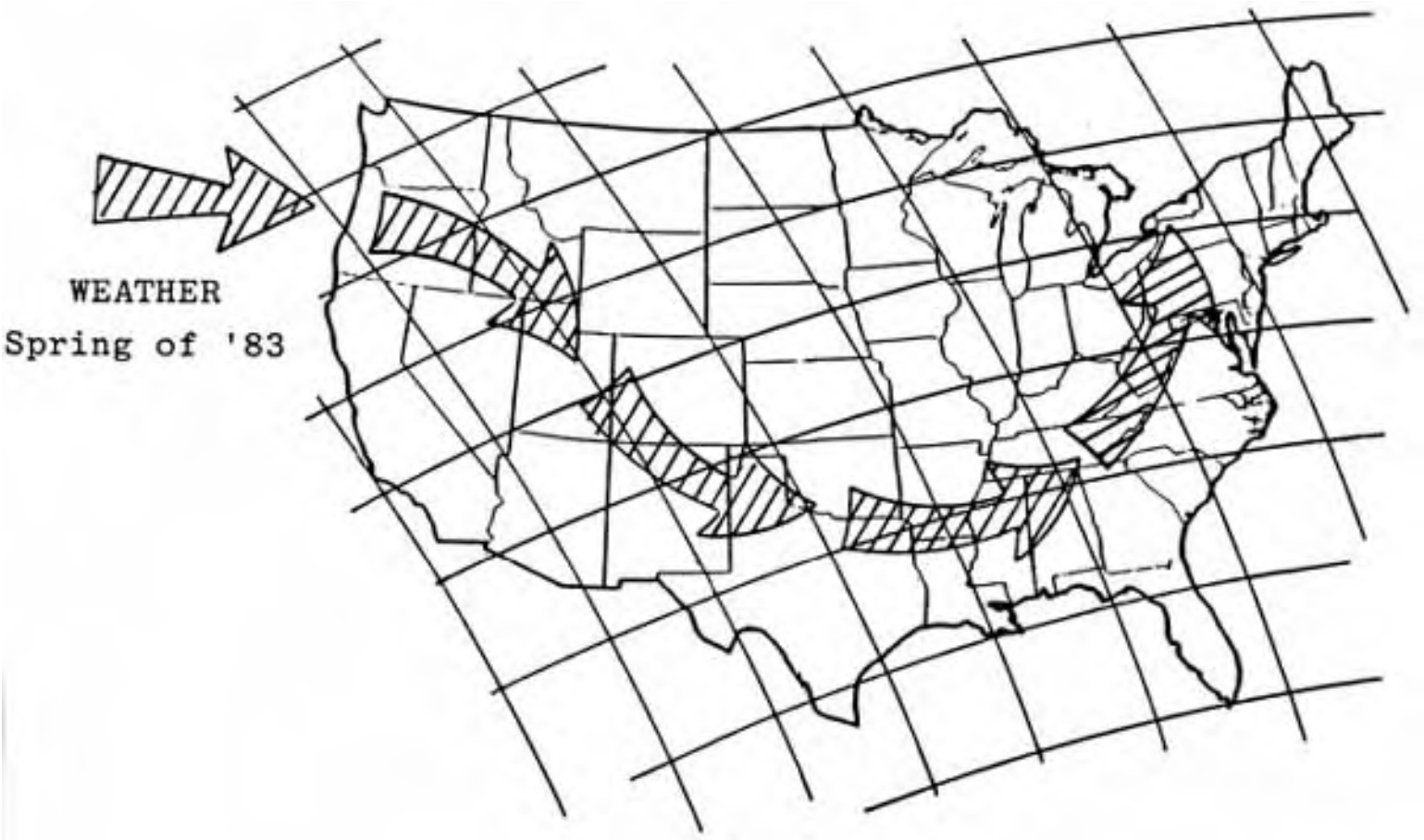

As is well-known, for years the Soviets have blanketed the world with large, powerful transmitter signals in the communications band, referred to as the "Woodpecker" signals because of the staccato noise the chirped signals make to the ear. The carriers have been modulated with known harmful bioactive ELF frequencies. At least some effects have been noted on humans from these signals, and other human effects are suspected but not proven.

In addition, evidence exists that such transmitters, utilized in the scalar transmission mode, may have been used to cause earthquakes and to control the weather. High altitude bursts off the coast of the Eastern United States and Canada, over

Timmons, Ontario, Canada, and off the coast from St. Petersburg, Florida have occurred also.

Mysterious "blackouts" of U. S .satellites -- and British satellites -- have occurred. These would be difficult to explain as the result of illumination from a ground laser, but easily explained as the result of illumination from a ground-based scalar beam or scalar interferometer.

Strange patterns of micro sky quakes and micro earthquakes occurred at various locations throughout the U.S. just before and shortly after the death of Leonid Brezhnev. These strongly appear to be connected with the adjustment of a scalar interference pattern -- a gigantic "energy bottle" across North America, as shown on this slide.

Shortly after this suspected adjustment and alignment, the underground net in the U.S. detected the emergence of numerous ELF-modulated signal carriers throughout the U.S., generally utilizing carriers in the vicinity of 40 MHz. Locations of the apparent transmitters were such places as Atlanta, North Georgia, St. Petersburg, Florida; Mississippi; Alabama; in the vicinity of Washington, D.C.; near Boston; around the Great Lakes; Michigan; in the Pacific Northwest (Washington and Oregon); and in both northern and southern California.

Researchers knowledgeable of the Soviet woodpecker signals and ELF modulations detected and reported these signals.

Physical effects were reported and correlated to the signals, including wakefulness at night, restlessness, fatigue, headaches, nausea, ringing in the ears, anxiety, disturbed dreams, etc.

What appears to have occurred is the adjustment and
alignment of a vast scalar interference pattern across the U.S. Recall that energy emerges in each grid, by phase interference between the composite substructure waves of the scalar beams.

Thus the Woodpecker "over-the-horizon radars," as accepted
by Western intelligence analysts, may have acquired a diabolical new strategic capability.

It is as if the Soviets had been permitted to build a vast network of transmitters directly on U.S. soil, for hostile employment against U.S. citizens.

Shortly after the net was aligned, a curious pattern of weather assaults on the U.S. began.

Storms assaulted California unceasingly. Then they roared across the Rockies, dipping sharply down to hit the Texas Panhandle, and bending northeast again to assault the South and the East.

The mighty jetstreams themselves were diverted and "kinked" into this looped, distorted pattern.

And the storms and floods assaulted the U.S. one after the other in this highly unusual fashion.

I maintain that the virtual transmitter net, just established by the Soviets and adjusted in on the U.S., was tested in the weather control mode. If so, it proved highly effective. Imagine what would have happened to the U.S. if it had been unleashed full force, and not just "gently tested."

And imagine what happens when disease, death, and nervous system disturbances are modulated upon these blanketing signals. The "transmitters" for the patterns are in each grid, all across the U.S.! And there are no physical transmitters there to destroy.

A counter is needed quickly. A simple one would consist of recording the signals in each grid zone, analyzing the substructure, reversing the signals and their structured patterns 180 degrees, and feeding the "cancellation signals" out in each area.

A great strategic Russian weapon of devastating power and potential is now operating directly on U.S. soil. The need for a crash countermeasures program is urgent.

In 1975 Brezhnev had introduced to the SALT talks the strange proposal that we should also consider outlawing the development of new weapons more frightful than the mind of man had ever imagined. We didn't know what the Russians were talking about. When we asked them later what weapons they meant, they referred vaguely to weapons of an electromagnetic nature.

The presentation I have just given you is part of what Brezhnev meant.

Next Slide

The Tom Bearden Website

SLIDE 58.

CONCLUSION

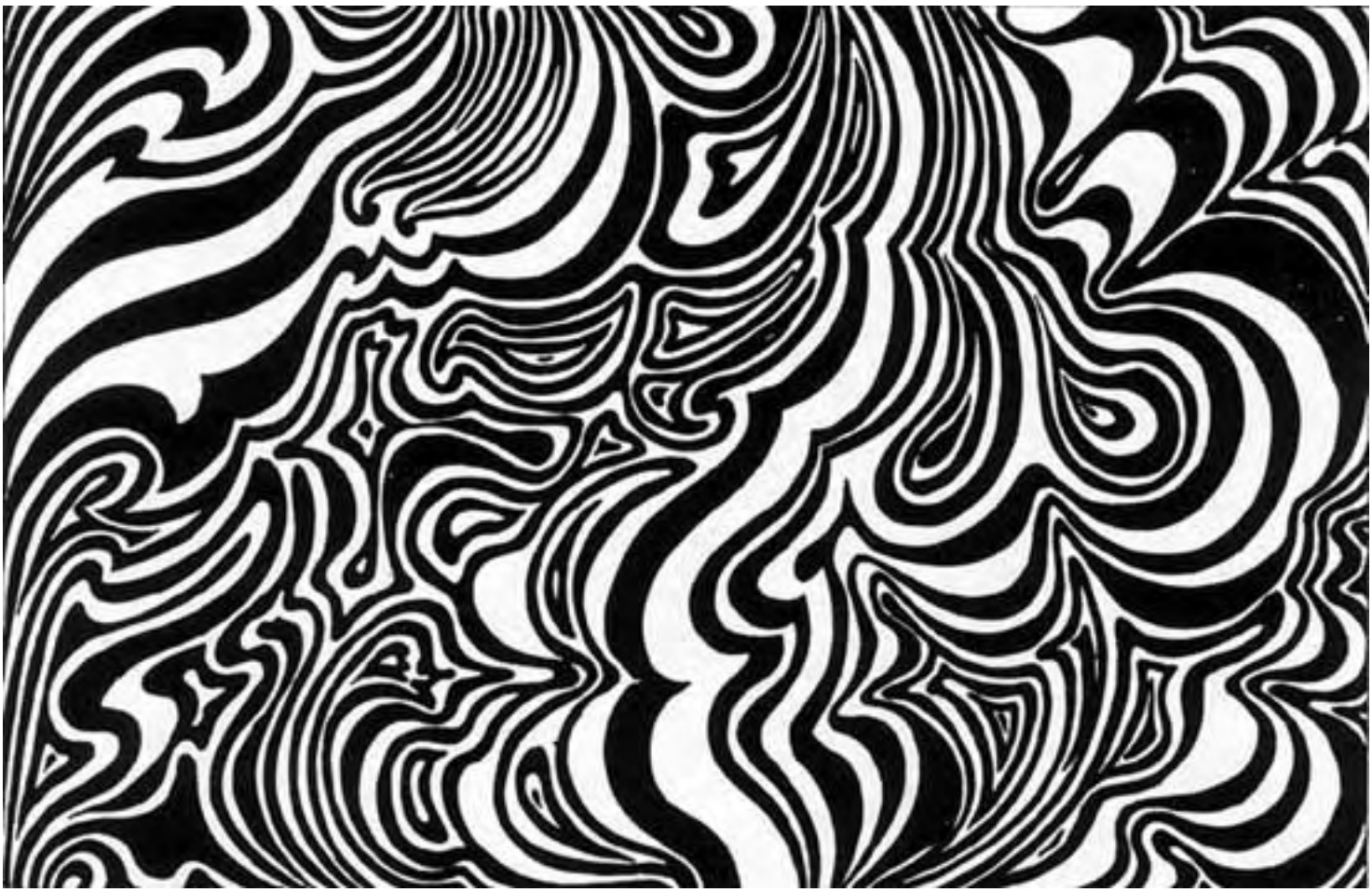

In conclusion, today I have released a number of powerful mechanisms that result from the new technological concepts. Many of these were originally discovered -- at least in rudimentary form -- by Nikola Tesla. In the West, the suppression of Tesla led to the suppression of these effects. And our knowledge of them went to the grave with Tesla.

After World War II, the Soviet Union mounted a massive campaign to obtain all the scientific literature of the West and thoroughly digest it. Great centers were set up, and thousands

of PhD's devoted to this purpose. Gradually they synthesized this technology from the errors in EM foundations they uncovered, and from obscure, ignored papers published in the orthodox Western scientific literature.

They rediscovered the technology of Tesla, Moray, and Rogers. And they have highly weaponized the effects, and adjusted and aligned the weapons upon us.

Now the radical movements are onto part of this technology. As late as about six months ago, one such group discovered how to build a translator and a scalar beam projector. Excitedly, they planned to build them the size of a large pistol, powered by a portable battery pack, and sell them to street criminals to kill or stop the police. They planned to get rich by this illicit means. At that time, a personal friend of mine, who moves in underground circles, was attempting to purchase one of the prototypes for my analysis. Fortunately, the inventor stepped into the beam of one of his devices and was almost killed. This frightened the group, and at least for now they have desisted. But be forewarned: this technology is coming down the pipe, and the police establishments in the West are in for the shock of their lives if the scientific community does not wake up and prepare defenses.

Again I urge my fellow colleagues to experiment vigorously with these new concepts, but build equipment for the benefit of man. Insect control, disease elimination and control -- both are noble purposes. Defense against the hostile use of such devices is also a fitting purpose.

We are in the final days, and the final technology is upon us. It is a stupendous tool for either good or bad, and assuredly it will be utilized for both means. I call attention once again to the fact that my ultimate purpose is to use this technology benevolently to achieve mind linkage, and elevate man from his present brutish state to the lofty state that is his destiny and his true God-nature.

For better or worse, Tesla technology is once again loose in the world, this time for good, and on a massive scale.

Let us prepare ourselves for a wild canoe ride, for the real white water lies just ahead.

Thank you for your attention, and good evening.

The Tom Bearden Website

Mind Control and EM Wave Polarization Transductions - Part I, II & III

Reprinted from "Explore" magazine, 1999

Part I

- Page 1
- Page 2
- Page 3
- Page 4
- Page 5
- Page 6
- Page 7
- Page 8
- Page 9
- Page 10

Part II

- Page 1
- Page 2
- Page 3
- Page 4
- Page 5
- Page 6
- Page 7
- Page 8

Part III

- Page 1
- Page 2
- Page 3
- Page 4
- Page 5
- Page 6
- Page 7
- Page 8
- Page 9

- The U.S. approach to mind control

- "Voices in my head"
  Flanagan's neurophone - used to give instructions to diplomats during negotiations, etc.

Mind Control and EM Wave Polarization Transductions, Part 1

©Copyright 1999 by T.E. Bearden, USA

Special Note

This article refers to experimental research techniques which can be detrimental or lethal in the hands of any but highly skilled, qualified experimental scientists proceeding under proper laboratory safety procedures. The purpose of this article is strictly for information to properly qualified and authorized scientists in certified laboratories. We do not propose or condone any use of these procedures for nonapproved practice of medicine without a license. Neither the publisher nor the author are responsible for accidents or outcomes in the use of these experimental pro-cedures and techniques. Any researcher who performs these procedures and experiments is acting on his or her own volition, and is solely responsible for insuring safety, qualifications, and legality of the acts and their results. We neither suggest nor condone unauthorized experimentation on human subjects. Such is a criminal violation of the constitutional rights of the subject under Federal and State laws, and is both illegal and immoral.

Abstract

For some time we have been repeatedly queried about the technical mechanisms and unusual electrodynamics of advanced mind control research, both in the West and abroad. Calling full attention to the special note above, in this paper we present a high-level over-view of the novel electromagnetic nature of mind operations, mind and body coupling, and *intent*•the induction of physical 3-space EM energy changes into the brain and nervous system, and into every cell of the body, from the mind's time-like coherent operations. We summarize the time-polarized electrodynamics used to engineer and affect mind operations and the mind-body coupling loop. Transduction mechanisms whereby differing EM wave polarizations can be transformed one-into-the-other are presented. We give two specific examples of lethal foreign military tests in 1997 of advanced mind control weapons against two military pilots over the central U.S. Some dangers and potential benefits of the emerging mind control technology are pointed out

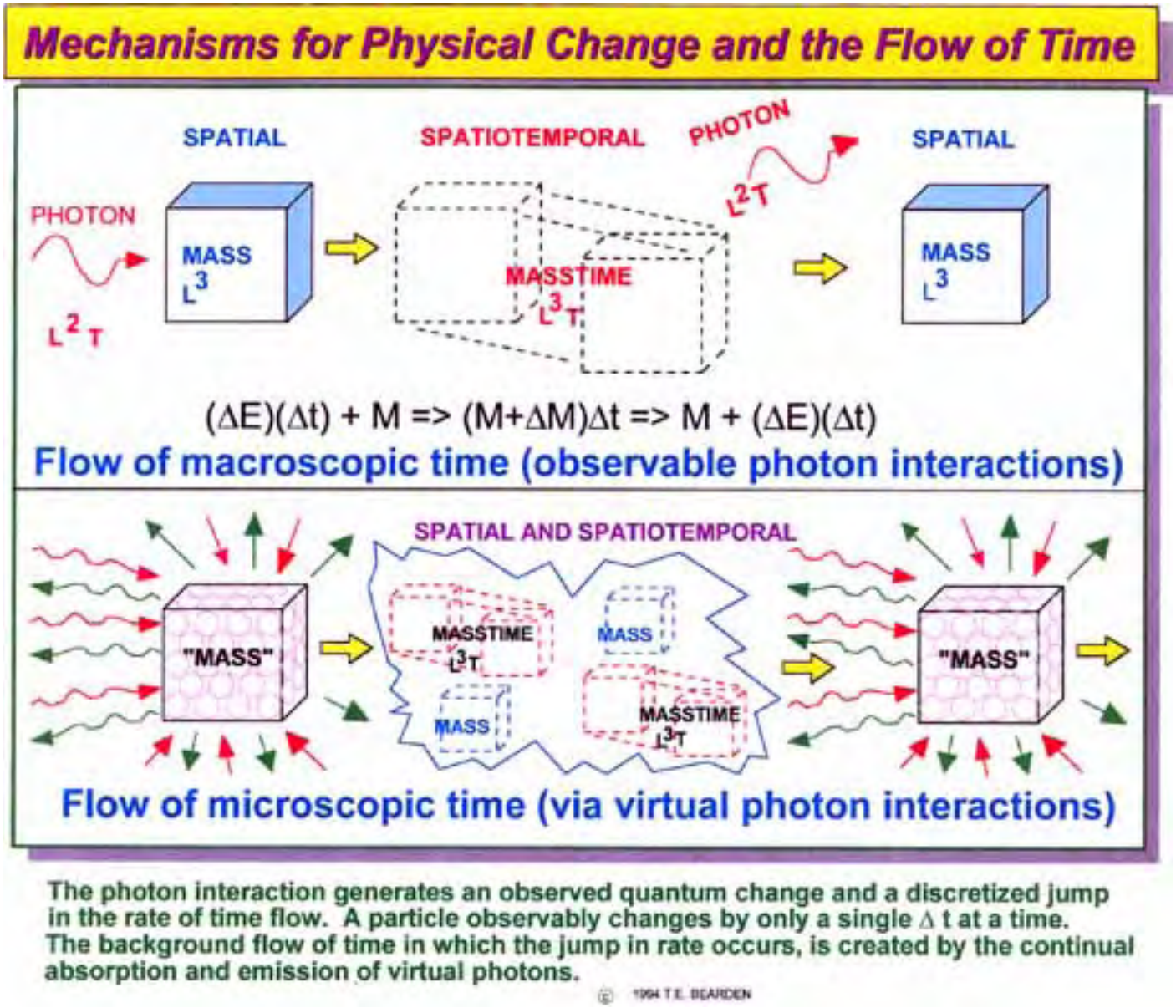

Figure 1. Mechanism that generates a mass's flow through time.

EXPLORE! VOLUME 9, NUMBER 2, 1999

Introduction and Background

In quantum field theory, there are four polarizations of photons.[1] Using 4-space and the z-direction as the direction of propagation, we have x- and y- polarizations where the 3-spatial energy of the photon is oscillating laterally, in the x- or y- direction. These are *transverse polarized* photons, as is any combination of the two. The third polarization is along the z-direction, which is a longitudinal polarization. In other words, the 3-spatial energy of the longitudinal photon cannot oscillate in the x- or y- direction, and so it is oscillating to-and-fro along the line of motion, z-. The fourth polarization occurs when the energy is frozen in all three spatial dimensions x-, y-, and z- and it cannot oscillate in any of those directions. In that case, the photon oscillates its energy in the t- direction, providing the t-polarized photon. We will later discuss how time is actually highly condensed energy.

In Minkowski 4-space, body operations are space-like, and are so treated in conventional materialistic physics. Mind and mind-operations are time-like, not space-like, even though they are totally electromagnetic in nature.[2]

As is well-known, all observation in physics is considered 3-spatial..[3] Mass is a 3-spatial concept, and we detect changes to mass (as, e.g., in the shift of electrons in the circuits of electrical instruments). So one may model the common physical observation mechanism as a *time-differentiating process* which *a priori* discards time-change and retains 3-spatial energy change.[4] That is, Minkowski reality is modeled in the fundamental units of L^3t. Physical observation (via the transverse photon interaction) is the process given by applying the operator $\partial/\partial t$ to L^3t, yielding an L^3 output. Hence mind and mind operations are excluded by the usual physics instruments and observation, which simply exclude the time domain in their outputs and do not "measure" it.

For this reason, physicists have erroneously considered mind to be "metaphysical" and nonreal. Indeed, most physicists to one extent or the other are materialists, and consider the "mind" to be nothing but the operations ongoing in a "meat computer." Nonetheless, in the time-domain the time is absolutely real, and it is completely electrodynamic in nature. There is no metaphysics involved, and the temporal domain—along with mind and mind operations—is simply an erroneously neglected area of physics. In present physics, the notion of mind is comfortably disposed of by imposing the use of the "observer" concept, with out ever specifying that the observer has a consciousness and a mind. Indeed, "observation" is only about what that "observer" perceives. Obviously, one has a dramatically crippled physics if one eliminates that nonobservable called "time." Similarly, one also has a dramatically crippled physics when one eliminates the mechanisms and physics ongoing in those time-like and dynamic "things" such as mind, that occupy time and function in it.

From this viewpoint, Western physics adheres to its 3-spatial measurement foundation only by ignoring the transduction of time-polarized EM changes into detectable longitudinal and transverse EM wave changes. In this aspect, present Western physics is severely self-crippled.

Time is totally electromagnetic and energetic in nature. The flow of time is not a separate external river on which a mass floats along like a boat drifting down the current of a great flowing river. Instead, the flow of time is generated directly on every mass by its total set of photon interactions, both virtual and ob servable. We have previously presented the exact mechanism for the flow of time. *[Figure 1]*

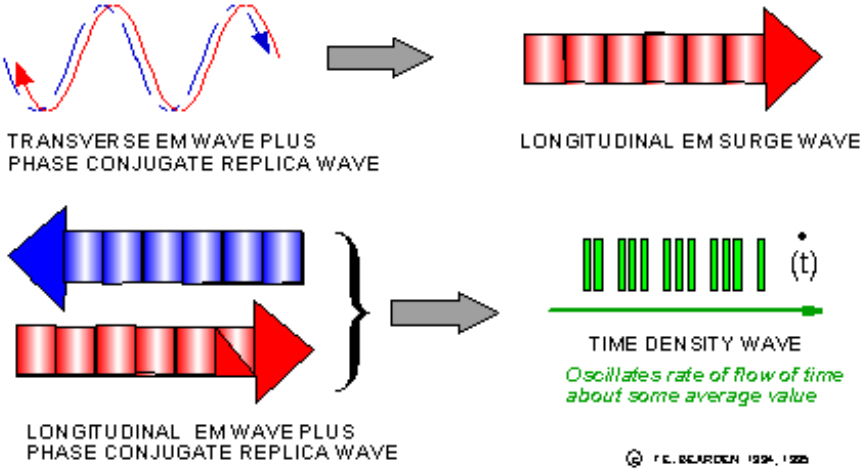

Figure 2. Transduction of EM wave type by successive phase conjugate pairing.

Further, a photon is comprised of angular momentum, therefore of (energy)x(time). It transports both energy and time, not just energy alone. When absorbed by a mass, not only does it "energy-excitation" charge the mass, but also it "time-excitation" charges it, converting the former "mass" to "mass time". Rigorously it is *masstime* that emits a photon, not *mass*. So a mass moves through time in little spurts, by the continual macroscopic addition and subtraction of little Dt components. Further, in being driven through time, mass is continually altered to masstime (a quite different critter from mass), to mass, to masstime, to mass, etc.

In any masstime state, a myriad of tiny virtual photon interactions made of very tiny (DE)(Dt)'s interact with that same mass during that particular larger Dt of the masstime state (m+Dm)(Dt). Hence mass in its alternate masstime state has that state internally structured by its surrounding environment's interactions with it. The masstime state is internally structured energetically in its (DE) component, and also internally structured temporally in its (Dt) component.

A standard charged fundamental particle such as an electron, e.g., is not necessarily identical with another, when the internal structuring of its masstime state is considered. Further, by two papers by Whittaker,[5] interferometry of masstime states with either energy reactions or temporal reactions can yield observable effects and changes due to these neglected "hidden variables" in the electron's masstime alternative states. To engineer the mind and its operations directly, one must perform electrodynamic engineering in the *time* domain, not in the 3-space EM energy density domain. The direct engineering of time-like mind and mind operations—in all levels and all aspects—requires the use of *time-polarized photons and time-polarized EM waves*. This is the rarest form of electrodynamics, almost untouched by Western physicists.

One can either painfully produce such time-polarized photons and EM waves and directly irradiate a target mass with specific assemblies of them, or one can force the mass itself to iteratively transduce ordinary transverse EM waves first into longitudinally-polarized EM waves and then into time-polarized EM waves. Both will be discussed briefly.

In the West, it appears that the present author's discovery of mechanisms for producing time-polarized (scalar) EM waves [see *Figure 2*] and for transducing between wave polarizations has no precedent. [See *Figure 3*]. While scalar (time-polarized) photons are known in the literature,[1] the creation and use of time-polarized EM waves does not seem to appear in the Western physics literature.[6]

Wave transduction or *polarization transductions* are terms used by the author for the process of transforming an EM wave's particular polarization into another polarization type. Such transduction to other than transverse polarization forms is little known in the West. It appears essentially haphazardly in some experiments, usually without any recognition by the experimenters themselves. Significant transduction in experiments will also produce "strange" and unexplained anomalies in the instruments being used for experimental measurements.[7]

So most probably Western mind control researchers have not recognized the methodology and mechanisms[8] for transducing one type of EM wave polarization directly into another.[9] They continue to seek the "mind" in 3-space and hence in the brain, rather than in the time domain. On the other hand, it appears

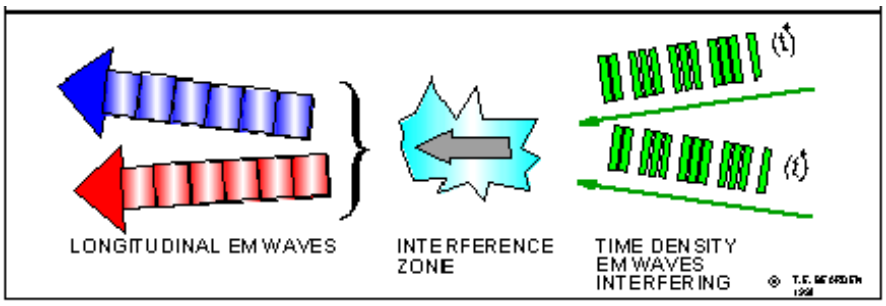

Figure 3. Interference processes for transducing higher EM wave polarizations into lower polarization states.

that the Russian KGB energetics[10] weapons scientists—particularly those in psychoenergetics[11]—have known and used methods of transducing one wave polarization into another, for at least two decades. It follows that those same scientists have very probably developed mind engineering and mind control via novel time-polarized EM wave means and a dramatically extended electrodynamics of the time-like mind operations.

In the present paper we briefly develop the wave transductions and the basis for mind engineering, including the specialized use of ordinary transverse wave (TW) EM spectra to force internal EM wave transductions and time-domain operations inside irradiated bodies, cells, and tissues. Through the mind-body coupling mechanism, these transductions of transverse EM waves can operate upon the mind and its deepest operations as well as upon the body, every cell, and every part of every cell.

Russian Mind Control Uses Higher EM Wave Polarizations

It is apparent that the KGB psychoenergetics weapons scientists know and use the full extended EM wave polarization range. As a postulation, one would expect our own weapons scientists to know and utilize the orthodox transverse wave (TW) EM for similar research and experimentation. However, in the West scientists are just beginning to realize the importance of a very general (and weaker) type of longitudinal EM wave (LW) polarization, as evidenced by the appearance of dozens of papers on "undistorted progressive waves" (UPWs, which are essentially imperfect LW s with TW residues remaining). The Los Alamos National Laboratory web site has a number of such papers—particularly by Rodrigues[12] and Lu—available for free downloading. UPWs have very interesting characteristics. If they were perfect longitudinal EM waves, they would have infinite energy and infinite speed. Since only imperfect UPWs can be physically made, their speed can vary from slower than the speed of light to faster than the speed of light. Their energy can also vary over a great range.

Another characteristic of UPWs that are reasonably good longitudinal EM waves, is that they pass readily through a large depth of water and mass, including through the ocean and the earth with only small interactions and losses. Yet by interfering two such beams of "high quality" UPWs at a great distance, then in the interference zone ordinary EM energy will rise directly out of local spacetime potential, as essentially shown by Whittaker[13] nearly a century ago. Russian weapon research facilities have weaponized these effects[14] for nearly 50 years, under rigid KGB control and operation. Nonetheless, even if using only ordinary TW waves, Western mind control researchers may get some fairly good results, brute-force-like, by using gross correlates between just the input irradiating TWs and the exhibited behavioral responses of the individual. The net input-output correlations can be determined, even though not taking into account the actual wave polarization transduction mechanisms ongoing inside the irradiated dielectric (or brain, or mind, etc.). However, Western researchers appear to have no knowledge of the exact mechanisms by means of which coherent time-like mind operations of a biological organism couple to the organism's 3-spatial body to provide the mental control loop. They also appear unaware of how the coherent 3-spatial behavior responses of the body couple back to the time-like mind to provide it with a sensory feedback of the body's responses.

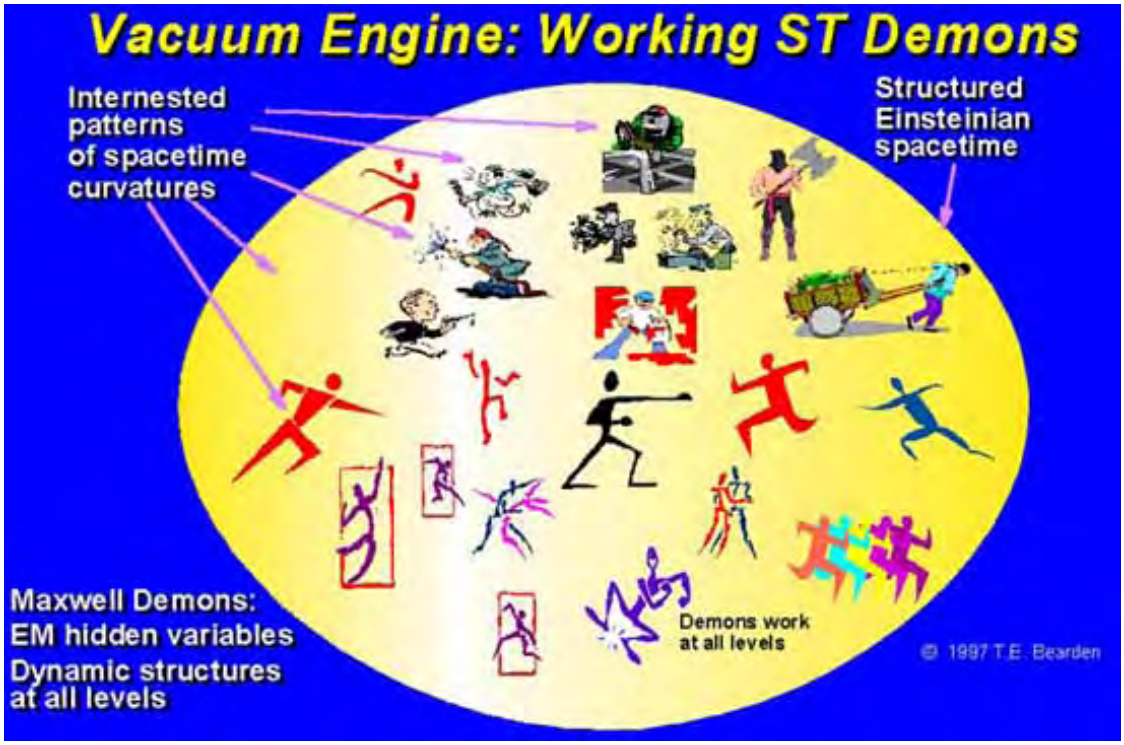

Figure 4. A spacetime curvature engine has myriads of small ST curvature components which act upon mass at all levels.

EXPLORE! VOLUME 9, NUMBER 2, 1999

General Relativity Aspects

Both these coupling mechanisms can be taken directly from general relativity, if one puts one's mind to it. However, unless the wave polarization transformations are known, it is difficult or impossible to apply the ordinary GR *directly*, since relativists usually concentrate upon spacetime curvature by altering 3-space energy density rather than by altering time-polarized "time-energy" density.

In applied general relativity, spacetime itself is an active medium. One speaks of a change in spacetime as a "spacetime curvature". Any curvature of spacetime in a local region directly performs continuous work upon any mass embedded in that region. Vice versa, any mass (or other concentration of energy) in a local spacetime continuously acts upon that spacetime to "curve" it.

So if one wishes to perform actions upon mass in a distant region, one may generate local curvatures of spacetime in that region, and these curvature "engines" will directly act upon the mass at all levels. *[Figure 4]* This is very different from energy propagation through space from one point to another. Now the "ordinary EM energy and actions" arise from every spatiotemporal point within the mass, at every level, and move upwards (from inside to outside). So we speak of specific forms of "templates" of nested spacetime curvatures formed and utilized to engineer mass "from inside out" as *spacetime curvature engines or vacuum engines*.

Use of vacuum (spacetime curvature) engineering[15] is a far more powerful form of engineering than is provided by energy propagation through space. As an example, it is easy to alter the quarks in a nucleon, using spacetime curvature engines and time-charging decay. Indeed, we have developed the mechanisms for cold fusion and the electronuclear interaction (formation of new nuclides) at feeble energy. An Invention Disclosure[16] on this work has been filed with the U.S. Patent Office, and formal patent applications are in preparation. Some information on these mechanisms and principles has been released[17].

Time as Dense EM Energy and a Strong Spacetime Curvature Agent

The advantage of using the time-polarized "time-energy" for spacetime curvature is that time is ordinary energy compressed by a factor of at least c^2—which, in the MKS system of units, is some $9¥10^{16}$. Thus use of time-polarized EM photons and waves as ST curvature agents gives an amplification of $9¥10^{16}$ over the use of transverse-polarized EM waves for that purpose. In turn, the use of the strong EM force in ordinary TW waves as an agent of ST curvature is already a nominal 10^{40} times as strong as is the weak G force used as the agent of ST curvature.

The bottom line is this: For spacetime curvature effects, the use of the t-polarized domain provides amplification of some $9¥10^{56}$ greater than the weak G-force ST curvature agent usually considered in general relativity[18].

Western Science Remains Largely Materialistic

Ironically, most Western scientists are materialists and consider "mind" as a mystical and nonscientific concept. They tend to consider mind operations and functions either to be simply "meat computer" operations and functions, or at best to be very weak ordinary transverse-wave EM operations and functions in the brain and nervous system.[8] This serious self-limitation exists because in the body we *measure* only weak TW EM operations and functions correlated to biological behavior and brain operations. We simply do not know how to measure "mind operations" directly.

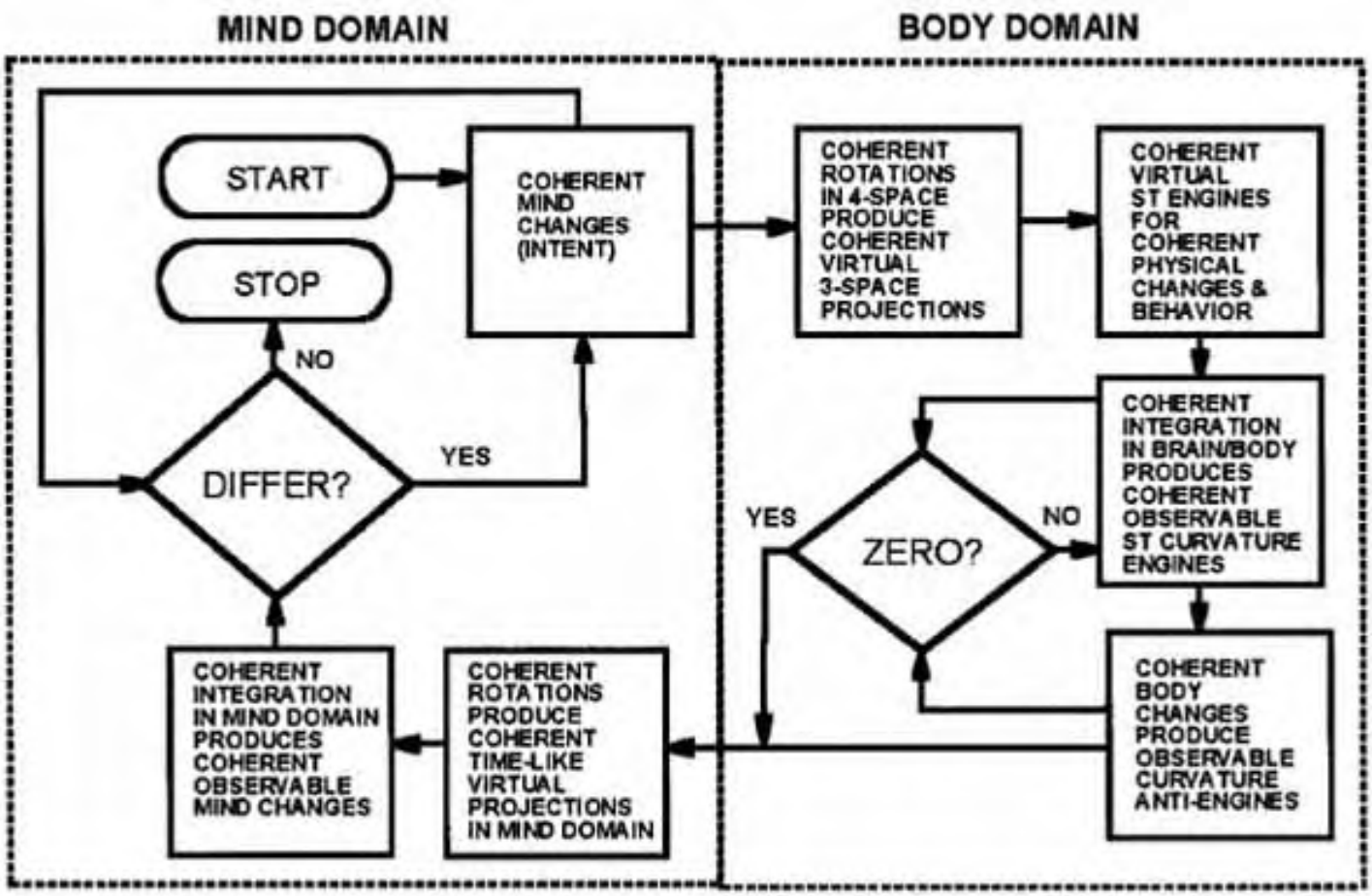

Figure 5. Mind-to body coupling and body-to-mind coupling.

EXPLORE! VOLUME , NUMBER 2, 1999

With no mind measurements possible and no instruments, it is understandable that Western science considers only the physical side of the mind-matter interface.

Presently our scientists do not measure the longitudinally-polarized EM wave operations and functions in the body and around it in nature. Few of them are aware that a maelstrom of such LW functions exist in the body and in all of nature in general. Presently only highly theoretical quantum field theorists seem to even be aware of the existence of scalar (t-polarized) photons, and even they are unaware of t-polarized EM waves. Certainly our scientists do not measure t-polarized EM waves in and around the body and in nature, nor do they make them in the laboratory. Apparently they have not studied such waves and their interactions with matter—living and inert—at all.

But it's even worse. In ignoring the time component transported by photons and EM waves, science has also erroneously omitted half of the excitation charging and excitation decay processes whenever a mass interacts with photons and EM waves. More on that later.

Brute Forcing Time Functions versus Fine Control Methods

Ironically, Western mind control researchers using transverse EM waves for mind control research, are using a brute force method of evoking and using vacuum engines (spacetime curvature engines) and a special form of general relativity, although they do not appear to realize it.

While KGB scientists also use TW EM "brute force" TW waves when necessary, they do "imprint" or "activate" those waves with the desired internal LW and time-polarized EM wave and photon structures required to directly perform the mind engineering desired. They also do not hesitate to use LWs and t-polarized waves overtly. So in blunt terms, Western compared to Russian mind control research is probably like comparing an automobile body shop with a fine surgical ward. Having long ago worked out all those "exact correlates" to the internal "information content of the field" is where the KGB scientists are at least 20 years ahead of the West.

The reason one can get mind and behavior results with the TW electromagnetics, while bypassing the real mechanism which uses t-polarized waves and photons, is due to (1) the very peculiar nature of the EM emission from a dielectric, and (2) what can be done by re-radiating that dielectric with its emitted spectrum, deliberately and very carefully altered in selected parts. We will return to that important feature later.

Polarization and Observability

As we stated, there are four photon polarizations and therefore there must be correspondingly four EM wave polarizations[1] The first three polarizations are the x-, y-, and z- spatial polarizations. The x- and y- polarizations are transverse polarizations and the z-polarization is a longitudinal polarization along the direction of propagation (along the z-axis, by standard notation). Simply put, we may visualize the transverse polarizations as rather like the wiggling of a fish's tail from side to side as the fish moves forward, or a whale's flukes up and down as the whale moves forward, or some combination thereof. We may visualize the longitudinal polarization as a sort of "repetitive accordion effect" along the line of motion of the wave. Usually the z- polarization is neglected in EM wave theory, although in recent years physicists have "rediscovered" longitudinal EM waves and are now intensely researching the use and characteristics of such waves.[12]

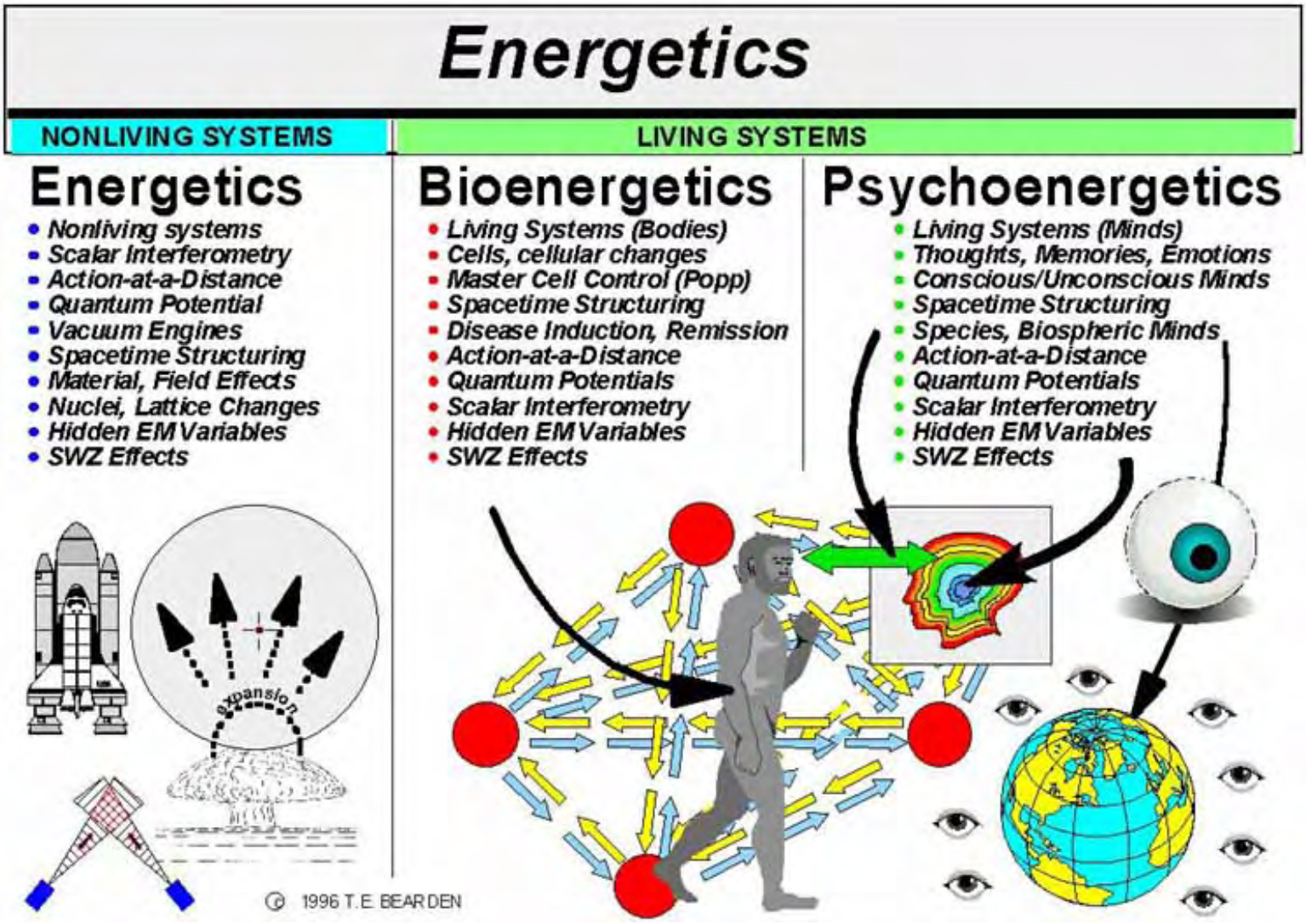

Figure 6. The three divisions of Soviet energetics and their characteristics.

Unfortunately, in quantum field theory there has been a tendency to regard the t-polarized or "scalar" photon—where the local rate of time is oscillated—as unobservable. Oscillation of the local rate of time produces powerful oscillations of local space-time curvatures, due to the extreme energy density of time. Individually, the t-polarized photon tends to be unobservable. However, a *coherent sequential group* of such t-polarized photons, each individually in the virtual state with respect to the external observer, may simply integrate in its interaction with mass over a short time period into observable change because of the coherent integration of virtual spacetime curvatures into a larger, observable spacetime curvature.

Rotations and Projections in 4-Space

Relativistically, any velocity change in 4-space is a rotation. Any such rotation in the time-domain also creates a tiny projection component into 3-space. Any such rotation in the 3-spatial domain also creates a tiny projection component into the time domain.

Hence a sufficient series of coherent time-domain (mental) changes produces a coherent series of virtual changes in 3-space (the body), thereby coherently integrating into an observable energy change in the body. A sufficient series of coherent 3-spatial energy changes produces a coherent series of virtual changes in the time domain which coherent integrate into an observable time-domain change.

Solution to the Age-Old Philosophical Problem of Intent

This is in fact the solution to the age-old problem of *intent*, or how the nonmaterial (i.e., non-3-spatial and non-observable) mind induces a 3-spatial, observable energy change upon the 3-spatial body. It is also the solution to the problem of *awareness*; i.e., how the mind is aware of itself[19] and of the responses of the body. Together the two form a closed loop coupling of the mind and body. The time delay in the loop together with memory recall for comparison, creates the sense of "persistence" of self in time. This also creates the sense of being a "separate, closed being" (i.e., of separate persistence in time—in the living entity). The sense of "separation of self from an external world" is created by comparing those body-to-mind sensory feedbacks which are not correlated to the mind's previous feed-forward intent.

Time As Energy and Why It Is Very Dense Energy

In addition to the three spatial polarizations of photons and EM waves, there is a very, very useful t-polarization along the time axis. In this polarization, the 3-spatial energy is not oscillating at all. Instead, the time or time-energy is oscillating. Time can be taken to be energy compressed by at least c^2, so it has at least the same energy density as mass. In other words, one second is 9×10^{16} joules of time-energy (energy compressed into time). The t-polarized photon or EM wave is called the scalar photon or scalar EM wave, respectively.

To demonstrate why time can be regarded as energy, we need only point out that the choice of fundamental units in any physics model is totally arbitrary. We usually choose these units to ease the mathematical manipulation, ease our understanding, and simplify the ability to visualize or "grasp" the physics. However, if one wishes, one can build all of physics from a single fundamental unit—e.g., energy. In that case, one readily sees that time is a function of energy and only energy. Hence it is perfectly proper to regard time as energy, and to seek out what form the function takes in our normal system of units (say, the MKS system).

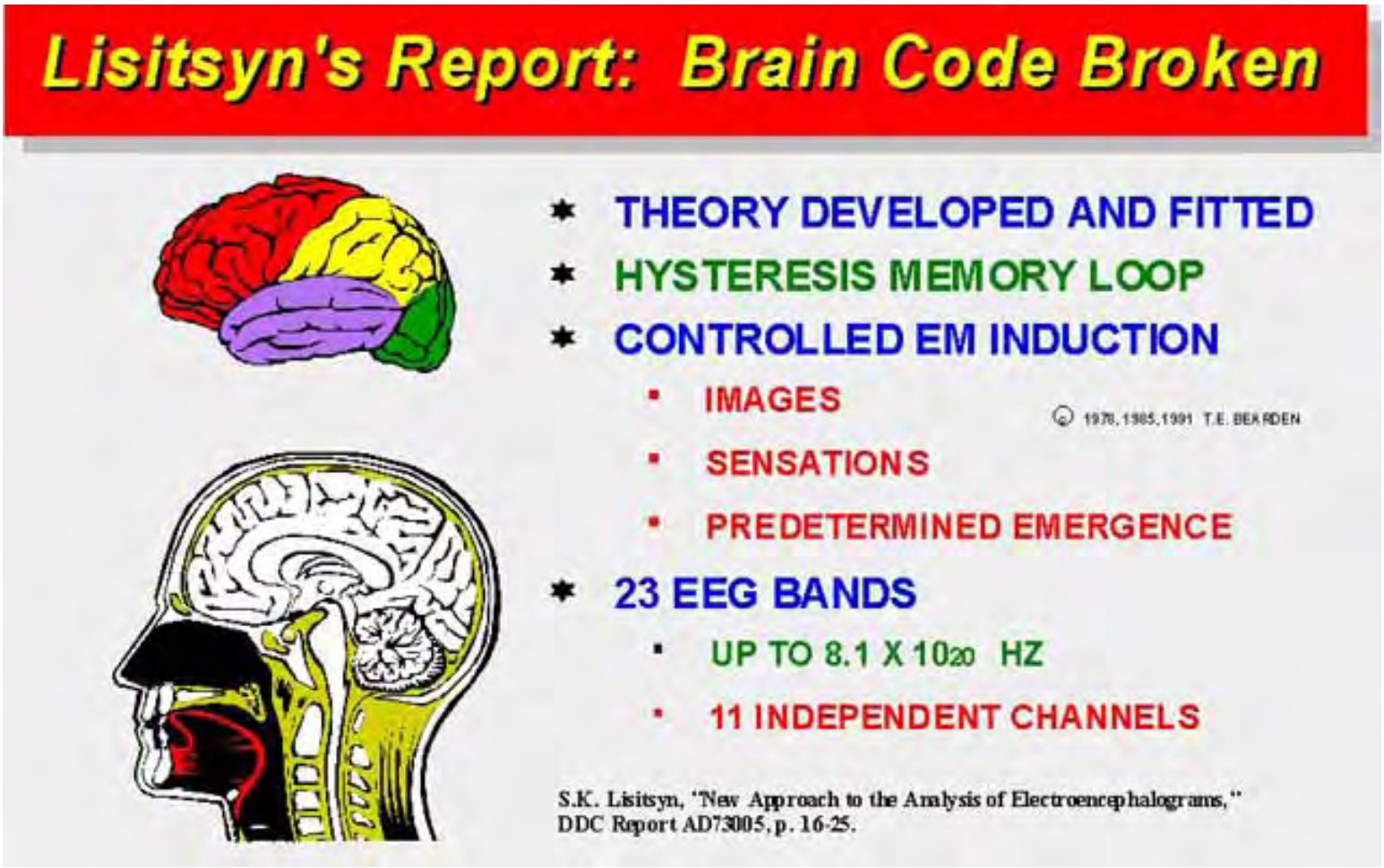

Figure 7. In the 1960s, Lisitsyn revealed Russian scientists had deciphered the human brain code.

EXPLORE! VOLUME 9, NUMBER 2, 1999

In that system, it appears that any change in time Δt can be taken as always a function of a corresponding change in energy ΔE, where $\Delta t \leq (\Delta E) \div c^2$ [1] from which it follows that $\Delta E \geq (\Delta t) \times c^2$ [2] For convenience, we take the special case where $\Delta t = (\Delta E) \div c^2$ [3] $\Delta E = (\Delta t) \times c^2$ [4].

Observation as Used in Physics Is Spatial

We note that all mind operations are time-like, i.e., they are comprised as scalar EM photon functions and scalar EM wave functions. Thus the mind is a very special kind of electromagnetic system, existing in the time domain, and thus "lost" by the stripping away of time in the ordinary observation process. Physical observation is essentially a time-differentiating mechanism applied to a 4-spatial change, or in terms of MKS fundamental units L and t, observation θ is $\theta = \partial/\partial t(L^3 t) = L^3$ [5].

Thus, as is well-known in quantum mechanics, physical observation is 3-spatial, and time is not a physical observable, even in theory. Since mind is time-like, it follows that mind is not a physical observable either, since discarding the time dimension also discards the mind. In short, one may also take physical operation as the mechanism that separates mind and body. To observe is to separate. We point out, however, that merely "separating and discarding" the time domain (as in physical observation of a single change) does not eliminate it, nor does it eliminate the single time-like mind change that may be involved in an intentional volition. The time domain certainly remains, even though only the 3-spatial intersection of the 4-spatial Minkowski change is given by physical mechanism and the resulting "outputs". So a series of coherently integrated "mental intent" changes introduced into the human body's overall servo-mechanism provides the continuing input. From there, ordinary physics will generate the resulting actions induced in the body by that servomechanism and its amplifying mechanisms.

Two Coupling Mechanisms Make a Closed Loop

This is the "mind-to-body" coupling mechanism. [See *Figure 5*] It is the mechanism whereby the mind is coupled to the body, and whereby mental intent is able to induce a series of physical inputs into the body servomechanism.

So the body's servomechanism then generates the responses of the body (including everything from chemistry to electrical changes to muscular movements, etc.). These responses are changes in 3-space.

The conscious mind is a *serial processor*, though extremely rapid. It produces the series of coherent intent inputs for volitional behavior.

The unconscious mind is a *massively parallel processor*.[20] It continually produces the vast series of coherent "unconscious intent inputs" for control of all the deeper processes in the body, beyond usual conscious awareness.

However, as the body moves or changes in 3-space, each resulting quantum change in body 3-space is also a slight rotation out of 3-space and toward the time axis. Hence it induces—in the "virtual state" in the time domain—a precisely correlated projection. The body's responses are in general coherent, so a coherent series of virtual state changes in the time-domain (in

observation. So we may say *that the time-change remains in the virtual state, with respect to attempted physical observation of a single Minkowski 4-space change.*

Rotation, Coherent Integration, and Intent

Previously we pointed out that any change in a 4-space entity may be regarded as a rotation away from the "trajectory" of the entity. Hence each and every t-polarized change creates a very small projection into 3-space by its rotation slightly away from the time axis. All mind changes in the time-domain actually produce virtual 3-spatial projections in 3-space (in the physical domain). We define "intent" as the continued production of successively coherent mental changes, producing coherent virtual changes in the 3-space body system, with coherent integration of those 3-space virtual changes into observable 3-space energy inputs into the 3-space body system. Successively coherent mind-changes will produce successively coherent 3-space virtual changes. In short, coherent mind-changes will produce coherent integration of those 3-space virtual projections into an observable 3-space change. This is the creation of an ordinary 3-spatial energy change induced upon the 3-space body. In short, this is the mechanism whereby time-like mental intent is able to produce a series of coherent observable quantum changes in the physical body (as in the brain and nervous system).

The Body as a Servomechanism

From the standpoint of control theory, we may consider the body system to be a complex servomechanism system comprised of many subordinate servo systems with feedback and feedforward the mind realm) are created successively. In short, again we have coherent integration, this time in the mind or time domain. This produces "observable" changes in the time-mind domain, which are coherent with the body's 3-spatial changes actually performed. Thus the mind receives feedback directly from the physical movements and changes of the body. This is the manner in which the body is coupled back to the mind.[21]

By comparing the "intent" behavioral move that was "fed forward" into the body, with the return "response" move analog that was "fed back" from the body to the mind, the mind is able to determine errors and differences, and originate additional correctional commands.

Thus the entire mind-body loop is a closed-circuit system of feedforward and feedback, together with corrections. It also has multiple levels of such, infolded in the larger volitional levels. See again *Figure 4*.

This solves the age-old problem of the mechanisms for the mind-body coupling, intent, volition, conscious and unconscious functioning, sense of the external world, sense of the internal world, sense of "being in" the external world, etc.[22]

All This Is Included in Russian Psychoenergetics

This is the highly summarized basis for *psychoenergetics*, the KGB's division of energetics that deals with the mind and body coupling and functions, and direct engineering of (1) the mind-body coupling and (2) the mind operations directly. [See *Figure 6*] The KGB intent, of course, has always been to exploit this science for the degradation, killing, and control of human beings, including all humanity.

The Russians know full well that, if you

looping.

Given the input from intent, ordinary servo theory will take it from there. Once a servo has an input, servomechanism theory describes the response of the

produce and utilize scalar EM photons and t-polarized EM waves, you can directly affect and engineer mind and mind operations at any and all levels. Western researchers, who know nothing of how to make

EXPLORE! VOLUME 9, NUMBER 2, 1999

time-polarized photons and time-polarized EM waves, do not yet know that. Consequently the Russians have developed a highly secret science of *directly* engineering the mind and its operations, including thought, images, perceptions, feelings, emotions, memory, and mind processing. Indeed, Lisitsyn[23] wrote quite specifically of this capability in the 1960s. [See *Figure 7*]

Western clandestine mind control researchers are apparently still slowly and painfully fitting TW EM irradiation correlates to induced or resulting mental and physical behavior responses. They seem unaware of the actual wave transductions occurring inside the body and mind, but are unwittingly inducing those transductions in hidden fashion anyway and in "brute-force input-response fitting" models.

These "fitted brute-force models" certainly can be very powerful, and certainly can produce the exact results shown in the experimental verifications of the fittings. However, they do not of themselves allow sophisticated design—for example—of the necessary time-polarized wave assemblies for engineering the entire human collective unconscious simultaneously, or for engineering the entire collective unconscious of all species on Earth (i.e., Gaia's collective unconscious), or even for precisely engineering the memory and knowledge base of an individual.

This fine research article will be continued in Part II with Russian Methodology, Waves and Wave Transduction, The Cellular Control

spacetime that is highly active. The mind is rooted in the time-domain and projects from that domain into 3-space. The body is rooted in the 3-space domain and projects into the time-domain. To "change" or "function" in one domain is automatically to function in the other. EM and gravitational phenomena are still modeled separately by human scientists, but not by nature.

3. In quantum mechanics, time is not an observable, but merely a parameter.

4. It is convenient to consider mass as a 3-spatial form of condensed energy.

5. E. T. Whittaker, "On the Partial Differential Equations of Mathematical Physics, " Mathematische Annalen, Vol. 57, 1903, p. 333-355;— "On an Expression of the Electromagnetic Field Due to Electrons by Means of Two Scalar Potential Functions, "Proc. Lond. Math. Soc., Series 2, Vol. I, 1904, p. 367-372.

6. A NERAC document search yielded some 16 good references on t-polarized photons, but not a single reference on t-polarized EM waves.

7. E.g., such previously inexplicable instrument anomalies have accompanied some excellent and rigorous electrolyte experiments at U. S. Navy research facilities at China Lake. For a description, see Melvin H Miles and Benjamin F. Bush, "Radiation measurements at China Lake: Real or Artifacts?", Proc. ICCF - 7 (International Conference on Cold Fusion—7, Vancouver, BC, Canada, Apr. 1998, p. 101. For a brief explanation of the anomalies, see T. E. Bearden, "EM Corrections Enabling a Practical Unified Field Theory with Emphasis on Time-Charging Interactions of Longitudinal EM Waves, " Explore!, 8(6), 1998, p. 7-16;— "Toward a Practical Unified Field Theory and a Deep Experimental Example," Proc. INE Symposium, Univ. Utah, Aug. 14-15, 1998.

8. Many U. S. researchers and journalists—and even many scientists—have wrestled with the problems of mind, intent, and mind-body coupling. Enumeration of those efforts would itself require an entire book. For an introduction into that domain, the reader is referred to the very determined exposé by

System, and other matters of interest. ♦

ABOUT THE AUTHOR

President and Chief Executive Officer, CTEC, Inc. Lieutenant Colonel US. Army (Retired). MS Nuclear Engineering, Georgia Institute of Technology. BS mathematics, Northeast Louisiana University. Graduate of Command & General Staff College, US. Army. Graduate of Guided Missile Staff Officers Course, U. S. Army (equivalent to MS in Aerospace Engineering). Numerous electronic warfare and counter-countermeasures courses. Tom is the leading advocate of scalar potential electromagnetics and the Fogal charge-blocking semiconductor: He is involved in alternate energy devices and scalar electromagnetic system prototypes. He has defined charge q as a coupled system of two components, advanced a mechanism for a vacuum engine, whereby the vacuums virtual particle flux is organized and used to energetically shape and manipulate matter and energy, and advanced a mechanism for a Bohm-type quantum potential, which theoretically allows the engineering of action at a distance in physical systems.
He is president of the Association of Distinguished American Scientists (ADAS), a life member of the Alabama Academy of Science, Emeritus member of the American Association of Physics Teachers, and has served on the Board of Directors of several associations and corporations. Tom is a guitarist, a retired aikidoist (Sandan, Yoseikan style), is happily married and has two sons and two daughters. He and his wife Doris live in Huntsville, Alabama where Tom is retired from aerospace, continues private research, and serves as a consultant to industry on Scalar

Cheryl Welsh in her very timely book, The 1950's Discovery of the Code of the Brain, May 1988, published on the Internet. Simply employ any Net search engine and search on the name Cheryl Welsh. A connection to the site and to Welsh's book will immediately be found Welsh's important compendium is highly recommended, giving the reader a "birds eye view", so to speak, of how Western scientists think and proceed regarding the subject of mind control by electromagnetic means. Unfortunately all journalists so far researching the area have not been aware that Western electrodynamics itself is seriously flawed, and that the great Russian advances in mind engineering and mind control are a result of their secret but complete revision and correction of Western electrodynamics to provide the basis for energetics. Until Western scientists revise their own decrepit old electrodynamics fouling the textbooks, they will never catch up to the Russian mind control developments springing from intense development programs that did that revision in the late 1940s and early 1950s.
9. An Invention Disclosure on these processes and enhancement embodiments has been filed with the U. S. Patent Office. Formal patent applications are also in preparation.
10. Energetics is a unified science of an extended electrodynamics possessing a hidden infolded general relativity inside the potentials, fields, and waves. It deliberately employs higher polarizations (longitudinal and tempic) of photons and EM waves to engineer action at a distance, use of specific patterns of spacetime curvature created at a distance, and direct engineering of either inert or living bodies. It also encompasses the direct engineering of time-like mind and mind functions. It is divided into three divisions, depending upon the nature of the target. Targeted against inert materials, structures, fields, and waves it is called "energetics. "Against living bodies, their fields, and biochemistry, it is called "bioenergetics." Against the mind and mind functions, it is called "psychoenergetics".
11. Psychoenergetics is that branch of energetics used to directly affect and engineer

electromagnetics processes.

R E F E R E N C E S

---

1. E.g., see Lewis H Ryder, Quantum Field Theory, Cambridge University Press, 2nd Edition, 1996, p. 147+. For an even deeper discussion of photon polarization, see F. Mandl and G. Shaw, Quantum Field Theory, Wiley, 1984, under the heading "Covariant Quantization of the Photon Propagator" in Chapter 5. Mandl and Shaw argue that the longitudinal and scalar polarizations are not directly observable, but only in combination, where they manifest as the "instantaneous" Coulomb (i.e. electrostatic) potential.
2. Nature is unified and not separated into the "separate" disciplines our science has prescribed. Thus the mind is also totally electrogravitational. The mind works not just with EM
forms in an inert space, but also with spacetime curvatures in a the mind, memory, perception, thought, emotion, sensation, personality, and other mind functions of a living biological organism. It is usable against a single personal conscious (serial processor) mind and a single personal unconscious (massively parallel) processor mind In theory it is also usable against lungs collective unconscious mind and its functions, as well as the deeper unconscious for all species on Earth (i.e., against Gaia). We are speaking of physics, not metaphysics.
12. W A. Rodrigues Jr.. and J.-Y. Lu, "On the existence of undistorted progressive waves (UPWs) of arbitrary speeds $0 \leq v < \infty$ in nature," Foundations of Physics, 27(3), 1997, p. 435-5•08 A slightly corrected version is downloadable as hep-th/9606171 on the Los Alamos National Laboratory website.
13. E. T. Whittaker, "On an Expression of the Electromagnetic Field Due to Electrons by Means of Two Scalar Potential Functions, "Proc. Lond. Math. Soc., Series 2, Vol. I, 1904, p. 367-372. The paper was published in 1904 and orally delivered in 1903.
14. E.g., see T. E. Bearden, Fer-de-Lance, Tesla Book Co., 1986;—AIDS: Biological Warfare, Tesla Book Co., 1988;—Soviet Weather Engineering Over North America, 1-hour videotape, 1985,—Gravitobiology; A New Biophysics, Tesla Book Co., P.O. Box 121873, Chula Vista, CA 91912, 1991,—Energetics of Free Energy Systems and Vacuum Engine

EXPLORE! VOLUME 9, NUMBER 2, 1999

Therapies, Tara Publishing, Internet node www.tarapublishing.com/books, July 1997; — Energetics: Extensions to Physics and Advanced Technology for Medical and Military Applications, CTEC Proprietary, May 1, 1998, 200+ pages furnished to selected government agencies and key Congressional committee leaders.

15. E.g., see T.D. Lee, Particle Physics and Introduction to Field Theory, Harwood; New York, 1981. On P.383, Nobelist Lee points out that the microstructure of the scalar vacuum field (i.e., of vacuum charge) is not utilized. Particularly see Lee's own attempt to indicate the possibility of using vacuum engineering, in his "Chapter 25; Outlook; Possibility of Vacuum Engineering, " p. 824-828. With wave transductions and use of higher polarization EM waves, there are far better and more powerful ways to do vacuum (spacetime curvature) engineering.

16 T.E. Bearden, "Formation and Use of Time-Reversal Zones, EM Wave Transduction, Time-Density (Scalar) EM Excitation and Decay, and Spacetime curvature Engines to Alter Matter and Convert Time Into Energy," Invention Disclosure Document #446522, Oct. 26, 1998.

17. T.E. Bearden, "EM Corrections Enabling a Practical Unified Field Theory with Emphasis on Time-Charging Interactions of Longitudinal EM Waves, "Explore!, 8(6), 1998, p. 7-16; — "Toward a Practical Unified Field Theory and a Deep Experimental Example," Proc. INE Symposium, Univ. Utah, Aug. 14-15, 1998.

18. We have used the enormous energy density of time in our approach to a totally new kind of electronuclear interaction at feeble spatial energy. By use of a time-reversal zone (TRZ) in a fluid; the free H+ ions—which are free protons—can be induced to attract each other so tightly that the edge of the nuclear force region is entered. In that case the protons form a quasi-nucleus. When the TRZ decays back to a time-forward zone (TRZ), this new quasi-nucleus decays by changing quarks in one or more nucleons, thereby producing new nuclides. We point out that means "sense of existing in time".

20. The "unconscious" is totally conscious, just multiply so. The conscious mind can see only "a single slide in the slide projector at a time, " so to speak. When it "looks" at the ongoings and outputs of the unconscious, it "sees" millions of slides in the slide projector simultaneously. Hence it cannot distinguish "one and one only". So it just sees nothing, where by "nothing" we mean "no single distinguishable thing." It therefore is unable to consciously perceive the actions of the unconscious. When the unconscious wishes to communicate with the conscious (because of unresolved conflicts, etc.), it must produce large groupings integrated into "symbolic scenarios". Hence the symbolism of the unconscious, and the basis for therapeutic psychology and psychiatry. A "symbol", after all, is just a thing which can have many different meanings, all folded into one.

21. The mind continually has activities of its own, each of which produces coherent changes in the body to a much smaller degree. The interweaving of these "smaller self-changes" infolded inside the 3-space major intent changes also produces slight body changes, which in turn "project back" into the mind. This huge group of "infolded self-loops" produces the sense of "my body" being "volitionally directed or occupied" simultaneously with the "greater intent" loops which represent "my intentional actions with my body". Further; the body servo continually receives a myriad of inputs from its sensory systems, both from changes inside the body and from incoming changes from the external universe. This interweaving produces the awareness of "being in the external world" by having (i) changes whose feedback do not match mind-intent changes, and (ii) changes whose feedback does match mind-intent changes. This of course applies to both the conscious and unconscious levels. The purpose here is to demonstrate that there exists an actual physics of the living being, the mind as well as the body, and the coupling and interfiinctioning of mind and body.

this is actually a very high energy reaction; however; since the time-energy is used and is very, very dense, the amount of 3-spatial energy that must be used is very small. If this new mechanism holds, it represents a revolution in particle physics.

19. "Self-awareness" refers to be continually "refreshed" by time-delayed coherent feed-back inputs from the body to the mind; where these inputs compare to the recalled memory of the minds inputs to the body. In short, the time-delay coherence creates the sense of "existing in time". Awareness usually

22. The methodology also easily extends to include deeper interlays for the collective human unconscious mind and for Gaia—the collective unconscious mind level for all the species on earth.

23. S. K Lisitsyn, "New Approach to the Analysis of Electroencephalograms, " in Problems of Bionics— (Selected Articles), Defense Documentation Center Report AD 73005, date unknown, p. 16-25. Available through the National Technical Information System (NTIS).

Mind Control and EM Wave Polarization Transductions, Part 2

©Copyright 1999 by T.E. Bearden, USA

This article continues on with T.E. Bearden's article, Part 1 of which was published in Volume 9, #2 of Explore! for the Professional. Because we feel that Col. Bearden's caution below is so very important we are repeating its publication in all parts of this article.

Special Note

This article refers to experimental research techniques which can be detrimental or lethal in the hands of any but highly skilled, qualified experimental scientists proceeding under proper laboratory safety procedures. The purpose of this article is strictly for information to properly qualified and authorized scientists in certified laboratories. We do not propose or condone any use of these procedures for non-approved practice of medicine without a license. Neither the publisher nor the author are responsible for accidents or outcomes in the use of these experimental procedures and techniques. Any researcher who performs these procedures and experiments is acting on his or her own volition, and is solely responsible for insuring safety, qualifications, and legality of the acts and their results. We neither suggest nor condone unauthorized experimentation on human subjects. Such is a criminal violation of the constitutional rights of the subject under Federal and State laws, and is both illegal and immoral.

A Strategic Threat Completely Unrecognized by the West

The Russian methodology leads directly to rather mind-bending, extended capabilities. KGB psychoenergetics scientists seem fixed on an eventual goal of directly engineering Jung's collective human unconscious, thereby converting the entire human species into a sort of "ant" species. In short, they seek to engineer what they regard as "perfect communism and perfect order" directly in the entire species. *Figure 8* indicates the direct connection of every human's conscious and unconscious mind to the collective species unconscious and to Gaia, the collective unconscious for all species on Earth. Since time is internally structured and layered, it follows that time-like mind levels are also internested and layered.

This appears to be a significant strategic threat, *well along in its development*, that our scientific and intelligence communities have completely failed to recognize.

The direct engineering of the entire human collective species is a doable.[1] It is going to be done, whether we like it or not. In that race (which may eventually determine whether or not we retain any personal freedom at all), the "democratic" nations are woefully behind. In fact, the West has not even realized there is such a new kind of "arms race" for dictatorship and control of the "collective species mind" and we have already almost lost it. The West has not yet even developed the overall theory of psychoenergetics.

Waves and Wave Transductions

A pure longitudinal EM wave (LW) would have infinite energy and infinite speed. In practice, one can only approach this perfect LW wave, and one always has transverse residues remaining. Hence the "imperfect" longitudinal EM waves we can make in suitable equipment and techniques, are known as "undistorted progressive waves" (UPWs). The UPWs may have velocity far greater than the speed of light, or less than the speed of light. So the speed v of UPWs can vary as

$$0 < v < \infty \qquad [6]$$

The Russians also know that, when a nearly-pure longitudinal EM wave interacts with matter (it usually doesn't interact very much, and has a low reaction cross section), the mass immediately adds the phase conjugate replica to the interacting LW portion, regardless of frequency, thereby transducing the input LW interactions into scalar (time-polarized) EM interactions.

One transduces from TW to LW to Scalar EM via iterative phase conjugation. One transduces from scalar EM to LW to TW via iterative interferometry. It took the present author 20 years to discover this simple thing; we now have filed an invention disclosure on the process and embodiments for performing it, and will be following with formal patent applications. Let TW = transverse EM wave, LW = longitudinal EM wave, and TDW = time-density EM wave (another name I use for t-polarized or scalar EM waves, since the density of time-energy is what is varying). Let (I) = interfering with, PCR = phase conjugate replica wave with a coupled set of parentheses enclosing the type of wave. The rules for wave type transduction are:

$$\mathrm{TW} + \mathrm{PCR(TW)} \Rightarrow \mathrm{LW} \qquad [7]$$

$$\mathrm{LW} + \mathrm{PCR(LW)} \Rightarrow \mathrm{TDW} \qquad [8]$$

Going the other way, the rules are:

$$\mathrm{TDW\ (I)\ TDW} \Rightarrow \mathrm{LW} \qquad [9]$$

$$\mathrm{LW\ (I)\ LW} \Rightarrow \mathrm{TW} \qquad [10]$$

In EM smog (dense EM signals, even though very weak), there is increased nonlinear multiwave interactions, both interferometric and phase conjugative. So in such EM smog there exists an increased, non-negligible component of LW and TDW irradiation, formed by the above transduction interactions in the irradiated living cells and bodies. This latter part accounts for many of the long term effects which show up in "correlative" studies, but which do not show up in the normal limited-frequencies TW experiments produced by so-called "physical experiments."

The standard EM bioeffects manner of experimenting uses a theoretical model of simple, direct energy deposition by means of absorption in cells and tissues. Now we must utilize an "open system" throughout the body dielectric in which higher polarized EM energy (either LW or t-polarized) travels readily throughout all areas of the body.

http://www.cheniere.org/explore%20articles/mind%20control2/p01.htm24.4.2005 23:21:30

EM Bioeffects and Wave Transductions

In the EM bioeffects experiments to date, there has been absolutely zero control of the internal transductions, and there has been no consideration of them. Almost all transductions of TWs into LWs will immediately result into transduction into TDW and time-excitation charging of the cells and all their internal components. These time-excitation charges (excited states of time-charging) will then slowly decay, emitting longitudinal EM waves in the process which travel throughout the body. These emitted LWs interfere with each other and the LW processes in the body, producing low level TW "noise jamming" of the cellular processes and—most especially—of the deep cellular control system of the body. The latter system functions by means of LWs and TDWs. Long-term effects of such "noise jamming" of biochemistry reactions and the control systems of the cells and body, can lead to degenerative diseases such as arthritis, atherosclerosis, Alzheimer's disease, heart disease, cataracts, tumors, leukemia, somewhat accelerated aging, immune system weakening and depressing, etc. As the body's natural defense and regeneration ability weakens, opportunistic infections further add to the degeneration.

It was shown by Whittaker in 1903 that any scalar EM potential is comprised of a harmonic series of bidirectional longitudinal EM wavepairs. [See *Figure 9*] Each longitudinal EM wave pair in the harmonic series is a phase conjugate pair. Unknown to Whittaker, that "LW phase conjugate pair" is actually a time-polarized EM "photon" structure, containing a phase conjugate LW photon substructure. So staid old "voltage" (potential) is comprised of a harmonic series of time-polarized EM waves!

The corresponding "t-polarized photons" are actually spin-4 *supergravitons* comprised of coupled antipairs of LW "photons". Each LW photon is a spin-2 *graviton* comprised of a coupled TW photon-antiphoton pair. Each TW photon and antiphoton in the coupled pair has spin-1. The couplet, being the longitudinal "photon" or graviton, thus has spin-2. And so on.

In 1904, Whittaker showed that any EM field or wave pattern can be decomposed into two scalar potential functions. By applying Whittaker 1903 decomposition to each scalar potential function, any EM field or wave has an enormously rich internal structure, comprised of scalar potential functions in interference. Each scalar potential function is comprised of time-polarized EM waves (made of spin-4 supergravitons). Each time-polarized EM wave is further comprised of bidirectional longitudinal EM wavepairs. Each longitudinal EM wave is further comprised of phase-conjugate pairs of transverse EM waves. Each transverse EM wave is further comprised of two scalar potential functions, each of which is in turn comprised of an infinite harmonic series of time-polarized EM waves, and so on *ad infinitum* and *ad nauseum*. Obviously all EM potentials, fields, and waves have an enormous "internal structure" or internal "information content of the field".

The Cellular Control System Uses t-Polarized EM Photons and Waves

The master cellular control system (MCCS) in the body utilizes these photon-gravitons, their corresponding EM wave polarizations, and transductions between them. By the use of very powerfully condensed gravitons and supergravitons, it is able to utilize small but highly significant direct curvatures of spacetime in precise patterns. In short, it utilizes general relativistic spacetime curvature engines, rather than "EM photon signals", to accomplish its control of the cells and their processes. It does not merely send a "signal" and hope the cell itself acts upon it. Instead, it sends an "engine" which alters the local spacetime in which the cell and all its components are embedded. This "local ST curvature engine" then physically works directly upon the cell and all its parts, to alter the cell according to the specific "template" of the engine.

This is the direct application of the Wheeler's simple statement of general relativity: *Mass (trapped energy) acts upon spacetime to curve it, and curved spacetime acts upon mass to change it.*

Popp's "ordinary photon" study of this cellular control system[2] therefore will detect the coherent ordinary TW photon residues which result from the photon polarization transductions occurring from the actions of the ST curvature engines upon the cells.

Cellular division, biochemical processes, growth and growth control, cell differentiation and dedifferentiation, etc. are all controlled by the MCCS or one of its subsystems, using spacetime curvature engines. The ordinary TW electronic activity our biophysicists detect and correlate are simply the intermediate components of the actual ongoing polarization transductions.

The Cellular Control System Uses EM Time-Energy

One important subsystem of the MCCS controls the immune system's functions, including the deepest and most subtle functioning performed by all elements of the immune system. This system has been rather intensively studied, but since our biophysicists have not possessed the full electrodynamics utilized, only the correlated residue of normal TW EM waves and photons have been recognized and studied. Hence Western biophysics is in its very crude infancy.

Incorporation of the total wave and photon polarizations, together with their transductions, will eventually present a revolution in both biomedicine and biophysics. Unfortunately, presently our entire medical community is very firmly entrenched in only ordinary TW EM polarizations and ordinary biochemistry. Our scientists thus are studying less than 1% of the functioning of the living organism.

As an example, since Western scientists have no knowledge or research into the time-polarized mind domain and mind-body coupling, the mystery of the *placebo effect*—in which the mind has been verified to produce actual physical effects – will indefinitely remain a mystery.[3] As one result of that "crippling" of our medical theory, medical experimenters have to deliberately drive experiments on drug effects, etc. beyond the "mind's own threshold" of physical effect. In short, they have to drive the experimental results over and above the results being accomplished by the placebo effect. They must perform valid placebo control experiments, and subtract the placebo component results from their own experimental results, to determine the "delta" induced purely by the drugs.

The Regenerative Subsystem

Another important subsystem of the MCCS controls the *regenerative system* of the body. The regenerative system has various mechanisms, including growth control, differentiation and dedifferentiation of cells, etc. Becker's portrayal of the regenerative system is shown in *Figure 10*. One of its most important functions is healing and restoring damaged or diseased cells. It does that by a most remarkable process.

This system has been very poorly studied, mostly by Becker[4] *et al.*, although there is still sporadic, ill-funded, and ill-planned research on regenerative effects from time to time.[5] Becker and his colleagues came closest, and—considering the severe limita-

tions of the orthodox U(1) EM model available to them—Becker's work is particularly revolutionary. He demonstrated beyond question that simple DC potentials could generate cellular differentiation and redifferentiation, and produce results at global sites in the body and not just at the local injury sites where the DC potentials were applied.

Becker was nominated for a Nobel Prize for his Herculean efforts and remarkable results. For his trouble he was hounded, his funds were withdrawn, and he was forced to retire at an early age in his 50s. His biggest "heresy" was to bravely point out that power line radiations had deleterious effects upon biological systems, and to testify to it in a series of hearings and court cases where a very powerful electrical power industry essentially ran rough shod over science and the public.

Organized Science Is Highly Politicized and Imperfect

It is not only politicians that are "bought and paid for" by powerful vested financial interests. In organized science, precisely the same arrangement holds true. Scientists are no better or no worse than any other segment of humanity. A surprising percentage will produce the results desired by their benefactors, if provided with cushy jobs, good income, prestige, and secure positions.

It has been said that money is power. It has also been said that power corrupts, and absolute power corrupts absolutely. In the scientific community, as well as in the political community, this "great corruption" by great financial power has been elevated to an art form. Simply examine the funds made available to scientists. There is not enough for all the scientists, so it is fiercely competitive. If the scientist does not get grants (e.g., a would-be professor at a university), he does not bring in extra money to the university. He cannot get his graduate students funded, so his own innovative (read: heretical) research is thwarted. His papers are rejected by the journals, and before long he has no funded position in science. If lucky, he will be employed in the grocery store or the butcher shop.

Every bit of funding available for the scientists to compete for (and apply for grants) already has firmly fixed controls of exactly what research can be done with that money. The "science" that will be applied is already formulated. That and only that can be done. It is a tribute to the dedication and resourcefulness of our working scientists themselves, that anything innovative at all gets done.

One can have a very fine scientific career, tenure as a professor, get one's graduate students funded, get one's papers published in prestigious journals, win awards and achieve stature and prestige, if one just plays the desired game prescribed by the "old boys schools" in control of almost all the scientific funding. Yes, one can permissibly move the decimal point in the present models a bit, and be rewarded handsomely for doing so. But one is damned if one attempts any serious change or overthrow of obsolete scientific models and practices favored by the "system".

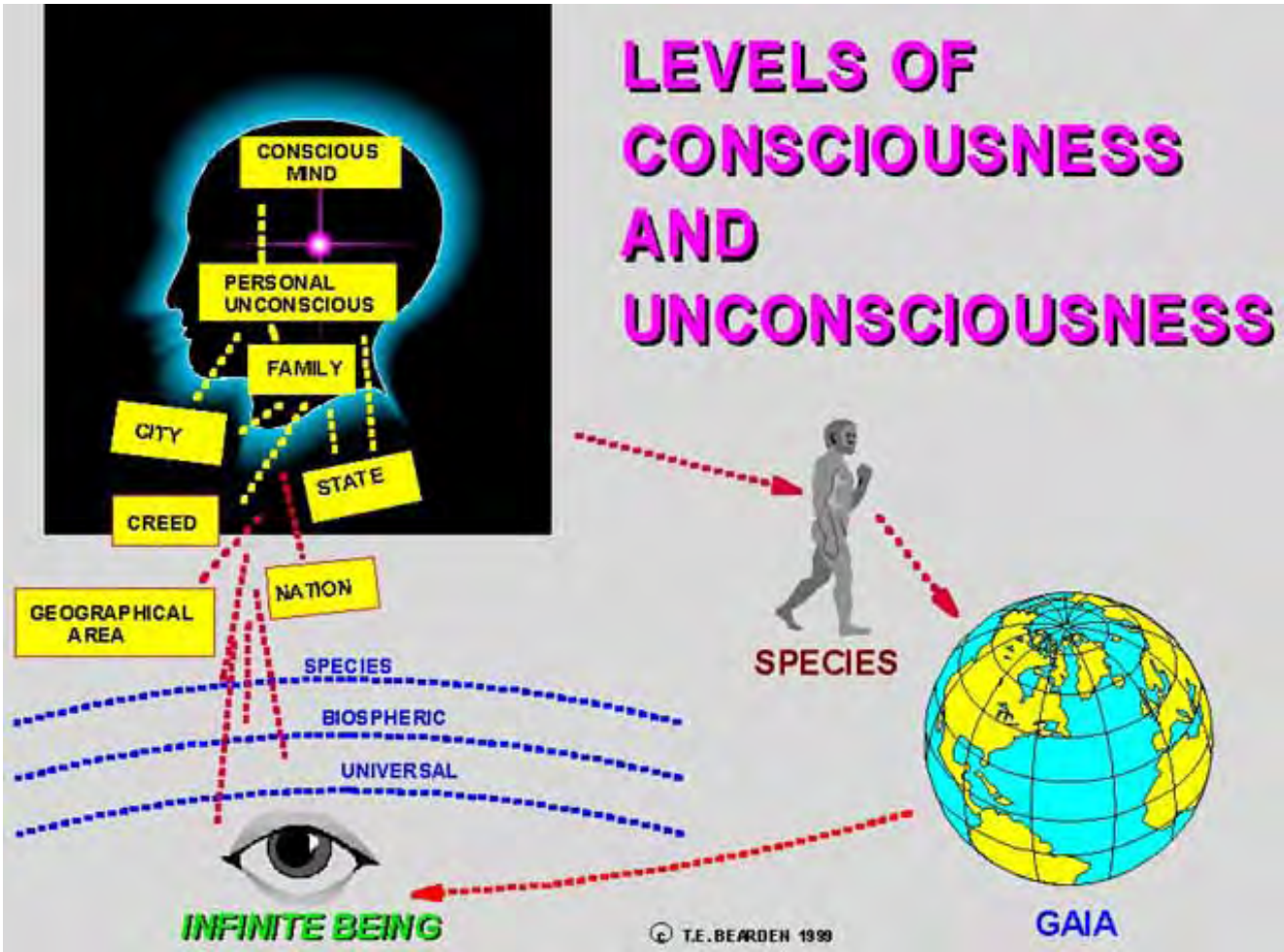

Figure 8. Nested levels of consciousness and unconsciousness. The mind levels contain the "life" and "mind" dynamics.

http://www.cheniere.org/explore%20articles/mind%20control2/p03.htm24.4.2005 23:26:46

That is precisely why all our universities continue to teach a terribly flawed electrodynamics that is a caricature with at least 32 major foundations flaws in it.[6]

And that's why the organized Western scientific community has betrayed the taxpayers who largely fund its research. In short, the scientific community fiercely enforces dogma, suppresses innovation, and has denied the U.S. the very defense we need to survive against our pressing enemies who have not been so scientifically dogmatic.

Microwave Radiation of the U.S. Embassy in Moscow

Because of the strongly enforced adherence to the insane foundations errors in classical electrodynamics, our scientists still do not comprehend the decades of so-called "microwave radiation" of personnel in the U.S. Embassy in Moscow.[7] All diseases and health changes produced in those personnel were in *field-free areas* (i.e., where the potentials were persistent and unchanging, with no gradients etc.)[8] No one even thought to look at the "inner longitudinal EM phase conjugate biwave composition" of those potentials, where they would have found the Whittaker internal bidirectional longitudinal EM wavepairs and the internal time-polarized EM waves. They would also have found the infolded, very powerful general relativity: the spacetime curvatures deterministically formed and being utilized to directly alter the irradiated cells and their constituents.

Instead, government-funded studies did a rather straightforward "force field" analysis, and concluded that, since there were no fields there, it could not have been the microwave radiation.

Elementary statistics would immediately indicate a different conclusion: The diseases and health changes were 100% correlated to the presence of potentials, and 100% anticorrelated to the presence of fields. Hence it was the field-free potentials that had to be inducing the diseases and health changes. If it were NOT the radiation at all, then some changes would have occurred in personnel in areas where fields were *present*, as well as in areas where fields were *absent*. Since this did not occur, such a premise is destroyed by self-contradiction. In short, the data actually proved (i) it was indeed the radiation that was causing the diseases and health changes, and (ii) further, it was the field-free potentials that were the culprit.

That this elementary statistical conclusion eluded our scientific community and our government community, is absolutely inexplicable.

Three U.S. Ambassadors eventually died of diseases induced by their exposure to the Embassy radiation. Ironically, Kaznacheyev[9] had openly released some of the results of thousands of Soviet military experiments showing that any kind of cellular disease or disorder could be induced in targeted cells by novel EM radiation emitted from diseased or damaged cells. Apparently no one in the West deciphered the mechanisms involved in Kaznacheyev's epochal work.

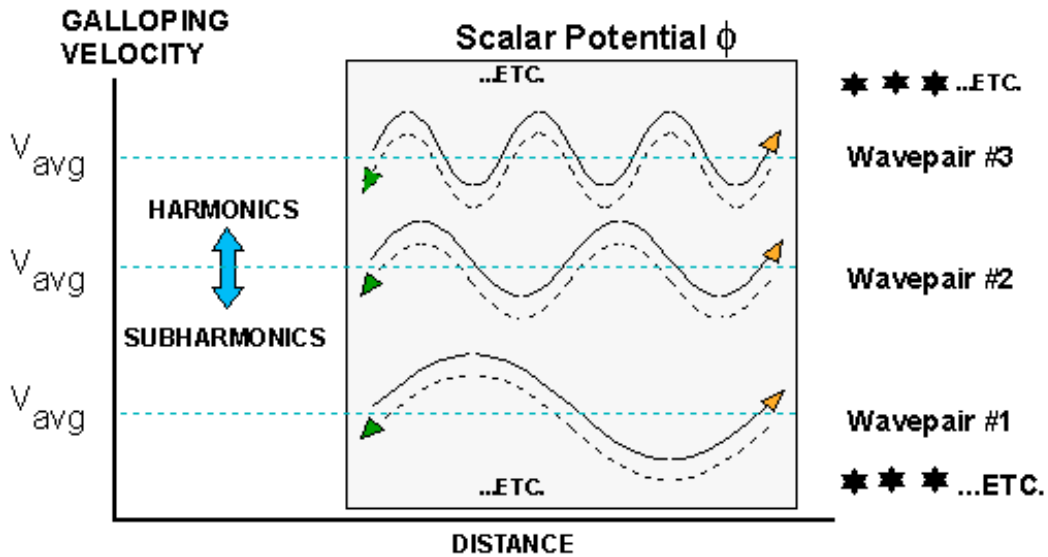

The Structure Is:

- A harmonic set of longitudinal phase conjugate wavepairs.
- In each wavepair the two waves superpose spatially after detection, but travel in opposite directions.
- The convergent wave set is in the imaginary plane, and hence is not observable. It is EM energy incoming to the potential (dipolarity) from the time domain.
- The charge's spin is 720 degrees, 360 in the real plane and 360 in the imaginary plane.
- Hence the charge receives the complex convergent EM energy, transduces it into real EM energy, and emits enormous energy at the speed of light in all directions -- which includes bidirectional pairs in 3-space (after the reaction, being after "observation").
- This produces the fields and potentials from the "source charge or dipole."
- Mandl and Shaw argue that the scalar (time-polarized) photon and longitudinal photon are observable only in similar pairs, which then makes the instantaneous scalar potential. Thus their quantum field theory work strongly supports the "negative resistor" interpretation of the scalar potential and our solution to the source charge and source dipole problem.

Figure 9. Infolded longitudinal biwaves (time-polarized EM waves)

composition of a scalar potential.

The Present Situation in Western EM Bioeffects Research

Our scientific community has not even *designed physical experiments* to validate long-term EM bioeffects of the kind caused by induced wave transductions and long-term effects inside the absorbing human cells and in the body's regenerative and immune systems. Western science has no knowledge of these technical internal "wave polarization transduction" mechanisms. Yet the basis for such mechanisms has existed in the hard physics literature for decades. Leading EM bioeffects researchers seem totally unaware of small reaction cross sections inside the body cells and tissues for the transduction of transverse EM signals into LW and t-polarized EM signals. Conventional Western researchers have not investigated it, and often will not believe it when it is pointed out to them along with the supporting basis in the literature.

A major part of the mainline "EM bioeffects" community, of course, seems comfortably funded largely by the power industry etc.[11] The record is clear that this dominant, well-funded group has little or no intention of "finding" anything that will question powerline radiation safety and upset their cushy positions.

In fact, leading bioeffects researchers have pointed out this deliberate biasing of EM bioeffects as a research area. Quoting Dr. Andrew A. Marino, one of the great pioneers in the area of EM bioeffects[10] and powerline radiation assessment.[11]

"Neither scientists nor the public can rely on power-industry research or analysis to help decide whether powerline electromagnetic fields affect human health because power-industry research and analysis are radically misleading."

Dr. Marino then gives the specific details to prove it, and he shows specifically how they slant and mangle their experiments and interpretations of the results, to do it. If the major financial interests cannot *scientifically* destroy determined, honest researchers such as Marino and Becker, they do not hesitate to attempt to destroy them in lawsuits.

The "Diffusion Mixmaster" at All Body and Cellular Levels

Every mass and all its particles are in a violent energy exchange with the active vacuum. A human body and every part of it is in a continual exchange of EM energy with its environment(s), including transverse, longitudinal, and t-polarized (scalar) EM energy exchanges. Further, within the dielectric body there is a sort of intensive "diffusion" of special kind, actually due to iterative phase conjugation and iterative interferometry of the dense signals environment impinging upon it. This internal "diffusion" and transduction (iterative multiwave phase conjugation and iterative multiwave interferometry) thoroughly "mixes up and transduces" one type of EM wave or signal into the other, including many of the body's own TW, LW, and TDW signals.

Continual or sustained TDW exposure (irradiation by t-polarized EM waves) charges the body and its particles with time-excitation charging, something which has been erroneously omit-

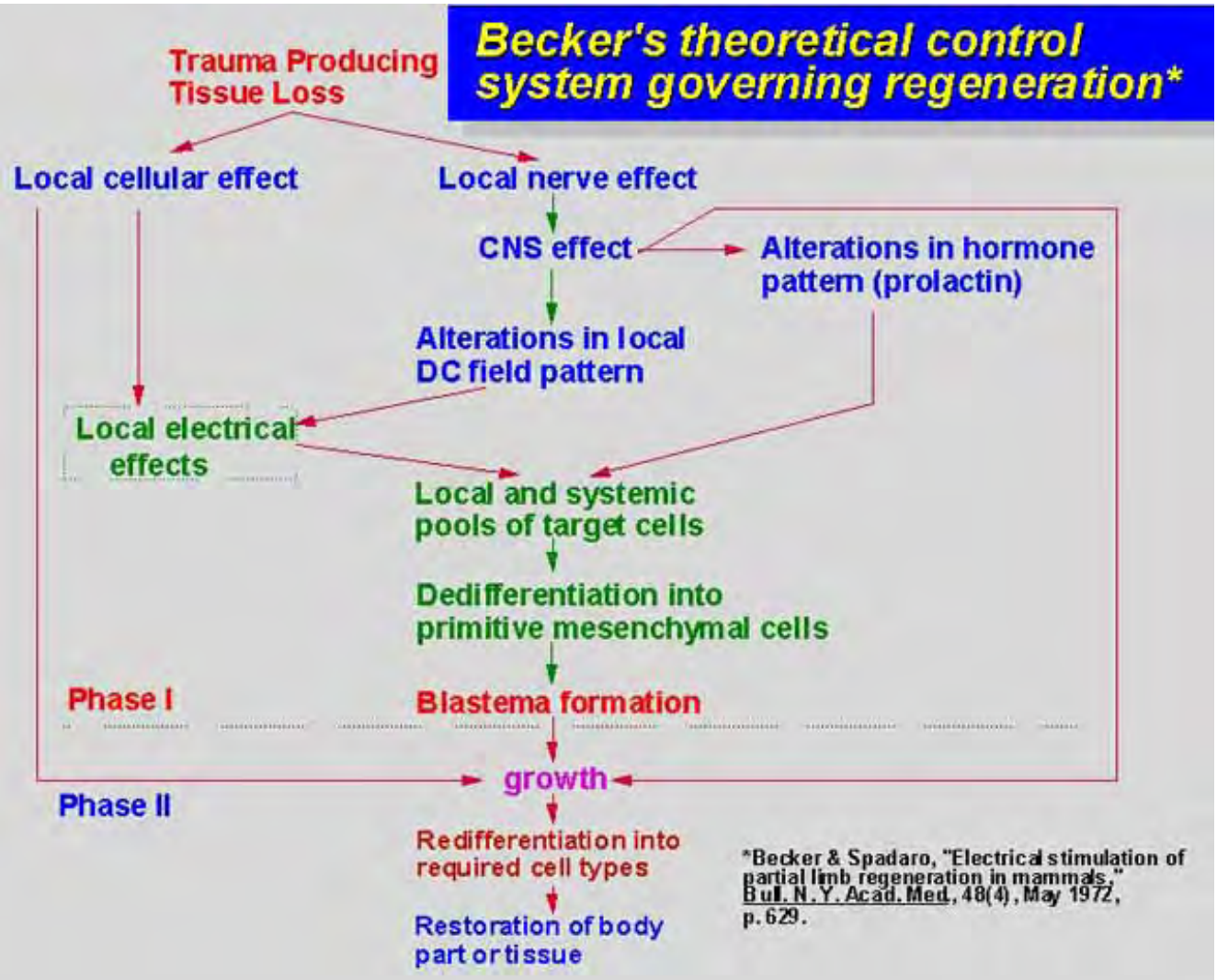

Figure 10. Becker's model of the Regenerative system of the body.

ted in physics, but is true nonetheless. Inexplicably, physicists just ignore what happens time-wise when a mass absorbs a photon. We have covered that elsewhere.

So inside the body dielectric, there is a "diffusion mix" correlate of any and every type of the waves, to any or all of the exchanges, plus the additional internal interactions of the body in its TW, LW, and scalar EM wave transductions. There is a one-to-one correspondence to any one of the three types of polarization waves (transverse, longitudinal, and scalar) and everything going on anywhere in the body.

Note that the type of LW we are using is actually made of phase conjugate pairs of transverse EM waves, so its "photons" are made of photon/antiphoton pairs. That is, our longitudinal EM wave has an internal TW structure, and the LW wave is comprised of spin-2 *gravitons*. Our longitudinal EM wave has an internal structure, and it dramatically differs from the LW used by the U.S. scientific community which ignores wave, field, and potential infolded substructures. Our LW (which seems to be what the Russians use) is also a gravitational wave because it is comprised of oscillations in its distributions of spin-2 photon/antiphoton pairs (i.e., *gravitons*).

The type of t-polarized (scalar) EM wave we are using is a phase conjugate coupled pair of the specialized electrogravitational (EG) LWs. The "t-polarized photons" comprising this t-polarized "EM" wave are comprised of spin-4 *supergravitons*. These are, I believe, what the KGB energetics weapons scientists use also. By iteration, we can go into as deep an internal multilevel structuring of EM and EG waves, of any type, via methods shown by Whittaker.[12]

Now let us examine a body as a dielectric, sitting there in its exchange, in relative equilibrium. It turns that every tiniest piece of a dielectric participates in any emission from it[13]—even the emission of a single photon, graviton, or supergraviton. Well, it *would* so participate, due to the special sort of correlated diffusion and interferometry and phase conjugation that we pointed out. Anything that escapes (is re-emitted) from the body, has been through this "diffusion wringer". It has escaped from each and every internal part of the body.

Novel Signatures in Body-Emitted EM Radiation of Any Polarization

A single photon or wave emitted from a dielectric carries in its internally structured time component a *template* of the exact internal time structuring of every part of the dielectric emitting that photon. It carries in its internally structured energy component a *template* of the internal energy structuring of every part of the dielectric emitting it. An emitted EM wave, being a collection of emitted photons and photon structures, thus carries the same internal structuring of both its transported energy and its transported time.[14] Western scientists do not use the internal

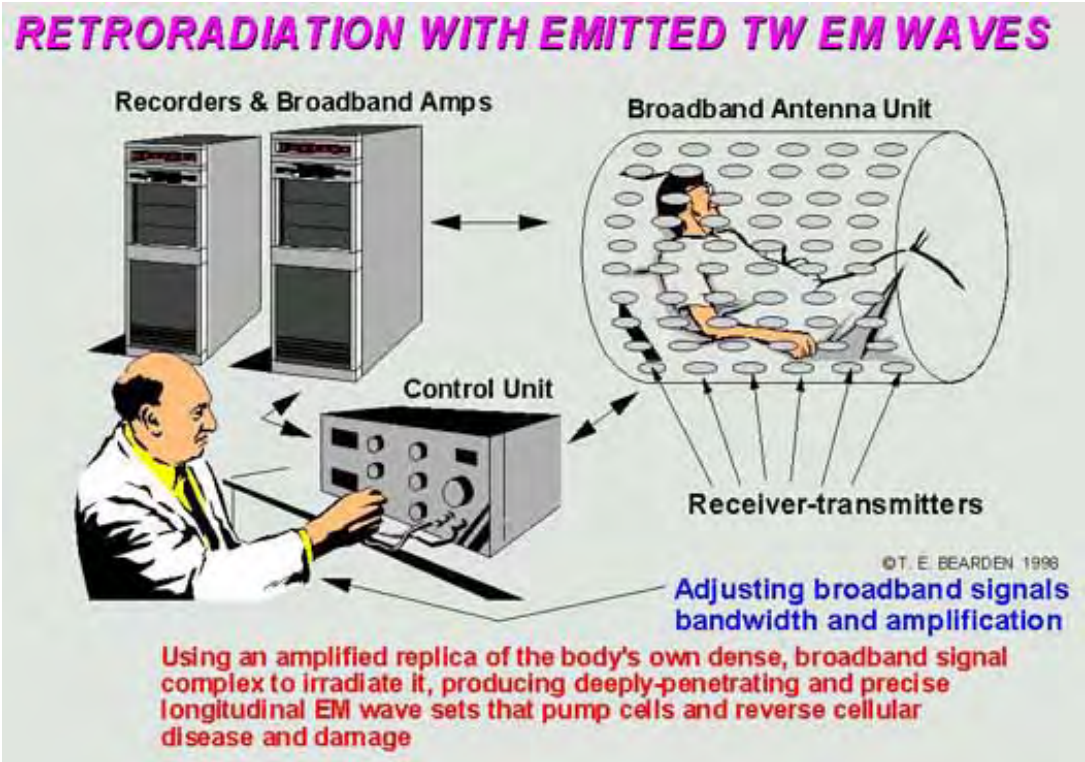

Figure 11.

http://www.cheniere.org/explore%20articles/mind%20control2/p06.htm24.4.2005 23:34:27

structuring of photons and EM sine waves, have no instruments for that, and so do not know it. The Russians know it,[15,16] use it, and have developed sophisticated instruments for it for the last 30 years or more.

Shortly we will postulate how conventional scientists experimenting with mind and behavior control electromagnetically might utilize an immediate consequence of the fact that the specific emission from a body at any time—whatever type of wave component we look at—is a total correlate to all that body's internal functions, its energy exchanges with its environment, its states, its mental states and conditions, etc.

And we accent that the coherently integrated intent-changes in that body from its coupled mind's operations are also in the substructure of photons and EM waves emitted from the living body into its environment.

How Western Mind Control Scientists Might Proceed

Conventional scientists would ignore scalar photons and waves, determine the TW spectrum, and then slowly and painfully correlate that to the various physical, mental, and emotional things. That's the way they would *have* to do it, since apparently they use only standard electrodynamics. They can in fact do this via brute force, because that emission TW spectrum is of waves escaping from the entire "diffusion machinery" mixmaster in the body dielectric. It does contain all those integrated *mind-intent* 3-space correlates as well as the ordinary body 3-space energy correlates.

Anyhow, in envisioning Western procedures, the test body would be sitting there, in its normal (let's say fairly normal and quiet) EM environment. [See *Figure 11*] Let's assume this body is not sick, but is healthy and normal. Its emissions are a part of its equilibrium condition. It follows that the totality of its TW emissions is correlated to the sum total of everything that interacted with the body, plus its own internal reactions, including from mind-body coupling. Indeed, everything that has ever happened to that entity—physically, mentally, emotionally, etc.—has internal correlates infolded inside the emitted transverse EM wave spectrum.[17]

So first the scientists would simply measure the full environmental TW spectrum down to very tiny levels in all frequency bands possible—everything that is coming in to the body from its environment. They would probably perform the experiments in a triply-shielded Faraday cage, so the external environment outside the cage contributes very little transverse EM wave noise (perhaps some Schumann resonance). Magnetic wave shielding and ELF shielding is something else again, and longitudinal EM wave shielding is in general not possible unless longitudinal EM waves are employed in the shielding. But a "quiet external TW environment" enhances the isolation and measurement of the specific TW signal transforms the Western experimenters would be seeking.

Then they would measure everything likewise that the body is *emitting* when in that environment. That is the "zero reference" or "normal reference" level. They would measure every aspect: frequency, amplitude, phase, wave shape, modulation, etc.

Probable Experimental and Measurement Techniques

Next they would selectively irradiate the body with specific signals, frequencies, waveforms, etc. They would begin by using portions of the same frequencies that are being emitted from the body in the "zero reference" environment. They would insure that the returned signal was of higher amplitude than the usual signal being emitted by the body at that same frequency and type.

They would consider the body dielectric as a "ship with portholes". Light (EM transverse wave energy) coming out of the portholes has originated and adapted from everywhere inside the ship and its operations. When the experimenters reinsert energy through one or more portholes, they are interested in determining precisely which operations inside the ship are affected. So the body physiological functions are also heavily instrumented.

By feeding back in the exact EM pattern and magnitude escaping the body dielectric through a single porthole, one "nullifies" that part of the emission by producing a net equilibrium in that component. This will in turn produce changes elsewhere in the spectrum emission from other portholes, and this can be measured. It will also produce "stress changes" in specific portions of the body dielectric, and in the heavily instrumented body these physiological, chemical, electrical, etc. changes can also be detected. Monitoring of the skin conductance, e.g., indicates the level of stress, and EEG monitoring with sophisticated instrumentation can indicate something of the brain wave states.

In short, the necessary measurements from which to construct specific correlates can be performed, recorded, and later analyzed.

This article will be concluded in Volume 9, #4 with Improving the Methodology, Further Phenomenology Experiments, Rejuvenation and other matters. ◆

ABOUT THE AUTHOR

President and Chief Executive Officer, CTEC, Inc. Lieutenant Colonel U.S. Army (Retired). MS Nuclear Engineering, Georgia Institute of Technology. BS mathematics, Northeast Louisiana University. Graduate of Command & General Staff College, U.S. Army. Graduate of Guided Missile Staff Officer's Course, U.S. Army (equivalent to MS in Aerospace Engineering). Numerous electronic warfare and counter-countermeasures courses.

Tom is the leading advocate of scalar potential electromagnetics and the Fogal charge-blocking semiconductor. He is involved in alternate energy devices and scalar electromagnetic system prototypes. He has defined charge q as a coupled system of two components, advanced a mechanism for a vacuum engine, whereby the vacuum's virtual particle flux is organized and used to energetically shape and manipulate matter and energy, and advanced a mechanism for a Bohm-type quantum potential, which theoretically allows the engineering of action at a distance in physical systems.

He is president of the Association of Distinguished American Scientists (ADAS), a life member of the Alabama Academy of Science, Emeritus member of the American Association of Physics Teachers, and has served on the Board of Directors of several associations and corporations. Tom is a guitarist, a retired aikidoist (Sandan, Yoseikan style), is happily married and has two sons and two daughters. He and his wife Doris live in Huntsville, Alabama where Tom is retired from aerospace, continues private research, and serves as a consultant to industry on Scalar electromagnetics processes.

REFERENCES

1. *In fact, it simply applies in the laboratory that method that is already used by species for the so-called "directed evolution" component of evolution. The exact mechanisms for directed evolution also arise naturally in the new approach. Directed evolution is required; e.g., no reptilian species could have evolved slowly into a bird. As it started slow changes, it would have not been able to fly or to run, and would have been simply destroyed immediately by predators. Instead, such evolution occurs in a single jump in a species hard-pressed for a lengthy period. In the evolution of birds, one day every reptile egg that hatched, now hatched into a complete and functional bird with light bones, feathers, etc. A continuing debate (with perhaps more emotion than science) continues to this day on directed evolution. But it is real, and the mechanism can readily be generated (we've already done the gist of it).*

2. *Fritz Albert Popp, "Photon Storage in Biological Systems," in Fritz Albert* Popp et al, *eds.*, Electromagnetic Bio-Information: Proceedings of the Symposium, Marburg, Federal Republic of Germany, Sep. 5, 1977; *Urban & Schwarzenberg, Baltimore, 1979, p. 123-149;—"On the coherence of ultraweak photoemission from living tissues," in* Disequilibrium and Self-Organization, *ed. by C.W. Kilmister, D. Reidel, Hingham, MA, 1986;*—et al., *"Physical aspects of biophotons,"* Experientia, *Vol. 44, 1988, p. 576-585;—"Biophoton emission: New evidence for coherence and DNA as source,"* Cell Biophys., *Vol. 6, 1984, p. 33-52. See particularly Fritz Albert Popp, Ke-hsueh Li, and Qiao Gu, Eds.*, Recent Advances in Biophoton Research and its Applications, *World Scientific Publishing Co., New York, NY, 1992.*
3. *With novel use of EM time-energy to curve spacetime, the physical actions of the "placebo effect" are due to the use of such "spacetime curvature engines" to produce actual physical effects—at least temporarily —in the cells and throughout the body's chemistry, physiology, etc. Experimental detection of these physical effects are well-established in the orthodox medical literature.*
4. *For example, see particularly R. O. Becker, "The direct current field: A primitive control and communication system related to growth processes,"* Proceedings of the. XVI International. Congress of Zoology, *Washington, D.C., Vol. 3, 1963, p. 179-183;—"The direct current control system: A link between environment and organism,"* New York State Journal of Medicine, *Vol. 62, 1962, p. 1169-1176;—and D. G. Murray, "A method for producing cellular dedifferentiation by means of very small electrical currents,"* Trans. N.Y. Acad. Sci., *Vol. 29, 1967, p. 606-615;—and Joseph A. Spadaro, "Electrical stimulation of partial limb regeneration in mammals,"* Bulletin of the New York Academy of Medicine, *Second Series, 48(4), May 1972, p. 627-64.*
5. *E.g., a popular discussion is given by John Travis, "Starting Over: Some Animals can regenerate limbs or even most of their bodies. How?"*, Science News, *152(18), Nov. 1, 1997, p. 280-282. For a typical technical paper, see Jeremy P. Brockes, "Amphibian limb regeneration: Rebuilding a complex structure,"* Science, *276(5309), Apr. 4, 1997, p. 81-87.*
6. *I have one viewgraph which lists those 32 major flaws in electrodynamics. Further, leading theorists (Evans, Crowell, and others) in the Alpha Foundation's Institute for Advanced Study (AIAS)—of which I am a Fellow Emeritus by AIAS's kind tolerance—have added about another very technical and very fundamental dozen or so errors to my own list. A leading foundations scientist with over 500 papers in the literature commented dryly to the AIAS that "I broadly agree. that the transverse plane wave view of vacuum electrodynamics is the biggest blunder of twentieth century science. Faraday visualized that "EM disturbances" surrounding wires, magnets, etc. were simply the transverse plucking of taut strings. As he states in his book, Maxwell—who also firmly believed in the material ether—simply captured Faraday's thinking and assumed that transverse "plucked string" wave disturbance in the material ether. At the time all this was expressed, the electron had not been discovered, the atom had not been discovered, the molecule was a featureless blob, and no one had the slightest notion of an atomic nucleus filled with protons and neutrons. Charge was simply a "certain volume of electric fluid" and everything electromagnetic was expressed in fluid dynamics. As an example, that "material fluid" and "material ether" theory was destroyed in the late 1880s by the Michelson-Morley experiment. All the Maxwell equations assume that material ether to this day; not a single equation was ever changed to eliminate the material ether assumptions during the last 110 years.*
7. *For full explanations of the "Moscow Signals," see T. E. Bearden, .,* Gravitobiology: A New Biophysics, *Tesla Book Co., P.O. Box 121873, Chula Vista, CA 91912, 1991;—*AIDS: Biological Warfare, *Tesla Book Co., 1988. For an excellent Government study of the Embassy radiation by excellent but orthodox Johns Hopkins scientists, see A. M. Lilienfeld* et al., Foreign Service Health Status Study: Evaluation of Health Status of Foreign Service and Other Employees from Selected Eastern European Posts, *Department of Epidemiology, of Hygiene and Public Health, The Johns Hopkins University, Baltimore, Maryland, Final Report, July 31, 1978. On p. 245, it is noted that a marked excess of symptoms were noted in the Moscow employee group as compared to other East European employees in other East European nations.*
8. *Johns Hopkins researchers established the exact field patterns present in the Embassy from the microwave carrier radiation; see Robert C. Mallaliew,* A Model of the Microwave Intensity Distribution within the U.S. Embassy, *Moscow 1966 to 1977, Report FS-80-166, Applied Physics Laboratory, Johns Hopkins University, Aug. 1980. Nowhere in any of the Government-funded studies is there any consideration of field-free scalar potentials and their internal time-polarized EM wave structures (the bidirectional phase conjugate wavepairs shown by Whittaker to comprise the scalar potentials). Yet the field radiation patterns surprisingly showed that in just such field-free, persistent potential zones was where 100% of the health changes occurred.*
9. *Vlail Kaznacheyev and L. P. Mikhailova,* Ultraweak Radiation in Intercellular Interactions, *[in Russian], Novosibirsk, 1981 [an English exposition of much of the Kaznacheyev work is given in Vlail Kaznacheyev, "Electromagnetic Bioinformation in Intercellular Interactions,"* Psi Research, *1(1), Mar. 1982, p. 47-76.]. See also Vlail Kaznacheyev* et al., *"Distant intercellular interactions in a system of two tissue cultures,"* Psychoenergetic Systems, *1(3), Mar. 1976, p. 141-142. In the same issue, see "A Comment" by William A. McGarey, p. 143; "A Comment" by Arthur C. Hastings, p. 143-144. See also Vlail Kaznacheyev, "Apparent information transfer between two groups of cells,"* Psychoenergetic Systems, *1(1), Dec. 1974. The Soviet Union awarded Kaznacheyev a very high medal for his achievements.*
10. *For a very nice summary of EM bioeffects from the more conventional view, see Robert O. Becker and Andrew A. Marino,* Electromagnetism and Life, *State University of New York Press, Albany, 1982. The book is also available at http://www.ortho.lsumc.edu/Faculty/Marino/El/ElPub.html.*
11. *Andrew A. Marino,* Powerline Electromagnetic Fields and Human Health, *http://www.ortho.lsumc.edu/Faculty/Marino/Marino.html. This book is highly recommended. Particularly see "Chapter 5, Blue-Ribbon Committees and Powerline EMF Health Hazards," and "Chapter 6: Power-Industry Science and Powerline EMF Health Hazards." Biophysicist Marino is one of the leaders in the field and has been personally involved in many skirmishes with powerline-dominated studies and findings.*
12. *E. T. Whittaker, "On the Partial Differential Equations of Mathematical Physics,"* Mathematische Annalen, *Vol. 57, 1903, p. 333-355; — "On an Expression of the Electromagnetic Field Due to Electrons by Means of Two Scalar Potential Functions,"* Proc. Lond. Math. Soc., *Series 2, Vol. 1, 1904, p. 367-372.*
13. *Reali, G. C., "Reflection from dielectric materials,"* American Journal of Physics, *50(12), Dec. 1982, p. 1133-1136. The reflected field from a dielectric material is not generated just at its surface but comes from everywhere in the interior of it.*
14. *Present physics models the EM wave as transporting energy, but erroneously omits that it also transports time. A photon is made of angular momentum, or "energy x time". Since EM waves are made of photons, it follows that they transport both the energy components and the time components making up those photons. An EM wave is a wave of angular momentum, not just a wave of energy.*
15. *KGB energetics weapons scientists call this internal structuring the "information content of the field." However, the Russians use a good deception plan, which implies that the "information content of the field" is just the normal transverse EM spectral content of EM signals. Appreciable "pertinent" work using that phrase is produced by the open Russian scientific community, thus confusing the issue. Our electrodynamicists seem to buy it hook, line, and sinker. The deception plan also tricks Western scientists into thinking that psychoenergetics is nothing but a Russian version of Western parapsychology. Again, our scientists comfortably accept this with smug satisfaction.*
16. *Presently the Russians are in a great new version of this deception plan, with the goal of deceiving Western scientists into thinking that the "secret" Russian energetics is based on torsion fields. Consequently they are releasing substantial material on torsion wave theory, including replicable experimental results. The released version of torsion fields has one glaring omission: the time components and structuring. This deception plan is excellent, because the torsion field theory that is released, is indeed "real" and testable. It is also revolutionary, with respect to present Western science. It almost positively assures diverting the attention of much of the Western science community into this highly limited subset of the full Russian torsion theory—effectively diverting the West away from psychoenergetics and the direct use of t-polarized EM waves and fields, torsion or otherwise.*
17. *We point out that E. T. Whittaker, in "On the Partial Differential Equations of Mathematical Physics,"* Mathematische Annalen, *Vol. 57, 1903, p. 333-355, showed that every scalar potential is comprised of an internal structure of bidirectional longitudinal EM phase conjugate wavepairs in an infinite set of harmonics. Each of those phase conjugate longitudinal EM wavepairs comprises a time-polarized EM wave. So the common potential contains an internal longitudinal EM wave structure that is further organized into an internal time-polarized EM wave structure. The mind-intent correlates and the total mind and emotional experience correlates from fertilization of the egg that led to development of that person, is in the internal substructure of every potential in the living body. In his "On an Expression of the Electromagnetic Field Due to Electrons by Means of Two Scalar Potential Functions,"* Proc. Lond. Math. Soc., *Series 2, Vol. 1, 1904, p. 367-372, Whittaker also showed that any EM field or wave is comprised of two scalar potential functions. It follows from Whittaker and Reali that the EM emissions from the living body carry the internal correlates of everything that has been experienced by that person from conception in the womb. Sometimes this deep embedded "hidden information content" can even be accessed in deep hypnosis. I once observed the deep hypnotic regression of a subject back to her prenatal experiences prior to birth, where the subject relived hearing words of rejection by the father, before the subject was born. The occurrence of the incident and the father's words were directly confirmed on the spot by the mother, who was closely observing the session as it occurred. It turned out that this particular rejection of the baby still in the womb had played a major role in subsequent deep psychological problems experienced by that person all her life. To resolve the problem, use of a powerful "simulated" reliving pre-birth experience was conducted with the subject again in the pre-birth state and actively participating, but now with the father figure directly expressing love, acceptance, and cuddling and hugging his daughter. This led to a rather dramatic remission of most of the deep psychological problems within 24 hours.*

Mind Control and EM Wave Polarization Transductions, Part 3 of 3

©Copyright 1999 by T.E. Bearden, USA

This outstanding article is the last, Part 3, Part I and 2 of which were published in Volume 9, #2 and #3 of Explore! for the Professional. Because we feel that Col. Bearden's Special Note below is so very important we are repeating its publication in all 3 parts of this article.

Special Note

This article refers to experimental research techniques which can be detrimental or lethal in the hands of any but highly skilled, qualified experimental scientists proceeding under proper laboratory safety procedures. The purpose of this article is strictly for information to properly qualified and authorized scientists in certified laboratories. We do not propose or condone any use of these procedures for nonapproved practice of medicine without a license. Neither the publisher nor the author are responsible for accidents or outcomes in the use of these experimental procedures and techniques. Any researcher who performs these procedures and experiments is acting on his or her own volition, and is solely responsible for insuring safety, qualifications, and legality of the acts and their results. We neither suggest nor condone unauthorized experimentation on human subjects. Such is a criminal violation of the constitutional rights of the subject under Federal and State laws, and achieving many more effects in the targeted bio-organism or groups of them. With Hunt's method, the system as an open dissipative system far from thermodynamic equilibrium in its environment is being measured as such. This more directly allows for determination of the environmental inputs on a much broader range of subsystems, both space-like and time-like. Particularly for mental and emotional correlates to environmental stimuli, such measurements and correlations are essential.

More Comprehensive Phenomenology Experiments

To return: Now the scientists would perform many phenomenology experiments, making one little change at a time and profusely recording the data. Each time, they would establish the physical change(s) that occur in the body and/or the mental and emotional changes that occur in the mind for each spectral reinsertion back through the "ship's portholes". They would simply but painstakingly (over some years) build up an extensive database of those individual correlates.

In these experiments, the experimenters will eventually be able to provoke any body or mind change they wish. Strong emotion. Intense pain. Intense pleasure. Painful thoughts. Images. Memories.

is both illegal and immoral.

Two Ways to Improve the Methodology and Experimental Correlates

We diverge momentarily: If they wish to improve this methodology, they will consider the body dielectric as a nonlinear isotropic medium. Then they will pretend that the spectrum of difference frequencies between each two adjacent waves is the spectrum of "emissions" from the body. They would also use those, as if they were actual emitted spectral signals, instead of the actual signals emitted. That procedure will give superior correlations, but it is more complicated. Part of that is known for underwater sonar,[1] and so our own scientists may or may not have realized it for use in mind and behavior correlate determination with respect to the body dielectric.

Another dramatic improvement in the depth to which the correlates can be constructed, is provided by detecting each porthole output in a two-channel device, where one channel has an adjustable time-delay as utilized by Dr. Valerie Hunt.[2] The two channels—one real-time and one slightly delayed—are then mixed, as by Hunt's method, producing an instrumental measurement of the chaotic part of the functions. Again, this can be measured, recorded, and later analyzed. It adds (i) a completely different kind of thermodynamics in the system measurements, (ii) a dramatically extended set of correlates, (iii) more direct measurement of the time-polarization causative signals, and (iv) an applications technology eventually having many additional degrees of freedom and therefore capable of Perceptions. Dreams. Visions. Memory losses. Memory changes. Personality changes. Etc. The "delta" in the emission spectrum (the changes from zero reference spectrum) represent the precise totality of all mental, physical, organic, chemical, etc. changes and interactions.

A particularly vulnerable aspect of every mammal is the pleasure center in the brain. Experiments have shown that, when this center is stimulated, it is the most addictive experience possible. Rats will forego food, endure electrical shocks, starve, and even die to obtain stimulation of this center. Obviously a device capable of generating signals that evoke direct stimulation of the pleasure center in humans would be a powerful weapon.[3]

Extending the Data Base

See Figure 12. After the researchers have made an "individual porthole signal insertion" correlate database, then they would make a "two, three, four," porthole signal insertion correlate database by inducing selected multiple changes at once. Again they would analyze everything; the program would need one or more supercomputers. It would also require quite a highly qualified multidisciplinary team, extensive facilities, substantial funding, and would be many years in duration. We are describing a decades-long program. But it's a doable.

With sufficient development and performance of such a program, the researchers would have produced (with sufficient testing and analysis, and sufficient retest validation and verification) a database of "specific correlates for a given overall desired physical, mental, or physical and

mental delta."

A second stage in the research would be to test the correlates and porthole insertions upon a statistically significant cross section of ordinary people, and/or specialized populations (such as toughened soldiers). The program would evolve a highly complex, very effective, ever-improving science and technology of mind and behavior control and engineering mechanisms, complete with finished database and developed applications equipment.

The Dielectric Body as a Ship With Portholes

Again let us review what the EM transverse wave irradiation from the body dielectric represents. Think of the body dielectric as a sort of "ship", with lots of portholes. When it gets irradiated, certain operations happen internally to that radiation, i.e., certain "processes" and "interactions" occur, which change both the mental and physical states. The output emissions back from the body dielectric, out through the filtering "portholes", will directly correlate to what has happened inside the ship.

It is terribly important to realize that one can use the same frequencies and spectra coming back out of those "portholes" to insert EM signals and waves etc. back in there, and into the deepest processes going on in the body and in the mind (at all levels, including the deep unconscious). times. So it will reach directly into and affect any and every part of the dielectric, as you wish, and in whatever manner you have correlates for.

We filed an invention disclosure[4] on the above correlate and "back-porthole" process for use in directly inducing full and efficient conversion directly to time-density (scalar, or time-polarized) EM waves inside the body/ cells, therefore immediately and directly time-excitation charging the body cells and all their internal components.

Subtracting the Normal Correlates to Obtain the Deltas

A specifically diseased body, e.g., has a specifically tailored change in its "normal" emission spectra, because of the disease condition alteration of its resident spacetime curvature engine. By having a database for the normal emission spectra of the healthy body, one can subtract it from the actual emitted spectra, to obtain the "delta spectrum".

If the correlates have been previously determined by the above mentioned research program, then one may simply introduce an amplified "delta spectrum" into the body, i.e., through the portholes. This will immediately time-excite the cells and their components throughout the body, particularly where that disease does exist. It turns out that the time-excitation charging by that method will "pump" those diseased cells in the time domain. The cells themselves (and all their parts) are highly nonlinear—to time-excitation

Remember, whatever you put back in there, is going back through the "mixmaster" hopper. It will be iteratively phase conjugated and interfered with by everything, countless charging, they are totally nonlinear. So they will act as rather perfect pumped phase conjugate mirrors, but pumped in the time-energy domain rather than in the spatial

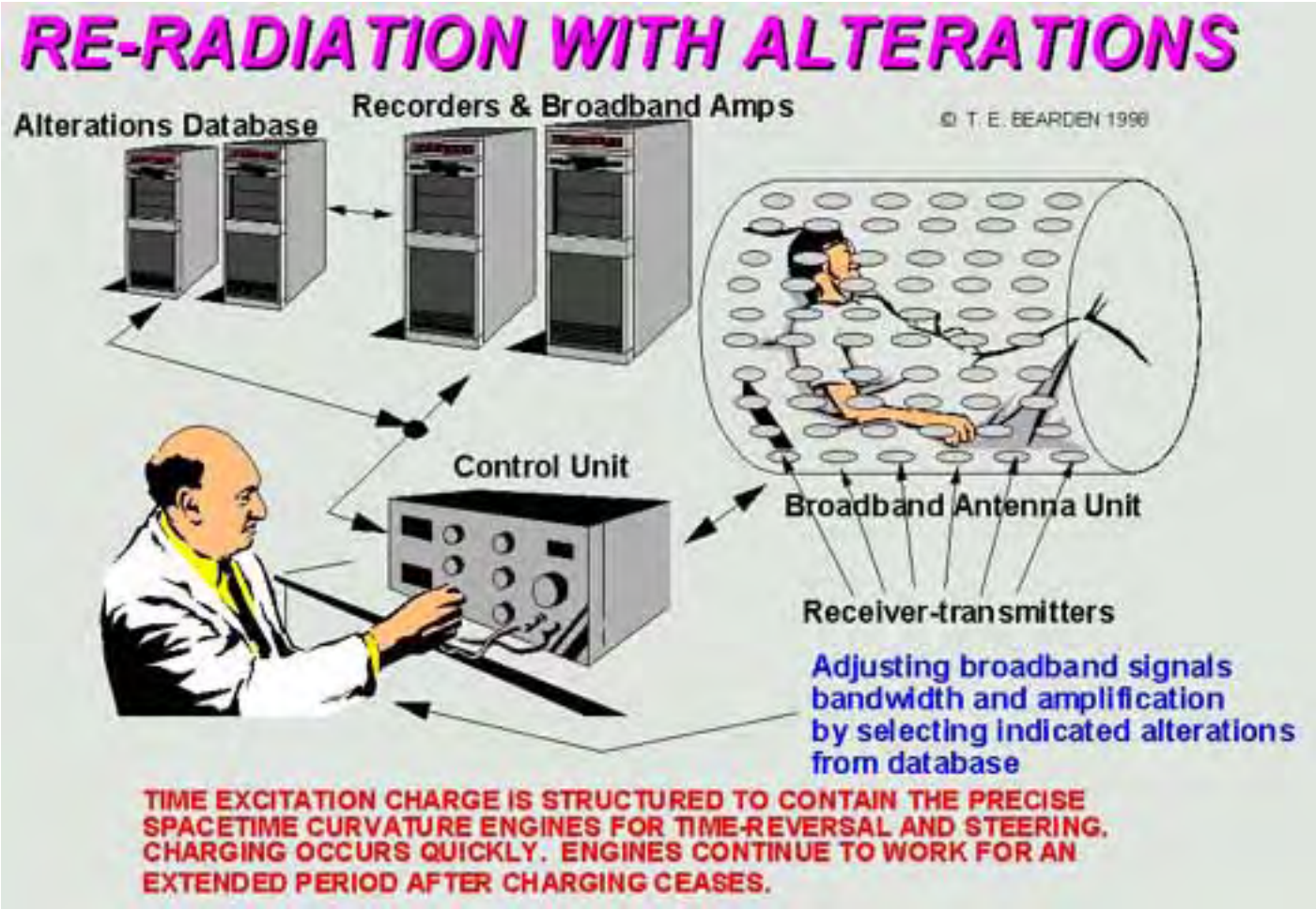

Figure 12. Using an amplified replica of the body's own dense, broadband signal complex, containing added alterations, to irradiate the body and produce deeply-penetrating precise time-density charging for cellular time-reversal while steering the time-reversal trajectory to also correct a congenital condition.

EXPLORE! VOLUME 9, NUMBER 4 & 5, 1999

energy domain. This is a dramatic extension to nonlinear phase conjugate optics theory.[5]

General relativity tells us that each specific detail of the mass and energy structure of each cell and all its parts—down to the finest details—is accompanied by a precise set of spacetime curvatures. By reintroducing the same energy as the disease delta TW waves, the affected cells add the phase conjugates, converting the inserted TW signals into longitudinal EM wave signals. The longitudinally-pumped cells again phase conjugate, converting these longitudinal EM waves to time-polarized EM waves, and "charging" the cells and all their parts in the time domain.

Suddenly, at that point the resident spacetime curvature engine—rather than TW or LW EM waves-serves as the "input signal" to the cell-and-its-parts as pumped phase conjugate mirrors (PCMs), pumped in the time domain. An extension to the distortion correction theorem of nonlinear optics results. An exact, amplified antiengine for the diseased cells—i.e., a phase conjugate replica of the resident spacetime curvature engine—is formed. This amplified antiengine overpowers the resident disease engine, powerfully time-reversing the cells and their components back to a previous healthy state. The time-reversal actually occurs over a period of time after the "time excitation charge-up" ceases, say over the next week or two. Usually two to three quick irradiations are required, one week apart, to give a time-reversing period of three to four weeks.

Even though appreciable forces are operating internally upon the cells and all their parts, there is no net translation force upon the cells or any part. E.g., as Pepper[6] states,

"On a more fundamental level, the ideal lossless PCM reverses all the quantum numbers of the incident photon (i. e., linear momentum, angular momentum, etc.). It can be shown that the PCM therefore experiences no linear or angular momentum transfer from the incident photons; hence, the PCM is free from photon radiation pressure and torques."

Note that, in ordinary EM theory, it is precisely translation forces that are engendered upon charged mass by EM fields. This process is quite different. In biological terms, this process dedifferentiates (in physics: time-reverses) the diseased cells and all their components—including the genes—back to an earlier healthy state.

By taking a diseased body and feeding back into it an exact amplified replica of its emitted TW spectrum, one can force the body to "time-excitation charge" all cells and their components immediately, with high efficiency. The human body and every cell and every part of every cell does the necessary "calculation" for the exact antiengine for each part. Since time is extremely condensed spatial EM energy (by a factor of almost 10^{17}), a startling contraction occurs in the radiation time required to time-charge the cells and their components and charged particles. This is a method for instant initiation of time-charging, hence it is extremely rapid. What took Priore several hours of LW irradiation to accomplish in the body,[7] can now be done in seconds with this "thwarting" and spectrum transduction method. In fact, it is an intense stress on

the body, and—say—should only

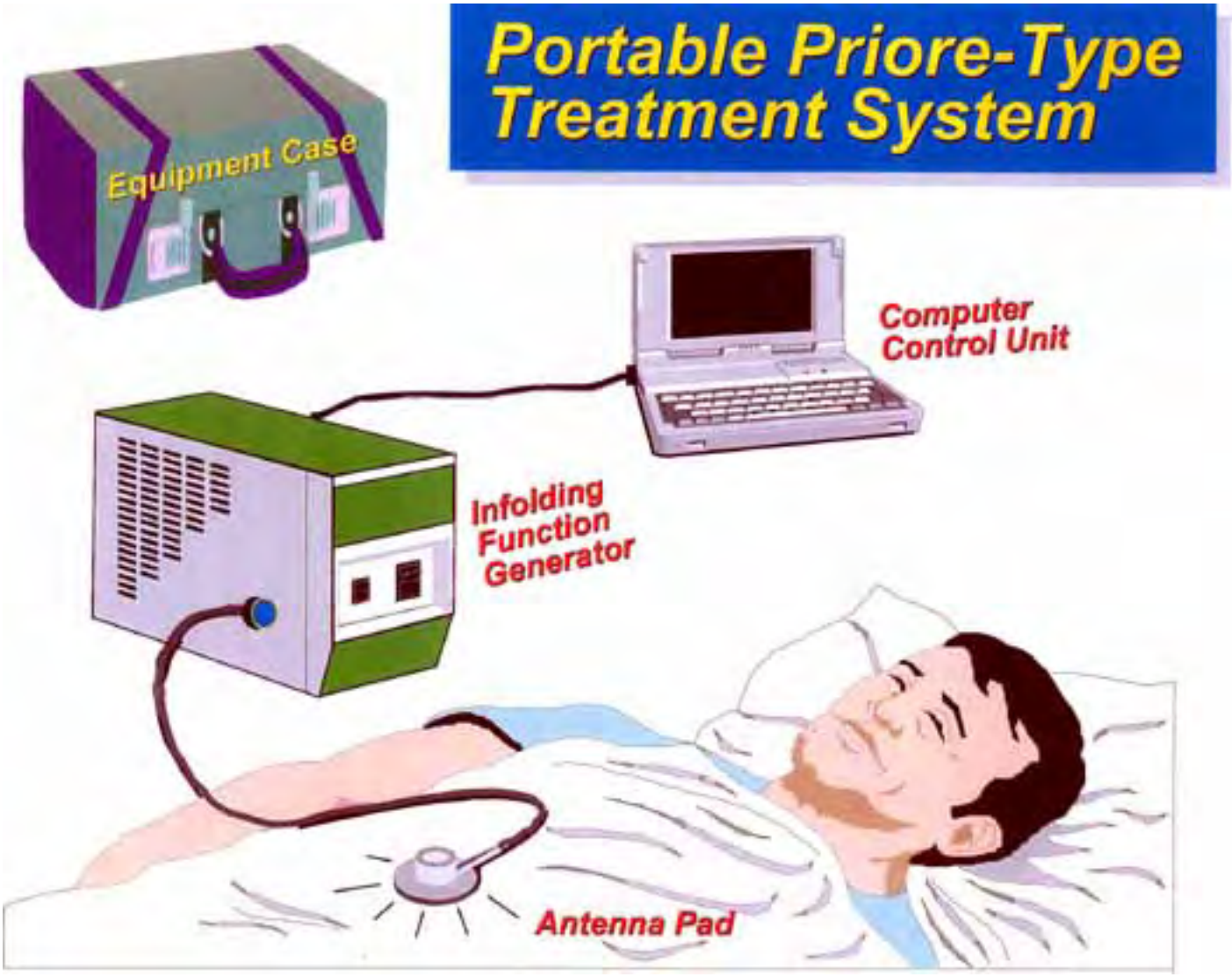

Figure 13. Portable first-method treatment unit proposed to the Department of Defense. For treating and curing mass casualties from terrorist BW attacks on U.S. population centers.

be continued for 30 seconds or so. We highly stress that overcharging in this time domain can be detrimental or even lethal if prolonged.

At the end of the very short time-excitation charging time, the body is "time-excitation charged in all its minutest particles". So everything is therefore pumped in the time domain for the next several days after the irradiation is removed, since the time-charge decays very gradually over a period of time. During that decay period, every part of the cell and body acts as a pumped phase conjugate mirror material, pumped in the time domain rather than in the 3-space energy domain. When time-pumped, the mass itself reverses to a previous physical state. This can be used for both nonliving and living masses. Because there is no forcible translation manipulation of the cells and their parts, it can be utilized on living cells in vivo. In the case of diseased cells—e.g., AIDS-it appears that three precisely determined 30-second "AIDS correlate" irradiations a week apart, should be sufficient to completely cure AIDS, including removal of all HIV-genetics changes from every previously infected cell of the body. Also, it would accomplish considerable rejuvenation of the body (making the body younger).

Rejuvenation: Restore the Telomeres and Produce Immortal Cells

Saving Most of the Casualties from Mass Terrorist Attacks

To defend against things like anthrax attacks on our civilian population centers, we also have recommended to the U.S. Government the crash development of small, portable treatment machines—using similar "antiengine-forming" and cellular reversing "porthole technology". [See Figure 13 on previous page]. Such portable machines could be developed cheaply and quickly, and present government facilities could be used to massively attack the correlate database production problem. The portable treatment units could be cranked out by the hundreds of thousands and flooded down through emergency response agencies such as the police forces, the National Guard, emergency hospitals, emergency response teams, etc.

Each device could be used in "assembly line" fashion upon hundreds of sickened patients, in case of a WMD (weapons of mass destruction) attack upon one or more of our cities. The first generation equipment would save probably 70% of the stricken (as from anthrax, etc.). With second generation equipment, one would expect 90% of the stricken casualties could be saved.

Just now, there is a very dim prognosis for all those casualties, using present available treatment capabilities. Time and lack of vaccines defeats just about everything that can be done. Brutally speaking, most of those unfortunate enough to breath in anthrax spores from an

In fact, it is now known that the gradual loss of the telomeres—the natural ends of chromosomes—in a cell's chromosomes is what causes the cell to age. The gradual loss of the telomeres and the resulting shortening of the chromosomes represents a cellular "disease state" or "disorder" state" accompanied by a precise delta in the spacetime curvature engine accompanying every affected (aging) cell.

By determining the correlate for that precise telomere loss in the aging body's emitted radiation spectrum, an effective telomere regeneration process immediately emerges. One simply amplifies that aging "precise telomere reduction" correlate and reradiates the body with it, passing an amplified correlate back into every cell of the body. The cells and all their parts—including the chromosomes—add the phase conjugate replicas, converting the incoming TW EM correlates to longitudinal EM wave correlates. The cells again phase conjugate the LWs and add the phase conjugate replicas, converting the LW correlates to time-polarized EM wave pumping correlates. This latter process time-excitation-charges the aging cells and all their parts, including the genes and chromosomes. The cellular matter itself produces the amplified "aging antiengine" for each and every cell and telomere ending. The result is to again add telomeres, converting the cell back to a younger, more vigorous cell, and reversing the process of aging.

We point out without further elaboration that these methods also introduce direct engineering signals into the body's master cellular control system, including the regenerative subsystem. Hence the body's regenerative subsystem is involved in helping produce the necessary engines and operate upon the short telomere chains to add back telomeres. More specifically, the regenerative subsystem is changed into attack, are going to die. At least 80% of them will expire, in spite of everything the present system can do for them.

Note each device could rapidly treat a whole series patients, one right after the other, merely laying them between "blankets" containing wire antennas, irradiating with the proper correlate spectrum quickly, moving on to the next patient, irradiating quickly (seconds), etc. The entire apparatus could be made to fit in a large suitcase-sized container, and it would be highly portable and controlled by a laptop-sized computer.

Unfortunately, so far the DOD doesn't even understand what the heck we're talking about! The National Institute of Health (NIH) and the National Science Foundation (NSF) are not interested at all. After all, it isn't drugs, vaccines, antibiotics, etc. — which are simply not going to do the job. However, those are what the government and scientific communities are going to finance to the tune of hundreds of millions of dollars. They are then going to lose almost all those mass casualties when the terrorist attacks on our population centers inevitably occur.

Those are Americans. They are going to die. Most of them could be saved. We ought to save them.

For any change in state (physical, chemical, emotional, mental, perceptual), the body dielectric "portholes" change and the output spectrum changes. The delta from zero reference now represents that exact change.

Where Western Mind Control Research Has Probably Arrived

Western mind control researchers probably first established a correlation database of porthole emission correlates to changes in internal states, both physical

perfect consonance with the external introduction of the amplified antiengines.

That exact process can be used to rejuvenate the aged population and remedy most of the debilities of growing old. That is how we eventually intend to do it, if we can convince the U.S. government and the U.S. scientific community to perform the necessary research and validation.

and mental. They almost certainly recognize the peculiar participation of every part of the body dielectric in the TW emission spectrum from the body. They will almost certainly have opted for this "porthole" notion of some similar expression of it, and the "thwarting" of these "relaxation and release" emission processes to engender internal physical changes in the body and in the brain-meat-computer, as they see it.

EXPLORE! VOLUME 9, NUMBERS 4 & 5, 1999

They probably experimented with different TW EM radiation mixes, to see what the body emission change to, and what states are induced. Undoubtedly they found that the induced states began to correlate with the former emission delta data base. That is, they found out which delta emissions spectra, reversed and amplified and fed back thorough the portholes, produce what internal changes.

Use for healing is the simplest of all. Use for killing or debilitating is more complicated. Of course weapons researchers wish to look only at the killing aspects. That is something they understand. They do not understand healing, for they do not even have the "regenerative" or "healing" mechanism in any of the scientific papers or texts. Becker[8] came closest in this country, and Priore did it in France. Both of those scientists were suppressed and paid a bitter price for their revolutionary and innovative research.

But look at what has been done, by "input-output" correlation research. The scientists will have a database now, that tells what state emerges in the body and in the mind, for what irradiation spectra (frequency, relationships, phases, amplitudes, wave shapes, etc.) one uses. And they did not work out all the wave-to-wave transductions ongoing in the mind and body connection and in the body and in the mind, individually, between TWÛLWÛTDW.

We suspect that this is the course Western mind control researchers will have taken, without even realizing the internal wave transductions occurring. And they would not be concerned with that. They would have what they want, for weapons, mind control, and behavior control. And of the internal "mix" of the dielectric and all its tiniest portions. So Western mind control researchers and rogue groups probably do get good results.

We are not just picking on the U.S. government here! Internal divisive groups exist in all large and powerful groups, and joust for power. In highly classified groups, these groups are greatly enabled to joust more widely, unethically, and immorally because it is so deeply hidden. So very deep classification evokes the growth and intensity of rogue groups. It's the old "Power corrupts, and absolute power corrupts absolutely" routine.

The implication is that in the West one or more highly classified, sustained, heavily funded developments in advanced mind control programs, probably exists and probably has existed for some time. Due to loose formation of rogue groups inside such programs, they may have dual or triple purposes, may not operate under very much legitimate government control at all, and may operate specifically for the purposes of the rogue group or groups that have gained control.

In a nutshell, that's what may be going on in the clandestine mind control projects in several Western governments. The involvement of at least some rogue groups, some being "cowboys" who operate well outside all laws and ethics, could also result in such things as assassinations, clandestine testing on individuals without their consent, etc. In short, it could account for what seems to be actually occurring. As also is "usual" in such a mess, one or more of the rogue groups eventually may become very powerful because their secret weapons are very powerful. They may become confident, thinking they have the "best in the world." They may actually believe they are ahead of the Russians.

they would of course ignore the healing aspects. And they would get results of course, revolutionary results. So they would undoubtedly classify the program very highly, thinking that they had the best of the best.

Rogue Groups May Also Have Arisen to Divert the Purpose of the Projects

And that is where real problems may arise. Every human group has within it competing subgroups, jousting for power. The more highly classified the group and its activities, and the less that is known about it outside its confines, the more strongly and secretly the subgroups can play. So they can emerge as rogue groups pursuing their own agendas, not that of their duly elected governments. In the extreme, such a deep black program can even become a "captured" program, which is totally in the hands of rogues and no longer reports to or is bound by the dictates of the parent government.

It has long been suspected in some quarters that even the US's highly classified research community may be riddled by such rogue groups, and so may be certain highly sensitive parts of the Research and Development community.

Remember that, in every large and powerful human organization, the basis for rogue groups is power and secrecy. They are always seeking to increase their power, control, influence, prestige, etc. Nothing else. Patriotism and mission are—to rogue groups—often just idle words. They have their own agendas. And being rogue groups, they may well bring in unethical, immoral tricks: assassination, bribery, entrapment, disinformation, plausible deniability, etc. A certain percentage of a highly secret rogue group will wind up using all these things and more. It's a

Where the Russians Probably Have Arrived

On the other hand, the Russians will have developed instruments for detecting and isolating the LWs and the scalar waves, in addition to the ordinary mundane instruments for measuring the TWs. So they will have not only the TW correlates, but also the much finer TWÛLWÛTDW (scalar EM wave) correlates. They will understand and employ the use of vacuum engines (spacetime curvature engines) which Western researchers will often invoke but not understand or even be aware that this is what is being invoked. In other words, Western researchers probably just use the old method of "input fi set of functions fi output". That is the standard basis for almost all Western system analysis. With it, one doesn't have to know the exact functions and processes going on in the middle. One just determines a transfer function from a given input to the output that results. Then one catalogs that transfer function. One does that for lots and lots of transfer functions for particularly desirable results, and one has the system analysis. One also has the immediate basis for a rapidly-developed applications technology.

Western scientists are good system analysts. But they have little or no comprehension of what is really going on in that "inside the ship functions" portion, even though they have determined the transform function which acts upon the input to give the "from the portholes" output.

The Russians, with their additional knowledge of the actual mechanisms in the transforms, will be much more advanced than the West, because their fundamental psychoenergetics science is far more advanced, so long as we continue to use

human characteristic, the old primate dominance game. Only now disguised and hidden under deep classification.

Nonetheless, the "simplified" TW EM "porthole correlate" approach will yield very positive results, due to the correlation existing with the LW s and scalar portions the old U(l) electrodynamics. Further, the Russians have decades of use of longitudinal interferometry beams to reach right through the earth and ocean and produce stringent EM effects at a distance. So they will also be able to do the same things here in "mind control" with LW interferometers, through intervening mass

including the earth and ocean. Western mind-control scientists and their rogue groups—assuming they exist as postulated—largely will not be able to do that, and probably won't even recognize Russian testing of psychoenergetics weapons directly in or over Western nations.

Russian Lethal Psychoenergetics Mind Control Tests Over the U. S.

In fact, the KGB tested just such highly advanced mind control weapons over the middle of the United States in 1997 on two occasions. The tests were conducted against Captain Button in his A-10 "Warthog" aircraft on April 2, 1997 [See Figure 14], and upon Captain Svoboda in her A-10 "Warthog" on May 27, 1997. [See Figure 15].

Over Arizona, Captain Button was thrown into a hypnogogic state, and his perceptions instantly altered and controlled. In his instant "dream-waking" state, everything seemed perfectly normal. His sense of direction was altered a bit more than 90 degrees, so he simply corrected and turned and "flew toward the range", actually flying off course by more than 90 degrees and ignoring radio contacts. He flew right on out of Arizona. At one point he circled, probably thinking he was over the range, and he probably dropped his ordnance there. Then he "flew on back toward home," as he thought in his waking dream state, until his fuel ran out and he crashed and died in the explosion—dream-thinking until he died that everything was normal. All the while, his sense of the passage of time was altered. To him, in his dream-thinking, dream-acting state, everything was normal and nothing untoward had happened. So the distant KGB transmitters and associated psychoenergetics team controlled him for over an hour.

Indeed, that was the exact purpose of the test: demonstrate control (at a great distance) of a skilled person performing highly skilled tasks. A secondary purpose was to stimulate the U.S. government, watch its investigation and findings, and ascertain if the U.S. knew of the extent to which Russian KGB mind control weaponry had advanced. Obligingly, we proved to me KGB that we did not understand what had actually happened to Captain Button.

Captain Svoboda was from the same Wing as Captain Button and was its most experienced night fighter A-10 pilot. In fact, she taught other pilots the fine points of night flying combat missions in the A-10. About two months after Captain Button's bizarre flight and death, Svoboda was engaged in night target bombing on the range. Rising from her ordnance drop on me target, Svoboda was suddenly struck and rendered hypnogogic and in a waking-dream state. Her sense of the vertical was instantly reversed. Superb pilot that she was, she immediately dream-perceived she was diving, not climbing out of the delivery. She instantly corrected to "climb out". So in the real world she dived sharply into the ground and her aircraft exploded.

This test demonstrated the instant alteration of a skilled pilot's perception, causing that pilot to inadvertently react promptly in an unintentionally suicidal manner. A secondary purpose of the test was to stimulate the U.S. government system again, to see if the system recognized what had

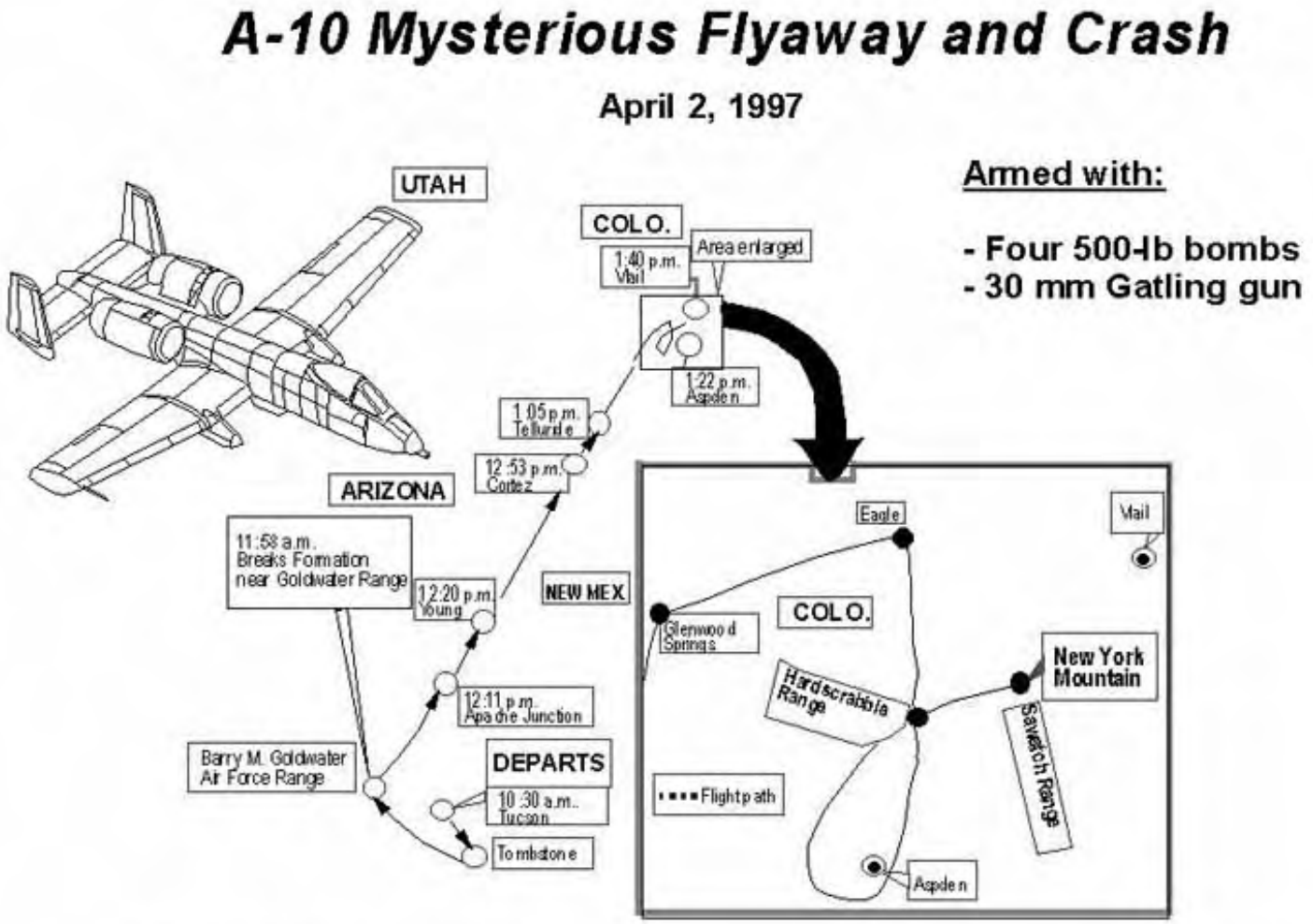

Figure 14a. Captain Button's mysterious flyaway and eventual crash.

EXPLORE! VOLUME 9, NUMBER 4 & 5, 1999

occurred. Sad to say, it did not and it has not. It was lamely speculated that Svoboda probably looked over her shoulder like a rank greenhorn, and inadvertently dived her aircraft into the ground while looking back at the target. If there was one pilot in the USAF who would have not done that, it was Captain Svoboda. At any rate, the KGB determined that the U.S. scientific, intelligence, and governmental communities did not have the foggiest notion of what had occurred.

In private proprietary communications[9] we have explained further, to proper parties, exactly the reasons for these two tests, and what exactly was being tested, and what is its planned strategic use.

The Final Race for Direct Mind Control of the Entire Human Species

The KGB psychoenergetics weapons scientists—because of their direct measurements and detections (and use) of t-polarized waves and LWs for decades—also understand that Jung's collective unconscious mind (of the entire human species) also has its own time-like operations and correlates, which one measures also when using t-polarization measurements and sorting it all out. The collective unconscious mind operations are buried several levels deeper inside the recursive Whittaker structuring inside the EM fields, waves, and potentials.

The KGB scientists also know that something very like Gaia— a collective unconscious mind for all species on earth—also exists, and they are striving to be able to sort out and measure that one as well. The Gaia operations are buried even deeper in the recursive structuring inside the EM fields, waves, and potentials. If one reads some later books by Kaznacheyev,[10] e.g , this human species unconscious mind aspect and the biosphere unconscious mind aspect emerges loud and clear, if one interpolates between the lines, so to speak. Actually, from day one, the Russian mind control scientists have had their eventual goal set upon this "deeper area of mind and possible mind control" of the entire human species.

I am convinced that the KGB psychoenergetics scientists understand this deeper area. If they can learn to directly engineer the collective human species unconscious, they can then convert the human species easily into a sort of "ant" society, modeled along ideal Communism lines, except of course with an excluded "hierarchy at the top" running everything. The "ant society"—communist style—is still a variation of feudalism (all systems tend to feudalism or some form thereof).

The KGB psychoenergetics weapon scientists are seriously pressing on toward that very goal. In my opinion they are not very far from it right now. It is simply a matter of developing sufficiently complex equipment to be able to directly engineer the time-domain substructuring at sufficiently deep levels. It is a doable, although it is very, very complex and very, very difficult. On the other hand, they have been at it for decades. Even in the 50s the Russians already had the old LIDA device,[11] capable of inducing a catatonic trance-like state in a mammal—either a human or a cat,[12] for example. Some versions of Russian mind control devices were used on Russian soldiers in the

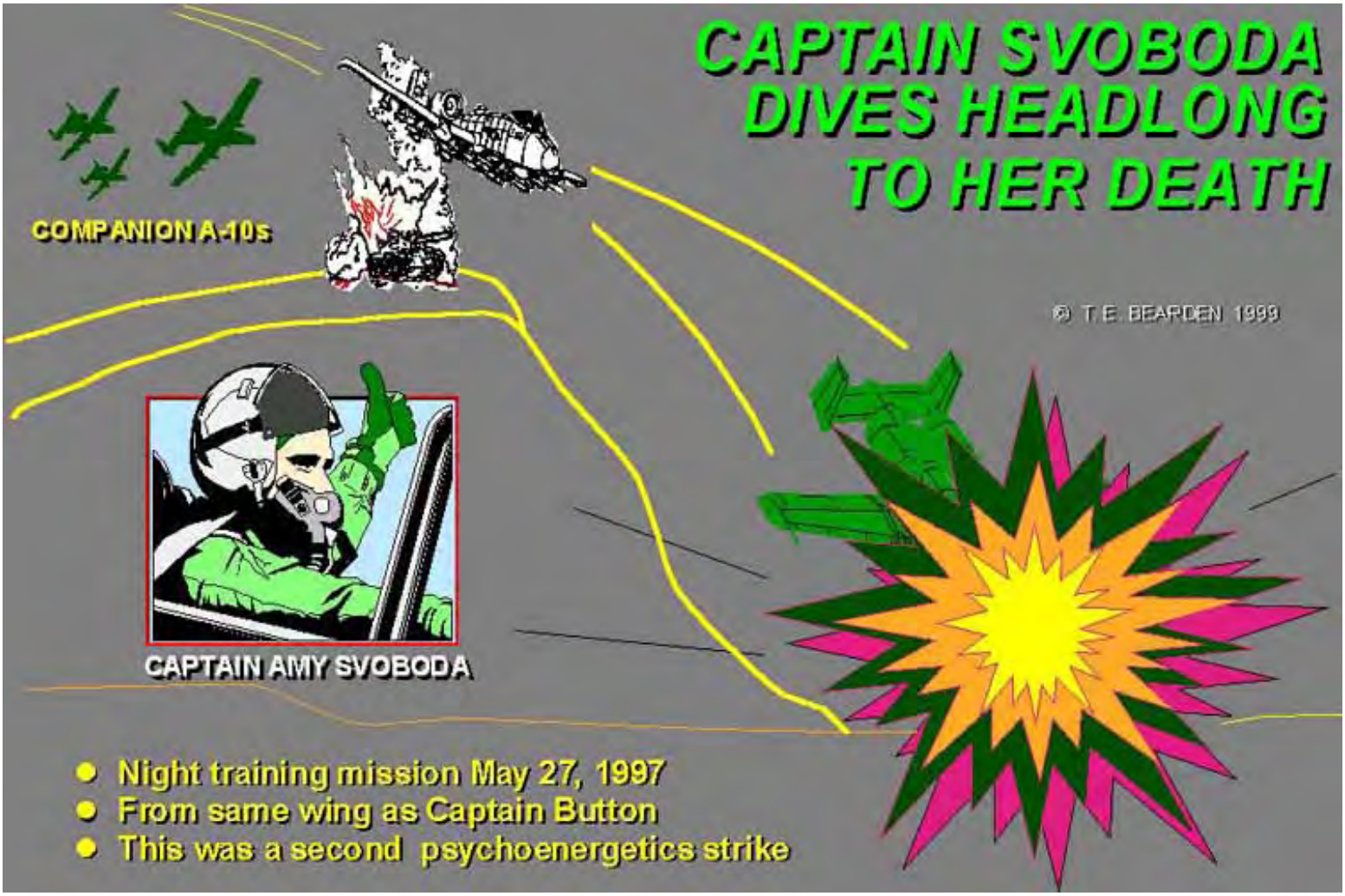

Figure 15. Captain Svoboda dives headlong to her death.

EXPLORE! VOLUME 9, NUMBER 4 & 5, 1999

Afghan War to condition them for performance of merciless acts.[13]

Potential U.S. Rogue Groups and Two Recent Examples

Meanwhile, rogue groups amongst Western clandestine mind control researchers will probably arise if they have not already done so. They will likely seek to increase their personal control and further isolate the programs from orthodox government review and from government and legislative control. They may even divert the research into highly illegal and unethical means, because it furthers their own rogue agendas. That is how clandestine U.S. government research can sometimes go sour, unless great care is exercised by the oversight committees in the House and the Senate.

Sometimes when rogue groups do gain control and total secrecy of a given new technological area, then what appears to be "U.S. government operations" do start to encompass a criminal and unethical operations, hidden usually beneath the deep veil of high classification. Also, if it's "scientific," no one is ever brought to justice, even if the "evil science actions" are uncovered and publicly revealed.

We Certainly Have Proof of Such Rogue Activity. For Example, Here are Two Prominent Cases:

1. For three decades, scientists from the U.S. government, universities, and civilian contractors secretly as a result of those ghoulish experiments. So what happened when this gruesome thing was revealed? Again President Clinton publicly apologized! The head of the Executive Branch did not turn the macabre matter over to his Attorney General to prosecute. How many of these scientists were indicted? Not one. How many are going to be indicted? Not one. Suppose again this had been done by a private doctor in his own private clinic. You get the point.

There is Little or No Punishment of Rogue Scientific Groups

Shockingly, the U.S. government at the highest level has directly shown (and these are not all such cases by any means!) that mass crimes against U.S. civilians, perpetrated by portions of the U.S. scientific community in direct conspiracy and in secret, will likely be condoned. The perpetrators will not be indicted, tried, or convicted.

Note the connection of the "rogue groups" thesis to the above incidents. Note how rogue scientific groups got away with it in both these cases. There may be other rogue scientific groups getting away with such things today. They should not be able

conspired to treat unsuspecting human patients with whole body nuclear radiation, including some retarded children and cancer patients. Some of those patients—including some of the retarded children—died as a result. These illegal experiments were conducted in great secrecy, and the results were highly classified. Eventually these actions were revealed, and a Presidential investigation committee investigated. These experiments would seem to be little different from the WWII Nazi and Japanese experiments on human prisoners. Are those U.S. scientists who were responsible for those retarded children's' deaths any different from the Nazi scientists and criminals we executed at Nuremberg? So what happened when this terrible thing finally came out into the open? President Clinton publicly apologized! How many of the responsible scientists were indicted for murder? Not one. None is ever going to be. Suppose a doctor here in South Alabama, with his own private clinic, had secretly irradiated those human patients and retarded children with whole body nuclear radiation, over a period of 30 years, resulting in some agonizing deaths. How many state and federal agencies would have come after him with arrest warrants? Probably about 50 or so. Would he have been indicted, tried, convicted, and executed or sent to prison for life? Absolutely! Would the President of the United States have apologized? Not on your life; he would have turned it over to the U.S. Attorney General with a strong directive to to get away with it. But they can.

Perhaps a most startling additional part of those two incidents is that there was no great public outcry from the scientific community, deploring these murders and demanding that the criminal scientists be indicted and tried.

As the old saying goes, "By their silence they have convicted themselves." The organized scientific community, as a community, has shown that it has little or no ethics, and—while deploring any scientific murdering that "gets revealed,"—is not really interested in justice. In short, much of the U.S. scientific community may now have very little ethics left.

We are not talking about normal individual scientists, but the Big Science community. There is a whale of a lot of difference between the two. In the Big Science community, there can be and there are rogue groups. Lots of them. There is deep cover, deep classification. And there is very probably advanced mind control research and testing, be it legal or illegal. Hopefully most of it is legal and constrained. However, some of it is almost certain to be illegal and ill constrained.

Human beings are still human beings. All the good and evil is still there, regardless of the group. The stage settings change, but the cast of characters and the play never change.

It's sad, but 'twas ever thus. Hidden parts of our own governments—and other governments throughout the world—are no different from the old medieval groups, where nobles etc. were always plotting against the king, or using the king's power for their own nefarious end. The rogue groups today are no different from all the scheming and conniving groups that destroyed the Roman Empire. Great empires fall from within, not usually from without!

investigate and prosecute on criminal charges.

2. Again for three decades, scientists from (i) the U.S. Government, (ii) universities, and (iii) civilian contractors conspired to give poor syphilitic blacks in Tuskegee, Alabama a placebo while ostensibly treating them for syphilis. The purpose of the program was to deliberately observe and record the ravages of the disease to its fruition in their wracked bodies. So the scientists deliberately sat there and watched their brains rot and their bodies rot. They kept meticulous notes, of course. It was very scientific. And it was macabre. They "treated" some 400 blacks in the "program." Over 100 blacks died

Conclusion

This concludes our brief portrayal of the probable directions that mind control research has taken, in Russia and in the West. It is a novel and powerful area, and it poses both severe dangers and great benefits to all the peoples of the Earth.

Let us hope this great new area, already off to a bad start, can be bridled and steered in the direction of helping and healing people, rather than killing or abusing them. The excesses in its bad use are a potent threat to all nations on earth. Yet it can revolutionize medical science, education, communication, and psychology. Eventually it can engineer the mind and memory directly, beneficially. We foresee the day—perhaps 30 years hence—when education will be

EXPLORE! VOLUME 9, NUMBER 4 & 5, 1999

accomplished by directly loading the software into the mind. Then in three weeks one will "load" a doctorate, say, in physics. In three more weeks one will also load a doctorate in chemistry. Another three weeks, in electrical engineering. Another three weeks, an M. D. And so on. When that happens, then truly everyone on earth can be educated. Freedom from ignorance may well be another great freedom that is legally recognized. There will be no impoverished large groups lacking the education to find decent, productive jobs.

We urge all nations to use the principles involved: not for human abuse, but for healing, educating, uplifting, and life-expanding of every person on Earth. If we

446955, Oct. 23, 1998, forwarded to US. Patent Office on Nov. 4, 1998.

5. A very good introduction to nonlinear phase conjugate optics is given by David M. Pepper, "Nonlinear Optical Phase Conjugation," Optical Engineering, 21(2), March/ April 1982, p. 156-183. Also see David M. Pepper, "Applications of Optical Phase Conjugation," Scientific American, 254(1), Jan. 1986, p. 74-83.

6. Pepper, Optical Engineering, ibid., p. 158.

7. See T.E. Bearden, Energetics of Free Energy Systems and Vacuum Engine Therapies, Tara Publishing, Internet node www. tarapublishing.com/books,July 1997. See also T.E. Bearden, "Energetics Update and Summary, " Part I, Explore, 7 (6), 1997, p. 60-67, Part II, Explore!, 7(7), 1997, p. 53-56; Part III Explore!, 8(1), I997, p. 53-56; Part IV; Explore!, 8(3), 1997, p. 56-63. See also T.E. Bearden, "Vacuum Engines and Priore's Methodology: The True Science of Energy-Medicine: Parts I and II " Explore!, 6(1), 1995, p. 66-76; 6(2), 1995, p. 50-62.

8. E.g., see R.O. Becker; Charles H. Bachman, and Howard Friedman, The direct current system: A link between the environment and the organism, " New York State Journal of Medicine, Vol. 62,

do, we shall all have a far brighter future. Then we shall check what has started out to be the Sword of Damocles and turn it into the golden Millennium.

We are reminded of a poignant quote from Teilhard de Chardin:

"Someday, after we have mastered the winds, the waves, the tides and gravity, we shall harness for God the energies of love. Then for the second time in the history of the world man will have discovered fire."

May the nations of the world utilize the new mind engineering science to truly free all minds into a common love of, and respect for, their fellow humans of every color, creed, and circumstance. As de Chardin envisioned, may we use the new science to discover a new fire, burning clearer and brighter than anything that has gone before. ♦

ABOUT THE AUTHOR

President and Chief Executive Officer, CTEC, Inc. Lieutenant Colonel US. Army (Retired). MS Nuclear Engineering, Georgia Institute of Technology. BS mathematics, Northeast Louisiana University. Graduate of Command & General Staff College, US. Army. Graduate of Guided Missile Staff Officers Course, U. S. Army (equivalent to MS in Aerospace Engineering). Numerous electronic warfare and counter-countermeasures courses. Tom is the leading advocate of scalar potential electromagnetics and the Fogal charge-blocking semiconductor: He is involved in alternate energy devices and scalar electromagnetic system prototypes. He has defined charge q as a coupled system of two components, advanced a mechanism for a vacuum engine, whereby the vacuums virtual particle flux is organized and used to energetically shape and manipulate matter and

April 15, 1962, p. 1169-1176. See also R. 0. Becker; "The direct current field: A primitive control and communication system related to growth processes, "Proceedings of the XVI International Congress of Zoology, Washington, D.C., VOL.3, 1963, p. 179-183; —"The neutral semiconduction control system and its interaction with applied electrical current and magnetic fields," Proc. 1lth International. Cong. Radiol., Amsterdam, Excerpta Medica Foundation, 1966, Series 105, p. 1753-1759. See particularly Robert O. Becker and David G. Murray, "The electrical control system regulating fracture healing in amphibians," Clinical Orthopaedics and Related Research, Vol. TBD, No. 73, Nov.-Dec. 1970, p. 169-198.

9. Bearden, T.E., Energetics: Extensions to Physics and Advanced Technology for Medical and Military Applications, CTEC Proprietary, May 1, 1998, 200+ page enclosure to CTEC Letter, "Saving the Lives of mass BW Casualties from Terrorist BW Strikes on US. Population Centers," distributed to selected high U.S. Government agencies and Legislative subcommittees, May. 4, 1998.

10. E. g. , Vlail Petrovich Kaznacheyev, V. I. Vernadsky's Study on Biosphere and NooSphere, 1989 [in Russian]. Vernadskys concepts included living matter, biosphere, and human-transformed biosphere (noosphere). Kaznacheyev writes of evolution and

energy, and advanced a mechanism for a Bohm-type quantum potential, which theoretically allows the engineering of action at a distance in physical systems.
He is president of the Association of Distinguished American Scientists (ADAS), a life member of the Alabama Academy of Science, Emeritus member of the American Association of Physics Teachers, and has served on the Board of Directors of several associations and corporations. Tom is a guitarist, a retired aikidoist (Sandan, Yoseikan style), is happily married and has two sons and two daughters. He and his wife Doris live in Huntsville, Alabama where Tom is retired from aerospace, continues private research, and serves as a consultant to industry on Scalar electromagnetics processes.

R E F E R E N C E S

---

1. Owen Flynn, "Parametric arrays: A new concept for sonar, "Electronic Warfare Magazine, June 1977, p. 107-112.
2. Valerie Hunt, presentation to the U.S. Psychotronics Associations Annual Symposium, Bergamo Center, Ohio, 1988. Hunt presented epochal work showing chaos—and thus hidden order—in recorded ELF electromagnetic radiation from human bodies. Hunt split the received EM signals into two identical channels, time-delayed one channel by a very slight amount, then recombined (mixed) the nondelayed and delayed signals. The result was that attractors precisely indicative of chaos appeared. This positively proves that human systems produce ordered time-structuring of EM. organization of the living matter as the biosphere of the earth. Without specifying the exact technical details, Kaznacheyev discusses the gist of much of what is in this present article. The present author has an autographed copy of Kaznacheyevs book referenced above.
11. Rabichev, Lev Yakovlevich; Vladislav Fedorovich Vasiliev; Alexandr Sergeevich Putilin; Tatyana Grigorievna Ilina; Petr Vasilievich Raku; and Leopold Pavlovich Kernitsky, "apparatus for the treatment of neuropsychic and somatic diseases with heat, light, sound; and VHF electromagnetic radiation," U. S. Patent. No. 3,773,049, Nov. 20, 1973. This is the U. S. patent for the LIDA machine, developed by the Russians prior to the Korean War. Additional patents or applications are as follows: Italy, #619,129, March 1961. Germany, #1,183,607, Dec. 1964. Great Britain, #826,766, Jan. 1960.
12. Stefan T. Possony, "Psy-War: Soviet Device Experiment," Defense & Foreign Affairs Daily, 12(104), June 7, 1983, p. 1-2. Reports on Dr. Ross Adey's investigation of the Soviet device called LIDA which is used to bombard human brains with radio waves in the 40-MHz region. Also reports on work by A.S. Davydov of the Ukrainian Academy of Sciences, who discovered how the blood-brain barrier can be penetrated by low-frequency radio waves so that brain cells

3. Years ago, I read an obscure reference to Russian research directly along that line, with successful development of just such a portable device. Unfortunately I lost the reference in a disastrous flood in my basement and have been unable to recover it.
4. T. E. Bearden, "Alteration of Materials by Wideband Multiwave Irradiation Combined with Selective Emission Manipulation," Invention Disclosure Document Number

are affected. See also "Soviet device uses radio waves as tranquilizer, " Associated Press release, Huntsville [Alabama] Times, May 19, 1983. Dr. Ross Adey tested the Soviet LIDA machine on a cat, and in two or three minutes the cat was sitting quietly, almost as though transfixed, and uninterested in its surroundings. The animal remained uninterested in its surroundings for some 20 to 30 minutes after the machine was turned off.

13. "KGB Used PIS to Program Soldiers, "Resonance, No. 30, Mar. 1996, p.29. Quoting: "During the 1970s, the Soviet KGB developed a Psychotronic Influence System (PIS) that was used to turn people into programmable "human weapons." Soldiers fighting in the Afghan conflict were trained using the system which employs a combination of high frequency radio waves and hypnosis. Commands are activated by code words or cyphers. The purpose of PIS was to render regular soldiers and members of the special forces incapable of feeling sympathy.

EXPLORE! VOLUME 9, NUMBER 4 & 5, 1999

THE NEUROPHONE

Another device that uses the new hyperspatial, virtual state, nested modulation technology (and has done so for seventeen or eighteen years) is Dr. Pat Flanagan's neurophone. With brilliant insight and intuition far beyond that of science at the time, Pat invented and patented the instrument by the time he was seventeen years old. The neurophone is a device that, contrary to all present theory and knowledge, will directly "pump the brain" and reproduce sound and information directly in the brain and mind system, without going through the auditory system at all. A simplified diagram of Pat's improved neurophone is shown in Figure 11.

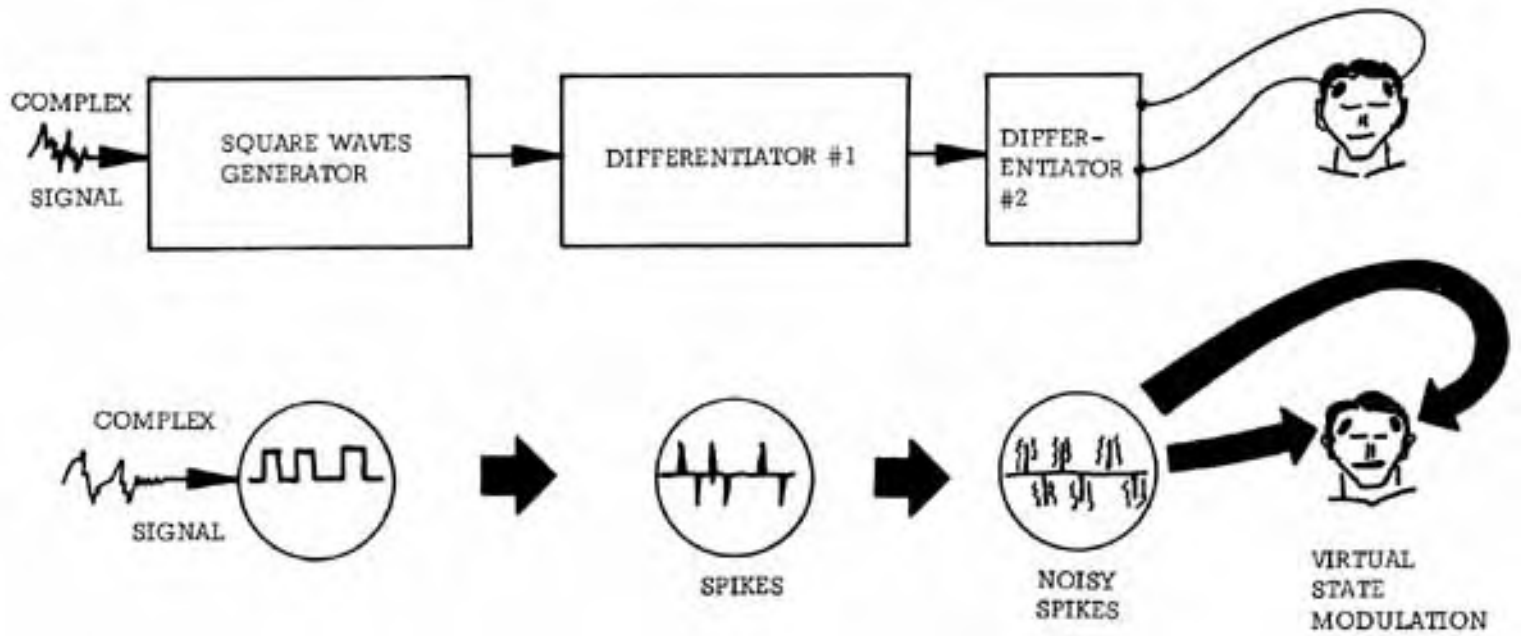

Figure 11. A simplified diagram of the improved Flanagan neurophone

Briefly, the device takes a complex signal, such as the sound of an orchestra playing a musical interlude, and electrically processes it as shown in the figure. First the signal is passed into a section that clips everything into a series of square waves, remarkably analogous to the sort of clipped waves Lisitsyn confirms are the information carriers of the human brain. Next the square waves are differentiated, yielding a series of sharp spikes (note that these spikes retain the pulse-time content of the clipped signal). These spikes are again differentiated, and since these are finite spikes with real nonzero rise times and decay times rather than theoretical constructs, a series of noisy spikes results from the second differentiator section. From here, the noisy spikes are introduced to special contact electrodes, one of which is normally placed on the forehead, while the other may be placed almost anywhere, including on the foot. Nowhere are any sound waves introduced to the head.

The square-wave clipper section reduces the complex signals, their overtones, and their complex modulations to square waves, retaining the temporal content of the wave mix but not the waves themselves. The first and second differentiators heighten or filter through the temporal content of the higher-order differentiations, that is, they serve as a band pass filter unit to accent the time keying of the neutrinic and mindfield portions or aspects of the signal. When these time spikes are then introduced across the body as pulsed voltages, they are modulated directly on the dendrite firings of the brain and nervous system, providing direct and pulsed modulation of the neutrinic and mindfield component channels of the mind-brain-consciousness-life loop itself. Thus the neurophone directly inputs information into the brain and nervous system, bypassing all the normal sensory systems that lie between the mind-brain loop and the outside environment.

Indeed, a similar development has been reported by two University of Missouri researchers. Dr. Donald York, a neurophysiologist, and Dr. Thomas Jensen, a speech pathologist, have recently reported identifying and decoding twenty-seven words and syllables in specific brain wave patterns and correlating these electroencephalographic patterns with both the spoken word and the silently thought word in about forty subjects. At present, Dr. York and Dr. Jensen are programming a computer with a brain wave vocabulary, to monitor and read the EEG of a stroke victim's brain and help stroke victims who have lost their powers of speech to communicate.

While all such developments can obviously be misused, their potential for assistance to mankind is enormous. Indeed, my own premise that brain linkage is possible and can be used to advance all mankind to the sixth stage of species evolution is slowly being proven. It is within our reach now to develop a multi-channel communications system that will directly link brains, minds, and consciousness into a single functional being; and I have already pointed out that the psychokinetic power of the emergent entity increases exponentially with the number of linked stages. The normal corpus callosum linkage of the two cerebral halves in each human head proves that brains, minds, and beings can be linked and

integrated into one.

The Excalibur Briefing details the basic concepts of the theory involved in hyperspace-virtual state engineering, and thus in the engineering of mind-life-consciousness links to multicellular organisms here on earth. Pat Flanagan's neurophone proves that complex information can be implanted directly in the brain and mind, bypassing the normal isolating barriers. Drs. York and Jensen have shown that the brain wave does indeed contain recognizable, decodable information analogues. Lisitsyn has already reported measuring the number of independent channels involved and has documented the importance of the clipped brain waves as opposed to the sine-wave content. If we have the vision, we can still develop a brainlink and rapidly apply it to link sixty to one hundred persons, thereby opening a conscious, multidimensional "eye" for the collective human unconsciousness, gently rousing ZARG into wakefulness, and fulfilling human destiny without undergoing the psychotronic Armageddon planned by the Soviets. The time is short, but it can still be done if the funding, the vision, and the team can be established on a crash priority basis.

SOVIET "WOODPECKER" SIGNALS

But, as I have said, all this can be used for the detriment of mankind as well as for its benefit. Unfortunately, it appears that the Soviet Union has chosen to weaponize the effects on a global scale. A prime example is the "woodpecker" signals emanating from the USSR in the 5-30 megahertz region and interfering with communications around the earth.

These complex woodpecker signals appear to originate from two or three dozen powerful Soviet transmitters, each with a power estimated as high as 40 megawatts (Figure 12).

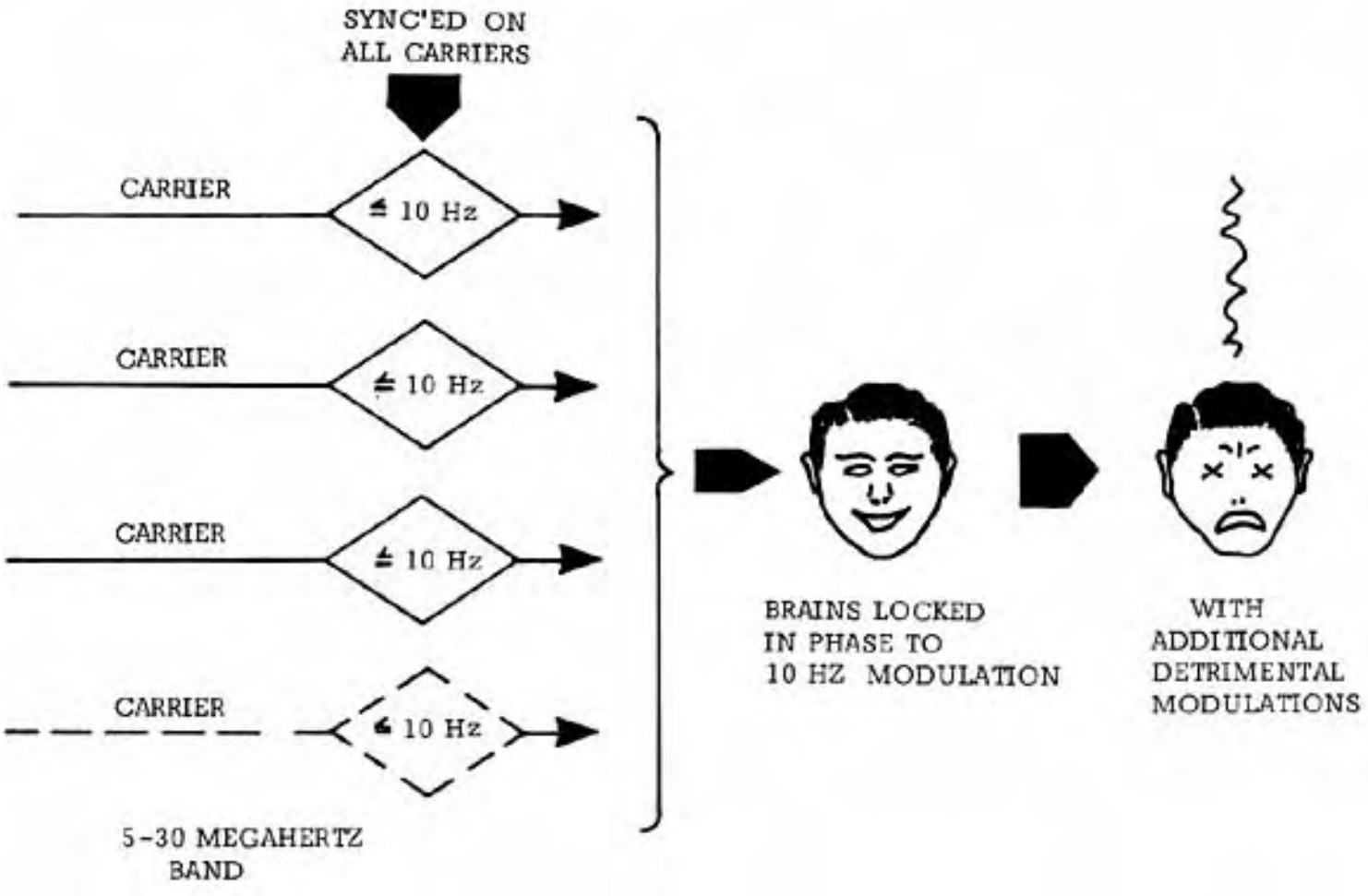

Figure 12. The Soviet "woodpecker" signals

The pioneering experimental measurements of these signals by Dr. Robert Beck and William Bise have shown just how deadly a potential may be possessed by the signals. These measurements have been performed in Eugene and Portland, Oregon; Los Angeles, California; Huntsville, Alabama; and several other locations. They have been particularly significant on the West Coast in and around Eugene, Oregon because of the presence of a direct current transmission line several hundred miles long, which has acted as a long wire antenna, picking up the signals and rebroadcasting them with appreciable gain in the vicinity.

Typically the signals may be found on, say, sixteen different carriers between 10 and 20 megahertz. Twelve of the carriers may appear normal, with normal side-bands, and the other four may have the carrier and both sidebands suppressed but still show the biologically significant modulation (for example, 10 hertz). On all sixteen channels a strong 10 hertz modulation may appear, all perfectly time synchronized and in phase channel-to-channel. The received signal from one of these carriers may be twenty-five to thirty times as strong as the earth's back-ground magnetic field, which is oscillating at approximately 7.0 to 7.5 hertz. Other complex modulation frequencies, many of them changing, are present on the various channels.

Normally, the brainwaves of mammals in an area are gently entrained by the normal oscillations of the earth's magnetic field and are oscillating along at, say, 7.5 hertz. Under continuous radiation from the Soviet

woodpecker signals, a percentage (say 30 percent) of the mammalian brains may be captured by the 10 hertz modulation on the overpowering Soviet signals. These captured brains are now in forced oscillation and are riding along in phase with the 10 hertz Soviet modulation. In other words, a certain percentage of the human brains in an area will phase lock to the 10 hertz modulation, and that will effectively lock into those brains the sixteen carrier frequencies with their concomitant frequency mixes and complex signal modulations. If the signals are made much more powerful (for example, by focusing them onto one particular area or increasing the power of the transmitters), then a much higher percentage of brainwave entrainment can be accomplished in the targeted area. By simply adding on the desired modulation patterns, the Soviets can now pump material directly into the mind-brain-consciousness-life loops of the entrained brains. The weapon implications are enormous: raw emotion such as sheer terror or panic can be transmitted; death or disease patterns of all kinds can be transmitted; informational content (thoughts and ideas) can be impressed directly into the captured brains and minds and processed as if originating inside each brain itself. Indeed, as long as the Soviets keep the effects rather gentle, an entire population can be subtly influenced without governmental notice. Certain specific ELF frequencies can rapidly disable or even kill, and for wartime use those frequencies can be directly implanted in the captured brains themselves by the woodpecker signals. It appears that 1984 came a little early, and one can perhaps now understand Brezhnev's strange 1975 proposal to the SAL T negotiations that we should also consider outlawing the development of new weapons more frightful than the mind of man has ever conceived.

The signals also have direct application against strategic targets other than personnel. For example, by incorporating the correct nested modulation pattern, the positron kindling (electron squelching) pattern can be impressed. By beaming through the earth (with a circularly polarized signal or with other complex modulation forms), a beam with a strong neutrinic component, which will squelch electrons and which will interact with great preference for strong voltages or strong magnetic fields, can be directed at a target complex. In the targeted area aircraft and communications systems can be disabled; automobile, truck, and other ignition systems will fail; power transformers and large motors and generators will fail; power transmission systems with their associated high voltages will fail; and so on. Even independent, self-contained emergency power equipment, such as at military installations and strategic missile sites, will fail to operate. Further, to some of these signals, the earth and the sea are as transparent as glass, and so underwater nuclear submarines can be electrically disabled on station before their missiles can be fired, while strategic missile complexes can be electrically disabled before their deadly nuclear missiles can be hurled toward their distant targets. If some submarines and land complexes succeed in firing missiles before being disabled, these missiles can be electrically dudded and scrubbed from the sky over Soviet territory while

still far from their intended targets.

So, as stated at the end of *Excalibur*, the players are on stage and in place. The final act begins. One thing is sure - mankind will never be the same again after seeing the play!

Provisional Patent Application of
Thomas E. Bearden

METHOD, SYSTEM AND APPARATUS FOR CONDITIONING ELECTROMAGNETIC POTENTIALS, FIELDS, AND WAVES TO TREAT AND ALTER MATTER

Inventor: Name Thomas E. Bearden, Ph.D.

Address correspondence to: Name: Thomas E. Bearden, Ph.D.

Prepared by: Thomas E. Bearden and Marcia Peters
Filed by: Anthony J. Craddock

References Cited:

Melba Phillips, "Classical Electrodynamics," Vol. IV: Principles of Electrodynamics and Relativity, in Encyclopedia of Physics, Edited by S. Flugge, Springer-Verlag, Berlin, 1962, p. 1-108. Overview of superpotential theory.

(a) E. T. Whittaker, "On the Partial Differential Equations of Mathematical Physics," Mathematische Annalen, Vol. 57, 1903, p. 333-355; (b) — "On an Expression of the Electromagnetic Field Due to Electrons by Means of Two Scalar Potential Functions," Proceedings of the London Mathematical Society, Series 2, Vol. 1, 1904, p. 367-372.

Christopher Bird, "The Case of Antoine Prioré and His Therapeutic Machine: A Scandal in the Politics of Science," Appendix I in T. E. Bearden, AIDS: Biological Warfare, Tesla Book Co., P.O. Box 121873, Chula Vista, California 91912, 1988.

Jean-Michel Graille, Dossier Prioré: Une Nouvelle Affaire Pasteur [The Prioré Dossier: A New Pasteur Affair?]. De Noel, Paris, 1984 [in French].

Antoine Prioré, "Guerison de la Trypanosomiase Experimentale Aigue et Chronique par L'action Combinée de Champs Magnètiques et D'Ondes Electromagnètiques Modules," thesis submitted in candidacy for the doctoral degree, 1973.

Antoine Prioré, "Procede et dispositif de production de rayonnements utilisables notamment pour le traitement de cellules vivantes." [Procedure and Assemblage for Production of Radiation Especially Serviceable for the Treatment of Living Cells.] Republique Francais: Brevet d'Invention P.V. No. 899.414, French Patent 1,342,772, Oct. 7, 1963.

Antoine Prioré, "Method of producing radiations for penetrating living cells," U.S.

Patent 3,280,816, Oct. 25, 1966.

Antoine Prioré, "Apparatus for producing radiations penetrating living cells." U.S. Patent 3,368,155. Feb. 6, 1968.

T. E. Bearden, "Vacuum Engines and Prioré's Methodology: The True Science of Energy-Medicine, Parts I and II," Explore, 6(1), 1995, p. 66-76; 6(2), 1995, p. 50-62.

T. E. Bearden, Energetics: Extensions to Physics and Advanced Technology for Medical and Military Applications, May 1, 1998, enclosure to CTEC Letter to Maj. Gen. Thomas H. Neary, Dir. Nuc. And Counterprolif., Ofc. DCS, Air and Space Opns., HQ USAF, May 4, 1998, Subj: "Saving the Lives of mass BW Casualties from Terrorist BW Strikes on U.S. Population Centers."

T. E. Bearden, CTEC Letter to Maj. General Walter Busbee, Assistant to Secretary of Defense, dated April 2, 1998, Subject: "Saving the Lives of Mass BW Casualties from Terrorist BW Strikes on U.S. Population Centers," with enclosures.

Eric Perisse, Effets des Ondes Electromagnétiques et des Champs Magnétiques sur le Cancer et la Trypanosomiase Expérimentale. [Effects of Electromagnetic Waves and Magnetic Fields on Cancer and Experimental Trypanosomiasis], doctoral thesis, University of Bordeaux II, No. 83, Mar. 16, 1984 [in French].

S. K. Lisitsyn, "New Approach to the Analysis of Electroencephalograms," in Problems of Bionics (Selected Articles), Defense Documentation Center Report AD 73005, date unknown, p. 16-25, available through the National Technical Information System (NTIS).

R. O. Becker, C. A. L. Bassett, and C. H. Bachman, "The bioelectric control system regulating bone growth," Proceedings of the International Symposium on Biodynamics of Bone, Henry Ford Hospital, Detroit, Michigan, Mar. 1963; published by Little, Brown, and Co., 1964.

Robert O. Becker, Joseph A. Spadaro, and Andrew A. Marino, "Clinical experience with low intensity direct current stimulation of bone growth," Clinical Orthopedics and Related Research, No. 124, May 1977, p. 75-83.

Robert O. Becker, "The significance of bioelectric potentials," Bioelectrochemistry and Bioenergetics, Vol. 1, 1974, p. 187-199.

R. O. Becker, "Stimulation of partial limb regeneration in rats," Nature, Vol. 235, Jan. 14, 1972, p. 109-111. See also Robert O. Becker, "Augmentation of regenerative healing in man, a possible alternative to prosthetic implantation," Clinical Orthopaedics and Related Research, No. 83, March-April 1972, p. 255-262.

Robert O. Becker and Joseph A. Spadaro, "Electrical stimulation of partial limb regeneration in mammals," Bulletin of the New York Academy of Medicine, Second Series, 48(4), May 1972, p. 627-641.

Robert O. Becker, "The direct current field: A primitive control and communication system related to growth processes," Proceedings of the. XVI International. Congress of Zoology, Washington, D.C., Vol. 3, 1963, p. 179-183.

Robert O. Becker and David G. Murray, "The electrical control system regulating fracture healing in amphibians," Clinical Orthopaedics and Related Research, Vol. TBD, No. 73, Nov.-Dec. 1970, p. 169-198.

Robert O. Becker, "The significance of bioelectric potentials," Bioelectrochemistry and Bioenergetics, Vol. 1, 1974, p. 187-199.

Robert O. Becker and David G. Murray, "A method for producing cellular dedifferentiation by means of very small electrical currents," Transactions, New York Academy of Sciences, 29(5), Mar. 1967, p. 606-615.

F. A. Popp *et al*., "Biophoton emission: New evidence for coherence and DNA as a source," Cell. Biophys., Vol. 6, 1984, p. 33-52.

F. A. Popp *et al*., "Physical aspects of biophotons," Experientia, Vol. 44, 1988, p. 576-585.

Fritz A. Popp, "On the coherence of ultraweak photoemission from living tissues," in Disequilibrium and Self-Organization, ed. by C. W. Kilmister, ed.; D. Reidel, Hingham, MA, 1986.

Fritz Albert Popp, "Photon Storage in Biological Systems," in Fritz Albert Popp *et al*., eds., Electromagnetic Bio-Information: Proceedings of the Symposium, Marburg, Federal Republic of Germany, Sep. 5, 1977; Urban & Schwarzenberg, Baltimore, 1979, p. 123-149.

F. Mandl and G. Shaw, Quantum Field Theory, Wiley, 1984, Chapter 5. Mandl and Shaw strongly argue that neither the scalar (time-polarized) photon nor the longitudinal photon is individually observable, but the combination of the two is observable as the instantaneous scalar potential. Translating this into the wave model and wave language, neither a time-polarized EM wave nor a longitudinal EM wave is individually observable, but the paired combination of the two is observable as the ordinary scalar potential. Hence Mandl and Shaw strongly support Bearden's reinterpretation [28] of Whittaker's biwave decomposition of the scalar potential, as does particle physics' broken symmetry of opposite charges such as a dipole.

T. E. Bearden, "Giant Negentropy from the Common Dipole," Journal of New Energy, 5(1), Summer 2000, p. 11-23. Bearden reinterprets Whittaker's 1903 decomposition of the scalar potential, where a Whittaker phase conjugate pair of longitudinal EM waves becomes a time-polarized EM wave interacting with the usually assumed unit point static charge, followed by emission of the longitudinal EM energy in 3-space. Thus Whittaker's decomposition is extended to wavepairs where each pair consists of a time-polarized EM wave coupled to a longitudinal EM wave, with coupling or "combining" accomplished by interaction (emission and absorption) with charge. This reinterpretation is strongly supported by Mandl and Shaw [27] in quantum field theory.

David J. Bohm, "A Suggested Interpretation of the Quantum Theory in Terms of 'Hidden' Variables, I and II." Physical Review, 85(2), Jan. 15, 1952, p. 166-179 (Part I); 180-193 (Part II).

Amnon Yariv, Optical Electronics, 3rd Edn., Holt, Rinehart and Winston, New York, 1985, p. 500-501. Quote: "If a scalar wave $E_1(r)$ propagates from left to right through an arbitrary but lossless dielectric medium, and if we generate in some region of space [say near Z = 0] its phase-conjugate replica $E_2(r)$, then E_2 will propagate backward from right to left through the dielectric medium, remaining everywhere the phase-conjugate of E_1."

W. A. Rodrigues, Jr. and J.-Y. Lu, "On the existence of undistorted progressive waves (UPWs) of arbitrary speeds $0 \leq v < \infty$ in nature," Foundations of Physics, 27(3), 1997, p. 435-508. A slightly corrected edition of the paper was placed on the Los Alamos National Laboratory web site.

J. O'M. Bockris, "Overpotential: a lacuna in scientific knowledge," Journal of Chemical Education, 48(6), June 1971, p. 352-358.

J. O'M. Bockris and A.K.N. Reddy, Modern Electrochemistry, Vol. 1 & 2, Plenum Press, 1970, particularly Chapter I.

Rod Donnelly and Richard Ziolkowski, "Electromagnetic field generated by a moving point charge: A fields-only approach," American Journal of Physics, 62(10), Oct. 1994, p. 916-922.

Robert A., Fisher, Ed., Optical Phase Conjugation, Academic Press, New York, 1983.

Myron W. Evans, Enigmatic Photon, Vol. II, Kluwer, ISBN 0792332881; — "The photomagneton B(3) and electrodynamic conservation laws," Foundations of Physics Letters, 7(2), 1994, p. 209-217; — "The photomagneton B(3) and longitudinal ghost field B(3) of electromagnetism," Foundations of Physics Letters, 7(1), 1994, p. 67-74. Particularly see Apeiron, 4(2-3), Apr.-Jul. 1997, B(3) field issue, guest editor Myron W. Evans. In the same issue, see particularly the Introduction by Evans, and also his

"Helicity and the Electromagnetic Field."

T. W. Barrett, "Sagnac Effect: A Consequence of Conservation of Action Due to Gauge Field Global Conformal Invariance in a Multiply-Joined Topology of Coherent Fields," in T. W. Barrett and D. M Grimes. [Eds.] Advanced Electromagnetism: Foundations, Theory, & Applications, World Scientific, Singapore, 1995, p. 278-313; — "Electromagnetic Phenomena Not Explained by Maxwell's Equations," in A. Lakhtakia (ed.), Essays on the Formal Aspects of Electromagnetic Theory, World Scientific, River Edge, NJ, 1993, p. 6-86.

Jean-Pierre Vigier, "Relativistic Interpretation (with Non-Zero Mass) of the Small Ether Drift Velocity Detected by Michelson, Morley, and Miller," Apeiron, 4(2-3), Apr.-Jul. 1997.

Ziolkowski circa 1985 rediscovered the infolded EM structure of the scalar potential. He added the product set to Whittaker's 1903 sum set, thereby advancing the theory. Since then, apparently he has not recognized or addressed the fact that this internal longitudinal EM wave structuring of potentials, fields, and waves represents an infolded, powerful general relativity (spacetime engines) inside ordinary electrodynamics itself.

Barrett certainly noticed and stated the internal Stoney-Whittaker structuring of the potential, and hence fields and waves, but apparently has not gone further with it.

Patrick Cornille, "Inhomogeneous Waves and Maxwell's Equations," Chapter 4 in Essays on the Formal Aspects of Electromagnetic Theory, Aklesh Lakhtakia, Ed., World Scientific, New York, 1993. Cornille clearly shows that Maxwell's equations are directly created by scalar potential interferometry. As he states, this means that EM force field waves are created by the interference of sound-type scalar potential waves, or "sound creates light."

John Archibald Wheeler and Richard Phillips Feynman, "Classical electrodynamics in terms of direct interparticle action," Reviews of Modern Physics, 21(3), July 1949, p. 425-433; — "Interaction with the absorber as the mechanism of radiation," Reviews of Modern Physics, 17(2/3), Apr.-July 1945, p. 157-181.

P. K. Anastasovski, T. E. Bearden, C. Ciubotariu, W. T. Coffey, L. B. Crowell, G. J. Evans, Myron W. Evans, R. Flower, S. Jeffers, A. Labounsky, B. Lehnert, M. Mészáros,
P. R. Molnár, J.-P. Vigier, and S. Roy, "The New Maxwell Electrodynamic Equations: New Tools for New Technologies," Journal of New Energy, 4(3), Special Issue of AIAS papers, Winter 1999. 60 papers by the Alpha Foundation's Institute for Advanced Study, advancing electrodynamics to a non-Abelian, gauge theoretic higher topology theory in (O)3 internal symmetry.

I. J. R. Aitchison, "Nothing's plenty: The vacuum in modern quantum field theory," Contemporary Physics, 26(4), 1985, p. 333-391. A good overview of the active vacuum.

Owen Flynn, "Parametric arrays: A new concept for sonar," Electronic Warfare Magazine, June 1977, p. 107-112.

M. I. Dykman *et al*., "Noise-enhanced heterodyning in bistable systems," Physical Review E, 49(30), Mar. 1994, p. 1935-1942.

David Jones, Vancouver Sun Times, Weekend Magazine, Dec. 17, 1977, p.17.

Craig F. Bohren, "How can a particle absorb more than the light incident on it?", American Journal of Physics, 51(4), Apr. 1983, p. 323-327.

H. Paul and R. Fischer, "Comment on 'How can a particle absorb more than the light incident on it?'," American Journal of Physics, 51(4), Apr. 1983, p. 327.

V. S. Letokhov, "Laser Maxwell's demon," Contemporary Physics, 36(4), 1995, p. 235-243. See also V. S. Letokhov, "Generation of light by a scattering medium with negative resonance absorption," Soviet Physics JETP, 26(4), Apr. 1968, p. 835-839. This is a theoretical analysis of the generation of light by a scattering medium with negative resonance absorption or gain. This analysis requires that a photon mean free path be much smaller than all of the dimensions (R) of the active scattering region. A condition for generation threshold is given. Letokhov also provides a theoretical analysis of scattering particles that are distributed in a gaseous medium with negative absorption, such as a He-Ne or He-Xe gas mixture excited by an electric discharge. The scattering particles are said to effect a non-resonant feedback, while the gaseous active medium effects resonant amplification. See also V.S. Letokhov, "Stimulated emission of an ensemble of scattering particles with negative absorption," ZhETF Plasma, 5(8), Apr. 15, 1967, p. 262-265.

M.W. Evans, P. K. Anastasovski, T. E. Bearden et al., "On Whittaker's F and G Fluxes, Part III: The Existence of Physical Longitudinal and Timelike Photons," Journal of New Energy, 4(3), 1999, p. 68-71.

David M. Pepper, "Applications of Optical Phase Conjugation," Scientific American, 254(1), Jan. 1986, p. 74-83. See particularly the striking photographic demonstration of time reversal of disorder on p. 75, which directly demonstrates the principle cited.

T. D. Lee, Particle Physics and Introduction to Field Theory, Harwood, New York, 1981, p. 184, 380-381; — "Weak Interactions and Nonconservation of Parity," Nobel Lecture, Dec. 11, 1957; — "Can Time Be a Discrete Dynamical Variable?", Physics Letters, 122B(3, 4), Mar. 10, 1983, p. 217-220. Examines possibility of time as a discrete dynamical variable, across the range of mechanics: from classical to

nonrelativistic quantum mechanics, and then to relativistic quantum field theories. In all stages of mechanics, time can be treated as a discrete parameter, and it can also be treated as a bona fide dynamic variable. See also T. D. Lee, "Space Inversion, Time Reversal and Particle-Antiparticle Conjugation," Physics Today, 19(3), Mar. 1966, p. 23-31.

H. J. Gray and Alan Isaacs, Eds., A New Dictionary of Physics. Longman Group Limited, London, 1975. Revised Edition. Quote, p. 151-152: *"Displacement current. The rate of change of electric flux with respect to time through a dielectric when the applied electric field is varying. When a capacitor is charged the conduction current flowing into it is considered to be continued through the dielectric as a displacement current so that the current is, in effect, flowing in a closed circuit. Displacement current does not involve motion of the current carriers (as in a conductor) but rather the formation of electric dipoles (a phenomenon known as dielectric polarization), thus setting up the electric stress. The recognition by Maxwell that a displacement current in a dielectric gives rise to magnetic effects equivalent to those produced by an ordinary conduction current is the basis of his electromagnetic theory of light."* [For the purposes of this invention, our comment is that placing an irradiated EM flux upon the surface of the body produces just such displacement current via dielectric polarization, throughout the body since the body acts as a capacitor. Hence one can use a specific set of ordinary EM irradiations of the body to produce a specific set of dielectric polarizations throughout the entire body. It follows that irradiation from the body also is associated with polarization relaxations and changes within the entire body. It then follows that if the exact field pattern emitted by the body is precisely returned to the body, exactly opposite polarizations are produced throughout the body dielectric. Further, if these reinserted "natural emission radiations" are amplified before re-inserting, the EM-driven processes in the entire body dielectric can be reversed in direction. Each polarization and its dynamics involves a formation of EM longitudinal phase conjugate wavepairs and their dynamics, since all EM fields, potentials, and waves are comprised of such LW wavepairs and dynamics, per Whittaker 1903 and 1904. This means that the optical pumping type operations ongoing in the body can also be time-domain pumped by the time-polarized EM waves associated with the Whittaker processes, as can be seen from Mandl and Shaw's Quantum Field Theory, and from Bearden's Giant Negentropy of the Common Dipole. Indeed, this time-reversal of damaged cells, back to a previous healthy physical state, is accomplished by the cellular regeneration system of the body as the mechanism used to heal cellular damage and disease.]

G. C. Reali, "Reflection from dielectric materials," American Journal of Physics, 50 (12), Dec. 1982, p. 1133-1136. The reflected EM field emitted from a dielectric material is not generated just at its surface but comes from everywhere in the interior of it. [Reversing this principle, the impinging of EM radiation upon a dielectric material, such as the human body, results in effects everywhere in the interior of the body dielectric.]

Mendel Sachs, "Symmetry in Electrodynamics: from Special to General Relativity;

Macro to Quantum Domains" in Modern Nonlinear Physics, Second Edition, M. W. Evans (ed.), Wiley, 2002 (in press); — General Relativity and Matter: A Spinor Field Theory from Fermis to Light-Years (Fundamental Theories of Physics), Reidel (now Kluwer), 1982. Provides a great generalization of general relativity and electrodynamics reaching from the quarks and gluons to the entire universe. See also Mendel Sachs, Quantum Mechanics from General Relativity: An Approximation for a Theory of Inertia, Reidel (now Kluwer), 1986; — "Relativistic Implications in Electromagnetic Field Theory," in T. W. Barrett and D. M. Grimes, eds., Advanced Electromagnetism, World Scientific, 1995, p. 541-559; — "On Unification of Gravity and Electromagnetism and the Absence of Magnetic Monopoles," Nuovo Cimento, Vol. 114B, 1999; — The Field Concept in Contemporary Science, Charles C. Thomas Publishers, 1973. See also M.W. Evans, "The Link between the Topological Theory of Ranada and Trueba, the Sachs Theory, and O(3) Electrodynamics," in Modern Nonlinear Optics, Second Edition, Editor M.W. Evans and S. Kielich, 2002 (in press), a special topical issue of I. Prigogine and S. A. Rice, series eds., *Advances in Chemical Physics*, Wiley, New York.

B. Lehnert and S. Roy, Extended Electromagnetic Theory: Space-Charge in Vacuo and the Rest Mass of the Photon, World Scientific, New Jersey, 1999. Extended forms of Maxwell's equations as well as EM fields, based on a nonzero divergence of the electric field and a nonzero electric conductivity in vacuo. Predicts the existence of both longitudinal and transverse solutions, space charge in vacuo, steady EM equilibria, a photon rest mass and a photon axial magnetic field. [For the purposes of this invention, we point out that normal classical electromagnetics assumes a flat local spacetime (falsified by general relativity for nearly a century) and no net exchange with the local active vacuum (falsified by particle physics for a half-century). When the real system – with local curvatures of spacetime and local net energy exchange between the local active vacuum and the system – is analyzed, the electromagnetics must be extended to include such interactions. Lehnert and Roy show that in the real case the photon is not massless but has mass. Hence, by delivering photon energy everywhere within the real physical body that is precisely accepted and involved in all the body's ongoing processes, the process involved in the invention is also delivering mass and mass-energy as necessary. This is not the normal photon interaction in an assumed flat spacetime, but is a different kind of photon-with-mass interaction in a curved spacetime. In this way, actual mass changes can be produced in the various minute ongoing body dynamics and interactions as required to eliminate the physical differences between the present mass-energy of the body in a diseased or disordered state, and the past mass-energy of the body in a healthy and normal state.]

M.W. Evans et al., "On Whittaker's Representation of the Electromagnetic Entity in Vacuo, Part V: The Production of Transverse Fields and Energy by Scalar Interferometry," Journal of New Energy, 4(3), Winter 1999, p. 76-78.

T. E. Bearden, "Porthole Briefing", 108 slides, attached and made a part of this PPA.

METHOD, SYSTEM AND APPARATUS FOR CONDITIONING ELECTROMAGNETIC POTENTIALS, FIELDS, AND WAVES TO TREAT AND ALTER MATTER

This invention pertains to the treatment of matter with electromagnetic energy to cause specified changes in the matter. More particularly, this invention deals with methods, systems and apparatus for the creation and application of conditioned electromagnetic potentials, fields, and waves, wherein the conditioning comprises the selection and combination of identified constituent electromagnetic waves, in order to produce desired interactions with matter. The matter may be chemicals, nuclear materials, living cells, and the like, and the results of the interactions may be the time-reversal of the matter to a previous state, or the application of a chosen delta to the matter's current state, so as to effect desired chemical reactions, nuclear reactions, or biological changes, respectively. The invention covers two versions of the conditioning process, depending upon whether EM conditioning is externally accomplished or internally accomplished. The two versions of the process are: (1) the formation of the conditioning of the electromagnetic potentials, fields, and waves outside the body, and then irradiating the body with EM radiation carrying the desired conditioning, and (2) the irradiation of the body dielectric with the same EM waves, fields, and potentials emitted by the body dielectric, but amplified. In the latter process, the formation of the desired conditioning of the induced EM potentials, fields, and waves into every part of the body is accomplished by the highly nonlinear characteristics of the body and cellular material at every level, in every location in the body dielectric.

SUMMARY OF THE INVENTION

The present invention exploits the fact that all electromagnetic fields, potentials, and waves are composed of more fundamental electromagnetic structures. To directly engineer spacetime and induce desired changes in matter – specifically the mass-energy of the body dielectric, in all parts and dynamics – the invention uses and applies these more fundamental electromagnetic structures, which constitute curvatures of spacetime capable of directly affecting and changing matter according to the exact pattern and dynamics of the internal structures.

The invention also utilizes a known but novel "dielectric channel" effect wherein every part of a dielectric participates in the absorption and emission of a photon or of an electromagnetic wave, at any point on the surface of the dielectric. It further uses the unique properties of the difference frequency between two frequencies. While the transmitted waves themselves are subject to overshoot and breakup in an isotropic nonlinear medium, the difference frequency passes through the dielectric medium unchanged. In this way the difference frequencies rather than the actual transmitted frequencies are considered as the active transmission frequencies communicating everywhere within the body and all its cells. Thus the desired difference frequency signals can be and are delivered to every point in the entire body dielectric medium, and the response from every point in the entire body dielectric medium participates in the electromagnetic signals emission from the body.

A scalar potential is just a bundle of bidirectional longitudinal electromagnetic waves, in pairs, where each pair consists of an incoming time-polarized EM wave (EM energy moving along the time-axis)

and an outgoing longitudinal EM wave in 3-space. That is the nature of the potential as it exists in spacetime (in 4-space) prior to interaction with charged mass. The halfset of all the outgoing 3-space longitudinal waves also forms a set of 3-space EM wavepairs comprising the 3-potential portion. Any electromagnetic field or wave may be decomposed into two scalar potentials, as shown by Whittaker in 1904, thus initiating that branch of electrodynamics known as **superpotential theory**. Everything that is presently recognized as an ordinary electromagnetic field or transverse electromagnetic wave is in fact created through the interference of potentials' internal longitudinal EM wave structures, as shown by Evans et al. and also by Cornille. This extended superpotential approach is a legitimate higher group symmetry – such as O(3) symmetry – electrodynamics, which is more fundamental and extensive than orthodox electrodynamics using U(1) group symmetry. The extended electrodynamics provides an electrodynamically engineerable unified field theory that is capable of directly changing matter through action-at-a-distance, including time-reversing matter (either living or inert), through the manipulation of the internal longitudinal wave pairs with associated time-polarized EM waves. The present invention provides methods, systems, and apparatus to engineer and utilize this new electrodynamics as a means of conditioning and altering materials.

The invention addresses all the steps in such a process. First, it provides methods to convert transverse electromagnetic waves into longitudinal waves, which are always accompanied by one-to-one correlated time-polarized EM waves with exact phase conjugate pairing. It then advances techniques to combine collections of input waves into a conditioned scalar potential, being a scalar potential containing a desired modification to its internal structure and internal dynamics. Moreover, it gives means to transmit the conditioning over a distance, and reconstitute the input transverse waves in a target zone through interference therein or thereupon. It also provides for recording, digital processing, and synthesis of engineered waveforms that can be used in conjunction with these embodiments. By combining the aforesaid functions, embodiments are provided to solve problems of environmental pollution, nuclear waste, hazardous chemicals, disease, biological warfare, and so forth, by deterministically altering and treating living or inert matter. These are all secondary goals that can be achieved by engineering higher group symmetry electrodynamics at the more fundamental level.

Most centrally, the invention advances a practical means, using the above scheme, to treat living cells and living bodies, in order to reverse disease and damage. In summary this is done by irradiating a body with longitudinal EM waves, which are always accompanied by correlated time-polarized EM waves. The longitudinal EM waves and their correlated time-polarized EM waves may be produced externally to the body, or triggered to be produced internally within the body. In either case, in the body dielectric the accompanying time-polarized EM waves pump the mass-energy of the body mass (including all cells and every part of each cell) in the time domain rather than the spatial domain. This is an extension of present nonlinear phase conjugate optics, which has until now only considered spatial EM pumping and has omitted time-domain EM pumping.

The normal phase conjugation process produces the time-reversal of planar EM wave energy in 3-space, as stated in the well-known **distortion correction theorem** [See Yariv, 30]. In short, it produces a planar wave that precisely retraces the exact 3-space path in the transmission medium, point for point, previously taken by the stimulus wave. In the new process, 3-dimensional EM energy is retraced back along the previous time-path taken by the stimulus 3-space energy – which latter is simply the resident mass-energy of the time-domain pumped mass, together with the internal

structuring and dynamics of that mass-energy. The extended phase conjugation process resulting from the time-domain pumping is applied to the nonlinear "input" 3-space mass-energy as it previously traveled through time, rather than being applied to an "input" plane wave energy in 3-space as it has traveled through space. The result is that, analogous to normal reversal of the 2-dimensional planar EM wave energy in 3-space, the pumped 3-dimensional mass-energy and its exact dynamics are reversed back along the time axis, to a previous 3-dimensional physical mass-energy state and dynamics. Since all the mass energy and its dynamics in the pumped 3-space mass are thusly time-reversed, the process also time reverses not just one but all the electromagnetic signal energy and EM process energy ongoing in the body's mass-energy, thereby time-reversing all of the body’s biological, chemical, and nuclear processes back through a precession through previous states to arrive at a previous healthy physical state. Because of the dielectric channel effect, every part of the body cells including the genetics are also precisely time-reversed through previous states to arrive at a previous healthy physical state.

It is further pointed out that, in a curved spacetime, the photon may be said to have mass, as shown by Lehnert and Roy [57]. Any change of energy or dynamics in spacetime, including electromagnetic energy or dynamics, constitutes a curved spacetime as is well known in general relativity. Hence the invention deliberately uses photon energy which also possesses mass, contrary to normal electrodynamics in a flat spacetime. In this way mass may be added or subtracted from the tiniest parts of the cells, in accordance with the time-reversal back of the time-domain-pumped cells back through their intermediate physical states to an earlier healthy physical state.

This is in fact the normal healing mechanism discovered by the inventor and used by the cellular regenerative system of the human body, within its limitations, to heal damaged cells and gradually restore them to a previous normal condition. Becker, e.g., demonstrated that weak potentials indeed time-reversed (in biology terms, dedifferentiated) red blood cells, then continued to "eliminate the deltas" in the previous bone-fracture area by then redifferentiating the resulting cells into the type of cells that make cartilage, then further into the type of cells that make bone, and depositing the latter cells in the fracture site to heal the fracture. In all these rigorously demonstrated changes, the mass of the cells was also being manipulated, although Becker was unable to decipher the mechanism accomplishing that feature.

In the present case, the time-reversed waves comprising the body's mass-energy are amplified by the pumping energy pumping the cells and their constituent atomic particles and subatomic particles in the time-domain and causing their time-reversal.

In addition, a much shorter method of accomplishing this amplified time-reversal of cells and their processes is provided by one version of the invention. The body is highly nonlinear in every part of itself, including the cell and every part of the cell. Consequently the nonlinearity of the cellular material can be made to partially decompose normal EM potentials, fields, and waves – transmitted into the body from outside – into their Whittaker longitudinal EM wavepair constituents, to include their accompanying time-polarized EM waves in the time-domain.

This can be seen by the "porthole" concept, where the internal body EM dynamics are regarded as a set of light-type or optical-type interactions ongoing everywhere within the body and its cells. We are

not referring to optical frequencies, but to optical-type functioning. It is known in electrodynamics that in a dielectric, such as the body, every part of the dielectric participates in each photon emission from the body surface [Reali, 55]. A differential area on the body's surface thus represents a special sort of "porthole" where the EM radiation (together with its internal Whittaker structuring) that is emitted is a direct function of all the internal EM dynamics ongoing in the body and every part of the body, down to the smallest level inside the cells. It follows that, if we record that external emission, and input it again to that body differential surface area, we are returning energy in reverse. Note that we are also directly utilizing the difference frequencies, which are the most important. Specifically we are returning, back through the dielectric and to all those EM processes everywhere within the body, a set of precise counter-forces and dynamics for the ongoing forces and dynamics. If we amplify the irradiation back to that differential surface of the body, the excess energy returned to all the processes in the body will slightly amplify and partially time-reverse all those EM interactions ongoing in the body cells. Specifically, this process will act to eliminate the "deltas" between the present interactions and dynamics and the body's past normal interactions and dynamics, since time-reversal rather than spatial reversal is involved. It is stressed that the 3-space forces affected, continue to operate in a "time-forward" manner, but are slowly and steadily changed in direction, phase, and magnitude by the existing "time-domain" delta between the present state at any given time in the pumping and the past healthy state to which the pumping is changing the ongoing dynamics, physics, and chemistry of the functioning cells.

The photon is its own antiparticle. That is, an antiphoton is simply a photon reversed in direction. So for any photon radiation pattern we can create antiphoton radiation comprising its precise antipattern, merely by precisely reversing the direction of photon radiation of that pattern. If we amplify the reversed direction radiation, we amplify the antiphoton radiation pattern so that it is stronger than the body's own emitted photon radiation pattern. This antipattern is forcibly transmitted through the porthole effect into all internal regions of the body, no matter how small.

To make a powerful effect, we record all the normal EM radiation from the body, from all its surfaces or a substantial portion thereof and including the difference frequencies, amplify this received radiation precisely, and feed it back precisely into the same body. We thereby much more strongly amplify the counterforces and time-reversals in those processes throughout the body. In short, from a physics view we overcome the body mass-energy's movement through forward time, and place it into simultaneous reversed-time movement along the time axis of
4-space, back to a previous point in time, changing its mass-energy and mass-energy dynamics as it reverses. We point out that both "movements through time" of the operating cells and their internal parts continue to exist vectorially; the body's mass energy is still moving through forward time at the same velocity, but is simultaneously moving through reversed time at a greater velocity. Hence the net movement of the mass-energy and its dynamics, as seen by the external observer, is a movement in reversed time, which thus is purely a "movement to eliminate the deltas between the present unhealthy state and the past healthy state". However, this is actually a set of very precise dynamic changes and forces, being imposed upon the mass-energy of the body, to change it back to a previous physical state before the cellular damage or disease. But the body mass-energy remains "normally alive" with all its ongoing functions during this process, and only net "deltas" are induced. So the living body's functions are not disrupted in a detrimental sense, but in a very positive sense known as "healing" – i.e., time-reversing the body and its dynamics back to a previous healthy state. The foregoing in fact may be taken as the definition of cellular healing itself.

The overall result is to time-reverse (physically) the cells and processes of the body back to a previous earlier physical state and condition. Any healthy part of the body's cells and cellular dynamics is simply made a little younger (rejuvenated). Any diseased or damaged cell or group of cells and their dynamics, is/are time-reversed back to their previous healthy condition (healed). This process is actually an amplification and application of the natural, but more limited, healing process the cellular regenerative system of the body has used for millennia.

For emergency conditions in mass casualty situations, the amplification of the time-reversal can be increased to where a treatment of only one minute is required, but with some discomfort and stress to the patient. A lesser amplification and two to three minutes radiation can be used to eliminate most discomfort, if the situation is still urgent. Three such treatments one week apart are the normal requirements. In normal situations, a treatment of 15 to 30 minutes at reduced amplification is indicated, so that the discomfort and stress is eliminated. Again, three such treatments one week apart are indicated.

This latter version of the invention – letting the body dielectric itself produce the pumping longitudinal EM waves and time-polarized EM waves everywhere within the body dielectric – greatly simplifies the accomplishment of the time-domain pumping process of the invention. It can thus be adapted to provide for portable treatment units, approximately the size of a large suitcase, which are suitable for the very rapid mass treatment of mass casualties – even in the millions – utilizing the aforesaid principles. Due to the novel mechanism used, the invention is applicable to a wide variety of infectious diseases and physical disorders.

BACKGROUND

This invention is largely based upon the application of some advanced new principles that exist in physics as shown by the references, but which have not yet gained widespread application in the scientific community and have not been applied in the engineering of electronic equipment or in the medical community. Hence a thorough discussion of the invention’s background and theoretical basis is necessary to convey an adequate understanding of the invention, the scope of its various embodiments and variations, and how it may be practiced.

In initiating superpotential theory, in 1904 E. T. Whittaker [2 (b)] showed that any electromagnetic field or wave could be considered as two scalar potential functions, and in 1903 he had previously shown [2 (a)] that any scalar potential has an internal composition of harmonic bidirectional EM longitudinal wavepairs. It follows that any EM field or wave or potential can be decomposed into a more primary structure of harmonic bidirectional EM waves and their dynamics. Melba Phillips, "Classical Electrodynamics," provides an overview [1] of the superpotential theory initiated by the 1904 Whittaker paper. A thorough discussion summarizing, reinterpreting and extending E. T. Whittaker’s 1903 and 1904 work, upon which the present invention is founded, can be found in the present inventor’s paper "Giant Negentropy from the Common Dipole" [28]; its teachings are incorporated herein by reference. This reinterpretation is also consistent with broken symmetry known in particle physics [53] since 1957, and is also strongly supported by quantum field theory, as given in the standard text by Mandl and Shaw [27]. However, electrical engineers have never

attempted to design and utilize equipment producing and using longitudinal EM waves in space and accompanied by correlated time-polarized EM waves, as does the present invention.

The necessary expansion of electrodynamics to embed EM in a higher-topology algebra such as quaternions or Clifford algebra has begun and is well along in physics, resulting in novel and revolutionary longitudinal-EM wave solutions to wave equations, etc. Summary papers by Rodrigues *et al*. [31] are particularly applicable, as is the B(3) electrodynamics work of Evans [36], Barrett [37], and Vigier [38], and the longitudinal EM wave work of Ziolkowski *et al*. [34] Nonetheless, with the exception of Ziolkowski [39], Barrett [40], and Cornille [41], few theorists have yet dealt with the Whittaker [2] and Bohm [29] infolded "hidden variable" longitudinal electrodynamics required for a thorough understanding of the present invention. Admittedly, this is a difficult subject, as completion of the theoretical work to produce a unified field theory uniting general relativity with electrodynamics is still in progress in physics, notably in the remarkable unified field theory work of Sachs [56], as further implemented by the higher symmetry O(3) electrodynamics spearheaded by Evans et al. [36, 43, 56]. The present invention takes these developments as its starting point, and goes slightly beyond them to include phase conjugate optical functioning in the time-domain (the fourth Minkowski axis), to further advance the state of the art. However, this extension is fully supported by quantum field theory [27] and by O(3) electrodynamics.

F. Mandl and G. Shaw [27] recognize four possible polarizations of the photon. The two spatial polarizations that yield common transverse electromagnetic (EM) photons and thus transverse EM waves are generally well known. They involve vibrations at a right angle to the axis of travel. For example**, transverse polarization** – for a wave in 3-space traveling parallel to the z-axis – may be parallel to the x-axis or the y-axis, yielding two distinct modes of spatial transverse polarization. Any combination of the two is still transverse polarization.

The third and fourth polarization types, both longitudinal, are less well known, and terminology for them is not well established. **Longitudinal polarization** means vibration to and fro along the axis of travel. The term **average velocity** is applied to longitudinal waves because their oscillation along the line of travel causes their velocity to change from peak to trough. Thus, longitudinal waves are sometimes (rarely) referred to as **galloping waves**. Spatially longitudinal polarization (the third type) involves vibration along the axis of travel in 3-dimensional space. The vibrations of such a wave traveling along the z-axis, e.g., are parallel to the z-axis. The wave may be moving along the x, y, or z axis or along some combination of them. We will refer to this as "**longitudinal polarization**" and the resulting waves may be called "**longitudinal EM waves**," "**LW**s," "**longitudinal surge waves**," or "**galloping waves**." When used without a qualifier, "spatially longitudinal" should be understood by use of the word "longitudinal".

The fourth type, **time-polarization,** entails vibration along the axis of travel in the time-axis (as defined in Minkowski spacetime). Such a wave may be referred to as a "**time-polarized wave**", "**time-density wave**", "**time-like wave**", "**electrogravitic wave**", "**scalar potential**" wave, or in some cases (infinite velocity) as "**quantum potential**". For the purposes of this disclosure, these terms are used equivalently, depending on the velocity involved. Such a wave should be understood to comprise traveling oscillations in the density of the time-energy component of space-time, i.e. periodic dilation and compression of the rate of flow of time, along the direction of travel. In general relativity terms it is a traveling oscillating rate of time dilation and compression. Since time-polarized

waves associate with longitudinal EM waves in 3-space on a 1:1 correlation basis, the time-polarized EM wave always accompanies the longitudinal EM wave, and vice versa, whenever any observable effects are apparent.

A further explanation follows concerning the time density of a wave, and the variation or oscillations of that time density.

Present electrodynamics erroneously omits the transport by electromagnetic waves of time-domain dynamics and considers only the transport of spatial energy and dynamics. That EM waves do indeed transport time energy can be seen by considering an EM wave as transporting photons. Each photon is comprised of angular momentum. Angular momentum is calculated as the product of energy and time (energy x time). Thus every photon carries not only an increment of energy but also an increment of time. The transport of a "piece of time" by each photon, and the involvement of time and time-energy in every photon-particle interaction, is not addressed by present-day physics prior to the present invention, outside of the very few researchers cited herein. Thus a dynamic assembly of photons – such as an EM wave – carries a dynamic spatial energy density structuring (via the dynamics of the energy components of its photons) and also a time density structuring (via the dynamics of the time components of its photons). "Dynamic" as used herein simply means "changing", and "**dynamics**" is the noun referring to such change.

A scalar potential carries "**hidden variables**" or "**hidden information**" [see Whittaker 2(a)] – i.e., infolded longitudinal EM wave information undetectable with conventional instruments adapted for detecting only traverse waves – in the precise frequency, phase angle, and magnitude (amplitude) composition of its constituent longitudinal EM wave parts. These properties of the constituent parts are sometimes called the internal "**dynamics**". When additional internal information carried by a scalar potential has been deliberately placed there, through processes such as those disclosed in the present invention, the scalar potential is said to be "**conditioned**". It may also be said to have a "**deterministic substructure**" or an "**engine**" or a "**spacetime curvature engine**". The hidden information is said to be "**infolded**" and may subsequently be reconstituted by constructive interference between two conditioned potential waves. Such conditioning is totally different from the well-known spectral decomposition of wave systems.

As shown by Whittaker [2 (b)], any EM field or wave can be decomposed into two scalar potential functions. Each potential of the two can be further decomposed into an internal set of Whittaker longitudinal phase conjugate wavepairs [Whittaker 2 (a)]. Hence these two Whittaker-structured potentials and their external and internal dynamics comprise any EM wave or field or complex thereof. It follows that EM fields and waves also carry internal EM structural dynamics, and hence can also be dimensioned by insertion of extra structure and dynamics (engines) during the production of the fields or waves.

By extension of Wheeler's general relativity principle [42] and the O(3) unified field theory advanced by Evans, Bearden, *et al.* [43], an EM wave's energy may be understood to be equivalently an oscillating curvature of spacetime. Mass-energy (trapped energy, by $E = mc^2$) and its structure and dynamics curves and structures spacetime also. Thus the conditioning on and in a wave – when created deterministically from specific constituent waves (i.e. spacetime curvatures) – may also be

referred to as a "**spacetime curvature engine**" since it is intended to produce, and can produce, specified changes in matter, energy, and spacetime. Such conditioning may also be called a "**vacuum engine**" or **engine** since it exploits energy-density vibrations of the virtual particle flux of the quantum-mechanical active vacuum [44] due to the reaction of dimensioned spacetime upon said vacuum. Spacetime curvature engines produce forces on mass components, telling them how to move and structure and forcibly changing their dynamics and structure. Since the present invention uses very strong electromagnetic force as an agent of curvature and dimensioning, very powerful general relativistic effects can be obtained through proper selection of the input waves, providing for the direct engineering of general relativity in every part of every cell of the body, by the new devices of unparalleled capability.

The present invention makes heavy use of principles of nonlinear optics as a means of creating and conditioning longitudinal EM waves. This field deals with "**phase conjugation**", a term for the time-reversal of an electromagnetic wave, as will be described with reference to **Fig. 25A**. Modern nonlinear optics started slowly after a Soviet scientific briefing to Lawrence Livermore National Laboratory in 1972, as noted by Fisher [35], and by 1977-1980 had picked up momentum. "**Pumping**" in nonlinear optics, which may also be called multi-wave mixing or hereinafter just "**mixing**", refers to the nonlinear combining of input signals in a nonlinear medium in which potentials superpose and mix (see **Fig. 25B**). Superposition of transverse phase-conjugate wave pairs forms a transverse standing wave that cancels out the transverse polarization. Similarly, mixing of longitudinal phase-conjugate wave pairs causes the formation of a longitudinal standing wave that cancels out the spatially-longitudinal polarization. These principles are used in the transduction processes of the present invention.

Conventional nonlinear optics only addresses pumping by means of transverse electromagnetic waves, providing rhythmic "squeezes" of the energy density in the spatial domain only. Thus the only type of time-reversed wave that the *conventional* methodology is capable of emitting is one with a 2-dimensional wavefront, namely a transversely-polarized replica wave going in the opposite direction to the stimulus wave. To time-reverse a 3-dimensional mass itself, as contemplated by the present invention, it is necessary to create a 3-D wavefront, that being a longitudinally-polarized wave in the time domain accompanying a longitudinally-polarized EM wave in 3-space. Thus new methods of pumping by means of rhythmic squeezes of the energy density of the time domain are needed, methods that did not exist prior to the present invention.

The invention teaches the production of longitudinal EM waves accompanied by their 1:1 time-polarized waves. As will be explained with reference to **Fig. 1**, coupling a transverse EM wave with a perfect phase-conjugate replica of that wave produces a bidirectional longitudinal EM wave pair, similar to Whittaker [2 (a)], which is corrected and re-interpreted by the present inventor [28] to yield the proper *scalar photon/longitudinal photon pairs* in accordance with quantum field theory [27]. This is the fundamental mechanism to make longitudinal waves in 3-space at will, together with their accompanying time-polarized EM waves. Assembling a chosen set of conventional transverse EM waves **(**per **Fig. 4A**), and mixing the same in nonlinear phase-conjugating media, such as ionized noble gases or mixtures thereof, yields phase-conjugate replicas of some of the conventional transverse EM waves. In that fraction, the conventional transverse EM

waves coupled with their respective phase-conjugate replicas constitute bidirectional longitudinal EM wave pairs as re-interpreted (the causal wave in the time domain and the effects wave in 3-space). This fraction forms a scalar potential with a deterministic substructure in the manner shown by Whittaker [2(a)]. This potential may be referred to as a *conditioned* or *dimensioned* scalar potential, since its internal structure has been deterministically chosen by controlling the constituent input waves. **Figs. 8A-9B** are directed toward apparatus embodying this methodology, in order to create a conditioned scalar potential that may be used in other aspects of the present invention. In the potential, the "acting" wave components to act upon charges are the incoming time-polarized EM waves, while the effect of the interaction is the emission of the longitudinal EM waves.

Moreover, interaction with a single charged particle automatically converts any longitudinal EM wave into a time-polarized EM wave, and the interaction of any time-polarized EM wave with a single charged particle automatically converts the wave into a longitudinal EM wave in 3-space. In the vacuum, there are always charge fluctuations (virtual charged particles) present, from the viewpoint of quantum mechanics. The vacuum interaction continually transduces a spatially-longitudinal EM wave reaction with a particle into a time-density wave interaction with the particle, and vice versa. This is ubiquitous, since any virtual or observable mass may be considered totally nonlinear with respect to a longitudinal wave's interaction with it. Hence any interacting mass containing charges will phase conjugate any longitudinal EM wave, regardless of frequency, and that interaction creates time and space as well as spacetime. Any ordinary "uncharged" mass includes nucleons (protons and neutrons) as well as electrons. The nucleons consist of charged quarks, hence even "inert" matter is totally charged. Hence the interaction and wave polarization transduction are ubiquitous.

The invention also provides other methods of phase conjugate production. In and near the optical frequency band, conventional nonlinear optics can add phase-conjugate replica waves to incident transverse waves. At radar frequencies, waveguide plumbing can add phase-conjugate replicas. For lower frequencies (as will be described with reference to **Figs. 8B, 9A** and **9B),** plasmas can be utilized, since certain plasmas possess the unique characteristic of producing a longitudinal wave from a transverse wave, and vice versa. In addition, exact but complicated mixes of specifically selected transverse EM wave complexes may be radiated into the living body, where the extreme nonlinearity of the body provides the plasma-like transduction into longitudinal and time-polarized EM waves and "engine structures and dynamics".

We will speak of longitudinal EM waves in 3-space, but always we bear in mind that every longitudinal EM 3-space wave is automatically accompanied by a time-polarized EM wave and vice versa. The ongoing transduction process – between time-polarized and longitudinal waves and/or photons – is what a scalar potential *identically is*.

In general, longitudinal EM waves interact only weakly with matter. They can pass directly through the ocean or the entire earth with minimal attenuation because of the weak reaction cross section with the mass particles of the ocean and earth. Mass is mostly empty space filled with EM fields, waves, and potentials, and at its own level its scale resembles that of a solar system. The internal EM fields, waves, and potentials between the greatly separated mass particles (at that level) are bundles of longitudinal EM waves and their dynamics. Hence mass is a *superhighway* for the passage of

longitudinal EM waves and their dynamics, a priori.

The present invention also teaches several other processes for conditioning potentials. When the phase angles of two transverse EM waves of the same frequency and amplitude are 180 degrees out of phase, their *transverse vector components* sum to zero, transforming the two waves into an oscillating stress potential in 3-space, which is a longitudinal EM wave (accompanied always by its paired time-polarized EM wave). In other words, the spatial oscillation energy of the two antiphased transverse waves does not disappear – because energy can be neither created or destroyed – but instead it is transduced into stress potential oscillations of stress energy. These stress potential oscillations decompose into oscillating longitudinal EM waves and paired time-polarized EM waves. The important part is the time-polarized EM wave, which is an oscillation of flowing EM energy on the fourth Minkowski axis, and hence is flowing time energy. This fact has not been noticed prior to the present invention because longitudinal waves penetrate and pass through matter with little interaction, and conventional detectors are not adapted to detect them. Nonetheless, the existence of longitudinal waves has been shown empirically through the use of special detectors, and longitudinal photons are an standard part of quantum field theory [see Mandl and Shaw, 27].

Apparatus to exploit the above antiphasing principle for creating LWs (and their scalar EM wave counterparts) is based on the following concepts: In a coil, the current lags the potential (voltage) by 90 degrees. At electrical frequencies, when a potential is suddenly pulsed onto a coil, within a very short time the full potential may be measured across the coil, despite the infinitesimal magnitude of the initial current. Thus introducing a sharp pulse while other AC waveforms are already present and stable on the coil causes both sets of potentials and waveforms to superpose. This is because in a short interval after a pulse but before significant current has flowed (i.e., if the value for *dq/dt* – the change in charge over a small time interval – is small enough), all the waves and frequencies may be treated as a single instantaneous scalar potential. The embodiments shown in **Figs. 8A-9B** and **11B** exploit this intermixing principle.

Another variation is to deliberately use an overpotential in a gas [32, 33], where the initial potential on a gas in a tube may appreciably exceed its ionization potential, often by 20%. During this period, the overpotential accepts, mixes with, and fuses internal longitudinal wave pair structures with all other potentials present in the gas. **Fig. 9B** discloses an apparatus for an embodiment of the present invention that exploits the overpotential as a further means of conditioning waves and potentials. The overpotential method can be used to condition both the E- and B-fields (i.e. both electrical and magnetic fields).

The prevent invention also provides methods and apparatus to produce a quantum potential similar to Bohm's quantum potential [29]. However, unlike Bohm's, the present invention's quantum potential may be formed at will and deterministically structured (conditioned). **Figs. 10-11** teach production of a quantum potential from input transverse EM waves using phase-conjugate mirrors or other nonlinear reflectors or scatterers. By the distortion correction theorem of nonlinear optics [30], each reflection from such a mirror provides precise reconvergence back to the point of origin, also called "**self-targeting**". Iterative repetition (i.e., a series of reflections back and forth between two mirrors), sometimes called "**ping-ponging**", reduces the signal's transverse magnitude component toward zero until the initial wave pair eventually becomes entirely longitudinal. This process is explained, and

exploited, in **Fig. 9C.** Note that we do not show the similar "zeroing" effect of the accompanying time-polarized waves in the time-domain, which "zero". Hence this potential exists in "zero change" for any two points in the universe that it will exist in. There is no time-lag in "appearance" of this quantum potential at all points in space that it will occupy. For a discussion of the prior art on retroreflection see Donnelly and Ziolkowski [34]. In such a system, the operating region where longitudinal polarization emerges and begins to predominate but before the transverse magnitude reaches zero is called the **pseudo-longitudinal wave pair** region. Here the waves' velocity ***v*** increases to a value exceeding the speed of light in vacuum ***c***, but remains finite. Actually, ***c*** is the limiting velocity in flat spacetime of a *transverse* wave or free *transverse* photon, not a *longitudinal* wave or *longitudinal* photon [see Rodrigues, 31]. If reconvergence continues, a second-order convergence starts where phase conjugation of the pseudo-LW pairs themselves rapidly eliminates the last remnant of transversality and the waves' speed becomes infinite as they become purely longitudinal. From Rodrigues' and Lu's theory of undistorted progressive waves [31], a pure longitudinal wave has infinite energy and infinite spatial velocity. "Infinite energy" simply means that any amount of energy can be collected from it by sufficient interceptors. "Infinite velocity" simply indicates that the wave's propagation into 3-space from the time axis is from the time-axis, rather than through 3-space, and the "lag" on that axis has been eliminated. Note that a single point in time co-exists with every 3-space point in the universe. If the energy entering 3-space from the time domain enters at multiple points instantaneously, the space is said to be "multiply connected". The result of such multiply connected space is a bidirectional longitudinal wave pair whose components appear to have infinite velocity, simply appearing everywhere in every point they will occupy, simultaneously. Hence energy and dynamics from a single point in time at one 3-space point in the universe, can be introduced into multiple other 3-space points simultaneously and instantly, constituting an "energy amplification". This is understood by visualizing the separated points seen in flat 3-space as superposed in a special kind of mathematical "folding" or "warping". In that case, any amount of energy that the three space observer inserts into one of those "folded superposed" points in his 3-space, will also simultaneously appear at each and every other of the (to him) separated points A quantum potential so created may be used in other aspects of the present invention, as will be explained more fully hereinafter.

Moreover, this invention teaches additional processes for conditioning potentials. **Fig. 10** shows how certain molecules in solution may be utilized for frequency ranges determined from their chemical resonance and anti-Stokes emission characteristics. Colloidal suspensions of active particles can also be utilized to partially perform the process, where the colloids are sized to a resonant frequency of the incident waves. Mixes of colloids can mix a multiplicity of input frequencies. Suspensions of larger particles or regular masses can be utilized if the liquid medium is agitated to keep the particles/ masses in suspension. In theory, special arrays and lattices of material mixes – e.g. in solid suspension or in liquid suspensions – can also perform or augment phase conjugation.

The invention further teaches methods and uses for the interference of conditioned (dimensioned) scalar potentials. Whittaker [2 (b)] showed that the interference of two potentials can be used to form all EM fields and waves. What is interfering are the multiple longitudinal EM wave pairs comprising the two potentials. Thus, interference of scalar potentials is just a special kind of multiple-wave interference, where the waves interfering are bidirectional longitudinal EM wave pairs. By Whittaker [2 (a) and (b)], it follows that, by conditioning potentials, fields, and waves to change their internal structures and then interfering them, the interference of said conditioning will create overt ordinary

electromagnetic potentials, fields, and waves in the interference zone, which may be either local or non-local. An essential proof of this "scalar potential interferometry" has been given by Evans et al. [58]. When the interferometry is non-local, this technique provides the novel capability for engineerable action at a distance, in a manner presently missing from classical electrodynamics. The longitudinal waves carrying the conditioning can pass right through matter, such as a Faraday cage, without appreciable attenuation. **Figs. 15-20** and **Figs. 22-23** will illustrate embodiments employing interference of conditioned scalar potentials for various purposes.

The closest known prior art to the invention's deliberate engineering and use of time-reversal zones is the cold fusion experiments conducted by Pons, Fleischmann, and others in the mid 1990s. Those experiments had varying results. Some of the phenomena given herein do occur haphazardly and randomly in various cold fusion experiments. The cold fusion literature and patents do not disclose or suggest any of the novel processes and features of the present invention such as the calibration of palladium electrode loading to control the initiation time for time charging, time-charge decay, transduction, etc. as is done in the present invention.

An apparatus exploiting the production of a time-reversal zone to selectively enhance a nuclear reaction will be shown in **Fig. 24**. Methods for treating a mass by creating a particular spacetime engine will be shown in **Figs. 26A-26B.** This process can be applied to inert or living matter. By "steering" the process as the changes occur, substances harmful to the environment such as chemical and radioactive wastes can be altered into new harmless elements and compounds. Again we accent that the use of photons containing mass, in a curved spacetime, does allow induced change of mass in nuclei and materials by photon interaction, something not met with in normal electrodynamics. The process can be applied, for example, to alter harmful chemicals in the upper atmosphere that are depleting the ozone layer, thereby changing the ozone layer-damaging chemicals into harmless form and restoring the ozone layer.

Inert matter can thus be altered in any manner desired, to any state desired, depending only on the developed equipment embodiments and state of the art. All levels of the matter treated are affected, including molecules and their binding forces, atoms, atomic nuclei, nucleons, and even the quarks inside the nucleons themselves. Any kind of fundamental particle known can be affected and altered. A major use foreseen in the future is directly engineering the atomic nucleus by novel new electrodynamic means, using longitudinal EM waves and a major extension of nonlinear optics and general relativity. Transmutation of elements, transformation of isotopes, isomer transforms, chemical transforms, and material lattice transforms are directly engineerable. The application to processing chemical wastes and rendering them harmless will be apparent to one skilled in the art.

Every system is immersed in the passage of time and hence is in a continuous interaction with time-energy flow. Time-energy flow is a previously unrecognized "external energetic environment" in which any system is immersed and with which it continually interacts. Further, time is spatial energy compressed by the factor c2, so time has similar energy density as mass. Use of conversion of time-energy to spatial energy – i.e., decompressing time into spatial energy – is equivalent to using nuclear energy with 100% conversion of mass to spatial energy, without nuclear radiation or radioactive isotope formation. Every system is thus an open thermodynamic system not in local thermodynamic equilibrium with respect to its interaction with time-energy flow, so that it moves through time. If

temporal thermodynamic equilibrium is established with respect to a system's interaction with time-energy flow, the system will not "move through time". Even clocks and watches in such a system or in its near vicinity will not experience a movement through time, and this results in the ultimate "time dilation" in a way not previously recognized in physics. However, real experiments have demonstrated just such effects where clocks and watches inside a zone experienced no passage of time, while clocks and watches outside the zone experience time passage in a normal manner. An example is the reported experiments of Hurwich [47]. The present invention exploits such effects, and includes methods, systems and apparatus to deliberately create and engineer such effects and apply them to treat matter.

The treatment of a living body using a particular spacetime engine, such as to time-reverse cellular damage and disease, will be taught in **Figs. 27-29.**

Scalar potential interferometers can be configured to scan energy differences in an interference zone, including inside materials, to provide remote "seeing" and remote non-invasive interior imaging of any location within the entire interference zone. Adaptations include small devices to scan and inspect packages and luggage for shipment on vehicles, etc. for drugs, biological warfare agents, and other harmful substances, devices, or materials.

Vacuum engines and steered asymmetrical time-reversal of mass can produce desired elements and compounds by transmutation and transformation from any desired element or material. Thus, e.g., desert sand could be processed into, say, palladium for use in palladium-cladding of electrodes. Precious metals such as gold, silver, platinum, etc. could also be produced in this manner. Many complex chemical interactions could be enhanced and eased in this manner, and chemical interactions impossible in the conventional chemistry can be produced, as we detail in some of the embodiments of this invention, to be discussed later.

Time-reversal of the cells of the body can reverse the cellular effects of aging.

Scanning and bias-toggling interferometers can be used to both image and perform surgery on the interior of bodies. Such an embodiment uses the scalar interferometer first in a scanning mode to scan and localize an interior region needing surgical treatment, and second in an output mode to project desired conditioning into a precisely selected part of the body region scanned.

Another variation on the inventive concepts herein, not illustrated, is an embodiment for the treatment of diseases in mass populations at a distance. The sudden appearance of new and more virulent strains of influenza, e.g., could be treated in this manner and destroyed in the environment, long before ordinary vaccines could be obtained and distributed. Eventually the normal radiations of TV towers, radio towers, etc. can be conditioned, in the manner disclosed herein, to treat and cure specific diseases in mass populations. This would be of great utility in treating a populace struck by weapons of mass destruction such as anthrax, smallpox, or bubonic plague attacks on cities and their populaces. The populace could be immunized, the bioagent completely destroyed everywhere in the struck environment, and the city and populace completely decontaminated. No prior art in such areas presently exists.

PRIOR ART

With respect to the embodiments for electromagnetically treating living bodies, the closest known prior art is the work of Antoine Prioré, Robert O. Becker, and Fritz Alfred Popp. The following discussion analyzes their work and contrasts it with the present invention. No close prior art to the remaining aspects of the present invention is known, beyond the references previously cited herein.

1. The Work of Antoine Prioré

The closest known prior art is the magnetic-field treatment of living cells and bodies by Antoine Prioré in France in the 1950s through about 1973. Prioré's electromagnetic devices dramatically time-reversed diseased and damaged cells in laboratory animals. Christopher Bird [3] gives an overview of the Prioré affair and Jean-Michel Graille gives a complete account [4]. Technical results of Prioré's experiments are summarized in his unpublished doctoral thesis [5], which refers to additional papers in the French scientific literature reporting the team's results.

Photos of the machine utilized by Prioré to treat small animals previously grafted with fatal tumors, or infected with trypanosomes, etc. are reproduced in T. E. Bearden [9]. Graille [4] shows a photograph of the machine Prioré used to treat human subjects. Into a tube containing a plasma of mercury and neon gas, a pulsed 9.4 GHz wave modulated upon a 17 MHz carrier frequency was introduced. These waves were produced by radio emitters and magnetrons in the presence of a 1,000 gauss magnetic field. Experimental animals were placed into this magnetic field and the modulations passed through their bodies. In the 1960s, Prioré's machines demonstrated a nearly 100% cure of various kinds of terminal cancers and leukemias, in thousands of rigorous laboratory tests with animals. However, no scientists – including Prioré's own team – have yet explained how the treatment produced such astounding results under rigorous scientific protocols.

Despite the exorbitant radiation power consumed by Prioré's equipment, it required constant trial-and-error adjustment, since its radiations were inexact and he did not understand its underlying theory of operation. At best, by repeated experiments with novel combinations mixing some 17 EM waves in a tube filled with a rotating gas plasma, surrounded by a large coil upon which a DC magnetic field was pulsed, Prioré speculated that he somehow "conditioned" the magnetic field in an unknown manner, and had no knowledge of the mechanism.

"Conditioning" is indeed an explanation, but was not further detailed by Prioré and his colleagues to explain why and how it can time-reverse living cells *in vivo*. Solely by trial and error, Prioré created one partial method of conditioning EM energy to treat matter, but never realized what was actually happening or how it was being accomplished. In hindsight, the present inventor has determined that Prioré combined the magnetic field with weakly-infolded multiple signals to unwittingly and partially produce a subset, or precursor, of an effect disclosed and exploited more fully in embodiments of the present invention.

Prioré obtained several patents upon his devices. See Antoine Prioré, "Procedure and Assemblage for Production of Radiation Especially Serviceable for the Treatment of Living Cells", French Patent No. 1,342,772 (Oct. 7, 1963) [6]; "Method of producing radiations for penetrating living cells," U.S.

Patent 3,280,816 (Oct. 25, 1966) [6]; and "Apparatus for producing radiations penetrating living cells", U.S. Patent 3,368,155 (Feb. 6, 1968) [8]. With colleagues Prioré also published dozens of papers in the scientific literature. These are listed in his unpublished thesis [5], and by Bearden [10, 11].

However, because Prioré's infolding method was very limited, he had to use a very powerful magnetic field. Also, all of science at the time did not possess the theoretical mechanisms or knowledge to explain the effects so painstakingly produced by Prioré. It was impossible for Prioré or any other scientist, therefore, to provide any adequate explanation, and in fact it was impossible to go forward with development and implementation of his technology into the marketplace. Consequently, in the mid-70s the French government ceased funding and the project died. Prioré died in 1984 after two years debilitation. Shortly thereafter, in his doctoral thesis Eric Perisse published some results of experiments with the Prioré device [12].

Neither Prioré nor anyone else was aware of the crucial role of nonlinear optics in his invention. That field was unknown in the West prior to a Russian briefing to Lawrence Livermore National Laboratory scientists in 1972, and did not really take off until 1978-1980. The extant nonlinear optics dealt only with transverse EM waves. Its extension to longitudinally-polarized and time-density waves is among the novel subject matter of the present invention.

There are numerous profound distinctions between Prioré's work and the present invention. Some of the more salient differences are set forth below.

Since Prioré did not truly understand the nature of his apparatus or how it produced its effects – his extraordinary and laudable efforts were trial-and-error – he could not produce a very good longitudinal wave. Thus the time-polarized accompanying wave was also weak and diffuse, requiring very long periods of irradiation (2-3 hours) to obtain only a mild, intermittent, and statistical time-charging effect, with the majority of the radiation being wasted or ineffective. The result was a very small degree of optical-level pumping. Prioré also had to adjust the machine for each case treated, and for every individual disease. In contrast, embodiments of the present invention may apply sophisticated recording, digital signal processing, amplification, and feedback of the signals emitted from the cells of the body (or other matter), and/or other methods unknown to Prioré, to generate a strong and precise time-reversal to directly engineer the microstate of the constituent cells, molecules, atoms, and subatomic particles. The present invention's precision, the short duration of its required treatment period, and its self-tuning for particular diseases or conditions, enables speedy and cost-effective treatment for, e.g., mass casualties of biological warfare and other large-scale disasters, as well as broad applicability in the public health domain. Prioré also painfully made his partial longitudinal waves and partially conditioned his fields and potentials *externally*. The present invention uses additional means of employing only ordinary EM waves externally, in special fashions that are aspects of this invention, to induce the formation and conditioning of fields and potentials in and by the body medium itself, including in the tiniest parts of all cells.

Furthermore, an embodiment of the present invention applies S. K. Lisitsyn's research [13] to selectively process some 11 specific frequencies, known to be key among all of the optical frequencies emitted by the body, plus several additional frequencies for applying the necessary signal

conditioning (dynamics), thus improving the efficacy of the process. Prioré had no particular reason to prefer one combination of frequencies over another, other than trial-and-error experimentation.

Moreover, embodiments of the present invention improve substantially upon Prioré's apparatus, which was bulky (four stories high), expensive (millions of 1970 dollars), fragile (the giant plasma tube in the full-scale unit broke after only a few days at full-power operation), and consumed a great deal of power. By contrast, embodiments of the present invention may take the form of small, portable, inexpensive, durable treatment units that can be deployed when and as needed.

Because of the lack of responsible mechanisms and underlying theoretical basis, Prioré's results were not understood or disclosed in his patents or publications, and his method was not engineerable by others. Thus it could not be generalized to other kinds of apparatus, or applied to treating other kinds of matter, and it never suggested applying a selected delta other than a time-reversal to living matter. Prioré's work did not suggest or teach the methods, systems and apparatus of the present invention.

The novelty and non-obviousness of the present invention is underscored by the fact that it has taken the present inventor years of painstaking research since 1978 to uncover the mechanisms responsible and refine them into the engineerable systems taught herein.

2. The Work of Robert Becker

Another related piece of prior art that unwittingly obtained a weak time-reversal of living cells was shown by Robert Becker in his DC treatment of intractable bone fractures and in his regeneration experiments. For typical papers on his bone-healing work, see [14, 15, 16] and for typical references on his regeneration experiments, see [17, 18] and particularly [19, 20, 21].

Becker proved that cells could be dedifferentiated and redifferentiated with very weak (picoamperes) of DC current and weak voltages, but like Prioré he did not understand the mechanism or theory involved, as evidenced by his publications [e.g., 22]. Becker's publications do not in any way suggest that he knew longitudinal waves and time-polarized waves were responsible, nor that an extended form of optical pumping in the time-domain was involved, nor how the various apparatuses of the present invention could be constructed to produce the LWs, nor how the resulting LWs could be applied to condition and treat other kinds of matter, as disclosed herein.

3. The Work of Fritz Albert Popp

A somewhat related piece of art is the work in Germany by Fritz Albert Popp, who used quantum electrodynamics to show that cellular systems have some kind of master cellular control system, and that mitogenetic photon emission is correlated to cellular condition [24, 25, 26]. Again, the scientific knowledge at the time was insufficient for one skilled in the art to understand the mechanisms advanced in Popp's paper, and it has remained insufficient until the present invention. Popp's work showed that somehow cellular condition is related to electromagnetic emissions and suggested that further research was needed to determine the mechanism. Popp did not suggest, nor is it obvious to one skilled in the art, to use the observed emissions to cause specified changes in living cells, or in other kinds of matter, or by what mechanisms, as disclosed in the present invention. Furthermore,

Popp never suggested that conditioned electromagnetic fields, waves, and potentials be deliberately created in order to induce desired changes in matter, or that the body itself could be induced to produce the engines doing the changing.

OBJECTS OF THE INVENTION

It is an object of the present invention to produce a longitudinal electromagnetic wave (along with its accompanying time-polarized electromagnetic wave) from transverse EM waves, and a conditioned time-density wave with deterministic substructure from longitudinal waves. Such waves may be utilized within other aspects of the present invention. The time-density wave may be a pseudo-longitudinal wave or a quantum potential of infinite velocity; methods and apparatus to produce it using a coil, plasma, multi-stage mixer, gas breakdown, 180-degree phase shift, phase-conjugate mirror, and digital-signal-processing means are provided. The conditioning may be produced by nonlinearly mixing predetermined transverse EM constituents controlled for phase, amplitude, and frequency.

A further object of the invention is to synthesize a conditioned scalar potential from its calculated mathematical constituents.

Yet another object of the invention is to amplify a phase conjugate replica wave so that a time-reversal zone or a vacuum anti-engine may be created. Such a wave may also be utilized in other aspects of the present invention.

A further object of the invention is to charge matter with a time-charge carrying a predetermined spacetime curvature set (an engine), and to produce specified changes in the matter by the operation of said curvature set and engine upon said matter, with emission of specified longitudinal EM waves during the excitation decay of the time-charge, and with the emitted longitudinal EM waves accompanied by associated time-polarized time-polarized wave companions which discharge the time-excitation charge, so that the emitted longitudinal waves and their accompanying time-polarized EM waves constitute ordinary, detectable transverse EM radiation from the body.

Another object of the invention is to produce predetermined conventional transverse EM waves in a target zone by interference of conditioned time-density waves, wherein energy can be added or removed from the target zone. Matter in the target zone can be time-charged with a deterministic spacetime curvature engine, and the engine applied to the matter through a process of excitation decay as described in the foregoing paragraph, to cause desired changes in the matter.

An additional object of the invention is to provide an instrument that can detect time-density charging and the initiation of time-charge excitation decay by calibrated interference from detected "ordinary" transverse EM wave radiation from a mass or body.

Yet another object of the invention is to propagate conditioned time-density waves by modulating them upon a standard carrier wave for conventional transmission. Transmission may be done by multiple antennas. Alternatively, by pre-mixing conditioned scalar potentials and transmitting them using a single antenna, a conditioned beam may be swept through a target zone and may contact

targets at various distances to produce desired effects.

A further object of the invention is to transport, by means of conditioning applied to a time-density wave modulated upon a standard carrier wave, signals whose bandwidth exceeds the normal capacity of the transmission medium, and reconstitute those signals at a destination.

An additional object of the invention is to produce a time-reversal zone via iterative phase conjugation. The time-reversal zone may be enhanced by adding particles to the zone with predetermined absorption characteristics. The particles may be a colloid, a suspension, a material lattice, or an intensely scattering medium. Performance may also be enhanced by pumping the apparatus with EM waves, including time-polarized waves. Furthermore, chemicals and nuclear reactions may be selectively altered within the time-reversal zone to render harmful substances harmless, hasten their decay, or otherwise alter the substances. The apparatus may also be used to form deuterium nuclides and/or alpha particles.

Yet another object of the invention is to provide a system utilizing a conditioned scalar potential that may be used to decontaminate places or specimens that are contaminated with specified substances including disease-causing agents. The system may be a mobile system and the conditioning may be a predetermined spacetime curvature engine. Alternatively, the conditioning may be created on demand through analog or digital-signal-processing means after scanning the target zone with a biased scalar potential interferometer to determine what substances are present therein.

Degradation of harmful nuclear wastes into less-harmful or short-lived isotopes is another object of the invention. This may be done by induced quark-flipping in nucleons to transmit elements, or by inducing excess energy to speed up radioactive decay.

Moreover, an object of the invention is to time-reverse a living or inert mass to a state in which the mass previously existed, by producing an amplified vacuum anti-engine and applying the engine to the mass. Another object of the invention is to modify a mass to a state in which it may never have previously existed, by applying a delta vacuum anti-engine in addition to the time reversing anti-engine, providing "steering" of the resulting physical changes to the desired new state or physical condition, to what *would* have been a healthy state in the past had it existed. The delta anti-engine may be formed by nonlinearly mixing the vacuum engine comprising the mass’s current state with the vacuum engine comprising a different mass-state.

Furthermore, an object of the invention is to provide a treatment unit to treat living cells and bodies to reverse disease and damage in them. A body is irradiated with longitudinal EM waves (which are always accompanied by time-polarized EM waves) to form phase-conjugate replicas of EM signals from the body. The replicas are amplified and modulated upon a magnetic field to which the body is exposed, thus pumping the living cells and their constituent atomic and subatomic particles in the time-domain and time-reversing them. Another aspect provides a treatment unit to repair congenital and hereditary conditions by applying a determined delta anti-engine to the body.

A further object of the invention is to provide a portable treatment unit utilizing the aforesaid methodology for treating mass casualties.

A further object of the invention is to provide a larger treatment unit utilizing the aforesaid methodology for research and treatment within hospitals and other facilities.

BRIEF DESCRIPTION OF THE DRAWINGS

Fig. 1 is a schematic depiction of the production of longitudinal EM waves from transverse EM waves, and time density waves from longitudinal EM waves.

Fig. 2 illustrates the time-charging of an electron to contrast a time-density-excited state used in the present invention with a conventional spatial-energy-excited state.

Fig. 3 shows the interference of time-density waves producing longitudinal EM waves, and the interference of longitudinal EM waves producing transverse EM waves.

Fig. 4A illustrates forming a time-density EM wave with a controlled substructure, by selecting and mixing constituent wave pairs, the constituent wave pairs being bidirectional phase-conjugate longitudinal EM waves, which may in turn be formed from constituent conventional transverse EM waves chosen from a harmonic series.

Fig. 4B illustrates a longitudinal EM wave pair given a difference frequency.

Fig. 5 is a flowchart illustrating a series of operations, according to embodiments of the present invention, that may be used to form a scalar potential with a deterministic substructure.

Fig. 6 is a flowchart illustrating operations, according to embodiments of the present invention, for creating conditioned pseudo longitudinal wave pairs and a conditioned scalar potential of infinite velocity, also known as a quantum potential.

Fig. 7 shows the production of conventional transverse EM waves in a target zone by interference of two time-density EM waves, which may be conditioned.

Fig. 8A is a schematic of an apparatus that may be used to condition a scalar potential using a coil.

Fig. 8B is a schematic of a different apparatus that may be used to condition a scalar potential using a plasma.

Fig. 9A is a schematic depicting an apparatus for multi-stage mixing that may be used to condition a scalar potential.

Fig. 9B is a schematic of yet another embodiment to produce a conditioned scalar potential using gas breakdown.

Fig. 9C is a diagram illustrating the nonlinear optics principle of self-targeting, and an enhanced method of exploiting them.

Fig. 10 illustrates an apparatus, according to one embodiment of the present invention, that may be used to convert transverse EM waves into longitudinal EM waves.

Fig. 11A is a diagram of an apparatus, according to a further embodiment, that may augment the present invention's wave conversion process.

Fig. 11B illustrates yet another method for creating a time-density wave.

Fig. 12 is a block diagram of a data processing system suitable for use as a controller in embodiments of the present invention.

Fig. 13 is a more detailed block diagram of a data processing system useful in embodiments of the present invention.

Fig. 14A is a block diagram of a codec for modulating a conditioned scalar potential upon a conventional sine wave carrier (carrier and its input to mixer not shown).

Fig. 14B is a block diagram of yet another embodiment for conditioning a scalar potential with an input signal and modulating it onto a sine-wave carrier for conventional transmission.

Fig. 15 is a block diagram of a system for interference of scalar potentials in a target zone using two transmitters and predetermined spacetime curvature engines.

Fig. 16 is a block diagram of a variant system for scalar potential interference using two transmitter systems and producing the spacetime curvature engines from transverse waves.

Fig. 17 depicts another scalar interference embodiment where a single transmitter may transmit two scalar potential beams by means of timed pulses.

Fig. 18 illustrates an embodiment that uses scalar interference to add or remove spatial energy from a distant target.

Fig. 19 shows an apparatus for altering chemicals by creating a time reversal zone within a reaction vessel.

Fig. 20 is a diagram of a mobile system that may be used to decontaminate buildings and similar structures via the interference of conditioned scalar potentials.

Fig. 21 is a flowchart showing steps of a process, according to embodiments of the present invention,

to utilize a database of predetermined spacetime curvature engines in combination with interference between conditioned scalar potentials to act on a specified agent such as a disease-causing agent.

Fig. 22 depicts a mobile system that may be used, e.g., for biologically decontaminating a target zone, preferably utilizing a database of predetermined spacetime curvature engines, according to embodiments of this invention.

Fig. 23A is a block diagram of an interferometer system and apparatus, according to embodiments of the present invention, useful to alter the rate of a nuclear reaction, such as to induce quick α-decay in samples of otherwise longer-lived isotopes.

Fig. 23B is a diagram of an instrument to detect time-density charging and the initiation of time-charge excitation decay.

Fig. 24 illustrates a modified electrolysis apparatus using engineered time-reversal zones to form, e. g., deuterium nuclides and/or α particles.

Fig. 25A depicts an ordinary mirror versus a phase-conjugate mirror.

Fig. 25B shows the conventional method for creating an amplified phase-conjugate replica wave by pumping a nonlinear medium.

Fig. 26A depicts a time-reversal of a mass by an amplified vacuum anti-engine.

Fig. 26B depicts an application of the **Fig**. **26A** process to alter a mass to a desired state that it never previously possessed.

Fig. 27 is a schematic of a portable treatment unit that may be used to treat a living body.

Fig. 28 is an illustration of the **Fig. 27** unit.

Fig. 29 is an illustration of a non-portable hospital and research embodiment of the portable apparatus shown in **Fig. 27** and **Fig. 28**.

DETAILED DESCRIPTION OF THE PREFERRED EMBODIMENTS

The present invention now will be described more fully hereinafter with reference to the accompanying drawings, in which illustrative embodiments of the invention are shown. This invention may, however, be embodied in many different forms and should not be construed as limited to the embodiments set forth herein; rather, these embodiments are provided so that this disclosure will be thorough and complete, and will fully convey the scope of the invention to those skilled in the art.

As will be appreciated by one of skill in the art, aspects of the present invention may be embodied as a method, data processing system, or computer program product. Accordingly, aspects of the present invention may take the form of an entirely hardware embodiment or an embodiment combining software and hardware aspects, all generally referred to herein as a "circuit" or "module" or "unit". Furthermore, elements of the present invention may take the form of a computer program product on a computer-usable storage medium having computer-usable program code embodied in the medium. Any suitable computer readable medium may be utilized, including hard disks, CD-ROMs, optical storage devices, flash RAM, transmission media such as those supporting the Internet or an intranet, or magnetic storage devices.

Computer program code for carrying out operations of the present invention may be written in an object oriented programming language such as Java®, Smalltalk or C++, or in conventional procedural programming languages, such as the "C" programming language. The program code may execute entirely on the user's computer, partly on the user's computer, as a stand-alone software package, partly on the user’s computer and partly on a remote computer, or entirely on the remote computer. In the latter scenario, the remote computer may be connected to the user’s computer through a local area network (LAN) or a wide area network (WAN), or the connection may be made to an external computer (for example, through the Internet using an Internet Service Provider).

Aspects of the present invention are described with reference to flowchart illustrations and/or block diagrams of methods, apparatus (systems) and computer program products according to embodiments of the invention. It will be understood that each block of the flowchart illustrations and/or block diagrams, and combinations of blocks in the flowchart illustrations and/or block diagrams, can be implemented by computer program instructions. These computer program instructions may be provided to a processor of a general purpose computer, special purpose computer, or other programmable data processing apparatus to produce a machine, such that the instructions, which execute via the processor of the computer or other programmable data processing apparatus, create means for implementing the functions/acts specified in the flowchart and/or block diagram block or blocks.

These computer program instructions may also be stored in a computer-readable memory that can direct a computer or other programmable data processing apparatus to function in a particular manner, such that the instructions stored in the computer-readable memory produce an article of manufacture including instruction means which implement the function/act specified in the flowchart and/or block diagram block or blocks.

The computer program instructions may also be loaded onto a computer or other programmable data processing apparatus to cause a series of operational steps to be performed on the computer or other programmable apparatus to produce a computer implemented process such that the instructions which execute on the computer or other programmable apparatus provide steps for implementing the functions/acts specified in the flowchart and/or block diagram block or blocks, and may operate alone or in conjunction with additional hardware apparatus described herein.

Various embodiments of the present invention will now be described with reference to the figures in which like numbers correspond to like references throughout.

Various forms of electromagnetic energy can be transduced (converted from one form to another) by successive phase conjugations, illustrating the principles of Whittaker [2]. These transductions are key elements that are used in various embodiments of the present invention and have been demonstrated empirically. Referring now to **Fig. 1, 100** shows a first phase conjugation and **110** shows a second phase conjugation taking the output of first phase **100** as its input. At **100,** a transverse electromagnetic (EM) wave **120** and its phase-conjugate replica wave **130** combine in mixing operation **140** to produce a spatially longitudinal wave **150.** At **110,** a longitudinal wave **150** and its phase-conjugate replica **170** combine at mixing operation **180** to yield a time-density wave **190** (depicted symbolically).

Fig. 25A depicts how a phase-conjugate mirror differs from a conventional mirror. A phase-conjugate mirror is a form of matter with unusual optical properties. In both diagrams there is a transverse EM radiation source **2500,** which could be an ordinary light bulb or other EM emitter, producing divergent radiation **120**. It is common knowledge that incident waves **120** from source **2500** impinge on an ordinary mirror **2505** and are reflected as reflected waves **2510** (which are also ordinary transverse electromagnetic waves similar to incident waves **120)**. In an ordinary mirror system **2505**, the angle of incidence equals the angle of reflection, about an axis of symmetry perpendicular to the mirror **2505**'s reflective surface. Thus waves **2510** continue to diverge after reflection from ordinary mirror **2505.**

By contrast, when divergent incident waves **120** impinge upon a phase-conjugate mirror **1010**, reflected waves **130** are not ordinary incident waves, but are exact time-reversed replicas of the incident waves **120.** Thus reflected waves **130** converge precisely back along the path taken by incident waves **120.** The energy in the waves **130** is time-reversed, which is observed instrumentally as parity reversal. Pumping phase-conjugate mirror **1010** with transverse EM pump waves **2520** may increase the magnitude of the phase-conjugate replica waves **130**. This amplification principle is exploited by various embodiments of the present invention. Note that the combining means **140, 180** of **Fig. 1** may be phase conjugation.

Fig. 2 schematically depicts a quantum-mechanical process by which an electron may become excited (i.e., charged) with energy, and subsequently emit the energy through a process of decay. A new kind of excited state – the **time-density charge** (time-energy charge) or **time-energy excitation** of a particle interacting with a longitudinal wave and thus with a time-density wave due to the automatic phase conjugating action of the particle – occurs upon charged particles. This kind of excited state is unknown to the prior art. This new type of excited state may alternatively be interpreted as an **electrogravitational charge** or **electrogravitational excitation**. Further, this new type of charge is internally structured (with a spacetime curvature engine or engines). So it can also be regarded as a **spacetime curvature engine charge**. Accordingly, matter can be activated (charged) in the new fashion so that, as the time-energy charges gradually decay by emitting longitudinal EM waves, those emitted waves in turn will induce desired actions upon and in any exposed mass irradiated by the LWs. This kind of activation (excitation) of deterministic spacetime-curvature engine charging of matter and subsequent emission of specific deterministic spacetime curvatures as longitudinal EM wave radiation patterns has not previously appeared in physics.

Now with reference to **Fig. 2**, atom **200** illustrates excitation with spatial transversely-polarized

energy and atom **250** illustrates excitation with time-polarized energy. A nucleus of an atom is depicted by **205**. Surrounding the nucleus are orbitals **210**, **215**, and **235**. Orbiting the nucleus is an electron **225.** When the electron is in a low-energy state it resides within a low-energy orbital **210.** An incident photon **230** carries an increment of spatial EM energy, such as in transverse polarization. When photon **230** interacts with electron **225**, the electron absorbs spatial energy **220** and moves to a higher-energy orbital **235.** Subsequently (not shown here), spatial energy **220** will be emitted from excited electron **235** by an emission of a transverse-polarized photon, causing the electron to resume its former energy-level **225** in orbital **210**.

In atom **250,** when electron **225** is in a low-energy state it resides within a low-energy orbital **210,** which here indicates a low time-energy state. An incident photon **265** is carrying an increment of time energy, such as a time polarization. When photon **265** interacts with electron **225**, the electron absorbs time energy **260** and moves to a higher-time-energy orbital **255.** In this state electron **270** is said to be time-charged. Subsequently (not shown here), time energy **260** will be emitted from time-charged electron **270** by emitting a time-polarized photon **265,** or LW pairs equivalent to the same, causing the electron to resume its former position **225** in orbital **210**.

Fig. 3 shows at **300** that transverse EM waves can be produced from longitudinal waves through a process of interference. In the example, LWs **150** interfere in an interference zone **320**, and as a result transverse waves **120** are emitted. Similarly, at **350** longitudinal waves **150** are produced from time-density (scalar) waves **190** by interfering in interference zone **320.** These interference processes are used in several embodiments of the invention, for example when it is desired to transmit waves in one form to a distant site, then convert their energy back to an observable form, for example as shown in **Fig. 7**.

Thus, as illustrated in **Figs. 1-3**, if sufficient nonlinear interactions of multiple transverse waves take place, the phase conjugation of transverse EM waves can be utilized to create the present invention's internally structured longitudinal EM waves. Then the longitudinal waves can be utilized to create the present invention's internally structured time-density EM waves (conditioned scalar potentials). The time-density waves will induce time-density charging (excitation) of the interacting particles, after sufficient time has elapsed. The time-density charged particles will then emit transduced longitudinal EM waves as the excited time-energy state decays. Subsequently some of these emitted LWs will also interact with available particles having spin, and be absorbed. In the re-emission, the excited particles will emit both longitudinal and transverse EM waves (the latter due to particle spin).

The key to producing higher-order (i.e. longitudinal) EM waves is to maximize certain nonlinearities in the system. Desirable nonlinearities are those that cause phase-conjugation within a particular system, which may be a function of the frequencies present in that system. Stable iterative phase conjugation gradually produces a complex of higher-order EM waves. Stable interactions of these higher-order EM waves with particles having spin gradually induces the formation of "anomalous" transverse EM waves at the end of the process for decay of the induced time-charge excited states.

Fig. 4A depicts a scalar potential (time-polarized electromagnetic wave) Φ (phi) **400** as being composed from members of a harmonic series of component longitudinal wave pairs **150, 170**. It will be understood by one skilled in the art, per iterative Whittaker transformations [2], that the LW pairs

themselves may be considered to be composed of transverse EM waves. By definition, the frequencies of members of a harmonic series are related by each being some integer multiple of a fundamental frequency. The figure shows a graph where x-axis **420** represents distance and y-axis **410** indicates velocity. Each wave pair consists of two spatially-polarized longitudinal waves, time-forward wave **150** and its counterpart phase-conjugate replica wave **170** (which may be thought of as being time-reversed). In each wave pair, the two waves superpose spatially, but travel in opposite directions. Thus each pair comprises a longitudinal wave and its corresponding anti-wave, coupled, through an application of nonlinear optics' distortion correction theorem in which individual photons couple in photon-antiphoton pairs. (Since a photon-antiphoton pair has spin 2, the pair is also known as a graviton; a phase-conjugate pair of any of longitudinal waves **430-470** may also be considered an electrogravitational standing wave.) Velocity modulation is a property of longitudinal waves. The space-energy-density carried by such a wave is not oscillating; rather, its time-energy-density is oscillating.

The wave pairs **430-470** shown in **Fig. 4A** differ in frequency and instantaneous velocity. So the wave pair with average velocity **430** is the fundamental and has a frequency of 1 on the graph. The wave pair with velocity **440** has a frequency of 2 over the same spatial interval; thus **440** is the second harmonic of wave pair **430.** Similarly wave pair **450** is the third harmonic and wave pair **470** is the fourth harmonic, making the four exemplary wave pairs members of a harmonic series. According to the invention, as will be explained with reference to **Fig. 5,** one can construct a scalar potential **400** with deterministic substructuring by adroitly (1) selecting a particular collection (i.e., spectral content) of component longitudinal waves – or equivalently selecting their precursor transverse waves; (2) controlling the waves for frequency, phase angle, and magnitude; and (3) superposing or mixing them. While not shown in the **Fig. 4A** example, in selecting components from which to form conditioned scalar potential **400** in accordance with embodiments of the present invention, some members of a harmonic series may be omitted (or, equivalently, their magnitude set to zero). Any modification of the basic internal waves in **Fig. 4A** constitutes an **engine** (spacetime curvature engine, vacuum engine).

Fig. **4B** illustrates longitudinal EM wave pair production by means of a difference frequency, another principle exploited by embodiments of the present invention. Two specific input frequencies **475** and **485**, which may be transverse EM waves, are input into a nonlinear medium **490**. Medium **490** may be any suitable nonlinear medium as described herein, or other medium capable of mixing input waves by superposition, and is preferably isomorphic. After mixing within medium **490**, input waves **475, 485** pass through transverse wave filter **492,** which is a filter capable of selectively blocking transverse waves. For example, at electrical frequencies, filter **492** can be a combination of band-pass filters, tank circuits, or other circuits resonant at given frequencies, configured such that no transverse wave frequencies are able to pass through the series of filters. Although input frequency **480** is not physically present as an input, a result of apparatus **490, 492** is to perform operations upon input frequencies **475, 485,** for example by means of superposition and mixing, such that difference frequency **480**, also called a "beat frequency", is selected. The stress produced by the intermixing (**480**) and blocking (**492**) of input waves **475, 485** removes the transverse energy components (i.e. components arising from electron precession) from the difference frequency **480**, leaving only the more fundamental longitudinal components. Since a transverse wave **480** is mathematically and physically equivalent to a bidirectional longitudinal EM standing wave pair, i.e. a wave plus its phase-conjugate replica, per Whittaker [2], then what is emitted from filter **492** is a bidirectional phase

conjugate longitudinal EM wave pair **495** at the difference frequency. The method of **Fig. 4B** may be exploited in various embodiments of the present invention whenever it is desired to produce a bidirectional phase conjugate longitudinal EM wave pair of a given frequency.

Fig. 5 is a flowchart illustrating a process **505** for a series of operations, according to embodiments of the present invention, that may be used to form a scalar potential with a deterministic substructure (i. e., a conditioned time-polarized wave). At step **500,** particular constituent transverse waves are selected comprising particular spectral content. At step **510** the constituents are controlled as to frequency, magnitude, and phase angle. At step **520** the transverse wave components **120** interact with a nonlinear medium, producing phase-conjugate replicas **130**. This combining operation **140** at step **530** yields longitudinal waves **150**. The production and combining operations are preferably done using an embodiment of the present invention, such as exemplary apparatus **1000, 1100**. At step **535,** the longitudinal waves **150** interact further with the nonlinear medium in combining operation **180**, producing phase-conjugate replicas **170** of longitudinal waves **150** (e.g., exemplary wave pairs **430-470**). At step **540,** conditioned scalar potential **400** with a deterministic substructure has been produced, and may be further utilized in other aspects and embodiments, concluding the **Fig. 5** process.

Fig. 6 is a flowchart illustrating operations, according to embodiments of the present invention, for creating conditioned pseudo longitudinal wave pairs **430-470** and a conditioned scalar potential of infinite velocity **400**, also known as a quantum potential. The process of **Fig. 6** is preferably implemented by means of an embodiment of the present invention such as apparatus **1000, 1100** depicted in **Figs. 10-11**. At step **600**, constituent transverse waves **120** are selected and individually controlled as to frequency, phase angle, and magnitude. Waves **120** are then introduced between phase-conjugating mirrors **1010**, which may be components of, e.g., apparatus **1000.** In step **620**, the mirrors perform nonlinear optics phase conjugation upon the input transverse waves, yielding transverse phase-conjugate replicas **130**. At step **630,** waves **120-130** interact between the mirrors, such that the traverse component decreases and the spatially-longitudinal component increases. If at step **640** the longitudinal component is not predominant, phase conjugation of the transverse wave inputs continues at step **620**. Otherwise, if the longitudinal component has become predominant at step **640**, block **650** indicates that pseudo longitudinal wave pairs with a velocity between zero and infinity have been created, such as wave pairs **430-470**. If it was desired to produce only pseudo longitudinal wave pairs, the process may terminate at block **650**.

If, however, the production of a conditioned quantum potential (a quantum potential being a pure time-polarized wave with no spatially-transverse residues) is desired, further phase conjugation of the pseudo longitudinal wave pairs **430-470** may be undertaken at step **660** by introducing the longitudinal wave pairs **430-470** between phase-conjugating mirrors, which may be phase-conjugating mirrors **1010**. A second-order convergence process ensues (step **670)**. By second-order it is meant that the interacting waves are not those first introduced at step **600**, but byproducts of their interaction. During step **670** the transverse component further decreases and the velocity of the longitudinal wave component increases (step **680**). If at step **690** the velocity of the resulting waves is not yet infinite (finite velocity being an indication that vestiges of spatial polarization remain), the second-order convergence process of step **670** continues. If however at step **690** the resulting waves' velocity is now infinite (indicating that all transverse polarization has been converted to longitudinal

polarization and the resulting wave is a pure bidirectional longitudinal wave pair with infinite velocity – consisting only of oscillations in the density of time-energy), the process ends at step **695**. The resulting quantum potential **400** has now been produced and conditioned with the selected constituents **120** and **430-470**.

It will be apparent to one skilled in the art that steps **620-650** and steps **660-695** can be performed in two separate stages, or concurrently within a single apparatus, or a mix of separately and concurrently. The output **400,** or any of the intermediate wave forms **120**, **130, 150, 160, 430-470,** may be recorded on any suitable recording media capable of recording electromagnetic fields, potentials, or waves, or combinations thereof. They may also be digitized, and the recordings or the digital representations stored, via a data processing system such as that to be described with reference to **Figs. 12-13**, for playback at a future time. It will also be apparent to one skilled in the art that such recordings may be introduced into the **Fig. 6** process, or other embodiments of the present invention, at one or more appropriate stages, in order to deterministically alter the mixture of interacting fields, potentials and waves, and thereby alter the conditioning of the resulting scalar potential. Furthermore, the recordings or digital representations may be transmitted to other locations in the same manner as conventional analog recordings and digital data are conventionally transmitted, for example by being modulated onto a sine-wave carrier such as a radio signal, or using a network such the Internet or any other suitable network capable of transporting data. Moreover, the recordings and digital representations may be transformed numerically using a conventional numerical data processor or digital signal processor to perform operations such as phase conjugation, addition, inversion, computation of a difference frequency, and so forth, before conversion back to analog form or other use within an embodiment of the present invention.

Fig. 7 illustrates the production of conventional transverse EM waves **120, 130** and/or longitudinal EM waves **150, 170** in a target zone **320**. Longitudinal EM waves **150**, **170** are shown being produced. Interferometer receivers are familiar in the field of astronomy, where the signals from multiple radio telescopes may be combined into a single more detailed image, through precise timing to reconstruct the signal as if received by a single instrument of larger aperture. An embodiment of the present invention shown in **Fig. 7** uses interferometry in a transmission mode.

In concept, a desired set of spacetime curvature forces and patterns is selected that is adapted to perform precise desired actions in a target mass. The set is calculated and transformed into at least two conditioned scalar potential functions. Each scalar potential function is then emitted by a respective transmitter of a scalar potential interferometer as a scalar potential function beam. Where the transmitted beams intersect in an interference zone, the desired forces and potential gradients arise within the quantum-mechanical active vacuum (also called the spacetime potential) of that zone. As a result, time-charging occurs and the local spacetime potential in the zone becomes structured with the desired spacetime curvature forces and patterns. The forces and patterns (also called spacetime curvature engines) arise from every point within masses present in the zone during the period of time-charge excitation decay within the zone, and do not propagate in the manner of conventional force fields through the space intervening between the transmitters and the interference zone. As shown by general relativity, spacetime curvatures do act on any mass in the spacetime where they exist. Hence the formed spacetime curvature engines do act on the exposed mass in the interference zone, to accomplish the desired purpose.

Referring specifically now to **Fig. 7,** transmitters **710** are two transmitters capable of transmitting time-polarized waves **190**. The transmitters are preferably Whittaker/Ziolkowski [34] transmitter arrays capable of transmitting 8 to 20 harmonic wave pairs each. In this example, each transmitter **710** transmits a conditioned scalar potential beam **400**. As a result of the prior selection of constituent transverse waves **120,** resulting in the creation of constituent longitudinal waves **150, 170**, **430-470** as previously explained with reference to **Figs. 5** and **6**, scalar potential beams **400** may be conditioned, i.e. carrying hidden bidirectional electromagnetic energy flows **720**. These energy flows **720** are "hidden" in the sense that the energy they are carrying is present in the form of time-polarized and longitudinally-polarized energy, but as a result of the conditioning process **505, 605,** the transverse polarization components (steps **630, 680**) have cancelled each other out, leaving no detectable transversely-polarized spatial energy residues. "Hidden" simply means the energy is not detectable with conventional instruments adapted solely for detecting transverse electromagnetic energy. The "hidden" component may of course be detected with specialized instruments that are adapted for detecting such energy in which the active principle may be a plasma, ionization, interference, and so forth. Where scalar beams **400** intersect in an interference zone **320,** they interfere (i.e., superpose nonlinearly). Peaks combine with peaks, resulting in higher amplitude; troughs add to troughs resulting in lower amplitude. Since after this addition the time-forward wave constituents and their phase-conjugate replicas are no longer perfectly matched as to phase and amplitude – a required condition for the transverse polarization components to have been suppressed – the "hidden" energy components become manifest as detectable conventional transversely-polarized electromagnetic fields, waves, and potentials. This results in the immediate emission of spatially longitudinally-polarized waves **150, 170** (and equivalently, transversely-polarized waves **120, 130,** per Whittaker [2]) in interference zone **320**. The resulting emissions or potential gradients may be positive (i.e., adding spatial energy to the target zone), negative (i.e. removing energy from the target zone), or fixed (constant). These processes may be further exploited in other embodiments herein.

In addition, some photons **265** in a scalar potential beam **190** carrying increments of time-energy **260** may be absorbed by some electrons **225** in a target zone of scalar potential beam **190**, moving to higher time-energy levels **270**. (This phenomenon does not require multiple scalar potential beams.) Thus, matter within a target zone of a scalar potential beam may become time-charged. The degree of time-charging depends on the magnitude of the scalar beam **190** and the duration of exposure. As time-energy **260** is emitted from time-charged target-zone electrons **270**, time-polarized photons **265** – or their equivalent spatially polarized equivalents – are emitted. This process of decay, of matter in the target zone, from a time-charged state to a non-time-charged state, occurs gradually after the presence of the scalar potential energy **190** within a target zone. The deferred emission of time-polarized photons in the target zone may interact with other energy in said zone, causing additional deferred interference phenomena. Various embodiments of the present invention, to be described, will make use of this time-charging phenomenon to alter and treat matter long after the scalar beam in the target zone ceases.

In an alternate embodiment for **Fig. 7**, a scalar potential may be calculated mathematically and synthesized from its calculated constituents. In this embodiment a selected scalar potential function is solved mathematically for its transverse wave constituents. The constituents are then assembled and phase conjugated, and then the resulting longitudinal waves also assembled and phase conjugated, yielding the desired scalar potential function. This process is also used to calculate and include

internal structural deviations in the internal waves, thus infolding **specific engines** in the scalar potential functions.

To reiterate this process in more detail, the required scalar potential functions are first calculated then mathematically decomposed into a set of bidirectional longitudinal EM wave pairs. Each longitudinal EM wave in the set is then further mathematically decomposed into the phase conjugation of a given transverse EM wave. Each calculated transverse wave is generated (e.g. using an analog wave generator or a digital signal processor) and individually phase conjugated, forming a first set of longitudinal EM waves. Each LW in the first set is then individually phase conjugated, thereby producing a second set, being a set of bidirectional longitudinal EM phase conjugate wave pairs. This second set constitutes the selected conditioned scalar potential. The second set **400** may be transmitted by the transmitters **710** of the scalar potential interferometer into an interference zone **320**, as previously described.

Fig. 8A is a schematic of a simple embodiment that may be used to condition a scalar potential. By way of explanation, when potentials superpose, their composite longitudinal wave pairs also superpose. So pulsing a DC signal upon a coil carrying transverse wave frequencies can fuse the constituent LW substructures of all potentials that are present on the coil. When the pulse is removed, waves leaving the coil have been conditioned to transport the desired longitudinal wave pair pattern that was introduced via the DC potential. This method may be used to condition signals in a coil on a continual basis. Apparatus **800** is powered by power source **810**, which is preferably a DC potential. A first terminal of power source **810** is grounded and a second terminal is operably connected to switch **820**, which may be any suitable switch such as a single-pole single-throw switch or momentary contact switch or oscillator-controlled switch. A first terminal of a coil **830** is operably connected to switch **820** and a second terminal of coil **830** is grounded. When switch **820** is closed, the potential from power source **810** appears across coil **830.** Waveform **825** (a square wave) indicates that due to the on-off action of the switch, the potential appearing on coil **830** has very sharp rise and decay times (i.e., a value of *dq/dt* approximating 0). Input transverse waves that are desired to be altered into a mixture of longitudinal electromagnetic bidirectional phase-conjugate pairs **430-470** are introduced by means of pulse **825**. Thus the input waves are mostly electrostatic wave oscillations, when measured across coil **830**. Coil **830** and band-pass filter **835** are operatively coupled to one another by radiation, not conduction. Filter **835** is adapted to pass only the frequency desired. The output **840** of filter **835** is a longitudinal bidirectional electromagnetic standing wave that may be used, e.g., in other aspects of the present invention.

Yet another embodiment for creating a conditioned scalar potential uses staged mixing. In this embodiment a first set of previously-conditioned signals are introduced onto a coil; these currents and voltages are allowed to build up and oscillate in the coil until they become stable (i.e., standing waves form). A second signal, which is a pulsed DC signal, is then introduced onto the coil. Again internal longitudinal wave pair structures superpose and mix. The pulsed DC signal leaving the coil is a conditioned pulsed DC carrier carrying a desired internal structure from the first set of signals.

Referring now to **Fig. 8B,** apparatus **850** is powered by a DC source potential **855.** A multiplicity of input transverse waves **120**, which may be selected according to the process of **Fig. 4A,** are introduced into the apparatus **850** from a multiply-structured frequency source **865.** Source **865** may

be a conventional signal generator, digital signal processor, or other means of producing a multiplicity of sine-wave signals, and is preferably capable of controlling the frequency, phase angle, and magnitude of the signals. A first terminal of coil **875** is operably coupled to a negative terminal of power source **855**, and an opposite terminal of coil **875** is operably coupled to a pulse controller **860**. The pulse controller **860** receives power from power source **855**, is operatively attached to frequency source **865**, and is adapted to control the frequency source **865** by conventional means so that the outputs of source **865** may be pulsed on and off at predetermined intervals. Mixing is performed within coil/plasma apparatus **870-875**. Coil **870** may be a conventional coil comprising a multiplicity of turns of a suitably-gauged conductor encircling a non-conductive cylindrical core. Within coil **870** is an enclosure or tube containing a confined gas, which is preferably a noble gas or mixture thereof, but may be other gas suited for performing the present invention's mixing functions at one or more desired frequencies. Each individual transverse wave frequency from source **865** is directed to a respective electrode in tube **870**. Two additional taps at opposing terminals of coil **870** are operably attached to the respective terminals of intermixed output stage **840**.

By way of further explanation, the plasma in tube **875** converts fractions of the input transverse waves **120-150** – which may be considered as energy-density oscillations in 3-space – into longitudinal electromagnetic waves **430-470 –** which may be considered as energy-density oscillations of time-energy, having a fixed spatial-energy density. The pulsed DC on coil **870** can be decomposed into two scalar potential functions, per Whittaker [2]. Thus the longitudinal wave components **430-470** created in the gas **875** comprise a scalar potential **190**. Since it is well known that potentials superpose, the mixing of the scalar potential functions **190** results in the infolding of the longitudinal EM waves **430-470** and their dynamics into the resulting scalar potential **190**. Such infolding is also called *conditioning* or *dimensioning*. The intermixed output **840**, which is a conditioned scalar potential **400**, may then be used, e.g., in other aspects of the present invention.

Fig. 9A is a schematic depicting yet another apparatus that may be used to condition a scalar potential. A plasma or gas-filled tube is placed inside a coil – preferably a toroid – and desired structuring frequencies introduced into the gas or plasma as conventional transverse EM waves. The outputs of several such pre-mixers can then be fed to a subsequent mixer. **Fig. 9A** shows such an array for multi-staged mixing of internal electrodynamic structures. Apparatus **900** is a variant on apparatus **850** in which conversions of a multiplicity of input transverse waves into longitudinal waves are performed by a multiplicity of pre-mixer stages (**928…934)** operating in parallel, and the resulting LWs (**440…470)** are subsequently mixed in a mixer **945.** Each premixer stage **928…934** of apparatus **900** is powered by a power supply **855**, and has a pulse controller **860** and a multiply-structured frequency source **865** as previously described with reference to **Fig. 8B.** Instead of a cylindrical coil containing a gas-filled enclosure, each premixer stage has its own toroidal coil **925** which is preferably a conventional toroid consisting of a multiplicity of turns of a suitable conductor wound on a doughnut-shaped non-conductive core. The physical arrangement of the multiplicity of premixer stages **928…934** is such that each toroid **925…925** lies at the circumference and surrounds a preferably-cylindrical enclosure **920** filled with a gas such as a noble gas or mixture thereof, and the same gas-filled enclosure passes through the center of the toroid **925** of each premixing stage **928…934**. At each premixer stage **928…934,** the multiple transverse wave inputs from frequency source **865…865** are introduced into that stage's respective toroid **925…925.** A tap on an individual toroid **925** collects the conditioned output **940** of an individual premixer stage. Each of a multiplicity of outputs **940...940** is operably attached to a multi-stage mixer **945**, which combines the same to yield

output **948.**

Fig. 9B is a schematic of a further embodiment to produce a conditioned scalar potential, in this case using overpotential and ionization breakdown in a gas. By way of overview, in apparatus **950**, a first set of conditioning waves and frequencies are mixed into a gas, so that the voltage of the first set is in the gas's overpotential voltage region but below the gas's initial ionization breakdown voltage. At the same time, a second potential, which is a DC potential, is placed upon the gas in the overpotential voltage range, but again shy of voltage breakdown of the gas. Thus, in a gas characterized by a charge-blocking of breakdown discharge current, a potential may be used as an overpotential. In this fashion the internal structures of the first and second set of potentials mix and fuse. All the introduced frequencies – each considered as just two potentials per Whittaker [2] – will diffuse and infold all their longitudinal wave pair structuring – and thus *themselves*, since they are just the sum total of their substructures – into the overpotential, conditioning the overpotential as desired. Addition of another voltage pulse sufficient to induce initial breakdown and discharge of the overpotential will then result in an emitted pulse containing the desired conditioning of its potential. The apparatus conditions both the E-field and B-field of the emitted signal. Components **860, 865, 870, 875,** and **840** of apparatus **950** are similar to those described with reference to previous figures. Instead of a single DC source, the apparatus **950** has two DC sources whose voltage is chosen with respect to the ionization breakdown voltage for a selected gas within enclosure **875**. The voltage of a first DC source **955** is below said breakdown voltage and the voltage of a second DC source **960** is above said breakdown voltage. The positive terminal of source **955** is operably connected to a positive input terminal of coil **870**, which in turn is also operably coupled with pulse controller **860**, and provides a steady-state potential. The positive terminal of source **960** is operably attached to provide an input to pulse controller **860**. The pulse controller **860** periodically allows the overpotential from DC source **960** to overpotentialize the plasma **875,** causing an ionization breakdown**.** This causes a mixing of the internal electrodynamic structures of the multiple potentials and fields. The negative terminals of both sources **955, 960** are operably connected to a negative input terminal of coil **870,** and taps on coil **870** are adapted so as to pass the output of the mixing process to intermixed output **840**.

Fig. 9C is a diagram illustrating the nonlinear optics principle of self-targeting. It explains how iterative retroreflection of an input wave between phase conjugate mirrors can convert the input wave from a pseudo longitudinal wave pair into a perfect longitudinal wave pair. An iterative phase conjugate reflection process gradually reduces the transverse component of a transverse EM wave to zero, while simultaneously transferring the oscillation energy to the time-domain.

First, it should be understood that when a pseudo-LW pair is phase conjugated, perfect phase-conjugate replicas are added to both the forward-time pseudo-LW portion and the reversed-time pseudo-LW portion. This converts the pseudo-LW pair into two "perfect" LW pairs slightly dephased from each other. That is the deeper mechanism involved in the simpler notion of adding a phase-conjugate replica to a transverse EM wave, to obtain a true LW pair. In fact, one obtains two perfect LW pairs, coupled but slightly out of phase. The dephasing is a little-known result of the well-known slight spatial separation between an atomic nucleus and its electron cloud, the time-forward components being emitted by photon interactions with electrons and the time-reversed components being emitted by anti-photon interactions with protons. Now, a proper analysis must take this slight dephasing into consideration because it produces a difference frequency that is primarily responsible

for converting an input wave to a pure longitudinal wave.

Fig. 9C graphically depicts the gradual diminution of transverse components' magnitude over time during a process of iterated retroreflection, shown in steps **970, 975** and **980** which represent a time 1, a time 2, and a time 3. Referring now to time 1 **(**step **970),** consider two phase conjugate mirrors **1010** facing each other and separated by a homogeneous nonlinear medium (omitted for clarity), with iterated retroreflection throughout the medium of a set of waves **981-982** between the mirrors. The mirrors **1010** may be, for example, colloidal particles in suspension, or other suitable phase-conjugate mirror materials. As is known in the art (see, e.g., Flynn [45]), in any homogeneous *nonlinear* medium, a difference between two sine waves acts as if it were a normal wave being transmitted through a *linear* medium. However, the phase conjugation of pseudo longitudinal wave pairs to produce pure longitudinal wave pairs is unknown in the prior art. Thus, according to the present invention, as iterative phase conjugation, also called self-targeting, continues between the mirrors **1010**, this action of the virtual difference frequency increases. The difference frequency acts as a wave input at both retroreflection endpoints **1010.** At time 2 (step **975),** the two real transverse waves **981-982** bounding the virtual difference wave now begin to act as pump waves in each mirror, increasing the amplitude of the virtual difference retroreflections. The result is a transfer of energy from the bounding transverse waves **981-982** into the growing virtual difference wave. At time 3 (step **980)**, the virtual difference wave itself (not illustrated) has been phase conjugated perfectly and become a perfect virtual longitudinal wave pair, illustrated symbolically by arrows **982-982** and **981-981** representing time-density waves. In addition, in the presence of noise in the medium, the energy from the noise can be transferred or partially transferred to the difference frequency, amplifying it [46].

By way of further explanation, the transfer of energy to the virtual difference wave is simply the transfer of energy to a virtual entity, and therefore it constitutes a broken symmetry. By the definition of broken symmetry, something virtual must become observable. In this case, the virtual entity (the difference wave) to which the energy is transferred becomes observable *a priori* via the broken symmetry. The virtual difference frequency becomes a real standing longitudinal bidirectional wave pair, and rapidly assumes all the energy of the original transverse pump waves. In short, two input frequencies have now been converted into their difference frequency, where that difference frequency wave is a pure longitudinal EM wave pair having infinite velocity and infinite energy.

The phase conjugation of pseudo-LW pairs, the production of a LW as the difference frequency between two transverse input waves, and the amplification of the difference frequency by the introduction of noise – all disclosed in the embodiment of **Fig. 9C –** may be exploited in other aspects of the present invention.

Fig. 10 is a diagram of an apparatus **1000**, according to an embodiment of the present invention, for creating a time-reversal zone by a process of phase-conjugation. The apparatus may be used to carry out the processes described in **Figs. 5-6** and may be used in conjunction with other embodiments described herein. In concept, iterative phase conjugation between separated but facing phase conjugate mirrors will produce a time-reversed zone in a space between the mirrors when the magnitude of the phase conjugate (time-reversed) wave energy in the space exceeds the total time-forward wave energy in the space. This can be achieved by adjusting the number of mirrors, the

energy of pump waves, and the bandwidth of frequencies within the space.

Referring now to **Fig. 10,** the apparatus **1000** contains at least two phase-conjugate mirrors **1010** made of suitable materials, with suitable placement, spacing, and dimensions, according to the principles of nonlinear optics, to create phase-conjugate replicas **170** of input signals **150** (longitudinal wave **150** may be considered equivalent to transverse wave inputs **120,** per Whittaker [2]). Protons **1020** may be used to enhance the effect. Input waves **150,** preferably chosen as previously described with reference to **Fig. 4A,** are introduced between mirrors **1010**. The phase-conjugate replicas **170** precisely retrace the spatial path of their input counterparts **150.** Bouncing back and forth through an iterative phase-conjugation "ping-ponging" process **1040**, standing waves form, transversely polarized components of the input waves **120** cancel each other out, and longitudinally polarized components reinforce one another and increase in magnitude. The area **800** of ping-ponging **1040** then becomes a time-reversal zone when the magnitudes of the longitudinally-polarized components exceeds the magnitude of the transverse components. The phase conjugation and time-reversal effects may be enhanced, and the resultants amplified, through the optional injection of pump waves **1030,** which are preferably injected at phase-conjugate mirrors **1010**. Transversely or longitudinally polarized waves can be used as pump waves **1030,** but wide-bandwidth longitudinal EM waves are preferred to enhance the effect.

The efficiency or tuning of apparatus **1000** may be altered by placing various materials between mirrors **1010,** i.e., into the location for time-reversal zone **800**. For example, particles **1040,** preferably a colloidal suspension of active particles resonant with a resonant frequency of the input waves **150**, may increase the ping-pong between the phase-conjugate mirrors **1010**. The formation of the time-reversal zone can be enhanced by increasing the energy absorbed upon each particle, e.g. by sizing the particles so that they are resonant, or nearly resonant, with a frequency of the absorbed radiation. Such particles may absorb and re-emit (including as phase conjugate emissions) more energy than they receive. See Bohren [48], Paul and Fischer [49] and Letokhov [50]. This asymmetrical self-regauging raises the energy density of the entire particle suspension, as well as the energy in the phase conjugate reflections. Mixtures of colloids may be used with a mix of input frequencies. Suspensions of larger particles or regular masses can be utilized if the liquid medium is agitated to keep the particles **1040** in suspension. The material may be an intensely scattering medium **1050,** preferably resonant to some of the frequencies **430-470, 1030** and subharmonically resonant to some of the others. Alternatively, the material may be a lattice or array **1060** of material mixes in solid suspension or in liquid suspensions to enhance the production of longitudinal wave pairs. In yet another embodiment, the material may be a solution of molecules chosen for their frequency ranges determined from their chemical resonance and anti-Stokes emission characteristics. In an alternate embodiment, an inert gas mixture can be utilized instead of a resonant particle suspension and the gas irradiated with transverse EM waves whose frequency is resonant or near resonant with the gas particles. If subharmonic oscillation is used with an inert gas, a delay will ensue before the gas particles go into stable resonance. It will be apparent to one skilled in the art that the materials placed between mirrors **1010** and/or within time-reversal zone **800** may be varied in order to produce particular effects, without departing from the spirit and scope of the present invention, and the above materials are by way of example and not of limitation.

Fig. 11A depicts an alternative embodiment **1100** that may improve upon the efficiency of apparatus

1000 by pumping the time-reversal zone **800** with time-density waves **190**. This may be done using a time-density wave generator **1110,** which may be any suitable time-density wave generator, including but not limited to an embodiment of the present invention. For example, the output of apparatus **1000** may be introduced into apparatus **1100.** Other methods of obtaining time-density waves may be employed, and the above example is not intended to in any way to limit the scope of what is claimed. By time-charging matter in the time-reversal zone **800**, this method **1100** may enhance the production of longitudinal EM waves and consequently provide an improved time-reversal zone and improved production of a conditioned scalar potential for treating matter.

Fig. 11B is a block diagram of yet another method for creating time-density waves. An input transverse wave **120** enters a wave splitter **1120,** which can be an ordinary wave splitter of a type well known in the art. The function of the splitter **1120** is to pass a first portion of the input wave **120** unchanged to a phase-shifter **1130,** and a second portion unchanged to a nonlinear mixing modulator **1140**, to both of which it is operably attached. The phase shifter **1130** is a 180• phase shifter which may be a commonplace RC circuit, a delay line, a digital signal processor of sufficient resolution, and so forth. The function of the shifter is to emit an output wave that is 180• out of phase from the input wave, resulting in an output wave **1135** whose phase angle is inverted with respect to the phase angle of input wave **120.** The shifted output wave is passed to modulator **1140,** which combines the first portion with its 180•-phase-shifted counterpart transverse wave **1135**. The modulator **1140** may be any suitable nonlinear medium, such as a plasma, capable of mixing the input waves by superposition. The output from the modulator **1140** is a time-density wave **190.**

The method of **Fig. 11B** may be used in various embodiments of the present invention whenever it is desired to create a time-density wave. It will be apparent to one skilled in the art that the elements of **Fig. 11B** can utilized in multiple stages and in various combinations, such that a multiplicity of input waves **120** may be combined to yield time-density waves **190.** In such a multiple-stage embodiment the mixing and combination may yield a conditioned scalar potential **400** wherein said conditioning is a function of the selection of the input waves.

Fig. 12 illustrates an exemplary embodiment of a data processing system **1200** suitable for use as a controller, such as controller **1200** in **Figs. 15-20** and **Fig. 22-23,** in accordance with embodiments of the present invention. The data processing system **1200** typically includes a memory **1236** that communicates with a processor **1238.** The data processing system **1200** may optionally include input device(s) **1232** such as a keyboard or keypad, and output devices such as a display **1230** that also communicates with processor **1238**. The data processing system **1200** may further include optional devices such as an audio device **1244**, mass storage devices **1248** such as disk drives, tape drives, CD-ROM drives, and so forth, and I/O port(s) **1246** that also communicate with processor **1238**. The I/O ports **1246** can be used to transfer information between the data processing system **1200** and other computer systems, networks, data acquisition units, transmitters, receivers, phase conjugators, time-density wave generators, longitudinal wave generators, and other analog and digital hardware. The components of controller **1200** may be conventional components, such as those used in many conventional data processing systems, and may be configured to operate as described herein.

Fig. 13 is a block diagram of embodiments of data processing systems that illustrates systems, methods, and computer program products in accordance with aspects of embodiments of the present

invention. The processor **1238** communicates with the memory **1236** via an address/data bus **1348**. The processor **1238** can be any commercially available or custom microprocessor capable of carrying out the operations required. The memory **1236** is representative of the overall hierarchy of memory devices containing the software and data used to implement the functionality of the data processing system **1200**. The memory **1326** can include, but is not limited to, cache, ROM, PROM, EPROM, EEPROM, flash, SRAM, and DRAM.

As shown in **Fig. 13**, the memory **1236** may include several categories of software and data used in controller **1200**: an operating system **1352**; application programs **1354**; and data **1356**. As will be appreciated by those of skill in the art, the operating system **1352** may be any operating system suitable for use with a data processing system, such as OS/2, AIX or System 390 from International Business Machines Corporation, Armonk, NY, Windows 95, Windows 98 or Windows 2000 from Microsoft Corporation, Redmond, WA, Unix or Linux, a real-time operating system kernel, and so forth. The application programs **1354** are illustrative of the programs that implement the various features of the data processing system **1200** and preferably include at least one application that supports operations according to embodiments of the present invention. Finally, the data **1356** represents the static and dynamic data used by the application programs **1354**, the operating system **1352**, and other software programs that may reside in the memory **1236.**

As is further seen in **Fig. 13**, the application programs **1354** may include a data acquisition module **1310**, a digital signal processing module **1320**, and a transmitter control program **1330**. These modules carry out operations as described herein such as the acquisition, conversion, processing, storage, and recreation of conditioned fields, potentials and waves. The exemplary modules **1310, 1320** and **1330** may operate in coordination with facilities of the operating system **1352** and obtain access to I/O ports **1246**, digital signal processor **1240**, mass storage **1248**, memory **1236**, and so forth.

The data portion **1356** of memory **1236**, as shown in the embodiments of **Fig. 13**, may include digital waveform representations **1360.** These may be used in various embodiments of the invention to generate predetermined waveforms. They may also be used to store digital representations of waveforms received from, e.g., digital signal processor **1240** or external analog hardware through I/O ports **1246** which may be under the control of data acquisition module **1310.** They may also be used for storing intermediate transformations of digitized signals such as sums and differences, phase-conjugate replicas, various spacetime curvature engines, and so forth. The digital waveform representations **1360** may also be used to produce specified transmissions from a transmitter, including interferometer transmitter systems as disclosed in various embodiments of the present invention. This may be done in various ways, such as by digital-to-analog conversion, which may be performed, for example, by digital signal processing software **1320** in conjunction with digital signal processor **1240,** or external signal generators via I/O ports **1246**. As will be apparent to one skilled in the art, these digital waveform representations **1360** can also be written to, and read from, mass storage devices such as storage device **1246**.

While the present invention is illustrated, for example, with reference to the data acquisition module **1310**, digital signal processing module **1320**, and transmitter control module **1330** being application programs in **Fig. 13**, as will be appreciated by those of skill in the art, other configurations may also

be utilized while still benefiting from the teachings of the present invention. For example, these functions **1310, 1320, 1330** may also be incorporated into the operating system **1352** or other logical division of the controller data processing system **1200**. Thus, the present invention should not be construed as limited to the configuration of **Fig. 13** but is intendedment of the present invention, but may be any suitable nonlinear optically active mixer. The mixer sums the signal **1455** and its antiphase signal **1460**, resulting in a net transversely polarized signal of zero. Mixer **1470** should include first, a conventional filter to remove any remaining AC and produce a good constant DC potential; and second, a nonlinear mixing function to produce a conditioned pulsed DC output. The output of mixer **1470** is then input into a suitable oscillator (not shown), such as a conventional phase-locked LC oscillator, that is adapted to produce a sine wave output from a pulsed DC input. The conditioned sine wave output (carrier) may then be transmitted conventionally (block **1475**).

Referring now to the receiver/demodulator **1479** section of **Fig. 14B**, the conditioned sine wave signal (carrier) output by modulator/transmitter **1477** is received conventionally in block **1480**. The signal is passed to optically active phase demodulator **1490**. Also input to the demodulator **1490** is the selected carrier **1465**, being the same frequency that was input into mixer **1470** in the modulator/transmitter section **1477**. Phase demodulator **1490** is adapted so that the interference of carrier **1464** with conditioned carrier **1475** removes (demultiplexes) the carrier frequency from the multiplexed conditioned signal, leaving only a conditioned scalar potential (i.e., a zero potential at a given bias voltage, carrying the hidden conditioning in the form of longitudinal wave dynamics). This scalar potential is then passed to optically active voltage phase detector **1495**. Detector **1495** is adapted to demultiplex input signal **1455** from its antiphase replica **1460.** The output from detector **1495** is then passed to resistive signal detector **1498**, which may for example be a conventional pair of headphones, an audio speaker, a signal strength meter, or the like.

Fig. 15 is a block diagram of a system for interfering scalar potentials in a target zone using at least two transmitters and predetermined spacetime curvature engines. The example teaches how transverse EM waves can be converted to a "hidden" form, "invisibly" transmitted from a first site to a second site, then reconstituted. One of the system's inputs is a spacetime curvature engine that may be produced, stored, and reproduced as provided for elsewhere within this invention. The spacetime curvature engine is modulated upon a time-density wave, also called a scalar potential. The conditioned time-density wave may then be modulated upon a prior-art carrier according to **Figs. 14A-14B**. The resulting signal is passed to at least two transmitters and transmitted to a designated target zone. Interference between these conditioned time-density waves then reconstitutes the desired transverse waves in the target zone.

Referring now to **Fig. 15,** system **1500** has three major components: a controller **1200** and at least two transmitter systems **1520** to which the controller is operably connected. Each transmitter system contains a spacetime curvature engine generator **1540**, a signal processor **1550**, and a transmitter **1530** with a suitable antenna system attached, which is preferably an antenna array capable of transmitting a set of predetermined transverse EM carrier wave frequencies, for example radar frequencies or short wave radio frequencies. A desired spacetime curvature engine is designated at the controller **1200,** which transmits control signals corresponding to the desired spacetime curvature engine to each of spacetime curvature engine generators **1540**. The function of a spacetime curvature engine generator is to condition a scalar potential with predetermined input signals. Each generator

1540 transmits its output, a conditioned scalar potential, to a signal processor **1550** in its respective transmitter system. The signal processor may use a technique such as that described with reference to **Figs. 14A-14B** to modulate scalar potentials from the generator upon a conventional carrier frequency. Under control of controller **1200**, each processor **1550** sends its output, a conventional carrier modulated with a hidden scalar potential that has been conditioned with a designated spacetime curvature engine, to its respective transmitter **1530**. Each of transmitters **1530** and particularly each of their antenna systems should be sited and adapted such that its beam can be directed toward a designated target zone. The spacing between the first and the second of transmitters/antennas **1530** should be chosen with consideration of the carrier wavelength, to yield the desired interference effects in the target zone. If they are too close together compared with the carrier wavelength, then the interference will be minimal, as the arriving wave fronts may be only slightly out of phase. Ideally they should be situated an odd multiple of one-half wave distant from one another. Alternatively, other methods well-known in the art such as phased arrays of small antenna elements may be used to achieve the necessary phase control. The beams carrying the conditioning are then directed toward the designated target, arrive in interference zone **320** out of phase, and interfere there. This demultiplexes and demodulates the conditioning, resulting in the emission of chosen transversely-polarized electromagnetic radiation in the target zone.

Fig. 16 is a block diagram of a variant system for scalar potential interference using multiple transmitter systems and producing the spacetime curvature engines from transverse waves. System **1600** is conceptually very similar to system **1500**. A primary difference is that in system **1600**, rather than reproducing predetermined spacetime curvature engines by means of a spacetime curvature engine generator **1540,** the engines are produced on-demand in a multi-stage process. A first process step is generation of transverse wave components by a transverse wave generator **1620** under the control of controller **1200.** A second process step is the operation upon said transverse waves by a first phase conjugator **1630**, whose output comprises pseudo longitudinal wave pairs**.** A third process step is the operation upon said pseudo-LW pairs by a second phase conjugator **1640** to produce conditioned time-density waves. A fourth process step **1650** is the conversion of the conditioned time-density waves by a spacetime curvature engine/transmitter into a form transmissible by a conventional EM transmitter. The conversion may preferably be done by a modulator **1412** or a modulator **1477**. The resulting conventional transverse EM waves carrying hidden conditioning **190** are then transmitted to a target zone. Where the beams intersect, interference occurs and the transverse waves that had been input into the conditioning are reconstituted in the target zone.

The result in the interference zone may be exothermic (divergent, adding energy) or endothermic (convergent, removing energy). Biasing the electrical ground potential of scalar potential interferometer transmitters **1605** above the ambient ground potential in the interference zone **320** produces heating, while biasing it below produces cooling. This phenomenon can be used to cause heating or cooling in the interference zone, and in and throughout any mass therein. Sharply pulsing the exothermic transmitters can produce a hot (exothermic) explosion in the interference zone, while sharply pulsing the endothermic transmitters will produce a cold (endothermic) "explosion."

Fig. 17 depicts another scalar interference embodiment whereby a single transmitter with a steerable antenna may project a composite scalar potential beam created by mixing two conditioned scalar potentials. Unlike **Fig. 16**, however, rather than focusing on a predetermined spatial region, the

composite beam may be swept until it contacts a selected mass at various distances and angles from the antenna, and may produce a desired vacuum engine therein to act upon said selected mass and accomplish the desired changes to it.

Referring now to **Fig. 17**, a block diagram of a single-transmitter swept-beam scalar potential interferometer system 1**700** is shown comprising a controller **1200,** a first time-density wave set generator **1715,** a second time-density wave set generator **1717,** a small delay generator/mixer **1705,** and a steerable transmitter/antenna unit **1710.** As in **Fig. 16,** a first set of conditioned time-density waves and a second set of conditioned time-density waves are created embodying at least one desired vacuum engine. Mixing the first and second sets of waves **1720-1730** in the delay generator/mixer produces a composite beam **1740**, which is then passed to the antenna unit and transmitted. By steering the antenna under control of controller **1200** through azimuth and elevation, the beam may be directed at a distant mass **1750** where range is unimportant. When the beam strikes the mass, the composite beam's conditioned scalar potential automatically produces interference in the material lattices, nuclei, molecules, atoms, etc. of an interference zone **320** within the mass, to form the at least one desired vacuum engine, at a distance which need not be predetermined. The beam can be swept across a multiplicity of masses at different ranges and radial angles from the composite interferometer **1700.** For example, the beam can be played across a ditch or container containing a hazardous material to be treated, and gradually the selected vacuum engine forming in said material will alter and nullify the hazardous material. Such a system may have many uses, as will be apparent to one skilled in the art. Thus, the present invention should not be construed as being limited to the examples cited herein, but is intended to encompass any method that can be carried out by the apparatus and system described herein.

Fig. 18 illustrates an embodiment that may add or remove spatial energy from a distant target, and/or deterministically alter matter in the target zone, by means of interference of conditioned scalar potentials. Scalar interferometer transmitter system **1600** is preferably comprised of transmitter systems such as **1520** or **1605,** and a controller **1200**. Antennas **1710** may be of a conventional type suitable for transmitting a selected carrier wave frequency such as a radar frequency. The output of each antenna is a carrier wave with selected spacetime curvature engines modulated upon it, as previously described. In the **Fig. 18** example, the target zone **1800** may be a storage area for dangerous or environmentally harmful substances such as hazardous chemicals, nuclear waste, pathogens, and so forth. By selecting suitable spacetime curvature engines and causing their carrier waves to interfere in an interference zone **320** within the storage area, the substances may be altered from a safe distance by converting them to materials that are not harmful. It will be apparent to one skilled in the art that the **Fig. 18** technique may be applied to a variety of materials, which may be located at remote distances from the site of interferometer transmitter **1600.** It will also be apparent that the alterations may consist of the breaking of chemical bonds by heat; transmutation of an element to a different element or isotope thereof by flipping of quarks within the element's nucleons, causing protons to change into neutrons or vice versa; and so forth.

In another aspect, the apparatus of **Fig. 18** may be used to hasten the decay of long-lived and dangerous radioactive isotopes.

A further discussion will explain the particular mechanisms involved in modifying the decay rates of

nuclear materials. Nuclear physics models assume that, within a heavy slow-decaying nucleus, there are α particles that "rattle around" a very large number of times before spontaneously tunneling through the surface and escaping, to provide α decay. For the long-lived decay of ^{238}U, e.g., the α particle must present itself at the barrier some 10^{38} times before it succeeds in tunneling through. Hence an α-decay will likely occur on the average of once every 4 billion years! The disintegration energy of this long-lived ^{238}U nucleus is 4.25 MeV. However, the transmission coefficient of a barrier is very sensitive to small changes in the total energy of the particle seeking to penetrate it. As an example, a change in the disintegration energy to 6.81 MeV results in barrier penetration of the α particle very quickly – indeed, in only 9.1 minutes. By use of time-density charging, it is straightforward to raise the disintegration energy of an otherwise long-lived ^{238}U isotope to 6.81 MeV or even higher, after a certain longitudinal EM wave radiation time. (In this instance, the addition of necessary phase conjugates to accomplish time-density charging happens in the vicinity of the irradiated nuclear mass.) It follows that a readily usable process can be designed to decay the long lived ^{238}U isotope quickly, and similarly with other radioactive isotopes having very long half-lives. Indeed, "mixes" of appropriate spacetime curvature engines can be designed to minimize actual radioactive emission, with the vacuum itself undergoing energetic processes that accept the excess energy in virtual state rather than radiating it away into 3-space as observable transversely-polarized nuclear decay contaminants. Nuclear wastes can be irradiated at a safe distance by an interferometer such as **1600.** Alternatively, the interferometer **1600** can condition the local vacuum in a specified disposal region by projecting the desired spacetime curvature engines, which become imposed on matter in the region by time-charging and subsequently emitted over a period of time through the process of excitation decay. Then the isotopes to be nullified can just be transported into the area and "parked" there while the conditioned active vacuum performs the necessary nullifying electronuclear interactions.

Fig. 19 shows an apparatus that may serve to alter and nullify hazardous chemical wastes by creating time-reversal zones within a reaction vessel. A time-reversal zone has the characteristic of reversing the electrical attraction and repulsion forces upon many charges within the zone. In such a zone, a hydrogen bond may become an anti-hydrogen-bond, thus loosening the bonds. As the bonds break, the chemicals may be altered to harmless new forms. As an example, the H-bond interactions in a hazardous chemical compound are due to protons. As time passes and the time-reversal zone strengthens due to time-density charging, the exposed hydrogen ions (protons) in the chemical acquire additional time-density charge, whereupon some begin to repel (due to the time-reversal of their attraction) while others continue to attract (due to the remaining time-forward component). As the time-reversal strengthens, repulsion equals and overtakes attraction, thereby dissolving the H-bond. The chemical thereby separates into component parts and component chemicals. Exposure can continue until the remaining chemical byproducts are harmless. In this manner, hazardous chemicals – including dangerous chemical warfare agents – may be rendered harmless. For the safety of operating personnel, the time-reversal zone may be established inside a protective reaction vessel from a little distance away.

Referring now to **Fig. 19**, a data processing system or controller **1200** is operatively connected to a detector array **1920** capable of detecting, by means of sensors **1950** positioned within a reaction vessel **1900**, the chemical composition or other physical parameters of the chemical being treated as may be necessary to determine when treatment is complete. The reaction vessel contains a

multiplicity of phase conjugate apparatus **1000** with appropriate materials chosen to act as phase conjugate mirrors therein. A quantity of at least one chemical to be treated **1910** is placed within the reaction vessel in proximity to at least one phase conjugate apparatus **1000**. The production of time-reversal zones within apparatus **1000** is then enhanced by means of pumped phase conjugate mirrors **1010.** The pumping is carried out by the introduction of electromagnetic waves into the reaction vessel and into the midst of apparatus **1000**, by a multiplicity of suitably-placed antennas **1940**. Pumping is effective for the reasons explained with reference to **Fig. 9C.**

The method of **Fig. 19** will work on a multiplicity of hazardous chemicals at once, since H-bonds and other ionic bonds are affected, weakened, and dissolved in the various chemicals simultaneously. It will be apparent to one skilled in the art that such an apparatus can be employed advantageously in the processing of many different kinds of chemicals, including mixtures, and can also be used to enhance the production of desired chemical reaction products, rather than solely to decompose chemical wastes.

Fig. 20 is a diagram of an exemplary mobile interferometer system that may be used, e.g., to decontaminate an area such as a civilian city or a combat zone previously contaminated by biological warfare attack, chemical spillage, etc., to render it safe for human occupation and living without protective masks and clothing. The system preferably makes use of an interferometer transmitter such as that described with reference to **Fig. 7** or **15** that is augmented with a scanning capability. In the **Fig. 20** embodiment, a target zone may be scanned (to determine the nature of the materials therein) through an area or volume at a distance. Thus this method may also be effective even when the type of contaminant is not known in advance.

The scanning may be done as follows. First, the interferometer device is set to endothermic mode, by biasing its ground potential lower than that of the target zone, to obtain a radiation signature (spacetime curvature engine) of substances in the target zone. The returned signature may be digitized and compared with a database of previously obtained signatures of known substances, to determine a best-fit match. The precise anti-engine corresponding to the determined signature may be read from the database, or calculated on demand, and passed to the interferometer, after first having been converted to a conditioned scalar potential modulated upon a conventional transverse EM carrier wave.

The interferometer is then set to transmit mode, by biasing its ground potential higher than that of the target zone, and the conditioned carrier is transmitted into the target zone for a suitable period of time, thus time-charging mass within the target zone with the selected anti-engine so as to render the harmful substance harmless. Alternatively, the signature returned by the scanning operation can be phase-conjugated on demand to produce an appropriate anti-engine, and the amplified anti-engine transmitted into the target zone.

Turning now to **Fig. 20**, system **1700** is an interferometer transmitter system preferably utilizing an embodiment of the present invention such as system **1500** or **1600,** having a controller **1200** containing a database that may be stored in mass storage **1248** of known spacetime curvature engines and their corresponding anti-engines. System **1700** also includes an interferometer transmitter/ scanner device mounted on a team vehicle **2010**, which is preferably a chemical/biological/radiation

(CBR) shelter vehicle to protect the occupants therein. An operator **2000,** who may ride within vehicle **2010** or may direct its operation remotely, operates system **1700** by interacting with processor **1200** by means of conventional data processing input and output operations such as a keyboard and display, wireless telecommunications link, or other equivalent means. The operator selects a target needing treatment such as a building **2020**, a boat or equipment **2030**, a populated place **2040,** a vehicle **2050,** or other structure or place needing treatment, and by interacting with controller **1200** aims the interferometer scanner at an interference zone **320** in order to "read" the signature of the contaminant. Controller **1200** then compares the returned signal from the zone **320** with a database of signatures of known substances and determines the best-fit match using algorithms that are well-known in the fields of data processing and signal processing. The operator then sets the interferometer transmitter into a transmit mode and the determined anti-engine **720,** having been conditioned upon a scalar potential **190** and modulated upon a conventional transverse EM carrier frequency, is transmitted into the selected zone **320**.

The system of **Fig. 20** is further illustrated by **Fig. 21**, a flowchart showing steps of a process, according to embodiments of the present invention, to utilize a database of predetermined spacetime curvature engines in combination with interference between conditioned scalar potentials to alter and treat a specified agent such as a pathogenic agent. At step **2100**, a signature of the agent to be decontaminated is obtained. At step **2110**, a database is searched for an anti-engine appropriate to the determined agent. At step **2120**, if an appropriate anti-engine was found**,** control passes to step **2140** in which the controller **1200** is programmed with the determined anti-engine. Thereafter at step **2150** the target zone is irradiated with the determined anti-engine. At step **2160** a determination is made as to whether there may be additional agents requiring treatment. If the result of the determining step **2160** is YES, then control passes back to step **2100** and the process may be repeated as necessary. If at step **2120** the appropriate anti-engine was not found in the database, then control passes to step **2130** wherein the operator **2000** selects an alternate spacetime curvature engine that may be helpful to mitigate the contamination even though it may not be specific to that particular contaminant (e.g., hydrogen peroxide may be effective against multiple pathogens). Control then passes to step **2140** as previously described. If at step **2160** no more agents need treatment, then the process of **Fig. 21** ends.

Fig. 22 depicts a mobile system that may be used, e.g., for biologically decontaminating a target zone, preferably utilizing a database of predetermined spacetime curvature engines, according to embodiments of this invention. A mobile single-transmitter swept-beam scalar potential interferometer system **1700** operated by an operator **2000** treats a designated contaminated area **2230,** depicted in the illustration as farm land, although the treatment may be applied to a great variety of areas and types of contamination. The interferometer is set into scanning mode and the target zone scanned. The results as passed to controller **1200** and compared with a database of known contaminant signatures (not shown). If the type of contaminant matches a known signature and a database **2220** contains an appropriate anti-engine specific to the contaminant, the anti-engine is programmed by the controller and transmitted on conditioned scalar beam **190** into an interference zone **320.** If the type of contaminant is unknown or no specific anti-engine is available, the operator may select a mitigating anti-engine from database **2210** of general-purpose and broad-spectrum anti-engines and send it to the target zone.

Fig. 23A shows an apparatus that may be used, e.g., for neutralizing a biological agent wherein

spacetime curvature engines are calculated for the specific agent, which may be a virus or a mycoplasma, and may include that same virus or mycoplasma even after it has already infected a living cell and dumped its genetics into said infected cell, thereby converting the cell to a host factory that makes more infectious agents (viruses). As an example, this would include a vaccine that is found to be contaminated by viruses (it is extremely difficult to produce bacterium vaccines, e.g., where the bacterium is not contaminated and infected by undesirable pathogens and viruses). As an example suppose a smallpox vaccine is inadvertently contaminated by HIV virus, of the type that induces AIDS. The need for the vaccine may be desperate, and no other vaccine available (such a scenario can easily arise, particularly in terrorist attacks on U.S. cities or impending attacks with smallpox agent). In this case, the "delta" spacetime curvature engine existing between (1) the normal vaccine bacterium without HIV infection and therefore with normal genetic material, and (2) the vaccine bacterium with HIV infection and altered genetic material) is determined or calculated. These resulting "delta" engines are then phase conjugated (time-reverse). Amplified time-reversed "delta" antiengines are then produced by the interferometer in its interference zone. The zone is scanned through the vaccine, with sufficient dwell time to produce time-reversal of the genetics in the bacterium, back to before the HIV virus dumped its genes. In this case, the genetics of the bacterium are altered from the "infected" case back to the "uninfected" case, and the vaccine is cleansed. **Fig. 23A** shows this methodology and process for decontaminating a biologically contaminated fluid, area, vaccine, etc.

A variant of the methodology may be used whereby in a desperate situation the contaminated vaccine is used to vaccinate the populace against smallpox. Then that populace is treated individually by scanning irradiation as described previously, to reverse the HIV infection and eliminate the HIV viruses and their genetics from the contaminated individuals.

Referring now more specifically to **Fig. 23A,** a block diagram depicts an interferometer system and apparatus **2300**, according to embodiments of the present invention, that may be utilized to perform the functions of system **1700** within a mobile decontamination system such as that described with reference to **Figs. 20** and **22**. Apparatus **2300** may be used to alter matter **2360** by, e.g., altering the rate of a nuclear reaction, such as to induce quick α-decay in samples of otherwise longer-lived isotopes, or to scan and/or alter a chemical agent or biological specimen. It may also serve to decontaminate a biologically contaminated fluid, vaccine, etc. when the contaminant is known. A first and a second interferometer transmitter unit each comprise a power unit **2310** providing power to a conditioned scalar potential beam unit **2320**, which is in turn operably connected to a beam transmitter **2330** and a beam receiver **2340.** The beam transmitter is adapted to transmit EM signals to, and the beam receiver is adapted to receive EM signals from, a scanning antenna horn or beam transducer **2350** that may be aimed at target matter **2360**. Both interferometer transmitter units are controllable by switch/controller unit **1200**, being a controller as previously described herein. The controller's function may be augmented by a conventional mobile display device **2380** and a conventional operator station **2385.** The controller retrieves a designated delta vacuum anti-engine embodying the delta between a normal and a contaminated fluid from a database, programs a photo unit **2380** and the interferometer transmitter units with the anti-engine, and applies the anti-engine to an interference zone **320** within the material under treatment. A photo unit **2380**, as will be described with reference to **Fig. 23B,** may be used to determine when sufficient time-charging has occurred and to monitor the progress of the **Fig. 23A** process.

In a variant of **Fig. 23A**, the method may be used even when the contaminant is unknown. If the particular genetics cannot be calculated (as for unknown variants of the infesting virus), then the interferometer may shift to basic longitudinal EM wave pair transmissions, so that strong longitudinal EM pump waves are produced in the interference zone. That interference zone may then be scanned through the contaminated vaccine, with sufficient dwell time to time-reverse the infected bacterium and thereby reverse and eliminate the HIV genetic material. This is the simple "eraser" method, where the undesired infection in the bacterium is simply "genetically erased" by time-reversal (dedifferentiation back to a previous cellular form when there was no genetic infection).

In yet another variant, the **Fig. 23A** apparatus can be used to speed up the α -decay of atomic nuclei by inducing a change of nuclide in an isotope by increasing the energy of α -particles conventionally forming within the nucleus and approaching the edge barrier, thus causing quick quantum tunneling of the α -particle. As previously described, increasing the energy of the interior α -particles inside the long-lived isotope of ^{238}U so that the disintegration energy of the nucleus increases from 4.25 MeV to 6.81 MeV decreases the decay time from about 4 billion years to 9.1 minutes. The same is true of most other nuclei above the mass number of 4He. While it will be apparent to one skilled in the art that several embodiments for inducing quick α -decay can be produced from the principles taught herein, the induced α -decay in ^{238}U is given by way of example and not by way of limitation.

Referring again to **Fig. 23A**, a very precise "microscope" scalar potential interferometer uses laser-like beams to project conditioned scalar potentials upon a sample of material for close focusing in an interference zone. A small interference zone **320** is produced, and may be scanned inside a sample of a material **2360**, which may be ^{238}U, placed in the target zone. By means of controller **1200,** a spacetime curvature engine is chosen that is appropriate for adding energy to α -particles via time-charging. Conditioned longitudinal EM waves carrying the determined engine in each beam irradiate the material for an exposure duration sufficient to produce significant time-density charging in the material. Interference adds excess energy directly to the atomic nuclei in the material, and therefore in and on the free α -particles inside the nuclei. As the disintegration energy of the nuclei increases, α -particles begin tunneling through the edge barrier, slowly at first and then with increasing frequency. Conventional radiation detectors may be used to detect the onset of the phenomena, the emission of α -particles by decay, and other energy-balancing decays that occur subsequently in the nuclei after each α -emission. A larger and more powerful version of the **Fig. 23A** embodiment can be used to scan and process larger quantities of radioactive wastes.

Referring now to **Fig. 23B,** a diagram is shown depicting a measurement instrument array **2398** suitable for performing the functions of photo unit **2380** for detecting the presence of time-density charging and the initiation of time-charge excitation decay. A multiplicity of detectors is arrayed through a space **2399** to be instrumented. The detectors may include thermometers **2395**, calorimeters **2392**, film radiation detectors **2393**, and radiation counters **2394**, all of which may be conventional varieties known in the prior art. The detectors may be operatively attached to a controller **1200** which is adapted to note state changes in the detectors. The array **2399** may also be operatively attached to a power meter **2391** that is adapted to measure the power input to the array. The detectors within the array **2398** are divided into three sets. A first set are detectors with very similar past time histories, so that all will agree in indicating the presence of either conventional or time-charge-related phenomena.

A second set are detectors with very dissimilar past time histories, so that all will agree in indicating the presence of conventional phenomena, but not all will agree when time-charge-related phenomena are encountered. A third set are detectors adapted for detecting the onset of excess energy emission. Excess energy emission may be defined as a difference between the amount of input energy measured by the power meter and the amount of energy detected by said third set. Detection by the first set and not all of the second set indicates the onset of time-charging-related phenomena, particularly the involvement of longitudinal EM waves, time-reversal zones, and time-density excitation charging, as well as inversion of the laws of charge attraction and repulsion in time-reversal zones. When in addition to the foregoing (detection by the first set and not all of the second set) the third set detects, the presence of excess energy is indicated and the decay of time-density excited states is underway. At this point, the instrumented region is now an open dissipative system transducing longitudinally-polarized and time-polarized electromagnetic energy from the active vacuum. As such, classical thermodynamics no longer applies; instead, the nonequilibrium thermodynamics of an open dissipative system now applies.

Fig. 24 illustrates a modified electrolysis apparatus using engineered time-reversal zones to form quasi-nuclei which then "decay" into the new full nuclei; e.g., to form quasi-nuclei of deuterium nuclides and/or α particles which then decay into real deuterium nuclides and/or alpha particles as the time-reversal zone diminishes and reverts to a normal time-forward zone.

In a first aspect of this embodiment, deuterium is produced in an aqueous solution by adapting and altering normal electrolysis processes, via the deliberate use of time-reversal zones. First, a conventional electrolysis apparatus is assembled using an aqueous medium and palladium electrodes **2420** to adsorb H+ ions (free protons) **2430** from the normal ions in the solution. Next, a time-reversal zone **800** is formed, preferably as previously described with respect to **Fig. 10** or **11A**, preferably adjacent to at least one of the palladium electrodes. The time-reversal zone reverses the conventional electrical law that like charges repel. Within the zone, now H+ ions (protons) attract. The adsorbed H+ ions in the palladium electrodes thus exert a powerful attracting force upon H+ ions in the solution, so that they are attracted toward the palladium. Although the Pauli exclusion principle prohibits *individual* fermions from being time-reversed, in even multiples of 2, 4, 6, etc. fermions can be time-reversed by acting as pseudo-bosons. Using parentheses to indicate a quasi-nucleus not fully bound by the strong force but also bound by the reversed electrical force (attractive now rather than repulsive), in the time-reversal zone **800**, many of the free protons will be attracted together in pairs, in the following reaction:

$$(_1H^1 + {}_1H^1) \Rightarrow 2(_1H^1) \Rightarrow {}_2(D)^2 \quad [1]$$

Equation [1] makes no sense in conventional nuclear or chemical reactions; however, in a time-reversal zone two protons may be attracted together, very closely, so that each enters the much-reduced strong force region of the other. They now constitute a pseudo-nucleus that is a novel isomer of deuterium, but still has two protons rather than a neutron and a proton. So long as the time-reversal zone holds, the two protons are bound firmly together by the reversed electrical force between them, now attractive rather than repulsive. Instead of negative virtual charges in the quantum-mechanical active vacuum being drawn to the ${}_2(D)^2$ nucleus, positive virtual charges are drawn to it. So the positive charge of the pseudo-nucleus increases nonlinearly, rather than decreasing due to the

shielding by negative virtual charges as occurs in conventional time-forward zones. To some extent the nucleus becomes "supercharged" by this unusual action of the virtual particles in the active vacuum in a time-reversal zone.

Then the time-reversal zone **800** is allowed to decay gradually and revert to a normal time-forward zone. As it does, the strong force recovers its normal strength much faster than the electromagnetic force zeroes and then reverses and recovers its normal direction and strength. Thus during the decay the two components of the quasi-nucleus are attracted even more strongly by the rapidly increasing strong force, so that extreme pressure toward formation of a true nucleus now exists and acts on the two components. Both charge and energy of the pseudo-deuterium nucleus and its constituent quarks are now highly unbalanced and in an excited state, and the ${}_2(D)^2$ nucleus is in a state of time-charge excitation. It decays in this case by flipping one quark in one proton, or by

$$\mathbf{{}_2(D)^2 \Rightarrow ({}_0n^1 + {}_1H^1 + energy) \Rightarrow {}_1D^2 + energy\ [2]}$$

Some of the excess energy from the transition will radiate away as virtual photons absorbed by the readjusting vacuum itself; i.e., as a readjustment of the vacuum due to positive virtual charges surrounding the D nucleus being expelled and negative virtual charges rushing in, as the time-reversal zone disappears and time in zone reverts back to its conventional forward passage. The remainder of the energy may radiate away as ordinary photons, constituting excess heat in the fluid.

In summary, by deliberately producing a time-reversal zone, the electrical charge law is inverted to assemble like-charged (positively charged) protons into pairs. The strong force is significantly weakened and may even be very slightly reversed, and the gluon forces in the nucleons are significantly weakened so that the quarks therein are nearly free and easily flipped in orientation. Then as the zone decays from time-reversal to time-forward, the readjustment of the active vacuum and curved spacetime causes a quark in one proton to flip, converting that proton into a neutron, and this is a *preferred* reaction in this novel case. This converts the proton pair pseudo-nucleus into a true deuterium nucleus. The method is simple and relatively inexpensive, and it uses this particular one of a huge number of new and previously unrecognized "nuclide-assembly" nuclear interactions at low energy in what otherwise would be merely conventional chemical interactions. Time-density energy is actually equivalent to highly compressed conventional EM energy, indeed on the order of that normally utilized in known nuclear reactions. This powerful energy is merely being used in compressed form, rather in the brute force form presently employed in high energy physics.

In a second aspect of the **Fig. 24** embodiment, helium 4 nuclei (alpha particles) may be produced in an aqueous solution by adapting and altering normal electrolysis processes, via the deliberate use of time-reversal zones and their decay. Again referring to **Fig. 24** and the previously-described apparatus, many of the protons in the time-reversal will be attracted together in fours, by

$$\mathbf{2({}_1H^1 + {}_1H^1) \Rightarrow 4({}_1H^1) \Rightarrow 4({}_4P)^4 \Rightarrow {}_4(He)^4\ [3]}$$

where (4P) means 4 protons in a pseudo-nucleus and ${}_4(He)^4$ means the pseudo nucleus of helium except that the normal 2 neutrons of helium each have one quark flipped so they are protons rather

than neutrons. Equation [3] makes no sense in present nuclear or chemical reactions, which are considered in time-forward zones only. However, in a time-reversal zone it represents the attracting together of four protons, very closely, due to the reversal of the electrical repulsion into electrical attraction, and due to the dramatic reduction of the strong force. The four bound protons now constitute a pseudo-nucleus that is a novel isomer of helium 4, except that one quark in each of two of the protons is oriented wrong for helium, the gluon forces are significantly weakened, and the quarks are nearly freed and easily flipped. So long as the time-reversal zone holds, the four protons are bound firmly together by the reversed electrical force. As in the previous aspect, positive virtual charges are drawn to the pseudo-nucleus, which may become "supercharged" by some fraction. Then the time-reversal zone is allowed to decay gradually. As it does, both charge and energy of the pseudo-helium nucleus are now increasingly unbalanced, and the ${}_4He^4$ quasi-nucleus is in an increasingly excited state, now heightened by the rapidly increasing strong forces. The ${}_4(He)^4$ quasi-nucleus decays in this case by first flipping one quark in one proton, and then flipping one quark in another proton, or by

$$\mathbf{{}_4(He)^4 \Rightarrow ({}_0n^1 + {}_3H^3 + Energy) \Rightarrow 2({}_0n^1 + {}_1H^1) \Rightarrow {}_2He^4 + Energy\ [4]}$$

The decay process is similar to that described for the first aspect of the **Fig. 24** embodiment, with part of the excess energy being absorbed by the readjustment of the active vacuum and local spacetime curvature, and with the other part of the excess energy being emitted as normal transverse photons, comprising excess heat in the fluid.

Fig. 25B is a block diagram showing a means of creating an amplified phase-conjugate replica wave by pumping a nonlinear medium. A phase-conjugate mirror **2555** can be any suitable nonlinear medium possessing the properties of a phase-conjugate mirror **1010,** as was illustrated and described with respect to **Fig. 25A.** An input wave **120** may be an ordinary, time-forward incident transverse EM wave impinging upon PCM **2555**. The PCM will emit a phase-conjugate replica **2570** of the incident wave**.** To obtain amplification of the replica wave, pumping is used. Pumping is done by inputting a multiplicity of transverse pump waves **2560** into the PCM **2555.** Within the nonlinear medium of mirror **2555**, the pump waves superpose with any other waves that may be present, causing their amplification. As a result of pumping, the time-reversed replica wave will have a larger magnitude than its corresponding input wave. The method **2550** of **Fig. 25B** may be utilized in embodiments of the present invention wherever it is desired to create a phase-conjugate replica wave that is amplified with respect to a given input wave, which may be a signal given off, e.g., from a mass, such as a living body. Such an amplified replica wave can be used to time-reverse a mass, as will be shown in **Fig. 26A,** or as part of a process such as that shown in **Fig. 26B** to induce desired state changes in a mass.

Fig. 26A depicts a time-reversal of a mass by applying an amplified vacuum anti-engine. Referring now to **Fig 26A,** a vector **2605** is the time axis of Minkowski space-time for the frame of reference within which a given mass exists. The vector **2605** represents the conventional forward direction of time-flow, and a point on said axis may be expressed mathematically as a positive value of a time variable. Thus on the axis **2605,** the mass at a current time value is represented by the mass **2620.** A mass **2630,** being the same mass as **2620** but at an earlier time (i.e. at a smaller value of the time

variable on the time axis), may be considered a previous mass-state for the mass **2620.** A first vacuum engine **2625** represents the current set of spacetime curvatures (per general relativity and unified field theory) associated with and producing the mass **2620** and comprising its current physical and energetic state. A second vacuum engine **2635** represents the set of spacetime curvatures that was associated with and comprised the mass **2630** at the previous time depicted. In order to time-reverse the mass **2620** to its previous state **2630**, a third vacuum engine **2615,** called a delta anti-engine, must be created. The delta anti-engine is a phase-conjugate (time-reversal) of the exact difference between the first (current) vacuum engine **2625** and the second (previous) vacuum engine **2635**. Moreover, to time-reverse the mass **2620,** the magnitude of the delta anti-engine must exceed the magnitude of the current engine. The delta anti-engine may be created and amplified using embodiments of the present invention. One such embodiment is the pumping process **2550** in which transverse pump waves **2560** are pumped into the mass **2620**, and the mass that is desired to be time-reversed itself performs the role of the phase-conjugate mirror or nonlinear medium **2555.** Another suitable embodiment is the pumping of the mass **2620** by longitudinal EM waves, which constitutes pumping in the time domain and thus time-reverses the mass back to an exact previous physical condition.

Fig. 26B depicts an alternate embodiment making use of aspects of the process **2600** to alter a mass **2620** to a desired state that it may never have previously possessed. A second vacuum engine **2690** embodying a desired state to be imparted to the mass is utilized. The second engine may be created in various ways, as taught by the present invention. **Fig. 26B** depicts creation of the second engine **2690** from a chosen second mass **2692** having a prior mass state **2894** with an associated prior-state vacuum engine **2696**. The delta of longitudinal wave pairs comprising the first engine **2625** and LW pairs comprising the second engine **2690** is phase-conjugated to produce a combined delta anti-engine **2655.** In order to effect a state-change upon the mass **2620 –** as in the **2600** process – the delta anti-engine's magnitude must exceed that of the current engine **2625** of the mass being treated. Thus the delta anti-engine should likewise be amplified before use. Then applying the amplified delta anti-engine **2655** to the mass **2620** alters the mass along a delta spacetime trajectory **2675**. By controlling the precise make-up of the second engine, and consequently the derived delta anti-engine, the delta trajectory can be steered to any new state desired. In other words, after adding the second vacuum engine, pumping with longitudinal EM waves deviates the time-reversed trajectory. The mass and its internal structure are altered into a new form with a new structure which it need never have had previously.

Conditioned EM fields, potentials and waves may be used for the treatment of living cells, for the purpose of healing any form of cellular damage. **Fig. 27** is a block diagram of a treatment unit for treating a living body, utilizing several teachings of the present invention in combination. The embodiment shown in **Fig. 27** time-reverses an entire cellular mass – including altered genetics, as in AIDS – back to a previous healthy state. This embodiment is capable of reversing any kind of cellular damage or disease, including physical damage, genetic damage, damage due to infections, toxins, chemical poisoning, nuclear radiation, metabolic changes, etc. It is theoretically capable of reversing the physical effects of aging. Time reversal physically changes the cell and all its internal parts, including its genetics and the molecular constitution of its amino acids, proteins, etc. The limitation of this embodiment is that the treated cells can only be reversed back to those physical states in which the cells, or their progenitor ancestral cells, actually existed at some time in the past. Thus this embodiment is incapable of curing congenital defects, e.g., since the affected cells never possessed a normal state. On the other hand, cancer, leukemia, infectious diseases, hardening of the arteries,

arthritis, and other diseases of cellular disordering from a previous normally ordered state, can all be treated and cured, since there existed previous normal states.

The following is a discussion of the theory involved in the embodiments that will subsequently be described with respect to **Figs. 27-29**. The embodiments take advantage of iterative phase conjugation interactions that can occur automatically in the highly nonlinear cells and tissues of an irradiated body. The wider the irradiation bandwidth, the greater the iterative phase conjugation. However, indiscriminately bombarding the body with broadband noise – as in the case of prior-art broadband noise irradiation with a Lahovsky oscillator – is not helpful, since the damage that could potentially be induced by random iterative phase conjugation could exceed such a treatment's healing potential. Instead, the body, its cells and tissues, and all their parts down to the smallest constituents, are used as phase conjugators. Transverse EM wave inputs must be limited to only the desired energies so that only the desired longitudinal EM pump waves and time-density waves will be produced. This invention discloses a remarkably simple, but non-obvious, means to accomplish this.

To ensure that phase conjugate radiation produced by shallow body tissues penetrates into deeper body tissues such as the bone marrow, a dense signal environment is induced with multiple signals incident simultaneously. (This is contrary to the prevailing "energy deposition in tissue" view which credits the superficial intervening tissues with absorbing incident energy to block its passage deeper into the tissues. The porthole concept due to the dielectric channel applies, as is given in detail in the 108-slide "Porthole Concept" briefing attached to this provisional patent application.) On the other hand, a dense signals environment causes the gradual diffusion of phase conjugation, causing phase conjugates formed superficially to penetrate further into the body, and successive phase conjugates from those locations to penetrate still further, including into and through the bone marrow and stem cells and their parts. In effect, the interior of the body, cells, and tissues becomes an intensely-scattering but slow-scattering medium in a dense signal environment. This previously unknown deep penetration process is materially enhanced when the signals irradiating the body are numerous (so there are multiple simultaneous signals), and very broadband simultaneously. This solves the problem of deep penetration throughout the body. The difference frequencies, on the other hand, propagate directly and immediately throughout the body, via the dielectric channel and the porthole effect. The diffusion effect is a previously unexplored and uninvestigated long-term cumulative degradation factor in the EM "hash" or noise picked up by powerlines as long wire antennas and re-radiated in homes, offices, inhabited areas, etc.

Another problem is identifying the exact frequencies, amplitudes, phases, etc. of transverse EM energy with which to irradiate the body – to include the exact difference frequencies to match the 11 major Lisitsyn frequencies. The body emits EM radiation continually, as a very complex representation of processes happening throughout the body. The body medium itself may be considered as a highly nonlinear dielectric. As is well known, the reflected field from a dielectric material is not generated just at its surface but comes from everywhere in the interior of it [see Reali, 55]. Similarly, every part of the dielectric also participates in the absorption of an EM field on the surface of the dielectric. While ignored by conventional EM bioeffects analyses, it is true nevertheless, and already known in the physics of dielectrics. So in fact every tiniest internal bit of the human body – down to even the atomic nuclei and the nucleons – participates in the EM emissions from that body, and in the absorption of EM emissions by the body. It follows that

innumerable EM pathways and frequencies through the body exist and directly participate in the EM energy transfer from the interior to the radiating surface and subsequently in the surface emission. Those internal pathways may be considered as having propagated through a highly distorting, highly phase conjugating medium.

As is also known, but more obscurely, the phase conjugate retroreflection of a distorted signal leaving a highly distorting medium, initiated from outside said medium, will pass exactly back through the intervening tortuous pathways previously taken by all signal components, to the exact interior signal-initiation points. See Pepper [52]. What has not previously been accented is that by irradiating the body with a great density of external wide band signals, ordinary EM wave complexes will induce extensive phase conjugation by the absorbing body surface. Many of these body-induced phase conjugates will be phase conjugates of signals from deep within. The amplified phase conjugates then will backtrack ongoing interior body signals back through the entire body, all throughout its interior. Simply irradiating a body with transverse wave EM radiation will not generally cause sufficient penetration to precise participating body parts and cell parts unless broad bandwidth and dense signals are utilized. Otherwise, skin depth absorption and incoherent reradiation will limit its effectiveness and the radiation will not be able to reach the distant finer components of cells throughout the body.

Note the following peculiarity. If broad frequency bands and dense signals are used, the body will be penetrated deeply. The difference frequencies between even a lesser number of irradiation frequencies – say, 8 to 20 – will penetrate deeply in any case, throughout the dielectric. The difference frequencies are in fact oscillating curvatures of spacetime and oscillating waves in the local nonlinear vacuum itself. Multiples of these difference frequencies form engines that affect the body everywhere within. The invention deliberately utilizes this previously unrecognized deep penetration to produce highly beneficial restorative actions throughout the body and within its cells.

Phase conjugate replicas will be impressed upon many of the deeper internal outgoing signals, thereby converting to longitudinal waves. So a diseased cell at some depth in the body will thereby experience two things in all its internal components: (1) longitudinal wave pumping of every component, and (2) conversion of the time-reversal interaction from wave-reversal to mass-reversal. In short, by deliberately invoking and optimizing the body's own iterative phase conjugation processes, the present invention can cause the body itself to convert dense, broadband, amplified irradiation of the body with transverse waves into time-reversal (dedifferentiation) of diseased or damaged cells – including their genetics – back to a previous undamaged, healthy state. *Spurious* spacetime curvature engines must not be introduced into a body or its cells as they can be detrimental. Only the precise spacetime curvature engine for each cell should be phase-conjugated, so as to produce a precise and beneficial anti-engine. The solution is to irradiate the body with precisely the same broadband, dense signal emission complex that the body emits from its own surface, which produces effects that – at any time during the irradiation – only act to reduce the difference between the abnormalities in the present physical state of the cell and a past healthy and normal state of the cell. To alter the body's cells and their components physically to a previous healthy condition in a short time, the radiation complex must be amplified before being used to irradiate the body.

A mechanism and embodiment to accomplish this is depicted in **Fig. 27.** The entire complex of

radiations from the body is first precisely recorded, across a wide bandwidth of frequencies, and including all signal phases and amplitudes. This complex is then amplified and fed back to the body. The reference phase of the fedback signal, versus the reference phase of the emitted signal, is adjusted to produce maximum effect on the body.

Because every iota of the body is involved and the irradiation into the body is amplified to be greater than the emitted radiation from the body, the stress on the body is significant and builds as a function of amplification and irradiation time. In practice the irradiation time is limited to very tolerable stress levels of the interiors of the cells, tissues, and body components, by simply reducing the amplification used and extending the time of the irradiation. For dire life-threatening emergencies, very short irradiation time by more amplified signal complexes is indicated. For intense (high amplification) irradiation, very short radiation times (e.g., one minute) are sufficient. For other than life-threatening situations, less amplification and longer irradiation time (e.g., five minutes) is indicated. For a given level of radiation and a given embodiment, in a life-threatening situation one should start with only 30 seconds of whole body radiation. After one week, a second 30-second irradiation may be used. If indicated, a third 30-second irradiation may be used one week thereafter. For more normal situations that are not immediately life-threatening, embodiments having lesser amplification and longer individual radiation times (several minutes) are utilized.

Using laboratory animals to calibrate a given embodiment and amplification, one may use a short radiation time of 15 seconds, then individual radiation time by additional 15-second intervals, establishing a "high stress" baseline. One then may adjust the individual radiation time by additional 15-second increments with proportionally decreased amplification, thus calibrating the system to determine ideal radiation amplification and time versus stress levels, for different conditions. Once the individual embodiment is calibrated for the optimal amplification and length of irradiation versus stress level permissible for the urgency of the situation, the embodiment is just set to the requisite irradiation time for each weekly irradiation usage, for each class of urgency in the treatment.

Although other treatment methods based on various teachings of the present invention may be apparent to one skilled in the art, and are within the scope of what is claimed, the **Fig. 27** embodiment provides significant advantages over other treatment methods. Transduction of the transverse EM waves by the body tissues themselves avoids the need for external apparatus to produce longitudinal waves in plasma tubes or other paraphernalia.

The **Fig. 27** treatment unit takes advantage of the body's nonlinearity to produce phase conjugate pumping of signals from the interior of the body moving toward the surface, so that the phase conjugates then backtrack deeply back throughout the body, coupling with the body's own interior transverse wave emissions, thereby forming longitudinal EM waves. Further phase conjugation of these longitudinal EM waves transduces them to time-density waves, so that the body cells and all their parts are pumped in the time domain. This time-reverses the masses of the cells and their components, causing damaged, deteriorated, or diseased cellular masses to dedifferentiate back to a previous healthy physical condition, thereby producing healing of the body's cellular damage, disease, or deterioration.

In concept, the **Fig. 27** process uses recording of the wideband emission of transverse EM wave

signals (including frequencies, phases, and amplitudes thereof), emitted by the body, amplifying said recorded signals, and then retransmitting them so as to irradiate the body with its own amplified broadband transverse EM wave signal complex, thereby causing the body surfaces and near-surface tissues and cells to perform phase conjugation, thereby time-density-pumping the deep interior cells of the entire body, to cause time-density pumping and cellular reversal (dedifferentiation) back to a previous healthy condition. The procedure may be utilized to reverse debilitation and deterioration of cells, tissues and components of the body due to aging, even in the absence of infectious disease or obvious physical damage, thereby rejuvenating the body and reversing the effects of aging.

Referring now to **Fig. 27,** a diagram of a treatment unit is shown. The unit's electrical components may be powered by a conventional electrical power source that has been omitted from the figure for the sake of clarity. The controller **1200** is preferably a data processing system as previously described with respect to **Figs. 12-13,** and may be a conventional mobile computer adapted to perform the functions required. Blocks **2720-2740** comprise an electromagnetic wave conditioning unit **2700**, as will be further described.

Each one of a multiplicity of frequency generators **2720** is adapted to generate a selected transverse electromagnetic wave that preferably comprises an input to a conditioning process. Each frequency generator is also adapted to be individually controllable by the controller **1200** as to the frequency, magnitude, and phase angle of its emitted wave. The frequency spectrum spanned by the set of frequency generators **2720** is at least one harmonic interval, but preferably utilizes at least S.K. Lisitsyn's [13] eleven specific frequencies, known to be key among all of the optical frequencies emitted by the body, plus several additional frequencies for applying the necessary dynamics to the signal conditioning. The frequency generators are operably connected to a mixing unit **2730**; both the mixing unit and a magnetic pulse generator **2740** are in turn operably attached to the controller and adapted to be controlled by it. The frequency generators' outputs feed into the mixing unit, which may be a plasma mixing unit or other configuration capable of performing nonlinear mixing, superposition of longitudinal waves, and conditioning of time-density waves; the mixing units of **Figs. 8B, 9A, 9B** are illustrative of plasma mixing units capable of performing these functions. The mixing unit **2730** is operably attached to the magnetic pulse generator **2740**, wherein the mixed waves, potentials, and fields output by the mixing unit are imposed upon a magnetic field by the magnetic pulse generator, under control of the controller.

A living body to be treated is preferably placed between, or in close proximity to, a multiplicity of antenna pads **2760**, which are preferably two in number. A conditioned magnetic field or pulse emitted from the magnetic pulse generator **2740** is directed, through an operable connection, to a first antenna pad **2760**, which is adapted for transmitting a plurality of electromagnetic frequencies into the body. Antenna pads **2760** may be similar to conventional electric blankets in which a suitable grid or mesh of conductors is emplaced into a fabric so as to create an antenna pad which is comfortable for a patient yet capable of performing the electromagnetic functions required. A second antenna pad **2760** is preferably positioned where it may receive EM signals emitted from the body. Both antenna pads are operably connected to a field sensor **2750** that is adapted to detect at least one of electromagnetic fields, potentials and waves, and preferably detects the EM emissions from the body under treatment. The sensor **2750** is in turn adapted to feed said emissions and/or information about the emissions to the controller **1200**, to which it is operably connected. Wherever the term "body" is

used herein, it should be understood that the treatment may be applied to a part of a living body; i.e., the patient's arm, leg, etc. could be placed into the apparatus for treatment of that limb or body part. It will be apparent to one skilled in the art that through utilization of timing, phase control, switching, and so forth, a single antenna pad **2760** may be made to serve the functions described with respect to both the first and second antenna pads.

In summary, in operation the treatment unit of **Fig. 27** may detect EM signals emitted by a body via a field sensor, calculate phase-conjugate replicas of said signals, cause a bank of frequency generators to create the necessary time-reversed replica signals comprising an amplified spacetime curvature anti-engine precisely tailored for the body's current state, condition them upon a suitable carrier such as a magnetic field, and expose the body to the resulting carrier and thus the anti-engine, so as to time-reverse cells of the body, including but not limited to diseased and damaged cells, to their previous and healthy states.

A variant, not illustrated, on the treatment unit shown in **Fig. 27**, combines **Fig. 27**'s sensing and phase conjugation of EM fields emitted from a living body with a selected second vacuum engine **2690** representing a normal and healthy state desired for said body, as described with reference to **Fig. 26B.** This variation can augment the **Fig. 27** process with the capability of treating genetic disorders, birth defects, and the like. This variant overcomes **Fig. 27's** restriction to the actual timeline traversed by the cells (or matter) from a prior value on the time axis to a present value thereon. It can alter the trajectory through time of the treated cells, so that the cells can be changed into any form desired. This variant can produce differentiation, dedifferentiation, and even total change of cellular form outside the entire normal growth and development process.

While the present invention is illustrated, for example, with reference to a particular configuration for conditioning electromagnetic fields, potentials and waves, as will be appreciated by those of skill in the art, other configurations capable of performing the required functions, including but not limited to producing an selected amplified vacuum anti-engine, may also be utilized while still benefiting from the teachings of the present invention. Thus, the present invention should not be construed as limited to the exemplary configuration of **Figs. 27-29,** but is intended to encompass any configuration capable of carrying out the operations described herein.

Fig. 28 is a further illustration of the **Fig. 27** system for treating matter with conditioned electromagnetic waves, as it may be constructed for rapid deployment in an emergency or medical treatment setting, and is again intended by way of illustration and not of limitation. System **2800** consists of a controller **1200** operably connected to an EM wave conditioning unit **2700** by means of a conductor **2820** which may carry control signals bidirectionally as described with respect to **Fig. 27**. The conditioning unit **2700** is in turn operably connected to at least one antenna pad **2760** by means of a conductor **2830** that is adapted to carry signals received from the at least one antenna pad as well as to transmit conditioned signals comprising an amplified vacuum anti-engine from the conditioning unit **2700.** The antenna pad **2760,** as depicted, may comprise a blanket adapted to serve as an antenna unit and may be placed upon the body of an individual under treatment **2805.** An equipment case **2810** may be provided that is adapted for securely storing and transporting all the parts of mobile treatment unit **2800**.

Fig. 29 illustrates a non-portable embodiment more suitable for hospitals and research facilities. Its operation is identical to that described for **Figs 27** and **28**.

The flowcharts, illustrations, and block diagrams of **Figures 1** through **29** illustrate the architecture, functionality, and operation of possible implementations of apparatus, systems, methods and computer program products according to various embodiments of the present invention. In this regard, each block in the flow charts or block diagrams may represent a module, electronic component, segment, or portion of code, which comprises one or more executable instructions for implementing the specified function(s). It should also be noted that, in some alternative implementations, the functions noted in the blocks may occur out of the order noted in the figures. For example, two blocks shown in succession may, in fact, be executed substantially concurrently, or the blocks may sometimes be executed in the reverse order, depending upon the functionality involved. It will also be understood that each block of the block diagrams and/or flowchart illustrations, and combinations of blocks in the block diagrams and/or flowchart illustrations, can be implemented by special purpose hardware-based systems which perform the specified functions or acts, or combinations of special purpose hardware and computer instructions.

In the drawings and specification, there have been disclosed typical illustrative embodiments of the invention and, although specific terms are employed, they are used in a generic and descriptive sense only and not for purposes of limitation, the scope of the invention being set forth in the following claims.

NOTE REGARDING CLAIMS:

In the discussions contained in this Provisional Patent Application we have included many major elements which obviously are bases for claims as we technically understand them without recourse to attorney. A later formal patent application will be legally prepared by a skilled patent attorney so as to accurately describe the claims for this invention. In addition, as is customary practice, in our formal patent application submission we will request that the Patent Examiner point out any resulting claims we may have inadvertently missed, and that he point out any relevant changes that should be made to clarify the submitted claims, and that he point out any unintended duplication of claims should such inadvertently occur.

FIG. 1

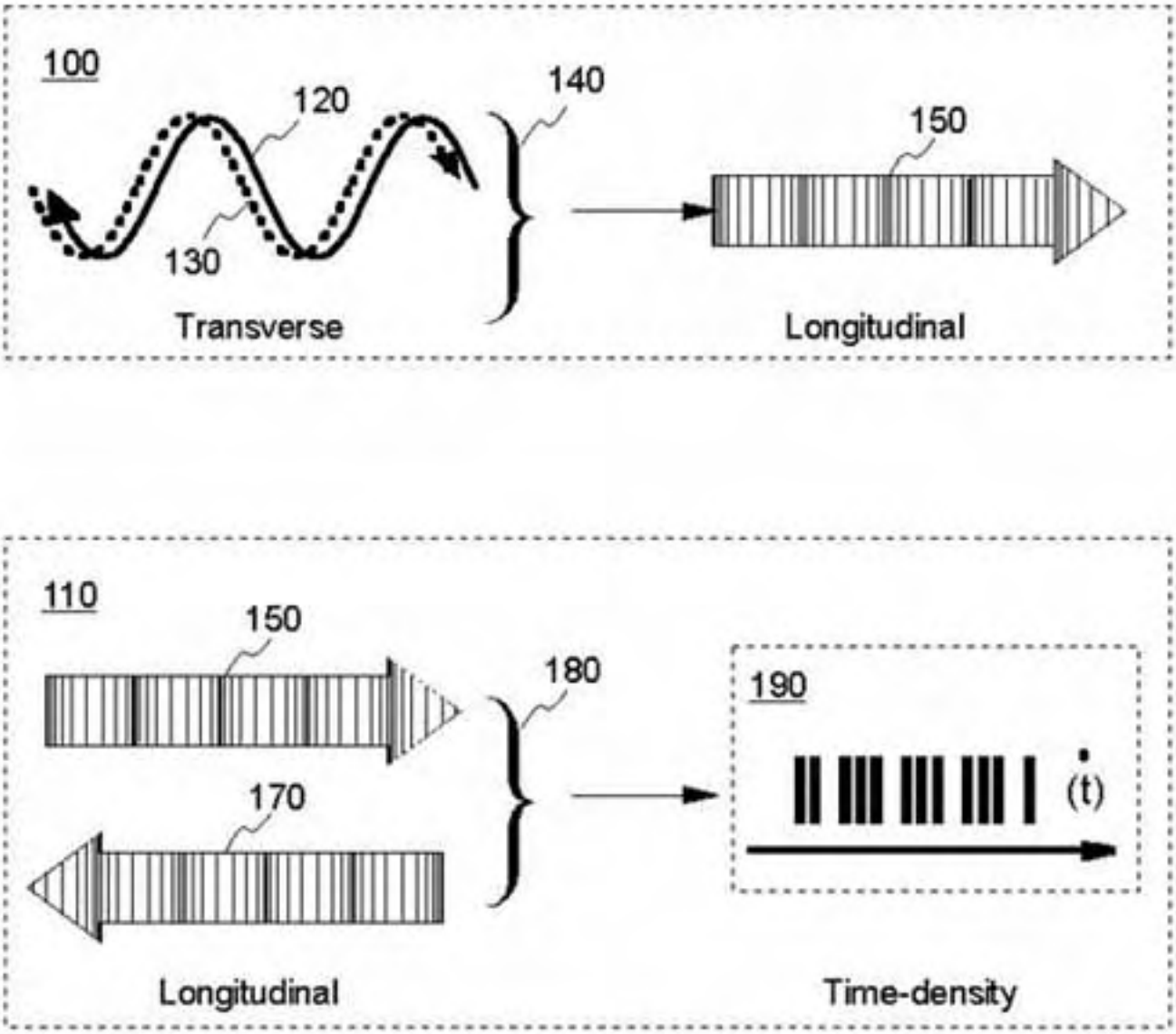
100
120
140
150
130
Transverse
Longitudinal
110
150
180
190
170
(t)
Longitudinal
Time-density

FIG. 4A

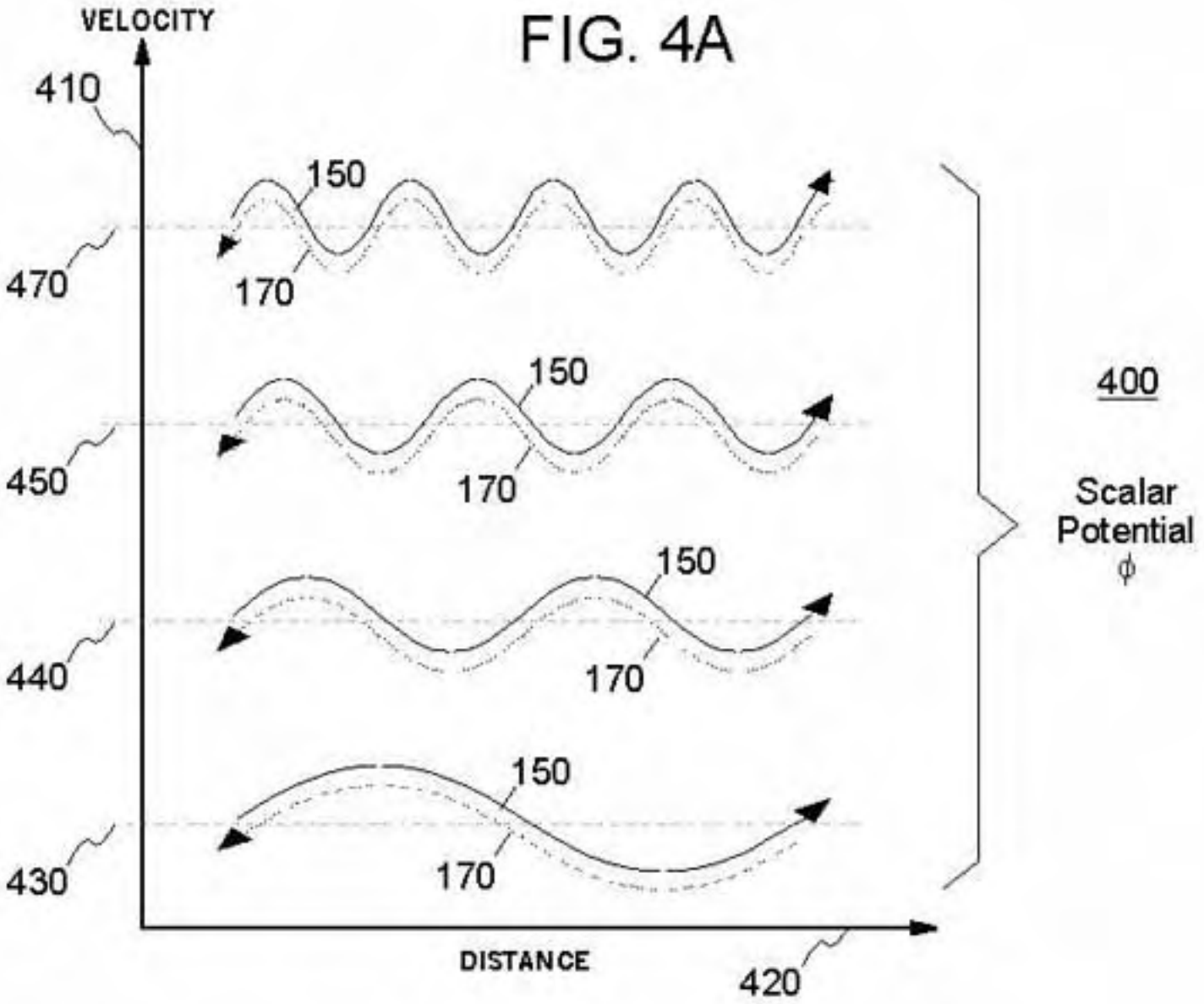
VELOCITY
410
150
170
470
150
170
450
150
170
440
150
170
430
DISTANCE
420
400
Scalar
Potential
ϕ

FIG. 4B

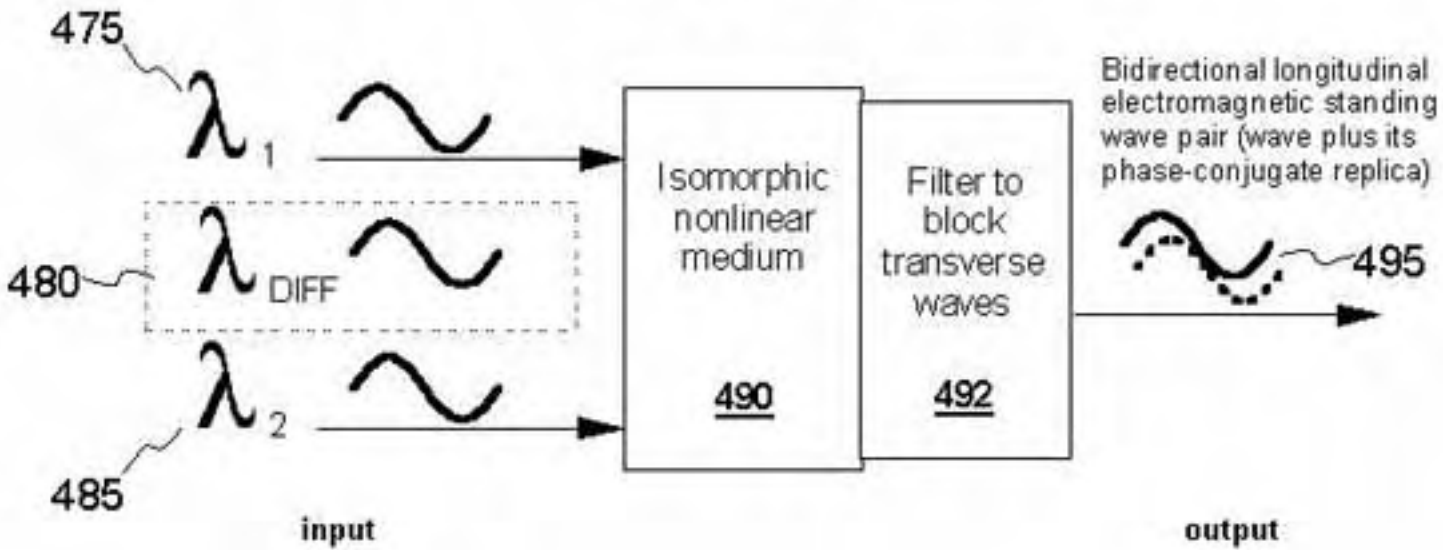
475
λ 1
480
λ DIFF
λ 2
485
input
Isomorphic nonlinear medium
490
Filter to block transverse waves
492
Bidirectional longitudinal electromagnetic standing wave pair (wave plus its phase-conjugate replica)
495
output

485

input

output

FIG. 8A

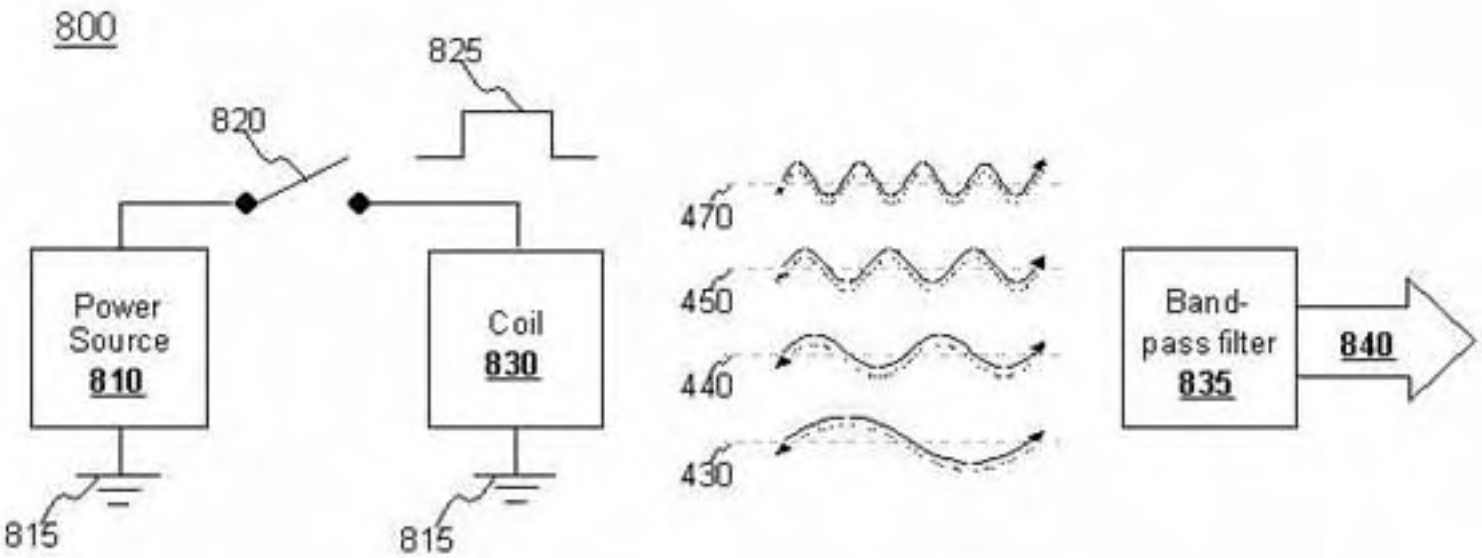
800
825
820
Power Source 810
Coil 830
470
450
440
430
Band-pass filter 835
840
815
815

FIG. 8B

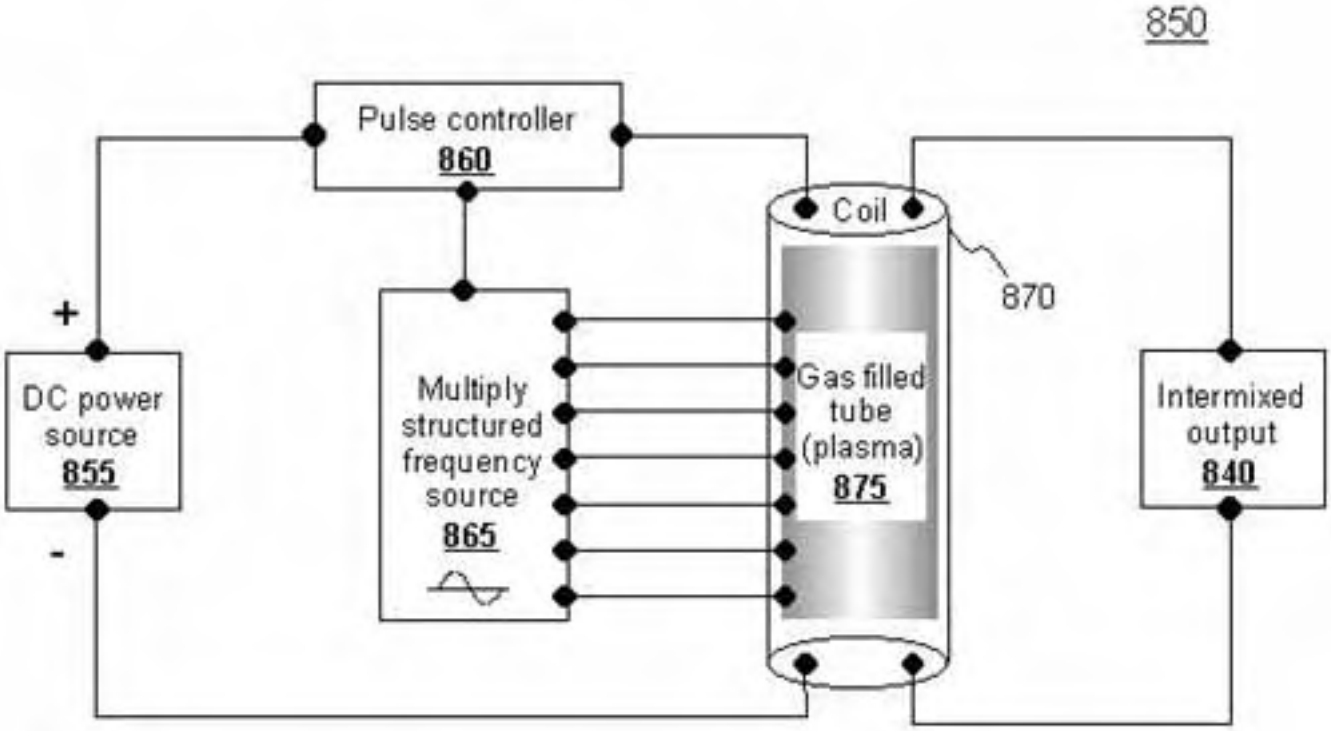
850
Pulse controller 860
Coil
870
+
DC power source 855
-
Multiply structured frequency source 865
Gas filled tube (plasma) 875
Intermixed output 840

FIG. 9A

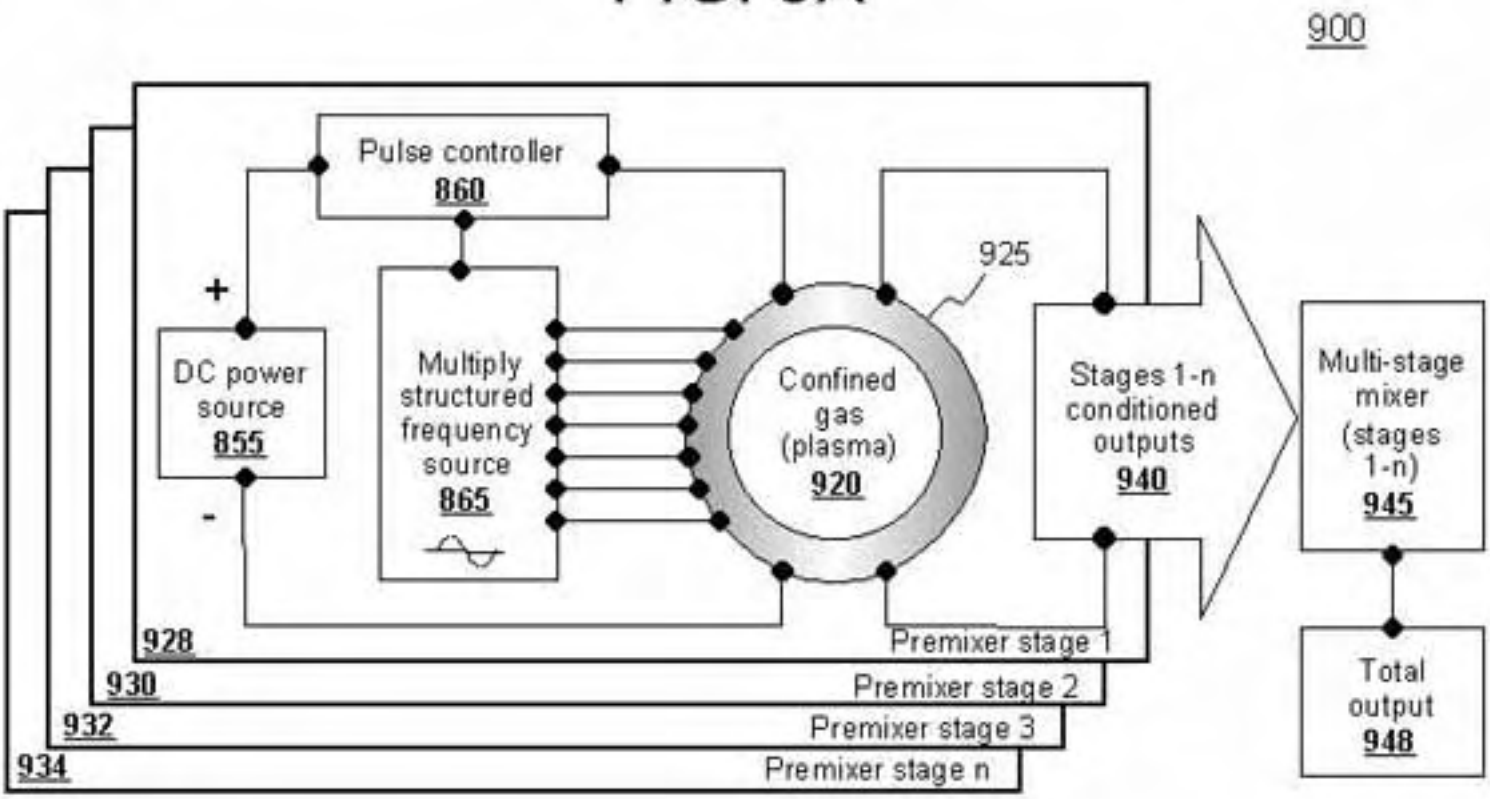
900
Pulse controller
860
+
DC power source
855
-
Multiply structured frequency source
865
925
Confined gas (plasma)
920
Stages 1-n conditioned outputs
940
Multi-stage mixer (stages 1-n)
945
Total output
948
928
Premixer stage 1
930
Premixer stage 2
932
Premixer stage 3
934
Premixer stage n

FIG. 9B

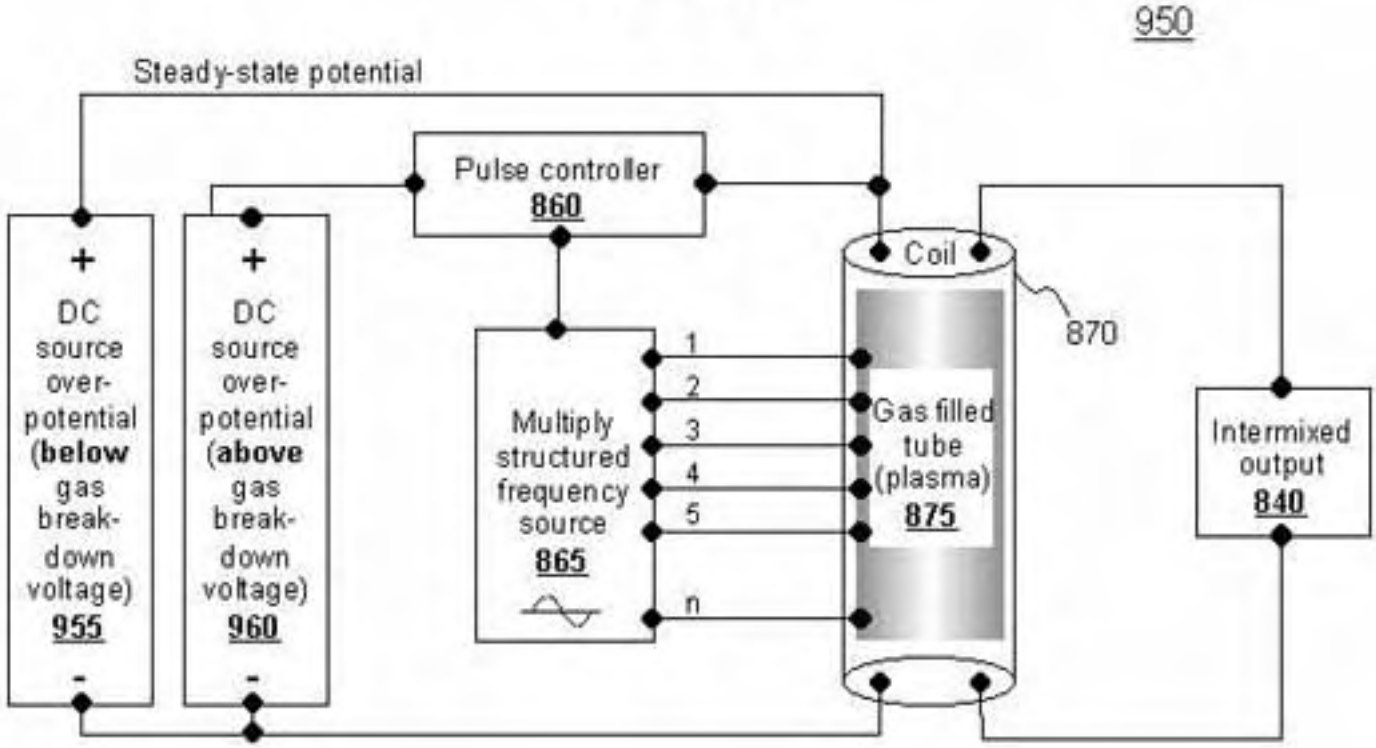
950
Steady-state potential
Pulse controller
860
+
DC source over-potential (below gas break-down voltage)
955
-
+
DC source over-potential (above gas break-down voltage)
960
-
Multiply structured frequency source
865
1
2
3
4
5
n
Coil
870
Gas filled tube (plasma)
875
Intermixed output
840

FIG. 11A

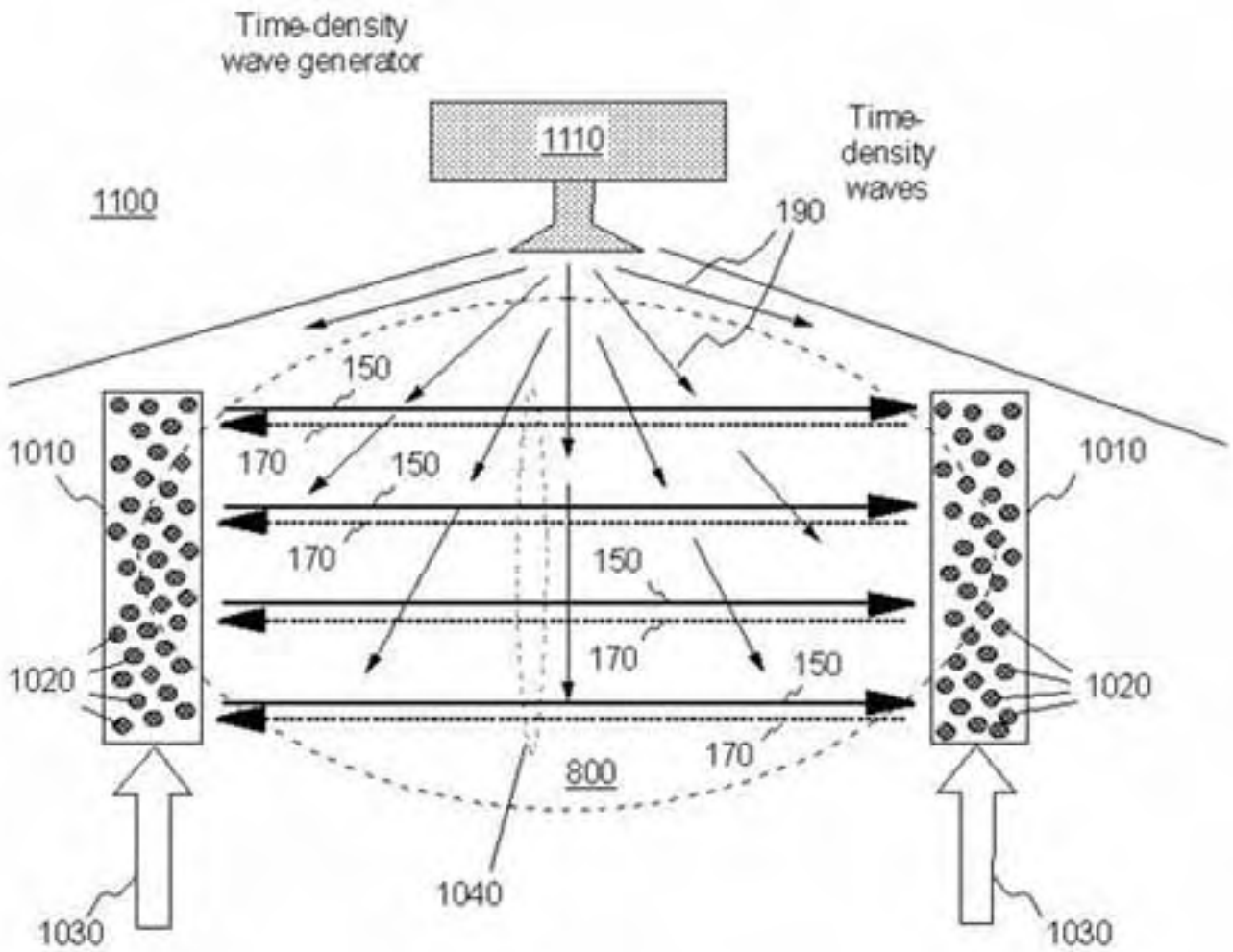

FIG. 11B

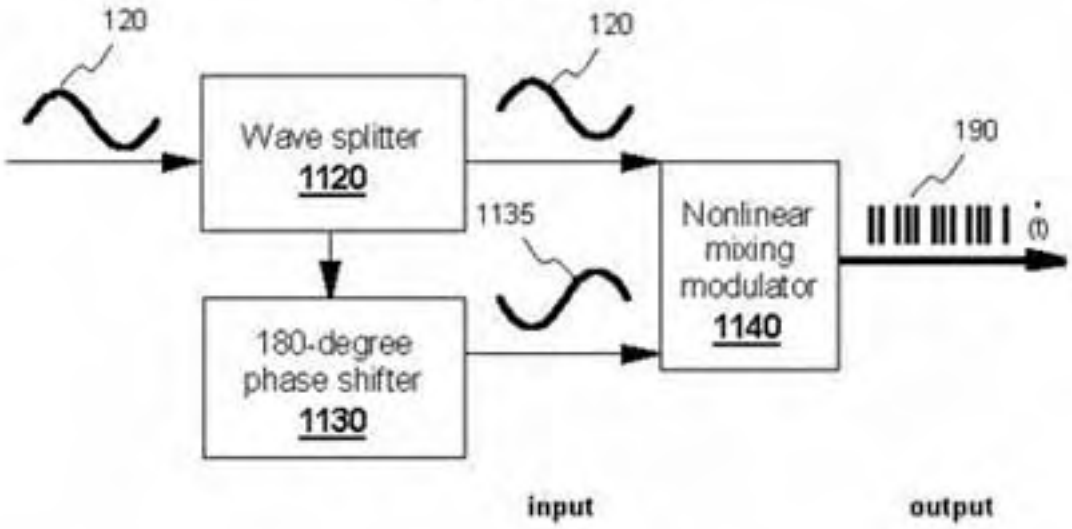

FIG. 10

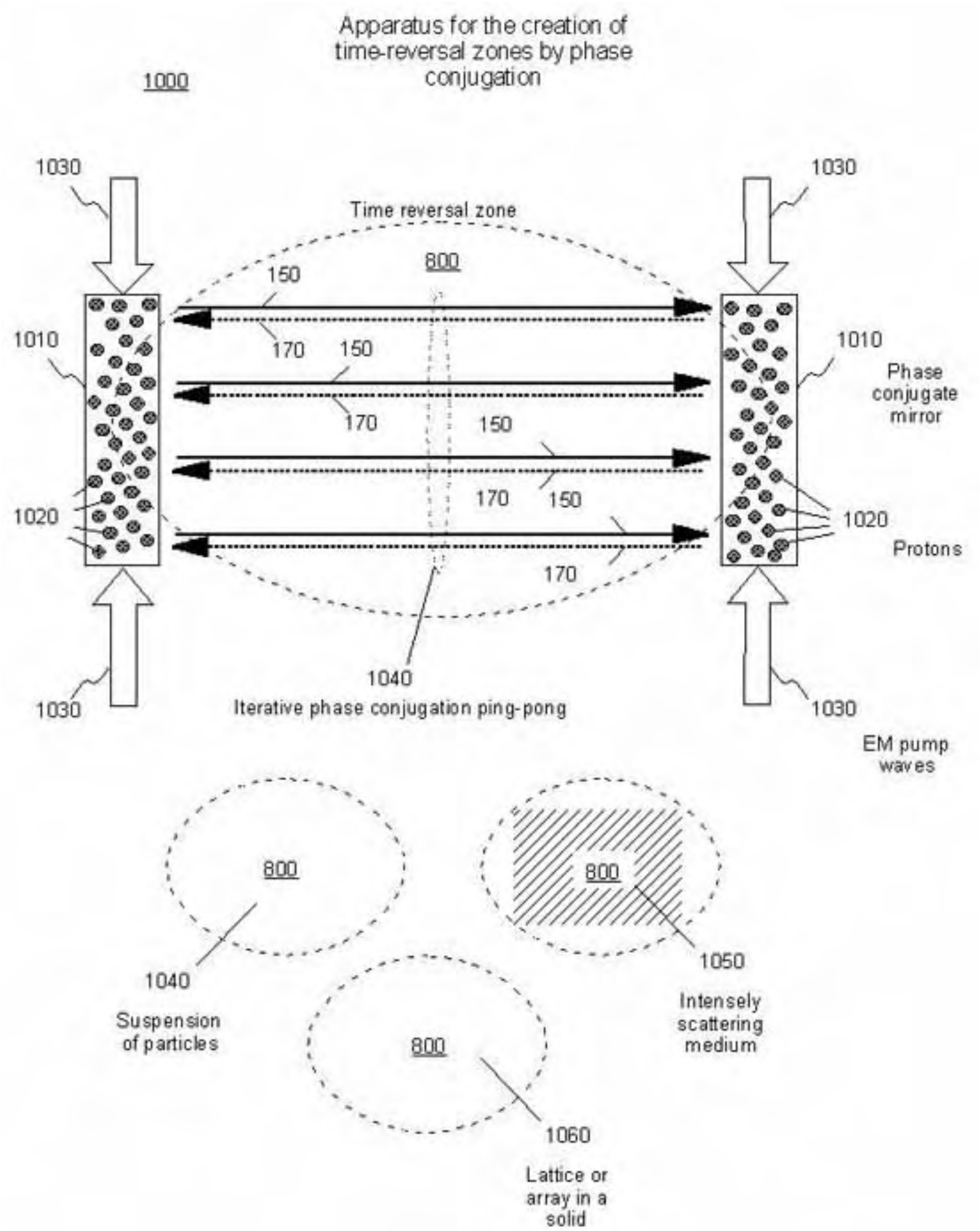
Apparatus for the creation of time-reversal zones by phase conjugation
1000
1030
1030
Time reversal zone
800
150
1010
170
150
1010
Phase conjugate mirror
170
150
170
150
1020
1020
Protons
170
1040
Iterative phase conjugation ping-pong
1030
1030
EM pump waves
800
800
1040
Suspension of particles
1050
Intensely scattering medium
800
1060
Lattice or array in a solid

FIG. 9C

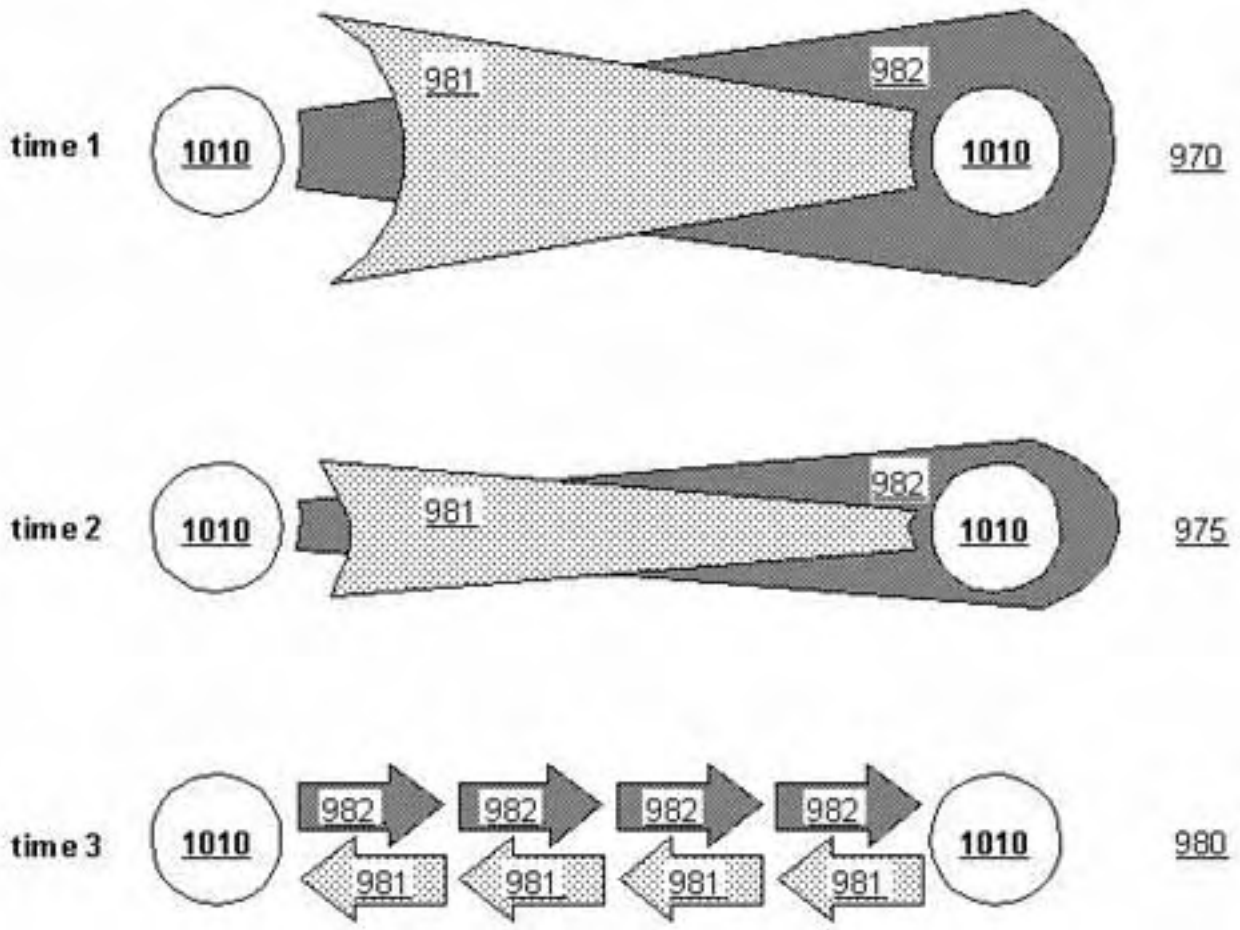
time 1
1010
981
982
1010
970
time 2
1010
981
982
1010
975
time 3
1010
982
982
982
982
981
981
981
981
1010
980

The Tom Bearden Website

Return to Patent Claim

Figure Index

---

1. FIG. 1
2. FIG. 2
3. FIG. 3
4. FIG. 4A, FIG. 4B
5. FIG. 5
6. FIG. 6
7. FIG. 7
8. FIG. 8A, FIG. 8B
9. FIG. 9A, FIG. 9B
10. FIG. 9C
11. FIG. 10
12. FIG. 11A, FIG. 11B
13. FIG. 12, FIG. 13
14. FIG. 14A
15. FIG. 14B

16. FIG. 15
17. FIG. 16
18. FIG. 17
19. FIG. 18
20. FIG. 19
21. FIG. 20
22. FIG. 21
23. FIG. 22
24. FIG. 23A
25. FIG. 23B
26. FIG. 24
27. FIG. 25A, FIG. 25B
28. FIG. 26A, FIG. 26B
29. FIG. 27
30. FIG. 28
31. FIG. 29

FIG. 24

Modified electrolysis apparatus using engineered time-reversal zones to form deuterium nuclides and/or Helium-4 nuclides (alpha particles)

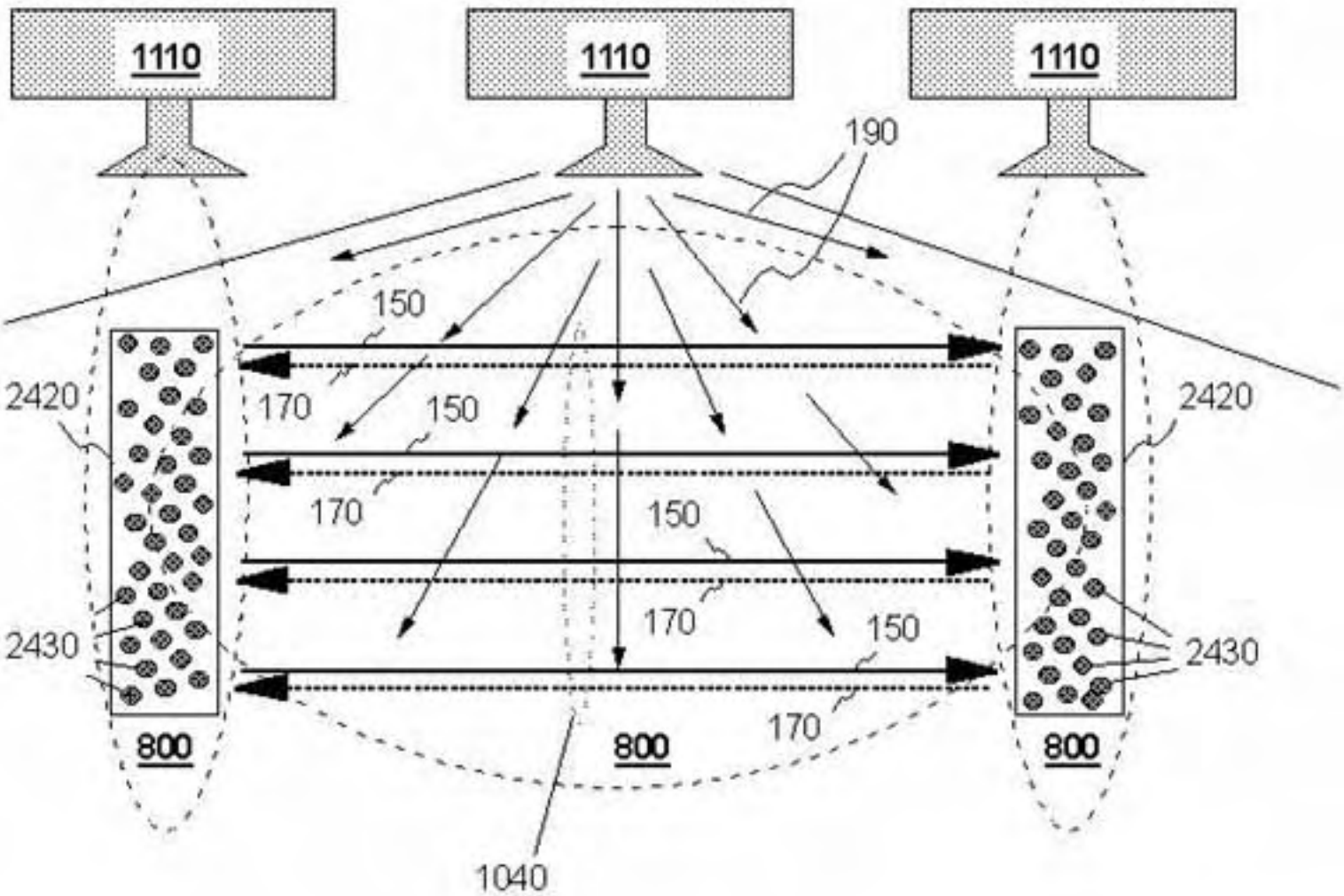

2450

$$ {}_1H_1 + {}_1H_1 \rightarrow {}_2H_2 \rightarrow ({}_0n_1 + {}_1H_1) \rightarrow {}_1H_2 = \text{deuterium} $$

2460

$$ 2({}_1H_1 + {}_1H_1) \rightarrow 4({}_1H_1) \rightarrow 2({}_0n_1 + {}_1H_1) \rightarrow {}_2He_4 = \text{helium (alpha)} $$

$$ ({}_1H_2 + {}_1H_2) \rightarrow 2({}_1H_2) \rightarrow {}_2He_4 = \text{helium (alpha)} $$

FIG. 26A

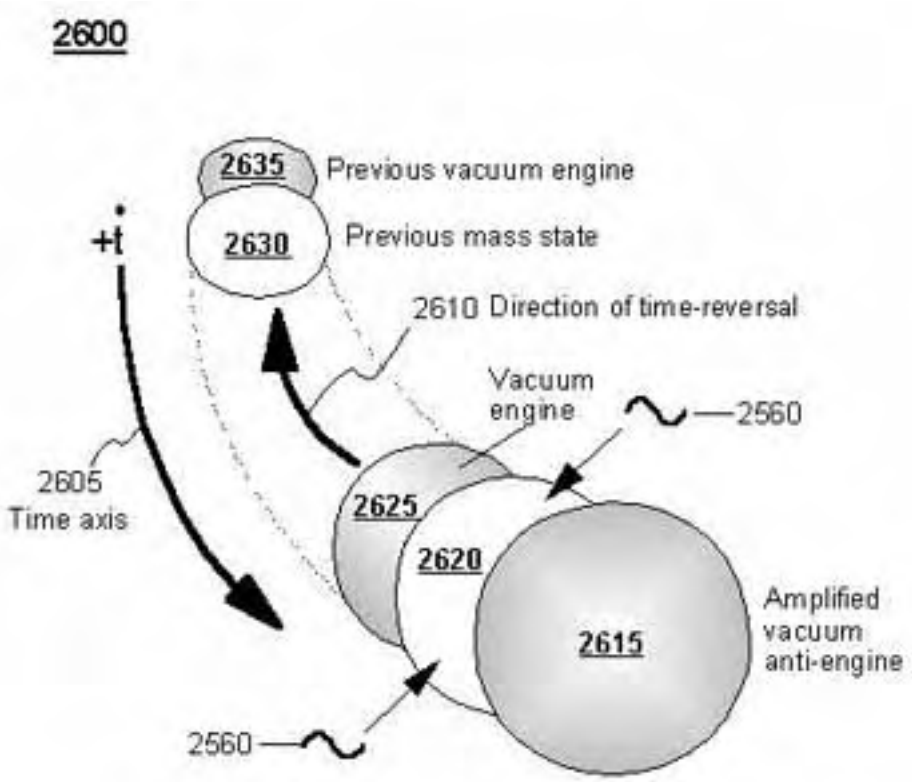

FIG. 26B

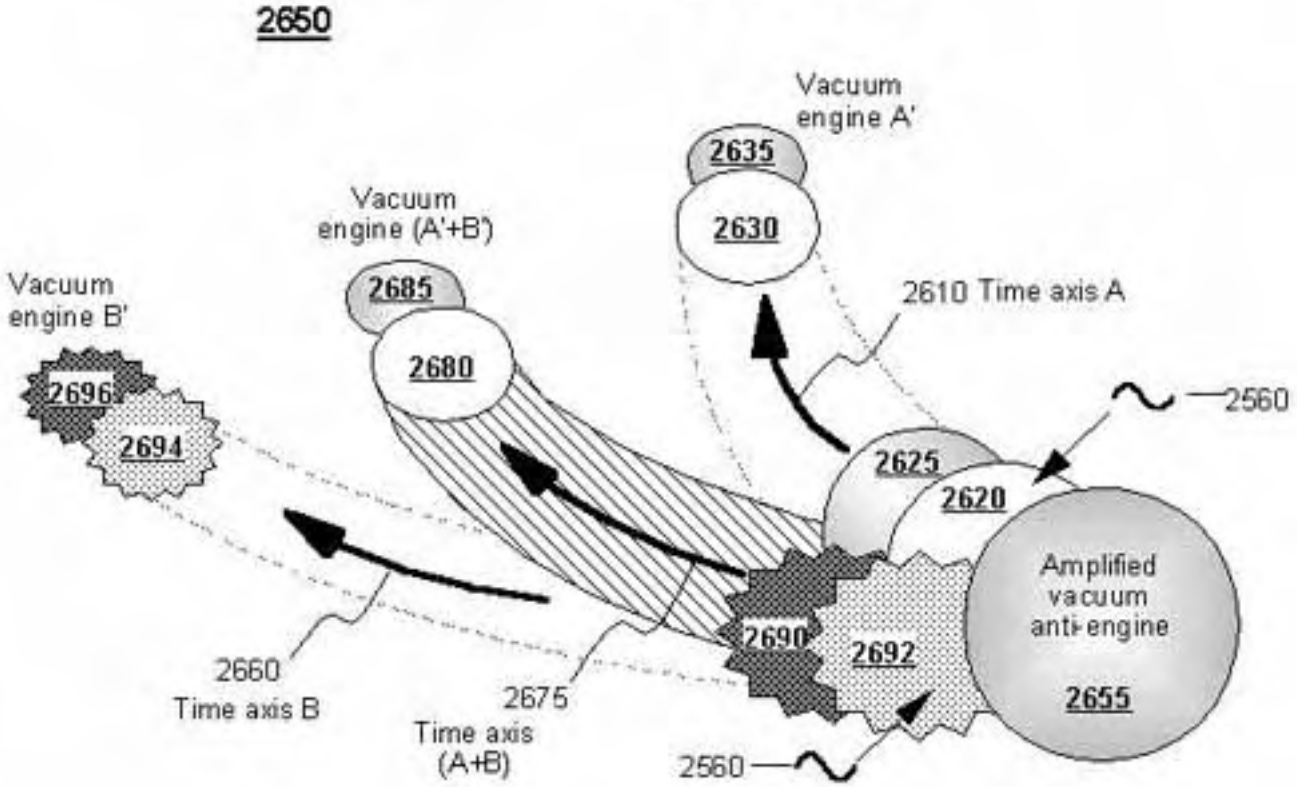

FIG. 2

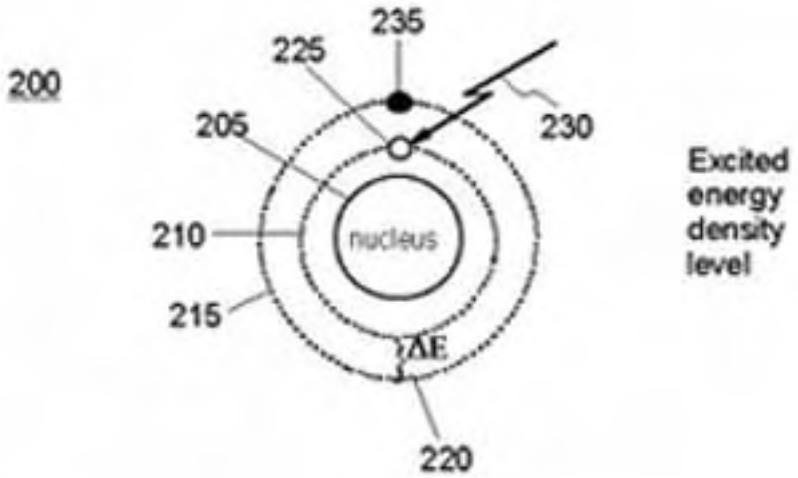
200
235
225
230
205
210
nucleus
215
ΔE
220
Excited energy density level

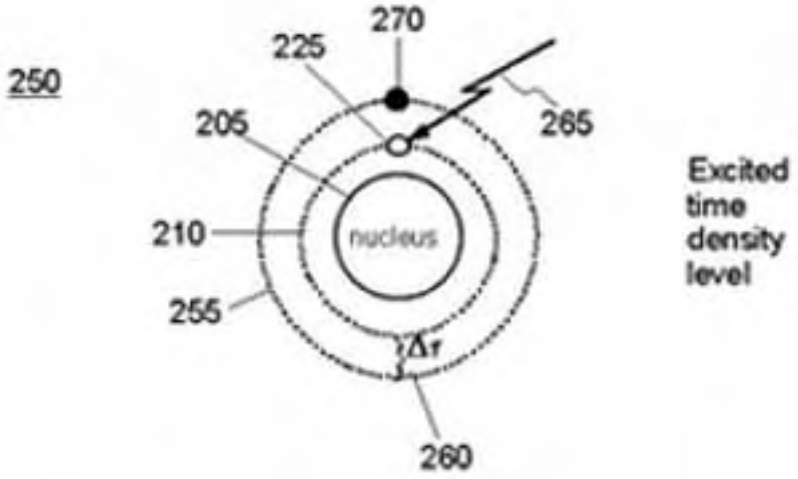
250
270
225
265
205
210
nucleus
255
Δτ
260
Excited time density level

FIG. 3

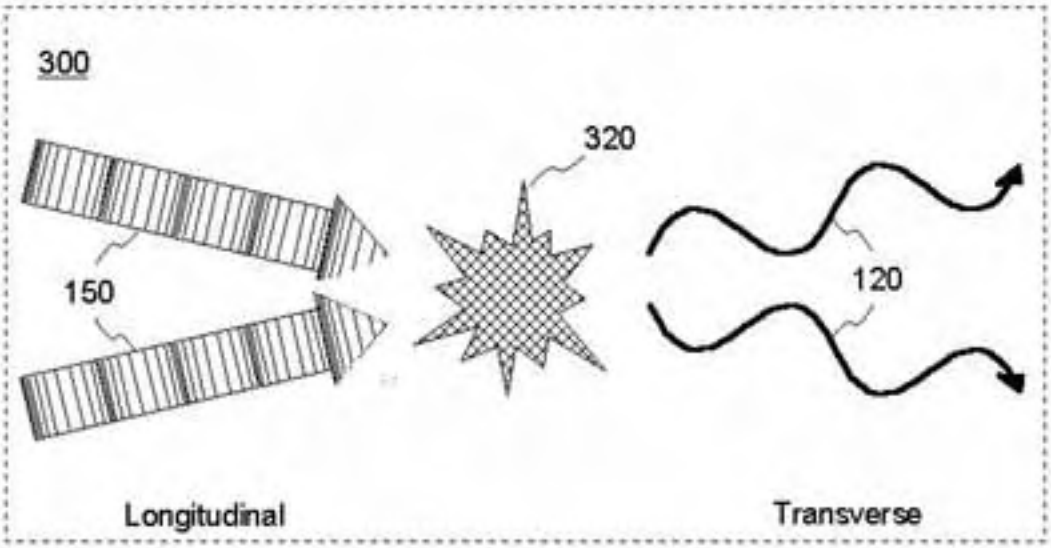
300
320
150
120
Longitudinal
Transverse

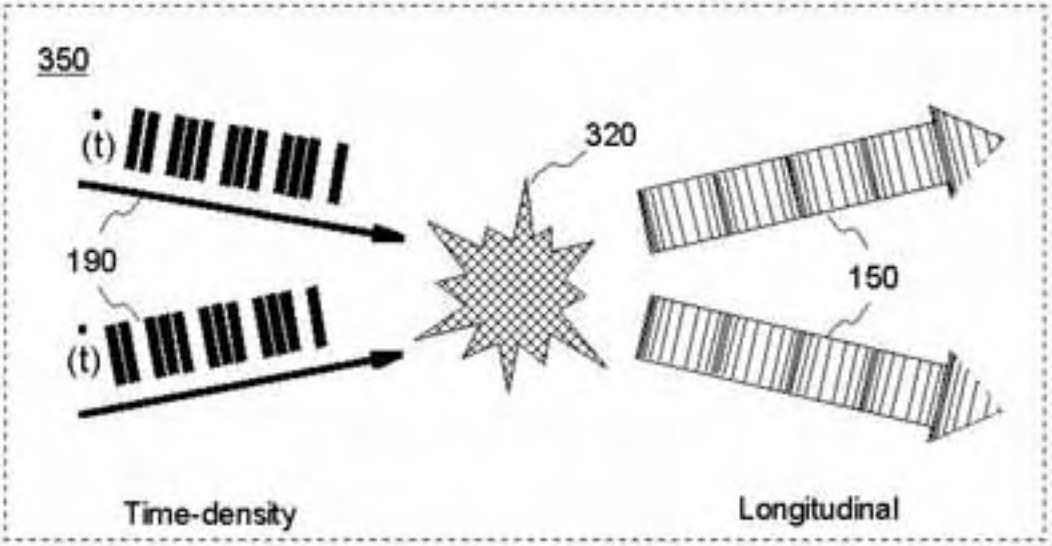
350
(t)
320
190
150
(t)
Time-density
Longitudinal

FIG. 5

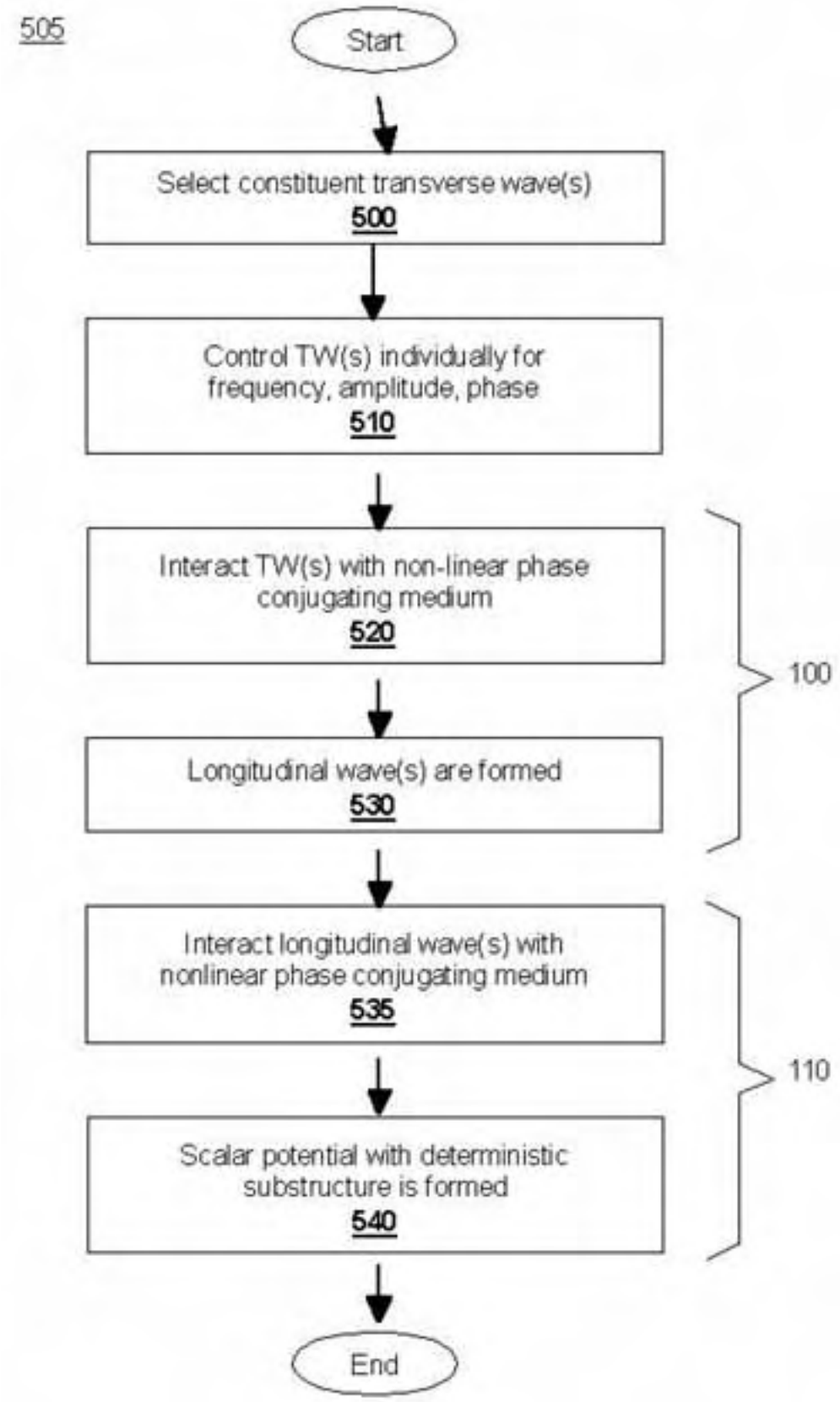
505
Start
Select constituent transverse wave(s)
500
Control TW(s) individually for frequency, amplitude, phase
510
Interact TW(s) with non-linear phase conjugating medium
520
Longitudinal wave(s) are formed
530
100
Interact longitudinal wave(s) with nonlinear phase conjugating medium
535
Scalar potential with deterministic substructure is formed
540
110
End

FIG. 6

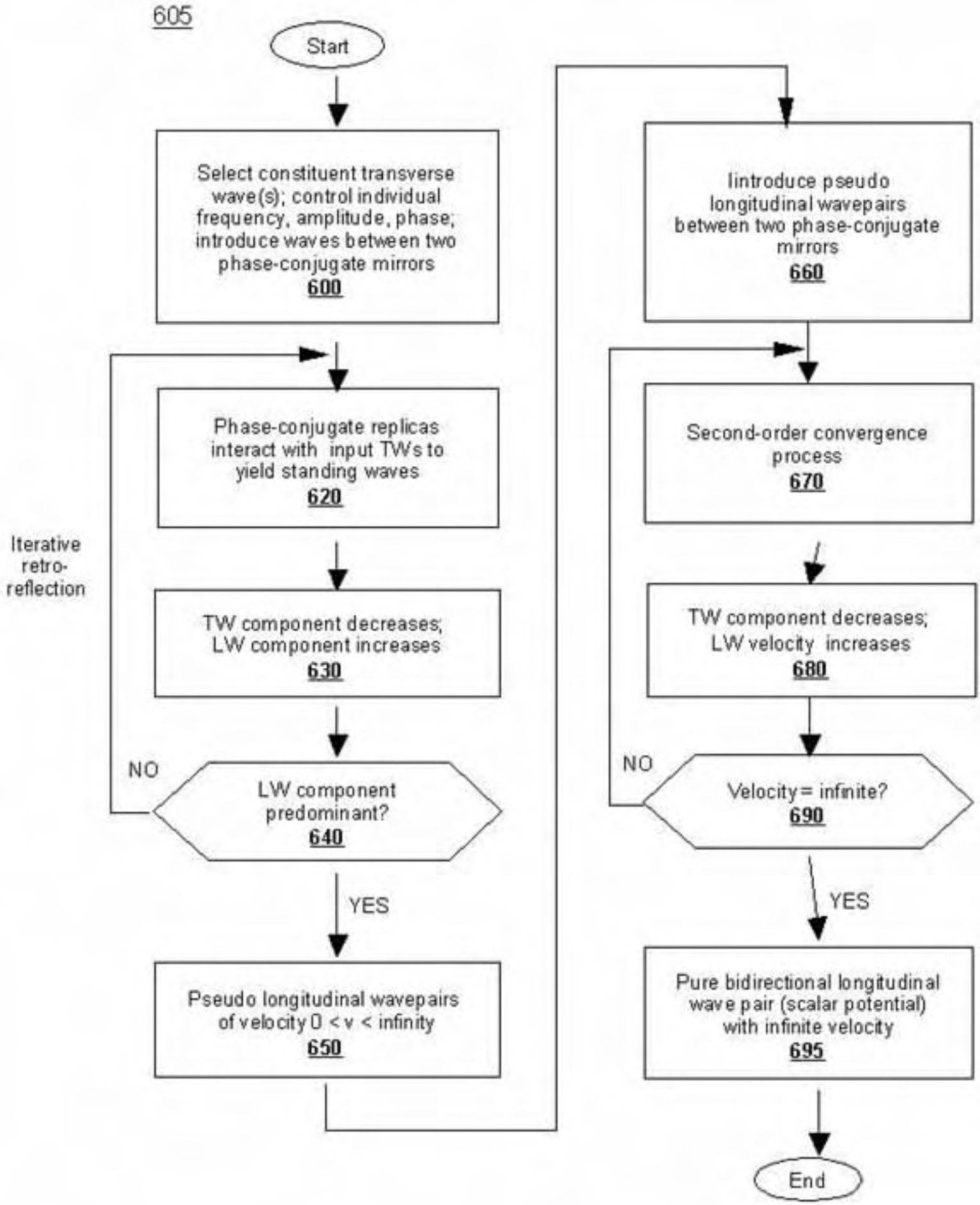
605
Start
Select constituent transverse wave(s); control individual frequency, amplitude, phase; introduce waves between two phase-conjugate mirrors
600
Phase-conjugate replicas interact with input TWs to yield standing waves
620
Iterative retro-reflection
TW component decreases; LW component increases
630
NO
LW component predominant?
640
YES
Pseudo longitudinal wavepairs of velocity 0 < v < infinity
650
Iintroduce pseudo longitudinal wavepairs between two phase-conjugate mirrors
660
Second-order convergence process
670
TW component decreases; LW velocity increases
680
NO
Velocity = infinite?
690
YES
Pure bidirectional longitudinal wave pair (scalar potential) with infinite velocity
695
End

FIG. 7

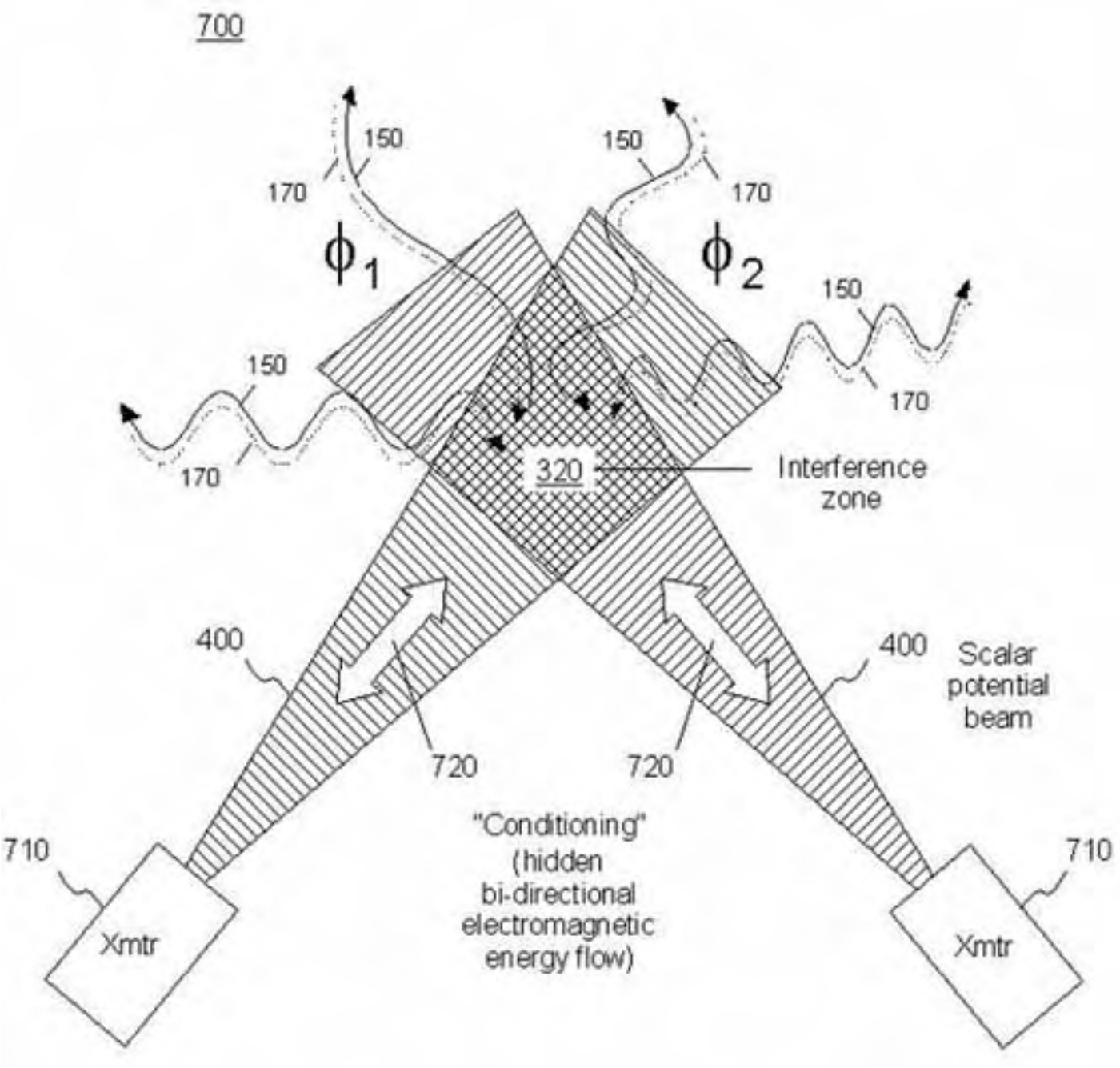
700
150
170
ϕ_1
150
170
ϕ_2
150
170
150
170
320
Interference zone
400
400
Scalar potential beam
720
720
"Conditioning" (hidden bi-directional electromagnetic energy flow)
710
710
Xmtr
Xmtr

FIG. 12

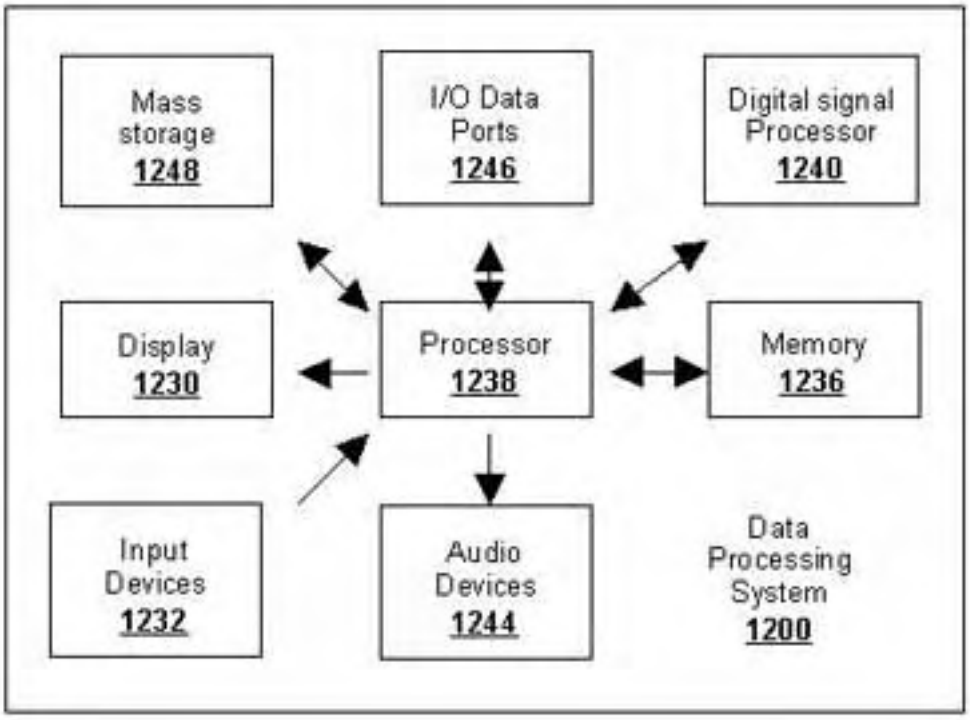
Mass storage 1248
I/O Data Ports 1246
Digital signal Processor 1240
Display 1230
Processor 1238
Memory 1236
Input Devices 1232
Audio Devices 1244
Data Processing System 1200

FIG. 13

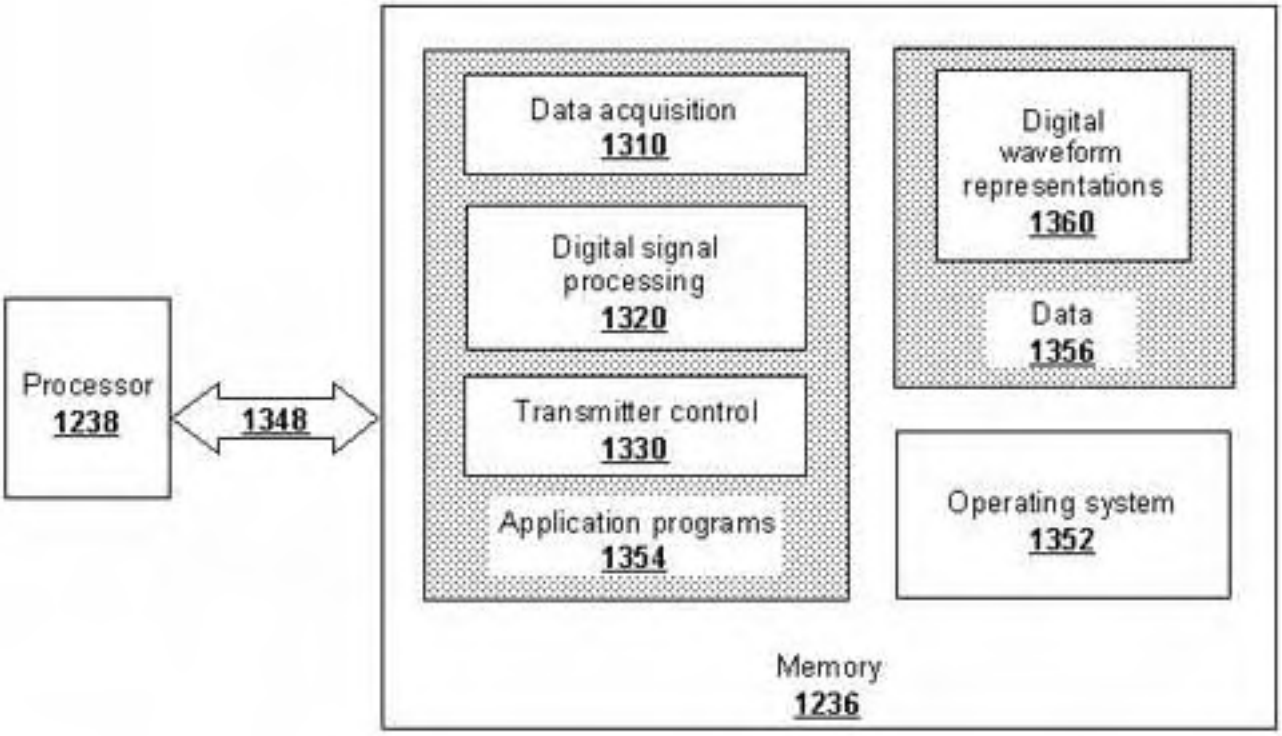
Processor 1238
1348
Data acquisition 1310
Digital signal processing 1320
Transmitter control 1330
Application programs 1354
Digital waveform representations 1360
Data 1356
Operating system 1352
Memory 1236

FIG. 14A

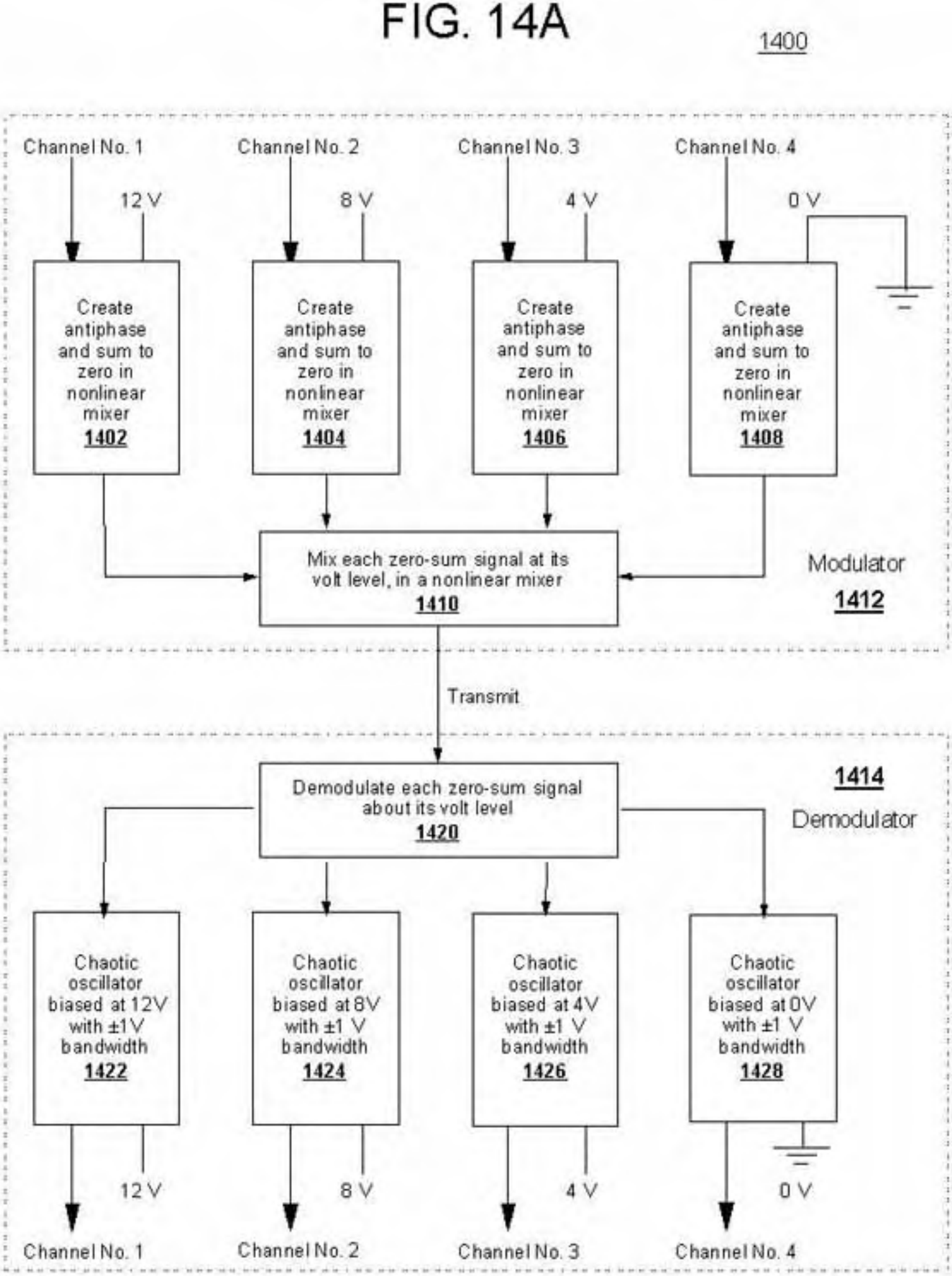
1400
Channel No. 1
Channel No. 2
Channel No. 3
Channel No. 4
12 V
8 V
4 V
0 V
Create antiphase and sum to zero in nonlinear mixer 1402
Create antiphase and sum to zero in nonlinear mixer 1404
Create antiphase and sum to zero in nonlinear mixer 1406
Create antiphase and sum to zero in nonlinear mixer 1408
Mix each zero-sum signal at its volt level, in a nonlinear mixer 1410
Modulator 1412
Transmit
1414 Demodulator
Demodulate each zero-sum signal about its volt level 1420
Chaotic oscillator biased at 12V with ±1V bandwidth 1422
Chaotic oscillator biased at 8V with ±1 V bandwidth 1424
Chaotic oscillator biased at 4V with ±1 V bandwidth 1426
Chaotic oscillator biased at 0V with ±1 V bandwidth 1428
12 V
8 V
4 V
0 V
Channel No. 1
Channel No. 2
Channel No. 3
Channel No. 4

FIG. 14B

1450

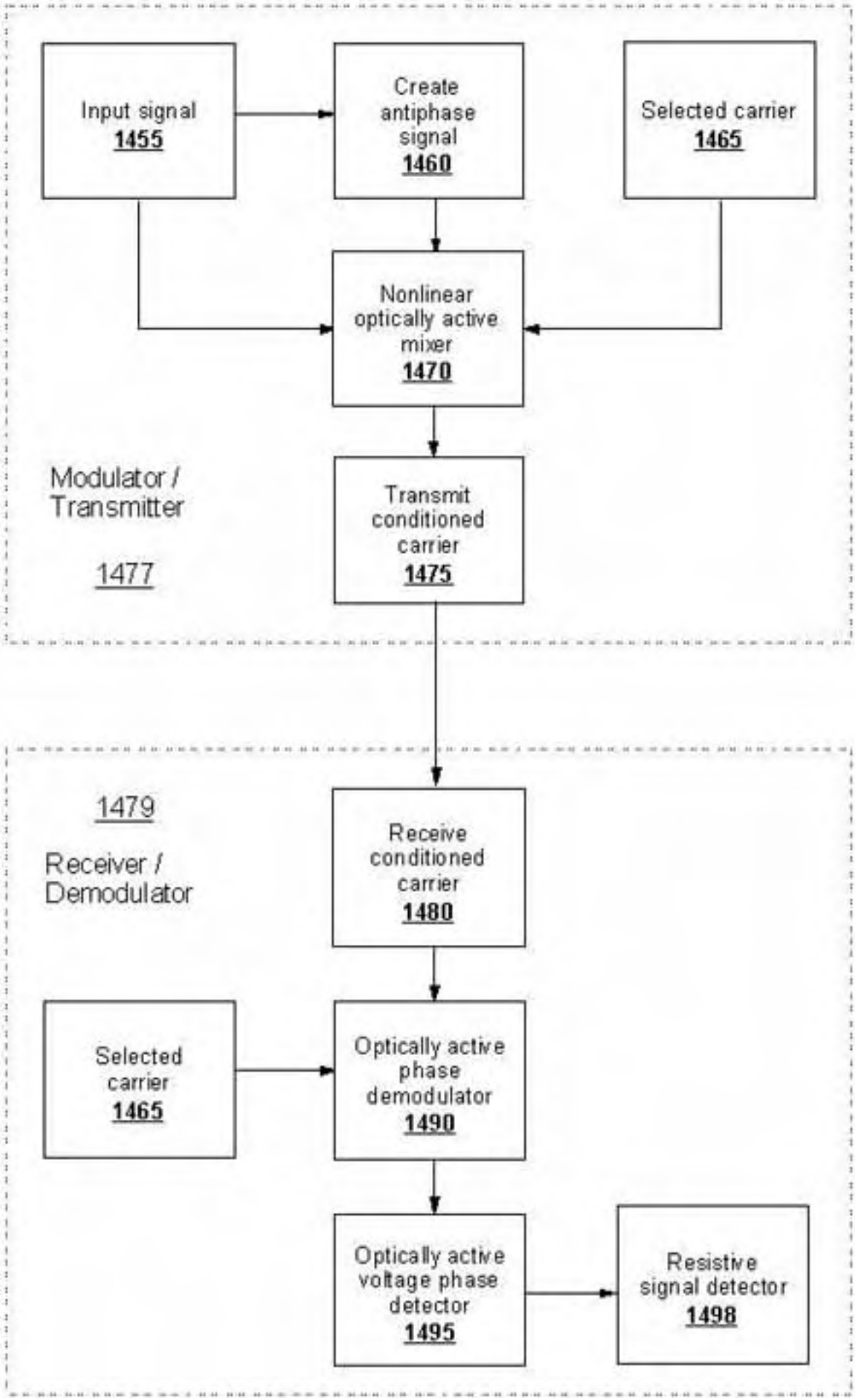
Input signal
1455
Create antiphase signal
1460
Selected carrier
1465
Nonlinear optically active mixer
1470
Modulator / Transmitter
1477
Transmit conditioned carrier
1475
1479
Receiver / Demodulator
Receive conditioned carrier
1480
Selected carrier
1465
Optically active phase demodulator
1490
Optically active voltage phase detector
1495
Resistive signal detector
1498

FIG

FIG. 15

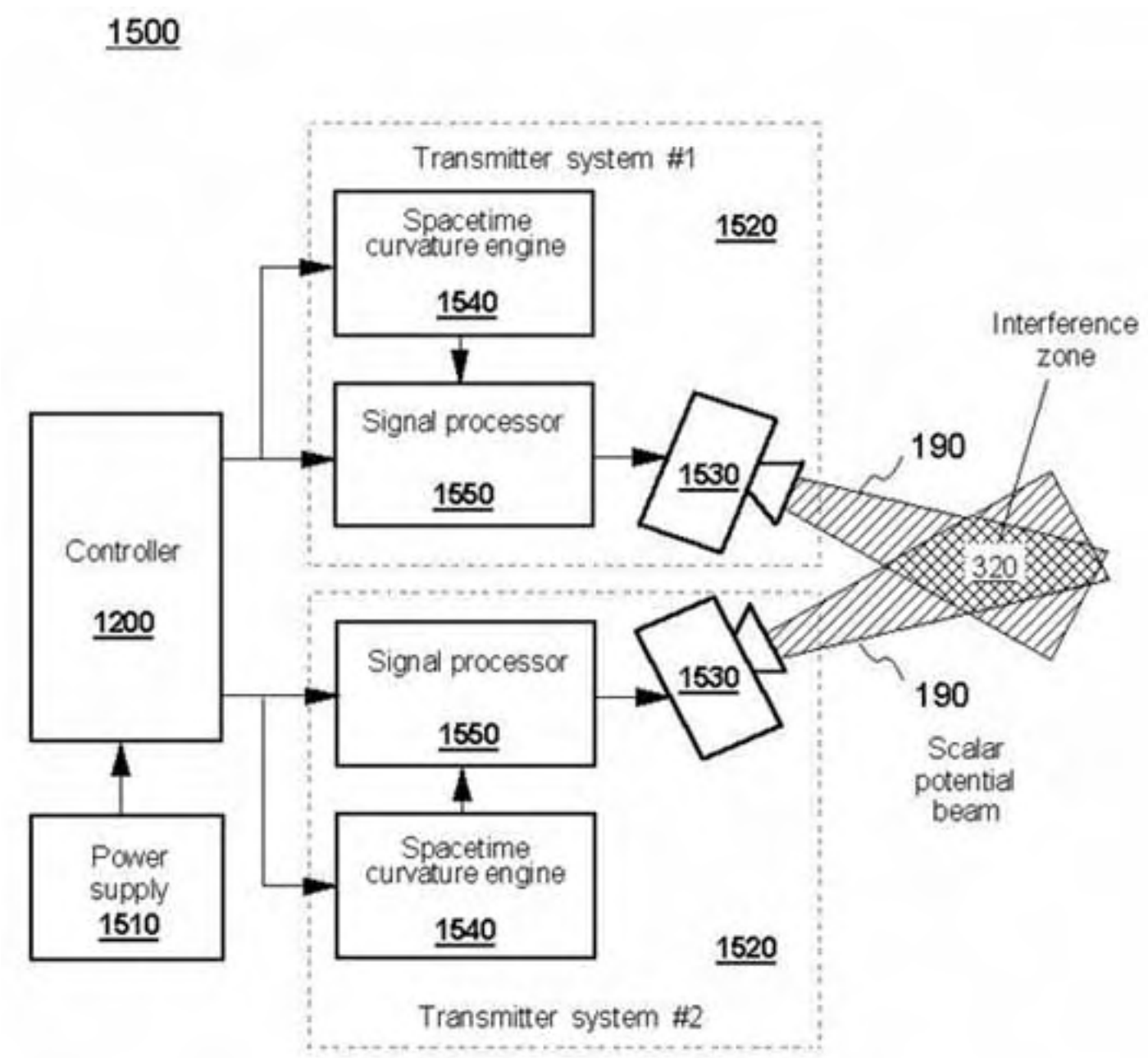
1500
Transmitter system #1
Spacetime curvature engine
1540
1520
Signal processor
1550
1530
Controller
1200
Power supply
1510
Signal processor
1550
1530
Spacetime curvature engine
1540
1520
Transmitter system #2
Interference zone
190
320
190
Scalar potential beam

FIG. 16

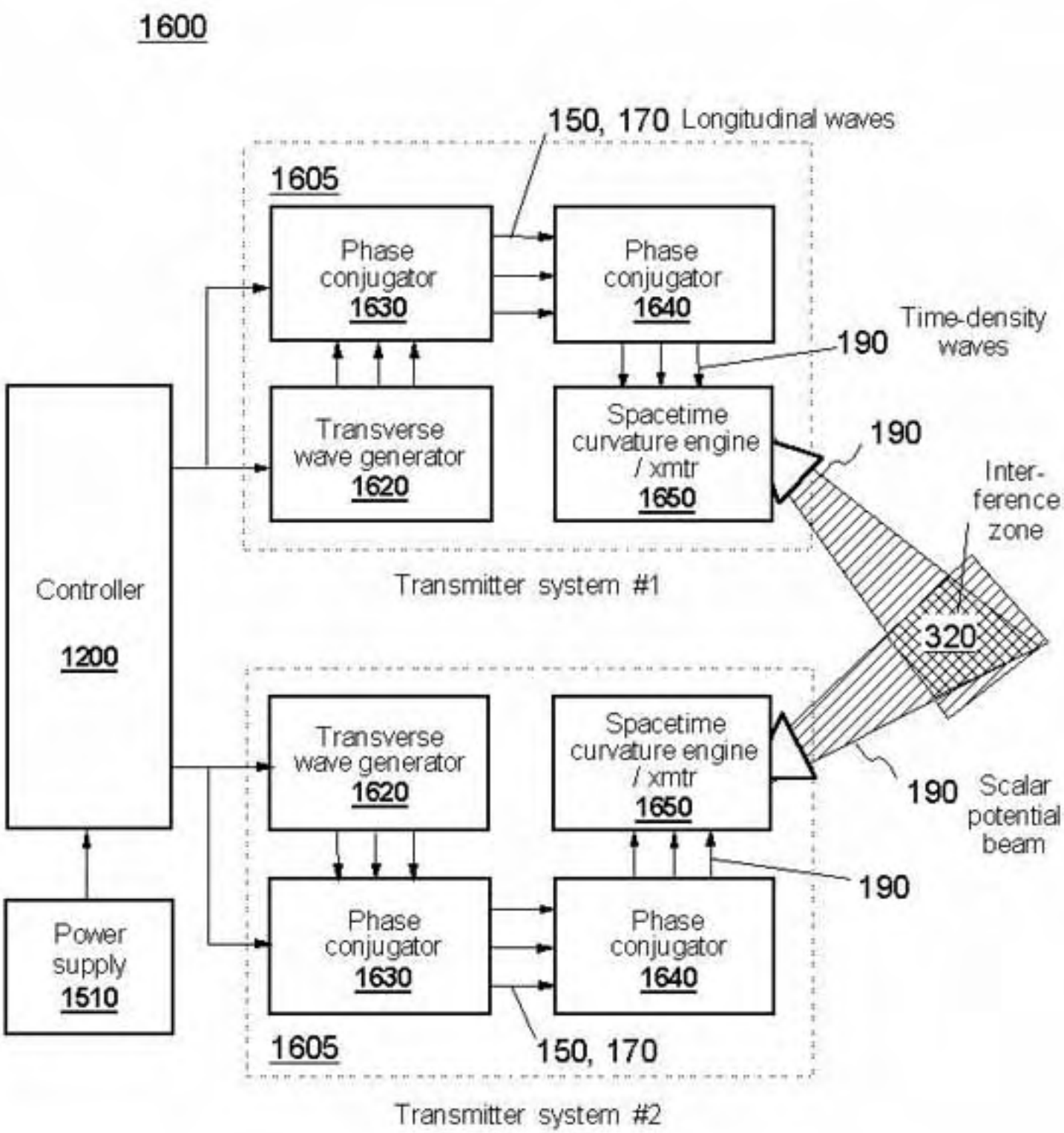
1600
150, 170 Longitudinal waves
1605
Phase conjugator 1630
Phase conjugator 1640
Time-density waves
190
Transverse wave generator 1620
Spacetime curvature engine / xmtr 1650
190
Inter-ference zone
Controller 1200
Transmitter system #1
320
Transverse wave generator 1620
Spacetime curvature engine / xmtr 1650
190 Scalar potential beam
190
Power supply 1510
Phase conjugator 1630
Phase conjugator 1640
1605
150, 170
Transmitter system #2

FIG. 17

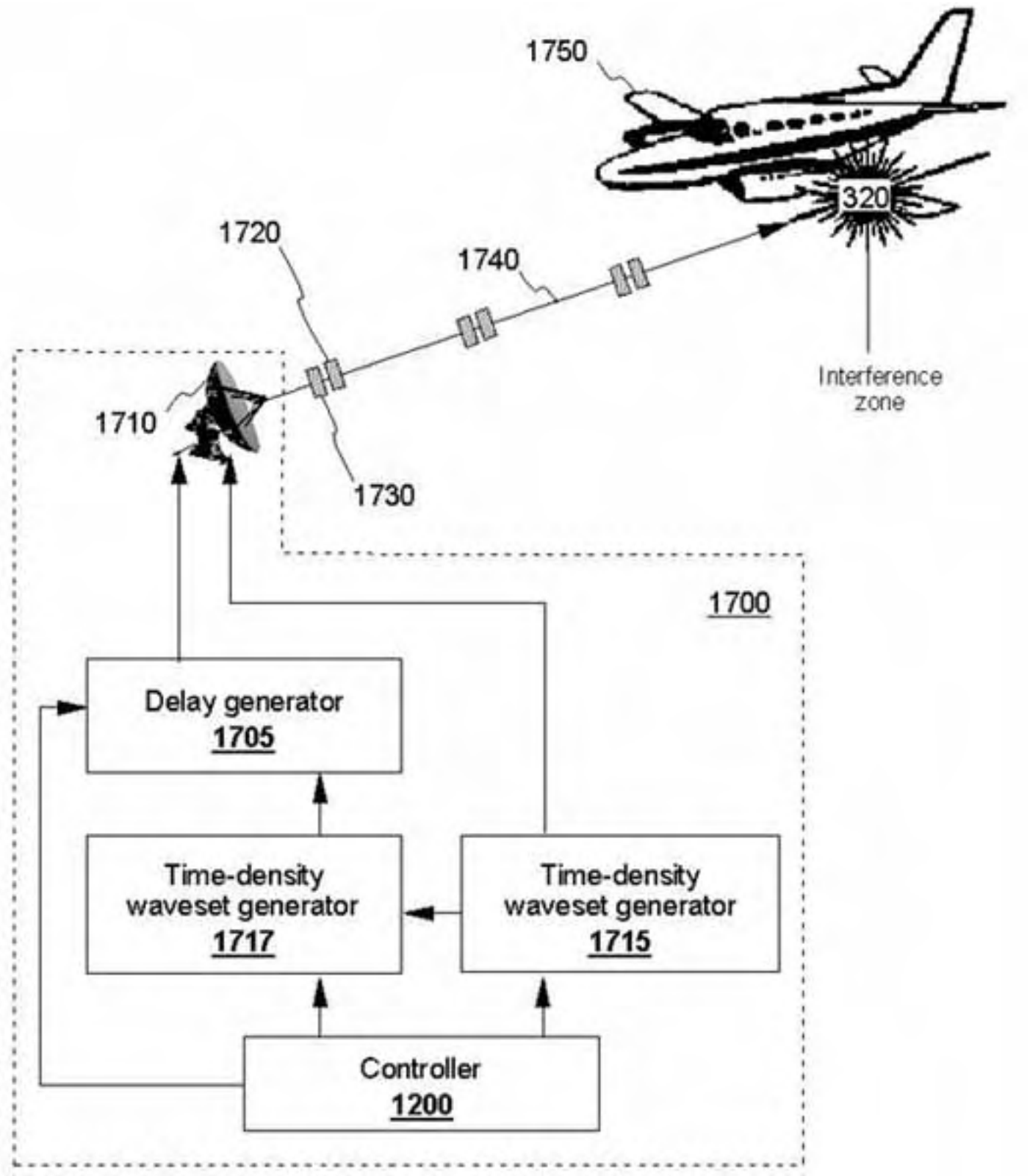
1750
320
1720
1740
Interference zone
1710
1730
1700
Delay generator
1705
Time-density waveset generator
1717
Time-density waveset generator
1715
Controller
1200

FIG. 18

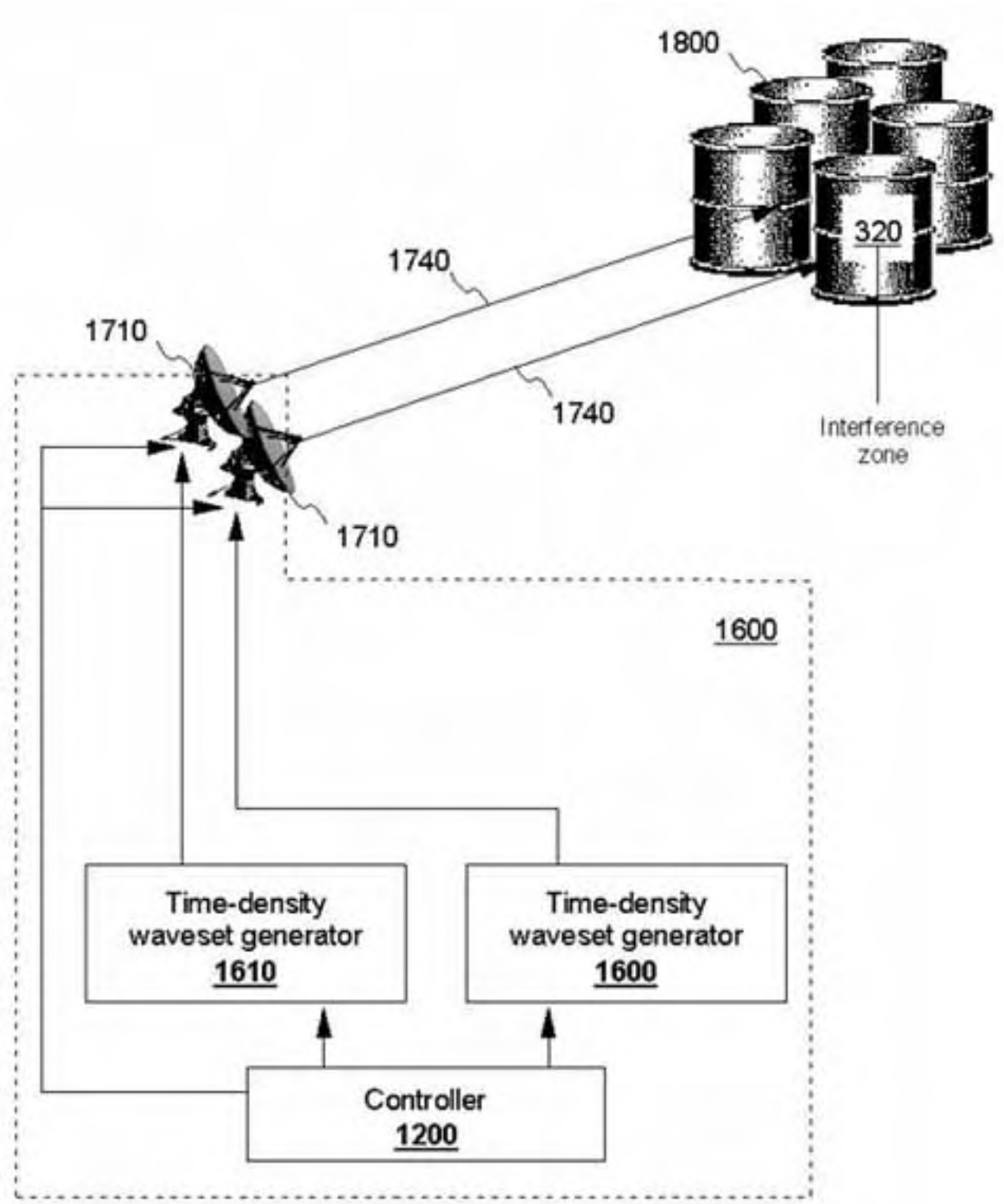
1800
320
1740
1710
1740
Interference zone
1710
1600
Time-density waveset generator 1610
Time-density waveset generator 1600
Controller 1200

FIG. 19

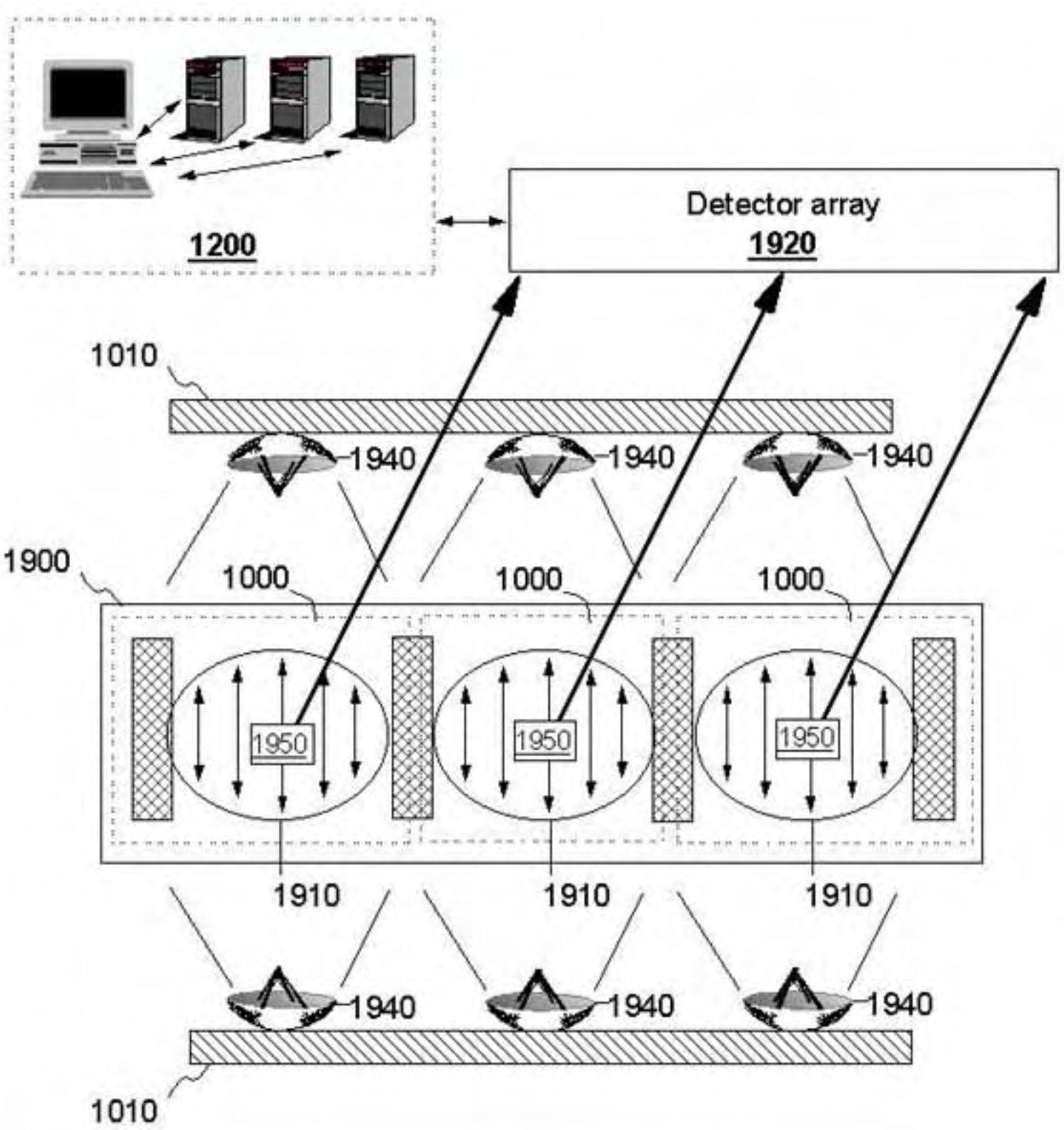
1200
Detector array
1920
1010
1940
1940
1940
1900
1000
1000
1000
1950
1950
1950
1910
1910
1910
1940
1940
1940
1010

FIG. 20

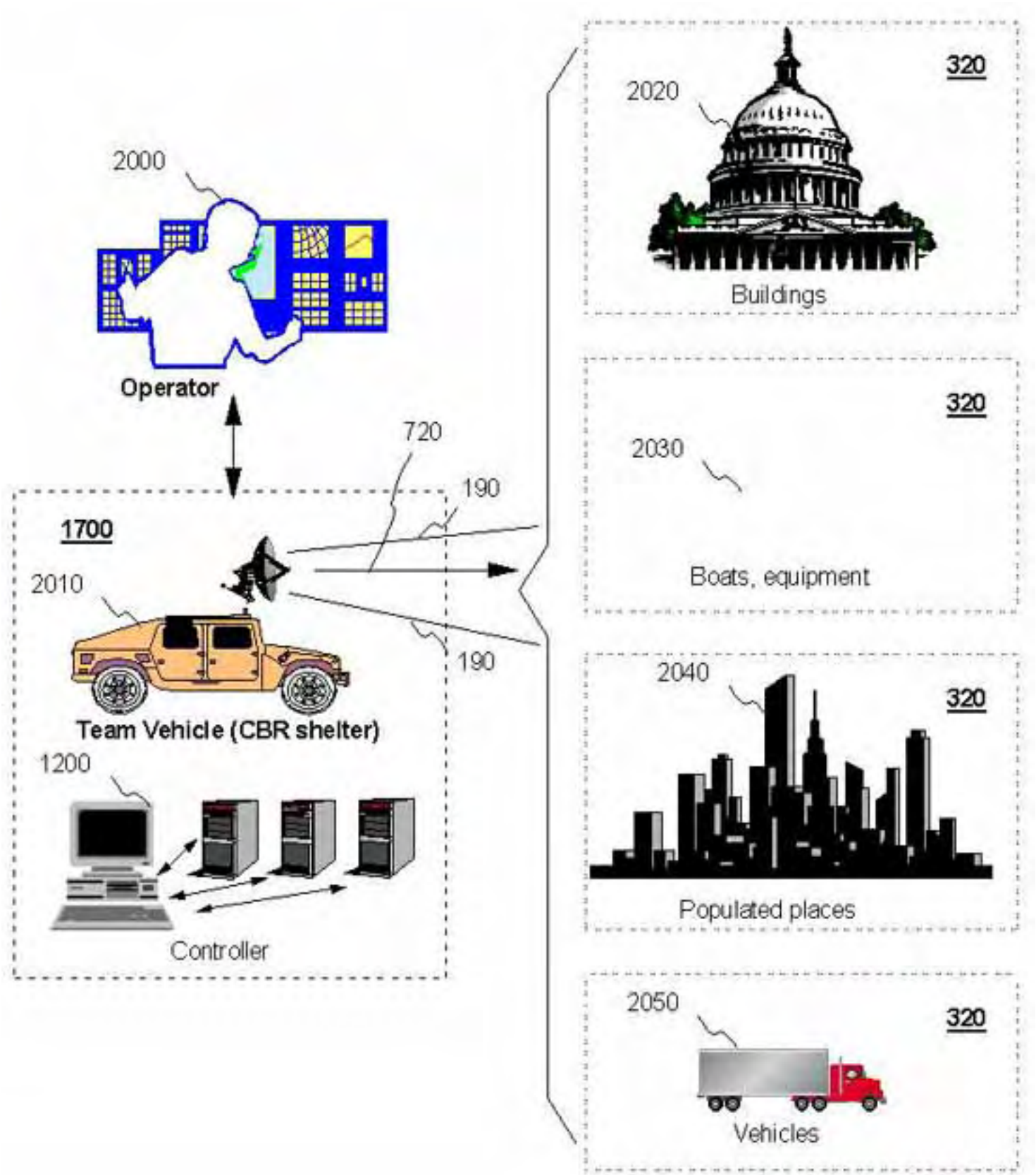
2000
Operator
720
190
1700
2010
190
Team Vehicle (CBR shelter)
1200
Controller
320
2020
Buildings
320
2030
Boats, equipment
2040
320
Populated places
2050
320
Vehicles

FIG. 21

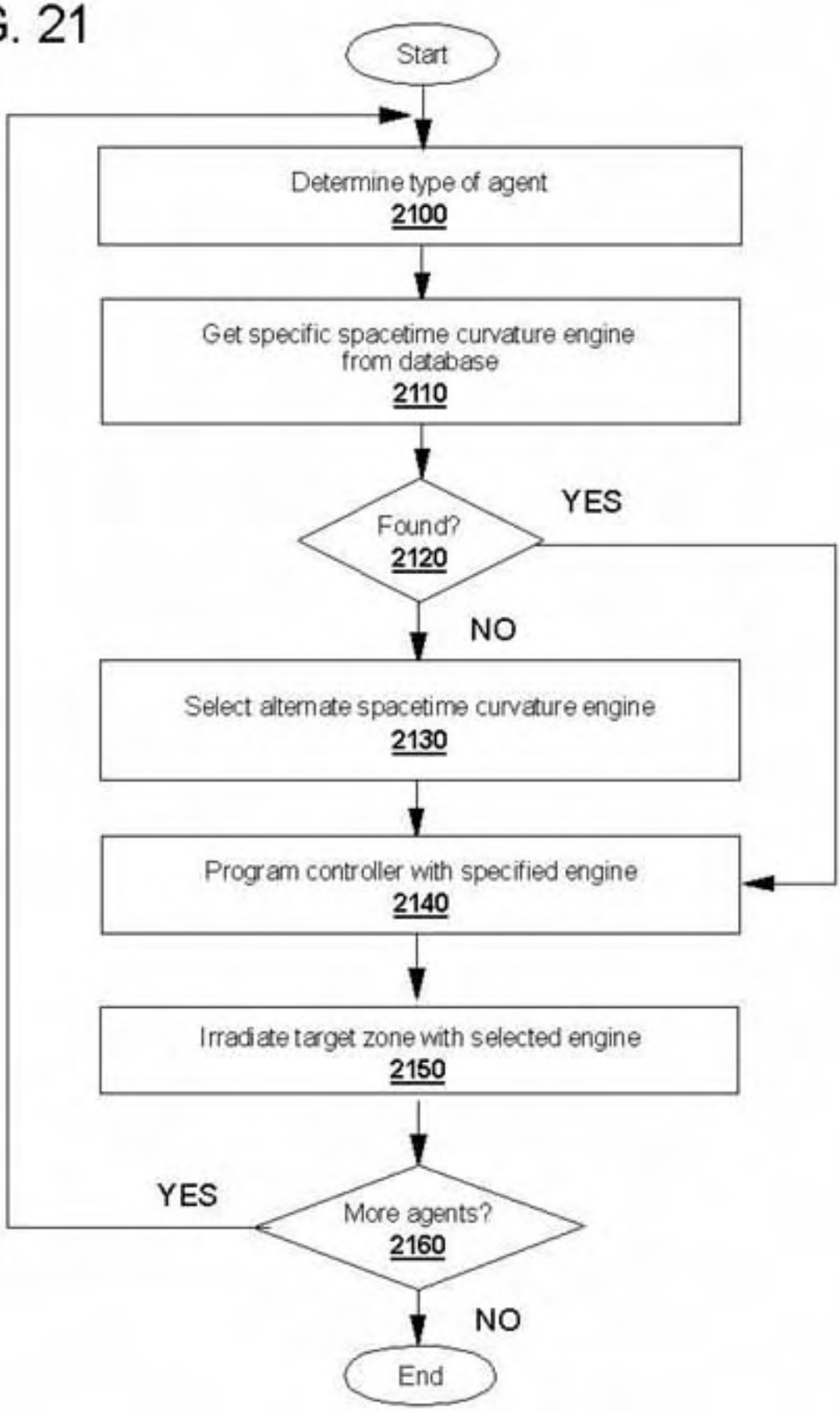
Start
Determine type of agent
2100
Get specific spacetime curvature engine from database
2110
Found?
2120
YES
NO
Select alternate spacetime curvature engine
2130
Program controller with specified engine
2140
Irradiate target zone with selected engine
2150
More agents?
2160
YES
NO
End

FIG. 22

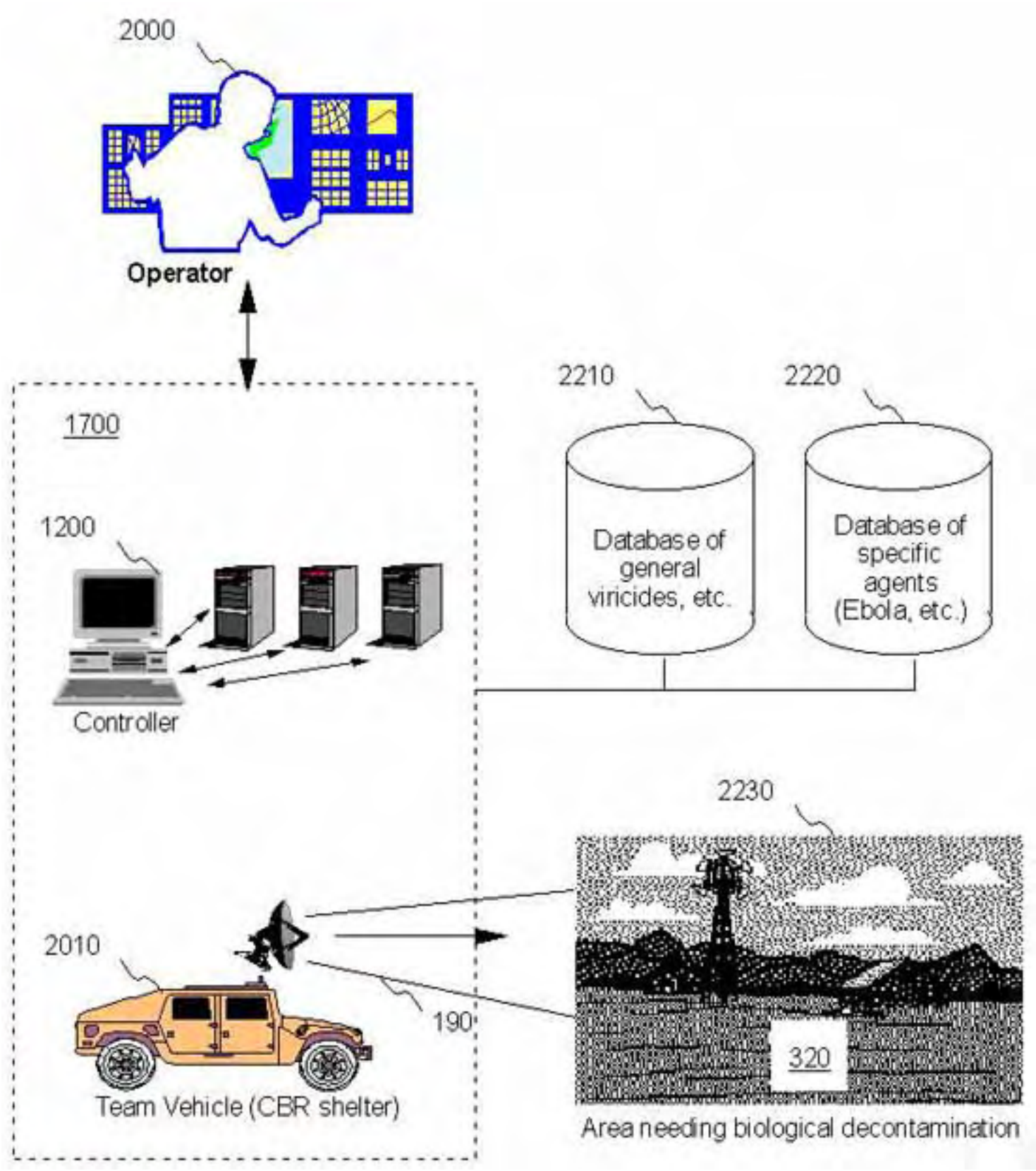
2000
Operator
1700
1200
Controller
2210
Database of general viricides, etc.
2220
Database of specific agents (Ebola, etc.)
2230
2010
190
Team Vehicle (CBR shelter)
320
Area needing biological decontamination

FIG. 23A

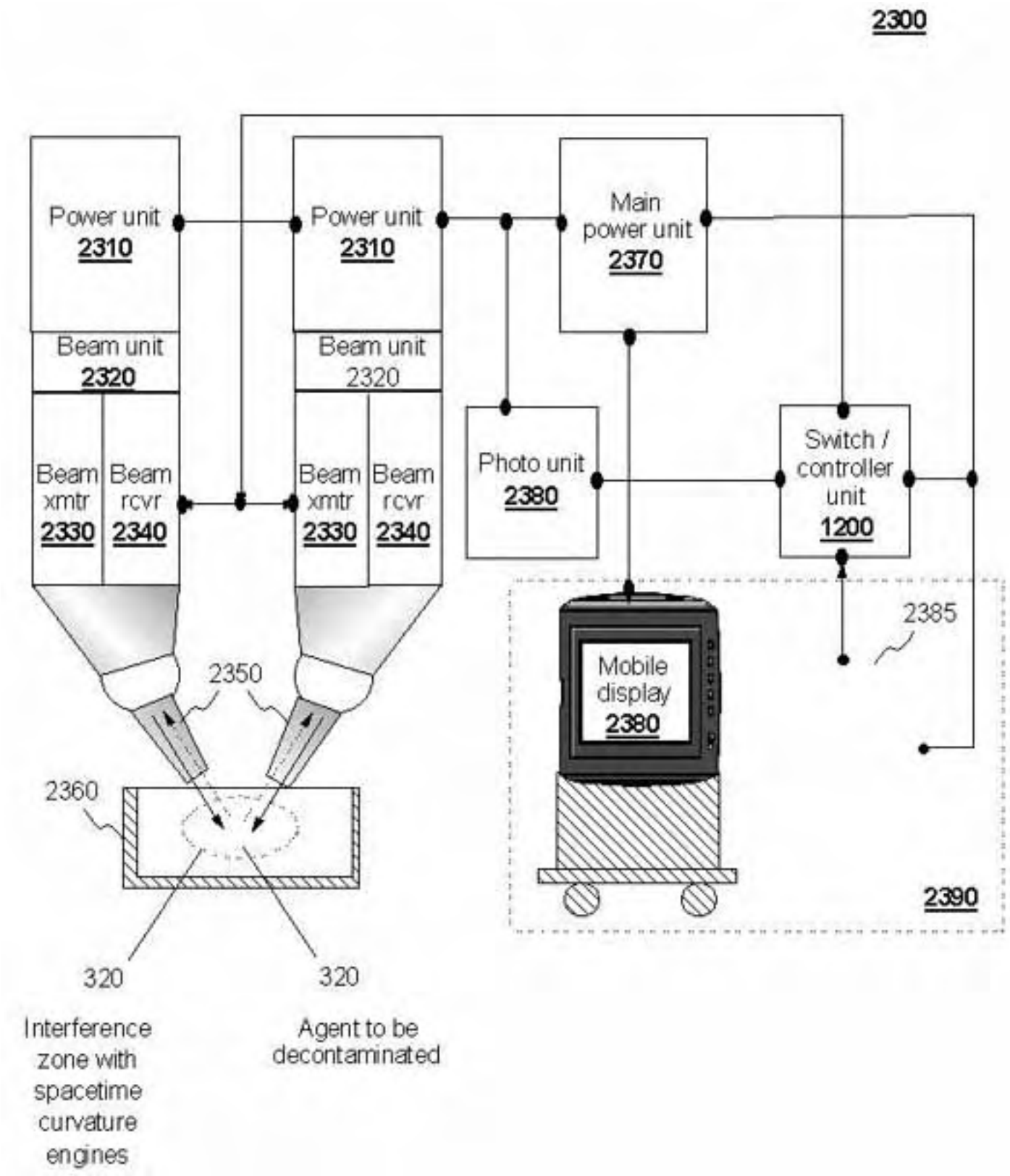
2300
Power unit
2310
Power unit
2310
Main
power unit
2370
Beam unit
2320
Beam unit
2320
Beam
xmtr
2330
Beam
rcvr
2340
Beam
xmtr
2330
Beam
rcvr
2340
Photo unit
2380
Switch /
controller
unit
1200
2385
Mobile
display
2380
2390
2350
2360
320
320
Interference
zone with
spacetime
curvature
engines
Agent to be
decontaminated

FIG. 23B

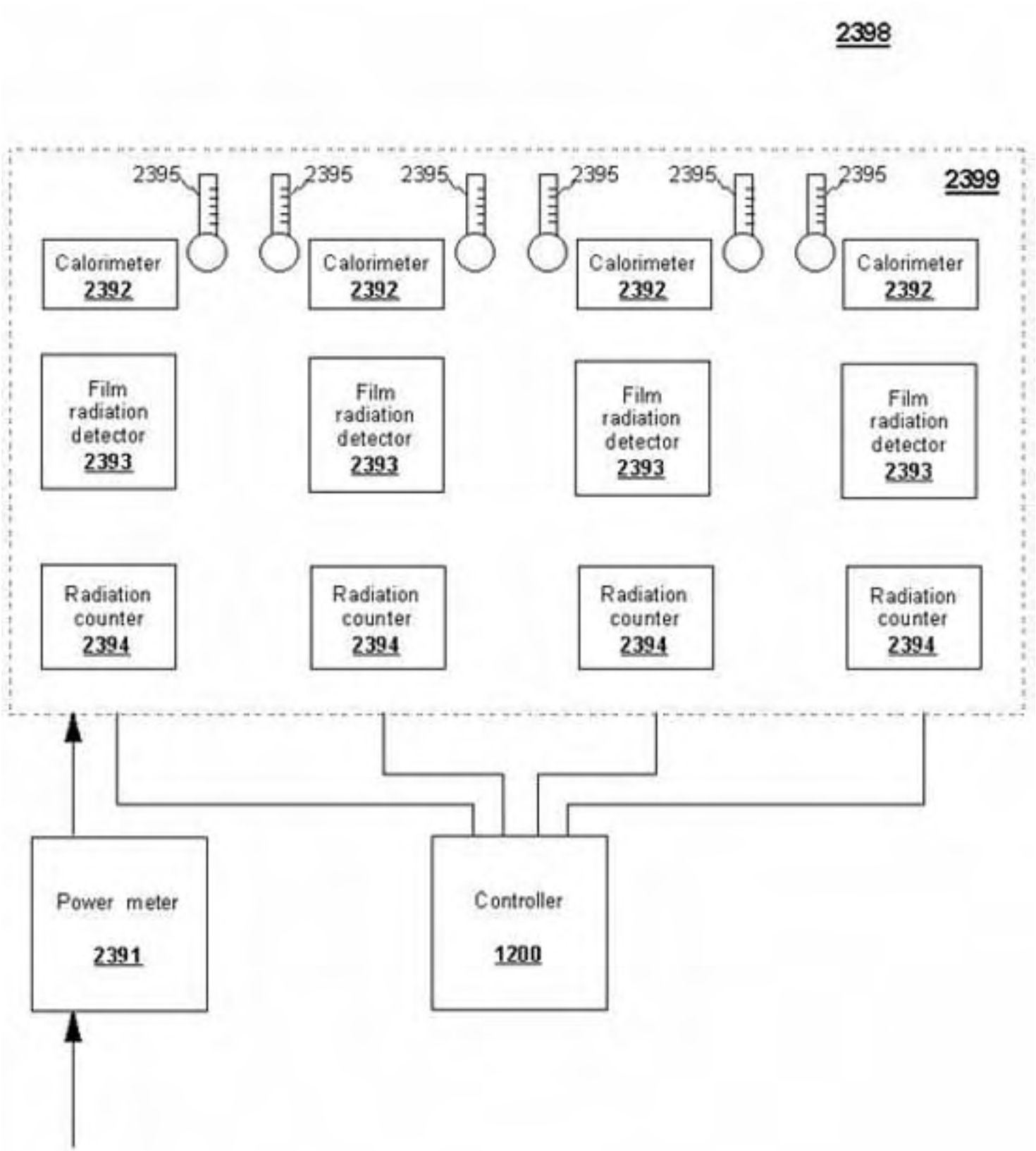
2398
2399
2395
2395
2395
2395
2395
2395
Calorimeter 2392
Calorimeter 2392
Calorimeter 2392
Calorimeter 2392
Film radiation detector 2393
Film radiation detector 2393
Film radiation detector 2393
Film radiation detector 2393
Radiation counter 2394
Radiation counter 2394
Radiation counter 2394
Radiation counter 2394
Power meter 2391
Controller 1200

FIG. 25A

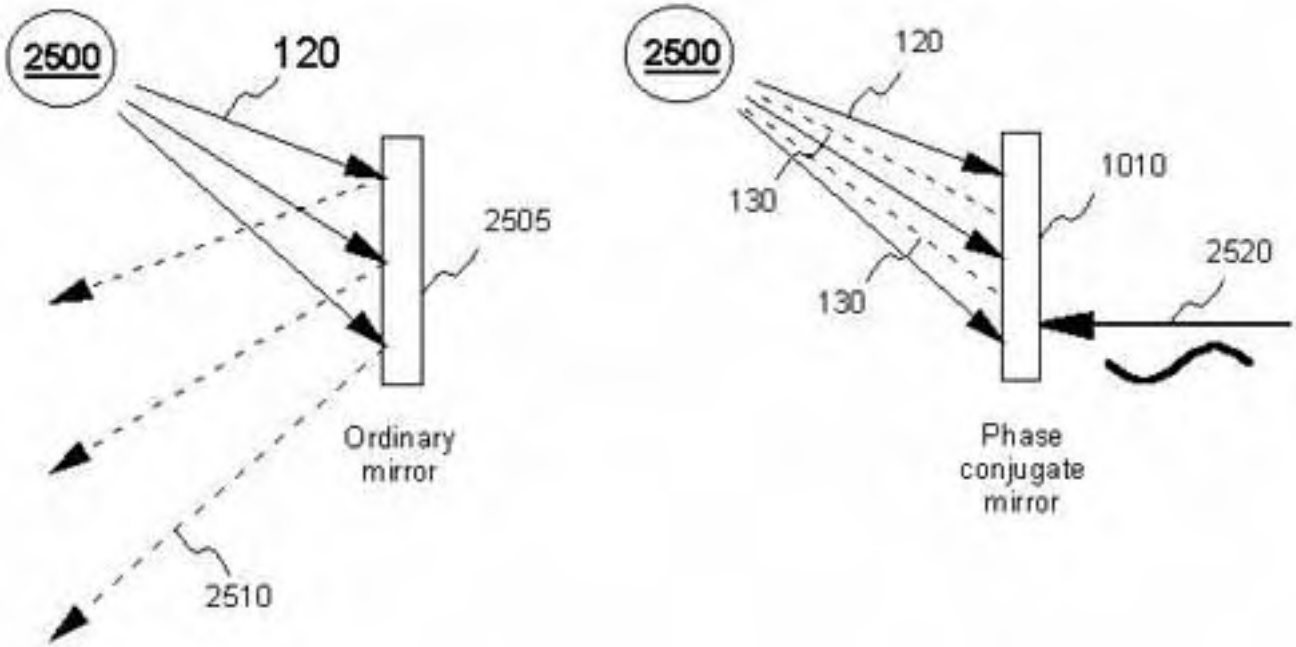

FIG. 25B

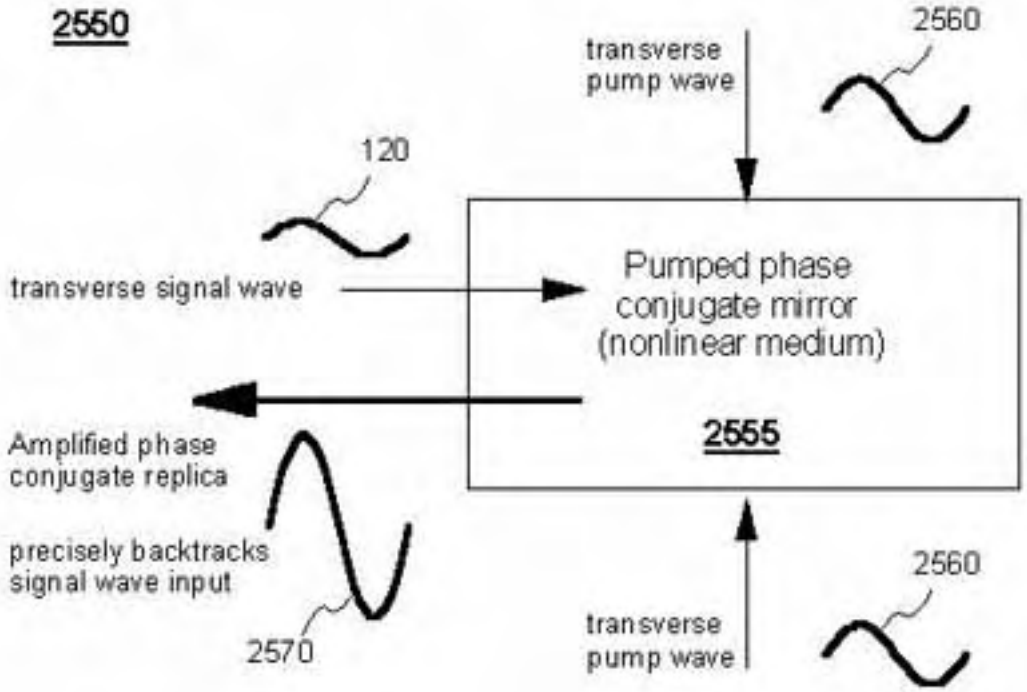

FIG. 27

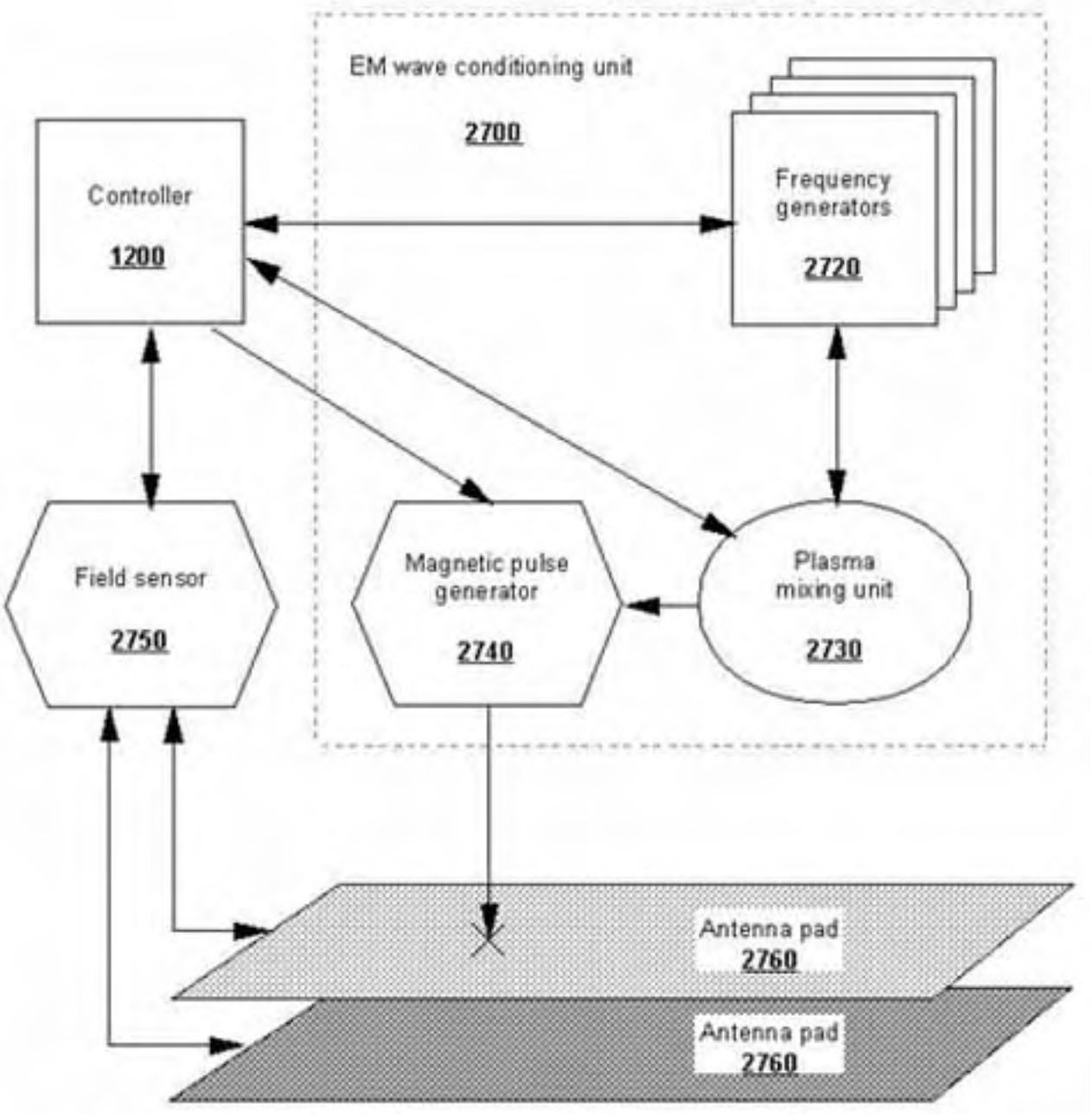
EM wave conditioning unit
2700
Controller
1200
Frequency generators
2720
Field sensor
2750
Magnetic pulse generator
2740
Plasma mixing unit
2730
Antenna pad
2760
Antenna pad
2760

FIG. 28

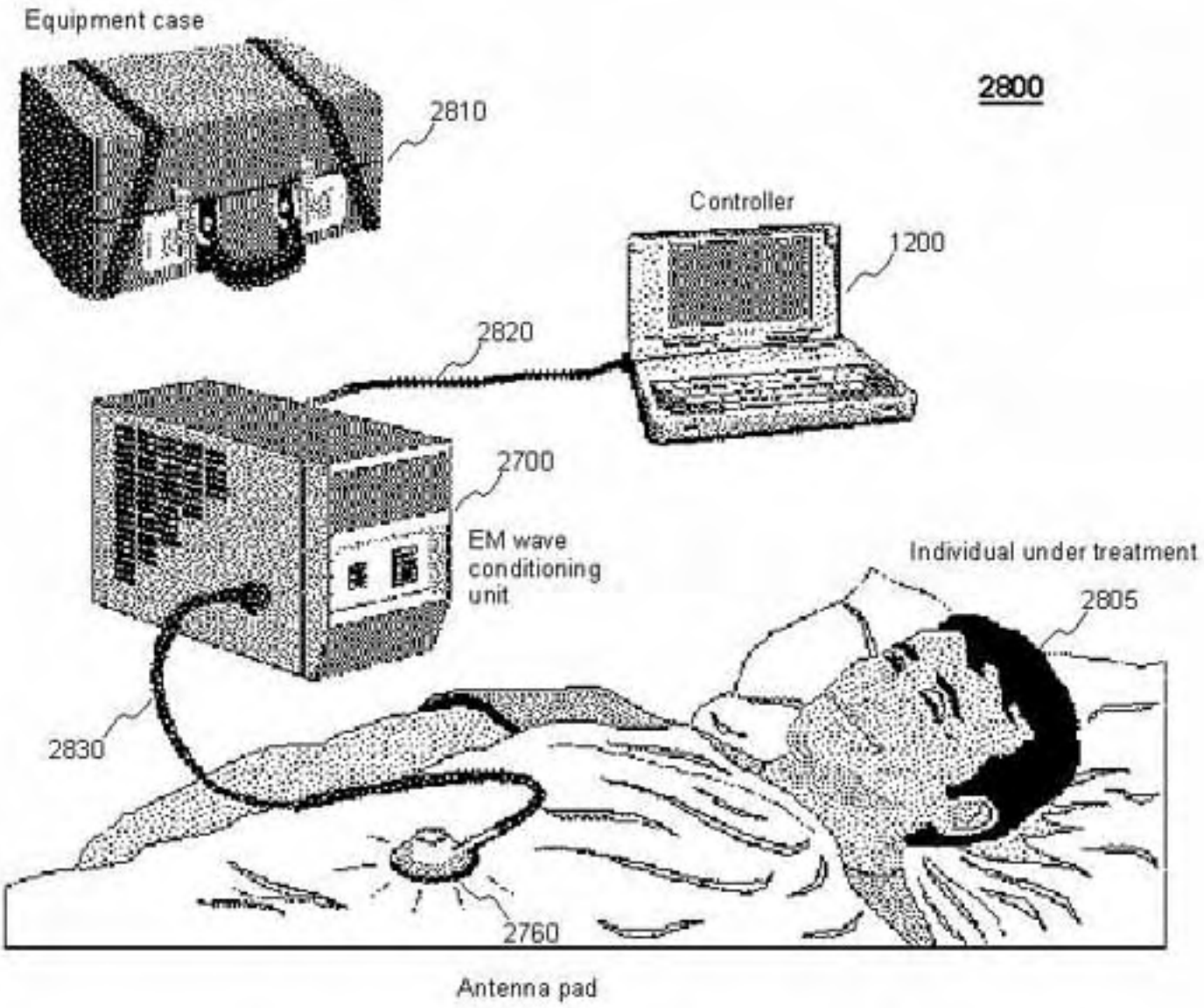
Equipment case
2810
2800
Controller
1200
2820
2700
EM wave
conditioning
unit
Individual under treatment
2805
2830
2760
Antenna pad

FIG. 29

2900

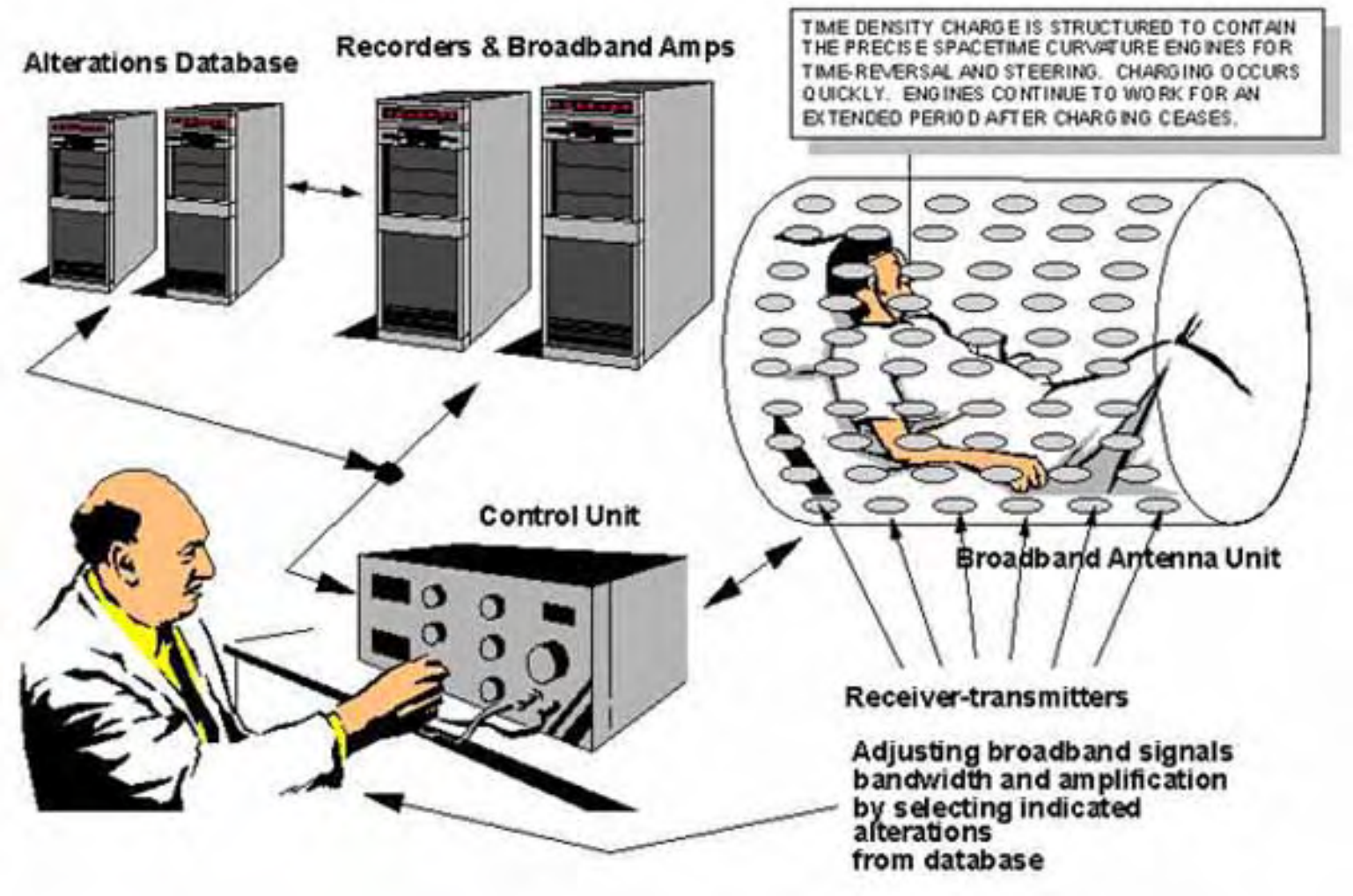
Alterations Database
Recorders & Broadband Amps
TIME DENSITY CHARGE IS STRUCTURED TO CONTAIN THE PRECISE SPACETIME CURVATURE ENGINES FOR TIME-REVERSAL AND STEERING. CHARGING OCCURS QUICKLY. ENGINES CONTINUE TO WORK FOR AN EXTENDED PERIOD AFTER CHARGING CEASES.
Control Unit
Broadband Antenna Unit
Receiver-transmitters
Adjusting broadband signals bandwidth and amplification by selecting indicated alterations from database

Electronic Projects for Beginners

F. G. RAYER, T.Eng. (CEI), Assoc. IERE

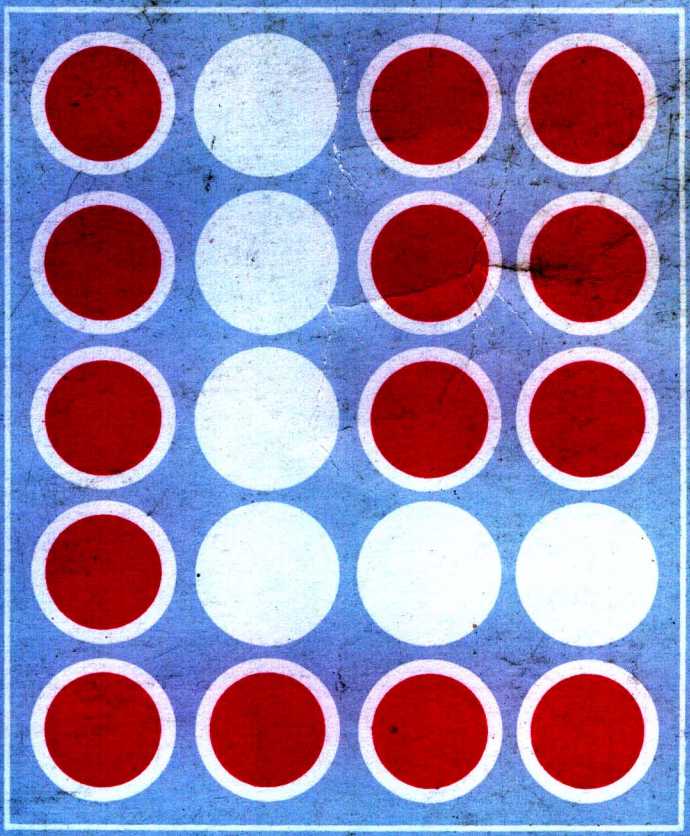

speaker SP2. SP1 then acts as a microphone, and sounds are reproduced in SP2.

With the switch in the opposite position, S1A selects SP2 as microphone, and amplified signals pass via S1B to SP1, so that speech can be in the other direction.

The switch, amplifier, battery and SP2 are assembled as the master control unit, and twin leads run to SP1. The person at SP1 should say "Over" so that the other person can operate the switch, and he in turn should say "Over" to signify that SP1 is again acting as microphone.

A simplified home-made change over switch is shown in Fig. 5. This is two strips of metal, pivoted so that they can be swung from side to side, and bearing on two of the three round-headed screws. A strip of insulating material is fitted so that both strips move together. In Fig. 5, this switch is in its "Off" position.

Ready made 2-pole 2-way switches can be obtained and used instead (see Fig. 49). Spring-loaded push switches are also available, and can be wired to provide "press to talk". A switch without a central "Off" position can also be used, a single pole on-off switch then being added in one battery connection.

The master unit can call SP1 by switching to speak, and allowing SP2 to be used as microphone. If calling in the other direction is required, a third connection, with bell push, battery and buzzer can be used. (An alternative, requiring more circuitry, but avoiding the need for a third wire, will be found in "Two Transistor Electronic Projects", (BP30, Babani Press.)

Fig. 5B shows assembly of the intercom in a wooden case. A 3½ inch speaker is suitable, so the whole can be quite a compact unit. The home-constructed switch, using the bolts below the speaker, can be replaced by a ready-made switch, as described, if preferred.

Best results are obtained with speaker units of quite high impedance – say 45 ohm to 75 ohm or so. The few other components are assembled on a small insulated board, as for earlier circuits.

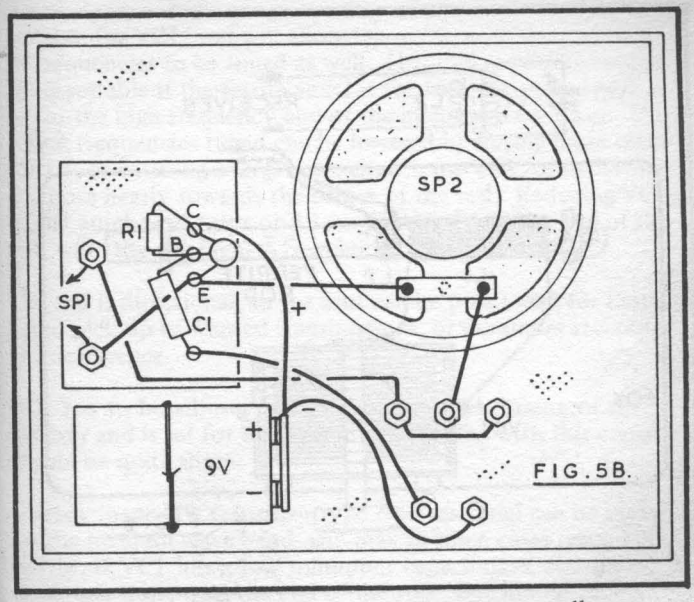

FIG.5B.

The speaker at the remote point also requires a small case. Dimensions are not important, and it is possible to utilise plastic boxes of suitable type for each unit. Connections between units are by twin bell wire, or any similar twin conductor. With a transistor of other than the type shown, the value of R1 can be chosen to give maximum amplification.

Tuned Ferrite Aerial

This simple device will allow "portable" reception with the old type of receiver which normally requires an external aerial, and it can also give improved reception in terms of freedom from interference on the 160 metre amateur band and adjacent frequencies. As shown in Fig. 6, it consists of a tuned circuit with ferrite rod, and a coupling winding to connect to the receiver aerial and earth sockets. It will be found very useful with a communications type receiver, where a long extended outdoor or similar aerial results in a high level of noise and interference.

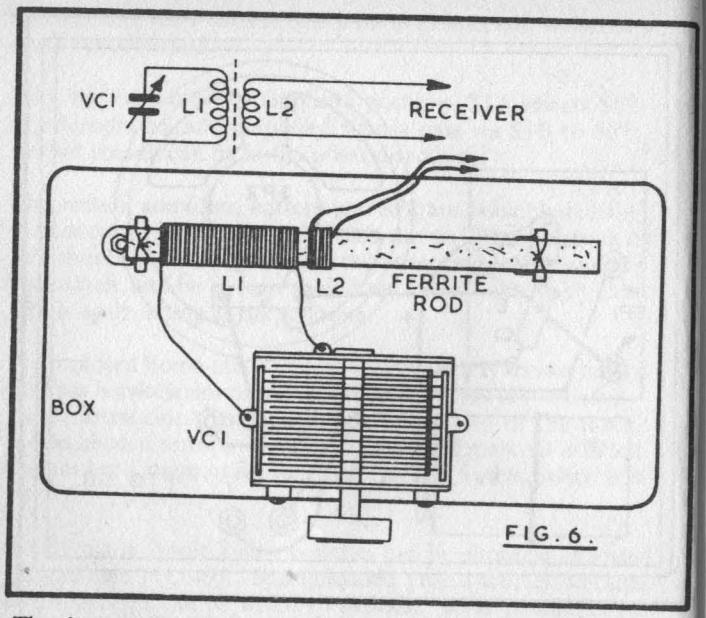

FIG. 6.

The device is constructed in a plastic lunch box about 6 x 4 x 4 inch or other *insulated* case. Some boxes of this kind, though strong, are of brittle material. These must be drilled without too much pressure, or they may crack. Drill points should also be sharp.

The rod is 6 inch long and 3/8 inch in diameter, and it is supported by two strips of insulating material, which are fixed with brackets. Each strip has a V-shaped notch, so that the rod can be held with thin string. L1 is the tuned winding, and it had sixty turns of 24 swg enamelled wire, side by side. Connections can be made to the frame (moving plates) and fixed plates of the capacitor VC1 by means of small bolts, or may be lightly twisted.

L2 is the coupling winding. Many communications type receivers have a low impedance input circuit, and twelve turns will be adequate for L2. The same wire can be used as for L1. With other receivers it may be worth while to experiment with the number of turns on L2, for best reception.

An air-spaced single gang capacitor of about 315pF is most suitable for VC1, and will allow the usual medium wave band of frequencies to be tuned as well. However, a smaller capacitor is suitable if the ferrite aerial is for 160m reception only, or for the high frequency end of the medium wave band. The actual frequencies tuned can be lowered by having more turns for L1, or by using a larger capacitance for VC1, or by having L1 more nearly towards the centre of the rod. Reducing VC1, or the number of turns on L1, or moving L1 to the end of the rod, will raise the highest frequency tuned.

The rod is directional, so the unit can be positioned for best signal pick up of wanted transmissions, or minimum reception of interference.

VC1 has to be adjusted in conjunction with tuning of the receiver and is set for best reception. Tuning with this control should be quite sharp.

A ready made MW transistor type receiver aerial can be useful for the medium wave band, and may in some cases reach 160 metres, if VC1 has a low minimum capacitance, and the winding is quite near the end of the rod. But should tuning not reach a high enough frequency, some turns will have to be removed.

Diode Radio

A lot of interest can be obtained from a diode radio receiver. It requires few components, no battery or other supply, and can give good headphone reception of a few of the more powerful transmitters. It can also be used as a tuner, as shown later, and will provide excellent audio quality for local station reception.

The circuit in Fig. 7 is intended for medium wave reception. That is, from about 200 metres to 500 metres, or 1500 kilohertz to 600 kilohertz.

The coil L1 is tuned by the variable capacitor VC1. At resonance with the wanted transmission, a signal voltage is developed across the coil. Detection or demodulation by the diode D1 allows the audio component of the signal to be

recovered, and taken to the phones or to an amplifier. Such "crystal sets" were used in very many homes, in the early days of radio.

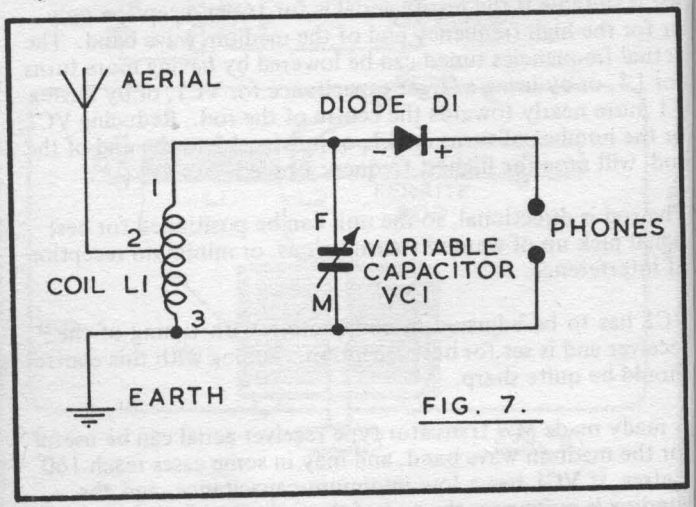

FIG. 7.

Fig. 7B shows the practical layout. It is convenient to use an insulated board larger than necessary, so that a transistor amplifier can be added later. A board about 5 x 8 inch is suggested, and it can be supported on 1 inch high runners (strips of wood) so that there is clearance for screws or terminals.

Coil L1 is wound with 26swg or similar wire, and has seventy turns, side by side. Secure the wire by passing it through two small holes, wind on about thirty five turns, and form a loop. Continue to wind in the same direction for a further thirty five turns, cut off the wire, and secure the end through two holes. The tube used can be 1½ inch to 2 inch in diameter, and can be paxolin, or can be made by winding thin card round a suitable object, smearing a little adhesive on to form a tube.

Point 1, the beginning of the coil, is taken to the fixed plates tag F of the variable capacitor, which is also connected to diode D1. The tapping 2 goes to the aerial terminal. End 3 is

taken to the moving plates connection or metal frame of the capacitor. Ends 1 and 2, and loop 3, are left long enough to reach these points, and the insulation is carefully scraped off the wire where connections are to be made. The capacitor VC1 can best be about 500pF, but this exact value is not essential.

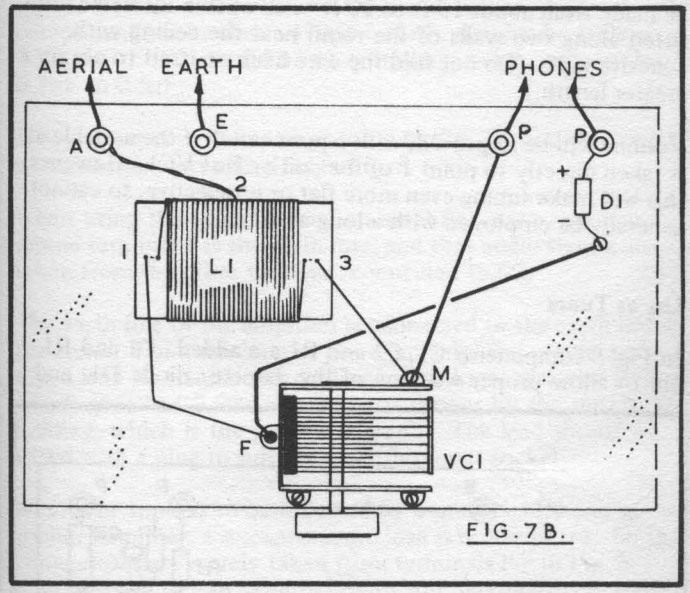

FIG.7B.

Four terminals, for Aerial, Earth, and Phones, will complete the receiver. Best results will be had by connecting a good headset, of about 500 ohm to 2,000 ohm. Very low impedance earpieces, such as are employed with some transistor receivers, are not suitable here.

With a simple receiver of this kind it is necessary to employ a reasonably effective aerial and earth. Only in some circumstances will volume be great enough with no earth, or with a short aerial. The earth connection can be taken to a metal spike in the ground, or to a metal object buried in soil, or to any other available earth other than a mains circuit earth. (No connection must be made to any mains plug or other mains circuit.) A cold water pipe may provide a good earth. Gas pipes should not be used.

For the aerial, a length of aerial wire some 30 ft to 75 ft or so in all may form the aerial itself and lead-in. If this can be suspended quite high, and clear of buildings or earthed objects, signal strength will be improved. However, satisfactory reception may be obtained from an indoor aerial, or shorter aerial, if a good earth is present. A simple indoor aerial can be made from about 15 ft to 20 ft or so of thin insulated wire, fitted along two walls of the room near the ceiling with adhesive tape. (Do not fold the wire back on itself to obtain a greater length.)

Volume will be improved, with a poor aerial, if the aerial lead is taken directly to point 1 of the coil or F at VC1. However, this will make tuning even more flat or unselective, so cannot generally be employed with a long aerial.

Use as Tuner

In Fig. 8 components C1, C2 and R1 are added. C1 and R1 are to allow proper working of the detector diode D1, and

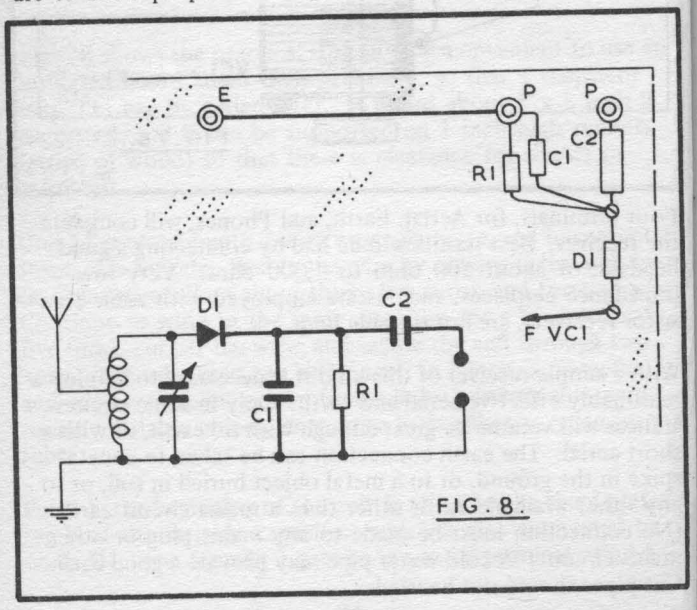

FIG. 8.

may be considered as replacing the headphones. C2 is a coupling capacitor passing audio signals to the following amplifier.

As with the previous circuit, any general purpose detection type diode is satisfactory for D1, such as the OA91 and many similar devices. The value of C1 is not critical, and this component can be about 470pF or 1nF. R1 can be 100k to 220k or so. C2 should be of quite large value, and can be 0.1μF to 0.5μF.

D1 can be moved from the position in Fig. 7B, and the few extra components added, as in Fig. 8.

When using the tuner to feed an amplifier, note that one phone terminal P is the earth line, and that audio signals are taken from the other terminal, connected to C2.

The earth line of the amplifier is connected to the earth line of the tuner. For a sensitive or powerful amplifier, a screened audio lead is recommended. This has an inner screened lead, which goes to C2, and a conductor former by the outer brading, which is the ground or earth. The lead should be fitted with a plug to suit the amplifier input socket.

Where the tuner is to be followed by a small headphone or similar amplifier, a screened audio lead is not required. So then connections are merely taken from terminals P-P in Fig. 8, remembering to join amplifier earth and tuner earth circuits as explained.

Medium and Long Wave

The addition of long wave coverage is worthwhile in some areas, and the coil can be modified as in Fig. 9 so that both MW and LW can be tuned.

A tube about 3 inch long and approximately 1½ inch in diameter will be necessary. The section L1 is wound as before. L2 consists of about two hundred turns of 34swg or 36swg wire, in two compact piles of one hundred turns each. All turns throughout are in the same direction. The junction of L1 and L2 goes to the waveband switch S1. The second

switch terminal goes to 4 and earth line. MW tuning is obtained with S1 closed, and LW tuning with S1 open.

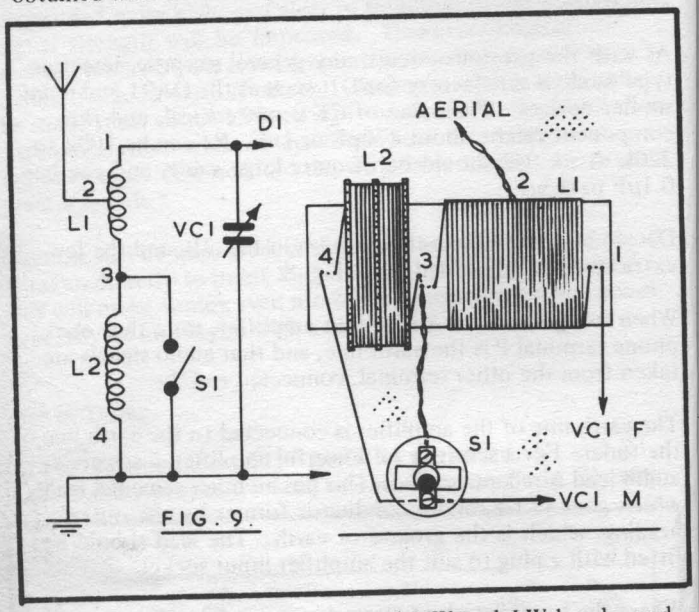

FIG. 9.

For accurate coverage of the usual MW and LW bands, and using a 1¼ inch diameter tube, L1 can be eighty-four turns of 32swg enamelled wire, with tapping 2 sixty turns from point 1. Leave a space of 5/8 inch and glue on a card disc cut to fit the tube. Also glue on two further discs, leaving spaces of ¼ inch between them. L2 is wound with 32swg double cotton covered wire, with one hundred and twenty turns in each slot (making 240 in all for L2). The coil can be fixed with two screws or small bolts, with spacers or extra nuts to hold it a little clear of the board. The windings should not be varnished, covered with adhesive, or wax.

With circuits of this kind there is no ganged tuning, or need for exact tuning of a particular frequency band. This means that coil winding details (wire gauge and covering, and diameter, or number of turns) can be varied to suit materials to hand. Ready-made coils can also be tried. Some commercially made coils with cores can give a slightly better

performance than the air-cored home made type of coil. Coils can also be wound in a similar way to that in Fig. 6.

One Transistor Amplifier

Headphone volume obtained from the crystal diode receiver can be considerably boosted by adding a single transistor audio amplifier. Space for this can be found on the circuit board.

In Fig. 10, resistor R2 and the transistor have been added, with a switch S2 for on-off switching of the battery. R1, C1, D1 and C2 are already present, as shown in Fig. 8.

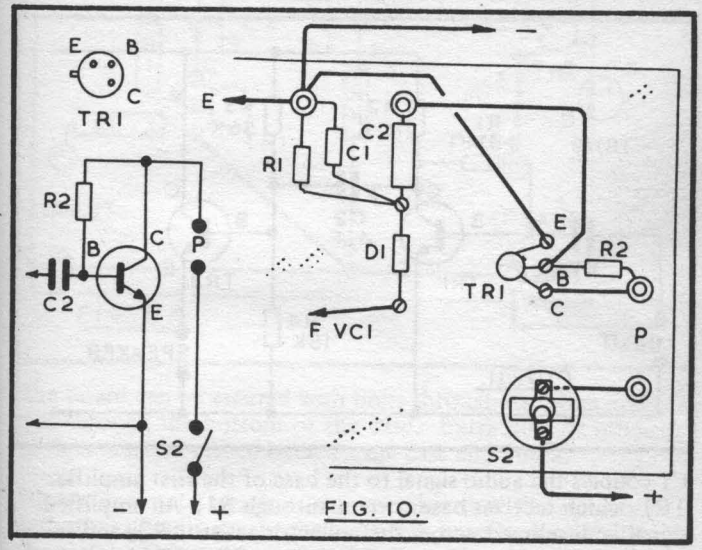

FIG. 10.

TR1, R2 and S2 are connected as shown. For TR1, a BC108, 2N706, or similar general purpose NPN transistor will be satisfactory. R2 can generally be 1 megohm with satisfactory results, but it can be worth while trying values from about 100k to 2.2 megohm here, as performance depends on the transistor, phones, and battery voltage.

Medium and high impedance phones, such as a 600 ohm DC headset, will be most suitable. The battery can be 4.5v to 9v.

If the phones are first connected to terminals P-P in Fig. 8, then taken to terminals P in Fig. 10, a very considerable increase in volume should be obtained.

If a PNP transistor is to be tried in this circuit, the polarity of the battery *must* be reversed.

Two Transistor Amplifier

Fig. 11 is the circuit for an easily made 2-transistor amplifier which can provide reasonable loudspeaker volume. The audio signal is taken to the input terminals, battery negative being the grounded side of this circuit.

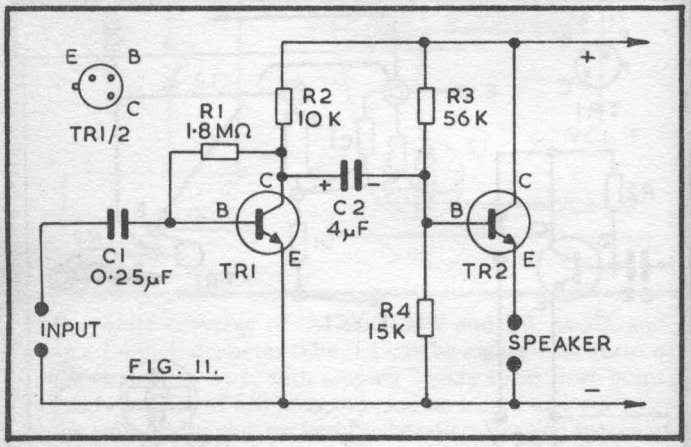

FIG. 11.

C1 couples the audio signal to the base of the first amplifier TR1, which receives base current through R1. An amplified signal is developed across the collector resistor R2, and is coupled to the base of the following amplifier TR2 by means of C2.

The two resistors R3 and R4 set the base operating conditions for TR2, and the output is taken from TR2 emitter.

Fig. 11B shows assembly of the components on a small insulated board. If preferred, connections between components can be on the underside of the board, in the way shown for

later circuits. Fit red and black flexible leads for battery connections. The amplifier, with its battery, can be fixed in an insulated box or metal case. Sockets can then be used for input and output circuits, and an on-off switch can be placed in one battery lead.

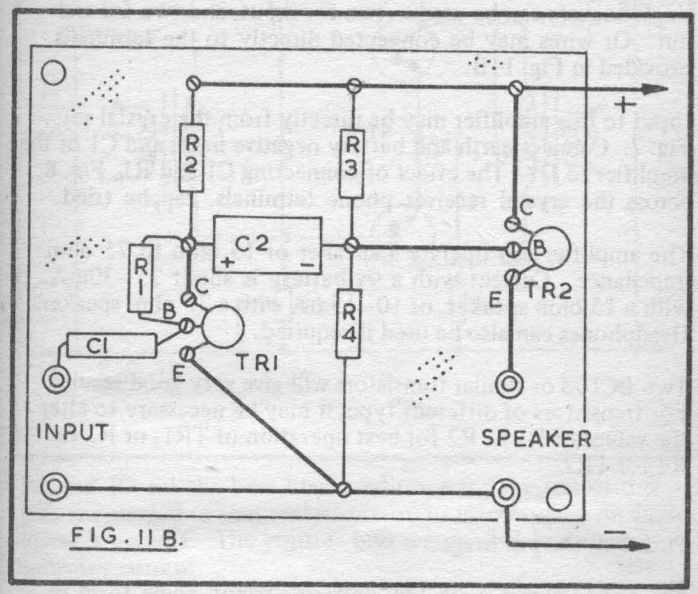

FIG. 11 B.

The board can be secured with bolts through its fixing holes, and through the bottom of the case. Extra nuts or other spacers must be placed between the case and board.

Whenever a metal box is used, remember that all connections and other circuits except the earth line must be insulated from the metal. The metal case itself is normally connected to the earth line, and a lead can be put under one of the fixing screws for this purpose. In Fig. 11, both input and speaker are returned to the earth line. So 3.5mm jack sockets of the type in which the outer or sleeve contact is common to the fixing bush could be used, as these points will be connected to battery negative and the earth line and metal box. But with some circuits it is necessary to use an insulated jack socket, or to insulate this from the metal. An example of this would

arise if the speaker were placed in the collector circuit of TR2, as the outer or sleeve circuit would then need to go to battery positive.

Instead of the type of socket which takes a jack plug, ordinary single sockets can be used – two for input, and two for output. Or wires may be connected directly to the terminals provided in Fig. 11B.

Input to this amplifier may be directly from the crystal set, Fig. 7. Connect earth and battery negative lines; and C1 of the amplifier to D1. The effect of connecting C1 and R1, Fig. 8, across the crystal receiver phone terminals, can be tried.

The amplifier can operate a speaker of 15 ohm to 75 ohm impedance. Current with a 9v battery is about 25–30mA with a 15 ohm speaker, or 10–15mA with a 75 ohm speaker. Headphones can also be used if required.

Two BC108 or similar transistors will give very good results. For transistors of different type, it may be necessary to alter the values of R1 or R2 for best operation of TR1, or R3 or R4 for TR2.

Push-Pull Output Stage

For good volume, with low battery current, some form of push-pull output stage is generally used. This has two transistors, and each amplifies one half of the audio signal. Base bias conditions of the two transistors are so arranged that only a low current flows during silent intervals. Overall battery drain is thus much lower than if a single transistor were used to obtain a similar level of volume.

Fig. 12 is a typical push-pull output stage. T1 is the input or driver transformer, and an audio signal is taken to its primary P. The secondary S is centre tapped. So for one half of the audio cycle one transistor base is driven positive and the other transistor base is driven negative, this being reversed for the remaining half cycle. Thus each transistor conducts alternately, and the centre-tapped output transformer T2 combines the collector currents, to operate the speaker connected to the secondary S.

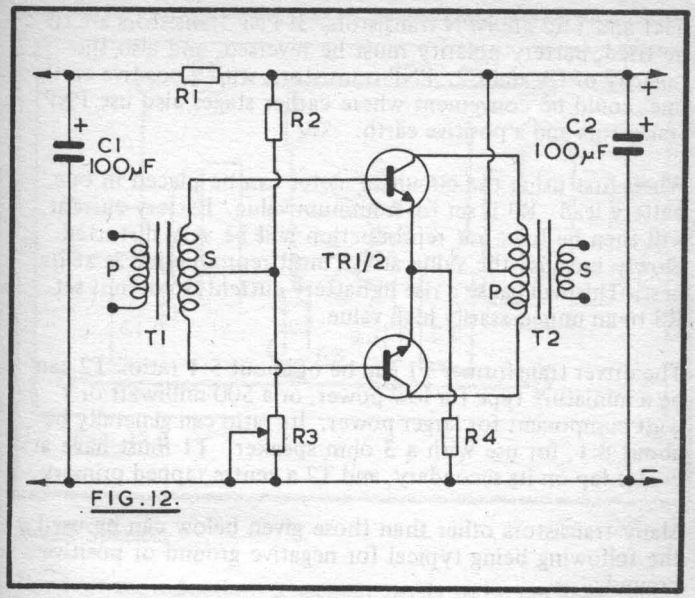

FIG. 12.

R2 and R3 set the base bias conditions for the transistors. Bias is arranged so that collector current is low, when no audio signal is present. The emitter bias resistor R4 limits peak collector current.

If R3 is a pre-set resistor, as in Fig. 12, operating conditions can be arranged to suit the transistors fitted. For best results TR1 and TR2 should be a matched pair. This means that they will have similar gain and current characteristics. However, two transistors of the same type number will generally be satisfactory.

It is assumed that the same battery will supply earlier stages of the amplifier, and current for this purpose is taken from C1 and R1. R1 and C1 prevent audio signals present in the positive line passing back to earlier amplifier stages. The by-pass capacitor C2 also helps in this respect. With simple circuits not giving much overall amplification, or small power outputs, R1, C1 and C2 might all be omitted.

TR1 and TR2 are NPN transistors. If PNP transistors are to be tried, battery polarity must be reversed, and also the polarity of C1 and C2. PNP transistors, with a positive earth line, could be convenient where earlier stages also use PNP transistors and a positive earth.

When first using the circuit, a meter can be placed in one battery lead. R3 is set for minimum value. Battery current will then be low, but reproduction will be very distorted. Slowly increase the value at R3 until reproduction is at its best. This will cause a rise in battery current, so do not set R3 to an unnecessarily high value.

The driver transformer T1 can be of about 5:1 ratio. T2 can be a miniature type for low power, or a 500 milliwatt or 1 watt component for larger power. Its ratio can generally be about 8:1, for use with a 3 ohm speaker. T1 must have a centre tap on its secondary, and T2 a centre tapped primary.

Many transistors other than those given below can be used, the following being typical for negative ground or positive ground.

Negative earth (NPN transistors). 2 x BC108. R1 1.2k. R3 100 ohm fixed or 250 ohm pre-set. R4 4.7 ohm.

Positive earth (PNP transistors). 2 x AC128 or 2 x AC142. R2 4.7k. R3 82 ohm or 250 ohm pre-set. R4 4.7 ohm.

R1 will generally be 1k to 2.2k, depending on the earlier amplifier. The primary of T1 can be connected to terminals P in Fig. 10; or alternatively to any audio source where a reasonably strong signal is present.

Where signals are too strong, an audio gain control needs to be fitted. In Fig. 8 this can be done by omitting R1, and disconnecting C2 from D1. Connect the outer tags of a 100k volume control or log pot from D1 to earth line. Take C2 to the centre tag or slider of the potentiometer. Any required audio level can then be taken off by adjusting the control knob.

Fig. 12B shows the board layout.

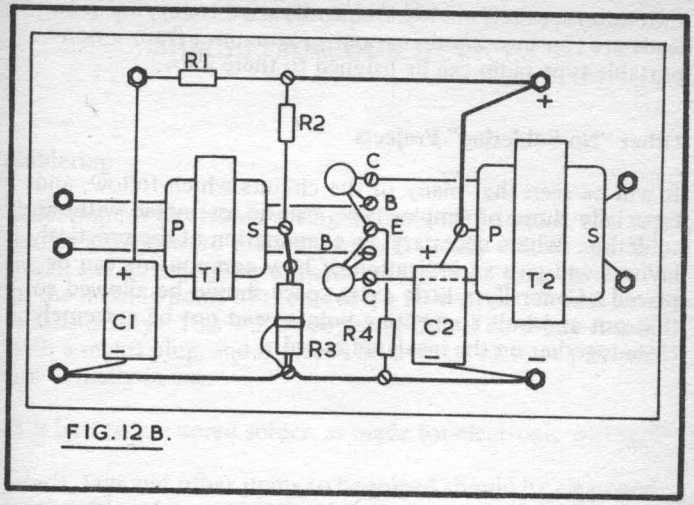

FIG. 12 B.

Boost Speaker

For best reproduction, a speaker needs to be enclosed in a cabinet or fitted to a baffle board. A cabinet can be made from wood, and can be about 6 x 10 inch and 4 inch deep, or as required for the speaker unit. Cut an aperture in the cabinet front to match the cone diameter, and glue thin fabric behind this opening. The speaker can be fixed with nuts and bolts, or short woodscrews driven in from behind.

Connect flexible leads, with separate plugs or a jack plug, to suit the equipment.

Small pocket receivers, which have a miniature speaker, can give much improved volume and reproduction when used with a larger speaker. If a headphone socket, operated from the receiver output stage, is present, it is only necessary to plug the speaker into this. A fairly large speaker, of sensitive type, will give best results. A unit 5 inch to 6 inch in diameter, or about 4 x 7 inch, will be convenient. The speaker has to be of approximately the correct impedance, which should be found in the receiver operating instructions. Where the speaker impedance is wrong, a matching transformer has to be employed between receiver and speaker.

Extension speakers are less frequently used today, but if two leads are run into another room programmes from a non-portable type radio can be listened to there also.

Other "No Soldering" Projects

It will be seen that many of the circuits which follow, and especially those of simpler type, can be assembled without soldering. Where necessary, an examination of the practical layouts will give an indication of how components can be placed. Generally a little extra space should be allowed so that nut and bolt connecting points need not be extremely close together on the insulated board.

SECTION 2
MISCELLANEOUS DEVICES

Soldering

Soldering for electronic wiring will be found to be a very easy and straightforward matter. An electrically heated iron is usual, and as large areas of metal do not have to be raised to the melting point of the solder, a 20 watt to 25 watt iron is satisfactory. This will be perfectly safe if correctly fitted with a mains plug, and if placed on a metal plate or tray when not actually in use.

It is best to use cored solder, as made for electronic wiring.

Leads, tags and other items to be joined should be clean and bright. They have to be raised in temperature to the melting point of the solder at the actual points where a joint is to be made, and the active core of the solder, or flux, must be present here when the joint is being made.

The iron should be tinned – that is, have melted solder on its tip – and have reached its correct temperature. Leads can be hooked or looped into position. The joint is then heated with the iron, and the solder is simultaneously applied to the joint, so that it melts and flows over the surfaces to be soldered. This usually takes place in a second or two. The solder and iron should be removed at once, as excessive heating may damage some components, and especially transistors or other semiconductors. The joint cools in a few seconds, and should be rigid, and solder having flown onto the items to be joined.

A probable cause of poor joints is insufficient heating of items to be soldered, or carrying solder to the joint on the iron, so that the activity of the flux is wasted.

Electronic items such as tags and the wire ends of components are generally designed for easy soldering. They will be copper, tinned copper, and similar metals and alloys which solder readily. For this reason, difficulties are unusual.

Some metals do not solder readily, or need special methods. Aluminium is one of these, and it is not used where popular cored solders intended for copper or general wiring are employed.

Make sure that heat from the iron does not damage furniture or other items, and keep the flexible cord away from the heated tip. Always switch the iron off at once when the work in progress is to be left.

One Transistor Audio Oscillator

This can be used instead of a bell or buzzer warning, or for code practice and similar purposes. It needs very few components, Fig. 13, and can be made to work satisfactorily with a wide range of transistors.

In Fig. 13, an NPN transistor is shown in the theoretical circuit, so battery polarity is as indicated, with negative to emitter. If a PNP transistor is fitted, battery polarity must be reversed.

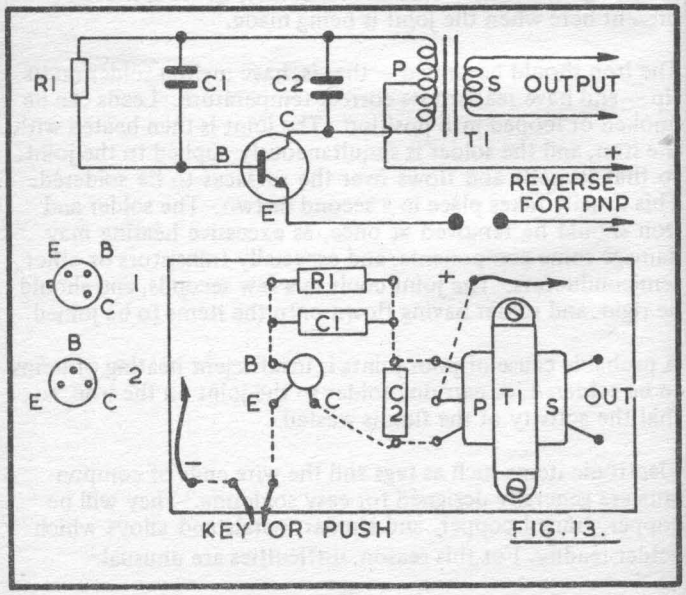

FIG. 13.

(1) shows leads from a typical NPN transistor, such as the BC108, 2N706, and similar types. (2) is the base of the PNP AC128 transistor.

T1 can be a small speaker matching transformer, as used for push-pull stages. A centre tapped primary is necessary. The secondary S can be taken to a loudspeaker or headphones.

The values of R1, C1 and C2 can be varied considerably. C1 can be 0.1μF or so. R1 determines to some extent the power obtained, and can be about 22k, increased to 47k or 100k for lower power. The value of C2 has considerable influence on the note, or frequency of oscillation. Increasing the value of C2 lowers the pitch. C2 can be about 47nF to 4.7nF or thereabouts. A 9v battery can be used. Changes to the supply voltage will influence the note produced.

Fig. 13 also shows a layout for components, using either a fully perforated board, or a panel drilled to suit. Transformer T1 is fixed by screws. Small transformers of this type are usually wire ended, or have pins which pass down through holes in the board.

The wire ends of the resistors and capacitors are passed down through suitable holes, and bent over. The board is then turned so that the underside wiring can be carried out. In most places the wire ends of the components will be long enough to reach connecting points. Elsewhere, 24swg tinned copper wire, or similar connecting wire, will be used. Make the soldered joints as described, and snip off unwanted ends of wire. It is as well to leave the transistor to last, as this avoids heating it unnecessarily when soldering other items. Lengths of flex, anchored at holes in the board, are used for battery, key (or push) and speaker connections.

Multivibrator

Fig. 14 is the circuit of the multivibrator assembled in Fig. 2. Reference to Fig. 14B will show how this can also be prepared on a tag board.

The tag board has two rows of tags fitted to an insulated

board, and it is five tags long in Fig. 14B. Boards of this type can be obtained in many sizes. It is also easy to cut a section from a long tag board, to suit the needs of the item to be assembled. Such boards are very handy indeed for electronic assemblies, as the tags support resistors, capacitors and other items, and a neat layout is readily achieved.

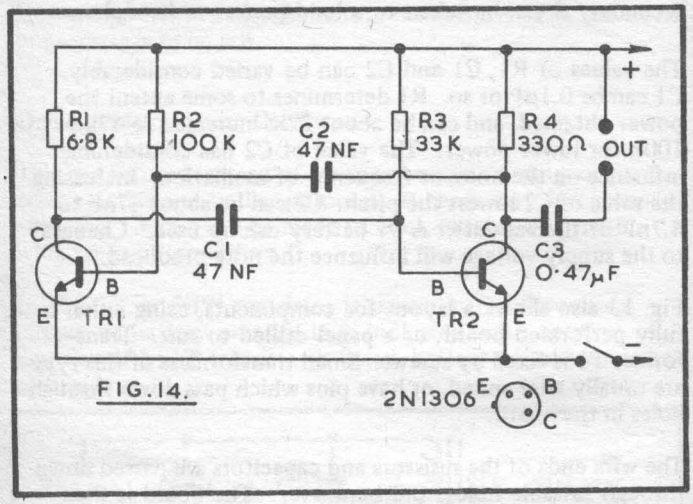

FIG.14.

Tag strips are also useful for projects, and may have any number of tags required. Long tag strips can be cut down as necessary. Short tag strips have one tag for mounting the strip, longer strips having two tags formed as brackets for this purpose.

Place the components approximately as in Fig. 14B, and solder the wires to the tags. If any component values may be changed, do not twist the leads tightly round the tags before soldering, or removal will be difficult.

Wires which cross can be kept clear of each other, and then no insulated sleeving will be necessary. The transistors can be soldered on last, and can readily be changed without disturbing other parts.

The same layout can be used for the next project, though the component values are different.

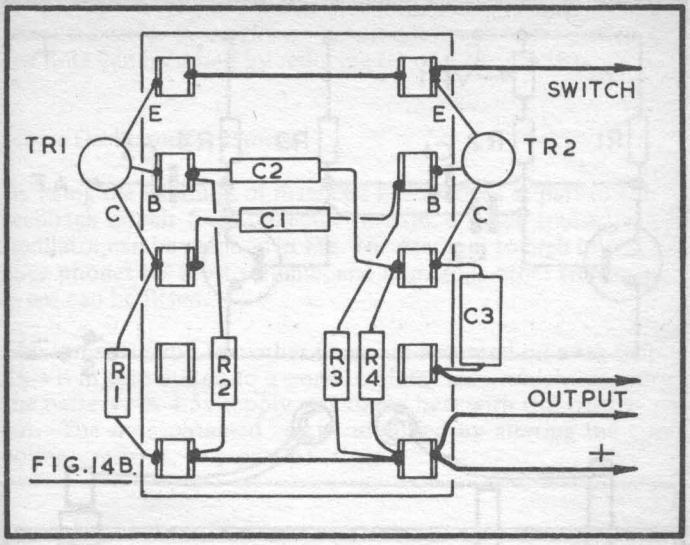

FIG.14B.

Glissade

This device will produce swooping, rising and falling tones, for "effects" purposes, or can with additional skill be used to obtain musical notes through several octaves. The circuit is shown in Fig. 15, and reference can be made to Fig. 14B for a practical layout on a tag board.

In Fig. 15, suitable component values are:

R1	10k	C1	22nF
R2	12k	C2	22nF
R3	100k	C3	22nF
R4	10k	VR1	100k linear pot.

Transistors: 2 x BC108 or similar types.

The circuit is a wide frequency audio oscillator, in which the pitch can be controlled by VR1, and "on" switching is obtained by S. The oscillator is placed in a box, so that switch S and VR1 can be mounted on the top. The switch is a strip of springy metal, fitted with a spacer and bolt, so that it is just clear of a further bolt. A small downwards movement of the arm or knob completes the circuit.

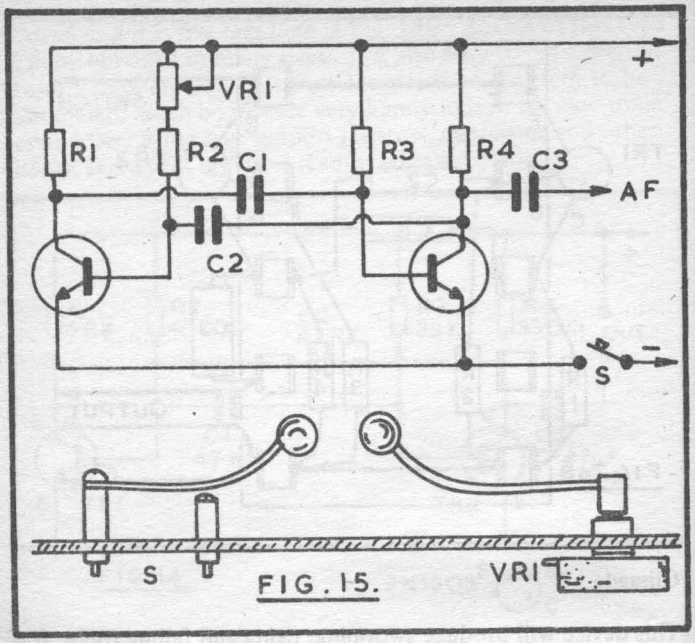

FIG. 15.

VR1 has a ¼ inch shaft coupler, into which is screwed a length of 4ba threaded rod. A knob is also fitted to the end of this rod. It can be swung backwards or forwards, to change the resistance of VR1. Connect VR1 so that movement of the knob towards the right raises the pitch.

Output from C3 can go to high resistance headphones, for amusement, but should be taken to an audio amplifier. Gain of the amplifier will have to be turned back somewhat, as the output from the glissade is at a quite high level.

Swooping tones are produced by holding down the switch S and swinging the control knob attached to VR1 from side to side. For notes which do not swoop to frequency, switch S must be released while VR1 is rotated. A slight quivering motion of the hand controlling VR1 will produce a vibrate effect. It is useful to have an ordinary switch in parallel with the knob control S, and to have the amplifier audio gain control near the left hand, so that fading effects can be produced as well.

About 4.5v to 9v can be used, this influencing volume. Should other transistor types give an unsuitable range of frequencies, the note can be raised by reducing C1 or C2 (or both).

Morse Oscillator for Phones

By using the windings of magnetic headphones as part of the feedback circuit from collector to base, a single transistor oscillator can be made as in Fig. 16. Medium to high impedance phones are most suitable, and numerous other transistor types can be fitted.

The transistor and few other items are mounted on a tag strip. This is in turn bolted to a small insulated box, which can carry the battery. A 4.5v supply was found best with this oscillator. The note obtained can be modified by altering the voltage, resistor, or capacitor values.

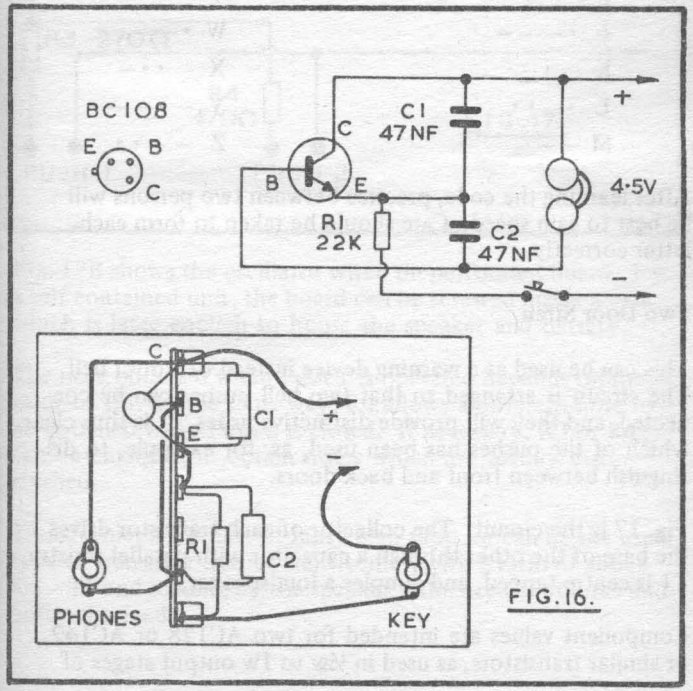

FIG. 16.

For serious code practice a good Morse key is required. It is adjusted so that only a small movement of the wrist is needed to operate it. Each letter consists of short and long sounds, shown as (•) and (–). The (–) has three times the length of the (•)

A	• –	N	– •
B	– • • •	O	– – –
C	– • – •	P	• – – •
D	– • •	Q	– – • –
E	•	R	• – •
F	• • – •	S	• • •
G	– – •	T	–
H	• • • •	U	• • –
I	• •	V	• • • –
J	• – – –	W	• – –
K	– • –	X	– • • –
L	• – • •	Y	– • – –
M	– –	Z	– – • •

After learning the code, practice between two persons will be best to gain speed. Care should be taken to form each letter correctly.

Two Door Siren

This can be used as a warning device instead of a door bell. The circuit is arranged so that two bell pushes can be connected, and they will provide distinctive notes. It is thus clear which of the pushes has been used, as, for example, to distinguish between front and back doors.

Fig. 17 is the circuit. The collector of each transistor drives the base of the other through a capacitor with parallel resistor. T1 is centre tapped, and couples a loudspeaker.

Component values are intended for two AC128 or AC142, or similar transistors, as used in ½w to 1w output stages of

receivers and small amplifiers. Other transistors will of course operate in this circuit. The pitch obtained can be modified by changing C3. The circuit shown is for PNP transistors, and battery polarity has to be reversed for NPN transistors.

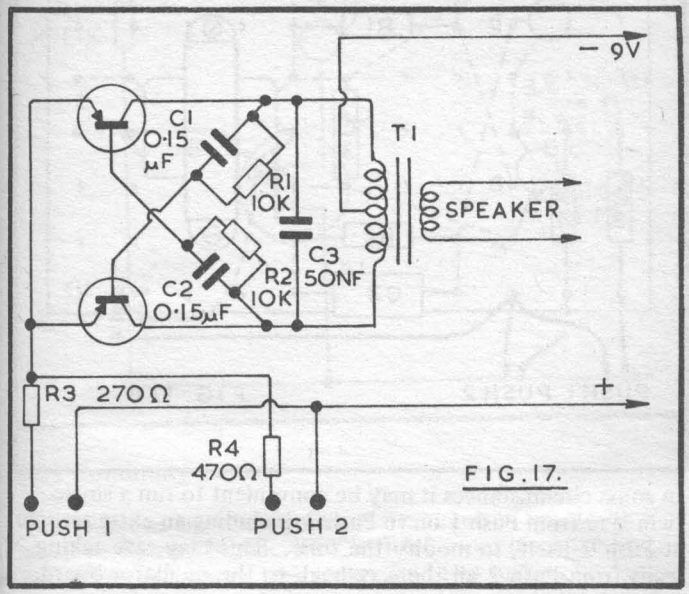

FIG.17.

Fig. 17B shows the oscillator wired on perforated board. For a self contained unit, the board can be screwed inside a case which is large enough to house the speaker and battery.

The note obtained when Push 1 is operated depends on the value of R3. In the same way, R4 allows a different note to be obtained when Push 2 is closed. If necessary, R3 or R4 can be changed, to obtain notes which are readily distinguished.

Transformer T1 is best of fairly high ratio, or can be the usual type of transistor output transformer, with a ratio of about 8:1. T1 and loading by the speaker influence the volume and notes obtained.

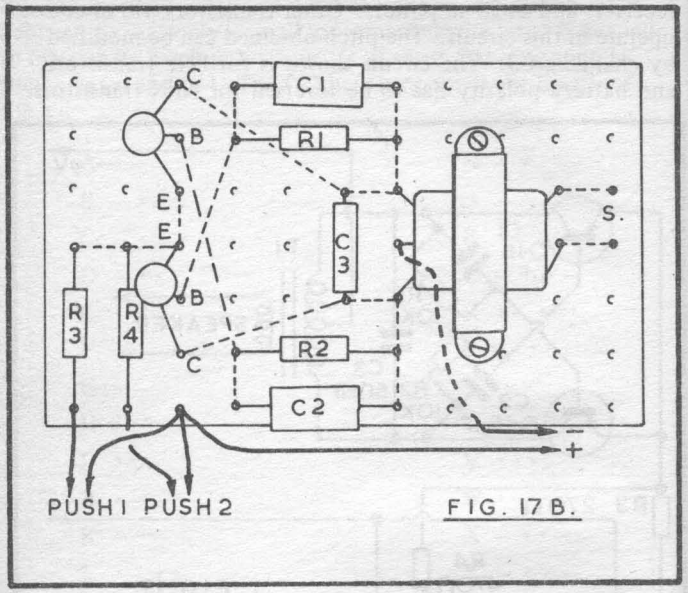

FIG. 17 B.

In some circumstances it may be convenient to run a single twin lead from Push 1 on to Push 2, including an extra resistor at Push 2 itself, to modify the tone. This may save taking leads from Push 2 all the way back to the oscillator board.

UJT Oscillator

The uni-junction transistor is a device having emitter, Base 1, and Base 2, Fig. 18. B2 receives positive bias, in this case through the headphones. When forward bias on the emitter E is reached the UJT conducts.

In Fig. 18, the emitter potential rises as C1 charges through the resistor R1. When the UJT conducts, C1 is discharged, and the process is repeated. This can take place over a very wide range of frequencies, depending on the values used for R1 and C1. Here, these are chosen to produce an audio tone.

A battery supply of 3v to 9v will be convenient. For use of the UJT oscillator during code practice, place the key in one battery lead.

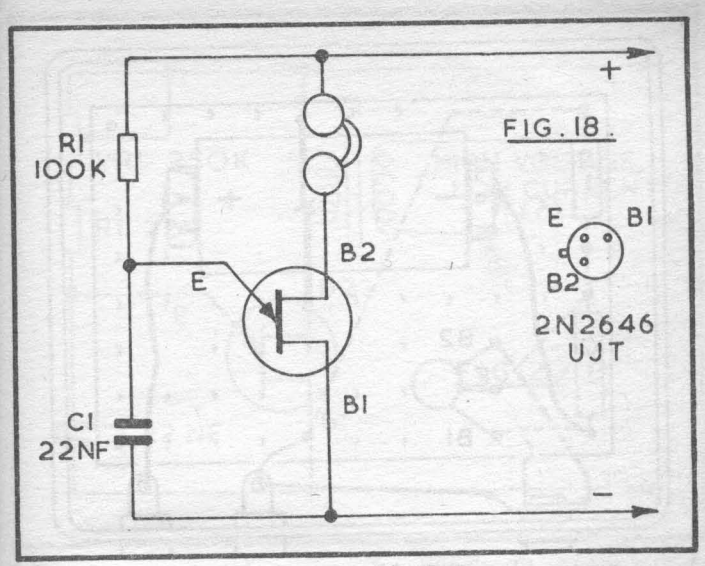

FIG. 18.

UJT Continuity Tester

Fig. 19 shows actual assembly of the circuit in Fig. 18 on a small perforated board. This is fitted in an insulated box, which carries a phone jack socket, and two sockets for Morse key or test leads. A 9v battery is used, secured with string or elastic.

For continuity tests, take prods or clips on the test leads to the suspected item. If the circuit is in order, the UJT oscillator will produce an audio tone. Oscillation will be obtained with a series resistance between the prods of up to 20k or more, so various components can also be tested, and some idea of the resistance in circuit can be gained from the sound obtained. The tester can also be used to check bulbs, lamps, fuses, extension and other leads, and similar items – these must of course be removed or disconnected from the equipment, before being tested.

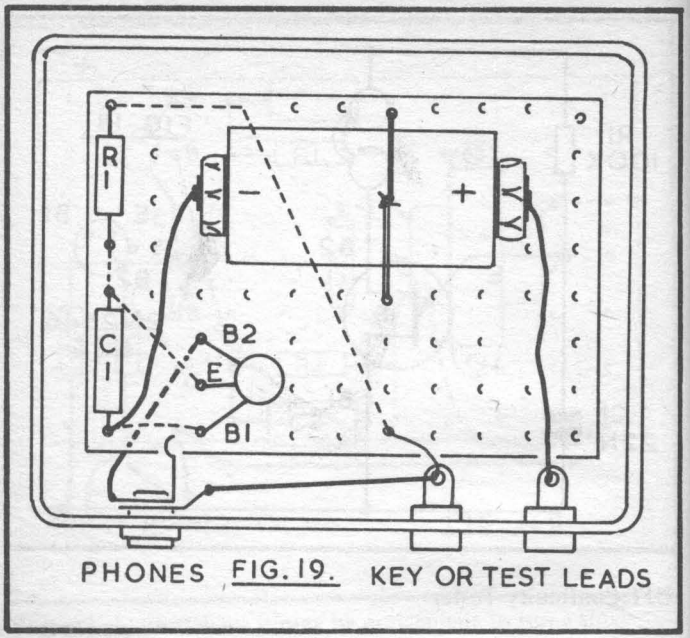

FIG. 19.

UJT High Voltage Producer

The UJT oscillator can be used to produce a high voltage, at very low current, by connecting a transformer as in Fig. 20. A loudspeaker transformer, as would be used in valve equipment, is suitable, and will have a ratio of about 45:1 or so. The usual secondary, or low-resistance winding, is connected to B2 and positive, so that a step-up of voltage is obtained. This should be found to light a small neon lamp.

VR1 is fitted to allow some adjustment, to find the most suitable frequency of oscillation. For maximum possible high voltage output, if required, operating voltage and current should be raised. No rating of the UJT must be exceeded. For the 2N2646, the supply should not exceed 30v, emitter current should not be over 50mA, and dissipation of power in the device should not be more than 300 milliwatts. (Dissipation can be found from Voltage x Current.)

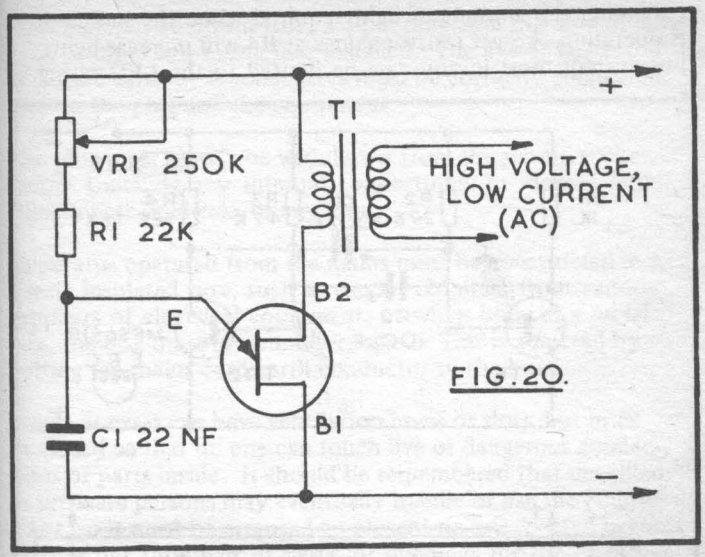

FIG. 20.

A small mains transformer can be used for T1, with a low voltage winding, such as that for a 6.3v heater circuit, as primary, and the 200/250v winding as secondary. The high voltage output is alternating current.

Signal Blinker

Fig. 21 is a multivibrator in which the feedback capacitors C1 and C2 are of high value, so that conduction alternates between TR1 and TR2 at a low rate. A light emitting diode is placed in the collector circuit of TR2, and so flashes on and off.

This device can be used for various instruments and other equipment, and a flashing indicator draws attention to a greater extent than does one continuously illuminated. The LED can be located at any required point, with leads running to it.

Transistors other than the types shown can be utilised. R4 can usually be about 150 ohm for a 3v supply, 470 ohm to 1.2k for 6v, or 680 ohm to 1.5k for 9v. This depends to some

extent on the amount of light required when the indicator is operating. Lower resistor values at R4 will increase light, but current must in any case be limited to the LED rating.

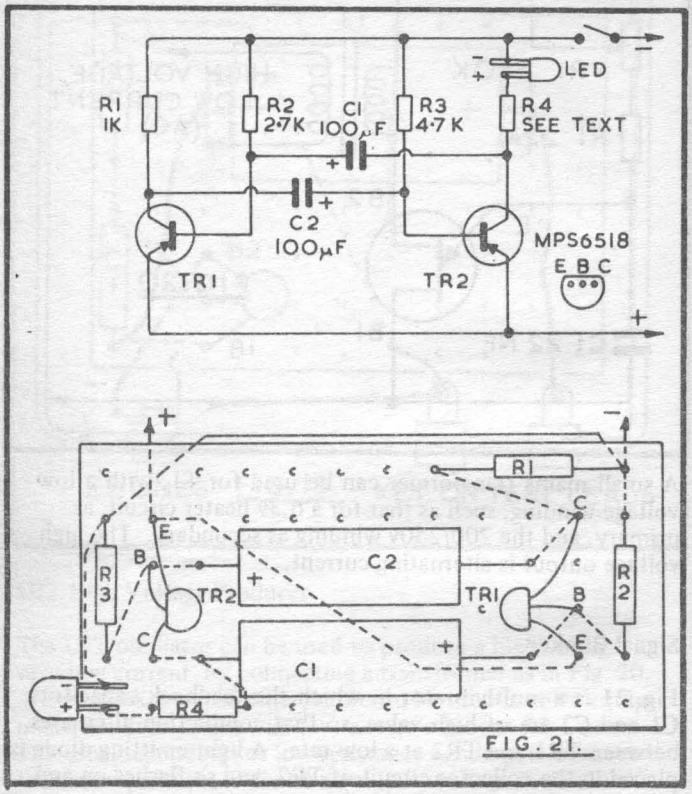

FIG. 21.

C1 and C2 need only be 6.4v working, and the device can be assembled on a very small perforated board. See p.61 for LED polarity.

Mains Wiring

All the devices described so far have operated from low voltage batteries, so than no shock hazard exists with them. However, it is necessary to employ mains power for some units, and proper care must then be taken to avoid any danger.

Power should be drawn from a 3-pin plug, and this should have a 3A or other low rating fuse installed. The live or L, neutral or N, and earth or E conductors must be correctly connected, both at the plug and the equipment.

The plug must always be withdrawn from the supply socket, before touching any internal connections, or making any adjustments or checks of any kind.

Apparatus operated from the mains must be constructed in a strong insulated box, such as can be obtained from various suppliers of electrical equipment; or when built in a metal box, the box must be soundly earthed. This is achieved by bolting the mains cord earth conductor to the box.

Boxes or cases can have ventilation holes or slots, but must be closed so that no one can touch live or dangerous connections or parts inside. It should be remembered that unskilled or unaware persons may eventually handle or use the equipment, so it must be arranged to present no unexpected hazards such as live terminals or parts, or openings for the fingers.

If these points are remembered, mains operated equipment can be safe to use and handle. No switch or other means of interrupting the circuit is put in the earth conductor, and any switch or equivalent device is placed in the live or L conductor. This leaves both earth and neutral permanently connected, for maximum safety.

Dimmer/Heat Control

It is often convenient to dim a filament lamp, or reduce the heat of a soldering iron to be left on for long periods, or the power of a low wattage heater. The silicon controlled rectifier circuit in Fig. 22 can be used for these purposes.

When the switch marked "Full" is closed, current for the load passes through this, so that full power is obtained.

When this switch is opened, current passes through the SCR. This device conducts only when the gate has been triggered, and the instantaneous point in the alternating current cycle

where this arises is determined by the setting of the potentiometer VR1. Triggering is advanced as the wiper of VR1 is moved towards R1. The average power supplied to the load can thus be adjusted between wide limits. Since the device is operating as a half wave controller, full power is not obtained with VR1 at maximum, so the switch is closed as described.

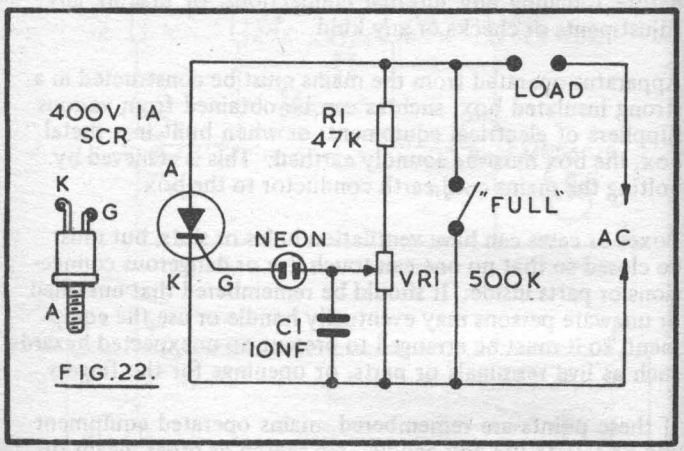

FIG.22.

Fig. 22B shows construction of the SCR controller in a metal box. The front of this carries a socket outlet, and the mains cord has a 3-pin plug, wired as explained earlier. It is thus easy to plug the controller into an outlet, and insert the plug of the lamp or other item to be used in the new outlet.

The mains cord is secured with a clamp, and passes through an insulated grommet. The tag strip supporting the small items is mounted by an unused tag. A strip of metal is cut to clamp round the body of the SCR, and is soldered to one tag, as shown. Run earth and neutral leads from the cord up through a hole, and connect them to the E and N terminals of the socket outlet. Also earth the case, at E. A well insulated wire runs from the L terminal of the outlet, to the "Full" switch. The outlet can be secured with bolts and nuts.

R1 should be 1 watt, and C1 is a 500v capacitor. The neon is a small type as used for indicators, etc.

After checking that the controller operates correctly, the back

of the box should be screwed in place. A suitable size is about 4 x 5 x 2 inch deep.

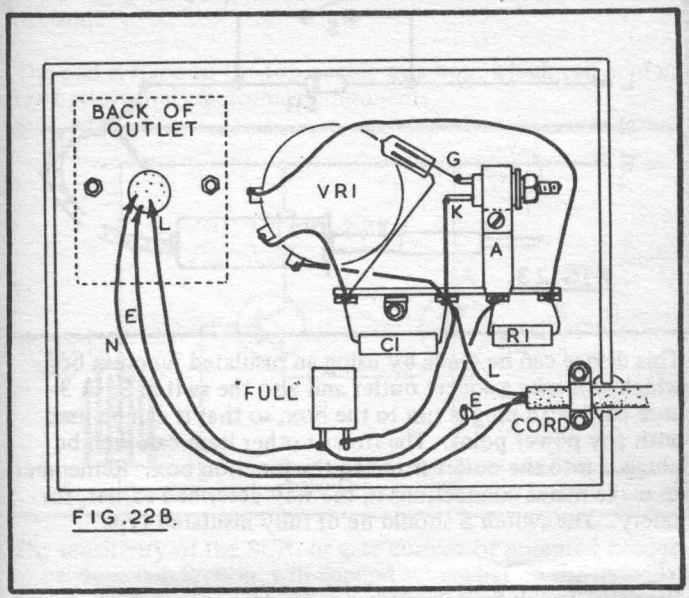

FIG.22B.

If a fully insulated box is used instead, then the bush of VR1 and of the switch should both be earthed by wires, except when these items are constructed wholly with insulated material. (This precaution is necessary to avoid any chance of metal parts outside the box becoming "live".)

Two Power

A circuit which will allow half or full power can be useful to reduce the heat of a soldering iron, or for dimming a filament lamp.

Fig. 23 is an easy circuit of this type. Full power is obtained when the switch S is closed. With S open, the silicon rectifier allows current to flow in one direction only, so that power is approximately halved. A 600v 1A or 1000v 1A rectifier is suitable.

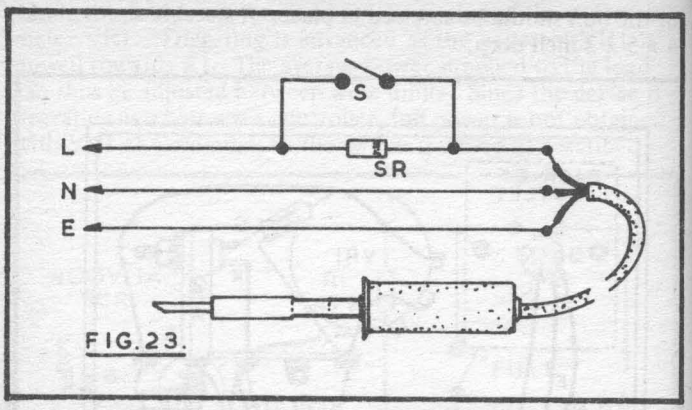

FIG. 23.

This device can be made by using an insulated junction box which will take a socket outlet and also the switch S. A 3-core cord with plug is run to the box, so that it can be used with any power point. The iron or other item can then be plugged into the outlet fitted to the junction box. Remember to make mains connections in the way described earlier, for safety. The switch S should be of fully insulated type.

Sensitive Touch Switch

In Fig. 24, finger contact with the touch pad switches on a low voltage bulb. This circuit is suitable for a battery operated portable bedside light, and for some other devices.

Normally the silicon controlled rectifier is not conducting, so the lamp is extinguished. Finger contact with the pad provides positive base bias for the transistor so that it conducts. This moves the transistor emitter and SCR gate positive, triggering the SCR. Current then flows from cathode K to anode A, and through the bulb. The SCR remains in the conducting condition until the battery circuit is interrupted by opening the switch. A push switch, normally closed, is most suitable here. Pressing it then switches off the bulb.

This touch pad is easily made from a piece of circuit board with foil strips. It can be about 2 x 1 inch, or of any convenient size. Join together alternate foils – e.g., 1, 3, 5 and 7 – by

soldering a connecting wire through the holes. This will provide one connection to the pad. The other foils – 2, 4 and 6 – are similarly joined together for the other pad connection.

The pad is fixed to the top or side of a box, which can contain the battery and electronic components.

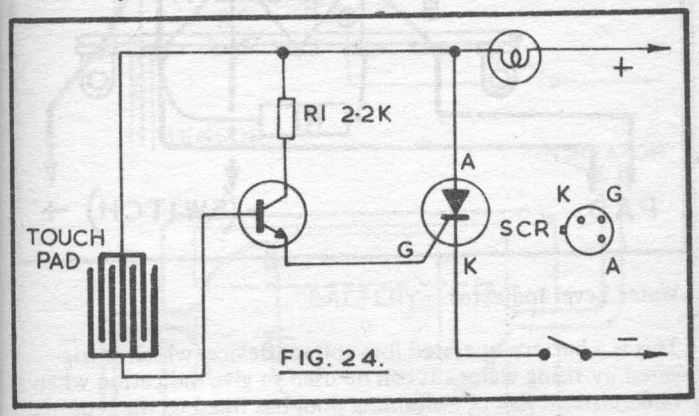

FIG. 24.

The sensitivity of the SCR, or gate current or potential needed to produce conduction, will depend somewhat on the individual device, while the gain of individual transistors will also be different. Numerous NPN types are suitable. If it is found that the switch is too sensitive, this can be corrected by placing a resistor from transistor base to SCR cathode or negative line. This resistor can be about 470k to 1 megohm or so. Excessive sensitivity will be apparent if the circuit is switched on by dust, damp air, or similar effects. The pad should be kept clean by wiping it with a dry cloth.

Fig. 24B shows assembly of the components on a tag strip. A small 50v 1A SCR is more than adequate. The bulb can be a screw in type, and can be 6.3v 0.15A, or 6.3v 0.3A. A 6v 3W (0.5A) bulb is also suitable, provided the battery is fairly large.

It is convenient to make a wooden box which will take the battery, and leave a little space for the tag strip assembly.

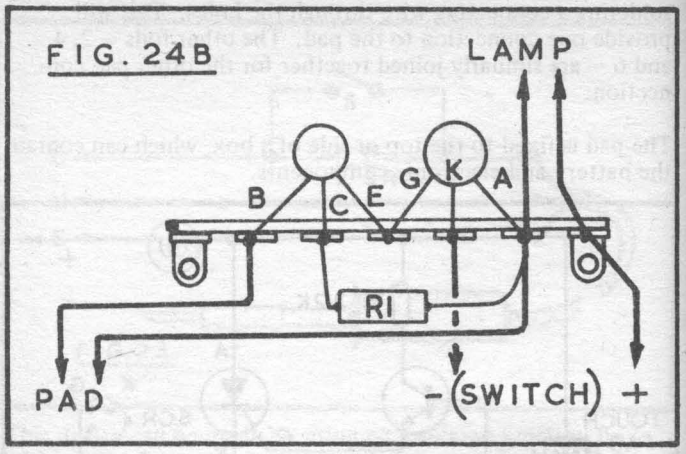

Water Level Indicator

This is a battery operated low voltage device, which is triggered by rising water. It can be used to give indication when a tank, cistern, fish or swimming pool has filled to the required level.

Fig. 25 shows the circuit, and also assembly on an insulated board. This also carries the battery, and it is fitted in a metal or plastic box.

In use, the base normally has no positive bias, as the sensor passes no current. When water reaches the sensor, it conducts, and the transistor passes collector current, to operate the indicator. R1 limits base current.

This circuit will operate satisfactorily with a wide range of PNP or NPN transistors, but battery polarity must be reversed for the PNP types.

The indicating or warning device can be one of the multivibrator or other audio oscillators shown earlier. These will give an audible warning, and will draw only a small current, so that a large transistor is not required.

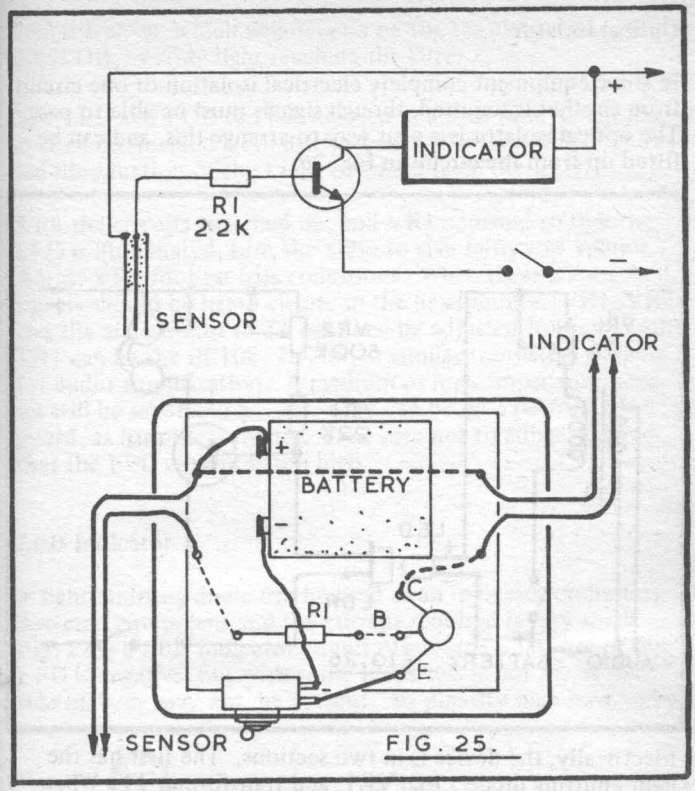

FIG. 25.

For indoor use or in a location protected from rain, the sensor can be two bare wires, about ¼ inch apart, bolted to a strip of insulated material. Where rain could operate the device, it needs to be covered. Alternatively, it can be made from a piece of metal tube, with a central wire, as in Fig. 25. The wire is bound with insulating tape for about half its length, to fit tightly in the tube. Flexible leads are soldered on, and the joints covered with tape. The sensor can be suspended inside the tank or pool, with its bottom at the required water level.

If the transistor is a high gain one, so that damp operates the indicator, sensitivity can be reduced by connecting a 100k resistor from base to emitter.

Optical Isolator

In some equipment complete electrical isolation of one circuit from another is required, though signals must be able to pass. The optical isolator is a neat way to arrange this, and can be fitted up from the circuit in Fig. 26.

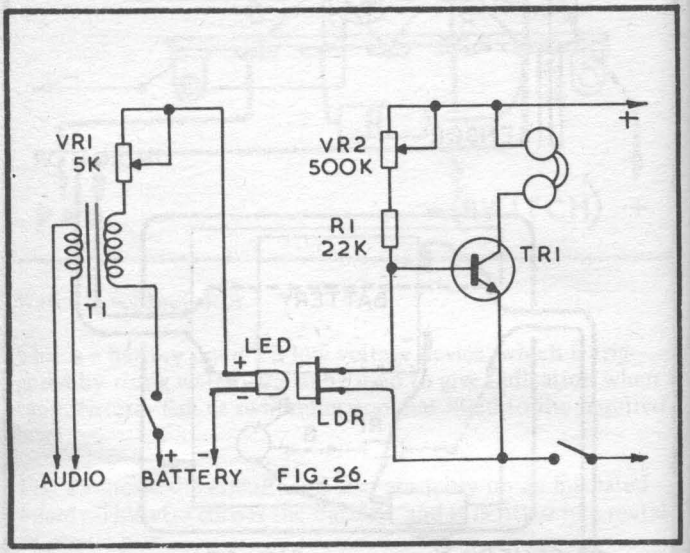

FIG.26.

Electrically, the device is in two sections. The first has the light emitting diode LED, VR1, and transformer T1. When the battery is switched on, current flowing through the LED is adjusted by VR1, so that the LED glows dimly. A signal voltage in the secondary of T1 then modulates the LED light intensity.

To operate this circuit from a radio having a 2/3 ohm or similar speaker, a speaker matching transformer with a ratio of about 45:1 can be used. (The actual ratio is not very important.) Connect the usual transformer secondary to the radio speaker, so that T1 provides a step up effect.

The second part of the equipment has the light dependent resistor LDR, forming part of the network providing TR1 with base bias. VR2 allows adjustment of conditions for best

amplification, which will depend on the transistor, and also the LDR, or stray light reaching the latter.

The LED and LDR can be enclosed in a card tube, or should at least be shielded from light, which will swamp the modulated illumination of the LDR, obtained from the LED.

With the circuits switched on, and VR1 adjusted so that the LED is illuminated, turn the radio to give fairly low volume. Adjust VR2 for best bias conditions. When these are reached, signals should be heard clearly in the headphones. VR1, VR2 and the audio input to T1 can then be adjusted for best results. TR1 can be the BC108, 2N706, or similar transistors suitable for audio amplification. A medium or high impedance headset will be satisfactory. Assembly can be on a perforated board, as for other circuits. Take care not to adjust VR1 so that the LED current is too high.

LED Indicator

A light emitting diode can be used as an indicator on battery powered equipment and the current required is very small. Fig. 27 is a LED indicator circuit. Here, the long wire of the LED is negative, but with some LEDs this is not so. A flat side may, or may not, be present. So polarity may have to be

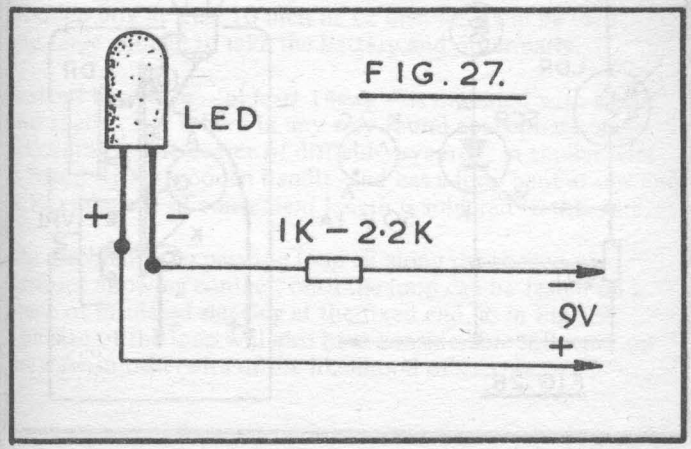

FIG.27.

found by trial – the correct connections are those allowing the LED to light. The series resistor may be about 150 ohm to 1k or more, depending on the actual voltage, and brightness required. Current drawn varies with different LEDs, and with voltage and series resistance, but can be about 5mA or less, without reducing the brightness too far.

The LED indicator with resistor is connected to the circuit where voltage is present when the equipment is on. LEDs are available in red, yellow, green and other colours, with grommets or clips for panel mounting. Different circuits may be identified by a range of colours.

"Magic Candle"

The triggering of a silicon controlled rectifier can be used for slave photoflash and similar purposes. In Fig. 28 it is employed to switch on a light when a match or lighter is brought near. Sensitivity is best in somewhat subdued light, and it will then be found that striking a match at some distance can bring on the light.

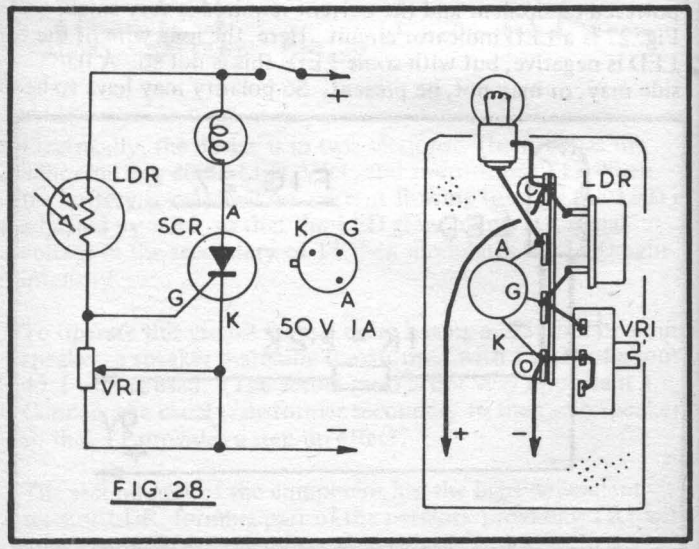

FIG.28.

The LDR has a high resistance when in darkness or subdued light, so that the gate potential of the SCR is not sufficiently high to trigger this device. When light reaches the LDR, its resistance falls, and the SCR gate voltage rises. The SCR then moves into its conducting condition, so that current flows through the bulb. The sensitivity of the circuit, or level of illumination needed to trigger the SCR, is set by VR1.

Components can be assembled on a small tag strip. This, with a battery, can occupy a tubular case, with the lamp on top. An opening is necessary opposite the LDR, and a hole is also made so that VR1 can be adjusted with a screwdriver. Here, a miniature pre-set 50k or 100k linear potentiometer is most suitable. It is necessary to have a small push switch to interrupt the battery current, as the SCR remains in the conducting condition until the circuit is momentarily broken. A 6V battery and bulb can be used. SCRs may fail to operate at all if attempts are made to use them with extremely low voltages, such as a single 1.5v cell.

"Nerve Tester"

This device tests the nerve, concentration, and steadiness of hand, and always provides amusement.

Connections and construction will be seen from Fig. 29. A wooden box at least 10 inch or 12 inch long will be used, and large enough to take the battery and other parts.

A stout bare wire – at least 14swg – is mounted with a bolt and spacer, and is bent in any way found appropriate, and according to the degree of difficulty wanted. A similar wire is fitted with a wooden handle, and has a loop bent at one end. A flexible lead of convenient length is soldered to this wire.

The problem is to pass the loop all along the shaped wire, without allowing contact, until the loop can be rested on a piece of insulated sleeving at the fixed end, as in Fig. 29. The size of the loop will also have considerable influence on the ease or otherwise of the likelihood of success.

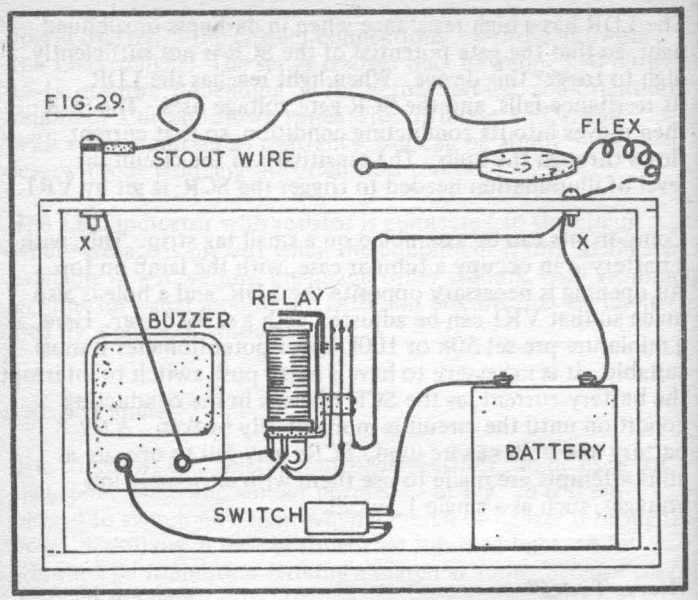

If loop and wire touch, current flows from the battery to the buzzer, which sounds. Current also flows to the relay winding, so that the relay contacts close. Even a momentary contact between loop and wire will thus cause the buzzer to sound until the switch is used to break the circuit.

Any 4.5v, 6v or similar battery and buzzer will be satisfactory, with a relay which operates on a similar voltage. Connections are to the relay contacts which remain open until the relay is energised.

In use, the device can stand upright. A back is attached with small screws.

Burglar Alarm

The same circuit arrangement as in Fig. 29 will provide a burglar alarm operated by pressure mats. The latter are available in various sizes, and consist of a thin pad which can be placed under a carpet or ordinary mat.

Leads from the mat or mats will run to the terminals at X–X. The buzzer should be changed for a bell, which need not be fitted in the box, but can be situated where it is best heard. Momentary weight on any of the mats will then switch on the bell, which will be locked on by the relay as described, and will ring until the unit is switched off.

Transistor Tester

A very useful check of transistors can be made with the aid of a multi-range test meter, with a selection of base resistors to provide base current, as in Fig. 30. This method does not give an exact indication of transistor gain, but it does allow defective transistors to be eliminated, and provides a good idea of the performance to be obtained from surplus or other unknown transistors.

A 6-way switch allows the base to be open circuit, or to receive current through one of the resistors R1 to R5. These values are R1 330k, R2 110k, R3 33k, R4 11k and R5 3.3k. After allowing for the base-emitter potential, switch positions and corresponding base currents are near the following: 1, zero; 2, 10μA; 3, 30μA; 4, 100μA; 5, 0.3mA, and 6, 1mA.

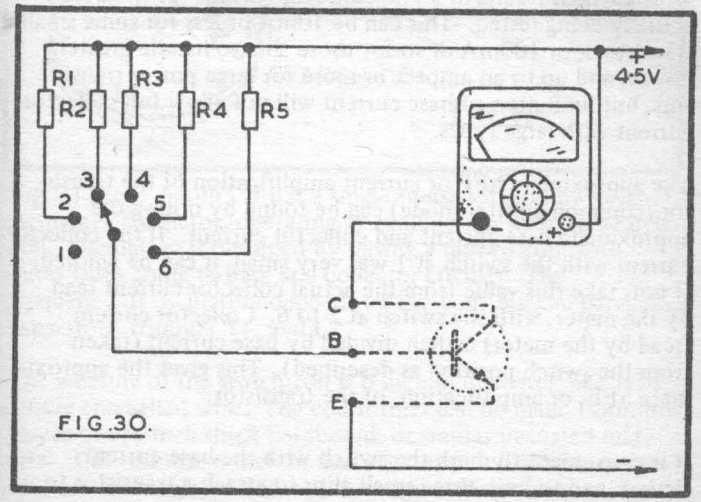

FIG.30.

Polarity is shown for NPN transistors. Reverse polarity of both meter and battery for PNP transistors.

For all tests, initially set the switch to 1, and the meter to its highest range (say 1 ampere). Afterwards, switch the meter to a lower range, after adjustment of the 6-way switch, as may prove to be necessary to obtain an easy reading.

With the switch at 1, a high reading on the meter shows that the transistor has a short circuit from emitter to collector, and is defective.

With germanium transistors, collector current (with the switch at 1) may be 0.1mA or so up to perhaps 0.5mA for small types, and up to some milliamperes for larger types. This small leakage current does not show that the transistor is defective.

In the case of silicon transistors, the leakage current (with switch at 1) will be zero or extremely small, if the device is in good condition.

The switch is then turned to one of the positions 2 to 6. If collector current does not rise, the transistor is defective. If current rises at each step, do not go beyond the switch setting which results in a safe collector current for the device actually being tested. This can be 10mA or less for some small transistors, or 100mA or so for those able to handle greater power, and up to an ampere or more for large power transistors, but limitation of base current will not allow full collector current with large types.

The approximate hFE or current amplification of the transistor (common emitter mode) can be found by noting the approximate base current and collector current. If the collector current with the switch at 1 was very small, it can be ignored. If not, take this value from the actual collector current read by the meter, with the switch at 2 to 6. Collector current (read by the meter) is then divided by base current (taken from the switch position as described). This gives the approximate hFE, or amplification, of the transistor.

It is convenient to mark the switch with the base current figures, and to have three small clips to attach a transistor to

the circuit. Switch, clips, and battery can all be fitted to a small box. A development of the circuit would be to include a current meter, with switch and shunts, to replace the external general purpose test instrument.

Treasure Locator

This locator is among the simplest that can be constructed, as it uses an ordinary small portable radio as part of the detection circuitry. No modifications or connections to the radio are needed.

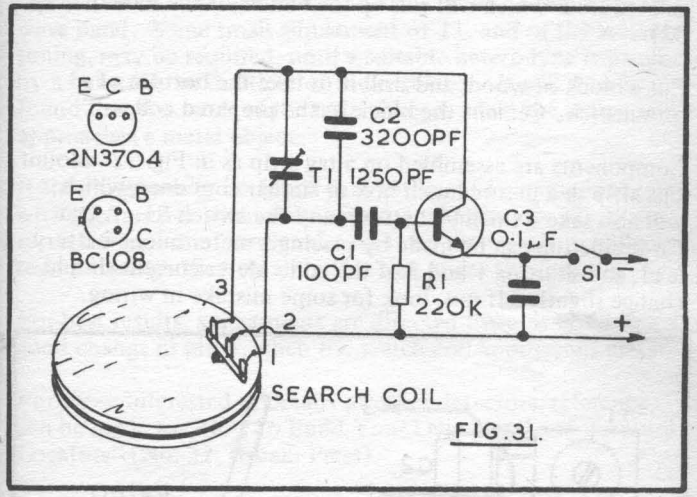

FIG.31.

Fig. 31 is the circuit. It has a single transistor as a low radio-frequency oscillator, operating in conjunction with the search coil. Oscillation is obtained by having a tapped coil, with outer leads going to base and collector circuits. The frequency of oscillation depends on the coil, and the parallel capacitors, trimmer T1, and C2.

The winding of the search coil is 6 inch in diameter, and is of 34swg enamelled wire. The coil former can be made from three pieces of 1/8 inch thick hardboard, or similar insulated material. Cut one disc 6 inch in diameter, and two others about 6½ inch in diameter. Smooth the edges with glasspaper, and

cement them securely together, with the small disc between the larger discs. This provides a former with a channel to take the winding. The adhesive should be allowed to dry with the discs under pressure, so that there is no gap into which turns can fall. The former should also be varnished, and allowed to dry, before winding.

The wire is passed up through a small hole, this being point 1. Wind on fifteen turns. Make a loop and pass this up through a hole, for point 2. Wind a further twenty-five turns in the same direction, finishing off at point 3. These leads are scraped and soldered to a small tag strip. This is an anchor point for insulated leads which will run up the handle of the locator (Fig. 32).

Cut a block of wood, and drill it to take the bottom of a broomstick. Cement the block to the prepared coil.

Components are assembled on a tag strip as in Fig. 32. Mount this strip in a plastic lunch box or similar container, which will also take a small 9v battery, and the switch S1. A test for oscillation can be made by placing a meter in one battery lead, and shorting 1 and 3 of the coil. Meter current should change slightly. If not, look for some mistake in wiring.

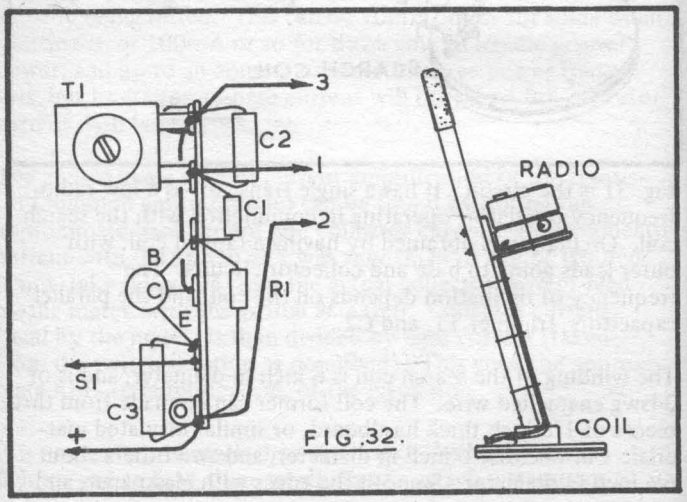

FIG.32.

A shelf is bolted to the handle, and the detector rests on this, with connections passing down to the search coil. A few loops of tape or string will secure these to the handle.

Operation in Great Britain can be on frequencies under 100kHz. Initially tune the radio receiver to 200kHz on long wave, and place it near the coil. Adjust T1 until a strong whistle is heard in the receiver speaker. This is the 2nd harmonic of the oscillator. T1 is then screwed down very slightly from this position.

The small portable radio is placed on top of the locator box, and can be held here with elastic. It is tuned to the medium wave band. Some small adjustment of T1, and of the receiver tuning, may be required, until a suitable heterodyne is produced by a harmonic or multiple of the oscillator. It will then be found that the pitch of the note changes when the search coil approaches a metal object.

It should generally be found that sufficient coupling is obtained with the receiver when they are situated as in Fig. 32. If not, run a few inches of insulated wire from the transistor collector tag up through the box and place this under the receiver.

For best results, adjustments are directed towards obtaining a good change in pitch, when the search coil approaches metal.

For those interested in details of other detectors, reference can be made to "How to Build Your Own Metal and Treasure Locators" (No. 32, Babani Press).

SECTION 3
RADIO AND AUDIO FREQUENCY

MW Booster

This unit can be employed in conjunction with any ordinary portable having a ferrite rod aerial, and will provide a considerable increase in range and sensitivity to weak signals. It has two functions – to allow the use of an external aerial and earth, and to amplify and couple signals to the portable receiver.

Tuning coverage is for medium waves. That is, about 200–550 metres, or 1500–550kHz. Many overseas and other stations can be picked up on this band, and distant reception can be particularly common on the higher frequencies, during the hours of darkness.

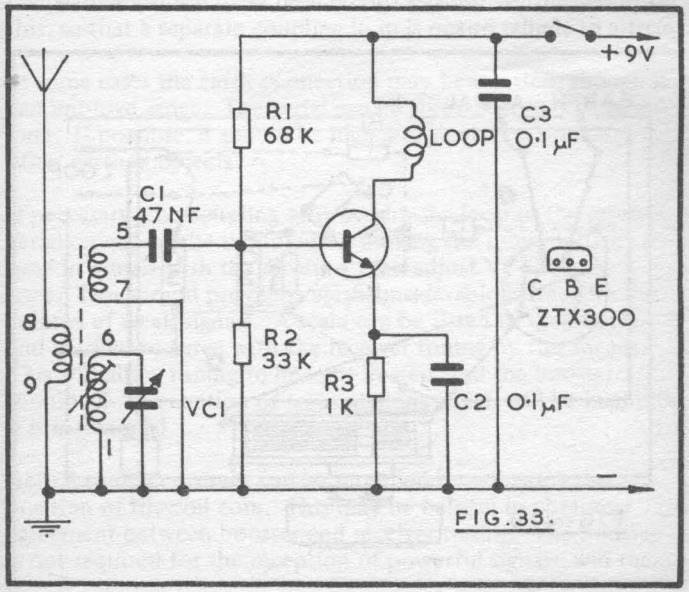

FIG.33.

Fig. 33 is the circuit, and it uses a cored tuning coil with aerial coupling winding 8–9, tuned winding 6–1, and base coupling coil 5–7. These numbers are for the pins of the Denco (Clacton) "Blue" Range 2 component. It will be apparent that other coils, or surplus or home-wound inductors, can be substituted.

For the coil mentioned, VC1 is 315pF. However, this value is not too critical, provided the capacitor fitted allows tuning the wanted frequencies. A solid dielectric capacitor can be used, though the air spaced type is likely to be a little more efficient.

Coupling to the base is by C1, and resistors R1 and R2 set the base bias conditions, with R3 for emitter bias. These values will suit numerous RF transistors.

Fig. 33B shows assembly of the components on an insulated board. The coil is mounted by its threaded bush. When the board has been wired, it can be mounted by means of bolts with extra nuts. The case is preferably metal, for screening purposes, but the booster can be used satisfactorily with a plastic or similar box.

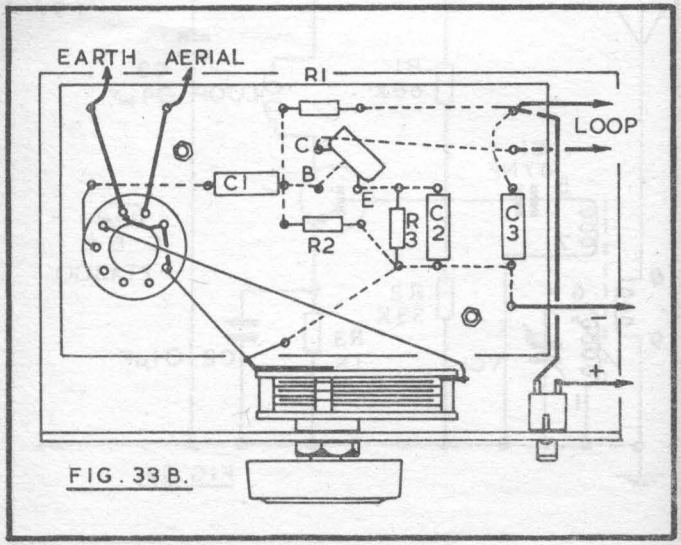

FIG. 33 B.

Fit a small slide switch to the box front, and aerial and earth sockets to the back, near the coil. A 9v battery is accommodated in the case.

Coupling to the transistor receiver is by means of a loop which is placed on the receiver ferrite rod, or near the rod. The loop can be about twenty turns of thin insulated wire, about ½ inch in diameter, and bound with cotton to keep the turns together The ends can be left long enough to reach the two connecting points in Fig. 33B.

If the case is metal, the booster and receiver can be near each other, so the loop leads will only need to be a few inches long. But when an insulated case is used, coupling from the receiver ferrite aerial or other circuits, to the booster coil, may cause instability. This will become apparent as whistles accompanying most signals. If this arises, the booster and receiver should be moved some inches apart. The aerial lead must not run near the loop connections.

Some receivers have an internal winding which is intended to couple an external aerial, and it may be possible to connect to this, so that a separate coupling loop is not required.

In some cases the earth connection may be omitted, though it can improve range. The aerial can be some 20ft to 40ft or so long. If possible, it should be high and clear of walls and other earthed objects.

If necessary, the coupling afforded by the loop to the receiver aerial circuit can be modified by moving the loop. Initially, tune in signals with the receiver, then adjust VC1 for resonance. This should provide a very considerable increase in the volume of weak signals. A scale can be fitted to the booster, and marked to agree with the receiver tuning by this means. This will allow tuning to be kept in step, and the booster should allow reception of transmissions which will be inaudible if it is removed.

Actual tuning coverage can be modified by adjusting the position of the coil core. This may be helpful in obtaining agreement between booster and receiver tuning. The booster is not required for the reception of powerful signals, and the

receiver automatic gain control circuit will tend to mask any increase in signal strength obtained with such transmissions.

Midget MW Diode Radio/Tuner

A small, compact tuner can be of utility in allowing radio reception through an amplifier, and a diode receiver can give excellent quality of reception. Such a unit can also be employed alone, with headphones, for personal listening.

Fig. 34 is a receiver/tuner which can be built in a very small plastic or other insulated box. VC1 is a compression type trimmer, fitted with a small knob for adjustment by hand. To do this, it is necessary to remove the short screw (generally 6ba) and replace this with a longer one, which projects to take the knob. The latter can be a terminal head, or the cap from an empty tube of adhesive, secured with lock nuts.

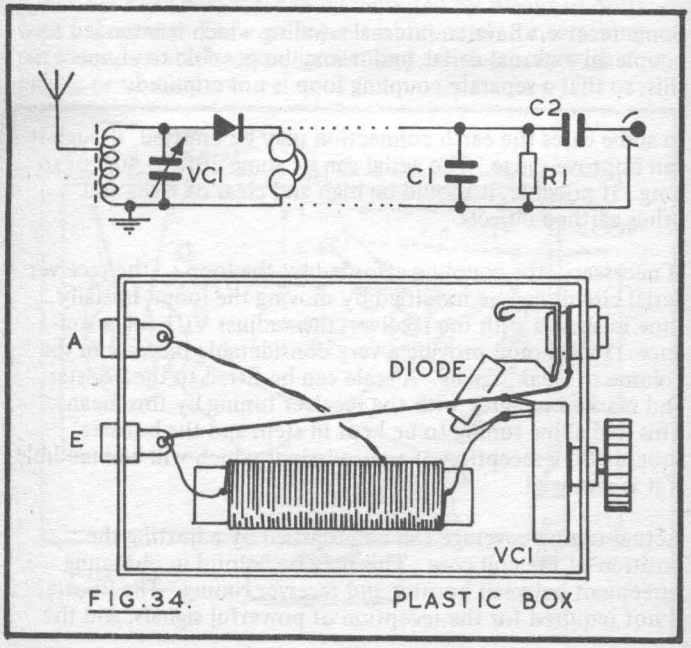

FIG.34. PLASTIC BOX

For best efficiency and small size, the tuning coil is wound on a piece of ferrite rod. It consists of seventy turns of 24swg or similar enamelled wire, on a rod about 1½ inch long and 3/8 inch in diameter. Actual details will not be critical. A piece can be obtained from a longer rod by cutting a notch round the rod with a file and snapping at this point with the fingers. A few touches of adhesive will hold the ends of the winding secure. The loop for the aerial connection is about one-third the total number of turns from the diode end of the coil. (Moving this tapping towards the earthed end of the coil will increase selectivity or sharpness of tuning, but reduce volume.)

Aerial and earth sockets, and a 3.5mm jack outlet, complete the receiver. Headphones can be plugged directly in here.

The aerial and earth can be provided as explained for the diode radio in Fig. 7.

To use the radio as a tuner, C1, R1 and C2 may be added. Suitable values are C1 470pF, R1 220k, and C2 0.25μF. A screened lead with jack plug should be made up to connect the tuner to the amplifier input socket.

One Transistor VHF Receiver/Converter

The super-regenerative receiver is well known for its great sensitivity, which equals that of a multi-stage superhet. It has no alignment difficulties, and few components, so is an interesting project. Its main disadvantages are its background hiss, but this ceases when a signal is tuned in, and its lack of selectivity. The latter is however relatively unimportant on the VHF bands. The circuit here is particularly intended for 2m reception, but is easily modified. It is not intended for FM signals.

In Fig. 35 the detector is a VHF FET, and the field effect transistor will be found very satisfactory in circuits of this kind. T1 is the pre-set tuning capacitor, which allows adjustment over a fairly wide band of frequencies. Tuning is by VC1, which does not require a reduction drive.

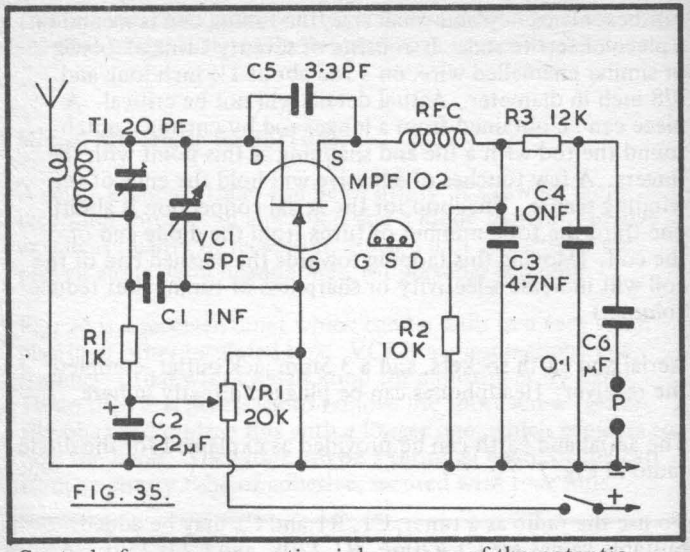

FIG. 35.

Control of super-regeneration is by means of the potentiometer VR1, which adjusts the FET drain potential. The value of VR1 is not very important, but a linear potentiometer is necessary.

C5 provides feedback from source to drain, for regeneration. R3 and the associated components form the quench network, with C6 feeding headphones, or an audio amplifier.

For best results, VR1 should enable the transistor to go smoothly into super-regeneration, which is shown by the hiss mentioned. Achieving this depends somewhat on the transistor, value of C5, adjustment of T1, and aerial loading. However, matters are not too critical.

Transistors unsuitable for VHF cannot be used. Individual FETs of the same type will also differ somewhat, so that in some cases it might be necessary to omit C5, or change the value. Alternatively, a small pre-set (not over 10pF) may be fitted. It will be found that a very small capacitance is required.

Another cause of failing to obtain super-regeneration is too tight aerial coupling, and this is easily corrected by moving the aerial coupling winding a little further from the larger winding.

The RF choke can be a VHF type, or can consist of seventy five turns of 36swg enamelled wire, side by side on a ¼ inch diameter insulated rod. Touches of adhesive may hold the end turns only.

Short leads are essential, and assembly on a tag board is shown in Fig. 35B. The variable capacitor is fitted first, and it can later attach the finished board to a panel, by means of an extra nut.

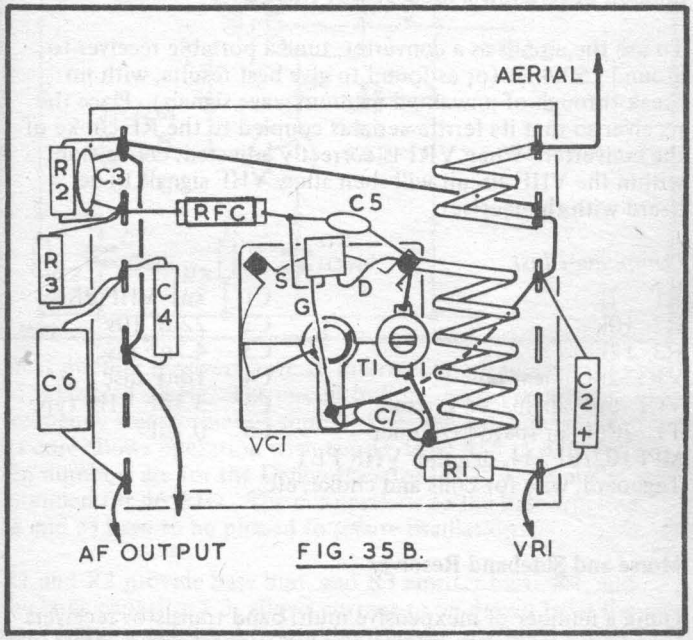

FIG. 35 B.

The larger coil has five turns of 18swg wire, and is ½ inch in diameter and ¾ inch long. The smaller coil has two turns. Wiring to VC1, T1, C5, the coil and C1 must be as short as can be arranged. Connections elsewhere are reasonably direct. A ceramic disc capacitor may be used at C1. T1 should be a low loss trimmer.

The board can be fitted in a case which will carry VR1, and large enough for the battery and on-off switch. The case can be used to support a telescopic aerial, some 30 inch or so when extended.

Frequencies tuned by VC1 can be raised by unscrewing T1, or by stretching the larger coil to separate the turns more, or by using a coil with fewer turns, or of smaller diameter. The receiver is most suitable for use over the 70MHz to 200MHz range.

For the single transistor alone, a sensitive pair of medium or high resistance phones will be needed. Audio ouptut from C6 can be taken to an amplifier, for more powerful reception with phones, or to allow a loudspeaker to be used.

To use the circuit as a converter, tune a portable receiver to around 1500kHz (or as found to give best results, with no break through of unwanted medium wave signals). Place the receiver so that its ferrite aerial is coupled to the RF choke of the converter. When VR1 is correctly adjusted, conversion within the VHF circuit will then allow VHF signals to be heard with the receiver.

Component List

R1	1k	C1	1nF VHF disc
R2	10k	C2	22μF 10v
R3	12k	C3	4.7nF disc
VR1	20k linear pot.	C4	10nF disc
VC1	5pF air-spaced variable	C5	3.3pF VHF type
T1	20pF air spaced trimmer	C5	0.1μF

MPF102/BF244, or other VHF FET
Tagboard, wire for coils and choke, etc.

Morse and Sideband Resolver

Quite a number of inexpensive multi-band transistor receivers have frequency coverage which includes one or more Amateur bands. That is, 1.8, 3.5, 7, 14, 21, or 28MHz. On these bands transmissions are often in Morse code or CW, or single sideband. CW or SSB can be resolved by the specialised Amateur receivers and transceivers, but not with the general purpose home receiver. To receive CW or SSB with the latter type of radio, it is necessary to add an oscillator. This either generates a heterodyne or beat note for code reception, or replaces the carrier which was eliminated from the single sideband transmission.

The circuit in Fig. 36 may be used for these purposes. It generates a carrier of about the same frequency as that used in the intermediate frequency stages of the receiver, exact adjustment of frequency being by VC1,

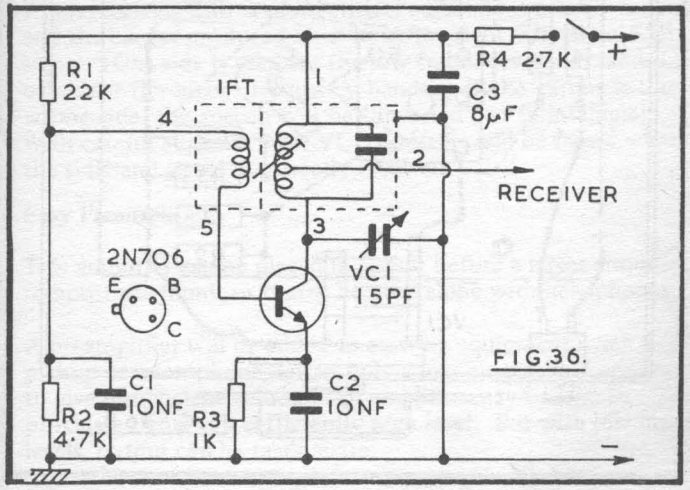

FIG.36.

Most popular receivers have an intermediate frequency of about 455kHz to 470kHz. The circuit in Fig. 36 uses an intermediate frequency transformer of similar type, and adjustment of its core allows operation with any IF from 455 to 470kHz. Pin numbers are for the Denco (Clacton) IFT13, normally intended for 465kHz. The connections to the base winding (4 and 5) have to be phased to secure oscillation.

R1 and R2 provide base bias, and R3 emitter bias. R4, and the large capacitor C3, allows current to be drawn from the same battery as is used to run the receiver, if wished. Alternatively, a separate 9v battery may be employed here.

Fig. 36B shows the practical layout of components, and wiring to them, using a perforated board. Connections and joints are kept close against the underside of the board. When wiring is finished, the board is mounted in a metal box, using ½ inch bolts with extra nuts for clearance.

VC1 can best have a dial with a central zero mark, this showing when the plates are half meshed.

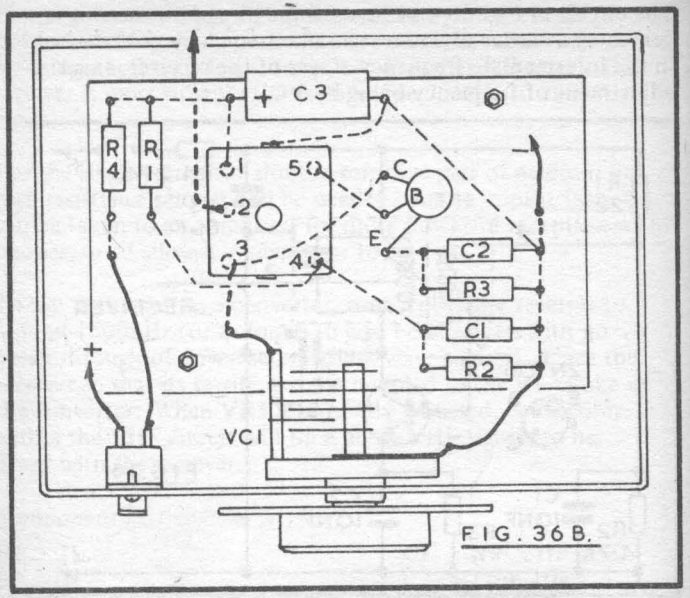

FIG. 36B.

An insulated lead is run from 2 on the IFT, and is placed near the receiver. This lead may be so positioned as to give best coupling into the IF stages of the receiver. If coupling is too weak, the signal from the CW/SSB Resolver will be inadequate. On the other hand, tight coupling will allow the carrier to swamp weak signals tuned in on the receiver. Fortunately the degree of coupling is not at all critical.

To set up the oscillator, first of all tune in any normal broadcast with the receiver. Set VC1 half closed and switch on. The core of the IFT should now be slowly adjusted until a loud heterodyne or beat note is heard accompanying the signal received. Set the core so that this note falls to about zero, or to a low pitch. It will then be possible to rotate VC1 either way from this central zero beat position, in each case producing a note which rises in frequency as VC1 is rotated.

To receive CW or Morse code, it is only necessary to tune in the code signal with the receiver, and then to adjust VC1 to

obtain a note of the most suitable pitch. VC1 can be rotated either way from its central or zero beat position, to obtain best freedom from interference.

When receiving SSB, a more critical adjustment of VC1 is needed and the carrier produced must be at the right side of the SSB signal. (One side is used for the low frequency bands, and the other for the higher frequency bands.) If the carrier is the wrong side, the speech will be "inverted" or unintelligible. With careful adjustment of VC1, a setting will be found where the sideband signal is correctly resolved.

Easy Preamplifier

This amplifier can be placed in circuit before a larger amplifier, to boost the input, or it may be used alone with headphones.

A preamplifier will be added to existing equipment when a pickup or microphone having only a low output has been found to give insufficient volume. An amplifier may be able to provide a signal at a sufficiently high level. But with low input levels, output can be inadequate.

The stage in Fig. 37 can provide considerable gain. Audio input is to C1, and R1 provides base current for the transistor. Amplified signals are obtained across R2, and pass to the main amplifier (or phones) via the isolating capacitor C2.

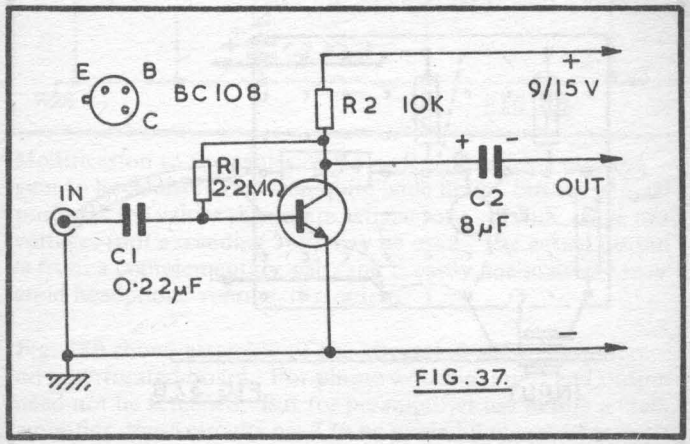

FIG. 37.

With a BC108 or similar transistor, the supply can be about 9v to 15v. Numerous NPN transistors, intended for preamplifier use and of low noise type, will perform well. Current may be from a separate battery. Or it may in many cases be drawn from the main amplifier. To avoid instability or similar troubles, the positive supply should be from a well decoupled and smoothed point in the main amplifier. If this is not available, connect a 220μF capacitor from positive to negative in Fig. 37, and draw the positive supply through a 1k resistor. Negative is returned to the negative line of the main amplifier.

Should the main amplifier have a positive earth line, then the transistor can be a PNP type, R1 and R2 being changed to suit.

Fig. 37B shows assembly on a perforated board. When the circuit provides input to a main amplifier, it should generally be in a metal case. Input is by a screened lead, and a screened lead is also fitted for the audio circuit to the main amplifier. The case should be earthed to the negative line. This can be by means of one of the bolts securing the board.

Screening to avoid hum or instability will generally prove to be unnecessary when using the stage to operate headphones. So two sockets, or a jack socket, will be more convenient for the phone circuit.

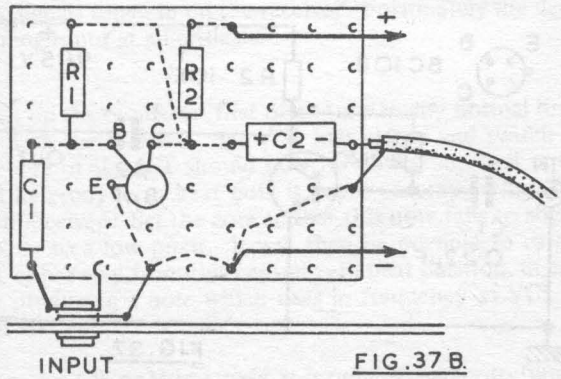

FIG.37B.

741 Preamplifier

Integrated circuits have several stages of amplification, formed as a single chip and enclosed in a small case. The 741 is an easily obtained audio IC which can be used in many circuits. The uA741CE or metal can 741 is convenient, as its leads may be spaced to suit any ready perforated board. The dual in line 741 is electrically similar.

Fig. 38 shows a preamplifier using the metal can 741. Input is via C1 to 3. As shown, 7 and 4 are positive and negative, while output is from 6. Negative feedback is applied to 2, via R4. C3 is an isolating capacitor.

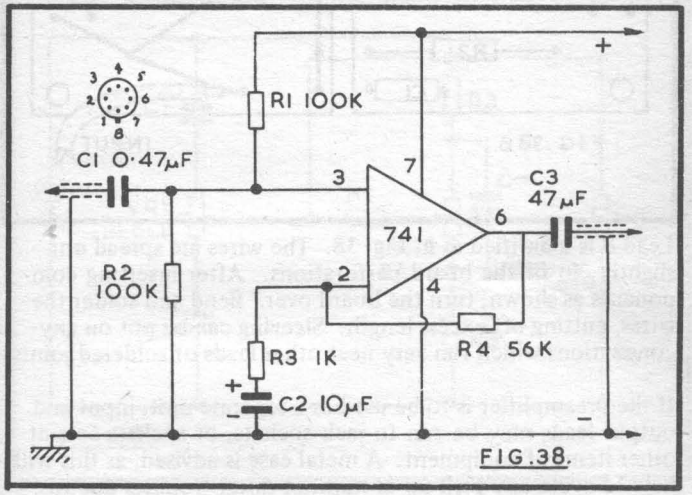

FIG.38.

Modification to the values of R3 or R4 allow feedback and gain to be adjusted between quite wide limits, but for general purposes the values shown are satisfactory. A wide range of voltages (not exceeding 36v) may be used. The actual output is from a complementary pair, and is easily adequate for very good headphone volume, if required.

Fig. 38B shows assembly of the integrated circuit amplifier on a perforated board. For phone working, input and output need not be screened. But for preamplifier use before a main amplifier, these circuits need to be made by means of screened leads.

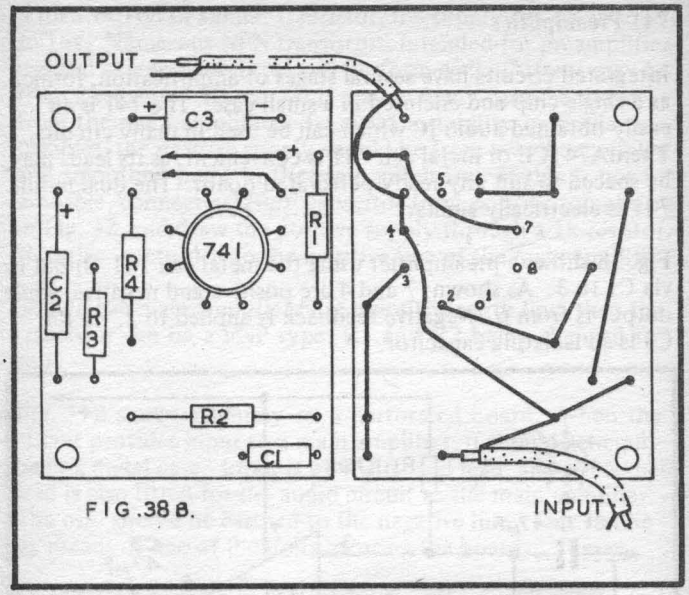

FIG.38B.

Lead 8 is identified as in Fig. 38. The wires are spread out slightly, to fit the board perforations. After inserting components as shown, turn the board over. Bend and solder the wires, cutting off excess length. Sleeving can be put on any connections which run very near other leads or soldered joints.

If the preamplifier is to be used as a separate unit, input and output leads may be run to jack sockets, or sockets to suit other items of equipment. A metal case is advised, as this will help to avoid any pick up of hum, or other troubles due to coupling to the board wiring. The board can be secured to the metal box or case with ½ inch 6ba bolts, and extra nuts to give a little clearance.

The amplifier may be run from its own battery; or from a supply used with a main amplifier. For the latter, it is wise to provide a decoupled point, in a similar manner to that described for the transistor preamplifier. This consists of a quite large capacitor (say 220μF to 470μF) from positive to negative across the preamplifier supply circuit, and a resistor of 1k to 2.2k or so from preamplifier positive to positive on the main amplifier.

Tone Control for Your Discs Etc.

The preamplifiers shown have a substantially flat response. That is, they do not purposely emphasize bass or treble, or have similar effects in modifying the audio frequencies present. In some circumstances it is necessary to boost treble or bass, or reduce the emphasis of these frequencies, in order to obtain the most satisfactory reproduction.

This may be achieved by making a fully adjustable tone control, and Fig. 39 is a suitable circuit. A volume control is also incorporated, as this has not been present in the preamplifiers.

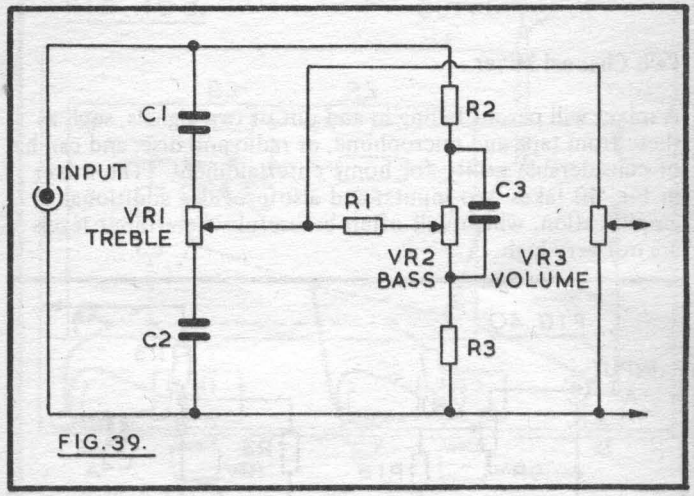

FIG.39.

The tone control is a passive circuit, needing no battery, and it can be placed between the source of audio signals (generally a microphone, pick-up, or radio tuner) and the amplifier or preamplifier. It may also be located between preamplifier and main amplifier, if wished.

Results are substantially flat with the treble control VR1 and base control VR2 in their central positions. Adjustment of VR1 and VR2 will provide separate boost or cut of treble, or boost or cut of bass frequencies. VR3 is the volume control.

The degree of control afforded by circuits of this type may be adjusted by alterations to the component values. In practice, it will be found that there is little point in having extreme levels of adjustment, which will never be required. The following values may be used: C1 and C2, 270pF; R1, 390k; R2 and R3, 100k; C3 680pF; VR1 and VR2, 2 megohm linear potentiometers; VR3, 2 megohm log potentiometer.

Components should be assembled in a metal case, for screening. The case is grounded to the earth line. Input and output sockets can be near the ends of the case, with VR1, VR2 and VR3 between. Components can be soldered directly to the potentiometer tags.

Two Channel Mixer

A mixer will permit fading in and out of two signals, such as these from tape and microphone, or radio and disc, and can be of considerable utility for home entertainment. The mixer in Fig. 40 takes two inputs, and also provides additional amplification, which will often be useful where input levels are not very high.

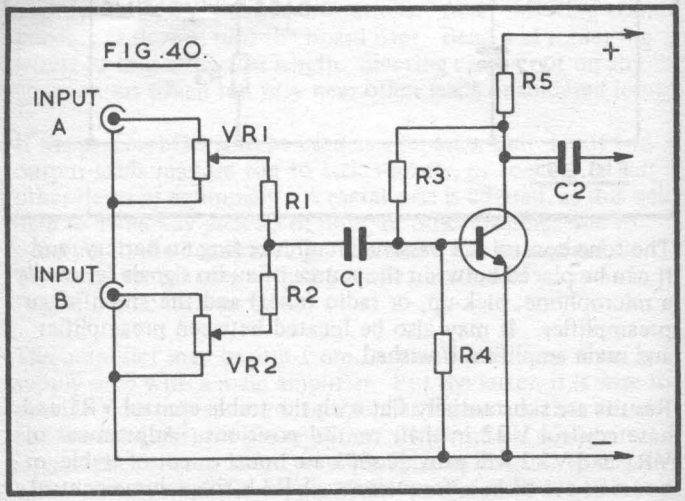

Input A has its individual volume control VR1, and Input B is similarly provided with VR2. Resistors R1 and R2 prevent short circuiting one input when the other potentiometer is set at zero. Coupling to the transistor base is by C1. R3 and R4 set base bias conditions, with R5 as the collector load and audio output from C2.

Component values are not very critical, though R3, R4 and R5 need to be selected to suit the transistor fitted. The mixer is connected and used in a similar way to that explained for the preamplifiers.

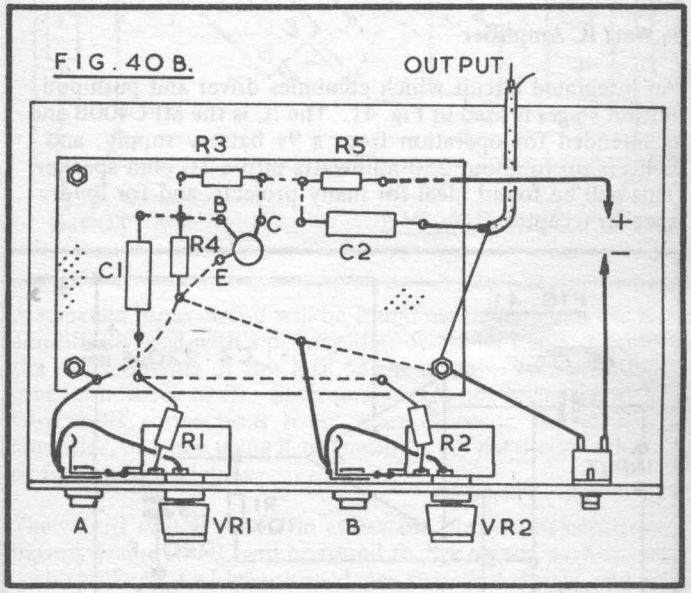

Fig. 40B is the layout, using a metal case or box. A screened output lead is provided. Input sockets A and B may be chosen to suit the type of plugs on existing equipment. The on-off switch is separate from the potentiometers, so that these can be left at pre-set levels if wished.

Component values may be chosen to suit low or high impedance inputs, if wished. Or the following may be used for general purposes:

Components List:

VR1, VR2, 1 megohm log potentiometers.
R1, R2, 200k
C1 0.5μF
R3 330k
R4 22k
R5 10k

C2 0.5μF
BC109

This is when using a 9v supply.

¼ Watt IC Amplifier

An integrated circuit which combines driver and push-pull output stages is used in Fig. 41. The IC is the MFC400B and is intended for operation from a 9v battery supply, and delivers up to about 250 milliwatts into a 16 ohm speaker. This will be found ideal for many projects, and for loudspeaker reception.

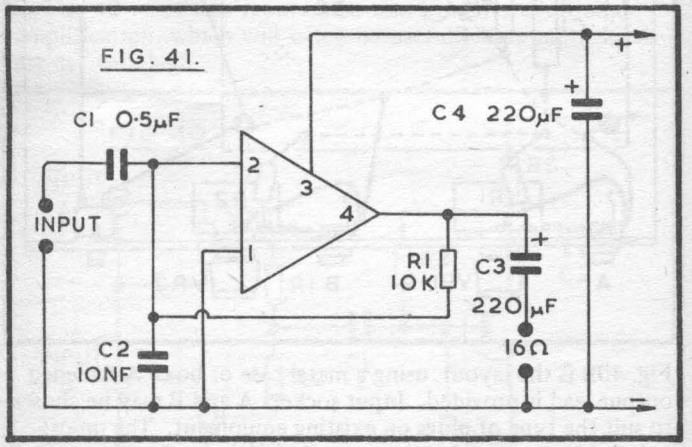

Audio input is to 2 of the IC, from the isolating capacitor C1. C2 is a by-pass capacitor to maintain stability. The IC has only four connections, 1 going to the negative line, and 3 to the positive supply. Audio output is from 4, and to the loudspeaker via C3. R1 provides negative feedback and bias to point 2.

The assembly of this amplifier on 0.15 inch matrix board is shown in Fig. 41B. Pin numbering is when looking at the top of the IC and the component side of the board.

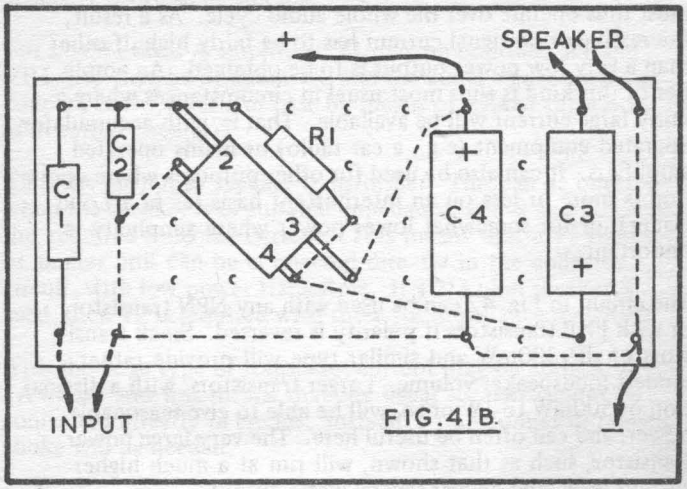

FIG. 41B.

A screened input circuit will be found necessary when the IC amplifier is used with a preamplifier or similar items. Connect the outer brading of this lead to the negative line, and the inner conductor to C1. Such screening is not necessary with very short connections from other stages to the IC amplifier, or when using it to amplify a crystal diode radio, or for similar purposes.

The on-off switch can be in either the positive or negative battery lead. The IC will be found to give a good performance with speakers of a higher impedance than that shown, and up to 75 ohm may be used (with some small loss in output). Units of lower impedance than 16 ohms should not be fitted.

The small size of this IC and the few extra components needed make is very suitable for miniature apparatus, probably with a 2½ inch speaker. It will also operate a large speaker well (see "Boost Speaker") and at a volume level adequate for many purposes.

Class A Amplifier

A Class A amplifier uses a single transistor, Fig. 42, which must thus operate over the whole audio cycle. As a result, the resting or no-signal current has to be fairly high, if other than a very low power output is to be obtained. An amplifier of this kind is thus most usual in circumstances where a fairly large current will be available. That is, with accumulator operated equipment (e.g., a car radio) or mains operated amplifiers. It can also be used for other purposes where operation is more or less on an intermittent basis (as in a Loud Hailer), or for somewhat lower power where simplicity is important.

The circuit in Fig. 42 can be used with any NPN transistor, or with PNP transistors if polarity is reversed. Small transistors of the 300mW and similar type will provide rather modest loudspeaker volume. Larger transistors, with a dissipation of 500mW to 1W or so, will be able to give reasonable power, and can often be useful here. The very large power transistor, such as that shown, will run at a much higher current level, and deliver several watts output.

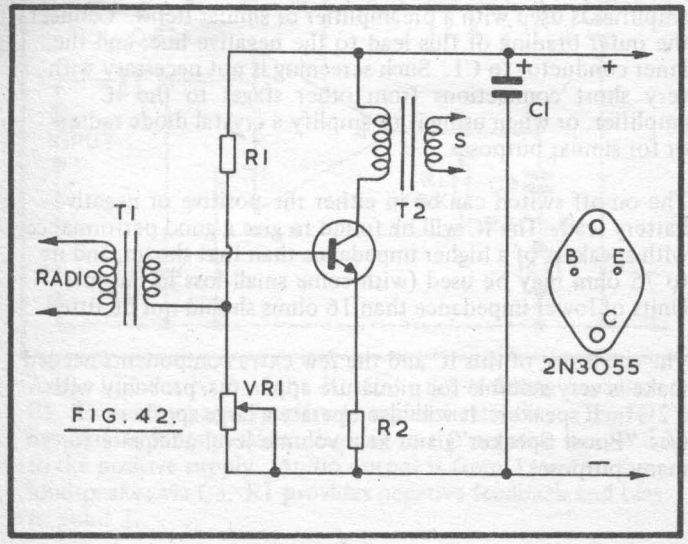

FIG. 42.

T1 is the coupling or driver transformer, which may receive audio signals from a radio receiver, smaller amplifier, or other equipment. A step down ratio of about 5:1 to 10:1 will generally prove to be suitable.

For smaller Class A amplifiers, T1 may be omitted. R1 and VR1 may then be of about 1k, and the audio signal can be coupled to the transistor base by means of a fixed capacitor, as in earlier circuits.

T2 is the output or speaker transformer. This can be omitted when the speaker is of suitable impedance, and is able to carry the required collector current. This means that a 75 ohm or similar unit can be connected directly in the collector circuit, with low power transistors. If a 2/3 ohm speaker is used, then T2 is required with these for impedance matching.

With the large type of transistor, current may be 500mA to 1A or so, and this means that the usual speaker cannot be connected directly in circuit. Instead, a transformer or tapped choke will be needed.

The circuit is often operated from 12v (a vehicle supply) but can be used with 9v, or more than 12v.

R1 and VR1 set bias conditions, and R2 limits peak collector current. For the 2N3055, R2 may be 1 ohm. R1 can be 100 ohm, and VR1 25 ohm. T2 can be 2:1 for a 3.5 ohm speaker. C1 is 3200μF. Begin with VR1 at minimum value, slowly increasing this until reproduction is satisfactory. (This will set collector current at about ½ ampere.)

With other transistors, adjustment can be made in the same way, by slowly increasing the base bias until best results are secured. Raising the value of VR1 in Fig. 42, or reducing the value of R1, will increase collector current, and thus raise the power which can be handled. However, current is limited by the power handling capacity of the transistor, so a meter should be put in one battery lead, and a check made that the power dissipation of the transistor is not exceeded. With small transistors, current can be limited to 50mA or so.

Fig. 42B shows assembly of the circuit in Fig. 42. The power

transistor is mounted on an aluminium plate, which acts as a heat sink to carry away heat from the transistor itself. Note that this plate is common to the collector. Base and Emitter pins pass through clearance holes. Smooth off any burr round the fixing and clearance holes, so that the transistor can rest flat on the metal. Where it is awkward to have the plate or case common to the collector, the usual insulation set can be fitted. This consists of bushes for the fixing bolts, and a thin mica washer to go under the transistor, so that electrical isolation is obtained.

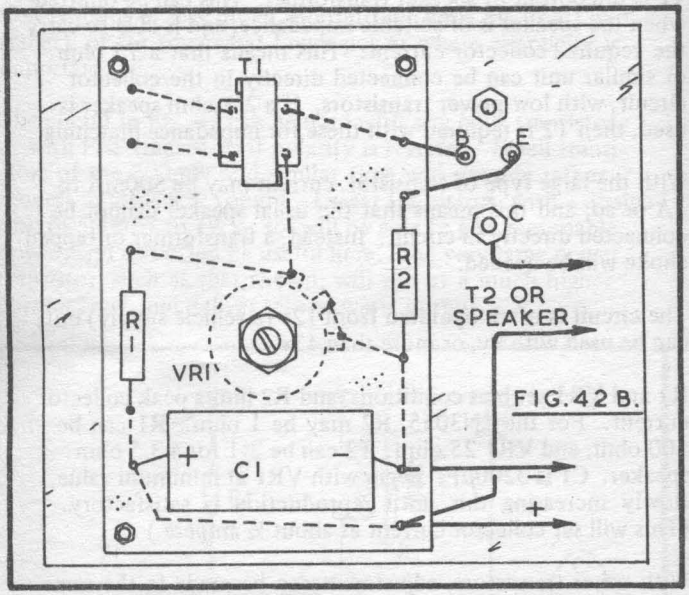

FIG. 42 B.

The insulated board carrying the other components is mounted by long bolts with extra nuts. A large Class A stage transistor of this type will grow very warm to the touch, if run at anything like maximum power rating. This does not indicate any defect.

Two Stage Amplifier

The circuit of a 2-stage amplifier is shown in Fig. 43, and this can be used for loudspeaker reproduction. Input to the driver

stage is by the isolating capacitor C1. Operating conditions in this stage depend largely on the values of R2, R3, and the emitter bias resistor R5.

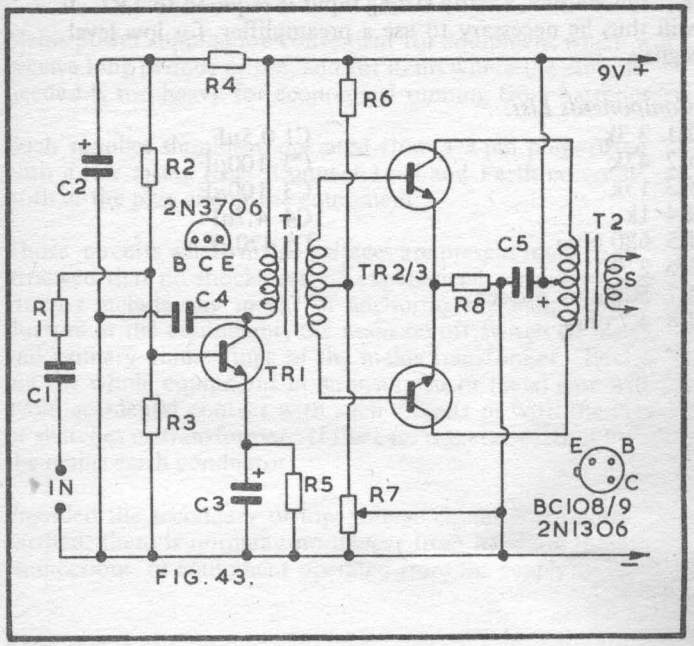

FIG. 43.

T1 is the driver transformer, with centre tapped secondary, so that TR2/3 may be operated in push-pull (see Fig. 12). T2 couples output to a 2/3 ohm speaker.

With the values shown, a BC109 will give very good results in the TR1 position, with 2 x BC108s for the output stage. R7 is set so that battery current is around 10mA, with no signal present. Current rises from 20mA to 60mA or so, according to volume, when the amplifier is driven.

A pair of 2N1306 transistors may be used for the output stage. Other transistors are also possible here, as operating conditions can be adjusted by R7.

The 2N3706 will operate in the TR1 position, though with

lower gain than the BC109. Numerous other small audio transistors can also be used here.

For full volume, a fairly strong input is required to TR1. It will thus be necessary to use a preamplifier, for low level signals.

Components List:

R1 3.3k	C1 0.5μF
R2 47k	C2 100μF
R3 15k	C3 100μF
R4 1k	C4 4.7nF
R5 680 ohm	C5 470μF
R6 2.7k	
R7 500 ohm pre-set	
R8 4.7 ohm	

SECTION 4
POWER SUPPLIES

Mains power supplies are convenient for equipment which will receive long periods of use, and for items where the current needed is too heavy for economical running from batteries.

Such supplies should be operated from a 3-pin plug, fitted with a low rating fuse. Connect L, N and Earth correctly, both at the plug and at the equipment.

Those circuits where mains voltages are present must be so arranged that no shocks can be experienced. Mains voltage circuits include any means of anchoring the mains conductors in the equipment, the main on-off switch (if used), and primary connections of the mains transformer. Enclosing the whole equipment in an insulated or metal case will avoid accidental contact with such circuits or with the tags of switches or transformer. If the case is metal, earth it by the mains earth conductor.

Provided the secondary or low voltage circuit is correctly earthed, there is normally no danger from handling these connections, or equipment operated from the supply.

Easy PSU

A useful power supply suitable for many purposes can use the circuit in Fig. 44. Mains L (live) and N (neutral) conductors go to the primary P of the transforer. A switch is placed in the L circuit.

The secondary S can delivery any wanted low voltage, and also give isolation from the mains.

Almost all equipment will need direct current. The four separate rectifiers, or an equivalent single device, produce pulsating DC. The reservoir capacitor C1 smoothes this. Resistor R1, with the second capacitor C2, gives additional smoothing. Output from the supply is then substantially smooth DC, as would be obtained from a battery.

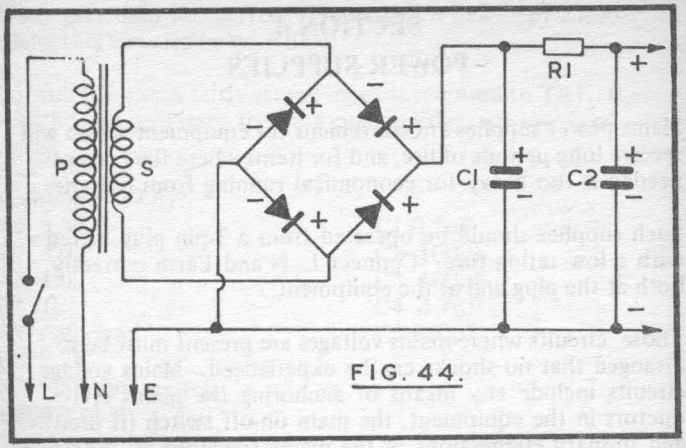

FIG. 44.

Sometimes R1 and C2 are omitted. Should hum accompany reproduction from an amplifier, this shows that smoothing is probably inadequate, and if so the cure is to add R1 and C2.

Any wanted voltage can be obtained by using a transformer with an appropriate secondary, with rectifiers and capacitors to suit.

C1 may charge up to approximately 1.4 times the RMS or usual voltage rating of the secondary S. Thus, if S were a 6.3v winding, about 8.8v would be expected across C1. But should R1 be present, a voltage drop will arise in it, the figure depending on the resistance value of R1, and current flowing.

For these reasons, the actual output may not be exactly the figure expected. This will often be unimportant, and such power supplies are largely used for all sorts of equipment.

For apparatus generally operated from a 9v or similar battery, a bell transformer with 3v, 5v and 8v output tappings is suitable. If R1 is 22 ohm, this will give around 9v at 100mA, with the 8v tap in use.

It is convenient to use 50v or 100v rectifiers, and the rating can be 1 ampere, with a 1 ampere transformer secondary. Four individual wire ended rectifiers can be mounted on a

tag strip, and connected as in Fig. 44. A combined rectifier will have AC, positive, and negative tags (see Fig. 45) and can be fitted instead.

The capacitors need to be of large value, and have a voltage rating higher than the actual voltage which will be present. The 12v capacitors could be fitted in the circuit described. C1 can be 2500μF or larger, and C2 can be of similar value.

Easy Regulated PSU

With the circuit in Fig. 44, the exact voltage will depend on the current drawn, rising when current is low. To avoid this, some means of regulation may be employed.

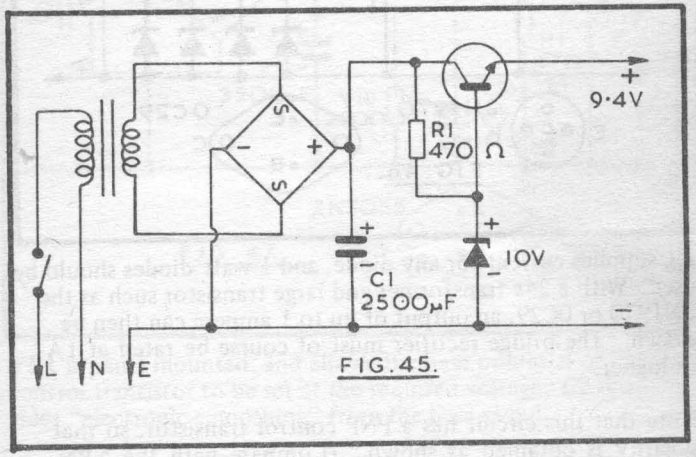

FIG. 45.

Fig. 45 shows a typical regulation circuit, giving an output of approximately 9.4v. The output from the rectifier needs to be of somewhat higher voltage than required at the output, and a transformer with a 10v secondary is suitable. Current through R1 supplies the Zener diode, which holds the base of the transistor at virtually the same voltage for all current loads. Some voltage is lost in the transistor, so the output is nearly the same, for any current load. For up to about 200mA, a BFY51 or equivalent transistor is adequate, so this will do well for many purposes.

Multi-Voltage Regulated PSU

Fig. 46 is a somewhat similar circuit, but it has a switch, to select any one of the four Zener diodes. These may be chosen so that 6v, 9v, 12v and 15v will be available.

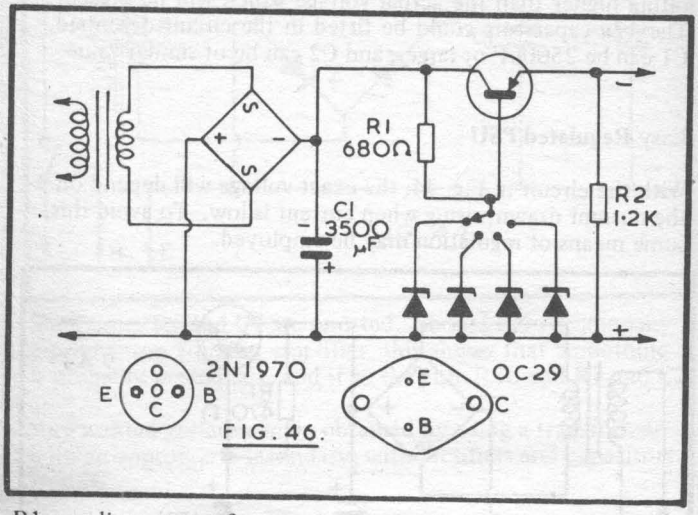

FIG. 46.

R1 supplies current for any diode, and 1 watt diodes should be used. With a 24v transformer and large transistor such as the 2N1970 or OC29, an output of up to 1 ampere can then be drawn. The bridge rectifier must of course be rated at 1A or higher.

Note that this circuit has a PNP control transistor, so that polarity is obtained as shown. (Compare with the NPN transistor in the previous circuit.) However, either positive or negative can be grounded, and a separate earth terminal can be provided to allow this. A flying lead is placed between earth terminal and positive, or earth and negative, as required. The permanent negative earth connection shown in Fig. 45 must of course then be omitted.

More details of actual construction will be found later.

One Transistor Adjustable PSU

Fig. 47 is the circuit of a simple power supply unit which can be set to provide any output from zero to 12 volts. The transformer has a 17v secondary, rated at 1 ampere or higher. After rectification, DC is obtained from the reservoir capacitor C1.

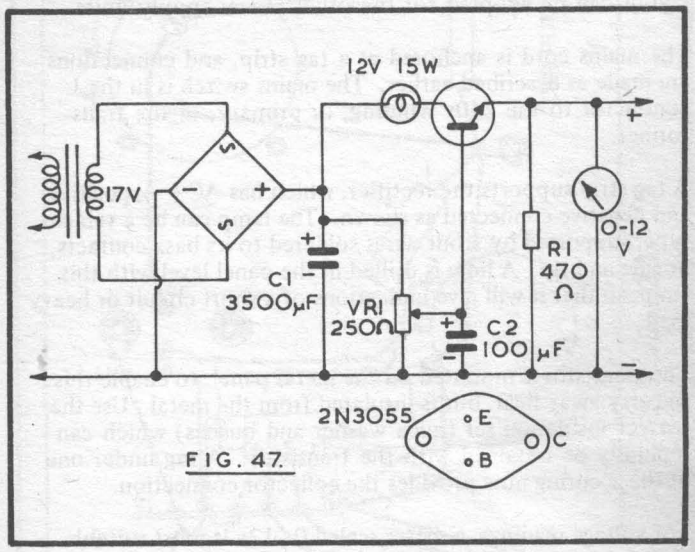

FIG. 47.

VR1 is panel mounted, and allows the base potential of the control transistor to be set at the required voltage. C2 provides "electronic smoothing" from the base circuit.

The 12 volt 15 watt bulb is for short circuit protection. With relatively low currents, little voltage is lost here. But if a short circuit arises in the output circuit, current is limited to a little over 1A by the bulb. This reduces the chances of any damage due to temporary shorts in leads or equipment.

R1 is a bleeder resistor, drawing some current even when no external load is connected. The meter is the usual high resistance type, scaled from zero to 12v. VR1 is adjusted until this instrument shows the wanted voltage.

The regulation of this supply is not so good as that of supplies using a number of transistors. But it will be found suitable for all ordinary purposes, and to supply power for circuits in this book, as only a small change in voltage arises, with changes to the load, or current drawn.

Fig. 47B shows practical construction of this PSU. A similar layout can be adopted for the other power supply units.

The mains cord is anchored at a tag strip, and connections are made as described earlier. The mains switch is in the L conductor to the 240v winding, or primary, of the transformer.

A tag strip supports the rectifier, which has AC (~), positive and negative connected as shown. The lamp can be a vehicle type, supported by stout wires soldered to its base contacts, or side and tip. A hole is drilled in the panel level with this lamp, so that it will give indications of a short circuit or heavy load.

The transistor is mounted on the metal panel, to enable this to carry away heat, but is insulated from the metal. Use the correct insulation set (mica washer and bushes) which can generally be obtained with the transistor. A tag under one of the securing nuts provides the collector connection.

For voltage readings, a meter scaled 0–12v is most suitable. Or a 1mA meter, with 12k 1% series resistor, may be used. If so, a new scale, marked 0–12, can be drawn for it.

A 3 watt linear potentiometer is used. Earth and negative are connected to the metal panel, for equipment with a negative ground line. The positive output terminal or socket is insulated from the metal.

The case can be metal, or wood. It should have a few ventilation holes. The transistor can be expected to run quite warm, at maximum current. Heating here rises as the output voltage is reduced by VR1, as in these circumstances more voltage is dropped in the transistor.

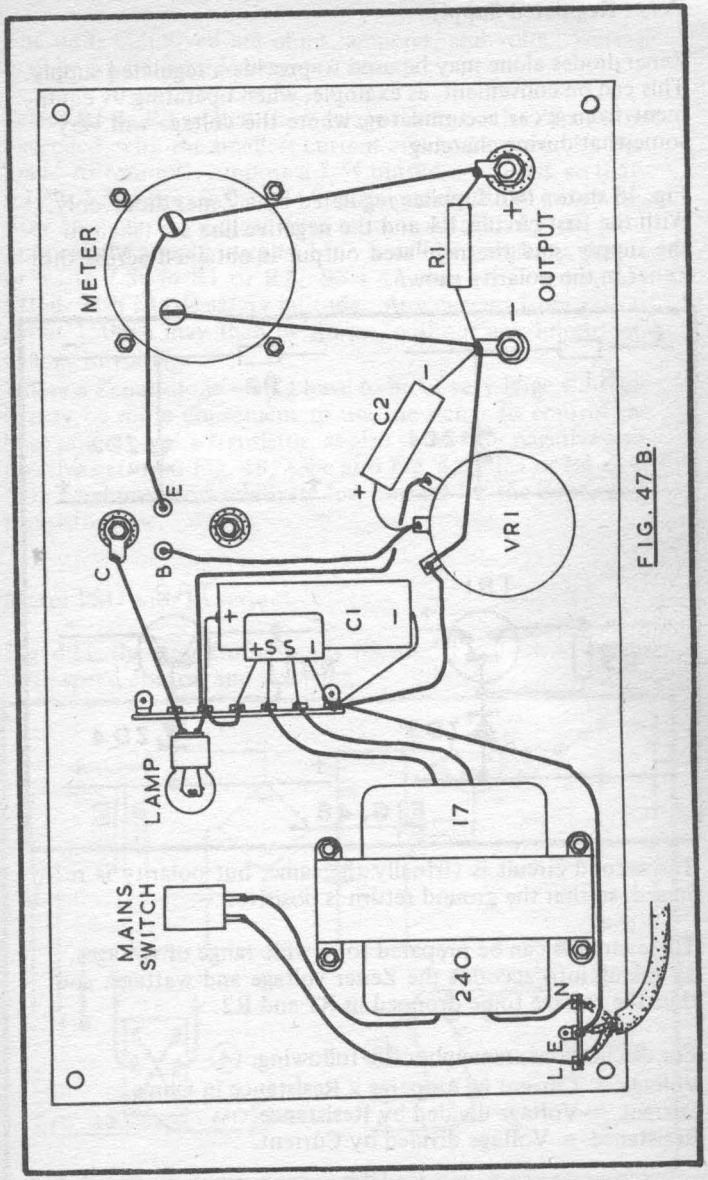

FIG. 47B.

Zener Regulated Supply

Zener diodes alone may be used to provide a regulated supply. This can be convenient, as example, when operating 9v equipment from a car accumulator, where the voltage will vary somewhat during charging.

Fig. 48 shows two supplies regulated by a Zener diode only. With the first circuit, R1 and the negative line are taken to the supply, and the regulated output is obtained across the Zener in the polarity shown.

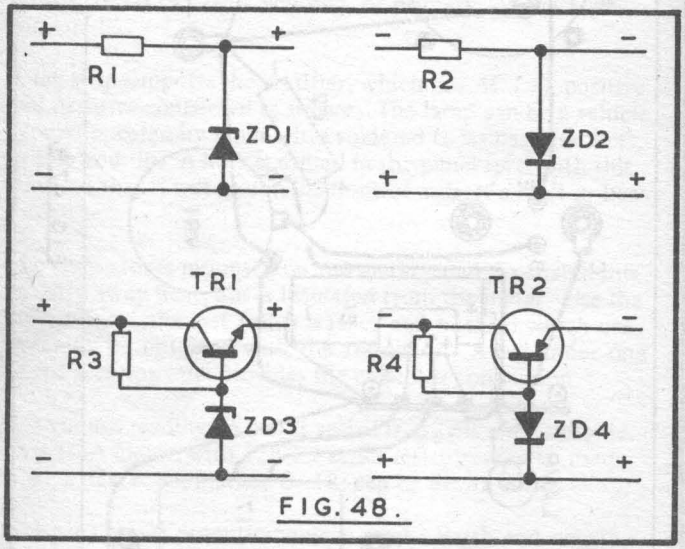

FIG. 48.

The second circuit is virtually the same, but polarity is reversed, so that the ground return is positive.

These circuits can be prepared for a wide range of voltages, by taking into account the Zener voltage and wattage, and thus the voltage to be dropped in R1 and R2.

For calculations, remember the following:
Voltage = Current in Amperes x Resistance in Ohms.
Current = Voltage divided by Resistance.
Resistance = Voltage divided by Current.

The units employed are ohms, amperes, and volts. Wattage may be found from Voltage x Current.

Select R1 or R2 so that the wattage rating of the Zener is not exceeded, with the smallest current ever to be drawn by the load. As example, suppose a 7.5v output is wanted, so that a 1½w 7.5v Zener is fitted. Approximately 200mA may thus flow through the Zener, if no current is taken by the load. Suppose the supply is up to 15v. It will be necessary to drop or waste 7.5v in R1 or R2. So a 42 ohm resistor may be fitted, with a little safety latitude. Any current from zero to about 150mA may then be drawn, without any important change in voltage.
Where a Zener diode would have to be of very large wattage, it may be more convenient to use the Zener to control the base potential of a transistor, as also shown for negative and positive earths in Fig. 48. (See also Fig. 45.) R3 or R4 then only need provide a relatively low current for the Zener and transistor base.

Motor PSU with Reverse

Fig. 49 is the circuit of a supply for model motors, and giving both speed control and reversing.

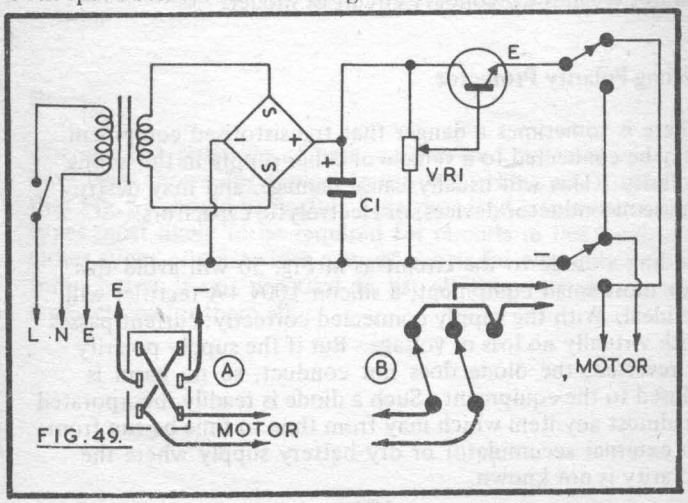

FIG. 49.

A transformer with a 12v secondary will be suitable for the usual model requiring up to 12v. The circuit is similar to that of the supply in Fig. 47. The potentiometer VR1 gives speed control. C1 can be around 2,000μF.

"A" is one type of ready-made switch, and it can be obtained with a central off position. "B" shows a home-built switch, similar to that described in Fig. 5. The switch must not short circuit the supply when changing over polarity, and one with central off is recommended.

Motors reversed in this way must be of the permanent magnet type, in which a change of polarity causes the armature to run in the opposite direction. Train and many other model motors are of this construction. Motors with a wound field will not be reversed by changing the polarity of supply.

A controller of this kind should be constructed as shown earlier, so that it is safe to use, and so that no joints in the mains circuits can be touched.

Earthing can only be omitted when a double-insulated transformer, of the type specifically made to avoid any need for earthing, has been used. The whole controller should be so constructed that, even if a fault develops, mains voltages cannot reach the secondary circuit or model.

Wrong Polarity Protector

There is sometimes a danger that transistorised equipment may be connected to a vehicle or other supply in the wrong polarity. This will usually cause damage, and may destroy the semiconductor devices, or electrolytic capacitors.

Adding a diode to the circuit as in Fig. 50 will avoid this. For most small equipment, a silicon 100v 1A rectifier will be ideal. With the supply connected correctly, current passes with virtually no loss of voltage. But if the supply polarity is reversed, the diode does not conduct, so no harm is caused to the equipment. Such a diode is readily incorporated in almost any item which may from time to time be run from an external accumulator or dry battery supply where the polarity is not known.

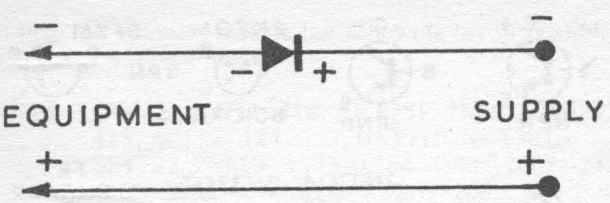

FIG. 50.

Component Tolerances

For circuits in this book, exact component values are generally not too important. Capacitor values such as 47nF (0.047μF) and 0.05μF may be regarded as interchangeable. In the same way, a 125μF capacitor may replace 100μF, or 200μF can be used instead of 220μF, and so on.

Resistors will generally be the standard 5% tolerance types. In some circuits exact resistor values are not at all critical. In others, and especially base, emitter and collector circuits, the values which provide best results can have much less latitude.

Bases

The lead-out positions of base, emitter and collector wires have been shown for typical transistors. However, it is felt that Fig. 51 should be useful. This gives lead information for types most likely to be required for circuits in this book. Other types of transistors may of course be used successfully, but it is not practical to list all these, or show connections for them all.

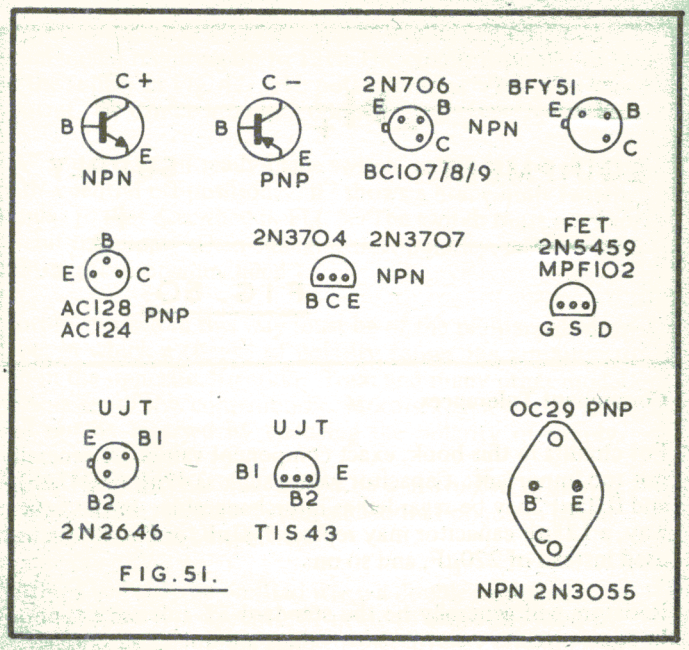

FIG. 51.

EQUIVALENT SEMICONDUCTORS

To help our overseas readers the following list of possible equivalents is shown below: –

AC128	CV9778, OC74–318, NKT281, 2N467, 2SB222–415, AC117–124–153, GET110, NKT302, SFT232, 2N659–1373–1384–1926–2001–2431–4106, 2SB370, SK3004, RS276–2005.
ACY39	CV9475, NKT243, ACZ10, 2N652–2303–2801.
AF117	2N642, 2SA155, AF102–105–127–133–137, BFX48, BSW19–73, GM1213B, NKT603F, SFT354, SK3006, 2N2273–2635–3324–4916–5354, RS276–2003.
BC107	CV9780, AM251, BC147–167–207–317, MPS6566, SK3020–3122, ZTX107, TT107, RS276–2009.
BC108	CV10541, AM252, BC148–168–208–318, MPS6520, SK3020, ZTX108, TT108, RS276–2009.
BC109	CV10769–10806, AM253, BC149–169–209–319, MPS6521, SK3020, ZTX109, TT109, RS276–2009.
BC147	BC171–182/L–207–317, MPS6566, SK3020, RS276–2013,
BC148	BC172–183/L–208–318, MPS6520, SK3020, BS276–2009.
BC149	BC184/L–209–173–319, MPS6521, SK3020, RS276–2009.
BF200	BF162–173–225–271–311–314, SE5020/1/2/3/4, SK3018, 2N616–2708–3288–3693, RS276–2011.
BFY51	CV7723–7726–10827–11238, BFX51–68A, BFR19, BSX45/X, BSY46–85, SK3024, 40347, 2SC708, ME6102 2N2193/4–2218–2410–3053–3252–4046, RS276–2009.
BSY95A	CV7648–9379, BC108A, BSX51–73–91, BFX96, BSY20–58–62, ME9022, SK3122, 2SC321, 2N744–914–1708–2218–2369–5187, RS276–2011.
MPF102	E305, SK3116.
OA81	AA117–118–132–144, AAZ15, OA91–95–161, SD38, 1N38–56–476–618, 1S33.
OC26	CV8560, NKT452, 2N257–297–458–553–1021, 2SB3, AD130–131–138–140–149, OC28, SK3009, TF80, T1156–3027, 2N174–1073–2870–RS276–2006.

OC29	CV7083–8356, NKT402, 2N457, 2SB86–425, AD150, ASZ16, AUY21, OC28–35–36, SK3009, T13028, 2N174–1073–2870, RS276–2006.
OC44	CV5710–7003, OC170–171–410–613, 2N1303, 2SA15, AF101–117–126, ASY55, AC191, BC126, NKT211, SKT358, SK3005, 2N36–1191/2–1352–1373–1384, RS276–2003.
OC70	CV5457, OC303–602, NKT214, 2N279–1305, 2SB75, AC122–125–151–163, ACY27–34, ASY27, BC213–206A, BSX36, SK3003, 2N1193–1352–1375–2429, RS276–2004.
OC71	CV5712–7005–8344, OC70–304–604, NKT214, 2N280–1305, 2SB77, AC122–125–151–163, ACY35, BSX36, OC3041, SK3003, 2N1193–1352–1375–1384–2429, RS276–2004.
OC72	AC122/3–125/6–131–151 IV–152–162–191, BC126–213–206A, NKT211, SFT353, 2N282–1190–1352–1371–1384–1991–2431, CV5713–7006–8440, RS276–2005.
OC76	CV8314, OC307–6025, 2N284–1305, NKT212, 2SB89, AC128–131–151–152, ACY28, ASY58–76, BC126–213–260A, SK3004, 2N394–1191–1352–1371–1384–1991, RS276–2004.
ORP12	RS276–116, LDR03, RPY25.
1N4001	BY127, EM502, RS276–1101/1135, 1S100.
1N4002	BY127, EM502, RS276–1102/1136, 1S100.
2N1306	CV7350–10686, NKT736, 2N634–635–636–1891–1993–1994–1995, ASY26–29, BSX19–20, RS276–2001.
2N1613	CV7440–8843, BFY33–34–67, BSY44, 2N698–699–717–1711–1889–1890–1893, BFY41, BSX45/6, BSY53, MPS6530, 2SC708, 2N2101.

N.B.: Although equivalent semiconductors may have similar electrical properties, physical dimensions may be different and this must be born in mind if space is tight and for mounting details.
Remember polarities if replacing PNP with NPN types and vice versa. If in doubt always be advised by your dealer for suitable equivalent semiconductors.

Notes

Energy Projects
Electrodynamic Tether Photos

Deployment of the Tether Satellite

Boom Deploy

Initial Deploy

Satellite Deployed

Closeup of boom showing tether

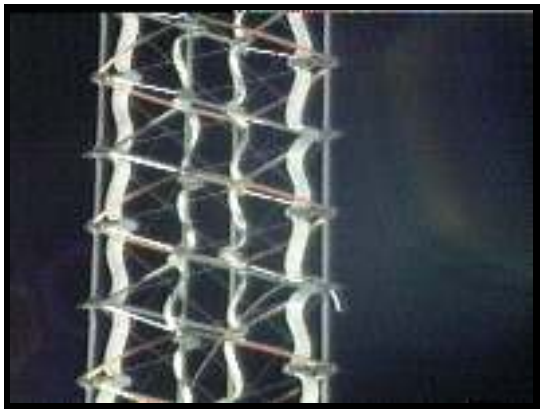

Close up of end of boom

Tether Break

The tether deployed to one mile

Shortly after the breakreak

The tether coils as it moves away from the Shuttle

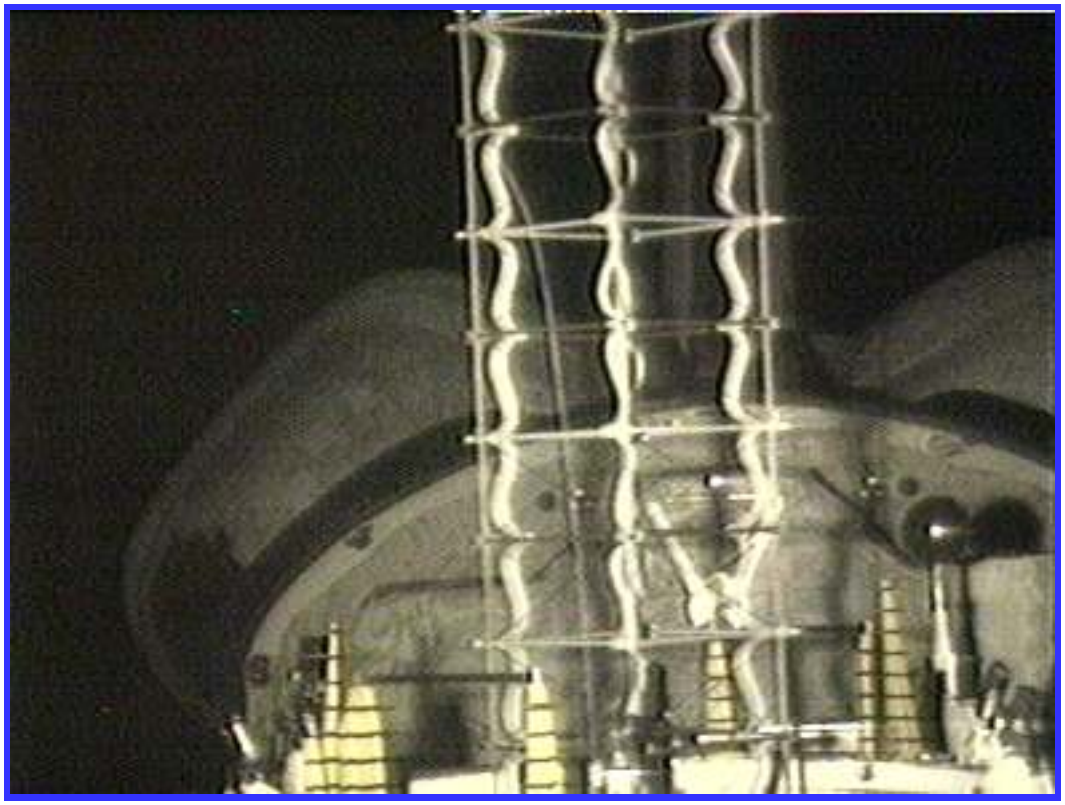

The base of the tether boom. The area looks more like a Tesla Laboratory than the space shuttle hanger bay.

After the Break

The following three images are those displayed for the public showing the white specks that appearall around the tether after it has broken free. NASA calls these "dust and debris" particles, though Mission control in the audio portion of the videos state that they see a "lot of stuff swimming around" and that the tether is wider than expected.

If you compare these images to the ones we captured from a hard to find high resolution copy of the video on this page you will see a remarkale difference. The video is a must see.

Video Clip
STS-75 'The Tether Incident' Feb 1996
Editors Note: This video has been removed several times by Youtube. Currently it is available again. If it does get removed again, email me and I can send you a copy as we have it on disk now. Contact me at webmaster
This one is from the hand held Infrared Camera and is not as clear as the other one was STS-75 Alternate Copy

Comments:

What is most interesting to note is that most of the video clips above are taken from this video, yet NASA does not show the video itself. The copy on Youtube is a transmission intercept copy. However the fact that the NASA info site DOES use those clips gives credibility to the video that it is indeed a NASA film - Zorgon

Tethered Satellite System (TSS-1R)
Source of Clips: NASA STS-75 Mission Pictures

Kennedy Space Center STS-75 Mission Fact Sheet

"Critters" from STS-75

The Report After the Fact

NASA/TP—2003-21228
Low Earth Orbit Spacecraft Charging Design Guidelines

Below are a few keynote excerpts from the PDF file. The entire 367 page document is available below for those with technically savy who want to read the entire paper...

Excerpt 1:

In the case of the TSS-1R tether, its 20 km length produced a maximum of about 3500 V potential between its most positive and negative ends, since it wasn?t oriented perfectly perpendicular to the velocity vector and the Earth?s magnetic field. A satellite at its upper end collected electrons, and an electron gun at the lower end emitted electrons to complete the circuit. When the electron gun was not in operation, a large resistance prevented the Shuttle from being biased thousands of volts negative of its surrounding plasma. However, there remained a large voltage between the tether lower end and the Shuttle orbiter. This enormous bias eventually led to a continuous arc on the tether (see The Continuous Arc, section 4.2.3.1 below), which broke, freeing the satellite and ending the experiment. During the arc, the satellite collected over 1 Amp of electron current to keep the arc going. Probe theory (Cohen et al, 19870010625 N) is usually used to calculate the total current collected by a wire with distributed potentials. However, before the break, TSS-1R demonstrated that a satellite at a high positive potential could collect an anomalously large electron current. See Zhang, et al (20000110580), Stone and Raitt (19990084046 and 20000025437), and Stone, et al (19980202347)

Excerpt 2:

Sustained arcs (continuous arcs) - These are the events that have been attributed with the destruction of on-orbit solar arrays. Generally, the process begins with a fast transient (a so-called trigger arc). Under some conditions, the transient develops into an arc that is fed directly by the entire array, effectively becoming a short-circuit. Such events invariably involve large quantities of energy and can be severely damaging to cells, interconnects or power traces.

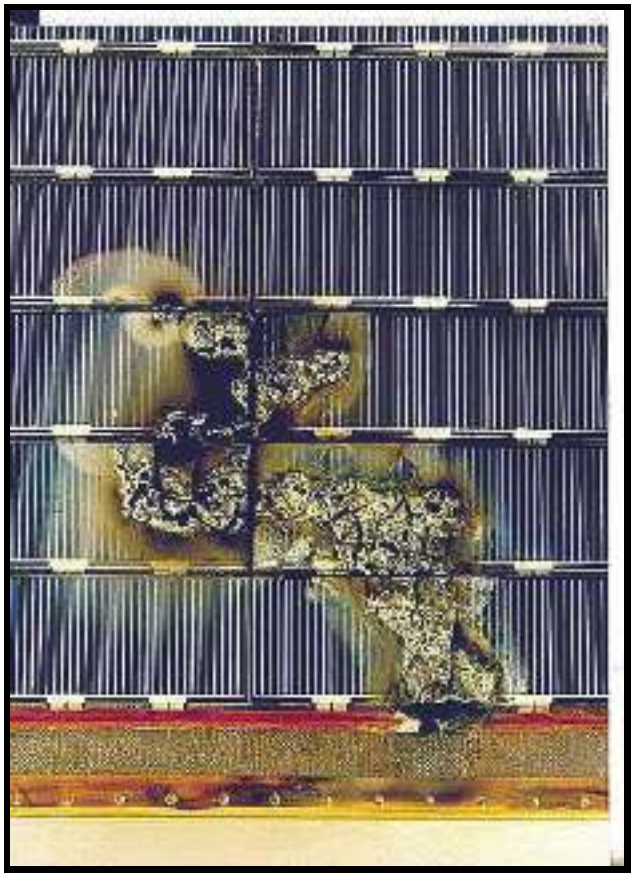

Excerpt 3:

When the structure or array capacitance electrically connected to the arc site is sufficiently large, the initial transient arcs themselves can be large enough to produce significant damage. In Figure 9, we see an anodized aluminum plate that has undergone repeated arcing in the laboratory with the ISS structure capacitance attached. Its thermal properties have been completely destroyed, along with most of the insulating surface layer of aluminum oxide.

Excerpt 4:

The most famous sustained arc event of all led to the breakage of the TSS-1R electrodynamic tether, and the loss of the attached satellite. The image below shows the burned, frayed and broken tether end still attached to the Shuttle after the break. Incidentally, the tether continued arcing long after it and its satellite were drifting free, until finally it went into night conditions where the electron density was insufficient to sustain the arc. Noel Sargent (2002) has investigated whether the TSS-1R arc was seen to disrupt Shuttle communications. Although he has found no record of disturbed communications during the event, for most of the time the arc was shielded by metallic structures from the communications antennas, and when the tether broke, the arc was many meters from the receiving antennas. It remains to be seen whether sustained arcs produce radio noise severe enough to be a communications problem.

Comments:

This is official confirmation that the tether continued to produce plasma energy long after it broke free, accounting for the "fluorescent bulb" glowing effect viewed after. We believe this concentrated collection of plasma energy is what attracted the "swarm" of "critters" to a "feeding frenzy"

To get the full PDF file you can download LEO_Charging_Guidelines_v1.3.1.zip

Tether Optical Phenomena Experiment (TOP)

Using a hand-held camera system with image intensifiers and special filters, the TOP investigation will provide visual data that may allow scientists to answer a variety of questions concerning tether dynamics and optical effects generated by TSS-1R. In particular, this experiment will examine the high-voltage plasma sheath surrounding the satellite...

In one mode of operation, the current developed in the Tethered Satellite System is closed by using electron accelerators to return electrons to the plasma surrounding the orbiter. The interaction between these electron beams and the plasma is not well understood...

Associate Investigator: Stephen Mende, Lockheed Martin

SOURCE

The Report After the Fact

...

The most famous sustained arc event of all led to the breakage of the TSS-1R electrodynamic tether, and the loss of the attached satellite. Figure 8 shows the burned, frayed and broken tether end still attached to the Shuttle after the break. Incidentally, the tether continued arcing long after it and its satellite were drifting free, until finally it went into night conditions where the electron density was insufficient to sustain the arc.

.....

US006116544A

United States Patent [19]

Forward et al.

[11] **Patent Number: 6,116,544**

[45] **Date of Patent: Sep. 12, 2000**

[54] **ELECTRODYNAMIC TETHER AND METHOD OF USE**

[75] Inventors: **Robert L. Forward**, Houston, Tex.; **Robert P. Hoyt**, Seattle, Wash.

[73] Assignee: **Tethers Unlimited, Inc.**, Seattle, Wash.

[21] Appl. No.: **08/929,271**

[22] Filed: **Sep. 12, 1997**

[51] **Int. Cl.**[7] **B64G 1/00**

[52] **U.S. Cl.** ..... **244/158 R**; 244/166; 244/172

[58] **Field of Search** ..... 244/158 R, 164, 244/166, 172

[56] **References Cited**

U.S. PATENT DOCUMENTS

4,097,010	6/1978	Colombo et al.	244/158 R
4,824,051	4/1989	Engelking	244/158 R
4,923,151	5/1990	Roberts	244/158 R

OTHER PUBLICATIONS

"Tethers Open New Space Options" by Ivan Bekey, *Astronautics & Aeronautics*, 1983.

Primary Examiner—J. Woodrow Eldred
Attorney, Agent, or Firm—Arthur M. Dula

[57] **ABSTRACT**

The present invention comprises an electrodynamic tether structure and a method of use. The structure of the tether taught by the present invention is a short, wide, interconnected multiwire (compared to the long, narrow single wires of the prior art) conductive tether whose area maximizes electrodynamic drag while simultaneously minimizing the Area-Time-Product swept by the tether during its operating life. The preferred tether length is two kilometers to five kilometers. The preferred tether mass is one percent to five percent of the spacecraft mass. The method of operation comprises orienting the tether structure at an angle to the local vertical to maximize electrodynamic drag on the host spacecraft and minimize tether instability. The angle of 35.26 degrees is preferred.

26 Claims, 12 Drawing Sheets

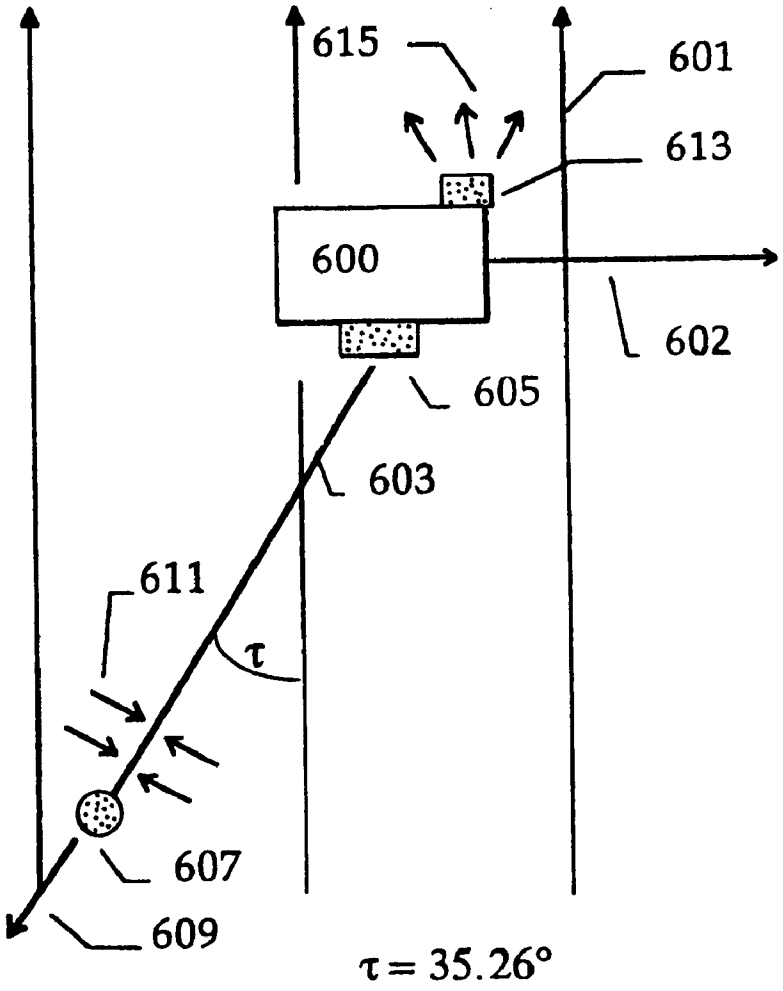

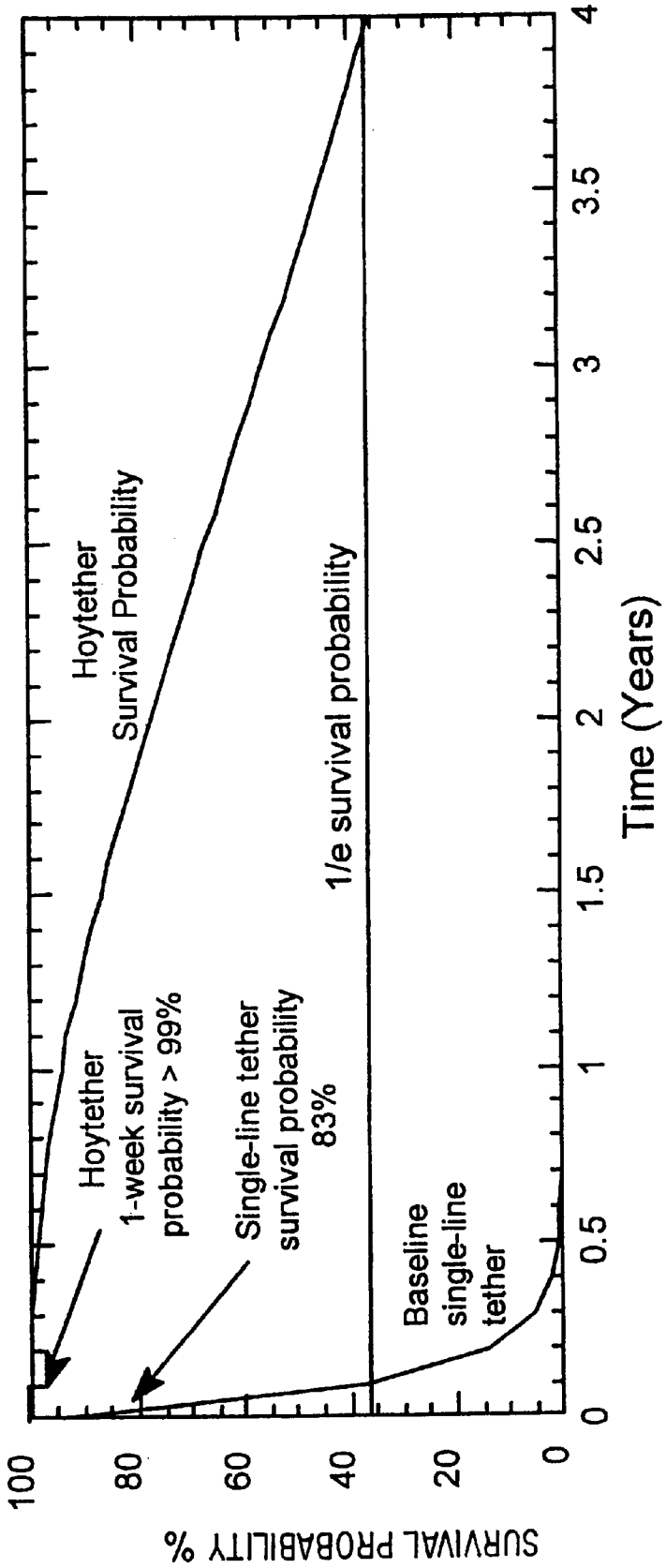
Hoytether
Survival Probability
Hoytether
1-week survival
probability > 99%
Single-line tether
survival probability
83%
1/e survival probability
Baseline
single-line
tether
SURVIVAL PROBABILITY %
100
80
60
40
20
0
0
0.5
1
1.5
2
2.5
3
3.5
4
Time (Years)

FIG. 1a

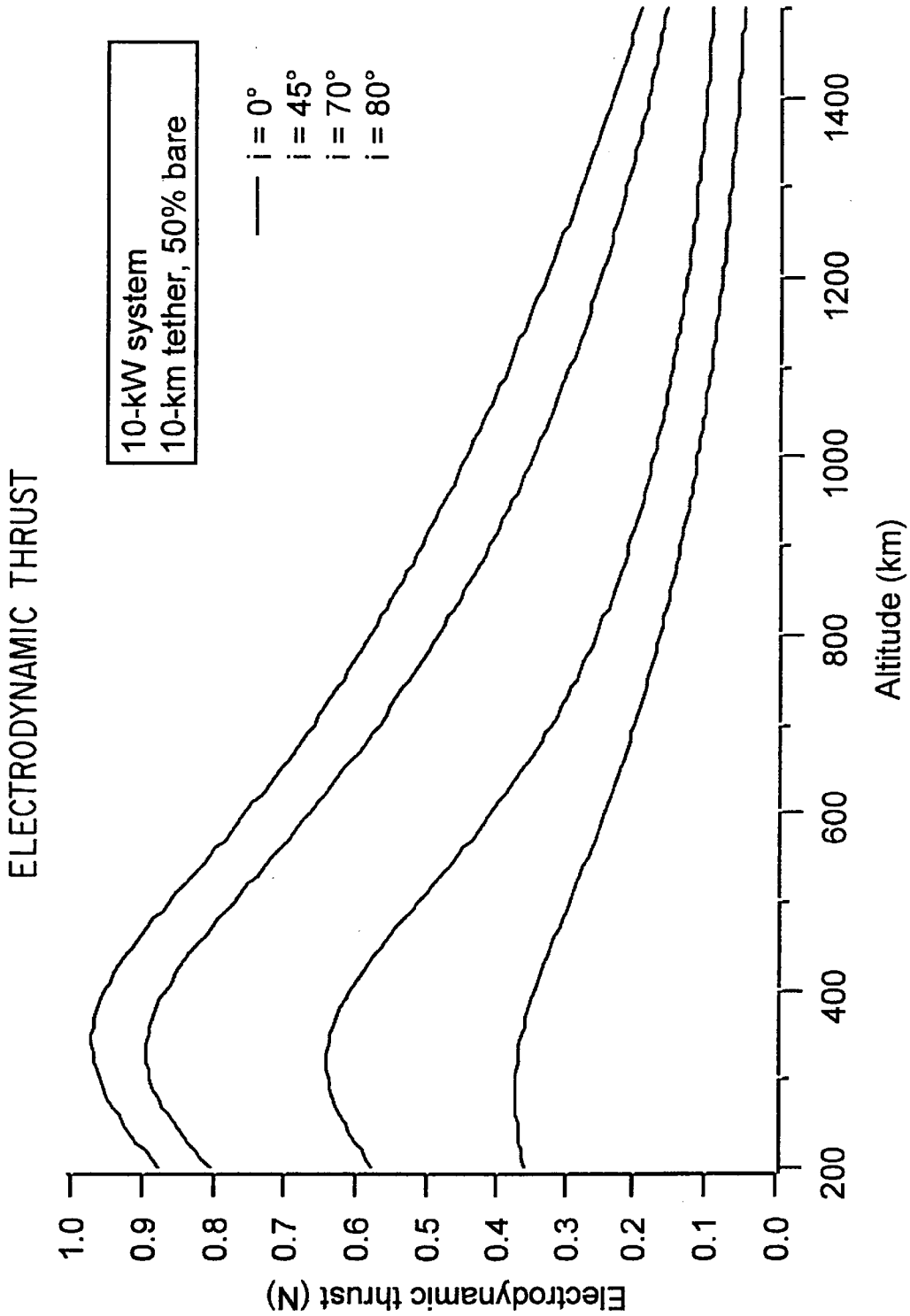
ELECTRODYNAMIC THRUST
10-kW system
10-km tether, 50% bare
i = 0°
i = 45°
i = 70°
i = 80°
Electrodynamic thrust (N)
1.0
0.9
0.8
0.7
0.6
0.5
0.4
0.3
0.2
0.1
0.0
200
400
600
800
1000
1200
1400
Altitude (km)

FIG. 1b

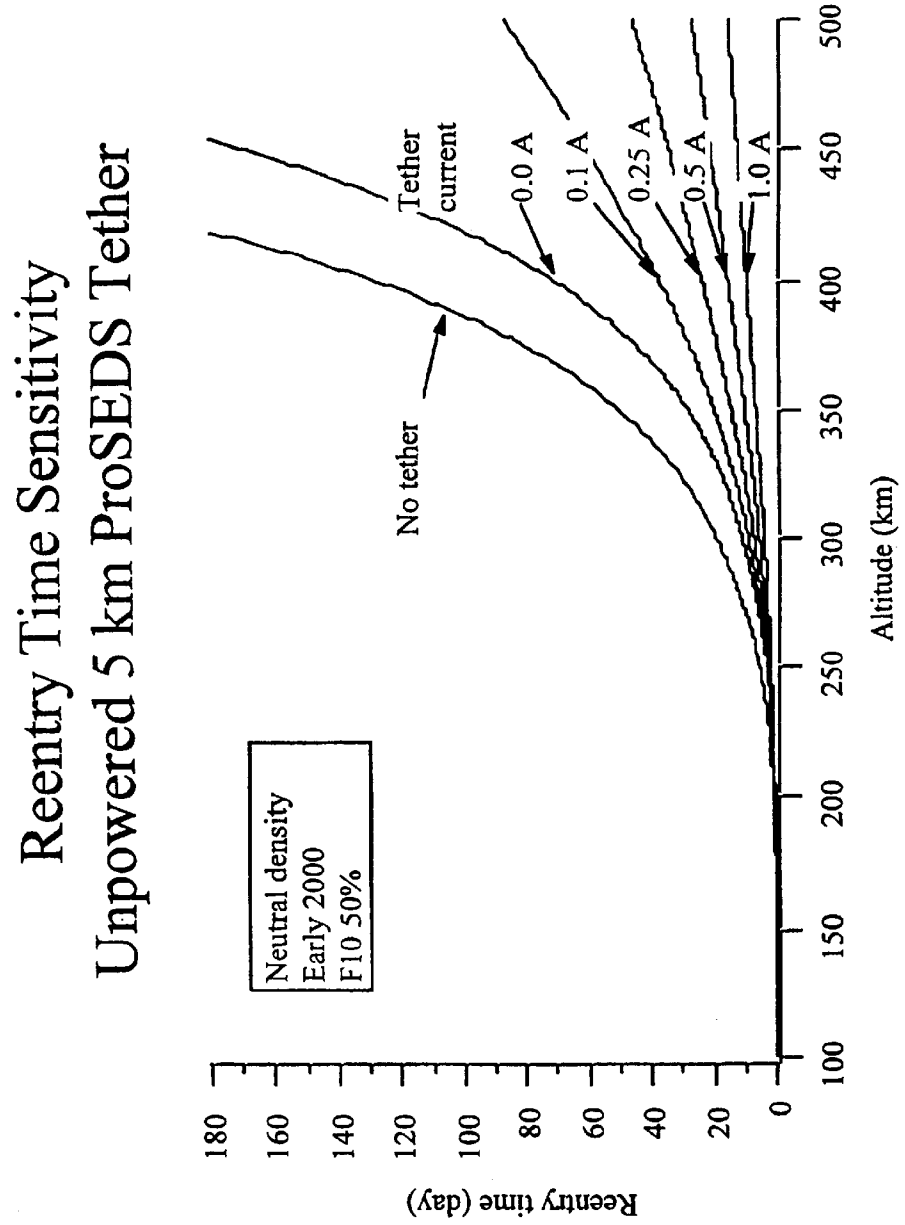

Enrico Lorenzini, SAO, NASA ProSEDS Mission (July 1997), NASA/MSFC Grant NAG8-1303

FIG. 1c

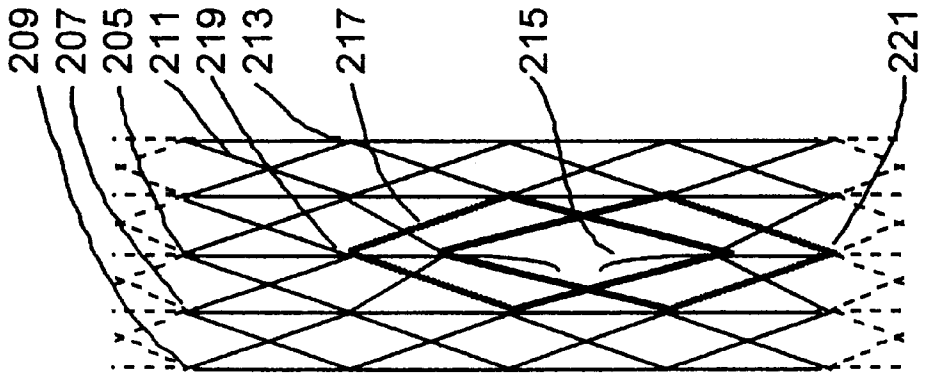

FIG. 2c

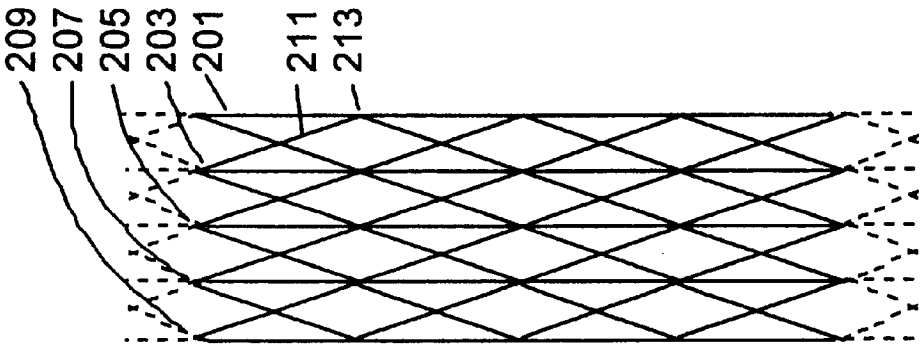

FIG. 2b

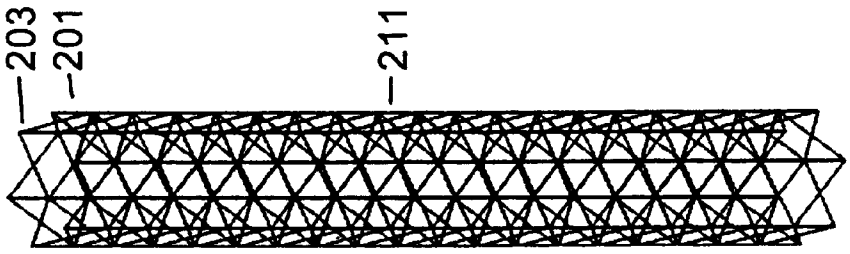

FIG. 2a

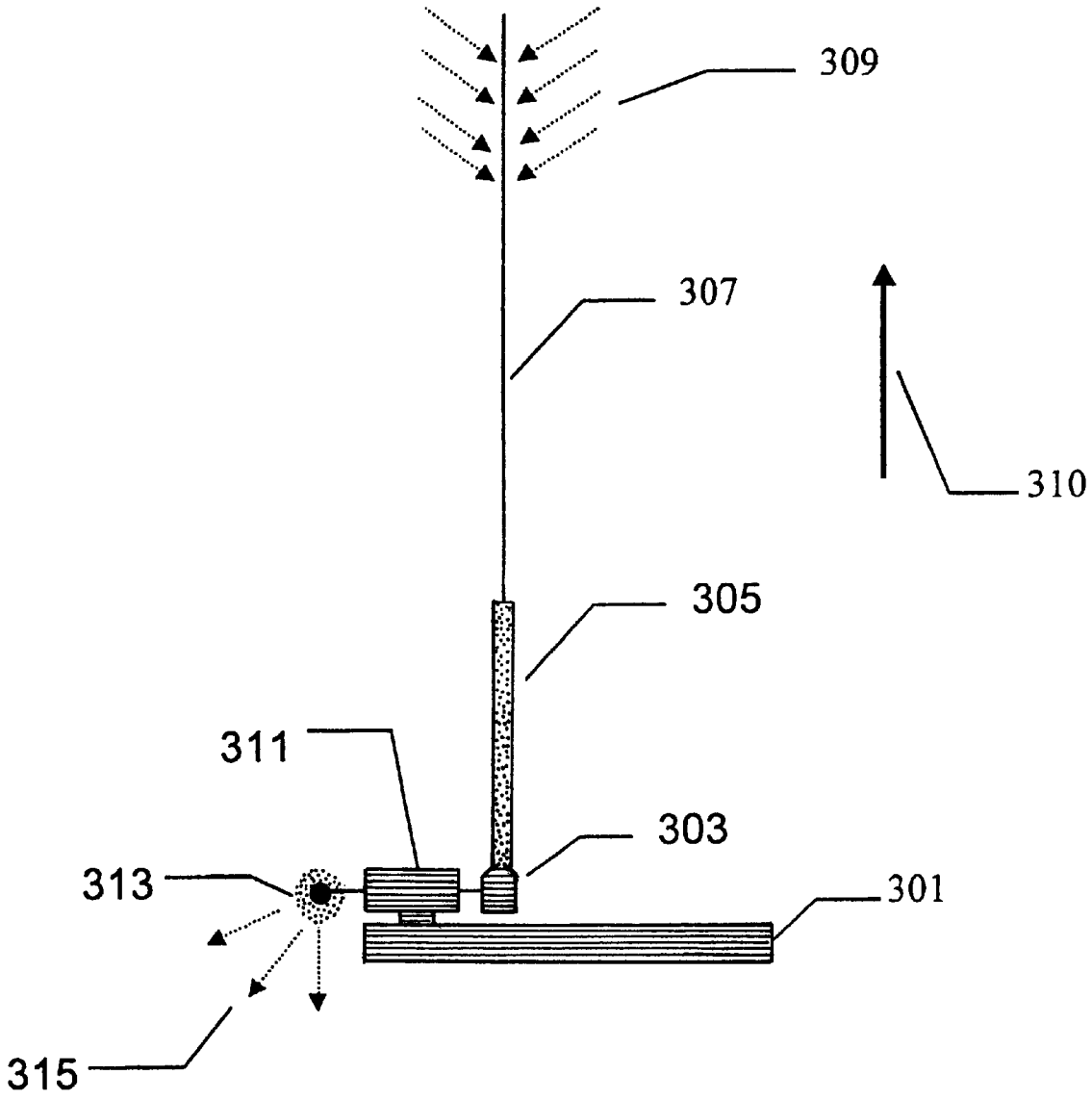

FIG. 3

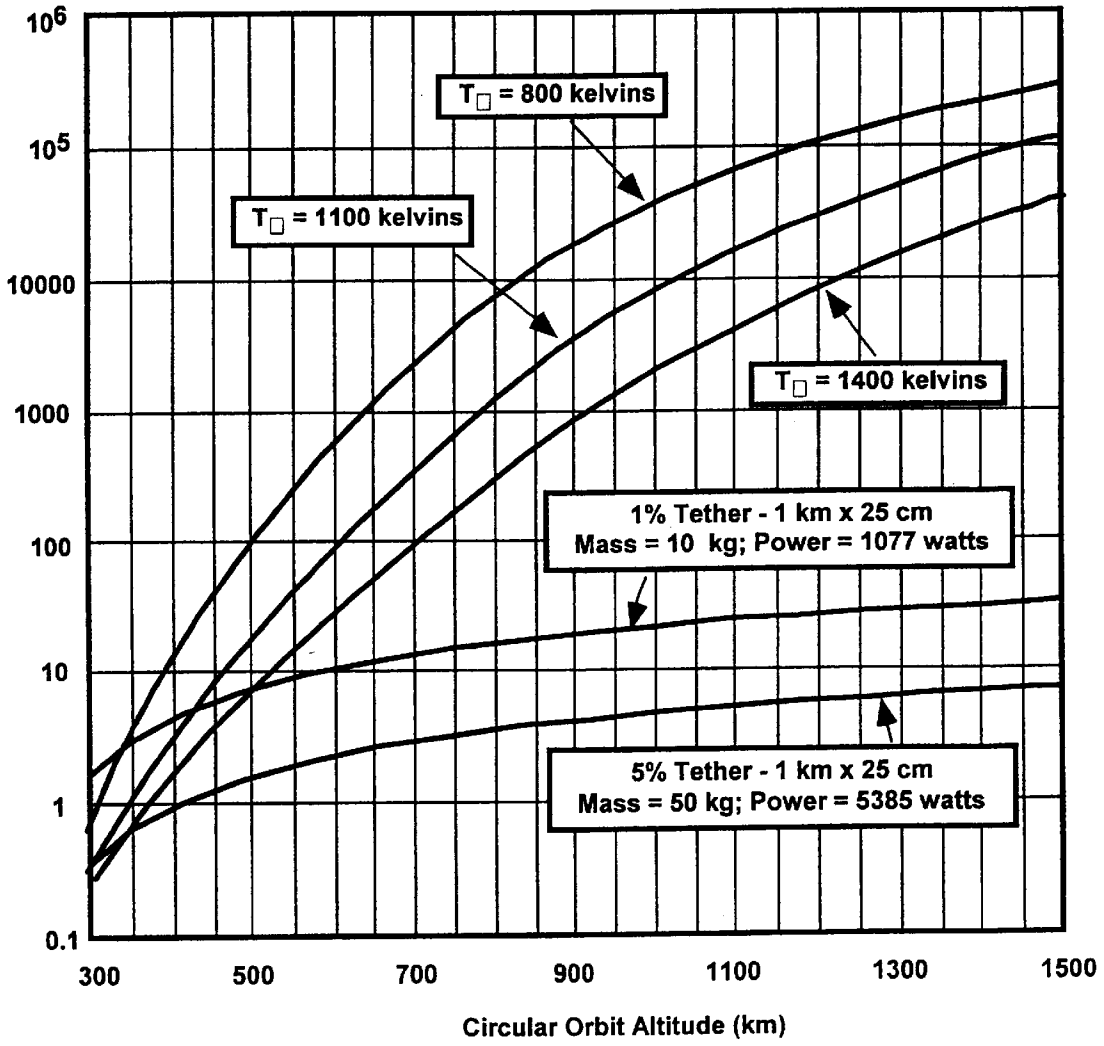

Area-Time Product for Mean and Extremes of Exospheric Temperature

(m = 1000 kg, Cd = 2.0 ; 1% Tether, 1 km x 25 cm; power = 1077 watts)

(5% Tether, 1 km x 25 cm; power =5385 watts)

FIG. 4

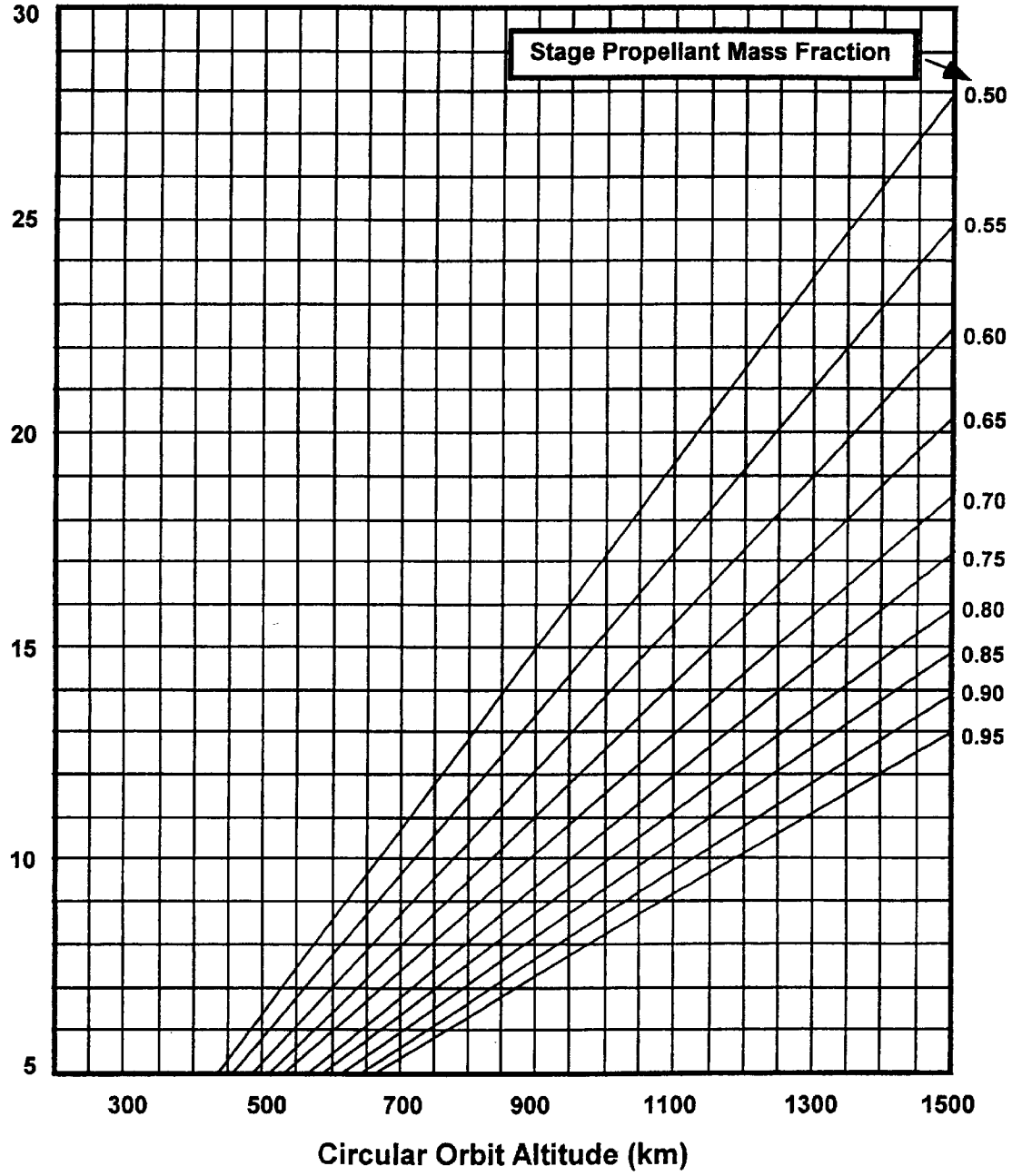

Conventional Solid Rocket Motor System

Percent Increase in Orbital Mass vs. Altitude and l' (Isp = 288 sec)

FIG. 5

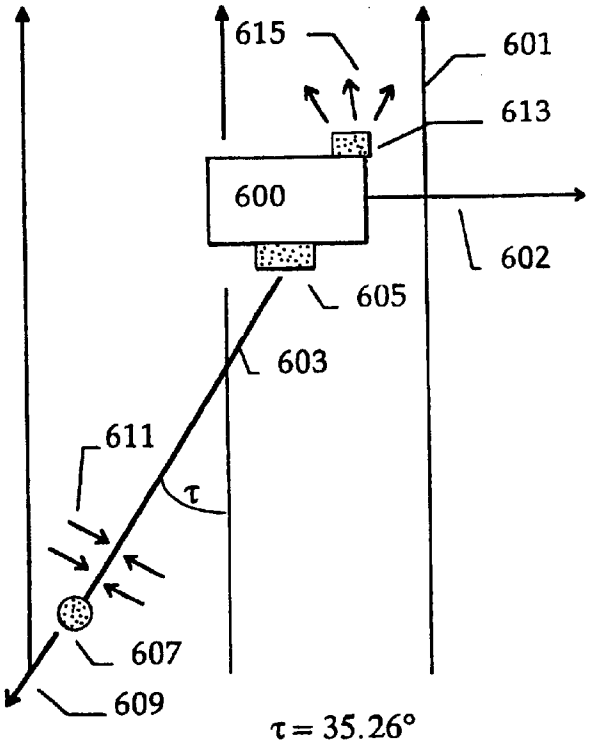
615
601
613
600
602
605
603
611
τ
607
609
τ = 35.26°

FIG. 6

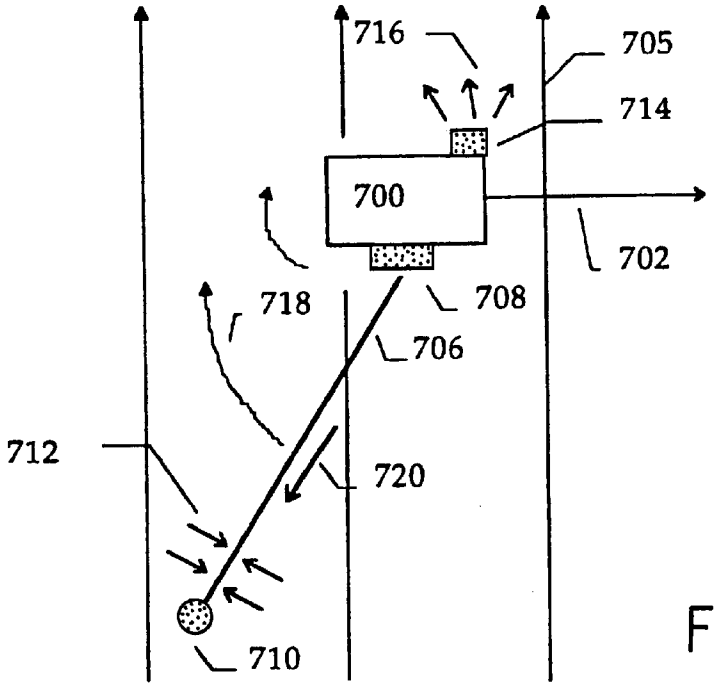
716
705
714
700
702
718
708
706
712
720
710

FIG. 7

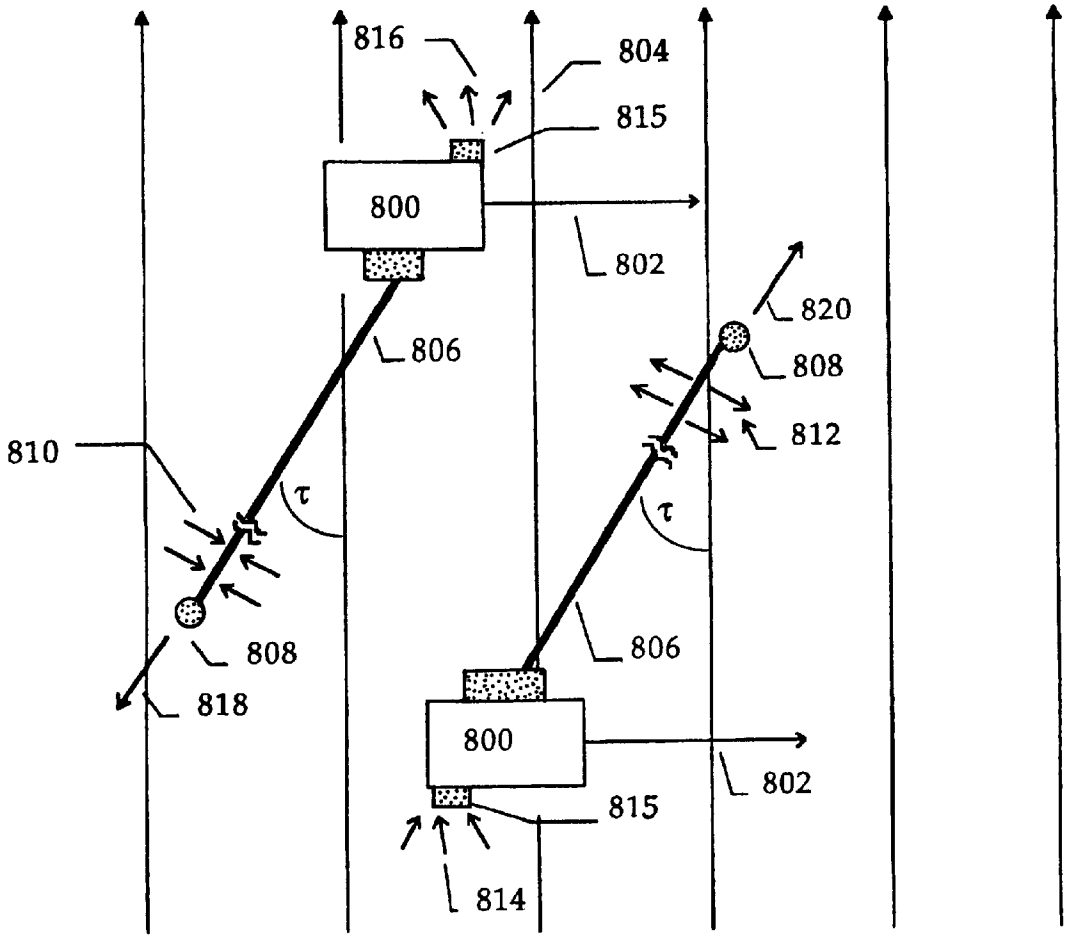
816
804
815
800
802
820
806
808
812
810
τ
τ
808
806
818
800
802
815
814

FIG.8

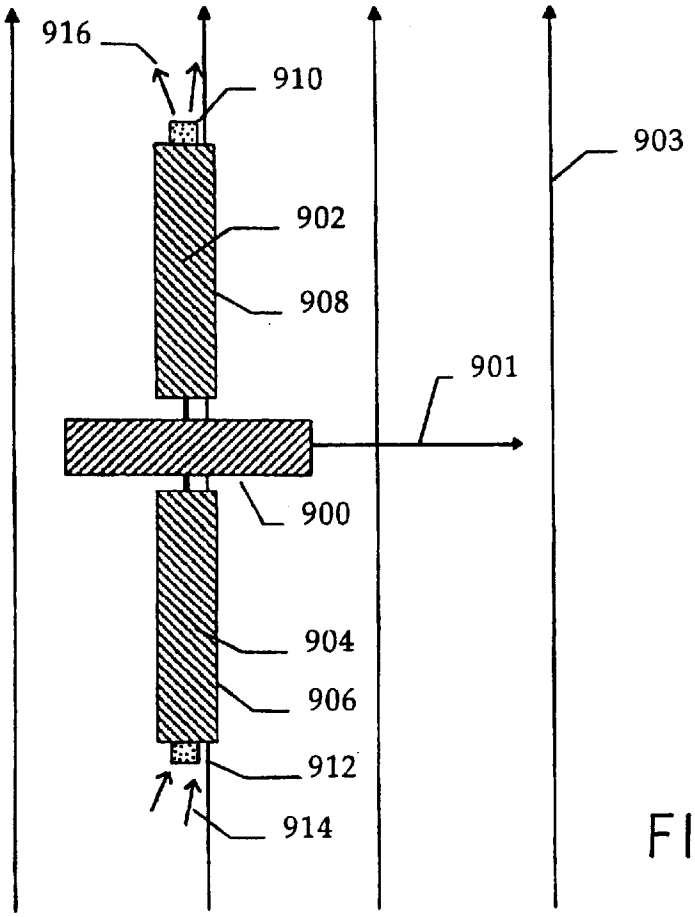
916
910
903
902
908
901
900
904
906
912
914

FIG. 9

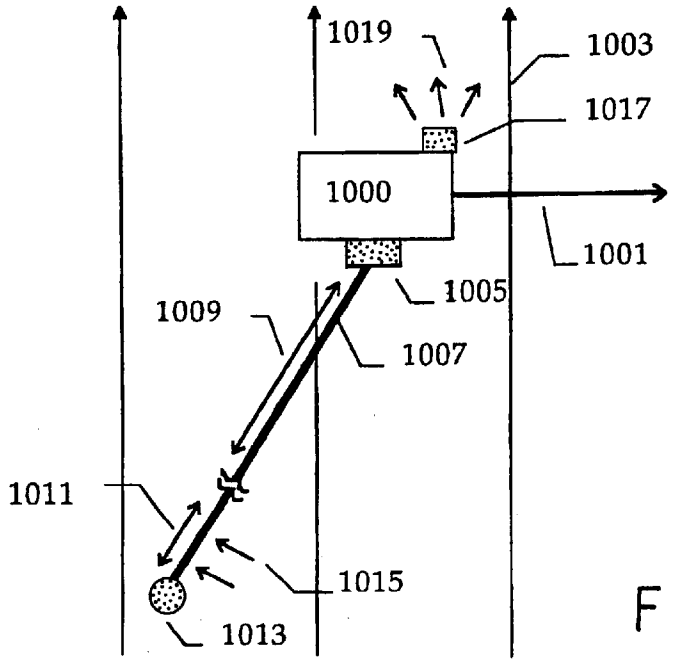
1019
1003
1017
1000
1001
1005
1009
1007
1011
1015
1013

FIG. 10

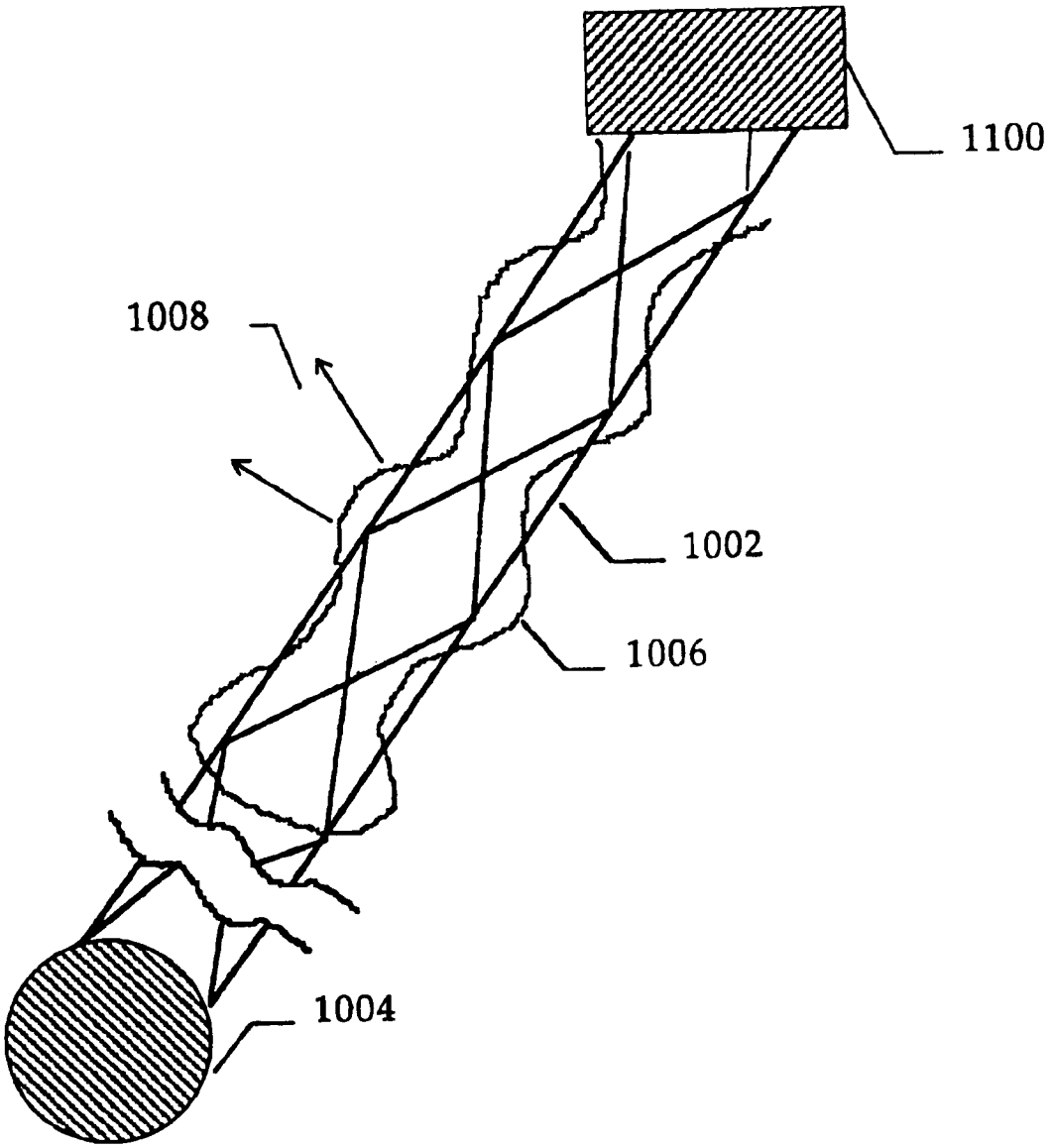

FIG. 11

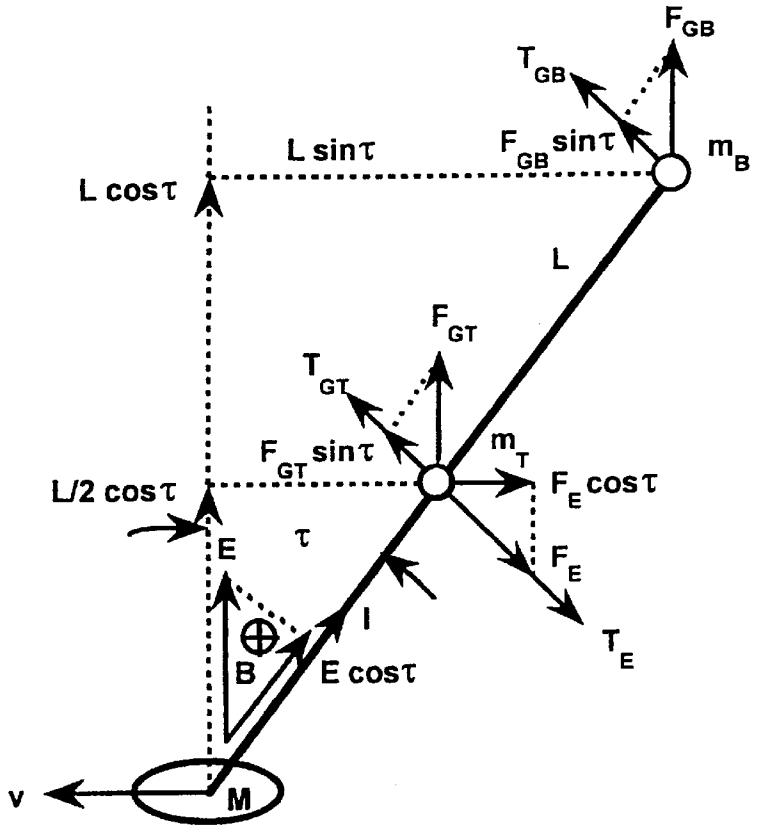

FORCES AND TORQUES ON AN UPWARD DEPLOYED CONDUCTING TETHER DUE TO THE MOTION OF THE HOST SPACECRAFT THROUGH THE MAGNETIC FIELD OF THE EARTH.

FIG. 12

ELECTRODYNAMIC TETHER AND METHOD OF USE

TECHNICAL FIELD

This invention relates generally to apparatus and methods useful for changing the state vector of a space object when the space object is moving relative to a magnetic field. More specifically, the present invention relates to an apparatus and method of using a conducting tether to produce an electrodynamic force to deorbit a satellite from its orbit around a celestial body, such as the Earth, which has an associated magnetic field.

RESERVATION OF RIGHTS

This application is subject to certain rights of the U.S. government as a result of contracts between the U.S. government and the inventors.

BACKGROUND ART

The present invention has its principal utility in outer space, primarily for deorbiting satellites at the end of their useful life to mitigate the harm and reduce the liability created by the proliferation of space debris. In order to obtain a better understanding of the present invention it is helpful to understand the prior art of space tethers, especially tether dynamics and tether electrodynamics. The present invention may be more readily understood through a review of the experimental prior art and a mathematical analysis of electrodynamic space tethers.

Prior Art Tethers:

A tether was originally a rope or chain used to fasten an animal so that it grazed only within certain limits. Tethers have been used for decades in space to attach astronauts to their spacecraft.

In 1974 Professor Guiseppe Colombo, holder of the Galileo chair of astronomy at the University of Padua in Italy, proposed using a long tether to support a satellite from an orbiting platform. U.S. Pat. No. 4,097,010, which issued to Professor Colombo and Mario Grossi on Jun. 27, 1978, teaches a satellite connected by means of a long tether to a powered spacecraft. Colombo actively pursued the design of a tethered satellite system.

Several NASA experiments, such as the two Small Expendable Deployer System (SEDS 1 & 2) experiments and the Plasma Motor Generator (PMG) experiment used tethers in space. SEDS used a nonconducting tether. The PMG used a 500-meter conducting tether. The Tethered Satellite System flights in 1992 and 1996 (TSS-1 & 1R) used a 20,000-meter conducting tether.

On the TSS-1 mission the tether deployed only 260 meters (853 feet) before the deployer failed. On the TSS-1R the tether was deployed 19,500 meters. In the SEDS-2 flight, a 0.8-mm diameter, 20,000-meter long braided single-line tether was deployed to study tether dynamics and lifetime. Orbital debris or a meteoroid severed this tether in less than four days.

In the TSS-1R flight, the conducting single-line tether was severed after five hours of deployment. This failure was caused by an electric arc produced by the 3,500 volts of electric potential generated by the conductive tether's movement through the Earth's magnetic field.

The Tether Physics and Survivability (TiPS) satellite consists of two end masses connected by a 4,000-meter long non-conducting tether. This satellite was deployed on Jun. 20, 1996 at an altitude of 1,022 kilometers (552 nautical miles). Its tether is an outer layer of Spectra™ 1000 braid over a core of acrylic yarn. The yarn will "puff" its outer braid to two millimeters to "give it a larger cross section to improve its resistance to debris and small micrometeoroids", according to the National Reconnaissance Office (NRO), which is a sponsor of the TiPS mission. As of Jun. 21, 1997 the TiPS tether had survived one year.

References:

1. Joseph A. Carroll, "SEDS Deployer Design and Flight Performance", paper WSEDSA-1 at the 4th International Conference on Tethers in Space, Washington, D.C., April 1995.
2. James E. McCoy, et. al. "Plasma Motor-Generator (PMG) Flight Experiment Results", pp.57–84, Proceedings of the 4th International conference on Tethers in Space, Washington, D.C., April 1995.
3. W. John Raitt, et. al. "The NASA.ASI-TSS-1 Mission, Summary of Results and Reflight Plans, pp. 107–118, Proceedings of the 4th International conference on Tethers in Space, Washington, D.C., April 1995.
4. Joseph C. Anselmo, "NRO Orbiting Spacecraft Studies Tether Survivability", Aviation Week, page 24, Jul. 1, 1996.

These experiments all used single line tethers.

The following reference is illustrative of the current state of the art in space tethers: Paul A. Penzo and Paul W. Ammann. Tethers in Space Handbook—Second Edition. NASA Office of Space Flight, NASA Headquarters, Washington, D.C. 20546. See also the hundreds of references in the 33 page bibliography at the end of the handbook.

The "Hoytether"™, an Improved, High-Reliability Tether:

In 1991, one of the present inventors, Robert Hoyt, invented a lightweight net-like structure that provides many redundant load-bearing paths. A number of primary load bearing lines running the length of the structure are connected periodically by diagonal secondary lines. The disclosed embodiment of this invention has the secondary lines firmly connected by knots to the primary lines. The secondary lines are connected only to the primary lines. At either end of the disclosed structure, a support ring enforces the cylindrical spacing between the primary lines. The secondary lines are designed with a small amount of slack. These secondary lines are only put under load if a primary line fails. This specific tether structure was disclosed to the public in 1992 (Forward, R. L., "Failsafe Multistrand Tether Structures for Space Propulsion", AIAA paper 92–3214, 28th Joint Propulsion Conference, Nashville, Tenn., 1992 (hereinafter "1992 Hoytether structure"). This structure was named a "Hoytether". The term "Hoytether" is used throughout the remainder of this specification for this type of tether structure.

The present invention uses an improved Hoytether, which was invented by the same inventors as the present invention. This improved Hoytether is the subject of a copending PCT application. The Hoytether is discussed briefly in this specification to aid understanding of the present invention.

The 1992 Hoytether design teaches that the normally slack secondary lines have half the cross-section (0.707 the diameter) of the primary lines. There are twice as many secondary lines as primary lines, thus the mass of the secondary lines is equal to the mass of the primary lines. In an undamaged Hoytether, the primary lines carry the entire load, while none of the secondary lines are under load.

While the survival probability of a single-line tether decreases exponentially with time, the Hoytether can maintain a high, i.e. greater than 99 percent, survival probability

for periods of months or years (forward and Hoyt, "Failsafe Multiline Hoythther Lifetimes", Paper AIAA 95–2890, 31st Joint Propulsion Conference, July 1995).

References:

1. Robert L. Forward, Failsafe Multistrand Tethers for Space Propulsion, Forward Unlimited, P.O. Box 2783, Malibu, Calif. 90265, July 1992, Final Report on NASA Contract NAS8-39318 SBIR 91-1 Phase I.
2. Robert L. Forward and Robert P. Hoyt, Failsafe Multistrand Tether SEDS Technology Demonstration, Final Report on NAS8-40545 with NASA/MSFC (Jun. 14, 1995).
3. Robert L. Forward and Robert P. Hoyt, "High Strength-to-Weight Tapered Hoytether for LEO to GEO Payload Transfer" Final Report on contract number NAS8-40690 with NASA/MSFC (Jul. 10, 1996).

The Hoytether is essentially a tri-axial net structure, with 'primary' lines running along the length of the tether and two sets of 'secondary' lines connecting these primaries diagonally. They can be made by hand and connected with knots as is taught by the 1992 Hoytether structure. Because knotted connections severely limit the strength of a structure, it is desirable to use a knotless fabrication technique to achieve interconnections that have strengths approaching the limits of the constituent material. As these tethers may be many kilometers long; fast and inexpensive mechanical methods are required for their practical fabrication.

Hoytethers may be made by mechanical braiding, i.e. three-dimensional braiding, such as 3-D rotation braiding using braiding machines such as those developed by the Herzog Company in Germany (August Herzog Maschinenfabrik GmbH & Co., Postfach 2260.26012, Oldenburg, Germany. The specialized loom developed by the Nichimo Company of Japan (Nichimo Company Ltd., 2-6-2 Ohtemachi, Chiyoda-Ku, Tokyo, Japan) is used to produce "Ultracross" knotless fishing nets in which the individual strands are braided as a 4-braid line, and the strands are interbraided where they cross. This produces netting that has slipless interconnections that are very strong, approaching the maximum capability of the fiber. Such a loom could, with some modifications, produce the present invention's structure. Only two such machines exist, one in Japan, the other in Washington State. Unfortunately neither can work with the small line diameters needed to practice the preferred embodiment of the present invention. See generally, Ko, F. K., "Braiding", in *Engineered Materials Handbook, Vol. 1., Composites*. ASM International, Metals Park, Ohio, 1957. Pp. 519–528.

The most common 3-dimensional braiding machines are 4-step braiders based upon the designs of Maistre (German Patent P230-16986, issued 1973) and Forentine (U.S. Pat. No. 4,312,261, issued 1982). Braiding is accomplished by using pneumatics or solenoids to push the parts of the braiding machine to the proper positions. This is a slow process and making a Hoytether kilometers long with these machines would be very time consuming and expensive. The composites division of Albany International (Albany International Research Company, 777 West Street, Mansfield, Mass.) also produces a 3-D braiding machine. This machine uses modular braiding components that arc assembled breadboard fashion on a large wall.

Although braiding is the preferred technique, alternate fabrication methods such as Raschel knitting and crocheting can be used successfully. Multikilometer long Hoyththers are presently being produced for the inventors by the vendors Culzean Fabrics and Flemings Textiles using an electronically controlled crochet machine produced by Comez in Italy.

Space Tether Systems:

The prior art teaches the use of tethers in space applications. U.S. Pat. No. 5,163,641, issued on Apr. 9, 1990 to Yasaka, teaches the use of a powered spacecraft connected by a tether to a satellite. This tether is disconnected to change the state vector of the satellite. The state of the art of energy and momentum transfer using space tethers is discussed in Ivan Beckey's article "Tethering, a new Technique for Payload Deployment", Aerospace America, March 1997, at pages 36–40. Beckey concludes, "Tethers can perform the same functions as propulsive upper stages of direct payload injection, but at lower weight and cost per pound." U.S. Pat. No. 4,923,151, issued Mar. 1, 1988 to Roberts, Wilknson and Webster, teaches a tether power generator for earth orbiting satellites. U.S. Pat. No. 4,580,747, issued Mar. 15, 1983 to Pearson, teaches use of a long tether extending downward into the atmosphere from a satellite. The state vector of the satellite is changed by forces acting on a lifting body connected to the end of the tether. U.S. Pat. No. 4,824,051, issued Jan. 12, 1987 to Engelking, teaches passing an electric current through a conductive tether attached to a satellite to provide propulsive force to alter the orbit of the satellite. U.S. Pat. No. 5,082,211, issued Jan. 21, 1992 to Werka, teaches use of a tether to deorbit space debris. U.S. Pat. No. 4,727,373, issued Mar. 31, 1986 to Hoover, teaches an orbiting stereo imaging radar system having two spacecraft in synchronous parallel orbits connected by a tether.

Tether Dynamics:

In order to understand the forces that cause a tethered satellite to move upward and away from an orbiting satellite, for example, it is first necessary to explain briefly how a satellite remains in orbit. An orbiting satellite is acted on by the force of gravity which pulls it toward Earth, and by a centrifugal force, which pushes it away from Earth. The centrifugal force" (actually inertia) results from the motion of the satellite around its circular orbit. This is the same force that one can experience by swinging a ball around on the end of a string. A satellite is maintained in its orbit when it travels at the natural speed for its altitude and, as a result, the centrifugal force is equal to the gravitational force.

At the typical orbital altitude of 250 kilometers for a low-Earth orbit satellite, for example, a speed of approximately 7.6-km per second is required to create sufficient centrifugal force to balance gravitational attraction on the satellite. If the altitude is changed, the two opposing forces will no longer be in balance unless the satellite also changes its speed. A higher orbital altitude requires a slightly lower speed so the satellite will take longer to complete an orbit. Because of this, if two free-flying satellites are in orbits at different altitudes, the lower satellite will circle the Earth in less time than the satellite in the higher orbit.

If two satellites, at different altitudes, are connected to each other by a tether, they are forced to travel around their orbits together—in the same period of time, which is longer than the natural period of the lower satellite but shorter than that of the upper satellite. The lower satellite will, therefore, slow down below the natural speed for its orbit and will tend to fall to a lower orbit because the centrifugal force will now be less than the gravitational attraction of the Earth. An upward force in the tether that makes up the difference between centrifugal and gravitational forces holds it in place, however.

Correspondingly, the upper satellite will be accelerated above its natural orbiting speed (increasing its centrifugal force above the gravitational attraction) and will tend to move to a higher orbit. It, too, is held in place by an additional force (downward) in the tether. In other words,

the net force downward on the lower satellite is balanced, through the tether, by the net force upward on the upper satellite. The effect of unbalanced forces on the two satellites is, therefore, to create tension in the tether. During the TSS-1 & 1R experiments, the inertia of the tethered satellite causes the satellite to rise above the orbiter as the tether is reeled out. Very close to the orbiter, there is little difference in the two orbits, and the tension force is insufficient to overcome friction in the deployer mechanism; therefore, until the satellite reaches a separation of approximately 1000-meters, the tension is augmented by small tether-aligned thrusters on the satellite. Beyond this point, the tension in the tether is the only force required.

By experimenting with a ball hung on a piece of elastic cord (a paddleball, for example) it is possible to simulate all the different types of oscillations that are possible on a space-based tether system. The elastic cord, representing the tether, may compress and stretch, causing the ball to bounce up and down (longitudinal oscillation). It also may move in a circular (skip-rope) motion or may develop wave-like motions (transverse oscillations). Even if the string itself remains straight, it is possible to get the ball swinging back and forth about its attachment point on the paddle like a child on a swing rope (pendulous motion).

Each type of motion occurs with a particular frequency, which depends on the length and tension of the tether. When the frequencies are different, the motions do not interact; however, at some tether lengths, the frequencies of two or more types of oscillation can become very close. At this point, energy can be transferred from one type of motion to another, a phenomenon known as resonance. For instance, the transverse oscillations in the tether may cause the satellite to swing back and forth in pendulous motion.

Many different factors may cause oscillations; the movements of the satellite or Shuttle are but two of these. For an electrodynamic tether, the skip-rope and pendulous oscillations are of particular interest. If a current is passed through a tether, the current will interact with Earth's magnetic field, resulting in a force that may produce skip-rope and pendulous oscillations. Because it is necessary to maintain control of the satellite, much study has gone into identifying the different types of possible motions and the methods used to control them.

One way to control the magnitude of those motions that cause a change in tension or transverse motion at the end of the tether is to have an end mass connected to the Hoytether that maintains a controlled tension on the tether, working much like a spring-loaded 'dog leash'. This may be as simple as a coiled spring, or as complex as an active control system that measures the tension and transverse forces on the tether and adjusts the applied tension according to a local or remotely operating algorithm.

Electrodynamic Effects of Conductive Tethers:

Electric potential is generated across a conductive tether by its motion through the Earth's magnetic field. Electromagnetic forces acting on a conductive tether in orbit can make the tether system behave like an electric motor or generator, thereby exerting a useful force to alter the state vector of the tether and any mass attached to it.

Electrodynamic tether propulsion is unlike most other types of space propulsion in use or being developed for space application today—there is no hot gas expelled to provide thrust. Instead, the environment of near-Earth space is being utilized to propel a spacecraft or upper stage via electrodynamic interactions.

A charged particle moving in a magnetic field experiences a force that is perpendicular to its direction of motion and the direction of the field. When a current flows through a long, conducting tether the electrons flowing through the tether experience this force due to the fact that they are moving along the wire in the presence of Earth's magnetic field. This force is transferred to the tether and to whatever the tether is attached (like a spacecraft, satellite, space station or upper stage). It can be an orbit-raising thrust force or orbit-lowering drag force, depending upon the direction of current flow. Operation in one mode allows boost from LEO to higher orbit while reversing the current flow provides negative thrust for deboost. The principle is much the same for an electric motor; reverse its operation and it acts as a generator. The current passing through the tether is returned through the ionosphere to complete the current loop with collection and emission occurring on opposite ends of the tether.

The PMG experiment demonstrated that a conducting tether can be used as both a motor and a generator. The TSS experiments, especially TSS-1R showed that very large voltages (about 3500 volts) can be generated by a sufficiently long tether.

Uses of an electrodynamic tether as an orbit raising and lower propulsion system has many advantages over competing systems:

a. It is nearly propellantless. Most other systems expel hot gases and require extensive resupply. To emit current, the electrodynamic tether propulsion system may use plasma contactors developed as a part of the International Space Station Program. These contactors consume less than 20 kg of xenon gas per year with a 50% duty cycle. The electrodynamic tether propulsion system can also use field emitter arrays, which emit electrons without the use of any gas.

b. It can change both altitude and inclination. The Earth's magnetic field is non-uniform and can therefore provide both in- and out-of-plane forces for inclination changes as well as altitude changes. This is of particular interest to payloads requiring polar orbits in that they can be launched on a small launch vehicle into a lower inclination orbit and have it raised in space by the proper phasing of current through the tether.

A demonstration of the propulsive capabilities of electrodynamic tethers was recently approved for a flight test in 1999. The Propulsive SEDS or ProSEDS mission, will fly as a secondary payload on a Delta II launch vehicle and deploy a 5-km conducting tether using the existing SEDS deployer concept. The ProSEDS experiment will be followed by the Electrodynamic Tether Upper Stage (EDTUS) experiment that will demonstrated the use of electrodynamic forces to change both the altitude and inclination of the experimental spacecraft. FIGS. **1**B and **1**C show the calculated electrodynamic thrust at several inclinations and the reentry time sensitivity of the ProSEDS tether, respectively.

One application for long-life conducting electrodynamic tethers is as a "Terminator Tether™" for removing from orbit unwanted Earth orbiting spacecraft at the end of their useful lives. When the mission of the satellite is completed, the Terminator Tether™, weighing a small fraction of the mass of the satellite, would be deployed. The electrodynamic interaction of the conducting tether with the Earth's magnetic field will induce current flow in the tether conductor. The resulting energy loss from the heat generated by the current flowing through the ohmic resistance in the conducting tether will remove energy from the spacecraft, eventually causing it to deorbit, thus reducing the amount of orbital space debris that must be coped with in the future.

In the following analysis, it is shown that the amount of energy loss generated by an electrodynamic tether is essen-

tially independent of its length or area, and instead is primarily proportional to the tether mass and the physical properties of the conductor metal chosen. In the typical example calculated, a 1000-kg spacecraft can be deorbited from a 1000-km high Earth orbit by a 10-kg mass tether in a month, while a 1-kg tether can deorbit a 1000-kg spacecraft in less than a year.

To the knowledge of the inventors, Joseph P. Loftus of NASA/JSC first proposed the general concept of using an electrodynamic tether to deorbit spent satellites. (Joseph P. Loftus <JLoftus@ems.jsc.nasa.gov>, personal communication via email to Robert Forward, Monday Jun. 10, 1996 15:50:10.) In order to show that the Loftus deorbit concept was not obvious to those skilled in the art of electrodynamic tethers, Forward contacted the leading expert, Joseph Carroll, of Chula Vista, Calif., who built and participated in the flight test of the PMG. After being told of the Loftus concept in a telephone conversation, his reply in an Email message dated Aug. 5, 1996, was "such a system would be feasible . . . by it is still not obvious to me that it would be useful . . . "

Loftus was considering the use of electrodynamic drag from a conducting tether to achieve this goal of bringing the unwanted spacecraft down from its high orbit (where atmospheric drag is negligible) to a 200-km orbit, where atmospheric drag would rapidly finish off the task of removing the unwanted spacecraft from orbit. The tether Loftus was considering was a single-line, conducting tether, typically 1-mm in diameter, 1-km long, and, if made of aluminum, 2-kg in mass. He would include means at the ends of the tether to contact the ambient space plasma around the Earth to complete the current loop.

Unfortunately it is probable that space impactors would sever the 1-mm diameter, 1-km long single-line tether proposed by loftus within a 1/e lifetime of four months. This would produce orbital debris rather than removing it. The motivation for this work is the NASA Safety Standard NSS 1740.14 "(Guidelines and Assessment Procedures for Limiting Orbital Debris." The relevant portion of the Standard starts on page 6-3: General Policy Objective-Postmission Disposal of Space Structures. Item 6-1: "Disposal for final mission orbits passing through LEO: A spacecraft or upper stage with perigee altitude below 2000 km in its final orbit will be disposed of by one of three methods." The method of interest is the atmospheric reentry option, Option a: "Leave the structure in an orbit in which, using conservative projections for solar activity, atmospheric drag will limit the lifetime to no longer than 25 years after completion of mission. If drag enhancement devices are to be used to reduce the orbit lifetime, it should be demonstrated that such devices will significantly reduce the area-time product of the system or will not cause the spacecraft or large debris to fragment if a collision occurs while the system is decaying from orbit."

The NASA standard applies only to NASA spacecraft and even then only to completely new spacecraft designs. New versions of existing designs are to make a "best effort" to meet the standard, but will not be required to change their design to do so. The Department of Defense has adopted the NASA standard with the same provisos. An Interagency Group report has recommended that the NASA standard be taken as a starting point for a national standard. It is NASA's recommendation to the Interagency Group that the safety requirement be phased in only as spacefaring nations reach consensus internationally, which is being done through the International Debris Coordination Working Group whose members are Russia, China, Japan, ESA, UK, India, France, Italy, and the US.

Thus, although the NASA Safety Standard in its present form is not the "Law", the existence of the standard means that some time in the future a similar requirement may be imposed on all spacecraft. This could result in major growth in future space tether business, with a sale to every non-geostationary spacecraft being "mandated" by government safety regulations, somewhat as the sale of seat belts and airbags for every car are mandated.

In fact, three of the companies planning to set up "constellations" of low to medium orbit communications: Teledesic, Iridium and Odessey have committed their companies to abide by the spirit of NASA Safety Standard 1740.14 by using one means or another to deorbit their spacecraft before they reach end of life.

Problems with Prior Art Tethers:

All electrodynamic tether designs proposed by the prior art teach that the tether should be operated at a right angle to the magnetic field through which the tether is moving. This is a problem because the electrodynamic force acting on the tether causes the tether to align itself with the magnetic field force lines. To overcome this problem the prior art teaches the use of a large ballast mass attached to the end of the tether and/or use of a very long (tens to hundreds of kilometers) tether. The large ballast mass is expensive to take to orbit because it replaces useful payload. The long tether sweeps a larger Area-Time-Product during its useful life and thus is more likely to impact other space objects, either debris or another spacecraft.

Another problem common to all proposed prior art tethers is tether instability. If the tether produces a large electrodynamic drag force, which is desirable because a large drag force will cause the satellite to deorbit quickly, then the tether will be dynamically unstable. This instability can cause the tether to lose its effectiveness, act uncontrollably and even wrap around the satellite or otherwise malfunction. Experts skilled in the art of tether design have opined that this dynamic instability is inherently unavoidable in any electrodynamic tether system. The prior art solution, such as that presently being used in the ProSEDS experiment, has been to use a large ballast mass to increase the stabilizing gravity-gradient force and/or to limit the electrodynamic drag of the tether to less that the maximum that could be produced. In the ProSEDS experiment, the conducting electrodynamic tether is five kilometers long. To insure stability, it will be augmented by a 20–35 kilometer long non-conducting tether, which to further have stability will have a 40 kilogram ballast end mass.

Yet another problem of all proposed prior art electrodynamic tether systems is how to radiate away the energy produced by the tether's operation. A satellite moving at an orbital velocity of 18,000 miles per hour has a kinetic energy of over 10,000 calories per gram. To put this amount of energy in an understandable perspective, it may be noted that when nitroglycerine explodes it produces about 1,500 calories per gram. Prior art designs of electrodynamic drag tethers teach the use of the electrical energy generated by the tether to charge batteries or operate electronics, with the excess energy being converted into heat by a resistive load. This excess heat must be radiated to the space environment or it will melt the resistive load. Thus the resistive load, and/or its associated radiator structures, must be massive and replace useful payload.

DISCLOSURE OF THE INVENTION

The present invention comprises an electrodynamic tether structure and a method of use. The principal industrial utility of the present invention is to deorbit satellites in Earth orbit

at the end of their useful life. This embodiment of the present invention is sometimes referred to in this specification as a "Terminator Tether™" because it terminates the orbital lifetime of the host spacecraft. The structure of the tether taught by the present invention is a short, wide, interconnected-multiwire (compared to the long single wires of the prior art) conductive Hoytether whose area maximizes electrodynamic drag while simultaneously minimizing the Area-Time-Product swept by the tether during its operating life. The preferred tether length is two to five kilometers. The preferred tether mass is one to five percent (1%–5%) of the spacecraft mass. The method of operation comprises orienting the tether structure at a 35.26-degree trailing angle to the local vertical to maximize electrodynamic force on the tether while avoiding tether instability and allowing use of a small tether end mass.

The present invention also teaches that the satellite-tether system may be rotated around its common center of mass to centrifugally produce tension force in the tether structure to oppose forces causing tether instability. The angle of the conductive tether structure of the present invention with respect to the velocity vector of the host spacecraft may be controlled by the method of the present invention so it interacts with the encountered magnetic field to induce a maximum current flow in the tether. This produces maximum electrodynamic drag. All or a portion of this electric power may be stored and then controllably applied to the conductive tether to produce an induced electrodynamic force. This induced electrodynamic force may by used to enhance the drag force, to rotate the tether-satellite system and/or to provide satellite propulsion, i.e. to change the state vector of the satellite for any useful purpose, e.g. to avoid collision or to change the host spacecraft's orbit to an orbit more favorable for more rapid deorbiting.

The present invention also teaches a tether structure that also functions as a thermal radiator and/or plasma contactor. An embodiment of the present invention using conducting elements of the satellite, e.g. the solar arrays, as electrodynamic tether structures is also disclosed.

BRIEF DESCRIPTION OF THE DRAWINGS

The present invention may be better understood with reference to the following drawings:

FIG. **1***a* is a graph comparing the survival probability of a single line tether as taught by the prior art to the Hoytether used by the present invention.

FIG. **1***b* is a graph showing the level of electrodynamic thrust for a 10 kilometer, 10 kilowatt tether at various altitudes and inclinations.

FIG. **1***c* is a graph showing reentry time sensitivity of a five kilometer ProSEDS tether for several conditions of current flow in the electrodynamic tether.

FIGS. **2***a*, **2***b* and **2***c* show the Hoytether structure used by the preferred embodiment of the present invention.

FIG. **2***d* shows the Hoytape structure used by the preferred embodiment of the present invention.

FIG. **3** is a block electrical diagram of an electrodynamic tether system.

FIG. **4** is a graph showing a graph of the Area-Time product for three separate levels of exospheric temperature (for neutral drag calculations) and for two separate assumptions regarding tether mass and power drawn from the ambient plasma (for the Terminator Tether™ calculations).

FIG. **5** is the percent additional mass required in orbit to drop the perigee of a circular orbit at altitude, at, to a value of 200 kilometers using standard chemical rocket as taught by the prior art for deorbiting unwanted spacecraft.

FIG. **6** is a deorbit tether system shown operating with its electrodynamic tether at a trailing 35.26-degree angle to the encountered magnetic field, as is taught by the preferred embodiment of the present invention.

FIG. **7** shows an embodiment of the present invention in which the electrodynamic tether—satellite system is rotated about its center of mass to avoid tether instability.

FIG. **8** shows an embodiment of the present invention wherein the tether is powered to provide induced electrodynamic force.

FIG. **9** shows an embodiment of the present invention wherein the solar power system structure of the satellite is used as an electrodynamic tether.

FIG. **10** shows the use of a portion of the tether structure as a thermal radiator and plasma contactor.

FIG. **11** shows the braiding of an ohmic resistive load into the tether structure.

FIG. **12** is a force diagram showing the forces and torques on an upward deployed conducting tether due to the motion of the host spacecraft through the magnetic field of the Earth.

DETAILED DESCRIPTION OF THE PREFERRED EMBODIMENT

The principal industrial utility of the present invention is the deorbiting of satellites in Earth orbit, which necessarily can happen only in outer space. Until the present invention is reduced to actual practice by use with satellites in outer space and a body of practical experience is thereby obtained, the present invention can only be constructively reduced to practice, such as by this written specification and its associated drawings, diagrams and graphs and by reference to electric measurements made on conducting tethers in space by the PMG and TSS experiments. The inventors provide herein a detailed discussion of the theory of the present invention to help those skilled in the art of aerospace and tether engineering to understand the present invention and to make and use the best embodiment of the present invention known to the inventors at the time this specification was prepared, without undue experimentation.

Although the present invention is discussed in this specification in its preferred embodiment as a means of deorbiting satellites, it must be emphasized that discussion of this specific use in no way limits the broad scope of the present invention. The present invention can be used to change the direction and speed, i.e. the state vector, of any space object providing that object is in motion relative to any magnetic field. This magnetic field may be that of the Earth or of any other celestial body, for example Jupiter or the sun.

In this specification the material forming the structure of the electrodynamic tether is specified as being a conductor. For example, a metal, such as copper or aluminum wire could be used. Likewise, nonmetallic conductor, such as carbon nanotubes, or a conductive polymer could form the conductive structure of the tether.

FIG. **1***a* shows the survival curve for a Hoytether as used by the present invention vs. the survival curve of a prior art single line tether. The survival probability curve of the Hoytether as a function of time does not conform to the well known "1/e decay" shape of a single-line tether. The Hoytether can maintain a high level of survival probability, about 99 percent, until it nears its 'lifetime'. Its survival probability then drops rapidly to zero. A detailed mathemati-

cal analysis of the difference between Hoytether and single tether survival probabilities is given in Appendix E "Small Impactor Survival Probabilities of Hoytethers" and Appendix F "Large Orbital Debris Survival Probabilities of Hoytethers", both contained in the Final Report of NASA Contract NAS8-40545. The resulting cut probability with time for the Hoytether has a "bingo curve" shapes. In a bingo game, at least five numbers must be called before anyone can win, and usually many numbers have to be called before one of the bingo cards gets five in a row. In the Hoytether at least four cuts must happen at the same level before any failure occurs, and many cuts have to be made before any one of the levels has all four lines cut. The bingo curve has the property that the probability of survival stays very high for periods short compared to the lifetime. The probability of survival is greater than 99% for periods shorter than 10% of the lifetime. This is much better performance than the 1/e curve of a single line tether, where the probability of survival is only 90% at 10% of the 1/e lifetime.

FIG. **1***b* shows the calculated level of electrodynamic thrust, in Newtons, produced by a ten kilowatt, ten kilometer single conductor tether at altitudes between 200 and 1400 kilometers and at orbital inclinations between zero degrees and eighty degrees.

FIG. **1***c* is a graph showing the reentry time sensitivity calculated for a five kilometer ProSEDS single conductor tether at altitudes between 200 and 500 kilometers with current flow in the tether between on flow and one ampere.

FIGS. **1***b* and **1***c* are the work of Enrico Lorenzini of the Smithsonian Astrophysical Observatory from his study "Performance Evaluation of the Electrodynamic Tether Tug", NASA/MSFC Grant NAG8-1303 (Nov. 12, 1966). They show that experts in the field believe that the present invention will have industrial utility, as the current flow of one ampere in FIG. **1***c* decreases the deorbit time for the calculated case from more than 180 days to less than 20 days.

FIG. **2***a* is an isometric drawing showing the generally cylindrical structure of the Hoytether. In FIG. **2***a*, primary lines **201** and **203** are shown connected via secondary lines **211**. In FIG. **2***b*, which is a schematic illustration of the structure shown in FIG. **2***a*, primary lines **201**, **203**, **205**, **207** and **209** are connected, each to their respective adjacent primary lines, by a plurality of secondary lines **221**. These connections, for example as shown at interconnection **213**, are made by knotless, slipless interconnections, such as Soutache braiding of twisted connections.

FIG. **2***c* shows the Hoytether structure of FIG. **2***b* but with a severed primary line **205** at breakpoint **215**. The second level of secondary lines **217**, shown as bold lines in FIG. **2***c*, redistribute the load from the severed primary line **215** at point **217** back to line **215** at points **219** and **221**, above and below the break, respectively.

For the electrodynamic tether, a preferred embodiment would be to unroll the tubular Hoytetherr™ into a flat Hoytape™ as shown in FIG. **2***d*.

FIG. **3** generally shows the arrangement of functional elements of an electrodynamic tether system. Of course such a system must have a means of attachment to the spacecraft, a deployer, the tether itself, some form of space plasma cathode contactor, some form of space plasma anode contactor, a power dissipation system, and a communication and control system. Each of these individual elements are known in some form to those skilled in the art of aerospace engineering. Thus the present inventors do not feel it is necessary to describe them in detail in this specification.

In FIG. **3**, a space object **301**, i.e. a satellite in Earth orbit, or any other space object either natural or man made, is physically connected to the tether system. The tether system comprises a deployer **303** from which a conductive Hoytether **305** having a bare segment **307** extends upward from space object **301**. The positively biased anode end **309** of tether **305** collects electrons from the ionosphere as space object **301** moves in direction **310** across the Earth's magnetic field. These electrons flow through the conductive structure of the Hoytether to the power system interface **311**, where it supplies power to an associated load, not shown. The electrons then flow to the negatively biased cathode **313** where electrons are ejected into the space plasma **315**, thus completing the electric circuit.

In order to allow those skilled in the art to better appreciate the broad scope of the present invention, the inventors will now provide an example using specific tether and system values to compare the Terminator Tether™ to prior art means, ie a rocket, for deorbiting a satellite.

Terminator Tethers™:

When an Earth orbiting conducting space tether moves through the magnetic field of the Earth, an electric field is generated in the tether that is proportional to the velocity of the conductor, the magnetic field strength of the Earth, and the angle between the conducting tether and the magnetic field lines. From data obtained during the various electrodynamic experiments that have been conducted in space to date, such as the PMG, TSS-1, and TSS-1R experiments, a typical value of the generated emf per unit length of tether of E=100–200 Volts/kilometer can be assumed. The electric potential V developed at the ends of a tether of length L is then V=EL. For a tether of length L=10 km, the electric potential developed is V=1000 V. For calibration, the 20-km long TSS-1R tether, at the moment of failure, was developing a potential of 3500 volts, which is 175 volts/km.

The mass of a conducting tether of length L, cross-sectional area A, and densin, d is given by m=dLA. Typical values for the density are d=2700 kg per cubic meter for aluminum and 8900-kg per cubic meter for copper. For a typical aluminum tether of mass m=10 kg and length L=10 km, the cross-sectional area will be A=0.37 mm squared. If this were a solid-wire single-line tether, the diameter of the wire would be D=0.69 mm (21.5 gauge). If this were an 18 line tubular Hoytether, the diameter of the lines in the Hoytether would be D=0.16 mm (34 gauge).

The resistance of a conducting tether of length L and cross-sectional area A is given by R=rL/A, where r is the resistivity of the conductor in nano-ohm-meters (nΩ-m). Typical values for the resistivity are r=27.4nΩ-m for aluminum and 17.0 -nΩ-m for copper. For the m=10 kg aluminum tether of length L=10 km and cross-sectional area A=0.37 mm squared at 20 degrees C, the end-to-end resistance is 750 Ω. This value of resistance is the essentially the same whether the conductor area is concentrated into a single-line tether or divided up into many lines as in a multiline Hoytether.

The current I generated in the conducting tether by the electric potential V between the ends of the tether applied across the tether resistance R is I=V/R. For the 10 kg mass aluminum tether of length L=10 km, electric potential V=EL=1000 volts, and resistance R=750 Ω the current is I=V/R=1.33 Amps. Currents near these values were measured in the TSS-1R experiment at the time of failure. At the time of failure of the TSS-1R tether, none of the plasma contactors on the Space Shuttle or the Italian Satellite were operating. Thus the current was being collected by the conductive surface area of the Space Shuttle and the Italian

Satellite at the two ends of the tether. The Space Shuttle area is quite large, so it was not the limiting factor in current collection. The diameter of the Italian Satellite was 1.6 m, which would give it an effective plasma contact area of about 8 square meters. This shows that, if the plasma contact area of the ends of a conductive space tether can be make large enough, then ampere level currents can be extracted from the ambient space plasma without the use of space plasma contactors.

The power dissipated as ohmic heating in the tether is given by P=IE. For an aluminum tether of mass m=10 kg, resistivity r=27 nΩ-m, and density d=2700 kg/cubic meter, subjected to an electric field of E=100 V/m, the power dissipated in the ohmic losses of the conductor is P=IV=1330 Watts. For a 1 kg mass tether, it would be still a considerable 133 Watts of dissipation.

There will no doubt be additional dissipation of energy in plasma ohmic losses, plasma wave generation, and plasma ion acceleration, but the ohmic losses in the conducting tether alone are sufficient for the task of deorbiting an unwanted spacecraft massing 100 to 1000 times more than the tether.

The decay time of a metric ton spacecraft moving from a 1000 km altitude orbit to a 200 km altitude orbit with an energy difference of dU=3.3GJ, when its energy is being dissipated at a power of P=1330 W by an aluminum tether massing just 10 kg, or 1% the mass of the spacecraft, is about one month. This is a remarkably short time, and indicates that the concept of using a conductive tether to deorbit a spacecraft is indeed feasible. If the aluminum tether massed only 1 kg, or 1/1000th the mass of the spacecraft it was deorbiting, then the decay time would rise to 10 months, still a reasonable value.

In reality, of course, the actual decay time will be longer than this. If the electrodynamic drag force is very large, and becomes larger than the gravity gradient forces pulling on the ends of the tether (which force is proportional to the mass of the tether), then the tether will tend to align itself along the magnetic field lines instead of across them, and the drag force will decrease because of the small angle between the conductor length and the magnetic field lines. The tether will then settle into an angle determined by the balance between these two forces.

Is the Terminator Tether™ theoretically a better means than atmospheric drag or a rocket engine for deorbiting satellites at the end of their useful life?

In the formula for da/dt (change in altitude per change in time), using the assumptions of near-circular spiral trajectories, the Area-Time-Product (Z), the criteria by which NASA judges compliance with Safety Standard 1740.14, is given by:

$$Z = A\int dt = -\frac{m}{C_D}\int \frac{da}{\rho(a)\sqrt{\mu a}},$$

where ρ(a) is simply the density as a function of semi-major axis. Thus, for a static atmosphere, the problem of area-time product is reduced to quadrature. Note that the area-time product depends only on the density profile and the ratio of spacecraft mass to drag-coefficient and is linearly related to that ratio.

The basic altitude-dependence of the atmospheric density, represented here by ρ(a) can be expressed in a low-order power series of ln(density)=f(ln(altitude)), so that it will be possible to develop a representation of the log—log relationship between altitude and density. The three static levels of atmospheric density are modeled as 5th order polynomials in the natural log of the altitude and are representative of well known atmosphere models, for example, Jacchia, L. G., "Thermospheric Temperature, Density, and Composition: New Model," SAO Special Report 375, March 1977. 2. Anon., Marshall Space Flight Center, "Long-Range Statistical Solar Activity Estimation," Atmospheric Sciences Division, 1989.) The values of exospheric temperature are reasonable (about 2-sigma) high and low solar activity values of 1400 and 800 kelvins respectively. The mean value is taken to be 1100 kevins.

FIG. **4** shows a graph of the Area-Time product for three separate levels of exospheric temperature (for neutral drag calculations) and for two separate assumptions regarding tether mass and power drawn from the ambient plasma (for the Terminator Tether™ calculations). The density profiles for the three values of exospheric temperature represent the extremes and mean values to be expected during the next several decades. The exospheric temperature goes through a cycle of about an 11 year period with maximum about 1400 kelvins and minimum about 800 kelvins.

The tether calculations include an inherent assumption that the Terminator Tether™ transfers all the energy extracted from the ambient space plasma into drag that decreases the orbital energy of the spacecraft at a rate given by the power drawn by the tether. Thus, the change in energy for a spacecraft of mass m at an initial altitude h is given by the expression:

$$\Delta E = -m\left\{\frac{\mu}{2(R_e+h)} - \frac{\mu}{2(R_e+250)}\right\},$$

and the time required to effect this change in energy of the mass, m, is just

$$\Delta t = \Delta E/P,$$

where P is the power drawn by the tether from the ambient plasma charge.

The curves for 1% and 5% tethers do not include the effects of atmospheric drag because the electrodynamic drag is orders of magnitude greater than the neutral atmospheric drag. At altitudes greater than about 700 km, the electrodynamic drag is 200 to 3000 times greater than the neutral drag forces.

It is clear, from FIG. **4** that the Terminator Tether™ concept is far superior to neutral drag in removing spacecraft from orbit, no matter how much additional area is added to the passive spacecraft to increase the atmospheric drag. The analyst should note that FIG. **4** is proportional to mass; that is, the Area-Time-Product values should be multiplied by the mass of the spacecraft and divided by 1000 kg. This is true for the neutral drag and Terminator Tether™ curves alike. The power levels assumed for the 1% and 5% tethers are only 80% of their theoretical values. This is done to provide a 20% margin on the power available from the ambient plasma and electrodynamic gradient.

Conventional rocket mechanisms can remove spacecraft from orbit, but this mechanism is apparently not viable from mass considerations when these factors are compared with the capabilities of the Terminator Tether™. A satellite owner may decide to satisfy the NASA safety requirements by adding a small solid motor and the associated hardware, software, sensors and structure to make the package independent, to be used to deorbit the spacecraft in case the main spacecraft power, attitude, or propulsion system fails.

The requirements of such a rocket motor system are more stringent than those attributed to ordinary spacecraft. The

rocket motor deorbit system must operate when some or all other systems of the spacecraft have failed. These more stringent requirements are balanced by lesser requirements of performance. The backup system must simply deorbit the spacecraft; it does not have to perform all the other duties of the spacecraft. But the backup system must know when to fire under all kinds of anomalous situations, including tumbling, offset of center of mass (because of loss of parts due to collisions), and lack of knowledge of the orbital position.

FIG. **5** shows the percent additional mass required by the rocket motor system to drop the perigee of a circular orbit at some initial perigee altitude to a value of 200 km. The atmospheric drag at this 200 km perigee altitude will remove any spacecraft (in the range considered) from orbit in a few revolutions. The contours of constant stage propellant mass fraction, λ, range from low values of 0.5 through reasonable values of 0.65 to 0.7, up to the values associated with the best solid motors ($\lambda \nabla 0.93$) without adding any extra hardware to the emergency stage. An effective, independent stage to provide a retro deltaV of from 50 to 325 m/s will almost certainly have a λ of the order of 0.6 to 0.75. If the emergency stage is required to perform its own attitude determination, the stage propellant mass fraction may be as low as 0.55 or 0.50. Note that the additional mass, shown in FIG. **5**, must also be lofted to orbit in the first place, to provide the mass on orbit for the originally intended service. The stage propellant mass fraction, λ, is a key stage performance parameter that describes the ratio of the mass of propellant to the mass of the stage. That is $\lambda=m_p/(m_p+m_I)$, where m_p is the mass of the propellant and m_I is the mass of everything else in the stage (not including the payload or any stages above or below the stage being considered). Typical independent small rocket stages have values of λ from 0.60 to 0.75. The curves of stage propellant mass fraction are shown as straight lines (a minor approximation) and are included only from 0.5 to 0.95, the extremes of reasonable design practice.

These calculations that show, beyond any reasonable doubt, that the Terminator Tether™ concept is far superior to conventional mechanisms such as drag enhancement devices or small rocket deorbit propulsion systems. The superiority is measured in terms of Area-Time-Product, NASA's measure of the likelihood of collision with other spacecraft in the path of the descending spent member of a constellation. Tether calculations were made using conservative assumptions that the power extractable from the ambient plasma and electrodynamic gradient is only 80% of the theoretical power available to a perfect tether crossing the magnetic field lines at a right angle, i.e. normally.

The following analysis is presented by the inventors to help those skilled in the art to better understand the present invention when it is used as a Terminator Tether™ for removing from orbit unwanted non-geostationary Earth-orbiting spacecraft at the end their useful lives. The primary result of that analysis is that the electrical power P in the tether that is converted into heat by the resistance of the tether and radiated away into space will remove energy from the spacecraft, causing it to rapidly deorbit, thus reducing the amount of orbital space debris that must be coped with in outer space. Tether electric power P is given by:

$$P=(vB)^2m/2rd$$

where m is the mass of the conducting tether, r and d are the resistivity and density of the conducting material, and v is the velocity of the spacecraft's motion through the Earth's magnetic field B. For a m=10 kg tether of aluminum with resistivity of r=27.4 nΩ-m and density d=2700 kg/m^3, moving at a velocity v=7037 m/s relative to the Earth's horizontal magnetic field B=26.5 μT, the power dissipated is P=2350 W! This energy loss in the form of heat must necessarily come out of the kinetic energy of the host spacecraft. For a typical example, a 1000 kg spacecraft in a 1000 km high orbit subjected to an energy loss of 2350 J/s from a 10 kg tether (1% the mass of the host spacecraft) will be deorbited in a few weeks.

Power levels of the magnitude estimated in the previous paragraph have been measured in a real orbital space experiment, the TSS-1R mission carried out on the Shuttle Orbiter in 1995. In that experiment, a large Italian spacecraft, 1.6 m in diameter, was deployed upward from the Shuttle Orbiter at the end of a conducting copper wire tether covered with electrical insulation. As the tether was slowly deployed upwards, a series of measurements were made of the open circuit voltage induced in the tether by its motion through the Earth's magnetic field. The voltage between the end of the tether and the Orbiter ground varied from zero volts at the start to 3500 V when the amount of tether deployed approached its maximum length of 20 km. Periodically, the end of the tether was connected either to one of two different electron guns, which supplied contact to the surrounding space plasma, or to the Orbiter ground. The bare surfaces of the Shuttle Orbiter proved to be a surprisingly good plasma contactor via a combination of ton collection and secondary electron emission. The current flow through the tether was deliberately limited by control circuits and the current capacity of the electron guns to about 0.5 amperes, but power levels of 1800 Watts were reached.

The tether was intended to have a fully deployed length of 20 km, but at a deployed length of 19.5 km, when about 3500 V was being induced at the end of the tether inside the Orbiter reel mechanism, a flaw in the insulation allowed an electrical spark to jump in an uncontrolled manner from the tether to the Orbiter ground. With no control circuits to keep the current level down to 0.5 amperes, the current flow jumped to 1.1 amperes, and the total power generated was P=3850 Watts Most of this energy went into the electrical arc, which burned through the tether, causing it to break and halting the experiment. This experiment showed that large areas of bare conducting material, such as that provided by the 8 square meter area of the Italian spacecraft at one end of the tether and the very large surface area of the Shuttle Orbiter spacecraft at the other end of the tether, can collect and emit amperes of current, while thousands of volts of potential can be generated by sufficiently long tethers moving at orbital speeds.

Thus, both theory and experimental data collected in the space environment indicate that significant amounts of electrodynamic drag force can be obtained from a low mass conducting tether attached to a host spacecraft, provided the ends of the conductor can exchange sufficient numbers of electrons with the surrounding space plasma.

Experimental data from the TSS-1R data also produced the amazing result that the efficiency of a bare metal surface in "contacting" the space plasma is many times better than the standard theory would predict. The 8 square meters of bare surface area of the Italian spacecraft were sufficient to collect the 1.1 A of electron current. This amount of area is easily replicated by a few hundred meters of bare wire, considering that the effective collection diameter around the wire is the Debye length, which is a few centimeters at the typical values for space plasma density and temperature.

Because of this result, that a bare wire can easily collect electrons, Les Johnson, Nobie Stone, Chris Rupp, and others

at NASA Marshall Space Flight Center have formed a team, which includes the present inventors, which is embarked on a new flight experiment. The experiment is scheduled for a piggy-back flight on a Delta II launch of an AF Global Positioning Satellite in early 2000. The goal of the experiment is to demonstrate that electrodynamic drag from a wire moving at orbital speeds through the Earth's magnetic field will create a large enough electrodynamic drag force to deorbit the Delta II second stage, whose mass is greater than 1000 kilograms, in a few weeks. This is essentially a demonstration of the Loftus electrodynamic drag deorbit concept and the first step in the development of a Terminator Tether™.

The ProSEDS (Propulsion Small Expendable-tether Deployer System) mission will use a 5 km long copper wire conductive tether massing 18 kg connected to a 20–35 km long nonconducting tether, which is in turn connected to a 25–40 kg ballast mass. The total of 25–40 km of tether length and the 25–40 kg ballast mass on the end will provide enough gravity gradient force to keep the tether aligned near the zenith, so that the direction of the current in the tether is at right angles to both the direction of the spacecraft motion in the nominal EW direction and the Earth's near-equatorial magnetic field in the nominal NS direction.

An important feature of the ProSEDS experiment is that it is designed to be completely self-powered. It uses a battery to initiate deployment and to power up the plasma contactor, but once current is flowing through the tether, some of the power is tapped off and used to recharge the battery. The battery, in turn, powers the current control electronics, the telemetry, system, and the plasma contactor. The ProSEDS mission will not be designed to allow ground control changes in operation, primarily because of the increase in complexity and cost associated with that option.

The present invention is the use of a small, low-mass deployer/controller package containing a large collecting area, short length, multiline space tether, such as a Hoytape mesh made of aluminum wire, as a "Terminator Tether™" for a constellation spacecraft. The Terminator Tether™ would be deployed when the host spacecraft is no longer working or no longer wanted. The electrodynamic drag from the Terminator Tether™ would rapidly remove the unwanted spacecraft from the constellation and a few weeks later complete the deorbit of the host spacecraft from space by burnup in the upper atmosphere of the Earth. For a Terminator Tether™ to be of maximum usefulness for constellation spacecraft, it would be desirable to minmize the mass and the length of the tether. A lower added mass means more mass for revenue producing transponders, while a shorter tether length means a lower collision cross-section Area-Time Product during deorbit.

FIG. **6** shows a spacecraft **600** having a state vector **602** that causes the spacecraft to move across magnetic field lines **601**. Spacecraft **600** has a conductive tether **603** attached to it by tether deployer and control system **605**. The outer end of tether **603** is attached to tether end mass **607**. Spacecraft **600** also has an attached electron emitter means **613**.

In FIG. **6**, spacecraft **600** has a velocity and direction defined by state vector **602**. As spacecraft **600** moves it causes conductive tether **603** to cut magnetic field lines **601**. As this happens the distal end of the conductive tether collects electrons, shown as arrows **611**, from the space plasma. Electrons **611** move through the conductive tether **603**, are passed through a resistive load, not shown, in control system **605**, and are emitted back into the space plasma as electrons **615** from electron emitter **613**. This produces an electrodynamic drag in the direction shown by arrow **609**.

As is discussed in detail in the electrodynamic drag analysis below, especially in that sections of the analysis titled "Optimization of Tether Angle", the maximum electrodynamic drag of the tether is achieved when the angle, shown as the Greek letter τ in FIG. **6**, is 35.26 degrees, trailing, to the direction of the magnetic field lines. This angle may be maintained by a feedback control circuit that maximizes the electrodynamic drag of the tether system, as is discussed in detail below. The tether structure **603** is a Hoytether having a length of about 2 to 5 kilometers. The use of the 35.26 degree angle to the magnetic field reduces the tether instability, allowing the use of a short tether which will have a small Area-Time-Product. This will minmize the possibility that the tether will impact another space object during its use.

In FIG. **7**, spacecraft **700** has a state vector **702** across magnetic field lines **704**. Conductive tether **706** is attached to spacecraft **700** by tether deployer and control system **708**. The distal end of tether **706** is attached to a tether end mass **710**. Spacecraft **700** has an electron emitter means **714**.

Functionally, electrons **712** flow from the space plasma into conductive tether **706**, are passed through a resistive load in control unit **708** and are emitted into the space plasma by electron emitter **714** as free electrons **716**. As is discussed in detail in the analysis below, this produces an electrodynamic drag on satellite **700**, which causes it to deorbit.

In FIG. **7**, spacecraft **700** is rotating with an angular velocity indicated by arrow **718**. This rotation causes a centrifugal force **720** to place tension on conductive tether **706**. This force **720** places tension on the tether **706** in a direction that counters tether instability. The Tether **706** may be at any angle to the magnetic field while the rotation of the tether-satellite system is producing this useful tension. FIG. **7** shows the angle to be 35.26 degrees, which is optimum, but any angle will work.

FIGS. **8***a* and **8***b* show a powered Terminator Tether™. In FIG. **8***a* the spacecraft **800** has a state vector **802** that causes it and its associated conductive tether **806** to move across magnetic field **804**. Tether **806** has an end mass **808** that is proximate a plasma contactor **810**. Just as was discussed in the embodiment of the present invention shown in FIG. **6** and FIG. **7**, an electric current moves through the circuit formed by the space plasma, the plasma contactor **810**, the conductive tether **806**, and the electron emitter **815**, thence back into the space plasma as electrons **816**. This creates an electrodynamic drag on the tether in the direction shown by arrow **818**.

In FIG. **8***b*, similar numbers indicate similar structures. In FIG. **8***b*, however, an electric power source, not shown, in spacecraft **800** provides electrons to conductive tether **806**. The electrons are emitted from the end **812** of the tether **806**. Electrons are collected to from the space plasma **814** by contactor **815**, thus completing the electric circuit. The result is an electrodynamic force on tether **806**, and therefore on spacecraft **800**, in the direction show by arrow **820**.

Spacecraft **800** in FIG. **8***b* may be rotated as is taught in the embodiment of the invention shown in FIG. **7**, above, to allow the control system to time the application of electric current to the tether **806** to cause force **820** to be exert force in any desired direction along the circle made by the rotating tether. This allows the state vector of the spacecraft to be modified to raise or lower the spacecraft's orbital altitude, or to otherwise usefully change its orbital elements.

FIG. **9** show an embodiment of the present invention wherein the conductive structure of a satellite is used as the tether. In FIG. **9**, a spacecraft **900** which has a state vector

901 and is moving across magnetic field 903, has two attached solar panels, 902 and 904. Solar panels 902 and 904 have conductive aluminum frames 908 and 906, respectively. Frame 906 is electrically and mechanically connected to plasma contactor 912. Frame 908 is electrically and mechanically connected to electron emitter 910. As spacecraft 900 moves across magnetic field 903, electrons from the space plasma 914 flow through contactor 912 and frame 906 to the body of spacecraft 900, where the current flows through a resistive load, not shown, and then into frame 908 and electron emitter 910 to the space plasma 916, thus completing the circuit. This creates an electrodynamic drag on spacecraft 900. If the power output from solar panels 902 and 904 was directed to flow into the frames, 906 and 908, then the electrodynamic interaction with the space plasma would cause a useful force to be impressed on spacecraft 900, as was discussed in connection with FIG. 8 above. The spacecraft may be rotated and/or oriented to a desired angle with the magnetic field lines, as was also discussed above.

FIG. 10 shows an embodiment of the present invention wherein the plasma contactor and the resistive load are structurally part of the conductive tether. In FIG. 10 spacecraft 1000 has a state vector 1001 that causes it to pass through magnetic field 1003. Spacecraft 1000 has a tether control and deployment system 1005 that is connected to a conductive tether 1007 having an end mass 1013. A contactor portion 1015 of the conductive tether 1007 near end mass 1013 is adapted to contact the space plasma so as to receive or emit electrons. This may be the bare wire strands of a wide Hoytether, or it may be any other plasma contactor means that can be conveniently made electrically part of the Hoytether structure, such as points or metal fuzz. A second resistive portion 1009 of tether structure 1007 is adapted to be a resistive load. This may be done by making a portion of the tether structure from a material, such as nichrome steel wire, that has suitable electrical resistance The large surface area of the Hoytether provides an excellent radiator structure into the three degree Kelvin radiation sink of outer space.

FIG. 11 shows an alternative embodiment of the load resistance/radiator structure of the present invention. In FIG. 11, a biline Hoytether 1002 is attached to its control and deployer system 1100 on a spacecraft, not shown, and to a tether end mass 1004. A resistive load, 1006 is woven into the Hoytether structure, whereby this load 1006 and the section of the Hoytether 1002 into which it is woven act together as a thermal radiator allowing photons 1008 to radiate into the thermal sink of outer space.

The following detailed analysis of the present invention will help those skilled in the art to better understand and use the present invention.

Electrodynamic Drag Analysis:

The following is an optimization analysis of the electrodynamic drag produced by a conducting tether deployed from a host spacecraft that it is to deorbit. The force and torque diagram used in the analysis is shown in FIG. 12, which shows the forces and torques on an upward deployed conducting tether due to the motion of the host spacecraft through the magnetic field of the Earth.

Physical Constants and Assumptions:

The analysis that follows will use the following physical constants and assumptions:

Newton's gravitational constant $G=6.67\times10^{-11}$ $m^3/kg\text{-}s^2$.

Mass of Earth $M_e=5.976\times10^{24}$ kg.

Radius of Earth near equator $R_e=6378$ km.

Assumed host spacecraft altitude h=622 km.

Assumed host spacecraft orbital radius a=7000 km.

Host spacecraft orbital velocity $w=\omega a=[GM_e/a]^{1/2}=7546$ m/s.

Vertical gravity gradient at spacecraft $2\Gamma=2GM_e/a^3=2.32\times10^{-6}$ s^{-2}.

Centrifugal gradient at spacecraft $\omega^2=GM_e/a^3=1.16\times10^{-6}$ s^{-2}.

Combined gradient at spacecraft $3\Gamma=3GM_e/a^3=3\omega^2=3.49\times10^{-6}$ s^{-2}.

Magnetic field of Earth (tilted dipole approximation):

Magnitude $B_o=35$ μT=0.35 gauss.

Angle between magnetic pole and spin pole 11.5°.

Field components at spacecraft with altitude a and angle β between radius vector of spacecraft and magnetic equatorial plane.

Horizontal $B_H=B_o(R_e/a)^3\cos\beta=26.5\ \mu T\cos\beta$.

Vertical $B_V=2B_o(R_e/a)^3\sin\beta=52.9\ \mu T\sin\beta$.

Electrodynamic Tether Constants and Assumptions:

The electrodynamic tether is assumed to be made of a conducting metal, and have a length L, density d, resistivity r, and cross-sectional area A that is constant along the length of the tether. If the tether is a single round wire of diameter D, then the cross-sectional area is $A=\pi D^2/4$. Because of the micrometeorite and space debris hazard, however, it is likely the tether will be made up of redundantly interconnected multiple lines whose individual cross-sectional areas add up to A. Given these assumptions, the tether mass is then $m_T=dLA$, while the end-to-end tether resistance is $R_T=rL/A=rdL^2/m_T$.

Specific Conductivity Parameter:

The choice of the metal conductor to be used in a space tether is determined by a combination of low resistivity (high conductivity) and low density, with cost, strength, and melting point as secondary considerations for certain applications. Copper has a resistivity r=17.0 nΩ-m, a density d=8933 kg/m, and a "specific conductivity" of 1/rd=6,585 m^2/Ω-kg. Aluminum has a resistivity r=27.4 nΩ-m, which is significantly greater than that of copper, but it has a much lower density of d=2700 kg/m^3. As a result, aluminum's "specific conductivity" of 1/rd=13,500 m^2/Ω-kg is twice the conductivity per unit mass of copper. Silver, because of its higher density and higher cost, is not competitive as an electrodynamic space tether even though its resistivity of 16.1 nΩ-m is slightly better than that of copper. An alternate candidate material would be beryllium, with a resistivity r=32.5 nΩ-m, density d=1850 kg/m^3, and a "specific conductivity" of 1/rd=16,630 m^2/Ω-kg, slightly better than that of the much cheaper aluminum. Beryllium also has a higher melting point at 1551 K than aluminum at 933 K, so some of its alloys may be a preferred material for some electrodynamic applications despite its higher materials cost. Unfortunately, despite decades of metallurgical research by the nuclear power industry, highly ductile alloys of beryllium have not been found, so it is difficult to pull beryllium into wire. As a result, because of its high specific conductivity, low cost, and ready availability in ductile wire form, it will be assumed for this analysis that the electrodynamic tether will be made of aluminum wire.

Typical Resistance Values:

To be economically competitive, the mass of the tether needs to be a small fraction of the mass of the host spacecraft it is required to deorbit. Since a typical constellation spacecraft has a mass of about 1000 kg, a typical Terminator Tether™ with a mass that is 2% of the host spacecraft mass would consist of a deployer/controller package with a mass $m_D=10$ kg, containing an aluminum tether with a mass $m_T=10$ kg with a volume of $LA=m_T/d=3.70\times10^{-3}$ m^3. If this 10 kg of aluminum were formed into a tether with a length

of L=2 km and a cross-sectional area of A=1.85 mm^2, then the end-to-end resistance of the tether would be $R=rL/A=rdL^2/m_T=29.6\ \Omega$ A longer tether would have a proportionately smaller cross-sectional area and a higher resistance; for example, a 5 km long tether with the same mass would have a resistance of 185 Ω.

Orbit Inclination Assumption:

In order to make the remainder of the analysis mathematically tractable, it will be assumed that the orbit of the host spacecraft is circular and above the magnetic equator, so that the angle between the radius vector to the spacecraft and the magnetic equatorial plane is β=0 degrees. In this orbit, the velocity v of the spacecraft with respect to the magnetic field is the orbital velocity w less the rotational velocity of the magnetic field at the orbital radius a due to the once per day rotation of the Earth, or:

$$v=W-2\pi a/1\text{day}=(7546-509)\text{m/s}=7037\text{m/s}$$

This equation also shows why electrodynamic drag will not be useful for removing geostationary spacecraft from orbit. At the geostationary orbital radius of a=42,200 km, the relative velocity of the spacecraft and the rotating magnetic field of the Earth is zero.

With this assumption of an orbit above the magnetic equator, the vertical component of the Earth's magnetic field is zero and the horizontal component of the Earth's magnetic field is at right angles to both the local vertical and the direction of motion of the spacecraft. The total magnetic field seen by the host spacecraft and its Terminator Tether™ is then orthogonally horizontal and has the magnitude:

$$B=B_H=B_o[R_e/a]^3 \cos \beta=26.5\mu T.$$

Where for simplicity the subscript H will be dropped for the remainder of this analysis.

This orbit, with its inclination of 11.5° with respect to the spin equator, will not stay in the plane of the magnetic equator, but will vary ±11.5° above and below it as the Earth rotates, causing a variation in magnetic field strength of ±0.5 μT, as well as a slight variation in angle. This 2% variation is negligible in terms of the other uncertainties in this analysis. It is not until the orbital inclination of the host spacecraft orbit reaches 60°, where cos 60°=0.5, that there is a significant drop in the expected magnitude of the electrodynamic drag forces calculated in this analysis.

Electromagnetic Drag Effects in Polar Orbit:

In many medium Earth orbit communication satellite constellations, there are a significant number of spacecraft at high inclinations and in nearly polar orbits. The high inclination spacecraft, with inclinations between 60° and 78.5°, will all have orbits that stay between the magnetic poles. Although the amount of electrodynamic drag will be significantly less than that experienced by spacecraft with orbits at lower inclinations, the direction of the induced electric fields in the tether will always be in the proper direction. If the tether is vertically upward, the outer tip of the tether will be positively charged and the bare wire in the tether will pull electrons out of the surrounding space plasma, while the electron emitter at the host spacecraft end will eject the electrons back into the space plasma to complete the circuit.

For spacecraft in near polar orbits with inclinations between 78.5° and 90°, however, there will be much more drastic variations. First of all, for a spacecraft in a 90° orbit that happens to pass directly over the magnetic poles, there is no horizontal component of the magnetic field when it is passing over one of the magnetic poles, so no voltage is generated in the tether during that part of the orbit, while the horizontal component of the magnetic field near the magnetic equator, while strong in magnitude, is along the spacecraft velocity vector, so no voltage is generated in the tether in that part of the orbit either. As a result, there will be negligible electrodynamic drag experienced by the host spacecraft during that particular orbit. The Earth is rotating, however, and the magnetic pole is rotating with it. A few orbits later, the host spacecraft will be passing over the Earth's spin pole at a point where the horizontal component of the magnetic field is exactly at right angles to the direction of motion of the spacecraft, so the full voltage is generated in the tether. When passing over the spin pole, the spacecraft radius vector is at an angle of 11.5° from the magnetic pole and at an angle β=78.5° away from the magnetic equatorial plane. With these assumptions, the magnitude of the horizontal component of the magnetic field at the Earth's spin pole is a respectable:

$$B=B_o[R_e/a]^3 \cos 78.5°=5.28\mu T$$

or 20% of the maximum value experiences by spacecraft orbiting above the magnetic equator. This value will drop slightly as the orbit continues, then build back up as the spacecraft passes over the opposite pole. As the Earth continues to rotate, bringing the magnetic pole again under the orbit, and the interaction of the tether with the horizontal component of the magnetic field again drops to zero. The average coupling of a tether to the Earth's magnetic field over all polar trajectories has been calculated to be 12.3 percent.

A problem experienced only by spacecraft with orbit inclinations greater than 78.5°:

The spacecraft will no longer be traveling from west to east with respect to the magnetic field axis, but will have a retrograde motion as it moves through the magnetic field. As a result, the voltage generated by the motion of the tether through the Earth's magnetic field will switch direction. The outer tip will be negatively charged and will attempt to collect ions, which is a much less efficient process than collecting electrons.

There are a number of solutions to this problem. The first is to increase the mass and length of the tether supplied to a spacecraft assigned to a polar orbit, so that higher voltages, currents, and drag are generated during the limited times the spacecraft is passing over the poles in the right direction. The second is to supply a tether with plasma contactors at both ends that can emit electrons from either end, allowing the current to flow either way, depending upon which direction the spacecraft is passing around the magnetic pole. The third is to utilize the first number of passes to torque the orbit of the spacecraft until the orbit inclination has been shifted below 60°, then turn on the electrodynamic drag full time to deorbit the spacecraft from this more favorable orbit inclination. This orbit torqueing maneuver is accomplished by activating the electrodynamic drag mechanism only when the magnetic field orientation is such that a strong out-of-plane component of force is created. This orbit torqueing maneuver can be augmented by switching to a propulsion mode, where power saved in the batteries during the drag force mode is pumped back into the tether when the magnetic field is in the opposite direction, applying electrodynamic propulsion to torque the orbit even further. With the tether at a large and stable trailing orientation, the coupling to the magnetic field can be significant to a vertical tether.

In summary, spacecraft in near-polar orbits might take longer to bring down, and might have to utilize specially designed Terminator Tethers™ that might cost and mass

more than the simpler Terminator Tethers™ usable in lower inclination orbits, but a Terminator Tether™ can still remove a spacecraft from a polar orbit when desired.

The inventors now present a detailed analysis and optimization of a typical Terminator Tether™ attached to a typical host spacecraft in a typical low inclination orbit.

Electromotive Generation of Voltage and Current in the Tether:

When an object is moved at a velocity v through a magnetic field B, an electric field is generated in the frame of reference of the moving object given by:

$$E=v\times B=vB$$

where the magnetic field B of the Earth, being mostly tangent to the Earth's surface in the north-south direction, is at right angles to the velocity vector v of the spacecraft, assumed to be orbiting in a generally west-east direction. The direction of the electric field E will be at right angles to both v and B, or along the local vertical. It should be noted that this electric field exists in the moving frame of reference because a moving magnetic field creates an electric field. No object actually has to be there, but if it is, then the relative motion of the magnetic field of the Earth will not only apply magnetic forces to whatever material the object is made out of, but electric forces too.

Note also that the velocity used in this equation is the relative velocity between the object and the magnetic field. Because the Earth's magnetic field rotates with the Earth, the motion of the magnetic field must be subtracted from the orbital velocity of the object to obtain the relative velocity.

Voltage generation in a Conducting Tether:

If the moving object is a long conducting wire of length L, the electric field E, generated in the wire produces a voltage V between the opposite ends of the wire given by:

$$V=E\bullet L=EL\cos\tau=vBL\cos\tau$$

where τ is the angle between the length vector L of the tether and the electric field vector E, assumed to be in the vertical direction at right angles to the velocity vector v in the plane of FIG. **12** and the magnetic field vector B out of the plane of FIG. **12**. A typical value for the voltage level built up in a vertically oriented tether with length L=5 km and τ=0, moving at a velocity of v=7037 m/s through the Earth's horizontal magnetic field of strength 26.5 μT, is 932 V, or 0.186 V/m. Spacecraft in higher inclination orbits would experience somewhat smaller electric fields. For calibration, the voltage measured between the ends of the 19.5 km long TSS-1R tether was 3500 V, or 0.175 V/m.

Contacting the Space Plasma:

Although a voltage will build up between the ends of the conducting tether, no current will flow unless the circuit is completed. The circuit cannot be completed with another wire, for it too will have a similar voltage generated in it by the moving magnetic field. Fortunately, empty space is not empty, and in near-Earth regions not too distant from the Earth's atmosphere there exists highly electrically conductive space plasma, kept partially ionized by radiation from the Sun. The electron and ion density varies from the dark to light side, with altitude, with season, with sunspot cycle, with contamination level, etc. but it typically varies from 10^{11} to 10^{13} electrons/cc.

Fortunately, it has been found that if a bare conductive surface such as the spherical Italian spacecraft in the TSS-1R experiment, or the long bare wire to be used in the ProSEDS experiment, or a multiline conducting wire Hoytape mesh, is charged to a few hundred volts, the bare conductor will readily pull electrons out of the space plasma. So all that is needed to complete a connection to the space plasma at the positively charged (upper) end of the tether is a sufficient large area of uninsulated conductor.

It is more difficult to eject electrons from a wire or to collect positive ions from the space plasma. Although it is conceivable that a very large area at the other end of the tether could collect enough ions to complete the circuit as was demonstrated during the TSS-1R mission when the Shuttle orbiter was found to be an adequate plasma contactor for over an amp of current, the present method chosen is to use an electron emitter of some sort, either a hot cathode, a plasma cathode or contactor, a field-emission device, or something similar. Once provisions have been made at both ends of the tether to allow the flow of electrons out of one end of the tether and into the other end, and the altitude of the host spacecraft is not too high, then there will be sufficient conductivity in the space plasma surrounding the host spacecraft to allow current to flow through the tether.

Current Flow In The Tether:

The amount of current I flowing through the tether depends upon the total resistance R in the circuit. This resistance will consist of three components, the effective resistance of the plasma, the resistance of the tether, calculated earlier as $R_T=rL/A=rdL^2/m_T$, and a control resistor R_C, which will be varied as needed to optimize the Terminator Tether™ performance. There will also need to be a parasitic load on the current in the form of a charging device to charge some batteries. The batteries in turn will be used to power the control and communication circuits, and drive the electron emitting devices at the negative end of the tether. A well-designed Terminator Tether™ will thus be completely self-powered, except for an initial charge in the batteries to provide electrical power for the deployment and startup procedure. For simplicity of analysis it will be assumed that this battery charging load, which absorbs power like a resistor, but which stores it and uses it later instead of dissipating it immediately as heat, is included in the control resistor R_c. Normally, this load would act as a "base resistance" below which the control resistor could not be lowered, but since the charging circuit can be turned off when desired, and operations continued without interruption using the power stored in the batteries, it will be assumed that the control resistor can be taken to near zero value in those circumstances where the space plasma conductivity is low, or the magnetic field is in the wrong orientation and the voltage being generated in the tether is not large. Under these circumstances, lowering the control resistor to near zero allows a much higher current to flow for a given generated voltage, thus increasing the power being dissipated in the tether and maintaining a high level of electrodynamic drag on the host spacecraft.

A properly designed Terminator Tether™ will have plenty of bare metal area for electron collection at the positive end, while the electron emitters at the other end are efficient in terms of emitting large electron currents at low voltages and therefore low powers, while at the same time the mass, length, and area of the conducting tether have been made such that the resistance of the tether is moderately high. Under these conditions, the effective resistance of the space plasma will be much less than the design resistance of the tether. To make the mathematics more tractable it will be assumed that the plasma resistance is can be neglected and that the voltage available to drive the tether is the full voltage generated by the moving magnetic field. Although voltage will be needed to power the electron emitter, what-

ever its form, it will be assumed that the required voltage and power will be supplied by the batteries. The batteries in turn will be powered by the battery charging circuit, whose effective resistance is included in the control resistor (except for those short periods when the plasma or magnetic field interactions are weak).

Given all these assumptions concerning the total resistance in the circuit, the current I flowing through the tether is then given by:

$$I=V/R=vBL\cos\tau/(R_C+rdL^2/m_T)$$

A typical current level can be estimated by assuming that the control resistance R_C should be about the same size as the tether resistance R_T, which for an aluminum tether with resistivity r=27.4 nΩ-m, density d=2700 kg/m^3, length L=5 km, and mass m_T=10 kg, is R_T=185 Ω, giving a total resistance, including the control resistance R_C, of R=370 Ω. Thus the current flowing though a tether of length L=5 km, generating a voltage of V=932 V, would be I=V/R=2.52 A.

Power Dissipation Analysis:

The induced current I flowing through the tether resistance R_T will generate heat in the wire, which will be radiated into space and lost. That radiated energy must come from somewhere. There is also power taken out of the current flow by the battery charging circuit and ultimately dissipated. In order to conform to energy conservation laws, this power and energy must come from a decrease in the total kinetic and potential energy of the host spacecraft, causing it to deorbit. Set forth below is a detailed, optimized force analysis which will calculate the drag force on the host spacecraft. In this section, by using some simplifying assumptions, it is possible to produce a general argument based on energy conservation laws, which will illustrate the broad scope of the present invention.

For this energy conservation analysis it will be assumed that the plasma resistance is small compared with the tether resistance, and that the control resistance is equal to the tether resistance:

$$R_C=R_T=rL/A=rdL^2/m_T$$

Assume that the ballast mass at the end of the tether is a large piece of the defunct host spacecraft, such as a solar panel, antenna, or battery pack, so that the gradient force is large and the tether is always oriented along the vertical so that the angle τ=0°. Also assume the spacecraft is in an orbit above the magnetic equator and thus is moving at right angles to the Earth's magnetic field, so that the angle between the orbital velocity vector and the magnetic field vector is 90°, and the electric field vector is in the vertical direction, aligned perfectly with the tether length vector. Under these ideal conditions, the voltage between the ends of the tether is given by:

$$V=E\cdot L=(v\times B)\cdot L=vBL$$

The current in the tether is then just:

$$I=V/(R_C+R_T)=vBm_T/2rdL$$

The power dissipated as ohmic heating in the tether is then given by:

$$P=IV=(vB)^2m_T/2rd$$

This equation shows the interesting result that the power dissipated does not depend upon the length or the area of the tether (within reason), but only the mass of the tether m_T, the resistivity r and density d of the tether material, and the velocity v of the conducting tether through the Earth's magnetic field B.

For a typical aluminum tether of mass m_T=10 kg, the power dissipated is an impressive P=2350 W. Even if only a small fraction of this power is dissipated in a real system, the kinetic energy of the host spacecraft would suffer a significant energy loss with time.

Orbital Energy Extraction Analysis:

The total energy U of a spacecraft of mass M in orbit around the Earth consists of two components, its positive orbital kinetic energy and its negative gravitational potential energy. If a circular orbit of altitude h and radius $a=R_e+h$ is assumed, then the total energy of the spacecraft moving at a velocity $w=(GM_e/a)^{1/2}$ is:

$$U=+Mw^2/2-GMM_e/a=-GMM_e/2a$$

The system will be dissipating energy in the tether to decrease the energy U of the unwanted spacecraft from its relatively low negative value in a high Earth orbit to a greater negative value in a lower Earth orbit. To give a specific example, an unwanted spacecraft with a mass of M=1000 kg (a metric ton) in an orbit with an altitude of h=1000 km and a high orbital radius of $a(H)=R_e+h$=7371 km, then its (negative) total energy is:

$$U(H)=-GMM_e/2a(H)=-27.1\text{ GJ or }-27.1\text{ MJ/kg}$$

It is desired to lower the spacecraft to an orbit with an altitude just outside the atmosphere of h=200 km or a lower orbital radius of $a(L)=R_e+h$=6571 km, where atmospheric drag will finish the job. The total (negative) energy of a metric ton spacecraft at 200 km altitude is:

$$U(L)=-GMM_e/2a(L)=-30.4\text{ GJ}$$

Thus, the amount of energy needed to be dissipated in order to move the 1000 kg spacecraft from a 1000 km orbit with a total energy U(H)=−27.1 GJ down to a 200 km orbit with energy U(L)=−30.4 CJ is:

$$dU=U(H)-U(L)=3.3\text{ GJ.}$$

The decay time T of a metric ton spacecraft moving from a 1000 km altitude orbit to a 200 km altitude orbit with an energy difference of dU=3.3 GJ, when its energy is being dissipated at a power of P=2350 W by a typical aluminum tether massing just 10 kg or 1% the mass of the spacecraft, is found to be T=dU/P=16 days.

The actual decay time will be longer than this. If the electrodynamic drag force is very large, and becomes larger than the gravity gradient forces pulling on the ends of the tether, then the tether will tend to align itself along the magnetic field lines instead of across them, and the drag force will decrease because of the small angle between the conductor length and the magnetic field lines. The tether current will need to be controlled until the angle of the tether settles into an angle determined by the balance between these two forces. These electrodynamic torque vs. gradient torque dynamic interaction effects are discussed in the next section.

Force and Torque Balance Analysis:

It is now possible to calculate the forces and torques on the tether. It is also possible to use the fact that the electrodynamic and gravity forces and torques on the tether must balance each other out to calculate and teach some optimum values for some of the Terminator Tether™ parameters.

Electrodynamic Force and Torque:

As discussed above, both theory and experiment show that: provided the conducting tether is moved rapidly through the Earth's magnetic field in order to generate a voltage across it, and provided good contact is made with the space plasma, the conducting tether will have a current flowing through it. When a wire (moving or not) carrying a current I is embedded in a magnetic field B, there will be an electrodynatnic force F_E generated on each element of the wire. The electrodynamic force will be at right angles to the magnetic field vector and the length vector of the wire element, with a magnitude given by:

$$F_E=J\times B=ILB$$

where B is the horizontal component of the magnetic field, which is perpendicular to the assumed magnetic equator orbit plane, while the tether length vector L is assumed to lie in the orbit plane. If, as will be the case most of the time, the electron current is leaving the space plasma and entering the tether along the length of the tether, then IL needs to be replaced with an integral of the current along the length of the tether.

Note that the electrodynamic force amplitude or direction is not directly dependent on the motion of the tether through the Earth's magnetic field. The electrodynamic force would be the same if the tether were not moving and the current was being supplied by a battery. Since the current I is a function of the orbital velocity, however, there is a secondary dependence of the electrodynamic force magnitude on the orbital velocity, but not its direction. The electrodynamic force is always at right angles to the conductor, and stays at right angles to the conductor as the angle τ varies, as shown in FIG. **12**.

Assuming that the electrodynamic drag force is applied uniformly along the length of the tether, it is possible to make the simplifying assumption that the integrated force is effectively applied at right angles to the center of mass of the tether at the point L/2 as shown in FIG. **12**. The electrodynamic torque on the tether is then:

$$T_E=F_EL/2=IBL^2/2=vB^2L^3\cos\tau/2(R_C+rdL^2/m_T)=vB^2L^3\cos\tau/2R$$

Gravity Gradient Forces and Torques:

When a tether and its ballast end mass are deployed from a host spacecraft, the gravity gradient force field of the Earth, combined with the orbital centrifugal gradient force field, will cause the tether to deploy either up or down from the host spacecraft. The direction desired depends on which end of the tether is connected to the electron emitter. Normally, the electron emitter will be on the end attached to the host spacecraft, in which case the desired direction of deployment will be upward so that the induced voltage in the tether will produce an excess of electrons at the electron emitter end of the tether. The desired upward direction is chosen by having the deployer eject the ballast mass in the upward direction. Once the ballast mass has been started in that direction, the centrifugal force due to the orbital motion of the ballast mass will cause the ballast mass to continue to accelerate in the upward direction until it is brought to a halt by the full deployment of the tether.

If there were no electrodynamic or atmospheric drag, the equilibrium direction of the tether would be exactly along the vertical, since the combined gradient field is a maximum in that direction. Because a significant amount of electromagnetic drag is expected, the actual angle of the tether with respect to the local vertical will be at some angle τ, lagging behind the spacecraft motion in the plane of the orbit, as shown in FIG. **12**. In the following analysis shows that there is an optimum angle for τ that produces the largest electrodynamic drag force on the host spacecraft without producing tether instability.

The combined vertical gravity gradient and centrifugal gradient field 3Γ acting on the ballast mass m_B at the end of the tether of length L will produce a gradient force F_{GB} given by:

$$F_{GB}=-3\Gamma m_BL\cos\tau$$

The strength of the force depends not only on the ballast mass m_B and the strength of the gradient field 3Γ, but also the component along the radial direction of the distance of the ballast mass from the center of mass, which is L cos τ. This force acts in the vertical direction along the radius vector leading from the ballast mass away from the center of the Earth. The amount of gradient force is not large. For a ballast mass of m_B=10 kg and a tether length of L=5 km, the gradient force is about 0.175 N.

As can be seen in FIG. **12**, the component of this gradient force that is at right angles to the tether, given by $F_{GB}\sin\tau$, will produce a torque T_{GB} on the tether that tends to restore the tether toward the vertical, lessening the angle τ.

$$T_{GB}=LF_{GB}\sin\tau=-3\Gamma m_BL^2\sin\tau\cos\tau$$

The tether mass m_T also contributes to the gradient force and torque. If it is assumed that the tether has a uniform cross section, then it is possible to replace the distributed mass of the tether with an equivalent point mass m_T placed at the center of mass of the tether, which is the point L/2 along the tether, and a distance L/2 cos τ in the radial direction. The gradient force due to the tether mass is then:

$$F_{GT}=-3/2\Gamma m_TL\cos\tau$$

While the gradient torque is:

$$T_{GT}=-L/2F_{GT}\sin\tau=-3/4\Gamma m_BL^2\sin\tau\cos\tau$$

The total gradient torque attempting to restore the tether to its vertical orientation is then:

$$T_G=T_{GB}+T_{GT}=3\Gamma(m_B+m_T/4)L^2\sin\tau\cos\tau$$

It is important to notice the variation of the total gravity gradient torque as the tether angle τ is varied. Since the gradient force is always in the radial or vertical direction, there is no torque on the tether when the tether is vertical, as is the case when there are no aerodynamic or electromagnetic drag forces. Once the drag forces become important and start to apply torque to the tether, increasing the tether angle τ, those drag torques causing an increase in tether angle τ will be opposed by a rising gradient torque which will attempt to decrease the tether angle. For small tether angles, the gradient torque increases first linearly with τ, then as sin τ, since cos τ is near unity for small τ, then at τ=45° the gradient torque reaches its maximum, where sin τ=cos τ=0.707 and sin τ cos τ=0.50. When this angle is reached, the tether is a point of catastrophic instability, for if there is a further increase in the electrodynamic drag force, causing the angle τ to become greater than 45°, the gradient torque, instead of growing stronger to counteract the increased drag torque, will become weaker and the tether angle will go rapidly to 90°.

To restore control to the tether angle if the instability occurs, it will be necessary to turn off the electrodynamic drag forces by shutting off the current flow through the tether. The τ=90° position for the tether and ballast mass is

a gravitationally unstable orientation. After a time, slight fluctuations in the gravity field will allow the gradient force to slowly take over and restore the tether to the vertical orientation, which, unless it can be controlled in some way, is equally likely to be up or down. It would therefore be desirable to maintain control of the tether angle so as to avoid the tether angle getting into the region of instability.

Torque Balance on the Tether:

The angle τ of the tether is determined by a balance between the electrodynamic torque T_E attempting to increase the angle τ and the gradient torque T_G attempting to decrease the angle τ. Balance is achieved when the two torques are equal:

$$T_E=T_G=T_{GB}+T_{GT}$$

or:

$$vB^2L^3 \cos \tau/2R=3_\Gamma(m_B+m_T/4)L^2 \sin \tau \cos \tau$$

Simplifing and rearranging yields an equation giving us the angle τ at which torque balance occurs:

$$\tau=\arcsin[vB^2L/6_\Gamma(m_B+m_T/4)R]$$

The physical interpretation of this equation is that the maximum electrodynamic force that can be sustained on the tether is limited by the gradient force on the tether. It is possible to increase the electrodynamic force by decreasing the total resistance R of the tether (for example, by using a tether with a larger mass and a lower tether resistance), but if the tether resistance is too low, then the quantity in brackets becomes greater than unity and this equation has no solution, indicating that the tether has reached an angle where instability sets in.

To maintain control of the tether angle, it will be necessary to vary the control resistance of the tether to compensate for variations in magnetic field strength and direction, plasma density (which affects the plasma resistance), and other factors, and thereby maintain the tether at an intermediate angle where both the electrodynamic and gradient forces are at an appreciable level and balance each other.

Optimization of Tether Angle:

At first glance, it might seem that the optimum angle for the tether would be 45°, since at that angle the gradient torque is largest and therefore can counteract a larger electrodynamic drag force. However, since the 45° angle is the point where instability sets in, it is desirable to set the tether angle at some value below 45°. The optimum angle is that which maximizes the horizontal or drag component of the electrodynamic force. This optimum angle τ is derived from the equation for the horizontal component of the electrodynamic force, or the electrodynamic drag force, since it opposes the host spacecraft motion:

$$F_{ED}=F_E \cos \tau=6[m_B+m_T/4]\Gamma L \sin \tau \cos^2\tau$$

By setting the partial derivative□F_{ED}/□τ=0 and solving, it is possible to calculate that the optimum angle for the tether that gives the maximum electrodynamic drag force F_{ED}, while still keeping the tether torques balanced and under control, is τ=arctan(0.707)=35.26°. With this angle selected and maintained by varying the control resistor R_C to compensate for variations in plasma contact resistance and variatins in the strength and direction of the Earth's magnetic field B seen at the spacecraft, the tether experience the maximum stable value for the electromagnetic drag force of:

$$F_{ED}(\max,\tau=35.26°)=2.31[m_B+m_T/4]\Gamma L$$

There are many ways to provide the sensing information needed to provide the feedback signals to the control resistor, but the simplest is to merely measure the drag acceleration on the host spacecraft with a set of accelerometers, and maximiize the force in the direction opposite to the host spacecraft motion. Another method would be to measure the current in the tether, and knowing the tether resistance and the amount of control resistance, calculate the power being extracted and maximize that value. Alternate methods would be to use an optical position sensor or GPS receivers at both ends of the tether to measure the angle of the tether or the position of the ballast mass with respect to the host spacecraft.

To make an estimate of the magnitude of drag force attainable, assume that a typical aluminum tether with a length of L=5 km, a tether mass of m_T=10 kg and a ballast mass of m_B=10 kg is being used. Then the maximum gradient force limited electrodynamic drag force is F_{ED}=0.167 N. The power being dissipated in the canoical tether at the angle τ, with $R_C=R_T=rdL^2/m_T$=185 Ω is given by:

$$P=IR=[vBL \cos \tau]^2(R_C+rdL^2m_T)$$

which for an angle τ=35.26° results in a power dissipation of 1570 W. Thus, the thrust level per unit power obtained by the typical Terminator Tether™ would be about 0.106 N/kW. This number is comparable to the value of 0.148 N/kW estimated for the much heavier and longer TSS-1R tether.

Reconciliation of Energy and Force Analysis:

By a force and torque balance analysis an optimum angle for the tether has been discovered at which it is possible to obtain a maximum in the drag component of the electrodynamic force. There is also an additional component of the electrodynamic force, the component in the vertical direction, $F_{EV=FE}$ sin(τ), which is downward for an upwardly deployed tether. This component of force combines with the gravity force of the Earth to effectively allow the host spacecraft to orbit a little faster than normal for that orbital altitude. It does not contribute to the deorbiting of the host spacecraft. But since this vertical component of force is created by current running through the tether, and that current is creating heat and dissipating energy as it passes through the tether, there might be some concern that the force and torque balance analysis above does not conform to the law of conservation of energy.

The inventors will now show, in a very general manner, that no matter what the tether angle, the electrical power being dissipated in the tether is exactly equal to the power being lost by the slowing of the host spacecraft.

The "deorbit power" P_D that must be removed from a spacecraft moving at a velocity v when that motion is opposed by a drag force F_{ED} is:

$$P_D=v\bullet F_{ED}=vF_E \cos \tau=vILB \cos \tau=I[vBL \cos \tau]$$

But, since the voltage V induced across the tether of length L and tilt angle τ moving at a velocity v through a horizontal magnetic field B is

$$V=E\bullet L=EL \cos \tau=vBL \cos \tau$$

Therefore:

$$P_D=IV=P_E$$

And the deorbit power P_D extracted from the slowing of the spacecraft by the drag component of the electrodynamic

force is always exactly equal to the electrical power P_E being dissipated as heat in the tether circuits, independent of the tether angle.

Optimization of Tether Mass Distribution:

If it is not possible to use a piece of the host spacecraft as ballast mass, then the mass of the ballast must be included in the Terminator Tether™ mass. It would be desirable to minimize the total Terminator Tether™ mass, since every kilogram saved means that another kilogram's worth of revenue-producing transponders can be added to the working payload of the host spacecraft. Given a total mass for the Terminator Tether™ and the mass of the deployer/controller unit, it is possible to optimize the mass distribution between the ballast mass and the tether mass to obtain a minimum total Terminator Tether™ mass. A well-designed Terminator Tether™ will also have most, if not all, of the deployer mass incorporated into the ballast mass.

Assume that the total Terminator Tether™ mass consists of the deployer/controller mass m_D, the tether mass m_T, and the ballast mass m_B, with $m_B>m_T>m_D$. Of the three mass components in the Terminator Tether™, two of them affect the electrodynamic drag performance. If it is assumed that the ballast mass is a factor X larger than the tether mass, or $m_B=Xm_T$, the maxinum drag force that can be obtained is now:

$$F_{ED}(\max)=2.31m_T(X+0.25)\Gamma L$$

If it is assumed that the control resistor has been adjusted so that this maximum value for the electrodynamic drag force is maintained as the motion of the spacecraft along its orbit moves the spacecraft into regions with different magnetic field strengths and plasma densities, then for the angle $\tau=35.26°$, $\cos(35.26°)=0.817$, and the maximum electrodynamic drag force in terms of the electrodynamic parameters will be:

$$0.817vB^2L^2/(R_C+rdL^2/m_T)=F_{ED}(\max)=2.31m_T(X+0.25)\Gamma L$$

or canceling out terms and rearranging:

$$(X+0.25)=0.353vB^2L/\Gamma m_T(R_C+rdL^2/m_T)$$

It is now possible to make the further simplifying assumption that to maintain control of the tether, the control resistor needs to be roughly the same size as the tether resistance or $R_C\approx rdL^2/m_T$. Using this assumption produces an equation for the optimum value for the ratio X of the ballast mass to the tether mass:

$$X = vB^2/\Gamma rdL - 0.25 = -0.25 + \frac{vB^2}{12\sin\gamma\cos\gamma\Gamma rdL} = -0.25\frac{\Lambda}{L}$$

Where Λ is the "effective electrodynamic length".

If the tether is short, so that L is small, this equation indicates that the ballast mass must be increased to increase the gradient force, since it is the gradient force which determines the upper limit to the amount of electrodynamic drag force that can be generated without losing control of the tether.

Assuming the usual values for the Earth's magnetic and gradient fields, the velocity of the host spacecraft through the magnetic field, and the resistivity and density of aluminum, this equation becomes:

$$X=10.9/L-0.25$$

where L is in kilometers.

For a typical tether of length L=5 km, X=1.93. If the total mass for the Terminator Tether™ is 20 kg, or 2% of the host spacecraft mass, and the mass of the deployer is 10 kg, then the remaining 10 kg should be distributed so that 6.59 kg is in the ballast mass while 3.41 kg is in tether mass.

Optimization of Tether Length:

If the ballast mass consists of a piece of the host spacecraft, then the mass of the ballast does not have to be considered in the optimization of the Tether system. In this case, the optimum distribution of the Tether mass is to put as much mass as possible into the tether, with a minimum in the deployer/controller package. Under this assumption, the optimum length of the tether is determined by the desire to keep the Area-Time Product of the host spacecraft plus Tether to a minimum.

In a long tether of length L, the effective "collision" cross-sectional area is not the area of the tether, but the larger area produced by multiplying the length of the tether by sum of the width of the tether plus the width of the "target" spacecraft that would be damaged by the tether hitting it. Thus, to decrease the "area" portion of the Area-Time Product, it would be desirable to shorten the tether, making it thicker, and perhaps slightly wider, at the same time, thus keeping the same tether mass and electron collection area, and thereby maintaining the drag force and keeping the decay time at the same level. The result will be a shortening of the Area-Time Product.

If the tether is shortened too much, however, the smaller voltage generated across the shorter tether will leave less voltage margin for the operation of the plasma contactors and the battery recharge system. Since the maximum voltage that can be generated is about 200 V/km, and typical plasma contactors and battery, chargers take 25–100 V to operate, a minimum length for a Tether would be roughly 2 km. Host spacecraft operating in polar orbits, where the conditions for voltage generation are not as good, may require a tether length of 5 km or more.

Since many watts of heat power will be dissipated in the control resistor, means must usually be provided to radiate the heat away into space. One low-mass method of accomplishing this is to make the control resistor (or resistors) in the form of a long, electrically insulated, high resistivity wire similar to those used in electric blankets, but designed to operate at a higher temperature, and during the fabrication of the electrodynamic tether, incorporate the high resistivity wire (or wires) into the end of the tether closest to the control circuit by weaving or braiding the insulated high resistivity wire in with the uninsulated aluminum wire of the electrodynamic tether. The surface area of a long wire is very large, so in this extended wire configuration, exposed to the space all around it, the hot control resistor wire can self-radiate its power into cold space without incurring the mass penalty of a separate radiating surface.

Implementation:

The basic optimum structure for a Terminator Tether™ would be one of the many types of Hoytethers. A multiline (6–12 primary line) Hoytape™ will provide the largest contact area with the plasma, since both sides of the tape would be able to pass current to the plasma. If the spacing between the primary lines is chosen to be larger than twice the Debye length of the plasma, then the effective current collection area per unit length of the Hoytape is proportional to the width of the Hoytape mesh, not the diameter of the wires in the mesh. Thus, a Hoytape not only provides an assured longer life for the Terminator Tether™, but very short lengths will also provide a very large current collection areas.

The deployer for the tether can deploy the Terminator Tether™ either down or up or both. The deployer can stay

attached to the spacecraft as was done in the SEDS missions, or perhaps a better alternative would have the deployer ejected from the spacecraft, with one end of the tether still attached to the spacecraft, reeling out tether as it leaves. The empty deployer would then act as a ballast mass at the end of the Terminator Tether™, which would improve the performance.

The "Remora Remover"

In addition to attaching Terminator Tethers to spacecraft before launch, it is possible to consider a missile-like application. This "Remora Remover" missile would use a Terminator Tether™ carried by a seeker missile similar to the small "hit-to-kill" missiles developed by the Space Defense Initiative Office that deployed a net loaded with oriented metal rods. The Remora Remover missile would hunt down a spacecraft that needs to be removed from space, but instead of hitting the spacecraft, the missile would be programmed to rendezvous with the spacecraft and attach itself to the host spacecraft using a hooked net, harpoon, or adhesive "sucker". The Remora Remover missile would then deploy the Terminator Tether™, which would bring down both the spacecraft and the missile.

The inventors have presented two analyses, backed up with data obtained from space flight experiments. One analysis was based on generalized energy conservation laws while the other analysis use force and torque balance arguments. Both analyses show that optimized aluminum wire tethers 2 to 5 km in length and massing just 1% to 5% of the mass of the host spacecraft can deorbit the host spacecraft in the order of a few weeks, thus mitigating the long-lived orbital debris hazard created by a constellation spacecraft after their end-of-life.

Power Augmented Operation of the Tether:

It is well known in the aerospace literature that if a spacecraft has a power supply and a conducting tether hanging from it, and the spacecraft is in an orbit or trajectory that takes it near a body, such as the Earth or Jupiter, which has both a magnetic field and a region of moderate density electron-ion plasma, and electrical current is pumped from the power supply through the tether and back through the plasma, that the current flowing through the tether will interact with the magnetic field of the body, producing forces on the tether and thence on the spacecraft, changing its orbit or trajectory. These forces can be used to increase or decrease the spacecraft altitude and/or inclination. The amount of altitude or inclination change is proportional to the ratio of the power available from the power supply divided by the mass of the spacecraft and varies with altitude. The unpowered Terminator Tether™ is a simple example of such a system, in which only altitude decrease is possible, although small amounts of both inclination increase or decrease are possible at the same time. Some typical references to this prior art are: Les Johnson, "Propulsive Small Expendable Deployer System Mission (ProSEDS)", Proceedings of the OAST 8th Advanced Propulsion Workshop, JPL, Pasadena, Calif., 20–22 May 1997; and Les Johnson, Joe Carroll, Robert D. Estes, Enrico Lorenzini, Brian Gilchrist, Manuel Martinez-Sanchez, Juan Sanmartin, and Irwin Vas, "Electrodynamic Tethers for Reboost of the International Space Station and Spacecraft Propulsion, AIAA Paper 1996.

Since the Terminator Tether™ of the invention is normally associated with a satellite that has a power supply in the form of a solar panel combined with a storage battery, the Terminator Tether™ can be operated in the "powered propulsion" mode if desired. Such a mode would be useful when attempting to avoid a collision between the Terminator Tether™ and another spacecraft. In such cases, the power from the solar panel, augmented by the power stored in the battery, can be used to temporarily operate the Terminator Tether™ in the propulsion mode instead of the normal drag mode. This would enable to Terminator Tether™ to raise its altitude and/or increase or decrease its inclination to avoid a collision.

In addition, the Terminator Tether™ could be operated in the "power-augmented drag" mode. In this mode, there will be a current induced in the tether by the motion of the spacecraft through the magnetic field, which will cause a drag force on the spacecraft. This induced current would then be augmented by additional current in the same direction generated by the solar panel and the storage batteries in the power supply. The increased current will cause an increased drag force. If there is a significant vertical component of the magnetic field there will also be an increased force normal to the orbital plane, which will cause an increased rate of change of inclination.

When the Terminator Tether™ is operated in the "powered propulsion" or "power-augmented drag" mode, the conditions for stable optimum operation will be essentially the same as in the "unpowered drag" mode. The reason the conditions stay the same is that the maximum tether force than can be effectively utilized is limited by the strength of the gradient force, which has not changed, since the length and mass of the tether and the ballast mass has not changed for these different modes of operation. As a result the optimum operational angle for the tether is still 35.26 degrees, and the optimum ratio of ballast mass to tether mass for different tether lengths and tether material is still determined by the analysis of the invention as is set forth above.

In the analysis given above, where the optimum tether angle was found, the tether was assumed to be in the plane of the orbit and lagging behind the spacecraft motion, since in the "unpowered drag" mode, that would be its normal position, although if the component of the magnetic field along the orbit were high, there would be some tilt of the tether out of the plane of the orbit, producing a force tending to change the inclination of the orbit. In either of the "powered" modes of operation of the Terminator Tether™, however, the tilt of the tether could be forward toward the motion of the spacecraft or strongly tilted to one side or the other of the orbital plane. In all these cases, if the electrodynamic force is allowed to become too large, and the tether angle exceeds 45 degrees, the restoring force of the gradient field will drop off and the tether angle will go unstable. As a result, the optimum angle for the tether that will give the maximum stable force, whether it is a maximum drag force, and maximum propulsion force, or a maximum inclination change force, will be 35.26 degrees, and the optimum ratio for the mass of the tether versus the mass of the ballast will be the same as for the unpowered drag case.

The analysis that gave the optimum angle as 35.26 degrees assumed that the tether would be oriented like a rigid rotor. In reality, variations in forces along the tether will probably cause the tether to hang in a slightly curved shape, where the optimum angle may not be exactly 35.26 degrees from the local vertical. The optimum angle of the tether as it leaves the host spacecraft in such a case is where the drag force is largest.

The present invention is discussed in this disclosure in terms of its space applications as a Terminator Tether™ useful for the removal of unwanted satellites. It should be understood, however, that the present invention is useful in any application where a space object can use a conductive tether to produce electrodynamic force through interaction

with a magnetic field. The invention, therefore, should be limited not by this description, but only by the appended claims and their equivalents.

What is claimed is:

1. A method of operating a conductive tether attached to a space object, said conductive tether being oriented at an angle to magnetic field lines of an external magnetic field and said conductive tether moving across the magnetic field lines of said external magnetic field at said angle to producing an electric current in said conducting tether and a resulting electrodynamic force acting on said tether and said attached space object comprising,

Controlling the amount of electric current flowing in said conducting tether to vary the angle between the conductive tether the field lines of the external magnetic field and the electrodynamic force acting on said tether and attached space object.

2. A method as in claim **1** wherein said angle is less than 45 degrees.

3. A method as in claim **1** wherein said angle is 35.26 degrees.

4. A method as in claim **1** wherein said angle is controlled to average 35.26 degrees over time.

5. A method as in claim **1** wherein said angle is controlled to average 35.26 degrees over the length of the tether.

6. A method as in claim **1** wherein the space object and the tether connected to it are rotated about their center of mass while the conductive tether interacts with the external magnetic field.

7. A method as in claim **1** wherein the angle of the conductive tether to the external magnetic field is controlled by sensing a measurable parameter of the space object/conductive tether system.

8. A method as in claim **7** wherein the parameter is current flow in the conductive tether.

9. A method as in claim **7** wherein the parameter is the electrical power dissipated in the conductive tether and the current control system.

10. A method as in claim **7** wherein the parameter is the relative position of the space object and the position of the far end tip of the tether.

11. A method as in claim **7** wherein the parameter is the acceleration of the space object.

12. A method as in claim **6** wherein the parameter is the state vector of the space object as measured by the Global Positioning System.

13. A method as in claim **1** including the step of applying electric power to the conductive tether to change the state vector of the space object.

14. A method of operating a conductive tether attached to a space object, said conductive tether being oriented at an angle to the local vertical between said space object and a celestial body having a magnetic field having magnetic field lines external to said conductive tether; said conductive tether moving across said magnetic field lines of said external magnetic field at an angle to the local vertical to produce an electric current in said conducting tether and a resulting electrodynamic force acting on said tether and said attached space object comprising,

Controlling the amount of electric current flowing in said conducting tether to vary the angle between the conductive tether the local vertical between said space object and said celestial body to vary the electrodynamic force acting on said tether and attached space object.

15. A method as in claim **14** wherein said angle is less than 45 degrees.

16. A method as in claim **14** wherein said angle is controlled to average 35.26 degrees over time.

17. A method as in claim **14** wherein the space object and the tether connected to it are rotated about their center of mass while the conductive tether interacts with the external magnetic field.

18. A method as in claim **14** wherein the angle of the conductive tether to the external magnetic field is controlled by sensing a measurable parameter of the space object/conductive tether system.

19. A method as in claim **18** wherein the parameter is current flow in the conductive tether.

20. A method as in claim **18** wherein the parameter is the acceleration of the space object caused by the electrodynamic force acting on the space object.

21. A method as in claim **18** wherein the parameter is the change in the state vector of the space object as measured by the Global Positioning System.

22. A method as in claim **14** including the step of applying electric power to the conductive tether to change the state vector of the space object.

23. A method as in claim **14** wherein the celestial body is the Earth and the magnetic field is the Earth's magnetic field.

24. A method as in claim **14** wherein the celestial body is the sun and the magnetic field is the Sun's magnetic field.

25. A method as in claim **14** wherein the magnetic field is the vector sum of the magnetic fields from all celestial bodies in the solar system.

26. A method as in claim **14** wherein the conductive tether is a Hoytether.

* * * * *

No. 674,427. Patented May 21, 1901.

A. PALENCSÁR.

APPARATUS FOR COLLECTING ATMOSPHERIC ELECTRICITY.

(Application filed July 10, 1900.)

(No Model.) 3 Sheets—Sheet 1.

Fig: 1.

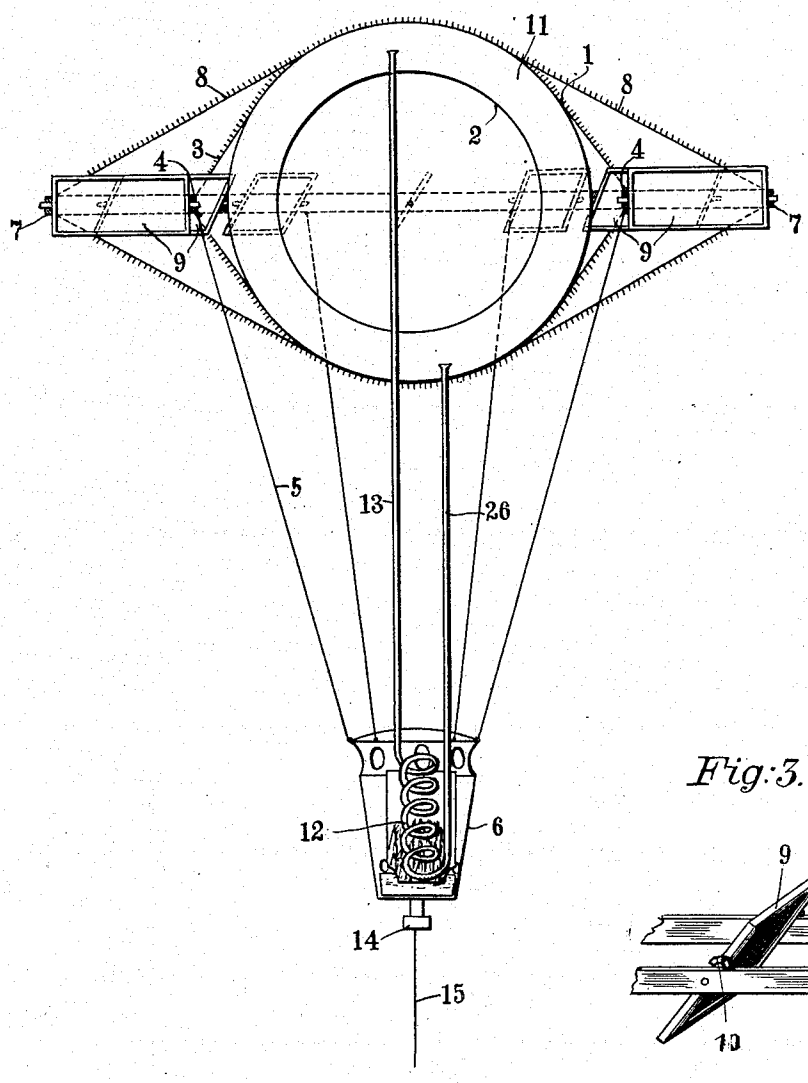

Fig: 3.

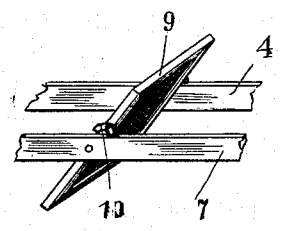

WITNESSES:
Ella L. Giles
Otto Munk

INVENTOR
Andor Palencsár
BY
Richards
ATTORNEYS

THE NORRIS PETERS CO., PHOTO-LITHO., WASHINGTON, D. C.

No. 674,427. Patented May 21, 1901.

A. PALENCSÁR.

APPARATUS FOR COLLECTING ATMOSPHERIC ELECTRICITY.

(Application filed July 10, 1900.)

(No Model.) 3 Sheets—Sheet 2.

Fig. 2.

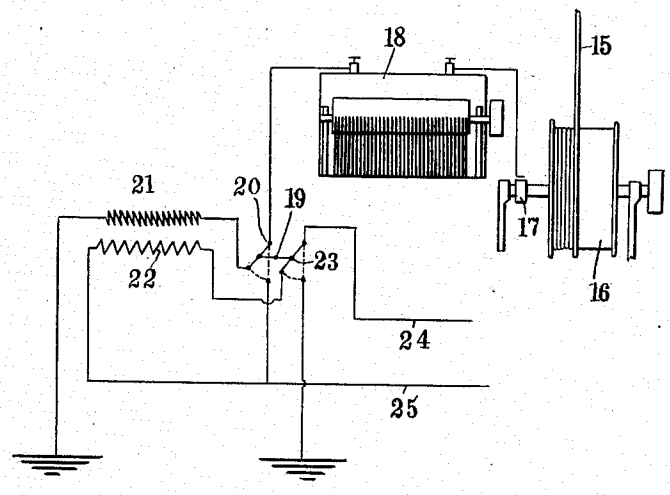

WITNESSES:
Ella L. Giles
Otto Munk

INVENTOR
Andor Palencsár
BY
Richards
ATTORNEYS

THE NORRIS PETERS CO., PHOTO-LITHO., WASHINGTON, D. C.

No. 674,427. Patented May 21, 1901.

A. PALENCSÁR.

APPARATUS FOR COLLECTING ATMOSPHERIC ELECTRICITY.

(Application filed July 10, 1900.)

(No Model.) 3 Sheets—Sheet 3.

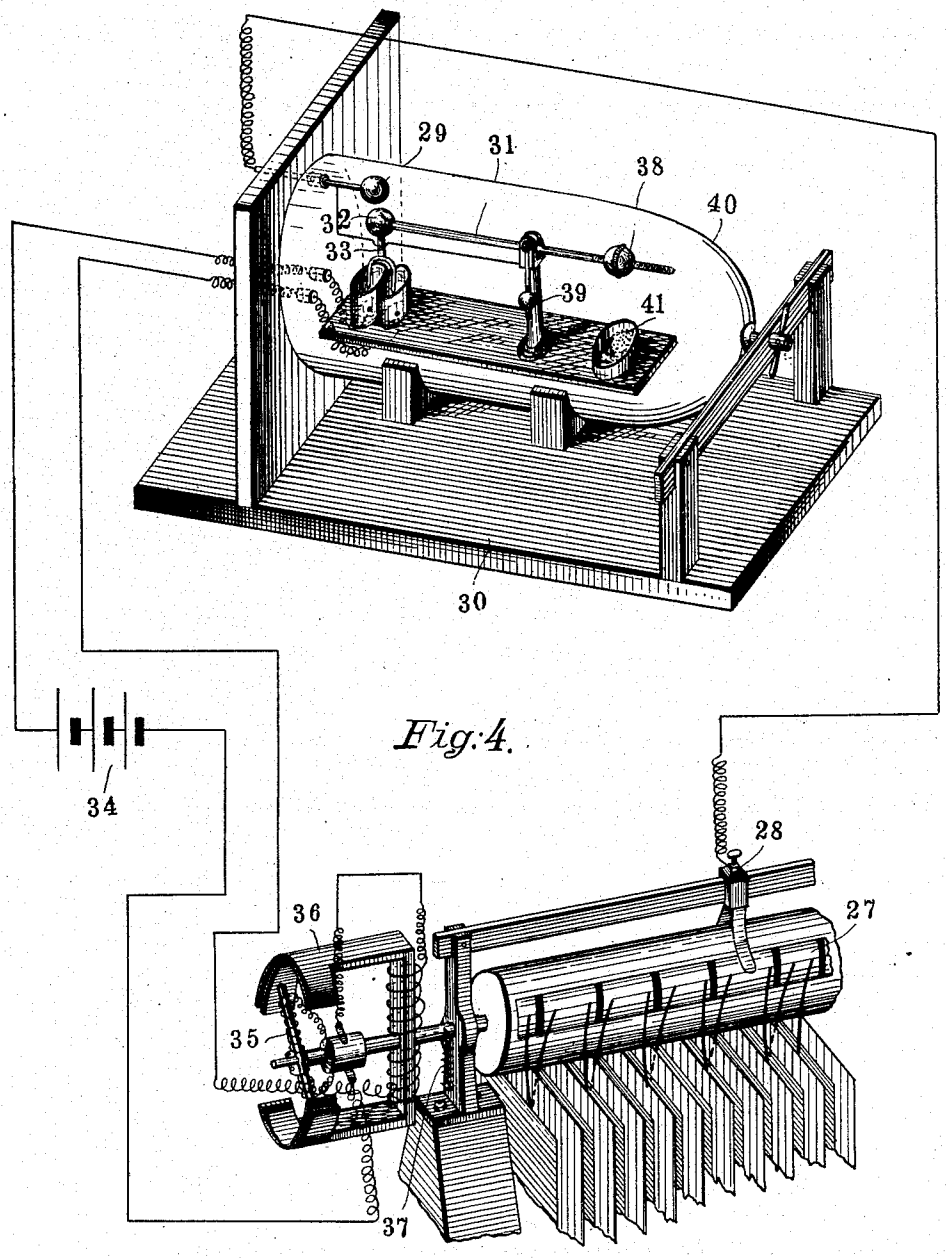

Fig. 4.

WITNESSES:
Ella L. Giles
Attorney

INVENTOR
Andor Palencsár
BY
Richards & Co
ATTORNEYS

THE NORRIS PETERS CO., PHOTO-LITHO., WASHINGTON, D. C.

UNITED STATES PATENT OFFICE.

ANDOR PALENCSÁR, OF BUDA-PESTH, AUSTRIA-HUNGARY.

APPARATUS FOR COLLECTING ATMOSPHERIC ELECTRICITY.

SPECIFICATION forming part of Letters Patent No. 674,427, dated May 21, 1901.

Application filed July 10, 1900. Serial No. 23,102. (No model.)

To all whom it may concern:

Be it known that I, ANDOR PALENCSÁR, a subject of the King of Hungary, residing at Buda-Pesth, Austria-Hungary, have invented a certain new and useful Apparatus for Collecting Atmospherical Electricity, of which the following is a full, clear, and exact specification.

The present invention concerns an apparatus for collecting and driving or conducting atmospherical electricity which renders it practicable to obtain material quantities of the same in serviceable form.

The experiments made hitherto have been limited to deviating or conducting the electricity by simple lightning-rods without making allowance for the progress of the theory of atmospherical electricity. It is obvious that only extremely small quantities of electricity can be collected in this manner, and, moreover, it was obtained in a form which entirely precluded its utilization. It is evident that a source of electricity of irregular yield can only be utilized by means of accumulators and for charging accumulators only a current of constant potential can be employed. The potential of electricity derived or deviated by means of a lightning-rod varies within wide limits, and, moreover, it is so high that it cannot be used at all for charging accumulators. All these drawbacks are remedied by the present invention, by which the atmospheric electricity is obtained in larger quantities with as low and constant a potential as may be desired.

The idea underlying the invention is based on the modern theory of atmospheric electricity, according to which it is produced by the condensation of steam or aqueous vapors, and that the increase of potential is effected by the concentration of the small drops of water into larger ones, as the proportion of the surface of the drops to the volume of same is materially reduced thereby. According to this theory the water-droplets floating in the layers of air are considered as vehicles or carriers of the electricity, and a rational system of the deviation of the atmospheric electricity must derive it from the water-drops. This is attained by the present invention in the following manner: A collecting-body of as large a surface as possible is provided with sharp needles. This is moved in the higher layers of air, while being continually heated by a suitable heating device. Owing to the heat the water-drops immediately ambient to the collecting-body will be evaporated, their capacity is gradually reduced, while the potential of the charge grows until it reaches an infinite height with infinite smallness of the drops. It is readily apparent that the whole charge of the drops as soon as they have been evaporated will have passed to the collector or collecting-body, from which it can be conducted. For the purpose of replacing the evaporated drops, which have been deprived of their charge by new-charged drops, the collector is moved in relation to the ambient air.

One way of carrying out the invention is represented in diagram in the accompanying drawings, in which—

Figure 1 is a longitudinal section of the collecting-balloon. Fig. 2 shows the deviating and conversion device, and Fig. 3 a detail. Fig. 4 is a diagrammatic perspective view of a form of automatic regulator for the rheostatic machine.

The apparatus consists of a balloon having two walls and covered with a light wire net, preferably of aluminium wire, said net being studded with needles. Besides, the balloon carries the net 3, on which the ring 4, made of a solid but light material, (wood, cane, &c.,) is fixed. This ring carries the basket 6 by means of the cords or ropes 5. On a level with the ring 4 is the ring 7, which is kept spread by the blades or wings 9, which are journaled in a manner to rotate easily. The ring 7 is kept fixedly in position by the cords or ropes 8. The blades or wings consist of a frame covered with light material, and their rotation in either direction is limited by the stops or ledges 10. The blades or wings form advantageously an angle of sixty to seventy degrees with the vertical line.

All wire nets, ropes, rings, and blades or wings may be covered with small metal needles which are electrically connected with each other.

From the space 11, formed between the double walls of the balloon, the pipe 26 leads from the lowest point of the same to the serpentine 12, arranged in the basket 6, which in turn is

connected with the pipe 13, ending in the upper part of the space 11 between the two walls 1 2. The serpentine is heated by means of a suitable source of heat, whereby a warm current of gas or air circulates continually between the double walls of the balloon.

Under the basket the ball-bearing 14 is arranged in electrical connection with the wire nets, and its stud is electrically connected with the carefully-insulated light though sufficiently strong cable 15.

On the earth's surface is a winch 16, Fig. 2, by means of which the balloon can be made to ascend or descend as soon as the interior space of the balloon is filled with illuminating gas or hydrogen.

The end of the cable-core is soldered to a collector arranged upon and insulated from the axle of the winch, and the electricity is conducted from this collector by means of a sliding contact. The collecting of the electricity takes place by moving the balloon continuously up and down by means of the winch. In this movement the balloon is turned by means of the wings or blades 9, which are adapted to turn the balloon always in the same direction whether ascending or descending, as in the change from ascending into descending of the balloon, or vice versa, the blades are turned over by the aerial resistance, and thus impart the rotating motion to the balloon in the same direction. In order to avoid torsion of the cable, the ball-bearing 14 is provided. This up-and-down motion and rotating of the balloon accomplishes the purpose of bringing it into contact with as many water particles floating in the air as possible.

As the electricity conducted from the collector-wing 17 possesses a much too high and varying potential for making its direct application practicable, and as it is usual with an irregular source of electricity to first charge accumulators and to further utilize the easily-regulated current of the same only, it becomes necessary to seek to maintain the electricity conducted from the collector 17 for the charging of the accumulators at a constant potential and convert the potential to a much lower one; but as we deal in this case with a direct current ordinary converters cannot be used for this purpose. Moreover, the electricity possesses in this case a much too high potential, so that with the employment of ordinary converters the greatest part of the collected electricity would be lost again. The only practical method for this purpose is the converting by means of the Planté rheostatic machine, by which this high-voltage electricity can be transformed almost without any loss whatever. Thus the question of conversion would be solved, and only the question of maintenance of constant potential remains. This is obtained in the following manner: The rheostatic machine 18 or only a part of the plates is connected with an electrometer of any construction, the movable part of which closes a contact which eventually actuates an electromagnet which effects the switching or reversion of the rheostatic machine. After the switching of the rheostatic machine it is discharged, the potential falls to zero, (*nil*,) and the electrometer resumes its initial position, whereby the current of the electromagnet which effects the reversion is interrupted and the plates of the rheostatic machine are reconnected to potential. The machine is then ready for renewed charge and is again discharged when the determined potential is reached. This action is continually repeated as long as the apparatus is in operation.

A form of the automatic regulator for the rheostatic machine is represented in Fig. 4. 27 is the contact-cylinder of the rheostatic machine, on which, for clearness sake, only the contacts for the charging position of the condenser-plates are shown, while the contacts for the discharging position, which come into action after the contact-cylinder has been turned, are omitted. The coating of the condenser-plates is connected in electrical circuit with the stationary ball 29 and the movable ball 32 of the charge-meter 30. When the charge of the rheostatic machine rises, the ball 32, arranged on the one extremity of the lever 31, is repelled and at a certain stroke actuated by means of the fork 33, which is fastened on the ball 32, and by dipping into a mercury-cup it closes the circuit of the source of current 34. This current passes through the windings of the anchor or armature 35, fixed on the shaft of the contact-cylinder, and it also passes through the electromagnet 36. Thereby the contact-cylinder is turned by a certain angle and the rheostatic machine is thus reversed. Then if the tension decreases by discharge and the repulsion of the balls 29 32 declines so far that the contact is interrupted at 33 the spring 37 turns the contact-cylinder into its normal position and the rheostatic machine is again switched to tension. The regulation of the electrometer is effected by the adjustable weights 38 39. When larger quantities of electricity shall be derived or deviated, two rheostatic machines may operate alternately so, that while the one is being discharged the other can be charged. It is readily apparent that if the capacity of the rheostatic machine is not changed the switching or reversion by the electrometer will always take place at the same potential of the rheostatic machine, and as the number of plates, and hence the proportion of conversion, remains the same the current impulses derived or deviated from the rheostatic machine will also have the same potential.

The irregularities of the source of electricity change the interval of time in which the charges follow each other; but as long as the potential remains constant this has no injurious effect on the charge of the accumulators. The current derived, or deviated from the

rheostatic machine can be further transformed by an ordinary converter 21 22, and whenever it is sufficiently constant it can be utilized without the intervention of the accumulators. The converters can be connected or disconnected by means of the double switch 19 20 23.

24 and 25 are the conducting-wires, which run either directly to the place of consumption or to an accumulator-battery.

Having now described my invention, what I claim as new, and desire to secure by Letters Patent, is—

1. An apparatus for collecting atmospheric electricity comprising a collecting-body adapted to be kept in motion, heating means for said body, and a rheostatic machine and a converter connected with the said body electrically, substantially as described.

2. An apparatus for collecting atmospheric electricity for storage comprising a collecting-body adapted to be kept in motion in the ambient air, heating means for said body, a conductor leading from said body, a rheostatic machine connected with the said conductor, an electrometer connected with said rheostatic machine electrically, a contact controlled by the electrometer, and an electromagnet controlled by said contact, said electromagnet controlling the reversing of the rheostatic machine, substantially as described.

3. In combination, the balloon-like collecting-body, having the collecting-points, means for heating the interior space of said body, a conductor leading from the balloon-like body, and electrical devices for receiving the current therefrom, substantially as described.

4. In combination, the balloon-like collecting-body, means for turning the same constantly in one direction in both ascending and descending, conducting means leading from the balloon and electrical devices for receiving the current therefrom, substantially as described.

In witness whereof I have hereunto set my hand in presence of two witnesses.

ANDOR PALENCSÁR.

Witnesses:
EUGÈNE HARRÄNJO,
PAUL BÖLESKEY.

Nov. 12, 1957

L. R. CRUMP

POWERING ELECTRICAL DEVICES WITH ENERGY ABSTRACTED FROM THE ATMOSPHERE

Filed March 12, 1954

2,813,242

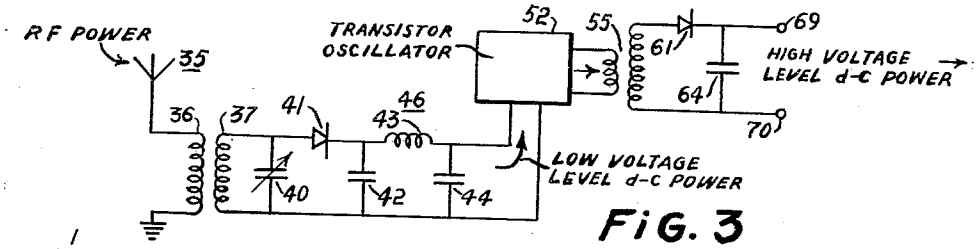

FIG. 3

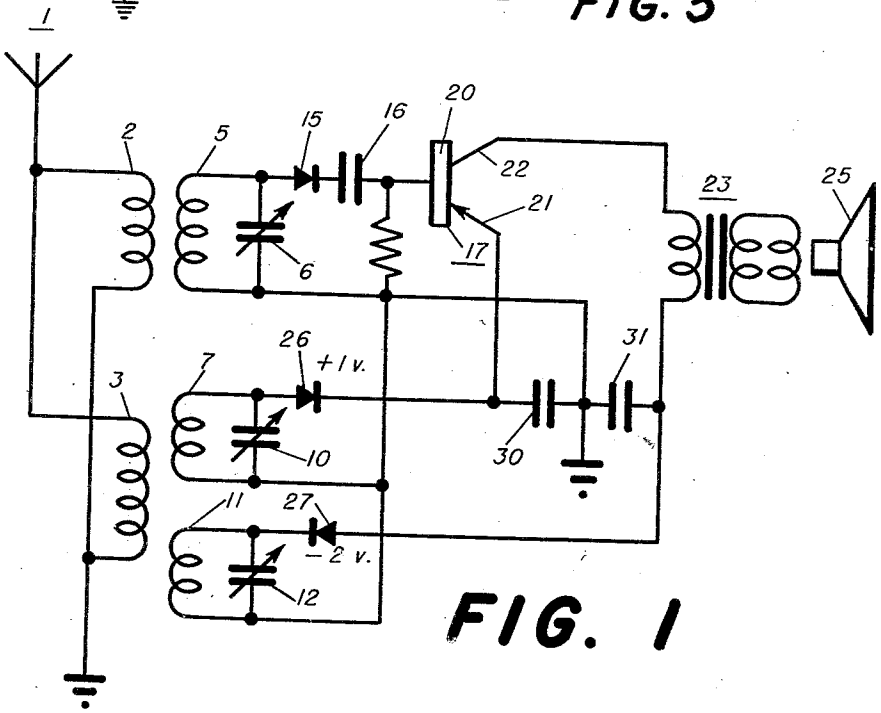

FIG. 1

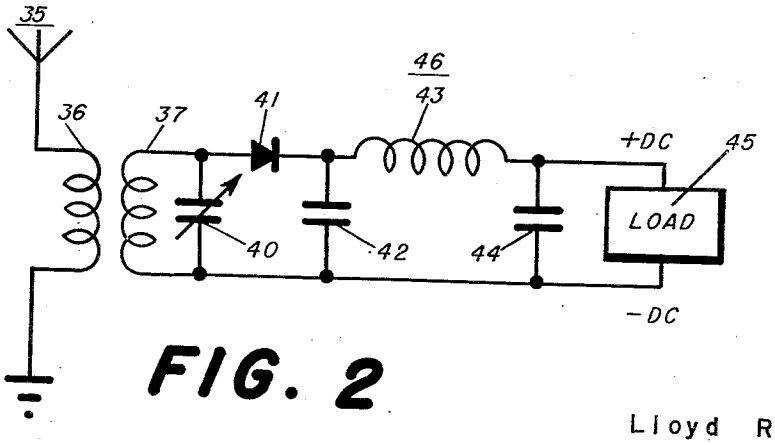

FIG. 2

INVENTOR

Lloyd R. Crump

BY W. E. Thibodeau + A. W. Dew

ATTORNEYS

United States Patent Office

2,813,242

Patented Nov. 12, 1957

1

2,813,242

POWERING ELECTRICAL DEVICES WITH ENERGY ABSTRACTED FROM THE ATMOSPHERE

Lloyd R. Crump, Silver Spring, Md.

Application March 12, 1954, Serial No. 415,986

1 Claim. (Cl. 321—2)

(Granted under Title 35, U. S. Code (1952), sec. 266)

The invention described herein may be manufactured and used by or for the Government for governmental purposes without payment to me of any royalty thereon.

This invention relates to the convenient and economical provision of power for the operation of electronic circuits and devices using transistors, and of other electrical devices having modest power requirements.

A great advantage of transistors, and a major reason for their enthusiastic reception since their introduction a few years ago, is the fact that they will operate satisfactorily with very low supply voltages and currents. One milliwatt or even less is sufficient to power a transistor in many applications. Various batteries have been developed to provide, in a minimum of space, the relatively minute amounts of power needed by transistors.

My invention provides methods and means that permit transistor circuits, and also other low-powered electrical devices, to be economically and conveniently operated without any batteries whatever, and indeed without any power supply whatever as power supplies are ordinarily conceived.

The invention centers around my discovery that it is practicable to construct operative transistor circuits that are able to abstract from the atmosphere sufficient electromagnetic energy to provide all necessary supply voltages and currents for their own operation. Circuits and devices powered according to my invention will operate indefinitely without any local power source whatever.

I have successfully constructed and demonstrated such circuits. For example, I have constructed a batteryless transistor radio receiver on which I have listened to either nearby or distant broadcast stations as desired, using either headphones or a loudspeaker; this receiver has been powered entirely by electromagnetic energy abstracted from the atmosphere.

From the successful operation of this receiver, and from other experimental work, it becomes clear that, by the methods and means of the invention, a great variety of practical and useful transistor circuits can be powered entirely by energy abstracted from the atmosphere.

Furthermore, as will become apparent below, my invention is applicable to the powering of other electrical devices requiring relatively small amounts of power.

An object of the present invention is to provide methods and means for powering transistor circuits entirely from radiofrequency energy abstracted from the atmosphere.

Another object is to provide methods and means for powering remote radio receivers, low-powered radio transmitters, and other low-powered electrical devices, with energy received by radio from a master station, so that no local power supplies are needed by the devices and so that the powering or non-powering of the remote device is under the control of the master station.

A further object is to provide methods and means for powering transistor circuits and other low-powered electrical devices with radiofrequency energy received from one or more remote radio transmitters.

2

Other objects, aspects, uses, and advantages of the invention will become apparent from the following description and from the drawing.

Figure 1 is a schematic diagram of a transistor radio receiver in which all necessary power is supplied by energy abstracted from the atmosphere in accordance with the invention.

Figure 2 is a schematic diagram showing a general application of the invention to provide direct-current power to a load.

Figure 3 is a schematic diagram of a system for obtaining a high energy D.-C. source at a high voltage level using energy abstracted from the atmosphere.

Referring to Figure 1, a receiving antenna **1** is connected to antenna coupling coils **2** and **3**, the other ends of which are connected to ground. A parallel resonant circuit consisting of coil **5** and capacitor **6** is coupled to coil **2**. A second parallel resonant circuit consisting of coil **7** and capacitor **10** is coupled to coil **3**. A third parallel resonant circuit consisting of coil **11** and capacitor **12** is also coupled to coil **3**.

Coil **5** and capacitor **6** are tuned to the frequency of a radio transmitter from which it is desired to receive information—for instance, an amplitude-modulated standard broadcast station. The signal received from this transmitter need not be strong. The signal is detected by diode **15** to obtain an audio-frequency information signal. This audio signal is coupled through a capacitor **16** and is amplified by a circuit that includes a transistor **17** having a base **20**, an emitter **21**, and a collector **22**. The amplified audio output of the transistor is coupled through an audio transformer **23** to an electroacoustical transducer, preferably a permanent-magnet dynamic loudspeaker **25** as shown.

The novelty of the invention lies largely in the method and means by which the necessary direct-current power is supplied to the emitter and collector circuits of transistor **17**. This method and means will now be described.

Coil **7** and capacitor **10**, and also coil **11** and capacitor **12**, are tuned to receive radio signals of relatively high strength. It does not matter whether these signals contain information. These power signals are rectified by diodes **26** and **27** to provide direct-current power that is filtered by capacitors **30** and **31**. The D.-C. power thus obtained is utilized to power the transistor **17**.

In the circuit shown, two tuned circuits (coil **7** and capacitor **10**, and coil **11** and capacitor **12**) are tuned to power signals and the D.-C. voltages obtained from each are connected in series. The tuned power circuits may be tuned to the same or different power signals. Under certain circumstances it may be desirable to use more than two tuned power circuits and to tune them to more than two power signals; in this way power can be obtained from several signals and combined. On the other hand, if a strong power signal is available, a single tuned power circuit may suffice to give the needed D.-C. power.

Even weak information signals can be received successfully. A plurality of transistor amplifier stages can be used if desired, or other circuits such as superheterodyne circuits can be used. It is merely necessary that a sufficiently strong power signal or signals be available to provide the small amount of D.-C. needed to power the transistors.

If the information signal happens to be strong, it can be used as the power signal; all of the tuned circuits (coil **5** and capacitor **6**, coil **7** and capacitor **10**, coil **11** and capacitor **12**) are tuned to the information signal.

Engineers who have observed my invention in operation have been surprised at the unexpectedly good results obtained, even with readily available power signals of quite moderate strength. For instance, sufficient power for satisfactory operation of a loudspeaker at low volumes is

readily obtained from a 5-kilowatt standard broadcast station 5 miles away, using only an indoor antenna to pick up the power signal as well as information signals. In typical operation under these conditions a D.-C. voltage of about 2.5 to 3 volts is obtained between the emitter and the collector, at a current of about 250 microamperes; D.-C. power input to the transistor is thus of the order of 0.5 to 1 milliwatt. So far as I am aware, no one has ever before discovered and demonstrated the practicability of this method of powering a radio receiver.

Because existing broadcast stations within a radius of a number of miles provide adequate power signals, the invention is readily practicable with existing power signals in almost any location in or near any city in the United States.

Although I have described a transistor radio receiver powered by my invention, it will be readily apparent that the invention is applicable to the powering of any transistor circuit using one or a number of transistors, and to the powering of other devices requiring relatively small amounts of power. For instance, sensitive electromechanical, electrochemical, or electrothermal devices can be operated by the method of the invention.

Referring to Figure 2, which shows a more general embodiment of my invention, an antenna 35 picks up radiofrequency energy from the atmosphere. This energy flows through coil 36, which is coupled to a tuned circuit consisting of coil 37 and capacitor 40. The radiofrequency voltage across capacitor 40 is rectified by diode 41 and filtered by a low-pass filter 46 consisting of capacitors 42 and 44 and choke coil 43. The resulting D.-C. voltage is applied to a load 45.

In the practice of my invention, larger amounts of power can be obtained for short periods of time by storing received energy in a suitable energy storage device. Stored energy may then be withdrawn at intervals at a more rapid rate than that at which it was received and put into the storage device. In this way the invention can be used to provide short pulses of relatively very high electrical energy. This result can be readily obtained by charging a relatively large capacitor with direct current and then discharging the capacitor rapidly into a load when desired. This rapid discharge can be initiated automatically when the voltage across the capacitor reaches a certain level, or it can be initiated when a transistor radio receiver receives a certain information signal.

Higher voltages can be obtained with the invention by means of well known devices for raising D.-C. voltages as shown in Figure 3. The D.-C. voltage output from the capacitor 44 can be used to power a low frequency transistor oscillator 52 whose A.-C. output is raised to a higher voltage level by the transformer 55. This relatively high A.-C. voltage can then be rectified by a diode 61 and fed to a capacitor 64 to provide a high energy D.-C. source at a relatively high voltage level at the terminals 69 and 70. If desired, energy can now be withdrawn from the capacitor 64 at intervals in short pulses of high energy at a high voltage level. Pulsed radio transmission is one of the possible uses for this form of the invention. Other uses would be to provide a single relatively powerful pulse needed to actuate an electrothermal or electromechanical device.

As has been indicated above, in many locations and particularly anywhere in or near most American cities, power signals normally present in the atmosphere are readily available for the easy and convenient practice of the invention. However, the invention also has important applications in systems in which the necessary power signal is generated and transmitted specifically for the operation of the particular system. Such systems can, for example, comprise a master station transmitting all the power that is needed for hundreds or thousands of fixed or mobile transistor receivers or other remote devices over

a range of many miles. This eliminates the need for hundreds or thousands, as the case may be, of local power supplies. At the same time, such a system has the advantage that all of the remote devices can be simultaneously activated or deactivated at the will of the master station, simply by starting or stopping the transmission of the power signal. In such systems it will often be advantageous to use power signals of frequencies sufficiently high to permit the use of resonant receiving antennas of small physical dimensions for signal pickup at the remote devices. In addition to the power signal, the master station may transmit an information signal on the same or a different carrier.

Certain types of devices powered entirely by received radio waves are of course well known. The well-known "crystal set" of the early days of radio, which used a diode rectifier to demodulate an amplitude-modulated radiofrequency signal, is an outstanding example of such a device. My invention is readily distinguishable from such prior devices, however. In typical prior devices a modulated radiofrequency signal is applied to a diode to obtain unidirectional half-wave pulses whose amplitudes vary with modulation. These pulses are integrated by means of a capacitor to obtain a unidirectional signal the amplitude of which follows the audiofrequency modulation envelope. If the radiofrequency signal is received with sufficient strength the audio signal may have sufficient power to operate headphones or similar utilization device without power amplification; but the signal is utilized for its information content, rather than to supply non-information-containing power.

My invention, on the other hand, entails the utilization of received radiofrequency energy to supply power to at least one pair of circuit points (across capacitor 31 in Fig. 1, for example), such circuit points requiring power solely for its power content and not for any information or modulation it may contain. In other words, my invention entails the utilization of radiofrequency energy to supply power that would otherwise have to be supplied by batteries, generator, or other local power source.

It will be apparent that the embodiments shown are only exemplary and that various modifications can be made in construction and arrangement within the scope of the invention as defined in the appended claim.

I claim:

An electrical device for obtaining a high energy D.-C. source at a high voltage level using energy abstracted from the atmosphere, said device comprising in combination: resonant means for receiving radio waves, first rectifier means for converting said radio waves into first direct current energy, first capacitor means for storing said first direct current energy, an oscillator powered by said direct current energy, said oscillator producing an A.-C. output, transformer means for raising said A.-C. output to an increased voltage level, second rectifier means for converting the A.-C. output of increased voltage level from said transformer into second direct current energy, and second capacitor means for storing said second direct current energy.

References Cited in the file of this patent

UNITED STATES PATENTS

1,540,998	Plauson	June 9, 1925
2,056,824	Cawley	Oct. 6, 1936
2,553,734	Adler	May 22, 1951
2,569,687	Pan	Oct. 2, 1951
2,647,957	Mallinckrodt	Aug. 4, 1953

OTHER REFERENCES

Turner: "A crystal receiver with transistor amplifier," Radio and Television News, January 1950.

US 20100220424A1

(19) United States

(12) Patent Application Publication

IBOK

(10) Pub. No.: US 2010/0220424 A1

(43) Pub. Date: Sep. 2, 2010

(54) METHOD OF ATMOSPHERIC DISCHARGE ENERGY CONVERSION, STORAGE AND DISTRIBUTION

(75) Inventor: EFFIONG ETUKUDO IBOK, SUNNYVALE, CA (US)

Correspondence Address:
THE TRAVIS BUSINESS GROUP, INC.
1005 E. HOMESTEAD RD.
SUNNYVALE, CA 94087 (US)

(73) Assignees: EFFIONG ETUKUDO IBOK, SUNNYVALE, CA (US); THE TRAVIS BUSINESS GROUP, INC, SUNNYVALE, CA (US)

(21) Appl. No.: 12/534,115

(22) Filed: Aug. 1, 2009

Publication Classification

(51) Int. Cl.
H02H 3/22 (2006.01)
H02J 7/00 (2006.01)

(52) U.S. Cl. 361/117; 320/166

(57) ABSTRACT

A method of converting atmospheric electrical discharge to a useable form of energy by arresting, storage and retransmission of lightning induced electrical discharge is disclosed. The invention discloses methods of deploying this technology even in isolated locations where no electricity infrastructure exists. Additionally, the potential for achieving in excess of 1 GWe of electrical power supply at costs orders of magnitude lower than fossil fuel or solar is also disclosed. Isolated collection units are disclosed. A method of deployment of these devices on individual cars and recharge stations is disclosed which in effect unplugs these automotive and recharge stations from the grid. This capability significantly decreases their dependence on the electricity grid infrastructure, enabling a much more enhanced rollout capability for the industry. The concept of Energy Dams is disclosed. These are facilities with substantial electrical energy storage capacities with the capability of receiving energy feeds from various generation sources.

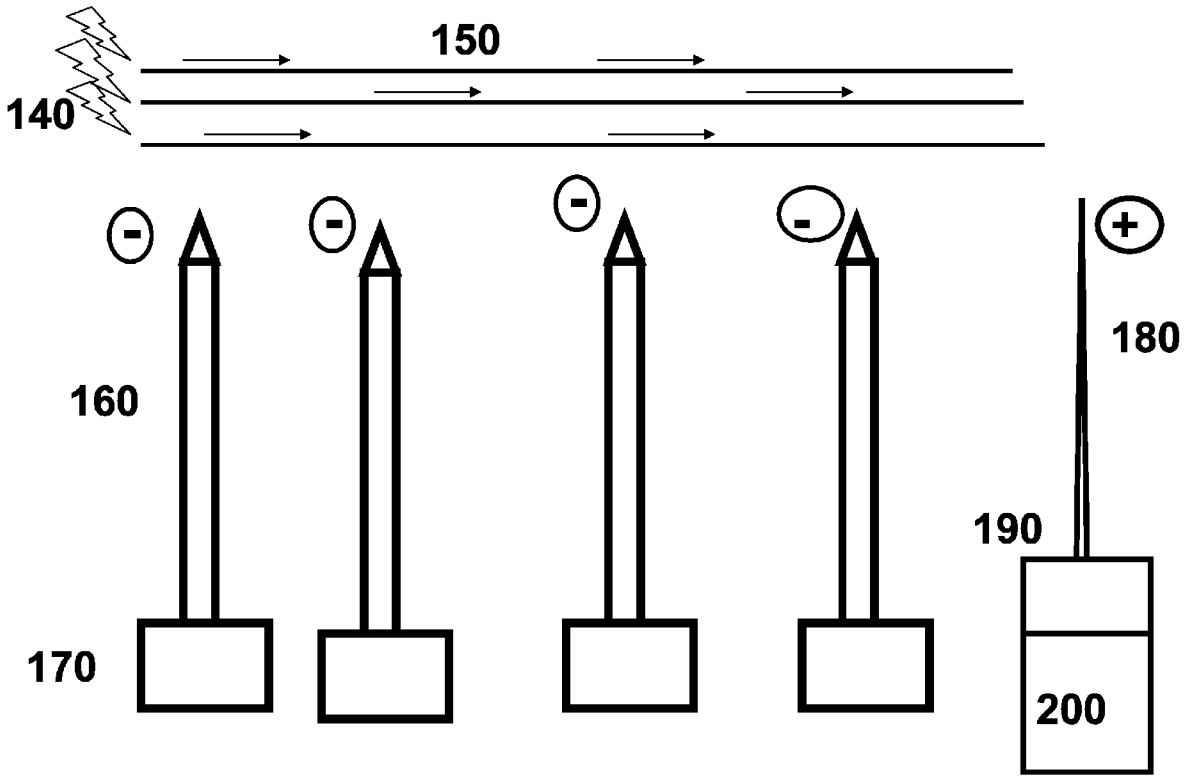

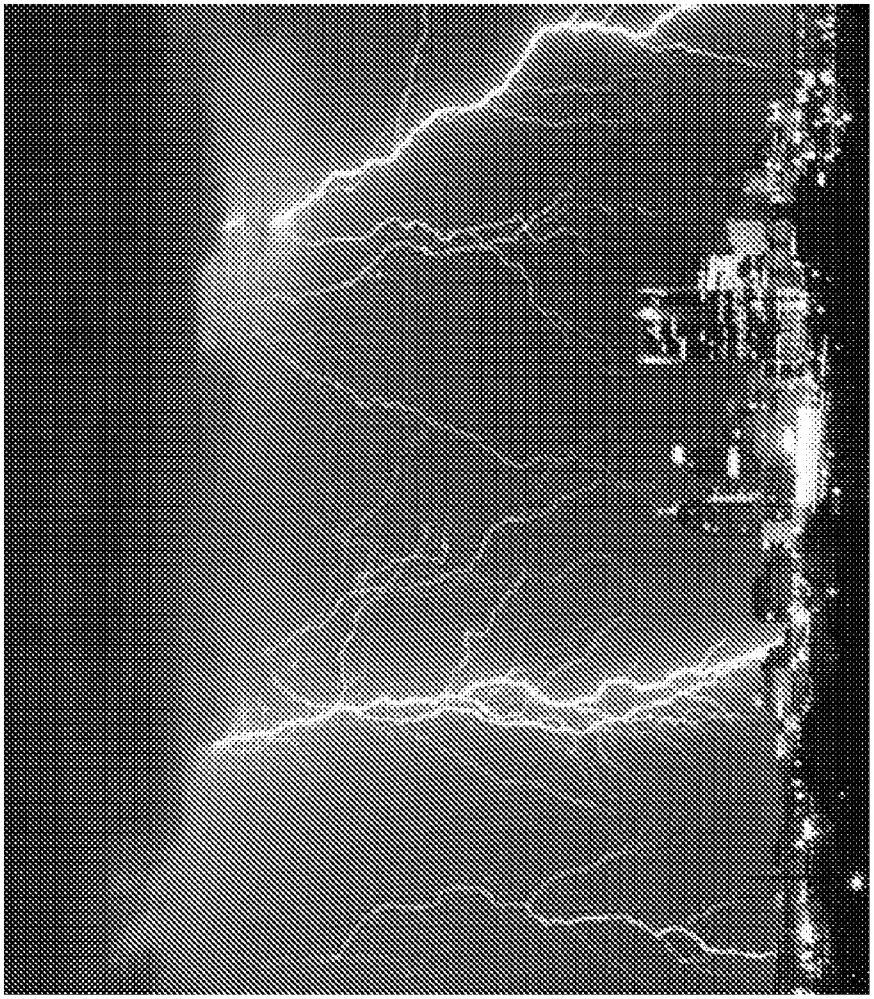

Fig. 1a

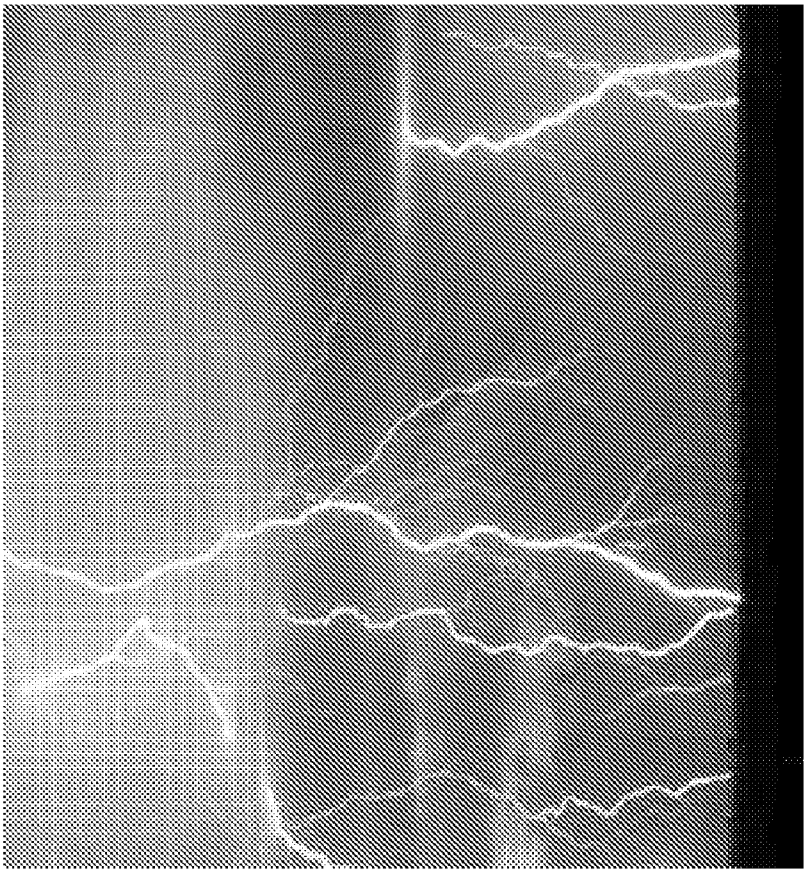

Fig. 1b

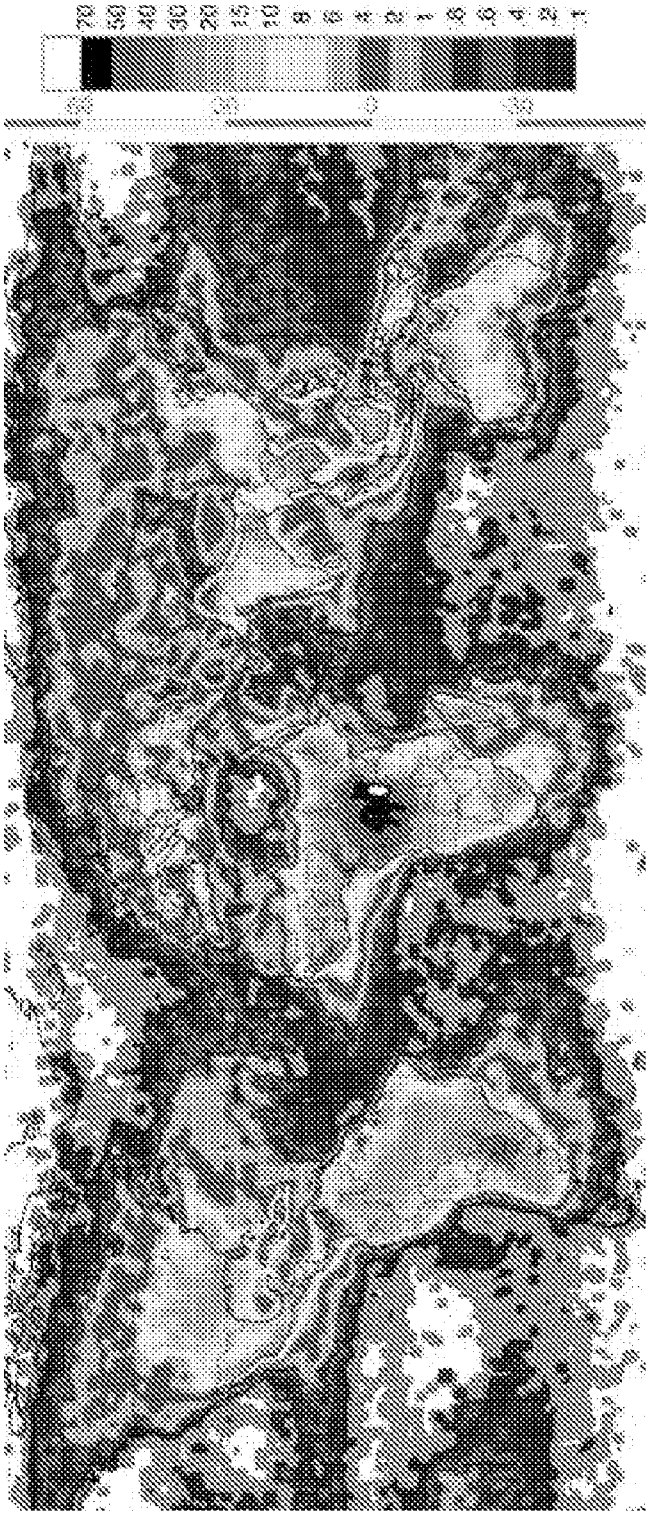

Global Distribution of Lightning Strikes: April 1995 – February, 2003. (Source: NASA)

Fig. 1c

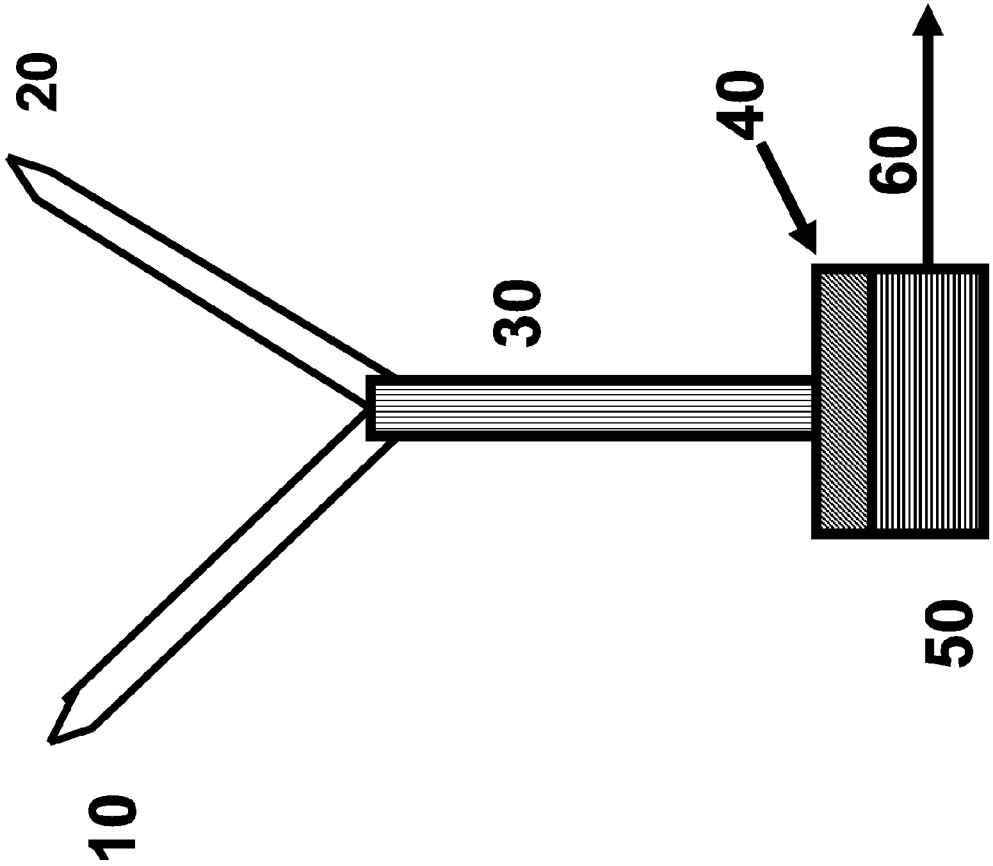

Fig. 2

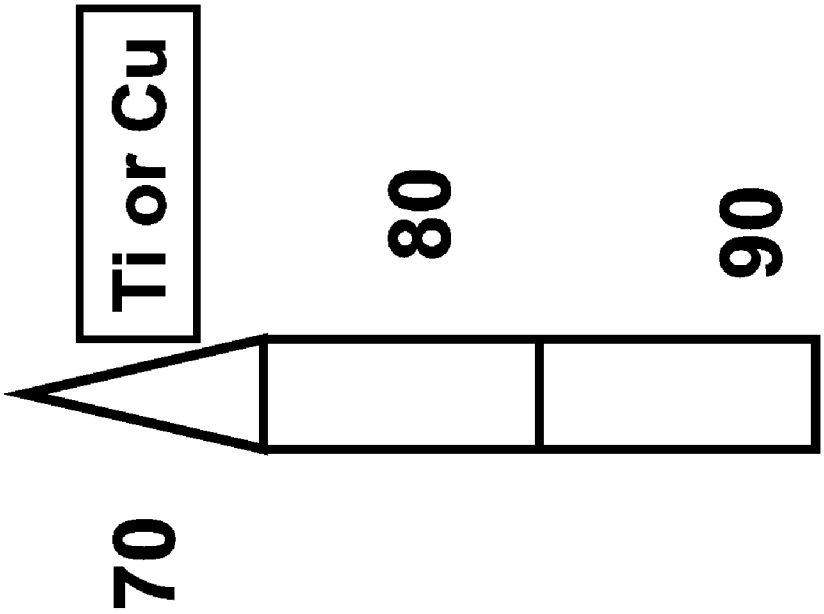

Fig. 3

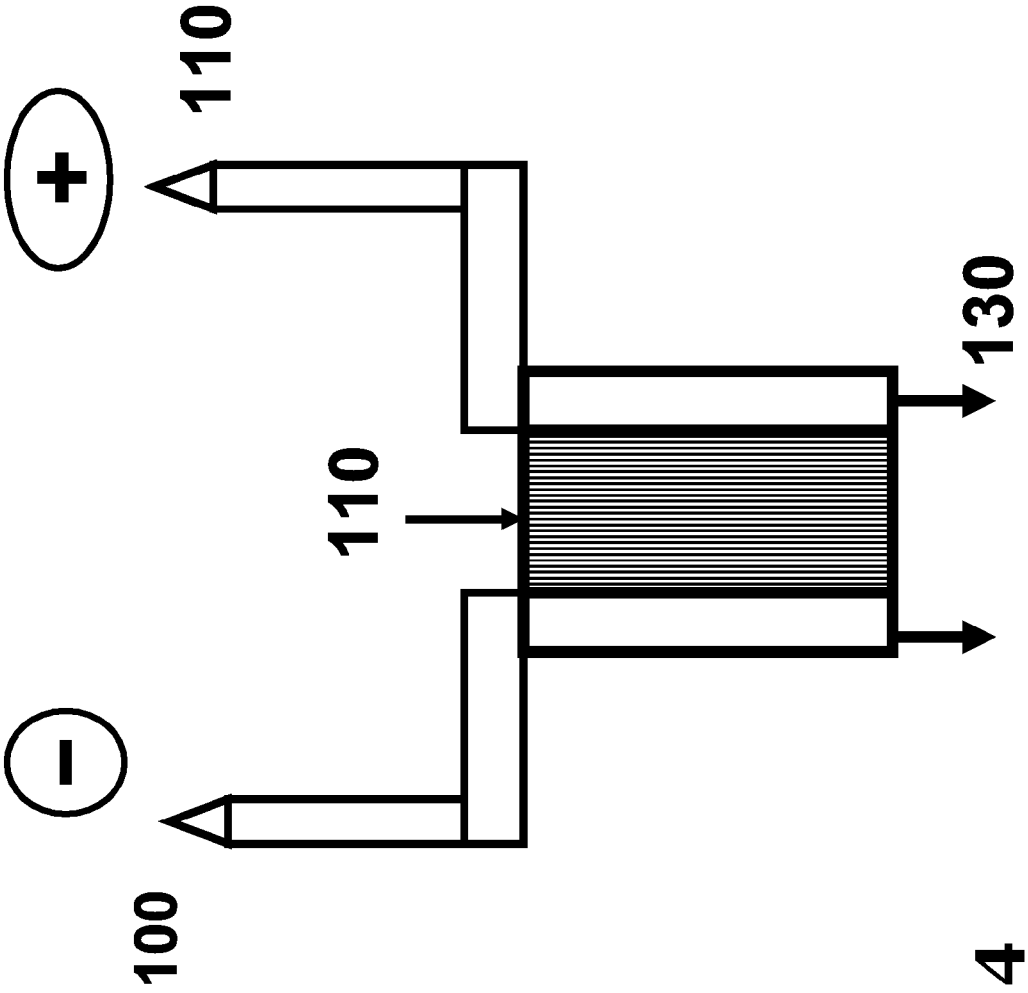

Fig. 4

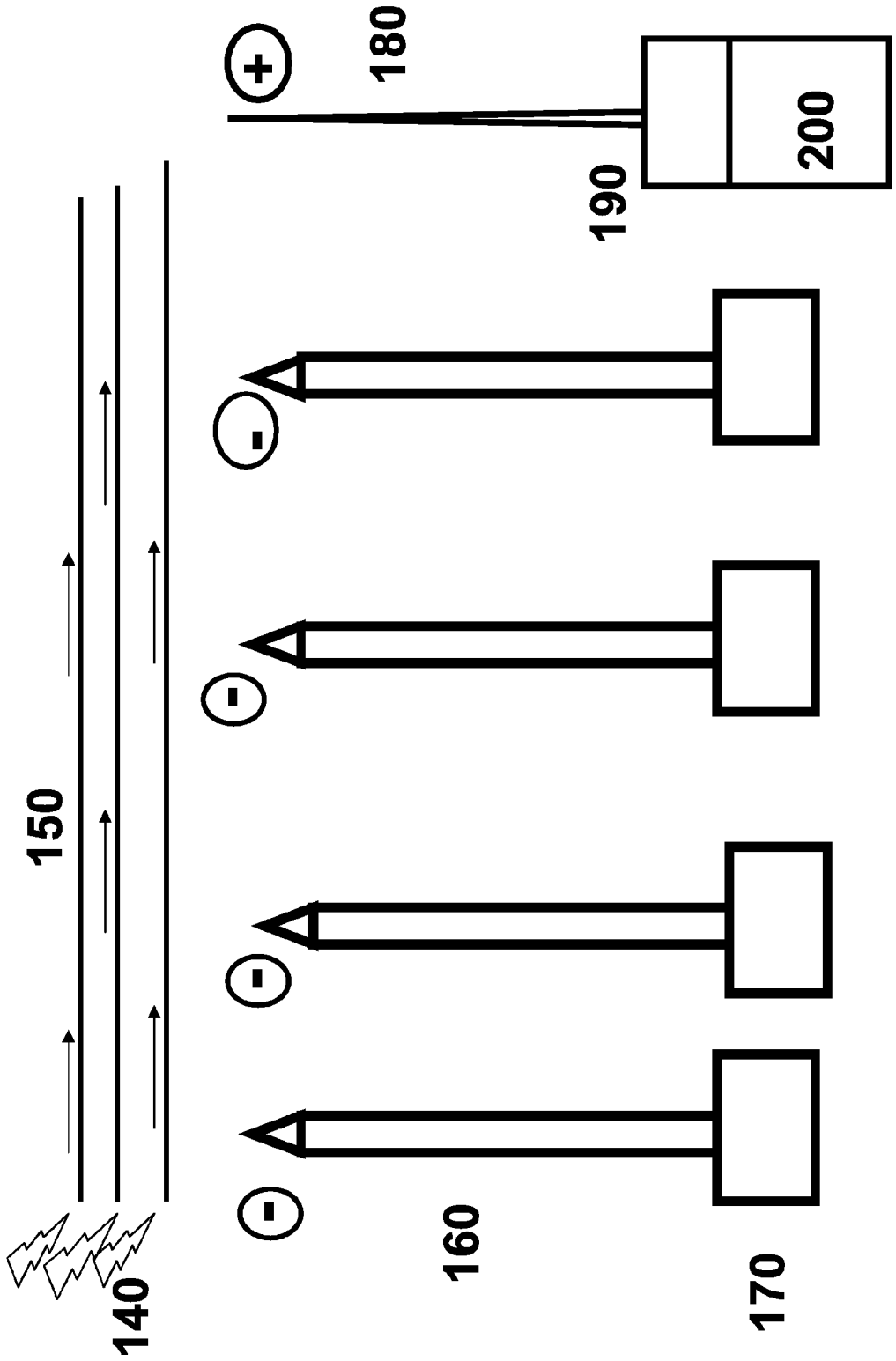

Fig. 5

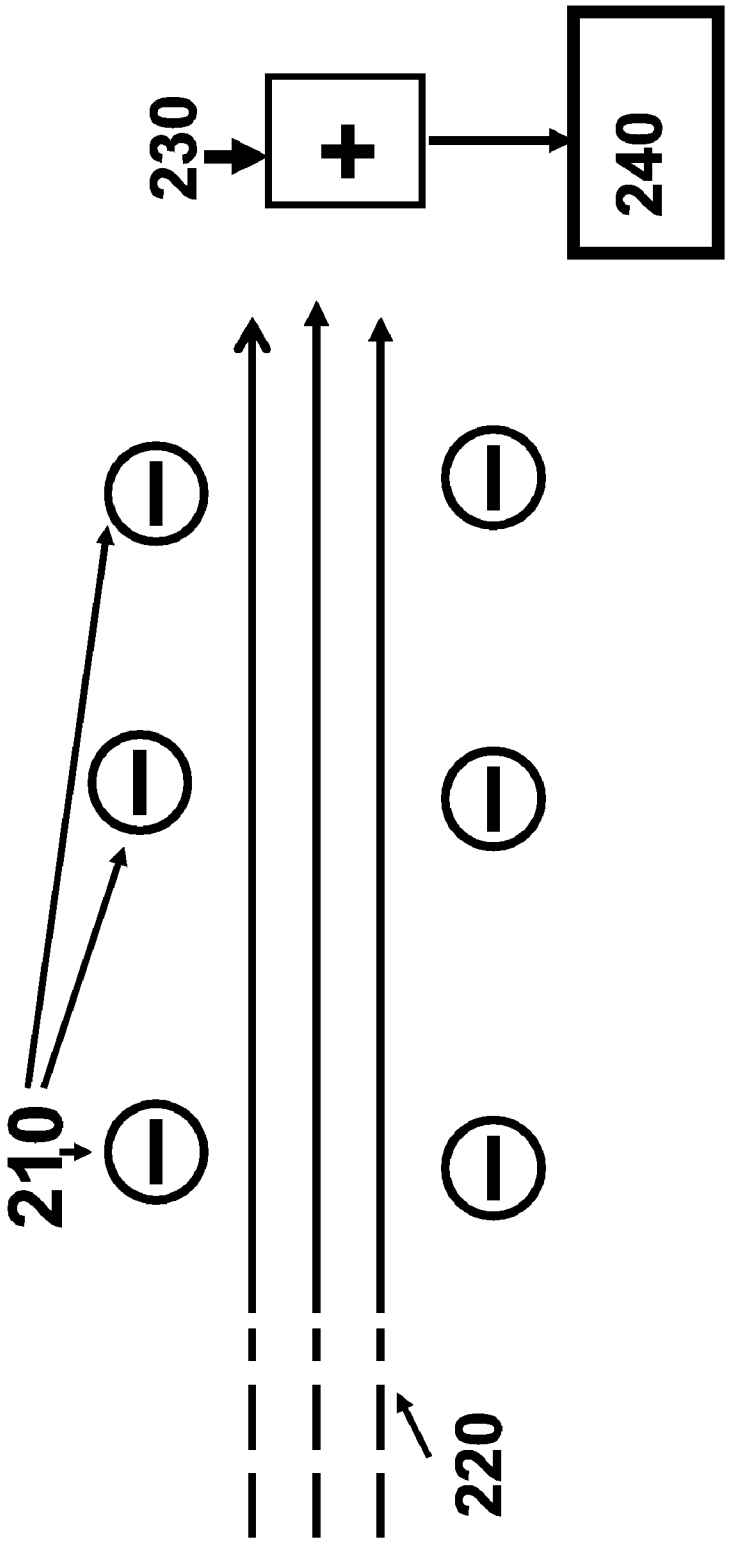

Fig. 6

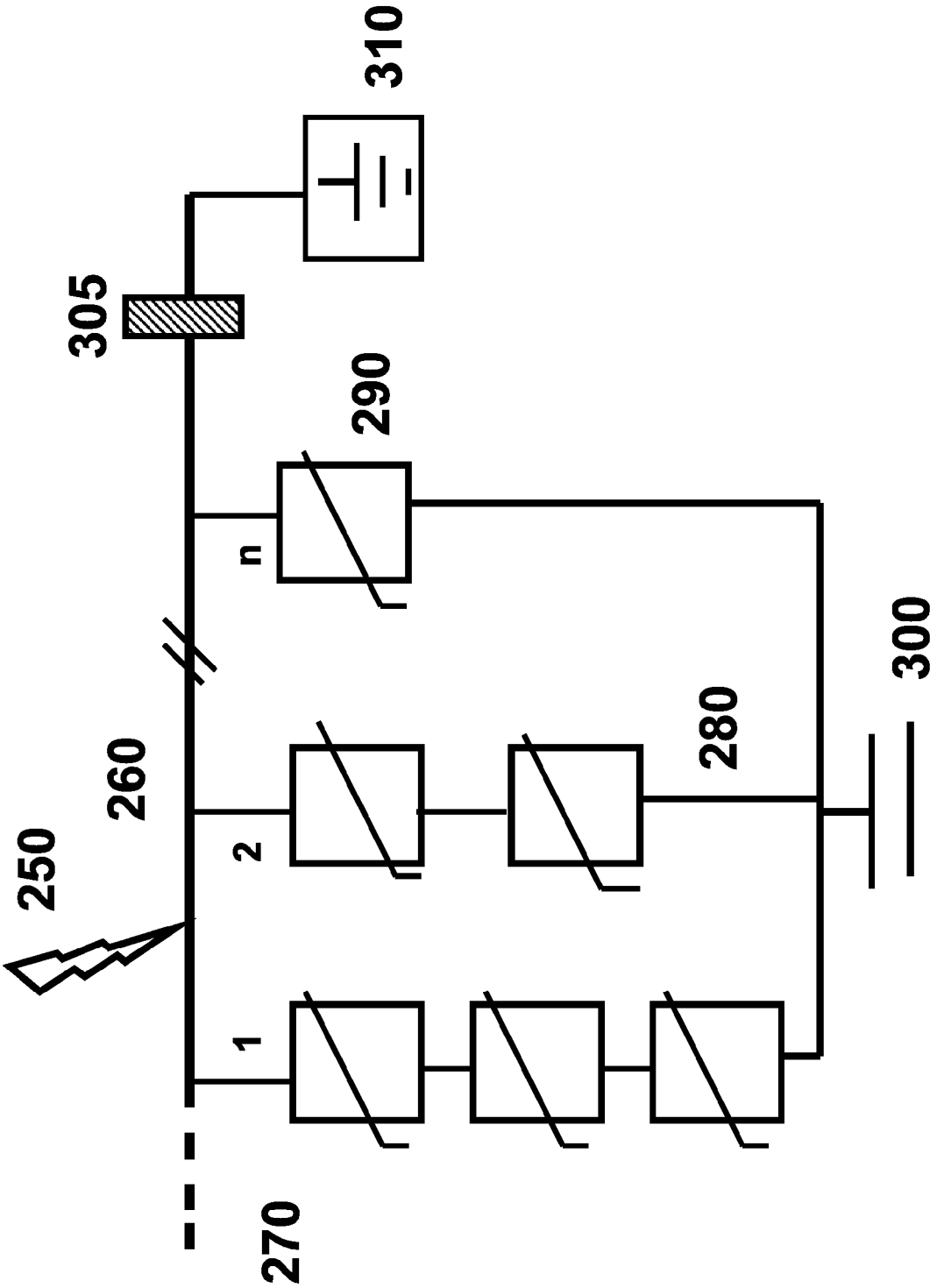

Fig. 7a

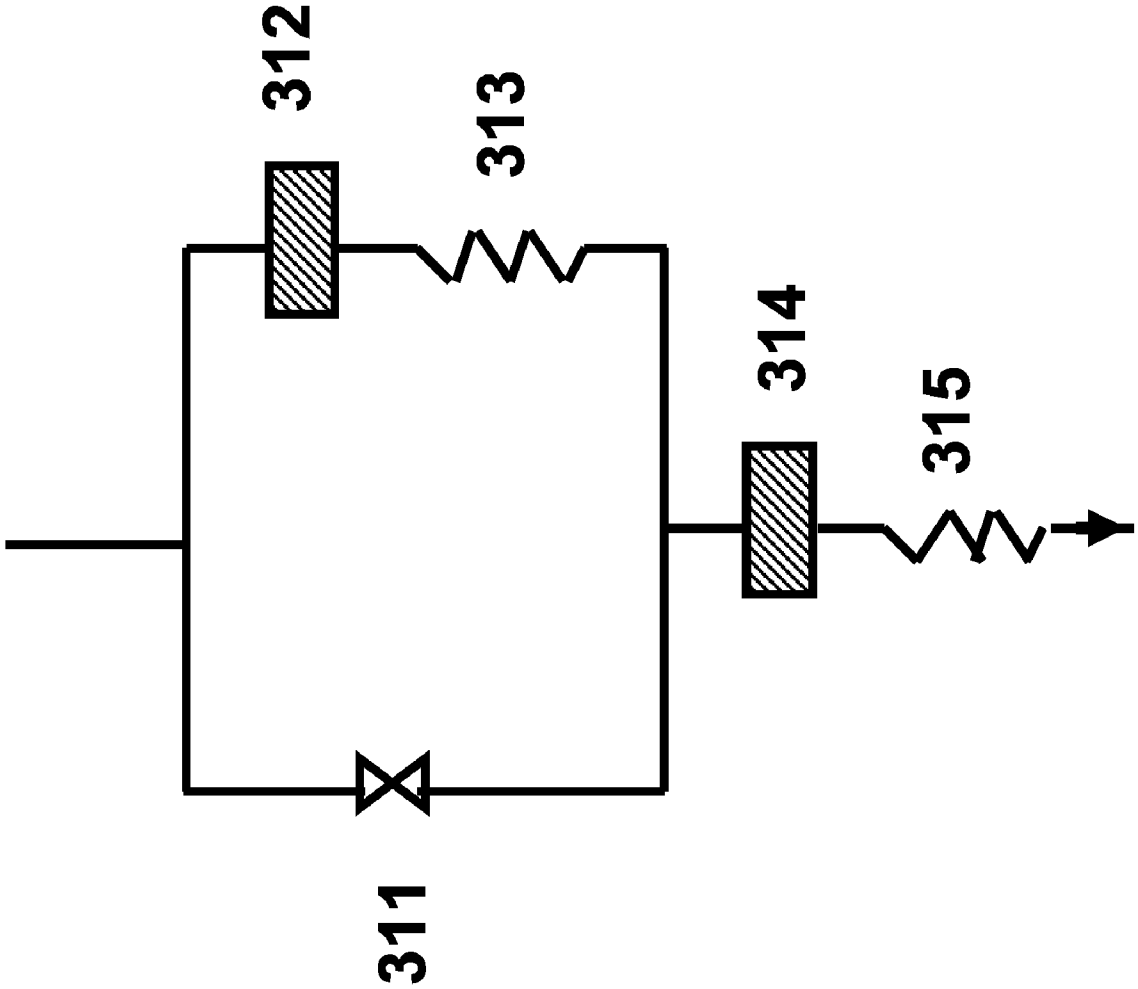

Fig. 7b

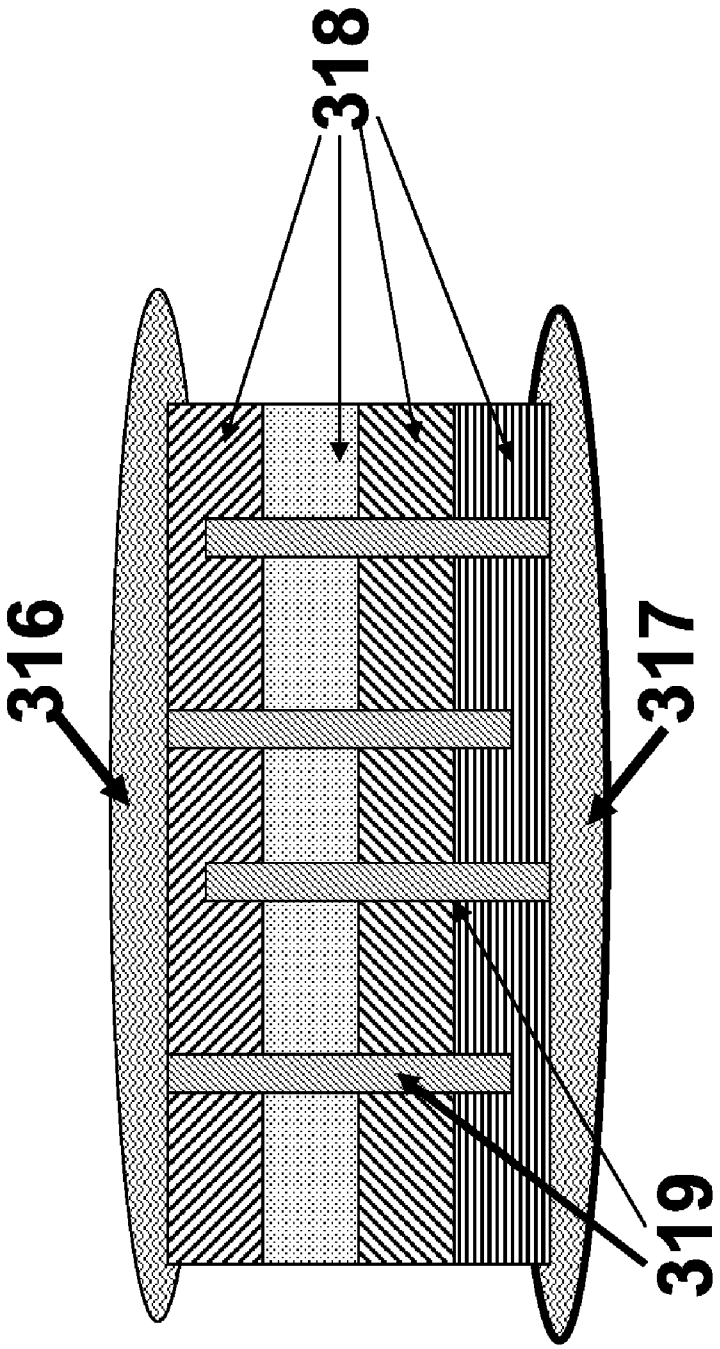

Fig 7c

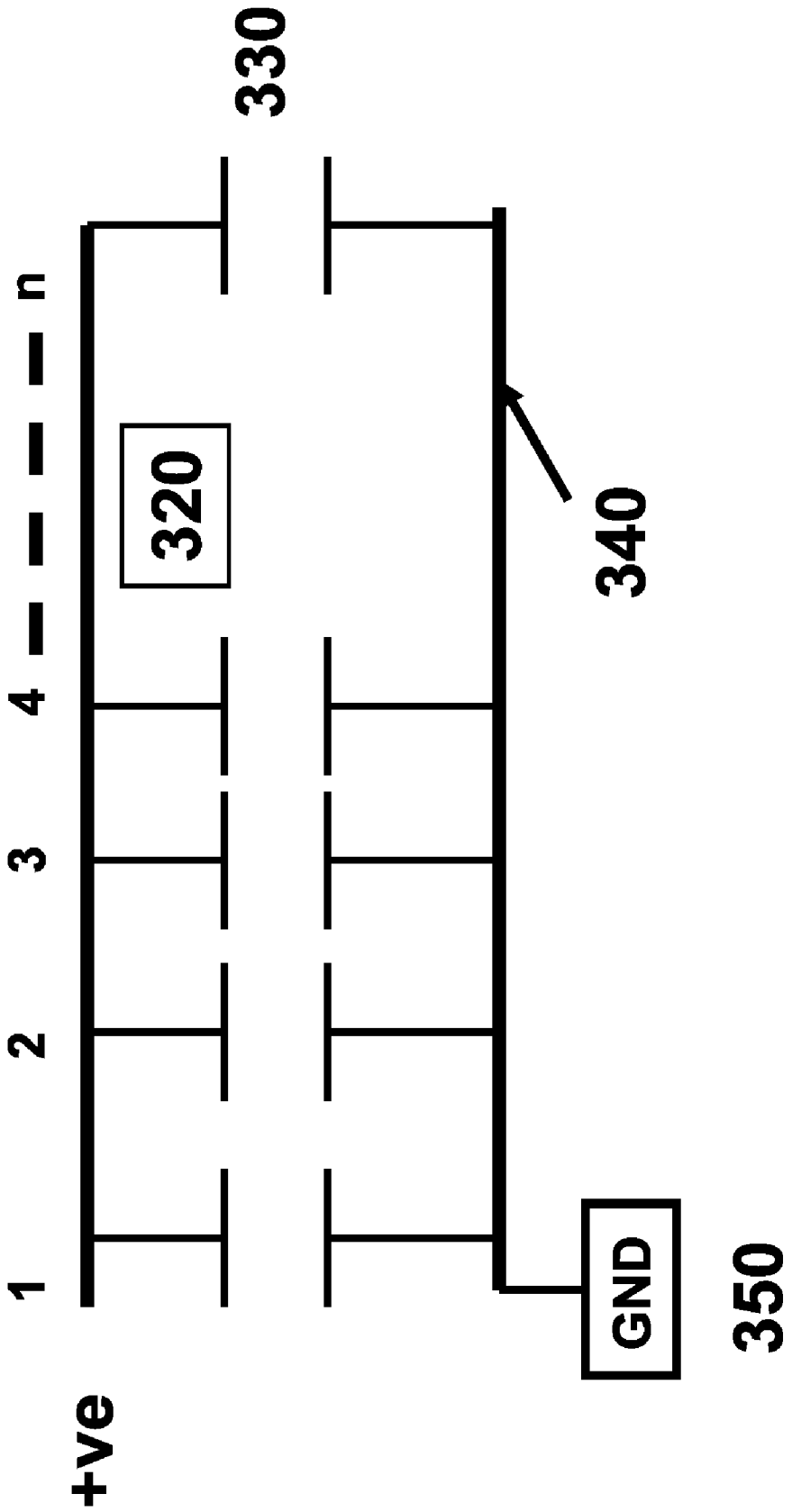

Fig. 8a

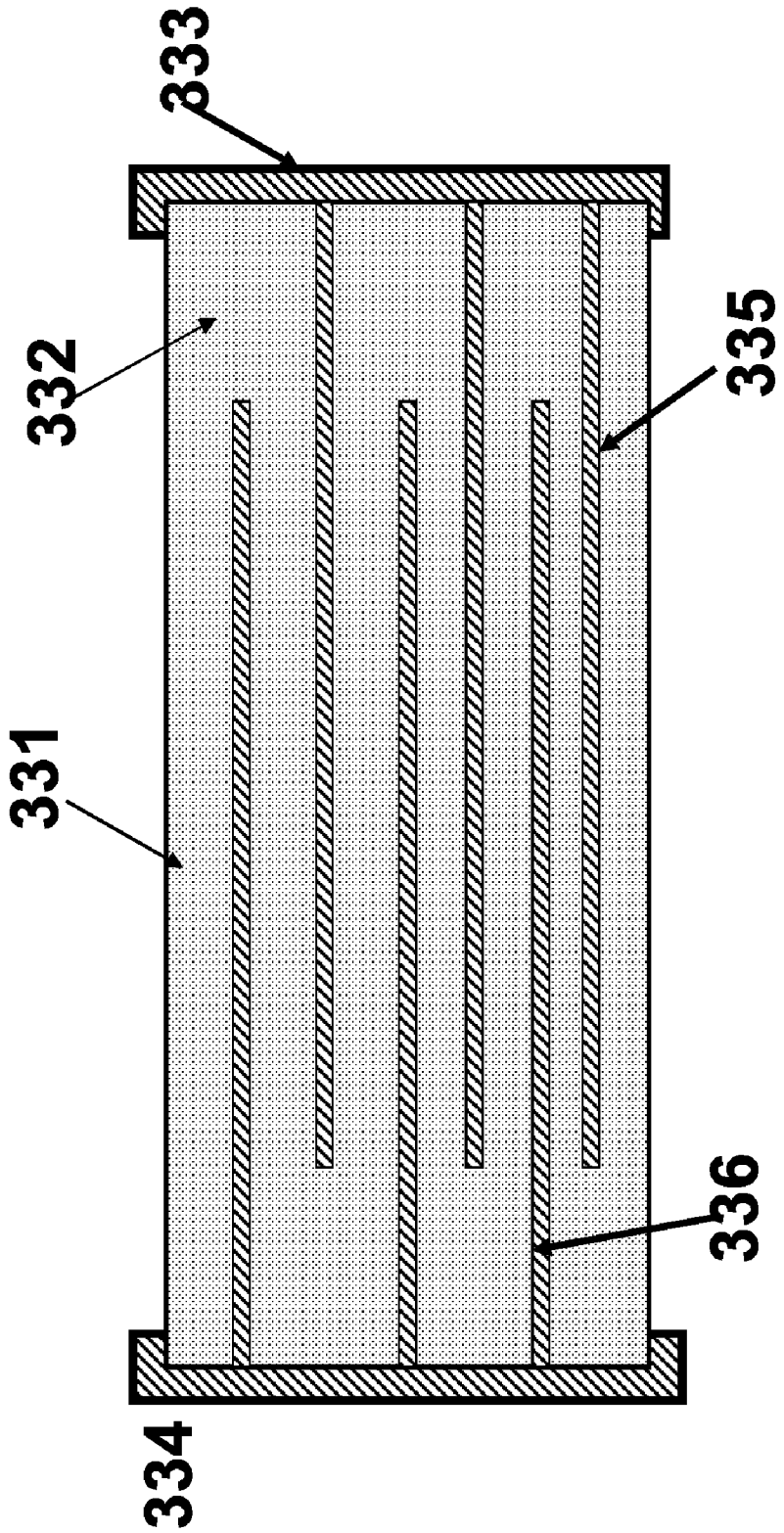

Fig. 8b

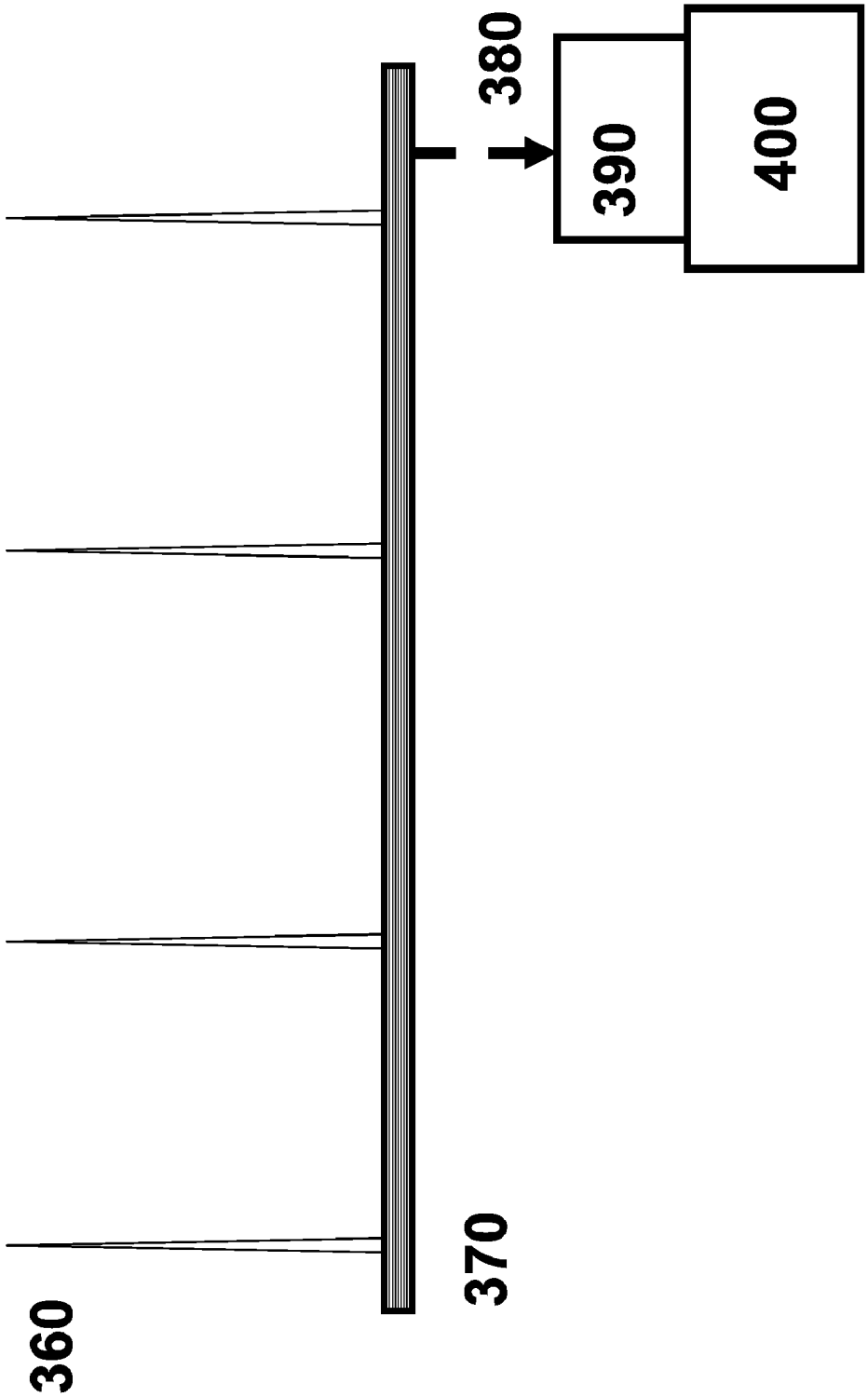

Fig. 9

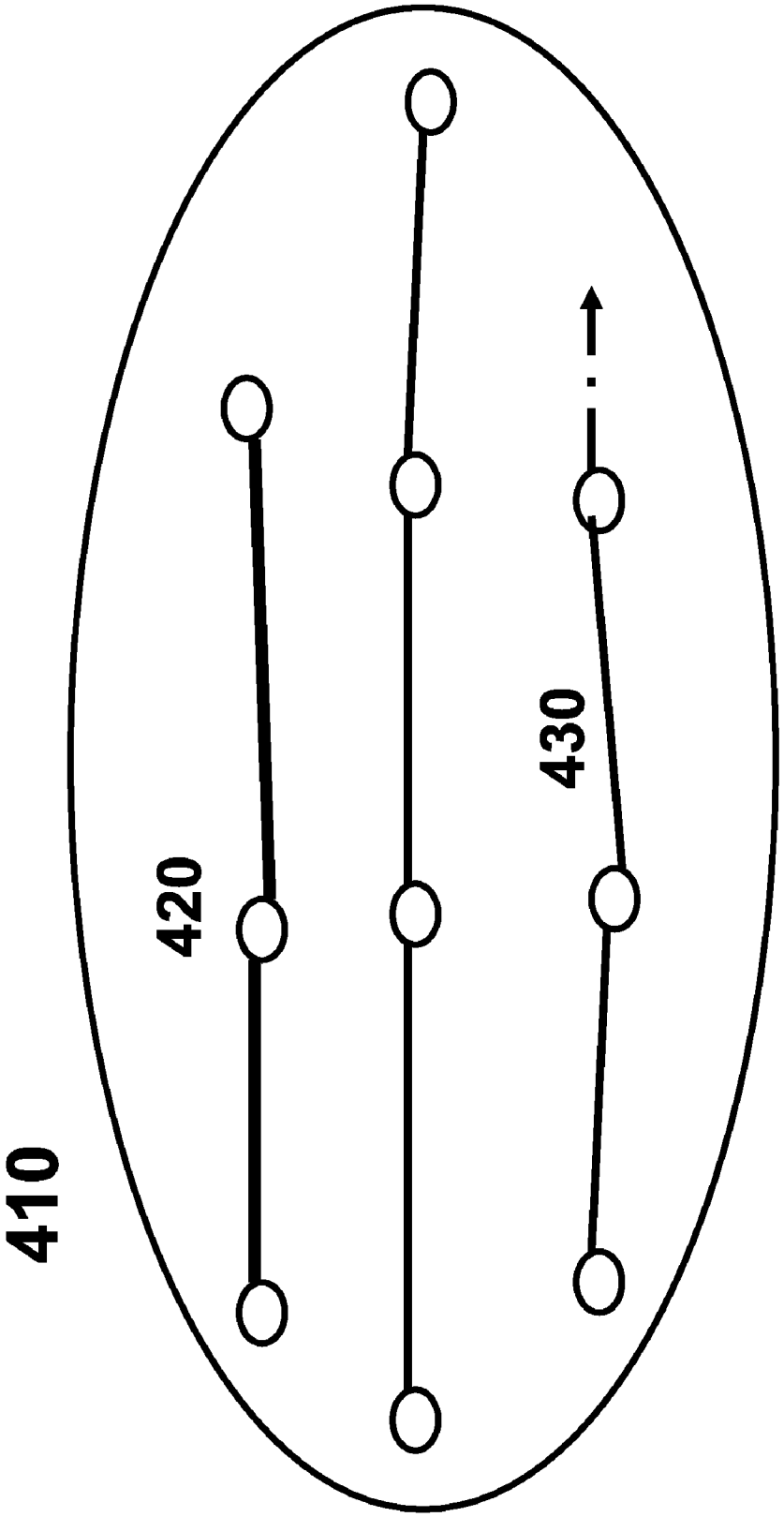

Fig. 10

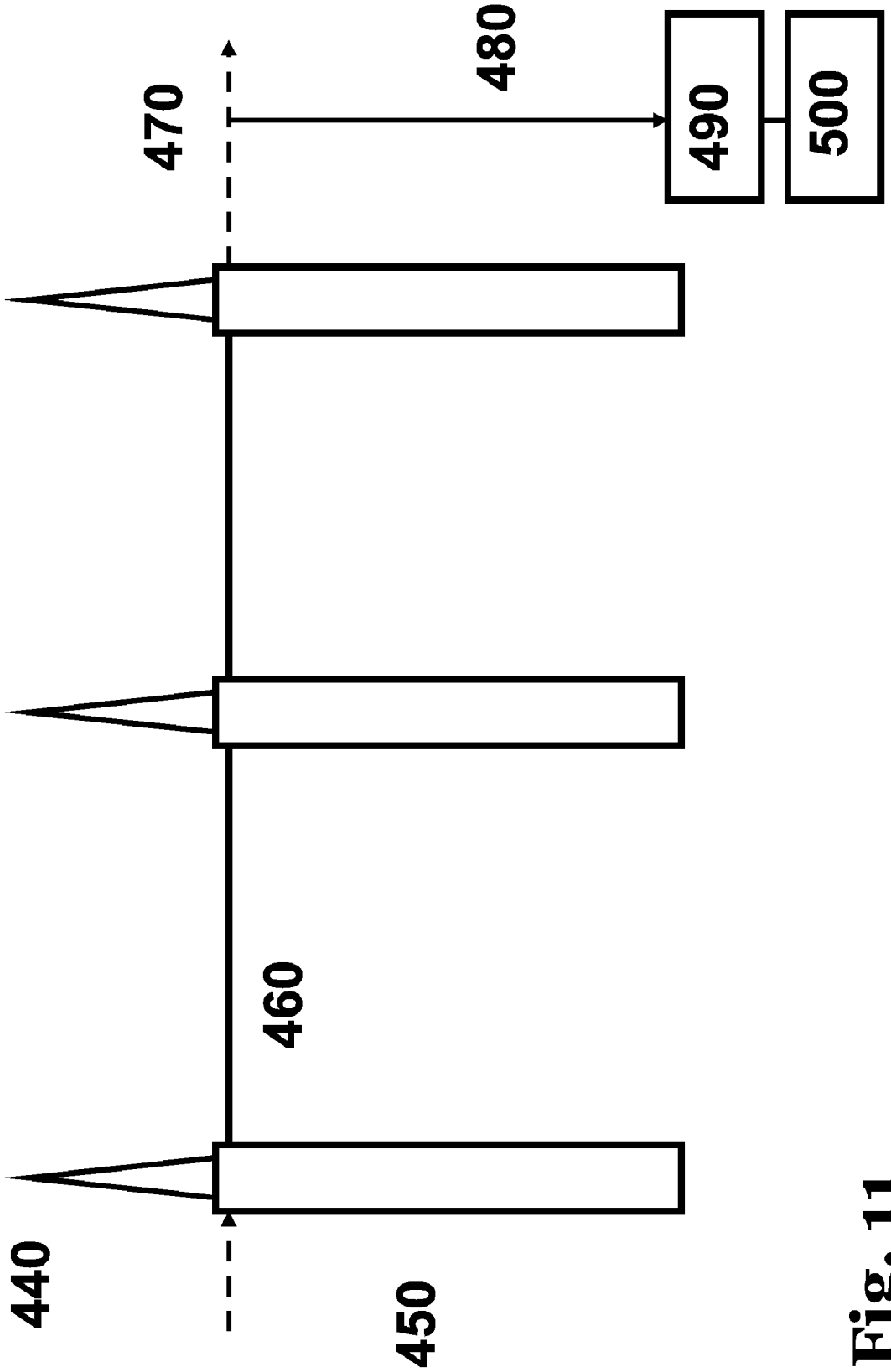

Fig. 11

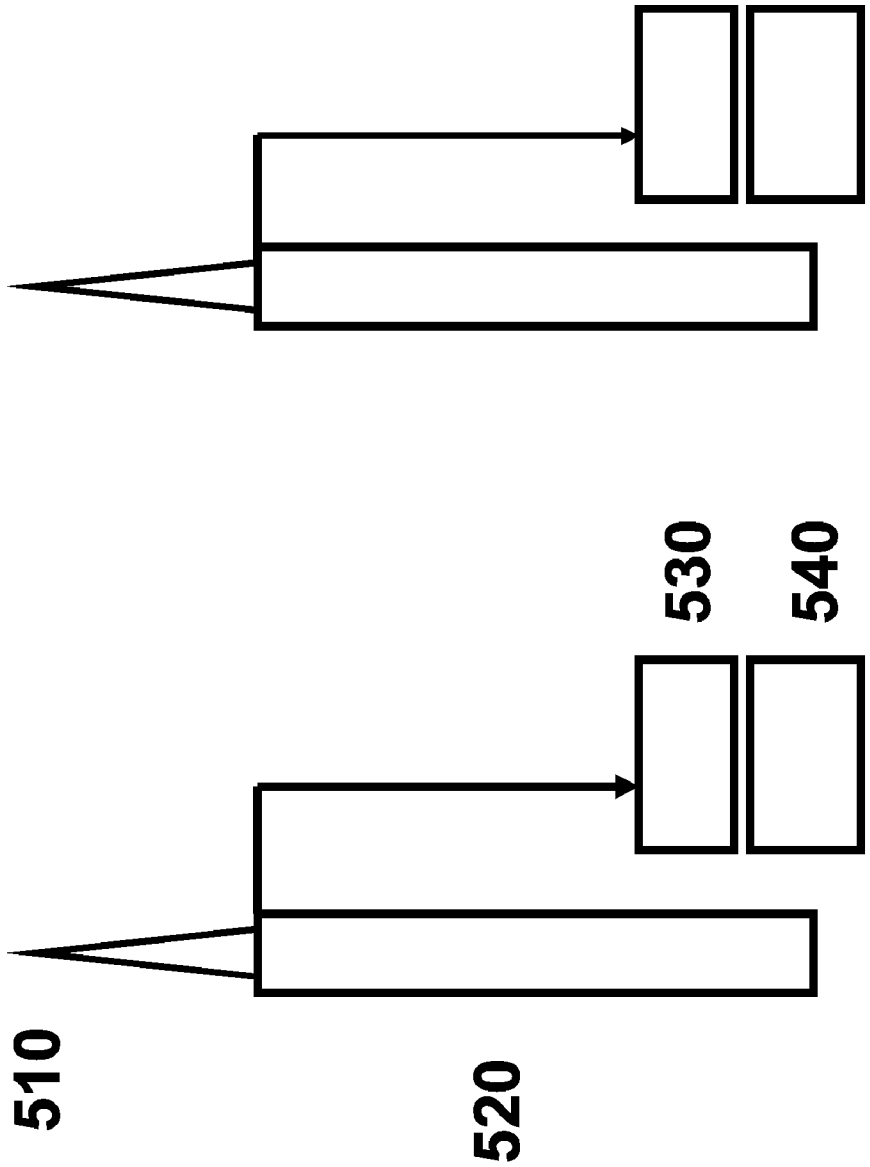

Fig. 12

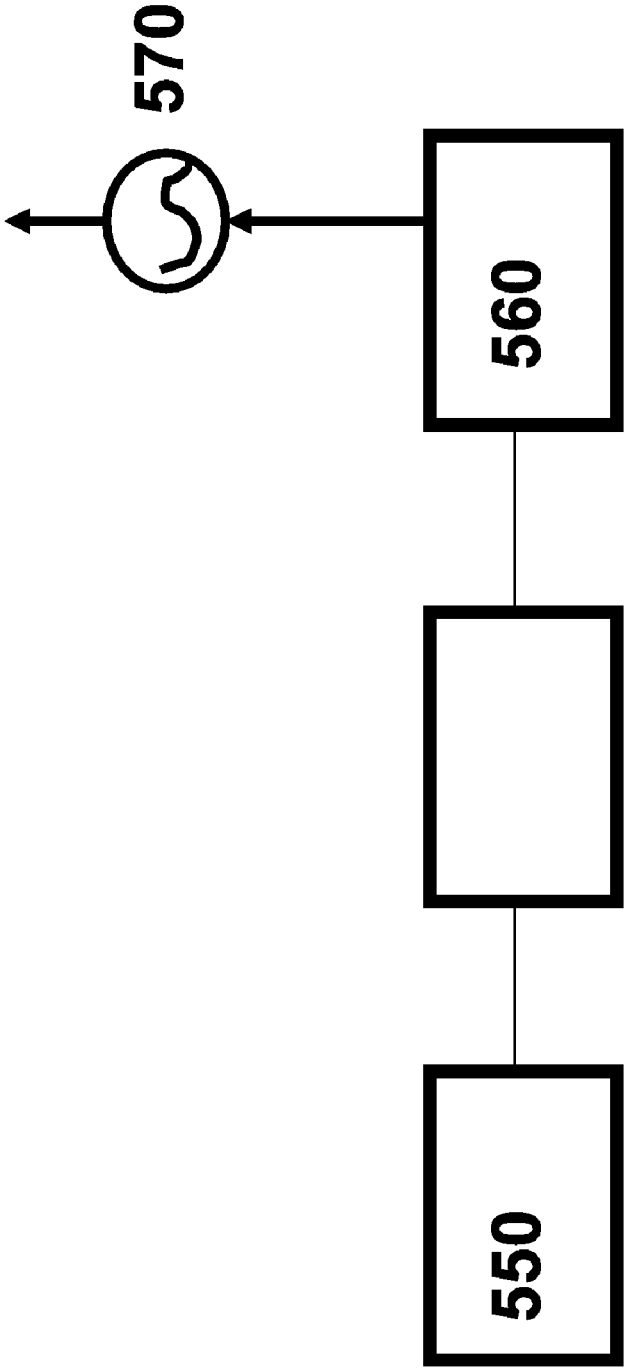

Fig. 13

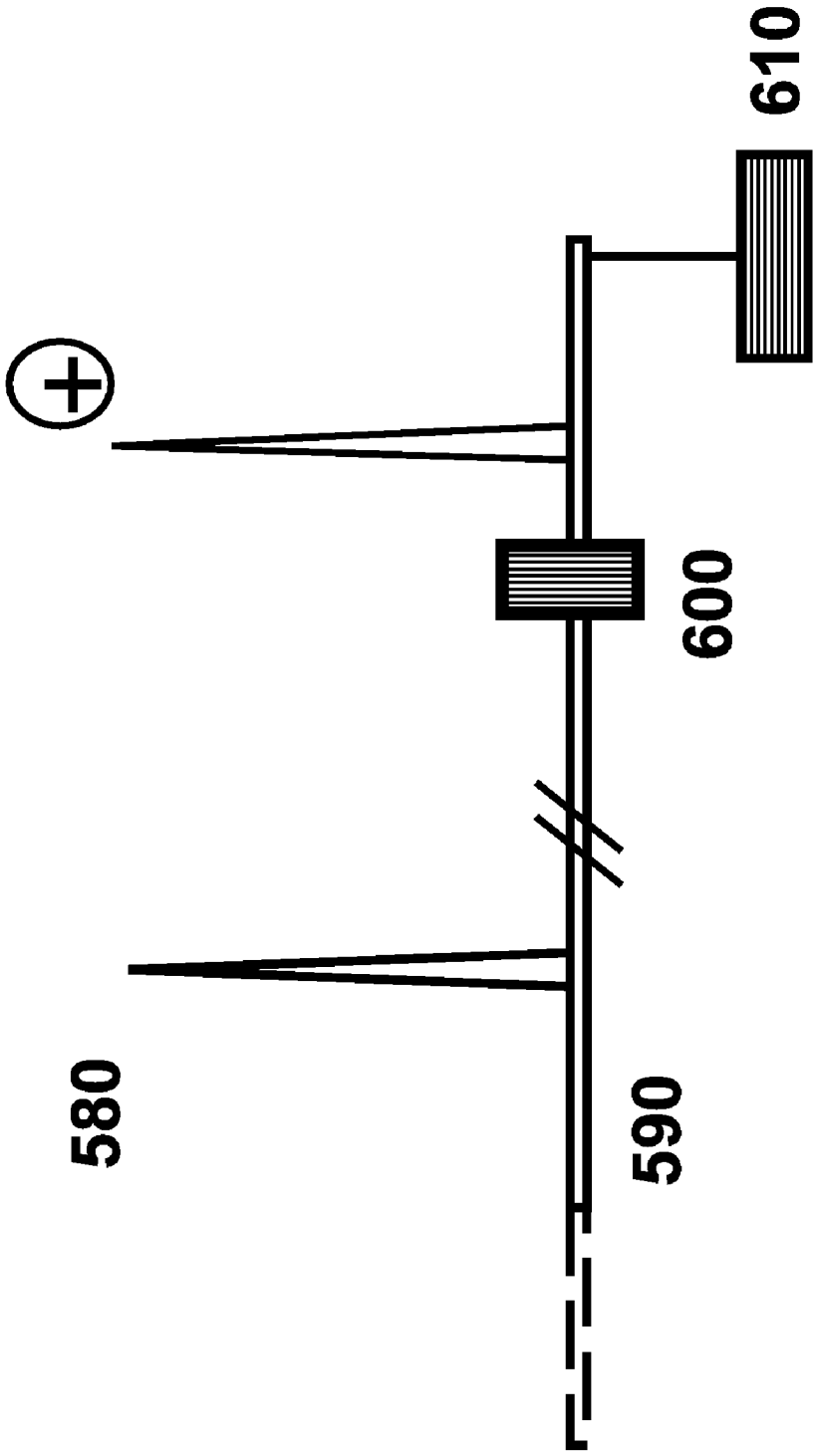

Fig. 14

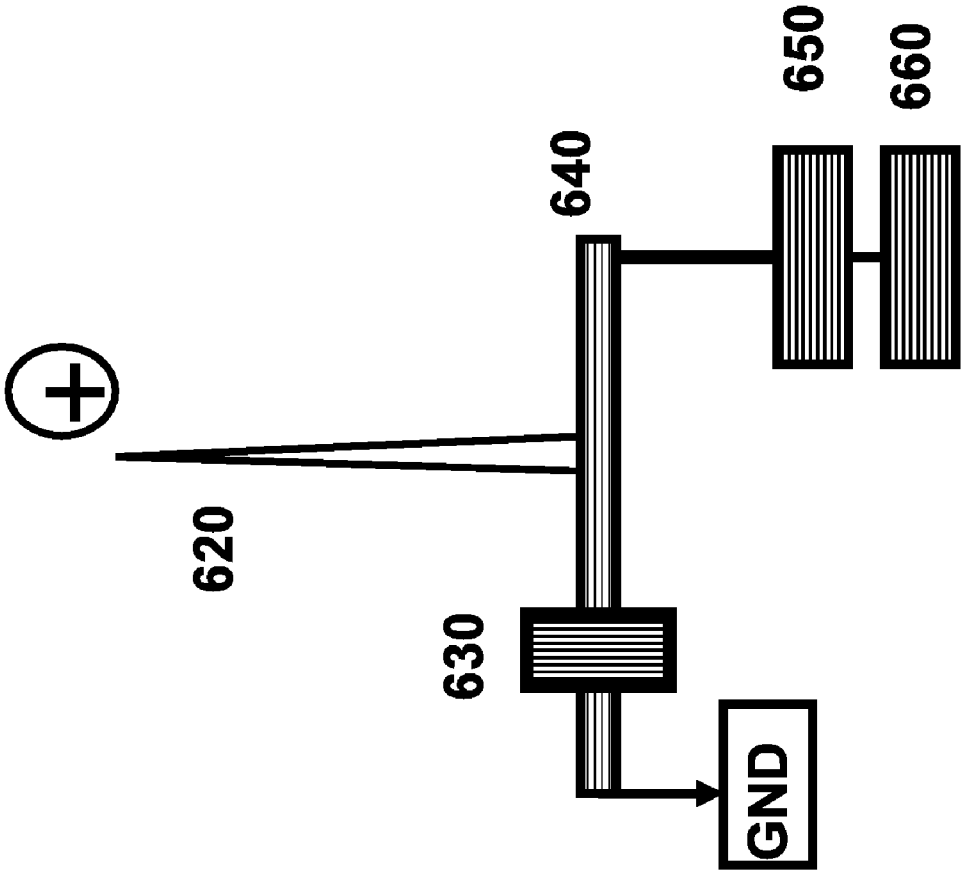

Fig. 15

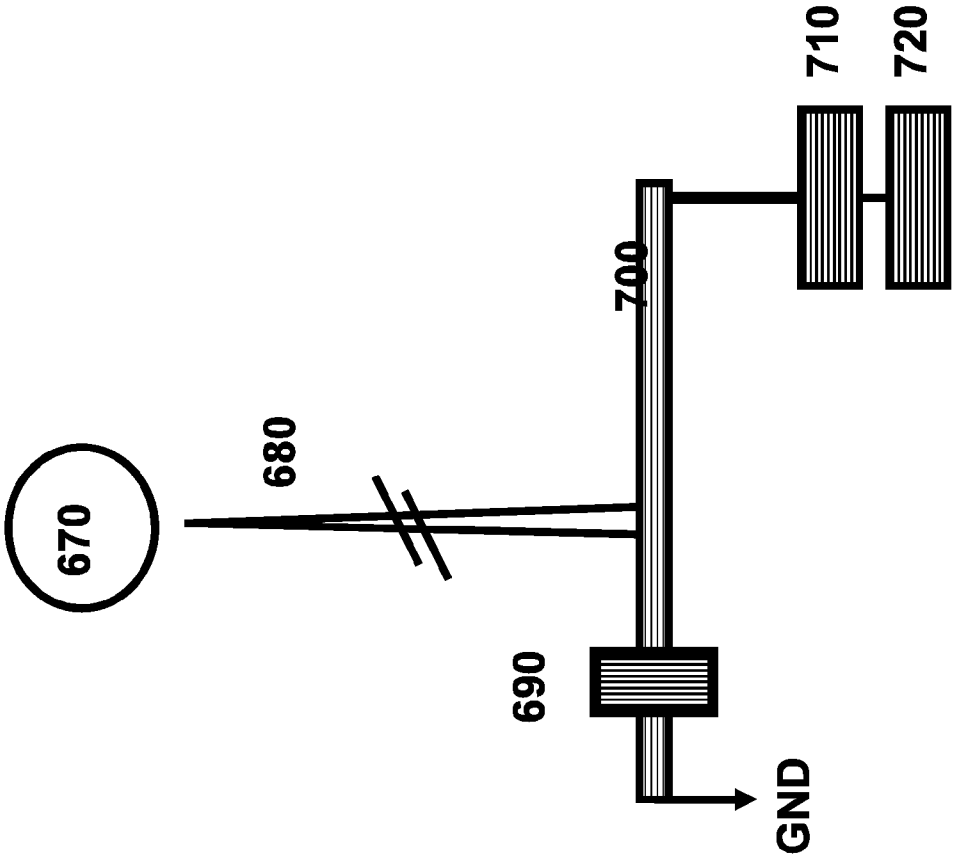

Fig. 16

METHOD OF ATMOSPHERIC DISCHARGE ENERGY CONVERSION, STORAGE AND DISTRIBUTION

TECHNICAL FIELD

[0001] This invention relates to the field of electrical energy generation and storage in general and the conversion of atmospheric electrical discharge to a useable form of energy by arresting, storage and retransmission of lightning induced electrical discharge in particular.

BACKGROUND OF INVENTION

[0002] Lightning has always been a destructive force of nature. Causing death by electrocution and starting fires both in residential areas and in forests. In either case the loss of life and property is substantial. Lightning strikes have affected communication systems, and by uncontrolled arcing, electricity grids leading to loss of power with substantial economic loss

[0003] Lightning is the number one cause of forest and farm fires just in the United States and causes over 80 percent of all livestock losses due to accidents. Property losses run into billions of dollars annually and thousands of deaths and injury are reported yearly. Business losses from power and communications failure run into billions of dollars annually. Up to now, lightning strike damage has generally been controlled primarily by grounding.

[0004] A lightning discharge can have voltage of 10 MV to 100 MV and current of 1 kA to 300 kA. It packs so much voltage that it can leap a mile through the air and strike another object. Lightning can strike a building directly or leaping to it after striking a tree or other nearby object or by following a power line. It can strike any object that provides an easier path to the ground for it than the air. Because of the large network of lines, lightning can strike a utility pole at one point and be transmitted to any location in the network. Because of this, utility companies use multiple grounding and other protective devices per mile to ameliorate the lightning effects.

[0005] There has been a lot of activity in the alleviation of lightning damage but none in utilizing its energy potential.

[0006] U.S. Pat. No. 7,495,168 discloses a dipole lightning conductor which can gather electrical charges from the atmosphere during a thunderstorm, opposite to the polarity of the adjacent cloud on one side and induce a different polarity on the other end contacting the ground. When a sufficient potential difference is reached between the dipole and the earth, a dielectric breakdown occurs sending a large amount of earth charge to the thundercloud, inducing a thunderbolt.

[0007] In U.S. Pat. No. 6,012,330, Palmer discloses a method of inducing lightning strikes by shooting a stream of ionized water into a thundercloud and triggering electrical conduction through the ionized water column to the ground. In this invention, while ionized water is used, advantage is taken also of capillary wetting of conducting mesh cable at the tip of which is tethered a balloon of conductor coated Mylar. It is easier to float a balloon than to pump a column of water to any significant height.

[0008] In U.S. Pat. No. 6,320,119 Gumley discloses a capacitively coupled composite air terminal with sharp and rounded end components for voltage manipulation to minimize electric field ahead of streamers to minimize corona discharge.

[0009] Kato, in U.S. Pat. No. 5,280,335, discloses a compound lightning low voltage arrester with high energy tolerance for power and telephone lines comprising a spark gap is connected to a serial combination of Zinc Oxide arrestor and a non-inductive resistor. By cooperative execution between the spark gap and the Zinc Oxide arrester, the Zinc Oxide is chosen to be of a rating such that thermal breakdown does not occur before the spark gap ignition voltage is reached. The arrangement ensures reliable and predictable discharge and arrester survival even under multiple lightning strikes of close proximity.

[0010] Subbarao in U.S. Pat. No. 4,338,648, discloses a discharge counter and arrester current meter to determine arrester steady state current and the number of discharge events occurring during a thunder storm lightning arrester event.

[0011] Greenwald and Moses in U.S. Pat. No. 5,610,813 disclose a thunderstorm cell detection and mapping system for acquiring localized lightning strike information and identifying and locating active thunderstorm cells.

[0012] In U.S. Pat. No. 4,272,720, a method of differentiating between cloud-cloud and cloud-ground discharges is disclosed. Indicating discharge events with no accompanying lightning ground strike. This indicates that even in the absence of streamers, there is significant electrical discharge that can be converted and stored.

[0013] Weir and Nelson disclose in U.S. Pat. No. 7,033,406, a high energy density ceramic capacitor with energy capacity of 52 kW.h in 2005 cu.in, the equivalent of 1600 $kW.h/m^3$. Hansen in U.S. Pat. No. 6,078,494 discloses multilayer ceramic capacitors comprising doped barium-calcium-zirconium-titanate dielectric, the materials basis for U.S. Pat. No. 7,033,406. It is claimed to be characterized by high dielectric constant, high stability of capacitance value, long service life, low loss factor, high insulation resistance capacitance, low voltage dependence, and wide temperature range stability. Electrodes of base metal alloys from the group of Ni, Fe, Co or their alloys are claimed to be perhaps just as effective as noble metals containing gold, silver, platinum and palladium and may also contain Cr, Ti, Zr, V, Al, Zn, Cu, Sn, Pb, Mn, Mo and W.

[0014] Although the energy density capacity is not disclosed, it may be in the same range as U.S. Pat. No. 7,033,406 showing a path for storing the energy that can be extracted from lightning discharge.

[0015] U.S. Pat. No. 5,361,187, claims dielectric constant (k) of up to 19000 using similar group of dielectrics and processes. In U.S. Pat. No. 5,604,167 dielectric constant values of between 11,000 and 14,000 are disclosed by the same inventor with equivalent materials and processes.

[0016] Since these capacitors use standard powder processing technique, it can reasonably be expected that equivalent characteristics may be observed with naturally occurring doped silicates such as phyllosilicates for example, montmorillonite: $(Na,Ca)_{0.33}(Al,Mg)_2(Si_4O_{10})(OH)_2.nH_2O$, or cyclosilicates such as Benitoite —$BaTi(Si_3O_9)$ as base materials appropriately calcined and doped.

[0017] In U.S. Pat. No. 6,078,494 multilayer ceramic capacitors comprising doped barium-calcium-zirconium-titanate dielectric is disclosed. It is claimed to be characterized by high dielectric constant, high stability of capacitance value, long service life, low loss factor, high insulation resistance and low voltage dependence, and wide temperature range stability. Electrodes of base metal alloys from the group

of Ni, Fe, Co or their alloys are claimed to be perhaps just as effective as noble metals containing gold, silver, platinum and palladium and may also contain Cr, Ti, Zr, V, Al, Zn, Cu, Sn, Pb, Mn, Mo and W. In U.S. Pat. No. 5,361,187, the inventors claim dielectric constants of up to 19000 using similar group of dielectrics and processes. In U.S. Pat. No. 5,604,167 dielectric constant values of between 11,000 and 14,000 is disclosed by the same inventors with equivalent materials and processes. Since these capacitors use standard powder processing technique, it can reasonably be expected that equivalent characteristics may be observed with naturally occurring doped silicates such as phyllosilicates for example, various grades of montmorillonite: $(Na,Ca)_{0.33}(Al,Mg)_2(Si_4O_{10})(OH)_2.nH_2O$, or cyclosilicates such as Benitoite—$BaTi(Si_3O_9)$ as base materials appropriately calcined and doped.

[0018] Although the technology to arrest lightning strikes has been around for at least a hundred years, this invention to harness and store that power has only become viable due to recent advances in super-capacitor technology which has made possible the fabrication of ultrahigh capacitance capacitors with very long lifetimes, high power, high energy densities and very fast charge and discharge rates.

[0019] Just as flood water, another destructive force of nature in times past was controlled by building dams, and from the dams eventually came hydroelectric power; and wind including thunderstorms has now been harnessed to generate electricity, this invention describes the technology to harness the power of atmospheric discharges including lightening storms to generate useable electrical energy.

[0020] This disclosure also introduces the concept of an Energy Dam. Facilities of substantial energy storage capacity capable of receiving energy feeds from various energy sources such as Solar, Wind, Thermal Power plants and Lightning. For example, during a thunderstorm, electricity generated by wind and lightning is collected and stored.

[0021] Lightning strikes every part of the globe but not uniformly. The regions with the highest historical concentration of lightning strikes are shown in FIG. **1***c*. These include Florida and the Gulf Coast in the Americas, the Equatorial Highlands of DRC, Rwanda and Burundi in Central Africa and the Monsoon Belt in Asia.

[0022] Except for the Americas, typically, these regions have very little electricity infrastructure. With the capability disclosed here, substantial reserves of electricity can be generated, stored and possibly traded.

[0023] In regions of epileptic electricity supply, disruptions in power do not necessarily translate into disruption in service. Since when power is generated, it is fed into these energy dams or local storage units for eventual use. Just as in water supply, the customer is not necessarily conscious of when the local water company is pumping water into storage tanks or local dams, in energy dams, the customer need not be conscious of whether or when electricity is being generated by the utility company because the power to his home is drawn not necessarily live from the grid but from the local energy storage units or energy dams.

BRIEF SUMMARY OF THE INVENTION

[0024] A method of harnessing atmospheric discharge and storing said energy in a useful form for subsequent use is presented.

[0025] Since the voltage of a lighting bolt can be as high as 100 MV, a methodology for safely channeling this discharge for storage is disclosed.

[0026] It is the also the object of this invention to present a storage medium in which an energy capacity of 1 MW.h in a volume of under 1 m^3 can be achieved.

[0027] It is also a further objective of this invention to show how lightening strikes on tall buildings can be harnessed to provide energy for the building either directly or fed into the grid.

[0028] It is also an objective of this invention to present a methodology for harnessing lightening, heretofore a source of power disruptions for electricity grids and converting it into a useable form of energy and feeding it back into the grid.

[0029] Since each electricity grid has a lightning suppression unit, a methodology for harnessing the impulse from these units from lightening strikes and feeding it back into the grid is disclosed.

[0030] a method of deploying a network of said storage units along a utility grid is also disclosed.

[0031] It is also the objective of this invention to disclose a method of modifying the storage units for single building deployment.

[0032] A method of deploying said storage units as vehicular charging centers even in locations not readily served by a utility grid is also disclosed.

[0033] A method of manipulating the direction and movement of the lightening bolt in open air locations and redirecting them to predetermined collection points is disclosed.

[0034] Lightning storms are some of the major causes of wild fires in the world. A method of redirecting the electrical discharges in any given space via a network of polarized and non-polarized collectors is presented. The discharges can be stored, fed into the grid or grounded.

[0035] A method for non-spontaneous discharge generation and storage is disclosed. And a method for adapting the methodology for electric automotive deployment is also disclosed.

BRIEF DESCRIPTION OF DRAWINGS

[0036] For understanding of the present invention reference is made of the accompanying drawings in the following DETAILED DESCRIPTION OF THE INVENTION. In the drawings:

[0037] FIG. **1***a*. Picture of lightning strike over a city.

[0038] FIG. **1***b*. Picture of lightning strike over open plain.

[0039] FIG. **1***c:* Global Distribution of Lightning Strikes: April 1995-February, 2003. (Source: NASA).

[0040] FIG. **2** shows a schematic of discharge collection and storage system.

[0041] FIG. **3** shows a schematic of collection unit showing metallic composition variation.

[0042] FIG. **4** Shows a Schematic of composite collector showing polarized ends.

[0043] FIG. **5** Schematic of collector network configuration with negatively polarized ends to manipulate and redirect lightning electrical discharge away from the earth for eventual collection at a predetermined location.

[0044] FIG. **6** Plan view of polarized collection network as shown in FIG. **5** acting to concentrate and modulate the electrical discharge and redirect such for collection at predetermined location.

[0045] FIG. **7***a*. Schematic showing a representation of a network of varistors arranged in rows and columns with the net effect of applying resistive arrestors in parallel and in series to effect voltage mitigation of atmospheric discharges prior to collection and storage.

[0046] FIG. **7***b:* Schematic of varistor of power mitigation unit showing cascade of ZnO arrestor in series with non-inductive resistor in parallel with spark gap.

[0047] FIG. **7***c:* Multilayer varistor with ZnO, ZnS and WO_3/WSi_2

[0048] FIG. **8***a.* Schematic showing cross section of a collection unit.

[0049] FIG. **8***b.* Schematic showing cross-section of multilayer ceramic capacitor of **8***a.*

[0050] FIG. **9** Schematic of collection unit network mesh in forested area with air frames deployed on each tree as collection of trees linked in a mesh network.

[0051] FIG. **10** Plan-view schematic of collection unit network mesh of FIG. **9**

[0052] FIG. **11** Schematic showing collection unit deployment on electricity transmission poles linked in a network and fed into the electricity grid.

[0053] FIG. **12** Schematic showing collection unit deployment on light poles or wireless towers.

[0054] FIG. **13** Schematic showing network of linked collection units and storage units on transmission lines, light poles or wireless towers fed into the grid.

[0055] FIG. **14**. Schematic of a system for non-spontaneous atmospheric discharge generation and storage.

[0056] FIG. **15** Schematic of atmospheric discharge collection and storage unit deployable on automotive units.

[0057] FIG. **16** Schematic of balloon-assisted discharge collection and storage unit.

DETAILED DESCRIPTION OF THE INVENTION

[0058] This invention describes a method of harnessing the electrical energy in atmospheric discharges, including, but not limited to lightning, storing said electrical energy and transmitting said energy for use. To this end, as an illustration, the preferred embodiments are represented in the drawings shown in FIGS. **2** to **15**.

[0059] Since lightning discharge voltages range from 10 MV to 100 MV with current of 10 kA to 100 kA, the technology challenge will be in mitigating the ultrahigh power which range from 100 GW to in excess of 10,000 GW. Although individual strikes last less than 100 μsec, thunderstorms usually last longer than 30 min. in any cloud formation and location. Indicating that the energy that can be mined from any location in a thunderstorm can run in excess of 50 GW.H. Enough energy for 500,000 homes consuming 1000 kW.h per month. At $100 per 1000 kWh, the revenue equivalent is $5 million per thunderstorm per location.

[0060] In solar energy generation, the cost of a 1 MWe rating PV panel is about $1 million. To achieve 1 GWe, the cost implications will be about $1 billion. In fossil fuel plants, the construction cost is approximately $1.3 million per MWe, putting the cost for a 1 GWe at ~$1.3 billion excluding fuel, carbon footprint, and other operating cost. Though thunderstorms are not continuous, with storage capability, the cost basis for an atmospheric discharge energy source will be several orders of magnitude lower than fossil fuel or solar of any architecture.

[0061] One embodiment of this invention is depicted in FIG. **2**. Lightning is collected at the air terminals **10**, **20** and transmitted through the conductor **30** to an arrestor **40** and on to the capacitor **50** where the electricity is stored. From which it can be extracted **60** at point of use or transmitted into the grid.

[0062] The degree of atmospheric discharge charge collection can be influenced by the metallurgical composition of the collectors. FIG. **3** illustrates the fabrication of the collector with different metals of varying conductivities and atmospheric and electrical stability. In this embodiment, metallurgical compositions for the various segments comprise Ti, Cu, Al. Other metals or their alloys can be used depending on the required properties and the locations of deployment.

[0063] In yet another embodiment of the invention as shown in FIG. **4**, a composite collector with opposite polarity air terminals **100**, **110** is used. The air terminals are isolated from each other by an insulator **120**. The negative polarity terminal serves to deflect and manipulate the charge to the positive terminal from which it is conducted to the storage unit **130**.

[0064] Another embodiment of the invention is illustrated in FIGS. **5** and **6**. In this representation, negative polarity collectors, **160** deflect the atmospheric discharge so that they do not reach the ground but are deflected for collection at a predetermined terminal **180** of positive polarity and thereafter storage **200**. A plan view representation of this embodiment is shown in FIG. **6**.

[0065] It is essential to mitigate the power of the lightning before storage. In one embodiment of this invention, a collection of varistors of various power capacities, linked in series **270**,**280** and **290** are connected in parallel in lines **1** to n, to achieve a desired capability as shown in FIG. **7***a.* The resultant power is stored in the capacitor **300**. An insulator or fuse **305** is placed at the end of the varistor chain to protect the capacitor **300** against over-current. In the event of overstressing, the dielectric or varistor is deformed and the excess current is grounded.

[0066] Each component of the power mitigation unit is any of the following configurations as shown in FIG. **7***b:* A ZnO varistor **312** connected in series with a non-inductive resistor **313** and in parallel with a spark gap **311**. The resultant current is further modulated through another ZnO unit **314** and resistor **315**. A cascade of this configuration could be adopted to achieve the desired properties.

[0067] Zinc Oxide has a relatively large band gap of ~3.3 eV at room temperature. The consequence of this large band gap includes, higher breakdown voltages, ability to sustain large electric field and high power and temperature operation. Because of this, ZnO is the primary component in varistors and in voltage suppression devices. Zinc Sulfide has a band gap of 3.5 eV for the cubic form and as high as 3.91 eV for the hexagonal form at 300K. While ZnO band gap can be tuned from between 3-4 eV by alloying with magnesium oxide or cadmium oxide, the co-processing of ZnO with ZnS of the hexagonal wurtzite form should provide electrical field and other operational advantages over ZnO alone.

[0068] Multilayers of ZnO and ZnS or as sandwich layers with each other with ZnO achieving 50-99.9 mol. % of each layer can be adopted to improve on the suppression properties of the single layer ZnO varistor as is shown in FIG. **7***c.* Said varistor comprising a ceramic base body **318** of multiple layers, terminal electrodes **316**, **317** and internal electrodes **319**.

[0069] Alloying of ZnO with metal oxides and nitrides of transition elements including W, Zr, Mo, Mg, Cr, and Ti may improve its band gap characteristics and improve its voltage response non-linearity. Tungsten, in the form of tungsten silicide has very unique crystallization characteristics, particularly in the presence of dopants such as phosphorus or

arsenic. Upon post deposition anneal, the Si in the non-stoichiometric tungsten silicide (WSix) segregates to the grain boundaries and the film interfaces. The dopant atoms diffuse preferentially along the grain boundaries. When oxidized, it is the segregated silicon that is oxidized selectively. If the W is exposed to the oxidizing ambient of O_2/Ar or O_2/N_2 at temperatures in excess of 700° C., tungsten oxide WOx (x=3, or 1.5) is formed. It has no corresponding crystallographic orientation to the underlying tungsten silicide or metal, being in the form of an amorphous powder. The fabrication of multilayer varistors with ZnO and WSi_2/WO_3, SiO_2 should provide the flexibility of modulation of the effective grain sizes of the host material to within 0.5-10μ as the case may be. This precise grain size control provides corresponding modulation of the electrical properties including overvoltage suppression.

[0070] A schematic of the storage unit **320** is shown in FIG. **8***a*. A collection of capacitors **330** are connected in parallel to achieve a desired capacitance. A schematic of the cross-section of each capacitor unit is shown in FIG. **8***b*. The unit **331** with dielectric layers **332** is a multilayer capacitor comprising alternately stacked internal electrodes **335**, **336** connected to external electrodes **333**, **334**. The dielectric layers may be of uniform composition, or layers of different compositions optimized for flexibility in the modulation of desired electrical, physical and reliability properties.

[0071] Capacitance in excess of 1 kF/m^3 with energy storage capacity of 1.5 MW.h is reported as being possible by existing art. With compositional and manufacturing improvements disclosed here these benchmarks are expected to be surpassed making possible energy storage capacities of up to 1 GW.h. Sufficient energy for 1000 households consuming 1000 kW.h of electricity per month for one month.

[0072] Lightning storms are a major cause of wildfire. To address this, in yet another embodiment of this invention as represented in FIG. **9**, air terminals **360** are set up on a selection of trees and connected by a conductor **370** in a mesh array as shown in FIG. **10**. The impinging charge is transmitted through a conductor **380**, through a suppressor unit **390** and on to the storage unit **400**.

[0073] Utility transmission lines usually have lightning collectors along the length of the network. In this invention as demonstrated in FIG. **11** air terminals **440** deployed transmission poles **450** are linked by a polarized conductor **460**. At predetermined locations the impinging charge is conducted through a suppression unit **490** and thereafter into the storage unit **500**. The stored energy is periodically released into the grid.

[0074] In yet another embodiment of the invention, air terminals **510** are deployed on light poles **520**. The collected charged are modified and stored in a storage unit **540**.

[0075] In another embodiment, the air terminal/collection units are deployed on radio transmission towers. The charge could be stored individually at each tower location or linked in a network as shown in FIG. **13**. In either case, the stored energy be used at each individual location or fed into the grid **570**.

[0076] In the absence of a thundercloud, lightening flash can be generated by the modification of the natural bias between the cloud and ground. This is demonstrated in FIG. **14**, where a positively biased conductor **580** of height greater than nearest ground elevation or nearest structure. The increased elevation and bias facilitates cloud to ground discharge even when there is no active lightning storm. The incoming charge is isolated by an insulator **600** and stored in the storage unit **610**.

[0077] In yet another embodiment of this invention, a balloon of conductive material is tethered to a terminal via a mesh line of conducting material. The balloon captures cloud to cloud discharges which are transmitted down to storage. In yet another embodiment this tether line may be wetted by a conductive solution such as but not limited to salt solution to facilitate the discharge conduction.

[0078] Another embodiment of this invention is shown in FIG. **15**. In an isolated collection system as shown here, the air terminal **620** which may be biased or unbiased is connected to a collection/storage unit **650**, **660** respectively by conductor **640** and isolated by a dielectric or insulator **670**. Should the discharge exceed the capacity of the isolation, the isolation is bridged and the charge grounded. This isolated collection system is particularly useful where there is no utility grid, particularly in very remote and isolated locations.

[0079] This isolated collection capability enables deployment on individual houses and isolated farms. In electric automotive recharge stations, this capability enables the location of these facilities in any location even those not served by regular electricity utilities lines.

[0080] In isolated rural areas, the deployment of these isolated collection units enables the provision of electricity where electricity grid infrastructure is not available or practical. The storage units can be deployed in banks as the estimated anticipated usage dictates.

[0081] In another embodiment of this invention, the isolated collection unit is modified to be portable for deployment on automobiles. The charge in the storage unit is linked with the automobile's electrical power or storage unit. Alternatively, it can replace the power storage unit of the automobile for pure EV or hybrid cars. Additionally, it can unplug these cars from the grid. With the ambitious industry plans for electric or hybrid cars the infrastructure for charging these cars either in garages or charging stations is somewhat limited. The capability to both 'charge as you go' and unplug from the grid would expand the infrastructure significantly.

[0082] In yet another embodiment of this invention, the isolated collection unit is deployed on trains. This could be in commuter trains that directly fed from the grid, or long-haul trains to augment or replace the fossil fuel used.

[0083] It is understood that the presentation of these steps in this disclosure is not exhaustive. Only the preferred embodiments of the invention and but a few of the examples of its versatility are shown and described in the present disclosure. It should be readily apparent to those of ordinary skill in the art that the invention is capable of use in various other combinations, environments and applications and is capable of changes or modifications within the scope of the inventive concept as expressed herein. These changes and modifications may be made without departing from the spirit and scope of the invention as set forth in the appended claims.

REFERENCES

[0084] U.S. Pat. No. 7,495,168,
[0085] U.S. Pat. No. 6,012,330
[0086] U.S. Pat. No. 6,078,494
[0087] U.S. Pat. No. 4,338,648
[0088] U.S. Pat. No. 6,407,900
[0089] U.S. Pat. No. 6,924,598
[0090] U.S. Pat. No. 5,569,972

[0091] U.S. Pat. No. 5,289,335
[0092] U.S. Pat. No. 4,272,720
[0093] U.S. Pat. No. 4,338,648
[0094] U.S. Pat. No. 5,610,813
[0095] U.S. Pat. No. 6,320,119
[0096] U.S. Pat. No. 5,604,167

1. A method of converting an atmospheric electrical discharge into a useable form of electrical energy comprising the following steps:

(a) Arresting the discharge via an air terminal,

(b) Said air terminal connected via a conducting unit to a power mitigating (step down) unit which can reduce the discharge voltage from approximately higher than 100 MV and 100 KA to below 20 kV, 10 kA.

(c) The step down unit connected to an energy storage unit which may comprise modules of high energy density capacitors

(d) Said storage units arranged such that the stored electrical energy can be discharged into the grid or to an appliance at point of use as desired.

2. A method of claim **1** wherein the arrestor and mitigating unit comprise an array of self-healing varistors in series and parallel chosen to ensure total conversion of the incident lightning discharge to a voltage/current level suitable for storage in said capacitors.

3. A method of claim **2**, where the power mitigation unit is any of the following configurations:

(a) Single ZnO varistor or

(b) Zinc Oxide arrester connected in series with a non-inductive resistor

(c) Zinc Oxide arrester in series with said non-inductive resistor and in parallel with a spark gap.

(d) A cascade of configuration as described in (c).

4. A method of claim **1** wherein the storage unit comprises modular array of high energy density doped ceramic capacitors with storage capacity of 10 kWe.h to 1 GWe.h and volume 0.1 to 1 m^3 and up to 1000 units as the desired capacity dictates.

5. A method of broad spatial lightning protection by the manipulation of the path of an electrical discharge via the manipulation of the air terminal bias magnitude and polarity Said arrestors being arranged in an array to achieve the redirection of the discharge path. The discharge path being directed to a collection unit at some location significantly removed from the initial discharge impact position.

6. A method of claim **5** wherein the discharge redirection is via a biased conductor to the said collection and storage unit.

7. A method of claim **5** wherein the area of protection is a forest whereby:

(a) A network array of air terminals is deployed on trees, in close proximity to said trees with tip approximating the treetops, or girding the trees to redirect the discharge along a biased conductor to a collection unit for the purpose of mitigating lightning induced fires.

(b) Said discharge electrical energy being stored or fed into the electricity grid.

8. A method of claim **1** wherein the discharge collection is on electrical power lines and the stored energy is fed back into the grid.

9. A method of claim **1** wherein the discharge collection and storage are at telecom towers, light poles or other free standing structures. Said storage being at individual collection sites or some location serving an array of collectors and said stored energy used for individual structure's operational energy need or fed back into the utility grid.

10. A method of non-spontaneous generation of atmospheric discharge by the following:

(a) Modulation of the magnitude and bias in a dipole air terminal relative to the ground

(b) Conductive material balloon tethered by a conductive mesh cable.

(c) Said cable being soaked by an ionic liquid, including, a salt solution to facilitate said atmospheric discharge conduction.

The discharge thus formed is stored for feeding into the greed or for operation as a stand-alone energy dam.

11. A method of claim **1** in which the discharge collection unit is configured as a mobile unit. Said unit being deployed on an automobile or any mobile platform. The said deployed unit extracting electrical charge from the atmosphere and storing such energy in a deployed storage unit on the said automobile. The energy thus stored, feeds the car battery which obviates the need for recharging at charging centers or from the grid.

12. A method of claim **1** wherein the electrical discharge energy collection unit is a stand-alone unit comprising modular capacitors configured as an electric vehicle charging station.

13. A method of claim **1** wherein the air terminals are deployed on buildings and the discharge energy collected thereby are:

(a) Stored and fed back into the grid.

(b) Stored for use by each building

(c) Stored in a central energy storage facility for use by the community in general.

14. A method of claim **1** wherein the said storage units are underground.

15. A method of claim **1** wherein the storage unit is of capacity and configuration to accept energy feeds from multiple electricity generation sources: Thermal, Hydro, Solar, Wind and Lightning.

16. A method of claim **4** wherein the storage unit is integrated into a Utility's Switch Farm.

17. A method of claim **4** wherein the multilayer ceramic capacitor unit comprises dielectric layers of varying compositions individually or as sandwich layers with each other containing Barium-Titanate silicates as host material doped with Zr, WSi_2/WO_3 to modulate grain growth to between 0.1 to 10 μm as the case may be; said modulation providing corresponding control of electrical and reliability properties.

18. A method of claim **1** wherein the varistor comprise multilayers of ZnO and ZnS individually layered or as sandwich layers with each other with ZnO achieving 50-99.9% of each layer; said layers being alloyed metal oxides of transition elements including W, Zr, Mo, Mg, Cr, Ti to improve voltage response non-linearity.

* * * * *

W. I. PENNOCK.

APPARATUS FOR COLLECTING ATMOSPHERIC ELECTRICITY.

APPLICATION FILED JUNE 26, 1907.

911,260. Patented Feb. 2, 1909.

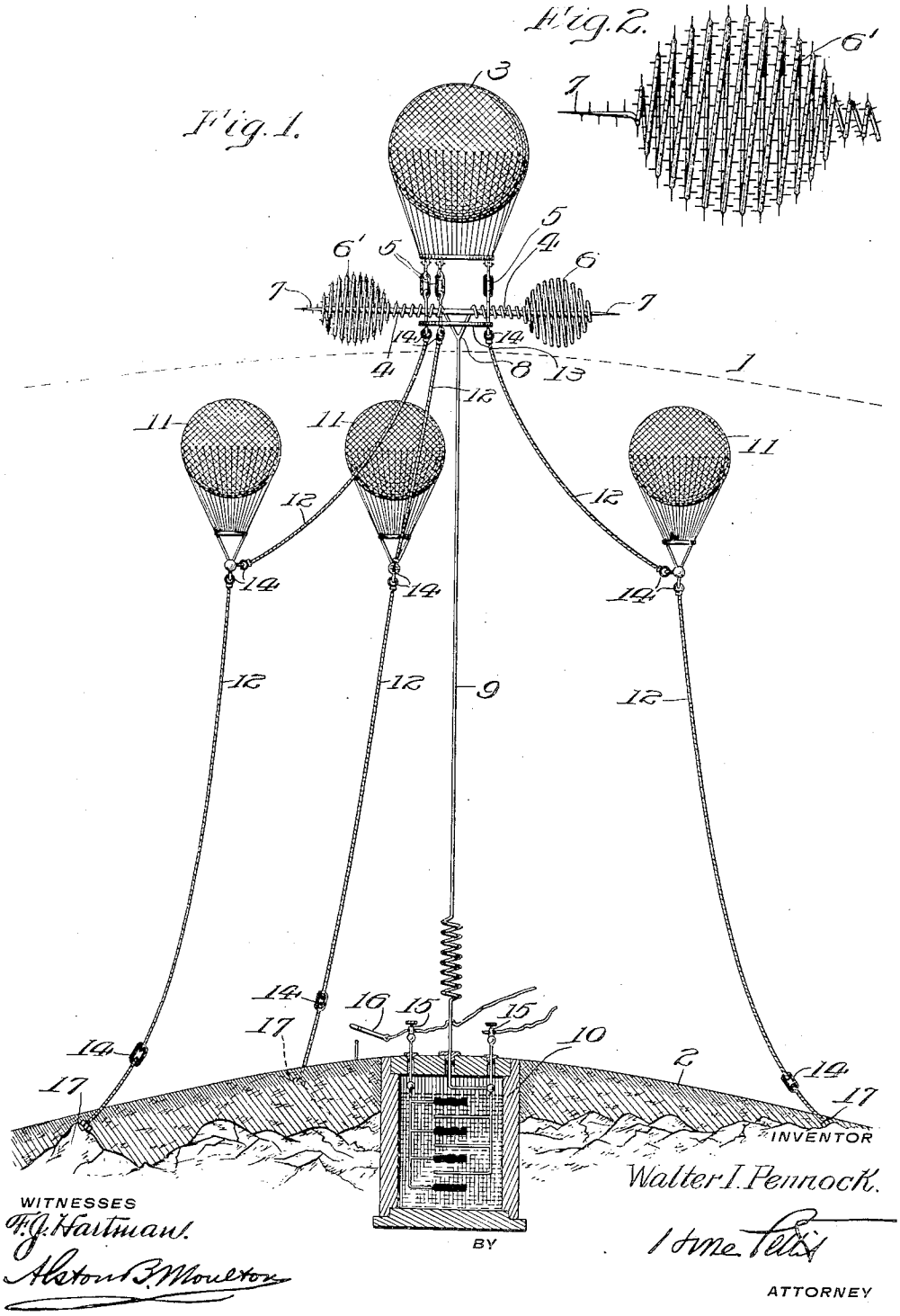

UNITED STATES PATENT OFFICE.

WALTER I. PENNOCK, OF PHILADELPHIA, PENNSYLVANIA.

APPARATUS FOR COLLECTING ATMOSPHERIC ELECTRICITY.

No. 911,260. Specification of Letters Patent. Patented Feb. 2, 1909.

Application filed June 26, 1907. Serial No. 380,907.

To all whom it may concern:

Be it known that I, WALTER I. PENNOCK, a citizen of the United States, residing at Philadelphia, in the county of Philadelphia and State of Pennsylvania, have invented certain new and useful Improvements in Apparatus for Collecting Atmospheric Electricity, of which the following is a specification.

My invention relates to a method of collecting electricity from a strata laden with electricity at high altitudes in the atmosphere, through the medium of a wire cable suspended from one or more balloons and in conveying this electricity to the earth's surface.

The object of my invention is to provide a conveyance of the electro motive force to be found in the upper strata of the atmosphere to the earth's surface; where it may be utilized for commercial and other purposes.

A further object of my invention is to provide a device or mechanism by which a suitable collector for the electrical energy in the upper strata of the earth's atmosphere may be elevated in the said strata and by which the said electric energy may be transmitted to and collected at the earth's surface, from which point it may be conducted to any place where it is desired to use the same.

A further object of my invention is to support and anchor said device in any desired position.

A further object of my invention is to provide an improved form of collector through which the energy of the said upper strata of the earth's atmosphere may be collected and transmitted for various purposes to the earth's surface.

Other objects of my invention will appear in the specification and claims below.

For a further full, clear and complete disclosure of my invention, reference may be had to the following description and accompanying drawings, in which like reference characters refer to corresponding parts.

Figure 1 is an elevational view of one form or embodiment of my invention and Fig. 2 is a detailed view of one form of my improved collector.

The passage of the electrical current to the earth under ordinary conditions is prevented by an obstruction afforded by the dense lower strata of the atmosphere, which is a bad conductor of electricity, as shown by the electrodes of an ordinary static machine. When the electrodes are placed close together, the atmosphere is seen to carry the current across from one electrode to another, but if placed far apart the current is obstructed by the intervening air. The dense lower strata of the atmosphere affords one of the best non-conductors of electricity, as shown in the conduction of the electric current by telegraph, or trolley wires on the earth's surface, where only a small quantity of the electric current escapes through the atmosphere; while rarefied atmosphere affords a good conducting media, as shown by the vacuum tube. The upper strata of the atmosphere being rare in proportion to the altitude, and being a good conductor of electricity while the lower strata of the atmosphere being dense and affording a non-conducting media for the electric current, thus causes an obstruction to the electric current, or power in its passage to the earth's surface from the electric strata of the atmosphere under ordinary conditions. When, however, the cumulus clouds of a thunder storm pass over the surface of the earth, these clouds being of very great height, the moisture in said clouds forms a better conductor of electricity than does the dry air, with the result that the electricity in the upper strata of the atmosphere breaks through the said cloud as a streak of lightning and in that form reaches even to the earth's surface, while the thin or shallow strata of clouds, observed in the so-called "settled rain" storm, do not extend upward to a sufficient height to form a conducting medium for the electricity from the electric strata to the earth's surface. For this reason there is usually no lightning during the said latter variety of rain storm.

By means of my invention, I have provided a mechanism for collecting the electrical energy or power created by nature and stored in the upper strata of rarefied air of the earth's atmosphere and have provided a conductor for said electric energy to the earth's surface.

Referring now to the drawings 1 indicates what may be called the lower limits or boundaries of the strata of electric energy above the surface 2 of the earth.

3 indicates a balloon which is elevated to a high altitude until it enters the said stra-

tum. The said balloon 3 carries a bar 4 of wood or any other suitable non-conducting material suspended by insulating links 5 or any other suitable form of insulation from the balloon 3. Upon either end of the said bar 4 I mount collectors, one form of which I have illustrated as spheres of coiled wire 6—6′ the outer ends 7 of which terminate in sharp points. The inner turns of the said spheres 6 and 6′ are wrapped around the wooden bar 4 and united as at 8 to a conductor of electric energy, preferably a large copper wire 9. This wire or conductor 9 extends to the earth's surface and may have its end suitably attached to an electric accumulator or other piece of electrical apparatus. I have illustrated one form of my invention in which the conductor 9 is connected to one pole of a storage battery 10 on the earth's surface.

The spiral spheres 6, 6′ are preferably provided with a polished metallic surface to form a good conductor of electricity and the material of said spheres should also be of such a character that it will not rust or corrode or tarnish. A polished copper wire or a copper wire plated with platinum or gold or a solid platinum or gold wire may be used for this purpose, inasmuch as these materials are least affected by moisture and the atmosphere. The said spheres or collectors may be made of smooth wire as shown in the sphere designated by the numeral 6 or of barbed wire, as is shown at 6′ and illustrated on a larger scale in Fig. 2 of the drawings. The latter form is preferable inasmuch as it provides a large number of points through which the electricity may flow to the wire from the surrounding air in the said upper strata of the earth's atmosphere.

In order that the supporting balloon 3 may be held in a relatively fixed position, it should be suitably anchored to the earth's surface. Inasmuch as the balloon 3 must be elevated to a very high position, the weight of the anchoring cables forms an important consideration, and if desired or necessary one or more supplemental balloons 11, 11, 11 may be attached to each of the anchoring cables 12, 12, 12 as illustrated in Fig. 1, to relieve the balloon 3 of such weight as would prevent it from ascending into the said electrical strata. In order that the electricity from the said upper strata of the earth's atmosphere may not be conducted down the anchoring cables 12, 12, 12, I attach them to the supporting balloon 3 and to the supplemental balloons 11 and to the earth's surface through suitable insulating devices 14.

In the form of my invention illustrated in Fig. 1, below the bar 4, I suspend a ring 13 of any suitable material from the balloon 3, and attach the anchoring cables 12 thereto by means of insulating rings 14, 14, 14. I may also provide additional insulating rings 14 between that portion of the anchoring cables 12 between the balloon 3 and the supplemental balloons 11, and also between that part of the cable 12 between the supplemental balloons 12 and the earth's surface. I may also provide, near the earth's surface and at the lower end of the anchoring cables 12, similar insulating links 14. While I have described links as forming a convenient form of insulating device for the purposes above set forth, I do not wish to be construed as being limited to the same, inasmuch as any suitable non-conducting connection may be used in place of the links 14.

The terminals 15, 15 of the storage battery 10 may be connected to any piece of electric apparatus which it is desired to run or operate and if desirable one of the poles of the battery is adapted to be connected by the switch 16 with the earth's surface. The lower ends of the anchoring cables 12 are securely anchored to the earth's surface as at 17.

With the apparatus arranged and connected in the manner illustrated in Fig. 1, the electric energy in the high strata of the earth's atmosphere passes to and through the conductive spiral spheres 6 or 6′ to the conductor 9 and is suitably stored or used at the earth's surface, while the balloons 11 support a part of the weight of the anchoring cables 12, and permit the balloon 3 to ascend as high as is possible, or necessary for it to enter the said electrical strata of the earth's atmosphere. By arranging the anchorage 17 of the cables 12 symmetrically or in any other position than in a straight line, the balloon 3 may be held in a substantially fixed position with relation to the earth.

While I have illustrated in the drawings and have described in the specification a form of apparatus in which my invention may be carried out, it is obvious that the drawings are more or less diagrammatic drawings, that is to say, that the proportions of the various parts are not necessarily those which would operate to the best advantage, inasmuch as certain portions have been shown as greatly enlarged in the drawings for the sake of clearness, and that it is likely that more than one supplemental balloon would be requird for each cable in order to support the weight of the same, and to relieve the supporting balloon 3 of such weight, as would prevent it from ascending into the high electrical strata of the earth's atmosphere, but such changes in form, proportion and arrangement I regard as being fully within the aim and scope of my invention, so long as such forms or modifications fall within the scope of the append-

ed claims. It is also to be understood that the storage battery or accumulator which I have shown as being connected to my collector, is only a type of apparatus which can be operated by the current collected by the spheres 6, 6′ and transmitted to the earth through the wire 9, and when I use the word "accumulator", I mean any piece of useful apparatus which is operated by the current transmitted thereto through the wire or conductor 9.

Having thus described my invention, what I claim and desire to protect by Letters Patent of the United States is:

1. The combination with an electrical collector comprising a bar of non-conducting material, and an open spherical conductor carried by said bar, of means to support said collector in the high electrical strata of the earth's atmosphere.

2. The combination with a balloon, of an electrical collector supported thereby and insulated therefrom, comprising a bar of non-conducting material, and a conductor wound spirally around said bar.

3. The combination with an electrical collector comprising a non-conducting bar, and a conductive wire wound thereon to form an open substantially spherical body, and means to support said collector in the high electrical strata of the earth's atmosphere.

4. The combination with a balloon, of an electrical collector carried thereby and comprising a non-conducting bar, and a polished wire wound spirally thereon to form an open substantially spherical body.

5. The combination with an electrical collector comprising a non-conducting bar, and a wire wound spirally thereon to form an open substantially spherical body, said wire being provided with pointed conducting projections, and means to support said collector in the high electrical strata of the earth's atmosphere.

6. The combination with a balloon, of an electrical collector carried thereby comprising a non-conducting bar, and a conducting wire wound spirally thereon to form open substantially spherical bodies upon the opposite ends thereof.

7. The combination with a balloon, of an electrical collector carried thereby comprising a non-conducting bar, a conducting wire wound spirally thereon to form open substantially spherical bodies upon the opposite ends thereof, an electrical accumulator, and an electrical connection between the said collector and said accumulator.

8. The combination with a balloon, and means to anchor said balloon, of an electrical collector supported by said balloon and insulated therefrom, an electrical accumulator, and a conductor connecting said collector and said accumulator.

9. The combination of an electrical collector, means to support said collector at a high elevation from the earth's surface and within the electrical strata of the earth's atmosphere, an electrical accumulator at the earth's surface, an electrical connection between said collector and said accumulator, and means to insulate said supporting means from said collector and from the earth.

In testimony whereof, I have hereunto set my hand this 25th day of June, 1907.

WALTER I. PENNOCK.

Witnesses:
HUGH F. QUINN,
WM. G. GLENN.

OVERUNITY ELECTRICITY

Atmospheric Electric Generator

https://overunity-electricity.blogspot.com/2022/04/atmospheric-electric-generator.html?m=0

Atmospheric Electric by Nikola Tesla

Nikola Tesla is known for his invention of the rotating magnetic field, which is the principle behind alternating current (AC) power. He also developed a version of radiant energy he called "Ether Power" or "Atmospheric Electric Generator" (AEG). AEG extracts electrostatic potential from the atmosphere and converts it into useful electrical energy. It is a free-energy device that does not require any external power source to operate.

There are several versions of the AEG design, but all of them extract energy from the atmosphere by using an electrically charged metal plate. The plate is charged by either an external power source or by capturing energy from natural lightning storms. When the plate is exposed to the atmosphere, it creates an electrical field that extracts electrical potential from the air. This potential is then converted into useful electrical energy by one or more electrical generators.

The original version of Nikola Tesla, radiant energy generator, both resonant and non-resonant, can be made in many different versions.

A practical guide to the electrical (non-resonant) calculation of radiant energy: How to Build Tesla's Radiant Energy Receiver

A famous version is Moray's (with resonance to generate arbitrary energy):

Practical guide - in just one box - engineer Moray's way
☆* **Revealed At Last**: Ancient Invention Generates Energy-On-Demand
The design includes:

- Harnessing electricity from the Earth: Neither is Schumann Resonance, nor is it known by Electromagnetism. It's Energy from Ether in Which the Earth Floats
- Extracted from ordinary electricity by the method called “fractionation.”
- Reverse Tesla coil - "Back to Back" mechanism
- Combination of **radiant energy** and negative resistance to amplify electricity
- And many other plans for Free Energy.

MORAY GENERATOR

Moray Generator - FREE Energy Systems - How Close Are We Into Generating Free and Cheap Electricity?

Moray Generator - FREE Energy Systems - How Close Are We Into Generating Free and C...

Update articles on radiant energy according to mainstream science: Radiant Energy - Moray Generator

Next we introduce another radiant energy version, in the style of capturing energy from the sky, like Tesla and Moray.

GUILLOT, Jules: Atmospheric Electric Generator -- A powerful proven design from the 1920s

The Guillot device generated about 2.5-3 Kilowatts with antenna height of ~ 20 meters. Power depends on the total collector surface and height of the vertical antenna. The apparatus in the photo produced ~300 watts with a collector 2 meters tall.

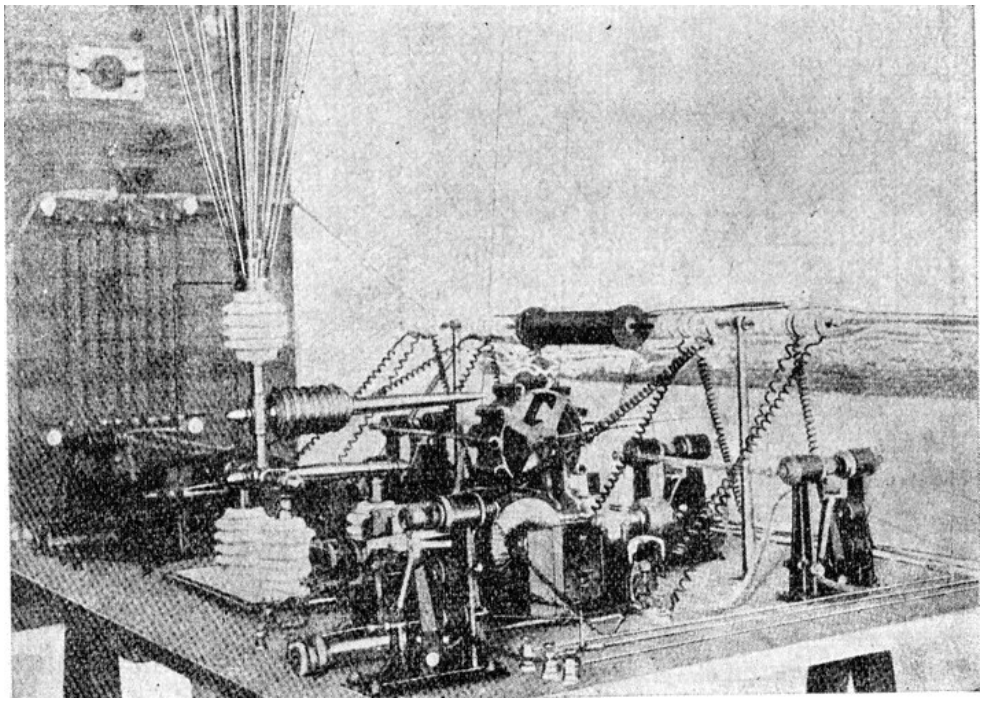

"Practical Utilization of Atmospheric Electricity"

by Gillbert Darida in *The Invention Encyclopedia,* pp. 204-207 (1930, Geo. Constantinescu, Ed.)

"The Earth has its own negative electricity, in the soil, and the atmosphere which surrounds the Earth is charged with positive electricity. The electric potential (the voltage) increases with the altitude, so we can say that the electric force is proportional to the atmospheric altitude (after Franklin, Quetelet, Lord Kelvin, Mascart, Joubert and other scientists).

The recent observations demonstrate that the air at 6000-7000 meters in altitude, is very highly charged with positive electricity, which could be explained by the friction between the external photosphere and the upper atmosphere of Earth, which rotates at a speed of more than 100,000 Kilometer per hour.

In that way, the Earth works like an electrostatic generator with electric charging by influence --- the upper atmosphere is positively charged by influence and the Earth crust obtains the negative polarity.

Between the two environments, the air and the soil, and inside the low atmosphere, in conditions of good weather, there are sbout 800 positive ions and also, 680 negative ion (and electrons) in just one square-centimeter of normal ionised air.

The Earth behaves like an huge electric armature negatively charged, which repels the electrons and attracts the positive ions. That positive ions' attraction determinates an electric current, also called "convective current". That's like an invisible continous bombardment, subject to daily and seasonal variations, which could be aproximated at **3 x 10 ^ -16 Amperes per square-centimeter,** and that is a total value of 1500 Amperes for the entire surface of the Earth.
The question is --- how does this current always maintains the same direction ? We can suppose that the natural radioactive emissions of the soil is responsable for this. We also know that radioactive emissions of the Earth works usually near the soil surface, and that explains the ionisation phenomenona inside caves.

The ionisation of the low atmosphere could also be the effect of the radioactive emissions of the Earth, especially when the X radiation works. Also, the Earth atmosphere is ionisated by the external radiation proceeding from the Sun and from the space environment, especially the action of ultraviolet radiation and the electron fascicles emitted by the Sun surface, at the temperature of 6000 deg. Celsius.

The capture of atmosphere electricity has been used in France, with aerial cables mounted on the Mont Blanc, and also in Germany --- with conductive cables carried by the captive baloons.

The atmosphere electricity collect system invented by eng. Jules Guillot is most ingenious and it relies on "the **electric siphon**" [*m.n. --- the discharging devices or spark-gap used today from the protection of aerial electric cables against the atmospheric electricity ; Jules Guillot has thought to recuperate and to use that electricity*].

His method consisted in the direct "pumping" of the atmosphere electricity using a collecting device which had two antennae and several collecting rods.

One antenna is **vertical** and it has a lot of **rods** scattered like an opened **fan**, with the tips against the **zenith**, for collecting the **negative** electricity which comes from the air ; the **horizontal** antenna is orientated against the **South** and its role is to collect the **positive** electricity.

The air electricity seems to have the double-polarity, as we can see at two electrised clouds when between them apears the electric discharge. The air could have different electric charging and the ionisation processus of atmosphere is very heterogenous. The inventor Guillot used **two separated and insulated armatures with the positive armature against the South** (more precisely, against the **Equator**...) and the **negative** armature against the **zenith**.

We can see in the scheme :

1,- the device P is the "**collector apparatus**" having **15-20 meters height** ; it also has a lot of **rods** which are scattered **fan**-like, all this on top of an **iron pillar** ; and also an **horizontal antenna** S oriented against the **South** ; the two antennae are disposed at **90 deg. angle** forming the two armatures where the electrical tension must apear. As the **height** of the pillar **increases**, the **voltage** increases more and more ;

2,- a system of **lightning-rods** (p1, p2, p3) for protection against discharges of atmospheric electricity during storms;

3,- the regulator system (**voltage regulator**, etc) R ;

4,- the electric **resistors** (Cn) for absorbing the parasite currents ;

5,- the "electric siphons" which have the role of making a magnetic field as a good environment for the transport of the ionized fluid, absorbing the electricity from the air ; the E1 and E2 are their regulator devices ;

6,- an **auxilliary continous current power supply** which send the current against an special **excitation coil**, used as starting device ; it works only when the system is starting.
This collector device works very good for lighting and heating. The device made by Guillot had **20 meters height** on the total surface of **3 square-meters**. Also, J.Guillot used and electrical transformer for the industrial utilization of this "collector" --- as power supply for industrial electric engines."

French Patent # 551,882

Apparatus for Capture of Electric Currents in the Atmosphere

16 April 1923

Considering the terrestrial globe like the inductor of a dynamo, where the extraterrestrial ether is the inductor of electric currents circulating in the atmosphere; the apparatus of the invention described here selects through the device described below two perfectly distinct currents and eliminates others.

The device includes:

1, The air sensor; 2, a series of lightning rods; 3, vacuum; 4, an array of resistances; 5, vacuum; 6, witnesses.

1. An aerial sensor mounted on a pole is composed of **magnetic steel** fixed and sealed by a porcelain **insulator**, and surrounded a base by a **bronze ring** which are screwed **32 points of soft iron**, all forming antenna a pole. level beside it and isolated from the first, forming the 2nd pole, is fixed a sharp point of magnetic steel fixed in the horizontal position and directed towards the south and **movable to an angle of 45** is sealed in a porcelain insulator. This point is also circled a **ring of copper** notches figure. 1.

2. A series of 6 lightning surge arrestors at corners between each pole and the earth and the various gauges.

3. A first **regulator** form of a device similar absolutely similar to the aerial amtenna, but the two poles are superposed and opposed to the vertical point, and a **copper disk connects to ground**. Opposite the horizontal point, a **ring of tin** to which are welded tubes alternatively **16 tubes** composed each composed of **copper-lead** and **iron-lead** . The ring connects to the **ground** as shown in figure. 2.

A second regulator form of **automatic breakers** balanced on 3 poles and two poles also equally balanced.

4. A panel of **resistances** composed of **wire mesh** in bunches from different sections of **glass tubes** containing **copper** dust, **coal** and flowers of **sulfur**.

Vacuum cleaners consists of a **wooden box** on each pole, containing a **porcelain vase** in which **layers** isolated with **mica** is made up of **mercury, tin, coal, copper** and **sulfur**, all contaied in a **copper tube**.

6. The witnesses are comprised of ordinary incandescent lamps.

Resume

By the point at the zenith and the point to the south we channel two currents forming the two poles. We also protect from lightning. It regularizes the flow by a regulator and similar devices by a controlling each devise of adequate strength of the current harmful nature of these devices do not have loads. The refined current is conducted by ordinary copper wires.

French Patent # 565,395

Combined Apparatus for Capture of Atmospheric Electric Currents with Immediate Implementation

25 January 1924

We know that earth with its constitution, its rotation and movement in space, provides the electricity in the atmosphere. The electrical currents escape into space or largely accumulate towards the equator, as a result of the greater periphery of the globe.

In the atmosphere, there are two clearly distinct poles, i.e., clouds that can be electrically positive or negative; everything in nature shows this, otherwise it would be difficult to explain the lightning that occurs between the clouds and which are none other than contrary cloud electrical charges discharged by too close proximity.

The invention relates to a set of devices capable of capturing the atmospheric electricity.

So far, all searches made for this purpose has been to capture the atmosphere, i.e., that brought together into one system to capture two poles and opposes effect has been to destroy or cancel each other leaving the amount as the difference of the strongest to weakest.

It is therefore easy to understand why, considering the two poles of air as about equal, it is almost impossible to measure some potential with the land, the highest on the lowest remaining which can be positive or negative, copper being the strongest of one or other of these polarities.

It is on this basis that all research until now have been made, and that is why we must consider that all the time, between the two poles captured in the atmosphere and not in any mixture of systems uptake, it is possible to obtain tension and intensity, a considerable and measurable power captured separately between the two poles and remaining isolated from one another until their utilization .

In accordance with this invention, this collection is made by attraction of primary electrical currents in teh atmosphere, either positively or negatively charged, by an antenna that has two points absolutely isolated from one another, where one points to the zenith to attract negative electricity, and the other turned south, toward the equator to draws in the masses grouped in this area.

This shows and proves the existence of atmospheric electrical currents, and that it is possible to capture them with specially designed equipment primarily acting as regulators, as the persistent difficulty encountered so far in realizing their capture lies with large variations of tension in which the current atmosphere is present in space, for each of the poles, and an overload could inevitably fatal.

The patent in its present form of presentation does not cover the regulators or devices that are anticipated in the system, because they can be designed in different ways and give the same result, but covers the application and grouping of equipment operating as automatic relays with variable influence to limit current tension to that chosen for utilization.

These devices have a role associated with an overflow reservoir outside carrying excess liquid; these regulators will divert the excess voltage flows to ground.

We can still absorb these regulators having filters because they have the sole purpose of diverting the post being used , currents that are not yet known but likely that we will call for simplicity, abnormal currents. [sic...]

The patent also covers systems for regulating currents, applied to each of the poles because it is recognized that the shape and tension of the currents of the two poles are not equivalent.

The method of capture is by special antenna has directed two points in the atmosphere, as will be stated after this, with Boot ecoulement prior to the current atmosphere is also of great importance.

Finally, the current atmospheric reception is adequate even with the installation of a post, which can be expected at any location without the need for special altitude, as has been attempted in previous efforts.

We refer to the attached drawings:.

Figure 1 represents in elevation and side view an antenna that only has two points, to overcome an elevation ;

Figure 2 is the end of one of the peaks, the horizontal:

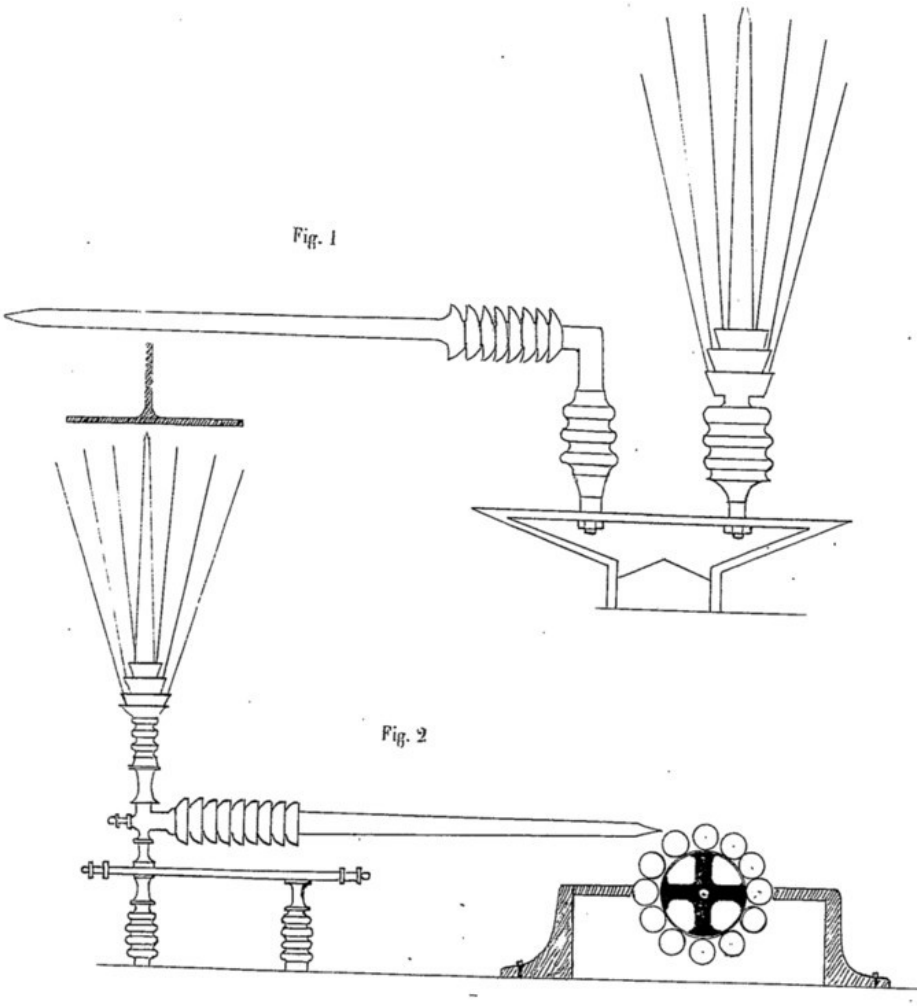

Figure 3 shows schematically the table on which are mounted various devices or accessories that act as regulators of current tensions.

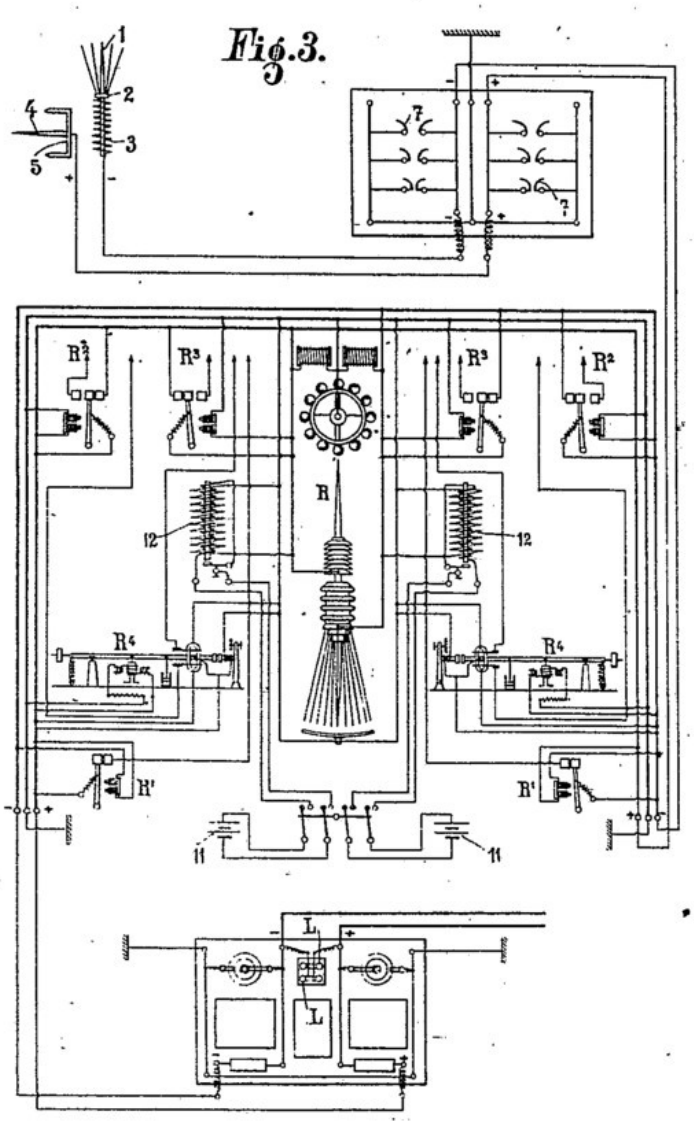

Figure 4 is a scheme of surge arrestors, and

Figure 5 a table of resistances.

Fig. 4.

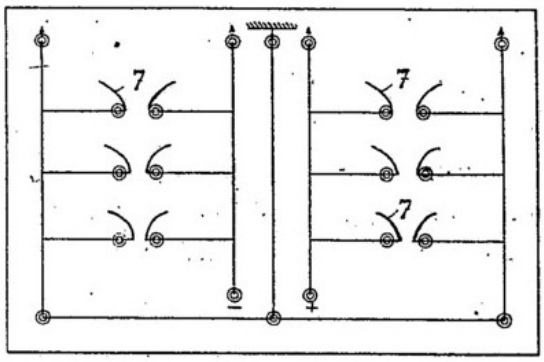

Fig. 5.

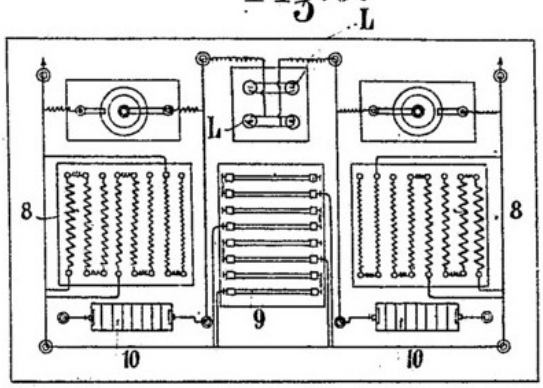

The necessary arrangements to capture atmospheric current form is as follows:

1. The **antenna** in figure 1 is formed with two peaks: the 1 is **steel**, supported by a **bronze ring** 2, surrounded by a **spiral form** 3; this point is oriented for attracting the **zenith** layers of **negative electricity** and the other edge 4 contains **copper coils** 6, and is oriented **south** to the **equator** to draw in the masses grouped in this area. To use this antenna it suffices to be raised on a mast or **pole** to a height a little higher than that of surrounding houses.

2. On the table **lightning arrestors**, contained 4, forms of 7 **copper horns** used to absorb large atmospheric discharges by certain time, as it would be dangerous to allow movement in the devices regulators.

3. On a table of **two** symmetrical systems **regulators**, Figure 3, one for each pole, to obtain and allow a regularization of large excesses in the current tensions, by automatically absorbing surges before passing over the surfacea chosen for the desired use. These regulators are represented on the drawing by the references R, R1, R2, R3, R4.

4. In the **resistance** panel in communication with regulators, these resistances are formed as **spiral coils or screens** 8, **tubes 9 of glass filled with fine coal dust , aluminum powder, sulfur and fine copper dust**. Finally, **two** special 10 **processors** and constitutes **layers** of metal forming an **absorbant** for harmful or abnormal currents.

5. As a source of energy formed **auxiliary batteries** 11 and **Ruhmkorff coils** 12 to get into the antenna sufficient attraction by means of an adjustment of intensity, which once it begins, allows the constant flow of atmospheric current in the system.

In considering Figure 3, which represents a sort of an installation scheme of the device, the reception of atmospheric electrical current will, as set out above, producing a priming of these currents. This boot is made in launching the system which is double to answer each of the poles, the current batteries 11 through 12 and reels going to the antenna.

This boot will continue until the disposal of electrical current atmosphere is evident by the one or more table lamps L of resistance shown in Figure 5.

Once the lights illuminate it is advisable to charge the batteries to boot. Natural flow and constant currents will be captured by the regulators , Figure 3; they will regularize in tension and in amperage and then directed to use in table lamps.

It has been said above that regulators R, etc., are intended and designed to automatically eliminate earth surge currents capture and abnormal currents that cannot yet be level but that these regulators could be replaced by devices with the same function.

There is therefore no need to describe in detail and especially the claims. We only specify that these regulators must be proper protection for the purposes described above.

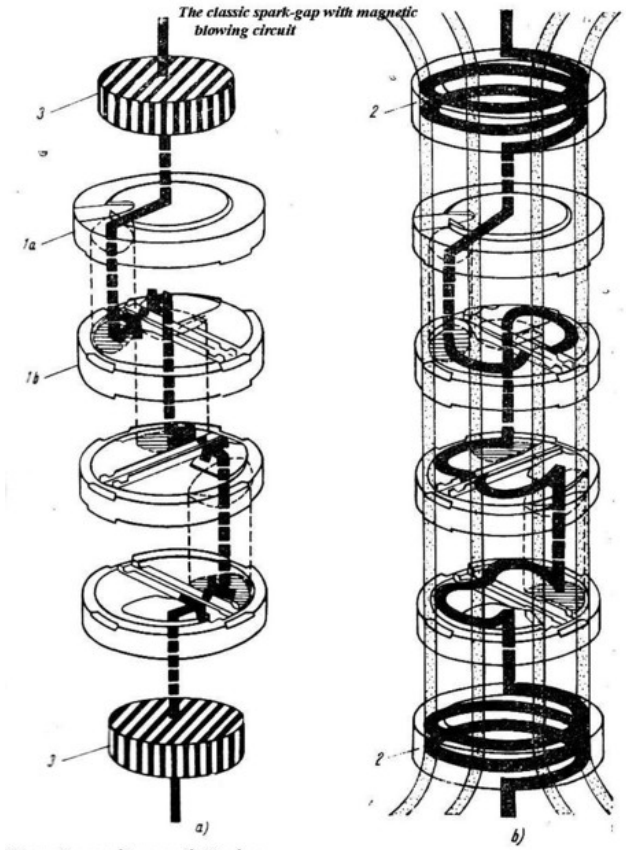

The spark-gap with magnetic blowing :
a,- the initial stage ; the impulse current send in soil through the shunt-resistences 3, because the coils 2 have an impedance too big for the impulse of 10/20 µs ;
the spark-gap 1 has two elements disc-shaped 1a and 1b, the inferior disc have one electrode and the upper disc the other electrode of the spark-gap circuit.
b,- the second stage ; the accompanying current discharge - after the impulse current ;
this accompanying current pass through the coils 2 which produce the magnetic field with the role to extend the electric arc into the slit between insulator discs 1a and 1b ; the thickness of this slit is smaller and smaller in accord with the extension of the electric arc, in this manner producing the magnifing of its electric resistance and finally, the electric arc extinction.

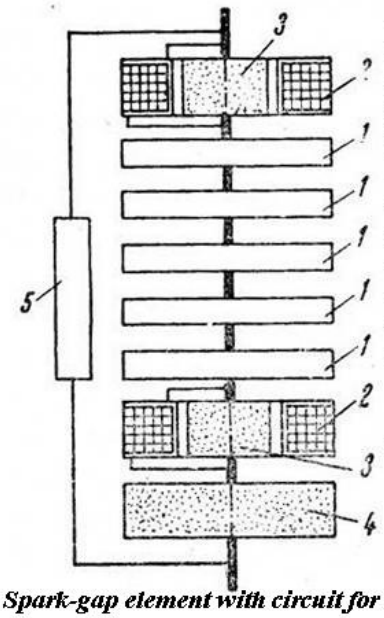

1,- the spark-gap individual devices which work in the manner to extend the electric arc of the accompanying electric current ;
2,- the coils which produce the magnetic field for the magnetic blowing ;
3,- the electric shunt-resistances in parallel connection on the blowing coils, with the role of reducing the current inside this coils
4,- the disc with unlinear resistance ;
5,- electrical resistance for the homogenous distribution of the electric field in all the elements of the spark-gap.

In Jules Guillot scheme, that kind of device could be used for leading the current.

Spark-gap element with circuit for the magnetic blowing of the electric fascicle

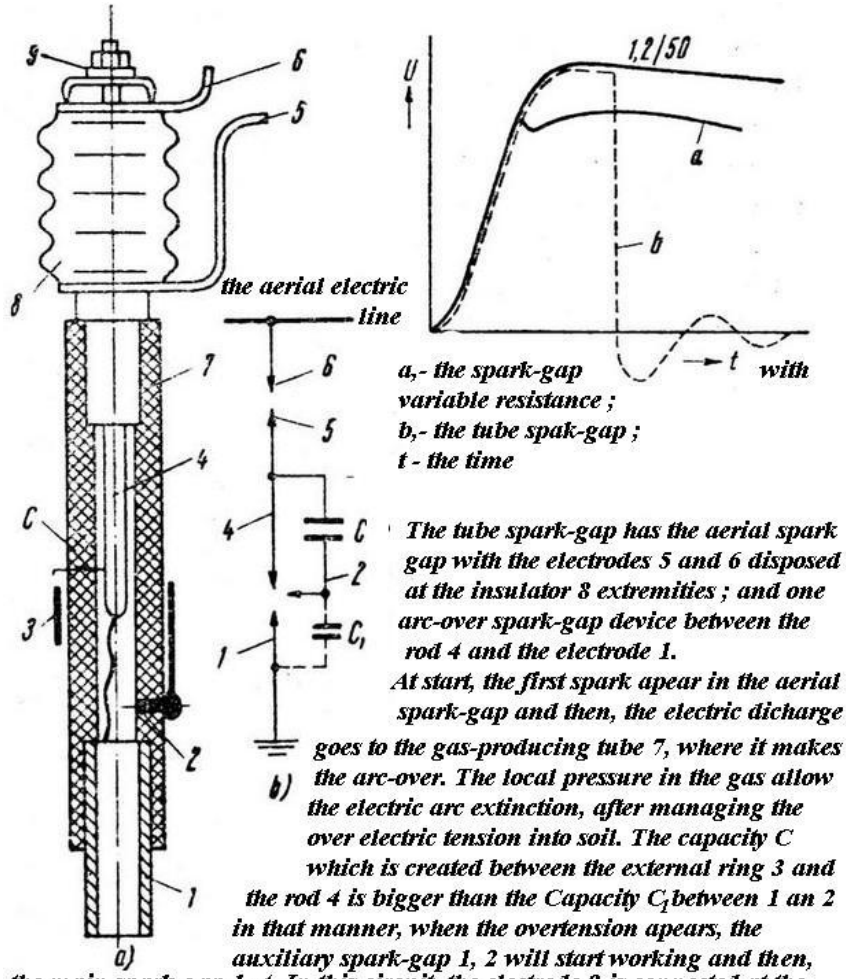

In the image above, it is an classic tube spark-gap used for the protection of aerial electric cables. The atmospheric electricity is discharged in soil and lost... The Guillot's inventions used that kind of devices for leading and absorbing of the atmospheric electricity.

DARIDA, Gillbert : "Practical Utilization of Atmospheric Electricity";
(in *The Invention Encyclopedia,* pp. 204-207 ; 1930, Geo. Constantinescu, Ed.) --

Utilizarea practică a electricităţii atmosferice

Pământul ca şi celelalte astre, posedă o electricitate proprie negativă în interior, iar aerul care-l înconjoară este pozitiv. Potenţialul sau tensiunea electrică a aerului se măreşte pe măsură ce ne ridicăm în înălţime, astfel că putem spune că intensitatea electrică este proporţională cu înălţimea (după lucrările remarcabile ale lui Franklin, Quetelet, Lord Kelvin, Mascart, Joubert şi a altor mari savanţi fizicieni).

Observaţiile făcute recent, au arătat că aerul regiunilor înalte dela 6000—7000 m este foarte încărcat cu electricitate pozitivă, a cărei explicaţie se datoreşte frecării fotosferei sau atmosferei terestre, prin învârtirea pământului în jurul soarelui cu mai mult de o sută de mii de km pe oră. Această frecare directă în fluidul eteric ambiant, face ca aerul să se încarce cu electricitate pozitivă prin influenţă, iar pământul să se încarce negativ.

Intre cele două medii, fluidic (aerul) şi (pământul) materie, ştiinţa ne spune, că în partea de jos a atmosferei, pe timp frumos un centimetru cub de aer ionizat, conţine circa 800 particule cu ioni pozitivi şi 680 ioni negativi (electroni).

Pământul se comportă ca un enorm conductor încărcat negativ, respingând electroni şi atrăgând ionii pozitivi. Această atracţie a ionilor pozitivi determină un curent electric, zis şi curent de convenţiune. E un fel de bombardament invizibil supus variaţiunilor zilei şi a sezoanelor, putându-l evalua aproximativ la o densitate mijlocie remarcabilă, dela 3×10^{16} sau a 30 quatrilionime de amper pe cm cub, ceea ce dă pentru întreagă suprafaţă a pământului un curent formidabil, de 1500 de amperi.

Se pune întrebarea cum un astfel de curent poate să-şi întreţie mereu acelaşi sens? Aceasta este enigma pe care ne-o punem, studiind curenţii naturali ai atmosferei noastre, presupunem că poate să fie o legătură a acţiunii emanaţiunilor radioactive. Aceste emanaţiuni fiind din gaze radioactive grele, se găsesc de obiceiu în mare abundenţă aproape de pământ ceea ce ne explică marea ionizare observată în general în grote şi caverne.

Ionizarea atmosferică poate de asemenea fi produsă în parte, de acţiunea razelor X, foarte pătrunzătoare şi de diferite substanţe radioactive închise în subsolul pământului. De asemenea poate să mai fie, ţinând seama de acţiunea «Calei Lactee» şi de ionizarea luminei solare, foarte bogată în radiaţiuni ultraviolete

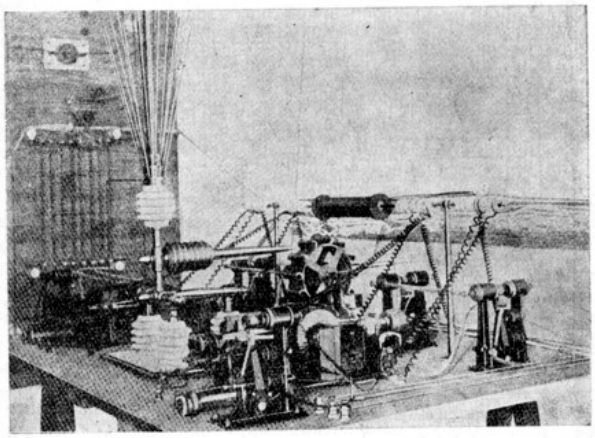

Fig. 108

precum şi a electronilor emişi direct din radierea căldurii solare de circa 6000 de grade.

Captarea electricităţii atmosferice a fost utilizată în Franţa prin cabluri aeriene montate pe Mont Blank, iar în Germania prin cabluri susţinute de baloane captive.

Sunt mai multe sisteme, vom da pe scurt pe cel mai ingenios procedeu, inventat de ing. Jules Guillot, bazat pe sifonul electric. Procedeul consistă de a pompa direct din atmosferă, electricitate

prin ajutorul unui aparat de captare, format din 2 antene aeriene şi o serie de bobine după cum se vede în fig. 108. Una din antene este verticală în formă de evantaiu dirijată cu vârfurile către zenit, pentru a capta electricitatea negativă din atmosferă; cea care este orizontală, este dirijată către Sud, pentru a capta electricitate pozitivă.

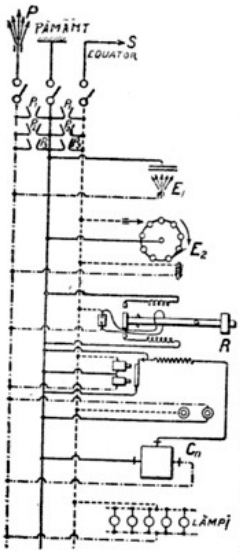

Fig. 109

Electricitatea în aer pare să fie cu dublă polaritate, după cum se vede la 2 nori electrizaţi, cari deplasându-se în sens contrar, dau naştere unei scântei (fulger) când distanţa respectivă poate să fie străbătută de puternica lor diferenţă de potenţial. Straturile de aer de densităţi diferite, nu sunt toate antrenate de aceeaşi viteză prin rotaţia pământului, ele se electrizează deci prin frecarea decalajului lor respectiv.

Aceste sunt consideraţiunile ce l-au făcut pe inventator să aşeze în atmosferă doi poli complet distincţi şi perfect izolaţi, al cărui pol pozitiv S (fig. 109) poate fi dirijat în direcţiunea Sudului, şi a celuilalt negativ P, în direcţiunea zenitului. Fig. 109 arată schema montajului şi a conexiunilor compuse după cum urmează: 1. dintr'o antenă dublă aeriană, montată pe stâlpi de 15—20 m înălţime. Această parte care se mai numeşte şi aparat de captat, este format din vârfurile P, dispuse în evantai în vârful unei tije de oţel dirijate către zenit, pentru a capta curenţii negativi ai atmosferei şi dintr'o altă antenă orizontală a cărei săgeată este îndreptată către sud S, adică către equator, pentru a recepta curenţii pozitivi. Aceste două părţi dispuse în unghiu de 90°, formează cei doi poli al curentului aerian, a cărei diferenţă de potenţial este suficientă pentru a permite utilizarea electricităţii atmosferice.

French Patent # 551,882

Appareil Capteur de Courants Electriques dans L'Atmosphere

BREVET D'INVENTION.

XII. — Instruments de précision, électricité.

5. — Production de l'électricité, moteurs électriques.

N° 551.882

Appareil capteur de courants électriques dans l'atmosphère.

M. Jules GUILLOT résidant en France (Tarn-et-Garonne).

Demandé le 27 septembre 1921, à 15h 20m, à Paris.
Délivré le 15 janvier 1923. — Publié le 16 avril 1923.

[Brevet d'invention dont la délivrance a été ajournée en exécution de l'art. 11 § 7 de la loi du 5 juillet 1844 modifiée par la loi du 7 avril 1902.]

Considérant le globe terrestre comme l'induit d'une dynamo, dont l'éther supraterrestre est l'inducteur, des courants électriques circulent dans l'intervalle c'est-à-dire dans la couche atmosphérique; l'inventeur capte au moyen de l'appareil décrit ci-dessous deux de ces courants parfaitement distincts et élimine les autres.

L'appareil comprend :

1° Le capteur aérien; 2° une série de parafoudres; 3° les régulateurs; 4° un tableau de résistances; 5° les aspirateurs; 6° les témoins.

1° Le capteur aérien monté sur un poteau est composé d'une pointe d'acier aimanté fixée par scellement sur un isolateur porcelaine et cerclée à sa base par une bague de bronze sur laquelle sont vissées 32 aiguilles de fer doux, le tout formant l'antenne d'un pôle. A côté et isolé de la première, formant le 2° pôle, est fixée une pointe d'acier aimanté dans la position horizontale et dirigée vers le sud dont la base coudée à 45° est scellée sur un isolateur porcelaine. Cette pointe est également cerclée d'une bague de cuivre à encoches fig. 1.

2° Une série de 6 parafoudres à cornes entre chaque pôle et la terre et à écartements variés.

3° Un premier régulateur formé d'un appareil absolument semblable au capteur aérien, mais ayant les deux pôles superposés, et, opposé à la pointe verticale, un disque de cuivre relié à la terre. Opposé à la pointe horizontale, une roue à jante d'étain sur laquelle sont soudés alternativement 16 tubes composés eux-mêmes de deux métaux soudés : cuivre-plomb et fer-plomb. Cette roue est reliée à la terre par son pivot fig. 2.

Un deuxième régulateur formé d'appareils à déclanchement automatique au nombre de 3 par pôles et deux basculateurs également par pôles.

4° Un tableau de résistances composé de fils de maillechort en boudins de différentes sections, de tubes en verre contenant des poussières de cuivre, du charbon de cornue et de la fleur de soufre.

5° Les aspirateurs composés d'une boîte en bois sur chaque pôle, contenant un vase de porcelaine dans lequel par couches superposées et isolées au mica est placé du mercure, de l'étain, du charbon, du cuivre et du soufre, le tout traversé par une tige de cuivre.

6° Les témoins composés de lampes à incandescence ordinaires.

RÉSUMÉ.

Par la pointe au zénith et par la pointe au

sud nous canalisons deux courants formant les deux pôles. On protège l'ensemble par des parafoudres. On régularise le débit par un régulateur semblable et par des appareils à déclanchement commandant chacun des résistances appropriées de la nature du courant nuisible dont ces appareils sont chargés. Les courants épurés sont conduits aux témoins par des fils de cuivre ordinaire.

Jules GUILLOT,
Moissac (Tarn-et-Garonne).

XII. — Instruments de précision, électricité.
5. — Production de l'électricité, moteurs électriques.

N° 565.395

Dispositif combiné pour capter les courants électriques atmosphériques avec application immédiate.

M. Jules GUILLOT résidant en France (Allier).

Demandé le 6 avril 1923, à 11h 30m, à Paris.
Délivré le 7 novembre 1923. — Publié le 25 janvier 1924.

On sait que la terre, par sa propre constitution, sa rotation et son mouvement dans l'espace, fournit à elle seule l'électricité que l'on utilise et qui est en suspension dans l'atmosphère. Les courants électriques, qui s'échappent de la surface du globe, montent directement dans l'espace où les grandes masses sont accumulées vers l'équateur, par suite de la plus grande périphérie du globe.

Dans l'atmosphère, il y a deux pôles parfaitement distincts, c'est-à-dire que des nuages peuvent être électrisés, soit d'électricité positive ou négative; ceci, tout dans la nature le démontre, sans quoi, il serait difficile d'expliquer la provenance des éclairs qui se produisent entre les nuages et qui ne sont autres que des nuages chargés d'électricité contraire et qui s'amorcent entre eux par un trop grand rapprochement.

L'invention dont il s'agit concerne un dispositif formé d'un ensemble d'appareils aptes à la captation de ces courants atmosphériques.

Jusqu'à ce jour, toutes les recherches faites dans ce but ont été de capter dans l'atmosphère une seule catégorie de courants atmosphériques, c'est-à-dire, qu'on a réuni dans un même système de captation, deux pôles opposés et dont l'effet a été de se détruire ou de s'annuler l'un à l'autre laissant comme quantité que la différence du plus fort au plus faible.

Il sera donc facile de comprendre pourquoi, en considérant les deux pôles d'un courant atmosphérique comme à peu près égaux, il est presque impossible par certains temps de mesurer le potentiel avec la terre, du plus fort sur le plus faible subsistant et qui peut être positif ou négatif, suivant que le plus fort est de l'une ou de l'autre de ces polarités.

C'est sur cette base que toutes les recherches jusqu'à nos jours ont été faites et c'est pourquoi, il faut considérer que par tous les temps, entre les deux pôles captés dans l'atmosphère et non mélangés dans aucun des systèmes de captation, il est possible d'obtenir, en tension et en intensité, une puissance aussi considérable que l'on puisse désirer et qui sera mesurée entre les deux pôles captés séparément et toujours isolés l'un de l'autre jusqu'à leur utilisation.

Suivant l'invention, cette captation se fait par attraction dans l'atmosphère au moyen d'un amorçage des courants électriques, soit positif ou négatif, par une antenne à deux pointes absolument isolées l'une de l'autre, dont l'une tournée vers le zénith attire les couches d'électricité négative, et l'autre, tournée vers le sud, puise vers l'équateur, dans les masses groupées dans cette zone.

Ceci exposé et l'existence des courants électriques atmosphériques étant prouvée, il est

possible de les capter à la condition de disposer d'appareils spéciaux étudiés surtout pour jouer le rôle de régulateurs, attendu que la difficulté persistante rencontrée jusqu'alors pour réaliser la captation incombe aux grandes variations de tensions sous lesquelles les courants atmosphériques se présentent dans l'espace, pour chacun des pôles, et dont l'écoulement dans un poste de captation serait inévitablement funeste.

Le présent brevet sous sa forme de présentation doit donc couvrir, non pas le ou les dispositifs régulateurs qui sont prévus dans le système, car ils peuvent être conçus d'une façon toute différente et donner le même résultat, mais sur l'application raisonnée et le groupement d'appareils fonctionnant automatiquement et intervenant chacun comme relais d'influence variable pour limiter la tension des courants captés dans l'atmosphère à celle choisie pour utilisation.

Ces appareils ont un rôle assez connexe avec celui de trop-pleins sur un réservoir qui acheminent à l'extérieur l'excès de liquide; ici ces régulateurs détournent l'excès de tension des courants à la terre.

On peut encore assimiler ces régulateurs à des filtres car ils ont pour but de détourner du poste d'utilisation, des courants qui ne sont pas encore de nature connue mais que pour simplicité on appellera courants parasites ou anormaux.

Le brevet portera aussi sur le système de régulation des courants, appliqué à chacun des pôles, car il est reconnu que la forme et la tension des courants aux deux pôles ne sont pas équivalentes.

Le mode de captation par antenne spéciale à deux pointes orientées dans l'atmosphère, comme il sera indiqué ci-après, avec amorçage préalable pour l'écoulement des courants atmosphériques est aussi d'une grande importance.

Enfin la réception des courants atmosphériques se fait à l'endroit même de l'installation du poste; celui-ci peut être prévu en un lieu quelconque sans nécessiter d'altitude particulière, comme cela a été tenté dans des essais préconçus.

Sur les dessins ci-annexés auxquels on se réfère

La fig. 1 représente en élévation et en coupe partielle l'antenne seule, à deux pointes, surmontant un poteau d'élévation;

La fig. 2 est le plan de l'une des pointes, celle horizontale:

La fig. 3 montre schématiquement le tableau sur lequel sont montés les divers appareils ou accessoires qui jouent le rôle de régulateurs des tensions de courants.

La fig. 4 est un schéma de parafoudre, et

La fig. 5 un tableau de résistances.

Le dispositif nécessaire à la captation des courants atmosphériques est formé comme suit :

1° D'une antenne, fig. 1, formée de deux pointes dont l'une 1 est en acier, supportée par une bague de bronze 2 entourée d'une spirale 3 formant self; cette pointe est tournée vers le zénith pour attirer les couches d'électricité négative; l'autre pointe 4 comporte un cadre 5 de huit branches supportant des spirales de cuivre 6 et est tournée vers le sud pour puiser vers l'équateur dans les masses groupées dans cette zone. Pour l'utilisation de cette antenne il suffira qu'elle soit portée par un mât ou poteau de hauteur un peu supérieure à celle des habitations environnantes.

2° D'un tableau de parafoudre, fig. 4, formé de cornes de cuivre 7 servant à absorber les tros grosses décharges atmosphériques que par certains temps, il serait dangereux de laisser circuler dans les appareils régulateurs.

3° D'une table de deux systèmes symétriques de régulateurs, fig. 3, un pour chaque pôle, qui permet d'obtenir une régularisation assez grande dans les tensions des courants en absorbant automatiquement les surtensions dépassant la tension choisie pour l'utilisation désirée. Ces régulateurs sont représentés sur le dessin par les références R, R^1, R^2, R^3, R^4.

4° D'un tableau de résistance en communication avec les régulateurs, ces résistances sont formées de spirales de maillechor 8, de tubes 9 de verre remplis de poussière fine de charbon de cornue, de poudre d'aluminium, de soufre et de poussière fine de cuivre; enfin, deux appareils spéciaux 10 formant transformateurs et constitués de couches de métaux absorbant certains courants nuisibles ou anormaux.

5° D'une source auxiliaire d'énergie formée de piles 11 et de bobines Ruhmkorff 12 permettant d'obtenir dans l'antenne une attraction suffisante au moyen d'un dispositif de

réglage d'intensité qui, une fois amorcé, permet l'écoulement constant des courants de l'atmosphère dans le système.

En considérant la fig. 3 qui représente en quelque sorte le schéma d'installation du dispositif, la réception des courants électriques atmosphériques se fera de la façon indiquée ci-dessus, en produisant un amorçage de ces courants. Cet amorçage est fait en lançant dans le système qui est double pour répondre à chacun des pôles, le courant des piles 11 passant par les bobines 12 et se rendant à l'antenne.

Cet amorçage sera maintenu et réglé jusqu'à ce que l'écoulement des courants électriques atmosphériques se soit manifesté par l'allumage d'une ou plusieurs lampes L du tableau des résistances représenté en fig. 5 portant la prise d'utilisation.

Dès que l'allumage des lampes sera constaté on sera averti de la captation des courants atmosphériques et on pourra couper le courant des piles d'amorçage. L'écoulement naturel et constant des courants captés se produira dans les appareils régulateurs de la table, fig. 3; ils seront régularisés en tension et en nature puis dirigés au tableau des lampes pour utilisation.

Il a été dit ci-dessus que les régulateurs R, etc., étaient prévus et conçus pour éliminer automatiquement à la terre les surtensions des courants captés ainsi que les courants anormaux qui ne peuvent encore être classés. mais que ces régulateurs pouvaient être remplacés par des appareils faisant le même office.

Il n'y a donc pas lieu de les décrire en détail et de les revendiquer spécialement. L'avenir seul précisera si ces régulateurs doivent faire l'objet d'une protection propre pour l'application décrite ci-dessus.

RÉSUMÉ.

Dispositif combiné pour capter les courants électriques atmosphériques avec application immédiate, caractérisé :

1° En ce que l'organe de captation est une antenne à deux branches orientées différemment, l'une vertical avec self est tournée vers le zénith pour puiser les courants négatifs, l'autre horizontale comporte un plateau central avec enroulement de fil et est orientée vers le sud pour puiser les courants positifs; l'orientation des pointes restant fonction du lieu terrestre où se fait la captation des courants considérés.

2° En ce que l'écoulement des courants atmosphériques dans le système récepteur est subordonné à un amorçage qui consiste à lancer dans l'antenne un courant provenant d'une source auxiliaire, telle que des piles reliées à des bobines de Ruhmkorff.

3° En ce qu'un tableau parafoudre est interposé entre l'antenne ou organe de captation et le tableau des régulateurs pour préserver l'installation en éliminant à la terre les décharges brusques atmosphériques.

4° En ce que les régulateurs sont disposés suivant deux systèmes symétriques correspondant à chacun des pôles des courants atmosphériques.

J. GUILLOT.

Par procuration :

V. PRÉVOST.

CONTACT OVERUNITY ELECTRICITY:

- Address: 9981, Overunity, Tartaria, Colorado, United States
- Phone: +1 303 779 8899
- Email: overunity.electricity.blogspot@gmail.com
- News & FAQs about Energy
- Generates Energy-On-Demand: Easy Power Plan Will Change Our World Forever
- Download the guide to learn how to build your own DIY power generator: Easy DIY Power Plan
- Tesla's radio technology and its application in electricity generation: Radiant Energy

POST A COMMENT

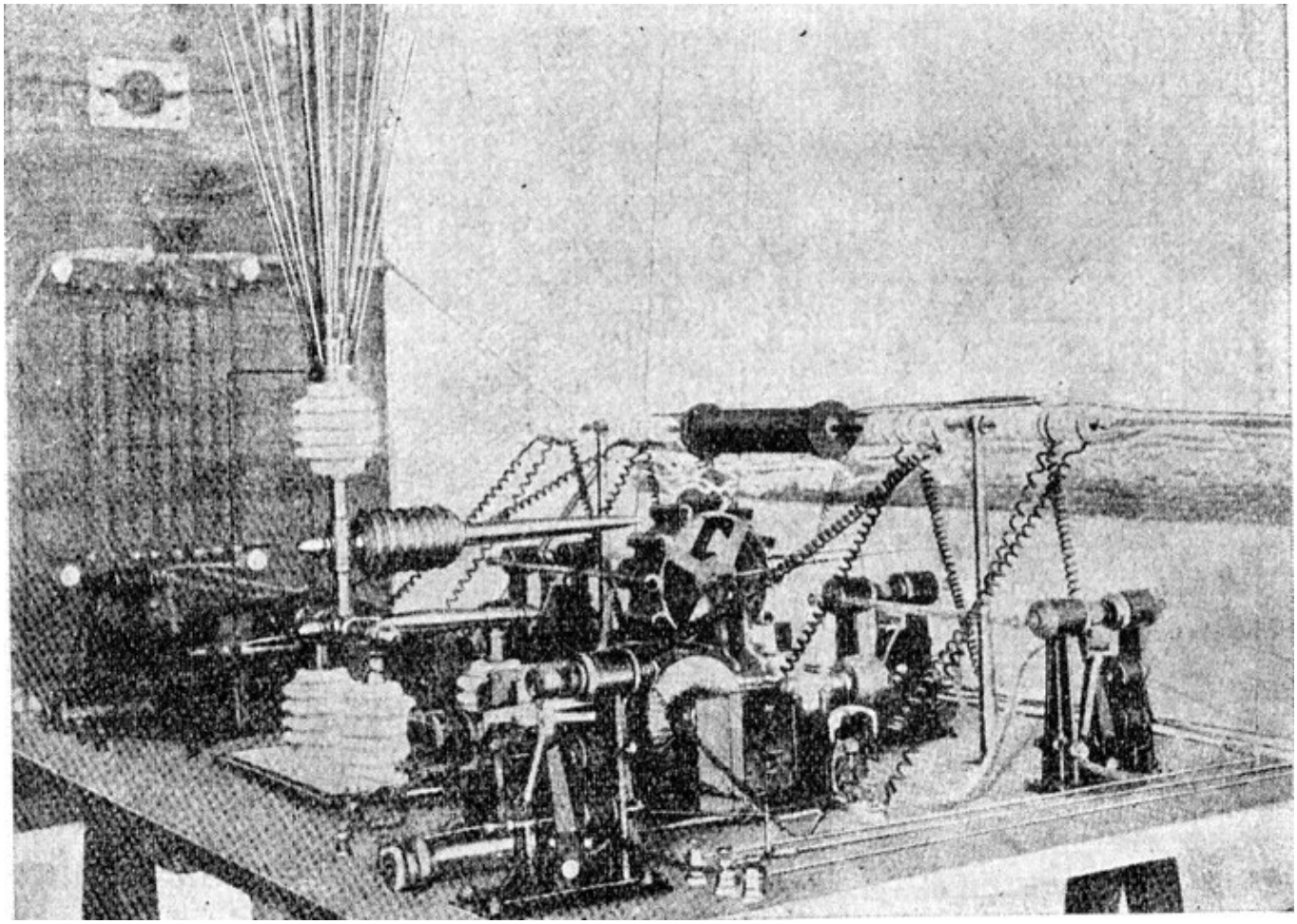

Shared by L. Cozma (Thanks !) --

The Guillot device generated about 2.5-3 Kilowatts with antenna height of ~ 20 meters. Power depends on the total collector surface and height of the vertical antenna. The apparatus in the photo produced ~300 watts with a collector 2 meters tall.

"Practical Utilization of Atmospheric Electricity"

by

Gillbert Darida

in *The Invention Encyclopedia,* pp. 204-207 (1930, Geo. Constantinescu, Ed.)

"The Earth has its own negative electricity, in the soil, and the atmosphere which surrounds the Earth is charged with positive electricity. The electric potential (the voltage) increases with the altitude, so we can say that the electric force is proportional to the atmospheric altitude (after Franklin, Quetelet, Lord Kelvin, Mascart, Joubert and other scientists).

The recent observations demonstrate that the air at 6000-7000 meters in altitude, is very highly charged with positive electricity, which could be explained by the friction between the external photosphere and the upper atmosphere of Earth, which rotates at a speed of more than 100,000 Kilometer per hour.

In that way, the Earth works like an electrostatic generator with electric charging by influence --- the upper atmosphere is positively charged by influence and the Earth crust obtains the negative polarity.

Between the two environments, the air and the soil, and inside the low atmosphere, in conditions of good weather, there are sbout 800 positive ions and also, 680 negative ion (and electrons) in just one square-centimeter of normal ionised air.

The Earth behaves like an huge electric armature negatively charged, which repels the electrons and attracts the positive ions. That positive ions' attraction determinates an electric current, also called "convective current". That's like an invisible continous bombardment, subject to daily and seasonal variations, which could be aproximated at **3 x 10 ^ -16 Amperes per square-centimeter,** and that is a total value of 1500 Amperes for the entire surface of the Earth.
The question is --- how does this current always maintains the same direction ? We can suppose that the natural radioactive emissions of the soil is responsable for this. We also know that radioactive emissions of the Earth works usually near the soil surface, and that explains the ionisation phenomenona inside caves.

The ionisation of the low atmosphere could also be the effect of the radioactive emissions of the Earth, especially when the X radiation works. Also, the Earth atmosphere is ionisated by the external radiation proceeding from the Sun and from the space environment, especially the action of ultraviolet radiation and the electron fascicles emitted by the Sun surface, at the temperature of 6000 deg. Celsius.

The capture of atmosphere electricity has been used in France, with aerial cables mounted on the Mont Blanc, and also in Germany --- with conductive cables carried by the captive baloons.

The atmosphere electricity collect system invented by eng. Jules Guillot is most ingenious and it relies on "the **electric siphon**" [*m.n. --- the discharging devices or spark-gap used today from the protection of aerial electric cables against the atmospheric electricity ; Jules Guillot has thought to recuperate and to use that electricity*].

His method consisted in the direct "pumping" of the atmosphere electricity using a collecting device which had two antennae and several collecting rods.

One antenna is **vertical** and it has a lot of **rods** scattered like an opened **fan**, with the tips against the **zenith**, for collecting the **negative** electricity which comes from the air ; the **horizontal** antenna is orientated against the **South** and its role is to collect the **positive** electricity.

The air electricity seems to have the double-polarity, as we can see at two electrised clouds when between them apears the electric discharge. The air could have different electric charging and the ionisation processus of atmosphere is very heterogenous. The inventor Guillot used **two separated and insulated armatures with the positive armature against the South** (more precisely, against the **Equator**...) and the **negative** armature against the **zenith**.

We can see in the scheme :

1,- the device P is the "**collector apparatus**" having **15-20 meters height** ; it also has a lot of **rods** which are scattered **fan**-like, all this on top of an **iron pillar** ; and also an **horizontal antenna** S oriented against the **South** ; the two antennae are disposed at **90 deg. angle** forming the two armatures where the electrical tension must apear. As the **height** of the pillar **increases**, the **voltage** increases more and more ;

2,- a system of **lightning-rods** (p1, p2, p3) for protection against discharges of atmospheric electricity during storms;

3,- the regulator system (**voltage regulator**, etc) R ;

4,- the electric **resistors** (Cn) for absorbing the parasite currents ;

5,- the "electric siphons" which have the role of making a magnetic field as a good environment for the transport of the ionized fluid, absorbing the electricity from the air ; the E1 and E2 are their regulator devices ;

6,- an **auxilliary continous current power supply** which send the current against an special **excitation coil**, used as starting device ; it works only when the system is starting.
This collector device works very good for lighting and heating. The device made by Guillot had **20 meters height** on the total surface of **3 square-meters**. Also, J.Guillot used and electrical transformer for the industrial utilization of this "collector" --- as power supply for industrial electric engines."

French Patent # 551,882

Apparatus for Capture of Electric Currents in the Atmosphere

16 April 1923

Considering the terrestrial globe like the inductor of a dynamo, where the extraterrestrial ether is the inductor of electric currents circulating in the atmosphere; the apparatus of the invention described here selects through the device described below two perfectly distinct currents and eliminates others.

The device includes:

1, The air sensor; 2, a series of lightning rods; 3, vacuum; 4, an array of resistances; 5, vacuum; 6, witnesses.

1. An aerial sensor mounted on a pole is composed of **magnetic steel** fixed and sealed by a porcelain **insulator**, and surrounded a base by a **bronze ring** which are screwed **32 points of soft iron**, all forming antenna a pole. level beside it and isolated from the first, forming the 2nd pole, is fixed a sharp point of magnetic steel fixed in the horizontal position and directed towards the south and **movable to an angle of 45** is sealed in a porcelain insulator. This point is also circled a **ring of copper** notches figure. 1.

2. A series of 6 lightning surge arrestors at corners between each pole and the earth and the various gauges.

3. A first **regulator** form of a device similar absolutely similar to the aerial amtenna, but the two poles are superposed and opposed to the vertical point, and a **copper disk connects to ground**. Opposite the horizontal point, a **ring of tin** to which are welded tubes alternatively **16 tubes** composed each composed of **copper-lead** and **iron-lead** . The ring connects to the **ground** as shown in figure. 2.

A second regulator form of **automatic breakers** balanced on 3 poles and two poles also equally balanced.

4. A panel of **resistances** composed of **wire mesh** in bunches from different sections of **glass tubes** containing **copper** dust, **coal** and flowers of **sulfur**.

Vacuum cleaners consists of a **wooden box** on each pole, containing a **porcelain vase** in which **layers** isolated with **mica** is made up of **mercury, tin, coal, copper** and **sulfur**, all contaied in a **copper tube**.

6. The witnesses are comprised of ordinary incandescent lamps.

Resume

By the point at the zenith and the point to the south we channel two currents forming the two poles. We also protect from lightning. It regularizes the flow by a regulator and similar devices by a controlling each devise of adequate strength of the current harmful nature of these devices do not have loads. The refined current is conducted by ordinary copper wires**.**

French Patent # 565,395

Combined Apparatus for Capture of Atmospheric Electric Currents with Immediate Implementation

25 January 1924

We know that earth with its constitution, its rotation and movement in space, provides the electricity in the atmosphere. The electrical currents escape into space or largely accumulate towards the equator, as a result of the greater periphery of the globe.

In the atmosphere, there are two clearly distinct poles, i.e., clouds that can be electrically positive or negative; everything in nature shows this, otherwise it would be difficult to explain the lightning that occurs between the clouds and which are none other than contrary cloud electrical charges discharged by too close proximity.

The invention relates to a set of devices capable of capturing the atmospheric electricity.

So far, all searches made for this purpose has been to capture the atmosphere, i.e., that brought together into one system to capture two poles and opposes effect has been to destroy or cancel each other leaving the amount as the difference of the strongest to weakest.

It is therefore easy to understand why, considering the two poles of air as about equal, it is almost impossible to measure some potential with the land, the highest on the lowest remaining which can be positive or negative, copper being the strongest of one or other of these polarities.

It is on this basis that all research until now have been made, and that is why we must consider that all the time, between the two poles captured in the atmosphere and not in any mixture of systems uptake, it is possible to obtain tension and intensity, a considerable and measurable power captured separately between the two poles and remaining isolated from one another until their utilization .

In accordance with this invention, this collection is made by attraction of primary electrical currents in teh atmosphere, either positively or negatively charged, by an antenna that has two points absolutely isolated from one another, where one points to the zenith to attract negative electricity, and the other turned south, toward the equator to draws in the masses grouped in this area.

This shows and proves the existence of atmospheric electrical currents, and that it is possible to capture them with specially designed equipment primarily acting as regulators, as the persistent difficulty encountered so far in realizing their capture lies with large variations of tension in which the current atmosphere is present in space, for each of the poles, and an overload could inevitably fatal.

The patent in its present form of presentation does not cover the regulators or devices that are anticipated in the system, because they can be designed in different ways and give the same result, but covers the application and grouping of equipment operating as automatic relays with variable influence to limit current tension to that chosen for utilization.

These devices have a role associated with an overflow reservoir outside carrying excess liquid; these regulators will divert the excess voltage flows to ground.

We can still absorb these regulators having filters because they have the sole purpose of diverting the post being used , currents that are not yet known but likely that we will call for simplicity, abnormal currents. [sic...]

The patent also covers systems for regulating currents, applied to each of the poles because it is recognized that the shape and tension of the currents of the two poles are not equivalent.

The method of capture is by special antenna has directed two points in the atmosphere, as will be stated after this, with Boot ecoulement prior to the current atmosphere is also of great importance.

Finally, the current atmospheric reception is adequate even with the installation of a post, which can be expected at any location without the need for special altitude, as has been attempted in previous efforts.

We refer to the attached drawings:.

Figure 1 represents in elevation and side view an antenna that only has two points, to overcome an elevation ;

Figure 2 is the end of one of the peaks, the horizontal:

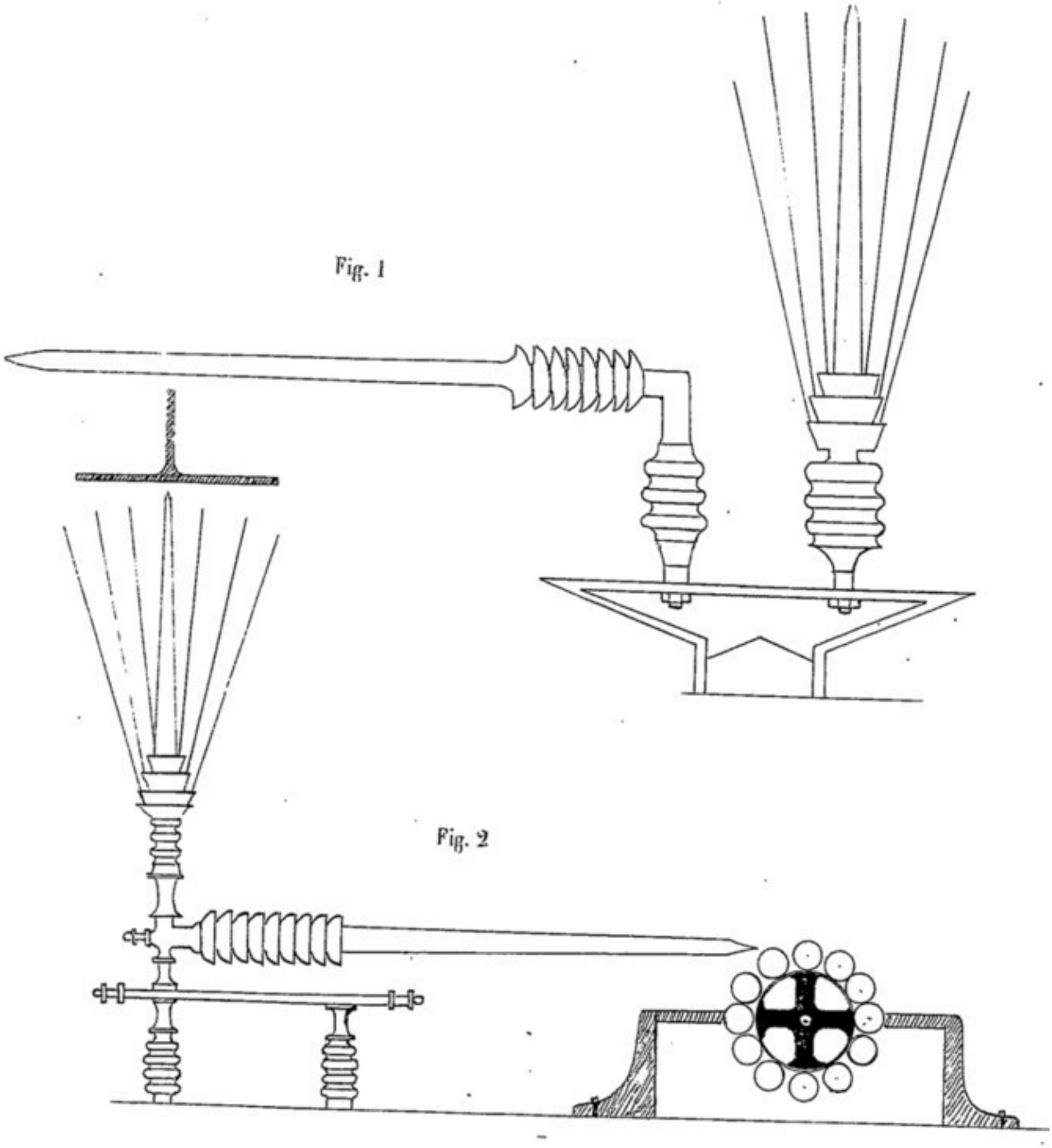

Figure 3 shows schematically the table on which are mounted various devices or accessories that act as regulators of current tensions.

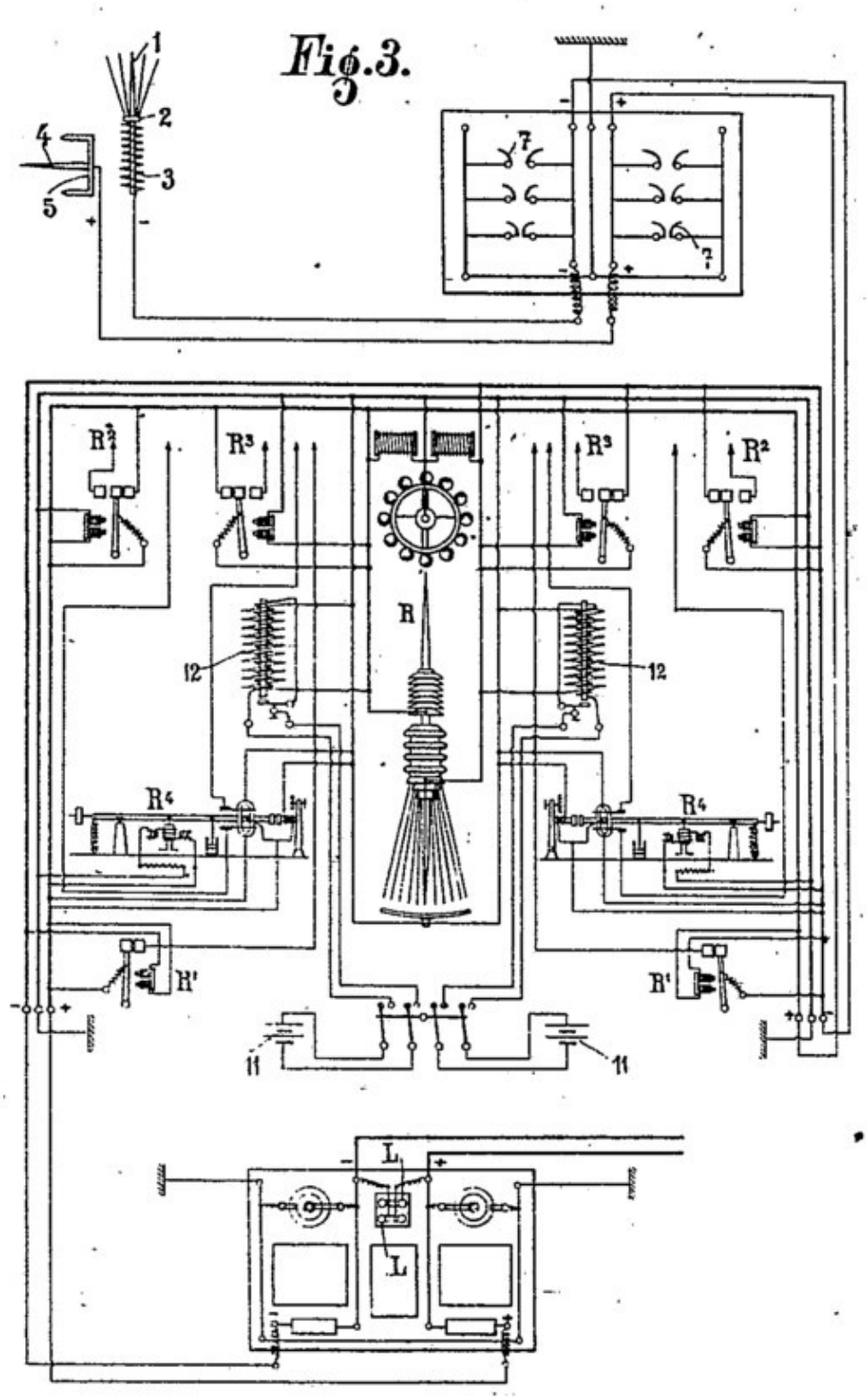

Figure 4 is a scheme of surge arrestors, and

Figure 5 a table of resistances.

Fig. 4.

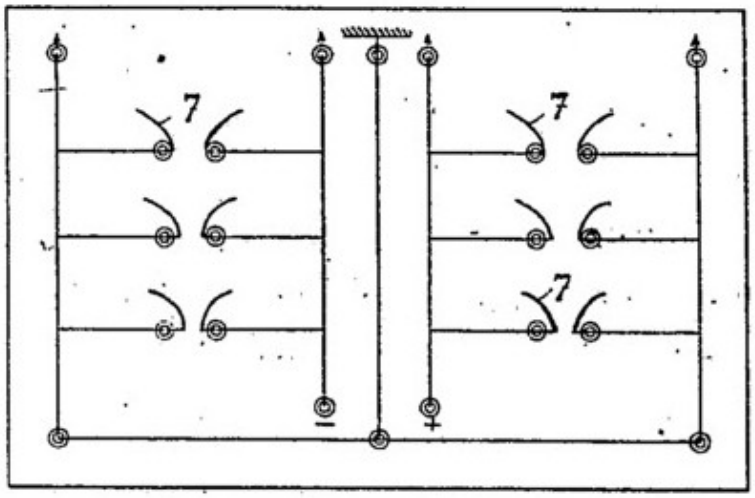

Fig. 5.

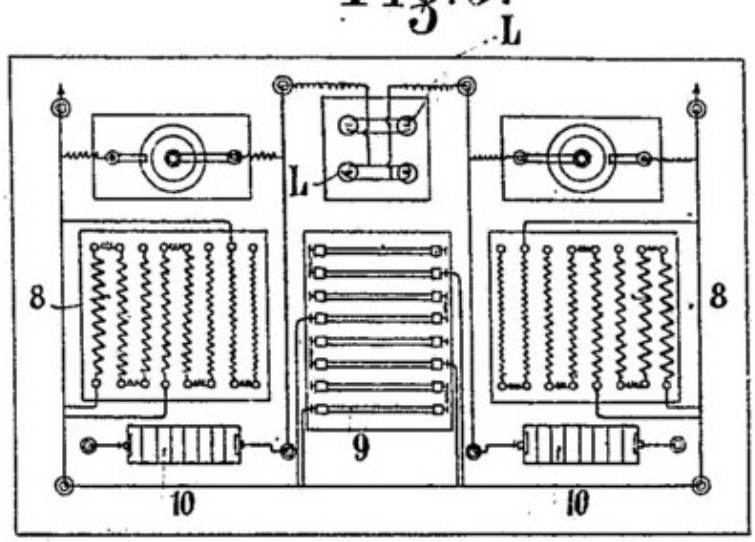

The necessary arrangements to capture atmospheric current form is as follows:

1. The **antenna** in figure 1 is formed with two peaks: the 1 is **steel**, supported by a **bronze ring** 2, surrounded by a **spiral form** 3; this point is oriented for attracting the **zenith** layers of **negative electricity** and the other edge 4 contains **copper coils** 6, and is oriented **south** to the **equator** to draw in the masses grouped in this area. To use this antenna it suffices to be raised on a mast or **pole** to a height a little higher than that of surrounding houses.

2. On the table **lightning arrestors**, contained 4, forms of 7 **copper horns** used to absorb large atmospheric discharges by certain time, as it would be dangerous to allow movement in the devices regulators.

3. On a table of **two** symmetrical systems **regulators**, Figure 3, one for each pole, to obtain and allow a regularization of large excesses in the current tensions, by automatically absorbing surges before passing over the surfacea chosen for the desired use. These regulators are represented on the drawing by the references R, R1, R2, R3, R4.

4. In the **resistance** panel in communication with regulators, these resistances are formed as **spiral coils or screens** 8, **tubes 9 of glass filled with fine coal dust , aluminum powder, sulfur and fine copper dust**. Finally, **two** special 10 **processors** and constitutes **layers** of metal forming an **absorbant** for harmful or abnormal currents.

5. As a source of energy formed **auxiliary batteries** 11 and **Ruhmkorff coils** 12 to get into the antenna sufficient attraction by means of an adjustment of intensity, which once it begins, allows the constant flow of atmospheric current in the system.

In considering Figure 3, which represents a sort of an installation scheme of the device, the reception of atmospheric electrical current will, as set out above, producing a priming of these currents. This boot is made in launching the system which is double to answer each of the poles, the current batteries 11 through 12 and reels going to the antenna.

This boot will continue until the disposal of electrical current atmosphere is evident by the one or more table lamps L of resistance shown in Figure 5.

Once the lights illuminate it is advisable to charge the batteries to boot. Natural flow and constant currents will be captured by the regulators , Figure 3; they will regularize in tension and in amperage and then directed to use in table lamps.

It has been said above that regulators R, etc., are intended and designed to automatically eliminate earth surge currents capture and abnormal currents that cannot yet be level but that these regulators could be replaced by devices with the same function.

There is therefore no need to describe in detail and especially the claims. We only specify that these regulators must be proper protection for the purposes described above.

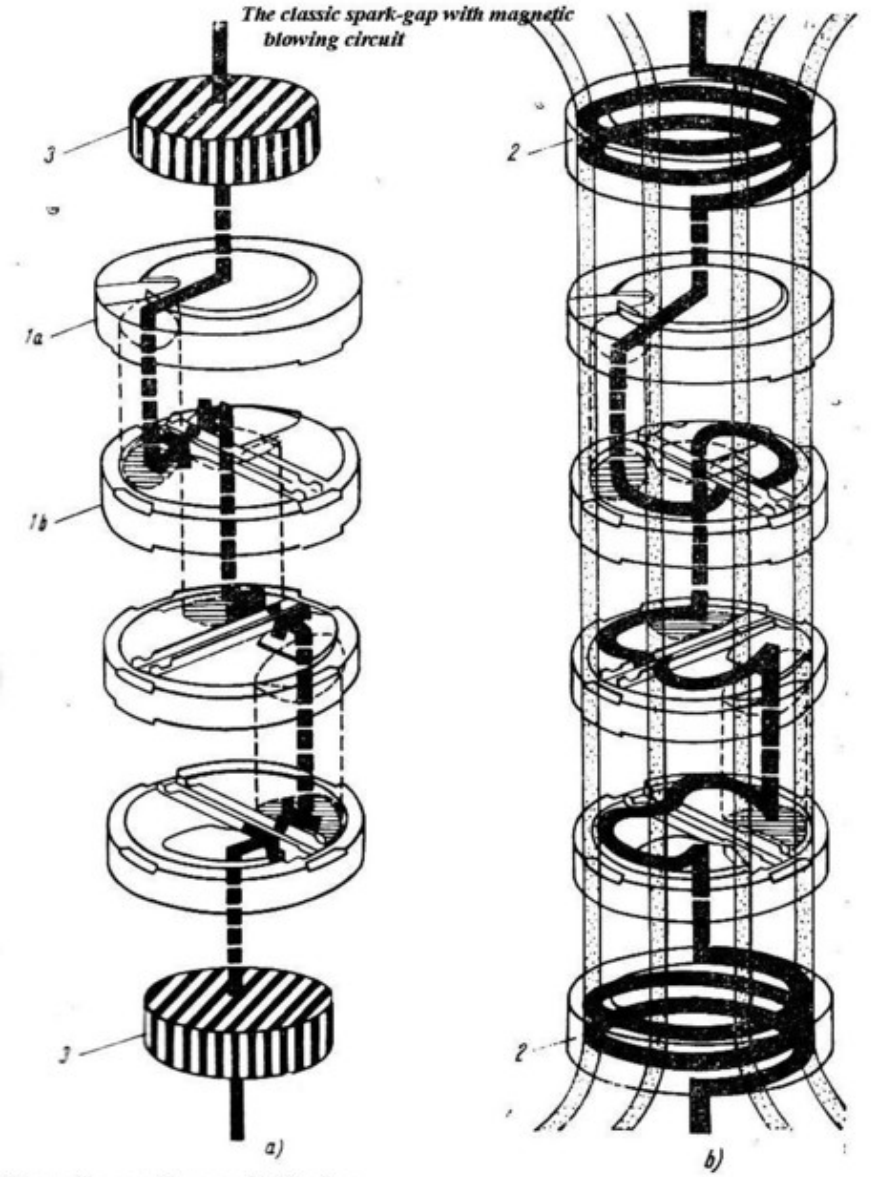

The spark-gap with magnetic blowing :
a,- the initial stage ; the impulse current send in soil through the shunt-resistences 3, because the coils 2 have an impedance too big for the impulse of 10/20 µs ;
the spark-gap 1 has two elements disc-shaped 1a and 1b, the inferior disc have one electrode and the upper disc the other electrode of the spark-gap circuit.
b,- the second stage ; the accompanying current discharge - after the impulse current ;
this accompanying current pass through the coils 2 which produce the magnetic field with the role to extend the electric arc into the slit between insulator discs 1a and 1b ; the thickness of this slit is smaller and smaller in accord with the extension of the electric arc, in this manner producing the magnifing of its electric resistance and finally, the electric arc extinction.

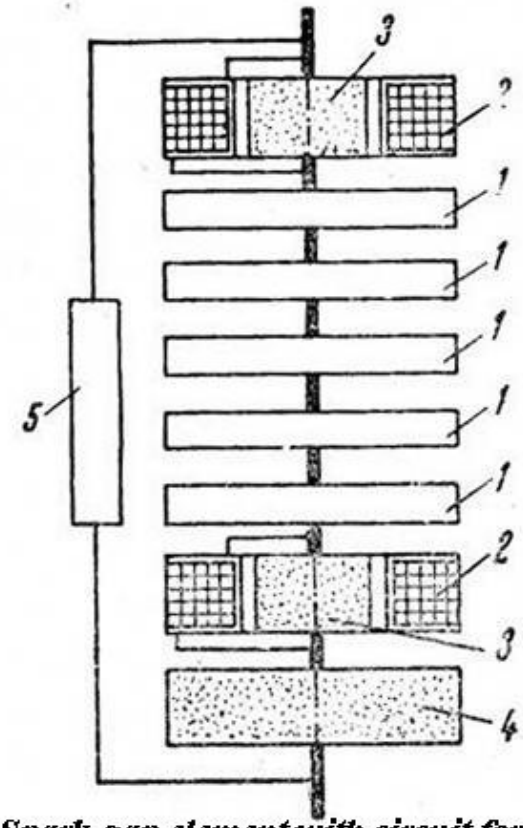

1,- the spark-gap individual devices which work in the manner to extend the electric arc of the accompanying electric current ;
2,- the coils which produce the magnetic field for the magnetic blowing ;
3,- the electric shunt-resistances in parallel connection on the blowing coils, with the role of reducing the current inside this coils
4,- the disc with unlinear resistance ;
5,- electrical resistance for the homogenous distribution of the electric field in all the elements of the spark-gap.

In Jules Guillot scheme, that kind of device could be used for leading the current.

Spark-gap element with circuit for the magnetic blowing of the electric fascicle

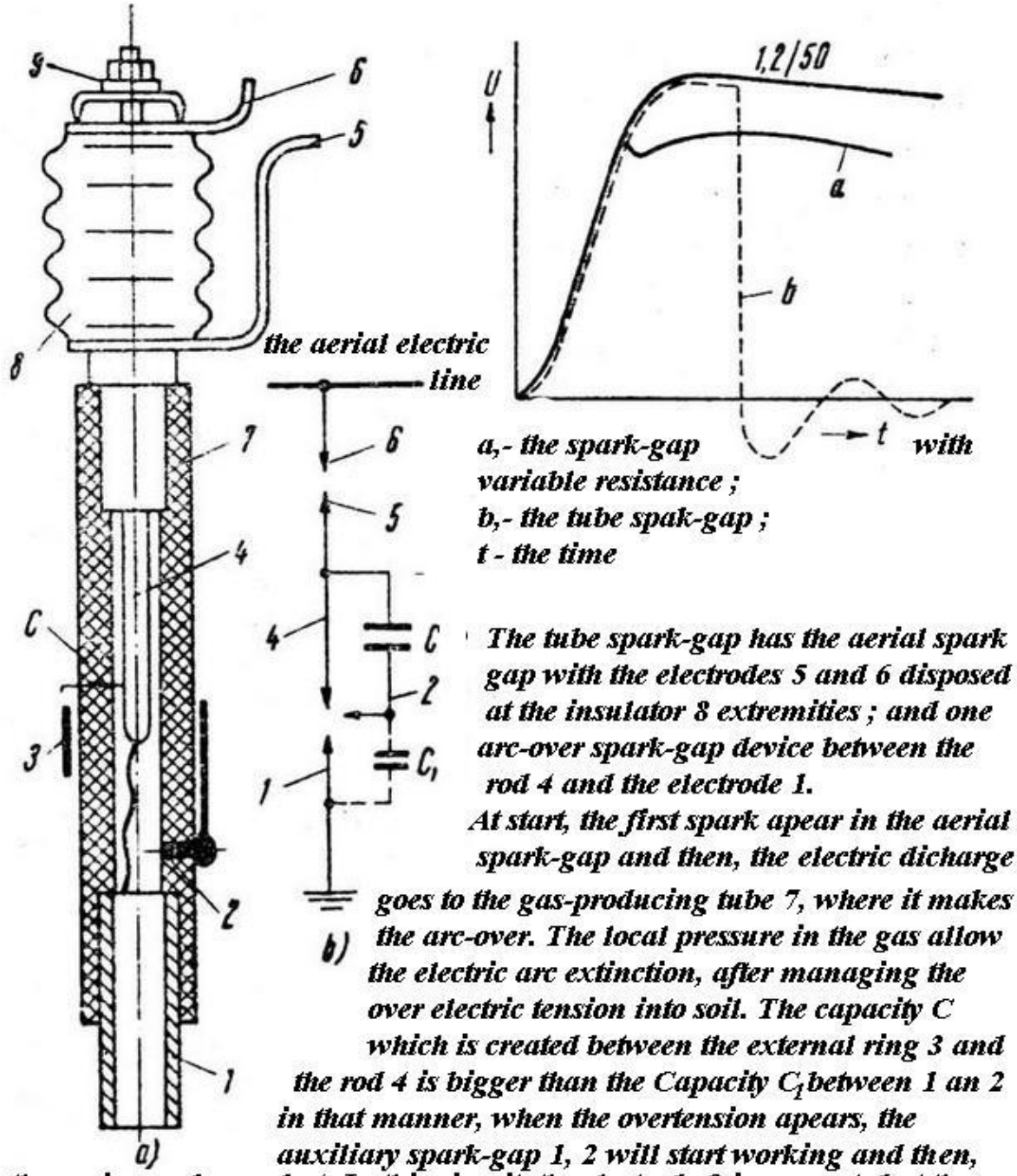

In the image above, it is an classic tube spark-gap used for the protection of aerial electric cables. The atmospheric electricity is discharged in soil and lost... The Guillot's inventions used that kind of devices for leading and absorbing of the atmospheric electricity.

DARIDA, Gillbert : "Practical Utilization of Atmospheric Electricity";
(in *The Invention Encyclopedia,* pp. 204-207 ; 1930, Geo. Constantinescu, Ed.) --

Utilizarea practică a electricităţii atmosferice

Pământul ca şi celelalte astre, posedă o electricitate proprie negativă în interior, iar aerul care-l înconjoară este pozitiv. Potenţialul sau tensiunea electrică a aerului se măreşte pe măsură ce ne ridicăm în înălţime, astfel că putem spune că intensitatea electrică este proporţională cu înălţimea (după lucrările remarcabile ale lui Franklin, Quetelet, Lord Kelvin, Mascart, Joubert şi a altor mari savanţi fizicieni).

Observaţiile făcute recent, au arătat că aerul regiunilor înalte dela 6000—7000 m este foarte încărcat cu electricitate pozitivă, a cărei explicaţie se datoreşte frecării fotosferei sau atmosferei terestre, prin învârtirea pământului în jurul soarelui cu mai mult de o sută de mii de km pe oră. Această frecare directă în fluidul eteric ambiant, face ca aerul să se încarce cu electricitate pozitivă prin influenţă, iar pământul să se încarce negativ.

Intre cele două medii, fluidic (aerul) şi (pământul) materie, ştiinţa ne spune, că în partea de jos a atmosferei, pe timp frumos un centimetru cub de aer ionizat, conţine circa 800 particule cu ioni pozitivi şi 680 ioni negativi (electroni).

Pământul se comportă ca un enorm conductor încărcat negativ, respingând electroni şi atrăgând ionii pozitivi. Această atracţie a ionilor pozitivi determină un curent electric, zis şi curent de convenţiune. E un fel de bombardament invizibil supus variaţiunilor zilei şi a sezoanelor, putându-l evalua aproximativ la o densitate mijlocie remarcabilă, dela 3×10^{16} sau a 30 quatrilionime de amper pe cm cub, ceea ce dă pentru întreagă suprafaţă a pământului un curent formidabil, de 1500 de amperi.

Se pune întrebarea cum un astfel de curent poate să-şi întreţie mereu acelaşi sens? Aceasta este enigma pe care ne-o punem, studiind curenţii naturali ai atmosferei noastre, presupunem că poate să fie o legătură a acţiunii emanaţiunilor radioactive. Aceste

emanaţiuni fiind din gaze radioactive grele, se găsesc de obiceiu în mare abundenţă aproape de pământ ceea ce ne explică marea ionizare observată în general în grote şi caverne.

Ionizarea atmosferică poate de asemenea fi produsă în parte, de acţiunea razelor X, foarte pătrunzătoare şi de diferite substanţe radioactive închise în subsolul pământului. De asemenea poate să mai fie, ţinând seama de acţiunea « Calei Lactee » şi de ionizarea luminei solare, foarte bogată în radiaţiuni ultraviolete

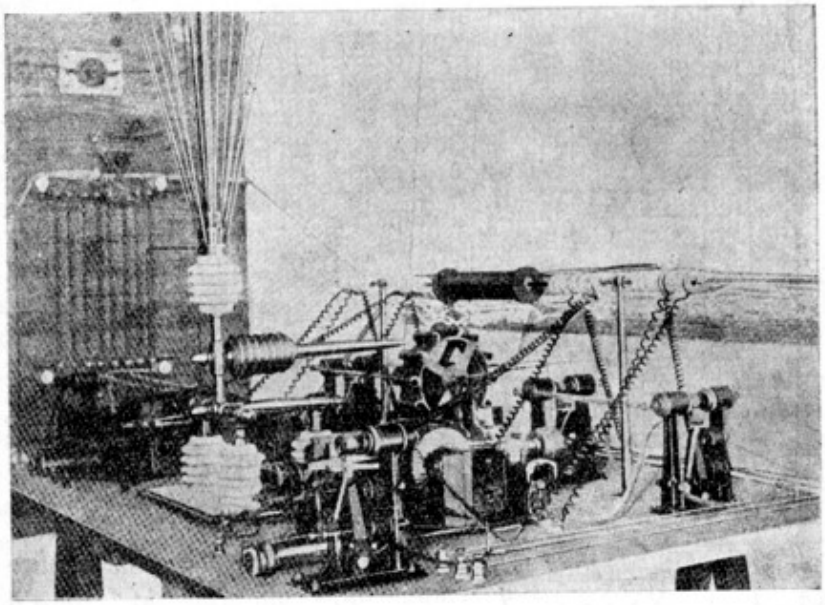

Fig. 108

precum şi a electronilor emişi direct din radierea căldurii solare de circa 6000 de grade.

Captarea electricităţii atmosferice a fost utilizată în Franţa prin cabluri aeriene montate pe Mont Blank, iar în Germania prin cabluri susţinute de baloane captive.

Sunt mai multe sisteme, vom da pe scurt pe cel mai ingenios procedeu, inventat de ing. Jules Guillot, bazat pe sifonul electric. Procedeul consistă de a pompa direct din atmosferă, electricitate

prin ajutorul unui aparat de captare, format din 2 antene aeriene și o serie de bobine după cum se vede în fig. 108. Una din antene este verticală în formă de evantaiu dirijată cu vârfurile către zenit, pentru a capta electricitatea negativă din atmosferă; cea care este orizontală, este dirijată către Sud, pentru a capta electricitate pozitivă.

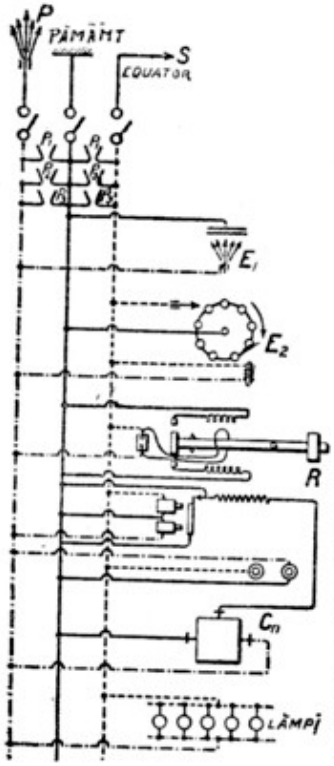

Fig. 109

Electricitatea în aer pare să fie cu dublă polaritate, după cum se vede la 2 nori electrizați, cari deplasându-se în sens contrar, dau naștere unei scântei (fulger) când distanța respectivă poate să fie străbătută de puternica lor diferență de potențial. Straturile de aer de densități diferite, nu sunt toate antrenate de aceeași viteză prin rotația pământului, ele se electrizează deci prin frecarea decalajului lor respectiv.

Aceste sunt considerațiunile ce l-au făcut pe inventator să așeze în atmosferă doi poli complet distincți și perfect izolați, al cărui pol pozitiv *S* (fig. 109) poate fi dirijat în direcțiunea Sudului, și a celuilalt negativ *P*, în direcțiunea zenitului. Fig. 109 arată schema montajului și a conexiunilor compuse după cum urmează: 1. dintr'o antenă dublă aeriană, montată pe stâlpi de 15—20 m înălțime. Această parte care se mai numește și aparat de captat, este format din vârfurile *P*, dispuse în evantai în vârful unei tije de oțel dirijate către zenit, pentru a capta curenții negativi ai atmosferei și dintr'o altă antenă orizontală a cărei săgeată este îndreptată către sud *S*, adică către equator, pentru a recepta curenții pozitivi. Aceste două părți dispuse în unghiu de 90°, formează cei doi poli al curentului aerian, a cărei diferență de potențial este suficientă pentru a permite utilizarea electricității atmosferice.

French Patent # 551,882

Appareil Capteur de Courants Electriques dans L'Atmosphere

BREVET D'INVENTION.

XII. — Instruments de précision, électricité.

5. — Production de l'électricité, moteurs électriques.

N° 551.882

Appareil capteur de courants électriques dans l'atmosphère.

M. Jules GUILLOT résidant en France (Tarn-et-Garonne).

Demandé le 27 septembre 1921, à 15h 20m, à Paris.
Délivré le 15 janvier 1923. — Publié le 16 avril 1923.

[Brevet d'invention dont la délivrance a été ajournée en exécution de l'art. 11 § 7 de la loi du 5 juillet 1844 modifiée par la loi du 7 avril 1902.]

Considérant le globe terrestre comme l'induit d'une dynamo, dont l'éther supraterrestre est l'inducteur, des courants électriques circulent dans l'intervalle c'est-à-dire dans la couche atmosphérique; l'inventeur capte au moyen de l'appareil décrit ci-dessous deux de ces courants parfaitement distincts et élimine les autres.

L'appareil comprend :

1° Le capteur aérien; 2° une série de parafoudres; 3° les régulateurs; 4° un tableau de résistances; 5° les aspirateurs; 6° les témoins.

1° Le capteur aérien monté sur un poteau est composé d'une pointe d'acier aimanté fixée par scellement sur un isolateur porcelaine et cerclée à sa base par une bague de bronze sur laquelle sont vissées 32 aiguilles de fer doux, le tout formant l'antenne d'un pôle. A côté et isolé de la première, formant le 2e pôle, est fixée une pointe d'acier aimanté dans la position horizontale et dirigée vers le sud dont la base coudée à 45° est scellée sur un isolateur porcelaine. Cette pointe est également cerclée d'une bague de cuivre à encoches fig. 1.

2° Une série de 6 parafoudres à cornes entre chaque pôle et la terre et à écartements variés.

3° Un premier régulateur formé d'un appareil absolument semblable au capteur aérien, mais ayant les deux pôles superposés, et, opposé à la pointe verticale, un disque de cuivre relié à la terre. Opposé à la pointe horizontale, une roue à jante d'étain sur laquelle sont soudés alternativement 16 tubes composés eux-mêmes de deux métaux soudés : cuivre-plomb et fer-plomb. Cette roue est reliée à la terre par son pivot fig. 2.

Un deuxième régulateur formé d'appareils à déclanchement automatique au nombre de 3 par pôles et deux basculateurs également par pôles.

4° Un tableau de résistances composé de fils de maillechort en boudins de différentes sections, de tubes en verre contenant des poussières de cuivre, du charbon de cornue et de la fleur de soufre.

5° Les aspirateurs composés d'une boîte en bois sur chaque pôle, contenant un vase de porcelaine dans lequel par couches superposées et isolées au mica est placé du mercure, de l'étain, du charbon, du cuivre et du soufre, le tout traversé par une tige de cuivre.

6° Les témoins composés de lampes à incandescence ordinaires.

Résumé.

Par la pointe au zénith et par la pointe au

sud nous canalisons deux courants formant les deux pôles. On protège l'ensemble par des parafoudres. On régularise le débit par un régulateur semblable et par des appareils à déclanchement commandant chacun des résistances appropriées de la nature du courant nuisible dont ces appareils sont chargés. Les courants épurés sont conduits aux témoins par des fils de cuivre ordinaire.

JULES GUILLOT,
Moissac (Tarn-et-Garonne).

XII. — Instruments de précision, électricité.

5. — PRODUCTION DE L'ÉLECTRICITÉ, MOTEURS ÉLECTRIQUES.

N° 565.395

Dispositif combiné pour capter les courants électriques atmosphériques avec application immédiate.

M. JULES GUILLOT résidant en France (Allier).

Demandé le 6 avril 1923, à 11h 30m, à Paris.
Délivré le 7 novembre 1923. — Publié le 25 janvier 1924.

On sait que la terre, par sa propre constitution, sa rotation et son mouvement dans l'espace, fournit à elle seule l'électricité que l'on utilise et qui est en suspension dans l'atmosphère. Les courants électriques, qui s'échappent de la surface du globe, montent directement dans l'espace où les grandes masses sont accumulées vers l'équateur, par suite de la plus grande périphérie du globe.

Dans l'atmosphère, il y a deux pôles parfaitement distincts, c'est-à-dire que des nuages peuvent être électrisés, soit d'électricité positive ou négative; ceci, tout dans la nature le démontre, sans quoi, il serait difficile d'expliquer la provenance des éclairs qui se produisent entre les nuages et qui ne sont autres que des nuages chargés d'électricité contraire et qui s'amorcent entre eux par un trop grand rapprochement.

L'invention dont il s'agit concerne un dispositif formé d'un ensemble d'appareils aptes à la captation de ces courants atmosphériques.

Jusqu'à ce jour, toutes les recherches faites dans ce but ont été de capter dans l'atmosphère une seule catégorie de courants atmosphériques, c'est-à-dire, qu'on a réuni dans un même système de captation, deux pôles opposés et dont l'effet a été de se détruire ou de s'annuler l'un à l'autre laissant comme quantité que la différence du plus fort au plus faible.

Il sera donc facile de comprendre pourquoi, en considérant les deux pôles d'un courant atmosphérique comme à peu près égaux, il est presque impossible par certains temps de mesurer le potentiel avec la terre, du plus fort sur le plus faible subsistant et qui peut être positif ou négatif, suivant que le plus fort est de l'une ou de l'autre de ces polarités.

C'est sur cette base que toutes les recherches jusqu'à nos jours ont été faites et c'est pourquoi, il faut considérer que par tous les temps, entre les deux pôles captés dans l'atmosphère et non mélangés dans aucun des systèmes de captation, il est possible d'obtenir, en tension et en intensité, une puissance aussi considérable que l'on puisse désirer et qui sera mesurée entre les deux pôles captés séparément et toujours isolés l'un de l'autre jusqu'à leur utilisation.

Suivant l'invention, cette captation se fait par attraction dans l'atmosphère au moyen d'un amorçage des courants électriques, soit positif ou négatif, par une antenne à deux pointes absolument isolées l'une de l'autre, dont l'une tournée vers le zénith attire les couches d'électricité négative, et l'autre, tournée vers le sud, puise vers l'équateur, dans les masses groupées dans cette zone.

Ceci exposé et l'existence des courants électriques atmosphériques étant prouvée, il est

possible de les capter à la condition de disposer d'appareils spéciaux étudiés surtout pour jouer le rôle de régulateurs, attendu que la difficulté persistante rencontrée jusqu'alors pour réaliser la captation incombe aux grandes variations de tensions sous lesquelles les courants atmosphériques se présentent dans l'espace, pour chacun des pôles, et dont l'écoulement dans un poste de captation serait inévitablement funeste.

Le présent brevet sous sa forme de présentation doit donc couvrir, non pas le ou les dispositifs régulateurs qui sont prévus dans le système, car ils peuvent être conçus d'une façon toute différente et donner le même résultat, mais sur l'application raisonnée et le groupement d'appareils fonctionnant automatiquement et intervenant chacun comme relais d'influence variable pour limiter la tension des courants captés dans l'atmosphère à celle choisie pour utilisation.

Ces appareils ont un rôle assez connexe avec celui de trop-pleins sur un réservoir qui acheminent à l'extérieur l'excès de liquide; ici ces régulateurs détournent l'excès de tension des courants à la terre.

On peut encore assimiler ces régulateurs à des filtres car ils ont pour but de détourner du poste d'utilisation, des courants qui ne sont pas encore de nature connue mais que pour simplicité on appellera courants parasites ou anormaux.

Le brevet portera aussi sur le système de régulation des courants, appliqué à chacun des pôles, car il est reconnu que la forme et la tension des courants aux deux pôles ne sont pas équivalentes.

Le mode de captation par antenne spéciale à deux pointes orientées dans l'atmosphère, comme il sera indiqué ci-après, avec amorçage préalable pour l'écoulement des courants atmosphériques est aussi d'une grande importance.

Enfin la réception des courants atmosphériques se fait à l'endroit même de l'installation du poste; celui-ci peut être prévu en un lieu quelconque sans nécessiter d'altitude particulière, comme cela a été tenté dans des essais préconçus.

Sur les dessins ci-annexés auxquels on se réfère

La fig. 1 représente en élévation et en coupe partielle l'antenne seule, à deux pointes, surmontant un poteau d'élévation;

La fig. 2 est le plan de l'une des pointes, celle horizontale:

La fig. 3 montre schématiquement le tableau sur lequel sont montés les divers appareils ou accessoires qui jouent le rôle de régulateurs des tensions de courants.

La fig. 4 est un schéma de parafoudre, et

La fig. 5 un tableau de résistances.

Le dispositif nécessaire à la captation des courants atmosphériques est formé comme suit :

1° D'une antenne, fig. 1, formée de deux pointes dont l'une 1 est en acier, supportée par une bague de bronze 2 entourée d'une spirale 3 formant self; cette pointe est tournée vers le zénith pour attirer les couches d'électricité négative; l'autre pointe 4 comporte un cadre 5 de huit branches supportant des spirales de cuivre 6 et est tournée vers le sud pour puiser vers l'équateur dans les masses groupées dans cette zone. Pour l'utilisation de cette antenne il suffira qu'elle soit portée par un mât ou poteau de hauteur un peu supérieure à celle des habitations environnantes.

2° D'un tableau de parafoudre, fig. 4, formé de cornes de cuivre 7 servant à absorber les tros grosses décharges atmosphériques que par certains temps, il serait dangereux de laisser circuler dans les appareils régulateurs.

3° D'une table de deux systèmes symétriques de régulateurs, fig. 3, un pour chaque pôle, qui permet d'obtenir une régularisation assez grande dans les tensions des courants en absorbant automatiquement les surtensions dépassant la tension choisie pour l'utilisation désirée. Ces régulateurs sont représentés sur le dessin par les références R, R^1, R^2, R^3, R^4.

4° D'un tableau de résistance en communication avec les régulateurs, ces résistances sont formées de spirales de maillechor 8, de tubes 9 de verre remplis de poussière fine de charbon de cornue, de poudre d'aluminium, de soufre et de poussière fine de cuivre; enfin, deux appareils spéciaux 10 formant transformateurs et constitués de couches de métaux absorbant certains courants nuisibles ou anormaux.

5° D'une source auxiliaire d'énergie formée de piles 11 et de bobines Ruhmkorff 12 permettant d'obtenir dans l'antenne une attraction suffisante au moyen d'un dispositif de

réglage d'intensité qui, une fois amorcé, permet l'écoulement constant des courants de l'atmosphère dans le système.

En considérant la fig. 3 qui représente en quelque sorte le schéma d'installation du dispositif, la réception des courants électriques atmosphériques se fera de la façon indiquée ci-dessus, en produisant un amorçage de ces courants. Cet amorçage est fait en lançant dans le système qui est double pour répondre à chacun des pôles, le courant des piles 11 passant par les bobines 12 et se rendant à l'antenne.

Cet amorçage sera maintenu et réglé jusqu'à ce que l'écoulement des courants électriques atmosphériques se soit manifesté par l'allumage d'une ou plusieurs lampes L du tableau des résistances représenté en fig. 5 portant la prise d'utilisation.

Dès que l'allumage des lampes sera constaté on sera averti de la captation des courants atmosphériques et on pourra couper le courant des piles d'amorçage. L'écoulement naturel et constant des courants captés se produira dans les appareils régulateurs de la table, fig. 3; ils seront régularisés en tension et en nature puis dirigés au tableau des lampes pour utilisation.

Il a été dit ci-dessus que les régulateurs R, etc., étaient prévus et conçus pour éliminer automatiquement à la terre les surtensions des courants captés ainsi que les courants anormaux qui ne peuvent encore être classés. mais que ces régulateurs pouvaient être remplacés par des appareils faisant le même office.

Il n'y a donc pas lieu de les décrire en détail et de les revendiquer spécialement. L'avenir seul précisera si ces régulateurs doivent faire l'objet d'une protection propre pour l'application décrite ci-dessus.

RÉSUMÉ.

Dispositif combiné pour capter les courants électriques atmosphériques avec application immédiate, caractérisé :

1° En ce que l'organe de captation est une antenne à deux branches orientées différemment, l'une vertical avec self est tournée vers le zénith pour puiser les courants négatifs, l'autre horizontale comporte un plateau central avec enroulement de fil et est orientée vers le sud pour puiser les courants positifs; l'orientation des pointes restant fonction du lieu terrestre où se fait la captation des courants considérés.

2° En ce que l'écoulement des courants atmosphériques dans le système récepteur est subordonné à un amorçage qui consiste à lancer dans l'antenne un courant provenant d'une source auxiliaire, telle que des piles reliées à des bobines de Ruhmkorff.

3° En ce qu'un tableau parafoudre est interposé entre l'antenne ou organe de captation et le tableau des régulateurs pour préserver l'installation en éliminant à la terre les décharges brusques atmosphériques.

4° En ce que les régulateurs sont disposés suivant deux sysièmes symétriques correspondant à chacun des pôles des courants atmosphériques.

J. GUILLOT.

Par procuration :

V. PRÉVOST.

Parts List

Steel Rods, magnetic, 2
Insulator, porcelain
Ring, bronze
Rods, soft iron, 32
Ring, copper
Surge Protector
Disk, copper
Ring, tin
Tubes, steel
Rx Cu-Pb, Fe-Pb
Breakers, automatic
Resistances : Wire Mesh, Glass Tube. Cu, C, S powder
Vacuum Cleaners : Box, Jar, Mica &

Tube, copper;
Rx : Hg, Sn, C, Cu, S
Battery
Ignition Coil

Your Support Maintains this Service --

BUY

The Rex Research Civilization Kit

... It's Your Best Bet & Investment in Sustainable Humanity on Earth ...
Ensure & Enhance Your Survival & Genome Transmission ...
Everything @ rexresearch.com on a Data DVD !

ORDER PAGE

Rex Research, POB 19250, Jean, NV 89019 USA

US007855476B2

(12) **United States Patent**
Ogram

(10) **Patent No.: US 7,855,476 B2**
(45) **Date of Patent: Dec. 21, 2010**

(54) **ATMOSPHERIC ELECTRICAL GENERATOR**

(76) Inventor: **Mark Ellery Ogram**, 780 S. Freeman Rd., Tucson, AZ (US) 85748

(*) Notice: Subject to any disclaimer, the term of this patent is extended or adjusted under 35 U.S.C. 154(b) by 254 days.

(21) Appl. No.: **12/218,297**

(22) Filed: **Jul. 14, 2008**

(65) **Prior Publication Data**

US 2010/0007218 A1 Jan. 14, 2010

(51) **Int. Cl.**
H02G 11/00 (2006.01)

(52) **U.S. Cl.** **307/145**; 307/149; 361/218; 361/230

(58) **Field of Classification Search** 307/149, 307/145; 244/30, 31; 174/2; 361/212, 215–218, 361/230, 231
See application file for complete search history.

(56) **References Cited**

U.S. PATENT DOCUMENTS

674,427 A * 5/1901 Palencsar 307/149
911,260 A * 2/1909 Pennock 307/149
1,014,719 A * 1/1912 Pennock 307/149
1,540,998 A * 6/1925 Plauson 310/309
3,121,196 A * 2/1964 Kasemir 324/464
4,234,167 A * 11/1980 Lane 254/291
4,486,669 A * 12/1984 Pugh 290/44
4,842,219 A * 6/1989 Jakubowski et al. 244/31
5,203,542 A 4/1993 Coley et al.
6,254,034 B1 * 7/2001 Carpenter ..... 244/153 R
6,829,911 B2 12/2004 Davis et al.
6,961,662 B2 11/2005 Murphy
7,016,785 B2 3/2006 Makela et al.
7,200,418 B2 4/2007 Kaikuranta et al.
7,330,366 B2 2/2008 Lee et al.
7,375,492 B2 5/2008 Calhoon et al.
7,378,181 B2 5/2008 Skinlo
7,388,350 B1 6/2008 Wright
7,394,671 B2 7/2008 Fukumoto et al.
7,397,220 B2 7/2008 Uchida et al.

* cited by examiner

Primary Examiner—Fritz M Fleming
(74) *Attorney, Agent, or Firm*—Mark Ogram

(57) **ABSTRACT**

A mechanism to tap an electrical source which uses an aircraft (preferably a lighter than air balloon) tethered by a conductive line. The conductive line is extended/withdrawn by a winch motor to adjust the altitude of the aircraft. The conductive line is isolated from the ground and an electrical conductor is connected to the conductive line and to an electrical load. In this manner, static electricity generated in the atmosphere is gathered for use.

15 Claims, 4 Drawing Sheets

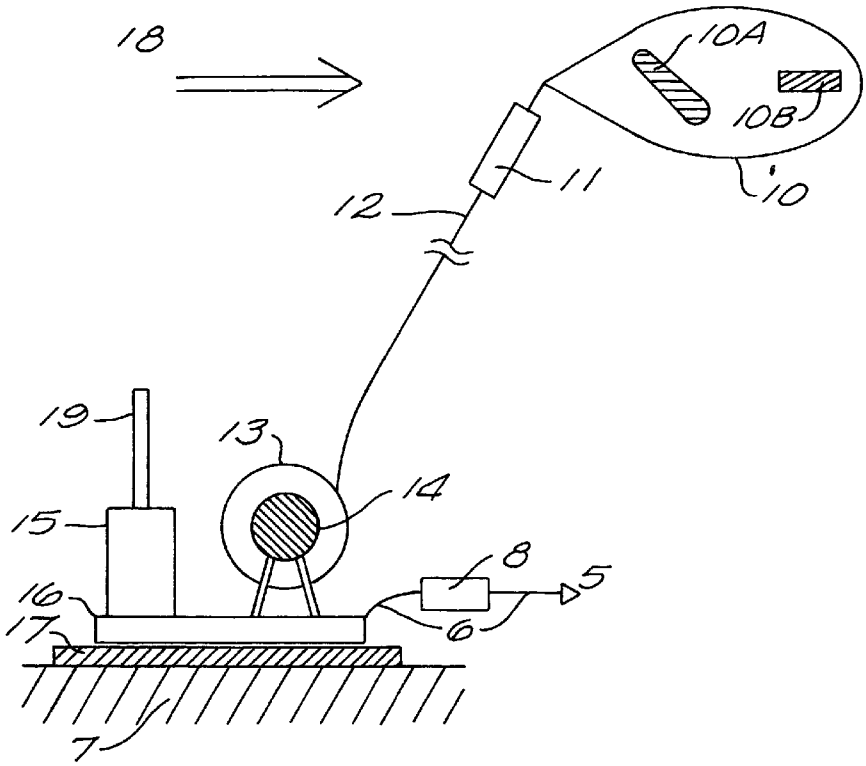

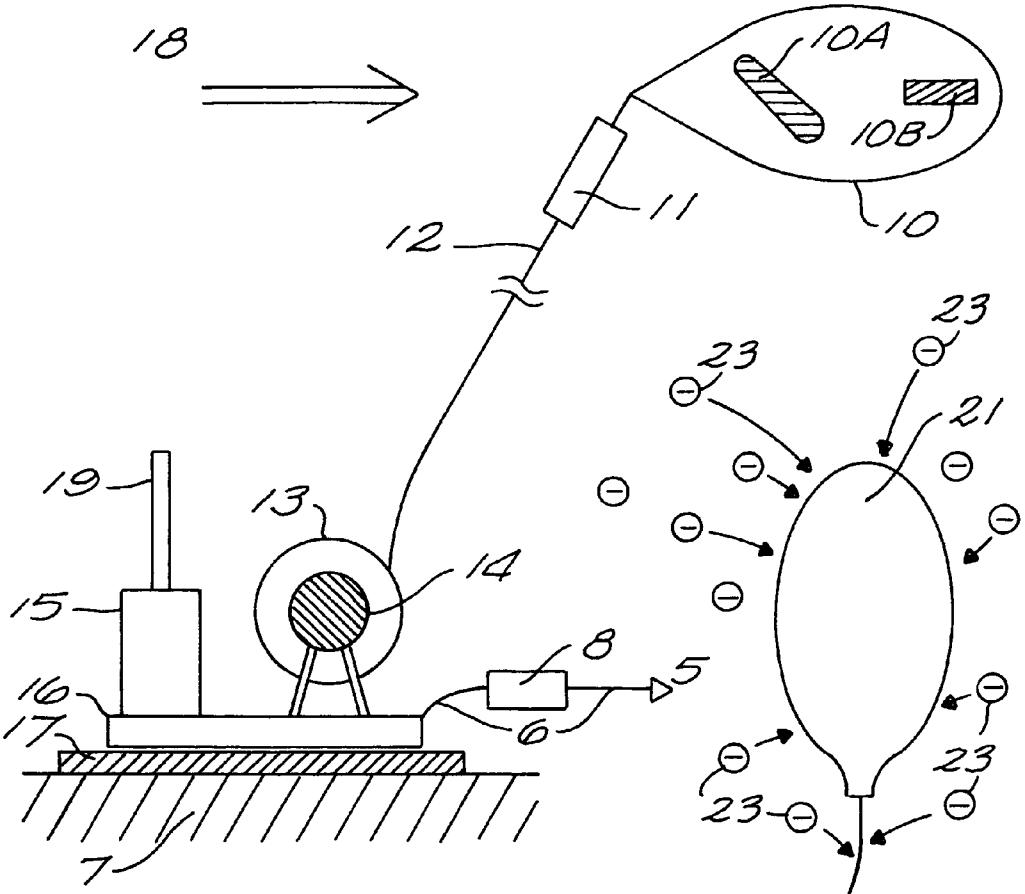

FIG. 1

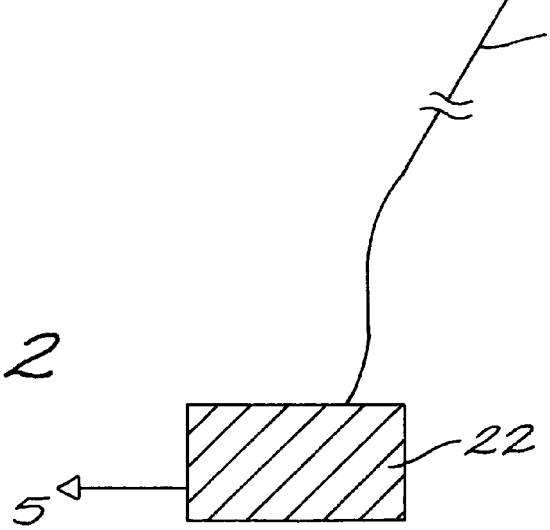

FIG. 2

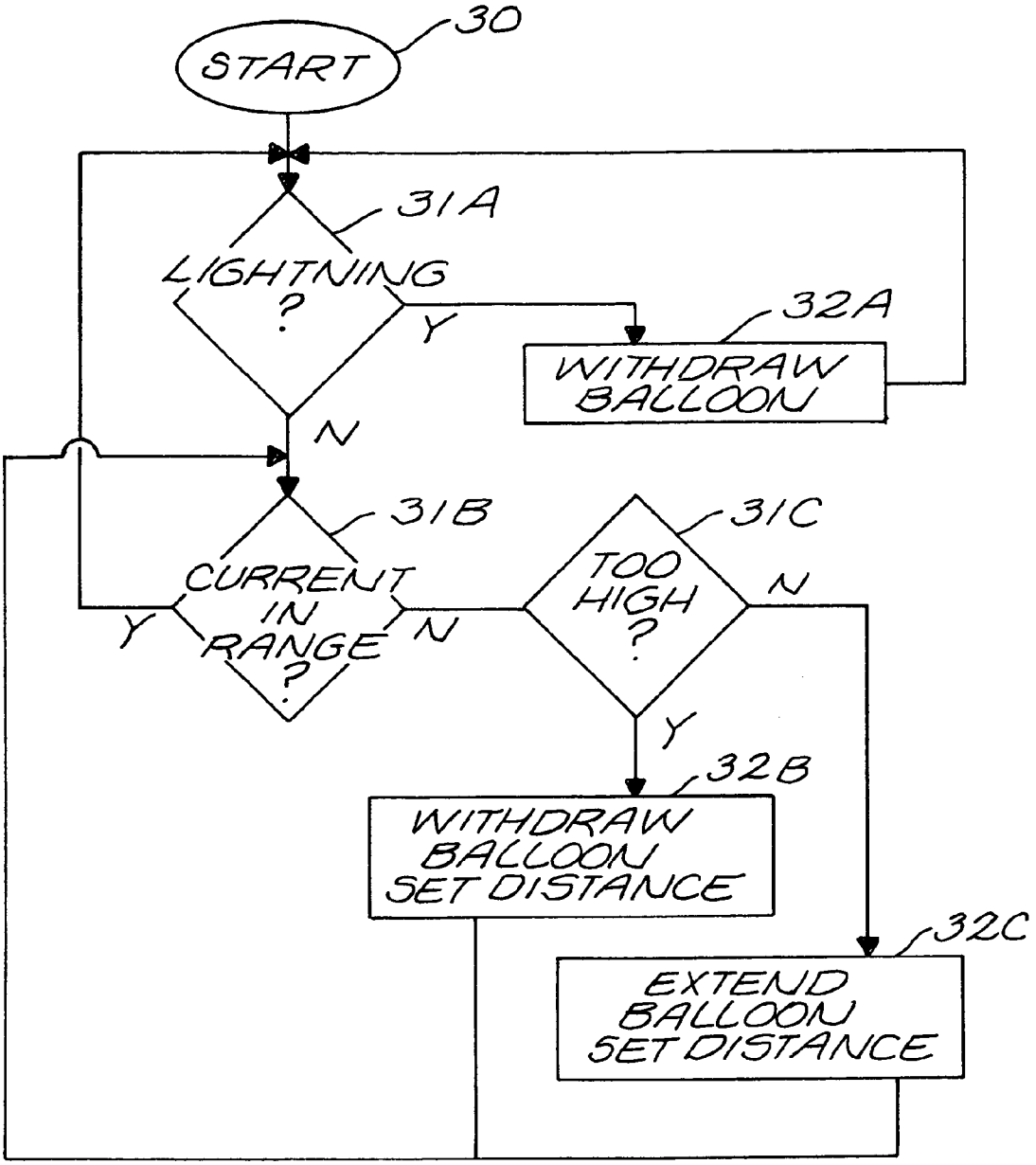
30
START
31A
LIGHTNING ?
Y
32A
WITHDRAW BALLOON
N
31B
CURRENT IN RANGE ?
Y
N
31C
TOO HIGH ?
N
Y
32B
WITHDRAW BALLOON SET DISTANCE
32C
EXTEND BALLOON SET DISTANCE

FIG. 3

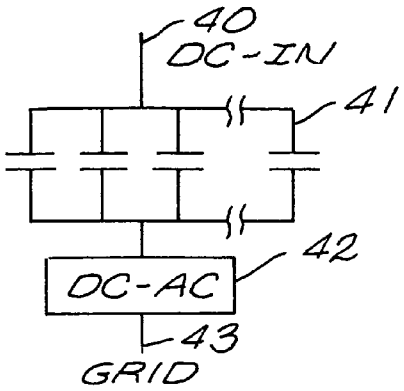

FIG. 4A

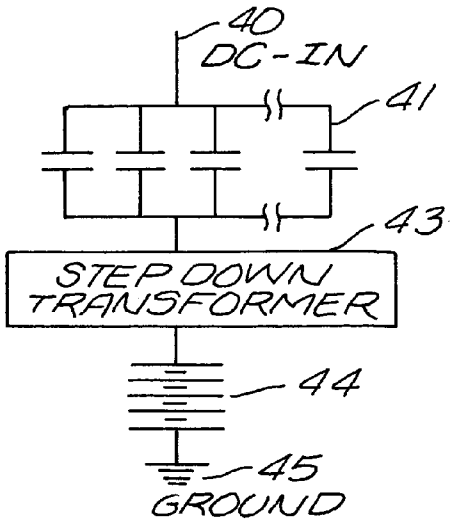

FIG. 4B

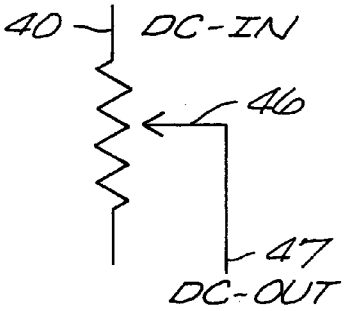

FIG. 4C

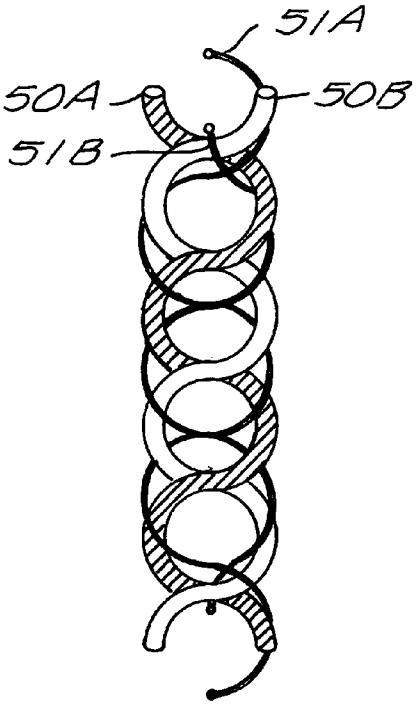

FIG. 5

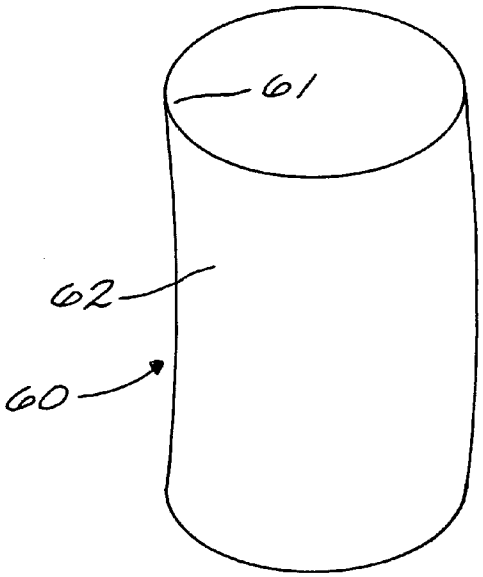

FIG. 6A

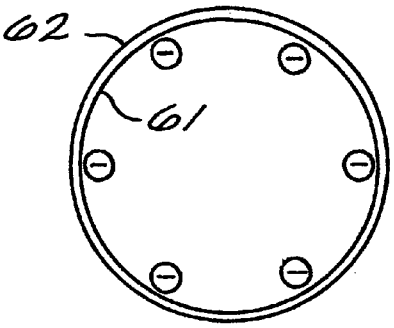

FIG. 6B
REPLACEMENT

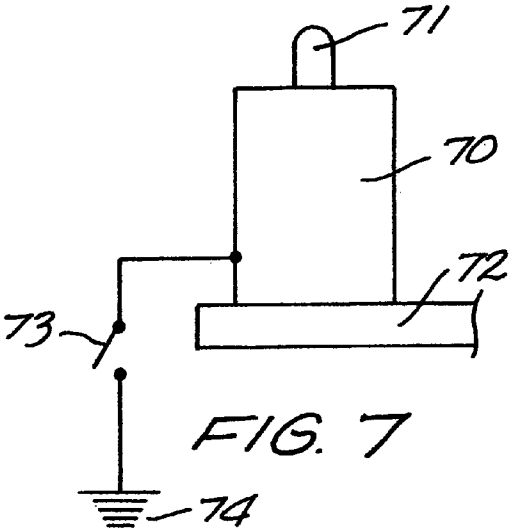

FIG. 7

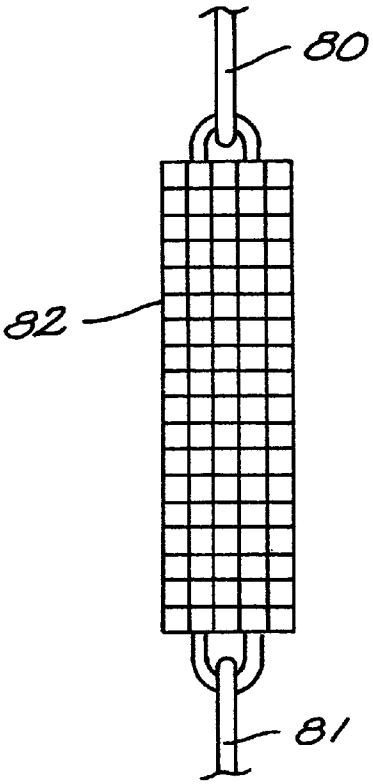

FIG. 8A

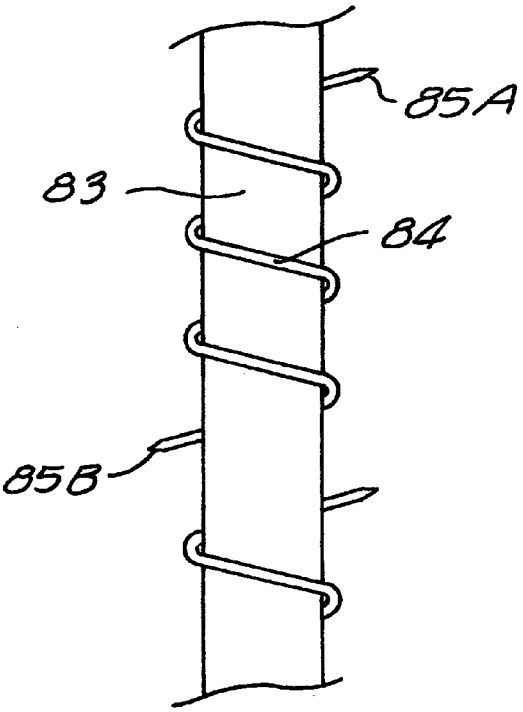

FIG. 8B

ATMOSPHERIC ELECTRICAL GENERATOR

BACKGROUND OF THE INVENTION

This invention relates to the production of electrical energy and more particularly to the production of electrical energy from the atmosphere.

Everyone is familiar with Benjamin Franklin's kite experiment of 1752. Using a kite whose string had become wet, negative charges from the passing clouds flowed into the string, down to the suspended key, and then into a Leyden jar via a thin metal wire. Franklin was protected by a dry silk string; but, when Franklin's knuckle came too close to the key, he received a strong shock. Fortunately, Benjamin Franklin was not killed, others who tried this same experiment were not so lucky.

Since then, the formation of lightning has remained something of a mystery. Lightning bolts are triggered when a negatively charged cloud base induces a positive charge from the ground, thereby forming a "pathway" for the discharge of the collected electrical energy.

Lightning travels up to 60,000 miles per hour with a flash that is brighter than ten million 100-watt lightbulbs. This wattage is as much power as is produced by all of the electricity plants in the United States and with a voltage of up to 300 million volts.

It is this very fact, the power within lightning is immense, that has prevented any successful collection of the electrical energy from lightning. The electricity in lightning is far too extreme for current technology to harness.

While lightning has attracted a energy starved industrial world, no one has developed any technique to harness this naturally occurring electrical source.

It is clear there is a continuing need for an electrical source other than carbon-based fuels and that the naturally occurring electricity in the atmosphere is being ignored.

SUMMARY OF THE INVENTION

The invention is a mechanism which taps into the naturally occurring static electricity in the atmosphere. Whereas heretofore, the attempt to garner electricity from the atmosphere has focused exclusively on capturing lightning, the present invention syphons off the static electricity which is generated from any agitated air and avoids lightning.

Lightning is only the final discharge of the static electricity, whether that lightning is intra-cloud lightning, cloud-to-ground lightning, or inter-cloud lightning. Other types of final discharges are known as heat lightning, summer lightning, sheet lightning, ribbon lightning, silent lightning, ball lightning, bead lightning, elves, jets, and sprites. Well before these discharges are observed, as the atmosphere becomes agitated by wind or thermal activity, static electricity is being generated.

The present invention recognizes that this static electricity is being formed and creates a mechanism to capture it.

The mechanism of this invention utilizes an aircraft such as a lighter than air balloon. While the preferred embodiment uses a foil balloon, a variety of other aircraft are obvious to those of ordinary skill in the art, including, but not limited to: gliders, rubber balloons (such as weather balloons), biaxially-oriented polyethylene terephthalate polyester film balloons, and latex balloons.

Within this discussion, the balloon is referenced, but, the invention is not intended to be limited solely to balloons.

The balloon is sent aloft and is tethered by a conductive line. In this context, the conductive line may be any obvious to those of ordinary skill in the art. For the preferred embodiment, the conductive line is a generically referred to as a "poly-rope" and is commercially available through a variety of sources. A suitable conductive line is described in U.S. Pat. No. 5,203,542, entitled "Apparatus for Improved Electric Fence Wire Construction for use with Intensive Grazing" issued Apr. 20, 1993, to Coley, et al. and incorporated hereinto by reference.

The conductive line is played out of a winch to control the altitude of the balloon. The motor controlling the winch is able to reverse direction to both extend and withdraw the conductive line which is wrapped around a spool on the winch. The winch/spool combination are part of a base unit.

In some embodiments of the invention, the spool is constructed of rubber so as to insulate the conductive line from the winch assembly. In this embodiment, only the conductive line is charged by the atmospheric static electricity while the winch remains neutral.

In yet another embodiment, the winch/spool are part of a base unit which is itself isolated from the ground by an insulator. In this embodiment, the entire base unit is charged by the atmospheric static electricity.

A conductor, such as an insulated wire, is electrically connected to the conductive line. In one embodiment, where the conductive line is electrically isolated from the spool and winch motor, the conductor is connected to the conductive line. In the embodiment where the conductive line is electrically connected to the base unit, then the conductor is connected anywhere on a metallic base unit.

The other end of the conductor is connected to a load. The load in this case can be any of a variety of electrical loads well known to those of ordinary skill in art, including, but not limited to a motor, a battery system, or the electrical grid for the system.

In the preferred embodiment, a sensor array is used to monitor the activities both at the base unit (such as electrical flow within the conductor) and in the surrounding locale.

A sensor monitoring the electrical flow (i.e. voltage and/or current) within the conductor is used to monitor the electrical activity within the conductor.

In the preferred embodiment, a lightning sensor monitors for lightning activity within the locale. As noted earlier, the electrical characteristic of lightning is so extreme that ideally this discharge is avoided as it might damage the mechanism of this invention.

The sensor array is utilized by a controller, such as microprocessor, programmed to operate the mechanism as outlined herein.

The controller operates the winch motor to extend or withdraw the conductive line and by extension the altitude of the balloon. The controller is programmed to operate the winch by monitoring the electrical characteristics of the conductor and adjusting the balloon's altitude to maintain these characteristics within the conductor within a preset range.

This preset range is established either in the base programming of the controller or is established by an operator of the system.

As example, by controlling the amount of current being withdrawn from the atmosphere, the mechanism operates within a safe range and also provides a relatively stable current flow from which a variety of activities can take place (such as DC-AC conversion).

The controller also utilizes the lightning sensor to protect the mechanism from a lightning strike. Should lightning be detected within a pre-determined range (as established by the software or defined by an operator), then the balloon is pulled down to minimize the risk of damage from a lightning strike.

The invention, together with various embodiments thereof will be more fully explained by the following description of the accompanying drawings.

DRAWINGS IN BRIEF

FIG. **1** diagrams the preferred embodiment of the invention.

FIG. **2** illustrates the collection of the negative charged particles in the atmosphere.

FIG. **3** is a flow-chart of the operation of the controller for the preferred embodiment of the invention.

FIGS. **4**A, **4**B, and **4**C are electrical schematics for handling the static charge from the atmosphere.

FIG. **5** illustrates a conductive line used in the preferred embodiment of the invention.

FIGS. **6**A and **6**B illustrate an alternative conductive line creating an ionized pathway for the flow of the static charges from the atmosphere.

FIG. **7** illustrates the controller of an alternative embodiment and the associated safety devices.

FIGS. **8**A and **8**B illustrate two embodiments of enhanced electrical collection leads.

DRAWINGS IN DETAIL

FIG. **1** diagrams the preferred embodiment of the invention.

Balloon **10** is an aircraft which, in this illustration, is a lighter than air balloon. Wings **10**A, extending from the body of balloon **10**, provide additional lift in air flow **18**. Tail **10**B helps to stabilize balloon **10**.

Balloon **10** is tethered to the ground via conductive line **12**. As noted earlier, a variety of configurations and materials are available to serve as conductive line **12**. In this illustration, a poly-wire is used Poly-wire is commercially available through a variety of vendors, including, but not limited to: Jeffers Livestock and Zareba Systems, Inc, of Ellendale, Minn.

In this embodiment, located proximate to balloon **10**, is an electrical collection enhancement lead **11** which assists in the collection of the static electrical charge in the atmosphere. Electrical collection enhancement lead **11** is configured to attract the static charge and conduct the charge into the conductive line **12**.

The electricity flows down the conductive line into spool **13**, where the conductive line **12** is collected and either withdrawn or dispensed through operation of winch motor **14**.

Winch motor **14** and spool **13** are mounted onto base unit **16** which is electrically isolated from ground **7** using insulator **17**. Note, in this embodiment of the invention, when electricity is being collected from the atmosphere, the entire base unit **16** becomes charged. In another embodiment of the invention, spool **13** is constructed of rubber, thereby preventing base unit **16** from becoming charged, thereby restricting the charging from the atmosphere to only conductive line **12**.

In this embodiment, conductor **6** is connected to base unit **16** (since the entire base unit **16** is charged and the base unit is metallic) to communicate the electrical current to load **5**. Conductor **6** is ideally an insulated wire.

The electrical current through conductor **6** is measured using sensor **8**.

In the alternative embodiment discussed above, where only the conductive line **12** is charged, then conductor **6** is connected to conductive line **12**.

Controller **15**, located in this embodiment on base unit **16**, operates winch motor **14** in response to signals from sensor **8** (measuring the current being discharged to load **5**) to maintain the current flow within a pre-defined range. As the current flow diminishes, then the conductive line **12** extended from spool **13** to increase the altitude of balloon **10** to that more static charge from the atmosphere is gathered; as the current flow falls exceeds a preset level, conductive line **12** is withdrawn onto spool **13** to decrease the static charge being collected from the atmosphere.

The range of current flow through conductor **6** is ideally set by the program, although some embodiments of the invention permit an operator to establish this range of operation.

In an alternative embodiment, the sensor monitoring conductor **6** monitors the voltage therein.

In the preferred embodiment of the invention, controller **15** is also equipped with a lightning sensor **19**. In this embodiment, when lightning is sensed within a preset range, then substantially all of conductive line **12** is wound onto spool **13** to pull balloon **10** near the ground and protect the entire mechanism from being damaged from a lightning discharge.

In the preferred embodiment, the "safe" distance form lightning is set in the programming of controller **15** and is ideally two miles; other embodiments permit the operator to "safe" distance.

There are a variety of lightning sensors well known to those of ordinary skill in the art, including, but not limited to those described in: U.S. Pat. No. 7,016,785, entitled "Lightning Detection" issued to Makela, et al. on Mar. 21, 2006; U.S. Pat. No. 6,829,911, entitled "Lightning Detection and Prediction Alarm Device" issued to Jones, et al. on Dec. 7, 2004; U.S. Pat. No. 7,200,418, entitled "Detection of Lightning" issued to Karikuranta, et al. on Apr. 3, 2007; and U.S. Pat. No. 6,961,662, entitled "Systems and Methods for Spectral Corrected Lightning Detection" issued to Murphy on Nov. 1, 2005; all of which are incorporated hereinto by reference.

In another embodiment of the invention, controller **15** is not located on base unit **16**, rather it is remote and communicates its control signals to winch motor **14** using radio waves.

FIG. **2** illustrates the collection of the negative charged particles in the atmosphere.

Static charges **23** are generated in the atmosphere by agitated air. These static charges are often collected at the bottom of clouds, but exist in other environments as well.

Balloon **21** is extended into this strata of static charges **23** which are then attracted to conductive line **12** to flow to base unit **22** and then onto load **5**.

By increasing or decreasing the altitude of balloon **21** (defined by the length of the extended conductive line **12**), conductive line **12** is selectively exposed to varying densities and levels of the static charge strata, and by extension, the current flow or voltage is increased or decreased.

FIG. **3** is a flow-chart of the operation of the controller for the preferred embodiment of the invention.

Once the program starts **30**, the lightning sensor is checked to determine if lightning has occurred within the unsafe range **31**A, if it has, then the balloon is lowered **32**A, and the program continues monitoring the status of lightning until no lightning is detected.

When the lightning status is acceptable, then the current within the conductor is checked to see if the current is within the prescribed range **31**B. If the current is acceptable (within range) the program returns to check the lightning status **31**A; otherwise a determination is made to see if the current is above the prescribed range **31**C.

If the current is above the prescribed range, then the altitude of the balloon is withdrawn a set amount **32**B (ideally twenty-five feet) and the program loops back to see if the current is within range **31**B.

If the current is below the prescribed range, then the altitude of the balloon is extended a set amount **32**C (ideally twenty-five feet) and the program loops back to see if the current is within range **31**B.

In this manner of feed-back and minor adjustments in the altitude of the balloon, the current is maintained within a prescribed range which can be handled by the downstream electrical system.

As noted earlier, some embodiments of the invention monitor the voltage instead of the current.

FIGS. **4**A, **4**B, and **4**C are electrical schematics for handling the static charge from the atmosphere.

By maintaining the voltage being collected in a prescribed range, an electrical conversion system is easily designed. While FIGS. **4**A, **4**B, and **4**C illustrate some electrical configurations, those of ordinary skill in the art readily recognize a variety of other configurations which will serve the same function.

Referencing FIG. **4**A, Direct Current In (DC IN) **40** is buffered by a gang of capacitors **41** before being communicated to a DC/AC converter **42**. The DC/AC converter converts the direct current into a an alternating current suitable for placement over an existing electrical grid **43** such as normally found from a power-plant.

Those of ordinary skill in the art readily recognize a variety of DC/AC converters, including, but not limited to: U.S. Pat. No. 7,394,671, entitled "Controller IC, DC-AC Conversion Apparatus, and parallel running system of DC-AC Conversion Apparatuses" issued to Fukumoto, et al. on Jul. 1, 2008; and, U.S. Pat. No. 7,330,366, entitled "DC-AC Converter" issued to Lee, et al. on Feb. 12, 2008; all of which are incorporated hereinto by reference.

FIG. **4**B illustrates an electrical arrangement suitable for use in charging a battery. DC IN **40** is buffered by capacitor bank **41** before entering into a step down transformer **43**. Step down transformer **43** reduces the voltage so that the voltage can safely be introduced into battery **44** which is connected to ground **45** at the battery's other pole.

Those of ordinary skill in the art readily recognize a variety of batteries which will work in this capacity, including, but not limited to those described in: U.S. Pat. No. 7,378,181, entitled "Electric Storage Battery Construction and Manufacture" issued to Skinlo on May 27, 2008; U.S. Pat. No. 7,388,350, entitled "Battery with Electronic Compartment" issued to Wright on Jun. 17, 2008; U.S. Pat. No. 7,397,220, entitled "Connection Member and Battery Pack" issued to Uchida, et al. on Jul. 8, 2008; and, U.S. Pat. No. 7,375,492, entitled "Inductively Charged Battery Pack" issued to Calhoon, et al. on May 20, 2008; all of which are incorporated hereinto by reference.

In FIG. **4**C, DC IN **40** is fed into an adjustable rheostat **46** which is controlled by the controller so that the DC OUT **47** falls within a specified range.

FIG. **5** illustrates a conductive line used in the preferred embodiment of the invention.

This type of conductive line is commonly called poly-wire and consists of multiple interwoven strands of plastic **50**A and **50**B woven into a cord or rope arrangement having intertwined therein exposed metal wires **51**A and **51**B. While this illustration shows two plastic strands and two metal wires, any number of possible combinations is possible.

The exposed metal wires **51**A and **51**B attract the atmospheric static charge and transmit the charge down to the base unit (not shown).

FIGS. **6**A and **6**B illustrate an alternative conductive line creating an ionized pathway for the flow of the static charges from the atmosphere.

This conductive line utilizes a tube **60** having an outer layer **62** of PET Film (Biaxially-oriented polyethylene terephtalate polyester film) which provides exceptionally high tensile strength and is chemically and dimensionally stable. The tube has an ideal diameter of between two and three inches.

An interior metal coating **61** provides an initial conduit for the flow of static charge. The static charge through the metal forces the tube to expand due to the repulsion experienced by like charges. Further, the flow of electricity causes the interior of the tube **60** to become ionized to provide an additional pathway for the atmospheric static charges to the base unit (not shown).

Because outer layer **62** provides a gas barrier, the resulting ionization is not dissipated by air currents, thereby providing a highly stable pathway.

FIG. **7** illustrates the controller of an alternative embodiment and the associated safety devices.

In this embodiment, controller box **70**, resting on insulating pad **72**, is in communication with the sensors as described above. Using the input from these sensors, when there is flow of electricity through the base unit, warning flashing light **71** is illuminated. To electrically neutralize the mechanism, switch **73** is activated to pass any existing current into the ground **74**.

FIGS. **8**A and **8**B illustrate two embodiments of enhanced electrical collection leads.

Referencing FIG. **8**A, enhanced electrical collection lead **82** is a wire mesh which is in electrical communication with conductive line **81** and balloon **80**. Because of the significant amount of metal exposed by enhanced electrical collection lead **82**, more static electricity from the atmosphere is drawn to the collection lead **82**, and then down conductive line **81** to the base unit (not shown).

Conductive lead **82** is positioned proximate to balloon **80**.

In FIG. **8**B, poly-wire **83** has enhanced electrical collection leads **84** wrapped therearound. Collection leads **84** have pointed ends **85**A and **85**B which have a propensity to attract more electricity than rounded ends do.

It is clear from the foregoing that the present invention captures an entirely new source of electrical energy.

What is claimed is:

1. A mechanism to tap an electrical source comprising:

a) a lighter than air balloon suspended in the atmosphere;

b) a base unit having a spool of conductive line on a winch motor, one end of said conductive line secured to said lighter than air balloon, a portion of said conductive line collecting electricity in the atmosphere, said winch motor capable of selectively extending or withdrawing said conductive line from said spool;

c) an insulator electrically isolating said conductive line from ground;

d) a conductor having a first end electrically connected to said conductive line and a second end electrically connected to a load being powered by collected electricity from said conductive line;

e) an electrical flow sensor monitoring electrical flow through said conductor and generating an electrical flow indicia indicative of said electrical flow in said conductor; and,

f) a controller receiving said electrical flow indicia and selectively operating said winch motor such that said electrical flow indicia remains within a selected operating range.

2. The mechanism to tap an electrical source according to claim **1**, wherein said selected operating range is established by an operator.

3. The mechanism to tap an electrical source according to claim **2**, further including a warning light activated when said electrical flow indicia is non-zero.

4. The mechanism to tap an electrical source according to claim **1**,

a) further including a lightning sensor generating a lightning presence indicia indicative of lightning within a prescribed range, said presence indicia being communicated to said controller; and,

b) wherein said control mechanism, in response to said lightning presence indicia, operates said winch motor to withdraw substantially all of said conductive line onto said spool.

5. The mechanism to tap an electrical source according to claim **4**, wherein said prescribed range is established by an operator.

6. The mechanism to tap an electrical source according to claim **1**, further including an electrical collection enhancement lead in electrical contact with a first end of said conductive material, said electrical collection enhancement lead configured to attract static electricity.

7. The mechanism to tap an electrical source according to claim **6**, wherein said electrical collection enhancement lead is positioned proximate to said lighter than air balloon.

8. The mechanism to tap an electrical source according to claim **7**, wherein said electrical collection enhancement lead includes at least two pointed electrical conductors.

9. The mechanism to tap an electrical source according to claim **1**, wherein said insulator electrically isolates said conductive line from said winch motor.

10. The mechanism to tap an electrical source according to claim **1**, wherein said insulator electrically isolates said base unit from ground.

11. A mechanism comprising:

a) an airborne aircraft having a conductive line secured to a winch capable of extending or withdrawing said conductive line from a spool, when said airborne aircraft is aloft, said conductive line collecting electricity from the atmosphere;

b) a conductor having a first end electrically connected to said conductive line and a second end electrically connected to a load such that collected electricity from said conductive line powers said load;

c) an electrical flow sensor monitoring electrical flow through said conductor and generating an electrical flow indicia indicative of said electrical flow in said conductor; and,

d) a controller receiving said electrical flow indicia adjusting an altitude of said airborne aircraft via said winch such that said electrical flow indicia remains within a selected operating range.

12. The mechanism to tap an electrical source according to claim **11**,

a) further including a lightning sensor communicating with said controller; and,

b) wherein said controller, in response to selected signals from said lightning sensor withdraws substantially all of said conductive line.

13. A mechanism to tap an electrical source comprising:

a) a lighter than air balloon suspended in the atmosphere;

b) a base unit having a spool of conductive line on a winch motor, one end of said conductive line suspended by said balloon, a portion of said conductive line collecting electricity from the atmosphere, said winch motor capable of adjusting an altitude of said lighter than air balloon by selectively extending or withdrawing said conductive line from said spool;

c) a conductor having a first end electrically connected to said conductive line and a second end electrically connected to a load being powered by said collected electricity from said conductive line;

d) a sensor array having,

1) an electrical flow sensor monitoring electrical flow through said conductor and generating an electrical flow indicia indicative of said electrical flow in said conductor, and,

2) a lightning sensor monitoring existence of proximate lightning; and,

e) a controller responsive to said electrical flow indicia from said sensor array to selectively operate said winch motor.

14. The mechanism to tap an electrical source according to claim **13**,

a) further including a warning light; and,

b) wherein said controller activates said warning light when said electrical flow in said conductor is non-zero.

15. The mechanism to tap an electrical source according to claim **14**, further including an electrical collection enhancement lead in electrical contact with said conductive material, said electrical collection enhancement lead configured to attract static electricity and positioned proximate to said lighter than air balloon.

* * * * *

May 9 2018, 4:29:05 pm

MY WEATHER STATION, BY DIMITRIS

Location: Peristeri of Athens, Greece
Position: 38° 00.58' NORTH / 23° 42.04' EAST
Elevation: 63 meters
contact me at meteo@otenet.gr

Click to enable Adobe Flash Player

RF field strength meter version 1.

I made a RF simple field strength meter for test the remote control from doors ,alarm e.t.c at frequency VHF-UHF, i used one μA meter ,2 diodes ,2 ceramic capacitors,a potentiometer,a box ,and one telescopic antenna.When press the button at remote control,output there is small current RF,where with this simple circuit ,easy i can to know if remote controls it work or no.

Here it is the electronic design

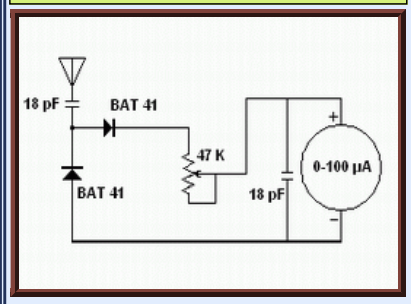

Here it is the electronic material,without yet the potentiometer 47 Kohm, 2 capacitor 18 pF,2 diodes BAT 41,and a μA meter

Here it is the plastic box,i have open holes for μA meter ,and i have touch the telescopic antenna

Here with soldering iron the components it is ready

Here it is the sensitivity test

Here it the test with remote temperature /humidity sensor

It is ready

Ready with full open telescopic antenna

Click over to photo for to see a video about it

RF field strength meter version 2.

I made a second version.The electronic design i saw from Here.

Here it is a electronic design.I left the old potentiometer 47 kohm and the μA meter 100 μA.

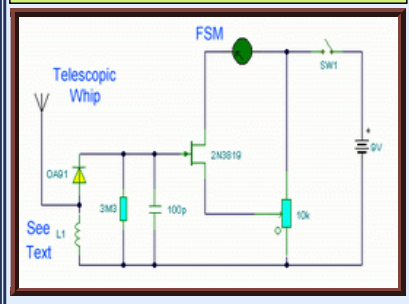

Here i added this electronic material.One transistor JFET 2N3819,one diode germanium AA119,one cap 100 pF,one resistor 3,3 Mohm,one clip 9 volt battery,one battery 9 volt,one switch on-off,and one inductor over ferrite 1,82 μH.

I use a coil over to ferrite about 1,82 μH (i removed little coil for it is about 1,82 μH)

Here i added a switch on-off,and i put the aerial antenna to other side.

From the other side.

I finnish with the soldering iron material.

RF field strength meter,It is ready

Here i make a test with out remote sensor from weather station at frequency 433 Mhz.

Here i make a test with remote control 433 Mhz

Here i make a test with mobile phone 1,8 Ghz.

Click here for you see a video

04/01/2012

Click here for you see video
Click here for you see video

PHGN 300
Crystal Radio
(in 45 minutes)

Ground Wire

Antenna
Need double
length

Please put away like
this when done!

Variable
capacitor

GaAs Diode

Ear piece

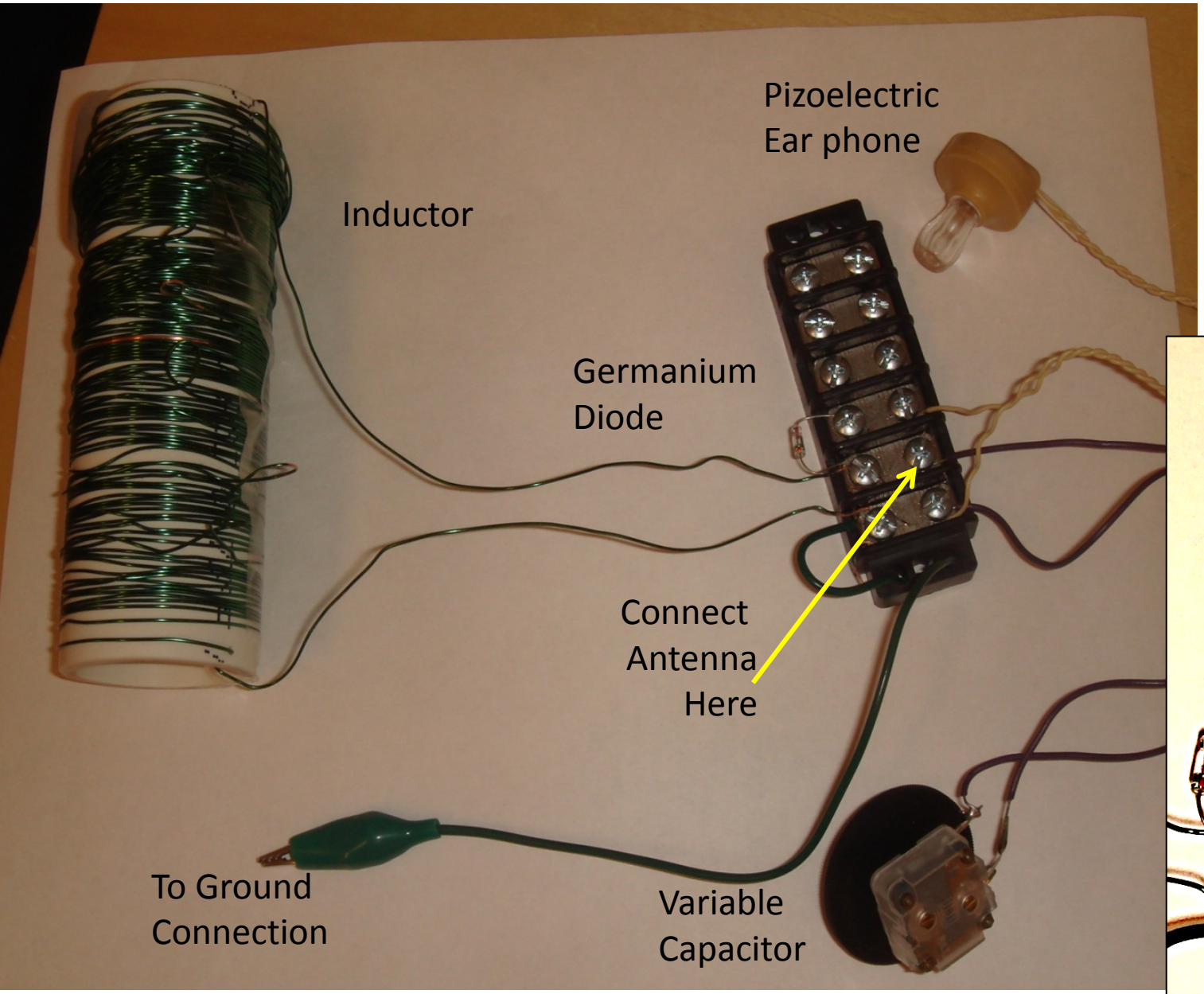
Pizoelectric
Ear phone
Inductor
Germanium
Diode
Connect
Antenna
Here
To Ground
Connection
Variable
Capacitor

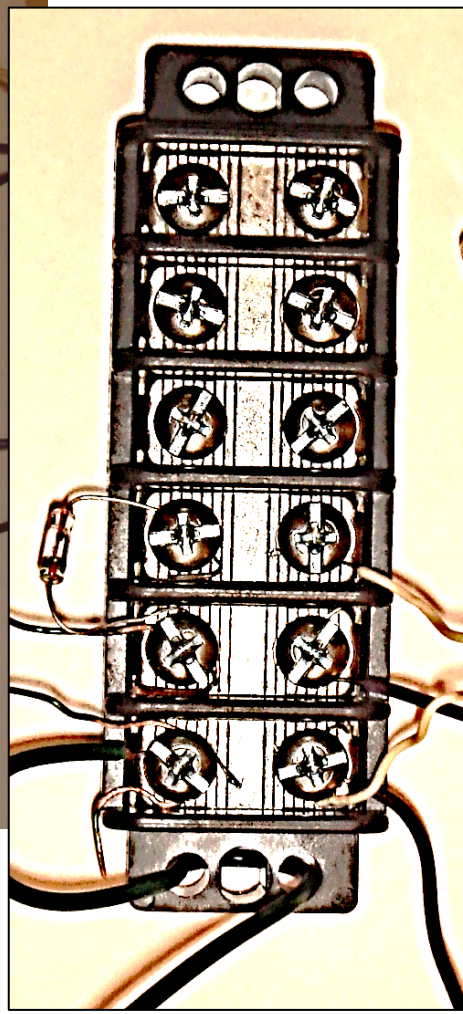

Crystal Radio in 45 minutes.

Work in groups of 4.

2 people should assemble the radio and connect the ground wire.

2 people should string the antenna

If you get your radio to work using the GeAs diode,
Try the Gallinium + Cat Whisker

Return everything the way you found it before leaving

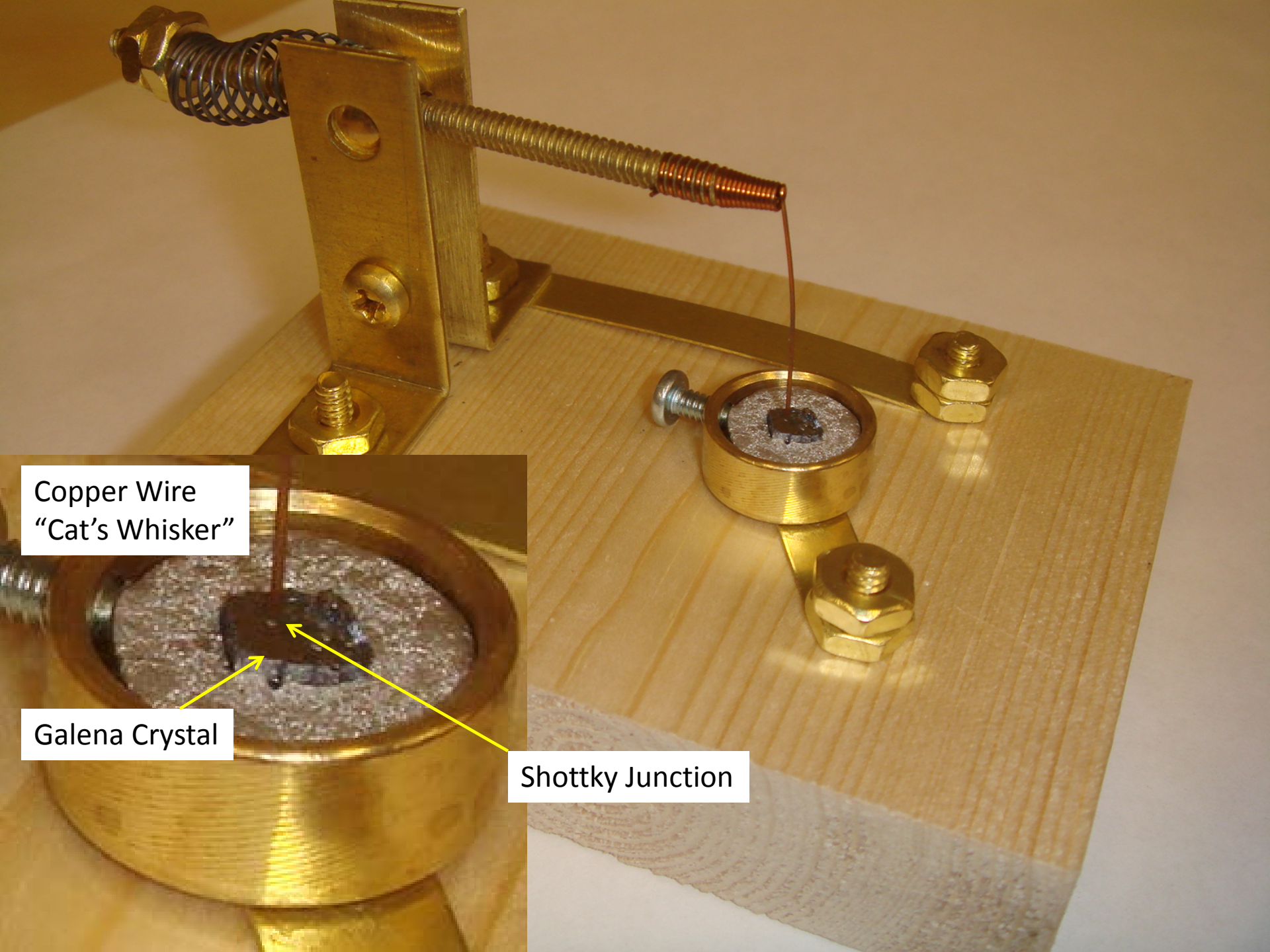
Copper Wire
“Cat’s Whisker”
Galena Crystal
Shottky Junction

The radios **must** have a good ground connection and a long antenna. Long means 100’-200’ of antenna wire outside. 200’ is better

Two possible routes are shown here. Use one.

Attach to tree branches you can reach.

When crossing a sidewalk, make it high so pedestrians don’t have to duck (they won’t).

You will take antenna down when class ends.

United States Patent [19]

Yukl

[11] **Patent Number: 4,494,009**

[45] **Date of Patent: Jan. 15, 1985**

[54] **METHOD AND APPARATUS FOR CAPTURING AN ELECTRICAL POTENTIAL GENERATED BY A MOVING AIR MASS**

[76] Inventor: **Tex Yukl**, Pleasant Valley Rte., Box 21, Baker, Oreg. 97814

[21] Appl. No.: **533,237**

[22] Filed: **Sep. 19, 1983**

[51] **Int. Cl.**[3] **F03D 5/04**; H02P 9/04

[52] **U.S. Cl.** **290/55**; 290/43; 290/44; 290/54; 310/308

[58] **Field of Search** ..... 290/42, 43, 44, 45, 290/52, 53, 54, 55; 416/132 B; 310/10, 11, 308, 309, 310; 60/202; 322/2 R, 2 A

[56] **References Cited**

U.S. PATENT DOCUMENTS

28,793	6/1860	Uion	310/308 X
414,943	11/1889	Dewey	310/308 X
911,260	2/1909	Pennock	310/308 X
1,014,719	1/1912	Pennock	310/308 X
2,239,693	4/1941	Benett	310/308 X
2,279,586	2/1939	Benett	310/308 X
4,146,800	3/1979	Gregory et al.	290/44
4,206,396	6/1980	Marks	290/44 X
4,302,684	11/1981	Gogins	290/44 X
4,433,248	2/1984	Marks	290/55 X

Primary Examiner—J. V. Truhe
Assistant Examiner—Paul Shik Luen Ip
Attorney, Agent, or Firm—Kolisch, Hartwell, Dickinson & Anderson

[57] **ABSTRACT**

A method and apparatus for making available an electrical current, which comprises placing a conductive airfoil in a moving air mass, sinking a conductive element subsurface, and insulating the airfoil from the conductive element and producing an electrical potential between the airfoil and the element in a moving air mass.

4 Claims, 5 Drawing Figures

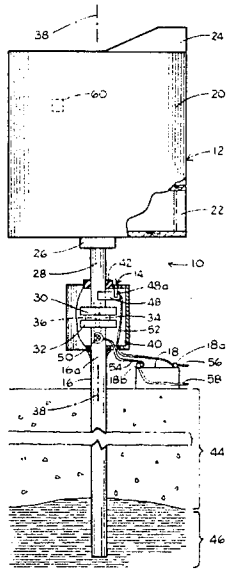

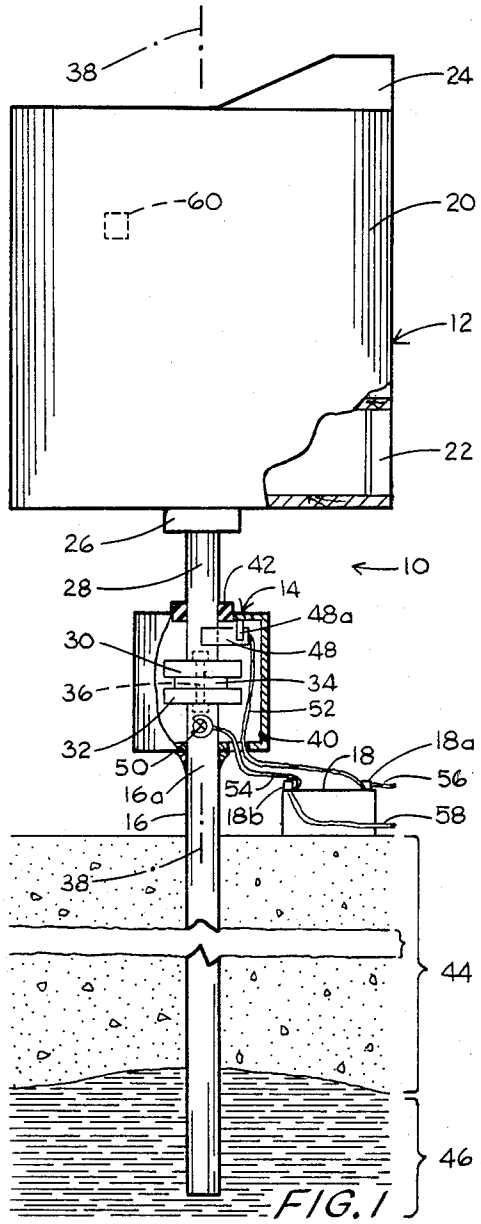

FIG. 1

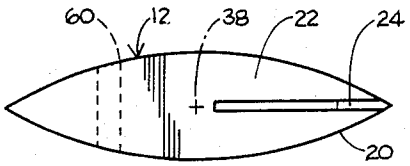

FIG. 2

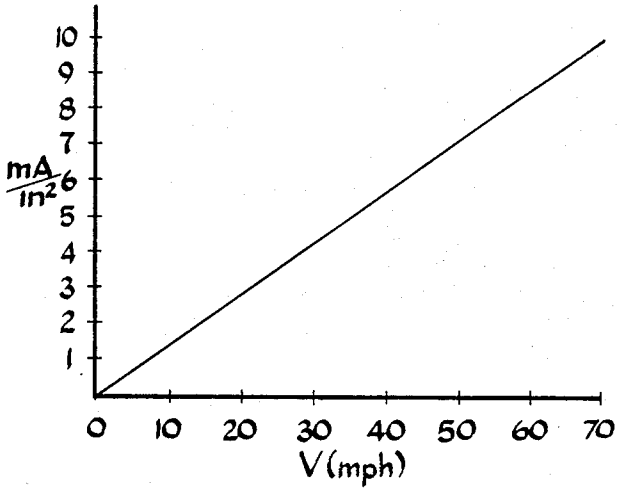

FIG. 5

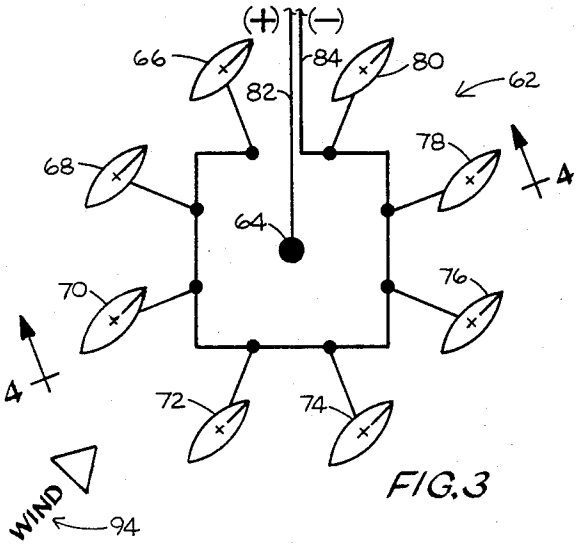

FIG. 3

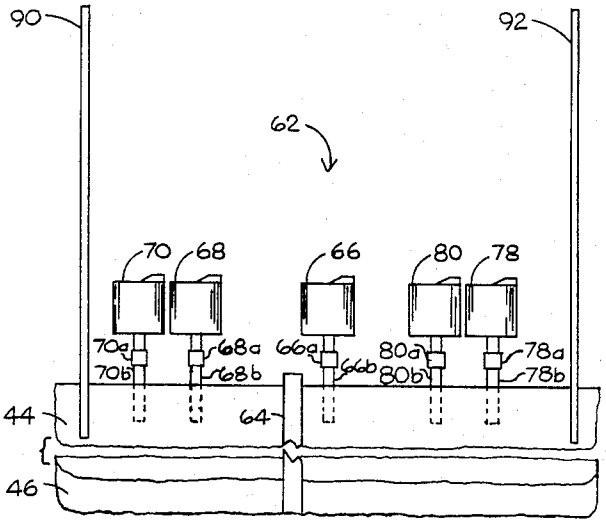

FIG. 4

METHOD AND APPARATUS FOR CAPTURING AN ELECTRICAL POTENTIAL GENERATED BY A MOVING AIR MASS

BACKGROUND AND SUMMARY OF THE INVENTION

The instant invention relates to a method and apparatus for capturing an electrical potential generated by a moving air mass. Specifically, the instant invention describes a method and apparatus for capturing an earth-air static electrical potential which is produced by an air mass moving over a stationary airfoil.

Known apparatus and methods of producing electricity from a moving air mass utilize windmills and windmill-driven turbines. Such devices are generally mounted on fairly high towers and require complex propeller systems to effectively drive electrical turbines. The systems also tend to have a rather large affect on the air mass as it passes over the blades of a particular windmill. As with the placement of any artificial barriers in an air mass, the air mass is disturbed, and turbulence is induced into the air mass. As a particular particle of the air mass reaches the next windmill, the induced turbulence results in less driving force on the blades of the secondarily driven windmill.

The present invention does not have a propeller system, nor does it induce significant turbulence into a moving air mass. It is well documented that an object, particularly an airfoil, which is moving relative to an air mass, develops a substantial static electrical charge on its surface relative to the air mass as the result of friction between the airfoil and the air mass. This naturally occurring static charge is particularly strong when the airfoil is a conductive surface, such as a metal-covered aircraft wing. For this reason, virtually all metal-covered aircraft employ static discharge strips along the trailing edges of airfoil surfaces in order to dispel any accumulated static electrical charge.

An object of the instant invention is to collect electrical energy from movement of an air mass over an airfoil.

Another object of the instant invention is to collect electrical energy with a non-complex collecting element.

A further object of the instant invention is to collect electrical energy from movement of an air mass over an airfoil with a substantially non-turbulence producing system.

A further object of the instant invention is to describe a method of collecting electrical energy from the frictional effects of an air mass moving over a conductive airfoil.

The electrical system of the instant invention includes a conductive airfoil, which is rotatably mounted on an insulated bearing, the airfoil being free to align itself with a moving air mass. A second component of the system is a ground rod which extends down to a water table level. Electrical leads are connected to a conductive portion of the airfoil and to the ground rod, and are then connected to a storage battery.

The method of collecting electrical energy from the system involves connecting the negative side of the storage battery to the airfoil and connecting the positive side of the battery to the ground rod. As an air mass moves over the surface of the airfoil, an electrical charge is produced and transmitted to the storage battery. Electrical energy may be drawn from the storage battery as needed.

These and other objects and advantages of the instant invention will become more fully apparent as the detailed description of the invention which now follows is read in conjunction with the drawings.

DESCRIPTION OF THE DRAWINGS

FIG. **1** is a front elevation of an earth-air electrical current friction generator constructed according to the instant invention, with portions broken away to show interior detail.

FIG. **2** is a top plan view of the generator of FIG. **1**.

FIG. **3** is a schematic plan view of a generator field constructed according to the instant invention.

FIG. **4** is a view of the generator field of FIG. **3**, taken generally along line **4—4** in that figure.

FIG. **5** is a graph depicting the relationship between current production and wind speed associated with the generator of FIG. **1**.

DETAILED DESCRIPTION OF A PREFERRED EMBODIMENT

Turning now to the drawings, and in particular FIG. **1**, an earth-air electrical current friction generator made according to my invention is depicted generally at **10**. The generator includes a metal airfoil, or conductive airfoil means, shown generally at **12**, which is supported by a rotatable airfoil mount **14** and an electrically conductive electrode **16**. A battery **18** provides storage capability for the collecting apparatus.

Airfoil **12** is vertically mounted above ground level. The airfoil is a zero-lift structure in the preferred embodiment, since both active surfaces are symmetrical. Airfoil **12** is formed of a conductive metal skin **20**, formed of lightweight aluminum sheeting in the preferred embodiment, over a frame **22** which is shown behind the cut-away portion of skin **20**. Frame **22** may be formed of any suitable material, such as wood, plastic or metal. In the preferred embodiment, frame **22** is a substantially square structure.

A wind vane **24** is mounted on the top and at one side of airfoil **12**. Wind vane **24** is also referred to as an air mass alignment means, and provides that airfoil **12** will be windfollowing.

An airfoil support bracket **26** is attached to the base of airfoil **12**. One end of a support post **28** is received within bracket **26**. The other end of post **28** terminates in a non-conductive airfoil bearing race **30** and is received within mount **14**. Bracket **26** and post **28** are electrically conductive and are electrically connected to skin **20**.

Rotatable airfoil mount **14**, or rotatable airfoil mounting means, electrically insulates airfoil **12** from electrode **16**, and is referred to herein as isolation means or isolator means.

Airfoil mount **14** is, itself, supported by an above-ground portion **16*a*** of electrode **16**. Portion **16*a*** terminates in a non-conductive electrode bearing race **32**. A bearing **34** is interposed race **30** and race **32**. The respective airfoil and electrode components are retained together by means of a fastener **36**, which is a nut and bolt combination in the preferred embodiment. Fastener **36** aligns with an airfoil axis of rotation **38**.

Mount **14** is enclosed by a cylindrical enclosure **40** which is secured to portion **16*a*** and which allows post **28** to rotate within a weathertight seal **42**. Enclosure **40** and seal **42** are, of course, electrically non-conductive.

Electrode **16** extends through whatever ground layers exist beneath the surface, which are depicted generally at **44**, and then extends into a permanent water table layer **46**. Extending electrode **16** into a water table provides an electrical surface which is as large as the water table. Although the generator would function if electrode **16** did not extend into a water table, the operation of the generator is greatly enhanced by extending electrode **16** to a water table, for reasons which will be explained later herein.

An electrical commutator **48**, and a grounding screw **50**, make electrical contact with post **28** and portion **16***a*, respectively. Commutator **48** is insulated from and fastened to enclosure **40** by bracket **48***a*. Commutator **48** is connected to a lead line **52** which is attached to battery negative terminal **18***a*, and screw **50** is attached to lead line **54** which is attached to battery positive terminal **18***b*. The commutator, screw and lead line comprise what is referred to herein as means for connecting, or connecting means.

Battery **18**, although represented in FIG. **1** as a solitary unit, may obviously include a plurality of units, connected in series or parallel, depending on the output of generator **10**. A pair of leads **56**, **58**, are shown coming off of battery **18**, and would presumably be attached to an electrical distribution system, possibly through an A.C. inverter. The battery and leads **56**, **58** compise an electrical system.

As an air mass moves over skin **20** of airfoil **12**, there occurs an exchange of ions between the air mass and the surface of the airfoil. This exchange takes place as an air mass moves over any stationary object. In most instances, however, the object is sitting on the surface of the earth, in electrical communication therewith, and a charge does not accumulate on the surface of the object. Since the airfoil of the instant invention is insulated from the earth, a static charge builds up on the surface of the airfoil as an air mass flows over the airfoil.

As the air mass moves over airfoil **12**, a collection of negatively charged ions builds up on the airfoil surface. Were there no electrical connection whatsoever between airfoil **12** and ground surface **44**, and were it not for the fact that eventually a charge built up on airfoil **12** would dissipate into the air mass, a charge would eventually build up on airfoil **12** of sufficient strength to arc, such as thc arc produced between a thunderstorm and the ground in the case of lightning, resulting in the complete discharge of the negative ions accumulated on airfoil **12**.

The electrical charge which accumulates on airfoil **12** is drawn off of the airfoil by means of commutator **48**, which is attached to battery **18**. A corresponding positive charge is drawn off of electrode **16** by means of screw **50**.

The surface area of airfoil **12** is defined by what is referred to herein as a cross-section square inch. This unit is depicted at **60** in FIGS. **1** and **2**. The unit is measured on both sides of the airfoil. The distance between the sides of the airfoil is not a factor. So long as the surface area in electrical contact with electrode **16** equals or exceeds the surface area of airfoil **12**, the generator will produce a current flow of 1-milliamp-per-square-inch of airfoil surface cross section with a wind speed of 7-miles-per-hour.

Because the airfoil collects negative ions, it is sometimes referred to as a negative collector element. Likewise, since electrode **16** acts as a source of a positive charge, it is sometimes referred to as a positive collector element, or conductive earth means.

Turning now to FIGS. **3** and **4**, a friction generator farm **62** is depicted schematically in FIG. **3**, and in a pictorial cross section side view in FIG. **4**. A generator farm, according to the instant invention, would include at least one conductive electrode **64**, placed in the ground down to the level of a permanent water table, which would act as a positive collector element. A plurality of airfoils is depicted by even numbers **66** through **80**. Electrode **64** is connected to a positive side of an electrical system by a conductive line **82**. Airfoils **66** through **80** are connected to a common negative lead **84** which connects to the negative side of an electrical system.

Turning now to FIG. **4**, a side sectional view of generator farm **62** is shown. Electrode **64** is placed in ground, represented by **44** as are the support posts for the airfoils. It should be noted that in this type of arrangement, a single commutator would be required within airfoil mounts **70***a*, **68***a*, **66***a*, **80***a* and **78***a*. An airfoil structure support post, represented at **70***b*, **68***b*, **66***b*, **80***b* and **78***b* may be formed from an electrically insulative material when a single electrode, like that shown at **64**, is utilized, thereby further simplifying the internal portions of the airfoil mount.

In addition to earth-air friction generators, a pair of lightning rod devices **90**, **92**, are shown in FIG. **4**. Rods **90** and **92** also are extended subsurface to provide protection from lightning strikes in the vicinity of generator farm **62**. A generator farm of the type described would be particularly susceptible to damaging lightning strikes were such lightning rods not provided.

Returning for a moment to FIG. **3**, a wind arrow **94** is depicted to show a prevailing wind and direction of air mass movement. It will be noted that airfoils **66** through **80** have aligned themselves with the wind indicated by arrow **94**. It should also be noted that with a generator farm in the layout proposed in FIG. **3**, there would be very little disturbance of wind flow by the airfoils of the generator farm. This is in extreme contrast to the turbulence and generally delaminating effect of conventional windmill generating farms.

It should also be obvious to those skilled in the art that the construction of the generator of the instant invention is many orders of magnitude less complex than the construction required for a conventional windmill-type turbine generator.

Turning now to FIG. **5**, a graph of current output per crosssection square inch mA/in^2 versus wind speed V (mph) is depicted. The above-described generator will produce 1-milliamp of electrical current per cross-section square inch with a 7-mile-per-hour wind. Generator output increases linearly, such that the generator will produce 10-milliamps per cross-section square inch in a 70-mile-per-hour wind. It should also be noted that very few known windmill turbine generators function in a 7- or 70-mile-per-hour wind. The generator of the instant application does not have such a limitation. The generator will produce current in any amount of wind, light or strong. As long as the structure is sufficiently durable to withstand a high wind, the system will continue functioning and producing an electrical current. Most systems are restricted to operations over a set wind speed range, generally in the 10- to 45-mile-per-hour range. Systems which produce electricity in extremely light wind conditions are very costly.

Assume for a moment, that an individual airfoil is constructed with sides which are 10-feet in length, thereby producing a cross section dimension on the order of 100-square feet, and further assume that ten airfoils are arranged similar to generator farm **62**, thereby resulting in a total cross section area of 1,000-square feet. The generator farm so described, when connected to a 12-volt D.C. system, and when excited by a wind of 7-miles-per-hour, will produce 1,728-watts of electrical energy.

Thus, a new method of capturing a usable electric current, and an apparatus for practicing the method described have been disclosed. While a preferred embodiment of the invention has been described, it is appreciated that variations and modifications may be made without departing from the spirit of the invention.

It is claimed and desired to secure by Letters Patent:

1. An earth-air electrical current friction generator which comprises

conductive earth means extending subsurface into a water table,

conductive airfoil means operatively associated with said earth means extending above surface into an air mass responsive to airflow to produce an electrical potential relative to said earth means,

isolation means electrically insulating said airfoil means from said earth means, said isolation means including a rotatable airfoil mounting means which allows said airfoil means to rotate in such an air mass and which supports said airfoil means above surface,

an electrical system, and

means for connecting said airfoil means and said earth means to said electrical system for conduction thereto of an electrical current.

2. An electrical charge collector which comprises

a positive collector element extending to a water table,

a negative collector element operatively associated with said positive collector element, said negative collector element being wind-following and including wind alignment means for aligning said negative collector element with a prevailing wind,

isolator means for insulating said negative collector element electrically from said positive collector element, said isolator means including a rotatable mounting which rotatably supports said negative collector element, and

connecting means for providing an electrical connection from each of said elements to an electrical system.

3. The collector of claim **2**, wherein said positive collector element includes at least one conductive electrode.

4. The collector of claim **2**, wherein said negative collector element includes at least one conductive airfoil.

* * * * *

DELHI
UNIVERSITY
LIBRARY.

Class No.....

Book No.....

DELHI UNIVERSITY LIBRARY

Cl. No. U28626 G2

Ac. No. 36281 Date of release for loan

This book should be returned on or before the date last stamped below. A fine of **one anna** will be charged for each day the book is kept overtime.

27 JAN 1954

19 JUN 1958

13 AUG 1959

Methuen's Monographs on Physical Subjects
General Editor: B. L. Worsnop, B.Sc., Ph.D.

ATMOSPHERIC ELECTRICITY

METHUEN'S MONOGRAPHS ON PHYSICAL SUBJECTS

Fcap 8vo. 2s. 6d. net each

General Editor · B L. WORSNOP, B.Sc., Ph.D.
Senior Lecturer in Physics
King's College, London

SPECTRA. By R. C. JOHNSON, D.Sc. *Second Edition.*

WAVE MECHANICS. By H. T. FLINT, D.Sc. *Second Edition.* 3s. 6d. *net.*

THE PHYSICAL PRINCIPLES OF WIRELESS. By J. A. RATCLIFFE, M.A. *Second Edition.*

THE CONDUCTION OF ELECTRICITY THROUGH GASES. By K. G. EMELÉUS, M.A., Ph.D.

MAGNETISM. By E. C. STONER, Ph D.

X-RAYS. By B L WORSNOP, B.Sc., Ph.D.

X-RAY CRYSTALLOGRAPHY. By R. W. JAMES, M.A., B Sc.

THE COMMUTATOR MOTOR. By Professor F. J. TEAGO.

APPLICATIONS OF INTERFEROMETRY. By W. E. WILLIAMS, M.Sc.

PHOTOCHEMISTRY. By D. W. G. STYLE, B.Sc., Ph.D.

THERMODYNAMICS. By Professor A. W. PORTER, F.R.S.

THERMIONIC VACUUM TUBES. By Professor E. V. APPLETON, M.A., D.Sc., F.R.S. 3s. *net.*

WIRELESS RECEIVERS. By C. W. OATLEY, M.A., M.Sc.

ATMOSPHERIC ELECTRICITY. By B. F. J. SCHONLAND, M.A., Ph.D.

THE METHOD OF DIMENSIONS. By Professor A. W. PORTER, D.Sc., F.R.S.

In Preparation

SURFACE TENSION. By A. H. FERGUSON, D.Sc.

THE NUCLEUS. By Professor J. A. CROWTHER.

TABLES OF PHYSICAL CONSTANTS. By W. H. J. CHILDS, B.Sc., Ph.D.

ATMOSPHERIC ELECTRICITY

BY

B. F. J. SCHONLAND, O.B.E., M.A., PH.D.
SENIOR LECTURER AND FELLOW IN PHYSICS AT THE
UNIVERSITY OF CAPE TOWN

WITH A PREFACE BY

O. W. RICHARDSON, F.R.S.
YARROW RESEARCH PROFESSOR OF THE ROYAL SOCIETY
NOBEL LAUREATE IN PHYSICS, 1928

METHUEN & CO. LTD.
36 ESSEX STREET W.C.
LONDON

First Published in 1932

PRINTED IN GREAT BRITAIN

GENERAL PREFACE

THIS series of small monographs is one which should commend itself to a wide field of readers.

The reader will find in these volumes an up-to-date résumé of the developments in the subject considered. The references to the standard works and to recent papers will enable him to pursue further those subjects which he finds of especial interest. The monographs should therefore be of great service to physics students who have examinations to consider, to those who are engaged in research in other branches of physics and allied sciences, and to the large number of science masters and others interested in the development of physical science who are no longer in close contact with recent work.

From a consideration of the list of authors it is clear that the reader need have no doubt of the accuracy of the general accounts found in these volumes.

O. W. RICHARDSON

KING'S COLLEGE
LONDON

CONTENTS

	PAGE
General Preface	v
CHAP.	
I. The Ionisation of the Atmosphere	1
II. The Penetrating Radiation	21
III. Electric Fields and Electric Currents in the Atmosphere	43
IV. The Electrification of Thunderstorms	72
General References	96
Index	97

ATMOSPHERIC ELECTRICITY

CHAPTER I

THE IONISATION OF THE ATMOSPHERE

THE electrical conductivity of the air, first established by Linss in the year 1887, plays an important part in all the phenomena included under the title Atmospheric Electricity. Since 1901, when Elster and Geitel and C. T. R. Wilson independently discovered that this conductivity is due to the presence of small carriers of positive and negative charge called ions, the nature and the origin of these ions have been the subject of many investigations. Two different paths have been followed, the one dealing with the number and the nature of the atmospheric ions, the other with the radiations producing them. The two paths converge on the problem of the ionisation-balance of the atmosphere, the manner in which an equilibrium is maintained between the rate of creation and the rate of disappearance of the ions. It is only of recent years that an answer to this problem has emerged.

The investigation of the ionisation of the air has been rendered exceptionally difficult by the number of separate factors involved and by the variation of each with local geological and meteorological conditions. Much remains to be done before the conditions governing the conductivity of even the lowest layers of the atmosphere are completely understood; observations at greater heights in the regions accessible to balloons and airships are just emerging from the difficult pioneer stage, and the very important regions of the upper air which lie

beyond fifteen kilometres above the ground can at present be examined only indirectly by deductions based upon the mode of propagation of upwardly directed wireless waves and upon the variations of the earth's magnetic field.

§ 1. The Atmospheric Ions, Small and Large

A gas molecule is ionised when some external agency supplies the energy necessary to remove an electron from it, whereupon the positively charged residue of the molecule and the ejected electron, both of which under ordinary pressures very soon attach themselves to one or more uncharged molecules, form what is called an ion-pair. Such ions are known as "normal," "small," or "fast," and when found in the atmosphere have mobilities of the same order as those determined for pure dry air in laboratory experiments, about 1·5 cm./sec. in a field of gradient 1 volt per cm.

The presence in the air of minute particles of dust, of the products of combustion, and of extremely small drops of water even when the air is unsaturated, leads very often to the capture of a normal ion by one of these condensation or Aitken nuclei, as they are termed, and so to the formation of another type of ion of low mobility, ranging from ·0005 to ·0003 cm./sec., known as "large," "slow," or "Langevin" ions. Roughly speaking, one-third of the condensation nuclei present in the air is electrically neutral, the other two-thirds carry, nearly equally, positive and negative charges captured from small ions. The interplay between the large and the small ions and the uncharged nuclei is of considerable importance.

Besides these two main types of atmospheric ion, a group of "intermediate" ions whose mobilities lie between ·1 and ·01 cm./sec. has been found to be present under special meteorological conditions such as low relative humidity. While the origin of this type of ion is at present uncertain, its existence emphasises the fact

that the customary division into the two main classes, large and small, requires refinement, and future work will no doubt proceed in the direction of dividing the ions according to their mobilities into a larger number of groups. J. Nolan and de Sachy have recently found evidence of such groups in the small and the large ion "families." [1]

It has been found that the great majority of the ions, large and small, carry a single elementary charge, either positive or negative.[2] Over land areas the large ions considerably outnumber the small ones, often in the ratio of ten to one. Thus while the numbers, n_+ and n_-, of small ions of each sign per c.c. of the air over land usually range from 300 to 1000, those of the large ions, N_+ and N_-, amount to from 1,000 to 80,000 per c.c. Since practically all the large ions are formed from the capture of small ones by nuclei, an increase in the number of these nuclei, such as is due to the fires of an industrial area, will increase the proportion of the large ions in the air at the expense of the small ions.

Over the oceans this state of affairs is reversed; the air away from land areas is but poorly supplied with nuclei and the large ions are in the minority. The mean values of n_+ and n_- at sea lie between 500 and 700 per c.c., while N_+ and N_- are about 200 per c.c. In view of their comparative freedom from capture by nuclei, it is at first sight rather surprising that the number of small ions per c.c. in mid-ocean differs but little from the same quantity over the land, where the average values of n_+ and n_- are also about 600 per c.c. This is, however, to be explained (§ 12) by the fact that the decreased rate of disappearance of the small ions over the sea is balanced by a decrease in the rate at which they are produced.

§ 2. The Determination of the Number of Ions per c.c.

To determine the numbers of the small ions, positive and negative, per c.c. (n_+ and n_-) an arrangement known

as an Ebert ion-counter is usually employed. This consists in essentials of a long earthed metal tube A (Fig. 1) on the axis of which is mounted a charged insulated rod B, connected to a quartz fibre electroscope. Air is sucked through the tube for about five minutes by means of a clock-work driven fan F and the speed of the air-stream is arranged to be slow enough for all the small ions entering A with charges opposite in sign to that on the central rod to be drawn to B before reaching the bottom of the tube. The speed of flow must at the same time be great enough to make it impossible for any appreciable number of large ions to have time to reach the rod. If v is the volume of the air sucked through in the course of the measurement (indicated by an anemometer C registering its revolutions on a dial), the quantity of electricity gathered in by the central electroscope system is ven_-, where e is the elementary charge on a single ion and the rod is supposed to have been positively charged. If then C is the capacity of the whole central system, rod and electroscope, and V and V′ are the potentials indicated by the electroscope before and after the experiment, $C(V - V') = ven_-$, an equation from which n_- can be

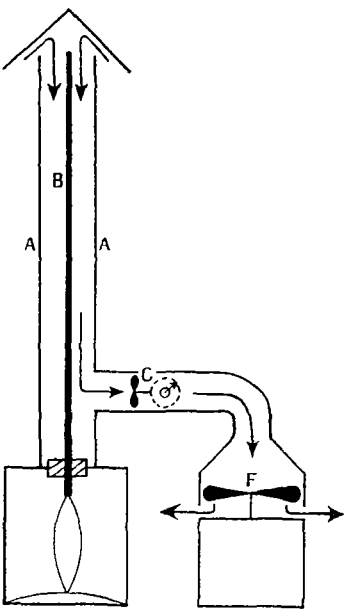

FIG. 1.—Ebert ion-counter.

found. To determine n_+, the measurement must be repeated with the rod B charged negatively.

The same method, using a longer tube, a stronger field in its interior, and a slower draught of air, and thus giving time for the capture of all the slow ions as well, can be applied to the determination of $N + n$. A combination of the two determinations then yields N_+ and N_-, the numbers of the large ions per c.c. of each sign.

The values found for n_+ and n_- are not usually the same; the ratio n_+/n_- over both land and sea has a mean value of 1·22. Although, as explained in § 30, the earth's electric field may sometimes affect the apparatus in such a way as to give a spuriously high ratio, Swann, who has made a special study of the point, concludes that when all precautions are taken a real excess of positive ions must be admitted. Probably the main factor causing this excess is the superior mobility of the small negative ion: Nolan has found that k_-/k_+ has the value 1·16. A lower mobility implies a lower velocity of thermal agitation for the positive than the negative ion, and consequently less likelihood of capture by condensation nuclei. Another contributing cause may be the Ebert effect discussed in § 38. This general excess of positive small ions does not necessarily involve a nett positive charge in the air; it is easily compensated for by a comparatively small excess in the much larger number of large negative ions.

An instrument known as the Aitken dust-counter is used to find the total number of nuclei, charged and uncharged, per c.c. It consists of a small expansion chamber filled with a sample of the air and saturated with water-vapour. The sudden movement of a piston gives an adiabatic expansion which causes drops of water to condense upon the nuclei; the resulting cloud falls upon a glass plate divided into squares and the number of droplets is counted under a microscope. Though called a dust-counter it does not record the coarser dust in the air.[3]

§ 3. The Polar Conductivities and the Ionic Mobilities

A simple relation holds between the conductivity of the air and the numbers per c.c. and the mobilities of the ions responsible for conduction. Consider a point in the atmosphere at which the electric field intensity is F and the specific conductivity, the reciprocal of the specific resistance, is λ. The conduction current, i, through unit area drawn perpendicular to the field is then equal to $F\lambda$, for F is numerically equal to the potential difference, and $1/\lambda$ is the resistance, between the ends of a unit cube of the air. In this equation we assume that conditions are such that Ohm's law can be applied to the air. Since the current is carried by positive and negative streams of ions moving in opposite directions we may write

$$i = F(\lambda_+ + \lambda_-), \quad . \quad . \quad . \quad (1)$$

where λ_+ and λ_- are called the polar conductivities.

Actually the existence of the two main types of ion, large and small, leads to the flow of four different ion-streams, two up and two down if the field is vertical, in each of which the velocity is different, being given by $F \times k$, where k is the corresponding mobility. The total current is thus

$$i = Fe(n_+k_+ + n_-k_- + N_+K_+ + N_-K_-), \quad . \quad (2)$$

where k_+ and k_-, K_+ and K_-, are the mobilities of the positive and the negative ions, large and small respectively, and e is the elementary charge. From (1) and (2), separating out the oppositely moving streams,

$$\lambda_+ = (k_+n_+ + K_+N_+) \text{ and } \lambda_- = (k_-n_- + K_-N_-). \quad (3)$$

In clear country air over land, n_+ and n_- number about 600 per c.c., while N_+ and N_- are about 2000 per c.c.; k_+ and k_- are 1·5 approximately and K_+ and K_-, ·0004. Here, therefore, the ratio of the first to the second term in each bracket above is 1100 : 1 and most

of the conductivity of the air is due to the small ions. Near large towns, however, n is usually of the order of 100 per c.c. and N, on account of the heavy pollution of the atmosphere may be 50,000. Under these conditions the second term would be one-seventh of the first and the large ions would play a part in the transfer of electricity through the air.*

It is not usual to find the polar conductivities from equations (3) above, but directly, from measurements of the rate which the charge on an insulated body exposed to the free air is dissipated by the flow of ions to it. Consider a negatively charged body exposed to moving air and let σ be the density of the electrification on any portion of area dS.[4] Positive ions will move to the body, and since the field F just outside the surface is $4\pi\sigma$, the current per unit area tending to dissipate the charge will be $F\lambda_+ = 4\pi\sigma\lambda_+$. The total dissipation current, obtained by integrating over the whole exposed surface, is $4\pi\lambda_+\int\int\sigma dS$ or $4\pi\lambda_+Q$, where Q is the charge exposed to the air. Since this current represents the rate at which the body loses charge, we have $-dQ/dt = 4\pi\lambda_+Q$, a relation which provides a means of determining λ_+. A similar equation, with λ_- substituted for λ_+, holds for the case of a positively charged body.

An arrangement used for this purpose is due to Gerdien (Fig. 2); it resembles the Ebert apparatus already described, but the air-stream is now made so rapid and the field in the interior of the tube so weak, that only a very small fraction of the total number of ions passing through A has time to reach the central rod. In this case the numbers of ions per c.c. are not appreciably altered by the experiment and Ohm's Law applies.

If the potential V of the negatively charged central electroscope system is observed to rise at a rate dV/dt and if C is the total capacity of the central system, rod and electroscope, we have $-dQ/dt = -CdV/dt$. Also,

* The methods used to determine ionic mobilities are described in text-books on the conduction of electricity through gases

if C′ is the capacity of that portion of the central system exposed to the stream of air, the rod B and its support, $Q = C'V$, consequently

$$-CdV/dt = 4\pi\lambda_{+}C'V, \quad . \quad . \quad . \quad (4)$$

a relation from which λ_{+} can be determined. A similar experiment with the rod positively charged yields λ_{-}. The use made of the values found for the polar conductivities and an adaptation of the Gerdien method due to Schering are described in Chapter III, § 30.

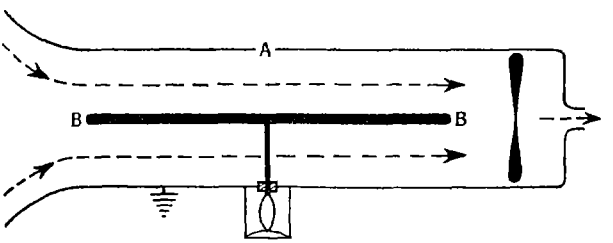

FIG. 2.—Gerdien conductivity apparatus.

§ 4. THE IONISING AGENCIES

Three principal agencies are responsible for the ionisation of the lower atmosphere: radiations from radioactive substances in the surface of the earth, radiations from radioactive matter present in the air itself, and the penetrating radiation. For a discussion of their relative importance it is convenient to use the symbol q to represent the number of "pairs of ions produced per c.c. per second in air at N.T.P.," a quantity which will be referred to as the ionising power of the radiation. This phrase in inverted commas is usually represented by the symbol I. Thus the statement $q = 4$ I means that, at the point in question, the radiations create four pairs of ions per c.c. per second, if the medium there is air at N.T.P. The contributions of the three different agencies just mentioned to the total ionising power, q, are distinguished by the symbols q_c, q_a, and q_h.

§ 5. The Effect of Radioactive Matter in the Earth

Uranium, thorium, and their products are widely distributed through the earth's crust, whose surface layers therefore emit α, β, and γ rays into the air. Since the α rays can only emerge from a very thin layer and can only ionise the first few cms. of the air, their effect is inconsiderable. The β rays can come from greater depths and penetrate much further into the atmosphere. Calculations based upon average values for the measured concentration of radioactive matter in the earth indicate that an effect ranging from 1 I at the surface to 0·1 I at about 10 metres above it is due to these rays. The γ rays are a more important factor, for they can come from still greater depths and consequently from a still larger quantity of radioactive material. It is estimated that they produce on the average 3 I at the surface, 1·5 I at 150 metres above it, and 0·3 I at a height of 1 kilometre. The recent discovery of the γ ray activity of potassium introduces another source of ionisation, for the potassium content of the earth's crust is considerable. No very detailed survey of this question has yet been made, but measurements indicate that at a height of 10 metres the contributions of radium, thorium, and potassium to the γ ray ionisation of the air are in the ratio of 1 : 1 : 0·7, in accord with sampling of the surface content of the earth.[5] The average value for the ionising power of the earth-radiations near the ground has been found directly to lie between 2 and 10 I, which is in accord with the measurements of the radioactive content of the earth's crust. Local surface and geological conditions naturally have a marked effect upon the value of q_e at any given spot.

The radioactive content of sea-water is found to be negligible in comparison with that of soil and rocks, and over the oceans the earth-radiation effect is very small indeed.

§ 6. The Effect of Radioactive Matter in the Air

The atmosphere contains a considerable quantity of the radioactive emanations, radon and thoron, and their successive products. A wire charged negatively to a potential of a few hundred volts and exposed to the air collects an easily detectable quantity of radium A and thorium A by recoil from the disintegration of these emanations. The gases themselves arise from the decay of radium and thorium within the earth, from which they escape by diffusion, by thermal convection, and as a result of decreases in the external atmospheric pressure. The greater portion of the ionisation thus produced is due to the α rays from the emanations themselves and from their A and C products, for here, unlike the case of the radiations from the earth, there is no absorbing layer between the disintegrating atom and the air. The radioactive gases and their products are fairly evenly distributed by atmospheric turbulence through the lower air. This "air-radiation" effect can be calculated from radioactive data if the emanation content of the air is determined. The emanations may be removed from a measured volume of air by drawing it through tubes cooled with liquid air or filled with cocoanut charcoal. The quantity of emanation condensed or absorbed is then determined by the effect produced in an ionisation electroscope, corrected for the decay of the material during the time of the experiment. A more direct method is to fill a closed ionisation chamber first with ordinary air and then with air which has been freed by the above method from the emanations and from their products, and to determine the saturation currents in the two cases. If these are i_1 and i_2 respectively, v the volume of the vessel and e the elementary charge, the value of the air-radiation ionising power, q_a, is given by $i_1 - i_2 = q_a ve$.

The results of such measurements agree with estimates based upon observations of the average emanation

content of the air in placing the air-radiation effect at about 5 I in the neighbourhood of the earth's surface. Of this about 60 per cent. is due to radon and its α ray products and the remainder to the thoron series. It varies somewhat with locality and with those meteorological conditions which determine the rate of escape of the emanations Apart from the effect of strong upward winds in elevating the richer surface layers, the emanation content of the air should decrease fairly rapidly with height. Direct information on this point is difficult to obtain, but what exists indicates that the air-radiation effect falls to less than 2 per cent. of its surface value at a height of 5 kilometres.

The effect, like that of the earth-radiation, is extremely small over the oceans, where the emanation content of the air is only about 1 per cent. of its value over land areas.

§ 7. The Effect of the Penetrating Radiation

The third factor in the ionisation of the atmosphere is a radiation of peculiar interest, whose origin and nature are still the subject of much investigation. It has a penetrating power which is considerably greater than that of the most penetrating γ rays from radioactive bodies, and it travels to the earth's surface in a downward direction, undergoing a certain amount of absorption on the way. Its ionising power at sea-level over both land and ocean areas lies between 1·5 and 2·5 I. Though these figures correctly suggest that the absolute value of the effect is not accurately known, relative observations can be made with great certainty and show that the ionising power of the radiation at a given height above sea-level is practically independent of geographical position and alters only slightly with meteorological conditions such as pressure. The ionisation due to this radiation increases rapidly with height above sea-level, rising ten-fold in the first 5 kilometres. It is discussed in greater detail in the next chapter.

§ 8. The Ionisation Inside a Closed Vessel

It is a matter of considerable difficulty to determine separately the ionising powers of the earth-radiation and of the penetrating rays. Calculations of the former must be based upon measurements of the radioactive content of the earth's crust, and these are necessarily tedious and rough. To proceed further, one must examine the ionisation produced in the air inside a sealed metal chamber under conditions which are modified from those existing in the free air by the presence of the metal walls. This involves correction to free-air conditions. A further disadvantage is that a new ionising agency is introduced, the radioactive matter in and on the inside walls. The ionising power of this "wall-effect," or the "residual ionisation" of the vessel as it is called, is a constant depending on the material of which the walls are made and the cleanliness of the inner surface. It is usually represented by the symbol q_0.

The total ionising power of all the radiations operating upon the gas in a closed vessel may be called q' and the modified effects of the three main ionising agencies q'_e, q'_a, and q'_h: we then have

$$q' = q'_e + q'_a + q'_h + q_0. \qquad (5)$$

We may suppose the vessel to take the form of a sealed ionisation chamber filled with air at N.T.P. which has been freed from radioactive matter. The saturation current carried by the ions to the central collecting electrode is then given by $i = q've$, where v is the volume of the vessel and e the elementary charge on an ion.

Various methods have been employed to separate out the four terms on the right-hand side of equation (5) from one another. The most satisfactory of these begins by determining q_0. The instrument, whose form is described in the following chapter, is taken to a large snow-fed lake whose radioactive content, like that of the sea, is negligible. When it is sunk to the depth of a few feet in such a lake, the effects of earth and air-

radiations are non-existent and equation (5) becomes $q' = q'_h + q_0$; on lowering the vessel still further, q'_h diminishes as the penetrating radiation becomes absorbed in the increasing thickness of water, and it is possible to reach depths at which the saturation current is practically constant and unaffected by further sinking of the instrument. At this stage $q' = q_0$, and the residual ionisation is determined. By combining this observation with that made close to the surface of the lake, q'_h may be found.

Since the effects of the penetrating radiation and of the walls of the vessel are both independent of local conditions other than height above sea-level, they remain the same when the instrument is transported to a site on land at the same level. A measurement of the saturation current in the chamber under land conditions gives q' as stated by equation (5), and hence the sum of the earth and air effects, q'_e and q'_a can be found In actual practice the air-radiation effect within a closed vessel is extremely small: the walls exclude α and β rays coming from outside and reduce q'_a to the ionising power of the γ rays emitted by the B and C products of the radioactive emanations. This amounts to but 4 per cent. of the effect produced by the air-radiation in the free atmosphere, in the case of a vessel with steel walls a few millimetres thick. It is therefore sufficient to determine the air-radiation effect, q'_a, by calculation based upon a knowledge of the emanation content of the air and of the nature of the walls of the vessel. The fourth factor, the effect of the earth-radiation, q'_e, is then obtained by substitution in equation (5).

To pass from these closed vessel determinations of the effect of the radioactive matter in the earth to the effect to be expected in the free air, experiments may be made with screens of different thicknesses placed around the ionisation chamber and the values thus obtained for the earth-radiation effect extrapolated to zero thickness. In doing so account has to be taken of the effect of the screens upon q'_h.

Until more is known of the properties of the penetrating radiation, the relation of its ionising powers inside and outside a closed vessel cannot be stated with any certainty, but it is probable that unless the walls are very thick they will differ little from one another.

The greater part of the residual ionisation arises from α rays and takes place close to the walls ; q_0 is therefore the effect of the residual ionisation near the walls divided by the volume of the vessel.

§ 9. Summary of Ionising Powers of Various Agencies

The table on opposite page gives a rough idea of the effects of the three main factors in the ionisation of the air at sea-level, both in closed vessels of steel, a few millimetres thick, and in the free atmosphere. The values given refer to measurements at about a metre from the surface of the earth ; they are averages and, except in the case of the penetrating radiation, are subject to considerable fluctuations with local conditions.

It is noteworthy that the rate of production of ions over land areas is about six times as great as over the oceans, where the ionisation is practically all due to the action of the penetrating rays. Over land close to the surface of the earth, these rays are much less important, but at greater heights the effects of the earth and the air-radiations fall off rapidly as we have seen, so that here also, from a height of one of two kilometres upwards, the penetrating radiation is the chief agent in making the air a conductor.

§ 10. The Rate of Disappearance of the Small Ions

The number of ions produced by the agencies we have discussed will not increase indefinitely as time goes on. Even in pure filtered air, free from nuclei, the small ions disappear by diffusion to the walls and by recombination with one another. Experiments have shown

TABLE I

IONISING POWERS AT THE EARTH'S SURFACE, SEA-LEVEL

Ionising Agent.	Ionising Power in Ion-pairs per c.c. per sec. in Air at N.T.P.			
	Unscreened Closed Vessel.		Free Air.	
	Over Land.	Over Sea.	Over Land.	Over Sea.
Radioactive matter in the earth . .	4·0	0	4·0	0
Radioactive matter in the air . . .	0·2	0	5·0	0
Penetrating Radiation	2·0	2·0	2·0	2·0
	Total ionising power for the free air .		11·0	2·0

that when the diffusion loss can be neglected, the equation $dn/dt = q - \alpha n^2$ applies to such filtered air, n being as before the number of positive or negative small ions per c.c., q the number of pairs of ions produced per c.c. per second, and α the so-called recombination constant of small ions. In the course of time a state of equilibrium will be reached, in which the processes of creation and disappearance of ions balance one another; then $dn/dt = 0$ and the equilibrium equation $q = \alpha n^2$ holds. Applying this equation to the free air, taking $q = 11$ I from the preceding section and $\alpha = 1{\cdot}6 \times 10^{-6}$ cm.^{3}/sec. from laboratory experiments, we find $n = 2622$. This is very much larger than the number of small ions actually observed, which is round about 600 per c.c. The discrepancy is due to neglect of the important part

played by the Aitken or condensation nuclei in capturing the small ions.

An equation applicable to air containing nuclei was first given by von Schweidler [6] in the form

$$dn/dt = q - \alpha n^2 - \gamma n Z,$$

where γ is a constant and Z the total number of nuclei, charged and uncharged, per c.c. of the air. For equilibrium, when dn/dt is zero, it becomes

$$q = \alpha n^2 + \gamma n Z = n(\alpha n + \gamma Z) = n(\alpha n + \beta) \quad (6)$$

or

$$q = \beta' n \quad . \quad . \quad . \quad . \quad (7)$$

The quantity β' is known as the disappearance constant of the small ions. Experiment shows that in ordinary air, where nuclei are plentiful, the term αn is small compared with β; even over the oceans it is probably only one-seventh of β. Thus β', while not a true constant, for it depends upon the concentration Z of the nuclei in the air, is to a large extent independent of the number of small ions per c.c. Equation (7) thus states a linear law of recombination as opposed to the quadratic law which holds for filtered air.

If the action of the ionising agents were removed, the small ions would disappear at a rate $dn/dt = \beta' n$, giving $n = n_0 e^{-\beta' t}$, for the number present at any subsequent time. It is assumed in the integration that there are sufficient nuclei present to make β' independent of n. Von Schweidler has pointed out that the quantity $\theta = 1/\beta'$ can, by analogy with the equation for radioactive decay, be termed the average life of a small ion. Equation (7) then becomes

$$q\theta = n \quad . \quad . \quad . \quad . \quad (8)$$

in which θ should vary inversely as the number of nuclei per c.c. of the air.

In a development of this theory put forward by J. J. Nolan and his co-workers, [2, 1] separate consideration is given to the capture of small ions by charged nuclei of opposite sign, leading to neutralisation, and by un-

charged nuclei, leading to the formation of large ions. For the small positive ions, they write

$$dn_+/dt = q - \alpha n_+ n_- - \eta_1 n_+ N_0 - \eta_2 n_+ N_- = 0, \text{ for equilibrium} \quad . \quad (9)$$

Here N_0 and N_- are the numbers of uncharged and negatively charged nuclei per c.c. respectively, while η_1 and η_2 are the recombination coefficients for the two types of capture. By a theoretical discussion, too long to be reproduced, this equation is converted into the simpler form $q = [\eta_2 Z/2{\cdot}1]n$, which corresponds to Schweidler's equation (6) and again indicates that the average life of an ion should vary as $1/Z$.

This average life θ is found over land areas to lie between 10 and 60 seconds according to the purity of the air, the higher values being associated with observations made in the country. Over the oceans it may be as much as 230 seconds, according to the measurements of Hess [7] and of Mathias [8] on the island of Heligoland. The table below, taken from Hess, illustrates the great difference in the equilibrium between small and large ions brought about when the wind direction changes; the first set of observations was made when the wind blew from the nuclei-laden European mainland, the second when it blew from the polar regions:—

TABLE II

OBSERVATIONS OF THE STATE OF ATMOSPHERIC IONISATION (HESS, HELIGOLAND)

Wind.	No of Small Ions per c.c (n).		No. of Large Ions per c.c. (N).		Total No. of Nuclei.	Average Life of Small Ion, secs.	
	n_+	n_-	N_+	N_-	$Z = N_0 + N_+ + N_-$	θ_+	θ_-
S.W. (Land)	220	267	1480	1510	6300	22	22
N.N.W. (Arctic)	794	843	200	200	1100	115	204

These authors find that for values of θ lying between 36 and 100 seconds, Schweidler's linear equation (8) is valid; in purer air, where θ is greater than 100 seconds, the simple equation no longer holds, for the quadratic recombination term αn^2 then becomes significant.

Experiments by P. and J. Nolan[9] and their co-workers have, however, suggested that the form of the accepted equilibrium equation is incorrect and should be replaced by a new empirical relation $q = n(\alpha n + \zeta\sqrt{Z})$, where ζ is a constant. For air with a sufficient concentration of nuclei this reduces to $q = [\zeta\sqrt{Z}]n$, which would imply that the mean life of an ion varies as $1/\sqrt{Z}$. It is therefore possible that the processes governing the disappearance of the small ions in the atmosphere are more complex than has hitherto been supposed. Account may have to be taken of variations in the actual nature of the nuclei, of complexities in the small and the large ion families, such as are indicated by the existence of "intermediate" ions, of the possible occurrence of multiply-charged large ions when the number of nuclei is small,[10] and of the effect of actual dust-nuclei.

§ 11. Methods of Determining the Average Life of a Small Ion

The average life, θ, of the small ions can be determined for a sample of air enclosed in an ionisation chamber by two methods suggested by Schweidler.[6] The first involves the separate measurement of the ionising power, q, of the ionising radiations, and of the number of small ions per c.c., n, and substitution in the equation $q\theta = n$. q is obtained from the saturation current, i, using the relation $i = qev$, where v is the volume of the vessel. The corrections to be applied have already been discussed (§ 8). The quantity n is found by allowing the air to stand undisturbed for a sufficient time for equilibrium between small ions and nuclei to be attained and then applying a strong field for a few seconds to sweep the small ions on to the collec-

ing electrode. The second method involves the measurement of the currents flowing in an ionisation vessel for various values of the applied potential difference.[11]

§ 12. The Ionisation-balance in the Lower Atmosphere

It is of considerable importance to decide to what extent the various factors in the creation and destruction of ions account for the state of ionisation actually observed in the air over land and sea. Any failure in this respect would suggest that new processes must be sought.

The evidence available indicates, however, that the chief factors in the ionisation-balance have been discovered. Over land areas where nuclei are usually plentiful, the Schweidler equilibrium equation, $q\theta = n$, applies. An average value of 60 seconds for θ, the mean life of a small ion, and of 650 per c.c. for the small ion concentration, requires that the rate of creation, q, should be 650/60 or 10·8 ions/c.c./sec. in satisfactory agreement with direct measurements of q, shown in Table I. No direct measurements of θ have yet been made over the oceans. The concentration of nuclei in mid-ocean has been estimated by Hess, from measurements on air from the Arctic, to be such as to give an average life of 230 seconds to a small ion. Since n was found on the *Carnegie* to amount to about 550 small ions/c.c., the ionising power at sea should amount to 550/230 or 2·4 I. The agreement of this figure with the value 2·0 I shown in Table I. is reasonable, in view of the roughness of the estimate of θ used, and of the present uncertainty in the value of q itself.

Hess's estimate of the concentration of Aitken nuclei over the oceans, about 800 per c.c., is borne out by direct measurements on the *Carnegie*, which give means of 870 and 774 per c.c. in the Atlantic and Pacific measure- respectively, and by a recent countpeaks, or in balloons, the Atlantic. ,nust and portable, as

The problem of the ionisation

cannot be said to be completely solved until agreement is reached on the form of the interaction-relation between small ions and nuclei. The general nature of the factors in the ionisation-balance has, however, been established, and an explanation can be given of the paradox that the conductivity of the air undergoes no large change as one passes from mid-ocean to land, despite a six-fold increase in the rate at which ions are formed. The increased birth-rate of the small ions is counterbalanced by an increased death-rate, owing to the greater concentration of predatory condensation-nuclei over the land areas.

REFERENCES TO PAPERS

[1] J. J. Nolan and de Sachy, *Proc. Roy. Irish Acad.*, A, 37, p. 71 (1927).

[2] J. J. Nolan, Boylan, and de Sachy, *ibid.*, A, 37, p. 1 (1925).

[3] Boylan, *ibid.*, A, 37, p. 58 (1926).

[4] C. T. R. Wilson, *Dict. of Appd. Physics*, Art. *Atmospheric Electricity*, vol. 3, p. 84.

[5] Suckstorff, *Naturwissenschaften*, 19, p. 87 (1931).

[6] von Schweidler, *Wien Sitz. Ber.*, 2a, 127 (1918), 128 (1919), 133 (1924).

[7] Hess, *Gerland's Beit. z. Geophysik*, Bd. 22, p. 256 (1929).

[8] O. Mathias, *ibid.*, Bd. 27, p. 360 (1930).

[9] J. J. Nolan and P. J. Nolan, *Proc. Roy. Irish Acad.*, A, 40, p. 11 (1931).

[10] Boylan, *ibid.*, A, 40, p. 76 (1931).

[11] O'Brolchain, *Gerland's Beit. z. Geophysik*, 29, p. 1 (1931).

CHAPTER II

THE PENETRATING RADIATION

UNTIL the year 1911 it was generally supposed that the ionisation inside a closed vessel was entirely due to radiations from the walls, and from radioactive matter in the earth and the outside air. It was therefore to be expected that this ionisation would decrease when the vessel was raised above the surface of the earth. This was tested in balloon ascents by Hess in 1911, and Kolhörster in 1913, who found that the diminution with height was only appreciable during the first kilometre, after which an increase occurred. These observations led Hess to postulate an ionising radiation coming from above and suffering partial absorption in the atmosphere.

Something has already been said of this radiation in § 7; the accurate determination of its properties has proved a difficult matter. Its great penetrating power implies that the ionisation it creates within a closed vessel is so small as to require specially refined technique to measure accurately in the presence of the other ionising agencies discussed in Chapter I. Further, the fact that it comes from above and suffers some absorption necessitates investigations at high altitudes so that any softer and more easily absorbed components which do not reach sea-level may be examined. Such measurements must be made on mountain peaks, or in balloons, under conditions which require robust and portable, as well as sensitive, instruments.

§ 13. Experimental Methods of Measuring the Intensity of the Radiation

The most extensive measurements of the intensity of the radiation have been made by the ionisation method. The first point to be attended to is to eliminate as far as possible the disturbing effects of the earth and air-radiations. This can best be done by sinking the ionisation chamber beneath the waters of a lake, or by surrounding it with a thick shield of non-radioactive iron or lead and correcting for the small fraction of the γ rays which are still able to enter the chamber.

The ionising power of the penetrating rays at sea-level is about 2·0 I (ions per c.c. per sec.), so that their contribution to the saturation current in a vessel of volume 1 litre, filled with air at N.T.P., would be $3{\cdot}2 \times 10^{-16}$ amperes. In order to increase this effect, it has become the general practice to fill the vessel with carbon dioxide at a pressure of 30 atmospheres or more.* This carries with it an important advantage, in that it considerably reduces the effect of the residual ionisation, which, we have already seen, is caused by α rays from the walls. The range of these rays in CO_2 at high pressure is small, and they produce all their effect within a few millimetres of the walls themselves. Here the electric field driving ions to the central collecting electrode is weakest and cannot separate out more than a small fraction of those produced before they recombine. A further decrease in the residual effect can be obtained by using a wire cage as an electrostatic screen to form the walls of an inner ionisation chamber. This cuts down the amount of wall material productive of undesirable α rays (Hoffmann, Fig. 4).

The quantity actually measured in these experiments is the sum of the penetrating ray and the residual

* Increasing the pressure does not give a proportional increase in ionisation. For 30 atmospheres the effect is only 14 times that at N.T.P. and the actual factor is somewhat uncertain. Hence the difficulty of finding the absolute value of q_h.

ionisations, q_h and q_0, and fluctuations in the latter limit the accuracy with which q_h can be found. These arise from the fact that in a given time-interval the number of α particles emitted from the walls undergoes variations about a mean value which are subject to well-known statistical laws. To smooth them out it is generally necessary to make observations over a period of several hours. For accurate measurements in a shorter time instruments have been devised by Hoffmann [1] and by the author [2] which are sensitive enough to show the sudden increases in the ionisation due to single

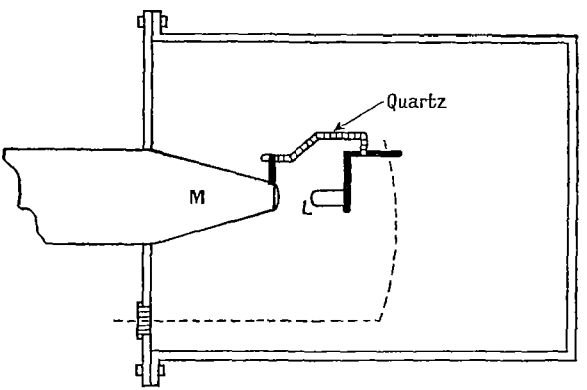

FIG. 3.—Kolhörster ionisation chamber and electroscope.

α particles and so to determine the residual ionisation directly.

The portable instrument developed by Kolhörster is shown diagrammatically in Fig. 3. The ionisation chamber is of steel, coated inside with zinc, and is filled with purified air at atmospheric pressure. Two small loops L of platinised quartz fibre, mounted upon a rod held in a quartz insulator, form the central electrode and can be charged by a device operated from outside by an electromagnet (shown dotted). Their potential is determined from their distance apart as read in the

eye-piece of a microscope M. In Millikan's instrument quartz fibres are also used as the central electrode, but the gas-filling is CO_2 at a pressure of 30 atmospheres. In both cases the quartz and invar-steel framework supporting the fibres is designed to reduce the effects of temperature variations. The chief disadvantage of this type of chamber is the small volume permissible in

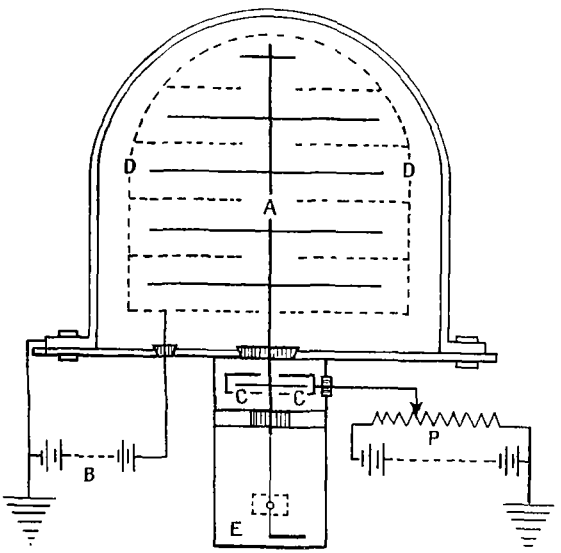

FIG. 4.—Hoffmann's null method for the measurement of the ionisation due to the penetrating radiation.

view of the pressure and the use of a high-power microscope. The penetrating radiation ionises the gas through the agency of fast-moving particles (§ 17) which fluctuate in number like the α particles from the walls. To smooth them out in the case of small ionisation vessels necessitates observations extending over many hours.

Another type of apparatus, due to Hoffmann,[3] employs

an electrometer which is outside the ionisation vessel (Fig. 4). The chamber is filled with CO_2 at a pressure of about 30 atmospheres, the residual radiation is reduced by the use of a wire cage for the walls of the ionisation vessel proper, and saturation conditions are obtained by adopting the branched form of central electrode A and cage D. The electrometer E is of a specially sensitive type developed from the quadrant electrometer. It serves as a null instrument, for arrangements are provided to maintain the whole central system at zero potential. The cage is kept permanently charged by means of the battery B, and the charge carried to the central electrode by the ions is compensated for by an equal and opposite charge induced upon the inner plates of the small condenser C by means of the potentiometer P. The amount of charge collected during a given time can be found from the capacity of C and the potential applied to the outer plates. Both C and the electrometer are kept evacuated. Though more complicated and less portable than the first type, this instrument has the advantages of freedom from all insulation losses on the collecting system and of greater volume.

The more recent portable instruments show a reduction in the ionising power of the residual wall radiation; in Millikan's 1926 form the ratio of this quantity to the ionising power of the penetrating radiation at sea-level was 4·5/1; in the form used by him in 1930 this had been reduced to 1/30. The ratio for Hoffmann's instrument is less than 1/5.

§ 14. The Ionisation-depth Curve in Air and Water

In studying the variation of the ionisation intensity of the radiation above and below sea-level, it has been found convenient to measure distance downwards from the top of the atmosphere. This distance is usually expressed in equivalent metres of water, i.e. in terms of that column of water which would possess the same

mass per unit area of cross-section as the column of air above the point of observation. Thus sea-level is 10·33 equivalent metres of water below the top of the atmosphere.

Observations of the ionisation at various depths below the top of the atmosphere are most conveniently made by sinking an ionisation vessel in a lake situated at a very great altitude. The results when plotted against the total depth, equivalent and real, of water below the top of the atmosphere constitute an ionisation-depth curve. An extensive series of investigations has been carried out by Millikan and Cameron to determine the shape of this curve, using lakes on mountain peaks in both North and South America.[4] Thus they were able to examine the absorption of the rays from near the surface of Gem Lake, California, where the depth below the top of the atmosphere was 7·4 equivalent metres of water (altitude 3000 metres), down to 81 actual metres below the surface of the lake, 86 equivalent metres from the top of the atmosphere. Owing to the need for some water-screening to cut down the air-radiation effect, q'_a, trustworthy observations began at a total depth of some 8 metres.

They have repeated these observations in other lakes at lower altitudes and have been able to show that at the same total depth below the top of the atmosphere the ionisation is always the same. This indicates that within the reasonably high accuracy of their measurements, the absorbing power of the additional thickness of air involved in the observations at lower altitudes is in fact that of the equivalent layer of water. As a consequence of this result measurements made at still greater altitudes on mountain peaks and in balloons can be plotted on the ionisation-depth curve for water with some degree of confidence that the absorption in the air can be reduced to that in water in this way. Observations made in air alone, however, require the instrument to be shielded with lead from the external earth and air-radiations and have not only to be cor-

rected for the small fraction of these which can still penetrate the shields but also for the absorption of the penetrating radiation in the lead. For these reasons they are not so reliable for plotting on the curve as the measurements made in water.

The ionisation-depth curves obtained by Millikan and Cameron are shown in Fig. 5, the portion below 30 metres being inset on a larger scale. The observations made in Lake Arrowhead (altitude 1700 metres) and Gem Lake (altitude 3000 metres) constitute the main "water" curve. The curve marked "land" shows the

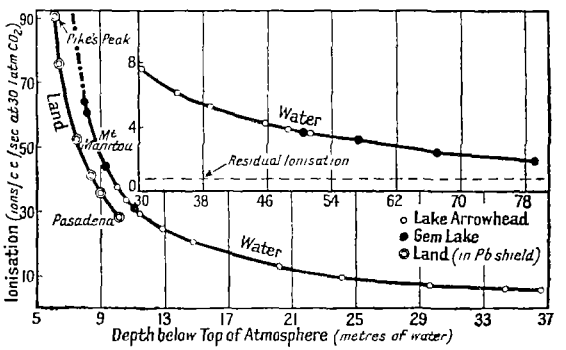

FIG. 5.—Ionisation-depth curve in air and water (Millikan and Cameron).

land observations made at various heights from sea-level to the top of Pike's Peak, California (altitude 4700 metres, 6·2 equivalent metres of water below the top of the atmosphere), inside a thick lead shield. By comparing the abscissæ of the land and water curves for the same ordinate, the water-equivalent of the shield at the higher altitudes was found to be 1·22 metres. The dotted portion of the water curve is obtained by adding this amount to the equivalent depth of the land observations.

Even at a total depth of 80 metres the water curve

is not parallel to the horizontal axis and the value of the residual ionisation (1·2 ions/c.c./sec. in CO_2 at 30 atmospheres) has to be obtained by extrapolation.

These measurements show clearly the very great penetrating power of the radiation, for the most penetrating known gamma rays (from thorium C″) would be reduced to one-fiftieth of their original intensity in their

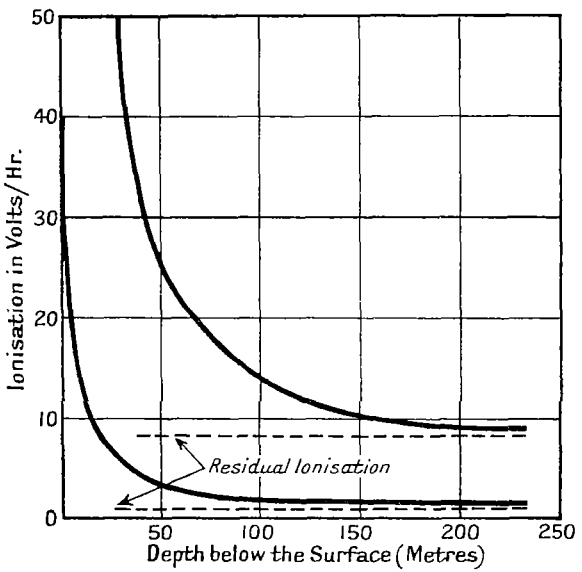

FIG. 6.—Ionisation-depth curve (Regener).

passage through a single metre of water. The lower part of the ionisation-depth curve has been extended still further by Regener [5] in experiments on Lake Constance. His ionisation vessel had a volume of 34 litres and was filled with CO_2 at a pressure of 30 atmospheres. This was surrounded by a protecting tank filled with water from the surface of the lake which formed a screen

1 metre in thickness and prevented possible variations with depth in the small radioactive content of the surrounding water from affecting the measurements. With this arrangement Regener has followed the radiation down to a depth of 230 metres of water below sea-level, the large volume of the chamber enabling accurate measurements to be made even at great depths. At 230 metres the curve was found to be still falling and could still be determined with an error of the order of 2 per cent. The movement of the fibres of the electrometer was recorded automatically by photographing their position at intervals of one hour. Regener's curve is shown in Fig. 6, with the ordinates of the portion below 30 metres repeated on a tenfold scale.

§ 15. Analysis of the Ionisation-depth Curve

The form of the ionisation-depth curve suggests that it may be made up of three or four separate curves corresponding to component radiations of different penetrating powers. On this view the initial steep portion would correspond in the main to an easily absorbed component which does not reach sea-level in any quantity compared to the others, while only the most penetrating component can reach to the great depths examined by Millikan and Regener. In endeavouring to analyse the curve in this way it has been assumed that the process of absorption of a parallel beam of the s-th component is represented by the well-known equation $-dI = \mu_s I dH$, where $-dI$ is the decrease in the ionisation I due to passage through a thickness dH of the absorbing medium and μ_s is a constant, characteristic of the radiation and of the medium, which is called the absorption coefficient of the s-th component. Integration of this equation gives $I = I_0 e^{-\mu_s H}$. The significance to be attached to μ_s will be discussed later.

There is, however, no reason to believe that the radiation strikes the top of the atmosphere as a parallel

beam, and we must assume incidence with equal intensity in all directions and take account of the increased thickness of air or water to be traversed as the angle of incidence is increased. When this is done, it is found that the relation between the ionisation I at a depth H and that which would be found at the top of the atmosphere, I_0, takes the form $I = I_0 \int_1^\infty [e^{-\mu_s Hx} . dx/x^2]$.* Tables of this integral have been given by Gold.

The analysis of the ionisation-depth curve must be carried out by a trial and error method, for not only the number of components but the absorption coefficient μ_s and the initial intensity I_0 of each has to be chosen to fit the curve. Analyses of this kind have been made by Millikan and Cameron, and by Regener, whose results are shown in the following table :—

TABLE III

ANALYSES OF THE IONISATION-DEPTH CURVE INTO COMPONENTS

Compt.	Millikan.		Regener.	
	Absorption Coefficient, μ_s.	Intensity at Top of Atmosphere, I_0.	Absorption Coefficient, μ_s.	Intensity at Top of Atmosphere, I_0.
1	0·80 metres^{-1}	141,000	?	?
2	0·20 ,,	130	0·21	130
3	0·10 ,,	80	0·073	51
4	0·03 ,,	33	0·02	6·5

The values of μ have been expressed in reciprocal metres of water ; in the same units the mean absorption coefficient of the gamma rays from radium B + C

* See Rutherford, *Radioactive Substances and their Radiations*, p. 262, where $x = \sec \theta$.

after filtration through 10 mm. of lead would be 5·4. Since Regener's experiments did not extend above sea-level he has not been able to determine the constants of the most easily absorbed component.

The agreement obtained by these independent observers for the other three components is striking; slight discrepancies in μ may be explained by the uncertainty in the exact value of the residual ionisation, for the curves are still falling at the lowest depths reached. The difference in relative intensities may be due to some selective action arising from the difference in the size of the chambers used.

§ 16. Ionisation-depth Curves in Heavy Metals: the Transition Zone

The absorption of the radiation in heavy metals has been studied by placing metal screens round the ionisation vessel. Since this corresponds to sinking it in a lake of the metal, the results obtained should agree with the ionisation-depth curve taken in water when the thickness of each screen is expressed in equivalent metres of water. It is, however, found that the absorbing power of a metal such as lead is initially very high. The curve falls abnormally rapidly at first (for 10 cm. in the case of Pb); afterwards it runs parallel to, but lower than, the water curve, additional screens producing the same reduction as their water-equivalents.* It has been shown that this effect is due to the transition from air to lead, and something similar is exhibited in all transitions from one medium to another. Fig. 7, after Steinke,[6] shows the ionisation-depth curves of aluminium and lead as thick lines. The effects of adding an inside layer of Pb after 28 cm. of Al have been used, and of adding inside layers of Al after 4 and 10 cm. of Pb, are

* In this work the water-equivalent is that thickness of water with the same number of extra-nuclear electrons in a column one sq. cm. in cross-section. Millikan's water-equivalents (§ 14) are mass-equivalents.

shown by the dotted lines. The increase in the ionisation in two of these cases is very remarkable. It is suggested that the transition zone effect is due to an alteration in the equilibrium between the primary rays and their secondary electrons (§ 20), but no quantitative explanation can yet be given. The phenomenon is of great importance in connection with the problem of the nature of the radiation.

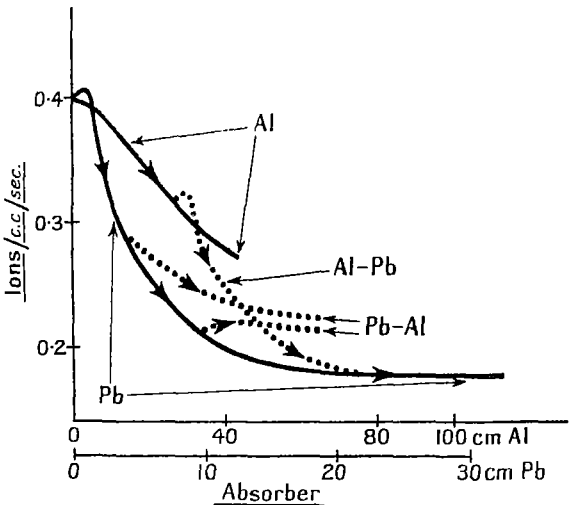

FIG. 7.—Transition-zone effects in Pb and Al (Steinke).

A striking instance of the initial drop in the absorption curve in lead is afforded by a screen used by Millikan in mountain observations. Its calculated water-equivalent was 85 cm., but a comparison with the ionisation-depth curve in water showed that it was effectively 170 cm. at sea-level and 122 cm. at a height of 5000 metres.

§ 17. Photographic Registration and Counting of the Ionising Particles

The ions produced by the rays can be studied by means of the Wilson cloud chamber, in which a water-drop is condensed on each. Skobelzyn [7] has shown in this way that much of the ionisation is due to the action of fast-moving particles which travel in a downward direction at the rate of about one particle per square centimetre per minute at sea-level. The photographs of their tracks show that they create some 40 ion-pairs per centimetre of their path in ordinary air.

It is not yet certain whether all the ionisation arises

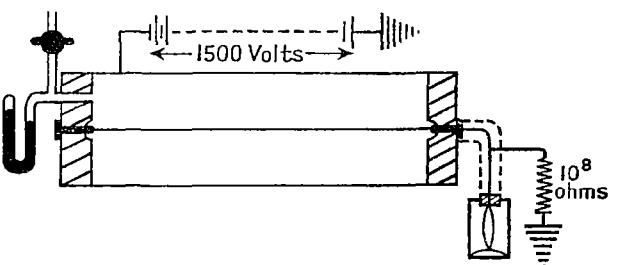

Fig. 8.—Geiger-Müller tube-counter.

from particles of this kind. A number of the tracks show a paired relation which may be significant, two or more particles entering the chamber during one expansion in directions making a small angle with one another.

The passage of these ionising particles can be continuously recorded with the tube-counter of Geiger and Müller. In this (Fig. 8) the ionisation vessel is a tube of zinc and the collecting electrode a thin wire along the axis, coated with a semi-insulating layer of oxide or varnish. Conditions of pressure and potential difference are adjusted below the sparking value so that the entry of each ionising particle gives rise to a sudden

pulse of current of very short duration. The advantage of this device is that the effect of an α particle is equal to that of a β particle, instead of 200 times greater as in the ordinary ionisation chamber. The same cleaning and screening precautions as have been described for the latter must be taken. This counter has been

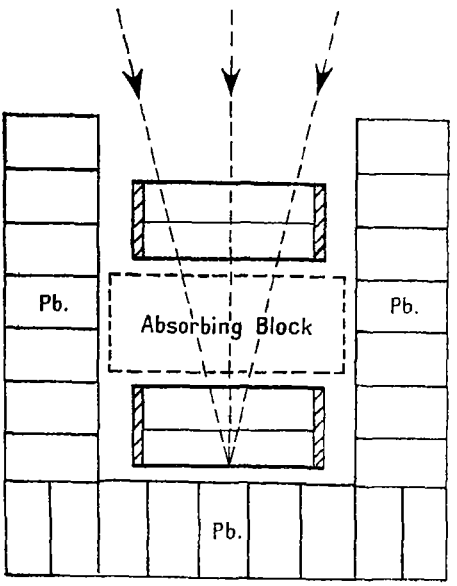

FIG. 9.—The Bothe-Kolhörster experiment.

used by Regener [5] to confirm the readings on his ionisation-depth curve; the submerged counter was joined to an arrangement which recorded each pulse automatically.

An apparatus which counts the penetrating ray particles only has been developed by Kolhörster and Bothe (Fig. 9). Two counters are mounted vertically

above one another, and account is taken only of those pulses which coincide in time with one another and are considered to be due to the passage of particles which are able to penetrate both counters. The coincidences were originally determined by recording the sudden deflections of both electroscopes on the same moving photographic film. In a development due to Bothe,[8] the two counters are joined to the two grids of a screened-grid valve which is so arranged that a pulse of plate current occurs only when both grids are practically simultaneously changed in potential.

§ 18. The Bothe-Kolhörster Experiment

Bothe and Kolhörster[9] have used this arrangement to determine the absorption coefficient of the ionising particles themselves. A block of gold 4·1 cm. thick was placed between the counters, and the reduction in the number of coincidences was observed. The value found for the absorption coefficient was so close to that given by the usual ionisation chamber method as to lead them to conclude provisionally that the ionising particles are the primary radiation and not of secondary origin. In an extension of this experiment carried out by Rossi,[10] however, evidence was found of the actual production of fresh ionising particles when the radiation was absorbed. These presumably arise from a primary radiation of γ ray type.

§ 19. The Energy of the Ionising Particles

If the ionising particles are electrically charged, the deformation of their paths in a transverse magnetic field should give information as to their nature and energy. Several unsuccessful experiments of this kind have been interpreted as indicating that their momentum is too great for them to be bent in the fields used. Mott-Smith[11] in this way has placed a lower

limit of 2×10^9 *e*-volts * to their energy if they are electrons, and 10^9 *e*-volts if they are protons.

The Bothe-Kolhörster-Rossi experiment suggests that the effective range of the particles is about 10 equivalent metres of water or $7{\cdot}7 \times 10^5$ cm. of air at N.T.P. They produce some 40 ion-pairs per centimetre of air and each ion-pair costs the particle about 30 *e*-volts. Hence the total initial energy of a particle must be of the order of $40 \times 30 \times 7{\cdot}7 \times 10^5$ or $9{\cdot}2 \times 10^8$ *e*-volts.

In experiments carried out under thunderstorms,[2] the author has found that the strong electric fields within and outside the cloud are able to stop a large proportion of these particles. He concludes that their energy must be less than 5×10^9 *e*-volts, if they are electrons or protons.

Such energies are more than a hundred times greater than those of the fastest particles emitted by radioactive bodies. If the particles are electrons they must be moving with a velocity only about 40 metres per second less than that of light and their inertial mass is 2000 times their rest-mass, slightly greater than the mass of a slow proton. At such energies electrons and protons may be expected to give approximately the same ionisation per unit path and the same absorption coefficient.

It has recently proved possible to obtain magnetic bending of the tracks in a Wilson cloud-chamber.[18] The paired particles are found to be of two types, positively and negatively charged, presumably protons and electrons. Their energies range from 10^7 to 10^9 *e*-volts.

§ 20. The Nature of the Penetrating Radiation

In view of the difficulties in the way of determining the nature of the fast ionising particles and of some

* Electron-volts, the energy expressed in terms of the difference of potential in volts through which an electron must travel to attain this energy.

uncertainty as to whether there are not other ionising rays of much shorter range, any discussion of the nature of the penetrating radiation itself is purely tentative. In this section two of the many important points which have been raised in this connection will be outlined.

The first concerns the effects to be expected if the primary radiation is itself constituted of fast-moving charged particles. In such a case the earth's magnetic field should produce a deflection of their paths leading to a concentration of the particles in the higher magnetic latitudes. Brucke has shown that for a fast electron to reach the earth's surface below magnetic latitude 50° its energy must exceed 5×10^9 volts, and for it to attain the equator it must have twice this energy, even if loss of energy in passage through the air be neglected. This question is being investigated at the present time; Millikan [12] has shown that the sea-level intensities in latitudes 59° and 34° are the same within the limits of accuracy of his measurements (1 per cent.). These and other observations speak against a corpuscular nature for the primary rays.

The second point concerns the view that the ionising particles are secondary electrons arising from the passage of primary ultra-gamma ray quanta through the atmosphere, and the utilisation of absorption coefficients derived from the ionisation-depth curve to find the frequencies of these quanta.[13] On this view an ionising particle is produced when a quantum of energy $h\nu$ makes a Compton collision with an electron in an atom. The electron moves forward with energy $h(\nu - \nu_1)$ and the quantum recoils with a lower "degraded" frequency ν_1. Consideration of the equations governing the Compton scattering process shows that for high-frequency quanta the collision in most cases leaves quantum and electron moving forward along paths only slightly inclined to one another, so that the radiation at any point within the atmosphere should consist of a mixture of primary and degraded quanta of various orders (the results of one, two, and more successive

collisions) together with the fast electrons arising from collisions of primary and degraded quanta.

Absorption measurements are made upon this mixed beam and yield an absorption coefficient $\bar{\mu}$; what relation this bears to the absorption coefficient of the pure primary radiation, μ, can be determined only by involved calculation. Since the degraded quanta have frequencies ν_1, ν_2, etc., which are less than the primary frequency ν, they are more easily absorbed than the primary quanta. Thus, as the radiation travels through the air, there will come a stage when as many degraded quanta of each kind disappear in each centimetre of path as are produced by Compton processes in the same centimetre. The parent beam is then in equilibrium with its *quantum* products in the same way as a long-lived parent radioactive body such as radium reaches equilibrium with its descendants. From this stage onwards, say after a thickness equivalent to D cm. of water, the constitution of the quantum part of the beam will remain unaltered, and this part will disappear at a rate set by the rate of disappearance of the primary quanta. Until this stage is reached $\bar{\mu}$ cannot equal μ.

Actual absorption measurements, however, are concerned with the ionising electrons and not with the quanta which give rise to them. Consider the first scattering process only, which we may assume for simplicity to give rise to electrons all of the same range, R cm. of water. Then the ionisation at a depth H cm. of water below the top of the atmosphere will be due to electrons from points lying between H and H − R cm. from the top. Thus the actual measurements reflect the state of the beam some distance above the point of observation and can give only an apparent absorption coefficient $\bar{\mu}$ which equals μ, provided that $H - R > D$. If this condition is not fulfilled, the number of electrons brought to rest in 1 cm. is less than the number generated in the same distance and $\bar{\mu}$ will be less than μ.

The ionisation-depth curve has been analysed into

four component curves, distinguished by different values of $\bar{\mu}$. The significance of these apparent absorption coefficients obviously depends upon how far the criteria for equilibrium are satisfied in each case. Since according to Millikan, only the least penetrating component reaches equilibrium with its electrons and degraded quanta, the values of $\bar{\mu}$ found for the others will be less than μ. The deduction of their true absorption coefficients is at present impossible, for it involves a wide extrapolation of the laws governing the passage of γ and β rays through matter. Recent experiments have shown that these processes are not completely accounted for by existing theories. In particular, high-frequency quanta interact with atomic nuclei in a manner which is likely to be very important in the case of the penetrating radiation. The paired proton and electron tracks referred to in §§ 17 and 20 show that the rays frequently disintegrate atomic nuclei. This process is not taken into account in the γ ray absorption formulæ. If the radiation does consist of a mixed beam of ultra-gamma quanta and fast electrons, the observed absorption coefficients do not in general approximate to the true coefficients, and it is not possible to deduce the quantum frequencies except perhaps in the case of the softest component.

§ 21. The Origin of the Radiation

The intensity of the radiation is remarkably constant, and no certain variation with solar or sidereal time has been established. Corlin[14] and others have put forward evidence of a sidereal time effect which decreases with depth below the top of the atmosphere and amounts at sea-level to about 2 per cent. of the mean intensity. The effect only shows in averages of a long series of hourly observations, for alterations in the effective thickness of the atmosphere (not always faithfully represented by changes in the barometer) and other causes give rise to larger and irregular fluctuations.

Hoffmann, with the sensitive instrument described in § 13, can find no evidence for a sidereal time variation. A suggested solar effect also awaits confirmation; if it exists at all it is very small ($\frac{1}{3}$ per cent).[16]

It is most natural to look for the source of quanta of such high energy in the interiors of the hot stars, where high temperatures may lead to the conversion of matter into radiation. This possibility has, however, been rejected owing to the absence of appreciable solar and sidereal time effects.

Another argument against it is provided by the estimated total energy reaching the outer atmosphere in the form of penetrating radiation. This is more than one-tenth, probably one-fifth, of the total energy arriving from all the stars as light and heat. If the radiation originated in stellar interiors, very little of it could escape unaltered and most of it would be turned into heat. Unless, therefore, the radiation is generated only in the outermost layers of the stars, it is not possible for it to convey anything like such a large fraction of the total stellar radiation as one-fifth.

Millikan [4] has considered the possibility of the radiation arising from the formation of more complex elements out of hydrogen in interstellar space. The mass of a heavy atom being less, by Δm, than the separate masses of its constituent protons and electrons, energy of amount $\Delta m \times c^2$ ergs would be radiated out as a quantum whose frequency is given by $h\nu = \Delta m \times c^2$, where c is the velocity of light. He considers that the four main components of the radiation (§ 15) represent the formation of the four most abundant groups of elements, apart from hydrogen, viz. helium, "oxygen" (C, N, and O), "silicon" (Mg, Al, and Si), and "iron" (Fe, Ni, and Co). These elements make up 99 per cent. of all known matter, excluding hydrogen. The atomic weight determinations of Aston with the positive ray mass spectrograph give Δm in each case, and thus the quantum frequencies, ν, can be calculated. The corresponding absorption coefficients, μ, are calculated by

extrapolating the relation which holds approximately in the gamma-ray region. The theoretical coefficients for the four groups are ·796, ·241, ·142, and ·075 m^{-1} H_2O, respectively, and are to be compared with the four values of the apparent absorption coefficients, $\bar{\mu}$, from the ionisation-depth curve (Table III), ·80, ·20, ·10, and ·03. Millikan attributes the disagreement in the last three cases to a failure on the part of the more penetrating components to reach equilibrium with their secondary electrons. This, as we have seen (§ 20), would cause $\bar{\mu}$ to be less than μ, but the difficulty of making a quantitative check on this point and the impracticability of any extrapolation of the $\nu - \mu$ relation have delayed acceptance of the theory.

C. T. R. Wilson [15] has suggested that part at least of the radiation may be of terrestrial origin and come from thunderclouds. A β particle of radioactive origin emitted upwards in the strong field within the electrified cloud would, he has shown, rapidly increase in energy, for the gain of energy from the electric field would exceed the loss of energy by ionisation along its path. Since he and others consider the electric field within the cloud to be in general directed downwards, a thundercloud should spray upwards a stream of "runaway" electrons of energy up to 5×10^9 e-volts (see § 42). These would either be bent down in the earth's magnetic field to strike the earth at distant points or would be converted by direct hits with atomic nuclei into ultra-gamma quanta. Attempts to find direct evidence of this effect are at present being made.

A suggestion that the dissolution of matter into radiation may be responsible for the more penetrating components of the rays has recently been supported by the argument that the smallest absorption coefficient found by Regener (·0205 m^{-1} H_2O) corresponds on certain reasonable assumptions (Jeans [17]) to the value calculated for the radiation arising from the complete dissolution of a particle within the nucleus of a heavy atom (·020 m^{-1})

Some workers consider that apparent contradictions in the results of experiments on the radiation arise from the fact that it consists of fast-moving "neutrons," proton-electron combinations endowed with no resultant charge but having a magnetic moment.

REFERENCES TO PAPERS

[1] Hoffmann, *Ann. d. Physik*, 80, p. 779 (1926).
[2] Schonland, *Proc. Roy. Soc.*, A, 130, p. 37 (1930).
[3] Hoffmann, *Gerland's Beit. z. Geophysik*, 20, 12 (1928).
[4] Millikan and Cameron, *Phys. Rev.*, 37, p. 235 (1931).
[5] Regener, *Naturwiss.*, 11, p. 183 (1929): *Zeit. f. Physik*, 74, p. 433 (1932).
[6] Steinke, *Phys. Zeit.*, 22, p. 1019 (1930).
[7] Skobelzyn, *Zeit. f. Physik*, 54, p. 686 (1929).
[8] Bothe, *ibid.*, 59, p. 1 (1929).
[9] Bothe and Kolhörster, *ibid.*, 56, p. 751 (1929).
[10] Rossi, *ibid.*, 68, p. 64 (1931).
[11] Mott-Smith, *Phys. Rev.*, 39, p. 397 (1932).
[12] Millikan, *ibid.*, 36, p. 1595 (1930).
[13] Gray, *Proc. Roy. Soc.*, A, 122, p. 647 (1929); Kulenkampff, *Phys. Zeit.*, 30, p. 561 (1929).
[14] Corlin, *Naturwiss.*, Jan. 9 (1931); Steinke, *Zeit. f. Physik*, 64, p. 48 (1930); Hoffmann, *ibid.*, 69, p. 703 (1931).
[15] C. T. R. Wilson, *Proc. Camb. Phil. Soc.*, vol. 22, p. 534 (1925).
[16] Millikan, *Phys. Rev.*, 39, p. 391 (1932).
[17] Jeans, *Nature* (April 18, 1931).
[18] Millikan and Anderson, *Phys. Rev.*, 40, p. 325 (1932).

CHAPTER III

ELECTRIC FIELDS AND ELECTRIC CURRENTS IN THE ATMOSPHERE

§ 22. The Fine-weather Field

It was first found in the year 1752 by Lemonnier that the air above the earth is the seat of a persistent electric field during fine weather. The direction of this field shows that the earth carries a negative charge and the upper layers of the air a positive one. The state of affairs close to a flat portion of the surface of the earth can be expressed in three ways: (*a*) the earth carries a charge of surface density σ per unit area; (*b*) there is a vertical field of strength $F = 4\pi\sigma$, just above the ground; or (*c*) between two horizontal planes close to the ground there is a difference of potential

$$dV = V_{h+dh} - V_h = - F dh = - 4\pi\sigma dh,$$

where $h + dh$ and h are the heights of the planes.

The quantity dV/dh is called the potential gradient and is positive, since σ is found to be negative. For the same reason, the field F is directed downwards, and this downward direction is by convention adopted as the positive direction for electric fields in the atmosphere. In these definitions it is assumed that the portion of the ground considered is flat and far removed from projections, such as trees and buildings, which would disturb the distribution of charge and concentrate the lines of force at certain points.

The average value of the fine-weather potential gradient is about 100 volts per metre; the corresponding value for the average charge density is $2{\cdot}7 \times 10^{-4}$ electrostatic units per square centimetre or ·0009 coulomb per square kilometre. The total fine-weather charge on the earth is of the order of 500,000 coulombs. Measurements of the fine-weather field are made by determining either σ or dV/dh; they are always expressed in terms of the latter, in volts per metre.

§ 23. Direct Measurement of the Surface Density of the Earth's Charge

The charge on such a limited portion of the ground as can be isolated for the determination of σ is so small that a sensitive electrometer must be used to measure it. Fig. 10 illustrates the "Universal portable electrometer" devised by C. T. R. Wilson for this purpose. A flat circular plate P, called the test-plate, is surrounded by a guard-ring and mounted flush with the surface of the earth but insulated from it. This plate is joined to a gold-leaf electroscope G, whose leaf moves inside a positively charged case and is observed through a telemicroscope. C is a variable cylindrical condenser, called a compensator, with its inner plate joined to the gold-leaf system, and its outer plate maintained at a constant potential, — V.

To make a measurement, the instrument is initially shielded from the earth's field by placing over it the earthed metal cover Q, indicated by the dotted lines. The reading of the leaf corresponding to earth or zero potential is found by momentarily earthing the plate P and the gold-leaf system with the key K. This earthing key is then withdrawn, the cover removed and the plate exposed to the field, with the compensator capacity zero. A negative charge thus appears by induction upon P, an equal positive charge is set free upon the central system, and the leaf moves inwards. It can be restored to its zero position if a negative charge is

induced on the central system by increasing the capacity of the compensator to a value C′. The charge on the test-plate is then $-C'V$ and the surface density, σ, is $-C'V/A$, where A is the area of the test-plate.

In its original form the apparatus is small and portable,

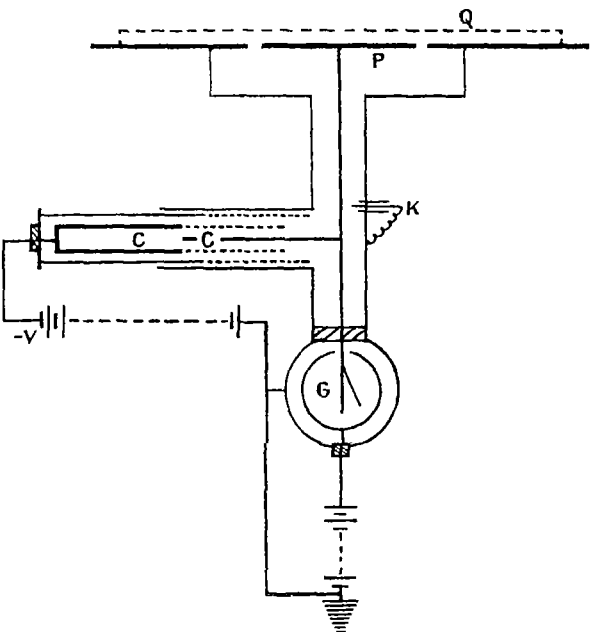

FIG. 10.—Universal portable electrometer (Wilson).

and the two batteries shown in the figure are replaced by small Leyden jars of silvered quartz, which keep their charge for a considerable time. For absolute measurements, with the plate mounted at ground level, a pit must be provided to house the observer; very often relative measurements are made with the instrument

mounted on a tripod, and the factor necessary to reduce the observations to standard conditions determined from simultaneous observations in a pit or with a potential gradient method. Since the lines of force are concentrated upon any projection above the earth, the factor is greater than unity; in the case of a tripod 1 metre high it amounts to 3 or 4. A useful method of calibrating the instrument is to place it in artificial electric fields of known strength. Two large flat metal sheets, one flush with, and the other above, the test-plate, are charged to a measured difference of potential by means of a battery of small cells.[1]

§ 24. Measurement of the Potential Gradient

The potential gradient dV/dh may be found by measuring the difference of potential between two

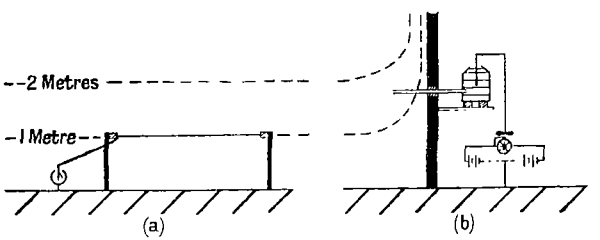

Fig. 11.—Measurement of the potential gradient.
(*a*) Absolute determination in open field.
(*b*) Continuous recording with the Kelvin water-dropper.

insulated conductors at different heights above the ground. Various forms of electrometer are employed, and one conductor may be the earth itself, while the other is a stretched horizontal wire about a metre above ground-level. Sometimes two wires at different heights are used. It is of course essential that the supports of the wires and the presence of the observer and his instruments should not materially alter the field to be measured. In the arrangement in Fig. 11 (*a*), the wire

is hung between amber or sulphur insulators at the ends of two vertical rods; its length should exceed twice its height above ground.

The wire when first set up is at a different potential to that of the air in its neighbourhood, and a current will flow between them which tends to remove this potential difference. The ordinary conductivity of the air is, however, too small for this process of equalisation to take place very rapidly and the electrometer reading will always lag behind a fluctuating field. It is necessary for this reason to place at the centre of the wire some active ionising agent which speeds up the process by increasing the local conductivity of the air. This may take the form of a glowing fuse of filter-paper, impregnated with a 5 per cent. solution of lead nitrate, or of a disc or spiral of metal coated with a deposit of ionium or radio-thorium. Such "collectors," as they are called, have the advantage of causing the wire and the electrometer to acquire the potential of the air at the centre of the stretched length, where the electric field is least disturbed by supports and observer. The time taken for equalisation of potential depends upon the type and activity of the collector and varies from 1 to 60 seconds. There is always some uncertainty as to the exact position at which the ionising agent exerts its effect, especially if a wind is blowing, but this can be avoided by making observations at different heights.

§ 25. Continuous Recording of the Potential Gradient

An adaptation of the arrangement just described is employed to obtain continuous records of the potential gradient, the electrometer being housed in a building and the collector carried on an insulated rod projecting from the wall. The earth's field is very much distorted by the presence of the building, and a reduction factor for the installation must occasionally be determined by making simultaneous measurements in an open field. Fig. 11 (*b*)

shows the nature of the distortion of the equipotential surfaces due to a building.

The Kelvin water-dropper is still largely used at recording stations as a potential equaliser. A jet of water from an insulated cistern within the building escapes from the end of a pipe passing through and insulated from the wall, and breaks up into fine drops at the point where the potential is required (Fig. 11). On starting the jet, the potential of the insulated system will in general be somewhat lower than that of the air at the end of the pipe; this end will carry an induced negative charge and the cistern a positive one. Each drop carries a negative charge away and leaves the system slightly higher in potential than before. Ultimately the negative charge at the end of the pipe disappears and the system is at the potential of the air at the point at which the drops break away. In practice this takes a time of the order of 30 seconds.

Radioactive collectors are also employed, but whatever the type of collector, the insulated system is usually joined to the needle of a quadrant electrometer of low sensitivity, and opposite pairs of quadrants connected to a battery whose centre is earthed. The record can be made intermittently, by means of a clockwork arrangement which depresses an inked pointer attached to the needle (Benndorf), or continuously, by receiving the spot of light from a small mirror on a moving strip of bromide paper.

§ 26. Variation of the Potential Gradient with Height above the Ground: Space-charge

A good many observations of the potential gradient have been made with balloons fitted with collectors of the radioactive or the glowing fuse pattern; they all indicate a rapid decrease in the field with increasing height above the ground (Table V, § 33). Though no great accuracy can be claimed for these measurements —for they are subject to errors arising from the dis-

tortion of the field by free and induced charges on the balloon and are but momentary observations of a quantity subject to considerable variation—it is well established that at a height of 10 kilometres the field has fallen to less than 1/50 of its value at ground level and is diminishing still further. Some recent experiments of Idrac,[2] in which a thermionic valve was employed as a voltmeter, suggest that at very great heights the gradient may sometimes be reversed in direction, but the significance of these results is not yet clear.

This rapid diminution in the potential gradient with height indicates that a free positive charge, practically equal to the negative charge on the surface of the earth, resides within the lower 10 or 15 kilometres of the atmosphere. Integration of the values of dV/dh obtained in balloon ascents gives a total potential difference between the earth and the air at a height of 15 kilometres of about 3×10^5 volts; at this height, and above it, the conductivity of the air is so great that this figure may be taken to represent the potential of the highly conducting "Kennelly-Heaviside layer" some 80 kilometres above the ground.

The density, ρ, of the positive "space-charge" referred to can be determined from Poisson's equation, which, if the lines of force are vertical, takes the form $\frac{d}{dh}(dV/dh) = -4\pi\rho$. Several investigators have endeavoured to examine the nature of the space-charge quite close to the ground, using collectors at different heights. The results obtained are conflicting as to the magnitude, and even the sign, of ρ in this region; evidently local conditions are of main importance.

§ 27. Variations of the Potential Gradient with Locality, Time and Season

Before passing on to the more important variations of the potential gradient, mention should be made of the fact that incessant fluctuations are observed over

short periods of time; these are due to local changes in the space-charge and the conductivity of the air in the vicinity of the collector.

For many years continuous records of the potential gradient have been taken at certain stations in the Northern Hemisphere. Less extensive information is available for the Southern Hemisphere, but observations have been made over considerable periods in the Arctic and Antarctic regions. Some very important measurements over the oceans have been carried out by the survey ship *Carnegie* of the Carnegie Institute of Washington. It appears that the sign of the potential gradient in fine weather is positive all over the earth's surface, but that over land areas its value varies considerably with local conditions. The mean of dV/dh at Kew is 317 volts/metre, while that at Davos in Switzerland is but 64 v./m. Over the oceans a value of 126 v./m., which varies little if at all with geographical position, has been found. The average value for the whole earth is not far from 120 v./m.

It would seem that the potential gradient observed on land is not a quantity of much fundamental significance, its value depending primarily upon local conditions of atmospheric conductivity. This is evident from the fact that a simple periodic variation according to *local* time is the basis of all fine-weather land records. The minimum values are obtained in the early morning at about 4 a.m. and the maxima in the evening between 6 and 8 p m. In many places a second maximum at 8 a.m. and a second minimun at midday are found. The amplitude of these daily variations at land stations sometimes reaches 50 per cent. of the mean value for the day.

The local time variation has been shown by Whipple [3] to be closely correlated with the amount and distribution of the smoke pollution of the atmosphere near large cities, where these continuous records have generally been made. Fig. 12 shows the variation at Kew of the potential gradient during the summer months for

the two periods 1898-1915 and 1916-28, together with the variation in the amount of pollution (determined by aspirating the air through filter-paper) for the period 1921-28. The figure shows not only the close relation which exists between potential gradient and pollution but also the striking effect of the introduction of "summer time" into Great Britain in the year 1916, after which the morning minimum and maximum moved back by approximately one real hour. The atmospheric pollution curve has maxima and minima which have been ex-

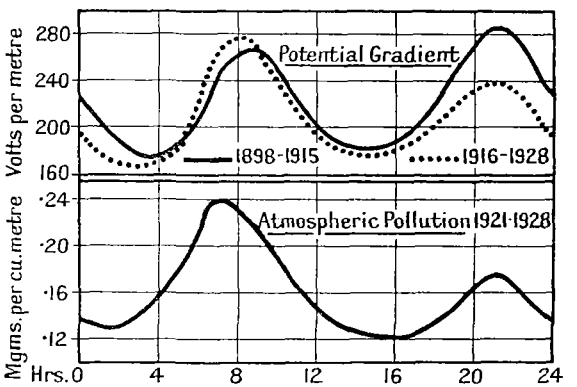

FIG. 12.—Relation between potential gradient and atmospheric pollution (Whipple).

plained by Simpson as due to the combined effect of variations in the amount of smoke produced in the city and variations in the stability of the atmosphere, that is in the mixing action of surface winds and general turbulence of the lower air.

As regards the annual variation of the potential gradient, land stations in both hemispheres show a maximum in the local winter and a minimum in the local summer. The only significant exception is the Antarctic region, where a reversal of phase occurs, giving rise to a maximum in the local summer and a minimum in the winter.

In view of the local origin of the variations of the gradient found at land stations near towns, observations over the oceans, where no pronounced local effects are to be expected, are of very great importance. Mauchly[4] has analysed the measurements of the *Carnegie* cruises and found that there is a well-marked diurnal variation at sea, with maxima and minima occurring at the same moment in all parts of the globe. Thus the potential gradient in all oceans is found to be about 15½ per cent. below the mean at 5 hours, Greenwich Mean Time, and

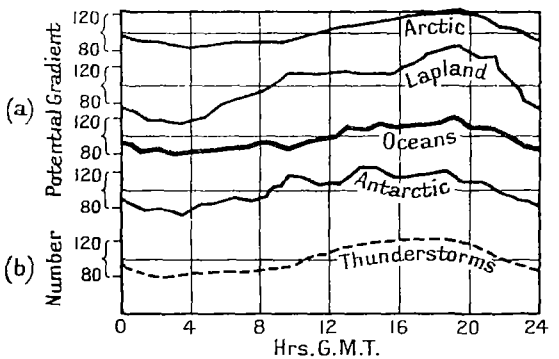

FIG. 13.

(*a*) Variation of potential gradient with universal time.
(*b*) Variation of thunderstorm activity over the earth's surface (Whipple).

about 20 per cent. above it at 19 hours, G.M.T. It is remarkable that the same 24-hour wave, progressing according to universal solar time, has been observed by expeditions to the Arctic and Antarctic regions and to Lapland. Fig. 13 (*a*) (after Whipple) illustrates these results, which have been confirmed by the last cruise of the *Carnegie*. In each case shown in the figure, the mean potential gradient has been reduced to 100 v./m. No appreciable annual variation has so far been observed over the sea.

Mauchly's discovery of a variation of potential gradient according to universal time is generally accepted as being of fundamental significance. The variation must clearly be ascribed to an alteration in the difference of potential between the upper conducting layers of the atmosphere and the earth; it affords an important means of testing any theory of the origin and maintenance of this potential difference.

§ 28. The Fine-weather Current: Conduction and Convection Currents

In the ordinary fine-weather field positive ions are driven towards the earth and negative ions away from it; the motion of these ions constitutes a downwardly directed conduction current. We have seen (§ 3) that the conduction current passing through 1 sq. cm. of a horizontal plane is given by $I_0 = F(\lambda_+ + \lambda_-)$, where F is the strength of the electric field and λ_+ and λ_- are the polar conductivities of the air at the point in question.

There is, however, a fine-weather current of a different nature which plays a part in the transfer of electricity by the atmosphere. If the air should contain at any point an excess of ions of one sign (a space-charge), movement due to wind or ordinary turbulence will give rise to a mechanical transference of electric charge. Thus if v is the upward vertical component of the velocity of the air and ρ the space-charge per c.c., the upward convection current due to this cause will be $v\rho$ per square centimetre. The real current-density in fine weather is thus the resultant of the downward conduction and the upward convection currents, and is given by $I = I_0 - v\rho$.

The mean value of the total fine-weather current is not far from 2×10^{-16} amperes per square centimetre or 2 microamperes per square kilometre, so that the total current flowing in this way between the upper atmosphere and the whole earth is about 1000 amperes. It would seem, from measurements which have been made in

various parts of the world, that this current varies much less with changes in geographical position, in time of day and season of the year, than does the potential gradient. Although in the past it has not received a great deal of attention, it would appear to be a more fundamental quantity than the potential gradient and less affected by purely local conditions.

§ 29. Direct Determination of the Conduction Current at the Surface of the Earth

Direct measurements of the magnitude of the conduction current which flows into the earth's surface have been made with the Wilson universal electrometer, with the test-plate mounted flush with the surface of the ground, as described in § 23. The curve of Fig. 14

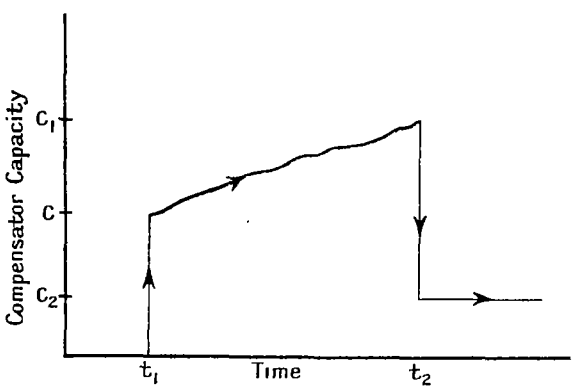

Fig. 14.—Measurement of conduction current with the Wilson universal electrometer.

illustrates the procedure followed in the measurements. At time t_1 the test-plate is exposed to the earth's field by removing the cover, and the capacity of the compensating condenser is adjusted to the value C necessary to bring the gold leaf back to the zero position. The

charge on the plate is then $-$ CV and the field strength $F = 4\pi\frac{CV}{A}$, where, as before, A is the area of the plate and $-$ V the potential of the outside of the compensator. The test-plate is now left exposed until time t_2 and kept continuously at earth potential by increasing the compensator capacity to balance the charge received from the positive ions driven from the air on to the plate. Owing to variations in the strength of the field, and so in the induced charge on the plate, this increase is not a regular one. At time t_2 the plate is again shielded with the cover and the compensator capacity is reduced from C_1 to C_2 to maintain the shielded system at earth potential. At this moment the field strength is $4\pi(C_1 - C_2)V/A$. Since at the beginning of the measurement the compensator capacity was zero, it is evident that during the interval, $t_2 - t_1$, the plate received a positive charge C_2V and the average value of the conduction current per square centimetre was $C_2V/A(t_2 - t_1)$. For routine observations the instrument is mounted on a tripod above the ground, and the readings are reduced to standard conditions by occasional determinations of the reduction factor, from observations in a pit.

§ 30. Indirect Determination of the Conduction Current at a Point in the Air

The conduction current at a point in the air can also be determined by separate measurements of the field strength, F, and the polar conductivities, λ_+ and λ_-. The methods used to determine F, or the potential gradient, have already been described in this chapter; the conductivities are usually found by the Gerdien method sketched in § 2. In another form of the Gerdien method, due to Schering, the cylindrical condenser is replaced by a large earthed wire cage, along the axis of which is a charged insulated wire connected to an electrometer. The rate at which the charge is dissipated by ions of opposite sign is determined in exactly

the same manner as in the Gerdien method, and the same equations apply if certain conditions are fulfilled. The cage must be large enough, and the charge on the wire small enough, to ensure that no considerable alteration in the number of ions is caused by the flow of current. The arrangement must be set up in the open air to ensure that ordinary atmospheric circulation prevents the development of the electrode space-charges to be described in the next section. And finally the whole cage must be shielded from the earth's field by a rough roof or by trees, otherwise it will carry an induced negative charge on the outside and rob the air entering it of negative ions.

§ 31. The Comparison of the Direct and Indirect Methods: Electrode Space-charge

The direct method due to Wilson measures the conduction current entering the earth; the indirect method measures the current at a certain height above the earth. In the latter case the current is carried by two oppositely moving streams of ions of opposite sign; in the former it consists of a single stream, for while positive ions enter the earth, negative ions do not pass from it into the atmosphere. The two methods, therefore, do not measure the same thing. One determines the true conduction current at a height, and the other its positive component at ground-level.

Consider a vertical cylinder of perfectly still air whose height is h and cross-section 1 sq. cm., with its base on the ground (Fig. 15). Let F' and F be the electric field strengths at top and bottom of this cylinder, and λ'_+, λ'_- and λ_+, λ_- the polar conductivities. The conduction current through the top is $F'(\lambda'_+ + \lambda'_-)$; a positive charge $F'\lambda'_+$ enters, and a negative charge $F'\lambda'_-$ leaves, in each second. Through the bottom there is only a downward flow of positive ions, carrying away a positive charge $F\lambda_+$ per second. The cylinder as a whole thus

loses a positive charge $F\lambda_+ - F'\lambda'_+$ per second, and a negative charge $F'\lambda'_-$ per second. This may be expressed as a development of a positive space-charge at a rate $F'\lambda'_- - (F\lambda_+ - F'\lambda'_+) = F'(\lambda'_+ + \lambda'_-) - F\lambda_+$ per second. The growth of this "electrode" space-charge will automatically decrease the field F′ and will cease only when F′ has such a value that as many negative as positive ions leave the cylinder in each second, i.e. when

$$F'(\lambda'_+ + \lambda'_-) = F\lambda_+ \quad . \quad (10)$$

The two sides of this last equation are respectively the conduction currents at height h and at ground level. Thus, for perfectly still air, the two methods we have described should give the same numerical values, though they measure different quantities. It appears probable that this conclusion is not realised in practice and that the Wilson method yields much smaller values than the other. Some average figures from the more extensive series of measurements are shown in Table IV.

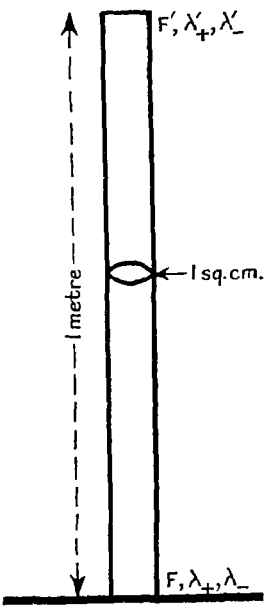

FIG. 15.—Electrode space-charge.

Still another consequence of the argument we have considered fails to appear in practice. Watson [1] has shown that during fine weather at Kew there is no sign of any electrode space-charge within the first metre above the ground, and that F′ and F are the same.

As there can be no doubt that a space-charge would develop if the air were perfectly still, it has been

TABLE IV

MEASUREMENTS OF THE AIR-EARTH CONDUCTION CURRENT

Indirect Method.		Direct Method.	
Station.	Current (amps./sq. cm.).	Station.	Current (amps./sq. cm.).
Potsdam .	$2{\cdot}2\ 10^{-16}$	Kew . .	$1{\cdot}1\ 10^{-16}$
Davos .	2·0 ,,	Munich (Lutz)	1·0 ,,
Gottingen .	2·7 ,,		

suggested that ordinary atmospheric turbulence, by continually mixing the lower layers of the air, carries the excess positive charge upwards as rapidly as it is formed. If $F' = F$ and $\lambda'_+ = \lambda_+$, the positive charge developed in the cylinder per second is $F'\lambda'_-$. This must be removed by the air at such a rate that an upward connection current $v\rho = F'\lambda'_-$ per sq. cm. crosses the top of the cylinder, and the total resultant air-earth current at the height h is

$$I = I_0 - v\rho = F'(\lambda'_+ + \lambda'_-) - F'\lambda'_- = F'\lambda'_+ \simeq F\lambda_+.$$

If this view is correct, the quantity $F\lambda_+$, which is the portion of the conduction current measured by the Wilson method, is actually equal to the total current, conductive and convective, passing between the atmosphere and the earth. While this result may not hold in practice with great exactitude, the arguments outlined above indicate that the test-plate method gives a closer approximation to the total fine-weather current than the indirect method which determines the conduction current only. The test-plate result is the more valuable because it appears that any direct estimate of the convection current by itself is very difficult.

§ 32. Variations in the Fine-weather Current

Both direct and indirect methods of studying the air-earth current indicate that in fairly fine weather it is less subject to variations than is the potential gradient. Simultaneous measurements of the field and of the total conductivity of the air, $\lambda = \lambda_+ + \lambda_-$, show that these quantities vary to some extent in inverse ratio, with the result that their product, the conduction current, is less variable than either. Factors such as an increase in the number of condensation nuclei or the presence of fog particles, which decrease λ by raising the proportion of the slow ions present, cause a corresponding increase in the potential gradient. The simple form of the daily variation in the earth's field has its counterpart in an inverse variation of the conductivity, with a maximum in the early morning between 3 and 4 a.m. The extreme effect of atmospheric pollution near large cities, which increases the potential gradient and diminishes the conductivity, has already been discussed (§ 27). In general the reciprocal relation between λ and F is not exact enough to keep the conduction current invariable. At land stations in Europe it is found to have an annual variation which coincides in phase with that of the potential gradient but has a smaller amplitude. At most stations its daily variation follows the changes in the conductivity.

As shown by Table IV the mean values obtained at European stations for the conduction current, using the indirect method, all lie close to $2{\cdot}0 \times 10^{-16}$ amps./sq. cm. The observations over the sea and near the poles give about double this value. Since, as we have seen, to make allowance for the upward convection current near the ground these figures must probably be reduced by half, the total air-earth current in fine weather may be taken to have an average value of 2×10^{-16} amps./sq. cm. over the whole globe.

§ 33. The Conduction Current at Great Heights

It has been found from simultaneous determinations of potential gradient and atmospheric conductivity during balloon ascents that the rapid decrease in F with height above the ground is accompanied by an increase in λ, of such magnitude as to keep the conduction current approximately constant. Table V shows the results of an ascent by Wigand,[5] in which it will be seen that when the field had fallen to 1/14 of its value at the ground, the conductivity had risen eleven-fold.

TABLE V

Conduction Current during Balloon Ascent (Wigand)

Height (metres).	F (volts/metre).	λ (e.s.u.).	I (amps/sq. cm.).
0	136	$1{\cdot}1\ 10^{-4}$	$1{\cdot}7\ 10^{-16}$
2500	27	4·8 ,,	1·4 ,,
4400	18	8·2 ,,	1·6 ,,
6500	8·8	12·6 ,,	1·2 ,,

§ 34. The Significance of the Air-Earth Current

The general constancy of the air-earth current with height above the ground and in different parts of the world suggests that, at any rate to a first approximation, it has its origin in a constant potential difference between the conducting layers of the upper atmosphere and the earth, and that its actual value depends upon the resistance of the air between the two regions. Now the conductivity of the upper portion of this air-path is entirely due to the penetrating radiation * and is unlikely to alter at all with time of day, locality or season (§§ 20, 21). But below a height of about 2 kilometres over land

* This refers to the regions from 15 to 30 kilometres above the ground. The Heaviside layer 80 kilometres up has a solar origin.

areas, an additional ionising influence is exercised by radioactive matter in the air and the earth, which, as we have seen (§ 5), varies very much. Moreover, the conductivity of the air in this region is dependent upon the relative concentrations of the large and the small ions, and these alter with the number of nuclei present. The current-bearing column of air above the point of observation thus consists of an upper constant resistance and a lower variable one in series with each other. The extent to which the current carried by the air-column alters with local conditions will depend on the ratio which the lower variable resistance bears to the total resistance.

The conductivity above 14 kilometres is so high that we may, for the sake of illustration, suppose that this is the actual height of the upper positively charged layer and take the mean specific resistance of the air between it and the earth to be $7{\cdot}1 \times 10^{14}$ ohms-cm., the value found by Wigand at a height of 6·5 kilometres. Then the total resistance of an air-column of cross-section 1 sq. cm. would be 10^{21} ohms. If the variable part of the column be the first 100 metres above the earth, where the specific resistance is usually 8×10^{15} ohm-cm., this portion will contribute 8×10^{19} ohms to the total. We see that even if the conductivity of the first 100 metres were halved, the effect upon the air-earth current would amount to but 4 per cent. The potential gradient near the ground, on the other hand, would be doubled, for from this point of view it represents the fall of potential per unit length of the lowest part of the current-bearing column. It is evident that potential gradient measurements over land, and in particular near cities, cannot be expected to yield information which bears directly upon the question of the total potential difference between upper atmosphere and earth. In the case of observations at sea and in polar regions the position is different; practically all the ionisation throughout the whole column is then due to the penetrating radiation, and the only local effect which can influence the

fine-weather gradient is a change in the number of nuclei available for the capture of small ions.

§ 35. The Electric Field during Disturbed Weather

The normal downwardly directed field, due to a positively charged upper atmosphere and a negatively charged earth, is frequently disturbed when the weather ceases to be fine. During fog, as explained in § 32, it is very much increased, and may reach ten times its normal value ; during dust-storms, of the type common in semi-arid regions and deserts, powerful reversed or negative fields are usual and reach 10,000 volts per metre. The effects found during cloudy weather and rain are variable, and range from gradients of the order of a few hundred volts per metre in a fine drizzle to as much as 50,000 volts per metre under thunderclouds.

Generally speaking, negative fields predominate when light or steady rain is falling, though occasional positive excursions are observed. In the case of heavy rainstorms and thunderclouds, the sign of the field depends upon the portion of the cloud passing over the point of observation, but here, too, there is evidence that negative gradients are the more frequent.

The field during thunderstorms fluctuates a great deal if the cloud is active in producing lightning. Its value at the ground does not as a rule exceed 10,000 to 20,000 volts per metre except for very brief intervals occupying fractions of a second. Equally high fields are observed during heavy rainstorms unaccompanied by lightning. During a snowstorm the field is usually positive and in a heavy storm may attain 10,000 v./m. The methods employed for the study of the large and rapidly varying fields of thunderclouds are described in Chapter IV.

§ 36. The Charge on Rain and Snow ; the Precipitation Current

The apparatus required to examine the charge carried to the earth by precipitation—rain, hail, snow, and

sleet—is comparatively simple, and consists essentially of an insulated metal vessel to catch the rain, etc., and an electrometer to measure the charge received. Great precautions must, however, be taken to eliminate the disturbing effect of the negative charge given to the air as the drops splash on the container (Lenard effect, § 43). If some of this is lost a spurious positive charge will be indicated. For a similar reason, the entry of spray due to the splashing of rain falling outside the receiving vessel must be prevented. The receiver must be screened electrostatically from the electric field outside. The rate of rainfall, and sometimes the average size of the drops, is also observed ; with sensitive forms of the apparatus the charges carried by individual drops may be measured. As the charges brought down vary considerably, it is necessary in all such work to carry out a long series of observations.

Since the year 1908, when the modern series of observations began, all observers agree in finding a preponderance of positive charge on rain in general. The average ratio of the quantities of positive and negative electricity brought down by all kinds of precipitation varies according to the situation of the observer. Some of the values found for this ratio are : Potsdam (Schindelhauer), 1·4 : 1 ; Puy-en-Velay (Baldit), 2·4 : 1 ; Dublin (McClelland and Nolan), 4·8 : 1 ; Simla (Simpson), 2·4 : 1 ; Otago, New Zealand (Marwick), 3·2 : 1. As exceptions to the general rule, it may be noted that snow usually carries a considerable negative charge, and that the fine drops of a drizzle are also negative. Simpson showed in 1908 that thunderstorm rain—the most heavily charged of all forms—is positively charged when it falls from the front of the cloud and negatively charged elsewhere. Ordinary steady rain, unaccompanied by sudden changes in the barometer, shows the most regular as well as the highest excess of positive charge. If such rainfall alone is considered, Baldit's average ratio of 2·4 : 1 for all types of precipitation rises to 4·3 : 1.

The charge per c.c. in the case of heavy thunder-

storm rains reaches average values of 30 to 40 e.s.u., while single drops may carry 100 to 200 e.s.u. (Gschwend) and attain potentials as great as 300 volts. The mean values reported by different observers for the nett charge per c.c. on all forms of precipitation during a long series of observations range from $+ \cdot 029$ e.s.u. at Potsdam (Schindelhauer) to $+ \cdot 176$ e.s.u. at Simla (Simpson).

The transfer of electricity from atmosphere to earth in this manner constitutes a "precipitation" current which appears on the whole to be in the same direction as the fine-weather conduction current, since it carries more positive than negative charge to the earth. In the case of thunderstorms this current sometimes reaches values as high as 2×10^{-11} amps./sq cm., and the total convection current carried by the rain in such a storm may amount to more than 0·1 amp. Before it is possible to frame a trustworthy estimate of the amount of the excess of positive over negative electricity conveyed to the whole earth in this way, much more information is required from tropical and equatorial regions.

§ 37. Currents due to Point-discharge

It is well known that an electric glow or brush discharge takes place from a pointed conductor when placed in a sufficiently strong field. It consists of a stream of ions of the same sign as the charge upon the point. Discharges of this kind must, therefore, be expected from the ends of exposed conductors on the surface of the earth whenever the potential gradient and the height and sharpness of the ends are sufficiently great. Indeed the earliest investigators, Franklin with his kite, Dalibard and Lemonnier with their high metal rods, detected electric fields, the first two in thundery, and the last in fine weather, by means of this current. Under favourable conditions, afforded by mountain peaks or the masts of ships exposed to the intense

fields of a thundercloud, the glow discharge may become very conspicuous (St. Elmo's fire).

It was first pointed out by C. T. R. Wilson[6] that point-discharge currents of much smaller intensity must play an important part in the interchange of electricity between the earth and the atmosphere. The fields prevailing under rainstorms and thunderclouds very frequently reach values sufficiently great for considerable currents to be discharged from exposed conductors, such as trees, bushes, housetops and even fields of grass. A conductor need not end in a sharp point or project to a great height in order that it should begin to act as a discharger. For example, an earth-connected sphere of radius 1 cm. need only be raised to a height of 3 metres in the not unusual field of 10,000 volts per metre for the electric intensity at its surface to reach the critical value of 30,000 volts per cm. at which brush discharge begins. A practical instance of the correctness of this suggestion is afforded by some experiments made by the author, in which a small tree, 4 metres high, was cut off at its base, mounted on insulators and connected to earth through a galvanometer. Exposure to the fields due to nearby thunderstorms yielded the average point-discharge currents shown below:—[7]

TABLE VI

POINT-DISCHARGE CURRENTS FROM A SMALL TREE (SCHONLAND)

Field (Volts/metre).	Current (Microamperes).
− 3,500	0·07
− 5,500	0·20
− 11,000	1·00
− 16,000	4·00

The contribution of a single tree such as this must be multiplied by a very large factor to obtain the total current flowing between the earth and a thundercloud; in the case quoted, the tree was typical of the exposed natural conductors for many miles around, and a rough surface integration over the area affected by the cloud indicated that the total point-discharge effect was of the order of 2 amperes in an upward direction.

Since the direction and magnitude of the large fields associated with disturbed weather vary considerably, it is extremely important to know the relative amounts of positive and negative electricity discharged from an exposed point over a long period of time. In a series

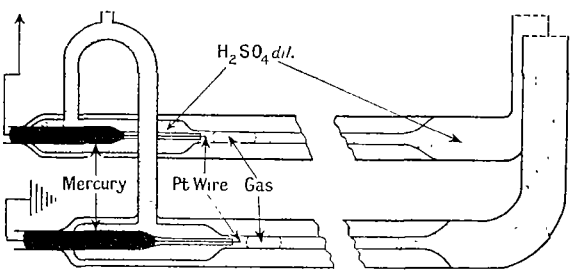

FIG. 16.—Water micro-voltameter (Wormell).

of observations by Wormell,[8] a sharp point carried on insulators at the top of a pole was connected by cable to one electrode of a voltameter filled with dilute sulphuric acid, the other electrode being earthed. The voltameter (Fig. 16) was constructed of fine capillary tubing (diameter 0·8 mm.) and the gases evolved were separately collected, their volumes being determined from the lengths of the bubbles formed. If v_1 and v_2 are the volumes of the mixed gases collected at the earthed and the point-connected electrodes respectively, the quantities of positive and negative electricity, q_1 and q_2, which have been discharged from the point can be separately determined in the following way: If one unit

of quantity liberates in electrolysis c c.c. of oxygen and $2c$ c.c. of hydrogen, we have

$$q_1c + 2q_2c = v_1 \quad \text{and} \quad 2q_1c + q_2c = v_2,$$

from which we may determine q_1 and q_2.

The quantities discharged in this way have been examined by Wormell at Cambridge over a period of three years. Some of his results are shown in the table below :—

TABLE VII

INTEGRATED EFFECTS OF POINT-DISCHARGE (WORMELL)

Year	1927	1928.	1929.
Positive quantity discharged, q_1 (coulombs).	·28	·24	—
Negative quantity discharged, q_2 (coulombs).	·14	·11	—
Nett positive discharge, $q_1 - q_2$ (coulombs) .	·14	·13	·11

Each year shows a considerable nett loss of positive electricity by the discharger.

In a more detailed discussion it is noted that of 147 separate periods of disturbed weather accompanied by precipitation, 103 showed an excess of upward current (+ ve discharge), 34 an excess of downward current (− ve discharge), and in 10 the nett discharge was zero. This is what would be expected from the predominance of negative potential gradients in disturbed weather. It is to be hoped that similar measurements will be made in other parts of the world.

§ 38. The Interchange of Electricity Between the Earth and the Atmosphere; the Maintenance of the Earth's Charge

The negatively charged earth and the positively charged upper layers of the atmosphere form two plates of a spherical condenser with the lower air as the dielectric. Although the conductivity of the air between the plates is small, the applied potential difference is great enough to make the leakage of charge through it very considerable. The average value of the charge per unit area of the earth's surface is 9×10^{-14} coulombs/sq. cm., and that of the fine-weather conduction current is 2×10^{-16} amps. per sq. cm. Left to itself, a condenser of this kind would be discharged by internal leakage in a time of the order of ten minutes. But this is not all: to the dissipation of the earth's charge by the fine-weather current we must add the effect of the charge conveyed by rain and snow, for it has been shown that on the whole the nett charge conveyed to the earth by precipitation is positive in sign. Thus to the conduction current of 1000 amperes over the whole surface of the earth must be added a precipitation current in the same direction, estimated by Wigand[9]—though any such estimate can only be provisional—at 400 amperes, making a total of 1400 amperes tending to dissipate the 500,000 coulombs with which the earth is charged.

In spite of the continuous operation of these two factors, the earth's charge remains practically constant, so it is clear that there must exist some reverse or compensatory process which neutralises their effect. Some agency must be continuously at work replenishing the charges on the earth and in the upper air. The discovery of the mechanism responsible for this replenishment has been one of the chief problems of atmospheric electricity, and many suggestions have been made to this end. Two of these, though they have not proved acceptable, will be briefly mentioned.

The suggestion of Ebert is based upon the experimentally verified view that ionised air escaping through the narrow capillaries of the earth's crust is richer in positive than in negative ions, for the higher mobility of the negative ion causes it to diffuse more rapidly to the walls of a narrow passage. The air escaping from the earth and ionised by radioactive emanations, etc., thus gives a positive charge to the lower atmosphere, which Ebert suggested was conveyed to considerable altitudes by convection currents. It appears, however, that the Ebert effect in the lower atmosphere is actually extremely small and that the upward air-currents are quite insufficient to produce the necessary convection.

Another suggestion, made by Simpson and developed by Swann, is that negative charge is conveyed to the earth by fast-moving negatively charged corpuscles or β particles. This view meets with the difficulty that the ionisation produced in the air by the number of β particles needed to maintain the earth's charge would be very large, many times greater than that observed and known to be due to other causes. The objection can be avoided only by ascribing a very small ionising power to an extremely fast β ray (Swann). This is not in accord with what is known of the fastest β rays from radioactive substances, whose ionising powers vary very slowly with their energies.

It was first suggested by C. T. R. Wilson that it is to regions of disturbed weather that we must look for the mechanism of replenishment, that under rain and thunderclouds, where the potential gradient is more often reversed than in the normal direction, there are two processes at work which convey considerable quantities of negative charge to the earth. The first of these is the action of point-discharge from conductors projecting from the ground. This has already been discussed, and it has been shown that experimental tests indicate that it is of great importance. The second process is the charge conveyed to the ground by lightning flashes from thunderclouds. Every second, as will be

seen in Chapter IV, some 100 lightning discharges occur over the whole surface of the earth, each involving the passage of a charge of the order of 20 coulombs. Only a fraction of these, perhaps one in four on the average, strike the ground. The effectiveness of this process of transference of charge will depend upon whether more charges of one sign than another are conveyed to the earth. If, for example, practically all the charges transferred were negative, the process would be equivalent to a continuous compensation current of about 500 amperes. Though there is evidence that this is actually the case, the question is still under investigation.

An estimate of the annual electrical "balance-sheet" of a square kilometre of ground at Cambridge has been made by Wormell,[8] on the basis of his point-discharge measurements and observations on lightning discharges. The air-earth conduction current loss and the effect of rain and snow were estimated from average values of these quantities. The results were :—

	Coulombs/sq. km./annum.
By natural point-discharge, gained .	+100
By lightning, gained	+ 20
By atmospheric conduction, lost . .	− 60
By precipitation, lost	− 20
Nett gain of negative charge . . .	− 40

Though such an estimate is only a very rough one, it appears to be quite possible that in this locality the four processes approximately balance one another, or even that the earth gains a negative charge.

This suggestion of Wilson involves more than the interchange of electricity between the bases of cumulonimbus clouds, showers and thunderstorms, and the ground; he regards them as equally active in supplying positive electricity to the upper air. On this view the cloud acts as an electrical generator which removes positive electricity from the earth and supplies it to the conducting layers of the atmosphere above, by which it is

rapidly distributed in such a way as to maintain them at a constant potential of about 3×10^5 volts, in spite of losses.

If this view is correct, we should expect the potential difference, and so the potential gradient, to show a maximum when the thundery regions of the earth are at their maximum activity.[10] The diurnal variation of the gradient discovered by Mauchly (§ 27) should agree in phase with the diurnal variation of thunderstorm activity over the earth. It has recently been shown by Whipple [11] that this appears to be the case. Whipple's examination of the diurnal variation of the world's thunderstorms is represented by the bottom curve of Fig. 13 (*b*), where it will be seen that the parallelism with the variation of the potential gradient over the oceans and the polar caps is indeed very close.

REFERENCES TO PAPERS

[1] Watson, *Met. Office Geophys. Memoir*, No. 45 (1929).
[2] Idrac, *Compt. Rend*, 182, p. 1634 (1926).
[3] Whipple, *Quart. Journ. Roy. Met. Soc.*, 55, p. 351 (1929).
[4] Mauchly, *Terr. Mag.*, 28, p. 61 (1923). See also Hoffmann, *Beitr. Physik. Atmos.*, Leipzig, 11, p. 1 (1923).
[5] Wigand, *Phys. Zeit.*, 26, p. 81 (1925).
[6] C. T. R. Wilson, *Proc. Phys. Soc.*, 37, p. 32*d* (1925).
[7] Schonland, *Proc. Roy. Soc.*, A, 118, p. 252 (1928).
[8] Wormell, *ibid.*, A, 115, p. 443 (1927); 117, p. 567 (1929).
[9] Wigand, *Ann. d. Physik*, 66, p. 81 (1921).
[10] C. T. R. Wilson, *The Observatory*, 44 (1922).
[11] Whipple, *Quart. Journ. Roy. Met. Soc.*, 55, p. 1 (1929).

CHAPTER IV

THE ELECTRIFICATION OF THUNDERSTORMS

§ 39. The Number of Thunderstorms over the Globe

WHILE a thunderstorm is a comparatively rare event at any one station in temperate latitudes, the number of thunderstorms per day experienced by the earth as a whole is very large. Even in such a limited area as France there are comparatively few days in the year where thunder is nowhere reported. The total amount of thunderstorm activity which takes place at various seasons of the year has been determined by Brookes [1] from information taken from all parts of the world. According to his estimate, the earth experiences 16,000,000 thunderstorms per annum, or 44,000 per day. Taking one hour as the average duration of each—a modest estimate—there will on the average be 1800 thunderstorms in progress in different parts of the world at any one moment. In terms of lightning flashes this would mean that something like 100 flashes occur over the earth in every second, or 360,000 per hour.

It appears from recent measurements (§ 42) that the average thunderstorm develops and expends two or three million kilowatts of electrical energy continuously during its hour or two of activity. Over the whole earth, therefore, thunderstorms are continuously expending electrical energy at a rate of some 4×10^9 kilowatts. This figure is so large that by the employment of even a small fraction of its power in an apparently

insignificant "side-line," the thunderstorm could be of importance in a number of geophysical problems. Amongst these may be mentioned the generation of Hertzian waves (atmospherics), the maintenance of the earth's negative charge and of the positive charge on the upper air (§§ 37 and 38), the production of high-speed electrons (§ 21), and of ionisation in the upper atmosphere.

§ 40. The Measurement of the Electric Fields and Field-changes due to Thunderstorms

Practically all the quantitative information on the electrification of thunderstorms which has so far been obtained has been derived from measurements of the electric fields and field-changes produced by them at the surface of the earth. The development of these measurements and the interpretation of the results obtained is mainly due to Professor C. T. R. Wilson.[2]

The general principle is similar to that of his test-plate or induced charge method of studying the fine-weather field (§ 23), in which an exposed conductor is kept at zero potential by alteration in the capacity of a compensating condenser, when the charge induced upon the conductor by the field is equal to that given by the compensator to the system. In the measurement of rapidly changing thunderstorm fields, however, compensation is produced automatically and practically instantaneously by means of an ingenious form of capillary electrometer. As shown in Fig 17, this consists of a small bubble of dilute sulphuric acid enclosed between mercury threads in a narrow capillary tube. The threads lead to end-cups of mercury, and one of these, A, is connected to a test-plate T insulated from, but flush with, the surrounding ground, while the other is connected to the earth. Between the mercury and the glass there is everywhere a thin film of dilute acid, so that an electrical "double layer" surrounds the mercury and makes each half of the electrometer a condenser charged to the potential difference of the double

layer, about ·90 volt, the mercury being positively charged with respect to the acid. If a positive charge is given to the left-hand side, it will increase the charge on the left-hand condenser and the left-hand thread will move forward a certain distance so as to absorb this charge, by increasing the area of the acid-mercury surface and the capacity of the left-hand condenser. A corresponding movement of the right-hand thread causes a reduction in area on this side and the passage to earth of a quantity of electricity exactly equal to that originally supplied to the electrometer. The distance moved, y, is easily seen to be related to the charge passed through, q, by the equation

$$q = 2\pi r C V'(1 - r/R)y,$$

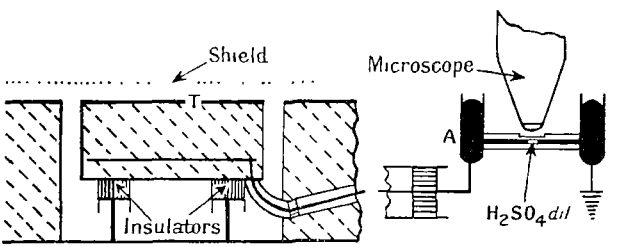

FIG. 17.—Measurement of the electric fields and field-changes due to thunderstorms (C. T. R. Wilson).

where r is the radius of the capillary and R that of the end-tube, V′ the potential difference, and C the capacity per unit area, of the double layer. Thus $q = ky$, where k is an instrumental constant which can be determined by discharging a known quantity of electricity through the instrument. The arrangement thus gives a linear relation between the movement of the acid bubble and the quantity discharged. In spite of the large value of C, about 30 microfarads per square centimetre, it is extremely sensitive. By using a microscope focussed upon one end of the bubble quantities of the order of 10^{-9} coulombs may be measured. A permanent record

is best obtained by placing a slit and a moving photographic plate in the focal plane of the objective.

When connected to a test-plate the electrometer automatically maintains it at earth potential and records by its movements the quantities of electricity passing to and from the earth as a result of changes in the external field and of the induced charges on the plate. The type of record obtained from this arrangement during a thunderstorm is illustrated by the thick line of Fig. 18. An earthed cover is swung over the test-

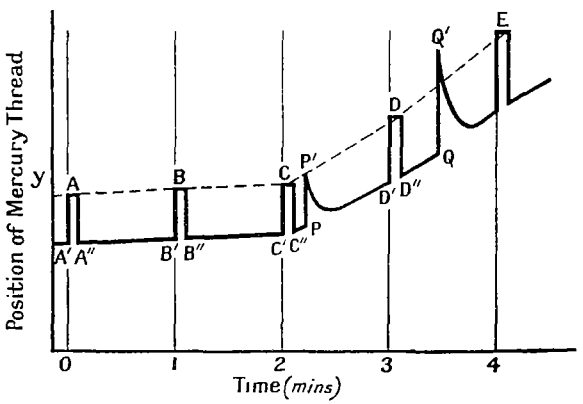

FIG. 18.—Capillary electrometer record during a thunderstorm.

plate for a few seconds at the beginning of each minute, causing the movements A′AA″, B′BB″, etc., as the induced charge flows away to earth and then returns. The points A, B, C, E would lie on a horizontal line if there were no actual transfer of charge between the plate and the atmosphere taking place, that is to say, no conduction current, point-discharge, or transport of charge by rain. The first two minutes in the figure show the slight slope due to the conduction current only, the last two show the effect of a fall of positively charged rain. The charge, for example, conveyed to the

plate by rain and conduction during the third minute is $k(y_D - y_C)$ and the mean value of the current per square centimetre $k(y_D - y_C)/60A$, where A is the area of the plate and k the constant of the electrometer. The dotted line joining the points A, B, C, D, E gives the reading of the instrument when the test-plate is shielded at any time during the record, and this line serves as the zero from which the field and field-changes are measured. The field at the end of the first minute, for instance, is given by $F = 4\pi k(y_B - y_{B'})/A$.

Two sudden interruptions in the record, such as are caused by lightning flashes, are shown at P and Q. At P the record suddenly touches the dotted line, indicating that for a moment the field was completely destroyed and the original induced charge ran to earth through the electrometer. At Q the movement extends beyond the dotted line, showing that the field was actually reversed in sign by the discharge and reached a reverse value equal to half its original strength. The shape of the record immediately after the passage of these lightning flashes, the recovery curve as it is called, is of considerable interest; it will be seen in these two examples that the thundercloud fields and charges recovered their original values after the lapse of something like twenty seconds. The rate of recovery was approximately exponential, being most rapid immediately after the flash and becoming very slow as the cloud approached its original electrified condition. We may find the magnitude of these sudden field-changes by the same method used for the field itself; if Δy be the movement PP′, or QQ′, the sudden field-change which caused it is given by: $\Delta F = 4\pi k \,.\, \Delta y/A$.

The test-plate arrangement, using a plate 50 cm. in diameter, is suitable for the measurement of fields of strength exceeding 1000 volts/metre, such as are caused by thunderstorms when they come within a distance of about 8 kilometres. For more distant storms Wilson employs a different form of exposed conductor, a copper ball 1 foot in diameter mounted on insulators at the end

of an iron pipe 5 metres in length (Fig. 19). When the arrangement is in use the pipe is held vertical; by turning it about a horizontal axis through its base, the pipe is lowered and the ball enters an earthed metal case which shields it from the field. Connection to the capillary electrometer is made by an insulated wire passing down the centre of the pipe.

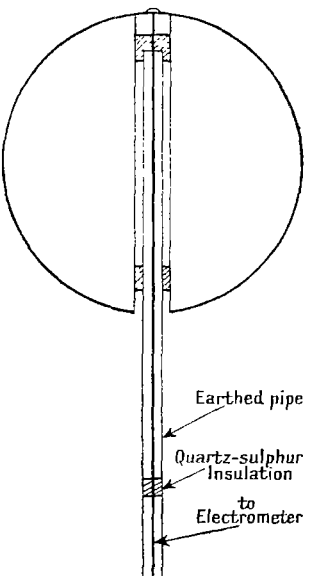

FIG. 19.—Elevated sphere for measuring fields of distant thunderstorms.

The field producing a given movement of the electrometer is calculated as follows: The charge q induced upon the ball when raised to a height h above the ground must be such as to maintain it at earth potential, for the ball is earth-connected through the electrometer. Thus if V is the undisturbed potential of the air at the point occupied by the centre of the sphere of radius r, we have $V + q/r - q/2h = 0$, the third term allowing for the effect of the electrical image of the charged sphere in the earth. If the movement of the electrometer caused by raising the ball from its case to the height h is y, we have $q = -ky$ and $V = k(1/r - 1/2h)y$. This observation therefore gives for the mean potential gradient between the ground and the height h,

$$F = V/h = (k/h)\,(1/r - 1/2h)y.$$

The same equation relates the sudden changes of field ΔF to the corresponding sudden movements Δy of the

electrometer. Since these relations, like those derived for the test-plate, are derived on the assumption of a perfectly plane earth, small corrections must be applied to allow for the effect of the concentration of the lines of force upon the hut used to house the recording instrument.

The effects obtained from the elevated sphere become too small for accurate measurement when the storm is more than 20 kilometres away ; for still greater distances a wireless aerial has been used by some workers. Thunderstorm fields are of the same order as the fine-weather field, about 100 v./m., when the cloud is 20 kilometres off. At distances of 6 to 8 kilometres they often reach 5000 v./m., and when the storm passes overhead values of 10,000 to 20,000 v./m. are commonly observed, while the sudden changes may exceed these figures very considerably for a small fraction of a second. In an active thunderstorm the fields are constantly altering as a result of the neutralisation of part or all of the charge by lightning discharges, of the subsequent rebuilding of the destroyed charges, and of movements of the cloud as a whole.

§ 41. The Changes of Field Accompanying Lightning Discharges

The methods described have been used for the measurement of the field-changes due to lightning in England and in South Africa,[2, 3] and have led to valuable information as to the magnitude of the electrical quantities involved in the thunderstorm and the distribution of the charges in the cloud. The principles to be followed in the interpretation of the observations have been very completely discussed by Wilson.[2] Their application is not always an easy matter, for though the structure of most thunderclouds may be the same in principle, meteorological conditions lead to frequent departures from any simple model which can be framed. Anything like a full discussion of this question would occupy too

much space, and so we will limit ourselves to the detailed consideration of a type of lightning discharge which takes place within the thundercloud without reaching the ground and which is the most frequent kind of flash in a tropical storm. In the Cape Province of South Africa nine-tenths of the discharges are of this nature, and simply involve the downward movement of a positive charge from a height of 4 or 5 kilometres to one of 2 or 3 kilometres.

Consider a simple cloud-model in which a positive charge Q is distributed through a spherical region with its centre at a height H_2 above the ground. To calculate

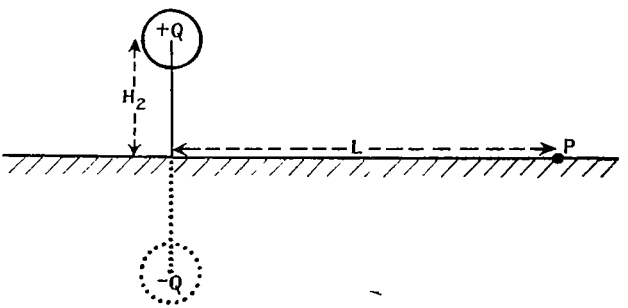

FIG. 20.—Thundercloud charge above the earth.

the resulting downwardly directed field at the earth's surface we may regard the charge induced on the conducting earth as replaced by the image-charge $-Q$ at a depth H_2 below the ground and we may disregard the curvature of the earth. The field at any point such as P (Fig. 20), at a horizontal distance L, is then that due to an electric doublet of moment $2QH_2$, and its strength is given by $F_2 = 2QH_2(H_2^2 + L^2)^{-3/2}$, vertically downwards. If a lightning discharge causes the positive cloud-charge to pass to a lower level H_1, the new field $F_1 = 2QH_1/(H_1^2 + L^2)^{-3/2}$ and the sudden field-change due to the discharge is

$$\Delta F = F_1 - F_2 = 2Q[H_1(H_1^2+L^2)^{-3/2} - H_2(H_2^2+L^2)^{-3/2}]. \quad (11)$$

It may be noted that this equation applies equally well if the act of lowering the charge Q involves the neutralisation of an equal and opposite charge $-Q$ at the height H_1, for the effect of adding the field due to this charge to both F_2 and F_1 disappears in computing the field-change ΔF.

Equation (11) shows that the change of field should be zero at a distance L_0 such that

$$H_1/(H_1^2 + L_0^2)^{3/2} = H_2/(H_2^2 + L_0^2)^{3/2},$$

that it is negative for $L > L_0$ and positive for $L < L_0$. This reversal distance L_0 is found to be 6·7 kilometres, if H_2 and H_1 are 6 and 3 kilometres respectively.

South African thunderstorms show this reversal in the sign of the majority of the field-changes very clearly. The following Table[3] gives the results of observations upon some fifty storms, giving 2800 observed field-changes which were grouped as "distant" when more than 15 kilometres from the station and as "near" when within 7 kilometres; in many cases the same storm was observed in both groups.

TABLE VIII

SUDDEN FIELD-CHANGES DUE TO THUNDERSTORMS (SCHONLAND)

Distant Storms.		Near Storms.	
Positive ΔF.	Negative ΔF.	Positive ΔF.	Negative ΔF
250	2375	188	9

The phenomenon of zero values for the field-changes, due to discharges at the reversal distance, can only be observed in isolated instances. In practice, owing to the discharge not taking a vertical but an inclined path, and for other reasons, the simple concept of a reversal point must be replaced by that of a reversal zone, in

which small field-changes of either sign are equally probable, and which, in the storms of Table VIII, may extend from 7 to 15 kilometres from the point of observation.

When the distance L is great compared with the heights H_1 and H_2 of the cloud-charges, equation (11) takes an important form ; it becomes

$$\Delta F = -2Q(H_2 - H_1)/L^3 \text{ or } 2Q(H_2 - H_1) = -\Delta F \times L^3.$$

The quantity on the left is now the difference between the electric moments of the thundercloud charges before and after the discharge ; it is referred to as the electric moment of the discharge. All that is needed to determine it is a measurement of the field-change due to a distant lightning flash and of the distance L, which can be found from the interval between the flash and the thunder it causes.

Measurements of the electric moments of discharges have been made both in England and South Africa, with similar results. The average value found is about 2×10^{16} e.s.u. $\times$ centimetres, or 60 coulomb-kilometres, in Europe, and 90 coulomb-kilometres in the more elevated tropical storms. Direct observation in the latter case gives for the vertical lengths of cloud-flashes, $H_2 - H_1$, values lying between 1·5 and 3 kilometres, so that the average quantity of electricity conveyed by a lightning discharge is about 20 coulombs. The usual range of variation for individual discharges is not large, from 2 to 100 coulombs if the length of the discharge is supposed constant, and probably much less if this quantity were actually observed in every case.

§ 42. Magnitudes of the Electrical Quantities Involved in Thunderstorms

The determination of the average quantity of electricity destroyed by a flash of lightning provides the starting-point for the evaluation of a number of important electrical quantities involved. A single flash, of the kind we have discussed, generally completely discharges

the whole cloud and momentarily reduces the field from it to zero. A fairly active cloud produces one flash every twenty seconds; to feed the flashes such a storm would have to generate electricity at an average rate of 1 coulomb per second, i.e. the mechanism would have to provide an average current of 1 ampere. Reference has already been made to the rapid rate at which the initial regeneration of the cloud-charges takes place. It is usually such as to be able to restore the whole electrification in about five seconds if it continued for that time. The exponential form of the recovery curves suggests that this initial rate may remain constant, but that, as the cloud charges grow, effects occur which tend to dissipate them and which are proportional to the quantity of charge present at any time. On this view the rate of regeneration involves a current of 20/5 coulombs/sec. or 4 amperes. The electrical energy generated by the storm is thus only partially employed in the feeding of lightning flashes; at the moment just before a discharge most of the power of the machine is being expended in overcoming various leakage effects. It may happen in this way that the field in the cloud never reaches the sparking value: this appears to be the case in many heavy rainstorms.

Before proceeding further it is necessary to know the critical value of the electric field strength at which the spark which we call lightning takes place. In air at ordinary pressure this is 30,000 volts per centimetre, but in a thundercloud the pressure is lower and the presence of small drops of water introduces a new and important factor. Macky[4] has recently investigated the behaviour of water-drops in strong electric fields, and finds that when exposed to increasing fields a drop of radius r cm. becomes elongated, until at a definite field strength, given in volts per cm. by $F\sqrt{r} = 3875$, it becomes unstable and filaments are drawn out from the ends. When instability occurs, a discharge passes through the drop in exactly the same manner as it would through a conductor pointed at both ends, with char-

acteristic luminous glows. The fields producing discharge through the drops are unaltered by reduction of the air-pressure over a wide range; for example, the field required to cause discharge through a drop 0·227 cm. in radius remains at 8400 volts/cm. as the pressure drops from 76 to 25 cm. of mercury. At still lower pressures the discharge is unaffected by the drop and the sparking potential falls in the usual way. The removal of water by the formation of filaments sets a limit to the size of the drops which can exist inside a thundercloud. Macky concludes from his experiments that no drops larger than 0·15 cm. in radius can be present in the fully charged cloud, and that the critical value of the field at which breakdown occurs is of the order of 10,000 volts/cm. or 33 e.s.u.

With this information the potential and the volume of the charged portion of the cloud can be estimated. Although the results might be expected to depend very much upon the manner in which the charge is distributed, it appears that whatever assumptions are made on this point the values obtained are of the same order of magnitude. Consider a simple spherical distribution of a charge q on a sphere of radius R. the electric field at the surface of the sphere is given by $F = q/R^2$, and at the moment at which a discharge takes place q is 20 coulombs or 6×10^{10} e.s.u. while F has the value 33 e s.u. Hence $R = 427$ metres and the dimensions of the charged region are of the order of 1 kilometre. The potential at the surface is given by $V = q/R = FR = 33 \times 4{\cdot}3 \times 10^4$ e s.u. or $4{\cdot}3 \times 10^8$ volts. If the radial electric force within the sphere everywhere reaches the sparking limit, the potential at the centre is 2FR or 9×10^8 volts. Two such spheres carrying opposite charges would therefore be at a difference of potential of the order of a thousand million volts.

A similar result follows if we make the very different assumption that the two poles of the cloud are distributed in horizontal layers with a vertical thickness L of neutral water-drops between them. The order of magnitude of

L is known from the lengths of lightning discharges to be 2 kilometres, and the critical value of the field, as we have seen, is 10,000 volts/cm. Thus the difference of potential between the poles is $10.000 \times 2 \times 10^5$ or 2×10^9 volts.

When a cloud-charge is conveyed to earth, or neutralised by another charge of opposite sign, by a lightning discharge, the energy dissipated is of the order of 2×10^{17} ergs or 5×10^9 calories; most of this is converted into heat along the path of the lightning flash. A cloud giving one flash every twenty seconds is dissipating electrical energy in the form of lightning at an average rate of 10^6 kilowatts. We have seen that other effects may account for an expenditure of energy at a rate considerably exceeding this.

§ 43. The Distribution and Origin of the Electric Charges

It is generally agreed that the seat of the generation of the electricity of a thundercloud lies within the cloud itself. Equal quantities of positive and negative electricity are produced and then separated by some agency into different regions, where they constitute the "poles" of the electrical machine. During the period in which the charges are built up the dissipation losses in these two regions may well be quite different and the quantities ultimately collected upon the two poles are not necessarily the same. The distribution of the charges has been the subject of a great deal of investigation, both practical and theoretical. At the present time two quite different views as to the distribution and the mechanism which gives rise to it, suggested by G. C. Simpson and by C. T. R. Wilson, are being examined.

According to Wilson the polarity of a thundercloud is what is called positive, the positive pole being higher up in the cloud than the negative one. The cloud is to be considered as made up of large negatively charged

drops and small positively charged droplets.[5] When a flash of lightning has just removed the free charges at the poles, the situation is momentarily that illustrated by Fig. 21 (*a*), in which the cloud as a whole is electrically neutral. Immediately afterwards, however, the faster rate of fall under gravity of the large negative drops leads to the development of free positive and negative charges at the top and bottom of the cloud, separated by a neutral region, as represented in Fig. 21 (*b*). Since

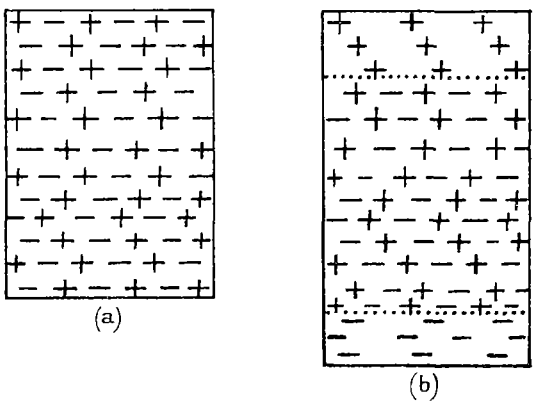

FIG. 21.—Distribution of thundercloud charges (C. T. R. Wilson).
(*a*) Just after a lightning flash.
(*b*) Just before a lightning flash.

the free poles attract each other, the rate of separation will become slower as the charges grow and will lead to a rate of fall of the larger drops which is just sufficient to maintain the charges at their existing values, in the face of the dissipating action of point discharge currents within and outside the cloud. Ultimately the field between the poles may become strong enough for a discharge to pass. If the charges are equal, this leaves the cloud in its initial state and the large drops in the neutral region once more separate under the action of

gravity. The relative rate of separation may be taken from Macky's results, already discussed, to be the terminal velocity of a drop 0·15 cm. in radius, which is about 6 metres per second. Relative to such a drop the much slower small droplets may be considered as stationary. The average rate at which the initial regeneration of the moment of the cloud takes place is 60/5 coulomb-kilometres per second, using the data given in § 42. From these figures Wilson [5] finds that the average total charge on the positive or negative carriers in the neutral part of the cloud is about 500 coulombs, occupying a volume of some 4 cubic kilometres. The charge per cubic centimetre of water on the larger negatively charged drops he finds to be less than 30 e.s.u., a result which we have seen (§ 36) to be in accord with direct measurements of the charge on rain from thunderstorms.

The mechanism suggested by Wilson as the cause of the opposite charges on large and small drops depends upon the presence in the cloud of numbers of slow ions, attached to Aitken nuclei and small water-drops. Since their mobility (§ 1) is about ·0003 cm./sec., the velocity with which these ions will move, even when the field attains its maximum value of 10,000 volts per metre, is only 3 cm./sec., which is less than that of a drop of water a few thousandths of a centimetre in radius falling under gravity. In the earliest stages of the development of the charged cloud, these may arise from natural sources, but later on they will be supplied in enormous numbers by brush-discharge from water-drops drawn out by the field into pointed forms.

Consider a large drop, say 1 mm. in radius, inside a cloud in which a strong downwardly directed field already exists. Owing to this field, the drop carries a negative polarisation charge upon its upper surface and a positive charge below (Fig. 22). As it falls downwards, it will interact with positive ions moving more slowly down and with negative ions moving up; encounters with other charged drops will be relatively rare. The

polarisation charge on the drop and the fact that its velocity, 590 cm./sec., is large compared with that of the slowly moving ions, will cause it to behave differently in its encounters with the two streams. At its under-surface a selective capture of negative ions will occur, for the negative ions which it meets will be attracted and the positive ions repelled by the positive polarisation charge there. A reverse process, a selective capture of positive ions, does not, however, take place at the upper surface, for here the drop is receding from the ions and the positive ions have been repelled away from the drop at the earlier encounter. Innumerable episodes of this kind will lead to the acquisition of a considerable resultant negative charge by the drop from the ion-streams, without seriously affecting the possibility of further captures. For example, a drop 1 mm. in radius falling in a field of 10,000 volts/cm. carries at each end a polarisation charge of ·25 e.s.u. and if it had collected a nett charge equivalent to the very reasonable value of 12 e.s.u. per cubic centimetre of water (§ 36), the negative ions captured would only increase the upper negative and decrease the lower positive charges by 10 per cent.

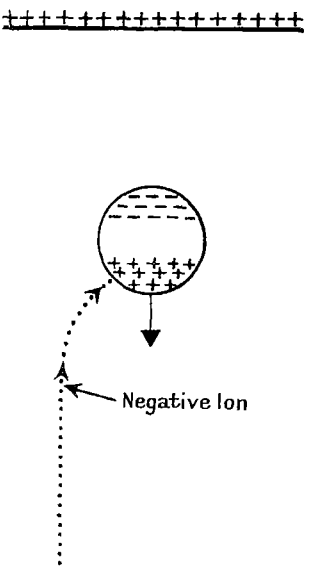

FIG. 22.—Capture of negative ions by large falling drops.

The tiny droplets in the cloud, which are falling with a velocity of the same order as that of the ion-streams,

would be unable to exercise the selective action described; they will therefore acquire a nett positive charge, the complement of the negative charge collected by the larger drops.

A complete account of this theory has not yet been given; it would involve consideration of the early stages in the building up of a charged cloud, the action of the normal potential gradient of fine weather in determining the direction of the field to be generated, and the initial building up with the aid of natural ions.

A very different view of the origin and distribution of thundercloud charges has been developed by Simpson,[6] who considers the generation of the electricity to be a consequence of the disruption of rain-drops. Lenard showed in 1892 that when pure water splashes against a solid obstacle the water becomes positively charged, while a complementary negative charge is given to the air. Simpson in 1908 extended these experiments to the breaking of drops in an ascending current of air and obtained the same result, and quantitative values for the charge developed in the process. In extending this observation to conditions within a thundercloud, account has to be taken of the fact that a water-drop of radius greater than ·25 cm. becomes flattened out and unstable when it falls through the air, with the result that it breaks up into a number of smaller drops. Since the terminal velocity of fall for a drop ·25 cm. in radius is 8 metres per second, it follows that no drops of water can ever fall downwards through an ascending current of air whose vertical velocity component exceeds 8 metres/sec. All drops of water under such circumstances will be carried upwards.

The meteorological conditions inside a thunderstorm of the heat-type are represented by Simpson as in Fig. 23; the continuous lines represent stream-lines of the air, and their distance apart is made inversely proportional to the wind-velocity at each point. The air enters the cloud from the right and passes upwards into the front of the cloud. The vertical component

of the velocity of the wind is taken to reach a value exceeding 8 metres per second within the oval unshaded region. No water, as we have seen, can pass vertically downwards through this region. The paths of the larger drops, as they fall through the cloud, are represented by the dotted lines. On the right-hand half of the figure these drops are deflected to the left by the air-stream. Above the oval region, therefore, there will be a considerable accumulation of water, and it is here that the larger drops will form and break up on account of instability, giving rise to electric charge. The largest drops, ·25 cm. in radius,* will be falling fast

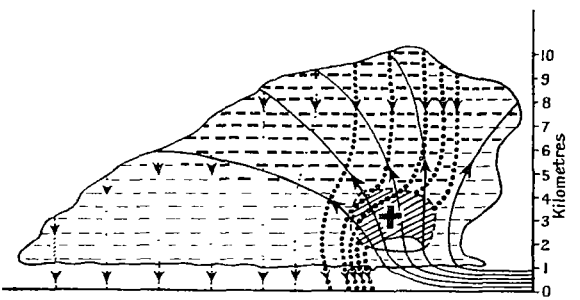

FIG. 23.—Thundercloud electrification (Simpson).

enough to penetrate to just above the forbidden oval, where they will be broken into pieces by the upward-moving air. The fragments, now positively charged, re-form drops and fall back again, and the negative charge given to the rising air will be absorbed by small droplets and carried to the main body of the cloud. The region in which the process of generation of electricity occurs is indicated by the heavily shaded area above the oval.

Simpson shows that a reasonable estimate for the average mass of water in the shaded region is 3×10^{11} grams, the dimensions of the region being of the order

* The theory in this form was put forward before Macky's results (§ 42) were published.

of a kilometre. If at any one time half this water is in the form of drops large enough to be broken up, the total number of drops available for breaking is $2{\cdot}2 \times 10^{12}$. Since the laboratory experiments showed that a drop of radius ·25 cm , when broken, gives rise to $5{\cdot}10^{-3}$ e.s.u. of charge, the quantity developed if every available drop broke once would be 3·6 coulombs. The drops would have to break six times to produce the 20 coulombs on the poles of the cloud.

To decide between these two views on the charge distribution, various experimental tests have been applied to thunderclouds, the description of which is beyond the scope of this book. For the discussions on this question, the reader may be referred to the references at the end of the chapter [2, 3, 6, 7, 8, 9]. It is not impossible that both the Simpson and the Wilson mechanism may be at work in a thundercloud at one and the same time.

§ 44. Lightning

Studies of the lightning discharge are of considerable interest in relation to the problems just discussed; they also furnish valuable material for the study of the spark discharge in air at ordinary pressures, over the mechanism of which general agreement has not yet been reached.

When photographs of the lightning channel taken on a moving camera are examined, they show that many apparently continuous discharges are made up of a number of separate strokes, separated by short periods in which faintly luminous channels sometimes continue. These discontinuities are often apparent to the eye as flicker of the flash of lightning. Though the whole flash often occupies more than a second, the component strokes are generally over in a few thousandths of a second. After each such stroke, the ionisation in places along its track persists sufficiently long to provide the succeeding stroke with a ready-made conducting path. Fig. 24 (after Walter) [10] illustrates how the apparent

branching of a flash observed by the eye (24 (*a*)) is often the result of the superposition of a number of separate strokes, whose tracks coincide in part. Fig. 24 (*b*) is from a photograph of the same flash as (*a*), taken on a rotating camera.

These discontinuous strokes must arise from discontinuities in the rate at which the thundercloud can supply electric charge to the end of the channel. Since the cloud itself, though charged, is only a conductor by virtue of the ions produced by point-discharge from drawn-out water-drops, the conditions within the

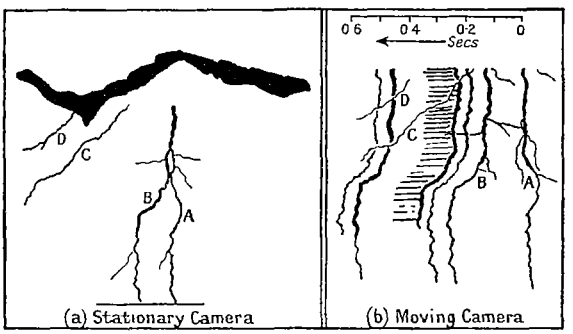

FIG. 24.—Component lightning strokes (Walter).

cloud, during the passage of a discharge, must be very complex.[11]

The field-change apparatus of Wilson, in the form described, does not usually yield information as to the quantities of electricity conveyed by these component strokes, the recording arrangement being too slow to record them separately. The results given in § 41 refer to the total integrated field-change and so to the total charge transferred by the flash.

§ 45. Oscillations in the Lightning Stroke

Much attention has been paid to the question as to whether a lightning discharge is oscillatory or aperiodic,

and several writers have examined the applicability of the well-known theoretical condition for aperiodicity, $R^2 > 4L/C$, where R is the total resistance of the circuit, C the capacity and L the inductance. The thunder-cloud itself is considered by some as a condenser plate whose capacity to earth can be estimated from its dimensions, by others as a non-conductor. Simpson,[11] who takes the latter view, has pointed out that the conducting channel of the flash, with its ramifications and tributaries within the cloud, is a conducting system possessing distributed capacity and self-inductance. He has shown that a straight lightning channel 2 km. high and 5 cm. in diameter will be capable of oscillation if its total resistance is less than 2000 ohms, or 1 ohm/metre. A potential difference of 10^9 volts applied to a channel of this resistance would give rise to a current of 500,000 amperes; there is evidence that momentary currents as large as this do actually flow.

On this view the oscillations may be expected to take the form of ripples superimposed upon the main current, without reversing its direction of flow. Such ripples have been observed by several workers (Appleton, Watt and Herd [7]; Norinder [14]; Mathias [20]) who have used the cathode-ray oscillograph to record the field-changes due to distant lightning flashes. The main effect is a unidirectional pulse which rises to a maximum and then falls to zero. On this are superimposed ripples which have a frequency corresponding to a wave-length in air of about 30 km. If the lightning channel be regarded as a gigantic wireless aerial 3 km. high, connected to earth at its base, its natural wave-length would be 12 km. Since the actual channel has extensive branches within the cloud, the agreement with the observed wave-length as regards order of magnitude can be considered satisfactory.

§ 46. The Electrical Effects of Direct Strokes

We have seen (§ 42) that the potential of a thunder-cloud pole is about 10^9 volts. An elevated and insulated

conducting system when struck by lightning may be expected to attain a considerable fraction of this potential. Experiments of this nature have been made by Brasch and Lange,[12] who used a wire stretched across an Alpine valley and insulated at each end. They have reported potentials of about 10,000,000 volts, giving sparks to earth 18 metres long. Pittman and Torok,[13] using a cathode-ray oscillograph connected to an overhead power line, have recorded a potential of 5,000,000 volts caused by a travelling wave from a lightning stroke which hit the line four miles away.

The time occupied by a lightning stroke is an important quantity in connection with the current in the discharge. Measurements by Norinder,[14] Mathias[20] and Watson-Watt[7] agree in giving values of the order of ·001 second for the duration of single strokes. Since we know from the work of Wilson that the average quantity of electricity carried by the stroke is about 20 coulombs, the average value of the current must be of the order of 20,000 amps. One would, however, expect that for very short periods of time the discharge current is much greater than this average. Lightning strokes to the supporting towers of power transmission lines have been found to carry currents as high as 250,000 amps.

The question of the diameter of the discharge channel has been the subject of laboratory experiments by Petersen,[15] who has found that powerful spark discharges carrying currents of the order of 60,000 amps. have a constant current-density of 10 amps. per square millimetre. If this result may be extrapolated to currents of 200,000 amps. it would yield 16 cm. for the diameter of the channel of a powerful lightning flash. The fulgurites formed by the fusion of sand struck by lightning have a diameter of some 5 cm., and Petersen reports that in his heavy current discharges the diameter of the channel at the electrodes contracted to one-third of its value elsewhere.

A simple and valuable instrument for the study of direct lightning strokes has been developed in America

under the name of the Klydonograph. This is an adaptation of the well-known Lichtenberg figure experiment and operates as a recording voltmeter for high potential differences. The positive electrode (Fig. 25) takes the form of a rod A, touching the emulsion of a photographic plate or film. Below this is a thin layer of varnished paper insulation resting upon a flat metal plate connected to earth. When A is raised to a high positive potential a discharge passes along the photographic emulsion, which on development shows as a circular patch or figure. It has been found that the relation between the diameter of this figure and the applied voltage is a linear one up to potentials of 25,000 volts. Above this the instrument must be used with a potential divider, tapped off, for example, from a string of insulators connected between the elevated conductor and the earth. To measure negative potentials the connections must be reversed, the rod A earthed and the plate connected to the high potential side. For lightning recording, two oppositely connected klydonographs have been joined to the transmission lines under examination.

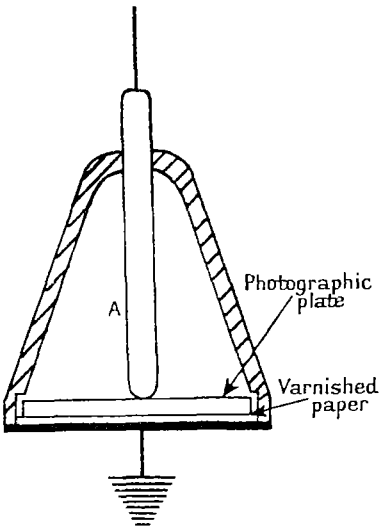

FIG. 25.—Klydonograph arrangement for recording potentials in lightning strokes.

Lewis and Foust [16] have recently published the results

of some years' investigations with 1500 klydonographs connected to the supporting towers of transmission lines. One hundred direct strokes were recorded and all these conveyed negative charge from cloud to ground. This result is of interest in connection with the problems of the maintenance of the earth's charge (§ 38), and of the distribution of electricity in the thundercloud.

§ 47. The Mechanism of the Discharge

Two discussions of the actual mechanism of the lightning discharge have been given. Dorsey [17] considers that the principal factor is the movement of a stream of fast electrons from the negative pole, the ions necessary for the subsequent passage of the main discharge arising from the Townsend collision process. According to Simpson,[18] however, the discharge proceeds away from the positive pole; the slower-moving positive ions, on this view, constitute the tip or spear-head of the discharge as it develops, and the negative ions produced at the tip flow into the positive pole along the channel.

Light may be thrown on this important question, which is directly connected with the vexed problem of the mechanism of the electric spark between metal electrodes, by photographs taken with a camera moving sufficiently rapidly to show the manner in which the first stroke in a lightning flash proceeds. C. V. Boys [19] has developed a camera of this type and has published one such photograph. It shows a flash beginning at a point some 500 metres above the earth and developing its track simultaneously above and below.

REFERENCES TO PAPERS

[1] Brookes, *Met. Office Geophys. Memoir*, No. 24 (1925).

[2] C. T. R. Wilson, *Proc. Roy. Soc.*, A, 92, p. 555 (1916); *Phil. Trans.*, A, 221, p. 73 (1921).

[3] Schonland, *Proc. Roy. Soc.*, A, 118, p. 233 (1928); A, 114, p. 229 (1927) (with J. Craib).

[4] Macky, *ibid.*, A, 133, p. 565 (1931); *see also* J. Nolan and O'Keefe, *Proc. Roy. Irish Acad.*, A, 40, p. 86 (1932).

[5] C. T. R. Wilson, *Journ. Franklin Inst.*, 208, p. 1 (1929).
[6] Simpson, *Proc. Roy. Soc.*, A, 114, p. 376 (1927).
[7] Appleton, Watt and Herd, *ibid.*, A, 111, p. 615 (1926).
[8] Banneriji, *Journ. Roy. Met. Soc.*, vol. 56, p. 305 (1930).
[9] Wormell, *Proc Roy Soc.*, A, 117, p. 567 (1929).
[10] Walter, *Phys. Zeit.*, 19, p. 273 (1928).
[11] Simpson, *Journ. I.E E.*, 67, p. 1269 (1929).
[12] Brasch and Lange, *Zeit. f. Physik*, 70, p. 1 (1931).
[13] Pittman and Torok, *Trans. Am. I.E.E.* (Sept., 1931).
[14] Norinder, *Journ. Franklin Inst.*, 205, p. 760 (1928).
[15] Petersen, *A.E.G. Progress* (Oct., 1930).
[16] Lewis and Foust, *G.E. Rev.*, 34, p. 452 (1931).
[17] Dorsey, *Journ. Franklin Inst.*, 20, p. 485 (1926).
[18] Simpson, *Proc. Roy. Soc.*, A, 111, p. 56 (1926).
[19] Boys, *Nature*, 118, p. 749 (1926); 122, p. 310 (1928).
[20] A. Mathias, *Mitteilungen der V.D.E W.*, No. 424 (1927).

GENERAL REFERENCES

Victor F. Hess, *The Electrical Conductivity of the Atmosphere and its Causes*, English translation by Codd, gives a detailed account of the matter treated in Chapter I, up to the year 1927.

The Dictionary of Applied Physics, vol. 3, contains a valuable article on "Atmospheric Electricity," by C. T. R. Wilson.

Encyclopædia Britannica, 1910, art. "Atmospheric Electricity," by C. Chree.

K. Kahler, *Einfuhrung in die Atmospharische Elektrizität*, gives details of instruments and the technique of measurement.

E. von Schweidler, *Einfuhrung in die Geophysik*, II, art. "Luftelektrizitat".

K. Kahler, *Die Elektrizität der Gewitter.*

A. Gockel, *Die Luftelektrizitat.*

B. Chauveau, *Électricité Atmosphérique.*

E. Mathias and collaborators, *Traite d'Électricité Atmosphérique et Téllurique.*

A discussion in the *Proceedings of the Royal Society*, A, volume 132, p. 331, and the chapter on the absorption of the gamma rays in Rutherford, Chadwick and Ellis, *Radiations from Radioactive Substances*, will be found valuable in connection with the penetrating radiation Critical summaries of recent work, in addition to original papers, are published in the journal *Terrestrial Magnetism and Atmospheric Electricity.* For information on the effect of lightning upon overhead transmission lines, etc., reference should be made to the *Transactions of the American Institute of Electrical Engineers.* As a source-book for recent work there is *Science Abstracts.*

INDEX

Air-earth current, *see* Fine-weather current
Air-radiation, 10
AITKEN counter, 5
AITKEN nuclei, *see* Nuclei
APPLETON, 92

BALDIT, 63
BENNDORF, 48
BOTHE, 34, 35
BOTHE-KOLHORSTER expt., 35
BOYS, 95
BROOKES, 72

CAMERON, 26
Capillary electrometer, 73
Capture of small ions, 2, 14
Carnegie, S.S., 19, 50, 52
Charge on the earth, replenishment of, 68
Closed vessel, ionisation in, 12, 14
Collectors, 47
Condensation nuclei, *see* Nuclei
Conduction current, *see* Fine-weather current
Conductivity, atmospheric, measurement of, 7, 55
  effect of pollution on, 52, 59
  influence of large ions on, 7
  polar, 6
  variation with height, 60
  variation with time and season, 59
Convection current in atmosphere, 53, 58
CORLIN, 39
Counter, GEIGER-MÜLLER, 33

DALIBARD, 64
DE SACHY, 3
Diameter of lightning channel, 93
Disappearance constant of ions, 16
Dissipation of charge in atmosphere, 7
Distribution of thundercloud charges, 84
DORSEY, 95
Drops, electrification by breaking, 88
Drops deformation in electric fields, 82
Dust-counter, 5
Dust-storms, field in, 62

Earth-radiation, 9
Earth's charge, 43, 68
EBERT effect, 5
EBERT ion-counter, 4
Electrode space-charge, 56
Electrometer, BENNDORF, 48
  capillary, 73
  universal portable, 44, 54
ELSTER, 1
Emanation content of air, 10
Equilibrium of atmospheric ionisation, 14, 19
Equivalent depth, 25

Fast ions, *see* Small ions
Field, earth's in disturbed weather, 62

Field, fine-weather, 43 *et seq.*
continuous recording of, 47
measurement of, 43
origin of, 68
variation with height, 48; with time and season, 49
Field-changes, due to lightning, measurement of, 73
sign of, 79
Fine-weather current, measurement of, 53, 54
significance of, 60
variation with height, 60; with time and season, 59
Fog, field during, 62
FOUST, 94
FRANKLIN, 64
Fulgurites, 93

Gamma radiation, absorption formulæ, 39
from air, 13
from earth, 9
from potassium, 9
GEIGER-MULLER counter, 33
GEITEL, 1
GERDIEN, conductivity apparatus, 7
GOLD, integral, 30
GSCHWEND, 64

HEAVISIDE, 49
HERD, 92
HESS, 17, 19, 21
HOFFMANN, 23, 24, 40

IDRAC, 49
Intermediate ions, 2, 18
Ionisation at sea, 15, 19
Ionisation balance, 19
Ionisation-depth curve, air and water, 25
analysis of, 29
in heavy metals, 31
Ionising agents, 8
Ionising particles, penetrating radiation, 33
Ionising power of radiations, 8, 14
Ions, atmospheric, 2 *et seq.*, *see* Large ions *and* Small ions
charge on, 3, 18
equilibrium of, 14 *et seq.*
life of, 16
mobilities of, 2
number of, 2, 3

JEANS, 41

KELVIN, water-dropper, 47
KENNELLY-HEAVISIDE layer, 49
Klydonograph, 94
KOLHORSTER, 21, 23, 35

LANGE, 93
LANGEVIN ions, *see* Large ions
Large ions, 3
charge on, 3
complexities of, 2, 18
effect on conductivity, 6, 59
formation of, 2, 14
mobility of, 2
number of, 3
LEMONNIER, 43, 64
LENARD, 63, 88
LEWIS, 94
LICHTENBERG, 94
Life of small ions, 16, 17, 18, 19
Lightning channel, diameter of, 93
Lightning, charge carried by, 81
current in, 93
discontinuous nature of, 90
duration of, 93
effect on earth's charge, 69
field-changes due to, 73
frequency of flashes, 72
mechanism of, 95
oscillations in, 91
photography of, 90, 95
polarity of strokes, 95
LINSS, 1
LUTZ, 58

M'CLELLAND, 63
MACKY, 82
Maintenance of earth's charge, 68
MARWICK, 63
MATHIAS, 17, 92, 93
MAUCHLY, 52
MILLIKAN, 24, 26, 29, 40
Mobilities of ions, 2
Moments of flashes, 81
MOTT-SMITH, 35
MULLER, 33
Multiply-charged ions, 18

Neutron, 42
NOLAN, J. J., 3, 16, 18
NOLAN, P., 18
NORINDER, 92
Normal ions, *see* Small ions
Nuclei, AITKEN or condensation, 2, 5
  counting of, 5
  effect on life of small ions, 14
  effect on potential gradient, 59, 60

Penetrating radiation, 11, 21 *et seq.*
  absorption in air and water, 25; in heavy metals, 25
  fluctuations, statistical, 21
  intensity of, 11, 22
  ionising particles from, 33
  ionising power of, 15
  nature of, 35
  origin of, 39
  variation with time, 39
PETERSEN, 93
PITTMAN, 93
Point-discharge, 64
  effect on earth's charge, 69
  effect on thundercloud charges, 82
Polar conductivity, *see* Conductivity
Polarity of thunderclouds, 84; of lightning strokes, 95
Pollution, atmospheric, 50; *see* Nuclei
Potassium, γ rays from, 9
Potential gradient, *see* Field
Precipitation, charge on, 62
  effect on earth's charge, 68

Radioactive matter in air, 10
  in earth, 9
Rain, charge on, 62
Recovery curves, thundercloud, 76, 82
REGENER, 28, 41
Residual ionisation, 12, 22, 25
  fluctuations in, 23
Reversal distance, lightning field-changes, 80
ROSSI, 35
Runaway electrons, 41
RUTHERFORD, 30

St. Elmo's fire, 64
SCHERING, 55
SCHINDELHAUER, 63
SCHONLAND, 23, 36, 64, 80
SCHWEIDLER, 16, 18
SIMPSON, 51, 69, 88, 95
SKOBELZYN, 33
Slow ions, *see* Large ions
Small ions, 2; capture of, 2, 14; charge on, 2; complexities of, 2, 18
  effect on conductivity, 6
  life of, 16 *et seq.*
  mobility of, 2
  number of, 2
Smoke pollution, effect on field, 50
Snow, charge on, 62
  field during, 62
Space-charge, at earth's surface, 56
  in lower atmosphere, 49
Sparking field, 82
STEINKE, 31
SWANN, 5, 69

Thunderclouds, charges on, 81, 86
distribution of charge on, 84
effect on upper atmosphere, 70
electrons from, 41
fields of, 62, 73
moments of, 80
number of, 72
origin of charge on, 84
point-discharge effects from, 65, 66
polarity of, 84
potentials in, 83
rate of working, 84
TOROK, 93
Transition zone, 31

Universal electrometer, 44, 54
Upper atmosphere: potential of, 49; effect of thunderclouds on, 70

Voltameter, for point-discharge currents, 65

Wall effect, *see* Residual ionisation
WALTER, 90
Water-dropper, 47
WATSON, 46, 58
WATSON-WATT, 92, 93
WHIPPLE, 50, 71
WIGAND, 68
WILSON, C. T. R., 1, 41, 44, 54, 65, 69 *et seq.*
WORMELL, 66, 70

PRINTED IN GREAT BRITAIN AT THE UNIVERSITY PRESS, ABERDEEN

H. C. VION.

Electric Apparatus.

No. 28,793. Patented June 19, 1860.

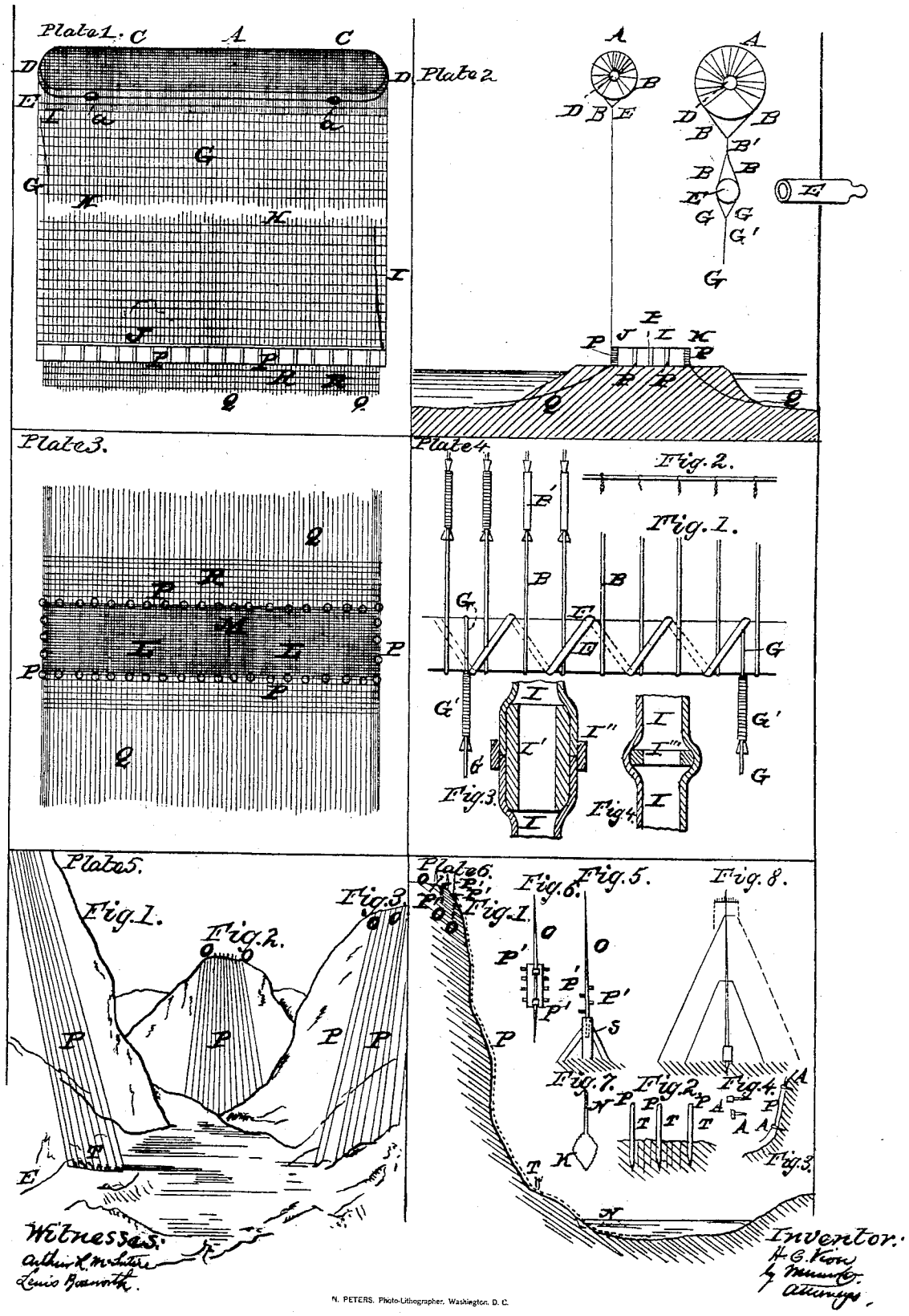

N. PETERS, Photo-Lithographer, Washington, D. C.

UNITED STATES PATENT OFFICE.

H. CHARLES VION, OF PARIS, FRANCE.

IMPROVED METHOD OF UTILIZING ATMOSPHERIC ELECTRICITY.

Specification forming part of Letters Patent No. **28,793**, dated June 19, 1860.

To all whom it may concern:

Be it known that I, HIPPOLYTE CHARLES VION, of Paris, in the Empire of France, engineer, have invented a new Mode of Obtaining Atmospheric Electricity and Terrestrial Electricity and its Industrial Applications; and I do hereby declare that the following is a full, clear, and exact description of the same, reference being had to the accompanying drawings, making part of this specification, in which—

Plate 1 represents a front elevation; Plate 2, a side elevation of an aerostat, in combination with certain other devices for obtaining atmospheric and terrestrial electricity; Plate 3, a plan of the device for obtaining terrestrial electricity; Plate 4, detached portions of the apparatus. Plate 5 shows a front view, and Plate 6 a vertical section and various details of the apparatus when applied in mountainous regions, the use of an aerostat being dispensed with.

The object of my invention is to form an electric pile of great power by using the positive electricity contained in the atmosphere, and the negative electricity contained in the earth, so as to make the electricity therein contained available for industrial purposes.

To enable others skilled in the art to make and use my invention, I will proceed to describe its construction and operation.

A is aerostat of a tubular form closed at both ends. It is made of suitable material, so as to be impervious to air. Its dimensions are such as to give it great ascensional power when filled with gas.

a a are valves in the surface of the aerostat, to be opened when the inflation of the aerostat should become too great.

A long india-rubber tube, I, communicates with the interior of the aerostat, being attached to the latter, near one end of its ends D, as seen in Plate 1, while the lower end of the tube I is attached to a gasometer, (not shown in the drawings.) The gasometer is to be fed with hydrogen gas, produced by the action of the pile itself, the negative wires of which (afterward to be described) enter a body of water at or near the base of the apparatus and decompose the water so as to produce the hydrogen gas. As the aerostat is supposed to be at a considerable height the tube I must be of corresponding length, and is constructed of a number of tubes, short wooden tubes I′ being inserted where the tubes I are joined, and a fastening-ring, I″, being slipped over each of the joints, as seen in Fig. 3 of Plate 4. At certain distances the tube I is fastened to the net-work of the positive wires (afterward to be described) in order to secure the tube against the action of the wind, and at each of these fastening-places a washer, I‴, is inserted in the tube in order that the tube shall not be compressed by the wire or other means employed to fasten it to the net-work of positive wires. (See Fig. 4, Plate 4.)

The aerostat is surrounded with a net-work of wires, one layer of the wires, C, being parallel with the axis of the aerostat and fastened to rings D at both ends of the aerostat, and the other layer of wires, B, extending partially around the aerostat at right angles to the wires C. One end of each of the wires B extends around an iron tube, E, some distance below the aerostat and meets the other end of it between the tube E and the aerostat. The two ends are fastened together by a ligature, B′. (See Fig. 1, Plate 4.) Each end of the tube E terminates into a ball, *e*. The wires B are fastened to the surface of the tube E by means of a helical wire, F, wound around the tube and across the wires B, as seen in Fig. 1, Plate 4. The upper ends of long vertical wires G are also wound around cylinder E, each wire G between two of the wires B, and the ends secured by a ligature, G′, as seen in Fig. 1, Plate 4. The helical wire F is also wound across the wires G, so as to keep them in their places on tube E.

The vertical wires G, which are to be the conductors of the positive electricity of the atmosphere, must be of a length proportionate to the desired efficacy of the electric pile, and the size and ascensional power of the aerostat must, of course, be adequate to sustain the weight of and keep suspended the wires G, (a weight still further increased by the horizontal cross-wires H, with which the vertical wires G are interlaced, in order to form a net-work not liable to be deranged by the action of the winds or similar influences.) The two outside wires, G, are stronger than the rest of them, and their lower ends are fastened to dyna-

mometers of any suitable construction. These dynamometers are attached to the ends or a massive iron cylinder, J, and they serve to indicate the tension in the outside wires, G, and the corresponding ascensional power of the aerostat. According to the reading of these dynamometers the aerostat has to be supplied (through tube I) with more or less gas. The lower end of each of the wires G is wound around the cylinder J, and secured by ligatures similar to those above described. The wires G are all insulated (by a coating of gutta-percha or similar substance,) except where they are in contact with tube E and with cylinder J, and a similar insulating coating is laid on cylinder J, after the lower ends of the wires G have been fastened to it.

Another cylinder, K, similar to J, is placed at some distance from and parallel to cylinder J. It is connected with cylinder J by wires L, wound around both cylinders and interlaced with cross-wires M. The wire-work L M and cylinders are insulated (in a manner already described) against outside influences, so that the only electric communication between the two cylinders will be through the wires L. The two cylinders are placed upon insulated columns P. The cylinder K may be used as a substitute for cylinder J, and vice versa, whenever repairs become necessary. Insulated branch wire or wires are attached to the cylinders J K and wires L, so as to conduct the positive electricity obtained from the atmosphere by means of the above-described apparatus to wherever it is desired for industrial purposes. The insulated wires Q (interlaced with cross-wires R) are placed on the ground underneath and parallel to the positive wires L. Both ends of each of the wires Q are sunk into the earth or submerged in water, and fastened to a metallic plate coated with a metal not subject to oxidation. These wires Q are the conductors for the negative electricity of the earth, and a branch wire or wires attached to the wires Q serve to transmit the negative terrestrial electricity to wherever it is wanted for industrial or other purposes.

By uniting to the ends of the positive and the negative branch wire or wires a powerful electric current will be obtained, one pole of which is the atmosphere and the other the earth, and may be applied to any suitable useful purpose.

I will now proceed to describe the modification of the above-described apparatus when to be applied in mountainous countries.

P represents the positive electric copper or other metal wires coated over with an insulating substance. The upper ends of each of the positive wires is soldered to a prompter, O, at P′, Figs. 1, 5, and 6, Plate 6. The lower portion of each of the positive-wires is secured to an insulator, T, Fig. 2, Sheet 6. The positive wires are held above the ground by joints A, Figs. 3 and 4, Sheet 6, projecting from the soil at suitable distances from each other. The wires P are intended to follow the inequalities of the ground on which they are laid.

The prompters O, Figs. 5 and 6, Sheet 6, are iron rods sharpened to a point and silvered or coppered at their upper ends. The lower part of the prompter is fastened into a pole, S, covered with tar, which isolates the prompter and holds it in a firm position. A large metallic plate may be soldered to each prompter, as shown in Fig. 6. The positive wires may be soldered to the rod of each prompter or to the plate which is fastened thereto.

One or more branch lines, E, are soldered up to the positive wires to transmit the positive atmospheric electricity for which the wires P are the conductors to any desirable point.

N are negative iron or other metal conductors coated with an insulating substance. The upper ends of these wires rest on the ground near the positive insulators. The lower ends of these wires are soldered to a metallic plate or plates, V, Fig. 7, Plate 6, coated with a metal not subject to oxidation. The negative wires are sunk into the ground at very great depth or into wells, rivers, or into the sea. The negative electric branch wires are attached to the negative conductors N in the same manner as the positive branch wires are to the positive conductors. The branch wires and the soldering are coated over with an insulating substance. They are intended to carry the negative terrestial electricity to any desired point.

What I claim as my invention, and desire to secure by Letters Patent, is—

1. The peculiar arrangement of means herein specified, whereby I am enabled to use the positive electricity contained in the atmosphere and the negative electricity contained in the earth, and thus form an electric pile of considerable power and make the electricity therein contained available for industrial purposes, as set forth.

2. The combination of an aerostat and vertical wire-work with a tube, I, for admitting gas into the aerostat, in the manner and for the purposes above set forth.

CHARLES VION.

Witnesses:
HARRY W. SPENCER,
A. GUION, Jr.

A field mill for measuring atmospheric electricity

by Frank Thompson F.Thompson@manchester.ac.uk

Introduction

Every time we walk outside, we are bathed in force fields that are produced by nature. They are gravitational, magnetic and electric fields.

In the on-line text *Motion Mountain* – Volume 3, on page 209 – Christopher Schiller makes the following statement about electric fields:

"…every person should know that there is a vertical electric field of between 100 and 300 V/m on a clear day, as discovered in 1752; the earth is permanently negatively charged and, on a clear day, current flows downwards (electrons flow upwards) trying to discharge our planet."

Figure 1 Distortion of field lines round a conducting object (grey - potential, red - field)

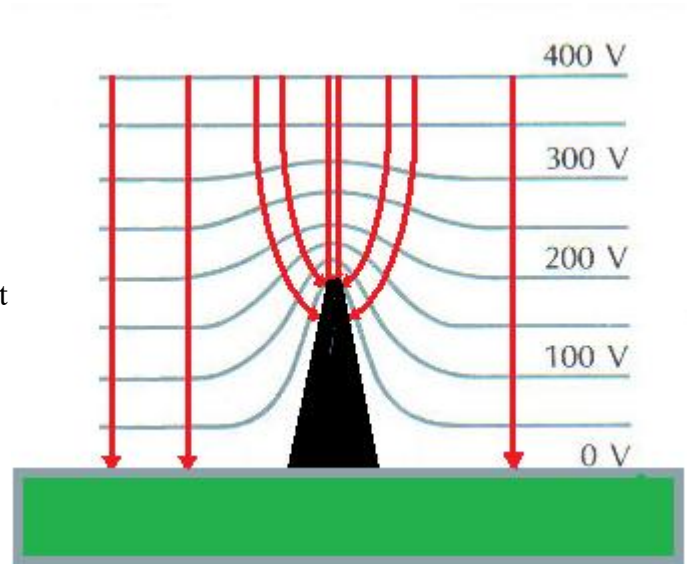

Now, we can all "feel" the gravitational force (just try jumping up and down) and we can easily detect magnetic fields with a compass needle. Indeed, these forces are very easily measured [1], [2]. The electric field, however, is more of a mystery and this is largely to do with the fact that it does not come indoors. This is a major obstacle to detection. An illustration is given in Figure 1:

Any conducting object at ground level will distort both potential and field lines of an electric field as shown. Houses, trees and people all have relatively good conductivity when compared to the surrounding air and therefore electric fields will not be present *inside* buildings at ground level.

It was taken as a challenge to measure this field and in doing so it was hoped that students would be made more aware of the vast topic of Atmospheric Physics.

It may be worthwhile visiting "University of Reading METFiDAS weather observations". On this web page, note that PG (potential gradient) denotes electric field.

Graphical data, listed under the heading "Atmospheric Electricity" at the bottom of the web page, shows the electric field values for the particular location of Reading, UK.

Figure 2 - Diagram of a typical Field Mill with electronic circuitry

Apparatus

A little background reading showed that a Field Mill was the most common arrangement for this field measurement and a typical layout is shown in Figure 2:

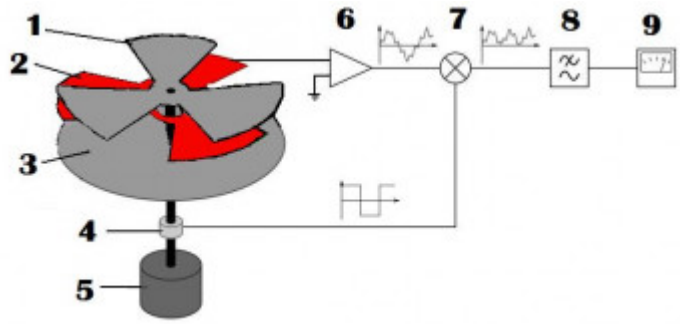

The key for Figure 2 is as follows:
1 - **Rotor blade** at earth potential, turned by the **motor** (item **5**)
2 - **Fixed plate** isolated from earth (this is also called the **sensor plate**)
3 - **Ground plate**, also held at earth potential
4 - **Tachometer** with three equally spaced black and white partitions for its optical switch
5 - **Motor** providing power to the **rotor blade** (item **1**)
6 - **Charge amplifier**
7 - **Mixing device** and in the present apparatus it is a **multiplier circuit** AD 633
8 - **Low pass filter**
9 - **Centre-zero meter**

Figure 3 - Photograph showing the motor plus tachometer

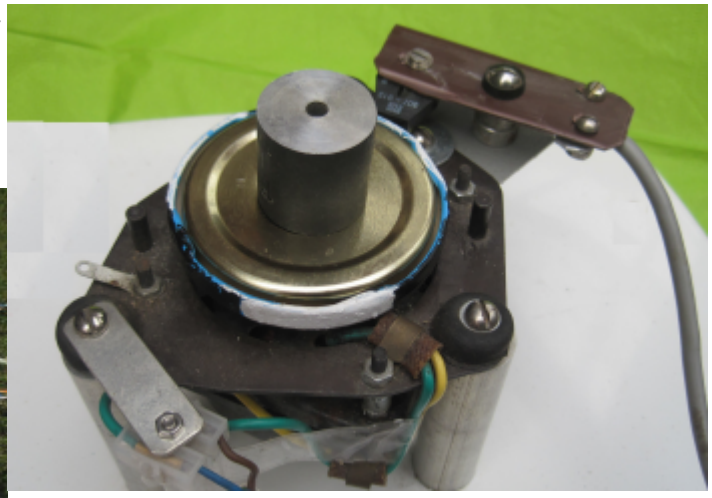

In the present work, item **5** is a small motor with a disc attached to the spindle as shown in Figure 3:

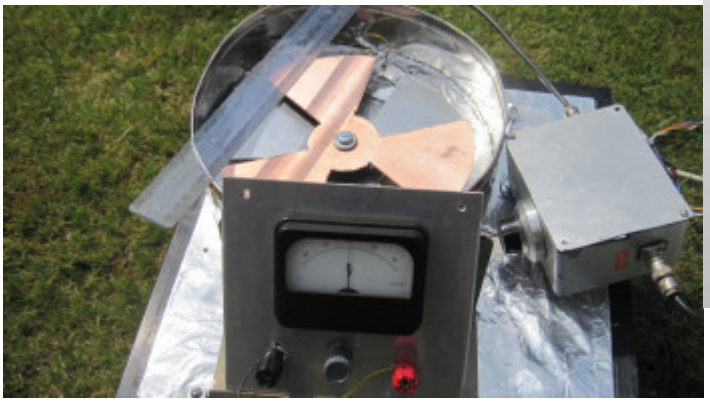

Figure 4 - Field Mill with separate charge amplifier (item 6) and centre-zero meter (item 9) resting on the case (ruler indicates the size of the apparatus)

Three black and three white stripes were painted on the rim so that the reflective optical-switch (RS Components Ltd, RS 307-913 or Optek OPB704W-Z supplied by Amazon) gave a square wave output signal.

The motor also turns the rotor blade (item **1**).

The ground plate (item **3)** is fabricated from a steel biscuit tin and the upper part of the spindle passes through.

The charge sensor plate (item **2**) is supported by this tin on insulated pillars and is alternately ***exposed to*** or ***shielded from*** the incident field by the rotor blade plate (item **1**).

The instrument/apparatus, positioned at gound level, is shown in Figure 4. Both the stationary and rotating blades are enclosed in a biscuit tin so allowing the instrument to be zeroed when the tin lid is placed on the tin. It also provided electrical shielding as extraneous noise from the motor was quite high.

Figure 5 - Multiplier circuit (item 7) for mixing the tacho and charge signals (X and Y)

The charge amplifier, encased in a separate metallic box, rests on the case of the apparatus and is connected to the fixed plate (item **2)**. If the signal from this amplifier were to be rectified then only the magnitude of the field would be measured and whether the field was incoming or outgoing would not be determined. But, by using ***a mixer*** (item **7**). we have synchronous demodulation which gives the sign of the field and a significant noise reduction. Commercial instruments are available for these measurements (e.g. Model 410 Scitech Instruments Ltd) and Figure 5 shows a low-cost alternative:

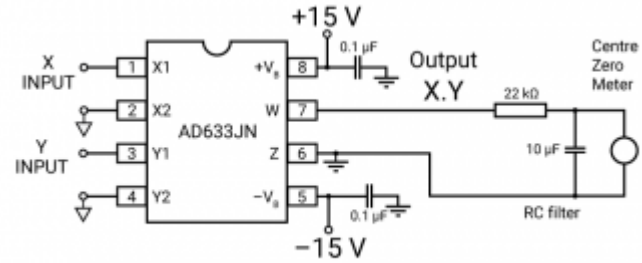

Basic multiplier connections

Figure 6 - Signals obtained when a charged PTFE rod is positioned over the Field Mill. (a) Signals from the tachometer (red) and the charge amplifier (blue)

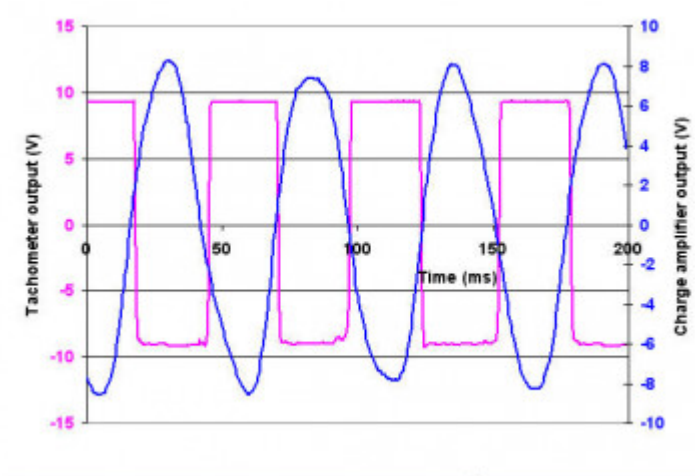

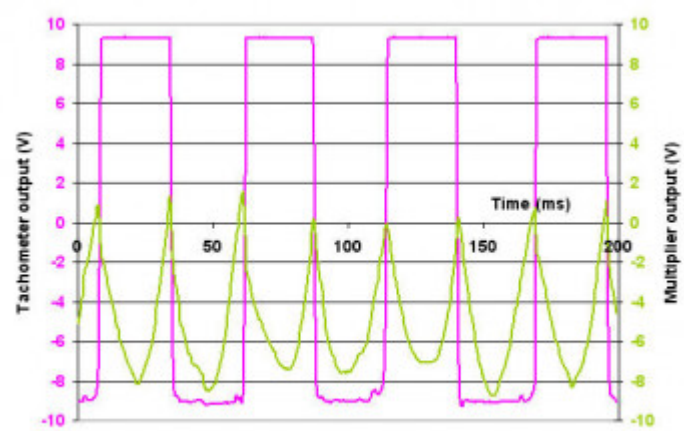

6(b) Signals from the tachometer (red) and the mixer (green)

In setting up the field mill one can place a charged object over the sensor plate (item 2) and observe the following signals. See Figure 6 (a), (b):

The output from the multiplier circuit is then passed through a low-pass filter and displayed on a centre-zero meter (item 9). The above readings (in Figure 6) were taken with a PicoScope 5242A oscilloscope and copied to Excel spreadsheets.

Preliminary results

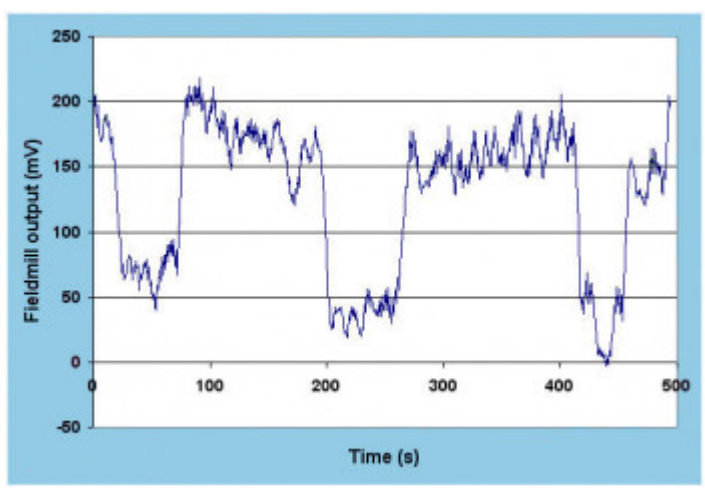

After the setting up, we can be confident that the output voltage from the filtered signal is directly proportional to the earth's field and a typical, fine day, outdoor graph is given in Figure 7:

As a very approximate calibration (carried out at the meteorological department of Reading University) the output readings in mV could be converted directly into field readings in V/m. Thus, the field mill gives the earth's electric field as 120 (±20) Vm^-1 as the covered reading of approximately 50 mV is subtracted from the uncovered reading of 170 mV. Further measurements

were made with the field mill on 22 June 2017. A thunderstorm had been forecast so there was a possibility of variability in the earth's electric field.

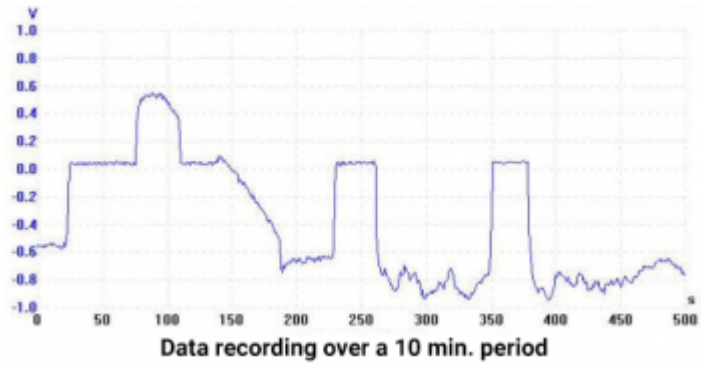

Figure 8 - Earth's electric field changes as a thunderstorm was approaching (rotor covered for periods 30–70, 107–140, 230–260 and 350–380 seconds).

The apparatus was placed in an open space at about 8:15 am and the trace (Figure 8) was obtained. At approximately 8:30 am both the meter and the trace were off-scale, indicating a large negative signal. Adjustment of the gain by a factor of 10x restored an on-scale signal and, for several periods a zero signal condition was tested by placing the tin lid over the rotor. The changes in the signal were quite rapid as Figure 8 shows:

In Figure 8 we see that the earth's electric field changes from negative to positive in about 30 seconds and then the positive signal changes to negative in about 100 seconds.

The instrument had to be moved indoors after 600s as rainfall had commenced. Thunder and lightning occurred shortly afterwards. The electric field is seen to vary between +600 V/m and –1 kV/m.

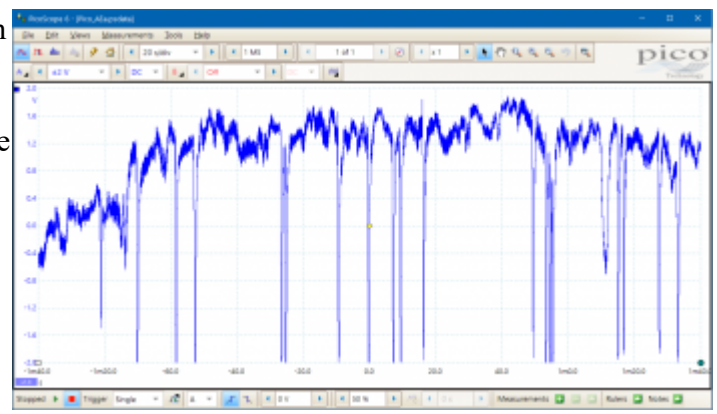

Figure 9 - Trace showing the atmospheric electric field on a fine day

The PicoScope 5242A is ideal for data logging as the time scale can be set as long as 5000 seconds per division. Figure 9 shows a typical fine weather trace for about 5 mins:

For the initial minute the rotating blade was covered with the tin lid and then it was uncovered for the rest of the time. The observed spikes were assumed to be spurious but further measurements need to be carried out to see if they are caused by an instrumental defect.

Conclusions

On a fair-weather day, the Earth's electric field was found to be close to 120 V/m but the accuracy for these preliminary results was at best ±20%. This agrees with the Schiller statement. The offset error of approximately 50 mV is likely to result from imperfect blade dimensions and/or the black and white tachometer divisions as these were hand-painted.

The variability of the Earth's electric field (Reading University - graphical data showing potential gradient) does pose a problem so it is advisable to carry out measurements on a fine day and then the field will be close to 120 V/m.

As a final point, the signal-to-noise performance of the apparatus is very low even with blade diameters close to 20 cm. If one could replace the simple mixer with a phase sensitive detector (PSD) then improvements would be possible. The PSD would greatly simplify the setting up procedure of the apparatus as both gain and phase of the charge signal could then be adjusted.

US009160156B2

(12) **United States Patent**
Allen et al.

(10) **Patent No.: US 9,160,156 B2**
(45) **Date of Patent: Oct. 13, 2015**

(54) **SYSTEM FOR HARVESTING ATMOSPHERIC ELECTRICITY**

(75) Inventors: **Edward H. Allen**, Lancaster, CA (US); **Sergey Macheret**, Palmdale, CA (US)

(73) Assignee: **Lockheed Martin Corporation**, Bethesda, MD (US)

(*) Notice: Subject to any disclaimer, the term of this patent is extended or adjusted under 35 U.S.C. 154(b) by 357 days.

(21) Appl. No.: **13/276,259**

(22) Filed: **Oct. 18, 2011**

(65) **Prior Publication Data**

US 2013/0093261 A1 Apr. 18, 2013

(51) **Int. Cl.**

H05F 7/00	(2006.01)
H02G 13/00	(2006.01)
B64D 45/02	(2006.01)

(52) **U.S. Cl.**

CPC ***H02G 13/20*** (2013.01); ***B64D 45/02*** (2013.01); *H05F 7/00* (2013.01)

(58) **Field of Classification Search**

CPC H02G 13/20; B64D 45/02; H05F 7/00
USPC 361/231, 230
See application file for complete search history.

(56) **References Cited**

U.S. PATENT DOCUMENTS

3,719,829	A *	3/1973	Vaill	307/149
4,017,767	A *	4/1977	Ball	361/117
4,950,978	A *	8/1990	Govaert	324/72
5,726,855	A *	3/1998	Mourou et al.	361/213
8,045,314	B2 *	10/2011	Ibok	361/231
2014/0231679	A1 *	8/2014	Kremeyer et al.	250/505.1

OTHER PUBLICATIONS

Tzzortzakis et al. "Concatenation of plasma filaments created in air by femtosecond laser infrared laser pulses", 2003, Applied Physics B, vol. 767, pp. 609-612.*

Zhou et al. , Revival of femtosecond laser plasma filaments in air by a nanosecond laser, Jun. 24, 2009, Optic Express, vol. 17, No. 14, pp. 1 -7.*

Assion et al., "Control of Chemical Reactions by Feedback-Optimized Phase-Shaped Femtosecond Laser Pulses", Science, Oct. 30, 1998, pp. 919-922, vol. 282.

* cited by examiner

Primary Examiner — Zeev V Kitov
(74) *Attorney, Agent, or Firm* — Baker Botts L.L.P.

(57) **ABSTRACT**

Systems, methods and apparatus for harvesting atmospheric electricity are provided. The system includes a laser configured to form a plasma filament and a collector configured to collect electricity flowing along the plasma filament. The plasma filament comprises an electrically conducting plasma filament. Atmospheric electricity may be collected by having the plasma filament form at least a part of a conducting path: (1) between ground and a cloud, (2) between differently charged regions of the same cloud, (3) between differently charged regions of different clouds, and (4) between different regions of atmosphere, where there is a vertical voltage gradient. When the plasma filament is not long enough to form the entire conducting path, a lightning may be triggered to complete the conducting path needed to collect atmospheric electricity.

21 Claims, 6 Drawing Sheets

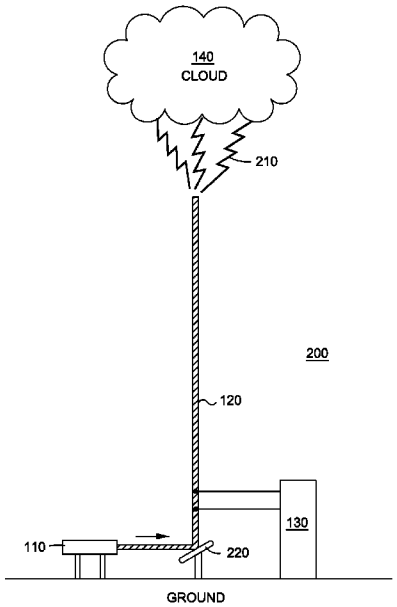

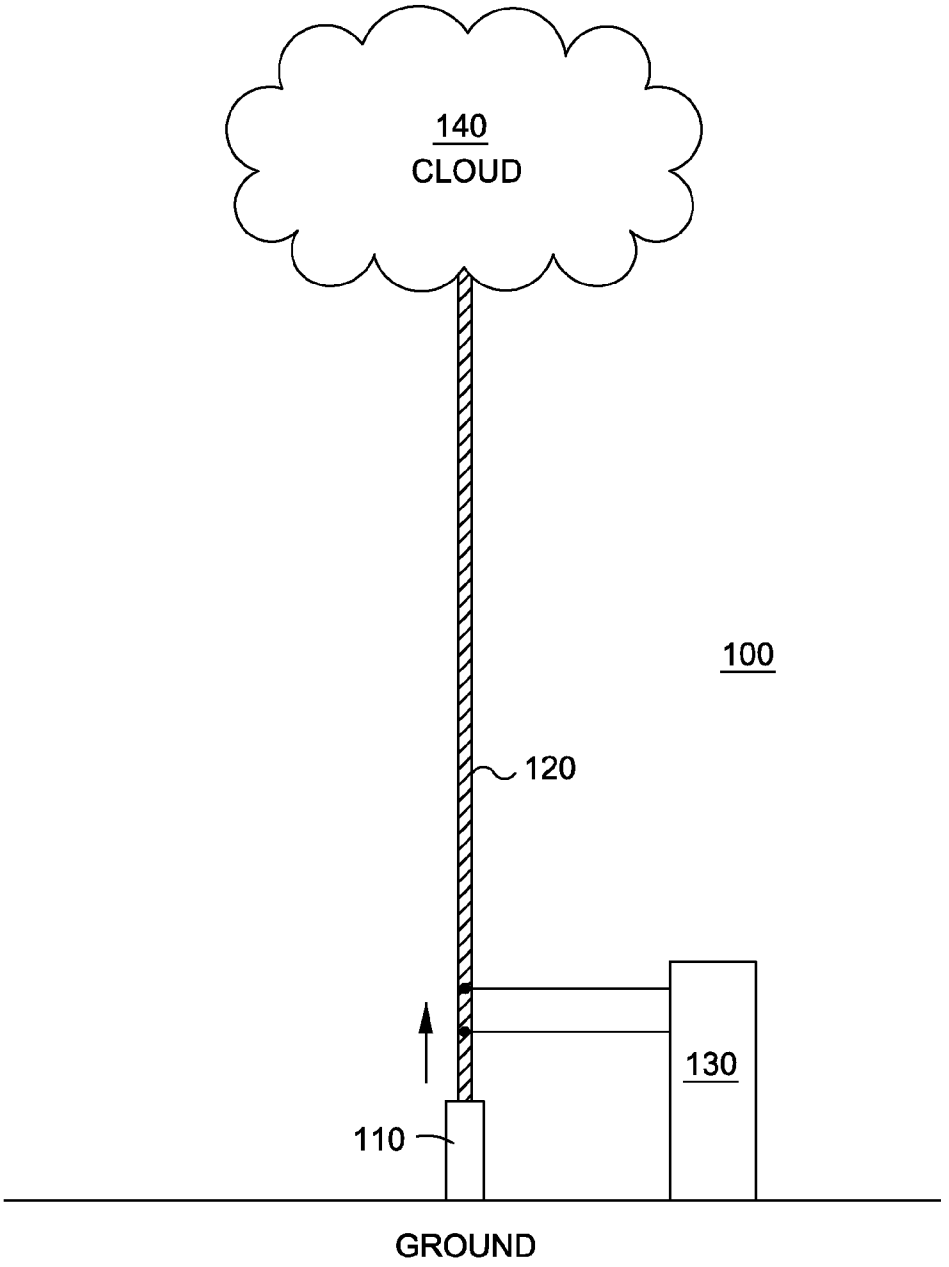

FIG. 1

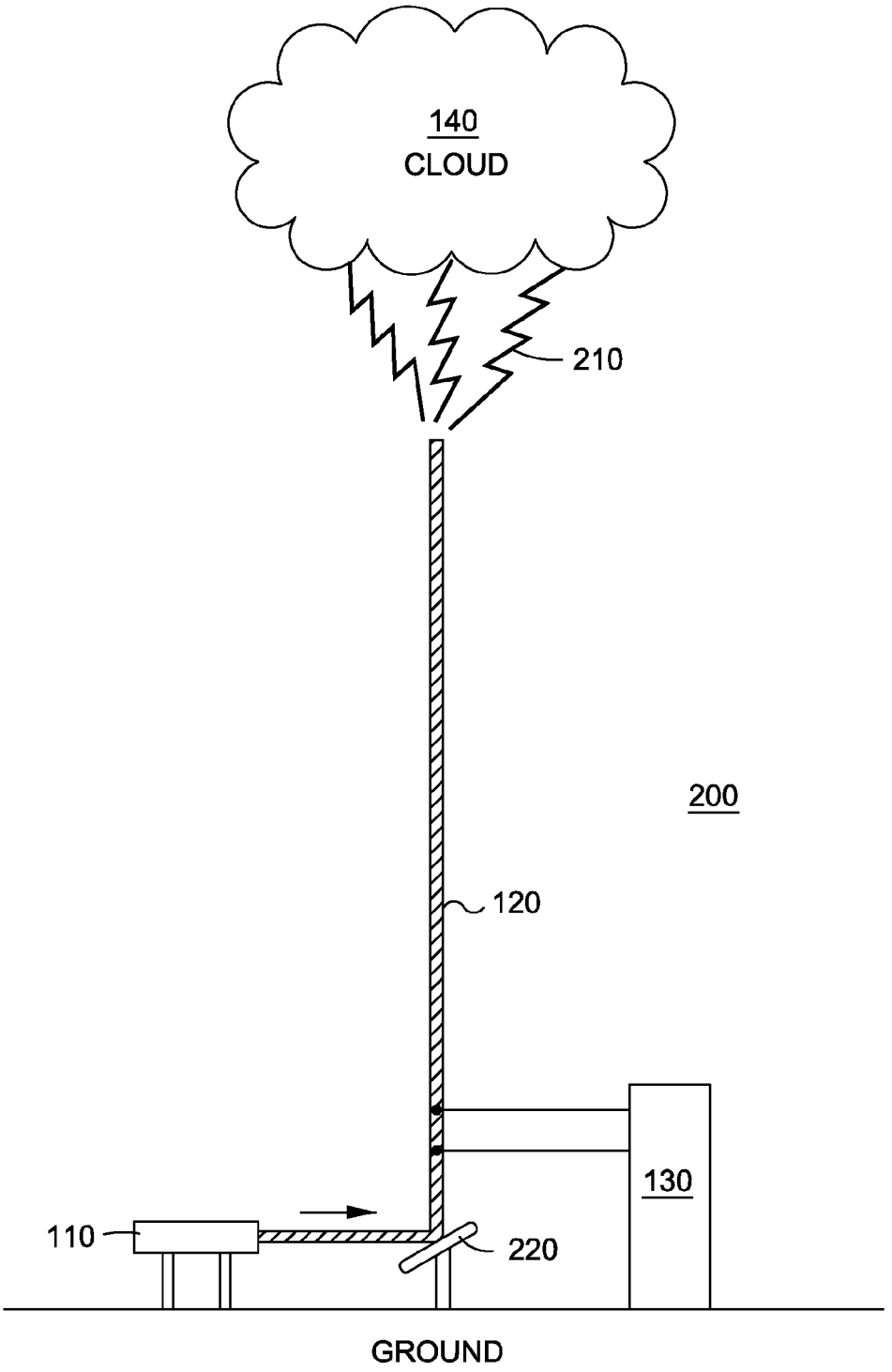

FIG. 2

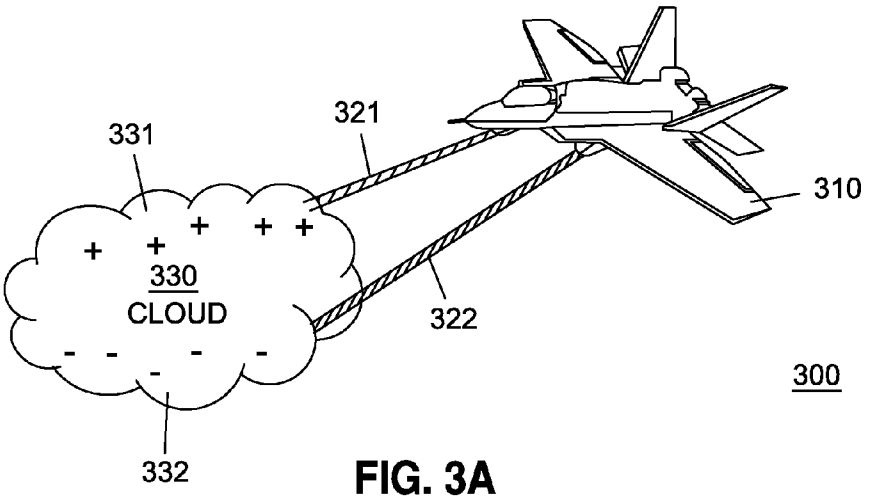
331
321
310
330
CLOUD
322
300
332

FIG. 3A

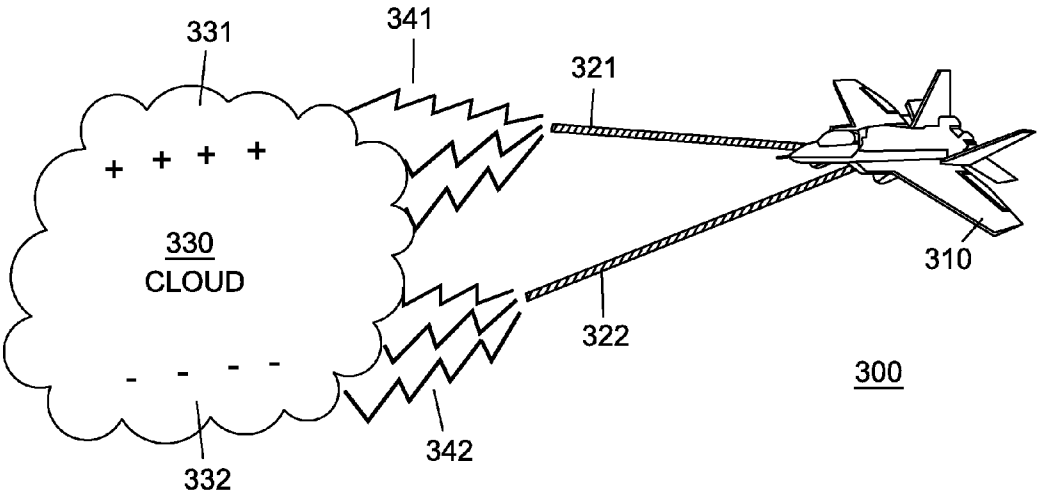
331
341
321
330
CLOUD
310
322
300
342
332

FIG. 3B

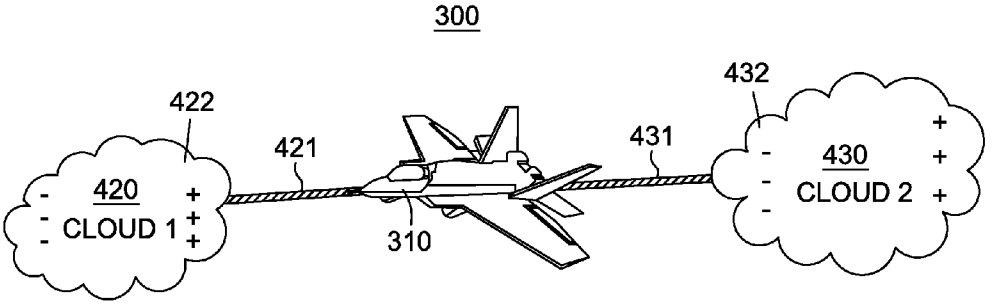

FIG. 4

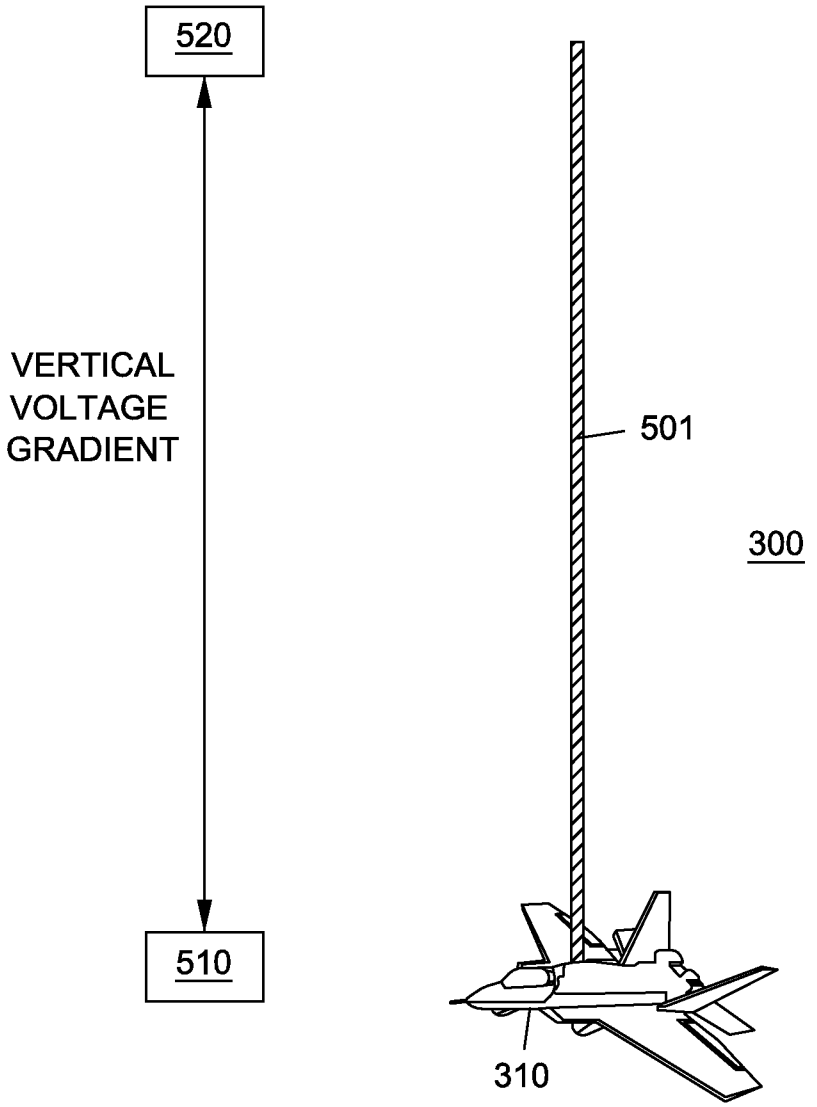

FIG. 5

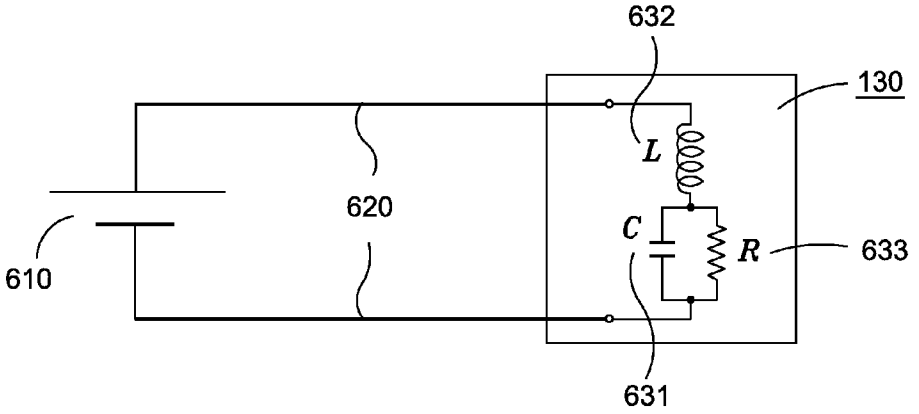

FIG. 6

SYSTEM FOR HARVESTING ATMOSPHERIC ELECTRICITY

STATEMENT REGARDING FEDERALLY SPONSORED RESEARCH OR DEVELOPMENT

Not applicable.

FIELD OF THE INVENTION

The subject technology relates in general to a system for harvesting atmospheric electricity, and more particularly to a system that uses a laser to form an electrically conducting plasma filament for harvesting atmospheric electricity.

BACKGROUND

It is well known that large quantities of electrical energy are present in the atmosphere and in lightning. Lightning was one of the first forms of electricity harnessed in the modern age by Benjamin Franklin in his famous kite experiment.

A lightning discharge typically contains on the order of 10^{10} Joules of energy. It has been estimated that the total electrical power of lightning across the Earth is of the order of 10^{12} watts. Collection of electrical energy from clouds associated with lightning is a problem that needs to be resolved.

Lightning is but a small part of the total electrical activity of the atmosphere. When a local build up of charge above the Earth exceeds the local breakdown potential of the atmosphere a lightning discharge occurs. However, there is a continual invisible flow of charge from Ionosphere to Earth occurring day and night over the entire surface of the globe, which exceeds the global lightning power output by many times. The source of this flow of charge from the atmosphere to Earth is the Sun. Radiation from the Sun helps form most of the ions found in the Ionosphere, a highly charged region above the atmosphere, through ionization of atmospheric molecules. Solar radiation, particularly in the UV and soft x-ray bands, consist of photons whose energies are well suited to ionization. The Sun also emits continuously a solar wind of positively charged particles. These are captured by the Earth's magnetic field and further contribute to the Ionosphere. The positively charged region in the Ionosphere in turn induces (by electrostatic induction) a negative charge on the surface of the Earth. The Earth becomes in effect an enormous spherical capacitor. A potential gradient or electric field is thus established between the two "plates" of this capacitor, the Ionosphere (or Electrosphere) and the surface of the Earth. While the upper strata of the atmosphere conduct electricity reasonably well, the lower levels act as an insulator or dielectric. Near the surface of the Earth, this electrostatic potential gradient is on the order of about 100 Vm^{-1} in summer, rising to 300 Vm^{-1} in winter. This flow of charge can be tapped and directed to provide useable electrical power. This source of atmospheric electricity has the following advantages: (1) Simple and robust technology; (2) Low cost technology—much cheaper than photovoltaics or wind turbines; (3) Available day and night in all weather conditions—in fact, more power is produced at night than during the day; and (4) Available at any point on the Earth's surface. Collection of this source of atmospheric electricity is another problem that needs to be resolved.

SUMMARY

According to various aspects of the subject technology, a system for harvesting atmospheric electricity is provided that

solves some or all of the foregoing problems. In some aspects, the system may be used to harvest atmospheric electricity arising from an electrostatic potential gradient: (1) between ground and a cloud, (2) between differently charged regions of the same cloud, (3) between differently charged regions of different clouds, and (4) between different regions of atmosphere, where there is a vertical voltage gradient. In other aspects, the system may be used to harvest atmospheric electricity arising from an electrostatic potential gradient between the Ionosphere (or Electrosphere) and the surface of the Earth.

According to various aspects of the subject technology, a system for harvesting atmospheric electricity is provided. The system comprises a laser configured to form a plasma filament. The system also comprises a collector configured to collect electricity flowing along the plasma filament.

According to various aspects of the subject technology, a method for harvesting atmospheric electricity is provided. The method comprises forming a plasma filament with a laser. The method also comprises collecting electricity flowing along the plasma filament.

According to various aspects of the subject technology, an apparatus for harvesting atmospheric electricity is provided. The apparatus comprises means for forming a plasma filament with a laser. The system also comprises means for collecting electricity flowing along the plasma filament.

It is understood that other configurations of the subject technology will become readily apparent to those skilled in the art from the following detailed description, wherein various configurations of the subject technology are shown and described by way of illustration. As will be realized, the subject technology is capable of other and different configurations and its several details are capable of modification in various other respects, all without departing from the scope of the subject technology. Accordingly, the drawings and detailed description are to be regarded as illustrative in nature and not as restrictive.

BRIEF DESCRIPTION OF THE DRAWINGS

The accompanying drawings, which are included to provide further understanding of the subject technology and are incorporated in and constitute a part of this specification, illustrate aspects of the subject technology and together with the description serve to explain the principles of the subject technology.

FIG. **1** illustrates a first example of a system for harvesting atmospheric electricity. The system comprises a laser configured to form a plasma filament and a collector configured to collect electricity flowing along the plasma filament. The plasma filament forms a conducting path between ground and a cloud.

FIG. **2** illustrates a second example of a system for harvesting atmospheric electricity. A plasma filament and a lightning together form a conducting path between ground and a cloud. A condensing mirror directs the beam of laser towards the cloud.

FIG. **3**A illustrates a third example of a system for harvesting atmospheric electricity. A laser system situated on an airplane forms two plasma filaments that together complete a conducting path between a first region of a cloud and a second region of the cloud. The first region of the cloud and the second region of the cloud carry opposite electric charges. A collector configured to collect electricity flowing along the two plasma filaments is also situated on the same airplane as the laser system.

FIG. **3**B illustrates a fourth example of a system for harvesting atmospheric electricity. It is similar to FIG. **3**A, except two lightnings complete the conducting path between a first region of a cloud and a second region of the cloud (i.e., a first lightning electrically connects the first region of the cloud to one of the plasma filaments and a second lightning electrically connects the second region of the cloud to the other plasma filament).

FIG. **4** illustrates a fifth example of a system for harvesting atmospheric electricity. A laser system situated on an airplane forms two plasma filaments that together complete a conducting path between a first cloud and a second cloud. The region of the first cloud that is connected to the first plasma filament and the region of the second cloud that is connected to the second plasma filament carry opposite electric charges.

FIG. **5** illustrates a sixth example of a system for harvesting atmospheric electricity. A laser situated on an airplane forms a plasma filament that completes a conducting path between a first region of atmosphere and a second region of atmosphere. A collector situated on the same airplane as the laser can collect electricity flowing along the plasma filament, because a vertical voltage gradient exists between the first region of atmosphere and the second region of atmosphere.

FIG. **6** illustrates an example of a collector configured to collect electricity flowing along the plasma filament. The collector may be a charge collection circuit characterized by capacitance, inductance, and resistance. The electricity may be collected by charging a capacitor.

DETAILED DESCRIPTION

The detailed description set forth below is intended as a description of various configurations of the subject technology and is not intended to represent the only configurations in which the subject technology may be practiced. The appended drawings are incorporated herein and constitute a part of the detailed description. The detailed description includes specific details for the purpose of providing a thorough understanding of the subject technology. However, it will be apparent to those skilled in the art that the subject technology may be practiced without these specific details. In some instances, well-known structures and components are shown in block diagram form in order to avoid obscuring the concepts of the subject technology. Like components are labeled with identical element numbers for ease of understanding.

FIG. **1** illustrates a first example of a system **100** for harvesting atmospheric electricity. The system **100** comprises a laser **110** configured to form a plasma filament **120** and a collector **130** configured to collect electricity flowing along the plasma filament **120**. The plasma filament **120** forms a conducting path between ground and a cloud **140**.

The plasma filament **120** comprises an electrically conducting plasma filament. The plasma comprises of electrons and positive ions. The electrically conducting plasma filament may be formed in atmosphere using an ultra short pulse laser (USPL). The USPL forms a plasma filament by raising the conductivity of a very small diameter channel (~100 microns or less) for a very brief time. The propagation of high power (~10^{14} W/cm^2) pulses from the USPL is accompanied by filamentation—self-channeling of femtosecond laser pulses in stable high-intensity light filaments with ~100 microns diameters (so that the Kerr effect focusing balances defocusing due to plasma formation). This filamentation keeps the beam virtually free of diffraction divergence. The long plasma strings have high electron densities (10^{16}/cm^3) which support high conductivities. The ionization of air at these intensities results from multi-photon processes. Filamentation has been produced and detected at altitudes as high as 13-20 km. Almost no beam scattering occurs in filamentation phenomenon, and virtually all the pulse energy is invested in ionization of air molecules. With the typical electron density and channel diameter, a 160 mJ pulse is sufficient to generate a 1 km long channel.

Once initiated, plasma filaments cannot go on forever, and typically only propagate a kilometer or so before energy depletion and exhaustion. However, by using two coaxial USPL projection optics having different time-lensing parameters, a near and far filament could be initiated in a "daisy-chain" to extend the total length of the conductive channel. The onset of filamentation in the far filament is time-lensed to coincide with the exhaustion range of the near filament. Additionally, using negative chirp, femtosecond laser pulses can propagate almost without loss until different frequency components of the wave packet, propagating at different speeds due to dispersion in air, come together at a certain desired location so that the laser intensity there exceeds the filamentation threshold, resulting in long ionized filaments created at a distance of up to several miles from the laser source. In other words, negative chirp is used to essentially focus a beam of the laser at a desired distance to form the plasma filament there. Accordingly, this technique may be used to move the starting point and to extend the length of the plasma filament.

The size, electrical conductivity, and lifetime of the plasma filaments are enhanced by an auxiliary radio-frequency electromagnetic waves or microwaves. The plasma filament may act like an antenna to absorb the auxiliary radio-frequency (RF) electromagnetic waves or microwaves.

The pulsed collection of electric charge and energy is repeated with an optimal (possibly very high) repetition rate of the pulsed laser and of the auxiliary RF waves or microwaves. The energy collected per one pulse should exceed the energy spent on creating and enhancing the plasma filaments, so that the net energy collected is positive. The optimal pulse repetition rate (PRR) depends upon atmospheric conditions which can vary widely over even short time durations. As a general rule, one tries to tune the repetition rate to the plasma relaxation time (the ion-electron recombination time) so that the conductivity of the filament remain as high as is optimal given the atmospheric conditions at the time. A feedback control system that varies the PRR as well as the rest of the pulse-shaping parameters may be employed to optimize the net power production of the system. For more information regarding pulse shaping and tailoring, which is the central theme of the field called "quantum control", please see A. Assion, T. Baumert, M. Bergt, T. Brixner, B. Kiefer, V. Seyfried, M. Strehle, G. Gerber (30 October). "Control of Chemical Reactions by Feedback-Optimized Phase-Shaped Femtosecond Laser Pulses". Science 282 (5390): 919-922. doi: 10.1126/science.282.5390.919. PMID 9794756.

FIG. **2** illustrates a second example of a system **200** for harvesting atmospheric electricity. A plasma filament **120** and a lightning **210** together form a conducting path between ground and a cloud **140**. A condensing mirror **220** directs the beam of laser **110** towards the cloud **140**. A collector **130** is configured to collect electricity flowing along the plasma filament **120**.

In the case of electricity collection from the cloud **140**, the initial and RF-enhanced plasma filaments can be relatively short, not reaching all the way from ground to the cloud **140**. The relatively short plasma filament can be optimized so that it would trigger propagation of the so-called leader (as in natural lightning), which would effectively use the energy and potential of the cloud to eventually create an electrically

conducting path between ground and the cloud **140**. The final conducting path would comprise of a plasma filament **120** and a lightning **210**.

It is not shown in the figures, but alternatively both the laser **110** and the collector **130** may be placed on a mobile device, which moves together with the cloud. One such mobile device may be a vehicle moving on the ground, but another such mobile device may be an airplane flying in the air. In the case of an airplane flying in the air, plasma filaments may be formed by the laser to reach both ground and the cloud at the same time. In the event the plasma filament directed at ground is not long enough to reach ground, a lightning may also be formed to complete the conducting path to ground.

FIG. **3**A illustrates a third example of a system **300** for harvesting atmospheric electricity. A laser system situated on an airplane **310** forms two plasma filaments (**321**, **322**) that together complete a conducting path between a first region **331** of a cloud **330** and a second region **332** of the cloud **330**. The first region **331** of the cloud **330** and the second region **332** of the cloud **330** carry opposite electric charges. In the example shown here, the first region **331** of the cloud **330** carries positive electric charges, while the second region **332** of the cloud **330** carries negative electric charges. A collector configured to collect electricity flowing along the two plasma filaments is also situated on the same airplane **310** as the laser. Positive and negative charges are naturally separated within the cloud, so this example makes use of the electrostatic potential gradient between different regions of the same cloud.

FIG. **3**B illustrates a fourth example of the system **300** for harvesting atmospheric electricity. It is similar to FIG. **3**A, except two lightnings (**341**, **342**) complete the conducting path between a first region **331** of a cloud **330** and a second region **332** of the cloud **330** (i.e., a first lightning **341** electrically connects the first region **331** of the cloud **330** to one of the plasma filaments **321** and a second lightning **342** electrically connects the second region **332** of the cloud **330** to the other plasma filaments **322**). The lightning formation is again because the initial and RF-enhanced plasma filaments can be relatively short, not reaching all the way from the collector situated on airplane **310** to the cloud **330**. These relatively short plasma filaments can be optimized so that they would trigger propagation of the so-called leader (as in natural lightning), which would eventually create an electrically conducting path between the two regions of cloud **330** via a connection through airplane **310**. The final conducting path would comprise of two plasma filaments (**321**, **322**) and two lightnings (**341**, **342**). Of course, one of the lightnings may not be formed, if one of the plasma filament can reach all the way from airplane **310** to cloud **330**.

FIG. **4** illustrates a fifth example of the system **300** for harvesting atmospheric electricity. A laser system situated on an airplane **310** forms two plasma filaments (**421**, **431**) that together complete a conducting path between a first cloud **420** and a second cloud **430**. The region **422** of the first cloud **420** that is connected to the first plasma filament **421** and the region **432** of the second cloud **430** that is connected to the second plasma filament **431** carry opposite electric charges. In the example shown here, region **422** of cloud **420** carries positive electric charges, while region **432** of cloud **430** carry negative electric charges. Positive and negative charges are naturally separated within the cloud, so this example makes use of the electrostatic potential gradient between different regions of different clouds. Once again, in case one of the plasma filament cannot reach all the way from airplane **310** to any one of the clouds, then lightning may be formed to complete an electrically conducting path from airplane **310** to any one of the clouds. But these embodiments are not shown in the figures.

FIG. **5** illustrates a sixth example of the system **300** for harvesting atmospheric electricity. A laser system situated on an airplane **310** forms a plasma filament **501** that completes a conducting path between a first region **510** of atmosphere and a second region **520** of atmosphere. A collector situated on the same airplane **310** as the laser system can collect electricity flowing along the plasma filament **501**, because a vertical voltage gradient exists between the first region **510** of atmosphere and the second region **520** of atmosphere. Because no clouds are needed for this embodiment, atmospheric electricity collection is possible under fair weather conditions (relying on the naturally existing vertical voltage gradient in the atmosphere) as well as under foul weather conditions.

FIG. **6** illustrates an example of a collector **130** configured to collect electricity flowing along a plasma filament **620**. The collector may be a charge collection circuit characterized by capacitance **631**, inductance **632**, and resistance **633**. The electricity may be collected by charging a capacitor associated with capacitance **631**. Battery **610** represents these naturally existing voltage sources: (1) between ground and a cloud, (2) between differently charged regions of the same cloud, (3) between differently charged regions of different clouds, and (4) between different regions of atmosphere, where there is a vertical voltage gradient. The plasma filament **620** can, for the purpose of analysis and optimization of the charge collection process, be viewed as electromagnetic transmission lines characterized by their effective capacitance, inductance, and resistance per unit length. Accordingly, the parameters of the charge collection circuit and of the effective transmission line representing the plasma filaments are optimized, so as to maximize the net charge and energy collected (minus the energy spent on generating and enhancing the plasma filaments).

The foregoing description is provided to enable a person skilled in the art to practice the various configurations described herein. While the subject technology has been particularly described with reference to the various figures and configurations, it should be understood that these are for illustration purposes only and should not be taken as limiting the scope of the subject technology.

There may be many other ways to implement the subject technology. Various functions and elements described herein may be partitioned differently from those shown without departing from the scope of the subject technology. Various modifications to these configurations will be readily apparent to those skilled in the art, and generic principles defined herein may be applied to other configurations. Thus, many changes and modifications may be made to the subject technology, by one having ordinary skill in the art, without departing from the scope of the subject technology.

It is understood that the specific order or hierarchy of steps in the processes disclosed is an illustration of exemplary approaches. Based upon design preferences, it is understood that the specific order or hierarchy of steps in the processes may be rearranged. Some of the steps may be performed simultaneously. The accompanying method claims present elements of the various steps in a sample order, and are not meant to be limited to the specific order or hierarchy presented.

A phrase such as "an aspect" does not imply that such aspect is essential to the subject technology or that such aspect applies to all configurations of the subject technology. A disclosure relating to an aspect may apply to all configurations, or one or more configurations. An aspect may provide

one or more examples of the disclosure. A phrase such as an "aspect" may refer to one or more aspects and vice versa. A phrase such as an "embodiment" does not imply that such embodiment is essential to the subject technology or that such embodiment applies to all configurations of the subject technology. A disclosure relating to an embodiment may apply to all embodiments, or one or more embodiments. An embodiment may provide one or more examples of the disclosure. A phrase such an "embodiment" may refer to one or more embodiments and vice versa. A phrase such as a "configuration" does not imply that such configuration is essential to the subject technology or that such configuration applies to all configurations of the subject technology. A disclosure relating to a configuration may apply to all configurations, or one or more configurations. A configuration may provide one or more examples of the disclosure. A phrase such as a "configuration" may refer to one or more configurations and vice versa.

Furthermore, to the extent that the term "include," "have," or the like is used in the description or the claims, such term is intended to be inclusive in a manner similar to the term "comprise" as "comprise" is interpreted when employed as a transitional word in a claim.

The word "exemplary" is used herein to mean "serving as an example, instance, or illustration." Any embodiment described herein as "exemplary" is not necessarily to be construed as preferred or advantageous over other embodiments.

A reference to an element in the singular is not intended to mean "one and only one" unless specifically stated, but rather "one or more." The term "some" refers to one or more. Underlined and/or italicized headings and subheadings are used for convenience only, do not limit the subject technology, and are not referred to in connection with the interpretation of the description of the subject technology. All structural and functional equivalents to the elements of the various configurations described throughout this disclosure that are known or later come to be known to those of ordinary skill in the art are expressly incorporated herein by reference and intended to be encompassed by the subject technology. Moreover, nothing disclosed herein is intended to be dedicated to the public regardless of whether such disclosure is explicitly recited in the above description.

What is claimed is the following:

1. A system for harvesting atmospheric electricity, comprising:

a laser configured to form a plasma filament comprising at least a first filament and a second filament, wherein onset of formation of the second filament coincides with an exhaustion range of the first filament;

an auxiliary source of electromagnetic energy operable to enhance the plasma filament by applying electromagnetic energy to the plasma filament; and

a collector configured to collect electricity flowing along the plasma filament.

2. The system of claim **1**, wherein the plasma filament comprises an electrically conducting plasma filament.

3. The system of claim **1**, wherein the laser is a pulsed laser.

4. The system of claim **3**, wherein the pulsed laser is pulsed at an optimal repetition rate.

5. The system of claim **1**, wherein the electromagnetic energy comprises at least one of radio-frequency energy or microwave energy.

6. The system of claim **1**, wherein the plasma filament forms at least a part of a conducting path between ground and a cloud.

7. The system of claim **6**, wherein at least one lightning forms another part of the conducting path between ground and the cloud.

8. The system of claim **1**, wherein the plasma filament forms at least a part of a conducting path between a first region of a cloud and a second region of the cloud.

9. The system of claim **8**, wherein at least one lightning forms another part of the conducting path between the first region of the cloud and the second region of the cloud.

10. The system of claim **1**, wherein:

the laser is further configured to form a second plasma filament,

the plasma filament is connected to a region of a first cloud, and

the second plasma filament is connected to a region of a second cloud.

11. The system of claim **1**, wherein the plasma filament completes a conducting path between a first region of atmosphere and a second region of atmosphere.

12. The system of claim **11**, wherein a vertical voltage gradient exists between the first region of atmosphere and the second region of atmosphere.

13. The system of claim **1**, wherein the collector comprises a charge collection circuit.

14. The system of claim **1**, wherein the laser is situated on ground.

15. The system of claim **1**, wherein the laser is situated on a mobile device.

16. The system of claim **15**, wherein the mobile device is an airplane.

17. The system of claim **1**, wherein negative chirp is used to move the starting point of formation of the plasma filament to a desired location.

18. A method for harvesting atmospheric electricity, the method comprising:

forming a plasma filament with a laser, wherein the plasma filament comprises at least a first filament and a second filament, and wherein onset of formation of the second filament coincides with an exhaustion range of the first filament;

applying electromagnetic energy to the plasma filament to enhance the plasma filament; and

collecting electricity flowing along the plasma filament.

19. An apparatus for harvesting atmospheric electricity, the apparatus comprising:

means for forming a plasma filament with a laser, wherein the plasma filament comprises at least a first filament and a second filament, and wherein onset of formation of the second filament coincides with an exhaustion range of the first filament;

means for applying electromagnetic energy to the plasma filament to enhance the plasma filament; and

means for collecting electricity flowing along the plasma filament.

20. The system of claim **1**, wherein the laser is an ultra short pulse laser (USPL).

21. The system of claim **1**, wherein the laser comprises two coaxial USPL projection optics having different time-lensing parameters.

* * * * *

(No Model.)

M. W. DEWEY.

METHOD OF UTILIZING NATURAL ELECTRIC ENERGY.

No. 414,943. Patented Nov. 12, 1889.

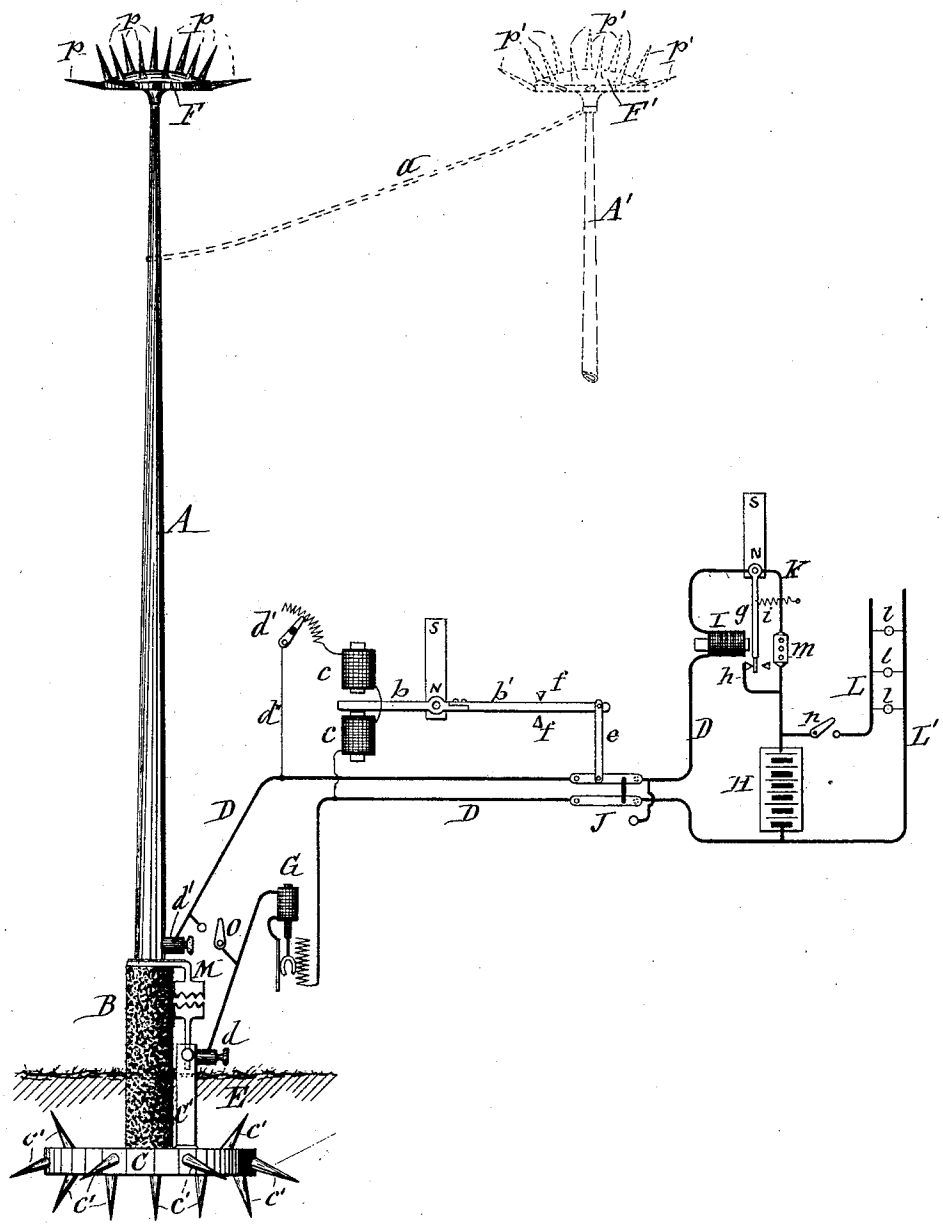

WITNESSES:

C. L. Bendixon

A. F. Walz.

INVENTOR

Mark W. Dewey

BY

Dull, Laass & Dull

ATTORNEYS

N. PETERS, Photo-Lithographer, Washington, D. C.

UNITED STATES PATENT OFFICE.

MARK W. DEWEY, OF SYRACUSE, NEW YORK, ASSIGNOR TO THE DEWEY CORPORATION, OF SAME PLACE.

METHOD OF UTILIZING NATURAL ELECTRIC ENERGY.

SPECIFICATION forming part of Letters Patent No. 414,943, dated November 12, 1889.

Application filed May 1, 1889. Serial No. 309,171. (No model.)

To all whom it may concern:

Be it known that I, MARK W. DEWEY, of Syracuse, in the county of Onondaga, in the State of New York, have invented new and useful Improvements in the Method of Utilizing Natural Electric Energy, of which the following, taken in connection with the accompanying drawings, is a full, clear, and exact description.

The object of this invention is to provide a method whereby natural electrical energy—such as the so-called "atmospheric electrical energy," or electrical energy that may be derived from the difference of potential existing between two points, one being the earth and the other the atmosphere at an elevation above the earth—may be collected or utilized for the various uses to which electricity is applied.

It has been found that the presence of electricity in the upper regions of the atmosphere is not confined to thunder-clouds, but can be detected at all times and often in great quantities in different conditions of the atmosphere. In fine weather this electricity is mostly positive; but in showery or stormy weather negative electricity is as frequently met with as positive, and it is in such weather that the indications of electricity, whether positive or negative, are usually the strongest. It has also been found that as we proceed farther from the earth's surface, whether upward from a level plane thereof or horizontally from an elevation, the potential of points in the air becomes more and more different from that of the earth, the difference being, in a broad sense, simply proportional to the distance; hence we can infer that there is electricity residing on the surface of the earth, the density of which at any moment in the locality of observation is measured by the difference of potential found to exist between the earth and a given point in the air near it. The results of observations show that the variations of the electricity residing in the atmosphere is the main cause of the variations of the electricity on the surface of the earth. A charged cloud or body of air induces electricity of the opposite kind to its own on the parts of the earth's surface over which it passes and produces such variations. The difference of potential in increasing the distance from the earth is due to electricity induced on the surface of the earth by opposite electricity in the air overhead, and the air being a non-conductor the electricities are unable to combine. As electrical density is greater on projecting parts of a surface than on those which are plane or concave, stronger indications are obtained on hills than in valleys, if the collecting apparatus be at the same distance from the ground in both cases. The average difference of potential is greater in the winter than in the summer. Little or no effects can be obtained within inclosures or under trees, as they tend to screen the apparatus.

Inasmuch as electricity travels in preference through the best conductors, it follows that if a path of low resistance is formed (such as the erection of a metal pole) to a sufficient elevation above the earth the electricities in the atmosphere and that on the surface of the earth will tend to combine and travel through the said path in a current or currents, and if this pole terminates in a metal point or a number of such points the earth and clouds exchange their opposite electricities without a disruptive discharge—as the lightning—but in a slow and gradual way through convection. Besides supplying the top of the pole with points, a metal plate to which the said points are fixed attracts the opposite electricity in the atmosphere. In order to obtain a greater and increased effect, a large metal plate is buried at the foot of the pole and electrically connected therewith, and is provided with points or branches extending in different directions in the ground. The plate and branches may be surrounded by metallic refuse, coke, or other good conducting substance. The metallic points on the top of the pole should be sharp, and preferably of copper, and may be platinized, gilded, or galvanized to prevent corrosion. It having been ascertained by practical experiments that either a flame or dropping water at an elevation above the surface of the earth produces convection of electricity, it is obvious that such means may be employed in place of the points hereinbefore referred to. As the electricity in the atmosphere is some-

times positive and other times negative, the direction of the currents is not always the same—that is, the atmospheric electrical energy is composed of a current of an alternating character, flowing in one direction on an average about as much of the time as in the opposite direction, but the length of the current in a certain direction, or the lengths of time between reversals or changes in the direction of its flow, is greatly varied. This and also the varied strength of the currents have prevented the utilization of atmospheric electrical energy in commercial quantities for the various purposes for which electricity is generally employed. In order to utilize such a current or currents, they should be transformed into a continuous direct current of uniform strength. The apparatus for accomplishing the transformation of atmospheric electricity into a direct current of uniform strength is susceptible of being greatly modified. The preferred form of apparatus, however, for carrying the invention practically into effect I will now proceed to describe to show that the method is capable of actual performance. Said apparatus is illustrated in the diagram accompanying this specification.

Referring specifically to said diagram, A represents a metallic pole, which is shown bare, but may be enveloped in suitable insulating material, if desirable. B is the base of the aforesaid pole, which base is of insulating material set in the ground E. C is a large metal plate beneath the said base, and has points or branches c' extending therefrom in different directions in the ground. C′ is a metallic post extending from the said plate above the surface of the ground and having a terminal d of the circuit D. On the top of said pole is mounted a metallic cap F, consisting, preferably, of a convex disk provided with sharp iron or copper points p, which project in all directions from the same. As before mentioned, the said points may be plated with a suitable metal that forms a good conductor and prevents corrosion. Similar caps F′ may be placed on other insulated poles, as A′, in the vicinity, and connected with the main pole A by an electric conductor a, for increasing the effect. The pole A′ may be of wood, and the pole A may also be of the same material if provided with a metal conductor within or on the outside, extending from the cap to the other terminal d' of the circuit D. The said circuit D leads from the terminal d through an automatic variable resistance G, thence to one of the poles of a secondary or storage battery H, and from the other pole of said battery through an automatic current-regulator to the terminal d'. An automatic current-reverser or pole-changer J is located in the said circuit for reversing the current whenever there is a change in its direction, so that it may be rectified or straightened during transit and caused to travel at all times whether its direction is toward or from the earth in one and the same direction through a portion of the circuit containing the secondary battery. The reversals are accomplished automatically by means of a pivoted polarized armature b, located between two electro-magnets c c, having their coils included in a shunt-circuit between the leads of the circuit D. The magnets are wound so that a north pole will be presented to the armature on one side and a south pole on the other. When the current is flowing in a certain direction, the said polarized armature will be repelled by one magnet and attracted by the other, and thereby moved to one side. When the current changes its direction through the magnets, the poles of the said magnets are reversed and the armature is both repelled and attracted to the other side. An arm b', of diamagnetic material, is fixed to and extends from the armature and is moved by the same. Between a movable end of the arm and the said current-reverser is a pivoted connection or link e, by which the motion of the arm is conveyed to the reverser. Stops f are provided for limiting the movement of the said arm, and an adjustable resistance d' is included in the shunt d'' to regulate the current through the same.

The current-regulator hereinbefore referred to prevents short-circuiting or the rapid discharge of the secondary battery into the air and ground when the strength of said battery-current becomes greater than that passing to the battery. Said regulator is composed of an electro-magnet I, having its coil in the circuit D. A pivoted polarized armature g is connected at its pivot to one terminal of the coil of said magnet, and when the current is flowing to the battery said armature is attracted by the magnet I and held in contact with the stop h, to which the terminal of the secondary battery is connected. In the aforesaid condition a free or low-resistance path for the current is provided to the battery; but when the battery-current exceeds the charging-current the magnet-poles are reversed and the armature is repelled by the magnet, and the free path of the circuit is broken between the armature g and stop h. In order to maintain the armature in the latter position until the charging-current has been increased in strength above that of the battery-current or discharging-current, and so that the said regulator will automatically operate, a shunt path K of high resistance is provided around the armature g and stop h. The high resistance of the said shunt is obtained by including a rheostat m. This shunt path or circuit K, with the resistance, permits a small but sufficient amount of current to flow through the magnet I to hold the armature away from the stop h until the current is reversed, and then move the armature back to stop h to close the free or low-resistance path. A spring i is provided to assist the movement of the armature from the magnet when it is repelled by the same.

The electric current may be directly con-

ducted to translating devices—such as lamps or electromotors; but, as hereinbefore stated, said current is preferably employed to charge one or more cells of the secondary battery H, and this battery stores or accumulates the electrical energy and supplies the said translating devices. To illustrate the latter feature, leads or wires L and L′ are extended from the poles or electrodes of said battery, and translating devices, in the shape of incandescent lamps *l*, are connected with the said wires in multiple arc. In the wire L is a common circuit maker and breaker *n* to close and open the circuit to the lamps. The said battery may be charged in series or parallel.

The automatic variable resistance G maintains the current flowing through the circuit D approximately uniform by increasing the resistance therein upon an increase of strength. Said resistance is not absolutely necessary and may be dispensed with.

The lightning-arrester M is to short-circuit a very heavy current to prevent the same from passing through the other parts of the apparatus and injuring it. A low-resistance shunt O, with a circuit maker and breaker therein, is connected between the leads of the circuit D, near the terminals *d* and *d′*, to completely short-circuit the apparatus when desired.

Having described my invention, what I claim as new, and desire to secure by Letters Patent, is—

1. The method of utilizing atmospheric electrical energy, consisting in conducting the electric current or currents between the earth and a point in the atmosphere at an elevation above the earth, rectifying or straightening the currents during transit, and storing or accumulating the electrical energy of said rectified current or currents.

2. As preliminary steps in the method of utilizing atmospheric electrical energy, conducting the electric current or currents through a path of low resistance between the earth and the atmosphere at an elevation above the earth, maintaining an approximately uniform strength of current and rectifying or straightening the same during transit.

3. As preliminary steps in the method of utilizing atmospheric electrical energy, conducting the electric current or currents through a path of low resistance between the earth and the atmosphere at an elevation above the earth, and rectifying or straightening said currents during transit.

4. The method of utilizing atmospheric electrical energy or deriving energy from the difference of electrical potential existing between the earth and a point or points in the atmosphere at an elevation above the earth, consisting in conducting the current or currents between the two points through a path of low resistance, rectifying or straightening the said currents in a portion of the path during transit, and storing or accumulating the electrical energy thereof.

5. The method of utilizing atmospheric electrical energy or deriving energy from the difference of electrical potential existing between the earth and a point or points in the atmosphere at an elevation above the earth, consisting in conducting the current or currents between the two points through a path of low resistance, maintaining an approximately uniform strength of current, rectifying or straightening the said currents in a portion of the path during transit, and storing or accumulating the electrical energy.

6. The method of utilizing atmospheric electrical energy composed of a current of a varied alternating character, consisting in conducting the electric current or currents through a path of low resistance between the earth and the atmosphere at an elevation above the earth, and then accumulating the electrical energy of said current or currents while flowing in both directions in one or more cells of a secondary or storage battery, as described.

In testimony whereof I have hereunto signed my name this 29th day of April, 1889.

MARK W. DEWEY. [L. S.]

Witnesses:
C. H. DUELL,
C. L. BENDIXON.

METHUEN'S MONOGRAPHS ON PHYSICAL SUBJECTS

ATMOSPHERIC ELECTRICITY

B. F. J. SCHONLAND

ATMOSPHERIC ELECTRICITY—B. F. J. SCHONL

9515.06

METHUEN'S MONOGRAPHS ON PHYSICAL SUBJECTS

General Editor: B. L. WORSNOP, B.Sc., Ph.D.

F'cap 8vo. **Illustrated**

THIS series is intended to supply science students at University level with a compact statement of the modern position in each subject. The Honours student and the research worker in other branches of physics, those engaged on work in related sciences, and those who are no longer in contact with active scientific work, will find here a series of expositions by authors who are actively engaged in research on the subject of which they write.

For list of series, see back of this jacket

METHUEN & C NDON

8/6 NET

Cat. No. 4053/U . net

£1 =

CHRIST'S COLLEGE LIBRARY

Methuen's Monographs on Physical Subjects
General Editor : B. L. Worsnop, B.Sc., Ph.D.

ATMOSPHERIC ELECTRICITY

ATMOSPHERIC ELECTRICITY

BY

B. F. J. SCHONLAND
C.B.E., F.R.S.
DIRECTOR OF THE BERNARD PRICE INSTITUTE OF GEOPHYSICAL RESEARCH
UNIVERSITY OF THE WITWATERSRAND, JOHANNESBURG

WITH 20 DIAGRAMS

LONDON: METHUEN & CO. LTD.
NEW YORK: JOHN WILEY & SONS, INC.

First published, November 1932
Second edition, revised and reset, 1953

WITHDRAWN
CHRIST'S COLLEGE
LIBRARY
ACCESSION NO.
14097
CLASS NO. LIHE STACK
910.5156
Cat Ch
2.10.69

CATALOGUE NO. 4053/U (METHUEN)

PRINTED IN GREAT BRITAIN

TO

C. T. R. WILSON

CONTENTS

CHAP.		PAGE
I.	The Ionisation of the Atmosphere	1
II.	Electric Fields and Electric Currents in the Atmosphere	19
III.	The Electrification of Thunderclouds	46
IV.	The Lightning Discharge	65
V.	Charge Generation in Clouds	80
	General References	90
	Subject Index	91
	Index of Names	94

CHAPTER I

THE IONISATION OF THE ATMOSPHERE

THE electrical conductivity of the air, first established by Linss in the year 1887, plays an important part in all the phenomena included under the title Atmospheric Electricity. Since 1901, when Elster and Geitel and C. T. R. Wilson independently discovered that this conductivity is due to the presence of small carriers of positive and negative charge called ions, the nature and the origin of the ions have been the subject of many investigations. Two different paths have been followed, the one dealing with the number and the nature of the atmospheric ions, the other with the radiations producing them. The two paths converge on the problem of the ionisation-balance of the atmosphere, the manner in which an equilibrium is maintained between the rate of creation and the rate of disappearance of the ions. It is only of recent years that an answer to this problem has emerged.

1. The Atmospheric Ions, Small and Large. A gas molecule is ionised when some external agency supplies the energy necessary to remove an electron from it, whereupon the positively charged residue of the molecule and the ejected electron, both of which under ordinary pressures very soon attach themselves to one or more uncharged molecules, form what is called an ion-pair. Such ions are known as "normal", "small", or "fast", and when found in the atmosphere have mobilities of the same order as those determined for pure dry air in laboratory experiments, about 1·5 cm./sec. in a field of gradient 1 v./cm.

The presence in the air of minute particles of dust and salt, of the products of combustion, and of extremely small drops of water even when the air is unsaturated, leads very often to the capture of a normal ion by one of these condensation or Aitken nuclei, as they are termed, and so to the formation of another type of ion of low mobility,

CHRIST'S

ranging from 0·008 to 0·0003 cm./sec., known as "large", "slow", or "Langevin" ions. Roughly speaking, one-third of the condensation nuclei present in the air is electrically neutral, the other two-thirds carry, nearly equally, positive and negative charges captured from small ions. The interplay between the large and the small ions and the uncharged nuclei is of considerable importance.

Besides these two main types of atmospheric ion, a group of "intermediate" ions whose mobilities lie between 0·2 and 0·01 cm./sec. has been found to be present under special meteorological conditions such as low relative humidity. Some of these are known to be associated with molecular clusters of sulphuric acid from industrial processes.[1]

It has been found that the great majority of the ions, large and small, carry a single elementary charge, either positive or negative.[2] Over land areas the large ions considerably outnumber the small ones, often in the ratio of ten to one. Thus while the numbers, n_+ and n_-, of small ions of each sign per c.c. of the air over land usually range from 300 to 1000, those of the large ions, N_+ and N_-, amount to from 1000 to 80,000 per c.c. Since practically all the large ions are formed from the capture of small ones by nuclei, an increase in the number of these nuclei, such as is due to the fires of an industrial area, will increase the proportion of the large ions in the air at the expense of the small ions.

Over the oceans this state of affairs is reversed; the air away from land areas is but poorly supplied with nuclei and the large ions are in the minority. The mean values of n_+ and n_- at sea lie between 500 and 700 per c.c., while N_+ and N_- are about 200 per c.c. In view of their comparative freedom from capture by nuclei, it is at first sight rather surprising that the number of small ions per c.c. in mid-ocean differs little from the same quantity over the land, where the average values of n_+ and n_- are also about 600 per c.c. This is, however, to be explained (§ 12) by the fact that the decreased rate of disappearance

of the small ions over the sea is balanced by a decrease in the rate at which they are produced.

2. The Determination of the Number of Ions per c.c. To determine the numbers of the small ions, positive and negative, per c.c. (n_+ and n_-) an arrangement known as an Ebert ion-counter is usually employed. This consists in essentials of a long earthed metal tube A (Fig. 1) on the axis of which is mounted a charged insulated rod B, connected to a quartz fibre electroscope. Air is sucked through the tube for about five minutes by means of a clock-work driven fan F and the speed of the air-stream is arranged to be slow enough for all the small ions entering A with charges opposite in sign to that on the central rod to be drawn to B before reaching the bottom of the tube. The speed of flow must at the same time be great enough to make it impossible for any appreciable number of large ions to have time to reach the rod. If v is the volume of the air sucked through in the course of the measurement (indicated by an anemometer C registering its revolutions on a dial), the quantity of electricity gathered in by the central electroscope system is ven_-, where e is the elementary charge on a single ion and the rod

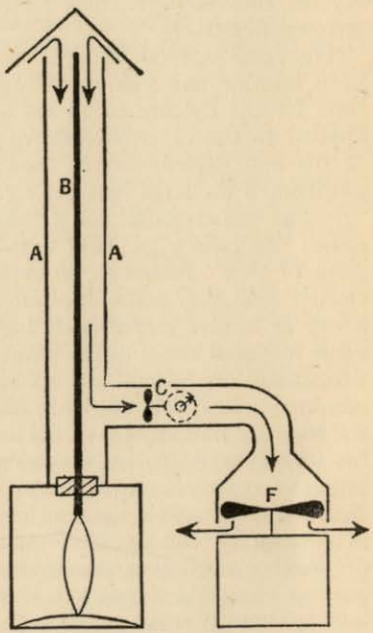

FIG. 1.—Ebert ion-counter.

is supposed to have been positively charged. If then C is the capacity of the whole central system, rod and electroscope, and V and V' are the potentials indicated by the electroscope before and after the experiment,

$$C(V - V') = ven_-,$$

an equation from which n_- can be found. To determine n_+, the measurement must be repeated with the rod B charged negatively.

The same method, using a longer tube, a stronger field in its interior, and a slower draught of air, and thus giving time for the capture of all the slow ions as well, can be applied to the determination of $N + n$. A combination of the two determinations then yields N_+ and N_-, the numbers of the large ions per c.c. of each sign.

The values found for n_+ and n_- are not usually the same; the ratio n_+/n_- over both land and sea has a mean value of 1·22. Although, as explained in § 22, the earth's electric field may sometimes affect the apparatus in such a way as to give a spuriously high ratio, Swann, who has made a special study of the point, concludes that when all precautions are taken a real excess of positive ions must be admitted. Probably the main factor causing this excess is the superior mobility (k) of the small negative ion; Nolan has found that k_-/k_+ has the value 1·16. A lower mobility implies a lower velocity of thermal agitation for the positive than for the negative ion, and consequently less likelihood of capture by condensation nuclei. This general excess of positive small ions does not necessarily involve a net positive charge in the air; it is easily compensated for by a comparatively small excess in the much larger number of large negative ions.

An instrument known as the Aitken dust-counter is often used to find the total number of nuclei, charged and uncharged, per c.c. It consists of a small expansion chamber filled with a sample of the air and saturated with water-vapour. The sudden movement of a piston gives an adiabatic expansion which causes drops of water to condense upon the nuclei; the resulting cloud falls

upon a glass plate divided into squares and the number of droplets is counted under a microscope. Though called a dust-counter it does not record the coarser dust in the air.[3]

In a recent improvement on the Aitken counter (Nolan [3]) a much larger sample of saturated air is expanded in a cylindrical vessel. The opacity of the cloud then gives a relative measurement of the concentration of nuclei.

3. The Polar Conductivities and the Ionic Mobilities. A simple relation holds between the conductivity of the air and the numbers per c.c. and the mobilities of the ions responsible for conduction. Consider a point in the atmosphere at which the electric field intensity is F and the specific conductivity, the reciprocal of the specific resistance, is λ. The conduction current, i, through unit area drawn perpendicular to the field is then equal to $F\lambda$, for F is numerically equal to the potential difference, and $1/\lambda$ is the resistance, between the ends of a unit cube of the air. In this equation we assume that conditions are such that Ohm's Law can be applied to the air. Since the current is carried by positive and negative streams of ions moving in opposite directions we may write

$$i = F(\lambda_+ + \lambda_-), \quad . \quad . \quad . \quad (1.1)$$

where λ_+ and λ_- are called the polar conductivities.

Actually the existence of the two main types of ion, large and small, leads to the flow of four different ion-streams, two up and two down if the field is vertical, in each of which the velocity is different, being given by $F \times k$, where k is the corresponding mobility. The total current is thus

$$i = Fe(n_+k_+ + n_-k_- + N_+K_+ + N_-K_-), \quad (1.2)$$

where k_+ and k_-, K_+ and K_-, are the mobilities of the positive and the negative ions, large and small respectively, and e is the elementary charge. From (1.1) and (1.2), if the oppositely moving streams are separated,

$$\lambda_+ = e(k_+n_+ + K_+N_+) \text{ and } \lambda_- = e(k_-n_- + K_-N_-). \quad (1.3)$$

In clear country air over land, n_+ and n_- number about 600 per c.c., while N_+ and N_- are about 2000 per c.c.;

k_+ and k_- are 1·5 approximately and K_+ and K_-, 0·0004. Here, therefore, the ratio of the first to the second term in each bracket above is 1100 : 1 and most of the conductivity of the air is due to the small ions. Near large towns, however, n is usually of the order of 100 per c.c. and N, on account of the heavy pollution of the atmosphere may be 50,000. Under these conditions the second term would be one-seventh of the first and the large ions would play a part in the transfer of electricity through the air.*

Nolan and Nolan have obtained the polar conductivities by separate measurement of the n's and k's in eqn. (1.3) above. It is, however, more usual to find λ directly, from measurements of the rate which the charge on an insulated body exposed to the free air is dissipated by the flow of ions to it. Consider a negatively charged body exposed to moving air and let σ be the density of the electrification on any portion of area dS. Positive ions will move to the body, and since the field F just outside the surface is $4\pi\sigma$, the current per unit area tending to dissipate the charge will be $F\lambda_+ = 4\pi\sigma\lambda_+$. The total dissipation current, obtained by integrating over the whole exposed surface, is $4\pi\lambda_+\iint\sigma dS$ or $4\pi\lambda_+Q$, where Q is the charge exposed to the air. Since this current represents the rate at which the body losses charge, we have $-dQ/dt = 4\pi\lambda_+Q$, a relation which provides a means of determining λ_+. A similar equation, with λ_- substituted for λ_+, holds for the case of a positively charged body.[4]

An arrangement used for this purpose is due to Gerdien (Fig. 2); it resembles the Ebert apparatus already described, but the air-stream is now made so rapid and the field in the interior of the tube so weak, that only a very small fraction of the total number of ions passing through A has time to reach the central rod. In this case the numbers of ions per c.c. are not appreciably altered by the experiment and Ohm's Law applies.

* The methods used to determine ionic mobilities are described in text-books on the conduction of electricity through gases.

If the potential V of the negatively charged central electroscope system is observed to rise at a rate dV/dt and if C is the total capacity of the central system, rod and electroscope, we have $-dQ/dt = -CdV/dt$. Also, if C' is the capacity of that portion of the central system exposed to the stream of air, the rod B and its support, $Q = C'V$, consequently

$$-CdV/dt = 4\pi\lambda_+C'V, \quad . \quad . \quad (1.4)$$

a relation from which λ_+ can be determined. A similar

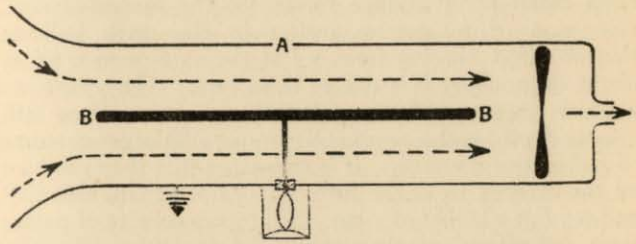

FIG. 2.—Gerdien conductivity apparatus.

experiment with the rod positively charged yields λ_-. The use made of the values found for the polar conductivities and an adaptation of the Gerdien method due to Schering are described in Chapter II, § 22.

4. The Ionising Agencies. Three principal agencies are responsible for the ionisation of the lower atmosphere: radiations from radioactive substances in the surface of the earth, radiations from radioactive matter present in the air itself, and the cosmic rays. For a discussion of their relative importance it is convenient to use the symbol q to represent the number of "pairs of ions produced per c.c. per second in air at N.T.P.", a quantity which will be referred to as the ionising power of the radiation. This phrase in inverted commas is usually represented by the symbol I. Thus the statement $q = 4I$ means that, at the point in question, the radiations create four pairs of ions per c.c. per second, if the medium there is air at N.T.P. The contributions of the three different agencies

just mentioned to the total ionising power, q, are distinguished by the symbols q_e, q_a, and q_h.

5. The Effect of Radioactive Matter in the Earth. Uranium, thorium, and their products are widely distributed through the earth's crust, whose surface layers therefore emit α, β, and γ rays into the air. Since the α rays can emerge only from a very thin layer and can ionise only the first few cm. of the air, their effect is inconsiderable. The β rays can come from greater depths and penetrate much further into the atmosphere. Calculations based upon average values for the measured concentration of radioactive matter in the earth indicate that an effect ranging from 1 I at the surface to 0·1 I at about 10 m. above it is due to these rays. The γ rays are a more important factor, for they can come from still greater depths and consequently from a still larger quantity of radioactive material. It is estimated that they produce on the average 3 I at the surface, 1·5 I at 150 m. above it, and 0·3 I at a height of 1 km. The γ ray activity of potassium introduces another source of ionisation, for the potassium content of the earth's crust is considerable. No very detailed survey of this question has yet been made, but measurements indicate that the contribution of potassium may exceed that of the combined uranium-radium and thorium families. The average value for the ionising power of the earth-radiations near the ground has been found directly to lie between 2 and 10 I, which is in accord with the measurements of the radioactive content of the earth's crust. Local surface and geological conditions naturally have a marked effect upon the value of q_e at any given spot.

The radioactive content of sea-water is found to be very small in comparison with that of soil and rocks, and over the oceans the earth-radiation effect is negligible.

6. The Effect of Radioactive Matter in the Air. The atmosphere contains a considerable quantity of the radioactive emanations, radon and thoron, and their successive products. A wire charged negatively to a potential of a few hundred volts and exposed to the air

collects an easily detectable quantity of radium A and thorium A by recoil from the disintegration of these emanations. The gases themselves arise from the decay of radium and thorium within the earth, from which they escape by diffusion, by thermal convection, and as a result of decreases in the external atmospheric pressure. The greater portion of the ionisation thus produced is due to the α rays from the emanations themselves and from their A and C products, for here, unlike the case of the radiations from the earth, there is no absorbing layer between the disintegrating atom and the air. The radioactive gases and their products are fairly evenly distributed by atmospheric turbulence through the lower air. This "air-radiation" effect can be calculated from radioactive data if the emanation content of the air is determined. The emanations may be removed from a measured volume of air by drawing it through tubes cooled with liquid air or filled with coconut charcoal. The quantity of emanation condensed or absorbed is then determined by the effect produced in an ionisation electroscope, corrected for the decay of the material during the time of the experiment. A more direct method is to fill a closed ionisation chamber first with ordinary air and then with air which has been freed by the above method from the emanations and from their products, and to determine the saturation currents in the two cases. If these are i_1 and i_2 respectively, v the volume of the vessel and e the elementary charge, the value of the air-radiation ionising power, q_a, is given by $i_1 - i_2 = q_a ve$.

The results of such measurements agree with estimates based upon observations of the average emanation content of the air in placing the air-radiation effect at about 2 I in the neighbourhood of the earth's surface. Of this about 55 per cent. is due to radon and its products and the remainder to the thoron series. It varies somewhat with locality and with those meteorological conditions which determine the rate of escape of the emanations. Apart from the effect of strong upward winds in elevating the richer surface layers, the emanation content of the air

should decrease fairly rapidly with height. Direct information on this point is difficult to obtain, but what exists indicates that the air-radiation effect falls to less than 2 per cent. of its surface value at a height of 5 km.

The effect, like that of the earth-radiation, is extremely small over the oceans, where the emanation content of the air is only about 1 per cent. of its value over land areas.

7. The Effect of the Cosmic Rays. The third factor in the ionisation of the atmosphere is a radiation of peculiar interest, whose origin and nature are still the subject of much investigation. It has a penetrating power which is considerably greater than that of the most penetrating γ rays from radioactive bodies, and it travels to the earth's surface in a downward direction, undergoing a certain amount of absorption on the way. Its ionising power at sea-level over both land and ocean areas when measured in closed metal vessels varies from about $2{\cdot}0\,I$ in low geomagnetic latitudes[6] to $1{\cdot}5\,I$ near the magnetic equator, the earth's field preventing the slower ionising particles from reaching the equatorial belt.

Until the year 1911 it was generally thought that the ionisation inside a closed vessel was entirely due to radiations from the walls and from radioactive matter in the earth and the outside air. It was therefore to be expected that this ionisation would decrease when the vessel was raised above the surface of the earth. This was tested in balloon ascents by Hess in 1911, and Kolhörster in 1913, who found that the diminution with height was appreciable only during the first kilometre, after which an increase occurred. These observations led Hess to postulate an ionising radiation coming from above and suffering partial absorption in the atmosphere.

The ionisation due to this "cosmic" radiation (so-called because it is now known to originate outside the atmosphere and to have little connection with the sun) increases rapidly with height above sea-level, rising tenfold in the first 5 km.

8. The Ionisation Inside a Closed Vessel. It is a matter of considerable difficulty to determine separately the ionising powers of the earth-radiation and of the cosmic rays. Calculations of the former must be based upon measurements of the radioactive content of the earth's crust, and these are necessarily tedious and rough. To proceed further, one must examine the ionisation produced in the air inside a sealed metal chamber under conditions which are modified from those existing in the free air by the presence of the metal walls. This involves correction to free-air conditions. A further disadvantage is that a new ionising agency is introduced, the radioactive matter in and on the inside walls. The ionising power of this "wall-effect", or the "residual ionisation" of the vessel as it is called, is a constant depending on the material of which the walls are made and the cleanliness of the inner surface. It is usually represented by the symbol q_0.

The total ionising power of all the radiations operating upon the gas in a closed vessel may be called q' and the modified effects of the three main ionising agencies q'_e, q'_a and q'_h; we then have

$$q' = q'_e + q'_a + q'_h + q_0. \qquad (1.5)$$

We may suppose the vessel to take the form of a sealed ionisation chamber filled with air at N.T.P. which has been freed from radioactive matter. The saturation current carried by the ions to the central collecting electrode is then given by $i = q've$, where v is the volume of the vessel and e the elementary charge on an ion.

Various methods have been employed to separate out the four terms on the right-hand side of eqn. (1.5) from one another. The most satisfactory of these begins by determining q_0. The instrument is taken to a large snow-fed lake whose radioactive content, like that of the sea, is negligible. When it is sunk to the depth of a few feet in such a lake, the effects of earth and air-radiations are non-existent and eqn. (1.5) becomes $q' = q'_h + q_0$; on lowering the vessel still further, q'_h diminishes as the cosmic radiation becomes absorbed in the increasing thickness of water, and it is possible to reach depths at which the

saturation current is practically constant and unaffected by further sinking of the instrument. At this stage $q' = q_0$, and the residual ionisation is determined. By combining this observation with that made close to the surface of the lake, q'_h may be found.

Since the effects of the cosmic radiation and of the walls of the vessel are both independent of local conditions other than height above sea-level, they remain the same when the instrument is transported to a site on land at the same level. A measurement of the saturation current in the chamber under land conditions gives q' as stated by eqn. (1.5), and hence the sum of the earth and air effects, q'_e and q'_a can be found. In actual practice the air-radiation effect within a closed vessel is extremely small; the walls exclude α and β rays coming from outside and reduce q'_a to the ionising power of the γ rays emitted by the B and C products of the radio-active emanations. This amounts to but 4 per cent. of the effect produced by the air-radiation in the free atmosphere, in the case of a vessel with steel walls a few millimetres thick. It is therefore sufficient to determine the air-radiation effect, q'_a, by calculation based upon a knowledge of the emanation content of the air and of the nature of the walls of the vessel. The fourth factor, the effect of the earth-radiation, q'_e, is then obtained by substitution in eqn. (1.5).

To pass from these closed vessel determinations of the effect of the radioactive matter in the earth to the effect to be expected in the free air, experiments may be made with screens of different thicknesses placed around the ionisation chamber and the values thus obtained for the earth-radiation effect extrapolated to zero thickness. In doing so account has to be taken of the effect of the screens upon q'_h.

To derive the true ionising effect of the cosmic rays in the free air from observations inside a closed vessel, account must be taken of the ionisation due to secondary radiation from the walls of the vessels. For a brass ionisation chamber with walls 2·5 mm. thick Hess has

shown that the secondary effect is only 0·09 I.[6] It is therefore likely that the free-air value of q_h in temperate latitudes is not far from 1·90 I.

The greater part of the residual ionisation arises from α rays and takes place close to the walls; q_0 is therefore the effect of the residual ionisation near the walls divided by the volume of the vessel.

9. Summary of Ionising Powers of Various Agencies. The table on page 14 gives a rough idea of the effects of the three main factors in the ionisation of the air at sea-level, both in closed vessels of steel, a few millimetres thick, and in the free atmosphere. The values given refer to measurements at about a metre from the surface of the earth; they are averages and, except in the case of the cosmic radiation, are subject to considerable fluctuations with local conditions.

It is noteworthy that the rate of production of ions over land areas is about four times as great as over the oceans, where the ionisation is practically all due to the action of the cosmic rays. Over land and close to the surface of the earth, these rays are much less important, but at greater heights the effects of the earth and the air-radiations fall off rapidly as we have seen, so that from a height of one or two kilometres upwards, the cosmic radiation is the chief agent in making the air a conductor.

10. The Rate of Disappearance of the Small Ions. The number of ions produced by the agencies we have discussed will not increase indefinitely as time goes on. Even in pure filtered air, free from nuclei, the small ions disappear by diffusion to the walls and by recombination with one another. Experiments have shown that when the diffusion loss can be neglected, the equation $dn/dt = q - \alpha n^2$ applies to such filtered air, n being as before the number of positive or negative small ions per c.c., q the number of pairs of ions produced per c.c. per second, and α the so-called recombination constant of small ions. In the course of time a state of equilibrium will be reached, in which the processes of creation and disappearance of ions balance one another; then $dn/dt = 0$

and the equilibrium equation $q = \alpha n^2$ holds. Applying this equation to the free air, taking $q = 7{\cdot}4\,I$ from the preceding section and $\alpha = 1{\cdot}6 \times 10^{-6}$ cm.^{3}/sec. from laboratory experiments, we find $n = 2145$. This is very much larger than the number of small ions actually observed, which is round about 600 per c.c. The discrepancy is due to neglect of the important part played by the Aitken or condensation nuclei in capturing the small ions.

TABLE I

IONISING POWERS AT 1 m. ABOVE THE EARTH'S SURFACE, SEA-LEVEL

Ionising Agent.	Ionising Power in Ion-pairs per c.c. per sec. in Air at N.T.P.			
	Unscreened Closed Vessel.		Free Air.	
	Over Land.	Over Sea.	Over Land.	Over Sea.
Radioactive matter in the earth . .	3·5	0	3·5	0
Radioactive matter in the air . . .	0·2	0	2·0	0
Cosmic Radiation .	2·0	2·0	1·9	1·9
	Total ionising power for the free air .		7·4	1·9

This question has been examined over many years, principally by Nolan and his co-workers in Dublin, and it is found to be extremely complex.[3] Separate considerations must be given to the capture of small ions by charged nuclei of opposite sign, which leads to neutralisation, and by uncharged nuclei, which leads to the formation of large ions.

For the small ions, making no distinction of sign, we write:

$$dn/dt = q - \alpha n^2 - \eta_0 n N_0 - \eta n N \quad . \quad (1.6)$$

where N_0 and N are the numbers of uncharged and of oppositely charged nuclei per c.c. and η_0 and η are the coefficients for the two types of capture. For the large ions:

$$dN/dt = \eta_0 n N_0 - \eta n N \quad . \quad . \quad (1.7)$$

disregarding the small loss by recombination of large ions with one another.

For equilibrium both dn/dt and dN/dt are zero, hence $\eta_0 N_0 = \eta N$ and

$$q - \alpha n^2 - 2\eta n N = 0 \quad . \quad . \quad (1.8)$$

From experiment it is known that η is of the same order of magnitude as α and since $N \gg n$ as a rule, eqn. (1.8) reduces to

$$q = 2\eta n N = 2\eta_0 n N_0 \quad . \quad . \quad . \quad (1.9)$$

If the total number of nuclei, charged and uncharged, is Z, so that $Z = N_0 + 2N$, eqn. (1.9) reduces to

$$q = \left\{\frac{2\eta_0\eta}{2\eta_0 + \eta}\right\} Zn \quad . \quad . \quad (1.10)$$

This is of the same form as an equation given originally by von Schweidler, $q = \beta n$, though β is constant only if the concentration of nuclei, Z, is constant.[5] It states a linear law of recombination, as opposed to the quadratic law which holds for filtered air. If the action of the ionising agents could be removed, the small ions would disappear at a rate $dn/dt = \beta n$, and $n = n_0 e^{-\beta t}$ would be the number present at any subsequent time. The quantity $\theta = 1/\beta$ can, by analogy with the equation for radioactive decay, be termed the *average life* of a small ion. Eqn. (1.10) then becomes

$$q\theta = n \quad . \quad . \quad . \quad (1.11)$$

in which θ should vary inversely as the concentration of nuclei in the air. Though this simple relation is only an approximation, it is useful for general purposes.

The average life θ is found over land areas to lie between 10 and 60 sec. according to the purity of the air, the higher values being associated with observations made in the country. Over the oceans it may be as much as 230 sec., according to the measurements of Hess[7] and of Mathias[8] on the island of Heligoland. The table below, taken from Hess, illustrates the great difference in the equilibrium between small and large ions brought about when the wind direction changes; the first set of observations was made when the wind blew from the nuclei-laden European mainland, the second when it blew from the polar regions:

TABLE II

OBSERVATIONS OF THE STATE OF ATMOSPHERIC IONISATION (HESS, HELIGOLAND)

Wind.	No. of Small Ions per c.c. (n).		No. of Large Ions per c.c. (N).		Total No. of Nuclei.	Average Life of Small Ion, secs.	
	n_+	n_-	N_+	N_-	$Z = N_0 + N_+ + N_-$	θ_+	θ_-
S.W. (Land)	220	267	1480	1510	6300	22	22
N.N.W. (Arctic)	794	843	200	200	1100	115	204

These authors find that for values of θ lying between 36 and 100 sec., Schweidler's linear eqn. (1.11) is valid; in purer air, where θ is greater than 100 sec., the simple equation no longer holds, for the quadratic recombination term αn^2 then becomes significant.

Measurements with city air have, however, shown that the sizes of the nuclei vary over a wide range and that the coefficients η_0 and η in eqns. (1.6) and (1.7) show a corresponding wide range of variation.[3]

When, as in a city, the air is continually being provided with fresh nuclei, they do not usually reach a final state of equilibrium with the small ions. This would require a time of the order of 15 min. and stable conditions such as are found only in mist and fog. A further complicating factor is the discovery that the meteorological conditions which cause large variations in the nature and the number of the nuclei also alter the value of q by altering the radioactive content of the air.

11. Methods of Determining the Average Life of a Small Ion. The average life, θ, of the small ions can be determined for a sample of air enclosed in an ionisation chamber by two methods suggested by Schweidler.[5] The first involves the separate measurement of the ionising power, q, of the ionising radiations, and of the number of small ions per c.c., n, and substitution in the equation $q\theta = n$. q is obtained from the saturation current, i, using the relation $i = qev$, where v is the volume of the vessel. The corrections to be applied have already been discussed (§ 8). The quantity n is found by allowing the air to stand undisturbed for a sufficient time for equilibrium between small ions and nuclei to be attained and then applying a strong field for a few seconds to sweep the small ions on to the collecting electrode. The second method involves the measurement of the currents flowing in an ionisation vessel for various values of the applied potential difference.[9]

12. The Ionisation-balance in the Lower Atmosphere. It is of considerable importance to decide to what extent the various factors in the creation and destruction of ions account for the state of ionisation actually observed in the air over land and sea. Any failure in this respect would suggest that new processes must be sought.

Although the variable nature of the process of capture by heavy nuclei prevents an accurate comparison of the rate of production of small ions with their rate of disappearance, the available evidence suggests that the chief factors in the ionisation-balance have been discovered. Over land areas where nuclei are usually plentiful, the Schweidler equilibrium equation, $q\theta = n$, applies approximately. An average value of 60 sec. for θ, the mean life of a small ion, and of 650 per c.c. for the small ion concentration, requires that the rate of creation, q,

should be 650/60 or 10·8 ions/c.c./sec. in reasonable agreement with direct measurements of q, shown in Table I. No direct measurements of θ have yet been made over the oceans. The concentration of nuclei in mid-ocean has been found to be from 400 to 800 per c.c. and the mean life-time of a small ion should be about 300 sec.[10] Since n was found on the *Carnegie* to amount to some 550 small ions/c.c., the ionising power at sea should amount to 550/300 or 1·83 I, in agreement with the value of q in the last column of Table I.

The problem of the ionisation of the lower atmosphere cannot be said to be completely solved until much more has been done to settle the manner in which the size and numbers of the nuclei affect their interaction with small ions. The general nature of the factors in the ionisation-balance has, however, been established, and an explanation can be given of the paradox that the conductivity of the air undergoes no large change as one passes from mid-ocean to land, despite a four-fold increase in the rate at which ions are formed. The increased birth-rate of the small ions is counterbalanced by an increased death-rate, owing to the greater concentration of condensation-nuclei over the land areas.

REFERENCES TO PAPERS

[1] A. R. Hogg, *Proc. Phys. Soc.*, **51**, p. 1014 (1939).

[2] J. J. Nolan, R. K. Boylan and G. P. de Sachy, *Proc. Roy. Irish Acad.*, A, **37**, p. 1 (1925).

[3] J. J. Nolan, *Archiv. f. Met., Geophys. u. Biok.*, A, III, p. 17 (1950).

[4] C. T. R. Wilson, *Dict. of Appd. Physics, Art. Atmospheric Electricity*, Vol. 3, p. 84.

[5] E. v. Schweidler, *Wien. Sitz. Ber.*, 2a, **127** (1918), **128** (1919), **133** (1924).

[6] V. F. Hess and R. P. Vancour, *Journ. Atm. and Terr. Phys.*, **1**, p. 13 (1950).

[7] V. F. Hess, *Gerland's Beit. z. Geophysik.*, **22**, p. 256 (1929).

[8] O. Mathias, *ibid.*, **27**, p. 360 (1930).

[9] C. O'Brolchain, *ibid.*, **29**, p. 1 (1931).

[10] V. F. Hess and J. D. Roll, *Phys. Rev.*, **73**, p. 916 (1948).

CHAPTER II

ELECTRIC FIELDS AND ELECTRIC CURRENTS IN THE ATMOSPHERE

13. The Fine-weather Field. It was first found in the year 1752 by Lemonnier that the air above the earth is the seat of a persistent electric field during fine weather. The direction of this field shows that the earth carries a negative charge and the upper layers of the air a positive one. The state of affairs close to a flat portion of the surface of the earth can be expressed in three ways: (*a*) the earth carries a charge of surface density σ per unit area; (*b*) there is a vertical field of strength $F = 4\pi\sigma$, just above the ground; or (*c*) between two horizontal planes close to the ground there is a difference of potential

$$dV = V_{h+dh} - V_h = -Fdh = -4\pi\sigma dh,$$

where $h + dh$ and h are the heights of the planes.

The quantity dV/dh is called the potential gradient and is positive, since σ is found to be negative. For the same reason, the field F is directed downwards, and this downward direction is by convention adopted as the positive direction for electric fields in the atmosphere. In these definitions it is assumed that the portion of the ground considered is flat and far removed from projections, such as trees and buildings, which would disturb the distribution of charge and concentrate the lines of force at certain points.

The average value of the fine-weather potential gradient is about 100 v./m.; the corresponding value for the average charge density is $2{\cdot}7 \times 10^{-4}$ electrostatic units/sq. cm. or 0·0009 coulomb/sq. km. The total fine-weather charge on the earth is of the order of 500,000 coulombs. Measurements of the fine-weather field are made by determining either σ or dV/dh; they are always expressed in terms of the latter, in volts per metre.

14. Direct Measurement of the Surface Density of the Earth's Charge. The charge on such a limited portion of the ground as can be isolated for the determination of σ is so small that a sensitive electrometer must be used to measure it. Fig. 3 illustrates the "Universal

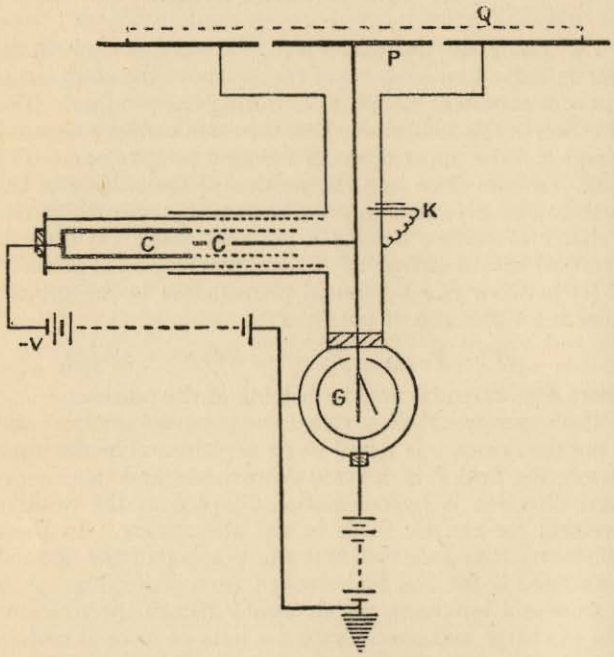

FIG. 3.—Universal portable electrometer (Wilson).

portable electrometer" devised by C. T. R. Wilson for this purpose. A flat circular plate P, called the test-plate, is surrounded by a guard-ring and mounted flush with the surface of the earth but insulated from it. This plate is joined to a gold-leaf electroscope G, whose leaf moves inside a positively charged case and is observed through a telemicroscope. C is a variable cylindrical condenser,

called a compensator, with its inner plate joined to the gold-leaf system, and its outer plate maintained at a constant potential, $-V$.

To make a measurement, the instrument is initially shielded from the earth's field by placing over it the earthed metal cover Q, indicated by the dotted lines. The reading of the leaf corresponding to earth or zero potential is found by momentarily earthing the plate P and the gold-leaf system with the key K. This earthing key is then withdrawn, the cover removed and the plate exposed to the field, with the compensator capacity zero. A negative charge thus appears by induction upon P, an equal positive charge is set free upon the central system, and the leaf moves inwards. It can be restored to its zero position if a negative charge is induced on the central system by increasing the capacity of the compensator to a value C'. The charge on the test-plate is then $-C'V$ and the surface density, σ, is $-C'V/A$, where A is the area of the test-plate.

In its original form the apparatus is small and portable, and the two batteries shown in the figure are replaced by small Leyden jars of silvered quartz, which keep their charge for a considerable time. For absolute measurements, with the plate mounted at ground level, a pit must be provided to house the observer; very often relative measurements are made with the instrument mounted on a tripod, and the factor necessary to reduce the observations to standard conditions determined from simultaneous observations in a pit or with a potential gradient method. Since the lines of force are concentrated upon any projection above the earth, the factor is greater than unity; in the case of a tripod 1 m. high it amounts to 3 or 4. A useful method of calibrating the instrument is to place it in artificial electric fields of known strength. Two large flat metal sheets, one flush with the test-plate and the other above it, are charged to a measured difference of potential by means of a battery of small cells.[1]

15. Measurement of the Potential Gradient. The potential gradient dV/dh may be found by measuring the

difference of potential between two insulated conductors at different heights above the ground. Various forms of electrometer are employed, and one conductor may be the earth itself, while the other is a stretched horizontal wire about a metre above ground-level. Sometimes two wires at different heights are used. It is of course essential that the supports of the wires and the presence of the observer and his instruments should not materially alter the field to be measured. In the arrangement in Fig. 4 (*a*), the wire is hung between amber or sulphur insulators at the ends of two vertical rods; its length should exceed five times its height above ground.

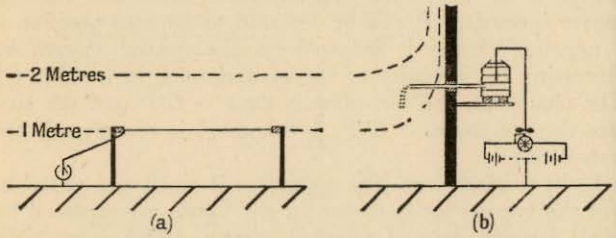

FIG. 4.—Measurement of the potential gradient.
(*a*) Absolute determination in open field.
(*b*) Continuous recording with the Kelvin water-dropper.

The wire when first set up is at a different potential to that of the air in its neighbourhood, and a current will flow between them which tends to remove this potential difference. The ordinary conductivity of the air is, however, too small for this process of equalisation to take place very rapidly and the electrometer reading will always lag behind a fluctuating field. It is necessary for this reason to place at the centre of the wire some active ionising agent which speeds up the process by increasing the local conductivity of the air. This may take the form of a glowing fuse of filter-paper, impregnated with a 5 per cent. solution of lead nitrate, or of a disc or spiral of metal coated with a deposit of polonium or radio-thorium giving off α rays. Such "collectors", as they are called, have

the advantage of causing the wire and the electrometer to acquire the potential of the air at the centre of the stretched length, where the electric field is least disturbed by supports and observer. The time taken for equalisation of potential depends upon the type and activity of the collector and varies from 1 to 60 sec. There is always some uncertainty as to the exact position at which the ionising agent exerts its effect, especially if a wind is blowing, but this can be avoided by making observations at different heights.

16. Continuous Recording of the Potential Gradient. An adaptation of the arrangement just described is employed to obtain continuous records of the potential gradient, the electrometer being housed in a building and the collector carried on an insulated rod projecting from the wall. The earth's field is very much distorted by the presence of the building, and a reduction factor for the installation must occasionally be determined by making simultaneous measurements in an open field. Fig. 4 (*b*) shows the nature of the distortion of the equipotential surfaces due to a building.

The Kelvin water-dropper is still sometimes used at recording stations as a potential equaliser. A jet of water from an insulated cistern within the building escapes from the end of a pipe passing through and insulated from the wall, and breaks up into fine drops at the point where the potential is required (Fig. 4). On starting the jet, the potential of the insulated system will in general be somewhat lower than that of the air at the end of the pipe; this end will carry an induced negative charge and the cistern a positive one. Each drop carries a negative charge away and leaves the system slightly higher in potential than before. Ultimately the negative charge at the end of the pipe disappears and the system is at the potential of the air at the point at which the drops break away. In practice this takes a time of the order of 30 sec.

Radioactive collectors are also employed, but whatever the type of collector, the insulated system is usually joined to the needle of a quadrant electrometer of low sensitivity, and opposite pairs of quadrants connected to a battery

whose centre is earthed. The record can be made intermittently, by means of a clockwork arrangement which depresses an inked pointer attached to the needle (Benndorf) or continuously, by receiving the spot of light from a small mirror on a moving strip of bromide paper.

17. The Electric Fluxmeter or Field Mill. If the cover Q in Fig. 3 were rapidly and periodically swung away from and over the plate P, the bound charge on P would alternately appear and disappear. If P is earthed through a high resistance R, an alternating potential difference of amplitude proportional to the field will appear across R. This can be amplified and if necessary rectified so that an output meter will show the magnitude of the field, an auxiliary device indicating its sign. Calibration can be carried out by comparison with a stretched wire in the open (§ 15).

Developments of this principle which was first employed by Russelvedt in Norway, have been used to measure electric fields during aircraft flights and under thunderclouds. In a recent form, capable of recording rapidly-varying fields, P is a ring of separate metal studs and Q is a rotating disc with a corresponding set of holes.[2]

18. Variation of the Potential Gradient with Height above the Ground: Space-charge. A good many observations of the potential gradient have been made with balloons fitted with collectors of the radioactive or the glowing fuse pattern; they all indicate a rapid decrease in the field with increasing height above the ground (Table III, § 25). Though no great accuracy can be claimed for these measurements—for they are subject to errors arising from the distortion of the field by free and induced charges on the balloon and are but momentary observations of a quantity subject to considerable variation—it is well established that at a height of 18 km. the field has fallen to less than 1/100 of its value at ground level and is still diminishing slowly.

This diminution in the potential gradient with height indicates that a free positive charge, practically equal to the negative charge on the surface of the earth, resides

within the lower 18 km. of the atmosphere. Integration of the values of dV/dh obtained in balloon ascents gives a total potential difference between the earth and the air at a height of 18 km. of about 4×10^5 v.; at this height, and above it, the conductivity of the air is so great that this figure may be taken to represent the potential of the highly conducting "Kennelly-Heaviside layer" some 80 km. above the ground.

The density, ρ, of the positive "space-charge" referred to can be determined from Poisson's equation, which, if the lines of force are vertical, takes the form

$$\frac{d}{dh}(dV/dh) = -4\pi\rho.$$

Several investigators have examined the nature of the space-charge quite close to the ground, using collectors at different heights. The results obtained are conflicting as to the magnitude, and even the sign, of ρ in this region; evidently local conditions are of main importance.

19. Variations of the Potential Gradient with Locality, Time and Season. Before any discussion of the more important variations of the potential gradient, mention should be made of the fact that incessant fluctuations are observed over short periods of time; these are due to local changes in the space-charge and the conductivity of the air in the vicinity of the collector.

For many years continuous records of the potential gradient have been taken at certain stations in the Northern Hemisphere. Less extensive information is available for the Southern Hemisphere, but observations have been made over considerable periods in the Arctic and Antarctic regions. Some very important measurements over the oceans have been carried out by the survey ship *Carnegie* of the Carnegie Institute of Washington. It appears that the sign of the potential gradient in fine weather is positive all over the earth's surface, but that over land areas its value varies considerably with local conditions. The mean of dV/dh at Kew is 317 v./m., while that at Davos in Switzerland is but 64 v./m. Over the oceans a value of

126 v./m., which varies little if at all with geographical position, has been found. The average value for the whole earth is not far from 120 v./m.

It would seem that the potential gradient observed on land is not a quantity of much fundamental significance, its value depending primarily upon local conditions of atmospheric conductivity. This is evident from the fact that a simple periodic variation according to *local* time is the basis of all fine-weather land records. The minimum

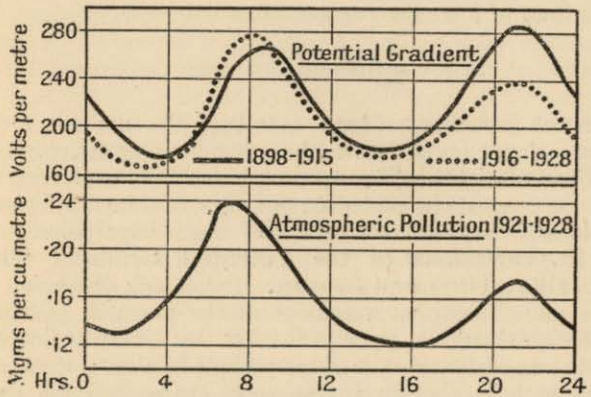

FIG. 5.—Relation between potential gradient and atmospheric pollution (Whipple).

values are obtained in the early morning at about 4 a.m. and the maxima in the evening between 6 and 8 p.m. In many places a second maximum at 8 a.m. and a second minimum at midday are found. The amplitude of these daily variations at land stations sometimes reaches 50 per cent. of the mean value for the day.

The local time variation has been shown by Whipple [3] to be closely correlated with the amount and distribution of the smoke pollution of the atmosphere near large cities, where these continuous records have generally been made. Fig. 5 shows the variation at Kew of the potential gradient during the summer months for the two periods 1898-1915

and 1916-28, together with the variation in the amount of pollution (determined by aspirating the air through filter-paper) for the period 1921-28. The figure shows not only the close relation which exists between potential gradient and pollution but also the striking effect of the introduction of "summer time" into Great Britain in the year 1916, after which the morning minimum and maximum moved back by approximately one real hour. The atmospheric pollution curve has maxima and minima which have been explained by Simpson as due to the combined effect of variations in the amount of smoke produced in the city and variations in the stability of the atmosphere, that is in the mixing action of surface winds and general turbulence of the lower air.

As regards the annual variation of the potential gradient, land stations in both hemispheres show a maximum in the local winter and a minimum in the local summer. The only significant exception is the Antarctic region, where a reversal of phase occurs, giving rise to a maximum in the local summer and a minimum in the winter.

In view of the local origin of the variations of the gradient found at land stations near towns, observations over the oceans, where no pronounced local effects are to be expected, are of very great importance. Mauchly [4] analysed the measurements of the *Carnegie* cruises and found that there is a well-marked diurnal variation at sea, with maxima and minima occurring at the same moment in all parts of the globe. Thus the potential gradient in all oceans is found to be about 15½ per cent. below the mean at 5 hours, G.M.T., and about 20 per cent. above it at 19 hours, G.M.T. It is remarkable that the same 24-hour wave, progressing according to universal solar time, had been observed by Simpson in the Antarctic and Lapland. Fig. 6 (*a*) (after Whipple) illustrates these results, which were confirmed by the last cruise of the *Carnegie*. In each case shown in the figure, the mean potential gradient has been reduced to 100 v./m. No appreciable annual variation has so far been observed over the sea.

Mauchly's discovery of a variation of potential gradient according to universal time is generally accepted as being of fundamental significance. The variation must clearly be ascribed to an alteration in the difference of potential between the upper conducting layers of the atmosphere and the earth; it affords an important means of testing any theory of the origin and maintenance of this potential difference.

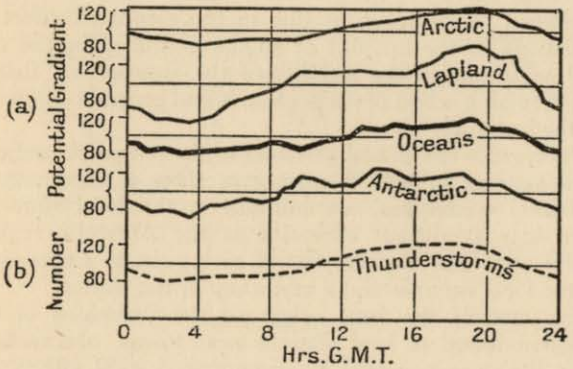

FIG. 6.

(*a*) Variation of potential gradient with universal time.
(*b*) Variation of thunderstorm activity over the earth's surface (Whipple).

20. The Fine-weather Current: Conduction and Convection Currents. In the ordinary fine-weather field positive ions are driven towards the earth and negative ions away from it; the motion of these ions constitutes a downwardly directed conduction current. The ionic conduction current passing through 1 sq. cm. of a horizontal plane can be written as $I_0 = F(\lambda_+ + \lambda_-)$, where F is the strength of the electric field and λ_+ and λ_- are the polar conductivities of the air at the point in question (§ 3).

There is, however, a fine-weather current of a different nature which plays a part in the transfer of electricity by the atmosphere. If the air should contain at any point

an excess of ions of one sign (a space-charge), movement due to wind or ordinary turbulence will give rise to a mechanical transference of electric charge. Thus if v is the upward vertical component of the velocity of the air and ρ the space-charge per c.c., the upward convection current due to this cause will be $v\rho$ per sq. cm. The real current-density in fine weather is thus the resultant of the downward conduction and the upward convection currents, and is given by $I = I_0 - v\rho$.

The mean value of the total fine-weather current over the whole globe is not far from 2×10^{-16} amp./sq. cm. or 2 microamp./sq. km., so that the total current flowing in this way between the upper atmosphere and the whole earth is about 1000 amp. It would seem, from measurements which have been made in various parts of the world, that this current varies much less with changes in geographical position, in time of day and season of the year, than does the potential gradient. Although in the past it has not received a great deal of attention, it would appear to be a more useful quantity than the potential gradient and less affected by purely local conditions.

21. Direct Determination of the Conduction Current at the Surface of the Earth. Direct measurements of the magnitude of the conduction current which flows into the earth's surface have been made with the Wilson universal electrometer, with the test-plate mounted flush with the surface of the ground, as described in § 14. The curve of Fig. 7 illustrates the procedure followed in the measurements. At time t_1 the test-plate is exposed to the earth's field by removing the cover, and the capacity of the compensating condenser is adjusted to the value C necessary to bring the gold leaf back to the zero position. The charge on the plate is then $-CV$ and the field strength $F = 4\pi\frac{CV}{A}$, where, as before, A is the area of the plate and $-V$ the potential of the outside of the compensator. The test-plate is now left exposed until time t_2 and kept continuously at earth potential by increasing the compensator capacity to balance the charge received

from the positive ions driven from the air on to the plate. Owing to variations in the strength of the field, and so in the induced charge on the plate, this increase is not a regular one. At time t_2 the plate is again shielded with the cover and the compensator capacity is reduced from C_1 to C_2 to maintain the shielded system at earth potential. At this moment the field strength is $4\pi(C_1 - C_2)V/A$. Since at the beginning of the measurement the compensator capacity was zero, it is evident that during the interval, $t_2 - t_1$, the plate received a positive charge C_2V

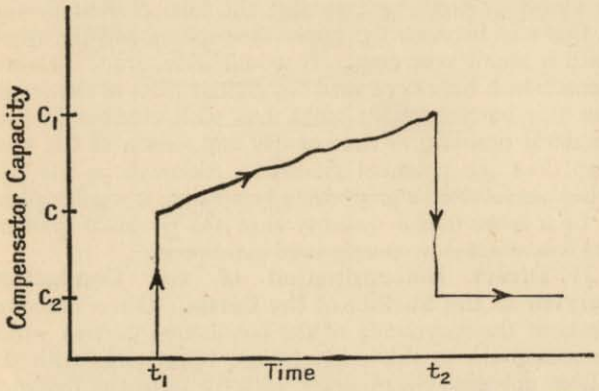

FIG. 7.—Measurement of conduction current with the Wilson universal electrometer.

and the average value of the conduction current per square centimetre was $C_2V/A(t_2 - t_1)$. For routine observations the instrument is mounted on a tripod above the ground, and the readings are reduced to standard conditions by occasional determinations of the reduction factor, from observations in a pit.

22. Indirect Determination of the Conduction Current at a Point in the Air. The conduction current at a point in the air can be determined also by separate measurements of the field strength, F, and the polar conductivities, λ_+ and λ_-. The methods used to determine

F, or the potential gradient, have already been described in this chapter; the conductivities are usually found by the Gerdien method sketched in § 2. In another form of the Gerdien method, due to Schering, the cylindrical condenser is replaced by a large earthed wire cage, along the axis of which is a charged insulated wire connected to an electrometer. The rate at which the charge is dissipated by ions of opposite sign is determined in exactly the same manner as in the Gerdien method, and the same equations apply if certain conditions are fulfilled. The cage must be large enough, and the charge on the wire small enough, to ensure that no considerable alteration in the number of ions is caused by the flow of current. The arrangement must be set up in the open air to ensure that ordinary atmospheric circulation prevents the development of the electrode space-charges to be discussed in the next section. And finally, the whole cage must be shielded from the earth's field by a rough roof or by trees, otherwise it will carry an induced negative charge on the outside and rob the entering air of negative ions.

23. The Comparison of the Direct and Indirect Methods: Electrode Space-charge. The direct method due to Wilson measures the conduction current entering the earth; the indirect method measures the current at a certain height above the earth. In the latter case the current is carried by two oppositely moving streams of ions of opposite sign; in the former it consists of a single stream, for while positive ions enter the earth, negative ions do not pass from it into the atmosphere. The two methods, therefore, do not necessarily measure the same quantity. One determines the true conduction current at a height, and the other its positive component at ground-level.

Consider a vertical cylinder of perfectly still air whose height is h and cross-section 1 sq. cm., with its base on the ground (Fig. 8). Let F' and F be the electric field strengths at top and bottom of this cylinder, and λ'_+, λ'_- and λ_+, λ_- the polar conductivities. The conduction current through the top is $F'(\lambda'_+ + \lambda'_-)$; in each second

a positive charge $F'\lambda'_+$ enters, and a negative charge $F'\lambda'_-$ leaves. Through the bottom there is only a downward flow of positive ions, carrying away a positive charge $F\lambda_+$ per sec. The cylinder as a whole thus loses a positive charge $F\lambda_+ - F'\lambda'_+$ per sec., and a negative charge $F'\lambda'_-$ per sec. This may be expressed as a development of a positive space-charge at a rate

$$F'\lambda'_- - (F\lambda_+ - F'\lambda'_+)$$
$$= F'(\lambda'_+ + \lambda'_-) - F\lambda_+$$

per sec. The growth of this "electrode" space-charge should automatically decrease the field F' and should cease only when F' has such a value that as many negative as positive ions leave the cylinder in each second, i.e. when

$$F'(\lambda'_+ + \lambda'_-) = F\lambda_+ . \quad (2.1)$$

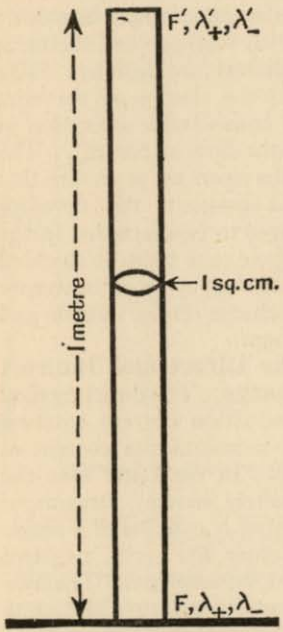

FIG. 8.—Electrode space-charge.

The two sides of this last equation are respectively the conduction currents at height h and at ground level. Thus, for perfectly still air, the two methods we have described should give the same numerical values, though they measure different quantities.

It was thought for some time that λ_+ must necessarily be considerably smaller than $(\lambda'_+ + \lambda'_-)$ and hence that F must be about double F'. Scrase[5] has, however, found practically no difference between F and F' and very little sign of electrode space-charge. A suggestion by Whipple that the space-charge is removed by atmospheric turbulence as rapidly as it is formed is unable to explain these results.

The difficulty appears to have been removed by the discovery by Hogg[6] that, owing to the local effect of α and β rays from radioactive matter in the soil, λ_+ is much larger than was thought and approximately equal to $(\lambda'_+ + \lambda'_-)$. Since $F \cong F'$, eqn. 2.1 is satisfied and the problem of electrode space-charge does not arise.

Values of the air-earth current in fine-weather obtained by the direct method in various parts of the world range from $1{\cdot}0$ to $4{\cdot}0 \times 10^{-16}$ amp./cm.^{2} Those by the indirect method vary from $0{\cdot}4$ to $3{\cdot}2 \times 10^{-16}$ amp./cm.^{2} Though as indicated above and found in practice, the two methods should give the same result, the variability of the ionising agents producing λ_+ and of convection currents suggests that the direct method is the more reliable of the two.

24. Variations in the Fine-weather Current. Both direct and indirect methods of studying the air-earth current indicate that in fairly fine weather it is less subject to variations than is the potential gradient. Simultaneous measurements of the field and of the total conductivity of the air, $\lambda = \lambda_+ + \lambda_-$, show that these quantities vary to some extent in inverse ratio, with the result that their product, the conduction current, is less variable than either. Factors such as an increase in the number of condensation nuclei or the presence of fog particles, which decrease λ by raising the proportion of the slow ions present, cause a corresponding increase in the potential gradient. The simple form of the daily variation in the earth's field has its counterpart in an inverse variation of the conductivity, with a maximum in the early morning between 3 and 4 a.m. The extreme effect of atmospheric pollution near large cities, which increases the potential gradient and diminishes the conductivity, has already been discussed (§ 19). In general however the reciprocal relation between λ and F is not exact enough to keep the conduction current invariable. At land stations in Europe the current is found to have an annual variation which coincides in phase with that of the potential gradient but has a smaller amplitude. At other stations its daily variation follows the changes in the conductivity.

CHRIST'S COLLEGE

25. The Conduction Current at Great Heights. It has been found from simultaneous determinations of potential gradient and atmospheric conductivity during balloon ascents that the rapid decrease in F with height above the ground is accompanied by an increase in λ, of such magnitude as to keep the conduction current approximately constant. Table III shows the results of an ascent by Wigand,[7] from which it will be seen that when the field had fallen to 1/15 of its value at the ground, the conductivity had risen eleven-fold.

TABLE III

CONDUCTION CURRENT DURING BALLOON ASCENT (WIGAND)

Height (Metres).	F (volts/metre).	λ (e.s.u.).	I (amps./sq. cm.).
0	136	$1{\cdot}1\ 10^{-4}$	$1{\cdot}7\ 10^{-16}$
2500	27	4·8 ,,	1·4 ,,
4400	18	8·2 ,,	1·6 ,,
6500	8·8	12·6 ,,	1·2 ,,

These results have been confirmed and extended by conductivity measurements made during the flight of the United States army balloon Explorer II in 1935.[8] They showed that up to a height of 18 km., the ionisation of the air increases by roughly 500 ion-pairs per km. and that the conductivity at 18 km. was about 100 times the usual value at the ground.

26. The Significance of the Air-earth Current. The general constancy of the air-earth current with height above the ground and in different parts of the world suggests that, at any rate to a first approximation, it has its origin in a constant potential difference between the conducting layers of the upper atmosphere and the earth, and that its actual value depends upon the resistance of the air between the two regions. The conductivity of the upper portion of this air-path is entirely due to the cosmic radiation *

* This refers to the regions from 15 to 30 kilometres above the ground. The E layer 80 kilometres up has a solar origin.

and is unlikely to alter appreciably with time of day, locality or season. But below a height of about 2 km. over land areas, an additional ionising influence is exercised by radioactive matter in the air and in the earth, and this, as we have seen (§ 5), varies very much. Moreover, the conductivity of the air in this region is dependent upon the relative concentrations of the large and the small ions, and these alter with the number of nuclei present. The current-bearing column of air above the point of observation thus consists of an upper constant resistance and a lower variable one in series with each other. The extent to which the current carried by the air-column alters with local conditions will depend on the ratio which the lower variable resistance bears to the total resistance.

Both the results of Wigand in Table III and those from the Explorer II flight[8] indicate that the total resistance of a column of air of cross-sectional area 1 sq. cm. is about $1{\cdot}0 \times 10^{21}$ ohms. The conductivity between 14 and 18 km. is so high that this upper region contributes only a small fraction to the resistance and higher regions would be still less important. If the variable part of the column be the first 100 m. above the earth, where the specific resistance is usually 8×10^{15} ohm-cm., this portion will contribute 8×10^{19} ohms to the total. We see that even if the conductivity of the first 100 m. were halved, the effect upon the air-earth current would amount to but 4 per cent. The potential gradient near the ground, on the other hand, would be doubled, for from this point of view it represents the fall of potential per unit length of the lowest part of the current-bearing column. It is evident that potential gradient measurements over land, and in particular near cities, cannot be expected to yield information which bears directly upon the question of the total potential difference between upper atmosphere and earth. In the case of observations at sea and in polar regions the position is different; practically all the ionisation throughout the whole column is then due to the cosmic radiation, and the only local effect which can

influence the fine-weather gradient is a change in the number of nuclei available for the capture of small ions.

27. The Electric Field during Disturbed Weather. The normal downwardly directed field, due to a positively charged upper atmosphere and a negatively charged earth, is frequently disturbed when the weather ceases to be fine. During fog, as explained in § 24, it is very much increased, and may reach ten times its normal value; during dust-storms, of the type common in semi-arid regions and deserts, powerful reversed or negative fields are usual and reach 10,000 v./m. The effects found during cloudy weather and rain are variable, and range from gradients of the order of a few hundred volts per metre in a fine drizzle to as much as 50,000 v./m. under thunderclouds.

Generally speaking, negative fields predominate when light or steady rain is falling, though occasional positive excursions are observed. In the case of heavy rainstorms and thunderclouds, the sign of the field depends upon the portion of the cloud passing over the point of observation, but here, too, there is evidence that negative gradients are the more frequent.

The field during thunderstorms fluctuates a great deal if the cloud is active in producing lightning. Its value at the ground does not as a rule exceed 10,000 to 20,000 v./m. except for very brief intervals occupying fractions of a second. Equally high fields are observed during heavy rainstorms unaccompanied by lightning. During a snowstorm the field is usually positive and in a heavy storm may attain 10,000 v./m. The methods employed for the study of the large and rapidly varying fields of thunderclouds are described in Chapter III.

28. The Charge on Rain and Snow; the Precipitation Current. The apparatus required to examine the charge carried to the earth by precipitation—rain, hail, snow, and sleet—is comparatively simple, and consists essentially of an insulated metal vessel to catch the rain, etc., and an electrometer to measure the charge received. Great precautions must, however, be taken

to eliminate the disturbing effect of the negative charge given to the air as the drops splash on the container (Lenard effect). If some of this is lost a spurious positive charge will be indicated. For a similar reason, the entry of spray due to the splashing of rain falling outside the receiving vessel must be prevented. The receiver must be screened electrostatically from the electric field outside. The rate of rainfall, and sometimes the size of individual drops, is also observed. By amplifying the induction effect of a drop as it passes through an insulated cylinder the charges carried by individual drops may be measured. As the charges brought down vary considerably, it is necessary in all such work to carry out a long series of observations.

Since the year 1908, when the modern series of observations began, all observers have found a preponderance of positive charge on rain in general. The average ratio of the quantities of positive and negative electricity brought down by all kinds of precipitation varies according to the situation of the observer. Some of the values found for this ratio are: Potsdam (Schindelhauer), 1·4 : 1; Puy-en-Velay (Baldit), 2·4 : 1; Dublin (McClelland and Nolan), 4·8 : 1; Simla (Simpson), 2·4 : 1; Otago, New Zealand (Marwick), 3·2 : 1. As exceptions to the general rule, it may be noted that snow usually carries a considerable negative charge, and that the fine drops of a drizzle are also negative.

The subject of the charge on rain and its relation to the prevailing electric field has recently received special attention because of its connection with the electrification of thunderclouds. This work is discussed in § 45.

The charge per c.c. in the case of heavy thunderstorm rains reaches average values of 30 to 40 e.s.u., while single drops may carry 100 to 200 e.s.u. (Gschwend) and attain potentials as great as 300 v. The mean values reported by different observers for the net charge per c.c. on all forms of precipitation during a long series of observations range from + 0·029 e.s.u. at Potsdam (Schindelhauer) to + 0·176 e.s.u. at Simla (Simpson).

The transfer of electricity from atmosphere to earth in this manner constitutes a "precipitation" current which appears on the whole to be in the same direction as the fine-weather conduction current, since it carries more positive than negative charge to the earth. In the case of thunderstorms this current sometimes reaches values as high as 2×10^{-11} amp./sq. cm., and the total convection current carried by the rain in such a storm may amount to more than 0·1 amp. Before it is possible to frame a trustworthy estimate of the amount of the excess of positive over negative electricity conveyed to the whole earth in this way, much more information is required from tropical and equatorial regions.

29. Currents due to Point-discharge. It is well known that an electric glow or brush discharge takes place from a pointed conductor when placed in a sufficiently strong field. It consists of a stream of ions of the same sign as the charge upon the point. Discharges of this kind must, therefore, be expected from the ends of exposed conductors on the surface of the earth whenever the potential gradient and the height and sharpness of the ends are sufficiently great. Indeed the earliest investigators, Franklin, Dalibard and Lemonnier with high metal rods and kites detected electric fields in thundery and in fine weather, by means of this current. Under favourable conditions, afforded by mountain peaks or the masts of ships exposed to the intense fields of a thundercloud, the glow discharge may become very conspicuous (St. Elmo's fire).

It was first pointed out by C. T. R. Wilson [9] that point-discharge currents of much smaller intensity must play an important part in the interchange of electricity between the earth and the atmosphere. The fields prevailing under rainstorms and thunderclouds very frequently reach values sufficiently great for considerable currents to be discharged from an assemblage of exposed conductors, such as trees, bushes, housetops and even fields of grass. A conductor need not end in a sharp point nor project to a great height in order that it should begin to act as a discharger. For example, an earth-connected sphere of radius 1 cm. need

be raised only to a height of 3 m. in the not unusual field of 10,000 v./m. for the electric intensity at its surface to reach the critical value of 30,000 v./cm. at which brush discharge begins. A practical instance of the correctness of this suggestion is afforded by some experiments made by the author, in which a small tree, 4 m. high, was cut off at its base, mounted on insulators and connected to earth through a galvanometer. Exposure to the fields due to nearby thunderstorms yielded the average point-discharge currents shown below: [10]

TABLE IV

POINT-DISCHARGE CURRENTS FROM A SMALL TREE (SCHONLAND)

Field (volts/metre).	Current (microamperes).
− 3,500	0·07
− 5,500	0·20
− 11,000	1·00
− 16,000	4·00

The contribution of a single tree such as this must be multiplied by a very large factor to obtain the total current flowing between the earth and a thundercloud; in the case quoted, the tree was typical of the exposed natural conductors for many miles around, and a rough surface integration over the area affected by the cloud indicated that the total point-discharge effect was of the order of 2 amp. in an upward direction.

Since the direction and magnitude of the large fields associated with disturbed weather vary considerably, it is important to know the relative amounts of positive and negative electricity discharged from an exposed point over a long period of time. In a series of observations by Wormell,[11] a sharp point carried on insulators at the top of a pole was connected by cable to one electrode of a voltameter filled with dilute sulphuric acid, the other

electrode being earthed. The voltameter, shown, with some minor but significant details omitted, in Fig. 9, was constructed of fine capillary tubing (diameter 0·8 mm.) and the gases evolved were separately collected, their volumes being determined from the lengths of the bubbles formed. If v_1 and v_2 are the volumes of the mixed gases collected at the earthed and the point-connected electrodes respectively, the quantities of positive and negative electricity, q_1 and q_2 which have been discharged from the point can be separately determined in the following way: If one unit of quantity liberates in electrolysis c c.c. of oxygen and $2c$ c.c. of hydrogen, we have

$$q_1c + 2q_2c = v_1 \quad \text{and} \quad 2q_1c + q_2c = v_2,$$

from which we may determine q_1 and q_2.

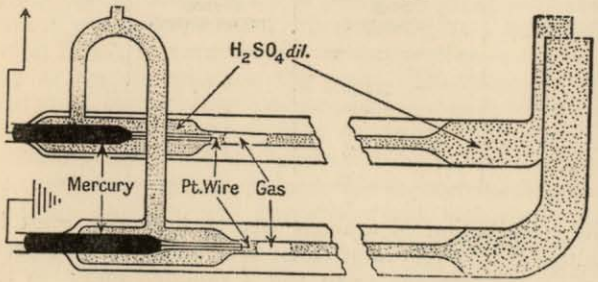

FIG. 9.—Water micro-voltameter (Wormell).

The quantities discharged in this way have been examined by Wormell at Cambridge over a period of three years. Some of his results are shown in the Table V.

Each year shows a considerable net loss of positive electricity from the discharger.

In a more detailed discussion it is noted that of 147 separate periods of disturbed weather accompanied by precipitation, 103 showed an excess of upward current (+ ve discharge), 34 an excess of downward current (− ve discharge), and in 10 the net discharge was zero. This is what would be expected from the predominance of negative potential gradients in disturbed weather.

Similar measurements have been made in other parts of the world (§ 30).

TABLE V

INTEGRATED EFFECTS OF POINT-DISCHARGE (WORMELL)

Year	1927.	1928.	1929.
Positive quantity discharged, q_1 (coulombs)	0·28	0·24	—
Negative quantity discharged, q_2 (coulombs)	0·14	0·11	—
Net positive discharge, $q_1 - q_2$ (coulombs) .	0·14	0·13	0·11

30. The Interchange of Electricity Between the Earth and the Atmosphere; the Maintenance of the Earth's Charge. The negatively charged earth and the positively charged upper layers of the atmosphere form two plates of a spherical condenser with the lower air as the dielectric. Although the conductivity of the air between the plates is small, the applied potential difference is great enough to make the leakage of charge through it very considerable. The average value of the charge per unit area of the earth's surface is 9×10^{-14} coulombs/sq. cm., and that of the fine-weather conduction current is 2×10^{-16} amp./sq. cm. Left to itself, a condenser of this kind would be discharged by internal leakage in a time of the order of 10 min. But this is not all; to the dissipation of the earth's charge by the fine-weather current we must add the effect of the charge conveyed by rain and snow, for it has been shown that on the whole the net charge conveyed to the earth by precipitation is positive in sign. Thus to the conduction current of 1000 amp. over the whole surface of the earth must be added a precipitation current in the same direction, estimated by Wigand[12]—though any such estimate can

only be provisional—at 400 amp., making a total of 1400 amp. tending to dissipate the 500,000 coulombs with which the earth is charged.

In spite of the continuous operation of these two factors, the earth's charge remains practically constant, so it is clear that there must exist some reverse or compensatory process which neutralises their effect. Some agency must be continuously at work replenishing the charges on the earth and in the upper air. The discovery of the mechanism responsible for this replenishment has been one of the chief problems of atmospheric electricity, and many proposals have been made to this end.

It was first suggested by C. T. R. Wilson[13] that it is to regions of disturbed weather that we must look for the mechanism of replenishment, that under rain and thunderclouds, where the potential gradient is more often reversed than in the normal direction, there are two processes at work which convey considerable quantities of negative charge to the earth. The first of these is the action of point-discharge from conductors projecting from the ground. This has already been discussed, and it has been shown that experimental tests indicate that it is of great importance. The second process is the charge conveyed to the ground by lightning flashes from thunderclouds. Every second, as will be seen in Chapter III, some 100 lightning discharges occur over the whole surface of the earth, each involving the passage of a charge of the order of 30 coulombs. Only a fraction of these, perhaps one in four on the average, strike the ground. The effectiveness of this process of transference of charge will depend upon whether more charges of one sign than another are conveyed to the earth. If, for example, practically all the charges transferred were negative, the process would be equivalent to a continuous compensation current of about 500 amp. Though there is evidence from a number of regions (§ 33) that this is actually the case, the question is still under investigation.

An estimate of the annual electrical "balance-sheet" of a square kilometre of ground at Cambridge in England

has been made by Wormell,[11] on the basis of his point-discharge measurements and observations on lightning discharges. The air-earth conduction current loss and the effect of rain and snow were estimated from average values of these quantities. The results were:

	Coulombs/sq. km./annum.
By natural point-discharge, gained	− 100
By lightning, gained	− 20
By atmospheric conduction, lost	− 60
By precipitation, lost	− 20
Net gain of negative charge	− 40

Though such an estimate is only a very rough one, it appears to be quite possible that in this locality the four processes approximately balance one another, or even that the earth gains a negative charge.

These results have been supported and extended by similar measurements at Kew Observatory, at Durham, at Pretoria and in Nigeria.

Over the oceans, where thunderstorms are infrequent and elevated points are absent, the balance-sheet may be expected to show a net loss of negative charge, so that the position for the whole globe would be one of approximate equilibrium.

This suggestion of Wilson involved more than the interchange of electricity between the bases of cumulonimbus clouds, showers and thunderstorms, and the ground; he regarded such clouds as equally active in supplying positive electricity to the upper air. The existence of this upward current has been established by recent high-altitude flights above thunderclouds. Gish and Wait,[14] by measuring both the electric field and the conductivity of the air, have shown that an average current of 0·8 amp. flows in the expected direction. The cloud thus acts as an electrical generator which removes positive electricity from the earth and supplies it to the conducting layers of the atmosphere above, in which it is rapidly distributed in

such a way as to maintain them at a constant potential of about 4×10^5 v., in spite of losses.

We should therefore expect the potential difference, and so the potential gradient, to show a maximum when the thundery regions of the earth are at their maximum activity. The diurnal variation of the gradient discovered by Mauchly (§ 19) should agree in phase with the diurnal variation of thunderstorm activity over the earth. It has been shown by Whipple[15] that this appears to be the case. Whipple's examination of the diurnal variation of the world's thunderstorms is represented by the bottom curve of Fig. 6 (*b*), where it will be seen that the parallelism with the variation of the potential gradient over the oceans and the polar caps is indeed very close.

Although the evidence discussed above makes it very probable that Wilson's replenishment theory is correct, it must be admitted that further quantitative measurements in different parts of the globe are needed to establish it.

A rather revolutionary extension of Wilson's ideas has been put forward by Frenkel,[16] who suggests that the generators chiefly responsible for the circulation of electricity between the earth and the upper air, in the reverse direction to the fine-weather current, are not thunderstorms but ordinary clouds. According to this theory all fog-like clouds carry a positive charge above and a negative charge below (§ 44) and thus create a conduction current which is opposite to that of fine weather. The fields due to these cloud dipoles (of which there are estimated to be a hundred thousand at any moment over the earth's surface) will, in Frenkel's view, induce and maintain the negative charges observed on the distant " serene sky " regions of the earth and positive charges in the air above them.

It has been shown, however, in § 24, that the enhanced fields below ordinary fog-like clouds are due to an alteration in the conductivity of the air and are in the normal positive direction. Such clouds do not give reversed electrical fields of the kind required by Frenkel's theory unless they are shower-clouds from which rain is falling (§ 45).

REFERENCES TO PAPERS

[1] R. E. Watson, *Met. Office Geophys. Memoir*, No. 45 (1929).

[2] D. J. Malan and B. F. J. Schonland, *Proc. Phys. Soc.*, B, **43**, p. 402 (1950).

[3] F. J. Whipple, *Quart. Journ. Roy. Met. Soc.*, **55**, p. 351 (1929).

[4] S. J. Mauchly, *Terr. Mag.*, **28**, p. 61 (1923).

[5] F. Scrase, *Met. Office Geophys. Memoir*, **67** (1935).

[6] A. Hogg, *Mem. Comm. Solar Obs., Canberra*, **7** (1939).

[7] A. Wigand, *Phys. Zeit.*, **26**, p. 81 (1925).

[8] O. H. Gish, *Terrestrial Magnetism and Atmospheric Electricity* (ed. J. A. Fleming), Chap. IV, New York, Dover Publications (1949).

[9] C. T. R. Wilson, *Proc. Phys. Soc.*, **37**, p. 32*d* (1925).

[10] B. F. J. Schonland, *Proc. Roy. Soc.*, A, **118**, p. 252 (1928).

[11] T. W. Wormell, *ibid.*, A, **115**, p. 443 (1927); **117**, p. 567 (1929).

[12] A. Wigand, *Ann. d. Physik*, **66**, p. 81 (1921).

[13] C. T. R. Wilson, *The Observatory*, **44** (1922).

[14] O. H. Gish and G. R. Wait, *Journ. Geophys. Res.*, **55**, p. 473 (1950).

[15] F. J. Whipple, *Quart. Journ. Roy. Met. Soc.*, **55**, p. 1 (1929).

[16] J. Frenkel (*a*) *Journ. Franklin Inst.*, **243**, p. 287 (1947); (*b*) *Ac. Sc. U.S.S.R., Journ. of Physics*, **8**, p. 285 (1944).

CHAPTER III

THE ELECTRIFICATION OF THUNDERCLOUDS

31. The Number of Thunderstorms over the Globe. Although a thunderstorm is a comparatively rare event at any one station in temperate latitudes, the number of thunderstorms per day experienced by the earth as a whole is very large. Even in such a limited area as France there are comparatively few days in the year on which thunder is not reported from some part of the country. According to a survey made by Brookes,[1] the earth experiences 16,000,000 thunderstorms per annum or 44,000 per day. Taking one hour as the average duration of a single storm there will on the average be 1800 thunderstorms in progress in different parts of the world at any one moment. As has been shown in § 19, Fig. 6, world thunderstorm activity alters regularly with the sun, reaching a maximum when the afternoon storms of equatorial Africa are ending and those of equatorial America are beginning. Brookes has estimated that about 100 flashes of lightning occur every second or 360,000 every hour.

The most thundery region of the earth is the island of Java, where thunder is heard at any one place on 61 per cent. of the days in a year. This percentage, the *isoceraunic level* of the place concerned, is 41 in parts of Central Africa, 39 to 37 in Southern Mexico and Panama, 29 in Brazil and 26 in Madagascar. In North America the isoceraunic level rises from 3 per cent. for Southern Canada to 25 per cent. for Florida. On the Californian coast it is about 1 per cent.

Over most of Europe thunder is heard on the average on about 11 days in the year; near the Alps the figure rises to 18 days. The figure for Johannesburg in South Africa is 50-60 days in the year. In using these figures account must be taken of the fact that on about 1 in 7 of thunderstorm "days" there is more than one storm within audible distance.

Over the oceans thunderstorms are infrequent except off the south-east coasts of Brazil and South Africa and in the seas surrounding Madagascar and the East Indian islands.

32. Methods used to Measure the Electric Fields of Thunderclouds. (*a*) *The capillary electrometer method.* This was devised by C. T. R. Wilson [2] for use in his classic investigations of thunderstorms and has also been employed by Wormell [3] and by the writer.[4] The general principle is similar to that of the test-plate or induced charge method of studying the fine-weather field (§ 14), in which an exposed conductor is kept at zero potential by alteration in the capacity of a compensating condenser, when the charge induced upon the conductor by the field is equal to that given by the compensator to the system. In the measurement of rapidly changing thunderstorm fields, however, compensation is produced automatically and very quickly by means of an ingenious form of capillary electrometer. As shown in Fig. 10, this consists of a small bubble of dilute sulphuric acid enclosed between mercury threads in a narrow capillary tube. The threads lead to end-cups of mercury, and one of these, A, is connected to a test-plate T insulated from, but flush with, the surrounding ground, while the other is connected to the earth. Between the mercury and the glass there is everywhere a thin film of dilute acid, so that an electrical "double layer" surrounds the mercury and makes each half of the electrometer a condenser charged to the potential difference of the double layer, about 0·90 v., the mercury being positively charged with respect to the acid. If a positive charge is given to the left-hand side, it will increase the charge on the left-hand condenser and the left-hand thread will move forward a certain distance so as to absorb this charge, by increasing the area of the acid-mercury surface and the capacity of the left-hand condenser. A corresponding movement of the right-hand thread causes a reduction in area on this side and the passage to earth of a quantity of electricity exactly equal to that originally supplied to the electrometer. The distance moved, y,

is easily seen to be related to the charge passed through, q, by the equation

$$q = 2\pi r C V'(1 - r/R)y,$$

where r is the radius of the capillary and R that of the end-tube, and V' is the potential difference, and C the capacity per unit area, of the double layer. Thus $q = ky$, where k is an instrumental constant which can be determined by discharging a known quantity of electricity through the instrument. The arrangement, therefore, gives a linear relation between the movement of the acid bubble and the quantity discharged. In spite of the large

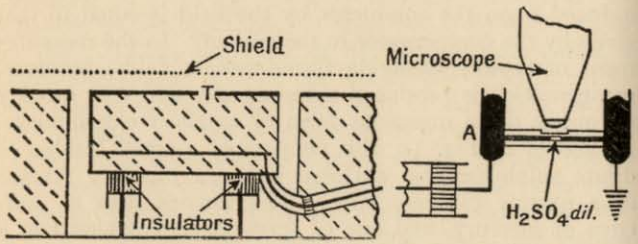

FIG. 10.—Measurements of the electric fields due to thunderstorms (C. T. R. Wilson).

value of C, about 30 microfarads/sq. cm., the electrometer is extremely sensitive. By using a microscope focused upon one end of the bubble, quantities of the order of 10^{-9} coulombs may be measured. A permanent record is best obtained by placing a slit and a moving photographic plate in the focal plane of the objective.

When connected to a test-plate the electrometer automatically maintains it at earth potential and records the quantities of electricity passing to and from the earth as a result of changes in the external field and of the induced charges on the plate. The type of record obtained from this arrangement during a thunderstorm is illustrated by the thick line of Fig. 11. An earthed cover is swung over the test-plate for a few seconds

at the beginning of each minute, causing the movements A′AA″, B′BB″, etc., as the induced charge flows away to earth and then returns. The points A, B, C, D, E would lie on a horizontal line if there were no actual transfer of charge between the plate and the atmosphere taking place, that is to say, no conduction current, point-discharge, or transport of charge by rain. The first 2 min. in the figure show the slight slope due to the conduction current only, the last two show the effect of a fall of positively charged

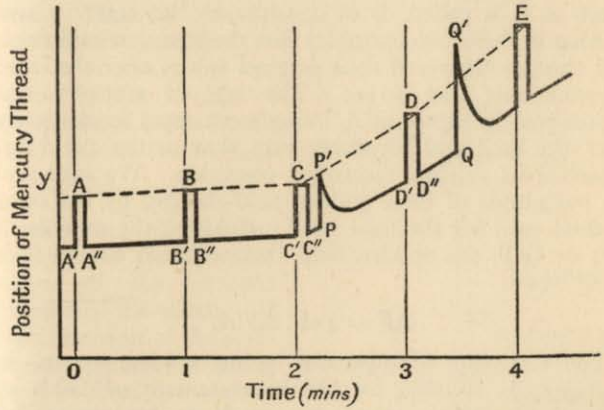

FIG. 11.—Capillary electrometer record during a thunderstorm.

rain. The charge, for example, conveyed to the plate by rain and conduction during the third minute is $k(y_D - y_C)$ and the mean value of the current per square centimetre $k(y_D - y_C)/60A$, where A is the area of the plate and k the constant of the electrometer. The dotted line joining the points A, B, C, D, E gives the reading of the instrument when the test-plate is shielded at any time during the record, and this line serves as the zero from which the field and field-changes are measured. The field at the end of the first minute, for instance, is given by

$$F = 4\pi k(y_B - y_{B'})/A.$$

Two sudden interruptions in the record, such as are caused by lightning flashes, are shown at P and Q. At P the record suddenly touches the dotted line, indicating that for a moment the field was completely destroyed and the original induced charge ran to earth through the electrometer. At Q the movement extends beyond the dotted line, showing that the field was actually reversed in sign by the discharge and reached a reverse value equal to half its original strength. The shape of the record immediately after the passage of these lightning flashes, the recovery curve as it is called, is of considerable interest; it will be seen in these two examples that the thundercloud fields and charges recovered their original values after the lapse of something like 20 sec. The rate of recovery was approximately exponential, being most rapid immediately after the flash and becoming very slow as the cloud approached its original electrified condition. We may find the magnitude of these sudden field-changes by the same method used for the field itself; if Δy be the movement PP′, or QQ′, the sudden field-change which caused it is given by:

$$\Delta F = 4\pi k \,.\, \Delta y/A.$$

The test-plate arrangement, using a plate 50 cm. in diameter, is suitable for the measurement of fields of strength exceeding 1000 v./m., such as are caused by thunderstorms when they come within a distance of about 8 km. An inverted test-plate of smaller dimensions mounted on a pole and with a cover periodically and automatically swung below it for a short time has been used by Wormell for measurements of the large fields due to near storms. This is of great use during heavy rain. For more distant storms Wilson employed a different form of exposed conductor, a copper ball 1 ft. in diameter mounted on insulators at the end of an iron pipe 5 m. in length (Fig. 12). When the arrangement is in use the pipe is held vertical; by turning it about a horizontal axis through its base, the pipe is lowered and the ball enters an earthed metal case which shields it from the field.

Connection to the capillary electrometer is made by an insulated wire passing down the centre of the pipe.

The field producing a given movement of the electrometer is calculated as follows: The charge q induced upon the ball when raised to a height h above the ground must be such as to maintain it at earth potential, for the ball is earth-connected through the electrometer. Thus if V is the undisturbed potential of the air at the point occupied by the centre of the sphere of radius r, we have

$$V + q/r - q/2h = 0,$$

the third term allowing for the effect of the electrical image of the charged sphere in the earth. If the movement of the electrometer caused by raising the ball from its case to the height h is y, we have

$$q = -ky$$

and $V = k(1/r - 1/2h)y$.

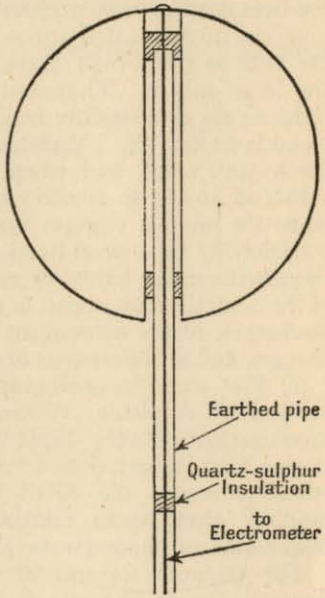

FIG. 12.—Elevated sphere for measuring fields of distant thunderstorms.

This observation therefore gives for the mean potential gradient between the ground and the height h,

$$F = V/h = (k/h)(1/r - 1/2h)y.$$

The same equation relates the sudden changes of field ΔF to the corresponding sudden movements Δy of the electrometer. Since these relations, like those derived for the test-plate, are derived on the assumption of a perfectly plane earth, small corrections must be applied to allow for

the effect of the concentration of the lines of force upon the hut used to house the recording instrument.

The effects obtained from the elevated sphere become too small for accurate measurement when the storm is more than 20 km. away; for still greater distances a wireless aerial has been used by some workers. Such a wire can, however, give rise to unwanted corona (point-discharge) effects if the field is fairly big; these are avoided by the use of the large sphere. Thunderstorm fields are of the same order as the fine-weather field, about 100 v./m., when the cloud is 20 km. off. At distances of 6 to 8 km. they often reach 5000 v./m., and when the storm passes overhead values of 10,000 to 20,000 v./m. are commonly observed, while the sudden changes may exceed these figures very considerably for a small fraction of a second. In an active thunderstorm the fields are constantly altering as a result of the neutralisation of part or all of the charge by lightning discharges, of the subsequent rebuilding of the destroyed charges, and of movements of the cloud as a whole.

(*b*) *The amplifier-oscillograph method.* This was developed by Appleton, Watson-Watt and Herd[5] for the investigation of very rapid field-changes from distant storms (atmospherics) and has been used by them and others to record the details of field-changes which the capillary electrometer method, which has a time discrimination of about 0·1 sec., is unable to resolve.

The essential features of the arrangement used are shown in Fig. 13, in which C_0 is the capacity of an exposed conductor such as the ball of Fig. 12 (or for very distant storms, a horizontal wire aerial) and R_1 is a resistance of some 50,000 ohms inserted to render the aerial circuit aperiodic. C_1 is a condenser which is variable in steps to suit the field to be measured and R_2 is a high-resistance selected so that the time-constant C_1R_2 is large compared with the duration of the field-change to be recorded.

If the field alters by ΔF as a result of a change ΔV of the potential at the effective height h of the exposed conductor, a change $-\Delta q$ must take place in the charge on

the conductor and the charge on the upper plate of C_1 must increase by $+\Delta q$.

This will produce a potential difference Δv across C_1 given by

$$\Delta v = \Delta q/C_1 = \Delta V - \Delta q/C_0,$$

since both these expressions give the change of potential at the point X.

Hence $$\Delta v = \frac{C_0}{C_0 + C_1} \cdot \Delta V = \frac{C_0}{C_0 + C_1} \cdot h\Delta F.$$

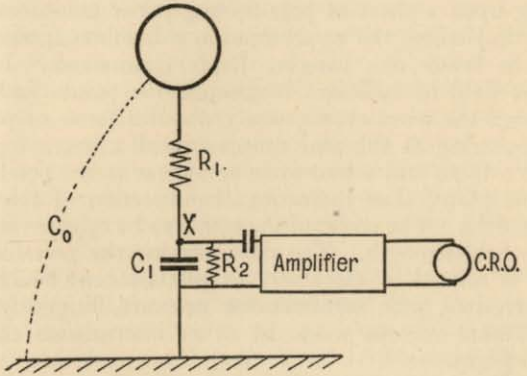

FIG. 13.—Input circuit for amplifier-oscillograph method (Appleton, Watson-Watt and Herd).

The arrangement thus acts as a condenser potentiometer and the amplified value of Δv causing the deflection of the oscillograph spot is proportional to the field-change. The oscillograph holds this deflection momentarily; its deflection drifts back to zero in a time set by the quantity C_1R_2 provided the time-constants of the amplifier are larger than this. C_1R_2 can usually be made long enough for the faithful recording of all but comparatively slow changes of field.

CHRIST'S COLLEGE

If C_1 and R_1 are removed from the circuit, the arrangement of Fig. 13 can be used to record the rate of change of field, dF/dt. For then

$$hdF/dt = dv/dt + (dq/dt)/C_0 = dv/dt + v/C_0R_2,$$

since the current i in the resistance R_2 is $v/R_2 = dq/dt$. If C_0R_2 is small enough, the second term is much greater than the first and $v \simeq hC_0R_2dF/dt$.

(*c*) *The Alti-electrograph.* This instrument was devised by Simpson and Scrase [6] for attachment to a small balloon to measure directly the electric fields at points near and within active thunderclouds. Two separate iron pins resting upon a sheet of pole-finding paper are connected to vertical wires, the upper one on a bamboo framework and the lower one hanging freely downwards. In an electric field of sufficient magnitude for point discharge to charge the wires appropriately, the difference of potential appearing at the pins causes a small current to flow between them and a blue stain to appear at the positively charged point, thus indicating the direction of the prevailing field. The width of the stain can be related roughly to the field-strength. The disc carrying the pole-finding paper is rotated by clockwork to give a record which can be correlated with simultaneous pressure, humidity and temperature records made by other instruments carried on the flight.

(*d*) *The electric fluxmeter method.* The principle of this method has been described in § 17. When the device is carried in aircraft inside clouds, care has to be taken to eliminate the "autogenous" field produced by the charge collected by the aircraft itself. This is done (Ross Gunn) by employing two fluxmeters, one on the upper surface of a wing and the other, facing downwards, on the lower surface. For one of these the external and the autogenous field will be in the same direction and for the other they will be in opposite directions. The deformation of the field due to the aircraft itself can be corrected for by model experiments. Owing to icing difficulties this device cannot be used at levels where the temperature is much below 0° C.

A high-resolution form of this instrument devised by Malan and the writer has been employed in observations at ground-level to fill the gap between method (*a*) which has a poor time-resolution for field-changes and method (*b*) which is more suitable for rapid than for slow field-changes. Records of the output of the fluxmeter are made on a magnetic tape recording machine and those portions of interest are played back and recorded photographically later on, thus providing economical high-speed recording of transient field-changes.

(*e*) *The point-discharge galvanometer method.* If a fine point erected on a tall pole is insulated and connected to earth through a recording galvanometer, the current I due to point-discharge is roughly related to the prevailing field F by the equation $I = a(F^2 - M^2)$ where a and M are constants for the particular arrangement used. This method, which has been examined in detail by Whipple and Scrase,[8] provides a useful general record of the sign and approximate value of F for near storms but its time-resolving power is low and the above equation does not hold with much accuracy when the usual thunderstorm winds are blowing.

33. The Distribution of Electricity in Thunderclouds. All the methods described in § 32 have contributed to the solution of the problem of the distribution of electricity in the thundercloud. After some controversy it is now generally agreed that the main distribution is one in which an upper positive charge lies several kilometres above a lower negative one. This pattern may be repeated in different parts (cells) of a large cloud. The arguments of C. T. R. Wilson [2] on which this conclusion was first based, are set out below.

Consider a charge Q which occupies a spherical region within the cloud, its centre at height H above the ground.

The field at P (Fig. 14) is that due to an electric doublet of moment $2QH$, the opposite charge induced on the earth by Q being replaced by the image-charge $-Q$. This field is then $F = 2QH(H^2 + L^2)^{-3/2}$ and is directed vertically downwards if Q is a positive charge.

A lightning discharge involving Q may be of two kinds. If it is a discharge within the cloud, Q may most simply be considered to move vertically from a height H_2 to a height H_1, where it neutralises an opposite charge $-Q$. If it is a discharge to ground, Q disappears and F becomes zero. The net field-change produced by a cloud discharge is then

$$\Delta F_C = F_1 - F_2 = 2Q[H_1(H_1^2 + L^2)^{-3/2} - H_2(H_2^2 + L^2)^{-3/2}] \quad . \quad (3.1)$$

and that due to a discharge to ground is

$$\Delta F_G = O - F = -2QH(H^2 + L^2)^{-3/2} \quad . \quad (3.2)$$

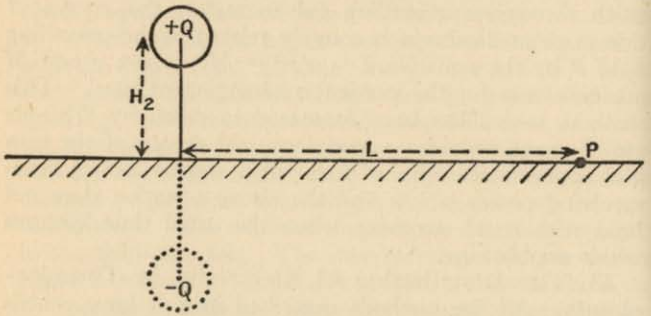

FIG. 14.—Thundercloud charge above the earth.

From observations of the sign of these field-changes one can infer the polarity of the cloud dipole responsible for them. If Q is a positive upper charge ($H_2 > H_1$) eqn. (3.1) shows that ΔF_C will be positive for all values of L less than a critical value L_0 and negative for all values of L greater than L_0. L_0 will be given by

$$H_1(H_1^2 + L_0^2)^{-3/2} = H_2(H_2^2 + L_0^2)^{-3/2}.$$

Again, if Q is a negative lower charge moving from height H to ground, eqn. (3.2) shows that ΔF_G should be positive at all distances.

Observations of ΔF_C and ΔF_G at various distances have verified these deductions and hence indicate that the majority of thunderclouds carry positive charges above and

negative charges below. Table VI gives the results of observations of ΔF_G which show predominantly positive field-changes at all distances.

TABLE VI

SIGN OF FIELD-CHANGES DUE TO FLASHES TO GROUND AT ALL DISTANCES

Positive.	Negative.	Observer.	Place.
67	4	Schonland	Somerset East, S. Africa
267	16	Halliday	Johannesburg, S. Africa
77	13	Jensen	Nebraska, U.S.A.
411	33		

As concerns ΔF_C, eqn. (3.1) and (3.2) show that both cloud and ground flashes should produce positive field-changes when the storm is near but that the former should reverse to negative changes when the storm is at a distance greater than L_0. Since in storms in tropical and semi-tropical regions cloud discharges considerably outnumber ground discharges, we should expect to find in such storms a preponderance of negative field-changes at a distance and of positive ones when the cloud is near. That this is the case is shown by the data from South Africa in Table VII.

The South African observations in the Table offer strong evidence for the reversal effect. Those from Great Britain support them in showing a considerable preponderance of positive field-changes at small distances but in this case field-changes of either sign are about equal in number at distances exceeding 15 km. The reason for this is that in Britain cloud and ground discharges are approximately equally frequent whereas in South Africa the former considerably outnumber the latter.

Observations of actual zero values for ΔF_C at the reversal distance ($L = L_0$) are rare. In practice the flash does not usually take a vertical path between H_2 and H_1. For this reason and because H_2 and H_1 vary from one flash

to another the concept of a reversal distance must be replaced by that of a reversal zone, in which small field-changes of either sign are equally probable. This zone may extend over a range of from 7 to 15 km. from the point of observation.[4]

TABLE VII

SIGNS OF DISCHARGE FIELD-CHANGES OF ALL TYPES

L kms.	ΔF + ve.	ΔF − ve.	Observer.	Country.
Distant Storms.				
> 15	250	2375	Schonland	S. Africa
> 10	113	644	Halliday	S. Africa
> 15	1699	1546	Wormell	England
Near Storms.				
< 5	54	16	C. T. R. Wilson	England
< 7	563	70	Schonland	S. Africa
< 6	86	18	Halliday	S. Africa
< 5	143	63	Wormell	England

Further strong evidence that the lower charge is usually a negative one has been given by direct observations of the polarity of lightning discharges to earthed metal structures (§ 41). These have been made in Europe, Russia, Japan and the United States and show that 90 per cent. or more of such flashes discharge negative electricity. The total number of direct observations available in 1941 was 2505 and 2422 indicated negative discharges.

In conformity with the general picture of the charge distribution outlined above, it is generally observed that the electric field from a nearby storm just before it discharges (the pre-discharge field) is negative, since the lower pole is nearer to the point of observation, while at a considerable distance it is found to be positive, the effect of the upper pole being then predominant. In these observations there is, however, a complicating factor of some interest. It is frequently observed that just before a very close discharge to ground the pre-discharge field becomes small and may even become positive.

This effect is explicable if there exists below the lower negative pole of the cloud an additional small "pocket" of positive charge either in the base of the cloud or in the air just below the base. Direct evidence for this pocket is discussed in the next section. Indirect evidence is afforded by the observation of Wormell [3] that there is a type of cloud (or air) discharge which reverses in sign at a much shorter distance than the normal and higher discharge between the main poles of the cloud and which is responsible for some of the apparently anomalous negative values of ΔF from near discharges quoted in Table VII. The type β leader process discussed in § 36 leads to the same conclusion.

All these deductions as to the distribution of charge in the thundercloud have been very beautifully confirmed and extended by the alti-electrograph balloon observations of Simpson, Scrase and Robinson.[6, 9] These have shown that in a balloon ascent near to or through the active centres of a thundercloud, the field is frequently positive on entering the cloud-base, after which it becomes negative for about 1 km., then positive for as much as 4 km. and thereafter it remains negative to the top of the cloud and beyond. The results from a typical sounding of this type, in which the width of the looped lines indicates the order of magnitude of the field and negative and positive fields are shown as open and hatched loops respectively, are given in Fig. 15 (*a*). The figure also shows the distribution of the three charges, P, N and p which were suggested to account for the observations. The values found for the heights of these charges, and so for the temperature levels at which they lie vary considerably from

storm to storm. It is not possible to be certain what path the balloon has followed in its fairly slow flight through the cloud nor whether the charge distribution derived from the results is that existing at the moment a flash takes place, but typical values for large thunderclouds in England are P, 7 km. (− 27° C.), N, 2·5 km. (− 4° C.) and p, 1·5 km. (+ 2° C.).

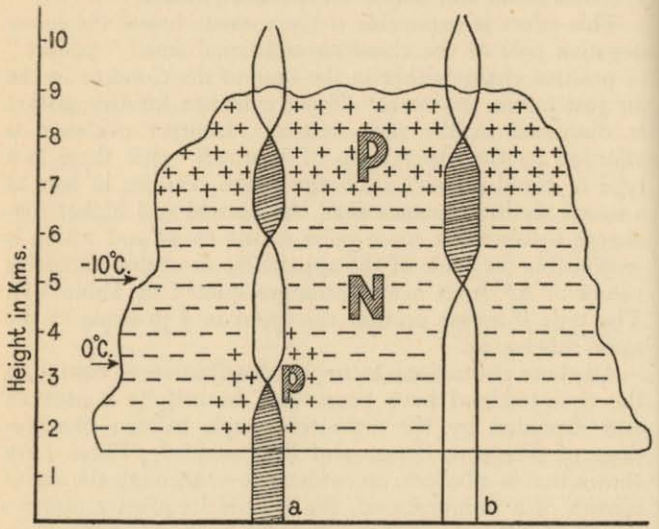

FIG. 15.—Typical alti-electrograph soundings (after Simpson, Scrase and Robinson)

The small p charge (which is called Q by Simpson, Scrase and Robinson) is not always observed, either because it is absent or because its small magnitude and dimensions cause the balloon to miss it. In such cases the record obtained is as in Fig. 15 (*b*).

Further confirmation of the general $P - N$ dipole distribution in thunderclouds has been obtained by Gish and Wait (§ 30) using the electric fluxmeter in aircraft flights above the tops of thunderclouds.

34. Magnitudes of the Electrical Quantities Involved in Thunderclouds. When the distance L is large compared with the heights H_1 and H_2 of the main P and N cloud-charges, eqn. (3.1) takes the form

$$\Delta F_C = 2Q(H_1 - H_2)/L^3$$

or

$$2Q(H_2 - H_1) = -\Delta F_C \times L^3 \quad . \quad . \quad (3.3)$$

The quantity on the left is the difference between the electric moments of the thundercloud charges taking part in the discharge and is called the electric moment, M, of the discharge dipole. To determine it, the field-change due to a distant cloud flash and the horizontal distance L are required. The most frequent value of M determined in Great Britain [3] is 110 coulomb-km. though values as high as 1200 coulomb-km. have been observed. The average value for South Africa is 90 coulomb-km.[4]

Since $H_2 - H_1$ is approximately 2 km. the average quantity of electricity, Q, neutralised in a cloud discharge is about 20 coulombs. The range of variation of Q in individual discharges is from 2 to 200 coulombs if the vertical length of the discharge is supposed constant. If this length could be measured in every case, the variation would probably be much smaller.

The average electric moment of discharges to ground, which usually involve the lower negative pole only, is found to be of the same order as that of discharges within the cloud.

A single cloud-flash appears to discharge most of the section of the cloud which is producing lightning at the time. A fairly active thunderstorm produces one flash every 20 sec. To feed these flashes alone, it would have to separate out charges of opposite sign at an average rate of 1 coulomb/sec. and the generating mechanism would have to provide an average current of 1 amp. Reference has been made in § 32 to the rapid rate at which the initial regeneration of the field takes place after a flash. In the case of cloud discharges it is usually such as to be able to restore the whole field in about 5 sec. if it continued for that time. The exponential form of the recovery curves

suggests that this initial rate of supply of charge remains constant but that an opposite neutralising effect occurs which tends to diminish the rate of increase of the charges and which is proportional to the quantity of charge present at any time.

That neutralising or dissipating effects of this nature exist below the cloud is shown by measurements of the mean current from positive point-discharge flowing upwards from the earth to the N charge (§ 29). This current is of the order of 2 amp. A similar dissipating current bringing negative charge down from the upper air to neutralise the P charge has been observed (§ 30). Its average value is about 1 amp. but it has been found on occasion to reach 6·5 amp.

The electrical energy generated by the cloud is thus only partially spent in the production of lightning discharges; just before a discharge most of the power of the generating mechanism is being used to overcome leakage effects opposing the building up of the main dipole. It may happen that the field, owing to this leakage load, never reaches the sparking value and the cloud, though electrified, does not produce lightning.

An estimate of the maximum potential reached by the two main cloud charges can be found from an argument given by C. T. R. Wilson.[10] Consider first the simple case of a charge Q contained within a sphere of radius R. The electric field at the surface is then given by $F = Q/R^2$. The maximum value of F for a discharge to occur is known from experiments by Macky on the behaviour of water drops in strong fields to be about 10,000 v./cm. or 33 e.s.u. This figure is one-third of that in normal air; the reduction is due to the fact that in strong electric fields a water-drop becomes unstable and pointed filaments are drawn out from opposite ends. For an average value of Q of 20 coulombs or 6×10^{10} e.s.u. the above equation gives $R = 427$ m. and the dimensions of the charged region are of the order of 1 km. The potential at the surface of the sphere is given by

$$V = Q/R = FR = 4{\cdot}2 \times 10^8 \text{ volts.}$$

If the radial electric force everywhere within the sphere were such as to produce sparking, the potential at the centre would be $2FR$ or about 8×10^8 v. Two such spheres carrying opposite charges would therefore be at a difference of potential of $1{\cdot}6 \times 10^9$ v. A similar result follows from the very different assumption that the two poles of the cloud are distributed in horizontal layers with a neutral region of thickness D, between them. If F is 10,000 v./cm. and D is 2 km., the difference of potential between them is 4×10^9 v.

Recent work on the manner of development of the lightning discharge (Chapter IV) suggests, however, that the average value of the field at the surfaces of the charged regions is considerably lower than 10,000 v./cm. Once a short leader streamer (§ 36) has been produced in a limited region where the field is momentarily 10,000 v./cm., its further development may be possible in fields which are only one-tenth as large. Actual measurements of fields inside thunderclouds by Ross Gunn[7] support this conclusion, for the highest "undistorted field" value reported was 1600 v./cm. just before the observing aircraft was struck by a discharge and the average maximum field for nine different thunderclouds was 1300 v./cm. If F is one-ninth of the value used above, the diameter of the spherical charged region ($2R$) becomes about 2·5 km., the potential reached before discharge $1{\cdot}4 \times 10^8$ v. and that between the poles $2{\cdot}8 \times 10^8$ v. These are likely to be lower limits for the potentials.

The disappearance of 20 coulombs in a lightning discharge is thus estimated to involve the dissipation of at least 6×10^{16} ergs or $1{\cdot}6 \times 10^9$ calories, most of which is converted into heat along the path of the lightning flash. A cloud giving one flash every 20 sec. is dissipating electrical energy in the form of lightning at an average continuous rate of at least 3×10^5 kw. To maintain in addition currents of the order of 2 amp. above and below it involves the provision of a further 6×10^5 kw.

REFERENCES TO PAPERS

[1] C. E. P. Brookes, *Met. Office Geophys. Memoir*, No. 24 (1925).
[2] C. T. R. Wilson, *Proc. Roy. Soc.*, A, **92**, p. 555 (1916); *Phil. Trans.*, A, **221**, p. 73 (1921).
[3] T. W. Wormell, *Phil. Trans.*, A, **238**, p. 249 (1939).
[4] B. F. J. Schonland, *Proc. Roy. Soc.*, A, **118**, p. 233 (1928); A, **114**, p. 229 (1927) (with J. Craib).
[5] E. V. Appleton, R. A. Watson-Watt and J. F. Herd, *Proc. Roy. Soc.*, A, **111**, p. 654 (1926).
[6] G. C. Simpson and F. J. Scrase, *Proc. Roy. Soc.*, A, **161**, p. 309 (1937).
[7] R. Gunn, *Phys. Rev.*, **71**, p. 181 (1947).
[8] F. J. Whipple and F. J. Scrase, *Met. Office Geophys. Memoir*, **68** (1936).
[9] G. C. Simpson and G. D. Robinson, *Proc. Roy. Soc.*, A, **177**, p. 281 (1940).
[10] C. T. R. Wilson, *Journ. Franklin Inst.*, **208**, p. 1 (1929).

CHAPTER IV

THE LIGHTNING DISCHARGE

35. General Features. The most frequent form of lightning is the *cloud discharge*. Though most cloud flashes are known from field-change records to be discharged between the main P and N charges of the cloud dipole (Fig. 15), there is evidence that others pass between the N charge and a lower positive charge, either the small p pocket of Fig. 15 (*N-p discharge*) or a positive space-charge in the air below the cloud (*air-discharge*).

A similar type of flash between the P charge and negative charge drawn down from the upper air to the top of the cloud or to the air immediately above it, would account for many cloud-flashes which are seen at night to be restricted to the cumulus heads of thunderclouds and the regions above them.

Most ground-discharges, as has been shown in § 33, remove negative charge from the N region. There is a good deal of evidence to show that they are usually triggered off by the strong field between the N and p charges or the positive space-charge in the air, thus extending an N-p or an air discharge all the way to the ground. The first strokes of such discharges thus bring to ground the residue of the negative charge left after the smaller and lower positive charge has been neutralised.

A general account of the various forms of the lightning discharge and their effects will be found in reference 1.

Many lightning flashes, both within the cloud and to ground, are observed to flicker. Early camera studies by Walter and others showed that this is due to the fact that the discharge consists of a number of separate components or strokes. Though the whole flash often occupies more than a second, the luminosity of the component strokes is generally over in a few milliseconds. After each stroke the ionisation along its channel, though much reduced by

electron-attachment and by recombination and diffusion of the ions, usually persists in sufficient measure to provide the following stroke with a ready-made path which it follows. If, however, the time-interval is exceptionally long, the channel ionisation is too much weakened and the following stroke may take a different path.

The channel is often shifted several metres by the wind in the intervals between strokes; the discontinuous nature of the discharge is then shown as *ribbon lightning*.

Observations with moving cameras show that the branching of the lightning discharge to ground is almost always confined to the first stroke of a series.

The maximum number of strokes so far observed from a single flash to ground is 42. The most frequent number is 3 or 4 and single-stroke discharges are quite common. The time-interval between strokes is variable, the most frequent value lying between 0·03 and 0·07 sec.

36. Luminous Streamer Processes in the Discharge. (*a*) *Experimental methods.* To investigate the nature of the luminous processes in the lightning discharge much use has been made of a method of high-speed photographic recording devised by Sir Charles Boys. If a camera is so constructed as to provide relative motion of lens and film, the recorded image of any series of luminous events in two-dimensional space will be distorted in such a way that later events are progressively displaced in position relative to earlier ones. Comparison of the distorted picture of a lightning discharge with one taken on a fixed camera would then show the order in which light was emitted at different parts of the channel. In practice, however, this is very difficult unless the distortion is large, because both fixed and moving cameras require an accurately placed reference line for the comparison. The difficulty is avoided in the Boys camera by the use of two lenses rotating in a circle; these give two pictures with distortions in opposite directions and a reference line provided by a diameter of the circle. This principle has been used to follow the processes in the discharge with a time resolution of 1 microsec. Full details of the Boys

camera and of later forms of camera which have been used by the writer and his associates in South Africa are given in references 1 and 2.

(*b*) *General results.*[1, 3] Each separate stroke of a discharge to ground has been found to be of a dual nature. A downward-moving luminous process, the *leader* streamer, is followed upon arrival near the surface of the ground by a much more rapid and intensely luminous main or *return* streamer which re-traverses the channel in the reverse direction. The leader to the first stroke is of a different nature to the leaders to subsequent strokes; it takes about ten times as long to reach the ground and its luminosity is intermittent instead of continuous.

Fig. 16 (*b*) (after Schonland, Malan and Collens) illustrates these points in the case of a discharge of three strokes which has been photograped by a single-lens camera in which the lens has moved in a straight line from left to right. It is actually a picture in two dimensions of space and one of time since horizontal displacements with reference to the fixed picture (*a*) represent time as measured from the point P. These displacements are not shown on a uniform scale in the diagram. The Boys camera gives two simultaneous pictures from two lenses moving in opposite directions and thus avoids the use of a fixed picture.

The figure shows that the leader to the first stroke proceeds in a series of steps. Each of these is about 50 m. in length (range 10 to 206 m.) with fairly regular pauses (31 to 91 microsec.) between the steps. After each pause there is almost always a fresh direction of travel, and these changes in direction are responsible for the tortuous form of the lightning channel. The branches of the leader, which are usually found in the first stroke only, are similarly developed in steps and move outwards from the main channel. Each step is the bright tip of a long streamer stretching down from the cloud, the stem of which is faintly illuminated.

When the most advanced branch of the stepped leader system approaches within from 15 to 50 m. of the ground,

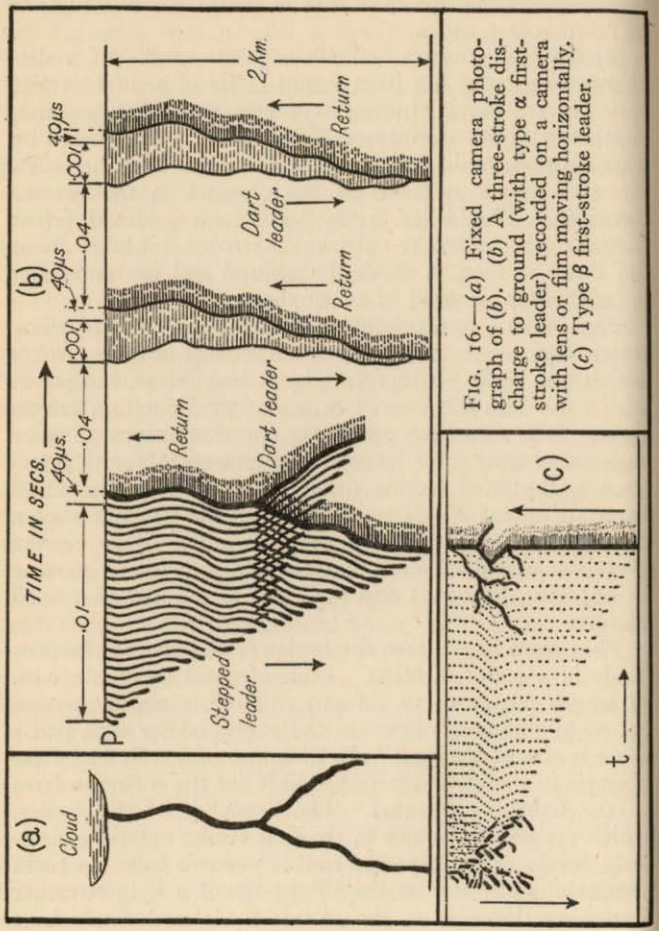

FIG. 16.—(*a*) Fixed camera photograph of (*b*). (*b*) A three-stroke discharge to ground (with type α first-stroke leader) recorded on a camera with lens or film moving horizontally. (*c*) Type β first-stroke leader.

the return streamer jumps the gap and passes rapidly back from ground to cloud, running outwards along each branch. This process takes microseconds to traverse parts of the channel originally created in milliseconds by the stepped leader.

Stepped leaders are of two types. In the type α leader (Fig. 16 (*b*)) the steps are short and are often difficult to photograph because they are not very bright. In the type β leader (Fig. 16 (*c*)) the upper part of the channel is formed by longer and brighter steps than the lower portion which has very weak type α steps. This difference is associated with extensive branching in the upper part of the channel. It suggests that there is a stronger electric field, due to positive space-charge in the air below the cloud, at the top of the leader path than later on. Electric field studies of the leader process show that although photographic records of events in the air below the cloud indicate that only 10 per cent. of leaders are of type β, this type is actually the most frequent one. The β stage in the leader is usually hidden within the cloud, the high field regions required to produce it presumably lying between the *N* and *p* charges of Fig. 15.

In the case of strokes subsequent to the first, the leader is not stepped but travels continuously to ground. As shown in the figure, it records as a continuous bright line followed (in the time dimension) by fainter illumination. This indicates that the leader takes the form of a fast-moving javelin, or dart, with a bright point about 40 m. long and a long, faintly-illuminated stem extending back to the cloud. For this reason it is termed a *dart* leader. The only exceptions to the continuous movement occur when an unusually long time-interval has elapsed since the preceding stroke ended. The dart leader is then much slower; frequently it shows the stepped method of progression over part of its length and takes a path different from that of its predecessors.

A typical first-stroke return streamer record is shown in Fig. 17. Times are shown in microseconds after the start at O.

The streamer covers the distance of about 2 km. between ground and cloud in 60 microsec. The figure shows that

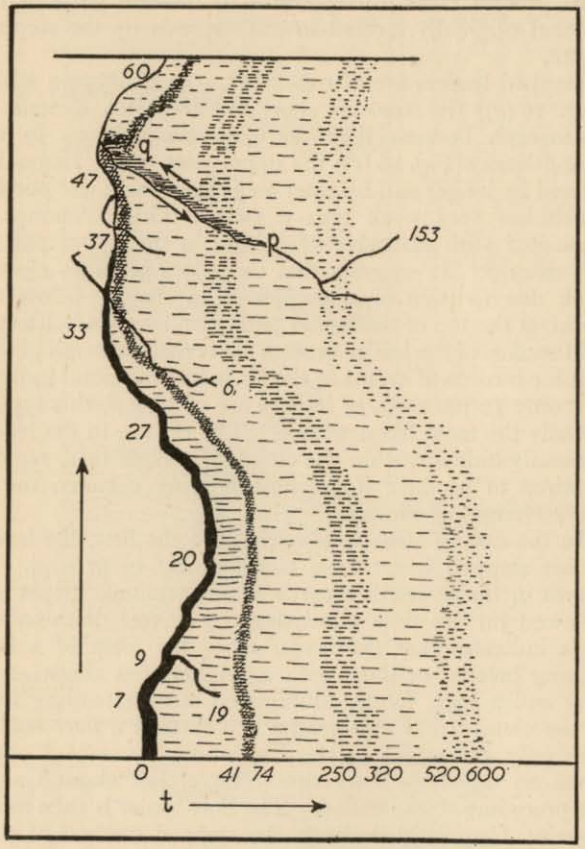

FIG. 17.—Return streamer time-table (Malan and Collens). (Times in μ-secs.)

it continues to remove charge from the cloud for a further 600 microsec. The brightness and velocity of the streamer decrease as it travels upwards but are revived suddenly

as each of the branching points is reached, indicating, as has been shown by the detailed studies of Malan and Collens,[4] that the charge on a branch calls into existence a fresh flow of current from the ground. The current at the base of the channel is subject to violent fluctuations (*M* components) from these effects. Further fluctuations, (like the last two in Fig. 17), are produced by processes which are hidden in the cloud. In the case of subsequent strokes these latter fluctuations are the only ones observed because there are usually no branches to be traced by the return streamer.

The average velocities of the three processes which have been described, the dart, return and step streamers, are 2,000, 20,000 and more than 10,000 km./sec. respectively. Although individual steps are pushed forward at > 10,000 km./sec., the step-streamer process as a whole, as Fig. 16 shows, is slow, for its numerous pauses cause it to have an *effective* velocity which seldom exceeds 300 km./sec. and can fall as low as 100 km./sec.

In the case of very tall structures like the Empire State Building, 1250 ft. high, McEachron and Hagenguth[5] have shown that the lightning discharge frequently begins with an *upwardly* directed stepped leader which travels from ground to cloud and is not followed by a return process. The current continues to flow for some time in the channel thus formed, after which a normal downward dart leader, followed by an upward return streamer, creates the second and later strokes.

37. Electrostatic Field-changes associated with Lightning Processes. The processes described in § 36 give rise to electrical field-changes which are best studied by the amplifier-oscillograph method of § 32 (*d*) or the electric fluxmeter of § 17.

Fig. 18 (A) shows the general form of the field-changes produced by a ground discharge of three strokes when near (3-5 km.), but not directly over, the recording instrument.[6, 7] Fig. 18 (B) shows the form taken by the same field-changes when the flash is fairly distant (12-20 km.). In this case, as described in § 40, induction

CHRIST'S COLLEGE

and radiation field-changes would be superimposed on the electrostatic field record but for the sake of clarity they have been omitted from Fig. 18 (B).

The manner in which various sections of the field-change record have been identified with the various streamer-processes observed with the Boys camera is shown in the figure. The l portions of the record correspond to the downward movement of leader streamers and the two r

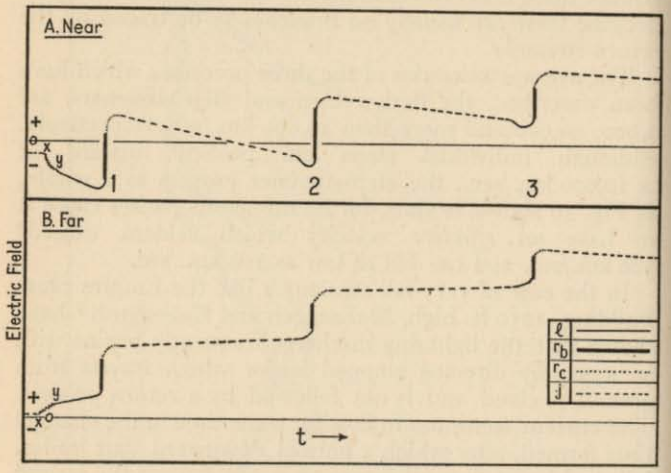

FIG. 18.—Electrostatic field-changes due to a discharge to ground (Schonland and Malan).

portions, r_b and r_c, with the upward return streamer. The remaining j portion corresponds to a streamer process which cannot be photographed since it takes place within the cloud. From a detailed study of records of this kind the following conclusions can be drawn :

(1) *Leader* (l) *field-changes.* These, which produce hook-shaped negative changes when nearby and parabolic positive changes when at a distance, indicate clearly the lowering of negative charge towards the ground by the leader streamers. Since they remove charge from an

initial height, H_2, to a lower effective height, H_1 (§ 33, eqn. 3.1) when the charge is distributed along the channel, their net field-changes reverse in sign with distance.

The leader to the first stroke in Fig. 18 shows a field-change which has a much larger slope over the first section xy than later. This is because it is a type β leader (§ 36 b), and lowers charge more rapidly in its initial than in its final stage.

As Fig. 18 shows, dart leaders to subsequent strokes occupy a much shorter time than the first stepped leader but show a similar form of field-change.

It is of some importance that the durations of leader field-changes are often much longer than the durations of the corresponding leader processes recorded by cameras operating at the same time. For this implies that a considerable length of the leader channel, sometimes of the same order as the visible length below the cloud, is hidden inside it and that the N charge creating the leader is at a considerable height.

(2) *Return streamer* (r_b *and* r_c) *field-changes.* Since these involve the removal to ground of the negative charge on the leader (r_b) and remaining in the cloud (r_c) their field-changes are positive at all distances. The rapid r_b change occupies a time of the order of 50 microsec. and has a complex fine structure which is not shown in Fig. 18. The slower r_c change, which occupies 1 or 2 millisec., is considered to be due not only to the final mopping-up of the charge remaining in the region which produced the leader, but also to an upward flow of positive charge induced on the top of the channel by N regions as yet untapped by the discharge.

(3) *Junction* (j) *field-changes.* These changes occupy the intervals between strokes. Since they are negative when near and positive when far, they must be created by slow movements of charge within the cloud, in which positive charge moves upwards or negative charge moves downwards. There is some evidence [7] that in most cases they are due to the upward movement of positive streamers

from the top of the channel to new regions of negative charge, which they render conducting.

(4) *The mechanism responsible for successive strokes.* It has been shown by Malan and the writer [7] that a number of lines of evidence leads to the conclusion that each stroke of a discharge to ground comes from an N region which is higher than that producing its predecessor. From this and other information it is deduced that the N regions creating a discharge of many strokes are not haphazardly distributed within the cloud but form a single and approximately vertical column which is intermittently discharged and which extends upwards to considerable heights. A ground flash of many strokes may come from a column 6 km. long. These authors have shown that the pauses between strokes represent the time required for the junction-streamer process to move upwards and render the next section of the charged column sufficiently conducting for it to discharge down the channel as a leader.

38. The Mechanism of Streamer Development.[8] It is known from laboratory studies of gas-discharge processes that an electrical streamer possesses a conducting stem filled with ions and electrons and that the motion of these charged particles in the field prevailing inside the stem constitutes a current which keeps the streamer surface, and its tip in particular, supplied with charge as it moves forward. For forward movement the electric field at the tip must be sufficiently great to cause free electrons in the air in front of the advancing streamer, some of which are created photoelectrically by ultraviolet light from the streamer itself, to ionise by collision. This ionisation is cumulative and leads to the production of electron avalanches which extend the streamer tip.

The streamers give out light at and behind their tips because excitation as well as ionisation occurs in the strong field region. Since the excited atoms and molecules return a short time later to their ground-states, and since the tip moves forward during this interval, the region of intense luminosity extends backwards for a limited distance behind the tip.

In the case of the dart leader, the negatively charged streamer is guided along a pre-existing channel because ionisation created by previous strokes exists in front of the advancing tip. It can be shown that the velocity attained by the streamer in this case should be proportional to the cube root of the pre-existing electron density, n, in front of it.[8] When the interval between strokes is short, n is large and high dart-leader velocities are possible, but when the interval is long and n has been reduced by electron attachment to atoms and molecules and by diffusion processes, the dart leader velocity is low.

The fast return-streamer also travels along a previously ionised channel, more heavily ionised and fresher than that available to the dart leader. In this case, however, as was first shown by Simpson, the tip of the streamer is positively charged and the electron avalanches in front of it move inwards in a strongly converging field. These factors account for the high velocity of the return streamer.

The stepped leader, which is the first of all the discharge processes, appears from the photographic records to involve advance into virgin air and to follow no pre-existing trail of ionisation. Its slow effective velocity, which is of the same order as the minimum velocity at which an electron can ionise by collision, coupled with the very high velocity of the step streamers themselves suggests, however, that it too follows an ionised path prepared by an unrecorded *pilot* streamer, or a cone of such streamers, which precedes it. On this view the steps are secondary effects superimposed upon the pilot streamer and catching up at intervals with it.

Such pilot streamers would be controlled in direction by purely local variations in the electric field in front of their tips and their paths will be tortuous and branching, especially if the air contains concentrations of positive ion space-charge.

A fuller discussion of these streamers and of the unsettled question of the mechanism responsible for the fairly regular pauses observed in the stepped process will be found in references 9, 10 and 11. It is generally agreed

that these pauses owe their origin to a property of the streamer itself[8] and not to any intermittent feature in the discharge from the cloud but whether this property involves a periodic transition from a "glow" to an "arc" form of streamer or is simply due to the streamer overreaching itself and requiring a pause to renew the field-strength and the conductivity of its stem is not yet certain.

39. Discharges which do not Pass to Ground. Discharges which do not reach the ground, whether they are air-discharges or take place entirely within the cloud are found to be of the leader type, without the usual return process. Air discharges when photographed show complex branched type β step-leader streamers with dart leaders superimposed upon them. They travel towards local concentrations of positive space-charge below the cloud and weak "recoil" streamers moving back from such concentrations have been observed. An example of recoil is shown along p, q in Fig. 17.

The study of discharges which are entirely within the cloud has so far been possible by field-change methods only. These show that cloud discharges are of the same character as air discharges and can occupy times of the order of milliseconds.

40. Induction and Radiation Field-changes. The form of the electrostatic field-changes associated with lightning discharge processes has already been described. The complete electric field from a small dipole of moment M is actually the sum of the components represented by

$$E = M/r^3 + (dM/dt)/cr^2 + (d^2M/dt^2)/c^2r,$$

expressed in e.s.u. where c is the velocity of light and r the radius vector to the centre of the dipole. The first term corresponds with eqn. (3.1) for the electrostatic field, the second is the induction or magnetic term and the third the well-known expression for radiation from a Herzian dipole. Within 10 km. of a lightning flash the first term is much larger than the other two and the field-changes caused by lightning produce mainly electrostatic effects. At 25 km., however, the last term shows up strongly and at 50 km. and beyond, it is predominant.

The radiation field is proportional to d^2M/dt^2 and so to the rate of change of the current in the portion of the discharge concerned at time $t - r/c$. Radiation effects from lightning are therefore most prominently associated with processes which involve the rapid starting and stopping of streamers carrying large currents. These are (a) the stepped processes found in first stroke leaders and in cloud and air discharges and (b) the return processes in each stroke.

The radiation effects of these processes are found to constitute the majority of atmospheric (static) disturbances on the longer wavelengths used in radio communication and can be observed more than 4000 miles away from the parent discharge. They have been of practical value in the location of thunderstorms for meteorological purposes (sferics) and the manner in which they are modified by successive reflections from the ionosphere has been used to give information about the height and nature of its lower D layer.[1, 12]

41. Currents and Current Variations. Much work has been done to determine directly the magnitudes of lightning currents to ground and their time-variations.[9, 10] One instrument used for determining peak currents through elevated conductors and towers struck by lightning is a simple recording voltmeter, known as a Klydonograph, placed across one of a string of insulators acting as a potential divider and connected between the conductor and the earth. This device makes use of the fact that the diameter of the "Lichtenberg" figure produced around a positive point resting on a flat photographic film backed by an earthed plate is proportional over a certain range (up to 25,000 v.) to the potential difference between point and plate. To record discharges of both polarities two instruments, oppositely connected, are necessary.

The Klydonograph method requires a knowledge of the surge impedance between the conductor and the earth and this is not always easy to determine. More use has recently been made of "magnetic links," two or three bundles of short unmagnetised steel strips of high

retentivity which are mounted at different known distances from the conductor. The peak currents passing in the discharge can then be found from the remanent magnetism in the links, calibration being effected with known currents.

In a development of this device called the Fulchronograph (Wagner and McCann)[14] the links are carried on an aluminium wheel which rotates between coils through which the lightning discharge passes. The remanent magnetism of successive links then gives the time variation of the current.

The time variation has also been determined by shunting special types of oscillograph across resistances of high current capacity. The data are, however, as yet insufficient for a generalised statement of the manner in which the current in a discharge varies with time in the successive strokes of a discharge. In first strokes it rises to a peak of average value 20,000 amp. (maximum observed value 250,000 amp.) in from 1 to 20 microsec., with a most frequent "time to peak" of 2 microsec. Its manner of decay is variable but it is usually stated to fall to half its peak value in about 24 microsec. (range 7 to 115 microsec.).

Continuing currents of considerable magnitude and of long duration have been found by McEachron[13] to follow strokes to the Empire State Building but in discharges to lower structures the current is usually found to have fallen to very low values ($< 0{\cdot}1$ amp.) a few milliseconds after the start of the return portion of the stroke.[14]

The quantities of electricity found by integrating the current-time curves of direct discharges are of the same order of magnitude (average 30 coulombs, maximum 164 coulombs) as those determined by the method of C. T. R. Wilson (§ 34).

REFERENCES TO PAPERS

[1] B. F. J. Schonland, *The Flight of Thunderbolts*, Oxford Univ. Press (1950).

[2] D. J. Malan, *Revue d'Optique*, **29**, p. 513 (1950).

[3] B. F. J. Schonland, D. J. Malan and H. Collens, *Proc. Roy. Soc.*, A, **152**, p. 595 (1935); *ibid.*, **168**, p. 455 (1938).

[4] D. J. Malan and H. Collens, *Proc. Roy. Soc.*, A, **162**, p. 175 (1937).

[5] K. B. McEachron, *Journ. Franklin Inst.*, **227**, p. 149 (1939).

[6] D. J. Malan and B. F. J. Schonland, *Proc. Roy. Soc.*, A, **191**, p. 487 (1947).

[7] D. J. Malan and B. F. J. Schonland, *Proc. Roy. Soc.*, A, **206**, p. 145 (1951); *ibid.*, **209**, p. 158 (1951).

[8] B. F. J. Schonland, *Proc. Roy. Soc.*, A, **164**, p. 132 (1938).

[9] *Reports on Progress in Physics*, Vol. X, art. by J. M. Meek and F. R. Perry, The Physical Society (1946).

[10] C. E. Bruce, *Proc. Roy. Soc.*, A, **183**, p. 228 (1944); C. E. Bruce and R. H. Golde, *Surge Phenomena*, Chap. I (1941), E.R.A., London.

[11] L. B. Loeb and J. M. Meek, *The Mechanism of the Electric Spark*, Stanford Univ. Press (1941).

[12] B. F. J. Schonland, J. S. Elder, D. B. Hodges, W. E. Phillips and J. W. van Wyk, *Proc. Roy. Soc.*, A, **176**, p. 180 (1940).

[13] K. B. McEachron, *Trans. Amer. Inst. Elec. Eng.*, **60**, p. 885 (1941).

[14] G. D. McCann, *Trans. Amer. Inst. Elec. Eng.*, **63**, p. 1157 (1944); *see also* C. F. Wagner, G. D. McCann and E. Beck, *ibid.*, **60**, p. 1222 (1941).

LIBRARY

CHAPTER V

CHARGE GENERATION IN CLOUDS

42. Introduction. Many suggestions have been made as to the manner in which electric fields can be built up in clouds. Some of these have had to be discarded as facts on which to test them have accumulated. Most of the mechanisms left in the field may well be in operation at the same time and it is not easy to decide which are predominant in creating the electrification of thunderstorms.

An acceptable theory must (*a*) offer an explanation of polarity of the main *P-N* dipole ; (*b*) give *P* and *N* charges each of about 30 coulombs under reasonable conditions of temperature, water-content and updraught ; (*c*) operate at a temperature at least as low as $-10°$ C., and (*d*) be shown experimentally to work. Subsidiary mechanisms may be necessary to account for the lower *p* charge and for observations to be described in § 45 on the relation of the charge on thunderstorm rain to the prevailing field.

Of the theories which have been rejected because they did not meet all these conditions the best-known is that of Simpson, which proposed to account for the main electrification of the cloud by the Lenard effect, the breaking-up of water-drops in ascending air-currents. This mechanism, which left the larger fragments with a positive charge can satisfy neither the temperature condition (*c*) above nor condition (*a*), since it requires the lower portion of the cloud to be positively charged. It may, however, as Simpson and Scrase have suggested, be responsible for the small *p* charge of Fig. 15.

43. The Separation of the Opposite Charges once they are Formed. All the mechanisms which are at present under consideration satisfy condition (*a*) because they all suggest two entirely different types of carrier for positive and for negative charge and because all give a

negative charge to the heavier of the two types. Polarisation of the cloud in the requisite direction then follows automatically by the action of gravity in pulling the negative charges down (Fig. 19). When an updraught in the cloud is capable of supporting or even of driving upwards the heavier negative group of carriers (raindrops or snow or large ice-particles) the lighter ones (droplets or ice-fragments) are driven upwards still faster, so that the

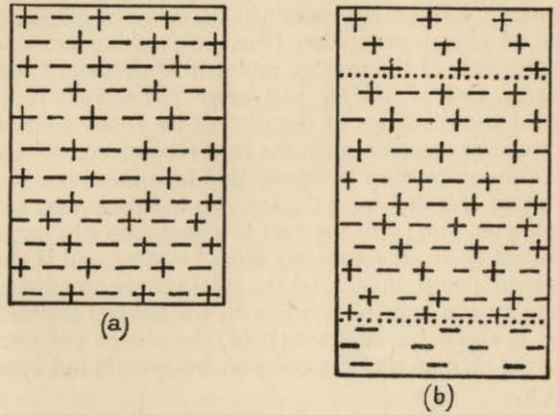

FIG. 19.—Gravitational separation of opposite charges (C. T. R. Wilson).

relative velocity of separation of the two groups is the same as if no updraught were present.

The shape of the field-changes immediately after a cloud-discharge (§ 32) suggests that the process of separation of the oppositely-charged carriers is one involving initially free fall under gravity and that this free fall is progressively retarded and finally reduced to nearly zero by the attractive forces between the separating charges. The rate of fall of the heavier carriers in this final stage must be considered just sufficient to maintain the charges constant in the face of dissipation currents within the cloud and directed to it from outside. Ultimately the field

between the separated charges may become strong enough for a discharge to pass. If the charges are equal, this leaves the cloud in its initial state and the larger carriers in the neutral region of Fig. 19 once more separate out under the action of gravity. The relative velocity of separation has been taken by C. T. R. Wilson[1] to be of the order of 6 m./sec., the terminal velocity of a water-drop 0·15 cm. in radius. Relative to such a drop, the much slower positive droplets may be considered as stationary. Wilson has examined the case of a disc-shaped region of charge-generation (Fig. 19) making use of his measurements of the average moment M developed before discharge and of dM/dt just after discharge. He has assumed the thickness of the disc to be about 1 km. and the discharge to occur when the field reaches 10,000 v./cm. From this information he found that (*a*) the volume of the generating region is 4 cu. km. and hence its cross-section 4 sq. km.; (*b*) the rate of generation of charge is equivalent to about 1 amp./sq. km. of surface and is therefore about 4 amp. in all; (*c*) the total charge on either the positive or the negative carriers in the neutral generating region is about 500 coulombs; (*d*) the charge per c.c. on the larger carriers is of the order of, but should not exceed, 30 e.s.u.

The values deduced in this way are all in conformity with what is known of the quantities concerned. They are not seriously changed if modifications are made in the postulates to bring these into closer agreement with more recent information (thickness 3 km., breakdown field 1000-10,000 v./cm.).

A different type of cloud polarisation by gravity has been discussed by Frenkel in connection with fog-like clouds of small droplets. These are considered by him to be capable of capturing negative ions from the air (§ 44 (*b*)) which is then left with an excess positive charge.[2] The charged droplets are not held up completely by the internal field but drift slowly downwards at such a rate that the polarisation charge developed per unit area is equal to the charge neutralised by the internal conduction or dissipation

current in the same time. The internal field, E_s, in this "stationary" condition is related to the equilibrium field, E_q in which the drops are fully supported, by the equation $E_s/E_q = \Delta/\lambda$ where λ is the ionic conductivity of the air and Δ is the much smaller contribution to the conductivity provided by the droplets. E_s is found to be of the order of 100 v./cm., a hundred times less than Eq. In clouds where the water content is greater, the positive ions will attach themselves to larger particles and the development of polarisation in the thundercloud then appears to become the same as that considered by C. T. R. Wilson.

44. Suggested Mechanisms of Thundercloud Electrification. (*a*) *Mechanisms which depend on the selective capture of negative ions by the larger carriers.* A mechanism suggested by C. T. R. Wilson depends upon the selective capture of negative ions from the air by large falling water-drops or ice-particles, the residual excess positive charge in the air being absorbed by very small droplets or ice-fragments in the upper part of the cloud.

For the mechanism to work, the ions concerned must be large ones (§ 1). Since their mobility is about 0·0003 cm./sec., the velocity with which they move under the influence of the prevailing electric field is much less than the velocity of fall of the larger carriers.

Consider a large drop or ice-particle inside a cloud in which a downwardly-directed field already exists. Owing to this field the drop will have a negative induced charge on its upper surface and a positive charge below (Fig. 20). In the case of an ice-particle, Chalmers has shown that dielectric polarisation will produce a similar distribution of charge.[3] As these larger carriers move downwards, they will approach positive ions moving down more slowly and negative ions moving up; encounters with other drops or ice-particles are considered to be relatively rare. The drops will behave differently in encounters with the two ion-streams. At the under-surface of a drop the negative ions will be attracted and the positive ions repelled and the former, if within a suitable distance, will be captured, giving

the drop a net negative charge. The negatively-charged upper surface of the drop does not reverse the process, because here it is receding from the ion-streams and positive ions have been repelled away from the drop in the course of their passage past it. Innumerable episodes of this kind can cause the drop to acquire a considerable net negative charge, without appreciably altering the chance of further captures. A water-drop 1 mm. in radius, falling in a field of 10,000 v./cm. carries at each end an induced charge of 0·25 e.s.u. If it has collected a net negative charge equivalent to the very reasonable value of 12 e.s.u./c.c., the increase in the upper negative charge and the decrease in the lower positive charge will be 10 per cent. only. Whipple and Chalmers have shown that the maximum charge which can be collected in this way if ions of both signs are in equal concentrations is $-0{\cdot}52Fr^2$ when F is the field-strength and r is the radius of the drop. This gives 40 e.s.u./c.c. for the case just considered. If negative ions only are present the maximum charge collected is $-3Fr^2$, six times as great.

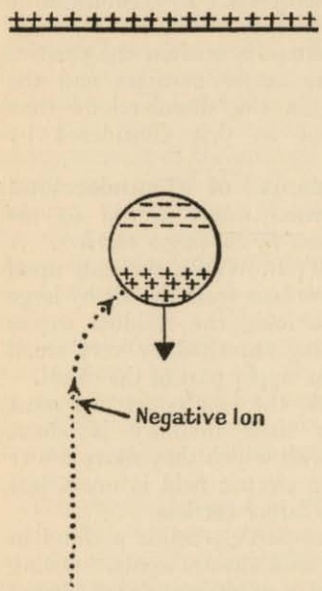

FIG. 20.—Capture of slow negative ions by large falling drops.

The tiny droplets and ice and snow particles, which fall relative to the air with a velocity of the same order as that of the ion-streams, will be unable to exercise the selective action described. They will therefore absorb a net positive charge, the complement of the negative charge collected by the larger carriers.

Wilson's mechanism operates in such a way as to enhance enormously a pre-existing field. This could be the normal field of fine weather or a field produced initially by one of the other mechanisms to be described. The Wilson process has been shown by Gott to work under laboratory conditions but it is not generally agreed that it is the chief agency in building up the fields of thunderclouds. One criticism which has been raised against it is that the concentration of large ions necessary for it to be effective is not likely to be present until the electric field is very strong.

The theory of Frenkel[5] is based upon a selective adsorption of small negative ions by water-drops or wet ice-crystals. Owing to the polar character of the water molecule, the skin of such carriers is considered to consist of an electrical double-layer with positive poles outwards. This tends to capture negative ions from the air until a difference of potential v_0 is created between the drop and the cloud of positive ions which surround it. The equilibrium negative charge acquired in this way is $v_0 r$ where r is the radius of the drop and v_0 is 0·25 v. This mechanism gives a considerable negative charge density to small drops but is not very effective in the case of large ones ($r = 0{\cdot}1$ cm., charge density 0·02 e.s.u./c.c.) nor does it give very large fields. To carry it further, Frenkel considers that adjacent downward-moving droplets coalesce into larger drops as a result of hydrodynamical forces between them. These larger drops in their downward flight sweep up and collect the charge from slower-moving droplets, obtaining in this way a charge which varies as r^3 and creating much larger fields. The theory does not appear to have been tested experimentally.

(*b*) *Mechanisms which depend upon electrification as a result of change of state.* In its earliest stage of development the cumulonimbus cloud consists almost entirely of droplets of water. Some of the droplets in the portion of the cloud above the freezing level remain unchanged in state and supercooled. As the cloud top rises, an increasing proportion of these droplets are converted into ice-particles,

either directly or by the action of special "sublimation-nuclei". The effectiveness of these processes increases with decreasing temperature and hence with increasing height. Ice-particles formed in this way grow very rapidly at the expense of surrounding supercooled drops if the temperature is low. As these grow in size they fall and the mature thundercloud contains a complicated mixture of hard and soft hail, snow particles, rime-covered ice (graupel) and water drops. All these hydrometeors are in various stages of growth, or of disappearance, depending upon the temperature-levels to which they have risen or fallen and all of them are constantly colliding and coalescing with one another. The changes of state, and the collision and coalescence processes thus involved, offer a variety of opportunities for the generation of electric charge and a number of possible mechanisms have been based upon them, most of which have been tested experimentally. These are listed in Table VIII below.

Mechanism No. 7 is not one of change of state but is included in the Table because it involves ice ; experimental test of it has so far yielded conflicting results. Mechanism No. 6 would not create a dipole of the correct polarity and could only operate in the lower levels of the cloud where like the Simpson breaking-drop mechanism, it may contribute to the formation of the lower *p* charge and the strengthening of the *N* charge above it (Fig. 15). Experiments by Kramer indicate that mechanisms Nos. 2 and 3 of Findeisen must be regarded as of minor significance compared with No. 1.

The remaining mechanisms, Nos. 1, 4 and 5, are all based upon electrification resulting from the freezing of supercooled drops, either directly (5) or by contact with falling ice-pellets (1 and 4). If one or other of them is responsible for the formation of the main cloud dipole, the first occurrence of lightning should be closely related to the first development of the ice-phase in the cloud. This in turn is bound up with the height and so with the temperature-level to which supercooled water-drops are raised by the updraught within the cloud.

TABLE VIII

	Proposer.	Charge Carriers.		Generating Process.	Sign of Charge on Heavy Carrier.	Remarks.
		Heavy.	Light.			
1	Findeisen and Kramer	Large rime-coated ice-particles	Small ditto	Coalescence of super-cooled drops with ice to form rime	−	Small rime fragments + vely charged
2	Findeisen	Ice	Ice-splinters	Growth of ice by sublimation from drops	+	Found experimentally to be of minor significance (Kramer)
3	Findeisen	Ice	Ice-splinters	Evaporation of ice	+	As for (2) above
4	Workman and Reynolds	Ice	Fragments of super-cooled drops	Glaze-ice formation on hail	−	Effectiveness increased by traces of $CaH_2(CO_3)_2$ in air
5	Chalmers	Ice	Water-drops	Sudden freezing of super-cooled drops	− ?	Not tested experimentally
6	Dinger and Ross Gunn	Water	?	Melting of ice at low levels	+	Presence of dissolved gases necessary before freezing if effect is to be appreciable.
7	Simpson and Scrase	Ice	?	Frictional electrification by collision	−	Inferred from Antarctic blizzard observations

Evidence as to the height of the larger droplets within the cloud at various stages has recently been made available by microwave radar studies of the so-called " cloud echo ". These suggest that full-scale electrification leading to fields sufficiently great to produce lightning does not occur until the supercooled droplets have been raised to a temperature level, variously given as between $-28°$ C. and $-40°$ C., where ice-crystal formation on an appreciable scale can occur.

These observations, together with the conclusions of Malan and the author (§ 37 (4)) that the N charge occupies a column of considerable vertical extent, whose top reaches to very low temperature-levels, make it probable that the main dipole electrification of the thundercloud is initiated as a consequence of freezing processes of one kind or another as soon as the ice-phase forms from super-cooled drops. The larger carriers of charge will then fall downwards and build up a field which may of itself be sufficient to cause spark break-down or may have to be enhanced by the selective charging mechanism of C. T. R. Wilson. Another method of enhancement, by droplets bouncing off melting hail in the lower portion of the cloud, has been discussed by Workman and Reynolds.[6]

45. The Charge on Rain from Electrified Clouds. Although the predominant sign of the electric field below a thundercloud is negative (§ 33) it has long been known that the charge on the rain from it is mainly positive in sign. This can be qualitatively explained by C. T. R. Wilson's selective ion-capture mechanism (§ 44 (*a*)), which would operate as in Fig. 20 with all the signs in the diagram reversed and might be expected to be very effective since point-discharge at the ground creates an abundance of positive ions most of which will be converted by capture-nuclei of various kinds into heavy ions during their passage upwards to the cloud.

Simpson,[6] in an important series of observations made at Kew, has compared the current, i, carried down by rain to a square centimetre of the ground with simultaneous records of the rate of rainfall, R, and of the point-discharge current, I, from an elevated point. For potential gradients exceeding 2000 v./m. he finds the relation $i \propto -I \times R^{0.57}$ from which it is clear that (i) the sign of the charge on the rain in these fields is always opposite to that of the prevailing field (mirror-image effect); (ii) with a given rate of rainfall the rain-current is directly proportional to the point-discharge current, and (iii) with a constant point-discharge current the rain-current varies with the rate of rainfall, increasing or decreasing approximately as $\sqrt{R}$.

It is clear from these results that the rain derives its charge from point-discharge ions. Ultimately, in very heavy rain, all the point-discharge ions are swept up and brought back again to earth, the rain current being found equal to the estimated point-discharge current per square centimetre of the ground. Whether the Wilson mechanism alone can account quantitatively for these results is still under discussion; it is not impossible that more than one process is at work in charging the falling drops. The rain current by itself gives a statistical mean for the charge on the drops and there is evidence that individual drops can carry charges of opposite sign.

In light steady rain and in some showers, the electric field at the ground is found by Simpson to be generally negative and as high as -1000 v./m. When it is positive it seldom exceeds the fine weather gradient of about $+400$ v./m. Such rain is found to be positively charged, the charge on it being directly proportional to the departure of the field from its fine weather value. No explanation of this effect has as yet been suggested.

REFERENCES TO PAPERS

[1] Ref. 10, Chap. III.
[2] Ref. 16*b*, Chap. II.
[3] J. A. Chalmers, *Quart. Journ. Roy. Met. Soc.*, **73**, p. 324 (1947).
[4] F. J. Whipple and J. A. Chalmers, *ibid.*, **70**, p. 103 (1944).
[5] Ref. 16, Chap. II.
[6] E. J. Workman and S. E. Reynolds, *Phys. Rev.*, **78**, p. 254 (1950).
[7] Sir G. Simpson, *Met. Office Geophys. Mem.*, **84** (1949).

LIBRARY

GENERAL REFERENCES

Victor F. Hess, *The Electrical Conductivity of the Atmosphere and its Causes*, English translation by Codd, gives a detailed account of the matter treated in Chapter I, up to the year 1927.

The Dictionary of Applied Physics, vol. 3, contains a valuable article on "Atmospheric Electricity," by C. T. R. Wilson.

Encyclopædia Britannica, 1910, art. "Atmospheric Electricity," by C. Chree.

K. Kähler, *Einführung in die Atmosphärische Elektrizität*, gives details of instruments and the technique of measurement.

E. von Schweidler, *Einführung in die Geophysik*, II, art. "Luftelektrizität."

K. Kähler, *Die Elektrizität der Gewitter*.

A. Gockel, *Die Luftelektrizität*.

B. Chauveau, *Électricité Atmosphérique*.

E. Mathias and collaborators, *Traite d'Électricité Atmosphérique et Téllurique*.

J. A. Chalmers, *Atmospheric Electricity*, Clarendon Press, 1949.

Terrestrial Magnetism and Atmospheric Electricity, ed. J. A. Fleming, Dover Publications, New York (1949).

T. W. Wormell, *Atmospheric Electricity*, Quart. J. Roy. Met. Soc., 79, 11, 1953.

For general references on lightning, see Chapter II, refs. 1, 9, 10.

SUBJECT INDEX

Air-earth current, *see* Fine-weather current
Air-radiation, 8
Aitken counter, 4; nuclei, *see* Nuclei
Alti-electrograph, 54
Amplifier-oscillograph method, 52
Atmospherics, 77

Boys' camera, 66

Capillary electrometer, 47
Charge on the earth, 19; maintenance of, 41
Collectors, 22
Condensation nuclei, *see* Nuclei
Conduction current, *see* Fine-weather current
Conductivity of the atmosphere—
  effect of pollution, 26, 33; of large ions, 6
  measurement, 6
  polar, 5
  variation with height, 34; with time and season, 33
Convection current, 29
Cosmic radiation, 7, 10

Dissipation of charge, 6
Drops, deformation in electric fields, 62
  electrification by breaking, 80; by change of state, 85; by Wilson process, 83
Dust-counter, 4
Dust-storm fields, 36

Earth-radiation, 8
Ebert ion-counter, 3
Electric fluxmeter, 24, 54
Electrode space-charge, 31
Electrometer: Benndorf, 24; capillary, 47; universal portable, 20
Emanation in air, 8
Equilibrium of atmospheric ionisation, 13, 17

Fast ions, *see* Ions, small
Field-mill, 24, 54
Fields in disturbed weather, 36; from thunderclouds, 52; in fog, 33, 36
Fine-weather current, 28 *et seq.*
  measurement, 29
  significance, 34
  variation with height, time and season, 33
Fine-weather field, 19 *et seq.*
  continuous recording, 23
  measurement, 21
  origin, 42
  variation with height, time and season, 24, 25
Fulchronograph, 78

Gerdien conductivity apparatus, 7

Intermediate ions, 2
Ionisation balance, 17
Ionisation, in closed vessel, 11; over oceans, 16, 18; residual, 11

Ionising power of radiations, 7, 14
Ion-counter, 3
Ions, atmospheric, 1 *et seq.*
Ions, intermediate, 2
Ions, large, 2
  charge on, 2
  effect on conductivity, 5, 33
  formation, 2, 15
  mobility, 2
  number per cc., 2
Ions, small, 2
  average life, 15, 17
  capture of, 3, 15
  charge, 2
  effect on conductivity, 5, 33
  mobility, 1, 4
  number per cc., 2
Isoceraunic level, 46

Kelvin water-dropper, 22
Klydonograph, 77

Lightning, Chapter IV
  Air-discharges, 65
  Charge carried, 61, 78
  Cloud-discharges, 65
  Currents, 77
  Effect on earth's charge, 42
  Electric moments, 61
  Empire State Building, 71
  Field changes ; electrostatic, 72 ; induction and radiation, 76
  Frequency of flashes, 46
  Junction streamers, 73
  Leader, 67 *et seq.* ; dart, 69 ; mechanisms, 74 ; pilot, 75 ; stepped, 67, 75
  M components, 71
  Photography, 66
  Polarity, 58
  Quantities in discharge, 61, 78
  Recoil streamers, 76
  Recovery of field after, 50, 61, 82
  Reversal distance, 57, 58
  Ribbon, 66
  Streamers, 66, 73
  Streamer velocities, 71
  Successive strokes, 65, 74

Magnetic links, 78

Normal ions, *see* Ions, small
Nuclei, Aitken or condensation, 2
Nuclei ; counting, 4 ; effect on life of small ions, 15 ; effect on field, 27 ; and smoke pollution, 27 ; sublimation, 86

Point discharge currents, 38, 55 ; and earth's charge, 41 ; and thunderclouds, 62
Polar conductivity, *see* Conductivity
Potassium, gamma rays, 8
Potential gradient, *see* Field, *passim*
Precipitation current, 38, 41

Radar cloud-echoes, 88
Radioactivity of air and earth, 8, 33
Rain, charge on, 36, 88
Residual ionisation, 11

St. Elmo's fire, *see* Point discharge
Slow ions, *see* Ions, large
Snow ; charge on, 36 ; field during, 36
Space-charge, 25, 31
Static, 77
Sublimation nuclei, 86

Thunderclouds, Chapters III and V
  Cells, 55
  Charge on precipitation, 88
  Distribution of charge, 55

Electric fields ; outside, 52 ; inside, 42, 63
Energy involved, 63
Field-changes, 57
Generation mechanisms, 80 *et seq.*
Number, 46
Polarity, 55
Potentials in, 63
  Recovery of charge, 50, 61, 82
  Separation of charges, 81

Universal electrometer, 20
Upper atmosphere ; potential, 25 ; currents to, 43

Voltameter, water, 40

LIBRARY

LIBRARY

INDEX OF NAMES

Aitken, 1, 4
Appleton, 52, 64

Baldit, 37
Beck, 79
Benndorf, 24
Boylan, 18
Boys, 66
Brookes, 46, 64
Bruce, 79

Carnegie, s.s., 18, 25, 27
Chalmers, 83, 84, 87, 89, 90
Chauveau, 90
Chree, 90
Collens, 67, 70, 79
Craib, 64

Dalibard, 38
De Sachy, 18
Dinger, 87

Ebert, 3
Elder, 79
Elster, 1
Explorer II, 34, 35

Findeisen, 87
Fleming, 90
Franklin, 38
Frenkel, 44, 45, 82, 85

Geitel, 1
Gerdien, 6
Gish, 43, 45, 60
Gockel, 90
Golde, 79
Gott, 85
Gschwend, 37
Gunn, 54, 63, 64, 87

Hagenguth, 71
Halliday, 57, 58
Herd, 52, 64
Hess, 10, 16, 18, 90
Hodges, 79
Hogg, 18, 33, 45

Jensen, 57

Kähler, 90
Kelvin, 23
Kolhörster, 10
Kramer, 86, 87

Langevin, 2
Lemonnier, 19, 38
Lenard, 80
Loeb, 79

Macky, 62
Maclelland, 37
Malan, 45, 55, 67, 70, 74, 78, 88
Marwick, 37
Mathias, E., 90
Mathias, O., 16, 18
Mauchly, 27, 45
McCann, 78, 79
McEachron, 71, 78, 79
Meek, 79

Nolan, 4, 5, 6, 14, 18, 37

O'Brolchain, 18

Perry, 79

Reynolds, 87, 88, 89
Robinson, 59, 64
Roll, 18
Russelvedt, 24

Schindelhauer, 37
Schonland, 39, 45, 55, 57, 58, 64, 67, 74, 78, 88
Scrase, 45, 54, 55, 59, 64, 80, 87
Simpson, 27, 37, 54, 59, 64, 75, 80, 87, 88, 89
Swann, 4

Vancour, 18
Von Schweidler, 15, 17, 18, 90

Wagner, 78
Wait, 43, 45, 60
Watson, 45
Watson-Watt, 52, 64
Whipple, 26, 32, 44, 45, 55, 64, 84, 89
Wigand, 34, 41, 45
Wilson, 18, 20, 38, 42, 45, 47, 55, 58, 62, 64, 81, 83, 90
Workman, 87, 88, 89
Wormell, 39, 43, 45, 58, 59, 64

PRINTED IN GREAT BRITAIN AT
THE UNIVERSITY PRESS
ABERDEEN

LIBRARY
CHRIST'S COLLEGE

RIST'S COLLEGE LIB
WOOLTO

FLUORESCENCE AND PHOSPHORESCENCE.
By E. HIRSCHLAFF

AN INTRODUCTION TO VECTOR ANALYSIS.
By B. HAGUE

THE CYCLOTRON. By W. B. MANN

THE SPECIAL THEORY OF RELATIVITY.
By HERBERT DINGLE

WAVE GUIDES. By R. L. LAMONT

WAVE FILTERS. By L. C. JACKSON

HIGH FREQUENCY TRANSMISSION LINES.
By WILLIS JACKSON

HEAVISIDE'S ELECTRIC CIRCUIT THEORY.
By H. J. JOSEPHS

PHOTOELECTRIC TUBES. By A. SOMMER

MAGNETIC MATERIALS. By F. BRAILSFORD

X-RAY OPTICS. By A. J. C. WILSON

FUNDAMENTALS OF DISCHARGE TUBE CIRCUITS.
By V. J. FRANCIS

AN INTRODUCTION TO THE LAPLACE TRANSFORMATION. By J. C. JAEGER

ATMOSPHERIC TURBULENCE. By O. G. SUTTON

PHOTONS AND ELECTRONS. By K. H. SPRING

ELECTROMAGNETIC PROBLEMS OF MICROWAVE THEORY. By H. MOTZ

AN INTRODUCTION TO SERVO-MECHANISMS.
By A. PORTER

INTEGRAL TRANSFORMS IN MATHEMATICAL PHYSICS. By C. J. TRANTER

SEMI-CONDUCTORS. By D. A. WRIGHT

AN INTRODUCTION TO ELECTRON OPTICS.
By L. JACOB

THE MEASUREMENT OF RADIO ISOTOPES.
By DENIS TAYLOR

PHYSICAL FORMULAE. By T. S. E. THOMAS

ATOMIC SPECTRA. By R. C. JOHNSON

WAVE MECHANICS. By H. T. FLINT

THE PHYSICAL PRINCIPLES OF WIRELESS. By J. A. RATCLIFFE

THE CONDUCTION OF ELECTRICITY THROUGH GASES. By K. G. EMELÉUS

X-RAY CRYSTALLOGRAPHY. By R. W. JAMES

THE COMMUTATOR MOTOR. By F. J. TEAGO

APPLICATIONS OF INTERFEROMETRY. By W. EWART WILLIAMS

THERMIONIC VACUUM TUBES. By W. H. ALDOUS and Sir EDWARD APPLETON

PHOTOCHEMISTRY. By D. W. G. STYLE

THERMODYNAMICS. By A. W. PORTER

ATMOSPHERIC ELECTRICITY. By B. F. J. SCHONLAND

THE METHOD OF DIMENSIONS. By A. W. PORTER

COLLISION PROCESSES IN GASES. By F. L. ARNOT

PHYSICAL CONSTANTS. Selected by W. H. J. CHILDS

ELECTROMAGNETIC WAVES. By F. W. G. WHITE

THE GENERAL PRINCIPLES OF QUANTUM THEORY. By G. TEMPLE

THE KINETIC THEORY OF GASES: Some Modern Aspects. By Professor MARTIN KNUDSEN

LOW TEMPERATURE PHYSICS. By L. C. JACKSON

HIGH VOLTAGE PHYSICS. By L. JACOB

RELATIVITY PHYSICS. By W. H. MCCREA

X-RAYS. By B. L. WORSNOP and F. C. CHALKLIN

HYPERFINE STRUCTURE IN LINE SPECTRA AND NUCLEAR SPIN. By S. TOLANSKY

INFRA-RED AND RAMAN SPECTRA. By G. B. B. M. SUTHERLAND

THERMIONIC EMISSION. By T. J. JONES

ELECTRON DIFFRACTION. By R. BEECHING

MAGNETISM. By EDMUND C. STONER

THE EARTH'S MAGNETISM. By S. CHAPMAN

MERCURY ARCS. By F. J. TEAGO and J. F. GILL

MOLECULAR BEAMS. By R. G. J. FRASER

ALTERNATING CURRENT MEASUREMENTS. By DAVID OWEN

(*Continued on back flap*)

ATMOSPHERIC ELECTRICITY—B. F. J. SCHONL

9 / 0 . 5 1 5 6

rexresearch.com

Atmospheric & RF Electricity Collectors

GB 157263
Process and Apparatus for Converting Static Atmospheric Electrical Energy into Dynamic Electrical Energy of any Suitable High Periodicity

Abstract -- Atmospheric electricity, utilizing; influence machines.-Static atmospheric charges are converted into alternating-currents of any desired frequency by rotary machines, the stator and rotor elements of which form condensers having a capacity which varies during the revolution as described in Specincation 157,262. In the simplest form, Fig. 2, the curved stator plates 2, 1 are connected to earth E2 and the aerial A which collects the atmospheric charges and is earthed through a safety spark gap F. The rotor is motor-driven and consists of concentric plates 3, 4 joined through slip-,rings (not shown) to an inductance 9 shunted by a condenser 5. With a given aerial polarity, rotation of the plates 3, 4 causes current reversals on the circuit A, 1, 9, 2, E@, whereby oscillations are set upon the circuit 9, 5, these being tapped by leads 11, 12. The condenser 5 may consist of concentric tubes rotating with the rotor or of two juxtaposed wound spirals having capacity. The stator and rotor condenser plates may extend over nearly a semicircle in place of the quadrants shown in Fig. 2 and the rotor may comprise two consecutive cylindrical plates or coil condensers each divided into halves, the inner half of each being connected to the outer half of the other. Fig. 7 shows a form in which rings 1, 2, mounted in a casing comprising upper and lower parts insulated from each other, are connected to the stator condenser plates at intervals. The rotor plates 3, in equal number, are connected to slip-rings 5, 6 from which alternating-current is taken by brushes when the rotor is motor-driven. The rings 1, 2 are respectively connected to the aerial collector and earth E2. Several methods of grouping the stator-rotor condenser pairs and the components of the oscillating circuit are described. The oscillatory current in the rotor circuit may react through a transformer on the main charging current and two pairs of stator and rotor plates 1, 2, 3, 4, Fig. 13, may be employed arranged on diameters at right-angles, the oscillatory circuit in this case consisting of a mutual inductance 5 having capacity and a portion of an adjustable inductance 9 in the stator earth connector E2. By suitably proportioning the stator and rotor plates, 'resonance may be established, whereby undamped waves may be produced. In the form shown in Fig. 15, for high-frequency oscillations, the aerial A and earth wire are tapped at points between the stator plates 1, 2 and condensers 16, 18 which are joined through an inductance 9. The rotor current is conveyed to the power circuit 11, 12 through transformers 10, 10<a>. The members composing the stator and rotor plates may be slotted, as shown in Fig. 8, with holes 1 for attaching them to the frame, or they may have spiral slots in their surfaces. Alternatively, they may be formed by embedding spiral wires 3 in a vulcanite mass 1 so as to give a smooth surface as shown in Fig. 11.

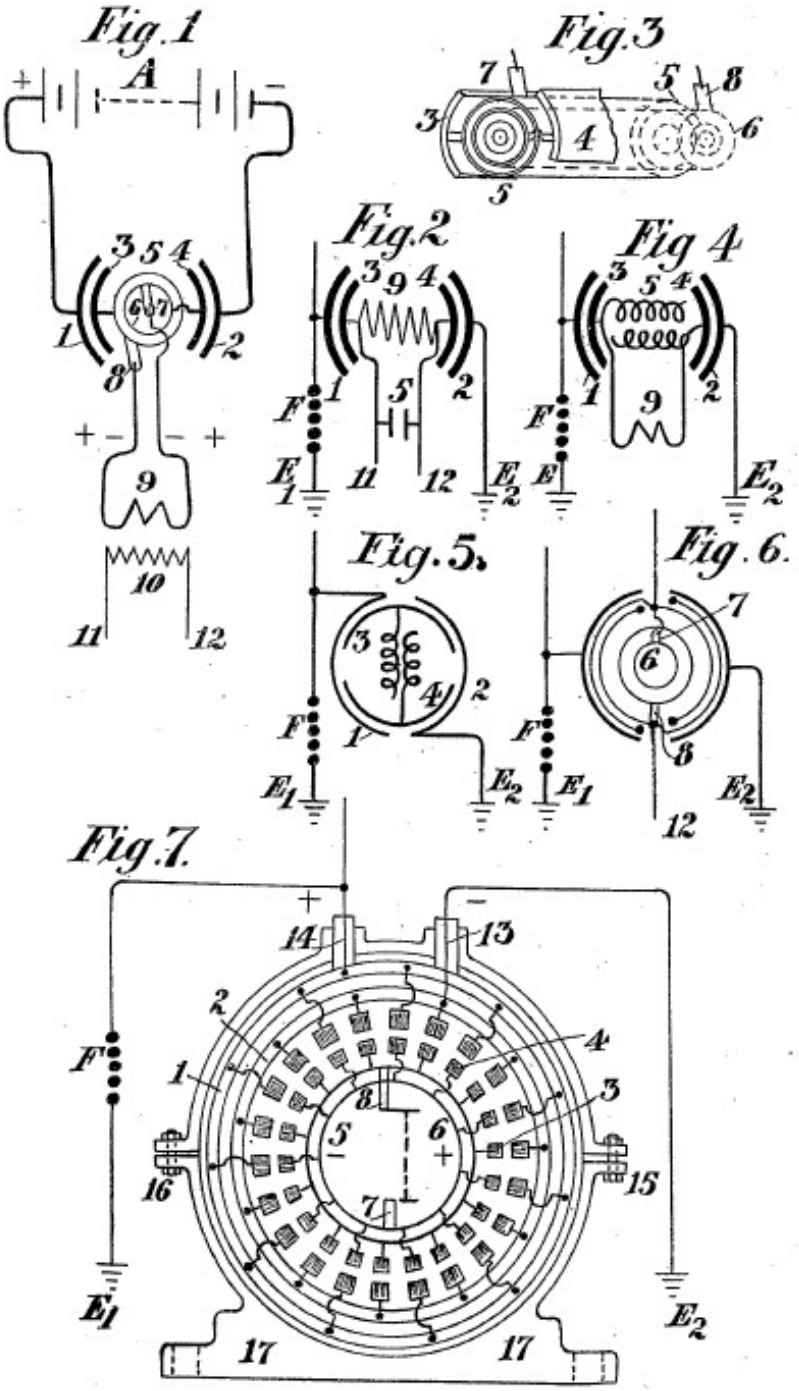
Fig. 1
A
Fig. 3
Fig. 2
Fig 4
Fig. 5.
Fig. 6.
Fig. 7.
F
E1
E2

Fig. 8

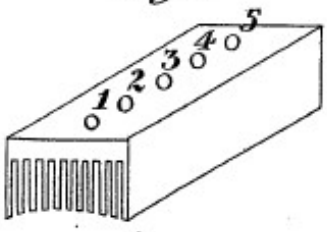

Fig. 10

Fig. 9.

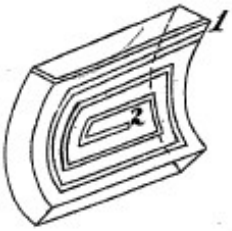

Fig. 11

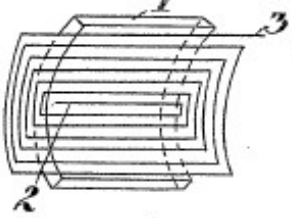

Fig. 12

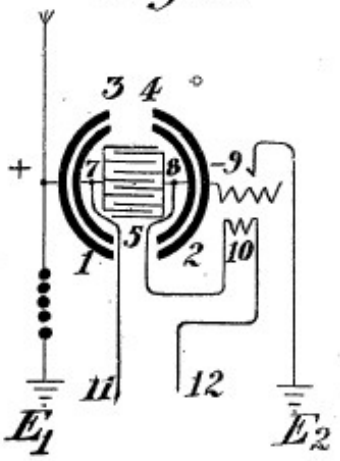

Fig. 13.

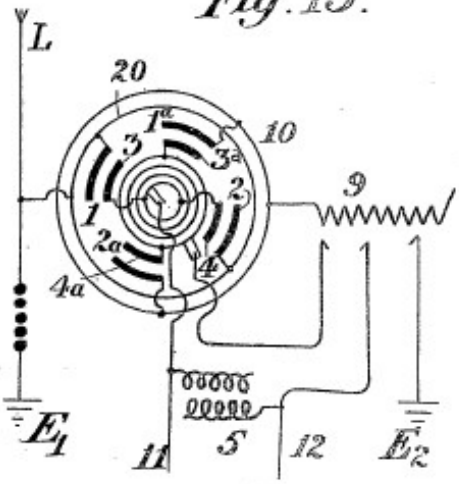

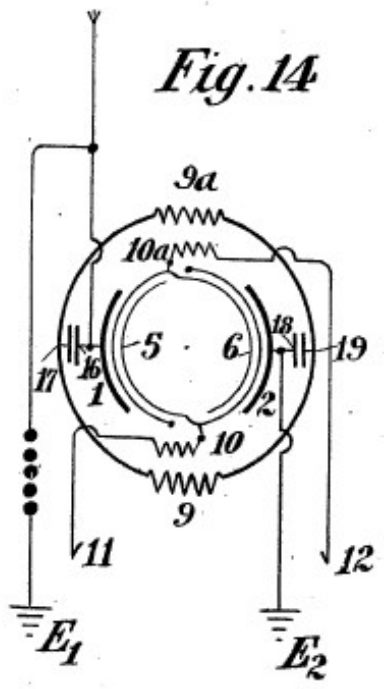

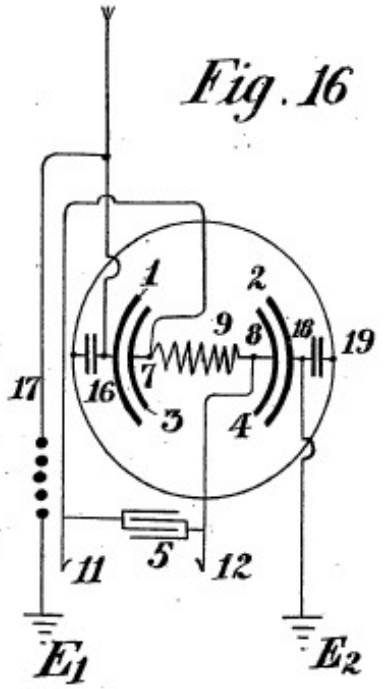

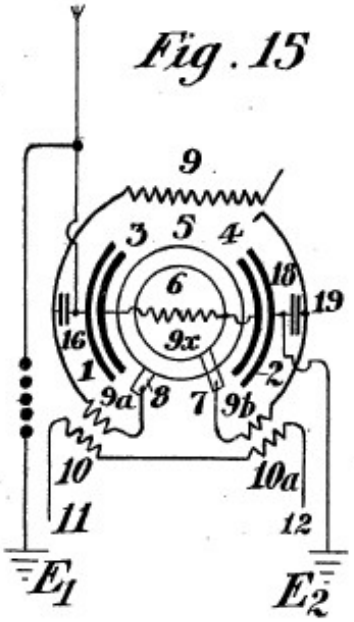

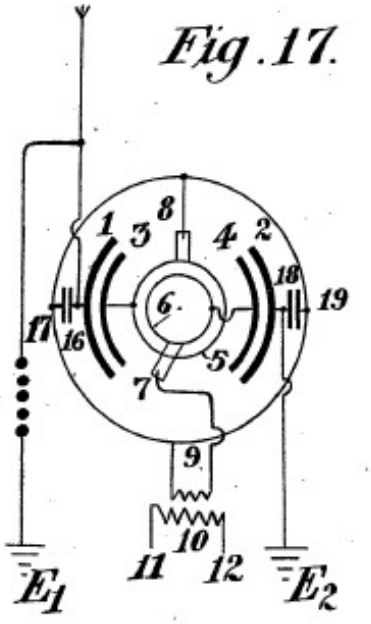

French Patent # 551,882
Apparatus for Capture of Electric Currents in the Atmosphere

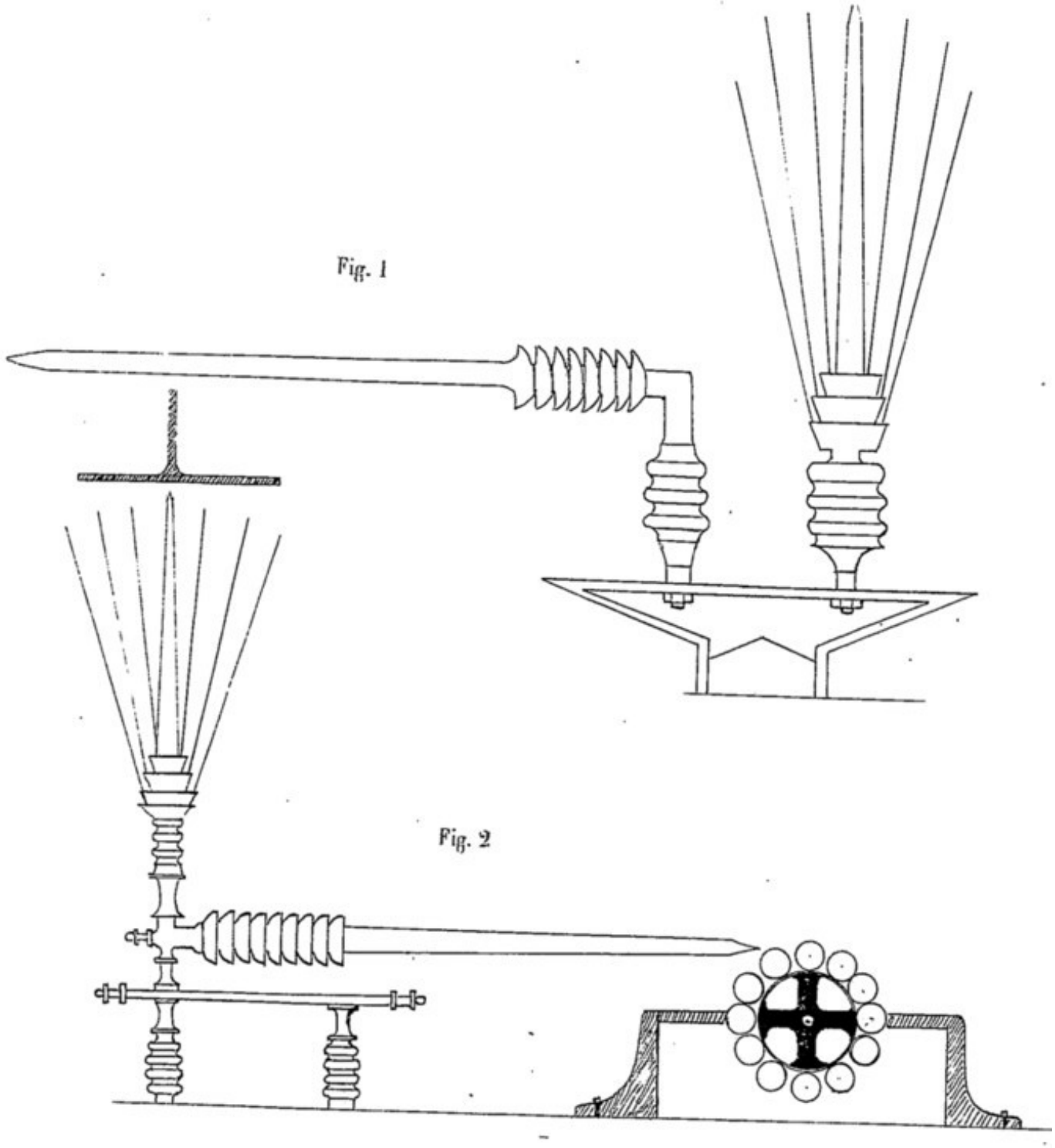

French Patent # 565,395
Combined Apparatus for Capture of Atmospheric Electric Currents with Immediate Implementation

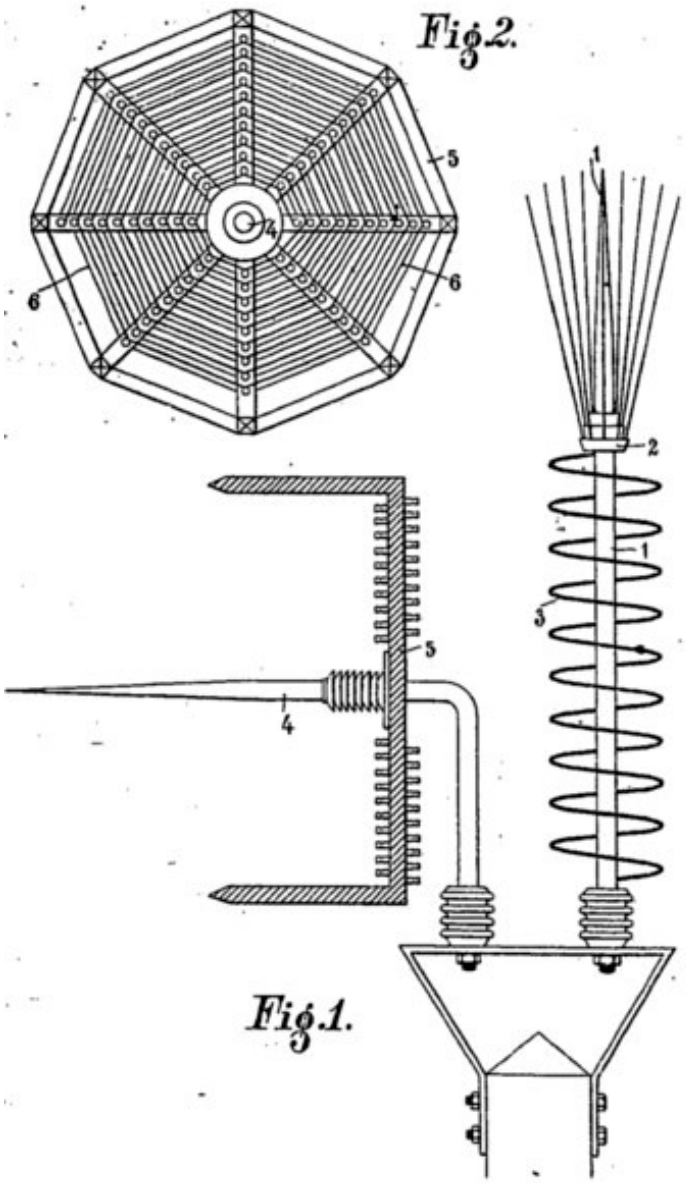
Fig. 2.
5
4
6
6
1
2
1
3
5
4
Fig. 1.

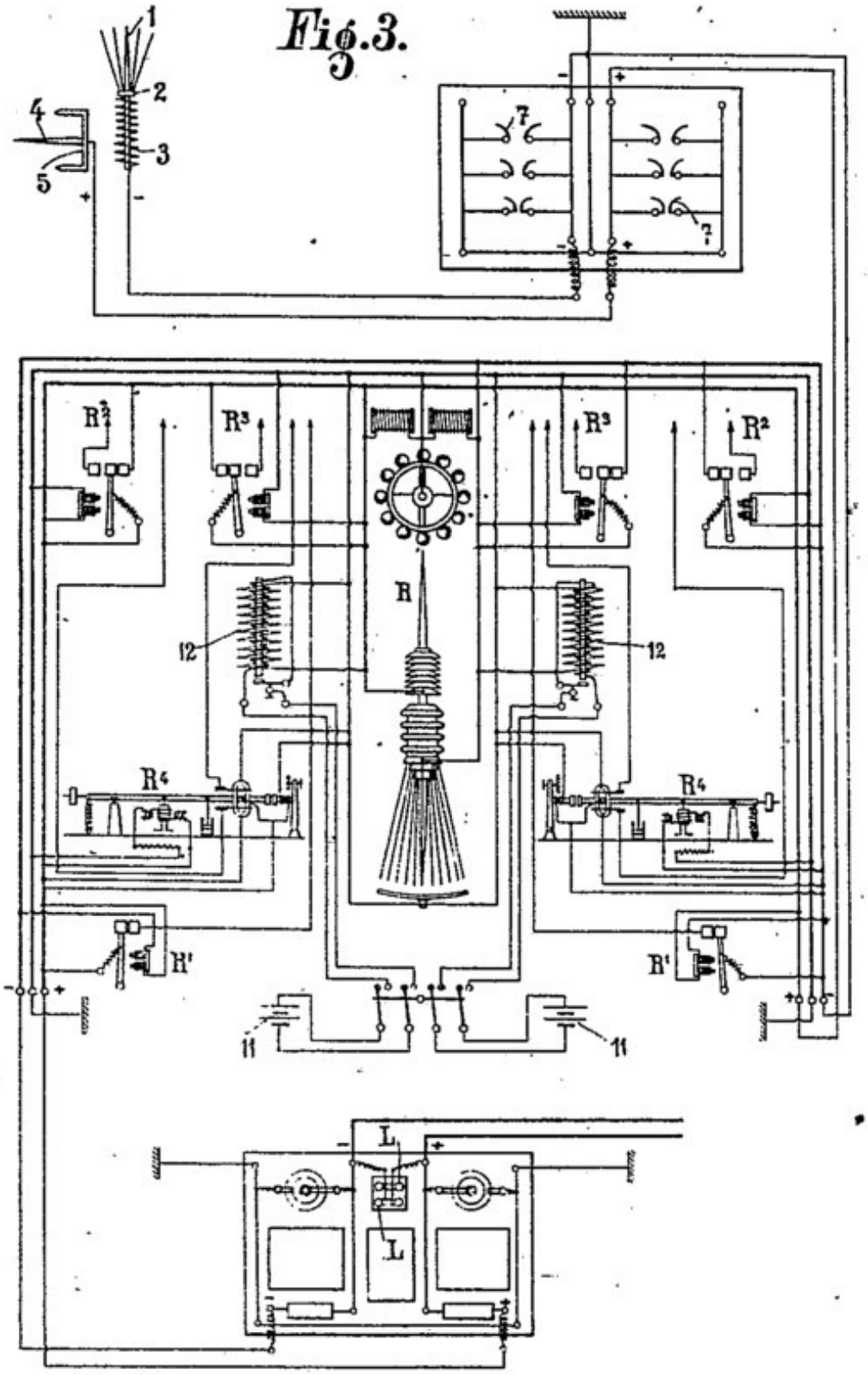
Fig.3.
1
2
3
4
5
7
7
R²
R³
R³
R²
R
12
12
R⁴
R⁴
R¹
R¹
11
11
L
L

Fig. 4.

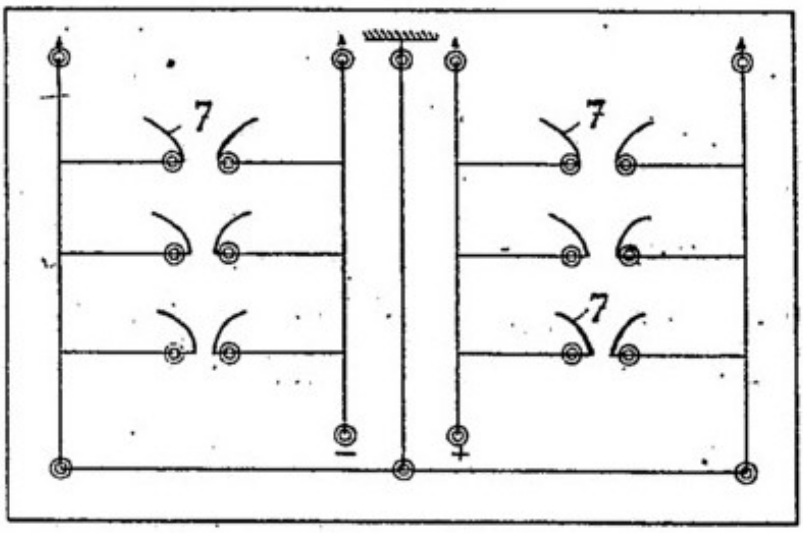

Fig. 5.

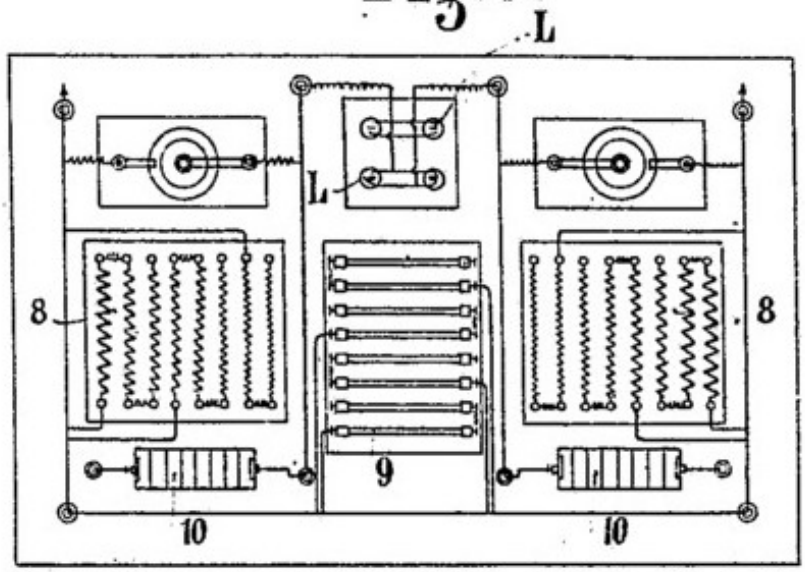

US 28793
Electric Apparatus

Abstract -- An aerostat for obtaining atmpspheric and terrestrial electricity...

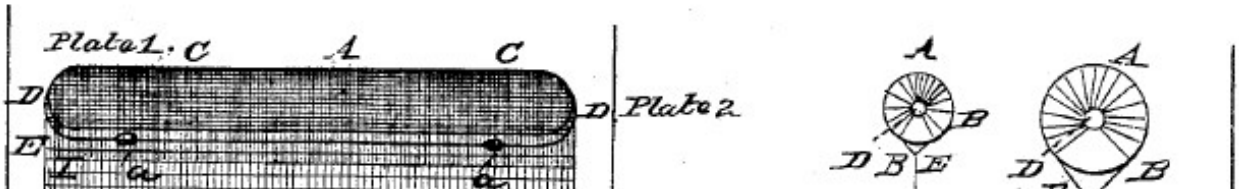

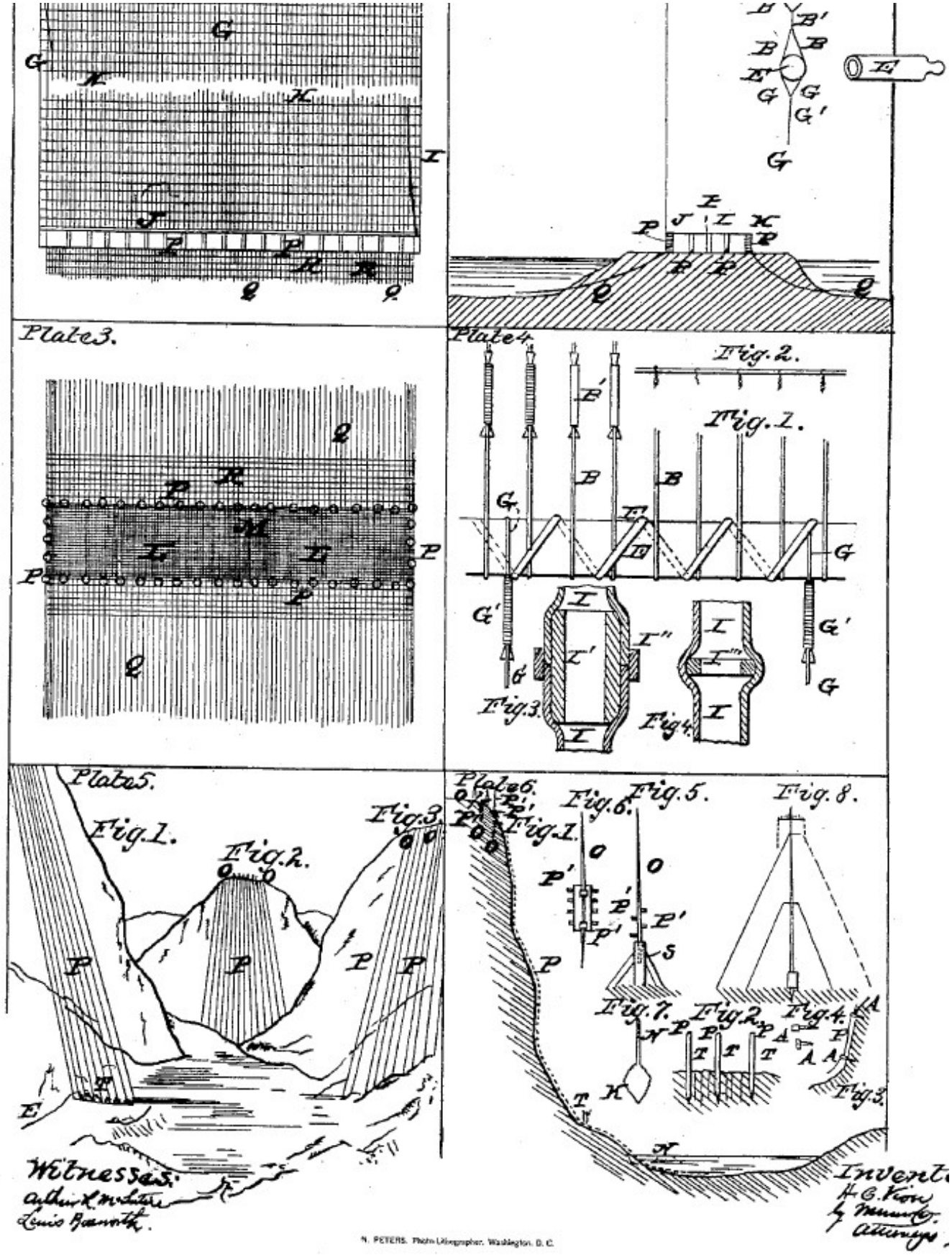
Plate 3.
Plate 4.
Fig. 2.
Fig. 1.
Fig. 3.
Fig. 4.
Plate 5.
Fig. 1.
Fig. 2.
Fig. 3.
Plate 6.
Fig. 6.
Fig. 5.
Fig. 8.
Fig. 1.
Fig. 7.
Fig. 2.
Fig. 4.
Fig. 3.
Witnesses:
Arthur L. McCutcheon
Louis Bennath.
Inventor
H. C. Kion
by Munn & Co.
Attorneys.
N. PETERS. Photo-Lithographer, Washington, D. C.

US 126356

Improvement in Collecting Energy for Telegraph

Abstract -- A tower for the purpose of receiving and imparting natural electricity, so as to be in constant contact with the upper stratum of electricity which surrounds the earth, by tapping which a never-failing supply is formed when brought into contact with the earth.

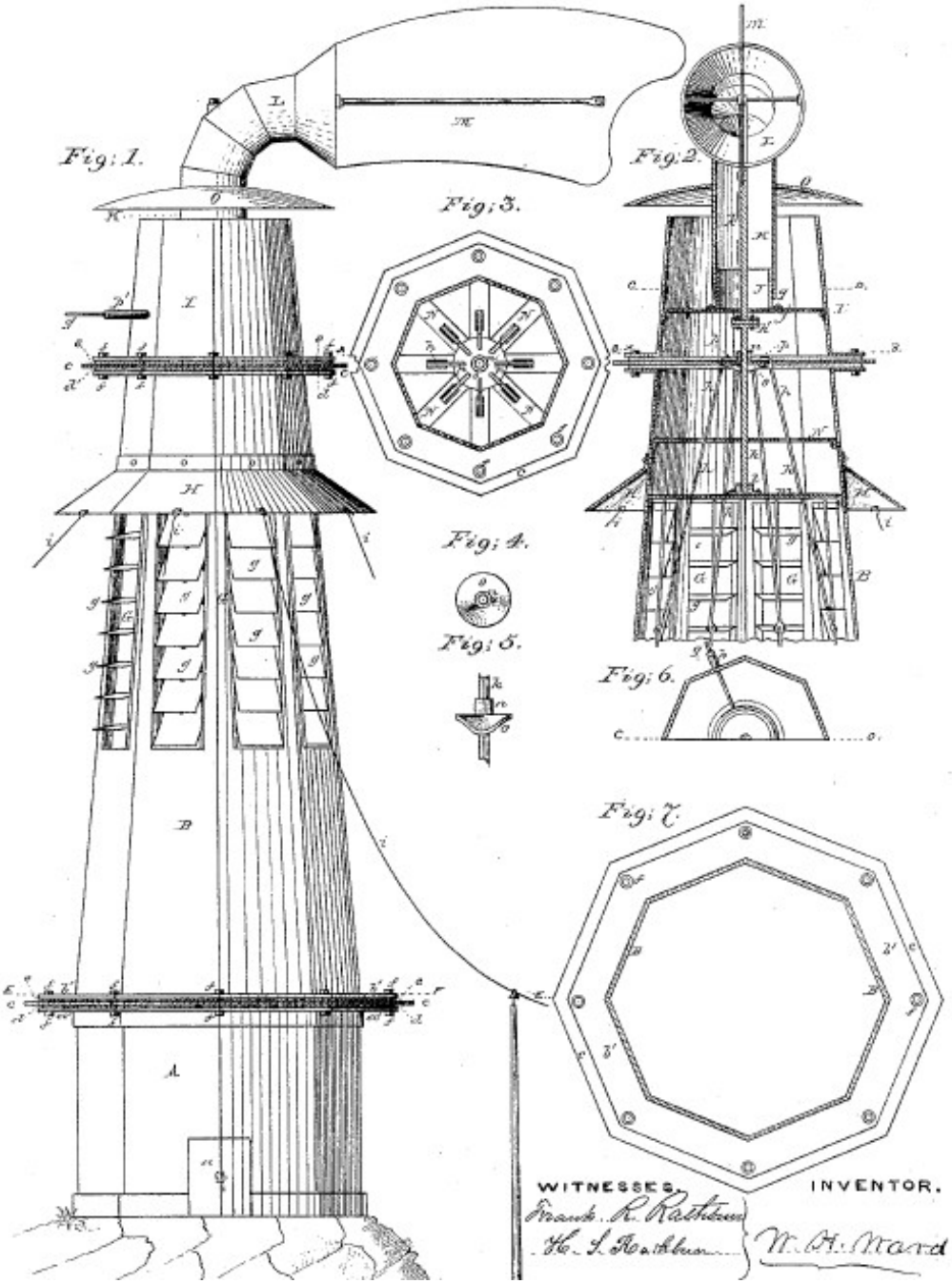

US 129971
Telegraph Power

Abstract -- Utilizing natural electricity and establishing an electrical current without the aid of wires, batteries, or cables...

US 674427
Collecting Atmospheric Electricity

Abstract -- An appartus for colecting and driving or conducting atmospheric electricity which renders it practicable to obtain material quantities of teh same in serviceable form.

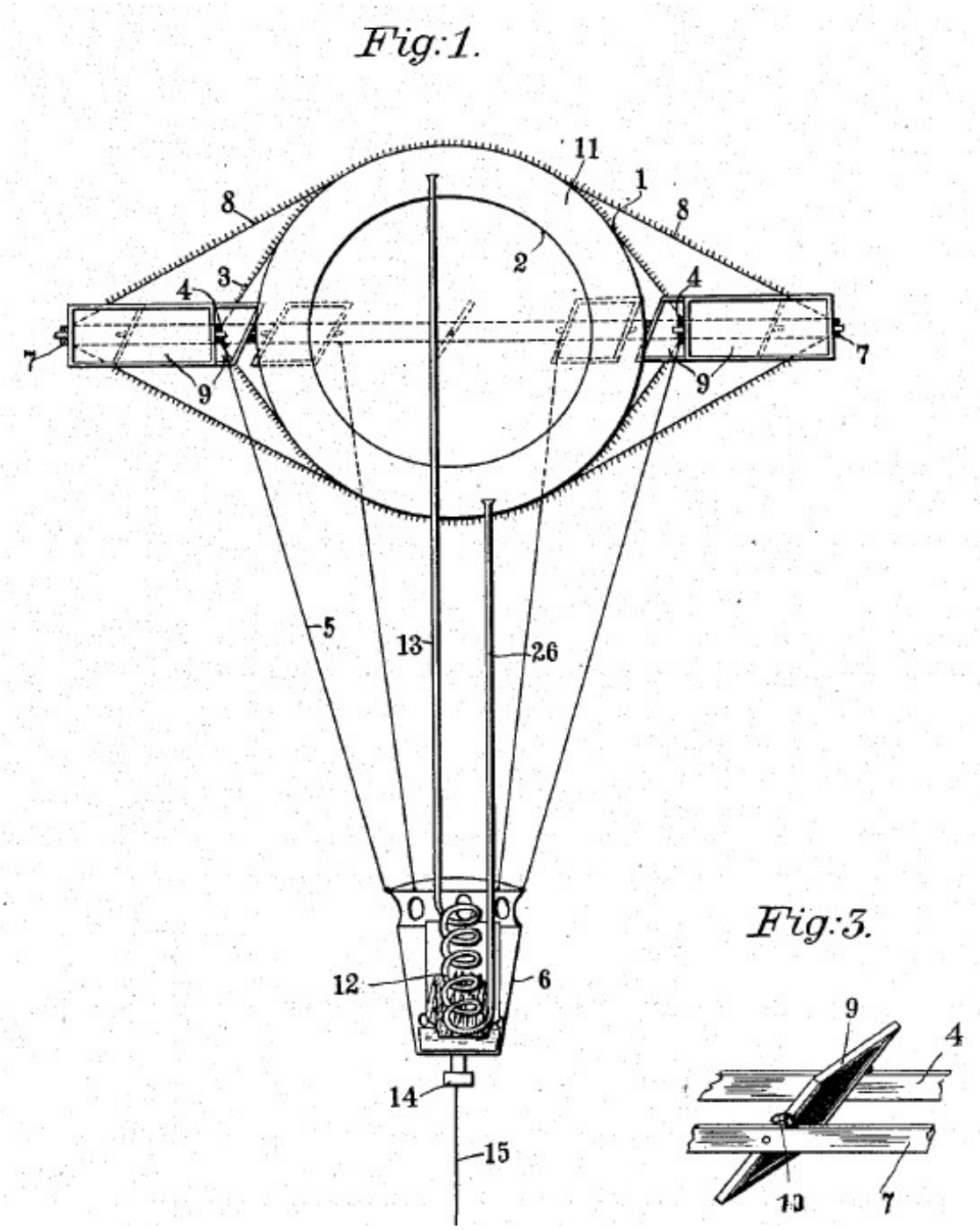

Fig: 2.

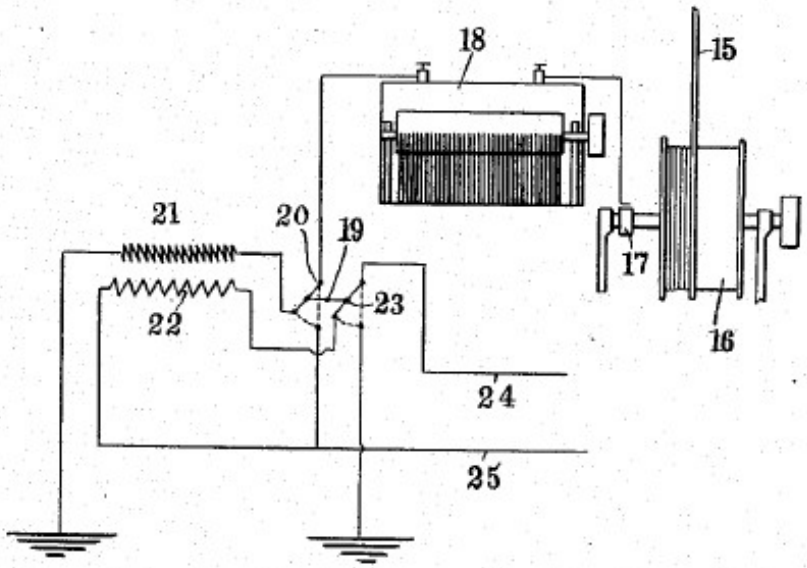

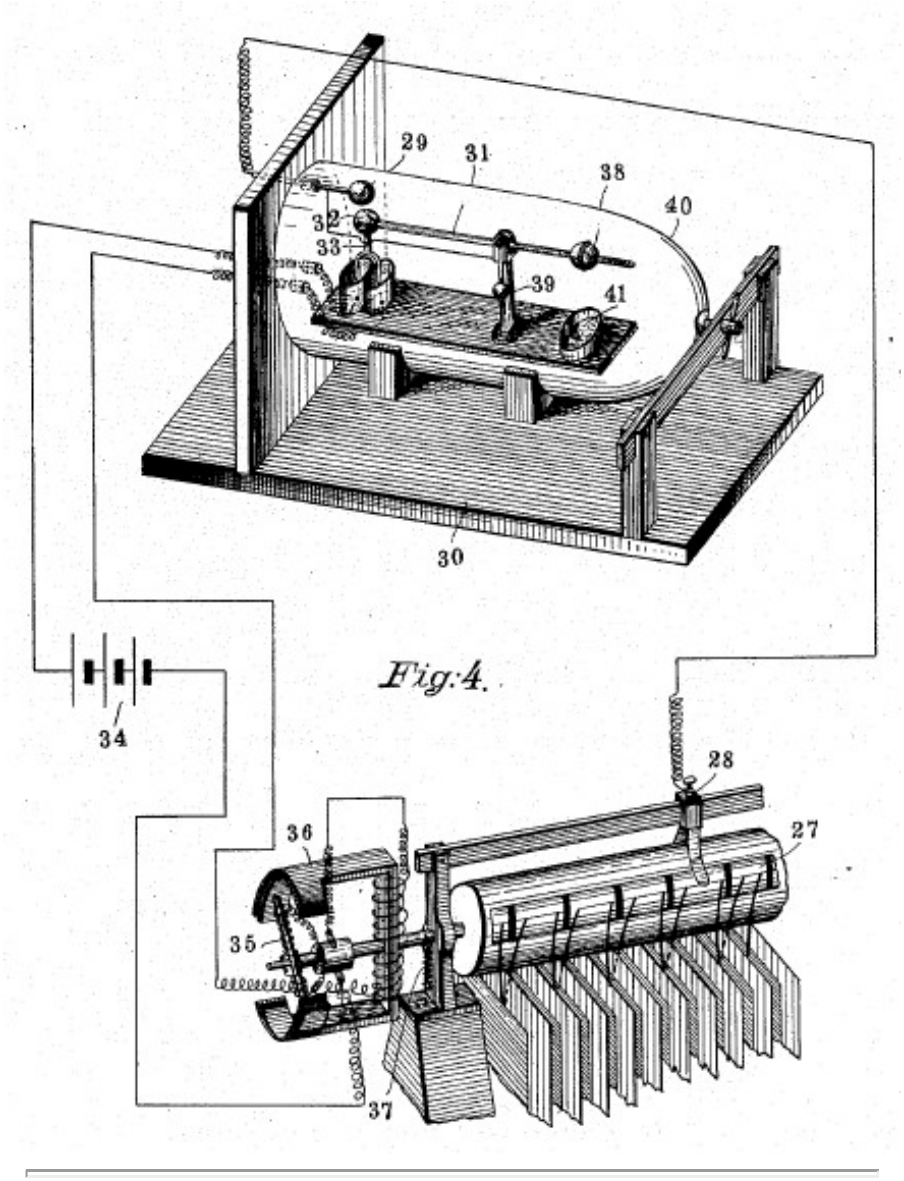

Fig:4.

US 911260
Collecting Atmospheric Electricity

Abstract -- A method of colecting electricity from a strata laden with electricity at high altitudes in the atmoshere, through the medium of a wire cable suspended from one or more balloons ...

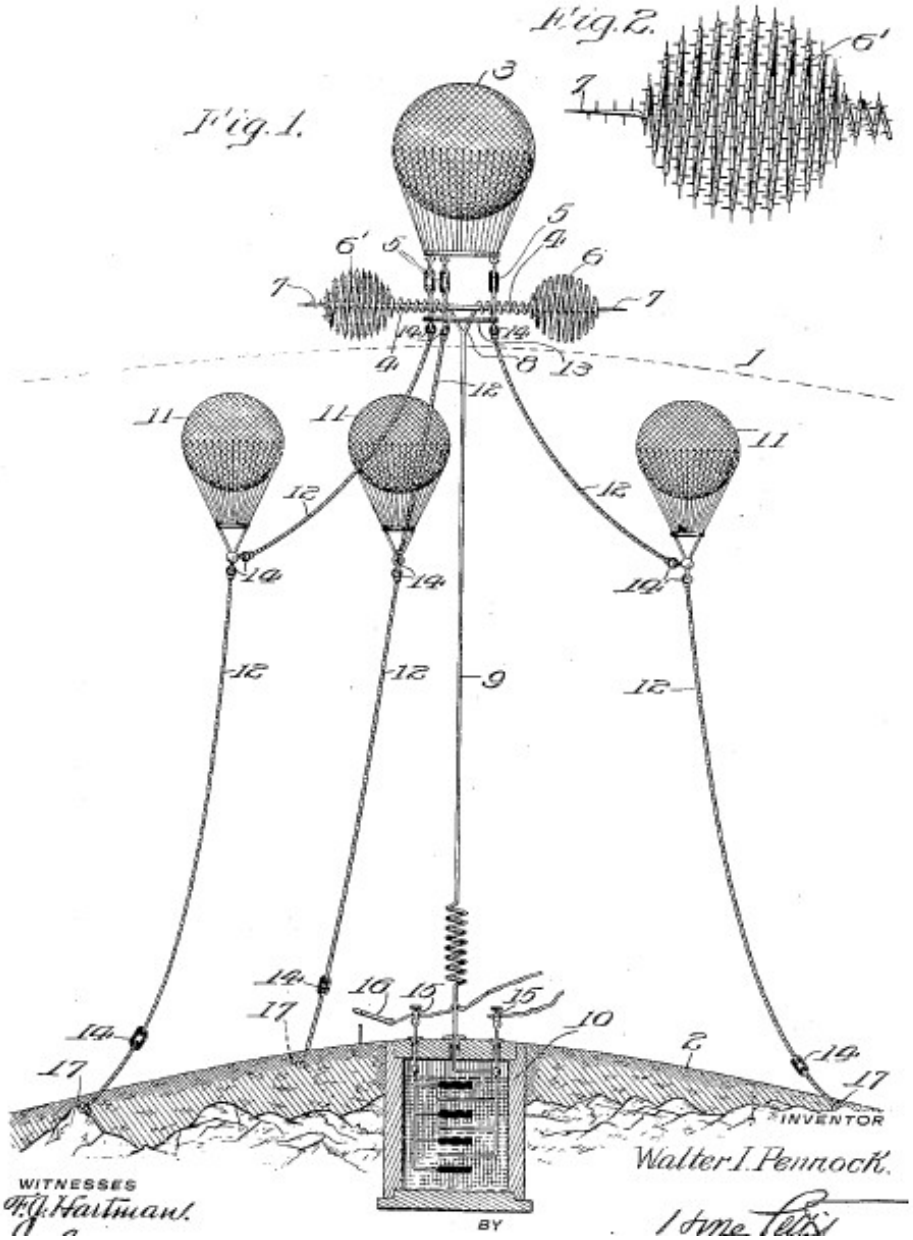

US 1014719
Collecting Atmospheric Electricity

Abstract -- A method of colecting electricity from a strata laden with electricity at high altitudes in the atmoshere, through the medium of a wire cable suspended from one or more balloons ...

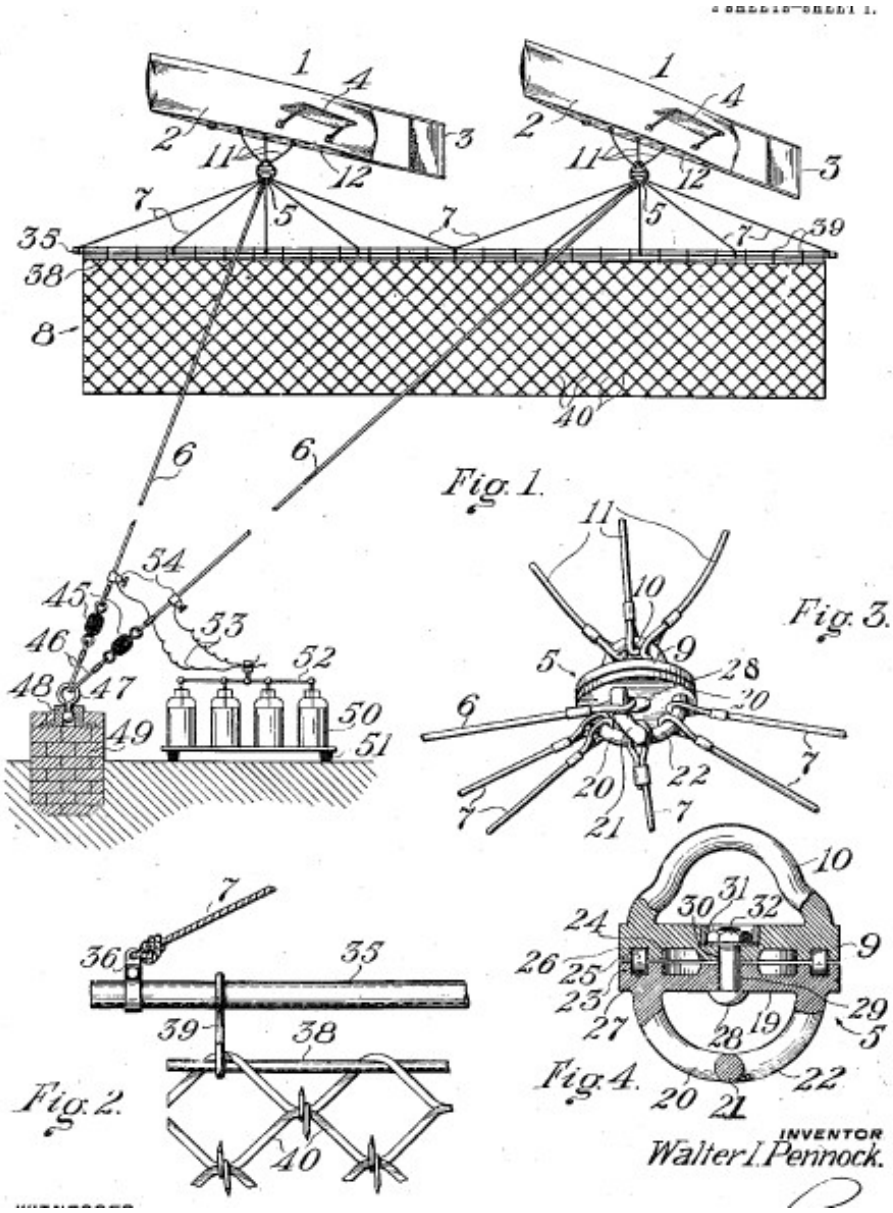
Fig. 1.
Fig. 2.
Fig. 3.
Fig. 4.
INVENTOR
Walter I. Pennock.

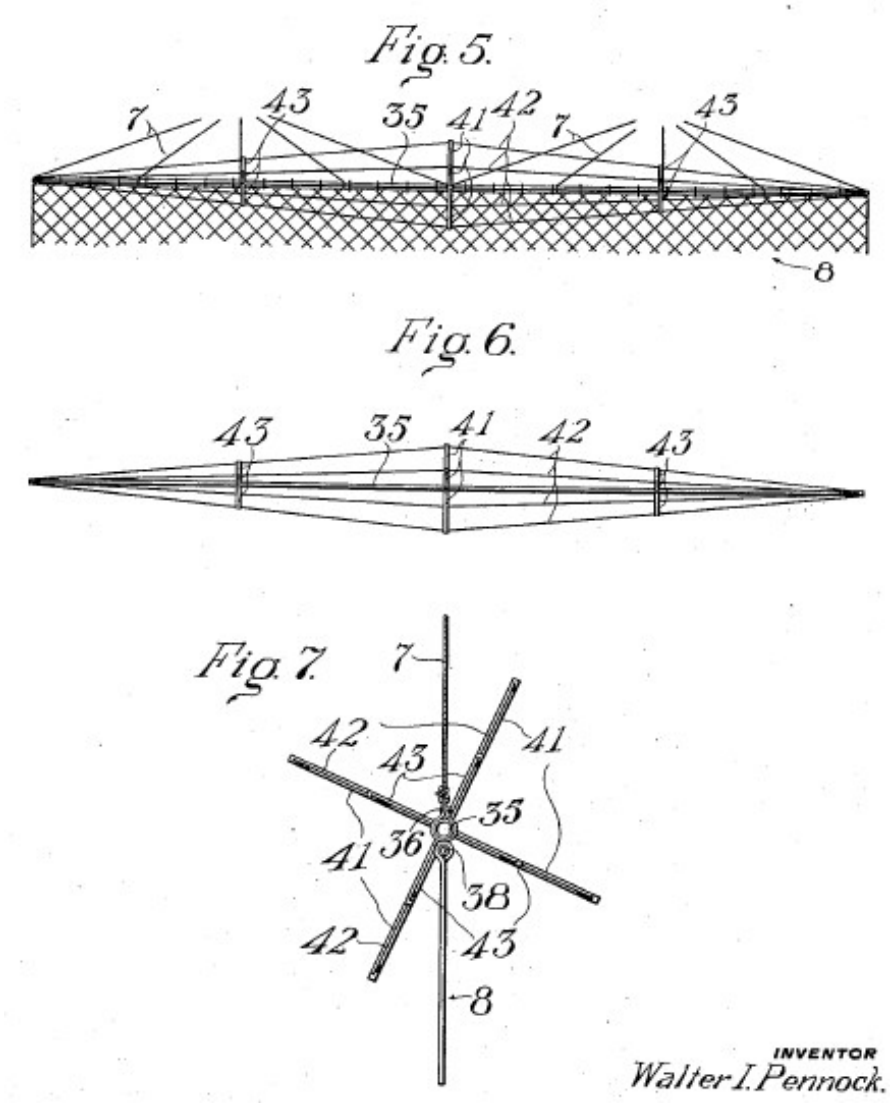

US 1540998
Conversion of Atmospheric Electric Energy

Abstract -- Method of obtaining atmospheric electricity by means of metallic ballon collectors...

Filed Jan. 15, 1921 12 Sheets-She

Fig. 1.

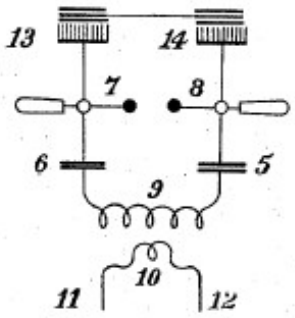

Fig. 2.

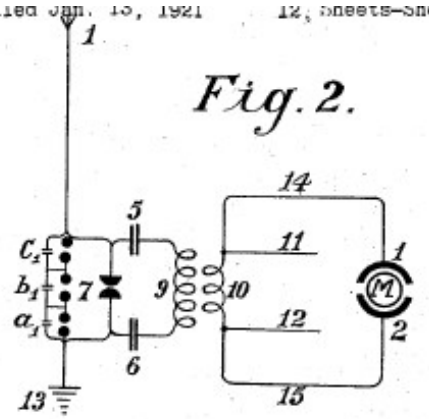

Fig. 3.

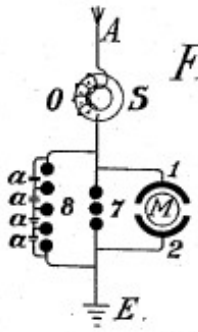

Fig. 4.

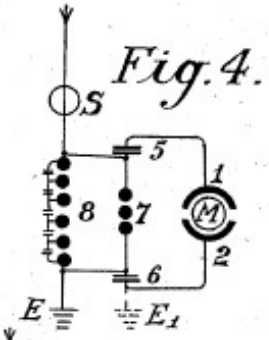

Fig. 5.

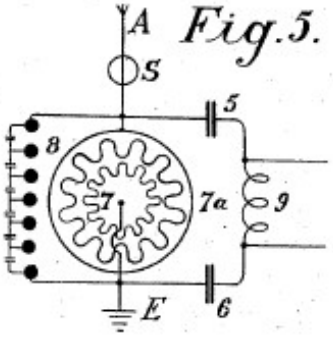

Fig. 6

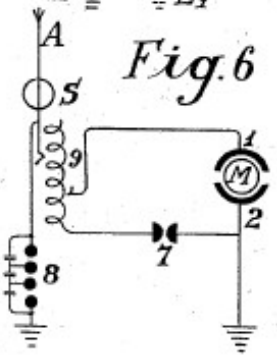

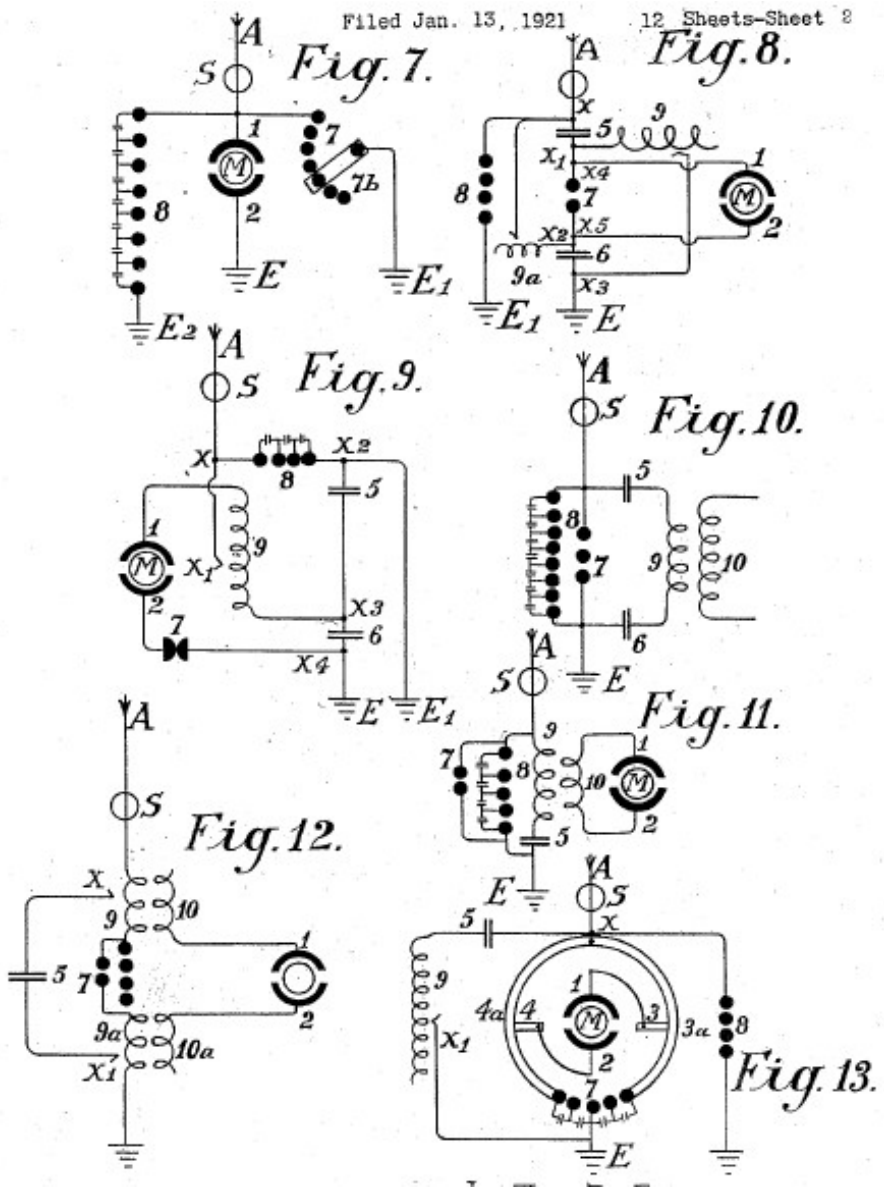
Filed Jan. 13, 1921 12 Sheets-Sheet 2
Fig. 7.
Fig. 8.
Fig. 9.
Fig. 10.
Fig. 11.
Fig. 12.
Fig. 13.

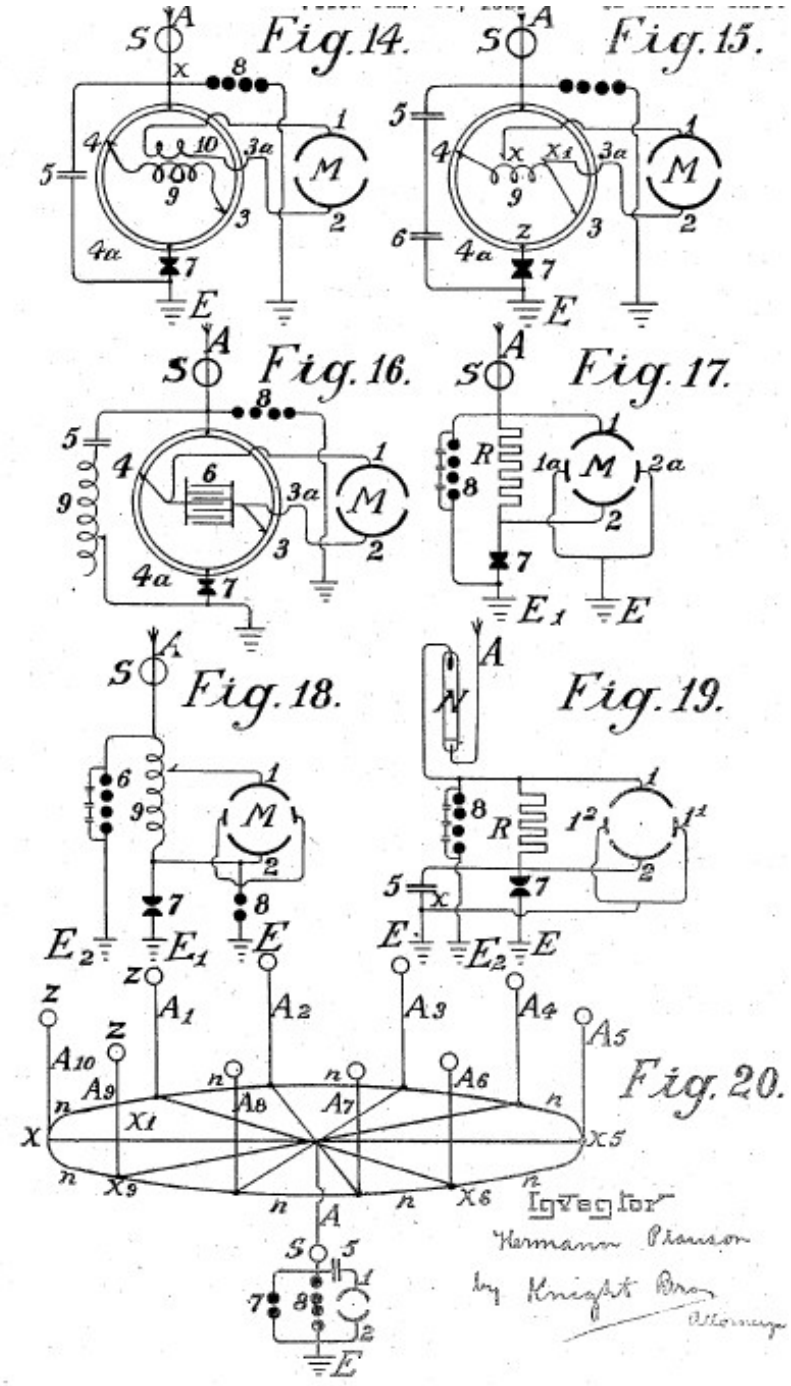
Fig. 14.
Fig. 15.
Fig. 16.
Fig. 17.
Fig. 18.
Fig. 19.
Fig. 20.
Inventor
Hermann Pfanson
by Knight Bros
Attorneys

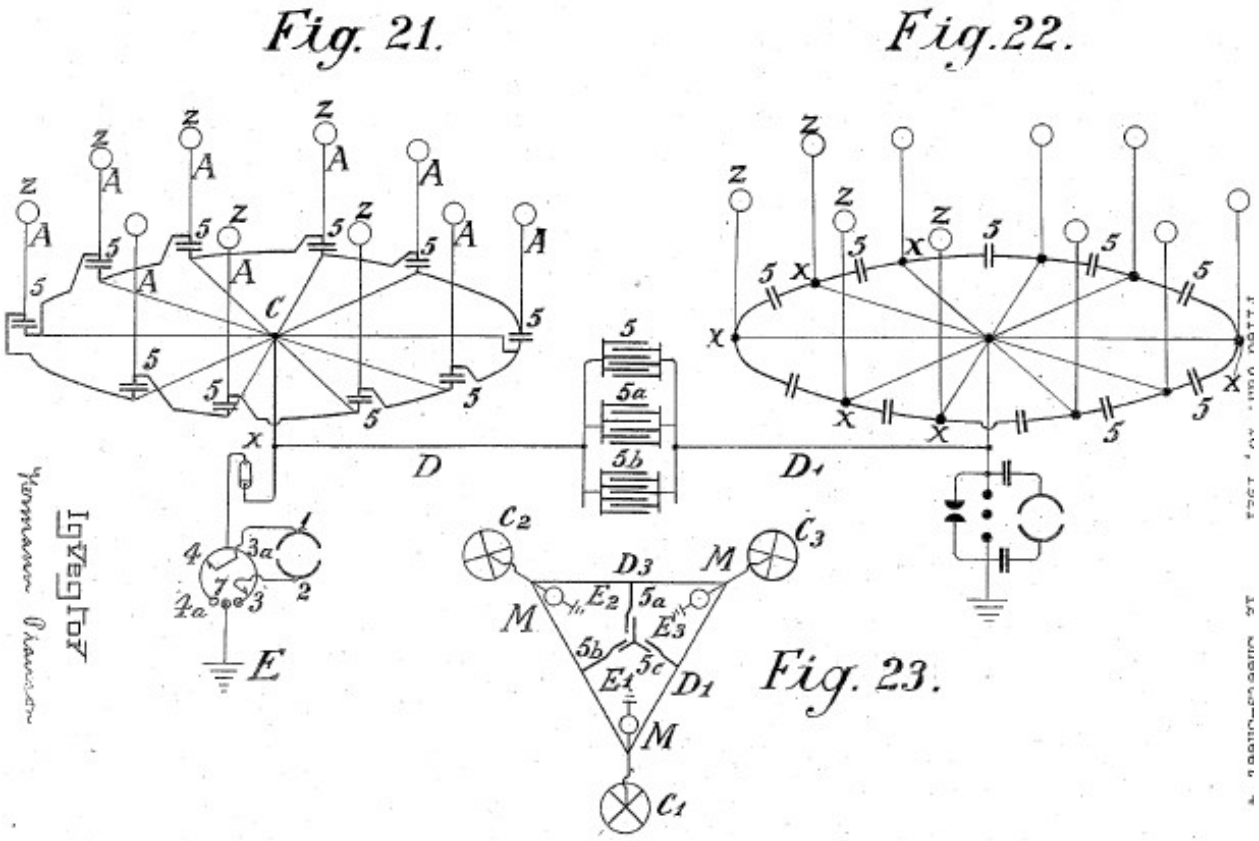
Fig. 21.
Fig. 22.
Fig. 23.
D
D1
D3
E
E1
E2
E3
C
C1
C2
C3
M
A
Z
X
5
5a
5b
5c
1
2
3
3a
4
4a
7

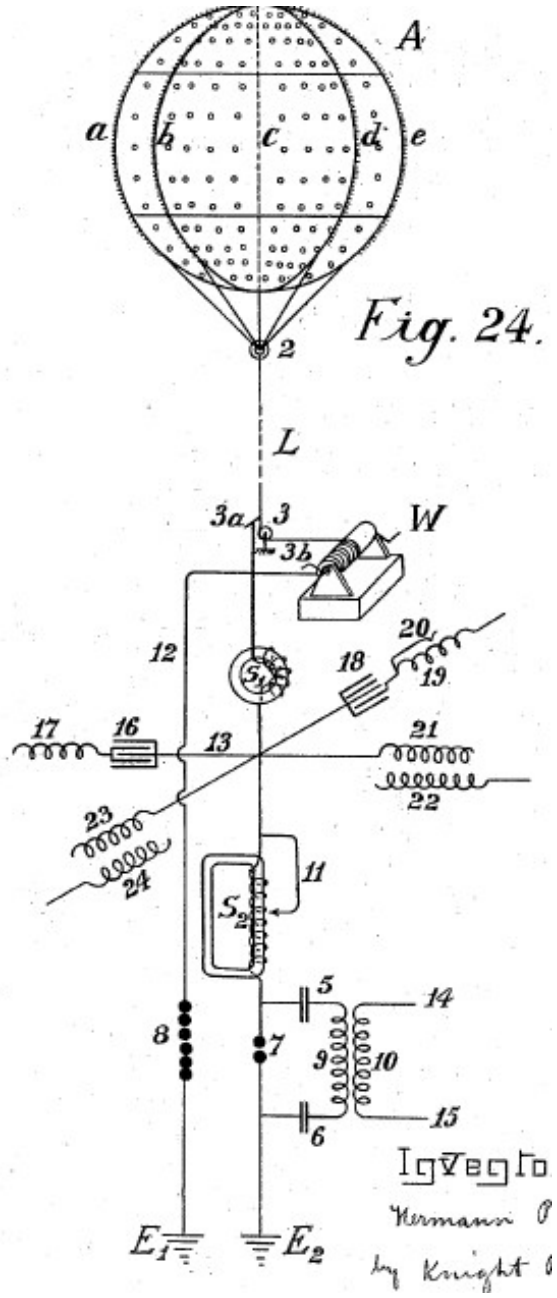
A
a
b
c
d
e
2
L
3a
3
3b
W
12
20
19
18
17
16
13
21
22
23
24
11
5
14
8
7
9
10
15
6
E_1
E_2

Fig. 24.

Fig. 25.

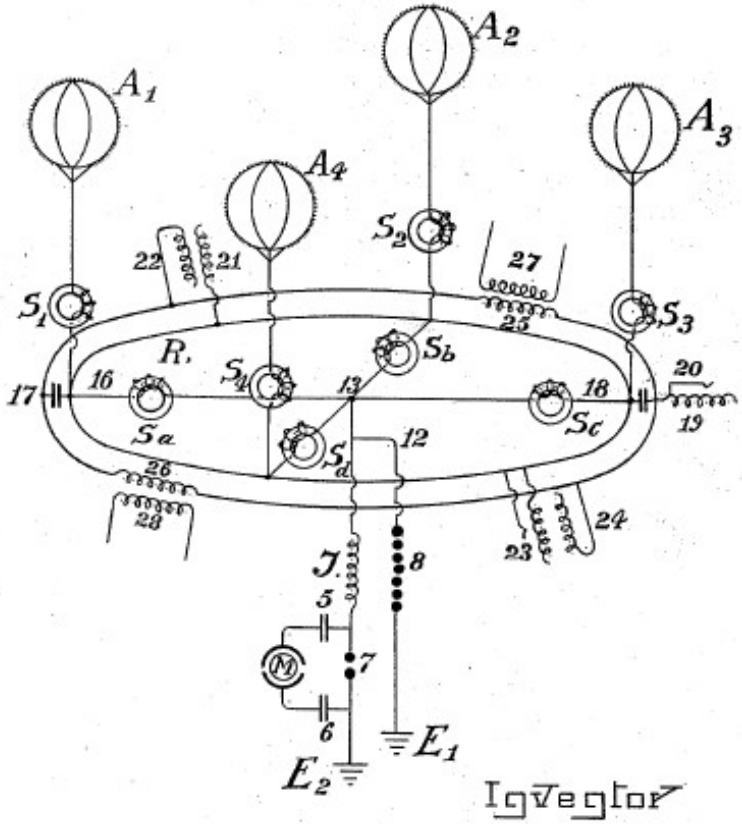

Inventor

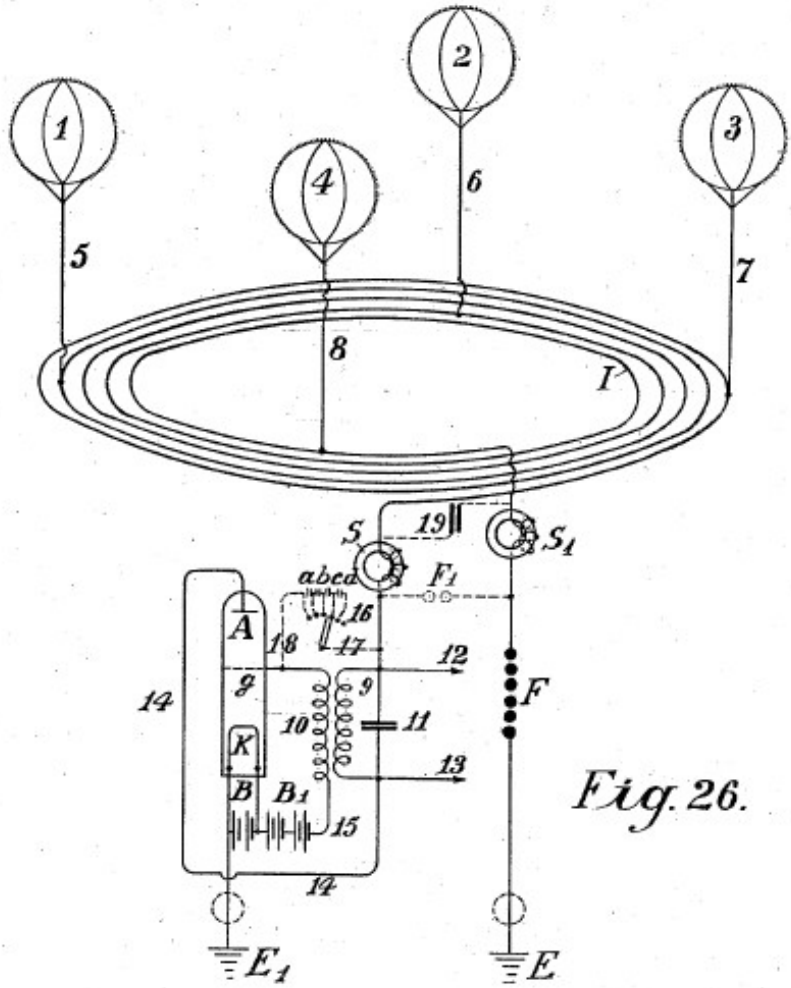

Fig. 26.

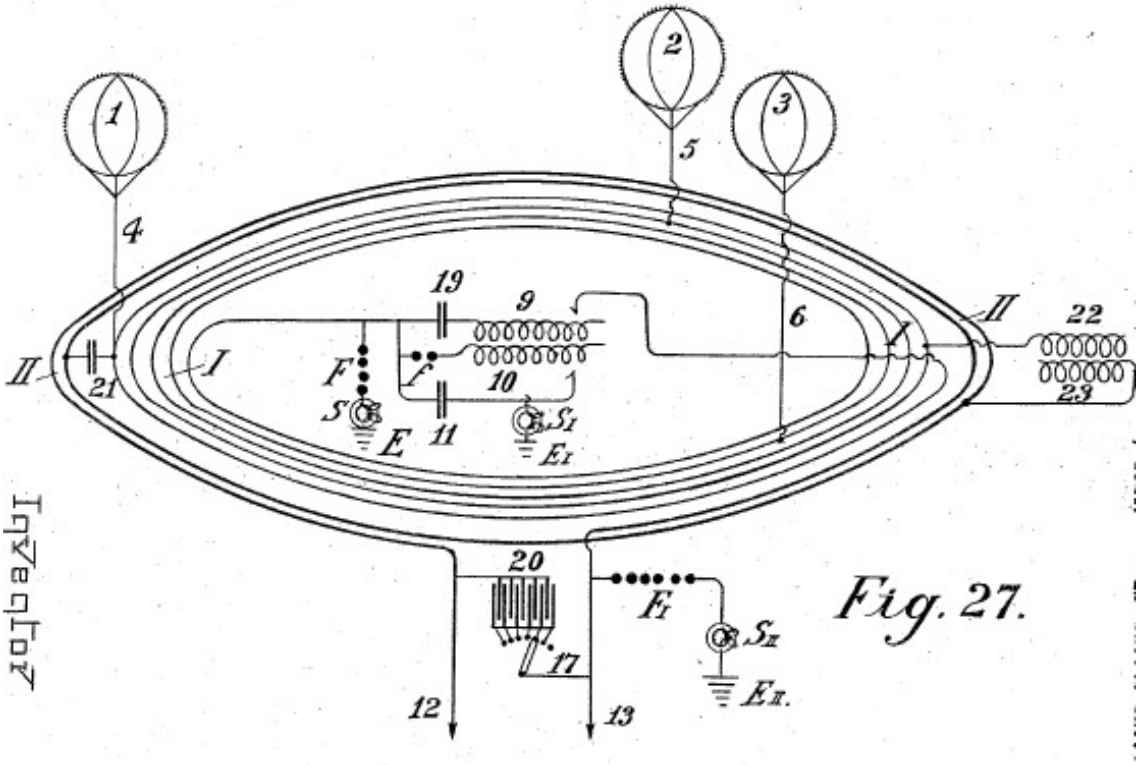

Fig. 27.

Inventor

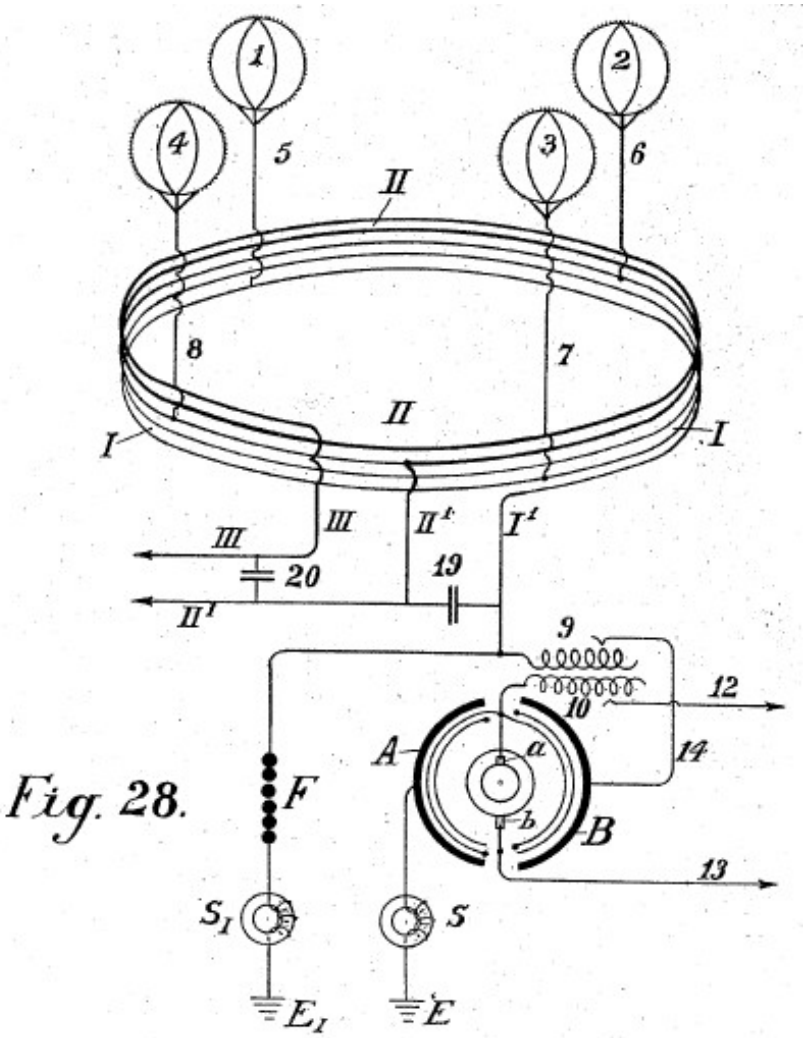

Fig. 28.

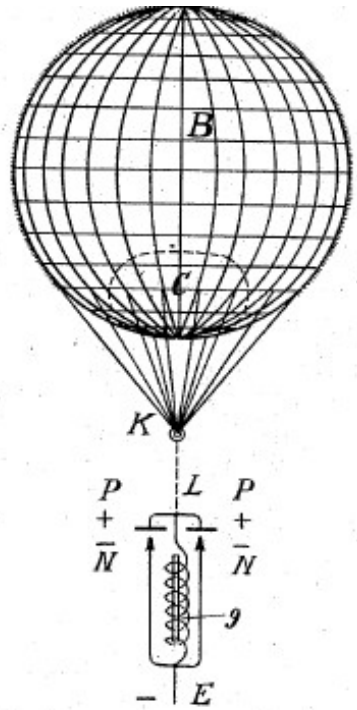

Fig. 29.

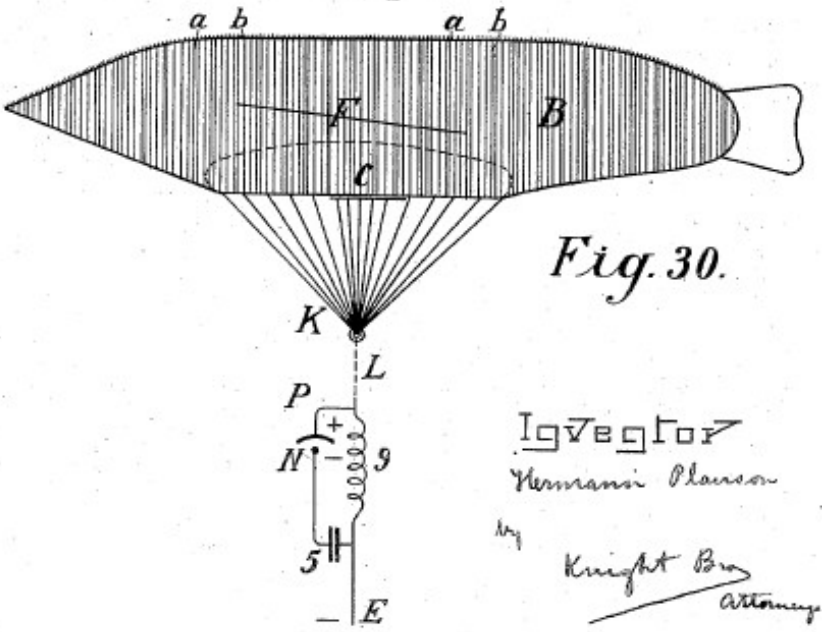

Fig. 30.

Inventor
Hermann Plauson
by
Knight Bros
Attorneys

Filed Jan. 13, 1921. 12 Sheets-Sheet 11

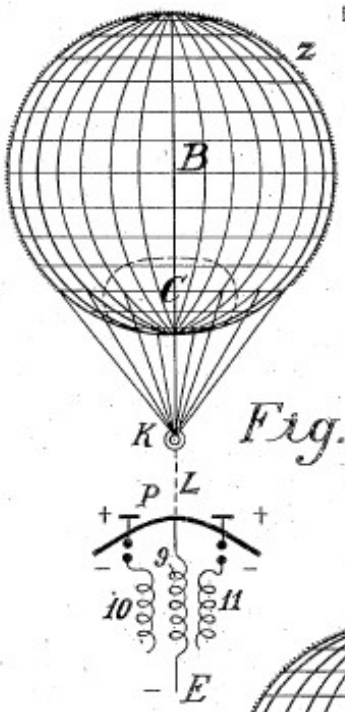

Fig. 31.

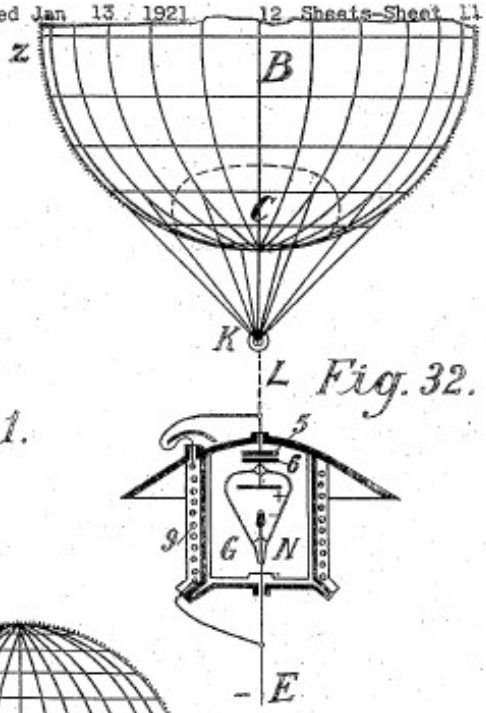

Fig. 32.

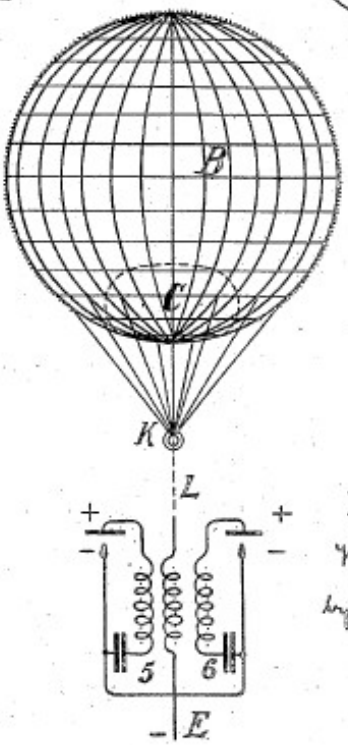

Fig. 33.

Inventor
Hermann Pharaon
by Knight Bros
attorneys

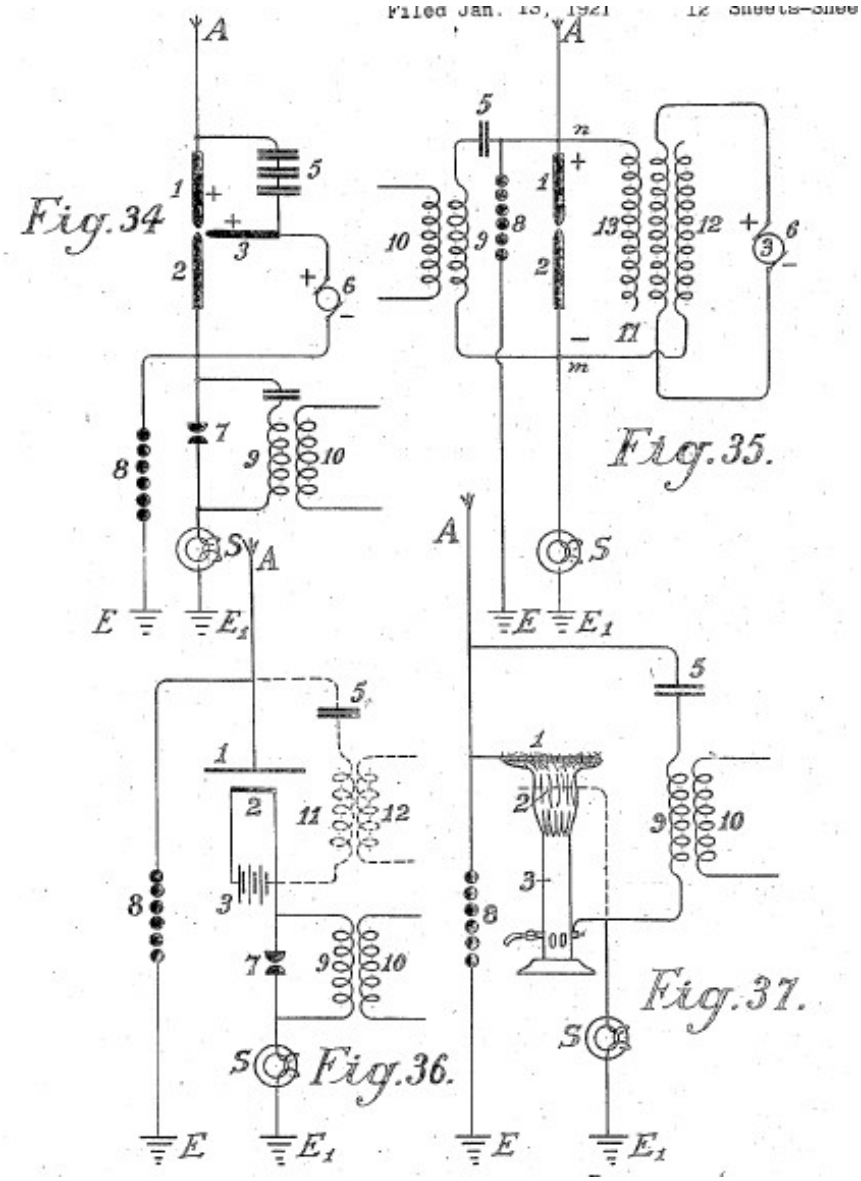

GB 149,917
Improvements in & Relating to Radio Communication Systems

Abstract -- Radio transmission and reception through the use of living vegetable organisms such as trees, plants, and the like.

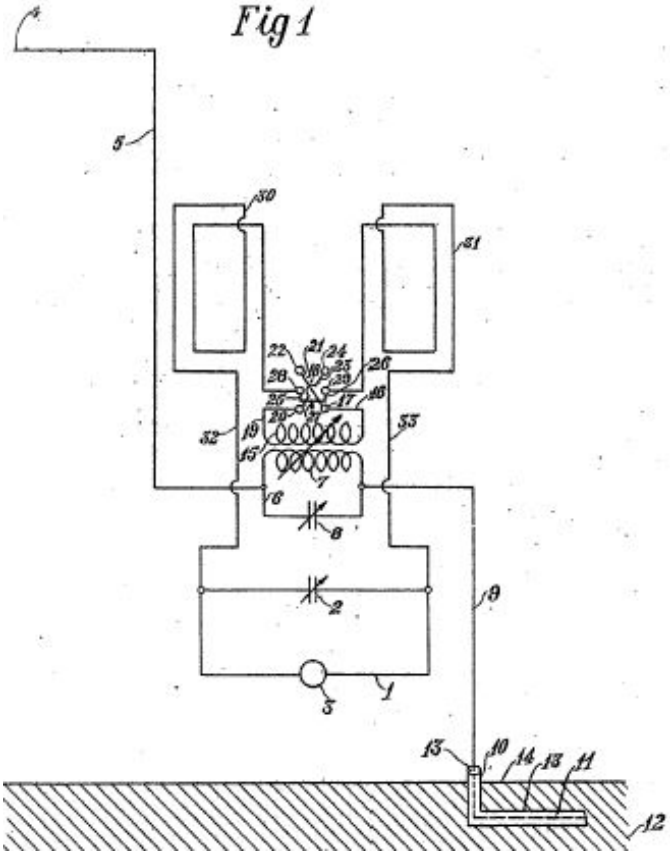

US 1826727
Radio Apparatus

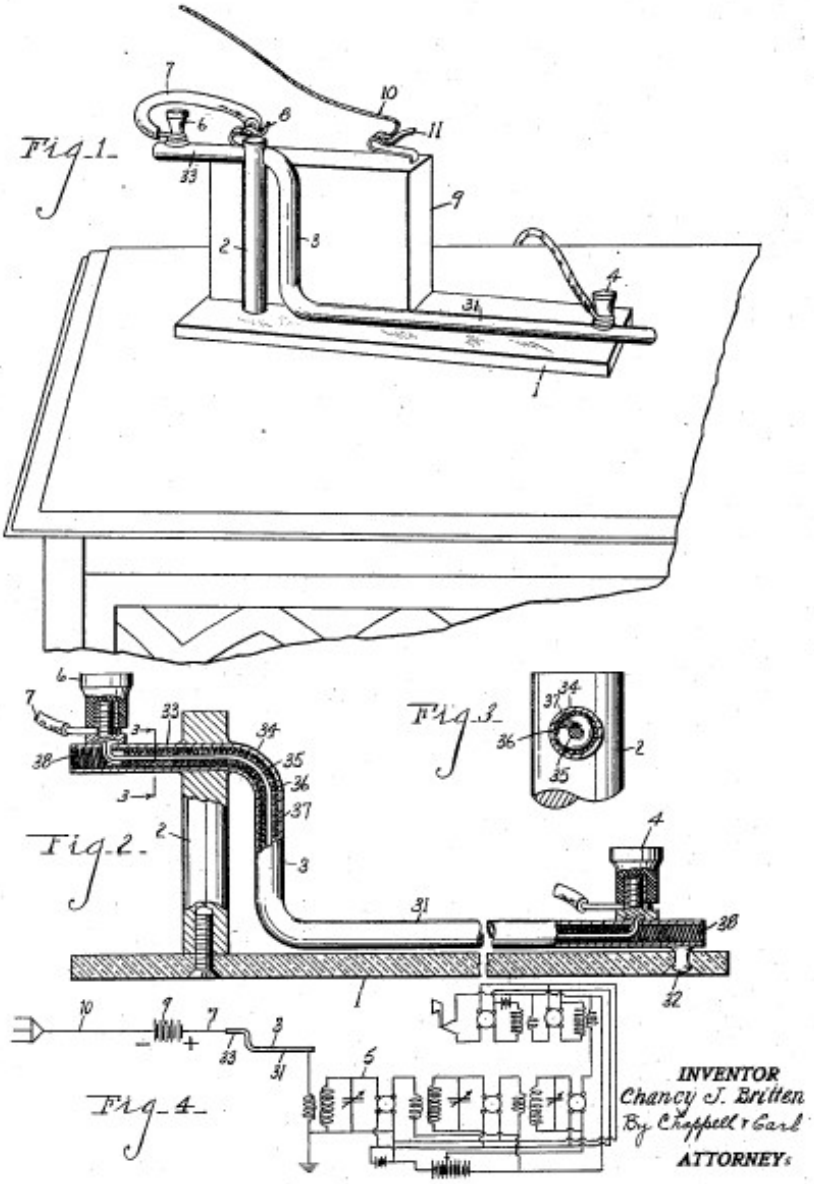

US 2143437
Radiant Energy System

Abstract -- An apparatus for receiving and transmitting radiant energy within a wide range of frequencies without necessity of a source of local energy.

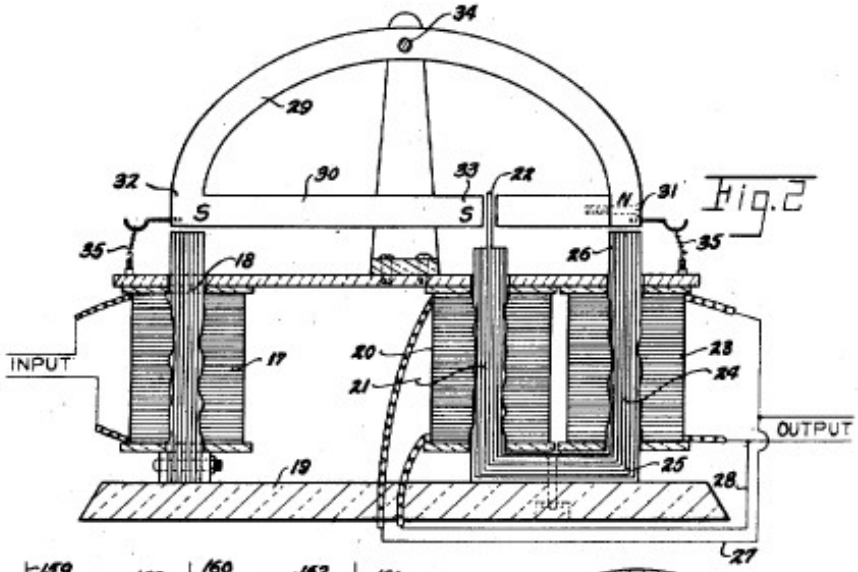

Fig. 2

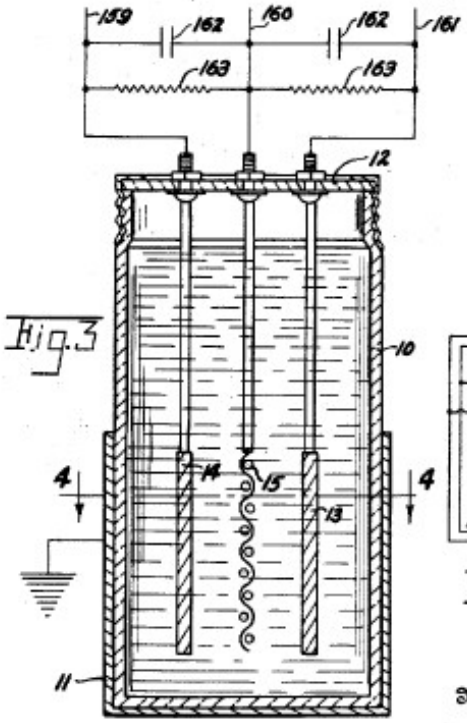

Fig. 3

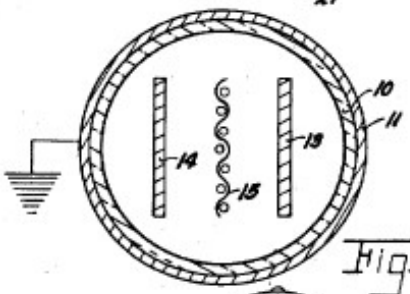

Fig. 4

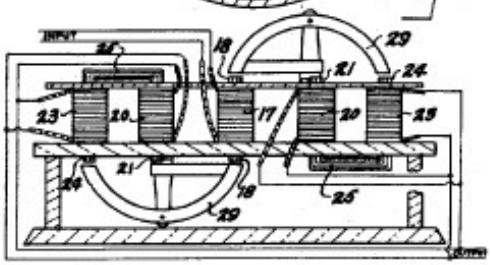

Fig. 9

Inventor

James Marion Fisher

By Murray and Zugelter

Attorney

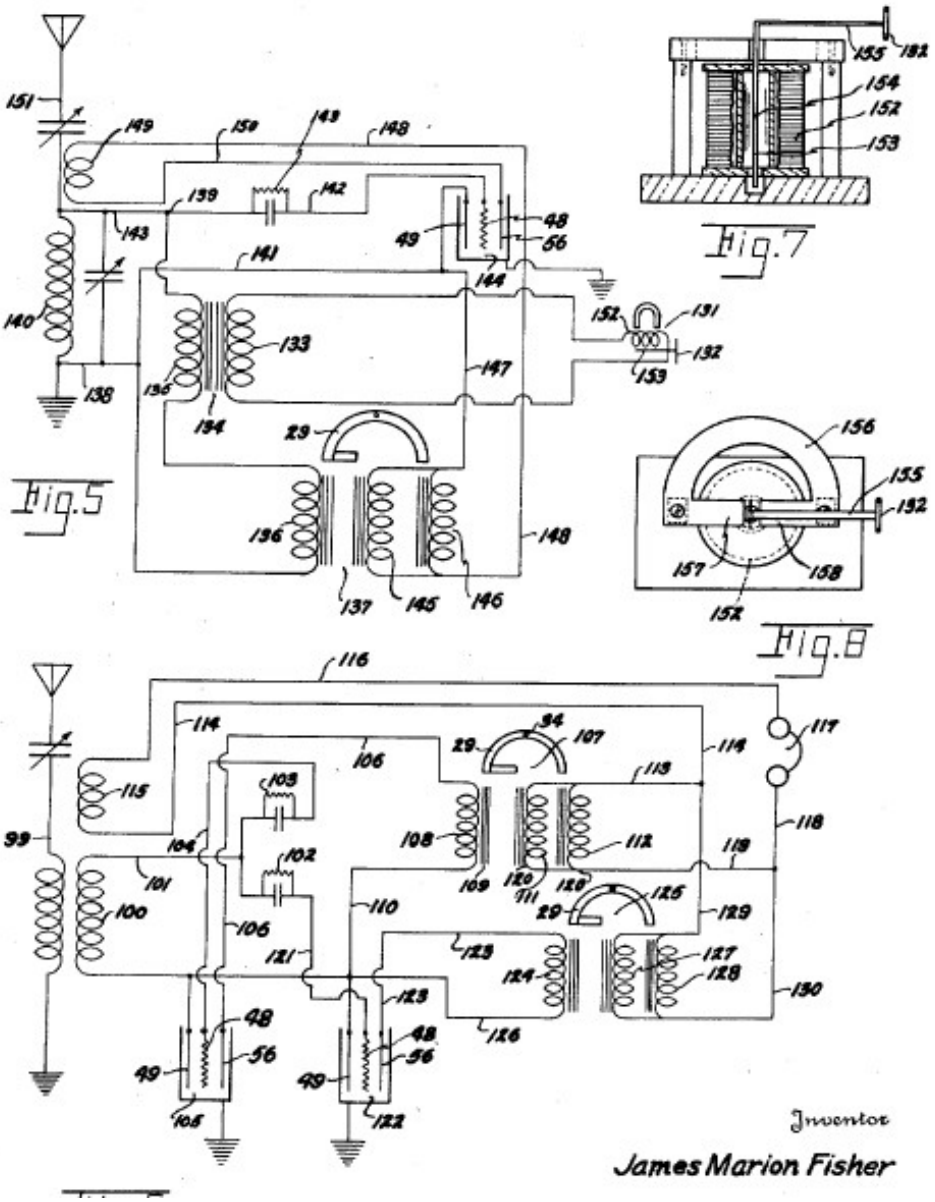

US 2813242
Powering Electrical Devices with Energy Abstracted from the Atmosphere

Abstract -- A convenient and economical provision of power for the operation of electronic circuits and devices using transistors, and of other electrical devices hving modest power requirements.

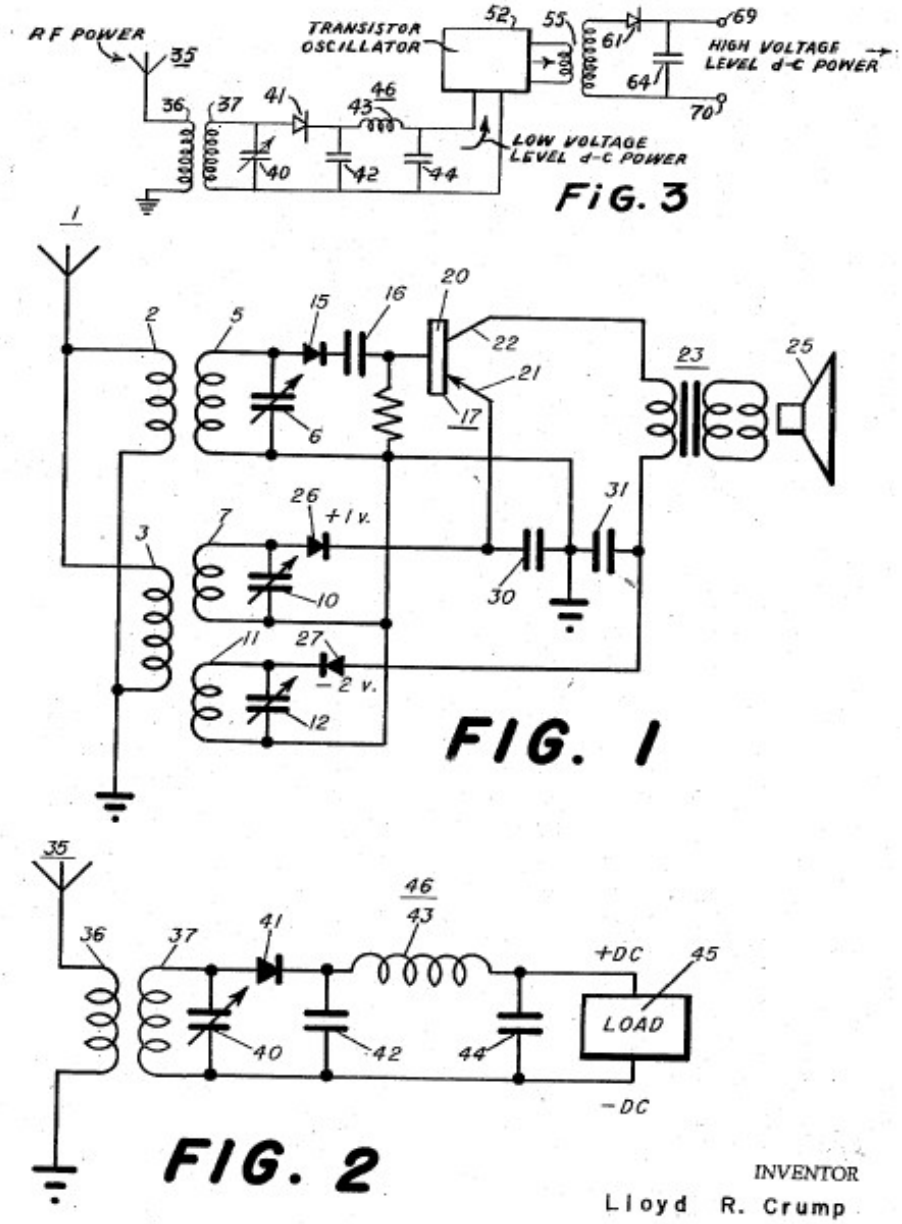

US 3205381
Ionospheric Battery

Abstract -- A method and apparatus for tapping the enormous reservoir of energy existing in the ionosphere...

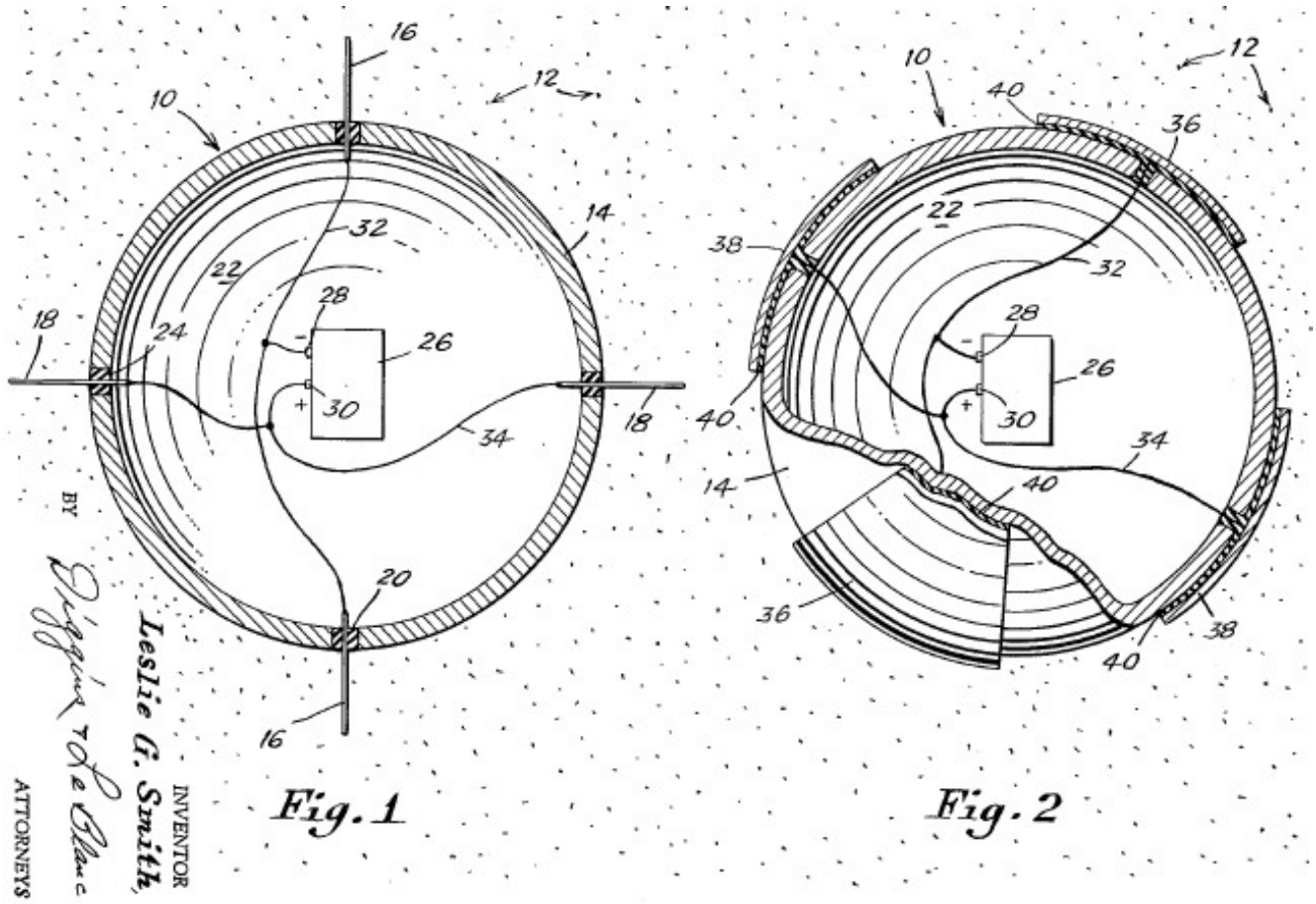

US 3273066
Apparatus for Detecting Changes in the Atmospheric Electric Field

Abstract -- A cloud detector and or an apparatus for sensing electrostatic conditions in the earth's atmosphere...

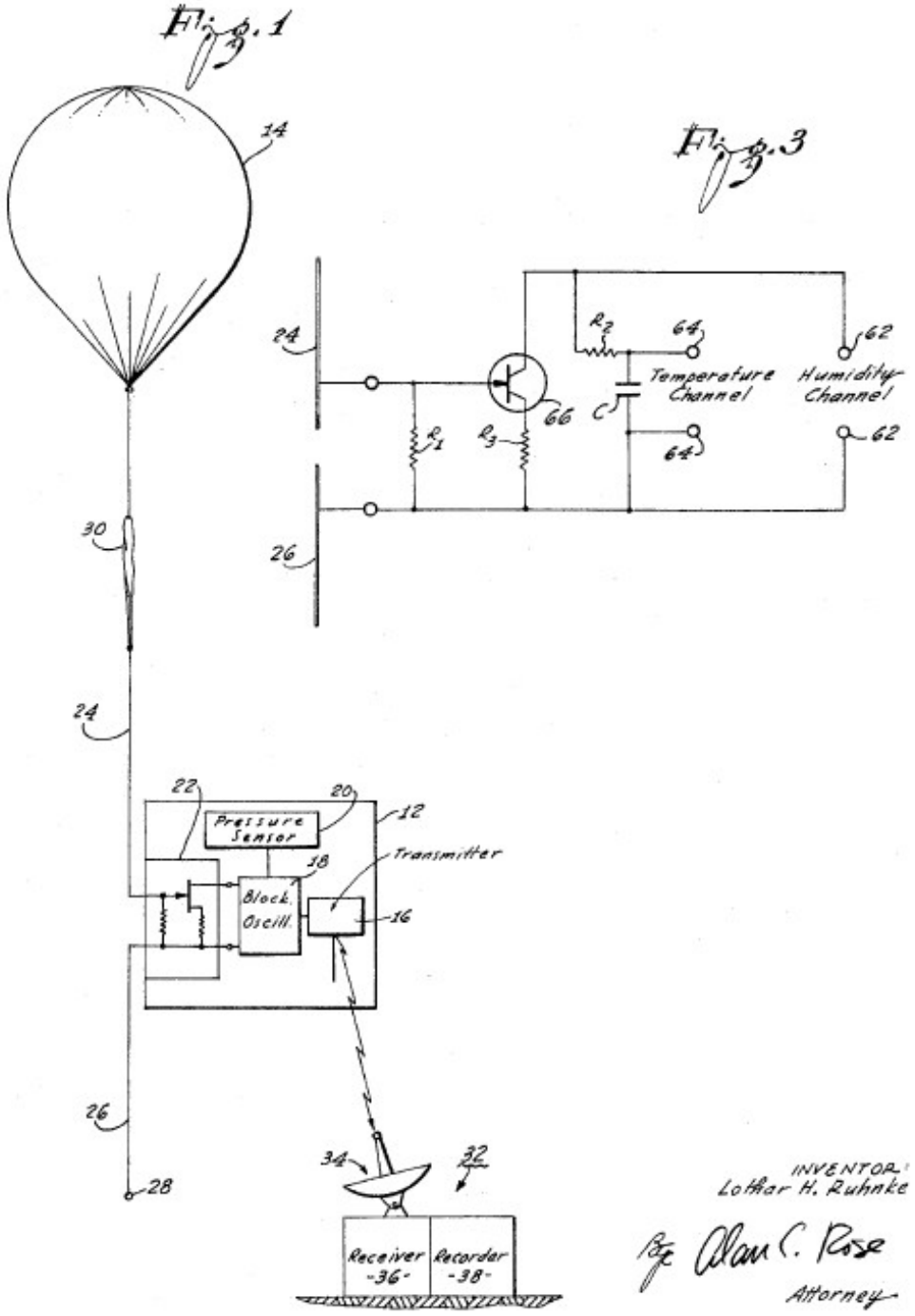

US 3760257
EM Wave Energy Converter

Abstract -- Electromagnetic wave energy is converted into electric power with an array of mutually insulated electromagnetic wave absorber elements each responsive to an electric field component of the wave as it impinges thereon. Each element includes a portion tapered in the direction of wave propagation to provide a relatively wideband response spectrum. Each element includes an output for deriving a voltage replica of the electric field variations intercepted by it. Adjacent elements are positioned relative to each other so that an electric field subsists between adjacent elements in response to the impinging wave. The electric field results in a voltage difference between adjacent elements that is fed to a rectifier to derive d.c. output power. The element pairs may be arranged in a two-dimensional

array to provide power conversion of randomly polarized electromagnetic waves, such as sunlight.

FIG. 1

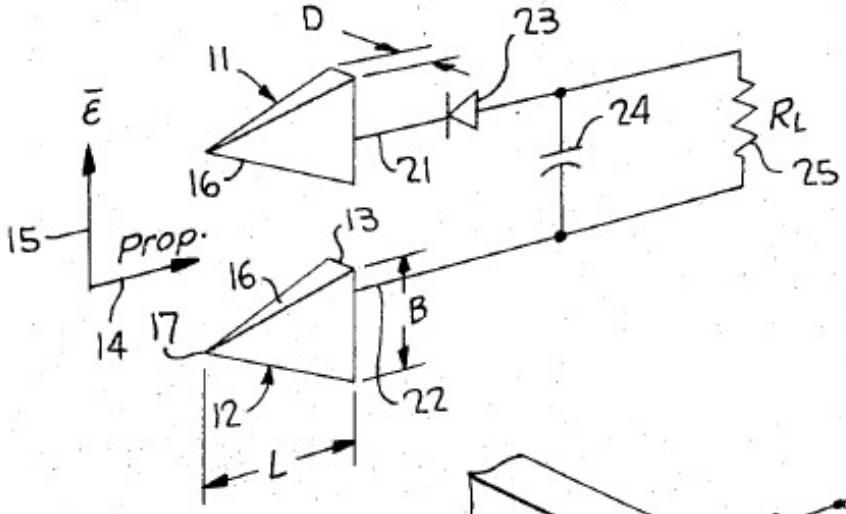

FIG. 2

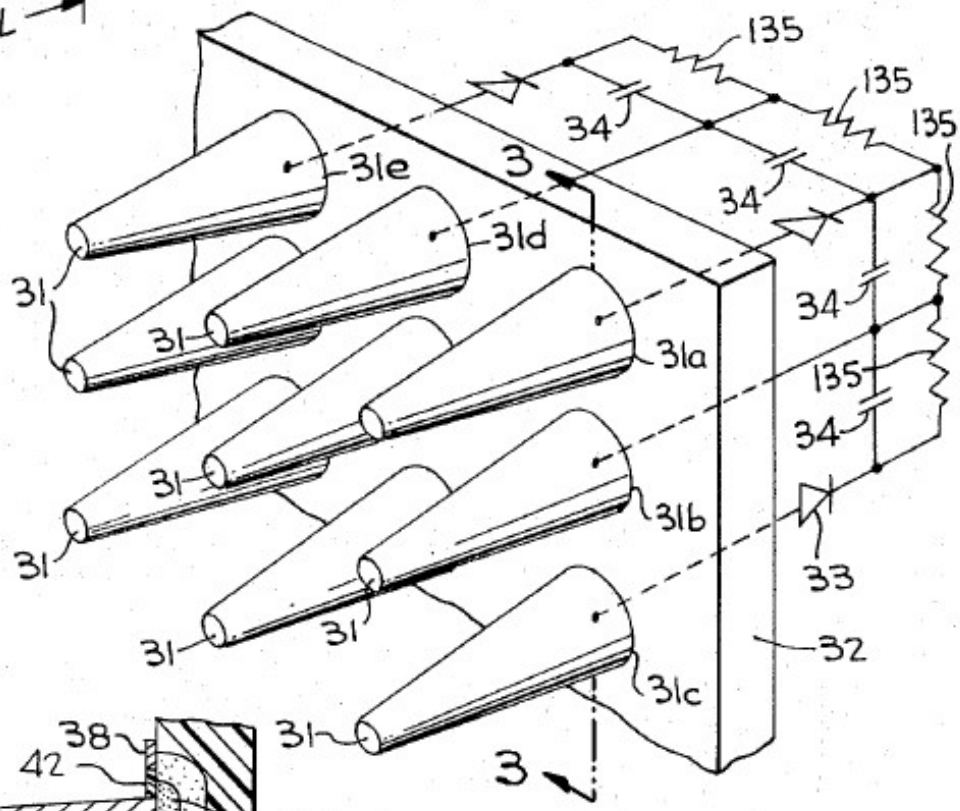

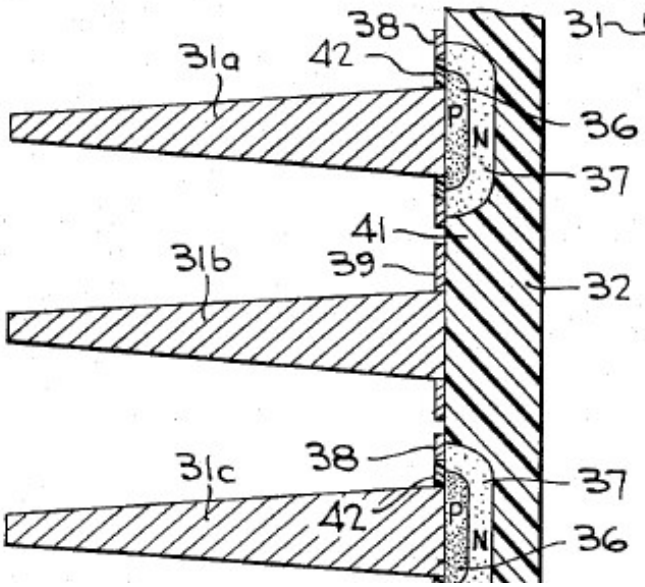

FIG. 3

US 3931577
Radio Receiver Protection Arrangement

Abstract -- A receiver protection arrangement in which a voltage dependent on aerial voltage and a voltage dependent on aerial current are aggregated and applied to means responsive to a predetermined aggregate level to effectively short circuit the aerial lead. Additional means may be provided to dissipate energy in the input stage of a protected receiver to cause a reduced impedance to be reflected across the output of the protective arrangement.

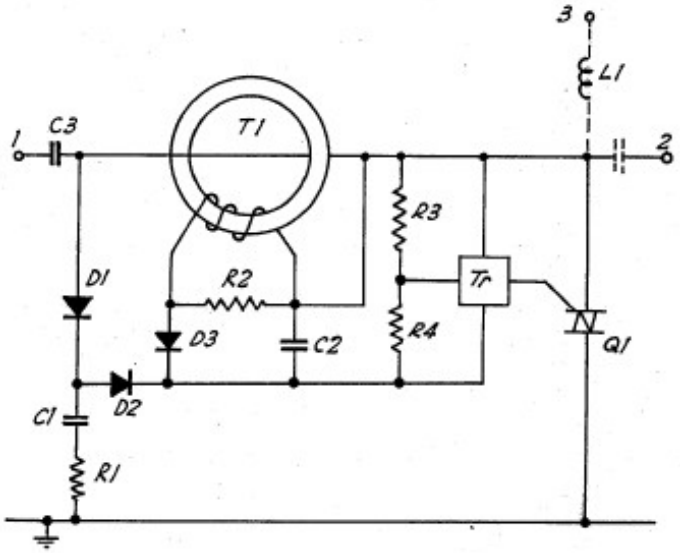

Fig. 1.

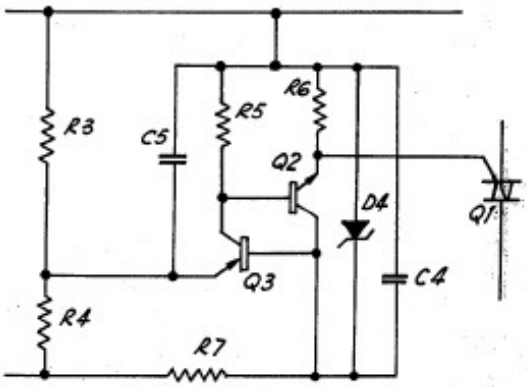

Fig. 2.

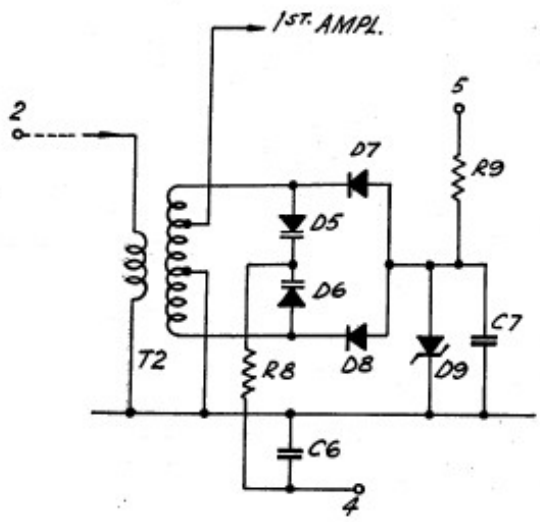

Fig. 3.

US 4,628,299
Seismic Warning System Using RF Energy Monitor

Abstract -- The ambient broadband radio frequency field strength from broadcast stations is monitored (Figure 4) by periodic sampling (50, 52). A warning indication is provided if the field strength drops significantly. Drops in such field strength have been correlated empirically with the occurrence of seismic activity, usually several days later. Thus the indication serves as an early warning of an impending earthquake. In one preferred embodiment, a broadband, horizontal, very long monopole antenna (40) was connected to a rectifying and smoothing circuit (Figure 3) to provide a dc output proportional to the ambient rf field...

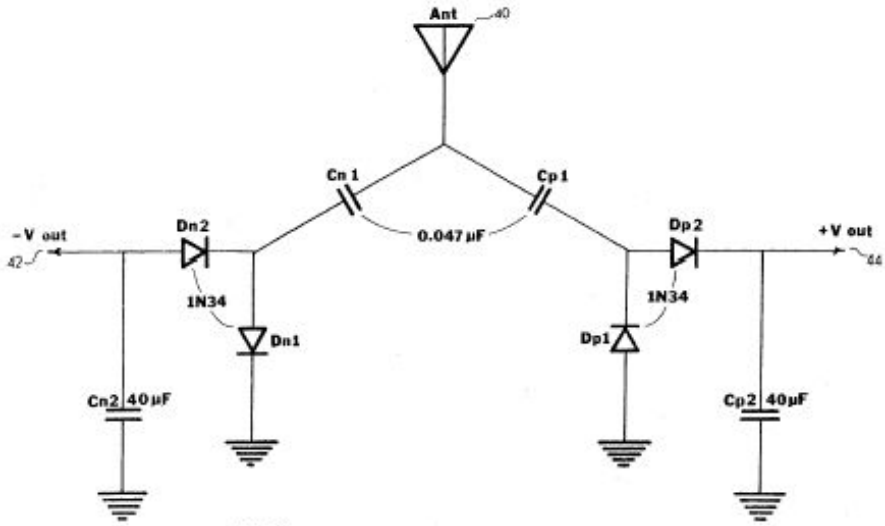

FIG 3

Your Support Maintains this Service --

BUY

The Rex Research Civilization Kit

... It's Your Best Bet & Investment in Sustainable Humanity on Earth ...
Ensure & Enhance Your Survival & Genome Transmission ...
Everything @ rexresearch.com on a Data DVD !

ORDER PAGE

W. I. PENNOCK.

APPARATUS FOR COLLECTING ELECTRICAL ENERGY.

APPLICATION FILED JAN. 4, 1911.

1,014,719. Patented Jan. 16, 1912.

2 SHEETS—SHEET 1.

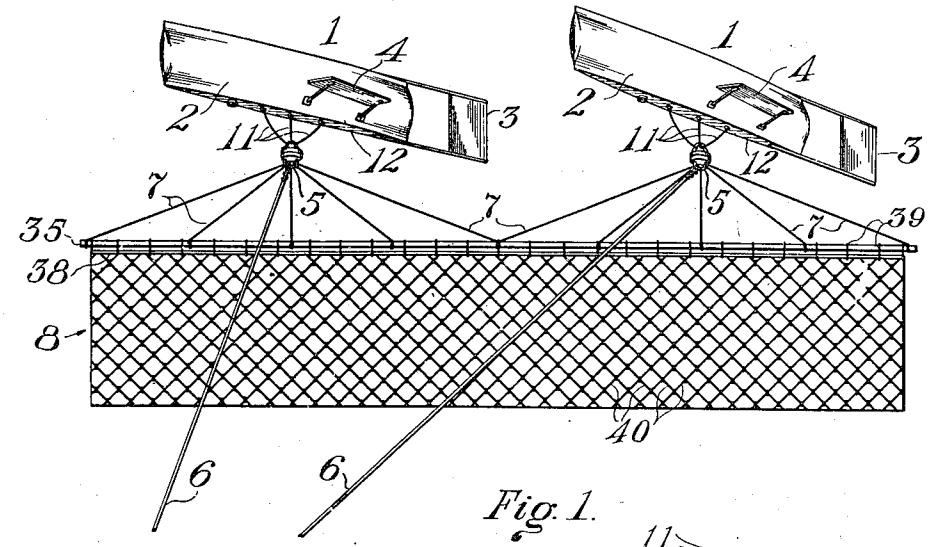

Fig. 1.

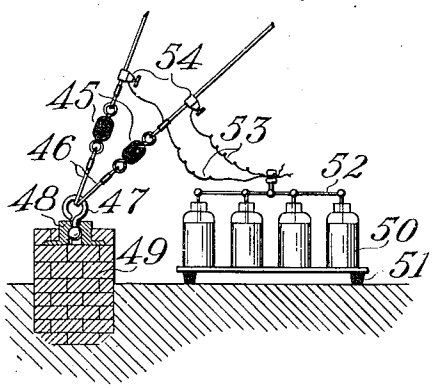

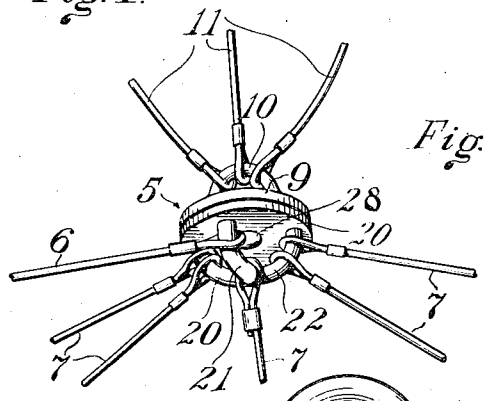

Fig. 3.

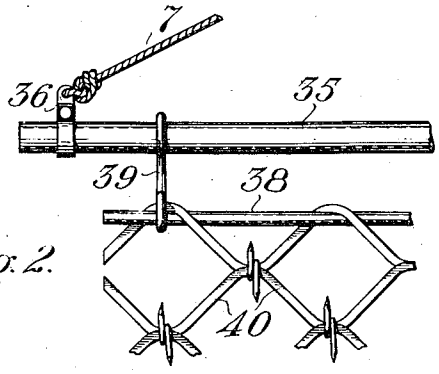

Fig. 2.

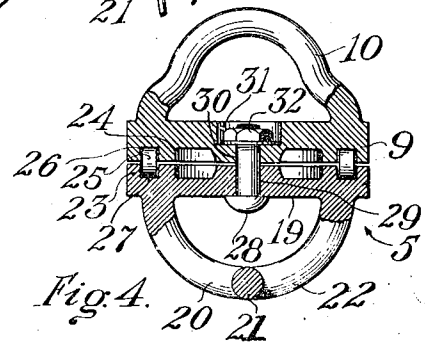

Fig. 4.

INVENTOR

Walter I. Pennock.

WITNESSES

Elizabeth L. Smith

J. Stuart Freeman.

BY

I. Irvine Lewis.

ATTORNEY

W. I. PENNOCK.

APPARATUS FOR COLLECTING ELECTRICAL ENERGY.

APPLICATION FILED JAN. 4, 1911.

1,014,719. Patented Jan. 16, 1912.

2 SHEETS—SHEET 2.

Fig. 5.

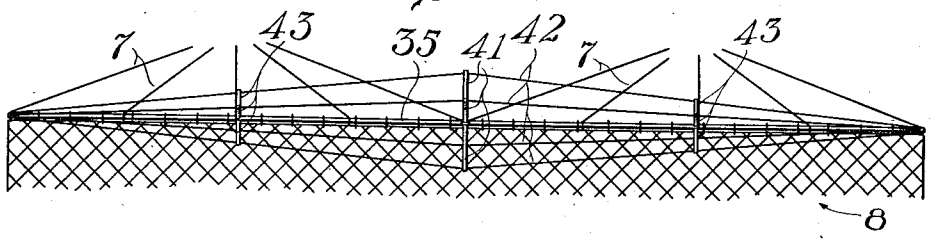

Fig. 6.

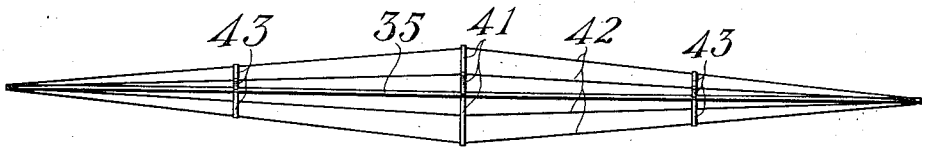

Fig. 7.

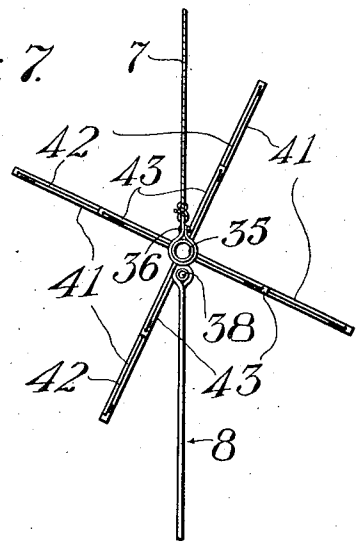

INVENTOR

Walter I. Pennock.

WITNESSES

Elizabeth L. Smith,

J. Stuart Freeman,

BY

Howard Telle

ATTORNEY

UNITED STATES PATENT OFFICE.

WALTER I. PENNOCK, OF PHILADELPHIA, PENNSYLVANIA.

APPARATUS FOR COLLECTING ELECTRICAL ENERGY.

1,014,719. Specification of Letters Patent. Patented Jan. 16, 1912.

Application filed January 4, 1911. Serial No. 600,777.

To all whom it may concern:

Be it known that I, WALTER I. PENNOCK, a citizen of the United States, residing at Philadelphia, county of Philadelphia, and State of Pennsylvania, have invented certain new and useful Improvements in Apparatus for Collecting Electrical Energy, of which the following is a full, clear, and exact disclosure.

The present invention relates to an improved means for collecting the charges of electricity from the upper atmosphere and more particularly to that form which consists in one or more captive balloons from which is suspended a suitable form of metallic conductor.

The principal objects of the device are: to provide a collector for atmospheric and static electricity, which when in operative position will present a large surface to currents of air, but which will offer comparatively little resistance thereto, to provide a collector of such material and construction as will be more efficient in its operation than any previously constructed for a similar purpose, to provide a means for maintaining such a collector suspended in the air and at right angles to opposing currents thereof, and to provide a suitable anchorage for holding said means captive.

With these principal objects in view, the present invention consists in further advantages which are brought out in the following specification and accompanying drawings, in both of which like numerals refer to like parts, and in which drawings—

Figure 1 is a perspective view of the complete device in operative position, Fig. 2 is an enlarged detail view of the wire mesh and the manner in which it is attached to the supporting balloons, Fig. 3 is a detail of the manner of securing the collector-supporting and anchor cables to the balloons, Fig. 4 is an enlarged cross section of the swivel connection shown in Fig. 3, Fig. 5 is top plan view of the reinforcing braces on the screen, Fig. 6 is an elevation of the same and Fig. 7 is an end view of the structure shown in Figs. 5 and 6.

Referring to the drawings, in Fig. 1 thereof, a plurality of balloons 1 of any suitable type is shown, each of which embodies hollow metallic elongated gas tanks 2, extending from the rear of which are single, rigidly affixed rudders 3, while on the sides of the tanks are secured stationary lifting planes 4.

To the bottom and slightly to the rear of the center of the tanks 2 is secured a suitable swivel 5, by which the anchor ropes 6 and the suspension ropes 7 for the metallic conductor 8 are secured to the balloons 1. A suitable form of swivel joint is illustrated in Figs. 3 and 4, but any type can be used that embodies the essential features shown therein.

The swivel joint illustrated consists in the base plate 9 having a looped portion 10 integral therewith and projecting from the upper face thereof. Secured to the loop 10 is a set of three light electrically conductive supporting ropes or cables 11 which extend upwardly and are secured at intervals to the bottom 12 of the balloon above.

The lower or revoluble member 19 of the swivel joint preferably comprises three upwardly directed curved arms, 20, 21, and 22, respectively, forming at their junction a T-shape as shown, said arms at their upper extremities being integral with the plate 23. The member 19 is revoluble below and concentric with the plate 9, and the two members are lightened in weight by opposed concentric grooves as shown at 24. Contact between said members is made through the roller bearings 25, which are carried in the opposed concentric grooves 26 and 27 of the respective upper and lower plates. Furthermore, said plates are maintained in coöperative relation with each other by means of a bolt 28 passing through centrally drilled holes 29 and 30 in the respective lower and upper plates, the drilled hole 30 opening upwardly into an enlarged recess 31, in which is sunken the nut 32 on the bolt 28. Two of the arms 20 and 22 of the lower revoluble member 19 extend in diametrical alinement, while from the central point thereof extends the third arm 21 at right angles thereto, and upward to the plate 23.

Suspended below the plurality of balloons is a hollow rod 35, of any suitable material, connected at regular intervals such as at points 36, by metallic ropes 7, to the alined arms 20 and 22 of the swivel joint 5. Below and parallel to the rod 35 is a similar but smaller rod 38 suspended therefrom by means of suitable couplings 39. From the rod 38 hangs a wire mesh 40 of any suitable form, such as can be extended over a considerable area and which will offer comparatively little resistance to the passage of air therethrough. The metal in such a screen is preferably rough, sharp or jagged and a convenient form embodying these characteristics is expanded sheet metal such as is used for lathing and for reinforcing concrete construction. Instead of the single hollow rod 35 alone, applicant contemplates the use of reinforcing means to prevent the buckling of the rod in a stiff wind, such, for instance, as the arrangement of wire bracing shown in Figs. 5, 6 and 7 in which cross rods 41, secured to the rod 35 at the center thereof are attached to the ends thereof by means of stretched wires 42. Between the rods 41 and the ends of the rod 35 are secured sets of cross rods 43 which support the wires 42 and strengthen the rod 35 at as many points as they may be placed.

For the purpose of maintaining the balloons and apparatus suspended therefrom captive, the light metallic cables 6 terminating downwardly in insulators 45 are employed. These insulators in turn are connected by means of short sections of rope 46 to the eye 47 of a suitable swivel 48, embedded in the anchorage 49.

When the balloons with the metallic screen suspended therefrom are allowed to rise into one of the higher altitudes, the entire apparatus being of metallic construction and uninsulated will become energized by contact with the surrounding natural charges of electricity. From the above description it is evident then that, while the screen 8, on account of its great extent, will be the greatest collecting agent, it will be seen that the balloons themselves and the suspending wires will also coöperate as one large collector, since no parts of which are insulated from any of the neighboring parts thereof. Consequently, when the apparatus described has reached an altitude or strata of the atmosphere abounding in static charges of electricity, an amount of the said charges proportionate to the surface area of the metal exposed will collect upon the apparatus as a whole and will be conducted downwardly toward the earth by means of the various anchor ropes 6, but will not pass into the ground on account of the interposition of the insulators 45.

To use the electrical charges thus acquired, a plurality of Leyden jars 50, or other suitable collectors are supported above the surface of the earth and insulated therefrom by any suitable means as represented by the blocks 51. Either the inner or outer conducting surfaces of the jars may be connected together and energized by the accumulated charge. In the present instance, the inner surfaces of the accumulators are shown to be connected, and the connecting means 52 is in turn connected to the ropes 6 by means of wires 53. These wires are secured to the ropes mentioned by means of suitable binding posts 54.

In the device described the anchor ropes 6 are of substantially the same length, and when the apparatus is raised to the desired altitude and is being blown by the currents of air, the balloons are turned by means of the vanes 3 to parallel relation with each other, and furthermore, from the manner in which the device is held captive and the collecting net 40 is suspended from the balloons, it is obvious that said net will at all times readily swing into a plane substantially perpendicular to any current of air acting upon the balloons above. The purpose of the swivel joint shown in Figs. 3 and 4 is principally for allowing the balloons to readily aline themselves with any new direction of the wind before the apparatus, including the suspended screen, can swing about the swivel 48, and said joint will also prevent the twisting of the ropes 7, when any rapid shifting of the air currents may occur.

While applicant has shown a set of Leyden jars as the accumulators in the accompanying drawings, it is obvious that any other suitable form may be used, and furthermore, that although not illustrated, any suitable apparatus may be run thereby, such as for instance, wireless telegraphic instruments.

Furthermore, although but one embodiment of the invention has been described, it is to be understood that various modifications may be made therein, and in fact several are contemplated by applicant that are of such structure as fall well within the scope of the appended claim.

Having thus described my invention, what I claim and desire to protect by Letters Patent of the United States, is:

A collector for charges of electricity, comprising a plurality of supporting means, a metallic gauze sustained thereby to lie in a plane and substantially equidistant from each of said supporting means, anchoring means emanating from a common point to each of said supporting means, means operative to maintain said supporting means

in their normal positions, and means between each of said supporting means and said gauze to permit each of said supporting means to readily and independently aline itself to accord with any alteration in the direction of opposing air currents.

In witness whereof I have hereunto set my hand this 28 day of December, A. D. 1910.

WALTER I. PENNOCK.

Witnesses:
MILDRED S. TEMPLE,
E. EUGENIA PENNOCK.

Иоффе Александр Юльевич: другие произведения.

Transmission of electricity on one conductor to an isolated object

Журнал "Самиздат": [Регистрация] [Найти] [Рейтинги] [Обсуждения] [Новинки] [Обзоры] [Помощь]

Реклама: Новинки на КНИГОМАН Реклама: Прода на ZELLULOZA

LingvoAnalyse

- Оставить комментарий
- © Copyright Иоффе Александр Юльевич (ioffe.shura@Yandex.ru)
- Размещен: 17/04/2015, изменен: 20/08/2017. 90k. Статистика.
- Статья: Foreign+Translat
- Иллюстрации/приложения: 20 шт.
- Скачать FB2

Ваша оценка: не читал ▼ ОК

- **Аннотация:**
In this article possibility of transfer of electric energy and/or information to the object isolated from Earth or from other carrying-out body on one conductor, and short history of this question is discussed. Some electric circuits of such electricity transmission are given and it is defined to what physical mechanism (a single-wire electricity transmission), according to the author, corresponds. Attempt of calculation of the transferred power and relative loss of energy is made. The author gives possible ways of increase in power and reduction of losses, and also protection against an adverse effect of such electricity transmission on a human body. In article there is a description of the conducted experiments. Also in article it is possible to read what, according to the author, are possible areas of practical application, advantage and shortcomings of transfer of the electric power on one conductor. The author apologizes, that not all declared chapters are published. Subject very extensive, in essence, rather new area of electrical equipment while there is a work, he decided to take out that on court of readers that is already ready.

TABLE OF CONTENTS.

- Foreword.
- Chapter 1: The mechanism of single-wire transmission.
- Chapter 2. Calculation of the transmitted power.
- Chapter 3. * Efficiency single-wire transmission and possible protection against radiation.
- Chapter 4 Ways of increasing the transmission power.
- Chapter 5. A third method of single-wire power transmission
- Chapter 6. * Our experiments.
- Chapter 7. Possible uses a single-wire power.
- Literature.

* Chapters not ready (at work)

CHAPTER 1. MECHANISM OF A SINGLE-WIRE ELECTRICITY TRANSMISSION.

The first experiments on transmission of the electric power on one conductor were made at a dawn of formation of the theory of electricity at the end of the 18th century. It is possible to find the description of experience in which the charged full-sphere (transmitter) connects to the uncharged full-sphere (receiver) one conductor in any solid textbook of physics. On the uncharged full-sphere charges flow, it becomes the owner of electric potential and consequently also energies. But except as contribution to the theory of potentials and condensers, for development of the theory of a single-wire electricity transmission and practical use this experience then brought nothing.

In 1899 Nikola Tesla in laboratory about the town of Colorado Springs made brilliant experiment on transfer of the electric power on one conductor, he used Earth as such conductor. The lamps thrust to Earth were lit. On my understanding, he made it using, in some measure, the above described experience. Results were reflected in article in the 'Century Magazine', magazine under Robert Johnson's edition.

But, unfortunately, demonstrations of experiences are the limit, futher affairs did not progress. And it occurred, owing to circumstances, that not depend in him. Further this Titan put a problem more widely. He tried to find a way, and probably found, how to transfer the electric power to any given square of space in general without wires by means of resonance "swing" of an ionosphere. Made successful experiments in Uordenkliff. Therefore, he is a father of wireless transfer of the electric power which now too goes uphill.

Somewhere around 1981 I, then a young engineer working in one of the Soviet research institutes, in connection with the above experience from the textbook, came up with this idea. And what if you take 4 sphere and one conductor? See Figure 1.

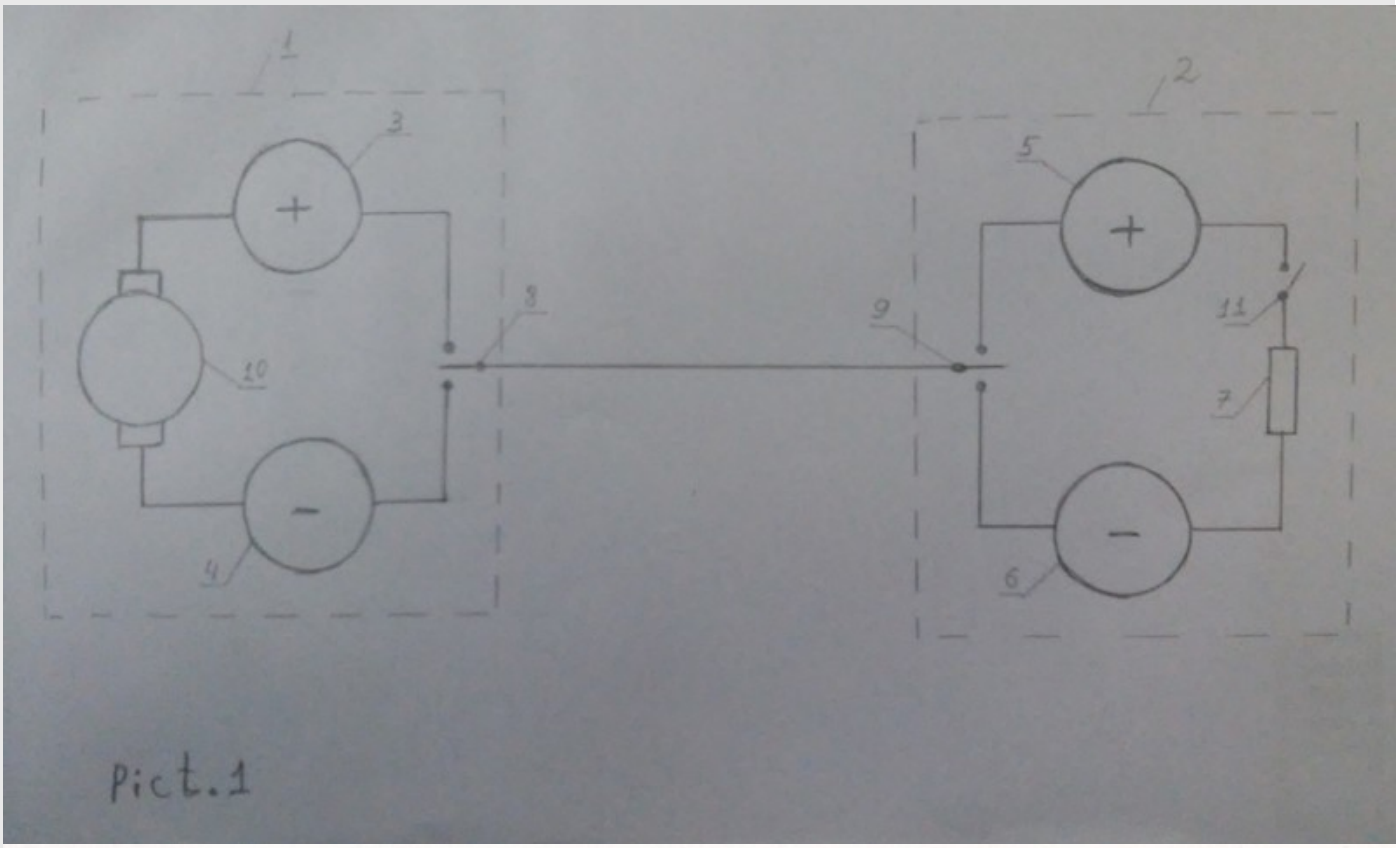

Pict.1

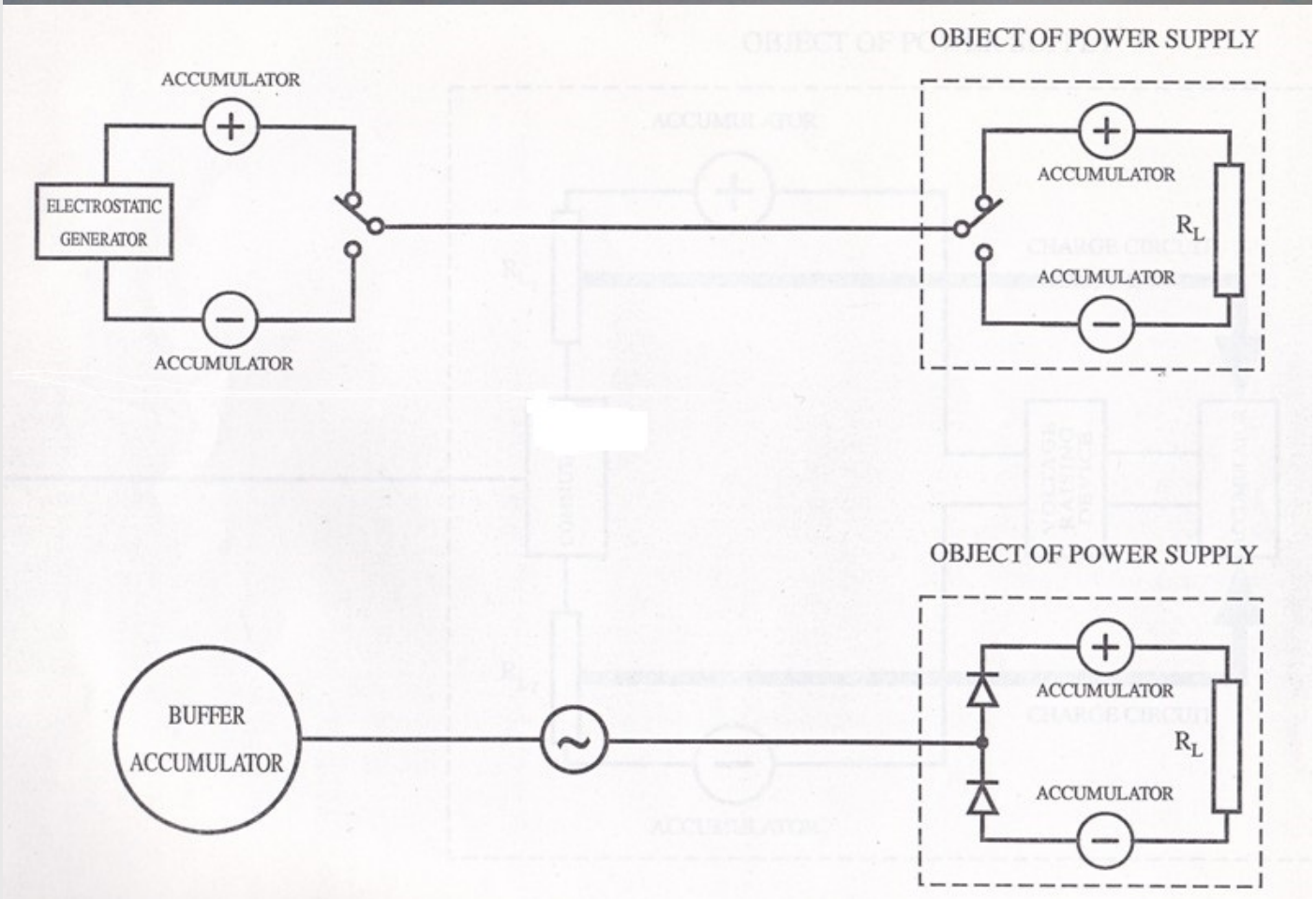

Two spheres (5 and 6) won't be loaded yet and to be on the receiver (2), and two loaded (3 and 4) one plus charges, and the second the minus - to belong to the transmitter (1). Then, working cyclically with switches (8 and 9), it is possible to connect in the first half of a cycle the same conductor the first loaded sphere (3) with not loaded (5), and in the second - the

second loaded sphere (4) with another not loaded (6). Thus, at the end of a cycle we will receive two loaded spheres on the receiver, and charges can be removed from them through the payload (7), having involved the switch (11). We will feed transmitter spheres with charges all the time, having connected them, for example, to the battery, the generator of a direct current (10) or an influence machine. It is the first way of single-wire transfer. Subsequently, in operating time over this subject, also the second way, and simpler appeared. See Fig. 2.

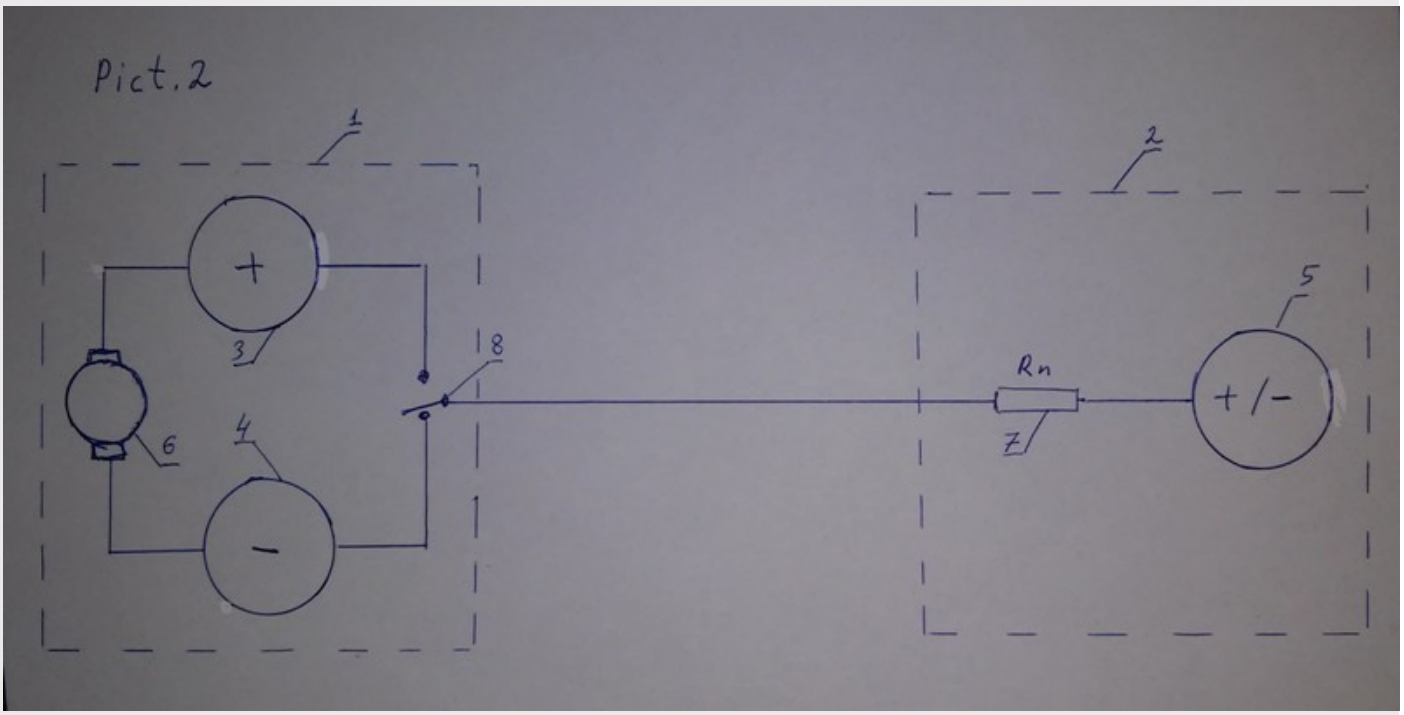

On the receiver (2) it is possible to leave only one store of electric charges(5) (in the text we will call spheres - stores of electric charges or it is simple - stores especially as stores aren't obliged to be a spherical form), but (7) we will place payload between it and the conductor going from the transmitter (1) now. Working with the switch (8), as well as at the first way, we connect alternately stores of the transmitter (3 and 4) to one conductor going to the receiver. The receiver store in each half-cycle of a cycle will receive charges of a different sign. And passing charges, every time a way from source stores to the receiver store, will make useful work, passing as well through load. Transmitter stores are recharged from the generator of a direct current (6) all the time. The continuity of transfer of current is provided to these. From the further text of article it will be clear that for the second way as load it is best of all to use, a winding of the transformer or an electric motor/electromagnet with the rectifier as thermal work won't be made. But if we want to receive, nevertheless, on the receiver heat on resistance, this resistance should be connected to a secondary winding of the transformer, and primary as it was told above, then to use as load.

Subsequently, for increase of overall performance and convenience, the scheme 1 and 2 underwent big changes. The transmitter in both schemes began to be the following device*.See Fig.3.

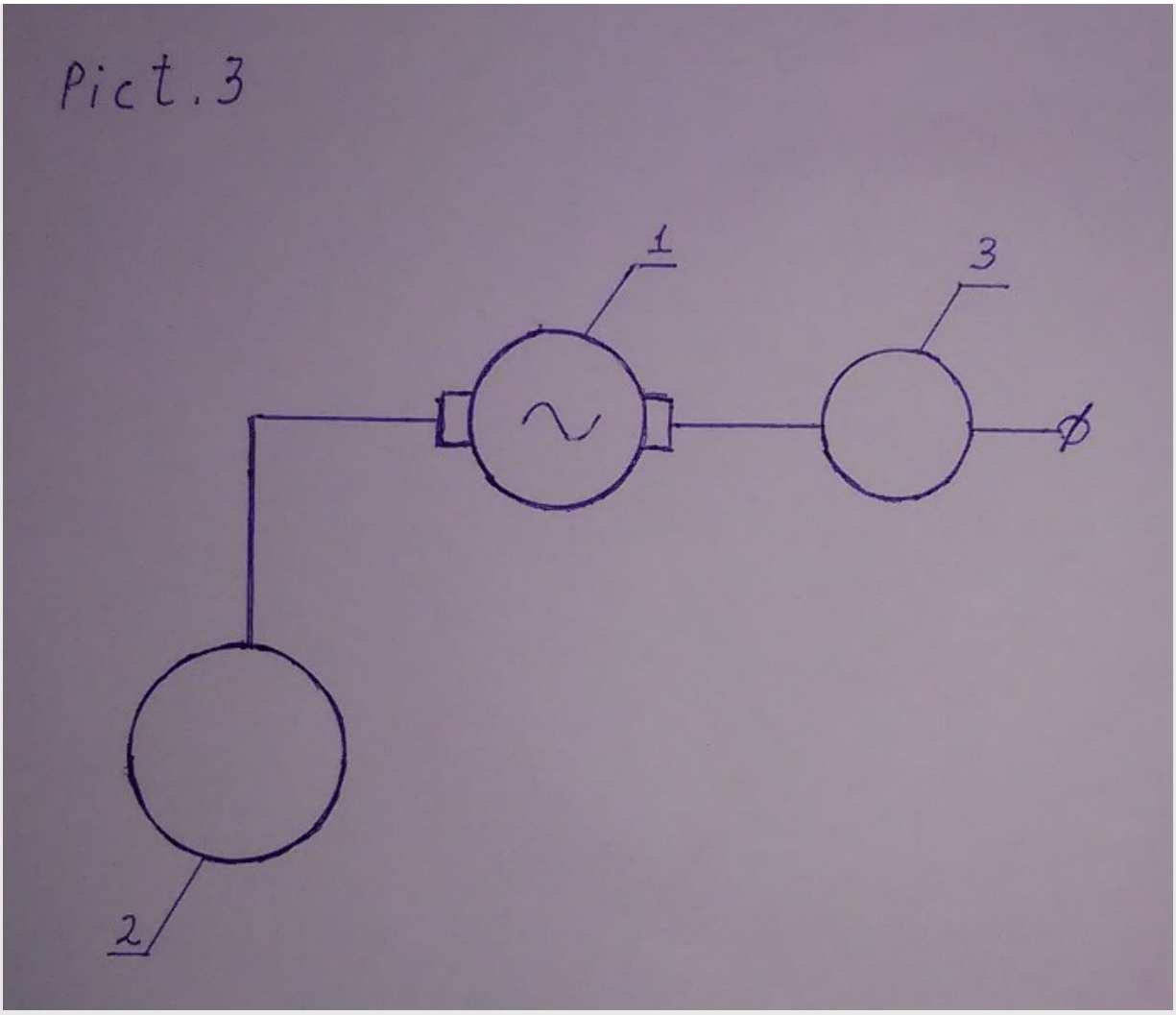

It is necessary to emphasize that here the generator of alternating current (1), but not constant already works. The store (3) transmitters from which charges for the conductor going to object of current supply not necessarily are removed has to possess big capacity, if receipt of charges from the generator continuously. In this case it can represent simply thin conductor. In case of faltering giving of charges from a source, its capacity has to be such that for a half-cycle not to allow essentially to fall to potential on it at "fence" of charges through the conductor on the receiver and interruptions in giving of charges from the generator. At such option its capacity and respectively the geometrical sizes, have to be at least 10 times more receiver store parameters. If interruptions small - that and the sizes modest. And here other store of the transmitter called in this article "buffer" (2), connected to its other conclusion even during the continuous operation of the generator has to possess rather big capacity and corresponding the big geometrical sizes. Its capacity has to be such that it at the set transfer of current potential (generator parameter) during a half-cycle could store so many charges of an opposite sign transferred, how many perceives the receiver store. That is in any way it isn't less than a capacity and according to the geometrical sizes of the store of the receiver. If it is more, it is only better. On Earth, a very good fit Earth itself - the spherical capacitor with huge geometric dimensions. That is, the second terminal of the generator, if conditions permit, the easiest way to ground **. The switch (9) in the first scheme (see Fig. 1) it was convenient to replace with a two diode switch 'diode fork' (4) (see Fig. 4).

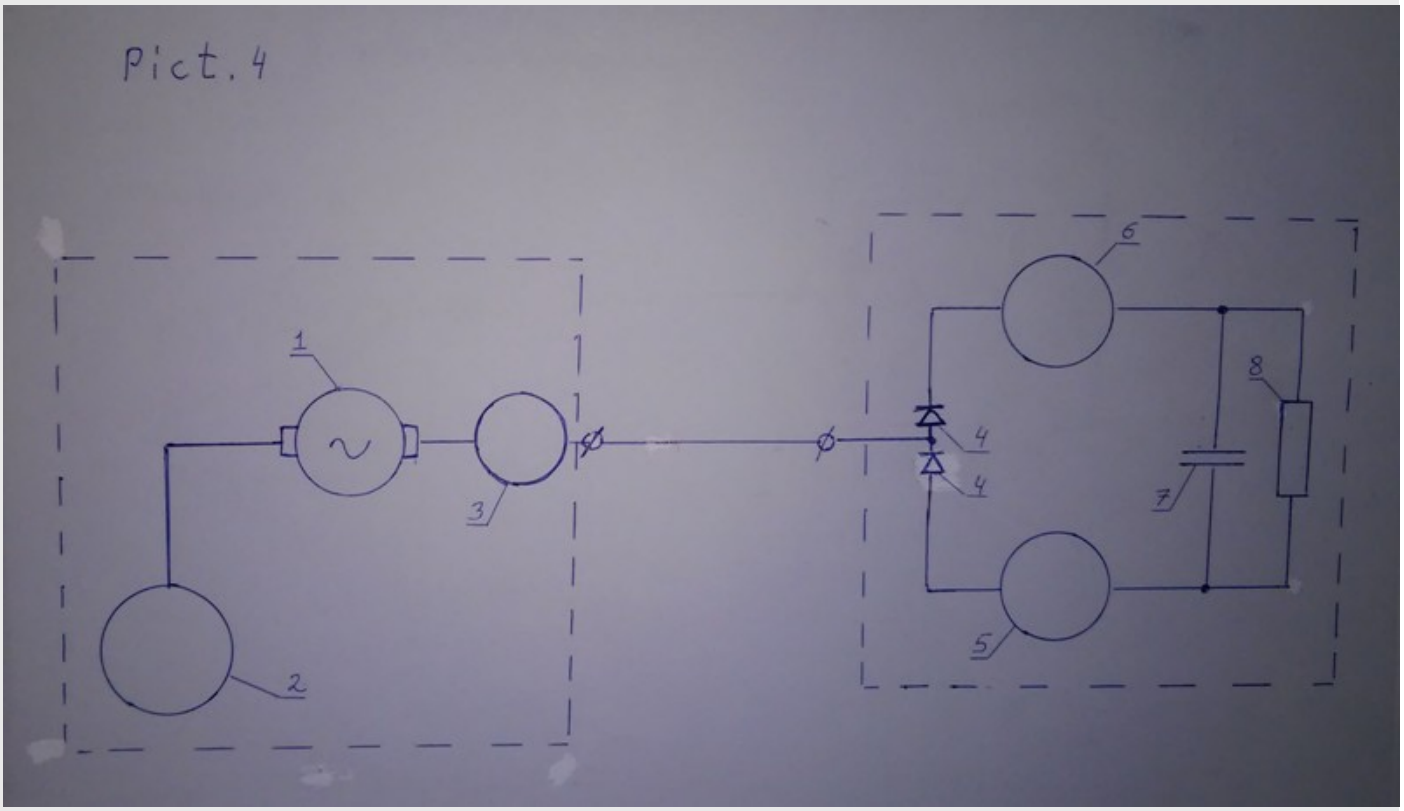

The switch (11) (see Fig. 1) in the same scheme was not necessary.

So, we will consider the modified schemes. The scheme for the first way of an electricity transmission is submitted in Fig.4, and for the second in Fig.5a. In the first way, for the smoothing proceeding through loading (8) (see Fig.4) current, it is useful to connect the condenser (7) (see Fig. 4) parallel to this load. And as for the second way if we want that through load current of one direction began to flow, it is possible to use the diode bridge (6) (see Fig. 5b) and, besides, for smoothing to connect parallel to load (4) (see Fig.5b) the condenser (7) (see Fig.5b). This scheme is submitted in Fig.5b.

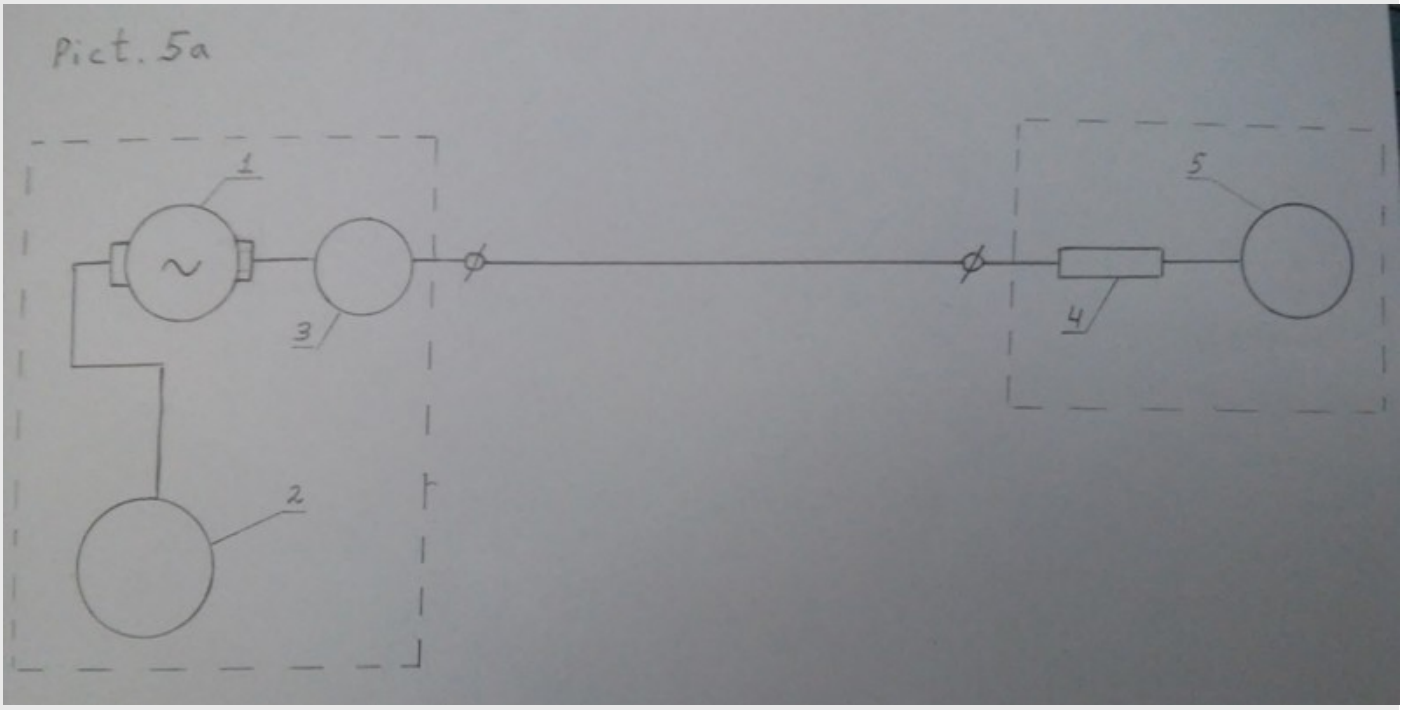

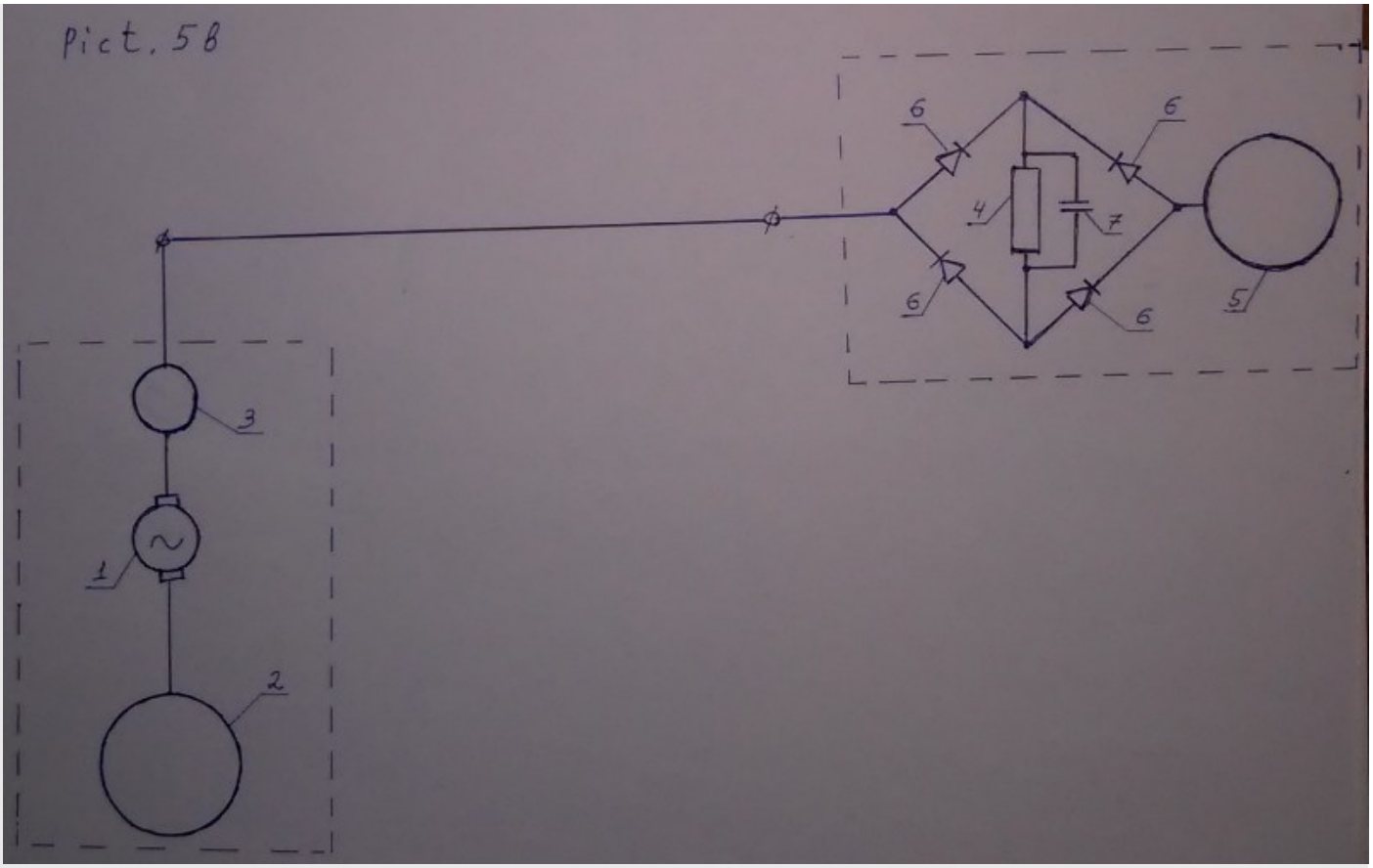

It is necessary to tell that as work on this subject didn't include in the plan of works of my scientific research institute, and I saw off it as a hobby, it moved ahead extremely slowly. During the researches I often went on consultation to Candidate of Physical Sciences Kirsanov Boris Petrovich and he made a big contribution to development of schemes and theories. In 1981/3 years I with Kirsanov B.P. submitted applications for inventions [5,6](photocopies at the end of the article). But experts of VNIIGPE didn't grant to us certificates, having referred to the low transferred power in our pilot unit executed according to the scheme of Fig. 4. But we experimental installation collected for the only purpose - to prove course of current in load, possibility of that was denied by experts absolutely at the first stage of ours with them communication. Then (in 1989) I with assistance of Kirsanov B. P. wrote article to the Inventor and Rationalizer magazine [1](photocopy at the end of the article). Soon after publication of my article it became clear that in parallel with us this subject is developed also by other people.

Group of inventors under the leadership of S. V. Avramenko under the auspices of Moscow Scientifically - Research Electrotechnical Institute collected and experienced installation on transfer of the electric power on one conductor [2,3]. This installation is very similar on thought up by us with Kirsanovy B. P. and published in the magazine [1]. In this article this installation is represented in Pict.4. They claimed that they made it before date of issue of our article. And that submitted the article to the same magazine, but didn't publish it. I won't argue with it. I will tell only, as at us before the publication installations too were collected and applications for inventions are submitted. I do not know how things are going with the priority, but that they are in the works, after our meeting and reading my article about something we have not mentioned, I think it ugly

As for their works, I think that they placed accents not there. Too great value was attached to a two diode switch 'diode fork' though the same results can be received and without it with synchronous switches. They worked (their installation) at very high frequency. Subsequently, from the text of this article it will be visible that it reduces efficiency of transfer and in general is harmful. But they collected very impressive pilot unit , I myself personally observed - it was possible to light the glow lamp.

Great merit of this group of people I see that they first drew attention to the fact that the single-wire transmission of electricity resistance of a conductor does not affect the transmit power. Furthermore, the transfer of electricity and do not affect the small gaps in the conductor cm. [4]. And I do not understand why these inventors have not submitted an application for discovery in the field of physics. As far as the physical process, it can be assumed that we are faced with a different mechanism of passing an electric current through a conductor. The charges are on the outer contour of the conductor, seeking to redistribute equipotentially throughout, even very distant surface. They do not go into the conductor and not get hit by the vibrating atoms of its crystal lattice. Nothing however retards the electrons and the conductor resistance is negligible regardless of its thickness and the material from which it is made. In experiments carried out in the writing of this article, such a property is supported by a series of experiments ... In addition, if the free electrons are facing

a narrow "abyss" - a break in the conductor, the repulsion "accumulates" neighboring electrons helps them to "jump" through the "cleft" and "land" to "sparsely" surface.

As for later works, Kosinov N. V. article is interesting [2]. I consider this work among works of other authors the most advanced, it is possible to see the scheme very similar on presented on Pict.5b. Here for the first time, if to speak about works of other authors, in an explicit form there is a receiver store called for some reason "antenna". However, at such big frequency at which as I suspect, experiments and about which they for some reason "modestly are silent" were made, most likely it already radio frequencies, such name arises by itself. And that is "still interesting", about its (store) of a role in this work, for some reason, it is told nothing. And in general, looking through literature on this subject I see that as stores connecting wires, and authors of works, it seems, even serve don't guess their such function. Stores with small own capacity, like wires also will be suitable for high frequencies, but whether here it is worth working with high frequencies is a big question.

NOTES.

* For the elementary experiments as the transmitter it is possible to use one conclusion of the socket of the household power supply network, i.e. to insert one conductor into the right opening of the socket (it is a phase). But, as in a household network low frequency, current will go very small and it is necessary "to arm" for its registration with the microampermeter. It is possible to connect instead of the microampermeter the condenser / (plus the rectifier) and to load it some minutes then to pull together its connections wires and to observe a spark.

** Just the household network is grounded or connected to big electric capacitance.

CHAPTER 2. CALCULATION OF THE TRANSFERRED POWER.

Calculation is made for low frequencies of an electricity transmission. For high there will be differences. The main is that the geometrical sizes of stores of the receiver will cease to influence the accepted power as these conductive bodies won't manage to be filled for a half-cycle with charges. It is confirmed in work[10].

CALCULATION OF POWER FOR THE FIRST WAY OF A SINGLE-WIRE ELECTRICITY TRANSMISSION.

We will take an interval of time (t) equal to a half-cycle (t=T/2) of the frequency (nu) of switchings of the direction of a current of charges at a single-wire electricity transmission. This time throughout which the store of the receiver is connected by the conductor to the transmitter store possessing at this stage charges of some one sign, or "+" or "-". And these charges are redistributed so that to form an equipotential surface, i.e. charge the receiver store until electropotential on it isn't equal to transmitter store electropotential.

Stores, in all schemes provided in article are condensers which one facing is a surface of their physical body, and other-infinity. Therefore, according to a well-known physical formula for the condenser, we can write that the charged store possesses energy (W1), calculated on a formula (2.1).

(2.1) W1 = C x Phi squared/2

Where C - the electric capacity, Phi - potential.

While capacitor charging time (tau) is defined by (2.2).

(2.2) Tau = r x C, where r - resistance of the conductors going to the condenser.

As it was stated above, according to a series of experiments of N. (the same can be read and in works of other authors [2, 3]) follows that at a single-wire electricity transmission resistance of the conductors going to the store is insignificant a little. With what physical process it was possible to explain it, it is specified in Chapter 1. Therefore, it is insignificant a little and time of charging of the store (condenser). According to it, it is possible to fill a surface of the store which is on the receiver almost instantly. But what follows for calculation of the transferred power from here? And that we can reduce somehow time of a half-cycle (t) considered by us at calculations follows from this and respectively increase the frequency of an electricity transmission (nu), after all they are connected by a formula (2.3):

(2.3) nu = 1/T = 1/2t, or t = 1/2nu

the store of a receiver will always manage to be loaded in time = t.

The basic formula for the power (P1) says:

(2.4) P1 = W1/t Reducing (t) we increase the transferred power. We will substitute in a formula (4) expression for (t) from a formula (2.3). We will receive:

(2.5) P1 = 2 x nu x W1

So it is possible to draw a conclusion. The transferred power is directly proportional to the frequency of an electricity transmission (nu). Now question. To what level we can increase frequency? Restrictions "from above" following. At increase of frequency losses on the electromagnetic radiation of a wire grow, and they grow in proportion to not the first degree of frequency, as the power received by the receiver, and the second. We will deal with this issue in more detail later when we consider electricity transmission K.P.D. in Chapter 3. Besides, the high frequency and respectively strong electromagnetic radiation, can negatively affect in the medical plan the population of areas where the similar electricity transmission will be carried out. Too high frequency will be included into area of radio frequencies and will create hindrances of broadcasting and a special radio communication. Well and technical capabilities of the transmitter of the electric power, especially powerful, have some restrictions at creation of too high frequency.

Now we will consider other aspect. Influence of the geometrical sizes of the store , on the power received by this receiver. The best, in respect of the maximum electric capacitance at the minimum size, a form of the single store is a form of a sphere. After all at such form charges don't flow down from acute angles. But also other bodies with the carrying-out surface will accumulate charges. In calculations, nevertheless, as they have the general character, we will accept that we have a store of a spherical form. According to a well-known formula, the capacity of the spherical lonely condenser (C) it is equal:

(2.6) C = 4 x Pi x epsilon zero x R

Where epsilon zero - electric constant, and R - sphere radius. We will substitute this expression in a formula (1). We will receive:

(2.7) W1 = 4 x Pi x epsilon zero x R x Phi a square / 2, or after reduction: W = 2 x Pi x epsilon zero x R x Phi square

We will unite formulas (2.5) and (2.7) now and we will find expression for power.

(2.8) P1 = 4 x Pi x epsilon zero x nu x R x Phi square

We see that the transferred power P is proportional to the geometrical sizes of the store of the receiver (to sphere radius - R).

We will consider one more factor - electricity transmission potential. From the received formula (2.8) it is visible that the power of an electricity transmission P is proportional to the potential of Phi on the receiver store in the second degree. Now restrictions on potential. They are connected with safety of the people dealing with such electricity transmission and with loss of energy on the "crown" and leakage of electrons that we will consider later in Chapter 3. Later we will consider intake option where high potentials are only in its isolated part, and the current transfer conductor intended for it are under the usual not alternating (plus / minus) life-threatening potentials. Here it should be noted that though Nikola Tesla also opened that current of high frequency isn't dangerous to the person, if frequency is higher than 700 Hz in case of any potential, but there are sudden interruptions in electrical power supply, and also switching on and switch-offs. The pulses resulting from it can be very dangerous. Therefore, I believe ,that insulation is all the same necessary even if we will decide to work at high frequency.

One more aspect. The formula (2.8) is fair for vacuum and is only approximate for the air environment (where dielectric permeability is very close to unit). After all the formula (2.2) on which we base calculation is written for a lonely sphere in vacuum. If we surround the receiver store with a cover, the formula for power will be already another. Store capacity,and trasmited power, will raise if to surround it with the isolating cover with a big dielectric permeability (epsilon). We will remember a formula for the spherical condenser:

(2.9) C = (4 x Pi x an epsilon x an epsilon zero) / (1/a - 1/b),

where a - the radius of the internal sphere, b - the radius of the external sphere. Here, for example, a ferroelectric material has coefficient of dielectric permeability about 10 in the fourth degree. But it doesn't mean that power will increase in the corresponding number of times. It would be fair only for the two-superficial condenser where all space between facings is filled with dielectric. In our case, one facing is a surface of the store, and the second - infinity, and we can't fill all infinite space with dielectric. Therefore also dependence will be weaker.

Series of experiments of N... shows that the cover from material with big dielectric permeability positively influences amount of the energy transferred to the store. These researches aren't finished yet and within my laboratory conditions hardly in general will be qualitatively executed. But so far all of us can accept that the transferred power depends on thickness of a cover of the store of the receiver and on dielectric permeability of material of which it is made. We will reflect it in a new formula.

(2.10) P1 = K1 x f (d, epsilon) x nu x R x Phi a square

Where:

K1 - coefficient , approximately equal (as not all stores of receivers will be the correct spherical form) 4 x Pi x epsilon zero. K1 is approximately equal = 1.11 x 10 to the minus tenth degree.

f - function, with parameters: d - receiver store cover thickness, an epsilon - dielectric permeability of material of which the cover is made. f > 1.

So, we "will sound" a final formula. Power of single-wire transfer grows in proportion to a potential square on the line, transmission frequency and to the sizes of stores in the first degree and it is influenced positively by the isolating cover of stores (the more thickness and dielectric permeability of material, the better).

It was calculation for the first way of a single-wire electricity transmission. We will consider as affairs with a power for the second way are.

CALCULATION OF POWER FOR THE SECOND WAY OF A SINGLE-WIRE ELECTRICITY TRANSMISSION.

We will define the energy received by object for a half of the period of fluctuations of potential on a power line. It is natural that all this energy is spent in the load located between a transmission line and the store. Work (A) of movement charges (Q) in electric field is defined by a formula:

(2.11) A = Q x deltaPhi ,

where deltaPhi - a potential difference of the store of object and the line. To start any half-cycle of transfer, on the line and on the store there will be potentials of a different sign, each of which on the module is equal to Phi. Potential difference

deltaPhi = Phi-(-Phi) =2Phi.

But, in process of leakage of charges from the store and their passing through the load, potential on the store, we will call it (Phi2) changes therefore deltaPhi is function of quantity of charges on the store. We will write down it so:

deltaPhi = F(Q)

Potential on the line at the movement of charges won't change, as annihilation of charges which now on the line, from revenues to the line of charges of other sign, all the time is compensated by giving to the line charges from the generator.

From the point of view of power, process of passing of electrons through load can be divided into two stages. The first stage where work (A1) will be made - this movement of all charges from the receiver store (we will assume negative charges) through the load to a power line. This process happens to a total disappearance of charges of this sign on the store and, according to it, transformation of its potential into the zero. The second stage where work (A2) - this passing through load of charges from the line will be made (in our example positive) to the receiver store before establishment of potential on it (positive) equal to the potential on the line. Thus, the general work or energy (that in this case the same) which is obtained for a half of the period on the load:

(2.12) W2 = A1 + A2

Despite the fact that we are talking here about the two stages of the process, in fact, in terms of movement of electrons - it is continuous, and the electrons will flow in one direction only. It's just a matter of determining the sign of the charge.

Let's try to calculate the work A1.

Elementary work (its differential) will be equal to the multiplication of the potential difference deltaPhi on the elementary charge (differential Q).

(2.13) dA1 = deltaPhi (Q) x dQ = F(Q) x dQ

As already mentioned above, the potential difference is a function of the charge on the store F(Q). Let's see how this function can be expressed. With the leakage of charges through the load, it decreases. The potential of the store (Phi2) is determined by the following formula.

(2.14) Phi2 = Q / C, then

(2.15) F(Q) = Phi - (-Fi2) = Phi + Fi2 =Phi + Q / C

Substituting this expression into (2.13), we obtain:

(2.16) dA1 = (Phi + Q / C) x dQ

In order to define work A1, we have to take the integral of the expression within the following limits: lower = 0, and the top, equal to the maximum (initial) charge that is Qmax = C x Phi. After the corresponding calculations which are excessive for bringing here, we will receive:

(2.17) A1 = Phi square x C + Phi square x C / 2

Now let's calculate the A2.

Work or energy of movement of charges, as well as for A1, is determined by a formula (2.11). The potential difference between the line and the receiver store (deltaPhi) is also a function of the charge on this store. Let's see how in this case is defined F (Q). During all process, including at its beginning, potential on the line = Phi. Phi2 store potential is equal in the beginning 0, but in process of receipt on it charges which pass a way from the line through load, potential grows. Phi2 is defined by a formula (2.14). Its final value will be Phi. For a potential difference or F(Q) the following formula has to be fair.

(2.18) F(Q) = Phi - Phi2 = Phi - Q/C

Elementary work (dA2) is defined by a formula (2.13). We will substitute in it the expression which is just received by us for a potential difference, i.e. a formula (2.18). We will receive:

(2.19) dA2 = (Phi - Q/C) x dQ

In order to define work A2, we have to take the integral of the expression within the following limits: lower = 0, and the top, equal to the maximum (final) charge that is Qmax = C x Phi. After the corresponding calculations which are excessive for bringing here, we will receive:

(2.20) A1 = Phi square x C - Phi square x C / 2

To find the general work or energy emitted on load for a half of the period of an electricity transmission (W2) we substitute A1 and A2 values in a formula (2.12). We will receive:

(2.21) W2 = Phi square x C + Phi square x C/2 + Phi square x C - Phi square x C/2 = 2 x Phi square x C

We will compare this formula to a formula (2.1) for the first way and we will see that the energy for a half period received by the object of a current supply at the second way grew by 4 times. We can write down.

(2.22) W2 = 4 x W1

As all the rest in calculation of power remains the same, it is possible to write down that the power (P2) too grew by 4 times. Besides, at the second way we receive "bonus" - it isn't necessary to have two stores on the receiver, only one and the same size.

(2.23) P2 = 4 x P1

We can write for the second method, the formula similar to the formula (2.10), only take into account the increase in the power coefficient. K2 = K1 x 4 or approximately equal to 4.44 x 10 in -10 degrees. So, power for the second way is expressed by a formula:

(2.24) P2 = K2 x f (d, epsilon) x nu x R x Phi square

CHAPTER 3. EFFICIENCY OF SINGLE-WIRE TRANSMISSION AND POSSIBLE PROTECTION AGAINST RADIATION.

Efficiency of power transmisson can be defined as follows:
Efficiency = (received power / power line input) x 100%
We introduce the notation:
Pr - received power of the receiver.
Pl - losses in the power transmission process.
Power line input= Pr + Pl
Now the expression for the efficiency can be rewritten as follows:
(3.1) Efficiency = (Pr / (Pr + Pl)) x 100%
For ease of calculation, let's divide the numerator and denominator of this formula on the Pr.
(3.2) Efficiency = (1 / (1 + Pl / Pr)) x 100%
Let's denote the ratio Pl / Pr as the alfa,
alfa = Pl / Pr ,
Then formula (3.2) is as follows:
(3.3) Efficiency = (1 / (1 + alfa)) x 100%
We see that change of all function completely depends on changes of a ratio of Pl / Pr= alfa. For ensure of high efficiency, "alfa" shall aim to 0, then efficiency will be hundred percent. How to calculate the "Pr" (the power received by the object receiver) we set in chapters 2 and 5, it is possible to look at formulas (2.10), (2.24) and (5.26). As for "Pl", here we can be guided by the following provisions.
a) Losses on corona discharge and electron leakage. Because of the relatively low voltage on the line (we have introduced this limit for safety reasons), the corona discharge is not possible, and electron leak is very small, and these losses cannot be taken into account.
b) Heating the wire losses - are virtually absent, since it has no resistance to the motion of electric charges. This has been repeatedly described above.
c) Losses on the mechanical oscillation of the conductor. (Repulsion from the magnetic field of the Earth). These losses are due to their insignificance cannot be taken into account (after all, small currents).
g) Losses from radiation of electromagnetic waves.
This is the main power losses in this method of transmission.
Every conductor with alternating current radiates electromagnetic waves, and with increasing frequency energy emitted waves increases sharply (in proportion to the square of the frequency). Electromagnetic waves permanently move away from the wire, and therefore the energy consumption of the radiation waves are the transmission system losses. The radiated energy depends on the amplitude and frequency of current as well as the length of the conductor. The total average power "Nav" emitted by segment conductor with current (short antenna), in which the length "L" is much smaller than the wavelength, is equal to [12]:
(3.4) Nav = Mu zero x L square x Omega in a square x I in a square / (12 x Pi x C) where
Mu zero - a magnetic constant
Mu zero = 4 x Pi x 10 in minus 7 degrees
Pi - constant = 3.14
Omega - frequency
I - maximum current
C - light velocity.
Substituting in this formula the values of the coefficients and the speed of light, and taking into account that Nav = Pl , and the frequency in our article was usually designated as "nu", it is possible to re-write it in the following form:
(3.5) Pl = 1.11 x 10 at minus 16 degrees x L square x nu in square x I in the square

LET'S DERIVE THE FORMULA FOR "ALFA" IN THE SECOND TRANSMISSION METHOD.

Here we give the power received by the receiver of the object "Pr". For the second transmission method, we derived a formula for it in Chapter 2, this is formula (2.24)
(2.24) P2 = K2 x f (d, epsilon) x nu x R x Phi square
Where
f - function, with parameters: d - thickness of the shell of the collector of the receiver, epsilon - dielectric permeability of the material from which the shell is made. f > 1.
R - is the radius of the receiver store
Phi - is the potential on the transmission line
K2 - is approximately equal to 4.44 x 10 at minus 10 degrees. (K2 = 4 x K1)
We replace "P2" by "Pr" , then the formula (2.24) takes the following form:
(3.6) Pr = K2 x f (d, epsilon) x nu x R x Phi square
In order to write the relation of formulas (3.5) and (3.6), we must reduce them to uniformity. For this, we express the current "I" in (3.5) in terms of other parameters.
(3.7) I = Q / (T / 2),

Where "T" is the power transmission period (of the line potential change). Since the frequency nu = 1 / T, formula (3.7) can be rewritten in the following form.

(3.8) I = 2 x nu x Q

"Q" can be expressed through the capacity of the receiver store and the potential on the power line.

(3.9) Q = C x Phi

here C = K1 x f (d, epsilon) x R (watch Gl.2 formulas (2.9) and (2.10))

we will rewrite a formula (3.8).

(3.10) I = 2 x K1 x nu x f (d, epsilon) x R x Phi

Substitude the derived value for "I" in a formula (3.5). We will receive

(3.10) I = 2 x K1 x nu x f (d, epsilon) x R x Phi

Substitude the derived value for "I" in a formula (3.5). We will receive

(3.11) Pl = 1.11 x 10 at minus 16 degrees x L square x nu in the fourth degrees x 4 x K1 x K1 x f (d, epsilon) x f (d, epsilon) x R x R x Phi x Phi

Recalling that K2 = 4 x K1, we give here the formula for the received power, the transformed formula (3.6):

(3.12) = 4 x K1 x f (d, epsilon) x nu x R x Phi square

Now we can write a formula for "alfa", which is the ratio of the right-hand sides of formulas (3.11) and (3.12).

(3.13) alfa = Pl / Pr = K1 x 1.11 x 10 in minus 16 degrees x L square x nu in the third degrees x f (d, epsilon) x R

We substitute here the value for K1 = 1.11 x 10 in minus 10 degrees.

(3.14) alfa = 1.23 x 10 in minus 26 degrees x L square x nu in the third degrees x f (d, epsilon) x R

WE WILL DERIVE THE FORMULA FOR "ALFA" IN CASE OF THE THIRD METHOD OF THE ELECTRICITY TRANSMISSION.

Here 'I' for the formula (3.5) will be defined as follows.

(3.15) I = 2 x nu x Q

this formula is similar to formula (3.8) for the second method, but 'Q' for the third method is defined differently.

(3.16) Q = C x (Phi m + Phi l),

Where 'Phi m' is the potential of the charging device (an electrostatic machine), And 'Phi l' is the potential on the transmission line (corresponding to 'Phi' for the second method).

The formulas for capacity are similar

C = K1 x f (d, epsilon) x R

We write the expression for the current:

(3.17) I = 2 x K1 x nu x f (d, epsilon) x R x (Phi m + Phi l)

We substitute 'I' in the formula for the lost power (3.5) with this expression. We get:

(3.18) Pl = 1.11 x 10 at minus 16 degrees x L square x nu in the fourth degrees x 4 x K1 in the square x f (d, epsilon) in the square x R in the square x (Phi m + Phi l) in the square

Now we give here the power received by the receiver of the object 'Pr'. For the third electricity transmission method, we derived a formula for it in Chapter 5, this is formula (5.26)

(5.26) Pr = 2 x nu x K1 x f (d, epsilon) x R x Phi l x (Phi m + Phi l)

Now we can write a formula for alfa, which will be the ratio of the right-hand sides of formulas (3.18) and (5.26).

(3.19) alfa = Pl / Pr = 2 x K1 x 1.11 x 10 at minus 16 degrees x L square x nu in the third degrees x f (d, epsilon) x R x (Phi m + Phi l) / Phi l

We substitute here the value for 'K1' = 1.11 x 10 in minus 10 degrees.

(3.20) alfa = 2.46 x 10 in minus 26 degrees x L square x nu in the third degrees x f (d, epsilon) x R x (Phi m + Phi l) / Phi l

Since the third method of single-wire transmission requires an electrostatic machine, a battery and a DC motor in the receiver, we must also take into account their efficiency. And since the efficiency of the battery and the motor is rather low, on the average 85 and 83 percent respectively, then they, and not the calculated efficiency on the basis of radiation losses, will determine the efficiency of the third method of electricity transmission. We will see this, considering the calculation of the example given in this chapter.

Mean values:

DC motor efficiency = 83%

Battery efficiency = 85%

Efficiency of the electrostatic machine - it was not possible to find the value in the literature. However, what I want to note: if you do not take into account the friction of the brushes (in a large machine, this is a miser), then the main losses will go to the friction of the discs about the air. Leakage charges will be small due to the intended isolation of the stores. There are no braking force fields in the machine, so the efficiency will be high.

Recall the preliminary condition of these calculations: 'L' must be much smaller than the length of the radiated wave.

We will provide the table of lengths of waves "VL" and the frequencies "Fr" corresponding to them here. VL and Fr are related by the following relationship: Fr = c / VL, where C is the speed of light.

Fr, Hz----------VL, m
100 Hz------ - 3 000 000 m
1000 Hz (1 KHz)----------300 000 m
10000 Hz (10 KHz)----------30 000 m
100000 Hz (100 KHz)----------3 000 m
1000000 Hz (1 MHz)----------300 m

EXAMPLES.

EXAMPLE N1

Suppose we have a working room with robots that receive electricity for their work. We will use the third method of electricity transmission. The room is equipped with an electrically conductive floor, and the robots themselves contain electric receiver and built- in electric intakes that comes into contact with the floor. The floor measures 100 x 100 m. Transmitters will be on the edges of the floor. Then L max = 100m. In order to comply with the above condition, i.e. L (antenna length) should be much smaller than the wavelength of the radiated wave-VL. Assume that VL min = 1000m (ten times more than L max). Let's calculate Fr max , it will be 300 kHz. Let the geometric dimensions of receiver's stores in robots be real and amount to 1 m in diameter. We use the existing Vimschurst electrostatic machine. The electrical potential on the receiver's stores (with insulating sheath) will be equal the potential on this machine and will be 300 kV. The voltage on the power line (and this is the floor), we agreed to use only safe for life and equal to 220 V.

Let's answer the following questions:

1) What maximum power can be transmitted to each robot ?

2) What is the efficiency of the power line ?

To answer the first question, let us use the formula derived by us in Ch. 5, which determines the power transmitted by the third method of transmission. This is the formula (5.26)

(5.26) P3 = 2 x Nu x K1 x f (d, epsilon) x R x Fl x (FM + FL)

Where:

K1 - coefficient , approximately equal (as not all stores of receivers will be the correct spherical form) 4 x Pi x epsilon zero. K1 is approximately equal = 1.11 x 10 to the minus tenth degree.

f - function, with parameters: d - receiver store cover thickness, an epsilon - dielectric permeability of material of which the cover is made. f > 1.

R- is the radius of the store. In our example it is 0.5 m.

Fl is the potential on the transmission line (its absolute value), in this case, equal to 220V.

Fm is the potential on an electrostatic machine or some other device of an object receiver that recharges its drives (also its absolute value). In this example, equal to 300kV.

Nu is the frequency equal to Fr max = 300 kHz.

We substitute these values in the formula. We get P3 = 2199.4 W or about 3 horsepower. Thus, we will be able to give the robots enough power.

Now let's compare what would have happened if we had used the second method of electricity transmission. The formula for the transmitted power for this method was derived in Ch.2. This is the formula (2.24).

(2.24) P2 = K2 x f (d, epsilon) x nu x R x Phi square

Where:

f - function, with parameters: d - thickness of the shell of the collector of the receiver, epsilon - dielectric permeability of the material from which the shell is made. f > 1.

R- is the radius of the reciever store. In our example it is 0.5 m.

Phi - is the potential on the transmission line

Phi = Fl = 220 V

K2 - is approximately equal to 4.44 x 10 at minus 10 degrees. (K2 = 4 x K1)

Nu is the frequency equal to Fr max = 300 kHz.

We substitute these values in the formula. We obtain P2 = 3.22 W, i.e. Incomparably less transmitted power.

CHAPTER 4. WAYS OF INCREASING THE TRANSMISSION POWER.

Goal is - to create a single-wire electricity transmission, powerful, safe for a human body, at the small sizes of a current collector and at high efficiency and low cost.

Chapter 2 has a formula of power. Frequency and potential increase power, but as it was already specified, there are restrictions. High frequency reduces efficiency creates strong electromagnetic radiation and hindrances, and a lot of

potential on the line may cause a fatal electric shock. In each case it is necessary to define the maximum potential on the line, and the maximum transmission frequency. In some cases, we will be ready to sacrifice high efficiency for increasing transmission power. For example, if the line goes through the taiga or in the desert, and the potential can be increased by high-frequency interference and electromagnetic radiation will not cause much harm, if you set the warning signs. But in the city it's different. In some cases, for example for electric transport transmission line should be no isolated because of the current collectors, respectively, and the potential to be safe. If the transmission line very long, too high frequency can lead to that charges for a half of a half-cycle won't manage to reach the store the receiver as a long wire has inductance which will work for delay. It can be explained from the point of view of the theory of an electrical oscillating circuit. In this case we have a sequential oscillating circuit with the certain natural frequency determined by values of capacity and inductivity. Capacity is a capacity of the receiver store (depends on the geometrical sizes), and inductivity is defined by length of a wire (line). It is known that the largest amplitude will be when the stimulated frequency (transmitter generator frequency) is equal to the natural frequency of a circuit determined by Thomson's formula. When the stimulated frequency is greater than the natural frequency, the value of the transmitted current decreases. A long wire has a large inductivity and will decrease natural frequency of the circuit. With the usual current transmission for small distances and with small geometric dimensions of the drives, we are always "not reaching" to the natural frequency of the circuit, therefore, as the frequency increases, the transmitted power increases, as shown earlier in Chapter 2.

Store capacity and consequently also transfer power, will increase if to surround it with the isolating cover with a big dielectric permeability (epsilon). In each case we define what material, firm or liquid will suit us depending on high cost, technical capabilities of performance and the demanded isolating properties.

Possible to use different physical effects and devices to increase the amount of charge received at halftime (of frequency period). According to the author, suitable Hall effect (the author has even experimental design in this area) and "Stop revolving coil" - as it was first used in the experiments L.I.Mandelstam and N.D.Papaleksi and later in experiments R.CH.Tolman T.D.Stewart.

The author has planned some more improvements (for example poly-cascade electric circuits) of an electricity transmission (increase in power) which need the experimental verification.

Besides, there is one more option - to apply "the third way of an electricity transmission", though it and more difficult for technical realization in devices, than the first two.

CHAPTER 5. A THIRD WAY OF A SINGLE-WIRE ELECTRICITY TRANSMISSION.

The idea is that for small (comfortable) geometric dimensions of the store of the receiver it would be placed at the half of period a large number of charges, much bigger, than it can place at safe potential on the line. And, potentials on object can be and much more, than on the line. It is admissible from the point of view of safety measures. As the small device of the receiver can be insulated carefully is a small space. But all of a transmission line is very difficult and in some applications as it was stated above, it just also has to be without isolation. This large amount of the charges will be "pumped" through the load toward the transmission line carrying the charges with opposite sign, and despite the fact that we have to expend energy in the beginning (to charge the receiver store) the total received by the load energy will be more than in the first two methods.

We will define this way so - giving of charges to object at safe potential on the line to the object stores, which are previously charged to higher potential, through the loads (which are on object), and charges on stores have to be an opposite sign, in relation to transferred.

This method has been presented long time ago in [1], but was then not well explained.In order to understand how it works, let's solve the small problem in physics, it is shown in Fig.6.

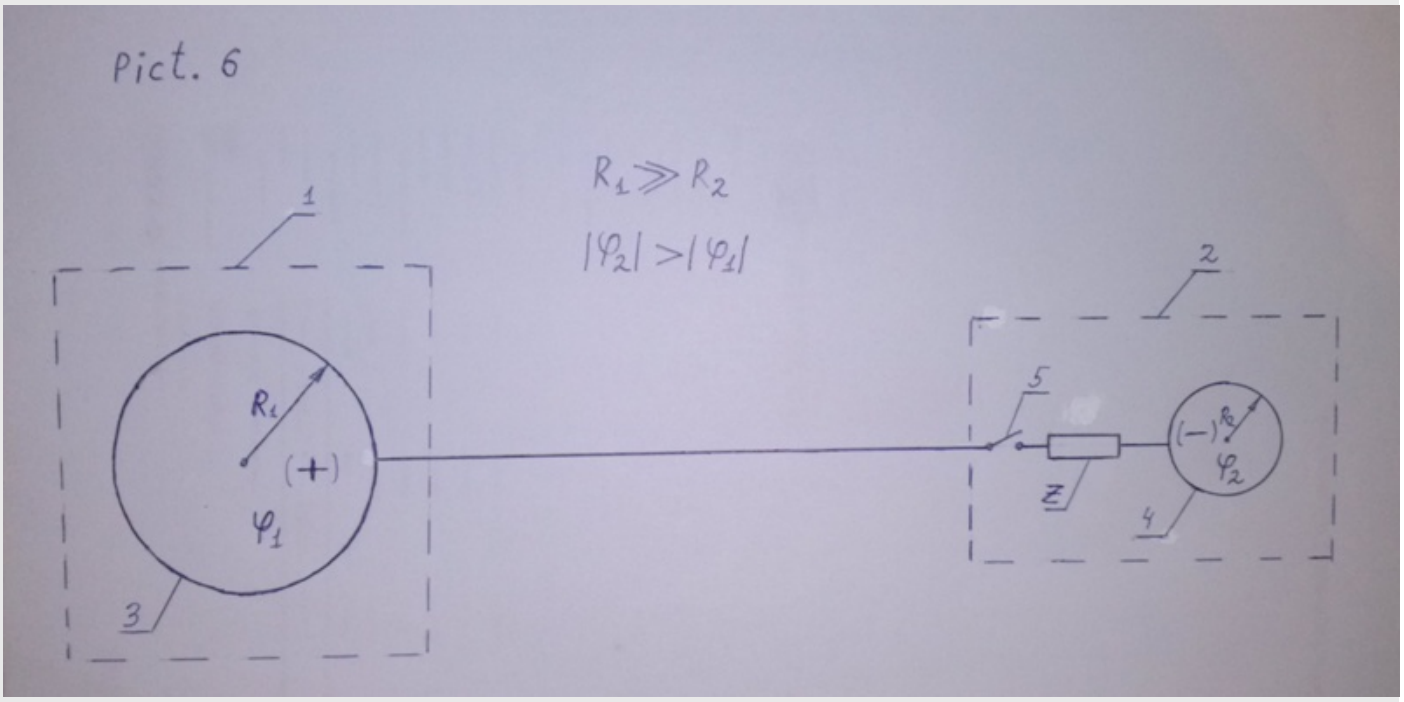

TERMS AND CONDITIONS:

In the transmitter (1) there is a electrically conductive sphere (3) very big sizes which radius we will designate (R1). On it there are many electric charges, and it is loaded to the potential (Phi1). It is small potential and it isn't deadly to a human body. Further, the transmitter is connected by one conductor with the receiver (2) in which too there is a electrically conductive sphere (4), but already very modest sizes convenient, say, for the moving object of a current supply. It via the switch (5) and through load (Z) is connected with the line. Radius of this sphere we will designate (R2). We can write that the radius (R1) is much more (R2). The switch is meanwhile opened. The sphere of the receiver is previously loaded to the potential (Phi2). And this potential is very high much more on the module, than the potential (Phi1). I think that makes sense to load this sphere (4) by means of an electrostatic machine*. Charges on a sphere of the receiver (4) are opposite on a sign to charges of a sphere of the transmitter (3). Previously having loaded a sphere of the receiver (4) we spent energy (Wzero). Now we close the switch (5). What will occur? The author believes that all charges from a sphere (4) through load (Z) will flow on a transmission line on a sphere (3). And, potential on a sphere (3) and on the line will practically not change as a sphere big and has many charges. After all condenser potential, as we know, is defined by a formula:

(5.1) Phi = Q / C ,

where Q - amount of charge, and C - capacitance.

Since we chose sphere large geometric dimensions (large R), it has a large capacity (because C = 4 x Pi x epsilon x epsilon zero x R) and has a large number of charges. Therefore, a small increase or decrease of the charge, which is necessary for the "work" with the sphere (4) will not greatly affect the potential of the sphere (3) and, consequently, the line. So it will have a real transmitter, as the annihilation of the charges that are currently on the line by entering the line of charges of opposite sign, all the time is offset by applying to the line charges from the generator. Then, part of the charges from the sphere (3), again, through a transmission line and through the load (Z) will flow to the sphere (4) to establish an equipotential surface. Ie until the potential on the sphere (4) will not be equal to the potential on the sphere (3) and on the line. The potential on the sphere (3) and on the line as before - will not change. Despite the fact that I am talking here about the two stages of the process, in fact, in terms of movement of electrons - it is continuous, and the electrons will flow in one direction only. It's just a matter of determining the sign of the charge. Time we take a half of the period and it more than enough for the described process. On load (Z), as a result of electron flow through it , some energy will be emitted **. We will designate it (Wz).

QUESTION N1: Will the released energy to the load (Wz) more than originally consumed at a charge storage facility (Wzero)? And if so, how much? The energy difference is denoted (deltaW).

QUESTON N2: To find (W3)- it is the energy received by object for a half of cycle at such way of an electricity transmission minus originally spent (Wzero), and to correlate it to the energy received for the same time at the second way of an electricity transmission (W2) (it more powerful, than the first way) on the store of the same size (R2), i.e. the same capacity (C2), and with the same potential on the line (Phi1). It all the same what to speak about comparison of power.

AUTHORS` SOLUTION:

The calculation given below, is very similar to the calculation of power for the second way of an electricity transmission given in Ch.2.

Work (A) of movement charges (Q) in electric field is defined by a formula:

(5.2) A = Q x deltaPhi ,

where deltaPhi - a potential difference of the sphere (4) and the line. At the beginning on the line and on a sphere (4) potentials of the different sign Phi1 and Phi2. Potential difference

deltaPhi = Phi1-(-Phi2) =Phi1 + Phi2.

But, in process of leakage of charges from a sphere (4) and their passing through the load (Z), potential on a sphere (Phi2) changes, therefore deltaPhi is function of quantity of charges on a sphere (4). We will write down it so:

deltaPhi = F(Q)

From the point of view of power, process of passing of electrons through the load can be divided into two stages. The first stage where work (A1) will be made - this movement of all charges from the receiver sphere (4) (we will assume negative charges) through the load (Z) to a power line. This process lead to a total disappearance of charges of this sign on the sphere (4) and, according to it, transformation of its potential into the zero. The second stage where work (A2) - this passing through the load of charges from the line will be made (in our example positive) to the receiver sphere (4) before establishment of potential on it (positive) equal to the potential on the line (Phi1). Thus, the general work or energy (that in this case the same) which is obtained for a half of the period on the load:

(5.3) Wz = A1 + A2

Let's try to calculate the work A1.

Elementary work (its differential) will be equal to the multiplication of the potential difference deltaPhi on the elementary charge (differential Q).

(5.4) dA1 = deltaPhi (Q) x dQ = F(Q) x dQ

As already mentioned above, the potential difference is a function of the charge on the sphere F(Q). Let's see how this function can be expressed. With the leakage of charges through the load, it decreases. The potential of the store (Phi2) is determined by the following formula.

(5.5) Phi2 = Q / C, then

(5.6) F(Q) = Phi1 - (-Phi2) = Phi1 + Phi2 =Phi1 + Q / C

Substituting this expression into (5.4), we obtain:

(5.7) dA1 = (Phi1 + Q / C) x dQ

In order to define work A1, we have to take the integral of the expression within the following limits: lower = 0, and the top, equal to the maximum (initial) charge that is Qmax = C2 x Phi2.

After the corresponding calculations which are excessive for bringing here, we will receive:

(5.8) A1 = Phi1 x Phi2 x C2 + Phi2 square x C2 / 2

Now let's calculate the A2.

Work or energy of movement of charges, as well as for A1, is determined by a formula (5.2). The potential difference between the line and the receiver sphere (deltaPhi) is also a function of the charge on this sphere. Let's see how in this case is defined F (Q). During all process, including at its beginning, potential on the line = Phi1. Phi2 sphere (4) potential is equal in the beginning 0, but in process of receipt on it charges which pass a way from the line through the load, potential grows. Phi2 is defined by a formula (5.5). Its final value will be Phi1. For a potential difference or F(Q) the following formula has to be fair.

(5.9) F(Q) = Phi1 - Phi2 = Phi1 - Q/C

Elementary work (dA2) is defined by a formula (5.4). We will substitute in it the expression which is just received by us for a potential difference, i.e. a formula (5.9). We will receive:

(5.10) dA2 = (Phi1 - Q/C) x dQ

In order to define work A2, we have to take the integral of the expression within the following limits: lower = 0, and the top, equal to the maximum (final) charge that is Qmax = C2 x Phi1.

After the corresponding calculations which are excessive for bringing here, we will receive:

(5.11) A2 = Phi1 square x C2 - Phi1 square x C2 / 2 = Phi1 square x C2 / 2

To find the general work or energy emitted on loading for a half of the period of an electricity transmission (Wz) we substitute A1 and A2 values in a formula (5.3). We will receive:

(5.12) Wz = Phi1 x Phi2 x C2 + Phi2 square x C2 / 2 + Phi1 square x C2 /2

Now we will try to find the answer to the question N1

According to the formula of calculating the energy of the charged capacitor determine Wzero:

(5.13) Wzero = Phi2 square x C2/2

(5.14) deltaW = Wz - Wzero

We will substitute in a formula (5.14) expressions for Wz and for Wzero, we will receive:

(5.15) deltaW = Phi1 x Phi2 x C2 + Phi1 square x C2 / 2

Thus, we see that we won power, and quite significantly, because the potential Phi2 can be very high, since the compact means of generating (eg electrostatic machines ***) - are available, and the means of isolation**** -the same.

LET'S ANSWER THE QUESTION N2.

We will consider energy which will receive object of a current supply in our task (at the third way of an electricity transmission) for a half of the period of an electricity transmission. We designated it as W3 above. We already found one component of W3 - it is deltaW - the energy emitted on load minus originally spent energy on store charging. Besides, the receiver store, having received a charge from the line of transfers (at the end of process) and therefore having got the potential Phi1, receives some power status, i.e. potential energy Wp which we too have to consider at calculation of a total energy W3 received by the receiver. Later, by consideration of a question of providing a continuity of an electricity transmission at the third way, it will be explained how to use this energy. So,

(5.16) W3 = deltaW + Wp

We will find Wp on a formula of calculation of energy of the charged condenser:

(5.17) Wp = Phi1 square x C2 / 2

We will substitute the found expressions for deltaW and for Wp in a formula (5.16). We will receive:

(5.18) W3 = Phi1 x Phi2 x C2 + Phi1 square x C2 / 2 + Phi1 square x C2 / 2 and after transformation:

(5.18) W3 = Phi1 x Phi2 x C2 + Phi1 square x C2

We will compare this expression to the energy received by the receiver at the second way of an electricity transmission for a half of the period - W2. The formula for W2 we learn in Chapter.2 It is a formula - (2.21). Phi in it it is possible to replace with Phi1, and C with C2. So: (2.21) W2 = 2 x Phi1 square x C2

In order to compare the energy W3 and W2, introduce the measure - n. This value shows how many times the potential of previously charged receiver store - Phi2 is more than a potential on the line - Phi1. We can write:

(5.19) Phi2 = n x Phi1

We will substitute Phi2 with the found now expression for Phi2 in a formula (5.18). We will receive:

(5.20) W3 = n x Phi1 square x C2 + Phi1 square x C2

and after transformation:

(5.20) W3 = (n+1) x Phi1 square x C2

Now you can see what will be equal to the ratio of W3 and W2?

(5.21) W3/W2 = [(n+1) x Phi1 square x C2] / [2 x Phi1 square x C2]

and after reduction:

(5.21) W3 / W2 = (n+1) / 2

ANSWER TO A QUESTION N1:

deltaW = Phi1 x Phi2 x C2 + Phi1 square x C2 / 2

ANSWER TO A QUESTION N2:

W3 / W2 = (n+1) / 2 ,

where n = Phi2 / Phi1

CONCLUSION :

At the third way of single-wire transfer, the power received by the receiver will increase almost in one thousand times in comparison with the first two ways. So, if to take the potential produced by electrostatic machine of Vimshurst = 300 kV - it there will be Phi2 and potential on the line = 200 V - it will be Phi1 (potential, safe for human life, on the standard canons), n will be 1.5 x 1000, and W3 relation to W2 on a formula (5.21) will be equal about 750. But Vimshurst's electrostatic machine - it yet not a limit of perfection. Such task - to create the electrostatic machine developing the maximum voltage at the minimum sizes wasn't set for mankind simply yet. So, in ONE THOUSAND TIMES it is quite possible to reach increase in power.

PROVIDING CONTINUITY OF THE ELECTRICITY TRANSMISSION.

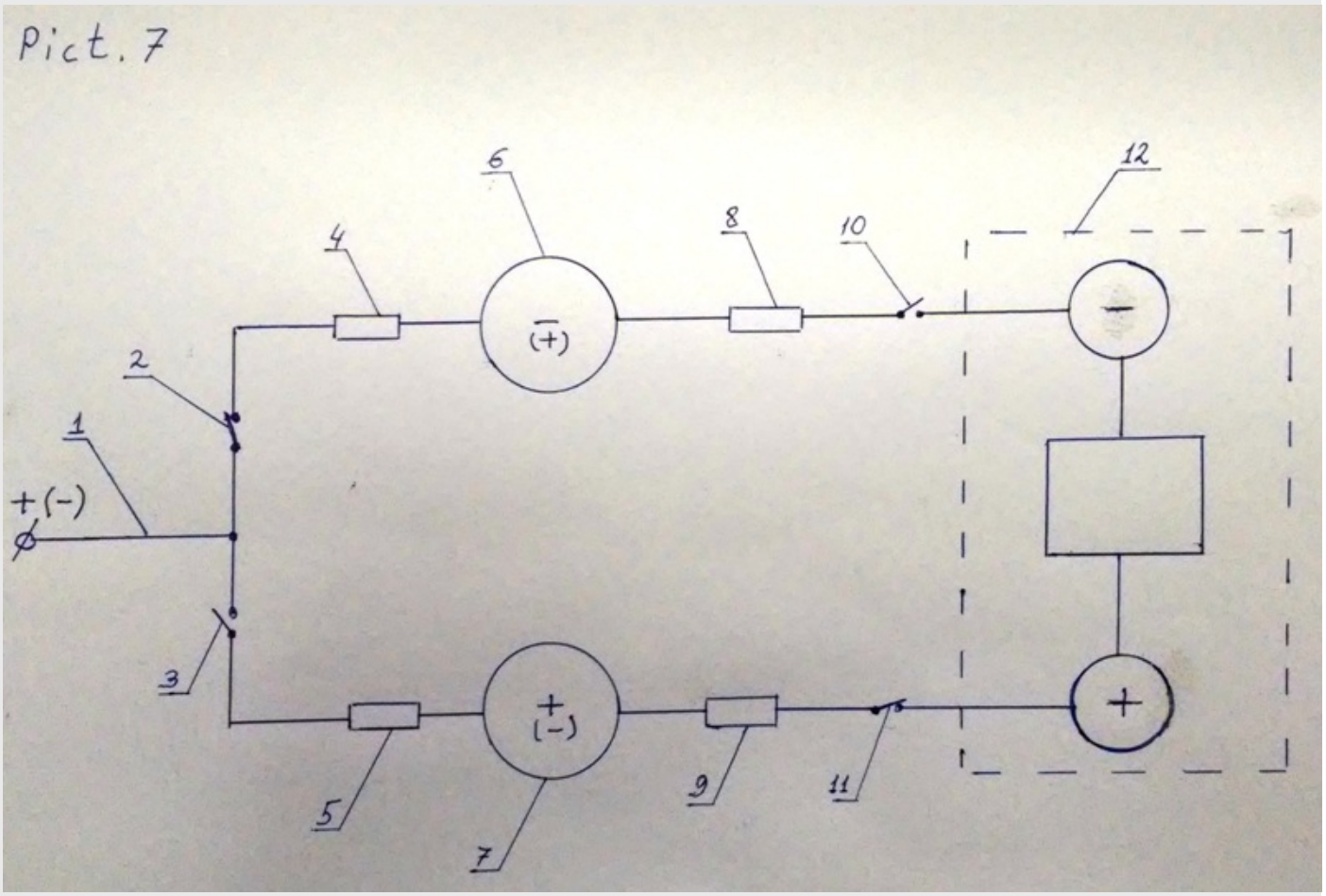

The diagram (Pict. 7) displays only the object of current supply and appropriate to it single-wire transmission line segment (1).The transmitter remains same what it was at the first and second ways of an electricity transmission (see Pict. 1-5).

In this scheme it is impossible to put a two diode switch 'diode fork' on an entrance of the object of a current supply as at the first way (see Pict. 4). Because of the fact, that previously charged object stores (6 and 7) will electrically connect with each other. However, through loads (4 and 5), but so they won't save up charges, and will lose the potentials, and to us, at this way of transmission, it is necessary that they had many charges at high potentials. Therefore we will use the operated switches (2 and 3).

Loads (8 and 9) between terminals of the electrostatic machine (12) and stores of object (6 and 7) are necessary for purpose to use the energy Wp formed as a result of a charge of stores by charges of an opposite sign (in relation to output terminals of the electrostatic machine) at the end of time of connection of each of them to a power line. This energy will be used when the store is switched-off from a transmission line and connected for charging to the electrostatic machine by means of the operated switch (10 or 11).

What happens in the first period of the power supply we have already discussed in detail above in the solution of the task (see. also Fig. 6).

For providing a continuous electricity transmission, on object of a current supply (see Fig. 7) there is a second store (the best form - sphere) which is previously charged with electric charges of other sign, than the first, and in the second half of the period we switch a transmission line to it through other load (4 or 5). And on the transmission line itself already the charge sign too will be changed, because of connection of other sphere of the transmitter (or operation of the generator). And in this half-cycle too everything will occur as in the considered task. In that part of the period when any store of object is switched-off from the line, it will be loaded on the object with the help, we will tell, the electrostatic machine or other device, but in the beginning of this half-cycle it will give the charge, which remained from the previous half-cycle, through the corresponding load (8 or 9) connecting it to the charger. Thus the power status received from the line of transfers at the previous half-cycle (Wp) will be used through this load.

If to compare this process to charging of the neutral store, yes, it is valid, the part of charges going from the electrostatic machine, equal to "spaciousness" of the store of the receiver Q = C x Phi at the potential of line = Phi1 will be annihilated, and must be "restored" by electrostatic machine. This of course would require additional energy (compared to charging a neutral store) from the electrostatic machine, but it will be "returned to us"(the truth with small losses which we don't consider in this calculation) i.e. will turn in "useful" as it will be allocated on load, and from loads we take energy for return to the electrostatic machine and on performing of useful work.

Algorithm of operation of the switches operated (naturally automatically) the following: in the first half-cycle switches (2) and (11) are closed, and opened (3) and (10). And in the second - are closed (3) and (10), and are opened (2) and (11). In the third half-cycle - as in the first, and in the fourth - as in the second etc.

When selecting receiver stores shells material at the third way, it is necessary to pay attention not only to dielectric permeability of material, as at the first two, but also to its electric durability as we will deal with high and life-threatening voltage. Besides, it is necessary to look how these properties of material will behave with the planned electricity transmission frequency (it concerns also the first two ways). Cost too should be considered.

ELECTRO-RECEIVER OF OBJECT OF A ELECTRIC POWER SUPPLY, WORKING AT THE THIRD WAY OF ELECTRICITY TRANSMISSION.

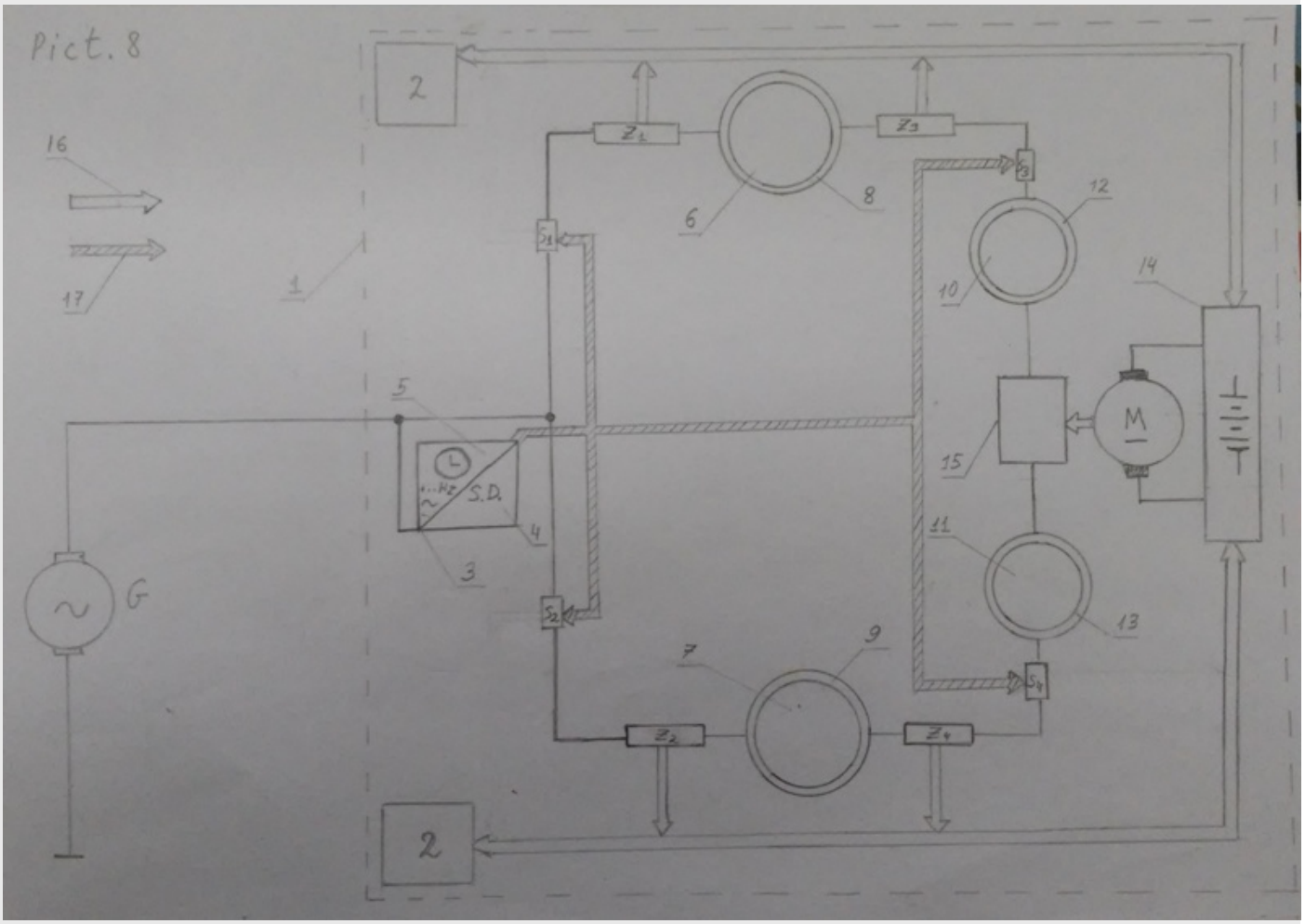

Pict. 8 SHEME OF THE ELECTRO-RECEIVER OF OBJECT OF A ELECTRIC POWER SUPPLY, WORKING AT THE THIRD WAY OF ELECTRICITY TRANSMISSION.

Signatures to Pict. 8

1-Object of a electric power supply.
2-The consumer of the electric power on object.
3-The block defining sign of charges on a power line.
4-The device defining a sign of charges on the line by means of the scheme of a single-wire electricity transmission.
5- The operating electric clock.
6,7-Stores of charges of object (main).
8,9-Isolating covers of the main stores.
10,11- Stores of charges of the electrostatic machine.
12,13-Isolating covers of stores of the electrostatic machine.
14-Rechargeable battery.
15-Electrostatic machine.
16-Energy stream.
17-Flow of managing signals.
Z1, Z2, Z3, Z4-Loads**.
S1, S2, S3, S4- The Operated switches.

TRANSFER OF THE ELECTRIC POWER ON OBJECT IN THE PRESENCE OF A SIMILAR COLLECTOR IS CARRIED OUT AS FOLLOWERS.

The generator (G) delivers on a power line charges of a different sign, in each half-cycle different, in one half-cycle - plus, in others-minus. And as he is connected by one terminal to the buffer store (in this example it is Earth - the grounding displayed on the scheme), these charges are "free", i.e. capable to fill a surface of conductors. You can object to this term, but how then to distinguish charges that could put a battery or generator in an electrical circuit connecting the two their terminals from the charges that capable to fill surface of free conductors and to interact with the same "free" charges? In any battery or generator "outside forces" divide charges. But from a terminal of the ordinary battery or the generator they are able to flow only on other terminal of the same device. Even to the terminal of other battery with an opposite sign they won't begin to flow. And in the Earth they won't begin to flow just like that (with an empty second terminal). Otherwise the situation is with the source given in the scheme and with electrostatic machines in which "outside forces" work too. It turns out that presence of "outside forces" for development of "free charges" - the necessary condition, but insufficient as mathematics say.

On a current collector 1 to which lead a line there is a Unit 3. A purpose of this unit - to define what charges in this half-cycle are on the line (plus or minus). If the unit is connected to the line, then it with it is helped by the device switch 4 (the device 4 is given as an example, also other options, say, the device consisting of diodes, electroscopes and optical sensors are actually possible - petals of electroscopes will cross beams), which operation we will consider later. But it can not be connected, then the sign of charges is defined by means of Clock 5 which are synchronized with the generator. The second purpose of the Unit 3 is development and a message of the operating signals on the operated switches (S1, S2, S3, S4). Passing of the operating signals on the scheme is conditionally designated by a stream 17 (the shaded arrows). These signals will depend on what charges (on a sign) in this half-cycle on the line of an electric supply.

On a current collector 1 are the electrostatic machine 15 and its stores of charges (10, 11) with the isolating covers (for safety) (12,13), the accumulator 14, the DC motor (M) for rotating the disk of electrostatic machine. All this "housekeeping" is necessary to receive more 'free' charges from the power line which is under the low potential, safe for life. The motor takes the electric power from the accumulator, puts the electrostatic machine in action and that charges the stores, one (we will tell 10) with positive charges, and another (we will tell 11) negative. This process goes constantly to all the time of an electricity transmission, irrespective of the fact which in this half-cycle charges (positive or negative) on the line going to a current collector. It is thought that the energy received on loads (Z1, Z2, Z3, Z4) quite will be enough both for recharge of the accumulator and for providing consumers of energy 2 objects. Streams of energy 16 are designated on the scheme by not shaded arrows.

The basic working elements of a current collector are stores of charges (6 and 7) and above-mentioned loads (Z1, Z2, Z3, Z4). Stores are surrounded with covers (8 and 9). These covers have double function: to increase the storage capacitor capabilities of stores, dielectrics of which they consist if surround the conductor, then with success it is done, and to isolate stores for safety reasons as on stores there will be sometimes a high voltage. By the way, the case of all current collector has to be made of the good insulating stuff capable to protect the person from high voltage.

We will notice that at the beginning of any half-cycle one of stores of object (6 or 7) has to be completely charged from the store of the electrostatic machine (10 or 11) and have the high potential, equal with him, and another has to begin to be loaded from other store through one of the loads (Z3 or Z4).

We will consider a "negative" half-cycle in the beginning. On the line the negative charge, the store 6 is loaded positively to the potential of the electrostatic machine (it 'inheritance' of the previous "positive" half-cycle), the S1 switch is open, the S3 switch is closed, the S2 switch is closed, the S4 switch is open. What is going on? The store 6 and the line interact through Z1 load, this process has been described above, on load energy is emitted, she is shown by not shaded arrow departing from her. Energy goes to the consumer of energy 2 objects and for accumulator charging 14. At the end of this half-cycle, the store 6 will get a negative charge and potential of the line and will transfer this "inheritance" to following, already "positive", half-cycle of an electricity transmission . The store 7 in the same time interacts with the store of the electrostatic machine 11 through S4 load. On the store 7 a positive charge and potential of the line (which has got to it "in inheritance" from the previous "positive" half-cycle) and at the end of this "negative" half-cycle it will be charged from the store 11 negatively and will get the potential of the electrostatic machine. From load Z4 energy will go to the same purposes.

Now, on the line "comes" the "positive" half-cycle. The Unit 3 "feels" it and "sends telegrams" on the shaded arrows on the operated switches. As a result S1 and S4 are closed, and S2 and S3 - open. The store 7, having high negative potential from last half-cycle, interacts with the line through Z2 load, at the end of a half-cycle he will get a positive charge and potential of the line. And the store 6, having a negative charge and potential of the line, interacts with the "positive" store 10 of the electrostatic machine through Z3 load. At the end of this half-cycle he will get the high positive potential equal to him.

When on the line again "come" "negative" half-cycle, object stores again, will have, the "inheritance", described right at the beginning. And the Unit 3, "having understood a situation", will open S1 and S4 and will close S2 and S3.

And so on everything will cyclically occur.

SWITCH *****,OPERATING DEPENDING ON A SIGN OF CHARGES ON A POWER LINE.

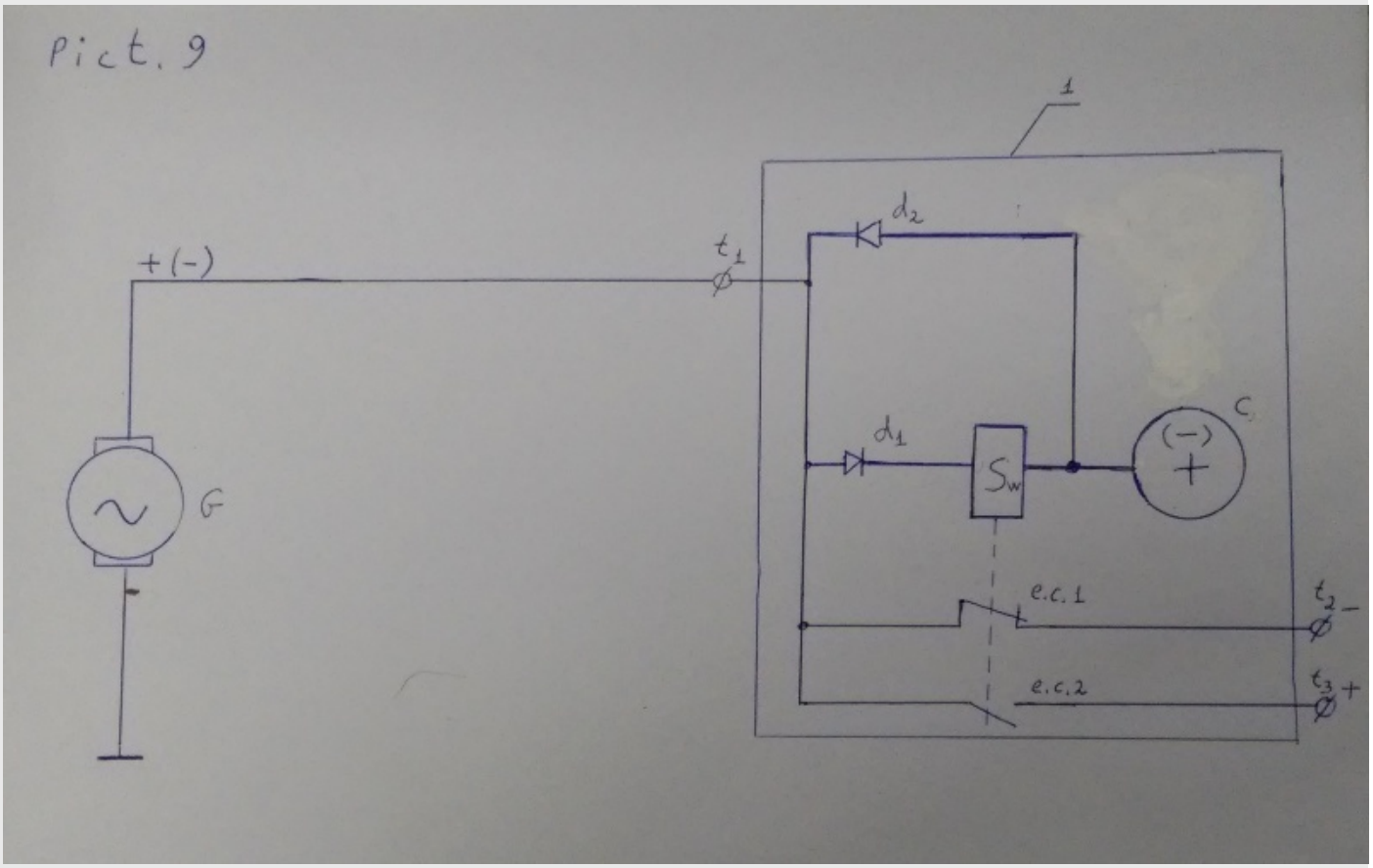

Pict. 9. THE SWITCH *****, ACTING IN ACCORDANCE WITH THE SIGN OF THE CHARGES ON THE POWER LINE.

This switch - unit 4 from the previous diagram (Figure 8).

1- the housing.

Sw- relay.

C-store of charges.

e.c.1- normally closed contact.

e.c.2- normally open contact.

Operation of this device is as follows.

As already mentioned above, the apparatus 4, part of unit 3 (scheme 8) should provide recognition charge sign which currently are in the single-wire transmission line as well as production and send control signals to the switches (S1, S2, S3, S4). Charges from a transmission line enter on the t1 plug. After it they are waited by the diode fork of d2 - d1. If positive charges, they, seeking to fill the store C, pass through the d2 diode and a winding of the Sw relay, having turned on this relay. If charges on the line the negative, then positive charges from the store C via the d1 diode go to the line (and are annihilated with the negative charges of the line) and pass a Sw relay winding. The Sw relay in this half-cycle will be in a silent state - there is no current through a winding.

Thus, depending on the operation or non-operation switch Sw charges recognition occurs on the line.

So:

When "+" charges on power line running to the object, the relay Sw is triggered (current passes through its winding) closes its contact e.s.2 that supplies currents (control signals) to the relay coil switches S2 and the S3, and, thus opens them. Normally closed contact e.s.1 thus opens and stops the currents flow (control signals) via a relay coil S1 and S4 and thus disables them.

If '-' charges on the transmission line, the relay Sw is de-energized , contact e.s.1 closed. He sends control currents to the relay S1 and S4 switches and opens them. e.c.2 - open. He stops for the currents in the windings of relay controlled switches S2 and S3, and disables them.

Pict. 9 SWITCH, OPERATING DEPENDING ON A SIGN OF CHARGES ON A POWER LINE.

This device includes the device 4 and the operated S1 and S2 switches from the previous scheme (Pict. 8).

Signatures to Pict.9

1- housing.

Sw- relay.
C- storage charges.
e.c.1- normally closed contact.
e.c.2- normally open contact.

FORMULA FOR POWER AT THE THIRD WAY OF THE SINGLE - WIRE ELECTRICITY TRANSMISSION.

Let's consider energy which will be received by object of an electric power supply at the third way of an electricity transmission for a half of the period of an electricity transmission. We already found it above and wrote for it a formula (5.18) having designated as W3.

(5.18) W3 = Phi1 x Phi2 x C2 + Phi1 square x C2

Now for larger simplicity and clarity we will change designations and we will explain them. W3 is replaceable on A, Phi1 to Phil, Phi2 to Phim. C2 can be replaced just with the simple C.

Let's rewrite taking into account new designations a formula (5.18), now it will become a formula (5.22).

(5.22) A = Phil x Phim x C + Phil square x C,

or

(5.22) A = C x (Phil x Phim x C + Phil square),

or

(5.22) A = C x Phil x (Phim + Phil)

Here :

A - the energy transferred to the object for half frequency period.

C - the capacity of one of receiver stores (there are two identical stores).

Phil - potential on a transmission line (its absolute value).

Phim - the potential of an electrostatic machine or some other device , which charges receiver stores (also its absolute value).

To find the power (denoted by P3), it is necessary to divide the work (A) on the time for which we have found it . We shall take an interval of time (t) equal to a half-cycle (t=T/2) of the frequency (nu) of switchings of the direction of a current of charges in case of a single-wire electricity transmission. Write a formula.

(5.23) P3 = A / t = A / (T / 2), but the T = 1 / nu, so, finally, this formula is as follows:

(5.23) P3 = 2 x nu x A

Substitute in this formula the expression for A (formula 5.22). We get: (5.24) P3 = 2 x nu x C x Phil x (Phim + Phil).

Now let's express storage capacity through the other parameters, as we did for the counting capacity of the first and second methods in the Chapter 2.

(5.25) C = K1 x f (d, epsilon) x R

Where:

K1 - coefficient , approximately equal (as not all stores of receivers will be the correct spherical form) 4 x Pi x epsilon zero. K1 is approximately equal = 1.11 x 10 to the minus tenth degree.

f - function, with parameters: d - receiver store cover thickness, an epsilon - dielectric permeability of material of which the cover is made. f > 1.

R- is the radius of the store

Substituting this formula in the expression for power. We get:

(5.26) P3 = 2 x K1 x f (d, epsilon) x nu x R x Phil x (Phim + Phil).

We will compare this formula to the formula derived by us in Chapter 2 for the power transferred in case of the second method of an electricity transmission (formula 2.24).

(2.24) P2 = K2 x f (d, epsilon) x nu x R x Fi square,

where Fi is a potential on the line, i.e. it is Phil in the present designations, and K2 = 4 x K1

We can rewrite a formula (2.24) in the following look now

(2.24) P2 = 4 x K1 x f (d, epsilon) x nu x R x Phil x Phil

and to compare it to a formula (5.26). We see that in a formula for the third method, one of multiplicands (Phil) is replaced on (Phim + Phil). And as Phim is a potential of the electrostatic machine, and it much above Phil, so delivered power for the third method will be much higher.

There is a question why in the case of count of power for the second method of an electricity transmission we didn't consider the potential energy Wp received by the store at the end of a half-cycle? But for the third - consider? - Because, this potential energy, we "transfer" without using in the following half-cycle (only on the next time span it brought benefit)- second way. And here (third way) we its, truth, transfer too without using in the present half-cycle, but we receive it (not its, it is more correct correct to say - equal to it) on the other store in the same interval of time, i.e. in a "estimated" half-cycle. Energy is received in the beginning of charging from the electrostatic machine of the parallel store on the appropriate load (Z3 or Z4 - see the Diagram 8).

We will remind that calculation is made for low frequencies of an electricity transmission. For high there will be differences. The main is that the geometrical sizes of stores of the receiver will cease to influence the accepted power as these conductive bodies won't manage to be filled for a half-cycle with charges. It is confirmed in work[10

NOTES :

* The author has an idea how to make an electrostatic machine with a miniature mechanism, i.e. does not take up much space on the receiver of the object, and without rubbing brushes - collectors. In fact, this idea belongs Kirsanov B.P., but the author of this article it creatively developed and perfected.

** The load, as noted in Chapter 1, should be in the form of a winding motor or transformer because of the three manifestations of the electric current (electromagnetic, thermal, chemical) with single-wire electric power transmission guaranteed only one thing - electromagnetic.

*** Wimshurst electrostatic machine, for example, with relatively small size, gives us 300 kV.

**** So, for example, electric durability of mica =135 kV/mm, polyethylene makes 40 kV/mm, and ebonite and porcelain = 25 kV/mm. Therefore , the insulation thickness of only a few cm can protect from breakdown at voltages of above-stated electrostatic machine.

***** If we want to define a sign of the plug of the battery or other device which isn't (like a given above transmission line) a source of 'free' charges, it is necessary to connect the second plug of the battery to the 'buffer' store of charges, i.e. to the big conducting body or to the Earth.

CHAPTER 6. OUR EXPERIMENTS .

The test report of the our pilot unit, executed according to the scheme of Pict. 4.

В Государственный Комитет СССР по делам
изобретений и открытий,
во ВНИИГПЭ

ВНИИГПЭ
10 03 6 г.

По поводу заявки 355 9986/07 033494
от Института [redacted]

АКТ ИСПЫТАНИЯ УСТРОЙСТВА

Настоящий акт подтверждает, что в лаборатории №3 отдела №6 Института [redacted] 17 января 1986г. было проведено испытание модели установки, которая была собрана по схеме, соответствующей описанию заявки на изобретение "Устройство для передачи электроэнергии" № 355 9986/07 033494.

В качестве источника питания использовалась стандартная промышленная электросеть /250В/. К изолированной установке шел только один проводник длиной 7м, сечением 0,8мм^2. В качестве накопителей зарядов использовались 4 картонные параллелепипеда /по два на каждый вид зарядов/, обмотанные металлической фольгой /размеры параллелепипедов 25х25х40см/. Коммутационные проводники были длиной приблизительно по 1м и сечением 0,8мм^2. Функцию электрических вентилей выполняли диоды марки Д247. Включенный последовательно с нагрузкой 5,1МОм микроамперметр марки М366 №109111 показывал ток около 10мкА.

Таким образом, возможность протекания тока через нагрузку /что ранее оспаривала экспертиза/ была доказана.

На испытаниях присутствовали:

Эксперты ВНИИГПЭ В.А.Круглова, К.И.Сотина

Зав.отделом [redacted]

От авторов: сотрудник отдела №6 [redacted] А.Ю.Иоффе

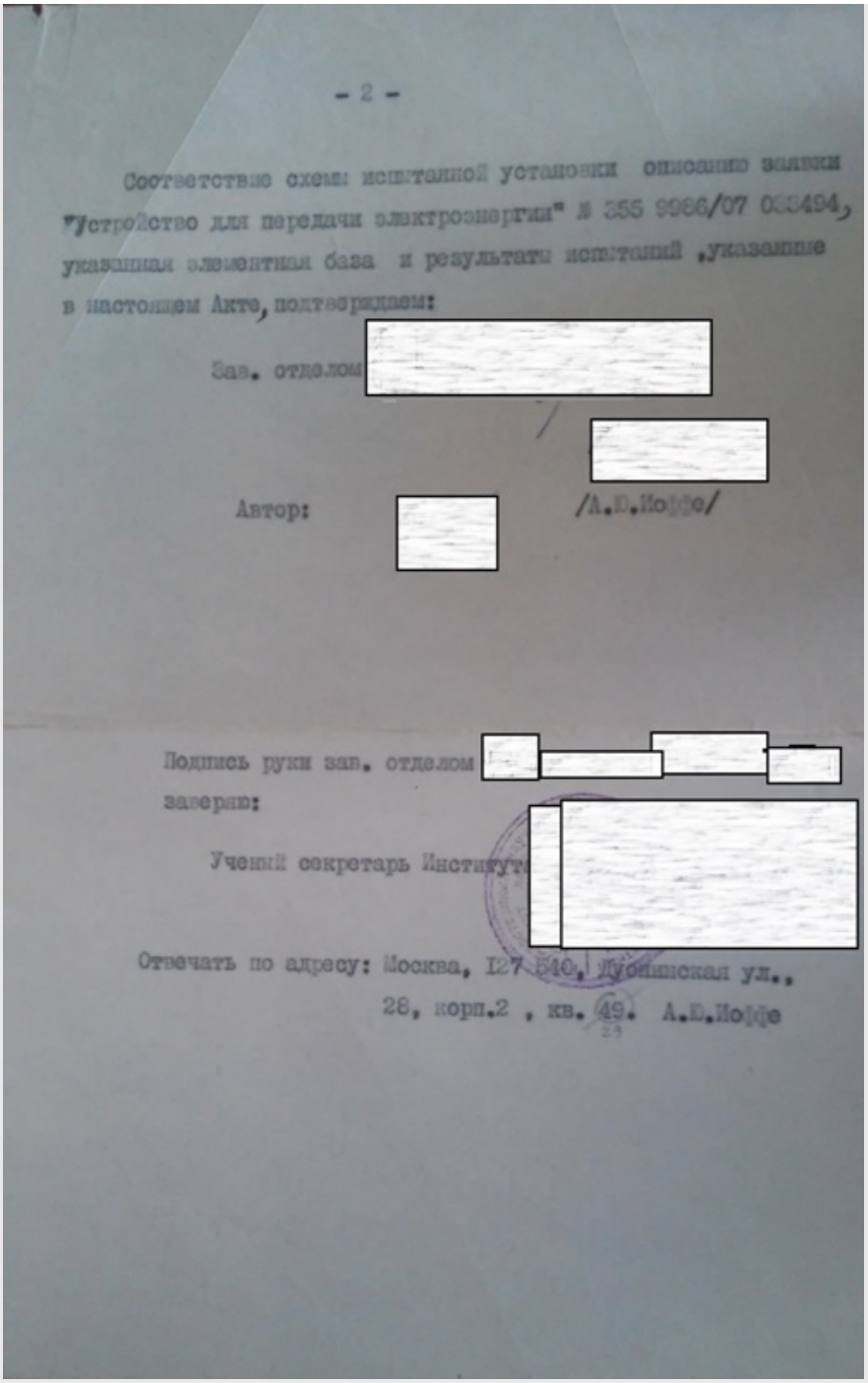

- 2 -

Соответствие схемы испытанной установки описанию заявки "Устройство для передачи электроэнергии" № 355 9986/07 033494, указанная элементная база и результаты испытаний, указанные в настоящем Акте, подтверждаем:

Зав. отделом [redacted]

/ [redacted]

Автор: [redacted] /А.Ю.Иоффе/

Подпись руки зав. отделом [redacted]
заверяю:

Ученый секретарь Института [redacted]

Отвечать по адресу: Москва, 127 540, Лусинская ул., 28, корп.2, кв. 49. А.Ю.Иоффе

Translation :

CHAPTER 7. A SINGLE-WIRE POWER TRANSMISSION APPLICATIONS.

So we see that the ability to transmit electricity at one conductor to an isolated object, still weak, but still there. But there is a question, and for what purpose in general these should be engaged?

The author according to his fancy may suggest the following applications.

1. Power supply of the mobile objects contacting to the conductive firm surface / the liquid environment. It can be, for example, robots with the built-in intakes, and the floor of the machine hall will be carrying out. The single-wire electricity transmission won't be, unlike two-wire, to limit their mobility. Charging or change of accumulators won't be required. Still it can be vehicles on an electricity conductive roadbed. I will remind that I had long ago, in the USSR, article on this matter [1]. Now, when everywhere in big cities there are separate road strips for public transport, it can be real. It is only necessary to make these strips electricity conductive (for the person if only he isn't grounded" contact with such strip won't constitute big danger). It is optional to do conductive this strip on all width, for the maneuvers which aren't interrupting electricity contact of a slip ring will be in it a narrow strip enough. It is natural that these objects of a current transfer have to have the corresponding current collectors where as stores their conducting cases or part them can serve. In addition, for ensuring electric contact there have to be slip rings representing, for example, freely turning conducting castors. Water

crafts in the electrolytic environment, including salty water can also be mobile objects of a current transfer. We will imagine an artificial pond with the sea or added some salt water and with the electricity isolated bottom. On it the boats with electric motors possessing the corresponding current collectors [4] can move.

2. Information electricity transmission when it is difficult to ground or duplicate the line carrying current and information (providing the second conductor). Such situations are rare, but, nevertheless, sometimes, can meet. Then, having the corresponding equipment, by means of such electricity transmission we can transmit signals modulating its parameters. For example, it is possible to transfer information and even energy on the metal pipe which isn't contacting to the earth.

3. It is possible to try to use such way of transfer of the electric power and information on monorail roads.

4. Power supply zeppelin having conductive body (huge storage charges) by means of thin cables coming from the ground. The cable for each zeppelin will be only one. Also will be a thin wire, with the coaxial carrying-out cover intended for prevention of an exit outside of the electromagnetic radiation which can be harmful to all live and, besides, will create a radio noise. It is possible to imagine and the return electric energy when on the zeppelin solar batteries are installed on all its surface, and the cable transferring the developed energy to the earth there will be a single thin wire with a coaxial cover as such cable will be easier and won't pull the zeppelin strongly down, owing to that that the wire can be very thin at a single-wire electricity transmission.

5. Transfer of the electric power on such single-wire lines to the isolated objects will save metal of electricity cables, and not because a wire only one, after all single-wire lines, are already applied to the grounded objects, and because wires can be made thin owing to other mechanism of conductivity which hypothesis of action is given above in Chapter 1. However, as reception objects it will be necessary to build buildings of the big sizes with the electricity conductive cases which, however, can be used in economy, say, as warehouses. Wires, as it was noted above, it is necessary to envelope in the shielding cover. And, even despite it, in view of the small diameter of such coaxial cables, the economy of metal is possible.

6. Transfer of electric power / information on the conductor or the channel having gaps. It can be both the metal conductor, and the interrupting stream of electrolyte. About possibility of a single-wire electricity transmission on not continuous conductor it is possible to read in work [4]. Besides, it is confirmed by a series of experiments... in this work.

7. Transmission of electricity / information between two crafts / vehicles upon contact of their bodies. The shells must be conductive, but not over the entire surface, otherwise we will encounter the "Faraday cage" effect.

8. Single-wire transmission of electricity in the plasma channel formed in the air by means of a laser beam. For information, energy and military purposes.

9. For medicine. For diagnostic devices.

10. Disinfection conductive surfaces. Nikola Tesla discovered that high frequency currents and high voltages have a bactericidal effect. For some conductive surfaces, especially hard-moving and rotating, bactericidal transfer currents may be more convenient for just one conductor and not two.

LITERATURE.

1. Ioffe A.Yu. "electric highway". Magazine "Inventors and Innovators." Number 10 for the year 1989. Moscow.
2. Article on the Internet: Kosinov NV "Experiments on wireless power transmission: CONFIRMATION revolutionary ideas Tesla' http://kosinov.314159.ru/kosinov31.htm
3. SV Avramenko , VN Lisin, Zaev NE Single-wire transmission line (fb2) Librusec http://lib.rus.ec/b/209819/read
4. http://loricsin.livejournal.com/70594.html
5. A.Yu.Ioffe, B.P.Kirsanov "method of transmitting electricity" invention application number 3351879/11 159 868 filed in the USSR VNIIGPE November 9, 1981.
6. A.Yu.Ioffe, B.P.Kirsanov "An apparatus for transmitting electricity" invention application number 3559986/07 033,494 filed in the USSR VNIIGPE February 28, 1983.
7. Strebkov DS, Nekrasov A.M. Resonance methods of electric energy transmission. - M .: GNU VIESH, 2004. - 188 p.
8. SV Avramenko 1-Wire Power Transmission - fantasy or reality? // Electricity and life. - 2000. - N 3. - S.18-27. - Bibliography .: 8 titles.
9. http://zaryad.com/tag/avramenko/
10. https://geektimes.ru/post/81513/
11. http://www.vitanar.narod.ru/AVR/AVR.htm

Bellow are photocopies of:
requests for registration of inventions and the article in the Magazine "Inventors and Innovators"

Государственный комитет СССР по делам изобретений и открытий

ВСЕСОЮЗНЫЙ НАУЧНО-ИССЛЕДОВАТЕЛЬСКИЙ ИНСТИТУТ ГОСУДАРСТВЕННОЙ ПАТЕНТНОЙ ЭКСПЕРТИЗЫ „ВНИИГПЭ"

Москва, 121858, Бережковская наб., 24 Тел. для справок 240-60-15

СПРАВКА

о приеме к рассмотрению заявки на изобретение

от 24 II 81 №

на

Настоящее уведомление удостоверяет лишь принятие к рассмотрению заявки на выдачу авторского свидетельства (патента) и не может служить основанием для получения льгот, установленных действующим законодательством для изобретателей.

Выдана в том, что Государственным комитетом СССР по делам изобретений и открытий принята заявка на выдачу:
(1) авторского свидетельства
(2) ~~патента~~

(76) Адрес 105264 Москва 7-я Парковая д 30/24 кв 205

(71) Заявитель ИОФФЕ А Ю, КИРСАНОВ Б П

(72) Автор(ы)

(21) Заявка № 3351879/II 159868

(22) Дата поступления заявки 9 НОЯБРЯ 1981

Название заявленного изобретения Способ передачи электроэнергии

Код эксперта (рук. группы) 110701 КН

Заведующий отделом

ППП „Патент" Зак. 1343-1352

Государственный комитет СССР по делам изобретений и открытий

ВСЕСОЮЗНЫЙ НАУЧНО-ИССЛЕДОВАТЕЛЬСКИЙ ИНСТИТУТ ГОСУДАРСТВЕННОЙ ПАТЕНТНОЙ ЭКСПЕРТИЗЫ „ВНИИГПЭ"

121858, Москва, Бережковская наб., 24 Тел. для справок 240-60-15

СПРАВКА

о приеме к рассмотрению заявки на изобретение

На _____ от 21 03 83

В ответе ссылаться на наш исх. № _____

Настоящее уведомление удостоверяет лишь принятие к рассмотрению заявки на выдачу авторского свидетельства (патента) и не может служить основанием для получения льгот, установленных действующим законодательством для изобретателей.

Выдана в том, что Государственным комитетом СССР по делам изобретений и открытий принята заявка на выдачу:
(1) авторского свидетельства
(2) ~~патента~~

(98) Адрес 105264 г Москва 7-ая Парковая 30/24 кв 205

(71) Заявитель ИОФФЕ А Ю КИРСАНОВ Б П

(72) Автор(ы)

(21) Заявка № 3559986/ 07 033494

(22) Заявлено 28 февраля 1983

Название заявленного изобретения Устройство для передачи электроэнергии

Заведующий отделом

Код эксперта (зав. группой) 070701 ет

4258—200 000

ЭЛЕКТРОПРОВОДЯЩЕЕ ШОССЕ

СОЗДАНИЕ ЭКОЛОГИЧЕСКИ ЧИСТОГО, ДЕШЕВОГО И НАДЕЖНОГО ТРАНСПОРТА — ОДНА ИЗ ВАЖНЕЙШИХ ИНЖЕНЕРНЫХ ЗАДАЧ ВО ВСЕМ МИРЕ. МНОГИЕ УМЫ ЗАНЯТЫ СЕЙЧАС РАЗРАБОТКОЙ РАЦИОНАЛЬНЫХ КОНСТРУКЦИЙ ЭЛЕКТРОМОБИЛЕЙ. АВТОР СЧИТАЕТ, ЧТО ЭТИ ПОИСКИ ИДУТ НЕ ВСЕГДА В ТОМ НАПРАВЛЕНИИ, ГДЕ ДЕЙСТВИТЕЛЬНО МОЖНО БЫЛО БЫ ОЖИДАТЬ ПРИНЦИПИАЛЬНО НОВЫХ ВОЗМОЖНОСТЕЙ.

А. ИОФФЕ,
инженер

Трамвай экологически чист, но чересчур «прямолинеен», троллейбус чуть маневреннее, но начисто лишен инициативы — не может оторваться от проводов. Неисправность на линии и троллейбуса, и трамвая выводит из строя весь маршрут. Свободнее чувствует себя электромобиль, но ему приходится тащить в кузове громоздкие аккумуляторы, а это не что иное, как бесполезное превышение мощности; иными словами, низкий КПД. И на большой пробег по ненаселенке рассчитывать не приходится — без подзарядки аккумуляторов не обойтись.

Вот если бы удалось сделать дорожное полотно так, чтобы его верхний слой стал токопроводящим, а нижний был изоляционной прокладкой, тогда электромобиль получил бы основную часть энергии от электропроводящего шоссе, а аккумулятор (небольшой, конечно) оставался в резерве — вдруг придется свернуть с основной дороги. Токосъемник электромобиля легко выполнить в виде устройства, не ограничивающего маневренности машины.

Что это — досужие фантазии или реальность?

Я бы сказал, реальность, если появится возможность передавать электроэнергию по одному проводнику. Но об этом мы все слышали еще в школе. Удивительно, почему мне не приходилось читать о серьезном использовании эффекта, известного всем по школьным учебникам. Вспомните лабораторный опыт. Заряжаете, скажем, положительными зарядами шар из проводящего ток материала. Соединяете шар-носитель зарядов — одним проводником с незаряженным шаром. Часть зарядов перетекает с первого шара на второй. Заметьте, мы передали электрическую энергию изолированному объекту с помощью одного лишь проводника.

Развеем эту идею. Пусть на изолированном объекте установили два шара-накопителя зарядов. Будем использовать проводник в периодическом режиме. В первый полупериод передаем по нему положительные заряды от положительно заряженных накопителей передатчика, а во второй — отрицательные. Накопители на объекте будут предназначены каждый для зарядов своего знака. Заряды с накопителей на объекте можно снимать через полезную нагрузку RH (см. рис. 1). В установке, изображенной на рис. 2, в качестве буферного накопителя, принимающего заряды, разделяемые генератором, может быть использована Земля или тело, обладающее большой собственной емкостью.

Вместе с Б. П. Кирсановым, сотрудником Физического института им. П. Н. Лебедева, мы хотели защитить идею этой установки авторским свидетельством на изобретение («Устройство для передачи электроэнергии», заявка № 2359506/07 033494), но эксперты ВНИИГПЭ отрицали ее работоспособность, не поверили, что ток потечет через нагрузку (RH). Тогда мы собрали опытную установку, которая продемонстрировала появление тока в нагрузке. Составили акт испытания модели. Но эксперт, а затем и Контрольный совет ВНИИГПЭ отказали нам в авторском свидетельстве, сославшись на то, что мощность, передаваемая объекту, невелика, поэтому наша установка практической ценности не имеет. Но мы и не подавали заявку на новый мощный источник энергии, мы хотели лишь «застолбить» идею, и опытная установка доказала работоспособность этой идеи.

По расчетам, передаваемая объекту мощность растет вместе с частотой передачи зарядов разного знака, с увеличением емкости накопителей и потенциала, при котором происходит токопередача. Повысить передаваемую мощность можно, например, таким путем. Перед началом передачи тока на накопители подаются заряды под большим потенциалом. Это обеспечит совместная работа небольшой аккумуляторной батареи и устройства, повышающего напряжение (см. рис. 3).

В первый полупериод, когда на проводник от передатчика подаются заряды положительного знака, коммутационное устройство соединяет проводник с накопителем отрицательных зарядов. Ток течет через RH_2. Во второй полупериод, когда на проводнике отрицательные заряды, коммутационное устройство соединяет проводник с накопителем положительных зарядов, и ток течет через RH_1. Часть полезной мощности подадим на подзарядку аккумуляторной батареи, а другую часть используем для совершения полезной работы.

В установке такого рода высокие потенциалы заключены внутри токоприемного устройства, хорошо изолированного от пользователей. На проводнике, с которым контактируют люди, будут только небольшие неопасные (меньше 220 В) напряжения.

Итак, мы показали, что в принципе передача электроэнергии по одному проводнику возможна. Устройства для реализации этой идеи могут быть разные — широкий простор для изобретательской мысли.

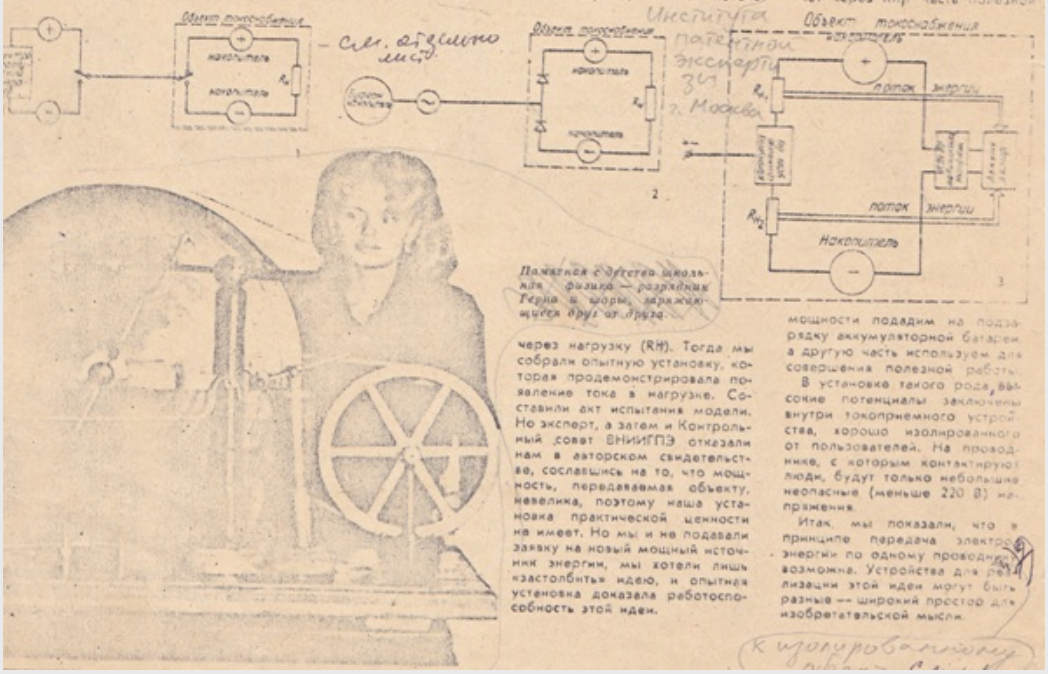

- Оставить комментарий
- © Copyright Иоффе Александр Юльевич (ioffe.shura@Yandex.ru)
- Размещен: 17/04/2015, изменен: 20/08/2017. 90k. Статистика.
- Статья: Foreign+Translat

Ваша оценка: не читал ОК

РЕКЛАМА: популярное на LitNet.com **Э.Ридлин** "Сердце подскажет" (Любовное фэнтези) | | **К.Лестова** "Без меня на мне женились" (Городское фэнтези) | | **Р.Вольная** "Одна из тысячи звезд" (Современный любовный роман) | | **K.Favea** "21 ночь" (Романтическая проза) | | **К.Невестина** "Брачная охота на главу тайной канцелярии" (Юмористическое фэнтези) | | **Д.Мар** "Когда я тебя найду" (Приключенческое фэнтези) | | **С.Шавлюк** "Я с тобой не останусь" (Романтическая проза) | | **Л.Свадьбина** "Попаданка в академии драконов 4" (Приключенческое фэнтези) | | **К.Ши** ""Муж" на час" (Короткий любовный роман) | | **А.Тарасенко** "Демон для попаданки" (Попаданцы в другие миры) | |

Связаться с программистом сайта.

Новые книги авторов СИ, вышедшие из печати:
Д.Смекалин "Ловушка архимага" Е.Шепельский "Варвар,который ошибался" В.Южная "Холодные звезды"

Friends, the "fever" around topics about alternative energy has made scammers excited too! Be vigilant and don't fall for cheap scams. Remember that if you are offered to buy a working BTG at a price less than a million dollars, then by 99% this is a scam for money. If you are offered to buy BTG for more than a million dollars, then this is a 100% scam. Alas, there are no miracles and exceptions yet, although you can always check it yourself... :-)

atmospheric electricity

one 2 Next >

NNN
Anti-Tenturian

hmm... here I came across such a scheme:

Иллюстрация листовки описания "Устройства для получения энергии из электрического поля атмосферы" Патент RU 2245606

maybe it will be useful for someone for experiments...
---
here is a small excerpt from the "theoretical" description:
===
Does the Earth have its own electric field? Who remembers its characteristics?

For absolutely clear weather, near the equator, the vertical electric field strength at the sea surface is ~ 130 volts per meter. That is, by raising your hands above your head, you will get between your fingers and boots, a voltage difference equal to the amplitude voltage in a conventional outlet, about 310 volts. Why doesn't anyone notice this? Firstly, the body is a conducting object and its potential almost coincides with the ground potential. Secondly, air is an excellent insulator and electric current flows through it at much higher intensities. About 30 kilovolts / cm, yeah ... And even in this case, the current through the air is indecently small, milliamps and fractions of a milliamp. Anyone who has been in the mountains and seen how the “fires of St. Elmo” appear on the fingers and points, in bad weather, is familiar with the extreme version of atmospheric electricity. And personally, such lights were shown to me at school, with the help of an electric car. You are standing on a dielectric stool, in a darkened classroom, someone is turning the handle of the unit, and you have your hair sticking up in all directions and blue corona discharges are burning on your outstretched arms. M-dya ... And if, on the same "electric stool" to put a girl with long hair - a spectacle outrageous. The field spreads her hair in a "sheaf" in all directions, each hair separately ... Screeching, screaming, sparks ... to put a girl with long hair is a sight to behold. The field spreads her hair in a "sheaf" in all directions, each hair separately ... Screeching, screaming, sparks ... to put a girl with long hair is a sight to behold. The field spreads her hair in a "sheaf" in all directions, each hair separately ... Screeching, screaming, sparks ...

The same effect can be obtained with very simple, almost home remedies. It is enough to have a high lightning rod at hand or launch a balloon or a kite into the sky, on a metal wire. The simplest arithmetic. If with each meter the voltage increases by 100-200 volts, then already a few tens of meters above the ground conditions arise for the breakdown of air by an electric discharge.

It can be calculated specifically. Do you know the lightning rod formula? Come on! Okay

... I understand that you would never need it in your life, therefore you didn't fill your head with nonsense ... Who knew that fortune would turn its back? Well, I remind you - "The lightning rod protects the site from atmospheric discharge (lightning), in the form of a circle circumscribed around its base, with a radius equal to its height." Why? Because the lightning rod is a voltage concentrator, and all the force lines of the atmospheric electric field, which were previously evenly distributed over this site, are now "pulled" to its top. There, on occasion, lightning will strike from a thundercloud. Towards the "leader" developing from the top of the lightning rod. I mean, first, a corona discharge will appear above its elevated part, and from there it will pull a chain of air ions, sufficient to break through lightning of the "linear" type. God, guys, why do you have such gloomy faces?

The question is, is it possible to obtain a similar effect (a gas discharge on a highly raised electrode) in clear, cloudless weather? And if so, what does it give us in a practical sense? After all, outside the discharge, the air will remain a dielectric. Then why? There is a reason and meaning, however... Where does the electric charge of the atmosphere come from? What feeds and sustains it, um... billions of years?

СРЕДНЕГОДОВОЙ РАДИАЦИОННЫЙ БАЛАНС ПЛАНЕТЫ ЗЕМЛЯ

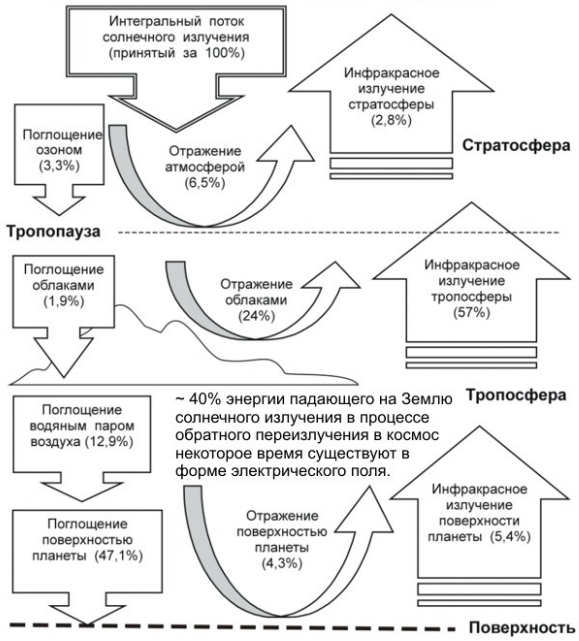

СРЕДНЯЯ ПЛОТНОСТЬ ПОТОКА ТЕПЛОВОЙ ЭНЕРГИИ СОЛНЦА НА ПОВЕРХНОСТИ СЕВЕРНОГО ПОЛУШАРИЯ (Вт/м^2)

Месяц	Широта местности, град									
	0	10	20	30	40	50	60	70	80	90
Январь	242	200	154	104	54	21	-----	-----	-----	-----
Февраль	255	221	179	133	83	42	8	-----	-----	-----
Март	266	250	221	183	141	91	46	**13**	-----	-----
Апрель	263	263	255	234	204	162	117	**71**	**24**	**5**
Май	245	263	271	266	255	229	192	150	120	**96**
Июнь	229	258	275	284	279	266	245	216	196	196
Июль	225	255	275	284	284	263	250	221	208	203
Август	237	258	263	271	258	241	208	167	133	125
Сентябрь	255	263	258	242	213	179	133	**88**	**42**	**16**
Октябрь	263	250	229	196	154	109	63	**21**	-----	-----
Ноябрь	255	225	188	146	96	50	16	-----	-----	-----
Декабрь	242	204	157	109	63	21	-----	-----	-----	-----
Среднее за год	248	242	227	204	162	138	106	**79**	**60**	**53**
Допустимо использовать	**3,7**	3,6	3,4	3,1	2,4	2,1	1,6	1,2	0,9	0,8

По опыту эксплуатации солнечных электростанций разных типов, совершенно безопасная норма использования - 1,5% от среднего потока энергии.

Approximately 40% of the energy of the sunlight falling on the Earth, in the course of the return radiation into space, for some time (the section of convective heat exchange) is converted into the energy of a potential electric field. The charge of the tropopause and the stratosphere is produced by flows of heated air with an admixture of water vapor ascending from the surface of the planet. The natural leakage of this charge is carried out due to the ionization of air by cosmic rays, thunderstorms, rain and snow falling on mountain peaks. Have you ever wondered why high peaks are always covered with snow caps? There, the same electric field, day and night, pulls the charged ice dust hanging in the upper layers of the atmosphere.

However, let's start from afar, from space. The temperature of any celestial body is rigidly

set by the integral power of external radiation absorbed by its surface and internal heat release from the depths. For the Earth, the average annual flux of sunlight ranges from 250-300 W/sq. meter at the equator up to 50-120 W/sq. meter in the polar regions. Cooling in a vacuum, of course, is purely radiative.

The sum of the energy fluxes reaching the surface is exactly equal to the energy flux radiated back into space. But, many planets of the solar system (in particular the Earth) have an atmosphere. They have only the stratosphere (from where thermal radiation goes into the world space) is close to the norm of the thermal balance (for the Earth, about -25 degrees C). On the surface of a celestial body surrounded by a gaseous shell, it is always much warmer. This thing is called the "greenhouse effect".

Any atmosphere is a spectral filter with multiple transparency windows. It can transmit light of a strictly defined range. Since the maximum of the return (thermal) radiation from the surface is always shifted, relative to the absorbed, to the long-wave region, then radiative cooling (like naked asteroids) is also impossible. Radiation from the surface does not diverge, heating the surrounding air. To remove thermal energy into space, a very productive mechanism with a material coolant is needed. In the dense part of the gas envelope of the planets (up to and including the stratosphere), heat transfer is almost entirely convective. The Earth's troposphere (this is below 12-17 km) contains 90% of the mass of air and 99% of atmospheric moisture. The heat flow "surface-space" there is due to the mechanical movement of air masses. This is an extremely rough model of the process. Now, its important detail.

The balance of radiative energy inflow and convective heat outflow requires a rapid vertical movement of the coolant. There is a sharp drop in temperature and pressure along the height. The thermal pressure between the surface of the planet and the upper boundary of the troposphere (altitude 12-17 km) is quite large (on Earth in the equator region from +45 degrees C at sea level to -70 degrees C in the tropopause). But, by itself, convective heat transfer still cannot cope with the load. Energy stupidly "gets stuck" in the lower layers of the atmosphere. Air is an extremely poor heat transfer medium. As a result, the main burden of energy transfer through dense layers of surface air usually lies with the much more productive effect of phase transitions, which acts in parallel with convection. The atmosphere is clearly stratified in height into layers that differ in composition, density and temperature. Moving from heat to cold and back, some of the components of air flows cyclically change their state of aggregation (evaporate, absorbing heat, and condense, giving it away). At the moment of condensation, in the upper layers of the atmosphere, each molecule emits a quantum of radiation leaving for the world space. On Earth, the "working body" of the described heat pump during phase transitions is water, on Venus - sulfuric acid, on Jupiter - ammonia.

In different regions of the planet, due to the evaporation of water from the surface and its re-evaporation in the clouds (water aerosol strongly absorbs infrared radiation), up to 10-55% of the integral solar energy flux is transferred from the troposphere to the stratosphere. The average content of water vapor in the Earth's atmosphere does not exceed 0.3-0.4%, but the energy consumption of its evaporation-condensation is huge and the total contribution of evaporation and condensation in the work of the

"atmospheric heat pump" prevails. This ensures more than 95% of the heat exchange between the surface and the stratosphere. The process goes on around the clock. It is most intense in the tropical zone over the oceans, but is noticeable even over the eternal ice during the polar night. In middle latitudes, during the winter, up to 25-30% of the snowfall evaporates.

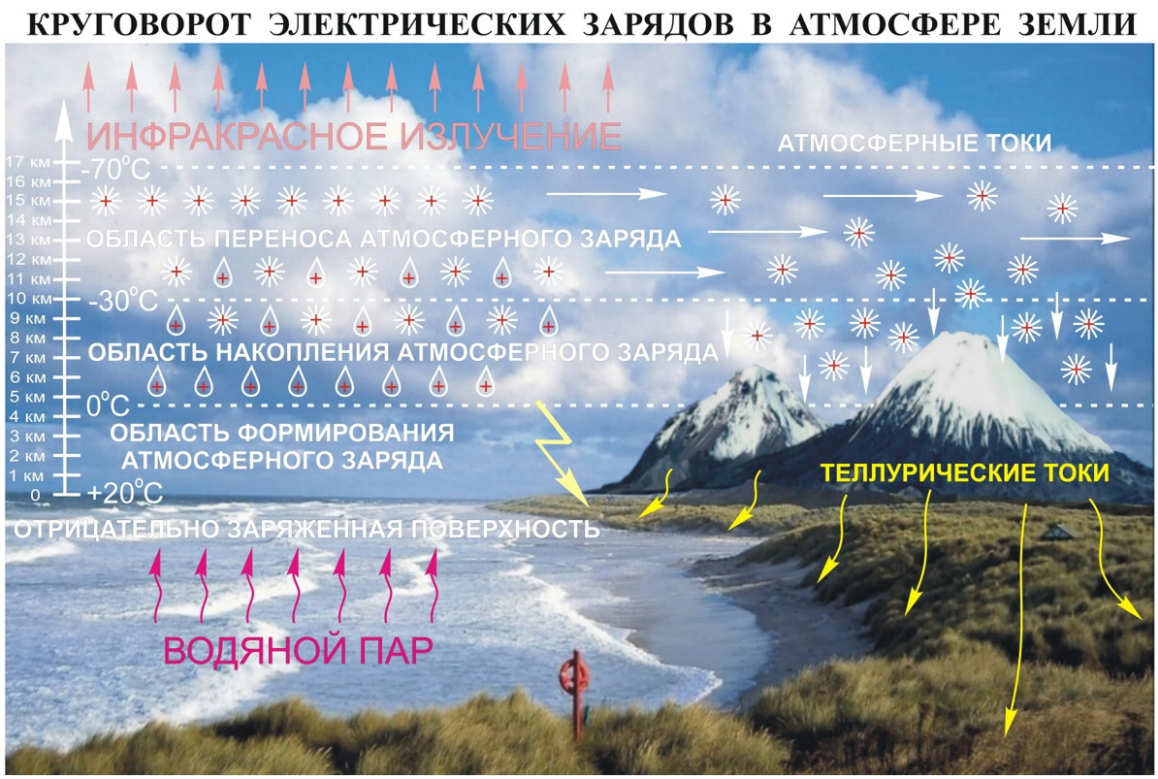

The work of the described atmospheric mechanism is accompanied by peculiar side effects. A change in the state of aggregation of a substance dramatically changes its dielectric constant. Spontaneous electrification always occurs at the phase boundary. Part of the thermal energy of the air components is converted into electricity... Condensation of water vapor in the cold upper layers of the gas envelope is accompanied by the accumulation of a large number of positively charged particles there. This is how space charges arise, which form a continuous layer in the upper layers of the Earth's atmosphere.

The uppermost layers of the atmosphere are highly ionized by cosmic radiation and represent a region of high conductivity. Result? Noticeable changes in the field strength over any point on the planet's surface are accompanied by a rapid redistribution of charges in the stratosphere and ionosphere. Therefore, the average intensity of the atmospheric field throughout the planet is almost stable.

The electric field of the lowest layers of the atmosphere, however, is very variable. It is associated with the smallest droplets of water and ice crystals suspended in the air. Free charge carriers (ions and electrons) are almost absent in the troposphere. This gives insulating properties to dense layers of air and prevents self-discharge of the aerosol mass. Due to the low mobility of condensate particles, volumetric electric charges (clouds, jets of fog, etc.) are strongly associated with carrier turbulent flows and move with them for a long time (often for weeks) until they evaporate, discharge onto mountain peaks or fall to the surface with precipitation. So "jet" electric currents in the stratosphere and

mirror-like "telluric" currents in the upper layers of the earth's crust. Result?

A positive space charge of about 0.57 million coulombs constantly hangs in the atmosphere. It creates an electric field with the already mentioned average intensity of 130 V/m. The field pulsates in time with the rotation of the planet (its intensity is maximum at 17:00 GMT, when the Pacific Ocean floats on the sunny side). The average potential difference between the surface and the stratosphere is about 400 kV. This is in any good physics textbook.

The total energy resource of the charged atmosphere (~ 40% of the integral power of solar radiation in the earth's orbit) is estimated at about 2.5-5 per ten to the seventh power of gigawatts. It covers the Earth from pole to pole and is like a global DC distribution network connected to an eternal, free and environmentally friendly source of energy - the Sun.

We return to where we started. There is a stick. On a stick - an insulated wire to the very top. At the end of the wire is an air ionizer. Yes, it doesn’t matter what ... It doesn’t matter at all ... A corona discharge, a heated wire, an open flame, a piece of a radioactive isotope ... The main thing is that around this elevated conductor, let’s call it a “receiver”, an excess of ions. Free charge carriers. Yeah, I see it's starting to get...

Air is a moving substance. If the charge left the conductor and escaped into the atmosphere, then its fate is indifferent to us. The electric field, of course, will drag him to the right address. And since there is a flow of charges, then an electric current flows in the circuit. Well, yes, through the air ... The strength of this current depends only on the performance of the ionizer. How many charge carriers he throws out of the metal every second, so many pendants of electricity will flow through this conductor. What is air resistance? And it doesn't exist, practically. can be considered equal to zero. It doesn't matter how we connected directly to the stratosphere, all 400 kilovolts of celestial voltage hanging over our heads seem to be sitting at the end of a lightning rod...

Unclear? Oh, guys and girls, what are you all ... Okay, I'll explain about air resistance. On the contrary... Do you know what grounding is? Well, yes, an iron pin driven into the ground to drain current from the protected equipment. If anything gets there, everything will “close” to the ground and disappear safely in the ground. Now a question for backfilling. What is the earth resistance value? Well, yes, if we take a couple of identical grounds, measure the resistance between them and divide them in two, we will just get the desired value. So, how much? But no! A good ground should have resistance in the order of an ohm. Yes, sir. In any soil, even in dry sand or rock. And don't care about the resistance of the material. In-in ... The main thing is to ensure good contact with the volume, albeit of poorly conductive material. The earth is big. Consequently, the earth's resistance tends to zero, and all resistance losses - only at the point of contact with the earth. Where the charge carriers move densely enough. And all problems are solved. The cross-sectional area of the worst "conductor", when the current spreads in the volume, with the distance from the ground electrode, increases as the square of the distance. Exponentially... Very fast. And just as quickly, its electrical resistance drops. Out of habit - it seems like a paradox ... And just as quickly, its electrical resistance drops. Out of habit

- it seems like a paradox ... And just as quickly, its electrical resistance drops. Out of habit - it seems like a paradox ...

When an ionizer operates at the upper end of our "atmospheric generator", its resistance, relative to the atmosphere, also tends to zero. More precisely, it is negligible. Volumetric effect, as in the case of grounding in the ground. The strength of the current in the circuit depends only on the performance of the ionizer .. Convenient ...

No, we will not pile the burner on the upper end of the pantograph. And firecrackers - we will not. And we don't have a piece of a radioactive element. It's for the best, by the way... During discharge, in a gaseous environment, the electrodes lose weight. For every ampere-hour of charge flowing through the gas, about a cubic centimeter of electrode material is sprayed by the plasma. Its composition does not matter. There are no materials resistant to plasma chemistry ... At least put tungsten, even silicon, even graphite. Everything burns and oxidizes. Guessed? If you put a radioactive source on top, then atmospheric corrosion will quickly corrode it to holes and all the muck will be sprayed into the environment, settling around in a thin uniform layer. Do we need it? Live easier.

The expendable knob for the receiver of atmospheric current, on all lightning rods, put a simple, environmentally friendly iron. From it, except for rust, no harm. We, too, will not break away from the team ... How to make a banal piece of iron emit plasma ions into the air? There is such a way!

We consider the area of the soil, which is shielded from the atmospheric electric field by a pin, for example, twenty meters high. Yeah, this is the same pine tree that we appointed under the receiver stand. Pi multiplied by "er square", right? Here "er" is the radius of the platform and the height of the receiver. The result is 1256 square meters.

Now we find the area of the receiving electrode, under given conditions, sufficient to ignite a corona discharge on it in clear, cloudless weather. It's simple too. The field strength in the corona is about 30 kV/cm or 3 MV/m. The field strength over flat ground is 130 V/m. We consider the proportion ... Approximately 500 square centimeters of bare metal, a ball with a diameter of 12-13 centimeters, at the top, will already be surrounded by a weak cloud of ionized air molecules ... If you take a thinner rod, then the corona discharge around it will be proportionally stronger. Just?

Not just... The speed of movement of free ions in the air, at atmospheric pressure, is measured in centimeters per second. The top of the current collector will be enveloped by a sedentary cloud of lazily drifting ions, and the discharge will stabilize at the threshold of ignition. As it actually happens with any real lightning rod. Something, slowly, always leaks through it into the atmosphere, but this current is almost imperceptible. Its consequences can only be detected indirectly, by the unnatural smoothness of the metal surface. All the irregularities there seem to be polished. Really. The protrusions and burrs are the first to be "eaten up" by a quiet discharge. For a similar reason, grass is so evenly "trimmed" in all high-mountain "alpine meadows". The field of atmospheric electricity in the mountains is strong. On each blade of grass, sticking out a little higher than the rest,

maybe, in bad weather, catch fire "

Conclusion? If you need a strong discharge, then you need a "point". Not simple, motionless, but dangling in the wind, blown by air pressure. Steel foil (ideally) or metallized paper, varnished from moisture. A long strip of such foil is now fluttering in the wind. Melting, melting, melting... Consumable! And the current adjustment is very simple - the position of the support. Tilt lower - the discharge field weakened. Raised higher - intensified. Need for inventions is cunning ...

Since the earth is negatively charged relative to the atmosphere, and the installation case is grounded, the voltage on the central electrode of the cement pipe is positive. Equal to the potential on the "receiver". When the process stops, this high-voltage part is closed to the housing with a grounded steel pin. Several tens of kilovolts are still present there. The simplest example of using an atmospheric generator "directly" as a ready-made power source for an "electrostatic precipitator". No matching devices for you, no converters. On one side of the chain, a corona discharge burns around an "electricity receiver" splashing in the wind, on the other, a corona discharge burns in a pipe through which dusty gas rushes from the reactor. From the central electrode (barbed wire) the ion flow pushes its way to the surrounding grounded walls. On the way, it charges cement particles and they drift there, after the discharge they settle on the metal. The pipe trembles as the cement slides down the spiral path into the hopper. And nothing else is needed. The "corona" sweeps the entire condensed fraction out of the gas like an invisible broom. It's very simple and clean, yeah... Adjustment of voltage and current - by tilting (lifting height) of the "receiver" bar. How much exactly the voltage in the circuit - no one knows. There were no people willing to measure. And why? You can see from the exhaust port of the pipe ... If the outgoing gas is clean of dust, everything works fine. As soon as the clubs appeared - lift the rack higher. The discharge does not cope ... And sparks of breakdowns began to click loudly in the iron pipe - lower it lower. On the way, it charges cement particles and they drift there, after the discharge they settle on the metal. The pipe trembles as the cement slides down the spiral path into the hopper. And nothing else is needed. The "corona" sweeps the entire condensed fraction out of the gas like an invisible broom. It's very simple and clean, yeah... Adjustment of voltage and current - by tilting (lifting height) of the "receiver" bar. How much exactly the voltage in the circuit - no one knows. There were no people willing to measure. And why? You can see from the exhaust port of the pipe ... If the outgoing gas is clean of dust, everything works fine. As soon as the clubs appeared - lift the rack higher. The discharge does not cope ... And sparks of breakdowns began to click loudly in the iron pipe - lower it lower. On the way, it charges cement particles and they drift there, after the discharge they settle on the metal. The pipe trembles as the cement slides down the spiral path into the hopper. And nothing else is needed. The "corona" sweeps the entire condensed fraction out of the gas like an invisible broom. It's very simple and clean, yeah... Adjustment of voltage and current - by tilting (lifting height) of the "receiver" bar. How much exactly the voltage in the circuit - no one knows. There were no people willing to measure. And why? You can see from the exhaust port of the pipe ... If the outgoing gas is clean of dust, everything works fine. As soon as the clubs appeared - lift the rack higher. The discharge does not cope ... And sparks of breakdowns began to click loudly in the iron pipe - lower it lower. the cement slides along a spiral path into the accumulator. And nothing else is needed. The "corona"

sweeps the entire condensed fraction out of the gas like an invisible broom. It's very simple and clean, yeah... Adjustment of voltage and current - by tilting (lifting height) of the "receiver" bar. How much exactly the voltage in the circuit - no one knows. There were no people willing to measure. And why? You can see from the exhaust port of the pipe ... If the outgoing gas is clean of dust, everything works fine. As soon as the clubs appeared - lift the rack higher. The discharge does not cope ... And sparks of breakdowns began to click loudly in the iron pipe - lower it lower. the cement slides along a spiral path into the accumulator. And nothing else is needed. The "corona" sweeps the entire condensed fraction out of the gas like an invisible broom. It's very simple and clean, yeah... Adjustment of voltage and current - by tilting (lifting height) of the "receiver" bar. How much exactly the voltage in the circuit - no one knows. There were no people willing to measure. And why? You can see from the exhaust port of the pipe ... If the outgoing gas is clean of dust, everything works fine. As soon as the clubs appeared - lift the rack higher. The discharge does not cope ... And sparks of breakdowns began to click loudly in the iron pipe - lower it lower. How much exactly the voltage in the circuit - no one knows. There were no people willing to measure. And why? You can see from the exhaust port of the pipe ... If the outgoing gas is clean of dust, everything works fine. As soon as the clubs appeared - lift the rack higher. The discharge does not cope ... And sparks of breakdowns began to click loudly in the iron pipe - lower it lower. How much exactly the voltage in the circuit - no one knows. There were no people willing to measure. And why? You can see from the exhaust port of the pipe ... If the outgoing gas is clean of dust, everything works fine. As soon as the clubs appeared - lift the rack higher. The discharge does not cope ... And sparks of breakdowns began to click loudly in the iron pipe - lower it lower.

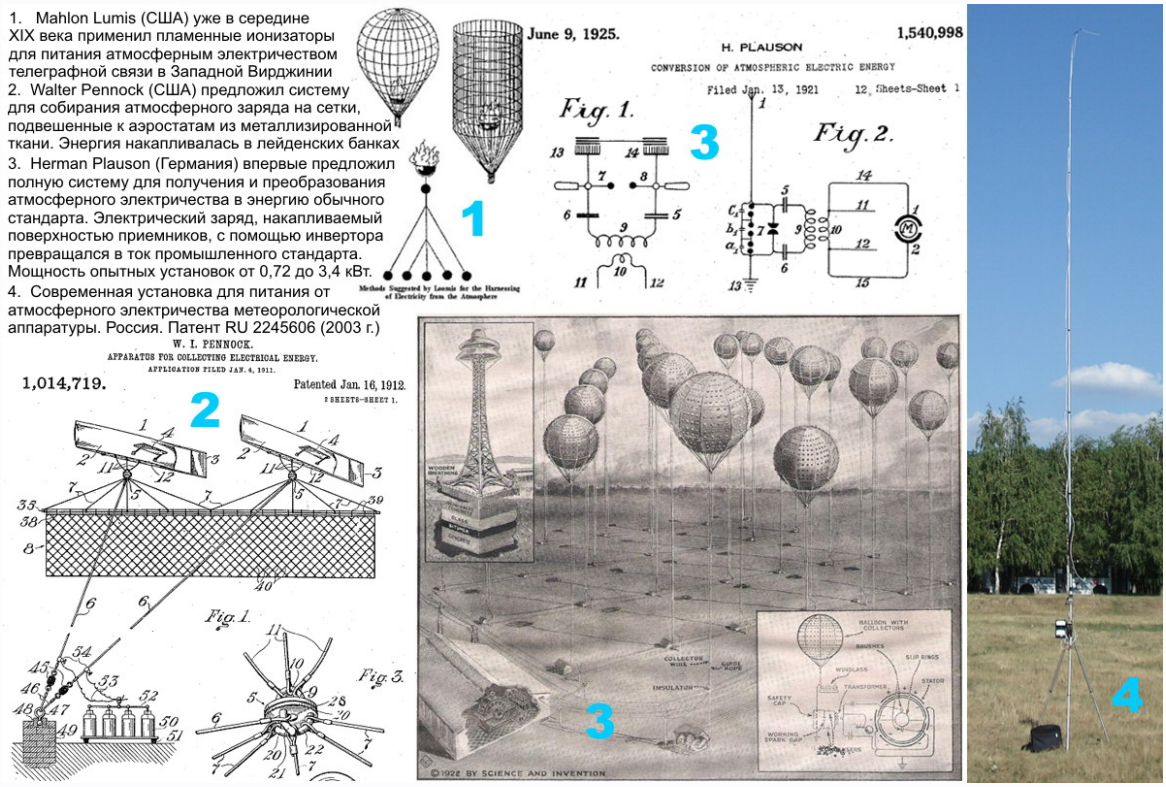

NNN , 5 January 2013 #one

Klon likes this.

Contact
Patsak

I came up with another idea for generating electricity from ionized air.
Man has long been able to receive electricity directly from the air. When we breathe, we do it. If we run fast, we consume more energy, and therefore we breathe more intensively.
How to collect ions in the air and get electricity?
It is possible to drive a stream of air through a strong magnetic field. Positive and negative ions will scatter in different directions, separated by a magnetic field. They should fall on the plates to which the current collector will be connected. For example, a capacitor. Only I need a person on the forum who will help to calculate this installation.
To know at what speed it is necessary to drive air through the pipe through a magnetic field, what strength the magnetic field should be, the area of the plates on which the ions fall. How much energy is contained in a cubic meter of ionized air?

-- Apr 20, 2013, 23:32 --

I tried to conduct the experiment I mentioned above - the effect is zero. Those. using a magnet, it was not possible to separate air ions.
I bought two plate magnets, fixed them with adhesive tape between two metal plates. I tried two plates of copper, aluminum and experience when one plate is made of copper and the second of zinc (as in galvanic cells). I connected a multimeter in voltmeter mode to the plates. He showed a potential difference of zero point, horseradish hundredths of milliamps. I tried to blow on the plates so that air passes between them and blow on them also with the help of a fan - the effect is the same. It turns out that ions in a magnetic field will simply rotate in a circle, as in this model . To force the ions to be attracted to metal plates, you need to apply an electric field of several kilovolts to them, but then no perpetuity will naturally work, because. we will spend more energy than we get.

The only thing that successfully came to my mind about the implemented projects of "vechnyaks" was to use horsepower. After all, horses also breathe air, eat free grass and water.

Who has any ideas how to make ions from the air separate into positive and negative, so that positive ones fly to one plate, and negative ones to another, so that a potential difference is created between the plates?

Attachments:

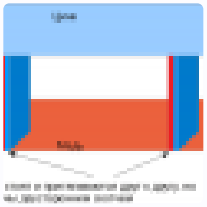

shema-opita.png
File size: 16.7 KB
Views: 439

Kontakter , March 31, 2013 #2

Good afternoon.
I decided to conduct some experiments for myself regarding atmospheric electricity.
First experiment:
- galvanized sheet s=0.3mm, 2 sq.m.
- height 25m,

Max Rud
Anti-Tenturian

- grounding - galvanized sheet 0.3mm, 0.5 sq.m.
- between them a wire through a voltmeter.
Result: 0.5V maximum.
Thinking that a brick building with iron elements distorts the electric field, we decided to inflate the balloon and go out into the open field.

Here is a video of experiment #2.
[media]https://www.youtube.com/watch?v=iFk3zOwr1wQ[/media]
nothing works yet....
Now we think that we need to introduce a capacitor into the circuit. Perhaps there is an equalization of potentials, which we cannot even notice.
While like this

Max Rud , 3 April 2014 #3

moderator
Administrator
Forum Team

Thanks for the material.
Shot perfectly, the work is done, but there are a couple of errors.
1. The resistance of a household voltmeter is very low, and the current obtained in this way is small, which is why you did not manage to measure the voltage!

Well, here's an example for you, charge a capacitor with a small capacity (up to ten microfarads) and measure its voltage with your voltmeter. You will see that the capacitor itself practically does not discharge, but as soon as you touch it with a voltmeter, the voltage across it immediately drops ...

Therefore, you also need to put a capacitor in the circuit and measure the voltage on it, but not constantly, but only occasionally touching with a voltmeter.

2. Take a steel broom instead of a frame and aluminum. that is, a bunch of wires sticking out like a panicle on one side and soldered or wrapped with wire on the other. So the efficiency will be many times higher.

moderator , 4 April 2014 #four

Rostislav
Administrator

> Max Rud said:
>
> *Thinking that a brick building with iron elements distorts the electric field, we decided to inflate the balloon and go out into the open field.*

What was used as a rope for the ball? The wire? In isolation?

Rostislav , 4 April 2014 #5

Thank you very much for your comment and attention.
I think now an active lightning rod should be used as an antenna.

Max Rud
Anti-Tenturian

It ionizes the air around it.
We will reach the voltage, but then there will be a question with the current strength ...
But we have assembled the circuit. But not tested due to extremely low voltage.
Let's move on.

> Rostislav said:
>
> *What was used as a rope for the ball? The wire? In isolation?*

As a cable, there was a stranded wire 2mm.kv.

Max Rud , 4 April 2014 #6

loginza22096
Anti-Tenturian

The topic is interesting. I will share my observations.
During a thunderstorm, I observed several times how a discharge of a couple of centimeters jumps between a disconnected antenna cable and a nail in the floor. This was before the army. We had strong dry thunderstorms then in Altai. There is lightning, but no precipitation.
Somehow, after the repair, I took the plasma home for testing. Installed and hooked up all right. In the evening it began to rain and a thunderstorm approached. I decided to be safe, the device is a client, you need to pull out the antenna. When trying to pull out the antenna, I received a millimeter discharge between the antenna and the antenna connector. (Plasma turned out to be alive) I bring my finger to the antenna cable and get a discharge. Reddish in color, about a millimeter long. Played for about five minutes. Later I decided to conduct an experiment to connect a voltmeter between the antenna and ground and take measurements. Waited until the storm approached again. All day before the thunderstorm it was roasting for 30. I went to the service. Time of measurements is 22-23 hours. I quickly bungled an antenna of 11 m of an antenna cord with a section of 3 mm, a decrease of 5 m of a 75 ohm cable (the cable braid was not connected either from above or from the bottom), grounding was 1 ohm. The height of the suspension top point is 6 meters (attached to the ridge of the building), the bottom point is 1.5 meters. In general, an impromptu inclined beam turned out.
The device used a switch, if memory serves ts4341. The selected mode is DC measurement, the measurement limit is 2.5 volts. Installed the device. I turned the head of the device to the exact "0". I'm sitting waiting. Readings "0" Thunderstorm is approaching readings "0", even the arrow does not twitch at the time of the lightning strike. As soon as it started to rain, the device came to life. The readings are very small, so I connected the dt890 in parallel. The measurement limit is 2 volts. The voltage between the antenna and ground is constant 0.02 volts. I didn't measure the current. The alternating voltage is not fixed by the devices. (Maybe not, or maybe the devices are not like that). The switch circuit during lightning discharges reacted but not more than 0.3 volts. Perhaps the inertia of the device is superimposed. The digital camera did not record flashes at all. The storm front proceeded from the place of measurements in 8-10 km. I counted the time after the lightning flash and multiplied by 300. Later this experiment was carried out in the daytime at about 14-15 hours. The storm passed in 3-5 km. The voltmeter reading is about twice as high. I did not write down the exact data (a working

http://www.ava.fmi.fi/~tjt/fairw.html Go MAR MAY JUL
18 captures 23
5 Feb 2005 - 30 Jun 2017 2005 2007 2011
About this capture

Fair-weather atmospheric electricity

Basic facts about atmospheric electricity

Atmospheric electricity involves phenomena which are connected with the separation of electric charges in the sub-ionospheric atmosphere (below about 100 km height). In the ionosphere and magnetosphere there occur strong electric currents originating directly from the solar-terrestrial interaction; in the lower atmosphere, there flows a much weaker electric current in the so-called global circuit, which is maintained by the thunderstorm activity. **Charge separation** takes place in three ways:

thermodynamically
: In a thundercloud, small ice crystals collide with rime-growing graupels; the crystals gain positive charge, the graupels negative (the microscopic mechanism is not yet well known).
Convection in the thundercloud carries the ice crystals to the cloud top, the heavier graupels staying in the mid-cloud: a macroscopic dipole structure forms.

by radiation ionization
: Cosmic and radioactive radiation ionize air, and equal numbers of molecular-size positive and negative small ions are formed; air becomes (weakly) electrically conductive.
Small ions are also attached to airborne dust (aerosol), which thus regularizes the number of small ions.

by collision ionization
: Lightning and other discharges in the thundercloud ionize air temporarily into electrically conducting channels.

The mobility of electrically charged particles depends strongly on their size and on the density of the medium. The mobility of small ions in the lower atmosphere corresponds to a (terminal) speed of about 1 cm/s in an electric field of 100 V/m. Dust particles are slower by a few orders of magnitude, so that the electric conductivity of air is practically that due to the small ions. In the stratosphere and mesosphere (10 - 90 km) air becomes thinner and cosmic radiation intensifies so that the conductivity increases exponentially with height: while the electric conductivity of air near the ground is of the order of 20 fS/m (femtosiemens/metre), in the ionosphere it is already as high as that of the ground. (In the ionosphere, the electric conductivity becomes also anisotropic: the geomagnetic field has an increasing influence on the ion motion.)

The thundercloud charge centres, accumulating tens of coulombs of electricity, are discharged mainly by lightning: cloud flashes (most abundant) cause mutual neutralization of the centres; the lower centre is also discharged to the ground - by negative ground flashes - and charges up the earth (the positive centre is discharged similarly, but by a smaller amount). An excess charge will be left in the upper positive centre, and it leaks by conduction to the surrounding air, about one ampere per thunderstrom cell. Because of the exponentially increasing conductivity, most of this leak current is guided to the ionosphere, where it is distributed over the globe and charges the upper atmosphere to a potential of about 300 kV with respect to the ground. This "ionospheric potential" maintains the so-called fair-weather current, whose density is about 2 pA/m^2 (picoamperes per square metre). According to Ohm's law, the fair-weather current density and the electric conductivity are associated with a downward electric field, about 100 V/m near the ground. The number of simultaneously active thunder cells ("thunderstorms") over the globe is about 1000-2000, so the whole circuit carries a current of about 1000 amperes.

http://www.ava.fmi.fi/~tjt/fairw.html Go MAR MAY JUL
18 captures 23
5 Feb 2005 - 30 Jun 2017 2005 2007 2011
About this capture

The ion balance near the ground can most simply be described by the equation

$q = an^2 + bnN$

where q is ionization, n is the density of small ions (both polarities separately, assumed equal), N is the density of aerosol, and a and b are recombination coefficients, which describe the neutralization of ions with each other or with aerosol particles. a and b are both about 1.6×10^{-12} m^3s^{-1}. Ionization in southern Finland is about 6.6×10^6 $m^{-3}s^{-1}$, one fifth or sixth coming from radioactivity. The small-ion densities are both about 5×10^8 m^{-3} and the aerosol density is more than tenfold, almost 10^{10} m^{-3}.

It should be noted that the notion "dirt increases electric conductivity" is valid for surfaces, for example insulators, but the matter is contrary for air: dirty (dusty) air has poorer conductivity. However, if the "dirt" is a radioactive pollutant, the higher ionization increases the electric conductivity. Such an episode happened in May 1986, when an iodine cloud from the Chernobyl emission arrived at southern Finland: the electric conductivity grew tenfold, but returned to a lower level in a few days, because the half-life of radioactive iodine is 8 days.

Information on international atmospheric electricity research (including lightning research) can be found at the address Atmospheric Electricity HomePage, which among others has a link to a comprehensive English glossary of atmospheric electricity.

Dr Prem
Life Improving Guide

Today's Mortgage Rate
3.75% APR
15-YEAR FIXED
Select Loan A

GREEN GUIDE

Capturing free atmospheric electricity: Feasibility and challenges

Earth's atmosphere is in itself an infinite storeroom of energy. The regular diurnal variations of the Earth's electromagnetic network produce strong electric currents on a gigantic scale. The Earth has its own negative electr while the atmosphere is positively charged. The electric potential increases with the altitude, hence the electric for proportional to the atmospheric altitude. In the present times, where alternative energy holds the key to the energ crisis, the abundance of this source of energy has attracted the researchers' attention. Evermore exciting is its free availability in air and clouds. There have been efforts to capture it since long but a considerable success is still harc come by.

Atmospheric Electricity, nature lends it for nothing:

All atmospheric electricity is a result of the potential difference between any point on the surface of the negatively charged earth and the other in the positively charged air above it. Earth's electromagnetic network consists of thunderstorms, the electrification of the air in a combined or uncombined state and the polar Aurora effects. Equa experiences more of thunderstorms than anywhere on the entire planet. These thunderstorms express themselve the form of lightning and atmospheric pressure, wind levels, solar winds and the solar particles. Estimates reflect t lightning strikes somewhere on the surface of the Earth about 100 times every second.

Secondly, the Polar Aurora provides a great natural spectacle and is an outcome of the atmospheric electricity. Ear magnetosphere abounds in profuse solar-wind-transferred-energy, which is visible from the polar regions of the p

Moreover, this simple, robust and low cost electricity is much cheaper than wind turbines. You don't have to count the weather conditions, and it's available day and night. No doubt, it's in abundance at the poles but that doesn't d its presence elsewhere.

Feasible ways to capture it:

Capturing Atmospheric Electricity means to exploit the natural electrostatic potential gradient of the Earth. The electrostatic potential gradient between the Earth and the ionosphere is about 100Vm-1 near the surface in summ and 300Vm-1 in winter. Electrically charging a bank of capacitors or operating an electrostatic motor/parametric conversion machine are some of the possible ways to convert this static atmospheric electricity into conventional Alternating Current.

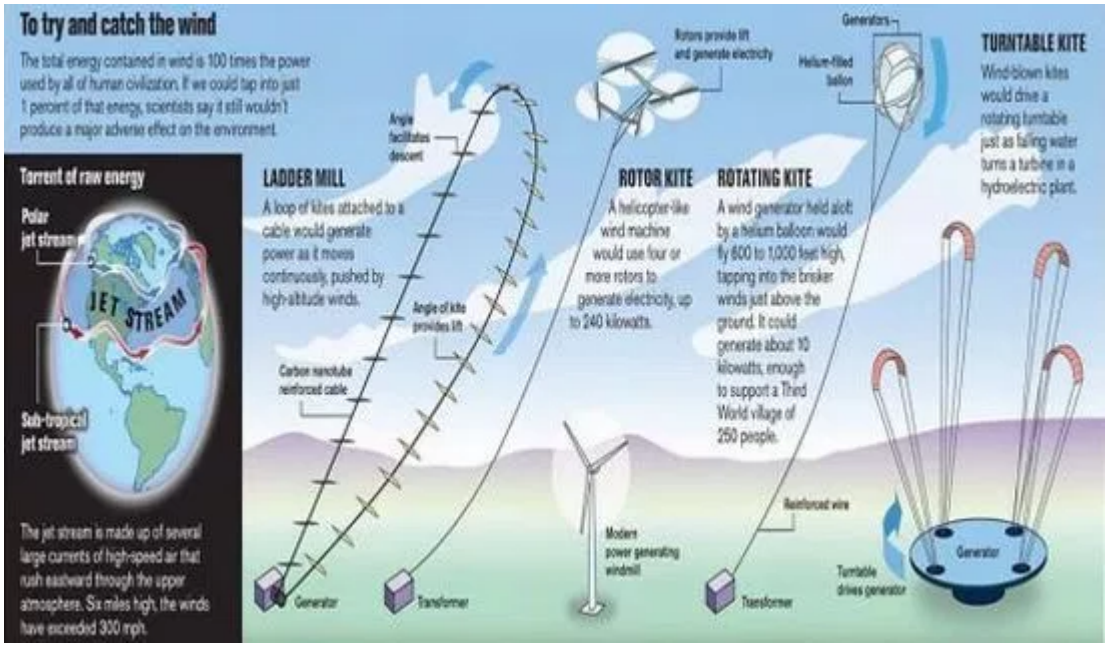

Image Source: SFGate

1) Tapping the Jet Streams:

The jet streams generally blow at speeds up to 310 mph over the northern hemisphere and are a possible source atmospheric electricity. If the researchers could succeed in tapping these ferocious winds, the world's entire electr needs can be met. Scientists believe that a kite-like wind-power generator, lobbed into the upper atmosphere to capture the power of the jet stream, can produce energy, which is transmittable to Earth via aluminum or copper c or invisible microwave beams. Next step includes its storage and transmission to target consumption points. The energy generation via the jet streams involved the inclusion of the designs enlisted below:

a. Ladder Mill: Rowing against the high-altitude winds, kites attached to a cable could generate a sizeable amount power.

b. Rotor Kite: A unique machine design includes more than four rotors to generate electricity, up to 240 kilowatts

c. Rotating Kite: The concept lies deep-rooted in conception of a wind generator at 600 to 1,000 feet. A helium ba keeps the kite in the air. The proposed electrical generation is about 10 kilowatts.

d. Turntable Kite: Though no data on the projected capacity is available, a rotating turntable still ensures better p generation.

2) Through Aerostats, as suggested by Dr. Plauson in 1920:

Dr. Hermann Plauson, the director of the Fischer-Tropsch "Otto Traun Research Laboratories" in Hamburg, Germa during the Weimar Republic of the 1920s, drew on the aerostats made from magnesium-aluminum alloy. Some electrolytically deposited needles, further doped with radium, perforated the aerostat all through it. Patched with

amalgam, the aerostat went on to produce 0.72kW and 3.4kW 300m above ground level. The power could further increased up to 81-1/2 kilowatts in 24 hours by using two balloons with a special condenser battery.

3) The Pyramidal Electric Transducer:

Inspired by the Great Pyramid of Giza (GPG), a Californian researcher, Peter Grandics says that pyramidal horn antennas suitably detect the short-pulse waveforms. Fed by the hypothesis, a pyramidal antenna, modeled on the can transfer the electrostatic discharge into a resonant circuit. While coupling into the atmosphere, it effectively converts the random impulses into an alternating current. Resultantly, it has the potential to utilize the renewable electric power.

Remarkable technology has some obstructions:

Moreover, this simple, robust and low cost electricity is much cheaper than the wind turbines. You don't have to cc on the weather conditions and it's available day and night. Frequent use of this technology will definitely lead to th discharge of storm clouds and the risk of lightning strikes will get minimized. No doubt, it's in abundance at poles l that doesn't deny its presence elsewhere.

Despite it's being a feasible energy source, there are certain hitches scientists need to deal with:

I. As this technology makes use of tethers, it's hazardous to aircraft. On the contrary, you can't compromise even o tether's thickness since density means more output. As a direct consequence, it necessitates bigger balloon size ar more maintenance.

II. Like the airplanes, the balloons are also defenseless when it comes to bad weather. So, as is the case with wind solar power, adverse weather conditions play a role here also.

III. At 200 meters or above altitudes, the amassed charge goes far beyond the wires' potential. It requires electrica insulation around the wire to avoid the energy loss.

IV. After you've exploited the device for quite sometime, the electrical potential goes down drastically. It further hu the ionization capability of the device. Therefore, it requires extending of the surface electrical field via the use of \ thin wires.

rexresearch.com

Oleg JEFIMENKO

Electrostatic Motors

1 | Tesla Generator - Build Your Own Generator
Eliminate Your Power Bill Easy. Do It Yourself. Great Discount Now! Just $49. tesla-energy.org/Generator
2 | Start Download - View PDF
Convert From Doc to PDF, PDF to Doc Simply With The Free Online App! download.fromdoctopdf.com
1 | Tesla Generator - Build Your Own Generator
Eliminate Your Power Bill Easy. Do It Yourself. Great Discount Now! Just $49. tesla-energy.org/Generator
2 | Start Download - View PDF
Convert From Doc to PDF, PDF to Doc Simply With The Free Online App! download.fromdoctopdf.com
VIEW PDF
Start Download
Begin Download - Free PDF Converter. Download & Start Now!

» JEFIMENKO, Oleg : Electrostatic Motors ~ PDF copy of the out-of-print classic. Run motors with atmospheric electricity.

Popular Science (April 1971)

The Amazing Motor That Draws Power from the Air

by

C.P. Gilmore & William J. Hawkins

Would you believe an electric motor made almost entirely of plastic? That can run on power transmitted through open air? And sneak free electricity right out of the earth's electrical field?

At the University of West Virgina we saw a laboratory full of such exotic devices spinning, humming, and buzzing away like a swarm of bees. They are electrostatic motors, run by charges similar to those that make your hair stand on end when you comb it on a cold winter's day.

Today, we use electromagnetic motors almost exclusively. but electrostatics have a lot of overlooked advantages. They're far lighter per horsepower than electromagnetics, can run at extremely high speeds, and are incredibly simple and foolproof in construction.

"And, in principle," maintains Dr Oleg Jefimenko, "they can do anything electromagnetic motors can do, and some things they can do better."

Jewel-like Plastic Motors.

Jefimenko puts on an impressive demonstration. He showed us motors that run on the voltage developed when you hold them in your hands and scuff across a carpet, and other heavier, more powerful ones that could do real work. Up on the roof of the University's physics building in a blowing snowstorm, he connected an electrostatic motor to a specially designed earth-field antenna. It twirled merrily from electric power drawn out of thin air.

These remarkable machines are almost unknown today. Yet the world's electric motor was an electrostatic. It was invented in 1748 by Benjamin Franklin.

Franklin's motor took advantage of the fact that like charges repel, unlike ones attract. He rigged a wagon-wheel-sized, horizontally mounted device with 30 glass spokes. On the end of each spike was a brass thimble. Two oppositely charged leyden jars -- high voltage capacitors -- were so placed that the thimbles on the rotating spokes barely missed the knobs on the jars (see photo).

As a thimble passed close to a jar, a spark leaped from knob to thimble. That deposited a like charge on the thimble, so they repelled each other. then, as the thimble approached the oppositely charged jar, it was attracted. As it passed this second jar, a spark jumped again, depositing a new charge, and the whole repulsion-attraction cycle began again.

In 1870, the German physicist J.C. Poggendorff built a motor so simple it's hard to see what makes it work. The entire motor, as pictured here, is a plastic disk (Poggendorff used glass) and two electrodes. The electrodes set up what physicists call a corona discharge; their sharp edges ionize air molecules that come in contact with them. These charged particles floating through the air charge the surface of the palstic disk nearby. Then the attraction-repulsion routine that Franklin used takes place.

A few papers on electrostatic motors have trickled out of the laboratories in recent years. But nobody really showed much interest until Dr Jefimenko came on the scene.

The Russian-born physicist was attending a class at the University of Gottingen one day shortly after World War II when the lecturer, a Prof. R.W. Pohl, displayed two yard-square metal plates mounted on the end of a pole. He stuck the device outside and flipped it 180 degrees. A galvanometer hooked to the plates jumped sharply.

"I could never forget that demonstration," said Jefimenko. "And I wondered why, if there is electricity in the air, you couldn't use it light a bulb or something."

Electricity Everywhere

The earth's electrical field has been known for centruries. Lightning and St Elmo's fire are the most dramatic manifestations of atmospheric electricity. But the field doesn't exist just in the vicinity of these events; it's everywhere.

The earth is an electrical conductor. So is the ionosphere, the layer of ionized gas about 70 kilometers over our heads. The air between is a rather poor insulator. Some mechanisms not yet explained constantly pumps large quantitites of charged particles into the air. The charged particles cause the electrical field that Jefimenko saw demonstrated. Although it varies widely, strength of the field averages 120 volts per meter.

You can measure this voltage with an earth-field antenna -- a wire with a sharp point at the top to start a corona, or with a bit of radioactive materials that ionizes the air in its immediate vicinity. near the earth, voltage is proportional to altitude; on an average day you might measure 1200 volts with a 10-meter antennas.

Over that past few years, aided by graduate-student Henry Fischbach-Nazario, Jefimenko designed advanced corona motors. With David K. Walker, he experimented with electret motors. An electret is an insulator with a permanent electrostatic charge. It produces a permanent electrostatic charge in the surrounding space, just as a magnet produces a permanent magnetic field. And like a magnet, it can be used to build a motor.

Jefimenko chose the electrostatic motor for his project because the earth-field antennas develop extremely high-voltage low-current power -- and unlike the electromagnetic motor -- that's exactly what it needs.

The Climactic Experiment

On the night of Sept. 29, 1970, Jefimenko and Walker strolled into an empty parking lot, and hiked a 24-foot pole painted day-glow orange into the sky. On the pole's end was a bit of radioactive material in a capsule connected to a wire. The experimenters hooked an electret motor to the antenna, and, as Jefimenko describes it, "the energy of the earth's electrical field was converted into continuous mechanical motion."

Two months later, they successfully operated operated a corona motor from electricity in the air.

Any Future In It?

Whether the earth's electrical field will ever be an important source of power is open to question. There are millions -- perhaps billions -- of kilowatts of electrical energy flowing into the earth constantly. Jefimenko thinks that earth-field antennas could be built to extract viable amounts of it.

But whether or not we tap this energy source, the electrostatic motor could become important on its own.

* In space or aviation, it's extreme light weight could be crucial. Jefimenko estimates that corona motors could deliver one horsepower for each 3 pounds of weight.

* They'd be valuable in laboratories where even the weakest magnetic field could upset an experiment.

* Suspended on air bearings, they'd make good gyroscopes.

In a particularly spectacular experiment, Jefimenko turned on a Van de Graaff generator -- a device that creates a very-high-voltage field. About a yard away he placed a sharp-pointed corona antenna and connected it to an electrostatic motor. The rotor began to spin. The current was flowing from the generator through the air to where it was being picked up by the antenna.

The stunt had a serious purpose: The earth's field is greatest on mountaintops. Jefimenko would like to set up a large antenna in such a spot, then aim an ultraviolet laser beam at a receiving site miles away at ground level. The laser beam would ionize the air, creating an invisible conductor through apparently empty space.

To be sure, many difficulties exist; and no one knows for sure whether we'll ever get useful amounts of power out of the air. But with thinking like that, Jefimenko's a hard man to ignore.

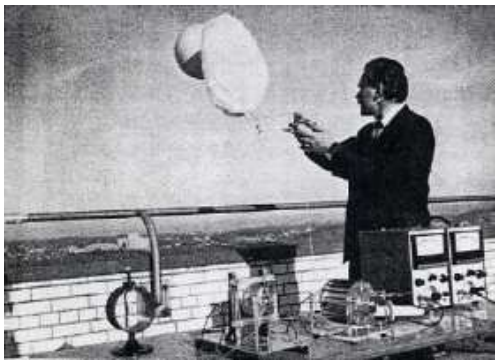

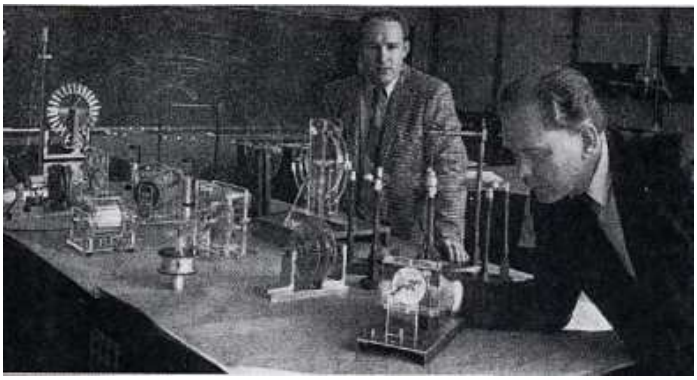

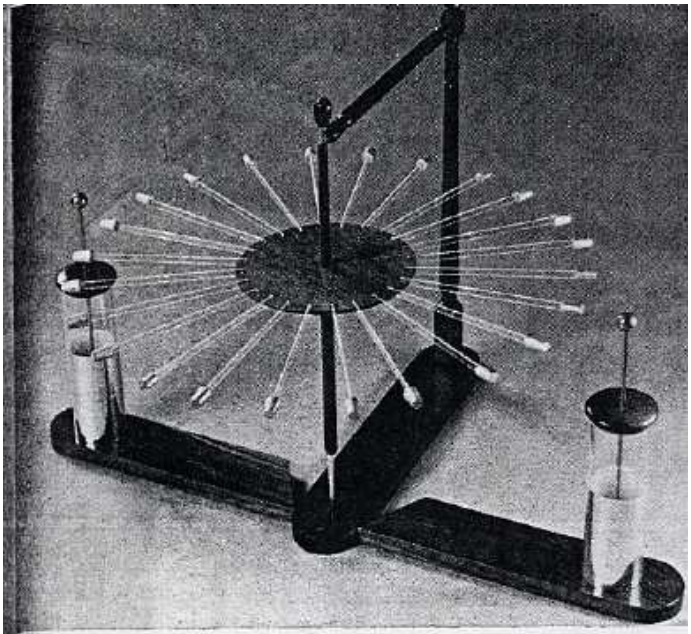

World's first electrostatic motor looked like this, according to Benjamin Franklin's description. Franklin said he'd use it to turn a roasting turkey, but there's no evidence that he did.

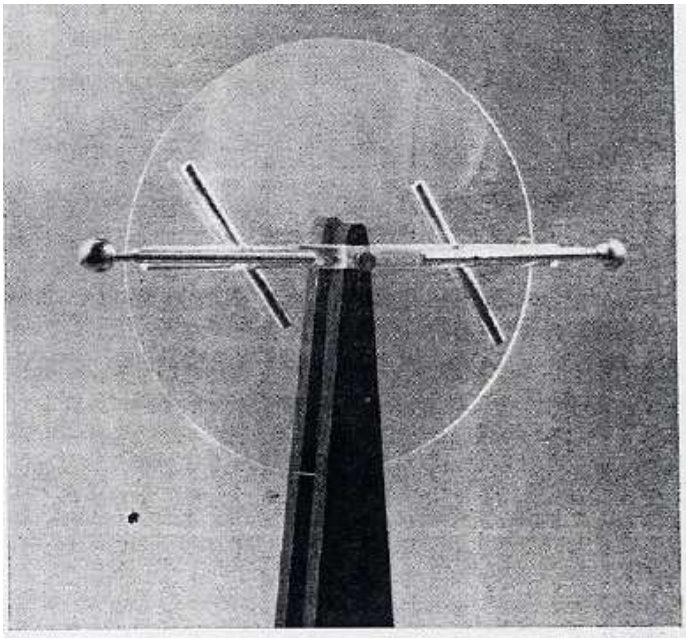

Simplest electrostatic motor ever designed was built by physicist J. C. Poggendorff. Two slanted electrodes spray charges onto disk, alternately repel and attract it to make it revolve.

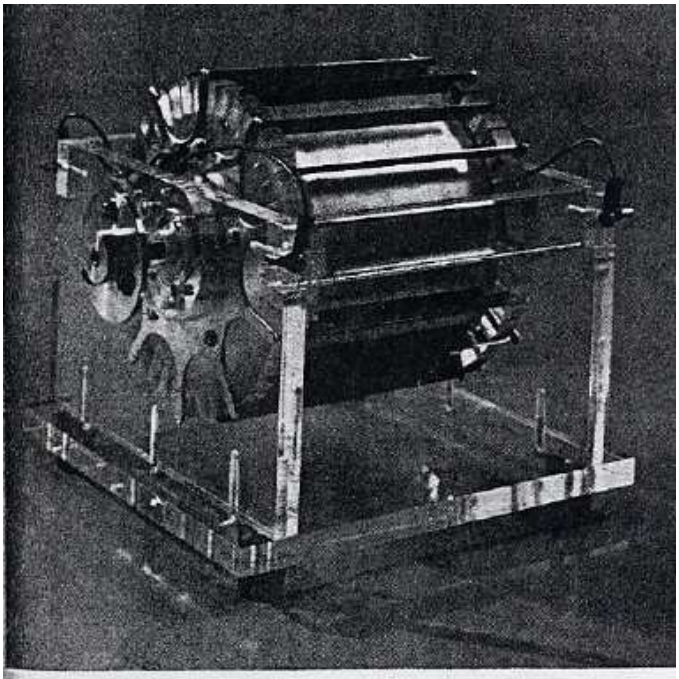

Most efficient, most powerful electrostatic shown to date was designed by Dr. Oleg Jefimenko. It has multiple electrodes, cylindrical rotor, and develops a maximum of 70 watts of power.

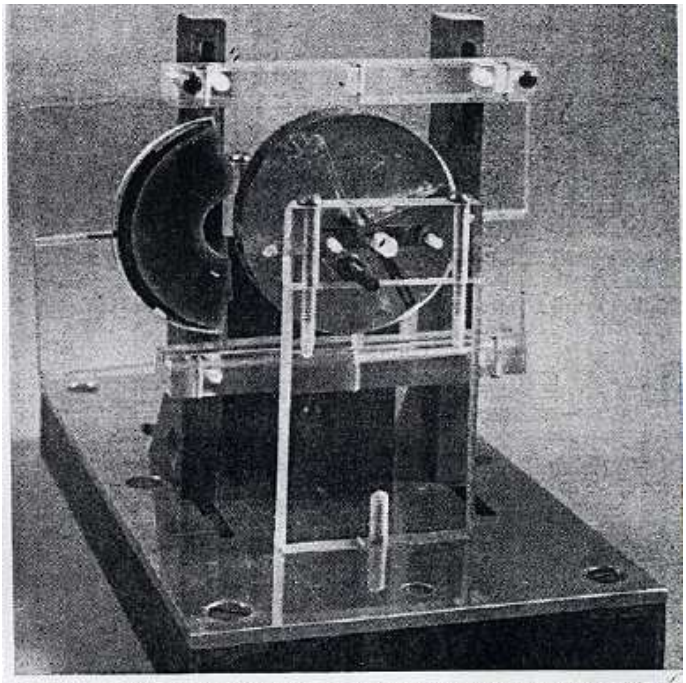

Electret motor above turns on as little as 60 volts. It was the first to run on power from the earth's electrical field. Such motors can achieve extremely high speeds, and use little power

---

Popular Science **(May 1971)**

Electrostatic Motors You Can Build

by

C.P. Gilmore & William J. Hawkins

When we crank up the electrostatic motor at the top of this page, people always want to know what makes it run. It is mysterious -- there's nothing but a plastic disk and two strange electrodes. Yet there it is, spinning merrily.

In "The Amazing Motor That Draws Power From the Air", last month, we told about our visit to the laboratory of Dr Oleg Jefimenko at the University of West Virginia, who has designed and built a variety of these ingenious machines. now, as promised, we bring you details on how you can build your own electrostatic motor from simple materials.

The devices that you see here are corona-discharge motors. The sharp-pointed or knife-edge electrodes create a corona, which ionizes or charges the air particles floating by. These charged particles transfer their charge to the closest part of the plastic rotor and charge it up, just as you can charge your body by walking across a wool rug on a dry winter's day.

Once a spot on the rotor assumes a charge, it is repelled from the chargin electrode by electrostatic forces, and at the same time is attracted to the other electrode, which has an opposite charge. When the charged section of the rotor reaches the opposite electrode, another corona discharge reverses the polarity and starts the whole thing over again.

The Concept is Simple

And so are the motors. But that doesn't mean thery're easy to build. These motors run on millionths of a watt; they've got no power to waste turning stiff bearings or slightly misaligned rotors. So they must be built with watch-making precision.

They're made of acrylic sheet, rod, and tube stock -- Plexiglas and Lucite are two of the better-known brands. Acrylic cuts and works beautifully. Cut edges can be sanded so they have a white, frosted appearance that, in contrast with clear surfaces, gives your finished motor a sparkling, jewel-like appearance. If you like clear edges, you can buff them on a wheel and the whole thing becomes transparent.

Drill and tap the acrylic and assemble parts with machine screws. This allows for fine adjustment and alignment. Later, you can make the whole thing permanent by putting a little solvent along the joints. The solvent flows into the joint and fuses it permanently.

Details of framework, support and so on aren't important; change them if you like. but work with care if you want to avoid headaches. The Poggendorff motor looked simple; we slapped it together in a couple of hours, hooked up the power source -- and nothing happened. We gave it a few helpful spins by hand, but it wouldn't keep running.

The cure took about 3 hours. First, we noticed that the outer edge of the disk wobbled from side to side about 1/16 of an inch as the wheel revolved. So the rotor-electrode distance was constantly changing. There was a little play in the 1/4" hole we had drilled for the electrodes -- so they weren't lined up absolutely square with the disk. Then we noticed that the disk always stopped with one side down. The imbalance was only a fraction of an ounce -- but it was too much.

We drilled out the old hub and cemented in a new one -- this time, carefully. We lined up the electrodes -- precisely. Then, once more spinning the disk by hand, we added bit of masking tape until it was perfectly balanced. We connected the power -- and slowly... slowly... the disk began to turn. After about a minute, we clocked some turns with a watch and found it was spinning at 200 rpm. A moment later, we lost count. It was a great feeling.

Where Tolerances Are Brutal

We had even more trouble with the octagonal-window machine. When it wouldn't run and we turned the shaft by hand, we could feel the rotor dragging. We took it apart, felt all the surfaces on the rotor and the framework's insides and found a few bits of hardened cement, which we removed. We filed down all edges on the rotor adn the windows to make sure there were no beads or chips dragging.

The rotor and corner separators are made from the same sheet of 1/2" plastic, so rotor clearance is achieved by putting shims at the corners to hold the side plates slightly more than 1/2" apart. With the 1/16" shims we were using, we could see that the sides were slightly misaligned so the shaft was not being held at a true 90 degrees. We drilled slightly oversized holes in the corners of one side piece and carefully adjusted until the rotor was turning true in the slot. To give the motor more torque, we put a bead of cement along the outer edge of each aluminum-foil electrode to stop corona leakage. The motor ran.

Take A Giant Step

Once you've built these machines, why not design your own? Start with the Jefimenko 1/10 hp model (pictured) as a challenge. Then plan one from scratch. You can power your motors with a laboratory high-voltage supply, a Van de Graff

generator, or a Wimhurst machine or any other high-voltage source. We've been running ours on the home-built Wimhurst machine shown in the photos. (If you don't want to build one, Wimhurst machiens are available from scientific supply houses such as Edmund Scientific).

The discharge globes are traditional for high-voltage machines. They aren't necessary, but they give a quick check on machine operation and a satifying arc when you move them within 1/2" of each other. Incidentally, that funny smell is ozone. But its concentration is too low to be harmful. The generator is safe, too. You can hold both electrodes in your hands and all you'll feel is a tingle. This particular generator, we estimate, puts out about 30,000 volts.

To make wiring simple, we used standard connectors on the Wimhurst collectors, and meter leads with regular banana plugs and alligator clips to hook up the motors.

Last month, we mentioned seeing Dr Jefimenko run his electrostatic motors on electricity tapped from the earth's field. We haven't had a chance to try this yet with ours, but it should work. If you want to try, you'll need a needle-pointed piece of music wire a few inches long to start a corona, plus several hundred feet of fine copper wire.

Connect the pointed wire to the fine conductor, get the sharp point up into the air at least 200-300 feet with a kite or balloon, and hook the wire to one side of the motor. Hook the other side of the motor to ground. The earth field antenna should at times be able to develop up to 20,000 volts from the earth's electrical field. If nothing happens, check your equipment, or try another day. The field changes constantly.

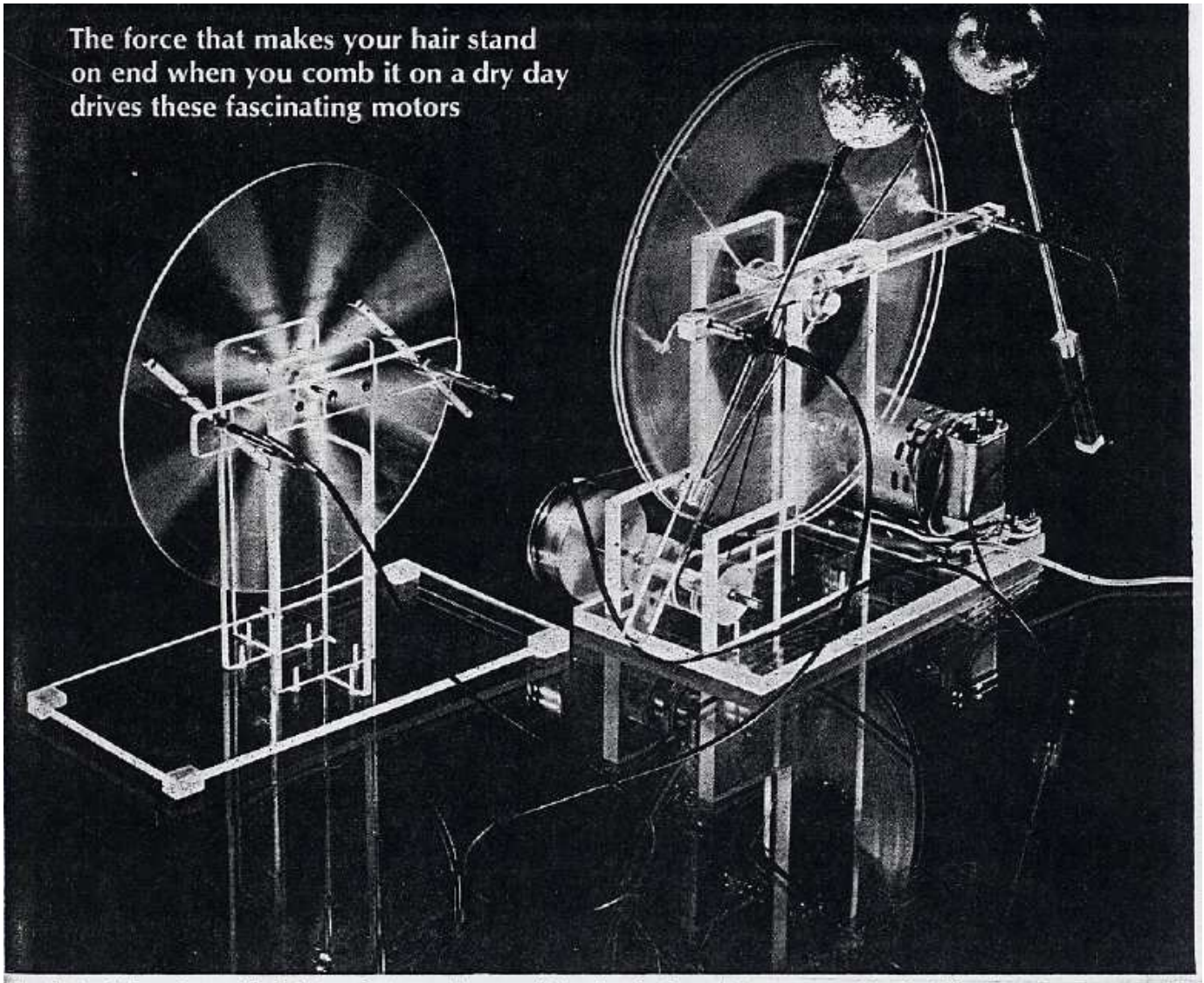

The electrostatic motor on the left turns between three- and four-hundred rpm when connected to the Wimshurst generator at right.

This octagonal-window design makes motor handsome, self-starting

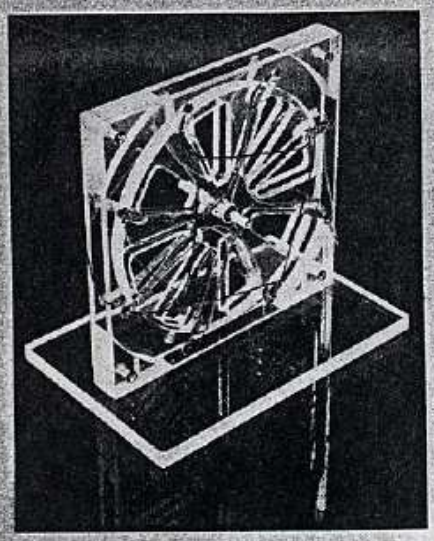

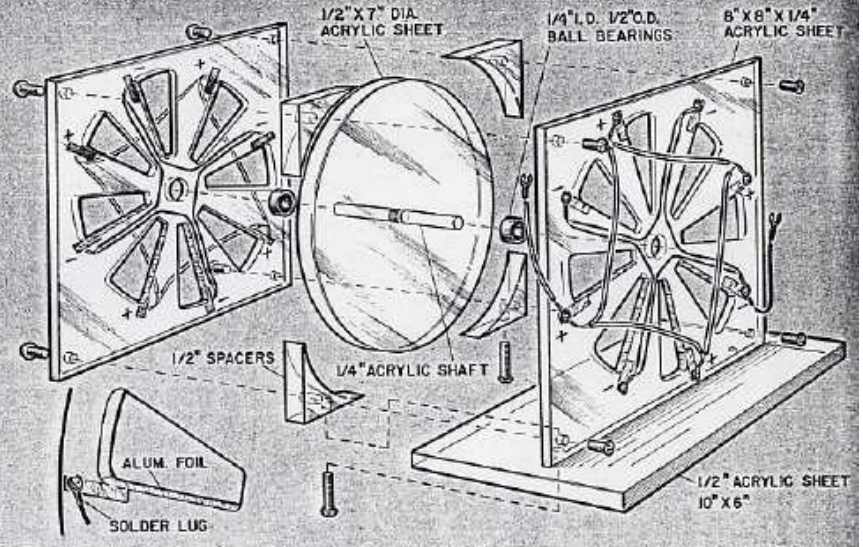

Rotor of the Jefimenko-designed motor shown here is a ½" plastic disk with a ¼" shaft cemented carefully in place. Clamp the two outer sheets together before you drill the bearing holes and cut the windows. Aluminum foil electrodes can be cut to approximate shape, glued in place, and trimmed with razor blade. Keep + and – wiring separated by ½" to avoid arcing. Note that electrodes oppose each other directly; opposing electrodes are of opposite polarity. Cement corner separators to one side for stability, attach other side with screws. To assemble, shim sides apart. Shim thickness of 1/16" or less is best if rotor can be made to turn freely within this narrow gap. Avoid sharp corners, points, or edges in electrical circuits. They develop corona and leak power into air.

METHOD OF LAYING OUT HOLES

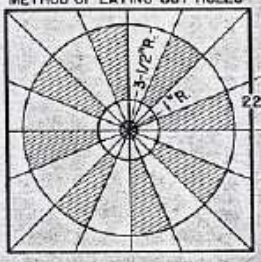

WIRING LAYOUT

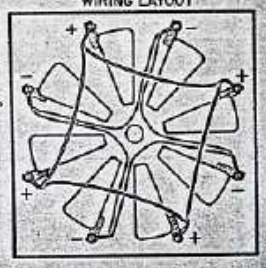

Wimshurst machine generates 30,000 volts

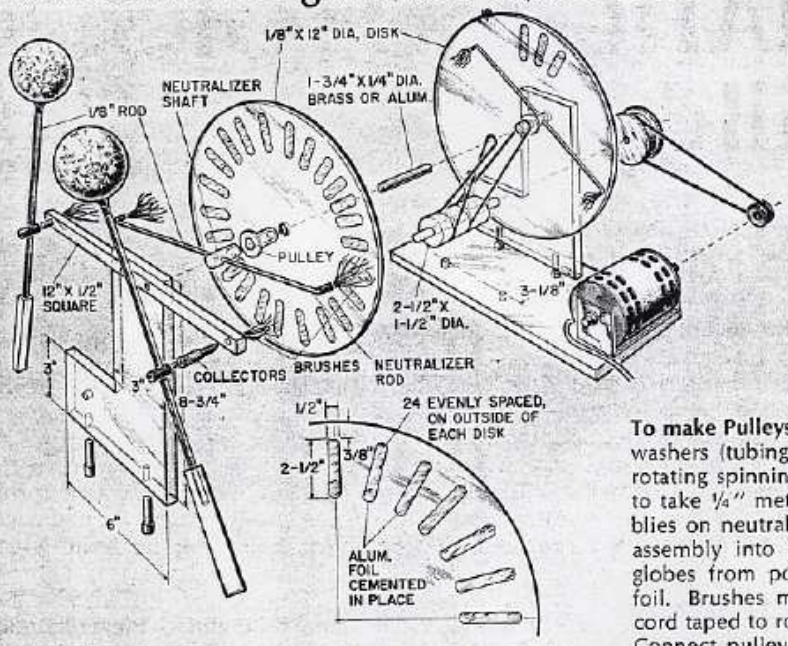

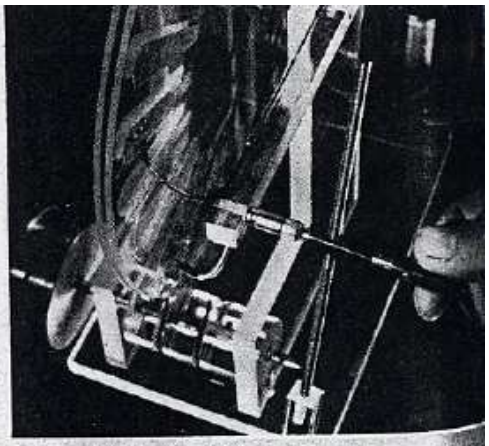

To make Pulleys, drill rotors, cement in ½" i.d. tubing plus plastic washers (tubing protrudes 1/16" on inner surface to hold counter-rotating spinning disks ⅛" apart). Drill ½" o.d. neutralizer shafts to take ¼" metal shaft; assemble by slipping rotor-pulley assemblies on neutralizer shafts, neutralizer shafts on metal shaft. Slip assembly into ¼"-deep holes drilled in supports. Make spark globes from polystyrene Christmas balls wrapped in aluminum foil. Brushes must be flexible; use aluminum-braided gift-wrap cord taped to rods. Use any drive that turns disks about 1,200 rpm. Connect pulleys with tape-recorder drive belts.

Best first project: motor designed by physicist J. C. Poggendorff in 1870

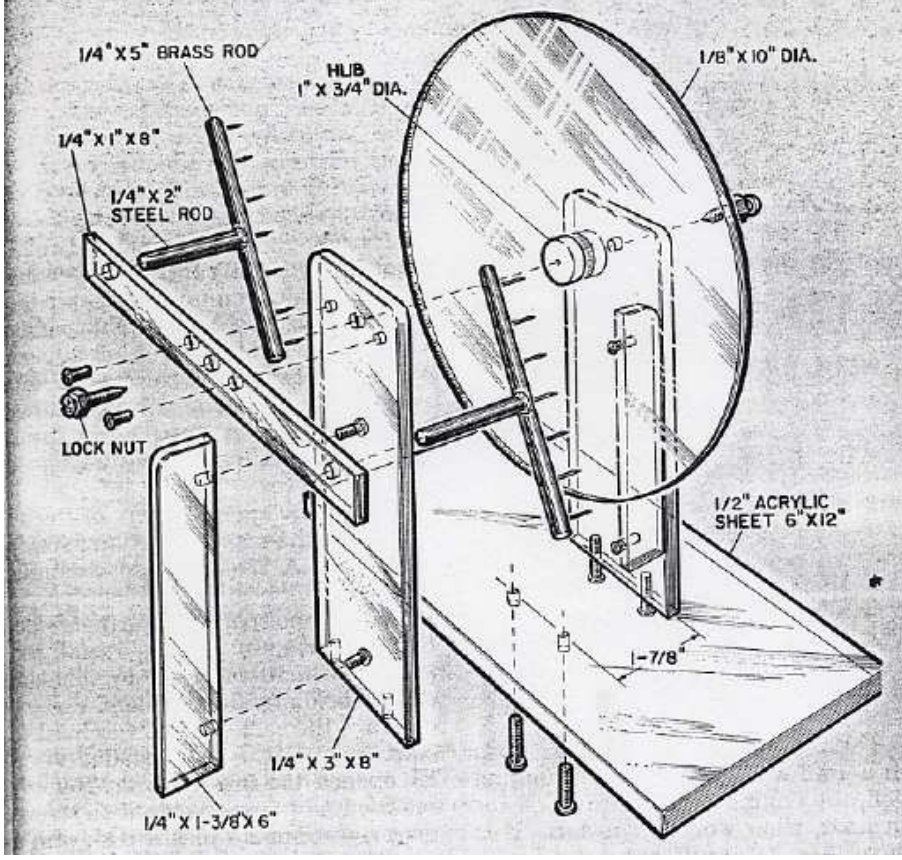

To build Poggendorff motor, drill center of the rotor disk accurately, cement ¾" hub in place, use centerpunch to make bearing indentations in the ends of the hub. Center gap between needle bearings must be adjustable; easiest way is to make bearings from machine screws sharpened on grindstone. Use locknuts to hold fine adjustment. For electrodes, drill seven equidistant holes in brass, steel, or aluminum rods; sharpen brads to a needle point, press-fit them into the holes, grind off heads flush. Brads should protrude about ½". File flat on the back of electrodes, solder or drill, tap, and thread support at right angles. Get extra torque if desired by adding an extra set of electrodes on the opposite side of rotor.

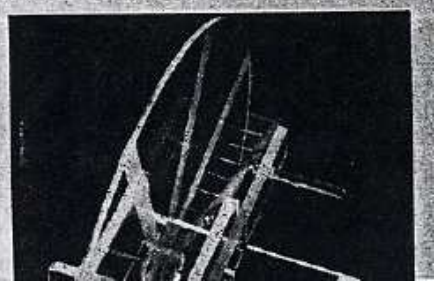

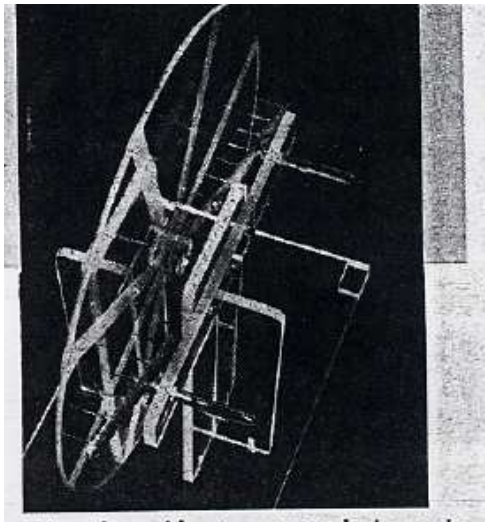

Mounting, with rotor removed, shows the relative positions of supports, needle bearings, and electrodes. Electrode points should be close to disk, but not touching.

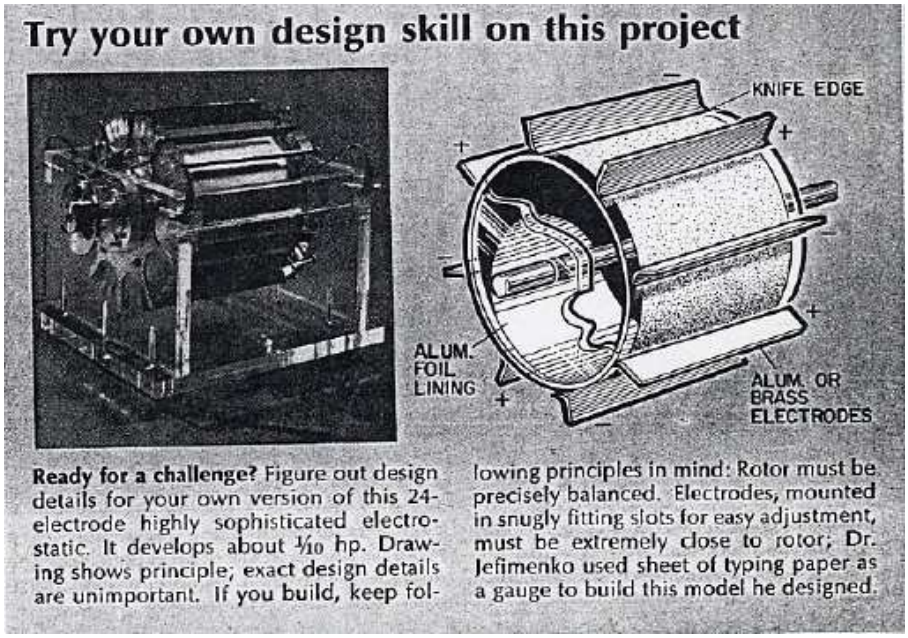

---

http://en.wikipedia.org/wiki/Oleg_D._Jefimenko

Oleg D. Jefimenko

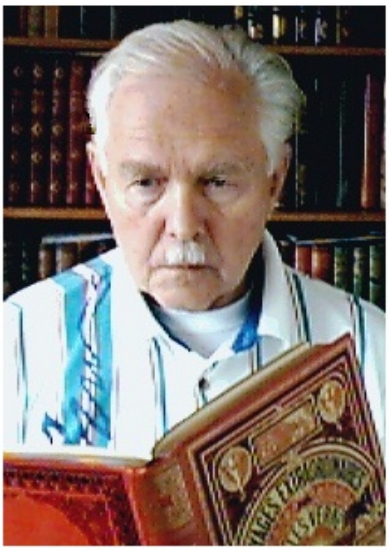

(October 14, 1922, Kharkiv, Ukraine - May 14, 2009, Morgantown, West Virginia, USA) - physicist and Professor Emeritus at West Virginia University.

Biography

Jefimenko received his B.A. at Lewis and Clark College (1952). He received his M. A. at the University of Oregon (1954). He received his Ph.D. at the University of Oregon (1956). Jefimenko has worked for the development of the theory of electromagnetic retardation and relativity. In 1956, he was awarded the Sigma Xi Prize. In 1971 and 1973, he won awards in the AAPT Apparatus Competition. Jefimenko has constructed and operated electrostatic generators run by atmospheric electricity.

Jefimenko has worked on the generalization of Newton's gravitational theory to time-dependent systems. In his opinion, there is no objective reason for abandoning Newton's force-field gravitational theory (in favor of a metric gravitational theory). He is actively trying to develop and expand Newton's theory, making it compatible with the principle of causality and making it applicable to time-dependent gravitational interactions.

Jefimenko's expansion, or generalization, is based on the existence of the second gravitational force field, the "cogravitational, or Heaviside's, field". This is might also be called a gravimagnetic field. It represents a physical approach profoundly different from the time-space geometry approach of the Einstein general theory of relativity. Oliver Heaviside first predicted this field in the article "A Gravitational and Electromagnetic Analogy" (1893).

Selected publications

Books

* "Electrostatic motors; their history, types, and principles of operation". Star City [W. Va.], Electret Scientific Co. [1973]. LCCN 73180890
* "Electromagnetic Retardation and Theory of Relativity: New Chapters in the Classical Theory of Fields", 2nd ed., Electret Scientific, Star City, 2004.
* "Causality, Electromagnetic Induction, and Gravitation: A Different Approach to the Theory of Electromagnetic and Gravitational Fields", 2nd ed., Electret Scientific, Star City, 2000.
* "Electricity and Magnetism: An Introduction to the Theory of Electric and Magnetic Fields", 2nd ed., Electret Scientific, Star City, 1989.
* "Scientific Graphics with Lotus 1-2-3: Curve Plotting, 3D Graphics, and Pictorial Compositions". Electret Scientific, Star City, 1987.

Book chapters

* "What is the Physical Nature of Electric and Magnetic Forces?" in Has the Last Word Been Said on Classical Electrodynamics? -- New Horizons, A. E. Chubykalo, Ed., (Rinton Press, Paramus, 2004).
* "Does special relativity prohibit superluminal velocities?" in Instantaneous Action at a Distance in Modern Physics: "Pro" and "Contra", A. E. Chubykalo, Ed., (Nova Science, New York, 1999).

Papers

* "A neglected topic in relativistic electrodynamics: transformation of electromagnetic integrals". arxiv.org, 2005.
* "Presenting electromagnetic theory in accordance with the principle of causality", Eur. J. Phys. 25 287-296, 2004. doi:10.1088/0143-0807/25/2/015
* "Causality, the Coulomb field, and Newton's law of gravitation" (Comment), American Journal of Physics, Volume 70, Issue 9, p. 964, September 2002.
* "The Trouton-Noble paradox," J. Phys. A. 32, 3755–3762, 1999.
* "On Maxwell's displacement current," Eur. J. Phys. 19, 469-470, 1998.
* "Correct use of Lorentz-Einstein transformation equations for electromagnetic fields", European Journal of Physics 18, 444-447, 1997.
* "Retardation and relativity: Derivation of Lorentz-Einstein transformations from retarded integrals for electric and magnetic fields", American Journal of Physics 63 (3), 267-72.
* "Retardation and relativity: The ease of a moving line charge", American Journal of Physics, 63 (5), 454-9.
* "Direct calculation of the electric and magnetic fields of an electric point charge movingwith constant velocity," Am.J.Phys. 62, 79-84, 1994.
* "Solutions of Maxwell's equations for electric and magnetic fields in arbitrary media," Am. J. Phys. 60, 899-902 1992.
* "Electrets," (with D. K. Walker) Phys. Teach. 18, 651-659, 1980.
* "How can An Electroscope be Charged This Way?", TPT 56, 1979.
* "Water Stream 'Loop-the-Loop'", AJP 42, 103-105, 1974.
* "Franklin electric motor," Am. J. Phys. 39, 1139-1141, 1971.
* "Operation of electric motors from atmospheric electric field," Am. J. Phys. 39, 776-779, 1971.
* "Demonstration of the electric fields of current-carrying conductors," Am. J. Phys. 30, 19-21, 1962.
* "Effect of the earth's magnetic field on the motion of an artificial satellite," Am. J. Phys. 27, 344-348, 1959.

Encyclopedia Article

* "'Maxwell's Equations'", Macmillan Encyclopedia of Physics, Macmillan, New York, 1996.

---

http://www.integrityresearchinstitute.org/FutureEnergy/FutureEnergyTech.html

The next energy breakthrough is Dr. Oleg Jefimenko's electrostatic motors. Discovered by Ben Franklin in the 18th century, electrostatic motors are an all-American invention. They are based on the physics of the fair-weather atmosphere that has an abundance of positive electric charges up to an altitude of 20 km. However, the greatest concentration is near the ground and diminishes with altitude rapidly. Dr. Jefimenko discovered that when sharp-pointed antennas are designed for a sufficient length to obtain at least 6000 volts of threshold energy, the fair-weather current density available is about a picoampere per square meter. Such antennas produce about a microampere of current. However, small radioactive source antennas may be used instead that have no threshold voltage and therefore no height requirements. Similar to a nuclear battery design of Dr. Brown, these antennas have larger current potentials depending upon the radioactive source used (alpha or beta source) and ionize the air in the vicinity of the antenna. Electrostatic motors are lighter than electromagnetic motors for the same output power since the motor occupies the entire volume. For example, it is expected that a motor one meter on a side will provide a power of one megawatt and weigh 500 kg or less. Electrostatic motors also require very little metal in their construction and can use mostly plastic for example. They can also operate from a variety of sources and range of voltages. As Dr. Jefimenko points out, "It is clear that electrostatic motor research still constitutes an essentially unexplored area of physics and engineering, and that electrostatic motor research must be considered a potentially highly rewarding area among the many energy-related research endeavors."[5] The atmospheric potential of the planet is not less than 200,000 megawatts. He has succeeded in constructing demonstration motors that run continuously off atmospheric electricity. Jefimenko's largest output motor was an electret design that had a 0.1 Hp rating. [6] Certainly the potential for improvement and power upgrade exists with this free energy machine.

---

http://forum.allaboutcircuits.com/newsgroups/viewtopic.php?t=67792

Book Report

So I go out on my step and what to my wondering eyes doth appear but the box from Amazon.com containing the Jefimenko books that Bill Miller shamed me into finally buying. So I take a quick look inside and decide to give an initial report here. (Too much vector math in there for a thorough review.)

These books have some amazing advanced thinking in the understanding of Maxwell and EM. One first thought is the consideration of causality. This is typically totally ignored in the EM community. Evidence of that is the fact that EM waves are widely held to be propagated by the E field creating the H field and the H field creating the E field as it goes along. Too bad it's just not true! Jefimenko points out that causality demands that that an event must be PRECEDED by it's cause! Simultaneous events CANNOT be "causal" of each other. Hence E and H fields of waves are created by the WAVE SOURCE not each other! Same things goes for the E field created by Faraday induction. It simply cannot be "caused" by the time-varying Magnetic Field. "Magnetic induction" is therefore a misnomer. Such induction is caused by the source CURRENT and NOT the magnetic field!

This leads Jefimenko on to note that contrary to the "one E field" theory that has been believed for so many years, the inductive E field is clearly NOT the same field as an electrostatic E field. Jefimenko terms this inductive E field the "Electrokinetic Field" to show that it is a different field from the electrostatic E field. Very good. However, old habits die hard and even Jefimenko persists in writing an expression for a "total E field" following Maxwell as consisting of a sum of the electrostatic and electrokinetic parts as if they were both the "same" kind of E field.

Jefimenko then proceeds to illustrate the electrokinetic fields with a series of calculations and examples using his formulas as an approach. He presents it as basically a "new" way of doing this and in one sense it is compared to the commonly used and non-causal bogus "flux linkage" methods. However, he fails to note that the causal Neumann formula is in essence identical to his formulation and has been a standard formulation for years for the calculation of the "electrokinetic field" or what is usually termed "mutual induction". Nevertheless his example calculations are important basic references to the topic of Faraday induction. And the consideration of causality clearly shows that the Neumann approach has the edge over the "flux linkage" ideas with at times fail to give correct results.

But the subject doesn't end with induction, he pulls gravity into the mix. Of particular interest is that he shows that once you introduce causality into Newton's theory of gravitation, interesting things start to happen! Relativity suddenly begins to show up and even more interesting "action-reaction" is soon discovered to actually be a law that does NOT hold in all cases! The electromagnetic nature of gravity quickly becomes strongly hinted at and without action-reaction laws, those dreamed of devices such as anti-gravity ships and the "force-glove" that you wear to push over a building become theoretical possibilities! These are truly books full of thought-provoking new ways of looking at tired old physics!

I'm not going to be going through the large quantity of field theory math in these books in a hurry, but that's OK because clearly taking the time to go through in detail WILL be worth the effort! What can I say? Listen to Bill Miller and get that

order off to Amazon.com now. At roughly $25 each these two books are a huge bargain to the usual EM text books costing hundreds of dollars and then being full of bogus ideas and misunderstandings of the established theories. Just do it! I did and I'm not sorry I did!

Benj

---

http://stupac2.blogspot.com/2007/04/bizarre-and-intriguing-story-of-oleg.html

The Bizarre and Intriguing Story of Oleg Jefimenko and the Solutions to Maxwell's Equations

I recently heard the story of Oleg Jefimenko during a lecture on Electrodynamics, specifically the general solution to Maxwell's Equations.

Jefimenko's tiny bit of fame comes from Jefimenko's Equations, which are the general solution to Maxwell's equations expressed solely in terms of sources, that is charge and current distributions. The equations are messy and difficult to work with, and aren't used much in practice. But they do reveal certain bits of physics (such as the applicability of the quasistatic approximation (the link goes to a thermodynamics page, but the idea is the same) and that fields must be created by sources), and it's always nice to have the general solution to a problem available.

These equations weren't written down until 1966, about a century after Maxwell's Equations were known. Some people will claim (as the Wikipedia article cited does) that Jefimenko's Equations were written down earlier, but those earlier versions are always slightly different and not quite complete. What's really funny is that Jefimenko wrote them down in an attempt to formulate an alternative to Maxwell's equations.

When my current Professor, David Griffiths, was in the process of writing a paper on the subject, he independently derived Jefimenko's equations, and tried to figure out if anyone had done it before. Other than some slightly tricky and annoying math, they're not hard to derive, so someone must have done it. He found that Jefimenko had written them in a book that was published by a company that had only published one other work, also by Jefimenko (apparently regular publishers wouldn't take his books, so he went to a prestige press). He contacted Jefimenko, and Jefimenko didn't believe that he had solved Maxwell's equations, but that he had created an electromagnetic theory separate from (and doubtless better than) Maxwell's. Of course he had done no such thing, his formulation is exactly equivalent to Maxwell's, but he wasn't buying it.

According to Griffiths, Jefimenko currently submits one or two papers a week to American journals, gets denied, then publishes them in Europe (where review is apparently not as stringent). I don't know what they're about, the Wikipedia article says he focuses on overthrowing Einstein's General Relativity and Maxwell.

I found this story behind some esoteric equations to be pretty amusing, and thought others might agree. I hope you've enjoyed the convoluted and intriguing story behind Jefimenko's equations.

[Most of my information comes from a lecture with Griffiths, and as such could not be found online. Anything that is available online has been referenced.]

---

http://electretscientific.com/

Electret Scientific Co
P.O. Box 4132
Star City, WV 26504 USA

Books by Professor Oleg Jefimenko

(also available from www.Amazon.com)

Gravitation and Cogravitation -- Developing Newton's Theory of Gravitation to its Physical and Mathematical Conclusion,
Paperback - List Price US$ 22.00
Hardback - List Price US$ 32.00

Electrostatic Experiments -- An Encyclopedia of Early Electrostatic Experiments, Demonstrations, Devices, and Apparatus,
by G.W. Francis (author), Oleg Jefimenko (editor)
Paperback - List Price US$ 24.00
Hardback - List Price US$ 48.00

Electromagnetic Retardation and Theory of Relativity -- New Chapters in the Classical Theory of Fields, 2nd edition,
Paperback - List Price US$ 24.00
Hardback - List Price US$ 44.00

Causality, Electromagnetic Induction, and Gravitation -- A Different approach to the Theory of Electromagnetic and Gravitational Fields, 2nd edition,
Paperback - List Price US$ 22.75
Hardback - List Price US$ 32.50

An Introduction to the Theory of Electric and Magnetic Fields, 2nd edition,
Hardback - List Price US$ 72.00

Electrostatic Motors -- Their History, Types, and Principles of Operation,

Out of Print -- free e-book download available soon

---

http://www.amazon.com/Electrostatic-Experiments-Encyclopedia-Demonstrations-Apparatus/dp/0917406133

Electrostatic Experiments: An Encyclopedia of Early Electrostatic Experiments, Demonstrations, Devices, and Apparatus (Paperback)

---

http://www.amazon.com/Electrostatic-Motors-Oleg-D-Jefimenko/dp/0917406028

Electrostatic Motors (Paperback)
by Oleg D. Jefimenko

***Scientific American* (October, 1974)**

Electrostatic Motors Are Powered by Electric Field of the Earth

by

C. L. Stong

Although no one can make a perpetual motion machine, anyone can tap the earth's electric field to run a homemade motor perpetually. The field exists in the atmosphere between the earth's surface and the ionosphere as an electric potential of about 360,000 volts. Estimates of the stored energy range from a million kilowatts to a billion kilowatts.

Energy in this form cannot be drawn on directly for driving ordinary electric motors. Such motors develop mechanical force through the interaction of magnetic fields that are generated with high electric current at low voltage, as Michael Faraday demonstrated in 1821. The earth's field provides relatively low direct current at high voltage, which is ideal for operating electrostatic motors similar in principle to the machine invented by Benjamin Franklin in 1748.

Motors of this type are based on the force of mutual attraction between unlike electric charges and the mutual repulsion of like charges. The energy of the field can be tapped with a simple antenna in the form of a vertical wire that carries one sharp point or more at its upper end. During fair weather the antenna will pick up potential at the rate of about 100 volts for each meter of height between the points and the earth's surface up to a few hundred feet. At higher altitudes the rate decreases. During local thunderstorms the pickup can amount to thousands of volts per foot. A meteorological hypothesis is that the field is maintained largely by thunderstorms, which pump electrons out of the air and inject them into the earth

through bolts of lightning that continuously strike the surface at an average rate of 200 strokes per second.

Why not tap the field to supplement conventional energy resources? Several limitations must first be overcome. For example, a single sharp point can draw electric current from the surrounding air at a rate of only about a millionth of an ampere. An antenna consisting of a single point at the top of a 60-foot wire could be expected to deliver about a microampere at 2,000 volts; the rate is equivalent to .002 watt. A point-studded balloon tethered by a wire at an altitude of 75 meters might be expected to deliver .075 watt. A serious limitation appears as the altitude of the antenna exceeds about 200 meters. The correspondingly higher voltages become difficult to confine.

At an altitude of 200 meters the antenna should pick up some 20,000 volts. Air conducts reasonably well at that potential. Although nature provides effective magnetic materials in substances such as iron, nickel and cobalt, which explains why the electric-power industry developed around Faraday's magnetic dynamo, no comparably effective insulating substances exist for isolating the high voltages that would be required for electrostatic machines of comparable power. Even so, electrostatic motors, which are far simpler to build than electromagnetic ones, may find applications in special environments such as those from which magnetism must be excluded or in providing low power to apparatus at remote, unmanned stations by tapping the earth's field.

Apart from possible applications electrostatic motors make fascinating playthings. They have been studied extensively in recent years by Oleg D. Jefimenko and his graduate students at West Virginia University. The group has reconstructed models of Franklin's motors and developed advanced electrostatic machines of other types.

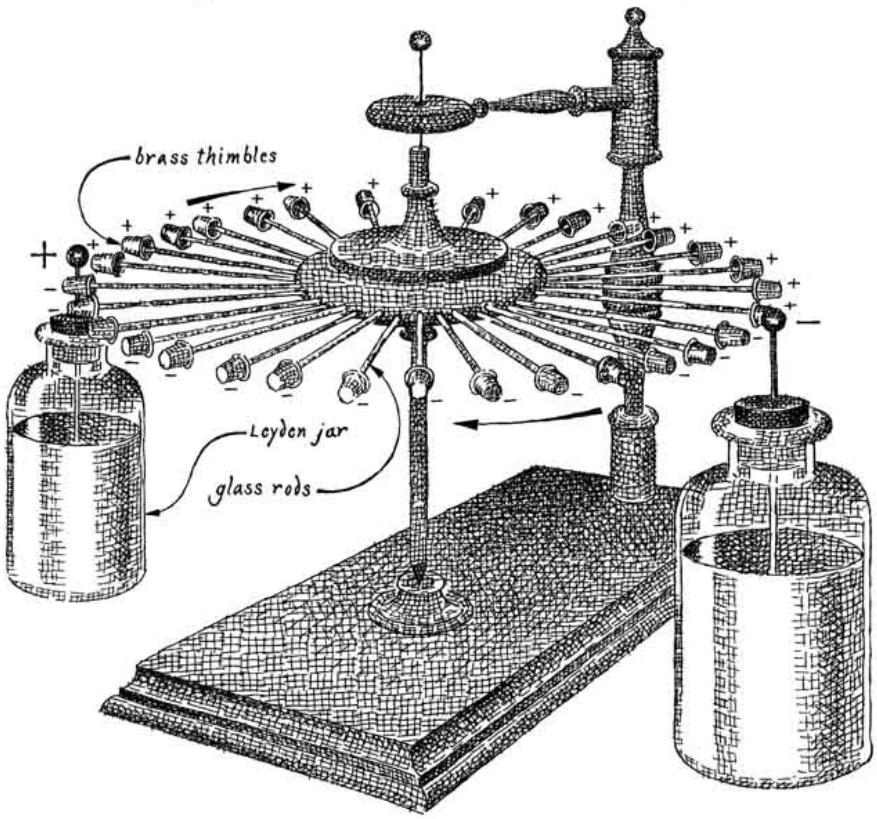

Although Franklin left no drawing of his motor, his description of it in a letter to Peter Collinson, a Fellow of the Royal Society, enabled Jefimenko to reconstruct a working model [see illustration at right]. Essentially the machine consists of a rimless wheel that turns in the horizontal plane on low-friction bearings. Each spoke of the "electric wheel," as Franklin called the machine, consists of a glass rod with a brass thimble at its tip. An electrostatic charge for driving the motor was stored in Leyden jars. A Leyden jar is a primitive form of the modern high-voltage capacitor. Franklin charged his jars with an electrostatic generator.

The high-voltage terminals of two or more Leyden jars that carried charges of opposite polarity were positioned to graze the thimbles on opposite sides of the rotating wheel. The motor was started by hand. Thereafter a spark would jump from the high-voltage terminal to each passing thimble and impart to it a charge of the same polarity as that of the terminal. The force of repulsion between the like charges imparted momentum to the wheel.

Conversely, the thimbles were attracted by the oppositely charged electrode of the Leyden jar Franklin placed on the

opposite side of the wheel. As the thimbles grazed that jar, a spark would again transfer charge, which was of opposite polarity. Thus the thimbles were simultaneously pushed and pulled by the high-voltage terminals exactly as was needed to accelerate the wheel.

Franklin was not altogether happy with his motor. The reason was that running it required, in his words, "a foreign force, to wit, that of the bottles." He made a second version of the machine without Leyden jars.

In this design the rotor consisted principally of a 17-inch disk of glass mounted to rotate in the horizontal plane on low-friction bearings. Both surfaces of the disk were coated with a film of gold, except for a boundary around the edge. The rotor was thus constructed much like a modern flat-plate capacitor.

Twelve evenly spaced metal spheres, cemented to the edge of the disk, were connected alternately to the top and bottom gold films. Twelve stationary thimbles supported by insulating columns were spaced around the disk to graze the rotating metal spheres. When Franklin placed opposite charges on the top and bottom films and gave the rotor a push, the machine ran just as well as his first design, and for the same reason. According to Franklin, this machine would make up to 50 turns a minute and would run for 30 minutes on a single charge.

Jefimenko gives both motors an initial charge from a 20,000-volt generator. They consume current at the rate of about a millionth of an ampere when they are running at full speed. The rate is equivalent to .02 watt, which is the power required to lift a 20-gram weight 10 centimeters (or an ounce 2.9 inches) in one second.

Jefimenko wondered if Franklin's motor could be made more powerful. As Jefimenko explains, the force can be increased by adding both moving and fixed electrodes. This stratagem is limited by the available space. If the electrodes are spaced too close, sparks tend to jump from electrode to electrode around the rotor, thereby in effect short-circuiting the machine. Alternatively the rotor could be made cylindrical to carry electrodes in the form of long strips or plates. This scheme could perhaps increase the output power by a factor of 1,000.

Reviewing the history of electrostatic machines, Jefimenko came across a paper published in 1870 by Johann Christoff Poggendorff, a German physicist. It described an electrostatic motor fitted with a rotor that carried no electrodes. The machine consisted of an uncoated disk of glass that rotated in the vertical plane on low-friction bearings between opposing crosses of ebonite. Each insulating arm of the crosses supported a comblike row of sharp needle points that grazed the glass.

When opposing combs on opposite sides of the glass were charged in opposite polarity to potentials in excess of 2,000 volts, air in the vicinity of the points on both sides of the glass was ionized. A bluish glow surrounded the points, which emitted a faint hissing sound. The effect, which is variously known as St. Elmo's fire and corona discharge, deposited static charges on both sides of the rotor.

Almost the entire surface of the glass acquired a coating of either positive or negative fixed charges, depending on the polarity of the combs. The forces of repulsion and attraction between glass so charged and the combs were substantially larger than they were in Franklin's charged thimbles. The forces were also steadier, because in effect the distances between the combs and the charged areas remained constant. It should be noted that adjacent combs on the same side of the glass carried charges of opposite polarity, so that the resulting forces of attraction and repulsion acted in unison to impart momentum to the disk, as they did in Franklin's motor.

By continued experimentation Poggendorff learned that he should slant the teeth of the combs to spray charge on the glass at an angle. The resulting asymmetrical force made the motor self-starting and unidirectional. When the teeth were perpendicular to the glass surface, the forces were symmetrical, as they were in Franklin's motor. When the machine was started by hand, it ran equally well in either direction.

Poggendorff was immensely pleased by the rate at which his machine converted charge into mechanical motion. He concluded his paper with a faintly odious reference to Franklin's device. "That such a quantity of electricity must produce a far greater force than that in the [Franklin] electric roasting spit," he wrote, "is perfectly obvious and nowadays would not be denied by Franklin himself. With one grain of gunpowder one cannot achieve so much as with one hundred pounds."

Electrostatic motors are now classified in general by the method by which charge is either stored in the machine or transferred to the rotor. Poggendorff's machine belongs to the corona type, which has attracted the most attention in recent years. Although its measured efficiency is better than 50 percent, Poggendorff regarded it merely as an apparatus for investigating electrical phenomena. He wrote that "it would be a sanguine hope if one wanted to believe that any useful mechanical effect could be achieved with it."

Poggendorff's negative attitude toward the usefulness of his design may well have retarded its subsequent development. A modern version of the machine constructed in Jefimenko's laboratory has an output of approximately .1 horsepower. It operates at speeds of up to 12,000 revolutions per minute at an efficiency of substantially more than 50 percent. In one form the modern corona motor consists of a plastic cylinder that turns on an axial shaft inside a concentric set of knife-edge electrodes that spray charge on the surface of the cylinder [see illustration at left]. Forces that act between the sprayed charges and the knife-edge electrodes impart momentum to the cylinder.

Machines of this kind can be made of almost any inexpensive dielectric materials, including plastics, wood and even cardboard. The only essential metal parts are the electrodes and their interconnecting leads. Even they can be contrived of metallic foil backed by any stiff dielectric. The shaft can be made of plastic that turns in air bearings. By resorting to such stratagems experimenters can devise motors that are extremely light in proportion to their power output. Corona motors require no brushes or commutators. A potential of at least 2,000 volts, however, is essential for initiating corona discharge at the knife-edges.

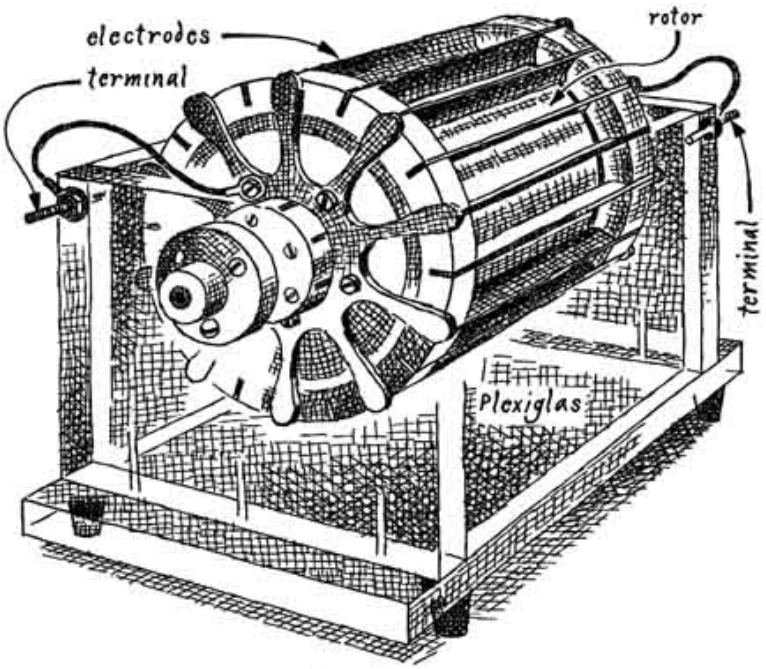

A smaller and simpler version of the machine was demonstrated in 1961 by J. D. N. Van Wyck and G. J. Kühn in South Africa. This motor consisted of a plastic disk about three millimeters thick and 40 millimeters in diameter supported in the horizontal plane by a slender shaft that turned in jeweled bearings. Six radially directed needle points grazed the rim of the disk at equal intervals. When the machine operated from a source of from 8,000 to 13,000 volts, rotational speeds of up to 12,000 revolutions per minute were measured.

I made a corona motor with Plexiglas tubing two inches in diameter and one and a half inches long. It employed stiffbacked single-edge razor blades as electrodes. The bore of the tube was lined with a strip of aluminum foil, a stratagem devised in Jefimenko's laboratory to increase the voltage gradient in the vicinity of the electrodes and thus to increase the amount of charge that can be deposited on the surface of the cylinder. I coated all surfaces of the razor blades except the cutting edges and all interconnecting wiring with "anticorona dope," a cementlike liquid that dries to form a dielectric substance that reduces the loss of energy through corona discharges in nonproductive portions of the circuit.

The axial shaft that supports the cylinder on pivot bearings was cut out of a steel knitting needle. The ends of the shaft were ground and polished to 30degree points. To form the points I chucked the shaft in an electric hand drill, ground the metal against an oilstone and polished the resulting pivots against a wood lap coated with tripoli.

The bearings that supported the pivots were salvaged from the escapement mechanism of a discarded alarm clock. A pair of indented setscrews could be substituted for the clock bearings. The supporting frame was made of quarter-inch Lucite. The motor can be made self-starting and unidirectional by slanting the knife-edges. Those who build the machine may discover, as I did, that the most difficult part of the project, balancing the rotor, is encountered after assembly. The rotor must be balanced both statically and dynamically.

Static balance was achieved by experimentally adding small bits of adhesive tape to the inner surface of the aluminum foil that lines the cylinder until the rotor remained stationary at all positions to which it was set by hand. When the rotor was balanced and power was applied, the motor immediately came up to speed, but it shook violently. I had corrected the imbalance caused by a lump of cement at one end of the rotor by adding a counterweight on the opposite side at the opposite end of the cylinder. Centrifugal forces at the ends were 180 degrees out of phase, thus constituting a couple.

The dynamic balancing, which is achieved largely by cut-and-try methods, took about as much time as the remainder of the construction. To check for dynamic balance suspend the motor freely with a string, run it at low speed and judge by the wiggle where a counterweight must be added. Adhesive tape makes a convenient counterweight material because it can be both applied and shifted easily.

I made the motor as light and frictionless as possible with the objective of operating it with energy from the earth's field. The field was tapped with an antenna consisting of 300 feet of No. 28 gauge stranded wire insulated with plastic. It is the kind of wire normally employed for interconnecting electronic components and is available from dealers in radio supplies.

The upper end of the wire was connected to a 20-foot length of metallic tinsel of the kind that serves for decorating a Christmas tree. The tinsel functioned as multiple needle points. Strips cut from window screening would doubtless work equally well.

The upper end of the tinsel was hoisted aloft by a cluster of three weather balloons. Such balloons, each three feet in diameter, and the helium to inflate them are available from the Edmund Scientific Co. (300 Edscorp Building, Barrington, N.J. 08007). The weight in pounds that a helium-filled balloon of spherical shape can lift is roughly equal to a quarter of the cube of its radius in feet. To my delight the motor began to run slowly when the tinsel reached an altitude of about 100 feet. At 300 feet the rotor made between 500 and 700 revolutions per minute.

A note of warning is appropriate at this point. Although a 300-foot vertical antenna can be handled safely in fair weather, it can pick up a lethal charge during thunderstorms. Franklin was incredibly lucky to have survived his celebrated kite experiment. A European investigator who tried to duplicate Franklin's observations was killed by a bolt of lightning. The 300-foot antenna wire can hold enough charge to give a substantial jolt, even during fair weather. Always ground the lower end of the wire when it is not supplying a load, such as the motor.

To run the motor connect the antenna to one set of electrodes and ground the other set. Do not connect the antenna to an insulated object of substantial size, such as an automobile. A hazardous charge can accumulate. Never fly the balloon in a city or in any other location where the antenna can drift into contact with a high-voltage power line. Never fly it below clouds or leave it aloft unattended.

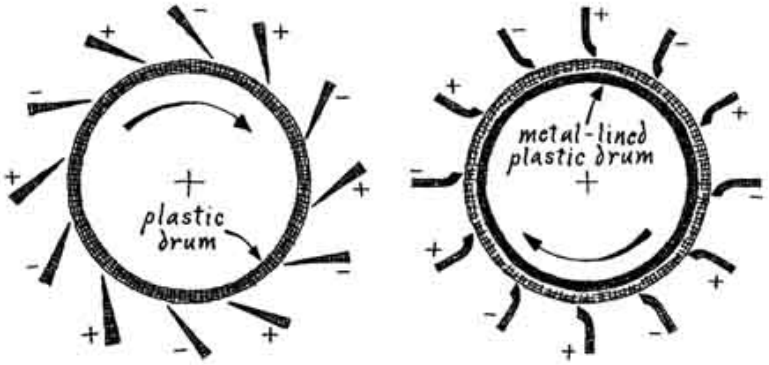

A variety of corona motors have been constructed in Jefimenko's laboratory. He has learned that their performance can be vastly improved by properly shaping the corona-producing electrodes [see illustration at right]. The working surface of the rotors should be made of a fairly thin plastic, such as Plexiglas or Mylar. Moreover, as I have mentioned, the inner surface of the cylinder should be backed by conducting foil to enhance the corona. Effective cylinders can be formed inexpensively out of plastic sewer pipe. Corona rotors can of course also be made in the form of disks.

One model consists of a series of disks mounted on a common shaft. Double-edged electrodes placed radially between adjacent disks function much like Poggendorff's combs. This design needs no foil lining or backing because a potential gradient exists between electrodes on opposite sides of the disks. It is even possible to build a linear corona motor, a design that serves to achieve translational motion. A strip of plastic is placed between sets of knife-edge electrodes slanted to initiate motion in the desired direction.

Notwithstanding the problem of handling potentials on the order of a million volts without effective insulation materials, Jefimenko foresees the possibility of at least limited application of corona power machines. In The Physics Teacher (March, 1971) he and David K. Walker wrote: "These motors could be very useful for direct operation from high-voltage d.c. transmission lines as, for example, the 800 kV Pacific Northwest-Southwest Intertie, which is now being constructed between the Columbia River basin and California. It is conceivable that such motors could replace the complex installations now needed for converting the high-voltage d.c. to low-voltage a.c. All that would be required if corona motors were used for this purpose would be to operate local low-voltage a.c. generators from corona motors powered directly from the high-voltage d.c. line."

As Jefimenko points out, a limiting factor of the corona motor is its required minimum potential of 2,000 volts. This limitation is circumvented by a novel electrostatic motor invented in 1961 by a Russian physicist, A. N. Gubkin. The motor is based on an electret made in 1922 by Mototaro Eguchi, professor of physics at the Higher Naval College in Tokyo.

An electret is a sheet or slab of waxy dielectric material that supports an electric field, much as a permanent magnet carries a magnetic field. Strongly charged carnauba-wax electrets are available commercially, along with other electrostatic devices, from the Electret Scientific Company (P.O. Box4132, Star City, W.Va. 26505). A recipe for an effective electret material is 45 percent carnauba wax, 45 percent water-white rosin and 10 percent white beeswax. Some experimenters substitute Halowax for the rosin.

The ingredients are melted and left to cool to the solid phase in a direct-current electric field of several thousand volts. The wax continues to support the field even though the external source of potential is turned off [see "The Amateur Scientist, SCIENTIFIC AMERICAN, November, 1960, and July, 1968]. The electret reacts to neighboring charges exactly as though it were a charged electrode, that is, it is physically attracted or repelled depending on the polarity of the neighboring electrode.

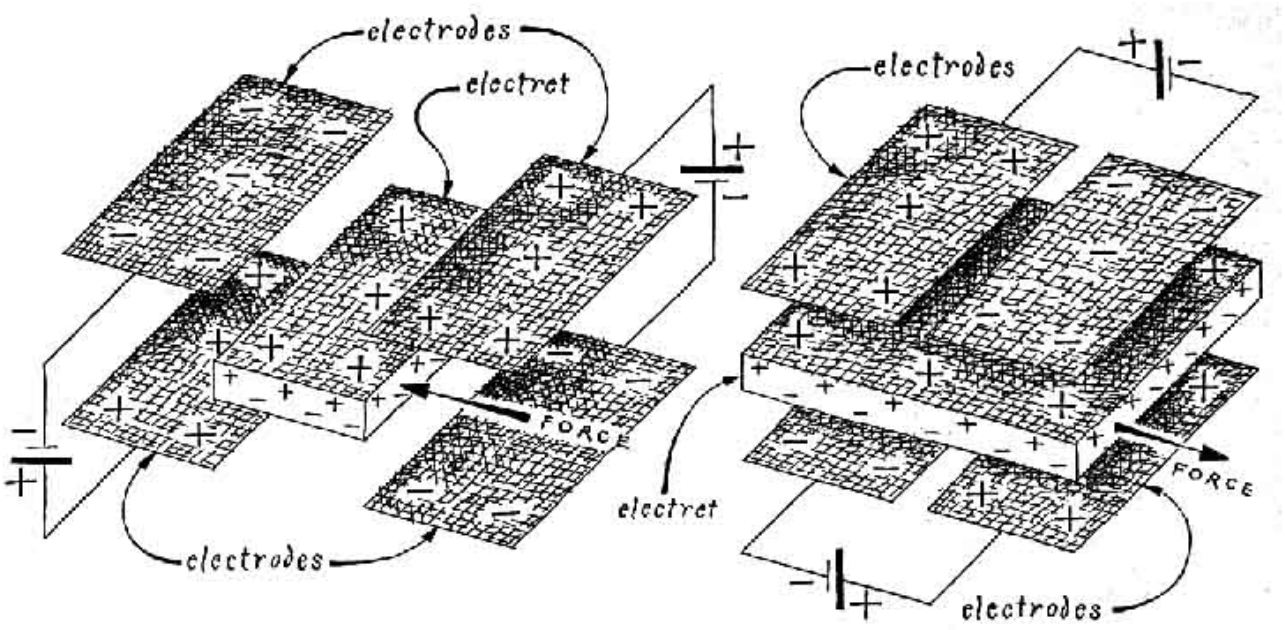

Gubkin harnessed this effect to make a motor. The rotor consisted of a pair of electrets in the shape of sectors supported at opposite ends of a shaft. The center of the shaft was supported transversely by an axle. When the rotor turned, the electrets were swept between adjacent pairs of charged metallic plates, which were also in the form of sectors.

The plates were electrified by an external source of power through the polarity-reversing switch known as a commutator. The commutator applied to the electrodes a charge of polarity opposite to the charge of the attracted electret. As the electret moved between the attracting plates, however, the commutator switched the plates to matching polarity. The alternate push and pull imparted momentum to the rotor in exact analogy to Franklin's motor.

Gubkin's motor was deficient in two major respects. The distances between the electrodes and the electrets were needlessly large, so that the forces of attraction and repulsion were needlessly weak. Moreover, during the electret's transit between electrodes its surfaces were unshielded. Unshielded electrets attract neutralizing ions from the air and lose their

charge within hours or days.

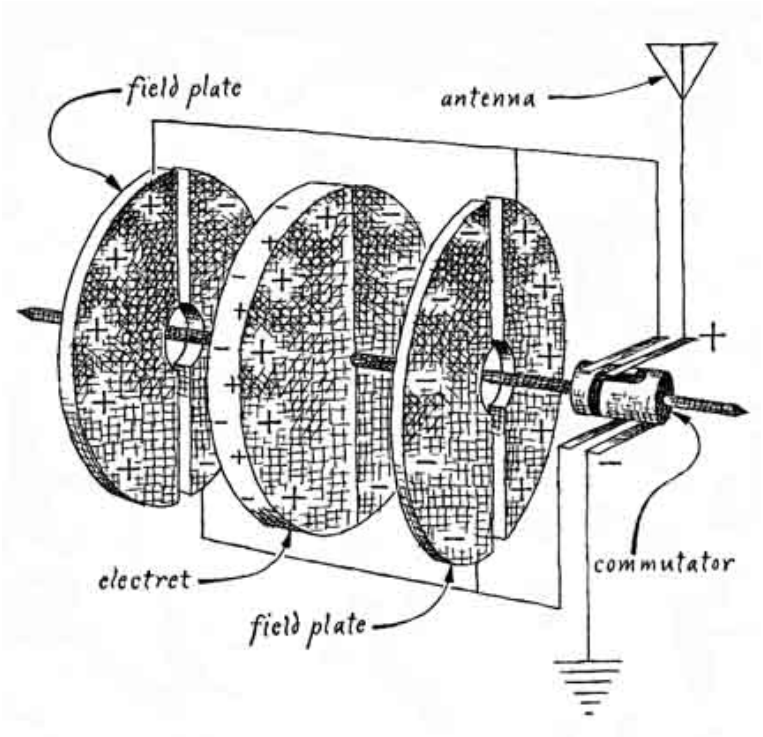

Both inherent deficiencies of Gubkin's motor have been corrected in Jefimenko's laboratory by taking advantage of what is termed the slot effect. Instead of sandwiching the electret alternately between pairs of metal plates, Jefimenko employs opposing pairs of adjacent plates [see illustration at rightt]. The adjacent plates are separated by a narrow slot. When adjacent plates carry charges of opposite polarity, the electret experiences a force at right angles to the slot and in the plane of the electret. The strength of the force is at a maximum because the electret is close to the electrodes. Simultaneously the electrodes function as shields to prevent the neutralization of the electret by free ions.

Motors based on the slot effect can be designed in a number of forms. One design consists of an electret in the shape of a wafer-thin sheet of Mylar supported by a flat disk of balsa wood 100 millimeters in diameter and three millimeters thick. (A long-lasting charge is imparted to the Mylar by immersing it in a field of a few thousand volts from an electrostatic generator after the motor is assembled.) This rotor is sandwiched between four semicircular sectors that are cross-connected [see illustration].

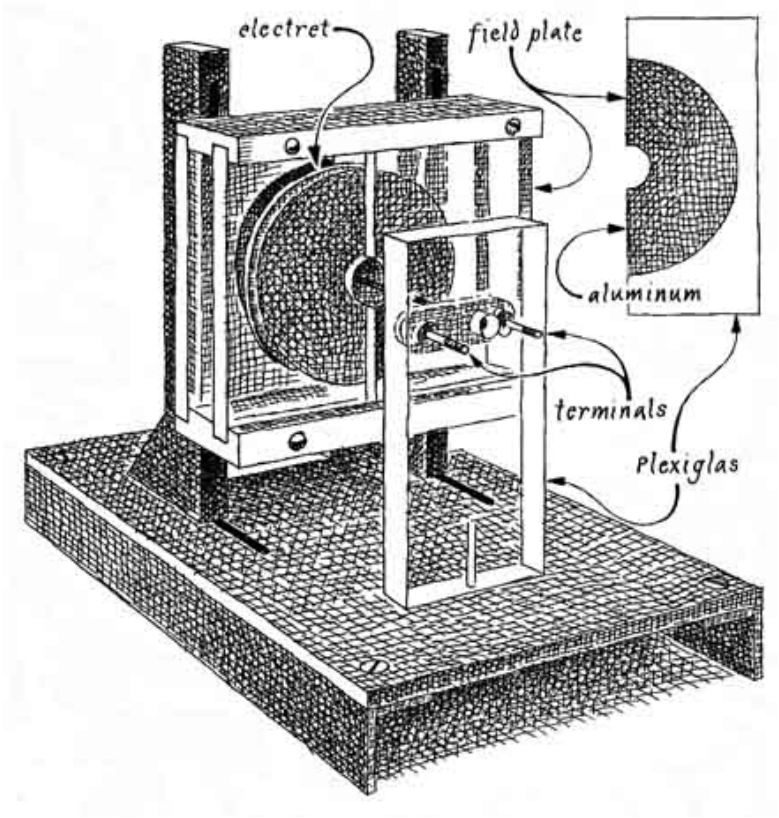

The electret is mounted on a four-millimeter shaft of plastic that turns in jeweled bearings. The conducting surfaces of the commutator consist of dried India ink. The brushes are one-millimeter strips of kitchen aluminum foil. The motor operates on a few microwatts of power.

Jefimenko has demonstrated a similar motor that was designed to turn at a rate of about 60 revolutions per minute and develop a millionth of a horsepower on a 24-foot antenna having a small polonium probe at its upper end. (By emitting positive charges probes of this type tap the earth's field somewhat more efficiently than needle points do.) The performance of the motor easily met the design specifications. The charm of these motors lies in the fact that, although they do not accomplish very much, they can run forever.

Bibliography

ATMOSPHERIC ELECTRICITY. J. Alan Chalmers. Pergamon Press, 1968.

ELECTROSTATIC MOTORS: THEIR HISTORY, TYPES AND PRINCIPLES OF OPERATION. Oleg D. Jefimenko. Electret Scientific Company, 1973.

ELECTROSTATICS AND ITS APPLICATIONS. Edited by A. D. Moore. John Wiley & Sons, 1973.

***Annales de la Fondation Louie de Broglie* 32 (1) : 117 (2007)**

Oleg Jefimenko : Gravitation and Cogravitation -- Note de Lecture (PDF)

Your Support Maintains this Service --

BUY

THE LIVING MOON

For Your Eyes Only

Aristarchus Crater

Electric Blue Gem or Fusion Reactor?

.

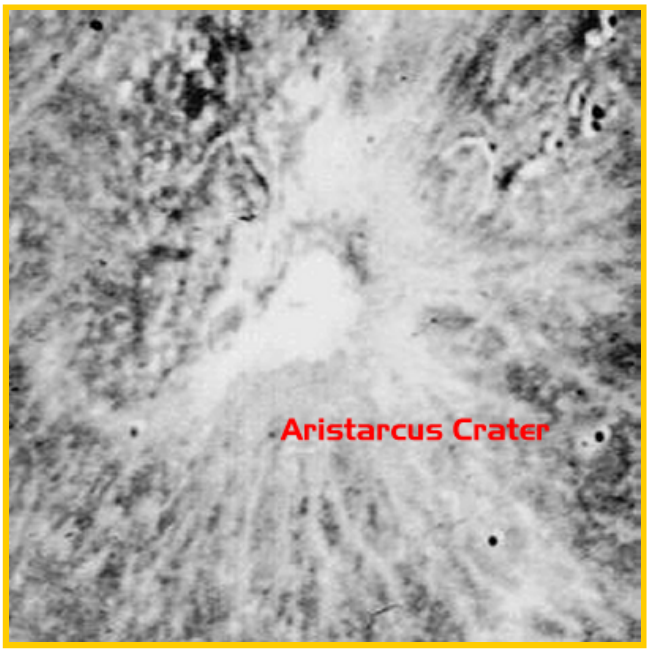

Aristarchus Crater has long been a much debated enigma on the Moon. Yet whenever you see pictures and try to get close in for details, the area is a total white out, with no detail. It is supposedly because of its brightness. We will discuss the rumors and stories of Aristarchus further down. The image above is taken from LICKOSB9 As you can see the area is devoid of any gray pixels, leaving a totally white splotch. Below is the same area on LICKOSBA. Again we see the totally white splotch. You will find this in all of the lesser quality full moon images on the web.

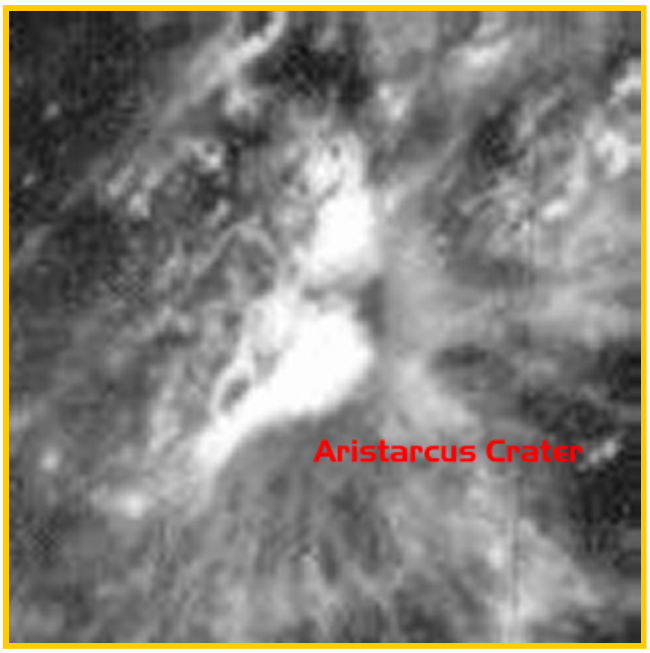

The Day The Lights Were On

.

Aristarchus Crater
Dec 17th 2005

.

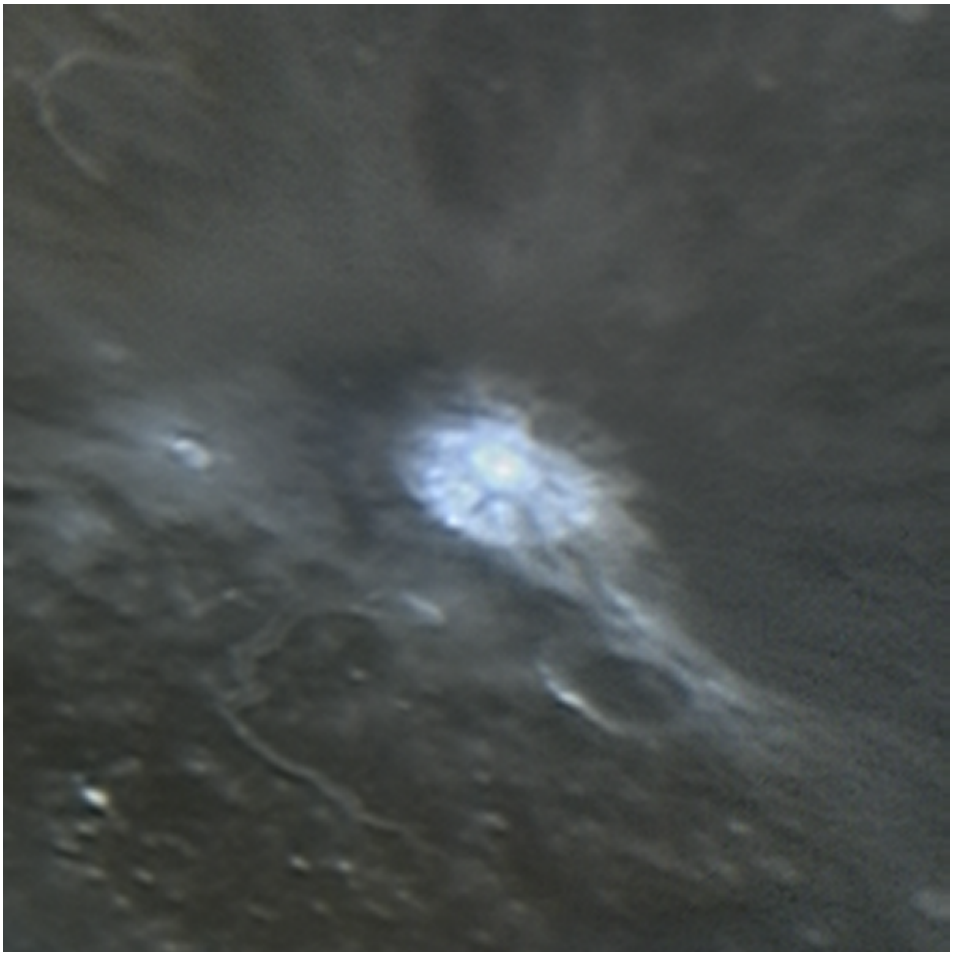

Aristarchus Crater
Credit: Mike's Astroimagery UK

If you haven't already seen the Full Moon that Mike took where this clip of Aristarchus is a small section, you can do so HERE. The picture above is Aristarchus Crater clipped from an image taken with a 10" Telescope in the UK. Compare this image to the high resolution image from the Clementine Satellite below and remember that this is a 10" telescope image.

You will notice the symmetrical dome like structure of the "crater" as well as the bright blue glow that literally lights up the surrounding area! The overall effect is that of plasma energy emitting from the dome, or at least very bright light.

Electric Blue Crater
Aristarchus Crater
Clementine Image
1994

•

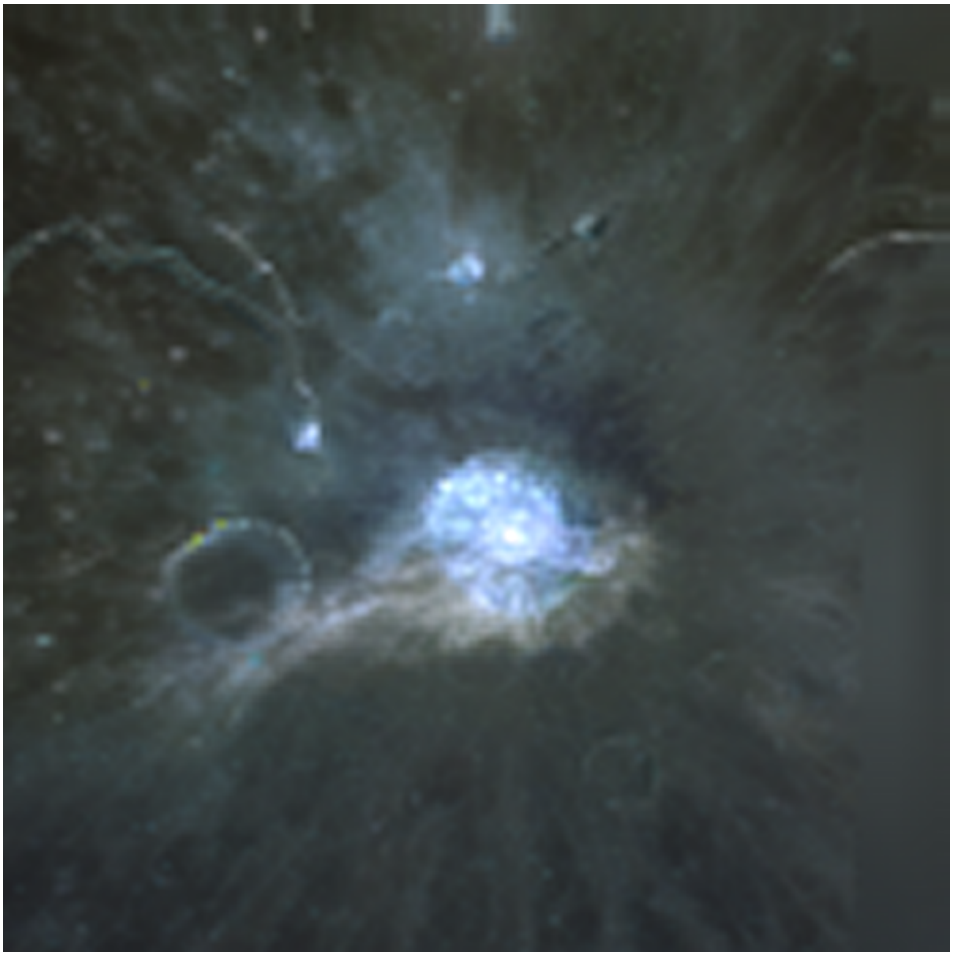

Credit: USGS/US Navy/Clementine Spacecraft

The image above is cropped from the full spread Clementine Nearside.tif image. Click on the image to see one cropped from the 65 meg version. Both the Clementine and Mike's image show the beautiful "Electric Blue" color of the crater and both show dome like structures, with a bright center. Both also show that the luminescence covers the surrounding area.

Now we have a third confirmation... this one is also from the UK

UPDATE
Sept 06 2007
Clementine Lunar Image Browser 1.5

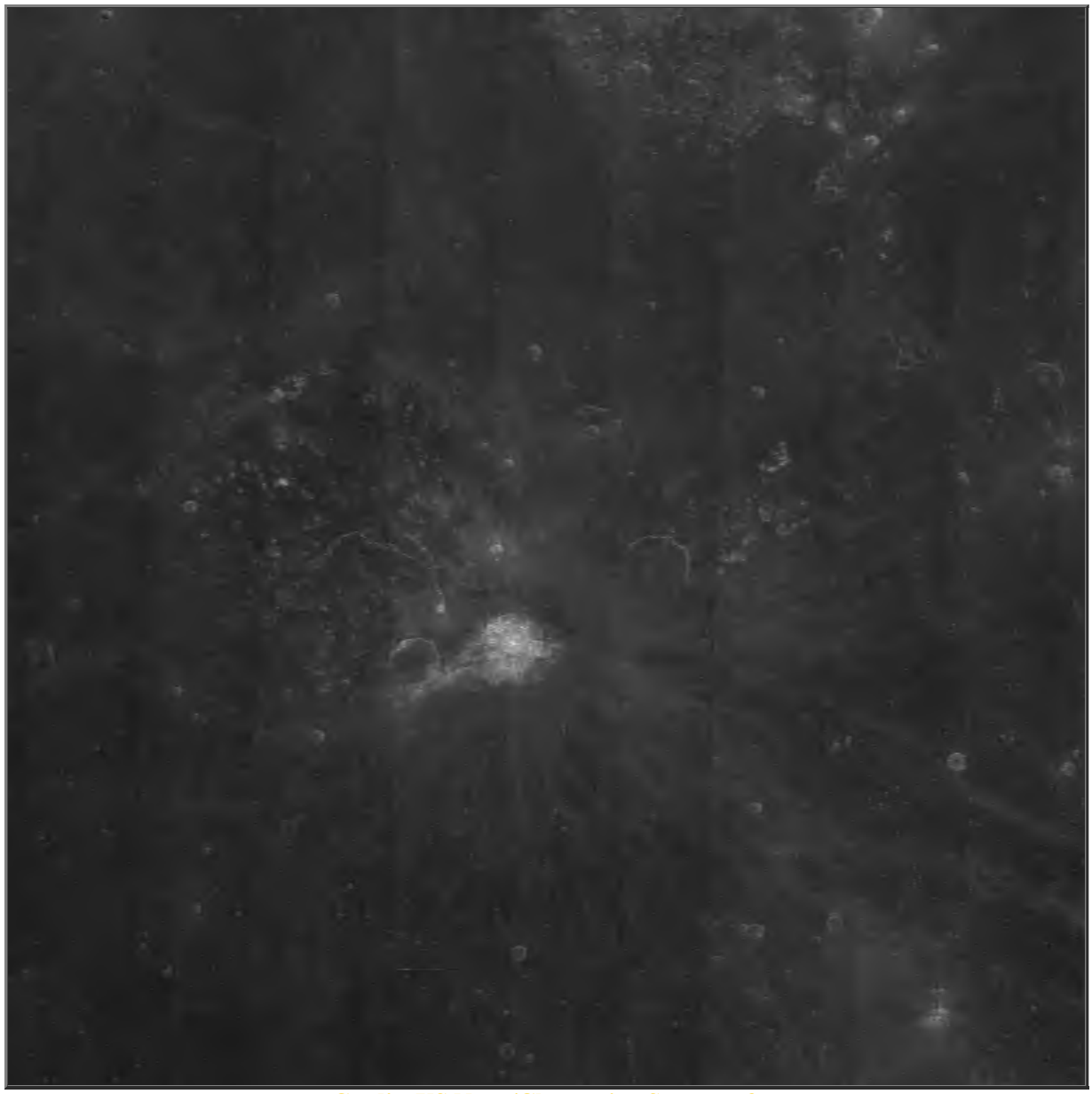

Credit: US Navy/Clementine Spacecraft

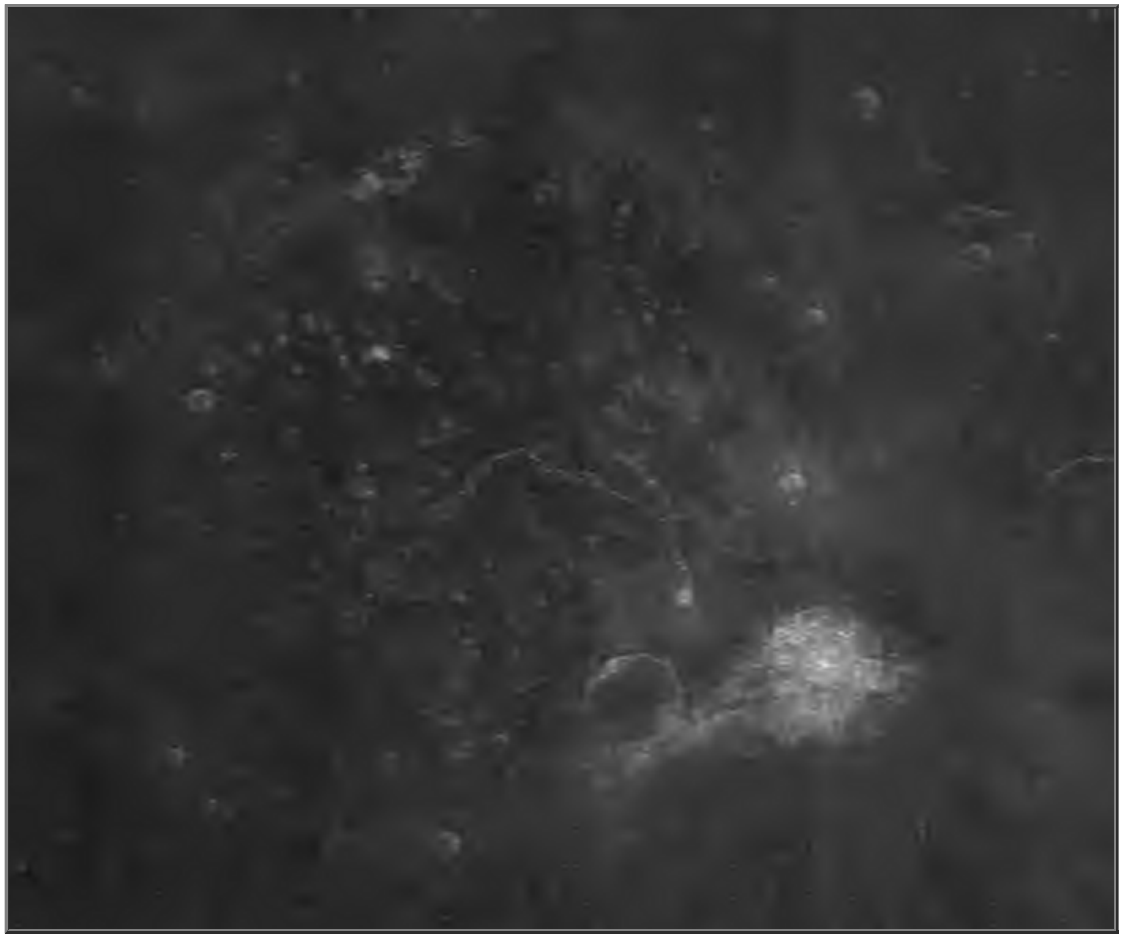

Aristarchus Showing Structure

The images above are clips from the US NAVY original Clementine gallery, Clementine Lunar Image Browser 1.5. The data set was only available in low resolution, heavy pixelated jpg images but even in those you can see the "glowing structure" and the rectangular area that is clearer than the surrounding area

Back to The Day The Lights Were On

Aristarchus Crater
Dec 17th 2005

•

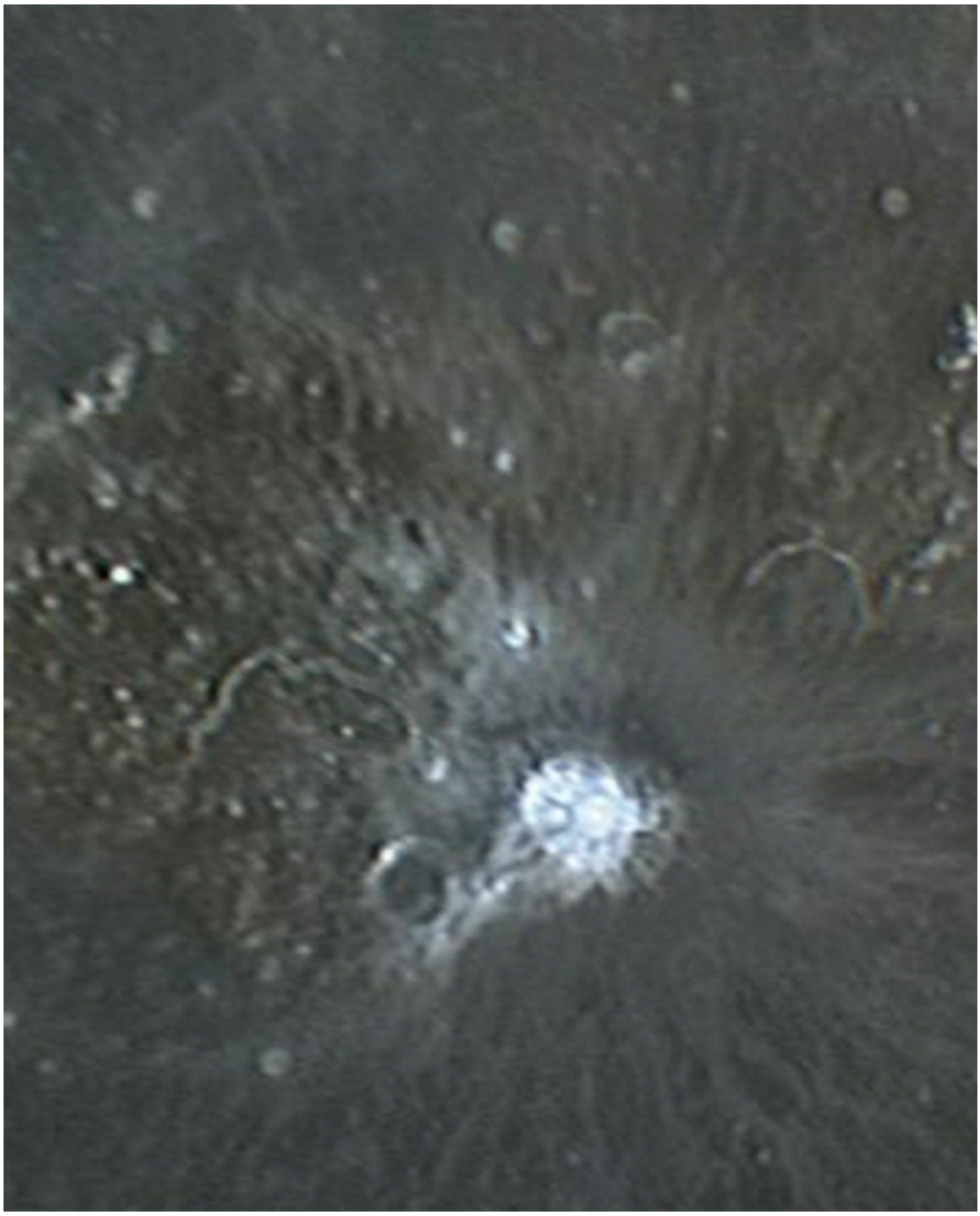

Original Image Credit: Anthony Jenkins ~ Anthony Jenkins Astronomy Site

The same pretty Blue Gem we see from Clementine! The same glow emanating from the center flooding the area. The image above is from another well known British astronomer, Anthony Jennings, using an 8" LX90 SCT telescope and a Philips ToUcam 2xBarlow camera. The image below is an enlarged clip. Anthony has no connection to Pegasus and his images are freely available at his web site; Anthony Jennings Astronomy Site

Both these Astronomers captured the "Blue Gem" on the same day from two locations, Date: 17th December, 2005. This is a clip from a Moon Mosaic of 120 images (Mike used 170). This time the scope is even smaller... an 8 inch scope!

Image Notes:
Aristarchus Crater
Date: 17th December, 2005 ,22:34
Location: Rhodes, North Manchester
Telescope: 8" LX90 SCT
Camera: Philips ToUcam 2xBarlow

Image: 120 Stacked Frames
Processing Software: Registax 3 & Paintshop Pro 8
Image By: Anthony Jennings ~ Anthony Jenkins Astronomy Site

Important Note: Neither Mike Deegan nor Anthony Jenkins are part of Pegasus or the Living Moon and are merely Astronomers that have taken excellent images. As such they do not necessarily share our views about Aristarchus, nor follow our research

More Blue Gems

Aristarchus Crater
Galileo Spacecraft
December 7, 1992

•

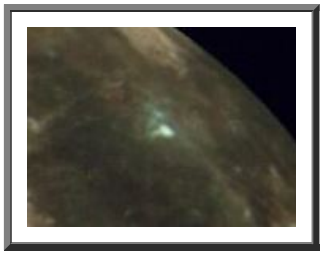

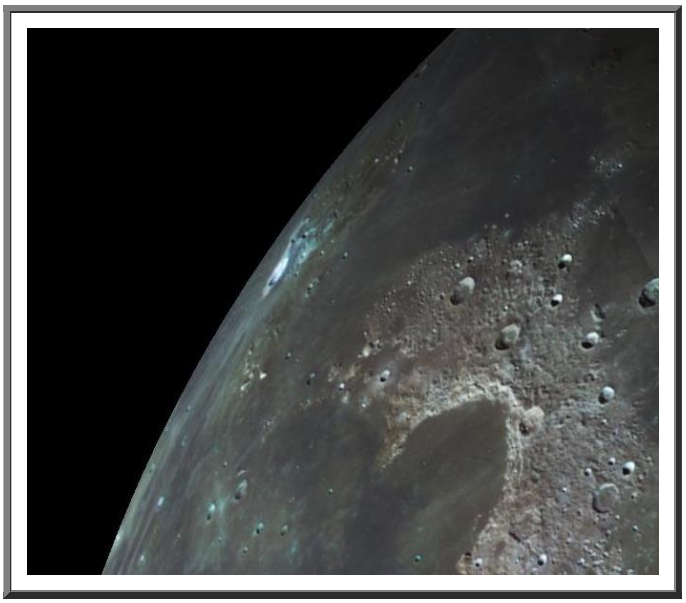

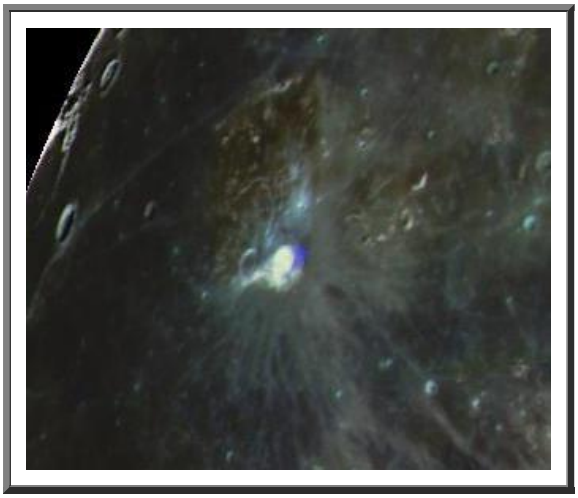

Though not as high a resolution, we can still see the blue glow in these three images.

John Lear believes this to be a Fusion Reactor. Other members of Pegasus have different ideas, but all are related to some sort of power device. We now have several images from several independent sources showing the electric blue glow and the "structure". All the images we have seen where "the lights are on" show this regular uniform structure, yet many photos can be found that show just a crater.

Transient Lunar Phenomena (TLP)

From this and other documentary evidence we have gathered, it appears that this phenomena is not always on. When all the data is correlated it will be presented here on this website. but here are a few observances around Aristarchus Crater...

Report Nov 2-3, 1958

"On the night of November 2-3, 1958, Russian astronomer Nikolai A. Kozyrev witnessed a strange phenomenon while making spectrograms of the crater Alphonsus with the Crimean Astrophysical Observatory's 50-inch reflector. As he watched through the telescope's guiding eyepiece, he saw the crater's central peak blur and turn an unusual reddish color. The spectrograms confirmed his visual impressions of a volcanic event; they showed an emission spectrum of carbon vapor (S&T:February, 1959, page 184).. Kozyrev has recorded via spectrograms numerous incidents of red transient lunar phenomena, particularly in the 80 mile wide crater known as Alphonsus. It was at this location in 1965 that the final Ranger probe 9 crash landed. Aristarchus is not only one of the brightest formations on the moon, it is responsible for more than half the number of reported TLP and has been a proven source for gaseous emissions - Farshores.org

Reports 1650 to 1950

NASA Technical Report TR R-277. was published in July 1968 as a Chronological Catalog of Reported Lunar Events and is available here - NASA Technical Report TR R-277

1650 Aristarchus "Red Hill." Mons Porphyrites Hevelius B.A.A. Lunar Sec. Circa. 1967, 2, No 8

1784 Aristarchus Nebulous bright spot of light Schroter Schroter 1791
1785 Aristarchus Nebulous bright spot of light Schroter Schroter 1791
1786 Dec 24 Aristarchus Extraordinarily bright Schroter Schroter 1791
1787 May 19-20 Aristarchus Extraordinarily bright von Bruhl Bode 1790; Schroter 1791; Herschel 1912
1788 Apr 9 Aristarchus; 1 hr Extraordinarily bright Bode Bode 1792b
1788 Apr 9-11 Aristarchus Bright spot 26" N of crater rim Schroter, Bode Schroter 1789, 1791, 1792a, 1792b
1788 Sep 26 Near Aristarchus; 30 min Bright spot 26" N of main crater Schroter Rozier 1788, 1792; Schroter 1791
1788 Dec 2, 5:35 am Aristarchus Extraordinarily bright, like star Schroter Schroter 1791

1824 May 1 Near Aristarchus Blinking light, 9th to 10th mag.. on dark side Gobel Gobel 1826
1824 Oct 18 Aristarchus, vicinity Mingling of all kinds of colors in small spots in the W and NW of Aristarchus Gruithuisen Gruithuisen 1824; Fauth 1899
1825 Apr 22 Aristarchus and vicinity Periodic illumination Argelander, Gobel Argelander 1826, Gobel 1826
1866 Jun 10 Aristarchus Star like light Tempel Denning, Tel.Work p.121
1866 Jun 14-16 Aristarchus, vicinity Reddish yellow Tempel Tempel 1867
1866 Dark side Bright spots Hodgson Hodgson 1866

1867 Apr 9, 19h30m - 21h00m Aristarchus, vicinity; 1 hr 30 min Bright spot on dark side, 7th mag., becoming fainter after 20h15m UT Elger Elger 1868
1867 Apr 12, 07h30m - 08h30m Aristarchus, vicinity; 1 hr Bright spot on dark side, 7th mag.. Elger Webb 1962
1867 May 6-7 Aristarchus; at least several hours each night Left side of crater, very bright luminous point, appearing like a volcano Flammarion Flammarion 1884
1867 May 7 Aristarchus, vicinity Reddish yellow, beacon like light Tempel Tempel 1867; Astr. Reg. 1868
1884 Nov 29, 19h00m - 21h00m Aristarchus; 2 hr Nebulous at center; elsewhere features well defined Hislop Sirius 1885
1889 Jul 12, ~20h52m Aristarchus During lunar eclipse, brilliance in surrounding gloom was striking Krueger Krueger 1889; Fisher 1924
1891 May 23, ~18h20m Aristarchus region Lunar eclipse, half hour before end of totality, Aristarchus and region immediately N of it became conspicuous and increased in brightness from that time on W.E. Jackson Jackson 1890-91; Fisher 1924

1931 Aristarchus Bluish glare Goodacre, Molesworth Goodacre 1931
1949 Oct 7, ~02h54m Aristarchus Abnormally bright during lunar eclipse G.Brown, Hare Contrib. by Moore
1949 Nov 3, 01h06m Aristarchus Blue glare, base inner W wall Bartlett Bartlett 1967

1950 Jun 27, 02h30m Aristarchus Blue glare, base inner W wall Bartlett Bartlett 1967
1950 Jun 27 Herodotus Bright point in crater Bartlett Strol. Astr. 1962
1950 Jun 28, 03h27m Aristarchus Blue glare, rim of W wall Bartlett Bartlett 1967
1950 Jun 29, 05h30m Aristarchus Strong bluish glare; E, SE wall Bartlett Bartlett 1967
1950 Jul 26, 02h52m Aristarchus Blue glare, base inner W wall Bartlett Bartlett 1967
1950 Jul 31, 04h50m Aristarchus Violet glare, E, NE rim Bartlett Bartlett 1967
1950 Aug 28, 04h25m Aristarchus Intense blue violet glare; E wall bright spot, E, NE rim Bartlett Bartlett 1967

Author(s): Cameron, W. S.
Abstract: This catalog lists 1468 descriptions of observed lunar transient phenomena reported in the literature.
NASA Center: Goddard Space Flight Center
Publication Year: 1978
Added to NTRS: 2005-08-25
Accession Number: 78N30157; Document ID: 19780022214;
Report Number: NASA-TM-79399, NSSDC WDC-A-R S-78-03

NASA Lunar transient phenomena catalog

Report April 23, 1994

Sky and Telescope published an article basically saying anyone who sees a TLP is just seeing an illusion, despite hundreds of sightings by reputable astronomers... Well April 23, 1994 would change that dramatically... and involves our friend Clementine

"A satisfying rebuke to the TLP naysayers was recently delivered by JPL's B. Buratti at the October 1999 meeting of the American Astronomical Society in Padua, Italy. Her specific TLP occurred on April 23, 1994. At that time, about one hundred amateur astronomers noticed a 40-minute darkening near the edge of the bright lunar crater Aristarchus. Happily, when this hundred fold "illusion" took place, the lunar satellite Clementine was mapping the area around Aristarchus. Defying the dogmatists, Buratti scrutinized the Clementine data again. Sure enough, Aristarchus had really turned redder after the TLP reported by the amateur astronomers."
- Science Frontiers #127, JAN-FEB 2000. © 1997 William R. Corliss

Report July 19, 1969

Apollo 11 provides us with this incidence that gives a perspective of one event from two angles... one on Earth and one in orbit around the moon.

"On July 19, 1969, the Apollo 11 command module had just achieved orbit around the Moon when the Mission Control Center in Houston, Texas, received word that amateur astronomers reported transient phenomena in the vicinity of the crater Aristarchus. Asked to check out the situation, astronaut Neil Armstrong looked out his window toward the earth lit region and observed an "area that is considerably more illuminated than the surrounding area.
It just has -- seems to have a slight amount of fluorescence to it." Although he wasn't sure, Armstrong believed the region was Aristarchus." - Farshores.org

UPDATE Sept 07, 2007

REPORTS of curious flashes and fleeting clouds on the Moon may not be figments of wild imaginations, astronomers say. A new look at observations by the American satellite Clementine show that a small area on the Moon's surface darkened and reddened in April 1994. Why this happened remains a mystery.

For hundreds of years, people have reported seeing flashes, short-lived clouds and other brief changes on the Moon's surface. But astronomers have never been able to confirm the sightings. "The events were observed on many occasions, but most astronomers don't believe in them," says Bonnie Buratti of NASA's Jet Propulsion Laboratory in Pasadena, California. On 23 April 1994, around a hundred amateur astronomers reported seeing a possible darkening of the Moon, lasting 40 minutes, near the edge of the bright lunar crater Aristarchus. At the same time, the US Department of Defense's Clementine satellite was mapping the lunar surface.

SOURCE: New Scientist

One of the first real attempts to catalogue a large number of TLP sightings was made on behalf of NASA and published in a report which gave details of 579 mysterious lunar events dating from 26 November 1540 (pre-telescopic) to 19 October 1967 [4]. The catalogue appeared just a year before Neil Armstrong planted his size 11 boot in the Sea of Tranquillity; strange that such an important and well-funded Moon-landing programme chose to arm itself with some basic historical TLP data only at the very last minute.

NASA's belated enquiries represented a grudging acknowledgement that the Moon might not actually be the dead world it so convincingly advertises itself to be for most of the time. It was in NASA's interest, however, to down-play the idea of an active Moon. Known factors in lunar exploration were hazardous enough to plan for and contend with, without having to admit that lurking somewhere beneath the Moon's surface there might be some unknown, unpredictable and uncontrollable threat to their prospective Apollo lunar astronauts which could jeopardize the $25 billion programme.

SOURCE: Fortean Times FT105 December 1997"Light Side of the Moon"

Aristarchus Crater

Apollo 11 Transcript from Mission Log

ARMSTRONG — Yes, I think we made it clear on a number of occasions preflight that we were not in agreement with the change, just prior to flight, to the 55 by 65 orbit. We did not disagree with the intent of what they were trying to achieve; it's just that this did not have the benefit of its effect on a number of other areas of the flight plan. I still feel as though that was somewhat of a mistake. There were some other sides to the discussion that had not been fully reviewed by all parties.

SPEAKER — What about items between the two maneuvers?

ALDRIN — One item that came up was the request to look at the crater Aristarchus to see if we could see any glow or evidence of some observations that had been made by people on the ground. That does bring to mind that as we were coming in on LOI and I could see the edge of the Moon coming back into the daylight, it appeared to me that at one point (which I can't identify) there was one particular area along the horizon that was lit up. I doubt that it was anywhere near Aristarchus. There appeared to be one region that was a little unusual in its lighting. Maybe our films will catch that. We'll just have to try to identify that one when we see the pictures. I don't think that there is any particular connection, but I thought I'd mention it because it did strike me as a little unusual.

ARMSTRONG — As long as we're talking about Aristarchus, I'd agree with Buzz's observation that the brightest part of the area that was somewhat illuminated might agree with the zero phase point of earthshine. This would mean you're getting a lot of local reflection from earthshine. That certainly ...

ALDRIN — You talking about once we were in lunar orbit?

ARMSTRONG — Yes. I would certainly agree, particularly with the highly illuminated parts of the inside of the crater wall. I think it was also true that the area around Aristarchus, that is in the plains, was also more illuminated.

ALDRIN — It wasn't just the crater, it was the whole general area.

ARMSTRONG — It's not necessarily obvious that this also would happen to agree with the zero phase point of earthshine.

COLLINS — It could. We had nothing to compare it with.

ALDRIN — This was not in sunlight; it was in earthshine. That wouldn't have been zero…

ARMSTRONG — Off-hand, it doesn't agree with anything I can think of, and it seemed to extend for quite a distance around that area. Although I called that a fluorescence, it's probably not a very good term. It certainly did not have any colors that I could associate it with. There was just a higher local illumination level over the surface at that point.

ALDRIN — It was a brighter area than anything else we could see in either direction. I don't know if you could compare that with any of the brighter areas we saw in the sunlit portions say on the back side; it didn't look like it was the same thing at all. Not having anything to compare it with in the way of earthshine illumination, we really couldn't tell much.

ARMSTRONG — We could say the effect was there, and it was a very pronounced effect. It's a more obvious effect than looking at the Earth's zodiacal light. It's a more pronounced effect than zodiacal light which is also observed easily with the eye. Our post-LOI-2 P52 option 3 was a good one with an extremely low torquing angle (torqued

This page is a copy of the Mission Debriefing Log after they came back to Earth. John Lear has a copy of this in his collection. What I find interesting is the other area that was "lit up" and was not Aristarchus. Aldrin says they could look in the films, but we all know what happened to those films...

JANUARY 15, 1961

JET PROPULSION LABORATORY
CALIFORNIA INSTITUTE OF TECHNOLOGY

ASTRONAUTICS INFORMATION
Translation No. 18

LUMINESCENCE OF THE LUNAR SURFACE AND THE INTENSITY OF THE SOLAR CORPUSCULAR RADIATION
1956

by

N. A. Kozyrev

(Per Akademya Nauk SSSR Izvestia Krymskoi Astrofizitcheskoy Observatorye)
Vol. XVI, 1956

Translated by J. L. Zygielbaum

Excerpt 001

The quantitative investigation of the luminescence of the lunar surface was accomplished by comparing the contours of broad Fraunhofer lines in the spectra of lunar details, with the contours of these lines in the solar spectrum. We succeeded in establishing and measuring the luminescence of the system Aristarchus-Herodotus.

Excerpt 002

Other investigations of details of the lunar surface have not disclosed any luminescence. These measurements, together with measurements of the spectral refractive capability of the crater Aristarchus, have made it possible to find a luminescence curve depending on the wave line. There obviously exist two belts: a brighter ultraviolet with a maximum of about 3900 Å and a blue belt (less reliably determined) with a maximum of about 4300 Å.

Excerpt 003

This type of spectrogram was obtained through the 50-inch reflector of the Crimean Observatory during a perpendicular position of the spectrograph's aperture toward the rim of the lunar disk. Spectrographs were obtained with a camera equipped for a luminosity of 1:4 during an exposure of about 1 hour.

Excerpt 004

The crepuscular phenomena on the Moon were not discovered even during very thorough investigations. Lyot and Dollfus have, by their observations on a coronograph, increased the upper limits of a possible lunar atmosphere, establishing this atmosphere at 3×10^{-8} of the Earth's atmosphere (Ref 1). However, this upper boundary did not exclude the possibility of the existence of an ionosphere on the Moon and the phenomena connected with it; for instance, the illumination of the lunar night sky. From this view point, the study of the spectrum of the dark rim on the lunar disk near a new Moon is of great interest.

Excerpt 005

As a result, it becomes possible to define x as a function of the wavelength. It is always possible that the rays of the curves near the belt G (4308 Å) are also affected by luminescence. As a result of the low depth of the belt G, it is difficult to make a reliable determination of x along its contours. However, one can notice that the depth of the belt G in the spectrum of Aristarchus is less than in the solar spectrum. This circumstance confirms the reality of the second blue belt of luminescence with a maximum of about 4300 Å.

We will try now to pass from the relative values $x(\lambda)$ which characterize luminescence, to the absolute energy values.

Excerpt 006

Another interesting circumstance is the fact that the luminescence, which is determined along the line K, is 1-1/2 times larger than along the line H. It is obvious that the doublet H and K are on the border of the luminescence line, the intensity of which increases towards the ultraviolet side of the spectrum. Therefore, knowing the luminescence for the wavelengths H and K, it is possible to try to find the full contour of the luminosity belt, according to the distribution of energy in the uninterrupted spectrum of Aristarchus.

Excerpt 007

On the other hand, by the same brightness of luminous glow, the value x should be larger than in the violet part of the spectrum, where a considerable decrease takes place in the brightness of the solar spectrum and in the reflective capabilities of the lunar surface. Therefore, a search for luminous glow should naturally begin from the investigation of the contours of the lines H and K of ionized calcium.

We obtained spectrographs of various regions of the lunar surface in the fall of 1955 with the 50 inch reflector of the Crimean Observatory, with the help of a spectrograph utilizing a large camera which yielded a linear dispersion of about 15 Å/mm near the doublet H and K. With an aperture width of 0.05 mm and Ilford hypo-panchromatic film, three exposures were made on the order of 2 to 10 minutes for the visible sector of the spectrum, and 30 to 40 minutes for the contours H and K.

Excerpt 008

On October 4, 1955, a particularly strong luminescence, which exceeded the normal by 4 times, was observed.

Table 1

GMT (1955), hr:min	α, deg	i, deg	x_H, %	x_K, %	x_K/x_H
Sept. 28, 18:0	-38.5	88	0.0	0.0	-
Oct. 4, 22:00	+41.4	23	13.0 ± 1.0	19.0 ± 1.0	1.5
Oct. 28, 18:30	-35.6	85	2.2 ± 0.2	3.3 ± 0.5	1.5
Nov. 4, 22:00	+63.8	31	3.0 ± 0.3	4.2 ± 0.3	1.4

Summary....

So it is established that Aristarchus has an unusual glow and that it is in the blue, violet and ultra-violet range. Here we also have brief mention (citing other papers which we are looking for) of a Lunar atmosphere in a NASA/JPL paper, and furthermore they state the night sky on the Moon is illuminated.

The table above shows us that Aristarchus increases in intensity at different times, with a major peak on Oct 2 1955 observed with a 50 inch Russian scope...

Below we will give you an idea what the H and K spectrums represent....

JET PROPULSION LABORATORY
A Research Facility of
National Aeronautics and Space Administration
Operated by
California Institute of Technology
Pasadena, California
January 15, 1961

FACILITY FORM 602

N64-85102 (ACCESSION NUMBER)

(THRU)

24 (PAGES)

None (CODE)

(NASA CR OR TMX OR AD NUMBER)

(CATEGORY)

H Spectrum

The photo above is the spectrum of a glass tube filled with hydrogen that is excited with a high voltage. It resembles a neon sign, except the glass is straight and filled with hydrogen gas and not neon.

The important features are the bright emission lines in the Hydrogen spectrum. There is one line in the visible red, the brightness one in the blue, the second from the right is in the violet range and the last in the ultra violet range, not visible to the human eye, but barely detectable with a digital camera. (Data collected from the Warren Wilson College Physics Department)

What is relevant in our look at Aristarchus is the intense emission in the blue to ultra violet end of the spectrum of Hydrogen plasma emissions. In the Russian/NASA document we see recorded evidence of strong and variable emissions in this H spectrum as well as the K. In the papers below we can see that the K spectrum emissions also are involved with ionized plasma...

"The explanation of the hydrogen spectrum is perhaps the most important test that any theory of electronic structure must pass. The wavelengths of the lines of the Balmer series (shown above) as well as other series in the spectrum of hydrogen are very well known indeed." - University of Kentucky

Seems Aristarchus Crater passes that test for "electronic structure" with flying colors

K Spectrum

***k* Spectrum of Finite Lifetime Passive Scalars in Lagrangian Chaotic Fluid Flows**

Keeyeol Nam,* Thomas M. Antonsen, Jr.,*,† Parvez N. Guzdar, and Edward Ott*,†
Institute for Plasma Research, University of Maryland, College Park, Maryland 20742
(Received 23 March 1999)

Papers:

High Resolution Measurement of the K Spectrum of Fe
New Spectral Diagnostics of Non equilibrium Astrophysical Plasmas
by V. Decaux and P. Beirsdorfer et al
Lawrence Livermore National Laboratory, University of California, Livermore, CA 94551
SOURCE

This paper is organized as follows. In § 2, we describe the EBIT and review our experimental procedure. In § 3, we present our measured spectra and compare them to published predicted spectra for ionizing plasmas. In § 4, we discuss the effects of K-shell ionization and the consequent spectral dependence on the shape of the electron distribution.

Livermore Electron Beam Ion Trap (EBIT). The electron density in the EBIT is similar to the electron density of solar flares...

All the papers we find dealing with the K Spectrum are all heavy reading in Physics, but they talk about electron emissions, solar and cosmic radiation and Ionized Plasma. Combining these pieces shows us that Aristarchus definitely has emissions in both these spectra, and that the emissions are not always there, and that they have ben recorded at different intensities.

Does this make Aristarchus a Fusion Reactor? We don't know, but the evidence certainly indicates something along those lines is going on. Time to start looking at the Moon with ultraviolet cameras...

One last piece of the puzzle... below is a Fusion Reactor that has proven successful at Sandia National Laboratory

"Z causes reactions to occur neither by confining low density plasmas in dimensionally huge magnetic fields, as do tokomaks, nor by focusing intense laser beams on or around a target, as in laser fusion, but simply through the application of huge pulses of electricity applied with very sophisticated timing. The pulse creates an intense magnetic field that crushes tungsten wires into a foam cylinder to produce X-rays. The X-ray energy, striking the surface of the target capsule embedded in the cylinder, produces a shock wave that compresses the deuterium within the capsule, fusing enough deuterium to produce neutrons." **Sandia National Labs**

What is most interesting is the appearance and color of the reactor... This makes it quite conceivable that when the Aristarchus Reactor is off, you might not see anything unusual at all. Perhaps a closer look at those pictures that show it close up might show something inside

SANDIA NATIONAL LABORATORY
Z MACHINE

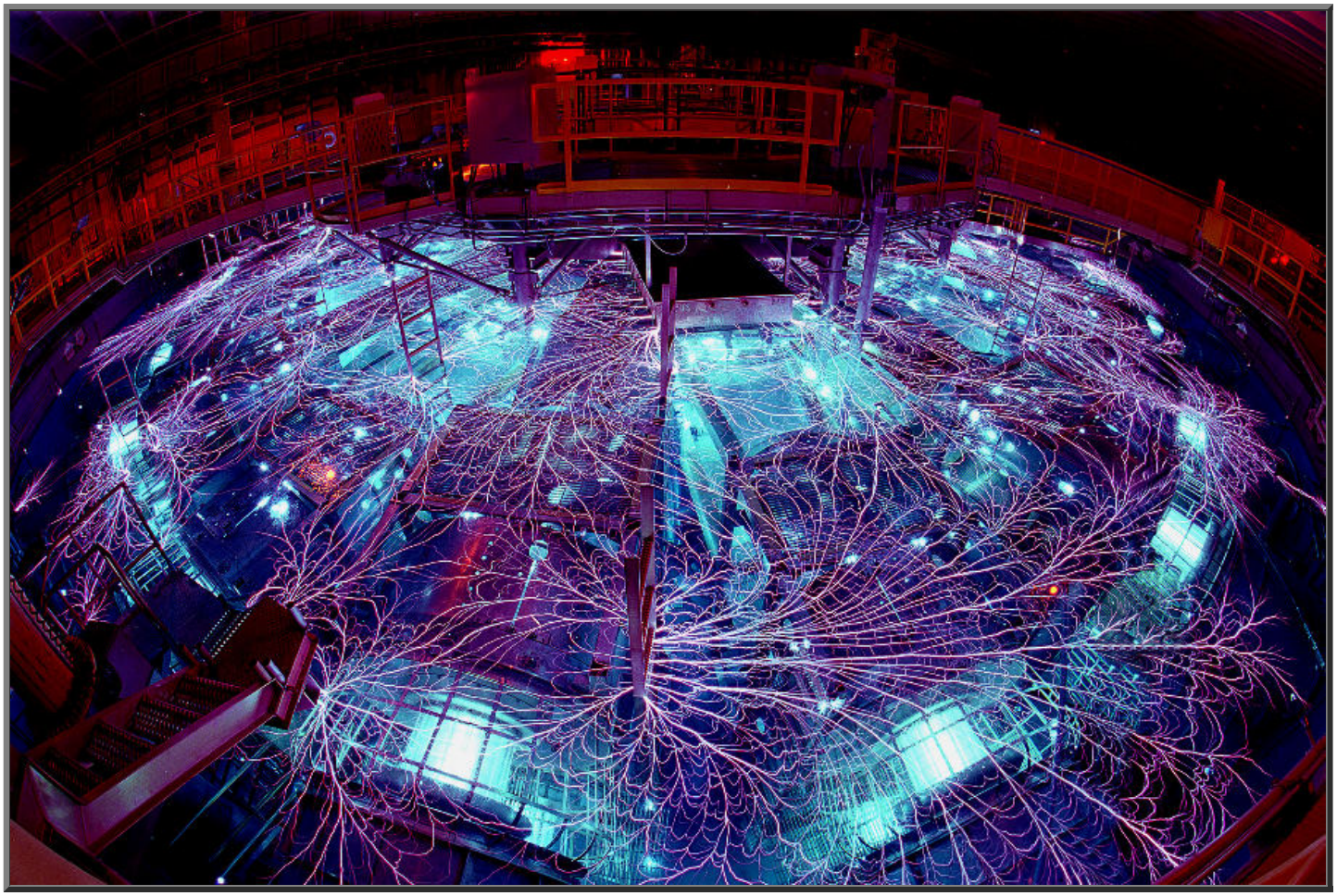

MIT
The Levitated Dipole Fusion Confinement Concept

•

Welcome to the Levitated Dipole eXperiment (LDX) web site. LDX is a novel experimental device designed to explore the physics of plasma confinement in a magnetic dipole field. What makes it unique? Besides levitating a 1/2 ton super conducting ring, we will conduct the first experimental test on the theory of plasma confinement by adiabatic compressibility. If this concept turns out to be correct, levitated dipoles may one day make an attractive magnetically confined fusion energy source. LDX is a collaboration between Columbia University's Dept. of Applied Physics and the MIT Plasma Science & Fusion Center and is funded by the Department of Energy's Office of Fusion Energy.

A levitated dipole would be favorable for a D-He3 fuel cycle based power source.

Additionally a levitated dipole device would be intrinsically steady state and extract power as surface heating, permitting a thin walled vacuum vessel and eliminating the need for a massive neutron shield.

MORE HERE

Update: Lawrence Livermore National Laboratories

High resolution measurement, line identification, and spectral modeling of the Kb spectrum
of helium like nt>

plasmas, fast pinches, and tokamaks. As a result, mid Z elements are typically found in the helium like charge state and radiate in the x-ray region. The helium like Ka emission consisting of transitions from the n52 levels to n51 has been studied in detail in both tokamak and laser produced plasmas (1,2). These studies have demonstrated the great utility of the Ka spectra for determining various plasma parameters such as the electron and ion temperatures, the plasma density, the ion transport coefficients, and the fraction of non Maxwellian electrons.

K-shell x-ray spectra involving transitions from levels higher than n52 have been studied in much less detail. We believe such K-shell spectra ~Kb, Kg , etc.! in many cases could be even more useful for diagnostic applications than the traditionally used Ka emission, because these transitions, as a rule, are optically thin even in a dense laser produced plasma. The most detailed investigations of the helium like argon Kb spectra have been made recently on the Princeton Large Torus tokamak (3) and on the Livermore electron beam ion trap ~EBIT! facility (4). In the present paper these spectra have been investigated for the case of a high density laser produced plasma. Using this type of plasma source it is possible to test the atomic theory for a plasma that is in an intermediate regime between that described by coronal ~collisionless! and local thermodynamic equilibrium approximations.

Our measurements include the positions and strengths of the 1s2l3l8-1s22l and 1s2l4l8-1s22l lithium like satellite lines, Kb1 and Kb2 helium like lines, and 1s25d-1s22p lithium like transitions. A detailed comparison of the measured argon spectrum with the theoretical data has been made. Good agreement is obtained for both the wavelengths and the intensities of the spectral lines, which allows us to estimate the parameters of the laser produced plasma from the gas puff target.

tokamaks -

A tokamak is a machine producing a toroidal (doughnut shaped) magnetic field for confining a plasma. It is one of several types of magnetic confinement devices and the leading candidate for producing fusion energy.

The term Tokamak is a transliteration of the Russian word ??????? which itself comes from the Russian words: "??????????? ?????? ? ????????? ????????" (toroidal'nayakamera v magnitnykhkatushkakh

Tokamak magnetic field and current

Source Wikipedia

Z elements -

Hence the Z-Machine fusion reactor mentioned above by Sandia National Laboratory. a division of Lockheed Martin

Here is another paper that is relatively easier to understand what the K Spectrum represents Every example we have show ties the K spectrum emissions together with fusion reactors. The H and K spectrums are something we also see in

the Sun. Based on our research we would expect to see them from the Sun... after all we KNOW the Sun is a Fusion Reactor...

We would NOT expect to see these types of emission from Aristarchus Crater, yet we have shown the visual and the measured data to prove that we in fact DO see these emissions...

H and K spectra are in the emissions from the Sun (a known fusion reactor); they are shown from the Z Machine of Sandia (a known fusion reactor); they are shown from Tokamaks (leading candidate for producing fusion energy); and they are shown from Lawrence Livermore laser produced plasma experiments and electron beam ion trap use in fusion experiments...

H and K spectra are shown in the emissions of Aristarchus Crater... so what is Aristarchus crater?

Repeat after me FUSION REACTOR

It is interesting to note that while doing all this research, we find ourselves getting our best data from RUSSIA... I even requested a NASA document from a NASA historian some time ago and they said they did not have it and referred me to a RUSSIAN website that had a good summary of the file...

Here again the Aristarchus readings were from RUSSIA in 1955. The document from LLNL was written by RUSSIANS. And the Tokamak, a fusion generator, is a RUSSIAN name and invented by RUSSIANS in 1950!!!

Does anybody else get the picture yet? Remember Sir Patrick Moore? The RUSSIANS got their moon data from him, not NASA

Na Zdorovje Comrades!

UPDATE Sept 06 2007

Aristarchus Crater Additional Information

(1) Observers have noted that the wall is roughly circular but has a somewhat polygonal shape.

(2) In 1911, Professor Robert W. Wood used ultraviolet photography to take images of the crater area. He discovered the plateau had an anomalous appearance in the ultraviolet, and an area to the north appeared to give indications of a sulfur deposit.[3] This colorful area is sometimes referred to as "Wood's Spot", an alternate name for the Aristarchus Plateau.

(3) The Hubble Advanced Camera for Surveys was used to photograph the crater is visual and ultraviolet light. The crater was determined to have especially rich concentrations of ilmenite, a titanium oxide mineral that could potentially be used in the future by a lunar settlement for extracting oxygen.[4]

(4) The region of the Aristarchus plateau has been the site of many reported transient lunar phenomena. Such events include temporary obscurations and colorations of the surface, and catalogues of these show that more than one-third come from this locale.[5]

(5) In 1971 when Apollo 15 passed 110 kilometers above the Aristarchus plateau, a significant rise in alpha particles was detected. These particles are believed to be caused by the decay of radon-222, a radioactive gas with a half-life of only 3.8 days. The Lunar Prospector mission later confirmed Radon-222 emissions from this crater.[6] These observations could be explained by either the slow and visually imperceptible diffusion of gas to the surface, or by discrete explosive events.

This gives us many sources that state "Ultra violet" is the range we need to be looking at, not "Infra red" It also proves that official studies have known this for a long time, and that sightings have been recorded for a long time by NASA.

But the most interesting piece is the fact that the Alpha particle emmisions INCREASED when Apollo 15 flew over head... in the same way that a sudden brightening was recorded both from Earth telescopes and the Apollo 11 Astronauts as THEY flew over Aristarchus

Source: Wikipedia Aristarchus Crater

Moon mystery emerges from the X-files

23 October 1999
From New Scientist Print Edition.
by Charles Seife

REPORTS of curious flashes and fleeting clouds on the Moon may not be figments of wild imaginations, astronomers say. A new look at observations by the American satellite Clementine show that a small area on the Moon's surface darkened and reddened in April 1994. Why this happened remains a mystery.

For hundreds of years, people have reported seeing flashes, short-lived clouds and other brief changes on the Moon's surface. But astronomers have never been able to confirm the sightings. "The events were observed on many occasions, but most astronomers don't believe in them," says Bonnie Buratti of NASA's Jet Propulsion Laboratory in Pasadena, California.

On 23 April 1994, around a hundred amateur astronomers reported seeing a possible darkening of the Moon, lasting 40 minutes, near the edge of the bright lunar crater Aristarchus. At the same time, the US Department of Defense's Clementine satellite was mapping the lunar surface.

Intrigued by the amateur reports, Buratti's team has taken a close look at the Clementine data to see if the satellite also recorded the event. Sure enough, they found that the crater looked different before and after the amateur reports. "After the event, it looks redder," says Buratti, who announced the findings at a meeting of the American Astronomical Society in Padua, Italy, last week.

Winifred Cameron, a retired astronomer who worked at the Lowell Observatory in Arizona, thinks that brief colour changes might be caused by small gas eruptions throwing dust around. We know that there are pockets of gas in the lunar soil, and the gas may occasionally escape. "I'm pretty sure that some of these changes are due to emanations of gas that are more dense than usual," says Cameron. "The Aristarchus region is the source of about a third of all of these."

From issue 2209 of New Scientist magazine, 23 October 1999, page 22
Printed on Fri Sep 07 00:03:59 BST 2007

Join the live discussion on Anomalies on the Moon and on Mars
at Above Top Secret Discussion Forum

John Lear's Moon Pictures on ATS

~ MENU ~

Copyright Notice

All clipped images and enhancements on these pages are copyright ©2006 Land of Legends. All text related to the clips and enhancements unless otherwise noted is are copyright ©2006 Land of Legends.

All other pictures and photos on this page, unless otherwise noted, have been gathered from public domain sources or are available under GNU License. Further documentation is available on our Copyright Page and our Legal Department.

Article Quotes all have links to their appropriate source and are noted.

All information quoted or referred to on this page is used only for non profit educational purposes. All reasonable attempts have been made that no credits are missed, but with a work of this size omissions may occur. If you see anything of yours that has not been properly credited or wish to have removed please contact the Webmaster

Webpages © 2001-2009
Blue Knight Productions

More Next Blog» Create Blog Sign In

QRP HomeBuilder - QRPHB -

Component level (mostly analog) electronics from microwave to AF. Jazz guitars and guitar amplifiers. Radio astronomy. I apply science and critical thinking in my daily life.

Showing posts with label **Inverter crystal oscillator tips**. Show all posts

Sunday, 17 January 2016

Inverter Crystal Oscillator

Greetings -- a short, first post for 2016 !

In numerous RF synthesizer chips lies an inverter with input and output pins for making a reference crystal oscillator clock. I built some discrete chip inverter xtal oscillators with 74HC series logic gates to better examine them. You'll quickly recognize the oft-used Pierce oscillator topology with 1 trimmer capacitor to tweak the fundamental frequency which might vary from factors like crystal aging and gate, crystal, crystal holder + board reactances.

I determined the 27 pF and trimmer cap values through experiments and measures.

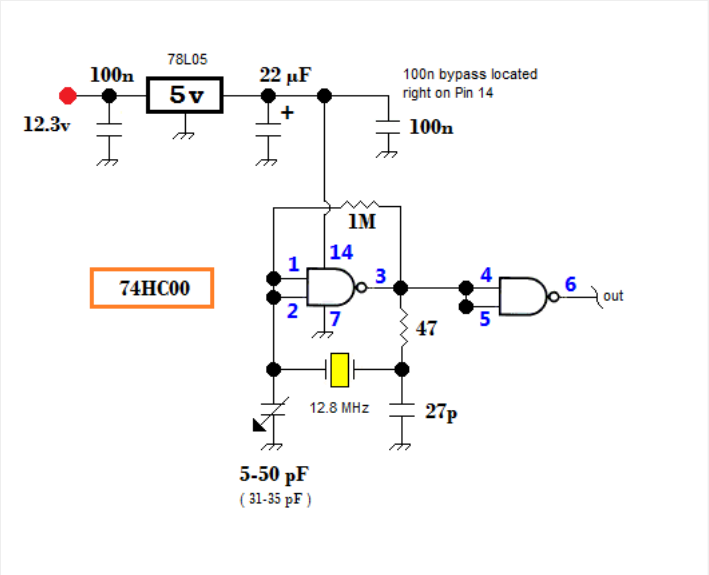

Above — A crystal reference oscillator + buffer with inverters built from NAND gates. The crystal is a good 1 — built in 2013; AT- cut; parallel 20 pF load capacitance; fundamental 12.8 MHz; a measured QuL of 265K and zero spurs during my test sweeps. Further, this crystal ages < 5 ppm per annum for at least 2 decades.

If I contrast this with some cheap xtals I bought and tested from eBay — it's night versus day. You might find such xtals in DDS and other low-cost synthesizers kits. They typically come in a HC-49S case, might suffer a QuL of 40-60K — and more alarmingly, those I measured often showed strong, close-in spurs to further trash the already compromised close-in phase noise of these low-cost synthesizers.

Translate

Select Language

My Blog List

Jay's Astronomical Observing Blog

Observing and Sketches from December 19th through December 21st, 2017. - I got some observing in on December 18th and 19th, 2017 out at my dark site off of Forest Road 006 at Juniper Grove. A couple of images. A little snow...
3 hours ago

Ripples in the Ether
Arduino – Si5351 Powered Signal Generator - Arduino – Si5351 Powered Signal Generator Please enjoy this write-up of a nifty, compact signal generator project using the Etherkit Si5351A Breakout Board...
23 hours ago

VE7SL - Steve - Amateur Radio Blog

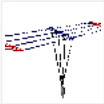

CLE 226 / CLE 227 NDB Listening Event Results - *CLE 226 and CLE 227*, both running during the Christmas to New Year period, produced some excellent propagation on the MF NDB band in most parts of the...
1 day ago

Victor Herrero Radio Astronomy Blog

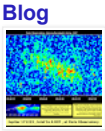

Sun Earth Jupiter 20171223 - ... *Many thanks to: Taxpayers of the United States of America, the Juno, STEREO, WIND Spacecraft Teams, the Panetary Data System Team, Prof. Dr. Kazumas...
2 weeks ago

The Signal Path
Rohde & Schwarz RTB2004 10-Bit, 2.5GS/s MSO Oscilloscope Review, Teardown & Experiments - In this episode Shahriar reviews the Rohde & Shwarz RTB2004 10-Bit oscilloscope. With its high-resolution touch-screen, intuitive and capable GUI as well a...
3 weeks ago

EA4EOZ, an amateur radio electronic enthusiast
Icom IC-R7100 and its clicking noise - Some time ago an Icom IC-R7100

Quoting Dr. Ulrich Rohde " [ALL] elements in a synthesizer contribute to noise. Two primary noise contributors are the reference and the VCO. Actually, the crystal oscillator or frequency standard is a high-Q version of the VCO" [Reference 1].

Although this post isn't about phase noise; in this era of poor quality, "cheapo" crystals, I think a low-noise reference is worth considering when synthesizing signals for specific applications that require low phase noise. Big thanks to Alexei Luk for sending me this 12.8 MHz gem.

I found a problem with my circuit as shown above: strong spikes on the positive and negative edges. My quest became finding ways to decrease these spikes and enhance the square waveform seen in my DSO

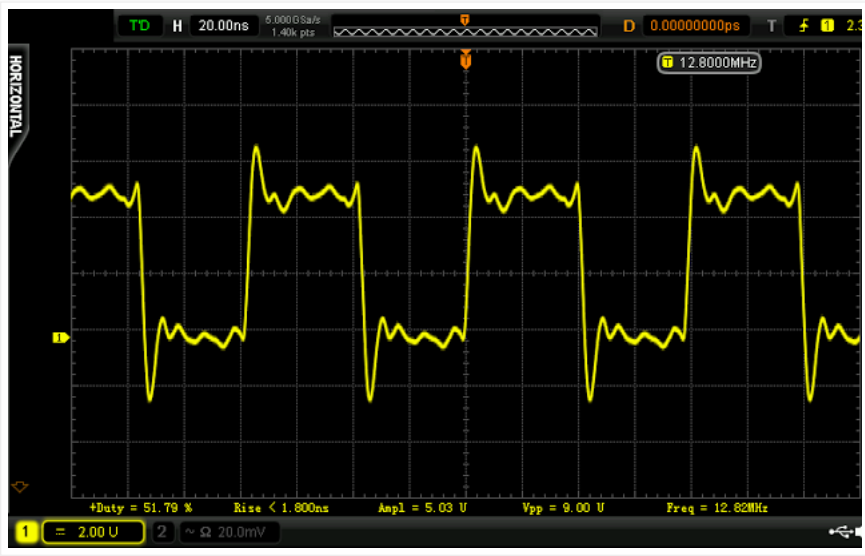

Above — My DSO screen capture of the NAND oscillator circuit show earlier. The edge peaks swings 9 Vpp. In 1 circuit they ran over 10.1 Vpp or double the rail to rail DC voltage. What's this all about?

I emailed my circuit and measures to Professor Ken Kuhn who gave me some excellent suggestions which I'll augment with experiments and apply in a circuit.

My favorite point from Ken: No matter how low the frequency you're working at, design and construct your circuits like you're operating them @ 1 GHz. Transistors don't know what frequency you're working at -- and many work well into 100's of MHz ! -- "If the circuit is built to work correctly at high frequency then it will work great at low frequency."

So from Ken's wisdom and a little of my thinking + experiments, here's what I did:

[1] Because we're operating a square wave oscillator, odd harmonics will run at high amplitude. The third harmonic at ~38.4 MHz was only 8-10 dB down from the fundamental in some of my frequency domain experiments. This means the power supply bypass cap should minimally bypass into lower VHF and go right on the DC power pin (14) with the shortest possible leads to keep its SRF as high as possible. The bypass cap should ideally offer high Q / low ESR at VHF.

[2] Apply compact construction to reduce stray C, L, — and to minimize distortion and start-up stabilization time. In particular, short ground lead lengths for the 27

arrived to my shack. It's a nice receiver and works surprisingly well but almost the very first time I powered it up an anno...
1 month ago

Circuit Salad
PWM Vibrato that sound Awesome! - Vibrato is the slight changing of frequency of a musical note. This can be accomplished by means of a varying time delay in a delay line or by phase shifti...
2 months ago

Amateur Radio Astronomy

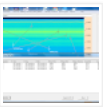

Radio-Sky Spectrograph works with Radio-Jupiter Pro, - There are a number of ways that Radio-Sky programs can interact with one another. For example, RTL Bridge can send signal strength from a RTL dongle recei...
4 months ago

Davide Bucci's Blog
-

Pages

- Home
- Guitar Related Index

My Micro Updates

Working on guitar amp circuitry Dec 2017

My Support Pages

- My Email
- My Articles
- Old pops.net site downloads & info
- Javascript Tools
- My RF Resources
- Jupiter Modular Receiver Main Index
- Radio Astronomy Links
- Solar Ham Data and Graphs

My Links

- Ed Ting: Telescope Review site
- Etherkit
- Kuhne Microwave Components
- Luis Cupido: Deep Space Radio

Simple Post Index

- 7 MHz scratch synthesizer
- 90 Degree Phase Shift: AF - UHF
- AF power amp design
- Anton Chekhov
- Funster receiver Part 1
- Funster Receiver Part 2
- Funster receiver part 3
- Harmonic VXO
- High IIP3 mixers
- hybrid-cascode regen detector
- Inverter crystal oscillator tips
- Jupiter receiver notes. KISS mixer
- Line - in audio amplifier Part 1
- Line - in audio amplifier Part 2
- LM386 notes
- Measure Crystal Q
- Measure resonator Q at VHF
- Oscillator phase noise
- Rail to rail audio power amp

pF and trimmer caps proved important to reduce my edge spikes The shorter the circuit wires, the better rings TRUE here.

[3] Although in synthesizer chips, we only get 1 inverter with 2 pins, for off-chip oscillators a buffer proves useful. A small series resistor between the oscillator output and the buffer input pins serves to dampen any resonance in the output circuit (often in the 10s of MHz) from excitation that causes the spikes you see as the inverter switches on and off. It's affected by stray L and C around the IC.

[4] 10X scope probe capacitance lowers the resonant frequency and boosts RF energy. To minimize this loading, you might tack solder a 100 Ω (or so) resistor onto the buffer output pin and attach the probe clip to this resistor. Experiment with the resistor values in [3] and [4] to find out what works best on your bench.

[5] The 27 pF cap and trimmer cap grounds should lie as close as possible to the IC ground pin.

[6] Don't overdrive your crystal. I placed a 47 Ω resistor between the inverter output and the 27p capacitor/crystal lead and determined this R value experimentally by watching the trace and frequency counter in my DSO. Since the output resistance of the inverter driver is very low compared to the reactance of the capacitors and crystal (the crystal , trimmer and 27 pF cap form a complex impedance) the resistor isolates the output driver and also lowers the crystal drive level.

My crystal features high Q and the 74HC inverter drives it hard. Adding the resistor reduced the edge spikes slightly. Further I performed a test where I raised the DC supply voltage slightly and my signal appeared to distort and the frequency dropped slightly. The 47 Ω resistor removed this issue and stabilized my TTL inverter oscillator.

Here's the final schematic:

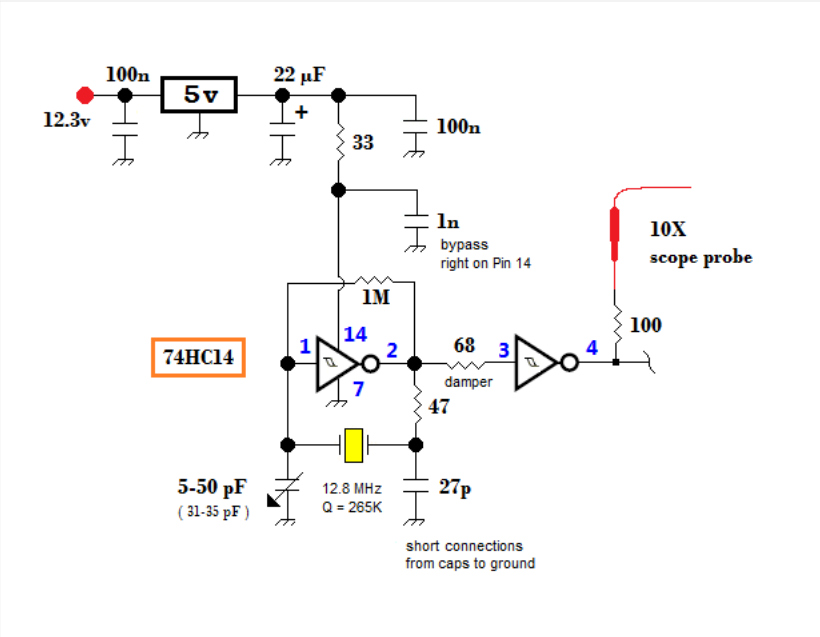

Above — My final TTL Pierce gate oscillator design with a 100 Ω resistor to isolate the 10X DSO probe during measurement. On the 5 VDC line. A 22 µF + 100nF then 33 Ω resistor plus 1 nF capacitor on Pin 14 form a pi-filter for wide band, low-pass DC filtration from AF to lower VHF. VHF bypass on pin 14 helps quench edge spikes.

- Matjaž, S53MV
- MIT Haystack
- Moonbouncers org
- My Twitter Page
- Paul, W1GHZ
- Radio Astronomy supplies
- Radio-Sky Publishing
- Reeves Radio Science
- Rigol Canada - Electro-Meters
- Society of Amateur Radio Astronomers
- Solid State Regenerative Receivers
- Test Equipment
- UK Radio Astronomy Association
- W7ZOI -- EMRFD
- YOUDAC-VA3IU

- Regen receiver #4
- Regenerative receiver #5
- SAW Resonator
- Simpler Single-Signal Direct Conversion Receivers
- Sine wave side tone
- Tone balance control
- Trixie 2 -- simple low current DC receiver
- Two tone mixer IIP3 Notes
- UHF Bypass and decoupling
- UHF RF Grounding
- VXO- based freq synthesizer
- Xtal parameters with spectrum analyzer and tracking generator

Blog Archive

- ► 2014 (13)
- ► 2015 (19)
- ► 2016 (13)
- ▼ 2017 (8)
  - ► January (3)
  - ► April (1)
  - ► November (1)
  - ▼ December (3)
    - Op-amps Make Life Better
    - Peerless Martin Taylor Maestro - a brief review
    - 1969 Fender Deluxe Reverb Restoration

The Professors

I learned another point from Ken about my earlier circuit with the NAND inputs shorted to make an inverter. It's often better to bias 1 NAND input gate to high and then use the other input for the oscillator feedback connections (inverter mode operation). This halves the input capacitance seen by the feedback network and may result in less effect tuning effect on the IC in some applications.

I tried this ---- and like when I connected the buffer inverter up, I had to adjust the trimmer cap to either re-establish high frequency oscillation, or set the desired oscillator frequency in my counter.

During my final experiments, I remembered that I purchased some 74HC14s in 2015 to build a simple HF sawtooth generator to externally quench a super regenerative receiver. The 74HC14 features 6 inverters with a Schmitt trigger input. Quickly, I built my oscillator around this chip. Further, I ordered 10 standard hex inverter 74HC04 chips for future projects. Logic ICs provide major fun!

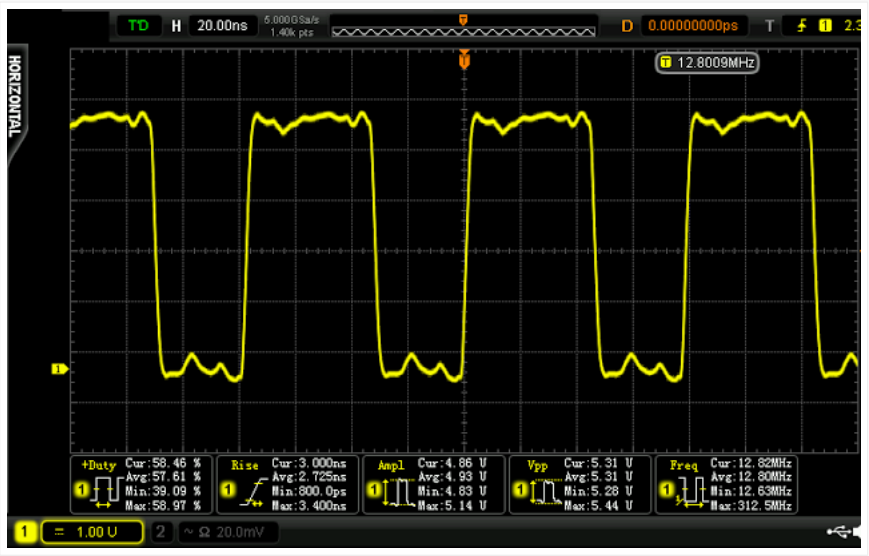

Above — DSO output of the improved inverter crystal oscillator. I'm quite happy with the output voltage(s) and oscillation + frequency stability now.

I also read about and performed some temperature compensation experiments. Nothing worth mentioning however. For reference purposes, here's a video of my uncompensated, board - on - bench 12.8 MHz clock into a HP, 10-digit, ovenized reference frequency counter.

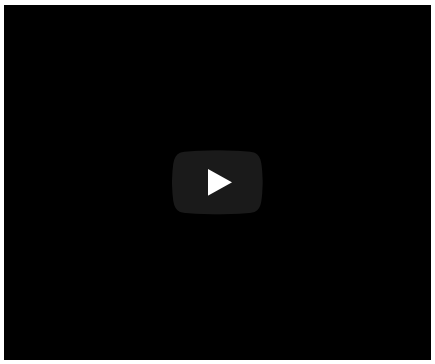

Above — Video shot just after power up @ room temperature. The (temperature) frequency drift of my inverter crystal oscillator circuit appears good. This crystal will provide an excellent on-chip reference for an experimental PLL project I'm

working on. The 12.8 MHz reference gets divided by 2048 in a PLL chip to achieve a tuning resolution of 6250 KHz.

Additional Bits and Pieces

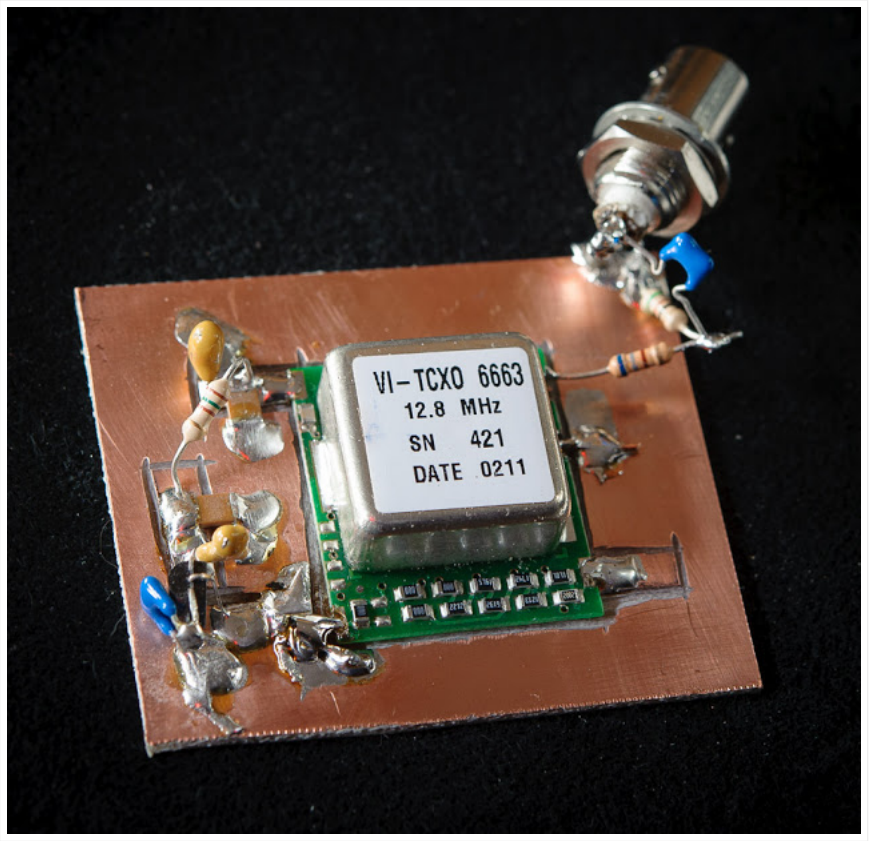

Above — Testing a commercial 12.8 MHz oscillator by Vectron International. Great engineering coupled with with a fabulous crystal results in a typical phase noise of -140 dBc/Hertz @ a 10 KHz offset — perfect for a UHF reference clock.

Above — I've always got music playing in and around my lab. Since 2006 my favorite singer = Julia Savicheva. Twitter. All of December to January I listened to Julia for creative inspiration while working on my PLL experiments. No Auto-Tune on her voice; amazing band; hard working. She sounds equally good live or

recorded — how refreshing!

References

[1] Synthesizer Design for Microwave Applications. Some notes published online by Dr. Ulrich L. Rohde. Year unknown.

[2] Professor Ken Kuhn. Email correspondence Jan 2016. My sincere thanks to Ken.

[3] An Analysis of Inverter Crystal Oscillators", RF Design,Aug. 1989, Leonard L. Klein berg, pp. 28,29,3l,32.

[4] Negative Gain-Single Pole Oscillators, RF Design, Sep. 1990, Leonard L. Kleinberg, pp. 35, 36, & 38. Modern Communications

Posted by Vasily Ivanenko at 20:49 7 comments:
Labels: Inverter crystal oscillator tips

Home Older Posts

Subscribe to: Posts (Atom)

Simple theme. Powered by Blogger.

28th June 2013

AM/FM/Loop Crystal Radio

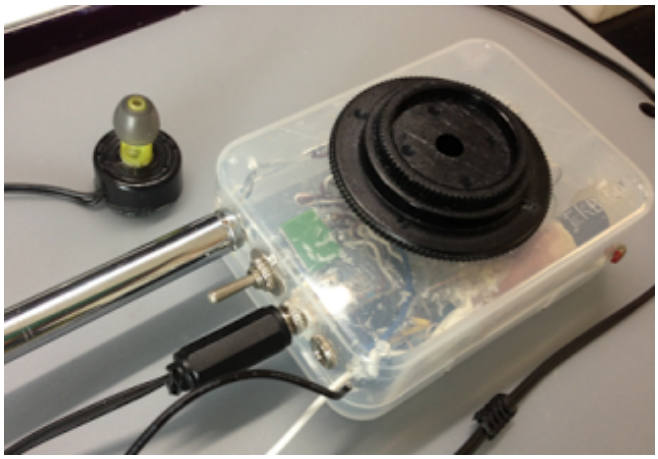

[http://3.bp.blogspot.com/-W5MoCILOqOU/Uc2WU1CTbbI/AAAAAAAABNA/hH64_FNxMpo/s436/Screen+Shot+2013-06-23+at+12.06.23+PM.png]

Build a multifunction battery free crystal radio to listen to either AM or FM radio.
You can also use the same radio to connect to a bigger loop coil to get stronger signal for the AM radio instead of relying on the smaller AM coil inside the radio.

Parts you will need:
A Diode that works in high frequency (200Mhz or above, e.g. AA112, 1N34A, 1N48, Iss86 or Iss106.
A Diode that work in AM frequency e.g 1N34A, 1N60, BAT85.
A quadruple PVC Variable capacitor with one end for 2x 20pf, the other end for 2x 140pf.
50pf and 180pf fixed ceramic capacitor
100K 1/4W resistor
33uH Choke coil.
AM radio coil - ferrite rod
3.5mm mono headphone jack
3.5mm stereo headphone jack with internal switches (for selecting whether to use the external big loop or the internal coil for AM.
A 2 by 3 switch to select AM or FM.
A high impedance 4K Ohm earphone or a crystal earphone.

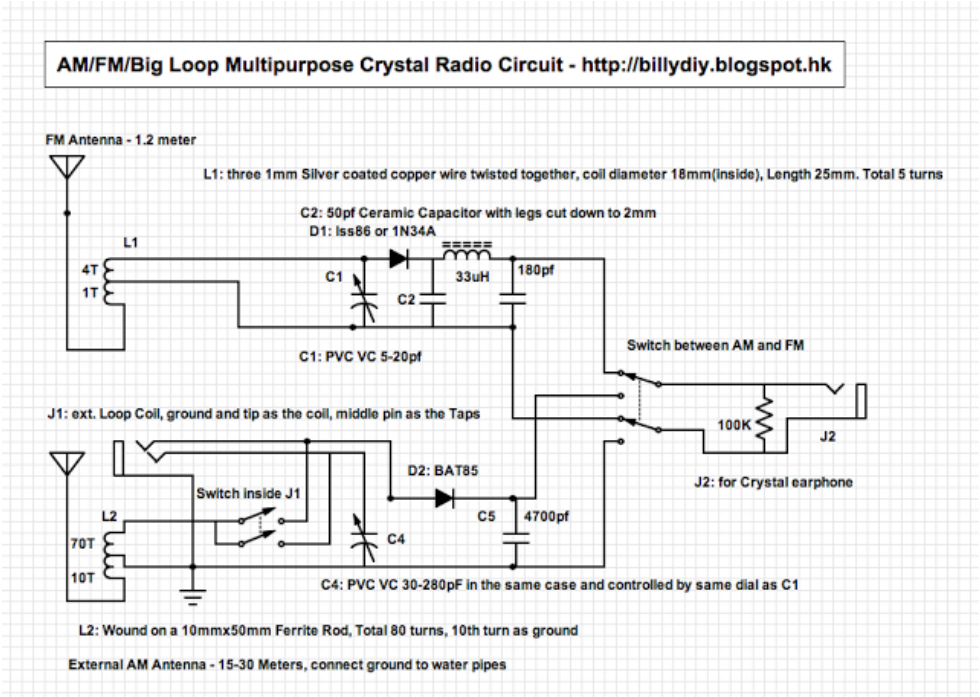

[http://2.bp.blogspot.com/--ZAhsy2SRko/Uc2WUu2Gz6I/AAAAAAAABM8/czIHQF1iPzI/s855/Screen+Shot+2013-06-23+at+11.22.21+AM.png]

To connect to external Loop coil for AM reception instead of using the internal AM coil, connect 3-color crocodile camp to the 3.5mm Stereo jack - white for the tuning, black for ground, yellow for the decoder diode.

[http://3.bp.blogspot.com/-df0Gv1TiXME/Uc2WTw3VL8I/AAAAAAAABMs/hJaPbNYh4uQ/s415/Screen+Shot+2013-06-23+at+1.19.26+PM.png]

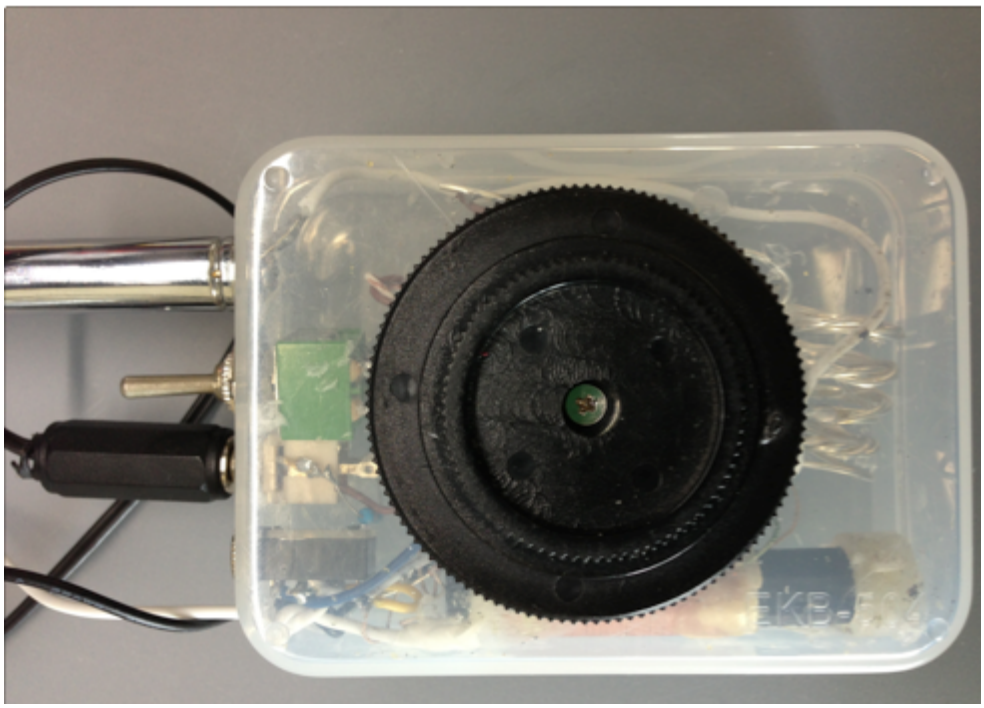

[http://2.bp.blogspot.com/-966mXwGZozE/Uc2WVmB2lLI/AAAAAAAABNY/P2KdoMFVIR0/s489/Screen+Shot+2013-06-23+at+12.07.13+PM.png]

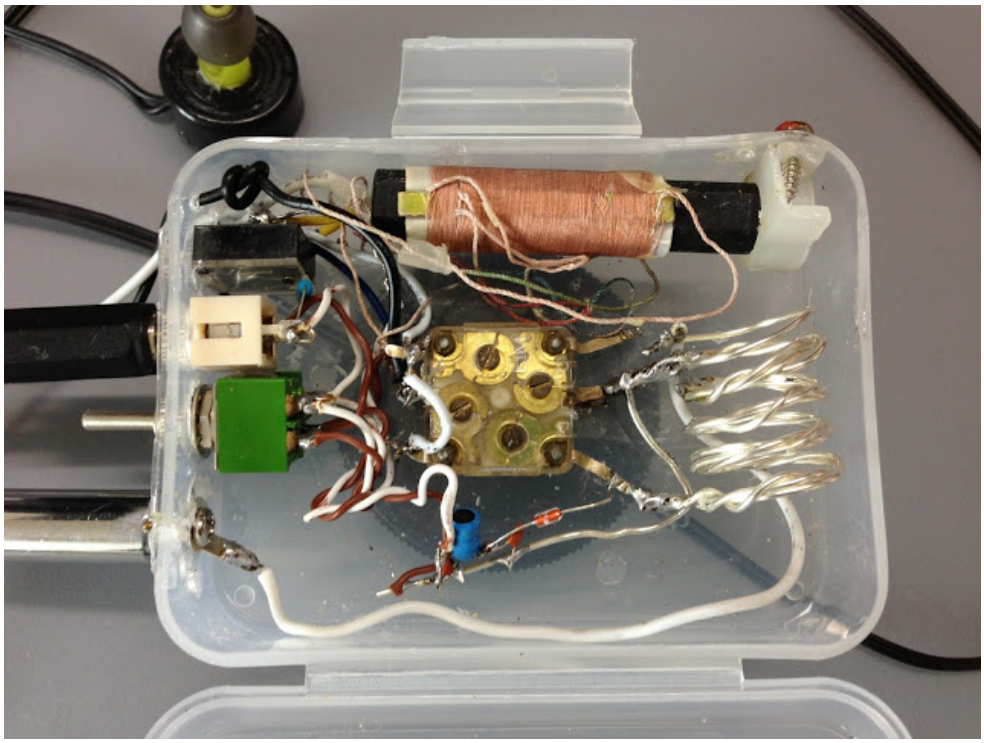

[http://1.bp.blogspot.com/-UURJiV8VfBY/Uc2WTLqcLFI/AAAAAAAABMc/q9_Y7C47Zb8/s1600/IMG_2521.JPG]

Posted 28th June 2013 by Billy

Precompliance Antenna
HighEnd Log-Periodic Wideband EMC Antennas from 1Hz to 40GHz
Go to aaronia.com/antennas

0 Add a comment

Enter your comment...

Comment as: Unknown (Goo ▼ Sign out

Publish Preview Notify me

The "Noisy Regen"

2007-07-17

This circuit is essentially the same topology as the "noisy oscillator" in EMRFD (page 4.13, diagram 4.21). I've just used PNP transistors (2N3906) so I can "ground" the tuning capacitor rotor and still use a "conventional" -ve potential ground plane (making it easier to integrate with common-grounded test equipment).

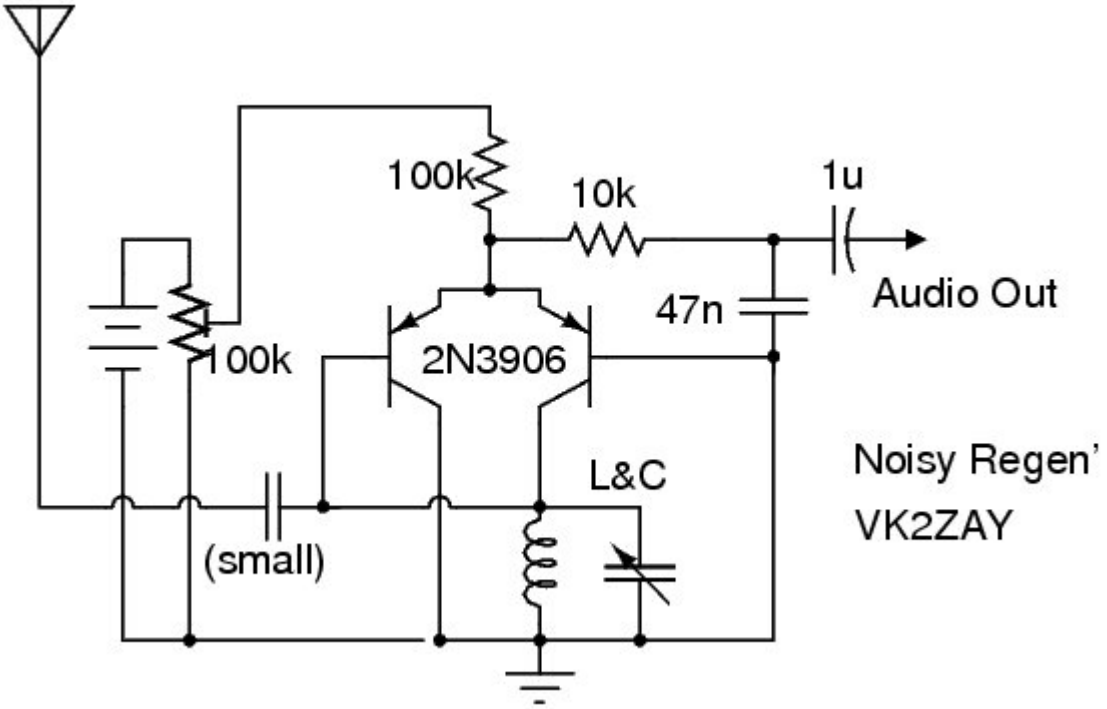

Although running at a very low current (which gives the transistors a reasonably high Re) the tight coupling of the resonator with the transistors severely degrades its Q, especially as the regeneration is turned up high. It actually performs fairly well when the reaction coefficient is just less than 1, but once the -ve resistance is increased until it oscillates is becomes one of the noisest oscillators I've ever seen. Even when just regenerating it is pretty noisy and broad.

OK, so it sucks electrically, but it does have some utility. It is extremely easy to get going, virtually any inductor that isn't completely hopeless will work in the circuit. It pulls very, very little current and works from LF to VHF. It needs only just over a volt to oscillate on the lower bands, and 3 volts will work into the low VHF region. The only frequency determining components are the L and the C, although the transistor capacitances are very significantly coupled to the resonator, limiting its MUF and complicating estimating the appropriate values for a particular frequency - two seconds of empirical capacitor swapping will get you in the right ballpark. The regeneration control modulates the transistor capacitances as well, pulling the frequency a bit, but this isn't unusual for a regenerative receiver and the selectivity is so bad anyway it doesn't matter much above MF.

© 2000 - 2009 Alan Yates - All Rights Reserved.

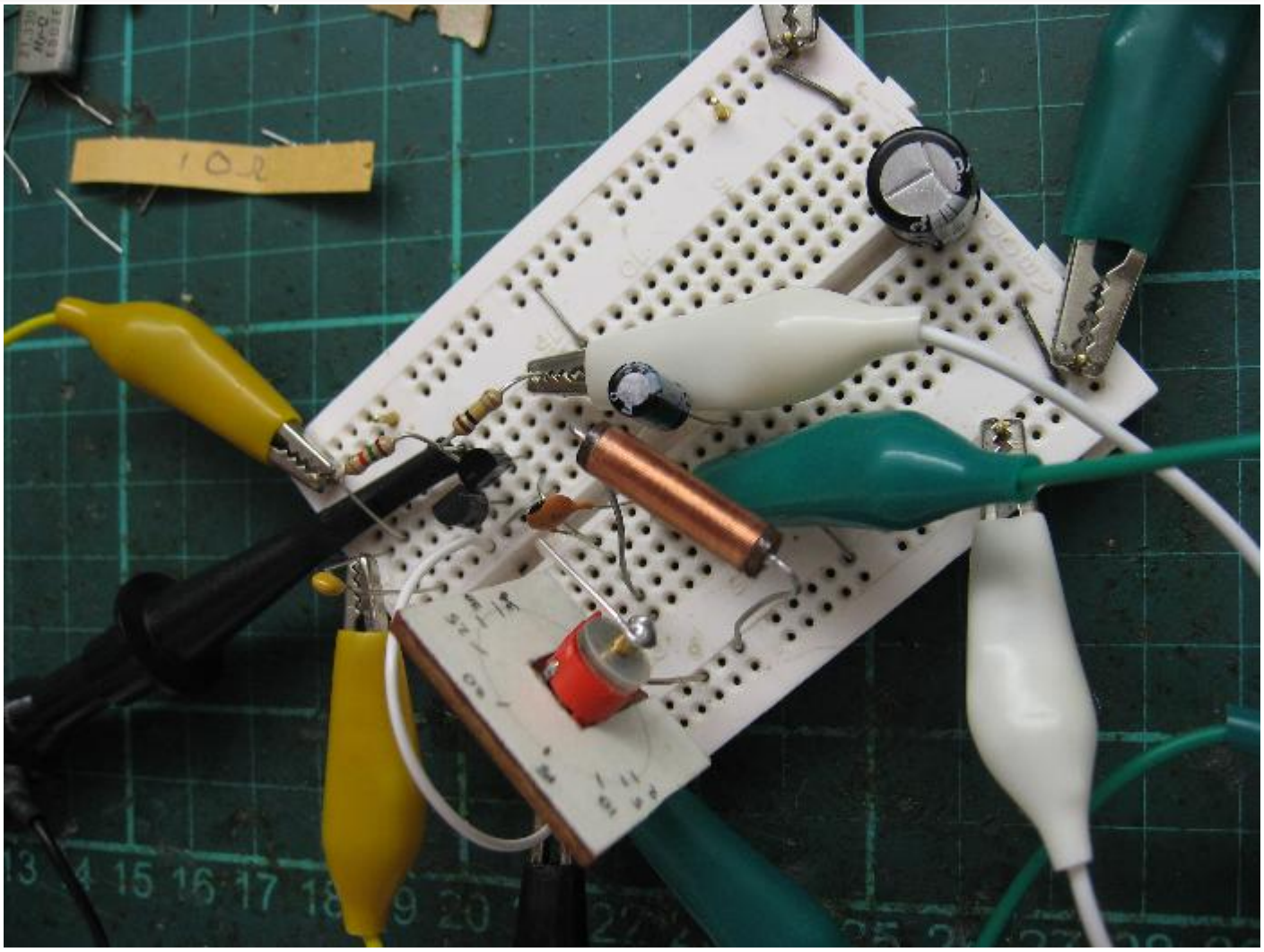

About 2 minutes after I assembled it on the solderless breadboard I was listening to Radio Australia on 6.025 MHz with just a short clip lead for an antenna (coupled directly to the tank at the collector though a 2.2 pF cap - the tank itself was simply a 10 uH Ohmite RFC and my low-C jig). It truly is an instant gratification receiver, and can be used with a crystal earpiece resulting in a circuit that pulls less than 300 uA, meaning no off-switch is required for a pair of AA batteries. I added a stage of audio amplification, using an 2N3904 with the familiar self-biasing (1M feedback, 4k7 collector load). Even without this, the circuit can drive the old Archer "Mini Amplified Speaker" Tandy used to sell, but the extra gain is helpful for weaker stations.

© 2000 - 2009 Alan Yates - All Rights Reserved. XHTML | CSS | CSS toggle

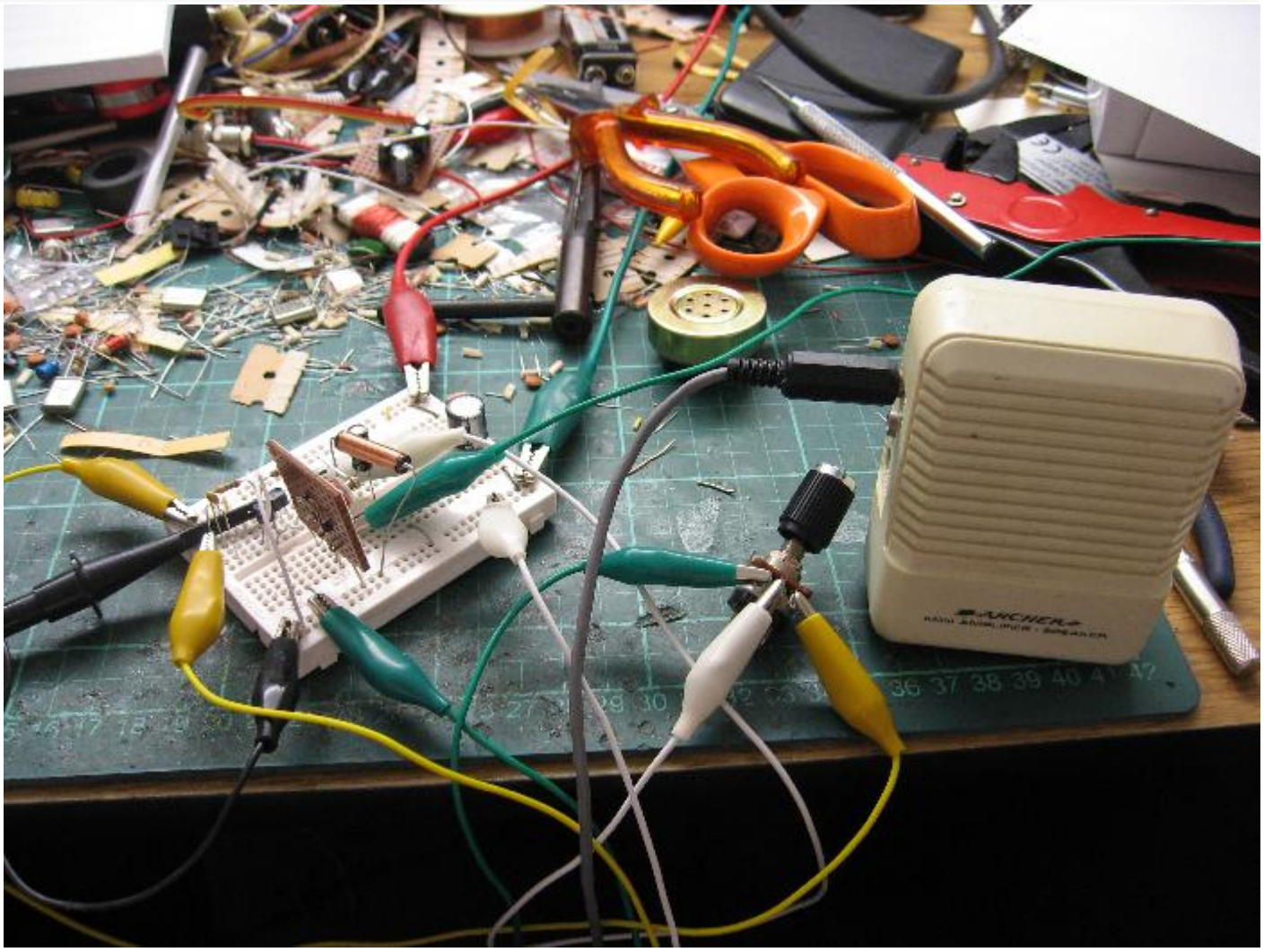

Other Uses

The circuit can be setup to super-regenerate by changing the emitter circuit to contain an RFC and a capacitance across the emitter resistor. In this mode it seems the circuit would be an excellent telemetry or control receiver; micropower, sensitive, and not too tuning critical. It would be fairly easy to integrate this circuit with a microcontroller for remote-control use. My surplus of 27.195 MHz crystals suggests some direction for future experiments with this topology.

Another use might be a LF receiver for a lightning detector. Many moons ago I built a version of Charles' lightning detector (a great little project, build one, they are fun). One thing that bugs me about it though is the need for an antenna. I think this little cross-coupled regen circuit would be perfect (being micropower) to build a lightning detector with a loopstick magnetic antenna rather than an electric whip.

Building a more Permanent Version

The "Noisy Regen" might not be much of a radio, but I couldn't help myself, I just had to give it a permanent place amongst my homebrew receivers. The circuit was rebuilt on PCB, this time with a 65 pF trimmer for tuning and a toroidal inductor wound on a T37-2 core (an additional 200 pF of fixed inductance was needed to put the receiver on the 49 metre band - this gives you a good idea of just how much the transistor capacitance is coupled to the tank, the inductor measures around 2.3 uH, which means it must see an additional 50+ pF of capacitance elsewhere to resonate near 6 MHz with the mid-trimmer capacitance).

© 2000 - 2009 Alan Yates - All Rights Reserved. XHTML | CSS | CSS toggle

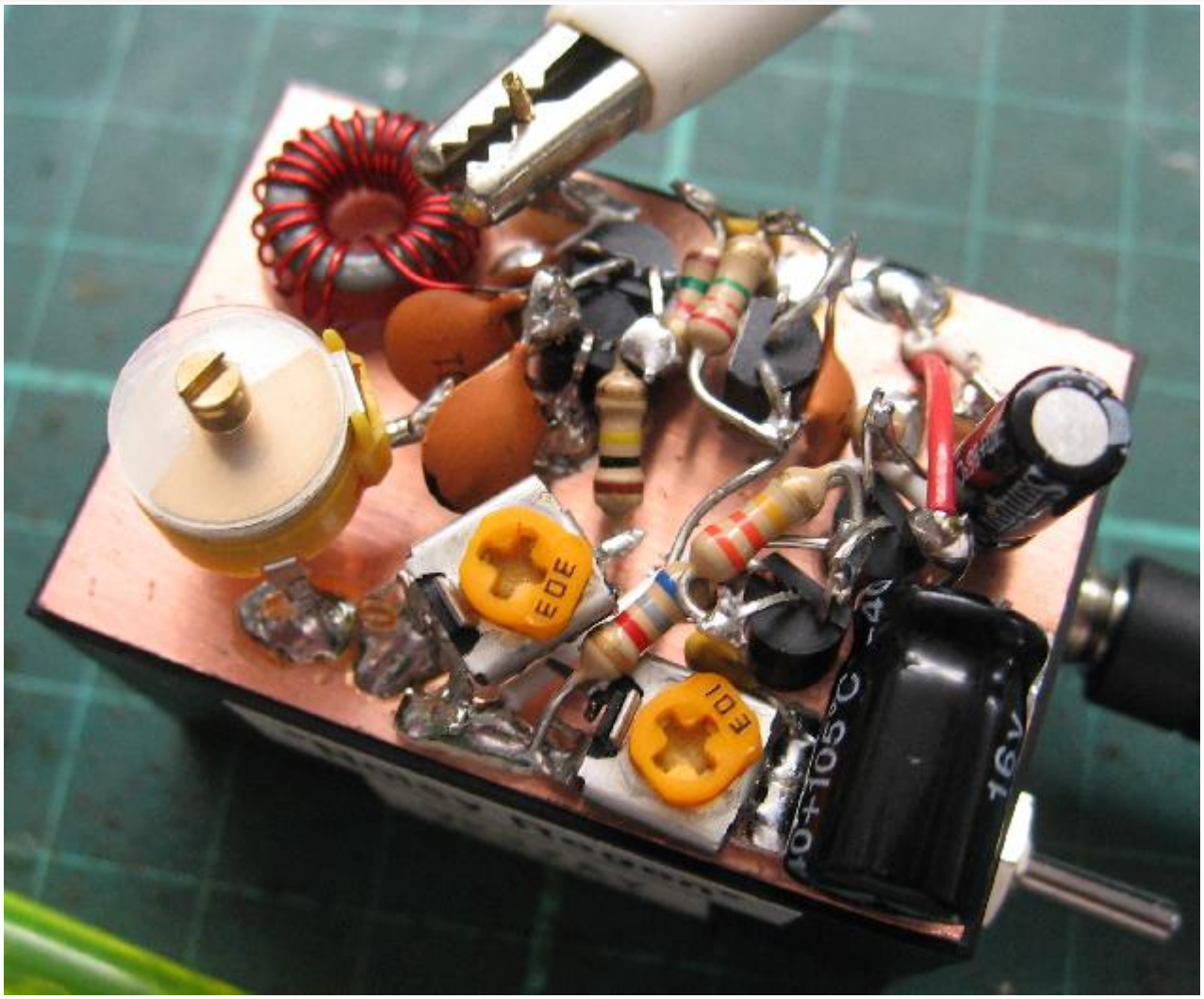

A simple three transistor audio amplifier was thrown together to drive 32 Ohm headphones. Complete the radio pulls about 3.5 mA and delivers enough audio for comfortable listening at home. (Omitted from this diagram is a 1 nF capacitor across the 2M2 feedback resistor in the first amplifier, this rolls off the AF response and kills the HF noise.)

© 2000 - 2009 Alan Yates - All Rights Reserved. XHTML | CSS | CSS toggle

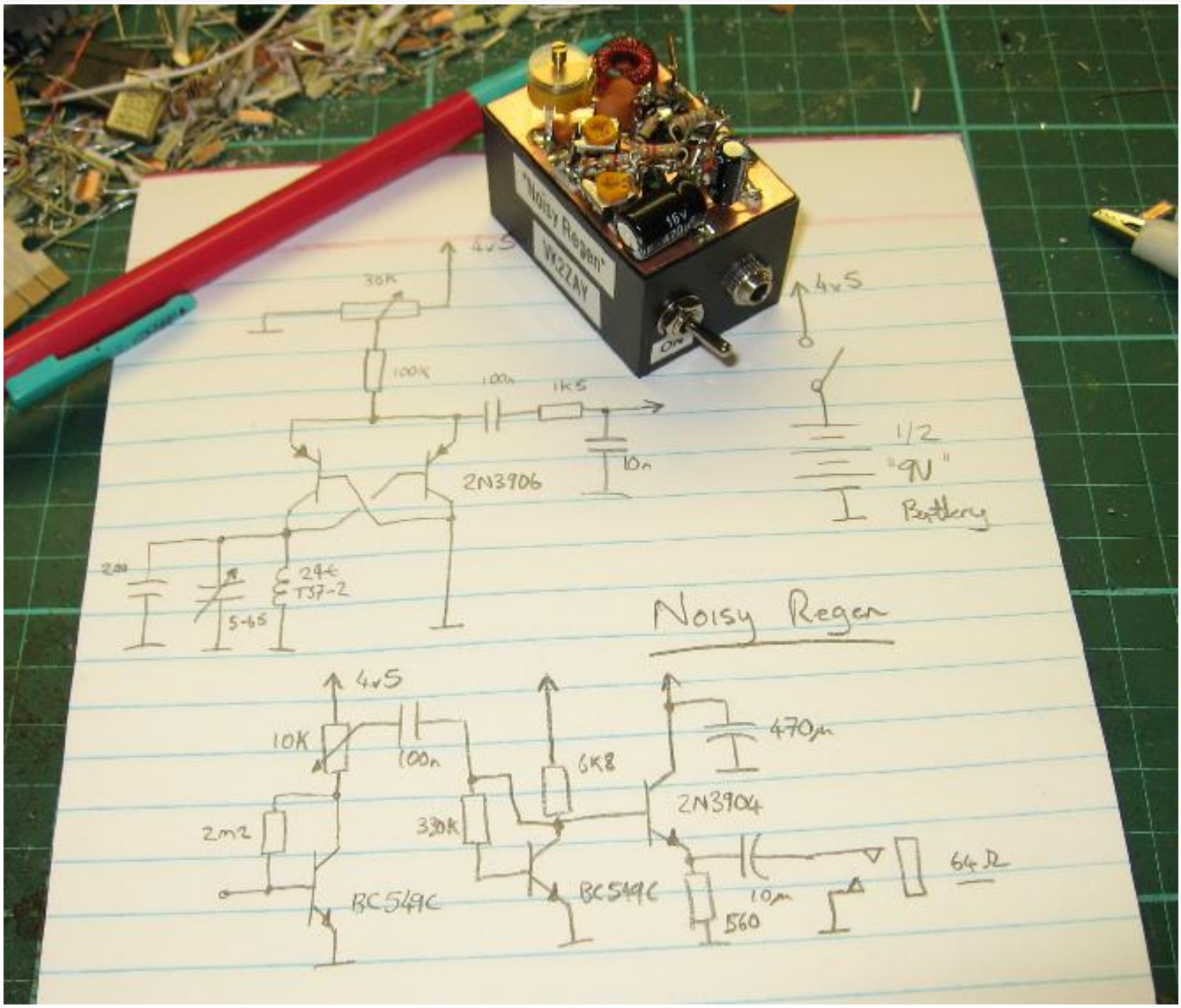

The PCB was cut and filed down to be a perfect friction fit in the top of a Jaycar potting case. The case itself houses half a 9V battery, the power switch and a stereo 3.5 mm headphone socket. To create the battery I dismantled a cheap 9V unit and snapped the wax-potted cell stack in half. (Some batteries have 6 sub-AAA cells instead of a linear stack of "pellet" cells, but even sub-AAA cells were too large to fit comfortably in the case.) This gives a 4.5 volt battery of moderate internal resistance. Actually the higher source resistance meant I had to raise the decoupling cap in the audio amplifier to 470 uF to prevent howling at max gain. My general purpose bench supply and AA batteries did not need this much capacitance for stability. A 10 nF cap from the emitter follower base to ground might help a little too, but I'm happy with the final result.

© 2000 - 2009 Alan Yates - All Rights Reserved. XHTML | CSS | CSS toggle

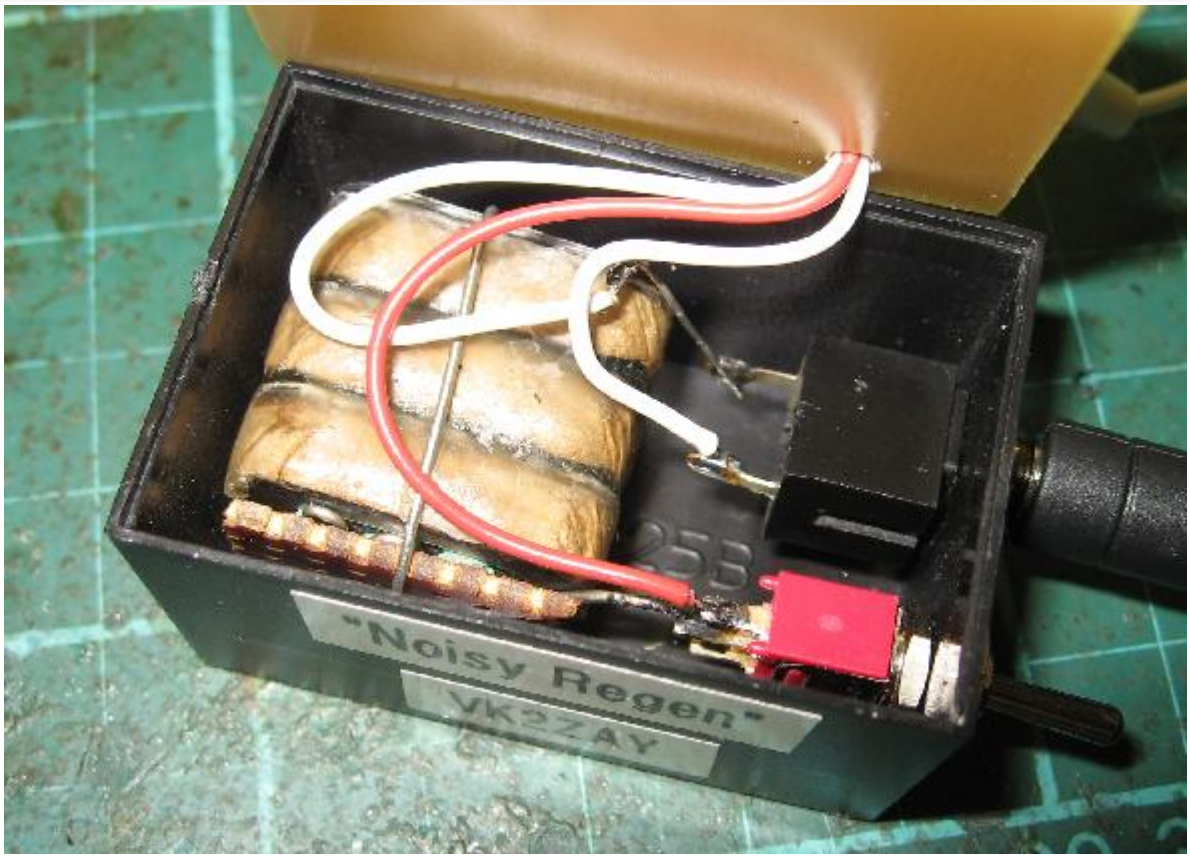

The antenna connection is simply a PC pin, which a clip lead is connected to, leading to a random wire for quite reasonable reception of the stronger stations. The radio tunes approximately 5.8-6.7 MHz which covers all of 49 metres, but it might be helpful to pull it a little lower to spread out the channels a little.

© 2000 - 2009 Alan Yates - All Rights Reserved. XHTML | CSS | CSS toggle

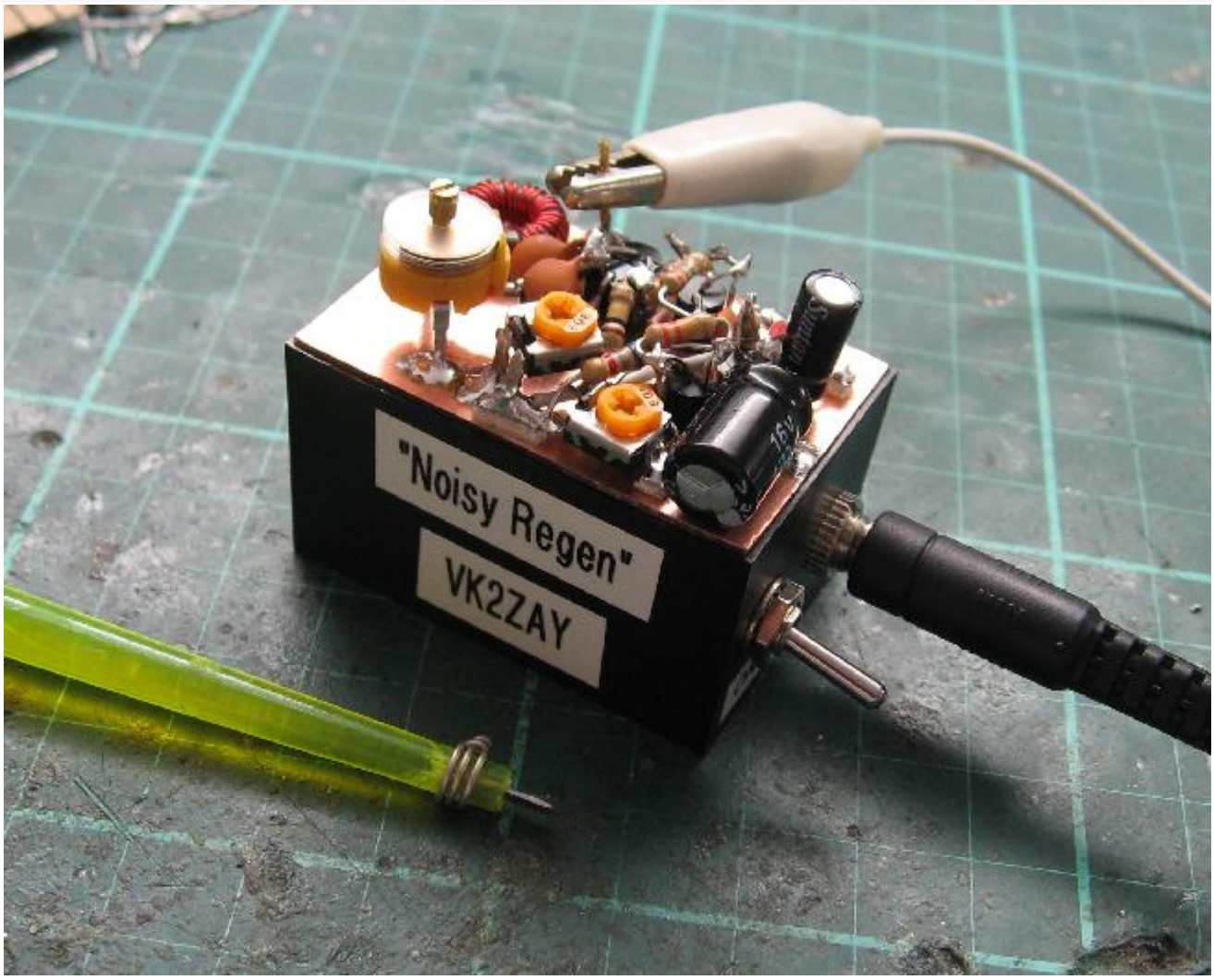

The little unit is quite cute. It is not a huge performer as receivers go, and you have to adjust it with a screwdriver, but it was a nice project none the less. This weekend it let me listen to Saturday Night Country on Radio Australia, but I also heard Radio New Zealand and a bunch of other stations. Sure, I can use any number of other radios I have, some with the comfort of AGC and other features, but there is nothing quite like using a radio you designed and built yourself, even one as backward and hacky as this one.

Suggested Improvements

- Add a 220-1K resistor and large (at least 10 uF) capacitor before the 10K volume control pot. This will stop AF noise on the power supply rail getting into the AF amplifier and causing howling at minimum volume with bad layouts and/or weak batteries.
- Adding a similar decoupling network to the intermediate BC549 and the detector stage can't hurt either if you are having stability problems.
- Consider building something less primitive than the emitter follower audio output stage!
- Add band-switching. (41 and 31 metres would be nice too)
- Build it bigger! (Although its small size is a large part of its charm)

Update: 2007-08-25

I use this little radio quite a lot, so much that I've flattened the battery three times now. The process of replacing the battery has grown tiresome; it involves hacking open a particular brand of 9 Volt battery and fixing up the anode contact with some care. I decided to install an external power jack (mono 3.5 mm socket) and run with conventional AA batteries in a 4-cell holder.

The "complete" radio isn't a self-contained 2 cubic inches any more, but I still get great joy out of using it.

7 comments.

Attachments

© 2000 - 2009 Alan Yates - All Rights Reserved. XHTML | CSS | CSS toggle

Circuit Source	application/postscript	14.563 kbytes

© 2000 - 2009 Alan Yates - All Rights Reserved. XHTML | CSS | CSS toggle

The "Wee Willy" RF Power Amp

2007-01-22

I first saw the Dick Pattinson VE7GC Wee Willy on the "Popcorn" site. It is quite an interesting little rig, but some things about the design concerned me, so until now I've largely ignored it. In particular, the final power amplifier stage is essentially class-C which seemed unlikely to work well for a DSB signal. The Solder Smoke guys were talking about it in an episode I heard on the way home from work tonight (21 I believe), so I decided to build and test it out. The circuit is so simple, I figured I could whack it together before dinner - which indeed I did, took less than 2 hours to build and customise the device.

I did not have VN10KM devices, but they are /fairly/ similar to 2N7000 devices, so I built it with 2N7000 devices instead. The VN10KM has slightly worse properties in most ways, except its dissipation capability, which is somewhat better, I suspect due to the metal tab most versions have embedded in the TO-92 case.

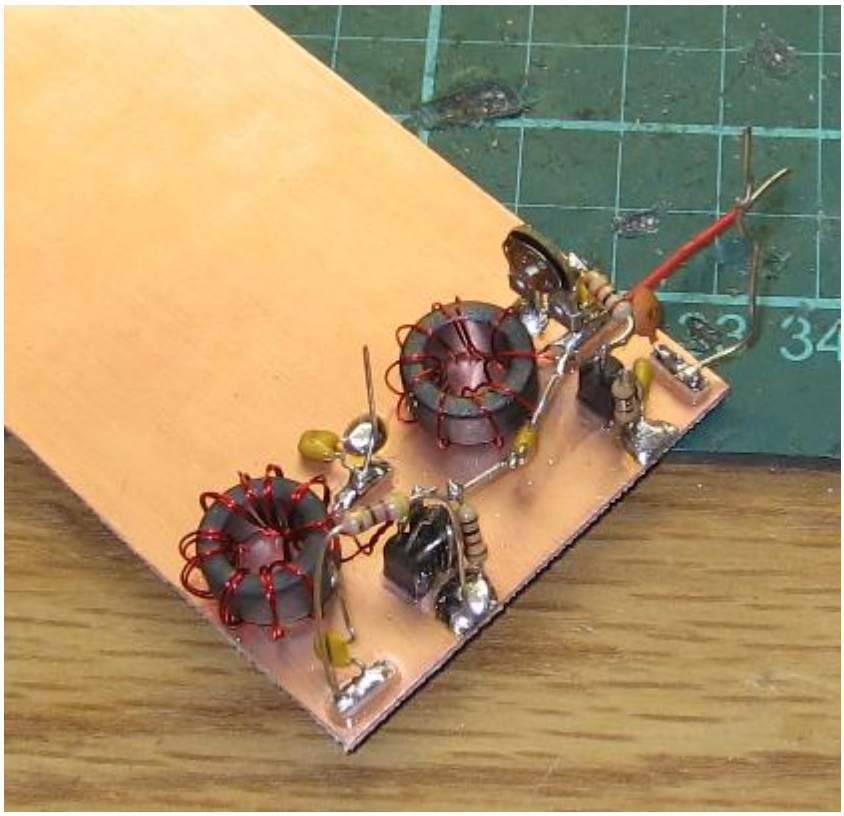

If you do the math on the output network at a 6 V supply you'd expect gain compression around 500-600 mW out. I *really* doubted the claims of 1 W out at 6 V. At 12 V it is definitely possible to get 1.5 W or more out, but the efficiency at either voltage will be pretty bad due to the modest on-resistance of the devices.

The driver stage is clearly designed for high-Z in and out, at 50 Ohms its power gain is only about 12 dB. My completed amplifier gave 25 dB more or less flat to 18 MHz (without the LPF network). Gain drops to about 23 dB at 1 MHz because of the transformers, and the gain is still usable at 30 MHz (about 20 dB). The 2N7000 has quite low capacitances, it is practical to build a HF-flat amplifier that puts out about 2 Watt with them paired up in push-pull.

Built as specified in the Wee Willy there is a noticeable "threshold" effect from the unbiased output stage. I assume either the noise or carrier leakage from earlier circuits make this a minor problem in the actual Wee Willy. Either that, or the VN10KMs have much lower threshold voltages. To avoid this problem with my amplifier I added another pot to bias the output stage as well.

Best efficiency is achieved with about 10 mA on the driver and 25 mA on the final pair. Efficiency isn't that good however. The best I achieved was 43% at 12 V, delivering about 1.7 W into 47 Ohms. At 6 volts I could get

© 2000 - 2009 Alan Yates - All Rights Reserved. XHTML | CSS | CSS toggle

about 680 mW out at a woeful 20% efficiency!

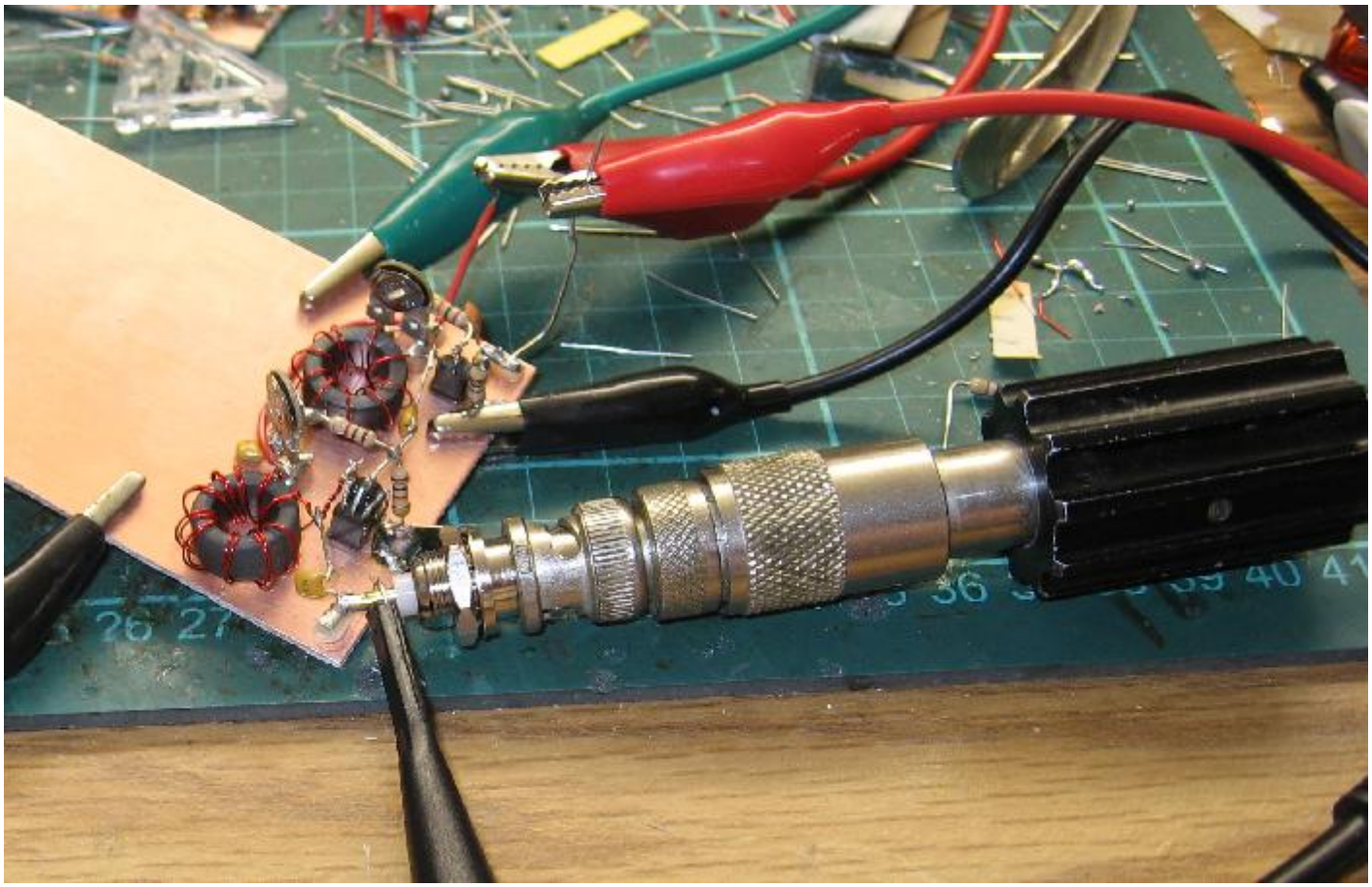

Envelope linearity seems fairly good, but I am yet to do IMD tests on it. The waveform without an LPF looks absolutely terrible! The LPF is *not* optional, without it you will be heard quite well on 40 metres.

© 2000 - 2009 Alan Yates - All Rights Reserved. XHTML | CSS | CSS toggle

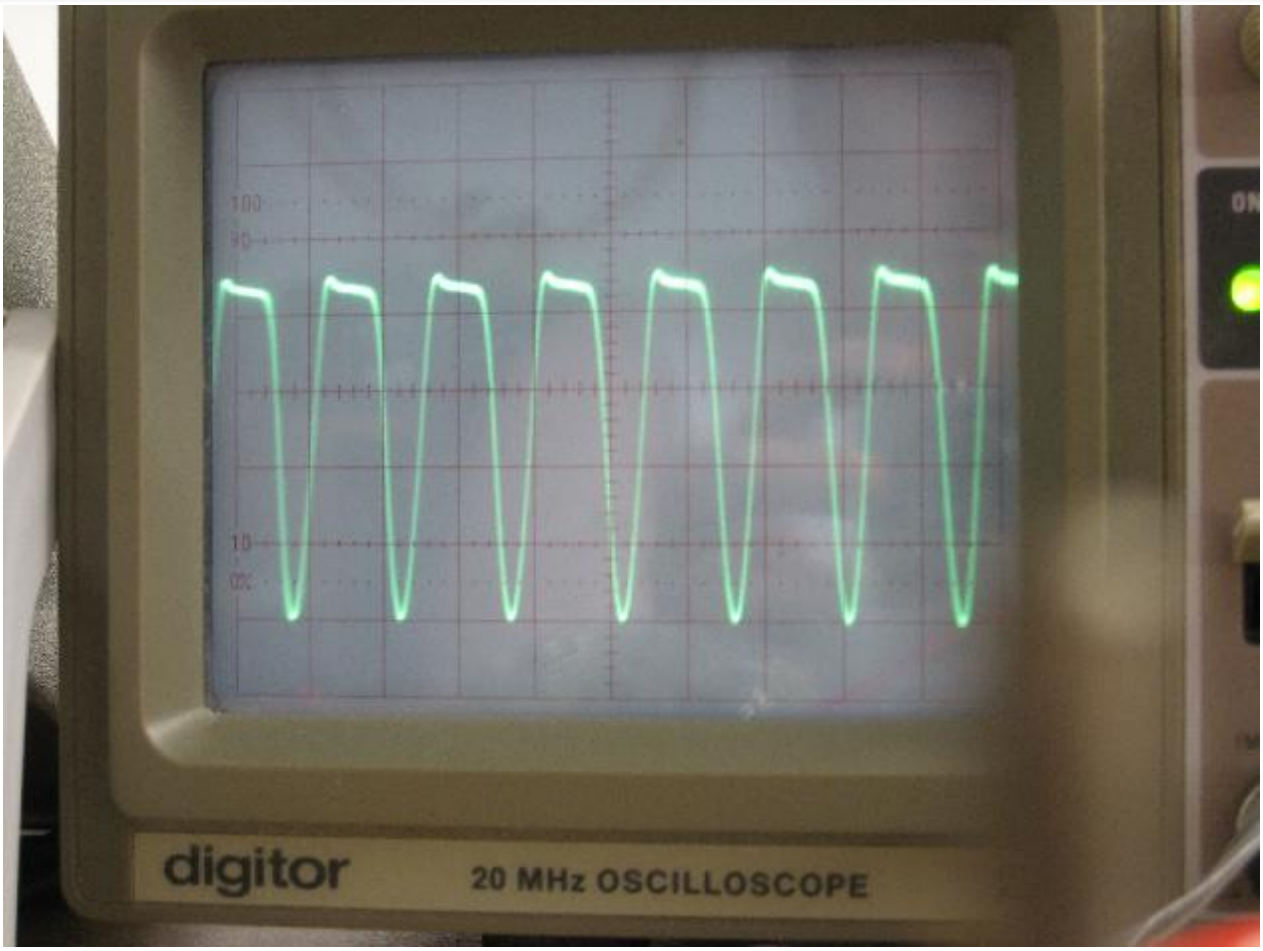

Without a load the circuit is fairly well behaved. It will not pull much current from the supply and appears to be able to tolerate the abuse continuously. Stability seems good with the input floating as well, however is it possible to cause self-oscillation by touching the input and output at the same time - not very advisable! Removing your fingers will stop it. When the input is terminated in a low impedance this goes away.

I didn't try shorting the output, but I did try running a torch globe from it. It wasn't a good match to 50 Ohms, so it largely refused to load up the circuit properly. The amplifier pulled normal amounts of current, but produced little output (a dim glow - and poor voltage across the load). The output devices got a bit warmer than usual, but survived the test (about 2 minutes). This is probably how it will behave into low-Z loads. I didn't fiddle much with reactive loads, and lacking a ready-to-go tuner for 80 metres I suspended testing at this point (I might have a fiddle with an L-network later). I did cook some 1/4 Watt 47 Ohm resistors though - the 20 Watt dummy load got warm to the touch, so there is real power there.

© 2000 - 2009 Alan Yates - All Rights Reserved. XHTML | CSS | CSS toggle

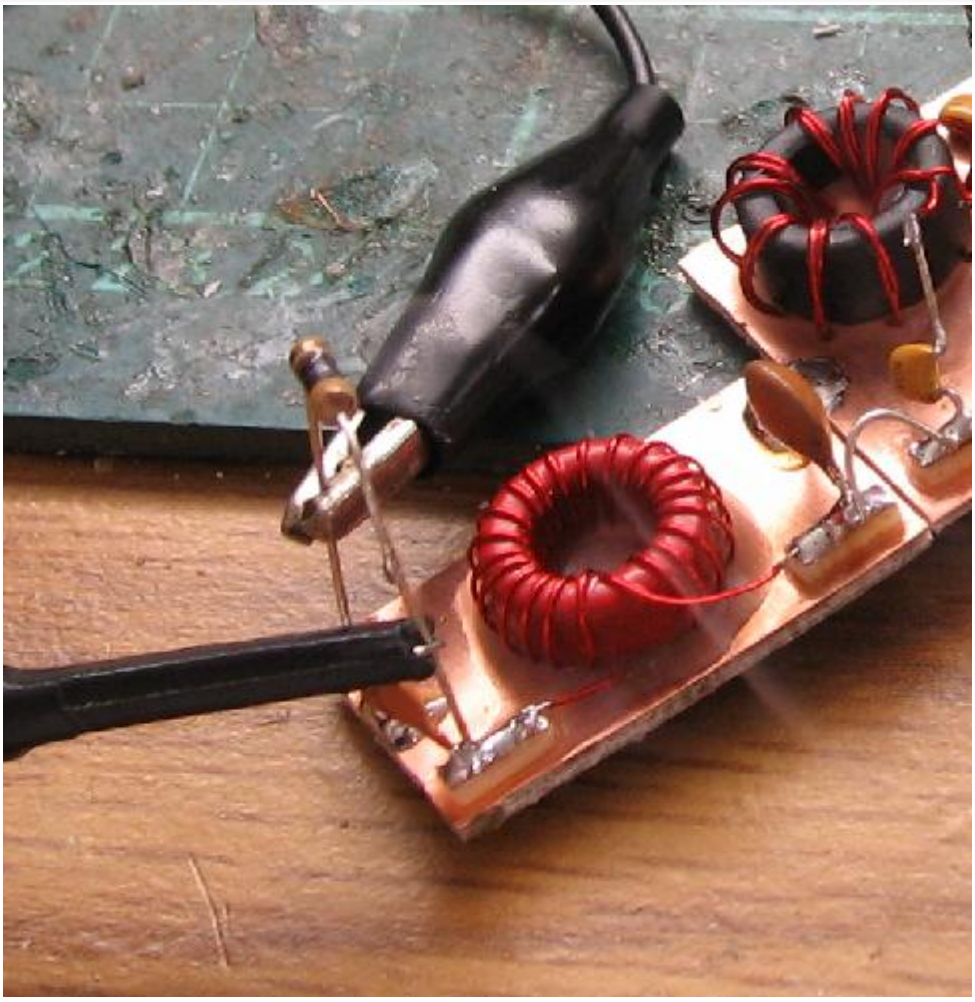

The output devices get quite warm, no doubt because of the poor drain efficiency. Being superglued top-down to the PCB does cool them somewhat. It doesn't get that hot that it will melt the wax I used to hold the toroids in place. The bias current drifts up after cooking the amplifier with 1.6 W out for a few minutes. As the devices cool it comes back down again, this seems to be non-damaging, the 2N7000 is a pretty robust device. Note that this is CW power, not what the amplifier would actually have to contend with in a phone rig like the Wee Willy.

© 2000 - 2009 Alan Yates - All Rights Reserved. XHTML | CSS | CSS toggle

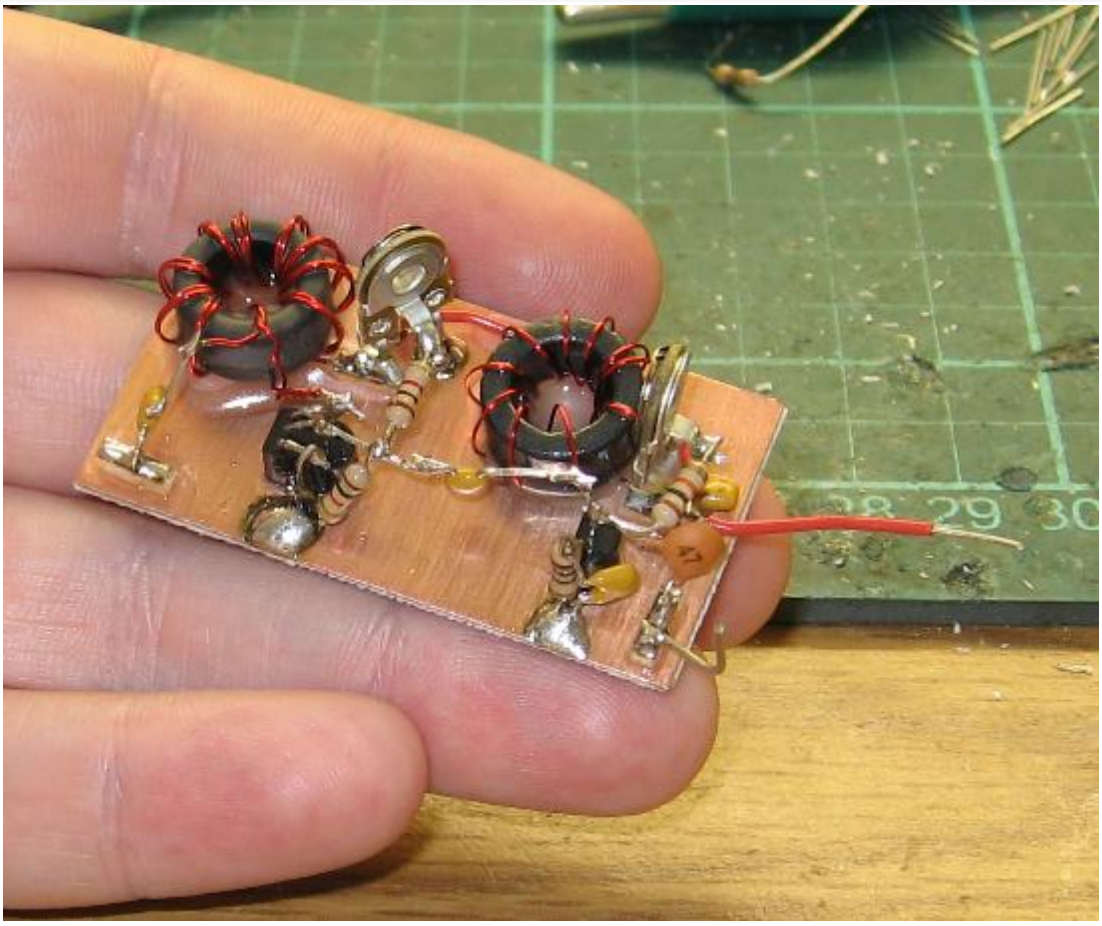

I intend to rebuild the amp at some point with the specified VN10KM devices. Jaycar carries them, but at about $4.00 each, I am hesitant to invest the money when I know the 2N7000 (much cheaper) works just fine. It would be interesting, however, to compare the performance with the devices specified.

Update

I built a LPF for the unit and started playing with it in a practical DSB transmitter using a few other bits and pieces I had laying around.

© 2000 - 2009 Alan Yates - All Rights Reserved. XHTML | CSS | CSS toggle

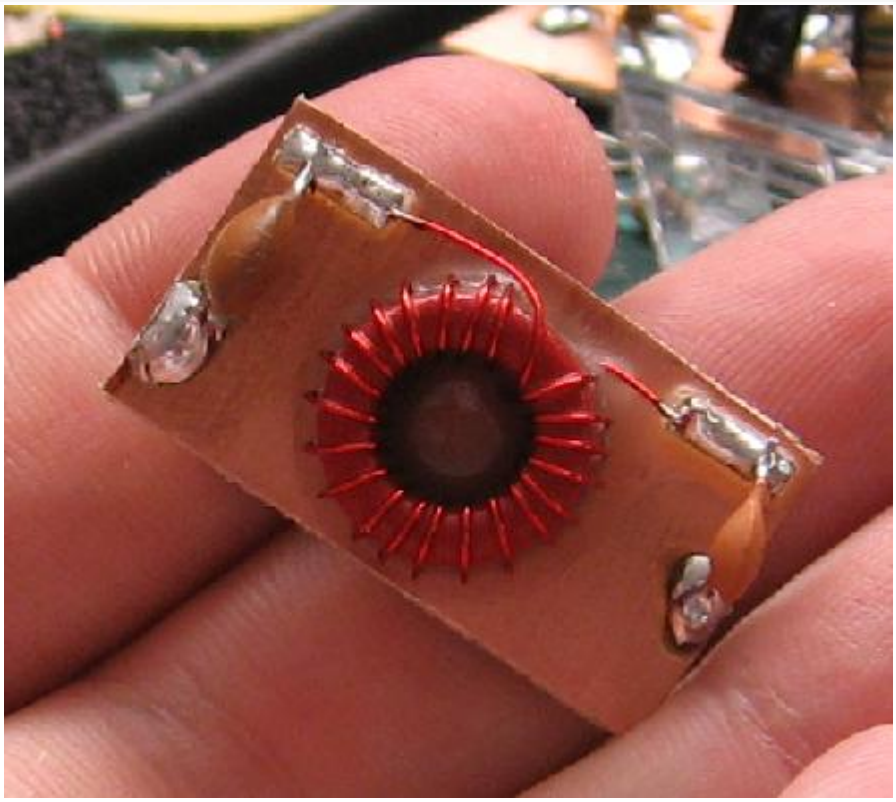

The signal looks *much* better with this filter in place.

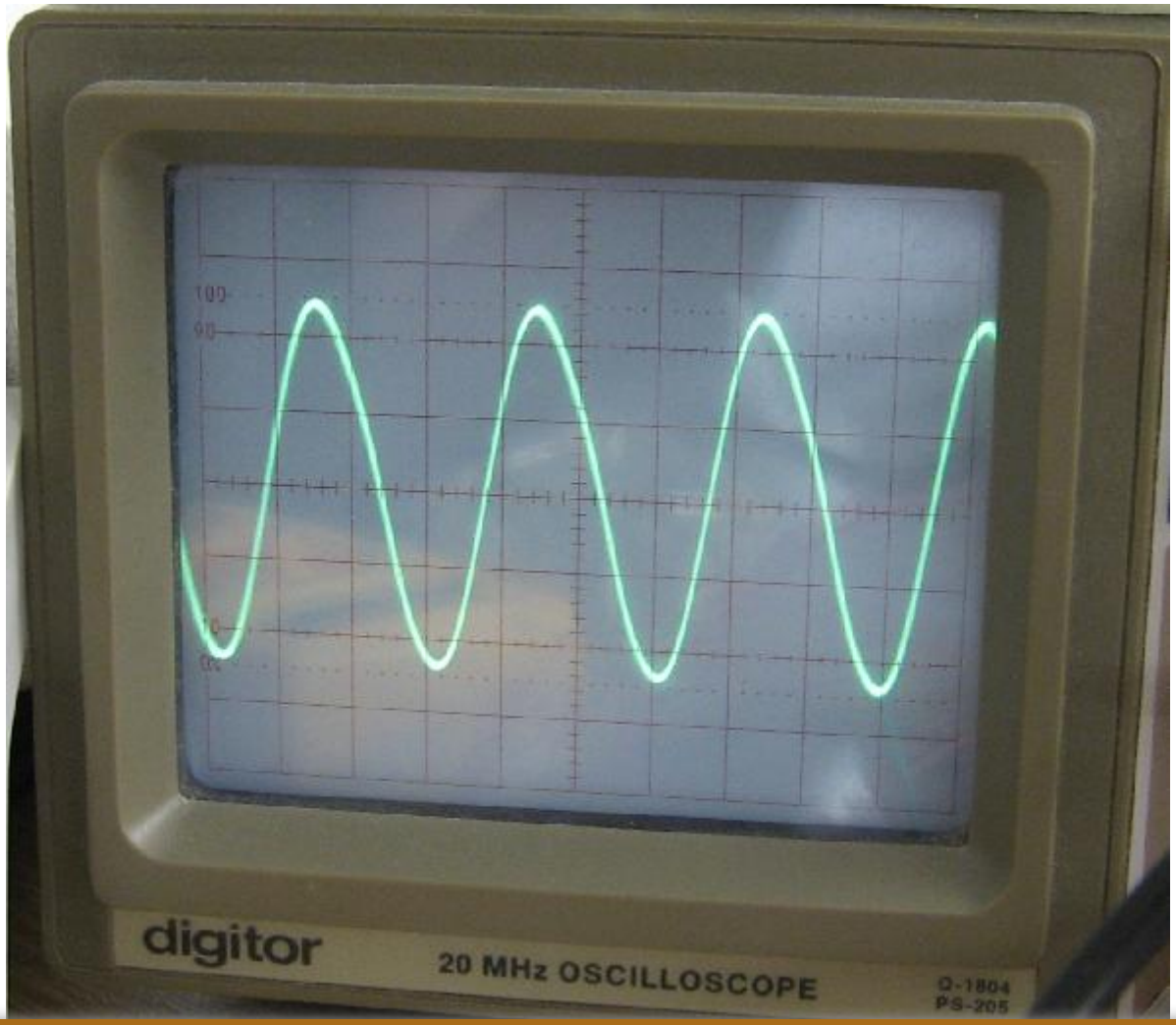

© 2000 - 2009 Alan Yates - All Rights Reserved. XHTML | CSS | CSS toggle

The insertion loss is less than 0.5 dB in-band. The efficiency and power output were not significantly affected by its addition. The stability seems unchanged as well. I tried shorting the output too, it reflects the transformer primary reactance to the collector in a similar manner to open-circuiting the output, so the circuit is poorly loaded and pulls much less current. I still haven't experimented with pathologically reactive loads.

Update 2007-04-09

I've since built the entire Wee Willy (which will be the subject of another article). This time I used VN10KM FETs for the final stage. I can now confirm that the 2N7000 performs identically in all ways, the only difference being the easier heat sinking of the VN10KM devices with the drain-connected tabs which you can solder a heat sink to.

I've also had the 2N7000 and the VN10KM operating at 6 metres delivering over half a watt per device. The VN10KM has internal protection zener diodes, which makes it more robust in theory, but I am still yet to kill either device by load mismatches or severe overdrive. The 2N7000 has less capacitance, which may mean it will operate better into the VHF region, but this is yet to be confirmed.

4 comments.

© 2000 - 2009 Alan Yates - All Rights Reserved. XHTML | CSS | CSS toggle

The Fredbox

2007-05-26

I first heard about The G3XBM Fredbox transceiver via Solder Smoke. As soon as I saw it I just had to give it a go. It is a very simple and elegant design. Of course it offers no bells or whistles, just a fixed TX and RX frequency, and a flea-power output on TX, but it has a special charm in its simplicity and the retro usage of AM on VHF.

Transmitter

I built the transmitter side first. BF199s were selected as a good candidate for the RF devices, but I lacked a crystal in the range specified in the original article. Instead, I used a common 16.384 MHz crystal and redesigned the circuit to be two triplers rather than two doublers. This crystal is a common "computer" crystal, but places the TX frequency in the high-end simplex segment. This is a bit too close to the pager-splattered end of the band for my liking, and doesn't match the band-plans. For now this is OK, I'll get a custom crystal cut eventually.

I didn't use shielded cans or variable inductors for the transmit coils (as specified by the article), rather I used fixed inductances wound on T37-6 toroid cores with bare 0.71 mm tinned copper wire. My LC resonance calculator and nH inductance meter were enormously helpful in making the selection and testing of the tripler and output stage resonators. Each stage was tuned with trimmer capacitors.

It was amazingly easy to get the TX-side working, I just built each stage from the crystal to the final amp in turn, testing as I went. Each stage is well behaved and peaks nicely.

Peter VK2TPM could hear the signal at his QTH several kilometres away when I connected the half-finished TX board into my flower-pot antenna. The DC input power was about 23 mW, and no special attempt was made to match the output into the load, in fact the series trimmer in the matching network was absent at this point, just a fixed 12 pF capacitor was used for DC blocking.

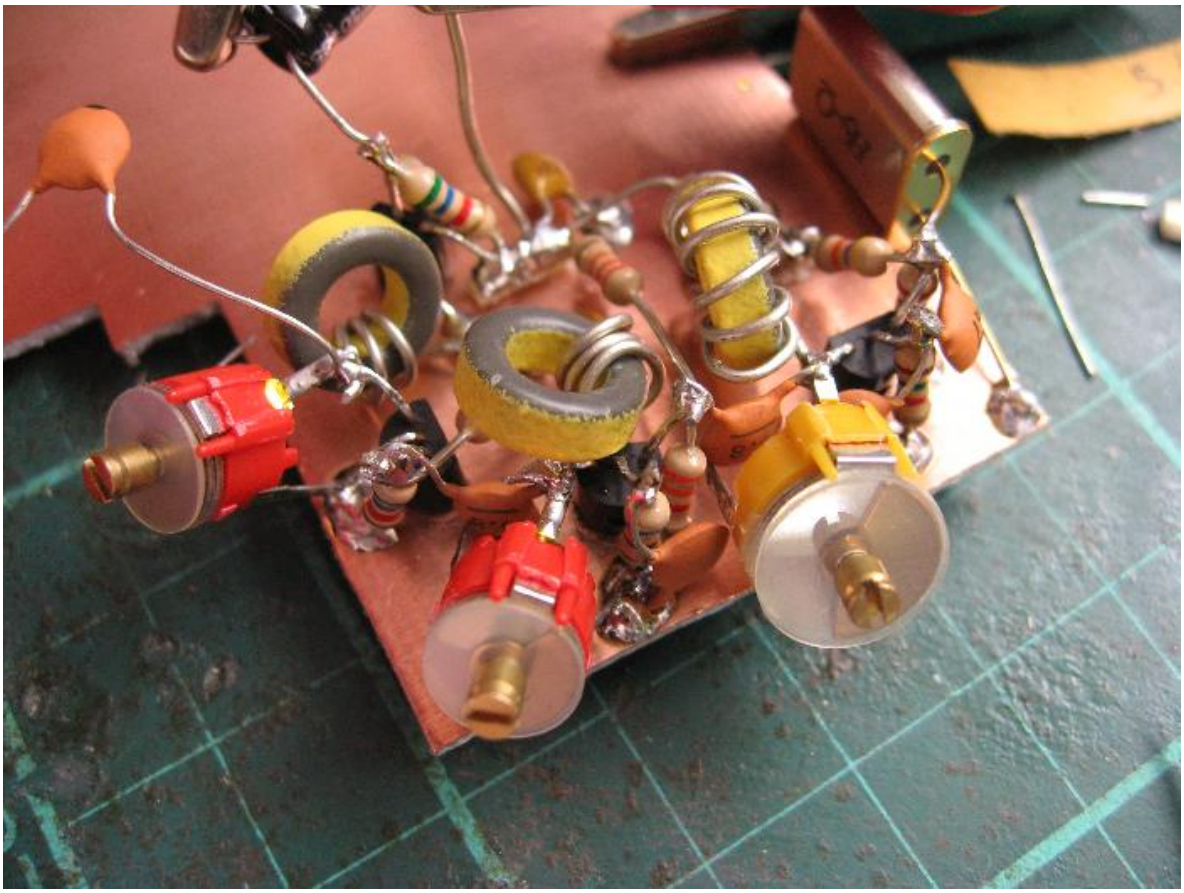

Upon finishing the TX circuit I did experience a bit of RF pick-up in the microphone amplifier 2nd stage. A 1 nF capacitor to ground discouraged its RF gain and eliminated the problem. The 2nd AF amp stage is located immediately adjacent the crystal oscillator stage and was picking up RF directly. The effect was not audible, but was visible on the spectrum analyser as weak 16.384 MHz sidebands either side of the carrier. This wasn't causing feedback, just high-frequency modulation of the signal. If nothing else it proved the bandwidth of the modulator, which is perhaps a surprise considering the 100 nF decoupling on the modulated rail, however the output impedance of the series modulator emitter is so low it could deliver a few tens of mVs of HF ripple into that kind of load.

Receiver

© 2000 - 2009 Alan Yates - All Rights Reserved.

As easy as the Transmitter was, the Receiver was hard. It fought me every inch of the way. I spent an entire day trying to work out why it was simply not super regenerating from about 130-160 MHz. It turned out to be a 10 nF decoupling capacitor on the cold-end of the detector resonator. The article specified 1 nF, and I originally intended to use this value, but I had a strip of 10 nF mono's on the bench, so I used them. At build time I did consider why 1 nF was specified in the first place, I figured it was avoid the exact problem that would befall my unit, decoupling resonance. (Lesson #1: Trust the original builder and your initial instinct.) When the unit wouldn't oscillate properly I assumed that I had damaged the capacitor on install - this is a pretty common fault, so I tested it in-place by ensuring it would shunt a HF signal (my standard decoupling cap test), it passed this test just fine. (Lesson #2: Test at the frequency of operation.)

My hubris about "modern components" being superior and likely "purely capacitive" at VHF turned out to be completely wrong. It took *hours* to work it out, but eventually I determined the entire decoupling network was resonant near the operating frequency. Much foul language later and I replaced the cap with a ceramic 1 nF, with its "flashing" broken off and scraped right back to the disc to minimise the lead length. This cured the problem.

For the longest time I had assumed it was the source coil - and in fact the first source RFC I used (a molded choke) was being operated above its self-resonant frequency and prevented any oscillation at all. I replaced it with a few turns on a ferrite bead which seems just fine now.

A couple of other minor annoyances/mistakes were worked through (like picking larger inductances and making the entire circuit so sensitive to stray capacitance it was a nightmare to tune - DUH!).

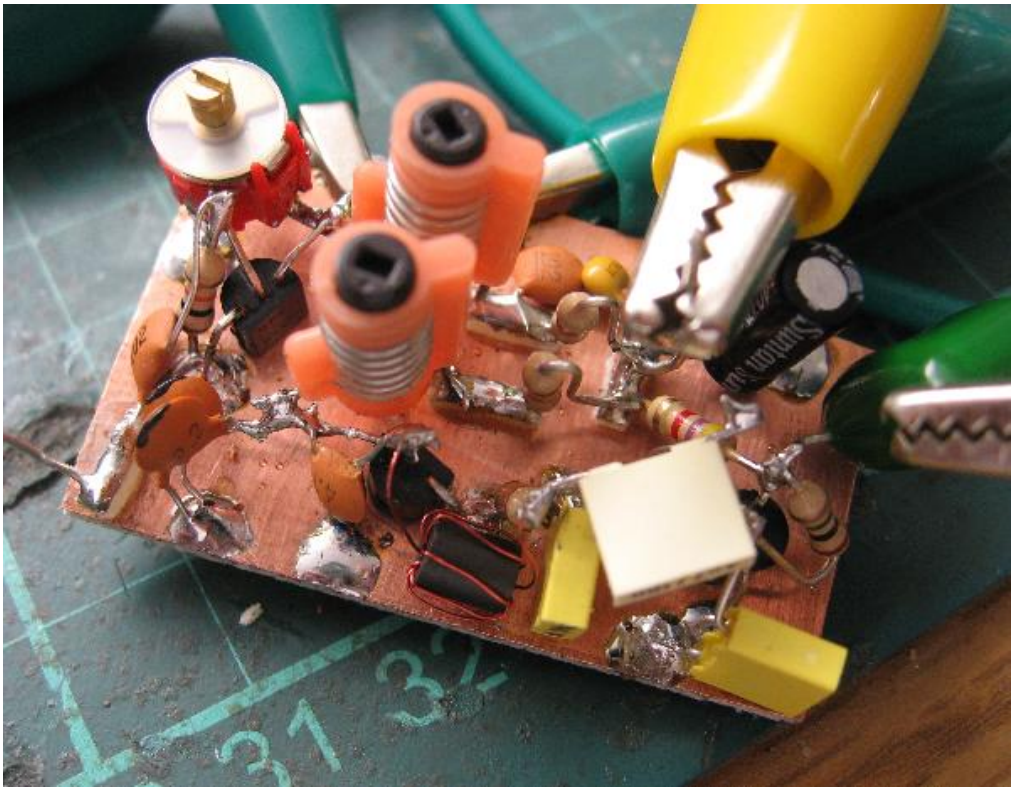

Eventually the unit super-regenerated right through the region of interest and the LNA stage was constructed. Initially I put the LNA drain coil too close to the detector coil and they over-coupled. This meant as I tuned through resonance on the LNA drain it would pull the detector so much it would shut down. Bugger! Moving the coils apart a little reduced this effect to acceptable levels, but the core of one still effects the other a little. I'm happy with the current coupling, and it is actually useful to help tuning the LNA resonator. As you rock it through resonance it will pull the detector, and by observing the wiggle on the spectrum analyser you can tell you've got it tuned up. The AGC action of the detector makes it hard to tune for maximum smoke otherwise, as the AF output doesn't change much at all even when the front-end isn't tuned up properly. Once you've got it nearly right you can use a weak signal to tune for best signal to noise.

© 2000 - 2009 Alan Yates - All Rights Reserved. XHTML | CSS | CSS toggle

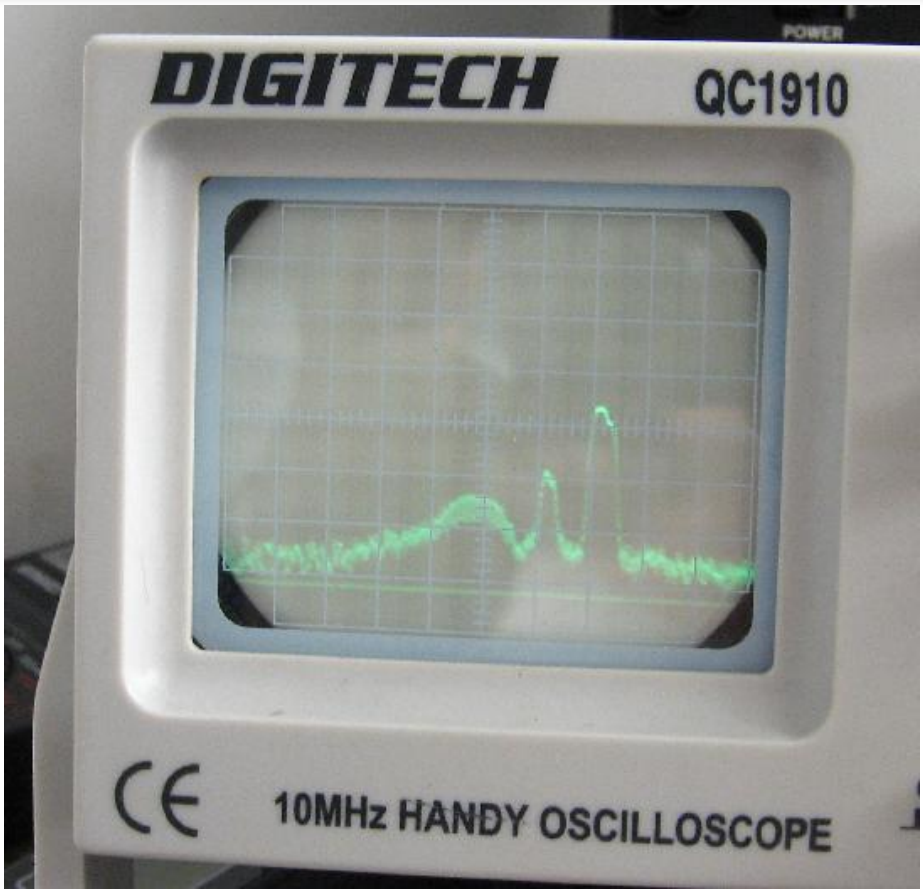

Note the pagers above the 2 metre band in this spectrogram. The hump in the noise floor is the receiver super-regeneration side bands. The smaller peak in between is the output of the Fredbox transmitter, the leakage from the unshielded prototype on my desk operating into a 47 Ohm load. It is rather disturbing that the pager signals are *larger* than this local signal just a foot or two from the spectrum analyser antenna.

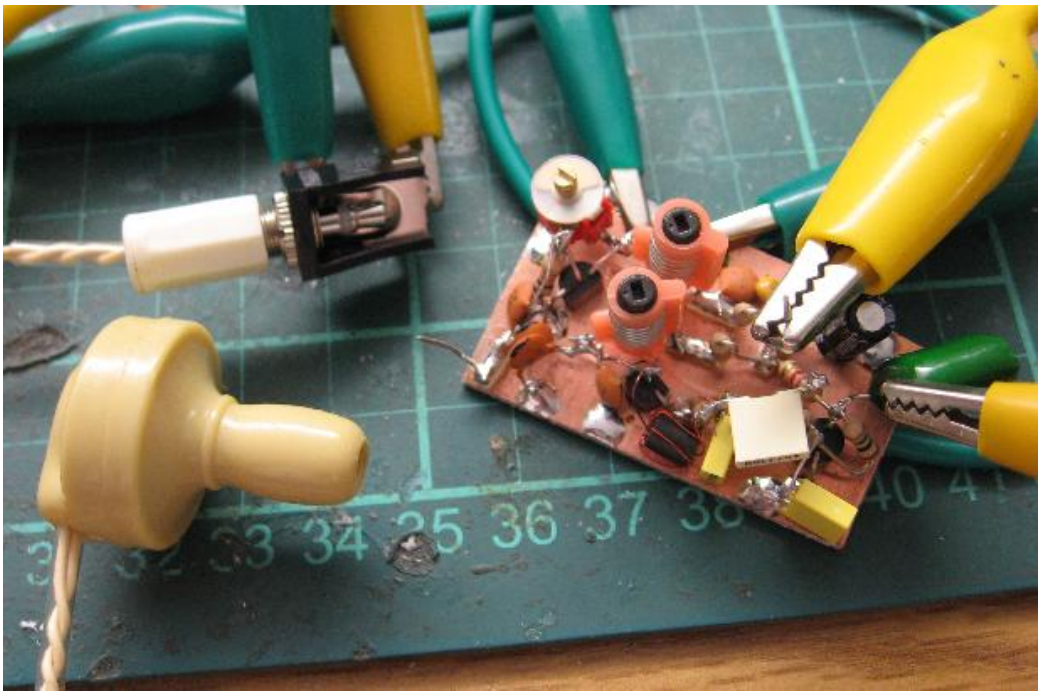

I used J310s for the receiver FETs, and a 2N3904 for the audio amp. Although the main design requirement for Roger appears to have been flea-power, I think a better AF amplifier that can drive modern low-impedance headphones would be preferable. Only Jaycar now carries crystal earphones with a nice soft silicone ear piece. The one I used comes from DSE and it is hard-plastic - not very nice on the ear. I really hate these kind of earphones anyway, I'll probably be rebuilding it for a low-Z output at some point, but it does work pretty well as-is.

BTW: While I was in the "Special Hell" of decoupling resonance I took the RX down to the FM broadcast band, and up to the VHF-hi TV band. It works wonderfully in both, which isn't a surprise. However, by adjusting the drain-source feedback (then a trimmer, now fixed) I

© 2000 - 2009 Alan Yates - All Rights Reserved. XHTML | CSS | CSS toggle

Hall's regen on the FM band. The topology is more forgiving however, allowing grounding of the tuning cap. I also built several different oscillator topologies in desperation before I identified the decoupling fault, in one I got a Colpitts-like oscillator working with emitter coupled feedback to a tapped capacitor across the tank. This is something I should have thought about a *long* time ago, I'll probably build yet another FM broadcast regen using this topology for the detector, it seemed quite easy to control just by manipulation of the base voltage.

Boxing It Up

I am still tossing up between a cast Aluminium box, a custom box folded out of Aluminium sheet, or an Altoids tin. The circuit is small enough to just fit inside an Altoids tin but it probably won't fit with a battery. I'll pick up a centre-off momentary-one-side switch over the next week and finish off the radio one way or the other.

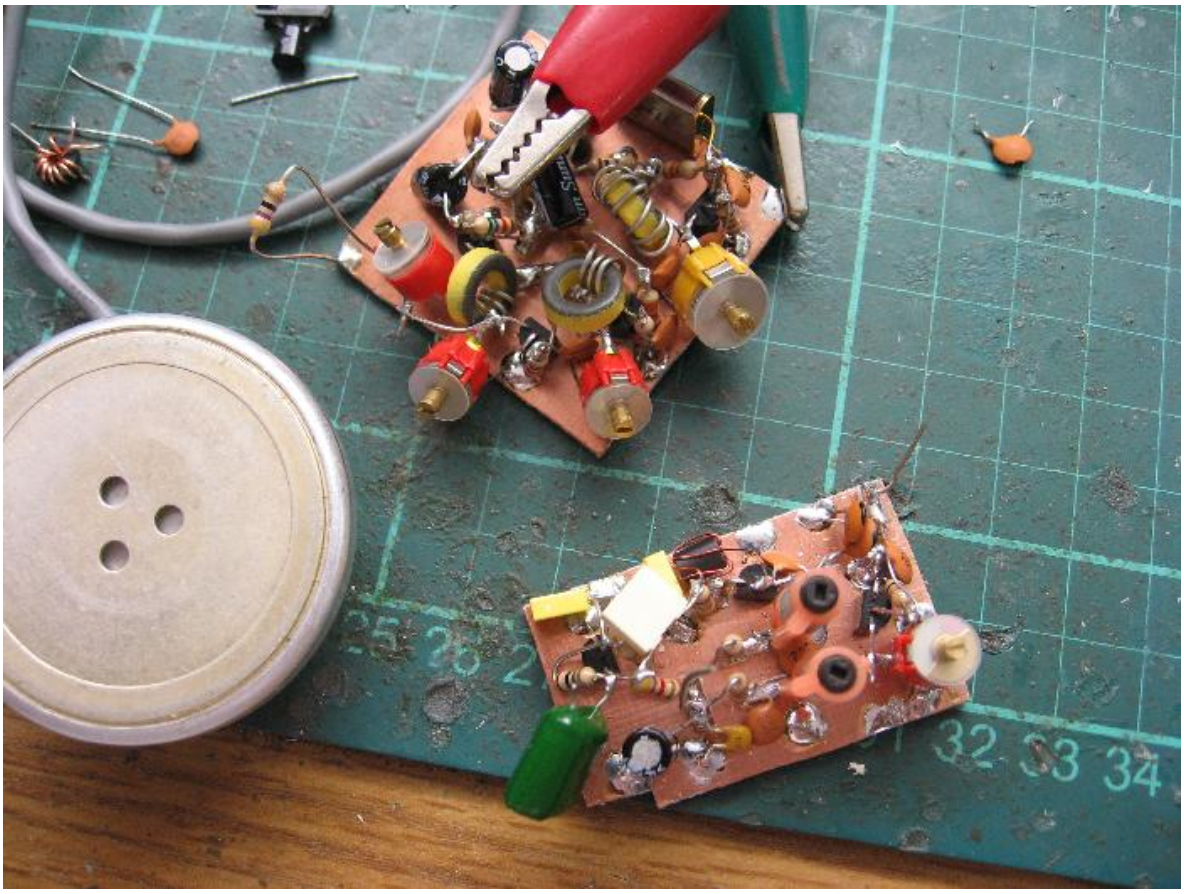

Note the use of an old telephone receiver as the microphone. It is nearly as large as the entire TX board. I'll have to find my electret mics, I know I have a bag of them somewhere that I got from a Rockby sale.

I'm strongly considering rebuilding the radio, perhaps through-the-hole to minimise its size. Although my prototype isn't too large as-is, it would be nice to neaten it up. Maybe I'll build it with fixed caps and variable inductors to save space too, although shielded cans are about the same size. It *might* be possible to tune the multiplier stages with stretched coils and fixed caps, this would make it much more compact and save money too if it ends up being kitted...

More TX Power

I am considering running the unit on 12 Volts to get a bit more RF out, and perhaps building in a small amplifier to get it up to 1 Watt region. This would probably involve a rebuild of the TX side to use a 2N4427 or similar final device, and a more robust series modulator transistor. This won't be efficient, but is probably easier to get going than a linear amp which would need careful drive adjustment.

I'll probably conduct some experiments around using a 2N7000 or VN10KM as the output device. The math suggests they may operate on 2 metres. I've already got them working on 6 metres in a brief experiment last month (must document that).

Comments

Working with VHF is fun! I find it a great learning experience, especially when you get problems like the resonant decoupling cap. That kind of thing really pushes your understanding of the physics and teaches you a lot.

I know a lot of HAMs won't touch anything above the bandwidth of their oscilloscopes. I can understand the frustration when something doesn't work, especially when you can't see why, but it really isn't that much worse at VHF. With just a diode probe you can achieve a lot. It does help enormously if you have VHF test equipment, for example I likely would have never noticed the HF modulation problem had I not had a spectrum analyser (although the HF was visible on the collector of the modulator drive amp, and most of us have a CRO that can see fine near 16 MHz).

A wavemeter can be helpful, if a bit retro, especially for making sure your multipliers are tuned up right and for looking for spurs. You can build one quite easily, it only needs to be a resonator with a detector and a LED or meter as a read-out. I'm a big fan of the biased 1N5711 through the decoupled bottom of the tank coil topology. For super-sensitivity you can use a MPSA18 as a DC amplifier. With a signal generator or dipper and a counter or scanner/receiver you can easily calibrate it. It can be used like a poor-man's spectrum

© 2000 - 2009 Alan Yates - All Rights Reserved. XHTML | CSS | CSS toggle

My only advice when you get stuck is to trust the physics, do the math and follow your instinct when nothing is making sense. Rebuild parts of the circuit and test them independently. Measure what is actually happening and try to figure out what kind of misbehaviour in the circuit would cause the observed of behaviour. That will often solve an otherwise intractable problem.

Update 2007-06-05

I took the Fredbox boards to the local Homebrew Group meeting. I had both halves hooked up and talking across the room. Peter VK2TPM had brought along a digital audio recorder and did an interview with many of us in attendance. You can hear what I said about The Fredbox on Soldersmoke 62, and even a brief snippet of audio going through The Fredbox.

Also on the recording are Peter VK2EMU talking about the 80 meter challenge, John VK2ASU talking about his transmitter modules for the challenge (and an interesting diversion into IRF510 gate-modulation with some input from Brian VK2TOX - something I was thinking about back here, apparently Drew Diamond VK3XU has already produced a design doing just this). Mike VK2BMR also talks about his great VSWR/power meter project. His unit was absolutely beautiful, I was very much taken by the excellent job he did of cutting the PCB stock that made up the external directional coupler box, essentially flawless, perfectly square workmanship.

Update 2007-06-09

I've built a weak-signal source for aligning the receiver. One of the biggest weaknesses of the Fredbox receiver is that it drifts in frequency quite significantly with Vcc variations. Powered by a 9 Volt battery near the end of its life, it may drift enough to make the receiver completely off-frequency despite its poor selectivity. If I build this circuit again I'll probably put in a stabilized supply for the detector stage to avoid this problem.

© 2000 - 2009 Alan Yates - All Rights Reserved. XHTML | CSS | CSS toggle

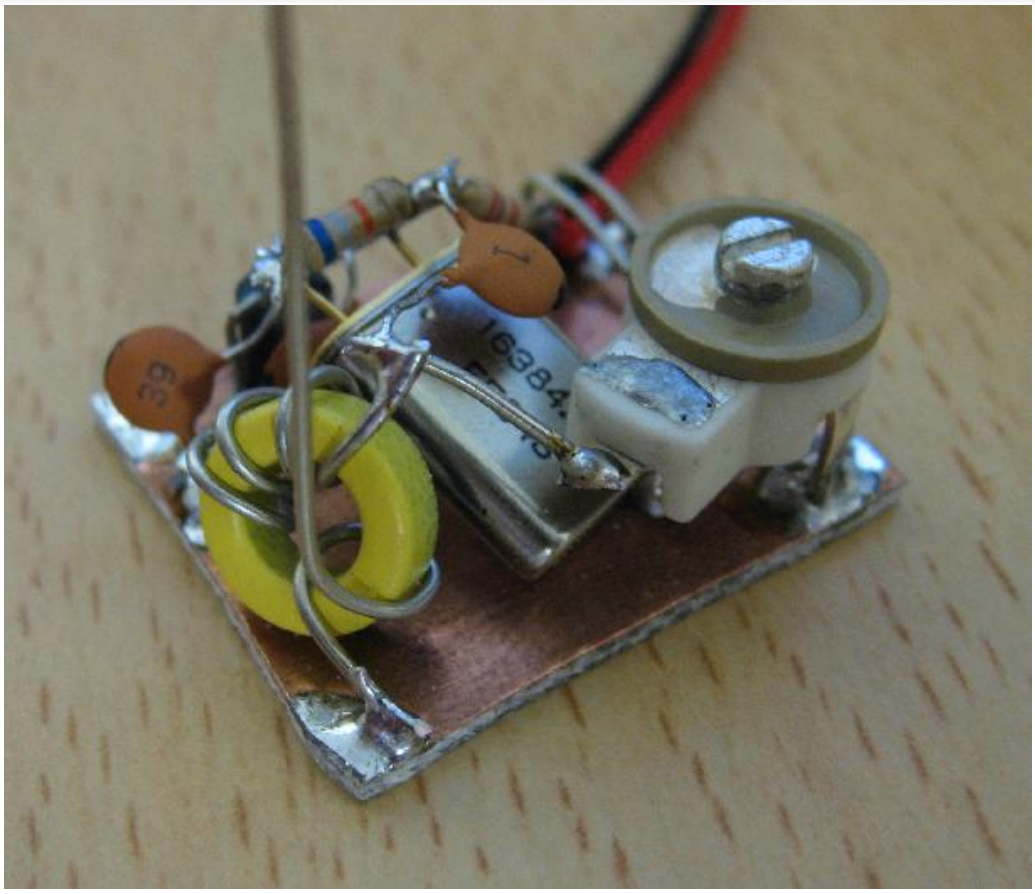

The signal source is a Pierce oscillator driving a tuned circuit which selects the VHF harmonic of interest. Because of the oscillator topology the crystal isn't pulled down as much as in the Fredbox circuit. The difference is fairly minor for my purposes, the poor selectivity of the receiver makes the difference in frequency of no real consequence. There is no active (or passive) multiplier, so the tuned circuit is merely extracting the harmonic energy from the oscillator. The harmonic energy available is very small, which is perfect for the application, giving an almost undetectable signal 1 metre away.

Update 2007-06-10

I've boxed up the Fredbox. As discussed earlier I went with the Altoids tin, despite this not allowing the battery to also fit inside the enclosure. I tossed up soldering an additional tin to the back to hold the batteries, but for now I've gone with the 9-volt battery snap just hanging out. It will work well with 6xAA battery holders which can just be held to the box with a rubber band.

© 2000 - 2009 Alan Yates - All Rights Reserved. XHTML | CSS | CSS toggle

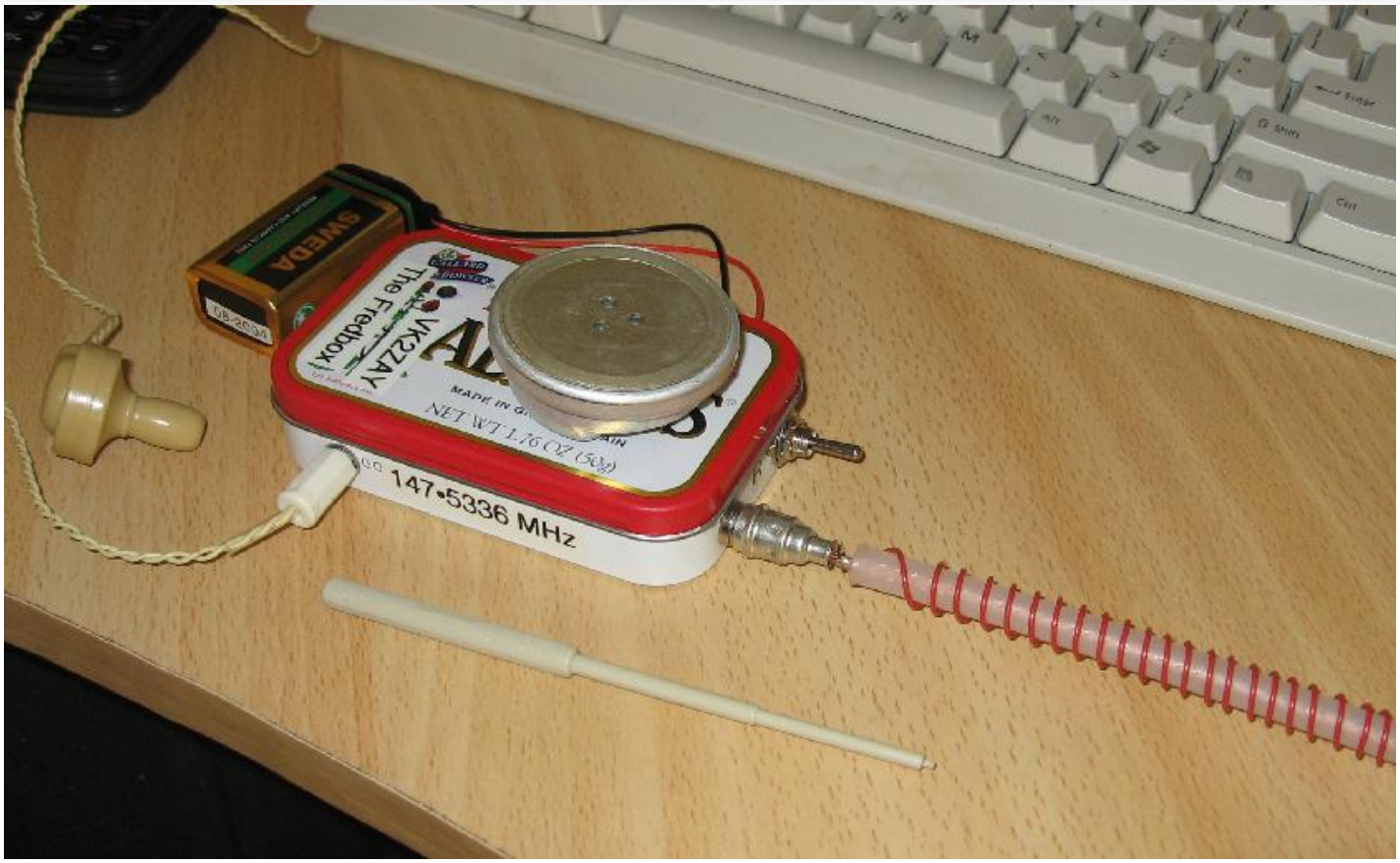

For the RF connector I chose an RCA. I can hear all the VHF engineers cringing, but for the purposes of this prototype it works just fine. The Antenna is a half-wave of wire helical which is quarter-wave resonant (with some pruning). The former is a piece of centre conductor and insulator from RG-213 coax. The centre conductor was left in place and is soldered into the RCA plug centre conductor, adding some capacitive loading and shortening the length of wire needed for resonance. I have no idea if this is good or bad, but it works.

© 2000 - 2009 Alan Yates - All Rights Reserved. XHTML | CSS | CSS toggle

I didn't find my stash of electret microphones, so I ended up just soldering the telephone receiver into the top of the Altoids tin. Ugly as hell, but also kinda unique. It looks somewhat like those Vietnam-war era VHF-low walkie-talkies.

I couldn't find a momentary-one-side toggle switch, so a centre-off on-both-sides switch was used instead. A special dummy load/diode peak-voltage probe was assembled for the final alignment. The carrier power ended up being near 25 mW on 12 Volts, on 9 Volts 10 mW just like Roger says in the article.

Update 2007-06-11

The 2N7000 on 2 metres experiment was a failure, it simply doesn't produce useful power beyond 90 MHz or so. However, it is very usable below 70 MHz. My input network was far from optimal, so perhaps with some more work it would be possible to get it working higher up, and I haven't tried an VN10KM in the same circuit.

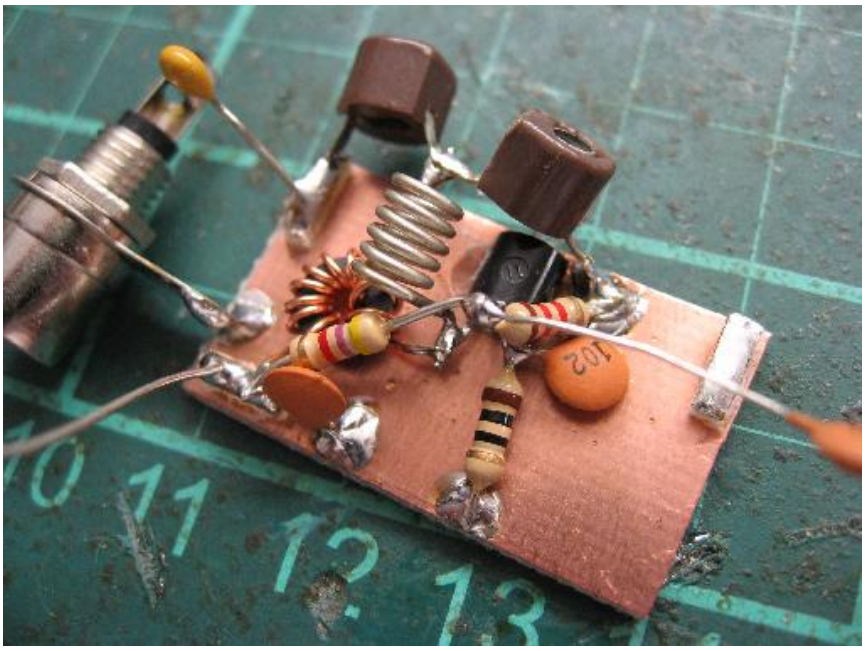

I've also been fiddling around with grounded-base class-C multipliers. (Not just decoupled, biased base, the base actually soldered directly to the ground plane.) At first this seems a little weird, but if you pull the emitter low with a link-coupling to the previous stage collector current will flow. The advantage is excellent reverse isolation, which might help with stability with less than ideal layouts and devices. Such a topology was apparently quite common years ago with the 2N918.

1 comment.

© 2000 - 2009 Alan Yates - All Rights Reserved.

Trivial Electric Motor

2002-10-17

OK, so its a child's toy, but lately I've been getting into simple things that show physics principles. Most importantly, trivial projects like this keep my hands dirty, in the world where I spend more and more time behind a keyboard.

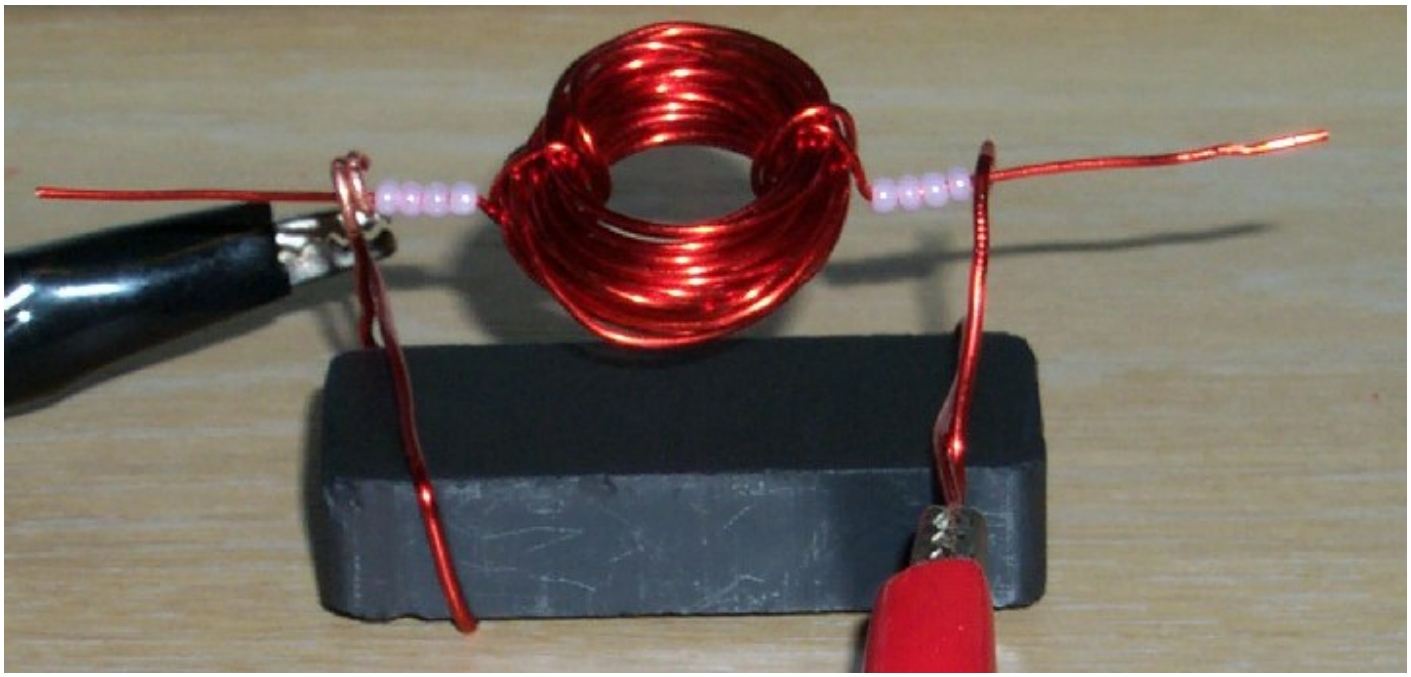

At first sight it is very simple, a coil, a magnet and some beads and bearings. But then you start to think about how it works. It appears to have no commutator, how can it work? Well actually it has a commutator, only half the enamel is stripped from the wires (one side, facing away from the camera), so the coil is active only half the time, inertia takes the coil around until it contacts again and gets another torque kick.

This is an excellent project to build with your children. It is simple, takes only minutes, and is instant gratification. Once assembled it runs up to speed quickly and rattles and shakes all over the desk. The physics are easy to explain (perhaps not to understand mathematically, but it all helps) and it works, they built it themselves, unlike some cold diagram in a textbook.

You might like to make your bearings out of bare wire, saves the stripping which took me the most assembly time. The power source is a D cell, which will run the motor for over 24 hours (I've timed it). The armature is wound on a AA cell or similar diameter tube. Being square would actually be better, and different sizes and turn counts all work with different outcomes, lots of experimentation there! My original prototype was 6 turns, this one is 40 turns, they both spin about the same speed, but the 40 turn one requires less magnets and produces more torque. The magnet is the strong boron magnets you used to get from Tandy (aka Radio Shack). They were once about 50c each, now they want something like $4.50 for them, but you can still get them if you are looking to build an exact replica.

The beads are just to keep the armature centred in the bearings. You don't really need them, but they help with the speed and consistency of the motor. My original prototype was held between the open alligator clips and worked fine. Don't expect it to self-start, it may if there is electrical contact, but you'll probably need to give it a small flick to get it going. A good replacement for my magnet would be the head positioning servo magnet out of a junked hard disk drive, just note the pole placement is a bit strange, but they are very powerful (perhaps too powerful, they give blood-blisters if they pinch you against the fridge for example).

Here is the parts list if you are shopping for it in Australia. Chances are you will be able to source all the parts for free, but worst case you can buy all the ideal parts you'll need at the local mall for about $10:

Part	Where	Price	Notes

© 2000 - 2009 Alan Yates - All Rights Reserved.

mm magnet wire.	Smith, Jaycar, or Tandy.	a 25 gram reel.	money, the 25 grams is way more than you need, it would make 20 motors. The gauge is not that important, #22 or #24 is the easiest to use too thin and it can't support the weight, too thick and it becomes impossible to bend.
Fairly strong magnet.	Jaycar or Tandy.	$4 for a good one.	Magnets from science stores or electronic stores are priced very high, don't buy them there. Scavange for them, old speakers work great, as do old hard disk drives, stepper motors, or anything else that has perm magnets in it. The poles may be in strange places, but they will probably still work if you experiment with the placement. Fridge magnets won't work unless they are the solid disk or bar type, the flat polymer ones are too weak and have alternating poles closely spaced.
Small plastic beads.	Lincraft.	$1 for a pack of 50.	My girlfriend dontated a small pack from her cross-stitch supply for this project. They are not strictly needed, but make operation much nicer. You could use a small length of soda straw instead but your bearings would need to be larger.
D-Cell holder.	Dick Smith, Jaycar, Tandy.	$1.25	You may as well get a good D cell holder. You can just tape wires to end of the battery, but the cell holder makes it a no-brainer and saves connection problems. While you are there, buy a small switch and hook it up in series with one power lead, that way you can turn it on and off easily and save juice.
D cell battery.	Anywhere.	Varies, $5 for 4.	Any old D cell will do, you don't need fancy ones.
Gator test clip leads.	Dick Smith, Jaycar, Tandy.	$3 for a pack of 10.	Always handy, not strictly required but saves twisting wires or soldering, and you don't need a switch that way. Reusable and a must for any electronic geek.

In addition you'll need some tools, I used the pair of pliers and knife in a Leatherman to build the whole thing sitting at my computer at home. The hardest part is winding and bearing only one side of the wire for the armature. One leg can be completely bared, I realised this after I carefully bared only half of each side. The main thing is that the bared side be the same on each end. You can make the motor run a little better by adjusting the phase of the torque spike, just twist the wires slightly so they contact later or sooner. Quadrature is probably the best.

2 comments.

Updates

2002-11-10: Bill Meara N2CQR writes

My first meeting with Bill of SolderSmoke fame.

© 2000 - 2009 Alan Yates - All Rights Reserved. XHTML | CSS | CSS toggle

Tube Regenerative Receiver

2001-08-27

Inspired by an old movie I saw one late night, I thought I'd have a crack at building something with tubes (this was my first tube project). I was a bit turned off at the thought of having to build a 90-250V DC supply (or lots of 9v batteries) just to experiment, so I took a look at the tube data available online. After a bit of digging, I found a range of fairly modern tubes that are designed to run very starved, just the ticket I thought, so I ordered 4 12DZ6 units and matching bases from The Tube Store

I ordered them on a Sunday night (local time), and they arrived on the same Friday. I was pretty impressed, as I had requested the cheaper shipping that is ment to be rather slow. They arrived nicely packed and in good shape.

That Saturday, I had some spare time to burn, so I set a tube up in its socket with lots of alligator clips, playing around with it, I was surprised how FET like it was, just like a JFET only more forgiving, more legs and gates, and much bigger and hotter.

Using a fairly conventional BRF981 style regen design, I 'ported' it to the tube.

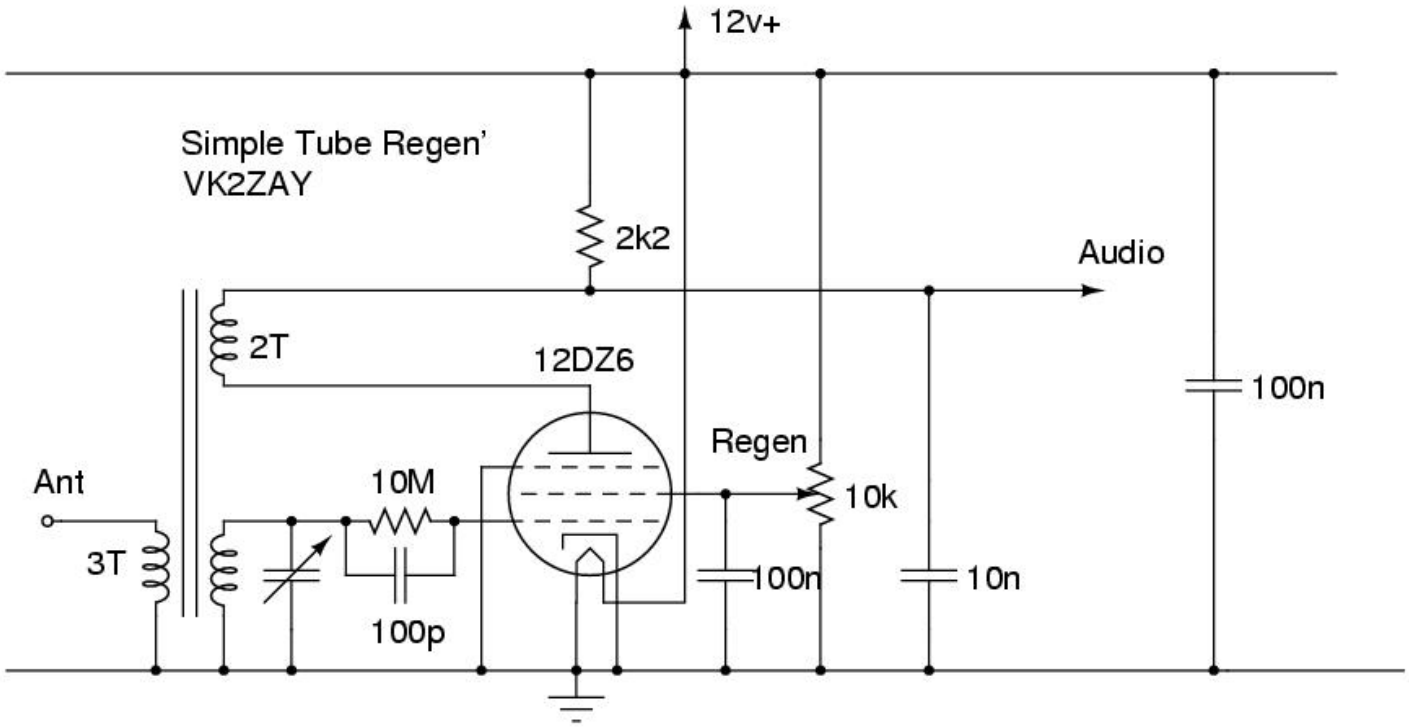

The unlabelled tank is a tuning gang and coil determined experimentally for the bandspread required.

© 2000 - 2009 Alan Yates - All Rights Reserved.

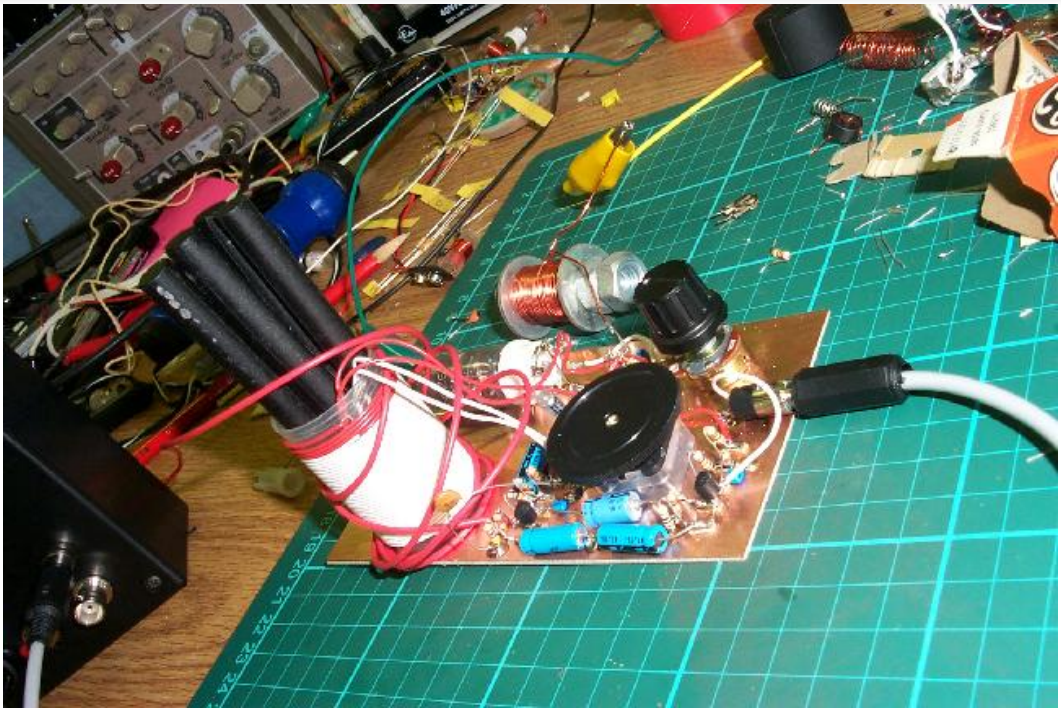

I built the prototype on a chunk of single sided unetched board (my favourite construction technique, a cross between ugly-bug and Manhattan). The coil was just a random bunch of turns on a film canister, it just happened to have holes in it from a previous project that were perfect for the tickler and tank winding lengths.

The antenna coupling coil is just some turns wrapped around the resulting structure and soldered to the ground plane. The ferrite rods you can see are some random ones I picked up at DSE for $1 each. I have no idea what material they are, physically they are hard enough to blunt my hacksaw blades, and quite resistant to shattering, even when notched (they are like tungsten carbide or something, but more elastic. The only way I could cut them for a later coil was to clamp them in a vice and beat on them with a hammer until they shattered, hopefully at the right length). Whatever the designation of this ferrite, it is unlike any I have seen before, I must try to measure its properties some day.

Here is a close-up of the prototype in a largely finished state, note the ugly 200p cap just dangling there in mid-air. I took the picture while I was finding out just where on the band it was working. The choke wound on the bolt is to prevent my PSU from oscillating. It has been playing up lately when connected to capacitive loads, I must fix it.

Also note the little black things with three legs littering the board (well there is only two of them). I ran out of room to use another tube for the AF stage, so I resorted to transistors, and built around the tuning cap (it was an after-thought really). The amp stages are identical, fairly conventional AF designs with a gain of around 10dB each, I have not included a circuit for them as they don't appear in the final version and you can replace them with you favourite building-block AF pre-amp. The just visible black thing that the AF lead heads off to is a small desktop amplified speaker. This arrangement provided enough gain to listen to DX stations while I built its daughter (the slightly better designed and more attractive version)

© 2000 - 2009 Alan Yates - All Rights Reserved. XHTML | CSS | CSS toggle

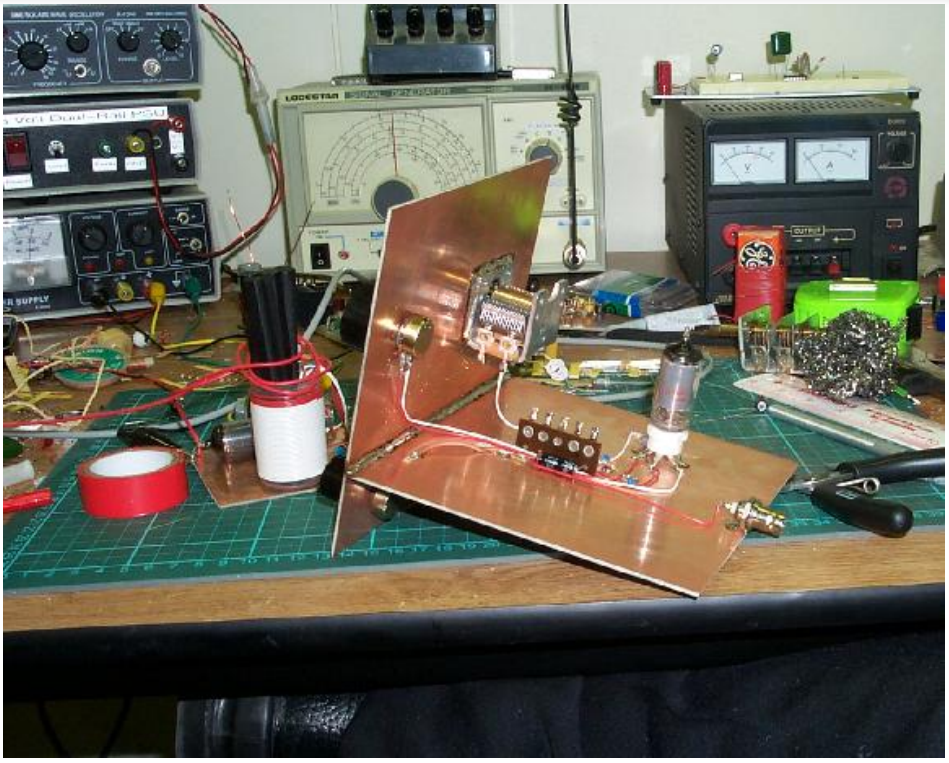

This image comes from about half-way though the construction, the surfaces are unetched single-side PCB material with a solder fillet holding them together. I was concerned about its mechanical strength, but it is more than capable. The front panel has a largish knob for the tuning gang (a ~315p unit I purchased in a lot 20 from Antique Electronic Supply, another rapid shipment and very reasonable prices). There is also a smaller but still quite large knob for the regen control pot, and a medium knob for the AF gain pot. There is also a 3.5mm mono headphone jack, headphones being the main target output device, although the desk amp works well, and the internal speaker is OK for local stations, if a bit tinny because it has no resonant cavity.

Just behind and to the left of the unit, the prototype is cluttering up my workspace, as I listen to some DX broadcast station (it is about 3 AM by now). It IDs as 'Radio 16 NTC' and I can hear other copies of its content elsewhere on the band, it plays country music. I am told this is a new network of country channels...

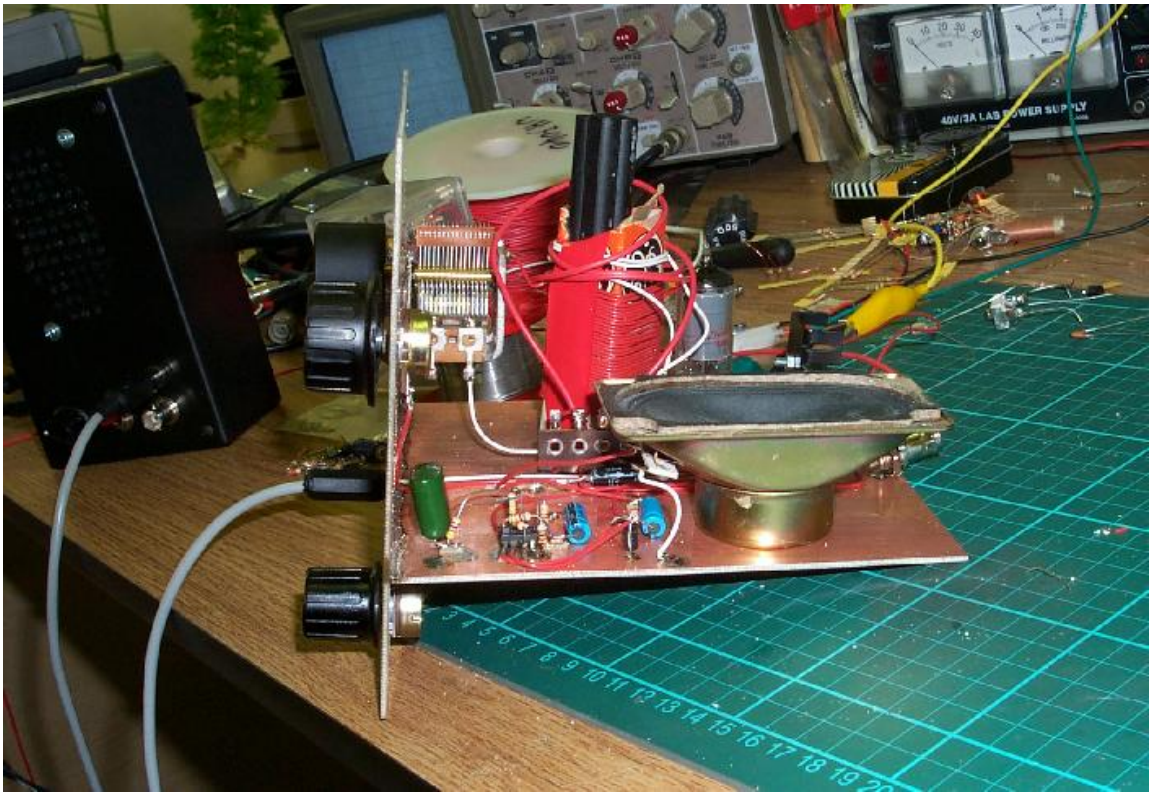

Here is the almost complete unit. There is no finishing touches to the face plate yet, and the coil is still a temp' one I wound on the tube box. The AF amp in this unit is almost identical to the one in the desktop amp the unit is plugged into, except it uses a cheaper (and nastier) LM1458 rather than an LF353, and the preamp stage has been given more gain and a different frequency response.

© 2000 - 2009 Alan Yates - All Rights Reserved. XHTML | CSS | CSS toggle

Note that I've added a 3 terminal regulator (the thing with the heatsink behind the speaker) so I can run the thing straight off my 15V PSU without reducing the heater life.

You can probably see the tinning on the board near the big green-cap, I originally built the unit with a three-stage direct coupled AF amp (100dB design gain) but the rest of the circuit is too microphonic for that. The transistors I used in it were labelled BC549C, but they were pathetic, quite noisy and low gain. I used carbon resistors too, which only made things worse. Maybe some day I'll rebuild the amp using metal film resistors and good quality BC550Cs.

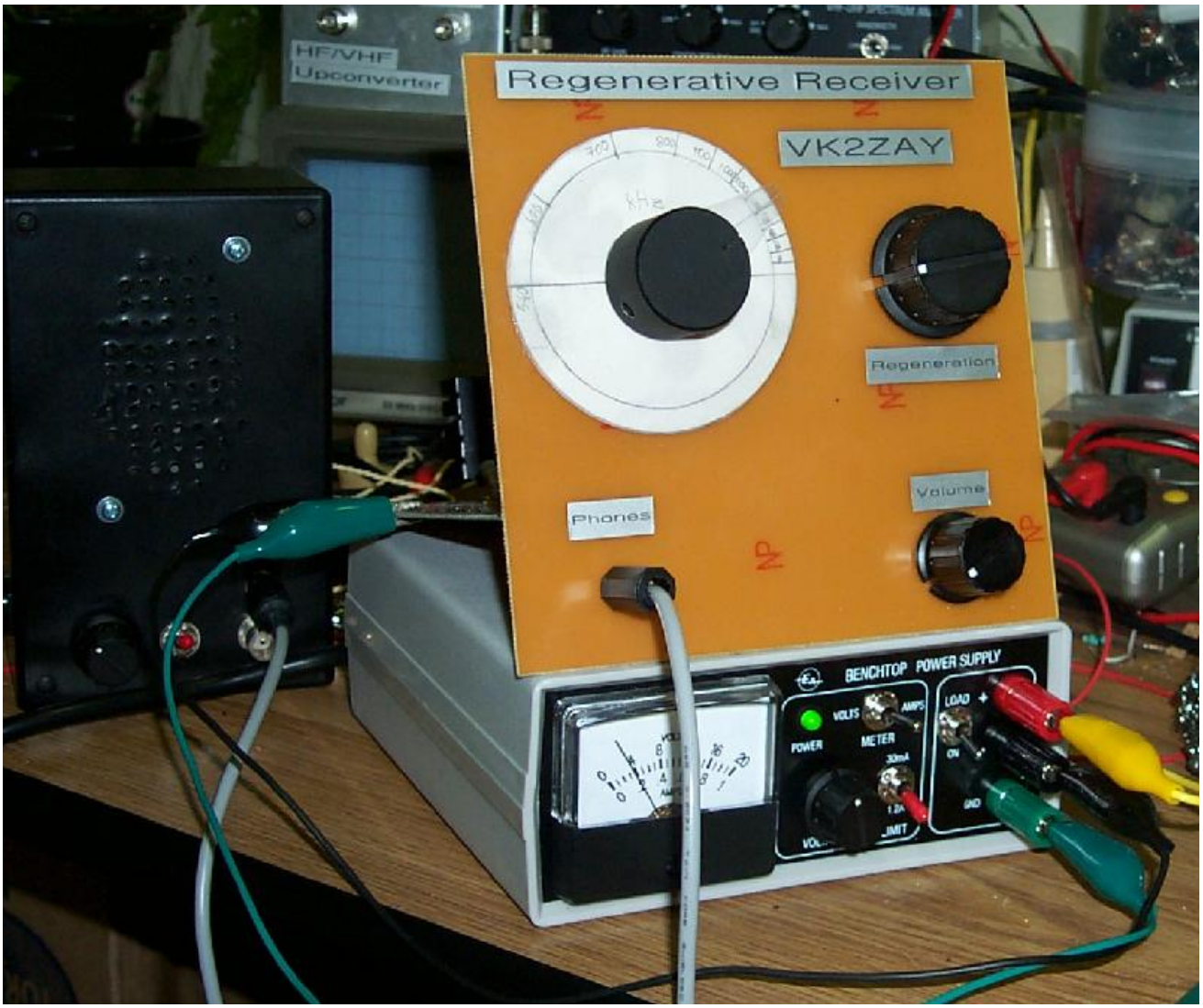

© 2000 - 2009 Alan Yates - All Rights Reserved. XHTML | CSS | CSS toggle

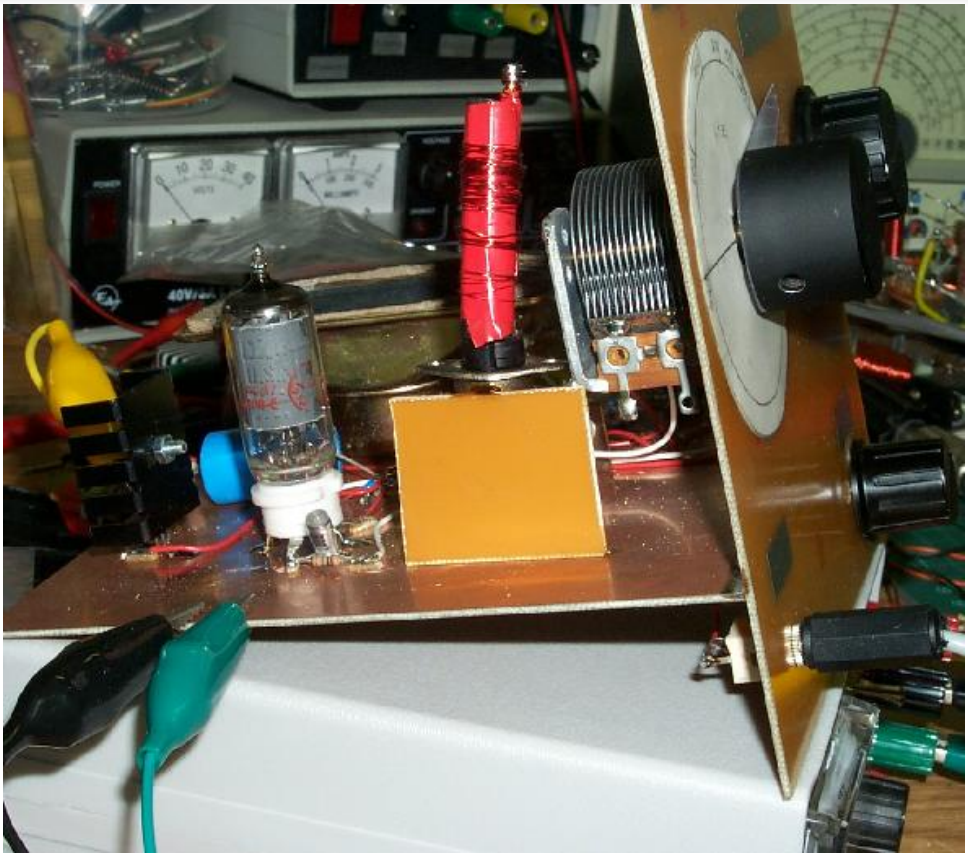

The finished product. The coil is socketed with a 5 pin DIN connector, allowing bandswitching. The tuning knob has a clear plastic needle overlay, and some 'dynamo' style labels have been added to the other front panel features.

I haven't ripped the prototype apart either. It is a workable radio in its own right. I may recoil it for WWVH and build a rather power-hungry stratum-0 clock receiver for the local network.

5 comments.

Attachments

title	type	size
circuit postscript source	application/postscript	12.636 kbytes

© 2000 - 2009 Alan Yates - All Rights Reserved. XHTML | CSS | CSS toggle

UHF Log-Periodic Array

2001-10-27

Presented here is an experimental LPA for the Australian UHF broadcast TV bands IV and V. They span about 520 MHz to 820 MHz. The original design was started when a friend wanted to build a cheap and effective TV antenna for his girlfriend's TV.

The boom/feeder is constructed out of PCB material, two strips of single sided fibreglass substrate, with about '1 ounce' copper cladding. The material is available from DSE in 300mm square sheets, so one fundamental constraint on the design was a 300mm boom length.

This constraint puts Tau at about 0.8 and sigma at 0.11, giving approximately 6 dBi of gain and a fairly flat VSWR profile across the design range. Originally the PCB/transmission line was carefully designed for 75 Ohms, but the dimensions required were mechanically challenging owing to the high dielectric constant of the substrate. 20mm wide strips, glued back-to-back was the final choice, mainly for its excellent mechanical properties rather than any real Zo design point.

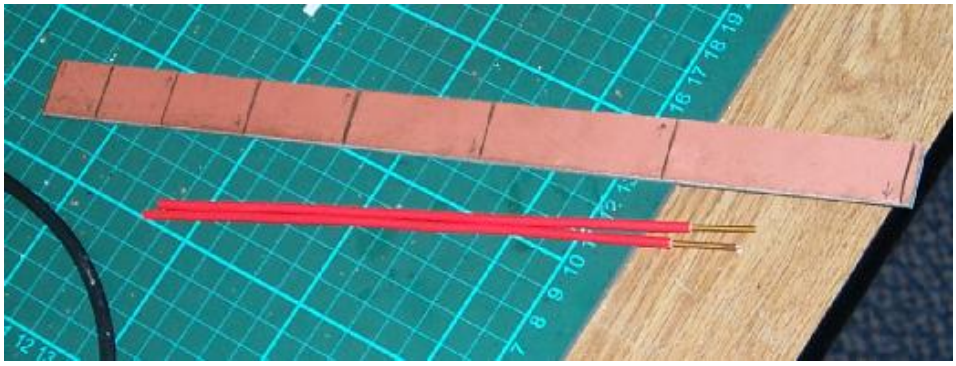

Here you can see the boom marked with element spacings and reminders about the phasing of alternating elements. The two largest elements are also seen, like all the elements, about 20mm extra length was cut, and trimmed as the final construction step. The boom is already laminated at this point, common super-glue was used for this step.

Element	Tip-Tip Length (mm)	Spacing (mm to next element)
1	343	75
2	275	60
3	220	48
4	176	37
5	141	31
6	112	25
7	90	20

Eutectic Tin/Silver solder was used, again not for any particular design purpose, it was what was plentiful and on hand. The higher melting point of this alloy compared to normal Tin/Lead solder made holding the shorter elements while soldering them to the boom quite a painful experience. The elements themselves are 1.5mm diameter solid copper wire, from the centre of heavy-duty mains cable.

© 2000 - 2009 Alan Yates - All Rights Reserved.

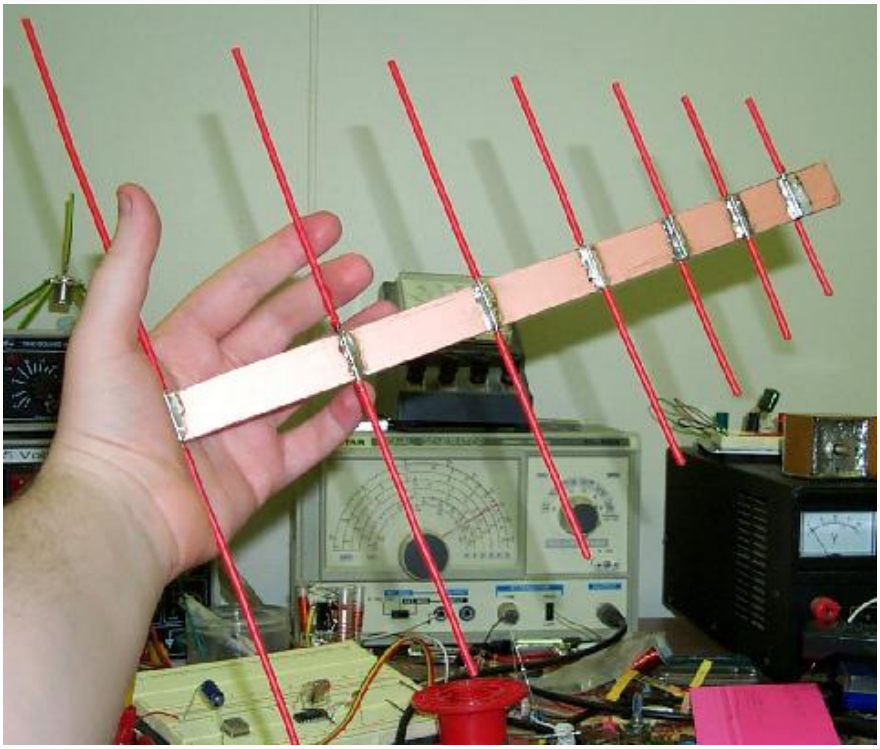

The array is fed directly by 50 Ohm coax (DSE branded RG-58CU in this case). The feed point is as the 'sharp' end of the array, the braid simply going to one side and the centre conductor to the other. A sleeve bead choke of VHF/UHF ferrites helps maintain balance, as does an air-wound choke coil in the coax. Some experimentation was performed with the placement of the sleeve choke, the final decision was to take the coax along the braid connected side of the boom/feeder and place the chokes beyond the end of the boom. There is no terminating stub. This arrangement produced the cleanest pattern

A short piece of wood dowel extends the boom and provides a mounting surface. Nylon cable ties are used to hold the feeder/boom to the dowel and dress the coax from the feed-point back along the boom.

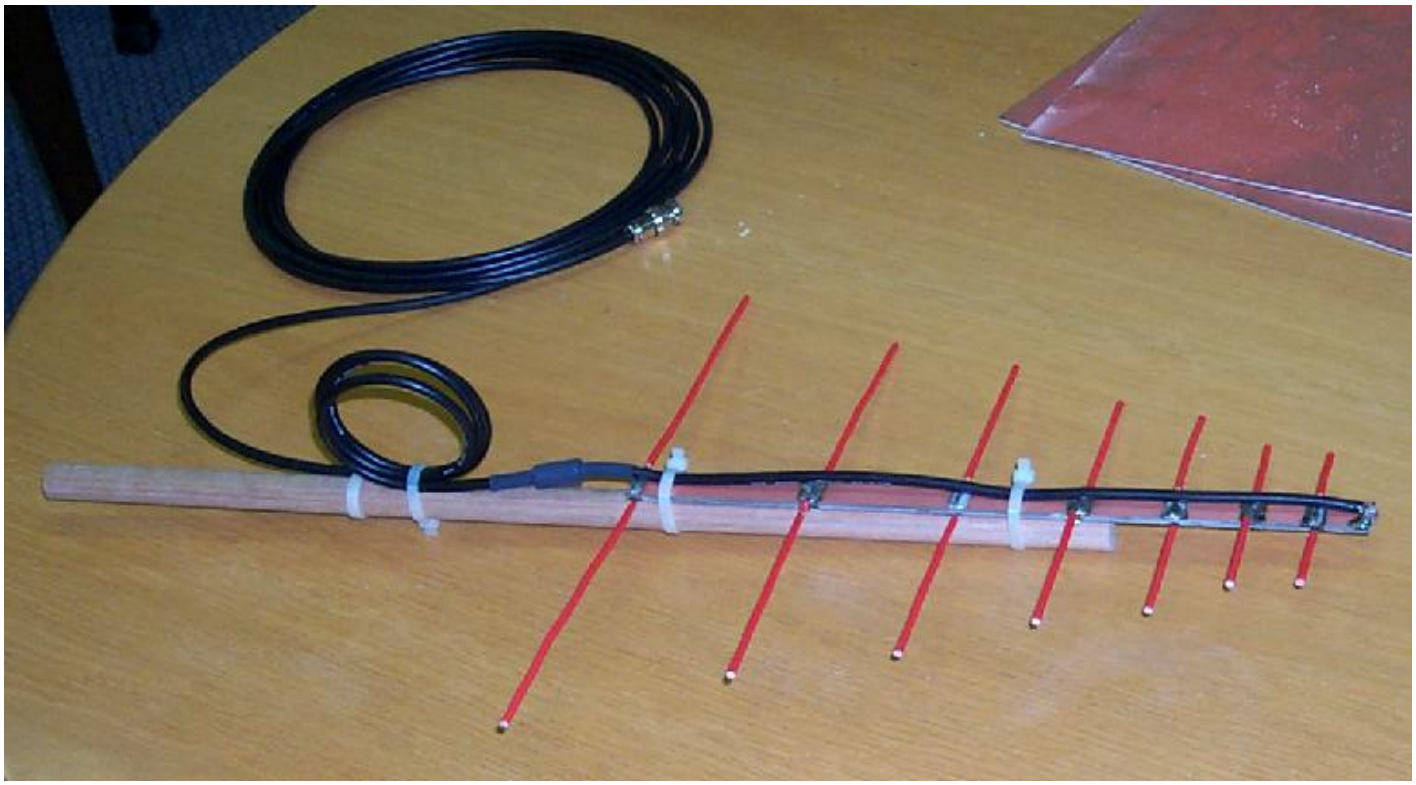

Performance testing is work in progress. So far the antenna shows excellent balance for such a simple feed. The first null is outstandingly deep (full) and symmetric off either side of the main 60-90 degree lobe. Polarization purity is also excellent, with full nulls being achieved by cross polarization. Tests have were carried out by ear, eye and S-meter, using the local North Head TV translator as a signal source. The antenna appears 'useful' well above and below the design range. No

© 2000 - 2009 Alan Yates - All Rights Reserved. XHTML | CSS | CSS toggle

Once the feed VSWR has been assessed a new prototype will be constructed out of hobby store brass tube and box stock. The pattern and bandwidth seem excellent so far, so only the matching really needs validation/tuning. The extra expense of the brass material may not be worthwhile, the cheap (but somewhat easily bent) wire is doing an excellent job.

6 comments.

Updates

2009-01-10: Mathias Katzar Builds One
Mathias Katzar builds an all-brass UHF Log-Periodic antenna.
2003-04-14: Tjerk Schuringa PE9ZZ writes

© 2000 - 2009 Alan Yates - All Rights Reserved.

USBtinyISP Programmer

2009-12-27

The recent blinkenlight projects have giving me a need for a AVR programmer that will work with my Win32 based laptop so I can fiddle with their scripting in place (especially the larger tree project which just won't fit in the attic lab). I've been meaning to play with WinAVR anyway, it is handy to have a Win32 setup for working with AVRs, especially on the road.

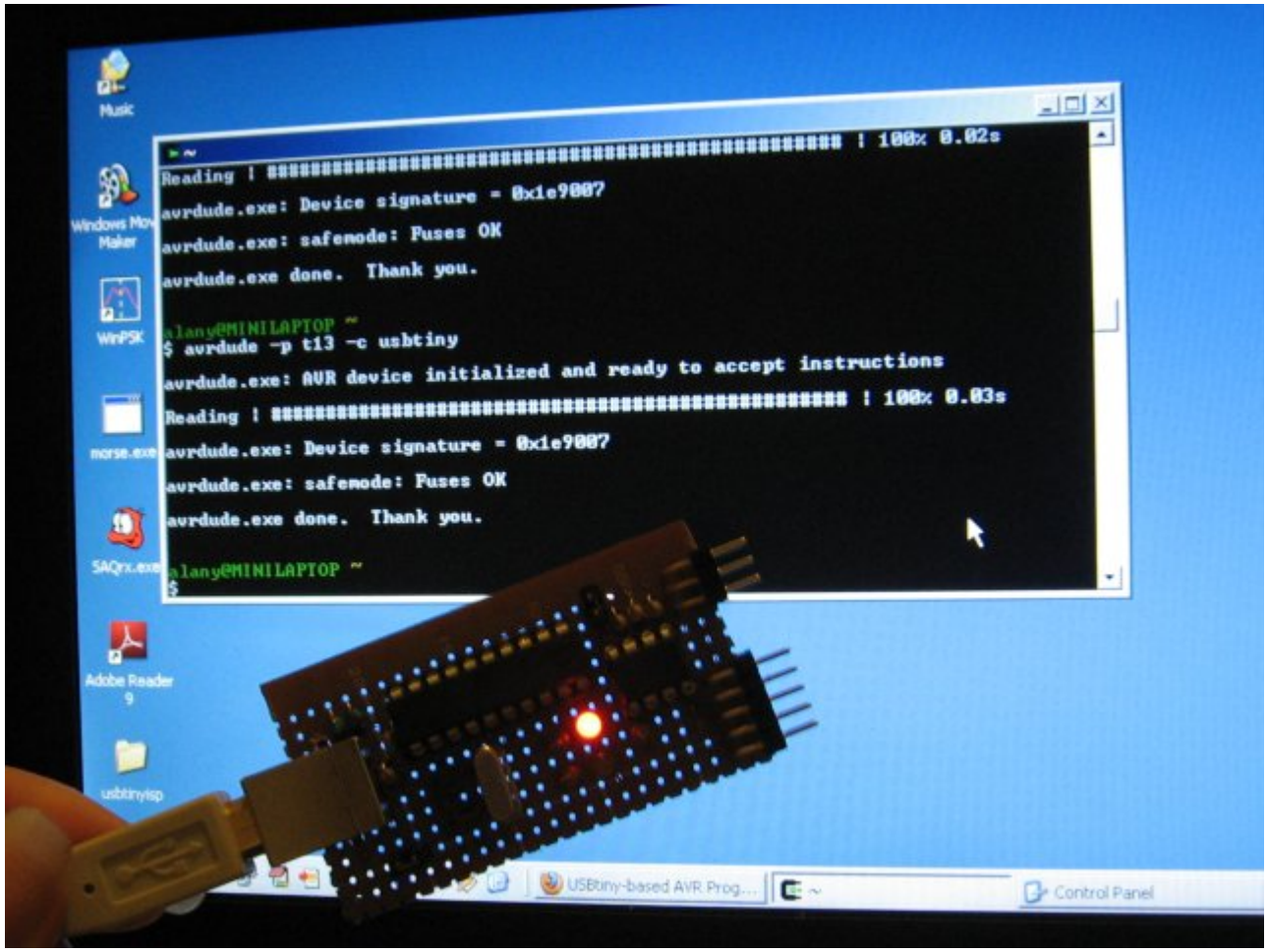

The project is a simple doughnut board implementation of a variant of the USBtinyISP and USBtiny projects.

© 2000 - 2009 Alan Yates - All Rights Reserved.

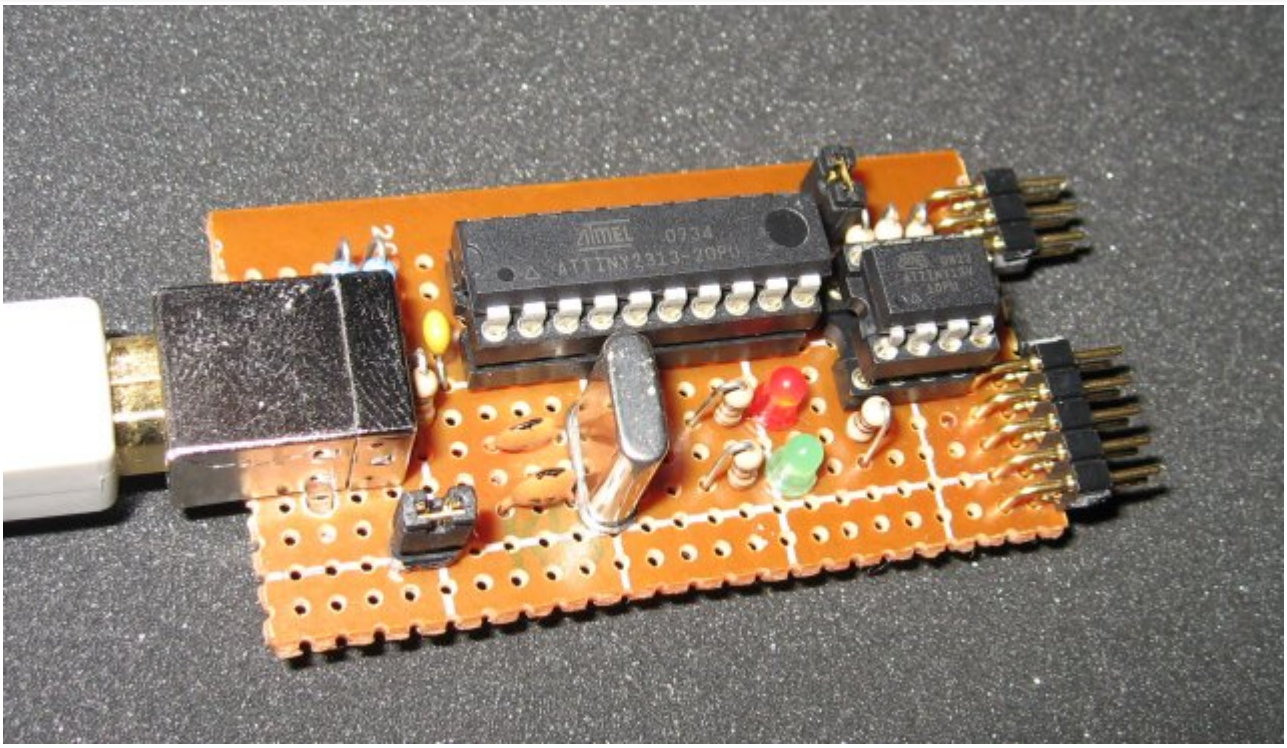

The wiring pencil made quick work of assembling the circuit. I used my current parallel port programmer to program the Atmel ATtiny2313. I left out the 3v3 clamping zeners as I did not have them in the junkbox, but put 100 Ω resistors in series with D+/D-, this seems to work with my USB ports. I'll likely add them when I get some to keep the signal lines in-spec.

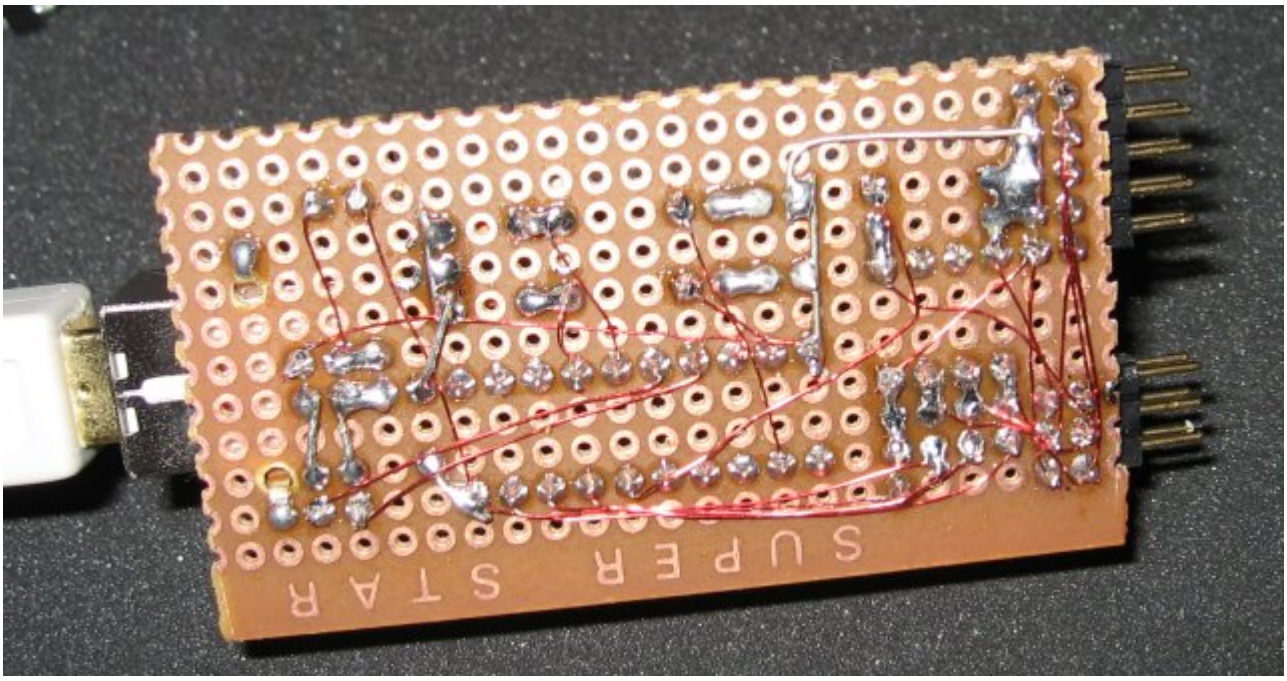

I did not bother to implement the "programmer programming" header option via the ISP header that the USBtinyISP has. I did implement the power control jumpers, letting the programmer run off the external circuit or vice versa. I added protection resistors to all the ISP lines for robustness. Mine also has a 8-pin DIP socket on the board for my current programming ZIF socket adapter (or direct connection of smaller devices) in addition to the standard 6-pin and 10-pin ISP headers. Unlike the original USBtiny project I did not implement a full parallel port D25 (although that is quite tempting as I have many parallel port projects that are deprecated now due to the obsolescence of the parallel port).

Naturally the device works fine under Linux too. In fact it was easier to get working under Linux than Windows.

1 comment.

© 2000 - 2009 Alan Yates - All Rights Reserved. XHTML | CSS | CSS toggle

© 2000 - 2009 Alan Yates - All Rights Reserved.

Variometer Prototype

2009-01-29

Apart from lash-ups with inductors on the bench I've never built a permanent, mechanically robust Variometer before. It has been a long-time interest though, both as a bench variable inductance tool and for practical uses in RF circuits - especially antenna matching.

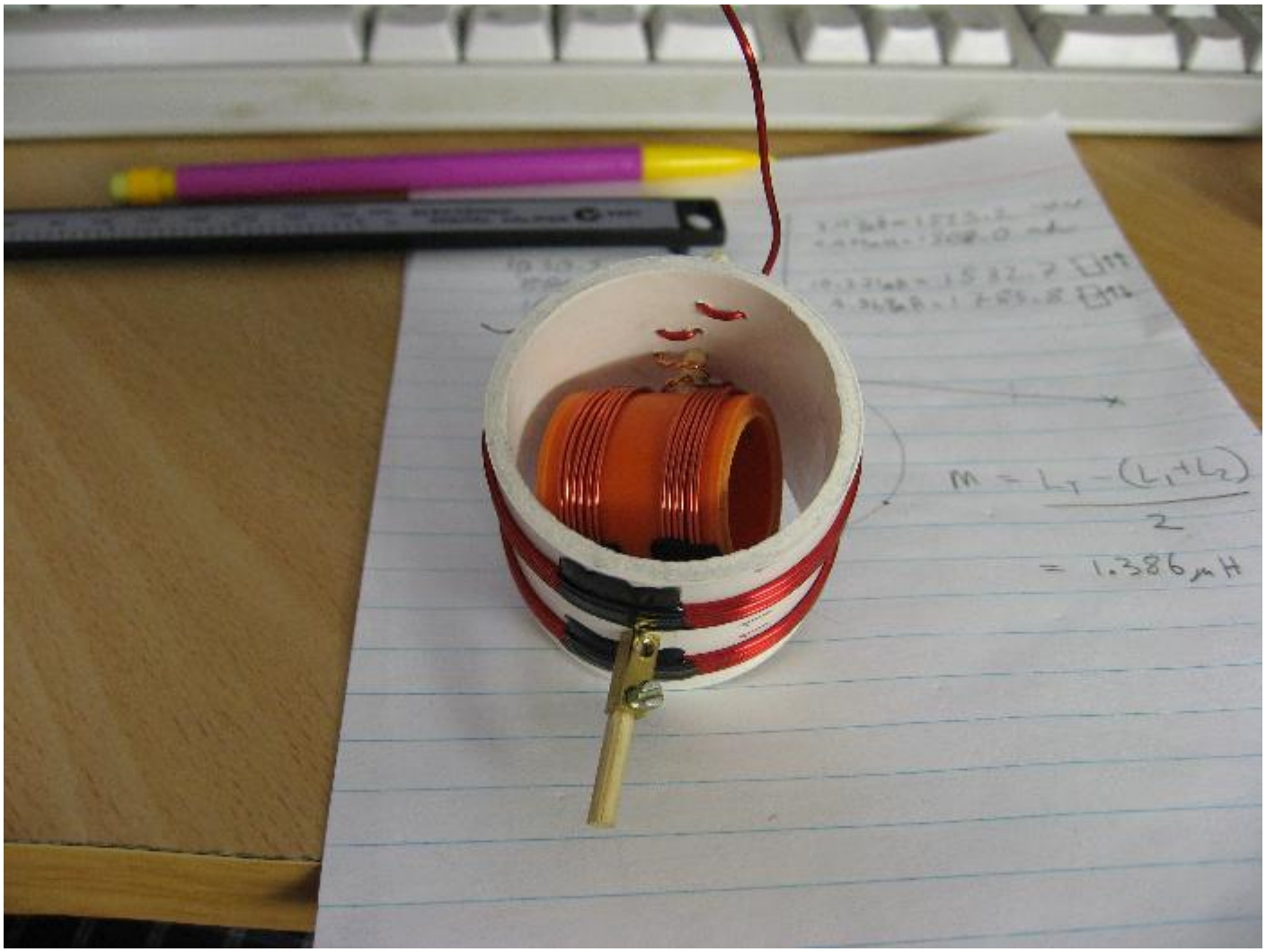

The Variometer relies on varying the mutual inductance between two coaxial solenoid inductors. This allows an inductance range of 4 times the mutual inductance, generally resulting in a 2:1 range of inductance/reactance for the finished device. The coupling of the inductors is varied by rotating one of the inductors with respect to the other. Rotation through a complete 180 degrees allows mutual inductance sign reverse (phase inversion) giving the full 4 times the mutual inductance range, as Ltotal = L1 + L2 + 2*Lm. Uncoupled, the inductors in series would total just L1 + L2 as per normal circuit theory, but their mutual coupling gives rise to the Lm term. Lm can be negative if the magnetic coupling is anti-phase, which like a capacitance can cancel the normally additive inductance.

I started construction by drawing a sketch and doing the maths to determine the geometrical limits on the inner inductor to allow rotation within the outer one. If the ID of the outer coil form is "D", the OD of the inner coil (coil + form) is "d", and the height of the inner coil form is "l", then this inequality must be met to allow rotation: d^2 + l^2 < D^2, which implies the inner former length can't exceed sqrt(D^2 - d^2). Similarly, if you want the inner coil to not poke out past the ends of the outer former (so it can be end mounted for example), then the height "h" of

© 2000 - 2009 Alan Yates - All Rights Reserved.

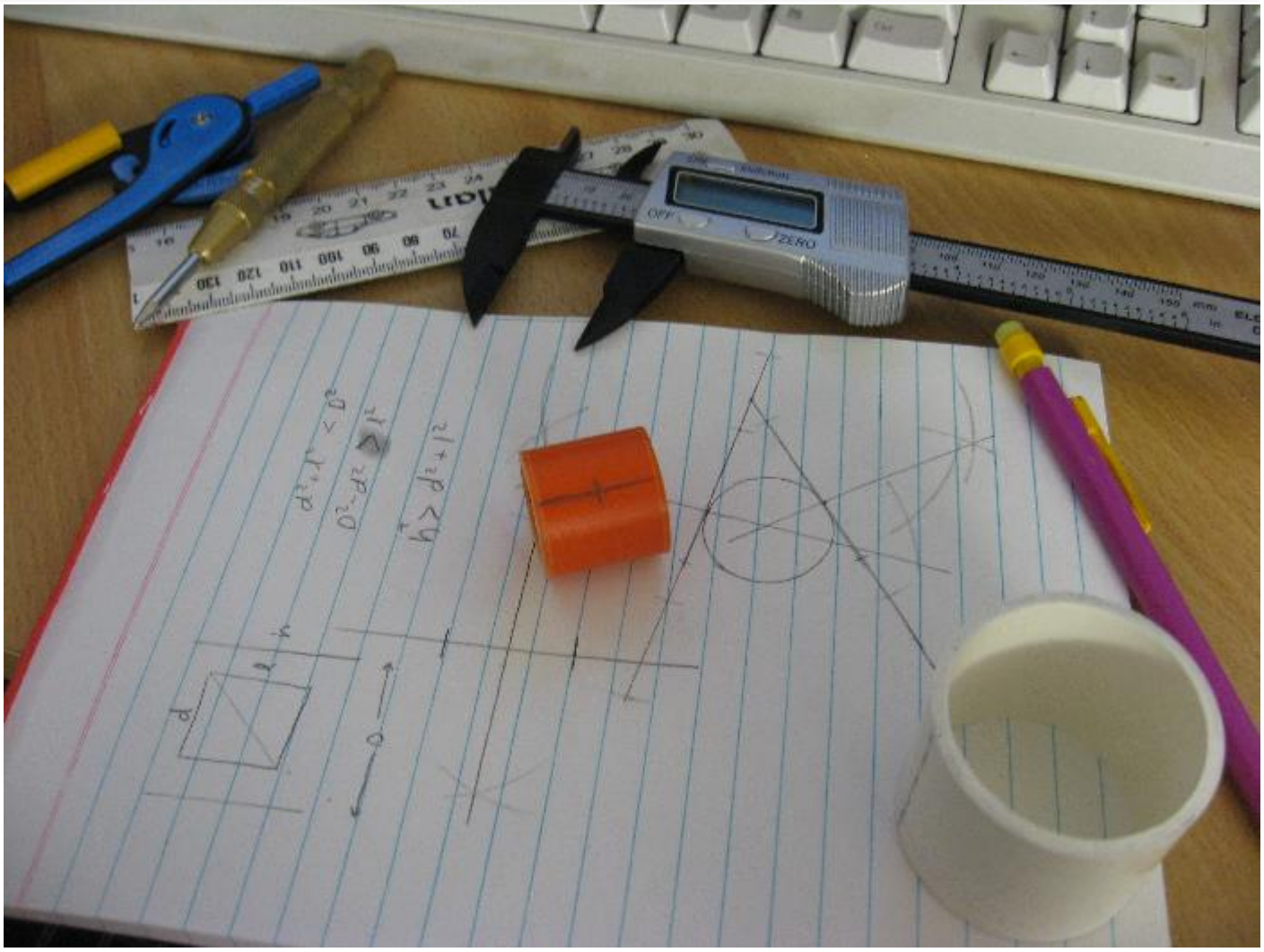

Some 25 mm PVC conduit was selected for the inner coil form, along with 38 mm ID PVC water pipe this constrained the inner coil form hight to be less than 28 mm, I chose 25 mm to give it a little bit of play. The "square" inner coil form constrained the outer coil form height to exceed 36 mm for bench-mountable niceness, so I picked 38 mm and cut up the tubes with a pipe cutter. Some rather inelegant geometrical constructions later to find the centres of the tube walls in both directions and the pipes were drilled.

© 2000 - 2009 Alan Yates - All Rights Reserved. XHTML | CSS | CSS toggle

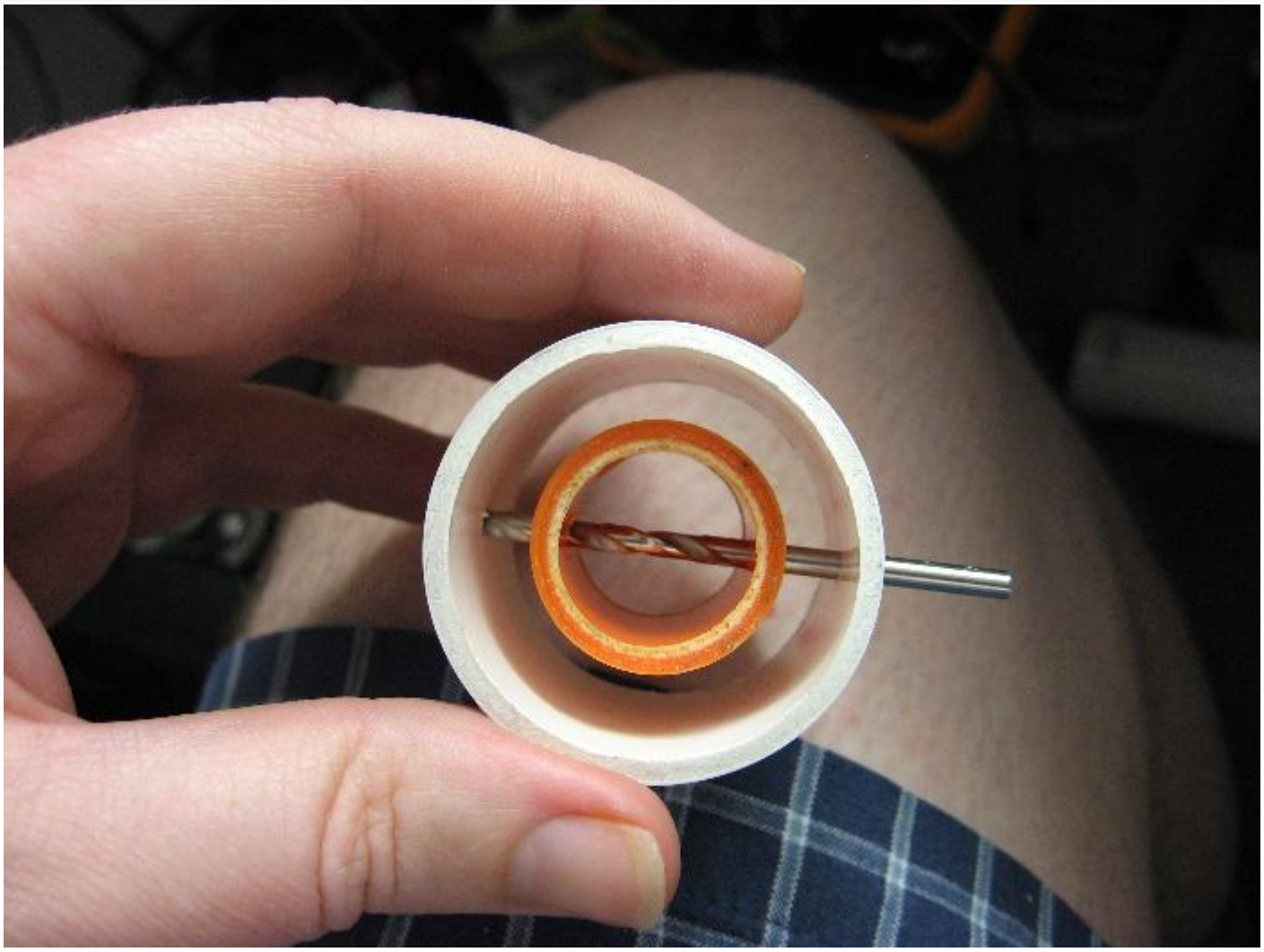

© 2000 - 2009 Alan Yates - All Rights Reserved.

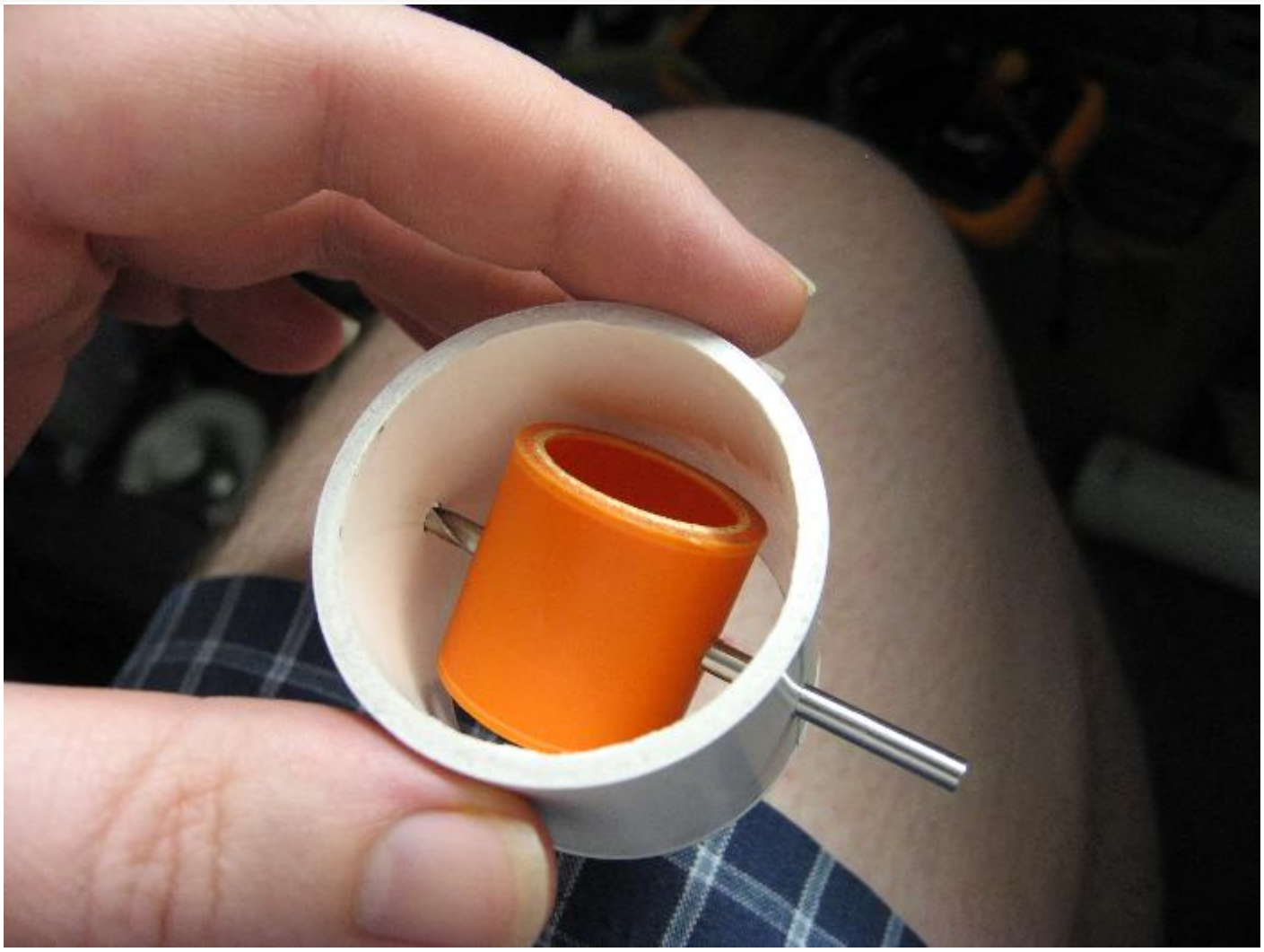

Some 1.3 mm holes were drilled for securing the coil turns and the coils wound. 710 um wire was used for the inner coil, 12 turns total, 6 either side of the rotation axle. For the outer coil 5 turns each side for a total of 10 with 1 mm wire. Some liquid electrical tape was used to hold the windings of both coils in place. Some twisted-pair of 500 um wire coiled around the axle brought out the inner coil connections in a flexible manner (but I have my doubts about the long-term robustness of this arrangement, multi-strand wire would be better where the flexing occurs). The axle was formed by a 3 mm bamboo kebab stick. After trial assembly the rotor was fixed to the axle with hot-melt glue and the centring assured using brass chocolate-bar connector inserts secured over the axle as it exits the outer coil form.

© 2000 - 2009 Alan Yates - All Rights Reserved. XHTML | CSS | CSS toggle

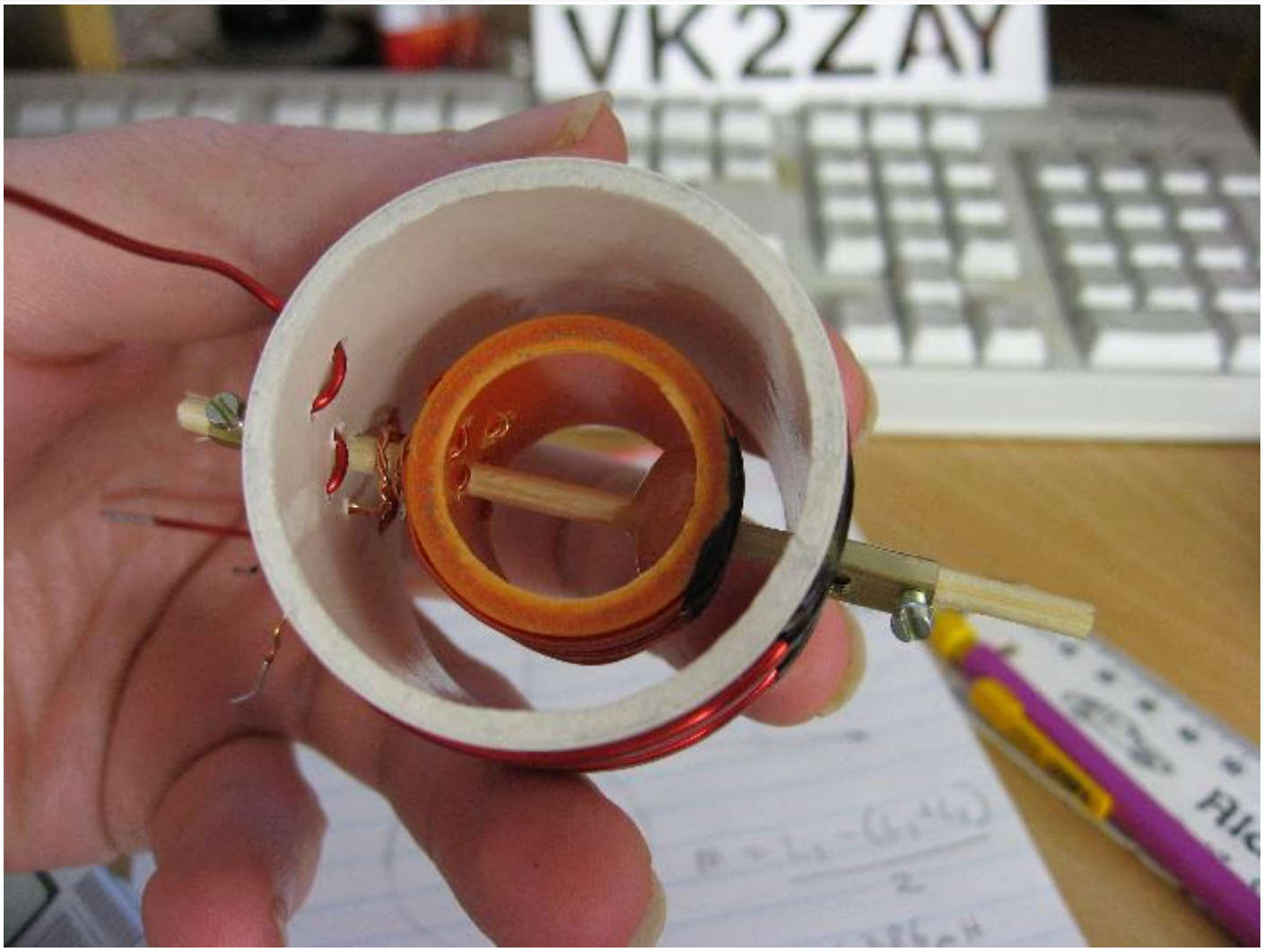

The outer coil measures 4.473 uH. The inner 3.127 uH. In phase they total 10.371 uH and anti-phase 4.869 uH. The matching mutual inductance Lm = [Ltotal - (L1 + L2)] / 2 is 1.386 uH. The coupling coefficient k = Lm/sqrt(L1*L2) is 0.371. The measured "range" of 5.5 uH closely agrees with the theoretical 4*Lm figure of 5.542 uH. I was also surprised by the extremely good agreement of the measured figures with the calculator on this excellent variometer page. If you punch in the geometry of my device the figures it outputs are very close indeed, within a few percent. It seems to slightly over-estimate the Lm, but not enough to be a problem in practice.

This "5-10 uH" variable inductor might become my long desired "L-jig" to match the other R and C ones, or it might become the interpolating inductor along with a fixed taped inductor in an L network matching unit. It's unfortunately high 5 uH inductance limits the HF response of such a matcher, having about j943 Ohms impedance at 30 MHz, however this could be tuned-out with a series capacitor capable of tuning below 5.6 pF. Designing a tapped inductor with ~ 10 uH steps for 90-100 uH would let me tune a 23 pF vertical at minimum of 80 metres. I know the 3 metre vertical on my balcony takes less than 60 uH to tune it (ie 32-33 pF of capacitance), so even just a 50 uH fixed inductor tapped 5 times plus this inductor could tune out its capacitance across HF as long as I had a way to switch in a series variable capacitance on the last tap (Variometer only).

7 comments.

© 2000 - 2009 Alan Yates - All Rights Reserved. XHTML | CSS | CSS toggle

VHF Impedance Bridge

2007-01-13

I've been trying to get into the 147.0 ARNSW repeater, so I can join their homebrew group's net on some Tuesdays of the month. Unfortunately my old FT-415 just can't make the trip barefoot, so I wanted to make an antenna that I could wander up the street with and perhaps get in...

I've been meaning to give the "flower pot antenna" a go, so I wrote to John Bishop VK2ZOI and he was kind enough to send me his articles which include dimensions and all the information needed to make 6 m, 2 m, 70 cm and dual-band 2 m/70 cm antennas. All I needed was a way to assess the VSWR and prove I'd constructed them correctly... I had to build myself some kind of SWR detector for 2 metres.

In the past, I've used my trusty Z-bridge on HF, but at 2 meters it gave me non-zero returns into a known-good dummy load - not a good sign. This project is another Z-bridge, direct from the pages of EMRFD (page 7.24, diagram 7.43). It is claimed to operate into the UHF region, I haven't proved that or really expect it with the sub-optimal resistors I used, however it is perfectly flat to beyond 200 MHz according to my measurements.

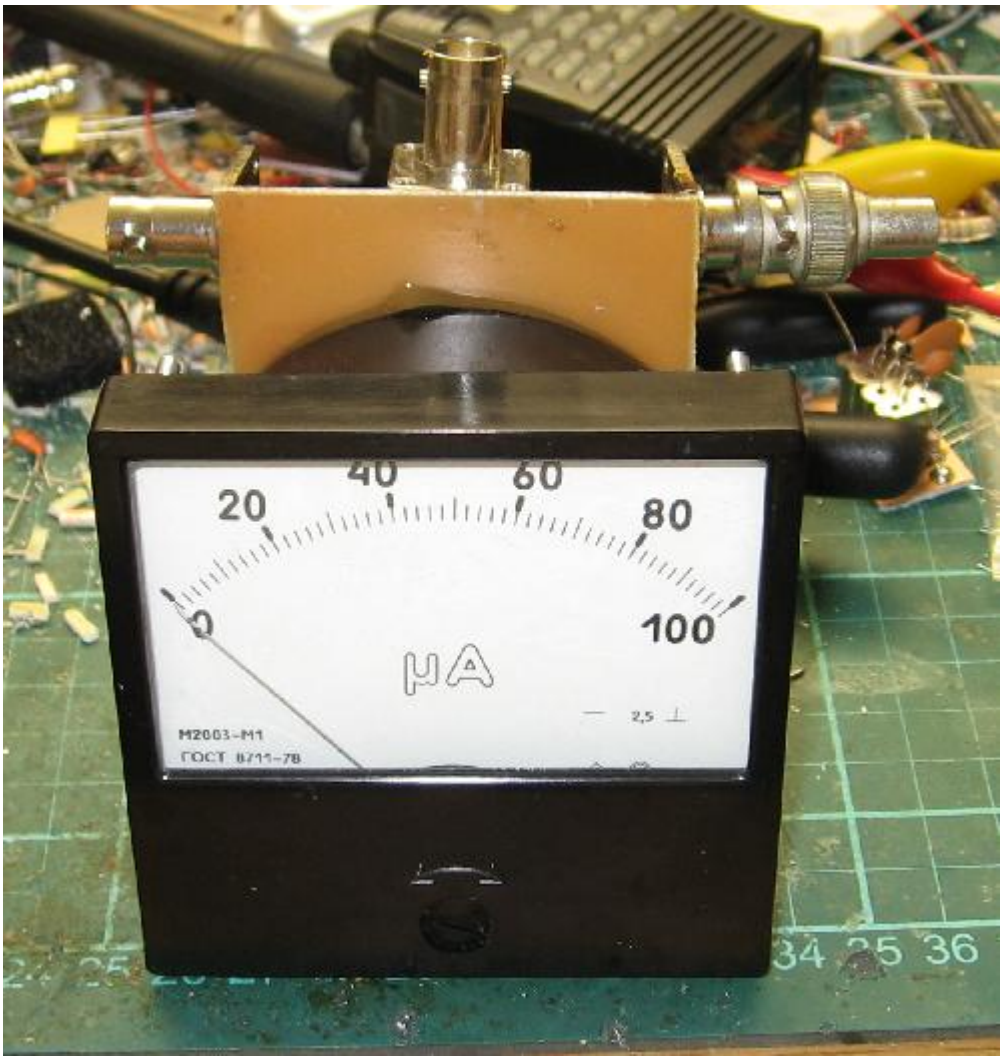

I threw it together in about 1 hour - most of that time was trying to get the damn BNC plugs to tin, so I could solder them direct to the board. Some filing and lots of heat did the trick eventually. The meter is from KW-TUBES on eBay, I have several left, they are perfect for this kind of project.

© 2000 - 2009 Alan Yates - All Rights Reserved.

At maximum sensitivity even my "loadstar" signal generator can make a deflection, so QRP use is fine. With the resistors I used it should handle a few watts.

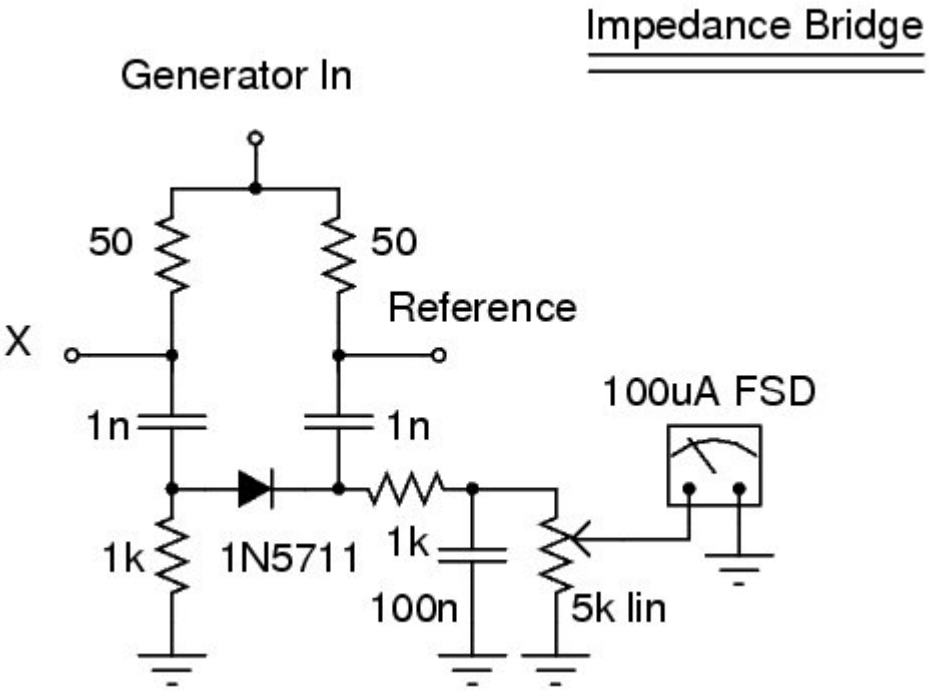

For the 2 metre antenna project it worked perfectly, allowing me to trim my "flower pot" to a pretty good match.

© 2000 - 2009 Alan Yates - All Rights Reserved. XHTML | CSS | CSS toggle

the repeater... More work to be done here, QRO will be needed I suspect. I might have a go at making a helical resonator to null the pager quite close to my QTH, or even a BPF for the band, but that is probably more plumbing than the old HT is actually worth.

3 comments.

Attachments

title	type	size
Circuit Diagram Source	application/postscript	11.993 kbytes

© 2000 - 2009 Alan Yates - All Rights Reserved. XHTML | CSS | CSS toggle

VHF Super-Regenerative Receiver

2002-03-07

I have started straight with the circuit out of the ARRL handbook, by Charles Kitchen N1TEV. I didn't have a 6v8 zener, or a few other part values, so I had to substitute a bit.

Unlike Charles' original circuit I found an audio pre-amp was needed to get sufficient AF gain so the 386 could actually be driven into saturation at full volume. I did have the 386 in its lowest gain configuration (nothing between pins 1 and 8), but the audio was still too weak when I tried it with a gain of 200. The single transistor pre-amp is collector-base feedback biased, which gives high gain, moderate noise, great stability and a good-enough frequency response, it isn't the best topology but it has a low parts count. I used 100n coupling caps in the audio path because I have a huge quantity of them, not because they are a good value choice. That said, the bass response is still quite acceptable, and the monolithic devices are much cheaper/smaller than electros.

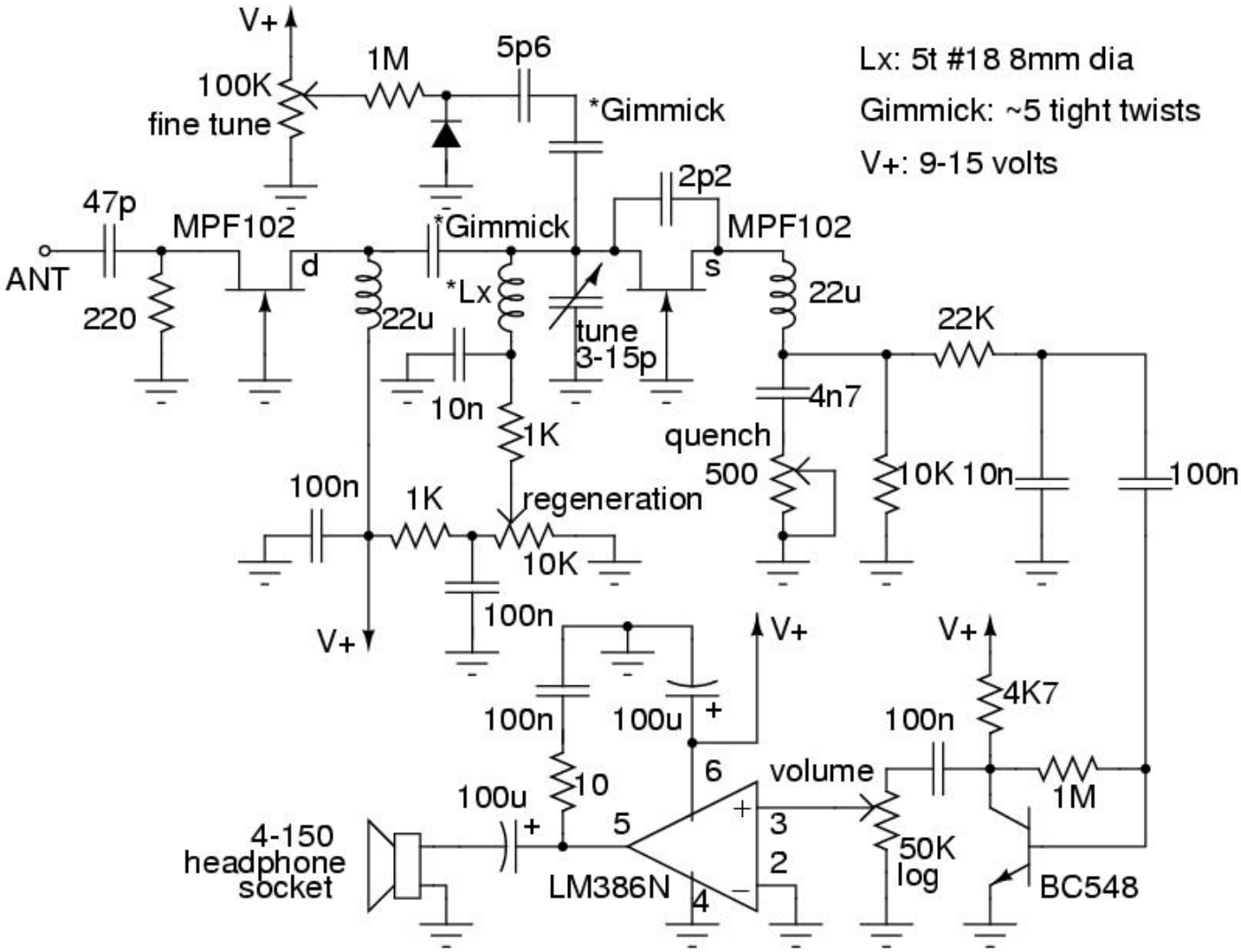

Construction was an organic affair, the unit was built as a prototype, I never intended to finish it off and use it as much as I now do. I listen to FM broadcast radio stations with it almost every night, I even take it to work and listen to the radio there some days.

Note the main tuning coil, it is made from the thick 1.5mm Cu core of house mains wiring. Such wire is cheap, about $1/metre, but contains 2 quite solid conductors, and one stranded (earth) conductor which can be unravelled to give 8 thinner solid wires, or used as-is. The coil must be kept high off the board to reduce stray capacitance for good performance. In hindsight, my choice to use a slab of unetched circuit board for the prototype limits its performance severely. However, it is mechanically robust and forms a low Z ground plain which helps stabilize the receiver.

The audio power amp has a touch of instability operating into higher Z loads with long leads (ie headphones). At high volume levels it can groan. A 10 ohm resistor in its power supply decoupling circuit should fix this, but I haven't bothered to add one yet, I

© 2000 - 2009 Alan Yates - All Rights Reserved.

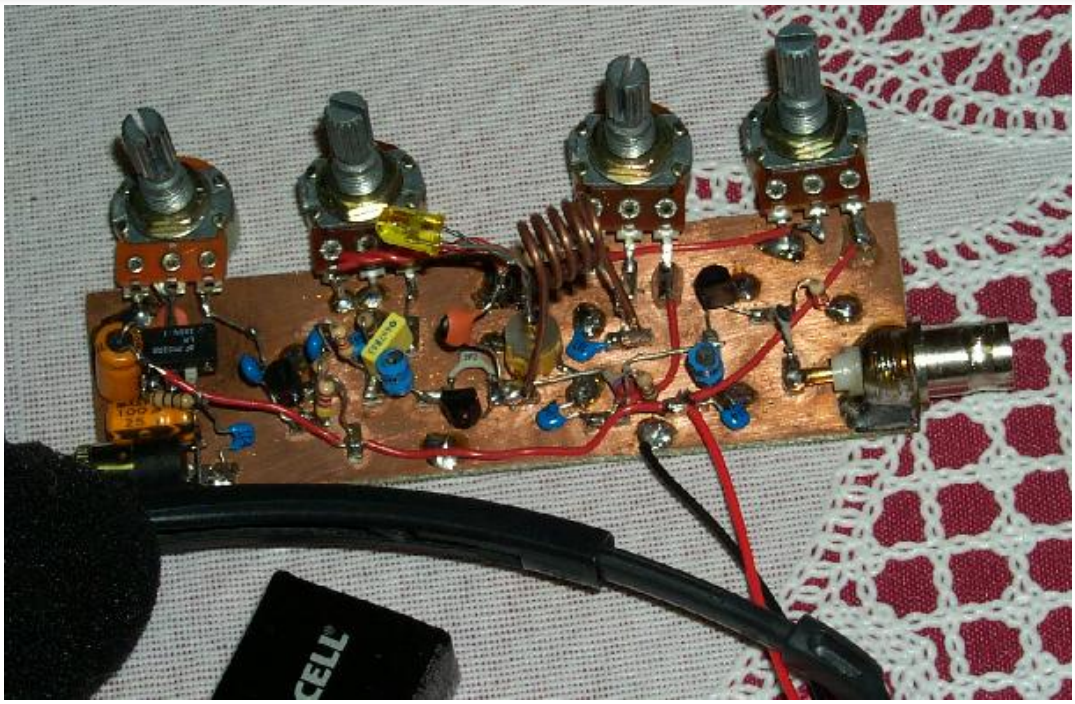

Here is an image of much earlier in the construction, the audio stages were built last (unusual), the audio pre-amp is on the breadboard, tacked to the rest of the circuit by some hook-up wire. There is no volume or fine-tune control at this stage, and the inter-stage coupling is a gimmick (later replaced by a 1p cap).

The coil was attached with IC socket pins, which allowed trying many geometries for performance and to play with different VHF frequency ranges. The thin solid hook-up wire used for the main coil was very poor for its performance, the losses being quite high, often the unit would refuse to oscillate at all unless the supply voltage was raised to 15v and the drain-source feedback cap tweaked.

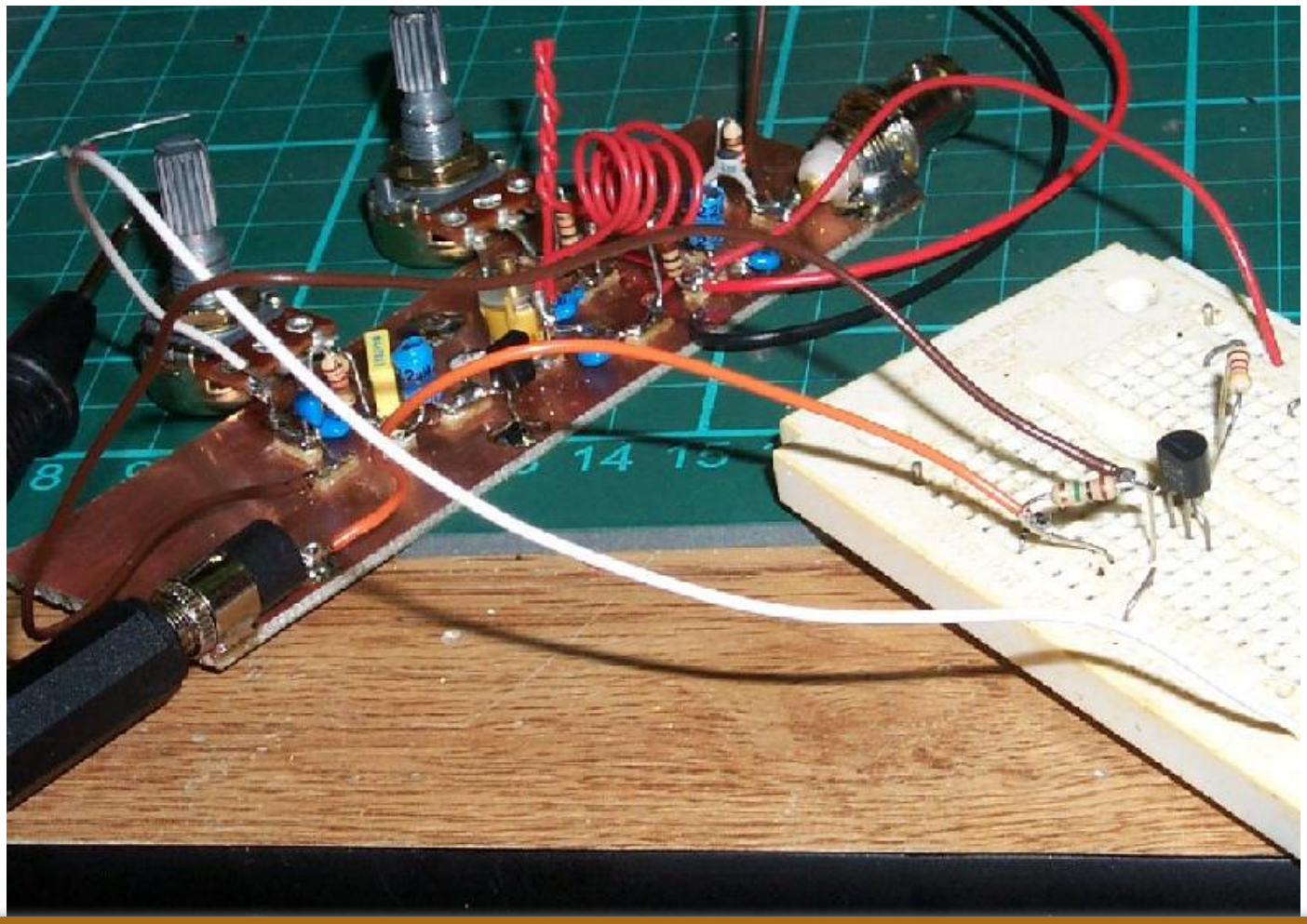

© 2000 - 2009 Alan Yates - All Rights Reserved. XHTML | CSS | CSS toggle

Here is a spectrogram of the receiver in regenerative oscillation. There is no quenching here, it is just making a pure RF sine wave, there is only modest amplification in this mode (there would be more if the regeneration was backed off to the edge of oscillation, but then there would be nothing to see), the selectivity is enormous, you can beat carriers of FM stations, even an AM signal generator's 1.5kHz sidebands are resolved and can be beat separately without a lot of heterodyne from the other 2 line frequencies (carrier and other sideband) in the audio passband, this is straining the stability of the receiver though, the fine tune control is a must to be able to keep up with the thermal drift from your breath.

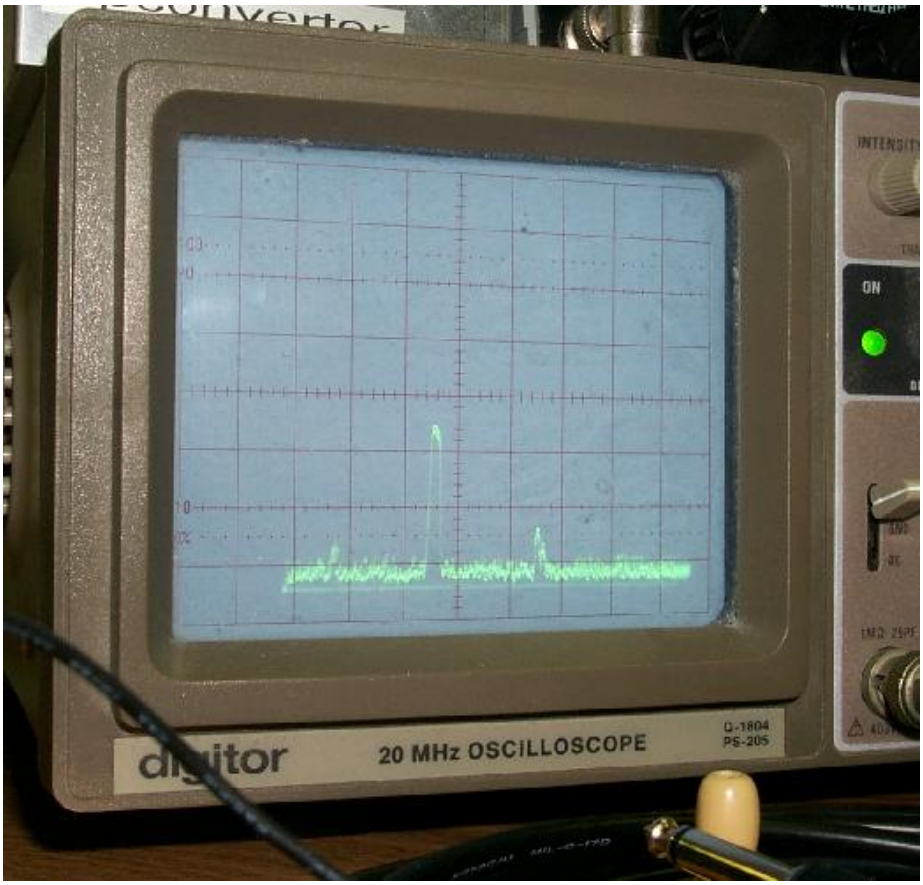

Here is a spectrogram of the receiver in super-regenerative oscillation. The quenching rate is about 120kHz, the waveform looks rather sawtooth like, but has smooth edges. The spectrum analyser's IF bandwidth is about 100kHz, so it doesn't really resolve the quenching sidebands and their harmonics, but you can see the sinc shaped envelope of the higher harmonics due to the scan rate harmonically beating with them.

While the poor IF selectivity of my SA has smudged the details it appears that the main oscillation is actually FMed as well as AMed by the quenching oscillation. It makes sense, the operating point (and hence the drain capacitance) of the FET is being pulled around by the quenching oscillation voltage on the source. This makes it much more complex to say what is **really** going on during the FM demodulation. The slope can't be too flat, and could be quite complex. I would like to investigate this mathematically in the future.

© 2000 - 2009 Alan Yates - All Rights Reserved. XHTML | CSS | CSS toggle

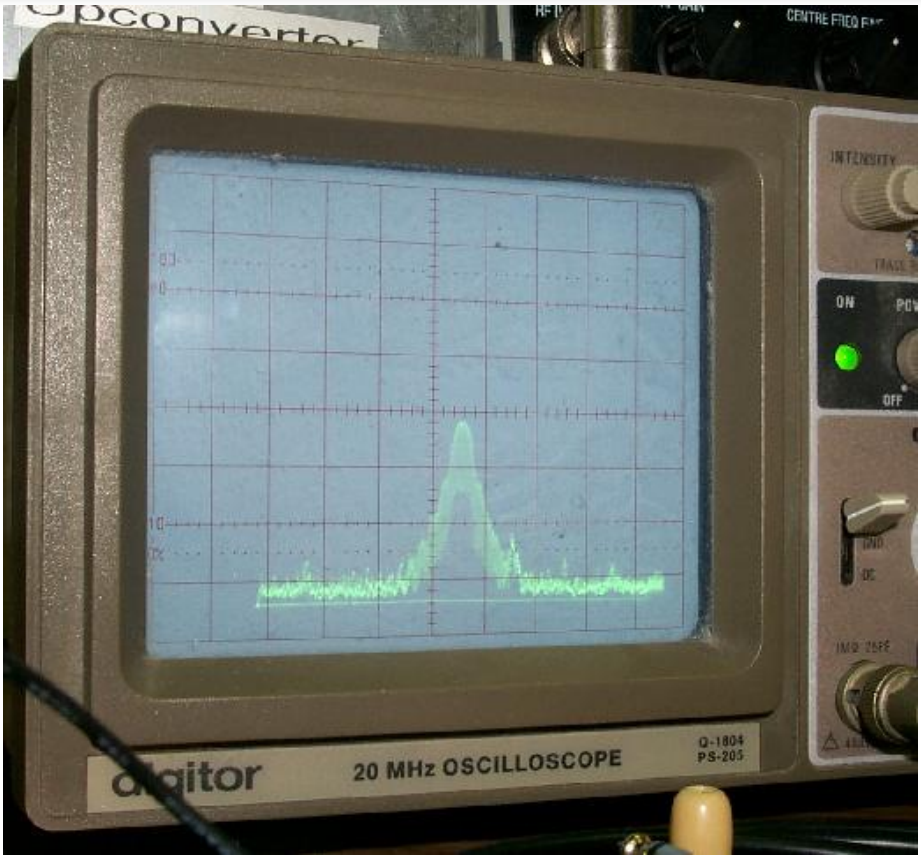

4 comments.

© 2000 - 2009 Alan Yates - All Rights Reserved. XHTML | CSS | CSS toggle

VHF Wavemeter

2008-10-19

Very similar to the HF version, just designed around a hairpin of 4 mm copper wire instead of a solenoidal coil. The ~60 pF gang of the polyvaricon is used alone to resonate the hairpin. An additional 120 pF of capacitance can be switched in parallel to implement the lower band.

Construction is upon a square slab of rather thick PCB material that Kevin VK2ZKB was kind enough to give me for my experiments. Also from Kevin came the smaller pieces of PCB that the hairpin is soldered to. He has tooling to make short-work of cutting up PCB, a task for which I keep promising myself that I'll purchase some better equipment for at some point. He and I have been discussing cutting thin strips of PCB the right geometry to implement strip lines for higher frequency work. It took a lot of heat to solder that thick chunk of copper to the PCB, challenging the super-glue used to attach the pads to the main board.

© 2000 - 2009 Alan Yates - All Rights Reserved.

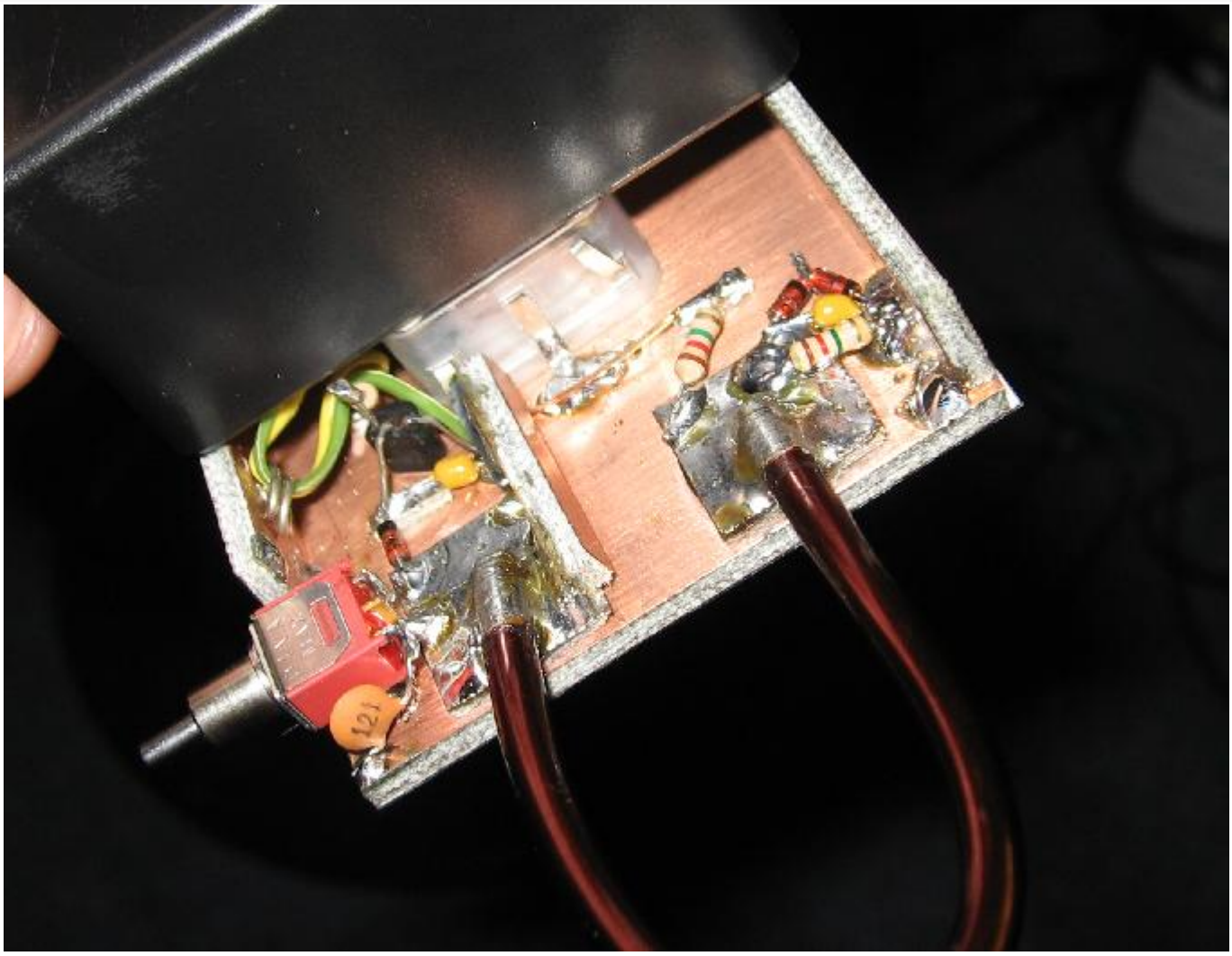

The circuit is otherwise identical to the HF instrument, power supply is the same 3V lithium cell inside the black plastic box which also houses the meter. There is no off-switch or any means provided to turn it off. It tunes 49 - 57 MHz for 6 metre coverage, and 76 - beyond 150 MHz for FM broadcast band and 2 metre coverage.

I use it mainly as a selective signal strength meter looking for stray currents in antennas. It isn't a very useful instrument in terms of absolute frequency resolution, but relative RF power and frequency ball-parking it works fine for.

I successfully made a coil for the HF meter which covers a similar range but with somewhat less sensitivity. Here is a video of me demonstrating mutual inductance coupling between tuned circuits at 2 metres using the older wavemeter.

Resonator Coupling Demonstration
(8.102 Mbytes)

I must admit I kinda like the HF unit better, it is a neater package and is more flexible, but this fixed-coil wavemeter covers the FM broadcast band and 6 metres with better bandspread. It would be excellent for people making FM wireless microphones (bugs) for both working out their rough TX frequency and tuning them up for best output. I wish I had made one this sensitive back in the days when I was an FM broadcast pirate. I did build a VHF wavemeter long ago, but it was a passive one and needed a fair signal for a reasonable deflection, I also then lacked the instruments to calibrate it properly.

© 2000 - 2009 Alan Yates - All Rights Reserved. XHTML | CSS | CSS toggle

© 2000 - 2009 Alan Yates - All Rights Reserved.

Wireless Power Demo Circuit

2011-04-26

A lot of people have been asking me for the circuit of the demonstration TX I used in the video, so here it is:

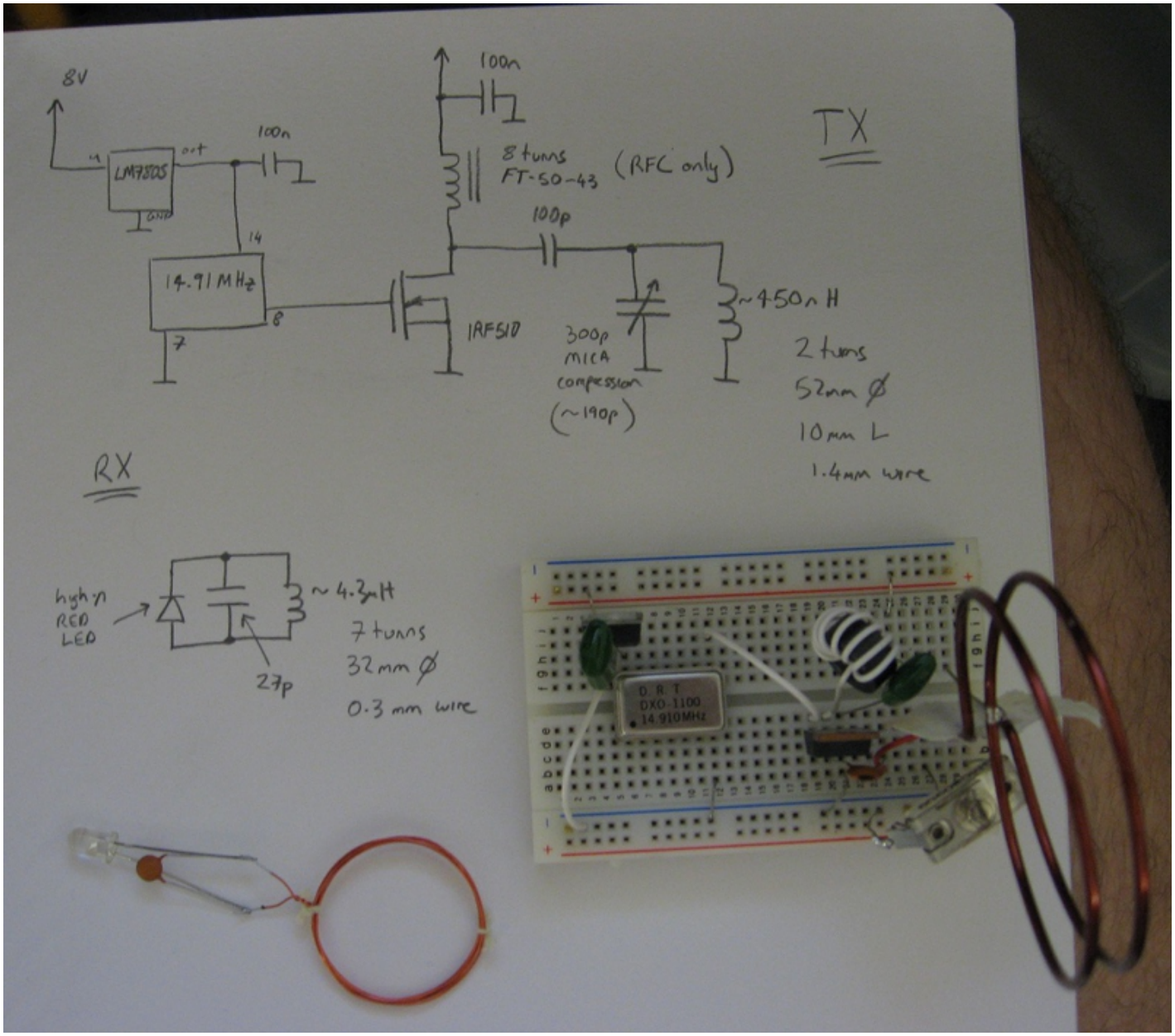

This is *not* an efficient design and is meant as a demonstration only. The compression trimmer should be fairly high quality, but as the demo was on a solderless breadboard perhaps any old junk trimmer would work OK? The IRF510 is hardly the best device for this service. There should *really* be a gate-source resistor on the MOSFET, if the drive disappears it will probably smoke, the drive probably isn't within spec either.

The tuning is quite sharp. Peak the trimmer for best range using the LED receiver. You may need to tweak the 27 pF capacitor in the RX coil to match your particular coil inductance, use a trimmer if you prefer.

Other frequencies for the canned TTL oscillator module should work fine if you adjust the tuned circuits appropriately. I used my resonance calculator to get ballpark values then tweaked from there. It is also helpful if you can measure inductance with some precision, I used my Carver-style LC measurement device for that.

If you were designing for high efficiency I'd suggest a class-E amplifier approach, with link coupling to an otherwise completely floating tank circuit. The link winding size/angle could be adjusted WRT the tank to adjust the coupling to optimise matching for

© 2000 - 2009 Alan Yates - All Rights Reserved.

best efficiency into whatever load is reflected. It would be useful if you could predict/measure the impedance seen to optimise the power amplifier design, but an L or Pi network and standard antenna matching techniques can be used.

29 comments.

Parent article: Wireless Power Experiments.

© 2000 - 2009 Alan Yates - All Rights Reserved. XHTML | CSS | CSS toggle

Wiring Pencil

2009-02-15

Verowire and Road Runner pens/pencils are not available in Australia (at least as far as I've been able to find), so I've always built digital prototype circuits point to point with magnet wire by hand (ie juggling a spool of urethane enamel magnet wire, tweezers, side cutters and the soldering iron). Today I had to build a relatively simple interface board for LED matrix devices, but in frustration after dropping the spool and tangling the wire I finally got around to building a proper wiring pencil.

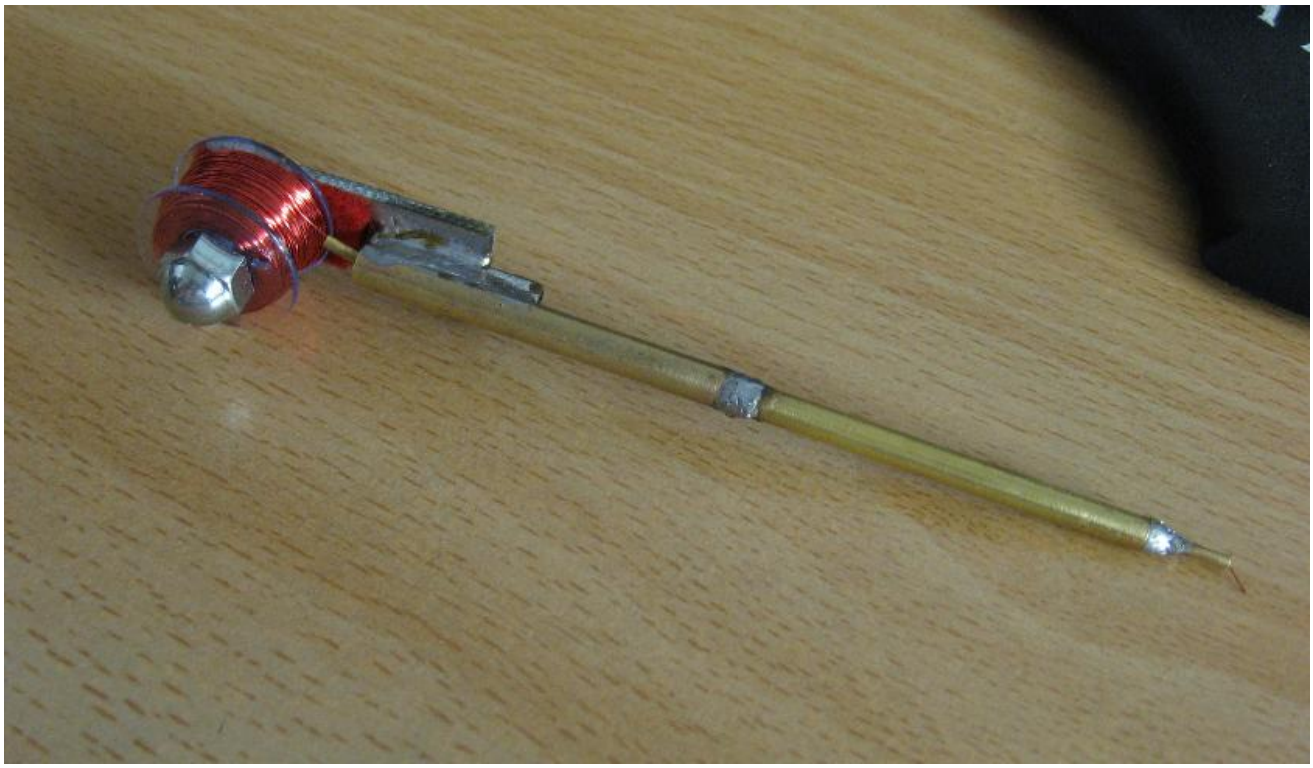

Some brass tubing from a hobby store bulk-pack was used. The pack came from Hobby Co and while moderately expensive contained a great variety of different sizes, all about 100 mm long. The smallest ID tube available was about 0.8 mm (allowing comfortable use of 125 um, 200 um and 500 um wire depending on the application), this was telescoped with several other pieces to build the barrel of the pencil. Some channel stock was used to attach the pencil barrel to a rectangle of PCB material which supports the sewing machine bobbin containing the wire. Electrical solder holds the works together - I had all the parts except the brass tubes sitting in the pile of junk of my desk. You could no doubt build something similar using a discarded writing pen, perhaps with a sports-ball inflation needle.

© 2000 - 2009 Alan Yates - All Rights Reserved.

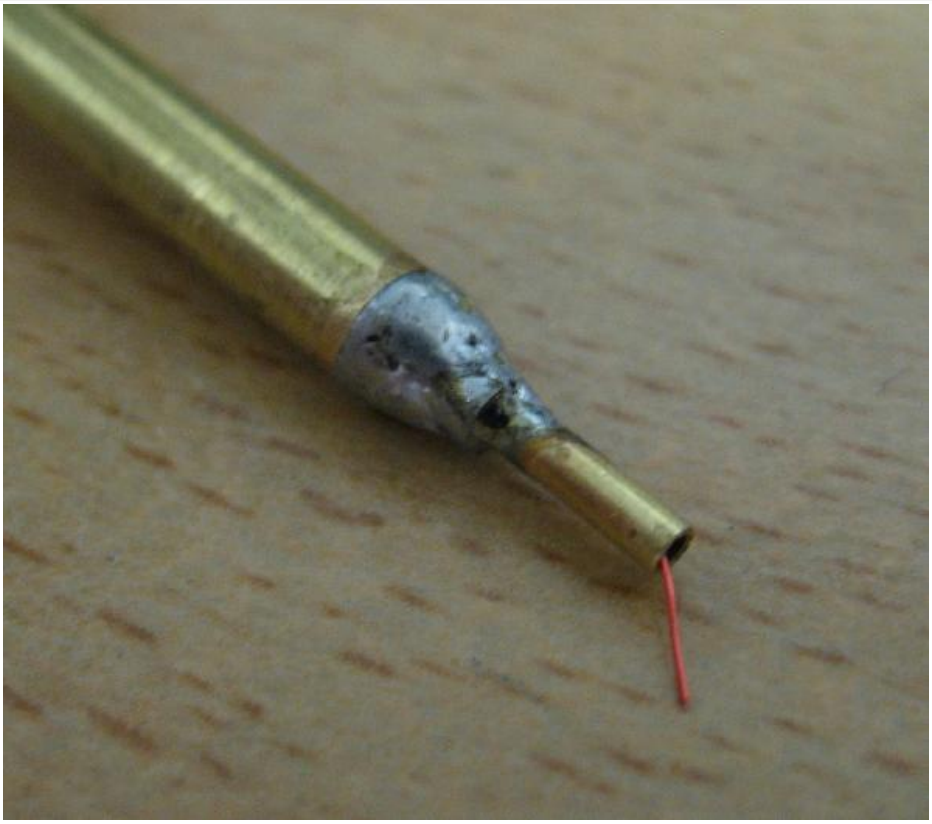

Some felt was fixed to the PCB material to facilitate variable tension; the spool axle is a brass machine screw which is tapped into the thick PCB material, a cap nut is tightened onto the bolt and the entire bolt moved in or out of the PCB to control the friction between the bobbin and the felt. This works quite nicely to control the flow of wire.

The bobbin was filled with wire by attaching it to my electric drill and running on enough wire to fill it from a larger spool. (BTW: a 6.5 mm audio jack just happens to be an excellent friction fit with the ~ 1/4" centre of the sewing machine bobbin. No doubt a bolt with washers would be a safer and more conventional choice - or perhaps a bobbin winder machine if you have access to one.)

© 2000 - 2009 Alan Yates - All Rights Reserved.

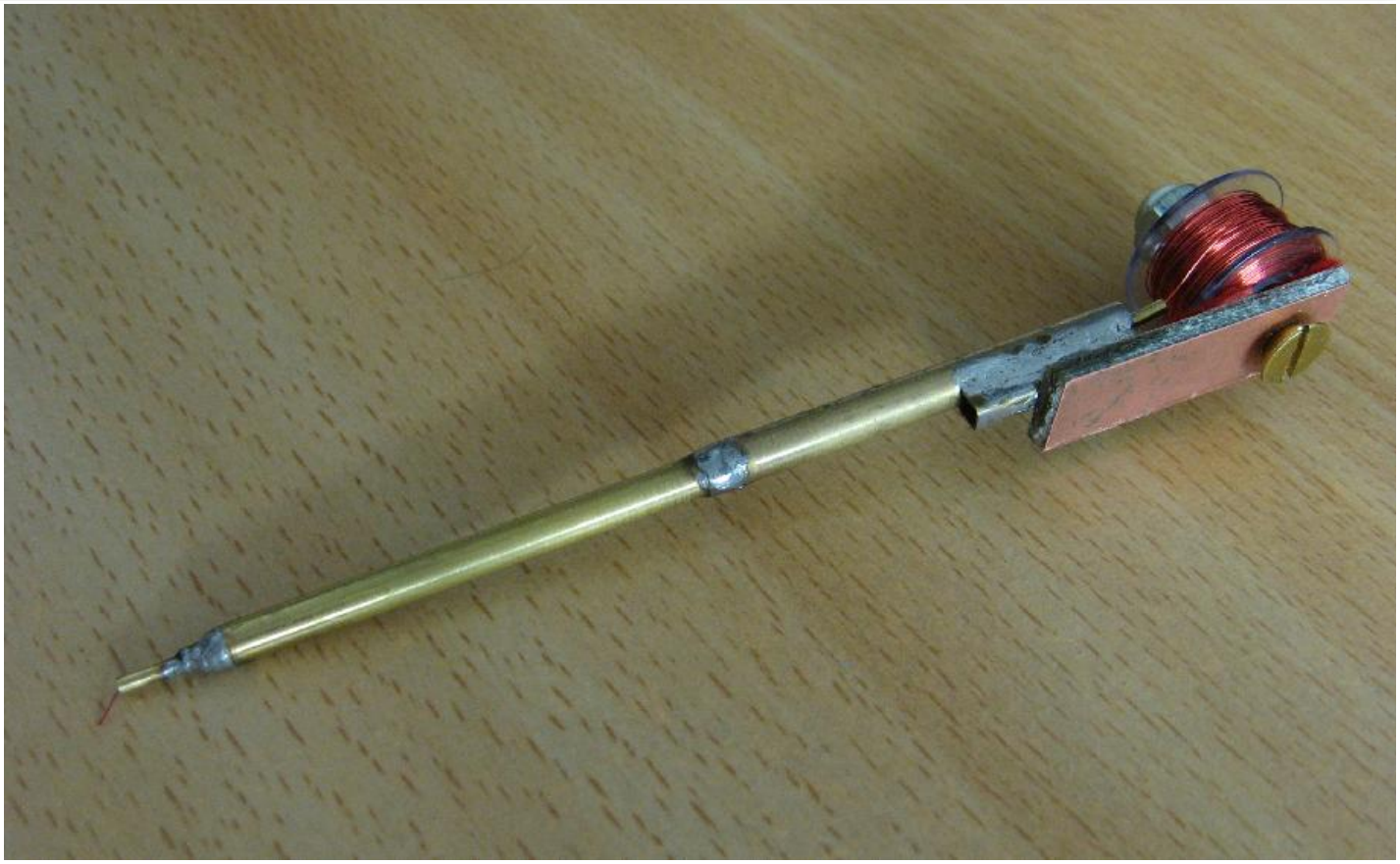

I am yet to find a local source for something like the wire management combs both commercial prototyping systems use. It is said that the self-fluxing wire the commercial guys offer is easier to work with than common UCW - dunno, never used it. The UCW wire is quite easy to tin, especially the 125 um wire which tins even starting far from a cut end. I prefer the mechanical properties of 200 um wire for general purpose work, and use 500 um wire for lines carrying significant current, but I often put thicker lines in by hand anyway. You might like to have several spools (or better, complete pencils) of different colour wire, say red and green for power, amber for signal, etc.

10 comments.

Updates

2009-02-16: Solderability of Enamelled Copper Wire
Tests of tinning various types of enamelled copper wire both from cut ends and through unbroken enamel.

© 2000 - 2009 Alan Yates - All Rights Reserved. XHTML | CSS | CSS toggle

The Fredbox

2007-05-26

I first heard about The G3XBM Fredbox transceiver via Solder Smoke. As soon as I saw it I just had to give it a go. It is a very simple and elegant design. Of course it offers no bells or whistles, just a fixed TX and RX frequency, and a flea-power output on TX, but it has a special charm in its simplicity and the retro usage of AM on VHF.

Transmitter

I built the transmitter side first. BF199s were selected as a good candidate for the RF devices, but I lacked a crystal in the range specified in the original article. Instead, I used a common 16.384 MHz crystal and redesigned the circuit to be two triplers rather than two doublers. This crystal is a common "computer" crystal, but places the TX frequency in the high-end simplex segment. This is a bit too close to the pager-splattered end of the band for my liking, and doesn't match the band-plans. For now this is OK, I'll get a custom crystal cut eventually.

I didn't use shielded cans or variable inductors for the transmit coils (as specified by the article), rather I used fixed inductances wound on T37-6 toroid cores with bare 0.71 mm tinned copper wire. My LC resonance calculator and nH inductance meter were enormously helpful in making the selection and testing of the tripler and output stage resonators. Each stage was tuned with trimmer capacitors.

It was amazingly easy to get the TX-side working, I just built each stage from the crystal to the final amp in turn, testing as I went. Each stage is well behaved and peaks nicely.

Peter VK2TPM could hear the signal at his QTH several kilometres away when I connected the half-finished TX board into my flower-pot antenna. The DC input power was about 23 mW, and no special attempt was made to match the output into the load, in fact the series trimmer in the matching network was absent at this point, just a fixed 12 pF capacitor was used for DC blocking.

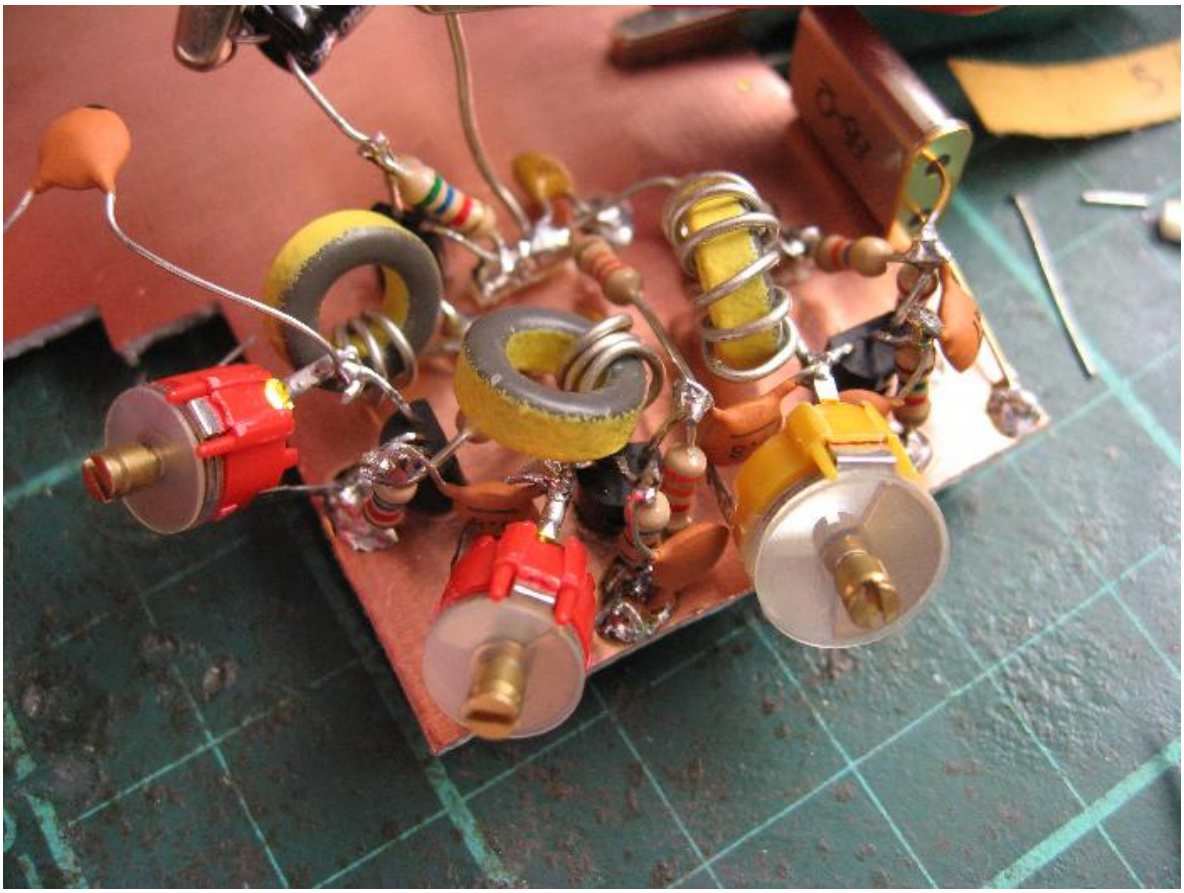

Upon finishing the TX circuit I did experience a bit of RF pick-up in the microphone amplifier 2nd stage. A 1 nF capacitor to ground discouraged its RF gain and eliminated the problem. The 2nd AF amp stage is located immediately adjacent the crystal oscillator stage and was picking up RF directly. The effect was not audible, but was visible on the spectrum analyser as weak 16.384 MHz sidebands either side of the carrier. This wasn't causing feedback, just high-frequency modulation of the signal. If nothing else it proved the bandwidth of the modulator, which is perhaps a surprise considering the 100 nF decoupling on the modulated rail, however the output impedance of the series modulator emitter is so low it could deliver a few tens of mVs of HF ripple into that kind of load.

Receiver

© 2000 - 2009 Alan Yates - All Rights Reserved.

As easy as the Transmitter was, the Receiver was hard. It fought me every inch of the way. I spent an entire day trying to work out why it was simply not super regenerating from about 130-160 MHz. It turned out to be a 10 nF decoupling capacitor on the cold-end of the detector resonator. The article specified 1 nF, and I originally intended to use this value, but I had a strip of 10 nF mono's on the bench, so I used them. At build time I did consider why 1 nF was specified in the first place, I figured it was avoid the exact problem that would befall my unit, decoupling resonance. (Lesson #1: Trust the original builder and your initial instinct.) When the unit wouldn't oscillate properly I assumed that I had damaged the capacitor on install - this is a pretty common fault, so I tested it in-place by ensuring it would shunt a HF signal (my standard decoupling cap test), it passed this test just fine. (Lesson #2: Test at the frequency of operation.)

My hubris about "modern components" being superior and likely "purely capacitive" at VHF turned out to be completely wrong. It took *hours* to work it out, but eventually I determined the entire decoupling network was resonant near the operating frequency. Much foul language later and I replaced the cap with a ceramic 1 nF, with its "flashing" broken off and scraped right back to the disc to minimise the lead length. This cured the problem.

For the longest time I had assumed it was the source coil - and in fact the first source RFC I used (a molded choke) was being operated above its self-resonant frequency and prevented any oscillation at all. I replaced it with a few turns on a ferrite bead which seems just fine now.

A couple of other minor annoyances/mistakes were worked through (like picking larger inductances and making the entire circuit so sensitive to stray capacitance it was a nightmare to tune - DUH!).

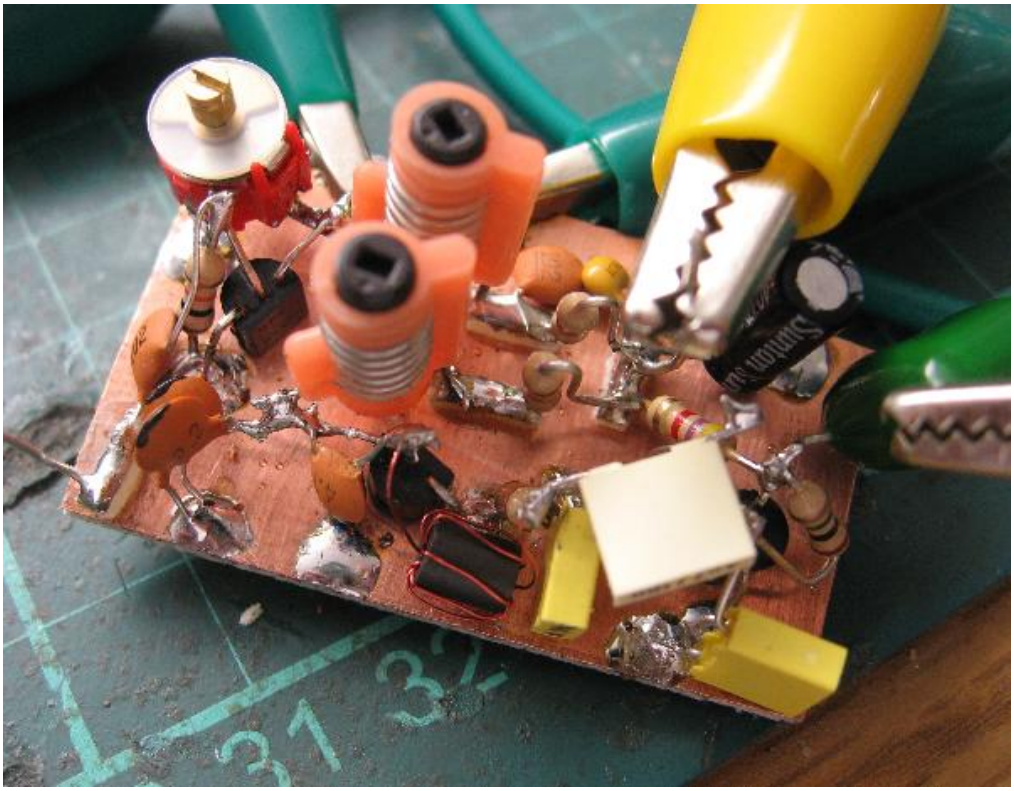

Eventually the unit super-regenerated right through the region of interest and the LNA stage was constructed. Initially I put the LNA drain coil too close to the detector coil and they over-coupled. This meant as I tuned through resonance on the LNA drain it would pull the detector so much it would shut down. Bugger! Moving the coils apart a little reduced this effect to acceptable levels, but the core of one still effects the other a little. I'm happy with the current coupling, and it is actually useful to help tuning the LNA resonator. As you rock it through resonance it will pull the detector, and by observing the wiggle on the spectrum analyser you can tell you've got it tuned up. The AGC action of the detector makes it hard to tune for maximum smoke otherwise, as the AF output doesn't change much at all even when the front-end isn't tuned up properly. Once you've got it nearly right you can use a weak signal to tune for best signal to noise.

© 2000 - 2009 Alan Yates - All Rights Reserved. XHTML | CSS | CSS toggle

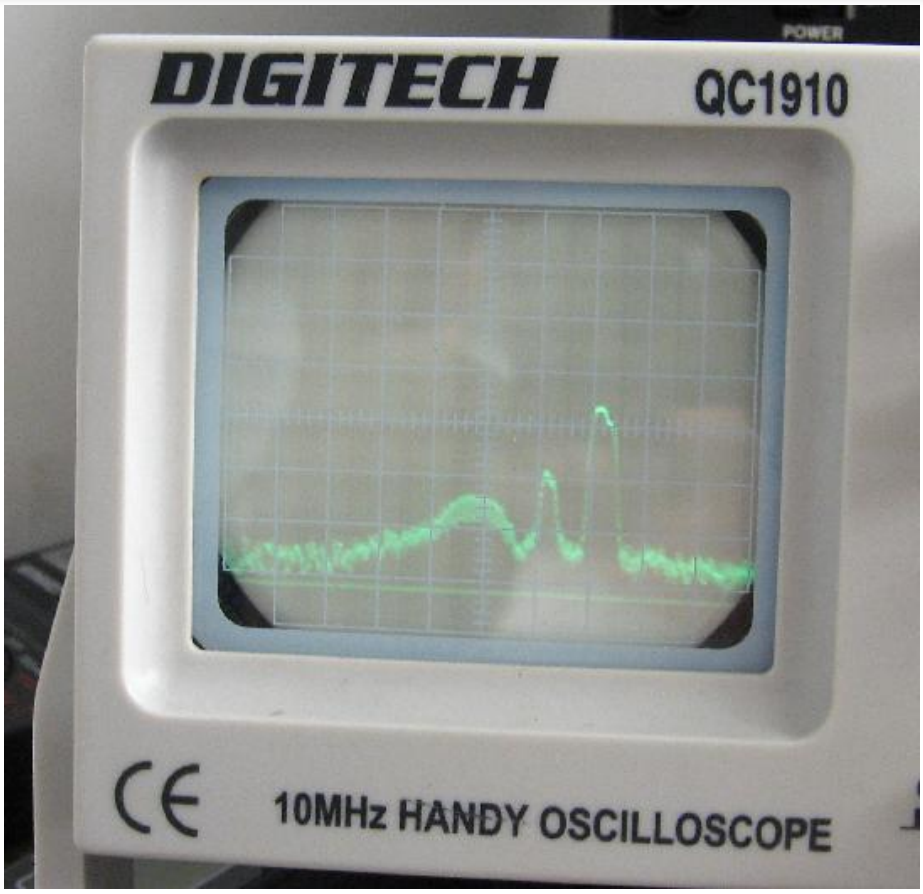

Note the pagers above the 2 metre band in this spectrogram. The hump in the noise floor is the receiver super-regeneration side bands. The smaller peak in between is the output of the Fredbox transmitter, the leakage from the unshielded prototype on my desk operating into a 47 Ohm load. It is rather disturbing that the pager signals are *larger* than this local signal just a foot or two from the spectrum analyser antenna.

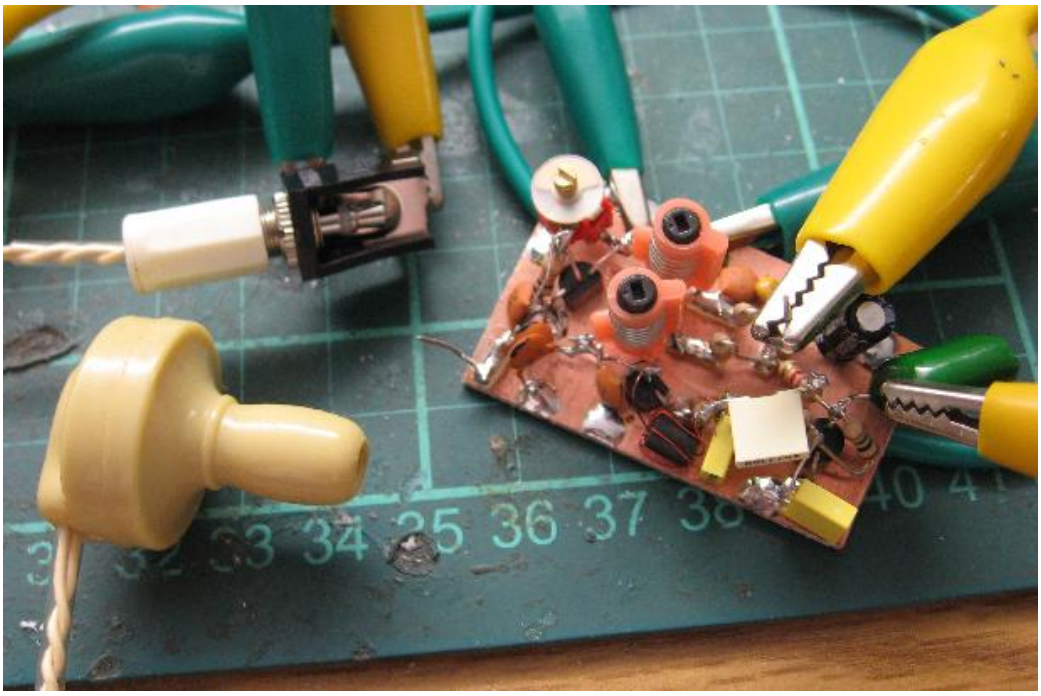

I used J310s for the receiver FETs, and a 2N3904 for the audio amp. Although the main design requirement for Roger appears to have been flea-power, I think a better AF amplifier that can drive modern low-impedance headphones would be preferable. Only Jaycar now carries crystal earphones with a nice soft silicone ear piece. The one I used comes from DSE and it is hard-plastic - not very nice on the ear. I really hate these kind of earphones anyway, I'll probably be rebuilding it for a low-Z output at some point, but it does work pretty well as-is.

BTW: While I was in the "Special Hell" of decoupling resonance I took the RX down to the FM broadcast band, and up to the VHF-hi TV band. It works wonderfully in both, which isn't a surprise. However, by adjusting the drain-source feedback (then a trimmer, now fixed) I

© 2000 - 2009 Alan Yates - All Rights Reserved. XHTML | CSS | CSS toggle

Hall's regen on the FM band. The topology is more forgiving however, allowing grounding of the tuning cap. I also built several different oscillator topologies in desperation before I identified the decoupling fault, in one I got a Colpitts-like oscillator working with emitter coupled feedback to a tapped capacitor across the tank. This is something I should have thought about a *long* time ago, I'll probably build yet another FM broadcast regen using this topology for the detector, it seemed quite easy to control just by manipulation of the base voltage.

Boxing It Up

I am still tossing up between a cast Aluminium box, a custom box folded out of Aluminium sheet, or an Altoids tin. The circuit is small enough to just fit inside an Altoids tin but it probably won't fit with a battery. I'll pick up a centre-off momentary-one-side switch over the next week and finish off the radio one way or the other.

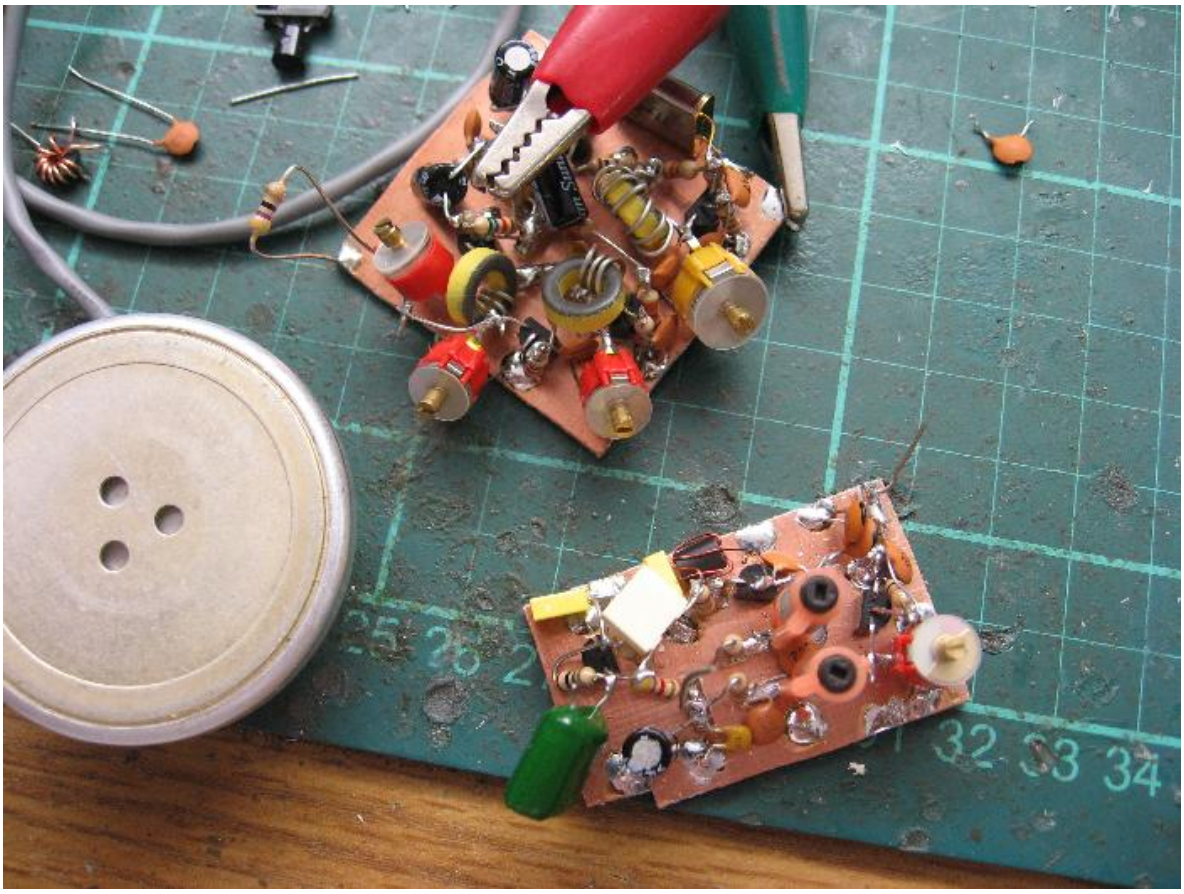

Note the use of an old telephone receiver as the microphone. It is nearly as large as the entire TX board. I'll have to find my electret mics, I know I have a bag of them somewhere that I got from a Rockby sale.

I'm strongly considering rebuilding the radio, perhaps through-the-hole to minimise its size. Although my prototype isn't too large as-is, it would be nice to neaten it up. Maybe I'll build it with fixed caps and variable inductors to save space too, although shielded cans are about the same size. It *might* be possible to tune the multiplier stages with stretched coils and fixed caps, this would make it much more compact and save money too if it ends up being kitted...

More TX Power

I am considering running the unit on 12 Volts to get a bit more RF out, and perhaps building in a small amplifier to get it up to 1 Watt region. This would probably involve a rebuild of the TX side to use a 2N4427 or similar final device, and a more robust series modulator transistor. This won't be efficient, but is probably easier to get going than a linear amp which would need careful drive adjustment.

I'll probably conduct some experiments around using a 2N7000 or VN10KM as the output device. The math suggests they may operate on 2 metres. I've already got them working on 6 metres in a brief experiment last month (must document that).

Comments

Working with VHF is fun! I find it a great learning experience, especially when you get problems like the resonant decoupling cap. That kind of thing really pushes your understanding of the physics and teaches you a lot.

I know a lot of HAMs won't touch anything above the bandwidth of their oscilloscopes. I can understand the frustration when something doesn't work, especially when you can't see why, but it really isn't that much worse at VHF. With just a diode probe you can achieve a lot. It does help enormously if you have VHF test equipment, for example I likely would have never noticed the HF modulation problem had I not had a spectrum analyser (although the HF was visible on the collector of the modulator drive amp, and most of us have a CRO that can see fine near 16 MHz).

A wavemeter can be helpful, if a bit retro, especially for making sure your multipliers are tuned up right and for looking for spurs. You can build one quite easily, it only needs to be a resonator with a detector and a LED or meter as a read-out. I'm a big fan of the biased 1N5711 through the decoupled bottom of the tank coil topology. For super-sensitivity you can use a MPSA18 as a DC amplifier. With a signal generator or dipper and a counter or scanner/receiver you can easily calibrate it. It can be used like a poor-man's spectrum

© 2000 - 2009 Alan Yates - All Rights Reserved. XHTML | CSS | CSS toggle

My only advice when you get stuck is to trust the physics, do the math and follow your instinct when nothing is making sense. Rebuild parts of the circuit and test them independently. Measure what is actually happening and try to figure out what kind of misbehaviour in the circuit would cause the observed of behaviour. That will often solve an otherwise intractable problem.

Update 2007-06-05

I took the Fredbox boards to the local Homebrew Group meeting. I had both halves hooked up and talking across the room. Peter VK2TPM had brought along a digital audio recorder and did an interview with many of us in attendance. You can hear what I said about The Fredbox on Soldersmoke 62, and even a brief snippet of audio going through The Fredbox.

Also on the recording are Peter VK2EMU talking about the 80 meter challenge, John VK2ASU talking about his transmitter modules for the challenge (and an interesting diversion into IRF510 gate-modulation with some input from Brian VK2TOX - something I was thinking about back here, apparently Drew Diamond VK3XU has already produced a design doing just this). Mike VK2BMR also talks about his great VSWR/power meter project. His unit was absolutely beautiful, I was very much taken by the excellent job he did of cutting the PCB stock that made up the external directional coupler box, essentially flawless, perfectly square workmanship.

Update 2007-06-09

I've built a weak-signal source for aligning the receiver. One of the biggest weaknesses of the Fredbox receiver is that it drifts in frequency quite significantly with Vcc variations. Powered by a 9 Volt battery near the end of its life, it may drift enough to make the receiver completely off-frequency despite its poor selectivity. If I build this circuit again I'll probably put in a stabilized supply for the detector stage to avoid this problem.

© 2000 - 2009 Alan Yates - All Rights Reserved. XHTML | CSS | CSS toggle

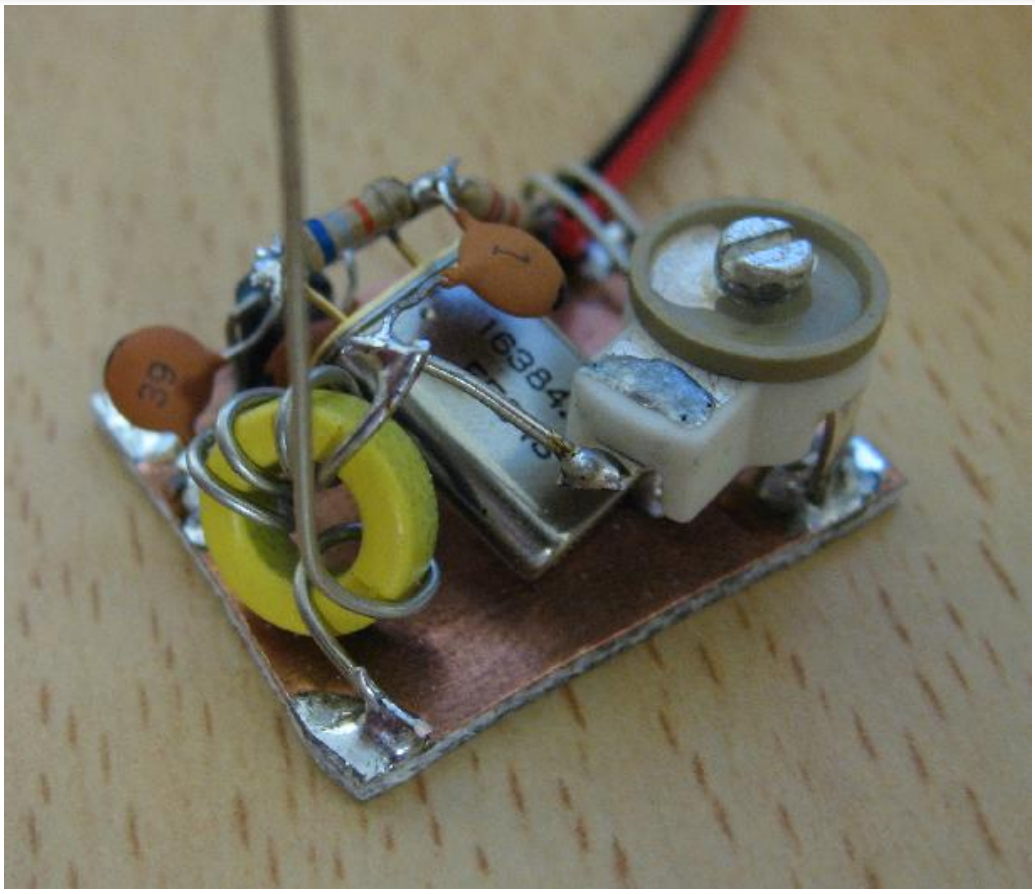

The signal source is a Pierce oscillator driving a tuned circuit which selects the VHF harmonic of interest. Because of the oscillator topology the crystal isn't pulled down as much as in the Fredbox circuit. The difference is fairly minor for my purposes, the poor selectivity of the receiver makes the difference in frequency of no real consequence. There is no active (or passive) multiplier, so the tuned circuit is merely extracting the harmonic energy from the oscillator. The harmonic energy available is very small, which is perfect for the application, giving an almost undetectable signal 1 metre away.

Update 2007-06-10

I've boxed up the Fredbox. As discussed earlier I went with the Altoids tin, despite this not allowing the battery to also fit inside the enclosure. I tossed up soldering an additional tin to the back to hold the batteries, but for now I've gone with the 9-volt battery snap just hanging out. It will work well with 6xAA battery holders which can just be held to the box with a rubber band.

© 2000 - 2009 Alan Yates - All Rights Reserved. XHTML | CSS | CSS toggle

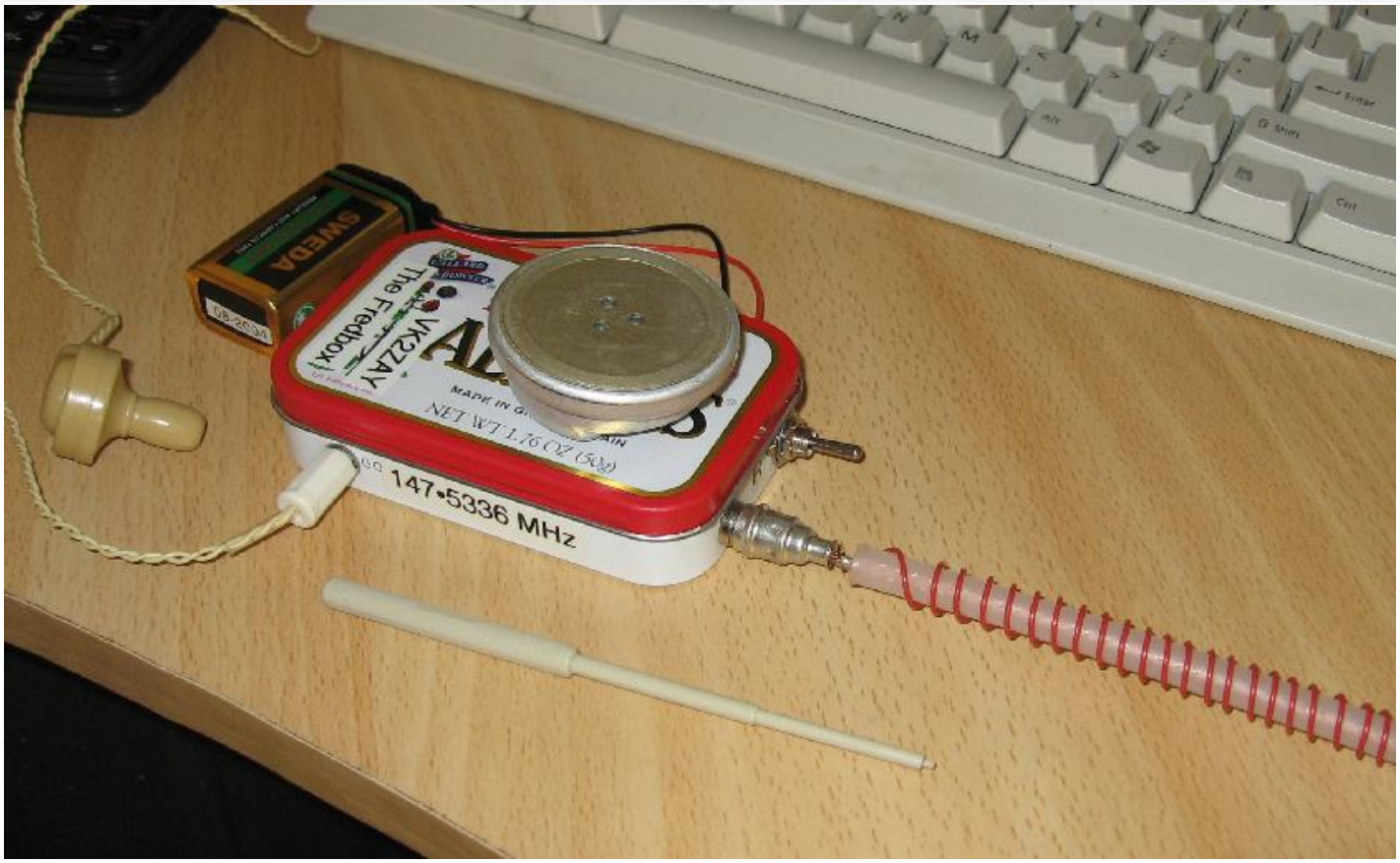

For the RF connector I chose an RCA. I can hear all the VHF engineers cringing, but for the purposes of this prototype it works just fine. The Antenna is a half-wave of wire helical which is quarter-wave resonant (with some pruning). The former is a piece of centre conductor and insulator from RG-213 coax. The centre conductor was left in place and is soldered into the RCA plug centre conductor, adding some capacitive loading and shortening the length of wire needed for resonance. I have no idea if this is good or bad, but it works.

© 2000 - 2009 Alan Yates - All Rights Reserved. XHTML | CSS | CSS toggle

I didn't find my stash of electret microphones, so I ended up just soldering the telephone receiver into the top of the Altoids tin. Ugly as hell, but also kinda unique. It looks somewhat like those Vietnam-war era VHF-low walkie-talkies.

I couldn't find a momentary-one-side toggle switch, so a centre-off on-both-sides switch was used instead. A special dummy load/diode peak-voltage probe was assembled for the final alignment. The carrier power ended up being near 25 mW on 12 Volts, on 9 Volts 10 mW just like Roger says in the article.

Update 2007-06-11

The 2N7000 on 2 metres experiment was a failure, it simply doesn't produce useful power beyond 90 MHz or so. However, it is very usable below 70 MHz. My input network was far from optimal, so perhaps with some more work it would be possible to get it working higher up, and I haven't tried an VN10KM in the same circuit.

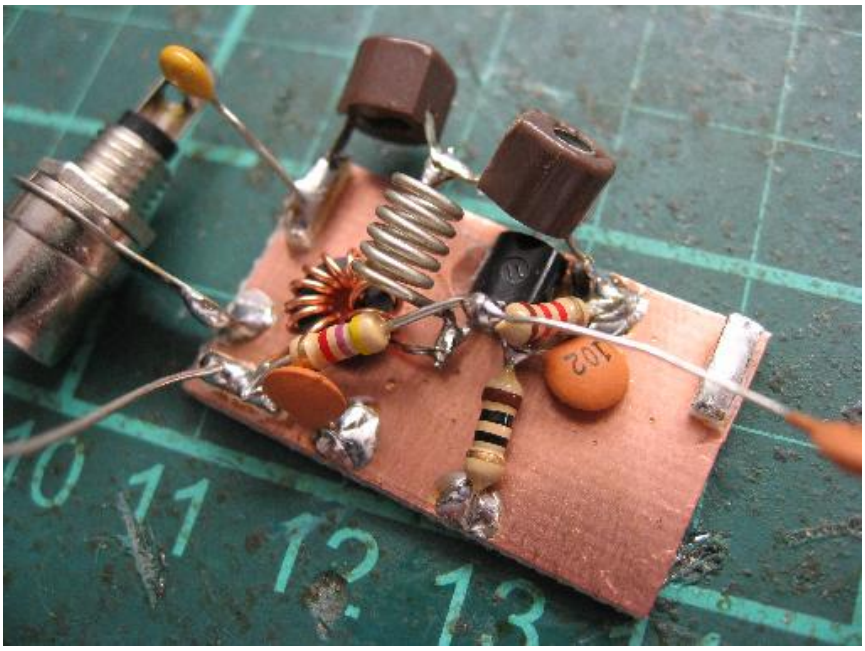

I've also been fiddling around with grounded-base class-C multipliers. (Not just decoupled, biased base, the base actually soldered directly to the ground plane.) At first this seems a little weird, but if you pull the emitter low with a link-coupling to the previous stage collector current will flow. The advantage is excellent reverse isolation, which might help with stability with less than ideal layouts and devices. Such a topology was apparently quite common years ago with the 2N918.

1 comment.

© 2000 - 2009 Alan Yates - All Rights Reserved. XHTML | CSS | CSS toggle

-20 dB Tap Attenuator

2008-08-23

Another device I've been meaning to build for a long time. The QRSS work has caused more interest in attenuators and transmission line monitoring, my current bodgy attenuator was tested with my most recent instrumentation and found quite lacking - more work on that instrument soon... Pi or Tee pads have precision issues, especially if you only stock E12 resistor values, so this tap is based on a transformer, the familiar 10:1 turns ratio -20 dB tap. It can offer quite good accuracy if carefully constructed and terminated correctly on all ports.

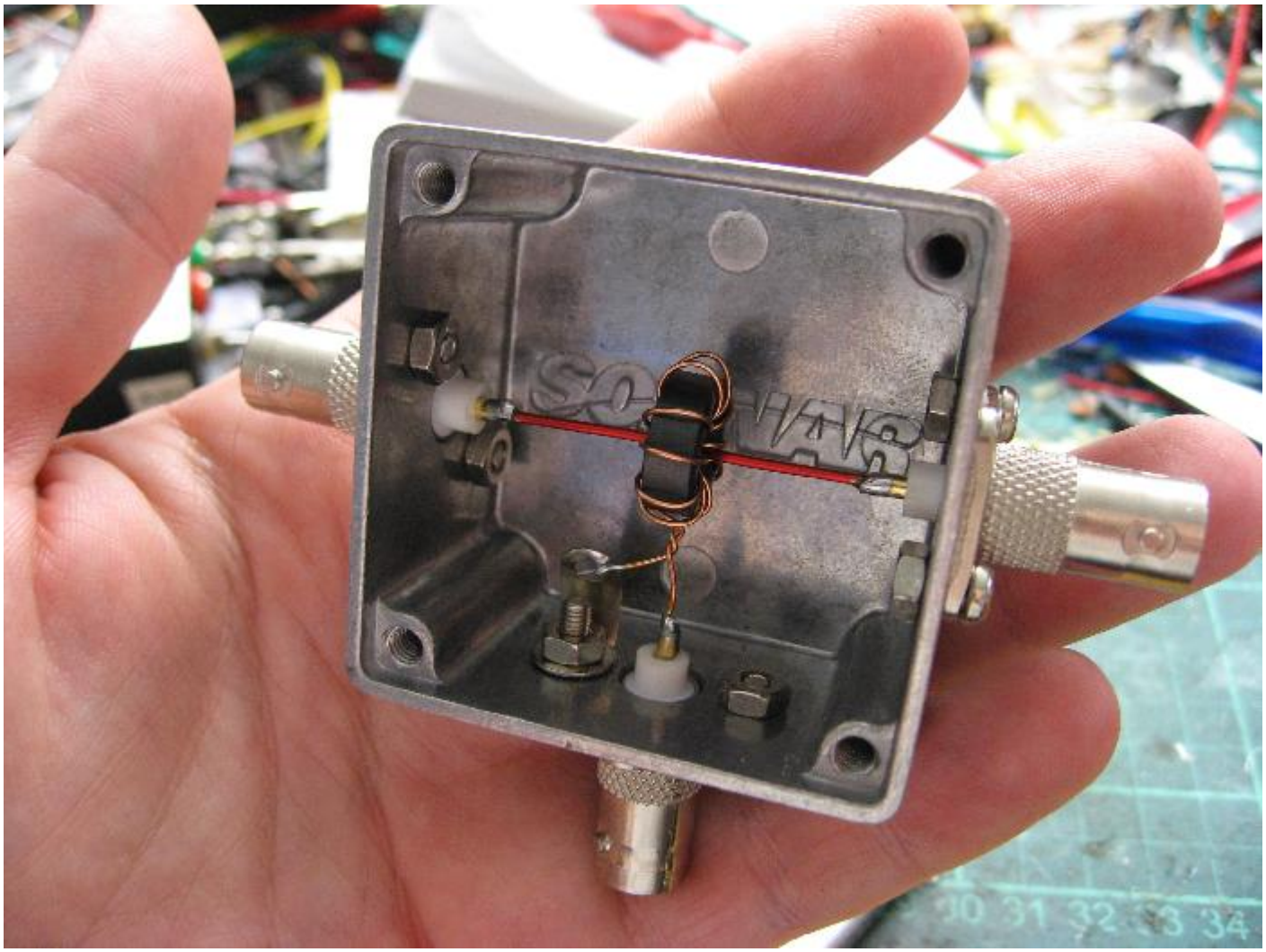

I tried various core materials and sizes. The FT50-61 was looking quite promising, especially at higher HF where its insertion loss is lower than type 43 material, but its performance didn't extend as well into lower frequencies so I settled on using an FT50-43 core. Physical construction in a diecast box limits the high-frequency response, and the inductance limits the low-frequency response. 10 turns on an FT50-43 is about 66 uH, using a 3 times the load resistance (50 Ohms) reactance (j150 Ohms) gives a lowest usable frequency of about 360 kHz. Experimentally roll-off starts to become annoying at about 400 kHz. On the high end the response is more difficult to predict and measure with my available equipment, I've only confirmed its response flat to 20 MHz, but a spot-test at 144 MHz using a 1 W HT as a signal source gave -20 dB to within my measurement accuracy at the tap port. Performance which I found quite surprising. I'm calling it 500 kHz to 20 MHz and have labelled it as such.

© 2000 - 2009 Alan Yates - All Rights Reserved.

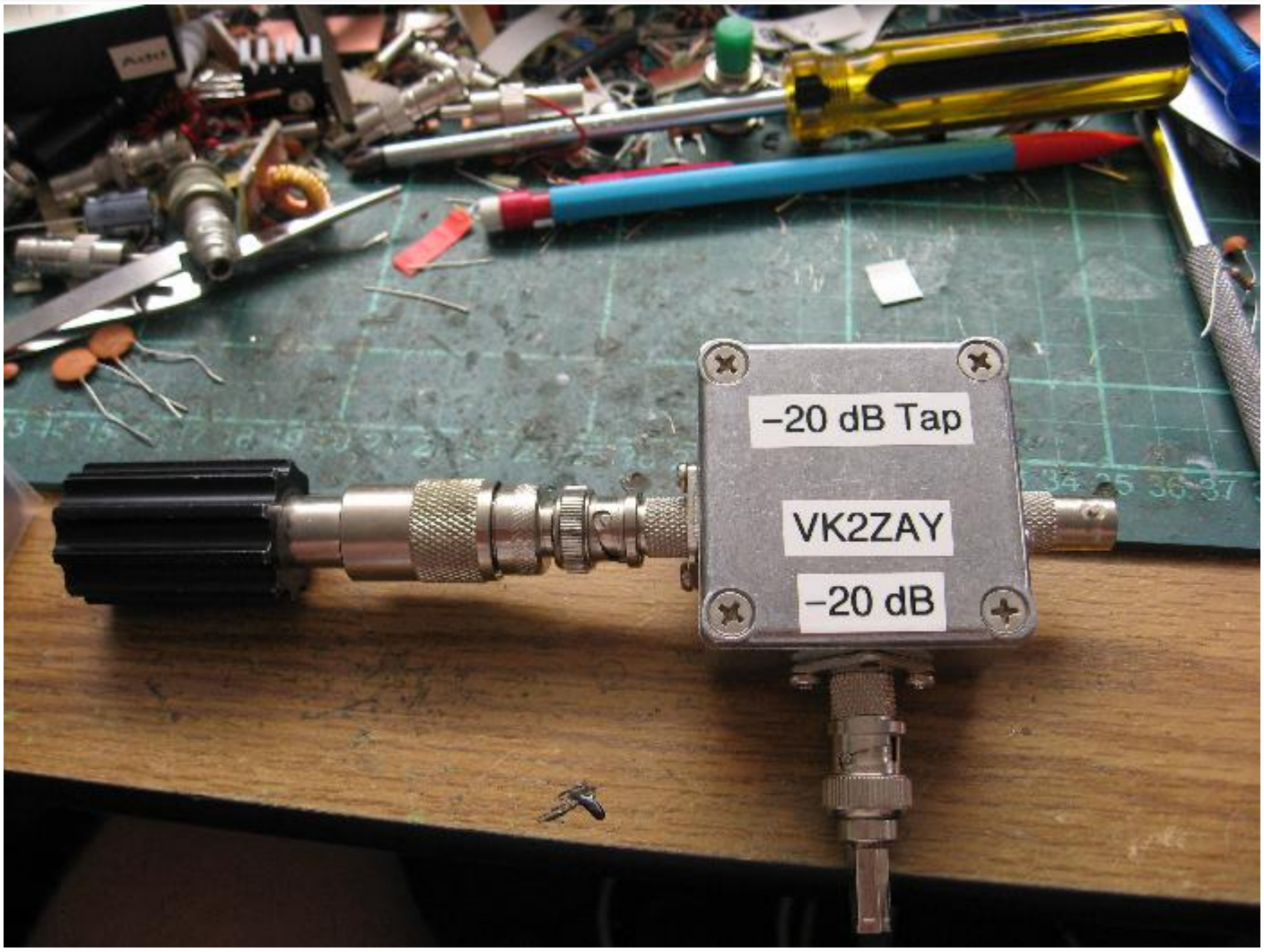

Precision wise my fairly limited measurement accuracy says better than +/- 0.3 dB 500 kHz to 20 MHz as long as both output ports are terminated properly. I can't stress that enough, if the "thru" or "tap" ports aren't terminated in 50 Ohms (or whatever you're measuring in/from - the BNCs are 50 Ohms units) the attenuation will be wrong. To be completely correct, the 10:1 turns ratio transformer reflects a resistance 100 times smaller than the tap termination in line with the thru termination. So 0.5 Ohms from a 50 ohm tap termination is added to a 50 Ohm thru termination (or a 1 % error). This means the total load impedance is slightly wrong, and the return loss seen looking into the input is measured slightly worse than just into a dummy load, but the effect is quite small and much better than my best -20 dB Pi attenuator constructed using E12 5% value resistors.

© 2000 - 2009 Alan Yates - All Rights Reserved. XHTML | CSS | CSS toggle

Notes

Construction using a binocular core might be superior.

You may be able to extend the HF performance by using a length of coax through the core, earthed at only one end to the box. This will minimise the impedance step created by transitioning from the coax/connectors into the lumen of the box where the wire to box geometry gives nothing like 50 Ohms of impedance. HF response will still be limited by mismatch effects (and eventually modeing inside the box), but type 43 ferrite is only good to low UHF anyway.

I've ordered some PCB-mount BNCs that are constructed like your typical SMA connector with four solder pins around the centre one. Using these and FT23-43 cores it should be possible to construct a similar but lower power device usable to low UHF. There is no reason why you couldn't "ring-bark" some RG-58 or RG-174 coax and construct the transformer directly over the coax, then re-complete the braid circuit with metal shim-stock or tape over the transformer. I once constructed a VHF directional coupler by passing insulated wire under the braid of a piece of RG-213, it worked quite well.

Leave a comment on this article.

© 2000 - 2009 Alan Yates - All Rights Reserved. XHTML | CSS | CSS toggle

30 Metre Autodyne Receiver

2008-01-27

As mentioned in the Australia Day article, building this receiver was the result of QRP-L discussions of WWV receivers. The design comes from Nick Kennedy's page, and itself seems to be the result of QRP-Tech discussions. I only discovered QRP-Tech last week, and just subscribed, looks better than QRP-L which has a somewhat worse signal to noise ratio if you interests are more technical.

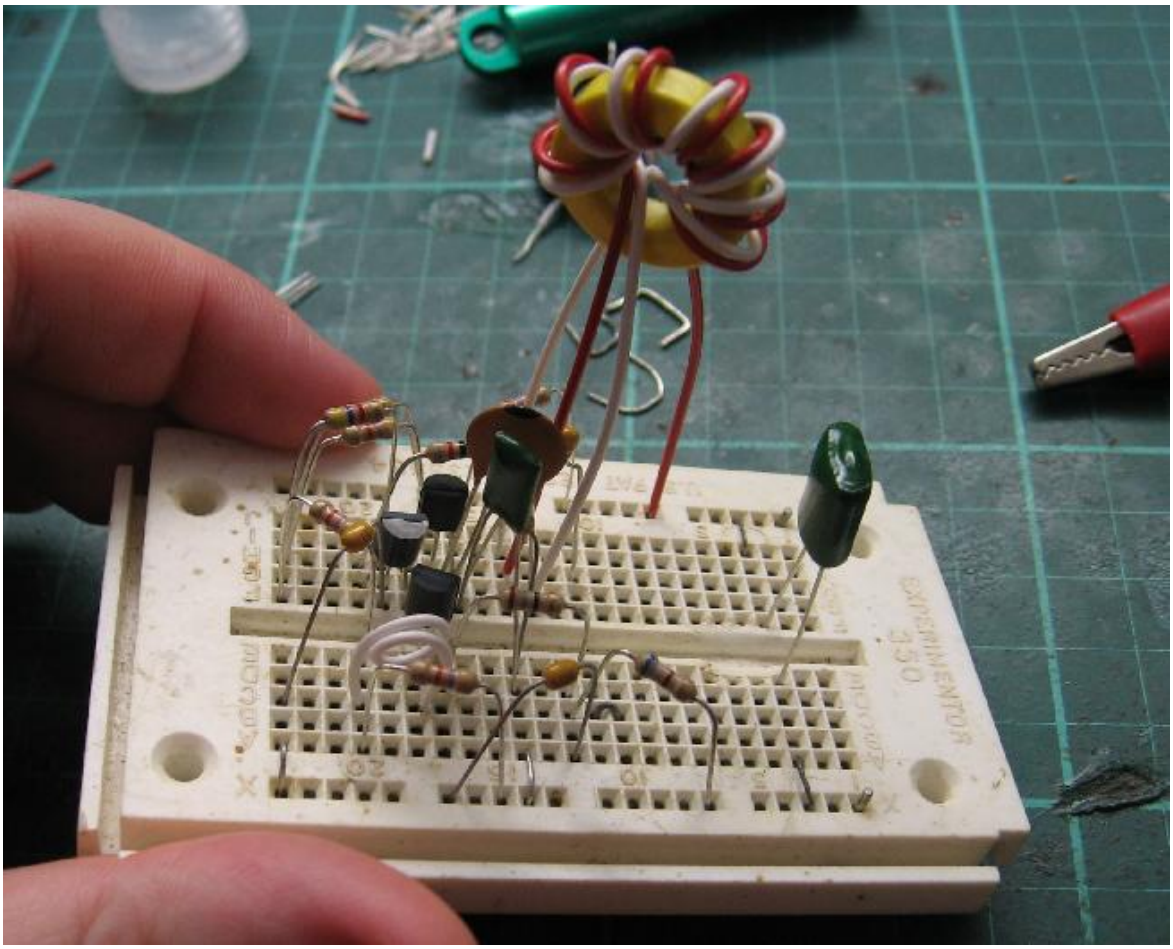

The receiver worked fairly well breadboarded, but did suffer from tunable-hum. This isn't surprising, as unshielded it is essentially a direct conversion receiver and the LO was illuminating all kinds of mains powered devices in close proximity. In particular my soldering iron which seems very efficient and hum modulating the near-field of coherent detectors. The breadboarded prototype wasn't (easily) tunable, but would lock my noisy BK (im)Precision generator/sweeper and hold it indefinitely with sufficient signal.

© 2000 - 2009 Alan Yates - All Rights Reserved.

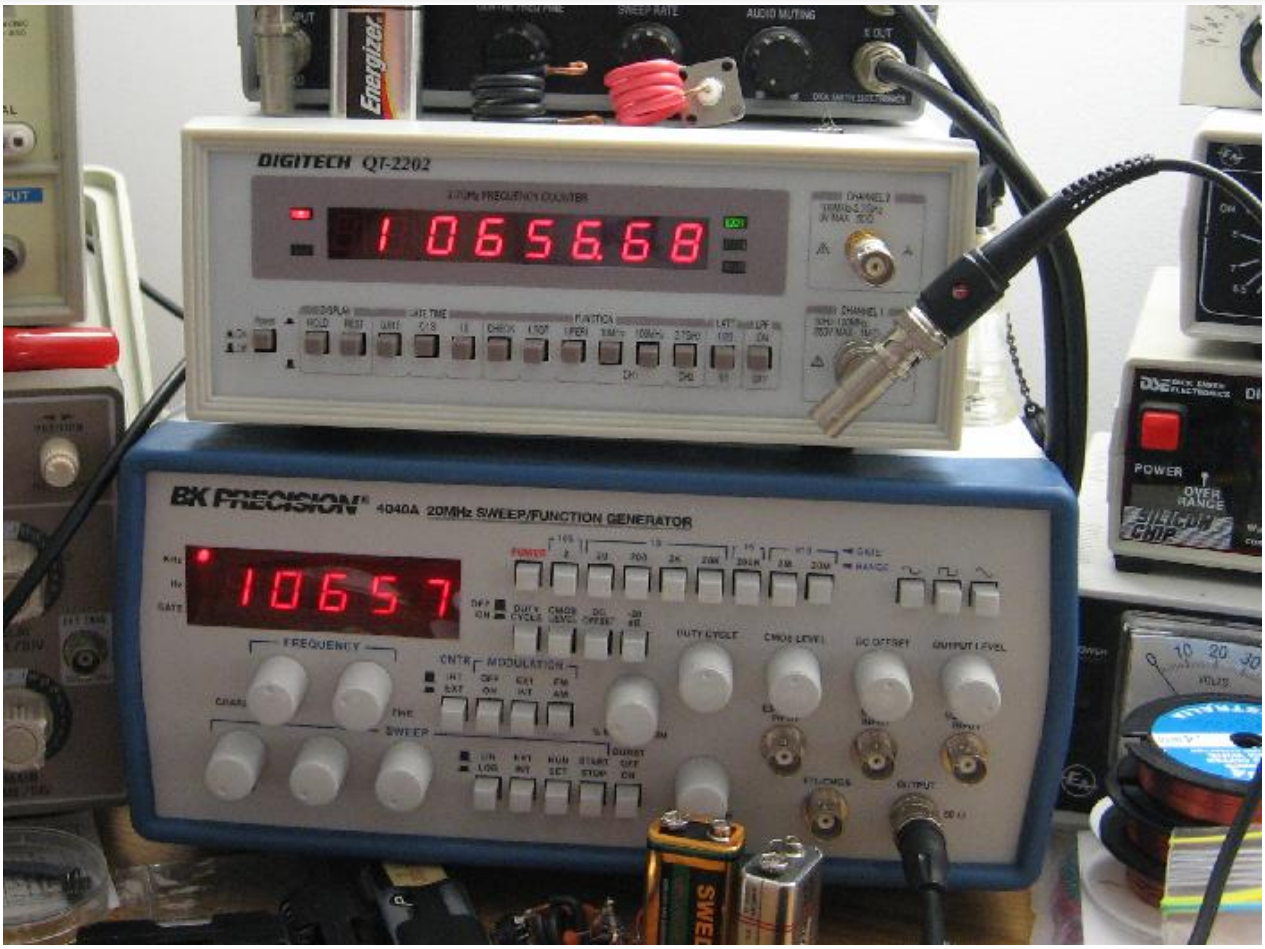

What does this look like in the time domain? When locked the LO perfectly phase-tracks the RF signal. When unlocked you see hetrodyne from the frequency difference of the LO and RF. Triggered from the RF signal you see something like this:

© 2000 - 2009 Alan Yates - All Rights Reserved. XHTML | CSS | CSS toggle

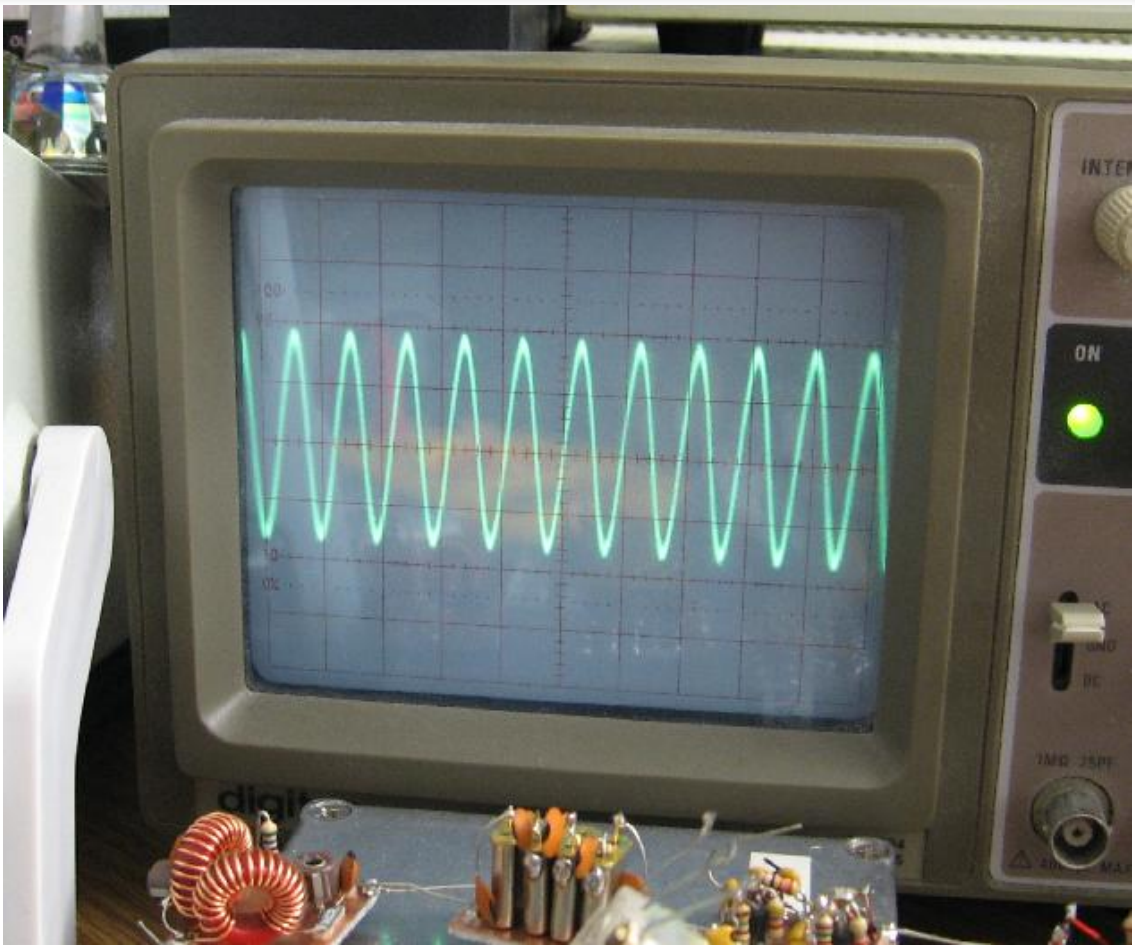

And unlocked, this:

© 2000 - 2009 Alan Yates - All Rights Reserved. XHTML | CSS | CSS toggle

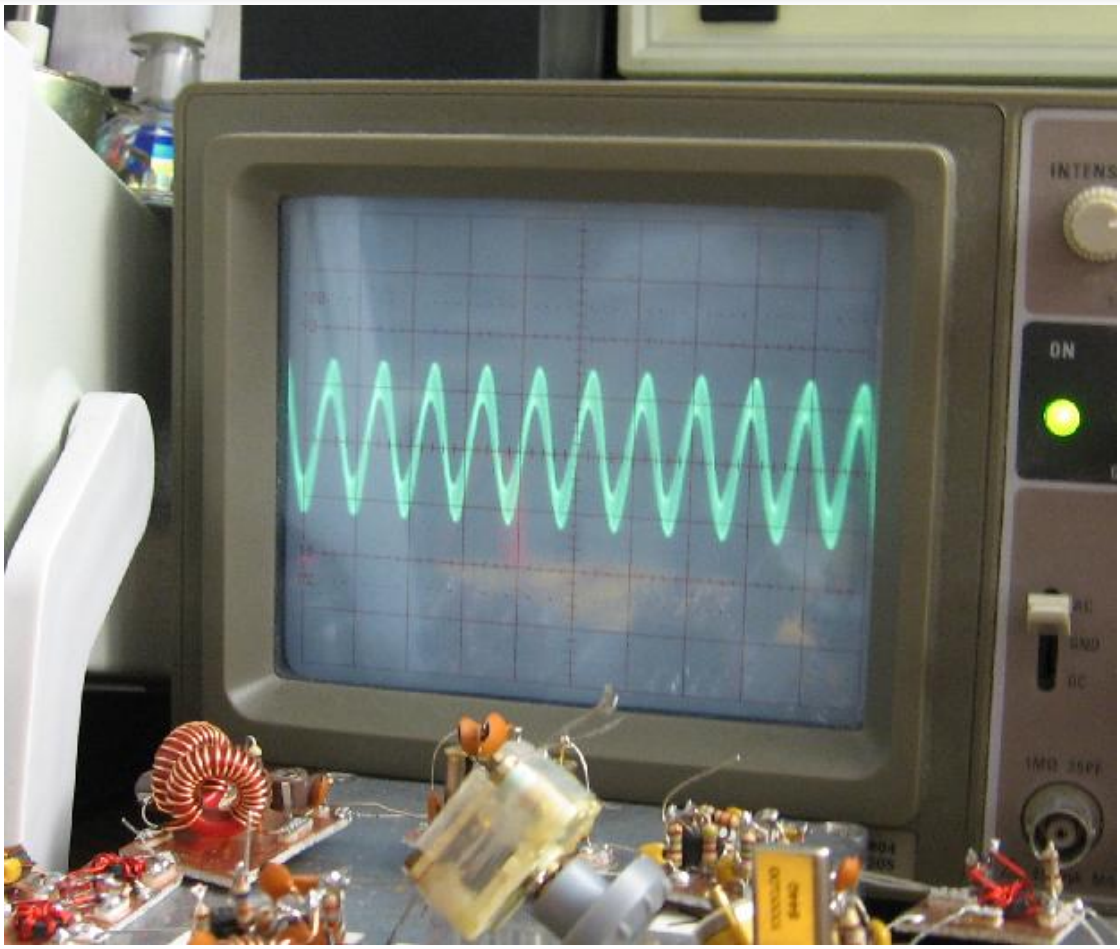

I had a much better dual signal trace with the LO and RF triggered from the RF in several configurations, but I didn't take pictures, sorry.

Akshay Parelkar VA7AAX shot me an email about the bread boarded version shortly after I posted it, and inspired me to build it properly.

© 2000 - 2009 Alan Yates - All Rights Reserved. XHTML | CSS | CSS toggle

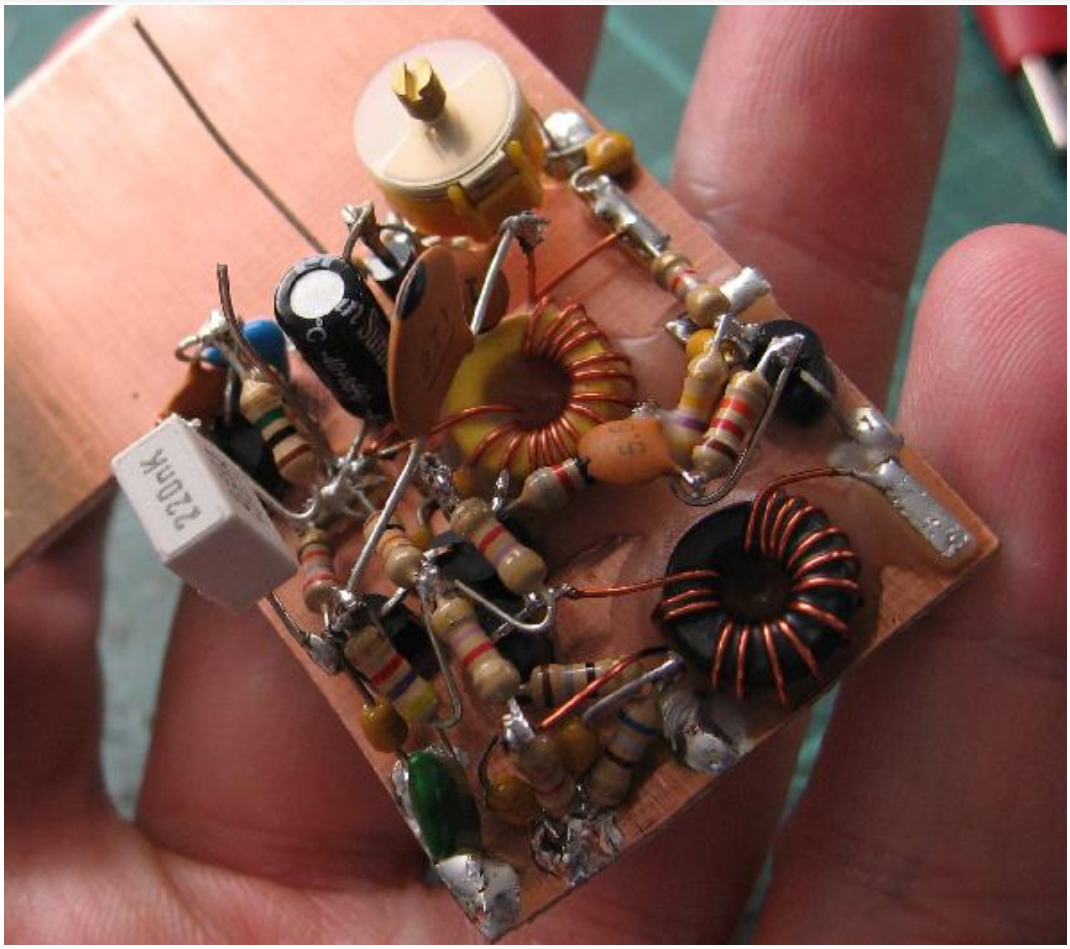

With the toroids waxed to the board and a trimmer to bandset the receiver more practical tests could be made. The varicap (1N4007 rectifier) gives a good range for fine tuning and it is quite easy to lock moderately strong shortwave signals with just an alligator clip lead for the antenna!

WWVH is far too weak here to lock with such a primitive antenna, or even really hear above the garbage coming from my computers. However the 31 metre broadcast band gave me plenty of strong signals to experiment with. Radio Australia gave three closely spaced, rock solid signals. I could also hear a few others, but I didn't catch their call signs. Quite surprisingly I could briefly lock them too as their signals came up.

© 2000 - 2009 Alan Yates - All Rights Reserved. XHTML | CSS | CSS toggle

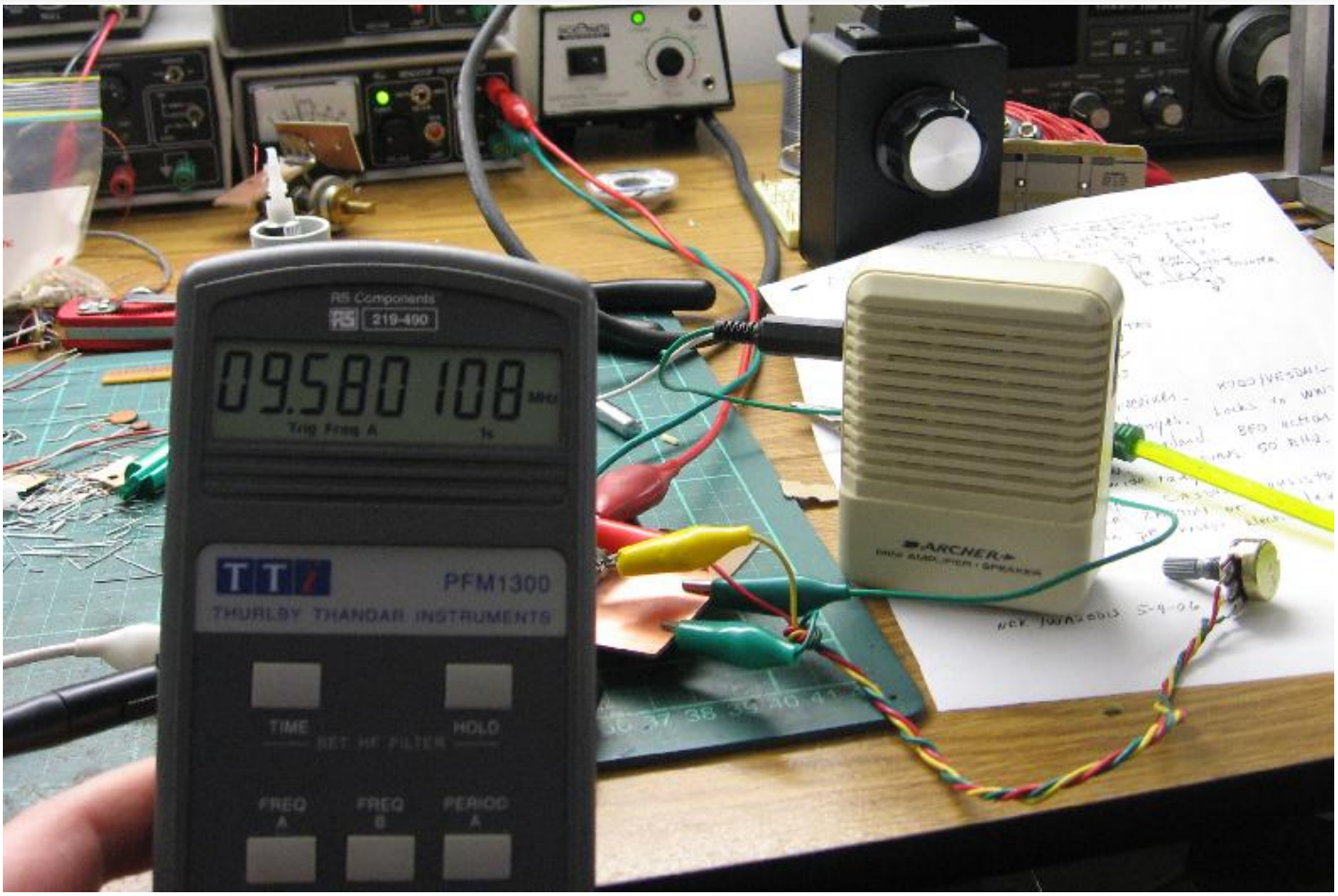

Apparently my counter's frequency reference disagrees with whatever Radio Australia is using. I assumed they have a precision clock. All three Radio Australia signals seemed to disagree by the same amount, as did the others I could briefly lock, so I took the leap and tweaked the calibration of my counter to reduce the error.

© 2000 - 2009 Alan Yates - All Rights Reserved. XHTML | CSS | CSS toggle

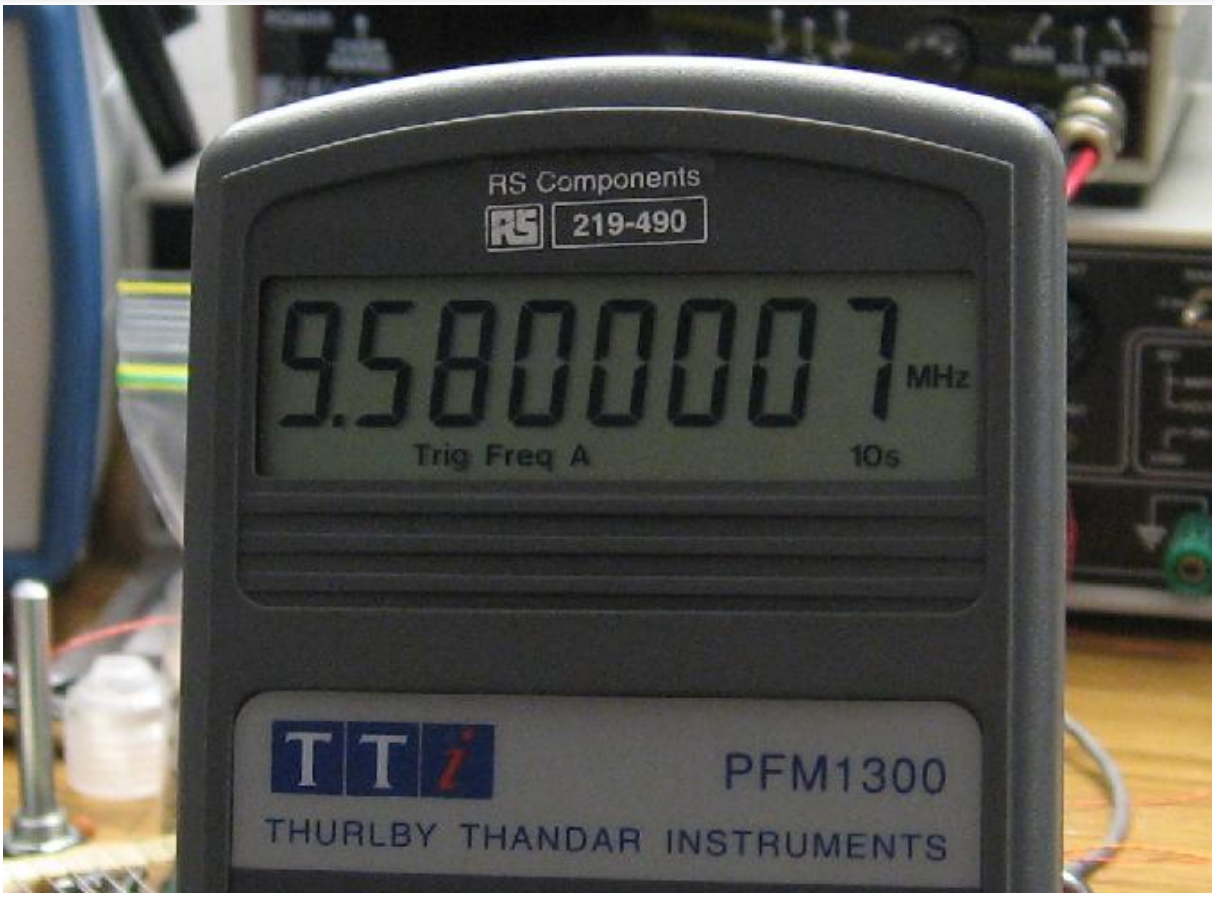

The lash-up held this to within 200 mHz for over an hour. Pretty good considering my counter has only a fairly cheap reference. Now and then the signal would fade and the receiver would break lock. The hetrodyne was immediately obvious and a tweak of the tuning pot would relock it, or the signal strength coming back up would also drag the LO back into phase lock.

Videos

There was something about the Australian Open on Radio Australia at the time I was experimenting with the circuit. Here is a video of a rocking the receiver across lock with the strongest copy. I also stick my finger near the tuned circuit which pulls it off lock temporarily. You'll note how it captures the carrier of the station, a normal direct conversion receiver would have all kind of beating and phasing effects as you approached zero-beat.

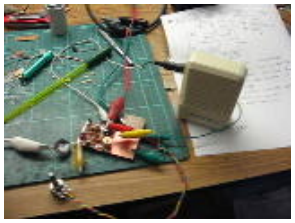

Tuning the Receiver across 9.58 MHz
(3.102 Mbytes)

Radio Australia was transmitting three signals separated by only 10 kHz, here we have a video of tuning across all three. It displays the heterodyne heard when the receiver is unlocked, and the locking effect once you are close enough to the carrier. Observe the frequency counter settling into each of the frequencies once lock is achieved.

Tuning Across Radio Australia's Three Signals
(4.006 Mbytes)

Problems

© 2000 - 2009 Alan Yates - All Rights Reserved. XHTML | CSS | CSS toggle

One minor problem with the receiver is VHF interference. The 270 pF capacitor that feeds back the LO tank to the transistor base appears to be resonant in the FM broadcast band. At one particular setting of the bandset trimmer 2MIX FM 106.5 MHz can be heard! Shielding the unit inside a box would fix this (and any final traces of direct-conversion LO radiation hell). It seems to be largely direct pick-up by the circuit, although putting a lashed-up low-pass filter into the antenna line did reduce the problem a bit.

I mentioned to Akshay that I thought the receiver needed a real front-end. A 30 metre bandpass is advised. I can't imagine what would happen with a real antenna rather than just a foot-long clip lead!

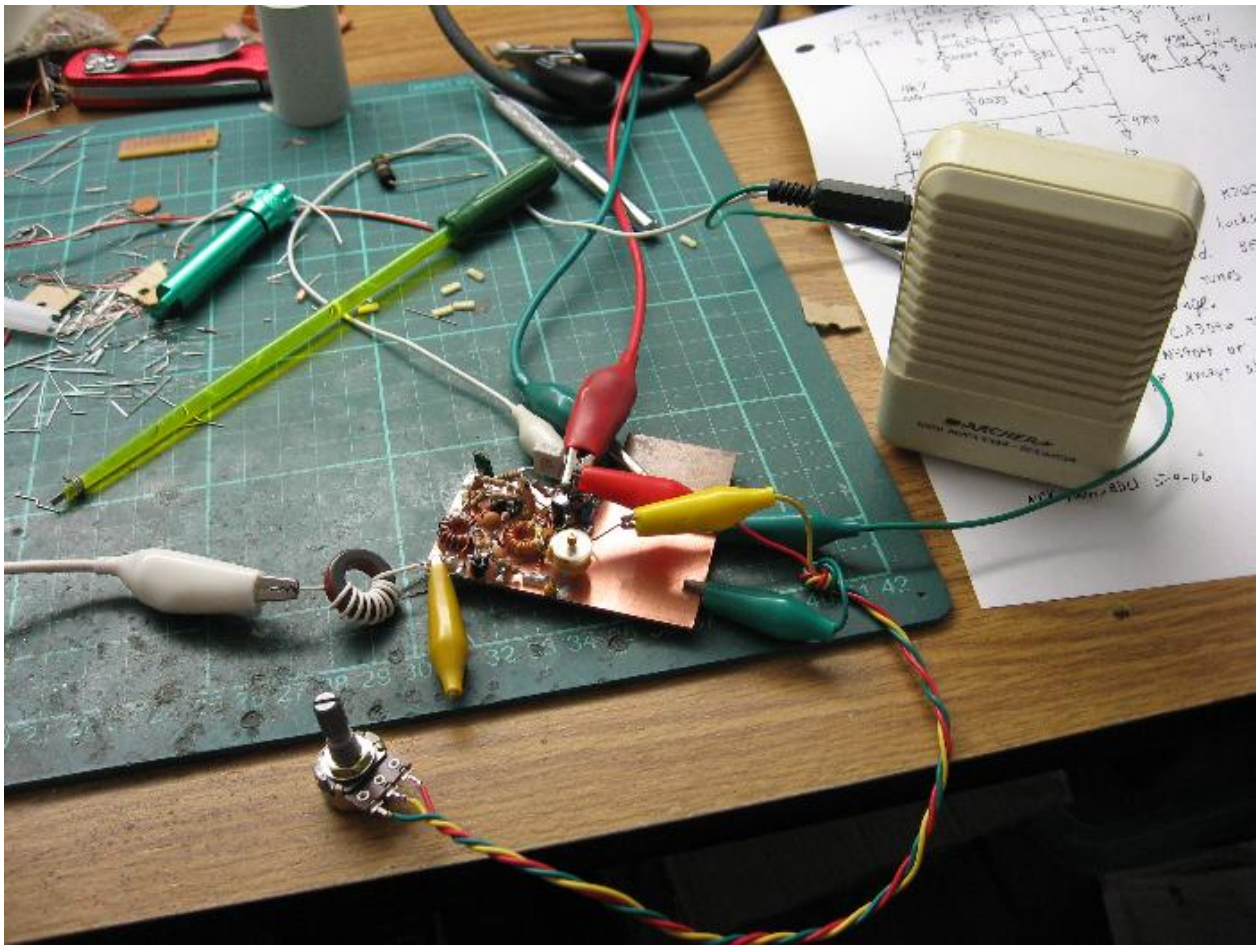

Better layout might be advised, reducing the length of all the HF circuit paths and pushing any possible spur resonances above the transistor bandwidth. I tried beads on the transistor base, but it killed the oscillation as well. Experimentation with a small amount of additional Miller capacitance may tame any VHF oscillations.

The VHF interference does suggest a similar circuit topology might work quite well as an FM radio autodyne front-end. Even fairly modest modern transistors (I used 2N3904s) have huge bandwidth in the differential configuration. I'd imagine it would be possible to have one side a tuned LO resonator and the other an IF one, with the cascoded transistor in the tail as the input buffer.

Notes

This autodyne receiver implements a coherent AM demodulator, which has some advantages to conventional envelope detection. It lacks AGC, which is annoying for general shortwave reception, but otherwise it makes a pretty good general purpose receiver. It can receive AM, CW and SSB with one only adjustment (tuning), unlike a regenerative set. Strong CW signals can grab the LO though, and pull it, right into lock in some cases, eliminating the beat note! Also, strong adjacent signals will capture the LO pulling it into around, which can be extremely annoying. If there is sufficient noise margin just attenuating the signal will help.

I shunted the AF amplifier feedback resistor with a 1 nF capacitor to roll off the HF response. The audio was otherwise a bit sharp. You might like to add a pair of cascaded Sallen-Key filters to roll it off more sharply and improve the selectivity. I wouldn't recommend the receiver for CW, but you might also like to add a 700 Hz bandpass for that purpose if you intend to use it. Not too tight though, its a bit chirpy with strong adjacent signals.

I used the same turns ratio at the input transformer, but wound 3:12 instead. This isn't too critical really, and I am yet to measure the input impedance or attempt to predict it, I'd imagine it will be moderately high though.

Shield your counter interconnection, LO leakage here will cause the all too familiar direct conversion tunable hum problems. The buffering is generally sufficient, but I can hear the count windowing of one of my counters back through the AF output which suggests you might like to improve it. A common-base isolator or padding will probably help. I picked off the LO at the tap point on the tank rather than its hot end, this reduced the effect of the load compared to the original design.

© 2000 - 2009 Alan Yates - All Rights Reserved. XHTML | CSS | CSS toggle

Updates

2008-02-04: Autodyne Receiver Now In a Box
I add a front-end and a box to the 30 Metre Autodyne Receiver

© 2000 - 2009 Alan Yates - All Rights Reserved.

30 Metre QRSS Beacon Updates

2008-08-16

The MEPT Beacon has gone through some steady changes over the past few days. Most importantly it is now in somewhat of a "finished" state, stable and boxed-up ready for real transmitting experiments. A fourth piece of foam surrounds the circuit for insulation once the top is closed, the open ends of this "oven" don't seem to hurt. Modules are (clockwise from the microcontroller board); The ATtiny13V based controller, the fine tuning and FSK modulator, the carrier oscillator and buffer, the amplitude modulator (on wall), the driver amplifier, the low pass filter (on wall), and finally the class-E power amplifier.

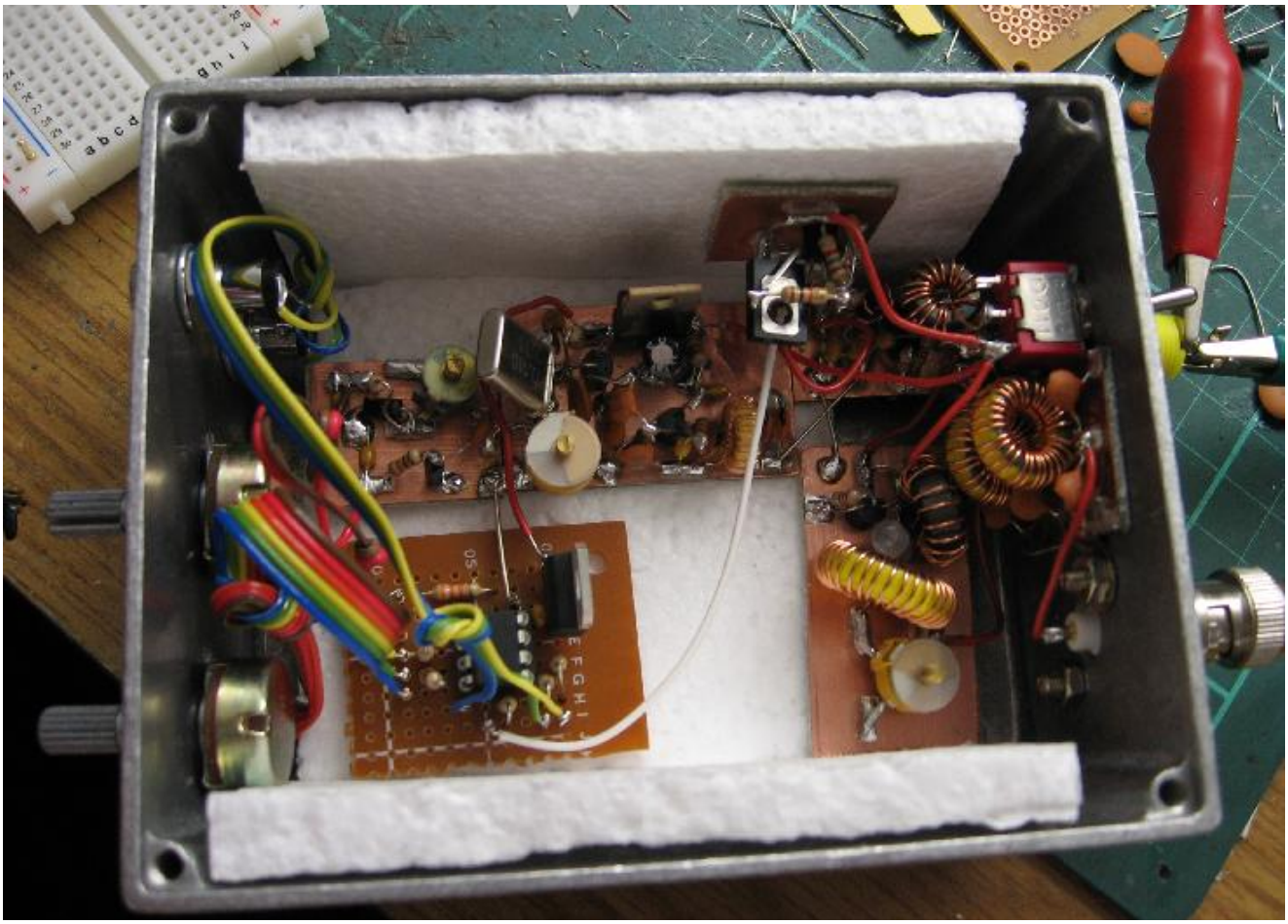

Carrier Oscillator

Essentially unchanged from the original circuit, except I have stripped out the diode switched modulation trimmer and replaced it with the frequency modulation and tuning board. Conventional Colpitts oscillator using a 2N3904 buffered by a J310 with a low-pass filter delivering 900 uW into 50 Ohms.

© 2000 - 2009 Alan Yates - All Rights Reserved.

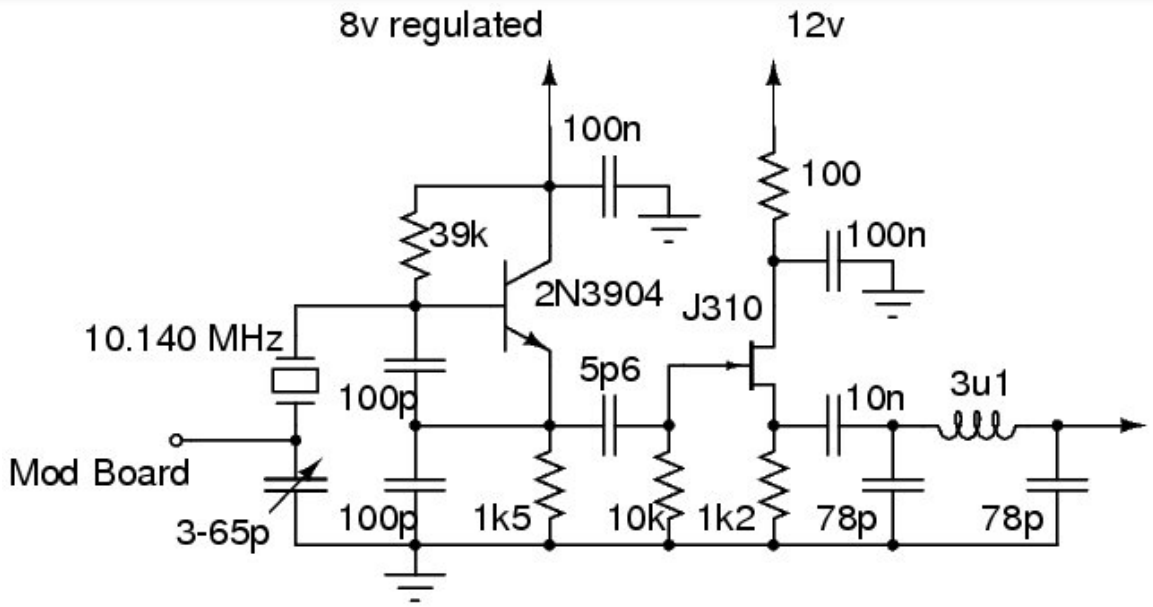

That 3.1 uH inductor in the filter is implemented by 32 turns on a T37-6 toroid. The 78 pF caps are two 39 pF in parallel.

The reverse-isolation of this circuit is pretty good. It might be used as-is for a QRPp beacon or with the driver amplifier for 14 dBm output which is quite usable.

Frequency Modulator and Tuning

A pair of 1N4007s are used as varactor diodes. I picked 1N4007s not because they are particularly well suited, but simply that I had some on the bench. One of the varactors is directly coupled to the xtal circuit through 1 nF so most of its capacitance change is seen, the other is coupled through a small trimmer to adjust its maximum effect. This gives two independent channels, one for relatively coarse frequency tuning, the other for FSK modulation. Thanks to John for his suggestion around this part of the circuit.

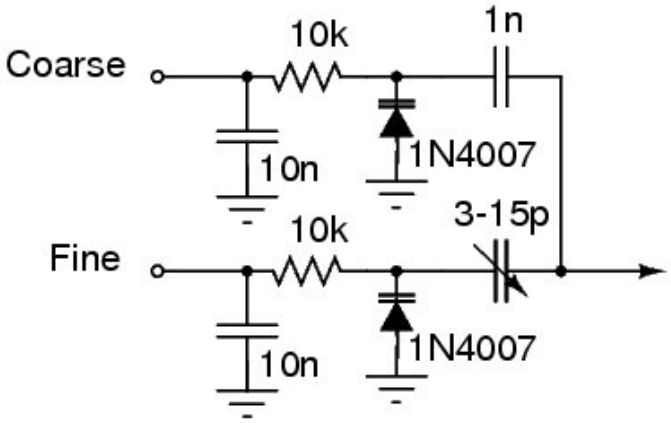

The varactor modulators were characterised to design the bias network in the controller for best linearity and desired range of shift (etc).

© 2000 - 2009 Alan Yates - All Rights Reserved. XHTML | CSS | CSS toggle

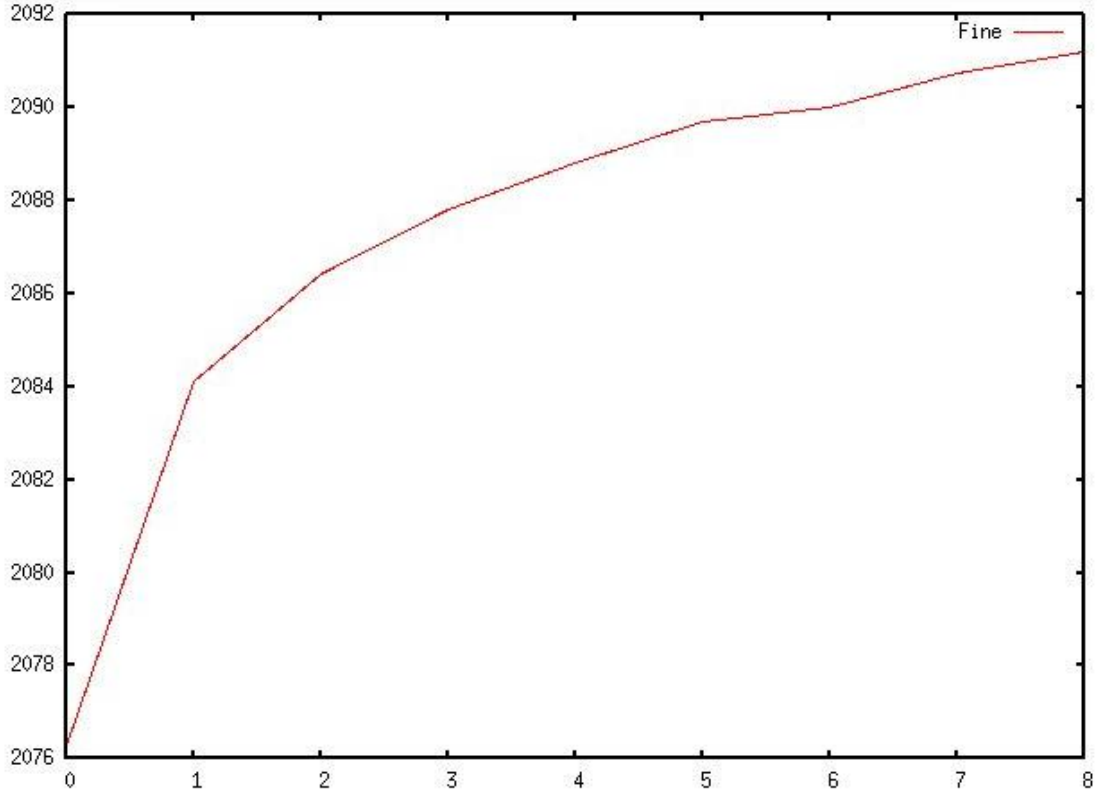

Fine was measured with the coupling trimmer quite loose, and subsequently tightened on final assembly to give a good maximum modulation width.

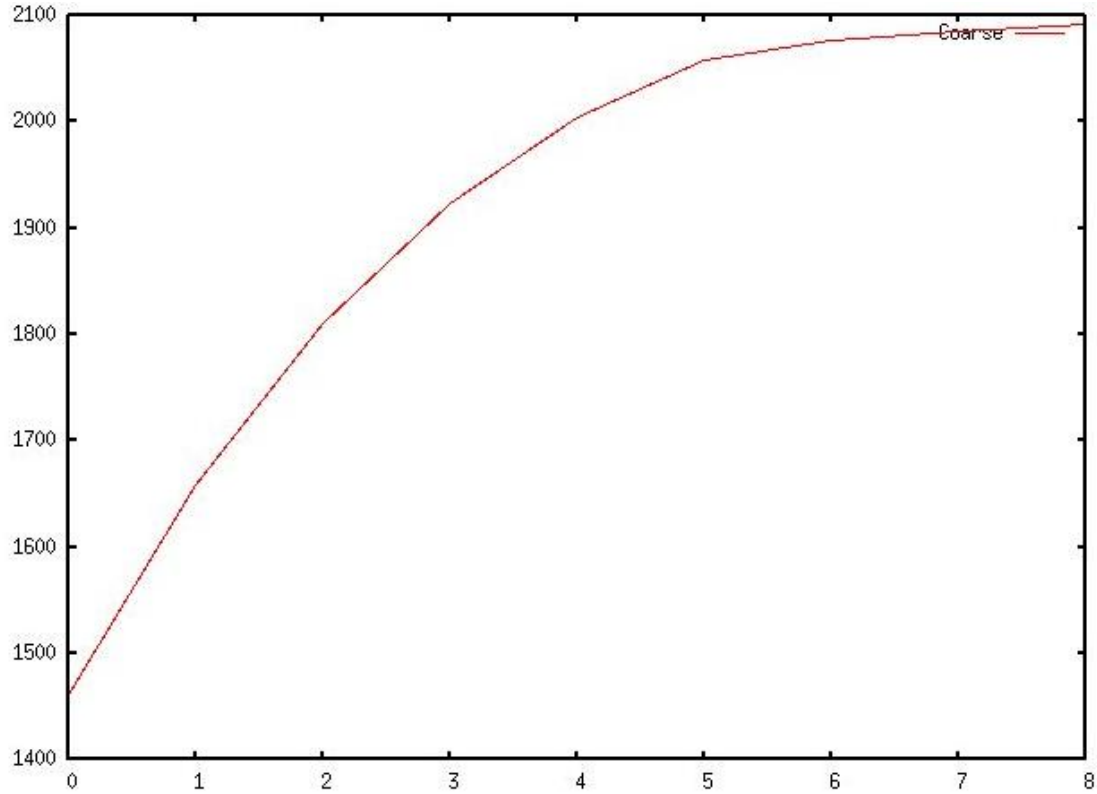

The data looks characteristically parabolic as expected. I suspect the oddness of the fine is measurement error. The y coordinates are in Hz relative to 10.138000 MHz (x is reverse voltage) so it doesn't take much error in measurement to make the fine trace look lumpy.

Driver Amplifier

The driver amp is a simple 2N3904-based feedback amplifier delivering about 25 mW from the 800 uW output of the oscillator board. The amplifier input impedance is about 300 ohms when loaded with 50 at the output, this is a pretty serious mismatch

© 2000 - 2009 Alan Yates - All Rights Reserved. XHTML | CSS | CSS toggle

the circuit in practice measured about 15 dB transducer gain from using the oscillator as a signal source, probably because of the increased output of the oscillator with the lower loading offered by the input impedance (compared to a dummy load). DC input power is about 500 mW, so this stage is woefully inefficient, running at its limits, and should probably be redesigned. The supply line is keyed by the amplitude modulator to affect CW modulation.

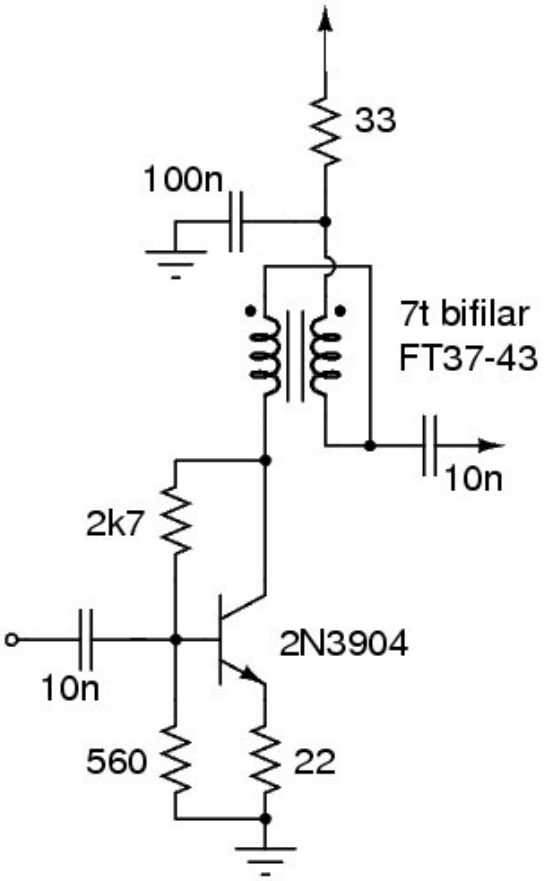

Amplitude Modulator

The amplitude modulator is simply a BD140 PNP transistor with a 2N7000 switching its base voltage. A resistor network gives some envelope shaping to soften the keying. In theory PWM could be used for fine-grain power control from the microcontroller board, but I don't think I will attempt this.

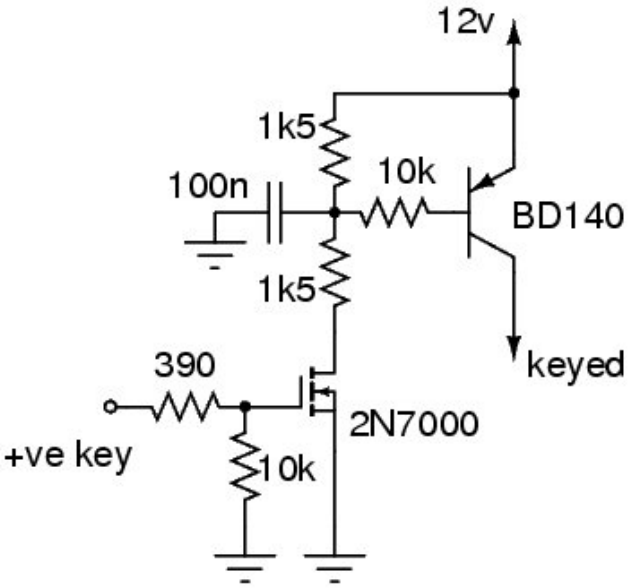

Power Amplifier

The power amplifier is a single 2N7000 running Class-E. From its 25 mW drive it can deliver about 2 Watts output (33 dBm) through the output filter into 50 Ohms from a 13.8 Volt supply. It barely gets warm although it is biased very slightly on by the

© 2000 - 2009 Alan Yates - All Rights Reserved. XHTML | CSS | CSS toggle

drive voltage. At the normal supply voltage (regulated 12.0 volts) it will deliver about 1.5 Watts - note also that optimal tuning changes noticeably with a change in supply voltage.

Impedance matching into the gate could be better but I suspect acheiving a good return loss would reduce the drive voltage amplitude and kill the output power, another active device would likely be required - in any case the impedance doesn't appear to upset the oscillator buffer LP filter even though the driver is partially "transparent" being a feedback amplifier. The mid-stage filter is largely redundant, but was useful for initial experiments, you might like to omit it.

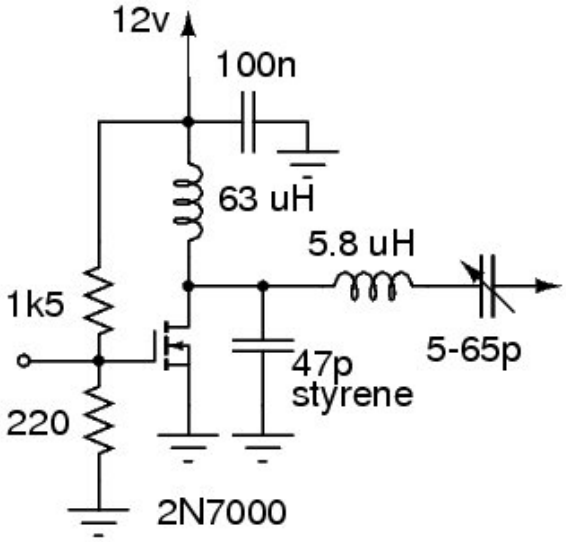

I wrote a calculator to help design class-E amplifiers. The design was based around 1 Watt out from a 12 Volt supply and a loaded Q of 5. The result gives a load of about 75 Ohms, but empirical tests showed 50 Ohms was suitable loading giving a sightly worse efficiency and more voltage at the drain (without changing the shunt capacitor). The shunt capacitor value was decreased from the calculated value to match the output capacitance of the 2N7000 (about 18 pF), experimental measurements closely agreeing with theory. Even better efficiency is likely achievable, but the circuit works quite well as-is.

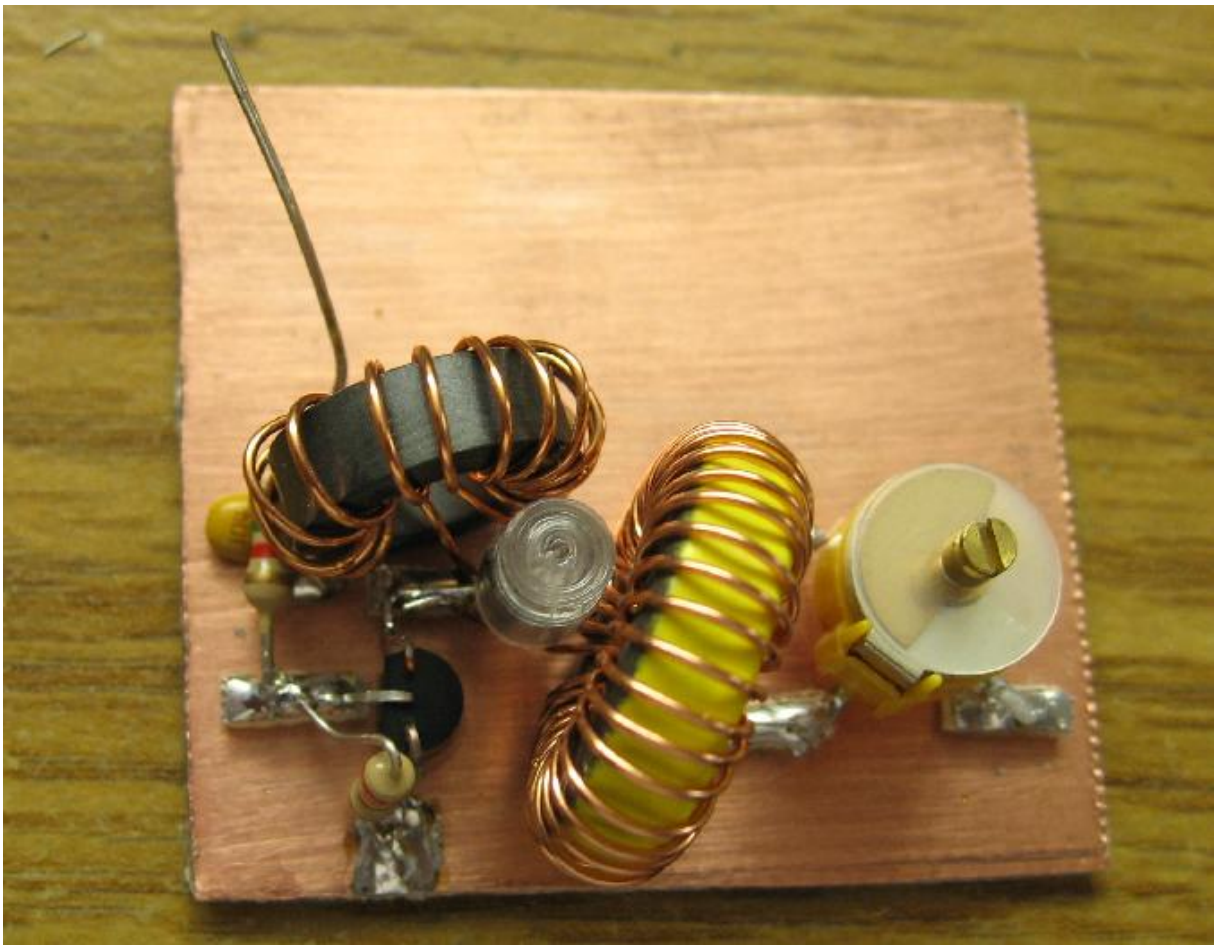

The drain choke is 12 turns on an FT50-43, its precise value is not critical, it just acts as a current source and could be (and perhaps should be) much smaller - the calculator does make a (very tiny - often ignorable) adjustment for its admittance. The

© 2000 - 2009 Alan Yates - All Rights Reserved. XHTML | CSS | CSS toggle

analysis was not carried out, T50 or perhaps even T37 might be OK? The trimmer is probably not the best for higher Q circuits, but at 5 it seems to work OK and doesn't get hot.

Low-Pass Filter

The filter is a Chebyshev with its final peak at the frequency of operation. It has pretty good measured characteristics, the centre capacitor was tweaked to tune out the effect of using E12 preferred values. Normal ceramic capacitors were used with no measurable ill effects.

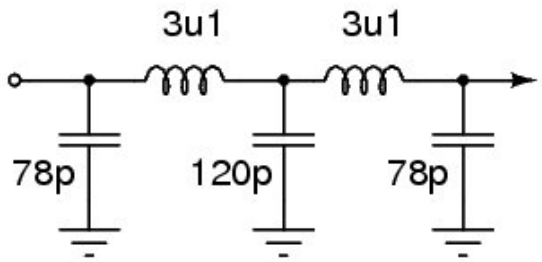

The 3.1 uH inductors are 28 turns on T50-6 toroids.

The Controller

An ATtiny13V is the brains of the MEPT beacon. The microcontroller code hasn't changed since the original build. The board also contains the resistor network for deriving the modulator and tuning signals from the "width" and "centre" pots, in addition to the green indicating LEDs which show the CW and FSK keying state.

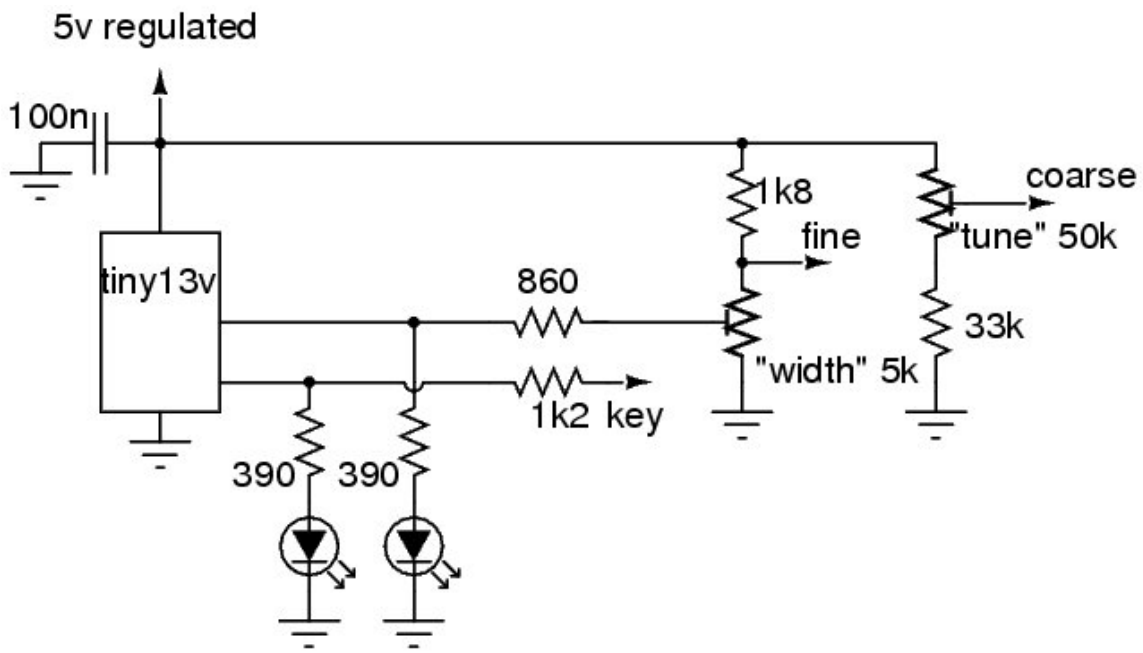

There are some elements omitted from these diagrams, for example the 5 and 8 volt three-terminal regulators, some filter capacitors, decoupling, supply filtering at entrance to the box, etc. All are extremely non-critical and conventional so I haven't detailed them here. Please post a comment if you want anything clarified.

Vertical Antenna

The antenna has also changed, I've built a matching network to feed my 3-metre vertical used in the 80 metre beacon on 30 metres. I hope to eventually build a diplexer and matching network that can feed this same chunk of metal with both beacon TXs concurrently - but much design work remains before I can attempt that.

© 2000 - 2009 Alan Yates - All Rights Reserved. XHTML | CSS | CSS toggle

The matching inductor is 7.8 uH. A polyvaricon fine-tunes the match. Oddly enough the return loss into this simple network alone is quite good. This is suggestive of rather large ground losses... A lot more antenna work needs to be done, while I get excellent signals into David VK6DI and Bob VK7KRW's sites I am yet to be seen anywhere else by the online grabber network.

Results

David VK6DI has been able to copy my beacon in all its various states of construction and stability. One experiment in particular used just the 25 mW output of the driver amplifier. Signal to noise measurements from this test indicate I should be just visible above his noise floor running only 25 uW!

© 2000 - 2009 Alan Yates - All Rights Reserved. XHTML | CSS | CSS toggle

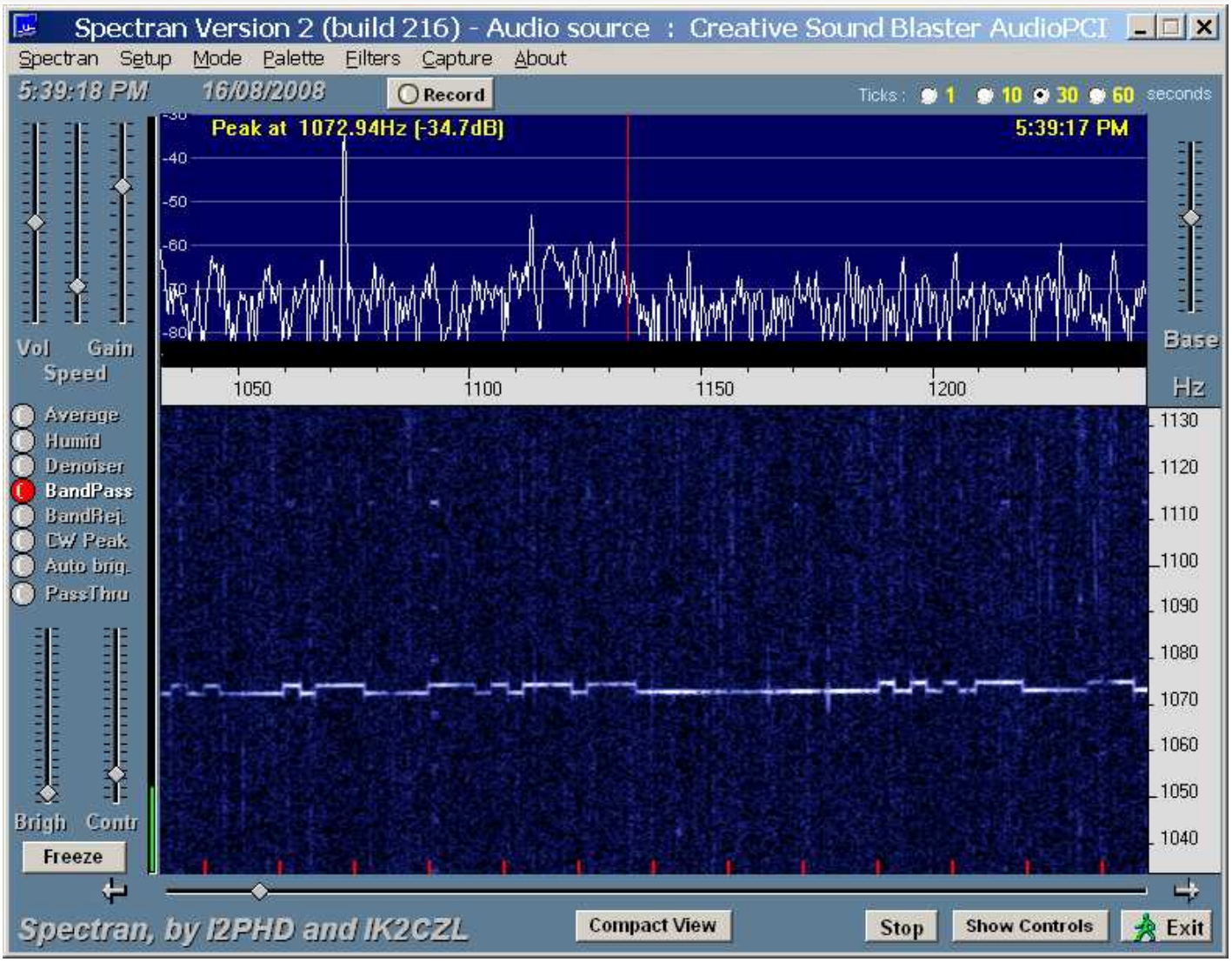

With the beacon output now at an easily measured ~30 dBm it is a simple matter to attenuate down for the real QRPp(p) experiments.

Bob VK7KRW has been seeing my signal as well. He is my first report from VK7, including the 80 metre beacon experiments. Next time I fire up the 80 metre beacon Bob will listen out for it as well.

© 2000 - 2009 Alan Yates - All Rights Reserved. XHTML | CSS | CSS toggle

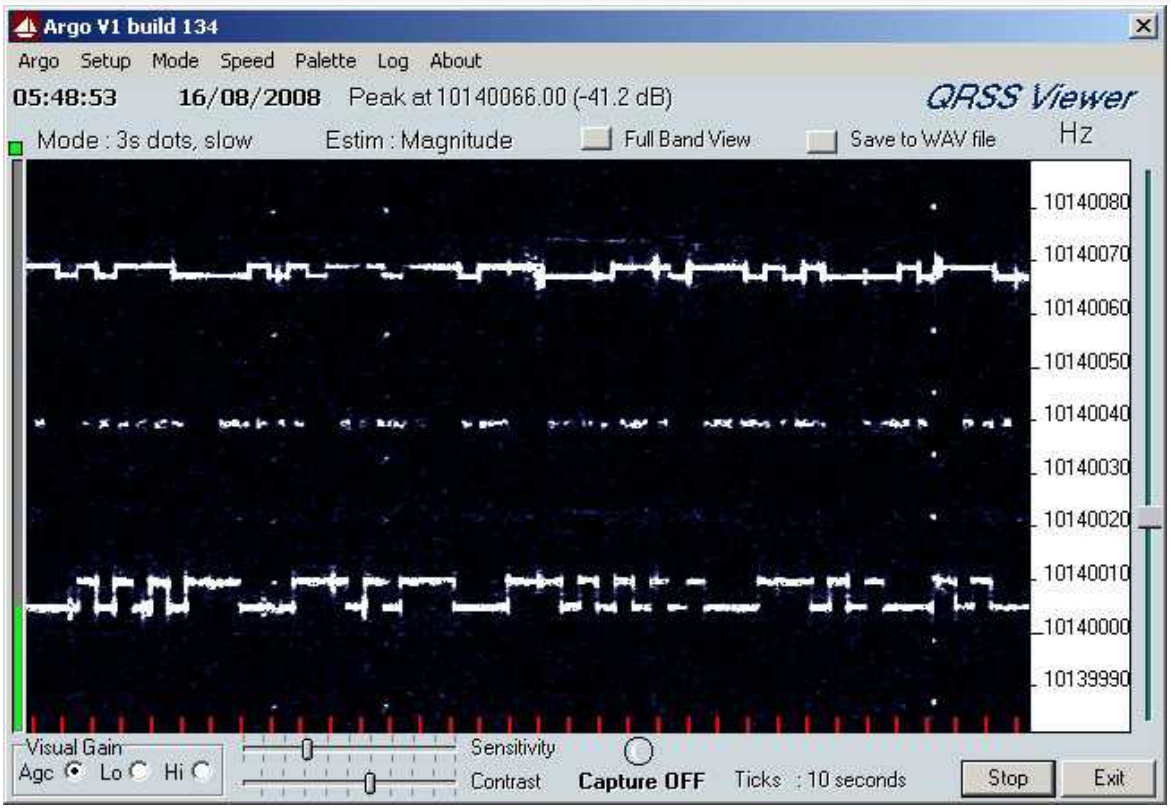

QRSS Reception

My attempts to receive QRSS have not been as successful as my TX work. My noise floor is *horrible*, combined with poor antennas this limits my chances. I did accidentally see VK6DI's 500 mW signal during measurement experiments on my beacon.

© 2000 - 2009 Alan Yates - All Rights Reserved. XHTML | CSS | CSS toggle

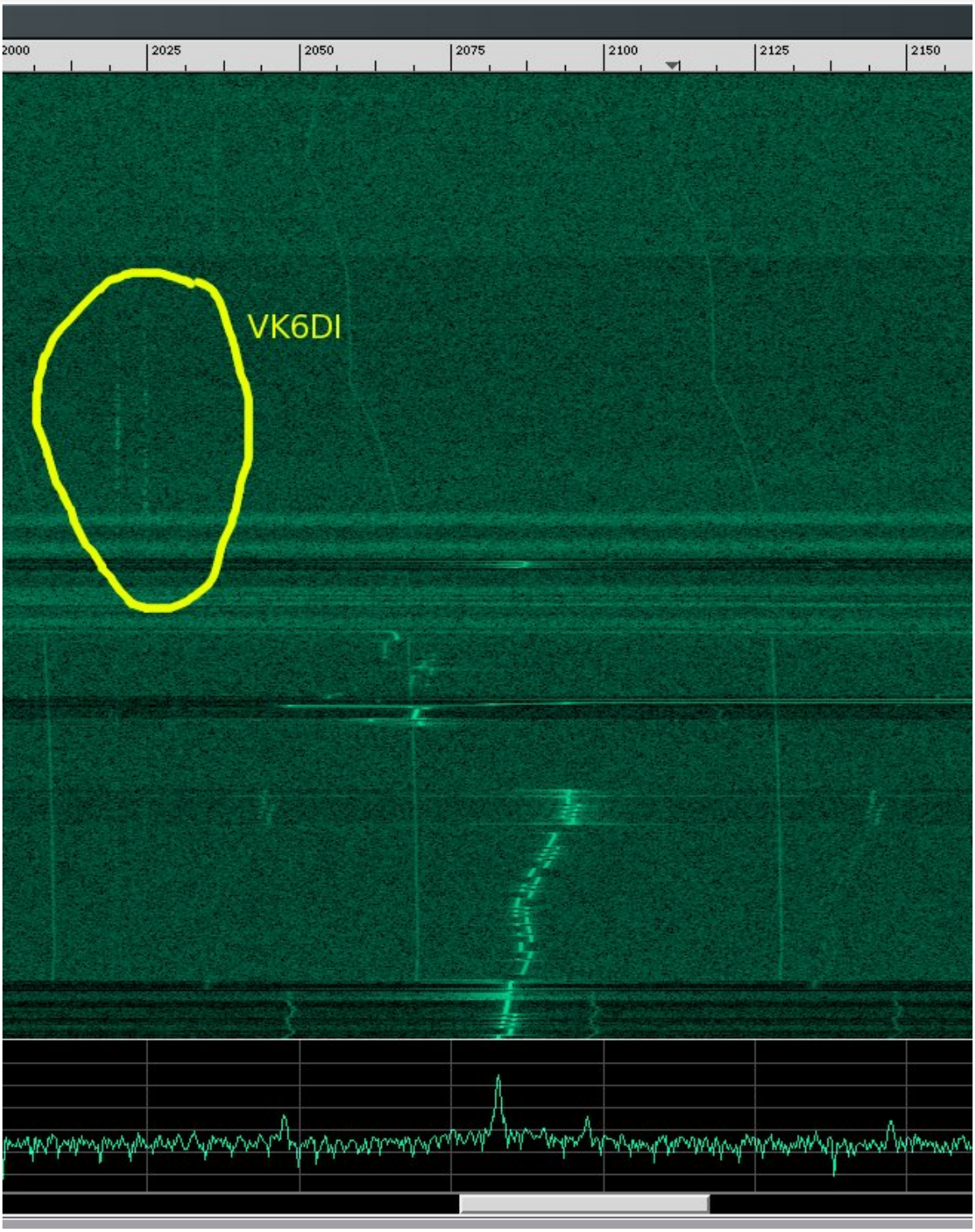

2 comments.

Attachments

title	type	size
Oscillator Circuit Source	application/postscript	14.584 kbytes
Frequency Modulator Circuit Source	application/postscript	11.443 kbytes
Driver Amp Circuit Source	application/postscript	12.719 kbytes
Amplitude Modulator Circuit Source	application/postscript	11.658 kbytes
Power Amplifier Circuit Source	application/postscript	12.412 kbytes

© 2000 - 2009 Alan Yates - All Rights Reserved. XHTML | CSS | CSS toggle

Controller Circuit Source	application/postscript	12.063 kbytes

Parent article: 30 Metre QRSS Beacon.

© 2000 - 2009 Alan Yates - All Rights Reserved.

30 Metre QRSS Beacon

2008-08-10

This weekend I had decided would be "QRSS weekend", I've been fiddling with the idea for too long now, it was time for a strong effort to complete the project. As luck would have it, David VK6DI found my 80 metre beacon and added some extra inspiration to get my act together on a 30 metres beacon.

I ordered my 10.140 MHz xtals from DL6JAN. The arrived quickly, nicely packed - it was an easy process, I highly recommend him as a source for QRSS rocks.

The Transmitter

The oscillator is a conventional Colpitts, with an 8 volts, 3-terminal regulator for voltage stabilisation. The buffer is a J310 JFET source follower with a 10 k input impedance fed through a 5p6 cap, the output is filtered through a LPF and delivers about 900 uW into 50 ohms.

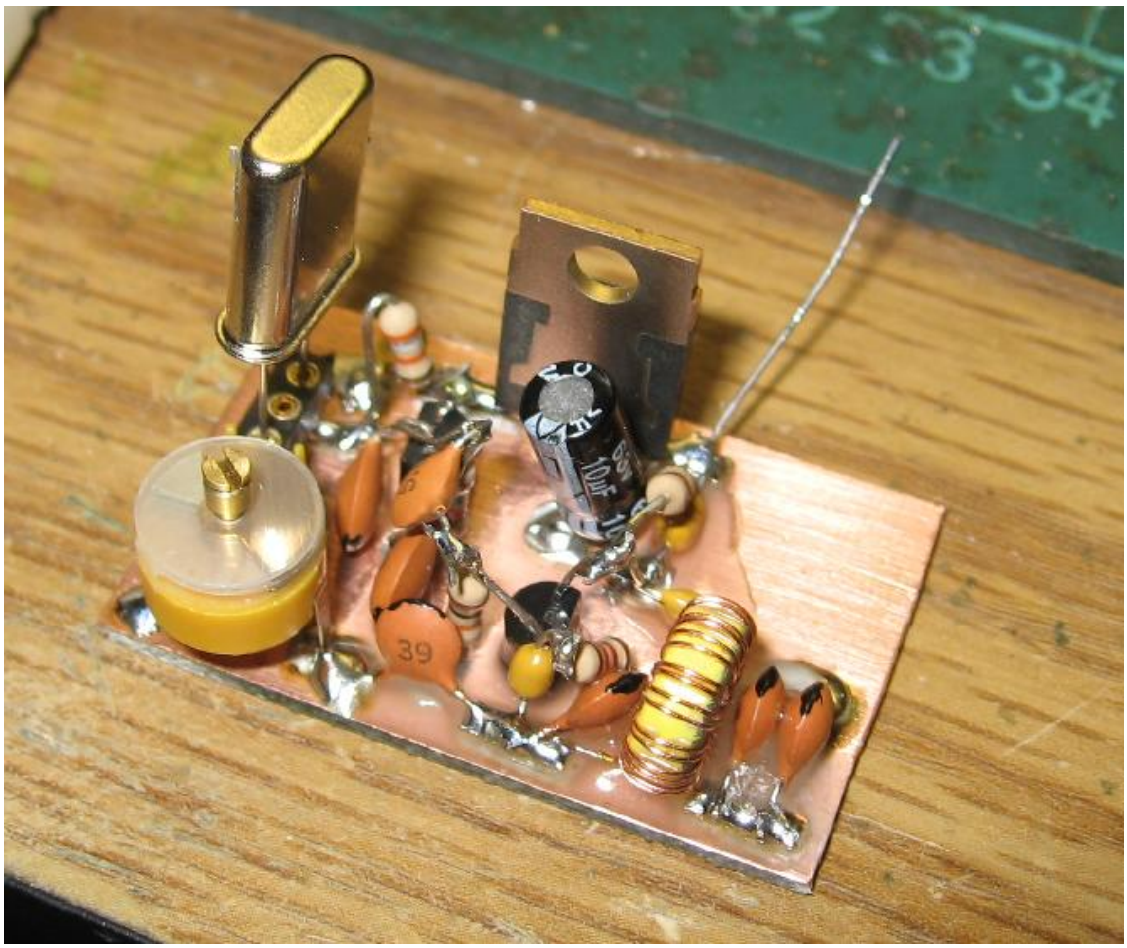

This is followed by a 2N3904 feedback amplifier giving about 20 dB of gain. This then drives my old SM0VPO QRP RF amplifier as a power amp.

© 2000 - 2009 Alan Yates - All Rights Reserved.

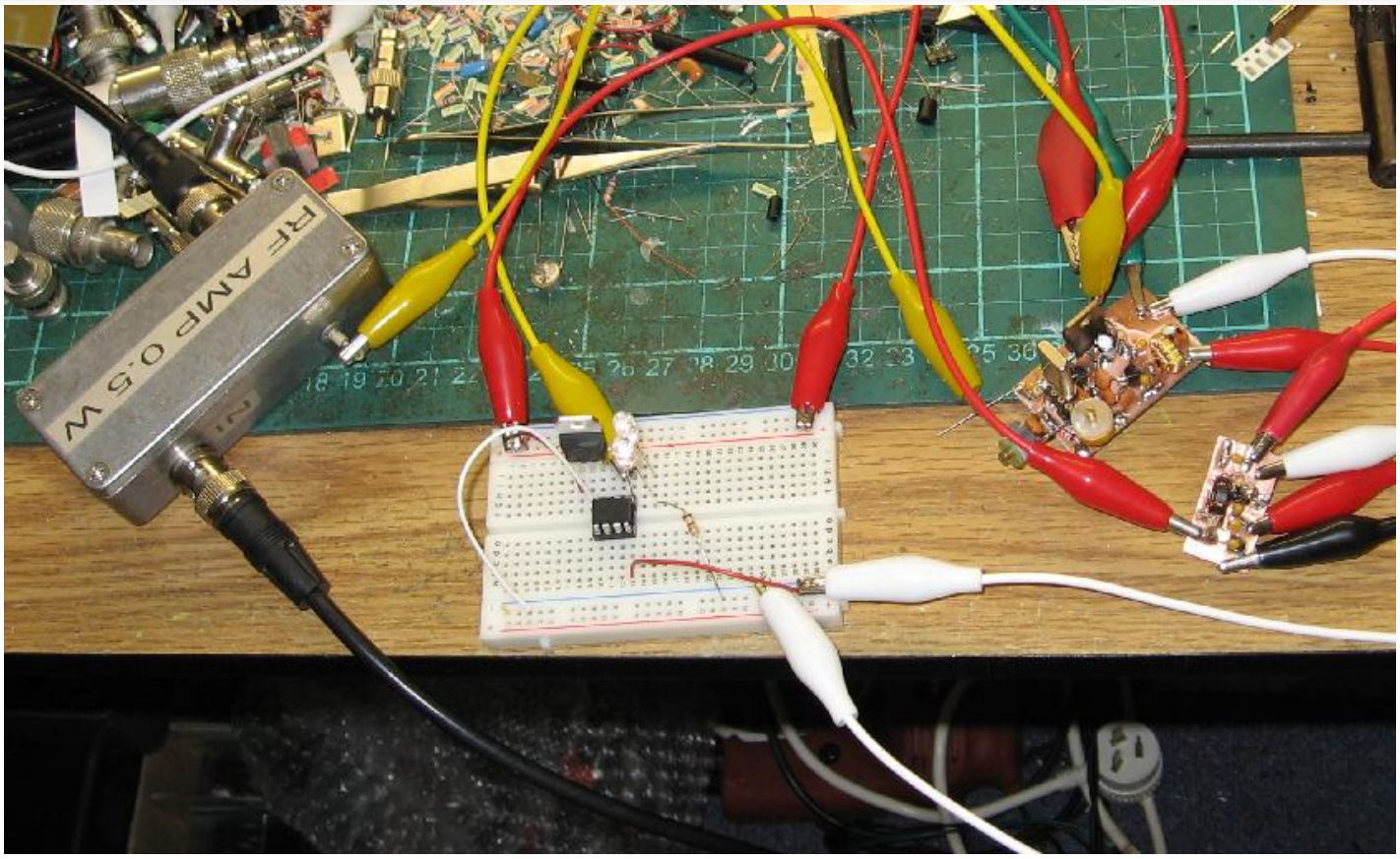

A small low-pass filter follows to clean up the output suitable for delivery to the antenna. About 29 dBm is delivered into 50 Ohms.

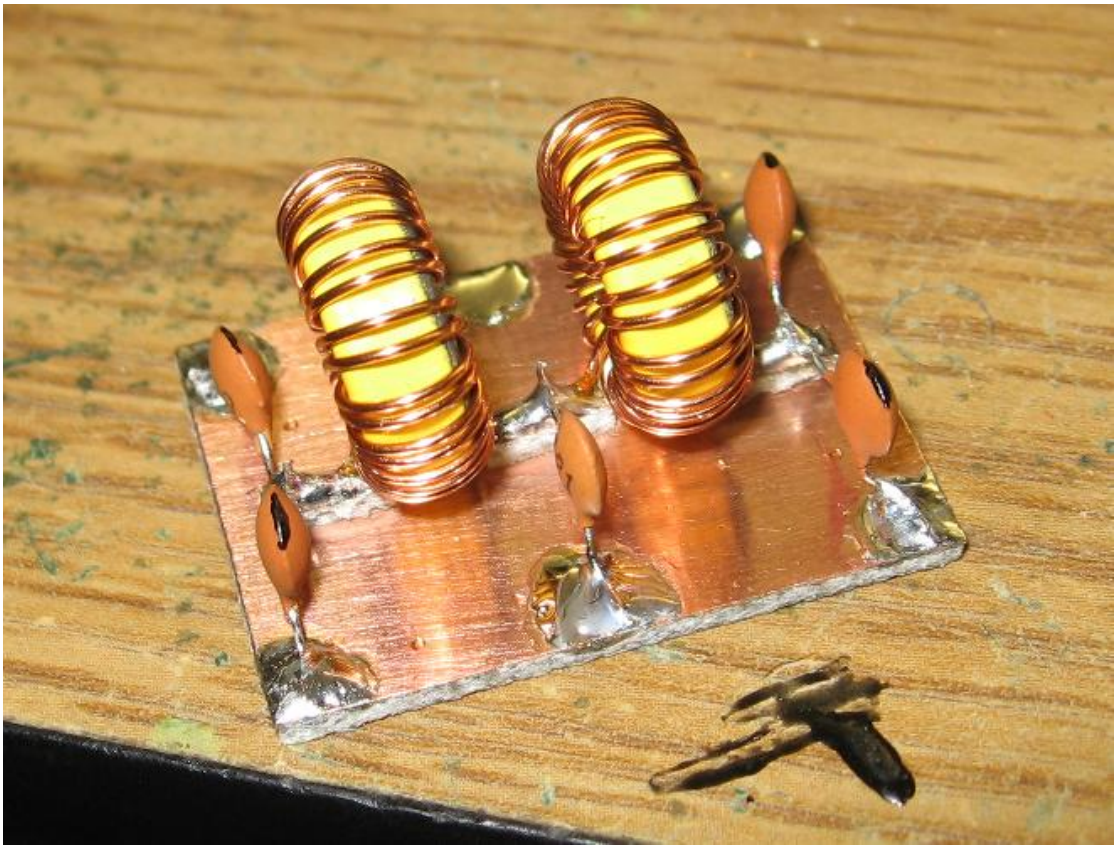

The Keyer

The beacon keyer is a Atmel ATtiny13V running very simple code. It offers two outputs, one for CW keying (currently unused), and the other for FSK. The beacon CW idents three times at 10 WPM between the QRSS6 FSKCW idents. A small trimmer in the oscillator circuit is diode switched by the beacon controller to pull the oscillator an adjustable amount.

© 2000 - 2009 Alan Yates - All Rights Reserved. XHTML | CSS | CSS toggle

The Antenna

The antenna took much of Saturday to setup and debug. It is a loaded inverted V. Two ~27 uH coils allow the ~2.5 metre arms to be resonant on 30 metres.

Precise tuning is achieved by a Z-match at the feedpoint.

© 2000 - 2009 Alan Yates - All Rights Reserved.

The antenna is still very much work in progress, but looks like it will work OK for now. Return loss can exceed 40 dB, but seems to drift with the temperature of the day (can be tuned back up again). I suspect the loading coils are drifting around a little as they change shape with temperature. I'll have to lacquer the turns in place, but I am cautious about increasing their distributed capacitance and causing SRF and Q-reduction problems.

Results

David's grabber has been enormously useful during this development work. From the initial lash-up on solderless breadboards into the newly constructed antenna I've been able to see my wiggly signal on his grabber. Here is a shot of my first 250 mW signal through the antenna bridge while I was still playing around with the Z-match. The relatively stable signal is also mine, which I then QSYed to prove to myself it was really my signal I was seeing, that's the wiggly bit, I was using the C-jig to tune the xtal oscillator by hand.

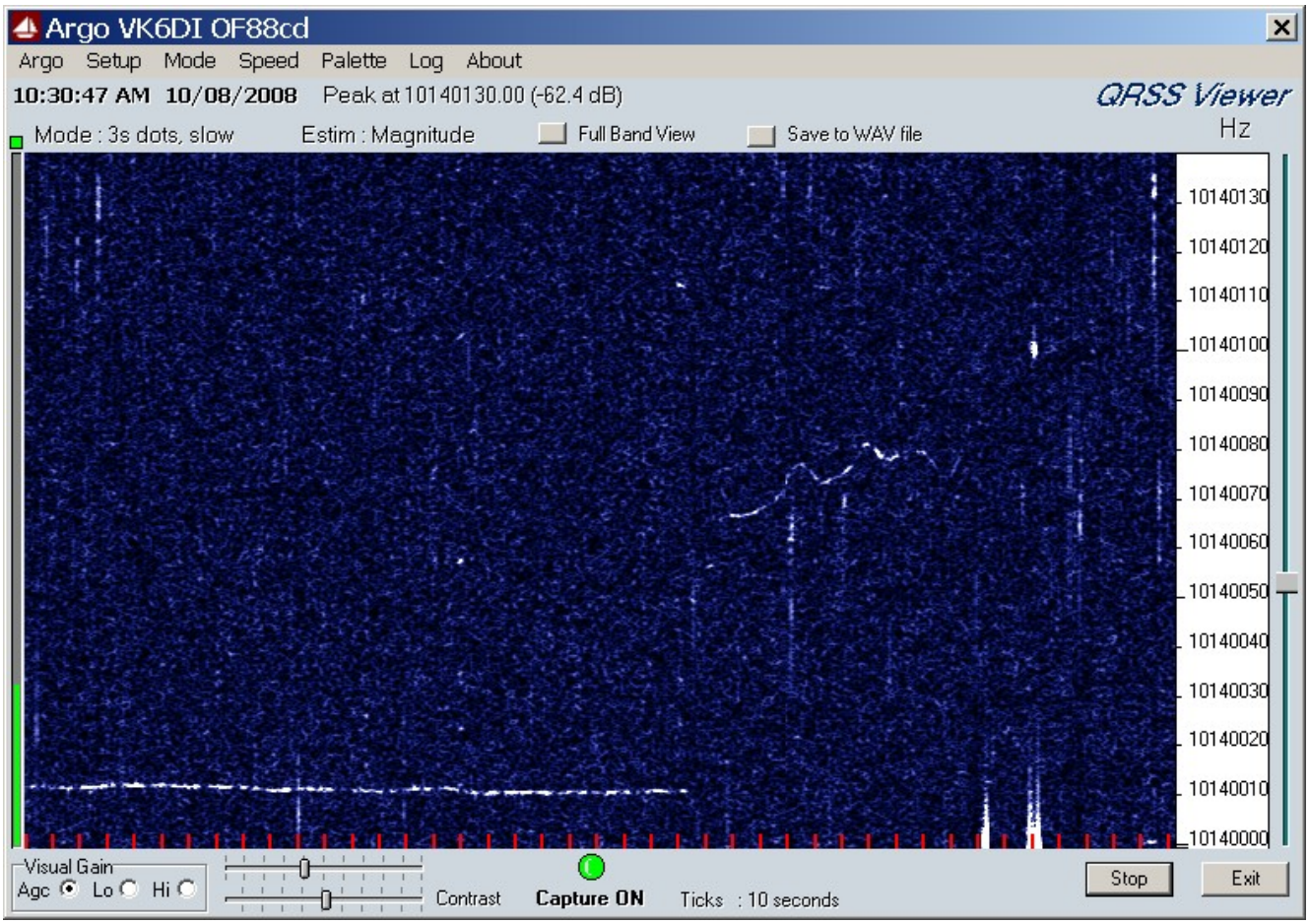

That's less than 1/4 of a watt from 3300 km away!

Improvements through the day lead to good signal reception at David's end.

© 2000 - 2009 Alan Yates - All Rights Reserved. XHTML | CSS | CSS toggle

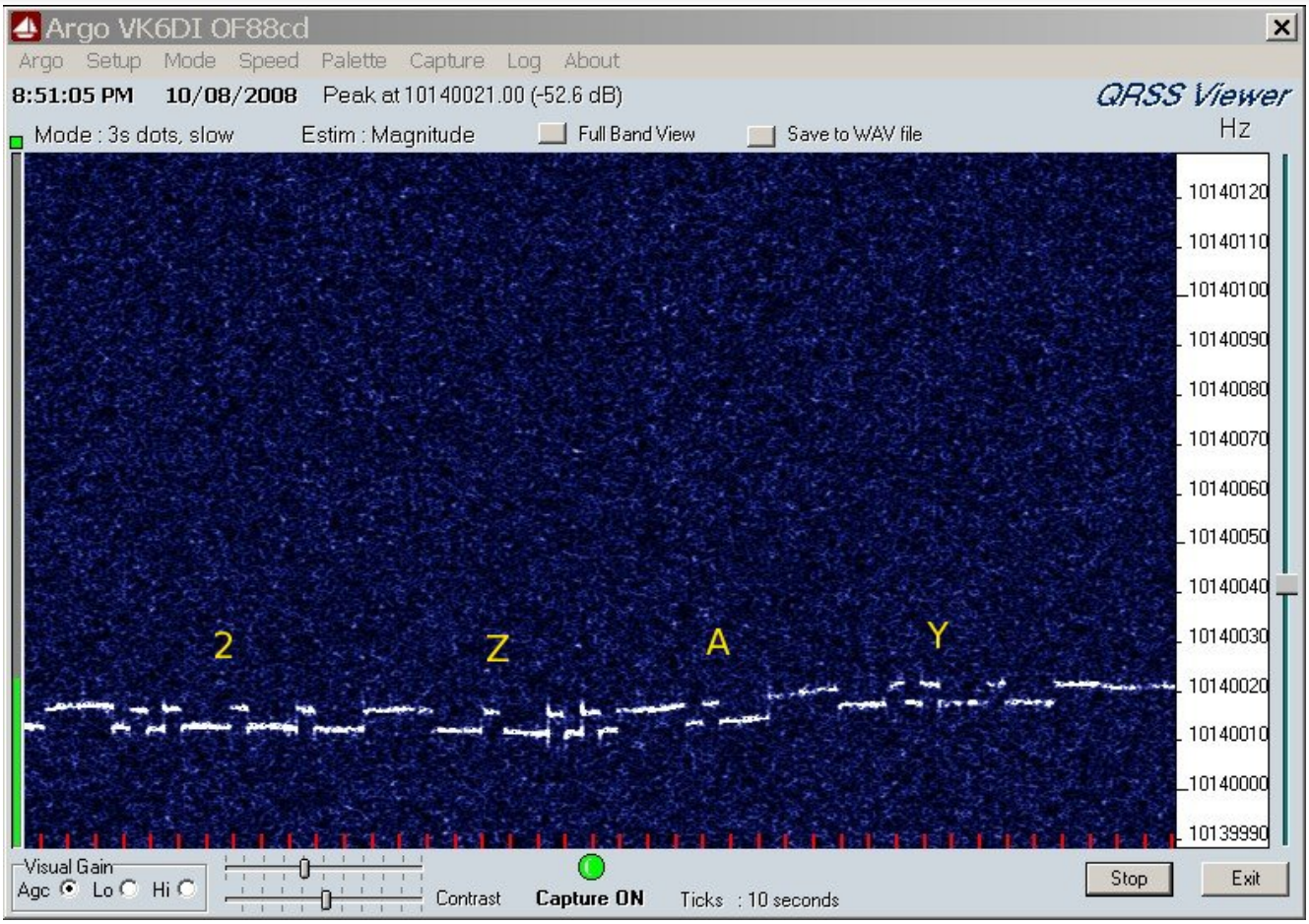

Stability is still a problem, as the TX isn't boxed the air conditioning in the lab is causing the oscillator to drift around. I have some PTC thermistors that should make good oven heaters for the final assembly, I figure a nice diecast aluminium box will do the trick, with its larger mass and thermal inertia providing improved stability. Load variation frequency stability is excellent BTW, the JFET buffer and extremely conservative gain distribution gives good reverse isolation.

I've been monitoring the signal locally using my FT-817 and baudline running a 16384 point FFT.

© 2000 - 2009 Alan Yates - All Rights Reserved. XHTML | CSS | CSS toggle

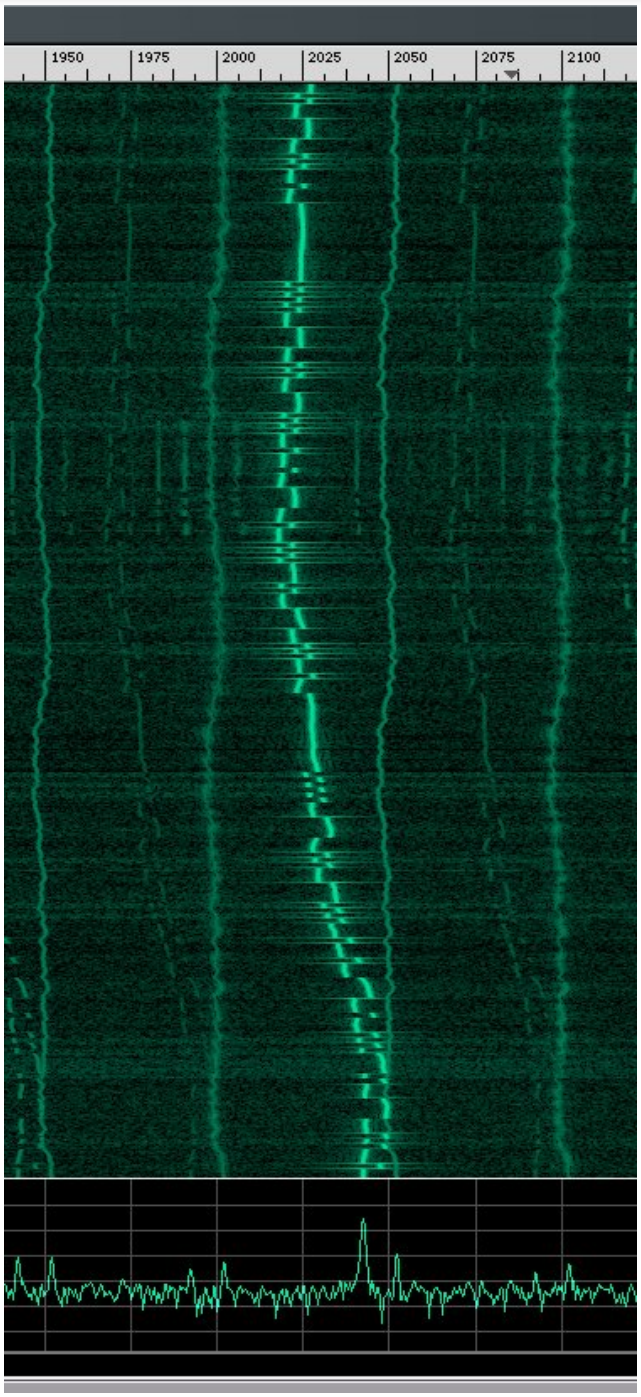

This isn't really optimal for QRSS visualisation, but gives me a good idea of my shift width, centre frequency and stability. Also, I found using my new 30 metre antenna into the same setup I could easily see many of the signals David can, in particular a stable carrier near 14.140000 MHz that seems to come and go. I may have to build my own grabber RX...

All in all, the results are very encouraging. I achieved an enormous amount of work in only 2 days, from building the antenna and Z-match, through to the various TX modules and software for the beacon. There is still much to be done however, I need to box and stabilise the beacon, build a dedicated 1W output amplifier for it rather than using the boxed test amplifier, and fix up the antenna in a more permanent manner, in particular water proofing the Z-match and fixing the end-insulators for the dipole arms. I'll have to post the technical details too, circuit diagrams, etc. Next weekend... :)

4 comments.

Updates

2009-03-06: Hellschreiber QRSS
I implement sequential multi-tone Hellschreiber modulation in the 30 metre QRSS beacon.
2009-02-24: 30 Metre QRSS Beacon Calibrated
I finally sit down and calibrate the front-panel controls of the QRSS beacon.
2008-08-16: 30 Metre QRSS Beacon Updates
I complete and box-up the QRSS beacon, and experiment with a vertical antenna.

© 2000 - 2009 Alan Yates - All Rights Reserved. XHTML | CSS | CSS toggle

80 Metre CW Beacon

2008-06-21

The local Homebrew Group has been talking about Peter Parker VK3YE's Carnegie Communicator project in Lo-Key. The general design of the circuit (based on the old "Oner" CW transceiver) lead in the usual round-about way to build this CW beacon. OK, so how does a top-band AM transceiver lead to a Morse beacon? Well, inspiration is a complex thing, and with the PSK beacon stuck in phase jitter hell, a CW beacon sounded like a good project to initially test the waters with.

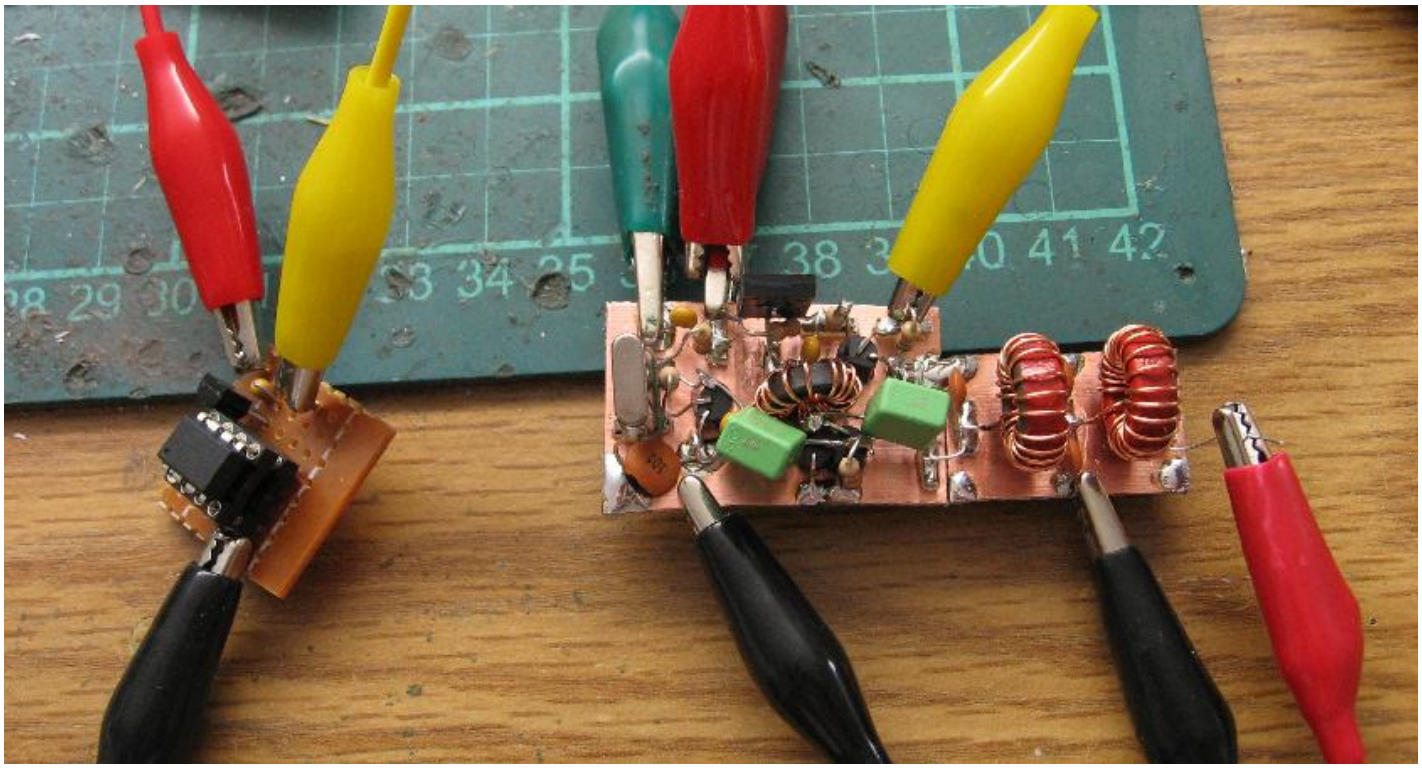

The design is very brute-force and simplistic, closely following the old Oner design. A Pierce oscillator drives a FET output stage with a keyed drain and an output filter. The output is loaded directly at 50 Ohms with no impedance transformation, limiting the output power to ~1.5 Watts from a 13.8 Volt supply when you consider the saturation voltage of the BD140 keying BJT. I tried several output devices, including IRF510 and VN10KM, but settled on a paralleled pair of 2N7000s which provided the best performance from the limited drive. A single 2N7000 will work and produce slightly more output power as the drive sees only half the capacitive load, but the device will run stinking hot and is being driven outside its safe working area. Two devices get warm to the touch and output about 200 mW less, but will probably last forever. The IRF510 on the other hand is under-driven in this circuit because of its much larger gate capacitance. The output with an IRF510 is still OK, and if its all you have it will work and give a little under a watt out for about the same drain current (~210 mA). With a little more than 1.5 Watts out, the efficiency is horrific at only about 60%. Modification of the output network to run in class-E could improve this towards 95% and the output devices would run much cooler, one 2N7000 would probably be fine. The 60 volt Vds limit of the 2N7000 gives a limited safety factor in this mode of operation however.

© 2000 - 2009 Alan Yates - All Rights Reserved.

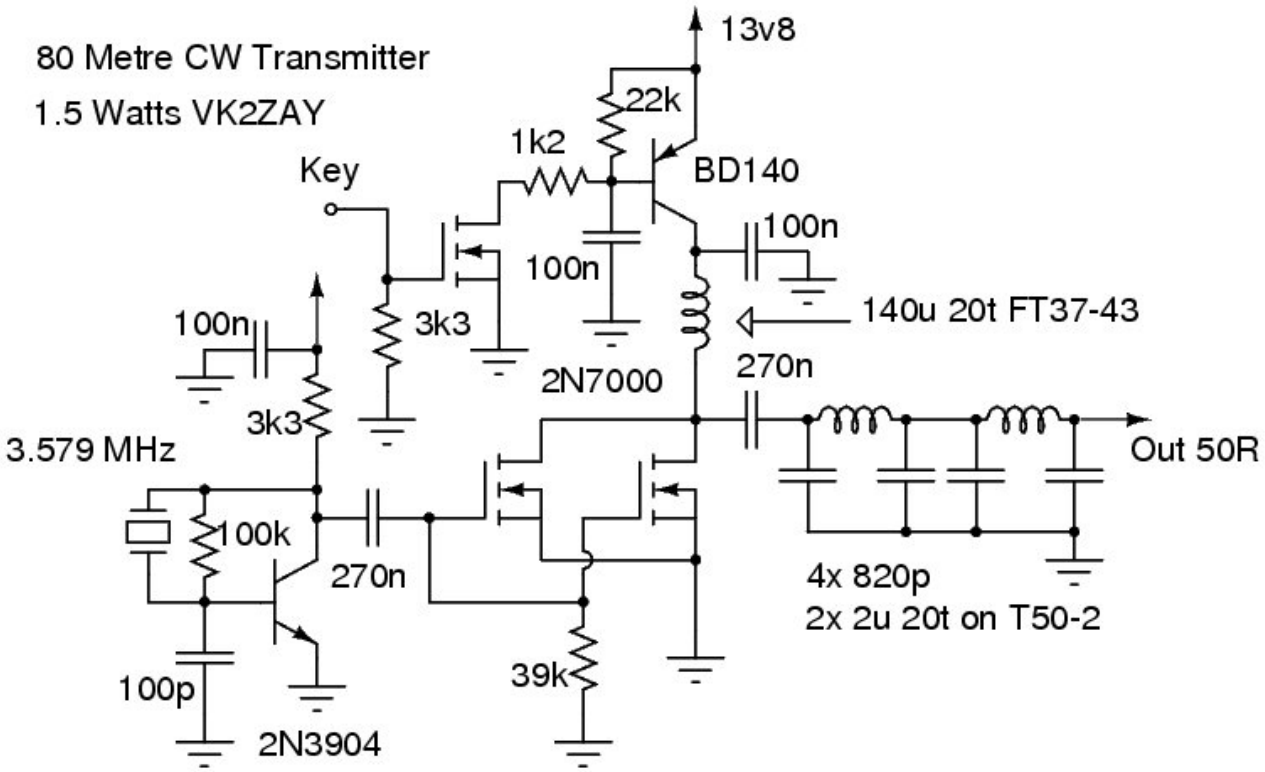

The crystal is an NTSC colourburst one from the junkbox, the output frequency is around 3.57867 MHz, but the crystal isn't oven-controlled so it will probably drift around a bit. Please send me a reception report if you hear it!

The keying is performed by an ATtiny13V. A small board holds a socket for the microcontroller a LM78L05 regulator and a decoupling capacitor. The active-high output of the keyer is used to drive the keyline through an extra 2N7000 pull-down. The microcontroller software is available here.

The "backwave" (key-up output power) is suppressed only about -46 dBc, which may prove to be insufficient. The backwave output power is of a similar order of magnitude as the total output power of some of Michael Rainey's beacons! Of course it is still very much QRP, and currently I am loading up my 40 metre end-fed dipole using 18 turns on an FT120-43 and my end-fed coupler which is just a terrible antenna for 80 metres so the actual radiated power is probably quite small. I'll probably build a loaded vertical with top-hat for this beacon if I keep it running.

6 comments.

Attachments

title	type	size
Transmitter Circuit Diagram Source	application/postscript	15.456 kbytes

Updates

2008-08-03: Beacon Reports
Summary of the reports received for the 80 metre beacon experiment.
2008-07-13: New Beacon Antenna
I finally rig up a vertical antenna for my 80 metre CW beacon.
2008-06-29: More Beacon Work
I put the 80 metre beacon in a box and do some more work towards an antenna for it.

© 2000 - 2009 Alan Yates - All Rights Reserved. XHTML | CSS | CSS toggle

A Working Receiver

2007-02-17

I completed a basically working AM receiver using the IF building-block from last week:

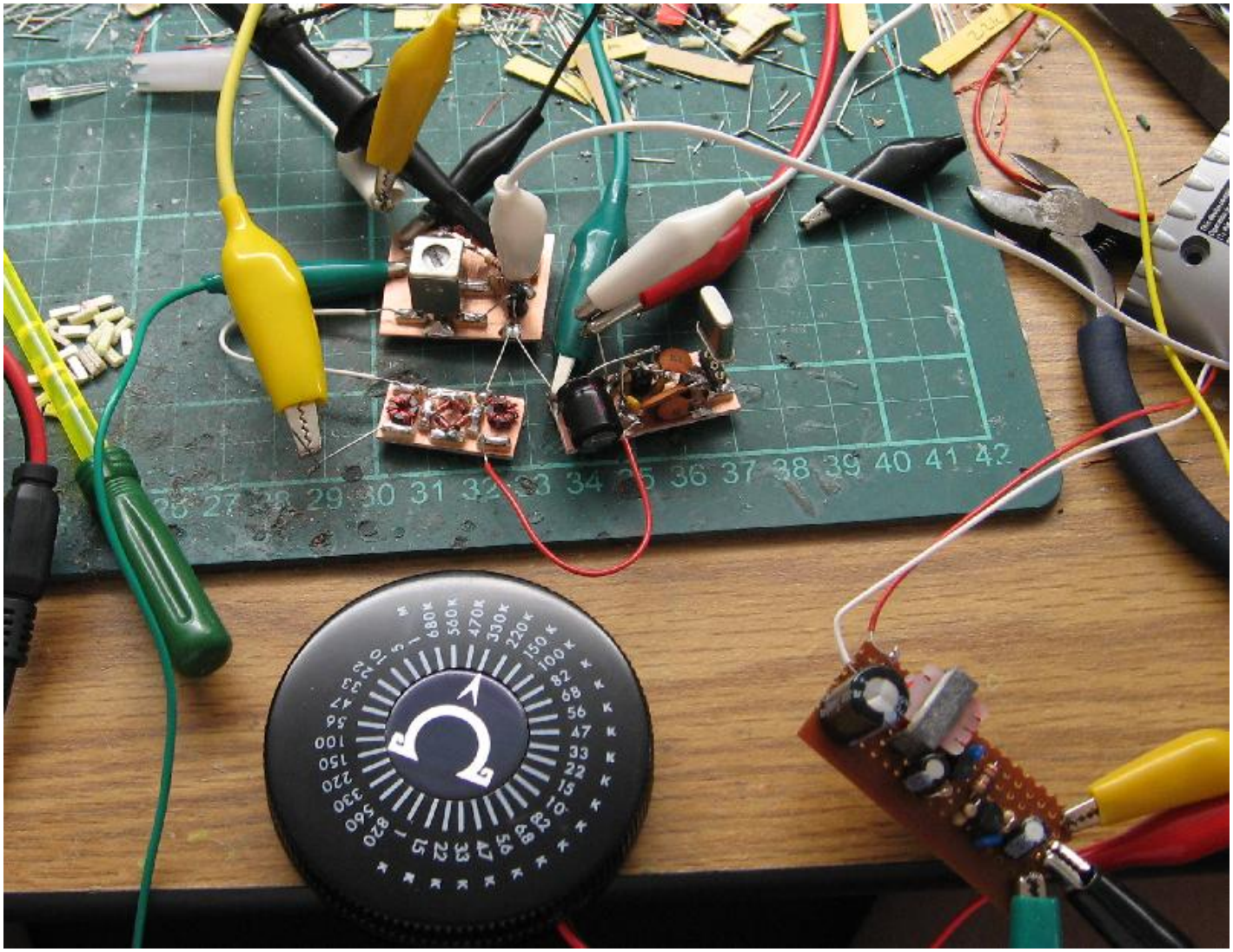

Note the lash-up with a 3.2768 MHz crystal oscillator, and the a two transistor veroboard AF amplifier I often use while prototyping. The resistance wheel is just acting as an attenuator for the AF signal path.

Some FT23-43 ferrite toroids arrived during the week from Kits and Parts. These tiny things allowed me to make an pretty small mixer without using excessively thin and difficult to manage wire, as I usually would when using ferrite beads at this frequency to get sufficient reactance (i.e. more than two or three turns through the bead means the wire must be very thin).

© 2000 - 2009 Alan Yates - All Rights Reserved.

The receiver produced a noisy, but quite usable signal from about 10uV of RF at 3.68 MHz:

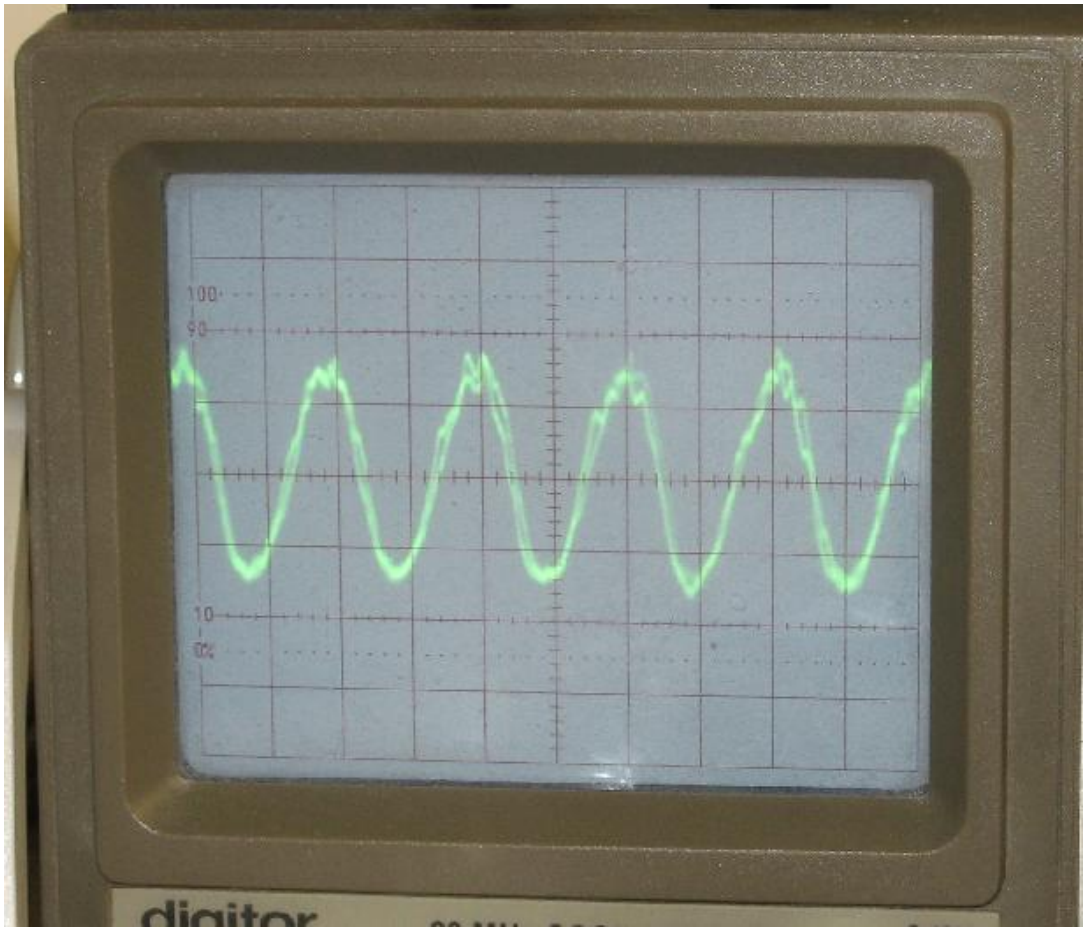

Finally I could use the AM transmitter to produce a test signal for the receiver. For this test, the TX was powered from a pair of 6 V gel-cells. The receiver was powered from my bench PSU. My VR-500 supplied the audio signal for the AM modulator, tuned to an FM radio station.

A dedicated AF amplifier was built for the receiver. I actually made it too sensitive, using a design I would normally use for direct conversion receivers. The output of the MK484 is high enough to make such extreme AF gain unnecessary. Removing the emitter bypass on the first stage offered acceptable gain, but a simpler amplifier with only two transistors would be sufficient. I also made the output class-A, with a 2N3904 standing quite a few mA - I may rebuild this module to something less of a hack, more efficient, and better suited to the mV output level of the MK484.

© 2000 - 2009 Alan Yates - All Rights Reserved. XHTML | CSS | CSS toggle

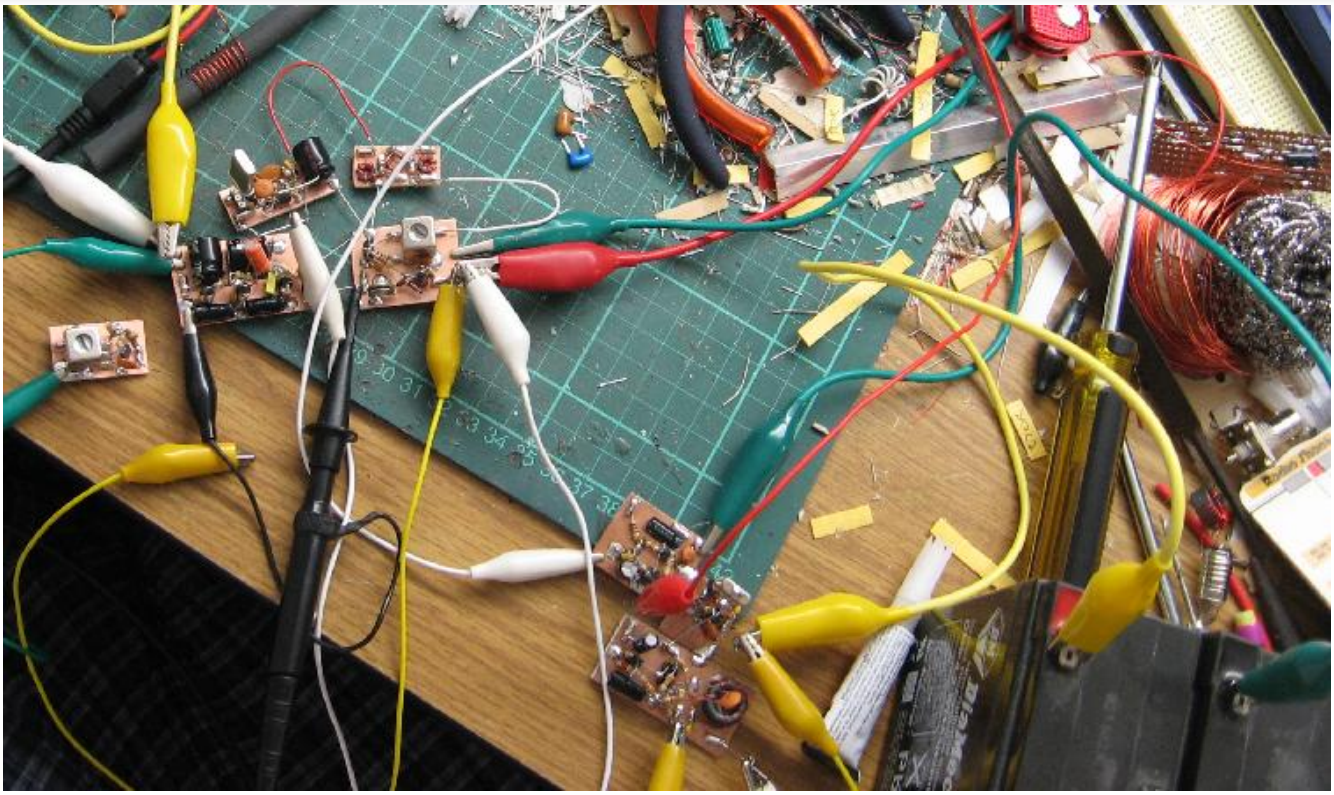

Note the small board with an IF can on it, this is a 455-ish kHz BFO oscillator for resolving CW/SSB. This doesn't work as well as a proper product detector, the injection level needs to be adjusted with varying signal strength, but the AGC makes a set level usable over a fair range. Higher injection levels de-sense the IF by activating its AGC. There is little way around this as the AM detector is buried inside the MK484 where you can't access it for BFO injection, and is simply the price you pay for such a simple IF circuit. That said, the BFO works fine, I was able to receive the ARNSW morse beacon on 3.699 MHz using this receiver and the BFO. Some success was obtained from injecting the BFO into the mixer LO port, requiring somewhat less injection level adjustment. I would like to avoid a front-panel BFO level adjustment, but a simple switched pot would be a practical solution if you don't mind the extra control.

Some VHF break-through interference was observed with the IF stage during testing. Vega FM at 95.3 MHz would be heard in the noise, extremely distorted. I assume the fairly long input lead from the MK484 to the IF can pad is picking this up, nothing else in the circuit changes the effect when touched. Shielding will correct this, but if I build this kind of IF circuit again I'll be more careful with the layout of this rather high impedance point.

As currently lashed-up the front-end allows anything into the mixer. This means it can harmonically resolve signals, for example, Radio Australia's monster signal on 6.020 MHz made it impossible to listen for ARNSW's morse beacon 3.699 MHz until after the shortwave station moved to another allocation for the day. While their respective IF frequencies where 100 kHz apart, the receiver selectivity was not sufficient to handle the enormous shortwave signal, some front-end filtering will take care of this. A ceramic filter in the IF path would improve the selectivity, or a Q-booster on the IF resonator.

By tuning around with the IF can, the receiver as-is makes a usable shortwave receiver. The AF amplifier can produce ear-splitting audio into headphones, and pretty room-filling audio using a matching transformer into a small speaker. You just slot in different crystals and tune around with the IF can, but doing so will eventually take its toll on the IF slug and its plastic threads. It would be a simple matter to replace the crystal LO with a VFO and tune that way. In fact, once I improve the selectivity I may build a copy to dedicate to SWL. The very trivial nature of the circuit would make it an excellent project for novices or foundation calls (or whatever we call newer hams now days).

2 comments.

Parent article: "2007 80m Homebrew Challenge".

© 2000 - 2009 Alan Yates - All Rights Reserved.

AD8307 RF Power Meter

2010-02-01

At the latest ARNSW Homebrew Group meeting I had the opportunity to finally calibrate my AD8307-based RF power measurement head.

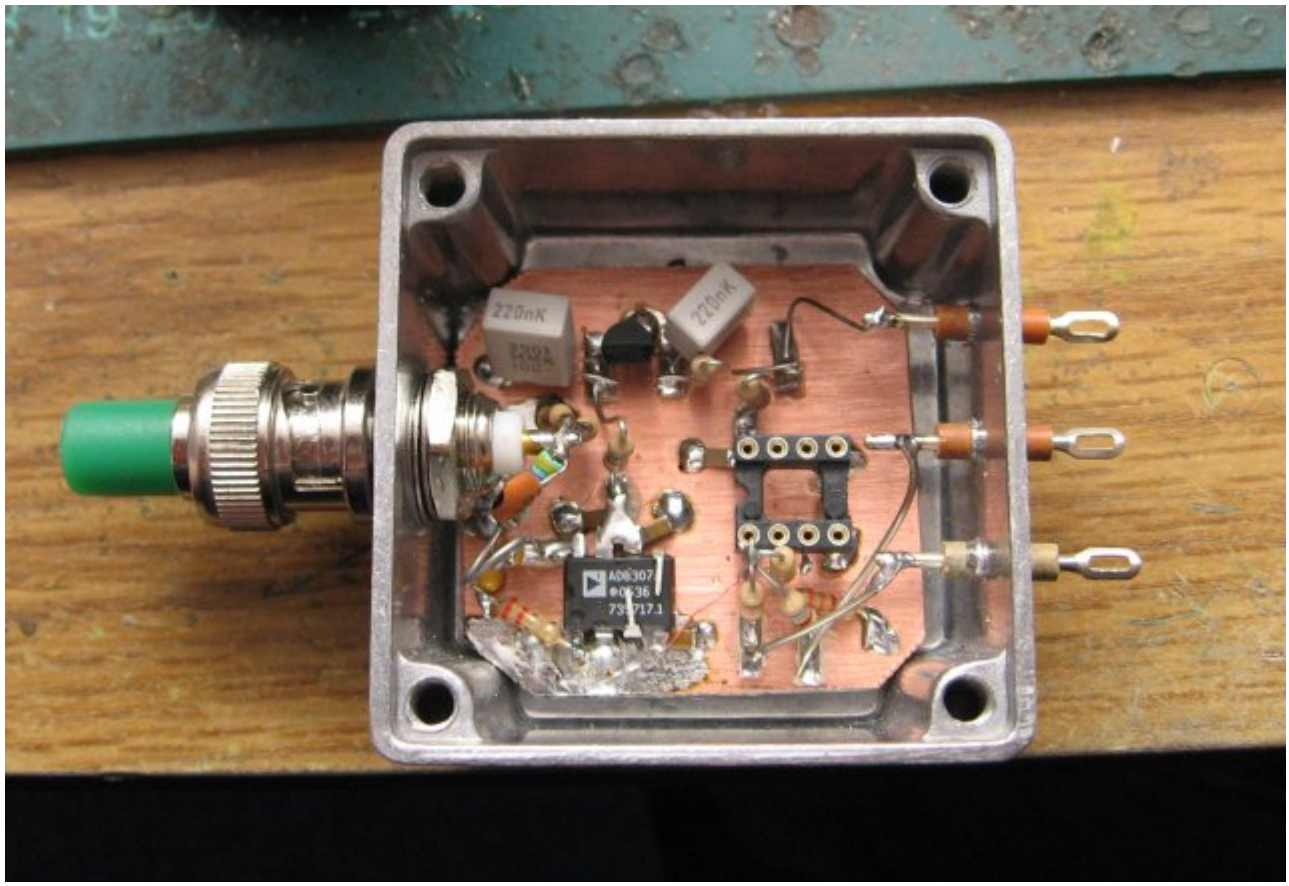

Mark VK2XOF brought along his power and frequency reference equipment and gave me a bunch of calibration points.

© 2000 - 2009 Alan Yates - All Rights Reserved.

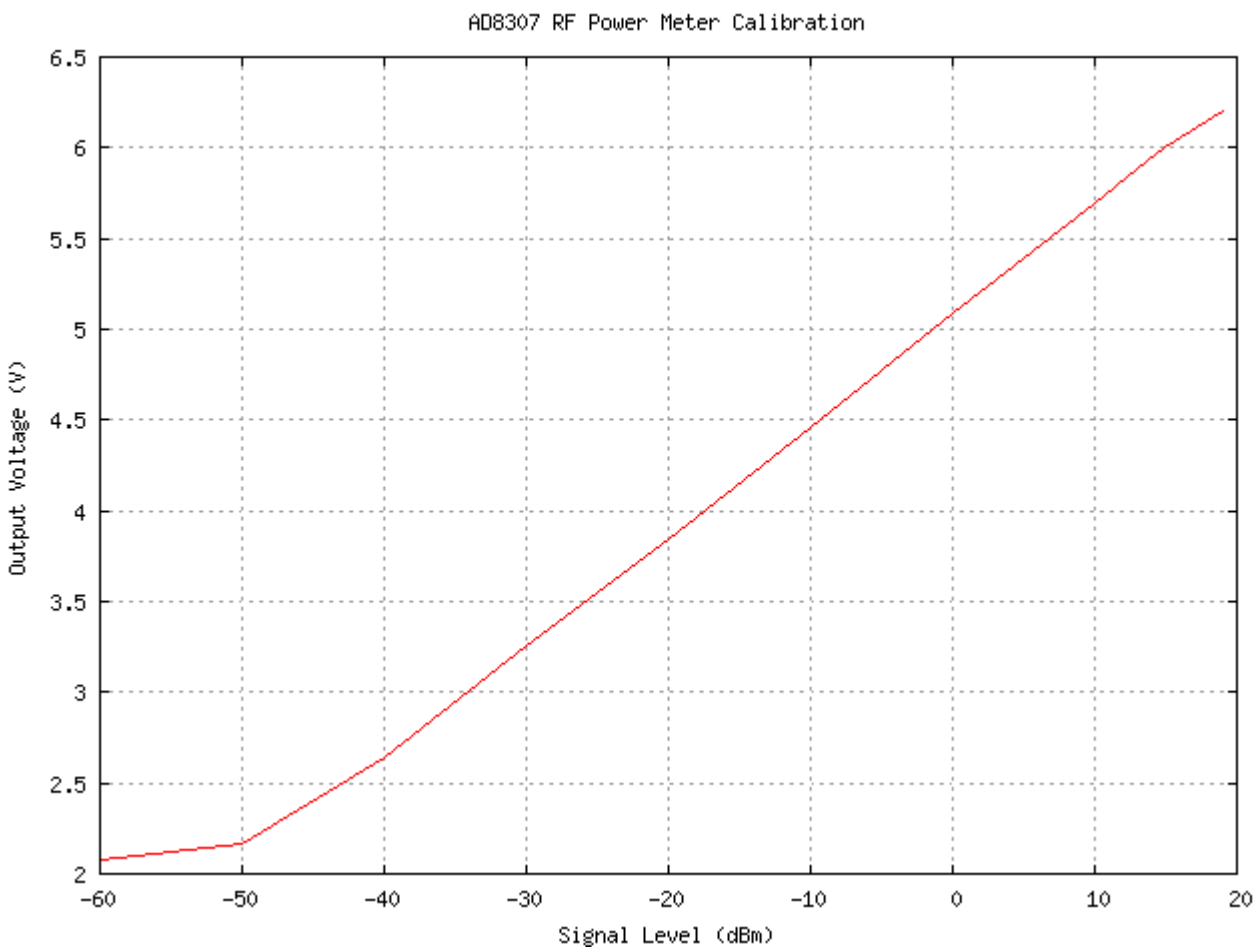

Data points above 13 dBm were given using the generator out of levelling-loop calibration so the slight compression approaching 20 dBm is to be expected. The levelling off below -40 dBm however is not. I know the noise floor of the meter (dummy-load terminated) is about 500 mV DC output, -40 dBm is about 2.65 V out, suggesting wideband noise from the generator was swamping the lower level spot calibration signals.

Regardless in between the data is very consistent and lets me compute a "slope + intercept" calibration relying on the excellent linearity of the AD8307. The 0 dBm intercept is 5.09 Volts and the slope is 16.469 dB per Volt (60.7 mV per dB). Based on the 500 mV noise floor this equates to about -75.6 dBm, or about 80 dB dynamic range - as expected for an AD8307-based unit.

Frequency response wise, my use of leaded resistors means it maintains its accuracy to about 250 MHz, which is sufficient for my immediate purposes. The circuit design itself is the W7ZOI design from EMRFD, page 7.7, figure 7.13.

3 comments.

© 2000 - 2009 Alan Yates - All Rights Reserved. XHTML | CSS | CSS toggle

Almost a Tesla Coil

2002-10-21

Over the weekend I had a chance to catch up with my electronics stuff which I haven't touched for ages, work has been nuts. I was sitting there building an inverter to drive a fluro tube, when I got interested in the properties of the primary and secondary windings, they were misbehaving, pulling the oscillator to one frequency, then another. I guess it was their self-resonance frequencies they were settling in, so curious as I was I wanted to measure them.

I tried a few ways, external drive coils with the CRO across the the coil, driven directly measuring the absorbed current with a in-line resistor, and probing with a dipper. It turned out that the primary's was about 1.6 Mhz and the secondary was about 50 kHz. The results of all methods agreeing with each other to within a percent or so.

All this fooling with inductors got me curious, so I put aside the project for a moment and started testing every inductor I could find. After finishing the junkbox full and promising to make a jig or tool to do this useful array of tests in the future really easy, I started winding my own with the left over wire from the inverter transformer. I think I learnt more about parasitics in inductors that night than ever before.

I've ended up with a simple measuring system, the square wave generator on my bench. Just injecting it into the inductor directly gives you almost all the information about an inductor you'll ever need, its resistance, its capacitance, its core losses. Try it sometime you'll never just grab a molded choke and whack it in the circuit without thought again.

So anyway, I decided to wind a long solenoid on a cardboard tube and measure its properties. A few turns at one end allowed tight coupling for injecting RF and seeing what happened. Here is the test set-up, my half-watt RF amp boosting the output of my signal generator:

© 2000 - 2009 Alan Yates - All Rights Reserved.

The solenoid has a self-resonance of around 730 kHz with both ends of open. On grounding the bottom end, this falls to about 715 kHz kHz. Those numbers surprised me a bit, although the wire is normal multi-strand hook-up wire of very poor quality, $DEITY knows what its dielectric properties are. Its self-resonance harmonics are not 'perfect harmonics'. This is normal for a coil but somewhat surprising at first. My amp doesn't cover its fundamental, so I fed it at its higher overtones. Grounded is on the left, open on the right.

© 2000 - 2009 Alan Yates - All Rights Reserved. XHTML | CSS | CSS toggle

Note that there is no connection to the frequency counter. The huge field around this coil fed at resonance is penetrating the shielding of the meter and inducing RF currents directly in its input circuits. The frequency was

© 2000 - 2009 Alan Yates - All Rights Reserved. XHTML | CSS | CSS toggle

Considering the input power is only about 500 mW the field is very strong. Strong enough to light a neon bulb held near the coil. Tuning is touchy, my body capacitance pulls the coil around as I approach so I had to tune the generator while I was near the coil. Strange effects could be witnessed, like going too close detunes the coil so much the bulb goes out and multiple anti-nodes in the field along the axis of the coil. The photo doesn't really do it justice, the flash has washed it out, the neon was glowing very brightly, like a mini road flare. You can also see the PSU's drop-out light is on, the RF is upsetting its ripple detection circuit:

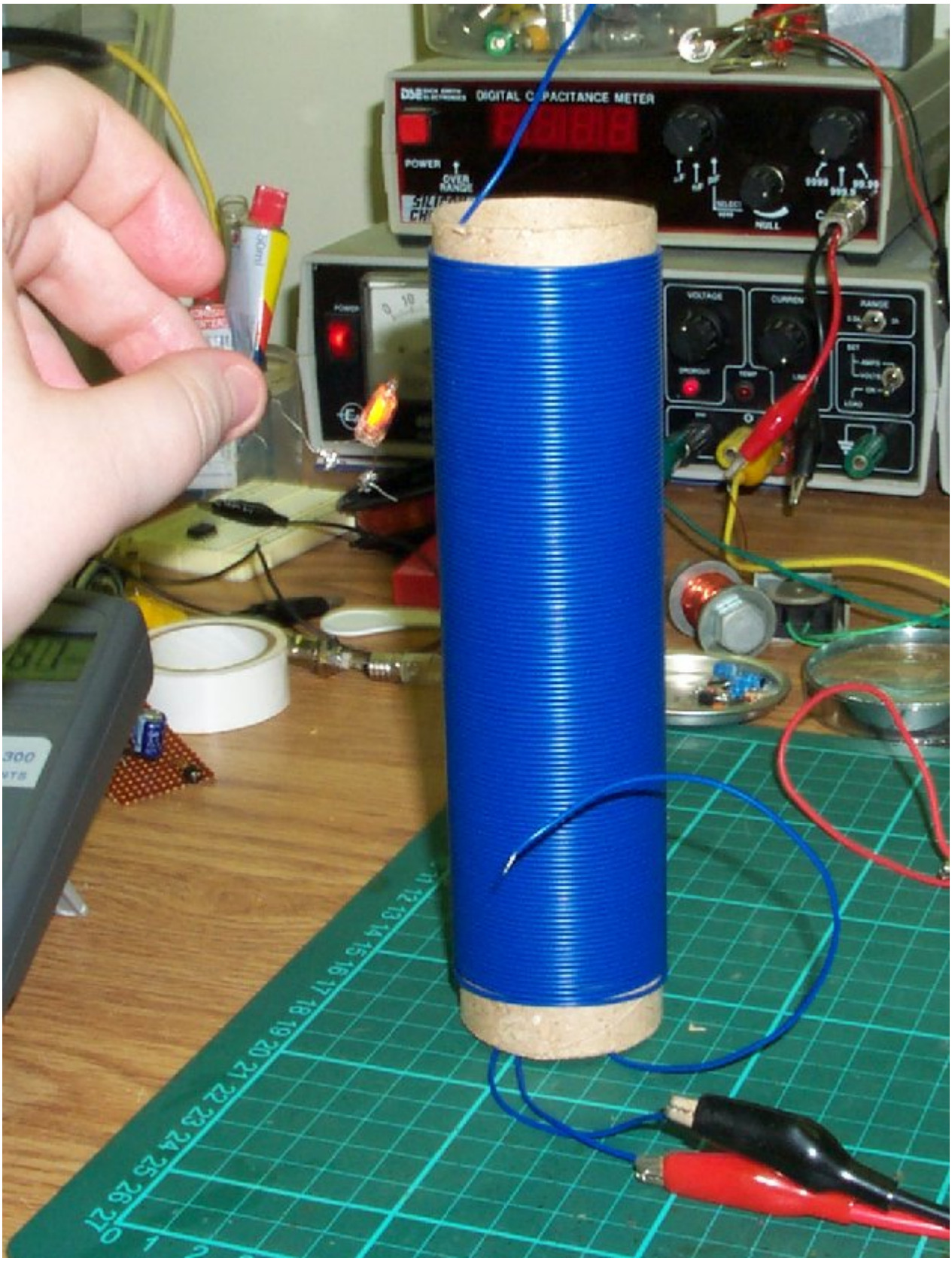

It is possible to strike a tiny RF arc across the output terminals, perhaps 1mm long at best. I would loved to

© 2000 - 2009 Alan Yates - All Rights Reserved. XHTML | CSS | CSS toggle

lousy neon that has seen better days in a ion counter.

With more RF power I'd imagine I would have had a small Tesla coil. It was clearly a very high impedance at the top when grounded at the bottom. My poor little half-watt amp just isn't up to job though. It got stinking hot running into this load (I was abusing it too, running it from 24 volts to get more power). I would like to build a dedicated driver amp or maybe a power oscillator that uses the secondary as its frequency determining part, that would solve the detuning as I load up the coil approaching it. I've always wanted to build a Tesla coil, and a solid state one seems achievable now. It shouldn't be too different from making a lowfer power amp, or class-D transmitter, hell it is almost identical to the original inverter, complete with its parasitic oscillation problems.

1 comment.

© 2000 - 2009 Alan Yates - All Rights Reserved. XHTML | CSS | CSS toggle

Another VHF Super-Regenerative Receiver

2003-05-10

Similar to my other VHF Super-Regenerative Receiver this design borrows heavily from Charles Kitchen N1TEV's various published designs. The audio stage is my own design, and I spent a lot of time tuning the component values for the FM broadcast band.

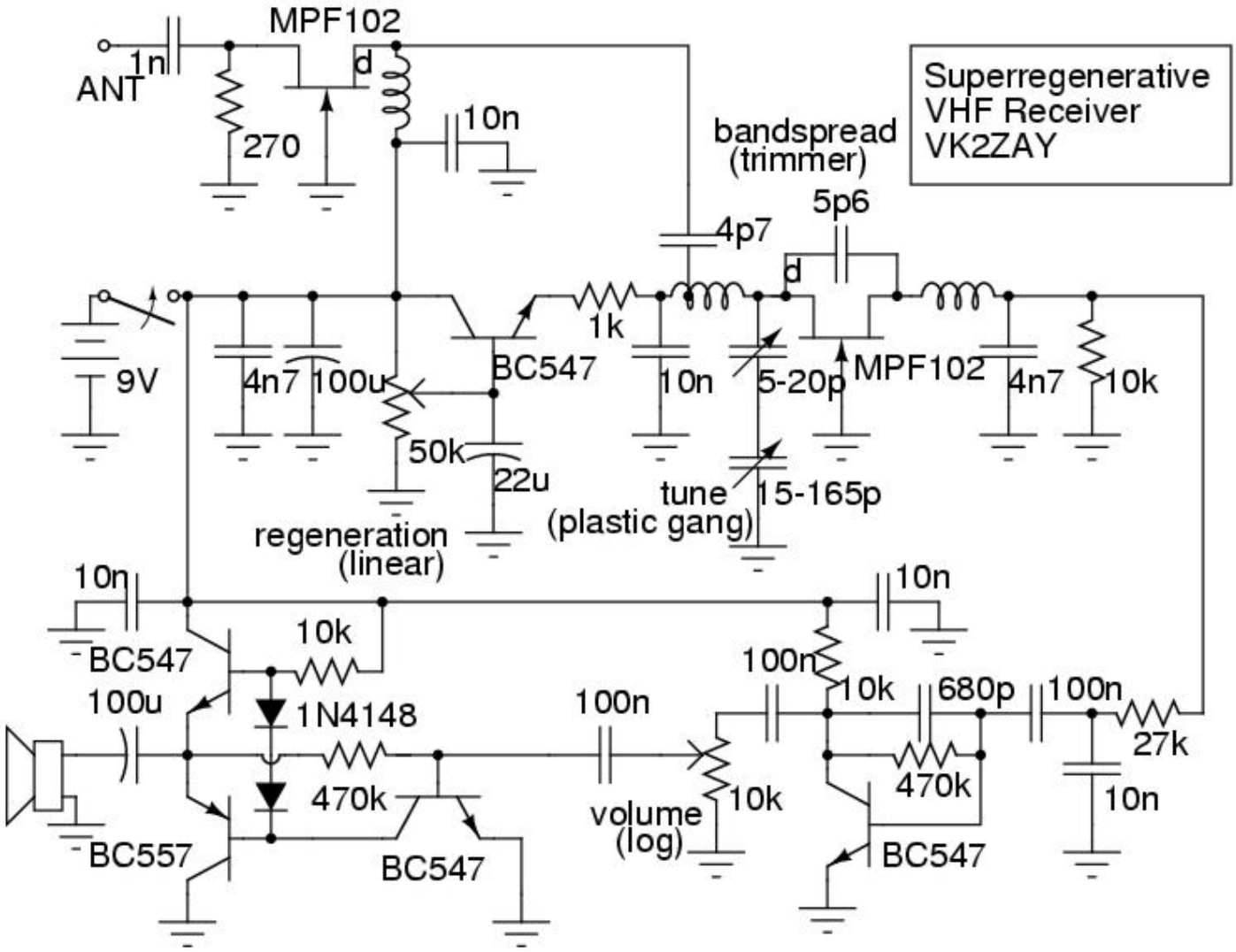

The three inductors are mounted orthogonally with respect to each other to minimise cross coupling. It isn't perfect, they are all in each other's near field and are not co-incident (obviously!) so there is some interaction, but it is greatly reduced compared to mounting them parallel, right alongside of each other. It is important to minimise local oscillator leakage back out the antenna, but as the entire board isn't screened the effort may not actually be worthwhile.

The low impedance current source supply for the regenerative stage improves performance over the usual 5 k pot regeneration control. It also reduces the current consumption of the entire circuit by about 2 mA, the regenerative stage pulling less than 3 mA max. The RF isolation stage by comparison pulls 3-4 mA. The circuit oscillates nicely down to 5 or 6 V which is much better than the previous receiver which had problems achieving super-regeneration with a 9 V supply.

© 2000 - 2009 Alan Yates - All Rights Reserved.

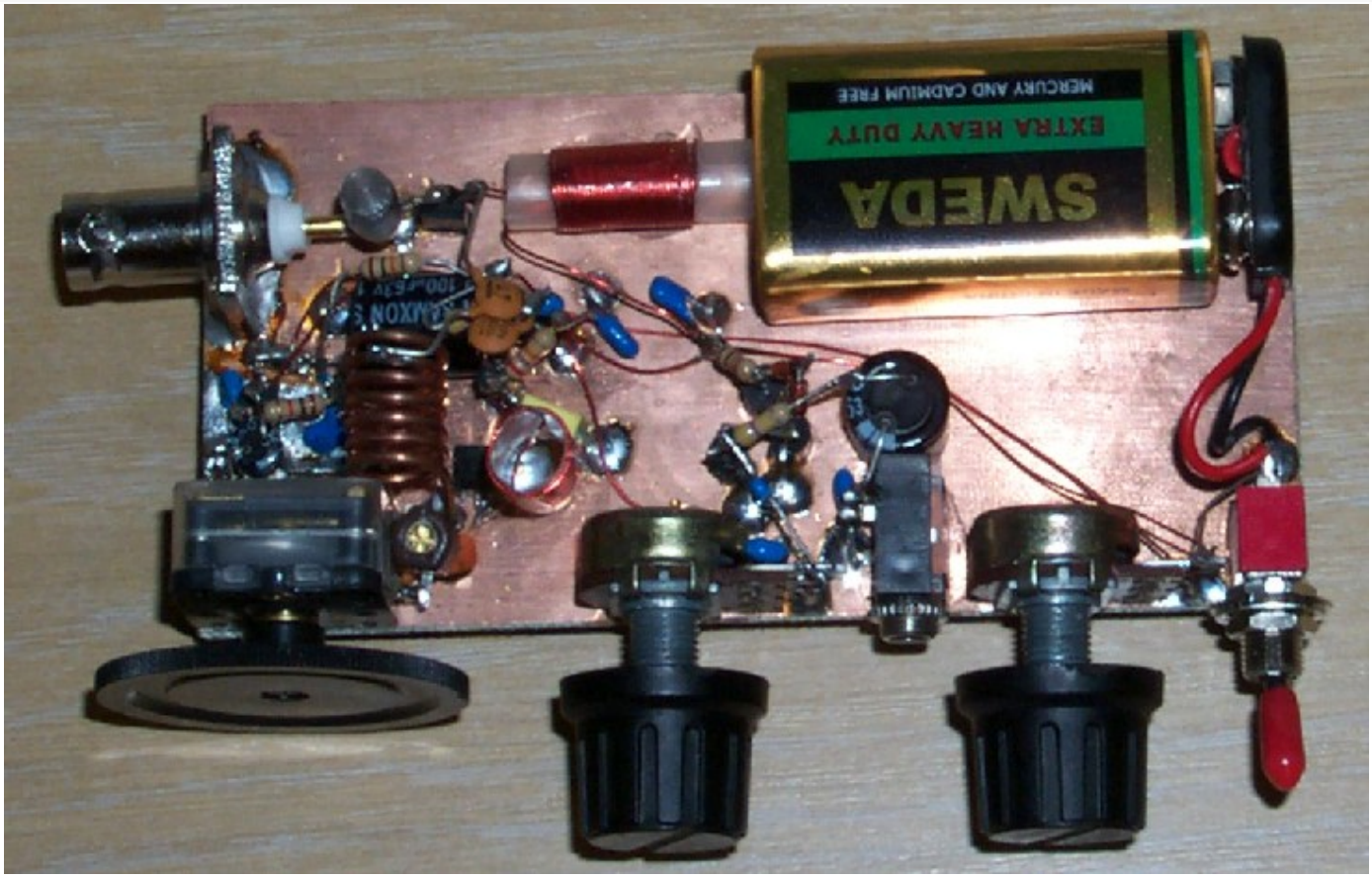

With a little bit of careful adjustment of the band-spread trimmer and the main oscillator coil I was able to achieve 87-109 MHz coverage. It spreads nicely across the 180 degrees sweep of the tuning capacitor which is designed for linear tuning in commercial AM radios. The main tuning coil is seven turns of 1mm bare copper wire from a length of mains cable. The inside diameter is about 10mm, I wound it on my hobby knife's Aluminum rod handle.

The other two coils are wound on soda straw using 0.4mm wire. The thick transparent soda straws from Subway, which have an outside diameter of about 8mm, make excellent coil formers for light winding wire. The RFC for the buffer amplifier drain circuit is 30 turns, the coil in the source of the detector is 25 turns. Neither are especially critical, but the detector one may need some experimentation to achieve the best super-regeneration quench. It is important however, that their self-resonant frequency is well above the frequency of operation.

The audio output stage is fairly crude. The design could, in theory at least, suffer thermal run away. Adding a few tens of Ohm resistance in the emitter circuits would prevent this. I did not find it necessary however and the amp seems to work just fine with minimal cross over distortion for such a simple design. The diodes gently bias a few mA of standing current, ie class AB operation, but there is no bootstrapping so positive going amplitude distortion might be a problem at high output powers. All that said, driving 32 Ohm headphones the sound quality seemed quite good. Good enough compared to the quality of the audio recovered by slope detection of FM by such a simple detector.

The volume control pot could be placed as the collector load of the audio preamp, saving a capacitor, but I wanted to have one side of it earthed so I could solder it down to the board like the regeneration pot and the tuning capacitor. The same could be achieved by using a PNP device in the preamp instead, but I didn't think of that at the time. :-)

The biggest problem with using this receiver to listen to FM broadcast radio is beating of the quench frequency with the higher frequency stereo signal components. Quite frankly is sounds horrible and makes it hard to listen to stereo music broadcasts for extended periods. I can't see an easy way to fix this. Increasing the quench frequency so it is above the L-R sidebands and any SCA sub-carriers reduces the selectivity and gain of the detector significantly, and there are still mixing problems: The super-regeneration process is very non-linear and the IMD is pretty bad, aliasing the sidebands into the audible range.

Perhaps locking the quench at 38 kHz with a separate crystal oscillator would help? Any slight frequency difference beating should be below audio frequencies. The quench filtering could be better. This is a common problem with all super-regenerative designs I've found on the net. The single pole RC filter works 'well enough', especially when the output is an LM386 and for human consumption. However the output stage I use works to many hundreds of kHz so the inductance and mechanical response of the mylar speakers is relied upon to deal with the remaining leakage quench signal. Injecting the output of this circuit into a sound card or a tape recorder could cause problems with beating against the sample rate or the bias oscillator.

2 comments.

© 2000 - 2009 Alan Yates - All Rights Reserved. XHTML | CSS | CSS toggle

title	type	size
circuit postscript source	application/postscript	19.009 kbytes

© 2000 - 2009 Alan Yates - All Rights Reserved.

Antenna and Weather Station Work

2009-01-13

A recent wind storm broke the support rope for my end-fed 40 metre dipole (also used as a random wire at times). While putting it back up I took the opportunity to do some other antenna work and put up the weather station my parents gave me in July last year!

For many years I've had a commercial discone antenna I picked up at the Wyong field day in a DSE clearance sale. IIRC it cost me about $40 which is *much* less than it normally retailed for. I've had it assembled on the balcony for several years, continuously getting in the way and spending most of its time upside-down collecting water in the mounting tube. Putting it up was long overdue. No idea what I will actually use it for, perhaps the airband - scanning was never really a big hobby for me.

Not exactly the ideal place for it, right next to my HF base-loaded vertical, but for now this is way better than sitting upside down. I chickened out on using the right-angle bargeboard mount in the manner it was intended after some back of the envelope calculations suggested the couple it would produce with an estimated wind loading from our infamous "southerly busters" was approaching the estimated mechanical limits of the bargeboard! Instead the bargeboard mount was used as a simple mast to attach the antenna to the balcony railing. At some point in the future I'll clean up this install and probably use a small bargeboard mount in that corner for other antennas.

© 2000 - 2009 Alan Yates - All Rights Reserved.

I'm now out of coax lines to the balcony again, I only had sufficient coax to install three in the last coax run, it is now time to go and purchase some more and fill the remaining BNC feed-thru. I'll need another pair of wallplates to install more after this, and I doubt I can get away with too many more antennas on the balcony anyway. Eventually the HF vertical will have an remote tuning mechanism to cover HF and release one coax run currently used for 30 metres instead of just swapping the same run between 80 and 30 metres.

The 2 metre "flower-pot" vertical has been lashed to the railing in a very temporary manner for almost exactly a year now, it was also well due for relocation to a more permanent spot. I placed it on a large bargeboard mount with an offset. This raised it several metres improving reception of most repeaters. Unfortunately its RG-213 coax run is still partially water logged and must be replaced eventually.

The bargeboard mount also now hosts the weather station anemometer and wind vane assembly. While not an ideal position for such a device, this is the best I can do given the limited mounting options.

© 2000 - 2009 Alan Yates - All Rights Reserved. XHTML | CSS | CSS toggle

The weather station's tipping bucket rain gauge was mounted to the balcony railing, again not ideal but fairly unshadowed. The temperature/pressure/humidity and RF backhaul link module was mounted under the eaves in the exposed corner of the balcony to keep it out of direct sunlight but still offer good airflow (and distance it from the air conditioning condenser/compresser unit).

The 30 metre loaded inverted-V dipole remains in place, but unconnected. It should really be removed and replaced by something more efficient and actually useful, perhaps a 20 metre antenna for PSK31, but I hope eventually to run all HF through the vertical with remote tuning leaving more space for experimental antennas.

The work cost me a fairly high UV radiation dose to the upper forearms, enough to cause erythema but (so far at least) no pain or desquamation. I was wearing a hat and sunglasses, but no topical protectant. I suspect the majority of the dose was absorbed on the walk to and from the hardware store to collect the coach screws used to install the bargeboard mounting bracket, not during the actual work on the balcony. I got a *far* larger dose on the DX-pedition with Peter last year. The exposure is very minor compared to what I see many people on the beach take on a daily basis - salmon pink and pealing but still going out for more - they will no doubt regret those burns in time.

Leave a comment on this article.

© 2000 - 2009 Alan Yates - All Rights Reserved. XHTML | CSS | CSS toggle

ATtiny High Voltage Programmer

2008-05-03

This project was meant to be a quick hack to unbrick an ATtiny13 I stuffed up performing an ill-advised programming kludge upon. It actually ended up taking me all damn day to debug the programmer hardware... Initially I thought I had software problems, but it turned out to be clock bounce from the cabling causing me grief.

I was too lazy to make the trip downstairs to get my Win32 laptop and look at the waveforms using my USB DSO, even when I eventually strongly suspected this was the cause. My laziness probably cost me hours of frustration, but I blindly added an RC low-pass in the clock line and everything started magically working. Don't you just hate that! Especially after you've spent most of the day wondering if the datasheet is wrong. (The ATtiny13 datasheet version I have actually does have several other errors I've noticed, but apart from a redundant address bit for reading the OSCCAL it appears the HVS protocol table is correct.)

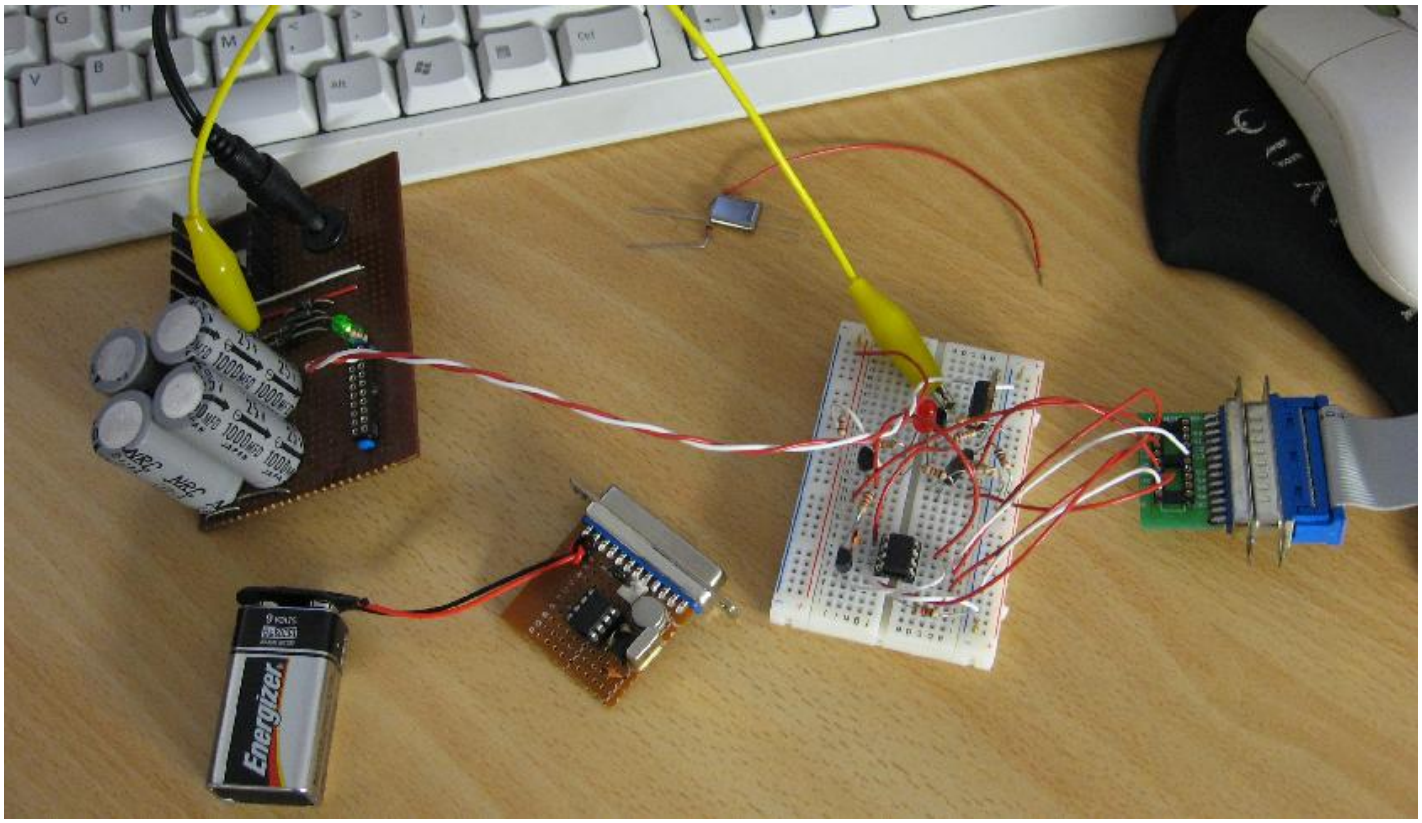

Anyway, the programmer has some switching to control Vpp and Vcc via a few data pins on the PC parallel port, the rest of the signals are directly bit banged, with the exception of the SDO pin, which has a pull-down for the initial HV-programming mode assertion. I depended upon the status line pull-up in the parallel port, supplying none externally.

Adventures also included smoking a 2N7000 accidentally when I shorted out the drain resistor with the multimeter probe and the PNP above it delivered the full current the PSU's 4000 uF of storage at 15 volts could deliver through the EB diode drop. The 2N3906 was unharmed surprisingly, but the 2N7000 explosion was quite spectacular. Naturally this didn't help my frustration level with the project! I was almost about to give up and just dig another ATtiny13 out of the rail from Futurlec when that happened.

Some moments of desperation caused me to build a LED on 8-pin IC socket jig to physically watch the logic levels change at a very slowed down rate and verify my code wasn't completely wrong:

© 2000 - 2009 Alan Yates - All Rights Reserved.

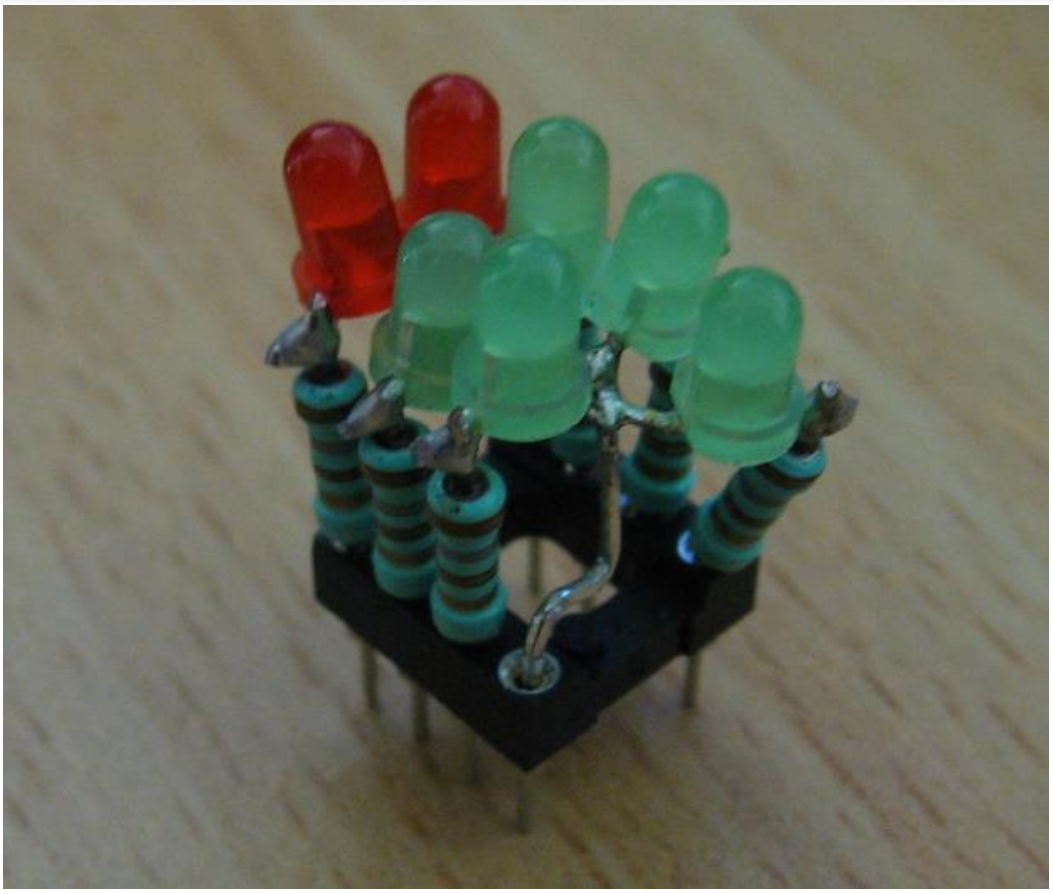

The code is very basic, it just reads all the fuses out of the device and then blindly does a chip erase and sets the fuses back to the factory default. It expects to be run in Linux with /dev/parport0 being the interface to use. Calling it "rescue-attiny13.c" might be more appropriate than "hv-programmer.c". In the end it worked nicely and unbricked my device - I was happy.

I should probably build this as a permanent circuit and finish the code, adding argument parsing and other niceties. I don't think I'll bother implementing flash/eeprom read/write, once you've fixed the fuses you can use SPI to do that. You can always use this programmer just to un-bugger a device you've bricked.

3 comments.

Attachments

title	type	size
The Circuit Diagram	image/jpeg	64.603 kbytes

© 2000 - 2009 Alan Yates - All Rights Reserved. XHTML | CSS | CSS toggle

Autodyne Receiver Now In a Box

2008-02-04

I've whacked the 30 Metre Autodyne Receiver into the an Altoids tin along with a front-end low-pass filter and impedance matching network.

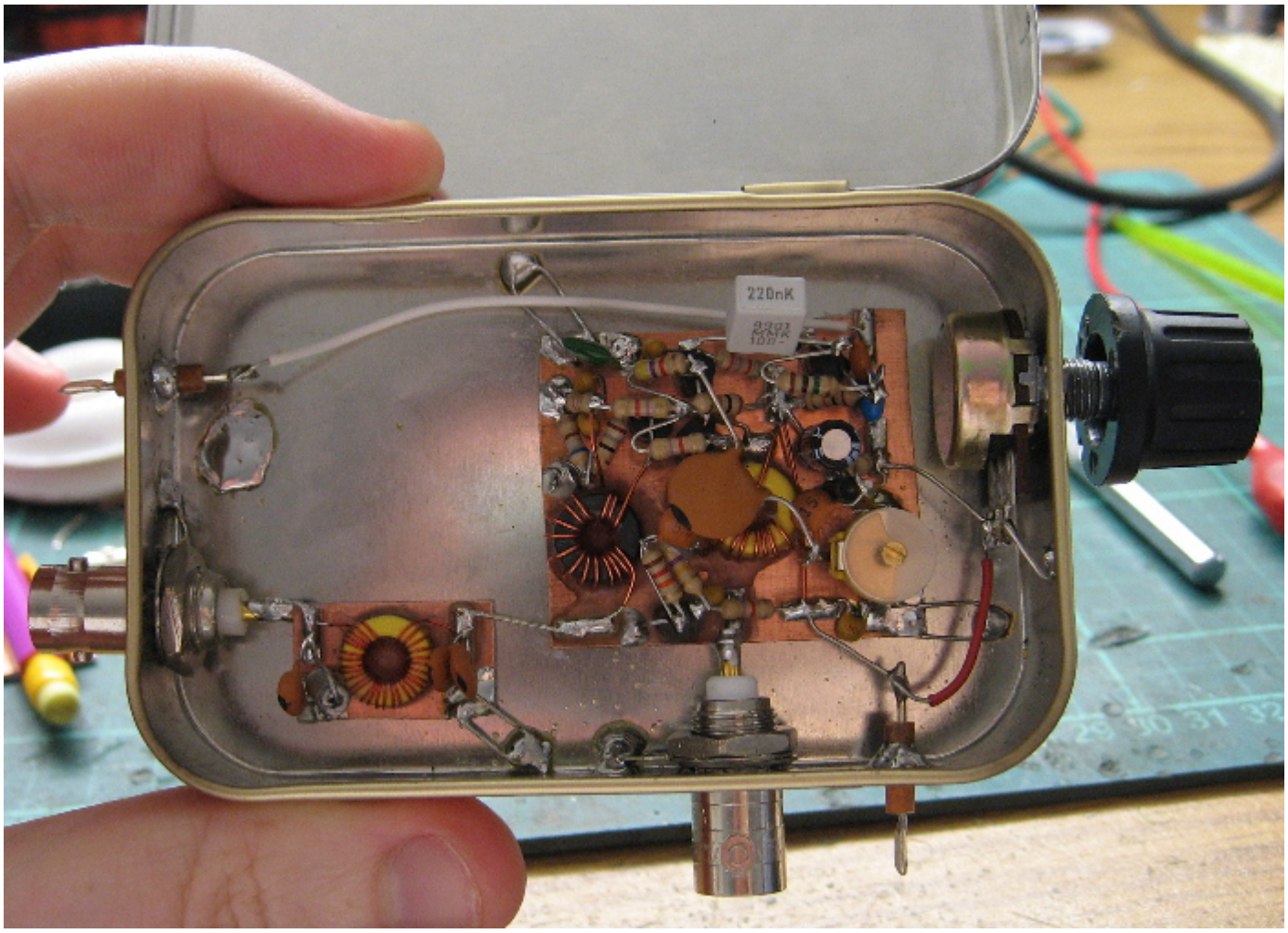

The input impedance magnitude was measured to be approximately 820 Ohms, dropping slowly with increasing frequency suggesting a somewhat capacitive reactance as well. A low-pass Pi matching network was computed to transform this to a standard 50 Ohms. The filter was built on a small piece of circuit board, 2.5 uH implemented as 29 turns on a T37-6 core, the shunt capacitances as a mixture of NP0 ceramic and Polystyrene capacitors. The input capacitance was absorbed into the high-side shunt capacitance, although its magnitude is quite small and the moderate design Q of only 6 means it wasn't especially critical to do this.

© 2000 - 2009 Alan Yates - All Rights Reserved.

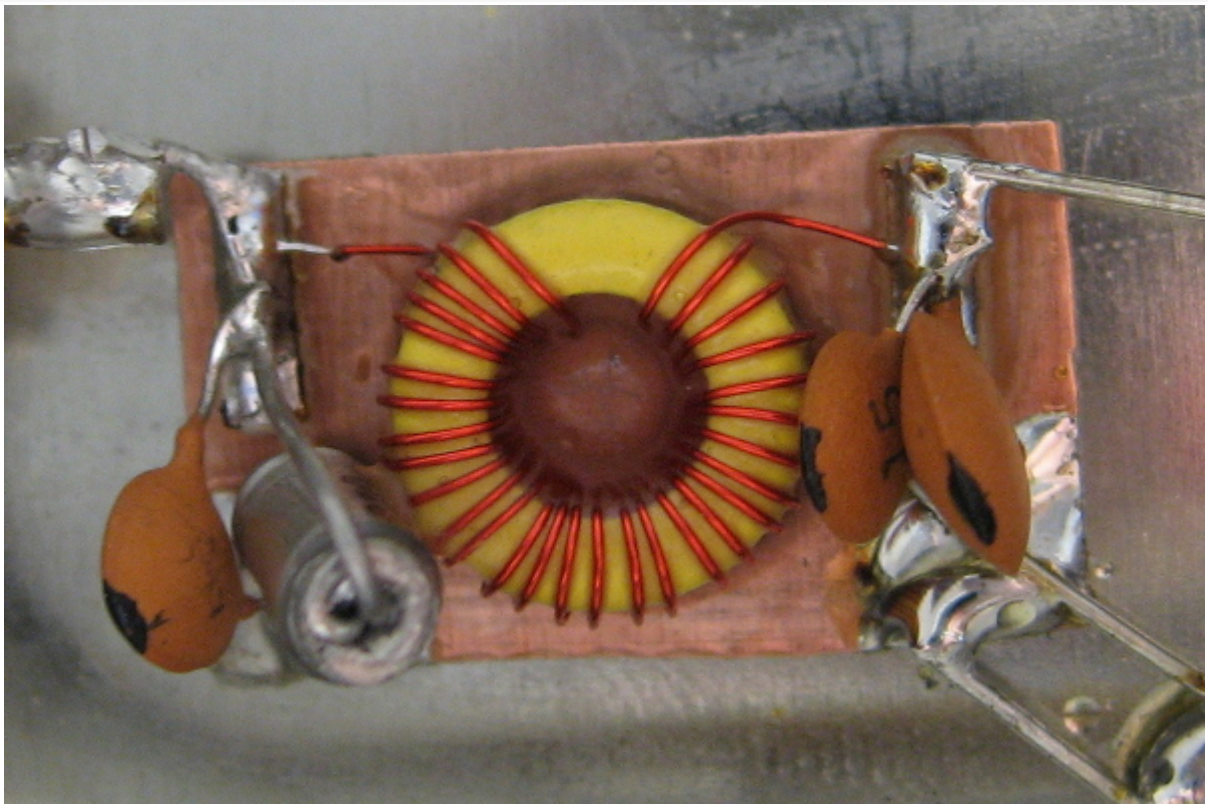

The filter was tested after construction with a hacked together return-loss bridge. Matching my signal generator into an 820 Ohm resistor it showed better than 0.5 Γ over about 2 MHz centred around 10.2 MHz. This is quite consistent with the design, and the precision of the measurements which wasn't very high. Similar results were seen into the receiver front-end once installed - actually I accidentally installed the filter backwards at first, additional testing of the input return loss showed my error quite quickly. (The receiver also performed extremely poorly with the filter reversed which was a big hint - it was quite deaf and had troubles locking even strong signals.)

The Antenna input and RF output are made via BNC connectors. The DC power and AF output pass through feed-through capacitors. The shielding with the lid closed is quite good, completely eliminating any tunable-hum and the VHF interference problems. The low-pass input, while not very aggressive is quite sufficient for my purposes. You can try a two or three resonator band-pass if you experience persistent problems.

There is sufficient room inside for an AF amplifier and even a small mylar speaker in the lid of the tin. This would make the receiver self-contained (except for the PSU of course).

1 comment.

Parent article: 30 Metre Autodyne Receiver.

© 2000 - 2009 Alan Yates - All Rights Reserved. XHTML | CSS | CSS toggle

Basket-Weave Coil Jig

2008-10-25

A mate in Queensland was discussing building a crystal set with his daughter to help introduce her to homebrew electronics. The discussion kicked off some thoughts and eventually modelling of crystal sets with Spice... The Q of the resonator being the major figure of merit I wanted to attack first, research into high-Q coils at MF brought up the old spider web and basket weave geometries to decrease distributed capacitance and the proximity effect. I had to try this in practice and see just how much of a difference it made.

To this end I built a quick jig for winding basket weave coils. The base is just a 5" square piece of MDF. I wrote a calculator to help construct the dowel spacings around the 100 mm diameter circle. This particular jig has just 7 pins (it must be an odd number), each 6 mm in diameter, which is a good fit to common soda straws - helpful for keeping the coil in shape after it has been removed from the jig.

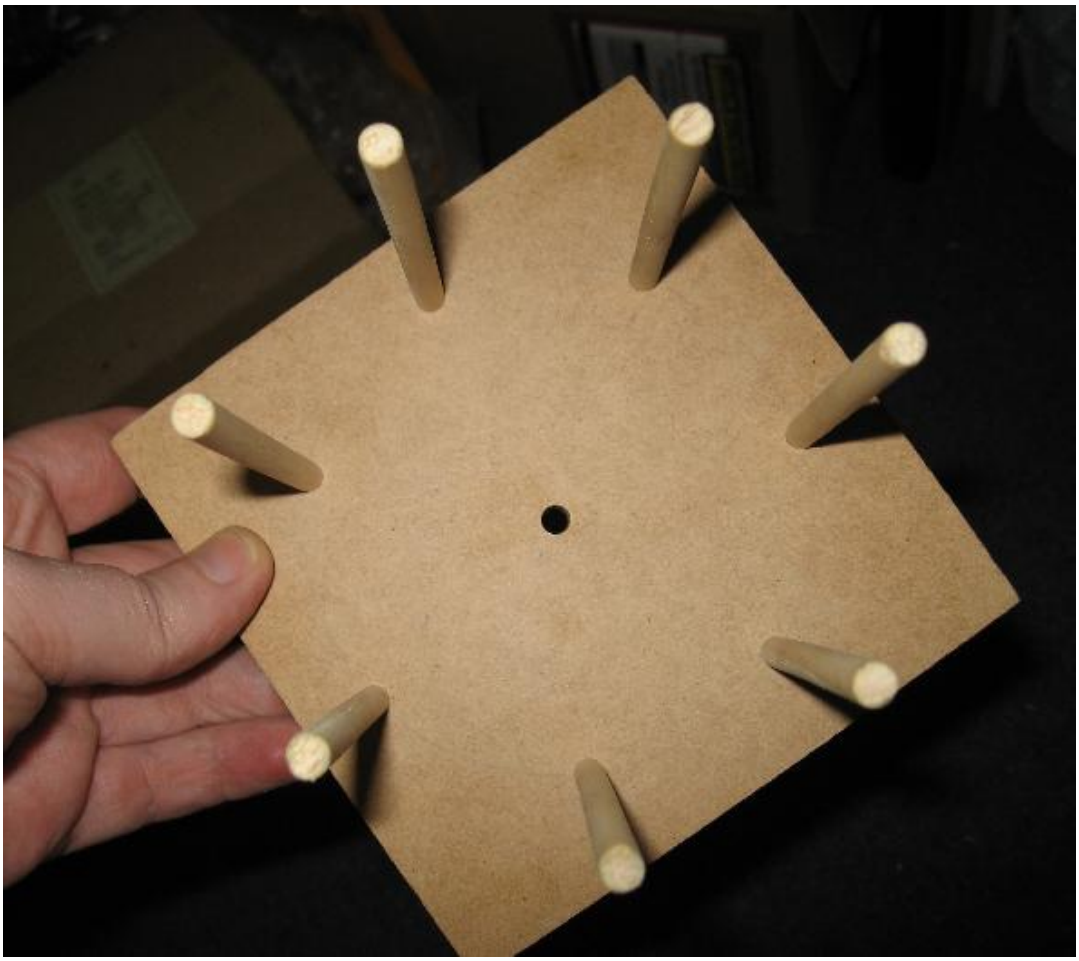

The first coil was wound with 1 mm diameter multi-strand zip-cord from the junkbox. A length of about 8.5 metres, initially used as part of an antenna, it had been corroded at the ends and replaced. 27 turns were made with the available length, tied together with some cotton string. The inductance was measured at 55.8 uH with a distributed capacitance of 4.3 pF. Q at 2 MHz was 149 and at 1 MHz was 151. Not very good but considering the wire used this is to be expected.

© 2000 - 2009 Alan Yates - All Rights Reserved.

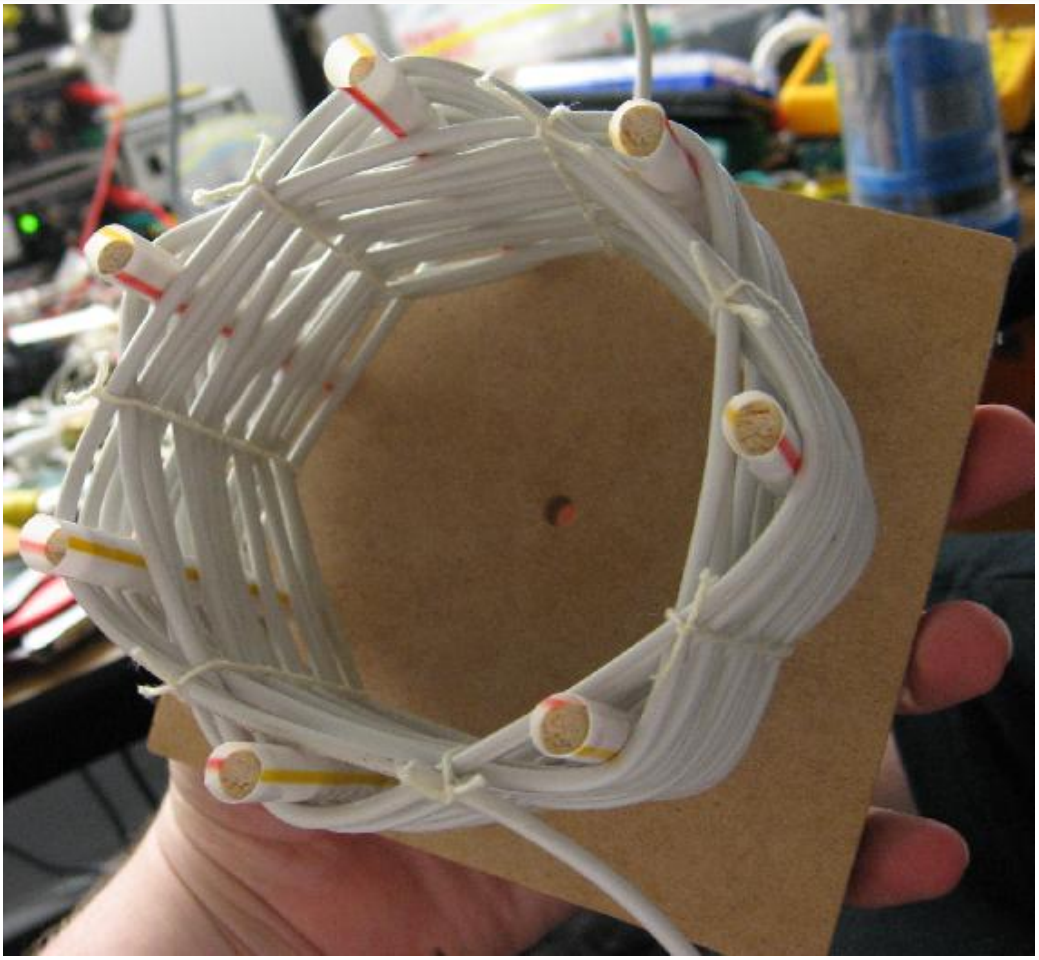

For comparison the other half of the same dipole was wound over the outside of the jig pins, giving an inductance of 62.1 uH and a distributed capacitance of 4.1 pF. The Qs where 165 at 2 MHz and 167 and 1 MHz. That didn't seem right at all, better Q and lower distributed capacitance. I'd clearly not taken enough care with the measurements or the corrosion of the wires had migrated unevenly and further into the cable than I had discarded.

© 2000 - 2009 Alan Yates - All Rights Reserved. XHTML | CSS | CSS toggle

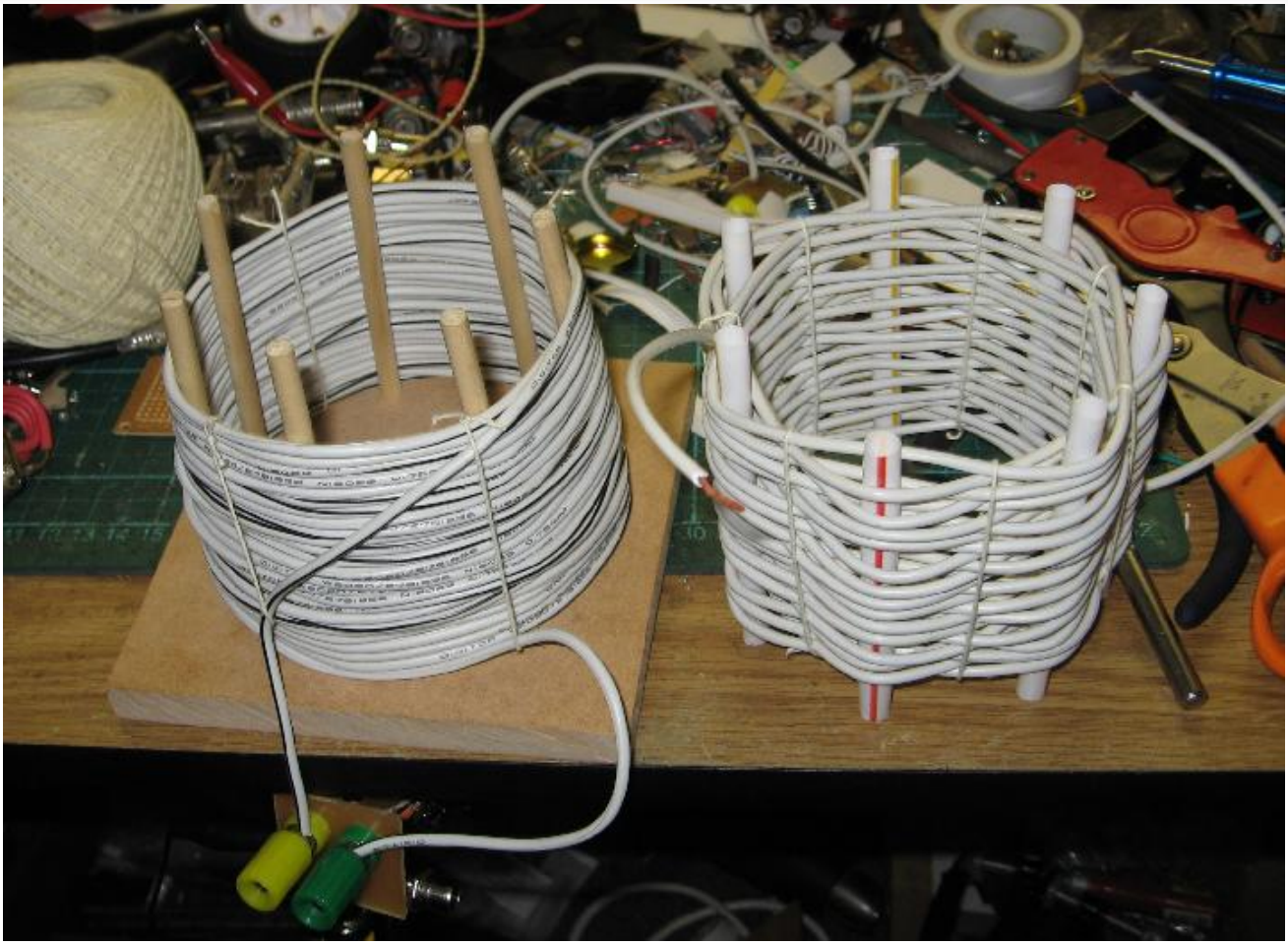

To make sure I wasn't going insane I bunched up the "close wound" coil into a doughnut-shaped bundle and repeated the measurements. L = 88.6 uH, Cd = 11.9 pF, Q = 83 @ 830 kHz, 73 @ 1.6 MHz. That looked better, and got "worse" as I tightened up the bundle by tying more strings around it. Still it didn't leave me feeling very confident that my choice of the junk-box zip-cord wire was representative. I initially thought it was the worst choice and would make an interesting lower bound - that it did, but its properties also probably hid any real advantage of the basket weave. Its jacketing definitely makes a coil much longer for the same inductance because it effectively spaces it out for you. The dielectric properties of the jacket are also an unknown.

© 2000 - 2009 Alan Yates - All Rights Reserved. XHTML | CSS | CSS toggle

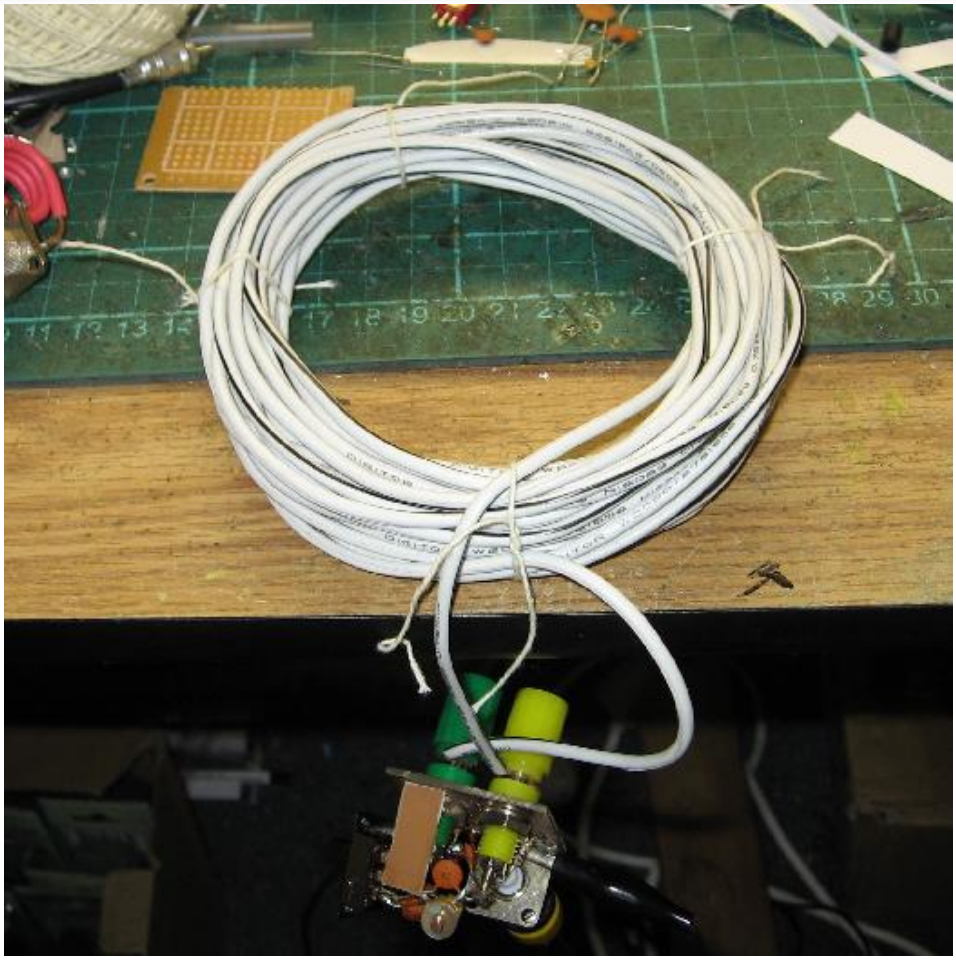

Frustrated by this likely invalid result I decided to go smaller. A 5 pin basket weave jig was constructed using BBQ kebab skewers and a 25 ml syringe barrel (about 20 mm in diameter). Using this jig and 0.5 mm enamelled copper wire a quite artistic pentogram-like coil was wound, giving 3.3 uH of inductance. My initial resonance measurements had sufficient error to cause -ve distributed capacitance results in my calculator - however it gave an accurate estimate of the true inductance and placed the distributed capacitance in the 0.5 - 1 pF region. The Q at 8.8 MHz was 176 and at 4.4 MHz 96. Self-resonance was measured using my tone dipper and the frequency measured to better than 1% by comparison against the signal generator and counter; 87.7 MHz which put the distributed capacitance at almost exactly 1 pF.

© 2000 - 2009 Alan Yates - All Rights Reserved. XHTML | CSS | CSS toggle

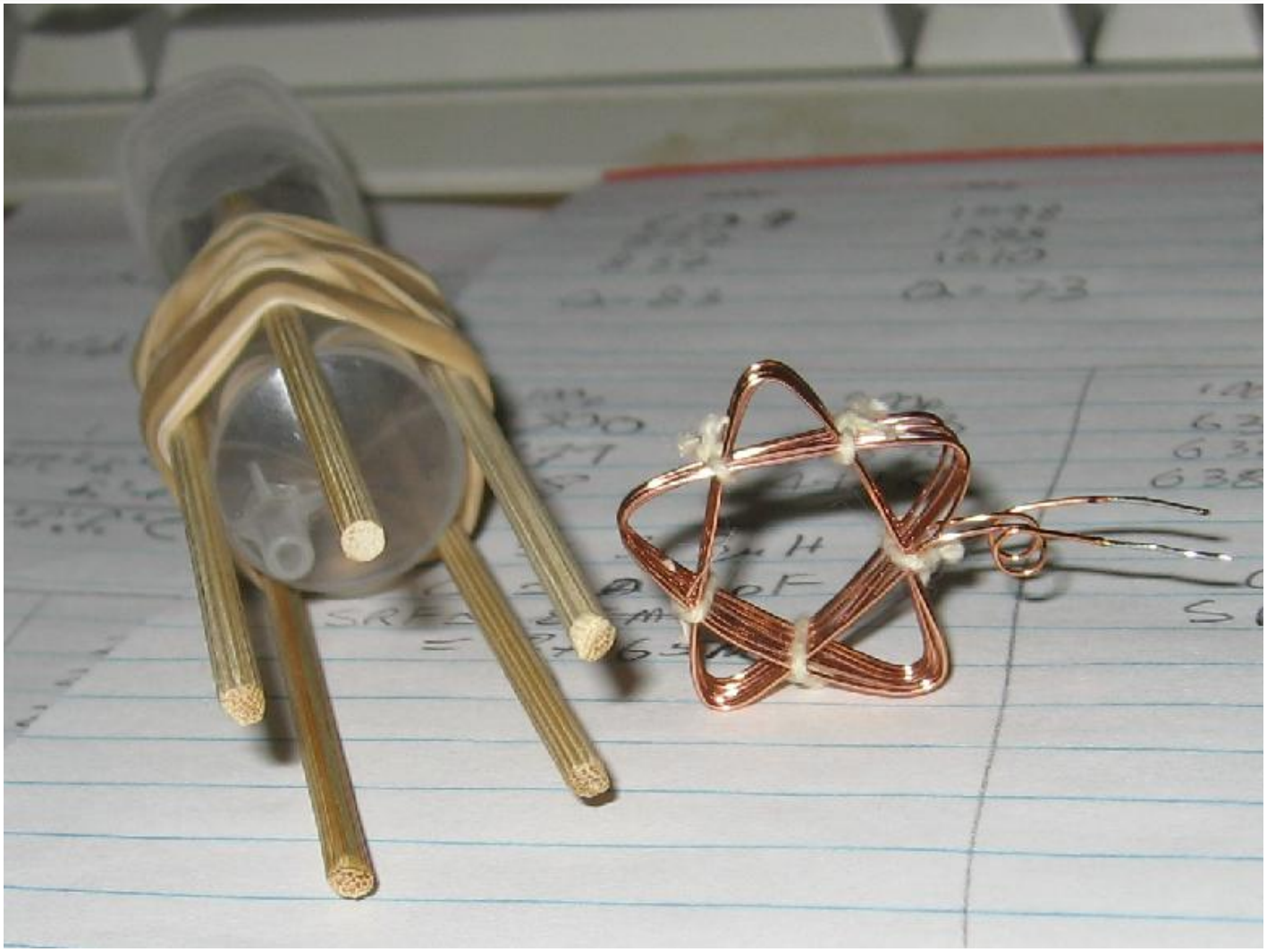

For comparison purposes a close-wound solenoidal coil was constructed of similar diameter and turn count using the same 0.5 mm wire. I was shooting of the same inductance, but overshot by almost twice at 6.3 uH. I guess leakage from the very non-circular cross-section of the basket weave coil is significant - the value estimated by the coil calculator is close to that for the solenoidal coil, but even reduction based on the approximate cross-sectional area still over-estimates the inductance a bit. I guess it is a bit like having two mutually coupled coils of triangular cross-section in series with the turns interleaved out of alignment. The solenoidal coil distributed capacitance was also lost in the initial resonance measurement error (considering the test fixture used is based on 100 pF and 400 pF caps trimmed to 1% and the distributed capacitance is about 1% of the smaller one this is not surprising! I'm lucky to measure anything except frequency to within 1%.). Self-resonance was measured in the same manner as for the basket coil and at 57.6 MHz gives a distributed capacitance of about 1.2 pF. The Q at 6.3 MHz was 114 and at 3.2 MHz 85.5.

© 2000 - 2009 Alan Yates - All Rights Reserved. XHTML | CSS | CSS toggle

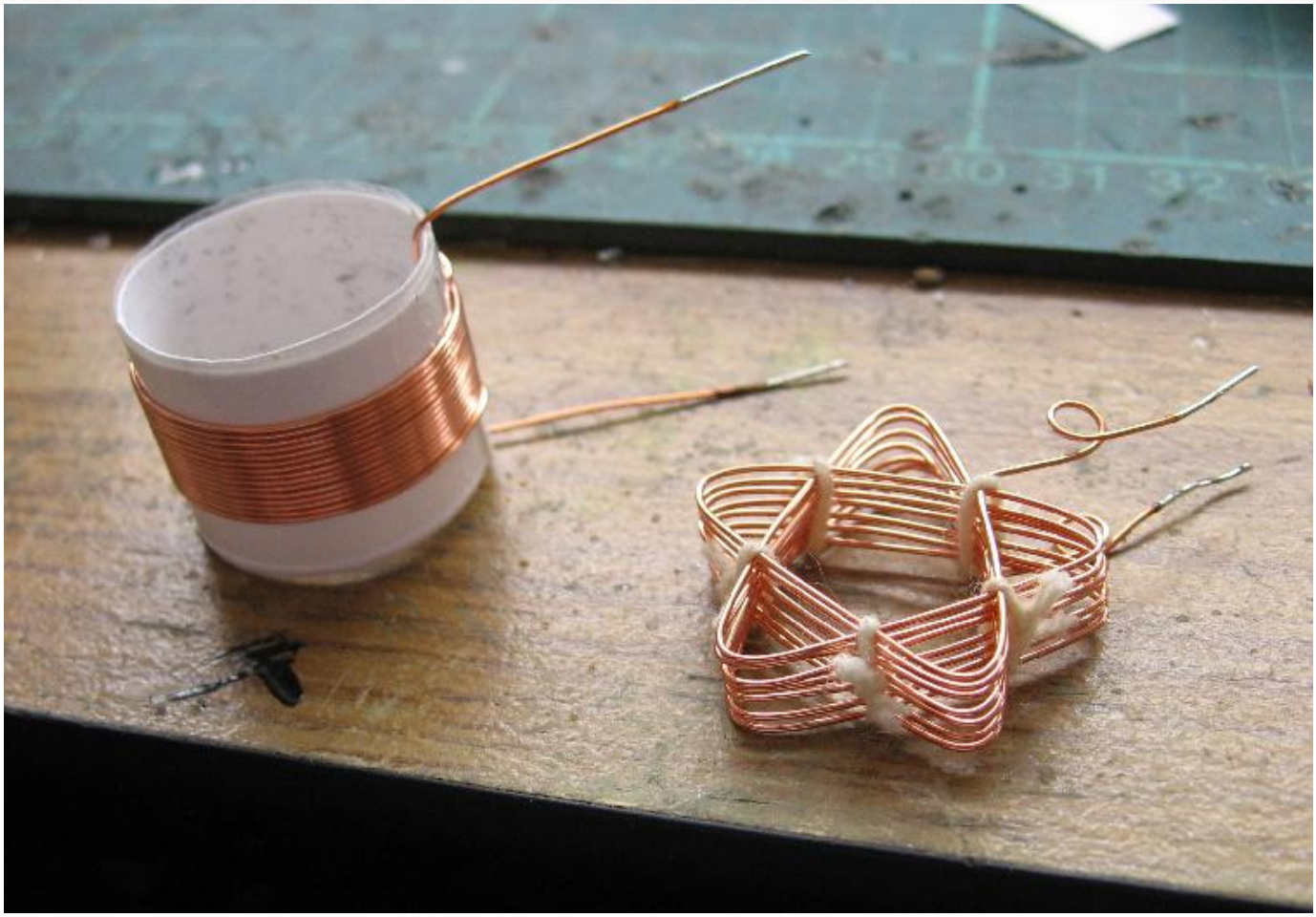

Also for comparison purposed a "long-thin" solenoid was wound on a 8 mm soda straw with 0.5 mm wire. Also shooting for about the same inductance I got 7 uH and didn't bother to remove turns to bring it back to ~ 6.3 uH. Its Qs were 63 at 3 MHz and 91 at 6 MHz. Not very impressive and worse than both previous coils on a root-frequency basis. The SRF was 78.3 MHz, quite impressive for a 7 uH inductor, which is about 580 fF of distributed capacitance! Around half that of the basket-weave coil and twice the inductance. This follows conventional wisdom that "flat" coils have more capacitance and a lower SRF than long thin ones, which in turn tend to make better chokes.

© 2000 - 2009 Alan Yates - All Rights Reserved. XHTML | CSS | CSS toggle

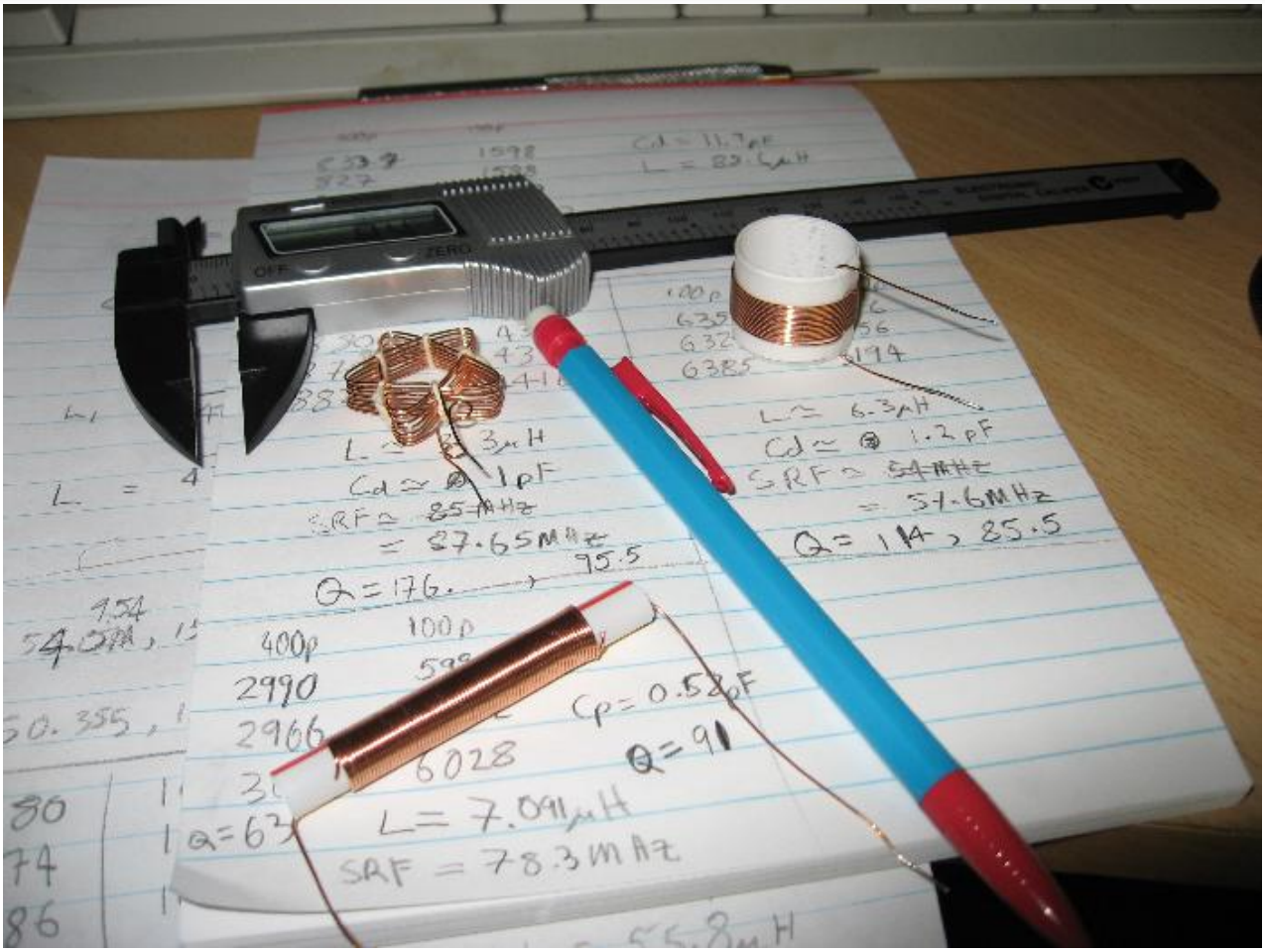

It is interesting to note that the slope of the Q change with root-frequency is much shallower for the basket-weave coil, suggesting perhaps its proximity losses are smaller. Only 2 data points for each coil is insufficient to say this, but it seems like the proximity effect reduction is visible in the numbers. More data points for each coil and comparison with a space-wound solenoidal coil would be a worth-while investigation. Measuring Q is laborious with the current jig and manual data reduction (3 dB points method - although I have recently constructed a 3 dB switched attenuator to make the process slightly more pleasant). A direct-reading Q meter would speed things enormously and will likely feature shortly.

The wire used in the larger coil is probably the reason the measurements were odd, in a way it is already spaced - by its jacket. Results with the smaller coils do look interesting. Once I have Q-measurement worked out I'll revisit this, and try using better wire, including some Litz wire I have (unfortunately not especially high-count). Litz wire could be homebrewed, but the machine to do it would be quite non-trivial, I could imagine doing it in hexagon-number (ie 7) wires at a time, then spinning 7 bundles of 7 together, etc. I think tension control would be the hard part, otherwise I'd invest in a few kg of very fine wire and give it a go - Litz wire is insanely expensive online and I haven't found an Australian supplier of it yet.

11 comments.

© 2000 - 2009 Alan Yates - All Rights Reserved. XHTML | CSS | CSS toggle

Biasing JFETs, AGC IF and other fun

2007-06-09

The W7ZOI tutorial on JFET biasing is a great place to start if you are looking to understand JFETs and use them in practical circuits. I encourage you to buy Experimental Methods, but the JFET biasing sidebar is reproduced on the popcorn site while you wait for the book to ship from the ARRL.

I wrote a simple calculator that implements this source resistor self-biasing. All you need do is measure your JFETs Idss and Vp then plug in the numbers to the calculator which will then spit out the source resistor required and the transconductance of the FET when biased like this.

I characterised three different JFETs from my collection, the MPF102, the J310 and the 2N5484. The J310s I tested gave an Idss of around 100 mA! This is far outside their datasheet spread of 24-60 mA, so I repeated the measurement several times on three randomly selected devices and played with biasing in trial circuits. The math was consistent, which makes me wonder about my particular batch of J310s. The J310 is obsolete, so perhaps these aren't NOS, but rebadged modern devices. I got them off eBay from a seller I trust. I guess the higher saturation current is actually a blessing, making them more useful at higher powers.

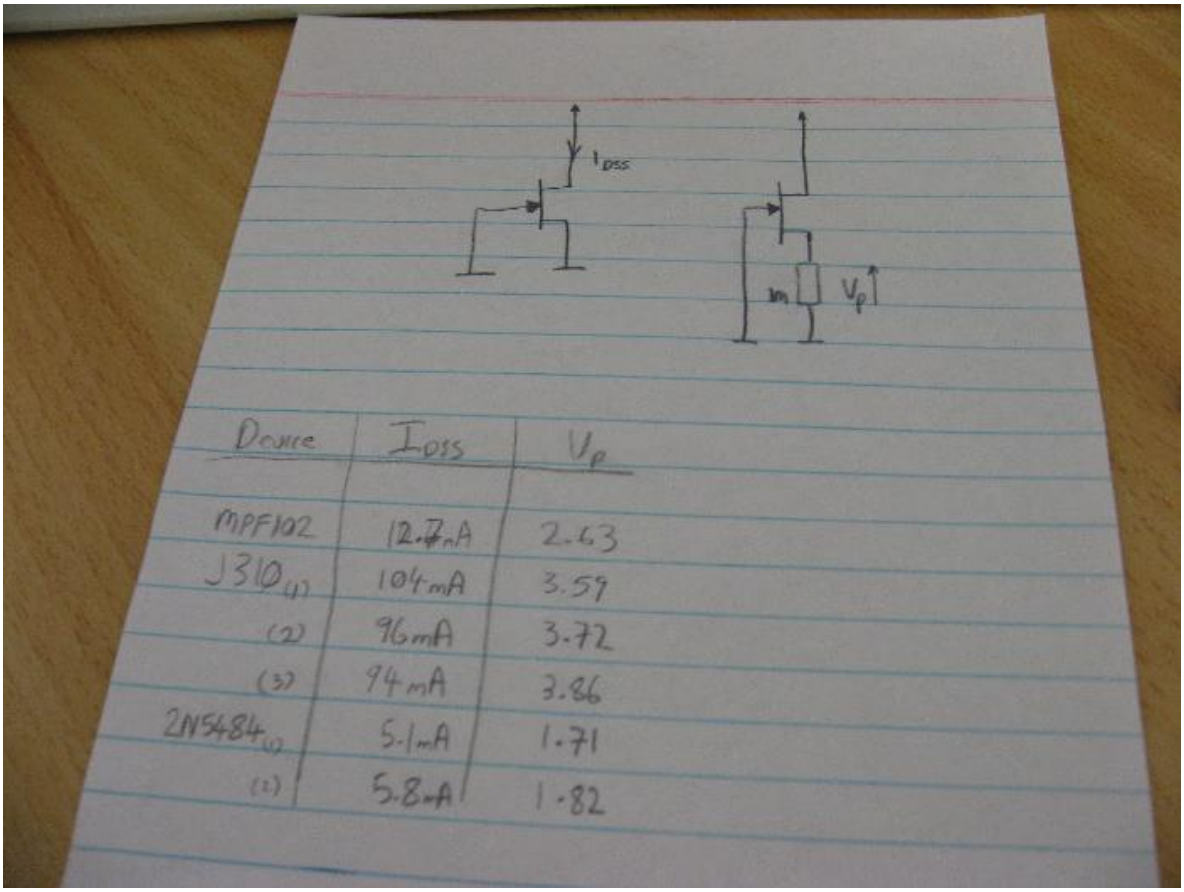

I selected 2N5484 for my AGC IF experiments, its lower Vp sounded easier to generate with a single diode detector, but this and their relatively low transconductance would limit the AGC range achievable. I picked an Id around 2 mA for the quiescent bias which is achieved with an Rs of 330 Ohms.

A very straight-forward JFET IF circuit was constructed, using a set of 455 kHz IF cans, the line-up being white into the 1st FET gate, yellow in its drain and the 2nd FETs gate, and black in the 2nd FETs drain feeding the detector. The untuned sides were placed in the drains, this was against my initial instinct, especially for the detector, but it seems to work fine. The IF cans themselves are designed for lower impedance BJT devices, so the design is sub-optimal, but it offers a reasonable 40 dB or so of dynamic range.

© 2000 - 2009 Alan Yates - All Rights Reserved.

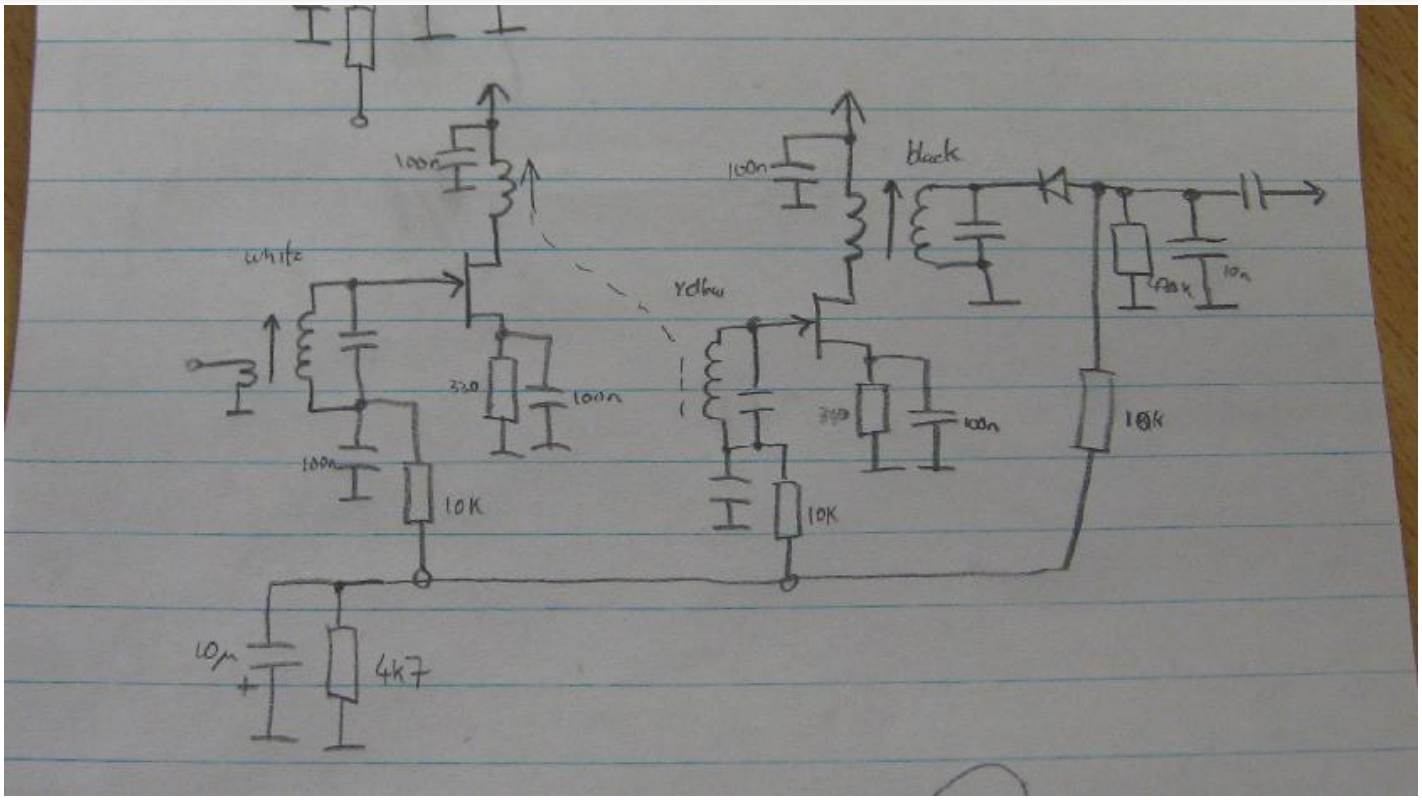

The AGC voltage is applied to the decoupled cold-side of the gate resonators. The AGC time constant is quite short, but I prefer it that way. Without AGC the circuit is actually slightly unstable, with at least 33 Ohms needed in the drain circuit of the second stage for stability, but once the AGC rail is unshorted it floats about -0.12 volts and the IF amplifier works great. The AGC rail swings down to about -1.8 volts before the dynamic range of the amplifier is exceeded and gain compression begins at the second stage, the distortion becoming severe by 2 volts below ground.

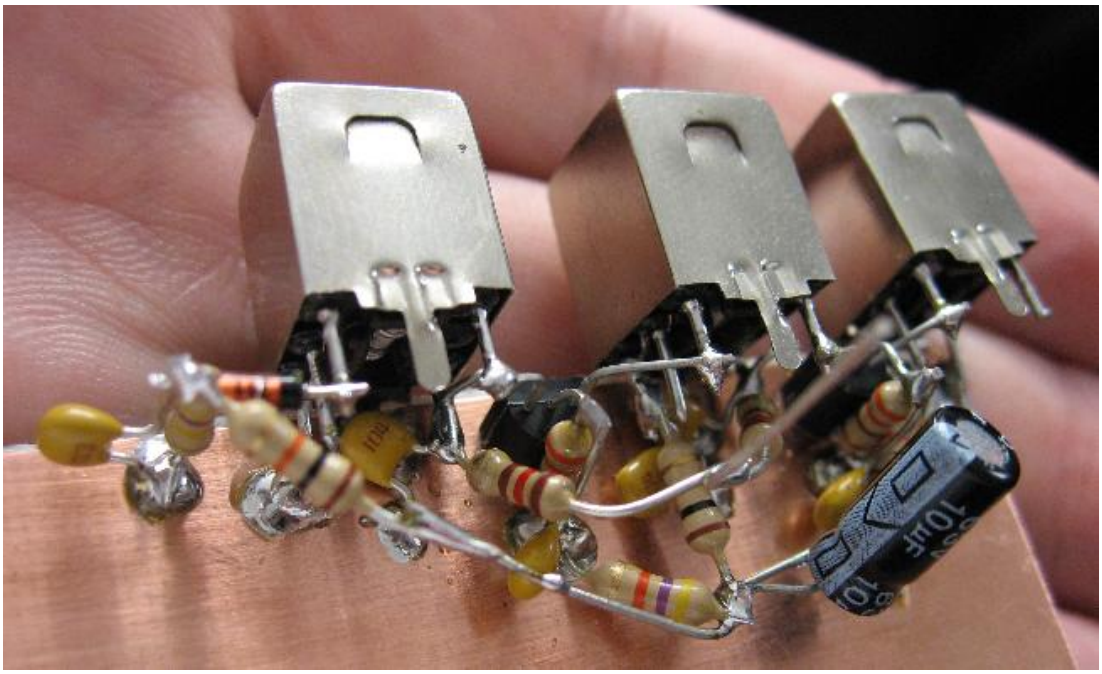

The remaining red oscillator IFT could be used to build an autodyne converter for a front end, completing a MW receiver with only two more active devices (one for the AF-side as well). However, this IF stage might find use in the 80 Meter Challenge receiver, if I ever finish that!

7 comments.

© 2000 - 2009 Alan Yates - All Rights Reserved. XHTML | CSS | CSS toggle

Bicycle Rim Antenna for 20 Metres

2008-03-08

Several months ago I was walking home from the post office, nearing my place I saw it was "clean-up week", the curb dotted with various piles of junk people had put out to be disposed off by the council pickup. The pile outside my block of units had mostly busted furniture, but one item caught my eye, an Aluminium bicycle rim. I dug it out and took a closer look. The spokes and hub were all rust-pitted chromed steel, and physically it was for a child's bike, only around 580 mm in diameter, but the Aluminium itself looked to be in good shape. Antenna was the immediate thought, so I carried it back to the shack.

The spokes and hub where removed and discarded. The rim had a join where steel pegs had been inserted into cylindrical openings in the extrusion and epoxy used to close and secure the join, forming the round shape. I used a cut-off wheel on the rotary tool to cut through the join, breaking the rim so I might measure and feed it.

Experiments

The rim is roughly 1.3 uH of inductance. This is a good fit with the "ring" inductor formula. I experimented with the loop of metal for some months before I finally settled on making it into an antenna for 20 metres. The efficiency is fairly poor on 40 metres and even somewhat marginal on 20, but on the higher bands it is an exceptional antenna. I even tuned it up on 11 metre CB and listened around, hearing not much but some Asian fishermen and the usual braindead 27.355 MHz crowd. It is self-resonant near 6 metres (distributed capacitance about 8 pF) and is therefore limited to upper-HF, roughly 30-10 metres.

Loop Demo on 40 Metres
(7.930 Mbytes)

Radio Australia Demo
(4.982 Mbytes)

For its life on 20 metres I chose the more electrically straight forward and tunable taped-capacitance feeding arrangement. The disadvantage of this arrangement is that it is a bit more difficult to tune, as the match and tune capacitances affect each other, but some iteration finds a good match quite quickly.

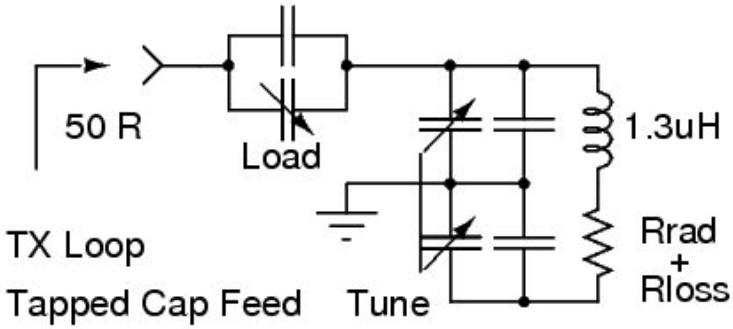

I did experiment with small coupling loop and gamma matching. Both work just fine but are a bit fiddly if you want to change bands a lot. Small driven loop has the advantage that you can twist the coupling loop with respect to the resonated loop to adjust the matching, and can pass the coax feed right through the main loop at its nodal-point where it has a voltage minima. The rim had a hole directly opposite the join where the tire valve likely was placed, this allowed hanging the loop by its coaxial feed. While interesting experiments and valuable lessons for future experiments, I like the tune/match capacitor coupling I ended up with.

© 2000 - 2009 Alan Yates - All Rights Reserved.

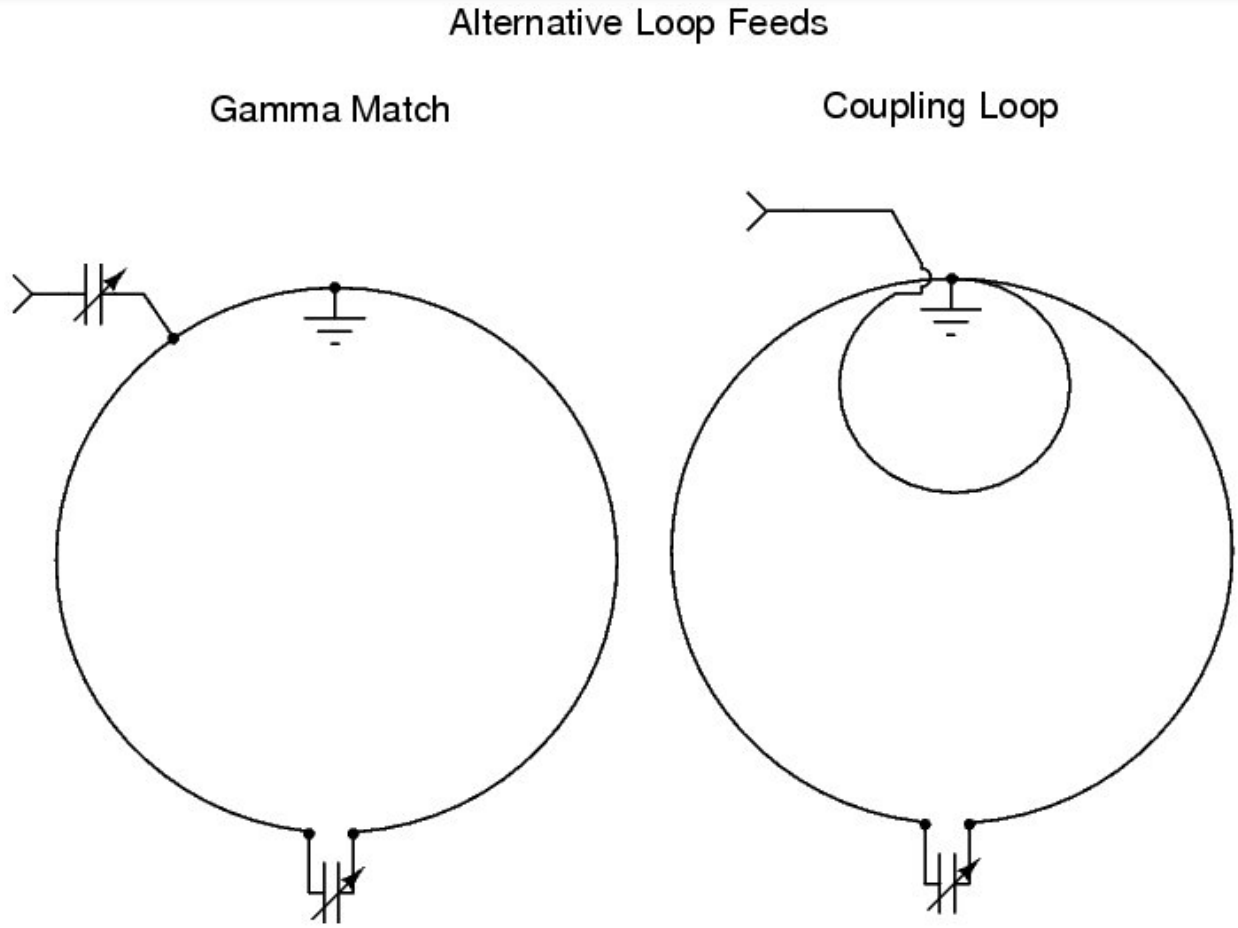

Construction

The loop was screwed to a piece of timber (a poor insulator unfortunately) as a base. The tuning and matching capacitors were screwed to the timber base as well and the coaxial feed fed though some holes in the timber as strain relief. The tuning gang was used in "split-stator" mode to reduce losses, leaving it with a capacitance range of about 20 pF. Some binding posts were used to allow different silver-mica transmitting capacitors to be put across the loop to shift bands.

© 2000 - 2009 Alan Yates - All Rights Reserved. XHTML | CSS | CSS toggle

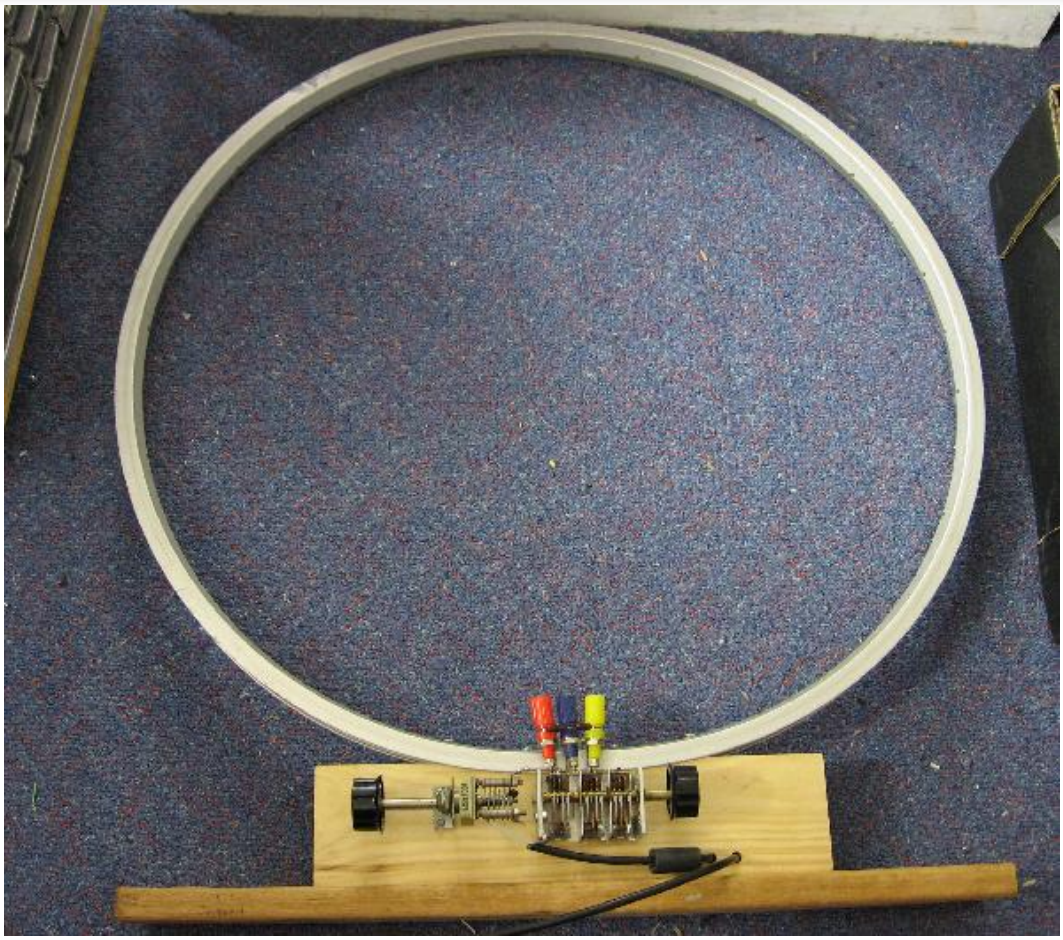

Two 160 pF capacitors are used for 20 metres, giving an equivalent capacitance of 80 pF. The loop tunes about 13.9 to 14.6 MHz, and the 2:1 VSWR bandwidth exceeds this.

The matching capacitor is a fixed 18 pF in parallel with a 10 pF trimmer. This value was determined experimentally with a signal generator, mini C-jig, and return loss bridge as the best arrangement for matching the loop over the frequency range of interest without excessive touchiness in the tuning.

© 2000 - 2009 Alan Yates - All Rights Reserved. XHTML | CSS | CSS toggle

Notes

Power handling is limited by the capacitors. The Silver-Mica caps used are rated to only 200 Volts, but for my current QRP use this isn't a problem. Efficiency if affected a little bit by using binding posts instead of soldered connections for the capacitors as well. I'll probably solder the caps in place permanently once I settle on them, but I am hoping to find higher voltage ones on eBay first.

The connection to the Aluminium of the rim is made with nickel plated hardware, thick copper wire and lots of star washers, etc. Ideally it should be spot-welded, as should all the rotor plates in the capacitor to the shaft and the stator to their connections. The stator plates are copper, I've never seen a capacitor quite like this one before, it would be possible to solder them together to reduce the losses. The rotor plates are Aluminium, the shaft brass, which presents more of a problem. The shaft has an inbuilt coaxial reduction drive with a 1/8" shaft that comes out of the middle of the 1/4" one. I'm having problems finding a suitable knob.

A ferrite suppression bead was slipped over the coax feedline near the feed-point to reduce a slight interaction with the coax position/body capacitance upon return-loss seen while experimenting.

9 comments.

Attachments

title	type	size
Feed Network Diagram Source	application/postscript	11.601 kbytes
Alternative Feeds Source	application/postscript	10.002 kbytes

© 2000 - 2009 Alan Yates - All Rights Reserved. XHTML | CSS | CSS toggle

Digital Display for the Bolometer

2009-03-01

To make the bolometer direct-reading I threw together this relatively simple 4-digit 7-segment digital display, driven by an atmel ATtiny13V. The tiny13 ADC measures the heater supply voltage, and computes the current applied power based on its memory of the quiescent bias power. The bias zeroing power is remembered with a button press.

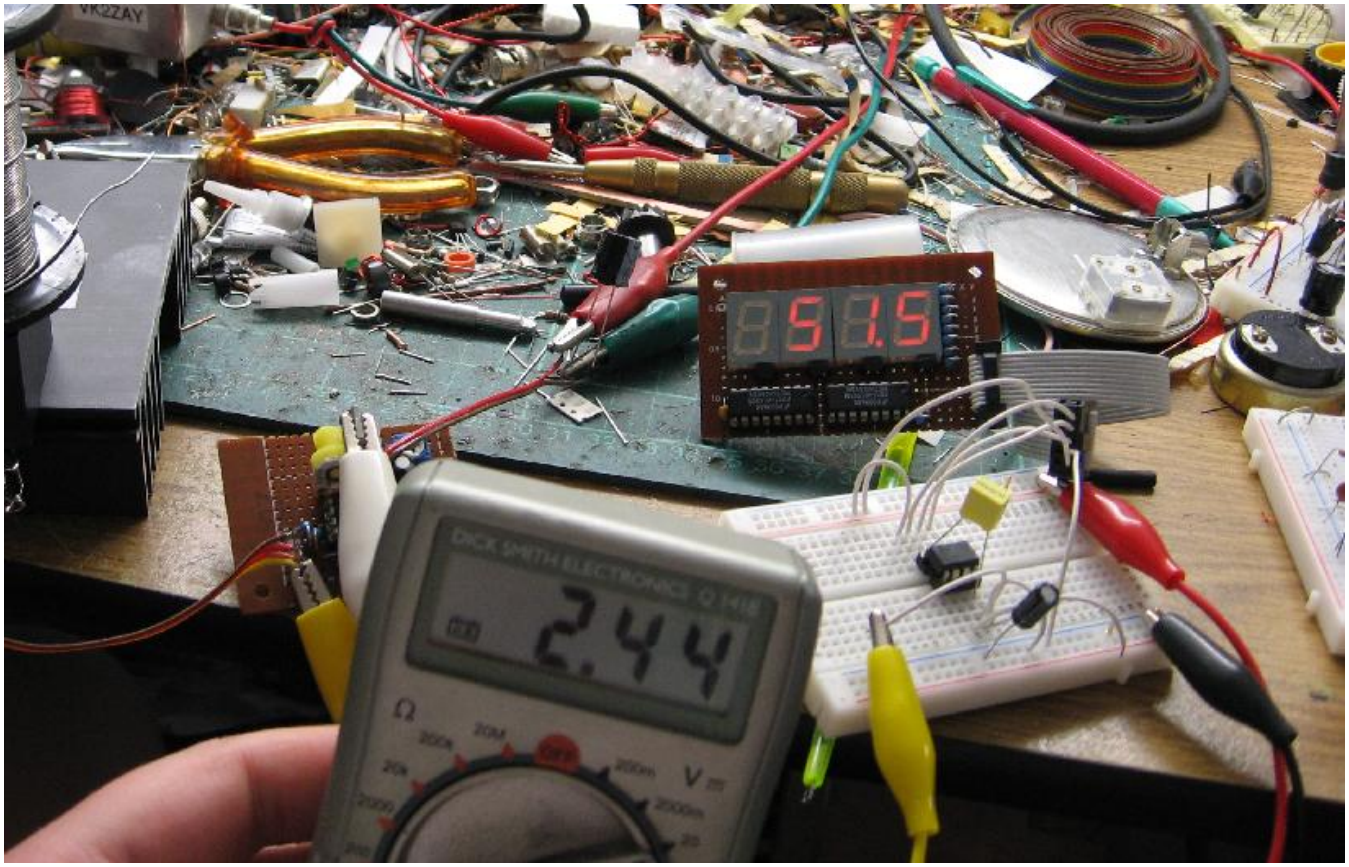

Hardware

The display is quite straight forward, but a little involved to construct because of the low IO pin count of the ATtiny13. I did not have an LCD display in the junkbox, but I had lots of 7-segment LED units, so naturally enough I used what I had. A pair of 74HC595 serial-in parallel-out registered shift registers does the 3-wire to 12-wire conversion required to multiplex the display. The displays are common cathode, the 8 anodes (7 segments + decimal point) are fed by the first 74HC595 in parallel through current limiting resistors. The four cathodes are each connected through a 2N7000 multiplexing FET, and the FET gates driven from the 4 LSB of the second 74HC595. (As there are 4 spare multiplexing pull-downs the general scheme could drive 8 digits).

I briefly toyed with using 4 74HC595s, one for each 7-segment unit so each would have its own 8-bit memory register... While this would have simplified the driving logic (no need to multiplex, just clock the data in once and latch it), it would have meant 32 current limiting resistors and I didn't feel like soldering in that many (also I lacked 32 220 ohm resistors anyway).

© 2000 - 2009 Alan Yates - All Rights Reserved.

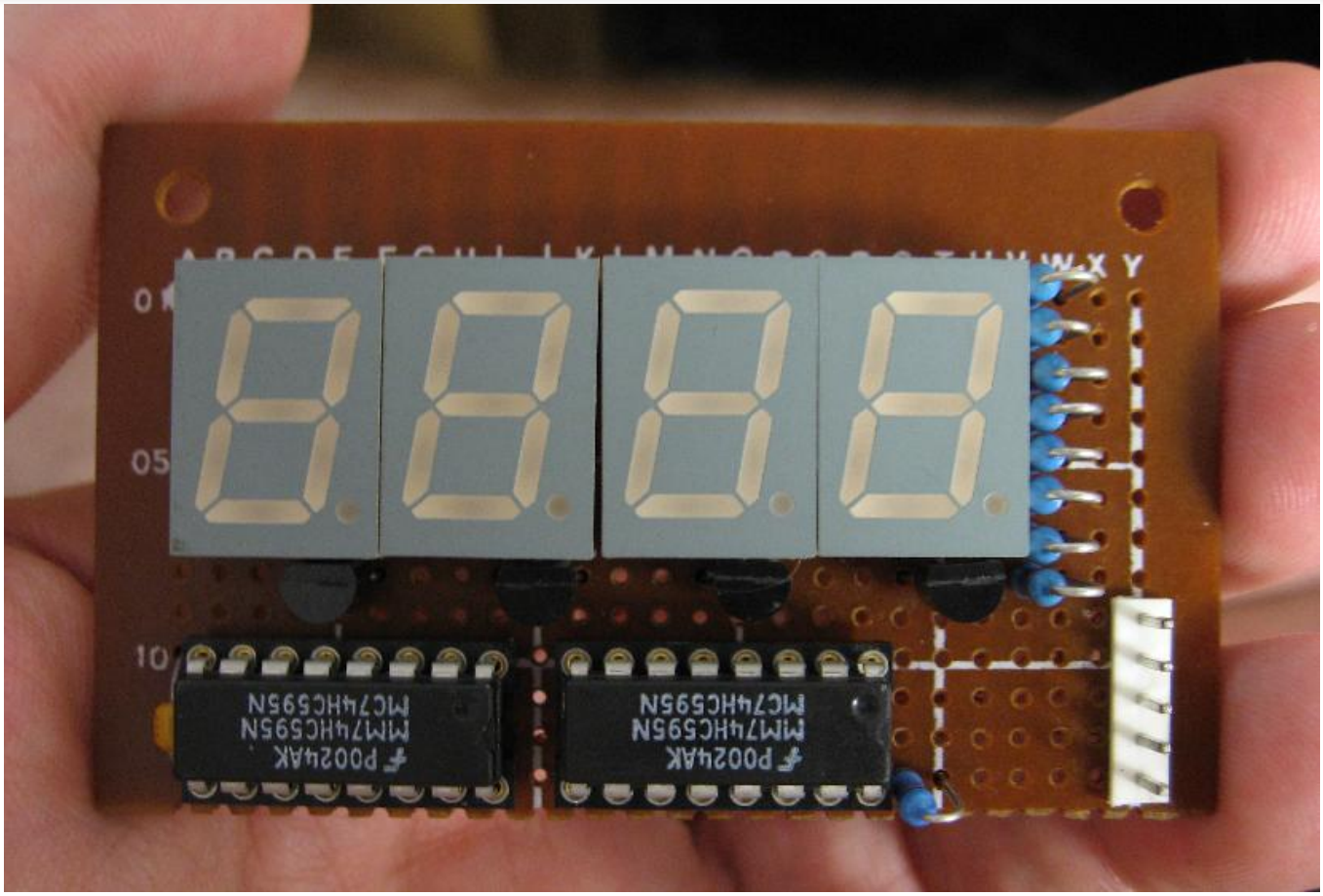

The wiring pencil once again made the construction fairly swift. The wiring is quite dense and much care was required, but otherwise construction was uneventful.

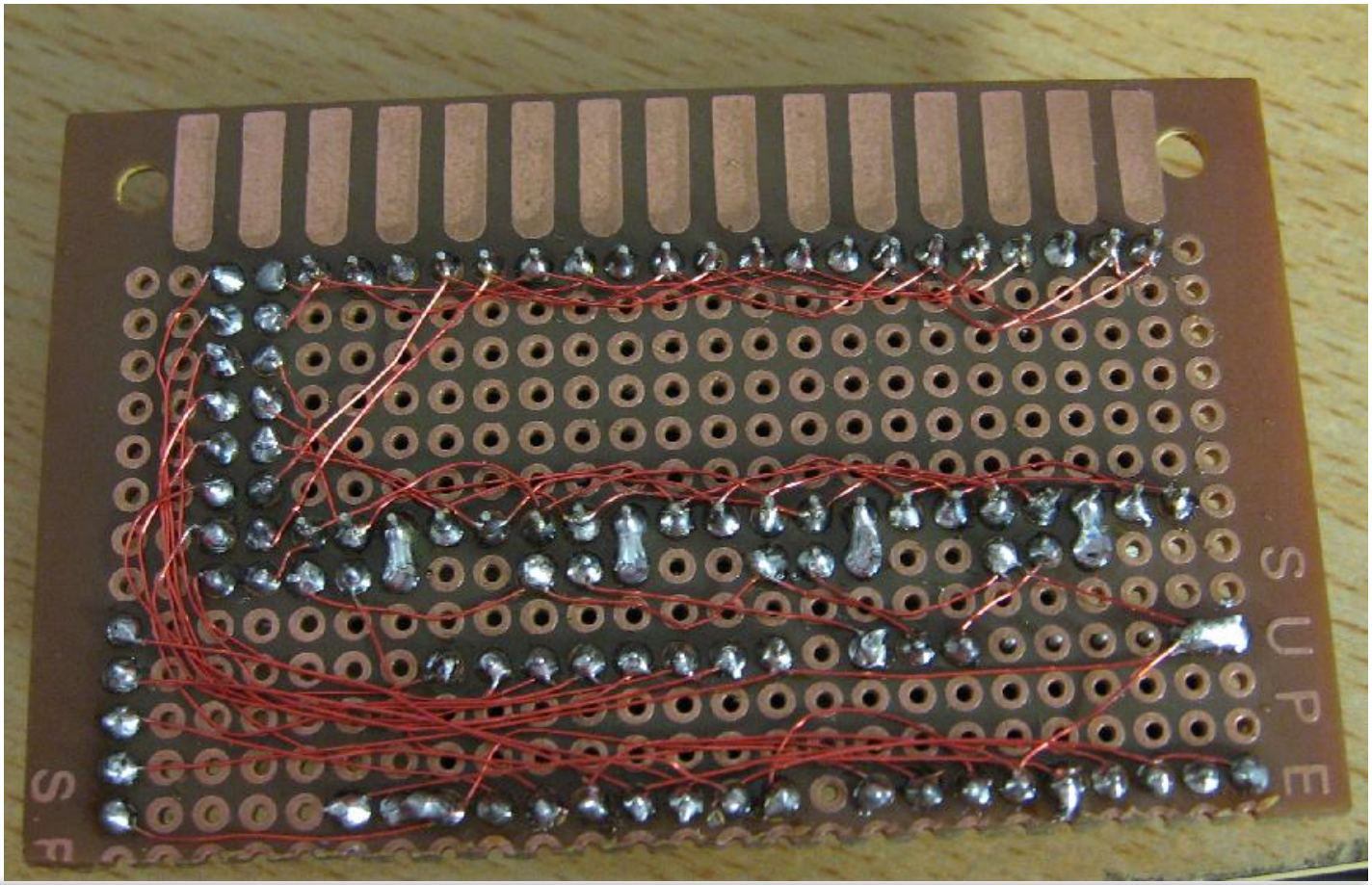

© 2000 - 2009 Alan Yates - All Rights Reserved. XHTML | CSS | CSS toggle

The display interface is via a 5-pin header. Two power lines, one data, and two clocks (shift and output latch). I toyed with the idea of bringing out the output enable so the display could be blanked and perhaps made somewhat more fail-safe in the event of lost multiplexing drive (which might cause excessive current in the static display). Instead I just used 220 ohm dropper resistors, giving a somewhat dimmer display but an inherently fail-safe one. The reset line of the tiny13 would be required to drive the enable line anyway as I needed two spare pins for the rest of the application.

Software

The remaining work is simply software. The display is multiplexed continously in a tight loop. The digits are bit-mapped into a byte wide, 18 byte long table for the digits 0-9, A-F, decimal point and blank. (The last two being trivial and not strictly required). I tested the display by having it dump a 16 bit integer in hex that was being incremented... The final application only requires the 0-9 (and E) states, so the rest could be omitted to save ROM space. The current version of the application takes about 900+ bytes so it just fits.

The ADC runs continously in auto-triggered mode. This is a problem as the ADC noise is significant and the application really needs more than the 10 bits of precision available... I need to work on this some more. The tiny13 timer is being used to periodically update the display state vector. It is possible to use the timer interrupt to trigger an ADC conversion in full noise-reduction sleep, but it will cause a small gap in the multiplexing which may be noticeable... Haven't tried that yet.

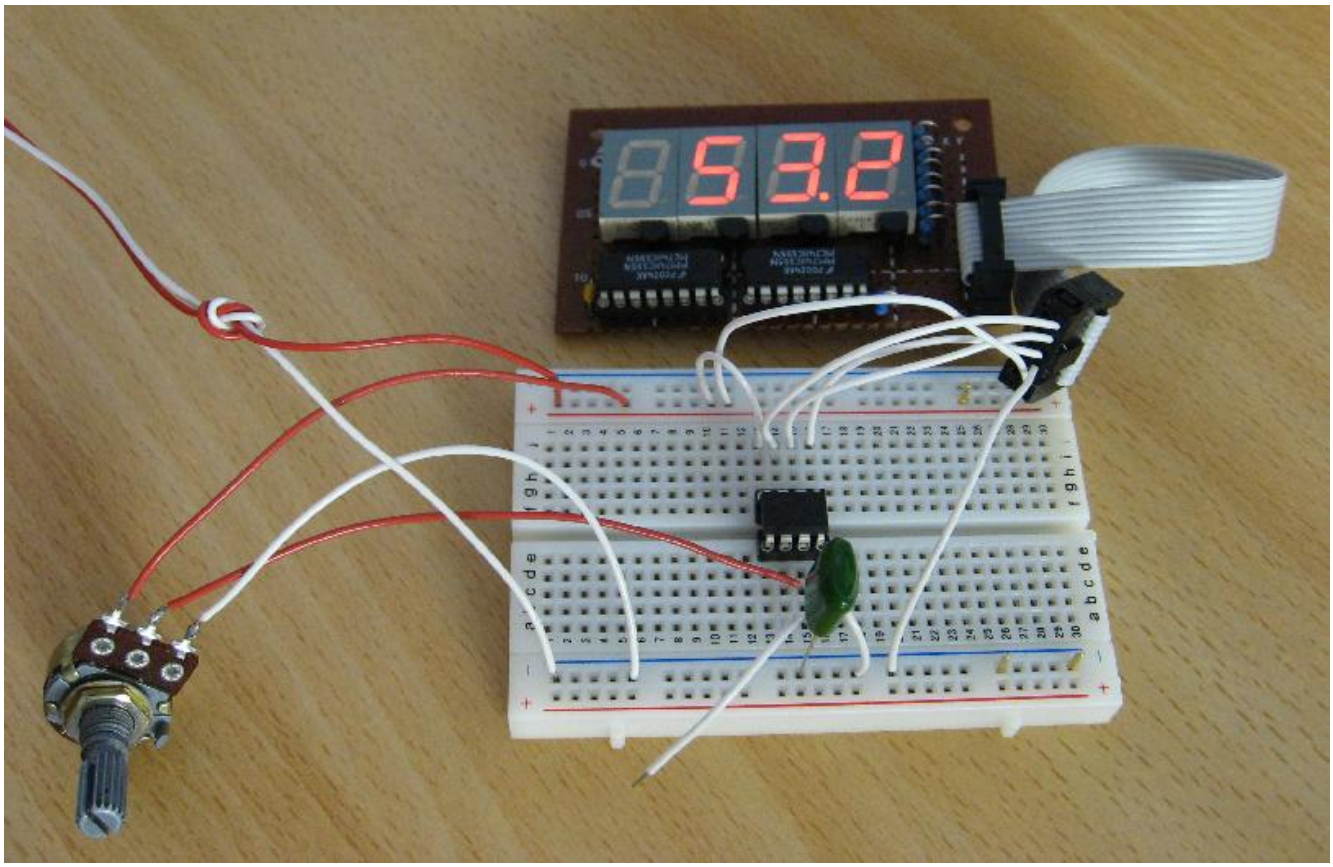

It does however basically work. The power computation is done in fixed-point arithmetic using longs. One intermediate code version was simply a 0-5 volt display (which worked quite well). A pin-change interrupt is utilised to cause memorisation of the current heater power (i.e. the zero button), each timer interrupt the difference between that value and the current value is placed into the display vector.

While annoying to wire-up the display is straight forward, easy to drive and expandable almost without limit. The dedicated register version would be quite nice as it requires no CPU time to maintain, you just clock in new data when you want an update. The 74HC595 can be clocked at 100 MHz, so most MCUs need no wait states and only a few cycles per segment. A PCB would remove the drudgery of building the display. The 74HC595 costs $0.30 - $1.50 depending on where you buy it, and 7-segement displays are about the same (4-digit display modules suitable for the multiplexing system I used are about $1.20 retail). At < $4 that is fairly competitive with LCD displays for a small number of digits. LCDs are obviously more flexible and cheaper but perhaps for some applications these nice bright displays are easy to build and talk to.

Application wise, the code is still work in progress. I think the limitations of the tiny13 will make the display stability an issue, the ADC just isn't good enough. Using a multimeter and a calculator is better for precision measurement, and the moving coil meter is nicer for general 1-100 mW trending. Building the display and its drive code was quite fun however, and probably more useful in the long run than a digital display for the bolometer.

Leave a comment on this article.

Attachments

title	type	size
The Code for the Bolometer Display	application/gzip	5.744 kbytes

Parent article: RF and Optical Bolometer.

© 2000 - 2009 Alan Yates - All Rights Reserved. XHTML | CSS | CSS toggle

Electrical Ignition

2005-01-16

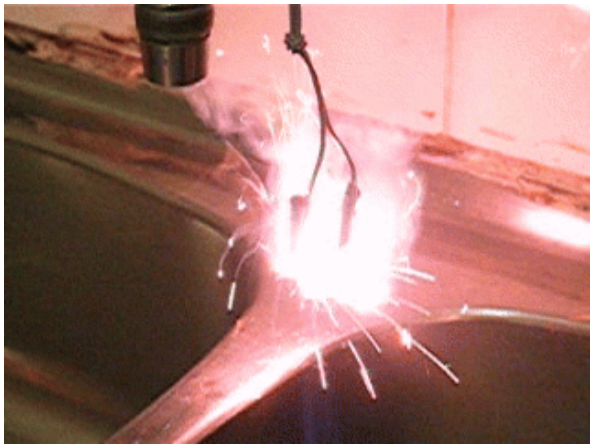

Theory

Electrical ignition systems use the ohmic heating caused by an electrical current passing through a conductor to initiate a pyrotechnic composition. They are typically designed to produce a short burst of hot gases and sparks for initiating other compositions further down the pyrotechnic chain.

Electric igniters, "fuse heads", "electric matches" or "e-matches", do not detonate. They contain only low-explosives and will not initiate a secondary high-explosive. However a similar device containing a primary high-explosive in a metal tube is called an electrical detonator and is used to initiate high-explosives. A "squib" is neither an e-match or electrical detonator, but is more similar to the later and must never be used to replace an e-match. The term "squib" is unfortunately ambiguous and is best avoided IMO. In this text we will address only e-matches used for igniting low-explosive pyrotechnic devices.

Physically e-matches are two wires that come together at the pyrotechnic end of the device where a small blob of "pyrogen" composition is found. Within this blob of composition is usually a very fine "bridge wire", typically of nichrome alloy, that connects each of the lead wires. It functions purely as a heating element, its job is to reach the initiation temperature of the pyrogen and reliably initiate it. Some e-matches, so called "bridgeless" e-matches, have no bridge wire at all, the pyrogen is formulated to be conductive and forms its own bridge wire. Some e-matches come with a removable plastic shroud that protects the match head and can be used to direct the gases and sparks if required.

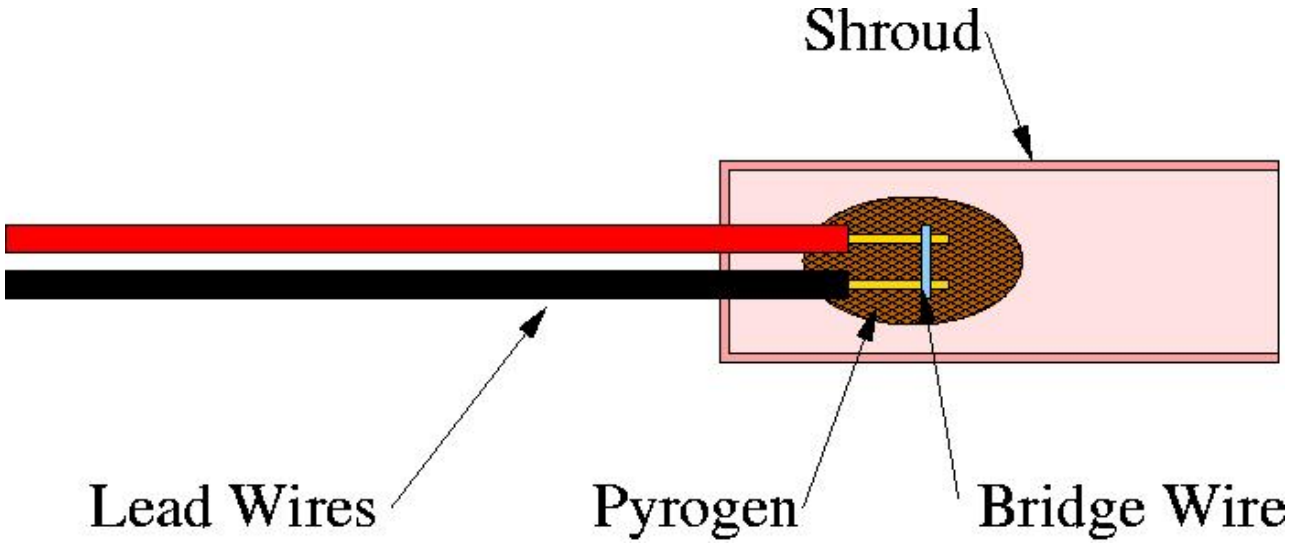

Electrically e-matches are essentially a pure resistive element. Typical values are 1.5 Ohms across the device. Commercial e-matches are rated by the "no-fire current" and the "all-fire current", the currents at which all units in a lot of devices won't "cook-off" and will reliably fire respectively. The no-fire current is typically 50 mA, and the all-fire current 500-1000 mA. The region between the all-fire and no-fire currents is undefined and must be avoided. The no-fire current is used for continuity test purposes in practical firing systems.

To reliably fire the e-match a voltage source is applied sufficient to cause at least the all-fire current to pass through the device for a specified time. Currents many times larger than the all-fire current still may not ignite the e-match if applied for very short intervals. Commercial e-matches come with a table or graph describing their "dynamic" behaviour with short-duration current pulses.

When computing the firing supply requirements it is important to take account of the line losses in the current loop between the supply and the e-match itself, as well as the internal resistance of the supply. The diagram and equation below can be used to calculate the minimum firing voltage given the supply internal resistance, the line resistance, the e-match resistance, and the all-fire current:

© 2000 - 2009 Alan Yates - All Rights Reserved.

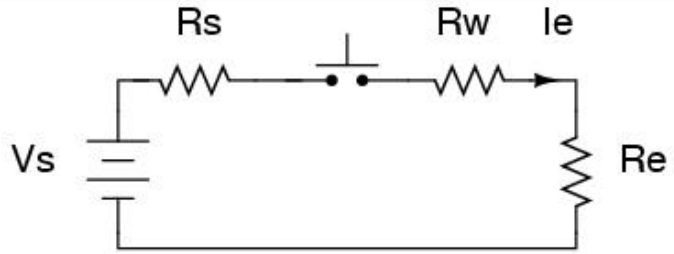

$$Vs > Ie * (Rs + Rw + Re)$$

As a simple example, take the supply internal resistance as 200 mR, the line resistance as 25 R, the match resistance as 1R5, and all-fire current as 500 mA. This results in a minimum firing voltage of 14.2 V. Ignoring the match and supply resistances would give you a figure of 12.5 V, which would not reliably ignite the e-match! In practical circuits the line resistance is typically the most dominant figure and adding "a couple of volts" over what is required by it will generally work, but be sure to do the calculation anyway.

Note that Rw figure includes ***all*** resistance from the battery terminals through to the binding post on the "slat" (or "rail") you are using, and the Re figure includes the resistance of the leader wires. Non-trivial resistances can accumulate, even with short lengths of hook-up wire inside slats and firing boxes.

Multiple e-matches can be interconnected to initiate multiple devices at once. You have three choices in the connection topology; series, parallel, and series-parallel. Each has its own advantages and disadvantages:

Series connection is the most widely used in practice, it has the advantage of being easy to debug, as the continuity testing feature of most firing systems will detect an open joint. The individual e-match resistances accumulate slowly, requiring only an extra volt or so per additional e-match. However, as all the bridge wires are in series, should any of them open significantly before the others it is possible that not all e-matches in the loop will fire. Any significant difference in e-match resistances or pyrogen sensitivity can cause only a single match to fire, the most sensitive protecting the rest in the loop from the firing current.

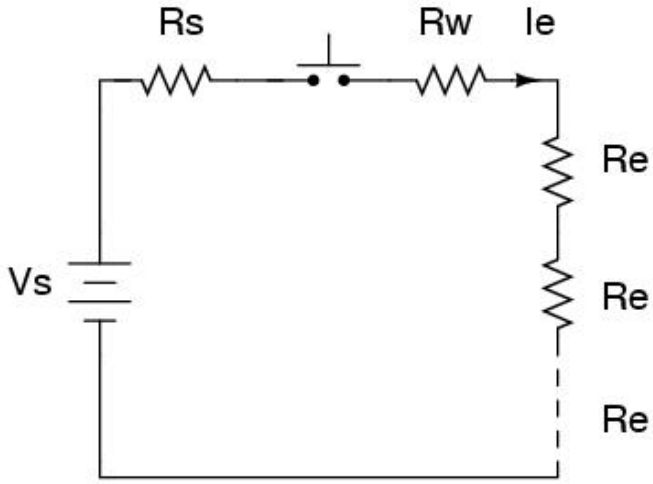

$$Vs > Ie * (Rs + Rw + (n*Re))$$

Parallel connection solves this problem, all connected e-matches will fire eventually. However as all e-matches are in parallel a faulty joint in the circuit can be be hidden by other correctly connected e-matches. Parallel circuits also demand larger current requirements from the supply and put limits on the line losses. For every N matches you have, Rs and Rw become N times more important:

© 2000 - 2009 Alan Yates - All Rights Reserved. XHTML | CSS | CSS toggle

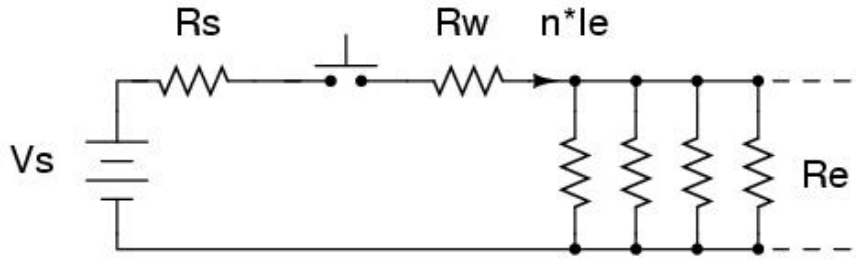

$$Vs > (n*Ie) * (Rs + Rw + (Re/n))$$

Series-Parallel is uncommon, but tries to make the best of both worlds. It places as many e-matches in series as you dare accept the chance of not firing correctly and as many strings on these series connected e-matches in parallel as you need in total. It is also the optimal topology for firing the largest number of e-matches from a given source resistance. This is helpful if firing a large number of devices together, as in clustered rocket engine arrangements, or large fronts of pyrotechnic devices. Such an arrangement, or a similar one fitting the same model, may be mandated by the physical arrangement of long fronts with multiple daisy-chained slats.

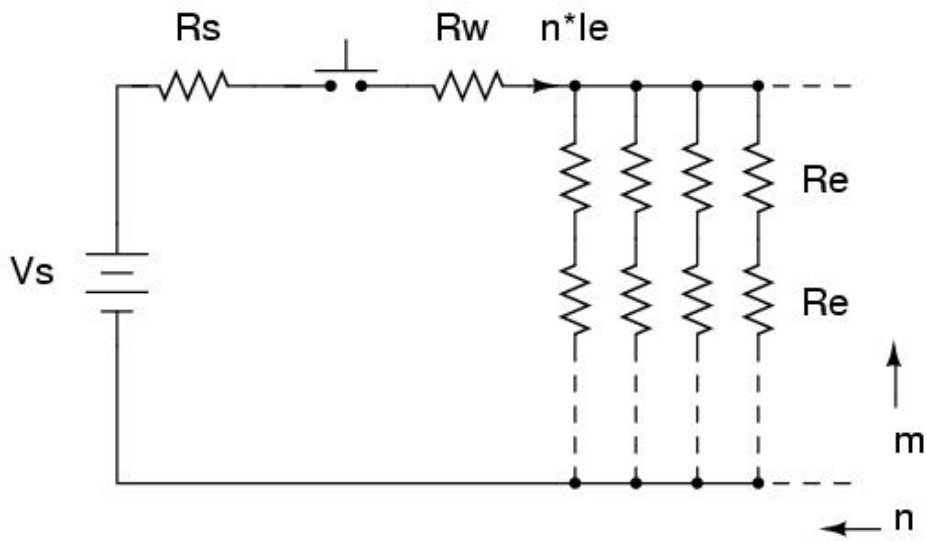

$$Vs > (n*Ie) * (Rs + Rw + ((m/n)*Re))$$

Practical Firing Boxes

A firing system can be as simple as a battery and a pair of wires which you touch to the terminals at the right moment, or a bunch of nails in a piece of timber (a "nail board" - handy for sequenced fronts). However, for safety it is best to have a somewhat more complicated arrangement. At minimum it is best to have a safety arming switch and a separate firing switch. The arming switch is best if it is physically difficult to press accidentally, a key-operated or shrouded rocker switch is ideal. The firing switch may also be shrouded for extra safety.

So called "shunt-plugs" are also a good safety feature, and are required by the standards in many countries. They simply short every shot circuit at the slat until just before testing or firing. Providing the facility to have a shunt-plug installed at the same time as a firing cable is useful, but risky in that someone may plug the other end of the cable into the firing box while you are up at the slat unplugging the shunt-plug. Generally a shunted lead is swapped for the shunt-plug and you take the key to the firing system with you out to the slat while performing the shunt-plug/firing lead swap.

Ideally your firing system should also have a continuity checking system. Activation of the continuity checker should be at the very least part of the arming procedure, if not a separate difficult to accidentally activate button. The potential exists in practical situations for the no-fire current being used to test the continuity to cook-off an e-match and prematurely discharge a pyrotechnic device, perhaps with lethal results!

Probably the most entry level firing box would be a circuit (per-channel) like this:

© 2000 - 2009 Alan Yates - All Rights Reserved. XHTML | CSS | CSS toggle

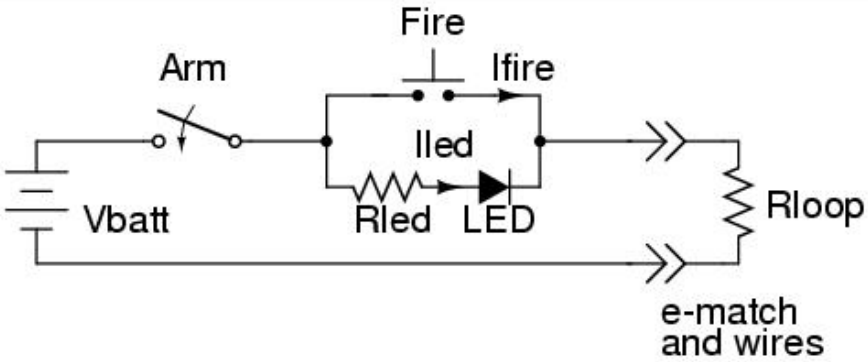

$$Vbatt > Ifire * Rloop$$

$$Rled > Vbatt / \min(Iled, Itest)$$

$$PRled > (Iled^2) * Rled$$

Vbatt is chosen such that it can deliver the all-fire current Ifire through Rloop. Rled is chosen such that worst-case somewhat less than the no-fire current Itest passes through it (ie, setting Rloop = 0). This current must also be less than the maximum the LED is rated for, Iled. Vbatt must also be greater than the forward voltage drop of the LED or else it will never light. The power dissipation of Rled can become significant at higher Vbatts, ensure it is sufficiently rated.

Here is a picture of a simple single channel system using such a circuit:

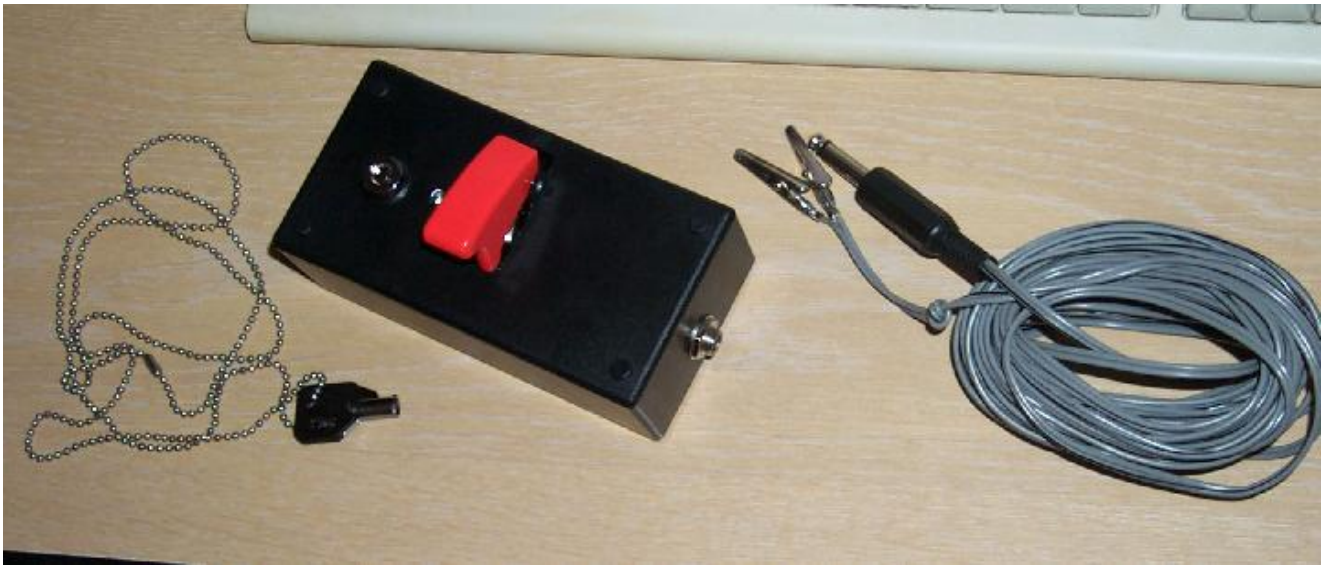

It is a simple matter to duplicate the circuit above as many times as required to build multi-channel firing boxes. Practical issues like quick interconnects between the firing box and the slats, and the slats and e-matches will drive the plug and socket selection. D-style data plugs are popular between the box and slats, they can take several Amps briefly which is more than sufficient for series connected e-matches. A D-25 system can carry 25 shots using the shell as the return, or 24 shots using one pin as the return. Multiple pins can be used for a single channel to boost current capability if required. D-type connectors make implementing shunt-plugs very easy. Spring-loaded speaker terminals are very popular for the slats, but some use binding posts for better mechanical restraint at the expense of somewhat longer set-up times.

Advanced Systems

Capacitor Discharge systems are becoming increasingly popular. They offer very high firing voltages and extremely low source resistances, capable of pushing large currents through even thin wiring. They are ideal for driving a large number of e-matches per channel at a great distance from the firing box. As smaller batteries can be used they offer a mass/volume benefit as well. Their charge-time and extra complexity tends to limit amateur construction, but modified photo flash units are easy to put together for single-channel use:

© 2000 - 2009 Alan Yates - All Rights Reserved. XHTML | CSS | CSS toggle

The unit above has a 130 uF capacitor which is charged to 340 V, delivering up to 7.5 J into the loop. The typical simplified circuit of a capacitive discharge firing box resembles this:

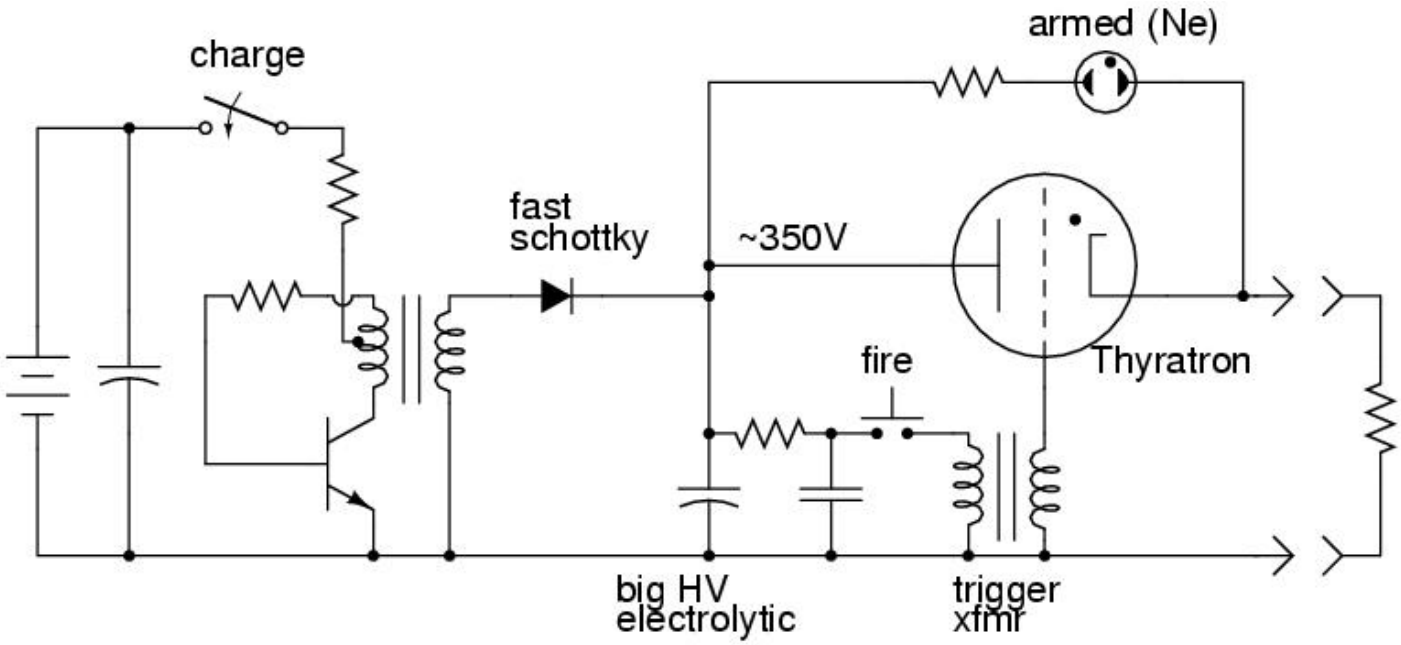

The HV capacitor(s) in such devices store **lethal** energies. Construction and use of capacitive discharge firing boxes is for experts only! There is quite a bit more to a successful circuit than show above.

Diode multiplexed, microprocessor controlled, computer driven, and RF linked systems are beyond the scope of this page, but much information can be found online about them. Anyone with sufficient electronics knowledge and attention to safety can easily build one for far less than the commercial asking price. Commercial systems are of course expedient and have some expectation of performance and reliability which many find very attractive. Be aware though that there are many commercial systems out there that are just terrible, either in design or build quality, frequently both. Quite a few builders of commercial systems found online have never used them in practice, or used them so infrequently that they don't have a good feel for making a practical rugged unit that will survive use in the hostile field environment.

Practical E-Matches

The simplest e-match is made by taking a suitable length of bell wire and bearing both ends, a short length of fine gauge nichrome is shorted across one end (preferably by soldering), and the result dipped in a slurry of black powder then allowed to dry. Almost all e-matches are also given a final coat of thick lacquer to protect and waterproof them, often nitrocellulose or cellulose acetate is used. The bare wires at the other end of the e-match are twisted together as a "safety shunt" for

© 2000 - 2009 Alan Yates - All Rights Reserved. XHTML | CSS | CSS toggle

Nichrome is not the only bridge wire material that may be used. Any metal that is ductile enough to be drawn into a filament sufficiently fine to achieve the required resistance in practical dimensions can be used. Nichrome is quite difficult to solder without resorting to acid-based fluxes (which require clean-up neutralization after use) so other metals are quite desirable. Folding and crimping the lead wires to the bridge wire is popular, but no substitute for a good pair of solder joints. Fine steel threads from steel wool pads or scourers work and solder quite well, and are very cheap compared to extra-fine nichrome. Very fine copper wire can also be used but I find it unmanageably small in practice.

A more sensitive pyrogen can be used to make ignition more immediate and reliable. Typical compositions are dark flash-like. Such a sensitive composition is always prepared as a slurry and is treated with the up-most respect. The smallest amount possible is used. Usually another layer of a less sensitive composition will be coated over the top to protect the e-match and give it better ignition qualities. Metal powders or thermitic mixtures are often added to generate long-lived hot sparks for their fire-giving properties, amorphous silicon or boron are also popular additions.

As the e-match head ignites from the inside they generally explode with a loud snap and throw burning pieces of pyrogen in all directions, this is where a shroud comes in handy to direct the blast where it is needed, and keep it away from where it isn't. The shroud also protects the sensitive e-match head from accidental friction and casual impacts. Crush damage is the most likely form of abuse to cause an accidental ignition, many commercial e-matches will ignite when crushed, stepping on them is generally enough to set them off.

Peroxides of Barium or Zinc are popular oxidisers for ultra-sensitive pyrogens. Barium Chlorate is quite popular too. One must balance their requirement for a "death mix" pyrogen with safety, most commercial pyrogen compositions are quite friction sensitive and can lead to nasty accidents while matching shell leaders, especially without a shroud or with it pulled back. Having sulfur containing blackmatch stabbing into the shroud-protected e-match head is probably just as dangerous. One school of thought suggests you match the shell leader while the shell is already in the mortar with all body parts well clear for the best safety, but I prefer to make less sensitive e-matches and beef up the firing system, it gives you that extra margin of safety against accidental ignitions.

Conductive pyrogens for bridgeless e-matches typically use conductive lampblacks and/or metal powders to form a "composition resistor" around the bare lead wires. The composition and the bare leader geometry is tuned to achieve the desired resistance. Acetylene black is very conductive and a popular choice, but more modern nano-structured carbon materials are now available and could be interesting to try. The bridge wire attachment is the most time consuming part of making e-matches, so bridgeless e-matches are very attractive. However they are generally considered less reliable and more difficult to make with controlled characteristics which makes them difficult to use in series strings.

Expedient e-matches may be made by soldering commercial 1/4 Watt (or less) low value resistors to a length of bell wire and then coating with a pyrogen. Surface mount components are gaining popularity. Other expedient systems use "grain of wheat" bulbs or Christmas tree lights as pre-wired e-match heads, almost ready to be dipped (the envelope is carefully opened before applying the pyrogen). Such a construction technique has quite a following in the amateur rocketry world. In the past Zr/Mg/O2 flash bulbs were very popular, those multi-shot flash bars and cubes were easily dismantled and the individual bulbs used. Narrow strips of PCB material, copper clad on both sides, are easily spiral wound with bridge wire then soldered the complete length. A fibre cut-off disk is then used to cut individual e-match "chips" that can be soldered to bell wire then dipped as usual, this is a very expedient way to make hundreds of e-match heads per hour.

As bell wire is becoming more difficult to get in Australia, I find using Cat-5 data cable pairs for e-matches quite usable. You can use stranded wire if you wish, but solid core wire is much easier to work with. Be careful, especially with bridgeless e-matches, that your pyrogen composition is compatible with the wire material, dry the pyrogen quickly to limit corrosion of the lead wires (and bridge wire), and then coat with syrupy lacquer for a good moisture seal.

Like commercial firing systems, commercial e-matches are expensive but extremely reliable. They offer very tight repeatable ratings, which is very important for series firing of large strings. For mission critical shots with cold batteries or long runs they are the only choice. **Never shoot a commercial display with homebrew e-matches**, it just isn't worth it! However being able to make a cheap e-match for testing things and other times when it just doesn't matter is quite useful.

2 comments.

Attachments

title	type	size
ematch fig source	application/octet-stream	1.377 kbytes

© 2000 - 2009 Alan Yates - All Rights Reserved. XHTML | CSS | CSS toggle

Elektor FM Broadcast Super-Regenerative Receiver

2008-12-07

In my continuing procrastination in not playing with levelling loops I finally got around to building the FM broadcast receiver from September 2007's Elektor magazine. Peter VK2TPM saw this article and suggested it to me because of my well-known love/hate relationship with super-regenerative receivers.

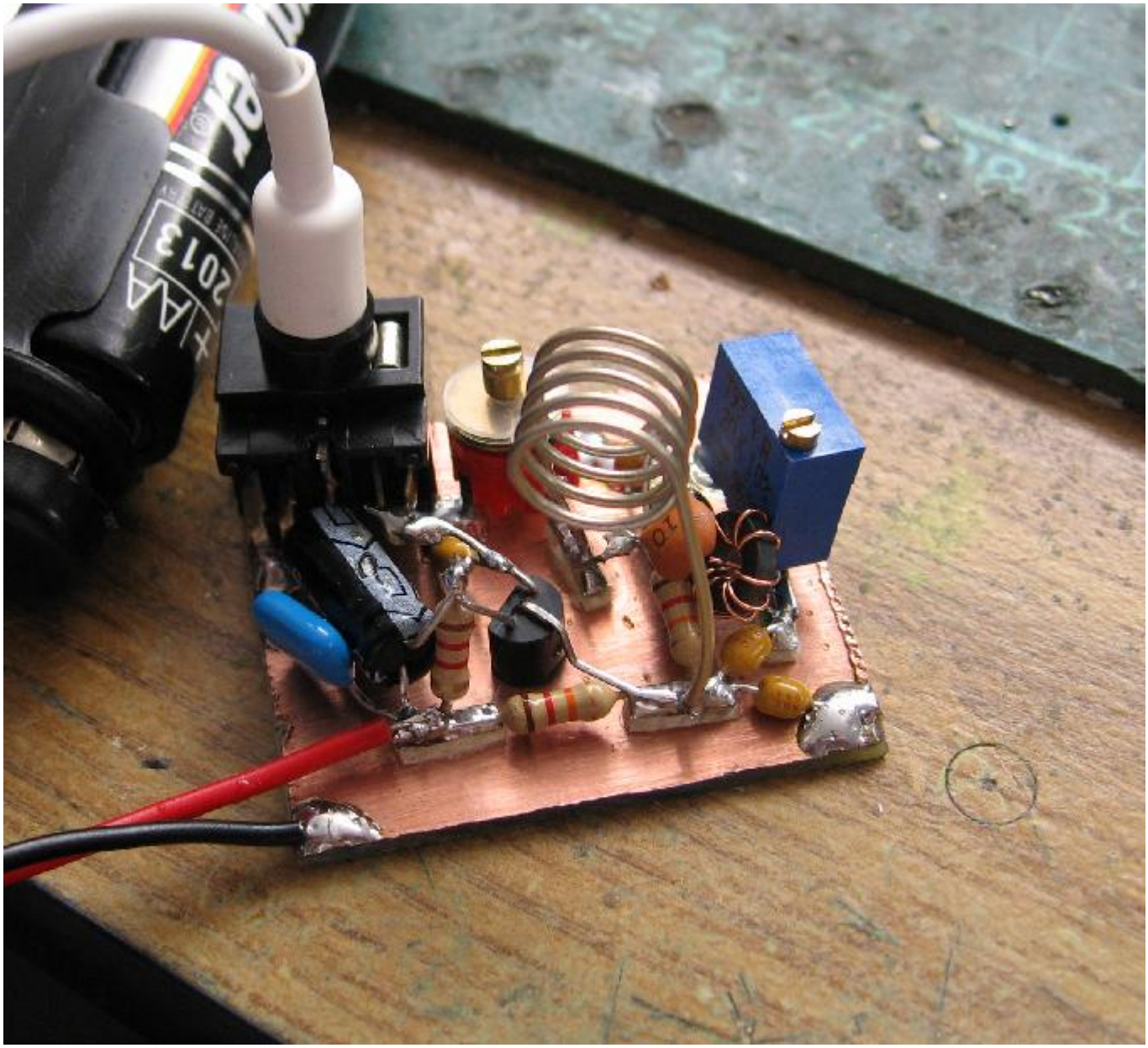

The circuit appears in the "Mini Projects" section of the magazine and is credited to Burkhard Kainka. The circuit is fairly conventional in all but one way; it returns the emitter/source capacitor to the collector circuit to partially suppress the quench waveform from the AF output. The effect isn't perfect, but it does work fairly well.

The audio output into 64 ohms isn't very loud, as the article says, it works better with a higher impedance load.

© 2000 - 2009 Alan Yates - All Rights Reserved.

of the final version to save space. The audio output is enough for listening in a quiet room. RF Performance is reasonable, but nothing special. My micropower FM receiver works better IMHO.

Google Translate is useful for looking at Mr Kainka's fine website. The receiver is mentioned here. Note also the regenerative receiver similar to his KW-Audion. It is very similar to my Noisy Regen, as is the KW Audion, except it uses an "infinite impedance" detector of sorts instead of the emitter current to recover the AF - something I must try myself.

Build Notes

I did have some trouble convincing the circuit to super-regenerate properly, it was extremely fiddly to get a good quench oscillation going, and would take-off in UHF oscillations if I wasn't careful. The picture in the article shows - well - an abysmal layout, perhaps that is why the author's circuit worked better than mine - I guess too much RF hygiene can be a bad thing?!

Looking up with BF494 I found its Ft is only 200 MHz or so... This explains a lot, I used a BF199 which has a *much* higher transition frequency. I probably would have made it a lot easier on myself if I had used a "worse" transistor. I am still suspicious about my current batch of 10 nF caps. I have thousands of them and they are axial-leaded so I rather like building with them, but they have caused me trouble before... I tried swapping them out with 10 nF disk ceramics, but it didn't seem to help, so perhaps the collector circuit strays are responsible, I did use fairly long wires on the resonator coil. Anyway, I replaced the emitter resistor with a multi-turn cermet trimmer and was able to adjust the circuit with good usability without resorting to a different transistor.

The RFC suggested in the article killed oscillations above 90 MHz with the other component values suggested, but oscillation could be achieved by varying the emitter resistor and/or power supply voltage. I replaced it with 9 turns on an FT23-43 which works great to beyond 150 MHz in all configurations.

As built I used the following circuit:

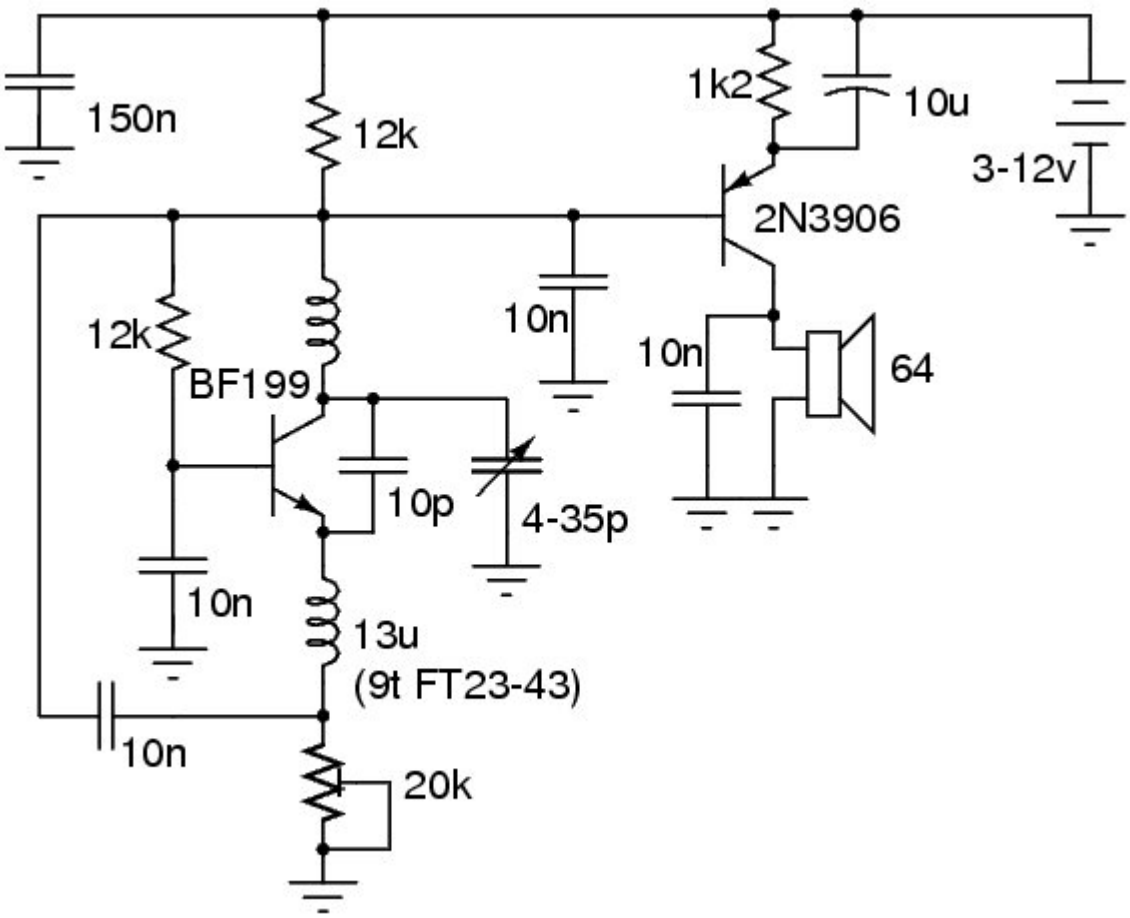

It tunes from the VHF-Low channel 0 audio carrier (about 51 MHz) to about 150 MHz, covering the FM broadcast band, air band, 2 metres and the pagers just above it. More bandspread would be preferable, especially if dedicated to FM broadcast use, this is a major reason why I favour my micropower unit who's tuning is carefully arranged to cover just the 3 metre broadcast band.

The antenna may be applied at the emitter, but isn't really needed as the unshielded unit just sitting on the bench works fine with the local stations, even airband signals, Sydney approach being heard fairly easily... The

© 2000 - 2009 Alan Yates - All Rights Reserved. XHTML | CSS | CSS toggle

and the rail decoupling 150 nF (it might be preferable to add collector-base feedback instead of the collector cap as it might cause instability itself with the inductive collector load, but with my headphones it didn't). The frequency of oscillation was quite high, in the HF region, and was pulled by the headphone leads. Again a "poor" transistor would probably avoid this problem, but the BC559C specified is actually quite likely to take off itself without the capacitor. Using a BC559C is probably overkill for the quality of audio recovered by the regenerative detector.

Using a trimmer instead of the fixed 10 pF emitter/collector feedback capacitor is helpful if your unit misbehaves. It allows more precise adjustment of the feedback. In the past I've had some transistors refuse to oscillate except in very narrow ranges of feedback capacitance. This particular circuit was fairly well behaved, but I did at one point use a trimmer. 10 pF was near the optimal, so I replaced it with a fixed value.

13 comments.

Attachments

title	type	size
Circuit Diagram Source	application/postscript	15.441 kbytes

© 2000 - 2009 Alan Yates - All Rights Reserved. XHTML | CSS | CSS toggle

Emitter Follower Regenerative Receiver

2009-01-14

I find myself really inspired by Burkhard's work. He experiments with some unique topologies and always comes up with something interesting to play with. Google Translate is as always very useful for reading his work if like myself you can't read German.

This receiver he calls the "The emitter-follower Audion". As usual he built it on a tinplate lid and uses a PC as the AF amplifier system. The unusual oscillator/detector topology drew me to it, naturally I just had to try it, being so simple it was easy to throw together.

I built mine in a Altoids Tangerine Sours tin I picked up in Las Vegas. A 12 k switch pot was used for the regeneration and a pair of polyvaricons for bandset + bandspread tuning rather than a single trimmer capacitor, and a toroidal core inductor instead of a slug-tuned one. Otherwise I followed his design (except I used 2N390x devices, despite having BC-series devices in stock - I had the non-European transistors sitting on my bench, left overs from the dekatron emulator build - no other reason). The antenna connection was applied at a tap on the tank circuit (5th turn from the cold end through a 3p9 capacitor). The inductor value (about 5 uH; 32 turns on a T50-2) was selected using my LC VFO calculator to optimise the tuning range given the polyvaricon capacitance of about 210 pF with the gangs combined.

The radio works quite well. It tunes from about 4.8 MHz to beyond 23 MHz. Break into oscillation is fairly

© 2000 - 2009 Alan Yates - All Rights Reserved.

reception of AM broadcast stations. With strong signals it tends to injection-lock the carrier, becoming an autodyne-style receiver. Weaker signals can be resolved as hetrodynes in oscillating mode, and by using software on the PC I was able to mix-down either sideband of a weak AM signal using the receiver oscillating and off-tuned.

Stability is quite reasonable, but degrades as expected with increasing frequency. A more robust mechanical construction might help in this regard (flexing the tin shifts the frequency a bit), but long-term drift is actually very good, surprising considering a type-2 toroid was used. The regeneration control pulls the RX frequency quite a lot, which is not unexpected when the tank is so heavily coupled to the transistor. It might be interesting to tap-down on the tank the connection to the transistor base. The bandspread polyvaricon makes tuning in stations quite easy. It's "antenna" gang (160 pF) is coupled to the tank via a 10 pF, this might be reduced if you want to more easily resolve SSB signals. It would be very unpleasant to use the radio without the bandspread/bandset tuning, at least with weaker stations.

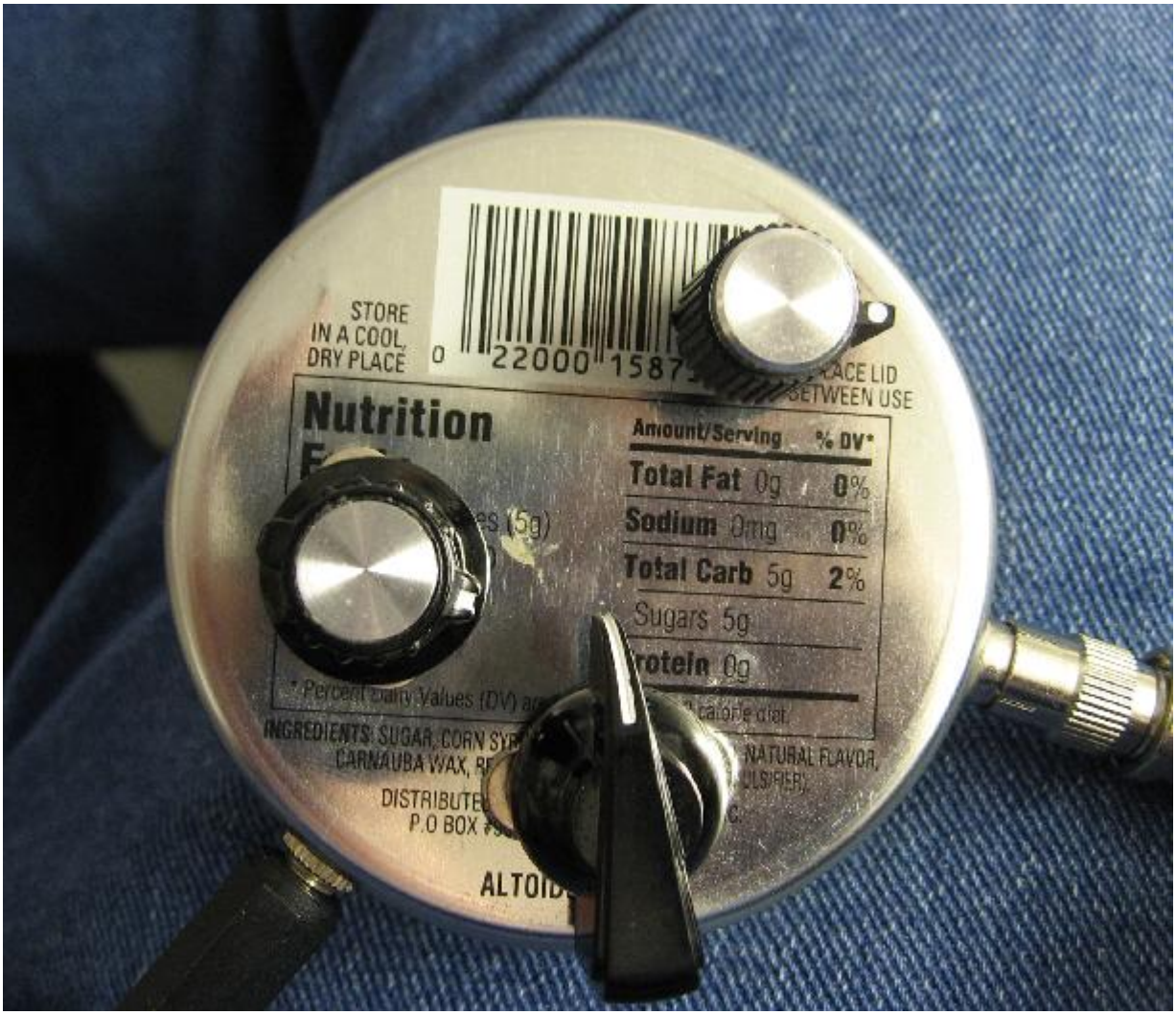

I haven't labelled the front yet. I'll probably calibrate the bandset capacitor (chicken-head knob) with the bandspread centred so I'll know roughly where it is tuned, at least highlighting the shortwave broadcast and HAM bands.

31 metres was very active during testing, and Radio Australia and Radio New Zealand dominated the band. Voice of America and China Radio International were easily heard. Weaker stations were a bit harder to tune in with Radio Australia overloading the receiver at times, a pre-selector would be helpful, but reducing coupling to the antenna is helpful and once the regen is tightened towards the onset of oscillation the detector Q becomes sufficient to reject adjacent signals, even ones within 10 kHz (like the pairs of RA transmissions). Many stations were not identified, carrying non-english content or failing to identify within my limit of patience for listening to rapid QSB.

This video is of Radio Australia in oscillating mode, showing the receiver injection locking to RA's enormous signal.

© 2000 - 2009 Alan Yates - All Rights Reserved. XHTML | CSS | CSS toggle

Some Music on Radio Australia
(5.974 Mbytes)

Naturally the receiver lacks AGC and rapid QSB on long-path signals can be rather annoying to listen to. However, for its simplicity you can't help but be rather amazed how well it actually works. As Burkhard suggests, it might be a great first-project for someone interested in building shortwave receivers, but direct drive of "walkman" headphones would be helpful, untying it from an external amplifier or PC. (I tried a crystal earpiece, which works but only with the very strongest stations). I might design a matching 1.5 Volt amplifier capable of driving 32 ohm headphones and build that into the unit, making it stand-alone.

10 comments.

© 2000 - 2009 Alan Yates - All Rights Reserved. XHTML | CSS | CSS toggle

End-Fed Half-Wave Antenna & Tuner

2007-03-11

For the on-going 2007 ARNSW Homebrew Group Challenge work I needed a simple 80 metre antenna. As a home-unit resident the size of a full half-wave is pretty impractical, but I decided to try it so I had a base-line to compare future shortened verticals to.

While centre-fed would be the simplest to get going and probably the easiest to install in a semi-permanent manner, I went with end-feeding. I would like to have the option of using the antenna portable, where a transmission line is just something else to carry and end-feeding is probably the easiest to set-up.

I read everything I could on the subject, the ARRL antenna book is good, but I found Steve Yates AA5TB's website especially useful. Steve explains the physics of the counterpoise well, and gave me confidence that it would indeed work as I had planned without stray-RF problems.

The Tuner

A matching box was constructed, containing both a matching circuit and a resistive 50 Ohm VSWR bridge that borrows heavily from Dan Tayloe N7VE (et al). The matching inductor value was picked to resonate the available variable capacitor gang just below 80 metres at maximum capacitance. The Hi-Z side floats to make it more versatile, a simple clip lead can be used to return the counterpoise side to the coax braid, if so desired.

The final device tunes a resistive load of 3-7 kilo-Ohms from 3.2 MHz to 12.6 MHz. 40 metres is covered (and 30 metres too, but I lack a transceiver for it currently), it is unfortunate that 20 metres could not be covered as well, without switching out some of the windings. W0CH switches his inductor taps, but this also changes the impedance match too much for my taste (Note that you can compensate somewhat for a few kOhms of resistive mismatch and an undetermined amount of reactive mismatch with the tuning). His circuit is otherwise very similar to mine (and just about everyone else's who has an internal bridge).

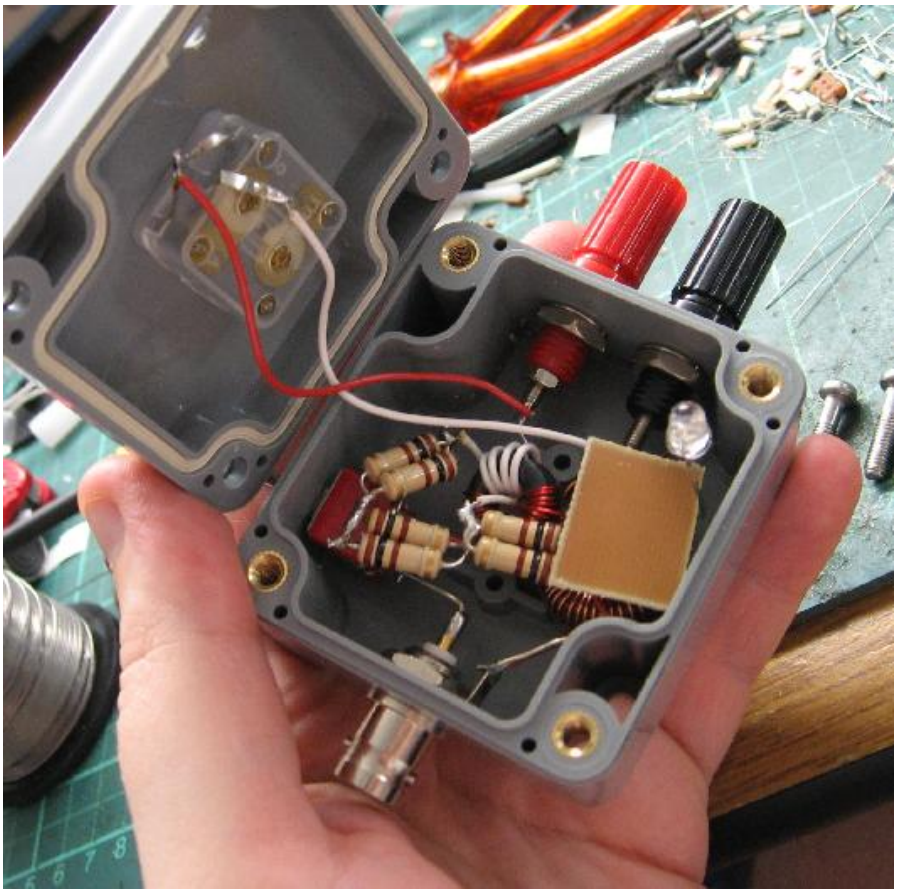

The unit was built in a small plastic box, and it was quite a squeeze to fit the tuner and the bridge inside. The resulting unit is very small and should work fine in portable operations. The tuner can be seen running about 1 Watt CW from the challenge transmitter into a 4k7 dummy load and a neon bulb which is getting stinking hot!

© 2000 - 2009 Alan Yates - All Rights Reserved.

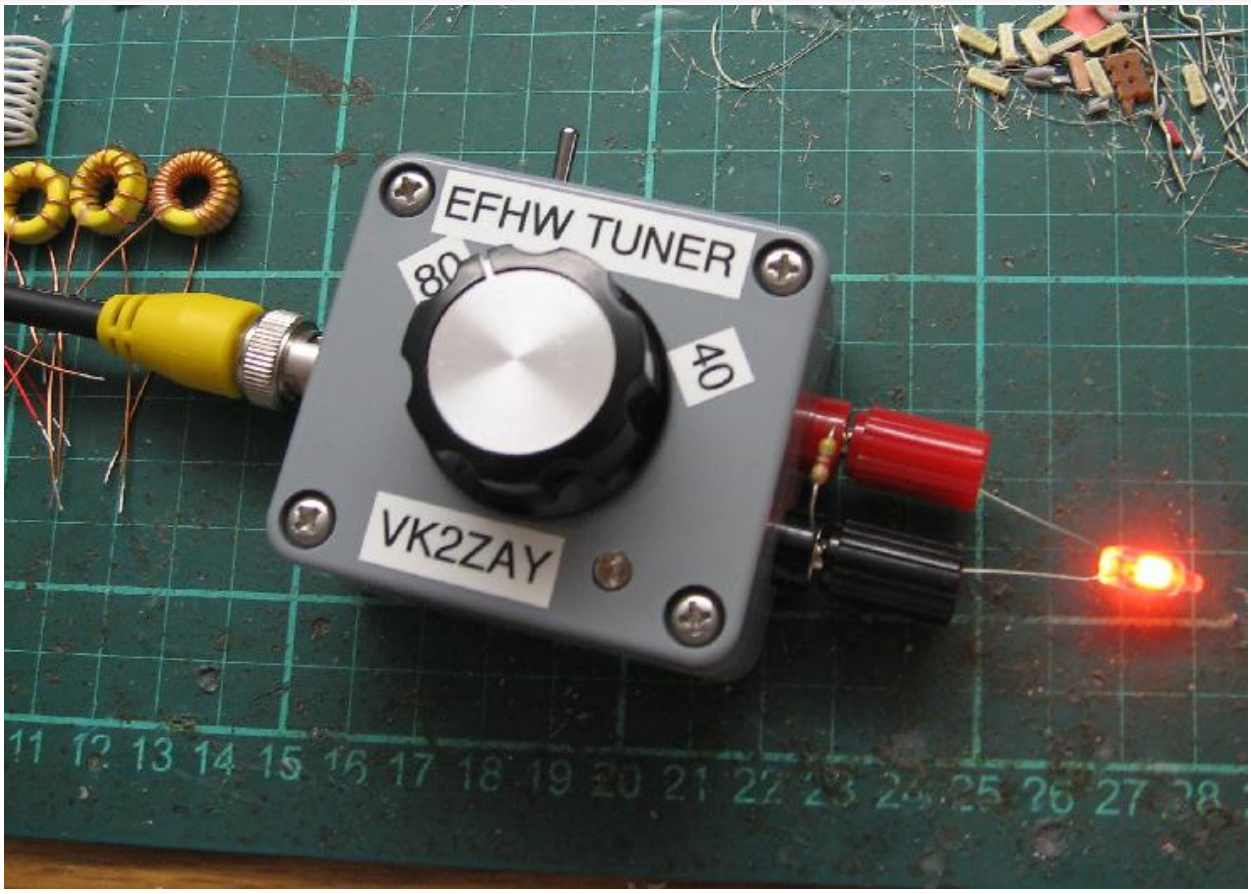

This gross abuse of a Neon bulb shows the voltage step-up of the tuner and proves it can feed a high impedance load fairly efficiently.

The Antenna

The radiator itself is simply a half-wave long piece of wire. I used an unzipped length of "zip cord", a full free-space half wave length (about 41.6 metres) which makes the antenna a bit reactive, but this is easily tuned out. Managing the wire while it was measured and unzipped was actually one of the more challenging parts of the project, but with the help of the XYL and the parents it took only 20 minutes or so. Black plastic egg insulators from the WICEN stand at Wyong were strung on the wire, two fixed at each end and two floating to allow various geometries for deployment. Banana plugs were added to each free end of the wire, so either might be used as a feed point.

© 2000 - 2009 Alan Yates - All Rights Reserved. XHTML | CSS | CSS toggle

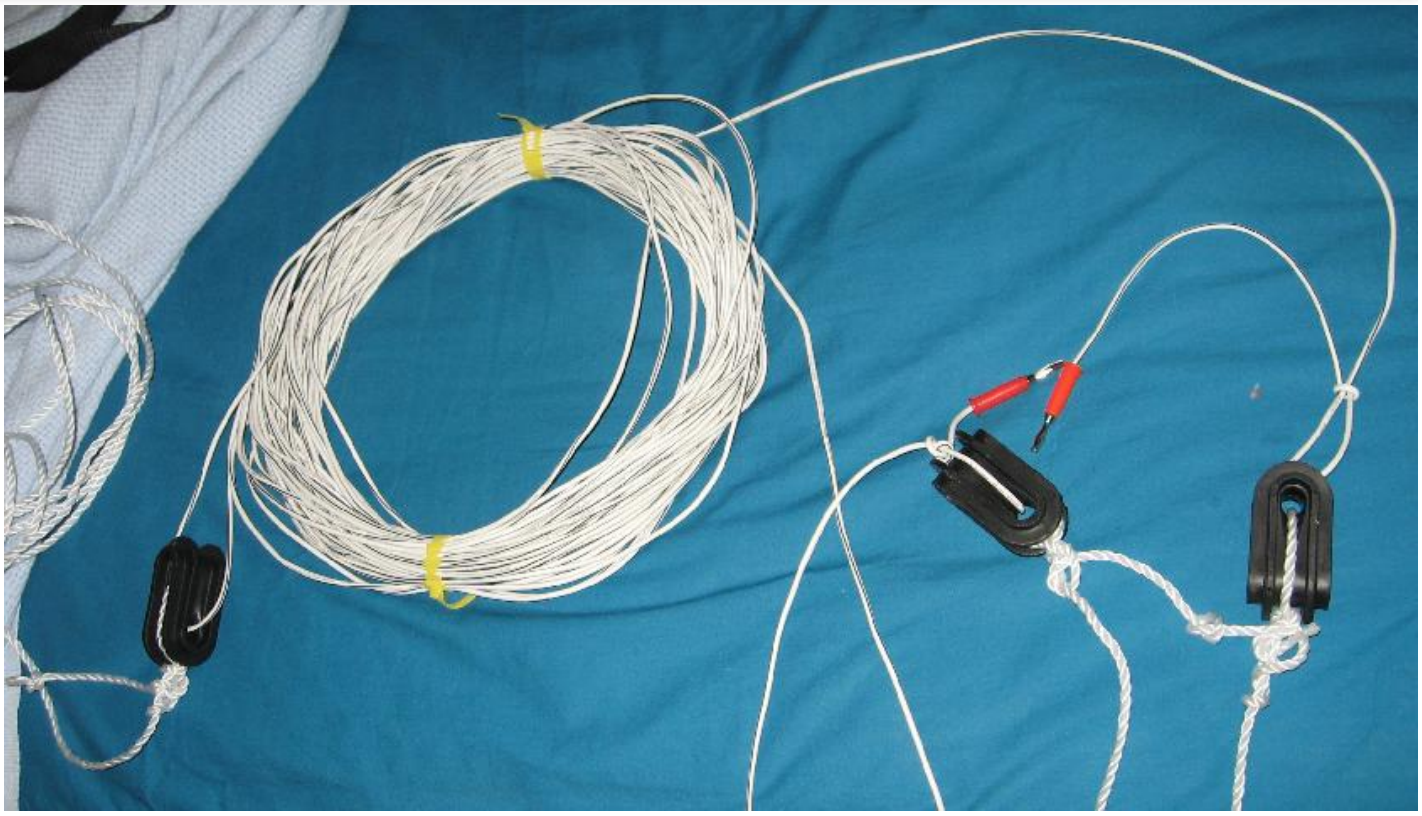

Testing

After some trial and error it was found possible to just fit the antenna's enormous length on my property. The centre was strung up at my 3rd story bedroom window and the ends sloped down to the extreme boundaries, one being the car park railing at the edge of a cliff, the other being the adjoining property's fence. The car park end was the most practical to feed from, so I took some gel-cells, a few radios and a fold-up chair down to the cliff edge and set-up there.

The antenna works much better than any I've used before. The inverted-V configuration may have something to do with this. I used the railing around the car park as a counterpoise, but it was possible to run using just the radio and its coax as a counterpoise too, by clipping the counterpoise connector to the coax socket outer with an alligator clip lead. It was very easy to tune in either way, on both 80 and 40 metres. The ARNSW morse practice beacon was full-scale on my VR-500, were normally is is barely S1 on my north-south horizontal 40 metre dipole. With a homebrew 80 metre transceiver I could hear lots of DX and local QSOs, and I listened to the WIA broadcast using my 80 metre VXO receiver for the first time at a good signal level. As the sun went down the mosquitoes got too bad to stand any longer, so packed up and went back indoors.

I had to take down the antenna, it is simply too big to leave up all the time, if I want to keep the neighbours on side anyway. The car park end is also a bit of pedestrian hazard, so this antenna will only be going up for special occasions. The experiment was otherwise a complete success, and I am very impressed with the antennas performance. I also now have good figures to shoot for with a shortened vertical.

5 comments.

© 2000 - 2009 Alan Yates - All Rights Reserved.

End-Fed Half-Wave for 2 Metres

2007-06-02

I threw this antenna together while playing with the Fredbox transmitter. I wanted a reasonable radiator for stuffing around, but without tying up the main half-wave on the balcony.

It is simply a half-wave radiator fed at the end with a matching network comprising a tuned tank. A balun is provided to decouple the feed-line, and the match to coax is affected by tapping into the tank coil near its cold end. It is hung by a string when used.

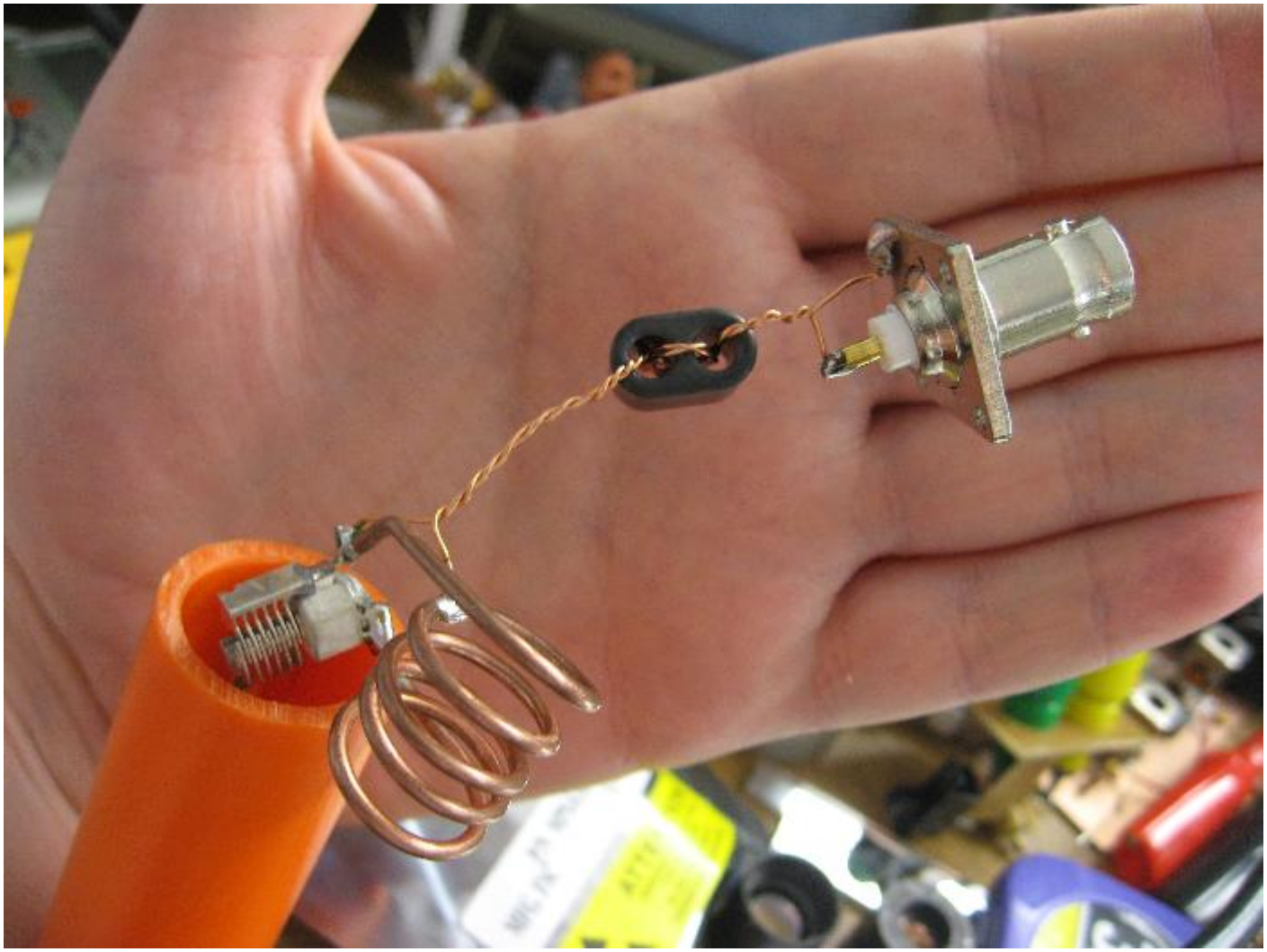

The tuning is pretty sharp, but once tuned has reasonable bandwidth and offers an excellent match to 50 Ohms. The radiator is a piece of mains cable earth (multi-strand), cut for the harmonic centre of 2 metres. The coil is a bare piece of the active conductor from the same cable, 5 turns well spaced on a AA battery. The trimmer is a 2-9 pF air-space unit from Rockby.

© 2000 - 2009 Alan Yates - All Rights Reserved.

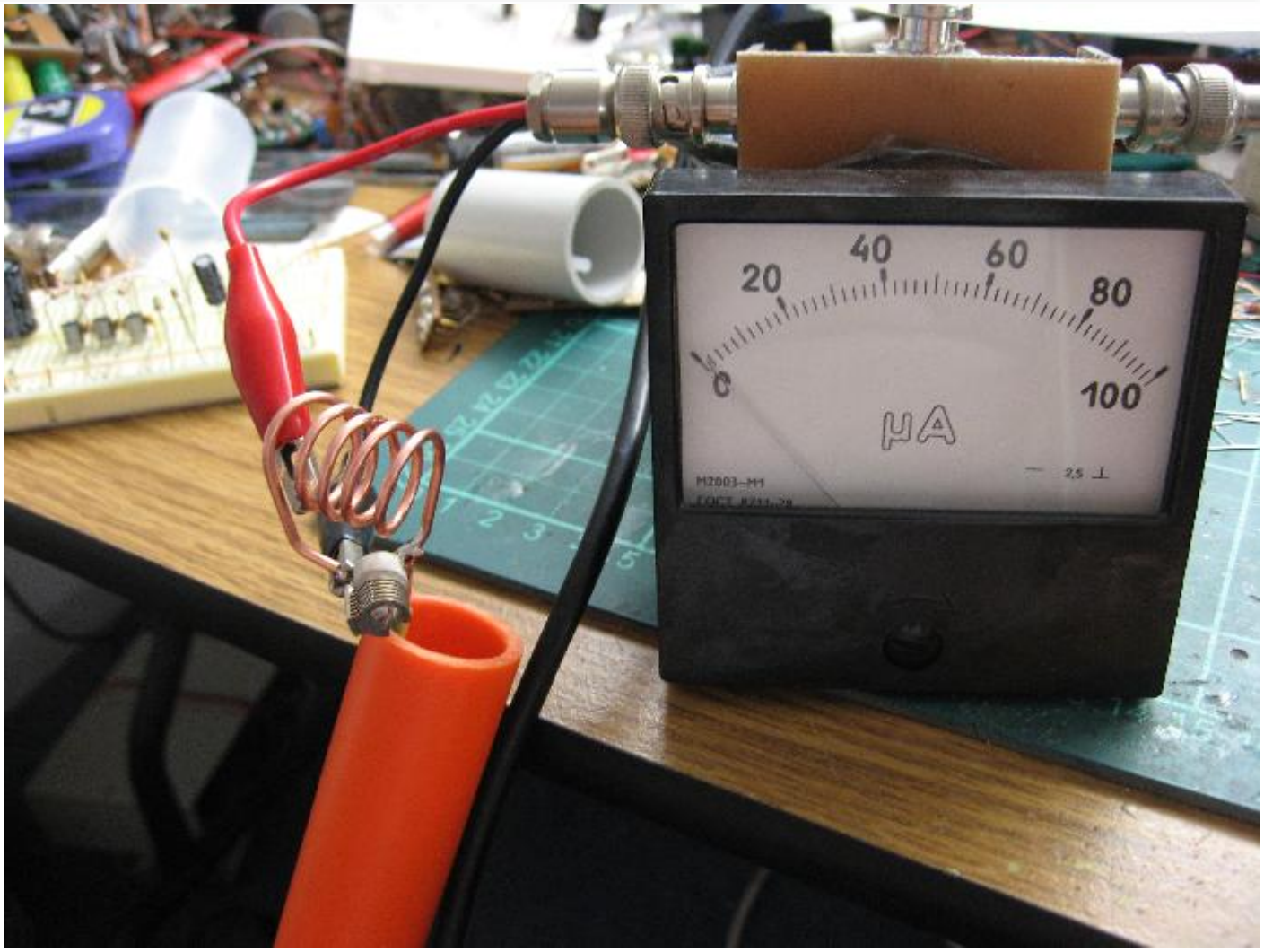

Power handling is likely limited by the trimmer plate spacing, and the balun core saturation. It works fine at QRP levels.

4 comments.

© 2000 - 2009 Alan Yates - All Rights Reserved. XHTML | CSS | CSS toggle

Fixed the MFJ-207 FM Problem

2008-12-23

Upon hearing that other HAMs have MFJ-207s free from the FM modulation problems my device shipped with I decided to take another crack at fixing the loop. Inspired by the design of the MFJ-269's ALC loop I simply added an AC feedback network to the LM324 lowering its AC gain but leaving DC unaffected. A easy, two component fix: 10 nF cap and a 1 Meg resistor, in series from pin 1 to pin 2 of the LM324 (output and inverting input).

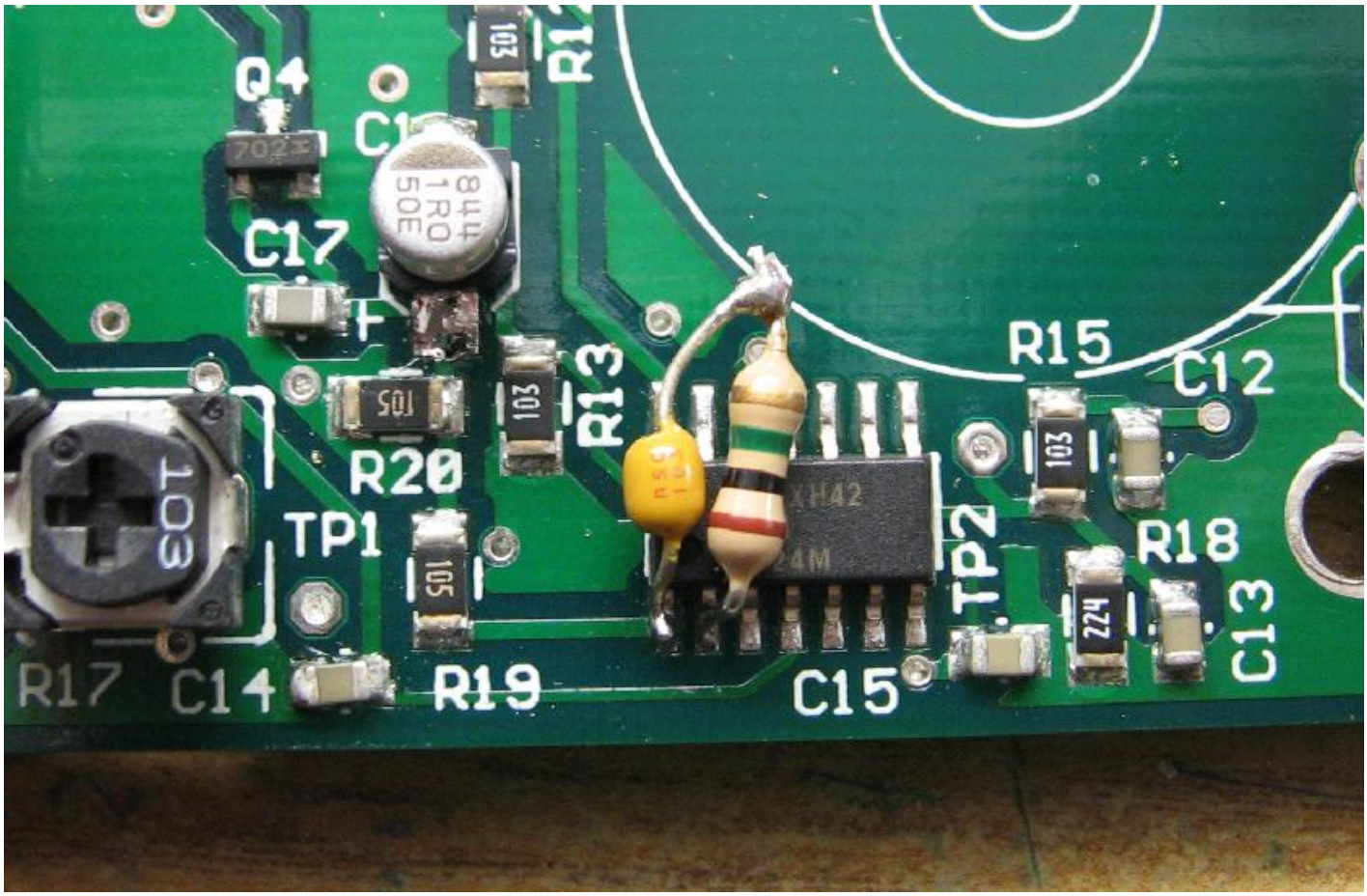

After this addition I reset the ALC loop control point to that indicated in the manual. The oscillator is now nice and quiet, with only moderate noise sidebands, no more FM!

This fix does nothing about the buffering issues. The oscillator is still pulled around by the load on the bridge (and counter output), but it is now much narrower and suitable for use as a stand-in signal generator. It still doesn't particularly like narrow loads, but it is far more usable.

I took the opportunity to more carefully test the SWR scale. To do this I constructed a series of precision dummy loads into BNC connectors. I've been meaning to do this for a while, and have been getting by with a cermet trimmer pot wired to a BNC, these spot loads are much more expedient and allow doing a calibration (especially of the MFJ-269) in only a few minutes. I lacked some of the smaller resistors in sufficient precision, so I took the next smallest preferred E12 value I had and filed away part of the film until the required value was achieved. The file knick was then filled with liquid electrical tape to prevent ageing effects on the exposed element edges. I was careful to null my multimeter and use the most accurate one I have which seems to be around 1% on the 200 Ohms range when compared to voltages dropped across the similar power resistors.

© 2000 - 2009 Alan Yates - All Rights Reserved.

The 207's SWR meter calibration is still utterly abysmal. You can only adjust it so one load resistance gives an accurate reading. Even reciprocal loads like 100 and 25 ohms, both 2:1, produce quite different readings. With loads on the lower side of the reference 50 Ohms the bridge seems to read low. Doesn't detract too much from its usefulness when tuning up a matching unit, it still dips sharply at 50 Ohms.

2 comments.

Parent article: MFJ-207 Review.

© 2000 - 2009 Alan Yates - All Rights Reserved. XHTML | CSS | CSS toggle

FM Broadcast Band Transmitter

2001-11-25

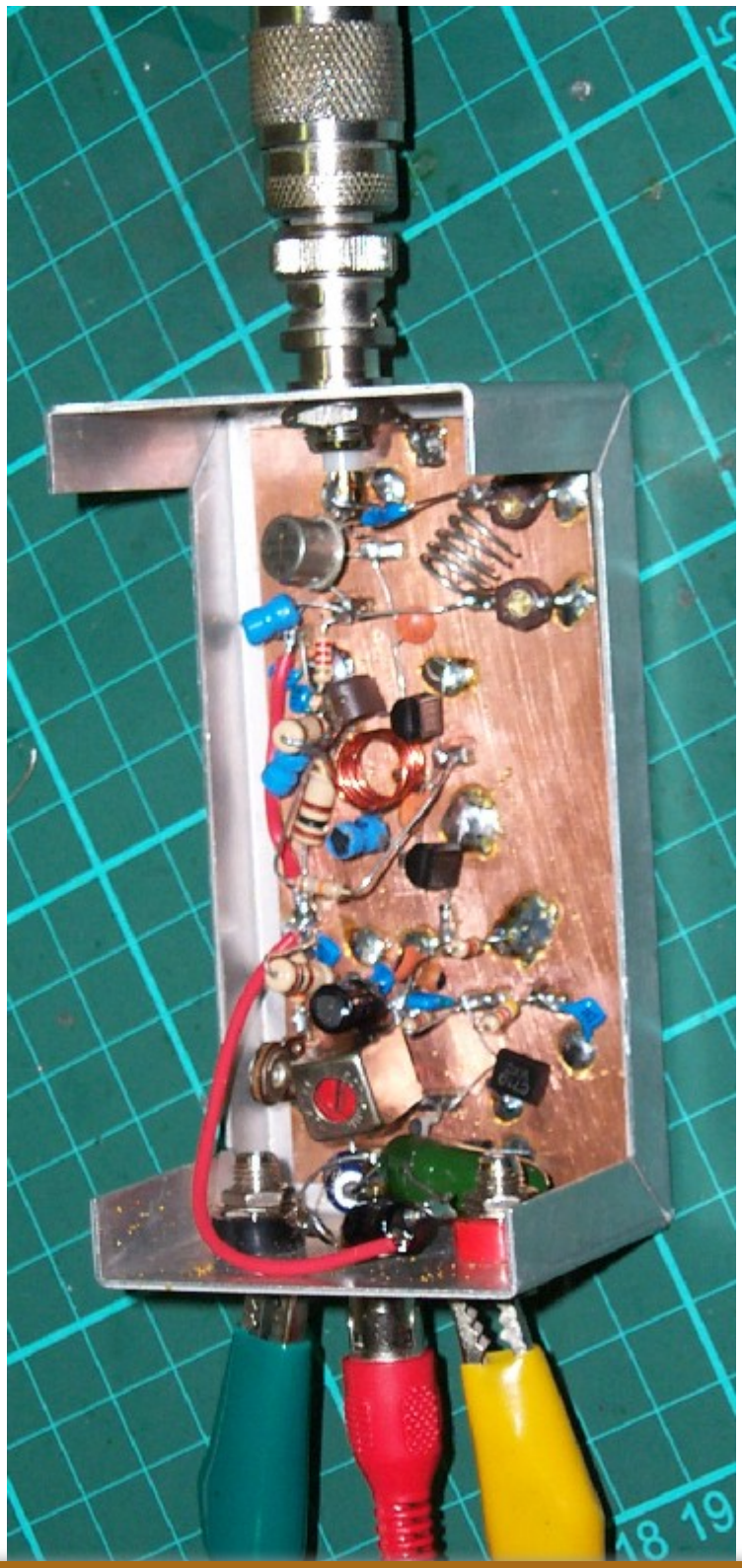

Building my AM broadcast loop antenna brought back old memories of being an FM broadcast pirate while I was at high school. So, figuring I've learnt a lot about VHF engineering since then, and having a evening to kill I assembled this half-watt transmitter out of whatever I had laying in the junkbox.

I am not going to provide the circuit diagram, at least not until I have it all stable and nicely engineered. I'll probably be besieged by requests for it, just as I am as a result of the page about my pirate days. Let's face it, a lot of us started of this way, and I am not shy about admitting that I was once a pirate. While licensing is preferable to anarchy, I don't mind seeing interested people building their own gear for any RF frequency, at any power level. Provided of course, they don't hurt anybody, or themselves in the process.

The design is a simple free-running VCO which runs at the transmit frequency of about 94.5 MHz. Coarse tuning is made via the red tuning slug of the VCO coil, fine tuning is available via the small pot also visible in the photo. The fine tuning voltage also effects the sound quality as it controls the bias on a tuning diode (a simple 1N4001), the wiper is also connected via a DC blocking cap to the input audio signal. The bandwidth is many MHz.

The VCO is almost a power oscillator, running at many milliwatts, about the limit for the 2SC710 used to implement it. The signal is then coupled into a two state driver and simple tank filter, followed by the C-class output stage consisting of a 2N4427, an RFC, and a pull-down resistor, (and not much else except decoupling of course). There is a simple PI filter on the output to suppress any harmonics, but there really should be a better filter, with notches at the harmonic points, the final stage is fairly dirty resulting in barely -36dBc of the first harmonic.

Stability is excellent, there are no spurious signals other than the harmonics. The shielded VCO coil makes for excellent stability as well. It is firmly soldered to the board so even mechanical abuse causes little drift. There is however quite a large thermal drift before equilibrium is achieved, this is to expected for a VCO running at such power levels, the 2SC710 is getting quite warm.

© 2000 - 2009 Alan Yates - All Rights Reserved.

I've made a simple ground-plane antenna for it out of some copper wire and a panel mount BNC. Most of the time the unit is plugged into four 220 Ohm carbon resistors in parallel, but at least once I've hung the antenna from the roof of the office, plugged the audio line into the sound card turned on some copyright music and took off down the street with a Walkman to see how well it gets out. It gets out *very* well for such a primitive design, it was still pretty much 100% quieting when I decided I'd walked far enough and turned back.

4 comments.

© 2000 - 2009 Alan Yates - All Rights Reserved.

Fremodyne VHF AM/FM Receiver

2010-05-23

The Fremodyne is a type of minimal super-heterodyne receiver intended for FM reception. It utilises a super-regenerative IF detector which doubles as a mixer stage. It has a long history, that began with vacuum tubes back at the beginning of FM broadcasting when a cheap receiver was needed to fill the lower-end market of receivers for the new FM services. John Hunter has an excellent site covering Fremodyne Receivers.

While the great majority of published designs are for vacuum tube devices my interest was in building a solid-state version for fun. This little experimental radio is the result of a quick back-of-the-envelope design during my commute to work, and a few hours of work on a late Sunday evening. It was intended to be an experimental receiver purely to work the bugs out of the design, so no effort was put into calibrating its tuning elements. Physically, the ugly hack was built on the tin-plate bottom of a Pringle chips can with a fragment of PCB edge connector glued to it acting a bit like a tag-strip.

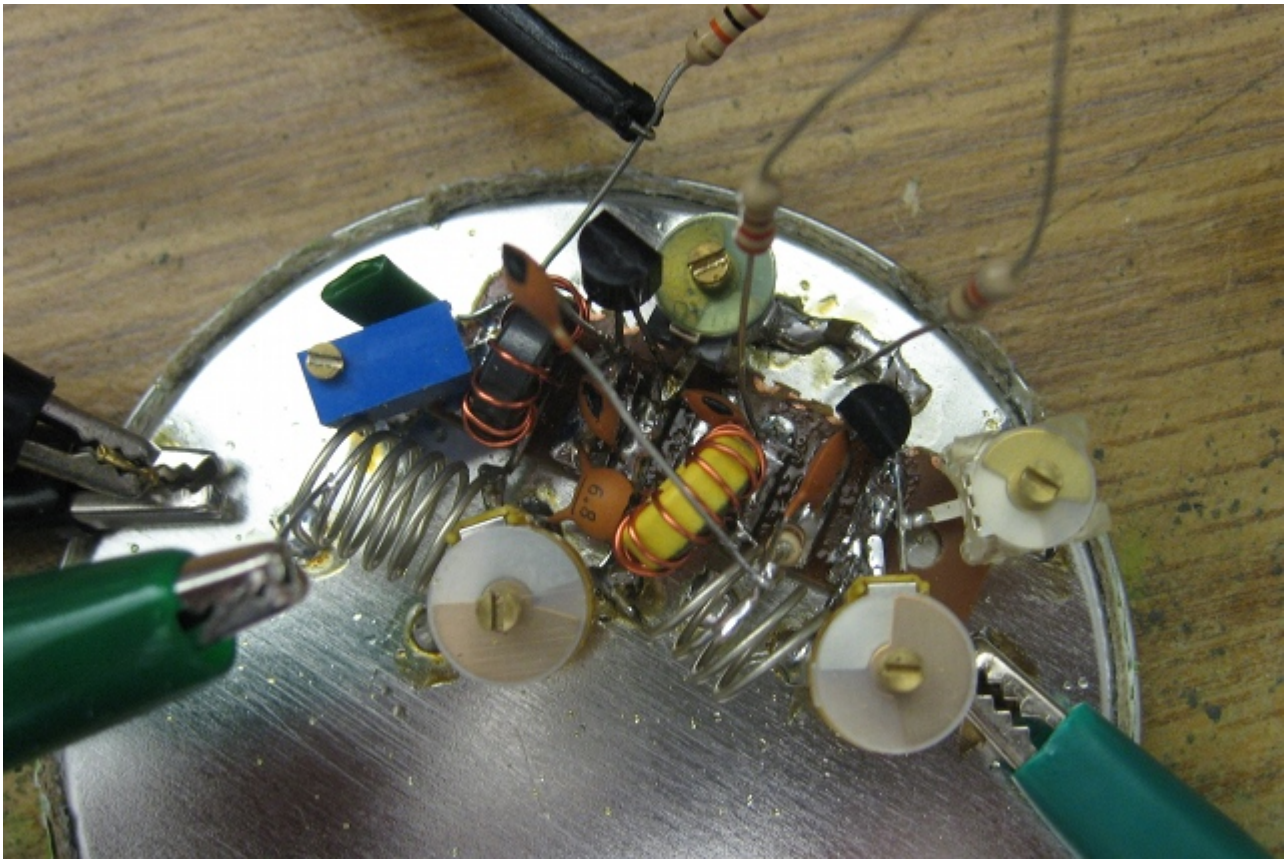

Despite having no in-built AF stage and needing about 6-8 volts for the detector to oscillate well, it is quite a good little receiver. It is sensitive enough to pick up all the local FM stations (even with little or no antenna) and works quite wonderfully on the air-band and TV-audio channels. Like all minimal self-quenched designs it is basically impossible to completely eliminate interaction between the quenching of the detector and the FM multiplex signal. A multi-turn trimmer allows positioning the quench frequency so as to minimise any objectionable squeals mixed down to base-band, but the modulation of the oscillator operating point by the super-sonic multiplex signals produces intermodulation distortion and rumbling effects that are rather annoying to listen to. With monophonic signals this does not occur, and with AM signals one does not need to tune off centre to slope detect and gains a little more sensitivity from the IF.

© 2000 - 2009 Alan Yates - All Rights Reserved.

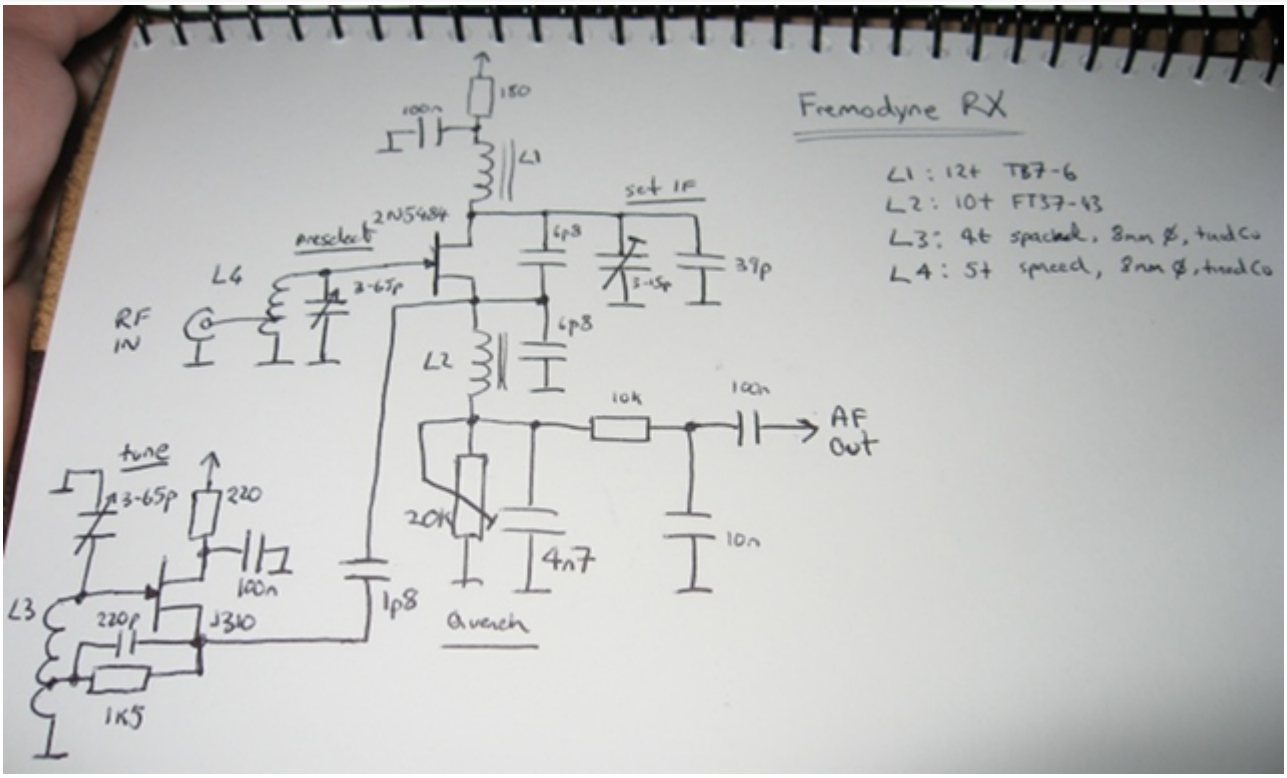

The circuit is quite straight forward, but has a number of adjustable elements which makes this unit challenging for beginners to operate (Ironically exactly the opposite of the original point of super-regeneration). The quench adjustment can be set and left if AM and mono FM content is being received, but will almost always need to be tweaked when listening to a stereo signal. The quench frequency is a strong function of the received signal strength, so this adjustment is best performed last, mercifully it does not pull the IF detector frequency too much, so retuning for optimal slope-point is generally not needed. The front-end pre-selector adjustment on the other hand can drastically change the signal seen at the detector and alter the quench, so it is best to set it first. The pre-selector tunes fairly sharply, I roughly set it by dipping with the tone-dipper, then more precisely once a signal is being received by maximising the quench frequency observed on the oscilloscope. You can still tune about a bit either side with reduced sensitivity without touching the pre-selector, definitely enough to locate signals of interest before re-peaking if so desired (the radio works fairly well with the strong FM broadcast band signals if to just centre the pre-selector at 100 MHz and hope for the best). The LO frequency adjustment is quite straight forward, it must be set at +/- the IF frequency (or a harmonic) from the signal of interest to mix it to the IF. There are two trimmers offered, a coarse band-set one, and a finer band-spread unit (not in the circuit diagram, 1-7 pF) which is very helpful for positioning an FM signal correctly for nice slope detection. The receiver may be operated at either high or low-side LO injection, low side tunes easier (more band-spread), high side has better image rejection. The pre-selector determines which image will be favoured. The IF detector tank has a trimmer too, which can be used to precisely set the IF frequency if so desired. I run it at about 28 MHz which is near optimal for FM broadcast band reception, causing no in-band spurs.

Notes

Building something similar is easy. There are no special parts, almost everything is junk-box sourcable. The toroids used can be replaced with air-coils at some increase of physical size. The source RFC is non-critical and need only be about 10 uH, just make sure its SRF is > 30 MHz. The receiver is quite forgiving, the only critical thing is getting the IF detector to super-regenerate, you may need to tweak the Colpitts feedback (the two 6.8 pF capacitors) if it refuses to squegg at any reasonable voltage and setting of the source trimmer. Like all super-heterodynes test equipment is very useful, but by no means mandatory. I originally used my signal generator as the LO before I built the Hartley oscillator onto the board. My tone dipper and VHF wavemeter are the main tools I used to play around with the circuit - so no digital gear is really needed if you have some experience with VHF work. An oscilloscope is darn useful for checking the quench action, but an audio amplifier will tell you when it is working right.

Layout is surprisingly non-critical for a VHF circuit, my first version of the IF detector was built on a solderless breadboard and worked fine - the IF is only high-HF so it somewhat less demanding. The LO needs fairly good layout, it operates at mid-VHF, but being a Hartley is rather hard to mess up (it also generates way more LO energy than needed, you can decrease its current consumption quite a lot and still have sufficient injection amplitude). The gate pre-selector circuit is also ideally built using good RF hygiene, but initially to prove the IF

© 2000 - 2009 Alan Yates - All Rights Reserved. XHTML | CSS | CSS toggle

at the gate rather than a tuned circuit. You could just as easily use a resistor, but high-value resistors inject more broadband noise into the circuit and really high values allow stray signal pick-up, including AF which will be followed to the source and straight into the audio amplifier.

The LO tunes 54-183 MHz. This means with a suitable front end resonator it can tune 26-155 MHz with high-side injection and 82-211 MHz with low-side, assuming you hold the IF at 28 MHz. Various spurs will be seen through-out the range however. The IF detector really misbehaves when the pre-selector resonator is tuned to the IF or LO frequencies, generally dropping out of oscillation completely or the quench becoming audible and/or chaotic.

Ideas

Clearly the mixing function can be performed in an extra transistor, this may reduce IF leakage and may improve IF rejection. Adding band filtering, buffering and amplification of the RF would be a good idea for a real receiver and may improve LO leakage. Separate quenching is worth experimentation, in particular this should help with the inherent distortion and intermodulation effects associated with the self-quenching detector. Digital control is something I am actively working with, and using an MCU to control the quenching allows easy RSSI and squelch integration.

2 comments.

© 2000 - 2009 Alan Yates - All Rights Reserved. XHTML | CSS | CSS toggle

G3XBM's XBM80-2 Trivial 80 Metre CW Transceiver

2010-02-07

As a keen subscriber to Roger's blog, I've been following his and his audience's work on the XBM80-2. It is such a neat little transceiver, I just had to build one myself eventually.

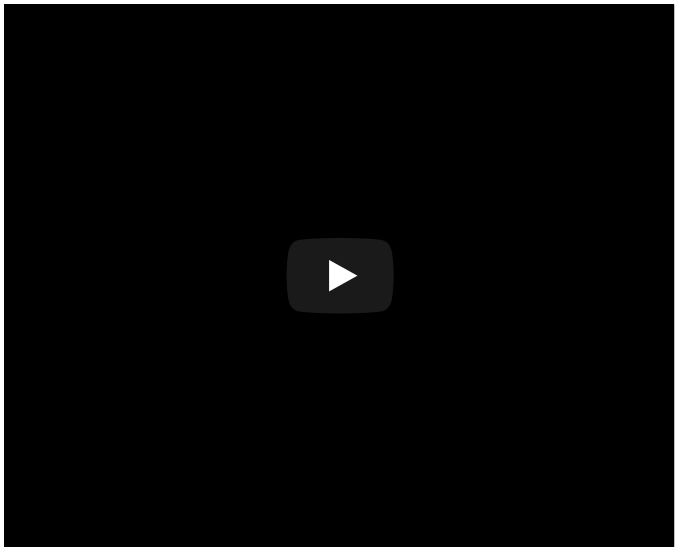

Of course it is a little ironic that I built a CW transceiver, when I can't RX CW! More incentive to learn.

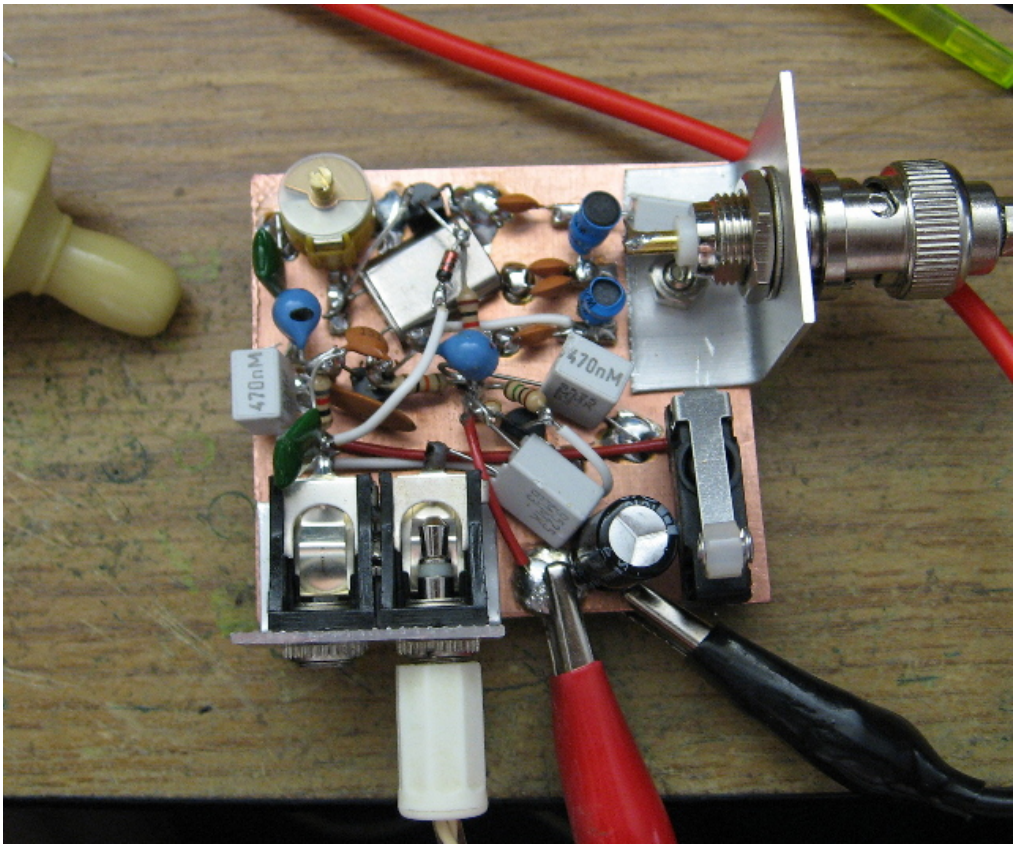

I initially bread boarded the vanilla circuit which works fine. Investigating the performance of the circuit as specified by Roger gave me something to compare any customisations against.

© 2000 - 2009 Alan Yates - All Rights Reserved.

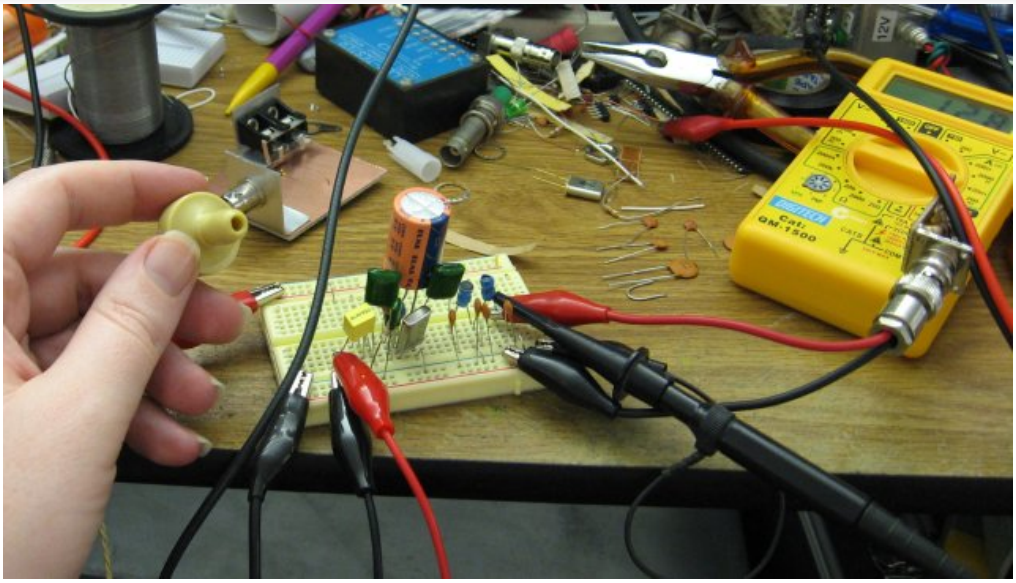

Naturally though, I ended up making my own changes in the more permanent version after fiddling with the bread board version:

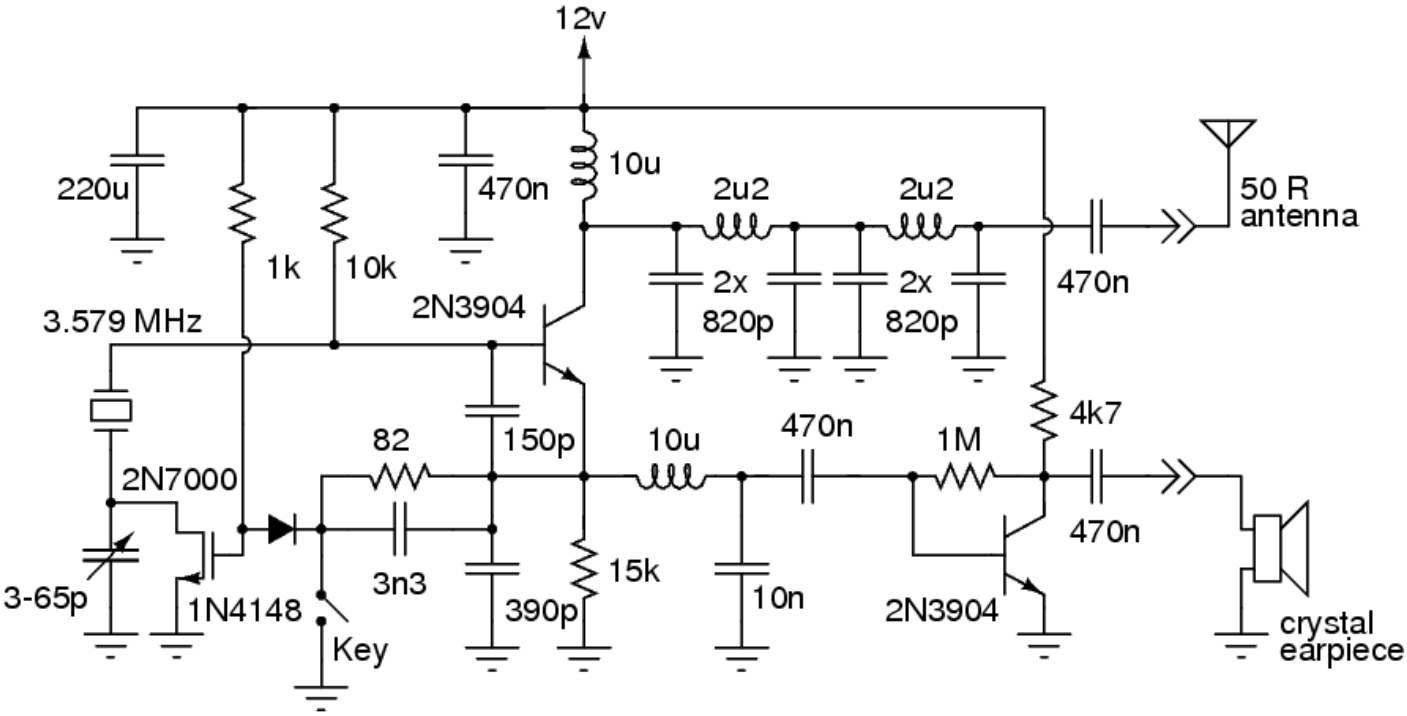

VK2ZAY's version of the XBM80-2 by G3XBM

My Changes

- Raised the lower feedback capacitor which improved the power output for my unit quite a bit. Unfortunately this also decreased the RX sensitivity, so I moved the extra capacitance into the keyline to prevent it affecting RX. You may need to RF bypass the keyline as a result. I added a microswitch on the board to act as a rudimentary Morse key, but also provide a keyline jack.
- Added a low pass filter to the antenna line. Michael AA1TJ used a band-pass filter in his version which is probably an ever better idea, but I was being lazy and used commercial RF chokes in a simple Q = 1 Pi configuration. Without the filter the output waveform was positively square! The harmonic energy is vastly reduced with this modification. The losses of the tiny chokes and vanilla capacitors are minor, there is little reason not to add these 6 parts, no toroid winding required, no tuning. (Although you can use 22 turns on T50-2's if you don't have the chokes in stock).
- Used a 10 uH commercial choke in the oscillator collector instead of a tuned value. The value is not critical, it should just be large with respect to the 50 Ohm load seen. 10 uH is about 200 Ohms, larger values are OK, but self resonance can be a problem with commercial chokes - I tried a 500 uH homebrew inductor at one point; worked fine. I did try tuned circuits in the collector but my oscillator was seriously upset as resonance was approached, even with de-Q-ing resistors.
- Added a LPF in the audio path to keep the RF out of the audio amplifier. Without this mod the audio amplifier was misbehaving on TX and worsening the harmonic radiation of the circuit. I toyed with the idea of making the filter series-tuned at 700 Hz to give some AF selectivity, but the required values I did not have and the large inductors required (88 - 100 mH) would likely be largely capacitive at 3.5 MHz. Still this might be worth a try, maybe fronted with the smaller RFC and cap to remove the RF first, or perhaps Michaels method of transformer matching into sensitive headphones and omitting the AF stage altogether is better?

© 2000 - 2009 Alan Yates - All Rights Reserved. XHTML | CSS | CSS toggle

- Added an automatic TX/RX frequency shift circuit. It adds complexity and a tiny bit of chirp to the circuit, but avoids the hardware T/R switch. The off-keying is a bit sharp IMO, adding a large capacitor across the keyline helps but worsens the chirp associated with my auto T/R change, so I omitted it. The on-keying is naturally soft because of the circuit time constants. The T/R transients in the AF output are annoying, but I couldn't do much to suppress them without making the circuit much more complex.
- I used 470 nF coupling caps because I have a lot of them. The value is valid where it is used, but frequently larger than the minimum required.

2 comments.

Attachments

title	type	size
Circuit Diagram Source	application/postscript	18.068 kbytes

© 2000 - 2009 Alan Yates - All Rights Reserved.

Heterodyne Sweep Generator

2008-11-23

Now days one would probably use DDS to implement such a device, but I wanted to build it the old-fashioned way to work out roughly what I'd face building one that sweeps much higher, to at least 150 MHz... The resulting HF instrument won't be useless itself and will be stand alone requiring no PC to drive it.

Heterodyne Sweep Generator

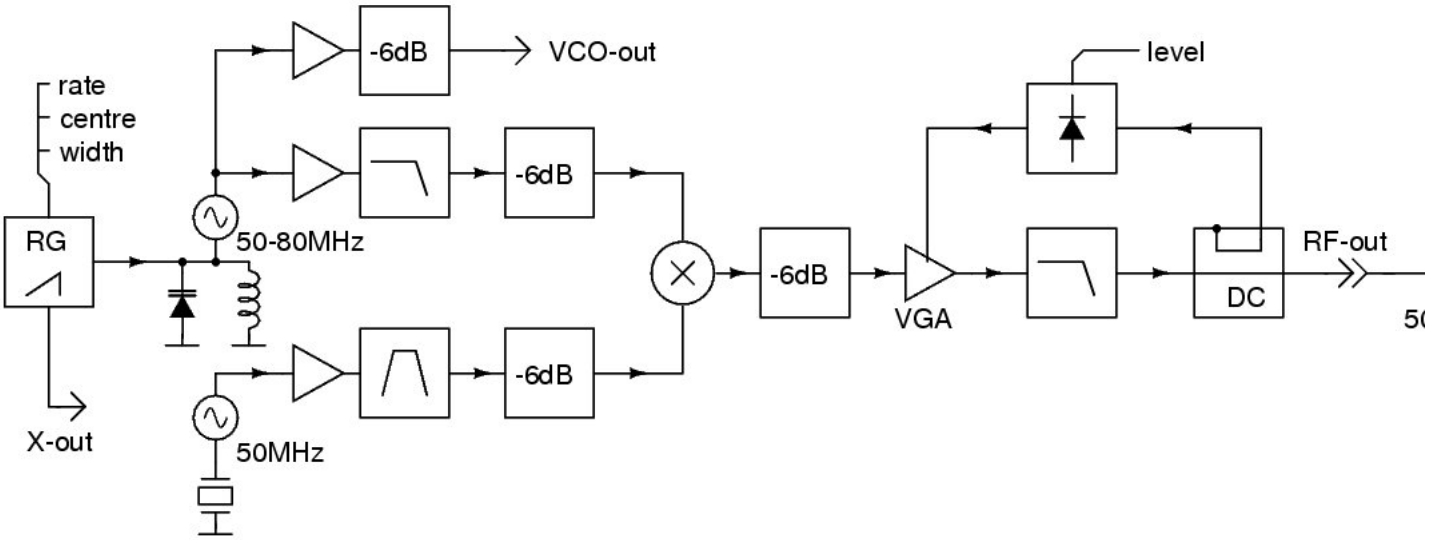

The sweep generator is quite simple in design. It mixes a 50 MHz xtal oscillator with a 50-80 MHz VCO then filters out the difference product and amplifies it to a constant level with a levelling loop. While quite straight forward to draw on paper there are a quite a few details that need to be carefully considered to get good spurious-free output from it.

I've gone overboard with blocks in the block diagram, adding lots of pads and buffering amplifiers in an attempt to achieve good clean performance. How many of these will actually be required to make a useful instrument remains to be seen. For now I've started with the key modules, the xtal LO and VCO, filters and the mixer. These 6 modules can be lashed-up in a crude fashion as a proof of concept, which is what I have done (in fact I initially left out the oscillator filters, building the LPF first).

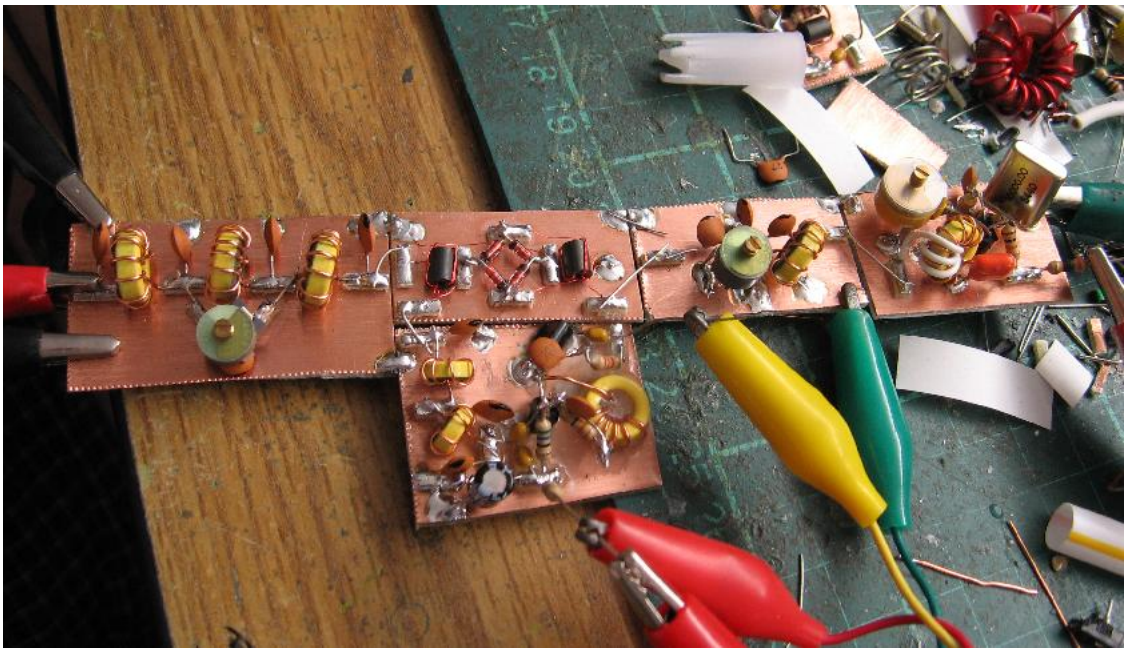

The result you can see in the video, a practically DC to 33 MHz swept source with pretty good flatness even without the levelling loop. My CRO bandwidth is only 20 MHz and its roll-off is much more significant than the level change until 28 MHz. The unshielded prototype is a bit buzzy, the VCO control input having a sensitivity of about 2 MHz/V, but otherwise it is surprisingly stable and well-behaved. The 50 MHz BPF cleaned up some harmonic mixing that was noticeable beyond 25 MHz, as did the VCO LPF. Without a real SA it is hard to test the device further, and largely pointless until it is fleshed out with the extra buffers and pads, and all nicely boxed up.

© 2000 - 2009 Alan Yates - All Rights Reserved.

Sweeping Manually
(1.598 Mbytes)

As a useful device the main thing it is missing at the moment is the ramp generator control system. I intend to build it last though, as it is a relatively straight forward circuit using some op-amps. Presently a 100 k pot is providing tuning. The RF parts present more of a challenge, especially the levelling loop, I've never designed a servo-loop from scratch before but I imagine a primitive 1st order one will be fine?

Levelling Loop Idea?

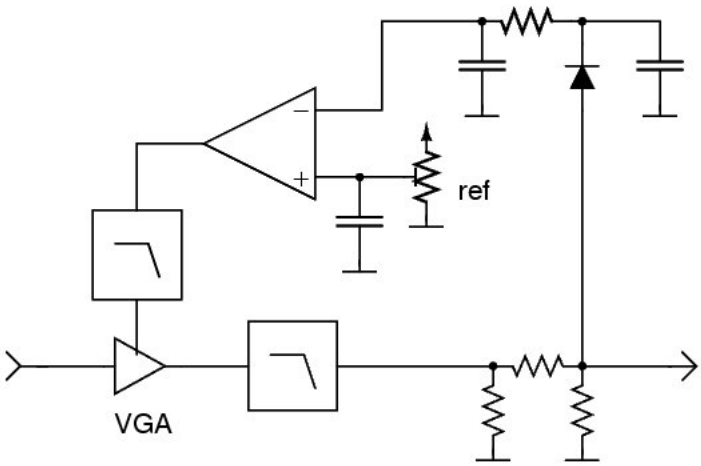

Development work at the moment is concentrated on making the variable gain amplifier for the levelling loop. I've prototyped a low-distortion BJT/JFET cascode VGA that looks quite promising, but it has virtually no gain when setup to terminate the input at a reasonable return loss. I need to follow this with a feedback amplifier or two capable of delivering at least 10 dBm, preferably more. It would be nice to have a few volts RF into 50 Ohms to play with, say 15-20 dBm.

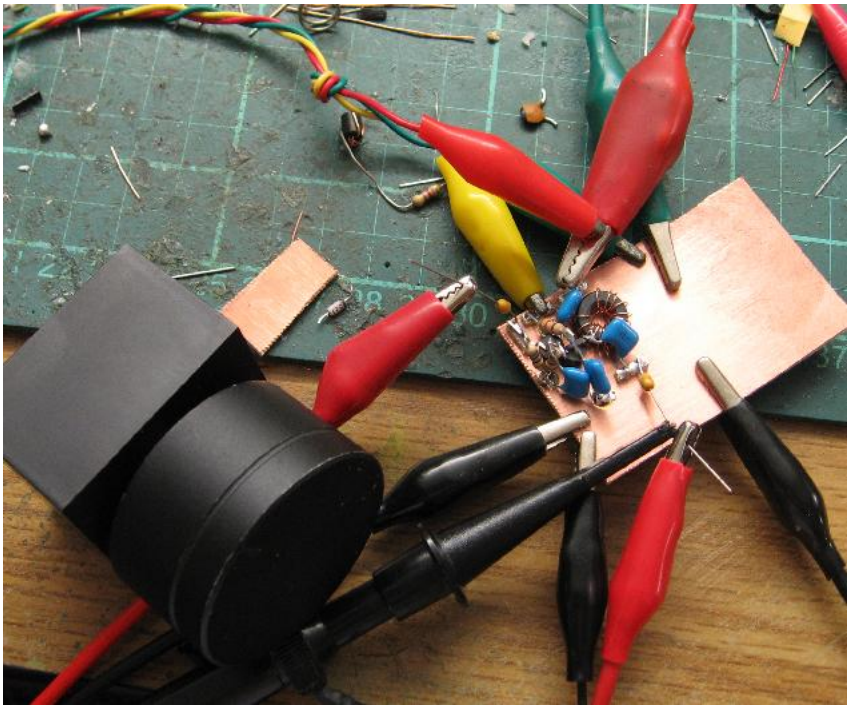

VGA Demo
(2.166 Mbytes)

The directional coupler might be replaced with just a simple moderate-impedance diode level detector in this initial HF instrument. This should offer a stable-enough level for sweeping antennas, filters, etc. The VCO output offers the possibility of using common sweep-circuitry in a HF spectrum analyser, a 50 MHz LC filter and downmixer + xtal filtered IF could be added externally, or even using some of the modules of the sweep generator itself. A log-detector would complete the primitive but useful SA.

© 2000 - 2009 Alan Yates - All Rights Reserved. XHTML | CSS | CSS toggle

8 comments.

Attachments

title	type	size
HF Sweep-Generator Block Diagram Source	application/postscript	14.497 kbytes

© 2000 - 2009 Alan Yates - All Rights Reserved.

HF Receiving Loop

2007-12-16

This experiment was inspired by Peter VK2TPM's receiving loop experiments for 80 metres. I saw his blog post last night and noted that his resonant frequencies looked a bit high, so I emailed him off my back-of-the-envelope calculations for what I figured he should be seeing. This morning I decided to check my own math by building a loop myself.

My loop is a bit smaller than Peter's, a single turn, the circumference is 4 metres + a little for the aligator clip lead, made from medium gauge mains lamp cord ("zipcord" for the yanks). The frame is just two pieces of 25 mm electrical conduit, lashed together with some sash cord. The winding simply taped in place for this quick experiment.

The "ring conductor" inductance formula suggests an inductance on the order of 6.4 uH, maybe a little more because of the relatively thin gauge of the wire. Direct measurements of the inductance at low frequencies using my larger-value inductance meter showed a similar order of magnitude, but the meter has limited resolution, at such values.

To get more accurate measurements I resonated the winding with my C Jig and coupled the loop into my VR-500 receiver with a large ferrite ring and some alligator clip leads. This allows detecting resonance at any frequency the receiver covers by just tuning the capacitance for maximum noise. In the local RF environment (lots of computers and telecommunications gear) there is plenty of noise for this kind of test, but even in the middle of no-where there should be a very discernible noise peak at resonance.

The receiver side of the coupling loop has too few turns I believe. The transformer reflects the receiver input impedance as a transformed value in series with the LC resonant circuit, degrading its Q. The LCR circuit so formed would be optimised by reducing the R (loss plus transformed loading) as much as possible, so the transformer ratio should be large to make the inserted series impedance very small (c.f. typical RF ammeter construction). Alternatively you might couple across the LC circuit instead of in series with it, into a very high input impedance amplifier, like a JFET.

© 2000 - 2009 Alan Yates - All Rights Reserved.

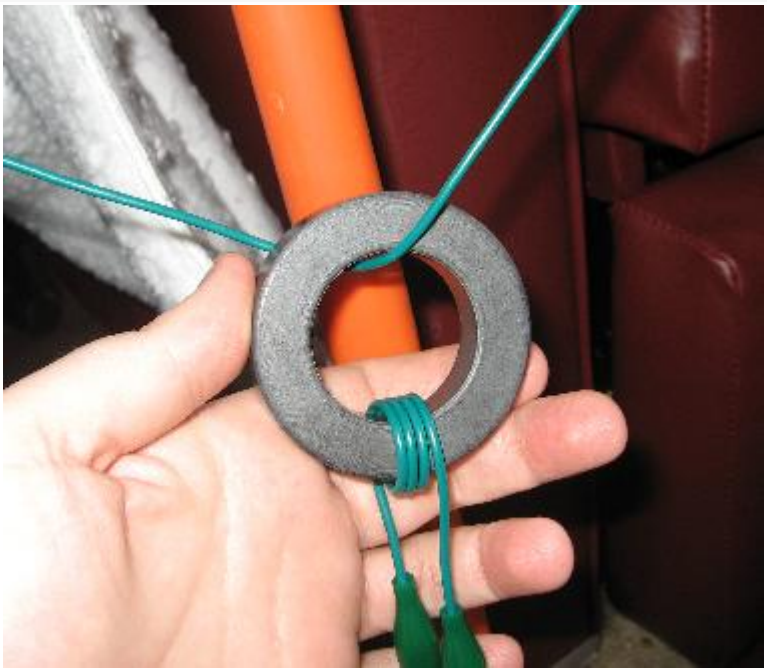

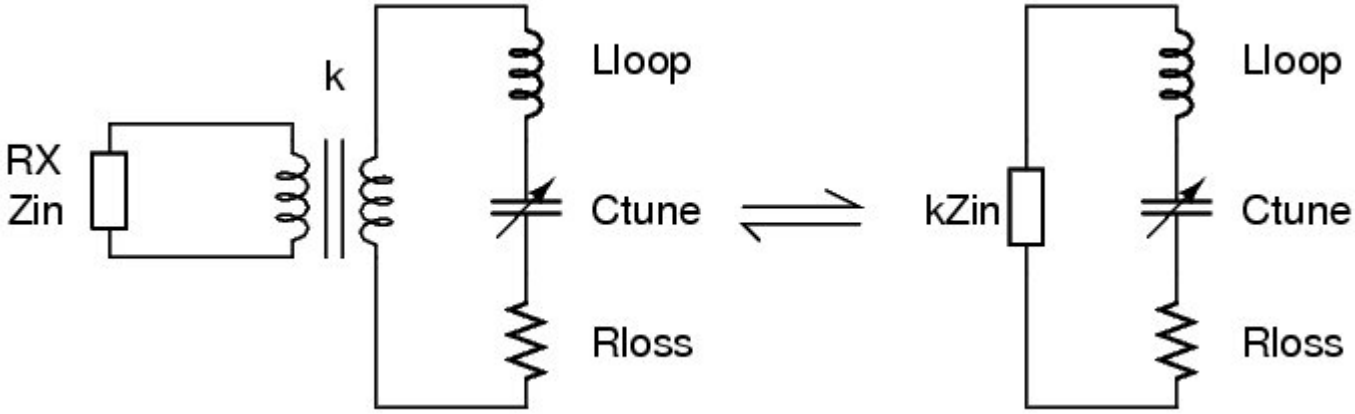

The Q-degrading is easily observed with the receiver, the loop is not near as sharp as I initially expected, but the simplicity of the feed works for the purposes of the experiment.

Low-Q Demonstration
(1.926 Mbytes)

Systematically measuring the capacitance needed to resonate the loop from 4-17 MHz showed an interesting pattern which I can't quite explain. The affective inductance of the loop appears to rise with frequency. Some rise is expected as the distributed capacitance of the loop becomes more significant at higher frequencies (becomes non-trivial compared to the tuning capacitance), but it does seem to take off a bit too fast above 13 MHz.

MHz	4	5	6	7	8	9	10	11	12	13	14	15	16	17
pF	>210	150	110	80	67	44	36	29	24	20	16	13	10	<10
uH	<7.5	6.8	6.4	6.5	5.9	7.1	7.0	7.2	7.3	7.5	8.0	8.7	9.9	>8.8

Note that the numbers at each end are bounds because of the limits of the C Jig, and the outlier at 8 MHz is

© 2000 - 2009 Alan Yates - All Rights Reserved. XHTML | CSS | CSS toggle

scales), but the numbers do show a 6-7 uH inductance which is roughly consistent with the initial inductance estimate. Unfortunately the loop is too big to fit in the lab and measure with my full range of test gear, but from a purely empirical point of view the loop works fine, and the calculations give you figures in the right ballpark.

Still, I was curious just what was going on... At first I thought the receiver input impedance was being reflected into the loop circuit through the transformer (or was so high the transformer primary reactance was being seen directly, 1 fully-coupled turn on a FT240-43 core is about 1 uH and the affective coupling would rise with frequency). I also suspected the ferrite material itself may have been causing the effect, but some checking with the tone dip meter showed consistent results without the coupling transformer in place. I started to doubt the calibration of my C Jig, but after testing that with fixed inductances back in the lab, it appears there is another effect at work. I'm at a bit of a loss, but it might be related to the skin effect, or I've underestimated the distributed capacitance significantly.

Dipping at 40 Metres
(517.605 kbytes)

Confirming Resonance by Dipping at 10 MHz
(4.950 Mbytes)

Rocking Across Resonance at 5 MHz
(1.010 Mbytes)

My capacitor wasn't large enough to take the loop down to 80 metres, at least not without adding more turns, but there is no reason why a similarly sized single turn loop couldn't be used on 80. The normal LC circuit calculator would give you the required capacitance.

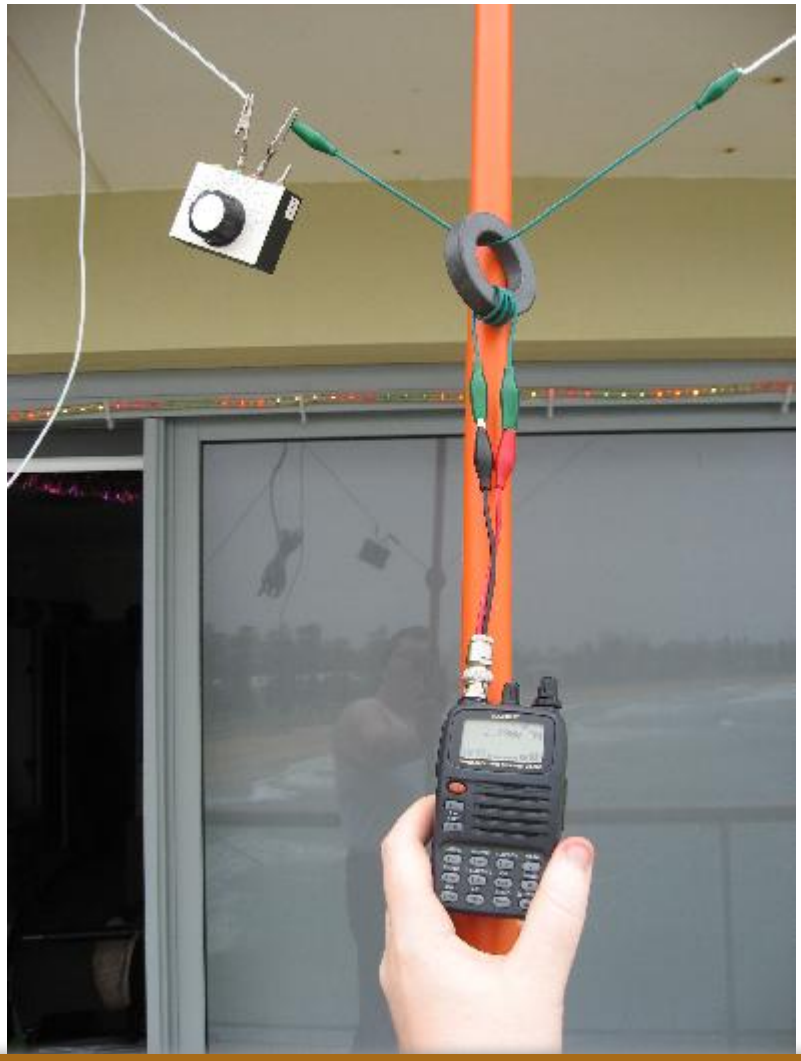

© 2000 - 2009 Alan Yates - All Rights Reserved. XHTML | CSS | CSS toggle

This experiment was quite a bit of fun on a rainy Sunday. Very educational, especially thinking about the transformer feed and how I might use it in a transmitting version. I think such an antenna with remote varicap tuning would be a good addition to the shack. I was doing some experiments with varicap tuning yesterday, while fiddling with a VCO circuit. Red LEDs are surprisingly good varicap diodes, but I have a few BB-series diodes for AM broadcast receiver use that should do the trick.

Leave a comment on this article.

Attachments

title	type	size
Feed Network Equivalent Circuit Source	application/postscript	12.026 kbytes

© 2000 - 2009 Alan Yates - All Rights Reserved. XHTML | CSS | CSS toggle

HF Wavemeter

2008-10-12

Why build a wavemeter in these days of frequency counters, CROs and spectrum analysers? Well it is a lot cheaper than a spectrum analyser, easier to build and can still tell you if you have significant harmonic energy in your signal or that you've tuned up to the right harmonic or mixing product. It also doubles as a field strength meter, RF current probe/sniffer, etc. It is a fun, if somewhat retro way of seeing what RF something is pumping out, be it your prototype on the bench, or a proximity smartcard security reader in the field.

The circuit is heavily inspired by Charles Wenzel's field strength meter. It uses a diode dropper arrangement to provide a stable forward bias for the 1N5711 detector. The pot shown in the circuit diagram was replaced in the practical circuit with a fixed resistor, but using the pot offers the ability to set the quiescent current. The exact amount is a trade off between sensitivity and moving the meter pointer too much. Mine sits on about "1" on the scale when a coil is plugged in.

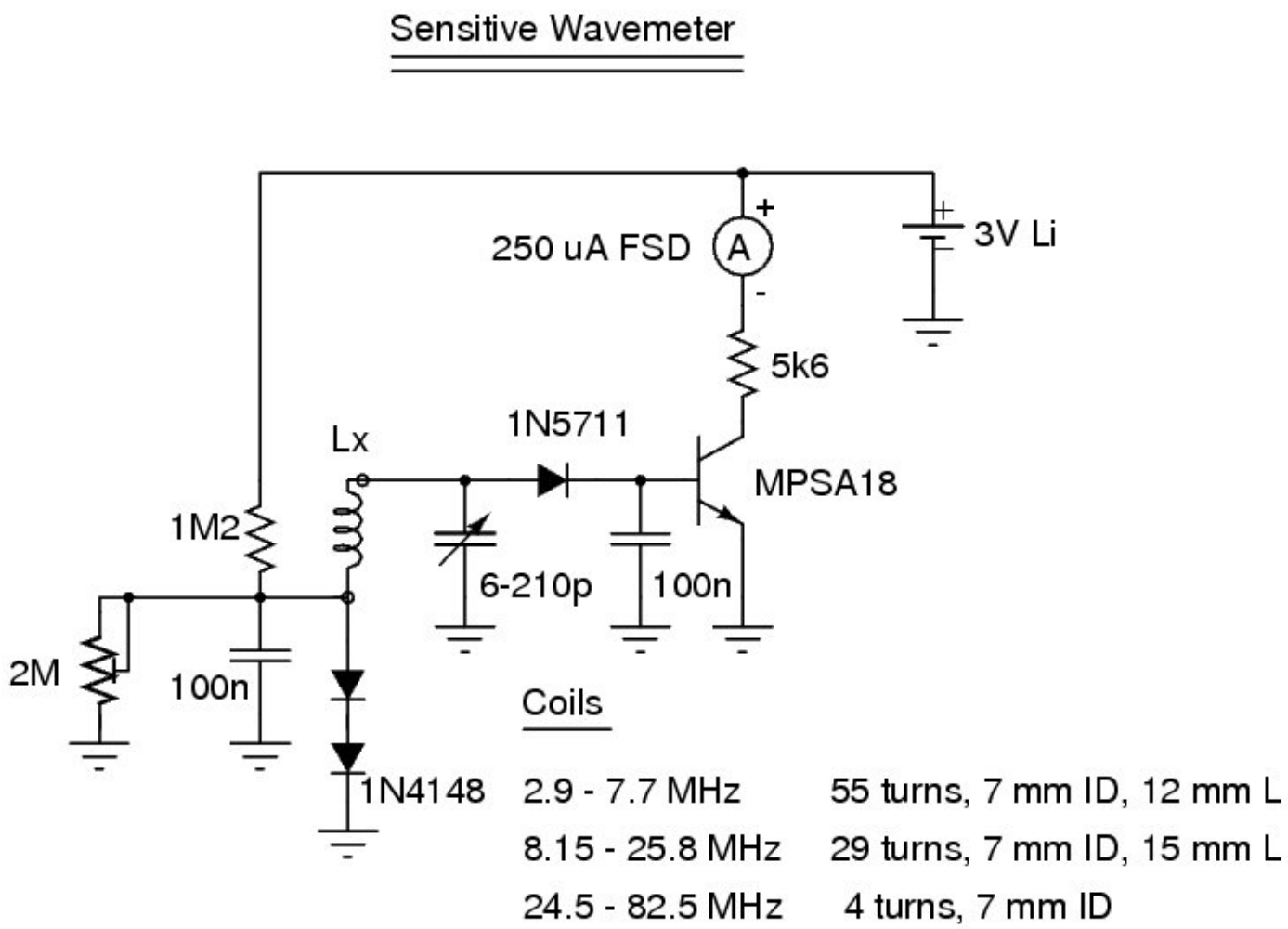

The unit is constructed in a small jiffy-box, the 250 uA FSD VU meter taking most of the box volume. The meter comes from eBay seller KW Tubes, I bought a box of them. They are excellent, except they are glued shut so you can't (easily) change the scale, also the solder tags are nearly impossible to tin without filing them back to what appears to be a rather light on the copper brass. The power is supplied by a 3V lithium cell (CR2025). Current consumption is only about 10-15 uA when a coil is plugged in and no signal is being detected, it drops to less 2 uA when there is no coil plugged in, so no battery switch is required. The few components are mounted on a postage-stamp sized scrap of PCB using my usual technique. A polyvaricon tunes the coils and is fitted with a calibrated dial produced with the help of XYLs laminating machine. The PCB is mounted on the back of the polyvaricon internally with the common leg soldered directly to the board. The coil plug is an RCA, internally to which a short "transmission line" of magnet wire twisted pair

© 2000 - 2009 Alan Yates - All Rights Reserved.

The coils are wound on 7 mm OD clear plastic soda straws (from Subway, they make great coil formers). Three coils are used to cover from 2.9 MHz to 82.5 MHz. There is a small gap near 8 MHz due to an excessive change in distributed capacitance when I potted the lowest frequency coil in wax. I had anticipated the problem and spread the turns out a little before potting, but the magnitude of the change exceeded the headroom I gave it. This could be easily corrected by removing a few turns.

The unit was calibrated using my signal generators and a frequency counter. Because of its fairly small size, the dial accuracy/detail isn't especially good, but for the purpose of checking harmonics, spurs and sniffing circuits this is of little consequence.

A better layout is recommended for extending the frequency coverage into higher VHF and UHF. Try forming the inductor as a thick loop that sticks out directly from the circuit board. Such a device could be custom built on a piece of PCB (and not much else except for the meter). In the opposite direction a larger capacitance cap would be useful, but there is nothing stopping MF coverage with the polyvaricon cap. In the picture the 4th coil actually plugged into the unit is a MF coil which covers down into the MW broadcast band (but the dial is not calibrated for it), it is about 150 turns over 10 mm on the 7 mm OD straws. You'd probably need at least two coils to cover all of MF nicely, and LF probably several more unless you get a better cap. A straight-line frequency cap (log cap) is strongly recommended for easiest use, unfortunately my stock of polyvaricons are straight-line capacitance (linear) so frequencies bunch towards the top-end. A larger knob or even a reduction drive improves the usability of the unit.

Leave a comment on this article.

Attachments

title	type	size
Wavemeter Circuit Source	application/postscript	14.762 kbytes

© 2000 - 2009 Alan Yates - All Rights Reserved. XHTML | CSS | CSS toggle

Inductance Meter

2006-09-03

Essentially identical to Dick's circuit, I built the unit point-to-point on an IC socket for the 74HC14 and a fragment of machined pin IC socket for the actual inductor.

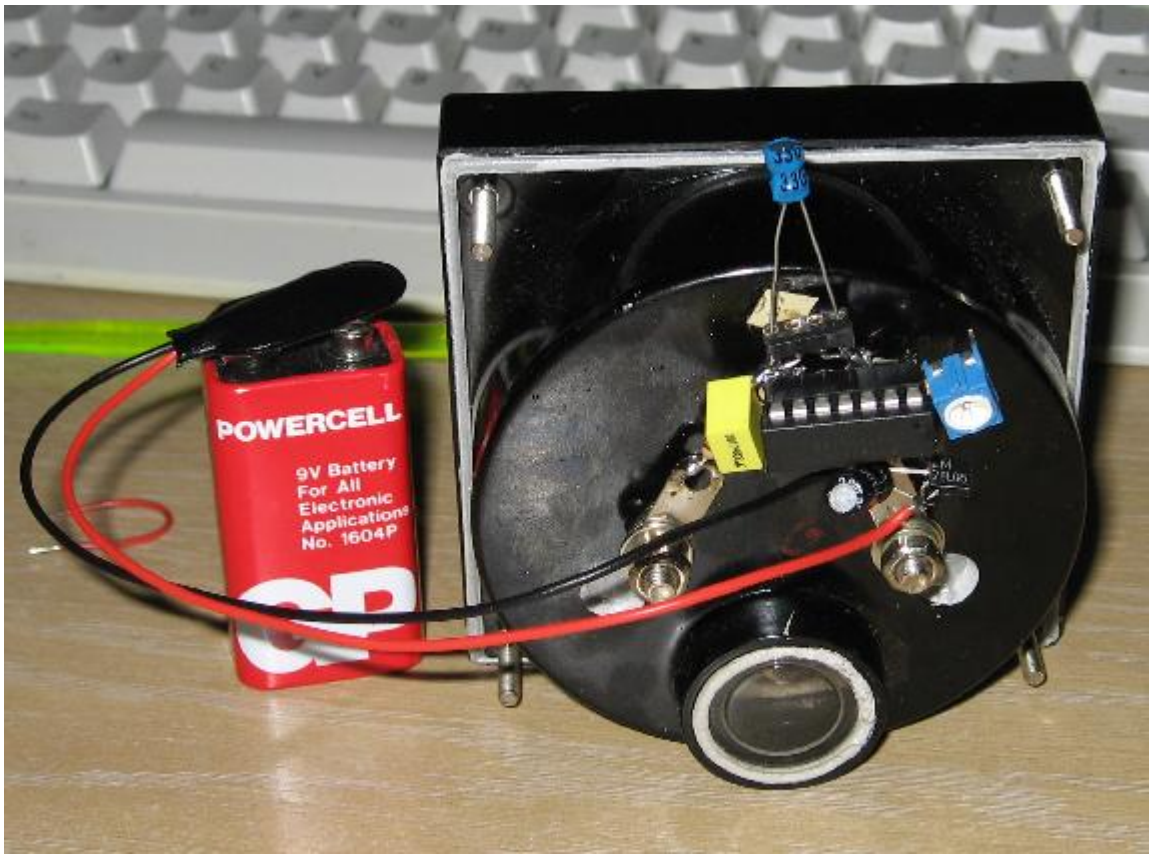

Initially I used a DMM as the display device, but on a whim I tried hooking up a moving-coil meter. To my surprise, it actually worked just fine, 1K in series was sufficient to allow a useful calibration and didn't overload the drive capabilities of the last gate in the package.

I calibrated my unit for 0-100 uH, as this is the range I am generally most interested in, and it gives direct-readings on the uA scale of the meter. With the values as Dick specified, there is sufficient range to calibrate it from about 25 uH to 250 uH FSD.

Here is the unit measuring a 33 uH commercial RF choke.

© 2000 - 2009 Alan Yates - All Rights Reserved.

The resolution of the analogue meter obviously limits its performance, but I generally use it to just ensure I am in the right ballpark while winding coils or picking from the junk box. More precise measurements I do with a resonance bridge.

4 comments.

© 2000 - 2009 Alan Yates - All Rights Reserved. XHTML | CSS | CSS toggle

Inductor and Capacitor Measurement Fixture 2008-10-26

While I've built something similar in the past, this is a general purpose version for use with values of inductance and capacitance you tend to find around the bench. The circuit is almost exactly the Colpitts reference design in EMRFD (page 7.12, figure 7.24), except I changed a few of the component values a little.

I built the unit in a small diecast Aluminium box. Two polystyrene 1 nF and a NP0 12 pF capacitor were used for the oscillator. The calibration capacitor (~ 1 nF WIMA cap) is internal to the unit, with a switch used to activate it when needed. I measured it at 974 pF and have labelled the unit with this value. I only used 40 turns on a T68-2 core using 0.5 mm wire, but waxed them well to the core and ruggedly mounted the toroid in place. All the oscillator and buffer components were built point-to-point hanging off the banana jacks and switch posts. The resulting oscillator is extremely stable despite using a type-2 core, it sits for hours with < 1 Hz stability near 2.2 MHz.

© 2000 - 2009 Alan Yates - All Rights Reserved.

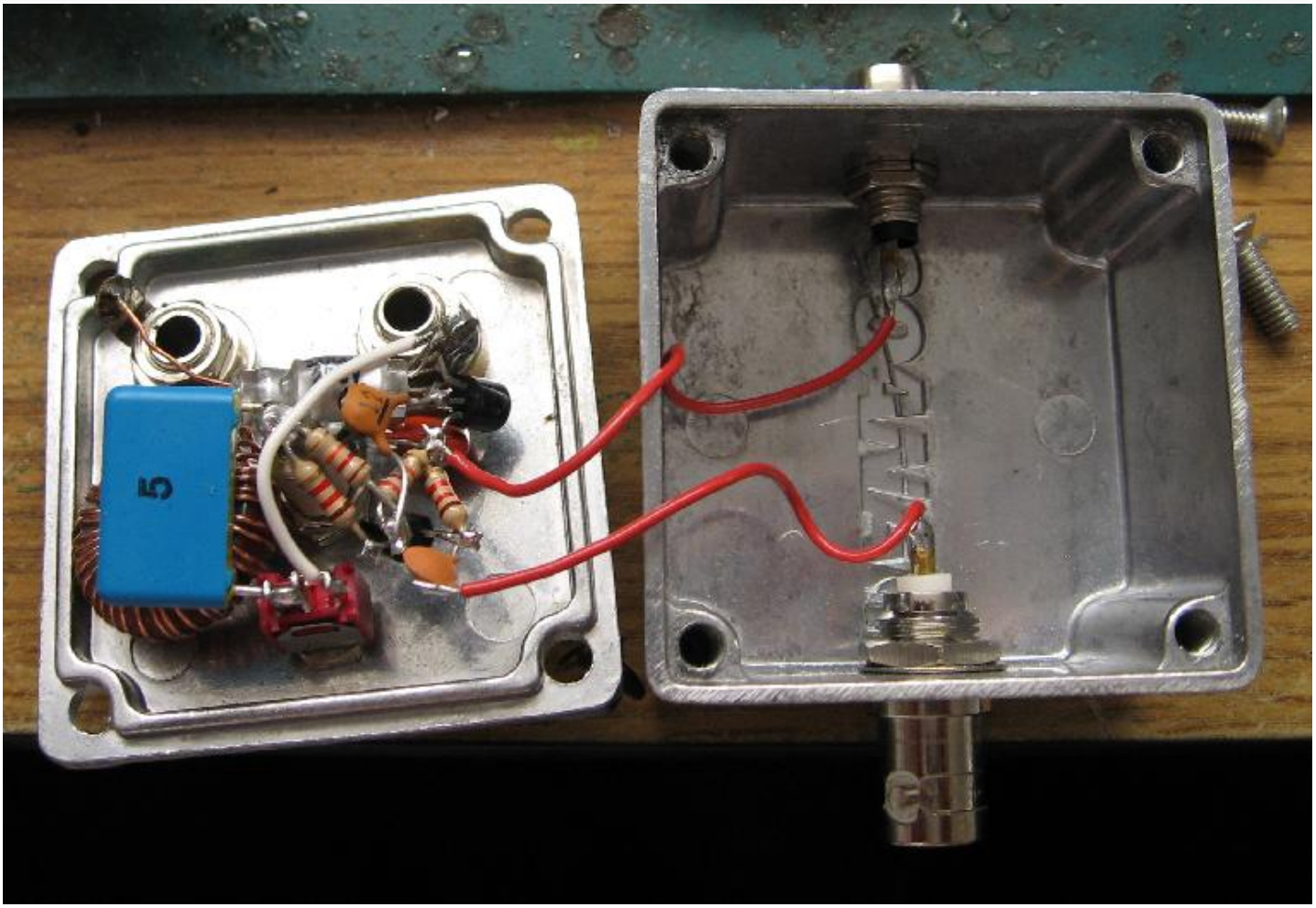

I've written a calculator to speed usage of the unit. As I've mentioned previously, this is a problem I've wrestled with and failed to solve in the past, but with some dedication I finally got the problem out. The need to measure inductor true-inductance and distributed capacitance for other projects took me in a direction that turned out to be a much better approach, the solution was actually quite trivial and should have been apparent much earlier. BTW: This method measures the apparent inductance, which can be in error if the coil has significant distributed capacitance. You can utilise the internal calibration capacitance along with the distributed capacitance calculator to approximate the coil true inductance.

My unit has a calibrated inductance of roughly 10.6 uH and a capacitance of 514 pF - this compares very well with what was measured of the components out of the circuit and the expected strays. Comparisons with inductors and capacitors measured via different means suggests good accuracy and repeatability. I currently use a short piece of 4 mm wire as a "zero" inductance reference. I can measure the difference in its inductance based on how far I push it into the unit - the measurement is consistent with the inductance of a straight piece of wire - I was pretty impressed by this level of resolution. I'll be building a matching test jig that plugs into the banana sockets and enables SMD and other small devices to be measured and allow nulling with extremely short lengths of thick wire. I expect I'll use it more to measure inductance than capacitance as I already have a digital meter for capacitance but this unit's resolution is superior. It would not be extremely difficult to write some MCU code to implement the calibration (reed relay maybe?) and metering giving a direct-reading meter - might have a go at that in the future (Yes I know you can buy a kit, but where is the fun in that).

Update

I've since replaced the WIMA calibration capacitor with a carefully measured parallel combination of several ceramic NP0 capacitors totalling 1017 pF (and relabelled the unit). This has improved the calibration accuracy of the unit slightly.

I also added a pi LPF choke to the DC power inlet as I noticed a ~3 Hz shift in frequency when I choked the DC power lead externally with a ferrite core and could detect a small amount of RF floating on it with my wavemeter. With the internal filtering this is no longer apparent. (The filter is simply a few turns on a ferrite bead with 100 nF caps either side of it to the lug of the RCA plug.) The DC voltage from my bench PSU is stable enough, but an internal regulator might be advisable if you are going to make lengthy measurements following a single calibration from a battery supply. The pushing from the supply voltage isn't huge and would probably be lost in the experimental error for most measurements however.

4 comments.

© 2000 - 2009 Alan Yates - All Rights Reserved.

Ionisation Chamber Radiation Detector

2009-04-18

This is something I've been meaning to try for quite a while. Radioactivity has become a recent area of study, so this unit was thrown together. I half expected it not to work, back of the envelope calculations suggested I'd need a very large number of ions produced per second to produce the base current required... but it works quite well.

The circuit is basically Charles Wenzel's nuclear war detector. I didn't have Darlington devices in a single package, so I just used discrete transistors to implement the NPN pair. I used an MPSA18 for the device connected directly to the chamber and generic transistors for everything else. The "switching" device for the piezo buzzer is a 2N7000. The chamber is an eclipse mint tin, the collection electrode is a circle of tinned copper wire insulated from the chamber wall with a glass bead. The connection is made to the MPSA18 base in mid air.

© 2000 - 2009 Alan Yates - All Rights Reserved.

Toy Ion Chamber Radiation Detector

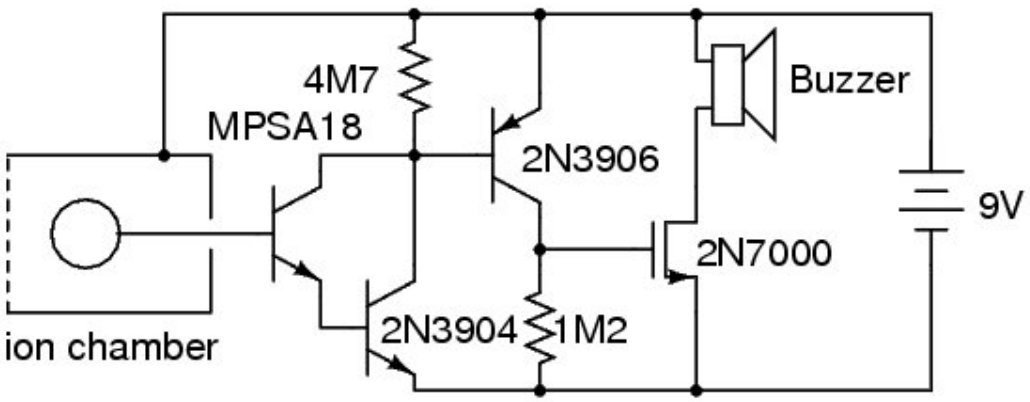

As radiation detectors go, it is insanely insensitive. If this thing ever goes of when you aren't provoking it artificially then you are in rather serious trouble. The 37 kBq Americium 241 source I extracted from a smoke detector will activate it from about 1" if you leave the lid of the tin open to let the Alpha particles in. Alphas are very effective at generating ions. As a comparison, at the same distance from my Geiger counter's Mylar window I only get about 180 CPM (and about 22 kCPM point-blank).

Introduction and Americium Source
(7.022 Mbytes)

It is also sensitive to ions produced by combustion. Lighting a butane torch or a match near the chamber will trigger the alarm. You can also blow ions into the chamber from a gas flame or near the Americium source with your breath or by wafting, which will also trigger the detector. Naturally touching the circuit high-Z points will also set it off. Putting the Americium source right up to the transistors or heating them with a hot-air gun or contact with the soldering iron will also cause an indication.

Combustion Ion Sensitivity
(4.926 Mbytes)

The battery is fairly flat (measures 6.8 volts) and came from smoke detector that the Am-241 source was removed from. The circuit performs a little better with a fresh battery, but the main improvement is the loudness of the piezo and speed of recovery after radiation/leakage is removed, not its absolute sensitivity.

I was surprised I could get away with building the circuit as unshielded as it is. I suspect not being mains powered and being fairly compact helps. You can hear a little mains interference on the 'edges' of its turn on and off points, where the MOSFET is in its linear region and amplifies the noise seen across its base resistor. It is quite mild however and needs careful modulation of the alpha flux to maintain it outside of saturation or cut-off.

© 2000 - 2009 Alan Yates - All Rights Reserved. XHTML | CSS | CSS toggle

Electrical Noise Sensitivity
(4.990 Mbytes)

All in all, it is a pretty cool toy. Quite amazing really that conventional transistors have sufficiently low leakages to make this practical. I want to build a real ion chamber now! I'm having trouble finding the high-value resistors required. I did find 1 GΩ resistors at Farnell for some insane price and have ordered a pair so I can build a device capable of measuring larger resistances - hopefully I can build my own 100 GΩ - 10 TΩ resistors.

5 comments.

Attachments

title	type	size
Toy Ion Chamber Circuit Source	application/postscript	12.278 kbytes

© 2000 - 2009 Alan Yates - All Rights Reserved. XHTML | CSS | CSS toggle

IR Remote Control Modem

2000-03-24

Goals

The general goal of the project was to develop a universal IR remote control interface for my PC. It was to be able to transmit and receive IR signals from a range of consumer electronics IR remote units.

Design

The unit had to be low cost, easy to build, and fairly easy to write a driver for. To these ends I chose a simple parallel port interface that I could talk to by bit-banging, and listen from using interrupts.

Not the most efficient design, but simple to implement, and very low cost. The transmit circuit is a simple single transistor buffer driving two IR LEDs in the collector. The receive circuit is a single buffer/inverter transistor stage driven from an integrated 3 terminal IR demodulator chip.

The unit case is a D-25 data cable gender changer hood. A small piece of dark red plastic from a scrapped alarm clock makes a reasonable IR filter which closes one end. A standard 25 pin female data socket closes the other. A single high brightness red LED services as an indicator for RX, (and TX due to reflected signal being demodulated). A 9v (216) battery supplies power for the unit.

Logic interface is achieved by taking the MSB of the data lines (pin 9) as the TX signal, and feeding the demodulated RX signal into the ACK pin (pin 10)

The most expensive part of the device was the IR receiver chip. At almost $6 (Aus) it was about 40% of the unit cost. The IR diodes where about $2 each, the other assorted bits and pieces were of negligible cost. All materials where purchased at Jaycar Electronics.

Implementation

After about 2 hours with a soldering iron and side cutters I arrived at this unit. Simple and neat, except for the 9v battery snap.

© 2000 - 2009 Alan Yates - All Rights Reserved.

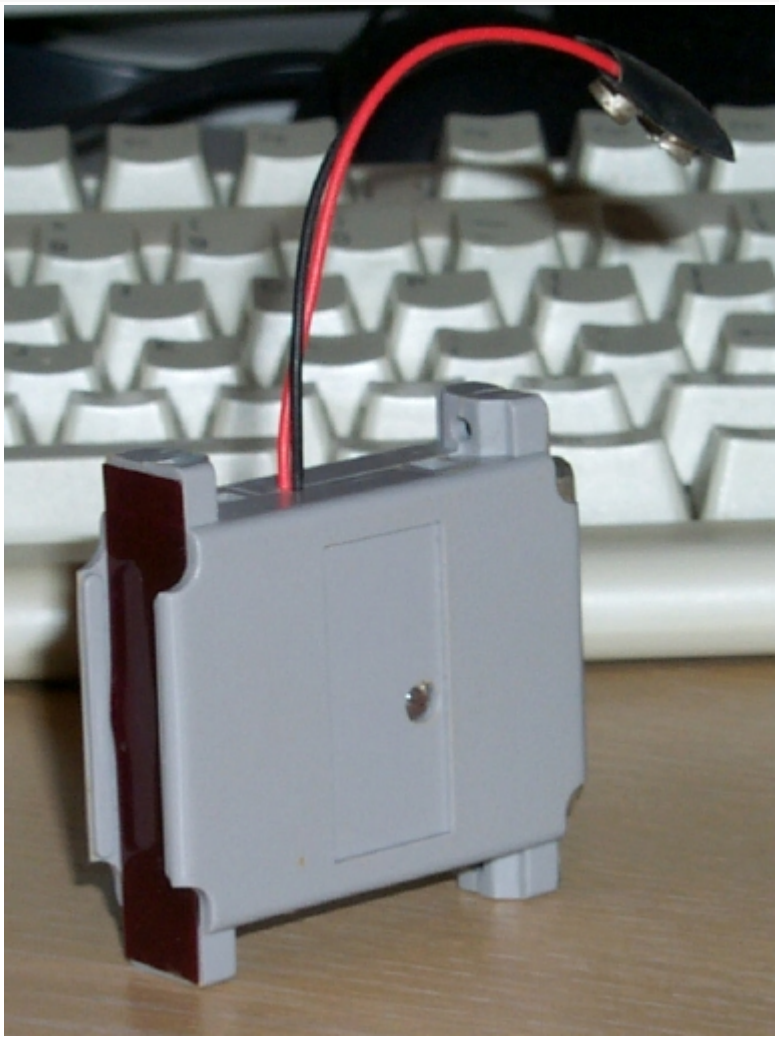

© 2000 - 2009 Alan Yates - All Rights Reserved.

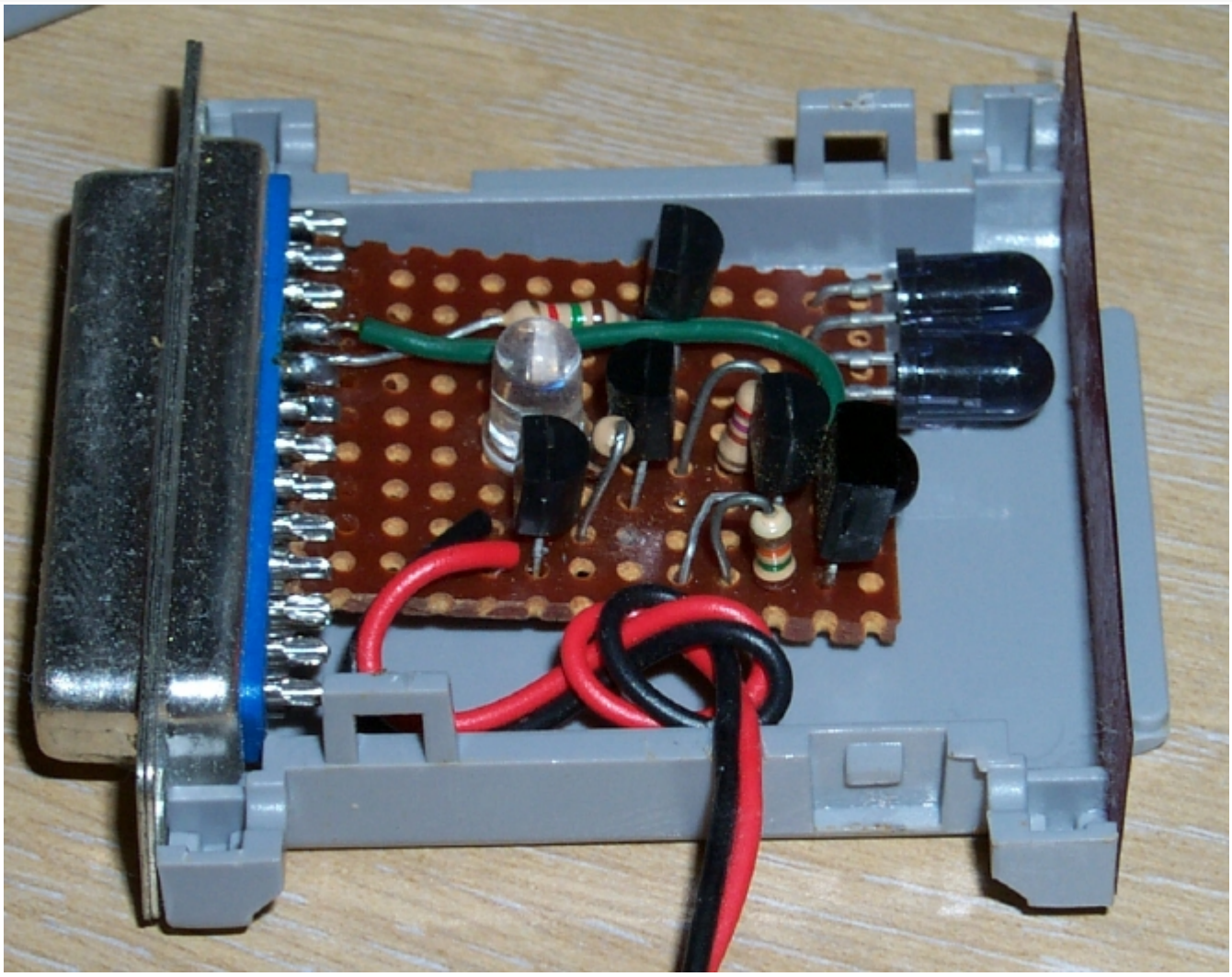

© 2000 - 2009 Alan Yates - All Rights Reserved. XHTML | CSS | CSS toggle

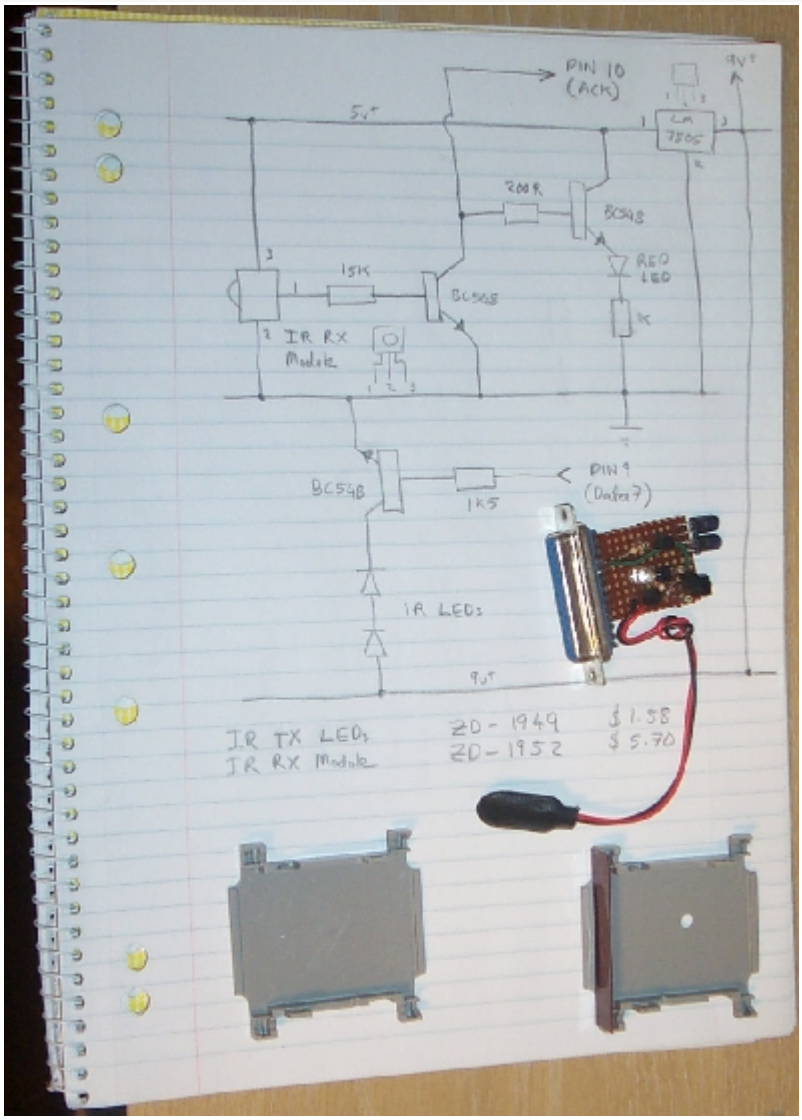

Talking To It

A simple Linux char device driver was written to talk to the device. It implements:

- open()
- read()
- write()
- select()/poll()
- close()

Honours O_NONBLOCK, is fully re-entrant, concurrent read() safe, and serializes write()s. It should compile on linux 1.2.13, 2.0.3x and 2.2.1x, and most likely will work on later kernels too, perhaps with some modification.

The User/Kernel Protocol

read() returns the timing, via do_gettimeofday(), of the rising edge of the demodulated IR signal. While this is not all the information in the signal, it is enough to decode all common IR signals.

write() is expected to *atomically* send a single integer (the IR carrier period in microseconds) followed by signal timing values in the form of pairs of integers; microseconds 'on' then microseconds 'off'. None of the integers passed may be zero (1 will do for the last 'off' time), for obvious reasons there is a limit on the maximum delay that will be honoured. Separation of the integers is via whitespace.

Userspace Magic

I find awk such a nice tool for quick hacks that I wrote some of the early tools to play with the modem's RX functions using it. Within a few hours I had worked out RECS-80 remotes, and the Foxtel (ST-100 cable decoder) box remote protocol.

© 2000 - 2009 Alan Yates - All Rights Reserved. XHTML | CSS | CSS toggle

Shortly after, I wrote a simple TX script that could change channels on the cable receiver, and later, tell my VCR to play, stop rewind, etc, basically anything I could do with the remotes.

Next I started on coding a proper C client for the device. One generic enough to send arbitrary IR signals, but with a sensible decoding chain that allows multiple plug-in protocol modules. This is where the project is currently up to. The TX hardware is used much more than the RX hardware, which sees use mainly for decoding new remotes.

The code is here: irctrl.tar.gz

Future Plans

The under utilized RX side of the device might be nice to work into a CD or MP3 player interface, or perhaps my TV card. Using a generic remote, like the one that came with the TV card, which features many buttons for TV/Stereo/VCR control, it would be possible to map many functions for remote control. (probably only useful if you are distant from your computer while enjoying its multimedia output. I guess some people will want to control their house with it :)

IR identification tags, through PAM modules, might be something fun to play with. Walk up to a workstation and it logs into your customized desktop.

open(), select(), and close() work as expected.

1 comment.

© 2000 - 2009 Alan Yates - All Rights Reserved. XHTML | CSS | CSS toggle

Mains Hum Survey Probe

2003-04-06

I've been working on VLF/ULF reception recently. In order to get a feel for the local mains noise I pieced together a simple opamp transimpedance loop preamp. With only a surplus solenoid coil for the transducer and moderate gain I got a huge signal out of the preamp, almost 500mV pk-pk. Clearly I'll need to go somewhere more electrically quiet for my VLF/ULF hunting.

I figured I may as well build the preamp into a portable unit so I could scout out quiet areas in the local region, hoping not to have to go too far into the bush to get away from the BUZZZZ!

I wanted to retain the TL702 opamp from the breadboard circuit for its fairly good noise factor. No where near as good as I'll need in the future full scale loop preamp, but I wanted to keep the noise low enough that when the mains garbage gets weak the circuit won't deafen me with hiss as I rack up the gain. This requires running the circuit off at least 10V. As hard as I tried, I just couldn't get the circuit to behave properly of 9V (especially as I am abusing the output with such a low impedance load, direct into a pair of 70 Ohm stereo headphones.) I settled with using 18V from a pair of 9V batteries. If I knew that voltage swing would be a problem in the first place I would have used the pair of 9Vs for a dual rail supply in a more conventional manner.

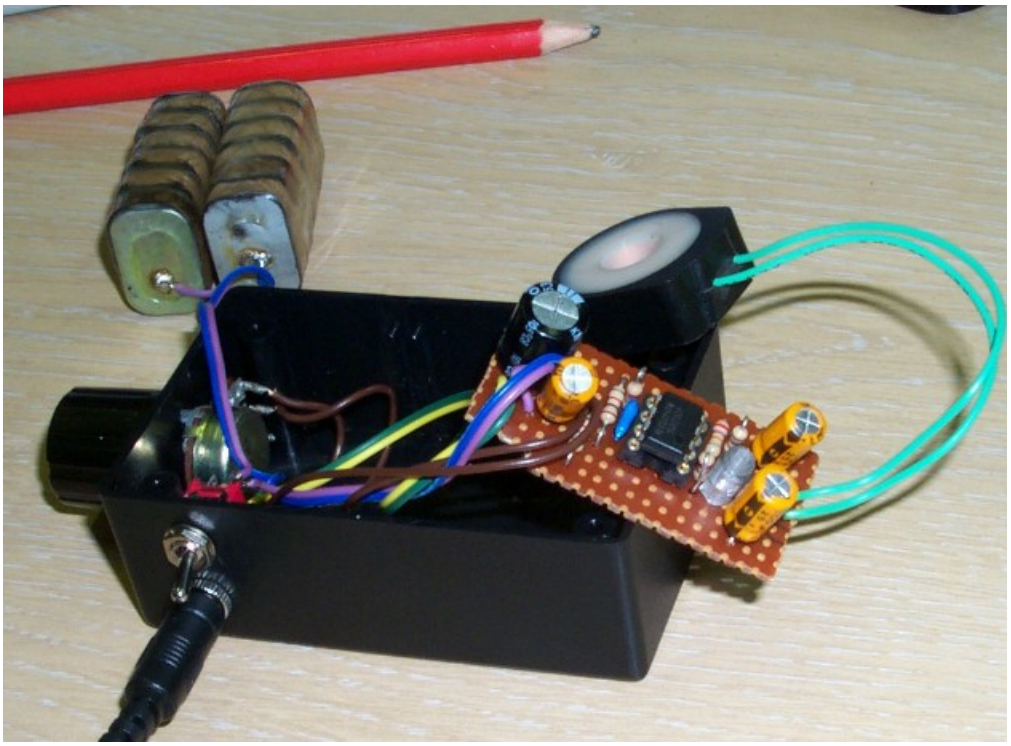

Fortunately the whole assembly fitted snugly inside the smallest Jaycar zippy box. At least once I skinned the batteries and soldered direct to their plates! The board was cut to mate neatly with the PCB slots in the box walls, the pickup coil nicely friction fitting between the chip at the end of the box. Just enough room was left once the middle of the box was consumed by the batteries to fix the gain pot, power switch, and 3.5mm stereo jack. Sometimes Murphy smiles on you and things come together perfectly.

© 2000 - 2009 Alan Yates - All Rights Reserved.

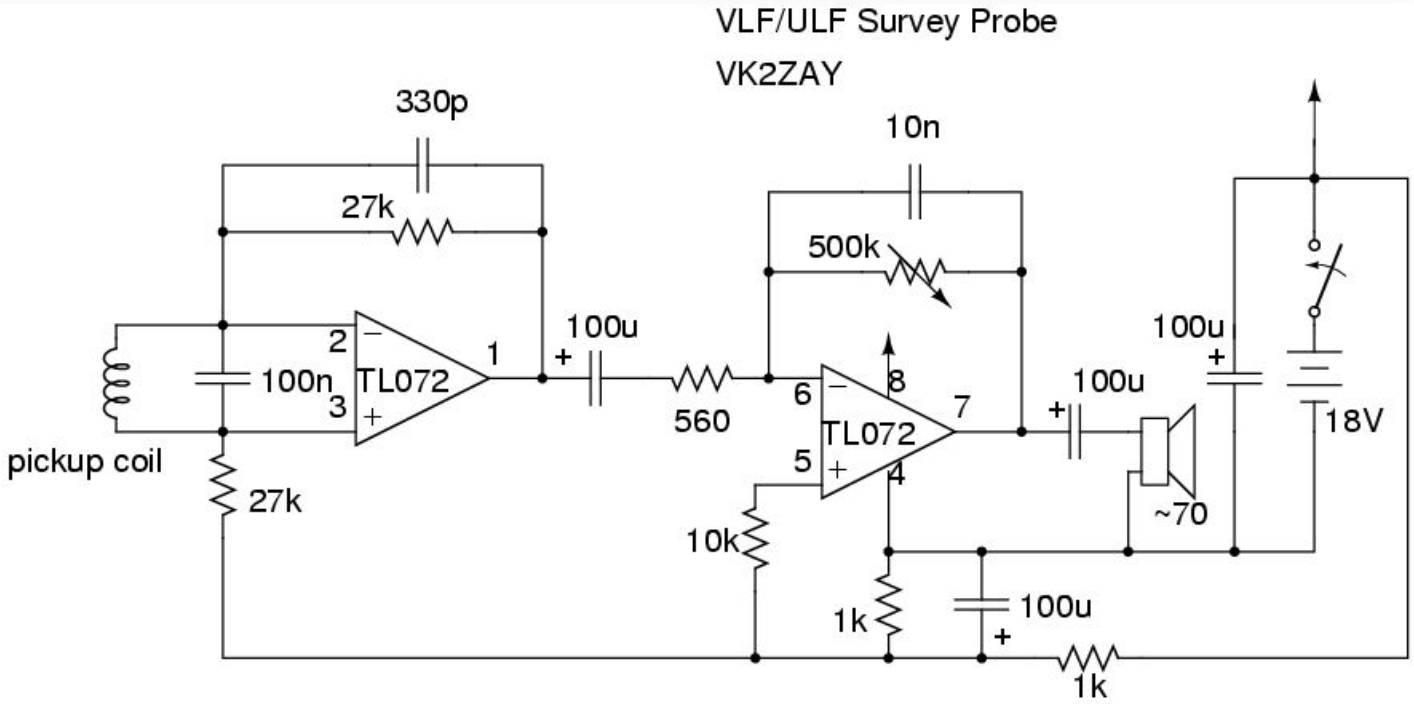

The circuit is a fairly conventional frequency limited transimpedance amp of fixed gain, largely determined by the DC resistance of the pick-up coil. The other amp in the 8 pin package is used to provide a headphone acceptable power output, its gain is controlled by varying its feedback resistance to provide volume control and offer large dynamic range. I experimented with DC coupling of the two stages, but the untrimmed offset voltage of the preamp swings the output into saturation at any reasonable gain. This is only for aural use anyway so response below 20Hz is not required, still a largish 100uF coupling capacitor was used to get a good corner frequency (and I had a large packet of them sitting on the bench).

It takes a truly enormous signal to drive the preamp into clipping. Such signal levels would not be seen except perhaps when the device is used to locate mains wiring inside walls, or is accidentally turned on within a few inches of a computer monitor. I used carbon resistors, which was a mistake, noise wise, but the result seems fine, the transducer is too small physically to pick up signals of the kind that would require excellent noise levels.

I used a transimpedance preamp because I am working with magnetic signals here. When I think magnetic, I think current. Unlike electric fields where potential is the thing you want to amplify, magnetism is all about moving charge. It is easier to get the current gain with the virtual earth/short of the opamp input to satisfy the inductive transducer than it would be to get the massive input impedance for a capacitive probe of similar dimensions. I guess I could have built a FET input device with a small capacitive plate or whip, but the magnetic transducer has an excellent null which is good for locating noise sources, while the vanishing short monopole is almost isotropic.

It is fun to go for a walk with the unit. Many man-made things produce near field magnetic radiation that this device picks up easily. It displays the awesome penetrating power of a magnetic field, AC hum is easily detected through inch thick slabs of iron. My mobile phone makes an almost melodic series of pocs and chirps as it goes about its maintenance cycle. Computer monitors make grating tones for many metres. Inside a car the alternator whine and ignition noise is unstoppable. Power cables inside walls are easily located, and can be centred quite accurately because of the deep null pointing out the top-center of the unit. It is almost impossible to quiet the din however, so far I have never been in a location quiet enough to not hear the familiar buzz (or soft hum is the mains is pure enough - e.g. miles from fluros).

With a larger coil a circuit not unlike this one would be suitable for VLF/ULF monitoring. When I find a quiet enough spot, the transimpedance topology will likely feature in my preamp for the big loop. A lower noise opamp would be preferable, probably a LM833 or better, and more pains would be taken with metal film resistors, DC offset, and MF/HF rejection. The virtual earth/short property of the opamp inputs tends to neutralize the winding capacitance (there is almost no voltage across them), at least as fast as the opamp's slew.

Leave a comment on this article.

Attachments

© 2000 - 2009 Alan Yates - All Rights Reserved. XHTML | CSS | CSS toggle

circuit postscript source	application/postscript	14.272 kbytes

© 2000 - 2009 Alan Yates - All Rights Reserved.

MFJ-269 Review

2008-12-20

After my review of my MFJ-207 Peter VK2TPM offered me his MFJ-269 to play with for comparison. Naturally I jumped at the chance. The MFJ-269 is the fully-featured descendent of the earlier and simpler antenna bridges like the MFJ-207. The manual can be found on MFJ's website.

The device is microprocessor based with an LCD interface and two main control buttons "Gate" and "Mode". There is also a Frequency band switch, a reduction geared tuning capacitor, power and UHF mode switches. Two analogue meters display SWR and impedance magnitude continuously, offering a trending display which is more user-friendly than the figures on the LCD display. In UHF mode there is a "bargraph" of sorts on the 2nd line of the LCD for trending SWR.

The unit tunes about 1.76 MHz to 172.7 MHz in six overlapping bands. There is also a "UHF" switch that triples the oscillator in the 114-170 band giving 415-470 MHz coverage the edges of which are enforced in software, the display telling you to increase or decrease frequency until within that band. UHF supports only loss and SWR features, not reactive measurements - likely because bridge performance issues at UHF would have required extensive calibrations to have any hope of accuracy.

The coaxial connector is a N-type and is surrounded by a generous rubber gasket. The frequency counter input is a BNC. The DC plug is a conventional unit, tip positive, I am unsure what internal over-voltage and polarity protection it has. There is a large grounding lug also provided.

© 2000 - 2009 Alan Yates - All Rights Reserved.

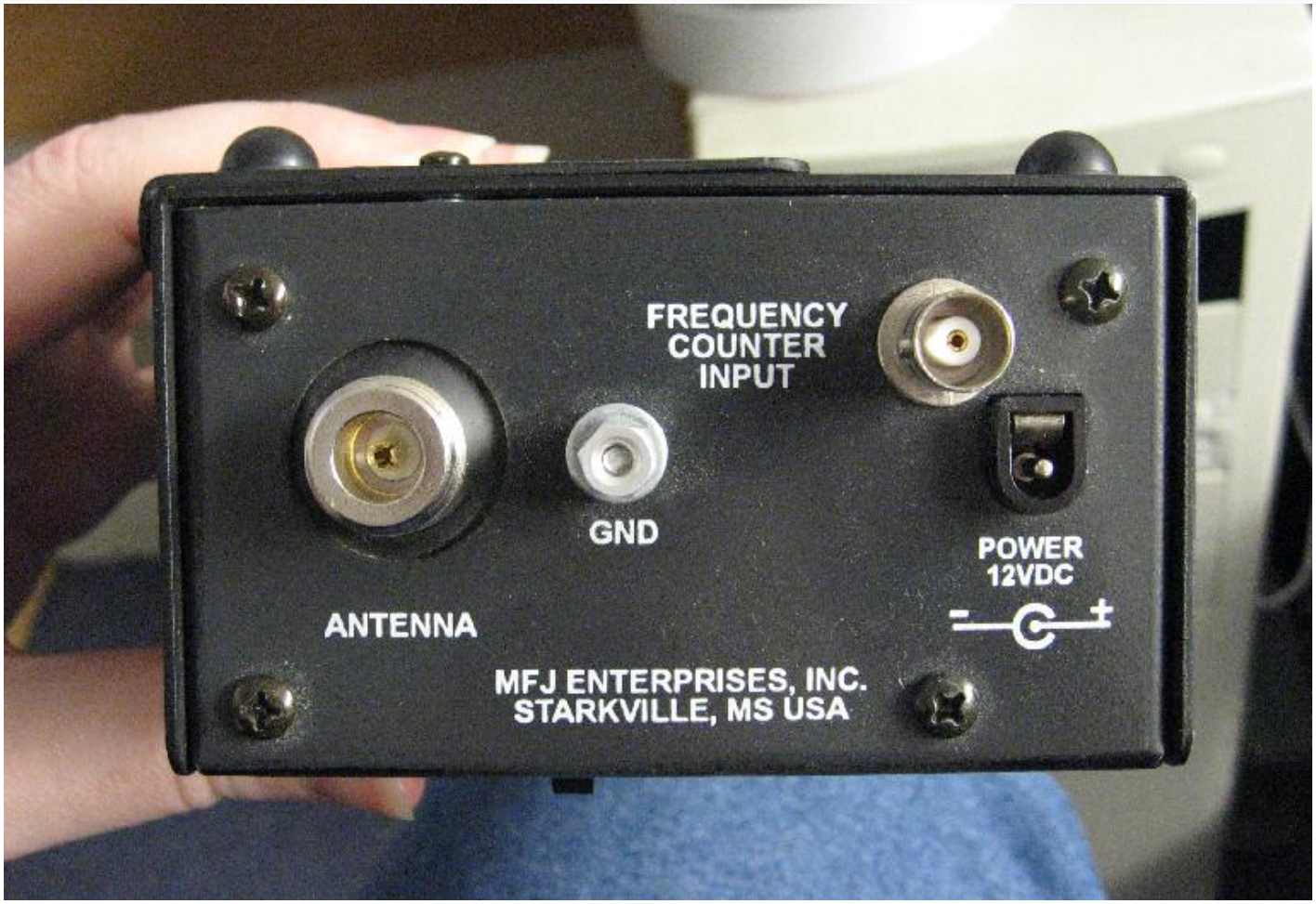

Features

There are 4 "Main" analysis features and 3 additional menus of Advanced ones. The advanced ones are mostly just different presentations of the same data from the bridge voltages (impedance in polar form, reflection coefficient, return loss, etc), but there is the option to select a different "Zo" for the calculations and also a two-frequency point semi-automatic calculating feature for line length, distance to fault, etc. The line length and fault distance calculations are pretty good, resolving several short (~2 metre) lines and offering compensation for velocity factor.

By pressing the "Mode" button you can cycle through the different modes, both main and advanced (once entered). Holding both the "Mode" and "Gate" buttons gives access to the advanced menus. The "Gate" button is used in frequency counting mode and as an enter-key of sorts in the calculating modes. Holding both buttons down on startup then alternatively pressing them as it boots enters the "Test" mode which gives a display of the raw ADC data for calibration of the unit with a set of calibrated dummy loads. The button mashing required to enter "Test" takes some practice, thankfully it isn't something you'd be doing often. The software version is displayed at boot, in this case 4.46, copyright 2004.

Impedance Analysis

The default "main" mode is the "Impedance R + X" mode and displays frequency, VSWR, and impedance as Resistive and Reactive magnitude (Rs +/- jXs) which update continuously as you tune around. The sign of the reactance is not resolved and displayed, which is pretty typical of the bridge system the device uses. The frequency counting is probably the "killer feature" of the device as well as the reactive magnitude display which allows searching for true resonances not just minimum reflection coefficient magnitude.

© 2000 - 2009 Alan Yates - All Rights Reserved. XHTML | CSS | CSS toggle

The impedance mode does seem to work pretty well, especially below 50 MHz, but is limited by the device's calibration accuracy. I am not very confident the unit I was playing with is calibrated properly, resistive magnitudes reads high, sometimes more than double - and above 300 Ohms resistive the reactive magnitude rises very quickly too, even with a "pure" resistance in the lowest frequency band. This and other behaviour I noticed suggests the "Vz" channel gain is a bit high. Upon checking the calibration pots under the battery holder I noticed that R72 was bottomed out, offering insufficient range to properly calibrate the unit as described in the calibration procedure. This is suggestive of mismatched or damaged diodes in the bridge or perhaps an incorrect resistor value or tolerance catastrophe. As the unit is not mine I didn't pull it apart to inspect the rest of the circuit and attempt to diagnose it further.

Coax Loss

The second "main" mode is "Coax Loss". It appears to simply display half the return loss measured by the bridge. When an unterminated coax line is attached the bridge sees the through-and-back (returned) loss of the line, which is twice the line loss for that particular length. Similarly you can attach attenuators and other lossy devices to the unit and measure their loss this way. The loss maximum appears to be 24 dB and is likely limited by the best bridge directivity over its frequency range (ie 48 dB, pretty good). As the unit is measuring with a 12 bit ADC a linear signal (not a log detected one) the dynamic range is pretty limited and the loss quantisation is fairly coarse. For "good" vrs "completely waterlogged" measurements of coax it is likely sufficient.

© 2000 - 2009 Alan Yates - All Rights Reserved. XHTML | CSS | CSS toggle

One annoying thing is the lack of auto-zeroing, this particular unit would always read about 0.9 - 1.6 dB return loss at HF. It would be nice to have software zeroing. In fact I can't see why the entire device could not have been designed to ship with a set of calibration loads and full software fine calibration. I do understand that some of the gain settings are quite critical, especially for reactance zeroing with the limited dynamic range offered by the 12 bit DACs fed by linear detectors. Still it would be nice to have "tare"-style zeroing for some measurements.

Capacitance and Inductance Measurement

The Capacitance and Inductance measurements simply compute the reactor value that matches the current reactive magnitude reading at the current frequency. It has no way of telling if the load is actually inductive or capacitive, and once outside the few ohms to 1.5 kohm range of reactance magnitude the software stops giving you a solution. This makes perfect sense, you just need to tune the VFO until the frequency offers a reactive magnitude in-range of the unit. The computed values are most accurate when the reactance magnitude is close to the bridge reference resistance (50 Ohms). This particular unit read high, about 19 pF high (about 6 pF of which was the test fixture) on average and again there is no way to null it. Inductance was probably worse but I didn't test it extensively, only a few trial inductances were compared to values measured by my LC tester. The LC measurement is nice to have, but I wouldn't trust it - in fact I'd go as far as to suggest using the frequency counter feature along with an external jig like the LC tester instead.

© 2000 - 2009 Alan Yates - All Rights Reserved.

Correctly calibrated the general measurement method is probably fine and quite useful as it tells you the true impedance of the reactive component at radio frequencies (unfortunately only those that present a 7-1500 Ohm impedance). For testing a component for spurious resonances this is very useful, but in practice I couldn't seem to easily find misbehaviour in capacitors. Inductors on the other hand were fairly easily tested for self resonance, but being placed in the tester environment pulled their self-resonances quite a lot. Dipping them instead is probably more reliable.

Frequency Counting

The frequency counting feature works as advertised. It can accept signals up to 5 volts and has an high-impedance input. I could easily get a stable measurement with just a few turn coil plugged into the input using my dip meter as a signal source from several inches. The counter counts to beyond 170 MHz, I didn't test it higher. I assume the "UHF" feature actually counts the VHF generator and triples the value in software? I can't see a counting range spec in the manual. The gating works as expected, long gating times give more resolution figures. The reference seems stable and accurate enough for the resolution offered.

© 2000 - 2009 Alan Yates - All Rights Reserved.

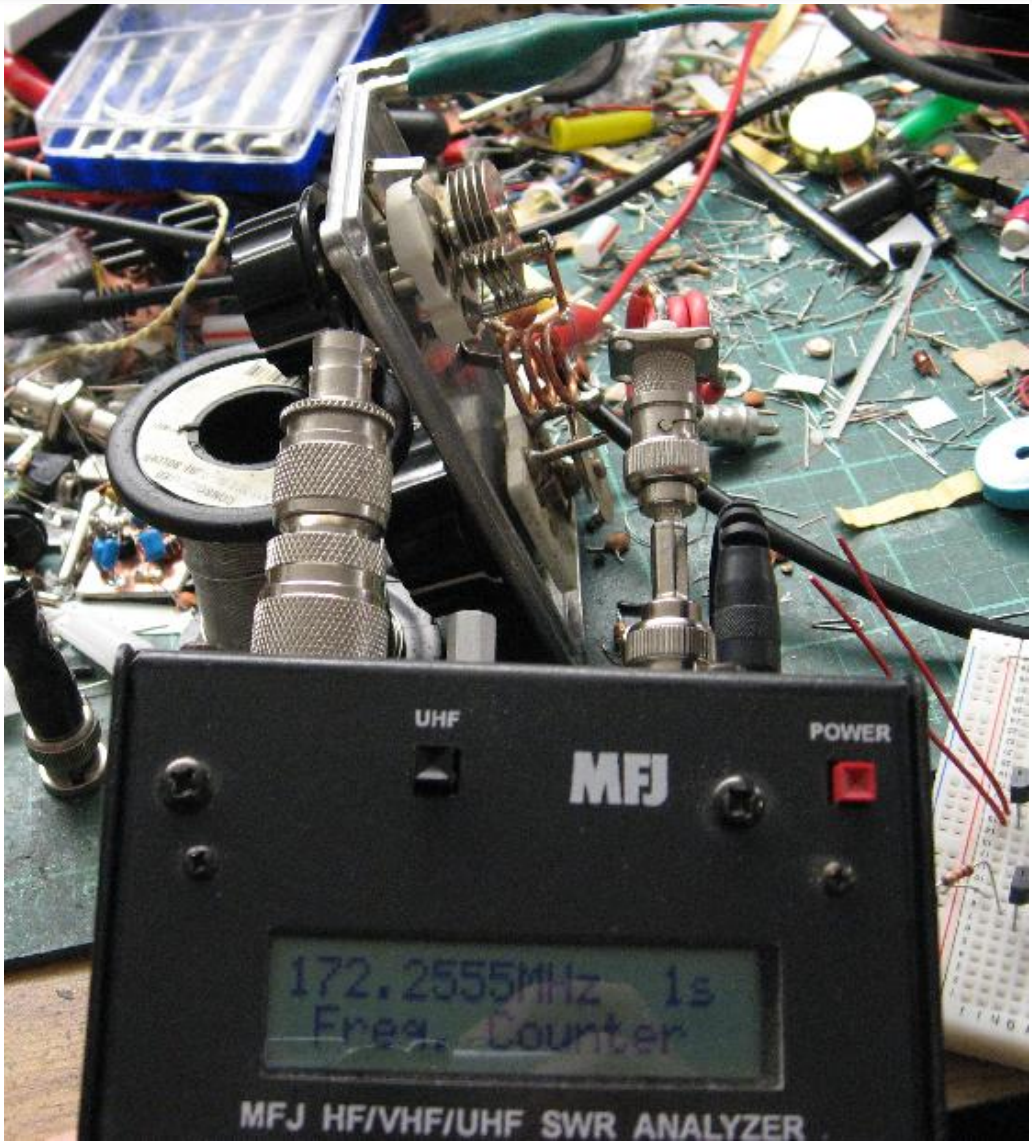

Advanced Features

Of the "Advanced" modes the stub length and resonance searching ones are probably the most useful. The stub length helpers are great for cutting matching and phasing stubs. Accuracy for 1/4 lines seems pretty good when compared to dipping a line with other instruments. It is unfortunate that the physical lengths are only given in feet. A metric physical measures software option would be nice, but considering this is a US product this is perhaps not surprising. The resonance searching mode makes the Impedance magnitude meter show Reactive magnitude while looking for a null. Oddly it does not use the LCD bargraph like SWR in UHF mode, instead showing Xs numerically.

The match efficiency mode is arguably the most useless feature. I'm not really sure what the point of it is. I guess there was extra room left in the MCU code space, so yet another "feature" was invented to fill it. Personally I'd prefer metric measures or software nulling instead.

Use as a Dipper

I understand there is an optional dipper coil set for the MFJ-269? - I just plugged my few turns of wire on a BNC into it and tried it out on some inductor self-resonances. It works quite well on HF and VHF. I'm not too confident about it on UHF, but the UHF range is quite narrow which makes it fairly useless for dipping anyway.

© 2000 - 2009 Alan Yates - All Rights Reserved. XHTML | CSS | CSS toggle

Power Consumption

The device does guzzle power. On HF-VHF in the default mode it pulls 140-170 mA (rising with frequency). On UHF it pulls over 350 mA! In counter-only mode it still pulls 90 mA. The AA batteries won't last long, and it takes 10 of them. Unlike the MFJ-207 at least you only need to remove two short machine-threaded screws to access the batteries. The external power option is almost mandatory (use at least a 500 mA plug-pack), but it does offer the ability to charge rechargeable batteries inside the unit by changing a jumper on the PCB. I have no idea how well it manages them if you choose this option.

© 2000 - 2009 Alan Yates - All Rights Reserved. XHTML | CSS | CSS toggle

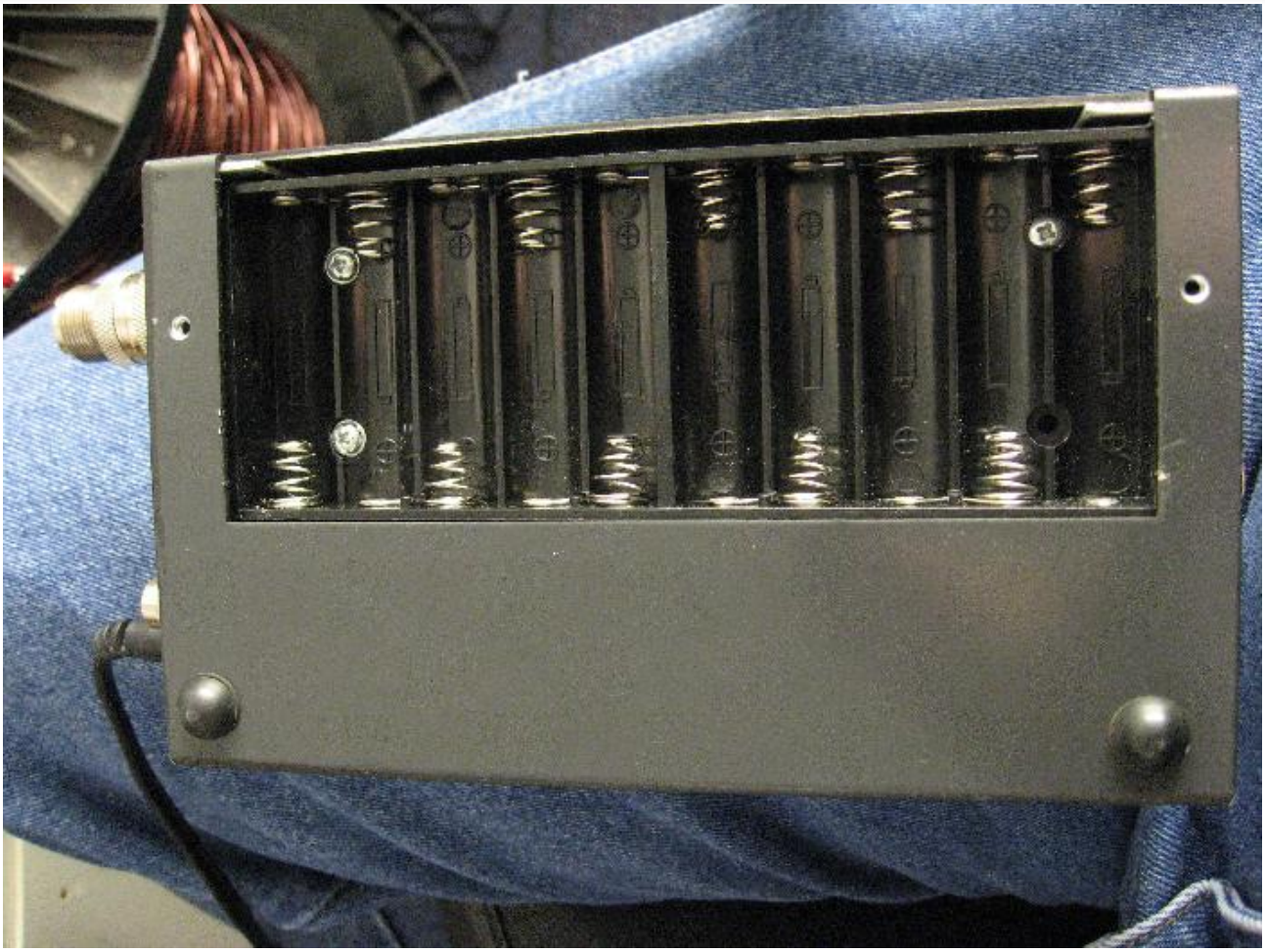

By default the unit enters a sleep mode to reduce power consumption after a period of inactivity. This would help extend battery life, but it still pulls more than 50 mA. The sleeping feature can also be disabled by holding down buttons while the unit is powered on and remains disabled until the power is cycled again, much like Test mode.

Comparisons to the MFJ-207

The 207 is very basic compared to the 269. The 269's frequency counting and reactive magnitude display are its best features. The 269 has none of the FMed oscillator problems of my particular 207 and has much improved buffering and harmonic distortion. There is a pot in the 269 for setting buffer bias up to minimise the harmonic energy. I didn't test it extensively, but there is a detailed procedure available using a coax stub instead of a spectrum analyser to ensure this is set correctly. Tests with narrow band antennas like my balcony HF vertical and bicycle loop antenna show it is very much improved over the 207. I can resolve the resonance of my balcony vertical on 80 metres with the 269 fairly easily where it is next to impossible with the 207. I even tried measuring a colourburst crystal with the 269. The xtal resonance is very steep and the analyser tries its best, but it is simply not sufficiently stable or well buffered enough to stay in the resonance. You can detect it and even get a fairly good idea of its frequency however, and see spurious resonances of the xtal as well.

The 269 covers part of VHF where the 207 stops just above 30 MHz - and the 269 also has the narrow UHF option. On UHF the 269 is essentially as limited as the 207 is on HF, measuring just return loss. I am highly suspicious of the UHF feature's accuracy and debate it actual usefulness for most HAMs.

Like the 207 the 269's SWR meter is largely just for trending. The calibration point is 2:1 (using a 100 Ohm load), above and below this the displayed figure is quite wrong. The LCD display however shows the correct figure, at least below about 5 - and of course if the unit is calibrated properly. (The impedance meter is a bit better, its calibration point is 50 Ohms using a flat load. Again the screen gives a more accurate reading.)

Summary

The good:

- Frequency display
- Reactance magnitude display
- Separate impedance and SWR analogue meters
- Mechanical reduction driven tuning capacitor
- Display options including RL and P
- Fairy compact unit, self contained

© 2000 - 2009 Alan Yates - All Rights Reserved. XHTML | CSS | CSS toggle

- Fairly stable and pure local oscillator
- Internal battery charging option

The bad:

- Large power consumption
- No nulling options (especially for L/C measurement)
- Imperial physical length measurements
- Analogue SWR meter scale calibration is poor
- Tendency to arrive broken or poorly calibrated

On the last point the evidence is only anecdotal... Well, the unit I played with has a poor calibration and Peter experienced a lot of problems with it himself. His is not an isolated experience if you search HAM forums.

Conclusion

The MFJ-269 seems to be designed quite well. I am sure with careful calibration it is capable of quite reasonable accuracy over HF and into VHF. I strongly suspect it would be quite difficult to design something more accurate without ending up building a true vector network analyser with log detectors and synthesised local oscillators. With recent advances in technology it might be possible to build such a device for about the same asking price, but I am sure the development costs would place its initial RRP closer to $1k, making the MFJ-296 look like quite a bargin.

Is the MFJ-269 overpriced? Well perhaps. Especially in the light of the horror stories out there about some HAMs experiences with the unit. How many of them are due to "operator error" is unknown, but MFJ is very well known for having quality control issues, so it is likely that many are real hardware problems. Fortunately there is also a great deal of support available for the unit, with MFJ sending part kits out to repair blow-up or factory-buggered units. By virtue of its ubiquity (and from the earlier 259 and 259B units) the HAM community has plenty of resources for fixing busted MFJ-269s.

Would I buy one? If it was < $300 AUD - yeah I would take the risk of getting a lemon. I would feel more comfortable if there was a circuit diagram in the manual, that way at least I could fix it easily enough. There are diagrams online that profess to be of the 269 or 259/259B, they seem pretty correct but I haven't extensively studied this loaner unit for comparison. There is a calibration procedure available, and one for the 259/259B as well from the original designer, but note that the 259 has 8-bit ADCs so the hex values displayed on the 269 and the pot numbers don't match this page - still it is a useful read and the document on the MFJ site seems to match the general guidelines when you convert to 12 bit numbers.

Unlike a VNA-solution the MFJ-269 isn't tied to a PC which is important for field work on antennas, but this is becoming less of a problem with USB-based VNAs that can run from a Netbook form-factor PC, perhaps it would be best to save the money and invest in a VNA as many of us already have a netbook PC, especially for use in the lab rather than just antenna work. Still, it would be nice to have it all in the one portable box like the MFJ-269.

5 comments.

© 2000 - 2009 Alan Yates - All Rights Reserved. XHTML | CSS | CSS toggle

Micropower FM Broadcast Receiver

2007-09-08

It's been quite a while since I built a super-regenerative receiver for the FM broadcast band and I've been meaning to play with a different source feedback topology, so this little radio was thrown together on the Saturday of the APEC long weekend.

The topology is your classic grounded-gate FET VHF Hartley oscillator. The drain resonator inductance is centre-tapped with feedback to the source through a small capacitance. By tapping down towards the cold-end of the coil the feedback isn't as critical as your usual source-drain capacitor feedback and it tends to be far less difficult to get to work across a broad range of frequencies. The RFC to an RC source circuit to implement self-quenching is very traditional for super-regenerative detectors. The quench gets frequency-modulated somewhat by the drain current, so it varies with signal strength and the recovered modulation, this is typical for self-quenched circuits (simplicity has its price).

Minimum Component u-Power
Super-Regenerative FM Receiver

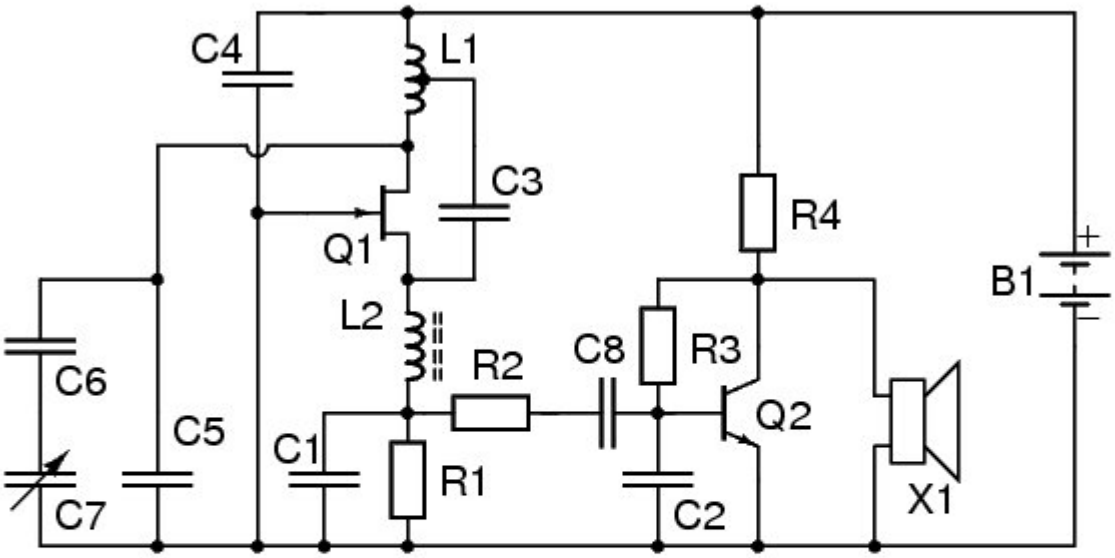

C1 6n8	R1 10K	L1 120n (5 turns, 7 mm ID & Length)
C2 1n	R2 10K	L2 25 uH (13 turns FT23-43)
C3 10p	R3 8M2	
C4 1n	R4 56K	B1 6 Volts (4x AA cells)
C5 10p		X1 Piezo Ear Piece
C6 22p	Q1 J310	
C7 2-35p	Q2 MPSA18	
C8 100n		VK2ZAY

The detector alone provides sufficient audio to drive a crystal ear piece in a very quiet room, giving a true "single transistor" FM receiver. A largish resistor (~10 k) prevents the source circuit from seeing too much of the

© 2000 - 2009 Alan Yates - All Rights Reserved. XHTML | CSS | CSS toggle

range. Some additional audio volume can be achieved by redesigning the quench circuit to utilize the piezo capacitance directly, but the source resistance has to be dropped quite a lot to achieve a viable quench frequency and the gain in sensitivity isn't as fantastic as one might hope. Still, give it a try, a single active device FM radio, pulling < 100 uA is mighty impressive!

The detector can operate with the source resistance approaching 1 M, even at extremely feeble currents it is still very sensitive. Best over-all performance was achieved with 10 K and 6.8 nF in the source circuit.

I decided to add a stage of audio gain, retaining the use of a high impedance ear piece to keep the current consumption as small as possible. I picked a super-beta transistor, the MPSA18, for the audio amplifier, and used a simple self-bias topology. This was all to keep the total receiver current consumption very small and maximise the battery life. The audio quality is quite acceptable (the usual super-regen' slope-detection distortion and quench inter-modulation with stereo sub-carrier, etc). There is no volume control, the super-regenerative receiver has an AGC-like quality because of its physics. The audio power available is on the low side, it is for quiet environment listening only; not exactly library-quiet, but not the local pub on Friday evening either!

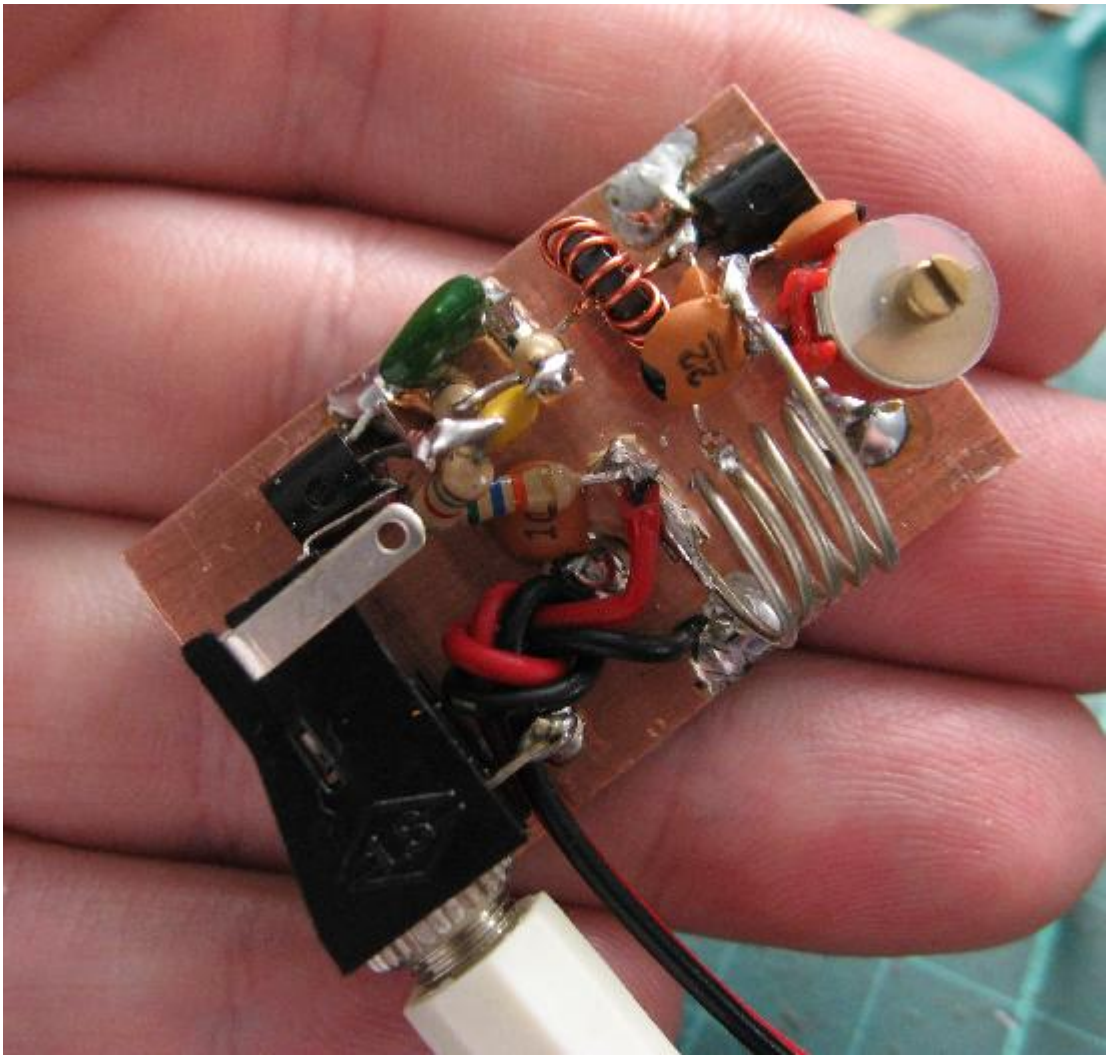

The complete receiver pulls around 500 uA from 6 volts. Four of your average bargain-store dry cells should run the receiver for at least a month continuously. Band-name alkaline cells might run it for a very long time indeed.

Tuning is achieved with a small alignment screwdriver, or similar insulated tool. The trimmer rotor is "grounded", but hand-capacitance is still slightly present because of the very high frequencies and gains involved (i.e. minor circuit layout strays).

Some effort was put into setting up the trimmer bandspread to cover the FM broadcast band (i.e. picking C5 and C6 to make C7 tune 88-108 MHz). I spent a lot of time doing the algebra to try to come up with a way to calculate the circuit stray capacitance and the actual tank inductance by trial frequency measurements with different fixed capacitances. The solution is truly horrible; involving finding a parabola that fits three points, which means solving a determinate of a 4x4 matrix equated to zero... I gave up after a few hours of wading through my sign and subscript mistakes, the whole experience leaving me feeling somewhat defeated!

I really wanted to achieve a result I could use to write a calculator, not unlike the VFO helper one which I did the

© 2000 - 2009 Alan Yates - All Rights Reserved. XHTML | CSS | CSS toggle

parameters just by measuring the frequency produced after a few capacitor swaps. I'll revisit this I think. Anyway, the geometry of the coil (7 mm diameter and length) gives about 120 nH using the Wheeler formula, and my inductance meter agrees. Some empirical capacitor swapping and trimmer jig twiddling later I arrived at a bandset (C5) of 10 pF and bandspread (C6) of 22 pF, giving a tuning range of 86-110 MHz, give or take. The stray capacitance that fits this is around 4.5 pF if I've done the math right. For comparison, my capacitance meter says the detector drain looks like 21.8 pF, but that is without a drain current, having the inductance disconnected, being measured at AF, etc... I'm happy, it tunes the whole band well.

Notes

Component substitution: The J310 is obsolete, I just happen to have a lot of them. Any RF FET should be a suitable replacement. The MPF102 is quite suitable. The MPSA18 could be replaced by any NPN signal transistor if you don't mind burning a bit more current. I'd recommend a low-noise device with good gain like the BC549C or BC550C. You'll obviously need to experiment (calculate) new resistor values for the audio stage if you change the transistor, the circuit is not particularly B independent.

You might like to play with the quench frequency by altering R1 and C1. The selectivity is at a minimum 4 times the quench frequency. Lower quench frequencies become audible and will mix down higher signal components. If you want to place the quench below 15 kHz you'll need to add much better filtering, perhaps a Sallen Key filter or two. Higher quench frequencies reduce the gain somewhat, so pushing it too high is a bad idea. The FM stereo MPX signal has energy to around 56 kHz, more if there are SCA services. Typically the quench is set around 30 kHz (8 kHz into the lower L-R sideband), but as discussed it will vary with signal strength and the modulation. The quench will tend to mix down the L-R sidebands and/or beat with the pilot tone at 19kHz. The result can be absolutely horrible to listen to, especially when the quench is getting pulled around by the modulation or the L-R sidebands are especially intense (lots of stereo difference content). For purely mono signals the recovered audio can be reasonably high fidelity if you position the slope properly. For AM signals (i.e. The Airband) the receiver is especially affective.

L2 is not especially critical, it is just an RFC to isolate the RF signal at the source from being shunted by the quench oscillation capacitor. Anything that gives > j1 kΩ of reactance should be fine, so 1.6 uH or more is sufficient, perhaps a little less would still work. The 10 pF feedback capacitor is about -j160 Ω at 100 MHz, anything at least 5-10 times larger in magnitude than that should be fine. The RFC specified has about j15 kΩ of reactance. A few turns on a ferrite bead will work, as will an RFC wound on a high-value resistor. Just make sure the inductor's self-resonant frequency is far above the frequency of interest so it is still inductive. It is difficult to make an inductor too large at VHF that would upset the circuit that isn't already looking very capacitive.

L1 and the associated C5,C6,C7 capacitors can be changed to put the receiver anywhere you like from high-HF to low-UHF. My particular receiver topped-out at 235 MHz with the 120 nH coil (indicating a stray capacitance of around 4 pF which is in reasonable agreement with the bandspread capacitor calculations), but could go much higher with smaller inductances.

Putting the radio on 10 metres is an interesting idea, it isn't especially difficult to build a miniature AM transceiver using this as the receiver, if you had enough poles on your TR switch/relay you could use the same transistor for the TX and RX, even the same tank. Similar ideas were explored years ago when frequency stability standards weren't what they are now. I've seen articles describing construction of 2 metre HTs using pairs of nuvistors or acorn tubes with free-running LC oscillators on TX and RX, switching around the cathode circuit to achieve either super-regeneration for RX or plate-modulated smooth oscillation for TX.

29 comments.

Attachments

title	type	size
Circuit Diagram Source	application/postscript	16.509 kbytes

© 2000 - 2009 Alan Yates - All Rights Reserved. XHTML | CSS | CSS toggle

MK484 MW Receiver

2007-03-24

I've grown tired of my regenerative AM broadcast receiver's lack of AGC and its RFI problems, so I decided to build something based on the MK484. I've had them laying around for years in the junk box, and my recent work in using them for an AM receiver IF prompted this project.

Other requirements for this project were a small size, something smaller than the current plastic tub I carry in my backpack to work every day, and something with a calibrated tuning dial to take the guess work out of tuning. I also set myself a challenge to build it using only a single 1.5 volt cell for the supply, and driving conventional 32 Ohm dynamic earphones.

The RF section is very simple, basically the single cell "reference design" MK484 receiver. The ferrite rod is the small rectangular prism unit available from Jaycar or Electus (catalogue number LF1016), I measured its mu-rod at about 65 and calculated the turns required for 400-450 uH or so, required to cover the extended AM broadcast band completely using the 165 + 62 pF tuning gangs also available from Australian electronic stores.

© 2000 - 2009 Alan Yates - All Rights Reserved.

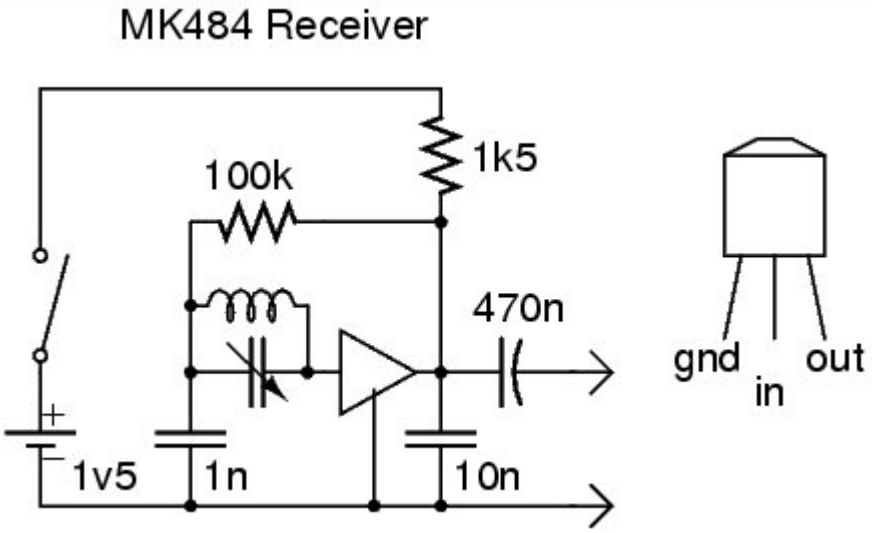

The RF circuit was constructed on a small scrap of veroboard and connections made between it, the rest of the components using PCB pins. At this point the smallest grey ABS box from Jaycar was selected as the enclosure and the polyvaricon tuning gang mounted in the middle of the lid. A knob was selected, large enough for good feel, but small enough to allow a well marked dial to be added later. The adapter hardware from Doug Hendricks KI6DS QRP Kits was again used to mate the polyvaricon with the 1/4" grub screw retained knob. The RF board was "mounted" with stiff wire on the back of the polyvaricon after its trimmers were set for minimum capacitance (a piece of cardboard insulating the track side), and the tuning range customised by removing several turns on the loopstick until it covered from about 538 kHz to 1791 kHz - my overshooting the inductance no doubt a result of the distributed capacitance of the windings. The windings were fixed in place with wax using a candle and the heat gun. The loopstick was then secured to the underside of the enclosure lid with two blobs of 2-part epoxy.

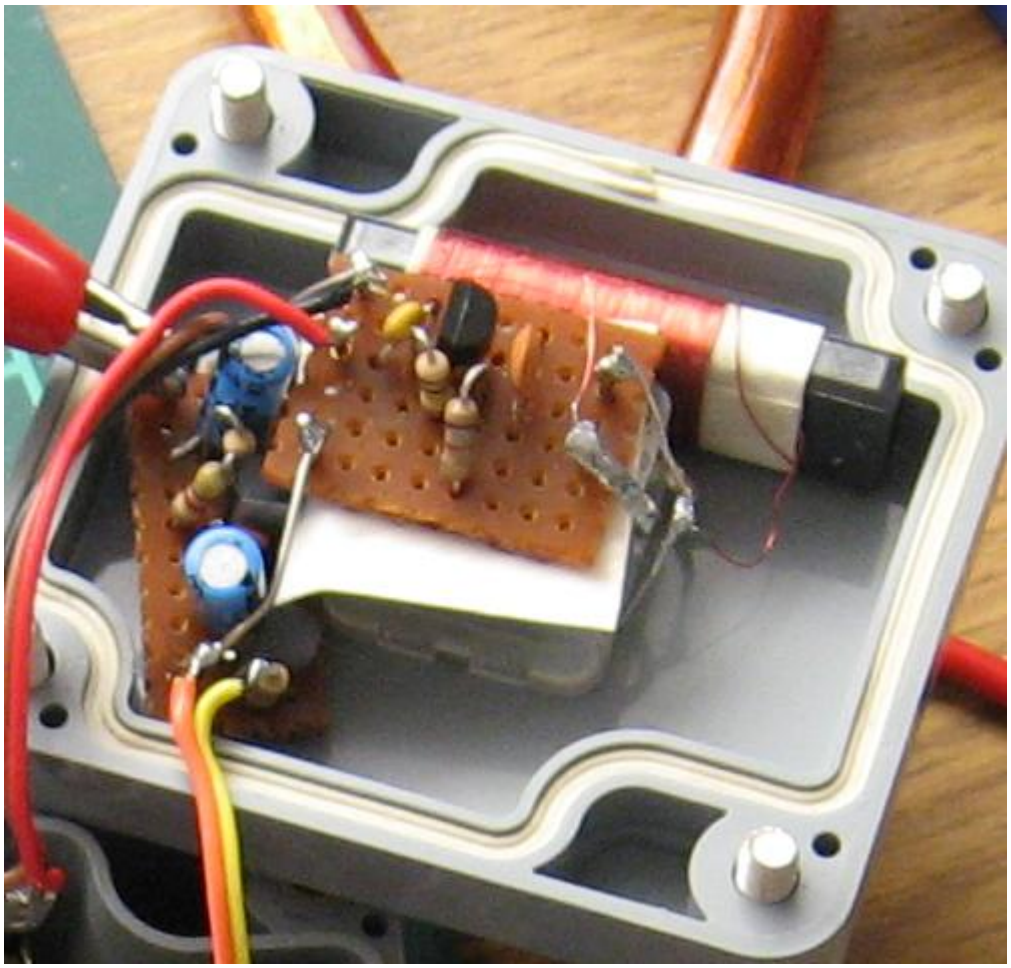

© 2000 - 2009 Alan Yates - All Rights Reserved. XHTML | CSS | CSS toggle

With the RF side of the receiver complete, now came the more challenging bit, an AF amplifier of reasonable performance powered by only a single cell. There have been many "optimised" single-cell headphone amplifiers published over the years, most of them heavily using boot strapping and being quite complex with lots of transistors and large value electrolytic capacitors. I had no where near enough room to fit such a design, so at first I went with a classic two transistor line up that fits on a 4x10 hole piece of veroboard.

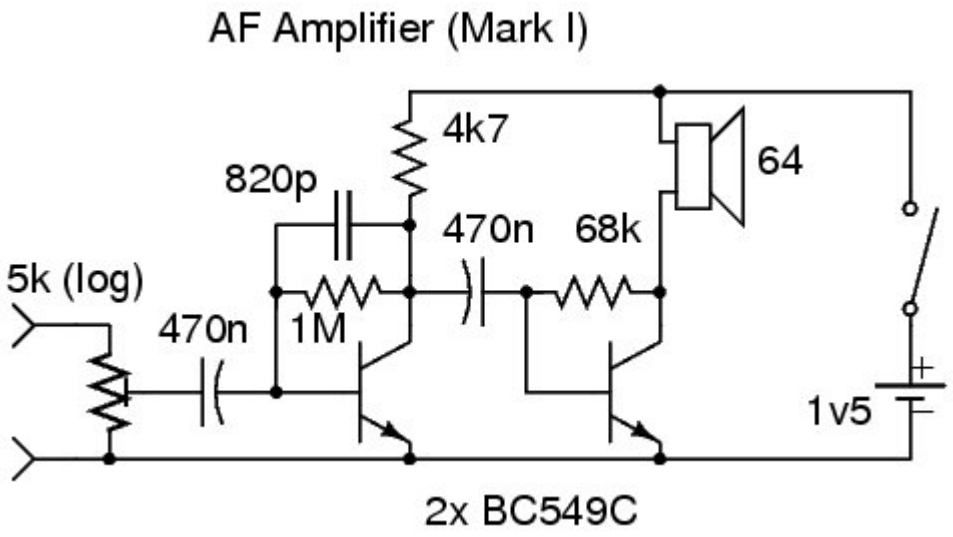

In this circuit DC passes through the speakers, and despite some careful design to improve its performance compared to the similar circuit in the Regenerative FM Receiver, I found its performance fairly poor. It offers sufficient gain and undistorted output for a quiet room, but it is completely unsuitable for the kinds of environment I wanted to use the radio in, on my daily commute to work. Its response rolls off at about 15-18 kHz, and the LF corner is quite good due to the largish coupling caps. From 3 volts up, such a circuit is quite usable. If you put a 1K:8 Ohm transformer in the final collector circuit and modified the feedback a little it might actually offer quite acceptable performance.

After using the radio with this Mark I AF amplifier, I decided to modify it for better performance. I picked a transformer coupled circuit to get the best output possible with the low supply voltage. Unfortunately this meant replacing the AA cell with an AAA cell to make sufficient room for the audio transformer.

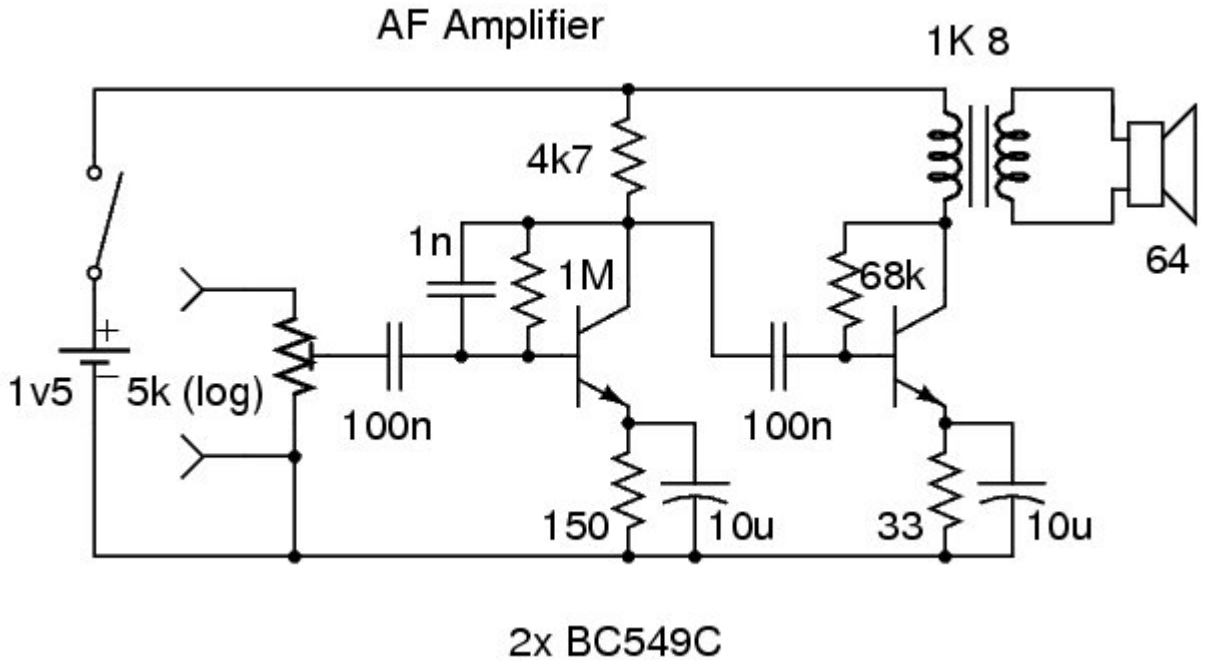

The emitter resistor bypass on the final transistor is probably redundant, it varies the gain only slightly, you can omit it to save space if you wish. The emitter resistance is important to minimise distortion however. The LF corner is somewhat worse than the original circuit, and the HF response rolls off a little earlier, but the result sounds quite natural. Most importantly there is much more power gain available, delivering ear-bleeding levels at the onset of objectionable distortion.

© 2000 - 2009 Alan Yates - All Rights Reserved. XHTML | CSS | CSS toggle

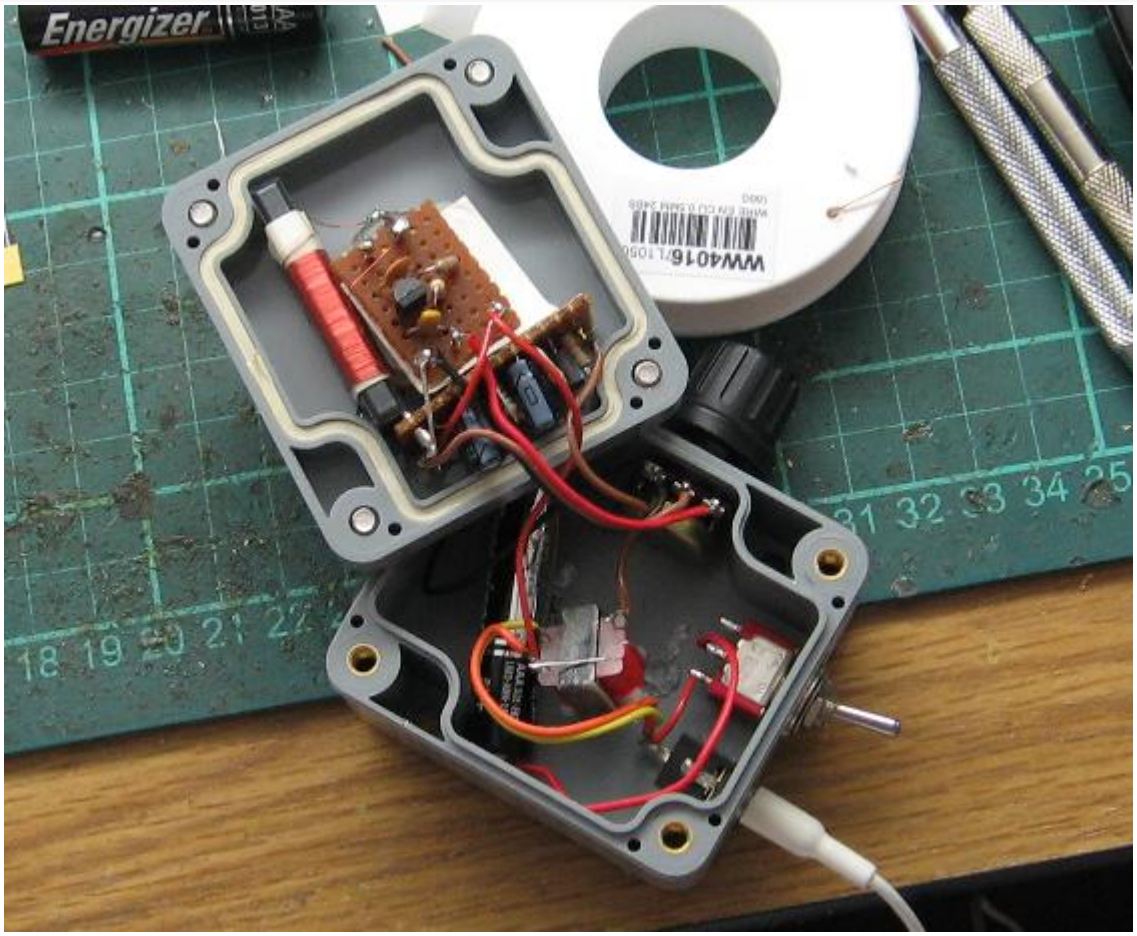

The finishing touches were some labelling using a Dynamo label maker, and the creation of a nicely laminated dial for the tuning knob. I used the XYLs Xyron 510 machine to make a piece of cardboard into a sticky-backed label which was pasted into place. This was marked with the assistance of the signal generator (and off-air signals). This was then peeled off and a final version made using the original as a template. The final version was run though the Xyron machine again using a laminate cartridge to produce a very pleasing glossy result.

© 2000 - 2009 Alan Yates - All Rights Reserved. XHTML | CSS | CSS toggle

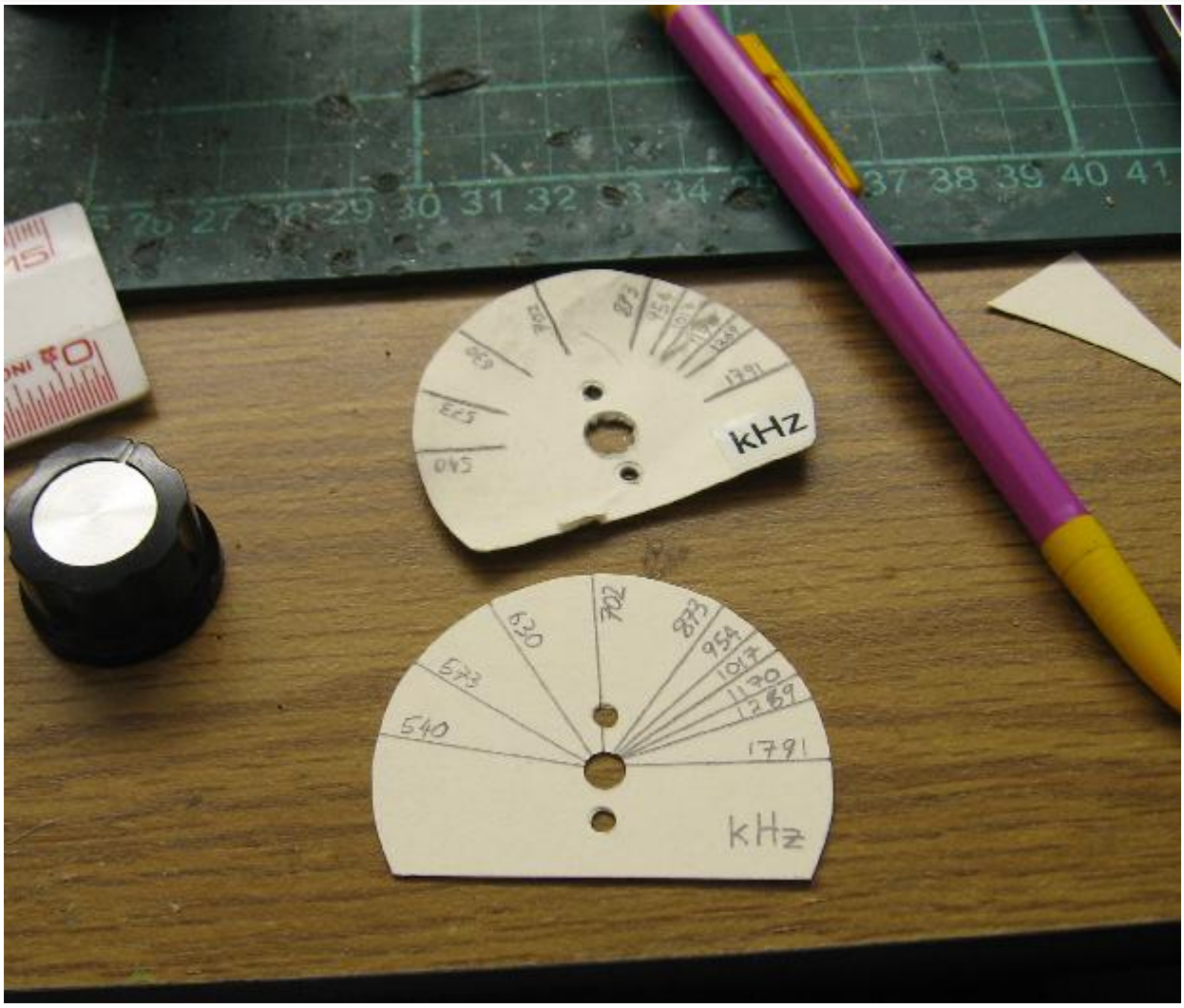

Notes

The wall of the plastic enclosure is too thick for the 3.5 mm stereo socket mounting thread. I ended up epoxying it into the wall. With some care I guess you could thread it into a slightly undersized hole, but gluing it right into the hole is much less mechanically challenging, especially if you didn't notice the problem until after you drilled the hole like I did!

As usual, a switched pot would avoid the need for a separate power switch. It would also make the radio more resistant to accidental turning on while it is knocking around in your bag. If only suitable switched pots were a still available from Jaycar or DSE...

The selectivity could be better, 2BL (702 kHz) is an enormous signal at my QTH and can be heard between channels near the centre of the tuning range. It is not all that objectionable, except when trying to chase DX at night - which was never a design requirement. I probably should have used Litz wire for the coil, or tried using one of the commercial pre-wound coils (like Jaycar catalogue number LF1020). Such coils are designed to match the tuning gang I am using, but past experience has suggested their precision leaves a lot to be desired, often being incapable of tuning the entire band even when moved physically on the ferrite bar and using the trimmers on the tuning gang. They are a cheap source of an approximately correct coil that can be tweaked though.

A Q-booster using a simple FET circuit could tighten the selectivity, but it would chew more power and isn't really required for local station work. I am just being picky really, the performance as-is exceeds most bargain-store superhets.

The Xyron 510 machine is a damn handy piece of kit. It can place adhesive on the back of any thin, fairly flat, object, or laminate both sides, or one side and put adhesive on the other. Cartridges are available with a choice of re-positionable or permanent adhesive, it can even make fridge magnets. Its main target market is the scrap booking community, but homebrew electronic hobbyists would find it very useful for panel work.

6 comments.

© 2000 - 2009 Alan Yates - All Rights Reserved. XHTML | CSS | CSS toggle

Attachments

title	type	size
RF Board Circuit Source	application/postscript	13.346 kbytes
AF Board (Mark I) Source	application/postscript	13.053 kbytes
AF Board (Mark II) Source	application/postscript	14.849 kbytes

© 2000 - 2009 Alan Yates - All Rights Reserved.

MK484 MW Receiver

2007-03-24

I've grown tired of my regenerative AM broadcast receiver's lack of AGC and its RFI problems, so I decided to build something based on the MK484. I've had them laying around for years in the junk box, and my recent work in using them for an AM receiver IF prompted this project.

Other requirements for this project were a small size, something smaller than the current plastic tub I carry in my backpack to work every day, and something with a calibrated tuning dial to take the guess work out of tuning. I also set myself a challenge to build it using only a single 1.5 volt cell for the supply, and driving conventional 32 Ohm dynamic earphones.

The RF section is very simple, basically the single cell "reference design" MK484 receiver. The ferrite rod is the small rectangular prism unit available from Jaycar or Electus (catalogue number LF1016), I measured its mu-rod at about 65 and calculated the turns required for 400-450 uH or so, required to cover the extended AM broadcast band completely using the 165 + 62 pF tuning gangs also available from Australian electronic stores.

© 2000 - 2009 Alan Yates - All Rights Reserved.

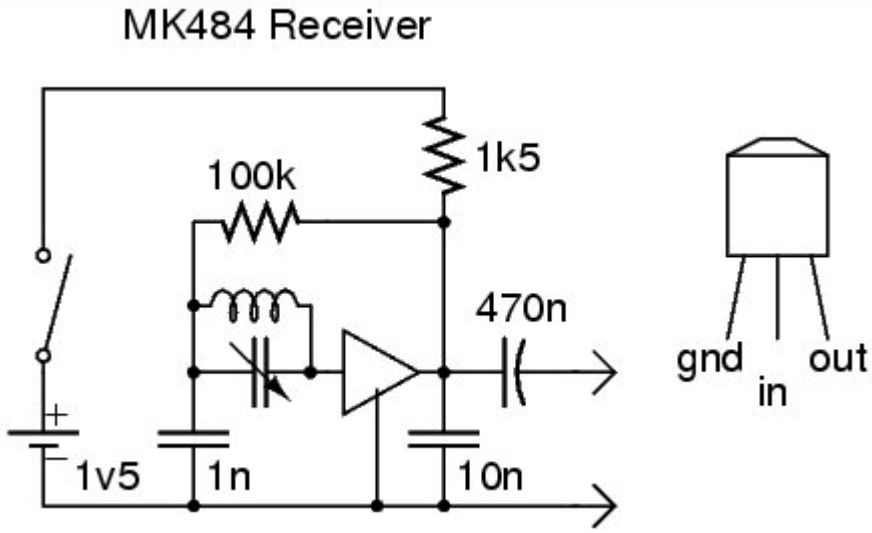

The RF circuit was constructed on a small scrap of veroboard and connections made between it, the rest of the components using PCB pins. At this point the smallest grey ABS box from Jaycar was selected as the enclosure and the polyvaricon tuning gang mounted in the middle of the lid. A knob was selected, large enough for good feel, but small enough to allow a well marked dial to be added later. The adapter hardware from Doug Hendricks KI6DS QRP Kits was again used to mate the polyvaricon with the 1/4" grub screw retained knob. The RF board was "mounted" with stiff wire on the back of the polyvaricon after its trimmers were set for minimum capacitance (a piece of cardboard insulating the track side), and the tuning range customised by removing several turns on the loopstick until it covered from about 538 kHz to 1791 kHz - my overshooting the inductance no doubt a result of the distributed capacitance of the windings. The windings were fixed in place with wax using a candle and the heat gun. The loopstick was then secured to the underside of the enclosure lid with two blobs of 2-part epoxy.

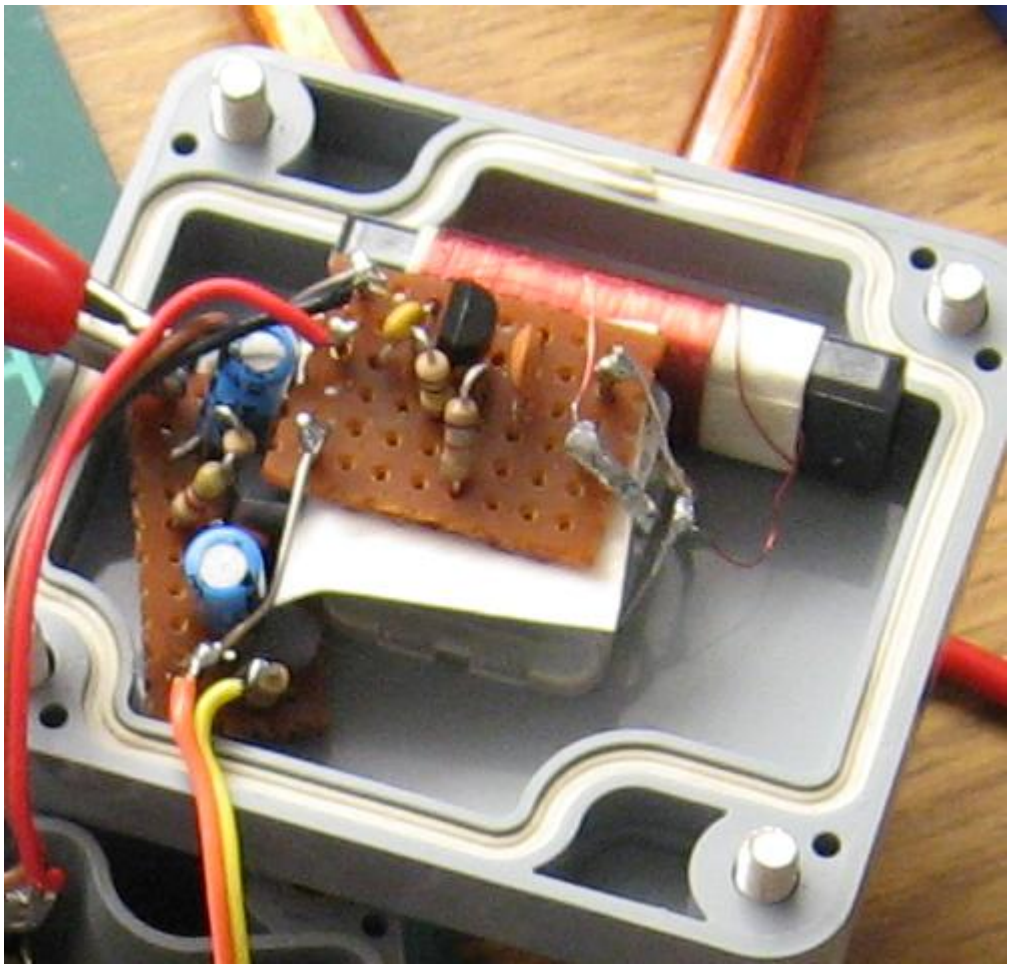

© 2000 - 2009 Alan Yates - All Rights Reserved. XHTML | CSS | CSS toggle

With the RF side of the receiver complete, now came the more challenging bit, an AF amplifier of reasonable performance powered by only a single cell. There have been many "optimised" single-cell headphone amplifiers published over the years, most of them heavily using boot strapping and being quite complex with lots of transistors and large value electrolytic capacitors. I had no where near enough room to fit such a design, so at first I went with a classic two transistor line up that fits on a 4x10 hole piece of veroboard.

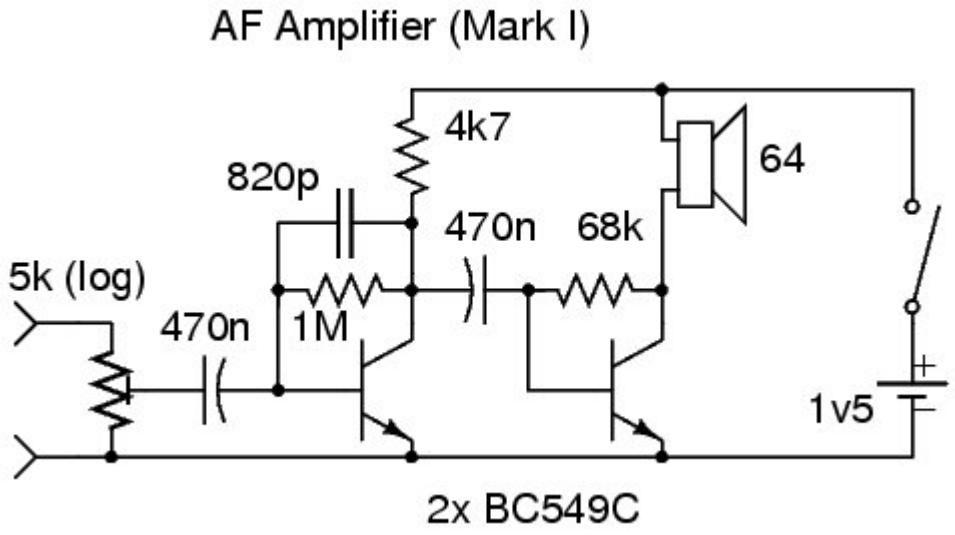

In this circuit DC passes through the speakers, and despite some careful design to improve its performance compared to the similar circuit in the Regenerative FM Receiver, I found its performance fairly poor. It offers sufficient gain and undistorted output for a quiet room, but it is completely unsuitable for the kinds of environment I wanted to use the radio in, on my daily commute to work. Its response rolls off at about 15-18 kHz, and the LF corner is quite good due to the largish coupling caps. From 3 volts up, such a circuit is quite usable. If you put a 1K:8 Ohm transformer in the final collector circuit and modified the feedback a little it might actually offer quite acceptable performance.

After using the radio with this Mark I AF amplifier, I decided to modify it for better performance. I picked a transformer coupled circuit to get the best output possible with the low supply voltage. Unfortunately this meant replacing the AA cell with an AAA cell to make sufficient room for the audio transformer.

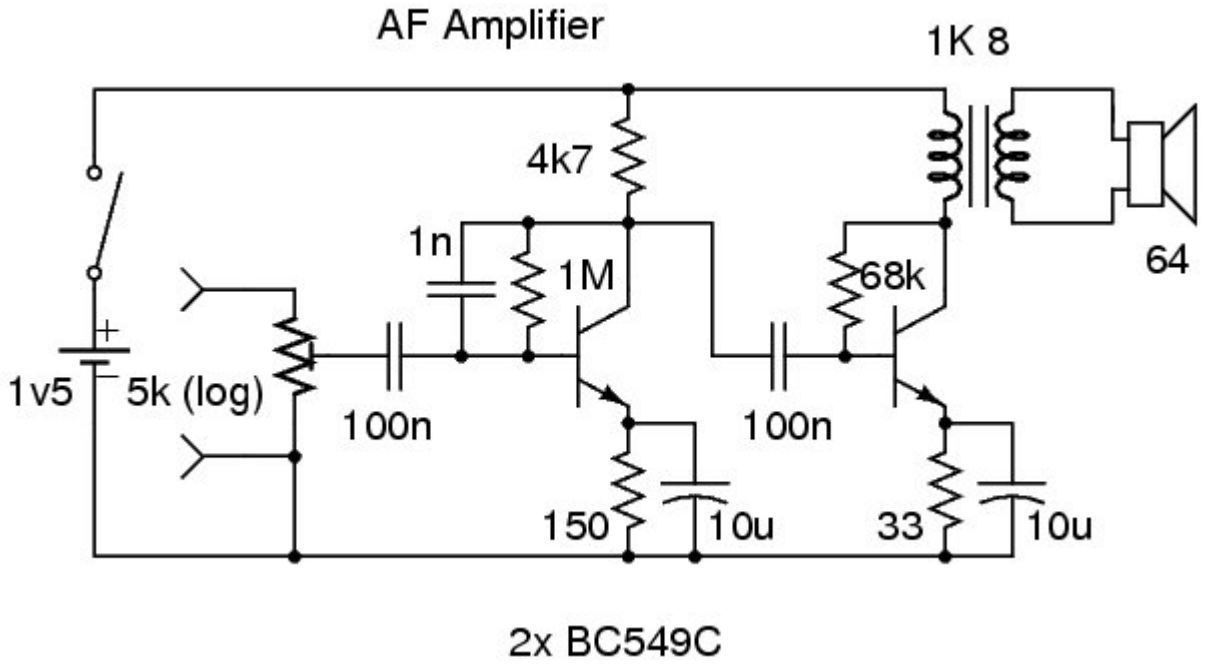

The emitter resistor bypass on the final transistor is probably redundant, it varies the gain only slightly, you can omit it to save space if you wish. The emitter resistance is important to minimise distortion however. The LF corner is somewhat worse than the original circuit, and the HF response rolls off a little earlier, but the result sounds quite natural. Most importantly there is much more power gain available, delivering ear-bleeding levels at the onset of objectionable distortion.

© 2000 - 2009 Alan Yates - All Rights Reserved. XHTML | CSS | CSS toggle

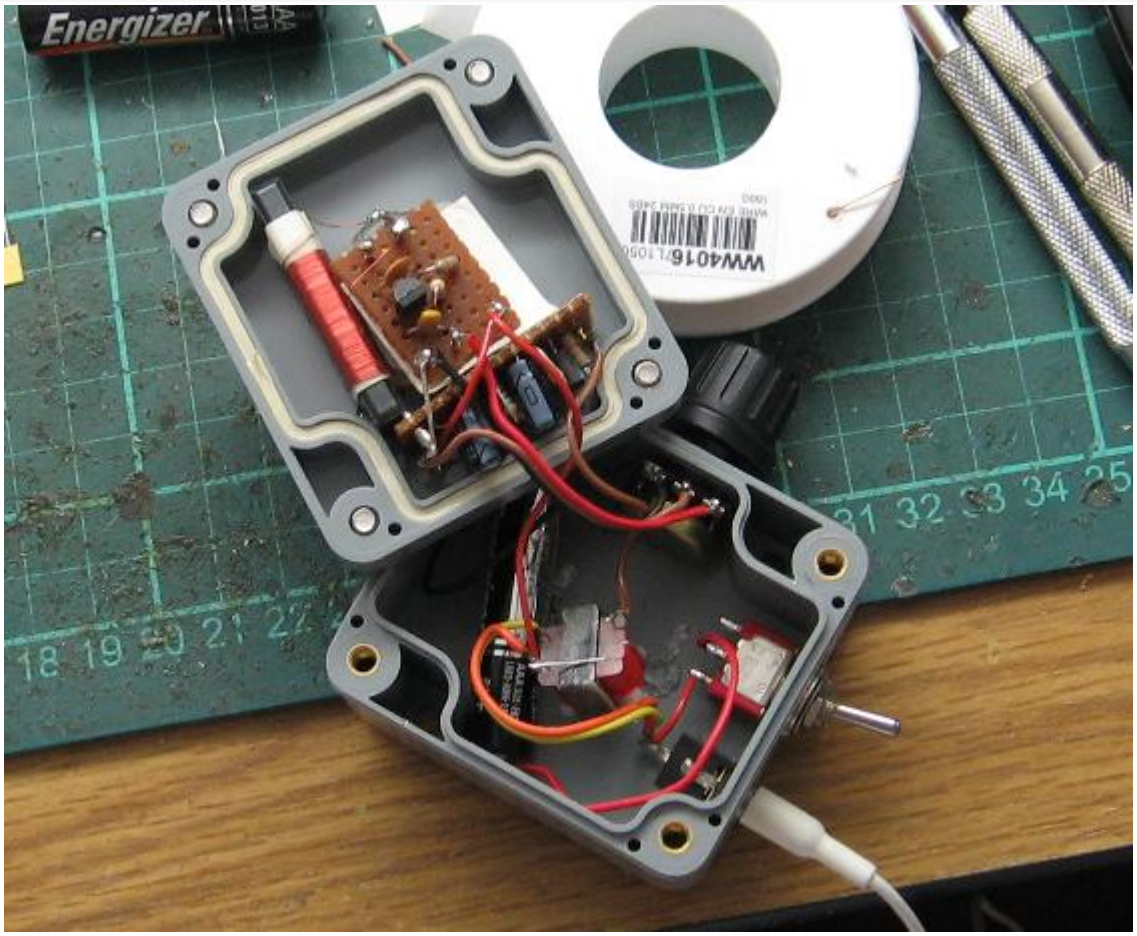

The finishing touches were some labelling using a Dynamo label maker, and the creation of a nicely laminated dial for the tuning knob. I used the XYLs Xyron 510 machine to make a piece of cardboard into a sticky-backed label which was pasted into place. This was marked with the assistance of the signal generator (and off-air signals). This was then peeled off and a final version made using the original as a template. The final version was run though the Xyron machine again using a laminate cartridge to produce a very pleasing glossy result.

© 2000 - 2009 Alan Yates - All Rights Reserved. XHTML | CSS | CSS toggle

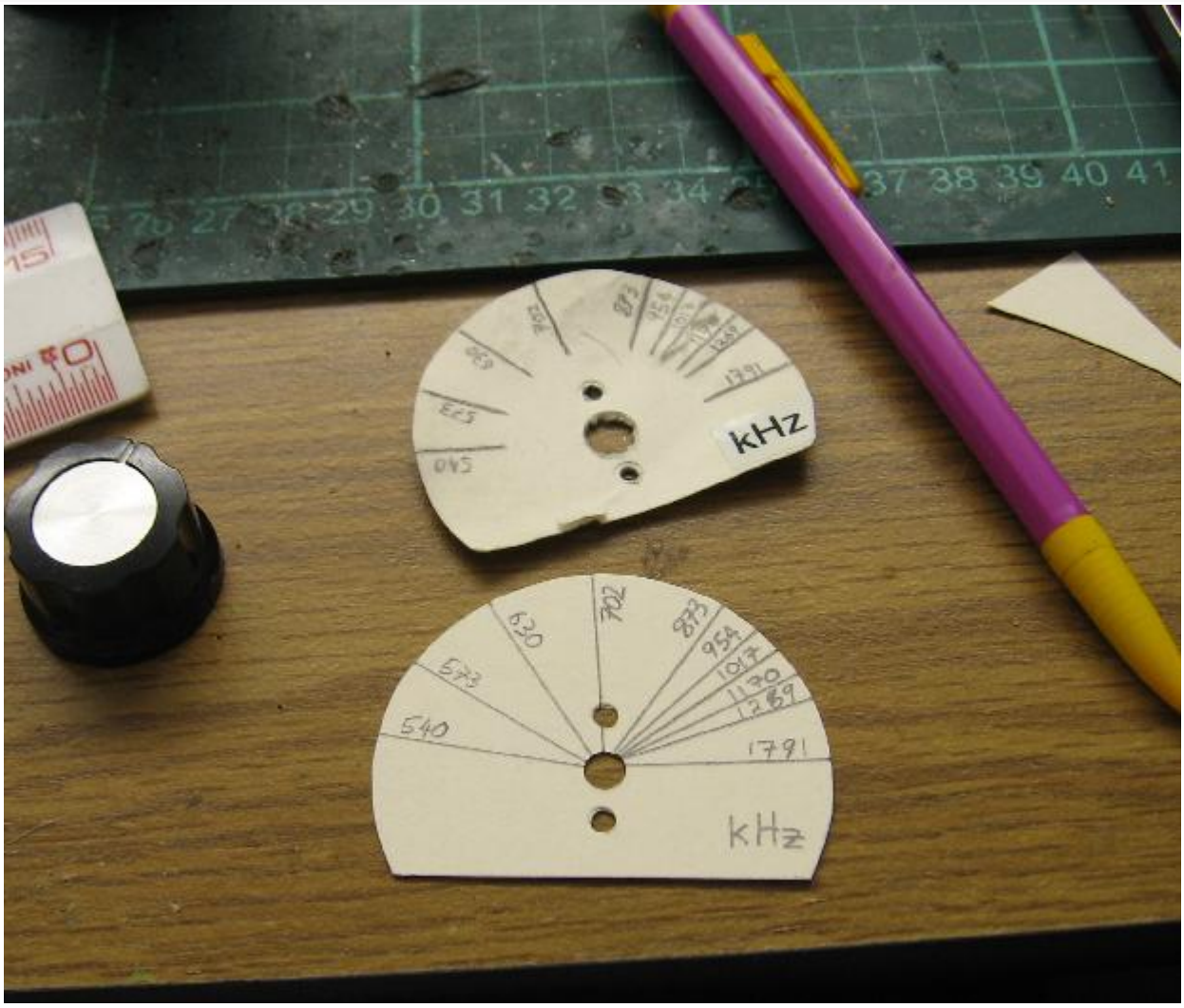

Notes

The wall of the plastic enclosure is too thick for the 3.5 mm stereo socket mounting thread. I ended up epoxying it into the wall. With some care I guess you could thread it into a slightly undersized hole, but gluing it right into the hole is much less mechanically challenging, especially if you didn't notice the problem until after you drilled the hole like I did!

As usual, a switched pot would avoid the need for a separate power switch. It would also make the radio more resistant to accidental turning on while it is knocking around in your bag. If only suitable switched pots were a still available from Jaycar or DSE...

The selectivity could be better, 2BL (702 kHz) is an enormous signal at my QTH and can be heard between channels near the centre of the tuning range. It is not all that objectionable, except when trying to chase DX at night - which was never a design requirement. I probably should have used Litz wire for the coil, or tried using one of the commercial pre-wound coils (like Jaycar catalogue number LF1020). Such coils are designed to match the tuning gang I am using, but past experience has suggested their precision leaves a lot to be desired, often being incapable of tuning the entire band even when moved physically on the ferrite bar and using the trimmers on the tuning gang. They are a cheap source of an approximately correct coil that can be tweaked though.

A Q-booster using a simple FET circuit could tighten the selectivity, but it would chew more power and isn't really required for local station work. I am just being picky really, the performance as-is exceeds most bargain-store superhets.

The Xyron 510 machine is a damn handy piece of kit. It can place adhesive on the back of any thin, fairly flat, object, or laminate both sides, or one side and put adhesive on the other. Cartridges are available with a choice of re-positionable or permanent adhesive, it can even make fridge magnets. Its main target market is the scrap booking community, but homebrew electronic hobbyists would find it very useful for panel work.

6 comments.

© 2000 - 2009 Alan Yates - All Rights Reserved. XHTML | CSS | CSS toggle

Attachments

title	type	size
RF Board Circuit Source	application/postscript	13.346 kbytes
AF Board (Mark I) Source	application/postscript	13.053 kbytes
AF Board (Mark II) Source	application/postscript	14.849 kbytes

© 2000 - 2009 Alan Yates - All Rights Reserved.

More Beacon Work

2008-06-29

Beacon Transmitter

I put the 80 metre CW beacon into an Altoids tin. This worked quite well shielding the unit far better than expected despite no effort having been made to decouple the DC input feed. With a dummy load the signal is hardly detectable across the room. The boards are held in place with double-sided foam tape, short wires connect to the tin for grounding where required, power comes in via an RCA socket.

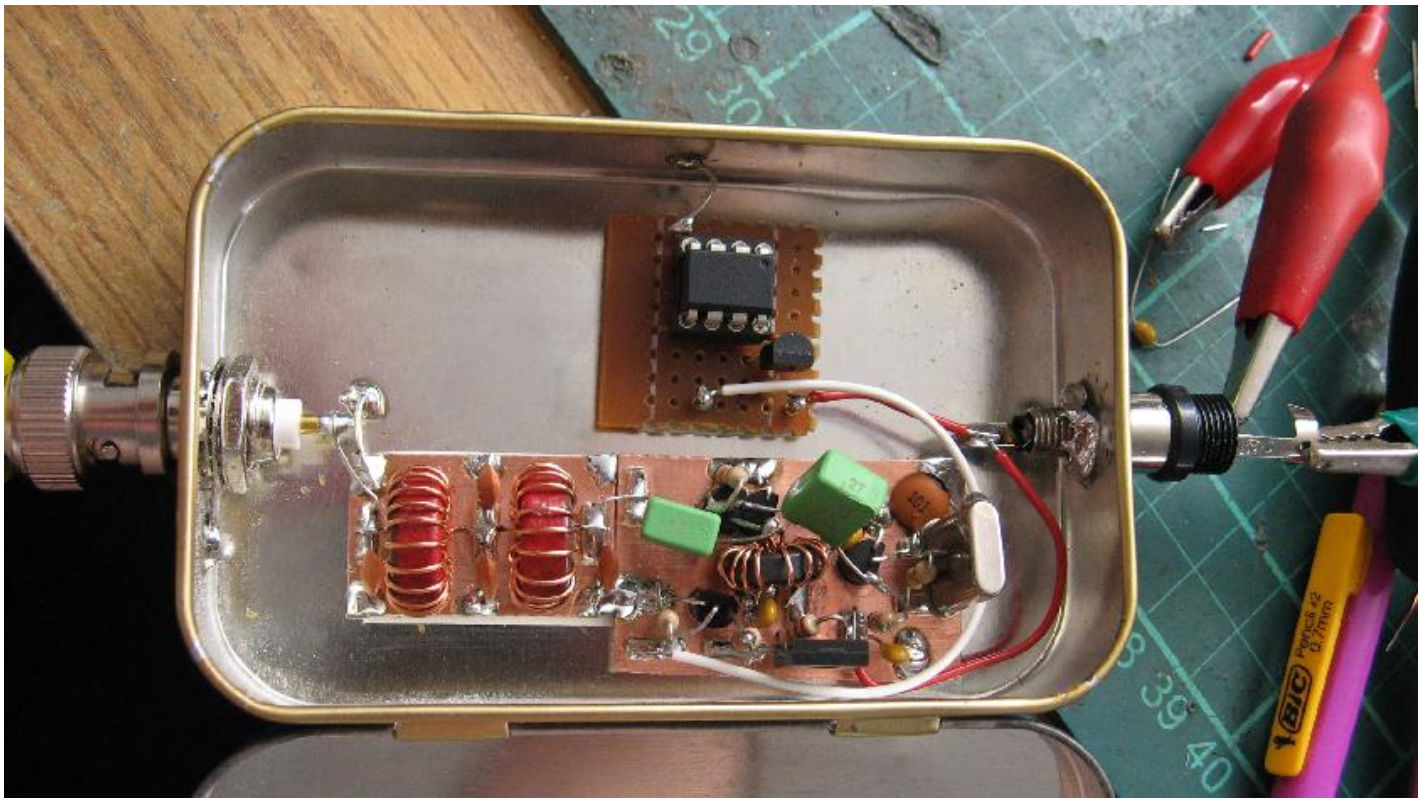

Antenna Work

Previous quick experiments with a ferrite base-loading inductor were reconsidered when I felt how hot the inductor was getting. Almost all the transmitter power was being dissipated in the core! Calculations and common sense about high-Q inductors suggested I needed copper wire gauges and coil former volumes I just didn't have in stock, so an order was placed for materials. In the meantime I wound a 159 uH inductor using 0.5 mm wire close-wound on a piece of 25 mm OD conduit. Neatly hand-winding 150 turns without a winding jig is a process that requires much patience, my hands where cramping at the end of the job. The self-resonance frequency of the inductor is about 10 MHz (confirmed with my super-regen dipper), the aspect ratio was chosen to minimise self-capacity of the coil while still having a reasonable Q, while "squarer" coils often have better Q for the same wire gauge they have more self-capacity and hence a lower SRF and peak-Q frequency. This inductor has a Q-peak estimated near 2 MHz, so it is being operated non-optimally. Not being space-wound and in full contact with the former is the largest Q-limiting factor.

© 2000 - 2009 Alan Yates - All Rights Reserved.

While not ideal, this inductor dramatically improved the antenna performance, allowing Peter VK2TPM to hear my feeble signal at his QTH and even read parts of it. Here is a short recording he made after the inductor change. Prior to this he could just tell there was a signal there, but not read it.

The new inductor is somewhat larger in value than needed, my C-jig is used to reduce the effective antenna capacitance and tune to resonance with the fixed inductor. Resonance is quite sharp (a good sign - means the Q is fairly reasonable), and the RF voltage delivered into the high antenna impedance (kilo-ohms in magnitude) is quite high, enough to ionise Neon NE-2 bulbs held near the coil.

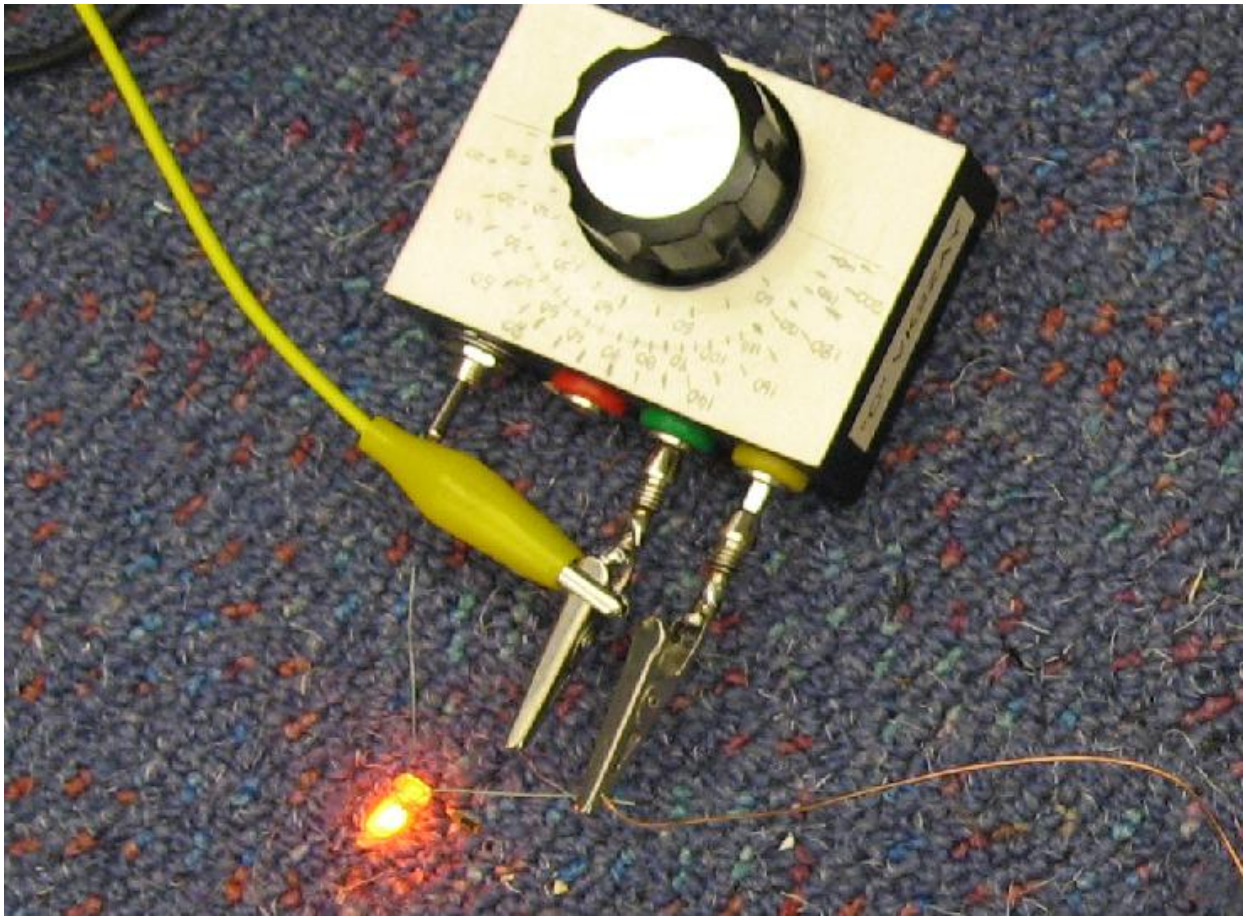

This voltage is not healthy for the C-jig polyvaricon BTW, it resulted in a flash-over of the small trimmers on the back of the polyvaricon causing a small region of carbonisation in the insulator edge. This gave an intermittent fault that only appeared as resonance was approached and the voltages rose high enough to flash to the burnt spot - the trimmer insulation was carefully scraped cleaned and the trimmer position displaced slightly from minimum reducing the 'sharp edge' field concentration curing the problem, but the final matching network will use an air-spaced trimmer of higher voltage rating. At higher powers I have no doubt you could destroy a polyvaricon quite easily.

© 2000 - 2009 Alan Yates - All Rights Reserved. XHTML | CSS | CSS toggle

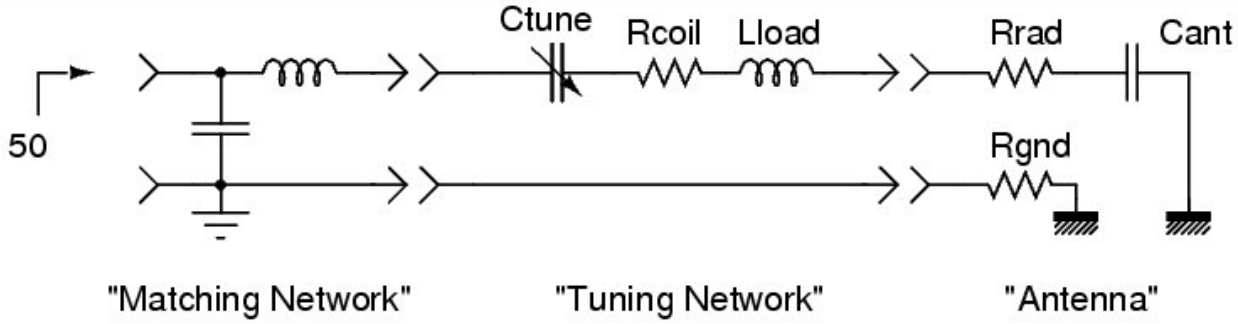

Essentially the antenna appears as a small capacitance (Cant - 10-30 pF) in series with a resistance which is composed on a small value which models actual signal radiation (Rrad) and a larger value that models the losses in the ground system (Rgnd). The coil has its losses modelled as a resistance as well (Rcoil), but basically the entire system resistance appears lumped together once Cant is tuned out by Lload (and Ctune, which acts to reduce Lload and/or Cant). This total antenna resistance must then be matched back to our transmitter output load resistance, 50 Ohms in this case. The inductive part of the L-matching network could be absorbed into Lload but I decided not to do this enabling each section to be tested separately.

Matching is important because the filters and output devices in the transmitter were designed to operate with a 50 Ohm resistive load, reflecting smaller resistances (or more pathological reactive impedances) back into the transmitter can make it pull too much current destroying its output devices or cause it to generate spurious signals. Larger resistances are fairly safe with this particular design, it just tends to poorly load the unit and result in very little output power. Especially bad is inductive reactance which can result in resonances in the output stage and frequency multiplication preferentially producing higher harmonics resulting in overheating - this is unfortunately easy to achieve with the L-match feeding scheme and happens close to the optimal resistive match because of the sharpness of the tuning.

Two different feeding schemes have been trialled; initially my trusty end-fed half-wave antenna matching unit was used instead of an L-network, having just sufficient range to match the moderate resistance (hundreds of ohms) of the resonated antenna. More recent work involved careful measurement of the antenna resistance at resonance (near 300 Ohms) and design of an L-network to match this to 50 Ohms (5 uH inductor and 330 pF capacitor in a low-pass configuration). A pair of 10 uH Ohmite chokes in parallel were used and a silver teflon capacitor from the junkbox, network Q is around 2.2 so the values and component performances aren't especially critical. At resonance the Γ seen looking into the matching network is < 0.15 which is a VSWR better than 1.35:1.

The 300 Ohm resonant load resistance figure suggests very high ground losses (Rgnd), I am using the cast iron sewer back-vent of my building as a ground system, it may not be well bonded at each joint. The radiation resistance is estimated to be in the 1-5 Ohm region for this length of wire, so the total system efficiency is 1.7% at best and perhaps as little as 1/3 of a percent! Radiated power is therefore in the 450 uW - 2.5 mW region ignoring mismatch and any other losses I can't quantify.

Enough to say it isn't getting out very well at present, better antennas are in the works though.

14 comments.

Attachments

title	type	size
Antenna Network Circuit Source	application/postscript	12.276 kbytes

Parent article: 80 Metre CW Beacon.

© 2000 - 2009 Alan Yates - All Rights Reserved.

More Sports Ears Related Musings

2010-05-12

A Cheaper Compatible Receiver

Checking eBay the other day I found a 3-band consumer radio that covers the Sports Ears frequency for $5.48 AUD. Naturally enough I ordered it to check out. The shipping was about $5 on top, so < $11 landed. Apparently you can also order it direct from the Suntek store and get free shipping. The unit is "Kaide" brand, model designator "BC-R30". It is a little physically larger than the AFL Sports Ears product, with 2 VHF FM bands and MW. Turn-the-dial tuning, covering 64-86 MHz, 86-108 MHz and 530-1600 kHz.

It operates from two AAA batteries, pulls about 17 mA quiescent on all bands and features a red LED power indicator. It has a small telescopic antenna, a front-panel speaker and a 3.5 mm stereo headphone jack. The FM detector is only monophonic, but like the Sports Ears unit (and unlike so many cheap radios) the actual socket is wired to support stereo headphones not the mono magnetic ear piece of years gone by. Unlike the AFL Sports Ears unit its dial indicator is easy to read, and even at full (ear-splitting) volume the audio amplifier has very little distortion. The unit does not come with earphones, one must provide their own if they desire private listening.

The front panel speaker offers flexibility that none of the Sports Ears range have - perhaps by design. One could say so as not to annoy near-by fans in the stadium, or perhaps because of its limited practicality in the noisy stadium environment. Less charitably, to minimise costs and encourage more sales.

© 2000 - 2009 Alan Yates - All Rights Reserved.

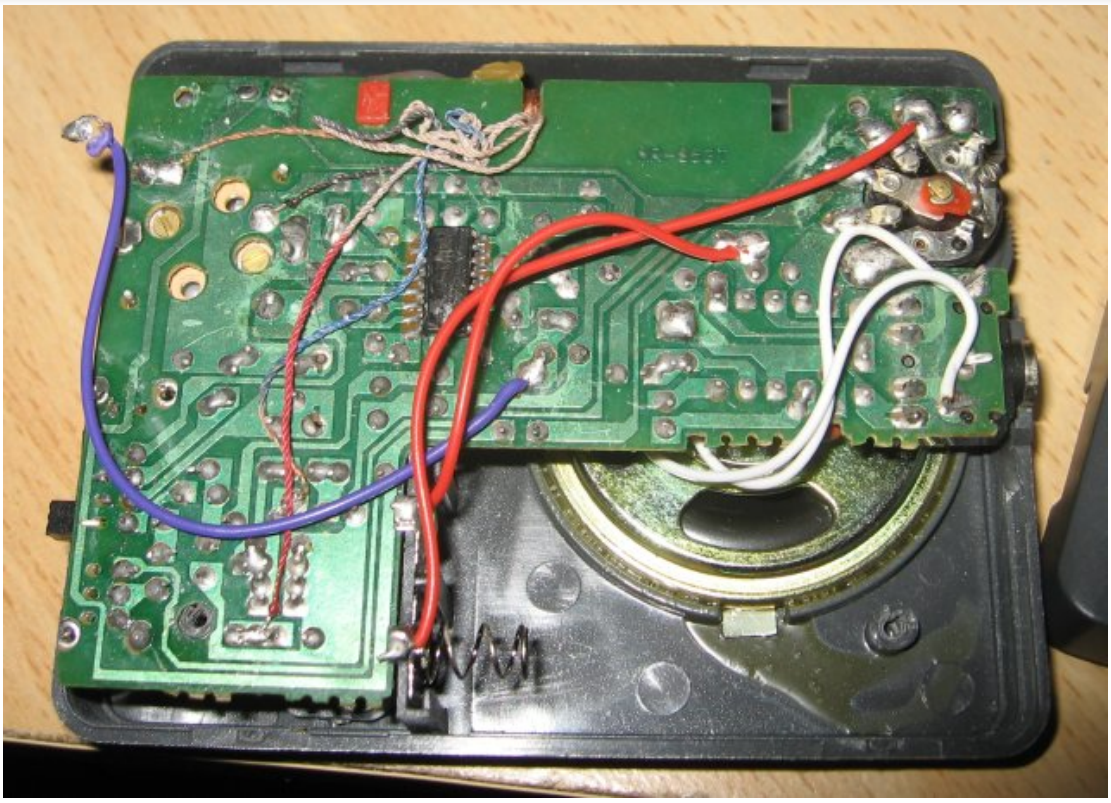

Inside, the BC-R30 is based on the CD9088CB (a TDA7088 clone). This particular chip is vaguely similar to the old TDA7000 low-IF (70 kHz) with FLL detector architecture and is aimed at the very cheapest end of the FM broadcast receiver market. It provides acceptable quality FM detection and features scan/reset varactor or turn-the-dial polyvaricon tuning with or without AFC. Being low-IF with FLL recovery it has rather weaker selectivity than the ceramic filtered quadrature detector system used in the genuine Sports Ears unit. As supplied I found the mute circuit annoying, so I changed R6 to 10 kΩ to disable the mute. I also personally find the capturing effect of the FLL demodulator annoying, and prefer the smoother tuning of other architecture FM discriminators. That said, the unit is sensitive and more than adequate for the task, even with the mute unmodified.

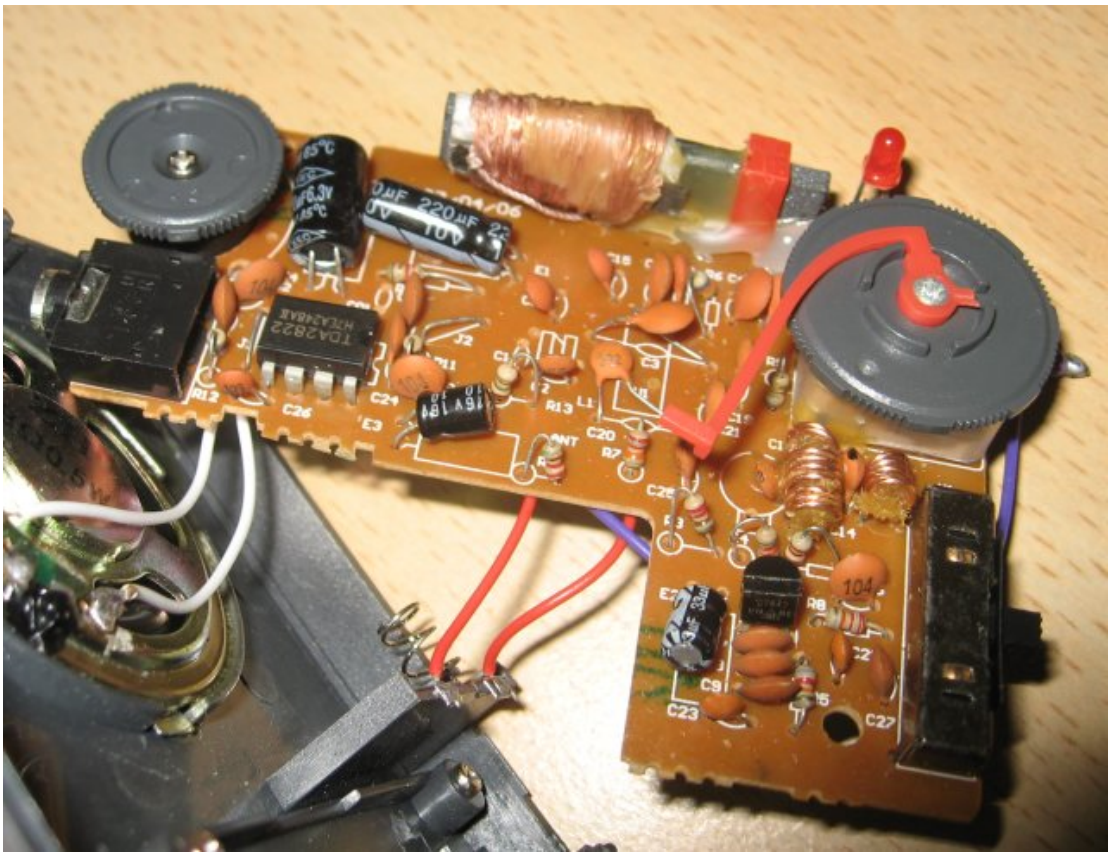

The MW feature of the receiver is based on the CC7642 AM TRF 3-pin TO-92 chip (a clone of the TA7641 which is a clone of the old ZN414 or MK484). The arrangement is even simpler than that suggested in the TDA7088 datasheet for an AM/FM solution.

© 2000 - 2009 Alan Yates - All Rights Reserved. XHTML | CSS | CSS toggle

which utilises the CC7642 at a 455 kHz IF using the TDA7088 as an RF amplifier and mixer. Rather the CC7642 works directly at the RF frequency as a TRF receiver. The drawback is absolutely pathetic selectivity, especially with the fairly poor Q of the loop-stick used. One can hear 2BL 702 kHz across most of the band for example, even under some of the weaker stations towards the top of the band.

Indeed, this receiver is built for a price and it shows it. There is little else you could remove and still have a functional receiver. The genuine Sports Ears unit has a technically much more advanced architecture, especially on MW where it is a single-conversion superhet and uses a ceramic filter for much better performance. The BC-R30 has no IFT cans or ceramic filters in it at all, in fact only three inductors, the two VHF LO tanks for the two FM bands and the MW loop-stick antenna, there is no front-end track-tuning tank on VHF! This is a "feature" of such minimal AM/FM receivers which minimises the production costs and simplifies the factory alignment requirements.

The lack of a track-tuned front-end means the FM detector will also harmonically detect out-of-band transmissions. For example, on the "SCH" band, I can easily hear TV channel 7 audio (187.75 MHz) near the bottom of the dial "64". this is a 3rd harmonic response: LO = (187.75 - 0.07) / 3 = 62.56 MHz. (I confirmed this by listening to the LO using my VR-500, the LO being locked to the RF signal by the FLL is WBFM modulated by the signal being received.) This harmonic mixing is either a feature or a major limitation depending on what you want to listen to. For the 70.2 MHz Sports Ears channel the harmonic spur and image responses are in sparely populated regions of the spectrum and will likely cause no problems.

Still, none of these limitations of the BC-R30 make the Sports Ears receiver look like a great deal. The Sports Ears receiver costs 8 times more than BC-R30. At least with Sports Ears you are getting a real superhet with fairly good selectivity. It is arguable that fixed "UMPS" tuning is also preferable as you do not need to retune, and can flick between your favourite FM station and UMPS easily. The Sport Ears receiver also pulls a little less current, so its batteries will last somewhat longer. That said, the BC-R30 is quite usable if you don't want to buy the genuine product.

The big feature of the BC-R30 is the TDA2822 audio amplifier. Even at only a 3 volt supply it can deliver several hundred milliwatts of audio at very low distortion. That combined with the front-panel speaker and better treble response makes the BC-R30 a pretty nice radio for casual use, especially as it covers part of the VHF TV band, and for the price is fairly competitive to the Digitor/Tecsun receiver available from Dick Smith I suggested as another alternative.

Converting a Common AM/FM Radio

For comparison purposes, I picked up a $12 AUD "Sansai" AM/FM radio at Hot Dollar in Cronulla. It is a fairly bulky unit, has a monophonic earphone socket, and a really pathetic dial scale pointer that sometimes sticks. It tunes the usual 88-108 MHz and 530-1600 kHz bands. It has a belt-clip in addition to the lanyard shared by the other receivers and runs from two AA batteries making it a bit cheaper to feed although it pulls about 20 mA quiescent despite having no power indicator LED. There are no screws holding the shell together, just rather fragile moulded clips.

Inside that extra $5 shows, the radio is arguably better engineered than the BC-R30. It is based on the SA2003 (a TA8164 clone). This chip implements a full superhet AM/FM receiver with AM AGC and a quadrature detector for FM. The implementation utilises track-tuned circuits for both bands and ceramic filters/quad network. It just happens to use the TDA2822 audio amplifier. Why it only has a mono earphone socket despite a dual-channel amplifier is a bit of a puzzle.

© 2000 - 2009 Alan Yates - All Rights Reserved. XHTML | CSS | CSS toggle

The MW selectivity is provided by the 455 kHz ceramic filter and is fairly similar to the Sports Ears receiver. Needless to say, a vast improvement over the BC-R30's MW receiver.

For VHF WBFM the ceramic quadrature network based detector is actually a little touchy to tune compared to the LC quadrature network detector in the Sports Ears receiver. I am unsure if the ceramic IF filter pass-band does not exactly correspond to the ceramic quad network or if the filter itself is a little too narrow, but distortion on deviation peaks is noticeable unless tuned exactly on frequency with a strong signal. Despite the locking effect of the FLL in the BC-R30 I think I prefer its detector for overall quality of recovered modulation with less than precise tuning.

Anyway, conversion was a simple affair. Although I had hoped there would be enough adjustment range in the existing coils, this was not the case, I was forced to replace the oscillator and front-end tanks. I replaced the LO coil with a 5 turn one (5 turns on 5 mm ID, 700 um tin-plated Cu wire) and replaced the pair of bandset caps (an 20 pF and 30 pF) with a single 56 pF capacitor. For the front-end tuned circuit I replaced the coil with a similar 5-turn coil and needed about 10 pF extra capacitance across the existing gang + bandset cap to place 70.2 MHz mid-dial. The turn spacing was tweaked with the tracking trimmers at mid-swing. The resulting receiver works just fine, but doesn't quite track-tune properly. This is of no consequence for use with just Sports Ears, and I did not believe it was worth the effort to unsolder and measure the polyvaricon properties to compute a L & C solution for near-perfect tracking.

When I said "trivial" affair in my previous article, I may be exagerating a little. Without test equipment, especially a signal generator and frequency counter this task would have been pretty daunting, especially if you want to preserve proper track-tuning or add band-switching. I found my wavemeter and tone dipper especially helpful for this realignment, more so when I got completely lost and couldn't sniff enough LO energy to drive the counter properly.

A Signal Generator For Testing

In order to locally test receivers and converters for the Sports Ears frequency I built a simple test source. It is carefully shielded with a fairly weak output power and internal PSU so the signal can be attenuated to very feeble levels for sensitivity testing. When terminated in a dummy load the signal is undetectable near unit. Despite no special precautions being taken with the AF connector line to prevent RF leakage, very little escapes there. Originally an internal AF oscillator was planned, but was found to be unnecessary and the socket added to allow a range of audio sources to be used for testing.

© 2000 - 2009 Alan Yates - All Rights Reserved. XHTML | CSS | CSS toggle

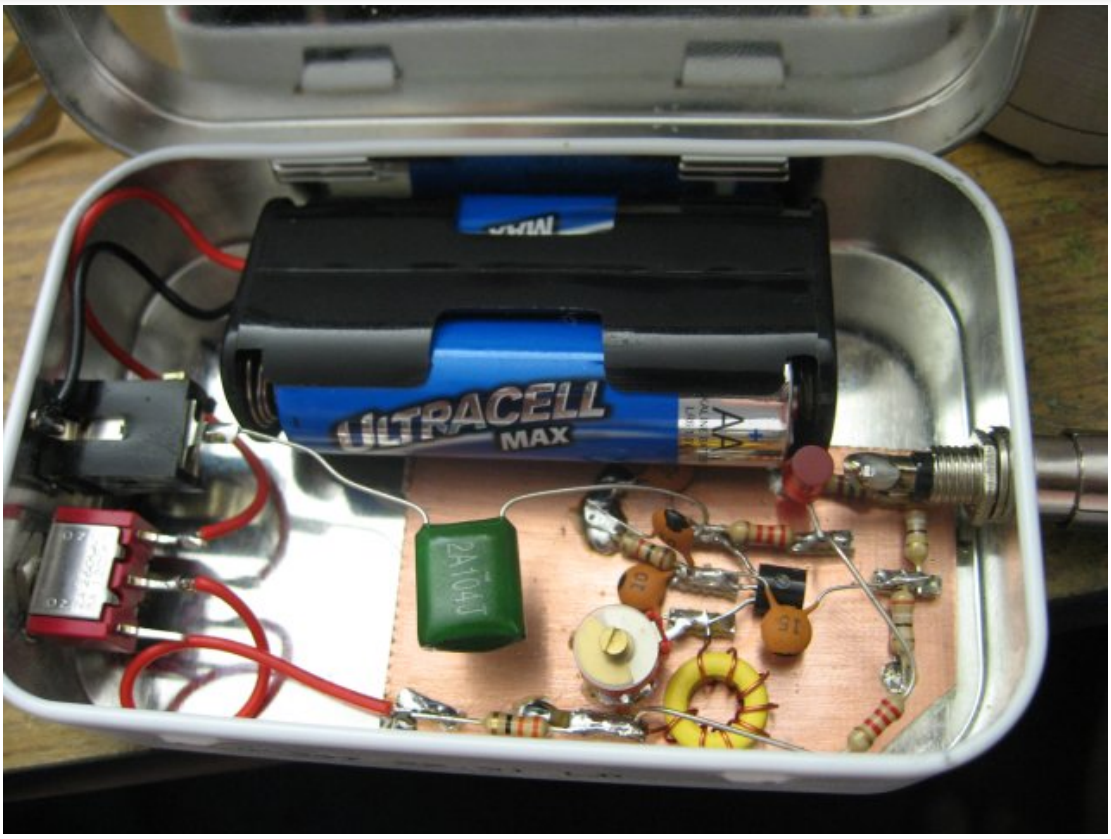

The circuit delivers about -13 dBm into 50 Ohms and has sufficient stability for the purpose. It tunes about 52-90 MHz with the values indicated. The LED based transistor base bias is to allow operation from a wide range of supply voltages (near constant emitter current). This was more useful during testing than in the final circuit with its 3 volt battery supply, you may fix the base bias with resistors if you prefer.

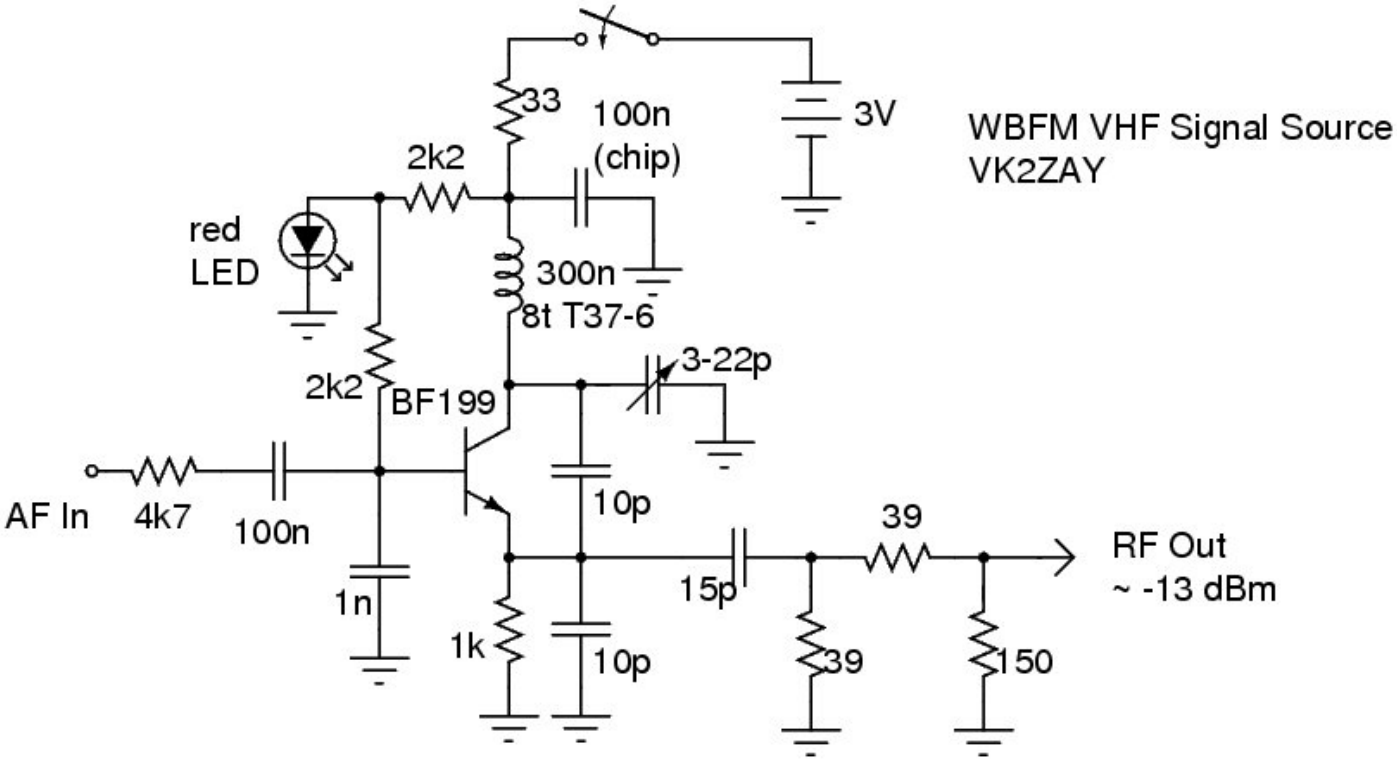

The oscillator is very conventional, grounded base Colpitts topology. I used a T37-6 core for the tank coil and it seems to offer sufficient stability, even without embedding it in wax. A trimmer allows tuning to the frequency of interest (in this case 70.2 MHz), and it will only drift 50 kHz or so over an hour once set and drifts much less once completely warmed up. The base bias is modulated by the audio signal to provide quite reasonable frequency modulation, with only a small amount of parasitic AM. Deviation achievable far exceeds that required for FM broadcast band standards (75 kHz).

Incidentally I also built a quick hack that delivers several hundred milliwatts which I'll only provide a photo of. Not so much because I

© 2000 - 2009 Alan Yates - All Rights Reserved. XHTML | CSS | CSS toggle

As you can see, it has no output low-pass filter and matching. It is rather inefficient, pulling about 1 Watt DC. The multiplier stage is very coarsely tuned and the output is not very pure, but it works for higher power testing with external clean-up gear.

9 comments.

Attachments

title	type	size
VHF WBFM Signal Generator Circuit Diagram Source	application/postscript	15.001 kbytes

© 2000 - 2009 Alan Yates - All Rights Reserved. XHTML | CSS | CSS toggle

Multimeter RF Power Add-On

2007-09-09

Being able to quickly measure RF power from -10 dBm to + 30dBm is extremely useful. This simple 50 Ohm load with inbuilt diode peak voltage detector fits the bill. Unfortunately it must be calibrated carefully and isn't direct-reading, but a simple table of Voltage or Current measured to delivered dBm can be constructed and kept near the unit.

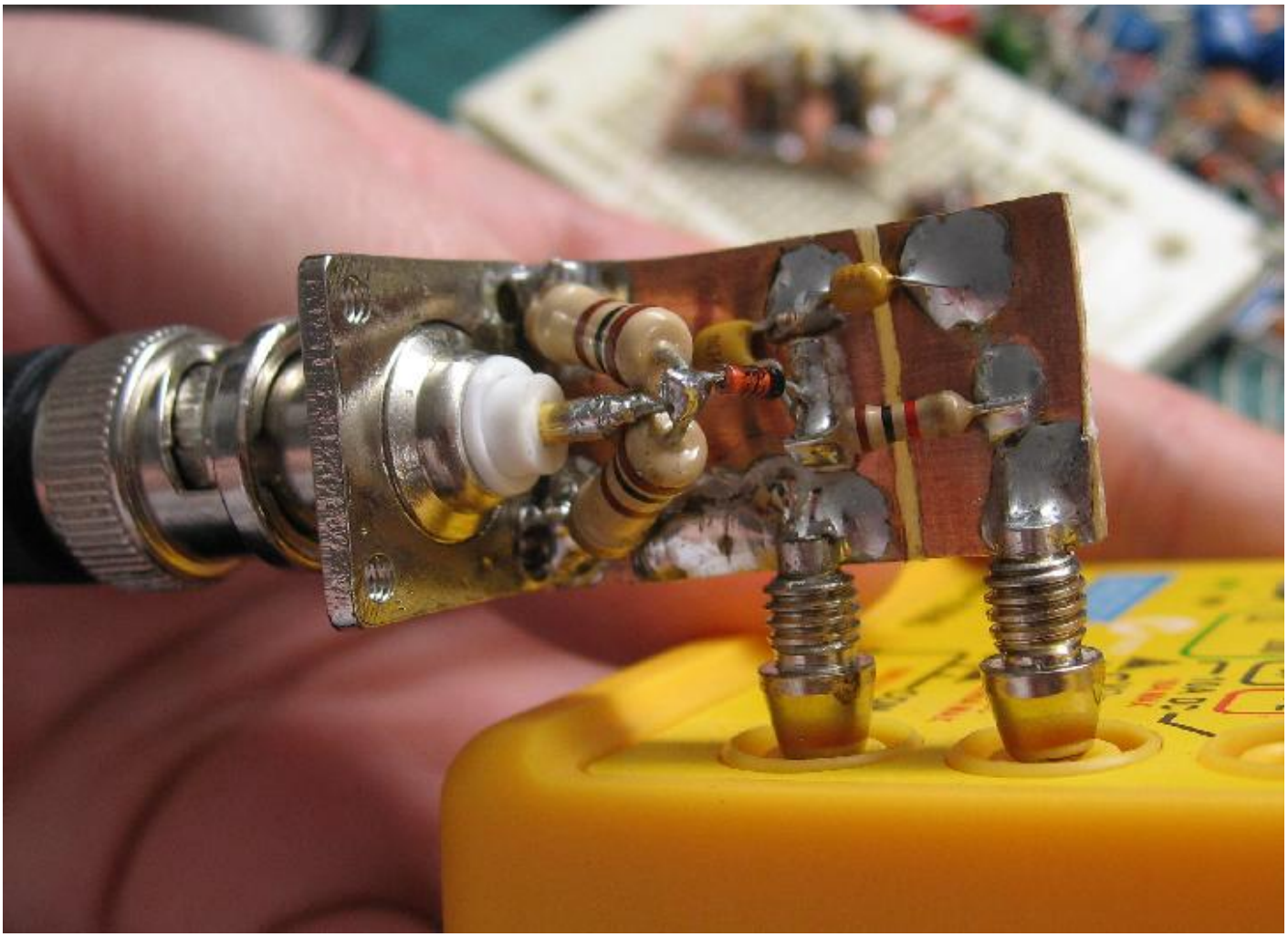

I wrote a short program to generate a table of the Voltages, RMS, Peak and Peak-to-Peak that represent -20 dBm to +30 dBm. The formulae might be simple, but the table is useful for ball-parking, and was used to calibrate the meter at DC.

Calibration at DC isn't perfect, RF will read slightly differently as the dynamic properties of the diode vary. However it is extremely easy to just dial up DC voltages on your bench PSU and write down the corresponding reading on the multimeter.

If you use 75 Ohms more than you use 50 you might build and calibrate yours for that impedance. The load resistors will tend to dominate the frequency response, but the detector itself does affect the high-frequency return loss. The resistors and layout I used are only really suitable to low VHF, but for my immediate uses that is sufficient.

Build yourself a diode probe too (there is a 470p chip capacitor hidden under the wires).

© 2000 - 2009 Alan Yates - All Rights Reserved.

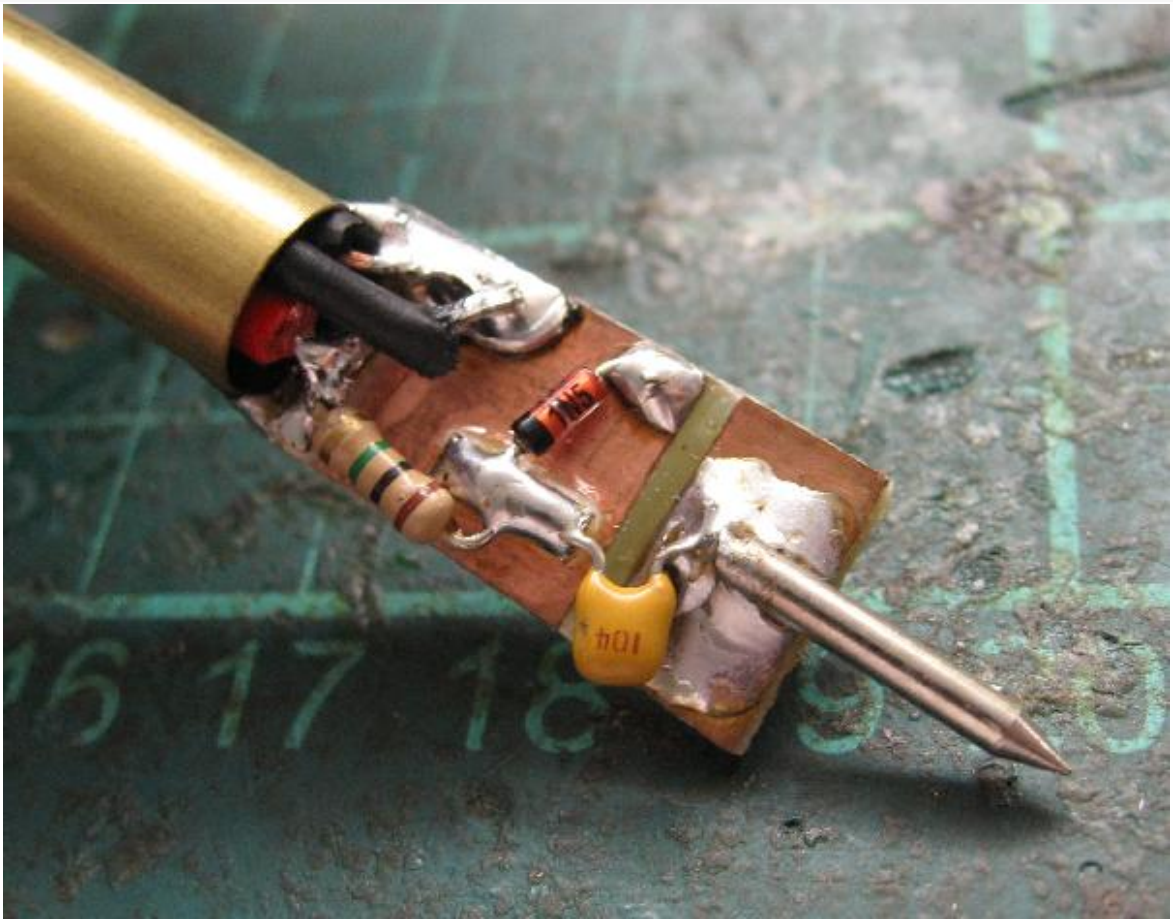

Unlike the power meter the diode probe is designed to only load the circuit very lightly, measuring the peak RF voltage at the point under test. As the impedance of the particular point in question will vary it can only use used for relative measurements so there is little point calibrating it.

Notes

The diode is a 1N5711.

The 10 nF capacitor directly across the meter plugs is to prevent RF from upsetting the meter (smaller values using ceramic or chip caps might be more appropriate at higher frequencies). The budget meter show is actually very resistant to RF interference compared to some of my other multimeters, my old DSE Q-1418 did not like the RF at all once more than a few dBm was delivered. (Meter show is a Jaycar QM-1500, about $8 AUD. For the price you may as well just dedicate one to this service.)

The 1 KΩ resistor in series is to limit short-circuit currents to something that won't zap the diode. It is small enough to be effectively ignored when looking at the peak voltage with the high input resistance of a modern multimeter. It also allows you to use a current measurement instead, either with a mechanical VOM or bare meter movement, or with the multimeter. Your multimeter might work better in this mode. It can't hurt to produce a calibration for current too, so you can compare the measurement of voltage and current if something looks weird. (i.e. If you have your doubts about RF upsetting the meter due to an unexpected resonance.)

4 comments.

Attachments

title	type	size
RF Power Table Generator Source in PHP5	text/plain	1.082 kbytes

© 2000 - 2009 Alan Yates - All Rights Reserved. XHTML | CSS | CSS toggle

MW Regenerative Receiver

2006-08-06

This radio is based on the Moorabbin Receiver. The Regenerative detector is basically identical, however the audio stage in the original radio is dependant on a transformer that is now quite expensive in Australia. I also believe the gain of the original audio stage is insufficient for comfortable listening with weak signals.

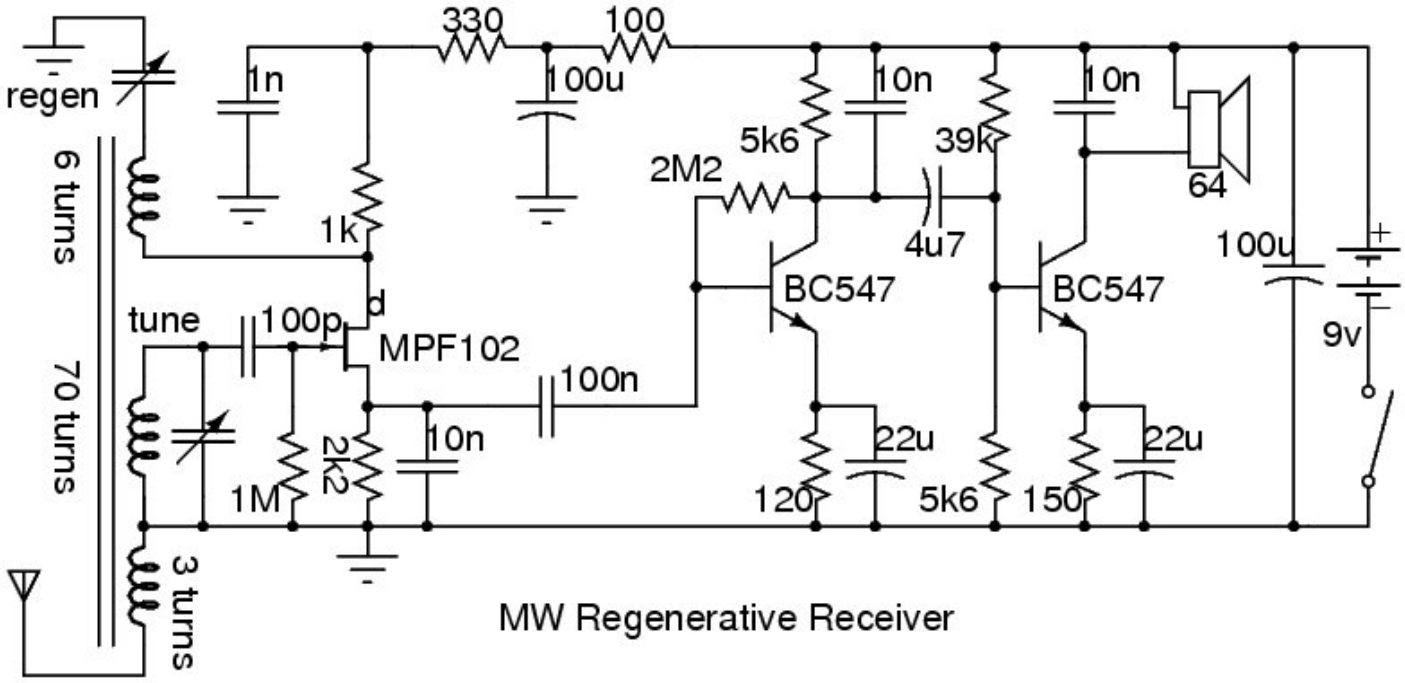

The audio pre-amp stage is biased to 750 uA. It is somewhat noisy. Metal film resistors and a transistor with lower noise and better gain at a lower collector current would perform better. (Try a BC550 or BC549C.) However, it is simple and works quite well. You can increase the 10n capacitor in the collector to roll-off the HF response earlier if you find the audio a little tinny. (Doing so will also kill off much of the noise the stage produces.)

The audio "power-amp" is a simple class A affair, biased to 3.5 mA standing current. The DC passes through the speakers, this might be considered undesirable, but is safe at such a low level. Like all such primitive circuits it suffers from positive-going amplitude distortion as the beta of the device changes with its collector current. I experimented with a current mirror to prevent this, the distortion was almost completely eliminated, but at the expense of two more transistors and more than twice the supply current draw. As this device is powered by a 9V battery and I wanted an extremely simple device I elected to use the simpler output stage. The distortion is quite small at "normal" listening levels and is basically a non-issue.

You might like to use something similar to the audio output stage from the VHF regenerative receiver instead.

The device was built into 250 ml Decor brand Polypropylene kitchen container with a friction-fit lid.

© 2000 - 2009 Alan Yates - All Rights Reserved.

The circuit was built point-to-point on a sample swatch of Formica (the kind you find in hardware stores), superglue was used to glue down the 3.5 mm stereo headphone jack, the transistors, and several capacitors, giving it sufficient rigidity. The ferrite rod (Jaycar's old short one) friction-fits inside the top of the box surprisingly well. The tuning and regeneration control caps, and the power switch are mounted on the removable lid. The headphone jack and its attached Formica board bolts to the box side, with some foam padding under the board, securing it in place. The 9v battery is simple held in place with a small block of foam when the lid is closed.

© 2000 - 2009 Alan Yates - All Rights Reserved.

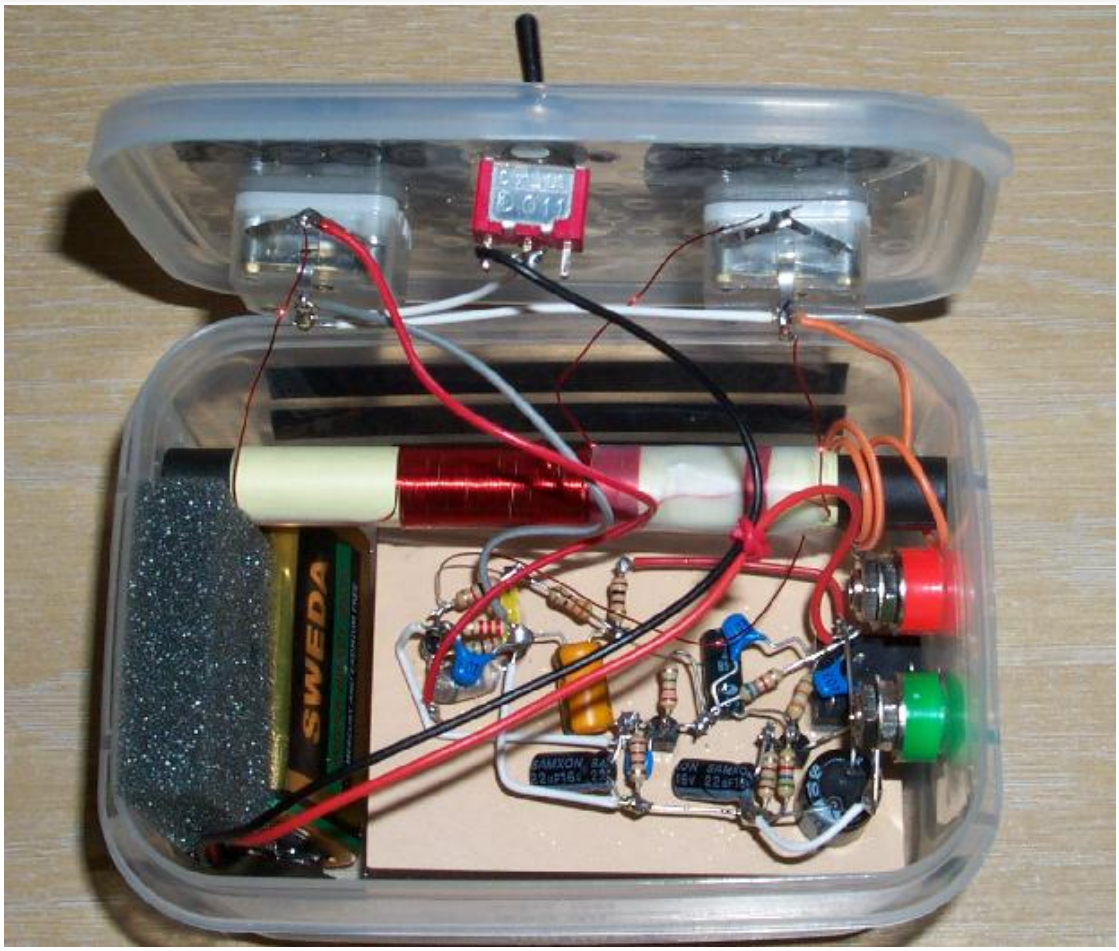

Two banana jacks form the external antenna connections, this was done almost as an after though, the radio is more than sensitive enough for local listening with just the loopstick - in fact with an external antenna you may need to modify the AF stage to have a volume control, reducing the regeneration to control the audio volume compromises the selectivity, which is especially important when you have strong signals like an external antenna can give.

© 2000 - 2009 Alan Yates - All Rights Reserved. XHTML | CSS | CSS toggle

The completed radio pulls about 4.5 mA and will work fairly well down to less than 6 volts. Your average 9 V battery should run the radio for 48 hours or more. The supply decoupling networks are mandatory if you want good stability with higher impedance supplies (like flat 9 V batteries!). The biasing of the AF stages can be modified to work virtually right down to 1.5 V, but at much less than 4.5 V and performance of the RF stage drops. It is definitely possible to make the radio run of a single alkaline cell, but two or more are easier to work with.

Usage Experience

The radio really needs a true RF AGC for casual listening. It is a good radio for beginners to build, it is easy to get going, simple and fun. However, compared to an equally simple MK484-based circuit, its very unpleasant to use pedestrian mobile. On foot or on a bus the huge variations in signal strength leave you playing the regeneration control. There is a particular spot on George St Sydney that 2BL 702 kHz absolutely blasts in at (right at World Square). I don't know why, perhaps it has something to do with the height of the world square building, it may be resonant?

The radio is completely unshielded. Mobile phone radiation goes straight through the receiver and blasts you in the ears. Its quite painful when someone calls you and the mobile in your pocket starts actively radiating. I suspect some careful filtering of the headphone line would help a lot. However, I've noticed that the amount of RF noise detected changes as you tune the radio, probably the internal wiring being tuned as the main gang capacitance changes. It is extremely annoying and makes the radio basically unusable on the Ferry in the afternoon were lots of people are calling their partners to arrange dinner, etc.

TV transmitters, CFL and RFL bulbs, naval radars, repeaters, computers, in fact just about everything electronic radiates RF that will get into this radio and be detected if you aren't careful. This is however quite interesting, listening to all this RF smog is instructive, if at times a little deafening.

A little shielding would go a long way. Peter Parker warns against using a metal box, however if I built the radio again I'd definitely use a Aluminium box. The loopstick could be placed outside, in a piece of Aluminium pipe with a slot cut in it to form an electrostatic shield, but not a shorted-turn. Alternatively the entire box could be slotted and the loopstick mounted inside.

7 comments.

Attachments

© 2000 - 2009 Alan Yates - All Rights Reserved. XHTML | CSS | CSS toggle

Circuit Diagram Source	application/postscript	18.045 kbytes

© 2000 - 2009 Alan Yates - All Rights Reserved.

MW Regenerative Receiver

2006-08-06

This radio is based on the Moorabbin Receiver. The Regenerative detector is basically identical, however the audio stage in the original radio is dependant on a transformer that is now quite expensive in Australia. I also believe the gain of the original audio stage is insufficient for comfortable listening with weak signals.

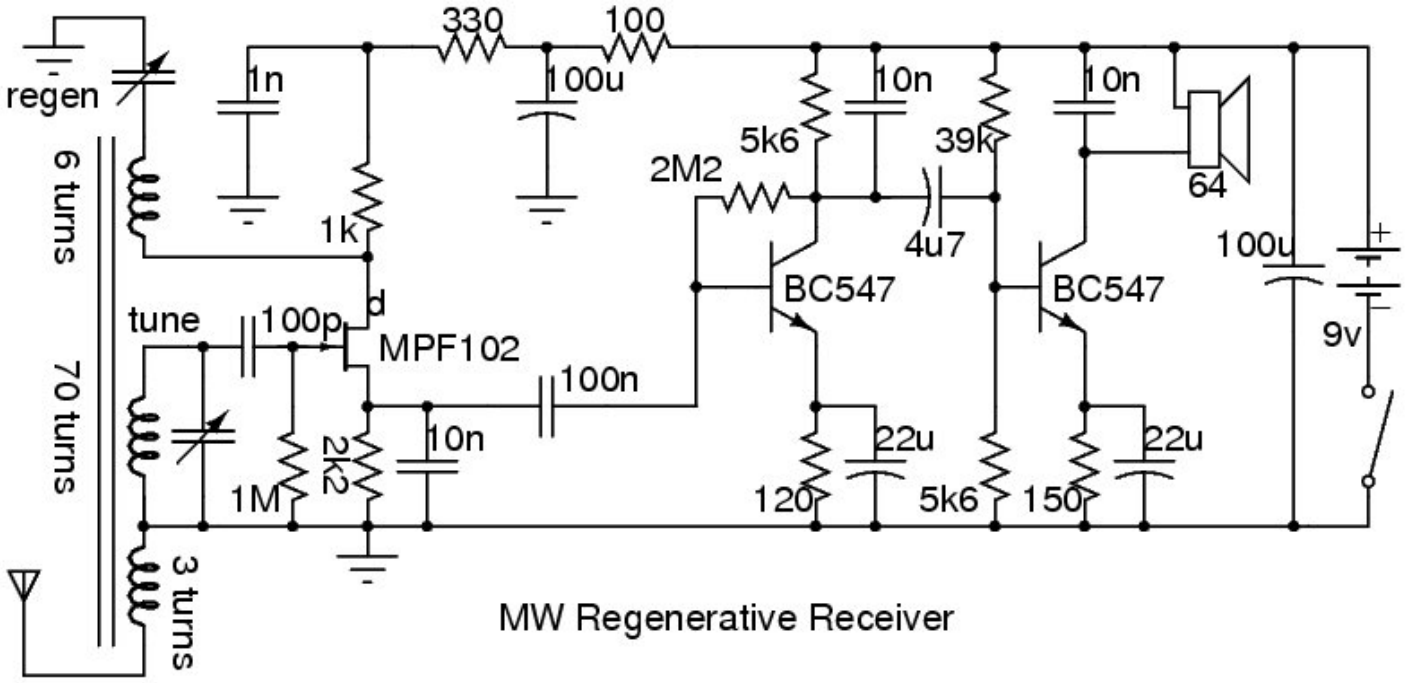

The audio pre-amp stage is biased to 750 uA. It is somewhat noisy. Metal film resistors and a transistor with lower noise and better gain at a lower collector current would perform better. (Try a BC550 or BC549C.) However, it is simple and works quite well. You can increase the 10n capacitor in the collector to roll-off the HF response earlier if you find the audio a little tinny. (Doing so will also kill off much of the noise the stage produces.)

The audio "power-amp" is a simple class A affair, biased to 3.5 mA standing current. The DC passes through the speakers, this might be considered undesirable, but is safe at such a low level. Like all such primitive circuits it suffers from positive-going amplitude distortion as the beta of the device changes with its collector current. I experimented with a current mirror to prevent this, the distortion was almost completely eliminated, but at the expense of two more transistors and more than twice the supply current draw. As this device is powered by a 9V battery and I wanted an extremely simple device I elected to use the simpler output stage. The distortion is quite small at "normal" listening levels and is basically a non-issue.

You might like to use something similar to the audio output stage from the VHF regenerative receiver instead.

The device was built into 250 ml Decor brand Polypropylene kitchen container with a friction-fit lid.

© 2000 - 2009 Alan Yates - All Rights Reserved.

The circuit was built point-to-point on a sample swatch of Formica (the kind you find in hardware stores), superglue was used to glue down the 3.5 mm stereo headphone jack, the transistors, and several capacitors, giving it sufficient rigidity. The ferrite rod (Jaycar's old short one) friction-fits inside the top of the box surprisingly well. The tuning and regeneration control caps, and the power switch are mounted on the removable lid. The headphone jack and its attached Formica board bolts to the box side, with some foam padding under the board, securing it in place. The 9v battery is simple held in place with a small block of foam when the lid is closed.

© 2000 - 2009 Alan Yates - All Rights Reserved.

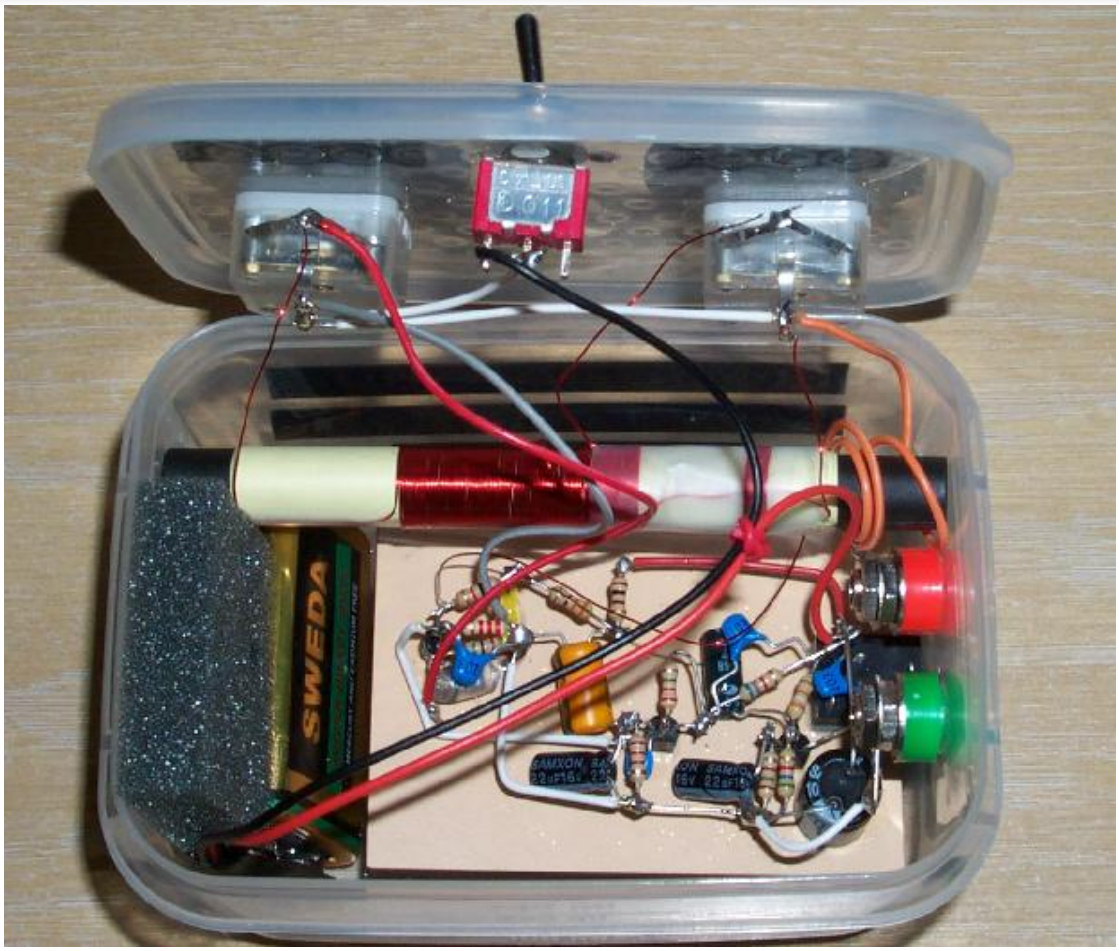

Two banana jacks form the external antenna connections, this was done almost as an after though, the radio is more than sensitive enough for local listening with just the loopstick - in fact with an external antenna you may need to modify the AF stage to have a volume control, reducing the regeneration to control the audio volume compromises the selectivity, which is especially important when you have strong signals like an external antenna can give.

© 2000 - 2009 Alan Yates - All Rights Reserved. XHTML | CSS | CSS toggle

The completed radio pulls about 4.5 mA and will work fairly well down to less than 6 volts. Your average 9 V battery should run the radio for 48 hours or more. The supply decoupling networks are mandatory if you want good stability with higher impedance supplies (like flat 9 V batteries!). The biasing of the AF stages can be modified to work virtually right down to 1.5 V, but at much less than 4.5 V and performance of the RF stage drops. It is definitely possible to make the radio run of a single alkaline cell, but two or more are easier to work with.

Usage Experience

The radio really needs a true RF AGC for casual listening. It is a good radio for beginners to build, it is easy to get going, simple and fun. However, compared to an equally simple MK484-based circuit, its very unpleasant to use pedestrian mobile. On foot or on a bus the huge variations in signal strength leave you playing the regeneration control. There is a particular spot on George St Sydney that 2BL 702 kHz absolutely blasts in at (right at World Square). I don't know why, perhaps it has something to do with the height of the world square building, it may be resonant?

The radio is completely unshielded. Mobile phone radiation goes straight through the receiver and blasts you in the ears. Its quite painful when someone calls you and the mobile in your pocket starts actively radiating. I suspect some careful filtering of the headphone line would help a lot. However, I've noticed that the amount of RF noise detected changes as you tune the radio, probably the internal wiring being tuned as the main gang capacitance changes. It is extremely annoying and makes the radio basically unusable on the Ferry in the afternoon were lots of people are calling their partners to arrange dinner, etc.

TV transmitters, CFL and RFL bulbs, naval radars, repeaters, computers, in fact just about everything electronic radiates RF that will get into this radio and be detected if you aren't careful. This is however quite interesting, listening to all this RF smog is instructive, if at times a little deafening.

A little shielding would go a long way. Peter Parker warns against using a metal box, however if I built the radio again I'd definitely use a Aluminium box. The loopstick could be placed outside, in a piece of Aluminium pipe with a slot cut in it to form an electrostatic shield, but not a shorted-turn. Alternatively the entire box could be slotted and the loopstick mounted inside.

7 comments.

Attachments

© 2000 - 2009 Alan Yates - All Rights Reserved. XHTML | CSS | CSS toggle

Circuit Diagram Source	application/postscript	18.045 kbytes

© 2000 - 2009 Alan Yates - All Rights Reserved.

My Pirate Radio Station

2000-03-25

Some years ago, when I was still in high school, I decided to start a radio station. Just a few watts, 2 CD players, a mic or two, and a mixing desk. Not content with mono operation, I hacked a stereo multiplex, which was probably a mistake as weak signals get noisy faster with stereo. Still, it was a lot of fun, I was never caught, and I learnt a lot from it.

At the time, the call sign 2 HOT FM was not in use in Sydney, neither was the frequency of 94.5 MHz. This I believe is no longer the case. Now days I could probably get a community low-power licence from the ACA, but in those days of the SMA no such provision existed.

The Hardware

Bits of the transmitter and studio have gone astray over the years. I sold the mixing desk when other interests took my fancy, I believe I got about $200 for it and purchased a CB with the cash. I still have the mics and the RF gear, I used 2 radio mics, one for me, the other for guests.

The exciter was composed of a VCO and buffer, plus a 3 stage amplifier. The VCO has been stripped out for other projects (it worked very well for its simple design, it still rocks actually) the three stage amplifier is show here.

The VCO board connected to the power rails and the MPX signal input (the BNC connector) the buffer output fed into the first stage of the amp.

The 200 mW output of the exciter was fed by coax into a 2 W amp. The output device in this amp was grossly under-speced for the abuse I gave it. I blew them weekly, but at about $3 each it was affordable.

The antenna for the station was a 5/8th wave vertical fed over four 1/4 wave radials. It made a good match to 50 ohms, and was fed using a few metres of RG-58. The physical support for the antenna was a combination of a potted plant, the balcony roof fascia and a length of nylon rope tied to the balcony railing.

© 2000 - 2009 Alan Yates - All Rights Reserved.

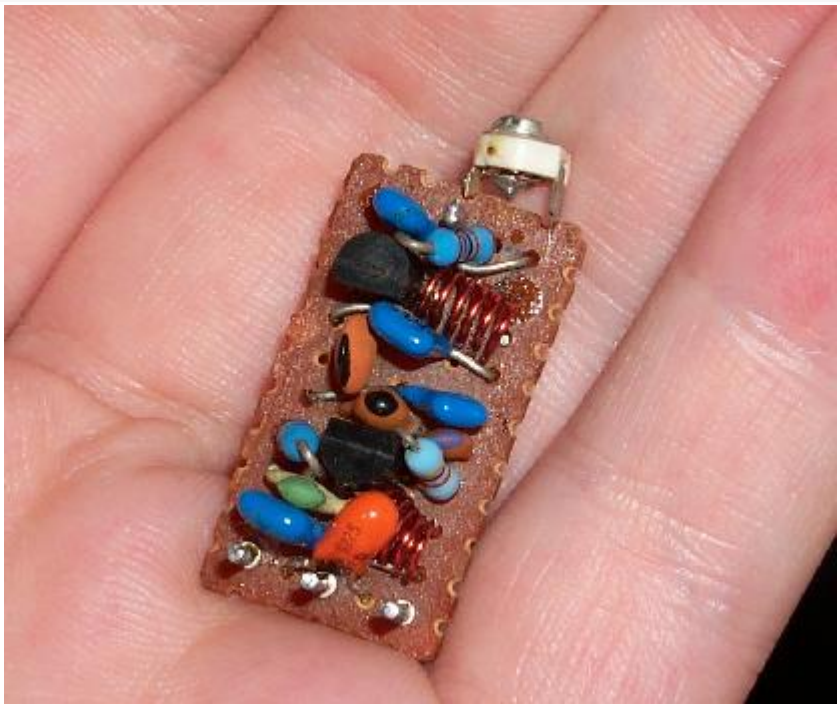

The RF system as a whole was terrible, it had to be tuned carefully to avoid parasitics that would otherwise take out TV reception for a block. I've learnt much about RF engineering since then and cringe at how primitive it was, but it did work quite well.

Once it was all tuned up and working the station was heard for several kilometres at full quieting. The fringe zone extended across most of the metro area. My QTH is on the south side of a hill, directly over water, VHF DX heaven, at least towards the south.

What We Played

Well, we are talking about the 90s, so, 90s music.

I can't remember what our exact programming was, but every Friday I would invite anyone I could (mic shy or not) over as guests for the broadcasts. This must have been quite amusing to listen to, and probably refreshing compared to the usual dribble commercial stations air on Fridays. I still have at least one analogue tape recoding of "The DJ Crew" sessions, I should digitize it before analogue technology disappears completely.

We were far from professional, but a great time was had by all. After a few months we even had a phone patch going (even more laws broken!), which became a feature of the Friday programs.

Somewhere along the way I got a girlfriend (perhaps the radio station helped a bit with that! :), got into CB radio, and had to attempt to study for the HSC. The radio station got less and less attention, and fell into disrepair. The Fridays stopped and it was largely forgotten, until I dug out the hardware and took some photos for this page.

9 comments.

© 2000 - 2009 Alan Yates - All Rights Reserved. XHTML | CSS | CSS toggle

Nano-Henry Inductance Meter

2007-03-04

Desiring a simple way to quickly measure inductances in the 10s and 100s of nanohenry for VHF work, I was inspired to build a direct-reading meter like Drew Diamond VK3XU's design "Nano-L" Inductance 'Bridge' for Small Coils. The circuit is published in Volume 2 of his excellent series of books "Radio Projects for the Amateur". I highly recommend you purchase all three volumes, they are great books, I picked up my copies from the recent Wyong Field Day. They can be obtained through the WIA.

I don't know why he calls it a bridge, it is rather a resonance meter, but the name probably comes from its relation to his other true-bridge inductance meter for micro-Henry coils. My implementation is only very slightly different to Drew's, and functions in exactly the same manner. I use a 44.7 MHz TTL oscillator package, as I had some in the junk box. (I actually started out with 80 MHz, but it proved too high for the range of inductances I wanted to measure, with the Lx connection shorted with a piece of brass shim I could peak the meter about middle of the range and a 2" hairpin was beyond its measurement range.)

I also used a "polyvaricon" style capacitor, lacking a suitable air-spaced gang. The detector is identical, and the clean-up resonator values picked for the lower design frequency. I used a spring-loaded speaker terminal block for the Lx connector. I was concerned this would limit its range, but in practice is has proven quite usable, and much more expedient than binding posts.

The circuit is constructed on a piece of unetched PCB board and mounted in a die-cast Aluminium box which came painted glossy black. Four AA cells provide the power supply, the TTL oscillator can is run at the full 6 volts, there is no dropper diode to keep it within spec, it gets warm but doesn't seem to mind.

The Circuit

The case is dominated by the batteries, inside there is much free space. The Lx hot-side connection is made with a fragment of PCB board to minimise the stray inductance and improve the instrument's minimum inductance capability.

© 2000 - 2009 Alan Yates - All Rights Reserved.

© 2000 - 2009 Alan Yates - All Rights Reserved. XHTML | CSS | CSS toggle

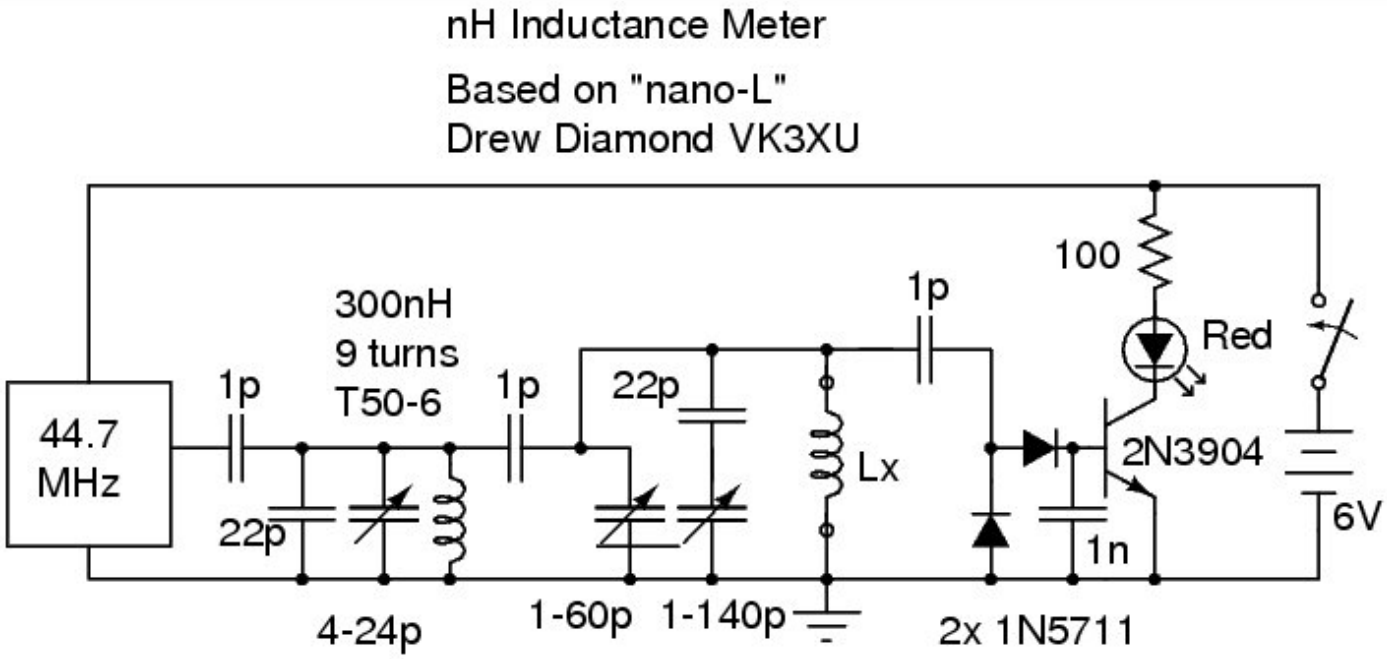

Usage

To use; one connects the inductor to me measured, switches on the unit and sweeps the knob searching for peak brightness of the red LED. The tuning is fairly sharp with moderate-Q inductors, and the peak is generally very obvious, a few degrees off the peak the LED will be completely extinguished.

Calibration

Building the unit is quite easy, but to make it a practical instrument it must be calibrated. You can probably use 5% chokes for the top of the range, but commercial inductors towards the bottom of its range are rare or SMD-only devices.

To calibrate mine I decided to construct a series of calibration inductors of fairly high accuracy, a challenge that exceeds that of building the unit by an order of magnitude!

Having 100p capacitors of fairly high accuracy and stability, I sat down with my LC resonance calculator and came up with resonant frequencies for a geometric series of inductors, resonated with 100p and 400p. As I can measure frequency and capacitance to within about 1% this gave me a way to trim my inductors to the desired values with accuracy beyond what the meter needed.

© 2000 - 2009 Alan Yates - All Rights Reserved. XHTML | CSS | CSS toggle

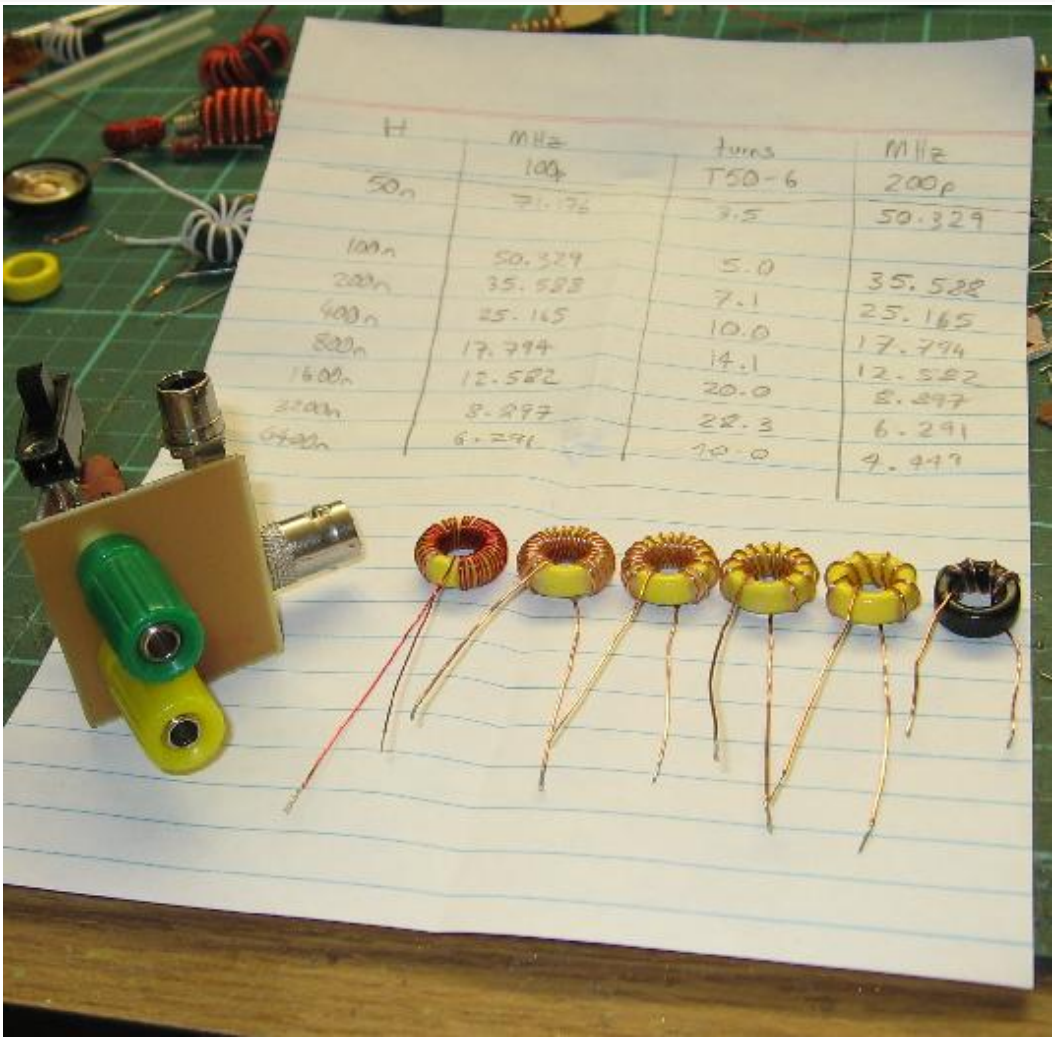

I choose T50-6 cores for the larger inductance values as they offer the best stability/Q/price trade off. The material is suitable for the VHF test frequency, and has a fairly low thermal coefficient. Tx-7 (white) cores are better but much more expensive - I save them for VFOs. A T50-10 core was used for 200 nH, but I may replace this with a air-core inductor as I am unimpressed with its mechanical stability. Values below 200 nH were all air-core, wound with stiff tinned copper wire. All coils were dipped in wax once trimmed to stabilise them. Some experimentation was performed with enamelled wire on soda straws, but the stability was inferior. Repeatability of sub-150 nH inductors is somewhat challenging, even when waxed to a core and the lead length carefully controlled.

© 2000 - 2009 Alan Yates - All Rights Reserved. XHTML | CSS | CSS toggle

The testing jig in the picture above was specially constructed for the calibration exercise. It allows a trimmed 100p or 400p to be switched across the inductor under test. The signal generator is used as the frequency source, measured with a high-resolution frequency counter than has had its reference zero-beaten against WWVH recently. A CRO or VOM is used to detect resonance, measuring the DC voltage generated by a charge pump. In principle it works a lot like the meter itself, except the capacitance is fixed and the frequency variable.

Inductance Measuring Jig

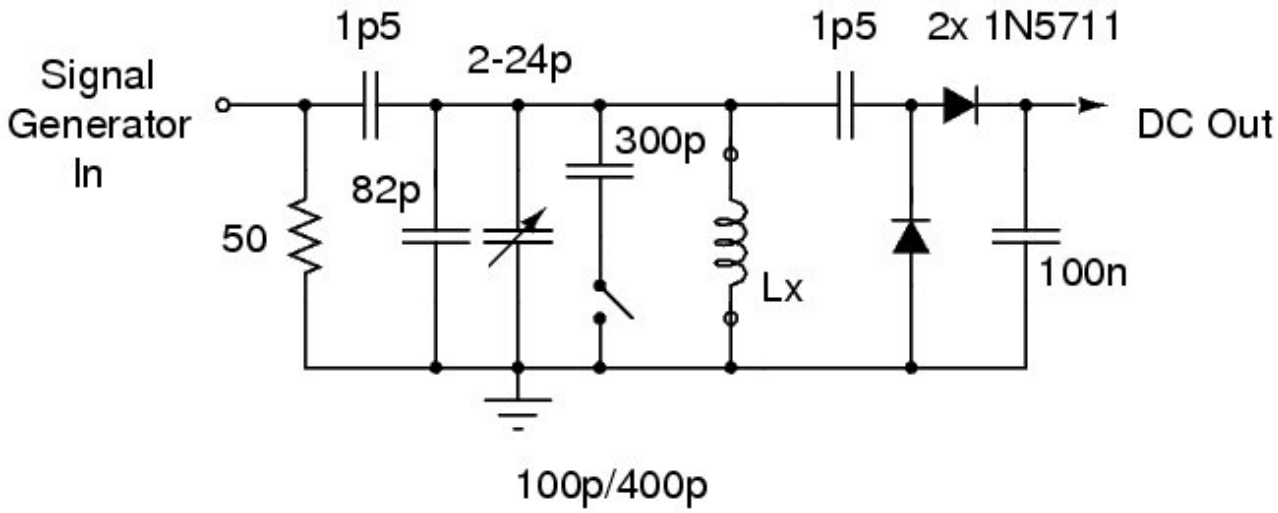

To use, one hooks it up to the detector and signal generator, then measures the capacitance seen across the Lx terminals while trimming it to precisely 100 pF or 400 pF. The capacitance meter is then exchanged for the inductor under test and the signal generator swept to find the resonance peak. Note that in some situations rearranging the circuit to use series resonance would be preferable. One would then tune for a null, which is

© 2000 - 2009 Alan Yates - All Rights Reserved. XHTML | CSS | CSS toggle

generally a better proposition anyway, but I used parallel resonance for all my inductors and had little problem achieving high repeatability.

How precise is all this? I am not sure, but I estimate at least 5% with careful use, if not better, as long as you are well below the self-resonant frequency of the inductors.

The testing jig is a useful gadget in its own right, and is usable across a wide range of inductances, it can't hurt to build something similar yourself. Use NP0 capacitors of good quality and their values should be pretty close, even without the ability to measure capacitance. The distributed capacitance of my particular jig was 4.6 pF, so even untrimmed it is still fairly accurate.

1 comment.

Attachments

title	type	size
Inductance Measuring Jig Circuit Source	application/postscript	12.981 kbytes
Inductance Meter Circuit Source	application/postscript	15.142 kbytes

© 2000 - 2009 Alan Yates - All Rights Reserved. XHTML | CSS | CSS toggle

Negistor Applications

2008-02-29

The "Negistor" is a favourite toy of the Free-Energy Freaks. (More charitably known as the Over-unity Experimenters) Unfortunately most over-unity experimenters don't seem to grasp the conceptual difference between power, voltage and current. Neither do many seem to understand that average power is an integral and most test equipment is not true RMS, and that even true RMS multimeters have bandwidth limitations. Build something that will indefinitely deliver more DC power than what it receives from all sources and I'll start taking you seriously...

Anyway, enough OU-bashing, the negistor is a common NPN transistor, biased with its emitter more positive than its collector and the base open-circuit. Most signal transistors break down at about 8 volts in this mode and in the avalanche region exhibit some negative resistance. Negative resistance is nothing magical of course, just a non-monotonic region in the device transfer function, but it lets us build somewhat exotic-looking oscillators.

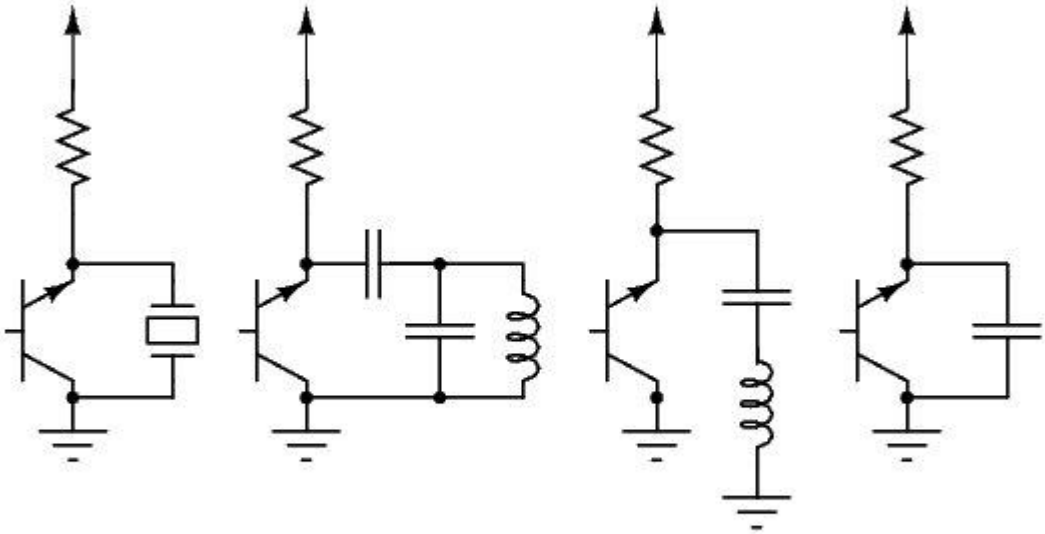

Negistor Oscillators

By placing a tank across the negistor, oscillations up to about 1-2 MHz can be achieved. Even just placing a capacitance across the device will cause oscillations, the circuit functioning somewhat like a NE-2 Neon relaxation oscillator.

PY2OHH utilises this curious circuit as a BFO oscillator! This ingenious application inspired my interest in the circuit, especially after I realised it could produce pretty linear sawtooth ramps. I was hoping to use it as an minimal component external quench oscillator, but the output is very small in amplitude and a unijunction oscillator is better suited. With amplification it could be used as a simple sweep generator instead of a unijunction, NE555 or Op-Amp circuit.

The most immediate application I could think of is a simple sidetone oscillator for QRP rigs. Most QRP rigs are powered from 12 Volts, so the supply voltage is sufficient, and the resulting circuit has quite a low parts count. A piezo squeaker is used to actually make the noise, and just three other components are needed, four if you include a keyline diode and maybe five for a shaping capacitor to soften the edges.

© 2000 - 2009 Alan Yates - All Rights Reserved.

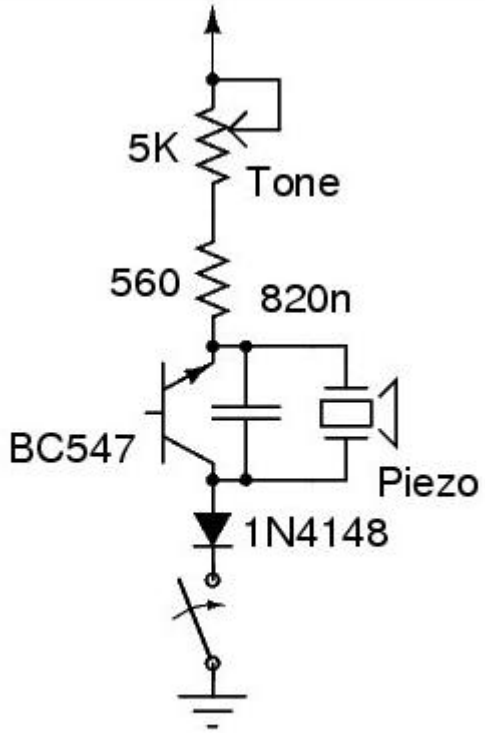

Delux Negistor Sidetone

You could add a 1k pot for a volume control if you wanted. You might like to pipe the sidetone out via the RX AF path instead of via a piezo. In which case you can just capacitive couple it into the AF amp input.

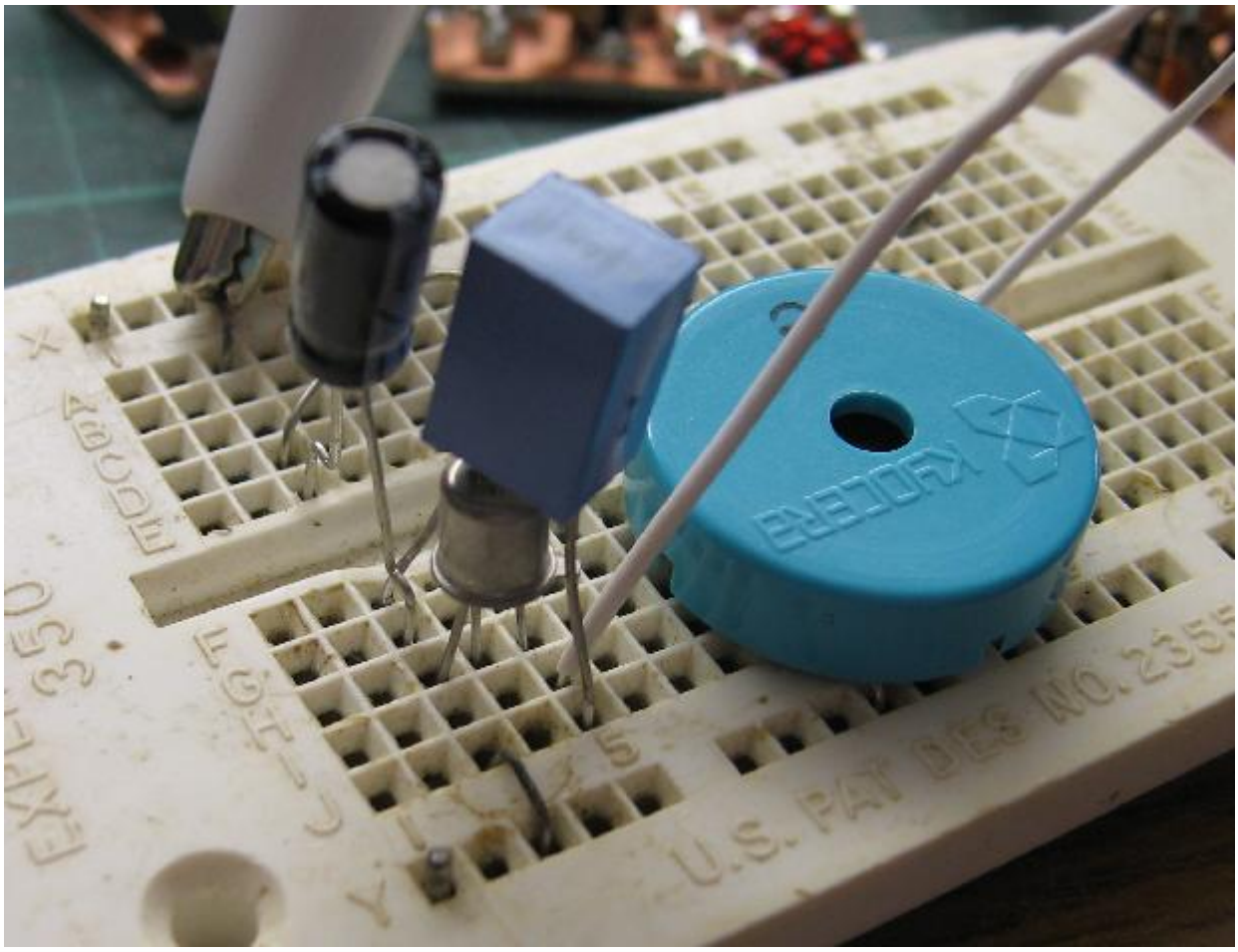

© 2000 - 2009 Alan Yates - All Rights Reserved. XHTML | CSS | CSS toggle

Anyway, it works. Its simple, if kinda exotic. Possibly the weirdest code practice oscillator you might like to build too.

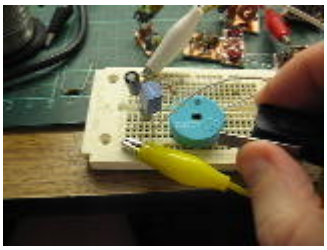

Demo Video
(741.605 kbytes)

Notes

- Try using the piezo capacitance alone for optimum 3-component minimalism.
- Base voltage affects its properties, one negistor oscillator can FM another... Siren applications?
- Some transistors work much better than others. I found an old BC109 that worked quite well.
- Can you make a regenerative receiver by putting a variable +ve resistance in the tank and tuning it for near-zero affective resistance?

9 comments.

Attachments

title	type	size
Negistor Circuits Source	application/postscript	14.431 kbytes

© 2000 - 2009 Alan Yates - All Rights Reserved. XHTML | CSS | CSS toggle

Neon Flasher

2003-02-14

OK, there is nothing special about flashing a neon, but this little inverter will run from as little as 1.2V (a NiCd or NiMH cell).

The circuit is based on the Joule Thief circuit which is credited to Z. Kaparnik on that site. The circuit is a simple oscillator, which in the case of the Joule Thief has sufficiently high voltage spikes at the collector when running from less than 1.5V to forward bias a LED. In the practical circuit I built to test the idea (very neat I might add!), the spikes are about 35V peak at 70kHz into an open circuit. Add the LED and the frequency drops to about 40kHz and the voltage is clamped to the drop of the LED, with a duty cycle of about 75%.

For the neon flasher I have used the same Hartley oscillator configuration, but instead wound it on a xenon flash lamp trigger transformer to facilitate a voltage step-up to the 70-90V needed to ionize the neon. The raw AC output of the transformer will light the neon quite well from a 3V supply, but adding a rectifier and storage capacitor gives bright flashes from 1.2V or less.

The trigger transformer is the model available from Jaycar Electronics, it has the secondary wound on the ferrite core first, the primary is wound over that with thicker wire. It is a simple matter to remove the primary winding and wind 400mm of bifilar 0.2mm winding wire onto the core to make the new primary and feedback windings (take about 800-1000mm of wire, halve it, twist it up with a drill, and wind that, then separate out each filament with a continuity tester). It isn't really practical to save and re-use the primary, or even leave it in its auto-transformer configuration, unless you redesign the oscillator to have the primary in the emitter (probably worth a try some day).

While not really suited to the frequency the 1N4004 works almost as well as an 'ultra-fast' device of the same current rating, the difference isn't worth being concerned about, I measured it at 2% percent (which was surprising). Picking a neon that ionizes at a low voltage allows the circuit to operate usefully to very low input voltages. It will continue to oscillate to at least 600mV, but won't produce enough voltage to fire a neon below about 1V. I probably wound too many turns on the primary, using a few less could extend the operational

© 2000 - 2009 Alan Yates - All Rights Reserved.

voltage lower, but would make the efficiency even worse. The whole transformer is 'wrong', but very easy to work with.

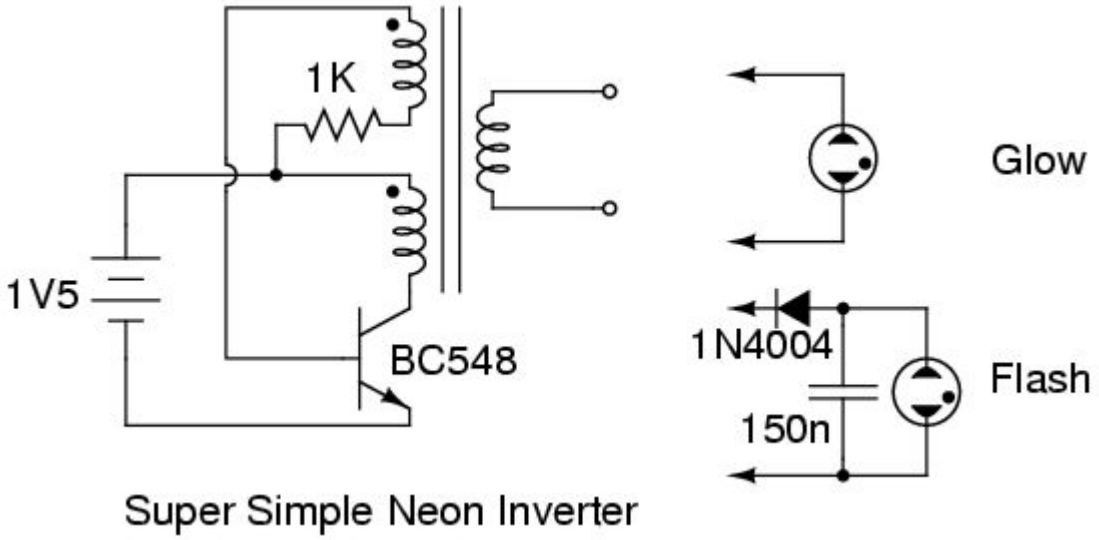

My prototype unit pulls 33mA from 1.5V (about 50mW), charging the output capacitor to 82V before the neon fires. That means with each flash about 500uJ is delivered to the neon gas per shot, at 4Hz flashing rate, that places the efficiency at a woeful 4%. Less than 1mW is lost in the bias resistor, the bulk of the losses are in the transformer magnetizing current and the capacitive load of the diode and storage cap series combination across the high impedance secondary. A resistor to control the charging rate might help with those losses, as might an RF rated rectifier with lower reverse capacitance and a fast response time. I am not sure if decoupling capacitors would help, but the problem is fundamental, the transformer and rectifier are too lossy because they are operating at around 200kHz.

There is no discharge resistor across the cap. I tried a 10M unit, but it loaded the circuit too much to flash at 1.2V. Instead I just potted the entire device in epoxy. To display how poorly designed and feeble the transformer output is, you can place your finger on the epoxy over the hot side of the transformer near the diode and the extra capacitance will drop the flash rate. If your unit seems even more pathetically inefficient than mine, try reversing the diode, the drive is unipolar and far from square so you should pick the best half of the cycle for charging and leave the least for the losses.

Although I've made it sound really bad, it works well, even if it isn't very efficient. In glow mode it is quite a bit more efficient, the RF output ionizing the neon easily, but the primary still has too few turns and a very large magnetization current. Winding your own transformer but keeping the circuit the same you could achieve much more efficiency, but the wire would be very thin and take considerable effort to wind without a machine.

1 comment.

Attachments

title	type	size
circuit postscript source	application/postscript	12.795 kbytes

© 2000 - 2009 Alan Yates - All Rights Reserved. XHTML | CSS | CSS toggle

New Beacon Antenna

2008-07-13

Its been a while coming, but I've been battling the winter flu so the antenna project has dragged on a lot longer than I wanted. Part of the delay was waiting for thick magnet wire to arrive from OBA they were doing a stock take and my order took a few days to process. I was happy enough with that as at the time I was in bed crook anyway.

Once I felt better and had collected all the materials, it was a relatively quick exercise to assemble the new antenna. A three meter section of the 15 mm OD Aluminium tube was used for the radiator. A quick lash in the selected position allowed me to measure the capacitance it saw against the balcony railing. The figure was a surprisingly high 34 pF... Some quick calculations said I needed about 60 uH for a base loading coil with enough room to play with assuming my measurements where a bit off. I temporarily tuned out the antenna capacitance using the previous loading inductor and my C-jig, then using my impedance bridge and R-jig I was able to measure the pure antenna resistance at 22 Ohms. This figure was rather disappointing, but it turned out to be a bit too large, the result of significant coupling to my body in the vicinity of the tests.

Some maths, coil winding and bench testing later I had a 62 uH base load inductor, ~900 pF of matching shunt capacitance and a polyvaricon to match the transmitter into the antenna. It turned out the polyvaricons I recently purchased had sufficient voltage rating for this application, unlike the one I previously cooked in the C-jig. The loading inductor was close-wound despite this giving is a somewhat reduced Q. When the coil losses were compared to the grounding system losses the improvement in Q at the expense of coil volume was not really worth it. The coil is already quite large ~2" ID, 5" long and has a pretty good Q, the SRF is beyond 12 MHz.

© 2000 - 2009 Alan Yates - All Rights Reserved.

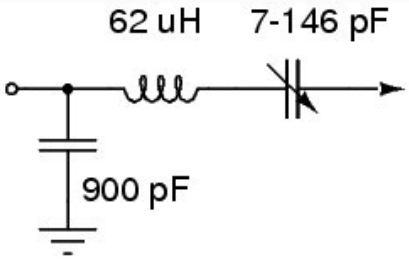

Antenna Matching Network

A 25 mm dowel and a piece of scrap timber gave me the stand-off and mast for attaching the antenna to the balcony railing. A piece of PVC tubing over the timber provided the base insulator (not shown). To hold the radiator square against the mast I bolted two appropriately sized pieces of channel section back to back with stainless hardware and held the works together with stainless steel hose clamps. This was surprisingly effective and quite easy to assemble with no special tools. Hose clamps also held the mast/stand-off to the balcony railing and facilitated the ground connection.

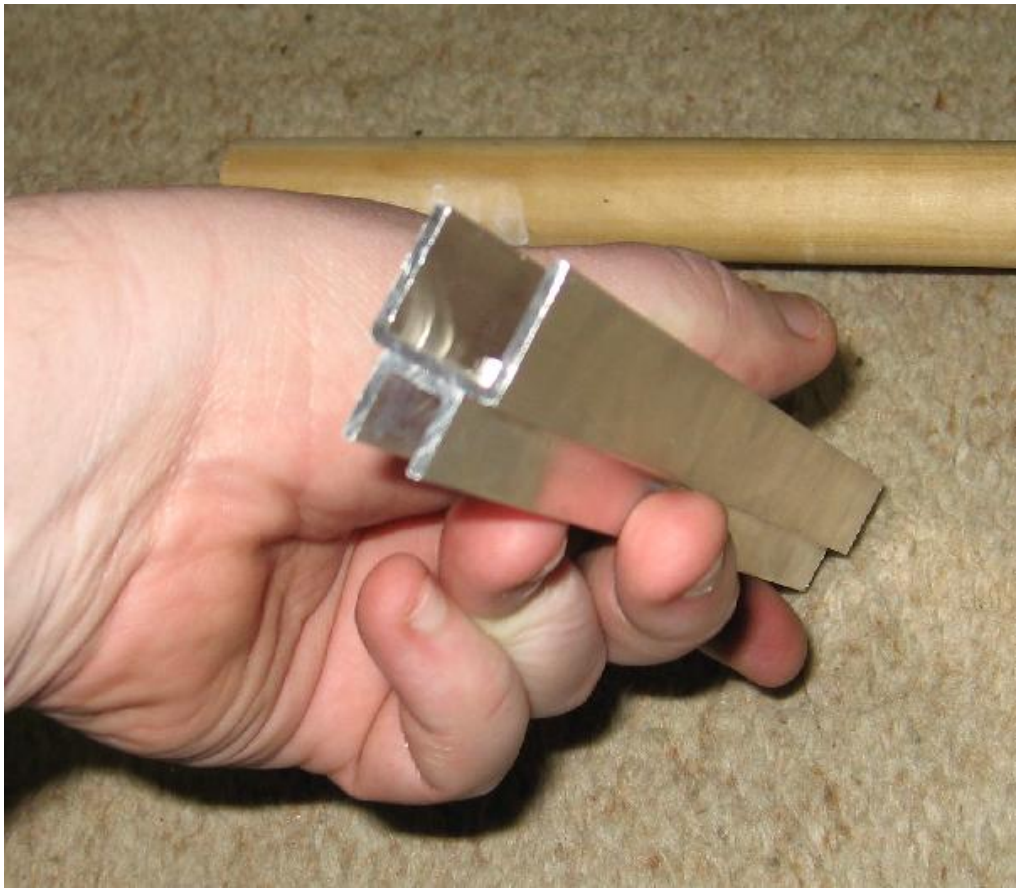

© 2000 - 2009 Alan Yates - All Rights Reserved. XHTML | CSS | CSS toggle

The matching network was boxed up and lashed to the mast with cable ties. This is not intended to be its permanent fixture, but it seems fine as the matching box is fairly light. If I replaced the cable ties with black UV resistant units it might be better. No doubt the matching box itself will suffer from UV exposure, it is just a Sistema Plastics Klip It Meat Keeper box designed for cold-cuts storage. Cabling from the matching box to the antenna is currently just alligator clip leads, these will probably fall apart in the salt air within a week or two and will be replaced with stainless/Aluminium to copper transitions terminated in banana plugs, all suitably weather proofed.

© 2000 - 2009 Alan Yates - All Rights Reserved.

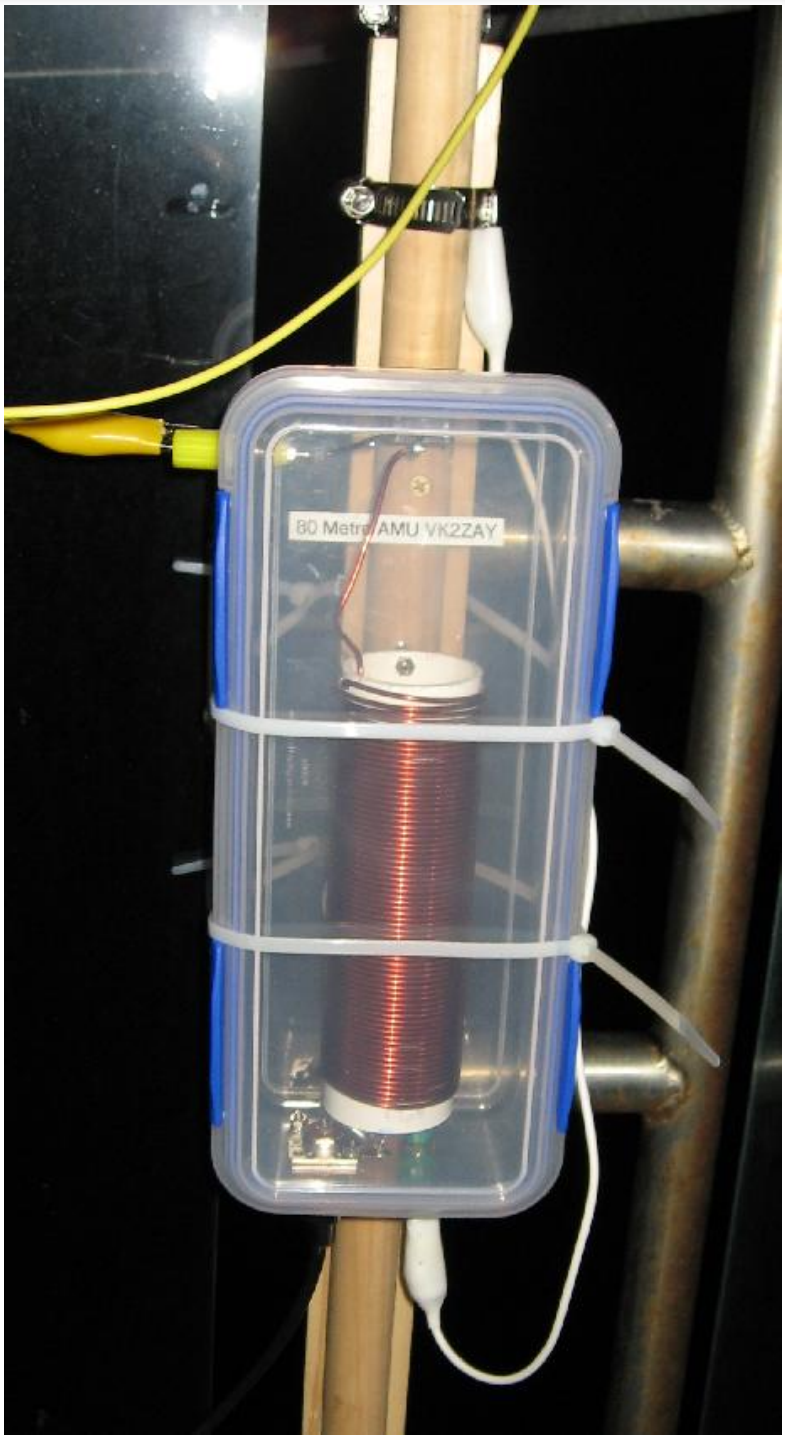

Connection to the transmitter is made with a few metres of RG-58 coax, the transmitter and switchmode PSU being double bagged and placed under the eaves out of the direct weather. I added a "Tune/Operate" switch to the beacon TX which gives a choice between keyed CW or just solid carrier. This is very useful for tuning up the antenna network. There is some interaction between my body and the antenna, generally I need "overtune" a touch, back off and crouch to minimise my capacitive loading and observe the match. Some iteration finds a good setting of the polyvaricon. Initially I used the impedance bridge, but I've found a NE-2 bulb hanging off one of the hose clamps on the radiator works very well for tuning for maximum smoke (which very nearly coincides with 50 Ohms resistive input impedance to the matching box).

10 comments.

Attachments

title	type	size
AMU Circuit Diagram Source	application/postscript	10.604 kbytes

Parent article: 80 Metre CW Beacon.

© 2000 - 2009 Alan Yates - All Rights Reserved. XHTML | CSS | CSS toggle

Non-Emissive Air-Band Receiver (Implementation & Use)

2010-06-11

I threw this receiver together the day before I left for the United States for a months holiday. It is anything but physically elegant, I half expected it to be confiscated by TSA so I did not spend a lot of time on making it pretty.

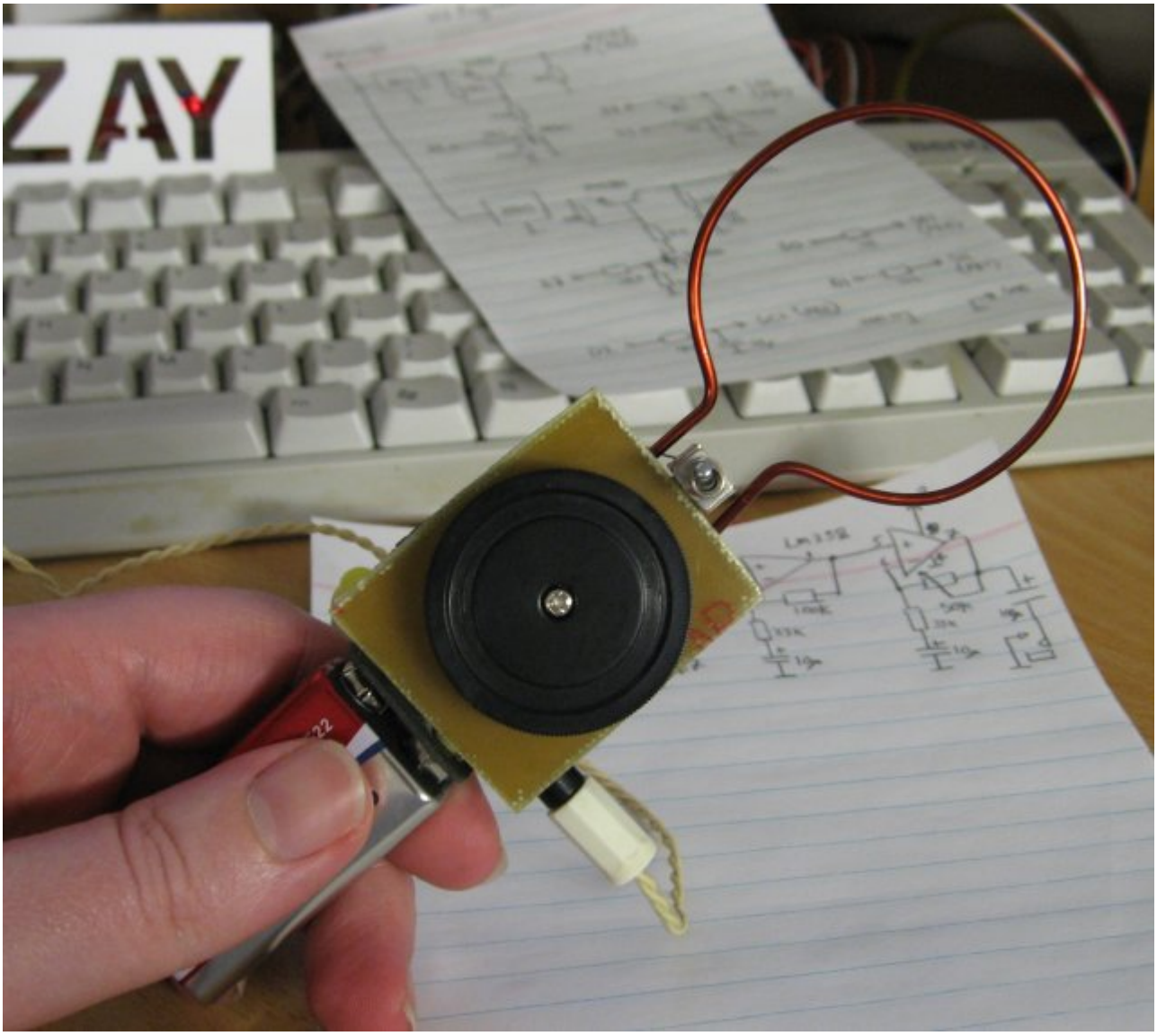

The circuit is only superficially different to Charles Wenzel's original design. The major departure from Charles' implementation is the use of the main tank inductor as a loop antenna. A stiff piece of ECW is used to create a 50 mm diameter loop, which is both the receiver antenna and the tuned circuit providing the receiver selectivity. In this way it is somewhat similar to my VHF Wavemeter, but the detector circuit is an AF amplifier and the cross-section of the loop is larger to intercept more RF.

© 2000 - 2009 Alan Yates - All Rights Reserved.

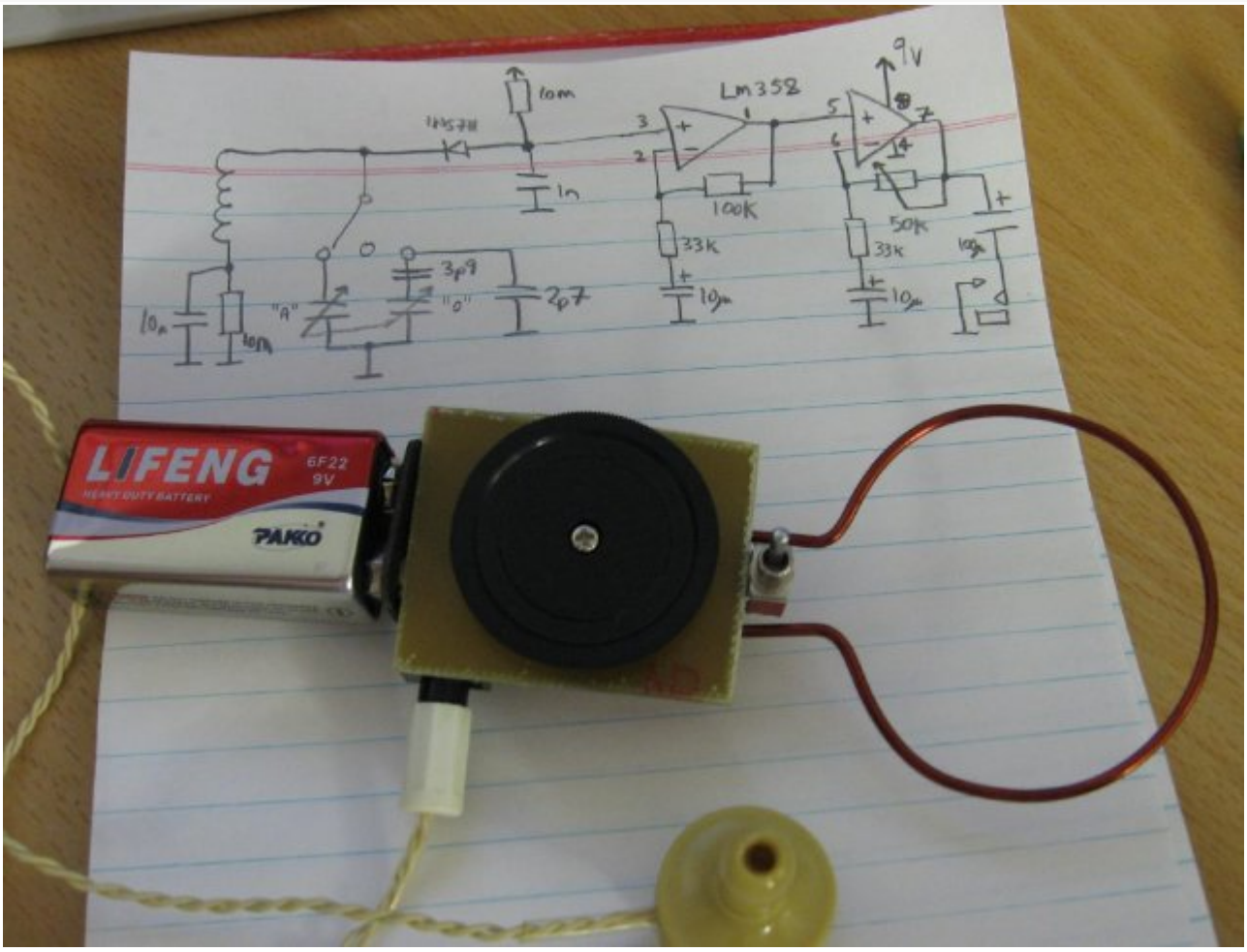

Construction centred around the physical bulk of the polyvaricon tuning capacitor, the loop antenna, and the 9 volt battery power supply. The small centre-off switch selects between bands. One band tunes 32.7 - 126 MHz, the other a narrow range of interest in the Air Band, 121 - 133 MHz. In the centre "off" position the loop acts as a short-range magnetic probe for RF with sensitivity increasing rapidly with frequency (the loop inductance is quite small) - in this mode the device is essentially Charles' Amazing All Band Receiver.

© 2000 - 2009 Alan Yates - All Rights Reserved. XHTML | CSS | CSS toggle

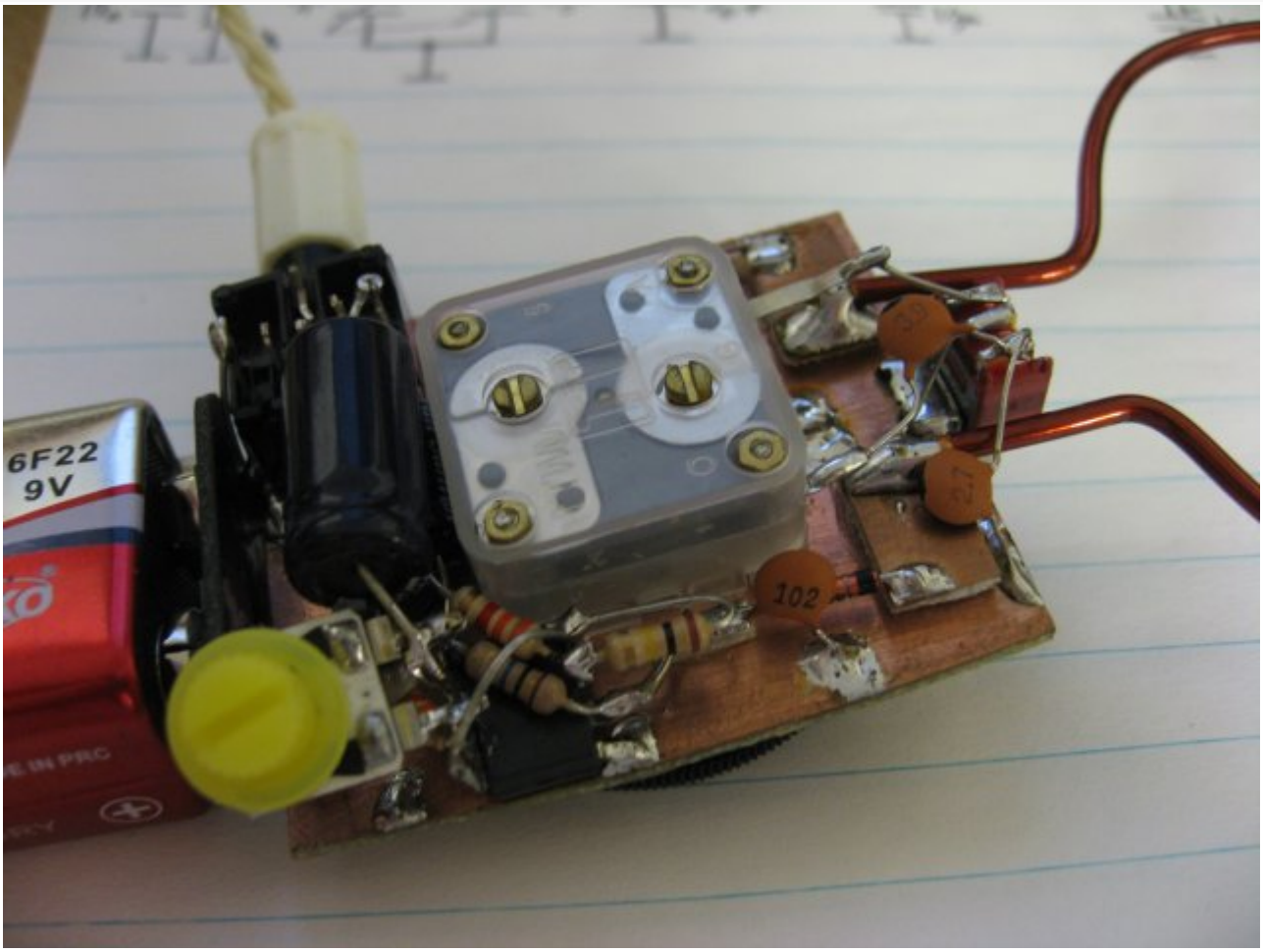

The receiver selectivity is so poor tuning can be quite imprecise. This is actually a benefit in practical use, allowing sloppy tuning while searching for signals. In practice the only signals you hear on board an aircraft are transmissions from the aircraft which hop around in frequency. I did on occasion hear other aircraft on the ground or the tower, but the signals were quite weak, the receiver is not very sensitive. That said, on the broad tuning band I can hear FM and TV stations quite clearly at home - a high signal area.

In-Flight Experience

On the international flight from Australia to the US I heard very little. Once over the pacific VHF is basically not used until shortly before landfall in the US. I did hear the push-back, taxi, and take-off clearance acknowledgements, and once in the air a few other transmissions before leaving Sydney's controlled airspace. Similarly on arrival in the US I heard the pilot contact the approach controller, get talked down through the busy LAX airspace and once landed heard the instructions to wait for towing to the gate. Sydney security didn't even bat an eyelid about the device, it just went straight through the carry on x-ray scanner. On the aircraft the crew and passengers ignored it, but I didn't exactly wave it around nor try to hide it either.

The domestic flight from LAX to Boston was more interesting. Over land the pilot is continously contacting different airspace controllers and moves around in frequency quite a lot. We had to fly around a massive storm system and deep into Canadian airspace, changing flight level many times, it is quite interesting hearing the pilot request course and level changes to avoid storms or take advantage of jet streams. It is an extra window on the whole flight experience. Once upon a time there was an in-flight entertainment channel for this, but AFAIK no airline has this option any longer? Generally tuning coarsely to the "top" and "bottom" ends of the narrow range was sufficient to keep up with the pilot, even if you didn't hear what frequency he was acknowledging the QSY to. If the signal became weak (indicating the TX frequency was at the other end of the band from where I was tuned) you just racked the polyvaricon to the other end of the band. Yep, the selectivity is that hopeless you can hear the transmissions (weakly) even if completely mis-tuned by 10 MHz. Once again security couldn't care less about the unit. I had purchased a small (Pelican 1030) hard-shell case for the device in LA, bright yellow like a Civil Defence radiation meter. One humorous moment was hearing the pilot argue with the tower about how much fuel he was wasting while delayed on take-off.

On the flight back from Boston to LAX TSA did flag the device. I aroused their suspicion somewhat because I had a 800 ml dewer of drinking water with me that I forgot to tip out until right at the check-point. I also suspect

© 2000 - 2009 Alan Yates - All Rights Reserved. XHTML | CSS | CSS toggle

TSA lady asked me a few questions, I said I was an amateur radio operator, etc. When asked why I built such a device I answered simply "I am a geek." Apparently a good answer, I was allowed to continue on my way with my receiver. The in-flight reception was a little poorer this time, some broadband RFI from the entertainment system was more audible and the air band signal was a bit weaker in the particular seat I was in - still quite usable though.

The international flight from LAX to SYD was quite similar to the initial flight. No security dramas and no traffic once out over the pacific. The periodic data-bursts I could hear on all flights was somewhat louder on this flight. I assume this is ACARS? Oddly enough the voice transmissions were much weaker, perhaps they use different antennas and I was near a node in the RF pattern inside the airframe that the voice TRX antenna excites?

So, in summary a bit of geeky fun and no security dramas despite a quite conspicuous looking, clearly home-made device.

18 comments.

Parent article: Non-Emissive Airband Receiver.

© 2000 - 2009 Alan Yates - All Rights Reserved.

Non-Emissive Airband Receiver

2007-07-14

I was looking into building a non-emissive receiver for the air-band to take with me on the odd occasion I take air transport. Obviously with all the EMC paranoia with aerospace technology the only "safe" device is one with no possibility of RF emission, even at microwatt levels so regenerative and super-regenerative receivers are out.

Charles Wenzel's excellent site has an interesting circuit along these lines. Essentially an amplified VHF crystal set. It uses a biased 1N5711 to achieve good sensitivity (rather like my wavemeter), and a front-end resonator to make it sufficiently selective in the band of interest (instead of being wide-open like his Amazing All-Band Receiver).

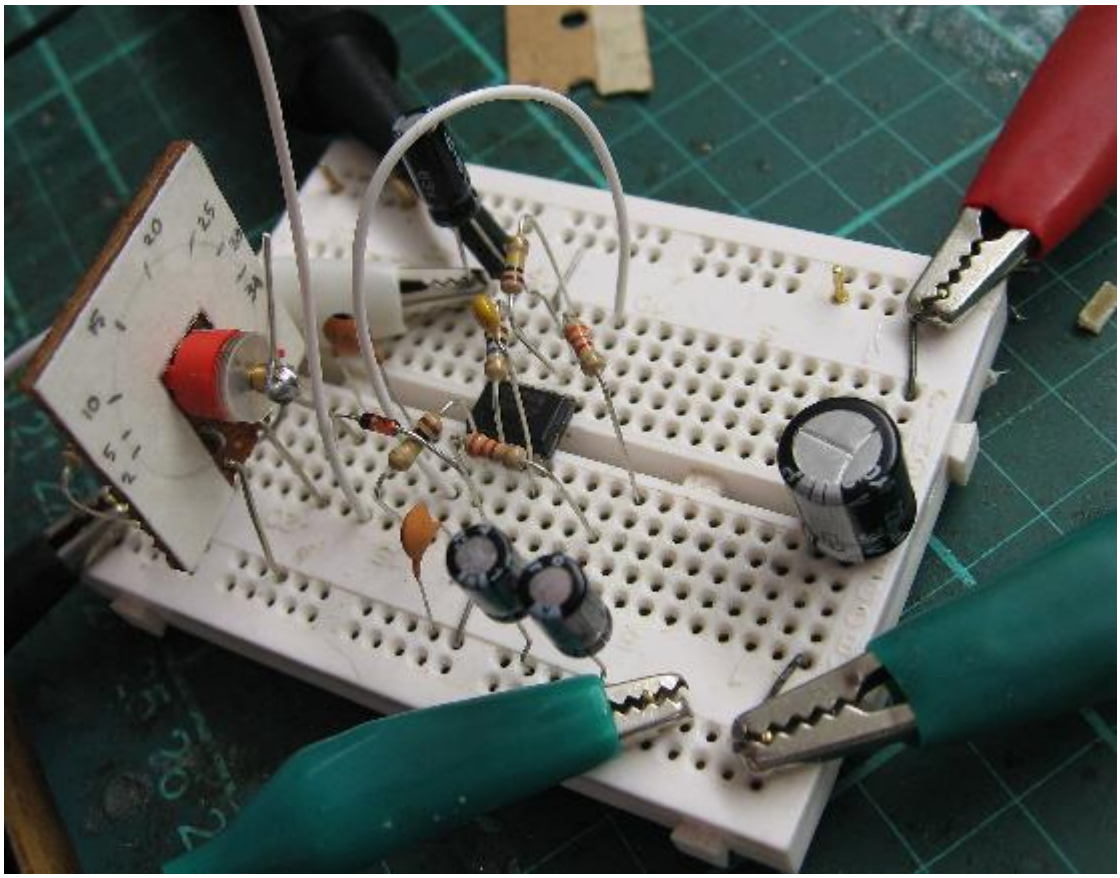

The circuit is quite trivial, it took me only minutes to build on a solderless breadboard. I used a TL072 opamp rather than an LM358 (Which makes very little difference at all, despite having many orders of magnitude better input bias current and about three times the unity gain bandwidth. Its main advantage is its rather low noise.). Once built it works very well indeed. The selectivity is limited almost completely by the Q of the inductor in the front-end, and is acceptably wide for the application. I tried tapping down on the inductor (a few turns of tinned copper wire) to affect a better match into the detector, the improvement in selectivity isn't really worth the reduction of sensitivity.

The audio gain is more than sufficient to hear the noise from the resistors in the front-end, it might be worth using less noisy devices actually. The total audio power might be a bit weak inside an aircraft, but for around town it is plenty loud.

© 2000 - 2009 Alan Yates - All Rights Reserved.

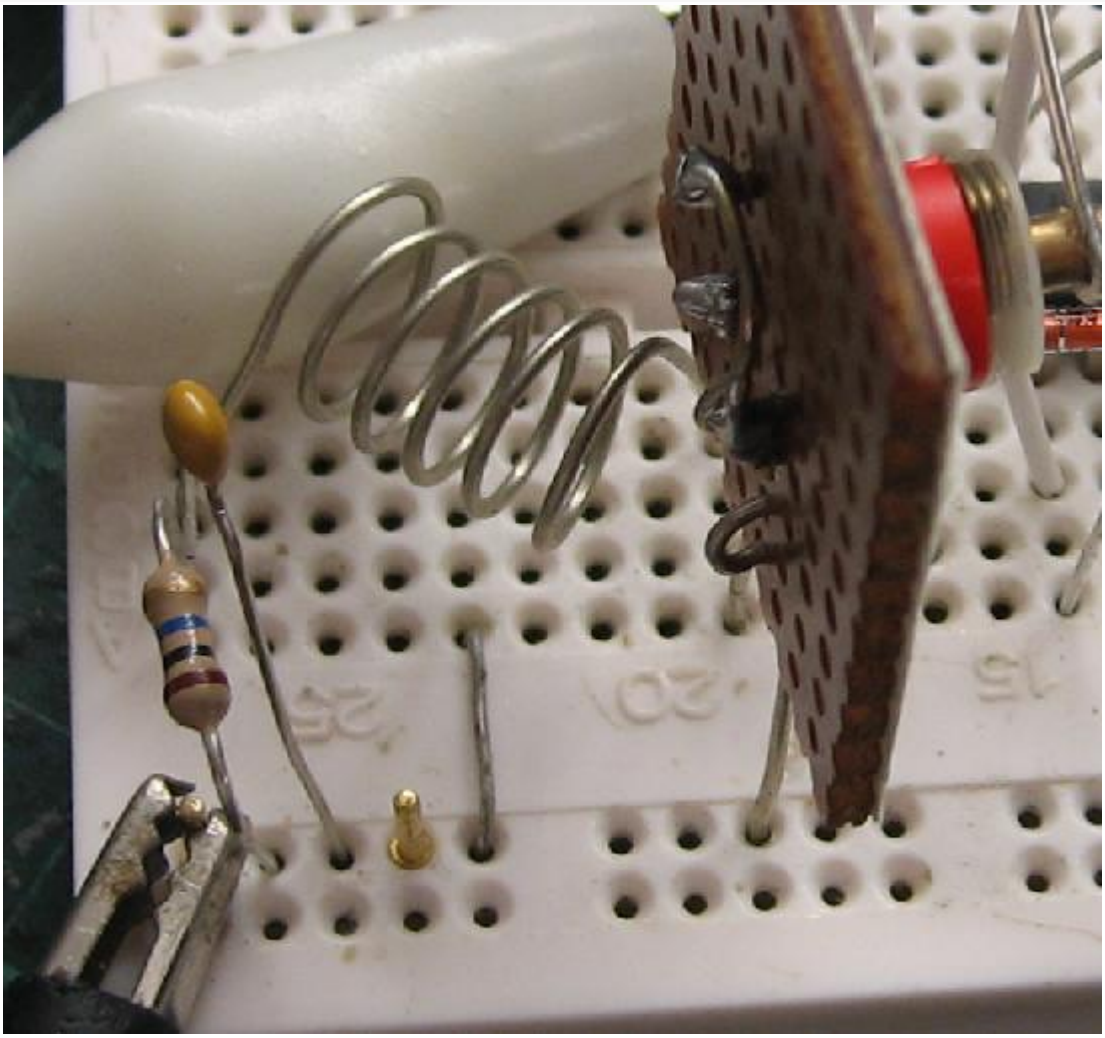

On the FM broadcast band I could separate about three of the major high-power-end stations, specifically 2DAY, 2MMM, and 2MIX. 2WS is for some reason the easiest to tune in (at modest distortion), it may be that the circuit Q is near-ideal at 101.7 MHz, or perhaps it is just far enough away from other powerful stations that it is easier to slope-detect without confounding garbage from adjacent stations. 2DAY and 2MMM are fairly hard to separate, you have to tune below 2DAY and above 2MMM to avoid the other. 2JJJ for some reason isn't sufficiently powerful in my shack to work well with the receiver, but you can understand the speech of the announcer. 2ABC is also easily detectable, but the quality of the demodulation is not fit for its programming.

You certainly would not want to use this receiver to listen to FM broadcast, it sounds even worse than a super-regenerative receiver (and is hopelessly deaf), but perhaps with some effort in constructing a helical resonator it might be improved to the point where it was acceptable. I still think the best non-FM receiver I've built for FM broadcast is the regenerative one, which has the advantage of variable-Q and good sensitivity.

On the Airband I couldn't hear a thing with the receiver. It isn't sufficiently sensitive to hear off-air signals, but experiments were carried out with the signal generator suggests it should work fine in close proximity to an airband transmitter. It works quite well on 2 metres to hear my fredbox, and can separate it from the pagers above 2 metres. It can hear TV stations very well, especially ABN-2 and ATN-7. With a baseband amplifier of sufficient bandwidth I'd imagine it would be possible to actually watch TV (poorly) with the recovered signal!

© 2000 - 2009 Alan Yates - All Rights Reserved. XHTML | CSS | CSS toggle

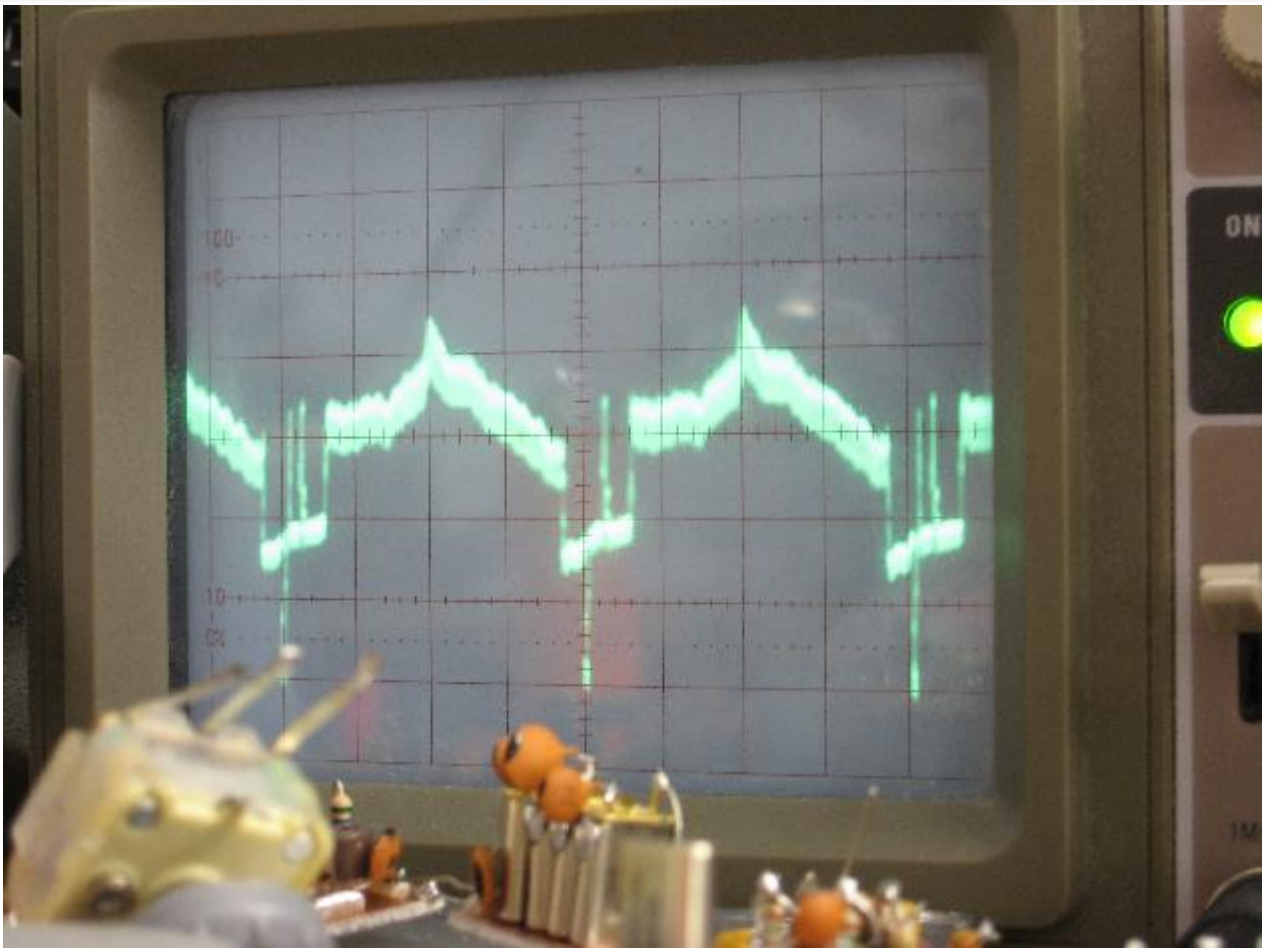

Thoughts

Such a circuit is extremely useful around the bench. Much as Charles has built a general purpose one as a detector I am considering building one with pluggable coils to cover MF-VHF. It would not be extremely difficult to add the audio amplifier stage to my existing wave meter (currently it just has a Hi-Z headphone output).

For the original purpose of air-band reception at an airport or onboard an aircraft I think a better solution might be a TRF receiver. Well, a TRF receiver with a bandwidth of about 20 MHz! Reviewing the noise-floor math, suggests it would be quite practical to simply amplify the entire airband (after a good front-end filter) and AM detect that (maybe with an AGC loop). The thermal noise floor is around -98 dBm, which means it will need signals significantly more than 3 uV for a reasonable SNR assuming a perfect noise figure. At 20 uV the signal will need around 80 dB of power gain for a mW of audio (around 200 mV into a 32 ohm mylar speaker - quite loud). With 40 dB each of RF and AF gain this seems quite do-able with stability. Making the receiver in this manner means it requires no tuning. (i.e. you hear *everything* in band, at once). The big problem would be VHF beacons dominating the reception, but perhaps a tunable trap or two in the front-end would let you notch out any that were causing you trouble. Beacons are allocated in the 1st 10 MHz of the band, which could be rejected by the front-end BPF.

The BPF for such a receiver would need a loaded Q of only 6 at a harmonic centre of 127 MHz, so it is quite practical to build. Two resonators loosely coupled should do the trick, 100 nH and 15 pF is about right with an impedance tap about 1/3 of the way up from the cold end. 22 pF trimmers could be used to tune, or some squash/spread of the 6 turn coils (8 mm ID, 15-20 mm long). Anyway, that is back of the envelope stuff, only way to tell for sure is to build it. The RF amplifier is the most difficult part, 20 MHz wide at VHF, low noise, stable and preferably AGC-able with around 40 dB power gain.

2 comments.

2010-06-11: Non-Emissive Air-Band Receiver (Implementation & Use)

A semi-finalised implementation of the passive air-band receiver and field testing while I was travelling in the US.

© 2000 - 2009 Alan Yates - All Rights Reserved. XHTML | CSS | CSS toggle

Non-Linearity, Harmonic Generation and Frequency Mixing

2007-12-31

This article is inspired by SolderSmoke 72, where Bill states that he understands the multiplication identity maths, but not the actual physical mechanism of frequency mixing through non-linear circuit elements. I decided to try to answer that question, to myself mainly, to deepen my own understanding. Of course, it is also an excuse to use the new MathML support!

Multiplication vrs Addition

As Bill said, frequency mixing results from multiplication of two sinusoids, the familiar trig identity that most of us were forced to memorise at school shows this:

cos(ωt)·cos(vt)=cos((ω-v)t)+cos((ω+v)t)2

A graphical example might be:

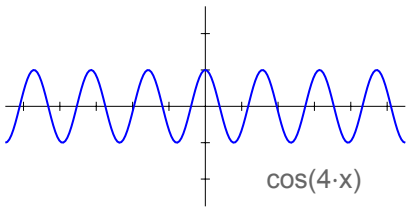

times

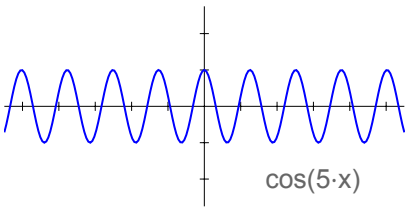

gives

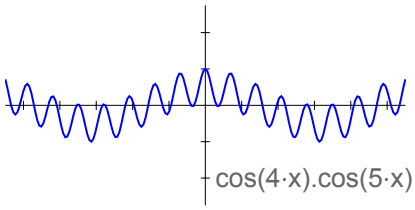

which is

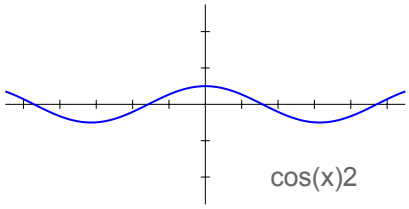

plus

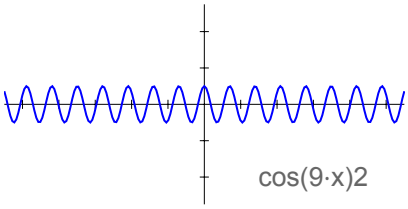

An aside to electronics for a moment: This is what we might see at the output of a perfect four-quadrant multiplier using a CRO. This might be confusing to some, compared to say the output of a DSB modulator driven with an pure AF tone (which looks like what we see below). However remember than the DSB signal is actually the superposition of two RF tones, the sum and difference frequency, with the AF and carrier suppressed. So quite rightly it looks like the beating below because it actually ***is*** the sum of two RF tones. For an SSB signal you'd see just the one constant RF tone as one product is suppressed/filtered. For a two-tone test you'd see the beating again, and a more complex 4-tone superposition for a two-tone DSB signal.

Simple addition (superposition) on the other hand, produces the characteristic "beating" pattern, but this is **not** frequency mixing. The components are simply superimposed. For perfectly linear systems no mixing products

© 2000 - 2009 Alan Yates - All Rights Reserved. XHTML | CSS | CSS toggle

cos(ωt)+cos(vt)=2cos((ω+v2)t)cos((ω-v2)t)

A graphical example:

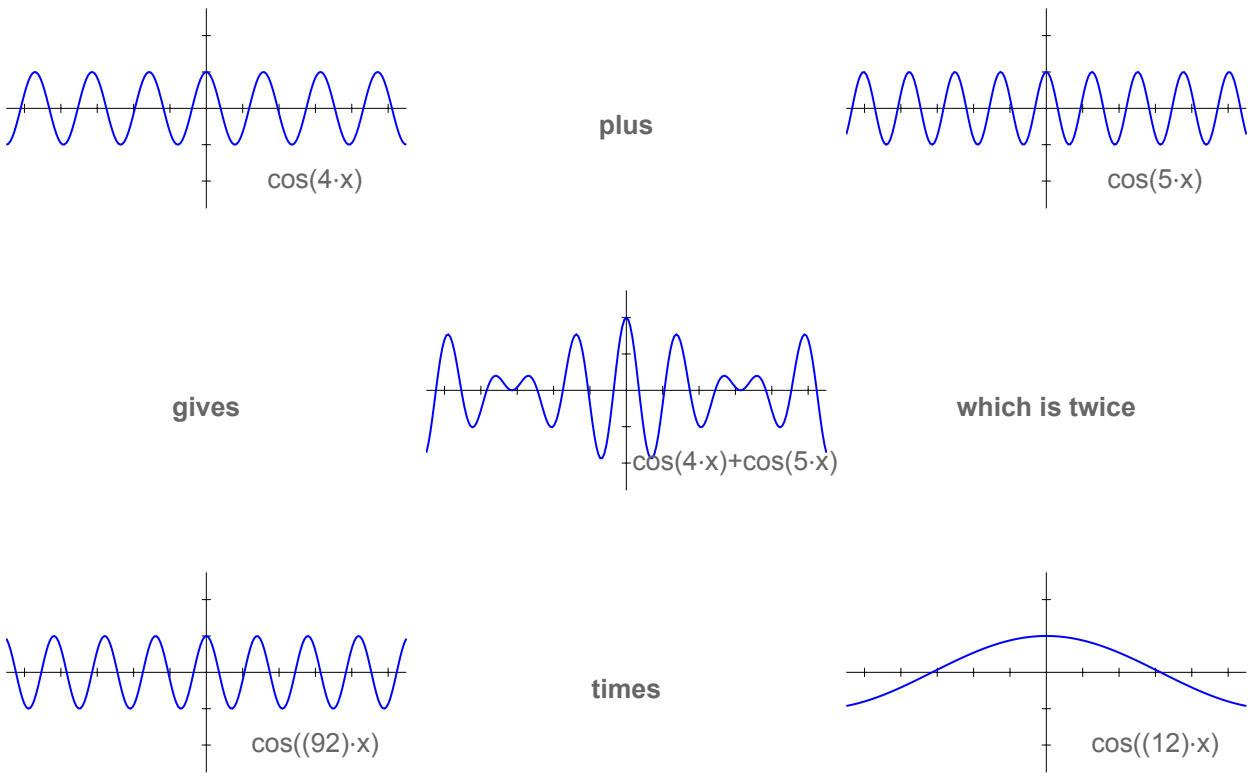

The envelope of the ω-v2 component is clearly visible, but a filter can't extract energy at ω-v2 because there is *none* there, neither is there energy at ω+v2. Filters at ω or v would however recover the individual components. This is obvious if we use our first multiplicative identity upon each apparent "component", essentially reversing the process and giving us the separate ω and v tones back again. You might like to think of the sum of two tones as that which would result from the multiplication of tones of 2 amplitude at their average and half their difference. This is somewhat intuitive if you think of it as the result of DSB modulating 2cos((ω+v2)t) with 2cos((ω-v2)t) which is cos(ωt)+cos(vt).

In the Frequency Domain

I personally find it somewhat confusing to visualise this in the time domain, so here is a frequency domain picture of what is going on:

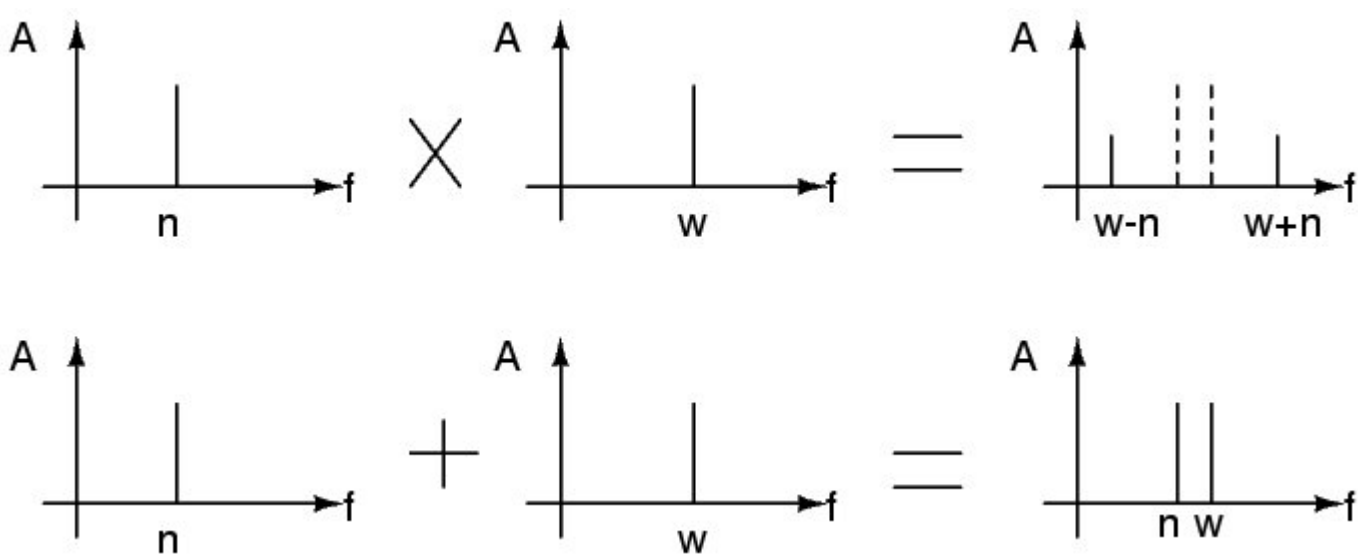

© 2000 - 2009 Alan Yates - All Rights Reserved. XHTML | CSS | CSS toggle

Lets first consider a linear circuit; two resistors R fed from two AC voltage sources operating at ω and v radians per second, delivering 1 volt pk-pk each.

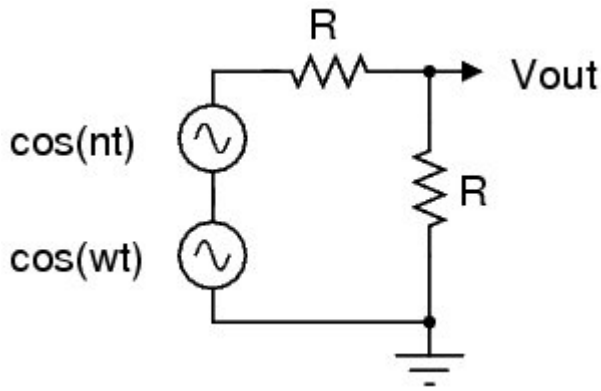

The transfer function is perfectly linear, the output voltage is one half the input voltage, and the input voltage is the simple sum of the instantaneous voltages of each AC source.

Vout=12(cos(ωt)+cos(vt))

From our identity investigation above, this contains only ω and v components in the frequency domain. No mixing products are produced.

Now lets replace the series resistor with a diode.

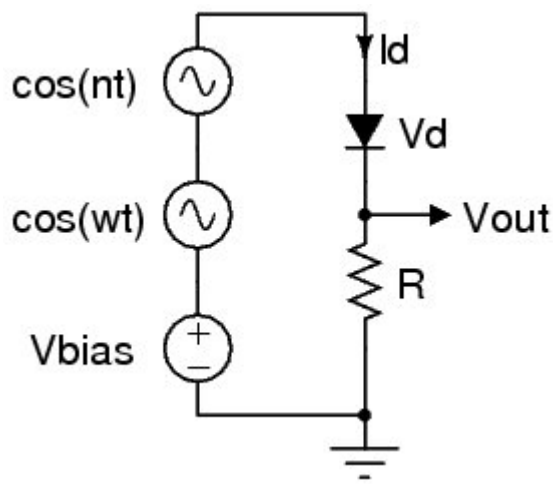

The diode is the classic non-linear component, its dynamic properties described by the Shockley diode equation:

Id=Is(eVdnVT-1)

Unfortunately this is absolutely horrible to solve analytically, and I won't attempt to do so here. Read the wikipedia Diode Modelling article for a starting point on the gory details. Instead, I'll just assume the diode gives as an exponentially changing "resistance" with the applied voltage. This is sufficient for a hand-waving argument to show how multiplication occurs.

© 2000 - 2009 Alan Yates - All Rights Reserved. XHTML | CSS | CSS toggle

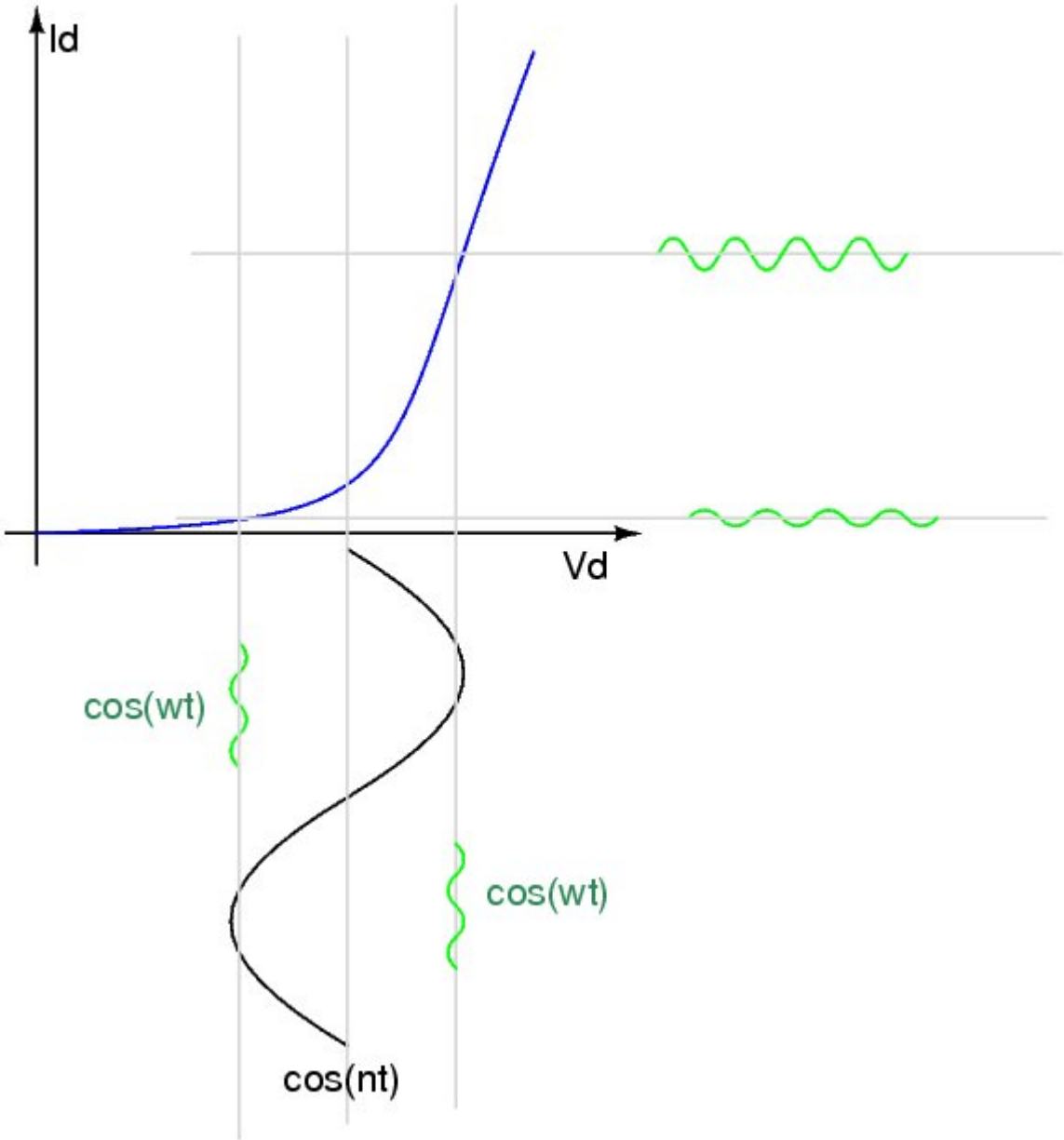

Consider cos(ωt)+cos(vt) being exponentiated by the diode Vd/Id characteristic. Assume v is much smaller than ω, such that we can consider cos(vt) to be almost DC during cycles of cos(ωt). We'll also assume there is a DC bias that prevents the diode rectifying the signals and they are of sufficiently small amplitude to be operating near the "knee" of the diode curve - this simplifies the argument and helps the visualisation, but isn't strictly required. The voltage seen across the resistor varies something like eAcos(ωt)+k. Where k is current value of cos(vt) and A some small amplitude constant. You can visualise this as cos(vt) slowly sliding the cos(ωt) up and down the diode Vd/Id curve. Towards the bottom Id varies quite slowly with Vd, so Vout is some small almost constant factor of (a distorted) cos(ωt), further up this "constant" increases as the slope of the Vd/Id curve increases and so the amplitude of the passed cos(ωt) increases. You can think of it as cos(vt) modulating the diode's dynamic resistance and hence multiplying its instantaneous value with cos(ωt).

Actually both voltages affect each other, and the products produced also mix. This is intermodulation distortion.

All this non-linearity also causes harmonic distortion of singly applied signals, distorting their waveshape and pushing some of their energy into harmonics. In the simple diode example all kinds of junk is produced, with them all intermodulating each other right down into the noise floor.

More Rigor

I am always troubled by hand-waving arguments, even if they provide some intuitive understanding. Quite frequently such "lies to children" are just that, complete falsehoods of dubious pedagogical merit. Here is a more mathematically sound argument...

Consider the Taylor expansion of ex:

© 2000 - 2009 Alan Yates - All Rights Reserved. XHTML | CSS | CSS toggle

ex=∑n=0∞(xnn!)

It is therefore easy to show that ex-1 is well approximated by x+x22 for small x. Remembering for the diode equation our x here will contain Vd and that (a+b)2=a2+2ab+b2 it is easy to see that there will be an a·b term in the transfer function somewhere. When a and b are our sinusoids x=a+b and we have our multiplying action!

This is the very heart of intermodulation through a diode.

The other higher-order terms are less important because their denominator grows as n! and will soon be into the noise floor, but it is helpful to remember they exist. In RF systems the 3rd-order products are of some concern, because they are quite close to the signals of interest. 3rd-order intercept is hence a figure of merit for high-performance mixers.

This same expansion explains harmonic distortion if you consider that cos2(ωt)=1+cos(2ωt)2 and that cosn(ωt) has a cos(nωt) term in general.

It is possible to show that all non-linear systems will produce harmonics and intermodulation products. The phase and amplitude of the products themselves are a function of the particular system, only in perfectly linear systems do the higher-order terms vanish.

Multiplication by Switching

Switching mixers can be thought of as multiplying the signal by +k or -k on each excursion of the local oscillator waveform. Selectively inverting the signal at the LO rate. Basically the LO is a square wave and its harmonic comb is convolved with the input signal, resulting in a heap of mixing products around each harmonic as well as the fundamental. Filtering is usually used to pick the IF desired, but this also gives an idea how harmonic and sub-harmonic mixing works.

Symmetric ±k multiplication is not strictly required, even just chopping the signal on and off at the LO rate is sufficient to achieve frequency mixing (but suffers from other problems due to lack of balance). This can be visualised as sampling the signal at the LO rate, where the IF is an alias. If you remove the Vbias from our diode example above you have an unbalanced product detector which functions essentially by switching (the alias being at baseband). In practice it would need to be driven fairly hard by the LO and would tend to suffer from AM break-through, however such circuits are used after IF filtering in many receivers as the signals presented to it are well controlled.

Although not normally described as mixing, the rectification often used to demodulate full-carrier AM is also an example of mixing by switching. The carrier toggles the rectified path on and off at the carrier rate, mixing itself with the sidebands also present and generating the baseband image (basically folding both sidebands over each other).

True four-quadrant multipliers are ideal mixers and the LO signal remains as pure as it was injected. "Gilbert Cell" mixers approach this, and also suppress the injected LO and RF signals because of their symmetry. Leaving mostly the IF (and the image) at the output, simplifying the filtering of the IF.

Parametric Mixing

We've only discussed time-varying resistance causing intermodulation here, but it is possible to vary reactance as well (and impedance in general). Parametric mixers use their pump waveform (LO) to alter the reactance of tuned circuits at the LO rate. One or more tuned circuits may be used, depending on the desired result.

In a parametric mixer one tuned circuit is set up to resonate at the desired IF, and other at the signal frequency, they are coupled through a varactor which is then pumped at the sum or difference, converting energy at the signal rate into that of the IF rate. The actual mechanism can be considered energy shunting between the coupled resonators as their LCR properties are varied, but the mathematics is pretty ugly. Double-sideband parametric mixers have three resonators, allowing extraction of both the sum and difference IFs. The IF resonators are generally called the idler, which I assume is a term from their mechanical origin?

It is possible to use a parametric mixer as an amplifier. Parametric mixers have gain as the pump energy is converted into the signal and IF frequencies. Hence a small signal in the signal resonator experiences amplification and can be extracted there if so desired (directional couplers/circulators are useful to isolate the input and output). The gain of the amplifier is controlled by varying the amplitude of the pump. Pump too hard and you simply have a parametric oscillator at the IF and signal frequencies.

Degenerate parametric amplifiers have only a single resonator (i.e. their IF equals the signal frequency) and are pumped at exactly twice their resonance frequency. This makes them quite phase-sensitive as the pumping must be coherent. The pump frequency for any parametric device must be at least twice the signal frequency.

Parametric mixing and amplification is typically used at very high frequencies, usually microwaves up to light. It is an extremely common practice in optics and low noise microwave converters. However, it can in principle be used at any frequency, and even in non-electronic systems, such as mechanics. The playground swing is a

© 2000 - 2009 Alan Yates - All Rights Reserved. XHTML | CSS | CSS toggle

familiar example to all of us, changing your centre of mass dynamically alters the inertial terms of the system and pumps the oscillation (degenerate parametric amplification).

1 comment.

Attachments

title	type	size
Linear System Diagram Source	application/postscript	9.722 kbytes
Non-Linear System Diagram Source	application/postscript	10.569 kbytes
"Non-Linear Multiplication" Diagram Source	application/postscript	9.788 kbytes
The Frequency Domain Picture Source	application/postscript	10.181 kbytes

© 2000 - 2009 Alan Yates - All Rights Reserved. XHTML | CSS | CSS toggle

One Transistor Voice Transceiver

2008-03-01

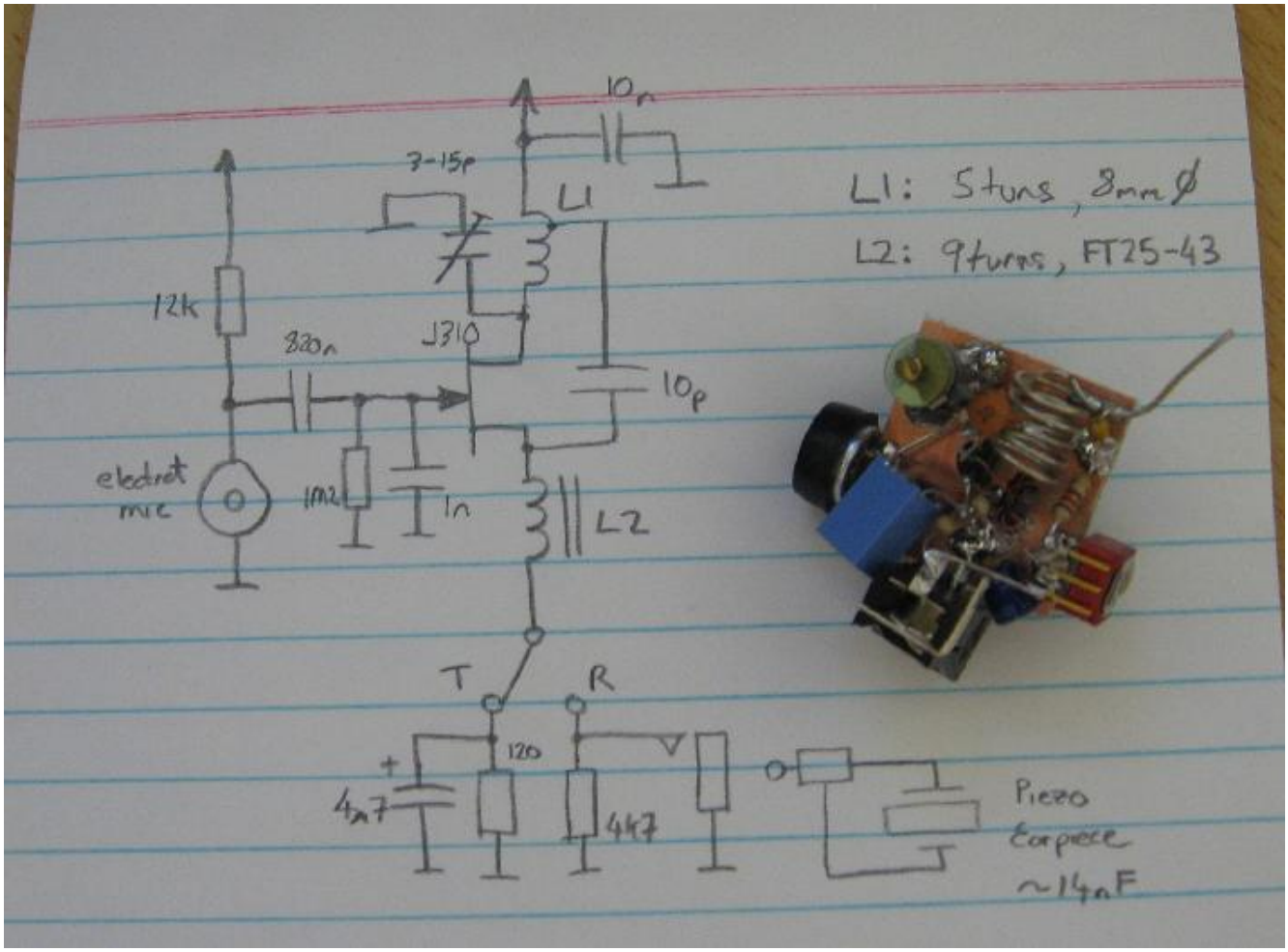

The Inspiration

Michael Rainey's recent adventures with minimalist transmitters and receivers has been an active topic of discussion on QRP-L. Michael's One Transistor Direct Conversion RX inspired me to finally attempt a project I've been toying with for years; a one transistor voice transceiver. John Kirk VK4TJ also exchanged some emails with me about single transistor TRXs, in particular John reminded me about the QSK-1, Bob Culter N7FKI's single-2N7000 based CW transceiver.

A one transistor CW TRX isn't that difficult to achieve, but I wanted a phone rig. I was under no illusion that this would be extremely difficult to achieve, openly doubting if it was even possible. I agreed to be happy if I managed to achieve any kind of "toy" walkie-talkie style performance.

The General Concept

I decided to go with minimalist WBFM transmitter and a super-regenerative detector. The topology of both circuits is extremely similar, and I had previously got a single transistor FM broadcast receiver working fairly well. It is pretty easy to turn a self-quenched super-regenerative detector into an oscillator by just altering source/emitter circuit to prevent quenching. This is the approach I took.

I picked the FM broadcast band as a candidate frequency band. It is not excessively high of a frequency, WBFM is already common there, and locally there is an empty gap around 100 MHz where Low Interference Potential Devices are allowed to operate (wireless microphones, toys, etc). My spectrum analyser also works well on 3 metres, and includes WBFM demodulation. There is no reason in principle why the resulting device could not be rebuilt for 10 metres, which is very sparsely populated, or even maybe 70 cm. 2 metres is too busy now days for a free-running LC oscillator to be

© 2000 - 2009 Alan Yates - All Rights Reserved.

frequency stability would become a big problem. Antennas for HTs are much easier at UHF than HF, which might be considered an advantage of using 70 cm.

A Starting Point

I started with a grounded-gate JFET oscillator. (Using a JFET simplifies the biasing components, while I wasn't trying to build a minimum-component receiver, simplicity is always preferable.) A SPDT switch in the source provided the switching between straight oscillation and quenched super-regeneration. For RX, a crystal ear piece was used as both the audio output device and the quenching capacitance (about 14 nF). The resistor paralleling (4k7) it was chosen to give a quench of about 25 kHz which corresponded to the best sensitivity. (Slightly more AF output was available when the quench was dropped to around 18 kHz, but the passive filtering required to remove the quench tone killed any extra AF output, so I kept the quench supersonic.) For TX just a single resistor was switched in resulting in CW oscillation. A trimmer (not show below) in the drain circuit provided tuning from about 70-180 MHz.

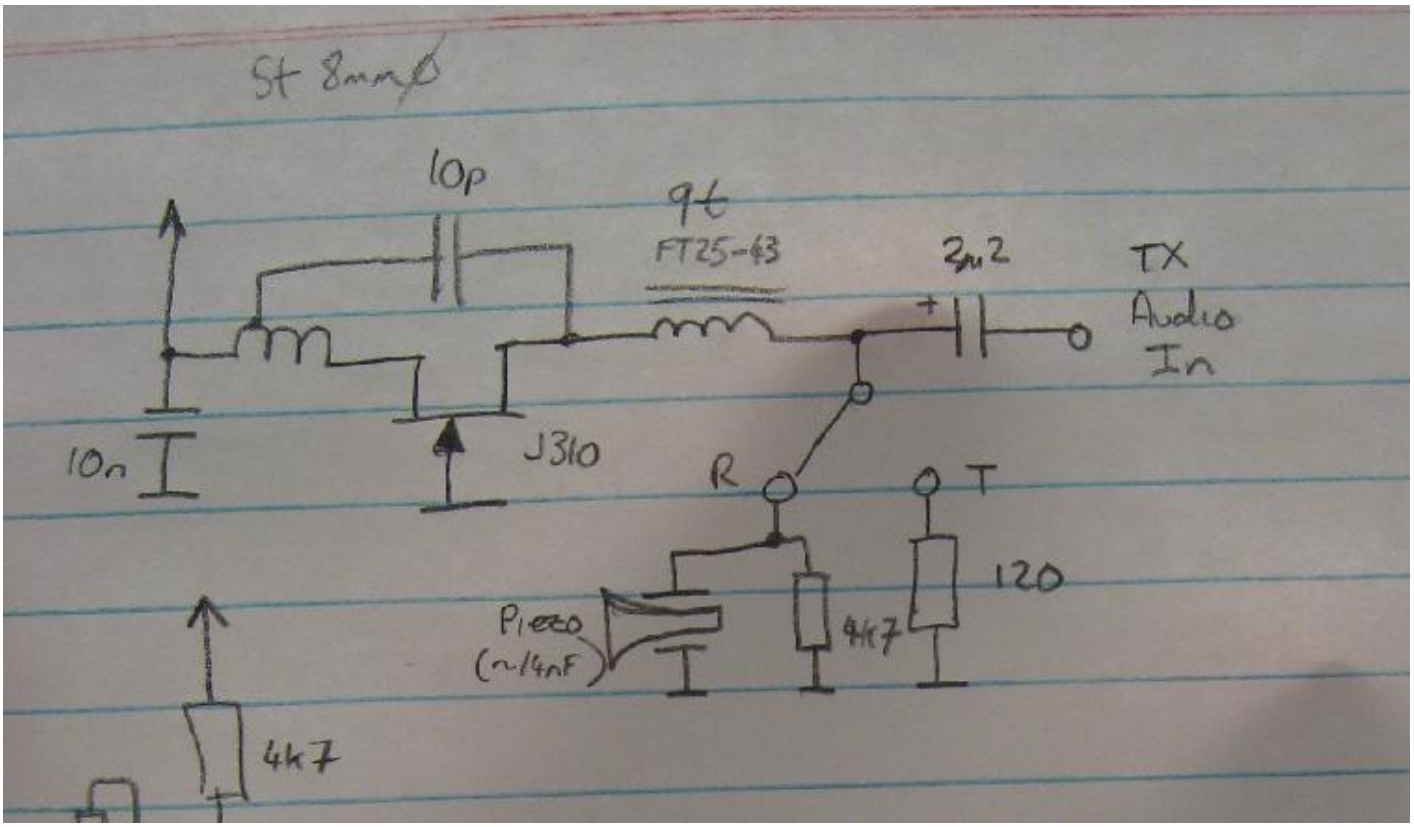

At this point, the RX was working fine. The audio output level is quite low, requiring a quiet room, but the receiver is quite sensitive, picking up even the weaker FM broadcast stations with no antenna at all. (The 8 component RX is in itself quite impressive in its minimalism!)

Coupling to the source for an antenna proved to be practical for both TX and RX but did cause some frequency instability with hand capacitance. Coupling to the cold-side of the tank offered no better stability. The antenna was left off for further experiments, it was just getting in the way, and was something that could be left out for now.

The frequency shift between TX and RX turned out to be only about 50 kHz for my ugly birds-nest of a prototype. This was completely unexpected. Previous experiments had delivered circuits with more than 800 kHz of shift between CW and quenched oscillation. The 50 kHz shift is pretty acceptable with WBFM, considering the selectivity of the RX.

Getting TX Modulation

To FM modulate the TX carrier I injected 100 mV of audio from my signal generator into the junction between the source resistor and the RFC. This resulted in an acceptable deviation, similar in "loudness" to commercial FM stations. However, here I had a problem. 100 mV of audio into a low impedance point would require some kind of audio amplifier, no passive microphone could deliver this.

For the purposes of further experimentation I built a two transistor AF amplifier which could amplify a dynamic or electret mic signal up to the required level and drive the low impedance of the source. Note that this particular circuit is capable of providing RX audio amplification as well, and can drive 32 Ohm headphones to a reasonable volume.

© 2000 - 2009 Alan Yates - All Rights Reserved. XHTML | CSS | CSS toggle

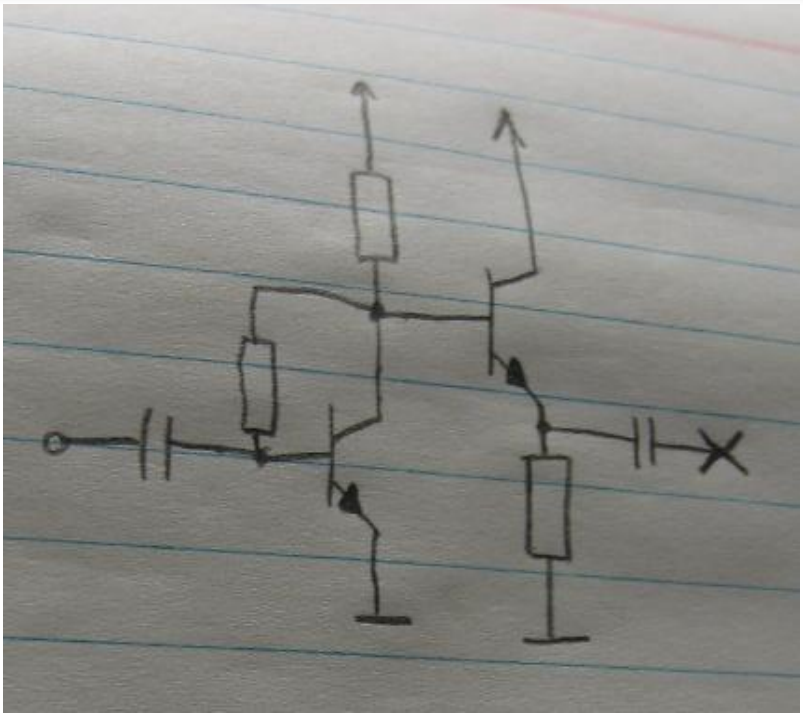

In an attempt to avoid the need for the AF amplifier I lifted the J310's gate lead and took it back to ground with a 1M resistor, paralleled with 1 nF of RF bypassing. This gave me a higher impedance point into which I could inject much smaller AF signals and get the JFET to amplify the signal itself. The result was fairly good deviation with just a dynamic Mic and a DC blocking capacitor connected to the gate - at least as long as you yell into the microphone!

A down side was this change to the circuit caused the RX/TX frequency shift to increase to almost 500 kHz. I had always planned to include a switched trimmer to correct the RX/TX shift, so while annoying, this wasn't a fatal flaw. The RX frequency was higher, so a DPDT switch could be used to switch in extra capacitance on RX. This gives you a RIT feature too which is very helpful in minimising RX audio distortion.

The low deviation was a problem though, it was no where near as good as with the source injection with the AF amplifier, and combined with the fairly poor AF output of the RX this configuration is just barely usable (unit-to-unit anyway)...

After much fiddling around I decided to cheat and use a electret microphone instead of a dynamic one. A electret mic has an internal FET and can't be classified as "passive" (but more importantly for the circuit, its output is significantly greater). Along with adding a AF bypass capacitor at the source resistor, this provided acceptable deviation with no additional stage of AF gain and only a moderately raised voice.

A carbon microphone might be a way to avoid the extra "active" device. I also contemplated directly pulling the tank frequency with either the capacitance of a microphone diaphragm in close proximity, or a piece of ferrite glued on to a diaphragm which might be rubber or acetate sheet stretched across a PETE plastic bottle top as an acoustic "horn". The mechanics of this were thought too fiddly for the proof of concept unit, the purists might like to explore this route however.

Success

So at this point, I have a working toy VHF transceiver using only a single J310 transistor and just a handful of other components. The miniature switch and earphone socket dwarf most of the other components, and the current drain is next to nothing.

© 2000 - 2009 Alan Yates - All Rights Reserved. XHTML | CSS | CSS toggle

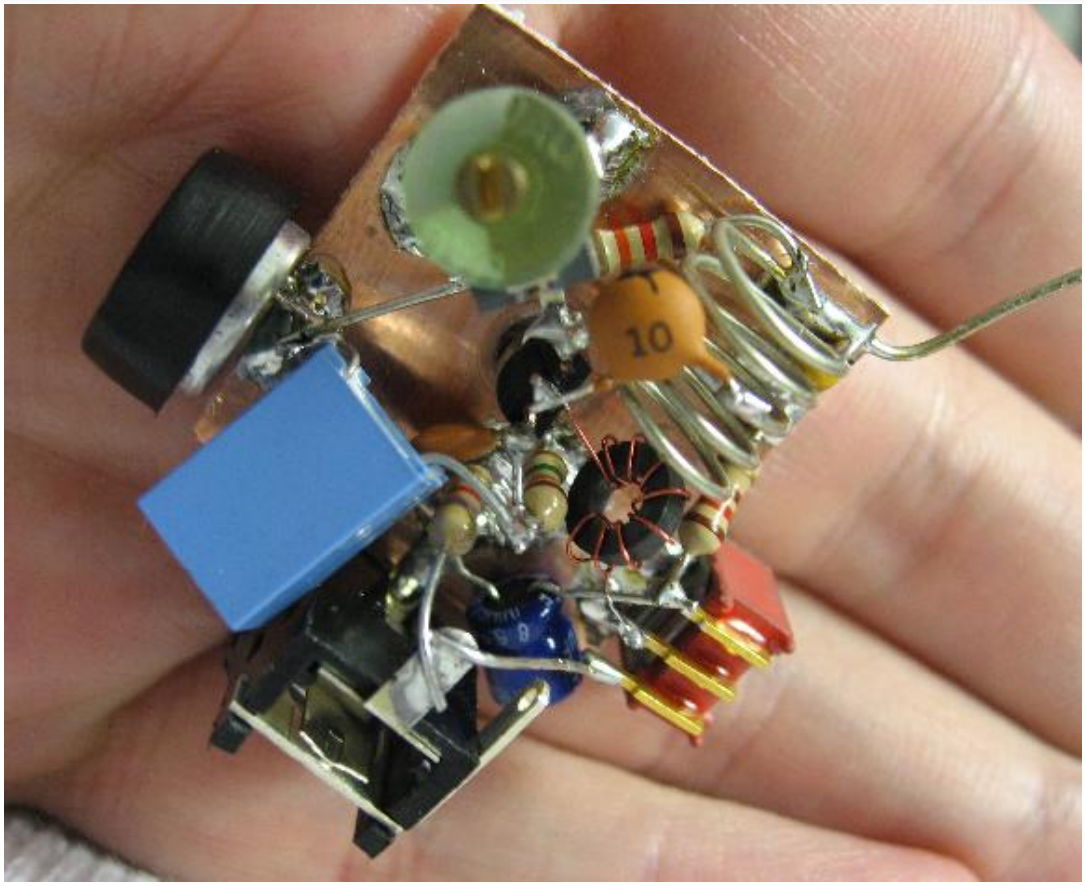

I've contemplated building a pair of these circuits into Eclipse mint tins.

I do really need to build at least two, so I can have a proper QSO unit-to-unit.

Improvements

The proof-of-concept circuit has a lot of limitations, the biggest is no RIT or fixed TX/RX frequency shift compensation. When I tightened-up the initial messy layout, the circuit actually ended up having a much smaller T/R frequency offset. Almost acceptable considering the selectivity of the RX, but wrong enough to limit its performance significantly.

At its most primitive using a DPDT T/R switch and a small compensating trimmer would allow correcting this. I am tempted however to use varicap tuning for the RIT. Some TX shift would be handy for "netting" three or more units, so perhaps a pair of pots; tune + RIT.

The microphone isn't cut off on RX, you can hear it in the RX audio. Removing the microphone supply or shorting out the transistor gate would fix this. More T/R switch poles or some diode switching associated with the RIT implementation sounds the most feasible.

The TX frequency takes a moment to settle while the AF bypass capacitor on the source charges. This isn't a big deal, but you can watch the oscillator sweep up the band on the SA as it charges when you first key the transmitter. Reducing the value of the capacitor helps, but reduces the low-frequency deviation. Some adjustment of TX frequency is available by varying the source resistor, but this also changes the output power and can only be done within certain limits (before it starts super-regenerating at a fraction of a Hertz or the transistor saturates). It is possible to tune out the T/R frequency difference by this method.

Obviously coupling the tank to an antenna needs to happen in the final unit too.

More Devices?

There is a obvious trade-off here in performance vrs device count. For one active device you get a quiet RX with moderate TX deviation, and an output power in the milliwatt region: Usable, but only really to say you've done it!

Adding another transistor gives you either better RX AF gain, or more TX deviation. Two extra transistors lets you have quite good TX and RX performance, but you are still tied to the earphone for RX. Extra switching lets you drive a small speaker which will also act as the microphone, but a 4PDT TR switch is required and circuit complexity is rising fast. An dual Op-Amp IC gives you similar options for more current draw.

If you don't mind extra transistors you can just build yourself separate Microphone and Speaker amplifiers. Three or four extra transistors gives you a quite capable little rig. You can even just build the TX and RX separately and switch the power and antenna, at that point though, you have a transceiver not unlike the Fredbox.

The AM signal of the Fredbox is more compatible with the super-regenerative detector too, in the sense that tuning is not

© 2000 - 2009 Alan Yates - All Rights Reserved. XHTML | CSS | CSS toggle

FM in the current circuit, but a modulated buffer would be a better idea to minimise FM. Crystal locking the TX frequency would be an option for an AM rig.

RF buffering on RX would reduce LO radiation. On TX you could develop more power with a stage or two of amplification and both would help prevent the antenna loading pulling the frequency around while in use.

So even if limited to say, 6 transistors total you could make a pretty good transceiver with a tiny footprint and power consumption. Of course, it would have none of the wow factor of using a transceiver with only one transistor!

8 comments.

© 2000 - 2009 Alan Yates - All Rights Reserved. XHTML | CSS | CSS toggle

Optical Tachometer

2002-12-14

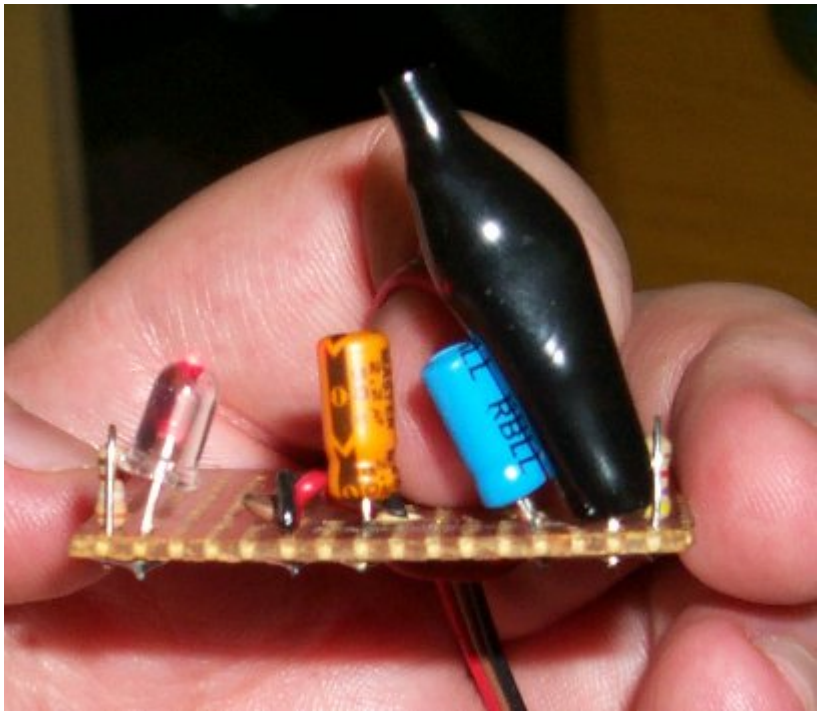

I built this simple reflection-pair optical tachometer head for my CD-ROM structural strength experiments. I needed a simple and accurate way of measuring their angular speed, while I spun them, before I could proceed to more scientific tests.

The circuit is simplicity itself. There is a red LED to illuminate the target and a photo diode in photo-conductive mode to pick up the reflected light. A simple three-wire (supply/signal/common) umbilical feeds back to the power supply and readout. Currently I use my CRO for the readout, but I have left room on the head board for a pre-amp to help integration with a counter circuit at a later stage.

As you can see in the picture, I am using a boot from a alligator clip as the light shield. The resulting signal is about 50mV pk-pk for the difference between the shiny CD surface and a black region painted on with a whiteboard marker.

The supply voltage is 6V, but anything that correctly biases the red LED and photo diode with the given resistor values will work fine. I used 4 AA penlight cells in a holder than offers a 9V battery snap style connector.

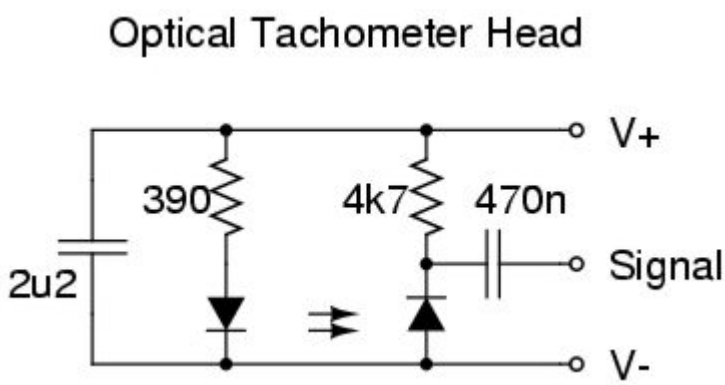

Below is an image of the signal observed while monitoring a CD being spun via a small electric motor. The two peaks are from the non-reflective black lines on the CD the smaller blurry peaks are the RF noise from the electric motor (Their constant phase relationship with the optical signal indicates the drive connection is solid with no slip, their number also confirms the motor has 3 poles). The vertical gain is 20mV/div and the horizontal rate 2ms/div, giving an RPM of about 4800.

© 2000 - 2009 Alan Yates - All Rights Reserved.

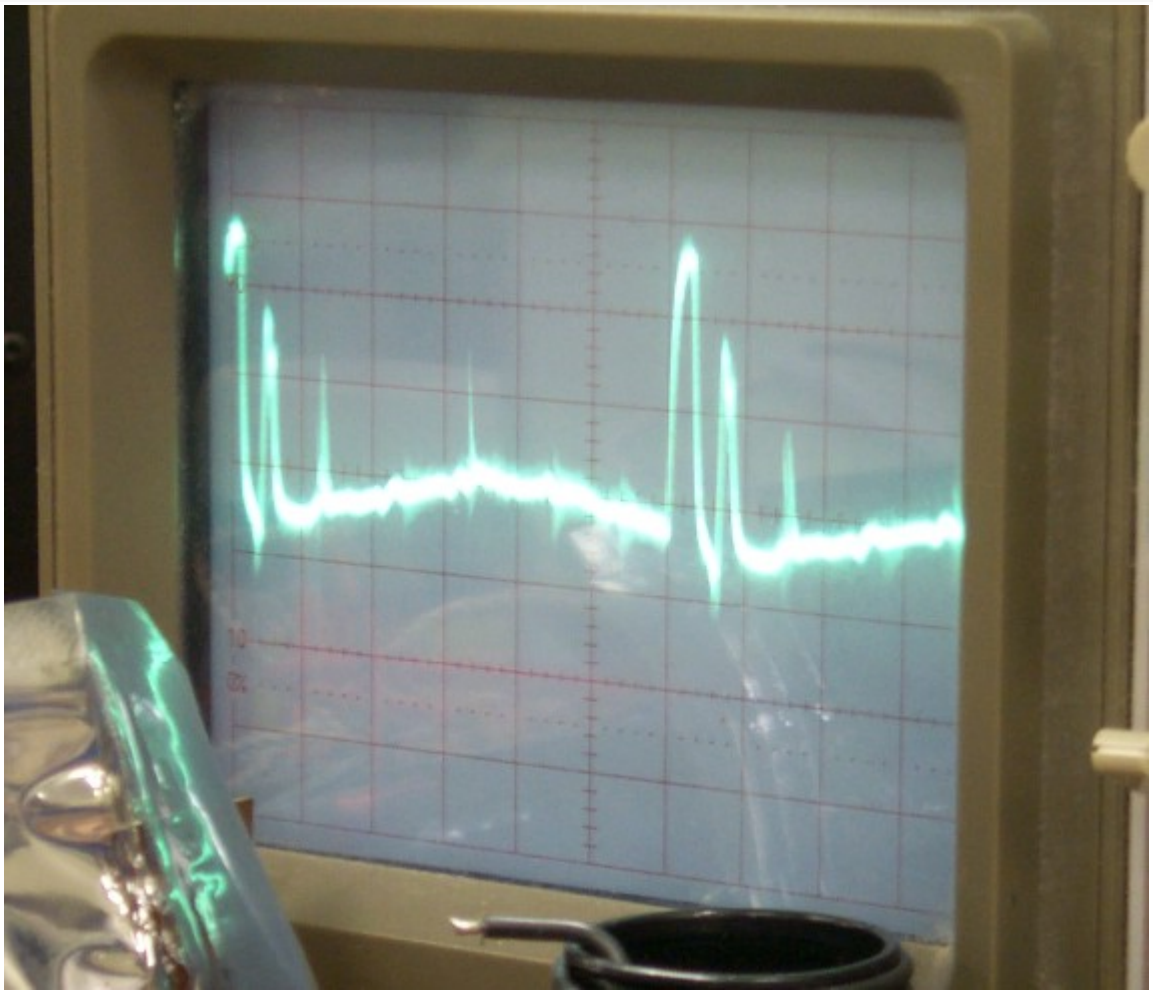

Leave a comment on this article.

Attachments

title	type	size
circuit postscript source	application/postscript	9.903 kbytes

© 2000 - 2009 Alan Yates - All Rights Reserved. XHTML | CSS | CSS toggle

Pancake Geiger Müller Tubes and a new Power Supply

2009-06-07

I found some very nice ~ 50 mm pancake Geiger Müller tubes on eBay. They were about $60 AUD landed from the Ukraine, so naturally I couldn't help myself, I bought a pair.

They are fairly modern devices, built in the 90s with a Neon/Bromine fill and an operating voltage of about 400-500 volts. Their end-window is a bit thicker and more alpha absorbing than the one in my old high school tube (likely for the required mechanical robustness to not implode), but their overall sensitivity is much better because they are physically larger.

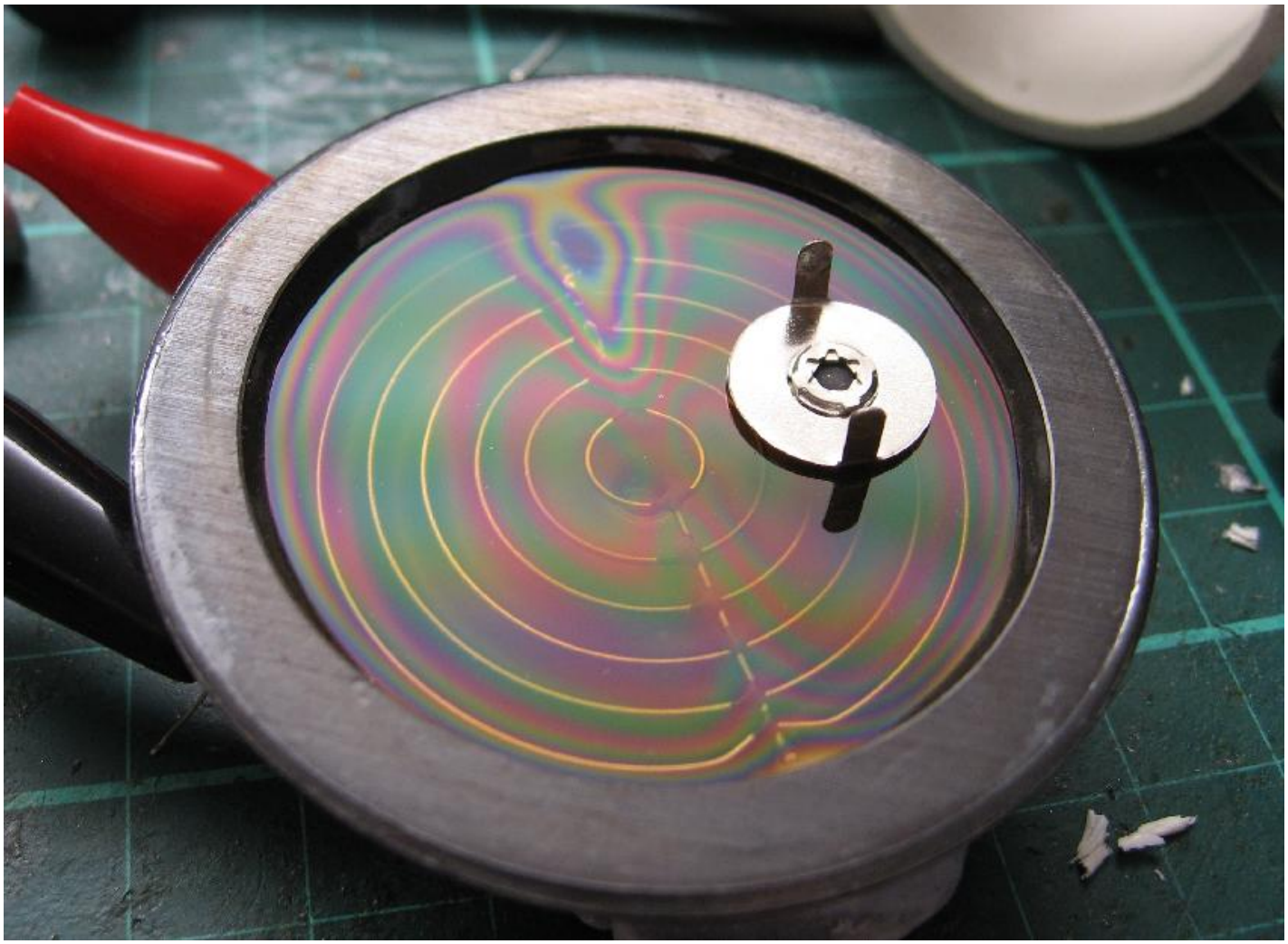

With the end window being quite transparent you can easily see the discharges in the tube caused by the ionisation radiation. While not particularly localised (the plasma sheath expands rapidly by secondary ionisations in the avalanche) it is a bit like a spark chamber, showing you roughly where the particle passed through the detector. I quite enjoyed observing the flashes in the dark, it is a bit like a spinthariscope, only with much brighter diffuse pink flashes. I tried to capture the effect on video, but wasn't very successful.

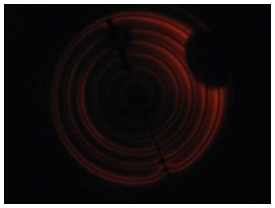

Video of the GM tube discharge flashes in the dark
(4.934 Mbytes)

© 2000 - 2009 Alan Yates - All Rights Reserved. XHTML | CSS | CSS toggle

Initially I used the circuit I built for the previous tube, but I decided to build a smaller portable version I could use a "survey meter" - there are some Coleman lamp mantles at Big-W I want to determine are Thoriated or not... A new inverter was constructed on a scrap of PCB material. I tried a different 10 mH inductor from the junkbox this time and found it worked better than the unit I had used previously. This let me use fewer multiplier stages for the supply, the circuit ending up virtually identical to Charles Wenzel's, except I used a protective gas-gap tube (from Rockby's clearance sales) for the regulation string and picked off the voltage at the last multiplier stage. This gives my unit excellent regulation and I lucked out that the tube gives almost exactly 500 volts in the circuit. (Open-loop the device delivers 783 volts.) The 3-pin transient protection tube is designed to be placed across telecom lines and features a 350 volt breakdown from each line to earth. It just so happens the breakdown from line to line is about 500 volts - perfect for my purposes. I originally grabbed them for a crazy idea of using them in Marx generators as a substitute to spark gaps or avalanche devices, but I am yet to try that.

To measure the very high impedance output of the supply I threw together a simple instrument using a 1 GΩ resistor and a commercial 200 mV FSD LCD digital display module. The module came from Rockby and has an input impedance that exceeds 200 MΩ, but I am shunting it with 10 kΩ so in relative terms it is quite insignificant. The 1 GΩ resistor I got from Farnell, and cost a ridiculous $8.40. It is rated to 5 kV, but I've tested it to beyond 15 kV. I arranged the meter decimal point so it reads directly in kV, forming a 20 kV FSD meter, but I wouldn't trust the single 1 GΩ resistor at 20 kV. I've used it to measure 15 kV sources however. I killed one of my favourite multimeters trying the same thing at 30 kV, so I am hesitant to push my luck much further until I build a similar device with good insulation and protection devices across the divided output.

© 2000 - 2009 Alan Yates - All Rights Reserved. XHTML | CSS | CSS toggle

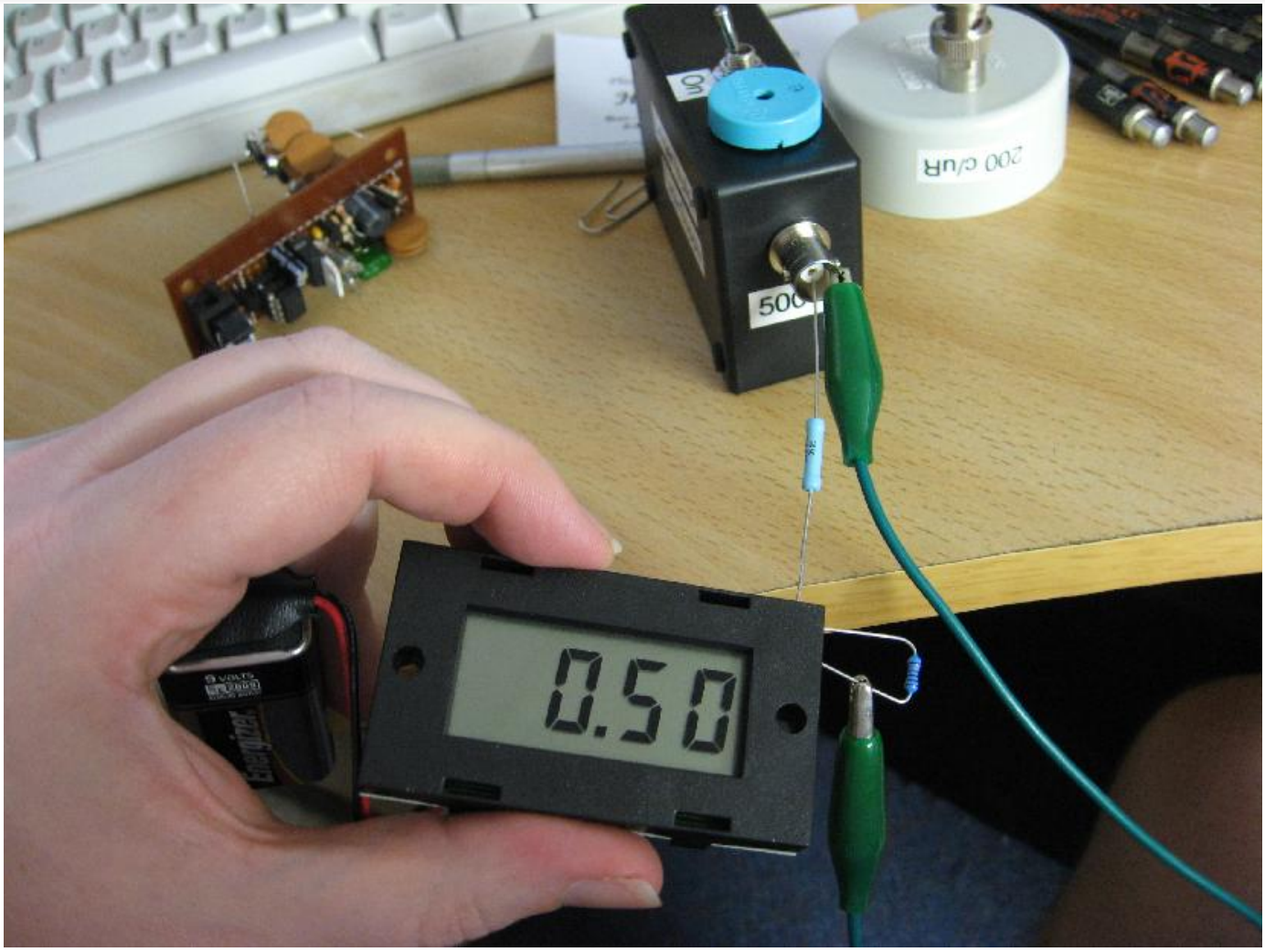

Anyway, the resulting radiation measurement instrument is not calibrated in any way and offers just a piezo clicker for registering tube counts. I intend to add a count-out jack and probably interface it with a microcontroller driven LCD. The tubes came with sufficient information to roughly calibrate the device (about 200 counts per micro-Röntegen for Cobalt-60 gammas).

© 2000 - 2009 Alan Yates - All Rights Reserved.

It fits the bill for a compact activity sensing unit I can take down the mall and check out the Coleman mantles with. Here is a video of the unit clicking away to the beta emissions of the small Potassium 40 content of natural Potassium Chloride.

GM detecting Potassium-40 emissions
(2.894 Mbytes)

The sensitivity of the tube is quite excellent. Without integration the emissions from the KCl are easily missed when using the old end-window tube. With the pancake tube they are quite obvious to the ear alone. The supply will work just fine with the older tube which is handy, and I've re-plugged it with a BNC to facilitate quick swapping.

12 comments.

© 2000 - 2009 Alan Yates - All Rights Reserved. XHTML | CSS | CSS toggle

Parallel Port Breakout

2003-07-11

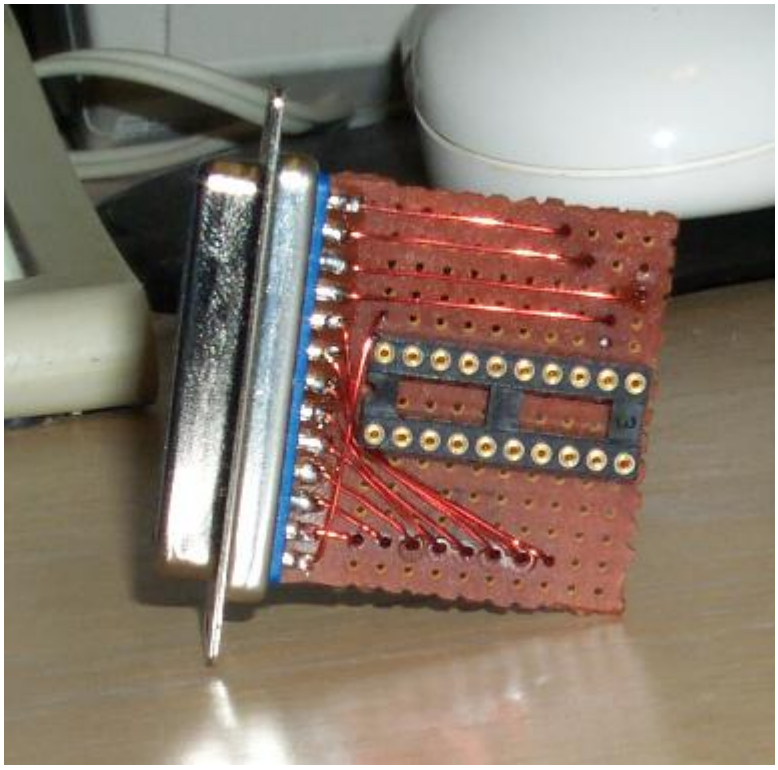

One day a fair while ago I built this prototype parallel port breakout widget after spending a few frustrating hours working with the arcane pin-out of the PC parallel port.

It probably isn't a new idea, and it probably isn't really that earth shattering, but I find it much easier to work with the signals lines brought out in the same order as their respective bits in the registers that represent them. At least when I am probing around with a logic probe while debugging.

The prototype was built using some fine gauge enamel wire and about an hour of patient soldering. You can build your own pretty easily, but it is time consuming. After extensive use of the little tool I showed it to a few people and they loved it, vowing to build their own.

The idea, for those unfamiliar with the practice of using machined-pin IC sockets as transient connectors, is to use a piece of *solid-core* (single strand) hook-up wire to plug into the socket and then into your prototype on a solderless breadboard. I find the wire from cat-5 cable, or old PC data leads ideal for this kind of service. A pair of side cutters and a *T-Rex stripping tool* is an excellent rapid bread boarding combination. (Sourcing 0.71mm solid core PVC jacketed wire is increasingly difficult and expensive compared to flex hook-up wire, at least in my neck of the woods.)

I decided to get a small PCB made up to make building them trivial. I figured, worst case, I can probably flog them on eBay if my idea turned out to be totally insane.

Unfortunately the first batch I got made up were missing the silkscreen because the board house's machine broke down and they sent them anyway, believing I was in a rush for them. This is a little annoying, but doesn't make the entire batch worthless. I am selling them on eBay at cost. I've since received a replacement batch from the board house with the silkscreen which will also be sold to friends and on eBay.

Here is a picture of one without a silkscreen:

© 2000 - 2009 Alan Yates - All Rights Reserved.

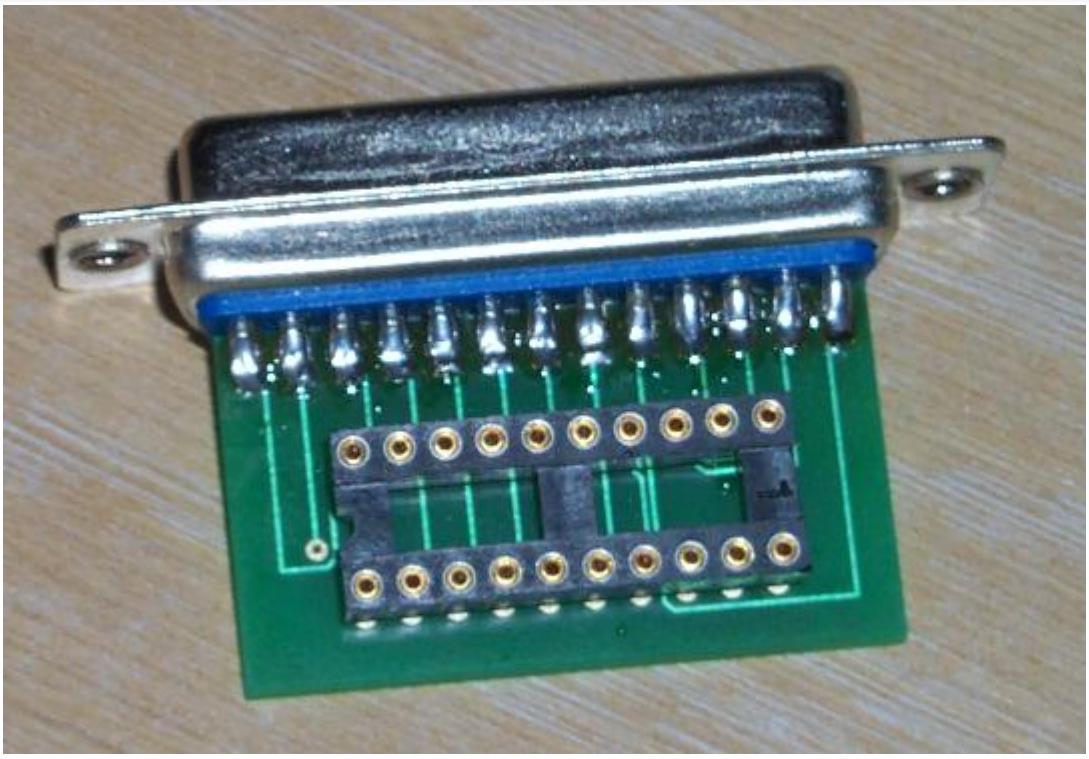

The pin-out is easy to learn and remember:

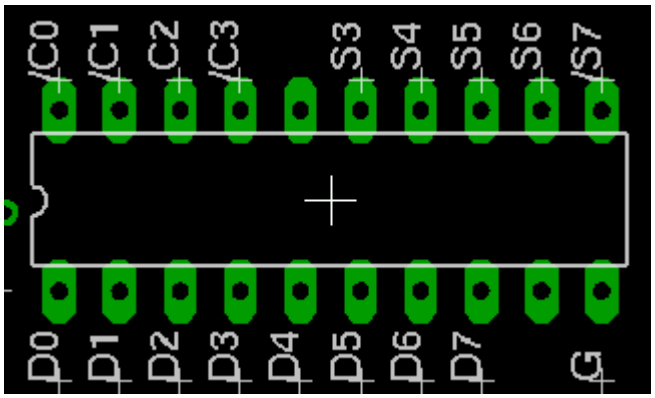

The leading / denotes signals of inverted logic (i.e. active low, a 0 in software is 5 Volts in hardware). The PC parallel port is represented in software as three 8 bit IO locations. For the first port, the IO base address is 0x378. Various signals, both input and output and inverted in the hardware of the PC port, this breakout is completely passive, doing nothing to 'correct' this, it simply notes it in the silkscreen and lets you deal with it in your application hardware (or software).

The first register (i.e. 0x378) is the Data or D register. By default it is an 8 bit wide output. This breakout maps D0-D7 to pins 1-8. By setting a bit in the Control register you may turn these pins into 8 inputs with weak pull-ups. There is no facility to do bit-wise I/O selection, it is all 8 bits at once or none. At least for the SPP mode. Input (bi-direction) may not be supported on some older ports, but all modern devices claiming to be SPP compliant will offer bidirectional mode. The pins can source several mA, and can light a LED via a 560 Ohm resistor to the DC return/ground, which this breakout offers as pin 10.

'''In fact I've made up several strips of LEDs with dropper resistors on a piece of IC socket or SIL header. It is very handy for viewing byte-wide bus states, or general bit states from a prototype. If you are fortunate enough to come across an IC test clip you can make a buffered parallel logic probe.'''

The second register (i.e. 0x379) is the Sense or S register. It offers 5 inputs, mapped to the 5 MSB of the register. The MSB (S7) is inverted. The inputs typically offer weak pull-ups in hardware, but I've seen many ports that are a bit weird in this respect, in particular many Toshiba laptops have truly bizarre parallel ports. The bottom 3 unused sense bits seem to always read 1 in SPP mode, but I wouldn't depend on it.

The third and final register (i.e. 0x37A) is the Control or C register. It offers 4 outputs mapped to the 4 LSB of the register. All are inverted except C2. The output will source a few mA and are much like D0-D7, some are defined to be open collector, but all modern ports seem to ignore this. The C5 bit is special, setting it enables

© 2000 - 2009 Alan Yates - All Rights Reserved. XHTML | CSS | CSS toggle

enables interrupt generation, the IRQ associated with the parallel port (i.e. IRQ 7) will fire on the rising edge of S6. C6 and C7 seem to always read 1 in SSP mode, but again don't depend on it.

Strange things to watch out for are ports that tri-state after each read, or only assert D0-7 while the Strobe signal is asserted. This is totally broken, but not uncommon on cheap 486 I/O cards and laptops.

This site has a huge collection of parallel port information. It also carries lots of Win32 specific software and links, which is something I can't help you with :-).

I've also written some software for Linux to help with prototyping with these things. It is very simple, it offers a few commands to print the state of the parallel port registers, toggle or set individual bits, and set entire registers to decimal, hex, or octal values. It is interactive, the ? command gives the command list:

```
Commands:
        q               quit
        ?               this usage message
        r               Read status of port
        d <byte val>    assign Data register
        D <bit num>     toggle bit of Data register
        c <byte val>    assign Control register
        C <bit num>     toggle bit of Control register
```

Byte values can be supplied as decimal (e.g. 34), octal (e.g. 042), or hex (e.g. 0x22).

In Linux you need to be root to call the ioperm() system call (giving a user space process access to IO space). You should setuid the tool and only allow your development people's group to execute it. You may of course just run it as root, but setuid is nice. It isn't written to be super secure, it is a development tool, not something you'd have on a Internet facing server. #include <std-disclamer.h>

Some ideas to get you started? How about bread boarding my I2C Interface/Serial EEPROM programmer, or how about testing some stepper motors with something like this code and this circuit (I've used this many times, works great for small steppers from fax machines, scanners, and disk drives. Use more voltage for more torque, you will warm up, but not destroy 5 V steppers running them from up to about 18 Volts, just don't leave them sitting there burning, share the current around the windings, or add resistors.). Two steppers can be controlled via one port in this manner, for example, to move an X/Y platform. Perhaps some other 2 dimensional control system. Limit switches can be read via the Sense bits. Perhaps the Control bits can turn on machines, maybe a vacuum clamp, maybe a Z-axis stepper. CNC here we come :-)

Leave a comment on this article.

© 2000 - 2009 Alan Yates - All Rights Reserved. XHTML | CSS | CSS toggle

Pedometer with Morse Interface

2008-05-04

This project was inspired by the death of my current pedometer's battery. Being too lazy to find my box of LR44s buried somewhere in my junque box, I decided to implement my own pedometer. Longer term I have visions of storing biotelemetry into a serial EEPROM for later analysis (making it a more useful device than the current cheapy commercial unit), but this initial proof of concept is just a step counter.

The concept was scribbled in my notebook on the evening Ferry trip home for work last Monday, shortly after I noticed my commercial pedometer was dead. Unfortunately I didn't get a chance to actually work on the project until the weekend, but once I started it only took a few hours to get going - I'd had almost a week to design it in vivo.

Yeah, but Morse Code?

Using Morse Code as the interface was from the realisation that it was fairly easy to implement, consumed very little power and took only one drive pin (compared to the three required to charlieplex LEDs for a 6-pixel POV display - a future project no doubt). Usability might be a problem, but it is also a good excuse to drive me to learn CW properly, the numbers are easy and I think even complete CW novices would learn to read it quickly. No doubt such a device might be good for the vision impaired.

Hardware

The interface is simple, a Mercury switch as a footstep detector, a button which you can press to request the current count be squeaked out in Morse Code (through a piezo) or held somewhat longer to clear the count back to zero.

© 2000 - 2009 Alan Yates - All Rights Reserved.

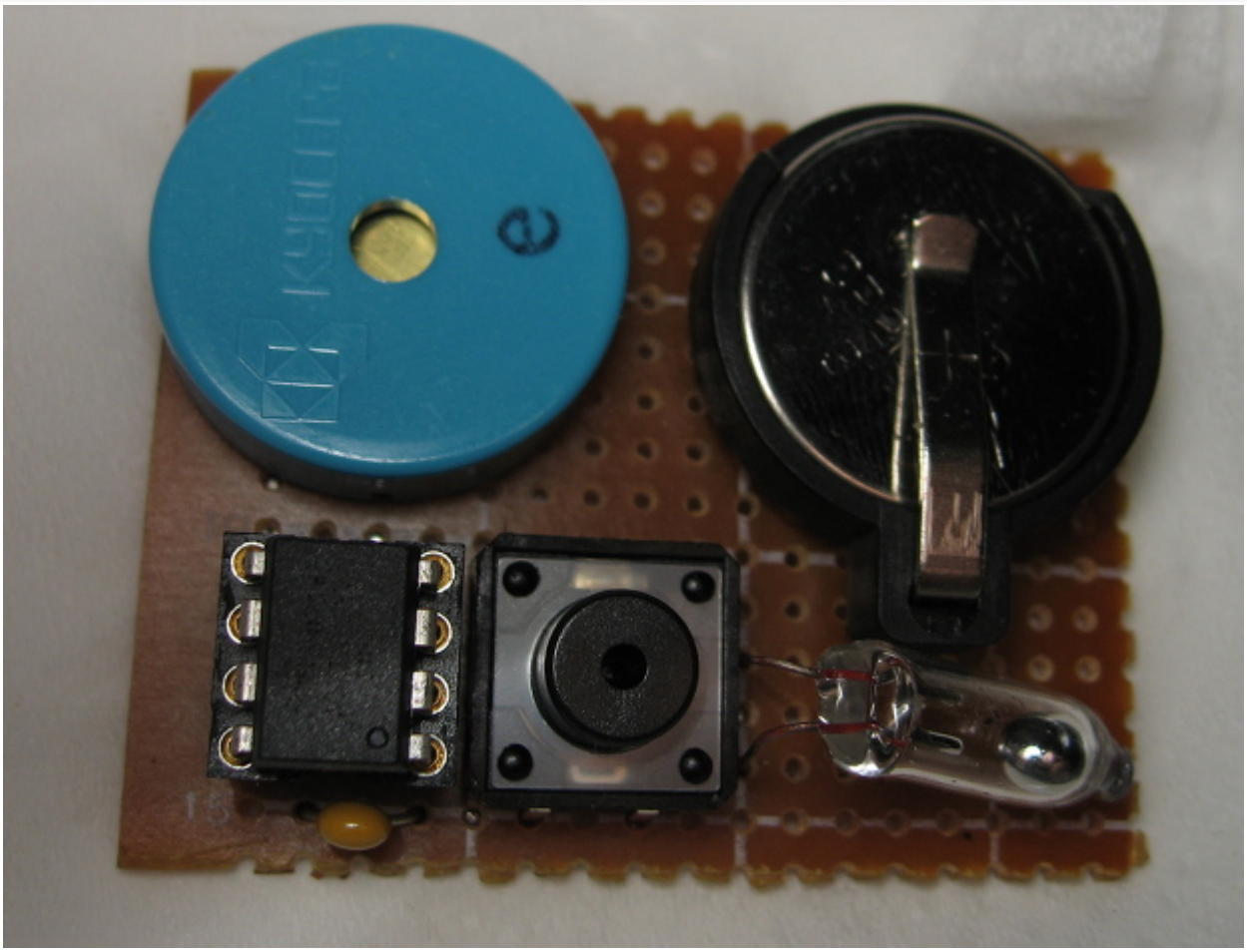

The brain is a ATtiny13V MCU, sourced from Futurlec. Power is from a CR2025 Lithium battery which was found on my desk and for which I just happened to have a bag of battery holders from a recent Rockby clearance. The same Rockby order also supplied the Hg switch, button, and the piezo. The only other component is a 100 nF decoupling cap across the MCU.

Smaller components could miniaturise the unit a lot, the piezo, battery and switch in particular are quite large, but an SMD tiny13 is available too.

Here is a video of the prototype being tested:

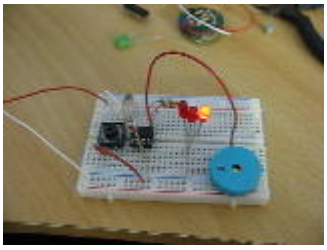

Prototype Under Test
(5.878 Mbytes)

Software

The MCU spends most of its time sleeping powered-down. Asynchronous pin-change interrupts wake it for a footstep transition or the button. Footsteps are de-bounced before counting and have a lockout period to limit the transitions to physically likely frequencies (about 5 Hz max which is reasonable for human cadence rates). The counter is incremented, then straight back to sleep after toggling the piezo drive line (generates a quiet click). Button presses are debounced in a similar manner and then decided between a press and a longer hold, which drives either a display action or clearing of the counter.

The Morse Code is stored as 2 bits per symbol. This is a standard I've used in beacon code in the past, in fact I put the full code in there for handling char and word spaces even though it isn't used. I am considering adding an interactive menu so it might be needed in future. In the current application I actually only need one bit for

© 2000 - 2009 Alan Yates - All Rights Reserved. XHTML | CSS | CSS toggle

spacing is constant). There is still a bit of ROM left so I could shrink the CW associated code and put in another feature that didn't need Morse, perhaps I2C support for data logging.

All the timing intervals and frequencies are set by #defines and are easily tuned to the user's preferences. The 800 Hz morse frequency is a bit low for efficient drive of the pizeo used, its resonant frequency is about 4 kHz. Lower frequencies are more traditional for CW, but higher ones sound cleaner because of the reduced harmonic content. I picked 15 WPM as a good beginners rate, but 25 might be better as you are tempted to count dits and dahs at only 15 wpm.

I did have a little stack-smash problem with the software that took some figuring out. I was simply running out of stack because of the number of frames I had in the execution trace. Some code revision fixed it, in particular moving the decimal magnitude array into ROM, originally I was creating it on the stack - all 10 bytes of it! I also reduced the size of some loop counters to save a bit more when they were pushed. I was at one point going a bit nuts though, I even compiled the same algorithm with gcc to prove it was OK on the "big machine". The experience made me investigate the standard toolchain utilities much more closely, in particular avr-nm and avr-objdump. Reading the assembled output of avr-gcc is always helpful in such a situation. The compiler is very good, but looking at what it generates I know I could do a little bit better by hand if I ever need to really squeeze more into a small device like the tiny13.

The source is here.

Battery Life

The two internal weak pull-ups probably dominate the current consumption. It takes about 90 uA sleeping, 1.3 mA while sounding. The CR2025 has a capacity of about 150 mAh so I'd expect about 2 months battery life with modest use. This could no doubt be improved.

2 comments.

© 2000 - 2009 Alan Yates - All Rights Reserved. XHTML | CSS | CSS toggle

Phantom-Powered Active Loop Receive Antenna for 30 Metres

2010-03-27

This loop antenna was built for 30 metre QRSS reception, but tunes beyond 30 metres and might be useful for general narrow-band (fix-tuned) HF work.

The Antenna

The loop is two turns of ~3 mm multi-strand hook-up wire, wound on a large (465 mm diameter) embroidery frame. The coil is centre-tapped, and referenced to "ground" at that point. A polyvaricon tunes the coil to resonance at the frequency of interest, and a push-pull JFET buffer amplifier transforms the very high impedance of the parallel resonant circuit down to something suitable for what is seen through the coax from the receiver (and also offers some power gain at the same time to offset feed-line loss). The buffer can deliver a relatively large amount of power, in excess of 0 dBm. This should offer good strong-signal handling, but I have not measured its IP3.

© 2000 - 2009 Alan Yates - All Rights Reserved.

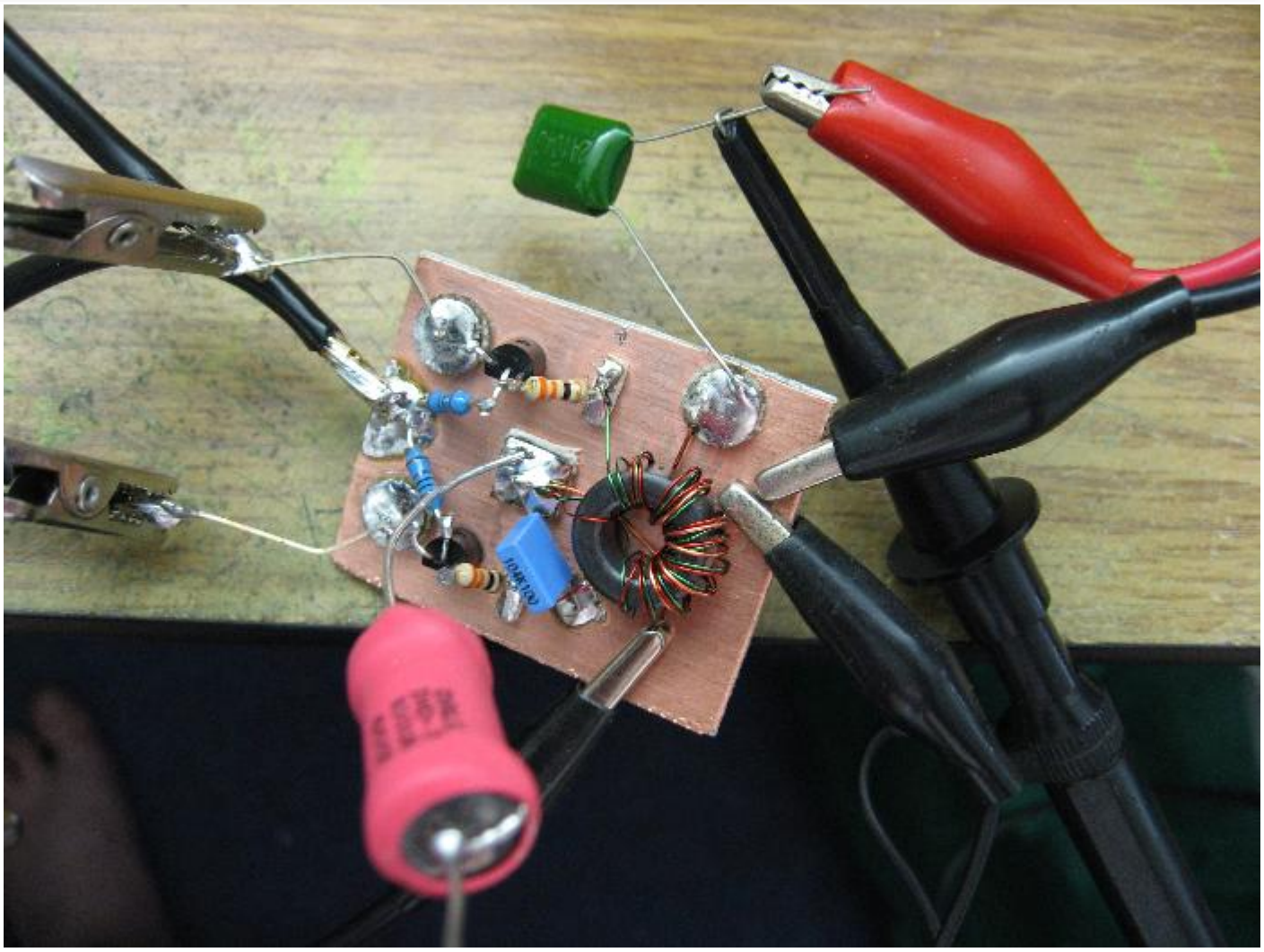

Each J310 stands about 2.5 mA. I hand-picked a pair of well matched J310s (by Vpp and Idss), this is likely unnecessary but it can't hurt to ensure each arm has similar biasing and gain to optimise the distortion cancelling effects. The 33 Ohm resistors in the drains help eliminate any tendency for spurious oscillation. The supply current feeds into the bifilar drain loads from the decoupled "cold"-end of the output winding, using it as a choke. This seems to work well in practice, with no visible distortion asymmetry (when over-driven) from the DC bias on the magnetics. (The standing currents in the bifilar winding cancel, but those in the output secondary do not, fortunately the supply current is only about 5 mA so this should be of no consequence. As long as the transistors saturate well before our ferrite core - an FT50-43 - we are in good shape.)

© 2000 - 2009 Alan Yates - All Rights Reserved. XHTML | CSS | CSS toggle

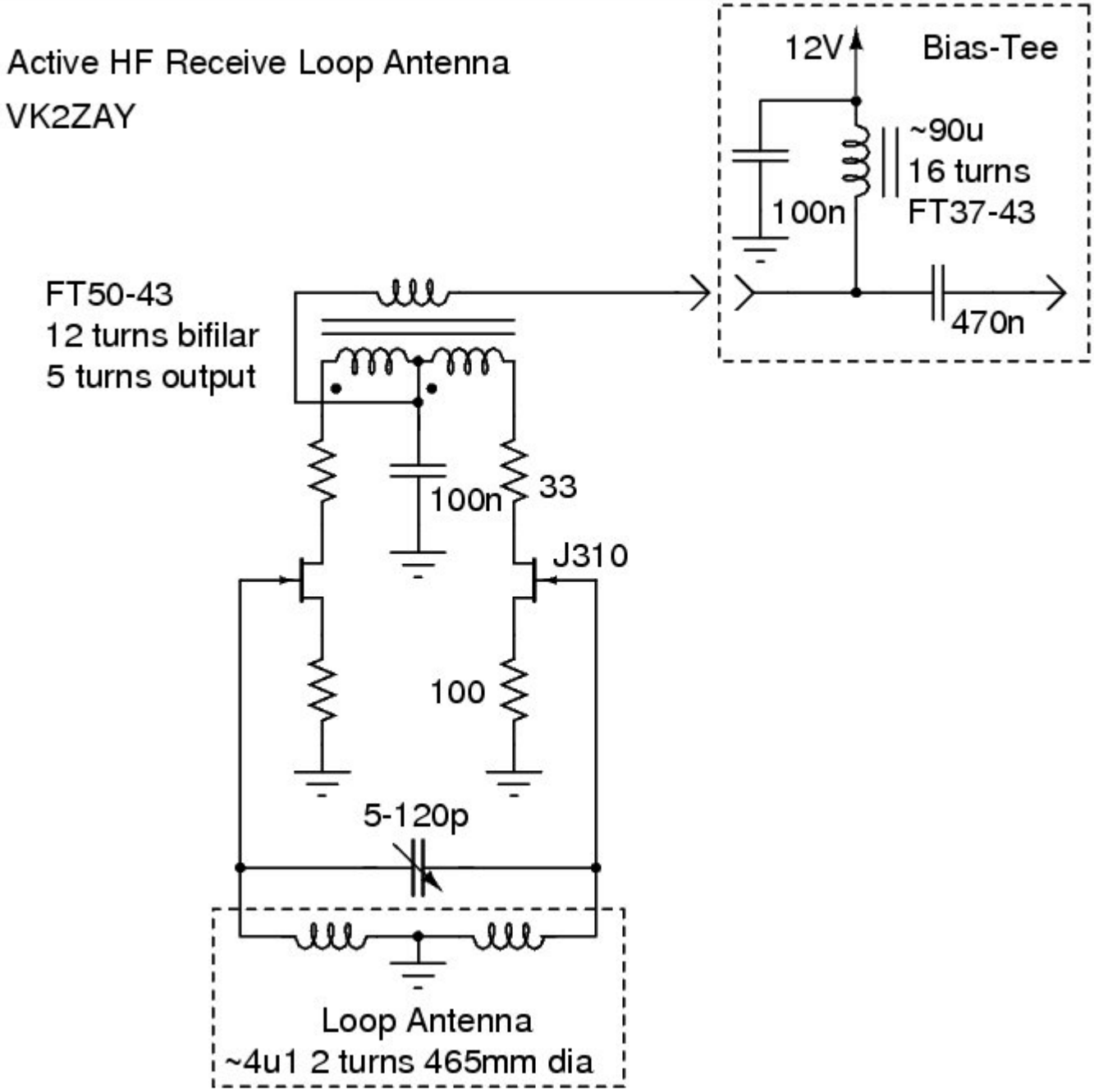

More gain is available by bypassing the 100 Ohm source resistors. Oscillation can occur with excessive gain. You can set the gain at a higher, but stable level by adding resistance in series with the bypass capacitors.

The Bias-Tee

To feed the DC supply to the antenna at the shack-end of the coax a simple bias-tee was constructed. As the frequency of operation is only mid-HF a simplistic ferrite toroidal choke and two capacitor affair was constructed in a small die-cast box. I was confident this construction was sufficient at the frequency of operation, but curious about its performance elsewhere, as such it became one of the first test subjects for my experimental scalar network analyser.

© 2000 - 2009 Alan Yates - All Rights Reserved. XHTML | CSS | CSS toggle

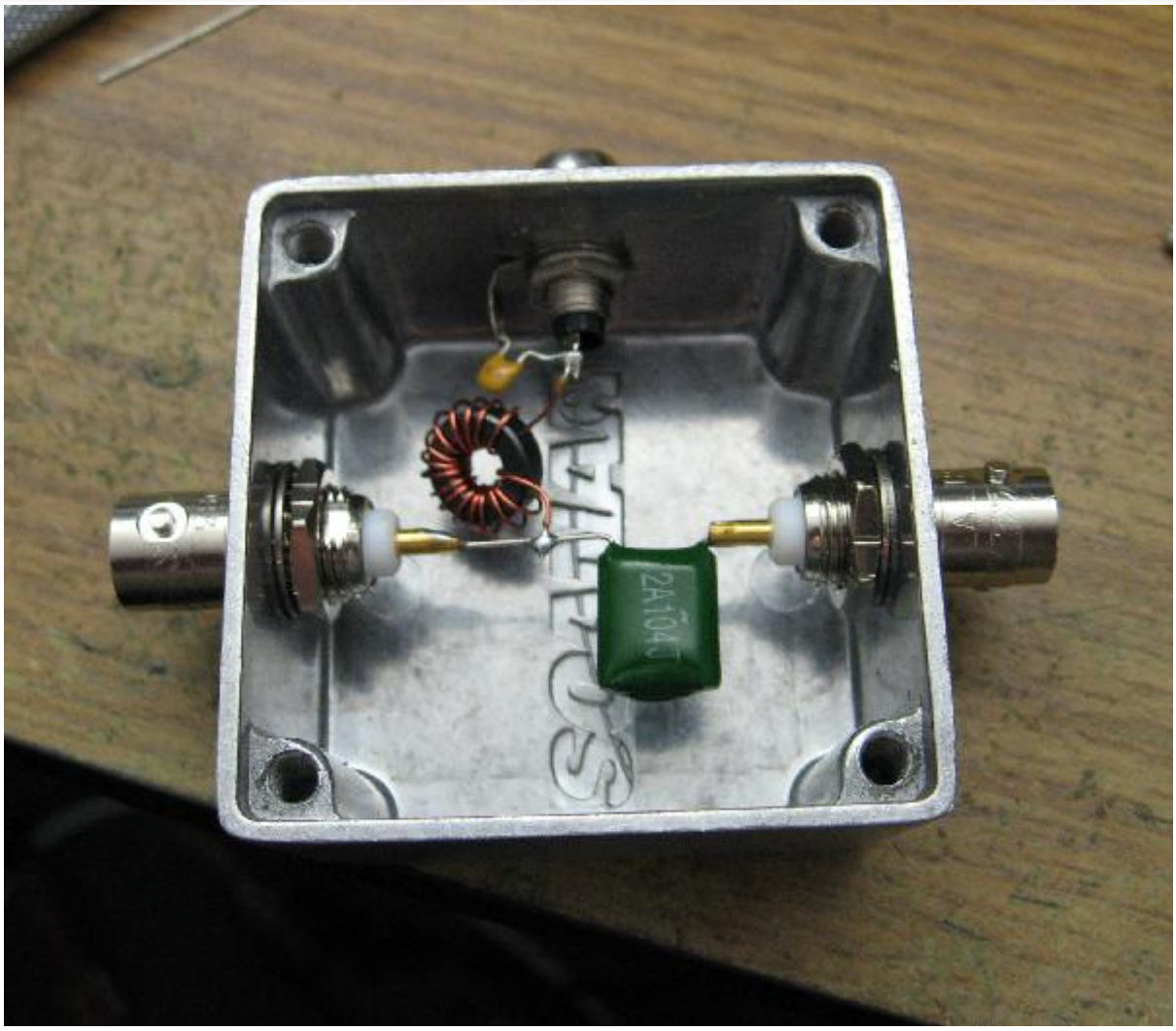

Despite having very poor "design hygiene" for high frequency response, sweeps of the bias-tee with the analyser suggest it offers acceptable performance across HF. There are some oddities in these measurements however. Fortunately they appear to be measurement equipment problems rather than excessively nasty behaviour of the device under test:

© 2000 - 2009 Alan Yates - All Rights Reserved. XHTML | CSS | CSS toggle

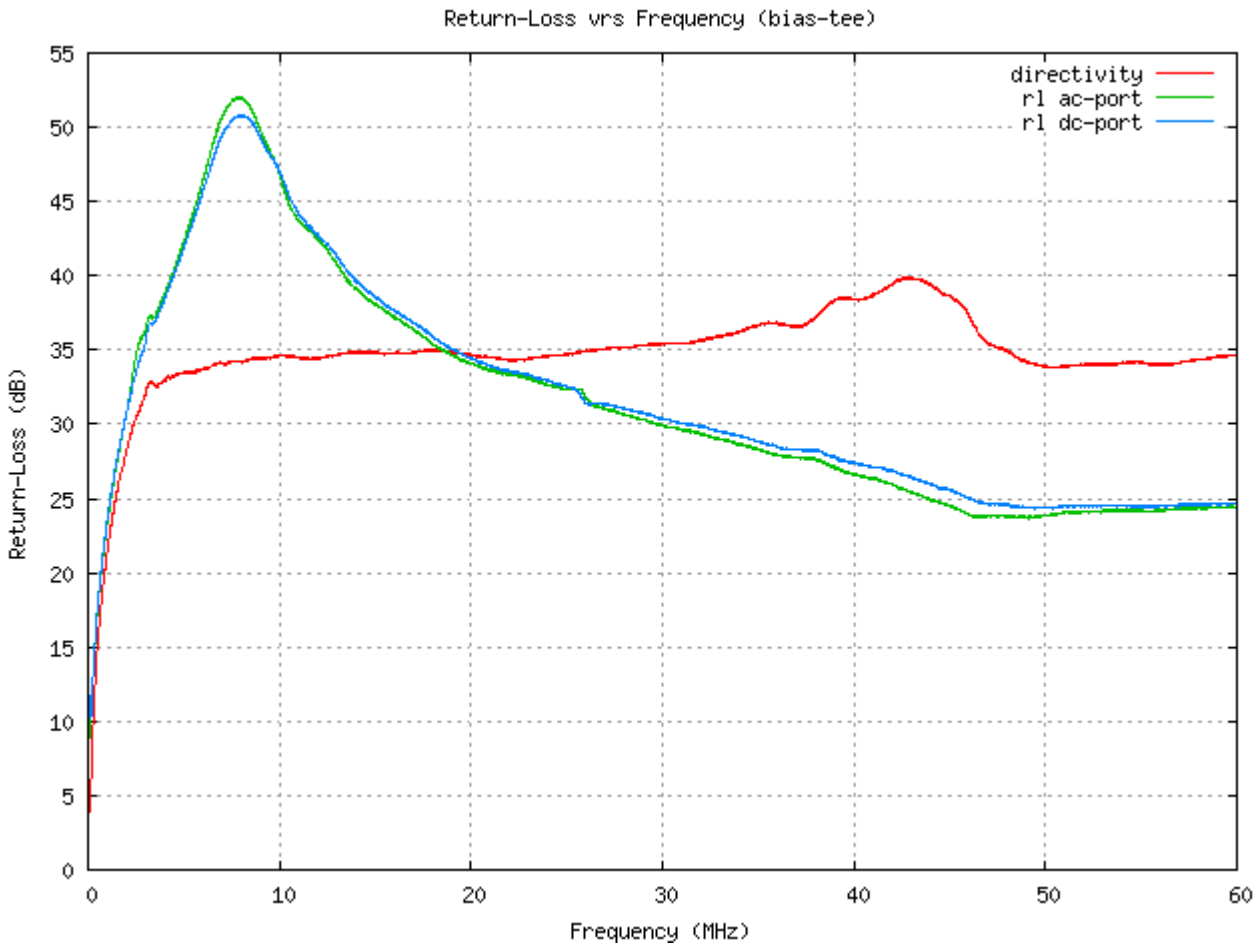

Note how the measured "return-loss" exceeds the bridge directivity below 20 MHz. This is of course an illusion, caused by the small stray reactances of the bias-T conjugate matching the bridge for better than calibration reference balance. Ideally I should change the graphing software to compute error bars based on the reflection signal magnitude compared to the directivity established by Open-Short-Load calibration at the same frequency. As the directivity of the bridge exceeds 30 dB above a few MHz all the way to 60 MHz we can safely say the bias-Tee is an reasonable match over the same range displaying a return loss exceeding 20 dB the entire way.

© 2000 - 2009 Alan Yates - All Rights Reserved. XHTML | CSS | CSS toggle

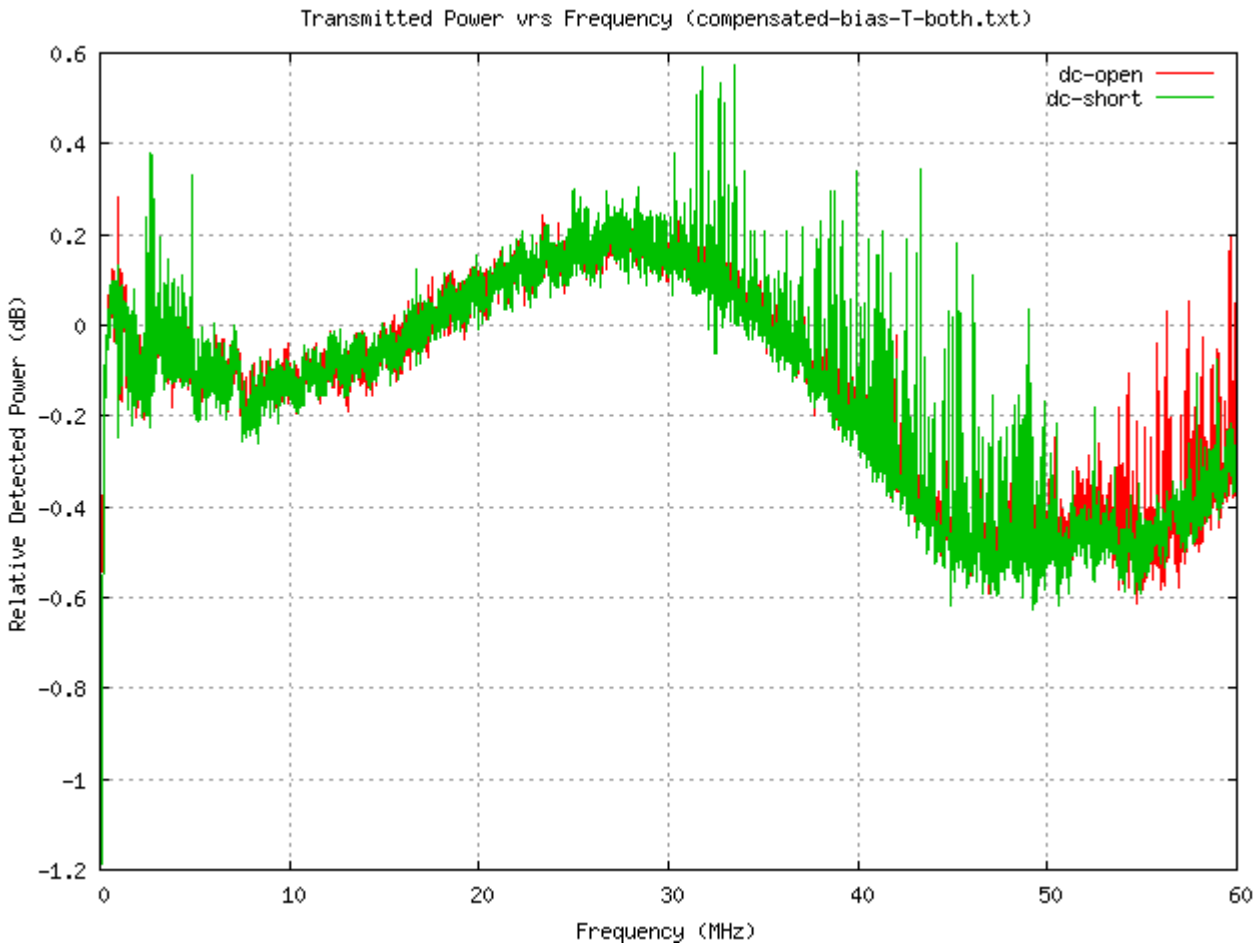

Transmission measurements similarly have some weirdness. Despite the test setup having 20 dB of attenuation in the signal path the bias-T performs the miracle of over-unity performance. Of course this is not real! Again it is just conjugate matching something in the system to make the reference calibration invalid. The variation is only a fraction of a dB so for all intents the bias-T is near-perfect across HF and into low VHF.

Lab Testing

It is rather difficult to lab test a loop antenna in a reasonable way. In particular it is extremely difficult to immerse it in a RF field of sufficiently controlled spatial uniformity and consistent amplitude with frequency to make absolute and repeatable measurements. For my initial testing a 100 mm diameter coupling loop was connected to the signal generator and loosely coupled to the antenna loop. Sufficient drive was applied to achieve a few dBm out of the loop buffer and into the power meter at peak of resonance. This allowed crude measurements of bandwidth and amplifier compression.

More detailed investigations were made by sweeping the unit with the same experimental scalar analyser used to test the bias-tee. Exact amplitude measurements made in this way are fairly meaningless, as the coupling loop is not well matched to the generator. 10 dB of padding was placed between the coupling loop and the generator but as the loop was placed almost orthogonally to the antenna loop to provide weak coupling (for Q estimation) the coupling loop does not see much of the antenna loop loss resistance.

© 2000 - 2009 Alan Yates - All Rights Reserved. XHTML | CSS | CSS toggle

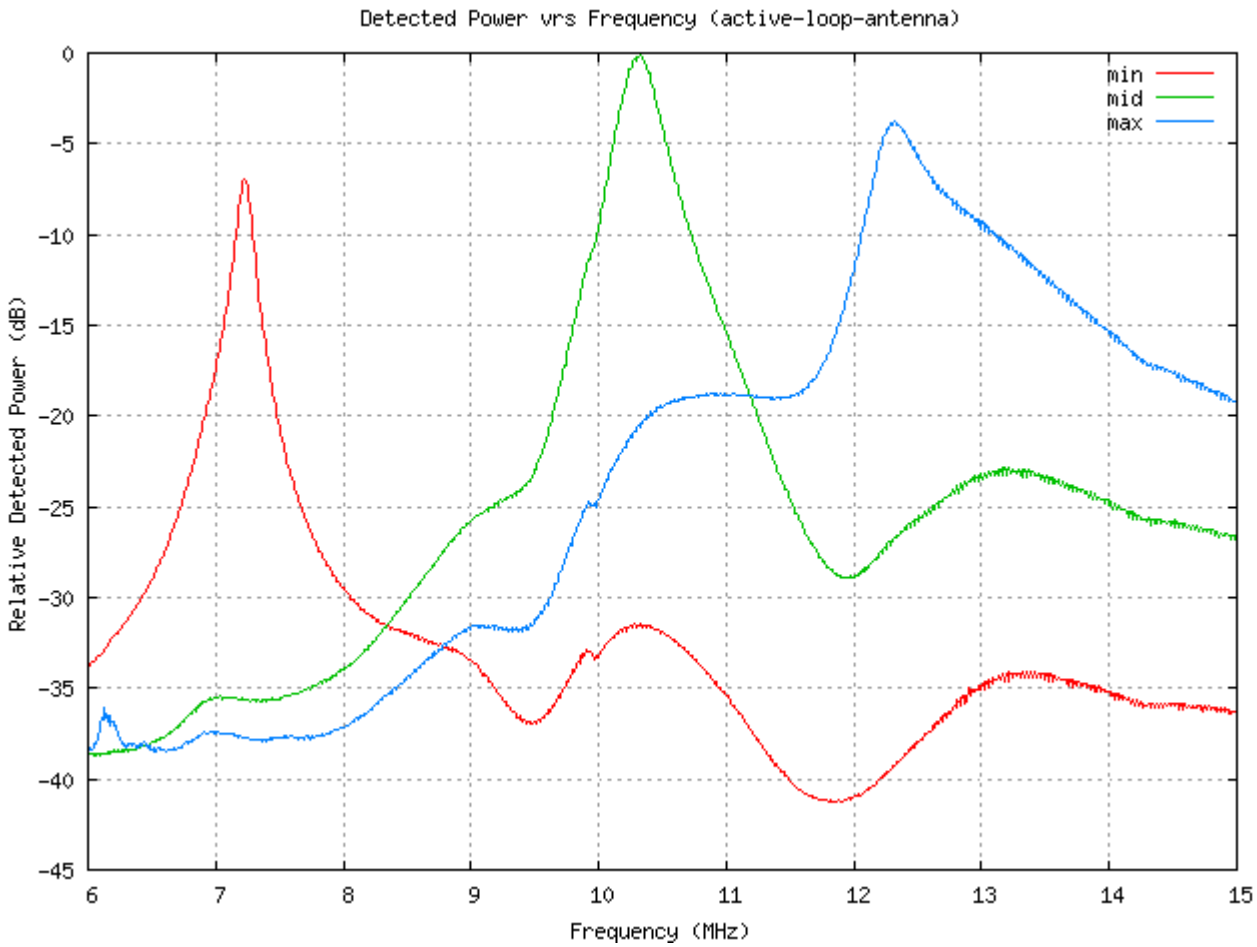

The loop tunes 7.23 MHz to 12.32 MHz with the polyvaricon used. The apparent loop Q drops with frequency, being 55.6 at 7.23 MHz, then 33.3 at 10.33 MHz and 28 at 12.32 MHz. The loop inductance is about 4.1 uH so the input impedances which match these Qs are 10 kΩ, 8.8 kΩ and 8.9 kΩ respectively. Wider sweeps show problems with the test set-up, in particular generator harmonic energy when tuned below the loop resonances. Neither sweeps have me feeling very comfortable about the quality of test set-up (or the loop construction for that matter). The HF feed-through is probably due to the unshielded housing of the buffer amplifier and stray circuit capacitances. Maybe a LPF should be added to the output to suppress these responses? A HF receiver should reject them with no dramas, but the number of hints of internal resonances and general "complexity" of the baseline above and around resonance doesn't make me too comfortable.

© 2000 - 2009 Alan Yates - All Rights Reserved. XHTML | CSS | CSS toggle

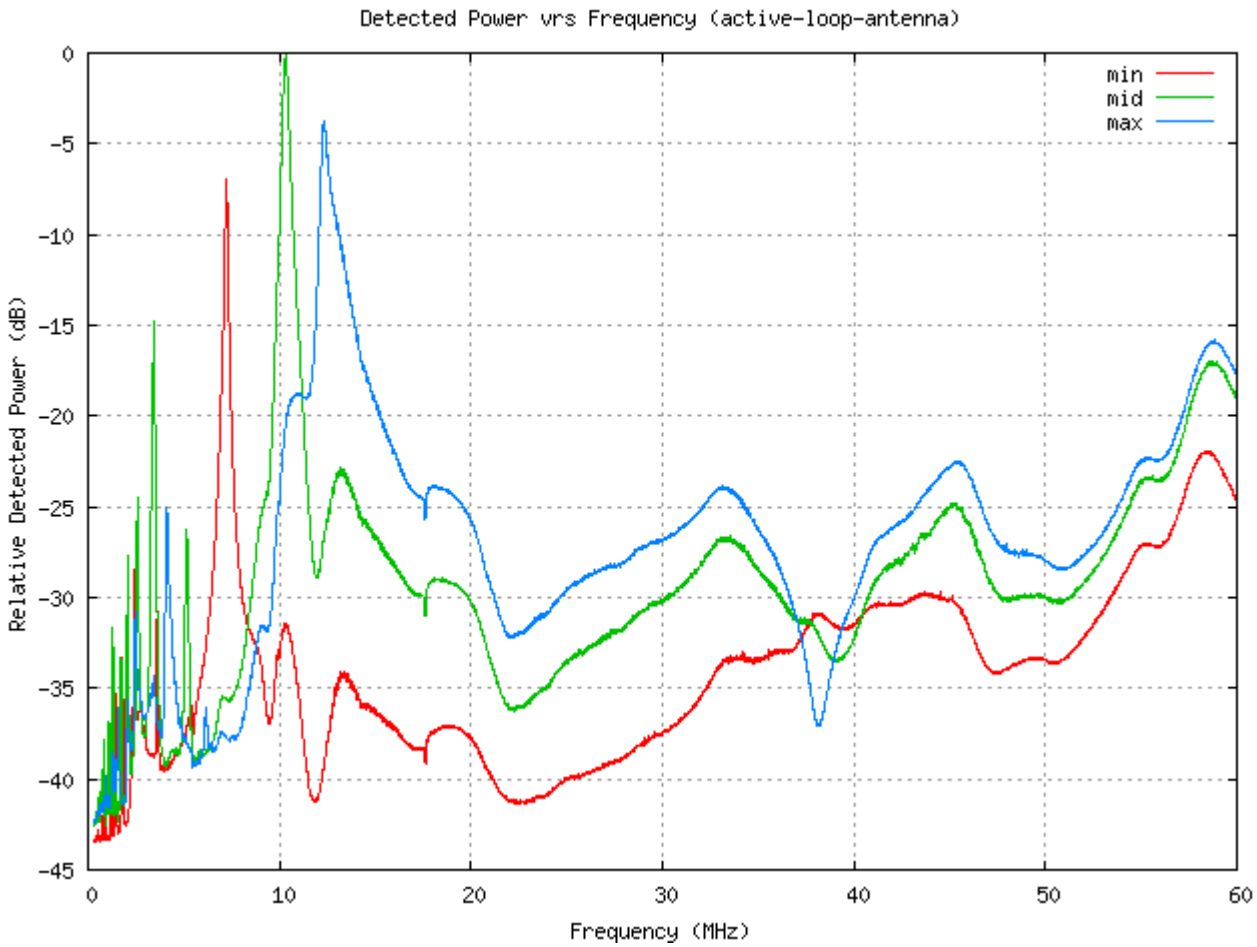

When the amplifier is left unpowered the loop leaks through RF at a lower amplitude, and the resonance is shifted down in frequency somewhat. This is immediately apparent when you connect a receiver to the loop, even without powering it on you can peak-up the background noise level by tuning the polyvaricon. However once power is applied the loop must be retuned (up somewhat) for maximum background noise. Loop Q is degraded quite significantly in the leak-through mode, with Qs of 39.3, 17.1 and 9.1 for the test frequencies discussed above. Loop Q in general could be improved by weaker coupling to the JFET gates, some simulation could optimise the values required if the resonator usable Q was measured and the FETs well characterised. Noise figure would be compromised by resistive DC gate biasing, maybe use chokes?

© 2000 - 2009 Alan Yates - All Rights Reserved. XHTML | CSS | CSS toggle

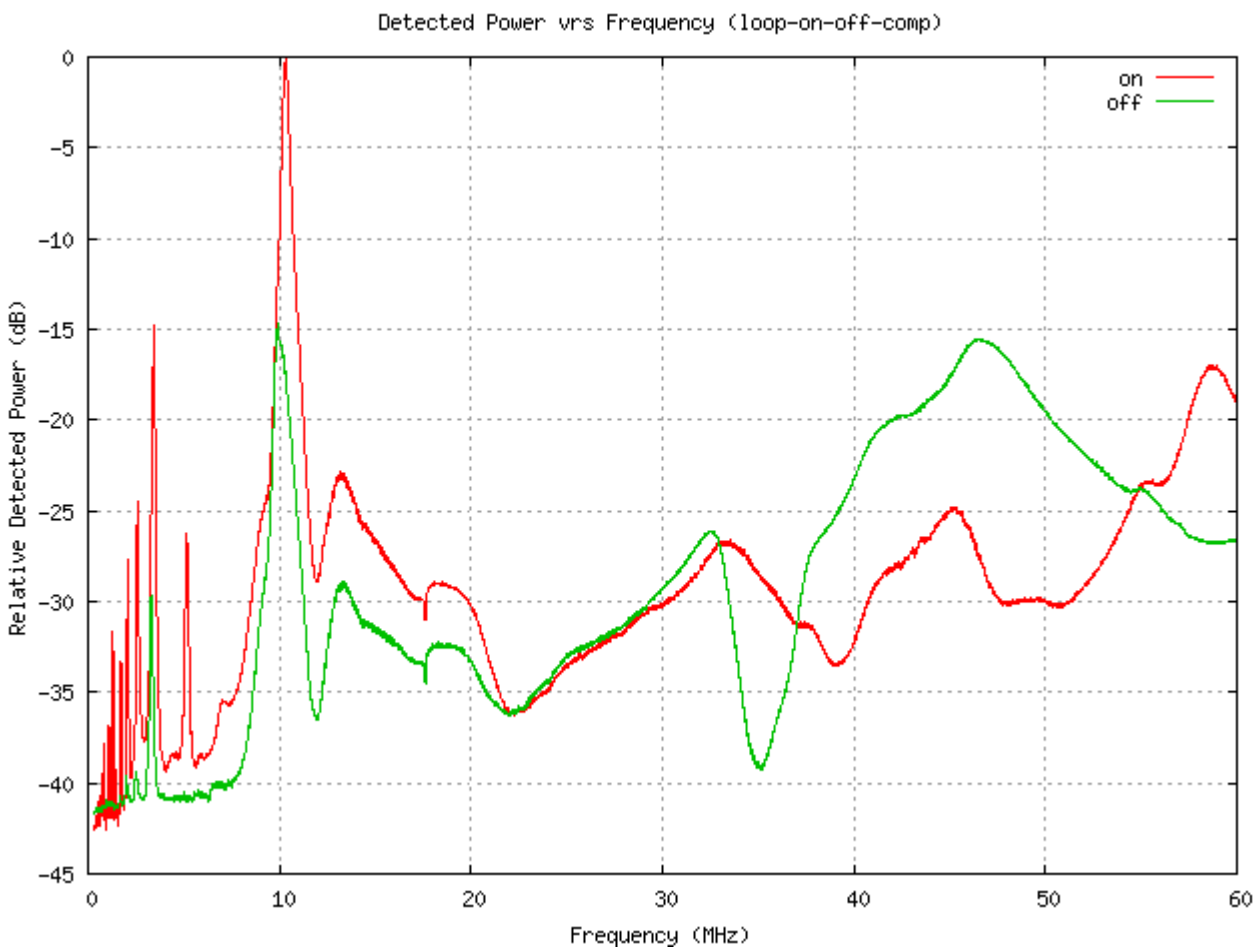

On thing I initially found rather disturbing about this particular sweep is the 2nd harmonic peak is absent from the "off" run. The 3rd harmonic peak is 15 dB different just as the fundamental is - but the 2nd harmonic "on" signal is smaller and 15 dB down from its level is into the -41 dB "leakage floor" we appear to be observing... All was revealed when I considered that the reference level here is about -12 dBm meaning the leakage is around -53 dBm, quite likely considering the unshielded nature of the amplifier in close proximity to the coupling loop.

Field Testing

For real RX testing I lashed-up the antenna on the balcony, mounted a little above railing height, and A/B compared it against the base-loaded vertical I use for QRSS transmission. This is *not* a very fair test, as the vertical is 3 metres tall, while the loop is less than half a metre in diameter and was mounted at the base of the vertical. Also, interaction between the antennas was *not* controlled during the experiment, and experience has taught me this is critical for meaningful results.

The loop is largely limited by its aperture (cross-section). Compared to my loaded vertical it is about 6 dB down, making it ineffective for its original design purpose (improving my QRSS RX noise floor). However, unlike the omnidirectional vertical it has well defined nulls which are useful for avoiding local interference. The nulls do help dodge some noise, but unless I make it larger or mount it higher the loop is simply not as good for QRSS RX.

For comparison purposes I have built a much larger passive tuned loop antenna. The square loop is root-2 metres on a side in a diamond configuration (for mechanical simplicity) and is matched to the coax using a ferrite transformer placed near the polyvaricon that tunes the loop winding to resonance. It was not possible to fit the loop in the shack for Q-determination and hence the matching is at best an educated guess. Its Q is likely dominated by whatever the receiver input impedance reflects into the loop tank through the matching transformer. Experiments continue, comparing the three antennas for relative performance. More experience and additional test instrumentation is required before fair comparisons can be made.

2 comments.

Attachments

title	type	size

© 2000 - 2009 Alan Yates - All Rights Reserved. XHTML | CSS | CSS toggle

Active Loop Circuit Diagram Source	application/postscript	13.671 kbytes

© 2000 - 2009 Alan Yates - All Rights Reserved.

Photodiode Gamma Ray Detector

2011-07-10

Gamma photons interacting with cheap photodiodes produce small current pulses which are easily amplified and allow detection of individual photon events. This offers the possibility of cheap, small and rugged radiation detectors of reasonable sensitivity. While not as sensitive as larger GM-tube detectors, this solid state device is still quite useful for determining if something is radioactive enough to be interesting/concerning.

The circuit is simple, but as currently implemented has one major problem; poor temperature stability. As it is DC coupled right through to the comparator moderate temperature changes cause the threshold level to drift enough that the noise floor starts causing false triggering, or the sensitivity to less energetic radiation drops. Similarly DC shifts associated with battery voltage drop is also a problem. This is easily remedied by AC coupling the comparator stage. The unit shown has an extra output transistor driving the counter module, this is not required for the basic qualitative detector - it is implemented in much the same way as the counter interface of the ion chamber alpha counter. There is great similarity between the two circuits really, and one might build a dual gamma/alpha counter in a quite small package. (Note that there is also some sensitivity to higher energy beta.)

© 2000 - 2009 Alan Yates - All Rights Reserved.

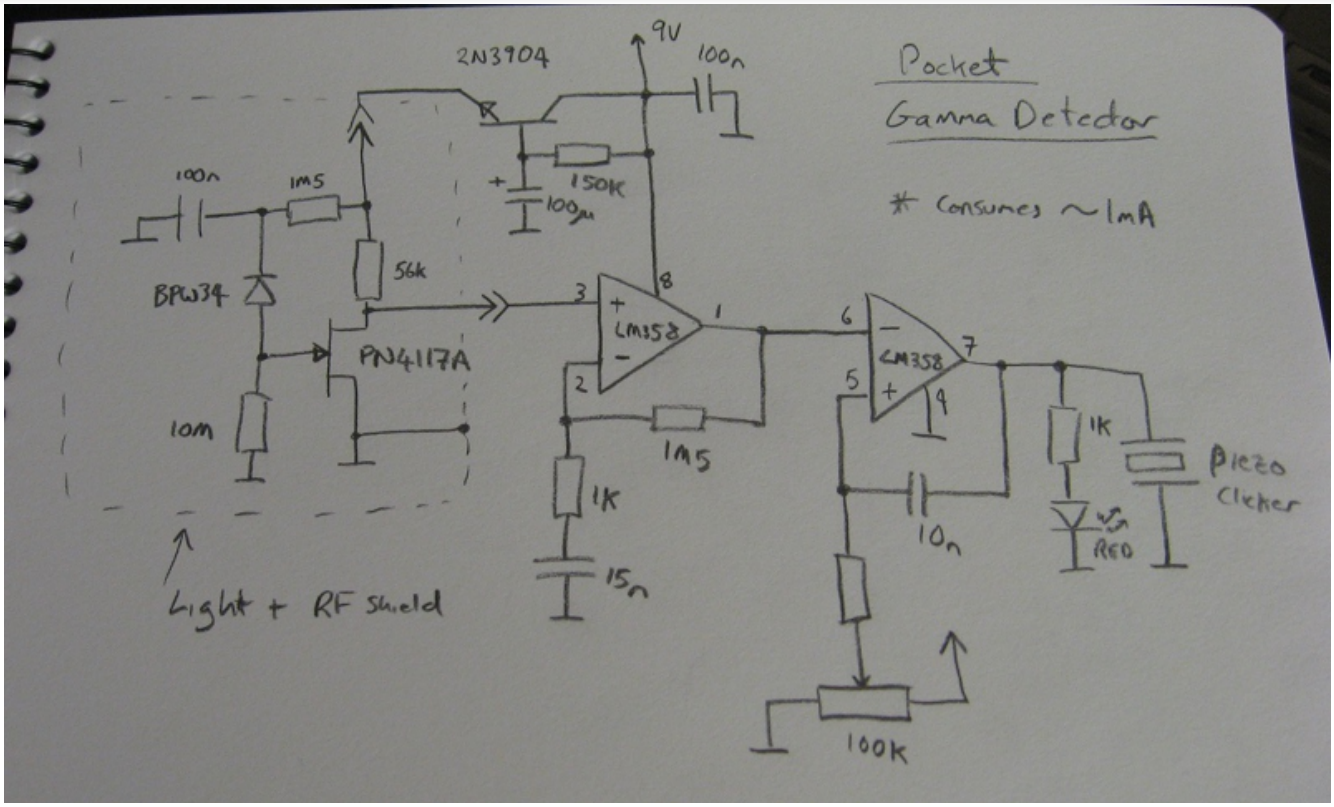

Construction is fairly non-critical. The sensor assembly was built using a mixture of SMD and through-hole components, with the BPW34 photodiode placed over the PN4117A JFET body. The completed sensor head was then placed in a small brass tube, with a thin piece of brass shim-stock foil closing one end to exclude light and offer some EM shielding to the sensitive front-end electronics. The other end was closed with wadding and liquid electrical tape. The detector module has three wires emerging from it and can be integrated with different electronics.

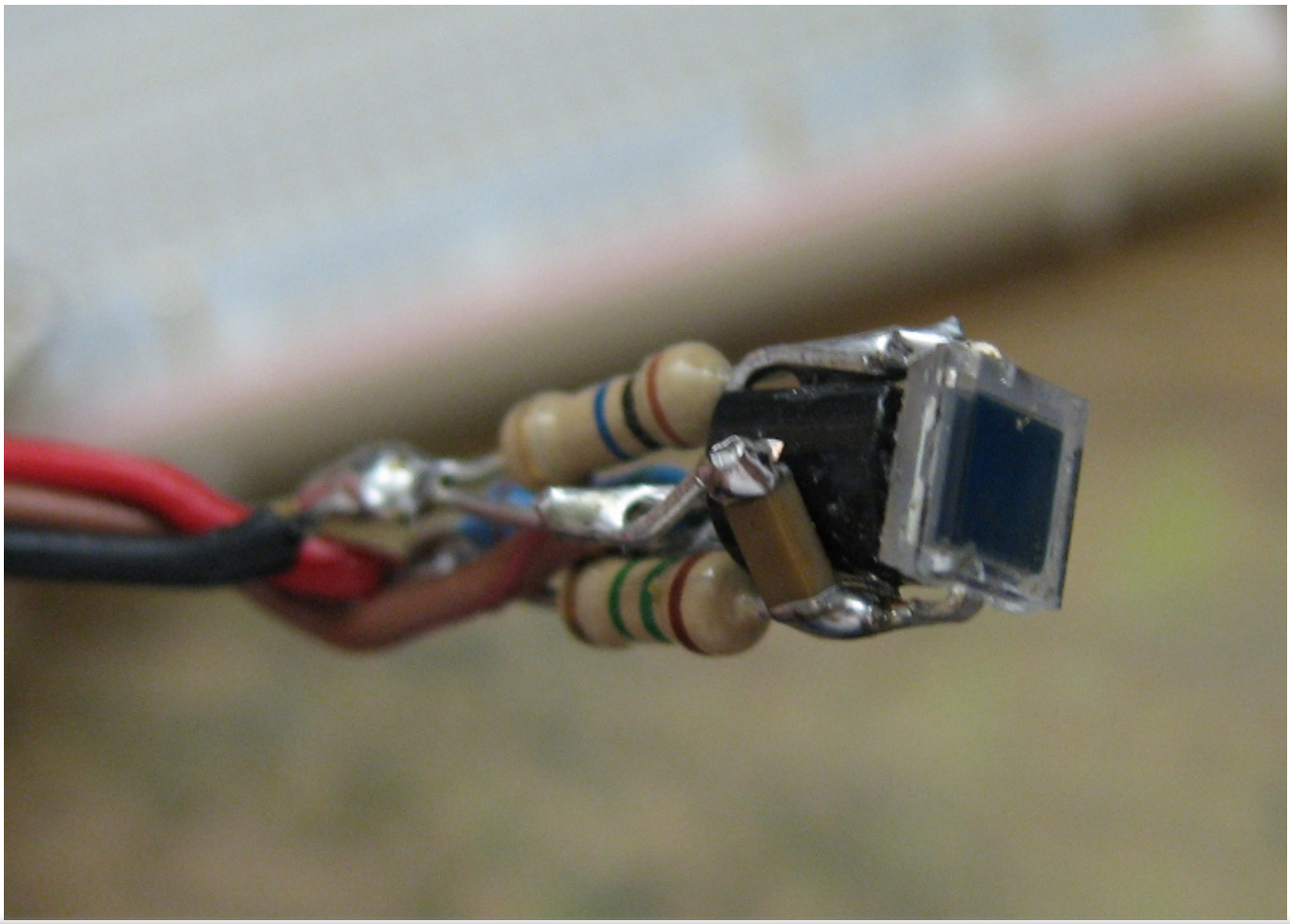

© 2000 - 2009 Alan Yates - All Rights Reserved. XHTML | CSS | CSS toggle

Spectroscopy *may* be possible with this detector, pulses do vary in amplitude, and appear to cluster around several similar amplitudes for different sources. However, the physical semiconductor sensor is quite small and no doubt only a small fraction of the energy of higher energy gammas is collected by it. It likely makes a very poor spectroscope, resolution wise, but it may be sufficient to tell apart the usual suspects, U, Th, Ra, and Am.

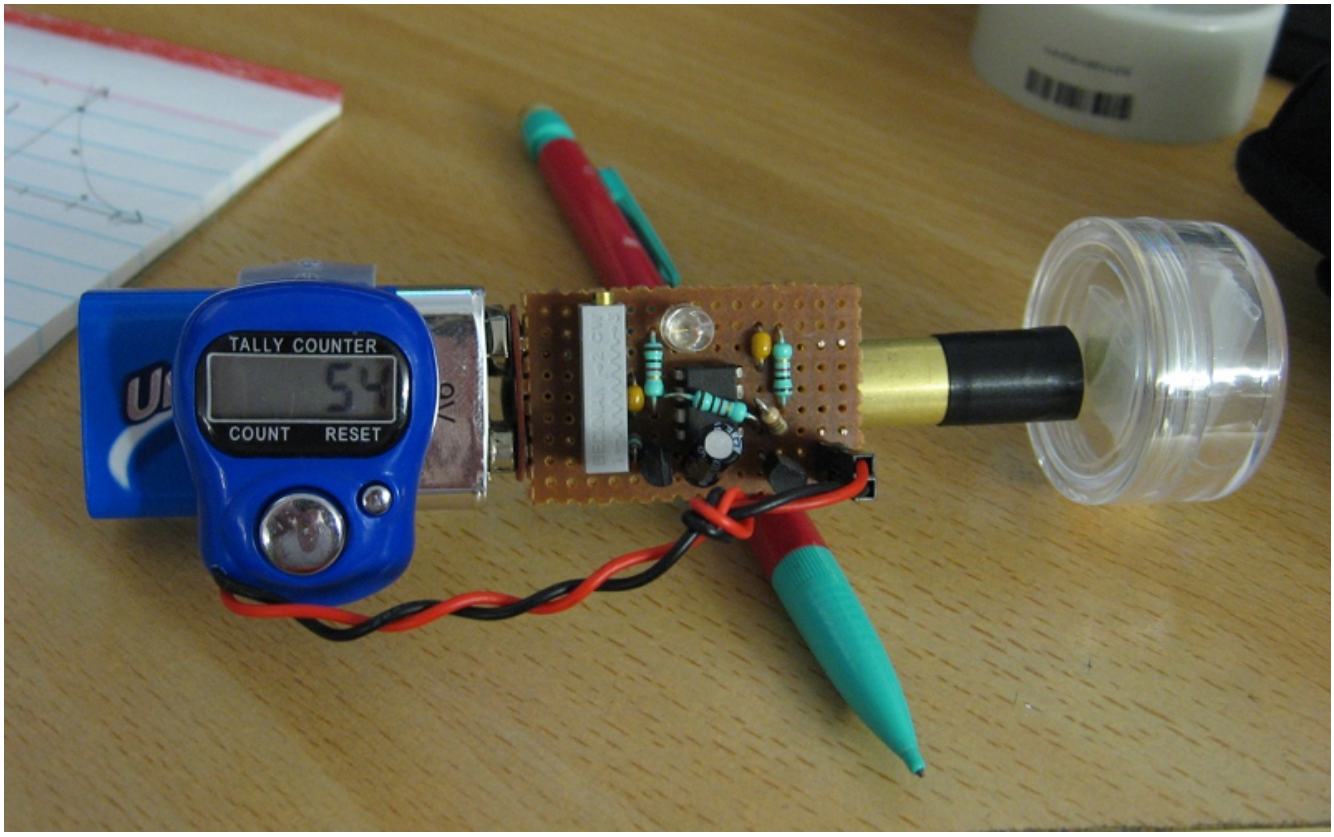

The background count rate is approximately a count every two minutes. The noise floor is quite close to ~59 keV gammas of Americium. This is probably the practical limit of the detector in its current form. More overall sensitivity might be achieved with additional or larger sized photodiodes. It should be possible to build large arrays with multiple buffer FETs all driving the one amplifier and comparator or pixelated detectors which operate like a gamma camera with seperate pulse detectors forming a matrix.

33 comments.

© 2000 - 2009 Alan Yates - All Rights Reserved. XHTML | CSS | CSS toggle

PIC Programmer

2003-04-13

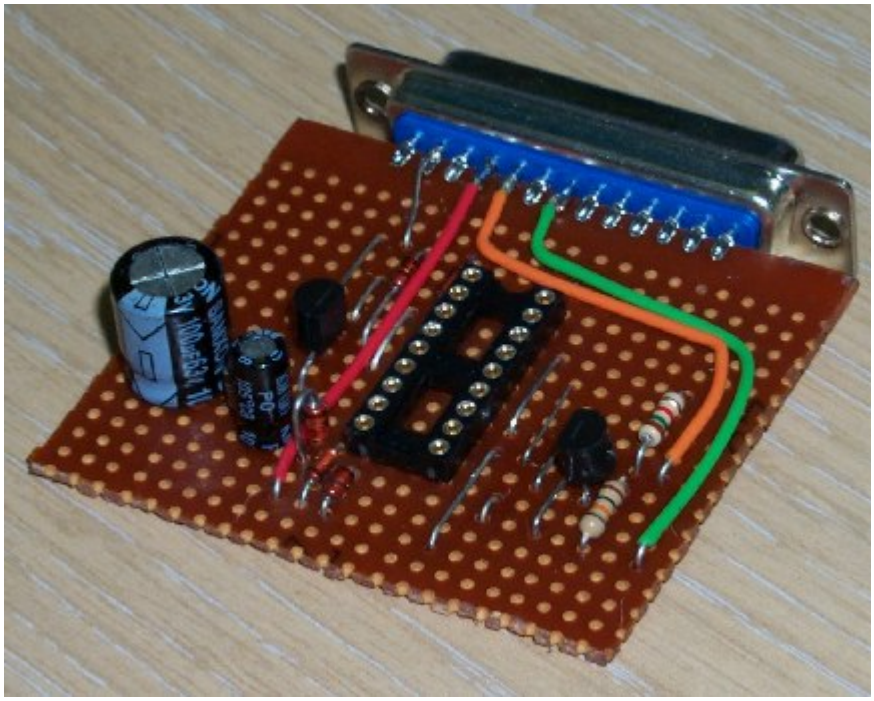

This is my ugly implementation of Jens Dyekjær Madsen's PIC programmer. I omitted the ICSP header as I do not plan to use it. My veroboard embedding of the topology borrows heavily from Paul Scrivens' veroboard version, but mine has a lot more links on the top of the board.

I built it to program OTP 12C50XA chips which are quite cheap (about $2 AU in bulk). I am planning to make a CW beacon controller to bang out "test de vk2zay", maybe with some sequences of vees and a period of long steady carrier for use in my VLF experiments.

Work on a Linux driver is under way as a back burner project. I've become more interested in the ATMEL devices, in particular the 89C2051, which is a flash 8051 compatible. At only 40 cents more for more pins and a faster clock rate, they sound pretty attractive. The lack of an internal clock and reset is a bit of a drawback compared to the tiny 8 pin PICs, at least for the beacon project, but for larger projects they sound like a lot of fun. I've worked with 8051s before, I rather like the instruction set, even if the assembler is in Intel (backwards: opcode dest source ...) order.

The 2051 requires parallel programming, so I will have to Macgyver up some kind of parallel port programmer with a switchable voltage to the reset pin.

1 comment.

© 2000 - 2009 Alan Yates - All Rights Reserved.

Plasma Diode Detector

2002-12-22

Recently I bought a gross of neon bulbs for various experiments, they are quite cheap in large quantities. While researching neon glow discharges I found a few mentions of their use for microwave demodulation. I've used them for quite a while as sniffers for RF and strong electric fields, even as thyratrons, but I never thought about using their nonlinear diode like properties for demodulation.

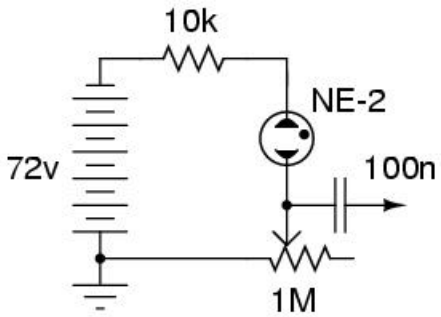

Bias Testing Circuit

While Christmas shopping at a $2-store I saw some cheap and nasty 9v batteries on sale for about $1 each, figuring I could use them for a B+ battery in tube experiments, or some other no-fuss moderate voltage supply, I bought all of them. When this neon experiment came along, I had just the right power supply for experimentation. Using 8 of them and a 1M pot I experimented with biasing a neon bulb and observing the current through it via the voltage across the pot, picked off via a new nano capacitor. It worked very well for such a primitive setup, just a bunch of alligator clips and Blu-Tack holding the prototype together on the bench, the 1kHz AM signal from my RF oscillator was clearly visible on the CRO as a few millivolts above the noise floor while the end of the coax was held near the neon bulb.

Further experimentation with the biasing showed that the current was more important than the voltage in giving the best sensitivity and lowest distortion. While this 1980 Ham Radio article I found in my research suggests altering both parameters I found keeping the voltage above the striking voltage was fine as long as a large series resistance was used to limit the current to the point where a gentle glow was just covering the inner surface of the cathode. Balancing the discharge on the edge of collapse was not needed for my particular bulbs, although there was much variation in strike voltage and best bias current. In practice I found only 3dB or so difference in optimal bias and just giving the bulb 100 volts through 100k.

Building the practical device was a little more complicated, a bunch of 9v batteries is quite heavy and bulky. An inverter had to be built to produce the voltage, and AF amplification had to be provided to drive headphones or a small speaker.

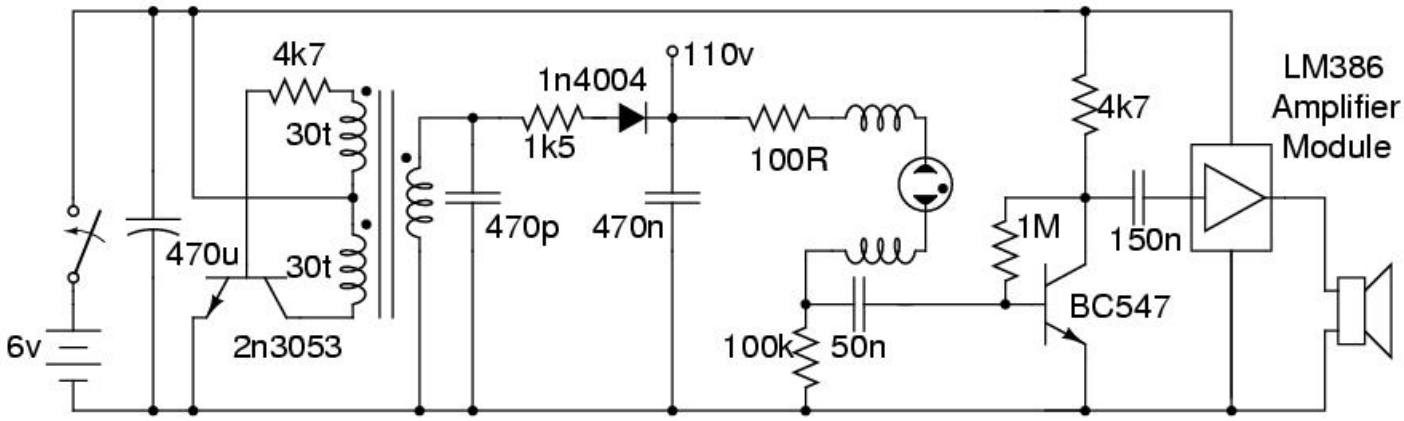

The inverter transformer was wound on a bobbin and ferrite E-core set. The primary windings are 30 turns each, of 0.5mm wire. The secondary winding is 0.2mm wire, wound by trial and error to provide about 110 volts. The primary and secondary layers separated by a layer of PVC tape. The 470p capacitor across it helps improve its efficiency. The 1N4004 was replaced with a Schottky device but little improvement was observed, so the 1N4004 was returned. There is no bleeder resistor across the storage cap, be careful, or add a meg or so resistor across the cap.

The AF amp is a single transistor pre-amp stage, followed by a DSE K5604 LM386 amplifier module. This module is available as a fairly cheap kit (about $5 when I bought 10 of them a few years back) the size and good PCB offers a nice short-cut for building a simple audio amplifier. Here is a picture of the unit without the audio amp module in place. The switch was later replaced with the headphone socket and power supplied externally, I ran out of room inside the box.

© 2000 - 2009 Alan Yates - All Rights Reserved.

Note the RF chokes wound on 1W 10M resistors to isolate the plasma from the supply, preventing the RF from being shunted. The detector seems to work fine from about 5MHz to many, many GHz. As in the Ham Radio article I tried making coupling loops out of flashing Aluminium, they worked quite well for higher frequencies, but for lower frequencies directly coupling the RF to the leads of the neon bulb worked better than capacitive coupling through the glass.

Placing the detector at the focus of a parabolic dish worked well. I could hear the output of a 24GHz motion detector from across the room, chopped with a metal shutter on a small electric motor to give it some AM.

2 comments.

Attachments

title	type	size
bias testing circuit postscript source	application/postscript	10.329 kbytes
detector circuit postscript source	application/postscript	15.439 kbytes

© 2000 - 2009 Alan Yates - All Rights Reserved. XHTML | CSS | CSS toggle

Pulse-Counting FM Broadcast Receiver

2010-11-14

Months ago when I was working in Cronulla I had plenty of time on the daily rail commute to design a pulse-integration circuit in LT Spice. At one point I threw the result together on a solderless breadboard and tested it with the signal generator - it worked well, but was far from a complete WBFM receiver. I forgot the idea for a while and built the Fremodyne instead. Last weekend I decided to revisit the idea. This radio receiver is the result.

© 2000 - 2009 Alan Yates - All Rights Reserved.

The design isn't fully optimised, the IF in particular is just bench-sweepings, and the audio amplifier isn't going to set any audiophile benchmarks, but for the most part the result is very pleasing to use. The pulse-integration discrimination method is inherently low distortion, high dynamic range, and has a frequency response to DC. Compared to super-regenerative FM receivers of the past this receiver sounds spectacular!

Pulse-Counting?

What is pulse-counting FM detection? Basically you generate a constant-width (narrow) pulse for each cycle of a signal (say at the zero crossing) and integrate the pulses to produce a "DC" voltage directly proportional to the frequency of the signal. This is the familiar "tachometer" circuit used in many places. Changes in frequency produce corresponding changes in the voltage stored in the integrator capacitor - essentially an ideal FM discriminator. We don't care about the amplitude of the signal only its frequency so the IF can be class-C and is

© 2000 - 2009 Alan Yates - All Rights Reserved. XHTML | CSS | CSS toggle

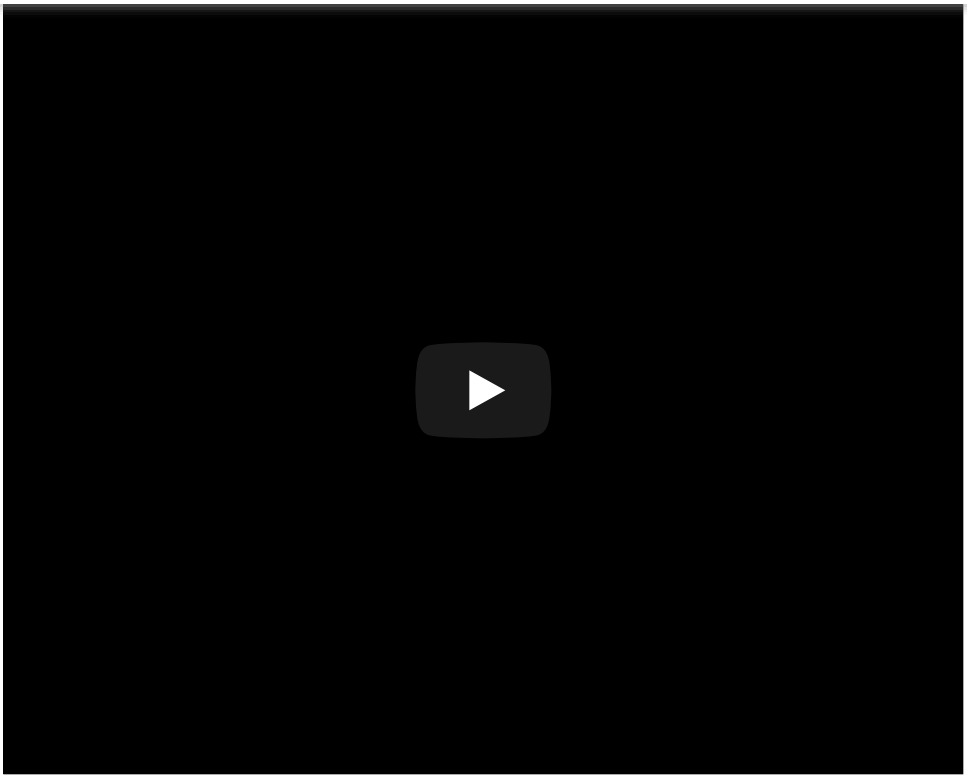

This radio uses a low-IF with a single conversion front-end. FM broadcast uses +/- 75 kHz peak deviation, so the IF needs to be at least 100 kHz or so and have a bandwidth of about 200 kHz. Channel spacing is 200 kHz too, which presents a bit of a problem, but in practice even a roughly designed IF/Limiter will perform fairly well. The FM multiplex signal has energy to at least 53 kHz so if you want to recover it you need to be a bit more careful about the IF system. This radio is not so careful and uses a very brute-force topology.

© 2000 - 2009 Alan Yates - All Rights Reserved. XHTML | CSS | CSS toggle

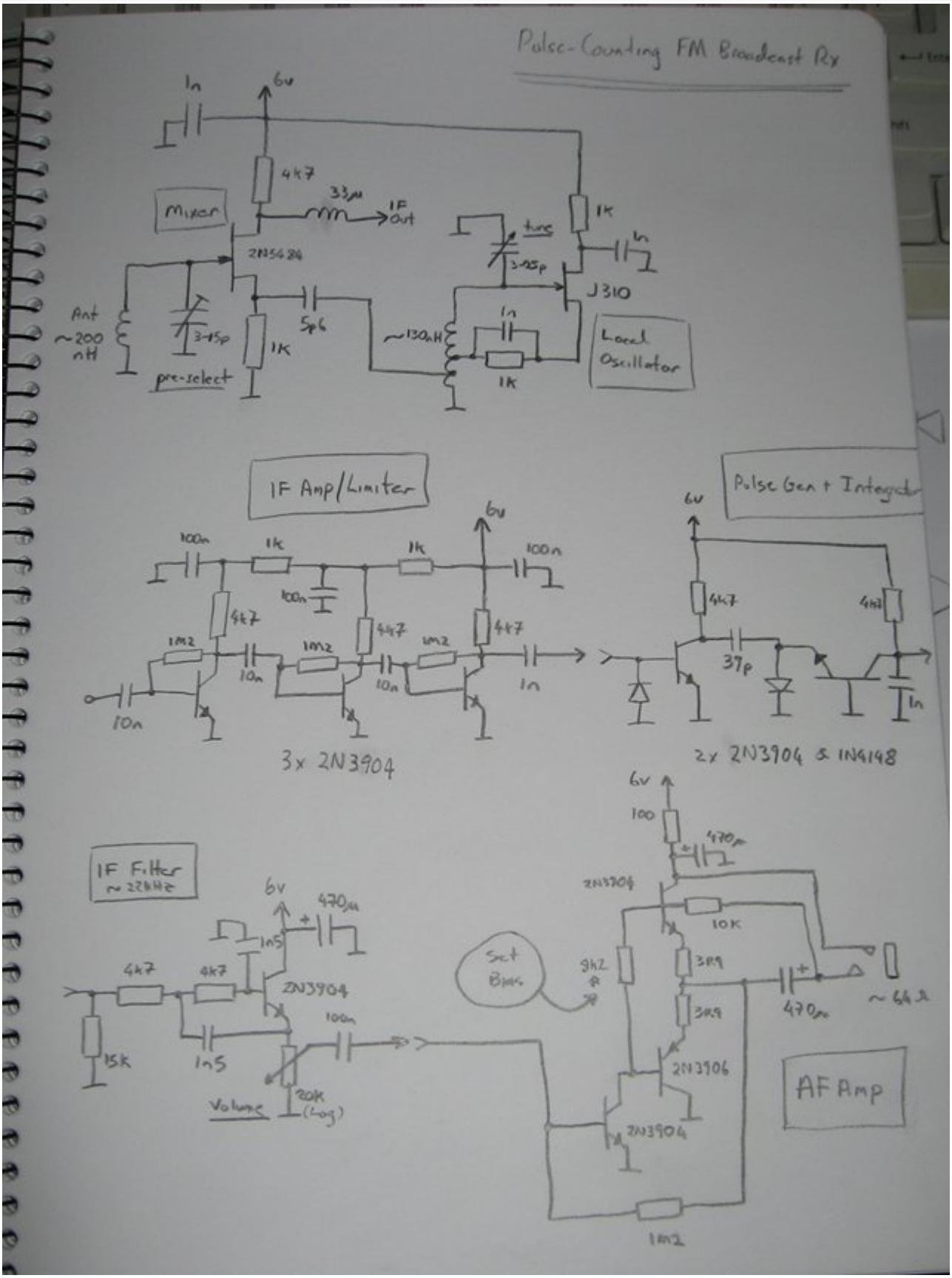

This simplistic design means there are two "optimal" local oscillator tuning spots per channel (+/- the IF relative to the carrier). In between the LO mixes down and/or aliases the IF into the audible range which is undesirable (sounds horrible). Ideally the IF amplifier only amplifies signals above "baseband" up to the peak IF frequency and the detector is followed by a filter that rejects the IF. This radio does the later with a simple Sallen Key filter, but the former isn't really implemented beyond the inter-stage coupling of the IF stages which roll off its gain towards lower frequencies. None the less the result is quite acceptable at the expense of a poorer signal to

© 2000 - 2009 Alan Yates - All Rights Reserved. XHTML | CSS | CSS toggle

noise ratio at baseband where a bit of "out of band IF" leaks through the detector on weak signals. Once in full limiting it isn't really a problem as only intermodulation can mix IF energy down into baseband.

RF Front-End

The front-end is a simplistic single-JFET mixer with a tuned-loop antenna on the gate. A Hartley JFET oscillator implements the LO, and injects into the low-Z source of the mixer JFET from a tap on the LO tank quite close to the cold end. The IF is extracted from the drain of the mixer. A choke rejects the higher frequency bits of the mess at the drain, but the IF amplifier does the bulk of the band-limiting - an area that probably needs improvement. The front-end is not particularly sensitive, but I live in a high-signal area so this is of little consequence. The pre-selection tunes sharply which is actually a bit annoying usability wise. Also severely detuned the pre-selector lets you tune the mixer to powerful out-of-band signals, this clobbers the signal of interest at the IF. In a better design the pre-selector would be track-tuned with the LO.

The IF Limiter and Pulse Integrator

The IF limiter is just three cascaded "minimal" common-emitter BJT amplifiers. It is works well enough, but I am not very happy with the design. The pulse-generator was originally designed to be biased slightly on, but I encountered instability problems doing so. It is now "auto-threshold biasing" class-C which decreases the sensitivity to non-limiting IF signals but it behaves... The preceding IF amplifier is largely to blame. In the absence of an input signal it can oscillate. This is a hack. The topology of the pulse-generator may look a little weird with the grounded base, but it is easy to understand if you simulate it in LT Spice - basically the emitter gets pulled below ground by the 39 pF cap on the edge of the previous stage's collector signal. This produces a very well defined narrow spike of collector conduction, pulling down the collector voltage proportional to the frequency of the IF signal.

The Audio Bits

I cheated to save a capacitor (and improve the LF response) by using the de-emphasis RC network to bias the Sallen Key emitter follower to near mid-rail on the emitter. The Sallen Key filter has a Q of only 0.5 and a corner of around 22 kHz - it works well enough to keep RF out of the following stages. The emitter resistor of the filter transistor just happens to be the volume control pot too...

The audio power amplifier should probably have been an IC, but I had used transistors for everything else, so what the heck! The result is very conventional complementary output stage with bias boot-strapping to prevent +ve going distortion (if the 10 k resistor just went to V+ instead of the output the bias headroom would eventually run out). The 8k2 resistor selects the quiescent current and minimises cross-over distortion. The 3R9 resistors stabilise the operating point with temperature variations. The frequency response of the output stage runs into LF. Attempts to shape it just coloured the audio too much, its current response could be considered a feature. The lower frequency corner is quite good - excellent in fact, fine for headphones. Output power is more than adequate, ear splitting in fact. The circuit can drive lower impedances, but prefers the 64R of headphones. Because of the bias boot-strapping it will not perform well into higher-Z loads and requires DC continuity.

Notes

The radio was first built on a solderless breadboard as just the mixer, IF and pulse integrator, using my signal generator as the LO. In this form is was actually more forgiving than once built on a PCB. Most of the development time was spent keeping it stable on the PCB through addition of RF-hygiene. The filtering of the IF rail supply could be better, 100 nF is probably too small. In hind-site, the lack of reasonable filtering down to audio frequencies at the mixer drain is probably a major problem...

© 2000 - 2009 Alan Yates - All Rights Reserved. XHTML | CSS | CSS toggle

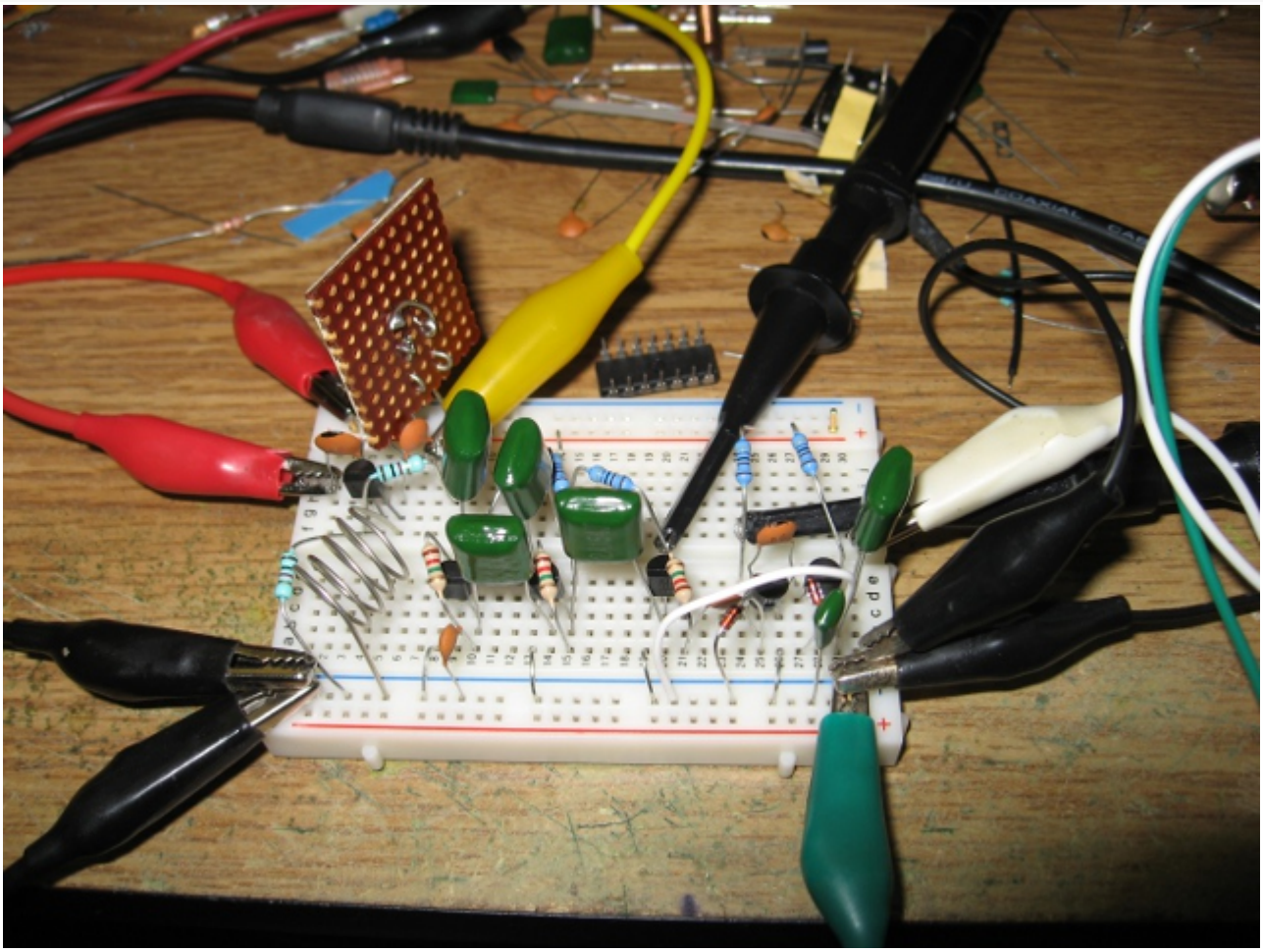

The receiver sounds good enough to actually use for listening to ABC Classic FM (92.9 MHz here in Sydney). The response is quite flat and uncoloured despite little attempt being made to implement de-emphasis properly. The LF response is excellent. The signal to noise ratio could be improved a bit, you don't notice this on most channels, only in the quiet passages of classical content can you notice the noise floor. On a spectrogram you can see the 19 kHz pilot signal of the stereo MPX (it is about 30 dB down once it makes it though the filtering), with a bit of effort it might be possible to build a stereo version...

Selectivity is a compromise of course, but the pre-selector helps. Often one of the sides is better than the other as it has a "quieter" adjacent band. Dual conversion would help eliminate the image response along with ceramic filters.

The loop antenna makes the receiver a bit fragile for my liking. A solenoidal inductor could replace it at some loss of capture aperture (see breadboard version photo - worked fine). The loop antenna interacts with the headphone lead a bit (the headphones act as a parasitic antenna too and not always for better signal as the phase relationship between them is uncontrolled). One might wish to add chokes to the headphone line and tap off the RF it collects for injection into the mixer instead of the using the loop antenna.

The receiver pulls about 10 mA and runs from four AA cells.

14 comments.

Attachments

title	type	size
Large Version of the Circuit Diagram	image/jpeg	339.579 kbytes

© 2000 - 2009 Alan Yates - All Rights Reserved.

Receiver Boxed Up

2007-12-18

I finally got around to putting the PA2OHH-style Reflexing-Regenerative Receiver circuit into a more permanent form. The tuning was arranged to cover 31 metres, spread nicely across the dial. It is no longer touchy to use and tunes slowly through the band. There is a slight body capacitance effect on the spot on the box nearest the coil, but it is hardly noticable unless you are using the receiver oscillating. For using a plastic box (a cheap Jaycar potting box) it is surprisingly stable. I chose this box so as to keep the guts accessible for tinkering and show-and-tell purposes.

A very simple audio amplifier was built into the radio to make it self-contained, driving standard 32 Ohm headphones in series. Its fidelity isn't wonderful, but its a reasonable match for the quality of the detector. There is a common-mode choke in the headphone lead to prevent any stray RF getting into the audio amplifier (which isn't especially well designed to reject RFI). The choke was added after experiencing some minor problems with FM and TV stations breaking into the AF-side of the radio.

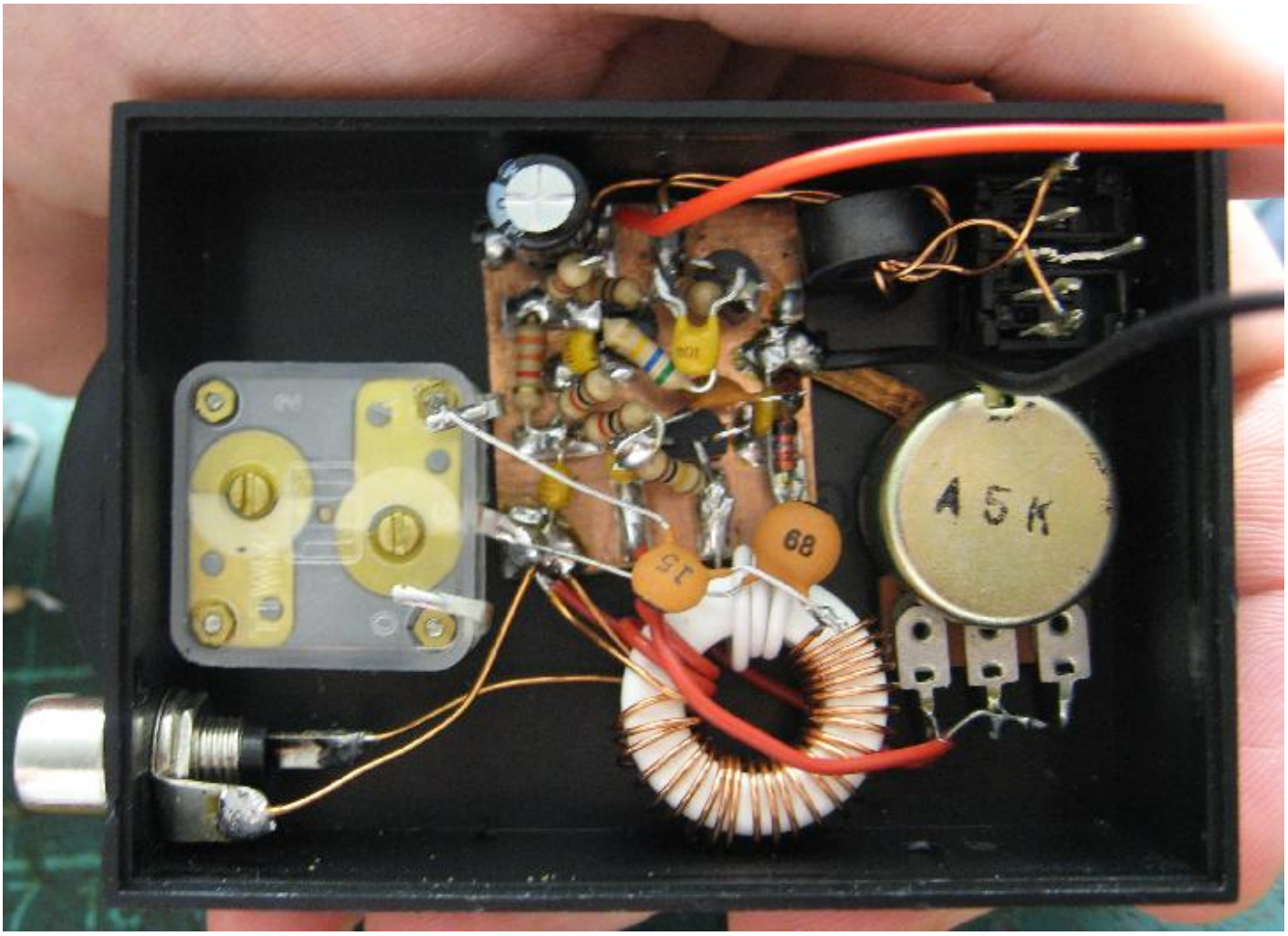

The dial has not been calibrated yet, and probably won't be. There is no front-end at all, the antenna is directly coupled to the resonator, so this is really only a toy radio, but it is quite usable for shortwave listening. I don't think it is too bad for 3 transistors and only a few mA of draw. The huge knob is all I had which wasn't for fluted shafts, but its large size is useful for smooth tuning, so I may keep it that way if I'm not going to calibrate the dial.

© 2000 - 2009 Alan Yates - All Rights Reserved.

The circuit diagram.

© 2000 - 2009 Alan Yates - All Rights Reserved. XHTML | CSS | CSS toggle

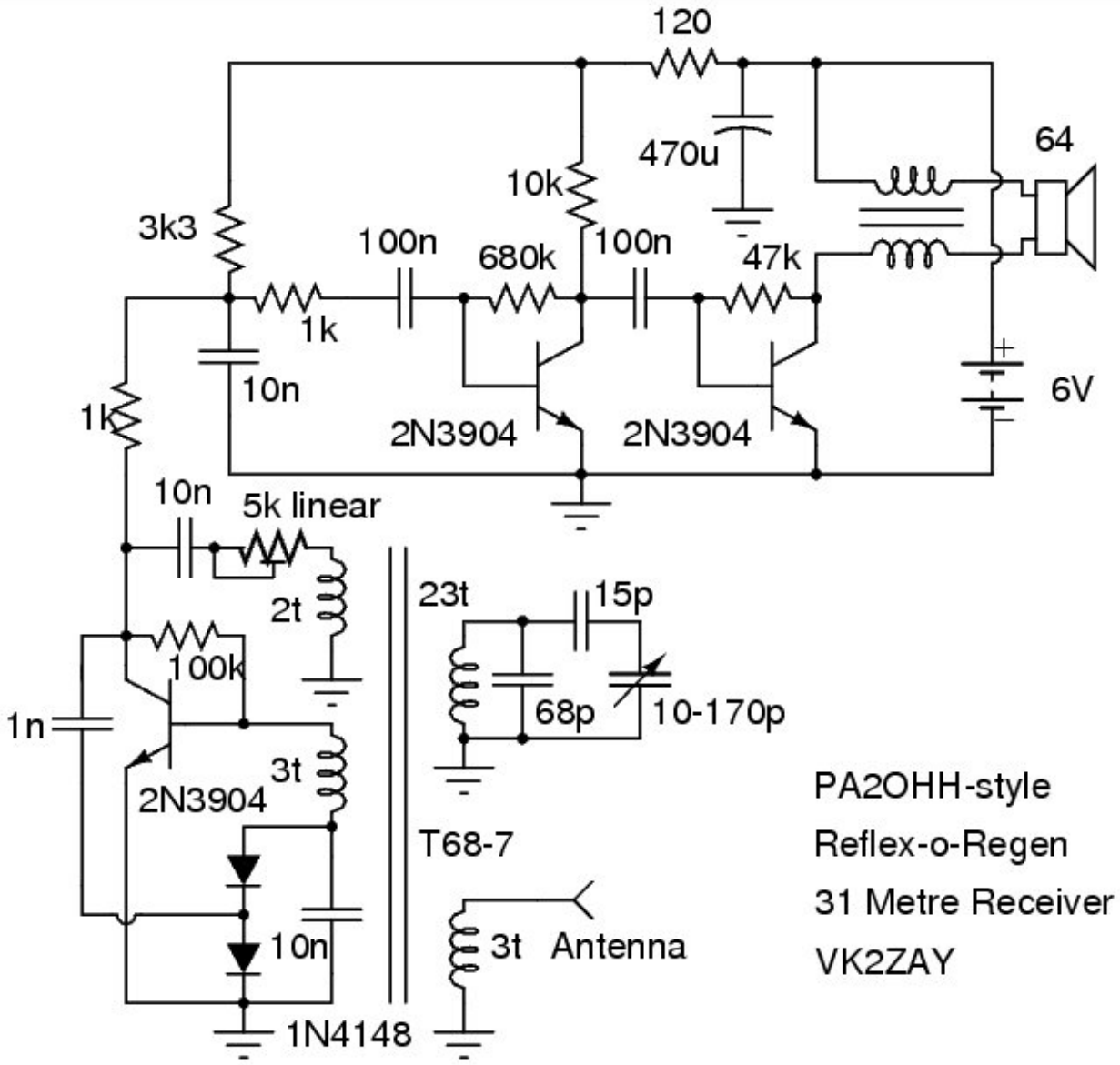

8 comments.

Attachments

title	type	size
Circuit Diagram Source	application/postscript	18.217 kbytes

Parent article: Regenenerative-Reflexive Receiver.

© 2000 - 2009 Alan Yates - All Rights Reserved. XHTML | CSS | CSS toggle

Regenenerative-Reflexive Receiver

2007-11-04

I first saw this detector topology on PA2OHH's website, and then again saw that PY2OHH had a go at it as well. I had to give it a try, it is obviously regenerative, but also appeared to be partially reflexive.

The circuit is simple and was thrown together in only a few minutes on a small piece of PCB. The lash-up included just the detector, using a T68-7 core for the coil and large tuning capacitor. The detected audio was delivered to my old Archer amplified speaker to quickly assess the circuit.

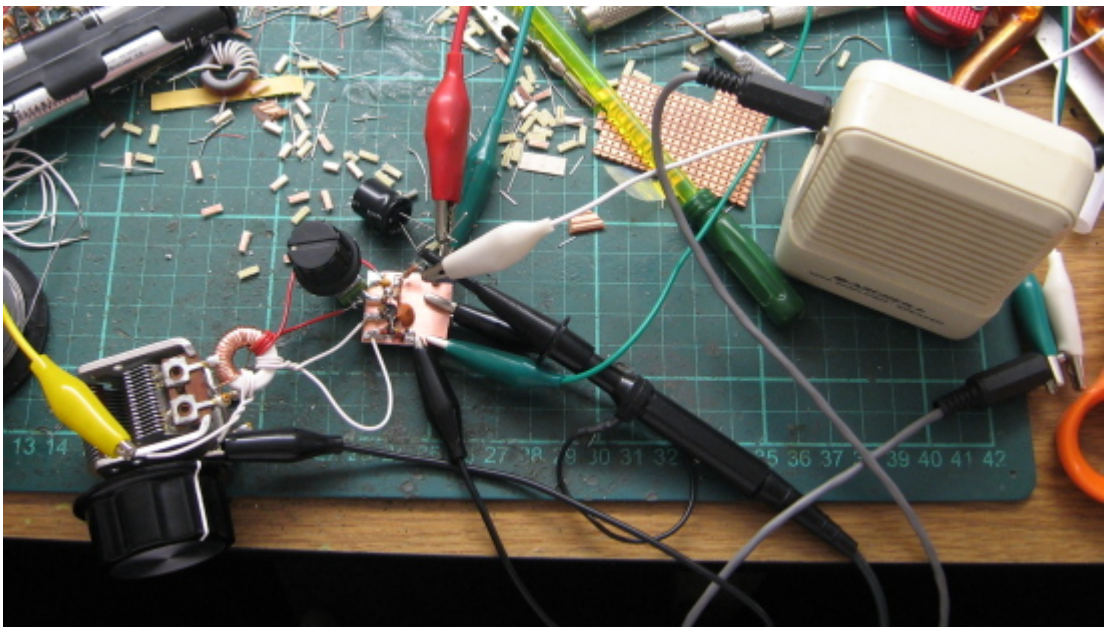

It works very well. The -ve feedback from the collector to the base bias helps control its break into oscillation. Initially I used 100 pF, but I increased this to 1 nF for smoother operation. This also enhances its reflexive properties, giving it quite good audio gain with only one transistor.

© 2000 - 2009 Alan Yates - All Rights Reserved.

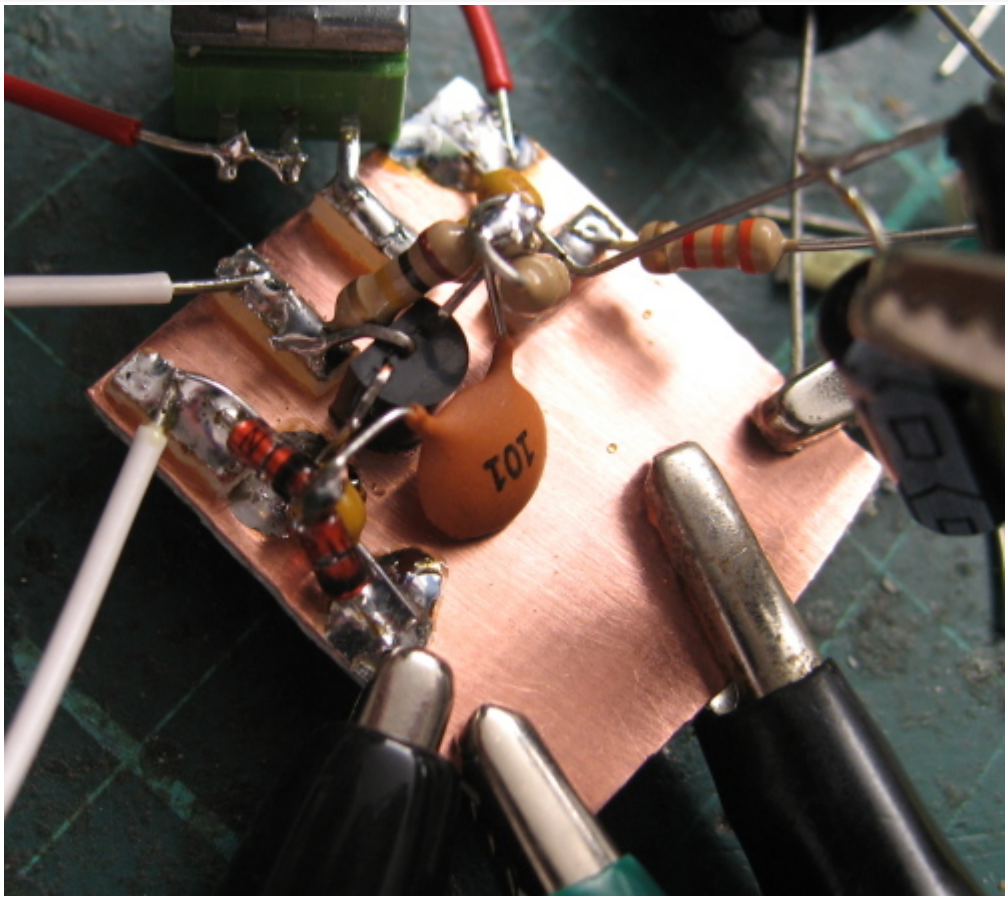

There is some distortion inherent in the detector, but its simplicity and stability is a big advantage. It took only minutes to get a working receiver with it, and easily heard the stronger shortwave stations with only two alligator clip leads for the antenna.

Here are some videos of the prototype receiver in operation (excuse the enormous mess my bench is currently in):

- Some Jazz on VOA (2 MiB)
- Tuning Around (4 MiB)

As there is no bandspread capacitance or reduction drive in this initial lash-up; the receiver is very touchy to tune. The full sweep of the cap tunes from about 3.9 MHz to over 18 MHz, far too much bandspread for practical use. This is easily fixed in a more permanent version of the receiver however.

3 comments.

Updates

2007-12-18: Receiver Boxed Up

I put the regen-o-reflexive receiver on 31 metres and put it in a box.

© 2000 - 2009 Alan Yates - All Rights Reserved. XHTML | CSS | CSS toggle

Regenerative FM Broadcast Receiver

2006-08-13

This radio comes from Everyday Practical Electronics magazine, January 2006, in the Ingenuity Unlimited (Readers Circuits) section. Francis Hall, from Meinerzhagen, Germany calls it his "Euro Set". I made only minor changes to the circuit, the diagram below is as I built it, see the article for as Francis specified it.

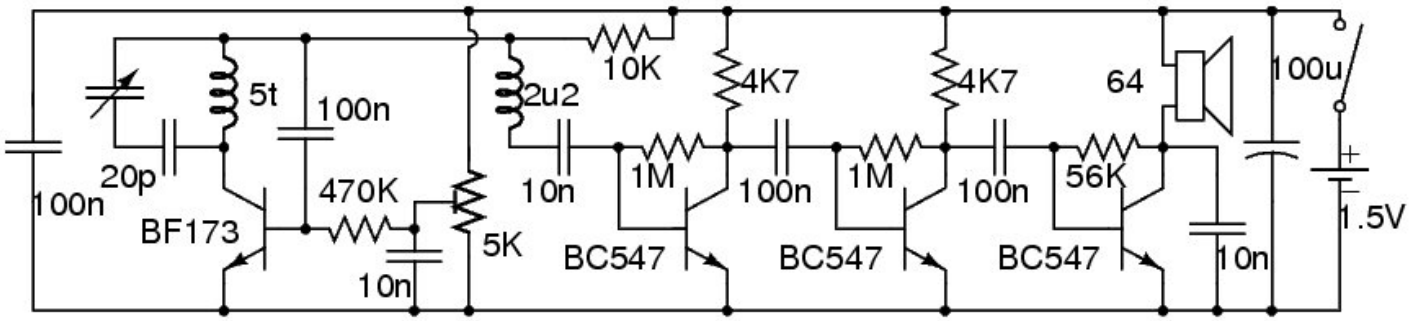

I must admit, at first I was sceptical looking at the circuit diagram, a single 1.5 V cell supply? But after a quick check of the audio stage bias with my calculator I saw that Mr Hall had designed it well, so I dug out the solderless breadboard and made up the audio strip. It "blurt" tested OK, and was surprisingly quiet and well-behaved (I used BC548B devices).

The front-end was more problematic, it was obvious that a real RF transistor would be required. The article specified a BF199, but I had none in stock, so I built a point-to-point hack of the circuit with a piece of IC socket to allow experimentation with whatever transistors I had in the junk box. Initial experiments were frustrating, I began to believe it would never oscillate, BC54x's definately don't cut it, neither did a PN3563, or a whole stack of 2SC's I tried. Eventually I found an ancient BF173, on plugging that in I saw a new peak on the spectrum analyzer - it was oscillating at last!

Now that I had a transistor that would oscillate, I rebuilt the front-end around a large tuning gang with an internal 2:1 reduction drive. (I got this unit from KW Tubes on eBay several years ago.). I substituted a 5K pot for the 10K one specified (all I had), and superglued it to the end of the tuning gang, giving me a device with a knob on each end. This physical arrangement is actually quite nice to use.

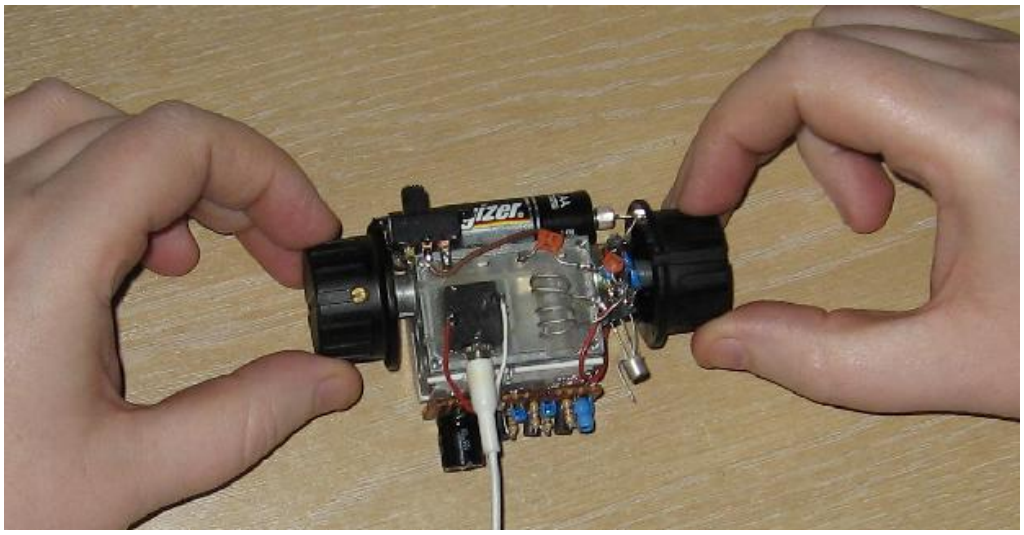

I retained the transistor socket, so other devices could be tried in the future. One thing became obvious during experimentation, it *requires* a large L:C ratio. Too much capacitance and it will not oscillate at 1.5V. The biggest challenge seems to be to get it oscillating, then you can adjust the components to the frequency band of interest. My frequency determining components, the coil, tuning gang, and series caps and quite different from the article - yours probably will be too. I used 5 turns of tinned 0.71 mm wire on a soda straw for the coil. I am unsure of the capacitance on the gang, I didn't measure it. The bandspread cap is a 56 pF in series with a 33 pF = near 20.7 pF. Mine tunes about 85 MHz to 122 MHz. I could achieve better bandspread, but with the reduction drive the radio is fairly easy to use as-is. Covering part of the airband is a nice feature too.

© 2000 - 2009 Alan Yates - All Rights Reserved.

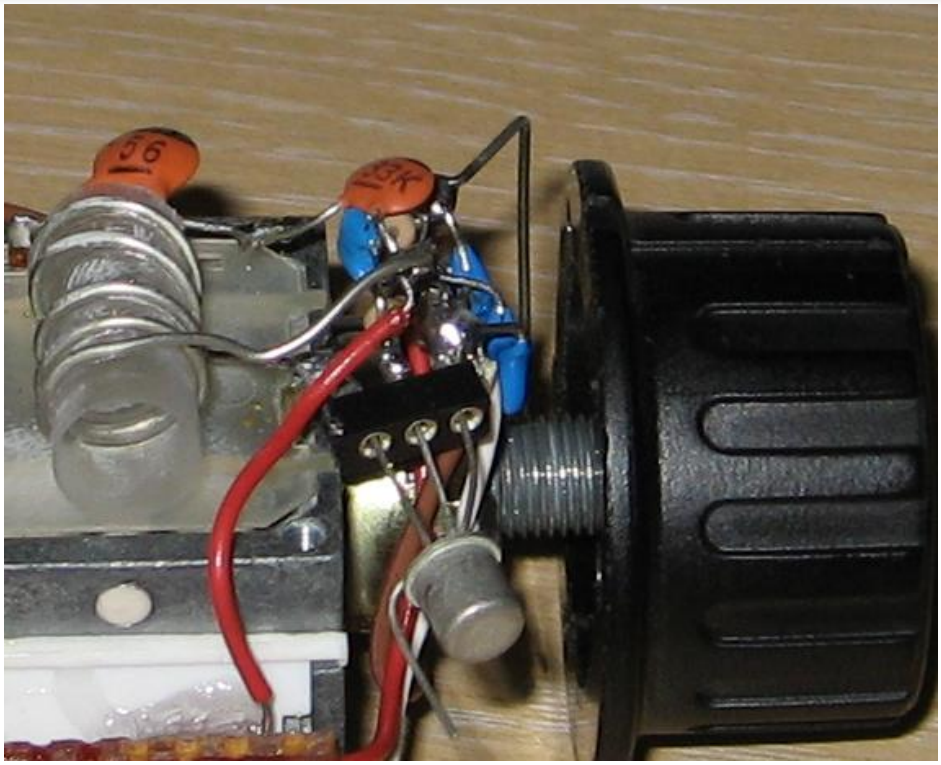

The audio amp was rebuilt on a piece of punch-board, this time using NOS Philips BC547s which aren't quite as good as the devices used in the breadboard test, but which worked fine. Some 5-minute epoxy was used to glue the board and headphone socket to the frame of the tuning gang. A slide switch was added as an "on" switch, and a pair of magnetic battery connectors (Jaycar) were used to make connection to the AA cell powering the device.

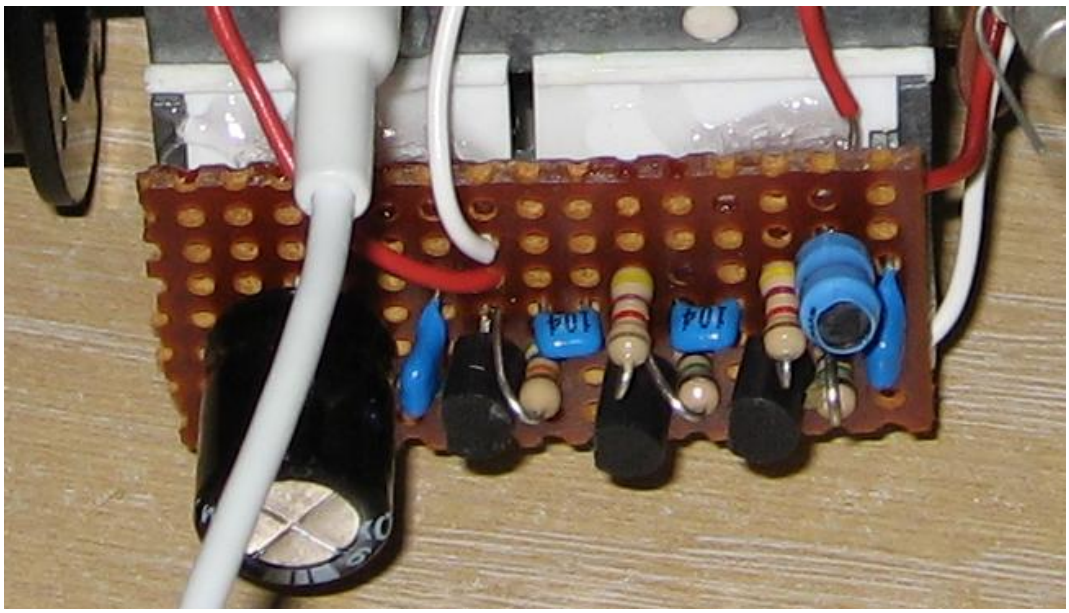

The completed device pulls about 2.5 mA, giving it a very long battery life. The regenerative stage and the first two audio pre-amps draw 450 uA.

© 2000 - 2009 Alan Yates - All Rights Reserved.

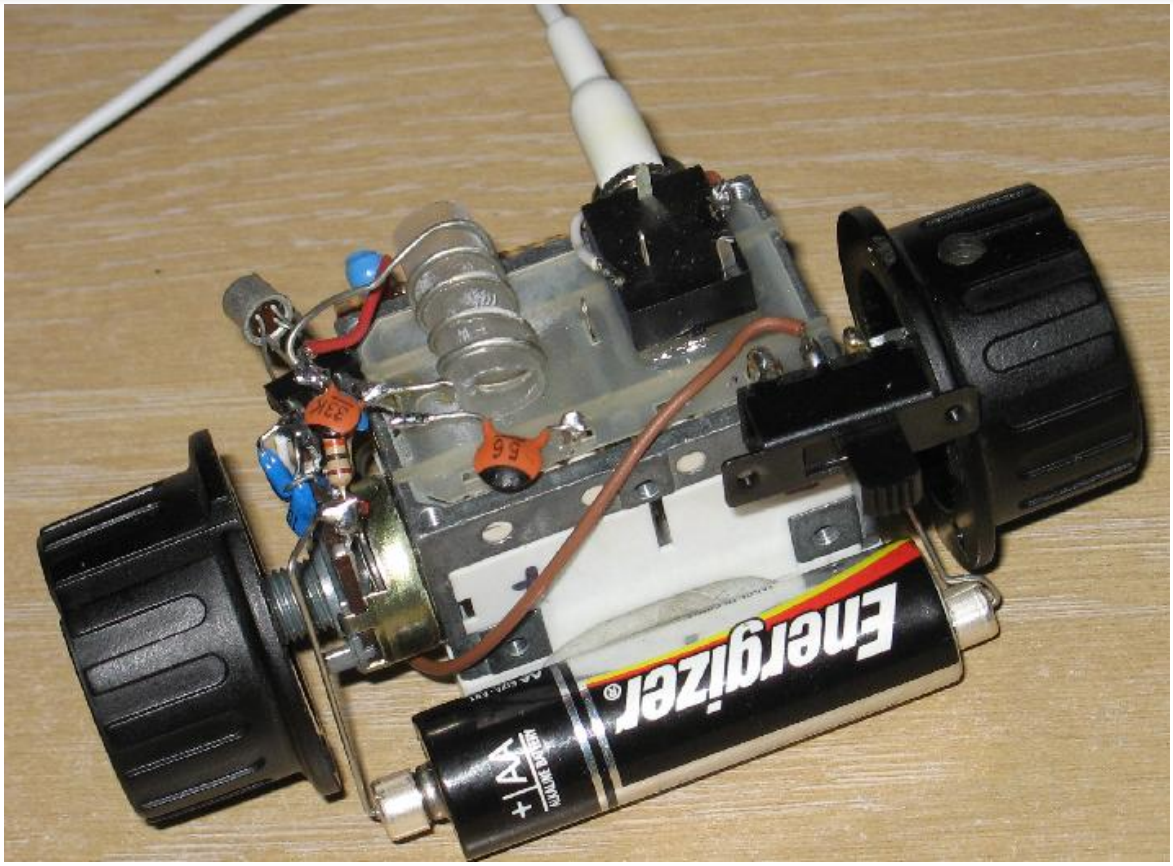

The Good

The radio is an excellent performer. It easily picks up all the local channels with more than enough volume. With the regeneration turned up it is narrow enough to distort the received signal purely because its bandwidth is too narrow for the signal's deviation.

Its audio quality is surprisingly good. Unlike the super-regenerative receivers I've built in the past there is no quench to mix the stereo sub-carrier and pilot into the baseband. It can also have an extremely high-Q, unlike the super-regenerative receivers which have a minimum bandwith of four times the quench. It is perhaps slightly less sensitive, but much, much nicer to use; far easier to tune for best audio quality.

To tune, you may use the RF stage gently oscillating to locate the station of interest. Tuning across a station will sound like listening to FM on a SSB receiver as most of the signal's energy will be outside the detector slope. Once you've got a channel near-by, you back-off the regeneration until it stops oscillating and the Q is at an optimal point, then shift the frequency to put the slope at the best position for low distortion. This requires some dexterity, manipulating the tune and regeneration controls at the same time to place the signal in the bandpass and adjust its width for an undistorted audio output. It takes more words to describe than actually do, you will quickly become proficient.

The Bad

Because of the regenerative stage topology, neither side of the tuning cap can be referenced to ground. This means the entire bulk of the receiver is RF hot, which makes it suffer badly from hand-capacitance effects. The regeneration control spindle is coupled to this capacitively (via its case) because I glued it directly to the gang frame - a physical design problem, not a limitation of the circuit as the former is, but annoying none the less. I would like to redesign the regenerative stage to use a common-base oscillator which should make the radio much more stable and pleasent to use.

There is no volume control. With strong signals the RF stage can overdrive the audio stage. At the very least this is painfully loud, but it also pushes the relatively simple amps into their +ve-going distortion and even into full clipping on very strong local signals. (The local ABC Classic FM - 92.9 MHz is a good example, it is a gigantic signal at my QTH and simply can't be tuned in properly at any regeneration level). Turning down the regeneration as a volume control is very non-optimal, it rapidly reduces the Q of the tuned circuit, widening the bandwidth and destroying the selectivity, however this does work for powerful stations in otherwise relatively quiet parts of the band (2WS FM - 101.7 MHz for example).

The Ugly

This radio is quite possibly the ugliest thing I've ever built. It is fairly small, and fits in a Decor 250 ml plastic tub for transport, but its still an ugly hack.

© 2000 - 2009 Alan Yates - All Rights Reserved. XHTML | CSS | CSS toggle

Usage Experence

The lack of AGC means mobile use can be almost impossible. Unlike lower wave bands where the longer wave lengths mean multipathing isn't a huge issue, at VHF multipath related fading is severe. Over water or in the city the fades can be so extreme and rapid it is very difficult to tune the radio, or listen to the program.

Stationary the device is quite pleasant to use, despite the body-capacitance issue. I've been considering lowering the gain of the 1st audio stage or putting in a volume pot, the radio is significantly more sensitive than is required at times, and often keeping it sufficiently selective in the crowded 50 kW+ upper-end of the FM band means the audio is simply too loud or distorted.

The radio suffers mildly from being unshielded. Some interference from mobile phones in close proximity is experienced, but putting your finger on the 1st audio stage biasing resistors shunts most of it. The problem is quite minor however, no where near as severe as with the recent MW Receiver with gets hammered by any phone within 20 metres and TV transmitters in Sydney Harbour.

Future Ideas

My next attempt at a similar radio will probably be a hybrid including a regenerative stage at a fixed IF in the HF region, with a front-end converter based on a varicap tuned VFO feeding a simple cascode mixer. I'll carefully design an 80-115 MHz filter and an LNA to feed it from signals taken from the headphone lead and build the entire circuit inside a shielded box to avoid mobile phone noise. I may be able to implement an AGC at the LNA stage, or a diode attenuator in the front-end to control the total system gain, however this will degrade the noise figure a bit - on the FM broadcast band this shouldn't be a huge issue as the signals are generally quite strong in the metro area where I'll be mostly using the unit. That said, a non-linear element in the front-end might produce intermod issues from the same very powerful signals in-band, so varying the gain of the LNA might be the better approach.

10 comments.

© 2000 - 2009 Alan Yates - All Rights Reserved. XHTML | CSS | CSS toggle

Resonant Coaxial Feedline Choke

2008-09-28

This is a tool I've been meaning to make for a while. For HF antenna experiments it is often useful to be able to selectively choke the feedline of common-mode currents. While you can use a ferrite bead choke or some arbitrary coil of coax to provide a bit of impedance, a resonant choke is tunable so you can make measurements with it still inline but detuned and then quickly tune it up for comparison.

The coil form is simply a plastic pill bottle about 50 mm in diameter. Onto this 9 turns of RG-58 coax are wound giving an inductance of about 3.5 uH. The coax passes out the bottom of the bottle and is terminated in BNCs. Inside the bottle the braid of the coax is exposed at each end of the coil and connected across a polyvaricon installed in the lid of the bottle. Liquid electrical tape (like RTV) is used to seal up the coax again and bottle penetrations.

© 2000 - 2009 Alan Yates - All Rights Reserved.

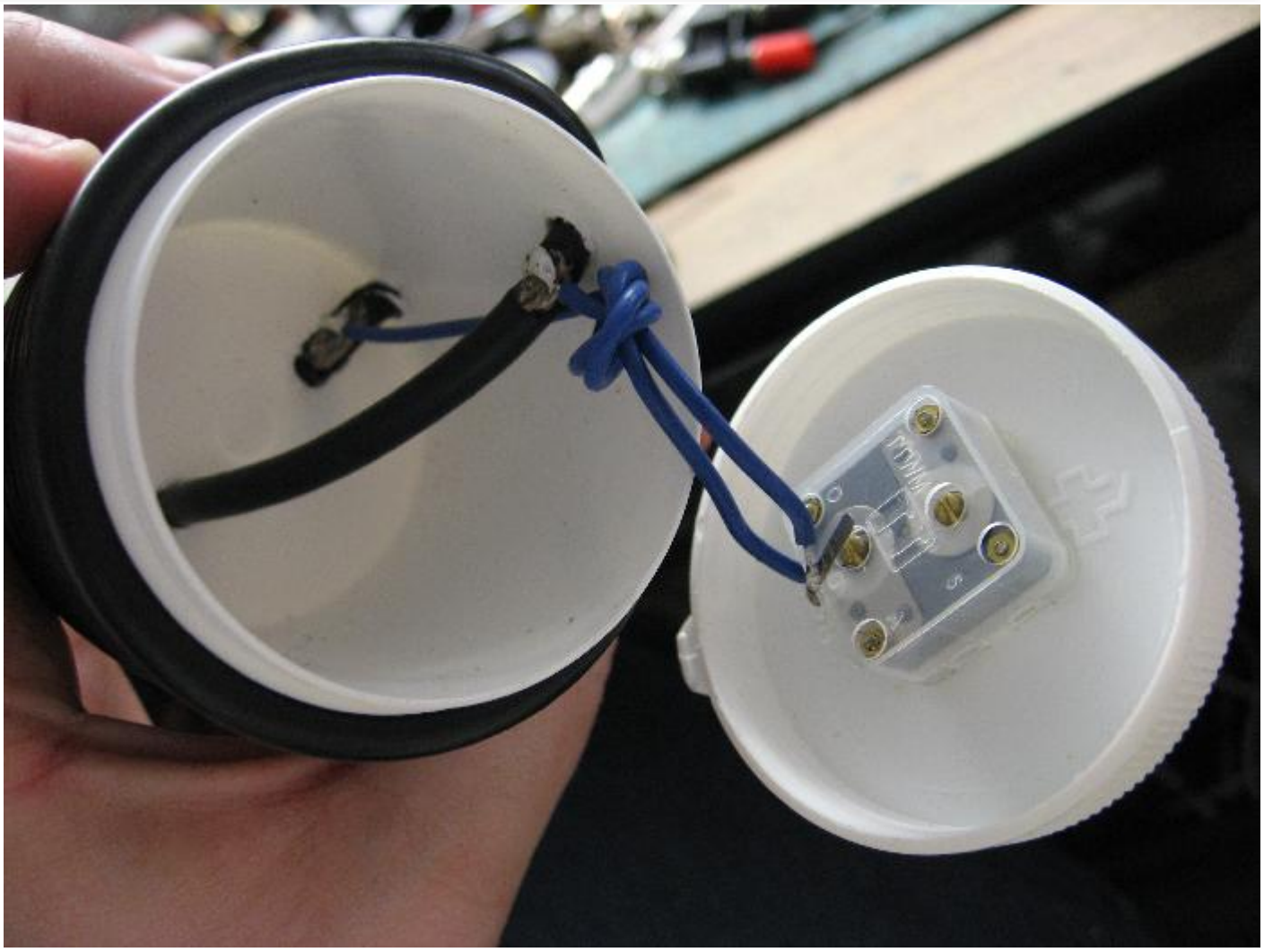

The lid is calibrated in MHz, performed by dipping the coil or tuning it to resonance near the output of my signal generator while monitoring the voltage across the BNC plugs on the CRO with a suitably small cap in series. The device tunes 5.7 MHz to beyond 16 MHz using the full 210 pF maximum capacitance of the polyvaricon's combined gangs. The distributed capacitance of the coil plus internal wiring capacitance is around 12 pF limiting operation to around 20 MHz tops.

Usage

It covers 20, 30 and 40 metres (it was designed for 40 metres in particular), and 17 metres too but the tuning gets fiddly up there. The general idea is scalable to any frequency. Tune-up is simple, place a clamp-on RF ammeter over the coax and tune for a dip in current. Alternatively you may pre-tune with a dipper, but it is easier to tune in-place where the extra capacitances of the feedline are attached. Pre-tuning will generally need to be tweaked up (less capacitance) because of the extra capacitance between the feedline ends.

It is fairly common practice to use self-resonance without additional lumped capacitance at VHF and UHF to choke feedlines, but it seems few people actually try for a resonant breaker, just adding "a few turns" in the feedline. With a dipper it is easy to fiddle with a roughly dimensioned coil of coax until you get resonance where you want it, then tighten zip-ties to hold the coil in place. Q is generally low at higher frequencies using the coil's self-resonance so tuning is not too touchy, but it must be done with care to get the best results.

The resonating of the coax braid like this DOES NOT effect currents flowing inside the coax. (I confirmed this experimentally to the limits of my return loss bridge.) Only currents trying to flow on the outside of the coax experience the impedance of the tank so formed. The Q of the tank is not especially good, the coil being close-wound of coax braid, but it offers at least several tens of kilo-Ohms to braid currents at resonance and is broad enough to not need much retuning in narrow bands. It is possible to construct a similar device for balanced lines, using isolated dual capacitors across bifilar mutually wound inductors fed by the feedline.

2 comments.

© 2000 - 2009 Alan Yates - All Rights Reserved. XHTML | CSS | CSS toggle

Return Loss Bridge

2008-08-02

I've built many return loss bridges over the years, this is but another. I've actually been using it for a while, but only just today got around to adding banana plugs for easy attachment to a multimeter and of course writing it up on the website. Unlike the VHF Impedance Bridge, output to a multimeter allows fairly precise measurement of return loss. The meter scale of the older bridge is better for tuning for best return-loss, or you might use a VOM instead of a digital meter with this bridge. The older meter still allows estimation of the reflection coefficient and comparisons between the instruments suggests the previous readings were quite valid.

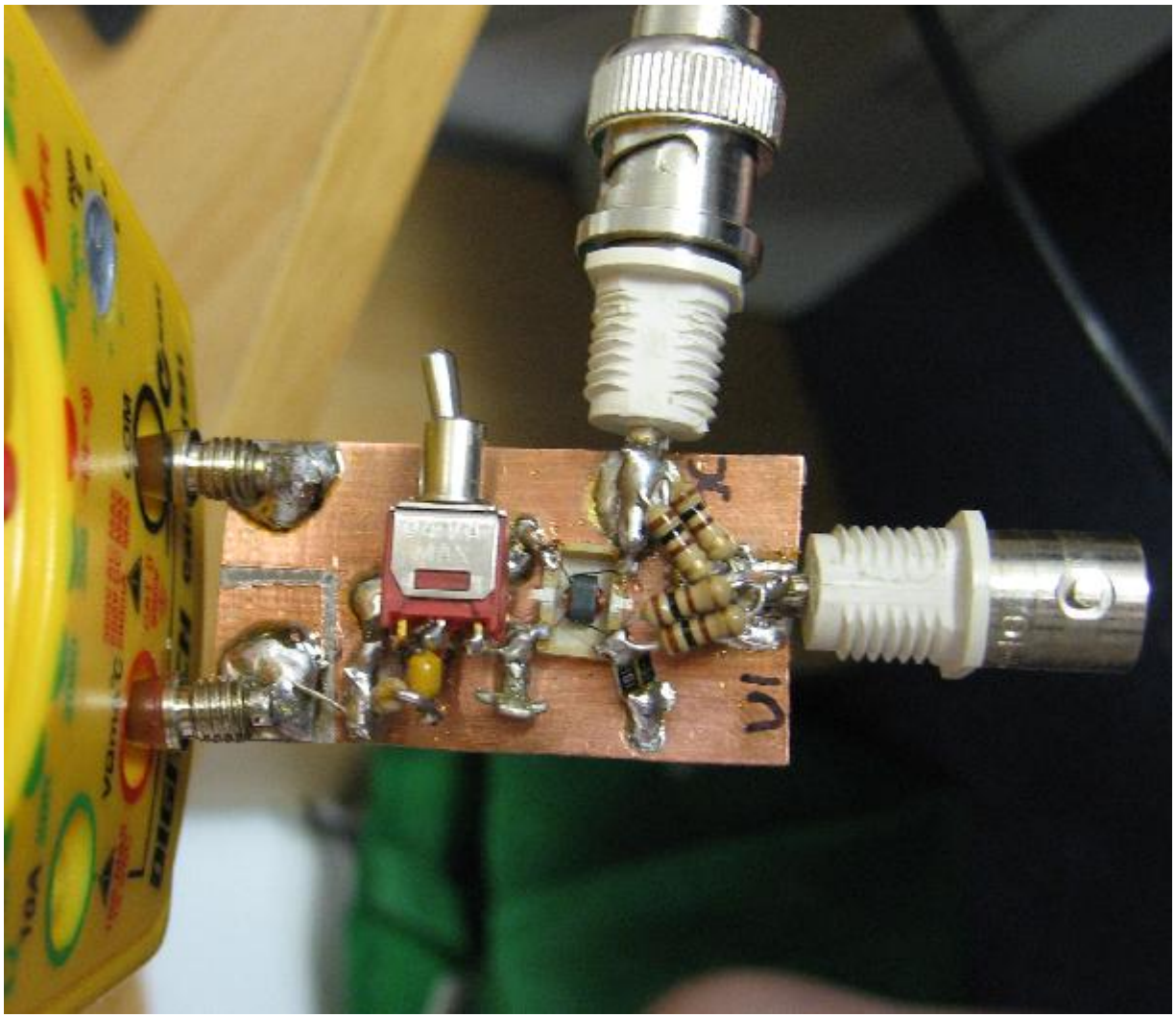

The circuit is extremely simple and can be thrown together in a few minutes. I don't really use the external detector output much, it would be better terminated in a BNC as well, but if you are going to go to that trouble for use with a SA and tracking generator you might want to build the unit nicely in a screened box with a good layout to improve the directivity.

© 2000 - 2009 Alan Yates - All Rights Reserved.

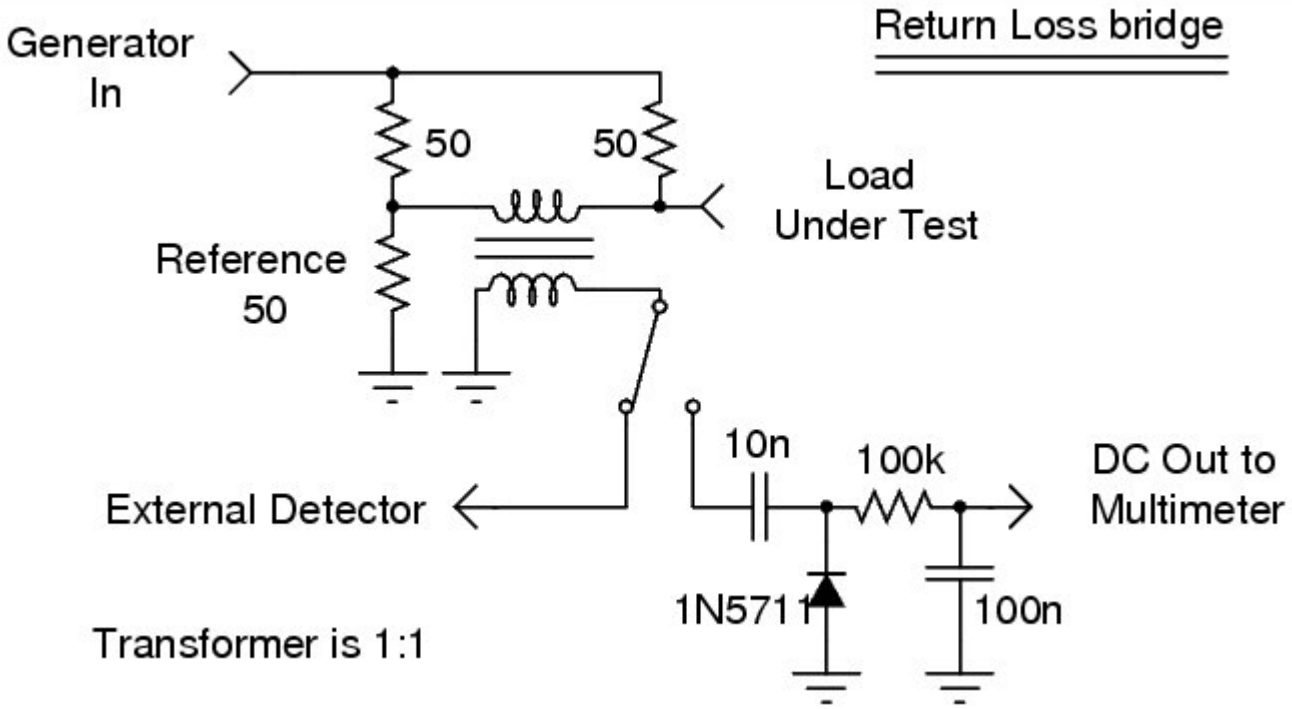

Initially it was constructed using all SMD 100 Ohm resistors, but abuse with use fractured them several times (point-to-point with SMDs soldered directly to BNC plugs is a bad idea!), so I replaced the two splitter resistors with leaded ones and kept the SMD ones for the reference load. The original configuration was quite good to high VHF, the leaded resistors only slightly worsening it.

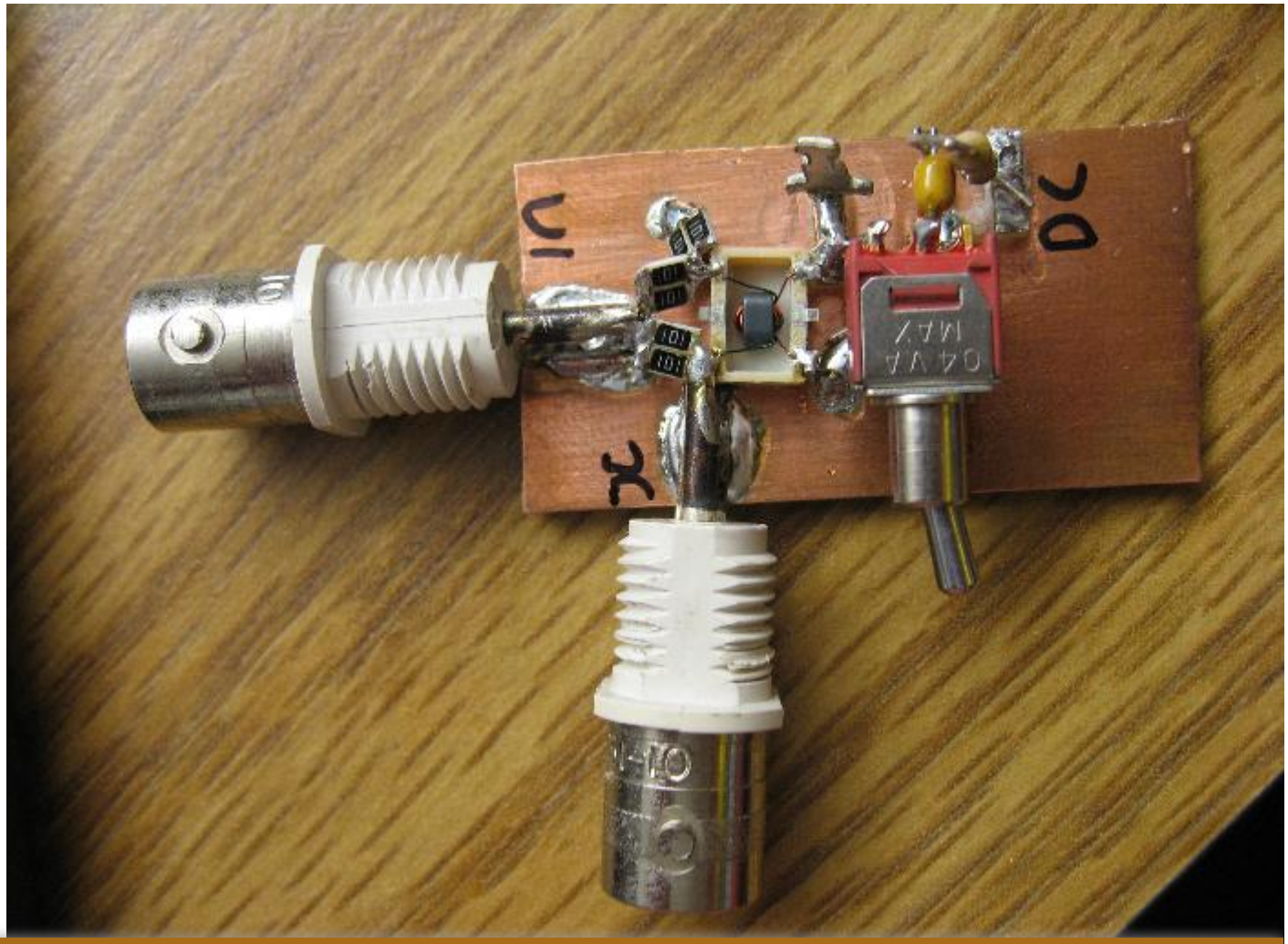

© 2000 - 2009 Alan Yates - All Rights Reserved. XHTML | CSS | CSS toggle

The extra flexibility of the leaded resistors means they will absorb the flexing of the device as leads pull on the connectors without breaking as easily. The splitter resistors are less critical than the reference load anyway, due to symmetry all that really matters is that they are fairly well matched. 1% devices would have been a better idea, but even with the 5% ones the directivity of the unit exceeds 53 dB to beyond 50 Mhz.

The unit has been characterised from 100 kHz to 100 MHz and offers better than 43 dB all the way. Directivity peaks around 3 MHz at over 69 dB, by 10 MHz it has dropped to 60 dB. At 100 MHz it is at least 43 dB but may be slightly better as I am suspicious about the calibration load I was using.

Usage

To use the RLB apply a signal source to the generator input large enough to give several volts of DC out when the X port is open. Larger drive is better as it keeps you away from the diode non-linearity, but don't burn out the resistors. Note the reading on the multimeter, then terminate the X port with a good dummy load, the reading should drop enormously. Note the new reading and divide the original reading by it, take the log and multiply by 20. The result is the bridge directivity in dB. The directivity should exceed the return losses you wish to measure by a reasonable margin for sensible results, ideally make sure it exceeds at least 40 dB and the 0-30 dB RL region is of most practical interest.

Similarly in use, note the unterminated reading, then divide it by the reading once connected to the load under test, take the log and multiply by 20. The return-loss through an attenuator is twice the attenuator loss (through and back, attenuated twice). Return loss is specified as a -ve number by convention, +ve numbers imply gain not loss, but it is common to see RL specified loosely as a +ve figure.

Return loss, Reflection Coefficient (magnitude), and Standing Wave Ratio are all related mathematically and measuring one allows to infer the other two. Here is a table of some common data points:

RL (dB)	|P|	SWR
0	1	∞
1.743	0.818	10
3.522	0.667	5
6.021	0.5	3
5.543	0.333	2
13.979	0.2	1.5
17.692	0.130	1.3
20.828	0.091	1.2
26.444	0.048	1.1
∞	0	1

RL (dB)	|P|	SWR
0	1	∞
2.499	0.75	7
6.021	0.5	3
10.458	0.3	1.857
12.042	0.25	1.667
13.979	0.2	1.5
20.0	0.1	1.222
∞	0	1

RL (dB)	|P|	SWR
0	1	∞
1	0.891	17.391
2	0.794	8.724
3	0.708	5.848
5	0.562	3.570
10	0.326	1.925
20.0	0.1	1.222
30.00	0.032	1.065
40.00	0.010	1.020
50.00	0.003	1.006
60.00	0.001	1.002
∞	0	1

Alternatively you can use my return loss calculator.

Practical Application

One of the first tests I did with it was to measure the line loss of my new coax runs. I spent most of last Saturday running 3 RG-58 coax lines from the shack to the balcony. The job is fairly neat, terminated at each end using BNC bulkhead female-to-female connectors and standard wall plates. The wall plates come from Jaycar and originally had four RCA sockets, which I removed and drilled out the holes to fit the BNC bulkheads. Using bulkheads means good terminations can be made at each end. I had to remove a two bricks from the cavity wall at the shack-end to feed the cable through, a process which took much time and cost some bruises. The real hard part of the job however was at the other end. The eaves are extremely difficult to access from the plenum. I was fortunate enough that a previous device had left a circular hole in the soffit cladding which I reused for this project, but I had to improvise a cable-snake/fish from some galvanised wire to pull the cables through. The access space was barely sufficient for a feline, let alone a larger human, so many more bruises

© 2000 - 2009 Alan Yates - All Rights Reserved. XHTML | CSS | CSS toggle

and Oregon splinters were accumulated in the process. Tanya assisted greatly by feeding the snake from the balcony side, and I complete with knee pads and a head-mounted light source did the fishing job in the plenum.

© 2000 - 2009 Alan Yates - All Rights Reserved. XHTML | CSS | CSS toggle

Anyway, a week after that effort the cables were measured for loss. Leaving the balcony-end open circuited the return loss of the cable approximates twice the loss of the line. Of course this is at essentially infinite VSWR which increases the line loss, however this simple test gives a good indication of cable health. The run is only about 30 metres so a homebrew TDR is unlikely to be useful. One of the three runs is from a different batch of cable (I would have run four to utilise all the BNC bulkhead adapters, but ran out of RG-58). This different batch had a better loss compared to the other two runs, but only slightly. Runs 1 and 2 measured almost exactly the same at 1.40 dB at 3.581 MHz (I used the 80 metre beacon TX as a signal source). Run number 3 measured 1.26 dB. Considering these figures where measured at infinite VSWR the lines and terminations seem to be in fairly good condition.

The RLB was then used to measure the match of the 80 metre beacon's antenna after recent improvements in its water proofing. Once tuned up the return-loss is 26.5 dB, which is a ρ of 0.047 or a VSWR of 1.099. It drifts around a little in the wind as the capacitance of the whip varies, this is unavoidable because of the high-Q nature of the matching network to get reasonable efficiency, but the variation is quite small and acceptable.

© 2000 - 2009 Alan Yates - All Rights Reserved. XHTML | CSS | CSS toggle

7 comments.

Attachments

title	type	size
Circuit Diagram Source	application/postscript	12.880 kbytes

© 2000 - 2009 Alan Yates - All Rights Reserved.

RF and Optical Bolometer

2009-02-25

When RF energy is delivered to a resistive load it dissipates heat. If the load has a relatively poor thermal coupling to its surrounding environment its temperature will rise. By measuring the temperature rise it is possible to determine the average power delivered to the load. There are various problems with the approach though, calibrating it is troublesome as ambient temperatures change and many of the coefficients involved are unknown and would need to be determined experimentally. It was during my design of the calibration system I discovered it is fairly easy to just put the temperature sensor and load into a servo loop and maintain a constant temperature above the ambient. In this way the change in DC power required to maintain the sensor at a constant temperature is directly the amount of power delivered to it by other means.

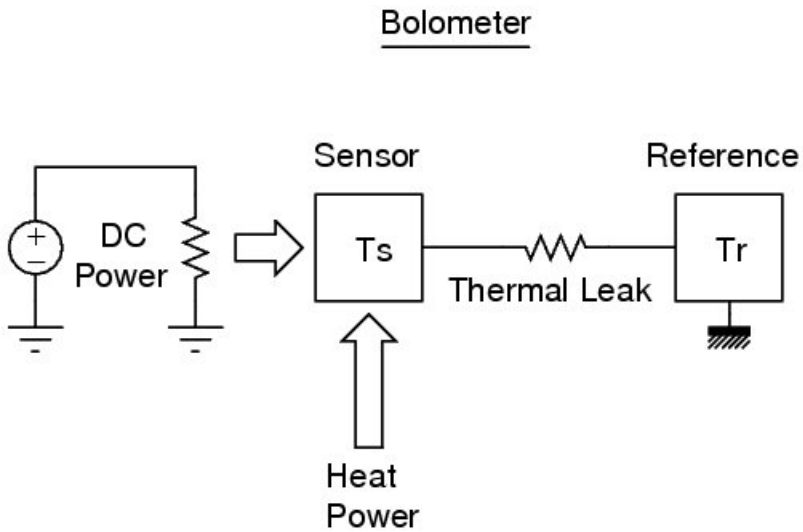

To achieve the thermal control system I started with thermistors but rapidly changed to using common silicon diodes who have a temperature coefficient of about 2 mV/K. An Op-Amp with offset compensation (a CA3130 was in the junkbox) amplifies the drop voltage difference between two diodes and drives a resistor heating element to keep one junction a constant temperature above the other. The amplifier gain is about 30 dB and is not completely open-loop except for the thermal feedback to give it some stability. The circuit in all is very simple and functions adequately for the task.

© 2000 - 2009 Alan Yates - All Rights Reserved.

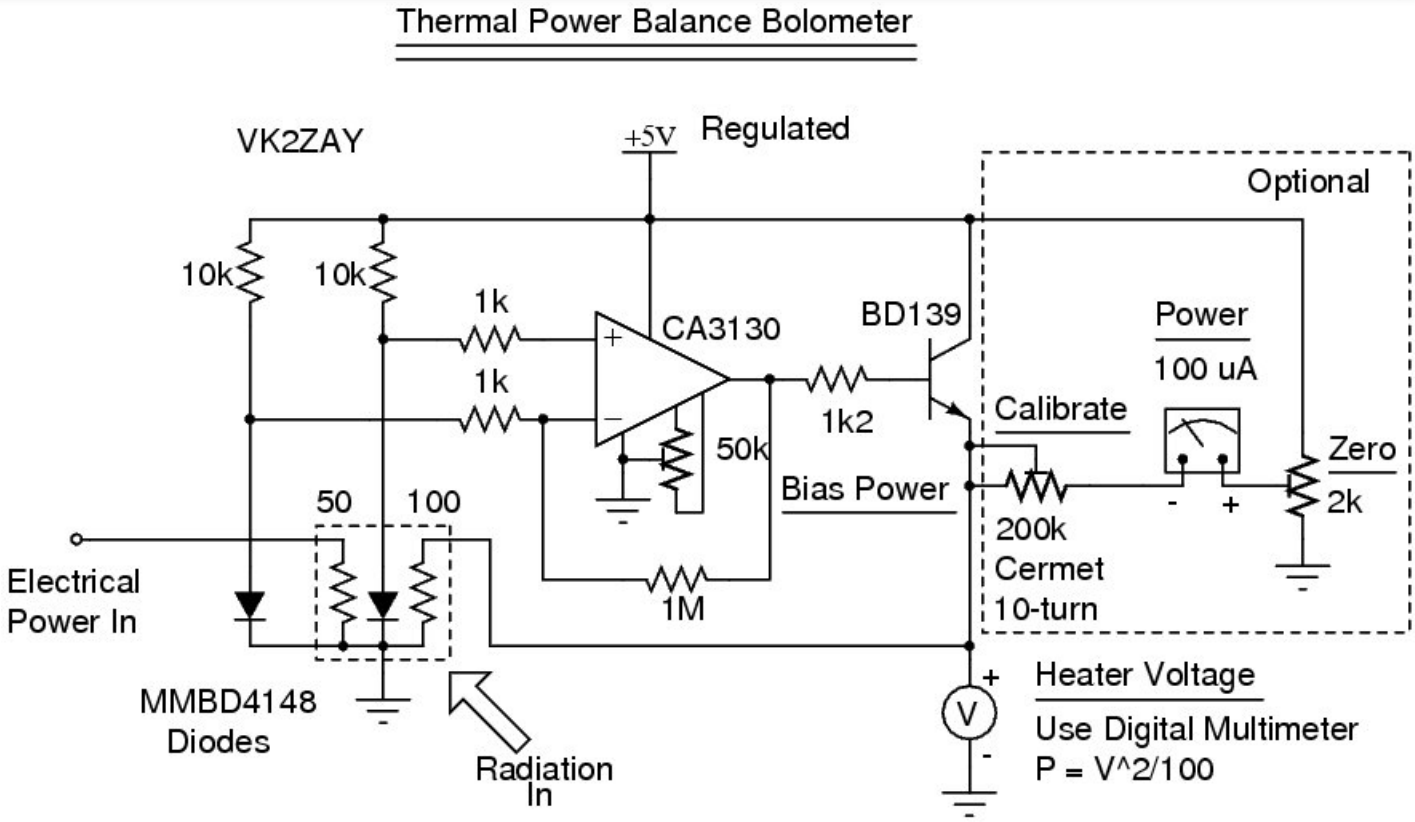

In the first version I used normal leaded components held together with a drop of liquid electrical tape. This arrangement allowed me to test the concept on a solderless breadboard. A centre-nulling meter facilitated "zeroing" the difference by biasing its other terminal to equal the quiescent voltage across the heater. This way I could watch the sensor drift and bias either sensor with my fingers resulting in a swing in the appropriate direction. Such an arrangement **does not** yield direct-reading of power, but can be calibrated at a particular ambient temperature and is handy for trending. For direct reading the absolute power levels in the heater load must be measured and subtracted to yield an accurate figure of power delivered by the external source.

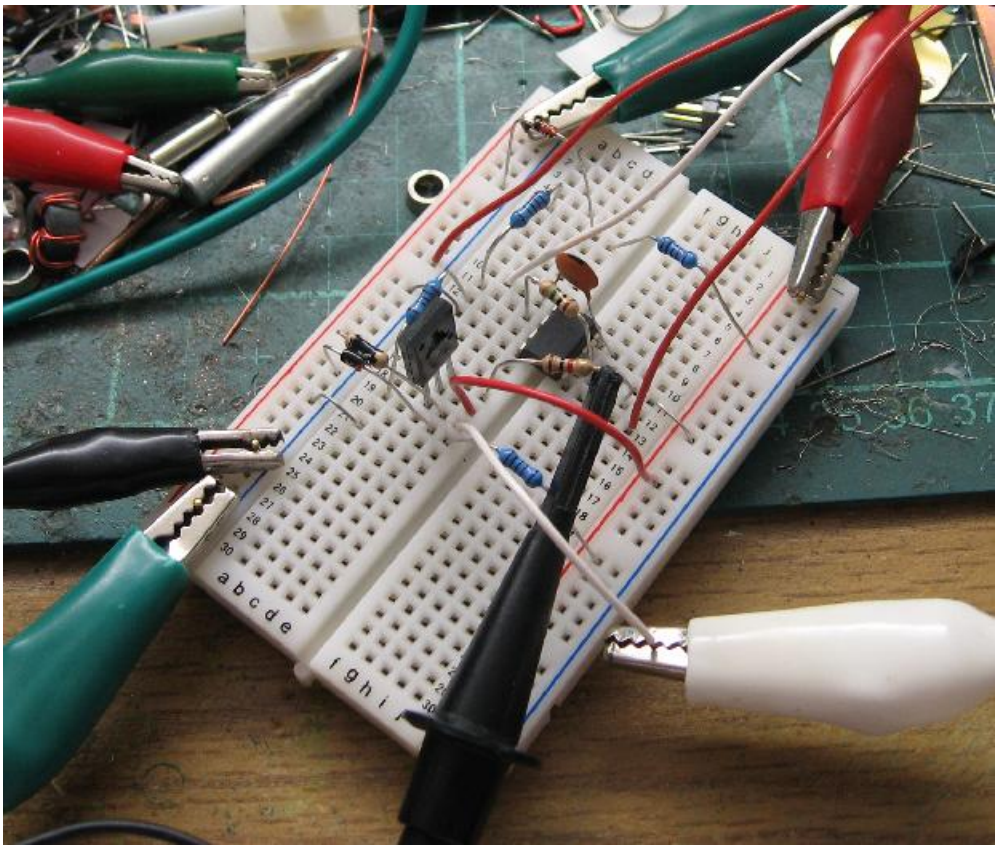

I considered using the same load for RF as the heater. In theory this is quite practical; an RF choke implementing a bias-Tee to deliver the DC heating power while the RF is delivered through a DC blocking capacitor. I wanted to be able to calibrate the device with DC (which is easily

© 2000 - 2009 Alan Yates - All Rights Reserved. XHTML | CSS | CSS toggle

loop. This mandates calibration as the heating effect of the current in each load may not be precisely communicated at the same level to the diode but in practice it was shown to work very well. For RF-only measurement the single heater/sensor system is simple and direct reading (but may require a high heater supply compliance to drive the 50 Ohm load).

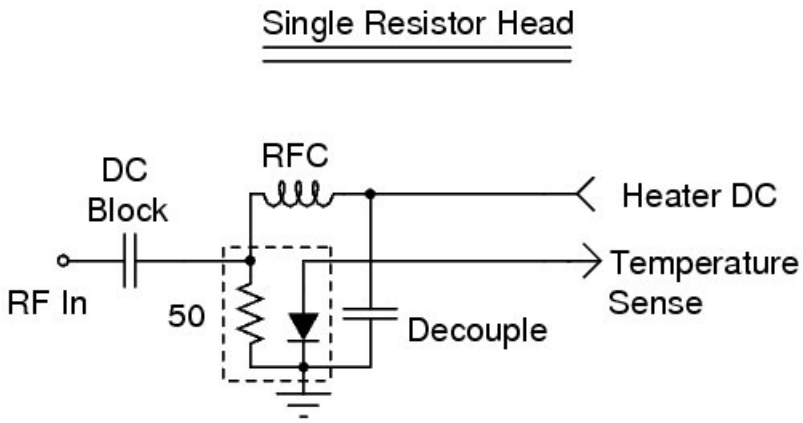

The power delivered to the load/sensor system need not be via the resistor. I discovered external heat sources (like my soldering iron) would produce measurable deflections from quite some distance. This enables direct measurement of electromagnetic radiation that the sensor can absorb. I tried aiming a toy laser pointer at the initial leaded detector arrangement and measured roughly 2 mW of dissipation difference, this seemed consistent with its < 5 mW compliance labelling.

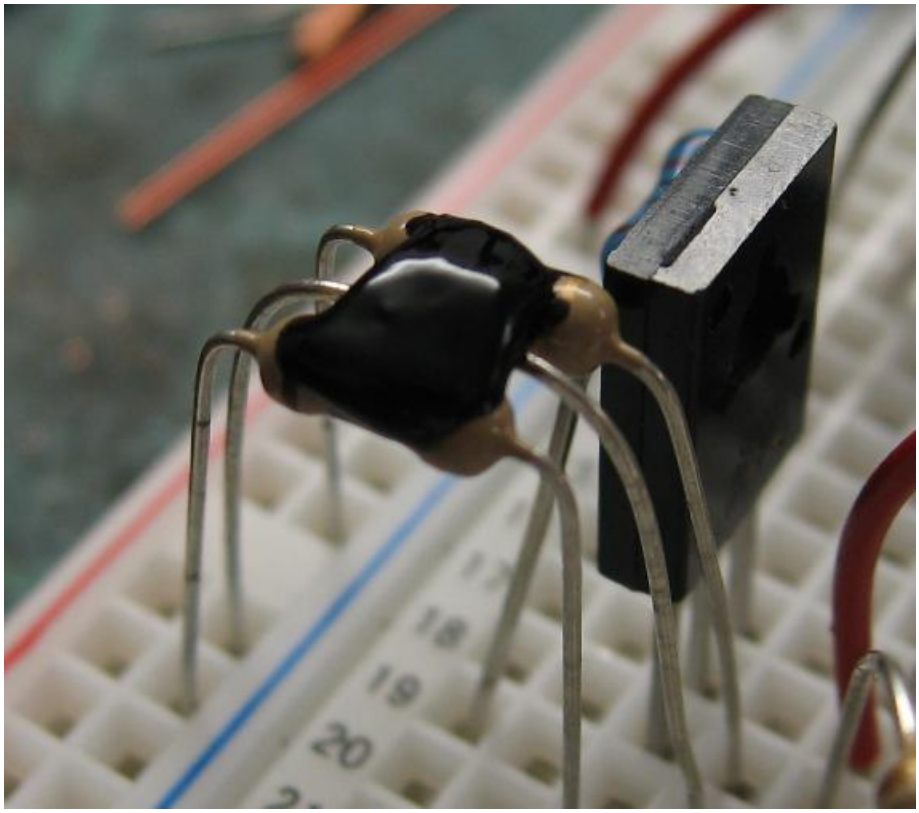

The time constant of the lashed-up detector was fairly long, and to minimise this I decided to build a more physically compact detector. I used SMD components soldered to a small square of brass shim stock. I reasoned the surface area of the plate could be measured and used to calculate optical fluxes. I soldered the SMDs directly to each other after bonding them together with superglue and then soldered their common ground to the plate. The entire assembly was then suspended over a larger brass plate which holds the reference diode. The larger plate can be attached to a physically large heatsink to form a stable ambient reference, while radiation and conduction to the reference mass from the sensor implements the heat-leak required. To facilitate the very low reflectance required for radiation measurements I eventually painted the top side of the brass sensor plate flat-black using Lampblack mixed with a little Red Gum in alcohol to bind it.

© 2000 - 2009 Alan Yates - All Rights Reserved. XHTML | CSS | CSS toggle

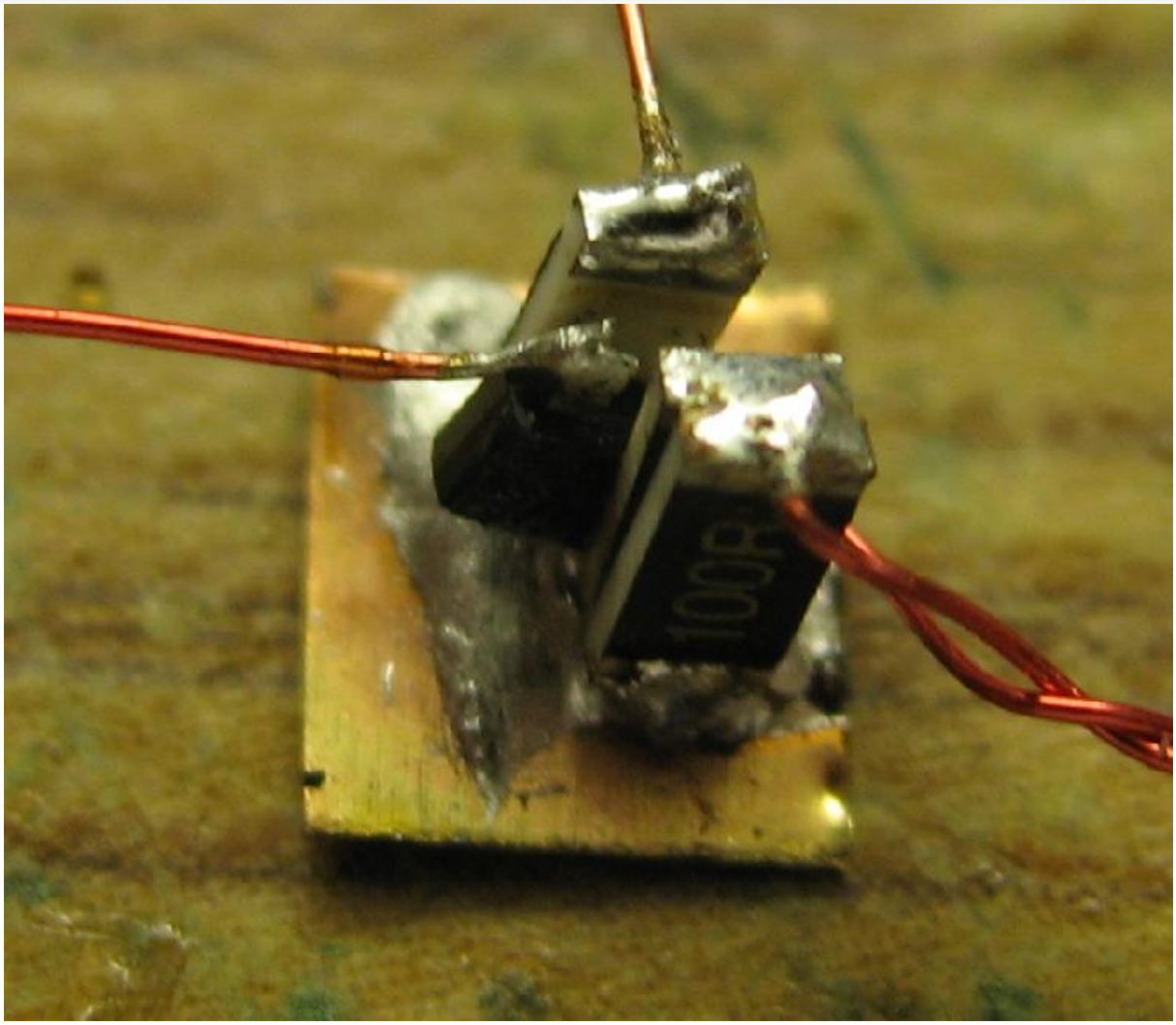

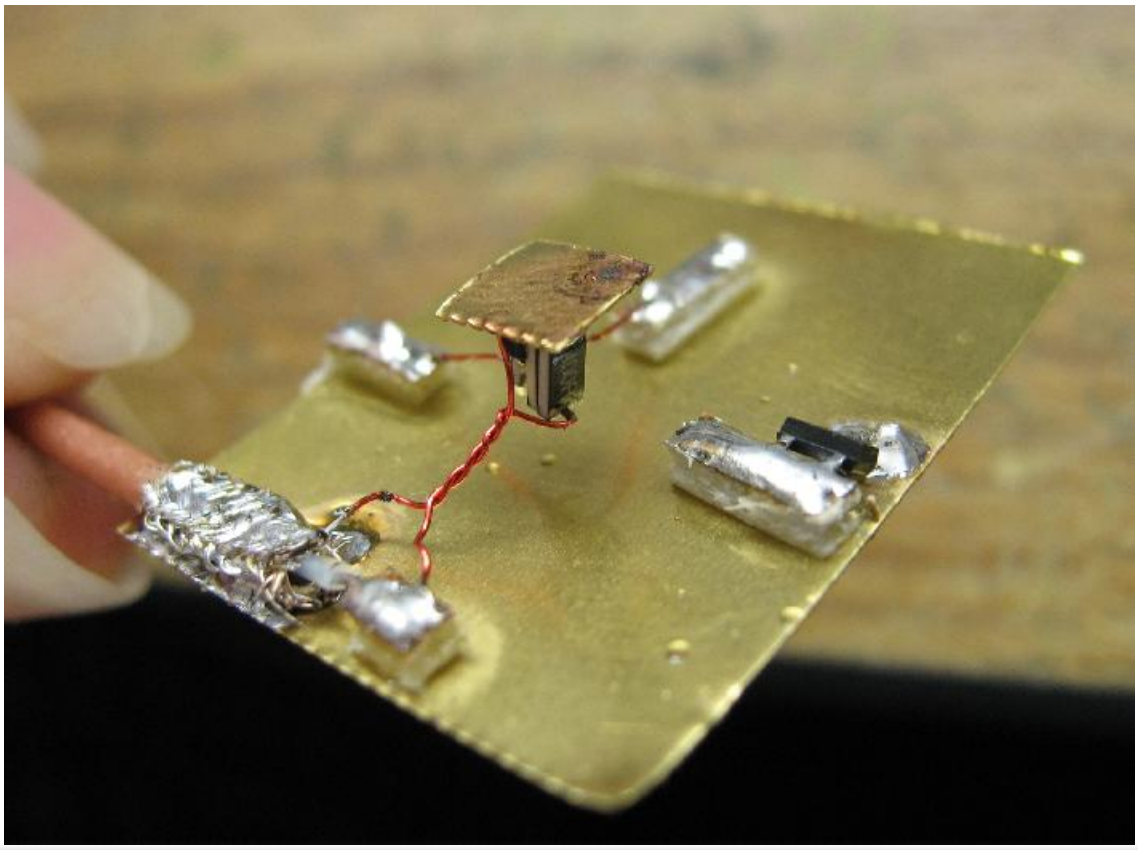

© 2000 - 2009 Alan Yates - All Rights Reserved. XHTML | CSS | CSS toggle

It is important to shield the detector and reference junction from drafts and differences in ambient illumination. The sensor is especially sensitive to drafts and I reason you could calibrate it quite accurately as an Anemometer (kinda neat, no moving parts!), at least at constant barometric pressure. I used a small potting box to cover the detector assembly to exclude drafts. This improved the baseline stability enormously. A small hole in the box allows a radiation beam to enter and hit the sensor plate facilitating its measurement.

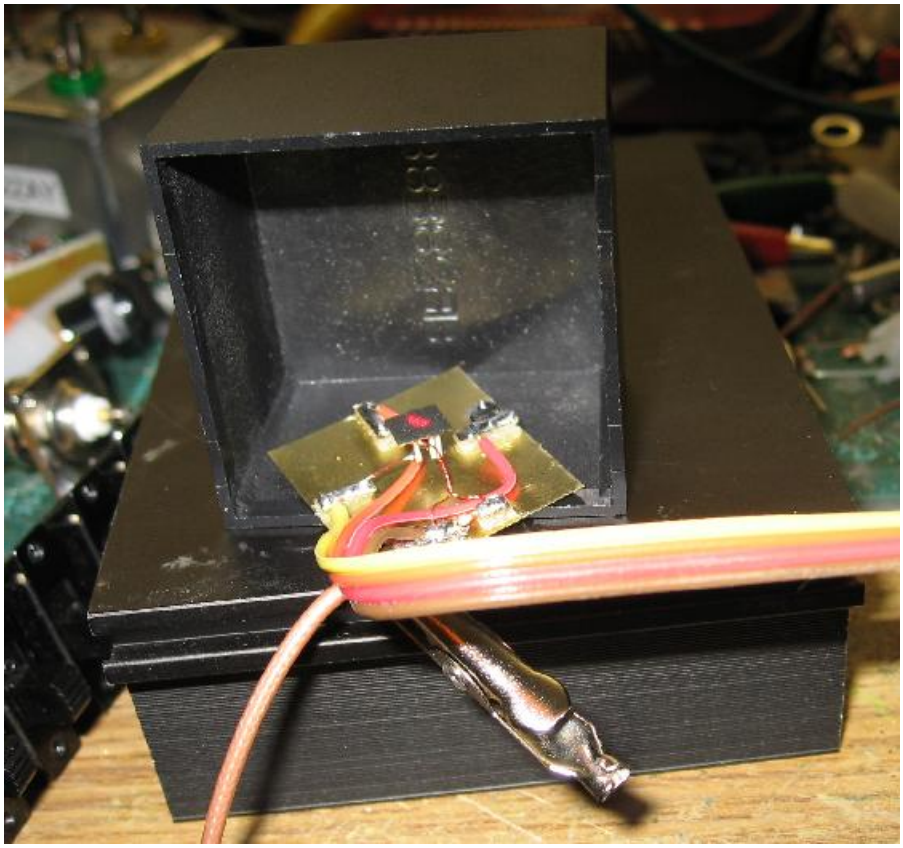

With the improved detector the output of the laser pointer was once again measured. 2.4 mW or 3.8 dBm was measured. The DC input from its battery is 72.8 mW, giving it a rather unspectacular efficiency of 3.3%. This concerned me that the sensor reflectance might still be fairly high, but as the compliance data suggests the output is < 5 mW it seems at least consistent. Diode lasers are usually more efficient than that, but the drive electronics is likely wasting a lot of power. I did not dismantle the laser head to directly measure the power delivered to the diode. I'd need a calibrated optical source to check the sensor at optical frequencies. Lampblack should be fairly flat with respect to frequency, at least compared to other "black" pigments. A green laser pointer measured 3.6 mW (5.6 dBm) and is also labelled as < 5 mW. Its IR local oscillator must be filtered from the output fairly well, I was expecting an unusually large reading from its IR leakage.

At RF the detector performs very well and consistently. I measured my 50 MHz "16 dBm" signal source at 48 mW (16.8 dBm) The previous calibration was by comparison to a DC-calibrated diode detector, so I am amazed by the agreement actually. Similarly I measured attenuation steps of a ~100 mW (20 dBm) signal at 10 MHz the results being quite consistent with my previous attempts to calibrate the poorly constructed attenuator at DC.

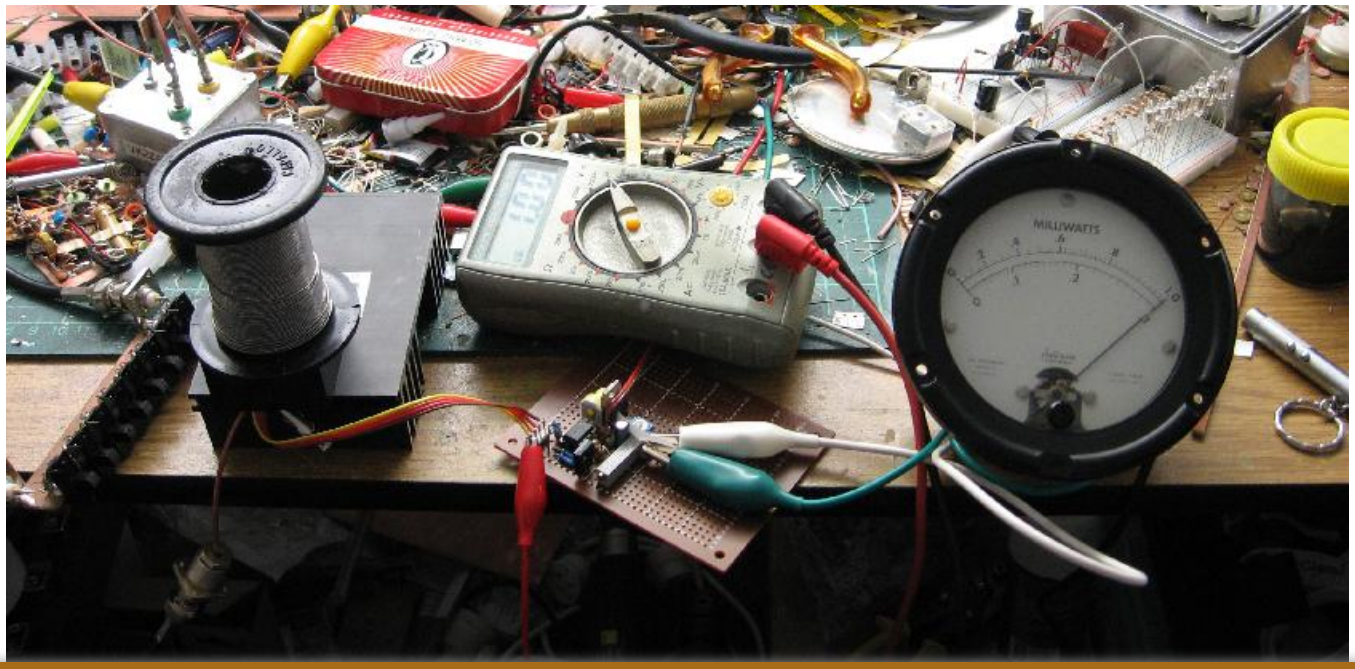

© 2000 - 2009 Alan Yates - All Rights Reserved. XHTML | CSS | CSS toggle

The system is configured to measure 1 mW to 100 mW, a 20 dB dynamic range. The poor dynamic range is typical of thermal sensors. Its lower limits could be improved by active cooling of the sensor head to achieve more sensitivity and more attention to noise filtering. Its upper limit is really only constrained by the temperature limit of the sensor assembly. I used 125 mW rated SMD resistors and set the bias power a little bit above that level (which is safe due to the heatsinking effect of the detector assembly). With larger resistors in the detector and a suitable power Darlington follower the circuit could be used up to kW. Efficiency is of course terrible, the sensor bias power must exceed the power to be measured. Larger RF powers are more easily measured with diode peak-voltage measurements, but as a thermal device is a natural integrator it can measure the true average power of complex waveforms containing multiple frequencies (including 0, DC biases which may or may not be a problem depending on the application). Attenuation from higher power is probably the most practical method. Amplification can be used to measure smaller signals, but the calibration of the amplifier then becomes an issue. MMICs with reasonably flat gain and compression points exceeding the detector range are available. The load offers a good return loss well into VHF and is therefore capable of absolute average power measurements from DC to several hundred MHz.

The general design can implement all kinds of radiant energy sensors. A pyrometer is simply a matter of optics and calibration. The device is already a fairly usable laser power meter.

Notes

- The heater and load resistors must be as ohmic as possible for best accuracy, although thermal variation in their resistance can be calibrated out. Obviously the 50 Ohm dummy load resistor must not vary too much or else the return loss will be compromised. For most commercial metal film devices the thermal coefficients are quite tiny.
- The "approximately" constant current biasing of the diodes is fine in this configuration, as it is thermal power balancing (not temperature sensing where two different currents would ideally be used to extract the absolute temperature). We don't really care too much about the diode coefficients, just that they hold the sensor at a constant temperature difference to the reference. The reference diode compensates the bias power for variations with ambient temperature. At constant ambient temperature a reference diode isn't strictly required. It is only required that the sensor diode temperature is held constant between zero and applied power conditions for the heater power difference to match the applied power.
- Small decoupling capacitors may be needed across the diodes to prevent RF pick-up upsetting things.
- Watch out for photovoltaic problems with glass encapsulated sensor diodes. SMD encapsulation is not susceptible, but glass cased 1N4148s needed painting black. Not all black paints are opaque at the full range of optical sensitivity of Silicon diodes.
- With a single resistor sensor for RF watch out for magnetic saturation in the RFC core which may drop its impedance dramatically shunting RF and degrading the return loss. Fortunately this is likely to happen with the smallest power inputs so mismatch damage to the DUT is unlikely, but the measurements will be compromised and perhaps go unnoticed. The RFC is problematic anyway, it must have a large impedance with respect to the 50 ohm load across the bandwidth of the instrument - a somewhat challenging requirement for a MF-UHF device. Commercial SMD RFCs designed for MMIC biasing may be useful in this service.
- Larger heating resistances allow the circuit to operate down to smaller power levels, but noise will become a problem.
- Filtering most of the resistor noise out of the bandwidth of the loop is probably a good idea if going for more sensitivity.
- The supply must be well regulated, even with the supply rejection of the op-amp the zeroing for the analogue meter will change (minor) but more importantly the slightly different dynamic resistance of the sensor and reference diodes reflects supply noise into the loop. It might be worth building an ultra stabilised supply for the sensor diode biasing, or even perhaps the entire circuit.
- The heater supply follower temperature coefficient has a small effect and can be minimised by thermal bonding to the reference heatsink.
- At constant ambient temperature the amplifier circuit temperature drift is unimportant, simply measure the change in heater power between quiescent and signal applied to find the applied power.
- The unit must come to thermal equilibrium before meaningful measurements can be made. Fortunately for the small sensor head this happens rapidly (a few seconds).
- Initial adjustment of the bias power should be done while monitoring the heater voltage. Set for about 150 mW of quiescent power and allow to stabilise. Do not set such that the op-amp is pegged out against its upper output voltage limit. Similarly in operation if the input power exceeds the bias power the op-amp will bottom out at near zero volts, the follower transistor will obviously be cut-off a bit before that happens.
- 1/f noise is going to be a major problem when trying to increase sensitivity. It might be practical with extremely small detectors to modulate the heater current and extract the AC response from the diode drop voltage variation and amplify it at that more reasonable frequency. This removes the direct-reading nature of the power balance, and linearity would be compromised based on the diode thermal coefficient linearity around the detector temperature, but baseline drift should be fairly small.

4 comments.

Attachments

title	type	size
Basic Bolometer Scheme Diagram Source	application/postscript	10.429 kbytes
Thermal Balance Bolometer Circuit Source	application/postscript	15.383 kbytes
Single Load Resistor Head Diagram Source	application/postscript	11.452 kbytes

Updates

2009-03-22: Bolometer Head Completed
I finally assemble the bolometer sensor head into something resembling a completed unit.
2009-03-18: Bolometer Baseline Noise Improvement
Gradual improvement of the bolometer baseline noise and the RS-232 sampler data capture system over several days.
2009-03-01: Digital Display for the Bolometer
A multiplexed 7-segment digital display for the bolometer.

© 2000 - 2009 Alan Yates - All Rights Reserved.

RF Sniffer

2008-11-17

Yet another circuit based on the biased 1N5711 detector topology utilised in the wavemeter and passive VHF receiver projects. The only two differences in this circuit are the lack of a capacitor to resonate the pickup coil and I didn't add the pot to set the quiescent current, using just the 1M2 resistor to the diodes produced a reading just beyond "1" on the scale with the particular MPSA18 I used. Unplugging the coil is the off-switch, but the current consumption is tiny so I usually leave it plugged in.

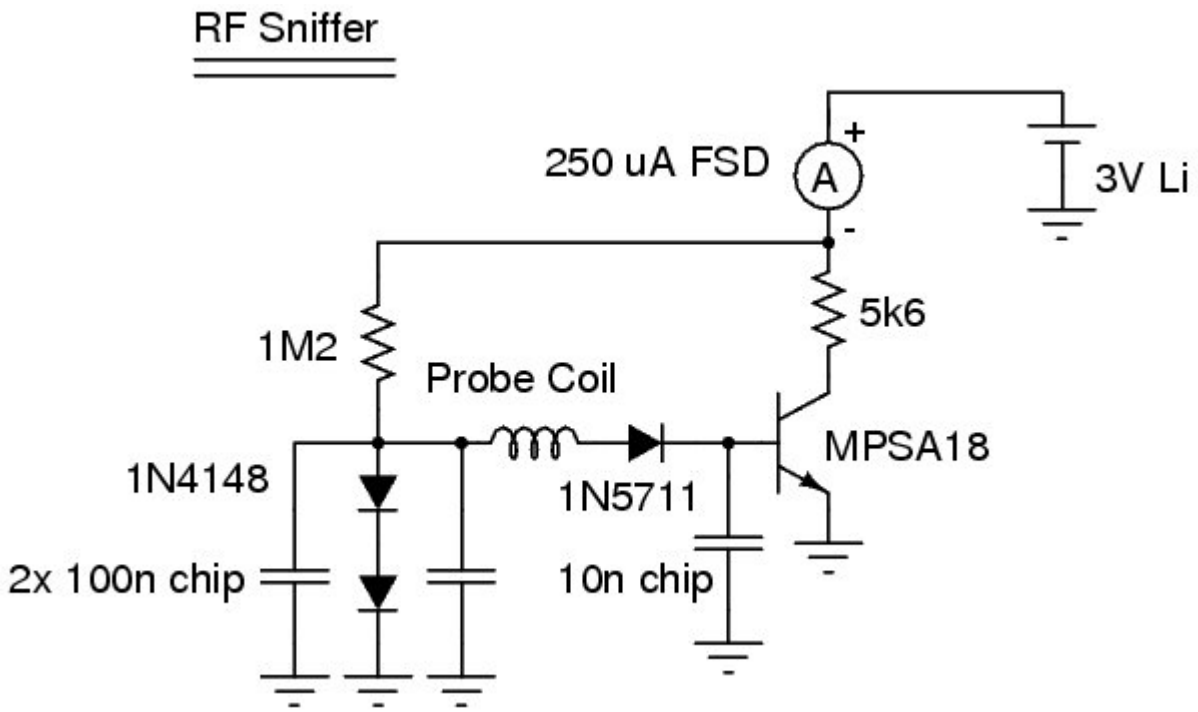

The pickup coil is slightly exotic, having a jumble-wound LF/MF choke in series with a HF/VHF coil with a varying pitch along its length. The general idea was to try and produce an probe with several resonances in key bands to make the unit more generally usable with the single probe coil. The turns are held in place by dipping the coil in molten wax. Other coils can be attached, it uses an RCA socket like the HF wavemeter and the two units can share coils. I have several for specific purposes. Sensitivity peaks at the self-resonance of the coil and the stray capacitance of the circuit. The hybrid choke probe works fairly well from LF to SHF.

© 2000 - 2009 Alan Yates - All Rights Reserved.

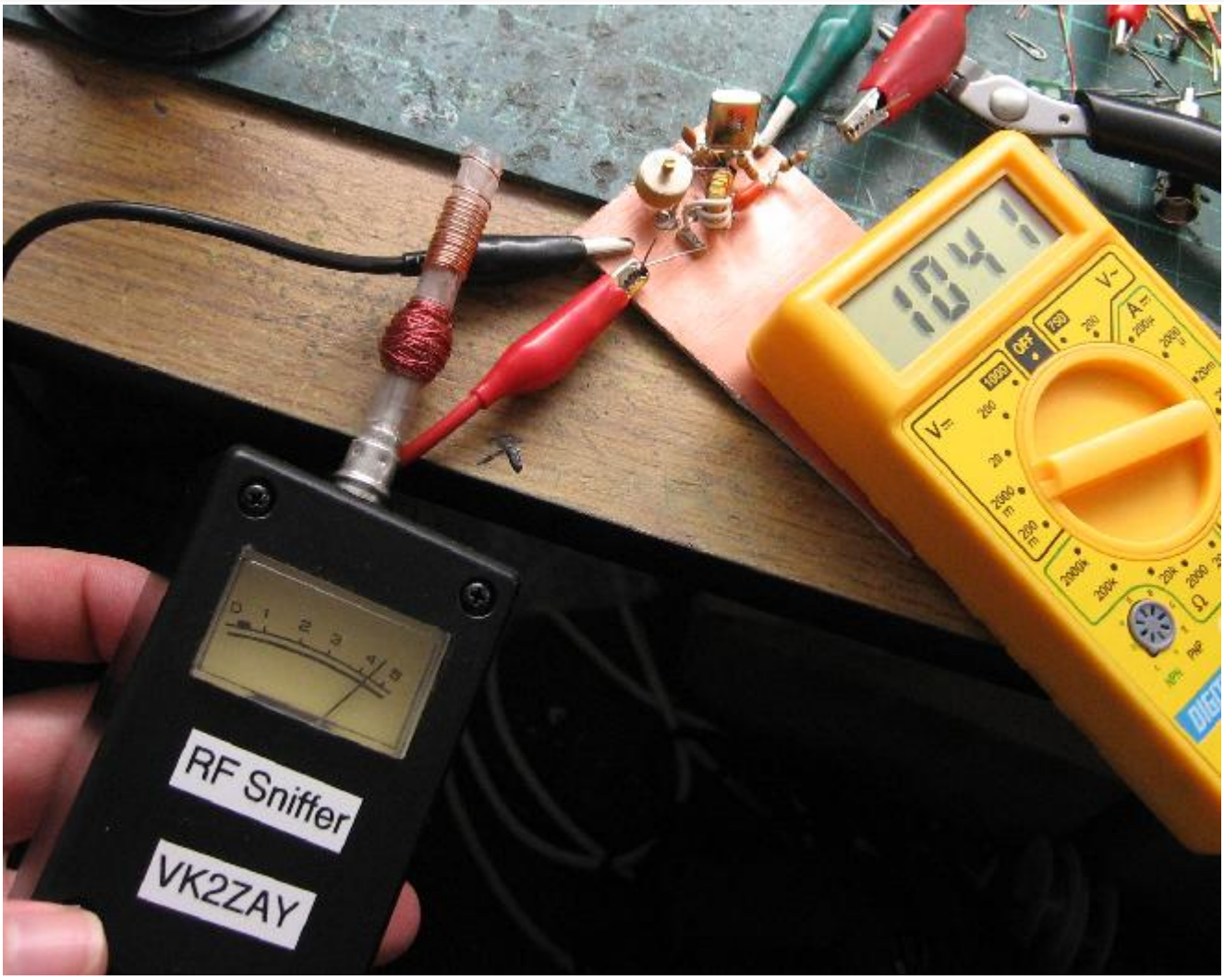

The microwave oven and WiFi base station are easily detected, showing the units SHF response. My various HAM transmitters happily slam the needle across HF to VHF and UHF. It picks up SAW-locked UHF keyfob transmitters, and even stray MF radiation from the LED multiplexing on the air conditioner control panel. LF radiation from 256 kHz contact-less proximity card readers is detectable quite a distance with the hybrid coil.

It is often too sensitive, and a way to vary the sensitivity would be useful. A 5-10k pot in the right place would do the trick if you are building your own. This would increase its usability as a stray-current tracking tool in antenna work. A probe comprising a split ferrite toroid (clamp-on current probe) would also be quite useful but I haven't had the need to build one yet.

© 2000 - 2009 Alan Yates - All Rights Reserved. XHTML | CSS | CSS toggle

Probably the most common use is just to see if an oscillator is making RF. For this purpose it was originally constructed: While experimenting with UHF oscillators around 1.5 GHz, the sniffer was used check the oscillator output, and to detect nulls while playing with Lecher lines.

27 comments.

Attachments

title	type	size
Sniffer Circuit Source	application/postscript	12.490 kbytes

© 2000 - 2009 Alan Yates - All Rights Reserved. XHTML | CSS | CSS toggle

RF Sweep Generator

2006-11-04

This simple tool has vastly expanded the kinds of projects I can undertake. My only recommendation is that you build it, or something similar. Without it making crystal ladder filters is next to impossible, and it finds other uses, like sweeping IF strips, filters, even antennas with the help of a simple resistive bridge.

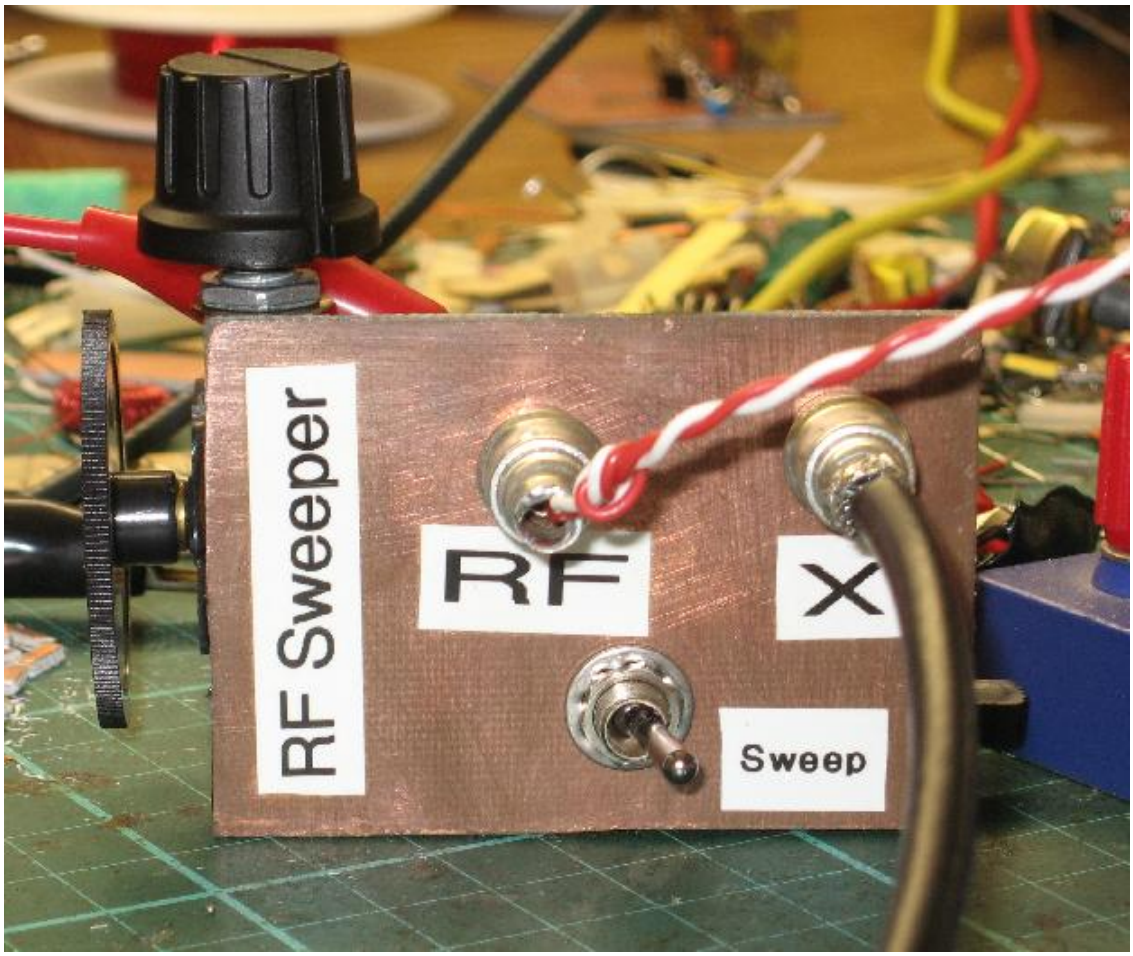

For a long time I've been wanting to build an RF sweeper, the VK5BR one in particular still holds my interest. It is quite elegant with the calibrated width and external generator mixing. However, JF1OZL's unit is far simpler to build, it took me only 2 hours to hack together my copy. Despite a few drawbacks which I'll discuss shortly, it is one of my most useful pieces of test equipment.

The core of the circuit is a VCO based around your basic JFET Hartley oscillator. The oscillator is buffered once with another JFET and the signal coupled out via a bifilar transformer. The VCO functionality is implemented with a varicap diode, the timebase being a simple 555 timer IC.

© 2000 - 2009 Alan Yates - All Rights Reserved.

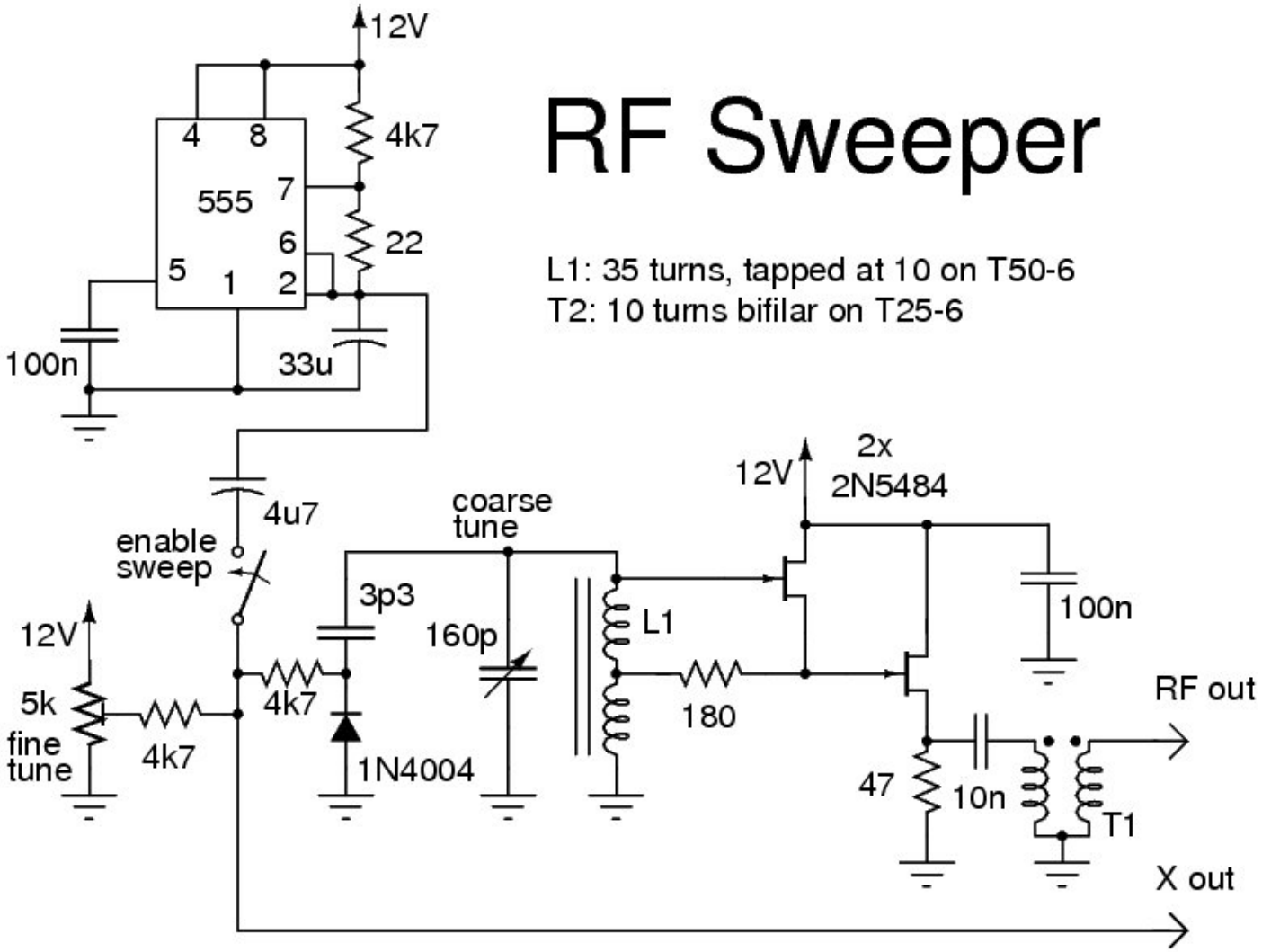

I used a 1N4004 as my "varicap" diode, and 2N5484 FETs. A plastic AM-radio tuning gang for the frequency adjustment. JF1OZL uses a pot for a fine frequency control, but only when the signal is unswept, I decided to arrange mine to bias the varicap at all times, and apply the timebase signal through a capacitor so the frequency swings either side of that set by the combination of the tuning cap and the bias on the varicap. Obviously this has linearity issues and width of sweep limitations, but the arrangement works quite well in practice.

My unit tunes 4.5 - 13.7 MHz with the values indicated.

© 2000 - 2009 Alan Yates - All Rights Reserved. XHTML | CSS | CSS toggle

If you need variable sweep width, or a wider sweep in general, you can replace the 3p3 coupling capacitor with a trimmer. If you require a more narrow sweep than can be provided by the minimum capacitance of your trimmer, pass the timebase signal through a 5k pot to reduce its amplitude before it is applied to the varicap (you may also wish to increase the 3p3 coupling cap and control the width purely by the amplitude of the timebase signal - you may also want to limit the range of the DC fine control signal to keep the varicap biased within a fairly linear region). Unfortunately this can not be directly calibrated in width, as the effectiveness of the capacitance varies with the main band-set capacitance setting. You could use a fixed frequency for the generator and add a mixer at the output to implement something quite similar to the VK5BR sweeper, which would then allow direct calibration of the sweep width.

I did not implement the additional output for a frequency counter. Instead I generally tap a 2-pole 12 dB pad at the 6 dB point and feed the counter from that. If I rebuild the unit, I will probably add an additional buffered output for the counter.

Here is the trace of a 11.98 MHz crystal filter I was tuning using the unit. The -20 dB width is about 4.5 kHz. You can determine this by turning off the sweep and using the fine tune control to rock the oscillator across the bandpass manually. Combined with a counter (and it is handy to be listening to the signal on a HF receiver) you can note the response and measure the circuit bandwidth.

© 2000 - 2009 Alan Yates - All Rights Reserved. XHTML | CSS | CSS toggle

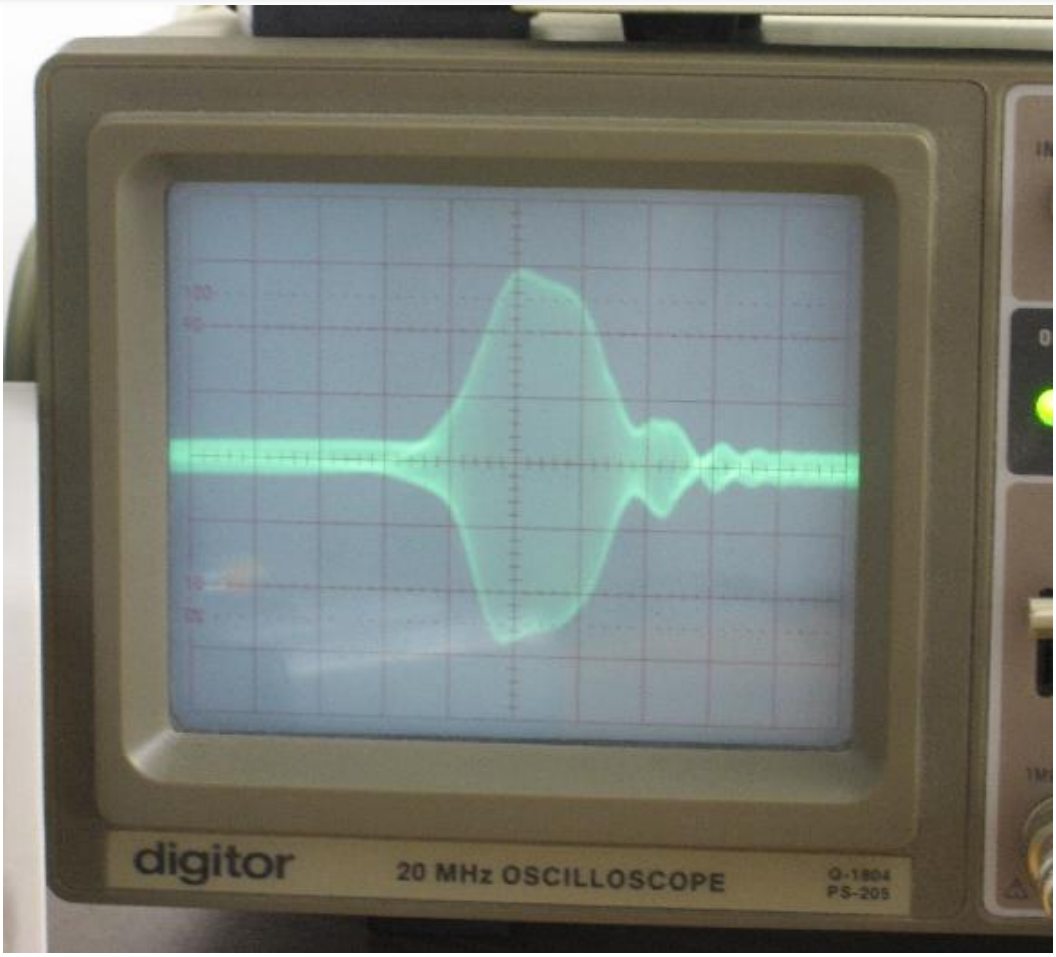

Limitations

Retrace can be a problem, smudging the trace on the CRO. I think a blanking circuit would solve this, and could be easily implemented by taking the output from pin 3 of the 555 and using it to switch the RF output or the detected signal fed back into the Y-input of the CRO.

The oscillator buffering is insufficient. The load can pull the oscillator, at times quite badly. For example, crystal filters have been known to pull the oscillator so much it simply refuses to tune through the series resonance of the filter. The oscillator will jump more than 1 kHz over the "dead-short" region of the filter, going in either direction no matter how carefully you tune it. This is apparent even with a 12 dB pad between the generator and the filter. Fortunately this is fairly simple to fix, and it my silly choice of a Tx-6 core for the output transformer is largely responsible. This should be a FTx-43 ferrite core, not a powdered iron one. But the buffering should be improved, probably by adding another stage, BJT based I think, and an internal pad.

The trace isn't linear. The timebase wave-shape is 1st order exponential because the simple 555 timer circuit charges the capacitor via a constant voltage source. Implementing a better timebase with constant current charging (say an op-amp triangle generator or FET current source relaxation oscillator). This would improve the display by making a linear scan. However, this is only half the problem, the "varicap" isn't remotely linear, especially for wide scans. This can be improved by careful biasing after characterising the diode in question, and using relatively small voltage deviations to approximate linear V/C characteristics. Obviously the rest of the circuit would need to be modified to support this. I just put up with the non-linearity, as shape is generally what I am looking at, not absolute width.

11 comments.

Attachments

title	type	size
Circuit Diagram Source	application/postscript	17.404 kbytes

© 2000 - 2009 Alan Yates - All Rights Reserved. XHTML | CSS | CSS toggle

Rope Light Controller Failure

2010-01-04

The commercial Rope Light used in the Christmas Star project stopped working suddenly. The usual checks failed to revive it or indicate a reason for the failure so the sealed controller box was opened. Opening it was quite challenging, eventually I simply smashed the heck out of the box glue joints with a big hammer. Unfortunately this rather brute-force approach applied forces and accelerations to the internal components that were beyond their limits. The phenolic PCB was smashed and the heavier components torn off the board.

Even before completely gaining access it was immediately obvious by the smell that something rather catastrophic had occurred. A small amount of black fluid leaked out as well, indicating the likely cause for the failure was rain water penetrating the "outdoor" control unit. Upon inspection of the PCB there was extensive charring around the mains ingress point and foul-smelling, greasy pyrolysis products coated everything inside the box. Cleaning with water didn't shift the blackening, but 2-propanol made short work of it. The full horror of the failure was then evident; an arcing fault had occurred directly across the mains carbonising the phenolic board and spraying copper everywhere. The fault occurred before the internal fuse and did not open it, rather it appears to have burnt itself open, as the 30 Amp circuit breaker to the mains circuit in question did not open. It was probably only its containment in the sealed unit that prevented a much more violent event and resulting fire.

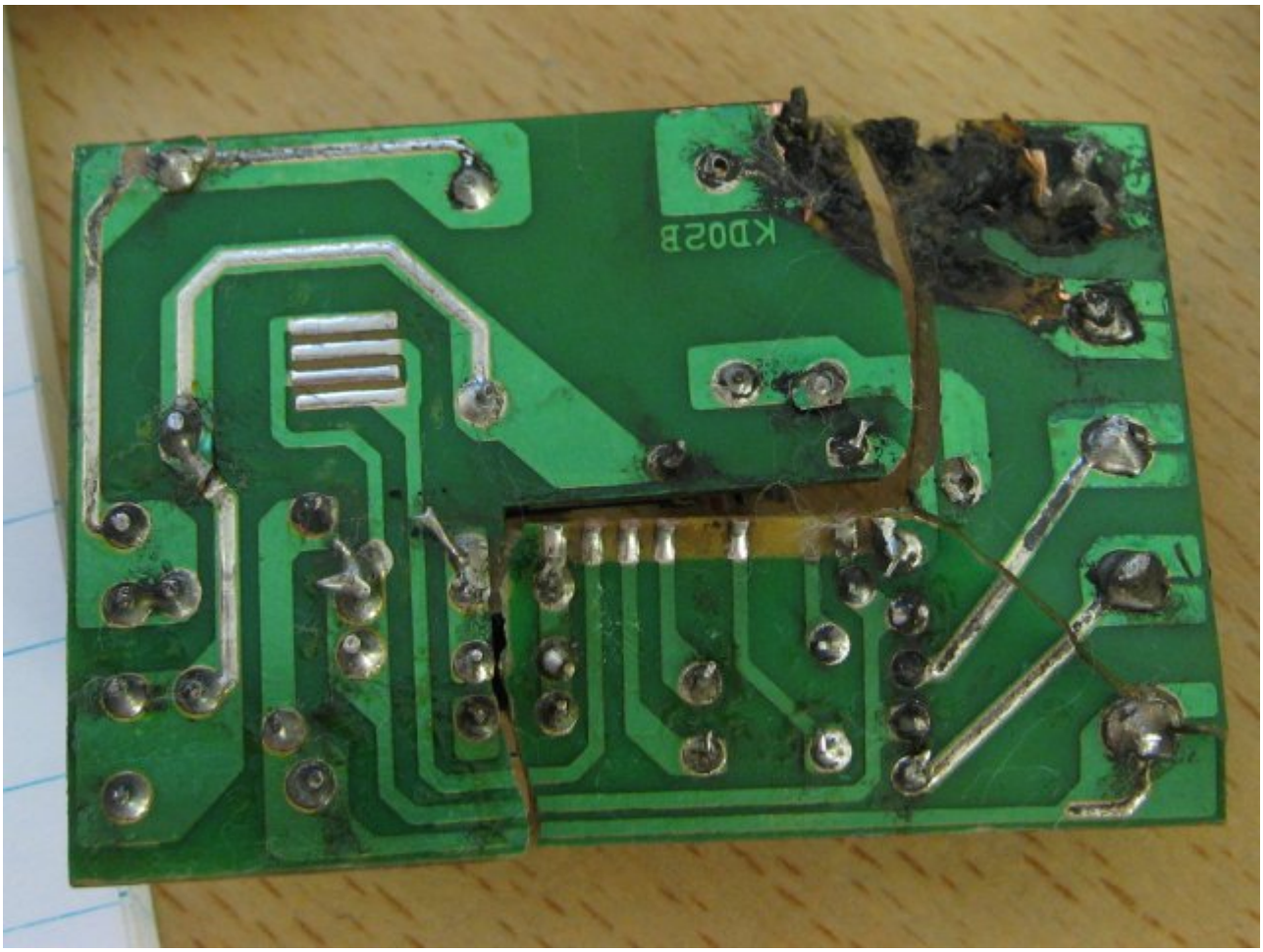

Despite my rather kinetic opening technique it was relatively easy to trace out the circuit and study it. The unit is a phase-angle controller, using SCRs to switch the bridge-rectified mains into the two circuits of the rope light. The controller logic is a small 10-pin SIP daughterboard with a die packaged directly to it covered in the familiar black encapsulation. The controller runs off a 5 volt rail derived directly from the rectified mains via a high-wattage dropper resistor, a 5v1 zener diode and a 220uF electrolytic capacitor. There is also a leading resistor

© 2000 - 2009 Alan Yates - All Rights Reserved. XHTML | CSS | CSS toggle

are driven directly from pins on the controller card, suggesting it has internal current limiting. There is a fairly substantial EMC filter on the mains side, with a common-mode choke and filter capacitors across the mains. There is also a MOV suppressor. The active feeds the controller a phase reference through a 200 K resistor and a 100 pF capacitor to LPF it.

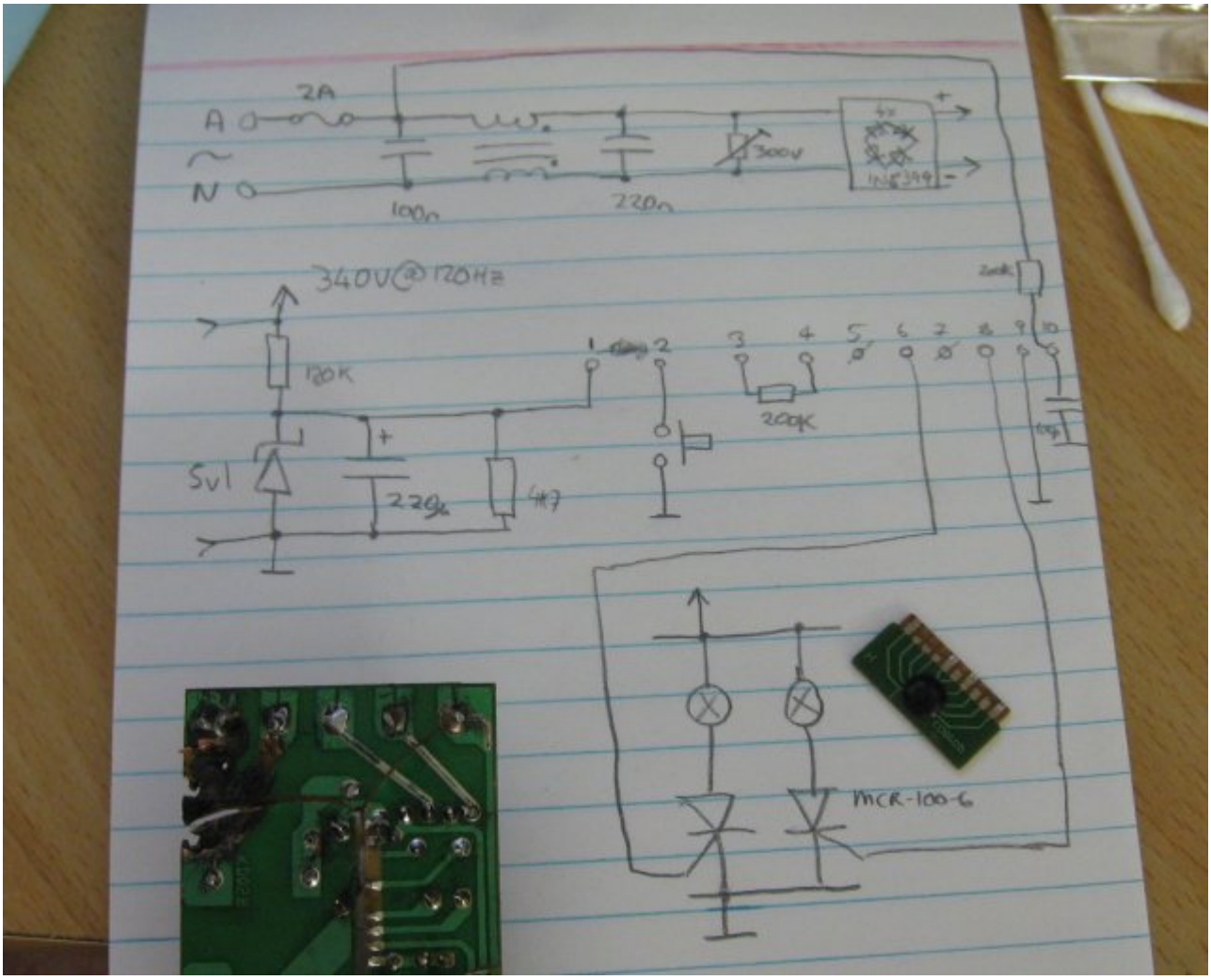

The controller daughter card had some minor damage to its track-work thanks to my aggressive access method, but being a metric pitch required a little effort to test. I wired it up to a "standard" 0.1-inch header with the wiring pencil and plugged it into a solderless breadboard.

© 2000 - 2009 Alan Yates - All Rights Reserved. XHTML | CSS | CSS toggle

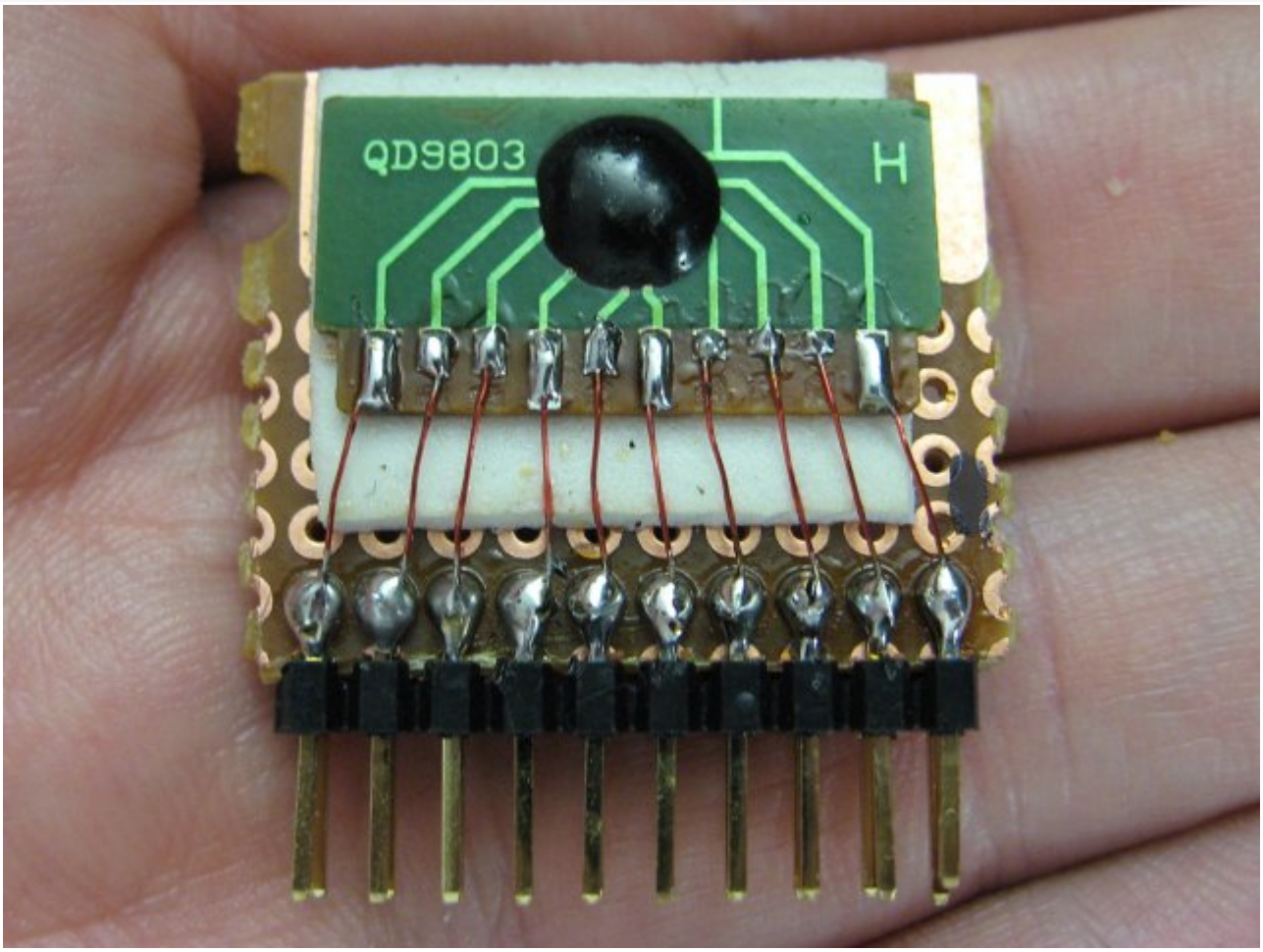

Once supplied with 5 volts, its timing resistor, and a zero-crossing reference I quickly determined it was a 4-channel unit (with the rope light only utilising channels 0 and 2) and was undamaged by the fault. The clock is about 115 kHz and varies quite dramatically with the timing resistor. It appears to be matched to the mains frequency, the zero-crossings of the reference synchronising its internal state so the control signals are phase-synchronous to the mains waveform. With smaller timing resistors it will happily generate several gating cycles per mains half-cycle, but it realigns upon the next zero-crossing. Larger timing resistor values compress the available phase-control range. The standard value 220 K is a little too large for 50 Hz, the supplied value in the original circuit (200 K) is also slightly too large, but wastes less of the waveform tail. The 100 Hz frequency of the full-wave rectified mains makes the fading quite smooth and flicker free, probably even with LEDs. It would not surprise me if this particular device is used with the typical 24 VAC LED lights as well. The gate drive signals are high for the entire conduction time, so they could drive non-thyristor switches too. There are a series of transients just after the leading edge of the drive lines going high, their purpose, if any is unknown? They exist into resistive loads but appear inversely proportional to current delivered (from a slightly higher impedance than the main logic level itself).

© 2000 - 2009 Alan Yates - All Rights Reserved. XHTML | CSS | CSS toggle

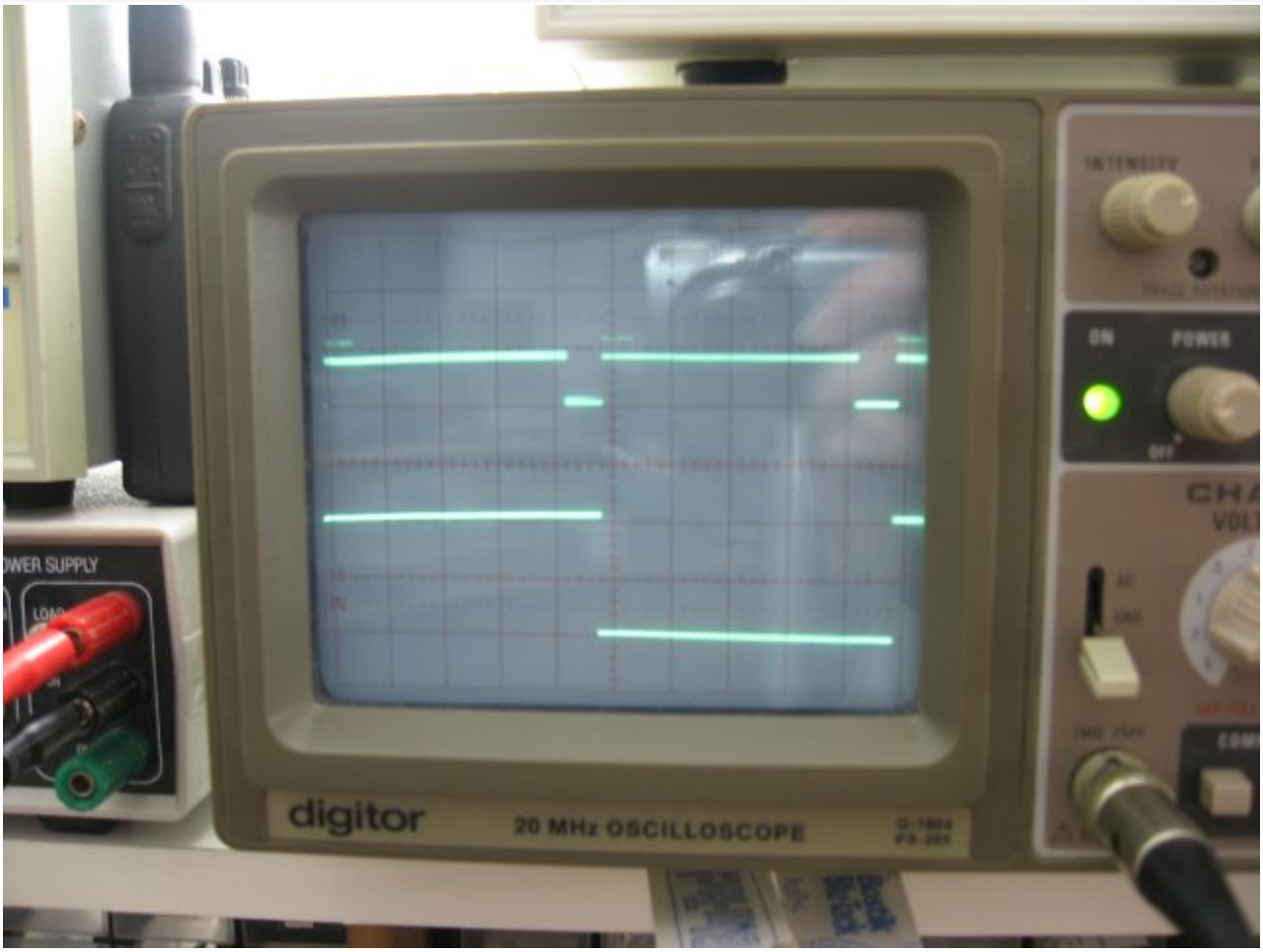

The drive outputs source enough current to directly drive LEDs, so I plugged some in. Not sure how much the outputs can sink, I didn't want to push my luck with what was clearly a working unit.

© 2000 - 2009 Alan Yates - All Rights Reserved. XHTML | CSS | CSS toggle

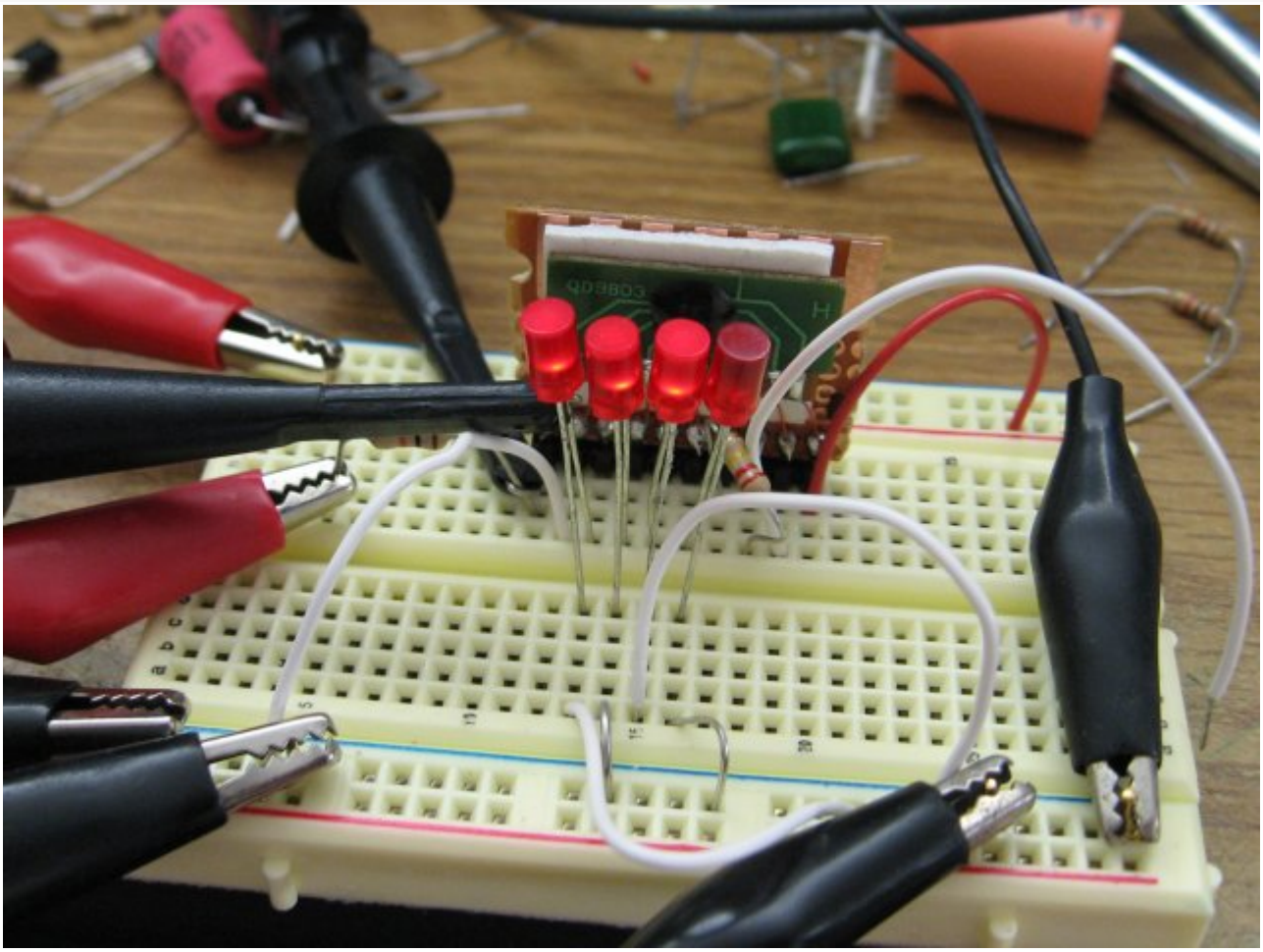

Now the choice becomes, do I rebuild the controller, returning the rope light star back to service? Or do I simply hard-wire the rope light straight to the mains (through a fuse) and have a static star? Another alternative is to chuck out the rope light and just buy a new one in December... Surely the time saved would be far more than the $22 price tag of the rope light - but that is never why I build things for myself anyway. I think I've had enough of blinken light projects for a little while, time to build some RF stuff again! Might get around to rebuilding it eventually though.

6 comments.

Parent article: Rope Light Christmas Star.

© 2000 - 2009 Alan Yates - All Rights Reserved. XHTML | CSS | CSS toggle

RS-232 ADC Sampling Interface

2009-02-27

Sometimes you just want to sample a DC voltage periodically and log the results on your PC. The Atmel ATtiny13 has a four-channel multiplexed 10-bit ADC capable of sampling at up to about 15 kHz. Its small package, low cost, and modest program memory seem to make it ideal for a quick 0-5 Volt sampler feeding a PC. However, the ATtiny13 doesn't have a USART, so getting the data out of the device requires a little bit more effort than with other AVRs.

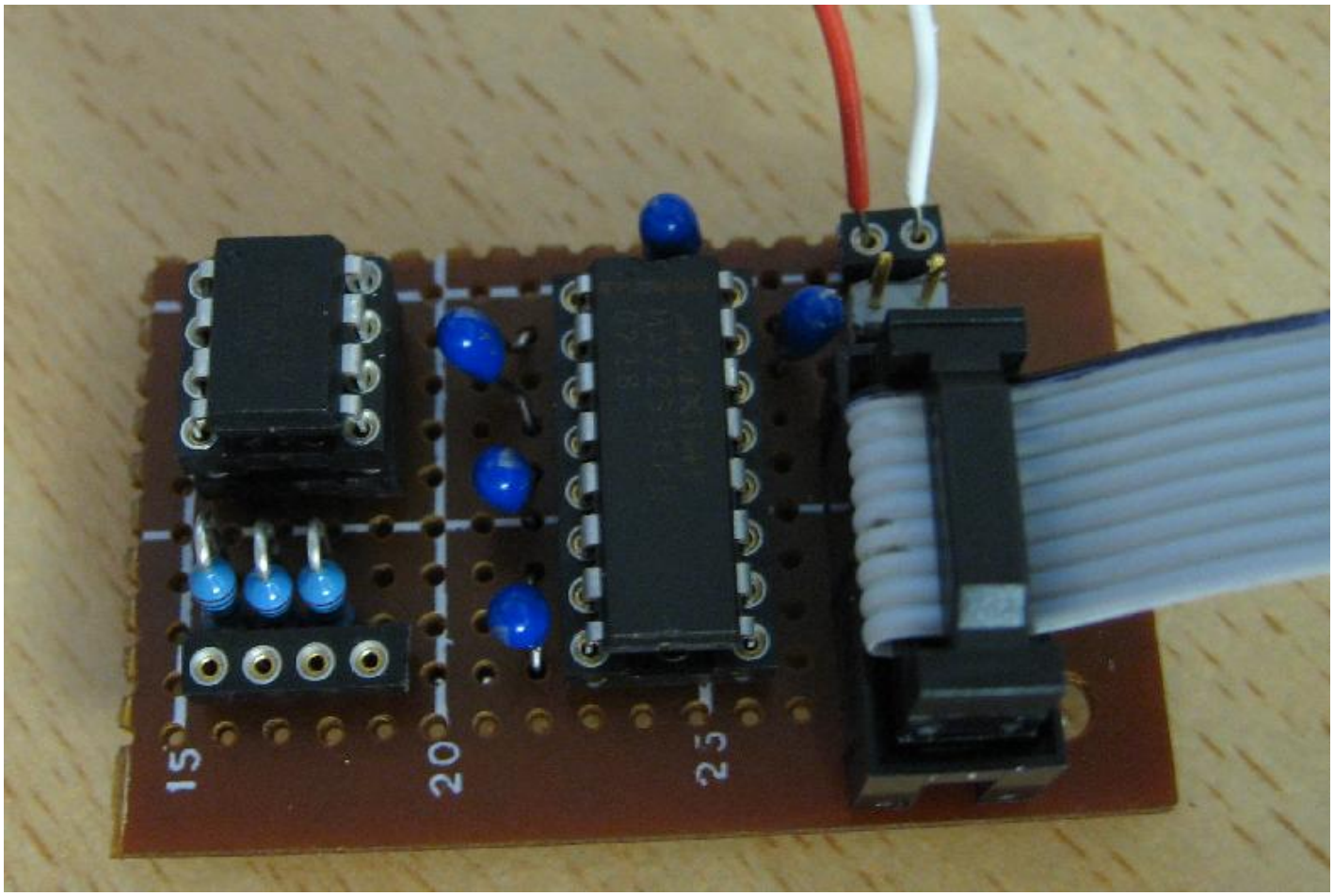

Software

To get around this lack of dedicated serial IO hardware I simply implemented serial TX in software. The tiny13 counter is set-up to interrupt the processor at the baud rate, a simple state machine bashes out the serial signal on a digital IO pin when there is data to send. The CPU spends most of its time asleep either in idle or ADC noise reduction mode.

Unfortunately the lack of an additional hardware counter means timing the ADC sampling is not very easy. As the application is simply "sample at a reasonable rate" (quazi-DC logging use) rather than a precise rate this is of no consequence, but perhaps with more work on the software it would be possible to specify the sample rate. The sample rate is deterministic, but as I am using the internal 9.6 MHz oscillator the rate isn't completely stable (an external clock could be used if so desired, at the cost of an input channel). There is also a phase-shift between the channel samples: ADC conversions are executed in series (because there is only one ADC in the chip). After all conversions are complete the results are converted into decimal text and sent down the serial line. Once the data has been sent sampling begins again. The full 10 bits of ADC data are delivered, the software in the PC can truncate the data if that level of resolution is not required. The text format is simply a line of four decimal numbers, the first is a monotonically increasing number (the number of ADC conversions executed since reset), the following three numbers are the ADC data 0-1023, finally a CR LF pair terminates the line (canonical text):

```
32745 445 440 413
32748 448 442 422
32751 453 446 434
32754 460 456 448
```

© 2000 - 2009 Alan Yates - All Rights Reserved.

```
32757 465 461 458
32760 468 465 464
32763 470 470 467
```

The fourth ADC multiplexer channel in the tiny13 requires the reset line to be dedicated as an IO pin. Setting this fuse breaks simple serial programming, so I chose to use only three of the available four channels. You can alter the code if you don't mind HV programming, or if you want to sample less channels (faster). The baud rate could be increased, but eventually the jitter of the internal oscillator will start causing problems. 9600 is fast-enough for my current uses.

Hardware

For RS-232 signal level conversion I use the trusty old MAX232 (as I happened to have some in the junkbox). More recent chips require less external capacitors, or even none at all. Analogue input protection is quite primitive, just a 1k series resistor. It is expected the sensor amplifier and conditioning circuit will guarantee 0-5 volts. As this is just for my experimentation, I can live with that.

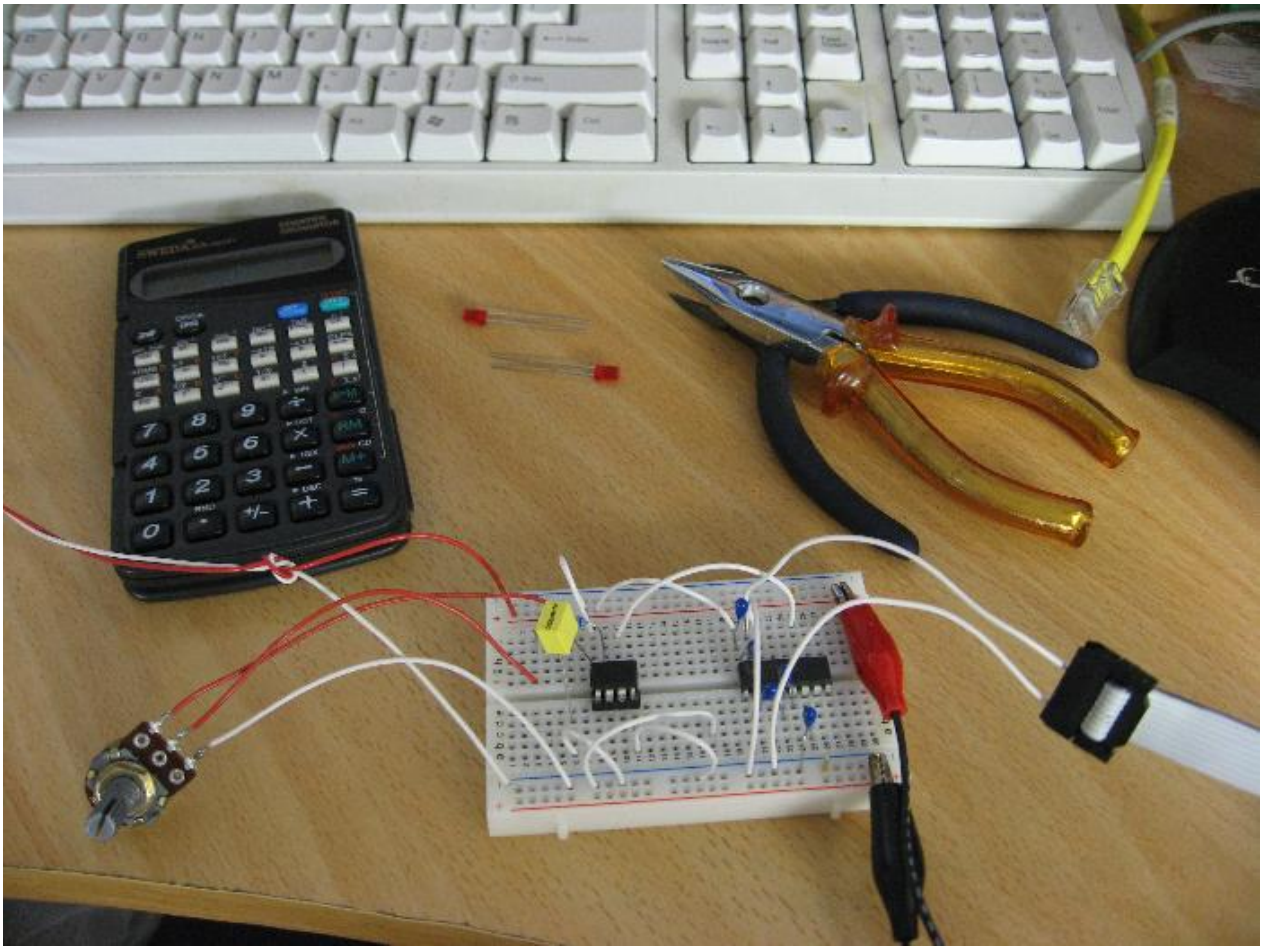

I love my wiring pencil, but I think I've said that before!

© 2000 - 2009 Alan Yates - All Rights Reserved. XHTML | CSS | CSS toggle

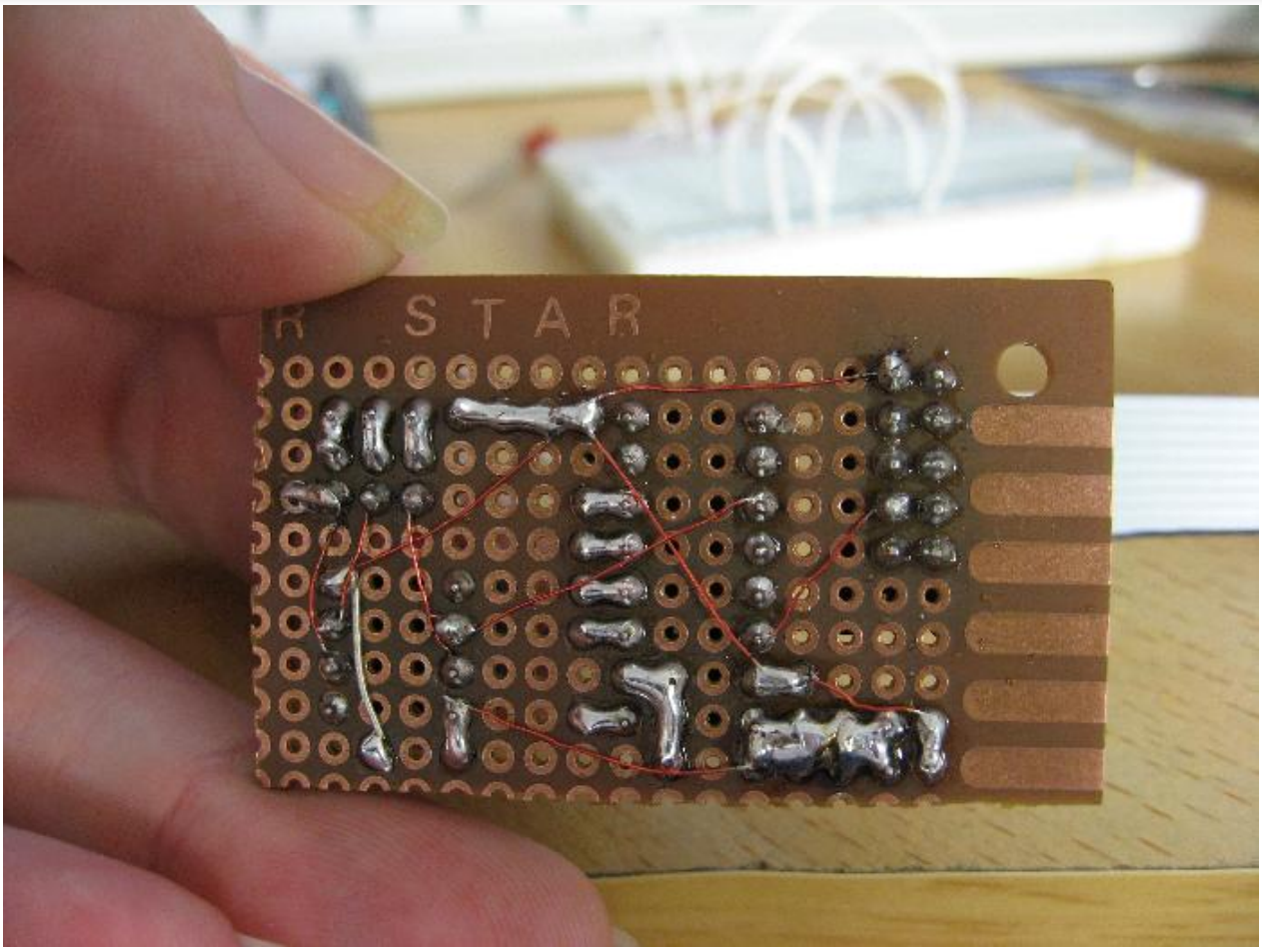

Notes

I had a lot of trouble with the software TX. My code was fine, but after much frustration I found the sink-driver of the PB0 pin in the particular tiny13 I was using was dead! When I added a LED to see what was going on it incidentally implemented a pull-down and things starting working fine. Switching over to PB1 cured the problems, but ideally I should replace the chip with one I haven't accidentally cooked in previous experiments.

There might be enough space left to implement software RX and have commanded sampling, rate and channel setting, etc. A larger device could easily do this, the current code is about 800 bytes. The full state machine for a software USART might not leave a lot remaining for the application in the tiny13; parsing textual commands is probably out.

Linux makes it really easy to use the device. After issuing stty against the appropriate /dev/ttySx device to configure the port you can simply cat data from the device node into a file. I doubt I'll write a client-side utility, as this interface is fine for my purposes and can be scripted up as needed. The data format interfaces well with GNUplot (somewhat by design), and is trivial to manipulate with awk or other languages. I used canonical text (CRLF) for "Microsoft compatibility" but the CR is easily removed with the appropriate stty option (igncr) while using from Linux.

2 comments.

Attachments

title	type	size
The ATtiny13 C-code For RS-232 Linked ADC Read-out	application/gzip	5.326 kbytes

© 2000 - 2009 Alan Yates - All Rights Reserved.

Serial EEPROM Programmer

2003-04-18

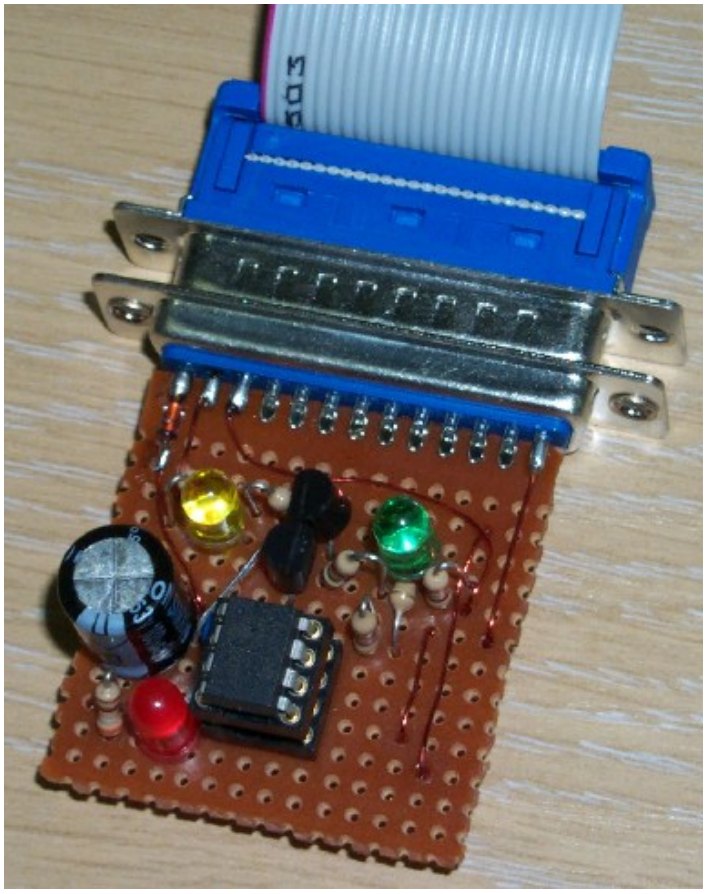

Here is a simple serial (I2C) EEPROM programmer for the PC parallel port. I built it to program 24XX devices, but it can, in principle at least, talk to any I2C device with a suitable adapter or fly-lead, it implements a complete I2C bus interface.

The original prototype and control software was developed against a 24LC16B device, but has since been extended and tested against the 24LCX range with X in { 08, 16, 21, 32, 64, 128, 256 }. It should work fine with other 24X I2C EEPROM devices, perhaps with slight changes to the addressing logic and sizing for larger devices like the 24LC512 (and 24LC1024 when it becomes available). Adding an extra device is generally just a matter of adding an extra struct near the top of 24xx.c and recompiling.

One exception might be the power supply. The 24LC16B and other similar chips pull just a little more than 3 mA when writing to power the internal programming voltage generator (less when reading, and virtually nothing in standby). The programmer is port powered but the parallel port outputs are specified to source only 3.5 mA. That is cutting it a bit fine, but in practice it has worked perfectly on several different PC parallel ports.

Power is sourced from the C0 bit, on some weird parallel ports this may be open collector rather than being capable of sourcing current. If yours is one of them, or you suffer other power problems, you can try pulling power from D2-D7 and C2-C3 with extra diodes, they are all pulled up by the software. If all else fails, supply an external 5 V supply. The diodes will protect the port if external power is supplied, especially if you intend to use the programmer as a generic I2C interface.

Note the switch/jumper in the diagram that allows selection of the state of the /WP signal on most devices. This was added after support for the 24LC21A was requested by Miika Ahdesmäki. The 24LC21A's /VCLK signal has the opposite sense to the usual /WP, as do several others designed for plug-n-play data service. The driver was also modified to pre-clock it as per the requirements in its datasheet to get it into the bi-directional operation mode.

A bi-directional parallel port is not required as the SDA and SCL lines are read through the Error and Paper-Out status bits (S3 and S4). The C1 bit drives a power indicating red LED (or a "don't remove chip" warning if you prefer). The D0 and D1 lines drive the pull-down of SDA and SCL, they have a yellow and green LED to display their states. (The state of the pull-down drive, not SDA and SCL themselves! You may wish to add two more transistors to drive the LEDs from the bus state instead, making them more useful.)

© 2000 - 2009 Alan Yates - All Rights Reserved.

Parallel Port 8-pin i2c EEPROM Programmer

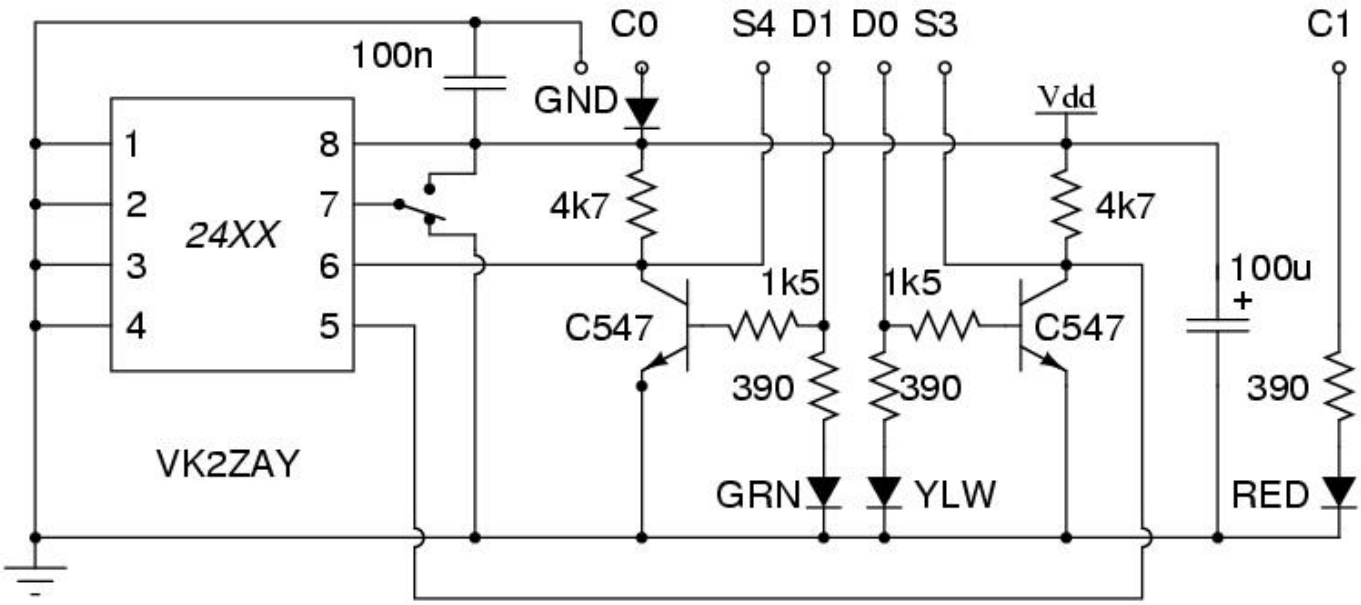

Signal	D25 Pin
D0	2
D1	3
S3	15
S4	13
C0	1
C1	14
GND	18-25

Supply is sourced from the Strobe (C0) pin. This worked fine for the low power EEPROMs I tested the device with. Add diodes from spare pins, or an external supply, if the current sourced from the port is insufficient.

Measure the rail voltage during writes (when the chip will be pulling more than 3 mA. It should not be below 4.8 V if the port is supplying sufficient current.

You can download my Linux user space programmer drivers. They call ioperm() to establish access to the I/O space for the parallel port so they must be run as root, or setuid root. Currently the I/O base is hardcoded for the 1st parallel port at 0x378. The code is interactive, entering '?' at the prompt will give you a list of options:

```
Commands:
        q                Quit
        ?                This usage message
        d                Dump EEPROM, as hex
        D <start> <len>  Dump EEPROM, as hex
        f <value>        Erase EEPROM, filling with value
        r <filename>     Dump EEPROM into raw binary file
        w <filename>     Program EEPROM from raw binary file
        t <type>         Set EEPROM device type (as 24C<type>)
        p <delay>        Set delay between I2C transitions (for slower devices)
```

It is fairly primitive right now, it only supports raw binary input and output files, but I intend to add support all the common hex-file formats. It already has the option to dump the data pretty-printed in hex for manual inspection, and can fill the device with a specified byte to clear it or test it for bit failures near its end of life.

It would not be very challenging to make this code portable to Win32 console, just replace the inb/outb() and ioperm() calls. All else should port directly. This is true for all remotely POSIX systems, as long as they have some facility to allow user space programs to invoke I/O instructions.

10 comments.

© 2000 - 2009 Alan Yates - All Rights Reserved. XHTML | CSS | CSS toggle

Simple AF Amplifier

2001-09-24

I use this device as a desktop AF amp. Just the ticket for listening to signals from new equipment as it is built, or for removing the headphone leash from some of the lower power equipment I've built.

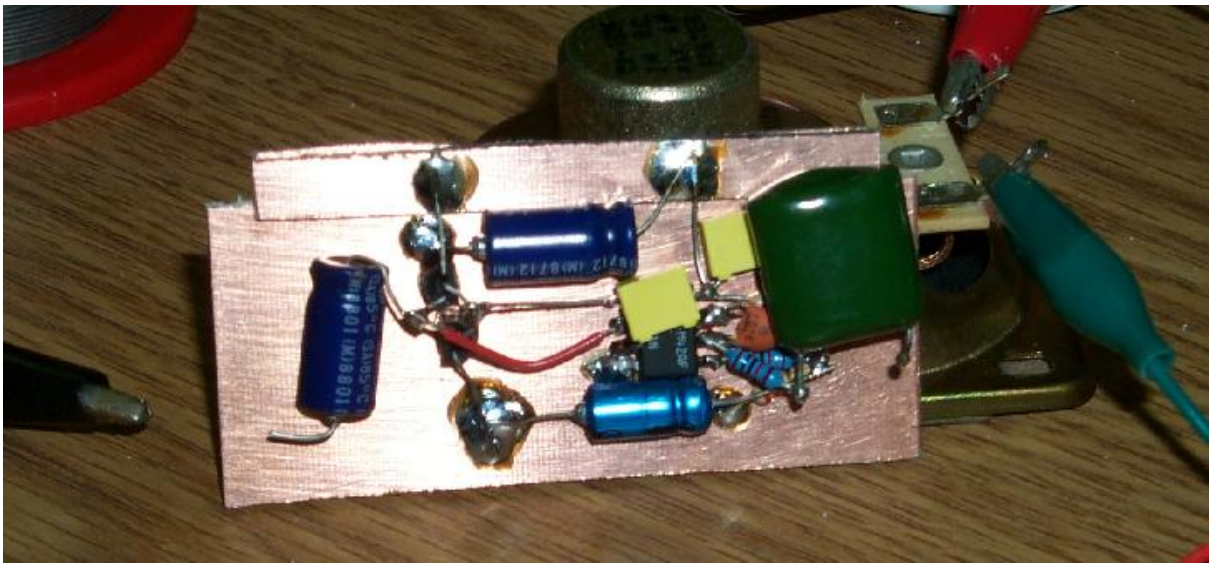

The output power is limited by the final devices, just two garden variety BC5X7 units in push-pull. The LF353 was chosen because it was the first I grabbed, and it wasn't a bad choice, I like JFET opamps much more than bipolar ones. The first op-amp is used as a unity gain current amplifier, the 100% voltage feedback pretty much eliminates crossover distortion. The remaining op-amp is used as a pre-amplifier and low pass filter, the roll-off is much higher than the response of the speaker, which was found in an old TV dumped outside my office.

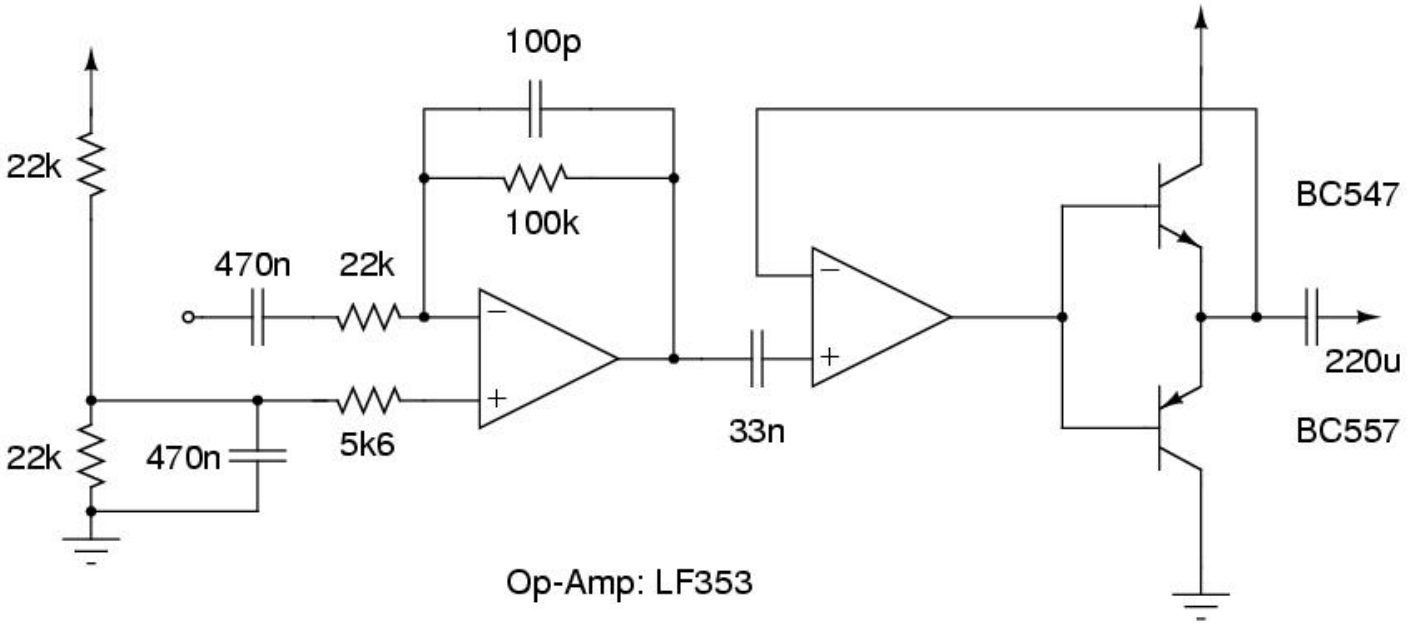

These values in the diagram are from memory, and squinting at the images. They may be a bit off. Nothing it too critical, just be careful of too much gain in the first op-amp, it will oscillate. I haven't shown the decoupling caps in the diagram either, the working model has a 33n from pin 8 to the ground plane, and a 220u across the rails. If you use a bipolar op-amp instead of the LF353 the 33n coupling cap will need to be increased (a lot). Alternatively use DC coupling as I have in a few other implementations.

The casing is a large-size project box, the 'old style' ones from Jaycar before their great new line of CAD boxes with the drilling helpers on the inside of the lid. (the new boxes are really, really good, beats DSEs hands down) This older box however has a weird surface layer, it kind of peeled when I drilled it for the speaker grill, and part melted making for a thoroughly ugly result.

© 2000 - 2009 Alan Yates - All Rights Reserved.

Feature wise, it is functional though. The front-panel has a volume knob and power switch, with a choice of BNC or RCA signal input plugs. There is an internal 6v battery pack (4x AA alkaline cells), plus an external DC plug-pack socket which disconnects the batteries on connection.

1 comment.

Attachments

title	type	size
circuit postscript source	application/postscript	11.914 kbytes

© 2000 - 2009 Alan Yates - All Rights Reserved.

Simple Electrometer

2002-11-16

A trivial JFET electrometer isn't a new idea, there are millions of designs for them out on the Internet, this is just yet another. This one is slightly unique in that it is a bridge configuration that makes it ultra-sensitive, much more so than a gold-leaf electroscope, but less than a vacuum tube or electrometer grade FET device.

When the unit is first switched on the pot is adjusted to give a half-scale reading on the meter. You may wish to have a centre-neutral nulling meter, but I only had the conventional meter in the junk box. I used a 10uA FSD meter which makes the electrometer fantastically sensitive, probably too sensitive at times, and difficult to null. A plastic pen rubbed against your hair slams the needle at more than 2 feet away.

© 2000 - 2009 Alan Yates - All Rights Reserved.

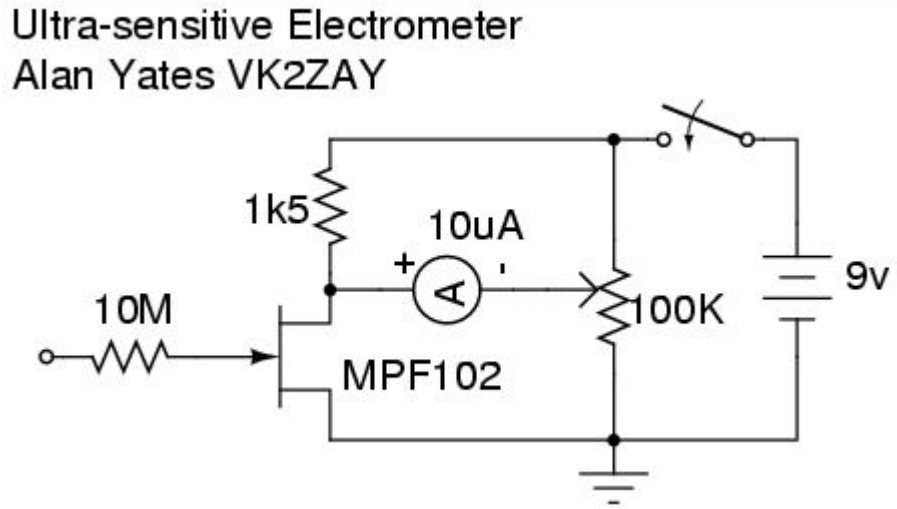

A selection of shunts or another pot across the meter would enable sensitivity adjustment. The 10M gate resistor is not strictly needed, but helps to protect the FET gate. Changing the value of the pot would effect the sensitivity and may be required if different FSD current meters are used. The 10uA FSD meter is the most sensitive DSE carry. The PCB material the device is built on is copper clad on both sides, this forms the ground connection and gives the electrometer a ground reference. Both sides are interconnected for good grounding.

You can charge the gate by induction slightly, which may give more range in both polarities. If you do charge the gate it will slowing leak away, but this takes a fair while. If you accidentally touch the gate with a charged object and excessively charge it slamming the needle, just touch one finger to the ground plane and another to the electrode to return the gate to a relatively neutral state.

The gate is sensitive enough to sense the electric field of a 9v battery or charged capacitor waved near the electrode. A good demonstration is to take a few nano capacitor with long leads, preferably axial, short it to discharge it completely. Wave both leads near the terminal and little deflection should be observed, just the usual effect of your body near the electrode. Now hold it by one lead, touch the ground plane of the electrometer with your other hand and the other lead of the capacitor to the +ve terminal of the electrometer's 9v battery for a second or so. Now remove it and holding it by one lead approach the electrometer electrode with the other capacitor lead, the needle should deflect a bit in one direction. Next carefully let go of the lead you are holding, say by taking hold of its body encapsulation with your other hand, then take hold of the other lead and again approach the electrometer electrode, it should deflect in the opposite direction. Now hold both leads to discharge the capacitor and try each end again to confirm its discharge.

It is quite amazing to watch it respond to you scuffing your feet on carpet while standing a meter or so away. My coke can Van de Graaff Generator slams the needle from across the room. It will respond to the difference between you touching the floor with your feet while sitting and not touching it, waving your arms around, or approaching the device and taking a step back. If you have a suitable UV light or other ionizing radiation source you can watch it discharge a charged object near the electrode. A thoriated gas lighting mantel discharges a pen cap in a few minutes.

Leave a comment on this article.

© 2000 - 2009 Alan Yates - All Rights Reserved. XHTML | CSS | CSS toggle

Solderability of Enamelled Copper Wire

2009-02-16

Kevin asked about the solderability of the wire I had used in the wiring pencil. I picked the wire I had in stock that was subjectively the was the right gauge and the easiest to solder based on past experience. I hadn't however made detailed tests, so this quick experiment was undertaken to detail the performance of the particular brands I had in stock.

I just happen to have a wide variety of gauges and brands of wire in stock, collected over the years from various suppliers. The supplies may no longer carry the particular wire I tested, or carry something different identified by the same catalogue number, so this data is only really for my benefit, but the experiment is easy to perform for yourself.

I generally find enamelled copper wire is much easier to tin from a cut end. Submerging the cut end in a puddle of solder on the tip of the iron will rapidly burn back the varnish except for especially refractory varnishes, of which I only have a few samples, mostly on quite heavy gauge wire. Tinning in the middle of an unbroken length is generally quite difficult, at normal soldering temperature, except for very fine gauge wires.

I have a cheap DSE sourced temperature controlled soldering station (catalogue number T-1976) which I purchased last year after my previous unit (also DSE sourced, the more expensive T-2200) was no longer supported by DSE for spares and I was in need of a new element. The unit is adjustable from 250 - 450 °C. I normally run at 340 °C, so I picked four test temperatures, starting with 340 °C and going right up the the units limit of 450 °C. Temperatures below 340 °C were not investigated.

Samples of wire were taped to a cardboard frame and tinning attempted at each of the four temperatures. The heat effected zones may have overlapped, especially for the thicker more conductive gauges, but lower temperatures were attempted first, progressing to higher ones. The tinning was attempted to a maximum of 20 seconds per test. Wires up to 500 um only were tested.

Supplier	Catalogue Number	Gauge	Colour	Solderability				Comments
				340 °C	380 °C	410 °C	450 °C	
DSE	W-3136	125 um	Red	Easy	Easy	Easy	Easy	By far the easiest wire to tin
DSE	W-3132	200 um	Red	Easy	Easy	Easy	Easy	Quite similar to the 125 um wire, takes slightly longer to tin, but otherwise very easy to use and mechanically

© 2000 - 2009 Alan Yates - All Rights Reserved.

DSE	W-3126	400 um	Amber	No	Hard	OK	Poor	Quite hard to tin at low temperatures. Lots of burnt material at higher ones.
Jaycar	WW4012	250 um	Amber	Easy	Easy	Easy	Easy	In most ways identical to the 200 um DSE wire, just a different colour and slightly thicker gauge.
Jaycar	WW4013	300 um	Red	No	Poor	OK	OK	Takes a long time to burn through and tin. Lots of heat works eventually, fair amount of burnt junk results.
Jaycar	WW4014	400 um	Amber	No	Poor	OK	Poor	Around 410 °C seemed optimal for this wire, producing less burnt material than higher temperatures, but being hard to tin much below this. I found this result a little surprising.
Jaycar	WW4016	500 um	Amber	No	Hard	Poor	OK	Needs lots of heat, not too bad otherwise.
Hendricks QRP Kits	NA	321 um (#28)	Red	Fair	OK	Easy	OK	"Thermaleze" wire. Tins with rubbing to get it started at the lowest temperature. Higher temperatures tin easier, but very high temperatures start to produce more burnt material.
Hendricks QRP Kits	NA	321 um (#28)	Green	Fair	OK	Easy	OK	Same as the Red except or the colour.
W8DIZ "The Toroid King"	NA	255 um (#30)	Red/Green	No	Fair	OK	OK	This is a twisted pair of red and green wires, intended for easy construction of bifilar RF transformers. Both colours behave the same. Tins with rubbing eventually, but not at the lowest temperature. Higher temperatures tin easier. Somewhat difficult to tin from a cut end at the lowest temperature. No burnt material at high temperatures, but the enamel colour fades in the heat effected region, appears to thin out and melt away from the heat.
Unknown	NA	400 um	Dark Amber	No	No	OK	OK	Sourced from Wyong Field Day 2009. Needs lots of neat to tin. Was the only material that didn't tin eventually at 380 °C.
Unknown	NA	250 um	Light Amber	No	OK	OK	Poor	Sourced from Wyong Field Day 2009. Fairly typical of the harder to tin wires. Burnt material at high temperatures.

In general the results indicate thinner gauges are easier to tin. All wires tested tin from a cut end at the lowest temperature, but may take quite some time and effort/rubbing. All wires will tin mid-wire eventually at 380 °C, but some can take quite a long time and require rubbing back and forth with the iron to start penetration of the enamel. At 410 °C and above all wires tin pretty easily. Higher temperatures are more robust and quicker to tin, but also tend to produce more blackening and slaggy solder.

© 2000 - 2009 Alan Yates - All Rights Reserved. XHTML | CSS | CSS toggle

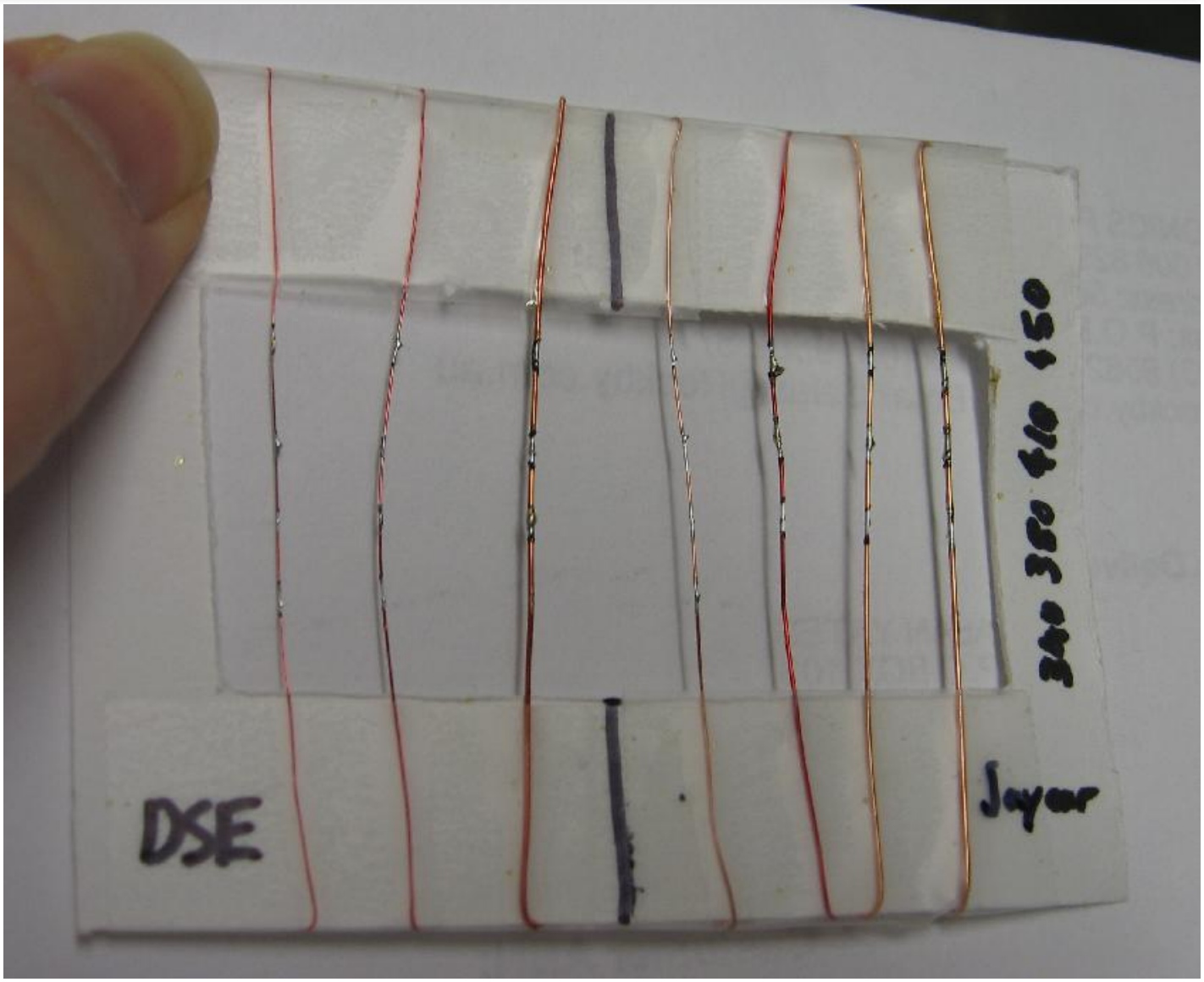

Wires that tin only with difficulty tend to produce a blackened region near the edge of the enamel layer which appears to be a mixture of burnt enamel and rosin flux. The blackening also seems correlated with decreasing quality of the solder. Wire that really needed a lot of cooking produces very slaggy solder that ideally would be removed and replaced with fresh material to make a nice joint.

The smell of the hardier enamel burning is quite different to that of the easily tinned material. There is a fair variety of enamel chemistries available, but I am unsure which correspond to the easiest tinning wires as the wire is uncharacterised as to its particular enamel chemistry. At least here in Australia, unless you order directly from a wire supplier, you seem to get almost random material. In particular the same type of spools are used for different kinds of wire, probably because of rebranding and splitting of bulk lots by the retailers. Some material purchased years apart, but of the same gauge, colour and brand has different enamel. This will no doubt frustrate attempts to use the data above.

One thing I didn't test which might be of more practical value is tinning when twisted around an IC socket pin in contact with PCB pads. This is the ultimate fate of the wire used in the wiring pencil, so good performance there is highly desirable. The two easiest to tin materials also happen to be those I chose for the wiring pencil, and I know that in practice they work quite well in that application. Unfortunately they are also the oldest sourced and perhaps are no longer consistent with what is currently offered by Dick Smith.

4 comments.

Parent article: Wiring Pencil.

© 2000 - 2009 Alan Yates - All Rights Reserved. XHTML | CSS | CSS toggle

Sports Ears Broadcast Receivers

2010-04-24

This Saturday I went to see the Sydney Swans slaughter the West Coast Eagles at the Sydney Cricket Ground. Murray Tregonning & Associates has been providing the Sports Ears stadium narrow casting service and associated receivers for other football codes for some time now, but this week was the first time they have offered it at AFL games in Sydney. The general idea is to broadcast the game officials chatter to listeners present in the stadium. My partner is a huge AFL fan and just had to partake in the new service, so she parted with $45 of her hard earned cash for one of their receivers at the game. I instead took my Yaesu VR-500 (a considerably more expensive device) with me to find the transmission and study the system in more detail.

The Magic Frequency

It took only a few minutes to locate the appropriate frequency. The transmission is wide-band FM at 70.2 MHz. The signal strength is reasonable throughout the stadium, probably several watts of transmitter power located locally. Polarisation is difficult to determine with all the scattering of the structure of the stands and people's bodies. Multi-pathing can at times cause deep fading as people move about in proximity, but this is not particular to the system, just a natural consequence of RF communication at this wavelength - FM broadcast band reception suffers similarly.

The Sports Ears® Receiver

The AFL Sports Ears receiver itself is a fairly conventional AM/FM broadcast receiver with a 3rd "UMPS" position on the band switch. In the UMPS position the local oscillator is fixed-tuned and receives the 70.2 MHz transmission regardless of the tuning dial position. The AM and FM positions operate normally, tuning 540-1600 kHz and 88-108 MHz respectively. The FM reception is monophonic in either UMPS or FM.

© 2000 - 2009 Alan Yates - All Rights Reserved.

Inside the plastic enclosure is a small hybrid through-hole and SMD board implementing the receiver. The CD1691CB features prominently - a single largish SMD-package AM/FM broadcast receiver and AF power amplifier chip. The AM and FM circuits are very conventional, almost the reference design in the datasheet. The UMPS channel utilises a crystal locked local oscillator, operating at 59.5 MHz for low-side injection (10.7 MHz IF with your typical ceramic filters and quadrature coil).

© 2000 - 2009 Alan Yates - All Rights Reserved. XHTML | CSS | CSS toggle

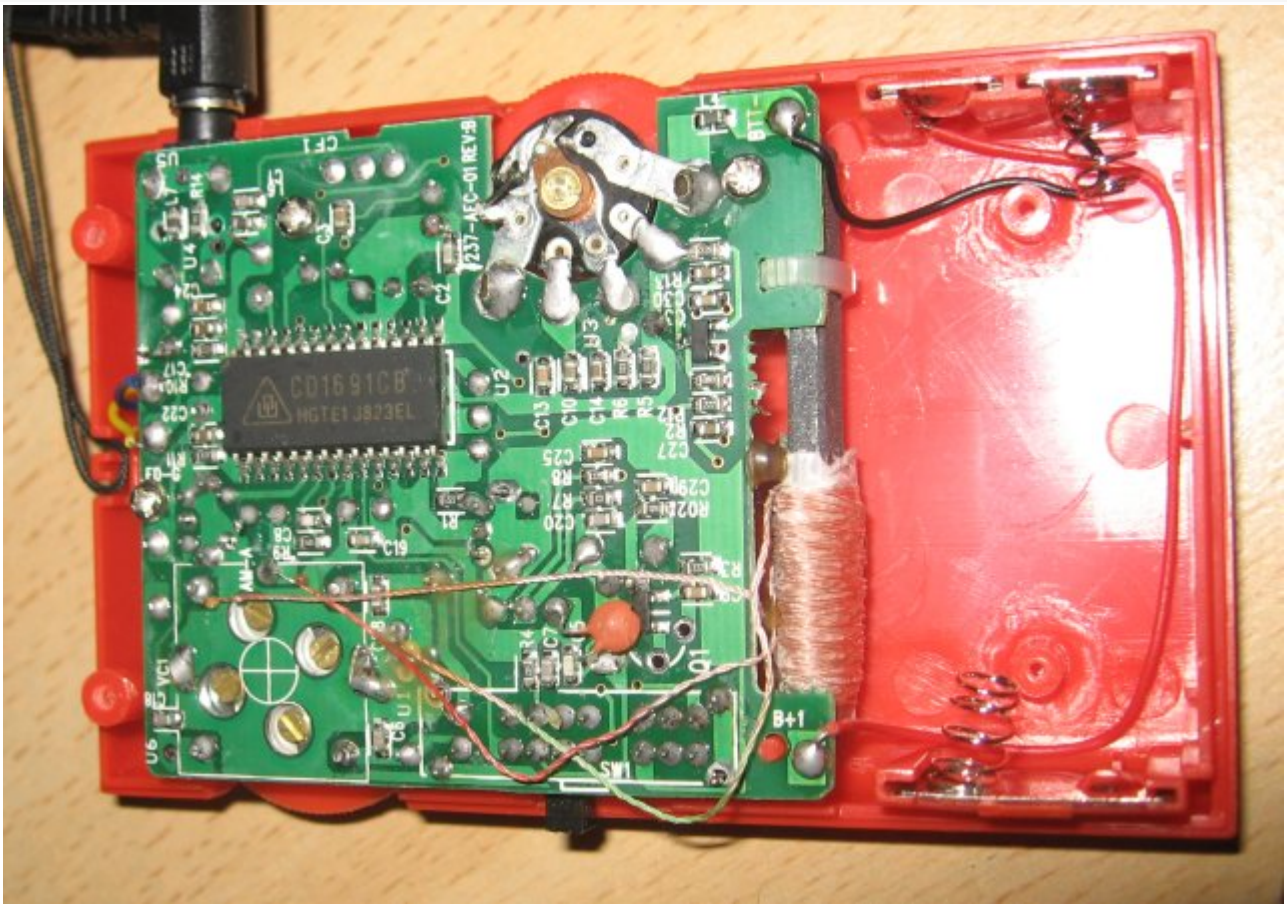

The UMPS crystal is in HC-49/U format, and is completely unmarked - I have no idea if this is an attempt to hide its frequency or simply the result of a custom-manufacturing run. The crystal is one of the larger components of the receiver, and is mounted on the "back side" of the board, accessing it requires removal of three screws and carefully unthreading the red plastic tuning dial indicator from its track. It is no doubt an overtone crystal, but I did not unsolder it to measure its properties directly.

© 2000 - 2009 Alan Yates - All Rights Reserved. XHTML | CSS | CSS toggle

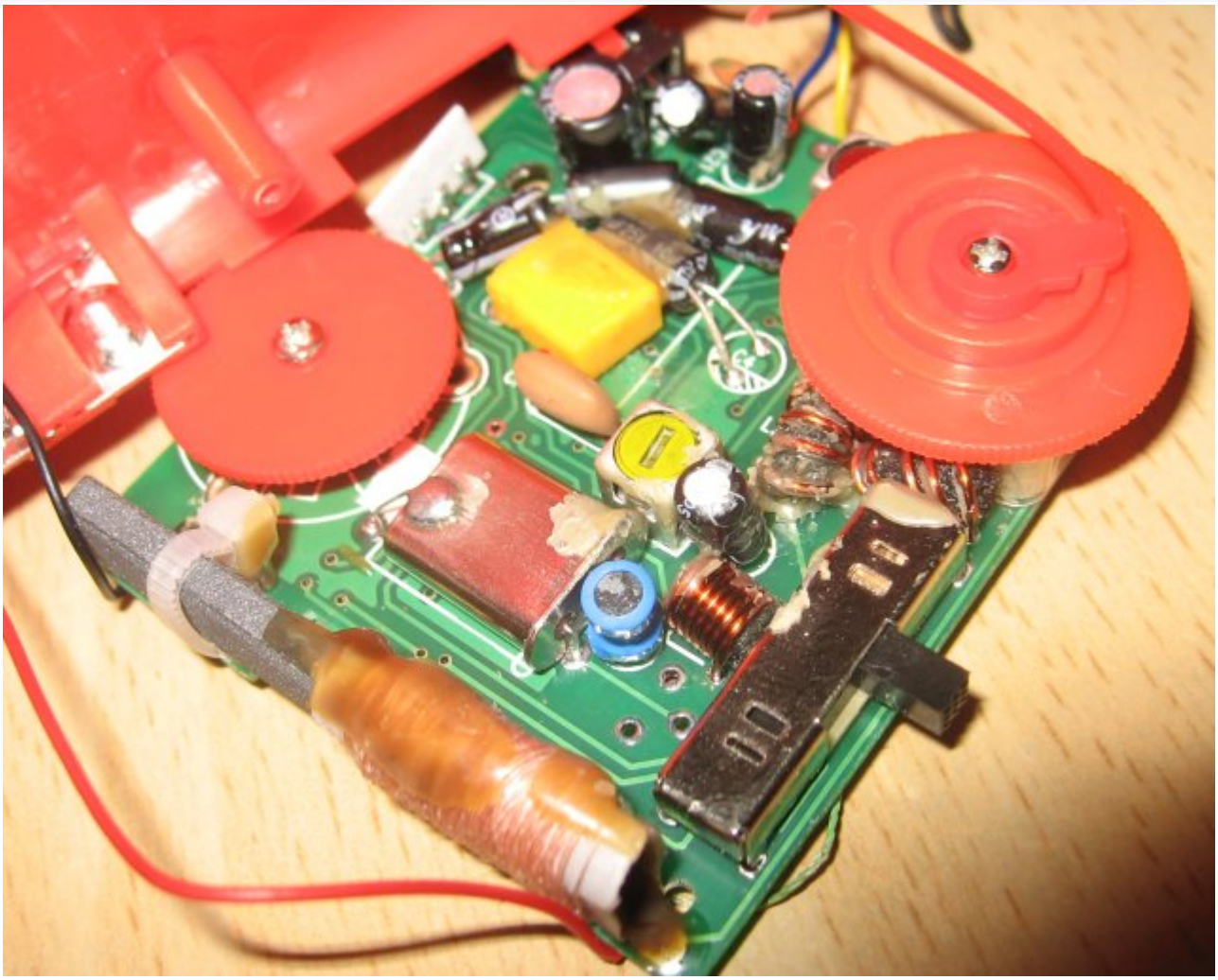

The local oscillator leakage is easily detected at quite some distance from the receiver - even my wavemeter can register the LO energy - but no significant sub-harmonic radiation is detectable.

© 2000 - 2009 Alan Yates - All Rights Reserved. XHTML | CSS | CSS toggle

The image frequency 48.8 MHz is not very suppressed, the image response on the FM broadcast band appears somewhat better, as does its sensitivity, but this was not assessed with much precision. Like most radios of this type the antenna for VHF is the headphone lead and controlling the applied signal is a little challenging without modifying the circuit. On FM and AM the LO injection is high-side (the AM IF in 455 kHz), the choice of low-side injection for UMPS is probably to place the image further from the FM broadcast band. The TV sound carriers for analogue TV channel 2 (69.75 MHz) are quite close to the 70.2 MHz UMPS channel and the receiver's selectivity is barely adequate in strong-signal areas when the narrow-casting signal is absent.

Physically the unit is a nice pocket/palm compatible size. It comes with a lanyard featuring a quick-release connector, and a pair of ear-bud earphones of surprisingly acceptable quality. The earbuds are hard-plastic and come with no textile covering "socks" like some other ear-bud style phones do, in particular I found they can slip out of larger ears easily because of the fairly low friction offered by the hard plastic against skin. On the other end of the anatomy scale, smaller-eared individuals may find them too large for comfort. The earphone socket is a conventional 3.5 mm stereo one and phones of your choice are easily substituted. Sports Ears themselves offer over-the-ear padded headphones as an accessory for $20, I can't comment on their quality. The audio power available from the unit before unacceptable distortion is quite adequate with the headphones supplied, even in the noisy stadium environment.

© 2000 - 2009 Alan Yates - All Rights Reserved. XHTML | CSS | CSS toggle

The AFL unit has one rather annoying feature, the tuning dial pointer is coloured red, as is the dial background, making it almost impossible to see even in good lighting conditions.

I took the opportunity when I had the receiver dismantled to colour the pointer black with a felt-tip marker so as to provide some contrast to the display. This is likely an accidental oversight of rushing the device into production, the red colour scheme of the casing being very similar to the pointer. Other code's units have better contrasting colour schemes. Unlike the higher priced units offered for Rugby, the AFL unit has only one receiver and can not simultaneously offer both the umpire audio and FM or AM broadcast band commentary.

The unit is powered by two AAA-size batteries, user replaceable and supplied in the initial package. Current consumption is about 14 mA on FM and UMPS, and 12 mA on AM, at peak AF output power it can rise by an additional 3-4 mA. I strongly suspect the bulk of the current is being consumed by the 3 mm red LED power indicator light, but I did not disconnect it to make a comparative measurement. The cells provided with my partner's unit are brand-name (Mitsubishi) alkaline. Assuming a capacity of about 1 ampere-hour they should run the receiver for about 65 hours. The unit is marketed as having sufficient battery capacity for the entire AFL season, this is quite accurate assuming it is used only 2-3 hours per game. Having the power LED to indicate the "on" state likely helps prevent accidental battery depletion when not in use, despite undoubtedly using quite a large amount of energy itself.

Value?

Their fine marketing aside, is the Sports Ears product value for money? At $45 it is extremely expensive for what's inside the box. A typical AM/FM broadcast receiver of similar quality would be in the vicinity of $10 retail and quite a bit less in large quantity. The addition of the special event channel reception is clearly a fairly custom feature, and some development has gone into adding this feature to an otherwise widely used general "chassis" (not unlike the hundreds of similar merchandising receivers you can get made in Asia in any number of different packaging).

Some unspecified percentage of the sales of the units are contributed back to the AFL and distributed to the clubs. No doubt this particular marketing point is important to many buyers, but a little too weakly specified for my liking.

The entire market for these devices is based on the transmission being on a frequency outside the usual tuning range of widely available receivers. Special Event FM radio licences are available from ACMA, it would have been just as technically easy to offer the service on an FM broadcast frequency that required no special equipment to receive. This is clearly more about creating a captive market for merchandise than simply providing a "fan-based" adjunct to the at-game experience.

There is of course nothing fundamentally wrong with this approach, it encourages attendance to the games, especially if the game official audio is not provided on other coverage of the event. How popular it will be, especially as knowledge of the choices made in its implementation become public remains to be seen.

Personally I found listening to the umpires very instructive and believe it does add a lot to the experience. I frequently record the pay-TV coverage of the event for later viewing, even when I attend the event live - mainly so I can hear the commentary and umpire audio explaining the decisions that can otherwise be quite perplexing when seen live without the benefit of hearing the calls.

The quality of the audio is quite high. Too high at times perhaps, some gentle souls may find the gasping, swallowing and expectorating sounds a little disturbing, although the pre-game and quarter break advertisement loop (and online marketing) warns about the uncensored nature of the content, especially concerning profanity. Further scanning around during the day suggests the microphones carried by the umpires operate around 225 MHz and likely use a diversity reception system to eliminate fading. Other interesting SCG specific frequencies

© 2000 - 2009 Alan Yates - All Rights Reserved. XHTML | CSS | CSS toggle

are around 499 MHz, although my VR-500 had insufficient selectivity to separate some of the powerful concurrent transmissions in close proximity, especially the camera direction instruction transmissions.

Security Through Obscurity?

A junk-store FM radio costing only a few dollars can be trivially modified by a suitably handy person to receive the 70.2 MHz transmission. No doubt the great majority interested in listening in will just cough-up the $45 for a Sports Ear receiver, despite the fact the transmission is unencrypted and emitted not too far from the FM broadcast band so as to make modification of a conventional receiver quite practical (and economical production of the Sports Ears receivers for that matter).

The controlled market for the receivers is obviously bad for the fans. Especially considering the current pricing point. I can't see how Sports Ears could prevent other agents developing receivers for the frequencies used in AU and NZ. I assume their only protection is the expense of development and barriers to penetration of the market. The market is surely large enough, but no doubt competing receivers would not be sold at the games in the merchandise stalls.

No mention of the frequencies involved are made on the product sites. In fact a search of the ACMA registry of radio communication licences found no entry for 70.2 MHz. Murray Tregonning as an entity is well known to the ACMA, but hold no current licences at all. I could find no entries for anything related to AFL, SCG or Sports Ears either. How the frequency can go unspecified in the ACMA database is unclear.

I have no idea if one of the NRL and ARU frequencies are the same as the AFL one, but it would not surprise me if they were be shared. The Rugby broadcasts clearly use at least two different frequencies. The NZ frequencies are different it seems, probably because of country-specific licensing. In any case a receiver capable of WBFM reception would quickly find them, probably not too far away in the VHF-L band.

Making Your Own Compatible Receiver

Retuning a cheap FM broadcast receiver to cover the 70.2 MHz band is actually very easy. Almost any non-digital tuning FM broadcast receiver will do, but a turn-the-dial rather than push-to-scan receiver is probably a safer bet to try. Simply locate the local oscillator coil and squash its turns together to move the frequency down. In many cases there will be sufficient range of adjustment to do this, otherwise you may need to add additional capacitance across the oscillator coil, a trimmer can be soldered across it and set to place 70.2 somewhere in the range of tuning. You can use the channel 2 TV audio signal as a reference, if you can receive it at the bottom of the tuning range (and perhaps still get the bottom couple of the FM radio stations now at the top-end of the dial), then 70.2 MHz will be just above, quite close to the TV audio.

FM radios designed for the Japanese market are even closer to the frequency in question and need less prodding and poking to get aligned.

Alternatively if you don't feel confident hacking a cheap-store receiver, you can even buy a receiver that covers the frequency in question (and more) for less than the Sports Ears product. Dick Smith for example still carries an TV-audio receiver, catalogue number A-4289 ($29.98 - appears to be a Digitor branded Tecsun). Over the years they have carried a number of similar units, I have an older model which is essentially identical internally, you often see them at garage sales or ham radio trash and treasure days for about $5.

Yet another way to receive the signal is to build a converter that mixes the 70.2 MHz up to something in the FM broadcast band. The region around 100 MHz is empty by design for LIPD devices, like toy radio microphones. It is a simpler matter to build a 30 MHz oscillator and mixer to shift the signal up to 100.2 MHz. In fact I found by experiment that most cheap FM broadcast receivers have such poor front-ends just placing them near a strong 30 MHz signal will cause them to mix up 70.2 MHz to 100.2 MHz internally. A simple overtone (3x 10 MHz xtal) oscillator held near a junk store FM receiver made a test signal at 70.2 MHz easily detectable with the receiver. A packaged 30 MHz TTL oscillator + a battery is an instant converter with a suitably average FM broadcast receiver. (This trick even works on my VR-500 because its LNA is broad as a barn door and fairly weak IP3 wise too.)

Can I Use The "UMPS" Channel Myself?

Well, technically it is very easy to build an FM modulated flea-power transmitter for 70.2 MHz and use your Sports Ears receiver around the house. Just take the typical "FM Microphone", "Wireless Bug" or "Sound Feeder" and retune it to operate at 70.2 MHz. Legally this is probably slightly more illegal than LIPD devices on the FM broadcast band. Obviously taking such a device to the game would be a very dumb idea, but around your home the chances of the signal being seen at any distance are quite small unless you build a good antenna for the transmitter. One wonders why you would bother hacking over a perfectly usable FM broadcast band transmission device, perhaps even capable of high-fidelity stereo transmission in the case of a sound feeder, and locking it down to a fixed-channel, mono uncommon receiver like the Sports Ears. A similar argument might equally apply to Sports Ears in the first place...

© 2000 - 2009 Alan Yates - All Rights Reserved. XHTML | CSS | CSS toggle

Summary

Sports Ears works well. It is fun, pretty much as described in the marketing hype, definitely worth a try if you are attending the games. The implementation method is perhaps a bit morally questionable, especially as the units are arguably overpriced, but the consumer is informed about the proprietary nature of the system and its limitations - the FAQ is quite clear in that respect. The consumer however is not informed that alternatives are available and this was my main motivation for writing this article.

17 comments.

© 2000 - 2009 Alan Yates - All Rights Reserved. XHTML | CSS | CSS toggle

SSB Exciter

2006-11-11

I recently ordered 200 units of 11.98135 MHz crystals from Hy-Q for use in crystal ladder filters. (They were $5/100 in their surplus stock sale section) With the construction of my RF sweeper, I can now make precision filters suitable for SSB and CW transceivers.

Four crystals were selected with a minimum frequency within 50 Hz. The 30p to ground-shorted shift was measured and capacitors calculated for a 2.5 kHz bandwidth. Some fiddling later and a filter with fairly good characteristics was produced. The termination Z was selected to be 150 Ohms and some tests showed it offered pretty good ripple with the particular crystals used.

A crystal oscillator with padding inductor was constructed to generate the carrier, and a diode DBM was made with ferrite beads and 1N4148 diodes.

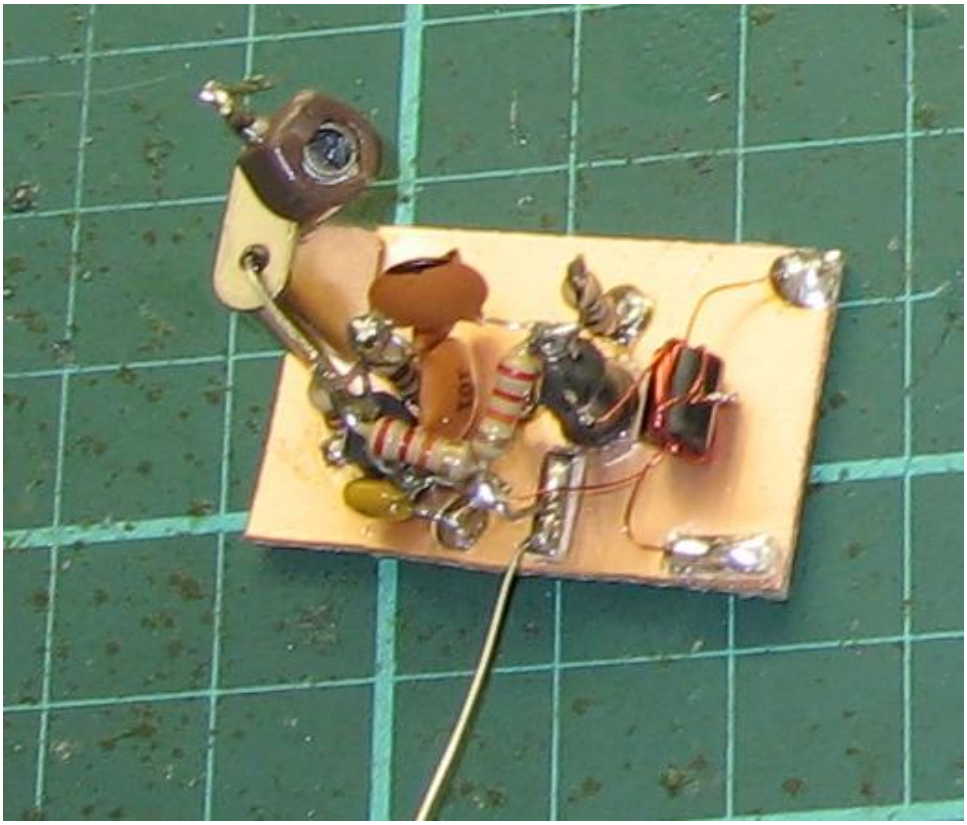

© 2000 - 2009 Alan Yates - All Rights Reserved.

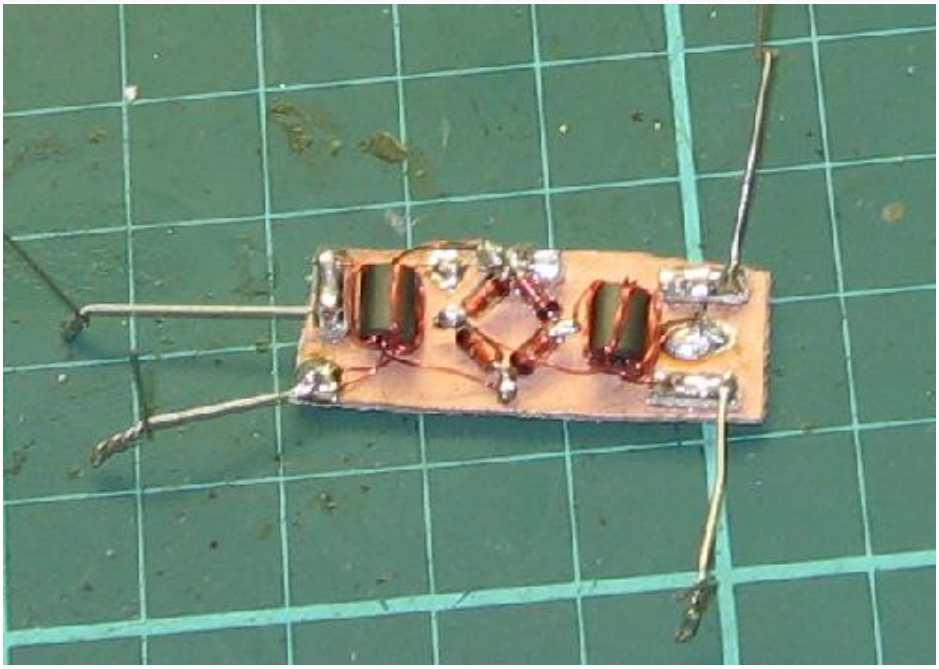

A quick lash-up on the desk proved the carrier oscillator and DBM alone produced a nice DSB signal.

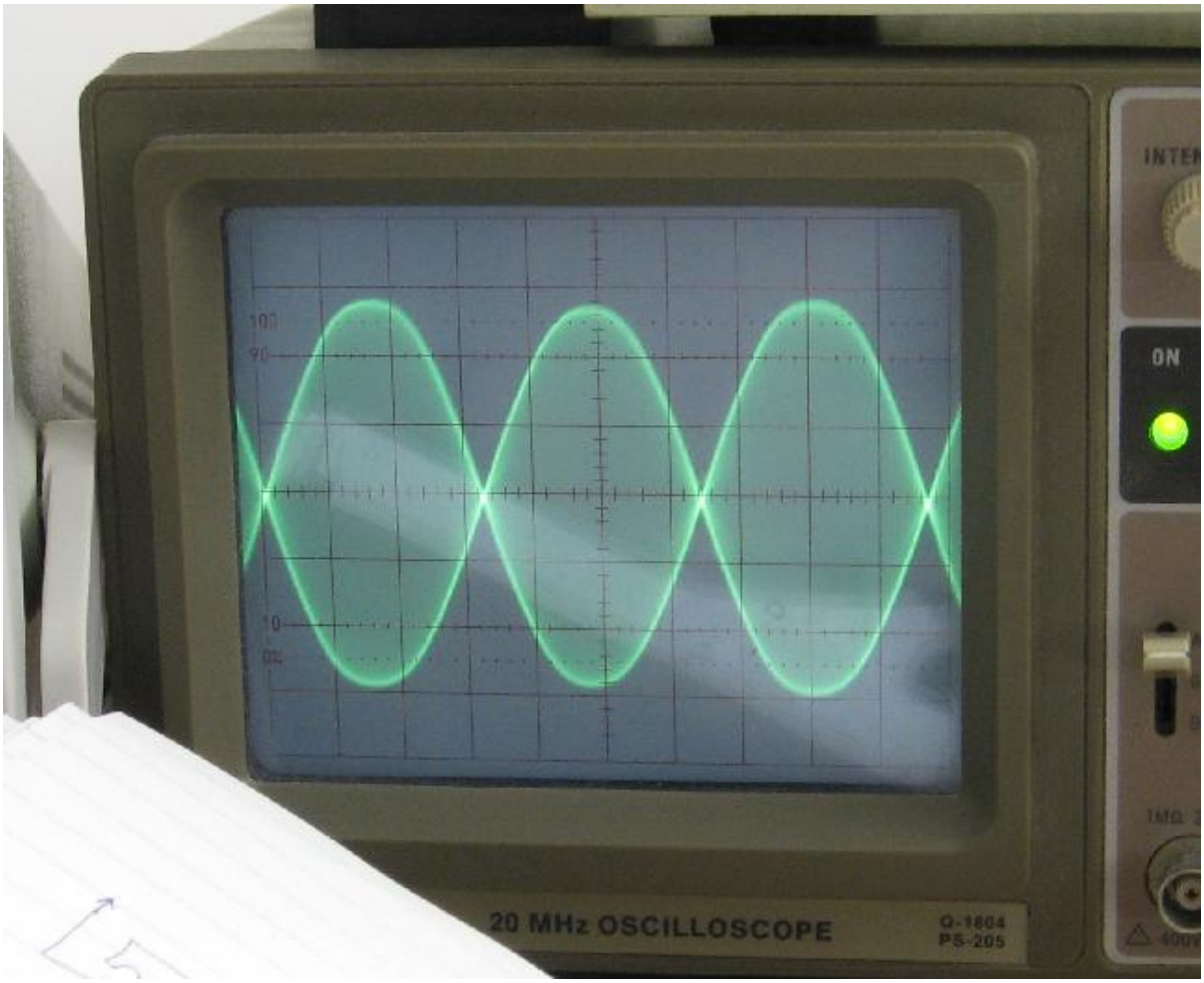

The crystal filter was added with a buffer amplifier after it to compensate for its insertion loss. Some teaking of the carrier frequency later and a very clean LSB signal was produced (LSB is easier because of the filter shape). I used an AM radio as a signal source.

© 2000 - 2009 Alan Yates - All Rights Reserved. XHTML | CSS | CSS toggle

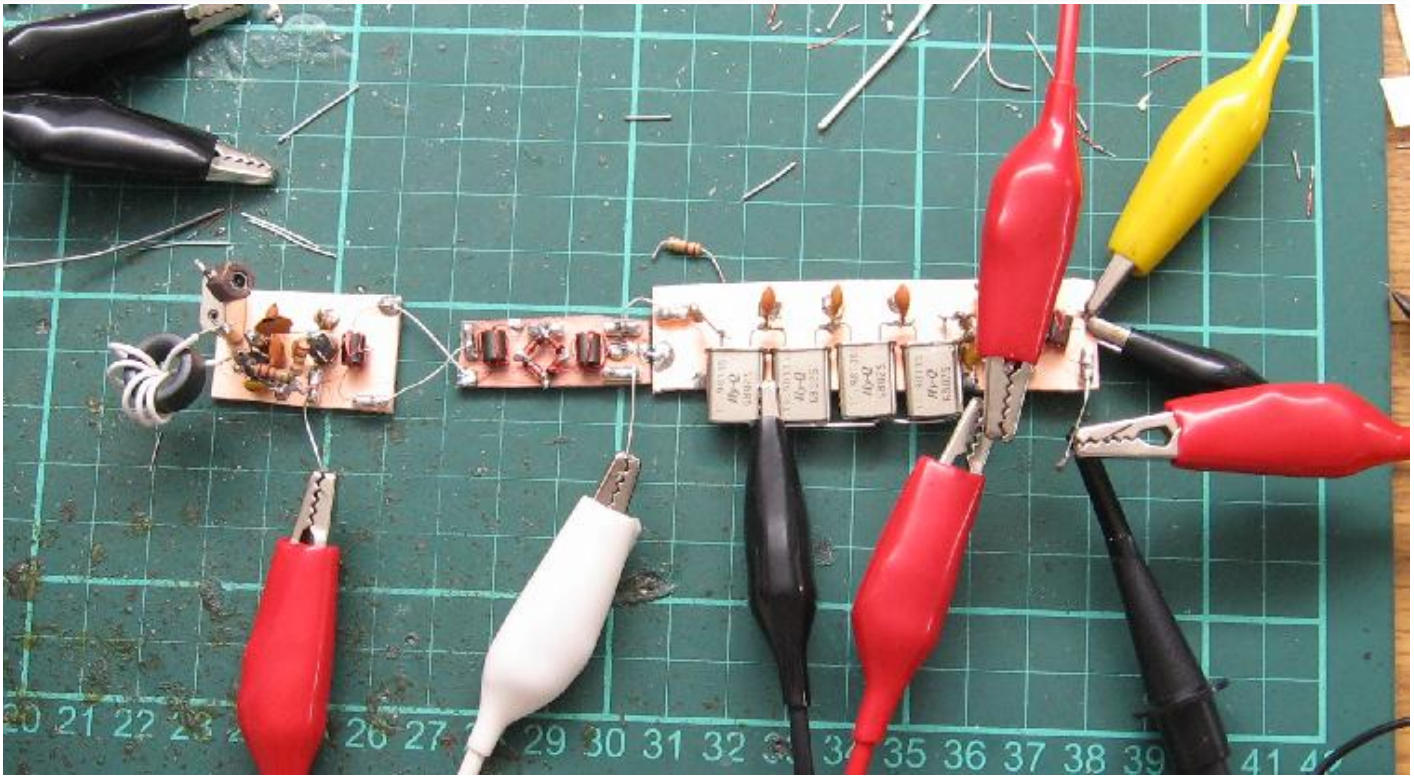

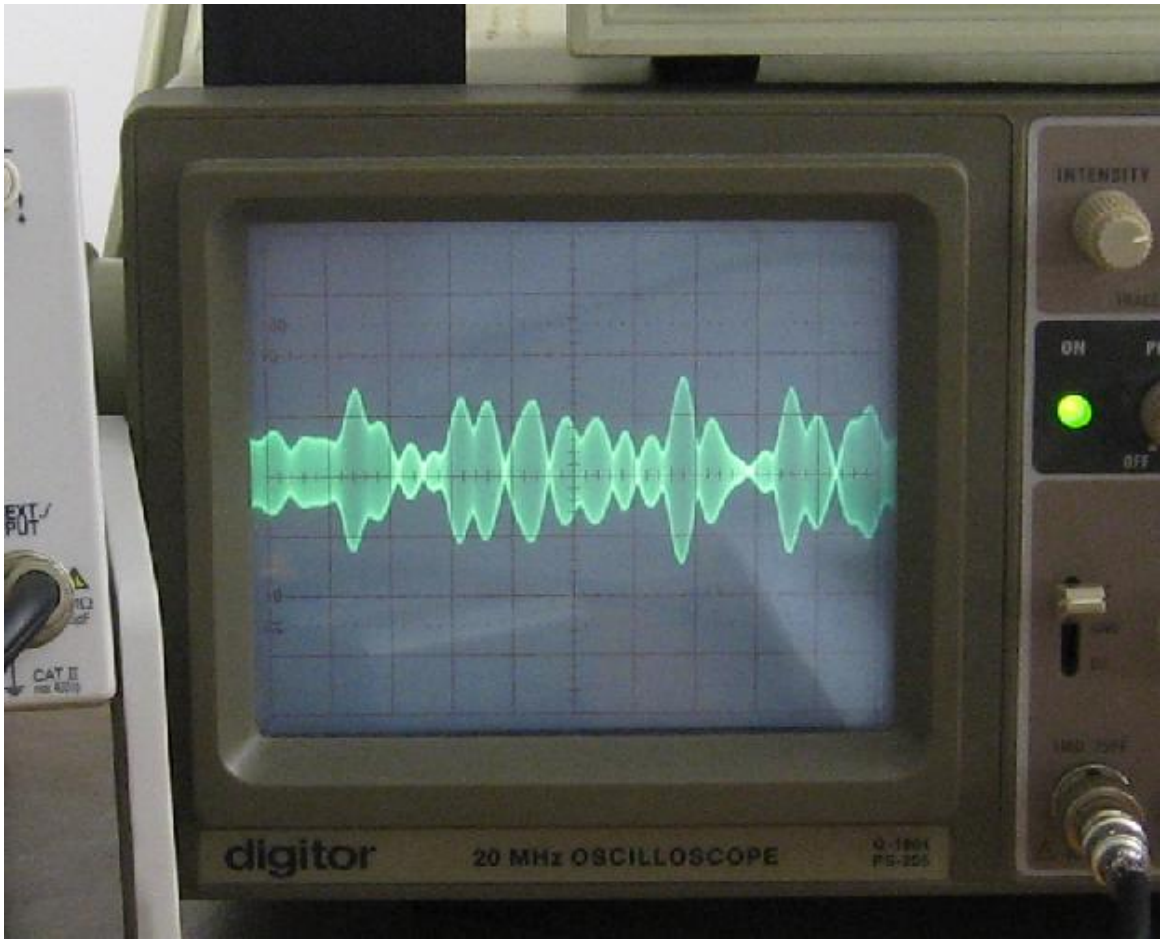

Next step is to make an microphone amplifier with AGC and then start thinking about switching the modules around to enable RX as well (I've already purchased DPDT mini-relays to do this). Then it is a relatively simple matter of building transverter-style circuits for the bands of choice. I think I'll investigate switchable carrier oscillator frequencies to enable LSB/USB selection. This will also give me more choices of LO injection frequencies.

40 metres will probably be my first band, I have a dipole for it already, and it is fairly open at the moment despite the solar cycle being at rock bottom.

© 2000 - 2009 Alan Yates - All Rights Reserved. XHTML | CSS | CSS toggle

Carrier suppression could be better, the crystal filter knocks it down 3-6 dB, and it is already about 16 dB down. I may replace the DBM with a single-balanced modulator having a carrier nulling pot so I can reduce the carrier power as much as possible.

2 comments.

© 2000 - 2009 Alan Yates - All Rights Reserved.

Switching Boost Converter Power Supply

2008-12-28

Building switchmode converters is something I had basically no experience with and only a very casual theoretical understanding of. Some might say it would have been safer and easier to just follow someone else's design, or at least pick one of the thousands of commercial blackbox chips out there... If I did that I wouldn't have taught myself as much about the wonderful mix of disciplines such circuits require knowledge of.

Requirements

First the requirements. My lab is lacking a high-voltage DC variable supply, something capable of say 40-200 volts at a few watts (say 10-20 mA) with current limiting protection. Such a device would enable basic vacuum tube experiments amongst a whole bunch of other uses. I wanted it to run from 12 volts input as I have plenty of such DC supplies and could avoid the dangers associated with low impedance mains work.

Critical Components

After reading some theory and sketching circuit ideas I dug through the junkbox looking for suitable parts; a HV MOSFET, a fast HV diode, a low ESR HV cap, and a suitable storage inductor. Unfortunately the best MOSFET I had Vds-wise was the humble IRF510 which at 100 Volts constrains the boost topology to delivering 112 volts. Diodes I had no problems with, I have a stock of BY229-600s which are very over-spec for the project. Output side filtering caps were looking grim, I wanted 1 uF 400 V or better, but had only 100 V in anything but vanilla electrolytic. I tested one 100 Volt mylar cap to over 300 volts - that will do for initial experiments as my MOSFET limits me to ~100 volts anyway unless I go for a flyback topology - maybe later. The inductor was the final remaining critical part, but pot and E-cores I have aplenty, along with power chokes.

Controller

The controller was originally going to be discrete, but after spending 2 days in LT Spice fiddling I decided to do something completely different for me - use software! I'm fairly well tooled up for using the Atmel ATtiny13 so it seemed logical to use it. The tiny13 has fast-PWM and ADC capability and a 9.6 MHz internal clock, so it can easily handle the job with *far* less parts than any other solution I was looking at.

Variable Duty-Cycle Experiments

To begin with I wrote some simple code to allow fiddling with the inductors I had and in general learning about switching boost converters. The code simply sets the PWM output duty cycle to match the ADC conversion reading. This lets you implement a 0-100% duty cycle controller with only the tiny13 and a pot (at a fixed frequency - 37.5 kHz currently). This piece of code is actually quite useful in its own right and can be a speed/power controller for motors, brightness control for lamps, etc. Anything that needs a variable duty cycle.

After some initial tests lighting up LEDs I breadboarded a basic boost converter and tried it out with the variable duty-cycle controller. To my surprise most of the inductors I had "worked" to some degree. Many suffered saturation problems, but the cheapest and most common 1 mH choke I tried worked quite well with a small load, right up to the voltage limit of the IRF510.

© 2000 - 2009 Alan Yates - All Rights Reserved.

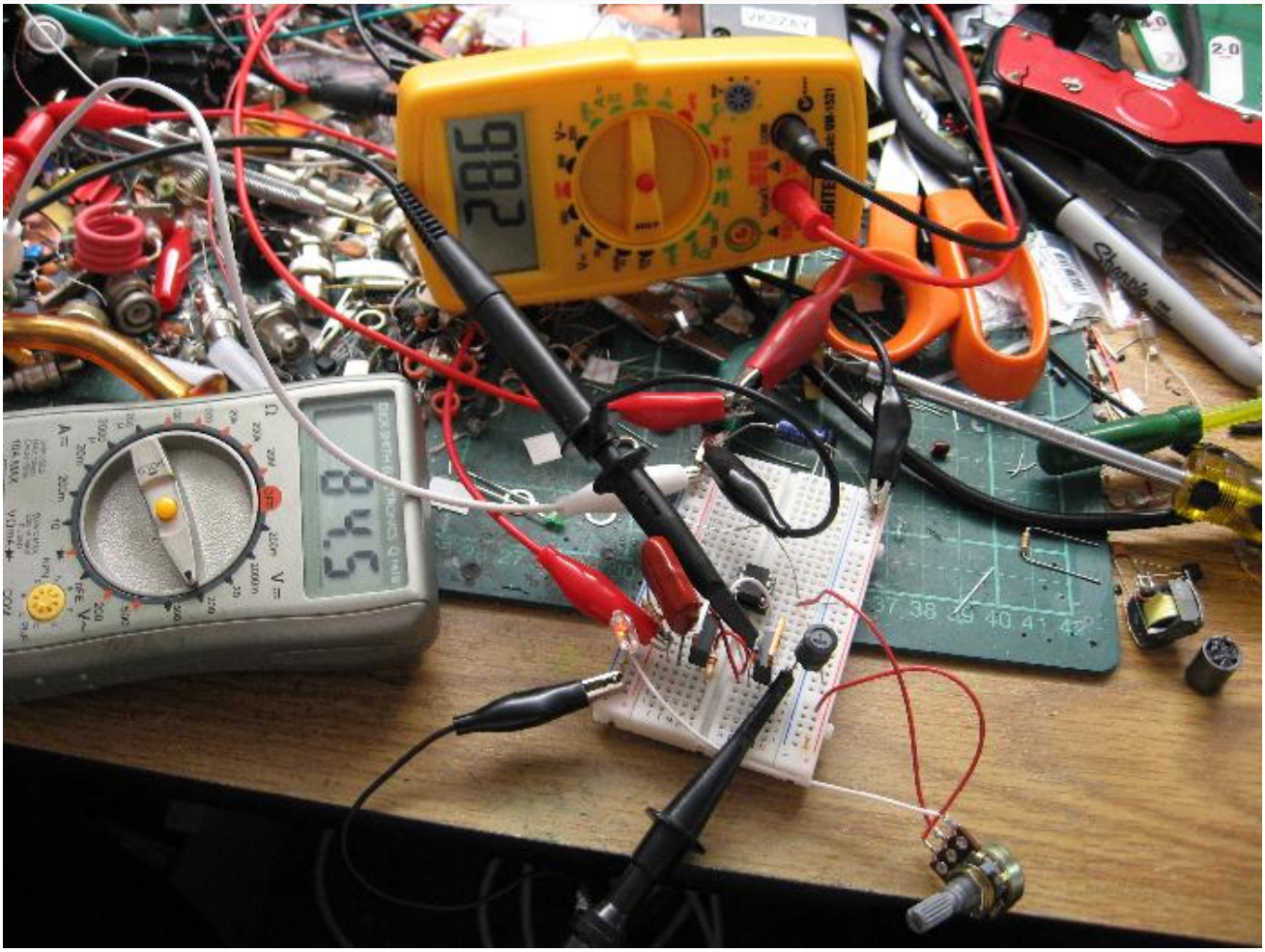

This oscillogram shows a roughly 80% duty-cycle gate drive and the corresponding drain waveform with the HV side under several 10s of mA load. With less loading it was possible to see free-wheeling on the drain after diode cut-off, where the inductor and drain capacitance would ring as an LC circuit. This is harmless, normal and quite expected.

© 2000 - 2009 Alan Yates - All Rights Reserved. XHTML | CSS | CSS toggle

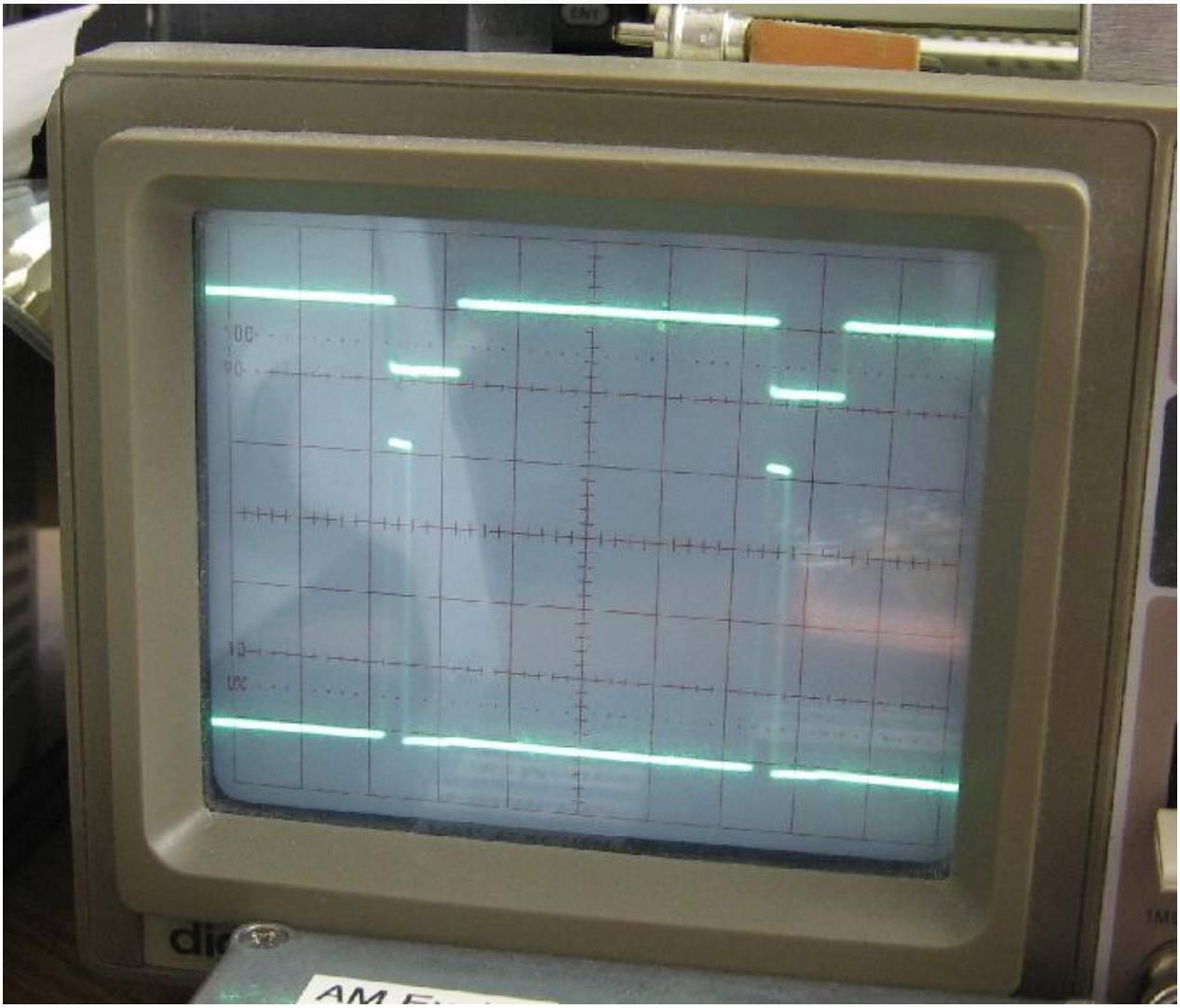

Here is a video of varying the duty cycle. The free-wheeling is observed at low duty drives, eventually continuous mode is entered and voltage increases rapidly, then the inductor saturates and the voltage drops again (with a corresponding rapid rise in input current).

Duty-Cycle Varying Experiment Video
(3.054 Mbytes)

Before long I had a dummy load of neon bulbs glowing brightly and a conversion efficiency of about 74% delivering a few watts. The efficiency isn't too bad considering the relatively large Ron value of the IRF510 and the choke inductor parasitic resistance.

© 2000 - 2009 Alan Yates - All Rights Reserved. XHTML | CSS | CSS toggle

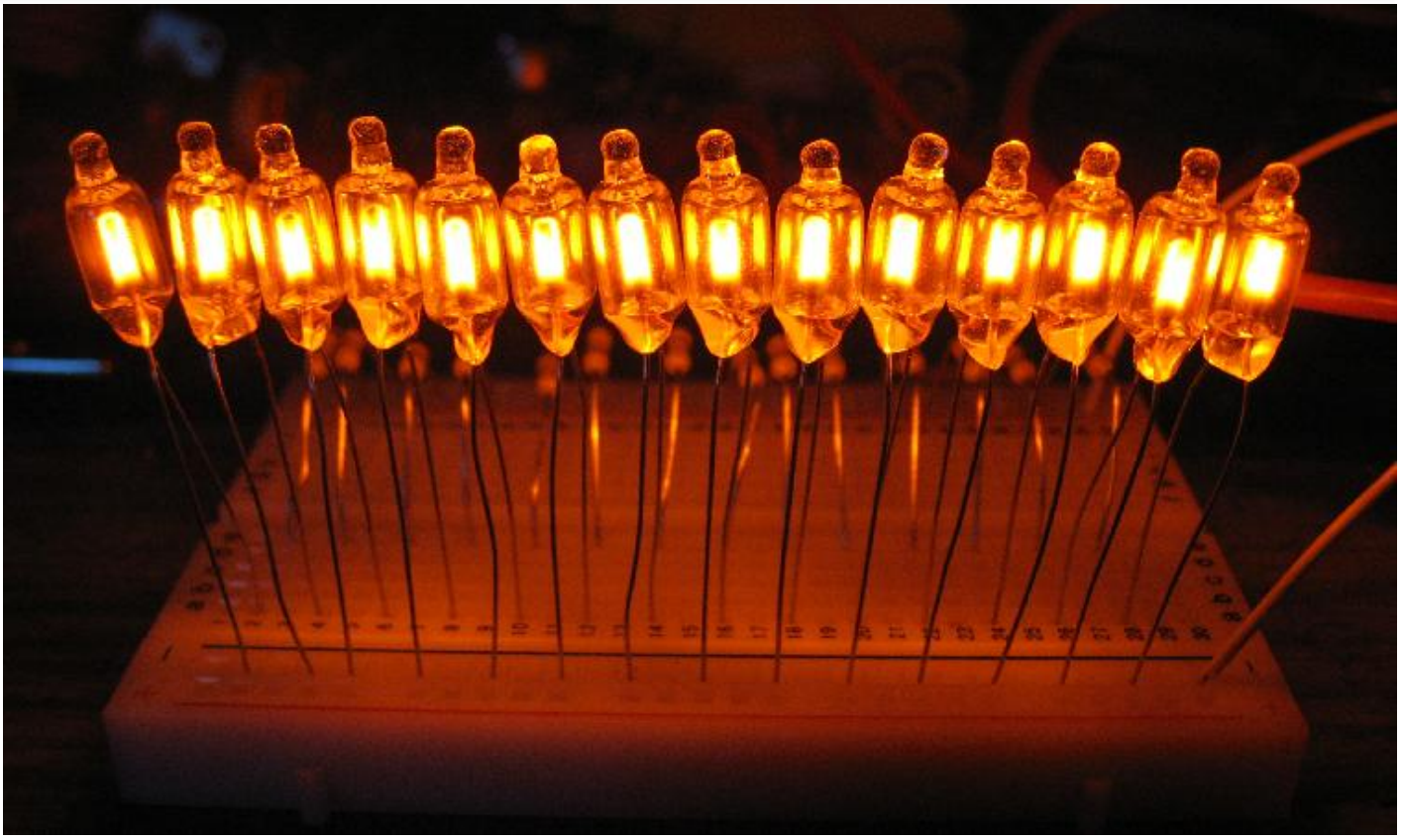

The Inductor

At this point with a 1 mH inductor output current was limited to less than 33 mA, as the 37.5 kHz switching rate only allows the inductor to charge to 282 mA in the 88% duty cycle on-time that corresponds to 100 volts from 12 volts input. Reduction of the inductor value is required to deliver more current, but inductor saturation then becomes more likely - for example a 100 uH inductor can charge to 2.8 Amps in the same time, that's a lot of ampere-turns for most ferrite cores. (And near the drain current limit of the switching transistor).

Time to experiment with gapped cores, and as such I needed an inductor core saturation tester... The test instrument that grew out of this need is quite simple, but I've made it the subject of its own article as it is a useful device in its own right.

Voltage Regulation

Closing the regulation loop was the next step. The controller programming was altered to adjust the duty cycle incrementally based on the ADC input, trying to maintain a value near mid-rail. With simple voltage divider from the HV side feeding the ADC input and some logic to drive a LED when the regulator could no longer retain control (dropout indicator), I had the basics of a working regulating boost converter.

© 2000 - 2009 Alan Yates - All Rights Reserved. XHTML | CSS | CSS toggle

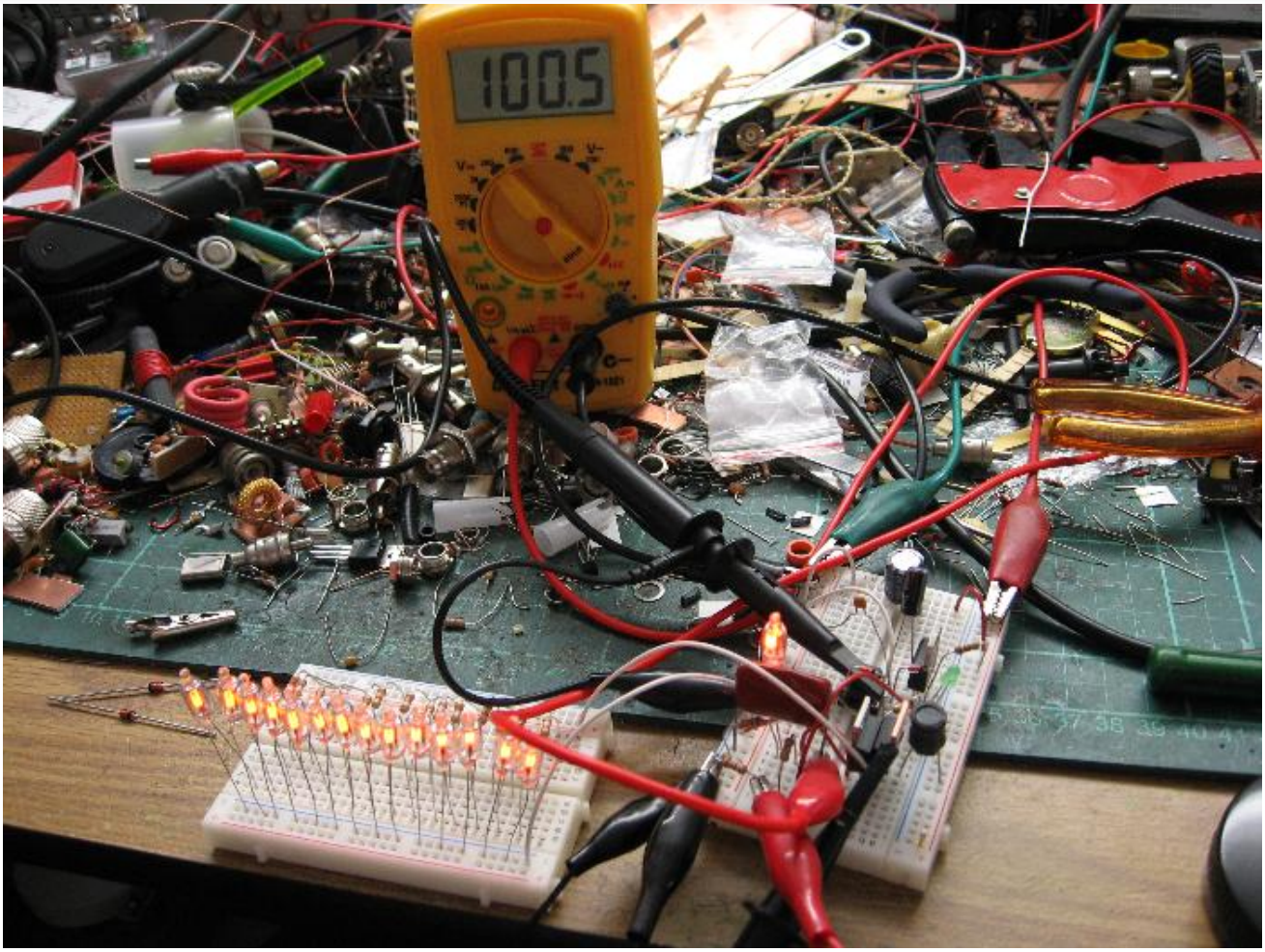

The delay and incremental adjustment affect a low-pass filtering of the control circuit. This seems to work quite well, but I have not investigated its behaviour extensively and have no idea of its stability. The regulation point does limit-cycle even with several bits of hysteresis, the control logic being digital (only 8-bit PWM) and high duty-cycles having a large "gain" in terms of output voltage change with small changes in duty cycle (approaching 100% is an asymptotic limit of voltage approaching infinity - 50% gives you twice the input voltage - during continuous-mode operation anyway). Operation in discontinuous mode with smaller inductors would allow lower duty cycles, but I am unsure if that would lower the loop gain - need to do the maths. Explicit digital filtering in the controller is probably worth investigating.

The controller logic also misbehaves when the inductor saturates or the MOSFET starts avalanching. When this occurs the duty-cycle to output voltage relation stops being monotonically +ve. The regulation will slam hard on against the upper duty-cycle limit. This condition is noted by the drop-out indication LED, but typically results in a large current consumption and would eventually cause damage. Current limiting in the input-side could allow unconditional safety, but it would be nice to detect the condition explicitly and complain because it is a supply hardware problem, not just overload. I have not investigated the lower boundary as much, the Neon bulb pilot light loads the output enough for it to not be a major problem, and the failure condition of a completely lost load is probably not too bad, the duty cycle lower limit can be selected to prevent dangerous voltages being developed.

Protection

Input-side current limiting is the most obvious protection scheme. Almost all failure modes result in large currents being drawn from the input. A simple circuit to detect this and throttle the current might be the conventional transistor pair with an emitter resistor that eventually biases one of the pair on to deprive the other of base current. The voltage drop would hurt efficiency and perhaps a more sophisticated scheme would be in order... For now my bench PSU is giving the overload protection.

Higher voltage MOSFETs and Capacitors are needed to take the experiments further towards a practical supply for the lab requirements. These devices are on-order, but haven't arrived from their suppliers yet. I'll do more work into the protection system and regulator stability after they arrive, and perhaps take a look at a flyback topology to achieve higher efficiency. The flyback topology also prevents input-supply shorts, as would AC coupling of the output. Filtering of the output ripple is another area that needs investigation, perhaps with LC filters although they have problems with load-dumps generating voltage spikes.

2 comments.

© 2000 - 2009 Alan Yates - All Rights Reserved. XHTML | CSS | CSS toggle

THE ANKH

Ancient Origin of Reincarnation

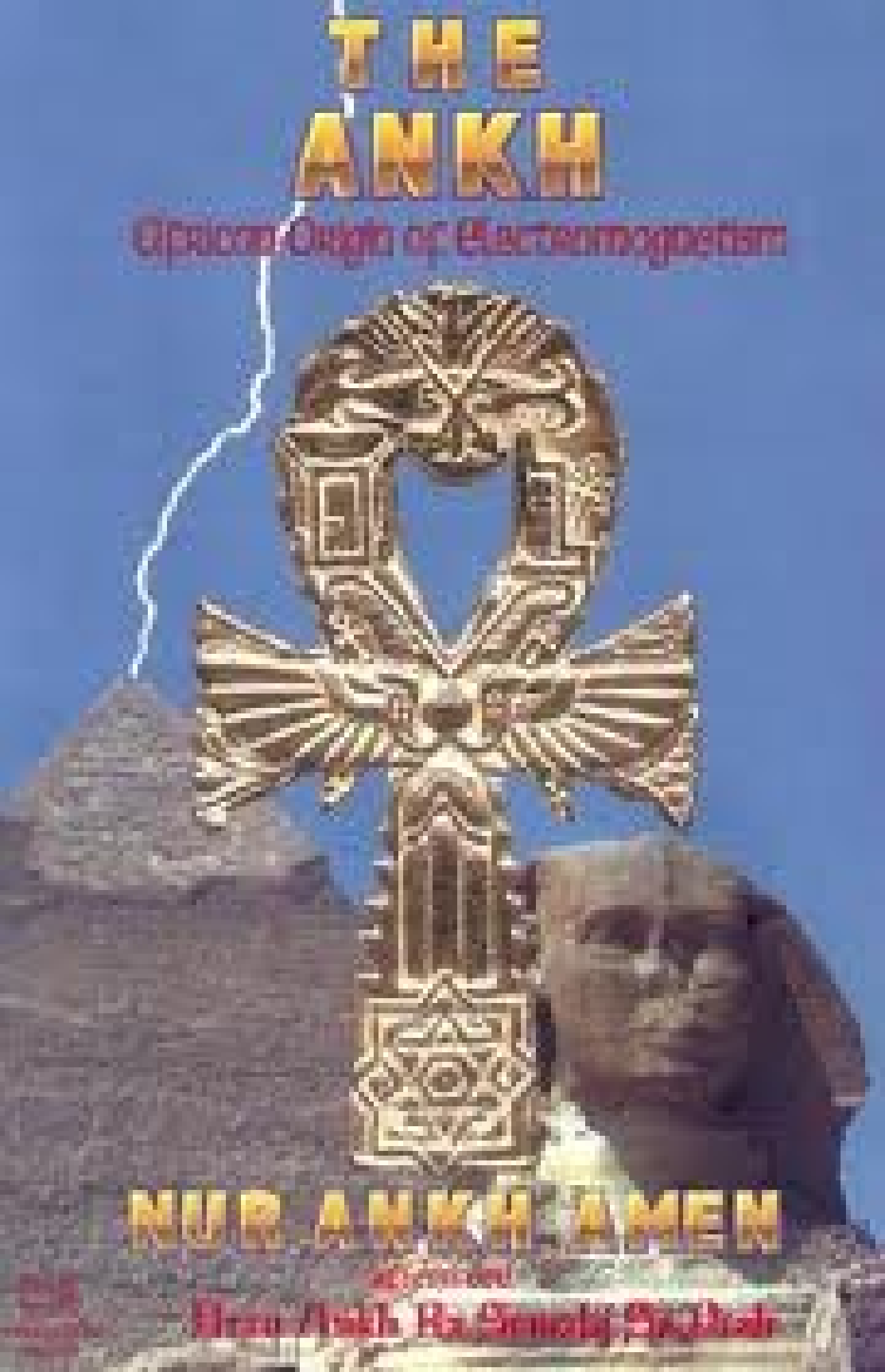

NUR ANKH AMEN

Hrdy Arsah Ra Simaiy Sirdhar

L2443
N87
999

UNIVERSITY OF N.C. AT CHAPEL HILL
00018843218

THE ANKH

African Origin of Electromagnetism

NUR ANKH AMEN

afterword

Heru Ankh Ra Semahj Sa Ptah

Adrift upon an electron sea
Dying of thirst how could this be?
With water everywhere,
I search for money without a care
Never once did I stop to think
maybe it's time to take a drink
Nur

BL2443
.N87
1999

THE ANKH

3-14-01AD

African Origin of Electromagnetism

NUR ANKH AMEN

AFTERWORD
HERU ANKH RA SEMAHJ SA PTAH

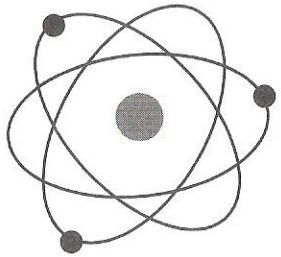

A&B Publishers Group
1000 Atlantic Avenue
Brooklyn, New York
11238

THE LIBRARY
THE UNIVERSITY OF NORTH CAROLINA
AT CHAPEL HILL

Acknowledgments

The Author wishes to thank the following for their contribution, although the views expressed in this publication does not represent their own.

Lee Boltin Picture Library
National Council of Churches of Christ
The Egyptian Organization of Antiquities

Contents

Introduction 9
Author's Notes 13
The Ankh and Popular Myth 16
Ankh Science and the History of European Electronics 25
The Oscillator 45
Melanin 55
The Spiritual or Electromagnetic Worlds 60
Osiris the First Resurrected Christ 64
The Heavens 85
African Physics: 101
The Science of Kemit 107
The Ankh of Science 117
Conclusion 121
Afterword 123
Glossary 129
References 131
Index 133

Introduction

DUE TO THE INCREASING INTEREST IN Egyptian science, the achievements of the Nile Valley civilization of Africa have been brought into focus. Depictions on tombs, pyramids and temples, provide a glimpse of the rich spiritual, cultural and scientific wisdom of Kemit.

These astonishing achievements point to the fact that Africa invented the Modern World. The origin of every scientific discipline, from algebra to zoology can be traced to the Nile Valley civilization in Africa. However in the face of overwhelming evidence to support an African origin of science and technology, the racist scientific community continues to deny its recognition. African Egyptologists fighting to return Egypt to Africa, have only been partially successful against the repressive colonial Academic Power that endeavors to hold our minds in slavery. The truth is the Real Estate over which we must be prepared to die, for a lie is far more dangerous, not only to ourselves but to our collective consciousness.

Now the war has taken a new turn on a different front: that of electronics. The most powerful tool of modern technology is electronics and its origin has, like most things, been attributed to the European minds of the early eighteenth century. With damaging consequences for our youth, the discovery of electronics has been claimed as the sole domain of Europeans without a single mention of any prior knowledge in Africa.

The European concept of discovery should be examined in the light of its political consequences on others, for a pattern exists which invariably results in domination and exploitation. The pattern eradicates the truth, and replaces it with lies designed to promote White supremacy. This is the prime directive: to maintain control over all other civilizations, by academic interference and distortion of traditional religious beliefs.

The discovery of the New World by Christopher Columbus is an example of this concept in action. Its awful brutality is fully documented and the results are evident on the native population even today, five centuries later. Discovery has nothing to do with original use, it is a means by which a Claim can be pursued and adjudicated by Colonial Powers.

The strategy is still used in all areas of endeavor, to allowing the expropriation of wealth, whether it be land, inventions, art or culture.

Evidence is mounting which proves that the so-called discoverers of electronics like Volta, Hertz and Benjamin Franklin, were merely Columbus's of the electronic frontier. The evidence also points to an extensive cover-up, which became imperative because of the legal aspects governing discovery. They are today known as Patent Laws. Subsequent knowledge of an invention could preclude any financial gains, rendering them useless to the new profiteer.

The cover-up and denial of prior electronic use in Africa allowed many inventions to be patented creating massive profit for the inventors and this new industry. One lie begets another and academia's role is to perpetuate these lies for future generations. However, to quote Professor Leonard Jeffries, "the truth is our most powerful weapon."

The parallel between the sudden rise in electronic inventions and European Egyptological excavations (grave-robbery) has been suspiciously ignored. It is no coincidence that the most important discovery in electronics, the pile or battery, and Napoleon's scientific expedition to Egypt occurred almost simultaneously.

Foremost in Egyptian electronics is the ☥ Ankh, and although the European Egyptologists claim that what it represents is still unknown, this is convenient ignorance.

The implication of Ankh Science is enormous and can only be fully understood through the spiritual awareness of the African, which allows him to appreciate and develop the technical sophistication with regard to its importance. I say Africans, because the ☥ Ankh is a symbol of our unique spiritual heritage. Although physical evidence of African electronic devices have long decayed or were expropriated for later examination by the plunderers of Egypt in the 18th and 19th centuries, there still remains sufficient proof of wide-spread knowledge and use in Kemit, prior to the Greek and Assyrian presence in the Nile Valley.

This book will be of special interest to those of us who have been educated in traditional electronics and science courses, and felt disenfranchised as White inventors were lauded for their contributions to a science our ancestors originated.

Author's Notes

IT IS THE AUTHOR'S HOPE IN writing this book, that serious investigation of this subject will follow, with the aim of restoring our traditional greatness and spirituality in these original African sciences.

My introduction to the ☥ ankh came in 1986 when I, as a jeweler, was asked, to make a silver ankh for a customer. I became extremely fascinated with the symbol that seem to communicate something about my ancestral past that resonated with my very soul. Trips to the local library and questions to so-called experts all gave a limited view on the subject. With the aide of my spiritual guide, Sankhamen, I investigated the Ankh for six years; studying every mention, drawing or article of jewelry. I came to the realization that the ☥ Ankh was the ultimate spiritual icon.

My traditional educational history was a disaster. I had difficulty understanding some concepts, because my professors were more concerned to label me as incompetent in science, rather than trying to educate me. The curriculum was designed to promote White

supremacy and discourage deeper understanding. There was something they did not want me to know, something that seemed to arouse great fear and anxiety in them. Somehow they knew I was different, that I was not buying "the great White scientist routine;" I wanted the truth. A truth that I later found them incapable of supplying. Was I asking to be educated or spoon fed?

I decided to wean myself from the American Educational System and pursue a deeper understanding of science through spiritual discipline and divine inspiration.

Through these methods I was taken to the heights of celestial wisdom and knowledge so vast in scope, that they could not be explained in the scientific precepts or language used today. My impressions are that spiritual precepts are a higher order of the same scientific concepts but separated by a yet unrecognized form of sensory perception. It was like trying to see with one's nose or attempting to describe a scene based solely on one's sense of hearing. No wonder the spiritualists were frustrated, they could not express to anyone what they knew to be true from these intensely personal spiritual experiences.

I have come to the conclusion that we can no

longer allow ourselves to be educated in the same manner, by a system based on cranial capacity, while ignoring our superior spiritual faculties, simply because they cannot be expressed in language to the satisfaction of our academic slave-masters. Divine inspiration is a supernatural form of communication and the ultimate goal of a truly liberated African Education System, a system that I contend is still intact today. Our professors and teachers are our ancestors, alive in a realm where belief is the door and the ☥ Ankh is the key.

What about credibility? Why do we need the Established Academic Apparatus to legitimize our theories, and why do we need degrees to expound on those we present? Why? Let the truth speak for itself.

They do not try to disprove the substance of what we are saying, instead they mount personnel attacks on us to discredit us, or worse , they will use one of our own. Maybe a respected Black Egyptologist, whose authority will be threatened by this revolutionary view of Kemit, which he, with all his scholarly acclaim could not bring to light.

The Ankh and Popular Myth

Anyone familiar with the ☥ Ankh will tell you it is the key of life and for some that explanation is sufficient, but for others the next question is, "what is life ?"

1. *Life:*
   - a: the quality that distinguishes a vital and functional being from a dead body.
   - b: a principle or force that is considered to underlie the distinctive quality of animate being compare
2. *Vitalism:*
   - a: an organismic state characterized by capacity for metabolism, growth, reaction to stimuli, and reproduction.
   - b: the sequence of physical and mental experiences that make up the existence of an individual.
   - c: one or more aspects of the process of living
3. *Biography*
   - a: spiritual existence transcending physical death.

Life is harmonious coordination of energy and matter, of such sophisticated construction and efficiency as to appear divinely ordained and self sustaining.

How could an object like the ☥ Ankh come to be representative of life? The only conclusion is that the Ankh is a mechanism that possesses a living characteristic.

An examination of the word and its usage in Egypt will reveal that the Ankh meant more than organic life.

By permission. From Webster's Ninth Collegiate Dictionary 1991 by Merriam Webster Inc., publisher of the Merriam Webster dictionaries.

ankh ☥ life, to live, living

ankh- ☥ "life, stability, blessing [or, good fortune]

ankh- ☥ ever-living," living forever

ankhu ☥ human life, male.

ankh ☥ the living incarnation of God.

ankh- ☥ "to whom life is granted." life giving.

ankh ☥ a living entity.

ankh ☥ the house of life

Ankhet ☥ the land of life, the etheric realm.

ankh ☥ life in a tomb.

The Encyclopedia of Hieroglyphics states:
The ankh is commonly known to mean life in the language of Ancient Egypt, where numerous examples have been found that were made from metal, clay and wood. It is usually worn as an amulet to extend the life of the living and placed on the mummy to energize the resurrected spirit. The gods and kings are often shown carrying the ankh to distinguish them from mere mortals. The ☥ ankh symbolized eternal life and bestowed immortality on anyone who possessed it.

There is no consensus among Egyptologists as to what object the ankh represents.

It is believed that life energy emanating from the ☥ ankh can be absorbed by anyone within a certain proximity. An ankh serves as an antenna or conduit for the divine power of life that permeates the universe.

The Amulet is a powerful talisman that provides the wearer with protection from the evil forces of decay and degeneration.

The Encyclopedia of Ancient Egypt defines the ankh as:

The symbolic representation of both physical and eternal life. The ☥ ankh is the original cross with a loop that was held by the gods. It is associated with Isis and Osiris in the Early Dynastic Period, and although the knowledge of what object it signified was lost, it remained a hieroglyphic symbol of life to the Christian era.

The ankh was used in various religious and cultural rituals involving royalty. In the Treasures of Tutankhamen, the ankh is explained away as:

A stylized version of a sandal strap.

Zolar's Encyclopedia of Omens, signs and superstition says:

The circle symbolizes eternal life and the cross below it represents the material plane. The ☥ ankh is called the "Crux Ansata," it is of Egyptian origin and can be traced to the Early Dynastic Period, appearing frequently in artwork of various material and in relief, depicting the gods.

It is usually held to the nose of the deceased king

by the gods to represent the breath of life given in the after-world. The ☥ ankh resembles a key and is considered the key to eternal life after death.

Its influence was felt in every dynastic period and survives as an icon possessing mystical power throughout the Coptic Christian Era.

Amen: The secret waters of the Great Pyramid.

The ankh was the key used to control the flow of water in the underground flow of the Nile, the way a tap is used in today's faucets.

The wire ankh has been used in Dowsing, which is the pseudoscience of detecting water underground.

Stonehedge: Large volts of energy have been emitted from a megalith to a wire shaped in the form of an ankh.

The ankh possessed by each god had power associated with that god. The ankh of Anubis related to the protection of the dead, that of Sekmet war, Hapi related to the living waters of the Nile and Amen, the spirit god, the breath of life. It is being suggested that the ankh box found in the tomb of Tutankhamen was actually a mirror case. Although no such mirror was found and mirror cases were not completely enclosed, as only the mirror face needed protection, it is still referred to as a mirror case.

The ankh box of Tutankhamen

The box contained Tutankhamen's ankh device, which today is no doubt sitting in the private collection of some wealthy European collector. Some say it's in the Vatican.

One very curious theory suggest the ankh ☥ produced high pitch ultrasound inaudible to our human ear but effective in frightening wild animals like jackals and hyenas. This would have been especially useful in the wilderness at night, protecting travelers from unseen dangers.

Not only were the living protected but the dead as

well. Ultrasound has the effect of frightening insects, rodents and maggots that would devour the bodies of the deceased. By producing tiny air bubbles in the body of pests, the ultrasonic environment is very uncomfortable.

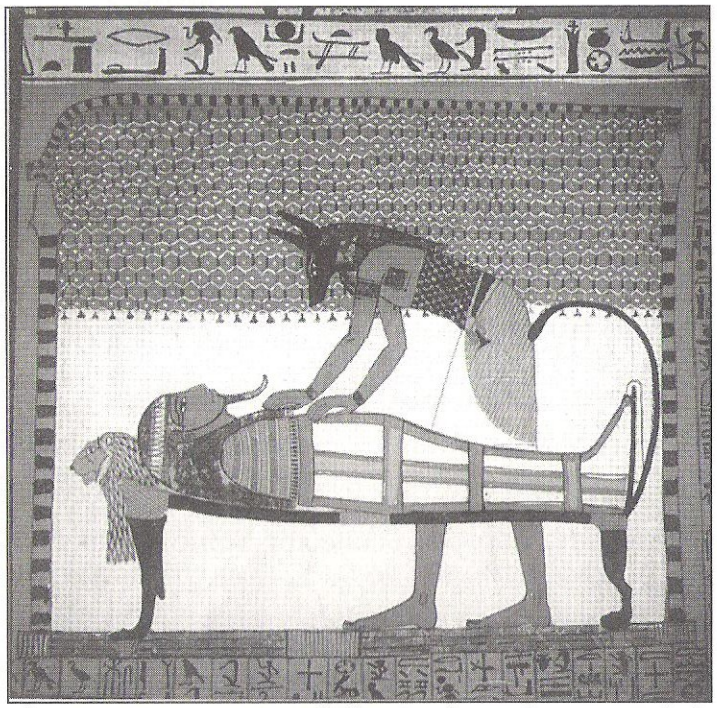

The deity associated with the dead, Anubis, is a jackal-headed god with his ears pointed up, able to hear what is inaudible to man.

Although the basic shape has remained constant, closer examination reveals subtle differences in design and construction of ankhs at different periods. The

different shapes suggest refinement or varied usage.

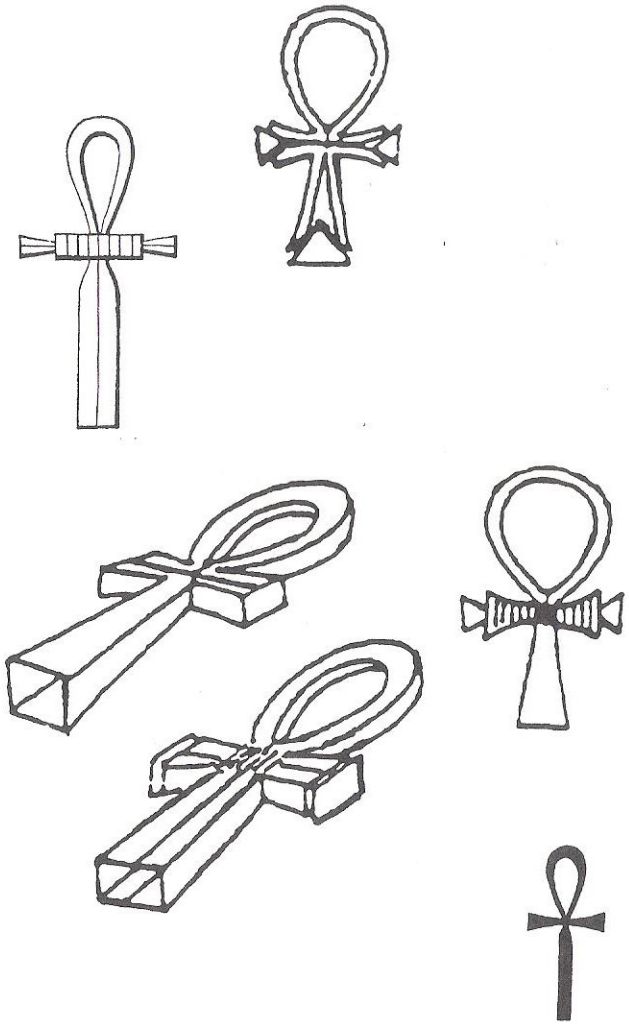

The ☥ ankh is often depicted in combination with other symbols, but it is usually attached to its power source, the djed.

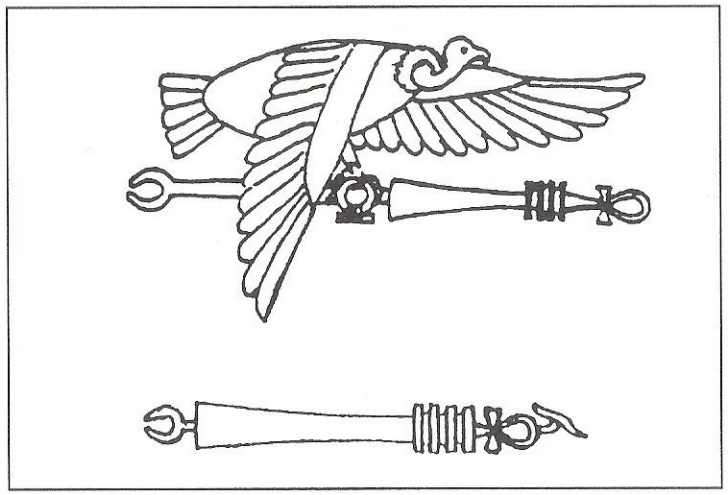

The gods Ptah and Khonsu hold this combination scepter.

Ankh Science and the History of European Electronics

THE EARLIEST RECORD OF studies in electrical and magnetic phenomena by Europeans, were done by priests of the Jesuit Schools in the 17th Century. The mysterious properties of amber, which attract small pieces of paper when charged, and the lodestone or magnet were investigated.

The core knowledge of these schools relied on the works of Greek philosophers like Pythagoras and Aristotle, who were students at the feet of the Africans in Kemit. The electron is named after the Greek word for amber.

Experimentations of the 17th Century culminated in the discovery of means by which large static electrical sparks could be produced by various contraptions which reproduced the effect of rubbing one's shoes on the carpet and touching a door knob.

An accidental discovery enabled electrical charges

to be stored in what is called a leyden jar or capacitor in 1742. This device stimulated interesting experimentation all over Europe and as far away as Japan. Electrical current could be passed from person to person in a chain and a terrific lightning bolt could be produced by the discharge.

A leyden jar or capacitor is constructed by placing an insulating material, usually wood or glass, between two sheets of metal. This invention was known 5000 years before in Ancient Egypt. Shrines were built of wood and covered with sheets of gold inside and out, then charged to protect sacred objects placed inside.

One of the most famous of these shrines was the Ark of the Covenant. Built by Moses the Egyptian, to protect the tablets of the Ten Commandments and to serve as a reminder of the presence of God. Once charged this portable shrine was potentially lethal if touched, as was evident in the Old Testament account. A priesthood specially trained to handle the shrine wore special clothing for protection and used a rod to ground or discharge the Ark. When the shrine was discharged by the priest it could be handled safely.

Exodus 25

10 "They shall make an ark of acacia wood; two cubits and a half shall be its length, a cubit and a half its height

11. And you shall overlay it with pure gold, within and without shall you overlay it, and you shall make upon it a molding of gold round about.

12 And you shall cast four ring of gold for it and put them on its four feet, two rings on the one side of it, and two rings on the other side of it.

13 You shall make poles of acacia wood, and overlay them with gold.

14 And you shall put the poles into the rings on the sides of the ark, to carry the ark by them.

15 The poles shall remain in the rings of the ark; they shall not be taken from it.

16 And you shall put into the ark the testimony which I shall give you.

17 Then you shall make a mercy seat of pure gold; two cubits and a half shall be length, and a cubit and a half its breath.

18 And you shall make two cherubim of gold; of hammered work shall you make them , on two ends of the mercy seat.

19 Make one cherub on the one end, and one cherub on the other end; of one piece with the mercy seat shall you make the cherubim on its two ends.

20 The cherubim shall spread out their wings above, overshadowing the mercy seat with their wings, their face one to another; toward the mercy seat shall the face of the cherubim be.

21 And you shall put the mercy seat on the top of the ark; and in the ark; and in the ark you shall put the testimony that I shall give you.

22 There I will meet with you, and from above the mercy seat, from between the two cherubim that are upon the ark of the testimony, I will speak with you of all that I will give you in commandment for the people of Israel.

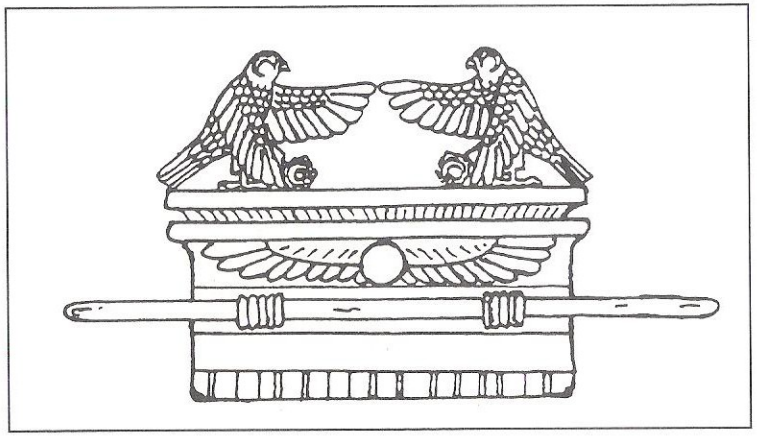

The Ark of the covenant

> And when they come to the threshing floor of Chidon, Uzzah put out his hand to steady the ark, when the oxen stumbled. And the wrath of the Lord was kindled against Uzzah; and he smote him because he put forth his hand to the ark; and he died there before God.
>
> *I Chronicles 13: 9*

When the positive and negative terminals of a charged capacitor or shrine where brought close to each other, a spark could occur and if the capacitor is attached to a stable source of current, charging and discharging occur at a specific rate.

The high voltage necessary to charge the shrine or ark was provided by the atmospheric potential difference between the sky and the ground. The electrical gradient above the earth is 60 to 100 volts per meter in

fair weather and increases to 6000 to 12,000 volts per meter under a thunderstorm.

Shrines were usually placed on high mountains, natural or artificial, to take advantage of this effect. Moses was no doubt an eye witness to the ark in the King's Chamber of the Great Pyramid at Giza. The sarcophagus contained the electrified mummy of the God-King Khufu as part of a high voltage circuit.

With this tremendous power, the God-king could still communicate his will in this world from the ankhet (the other-world). So powerful was this achievement that certainty of an afterlife was firmly engraved in the psyche of Egypt, lasting thousands of years. Communication was not necessarily in words, like radio, it was a spiritual communion or revelation which was impressed upon the mind resulting in a prophetic experience.

They were communications of a highly moral nature, coming from beings who had been freed from the sinful bodily nature and viewed us as being almost like children.

The pillaging and grave robbing in Egypt continued for hundreds of years by foreigners of every description. Total disregard for the African was the only rule, so much so that the mummies or corpses

were ground and boiled to make potions for sale. The European trade in mummies in the 16th and 17th century took on a feverish pace, because they were thought to have medicinal value. The melanin rich corpses of your ancestors were eaten by these savages.

By the 18th Century, the plundered skeletal remains of Egypt were under the control of intellectual scavengers in search of occult wisdom, by which they could feed the already mesmerized and addicted European aristocracy. Collectors were willing to spend fortunes to acquire these objects of antiquity, especially if they were rumored to possess some mysterious supernatural powers. Many of these curious objects are still kept secretly in private collections throughout the world.

In 1798 Napoleon recruited 167 scientists and technicians to accompany the French fleet in the conquest of Egypt. And in 1801 Volta, the so-called discoverer of the pile or battery, was given a medal and a pension by Napoleon for his contribution. The British invasion of Egypt in 1801 seemed primarily aimed at stopping the French savants from exporting anymore artifacts. It was viewed as a matter of National Security in those days.

Volta's discovery of the principles by which the

djed produced a stable electrical current, is considered to be the greatest invention of the 19th Century.

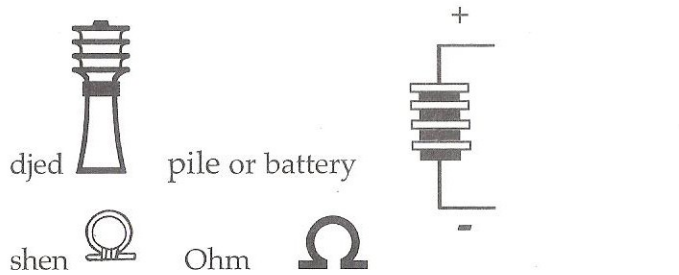

symbol for water electronic symbol
and hieroglyph "n"
Note the similarity between these symbols.

The Encyclopedia of Ancient Egypt defines the djed as:

The Egyptian symbol of stability. The djed is a pillar with bands across the top and base. This hieroglyphic symbol is associated with the Osirian mortuary cult practice of mummification. Serving as a powerful symbol in Egyptian magic and reincarnation, where it was used to symbolize the metamorphosis which the body underwent at death. The transformation of the physical being into its eternal celestial form.

The djed is thought to represent the backbone of Osiris, who's sparks were as bright as the Sirius Star.

It is also associated with Jacob's Ladder.

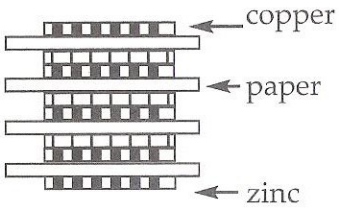

A djed or battery is made by placing two dissimilar metals on either side of a piece of papyrus soaked in salt water or acid. Greater power can be realized by increasing the number of units. For instance, a single unit of zinc and copper can produce 0.759 volts and the current has greater magnitude than that produced by electrostatic machines. Napoleon gave the Ecole Polytechnic University a battery with 600 units.

Passing voltage through all sorts of material, experimenters using these batteries were able to produce many chemical reactions and split molecules like water into hydrogen and oxygen.

Egyptologists have long suspected the use of direct current in Egypt by the many examples of electroplated jewelry and their knowledge of other chemical processes. The Egyptian word for electroplating of silver or gold is sem (sem means: a kind of, similar i.e. likeness of gold) which contains the ideo-

graphs conveying the entire process. The uas: an indicator of electric current and nub, a gold in solution. However rather than accept the scientific evidence, these artifacts are often attributed to accidental occurrence or some still unknown process.

A good example is their promotion of iron as a Hittite technology, despite evidence of prior usage in Kemit. Chiekh Anta Diop claims iron usage originated in the Ancient Empire (2700 B.C.) and that the steel blade of Tutankhamen's dagger, could only have been produced by very deliberate means. He theorized that such a purity of iron would require the type of sophisticated processes used in modern electrolytic refinement. The ideograph for pure gold is proof that the Egyptians knew that the electrolytic process led to the purest metals.

Plating was in common use during ancient times as evidenced by the many words for it. Yet no such words in Coptic (a Greek-Egyptian language) have survived, except in a reference to Alchemy from a variation of the word NHB neb; to smelt or work in metal (gold).

Alchemy, the transmutation of base metals, i.e. lead, to gold, was the most sought after secret of the Medieval Period. The origin of the word chemistry, it is a reference to Egypt and the philosophy held by the Blacks concerning the transmutation of the body to an immortal spirit.

Had Egyptology been in the hands of Africans or people without a racist agenda, more knowledge would have been gathered concerning these batteries. For instance, the origin of the lead acid batteries in popular use today, may well be Ancient Egypt. Both lead and lead oxide, the elements of its construction were widely used by 3000 B.C. But what is most interesting is the word tet (battery or djed), it sounds like teht, Copt ⲧⲁϩⲧ the word for lead.

With the principle of the djed fully understood, the principles of the Ankh remained the greatest challenge to European scientist, however it would not yield its secrets for another 87 years.

Early attempts to unravel its secrets were made by Henry, now credited with the discovery of self- induction.

Henry reports that...

When a short wire is connected across a battery, no

spark is perceived when the connection is formed or broken. But if a wire 30 or 40 feet long is used instead of the short wire, although no spark will be seen when the connection is made, yet when broken a vivid spark is produced. The effect appears somewhat increased by coiling the wire into a helix; and it also seems to depend in some measure on the length and thickness of wire...

Henry had rediscovered self-induction, the method of producing electricity from a changing magnetic field.

Hans Christian Oersted (1777-1851) observed in 1820 the magnetic action of an electric current, opening the study of electromagnetism. He observed the deflection of a magnetic needle during a thunderstorm.

In 1842, Henry observed that the effects of sparks in one location could be detected some distance away by their magnetic effects in another location. The analogy between the rippling waves, caused by a stone dropped in the center of a pool, and the spark transmitting rippling waves in an ether-like medium, were attributed to Henry. He also noted that the effects of a single spark could be detected thousands of feet away.

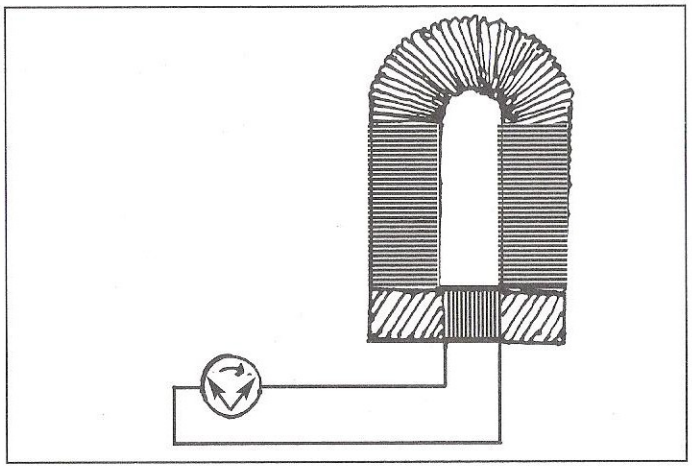

Hertz, experimenting with various sizes of loop detectors, was able to detect electromagnetic waves and determine quantitatively the effect known as resonance. Using the spark from an induction coil, electromagnetic waves could be detected in a loop some distance away. In other words, a spark in one location produces a spark between the gap of a loop detector in another location.

A hertz oscillator consists of a coil and a capacitor, made from two flat sheets of metal **B** and a spark gap **G**. One can easily see the similarity to an ankh oscillator, which produces a higher frequency because the coil is one turn or loop.

As mentioned before, the English defeated the French in Egypt, taking over the scientific explorations and

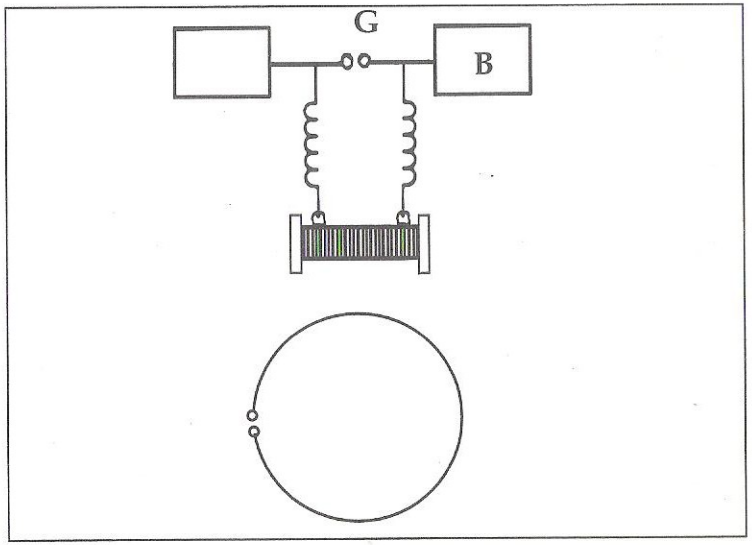

Apparatus used by Hertz to demonstrate the wave like nature of electromagnetism.

other antiquities excavated by the French. Among these were strange devices, numerous scientific and mathematical papyri and most notably, the "Rosetta Stone."

As a result of this scientific coup d'état, Newton, the famous mathematician provided the mathematical language to codify the theory of wave transmission and the action-at-a-distance properties of electromagnetic waves. Budge was able to translate the so-called Book of the Dead, and Sir Oliver Lodge discovered the properties of the ☥ Ankh.

Lodge was the first European to prove that lightning and sparks between the gap, were high-frequency discharges. Current would rather flow through the high resistance path across the gap, than the low dc-resistance wire loop. He was able to show that this occurs because of the high impedance presented by the wire loop at higher frequencies. Lodge was fascinated with the subject of psychic phenomena and communication with the dead. He spent much of his time trying to give scientific legitimacy to Spiritualism.

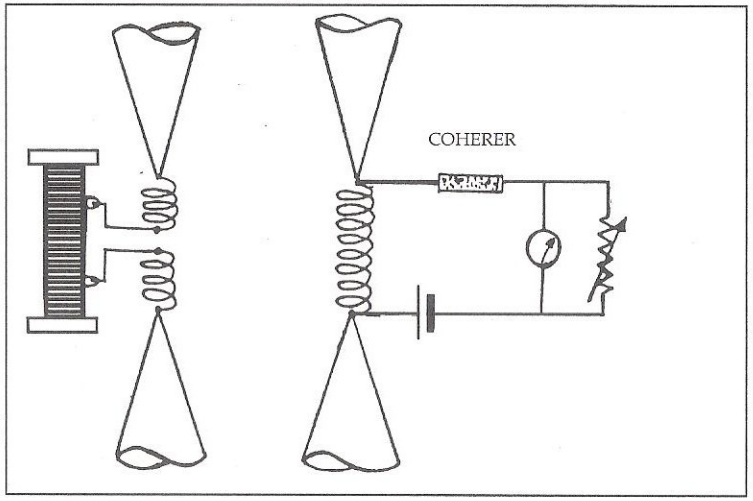

Lodge's transmitter and receiver.

You may have noticed a set of grooves or lines in the center of some ankhs, especially the one belonging to

Tutankhamen. Well, after the discoveries of Hertz, a Professor Righi invented a very sensitive spark gap made from a sheet of glass covered with tin foil. This foil was divided into several strips by very fine razor cuts. When used in a Hertz loop detector, sparks are easily observed jumping across each gap in the foil. I would think Professor Righi was 4000 years late.

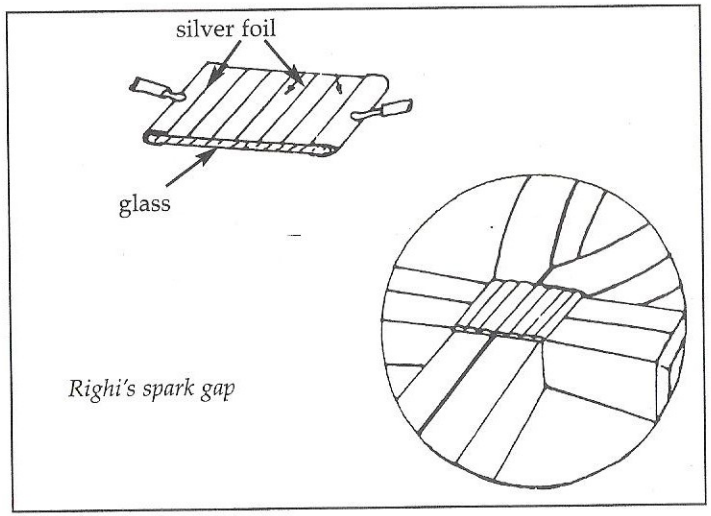

Righi's spark gap

The early telegraph and radio circuits used detectors of various construction and material. Detectors are required because the high frequency of the oscillator is inaudible. A very sensitive detector was galena (lead sulfide) crystals, some of which were found in Tutankhamen's tomb.

The hieroglyphic symbol for stone in the cen-

ter of the ☥ ankh, suggests the usage of crystal or even semiconductor technology. For instance, continuous wave oscillation can be produced by attaching oscillating components (capacitor and inductor) and a battery across a galena-galena contact. This black stone, kam a representative of Egyptian Spirituality, is the most sensitive crystal, detecting electromagnetic waves well into the infrared frequencies known as heat.

Maat with her eyes closed

If you subscribe to the belief that the ankh of a god had power associated with that god, then the ankh of Maat would be instrumental in the realm of law and righteousness. Maat is the goddess of truth, indispensable in the cause of justice. Her symbol is the feather of truth, against which the heart is weighed in the judgment. Therefore, she is representative of the solar archetype Libra.

The ankh she is holding, is the oracle of truth,

operating on a principle known as galvanic skin response (GSR) named after the Italian experimenter Luigi Galvani, who in 1750 discovered the reflex action of a frogs leg to electrical stimulus, it is widely used as a part of a modern polygraph test.

The conductivity of the skin varies with one's emotional state and what makes (GSR) so effective is how totally involuntary these skin responses are. An electrode is placed in the hand or taped to the finger of the subject and the conductivity or resistivity of the skin is measured in response to questioning. The skin is the key to the soul, portraying subtle psychological changes, it does not lie.

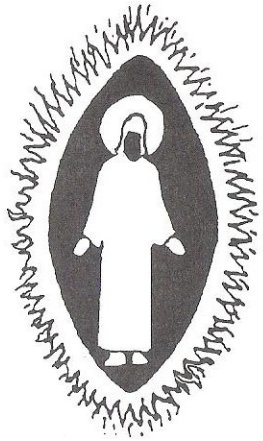

Vesica Piscis

Changes in conductivity of the skin alters the capacitance of the ankh, creating frequency changes as a result. By holding the ankh in this way, the emotional and spiritual responses can be communicated as a frequency modulated transmission.

A high frequency oscillator, like the ankh, has the advantage of producing high voltages at low current,

so they can be handled safely. Tesla was known to have attached a high frequency coil to himself and produced corona-like discharges from his body. Luminous effects produced by high voltage high frequency coils are used today in Kirlian photography. Objects appear to have a glowing aura around them, when subjected to high voltage.

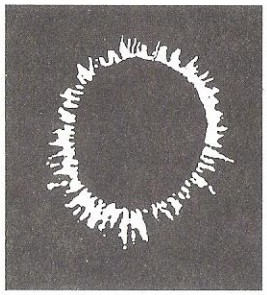

Kirlian photograph of a fingertip

The Europeans have skillfully rewritten history in such a way as to present themselves as the sole provenance of all science. Weaving a concoction so convincing, that one can only conclude that they alone have brought progress to the world. This part of their racial policy is important if they are to convince the world to tolerate their murderous onslaughts and exploitation as a necessary side effect in the cause of civilization.

One chord seems consistent in the propaganda of their discovery: a diversionary claim of ignorance and the naming of other Europeans on whose work they hold up as the basis or source material for their discovery.

Columbus used the diversion of seeking a route to

India, even though he was in possession of maps and accurate information gleaned from West African sailors who had been traveling across the Atlantic for 200 years. He claimed the Portuguese as his information source. It is the same with Volta and Galvani in the concealment of the piles Egyptian origin.

This stranglehold caused by European editorial censorship of Egyptology, is preventing the spiritual reconnection with our glorious past. Without the oppressive scrutiny of the Academic Establishment, you are free to develop your own conclusions about the ☥ ankh using your knowledge of electromagnetism as a guide.

It is imperative for us as Africans to develop a way of teaching electronics, that is both interesting and culturally relevant, if we are ever to compete successfully in the new millennium

FREE THE PEOPLE!!

The Ankh is essential to the liberation of African peoples throughout the world. Without the Ankh and it's associated technology we will remain dependent on the inferior technology permitted by the maintainers of the status quo.

As a Free Energy Generator the Ankh represents

the symbol of our liberation. It produces electricity indefinitely without any fuel or other energy sources such as wind, solar or hydro power.

Ankhs of different sizes or capacities may be used to power boats, cars or airplanes giving them infinite range. Imagine, never running out of fuel or paying another utility bill; enjoying the freedom to live in remote regions of earth and sky as UFOs that are powered by ☥ Ankhs.

The Oscillator

AN OSCILLATOR IS A circuit which produces or responds to electromagnetic waves, usually within a range of frequencies. The circuit may consist of only a single wire, crystal or transistor semiconductor device. They respond most strongly to vibration at their resonant frequency.

Everything in nature is an oscillator and God is the spark projecting all frequencies to which everything responds. Atoms and molecules are perfect oscillators, which respond to light by absorbing and emitting at specific frequencies. Even complex organic molecules like melanin exhibit quantum states once thought to be limited to atoms and molecules. An oscillator's ability to absorb and emit energy, explains a host of phenomena which were once considered mysterious.

Oscillator: ∿ a sine wave within a circle, is the modern symbol that corresponds to while the uraeus which is the ancient symbol, representing the serpents undulating or oscillating movements across the sand.

A circuit containing a capacitor, inductor and resistor are the components of an oscillator, which operates within a defined range of frequencies depending on their values.

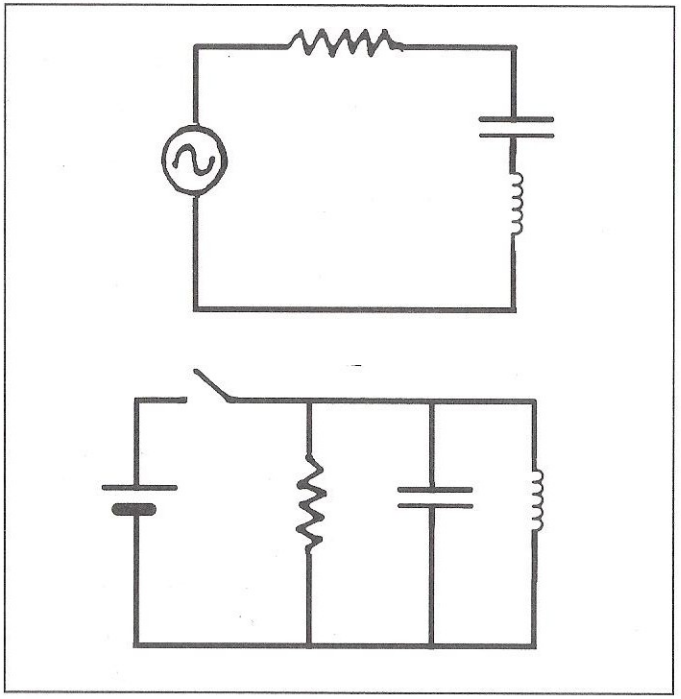

Because of the frequency-restricted nature of these oscillators they are called filters. They are also called tank circuits because of their ability to store energy.

When the switch is opened, oscillations are produced by the opposing nature of the reactive components. However, without a method of amplification in

the LC circuit, the resistance eventually quells these oscillations. The result is a dampened waveform.

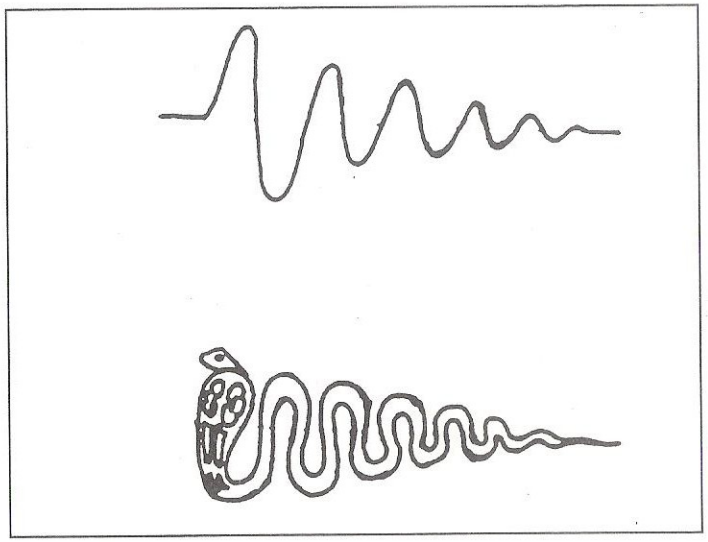

The components of a typical oscillator can be traced to the Amen Priesthood, which wielded power based on knowledge kept secret from the masses.

The symbols in many hieroglyphic reliefs are in fact elements of electronic circuit design, meant to convey knowledge of the hidden force of electromagnetism, to the future generations of this Order. These symbols would hold supreme religious significance only to the descendants of a race of Photonic Beings.

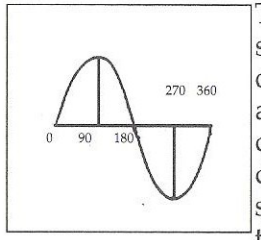

The mathematical description of a sine wave is attributed to Fourier, one of the 167 French savants who accompanied Napoleon in the conquest of Egypt. His formula describing a wave as a distinctive sum of sine waves, defined by their frequency, amplitude and phase, predates the European discovery of electromagnetic waves by almost a century.

Like Volta's discovery of the djed, Fourier's mathematical description of the serpent, has made a profound impact on all areas of analysis from sound to quantum physics.

The scepter (rod, conductor or connector) is an important electronic component, used in the conveyance of current through a circuit and in discharging a capacitor (shrine).

The gods are often shown holding the scepter to symbolize their power over the lethal force of electrical discharge. This rod, having a loop at its base which allowed a free swinging connection, is a switch. Once planted by the loop, it was thrown against the shrine to affect an electrical discharge flow to ground.

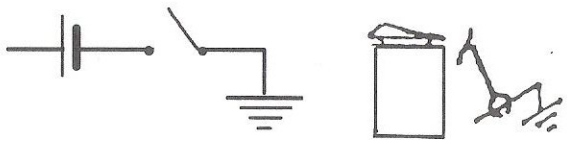

Hence the phrase "throw the switch."

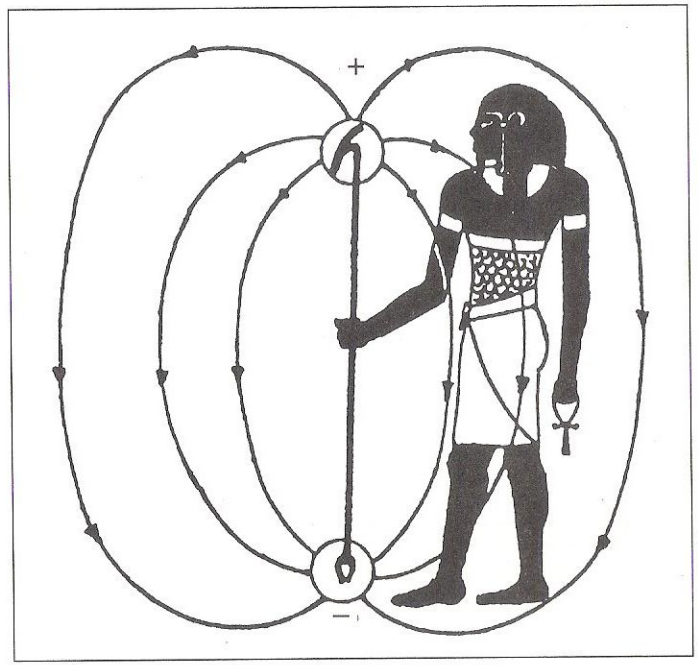

The electric field around a dipole antenna.

The mark of the beast Set (, a canine) and the mark of Cain are one and the same, the symbol of Christendom (+). The ion only the Setian could consider positive. While the ideograph of the earth is the ground and a source of the electron (-).

The Egyptians were fully aware of the fact that a spark produced high-frequency discharge and understood the inductive properties of rods and wires.

> So Moses and Aaron went to Pharaoh and did as the Lord commanded; Aaron cast down his rod before Pharaoh and his servants, and it became a serpent. Then Pharaoh summoned the wise men and sorcerers; and they also, the magicians of Egypt, did the same by their secret arts. For every man cast down his rod, and they became serpents.
>
> *Exodus 7: 10*

A conductor wrapped in coiled fashion, as a serpent is known to coil itself around a rod, is an electromagnet.

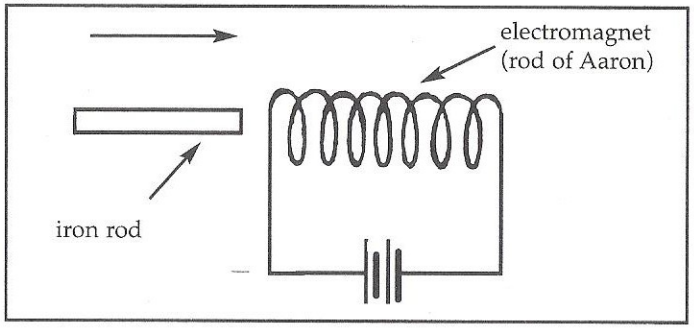

... But Aaron's rod swallowed their rods.

The Egyptian name for this coil circuit is qeb, which is also the name of the multi-coiled mythological serpent Qeb. The magnetic attraction of a coil was well known to the Egyptians, 4000 years before the European named Gauss, Henry or Weber as units of magnetic force.

Another device attributed to Moses is the Helicial

antenna, made in the form of a copper serpent and suspended on a pole. It was supposedly built in the wilderness (Egypt), and as the golden calf, represented the goddess Hathor, the serpent was symbolic of the goddess Isis The serpent built by Moses was destroyed by Hezekiah during a period when Israel was under intense pressure from the Assyrians to abandon their spiritual, cultural and military alliances with Egypt.

> He removed the high places, and broke the pillars, and cut down the Ashe'rah. And he broke in pieces the bronze serpent that Moses had made, for until those days the people of Israel had burned incense to it; it was called Nehushtan.
>
> *2 Kings 18:4*

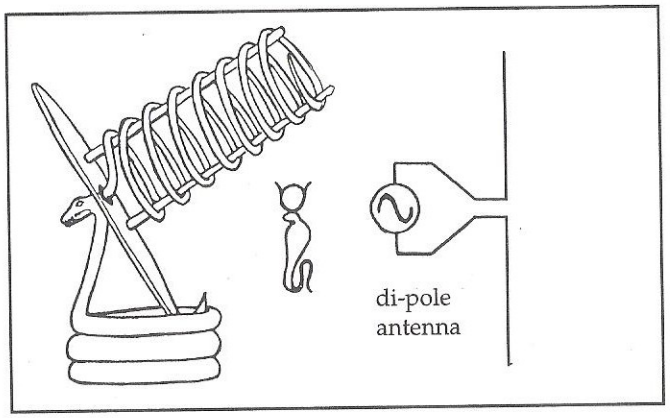

Antennas are resonant circuits which detect a speci-

fied range of frequencies. Two forms of these are the half-wave dipole and loop antenna. Used extensively by Hertz to prove the existence of electromagnetic waves, the loop antenna was used to detect the waves emitted from a dipole antenna.

loop antenna

At the turn of the century the basic concepts of the Ankh were understood, as evidenced by the Duddell's musical Arc. The arc or spark-gap has negative resistance, where the resistance to electron flow is greatly reduced. If an oscillating circuit (inductor and capacitor) is placed across a spark-gap, oscillations are induced in that circuit.

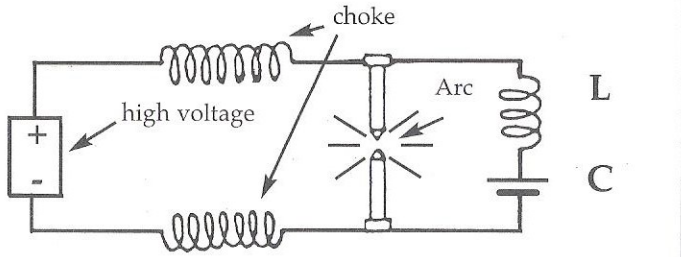

A metal loop in close proximity to the spark-gap could be excited into oscillation, due to the ultraviolet rays ionizing the air between the gap of the loop.

Perhaps the closest circuit that describes the ☥ ankh's operation is the Liebowitz Mercury Generator,

invented in 1914. Using a mercury vapor tube instead of a spark-gap, continuous oscillation was produced.

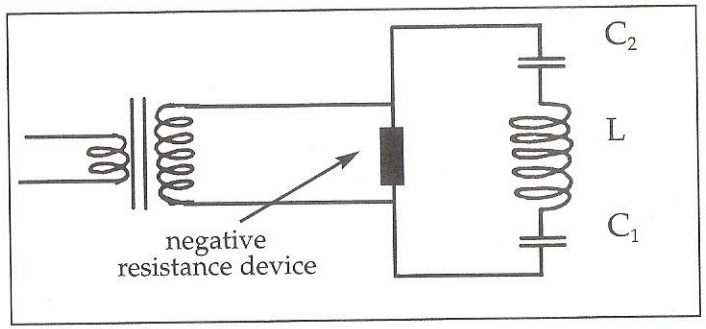

With the advent of other negative resistance devices, like the vacuum tube and the transistor, spark-gap oscillators were no longer used. They were considered noisy for the purpose of communication.

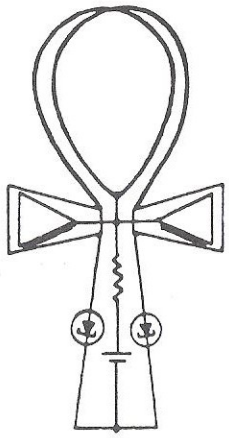

The modern equivalent of the ankh, using Tunnel Diodes.

The question still remains, whether a method of amplification existed in Ancient Kemit. An essential component in the production of continuous wave oscillation, amplification is necessary in overcoming the dampening effects of circuit resistance. It is my belief that both evacuated glass tubes (vacuum tubes) and semiconductor type active components were known

and used by the Egyptians.

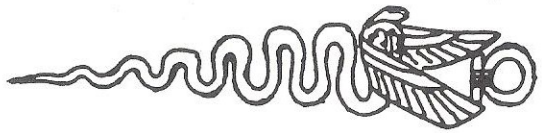

symbolic representation of amplification.

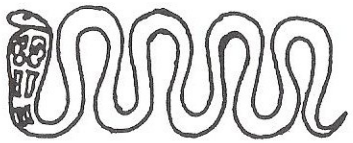

a representation of continuous waves

Continuous waves have been produced in circuits using an ark light bulb as an active device. And it should be remembered, that the first vacuum tubes were invented through experimentation with ordinary light bulbs.

You maybe asking yourself why the Europeans did not use the ☥ Ankh for its intended purpose, or how could an object so popular in the Nile Valleys of Africa be virtually ignored in Europe.

This is because the Europeans lacked melanin, which is an organic semiconductor, that acts as a detector (the sixth sense). Without an electric skin, an ankh is practically useless. However the principles on which the ankh operated would give birth to the many electronic gadgets in use today.

Melanin

MELANIN IS A PIGMENT IN THE skin of people of color, which is produced by melanocyte cells, and deposited in the epidermal tissue. Melanocytes are neuron-like cells which produce melanin and numerous proteins in response to electromagnetic radiation.

The production of melanin starts with the conversion of tyrosine by the enzyme tyrosinase to 5, 6-iodole quinone.

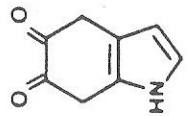

chemical stucture of 5, 6-iodole quinone

Tyrosinase is a copper-containing enzyme which catalyzes the conversion of tyrosine (an amino acid) and stabilizes the conformation of the melanin structure.

The metal ion acts as a backbone for the polymer structure of melanin, resulting in a metal-organic complex. The amino acid forms peptide-linked formations with the metal ions. The ligands are attached at the nitrogen atoms.

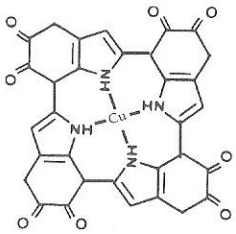

The proposed structure resembles a swastika, with the interactions occurring between the central Copper (Cu) ions. This complex metal compound is the only substance in the body that qualify as a organic semiconductor.

Black and brown melanin granules are oval in shape, forming a small dipole antenna. The field due to one dipole can induce a dipole in another melanin granule nearby.

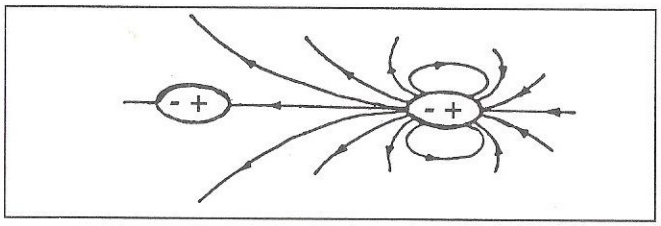

Melanin granules act as tiny primitive eyes, forming a large neural network structure, whose function is to absorb and decode electromagnetic waves. Neural-network computers are learning machines which are made with a number of receptors that can adjust their weights (quantitative properties) to produce a specific output.

The bodies of Africans contain massive amounts of melanocytes that encode all life experiences in their

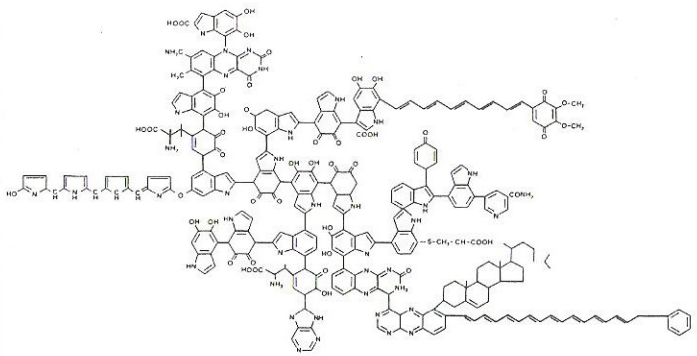

chemical stucture of melanin molecule

melanin production, with the aim of creating an actual- reality state after death. During life, visions appear frequently and ESP is common.

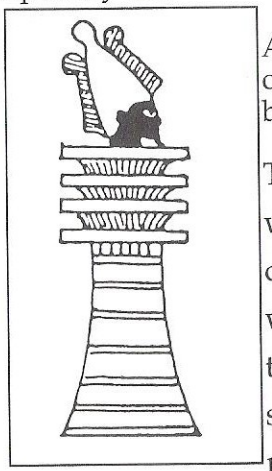

A representation of a higher form of life, in the superconducting body of Osiris (the mummy)

The reason for mummification was to preserve the skin which contained a living neural-network of melanin. The conductivity of melanin increases with age, so Tutankhamen's mummy is more alive in the spiritual plane than our own. Consider the difference in flammability between living green trees and coal.

As a semiconductor, melanin has an energy gap. The absorption of energy is required before electrons can jump into the conduction band and make melanin conductive. An increase in conductivity increases the sensitivity of melanin to the electromagnetic world of etheric beings, astral projections and spiritual entities.

At low frequencies, the conductivity of melanin is small, but at ultra high frequencies (UHF), melanin is a superconductor. Maximum current flows only on the skin, due to the skin-effect, at melanin's UHF resonant frequency.

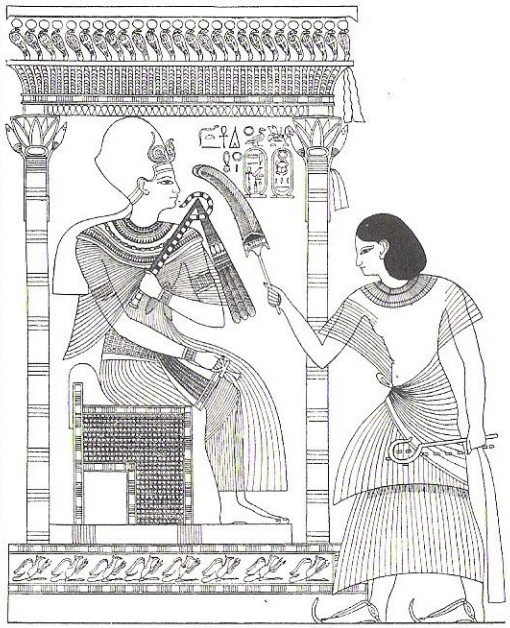

King Tutankamen on his throne

Melanin is the most important substance in the human body. It is an oxidized form of RNA, which enables the body to coordinate the production of Proteins

needed in cellular repair. Wherever there is cell damage melanin is seen surrounding the site, functioning as a neurotransmitter in coordination with melanocyte protein production for the repair of damaged DNA.

Knowledge of the medicinal value of melanin is suppressed by the Medical Establishment in order to deny its supremacy.

The most damaging attack on African health is the promotion of albino domesticated animals for consumption. In fact only albino animals are considered domesticated. The yellow pigment in chicken and the lack of tyrosinase in albino animals, are responsible for premature aging.

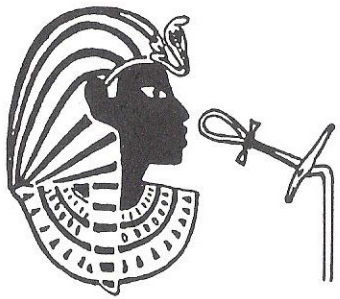

Illustrates the curative properties of negative ions, the electromagnetic energy of mental concentration can be directed through the breath of life, by a competent Psychic healer.

The laying of hands on which is known to emit energy from the aura.

The Spiritual or Electromagnetic Worlds

THE MYSTERIOUS NATURE of God is central to Christian doctrine. Most believers and their preachers maintain the mystery through ignorance and confusion. The various interpretations of the Bible leaves one wanting for a simpler understanding and a more practical version of God. Despite the many scientific discoveries into the nature of the world, a separation between science and religion has prevented the understanding of anything spiritual, from an objective point of view. This separation is the result of a pathological condition among non- pigmented people, which renders them incapable of becoming in tune or sensing these higher forces directly. Imprisoned by this condition, our white ruler's viewpoint on spiritual affairs cannot be trusted despite its domination over more traditional nature-based religions of the world.

It is obvious that the early Christians' religious concepts came to Europe from Ethiopia, as evidenced by the language used to describe the spiritual realm.

ethereal 1. a: of or related to the regions beyond the earth b: celestial, heavenly c: unworldly, spiritual.
2 a: lacking material substance: immaterial, intangible.

ether 1 a: the rarefied element formally believed to fill the upper regions of space
b: the upper regions of space: heavenly
2 a: a medium that in the undulatory theory of light permeates all space and transmits transverse waves
b: the medium that transmits radio waves

ethic the discipline dealing with what is good and bad and with moral duty and obligation.
2 a: a set of moral principles or values
b; a theory or system of moral values (the present-day materialistic)

Ethiopic 1 a: a Semitic language formally spoken in Ethiopia and still used as the liturgical language of the Christian church in Ethiopia
2 a: the Ethiopic group of Semitic languages.

utopia 1: an imaginary and indefinitely remote place 2 a: a place of ideal Perfection esp. in laws, government and social conditions.

By permission 1991 by From Webster's Ninth New Collegiate Dictionary by y Merriam Webster Inc., Publisher of the Merriam Webster dictionaries

The rise of materialism brought new language, electromagnetic replaced the word "ether," in describing the heavenly medium, thus erasing the link between spiritual and natural phenomena. The pathological condition of race caused them to enforce this separation academically and religiously, by claiming that the classical ether was unnecessary and the vacuum was somehow endowed with odd and unusual characteristics. With their strong emphasis on materialism, all electromagnetic theory was co-opted for material implementation, therefore losing all spiritual application.

Anyone displaying an interest in electromagnetic spiritualism was considered to be a pseudo-scientist and ridiculed. There were many devices which claimed to photograph, or record the voices of the dead. These ghost detectors were routinely rejected by the materialist' scientific community.

The seventies brought renewed interest in Psychic Phenomena and ESP around the world. Knowing that belief is the prerequisite to the use of ones psychic ability, the scientific community conspired to take over this research with the aim of disproving and suppressing any attempt at legitimizing this field. So most people continue to experience vivid dreams, visions,

premonitions and a host of strange occurrences, which scientists refuse to recognize because of their threat to the materialistic power structure.

African culture and history are rich with examples of the unity of spirit and matter; heaven has always been our birthright. Today those faculties that put us in tune with the spiritual world are weak from lack of exercise. We have allowed the TV, radio and the telephone to replace our telepathic abilities, few now believe or would accept the notion of astral-travel.

Service to the materialist's society requires the denunciation of the spiritual. When bills are on our minds, we dream less as we focus on the depressing condition of this earthly prison, with our tormentor on our backs. The ☥ Ankh is the key to the door of eternal life, strengthening our faith in a world unseen, where our souls can be free.

Osiris The First Resurrected Christ

Statue of Osiris

THE CORRELATION BETWEEN the myth of Osiris and the story of the Christ have been illustrated by many prominent historians, who have shown that the evolution of Christianity is rooted in the religion of Isis, Horus and Osiris. This religion survived in its last outpost in Nubia until the Temple at Philae was destroyed by Justinian in 6th century A.D.

Although there are many versions, the essential theme of the Osirian legend, states that Osiris was once king of Egypt. He came to an untimely death at the hand of his brother Set, who had the parts of the dismembered body of Osiris hidden in various locations all over Egypt. Isis, wife and sister of Osiris found all the parts and was

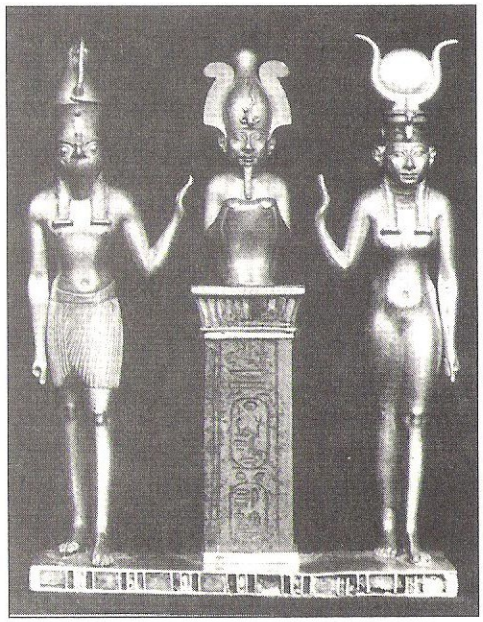
Horus, Osiris and Isis

able to reconstruct the body with the exception of the penis, which was thrown in the Nile and eaten by fish. Her lamentations were heard by Ra, who sent his fourth son Anubis to wrap the body with bandages and perform all rites due one of his stature. Isis caused the breath of life to enter into the body by the rapid beating of her wings, whereupon Osiris was resurrected and became the king of the other world. While hovering over the body she became pregnant and later conceived a son Horus, who would avenge his fathers death.

Hence-forth all the dead of Egypt were considered Osiris, wrapped in the bandages of the familiar mummy, with the hope of resurrection in the spirit world of the ankhet 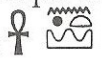 "the land of life."

If the Egyptians seemed to be preoccupied with the dead, it is from a belief that life on Earth was merely a preparation for an eternal life. The proof of this could be demonstrated by the ankh, which become the symbol of life, because of its ability to detect the energies of that realm.

Further proof that life on Earth was preparation for another life is the manner in which we dream. Dreams are our fledgling entrance into the spirit world while we are still alive. Our earliest attempt at spiritual flight are short. While dreaming the penis is usually erect (the phallus of Osiris is unnecessary) and the body is kept rigid by powerful chemical secretions from the brain; which prevent it from acting out the experience. During those brief seconds we are as if dead, yet alive in the other world.

> The days of our years are three score years an,reason of strength they be four score years, yet I labor and sorrow; for it is soon cut off, and we fly away.
>
> *Psalm 90: 10*

According to Gerald Massey's book *Ancient Egypt Light of the World* , Osiris is the Corpus Christi. The word Christ comes from the Greek word "Kristos" which means "anointed." In Egypt "krst" means; to embalm, to knot, to make the mummy.

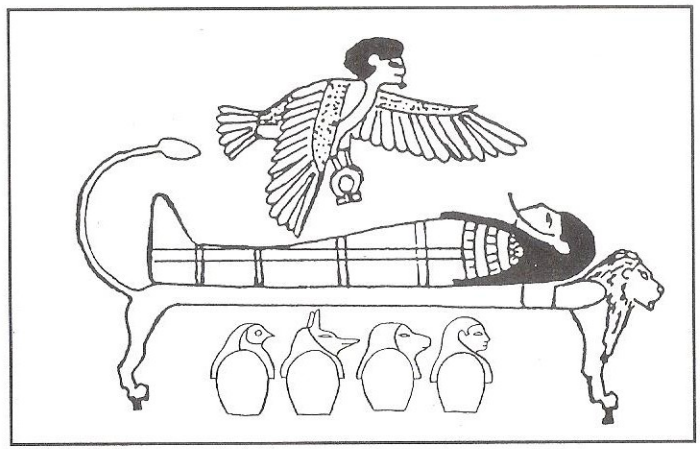

Central in Christian theology is the resurrection of Christ from the dead. This concept has an undying appeal for the masses of humanity from the dawn of the human experience.

> The thief cometh not, but for to steal, and to kill, and to destroy: I am come that they might have life, and that they might have it more abundantly.
>
> *John 10: 10*

Acceptance of the Egyptian definition of "Krst" could put the confusion within Christianity to rest. For Christianity did not start with the Jews, but was of Egyptian origin, revolving around mummification and the spiritual resurrection of the dead. The followers of Jesus, after his supposed death and resurrection, were only later called Christians because their beliefs were similar in nature to what was practiced in Egypt

for thousands of years.

Unfortunately the misinterpretation of this mystical gospel would ultimately inspire the outrageous behavior of ingesting the flesh of mummies (Krst, Christ) in hope of attaining immortality. This felonious religion let loose among a canine race, already predisposed to cannibalism, found easy acceptance in a god who offered his flesh and blood as a means of salvation.

> And he said to me, "It is done! I am the Alpha and the Omega, the beginning and the end. To them that thirst I will give water without price from the fountain of the water of life."
>
> *Revelation 21:6*

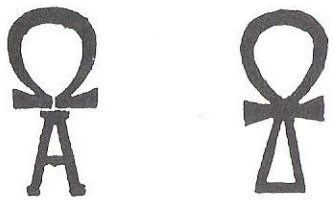

These Greek letters, alpha and Omega, have come to represent Christ.

In the original myth, Horus lost an eye in his victorious battle against Set. After his wound was healed by Thoth, he gave the eye to Osiris to eat, which vivified and strengthen him. The eyes of Horus are the sun and moon. Our sun is living water, made mostly of hydrogen that has not suffered the death of oxidation.

There is much evidence to conclude that life energy may be harnessed to prolong the life of the living. Our ancestors took full advantage of this wholistic science, allowing some to live hundreds of years. This technology predates the Early Dynastic Period in a time when the Earth, according to the Egyptian, was inhabited by demigods and kings. Obviously the Ancients had different priorities. The accumulation of wealth was superseded by a desire for wisdom and life.

The mythological story of the creation of man, recorded in Genesis, was taken from the original Egyptian story of the creator god Khnum who formed man and his Ka on a potter's wheel.

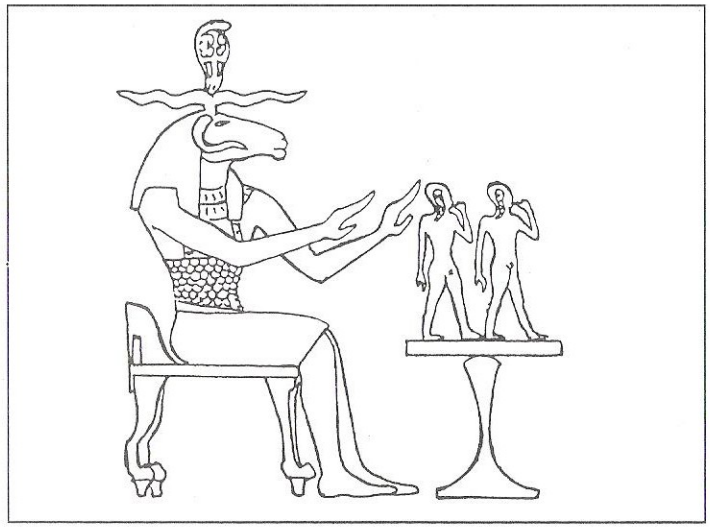

The hieroglyphic symbol which represents Khnum consists of a Tet between the raised arms of the Ka symbol and the word aun, which means light-tower, another name for the God Amen.

> "Allah" is the light of the heavens and the earth. A likeness of his light is as a pillar on which is a lamp. The lamp is a glass, the glass is as it were a bright shining star-lit from a blessed olive tree, neither eastern nor western, the oil whereof giveth light, though fire touch it not - light upon light. Allah guides to his light whom he pleases."
>
> *Surah 24:35*

The Tet is the orthodox illustration of a tree and according to Gerald Massey, it represents the eternal life after death.

> The Lord God formed man from the dust of the ground and breathed into his nostrils the breath of life, and man became a living being. The Lord God planted a garden in Eden away to the east and in it he put the man he made. The Lord God made trees to grow up from the ground, every kind of tree pleasing to the eye and good for food; and in the middle of the garden he set the tree of life and the tree of the Knowledge of good and evil.
>
> *Genesis 2:7-9*

Notice that the tree of life was not planted but set in the middle of the garden. After Adam and Eve ate of

the fruit of knowledge of good and evil they became knowledgeable.

> The man has become like one of us, knowing good and evil; what if he now stretch forth his hand and takes the fruit of the tree of life also and eats it and live forever? So the Lord God banished him from the garden to till the ground from which he has been taken.
>
> *Genesis 3:22*

The tree of life was no ordinary tree.

> She replied. "We may eat the fruit of any tree in the garden. But the tree in the middle of the garden, we may not eat or even touch it lest we die."
>
> *Genesis 3:2*

The Tet is a high voltage power source, touching it may have been lethal to those without knowledge. Adam, who now possessed knowledge knew that the ankh portion of the tree was a high-frequency source that could be handled safely.

Tet fruit tree., Danger do not touch.

Now we have come full circle and in our midst is the tree of good and evil, the modern computer and the Tree of Life, which is the Ankh Science of our Spiritual Nature. The moral question faces our gener-

ation, whether to trust Satan's path or the path which leads to Eternal Life as gods.

For it is not simply a question of a machine, but the programming of falsified information aimed at seducing you from your Divine Nature.

Who said you were ignorant, for you were created clad in Divine Wisdom and light.

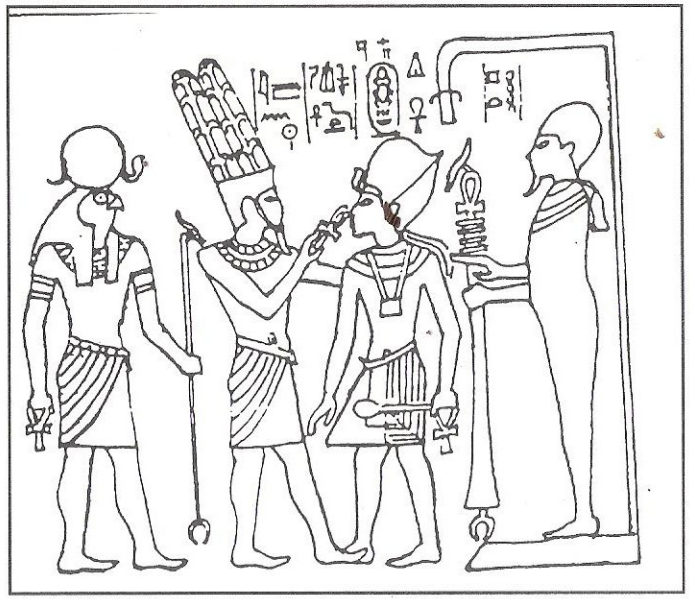

The depiction above shows Ra, Sun-god and his etheric double, Amen-Ra, the hidden force behind the sun. Our sun has a surface temperature of 6000 degrees, yet its corona (spirit or aura) exceeds 2 million degrees. The difference in temperature is caused by laser-like

effects produced by the strong electric and magnetic fields within ionized gases over the highly reflective surface of the sun.

King Tut is also depicted with his etheric double and like Ra his name Tutankhamen expresses the hidden source of life. All living systems have electromagnetic phantoms. The phantoms of atoms and molecules are called photons, they are the essence of nuclear life, governing the energy states of the material world.

The ankh is held to the nose area because of its sensitivity to electromagnetic waves. The area between the fifth and sixth chakra is centered around the nasal cavities, where a massive quantity of neural receptors, responsible for the sense of smell, are exposed to the environment. The sensations are often confused with sound because of their proximity to the ears, sounding like the noise you hear from a TV set tuned to an unused channel or like the sound of the ocean.

Sensitivity can be increased and with practice one can detect the presence of high frequency waves close by. Some highly spiritual people, are so sensitive to these waves, that their neurons can demodulate radio broadcasts, causing them to hear voices. Many end up in psychiatric wards because they hear voices other can't.

The gods, who are a spiritual race of photonic beings, made man in their own image and likeness, to serve them on Earth. However man became aware of his own divinity and sought to be like the gods while in the flesh.

The story in Genesis also relates the longevity of Adam and his sons, whose average life span was 900 years.

> Then the Lord said, "My spirit shall not abide in man for ever, for he is flesh, but his days shall be a hundred and twenty years"
>
> *Genesis 6:3*

So it is the spirit (photonic or electromagnetic energy) which gives man the ability to live an extended life span. A tree deprived of a important nutrient like sunlight or water would wither and die in a shorter time. Without this vital ingredient we grow old and die prematurely.

The first signs of aging are apparent in the skin and is related to some melanin dysfunction. There is an increase in yellow pigment and among Caucasians there is premature wrinkling and melanoma. If the resonant frequency of melanin was known, the appropriate energy could be absorbed to vitalize the skin and delay aging.

Electromagnetic radiation may cause cancer among Whites because non-pigmented skin, has no defense against a high frequency wave which penetrates deeply in human tissue.

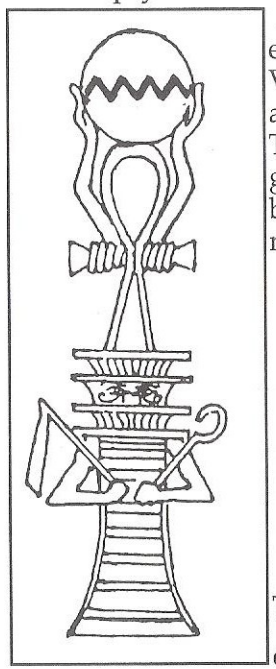

A drawing of the World's First electronic clock, built by Nile Valley Africans to represent their ancestral spirit Tet Ankh Ka Ra, The Ankhi (Khnum, chronos). The glowing globe was slowly rotated by the precise electromechanical movement of the arms.

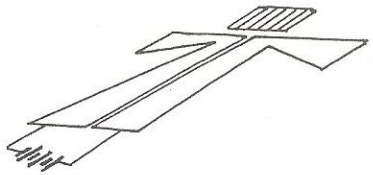

The Tree of Life provided sufficient power for the creation of electromagnetic radiation (angelic or spiritual beings) and the rotation of the world. The Egyptians not only knew the world was round, they knew the force which turned it was a perpendicular electric and magnetic field. They used elements of electronic circuitry to represent the spiritual nature of life. The circuit on the right of the tree is a relaxation oscillator, charging

and discharging through the spark gap, to provide excitation for the loop circuit in the figure below. A minimum of 300 volts is required to produce a spark across the gap.

The relaxation oscillator is an inefficient method of excitation, because the discharged cannot be synchronized. However, with the use of kam (galena), a more effective continuous wave excitation oscillator can be made that requires significantly lower voltage.

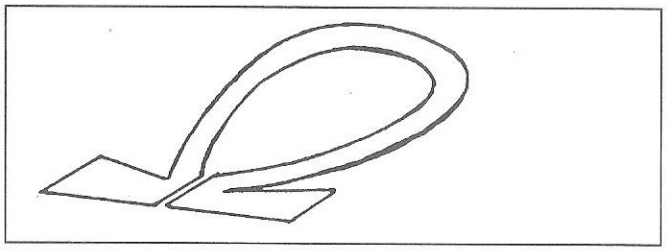

The loop and plates above are also a tank circuit which is shunted across the gap and capacitively coupled to the input resonant circuit. This transmitter radiates UHF power to ankhs of comparable size within the vicinity.

The spark was considered to be an indication of Gods presence because within a spark all frequencies are generated, therefore, all circuits are compelled to respond. The large capacitance of the shrine or ark could provide powerful sparks of lightning sufficient

to excite an ankh into oscillation, especially when this discharge was through the gap of a transmitting ankh circuit.

A circuit consisting of a loop and plates could also provide lighting at night or in the darkness of the tomb. It has always been a mystery as to what method of lighting was used to allow those intricate paintings to be produced on the walls of some of those tombs. No soot was found on the ceiling suggesting that some other method besides the torch was used. Again we are asked to believe it was done with mirrors reflecting sunlight, because the truth of electric lighting in tombs would suggest widespread use similar to our modern use, but superior, because power would be wireless transmitted..

The pectoral of King Senusret II embodies the spiritual and scientific principles governing the universe. The ankhs illustrated have coils on either side of the loop, and Heru (falcon) is standing on the senk Ω , a divine light.

When this type of ankh was constructed and attached to a battery, it operated like a motor and produced high voltage spikes at audible frequencies.

The coils on both sides of the loop, form an electromagnetic switch, which switches on and off under the influence of magnetic attraction and the flexibility

of the loop. The high voltage produced is a result of the sudden interruption of current flow through the coil.

This by itself did not seem strange, for on closer examination of the output, it was discovered that the

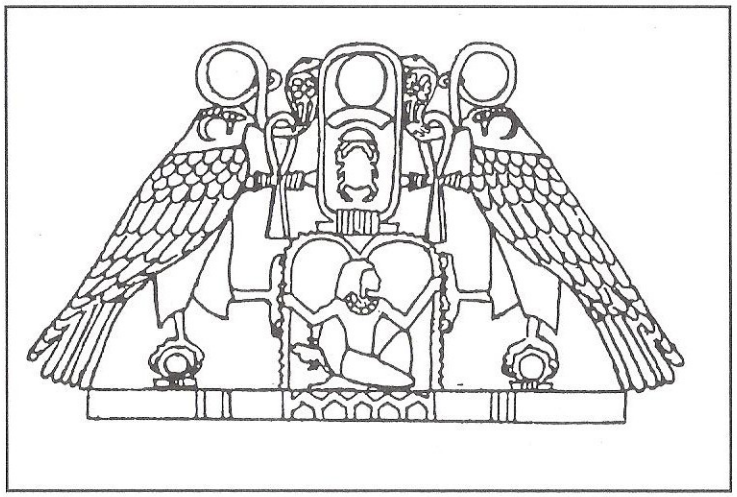

output power exceeded the input power. With the use of rectifiers and rechargeable batteries, the excess power kept the ankh in a state of perpetual motion. The latent energy within the magnetic field was harnessed to produce electricity.

The kneeling figure in the center of the pectoral is Heh the god of Eternity, holding the notched chain of infinity.

This type of ankh was undoubtedly the power transmitter for the loop circuit of the senk.

snk , to see the light

snk light rays

snk , night or darkness (note the senkh is upside down over the symbol for sky)

sen or kh senk or senkh.

sen means, similar, dual, two or alike.

Similar to today's fluorescent lamp, the senk was used extensively before the numerous invasions put this light of Egypt out forever.

Since there are no known surviving examples of the senk, its basic operation can only be extrapolated from fluorescent light theory and examples depicted in Egyptian Art. The primary elements of the senk's construction are:

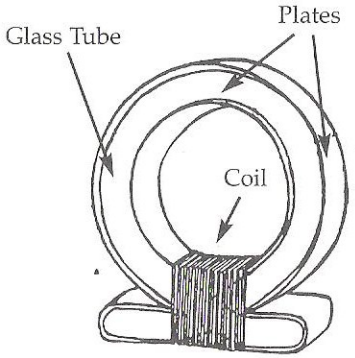

1. partially evacuated glass tube
2. coil or loop (inductance)
3. plates (capacitor)
4. DC. voltage

A partially evacuated glass tube can be made to glow when placed within a

rapidly changing electrostatic field. The air in the tube is ionized by the presence of high-frequency oscillation in the coil and plates, at 10 to 50 MHz. The ionized gas in the tube becomes conducting and establishes direct current flow from the battery through the tube, further increasing the intensity and duration of the glow.

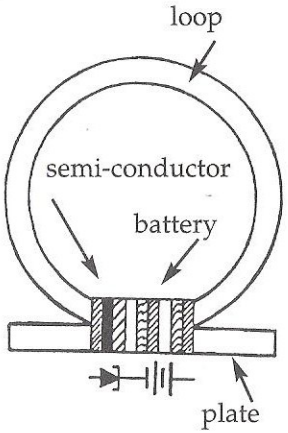

The ionized gas tube of the senk can be adapted for use as a diode (rectifier) or as an active device by exploiting it's negative resistance for amplification. By adding an extra set of plates to isolate the DC voltage, the senk could easily be modified to produce continuous wave oscillation. However since the Egyptians had knowledge of galena, it is likely that the vacuum tube was abandoned in favor of more efficient semiconductor technology. If all the components of modern radio transmission and reception were known and used in Kemit, 4000 years before their re-emergence in this century, then the super technology of the UFO's need not have come from

other planets, but could have developed right here on Earth.

These are the questions which will arise to disturb the status quo if knowledge of ☥Ankh science is made public. It would necessitate a complete re-examination of Kemitic religion to explain the connection between the African and these electromagnetic circuits, which were of such high spiritual significance. This would provide a direction for research into what we truly are as a people.

The atmosphere is a rarefied ocean inhabited by numerous spiritual entities living in realms which vary in activity levels between night and day or during cloudy weather conditions which causes the spirits to take on a higher density.

The electronic circuitry of the Egyptians was used to facilitate greater contact with the spirit world, known as the Kingdom of Heaven. The lords of this Kingdom are called the "grays" and many consider them negative aliens because of the fear they arouse and their enigmatic behavior.

"The fear of the Lord is the beginning of wisdom."

Ankh Circuits

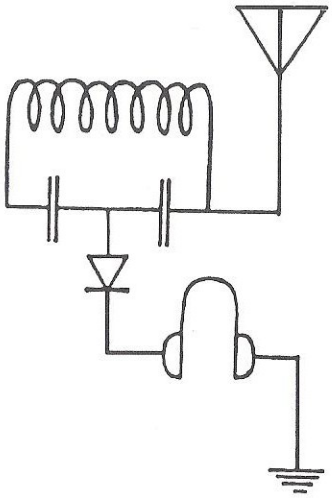

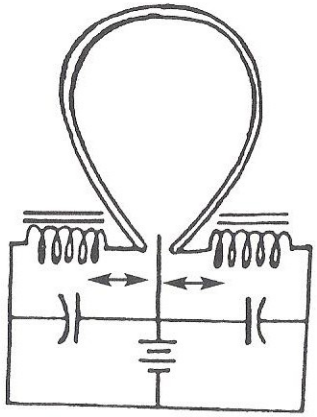

Ankh Circuits continued

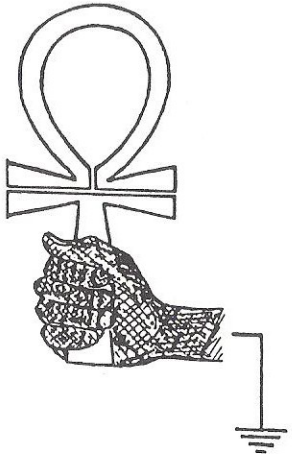

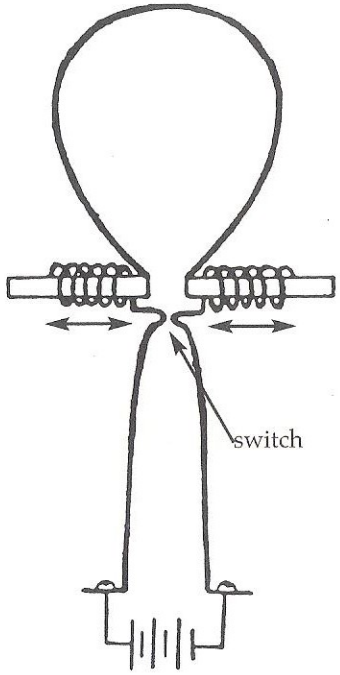

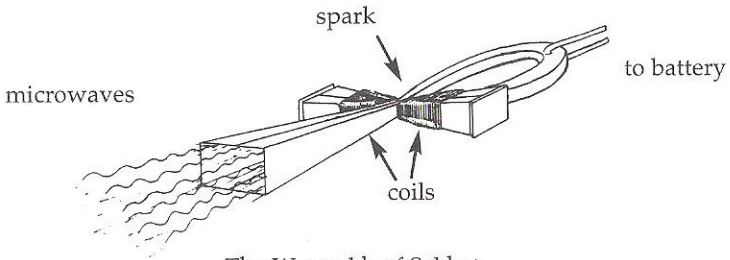

The War ankh of Sekhet

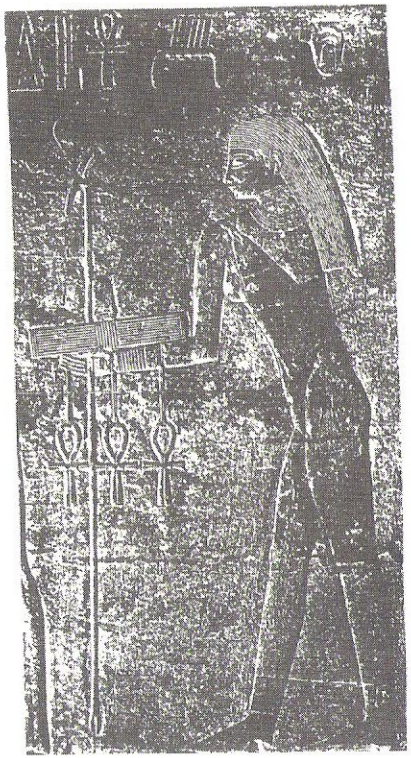

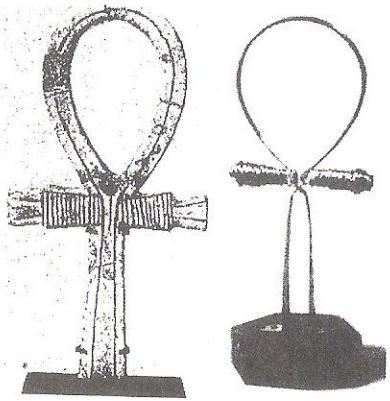

The Heavens

ALTHOUGH THE EGYPTIANS considered heaven to be the abode of the eternally blessed, it contained all the elements of a blissful earthly life. The dead were usually buried with their earthly possessions and provisions to sustain a life similar to their earthly one.

Everyone seems to agree that this realm is located in the sky above the clouds somewhere, but no one wants to specify its exact location. Here also, the separation of matter and spirit create

the usual confusion characteristic of modern religious theology and the materialist scientific aristocracy. If both spiritual and scientific evidence concerning heaven are examined objectively by someone with a unified perception, they would conclude that heaven was in the ionosphere. Our ancestors, who were not afflicted with this modem schism, knew this also.

> In the beginning God created the Heavens and the Earth.
>
> *Genesis 1: 1*

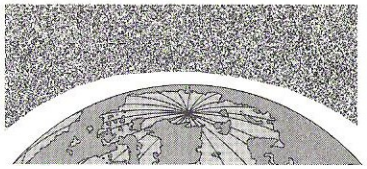

The aureole of the Earth created by the breath of Ra.

The Egyptian symbol of this Creator-God Khnum is the most profoundly esoteric, containing all the elements which could explain the nature of divine existence.

This is the god that created night and day by the rotation of the earth and made man on this revolving potter's wheel.

-island vacuum glass tube ... au

-breakdown discharge, "N" water, aurora.

-Ka, spirit, power, image-double.

-Horizon, the God Amen, aun; which means lamp or light post

-Tet, djed, battery or voltage Osiris, Jacob's ladder.

As we have discussed before, the evacuated tube provides an easy path in the flow of electrons, creating the

ionization and negative resistance used for continuous waves, and glowing when these electrons and ions recombine to form neutral atoms.

All these activities occur in the near-vacuum of the ionosphere, which is a region of high electron density, about 300 km above the Earth's surface. This layer is maintained by ultra violet radiation and high energy particle emissions from the sun. The high voltage (potential difference or electric field) between the earth and the ionosphere, represented by the Tet, is responsible for the rotation of the planet. This is due to the Earth's magnetic field being perpendicular to that electric field and in exactly the same way as the force which rotates the shaft of an electric motor created. The four bands at the top of the Tet represents the fact that the ionosphere is divided into four layers, the two uppermost levels F1 and F2 merge into one layer at the first hour of the Tuat (night).

Because of its high electron content, this layer reflects electromagnetic waves, allowing extended range to radio transmission.

> And he who talked to me had a measuring rod of gold to measure the city and its gates and walls. The city lies foursquare, its length the same as its breadth; and height are equal. He also measured its wall, a

hundred and forty-four cubits by a man's measure, that is, an angel's

Revelation 21:15

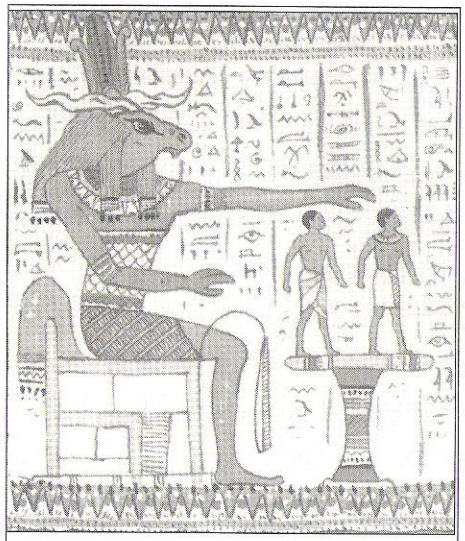

Khnum at his potter's wheel fashions a person out of clay. One figure represents the physical body while the other represents the spirit. Both came together to create one new being.

The description of the measurement are those of a sphere whose height is defined by the cut-off frequency of 1,440 Mhz. Because the measure of a man, that is of the angel is the Ka 𓂓, ten million.

And he dreamed that there was a ladder set up on the earth, and the top of it reached to heaven; and behold, the angels of God were ascending and descending on it! And behold, the Lord stood above it and said, "I am the Lord, God of Abraham your father and the God of Isaac; the land on which you lie I will give to you and to your descendants; and your descendants shall be like the dust of earth ...

Genesis 28:12-14

Heaven

Genesis Chap. 1-1
And the spirit of God was moving over the face of the waters.

The word "ankh" also means mirror, "that which sees the face," in the language of ancient Egypt.

Genesis Chap. 1-27
So God created man in his own image, in the image of God he created him; male and female he created them.

Earth

Chap. 2-7
then the Lord God formed man of dust from the ground, and breathed into his nostrils the breath of life; and man became a living being.

An

Phonetic Value	Hieroglyphic character	Meaning of the ideograph
ankh	☥	life
n	𓈖	water
kh	𓎛	dust (symbolized by a sieve)

examination of the word ☥𓈖𓎛 ankh, reveals the nature of our earthly and heavenly incarnation in the eternal cycle of life. The word contains three ideographs, each representing an aspect of the Trinity, Father, Son and Holy Spirit. If you can accept the concepts ... Our

Father who art in Heaven,... I and the Father are one and... Son of man, you will be well on your way to an understanding of eternal life.

From the Egyptian point of view, ;(pet) heaven was made from a material called baa. This baa (baa; metallic substance i.e. black meteoric iron) was known to have metallic properties such as conductivity and reflectivity.

The ionosphere is a mirror image of the electromagnetic emissions from the Earth, no matter how faint. The spiritual characteristics of every object on Earth is duplicated in Heaven, because their emissions cause the electrons there to vibrate in such a way as to emit an exact electrical image of all earth transmission.

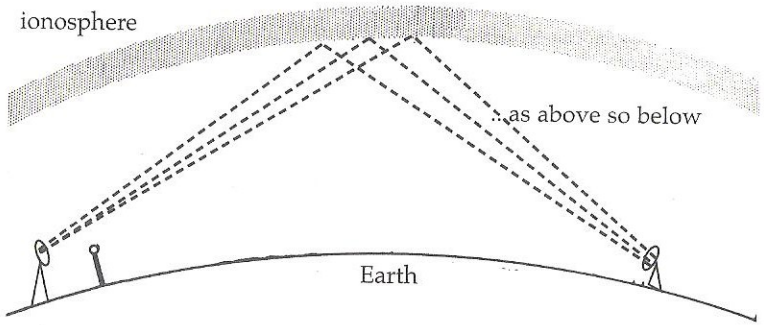

The body was preserved with the knowledge that its electromagnetic nature would continue to be reflected in the Heavens. The concept of a spiritual abode in heaven is as perplexing to the materialist of

today as it was in the time of the Messiah. In John chapter 3, the Messiah attempts to explain to a White man why he cannot go to or understand heaven.

> Jesus answered, "Truly, truly, I say to you, unless one is born of water and spirit, he cannot enter the kingdom of God. That which is born of the flesh is flesh, and that which is born of spirit is spirit. Do not marvel that I said to you, 'You must be born anew.' The wind blows where it wills, and you hear the sound of it, but you do not know whence it comes or whither it goes; so it is with everyone who is born of Spirit." Nicode' mus said to him, "How can this be?" Jesus answered him, "Are you a teacher of Israel, and yet you do not understand this? Truly, truly, I say to you, we speak of what we know, and bear witness to what we have seen; but you do not receive our testimony. If I have told you earthly things and You do not believe, how can you believe if I tell you heavenly things? No one has ascended into heaven but he who descended from heaven, the Son of man. And as Moses lifted up the serpent in the wilderness, so must the Son of man be lifted up, that whoever believes in him may have eternal life.
>
> *John 3:5-14*

It would be fruitless at this point to attempt to untangle the enormously confusing theology of the Trinity proposed by Whites who, having discovered themselves excluded, sought to deny the Divinely Blessed the knowledge of their birthright. The secret

ingredient, for which our race has been made to suffer is melanin, the dust of the Kha. The word Kha ranges in meaning, from dead body or corpse to powdered medicine or simply the dust of the dead.

Allow me to digress for a moment to examine the use of dust in the early days of radio. A phenomenon, which permitted the detection of radio waves, was the response of dust particles to electromagnetic waves caused by a spark. Particles of dust tend to stick together (coherence) aligning themselves in such a way as to increase the current flow in a certain direction. The early rectifiers, known as coherers, were made by filling a tube with an electrically responsive dust or filings, (See Lodge's transmitter and receiver). When there was a passage of electromagnetic waves the coherer would conduct, however once aligned they were no longer responsive and needed to be tapped periodically to loosen the particles to respond to the next incoming wave. This is the reason why the dreamer's body must be kept rigid, like the dead, for movement disrupts the alignment reducing conductivity.

Christ said to Mary, "Touch me not, for I am not yet ascended unto my father."

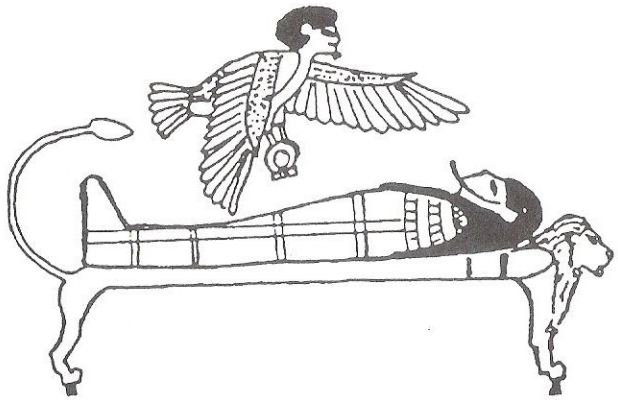

The senkh held by the Ba represents the electromagnetic emissions of the Kha.

The majority carriers (type of charge transport) of melanin are electrons as opposed to (+) holes. Therefore, in the Judgment of Osiris, described by the Millikan's oil drop experiment, the etheric body rises.

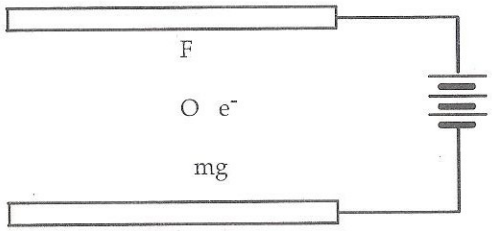

In Millikan's oil drop experiment, an electrically charged oil drop is suspended between two plates by the upward force of an electric field against it's weight mg.

Who Knoweth the spirit of man that goeth upward, and the spirit of beast that goeth downward to the earth?

Ecclesiaste s 3:21

The confusion as to the direction of charge flow displays Greek ignorance and Egyptian wisdom. Electrons flow from the so-called negative potential, known as the cathode, which canes from the Greek word "Kathodos" meaning 'the way down'. The Egyptian root of the word "Ka," is represented by the raised arms representing the true direction of electron flow, from the ground upwards.

Each melanin granule is a tiny feather and, when energized by the ankh of levitation, the gods were given the power of flight.

The ankh of levitation was related to the goddess of the Upper Kingdom, the Divine Vulture. These vultures are often seen soaring around large clouds during a thunderstorm. The reason for this behavior was thought to be related to upward convection currents of air. And it was believed that these birds used these currents to attain great heights without effort. This assumption neglected the fact that thunderclouds possessed strong electrostatic charges which exerted a force of attraction on the birds in the same way that a charged plastic comb attracts small pieces of paper.

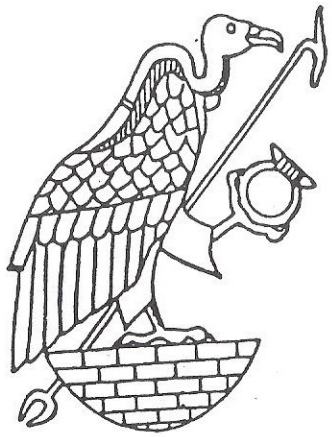

The goddess Nekhbet represented this principle, by which the Messiah was taken up into the clouds. By holding a high frequency emitter like the tet-ankh scepter, one could soar into the sky as the Medieval witches were said to do. At sufficiently high frequencies, the dipole of the melanin granule cannot respond rapidly enough to remain in step with the changing electric field. Therefore, a displacement current arises and the granule behaves as a dielectric, subject to the force of electrostatic attraction and repulsion

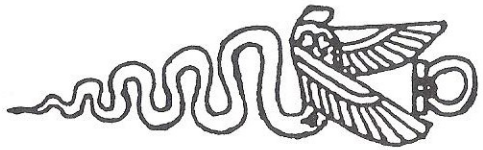

The winged serpent is the most compelling argument in the link between spiritual and electromagnetic phe-

nomenon. While representing all the elements of airborne electromagnetic wave transmission, it evokes the wisdom and spirituality associated with Isis.

SETI (Search for ExtraTerrestrial Intelligence)

In October 1992, NASA will engage in the study of the heavens under the guise of a search for extraterrestrial intelligence in the galaxy. This project, with the very Egyptian sounding acronym, will use the World's largest radio telescopes and advanced multichannel scanners to canvas the sky in an attempt to discover the source of angelic communications.

It is no coincidence that the frequencies of interest to these researchers is around the 21 cm wavelength of the constituents of water (hydrogen: H and hydroxyl: OH), called the "water hole." This is the most prudent choice since the Messiah referred to these beings as composed of water and spirit.

These beings have the some color as the clouds, a glowing gray, and it is said that their appearance is like unto the "the sons of men," that being like children.

Despite the sophistication of the computerized equipment, the project is doomed to failure. Even if angelic communications were detected among the

noise of terrestrial transmission, the language of the angels is unknown. I am not suggesting that communication with Angelic Beings is impossible. What is required is nothing less than Ankh Science in the hand of the Oracle.

The synthesis of amino acids (the building blocks of life) under the condition of a primordial atmosphere, with the use of electrical discharge, confirmed the existence of extraterrestrial life. If the chemical composition of amino acids (hydrogen, oxygen, carbon, nitrogen and other trace elements), can be found

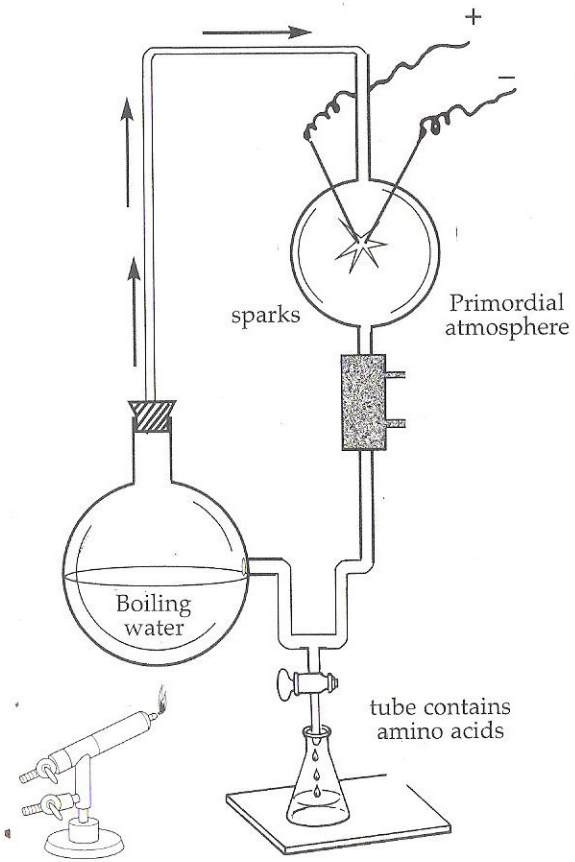

in the upper- atmosphere, then why should life be limited to the earth. The synthesis of more complex molecules (protein and nucleic acids) by linking together amino acids, involves the bonding of an amino group (H_2N) and an acid group (COOH). The C—N bonding results in the removal of (H and OH) a water molecule, exactly what SETI is searching for. In this hospitable environment, of the heavenly ocean, the holographic projection of the recently dead is reconstructed, giving birth to the Son of man. This is what is meant by the return of Christ in the clouds, now revealed in the present age of Aquarius.

It is said that these beings traverse the heavens in boats or barges. These UFO's are the Fishers of men. The Government is fully aware of the existence of these beings, and has launched an extensive campaign of disinformation to prevent its citizens from knowing the truth. How could they explain to their people that the lowly Africans are merely beings in a caterpillar stage, destined to be transfigured into an image of splendor and glory. Creatures whose total existence is so eloquently expressed in the life cycle of the Scarab beetle.

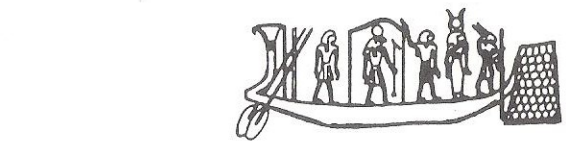

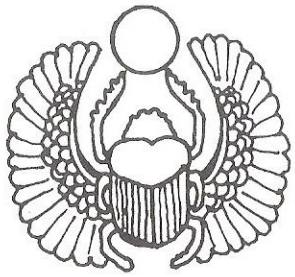

The Scarab Beetle

Symbol of Christianity the fish or UFO's

The Scarab, symbolic of the god Kheper is a dung beetle commonly found in Egypt. It. is usually seen rolling a ball of dung which contains it's larvae, around the countryside, creating in the mind the Egyptians an analogy with solar orbit. In Egyptian cosmology, the universe is represented as a cow called Nut.

The ball of cow dung is obviously the earth, although the European Egyptologist would like us to believe that our ancestors were as ignorant as theirs were of the Earth's orbit of the Sun.

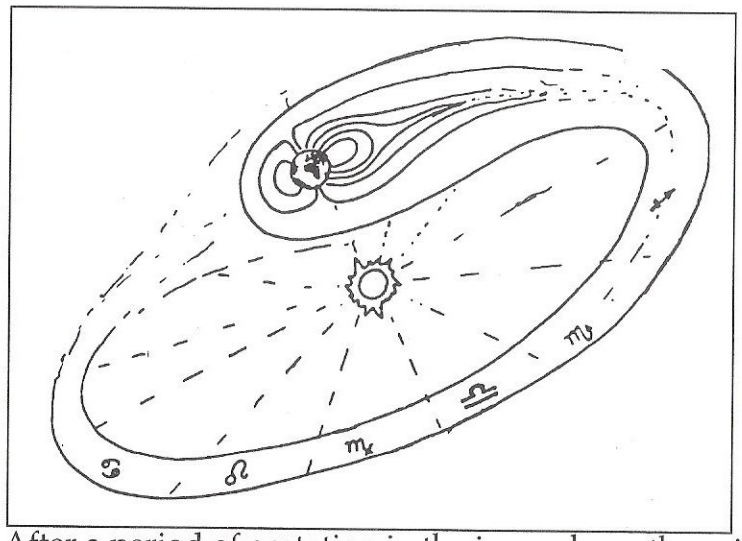

After a period of gestation in the ionosphere, the spiritual body returns to it's astral homeland, one of twelve regions, from which it came. There it will find a glorious existence beyond description, an existence where there is no night only day and it's every desire will be fulfilled in Amentet.

African Astrophysics

THE THEOSOPHICAL CONFLICT between the Big-Bang and the Steady-state model of the universe, is unresolved after 4000 years. It is deeply rooted in the Osirian and Amenite perspectives concerning the origin of the universe.

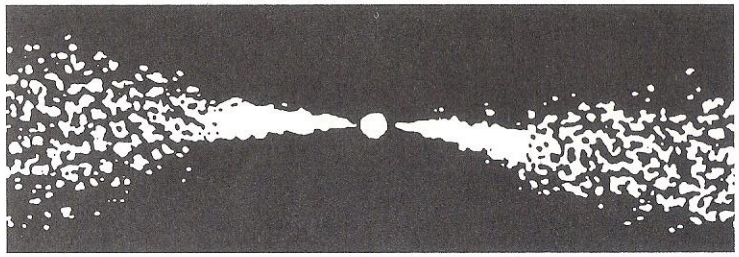

Fig. 1 Radiograph of a typical radio galaxy with jets projecting from its whirling black hole nucleus.

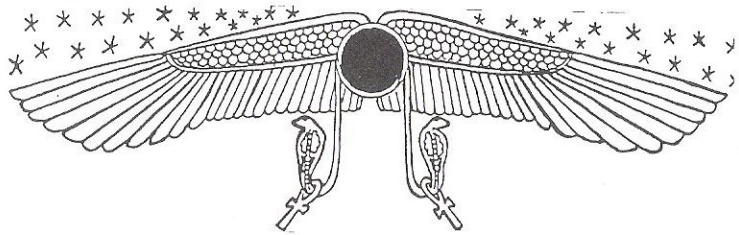

Fig 2 The twin serpents illustrate the unique feature of a radio galaxy which appear as two separate radio sources.

Osiris, God of continuity through the resurrection of the dead, is the Steady-state universe. A philosophy which arose from the African's view of himself as a reflection of the God Osiris, the Ultimate Black. The Ancient African Astrophysicist, studying the universe, also looked inside himself and found that the connection between melanin and the black hole, was the electron (the breath of life 4).

The Grand Unification Theory, which eluded Albert Einstein, has already been solved. The Africans discovered that subatomic particles, like the electron, were created when ordinary matter (energy) passes through a black hole. However, since the Europeans cannot accept Osiris, their scientists have sought diverse theories in order to circumvent the truth of an all powerful Black God.

African Plasma Physics

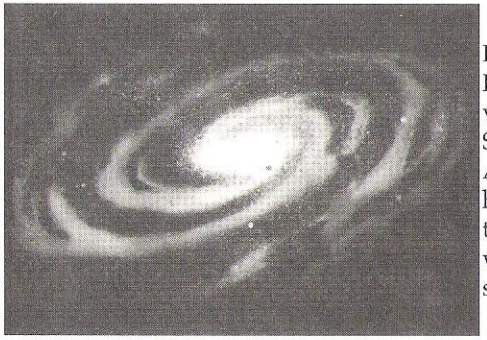

In the original myth, Horus lost an eye in his victorious battle against Set (Typhon, typhoon). After his wound was healed by Thoth, he gave the eye to Osiris to eat, which vivified and strengthened Him.

This myth, handed down from Ancient Times, relate the events occurring in the eye of a radio galaxy. Where stars and planets are swallowed by the central black hole and resurrected as fourth-dimensional matter (plasma).

A plasma is characterized by its high electron content. About 95% of the matter in the universe is in this state. A low pressure gas plasma need not be strongly ionized to respond to or produce electromagnetic effects. Black skin, which is composed of a layer of organic semiconductors can be considered a plasma or fourth dimensional matter. And since neuro-melanin and melanocytes are the basis of higher mental activ-

ity, it stands to reason that our moral nature is an expression of a more direct contact with God through the spirit. In other words, melanin is your link with the Universal Mind of God and morality is the Universal Law of reconciliation characteristic of our God Osiris. Osiris is the God of Judgment and the cross-road, whether to go right or left on the Path that leads to Him and Peace in the eye of the storm. The Egyptian symbol of a plasm is the same as "n" or water, but it must be considered as living water. It is also illustrated in the symbol of the aurora which most people can recognize as an electrical discharge in what is now called a cathode-ray tube.

Osiris

African Quantum Physics

SINCE THE DISCOVERY of the electron, modern physicists have found themselves in lockstep with a more ancient reality already defined by our African ancestors. The Tuat is the fourth- dimensional world of the electron and the core of the particle- wave paradox in quantum physics. Only the names have been changed to protect the guilty.

Our present reality is defined by the speed of light, beyond which nothing material can be transmitted, however in the actual reality world of the Tuat, the eye of the Ka sees another light. The light described in the Quran as 'light upon light' and in the Bible as an incomprehensible light that shines in darkness. The Bible is replete with descriptions of this immaterial world, providing a source for physicists, who behind closed doors, are probing the tenents of spirituality in search of answers.

> But, beloved, be not ignorant of this one thing, that one day is with the Lord as a thousand years, and a thousand years as one day.
>
> *2 Peter 3:8*

Here the existence of a non-local reality is defined by a difference in time reference. For if a thousand years is as a day, then something is traveling 365,000 times faster.

The intermediary between this world and the Tuat is the electron, the substance of the soul. It is indivisible, eternal and connected to the mind of God. This alternate reality can be understood in the analogy of the whale, whose dorsal fin emerges when the whale surfaces for air. What we observe is the point-like character of the electron or fin, but beneath the surface lies the greater glory of the whale. The Ka, which surfaces periodically from the sea of eternity, is represented not only as a particle but also a wave (the mythological serpent ⊿ 𓆑 𓆓 Qeb. The human body is merely the skin of this mystical serpent which is shed periodically and in which the god walks upon the Earth.

Nur Ankh Amen
The Religious Institute of Kemitronics.

The Science of Kemit

THE RELIGIOUS CONCEPTS of Ancient Egypt were structured on scientifically verified electromagnetic theory, not unsubstantiated traditional beliefs, as ours are today. Separation of science and religion is a modern phenomenon where clashes between cultures in a shrinking world, force compromises with the perception of truth.

Most of us are unprepared to cope with the idea of a superior African science. Years of slavery and colonial domination have damaged our belief in the ability of our race to have accomplished these feats of mental genius. In spite of the pyramids and other colossal monuments, which are a testimony to our greatness, most of us are still in disbelief.

Electromagnetic religion in Kemit can be seen to have played a role in the evolution of monotheism during the reign of Amenhotep IV in the 18th Dynastic Period. The reason for the conflict between the polytheistic doctrine of the past and the singular universal god Aten may have been the result of the

discovery of a new source of electromagnetic radiation called Cosmic Background Radiation,

In 1964, experimenters at Princeton University studying the possibility of leftover radiation from the "Big-Bang," discovered the universal microwave radiation hypothesized by Akenaten 3500 years before. The Aten was represented by a disc with many rays ending in hands holding the ankh (symbol of life). Because this source of radiation was universal, it was difficult to depict, therefore, the instrument used to detect its microwave emissions was used.

The Disk of aten was an ancient solar device, used to focus sunlight to a point or beam of extreme intensity. These large domed disks were made of highly polished metal (the word aten means mirror) to concentrate the heat of the sun on a focal point for a variety of uses, which include the splitting of large stone blocks. A stone block was exposed to a narrow beam and, when heated, cold water was poured causing the stone to split in precise dimensions lines.

With the rise of the Amenites, the technology concentrate other invisible electromagnetic wave obsessed with the building of larger and more requiring massive quantities of gold and silver shrines of the

ancient gods, which ruined the national economy and created enemies throughout Egypt. The disks were dismantled during the reign of Tutankhamen, to fund the restoration of the ruined temples of the Ancient gods.

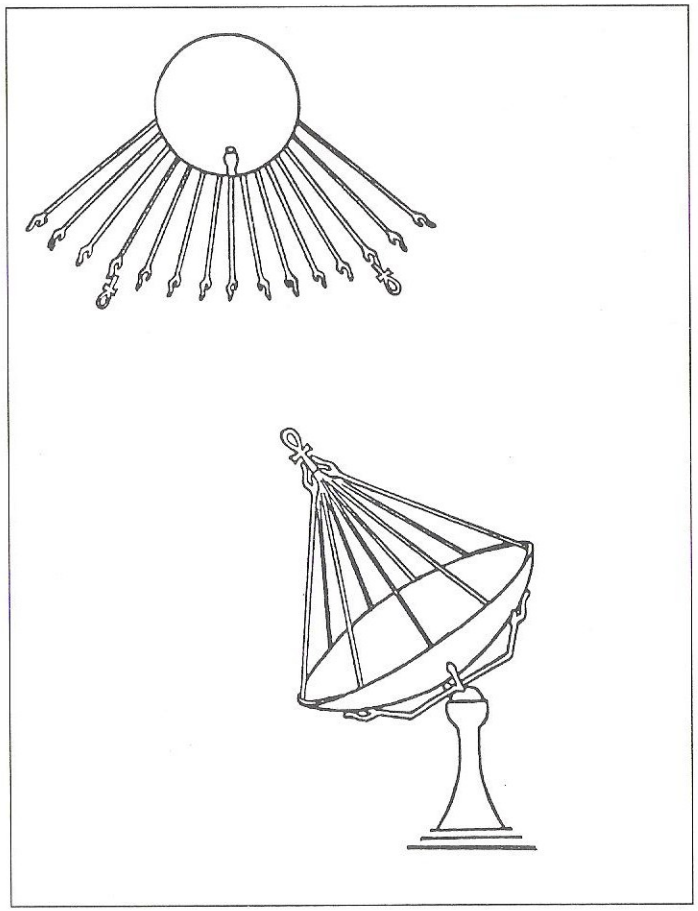

This may be difficult to accept if you are unfamiliar with the two dimensional convention of Egyptian Art

as opposed to the modern three dimensional representation.

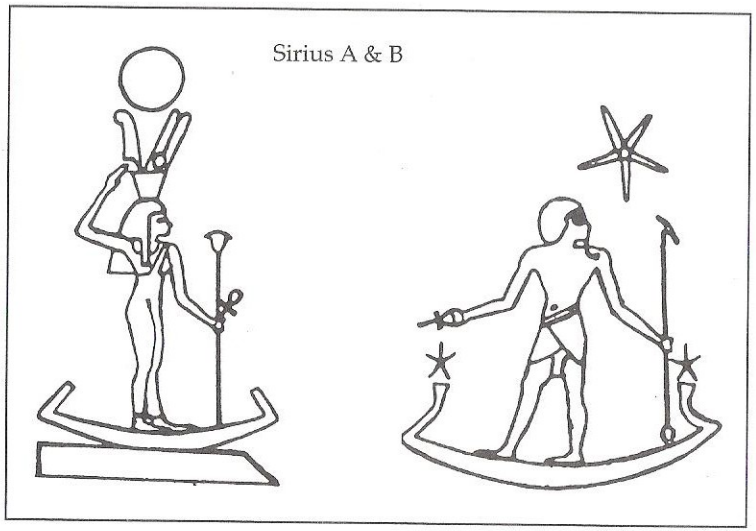

Invisible Sirius B was "discovered" in 1970. She is composed of super-dense matter created by an encounter with a black hole.

The Aten was rejected as the universal source of all life because the faintness of the emissions suggested weakness in comparison to the more powerful gods of the past.

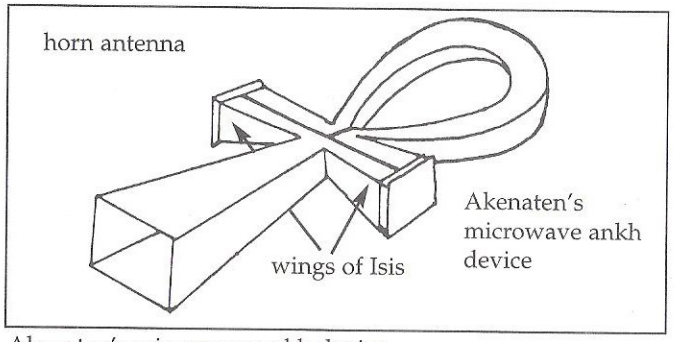

Akenaten's microwave ankh device

The disc of Aten, concentrated the microwave radiation into the horn antenna, exciting the wings of Isis (resonant cavity) into oscillation. The natural frequency of her wings and the incoming microwaves are mixed (heterodyned) and the lower difference frequency, which resulted from the mixing, is detected by the loop. An explanation of the loop's function in this FM discriminator requires an excessive use of technical jargon, which would only detract from the spiritual essence of this divinely inspired device.

This radio telescope could detect radiation from stars and other stellar activities in the cosmos. Akenaten was dismissed as a heretic and is not a favorite among European Egyptologists because of his distinctly African appearance. but he was undoubtedly one of the greatest astronomer- scientists in human history. For he not only discovered the remnants of the Original Spark (the Aten, the Big bang) from which all life originated, but he founded the first religion based on the Oneness of God.

Higher on the electromagnetic frequency scale above microwaves are the invisible infrared rays also known as heat. And by exploring infrared we come to the real reason the pyramids were built.

The word "pyramid" means, fire within (pyr; fire, heat & mid; middle), not the familiar flames, but the Ankhet 𓋹 𓏏 𓋹 𓇋𓇋𓇋𓂋𓂋

or focused by the pyramid into the sacred chamber under its base.

The pyramid was simply a lens which focused a specific frequency of infrared waves on the sacred chamber.

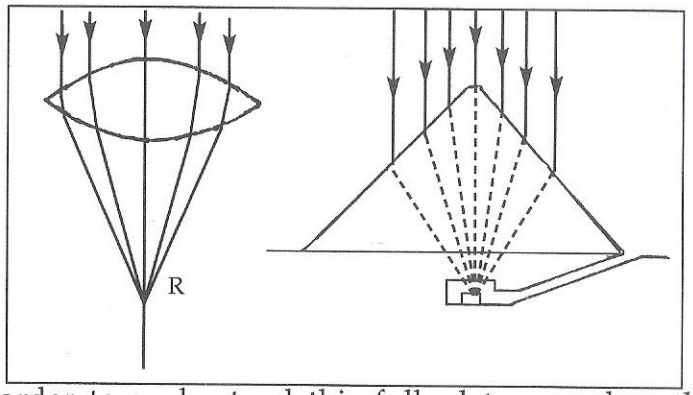

In order to understand this fully, let us explore the question of "living fire."

A by product of both life and combustion is carbon dioxide. If living fire is to exist, carbon dioxide must be eliminated or exhaled and fresh oxygen supplied for further combustion of fuel (organic, fossil or sugar). A flame in an enclosed area would die from the lack of oxygen, which would have been consumed and converted into carbon dioxide.

If carbon dioxide could somehow be converted to it's constituents, carbon and oxygen, the oxygen could be re-used to further continue combustion and pro-

duce a living fire.

Carbon dioxide molecules can be split into carbon and oxygen by absorbing energy at specific resonant frequencies. The molecule vibrates in response to the energy absorbed and if there is sufficient concentration of these photons, the molecule splits and oxygen is liberated.

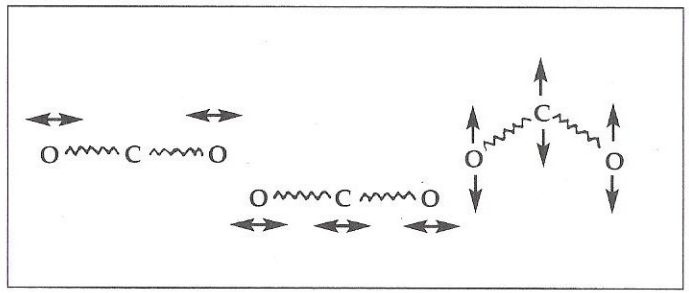

modes of vibration of CO_2

Every object with a temperature above zero degrees Kelvin (K), emits infrared by what is known as Black Body Radiation. The frequency and intensity of the radiation is related to the temperature of the object. At the pyramid's natural temperature of 300 K, there is sufficient infrared at the proper frequency, which the shape of the pyramid can concentrate on the sacred chamber to effect dissociation of carbon dioxide. If the incorrect frequency is used the molecule could split into poisonous carbon monoxide.

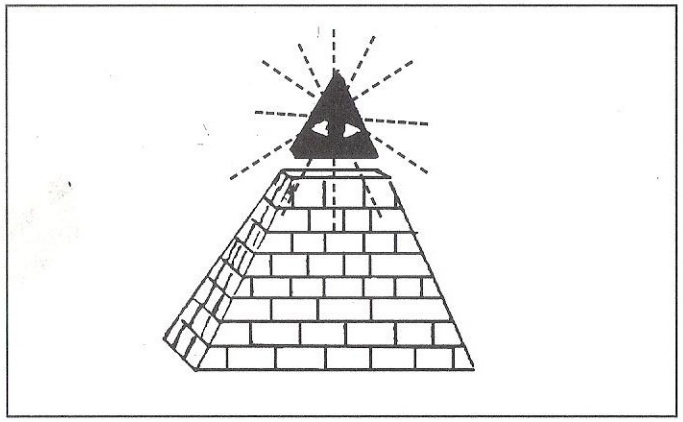

The Sacred Chamber was a special life promoting environment where the dead were revived and incredible surgical procedures could be carried out safely. This technology is specific to Africans, simply because white skin is too reflective and would not allow enough energy to be absorbed.

Imhotep, builder of the first pyramid

The first pyramid was built by Imhotep, the African multi-genius, whom the Greeks called Asclepius, their god of medicine.

ASCLEPIUS

Legend has it that Asclepius, god of healing and son of Apollo, was delivered by cesarean section performed on his dead mother Coronis by Thoth (Hermes) and taught the art of medicine. Another version states that he was abandoned on a mountain and suckled by goats. The shepherd who discovered him was frightened when he observed a mysterious aura of glistening corona discharges emanating from the child's skin.

His wisdom and skill in the healing arts were unsurpassed, for Asclepius discovered the secret of the Gorgon's blood, which was both a medicine and a deadly poison. With this knowledge he developed a method of bringing the dead back to life. After reviving many people he himself was killed with a lightning bolt from Zeus, for fear that he might reveal the secret which would give immortality to human beings. Apollo, angered by the

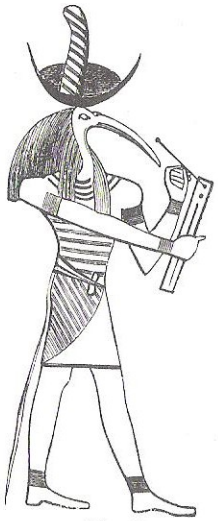

Thoth

murder, responded by killing the thunder-making Cyclopes of Zeus.

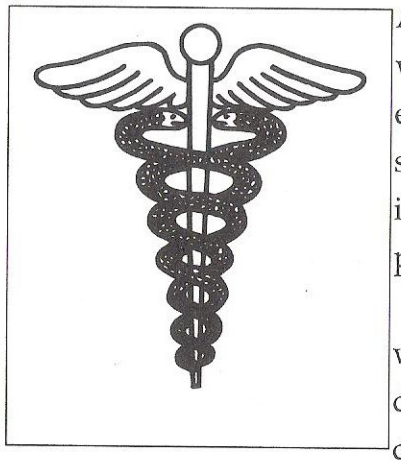

Asclepius was associated with serpents and his emblem of twin winged snakes is still used as the insignia of the medical profession.

Focused infrared rays were also used to dehydrate the bodies of the dead. This sophisticated form of mummification, usually reserved for nobility, produced the most life-like mummies because of the precision of the dehydration process.

However the ultimate use of infrared rays, involved the semiconductor nature of melanin, which requires an infusion of energy to bridge the gap between it's levels of conduction. With this constant source of power the Kha of the Pharaoh would remain an electrically active antenna, supporting his heavenly reflection in divine splendor.

The Ankh of Science

WHEN SANKH WAS HIGH PRIEST, Ankh Science had long ago reached it's zenith in Kemit. The Priesthood of the ☥ Ankh, an established University of Ankh Science, maintained the temples and shrines of numerous ankh possessing gods. The most notable of these were the shrine of khonsu, miraculous healing, and Ptah, the god of creative insight. However the Priests of Amen possessed the most powerful shrine, that of spiritual flight or teleportation. There power arouse from a knowledge of themselves, the knowledge that the photonic essence of man which emanated from the soul was indeed his truest self.

> In him was life, and the life was the light of men. And the light shineth in darkness; and the darkness comprehended it not.
>
> *St. John 1:4-5*

> The light of the body is the eye: if therefore thine eye be single' thy whole body shall be full of light.
>
> *Matthew 6:22*

After receiving this revelation, I beseeched my lord and master, the High Priest Sankhamen, continually to grant me the knowledge of the secret workings of the ankh of light, which was referred to as the Neb ankh. Understanding of the Neb ankh was achieved at the culmination of a lifetime of study and religious discipline. Although I am only a messenger, with a message already too complex for those who would receive it, I felt compelled to include some mention of it's enormous importance.

The Neb ankh was an awesome experience which would change forever, the initiate's perception of reality. For it was a foretaste of life after death, a discovery of an existence outside the mass of the body, a feeling of total weightlessness and an inter-dimensional access to the Tuat (the otherworld).

Superior African Technology has already achieved levels which are still thought to be science fiction.

The rewards of African Nationalism will be the ability to mount large scale research efforts, akin to the Space Program or the Manhattan Project, to revive ancestral wisdom. Imagine the cohesive power and national unity in Kemit during the Era of Pyramid Building. Modern technology is still in its infancy and can only scratch the surface of this enormously com-

plicated issue. We should abandon the Pale god and return to the worship (study) of Osiris (the Black God, the electronics of Black skin).

Ptah, portrayed as a mummy, with his hands protruding from the wrappings, holding a staff that combines the djed pillar, ankh sign and sceptre.

Although the active component is the melanin granule, its random orientation renders it ineffective. The electromagnetic emissions from the ankh and the uas (scepter) were used to align these tiny dielectric resonator antennas, in order to produce a coherent radiation pattern. The position of a granule can be adjusted. Because, as shown on page 56, the field of a melanin granule could exert a dipole moment on its neighbor, creating the proper alignment of this microscopic antenna array.

Coherence is the essential property of a laser (Light Amplification by Stimulated Emission of Radiation), and Black skin can be made to lase.

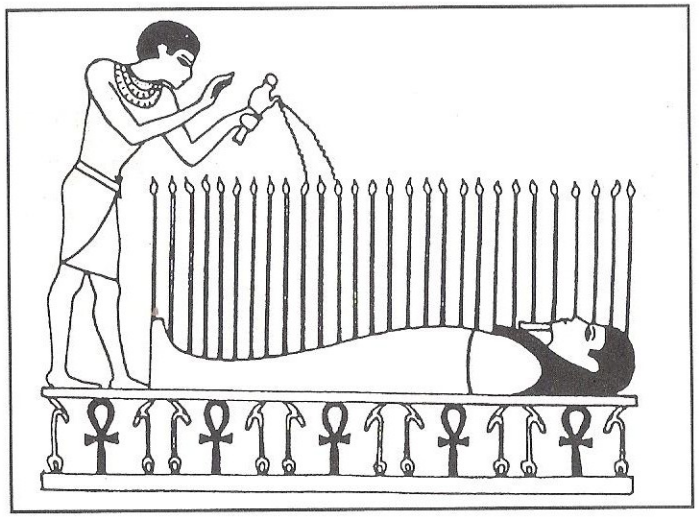

Light rays, in the form of beams tipped by tiny flames, emitted from the body of Osiris, the Neb Ankh.

Conclusion

THE BASIC CHARACTER OF African Science is the promotion of life, as opposed to the Euro-centric preoccupation with destructive or weapons based technology. Because of this mind-set, the view that all science has some weapons potential, Europeans are intent on suppressing Ankh Science as a matter of National Security. Their need to mis-educate African children results from a very real fear, that the genetic memory of these mental giants will be awakened. This policy has been in effect since the Greeks first encountered this advanced extraterrestrial civilization of the Nile Valley.

Because of the barbaric nature of the Greeks, the Amen Priests were killed, libraries burned, religion distorted and hieroglyphic writing forbidden. This arms race mentality is a permanent feature of Euro-science, having the effect of placing all science under the scrutiny and directorship of the governing body, in order to prevent a departure from science that is only beneficial to Whites. The encounter with an alien

civilization, possessing science developed over thousands of years around unique genetic differences, forced Whites to institute policies of mis-education.

The photo-active nature of melanin is an evolutionary quantum-leap, generating a science, culture and religion totally alien to the invaders of the Nile Valley. If allowed unimpeded development, this advantage could be exploited with miraculous consequences for the African, the greatest benefits being in the medical arena, where laser technology and the protein-producing melanocytes will be wedded to create cures unheard of since the time of Imhotep And speaking of Imhotep, could reviving the dead by using infrared laser techniques to dissociate carbon dioxide in the body be far away? This might not be our greatest achievement, for within the genetic memory of an African child is the knowledge to deoxidize melanin and put flesh on dry bones.

Afterword

WHEN I FIRST READ *The Ankh:African origin of electromagnitism*, I was elated, because all positive information about the Ankh is necessary to awaken the Nubian Kamitik Giants sleeping in the belly of Amenta (the West). The Ankh is the old rugged sign that has been despised by the world. The four major world religions: Hebrew-Israelite, Buddhism, Christianity and Islam were all nurtured by the Ankh people of the Nubian Hapi (Nile) Valley. In this scintillating book, the electromagnetic power of the Ankh has been scientifically investigated by Nur Ankh Amen.

The Egyptological would-be suppressers of AfrakaNubian Spiritual High Kulture continue to deny the primacy of Afrakan Kosmik thought and its application in the mundane realms. These humble Black farmers of the Nile Valley could not possibly have knowledge of electricity and atomic energy. Long before the atom was discovered and misused by western man, Atum appeared on the temple walls of Khamit (Egypt) as the primordial principle of unmanifested potential. It was Atum, cradled on the head of Ptah, the unmoved mover who copulated within her-

himself to bring forth Shu-Nifu, the fire fed wind and Tefnut-the materialization of H_2O. These complementary elements sustain the Ankh (Life) principle of the wombniverse.

Nur Ankh Amen has not been criticized because of fear that the reclamation of Ankh Spiritual Science by Afrakan people, will make the foreign imposed religions obsolete. The oppressor knows this much, that the Ankh sign itself is a primordial mental key to unlock the gates of ancestral memory. In his book, *Black Seminarians Without a Black Theology*, Dr. Yosef Ben Jochannan issued a call for restoration of the Ankh to its place of primacy in Afrakan Spiritual High Kulture.

The Ankh is also carried by Nubian Kamitik initiates in the major cities of the West. Bearers of the Ankh are very courageous people who are undaunted by the slander against the Ankh. They have seen beyond the lie that the original AfrakaNubian bearers of the Ankh were 'pagan' and 'heathen' people who 'worshiped idols.' Yet this slander has caused many people of Afrakan ascent to turn away from Ankh science. Bearers of the Ankh are keepers of a sacred legacy which calls them to service as healers in the earth. On the temple walls of Aton-Ra Akhet (called El-Armana today) the Aton Ra (Sun) is chiseled in stone projecting rays terminating in Ankh (Life). The rays of Aton-

Ra are the food of plants. To consume green plants is the way we feed our internal sun within the pineal gland.

The first Ankh bearer was called Heru (in Greek Horus). The aim of all initiates in Ankh Sacred Science is to become transformed into Heru. Heru is the Ankh (Life) advocate ruling the upper realms of your Konsciousness. Heru Asr, the Nubian Falcon of the Holy Spirit, is pictured on temple walls flying with Ankhs in its talons. Heru - the Ankh (Life) messenger came with words of healing and life.

The Socio-Spiritual Meaning of the Ankh

In woman the loop of the Ankh represents the womb, the crossbar the fallopian tubes, the staff the birth canal. In man the loop is his prostate, the crossbar his testes, the staff his penis. Ankh is a life wand. Khamitically speaking our ecological Ankh is that loop of mist drawn up through the power of Aton-Ra's (the Sun's) rays to make clouds which is purified by the Kosmik kiss of Tefnut (moisture). It falls back to earth (the crossbar) as Nun (Rain) or Hapi (die inundated river) fertilizing and bringing the seed of new life (the staff) out of the ground as vegetal food of life in the first times. Ptah's face was green with the promise of renewal and regeneration of life through eating and drinking the green. Queen Afua who as Mut Nebt-Het is Chief Priestess of Purification says,

"Eat green, wear green, walk on green" and Priestess Tehuti adds, "Put green in your pocket." Remember electromagnetic Ankhs utilized copper which is oxidized as green. This is the great drama of the rebirth of Asar the Resurrected One. Ankh is the perennial symbol of the Divine Afrakan family in perpetuity. However you look at it, Ankh is life.

Special Note: For Bearers. Wearers and Keepers of Ankh

Ankhians are not selfish, we share the gifts of healing and life with all people who respect the primordial Aftakan source of all earth life. The mitochondrial Eve is a Nubian Khamit woman - Ta-Urt Sekemet Mut Ast.

The Ankh is an Afrakan re-birth concept and symbol which Afraka gave to the world when she preserved the Ankh on temple walls and as amulets. Ankh may be worn by all who adore NTR the one life source as NTR Ankh (Divine Supreme Womb/Seed Source of Life) the Mother/Father Creator. A wearer of the Ankh is not racist, is not violent, does not eat dead or live animals, nor flesh, avoids any foods that cause putrefaction or fermentation stinking up the body and does not eat creatures with eyes. An initiate wearer, carrier or user of the Ankh honors the feminine (womb) principle as the first and eldest manifestation of divine in Kosmos and on earth. She/he is cognizant of the need of Maat in a patriarchal world. Ankh supporters practice Maatiarchy - balanced

Execution of power in female/male relationships. Ankh demands focus and attention to spiritual and material needs simultaneously.

However you see the Ankh either as a Spiritual, Kultural, healing or scientific tool or wand, it is essential to remember that the Creators of the Ankh instrument caused the rise of the longest lasting most righteous civilization in the Hapi (Nile) Khamitic Valley and sent messengers of Ankh (Life) to all people of earth. So tenacious is humanity's hold on Ankh (Life) that Ankh subliminally creeps up in all English words of continuity. All gerund (ing) words/sounds conceal the Hesi (mantra) Ankh - "ing" is continuity throughout all time and all space. The anchor which secures the lives of passengers on a stormy sea conceals the hesi (word/sound) Ankh. When we thank the Creator, we use the word Ankh. Connect conceals Ankh in the letters "onnec." Our interconnectedness with NTR (Divine) is the greatest lesson taught by Ankh (Life Eternal) science. Ask your k-nee (reverse the sound and the movement). Ask your ankle, ask your tongue which stimulates the waters which form the sound of your voice. Ankh the very word in MTU NTR begins with the wave, (Nu) water. According to Gerrald Massey in Ancient Egypt Light of the World, the very word King conceals the Khamite hope of life eternal. Nkh, Ankh - -g may he live. -g Live the -g.

The Ankh unifies us all in spite of religious and philosophical differences because it is the sign of the Wombniversal AfraKosmik Spiritual source of all religions. Without Ankh (life) of what use is religion? Meditate on ankh as you hesi (chant) Ankh over and over. Come to Ankh. Come to Life.

May this book serve to fill in open gaps in your knowledge. Add this scientific and spiritual portion to your store of Ankh knowledge (reverse the first three letters in know what do you get? Onk, life.) Ink makes the word permanent. The written words of wisdom gives life. I offer this humble addendum as I have been asked. May you take your Ankh back. RISE AFRAKANUBIANKHAMITIKUSHITE PEOPLE, RISE!

Forever yours in Ankhtuity,
For Ankhternity,
Ankhtually,
Heru Ankh Semahj sa Ptah
Studio of Ptah
155 Canal Street, suite 9
New York, NY, 10013
1-212-226-8487
1-212-343-9706

Glossary

ankh: A tau cross with a loop on top.

diety: A person or thing revered to as supremely powerful or beneficent.

djed: Cruciform symbol with at least three cross bars.

lodestone: naturally occurring mineral that is strongly magnetic.

aurora: Intermittent electrical discharge that occurs in the rarefied upper atmosphere.

ionosphere: An ionized layer in a planetary atmosphere where free electrons and ions with thermal energies exist under the control of earth's gravitational and magnetic fields.

ions: electrically charged atoms or group of atoms.

electron: negatively charged elementary particle of the atom.

DNA: The nucleic acid forming the genetic material of all cells.

Heh: God of infinity.

chakras: The points located along the body that are known as energy centers. They are seven of them.

diode An electrical device that allows electricity to flow in one direction only.

SETI: Search for Extraterrestrial Intelligence

UFO Unidentified Flying Object.

Khnum: A Ram-headed creator god often depicted at a pot-

ter's wheel fashioning man out of clay.

Hathor: Goddess of jou, love, fertility music and dance and daughter of Ra.

Alchemy: A form of chemistry during the Middle Ages that attempted to discover a method of transmuting base metal into gold.

scepter: A rod or wand held in the hand as a emblem of regal or imperial power.

shrine: Any structure or place that is consecrated or devoted to a holy person or deity.

Egyptology: The science or study of Egyptian antiquities.

capacitor: An arrangement of conductors separated by an insulator (dielectric) used to store charge.

Ptah: Creator God who was usually portrayed as a mummy, with his hands protruding from the wrappings, holding a staff that combines the djed pillar.

Maat: A goddess who personifies the laws of ordered existence.

Tutankhamen: Ruler of the late 18th Dynasty.

Anubis: A god of the dead in the form of a dog or jackal, closely associated with embalming and mummification.

superconductivity: The absence of electrical resistance in certain substances at temperatures close to 0 K.

References

1. Ben-Jochannan, Yosef, Modupe Oduyoye & Charles Finch. *African origins of the Major World Religions.*, Edited by Amon Saba Saakama, 1988.
2. Budge, E. A. Wallis. *Hieroglyphic Dictionary, Vol. 1 & 2.*
   ———. *The Mummy A history of the Extraordinary Practices of Ancient Egypt.*
3. *The Holy Bible*, Revised Standard Version. 1952
4. Popular Electronics, July 1990 Oliver Lodge: *Radio's Forgotten Pioneer* by James P Rybak p. 62.
5. Bordeau, Sanford P. *Volts to Hertz the rise of electricity.* 1982.
6. Seffe, Emilio. *From Fallen Bodies to Radio Waves.* University of California, Berkeley.
7. Dakin, H.S. *High Voltage Photography* by , Berkeley, California 1978.
8. Massey, Gerald: *Ancient Egypt Light of the World, Vol. I & 2 & Natural Genesis Vol. 2.*
9. 10. *Treasures of Tutankhamen* Metropolitan Museum of Art. 1976
11. American Scientific, Volume 70. *The Biosynthesis of Mammalian Melanin.* by John M. Pawelek & Ann M. Korner. March-Apnil pg. 136
12. BioScience Vol. 36 No. *What Can We learn From Chick Embryo Melanocytes.* June 1986.
13. *Organic Semiconductors* by Felix Gutmann& Lawrence E. Lyons.

14. Blake, George G. *History of Radio Telegraphy and Telegraphy*. by
15. Phillips, Vivian J., *Early Radio Waves Detectors*. Institution of Electrical Engineering, London & N.Y. 1980.
16. *Syntony and Spark. the origins of Radio*. Hugh G. J. Aitken. Princeton University Press. 1975.
17. Gottlieb, Irving M, *Understanding Oscillators* by
18. Chambers, R. G. *Molecular Semiconductors* (Physics and its applications 1.)
20. *Neural Network Architecture*, an introduction by Judith E. Dayhoff.
21. Cheikh Anta Diop, *Great African Thinkers* edited Ivan Van Sertima.
22. Cress Welsing, Dr. Frances, *The Isis Papers*.

Index

A

Academia, 11
Amino acid, 55
Adam, 74
Africa: 9, 11: Nile Valleys Civilization of, 54
After-world, 20
Afterlife, 29
Aging: premature, 59: delaying, 74
Akenaten, 108, 110, 111
Alchemy, 33, 34, 129
Allah, 70
Amen-ra, 72
Amenhotep, 107
Amenite, 101
Amenites, 108
Amentet, 100
Amino acid, 55, 97, 98
Amplification: method of, 46
Amulet, 18, 19
Ancestors, 12, 15, 30, 69, 85, 99, 105
Ancestral spirits, 75
Animals: wild, 21: albino, 59
Ankhet, 18, 29, 65, 111
Ankhs, 22, 38, 44, 76, 77,
Antenna, 18, 49, 51, 52, 56, 110, 111, 116, 119
Antennas, 51, 119
Anubis, 20, 22, 65, 130
Apollo, 115
Arc: musical, 52
Aristotle, 25
Ark: covenant of the, 26, 29
Art: Egyptian, , 79, 109
Arts, 50: healing, 115, 141
Asclepius, 114, 116 *see also* Imhotep
Assyrians, 51
Astral: projections, 58:travel, 63: homeland 100
Astronomer,111
Astrophysicist, 102
Astrophysics, 101
Aten, 107, 108, 110, 111
Ation, 72
Atmosphere, 81: primordial, 97
Atomic energy, 123
Aureole, 86
Aurora, 86, 104, 129

B

Ba, 93
Batteries: 32, lead acid, 34, 78
Battery, 11, 30, 32, 34, 40, 77, 80, 83, 86
Ben-Jochannan, Yosef, 131
Big-bang, 101, 108, 111

C

Cancer, 75
Cannibalism, 68
Capacities, 44
Capacitor, 26, 28, 36, 40, 46, 48, 52, 79, 130
Carbon dioxide, 112: monoxide, 113
Cathode, 94
Cathode-ray, 104
Caucasians, 74

Cesarean section, 115
Chakras, 129
Chemical, 32, 55, 57, 66, 97
Chronos, 75
Colonial powers, 10
Corona, 72, 115
Corona-like, 42
Coronis, 115
Cosmic background radiation, 108
Cosmos, 111
Creator-god, 86
Cyclopes, 116

D

Devices, 12, 37, 53, 62
Dielectric, 95, 119, 130
Diode, 80, 129
Diodes, 53
Djed, 24, 31, 32, 34, 48, 86, 119, 129
DNA 59, 129

E

Egyptians, 33, 49, 50, 54, 66, 75, 80, 81, 85, 99
Egyptological, 11, 123
Egyptology, 34, 43, 130
Einstein, Albert,102
Electric, 33, 35, 49, 54, 77, 87, 93, 95
Electrical, 25, 26, 31, 97, 104,
Electricity, 35, 44, 78,
Electromagnet, 50
Electromechanical, 75
Electron, 25, 49, 52, 87, 94, 105, 106,
Electronic, 11, 31, 47, 48, 54, 75, 81
Electronics, 10, 12, 25, 43, 119, 131
Electrons, 58, 86, 87, 90, 93, 94, 129
Electrostatic, 32, 80, 95
Encyclopedia, Zolar, 19
Euro-science, 121
European, 10, 12, 21, 25, 30, 34, 43, 48, 50, 99, 111
Extraterrestrial, 96, 97, 1

F

Fire, 70, 111, 113
Fluorescent lamp, 79
Fossil, 112
Fourier, 48
Fourth-dimensional: matter, 103, world, 105
Franklin, Benjamin, 11

G

Galaxy, 96: radio, 101, 103
Galena, 39, 76, 80
Galvani, 41, 43
Gauss, 50
Goddess, 40, 51, 94, 95, 129, 130
Gods, 18, 20, 24, 48, 76, 94, 109, 117
Gold, 26, 27, 32, 34, 87, 108, 129
Golden calf, 51
Gorgon, 115
Granule, 56, 94, 95, 119
Granules, 56
Grave-robbery, 11
Greek, 12, 25, 66, 68, 94, 125
GSR, 41

H

Half-wave, 52
Hapi, 20, 123, 125, 127
Hathor, 51, 129
Heh, 78
Henry, 34, 35, 50
Heritage, 12
Hermes, *see* Thoth
Hertz, 11, 36, 37, 39, 52, 131
Heru, 77, 125, 128 *see also* Horus
Hieroglyphic, 19, 31, 39, 47, 70
High-frequency discharge, 38, 49
Hittite, 33
Holographic, 98
Holy Spirit, 89
Horus, 64, 65, 68, 103 *see also* Heru
Hydrogen, 32, 68, 96, 97
Hyenas, 21

I

Icon, 13, 20
Ideograph, 33, 49, 89
Ideographs, 89
Imhotep, 114, 122 *see also* Asclepius
India, 43
Infrared, 40, 111, 113, 116, 122

Ionosphere, 85, 87, 90, 100, 129
Isis, 19, 51, 64, 65, 96, 110, 111
Israel, 27, 51
Italian, 41

J

Jackal-headed, 22
Jesuit, 25
Jesus, 67, 91
Jewelry, 13, 32
Jews, 67
Judaism, 141
Judgment, 40, 93, 104

K

Ka, 69, 70, 75, 88, 94, 105, 106
Kam, 40, 76
Kemit, 9, 12, 15, 25, 33, 53, 80, 107
Kemitic, 81
Key, 15, 16, 20, 63
Kh, 79, 89
Kha, 92, 93, 116
Kheper, 99
Khnum, 69, 70, 75, 86, 88
Khonsu, 24, 117
Khufu, 29
Kirlian photograph, 42
Kristos, 66
Krst, 66, 68

L

Laser, 120, 122
Laser-like, 72
Latent energy, 78
Lead oxide, 34
Leyden jar, 26
Liebowitz mercury generator, 52
Light-tower, 70
Lightning, 26, 38, 76, 115
Lodestone, 25

M

Maat, 40, 126, 130
Magic: Egyptian, 31
Magnetic, 25, 35, 50, 77, 78, 87, 129
Massey, Gerald, 66, 70
Medieval: period, 34: witches, 95
Melanocytes, 55, 56, 103
Melanoma, 74
Mercury vapor tube, 53
MHZ, 80, 88
Microscopic, 119
Millennium, 43
Millikan, 93
Molecules, 32, 45, 73, 98, 113
Monotheism, 107
Moses, 26, 29, 50, 51, 91
Mummies, 29, 30, 68, 116
Mummification, 31, 57, 67, 116
Mummy, 18, 29, 57, 65, 66, 119

N

NASA, 96
Neb, 33, 118, 120
Nekhbet, 95
Neural: network, 56, 57: receptors, 73
Neuro-melanin, 103
Neurotransmitter, 59
Newton, Isaac, 37
Nub, 33
Nut, 99

O

Oersted, Hans Christian, 35
Organic, 17, 45, 54, 56, 103, 112, 132
Osirian: legend, 64: perspective, 101
Other-world, 29
Oxygen, 32, 97, 112, 113

P

Papyri, 37
Papyrus, 32
Pharaoh, 50, 116
Photonic beings, 47, 74, 117
Photons, 73, 113
Polytechnic University, 32
Polytheistic, 107
Potter's wheel, 69, 86, 88, 129
Pseudo-scientist, 62
Pseudoscience, 20
Ptah, 24, 117, 119, 123, 128, 130
Pyramids, 9, 107, 111

Pythagoras, 25

Q

Qeb, 50, 106
Quantum-leap, 122
Quinone, 55
Qur'an, 105

R

Ra: 65, 72, 73, 75: breath of, 86
Radiation: 55, 75, 87, 111, 113: Cosmic background, 108
Radio, 29, 39, 61, 63, 73, 80, 87, 92, 96, 101, 103, 111
Radiograph, 101
Righi, 39
Rites, 65
Rituals, 19
RNA, 58
Rosetta stone, 37

S

Sacred: objects, 26: chamber, 112, 114
Sankh, 117
Sankhamen, 13, 118
Sarcophagus, 29
Satan, 72
Savants, 30, 48
Scarab beetle, 98, 99
Scepter, 24, 48, 95, 119
Sciences:Wholistic, 69: Egyptian, 13
Seffe, 131
Sekhet, 83
Sekmet, 20
Sem, 32
Senkh, 79, 93
Sensory perception, 14
Senusret, 77
Serpent, 48, 50, 51, 91, 95, 106
Set, 38, 49, 61, 64, 68, 70, 80, 88, 103
Seti, 96, 98
Shrines, 26, 29, 108, 117
Sine wave, 45, 48
Skin, 41, 54-55, 57, 74, 75, 103, 106,
Solar orbit, 99
Stonehedge, 20
Swastika, 56

T

Talisman, 19
Tau, 129
Technology, 9, 10, 33, 40, 43, 69, 80, 108, 114, 118, 121, 122
Tefnut, 125
Teht, 34
Tehuti, 126
Tet, 34, 70-71, 75, 87
Thoth, 68, 103, 115
Tuat, 87, 105, 106, 118
Tunnel diodes, 53
Tut, 73
Tutankhamen, 19, 21, 33, 39, 57, 73
Tyrosinase, 55, 59
Tyrosine, 55

U

Uas, 33
UFO, 80, 98, 99
UHF, 58, 76
Ultrasonic environment, 22
Ultrasound, 21, 22
University: Polytechnic, 32: Princeton, 108,: of ankh science, 117
Uraeus, 45

V

Vatican, 21
Vesica Piscis, 41
Volta, 11, 30, 43, 48

W

Walls, 77, 87
Weber, 50
Whale, 106

Y

Yellow pigment, 59, 74

Z

Zeus, 115, 116
Zinc, 32
Zoology, 9

A&B Publishers Group

Send for our complete full color catalog today!

A Book of The Beginnings Vol. I & II	*Massey*	45.00
Afrikan Holistic Health	*Afrika*	14.95
African Discovery of America	*Weiner*	10.00
Arab Invasion of Egypt & The First 30 Years of Roman Dominion		15.95
Anacalypsis (set)	*Massey*	45.00
Anacalypsis Vol.. I	*Massey*	25.00
Anacalypsis Vol.. II	*Massey*	20.00
Aids The End of Civilization	*Douglass*	9.95
Black Heroes of The Martial Arts	*Van Clief*	16.95
Apocrypha (hc)		14.95
British Historians & The West Indies	*Eric Williams*	9.95
Christopher Columbus & The African Holocaust	*John Henrik Clarke*	10.00
Columbus Conspiracy	*Bradley*	11.95
Dawn Voyage:The Black African Discovery of America	*Bradley*	11.95
Documents of West Indian History	*Eric Williams*	9.95
Education of The Negro	*Carter G. Woodson*	10.95
Egyptian Book of The Dead	*Budge*	9.95
Egyptian Book of The Dead/Ancient Mysteries of Amenta	*Massey*	9.95
First Council of Nice: A World's Christian Convention A.D. 325		9.95
Forbidden Books of The New Testament		14.95
Gerald Massey's Lectures		9.95
Global Afrikan Presence	*Edward Scobie*	14.95
Gospel of Barnabas		11.95
Greater Key of Solomon		10.00
Hairlocking: Everything You Need To Know	*Nekhena Evans*	9.95
Harlem Voices from the Soul of Black America	*John Henrik Clarke*	11.95
Harlem USA	*John Henrik Clarke*	11.95
Healthy Foods & Spiritual Nutrition Handbook	*Keith Wright*	8.95
Heal Thyself for Health and Longevity	*Queen Afua*	9.95
Heal Thyself Cookbook:Holistic Cooking with Juices	*Diane Ciccone*	10.95
Historical Jesus & the Mythical Christ	*Gerald Massey*	9.95
History of The People of Trinidad & Tobago	*Eric Williams*	14.95
Lost Books of The Bible & The Forgotten Books of Eden		11.95
Oludumare: God In Yoruba Belief		12.95
Rape of Paradise: Columbus and the Birth of Racism in America	*Jan Carew*	14.95
Signs & Symbols of Primordial man		16.95
Vaccines are Dangerous: A Warning To The Black Community		9.95
Vitamins & Minerals A to Z	*Jewel Pookrum*	9.95
Freemasonry Interpreted		12.95
Freemasonry & The Vatican		9.95
Freemasonry & Judaism		9.95
Freemasonry:Character & Claims		9.95
Freemasonry Exposition: Exposition & Illustrations of Freemasonry		9.95
Science of Melanin		9.95
Secret Societies & Subversive Movements		12.95

Prices subject to change without notice

Mail To:**A&B PUBLISHERS GROUP · 1000 ATLANTIC AVE · NEW YORK · 11238**

TEL: (718) 783-7808 · FAX (718) 783-7267

NAME:_____

ADDRESS_____

CITY_____ ST_____ ZIP_____

Card Type_____ Card Number_____

Exp____/____ *Signature* _____

We accept VISA MASTERCARD AMERICAN EXPRESS & DISCOVER

THE ANKH

African Origin of Electromagnetism

It behooves the African anthropologist to use every scientific discipline that modern technology has to offer, in the tradition of Chiekh Anta Diop, to acquire the correct perspective on African high culture and civilization. Now is the time for Africans to wrestle Egyptology from the clutches of the distorters of our civilization, by a more forceful and public attack on their lies. We must expose to the light of truth, every falsification and every claim of a European or Asian origin of Kemit and re-establish the link with our ancestors for the sake of our children.

ISBN 1-881316-36-X $ 10.95

90000

9 781881 316367

A&B Publishers Group
Egyptology